CAROLINA CROSSROADS

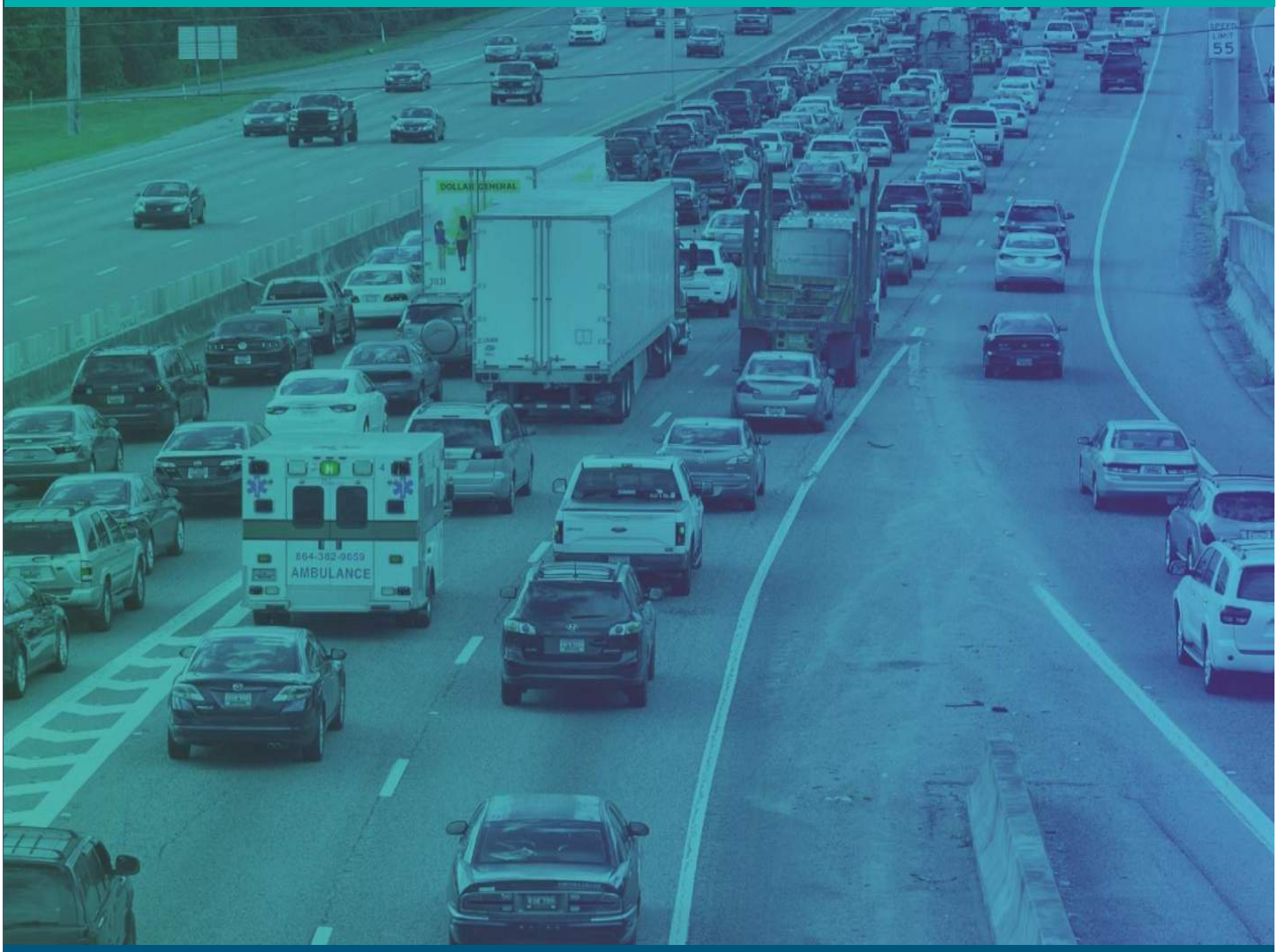

Systems Interchange Modification Report

I-20/I-26/I-126 Systems Interchange Modification Report (Systems IMR) Re-evaluation

March 19, 2026

CAROLINA CROSSROADS

I-20/I-26/I-126 Systems Interchange Modification Report Re-evaluation

Carolina Crossroads

I-20/I-26/I-126 Corridor Improvements

Lexington and Richland Counties, South Carolina

Final March 2026

Prepared for the South Carolina Department of Transportation, and Federal Highway Administration





Prepared by:

HDR Engineering, INC.

SCDOT | U.S. Department of Transportation Federal Highway Administration

Contents

1. Introduction 8
   1.1 Background 10
      1.1.1 Alternatives Traffic Analysis (April 2019) 10
      1.1.2 The approved Systems IMR (May 2019) 10
   1.2 NEPA 11
      1.2.1 NEPA Re-evaluation #1 - Colonial Life Boulevard (Phase I) 11
      1.2.2 NEPA Re-evaluation # 5 – Broad River Road Technical Memorandum (Phase 2) 12
      1.2.3 Modified Selected Alternative Phase 1/Phase 2 Traffic Technical Report (June 2022) 13
   1.3 Purpose and Need 14
   1.4 Systems IMR Re-evaluation Reasons 15
      1.4.1 Reason 1 – Change in the Design Year 15
      1.4.2 Reason 2 – Design Changes 15
      1.4.3 Reason 3 – Change in TransModeler Version 16
      1.4.4 Reason 4 – Change in Traffic Data 16
   1.5 Request for Approval 16
   1.6 The Applicant 16
2. Methodology 18
   2.1 Study Area 18
   2.2 Analysis Years 18
   2.3 Analysis Periods 19
   2.4 Project Alternatives 19
   2.5 Data Collection 19
   2.6 Traffic forecasting 20
   2.7 Traffic Operational Analysis 20
   2.8 Safety Analysis 20
3. Existing Model Development and Calibration 21
   3.1 Data Inputs 21
   3.2 Model Geometries 21
   3.3 Vehicle Inputs 21
   3.4 Traffic Composition 22
   3.5 Vehicle Fleet 25

3.6 Vehicle Routing 25
3.7 Desired Speed Distributions 25
3.8 Signal Operations and Stop Control 25
3.9 Number of Model Runs 25
3.10 Model Calibration 26
3.10.1 Visual Checking and Error Correction 26
3.10.2 Calibration Targets 26
3.10.3 Volume Validation 27
3.10.4 Travel Time Validation 27
3.10.5 Visual Audits 27
3.10.6 Global Parameters 28
3.10.7 Localized Calibration Parameters 28
3.11 Calibration Results 28
3.11.1 Travel Time Validation 28
3.11.2 Traffic Volume Validation 29
4. Future Traffic Forecasts 31
4.1 Historical Growth Rates 31
4.2 Model Growth Rates 31
4.3 2019 IMR Growth Rates 31
4.4 Recommended Growth Rate and Design Year Peak Hour Volumes 33
5. Future Conditions Alternatives 34
6. Future Traffic Operation Analysis 45
6.1 LOS Criteria 45
6.2 Network Performance 46
6.3 I-26 Freeway Analysis Results 46
6.4 I-20 Freeway Analysis Results 48
6.5 I-126 Freeway Analysis Results 50
6.6 Intersection Operations Results 50
7. Safety Analysis 52
7.1 Approved Systems IMR/SA Concept Configuration Results 52
7.2 Build Alternative Configuration Results 53
7.3 Configuration Comparison Summary 54
7.4 Crash Risk and Safety Factors at Project Interchanges 55

7.4.1 I-26 Exit 106 (St. Andrews Road) 55
7.4.2 I-126 Colonial Live Boulevard 55
I-20 Exit 65 (Broad River Road) 56
8. Other Considerations 57
8.1 Consistency with Other Plans/Projects 57
8.2 Project Schedule and Funding Plan 57
8.3 Environmental Analysis Status 57
8.4 Conceptual Signing Plan 57
8.5 Design Exceptions and Variations 57
9. Interchange Justification 58
9.1 Requirement a 58
9.2 Requirement b 59
9.3 Requirement c 60
9.4 Requirement d 60
9.5 Requirement e 60
10. Conclusion and Recommendations 61
Appendices 62

List of Figures

Figure 1 - Carolina Crossroads Project Study Area 9
Figure 2 - Phase 1 Preferred Concept for Colonial Life Boulevard Interchange 12
Figure 3 - Phase 2 Preferred Concept for Broad River Road Interchange 13
Figure 4 - Exit 63 Bush River Road Existing Tie-In Concept 14
Figure 5 – Purpose and Need 15
Figure 6 - Carolina Crossroads Project Phased Construction Map 17
Figure 7 - Peak Hour Traffic Flow Profile 22
Figure 8 - GEH Statistic for Volume Calibration 27
Figure 9 - Bush River Road at I-20 (Exit 63) – Selected Alternative 35
Figure 10 - Bush River Road at I-20 Interchange (Exit 63) – Build Alternative 35
Figure 11 - St. Andrews Interchange (Exit 106)– Selected Alternative 36
Figure 12 - I-26 and St. Andrews Interchange (Exit 106) – Build Alternative 36
Figure 13 - I-20 and I-26 System Interchange (Exit 64/107)– Selected Alternative 37
Figure 14 - I-20 and I-26 System Interchange (Exit 64/107)– Build Alternative 37
Figure 15 - I-126 and I-26 Interchange (Exit 108)– Selected Alternative 38
Figure 16 - I-126 and I-26 Interchange (Exit 108)– Build Alternative 38
Figure 17 - I-126 Colonial Life Boulevard at I-126 Interchange – Selected Alternative 39
Figure 18 - I-126 Colonial Life Boulevard at I-126 Interchange – Build Alternative 39
Figure 19 - I-20 at Broad River Road Interchange (Exit 65) - Selected Alternative 40
Figure 20 - I-20 at Broad River Road Interchange (Exit 65)– Build Alternative 40
Figure 21 – I-26 eastbound CD from St. Andrew to West of US 378 Part 1 41
Figure 22 – I-26 eastbound CD from St. Andrew to West of US 378 Part 2 – Selected Alternative 42
Figure 23 – I-26 eastbound CD St. Andrew to West of US 378 Part 2 – Build Alternative 42
Figure 24 - The fourth westbound lane on I-20 - Selected Alternative 43
Figure 25 - The fourth westbound lane on I-20 – Build Alternative 43
Figure 26 - I-26 mainline between I-126 diverge and the eastbound CD merge – Selected Alternative 44
Figure 27 - I-26 mainline between I-126 diverge and the eastbound CD merge – Build Alternative 44
Figure 28 - Project Schedule 57

List of Tables

Table 1 - Model Data Inputs 21
Table 2 - Peak Hour Truck Percentages for I-20/I-26/I-126 23
Table 3 - Peak Hour Truck Percentages at Study Intersections 24
Table 4 - Desired Speed Distributions 25
Table 5 - Travel Time Validation 29
Table 6 - Volume Validation Summary for Individual Link Flows 30
Table 7 - Volume Validation Summary for Total Volumes 30
Table 8 - Annual Historic and Model Volume Growth Rates 32
Table 9 - LOS Criteria for Uninterrupted Flow Facilities 45
Table 10 - LOS Criteria for Interrupted Flow Facilities 46
Table 11 - Network Performance Summary 46
Table 12 - Design Year (2050) Traffic Operation Analysis Results for I-26 47
Table 13 - Design Year (2050) Traffic Operation Analysis Results for I-20 49
Table 14 - Design Year (2050) Traffic Operation Analysis Results for I-126 50
Table 15 - Design Year (2050) Intersection Operational Results 51
Table 16 - Selected Alternative (2050) Predictive Crash Summary 53
Table 17 - Build Alternative (2050) Predictive Crash Summary 53
Table 18 - Design Year (2050) Crash Rate (Crashes per Mile) Comparison 54

List of Appendices

Appendix A – Previously Approved Documents

2019 Systems IMR

June 2022 *Technical Memorandum Modified Selected Alternative Phase 1/Phase 2 Traffic Report*

NEPA Re-evaluations #1, # 5 and #6

Appendix B – Approved Methodology

Appendix C – Data Collection

Appendix D – Existing Peak Hour Volumes

Appendix E – Forecasts

Growth Rate outputs

2050 Design Year Selected Alternative Forecasts

2050 Design Year Build Alternative Forecasts

Appendix F – 2050 TransModeler Detailed Results

Appendix G – 2050 ISATe Outputs

Appendix H – Conceptual Signage Plan

Appendix I – Design Exceptions and Variations

Appendix J – Project Area Design Roll plots

1. Introduction

The Carolina Crossroads Project includes three interstate routes (I-20/I-26/I-126) and incorporates the modification of the I-20/I-26 system interchange (Exit 64/Exit 107) and the I-26/I-126 system interchange (Exit 108). I-20 is an east-west interstate highway that begins near Kent, Texas at I-10. From this origin, I-20 runs eastward through Texas, Mississippi, Alabama, Georgia, and South Carolina where it ends at I-95 in Florence, South Carolina. I-26 is an east-west interstate highway that begins at the junction of U.S. Route 11W and U.S. Route 23 in Kingsport, Tennessee. From this origin, I-26 runs generally southeastward through Tennessee, North Carolina, and South Carolina, where it ends at U.S. Route 17 in Charleston, South Carolina. I-126 is an east-west auxiliary route of I-26 that begins and ends in Columbia, South Carolina.

The proposed project is a transportation corridor improvement located in Lexington and Richland counties. To date, the project area has been defined as a mainline corridor including I-20 from US 378 Exit 61 to the Broad River (approximately five miles), I-26 from west of Broad River Road Exit 101 to US 378 Exit 110 (approximately 9.5 miles), and I-126 from I-26 to Grey Stone Boulevard (approximately two miles). **Figure 1** illustrates the extent of the Carolina Crossroads Project study area.

The original I-20/I-26/I-126 Systems Interchange Modification Report (IMR), dated May 2019 and included in **Appendix A** of this report, evaluated the anticipated interchange modifications as depicted in the Final Environmental Impact Statement (FEIS) for the project. Since the approval of the 2019 Systems IMR, the Carolina Crossroads has been separated into five construction phases. The first three phases of the Carolina Crossroads Project comprise most of the work documented in the 2019 Systems IMR. Improvements to the I-126 at Colonial Life Boulevard interchange are now part of Phase 1 of the Carolina Crossroads Project Delivery, while the I-20 Exit 65 Interchange at Broad River Road is now part of Phase 2. Phases 1 and 2 are both under construction as design-build projects, and the construction is expected to be completed in 2026. The improvements to I-20/I-26/I-126 system interchanges, along with I-20 Exit 63 (Bush River Road) and I-26 Exit 106 (St. Andrews Road), were part of Phase 3, which was also to be a design-build project. Traffic Technical Memoranda addressing changes to the I-126 at Colonial Life Boulevard interchange and I-20 Exit 65 (Broad River Road) were submitted as part of the Phase 1 and Phase 2 design-build projects, ID P039718 and ID P039719, respectively, and included in subsequent National Environmental Policy Act (NEPA) Re-evaluations #1 and #5.

As the evolution of the Carolina Crossroads Project through the phased construction delivery is discussed, it is important to understand the key terms that define various milestones in the evolution of the design as it relates to the FEIS and the Record of Decision (ROD) for the Carolina Crossroads Project and the 2019 Systems IMR. The design concept depicted in the FEIS was referred to as the Refined Recommended Preferred Alternative (RRPA). Once the ROD was issued in May of 2019, the RRPA concept became known as the Selected Alternative (SA); however, many of the reference documents to the FEIS/ROD were not updated to reflect this change in nomenclature, including the 2019 Systems IMR. *Therefore, the terms RRPA and SA are synonymous.*

As the Carolina Crossroads Project has advanced through the initial construction phases and right-of-way acquisition, the design concept has been updated periodically. These updates include changes to the design associated with the final design that have been developed during Phases 1 and 2 and changes made to the design concept outside of Phases 1 and 2 based on refinements made during right-of-way acquisition throughout the entire limits of the Carolina Crossroads Project. The version of the design concept that includes all these changes is referred to as the Modified Selected Alternative (MSA).

This Systems IMR Re-evaluation documents the traffic and safety performance of the Build Alternative against the Selected Alternative. The Build Alternative includes the design refinements made since 2019 from multiple project phases' design-build procurements and project efforts throughout the entire limits of the Carolina Crossroads Project.

Figure 1 - Carolina Crossroads Project Study Area

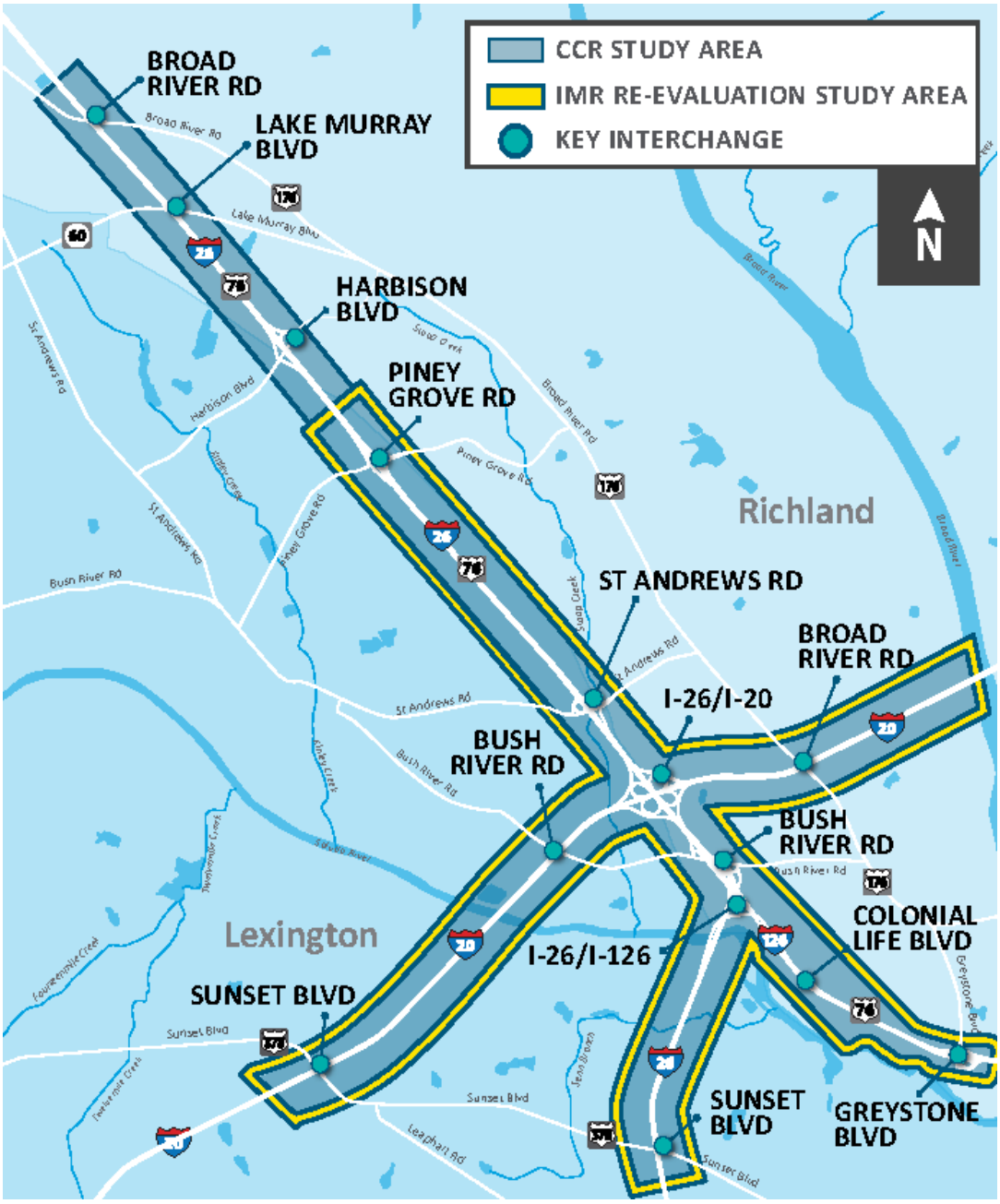

1.1 Background

The following studies were conducted as a part of the Carolina Crossroads Project:

1.1.1 Alternatives Traffic Analysis (April 2019)

The traffic analysis of the Representative Alternatives (RA) consisted of an iterative process involving the development of traffic projections incorporating previously collected data, screening of interchange Accessory Options (AO) that led to the development of the individual RAs, evaluating microsimulation networks of individual RA concepts that included microsimulation model calibration, review of areas of congestion within each alternative, and preparation of measures of effectiveness to facilitate the comparison of individual RAs. As areas of congestion and improvements in conceptual design of the RA were addressed, the microsimulation networks were modified to incorporate improvements to the original RA concept. Detailed information regarding the alternatives development and screening process is contained in the Alternatives Development and Screening Report included in the FEIS.
The Alternatives Traffic Analysis evaluated multiple improvements within the I-20/I-26/I-126 corridor designed to reduce existing traffic congestion, upgrade interchanges to meet design requirements, and accommodate future traffic needs. The study considered widening of I-20 from three to four lanes in each direction from about one mile west of Exit 63 (Bush River Road) to the Broad River, widening of I-26 from three to four lanes in each direction from just west of Exit 101 (Broad River Road) to Exit 110 (US 378), and realigning the connection to I-126 from I-26 towards the Colonial Life Boulevard interchange. In addition, the study examined modifications to the I-20/I-26 system interchange, I-26/I-126 system interchange, Exit 101 (Broad River Road), Exit 102 (Lake Murray Boulevard), Exit 103 (Harbison Boulevard), Exit 104 (Piney Grove Road), Exit 106 (St. Andrews Road), Exit 108 (Bush River Road), Exit 110 (US 378), Exit 63 (Bush River Road), Exit 65 (Broad River Road), and the Colonial Life Boulevard interchange on I-126. The Study Area for the Alternatives Traffic Analysis is shown in **Figure 1**.

1.1.2 The approved Systems IMR (May 2019)

The information discussed in the approved Systems IMR (May 2019) included in **Appendix A** of this report is derived from the Alternatives Traffic Analysis (April 2019). This report focused on traffic analysis of existing, future No-Build, and future Build conditions. The study area and TransModeler (version 4) remained consistent with the Alternatives Traffic Analysis (April 2019). The traffic conditions were analyzed for the following scenarios:

- Existing Conditions: An analysis of existing conditions in the year 2015.
- 2040 No-Build: An analysis of conditions in the year 2040 with no changes to the interstate or interchanges.
- 2040 Build: An analysis of conditions in the year 2040 with modifications to the study area interstate and interchanges

As part of the project development, nine RAs for the entire Carolina Crossroads Project study area were developed and evaluated along with a tenth ‘no-build’ alternative. From these alternatives, the RRPA also known as the SA was identified. The I-20/I-26 and I-26/I-126 system interchanges and adjacent service interchanges in the RRPA were modified as follows:

- I-20/I-26 System Interchange: the existing full cloverleaf interchange (I-20 Exit 64 and I-26 Exit 107) will be modified to a directional ‘turbine’ interchange. Multiple existing complex weaving movements will be eliminated from the mainline and relocated to collector-distributor roads which

will be constructed in each direction on I-20 and I-26 to separate movements traveling between I-20 and I-26 from through traffic on the mainline travel lanes.

- I-26/I-126 System Interchange: the existing interchange (I-26 Exit 108), which includes ramps from I-26 to Bush River Road, will be modified to eliminate the ramps to Bush River Road, improve the continuity of I-26, and revise the connection to and from I-126.
- I-20 Exit 63 (Bush River Road): the existing diamond interchange, which includes a loop on-ramp from eastbound Bush River Road to eastbound I-20, will be modified to provide a diverging diamond interchange. This modification includes eliminating the intersection of Berryhill Drive with Bush River Road and adding an overpass to connect Berryhill Drive over I-20 to Bush River Road via Rockland Road.
- I-20 Exit 65 (Broad River Road): the existing diamond interchange at Broad River Road, which includes a short, two-way segment on the eastbound on-ramp to connect Garner Lane to Broad River Road, will be modified to provide a single point urban interchange. The Garner Lane connection to the off-ramp was eliminated, making the interchange consistent with current standards and FHWA policy. A new connection was added to link Garner Road to Long Creek Drive.
- I-26 Exit 106 (St Andrews Road): the existing partial cloverleaf interchange includes a westbound loop off-ramp and eastbound loop on-ramp to and from westbound St Andrews Road. It will be modified to provide a single point urban interchange. The connections from the westbound off-ramp to eastbound St Andrews Road and to Burning Tree Drive will be maintained and adjusted to connect to the remainder of the modified interchange.
- I-26 Exit 110 (US 378): the existing single point urban interchange will remain unchanged; however, the eastbound off-ramp to US 378 will be relocated and extended by approximately 2,500 feet to reduce or eliminate the potential for off-ramp traffic queues from extending back to the eastbound I-26 mainline lanes.
- I-126 Colonial Life Boulevard: the existing partial interchange with ramps only oriented to and from downtown Columbia to the east will be replaced with a full access tight urban diamond interchange.

1.2 NEPA

A DEIS was completed in 2019, where the environmental impacts associated with the project were analyzed and documented. The FEIS and Record of Decision was issued by FHWA in May 2019. Subsequent design modifications since the completion of the 2019 Systems IMR were documented in NEPA Re-evaluations #1 and #5 are briefly discussed in this section, and approved documents are included in **Appendix A**:

1.2.1 NEPA Re-evaluation #1 - Colonial Life Boulevard (Phase I)

For this interchange, a full access tight urban diamond interchange was proposed in the 2019 Systems IMR. As part of the Phase 1 design build construction, an alternative design (partial diverging diamond interchange) (see **Figure 2**) concept was chosen as the most preferred concept based on several factors such as design innovation, constructability, cost effectiveness, and traffic operations.
This analysis was conducted using TransModeler version 4 to ensure that the proposed interchange design would not have significant impacts on the traffic operations and safety during AM and PM peak hours under current year (2020) and design year (2040) traffic conditions. The full traffic analysis including the interchange justification for this preferred alternative can be found in the September 2021 *Technical Memorandum I-126 at Colonial Life Boulevard Interchange – Traffic Analysis.* The changes to the Phase 1 design from the 2019 Systems IMR concept were included in the NEPA Re-evaluation #1, approved in August 2020.

Figure 2 - Phase 1 Preferred Concept for Colonial Life Boulevard Interchange

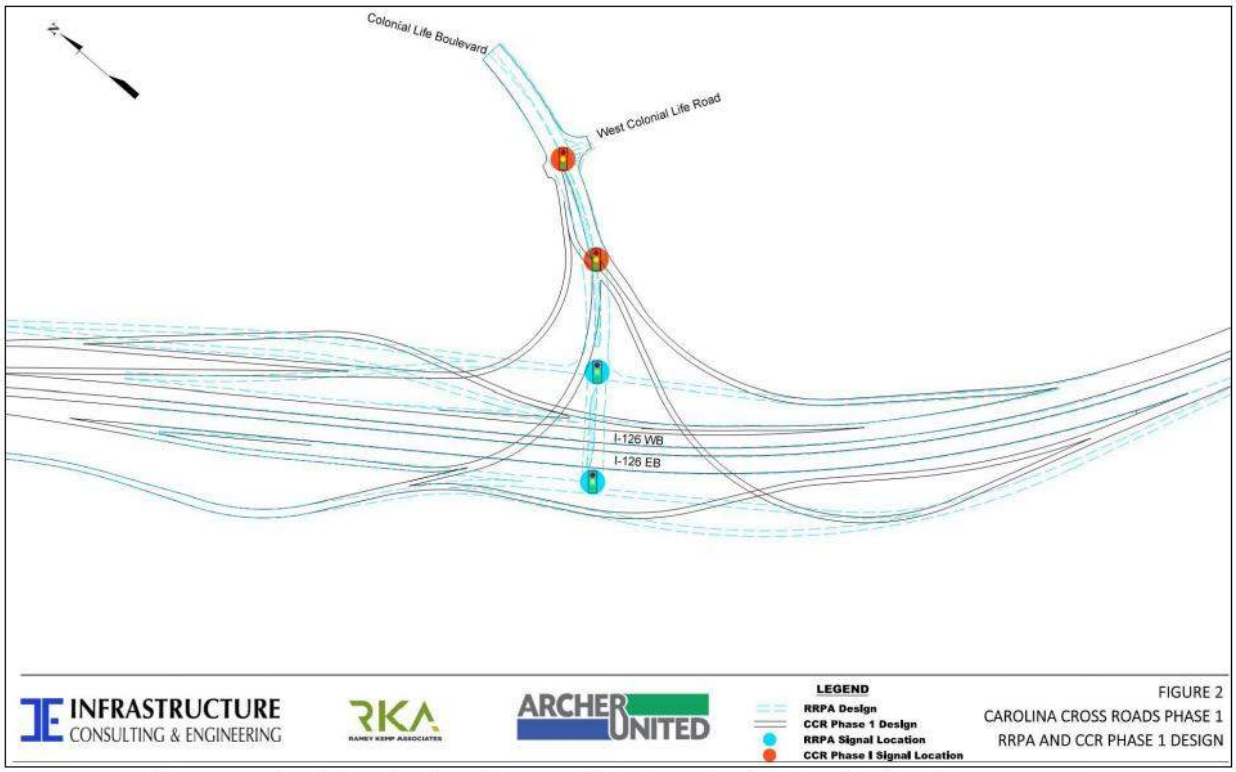

Source: Figure 2 of the *I-126 at Colonial Life Boulevard Interchange – Traffic Analysis Technical Memorandum (page 3)*

1.2.2 NEPA Re-evaluation # 5 – Broad River Road Technical Memorandum (Phase 2)

For the Broad River Road at I-20 (Exit 65) interchange, a single point urban interchange (SPUI) was proposed in the 2019 Systems IMR. As part of the Phase 2 design build construction, an alternative design Offset Diverging Diamond Interchange (DDI) concept (see **Figure 3**) was chosen as the most preferred concept based on several factors such as design innovation, constructability, cost effectiveness, and traffic operations. This design incorporates two new crossover intersections rather than a signal point intersection as proposed in the **Selected Alternative**. The analysis was conducted using TransModeler version 4 to ensure that the proposed interchange design would not have significant impacts on the traffic operations and safety during AM and PM peak hours under current year (2020) and design year (2040) traffic conditions. The full traffic analysis including the interchange justification for this preferred alternative can be found in the March 2022 *Technical Memorandum I-20 at Broad River Road Interchange – Traffic Analysis.* The changes to the Phase 2 design from the 2019 Systems IMR concept were included in the NEPA Re-evaluation #5 approved in September 2022.

Figure 3 - Phase 2 Preferred Concept for Broad River Road Interchange

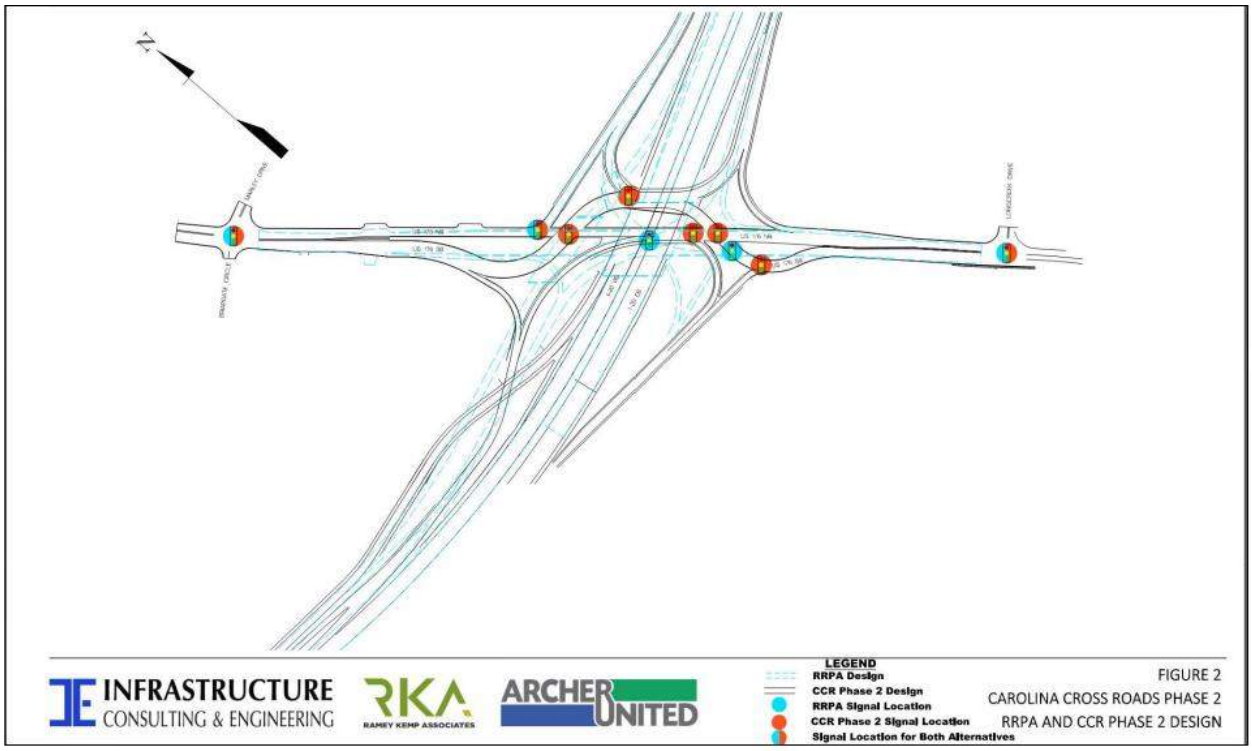

Source: Figure 2 of the *I-20 at Broad River Road Interchange – Traffic Analysis Technical Memorandum (page 3)*

1.2.3 Modified Selected Alternative Phase 1/Phase 2 Traffic Technical Report (June 2022)

As the Carolina Crossroads Project has advanced through the initial construction phases, the design concept has been updated to accommodate refinements made during right-of-way acquisition throughout the entire limits of the Carolina Crossroads Project. The version of the design concept that includes all of these changes is referred to as the MSA.

Due to substantial updates to the 2040 SA network and to understand the impacts to the network at the completion of Phase 1 and 2 before Phase 3 was completed, a simulation-based, dynamic traffic assignment (DTA) was completed for the updated SA design in 2040 AM and PM scenarios using TransModeler version 4. The analysis results of the mainline density segments for the 2040 SA (referred to the 2040 Build RRPA as part of the approved IMR) and the 2040 MSA conditions were compared and summarized in June of 2022 *Technical Memorandum Modified Selected Alternative Phase1/Phase 2 Traffic Report.* This report also summarized the updated MSA network analyses including the final design concepts for Phase 1 and Phase 2 and an updated interchange concept at I-20 Exit 63 (Tie-in). MSA network analyses MOEs were compared against the approved Systems IMR to identify the impacts of Phase 1 and 2 improvements prior to the completion of improvements to the entire project area.

Appendix A includes previously approved documents, including the 2019 Systems IMR and the June 2022 *Technical Memorandum Modified Selected Alternative Phase 1/Phase 2 Traffic Report.*

Figure 4 - Exit 63 Bush River Road Existing Tie-In Concept



1.3 Purpose and Need

The primary purpose of a project is the driver of the project. It reflects the fundamental reason the project is being pursued. The secondary purpose (or other desirable outcome) is an additional purpose(s) that is desirable but not the core purpose of the project.

The primary purpose of the proposed Carolina Crossroads Project is to implement a transportation solution(s) that would improve mobility and enhance traffic operations by reducing existing traffic congestion within the I-20/26/126 corridor while accommodating future traffic needs.

The secondary purposes of the proposed Carolina Crossroads Project are to enhance safety throughout the corridor, improve freight mobility, and improve system linkages, while minimizing community and environmental impacts.

As interstates initially developed in the 1950s and 1960s and improved during the 1970s and 1980s, I-20, I-26, and I-126 do not meet current vehicular traffic demands. The study area experiences heavy traffic congestion due to increases in vehicular traffic, vehicle weaving, interchange spacing, above average crash rates, and access ramps to and from each interstate that consistently become congested.

Figure 5 – Purpose and Need

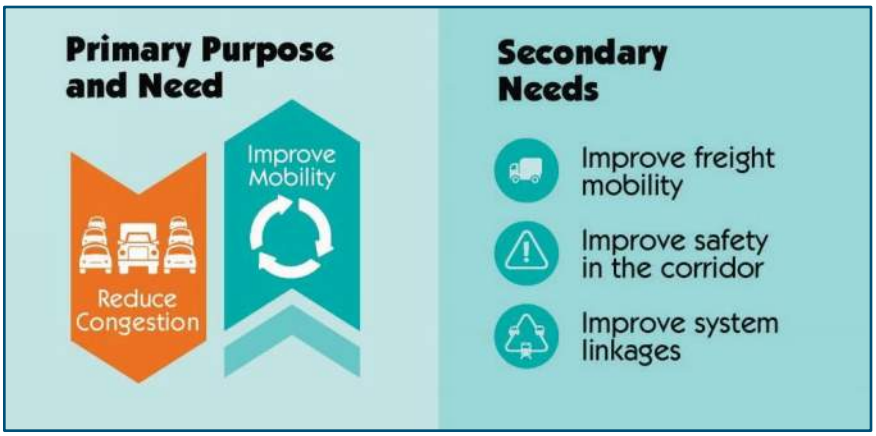

Finding an up-to-date solution has become a statewide priority. The need for this project is a result of the following factors:

- Growth in population and employment
- Decreased mobility and increased traffic congestion in the peak travel hours (inadequate roadway capacity)
- Increased user delay and lost productivity
- Safety concerns (increase in crash and fatality rates)
- Inadequate system linkages (lack of bicycle, pedestrian, and transit infrastructure)

1.4 Systems IMR Re-evaluation Reasons

There are four primary reasons necessitating the Re-evaluation of the approved Systems IMR. These are listed below.

1.4.1 Reason 1 – Change in the Design Year

The approved IMR and subsequent traffic analyses for Phase 1, Phase 2 and MSA have used Design Year 2040. The basis for 2040 projected traffic volumes was the 2040 South Carolina Statewide Model (SCSWM) and a 20-year design life of the project. The SCSWM is currently updated to Horizon Year 2050 and will be used to project traffic volumes for the Design Year 2050. Procurement challenges have resulted in the rephasing of the Project in 2024 which extends the Carolina Crossroads Project construction schedule and results in the I-20/I-26 system interchange construction phase planned to start in 2029. To evaluate the 20-year design life of the project, the design year has been revised to 2050.

1.4.2 Reason 2 – Design Changes

To obtain Safety, Operational & Engineering (SO&E) and NEPA approval for changes documented in the MSA and proposed design changes at the following interchanges:

- I-20 and I-26 System Interchange
- I-126 and I-26 System Interchange
- I-26 at St. Andrews Road
- I-20 at Bush River Road
- I-20/I-26 System Interchange collector-distributor system

- Colonial Life Boulevard at I-126
- Broad River Road at I-20

1.4.3 Reason 3 – Change in TransModeler Version

The TransModeler (Version 4.0 Build 6275) was used for the approved Systems IMR and subsequent traffic analysis for Phase 1, Phase 2 and MSA. The Highway Capacity Manual (HCM) methodologies have evolved from HCM 2010 since the Systems IMR approval to the latest HCM 7th edition. Similarly, the current TransModeler is version 7 which implements the latest HCM methodologies. This Re-evaluation will conduct traffic analysis using the latest TransModeler version 7.

1.4.4 Reason 4 – Change in Traffic Data

Traffic data for the existing and future traffic analyses for the approved Systems IMR was collected between 2014 and 2016 with the volume counts collected in 2015. Due to the age of the data reaching 10 years old, new data was collected in the Spring of 2024 as part of the re-evaluation. The new data was utilized for calibration and traffic forecasting to the new 2050 design year.

1.5 Request for Approval

Since the approval of the 2019 Systems IMR, the Carolina Crossroads Project has been separated into five construction phases and multiple subphases (see **Figure 6**).

Improvements to the I-126 at Colonial Life Boulevard interchange are now part of Phase 1 of the Carolina Crossroads Project Delivery, while the I-20 Exit 65 Interchange at Broad River Road is now part of Phase 2. Phases 1 and 2 are both under construction as design-build projects, and the construction is expected to be completed in 2025. Traffic Technical Memoranda addressing changes to the I-126 at Colonial Life Boulevard interchange and I-20 Exit 65 (Broad River Road) were approved as part of the Phase 1 and Phase 2 design-build projects, ID P039718 and ID P039719, respectively, and subsequent NEPA Re-evaluations #1 and #5, respectively.

In the new phasing plan for Carolina Crossroads Project, Phase 3 has been divided into subphases—A, B, C, D, and E. With this submittal, the SCDOT is seeking approval of the updated designs of Carolina Crossroads Project Phases 1, 2, and 3 (shown as “IMR Re-evaluation Study Area in **Figure 1**) to support the NEPA re-evaluation studies.

1.6 The Applicant

The interchange policy is administered by the Federal Highway Administration (FHWA). Therefore, FHWA is required to approve all new access or changes in access points pursuant to this policy.

As the owner and operator of the Interstate System, SCDOT (the applicant) is responsible for submitting a formal request to the FHWA demonstrating traffic and safety analysis for the proposed changes in access, as well as the recommended action.

Figure 6 - Carolina Crossroads Project Phased Construction Map



2. Methodology

The analysis methodology is consistent with the FHWA Policy No. 98-3460 (Federal Register; February 11, 1998; Volume 63, Number 28) and procedures outlined in the FHWA Interchange Request Access Request. The methodology consistent with the previously approved 2019 Systems IMR methodology. The methodology was discussed and developed in coordination with SCDOT and FHWA. The approved Project Methodology Report is provided in **Appendix B**.

2.1 Study Area

The Systems IMR Re-evaluation Study area is the same as the approved Systems IMR as shown in **Figure 1**. The study area includes the following:

I-26 from Broad River Road to US 378 (approximately 9.5 miles), including eight interchanges:

- I-26 at Broad River Road (US 176)
- I-26 at Lake Murray Boulevard (SC 60)
- I-26 at Harbison Boulevard
- I-26 at Piney Grove Road
- I-26 at St. Andrews Road
- I-26 at I-20
- I-26 at Bush River Road
- I-26 at I-126
- I-26 at Sunset Boulevard (US 378) -adjacent interchange analyzed to address FHWA requirements.

I-20 from east of US 378 to the Broad River (approximately five miles), including three interchanges:

- I-20 at Sunset Boulevard (US 378) -adjacent interchange analyzed to address FHWA requirements.
- I-20 at Bush River Road
- I-20 at Broad River Road

I-126 from I-26 to Grey Stone Boulevard (approximately two miles), including two interchanges:

- I-126 at Colonial Life Boulevard
- I-126 at Greystone Boulevard -adjacent interchange analyzed to address FHWA requirements.

The study area includes all ramp terminal intersections adjacent to the thirteen study interchanges along I-20, I-26, and I-126.

2.2 Analysis Years

The corridor is analyzed for the following years:

- Existing Year 2024. The existing year analysis was performed primarily for calibration purposes.
- Design Year 2050

The project alternatives were compared for the Design Year (2050).

2.3 Analysis Periods

Morning (AM) peak, and afternoon (PM) peak hour traffic conditions are evaluated within the study area to account for the significant directional flow of traffic in the respective peak hours.

Peak hours were established using traffic data collected on April 25, 2024, following the same approach applied in the 2019 IMR and the approved methodology. A one-hour analysis period was determined to be appropriate for both AM and PM peaks.

2.4 Project Alternatives

The Systems IMR Re-evaluation assessed the following alternatives:

- Selected Alternative (SA) – The approved 2019 Systems IMR Concept.
- Build Alternative - The updated designs of the Carolina Crossroads Project Phases 1, 2, and 3.

2.5 Data Collection

Consistent with the approved Systems IMR, the following data was recollected in 2024:

- Turning Movement Counts: 24-hour turning movement counts including pedestrian and bike counts were collected for the study intersections and ramp terminal on April 25, 2024.
- Vehicle Classification Counts: Seven-day vehicle classification counts were collected from April 21 through April 27, 2024.
- The following data was obtained from SCDOT:
    - Road Inventory Data.
    - ATR data for all active stations within the study area for available days in 2023 and 2024.
    - Historic AADT from SCDOT from 1996 through 2023.
    - NPMRDS (National Performance Management Research Data Set) Regional Integrated Transportation Information System (RITIS) speed data.
    - 2024 StreetLight Origin-Destination (OD) data.
    - Crash data for the study area for three years, from January 01, 2021, to December 31, 2023.
    - Latest (2024) Traffic signal plans and coordinated signal timing plans.
    - Travel Demand Model (TDM): Regional TDM and SCSWM model files.
    - Desired Speed distribution data was obtained from National Highway Traffic Safety Administration (NHTSA).

Data collection was conducted in late April under typical conditions, with schools in session, no major events, and mid-week timing to capture representative commuter and student travel patterns. SCDOT traffic count Station 095 shows that annual data indicates that the month of April had the highest average daily volume in 2024 of non-summer months on I-26 within the project area. The data collection is included in **Appendix C.** A summary of monthly traffic volumes at station 095 are shown in the appendix and the daily volume totals for the month of April are included and show that the week of traffic data collection was an appropriate sample of project patterns.

2.6 Traffic forecasting

The traffic forecasting used for this Systems IMR Re-evaluation is consistent with the approved Systems IMR and general SCDOT traffic forecasting practices. Future year traffic volume forecasts were developed for AM and PM peak hours for project alternatives. The methodology includes reviewing the following information.

- Historic linear, compound and average annual ADT growth trends for 10, 20 and 30 years were calculated. The linear, compound and average rates were calculated as follows:
  - Linear Growth - a straight-line growth between analysis years.
  - Compound Growth - percentage of growth from the previous year
  - Average growth - mean growth over analysis years.
- Grow rates from SCSWM and Columbia Area Transportation Study (COATS) Regional Travel Demand Model
- Previous studies
- Population and employment growth trends were estimated for Lexington and Richland Counties.

2.7 Traffic Operational Analysis

The study area is evaluated using Caliper's microsimulation modeling software, TransModeler version 7 Build 10280. A peak hour model was developed for AM and PM conditions. An existing TransModeler model was calibrated to 2024 conditions per FHWA Traffic Analysis Toolbox Volume III: Guidelines for Applying Traffic Microsimulation Modeling Software (2004), Wisconsin DOT Example calibration criteria.

The following microsimulation analyses were conducted for future conditions:

- Basic Freeway analysis
- Ramp merge, diverge, and weave analysis
- Intersection analysis

As described in the approved Project Methodology Report, the following measures of effectiveness (MOEs) from TransModeler were used to differentiate between the alternatives:

- Freeway, weave, and ramp merge/diverge: Density and LOS.
- Intersection: Intersection delay and intersection LOS

2.8 Safety Analysis

A predictive safety analysis was conducted consistent with the Highway Safety Manual (HSM) using the Enhanced Interchange Safety Analysis Tool (ISATe) for project alternatives for 2050 conditions. It should be noted that the 2019 Systems IMR included safety analysis but not the HSM predictive analysis.

3. Existing Model Development and Calibration

The existing conditions simulation models for the study area were developed using Caliper's microsimulation modeling software, TransModeler version 7 Build 10280. TransModeler is a microscopic behavior-based multi-purpose traffic simulation program that takes into consideration vehicle interaction and driver behaviors, as well as the operational impacts for both the upstream and downstream traffic conditions and can measure traffic densities on each segment and lane. TransModeler tracks individual vehicle movements and interactions more realistically than typical HCM methods and quantifies the performance of individual movements and overall delays and queue lengths for freeways, ramps, and intersections. Model assumptions, parameters, and network coding techniques are discussed in the following subsections. All assumptions are based on the traffic conditions collected in the field in April 2024. Existing models represent the year 2024 conditions.

3.1 Data Inputs

Multiple data sources were used to develop the data inputs and calibration targets in the TransModeler models for the Carolina Crossroads Project. The TransModeler model data inputs, sources, and uses are shown in **Table** 1 below.

Table 1 - Model Data Inputs

Data	Source	Use
Traffic Volumes	HDR/SCDOT	Input and Calibration
Signal Timing	SCDOT	Input
Speed	NHTSA/RITIS	Input and Calibration
OD	StreetLight	Input

3.2 Model Geometries

The calibrated 2019 Systems IMR TransModeler (Version 4.0 Build 6275) files were used for existing model development. The TransModeler (Version 4.0 Build 6275) files were converted to TransModeler version 7 Build 10280. Aerial photography was utilized to develop the 2024 base TransModeler network and establish intersection lane configurations, stop bar locations, and turn pocket lengths. The high-resolution aerials were also used to accurately model merge, weave, diverge, and lane drop sections on I-20/I-26/I-126.

3.3 Vehicle Inputs

Balanced traffic volumes were summarized in 15-minute intervals using existing count data in order to represent the traffic fluctuations during simulated peak hours, which allowed the TransModeler models to represent traffic arrival patterns and queuing more closely on the freeway and at study intersections. The TransModeler models included a 60-minute seeding period before the peak hour. The seeding period allows for vehicles to be loaded into the network before recording simulation results. Due to congestion in the study area, particularly in the AM peak period, the shoulder hours allow congestion to build prior to the peak hour and control how long the congestion lasts or how quickly it subsides.

A global peak hour of 7:15 AM to 8:15 AM and 4:30 PM to 5:30 PM was determined for the study area based on traffic counts collected during April 2024. Based on existing count data, the traffic profiles for AM and PM peak hours are shown in Figure 7, and peak hour volumes are included in Appendix D.

Figure 7 - Peak Hour Traffic Flow Profile

Peak Hour	Traffic Flow Profile
AM	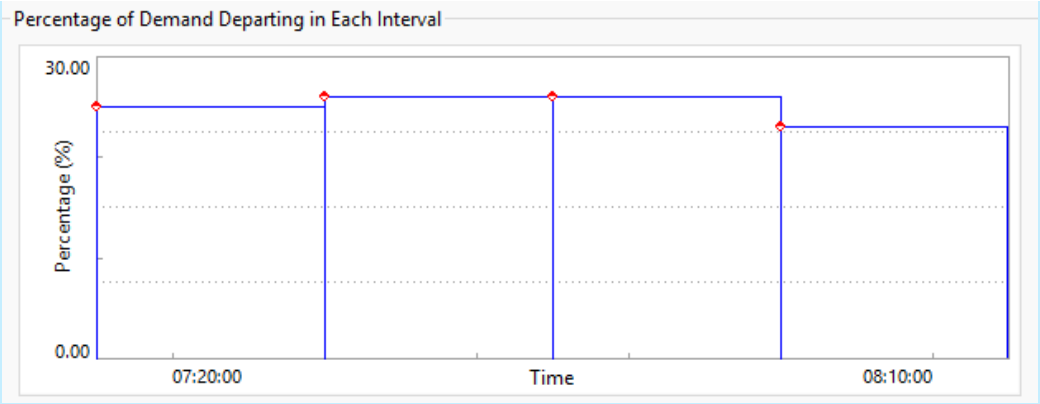
PM	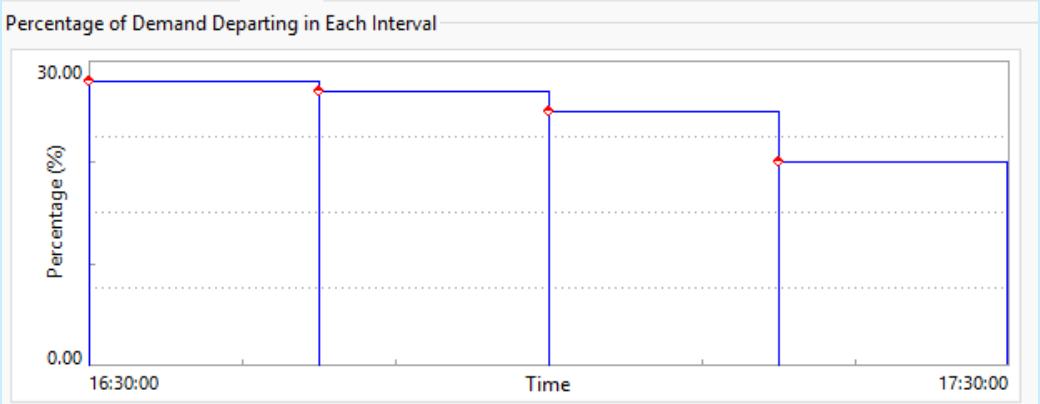

3.4 Traffic Composition

Traffic compositions (car and truck percentages) were derived from existing field measured count data. Traffic composition is a generalized classification utilized for high level differences of the analysis such as OD matrices. **Tables 2** and **Table 3** summarize peak-hour truck percentages for I-20/I-26/I-126 and study intersections for AM and PM peak hours. The truck percentages and StreetLight OD data were used to estimate truck OD, and Auto and Truck matrices were created for AM and PM peak hours. The vehicular inputs included the following matrices:

- 2024_AM_Auto Trip Matrix
- 2024_AM_Auto Trip Warmup Matrix
- 2024_AM_Truck Trip Matrix
- 2024_AM_Truck Trip Warmup Matrix
- 2024_PM_Auto Trip Matrix
- 2024_PM_Auto Trip Warmup Matrix
- 2024_PM_Truck Trip Matrix
- 2024_PM_Truck Trip Warmup Matrix

Table 2 - Peak Hour Truck Percentages for I-20/I-26/I-126

Mainline Location	Total Truck %	
	AM	PM
I-26 West of Broad River Rd WB	21.0%	7.8%
I-26 West of Broad River Rd EB	9.5%	13.4%
I-26 Btw Lake Murray Blvd and Broad River Rd WB	16.9%	6.6%
I-26 Btw Lake Murray Blvd and Broad River Rd EB	6.3%	9.9%
I-26 Btw Piney Grove Rd and Harbison Blvd WB	13.0%	5.8%
I-26 Btw Piney Grove Rd and Harbison Blvd EB	5.5%	8.2%
I-26 Btw St Andrews Rd and Piney Grove Rd WB	12.5%	4.7%
I-26 Btw St Andrews Rd and Piney Grove Rd EB	4.8%	6.8%
I-26 Btw I-20 and St Andrews Rd WB	8.3%	3.9%
I-26 Btw I-20 and St Andrews Rd EB	4.4%	5.5%
I-26 Btw Bush River Rd and I-20 WB	11.6%	3.9%
I-26 Btw Bush River Rd and I-20 EB	4.9%	5.5%
I-26 Btw Sunset Blvd and I-126 EB	12.9%	8.4%
I-26 Btw Sunset Blvd and I-126 WB	9.3%	7.4%
I-26 South of Sunset Blvd EB	10.9%	7.7%
I-26 South of Sunset Blvd WB	7.7%	6.4%
I-26 Average	10.0%	7.0%
I-126 Btw Greystone Blvd and Colonial Life Blvd EB	1.2%	1.6%
I-126 Btw Greystone Blvd and Colonial Life Blvd WB	3.1%	0.7%
I-126 Average	2.2%	1.1%
I-20 East of Broad River Rd EB	8.2%	7.4%
I-20 East of Broad River Rd WB	6.7%	7.4%
I-20 Btw I-26 and Broad River Rd EB	12.9%	13.0%
I-20 Btw I-26 and Broad River Rd WB	7.3%	8.1%
I-20 Btw Bush River Rd and I-26 EB	8.7%	8.5%
I-20 Btw Bush River Rd and I-26 WB	8.9%	8.0%
I-20 West of Sunset Blvd EB	12.5%	8.5%
I-20 West of Sunset Blvd WB	7.4%	11.0%
I-20 Average	9.9%	9.8%

Table 3 - Peak Hour Truck Percentages at Study Intersections

Intersections	Total Truck %	
	AM	PM
I-26 EB Off/On Ramps & Broad River Rd	3.2%	1.5%
I-26 WB Off/On Ramps & Broad River Rd	4.3%	1.0%
I-26 West / Broad River Rd & Lordship Ln	3.0%	1.4%
I-26 East / Broad River Rd & Western Ln	4.2%	1.6%
I-26 EB Off/On Ramps & Lake Murray Blvd	2.6%	1.1%
I-26 WB Off/On Ramps & Lake Murray Blvd	2.8%	1.1%
I-26 West / Lake Murray Blvd & Columbiana Dr	3.0%	1.3%
I-26 East / Lake Murray Blvd & Kinley Rd	2.2%	0.9%
I-26 EB Off/On Ramps & Harbison Blvd	2.8%	1.4%
I-26 WB Off/On Ramps & Harbison Blvd	2.9%	1.0%
I-26 EB Off/On Ramps & Piney Grove Rd	3.1%	1.5%
I-26 WB Off/On Ramps & Piney Grove Rd	3.3%	1.2%
I-26 EB Off/On Ramps & St Andrews Rd	2.3%	1.1%
I-26 WB Off/On Ramps & St Andrews Rd	2.1%	0.9%
I-26 WB Off Ramp & Burning Tree Dr	1.1%	1.1%
St Andrews Rd & Fernandina Rd	2.0%	1.0%
I-26 EB Off/On Ramps & Bush River Rd	3.5%	2.3%
I-26 WB Off/On Ramps & Bush River Rd	2.2%	1.4%
I-26 WB/EB Ramps & Sunset Blvd	3.1%	2.0%
I-26 West / Sunset Blvd & Harbor Dr	2.7%	2.1%
I-26 East / Sunset Blvd & Chris Dr	3.0%	1.9%
I-20 WB Off/On Ramps & Broad River Rd	3.2%	2.0%
I-20 EB Off/On Ramps & Broad River Rd	4.3%	2.4%
I-20 WB Off/On Ramps & Bush River Rd	2.7%	2.2%
I-20 EB Off/On Ramps & Bush River Rd	3.8%	2.4%
I-20 West / Bush River Rd & Berryhill Rd	1.8%	1.1%
I-20 WB Off/On Ramps & Sunset Blvd	2.4%	1.5%
I-20 EB Off/On Ramps & Sunset Blvd	2.3%	1.6%
I-126 EB Off/On Ramps & Greystone Blvd	1.9%	1.7%
I-126 WB Off/On Ramps & Greystone Blvd	1.7%	1.6%
Greystone Blvd & Candi Ln	2.8%	1.0%
Greystone Blvd & Stoneridge Dr	1.7%	1.6%

3.5 Vehicle Fleet

Car and heavy vehicle distributions were based on the TransModeler's default vehicle fleet, derived from the U.S. Bureau of Transportation Statistics data representing the U.S. vehicle fleet in 2019. Classifications are, in part, based on wheelbase using a methodology developed by FHWA. The model distribution for cars and trucks matches the distribution utilized in the 2019 IMR. Vehicle fleet data is a simulation parameter that influences vehicle dimensions and performance in the simulations which has a small impact on operations.

3.6 Vehicle Routing

Traffic patterns in TransModeler were modeled using OD matrices. The OD matrices were developed to achieve vehicle routing through the study area, where multiple intersections exist. The OD matrices were estimated using StreetLight OD as a seed matrix in Visum. The OD matrices were developed based on peak-hour volumes. The traffic patterns were created for cars and trucks separately.

3.7 Desired Speed Distributions

Default TransModeler National Highway Traffic Safety Administration (NHTSA) Desired Speed distribution profiles were used for the freeways and arterials and modified based on RITIS data for freeway 70 mph segments. The desired speed distributions used for the study are shown in **Table 4**.

Table 4 - Desired Speed Distributions

Deviation from Speed Limit (mph)	Driver Population (%)		
	Arterial/ Standard	Freeway (60 mph/55 mph)	Freeway (70 mph)
-10	2	1	5
-5	5	4	10
0	15	25	70
5	25	30	11
10	25	20	3
15	15	15	1
20	10	4	0
25	3	1	0

3.8 Signal Operations and Stop Control

The latest signal timing and phasing, obtained from current SCDOT signal plans, were used in the TransModeler for the AM and PM peak hours.

3.9 Number of Model Runs

Due to the varying nature of the simulations between runs with different random seed numbers, TransModeler results can differ from one run to the next. Multiple runs are required to improve model accuracy, and the results should be calculated using an average of these runs. Ten (10) runs were

performed for the existing conditions models, with random seed numbers ranging from 5 to 50 with increments of 5.

3.10 Model Calibration

Calibration is an iterative process that involves adjusting model parameters until the simulation reasonably replicates driver behavior, traffic flow patterns, and field-measured data. The calibration process used for the TransModeler models followed FHWA guidelines for determining the acceptability of model results compared to existing operations. The following subsections discuss a synopsis of the calibration process, with emphasis on identifying the key decisions and assumptions made in the refinement process to achieve the calibration targets.

3.10.1 Visual Checking and Error Correction

The visual checking and error correction process focused on addressing coding errors before the calibration process began. This process involved reviewing data inputs, TransModeler error reports, and model animations. Although primarily performed during model development, visual checking and error correction is still an important process that should be performed during calibration. When making changes to driver behavior or other model parameters, this step helps ensure that unintended consequences are minimized in the model.

Data inputs included network geometry, traffic volumes, signal timing, and route choices, and were reviewed by the model developer as well as a quality control reviewer. The animation was visually checked for abnormal driving behavior or irregular queuing within the network and to identify coding parameters subject to additional refinement.

3.10.2 Calibration Targets

The objective of model calibration is to match model performance estimates and the field performance measurements. However, there is a limit to the accuracy that results from an extensive process of matching the model to the field conditions, since observations on different days will naturally yield different results due to normal fluctuations in traffic patterns. The following calibration targets were used based on the FHWA Traffic Analysis Toolbox Volume III: Guidelines for Applying Traffic Microsimulation Modeling Software (2004), Wisconsin DOT Example calibration criteria:

1. Hourly Flows (Model Versus Observed)
    a. Simulated and measured link volumes for more than 85% of links to be:
        I. Within 100 vehicles per hour (vph) for volumes less than 700 vph
        II. Within 15% for volumes between 700 vph and 2700 vph
        III. Within 400 vph, for volumes greater than 2700 vph
    b. Simulated and measured link volumes for more than 85% of links to have a GEH statistic value of five (5) or lower.
    c. Sum of link volumes within calibration area to be within 5%.
2. Travel Time
    a. Simulated travel time within ±1 minute for routes with observed travel times less than seven (7) minutes for all routes identified in the data collection plan.

b. Simulated travel time within ±15% for routes with observed travel times greater than seven (7) minutes for all routes identified in the data collection plan.

3. Visual Audits

a. Check consistency with field conditions of the following: on- and off-Ramp queuing; weaving maneuvers; patterns and extent of queue at intersections and congested links; lane utilization/choice; location of bottlenecks; etc.
b. Critical queue lengths are visually acceptable to the satisfaction of analysts and reviewers.

3.10.3 Volume Validation

The GEH statistic used for traffic volume calibration compares expected or measured volumes with volume output from the microsimulation model and is calculated using the following formula:

Figure 8 - GEH Statistic for Volume Calibration

$$GEH = \sqrt{\frac{2(m-c)^2}{m+c}}$$

Notes:
m = output traffic volume from the simulation model (vph)
c = input traffic volume (vph)

The GEH is scored using the following classification:

GEH < 5.0	Acceptable fit
5.0 <= GEH <= 10.0	Caution: possible model error or bad data
GEH > 10.0	Unacceptable

Using GEH instead of difference percentages allows for better acceptance over a wider range of volumes. GEH is not linear and places less importance on links with low expected volumes while allowing for variation at high-volume locations. GEH values higher than 5 should warrant investigation, and values over 10 indicate there may be an error with the model.

3.10.4 Travel Time Validation

Travel time validation was conducted using observed data provided by SCDOT for I-20, I-26, and I-126, obtained from the Regional Integrated Transportation Information System (RITIS), which maintains archived freeway detector data. The calibration process compared measured travel times from RITIS with simulated travel times produced by the TransModeler model for both the AM and PM peak periods. This comparison was performed for all six freeway segments, including eastbound and westbound directions on I-20, I-26, and I-126, to assess the model's ability to replicate observed corridor-level operating conditions.

3.10.5 Visual Audits

Visual audits included reviewing observed speeds and bottlenecks from RITIS for AM and PM hours. The model replicated observed congestion extent and duration in the I-26 westbound direction (congestion

beginning at St. Andrews Road interchange) in the PM peak hour and I-26 eastbound direction (congestion beginning at Lake Murray Boulevard) in the AM peak hour.

3.10.6 Global Parameters

The default saturation flow rate of 2400 passenger car equivalent (PCE) per hour per lane was updated to 1900 PCE per hour per lane to account for local characteristics in the area for all Road Classes in the model. The Wiedemann 99 and Wiedemann 74 car following models were used for freeway and arterials roadways, respectively.

3.10.7 Localized Calibration Parameters

To account for lane changing near the merge areas along the freeway, a Parameter Marker was used to place local Wiedemann 99 car following behavior to allow for better vehicle gaps to merge. The car following model parameters CC0 (standstill Distance) and CC1 (Headway Time) were modified from national guidance including the 2021 Florida Department of Transportation Traffic Analysis Handbook and 2024 Ohio Department of Transportation Analysis and Traffic Simulation Manual. The Wiedemann 99 car following local parameters were modified from the default values based on the above-referenced national guidance documents.

3.11 Calibration Results

The results of the TransModeler calibration process were used to validate traffic volumes and travel times which are discussed in the following subsections:

3.11.1 Travel Time Validation

Travel time calibration was evaluated by comparing simulated travel times from the microsimulation model with observed RITIS travel times for the AM and PM peak periods. In accordance with FHWA Traffic Analysis Toolbox Volume III (Wisconsin DOT Example calibration criteria), routes with observed travel times less than seven minutes were evaluated using an absolute threshold of ±1 minute of the observed travel times, while routes with observed travel times greater than seven minutes were evaluated using a relative threshold of ±15 percent of the observed travel times. As summarized in **Table 5**, all freeway segments on I-20, I-26, and I-126, in both eastbound and westbound directions, meet the applicable travel time validation criteria for both the AM and PM peak periods. These results indicate strong agreement between simulated and observed travel times and confirm that the model is well calibrated across all evaluated corridors.

Table 5 - Travel Time Validation

Freeway*	Model Travel Time		Observed Travel Time		Calibration Target**	Travel Time Delta***		Meets Criteria	
	AM	PM	AM	PM		AM	PM	AM	PM
I-26 EB	16.0	14.8	16.1	14.0	Within ±15%	0.7%	-5.7%	Yes	Yes
I-26 WB	14.6	16.6	13.1	19.1		-11.8%	13.2%	Yes	Yes
I-20 EB	8.3	8.2	8.7	7.4		4.5%	-11.1%	Yes	Yes
I-20 WB	7.4	7.8	7.2	8.1		-2.4%	4.3%	Yes	Yes
I-126 EB	2.2	2.1	2.0	1.9	Within ±1 minute	-0.2 minute	-0.3 minute	Yes	Yes
I-126 WB	2.9	4.4	2.6	3.4		-0.3 minute	-0.9 minute	Yes	Yes

Notes: * The I-26 segment extends from Columbia Avenue to Leaphart Road; the I-20 segment extends from Augusta Road to the Broad River Bridge; and the I-126 segment extends from the I-26 System Interchange to Huger Street.
** The target for routes with observed travel times over seven minutes is ±15% of observed, and for routes under seven minutes is ±1 minute of observed travel time.
*** Travel time delta was calculated as (Observed−Modeled)/Observed for segments evaluated using the ±15 percent criterion, and as (Observed−Modeled) for segments evaluated using the ±1 minute criterion.

3.11.2 Traffic Volume Validation

Table 6 provides a validation summary based on individual link flows for simulated traffic volumes and balance field-collected volumes for the freeway and at each intersection. **Table 7** summarizes the criteria for the total volume (sum of all turning movements) in the study area. Overall, **Table 6** indicates that 99% of links in the AM peak hour and 97% of links in the PM meet the individual flow and GEH FHWA volume validation criteria guidelines.

Table 6 - Volume Validation Summary for Individual Link Flows

Hourly Flows - Model v. Observed	Target	AM Peak Hour			PM Peak Hour		
		Total Links	Links Meeting Target	% Links Meeting Target	Total Links	Links Meeting Target	% Links Meeting Target
Individual Link Flows							
Within 100 vph for flows < 700 vph	> 85%	176	175	99%	170	167	98%
Within 15% for 700 vph < flow < 2700 vph	> 85%	36	36	100%	40	38	95%
Within 400 vph for flows > 2700 vph	> 85%	26	26	100%	28	27	96%
All Links	> 85%	238	237	99%	238	232	97%
GEH Criteria							
All Links	> 85%	238	236	99%	238	229	96%

Table 7 summarizes the FHWA volume validation guidelines for total simulated volumes to be within 5% of observed volumes. The results show 1.3% and 1.8% for AM and PM peak hours, respectively. Both AM and PM simulated volumes do not significantly differ from the observed volumes in the field.

Table 7 - Volume Validation Summary for Total Volumes

Hourly Flows - Model v. Observed	Target	AM Peak Hour			PM Peak Hour		
		Counts (vph)	Model (vph)	% Meets	Counts (vph)	Model (vph)	% Meets
Sum of Link Flows	<5%	188225	185706	1.3%	200460	204072	1.8%

4. Future Traffic Forecasts

The approved 2019 Systems IMR and subsequent traffic analyses for Phase 1, Phase 2 and MSA have used Design Year 2040. The basis for 2040 projected traffic volumes was the 2040 South Carolina Statewide Model (SCSWM) and a 20-year design life of the project. The SCSWM is currently updated to Horizon Year 2050 and was used to project traffic volumes for the Design Year 2050. This section discusses the development of traffic forecasts used in 2050 future-year operational analyses. To develop future volume forecasts for future-year analysis, growth rates from historical data, population-based growth rates, and model-based growth rates from SCSWM and Regional Travel Demand Models were reviewed. In addition, the justification of the growth rate utilized in the 2019 IMR was reviewed and compared to growth patterns since the 2015 traffic data and rate were developed.

4.1 Historical Growth Rates

The SCDOT Trends Analysis spreadsheet was used to calculate traffic growth trends for the study roadways for 10, 20, and 30 years. **Table 8** summarizes the annual linear, compound and average growth rates for the SCDOT count sites, and the analysis outputs for each count station are included in **Appendix E**.

The trends growth rate also reviewed the growth rate since the completion of the 2019 IMR, which included existing traffic counts from 2015.

4.2 Model Growth Rates

The growth rates from the two travel demand models in SCSWM and Columbia Area Transportation Study (COATS) regional travel demand model were calculated. The latest models were obtained from SCDOT.

The SCSWM includes the entirety of South Carolina and is built upon existing travel demand models from the Metropolitan Planning Organizations (MPO) and the Council of Governments (COG) within the state. It has a base year of 2019 and a horizon year of 2050. Similarly, the COATS regional travel demand model has a base year of 2018 and a horizon year of 2045. The statewide (SCSWM) and regional travel demand model (COATS) include existing roadways and committed projects, including all planned and programmed improvements in the study area. Traffic volumes were extracted from SCSWM and COATS for the base year and horizon years, and growth rates were calculated for the study area. Annual growth rates from both models were calculated and compared across different model years. This approach normalized the differences between the SCSWM and COATS model years when developing growth rates. **Table 8** summarizes the annual growth rates for SCSWM and COATS.

4.3 2019 IMR Growth Rates

The 2019 Systems IMR utilized a 0.7 percent annual growth rate across the project study area to estimate 2040 peak hour traffic volumes. In addition to considering historical growth rates and regional demographic patterns, this growth rate was referenced from a I-20/26/77 Corridor Management Plan (CMP) by the COATS MPO which was a regional forecasting effort based on 2015 count data, coordination with the SCSWM, and a Transmodeler network of the Columbia metro area which included the CCR study area. OD data collected as part of the Carolina Crossroads Project data collection and developed into regional trip tables was then used in the microsimulation model.

Table 8 - Annual Historic and Model Volume Growth Rates

Road Name	Location	Historical Data									Model Annual Growth Rates		Trend Analysis Annual Growth Rate (Linear) *2015-2023
		30 Years - Annual Growth Rate (1994-2023)			20 Years - Annual Growth Rate (2004-2023)			10 Years - Annual Growth Rate (2014-2023)					
		Linear	Compound	Average	Linear	Compound	Average	Linear	Compound	Average	COATS	SCSWM	
I-126	I-126	0.15%	0.13%	0.29%	-0.43%	-0.45%	-0.27%	0.02%	-0.01%	0.42%	0.17%	1.65%	-1.48%
I-20	West of I-26	2.49%	1.88%	2.14%	1.18%	1.06%	1.38%	1.53%	1.44%	1.99%	1.05%	2.97%	-0.17%
	East of I-26	1.29%	1.10%	1.25%	1.39%	1.23%	1.44%	1.85%	1.71%	2.18%	0.69%	1.50%	1.34%
I-26	North of I-20	1.87%	1.46%	1.59%	0.48%	0.44%	0.55%	0.47%	0.46%	0.66%	0.75%	1.46%	0.01%
	South of I-20 (Between I-20 and I-126)	0.33%	0.31%	0.43%	0.46%	0.44%	0.58%	1.62%	1.51%	1.88%	0.21%	1.33%	0.79%
	South of I-20 (Between I-126 and US 378)	0.03%	0.03%	0.12%	0.38%	0.36%	0.46%	1.28%	1.22%	1.48%	0.52%	0.98%	-0.14%
Bush River Rd	West of I-20	0.52%	0.49%	0.77%	0.98%	0.90%	1.14%	1.96%	1.81%	2.16%	0.88%	0.98%	3.26%
	Between I-20 and I-26	-1.17%	-1.48%	-1.08%	-0.53%	-0.57%	-0.21%	-1.64%	-1.79%	-1.38%	1.87%	0.92%	-2.81%
	East of I-26	-1.35%	-1.72%	-1.05%	-1.31%	-1.50%	-0.55%	-2.73%	-3.14%	-3.08%	0.41%	0.79%	-2.72%
Colonial Life Blvd	East of I-126	-1.69%	-2.33%	-1.43%	-1.41%	-1.64%	-0.51%	-0.51%	-0.53%	1.70%	0.82%	0.68%	-3.97%
Harbison Blvd	West of I-26	-0.26%	-0.27%	0.08%	-1.32%	-1.52%	-1.26%	-1.53%	-1.66%	-1.29%	0.70%	0.51%	-1.45%
	East of I-26	-0.11%	-0.11%	0.41%	-1.20%	-1.36%	-1.02%	1.50%	1.41%	1.73%	0.46%	1.36%	-0.42%
Lake Murray Blvd	West of I-26	3.06%	2.19%	3.67%	0.97%	0.89%	1.41%	0.25%	0.25%	1.21%	1.10%	0.45%	-0.21%
	East of I-26	Data not available			7.78%	4.80%	5.69%	4.74%	3.96%	4.88%	0.44%	0.31%	0.00%
Piney Grove Rd	East of I-26	-0.23%	-0.24%	0.10%	-1.49%	-1.76%	-1.59%	-1.49%	-1.60%	-1.57%	1.73%	0.83%	-3.19%
St Andrews Rd	West of I-26	-0.56%	-0.61%	-0.47%	0.02%	0.02%	0.20%	0.95%	0.91%	1.23%	0.52%	0.75%	1.59%
	East of I-26	-0.91%	-1.05%	-0.90%	-0.86%	-0.94%	-0.82%	0.00%	0.00%	0.19%	0.27%	0.39%	-1.17%
US 176/Broad River Rd	West of I-26	2.52%	1.90%	4.10%	1.27%	1.14%	1.41%	2.71%	2.43%	2.95%	0.46%	1.23%	0.47%
	Between I-26 and I-20	0.17%	0.17%	0.48%	1.27%	1.12%	1.46%	1.47%	1.36%	1.85%	0.88%	0.82%	0.84%
	North and South of I-20	0.05%	0.05%	0.29%	0.26%	0.25%	0.45%	1.00%	0.95%	1.33%	0.67%	0.97%	-0.49%
US 378/Sunset Blvd	West of I-20	1.93%	1.53%	1.73%	0.98%	0.90%	1.08%	0.19%	0.18%	0.38%	0.44%	3.00%	1.17%
	Between I-20 and I-26	3.18%	2.26%	2.45%	1.52%	1.33%	1.48%	2.17%	1.99%	2.30%	0.97%	1.96%	2.39%
	East of I-26	0.93%	0.82%	1.03%	0.80%	0.74%	0.88%	1.55%	1.45%	1.71%	0.64%	2.26%	2.17%

4.4 Recommended Growth Rate and Design Year Peak Hour Volumes

Based on the growth rate study, it was recommended in coordination with SCDOT to maintain the 2019 IMR annual growth of 0.7 percent for the study area. While historic growth rates in the study area varied by time period and location, the growth rates since the 2015 data collection for the IMR and the CMP effort did not support the need to change the 0.7 percent rate. In addition, it would not be appropriate for this IMR Re-evaluation to replicate the CMP forecasting effort to update the detailed growth rate analyses. The 0.7 percent annual growth rate was applied to 2024 peak hour volumes to obtain 2050 peak hour volumes. The peak hour volumes are included in **Appendix E**.

5. Future Conditions Alternatives

The project evaluates the following:

1. Selected Alternative (SA) – The approved 2019 Systems IMR Concept.
2. Build Alternative - The updated designs of the Carolina Crossroads Project Phases 1, 2, and 3.

The Selected Alternative design concept has been updated to accommodate design refinements made since 2019 from multiple project phases' design build procurements and project efforts throughout the entire limits of the Carolina Crossroads Project. This updated design is the Build Alternative and is shown in **Appendix J**. The design modifications between the Selected Alternative and the Build Alternative configurations are shown in **Figures 9 through 27** and briefly listed below:

- Bush River Road at I-20 (Exit 63) interchange was changed from a Diverging Diamond interchange (**Figure 9)** in the Selected Alternative to the existing partial clover interchange (**Figure 10**) in the Build Alternative. Change resulting from additional interchange alternative analyses to reduce right-of-way impacts, improve constructability and reduce scope of work at interchange and was included in a Phase 3 design build alternative technical concept (ATC). Analyses included in NEPA Re-evaluation #6.
- St. Andrews Road (Exit 106) interchange changed from a single-point urban interchange (**Figure 11**) in the Selected Alternative to an improved partial clover interchange (**Figure 12**) in the Build Alternative. Change resulting from Phase 3 design build alternative technical concept (ATC).
- I-20 and I-26 system-to-system (Exit 64/107) interchange in the Selected Alternative changed from a Turbine interchange configuration (**Figure 13**) to an interchange with dual loops (**Figure 14**) in the Build Alternative. Change resulting from Phase 3 design build alternative technical concept (ATC).
- The I-126 and I-26 (Exit 108) interchange maintained the Selected Alternative with a major modification to the I-126 westbound to I-26 eastbound ramp. This ramp changed from a flyover (**Figure 15**) in the Selected Alternative to a semi-directional ramp in the Build Alternative that crosses I-26 1700' to the west of the Selected Alternative (**Figure 16**). Change resulting from Phase 3 design build alternative technical concept (ATC) and included in NEPA Re-evaluation #6.
- The Colonial Life Boulevard at I-126 interchange changed from a tight diamond (**Figure 17**) in the Selected Alternative to a trumpet-style interchange with a crossover intersection on Colonial Life Boulevard **(Figure 18)** in the Build Alternative. Change resulting from Phase 1 design build alternative technical concept (ATC) and included in NEPA Re-evaluation #1.
- The I-20 at Broad River Road (Exit 65) interchange changed from a single-point urban interchange (**Figure 19**) in the Selected Alternative to an offset-diverging diamond interchange (**Figure 20**) in the Build Alternative. Change resulting from Phase 2 design build alternative technical concept (ATC) and included in NEPA Re-evaluation #5.
- A collector and distributor (CD) road was added in the Selected Alternative for I-26 (**Figures 21 & 22**) in the eastbound direction from west of St. Andrews Road to west of US 378 in the Build Alternative (**Figures 21 & 23**). Change resulting from Phase 3 design build alternative technical concept (ATC).
- The fourth westbound lane on I-20, which dropped before US 378 (**Figure 24)** in the Selected Alternative, has been extended approximately 4000' to the US 378 offramp and drops as an exit only (**Figure 25**) in the Build Alternative. Change to improve operations and better accommodate 2050 design year traffic.

- The four I-26 mainline lanes between the I-126 diverge and the C-D road eastbound merge (**Figure 26**) was changed to three mainline lanes (**Figure 27**). Change resulting from Phase 3 design build alternative technical concept (ATC).

The NEPA Re-evaluation #1, #5, and #6 are included in **Appendix A**.

Figure 9 - Bush River Road at I-20 (Exit 63) – Selected Alternative



Figure 10 - Bush River Road at I-20 Interchange (Exit 63) – Build Alternative



Figure 11 - St. Andrews Interchange (Exit 106)– Selected Alternative



Figure 12 - I-26 and St. Andrews Interchange (Exit 106) – Build Alternative



Figure 13 - I-20 and I-26 System Interchange (Exit 64/107)– Selected Alternative

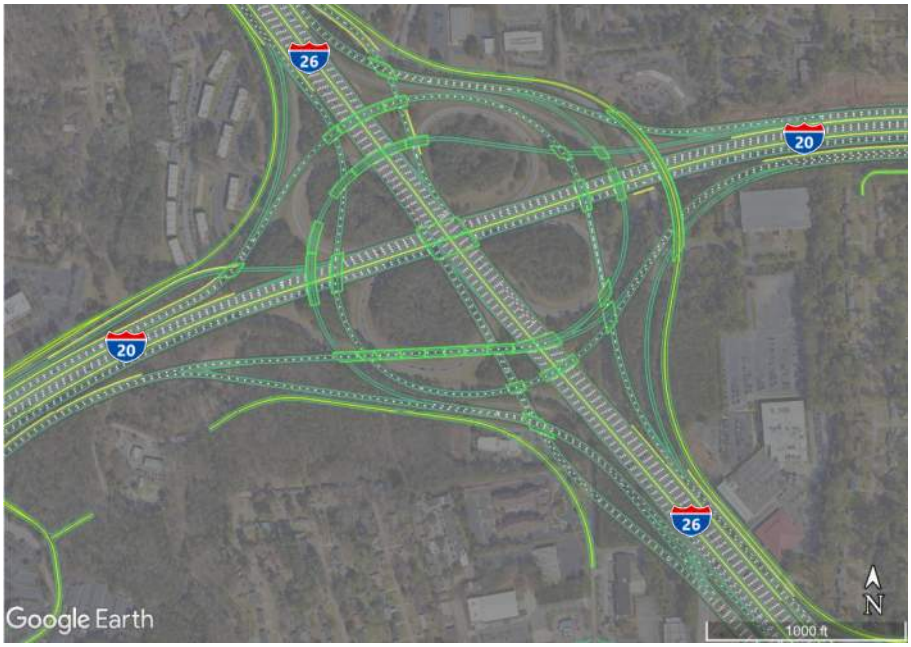

Figure 14 - I-20 and I-26 System Interchange (Exit 64/107)– Build Alternative



Figure 15 - I-126 and I-26 Interchange (Exit 108)– Selected Alternative



Figure 16 - I-126 and I-26 Interchange (Exit 108)– Build Alternative



Figure 17 - I-126 Colonial Life Boulevard at I-126 Interchange – Selected Alternative



Figure 18 - I-126 Colonial Life Boulevard at I-126 Interchange – Build Alternative



Figure 19 - I-20 at Broad River Road Interchange (Exit 65) - Selected Alternative

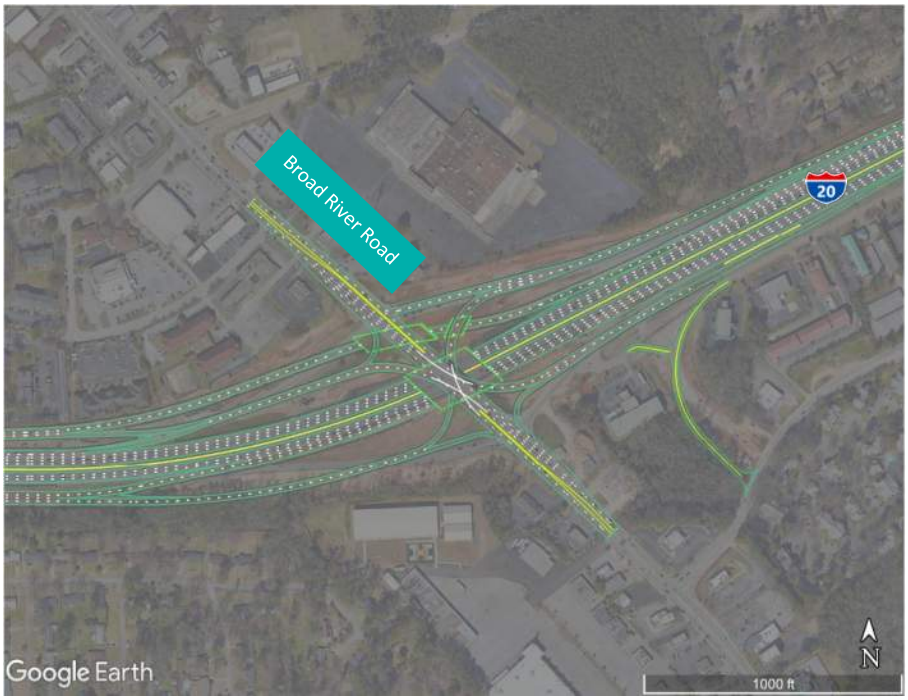

Figure 20 - I-20 at Broad River Road Interchange (Exit 65)– Build Alternative

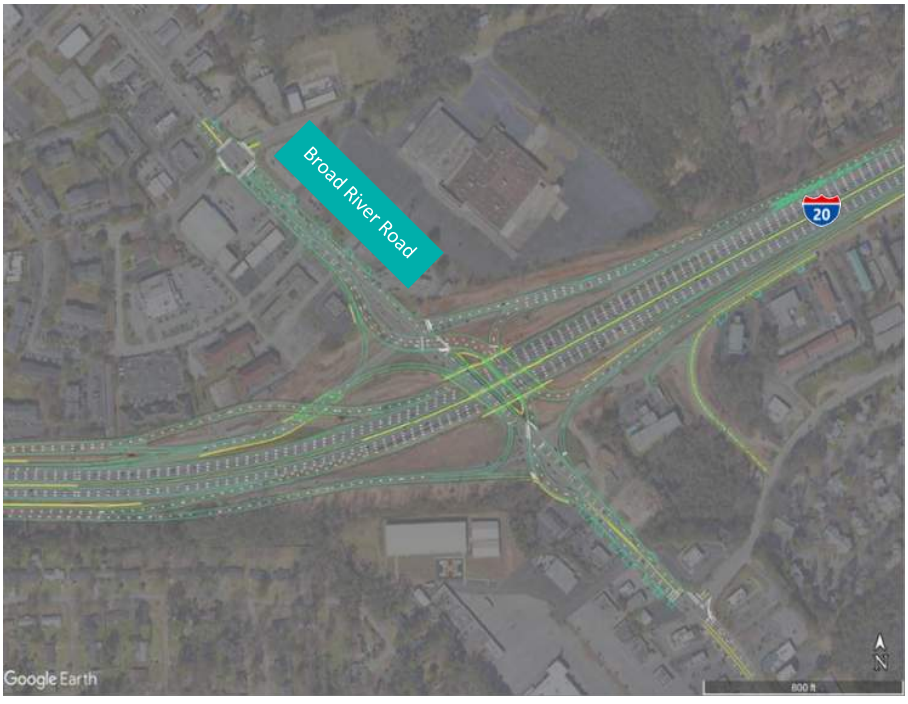

Figure 21 – I-26 eastbound CD from St. Andrew to West of US 378 Part 1

Selected Alternative



Build Alternative



Figure 22 – I-26 eastbound CD from St. Andrew to West of US 378 Part 2 – Selected Alternative



Figure 23 – I-26 eastbound CD St. Andrew to West of US 378 Part 2 – Build Alternative



Figure 24 - The fourth westbound lane on I-20 - Selected Alternative



Figure 25 - The fourth westbound lane on I-20 – Build Alternative



Figure 26 - I-26 mainline between I-126 diverge and the eastbound CD merge – Selected Alternative

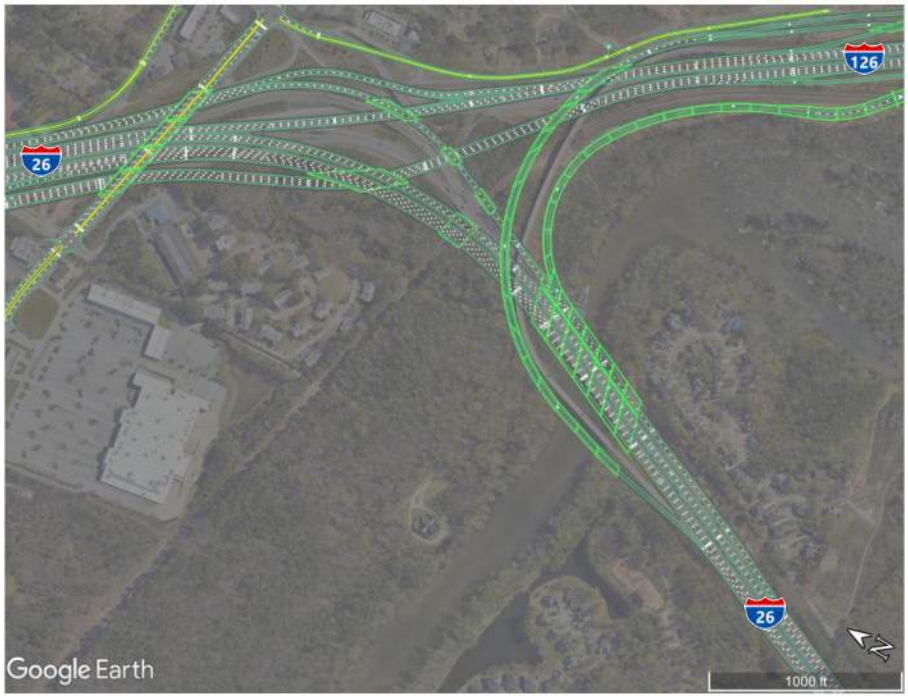

Figure 27 - I-26 mainline between I-126 diverge and the eastbound CD merge – Build Alternative

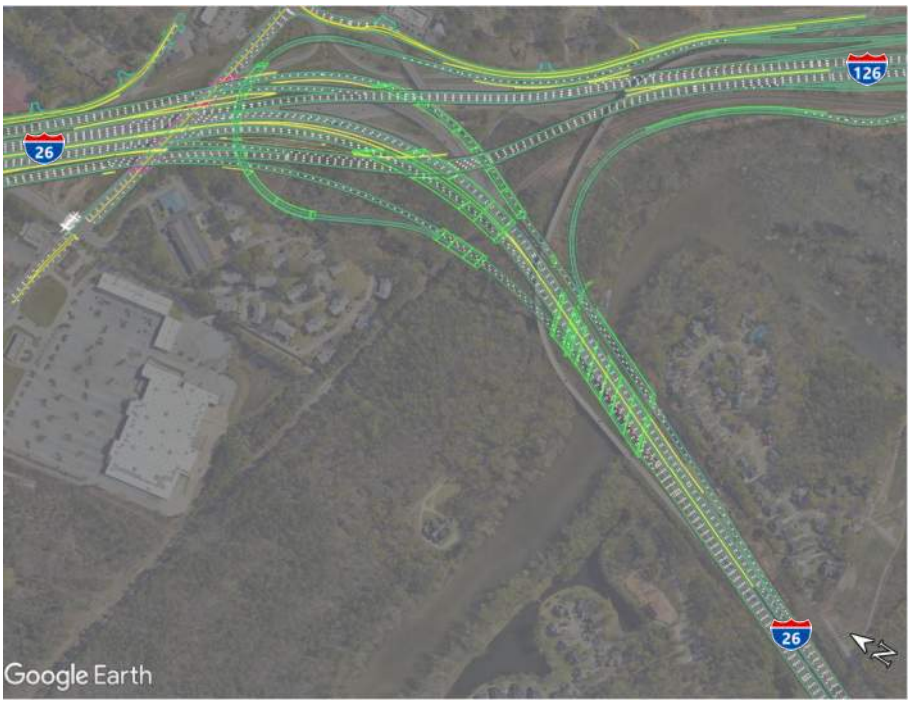

6. Future Traffic Operation Analysis

Detailed operational analyses were performed using TransModeler 7.0 for project alternatives for the AM and PM peak hours in the design year (2050). A TransModeler microsimulation model consists of a large component database and executable files that are run through the TransModeler software. One single project file is comprised of network files, traffic control and signal timing plans, vehicle detector layout and configuration, trip tables for both autos and trucks, traffic volumes, and driver/roadway parameter files.

TransModeler is a microscopic behavior-based multi-purpose traffic simulation program that takes into consideration vehicle interaction and driver behaviors, as well as the operational impacts for both the upstream and downstream traffic conditions and can measure traffic densities on each segment and lane. For these reasons, TransModeler was used to assess all the freeway segments, merge/diverge areas, weaving sections and intersections.

The design files for project alternatives were converted to .KMZ files and imported as background into the TransModeler microsimulation network. After updating the geometry to match the design of the project alternatives, intersection controls were added for the new geometry. Synchro was utilized to develop basic traffic signal timing plans at the signal-controlled intersections.

The OD matrices were developed for vehicle routing throughout the study area. The OD matrices estimated in the existing calibration were used as a seed matrix in Visum. The OD matrices for project alternatives were developed for 2050 AM and PM peak-hour volumes. The OD matrices were created for cars and trucks separately.

To assess the traffic operations of the study area, the basic freeway segment, weave, ramp merge/diverge, and intersection area analyses were conducted.

6.1 LOS Criteria

The basic freeway, merge and diverge segments, and weaving segment LOS is based on density – a function of flow rate (volumes) and travel speed – for uninterrupted flow facilities. Density is measured in passenger cars per mile per lane (pcpmpl). The HCM 7th Edition LOS and density targets for uninterrupted facilities are listed in **Table 9**.

Table 9 - LOS Criteria for Uninterrupted Flow Facilities

LOS	Basic Freeway	Merge and Diverge	Weaving
A	≤ 11	≤ 10	0-10
B	> 11-18	> 10-20	> 10-20
C	> 18-26	> 20-28	> 20-28
D	> 26-35	> 28-35	> 28-35
E	> 35-45	> 35	> 35
F	> 45	Demand Exceeds Capacity	Demand Exceeds Capacity

*Based on *Highway Capacity Manual (HCM) 7th Edition* Exhibit 12-15, Exhibit 13-6 and Exhibit 14-3

For intersection analysis, the peak hour LOS measures the adequacy of the intersection geometrics and traffic controls of an intersection or approach for the given turning volumes. LOS range from A through F, based on the average control delay experienced by vehicles traveling through the intersection during the

peak hour. Control delay represents the portion of total delay attributed to traffic control devices (e.g., signals or stop signs). **Table 10** shows LOS criteria by control type.

Table 10 - LOS Criteria for Interrupted Flow Facilities

LOS	Signalized Intersections (s)	Unsignalized Intersections (s)
A	≤ 10	≤ 10
B	> 10-20	> 10-15
C	> 20-35	> 15-25
D	> 35-55	> 25-35
E	> 55-80	> 35-50
F	> 80, and/or v/c > 1.00	> 80, and/or v/c > 1.00

*Based on *Highway Capacity Manual (HCM) 7th Edition* Exhibits 19-8 and 19-20

6.2 Network Performance

A network performance evaluation is an important statistic as it provides overall performance for the study area. As shown in **Table 11**, the Build Alternative provides better network performance than the Selected Alternative in the Design Year (2050). Each of the performance metrics, such as average speed, travel time, and total delay, is better in the Build than in the Selected Alternative.

Table 11 - Network Performance Summary

Peak Hour	Selected Alternative			Build Alternative			Percent Improvement		
	Speed (mph)	Average Travel Time (mins/veh)	Total Delay (vehicle hr)	Speed (mph)	Average Travel Time (mins/veh)	Total Delay (vehicle hr)	Speed	Travel Time	Total Delay
AM	49.5	6.7	1211.6	50.7	6.3	1060.0	2.3%	5.8%	12.5%
PM	47.9	7.6	1876.7	49.9	6.6	1384.2	4.1%	13.0%	26.2%

6.3 I-26 Freeway Analysis Results

Freeway densities for the freeway corridors were obtained from the TransModeler output files, which included an average of ten (10) replicate runs. HCM methodology is applied and averaged across segments to represent average density and LOS for freeway segments consisting of basic freeway, weaving and ramp merge/diverge.

The Design Year (2050) analysis results for the Selected Alternative and Build Alternative conditions on I-26 are summarized in **Tables 12**. The results indicate the following:

- **Selected Alternative and Build Alternative**
  - All I-26 eastbound and westbound segments are expected to operate at an average of LOS C or better during the AM and PM peak hours.

Table 12 - Design Year (2050) Traffic Operation Analysis Results for I-26

	Segment	Type	Selected Alternative				Build Alternative			
			Density		LOS		Density		LOS	
			AM	PM	AM	PM	AM	PM	AM	PM
I-26 EB	Harbison Blvd Interchange-Between Ramps	Basic	17.6	13.1	B	B	18.3	12.5	C	B
	Harbison Blvd to Piney Grove Rd	Weaving	17.7	14.4	B	B	18.5	14.3	B	B
	Piney Grove Rd Interchange-Between Ramps	Basic	19.4	16.2	C	B	20.2	16.2	C	B
	Piney Grove Rd On-Ramp	Merge	15.4	13.2	B	B	15.9	13.2	B	B
	Piney Grove Rd to St Andrews Rd	Basic	15.0	12.8	B	B	15.9	13.3	B	B
	St Andrews Rd Off-Ramp	Diverge	13.3	11.5	B	B	14.9	13.0	B	B
	I-126 EB CD Off-Ramp	Diverge	14.7	12.3	B	B	14.5	12.2	B	B
	St Andrews Rd Interchange-Between Ramps	Basic	16.3	7.5	B	A	16.1	7.4	B	A
	St Andrews Rd to I-126	Basic*	14.2	8.0	B	A	16.5	7.5	B	A
	I-126 EB Off-Ramp	Diverge	-	-	-	-	16.6	7.6	B	A
	I-126 to CD	Basic	8.0	6.9	A	A	8.4	5.2	A	A
	I-20 EB CD to Sunset Blvd	Weaving	-	-	-	-	14.6	15.6	B	B
	I-20 EB On-Ramp	Merge	10.3	8.7	A	A	-	-	-	-
	CD to I-126	Basic	11.7	10.0	A	A	-	-	-	-
	I-126 to Sunset Blvd	Weaving	15.9	16.2	B	B	-	-	-	-
	Sunset Blvd Interchange-Between Ramps	Basic	14.4	15.2	B	B	14.5	16.0	B	B
	Sunset Blvd On-Ramp	Merge	16.2	18.4	B	B	15.8	18.8	B	B
	Sunset Blvd to Leaphart Rd	Basic	19.1	21.5	C	C	18.8	21.9	C	C
I-26 WB	Leaphart Rd to Sunset Blvd	Basic	25.0	22.2	C	C	24.9	22.0	C	C
	Sunset Blvd Off-Ramp	Diverge	25.1	22.2	C	C	24.5	21.6	C	C
	Sunset Blvd Interchange-Between Ramps	Basic	18.9	18.4	C	C	18.8	18.1	C	C
	Sunset Blvd On-Ramp	Merge	17.1	16.7	B	B	16.8	16.7	B	B
	Sunset Blvd to I-126	Basic	16.7	16.2	B	B	16.6	16.6	B	B
	I-126 CD Off-Ramp	Diverge	17.0	16.7	B	B	16.5	16.9	B	B
	CD to I-126	Basic	17.9	16.2	B	B	13.4	11.8	B	A
	I-126 WB On-Ramp	Merge	-	-	-	-	8.7	14.7	A	B
	I-126 to St Andrews Rd	Weaving	9.7	14.9	A	B	-	-	-	-
	I-126 to CD	Basic	11.5	18.3	A	C	11.0	17.9	A	B
	St Andrews Rd to CD	Basic	-	-	-	-	13.1	18.6	B	B
	I-20 CD On-Ramp	Merge	12.4	17.2	B	B	-	-	-	-
	St Andrews Rd Interchange-Between Ramps	Basic	14.7	20.6	B	C	14.8	20.8	B	C
	St Andrews Rd On-Ramp	Merge	14.0	19.6	B	B	14.4	20.3	B	C
	St Andrews Rd to Piney Grove Rd	Basic	15.5	21.7	B	C	15.6	22.1	B	C
	Piney Grove Rd Off-Ramp	Diverge	15.3	21.4	B	C	15.6	22.2	B	C
	Piney Grove Rd Interchange-Between Ramps	Basic	16.3	23.1	B	C	16.3	23.1	B	C
	Piney Grove Rd to Harbison Blvd	Weaving	14.8	21.1	B	C	15.0	21.6	B	C
	Harbison Blvd Interchange-Between Ramps	Basic	14.7	20.9	B	C	14.6	21.3	B	C

"-" indicates that segment type does not exist in the corresponding model.

**: Basic Segment in Build Alternative and Weaving Segment in Selected Alternative.*

6.4 I-20 Freeway Analysis Results

The Design Year (2050) analysis results for the Selected Alternative and Build Alternative conditions on I-20 for basic freeway, weaving and ramp merge/diverge segments are summarized in **Table 13**. The results indicate the following:

- **Selected Alternative**
  - I-20 eastbound segments from Augusta Road to Sunset Boulevard, Sunset Blvd off-ramp and Sunset Blvd on-ramp (loop) are expected to operate at an average of LOS D during the AM peak hour.
  - I-20 westbound segments from Bush River Road to Sunset Boulevard, Sunset Blvd off-ramp and basic segment between ramps at Sunset Blvd Interchange are expected to operate at an average of LOS E during the AM peak hour.
  - I-20 westbound segment from Sunset Boulevard to Augusta Road is expected to operate at an average of LOS D during the PM peak hour.
  - All other I-20 eastbound and westbound segments are expected to operate at an average of LOS C or better during the AM and PM peak hours.
- **Build Alternative**
  - I-20 eastbound segments from Augusta Road to Sunset Boulevard and Sunset Blvd off-ramp are expected to operate at an average of LOS D during the AM peak hour.
  - I-20 eastbound segments from Broad River Road to Broad River Bridge are expected to operate at an average of LOS D during the PM peak hour.
  - I-20 westbound segments from Bush River Rd to Sunset Blvd and Sunset Boulevard to Augusta Road are expected to operate at an average of LOS D during the PM peak hour.
  - All other I-20 eastbound and westbound segments are expected to operate at an average of LOS C or better during the AM and PM peak hours.

Table 13 - Design Year (2050) Traffic Operation Analysis Results for I-20

Freeway	Location	Type	Selected Alternative				Build Alternative			
			Density		LOS		Density		LOS	
			AM	PM	AM	PM	AM	PM	AM	PM
I-20 EB	Augusta Rd to Sunset Blvd	Basic	28.2	16.5	D	B	28.2	16.5	D	B
	Sunset Blvd Off-Ramp	Diverge	31.1	17.7	D	B	30.2	17.3	D	B
	Sunset Blvd Interchange- Between Ramps	Basic	22.9	15.3	C	B	22.9	15.1	C	B
	Sunset Blvd On-Ramp (Loop)	Merge	28.1	18.8	D	B	27.6	18.5	C	B
	Sunset Blvd On-Ramp	Merge	25.9	18.4	C	B	25.7	18.2	C	B
	Sunset Blvd to Bush River Rd	Basic	23.8	17.0	C	B	23.6	16.9	C	B
	Bush River Rd Off-Ramp	Diverge	16.5	11.8	B	B	16.7	12.0	B	B
	Bush River Rd to CD	Basic	13.6	10.5	B	A	13.3	10.2	B	A
	I-26 CD On-Ramp	Merge	15.8	16.4	B	B	14.6	16.1	B	B
	Broad River Rd Interchange- Between Ramps	Basic	13.5	15.0	B	B	16.0	18.0	B	B
	Broad River Rd On-Ramp	Merge	19.0	21.6	B	C	19.2	22.2	B	C
	Broad River Rd to Broad River Bridge	Basic	20.1	22.4	C	C	23.8	29.2	C	D
I-20 WB	Broad River Bridge to Broad River Rd	Basic	14.4	15.7	B	B	21.4	23.5	C	C
	Broad River Rd Off-Ramp	Diverge	13.9	15.0	B	B	13.8	14.9	B	B
	Broad River Rd Interchange- Between Ramps	Basic	5.5	11.1	A	A	10.5	12.8	A	B
	I-26 CD Off-Ramp	Diverge	10.5	12.9	A	B	10.6	12.9	A	B
	Broad River Rd Interchange- Between Ramps	Basic	5.5	11.1	A	A	5.5	11.1	A	A
	Broad River Rd On-Ramp	Merge	5.4	10.5	A	A	5.6	10.9	A	A
	Broad River Rd to Bush River Rd	Basic	6.0	11.7	A	A	6.1	11.9	A	A
	Bush River Rd Off-Ramp	Diverge	5.6	10.8	A	A	6.1	12.0	A	B
	Bush River Rd Interchange- Between Ramps	Basic	7.4	15.2	A	B	7.5	15.1	A	B
	I-26 CD On-Ramp	Merge	10.1	19.9	A	B	11.0	21.5	B	C
	Bush River Rd On-Ramp	Merge	12.3	23.8	B	C	12.2	24.3	B	C
	Bush River Rd to Sunset Blvd	Basic	16.8	39.3	B	E	14.1	27.8	B	D
	Sunset Blvd Off-Ramp	Diverge	19.5	43.4	B	E	14.7	27.3	B	C
	Sunset Blvd Interchange- Between Ramps	Basic	19.5	43.4	B	E	10.2	24.8	A	C
	Sunset Blvd On-Ramp (Loop)	Merge	12.9	25.5	B	C	12.9	26.4	B	C
	Sunset Blvd On-Ramp	Merge	13.7	26.2	B	C	13.8	26.8	B	C
	Sunset Blvd to Augusta Rd	Basic	14.3	27.3	B	D	14.3	27.5	B	D

6.5 I-126 Freeway Analysis Results

The Design Year (2050) analysis results for the Selected Alternative and Build Alternative conditions on I-126 for basic freeway, weaving and ramp merge/diverge segments are summarized in **Table 14**. The results indicate the following:

- Selected Alternative and Build Alternative
  - All westbound and eastbound segments along the I-126 corridor are expected to operate at an average of LOS C or better during AM and PM peak hours.

Table 14 - Design Year (2050) Traffic Operation Analysis Results for I-126

Freeway	Location	Type	Selected Alternative				Build Alternative			
			Density		LOS		Density		LOS	
			AM	PM	AM	PM	AM	PM	AM	PM
I-126 WB	Huger St to Greystone Blvd	Basic	8.6	21.6	A	C	8.6	21.5	A	C
	Greystone Blvd Off-Ramp	Diverge	8.7	21.8	A	C	8.7	21.9	A	C
	Greystone Blvd Interchange- Between Ramps	Basic	6.8	19.4	A	C	6.8	19.3	A	C
	Greystone Blvd On-Ramp	Merge	7.6	21.3	A	C	7.6	21.3	A	C
	Greystone Blvd to Colonial Life Blvd	Basic	8.3	23.2	A	C	8.3	23.2	A	C
	Colonial Life Blvd Off-Ramp	Diverge	6.9	19.0	A	B	7.6	21.0	A	C
	I-26 CD Off-Ramp	Diverge	7.1	19.5	A	B	7.2	19.7	A	B
	Colonial Life Blvd Interchange- Between Ramps	Basic	-	-	-	-	5.9	16.7	A	B
	Colonial Life Blvd to I-26	Weaving	6.1	16.7	A	B	5.9	16.7	A	B
I-126 EB	I-26 CD to Colonial Life Blvd	Weaving	18.2	8.4	B	A	15.4	7.3	B	A
	Colonial Life Blvd Interchange- Between Ramps	Basic	15.8	6.9	B	A	16.0	7.1	B	A
	Colonial Life Blvd On-Ramp	Merge	19.0	8.5	B	A	15.8	7.3	B	A
	Colonial Life Blvd to Greystone Blvd	Basic	20.0	9.1	C	A	19.4	9.1	C	A
	Greystone Blvd Off-Ramp	Diverge	19.2	8.8	B	A	19.5	9.3	B	A
	Greystone Blvd Interchange- Between Ramps	Basic	16.9	7.7	B	A	17.2	8.2	B	A
	Greystone Blvd On-Ramp	Merge	17.9	9.7	B	A	18.2	10.1	B	A
	Greystone Blvd to Huger St	Basic	19.2	10.3	C	A	19.3	10.7	C	A

6.6 Intersection Operations Results

Capacity analyses for the signalized and unsignalized intersections at the study interchanges were performed using TransModeler software. The signalized and unsignalized intersection analyses were obtained from the TransModeler microsimulation output files, which include an average delay of ten (10) runs. For unsignalized intersections, the intersection operation is represented by the worst approach delay and LOS of all of the STOP-controlled approaches to the intersection. TransModeler measures control delay in accordance with HCM methodology and considers vehicles as soon as they begin to brake to join the back of a queue forming at an intersection until it has passed through the intersection and returned to speed.

Table 15 shows the comparison results of the capacity analyses for the Selected Alternative and Build Alternative for 2050 conditions. **Appendix F** includes the average control delay for each movement. The results indicate that the Build Alternative intersections are operating better than the Selected Alternative intersections.

Table 15 - Design Year (2050) Intersection Operational Results

Intersection	Control Type	Selected Alternative				Build Alternative			
		Delay		LOS		Delay		LOS	
		AM	PM	AM	PM	AM	PM	AM	PM
Piney Grove Rd & I-26 EB Ramp	Signalized	21.1	16.8	C	B	19.9	19.1	B	B
Piney Grove Rd & I-26 WB Ramp	Signalized	12.2	16.4	B	B	13.0	16.6	B	B
St Andrews Rd & I-26 EB Ramp	Signalized	6.0	15.2	A	B	23.3	29.0	C	C
St Andrews Rd & C-D Road EB Ramp	Signalized	51.9	47.5	D	D	5.9	11.5	A	B
St Andrews Rd & C-D Road WB Ramp						9.9	15.0	A	B
St Andrews Rd & Fernandina Rd	Signalized	24.3	29.9	C	C	40.2	72.9	D	E
Sunset Blvd & I-26 Ramps	Signalized	62.5	38.8	E	D	39.3	42.0	D	D
Colonial Life Blvd & I-126 WB Ramp	Signalized	7.2	31.2	A	C	14.1	15.7	B	B
Colonial Life Blvd & I-126 EB Ramps	Signalized	21.3	21.5	C	C				
Greystone Blvd & Stoneridge Dr	Signalized	43.5	38.4	D	D	20.7	30.8	C	C
Sunset Blvd & I-20 WB Ramp	Signalized	31.0	13.1	C	B	37.0	8.2	D	A
Sunset Blvd & I-20 EB Ramp	Signalized	17.2	9.4	B	A	22.5	7.3	C	A
Bush River Rd & Berryhill Rd	Signalized	7.2	23.9	A	C	6.5	37.6	A	D
Bush River Rd & I-20 WB Ramp	Signalized	6.8	6.7	A	A	43.7	45.2	D	D
Bush River Rd & I-20 EB Ramp	Signalized	17.2	9.4	B	A	20.3	15.2	C	B
Broad River Rd & I-20 WB	Signalized	25.9	27.6	C	C	9.7	10.4	A	B
Broad River Rd & C-D Road EB/ I-20 EB	Signalized					13.8	5.8	B	A
Greystone Blvd & Candi Ln	Unsignalized*	5.1	5.0	A	A	5.9	5.2	A	A
Greystone Blvd & I-126 EB Ramp	Unsignalized*	7.2	51.9	A	F	7.5	41.6	A	E
Greystone Blvd & I-126 WB Ramp	Unsignalized*	12.2	17.7	B	C	10.2	16.6	B	C

*The worst performing movement LOS is reported for unsignalized intersections.

7. Safety Analysis

A design year (2050) predictive crash assessment of the Selected and Build Alternatives was conducted using the FHWA Interchange Safety Analysis Tool Enhanced (ISATe) tool. Several assumptions were made to accommodate available information and/or limitations within the predictive crash analysis methodology.

- Future safety analyses were performed for approved Systems IMR/SA Concept (2050) and Build Alternative (2050). For purposes of the comparative analysis, only facilities with geometric or volume differences between the approved Systems IMR/SA Concept and Build Alternative were assessed (Project Methodology Report, April 3, 2024),
- Calibration factors were not altered during analysis. Therefore, the resulting crash predictions and severity distributions are considered relevant by comparison in a relative manner only.
- Several interchange designs consist of non-traditional intersection designs, such as Single Point Urban Interchanges and Diverging Diamond Interchanges. Limitations within the crash predictive methodology (HSM Part C, and Crash Modification Factors) preclude the analysis of such innovative interchange types. Therefore, consistent with the assumptions made in the Project Methodology Report (April 3, 2024), only freeway mainlines, and ramp segments were included in the predictive safety analysis.
- The projected Average Annual Daily Traffic (AADT) has been used in the predictive crash analysis methodology.

7.1 Approved Systems IMR/SA Concept Configuration Results

A summary of the crash severity and total crashes for various sections of the study area under the Selected Alternative is shown below in **Table 16**. Severity is represented with KABCO designation.

- K - Fatal crash
- A - Incapacitating injury crash
- B - Non-incapacitating injury crash
- C - Possible injury crash
- O - Property Damage Only (PDO)

The two most dominant characteristics with respect to crash prediction are AADT and number of lanes. As expected, the mainline sections of the configuration experience the highest overall crash frequency. This is due to the volume of daily traffic, relative to the volume on the ramp systems. Crash frequency on I-26 and I-20 are comparable due to similar AADT while crash frequency on I-126 is lower, correlating to a lower overall AADT between downtown Columbia and the I-26/I-126 system-to-system interchange.

Table 16 - Selected Alternative (2050) Predictive Crash Summary

Segment	K	A	B	C	PDO	Total
I-26 Mainline	0.8	2.0	11.5	21.4	88.9	124.4
I-126 Mainline	0.1	0.4	2.1	3.7	15.2	21.5
I-26 EB Ramps	0.6	1.8	9.5	22.5	28.9	63.2
I-26 WB Ramps	0.2	0.5	2.8	5.8	17.5	26.7
I-20 Mainline	0.7	2.0	11.3	20.5	87.4	121.9
I-20 EB Ramps	0.2	0.7	3.6	7.9	19.0	31.4
I-20 WB Ramps	0.2	0.5	2.8	6.0	15.8	25.3
Total	2.8	7.9	43.6	87.8	272.7	414.4
Crashes/Mile	**0.09**	**0.26**	**1.46**	**2.94**	**9.13**	**13.88**

7.2 Build Alternative Configuration Results

The Build Alternative configuration is the design update in 2024 and is compared to the Approved System IMR/SA Concept configuration within the IMR. A summary of the crash severity and total crashes for various sections of the study area under the Build alternative is shown in **Table 17**. Severity is represented with KABCO designation.

Table 17 - Build Alternative (2050) Predictive Crash Summary

Segment	K	A	B	C	PDO	Total
I-26 Mainline	0.8	1.9	11.3	21.5	89.1	124.4
I-126 Mainline	0.2	0.4	2.2	3.8	15.6	22.2
I-26 EB Ramps	0.6	1.9	10.4	26.1	35.4	74.4
I-26 WB Ramps	0.2	0.5	2.8	6.6	20.6	30.7
I-20 Mainline	0.7	1.8	9.5	16.4	68.7	97.1
I-20 EB Ramps	0.2	0.7	3.9	8.4	18.4	31.6
I-20 WB Ramps	0.1	0.5	2.6	5.5	14.8	23.5
Total	2.8	7.7	42.7	88.3	262.6	403.9
Crashes/Mile	**0.09**	**0.25**	**1.39**	**2.88**	**8.55**	**13.16**

With respect to the Build Alternative, the crash frequency along I-26 is higher than the expected frequency along I-126 or I-20. The reason for this is that the AADT on I-26 is higher than that of I-20 or I-126. The eastbound ramp system has a higher crash frequency than the westbound ramp system, primarily due to two reasons. The AADT on the ramp system in the eastbound direction is comprised of several collector-distributor sections carrying traffic from St. Andrews Road merging with traffic from I-26 bound for I-20 and carrying traffic from I-20 weaving with traffic from I-26 bound for I-126. The eastbound ramp and collector-distributor system is more complex than the westbound direction and has more merge and diverge sections. Both of these factors (AADT and merge/diverge/weave complexity) yield higher crash frequency along the eastbound side of the ramp and collector-distributor system.

The Build Alternative includes additional collector-distributor (C-D) road length, which is reflected in the I-26 EB and WB ramp results in Tables 16 and 17. This added mileage—about 20% more than the Selected Alternative—results in a higher count of predicted lower-severity crashes within the ramp summaries. However, Table 17 shows that the Build Alternative achieves a lower total number of predicted crashes overall. The extended C-D roads benefit from improved lighting, full-width shoulders, modern design standards, and lower operating speeds, all of which enhance safety. Because of these design differences, the most meaningful comparison between alternatives is provided by the total predicted crashes in Tables 16 and 17 and the crash rates in Table 18.

7.3 Configuration Comparison Summary

Overall, when comparing the Selected Alternative and the Build Alternative configurations, some systemwide similarities are seen. The predicted crash frequency on the I-26 and I-126 mainline is similar. On I-20, the Build Alternative Configuration consists of a fourth westbound lane between Bush River Road and US 378, which improves the crash frequency over the Selected Alternative.

On the ramp systems, the crash frequency along I-20 are very similar in both project alternatives. For the I-26/I-126 mainline ramp system, the ramp systems are more complex in the Build Alternative, which leads to a higher crash rate when compared to the Selected Alternative. While certain segments of each configuration are higher or lower depending on the configuration, the overall magnitude of predicted crashes is lower under the Build Alternative at 403.9 crashes compared to 414.4 crashes with the Selected Alternative. The number of estimated fatal crashes is comparable for both project alternatives, and trends lower for all other crash severity types with the Build Alternative, except for minor injury crashes, which has a slightly higher frequency. However, when viewed as a crash-per-mile rate, all crash types are lower with the Build Alternative. **Table 18** summarizes the crash rate for each configuration, by severity under 2050 AADT conditions.

Table 18 - Design Year (2050) Crash Rate (Crashes per Mile) Comparison

Crash Severity	Selected Alternative	Build Alternative	Percent Improvement
K - Fatal crash	0.09	0.09	0%
A - Incapacitating injury crash	0.26	0.25	4%
B - Non-Incapacitating injury crash	1.46	1.39	5%
C - Possible injury crash	2.94	2.88	2%
O - Property Damage Only	9.13	8.55	6%
Total	13.88	13.16	5%

ISATe output sheets for both alternatives are included in **Appendix G**.

7.4 Crash Risk and Safety Factors at Project Interchanges

Within the project limits there are four service interchanges, listed below. The configuration and interchange type of each service interchange varies between the Selected Alternative and the proposed Build Alternative. Given the relatively unique configuration of each interchange, a qualitative assessment of each is presented in the following section.

- I-26 Exit 106 (St. Andrews Road)
- I-126 Colonial Life Boulevard
- I-20 Exit 63 (Bush River Road)
- I-20 Exit 65 (Broad River Road)

7.4.1 I-26 Exit 106 (St. Andrews Road)

Selected Alternative Configuration: The currently approved design of the interchange is a conversion to a Single Point Urban Interchange (SPUI). A series of C-D roads east of the interchange would be utilized to transfer traffic between I-26, I-20 and the interchange ramps.

Build Alternative Configuration: The proposed design of the interchange would retain the partial cloverleaf configuration by preserving the two existing loop ramps for I-26 WB off-ramp traffic to St. Andrews Road WB and St. EB on-ramp traffic and by using directional ramps for other movements. A series of C-D roads east of the interchange would be utilized to transfer traffic between I-26, I-20 and the interchange ramps.

Both configurations make use of a C-D system to take traffic to and from I-20, as well as to carry I-26 WB off-ramp traffic and I-26 EB on-ramp traffic. Furthermore, both configurations terminate the I-26 EB on-ramp at a freeway merge and the I-26 WB off-ramp traffic begins at a freeway diverge point. Both configurations employ the use of a traditional six-phase signal at the intersection of St. Andrews Road and Woodland Hills Road/I-26 EB off-ramp.

The main difference between the two configurations is the use of a traffic signal at the SPUI versus a series of loop ramps and half-signals that stop only one direction of traffic on St. Andrews Road at a time. The SPUI is expected to have a total of 22 conflict points while the proposed Build Alternative's partial cloverleaf configuration is expected to have a total of 20 conflict points, yielding two fewer points of conflict.

7.4.2 I-126 Colonial Live Boulevard

Selected Alternative Configuration: The original design proposed for the Colonial Life Boulevard interchange with I-126 was a tight diamond configuration controlled by traffic signals at each ramp termini.

Build Alternative Configuration: The modified design of the interchange (which was modified through the Alternative Technical Concepts process of the design-build delivery model) includes a series of ramps converging at one primary traffic signal where crossing conflicts are controlled.

The traditional diamond interchange design typically has 30 conflict points, consisting of merging, diverging, and crossing conflicts. The Build Alternative yields a total of nine conflict points, which is 21 fewer than the Build Alternative.

7.4.3 I-20 Exit 63 (Bush River Road)

Selected Alternative Configuration: The currently approved design of the interchange is a conversion from the existing partial cloverleaf type to a diverging diamond interchange (DDI). Traffic from I-26 and from I-20 WB would depart the mainline onto a C-D system prior to reaching the interchange. Similarly, traffic bound for I-26 and I-20 EB would make use of an EB C-D system before entering mainline traffic flow.

Build Alternative Configuration: The Selected Alternative configuration (DDI) was modified during the project development and refinement and the revision is characterized within the Build Alternative. The proposed Build Alternative configuration retains the existing partial cloverleaf interchange type. Slight modifications to ramp approach and departure alignments are proposed. Furthermore, the use of a C-D system to transfer traffic between I-26, I-20 and the exit is proposed, in a similar manner to the Selected Alternative.

Both configurations make use of C-D roads to facilitate traffic flow east of the interchange. The Selected Alternative DDI has approximately 18 total conflict points while the Build Alternative configuration has approximately 16 conflict points which is two fewer points of conflict.

I-20 Exit 65 (Broad River Road)

Selected Alternative Configuration: The original design proposed for Exit 65 consisted of a SPUI configuration, tied to a C-D system west of the interchange to transfer traffic between I-20, I-26 and the interchange ramps. The interchange would be controlled by a single traffic signal.

Build Alternative Configuration: The modified design of the interchange (which was modified through the Alternative Technical Concepts process of the design-build delivery model) includes an offset DDI interchange and retains the use of the C-D system west of the interchange. Both configurations make use of C-D roads to facilitate the flow of traffic to/from the interchange on the west side. The Selected Alternative configuration, consisting of the SPUI design has approximately 22 total conflict points. The Build Alternative configuration, consisting of the diverging diamond interchange design has approximately 18 total conflict points and yields a total of four fewer points of conflict.

8. Other Considerations

8.1 Consistency with Other Plans/Projects

This Project is included in the 2045 South Carolina Statewide Multimodal Transportation Plan and the South Carolina Statewide Transportation Improvement Program (STIP) (FY 2021 - 2027).

8.2 Project Schedule and Funding Plan

As the Carolina Crossroads Project has advanced through the initial construction phases and right-of-way acquisition, the schedule and phasing have been updated periodically. The latest phasing and schedule are shown in **Figure 28**.

Figure 28 - Project Schedule

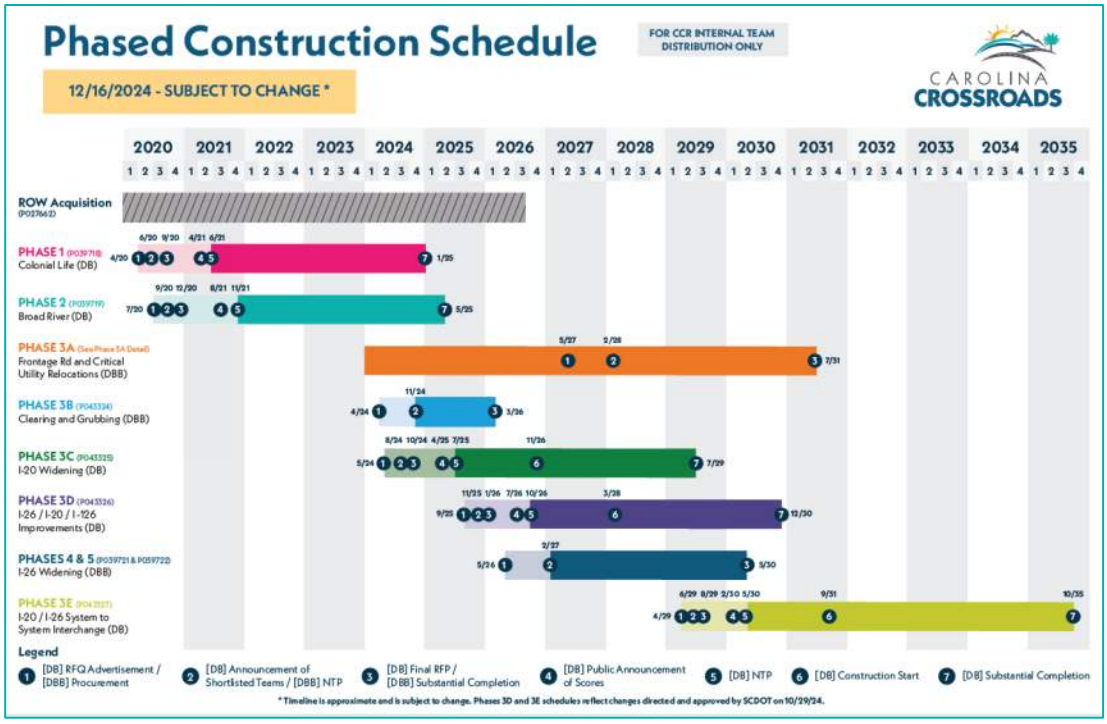

8.3 Environmental Analysis Status

All phases of the project study area are covered under a single FEIS/ROD approved in May 2019, and the design changes in the Build Alternative (discussed in Section 5.1) are included in NEPA re-evaluation #7, which is currently under review by FHWA.

8.4 Conceptual Signing Plan

A conceptual signing plan for the Build Alternative is provided in **Appendix H**.

8.5 Design Exceptions and Variations

The design exceptions and variations were coordinated with SCDOT and FHWA, and approved documents are included in **Appendix I**.

9. Interchange Justification

The original concept, Selected Alternative, received approval in May 2019, and modified concept, presented as the Build Alternative has been evaluated with respect to safety, operation, and engineering and was compared to the Selected Alternative and found to perform equal to or better.

Since the approval of the 2019 Systems IMR, the Selected Alternative (Approved 2019 Systems IMR configuration) design concept has been updated to accommodate refinements made during design build phases in construction and design refinements throughout the entire limits of the Carolina Crossroads Project. The version of the design concept that includes all of these changes is referred to as the MSA. The June 2022 Technical Memorandum Modified Selected Alternative Phase 1*/Phase 2 Traffic Report documented* the analysis results of the mainline density segments for the 2040 Selected Alternative and the 2040 MSA. MSA network analyses MOEs were compared against the 2019 Systems IMR to demonstrate equal or better operations and safety.

Additionally, the Carolina Crossroads Project has been separated into five construction phases. Traffic Technical Memoranda addressing changes to the I-126 at Colonial Life Boulevard interchange and I-20 Exit 65 (Broad River Road) were submitted as part of the Phase 1 and Phase 2 design-build projects, ID P039718 and ID P039719, respectively, and subsequent National Environmental Policy Act (NEPA) Re-evaluations #1 and #5. In the new phasing plan for Carolina Crossroads Project, Phase 3 has been divided into subphases - A, B, C, D, and E.

The following Title 23 CFR Part 624.7 Interstate System Requirements serve as the primary decision criteria used in the approval of the interchange modification projects. Responses to each of the requirements, as applicable, are provided to show that the proposed modifications in the Build Alternative are viable.

9.1 Requirement a

The proposed change in access to the Interstate System shall not result in a significant adverse impact on the Interstate System traffic operations or the safety for all users of the transportation system in the project's area of influence, as demonstrated by operational and safety analyses based on both the current and future traffic projections using traffic data that is no more than 5 years old and at least the most recent 3 years of available safety data.

The intent of the requirement is to require detailed operational and safety analysis of the relevant interstate segments and compare the project alternatives anticipated to occur during the project's Design Year (2050). The operational analysis was conducted using existing traffic data based on April 2024 counts.

This re-evaluation documents the design refinements in the Build Alternative, a change in the Design Year from 2040 (in the 2019 Systems IMR) to 2050 and the utilization of the latest TransModeler Version 7 compared to TransModeler Version 4.0 (Build 6275) used in the 2019 Systems IMR. New traffic data was collected in April 2024 and forecasted to Design Year 2050 using the 2019 Systems IMR growth rate (0.7 % annual growth rate). Detailed operational analyses were performed using TransModeler 7.0 for project alternatives for the AM and PM peak hours in the Design Year 2050.

The operational analysis conducted for this Systems IMR Re-evaluation confirmed that the proposed modifications in the Build Alternative will operate equal to or better than the approved Selected Alternative

and the modifications are not expected to have any significant adverse impacts on safety operations and engineering. The following describes the operations and safety results of the analysis:

- The networkwide results indicate that the average speed has increased, and the travel time and total delay have decreased in the Build Alternative compared to the Selected Alternative.
- In the Build Alternative, all freeway, weave, and merge/ diverge segments are expected to operate at LOS D or better in 2050 AM and PM peak hours.
    - All I-20 eastbound and westbound segments are expected to operate at an average of LOS D or better during the AM and PM peak hours.
    - All I-26 eastbound and westbound segments are expected to operate at an average of LOS C or better during the AM and PM peak hours.
    - All westbound and eastbound segments along the I-126 corridor are expected to operate at an average of LOS C or better during AM and PM peak hours.
- Intersection delay and LOS results for study intersections show that the Build Alternative performs equal to or better compared to the Selected Alternative.
- The crash rate comparison demonstrated that the Build Alternative results in a lower crash rate across all crash severities compared to the Selected Alternative. While the fatal crash rate (K) remains unchanged for both alternatives, the Build Alternative shows improvements in all other categories. Specifically, it reduces the rates of incapacitating injury crashes (A) by 4%, non-incapacitating injury crashes (B) by 5%, possible injury crashes (C) by 2%, and property damage only crashes (O) by 6%. In total, the Build Alternative achieves an overall reduction of 5% in the total crash rate. This data highlights that the Build Alternative offers a safer outcome with a lower crash rate overall, supporting its potential as the preferred option.

The Build Alternative maintains the pedestrian improvements from the existing conditions that the approved Selected Alternative also incorporated. Pedestrian safety is being improved with the reconstructed interchanges including updated pedestrian facilities at the Bush River Road and Broad River Road at I-20 interchanges that meet current design standards. The existing St Andrews Road at I-26 pedestrian facilities are being replaced and will meet current design standards. The existing Bush River Road and Broad River Road bridges over I-20 have sub-standard sidewalk widths, and pedestrian barriers. On Bush River Road and Broad River Road bridges over I-20, the project will add pedestrian facilities that meet current design standards including increased sidewalk widths, improved pedestrian barriers, and traffic control equipment and pavement markings at crossings. In addition, the Broad River Road interchange will implement no turn on red at the offramp intersections to further improve pedestrian crossing safety.

9.2 Requirement b

Interstate System access points shall connect only to a public road. Connections directly to private developments, parking lots, or private roads are prohibited.

The proposed improvements in the Build Alternative provide access only to public roads and maintain full access. There are no partial interchanges in the study area. The project meets current MUTCD, AASHTO, and SCDOT standards with design exceptions noted in Section 8.5 and included in **Appendix I** of this report.

9.3 Requirement c

Connections from outside of the Interstate System right-of-way to safety rest areas, information centers, weigh stations, and truck inspection stations located within the Interstate System right-of-way are prohibited.

No connections from outside of the Interstate System right-of-way to safety rest areas, information centers, weigh stations, or truck stations located within the Interstate System right-of-way will be provided.

9.4 Requirement d

Each interchange shall provide for all traffic movements.

The proposed improvements in the Build Alternative provide full access at all interchanges.

9.5 Requirement e

A proposed change in access shall be designed to meet the standards in accordance with 23 CFR 625 or have approved exceptions and shall comply with 23 CFR 655.

IARs only need to address Requirement e if it is attempting to use one of the exceptions listed below. On a case by case basis, FHWA may grant exceptions to the Requirements b through d for:

1. ***Locked gate access to private property for purposes of public safety;***
2. ***Locked gate access from an information center, weigh station and truck inspection station to a local road for the purposes of public safety;***
3. ***Access from a safety rest area to an adjacent publicly owned conservation and recreation area if access to this area is available only through the safety rest area as allowed under 23 CFR 752.5(d);***
4. ***Locked gate access from a local public road to the safety rest area for the limited purpose of providing access to safety rest area employees, deliveries and emergency vehicles; or***
5. ***A partial interchange where necessary to provide special access, such as to managed lanes or park and ride lots, or where factors such as the social, economic and environmental impacts of a full interchange justify an exception.***

This project is not requesting to make use of any of the exceptions listed above under Requirement e. As a result, addressing Requirement e is not required for this Systems IMR Re-evaluation.

10. Conclusion and Recommendations

The primary purpose of the proposed Carolina Crossroads Project is to implement a transportation solution(s) that would improve mobility and enhance traffic operations by reducing existing traffic congestion within the I-20/26/126 corridors while accommodating future traffic needs. The Systems IMR Re-evaluation was conducted to document the impacts of the following changes:

- Changes to the Design Year from 2040 to 2050
- Proposed changes to interchange configurations
- Change in the TransModeler version
- Change in traffic data

Conclusion:

This Systems IMR Re-evaluation documented traffic operational analysis using the TransModeler version 7 and predictive safety analysis using ISATe. The analysis results indicate that the Build Alternative performs equal to or better than the Selected Alternative.

Recommendation:

The Build Alternative, which includes CCR Phases 1, 2, and 3, is recommended for implementation based on its ability to continue to meet the project's purpose and need and satisfies the FHWA requirement that it performs equal to or better than the Selected Alternative.

Appendices

Appendix A – Previously Approved Documents

CAROLINA CROSSROADS
I-20/26/126 Corridor Project

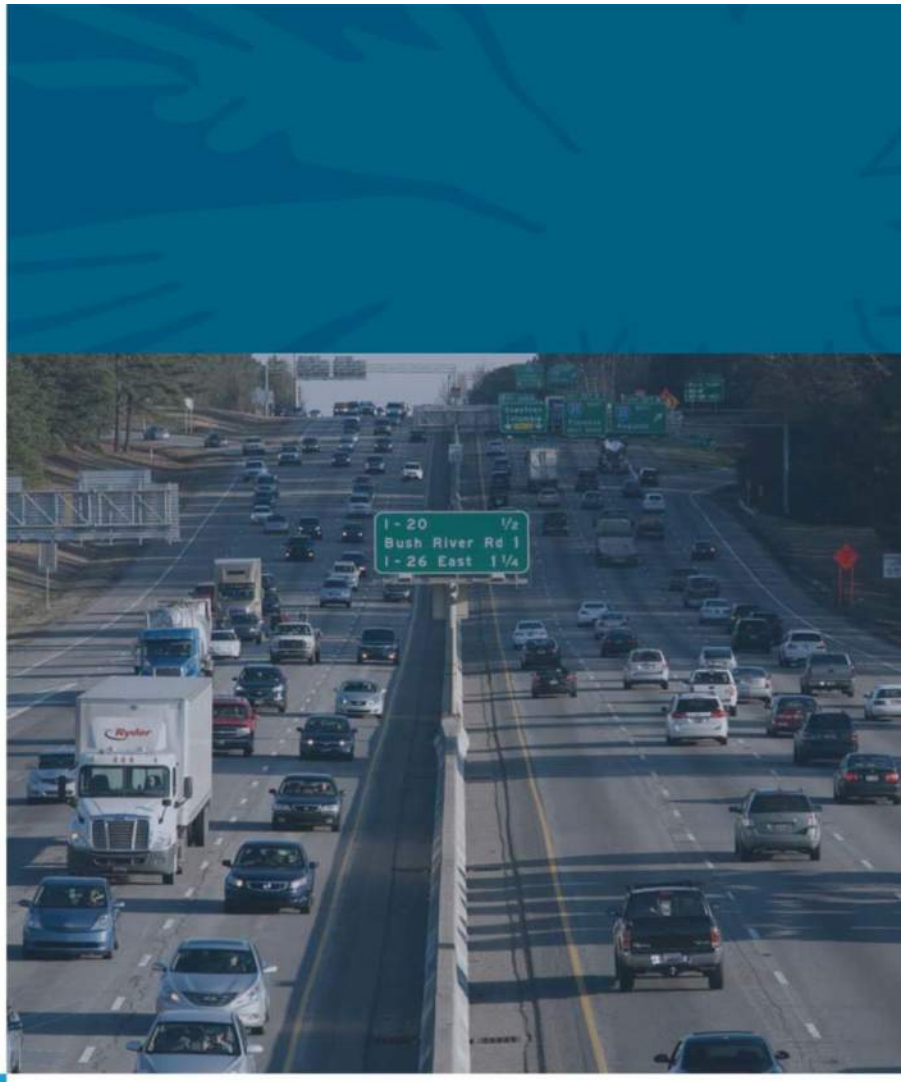

I-20/I-26/I-126 System Interchange Modification Report

Carolina Crossroads
I-20/I-26/I-126 Corridor Project
Lexington and Richland Counties, South Carolina

Final May 2019



SCDOT South Carolina Department of Transportation

U.S. Department of Transportation Federal Highway Administration

Prepared for South Carolina Department of Transportation and the Federal Highway Administration

CAROLINA CROSSROADS

I-20/I-26/I-126 System Interchange Modification Report

Carolina Crossroads

I-20/I-26/I-126 Corridor Improvement Project

Lexington and Richland Counties, South Carolina

Final May 2019

Prepared for
South Carolina Department of Transportation,
and the Federal Highway Administration

Prepared by

STV 100 Years

SOUTH CAROLINA REGISTERED PROFESSIONAL ENGINEER No. 22070 ROBERT J. DUBNICKA

4-29-2019

SOUTH CAROLINA CERTIFICATE OF AUTHORIZATION STV INCORPORATED NO. C03348

SCDOT U.S. Department of Transportation Federal Highway Administration

Table of Contents

Executive Summary **1**

1 Introduction **4**

2 Background **5**

2.1 Existing Conditions 6

2.1.1 I-26 6

2.1.2 I-20 7

2.1.3 I-126 7

2.1.4 Interchanges 8

2.1.5 Frontage Road System 22

2.2 Purpose and Need 24

2.3 Conceptual Design 24

2.4 Interchange Modification Report Applicant 25

3 Study Area **27**

3.1 Demographics 27

3.2 Land Use 28

3.3 Transportation System 29

4 Methodology **30**

4.1 Scenarios Analyzed 30

4.2 Traffic Forecasts 31

4.3 Traffic Analysis 31

5 Traffic Volumes **35**

5.1 Existing Traffic Volumes 35

5.2 2040 Traffic Volumes 36

6 Traffic Operations **37**

6.1 TransModeler Network Analysis 37

6.2 Freeway Segment Analyses 38

6.3 Freeway Merge Area Analyses 45

6.4 Freeway Diverge Area Analyses 51

6.5 Intersection Capacity Analysis 57

7 Interchange Justification **78**

7.1 Policy Point 1 78

7.2 Policy Point 2 81

List of Tables

Table 3-1 – Population Demographic 27
Table 3-2 – Population Growth 28
Table 4-1 - Freeway Segment LOS Criteria 32
Table 4-2 - Weaving Segment LOS Criteria 33
Table 4-3 - Merge/Diverge LOS Criteria 33
Table 4-4 - Unsignalized Intersection LOS Criteria 34
Table 4-5 - Signalized Intersection LOS Criteria 34
Table 6-1 - I-26 Freeway Segment Capacity Analysis – Existing, 2040 No-Build, and 2040 Build RRPA 42
Table 6-2 - I-20 Freeway Segment Capacity Analysis – Existing and 2040 No-Build, and 2040 Build RRPA 43
Table 6-3 - I-126 Freeway Segment Capacity Analysis – Existing and 2040 No-Build, and 2040 Build RRPA 44
Table 6-4 - I-26 Ramp Merge Capacity Analysis – Existing and 2040 No-Build, and 2040 Build RRPA 48
Table 6-5 - I-20 Ramp Merge Capacity Analysis – Existing and 2040 No-Build, and 2040 Build RRPA 49
Table 6-6 - I-126 Ramp Merge Capacity Analysis – Existing and 2040 No-Build, and 2040 Build RRPA 50
Table 6-7 - I-26 Ramp Diverge Capacity Analysis – Existing and 2040 No-Build, and 2040 Build RRPA 54
Table 6-8 - I-20 Ramp Diverge Capacity Analysis – Existing and 2040 No-Build, and 2040 Build RRPA 55
Table 6-9 - I-126 Ramp Diverge Capacity Analysis – Existing and 2040 No-Build, and 2040 Build RRPA 56
Table 6-10 - Intersection Capacity Analysis Results - Existing Vs. 2040 No Build 59
Table 6-11 - Intersection Capacity Analysis Results – 2040 Build RRPA 67
Table 6-12 - 2040 Build RRPA Intersection Queue Lengths - Exit 106 68
Table 6-13 - 2040 Build RRPA Intersection Queue Lengths - Exit 110 69
Table 6-14 - 2040 Build RRPA Intersection Queue Lengths - Exit 63 70
Table 6-15 - 2040 Build RRPA Intersection Queue Lengths - Exit 65 71
Table 6-16 - 2040 Build RRPA Intersection Queue Lengths - Colonial Life Boulevard 72

List of Figures

Figure E-1 - IMR Study Area 3
Figure 1-1 - Carolina Crossroads Study Area 4
Figure 2-1 - I-20/I-26 System Interchange Existing Configuration 10
Figure 2-2 - I-26/I-126 System Interchange Existing Configuration 11
Figure 2-3 - Exit 106 Existing Configuration 14
Figure 2-4 - Exit 108 Existing Configuration 15
Figure 2-5 - Exit 110 Existing Configuration 16
Figure 2-6 - Exit 63 Existing Configuration 18
Figure 2-7 - Exit 65 Existing Configuration 19
Figure 2-8 - Colonial Life Boulevard Existing Configuration 21
Figure 2-9 - Refined Recommended Preferred Alternative 26

Figure 6-1 - Exit 106 - St. Andrews Road Intersection LOS Summary 60
Figure 6-2 - Exit 108 - Bush River Road Intersection LOS Summary 61
Figure 6-3 - Exit 110 - Sunset Boulevard (US 378) Intersection LOS Summary 62
Figure 6-4 - Exit 63 - Bush River Road Intersection LOS Summary 63
Figure 6-5 - Exit 65 - Broad River Road (US 176) Intersection LOS Summary 64
Figure 6-6 - Exit 106 - St. Andrews Road 2040 Build RRPA Configuration 73
Figure 6-7 - Exit 108 - Bush River Road 2040 Build RRPA Configuration 74
Figure 6-8 - Exit 63 - Bush River Road 2040 Build RRPA Configuration 75
Figure 6-9 - Exit 65 - Broad River Road 2040 Build RRPA Configuration 76
Figure 6-10 - Colonial Life Boulevard Interchange 2040 Build RRPA Configuration 77

Appendices

Appendix A—Existing Peak Hour Volumes

Appendix B—2040 Peak Hour Volumes

Appendix C— TransModeler Density Outputs

Appendix D—2040 Build Unconstrained Summary

Appendix E—TransModeler Intersection Analysis Outputs

Appendix F—Conceptual Signing Plans

Executive Summary

The South Carolina Department of Transportation (SCDOT) proposes multiple improvements to the I-20, I-26, and I-126 corridors within what is identified as the Carolina Crossroads study area. The limits of the Carolina Crossroads study area include approximately four miles of I-20 between the crossings over the Saluda River and Broad River, approximately nine miles of I-26 from Exit 101 (Broad River Rd) to Exit 110 (US 378), and approximately one mile of I-126 from I-26 to Colonial Life Boulevard.

The purpose of the proposed Carolina Crossroads project is to improve mobility, enhance traffic operations by reducing existing traffic congestion, accommodate future traffic needs, enhance safety throughout the corridor, improve freight mobility, and improve system linkages, while minimizing community and environmental impacts.

This interchange modification report (IMR) presents information for the proposed modification of the system interchanges of I-20/I-26 (I-20 Exit 64 and I-26 Exit 107) and I-26/I-126 (I-26 Exit 108) located in Lexington and Richland counties. The proposed modifications to the system interchanges will also affect closely spaced adjacent interchanges which are also to be modified. These interchanges include the I-26 Exit 106 (St Andrews Road), I-20 Exit 63 (Bush River Road), I-20 Exit 65 (Broad River Road) and the I-126 interchange at Colonial Life Boulevard.

As part of the project development, nine representative alternatives for the entire Carolina Crossroads study area were developed, along with a tenth 'no-build' alternative. From these alternatives, the Refined Recommended Preferred Alternative (RRPA) was identified. The I-20/I-26 and I-26/I-126 system interchanges and adjacent service interchanges in the RRPA are proposed to be modified as follows:

- I-20/I-26 System Interchange: the existing full cloverleaf interchange (I-20 Exit 64 and I-26 Exit 107) will be modified to a directional 'turbine' interchange. Multiple existing complex weaving movements will be eliminated from the mainline and relocated to collector-distributor roads which will be constructed in each direction on I-20 and I-26 to separate movements traveling between I-20 and I-26 from through traffic on the mainline travel lanes.
- I-26/I-126 System Interchange: the existing interchange (I-26 Exit 108), which includes ramps from I-26 to Bush River Road, will be modified to eliminate the ramps to Bush River Road, improve the continuity of I-26, and revise the connection to and from I-126.
- I-20 Exit 63 (Bush River Road): the existing diamond interchange, which includes a loop on-ramp from eastbound Bush River Road to eastbound I-20, will be modified to provide a diverging diamond interchange. This modification includes eliminating the intersection of Berryhill Drive with Bush River Road and adding an overpass to connect Berryhill Drive over I-20 to Bush River Road via Rockland Road.
- I-20 Exit 65 (Broad River Road): the existing diamond interchange at Broad River Road, which includes a short, two-way segment on the eastbound on-ramp to connect Garner Lane to Broad River Road, will be modified to provide a single point urban interchange. The Garner Lane connection to the off-ramp will be eliminated, making the interchange consistent with current standards and FHWA policy. A new connection will link Garner Road to Longcreek Drive.

- I-26 Exit 106 (St Andrews Road): the existing partial cloverleaf interchange includes a westbound loop off-ramp and eastbound loop on-ramp to and from westbound St Andrews Road. It will be modified to provide a single point urban interchange. The connections from the westbound off-ramp to eastbound St Andrews Road and to Burning Tree Drive will be maintained and adjusted to connect to the remainder of the modified interchange.
- I-26 Exit 110 (US 378): the existing single point urban interchange will remain unchanged; however, the eastbound off-ramp to US 378 will be relocated and extended by approximately 2,500 feet to reduce or eliminate the potential for off-ramp traffic queues from extending back to the eastbound I-26 mainline lanes.
- I-126 Colonial Life Boulevard: the existing partial interchange with ramps only oriented to and from downtown Columbia to the east will be replaced with a full access tight urban diamond interchange.

The portion of the RRPA evaluated in this IMR is shown in Figure E-1.

The analysis of the 2040 Build condition of the RRPA illustrates that the project would not have any significant negative impact on the safety and the operation of the facilities within the project area. The increased capacity provided by the RRPA will result in improved LOS over the 2040 No-Build conditions.

The I-20 Exit 61 (US 378) westbound off-ramp, outside of the project limits, may substantially affect the westbound mainline density and Exit 63 (Bush River Road) westbound merge operations due to high ramp volumes and congestion identified along US 378 at Exit 61.

Because of the distance between Exit 65 (Broad River Road) and Exit 68 (Monticello Road), the bridge crossing the Broad River creating a barrier, and the widening of I-20 ends east of the Broad River crossing, FHWA and SCDOT agreed that the Exit 68 interchange would not influence operations at Exit 65. However, with increased volumes and improved throughput within the system-to-system interchange, heavy queuing and ramp backup along I-20 eastbound was identified, due to the mainline capacity constraint that occurs at the eastern project limits as the proposed four lane section transitions into the existing three lane section at the bridge across Broad River just east of Exit 65.

The proposed interchange improvements at the system interchanges and the addition of the collector-distributor road systems along I-20 and I-26 should improve traffic operations and safety by removing the numerous existing vehicle conflict points and relocating merge/diverge areas and weaving sections within the study area from the mainline lanes to the collector-distributor lanes. By removing the Bush River Road ramps at Exit 108, the short weaving section between the ramp from eastbound I-20 to eastbound I-26 and the eastbound off-ramp to Exit 108 is eliminated. The congestion caused by the complex westbound weaving movements to travel to I-20 and to Exit 106 (St Andrews Road) after I-126 merges with I-26 is also eliminated.

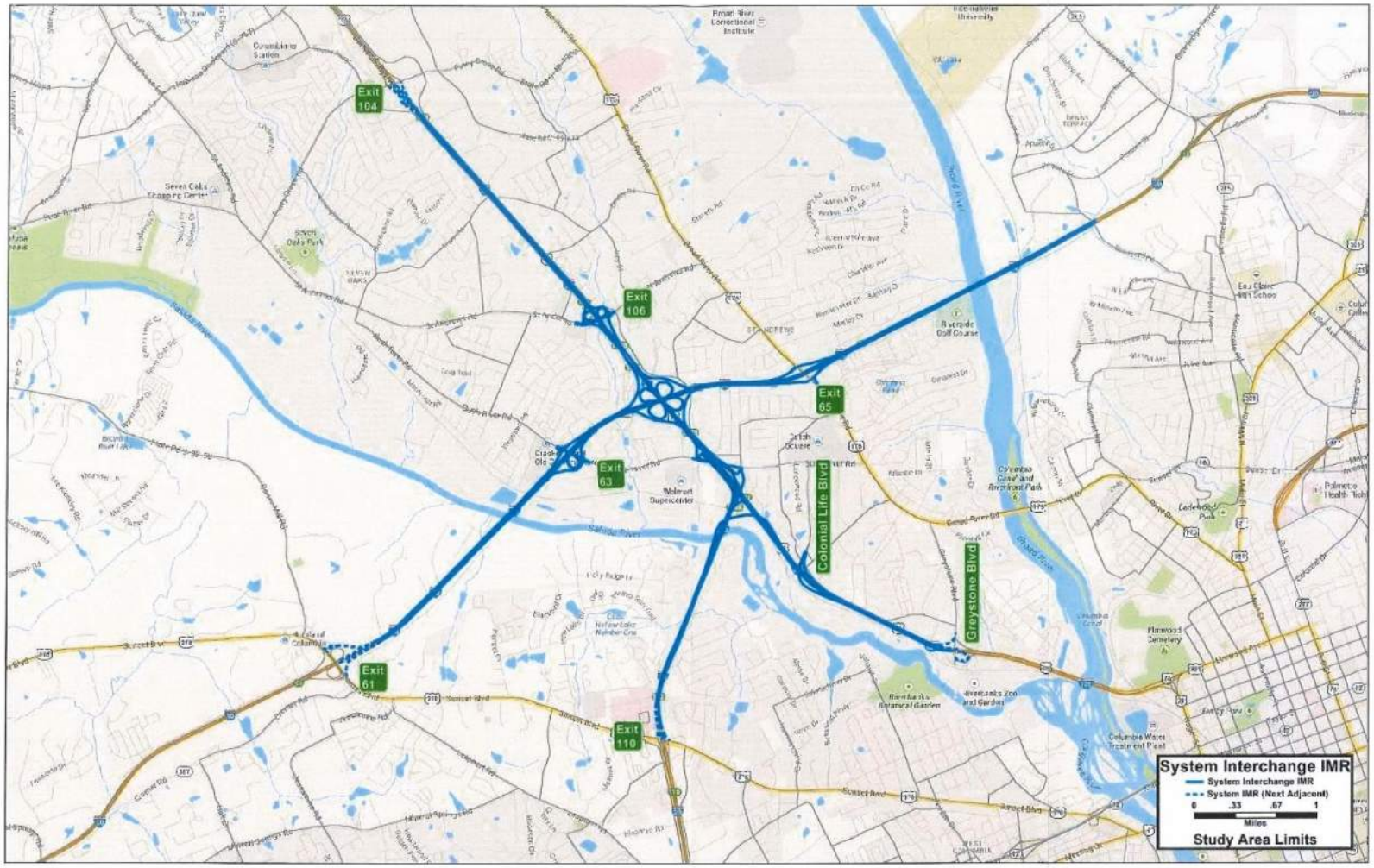

Figure E-1 - IMR Study Area

1 Introduction

STV, in cooperation with HDR and Mead & Hunt (the project team), has been contracted by the South Carolina Department of Transportation (SCDOT) to provide engineering services necessary for the preparation of an Environmental Impact Statement (EIS), right of way plans, and final construction plans for roadways and bridges for the proposed Carolina Crossroads I-20/I-26/I-126 Corridor Project.

I-20 is an east-west interstate highway that begins near Kent, Texas at I-10. From this origin, I-20 runs eastward through Texas, Mississippi, Alabama, Georgia and South Carolina where it ends at I-95 in Florence, South Carolina. I-26 is an east-west interstate highway that begins at the junction of U.S. Route 11W and U.S. Route 23 in Kingsport, Tennessee. From this origin, I-26 runs generally southeastward through Tennessee, North Carolina, and South Carolina, where it ends at U.S. Route 17 in Charleston, South Carolina. I-126 is an east-west auxiliary route of I-26 that begins and ends in Columbia, South Carolina.



Figure 1-1 - Carolina Crossroads Study Area

The proposed project is a transportation corridor improvement project located in Lexington and Richland counties. To date, the project area has been defined as a mainline corridor including I-20 from the Saluda River to the Broad River (approximately four miles), I-26 from Broad River Road to US-378 (approximately nine miles), and I-126 from I-26 to Colonial Life Boulevard (approximately one mile. **Figure 1.1** illustrates the extent of the Carolina Crossroads study area.

The I-20/I-26/I-126 corridor is a vital link in South Carolina, serving residents, commuters, travelers, and commerce. Due to nearby residential and commercial development, proximity to downtown Columbia, traffic volumes, and the overall geometric layout, including 12 interchange points, the I-20/I-26/I-126 corridor has become one of the most congested interstate sections in South Carolina. The purpose of the proposed project is to address this congestion and enhance safety throughout the corridor.

Information discussed in the report is derived from the following project reports: *Alternatives Traffic Analysis: Carolina Crossroads I-20/I-26/I-126 Corridor Project, Crash Analysis: Carolina Crossroads I-20/I-26/I-126 Corridor Project, Carolina Crossroads I-20/I-26/I-126 Corridor Improvement Project Draft Environmental Impact Statement (DEIS).*

The *Alternatives Traffic Analysis* study evaluated multiple improvements within the I-20/I-26/I-126 corridor designed to reduce existing traffic congestion, upgrade interchanges to meet design requirements, and accommodate future traffic needs. The study considered widening of I-20 from three to four lanes in each direction from about one mile west of Exit 63 (Bush River Road) to Broad River, widening of I-26 from three to four lanes in each direction from just west of Exit 101 (Broad River Road) to Exit 110 (US 378), and realigning the connection to I-126 from I-26 towards the Colonial Life Boulevard interchange. In addition, the study examined modifications to the I-20/I-26/I-126 system interchange, Exit 101 (Broad River Road), Exit 102 (Lake Murray Boulevard), Exit 103 (Harbison Boulevard), Exit 104 (Piney Grove Road), Exit 106 (St. Andrews Road), Exit 108 (Bush River Road), Exit 110 (US 378), Exit 63 (Bush River Road), Exit 65 (Broad River Road), and the Colonial Life Boulevard interchange on I-126.

2 Background

The Carolina Crossroads Project includes three interstate routes and incorporates the modification of the I-20/I-26 system interchange (Exit 64/Exit 107) and the I-26/I-126 system interchange (Exit 108). Several immediately adjacent service interchanges are expected to be modified as well. Due to the close proximity and interconnected movements of the service interchanges with the system interchanges, the modification of all the interchanges are to be evaluated collectively. The modified interchanges to be evaluated in this IMR include:

- Exit 106: I-26 at St. Andrews Road (S-32-36/S-40-42)
- Exit 64/Exit 107: I-26 at I-20
- Exit 108: I-26 at Bush River Road (S-40-31);
- Exit 108: I-126 at I-26
- Exit 63: I-20 at Bush River Road (S-32-273)
- Exit 65: I-20 at Broad River Road (US 176)
- I-126 at Colonial Life Boulevard (S-40-2963)

To address Federal Highway Administration (FHWA) requirements, adjacent interchanges analyzed as part of this IMR include the following:

- Exit 104: I-26 at Piney Grove Road (S-32-671)
- Exit 110: I-26 at US 378 (Sunset Boulevard)
- Exit 61: I-20 at US 378 (Sunset Boulevard)
- I-126 at Greystone Boulevard (S-40-3020)

The interchange at Exit 68 (I-20 at Monticello Road/SC 215) is the interchange adjacent to Exit 65 (I-20 at Broad River Road). However, FHWA has provided concurrence that this interchange will be excluded from consideration in this IMR since its distance from the Exit 64 system interchange (approximately three miles) and

the barrier created by the bridge crossing the Broad River effectively limits its influence on the subject interchange operations.[1]

This report focuses on traffic analysis of existing, future no-build, and future build conditions. The traffic conditions were analyzed for the following scenarios:

- Existing Conditions: An analysis of existing conditions in the year 2015
- 2040 No-Build: An analysis of conditions in the year 2040 with no changes to the interstate or interchanges.
- 2040 Build: An analysis of conditions in the year 2040 with modifications to the study area interstate and interchanges.

2.1 Existing Conditions

2.1.1 I-26

Eastbound I-26 approaches the study area from the northwest, entering from Richland County as a two lane section with a posted 70 miles per hour (mph) speed limit. Approximately 1,900 feet in advance of the off-ramp to Exit 101 (Broad River Road), the speed limit is reduced to 60 mph. Approximately 850 feet in advance of the Exit 101 off-ramp, I-26 begins to transition to provide a third lane, which is fully established approximately 525 feet in advance of the off-ramp. Immediately south of Exit 103 (Harbison Boulevard), I-26 crosses into Lexington County. Approximately 2,000 feet in advance of Exit 106 (St Andrews Road), the speed limit is reduced to 55 mph.

At Exit 106 (St Andrews Road), two lanes are added. The first additional lane is a continuation of the loop on-ramp from westbound St Andrews Road, while the second lane is a continuation of the on-ramp from eastbound St Andrews Road. This fifth lane drops at the off-ramp to westbound I-20, with the four lane section traversing the I-20 system interchange (Exit 107). At the I-20 system interchange, I-26 crosses back into Richland County for a short distance. The four lanes approach the I-126 split, where the left two lanes continue eastbound on I-126 towards downtown Columbia, a “decision lane” continues to either I-126 or I-26, and the right lane continuing eastbound on I-26. There is a 50 mph posted advisory speed on the I-26 curve at this split.

I-26 continues eastbound on two lanes crossing back into Lexington County at the Saluda River, where a lane is added from the ramp from westbound I-126. The speed limit increases to 60 mph in this area. I-26 continues on three lanes past Exit 110 (US 378) and exits the study area south of that interchange.

Westbound I-26 enters the study area in Lexington County south of Exit 110 (US 378) as a three lane section with a posted 60 mph speed limit. The two lane westbound on-ramp from Exit 110 merges and adds a fourth westbound lane. Approaching the bridge over the Saluda River, the posted speed limit on I-26 is reduced to 55 mph, with the left two lanes designated to continue as I-26 towards Spartanburg and the right two lanes exiting to Bush River Road and I-126 towards Columbia at Exit 108.

[1] Memo from SCDOT to FHWA, June 1, 2018

As it crosses the Saluda River, I-26 enters Richland County and crosses over I-126 as it curves to the northwest with an advisory speed limit of 50 mph. These two lanes are joined to their left by two westbound lanes continuing from I-126 into I-26, and to their right by a single lane ramp that combines a lane from I-126 and directs traffic to I-20 with the on-ramp from Bush River Road (Exit 108), creating a five-lane section. This five lane section continues for approximately 1,100 feet until the right lane drops on the off-ramp to eastbound I-20. I-26 continues as a four lane section through the system interchange with I-20 (Exit 107), where it exits Richland County and re-enters Lexington County.

The on-ramp from westbound I-20 adds a fifth lane to I-26, creating a weaving section approximately 1,300 feet long before the fifth lane drops at Exit 106 (St Andrews Road) as an exit ramp taking traffic to eastbound St Andrews Road. After crossing under the St Andrews Road overpass, the fourth lane drops at the loop off-ramp to westbound St. Andrews Road. From here, I-26 continues westbound as a three lane section. The posted speed increases to 60 mph approximately 2,200 feet north of the Exit 106 westbound on-ramp. I-26 re-enters Richland County just south of the Harbison Boulevard overpass at Exit 103 and continues west as a three lane, 60 mph section to the west of Exit 101 (Broad River Road). About 550 feet west of the Exit 101 on-ramp, the inside lane begins its merge to create a two-lane section, which begins approximately 1,050 feet to the west. I-26 westbound exits the study area as a two-lane section, transitioning to a 70-mph posted speed limit at a point approximately 2,700 feet west of the Exit 101 on-ramp.

2.1.2 I-20

Eastbound I-20 approaches the study area from the west. Entering the study area in Lexington County at its crossing of the Saluda River, I-20 eastbound provides three lanes with a posted 60 mph speed limit. At Exit 63 (Bush River Road), the loop on-ramp from southbound Bush River Road adds a fourth lane, which is dropped approximately 2,650 feet to the east at the off-ramp to eastbound I-26. I-20 continues east with three lanes through the I-26 system interchange (Exit 64) where it enters Richland County, and past Exit 65 (Broad River Road). It exits to the east of study area at the bridge over the Broad River with three lanes and a 60 mph posted speed limit.

Westbound I-20 approaches the study area from the east. Entering the study area in Richland County at its crossing of the Broad River, I-20 westbound provides three lanes with a posted 60 mph speed limit. I-20 continues west with three lanes through the I-26 system interchange (Exit 64), where a fourth lane is added from the on-ramp from eastbound I-26. This four lane section continues for approximately 1,100 feet before it drops at the off-ramp to Exit 63 (Bush River Road). I-20 continues as a three lane, 60 mph section to the west where it leaves the study area at the bridge over the Saluda River.

2.1.3 I-126

Eastbound I-126 begins where I-26 splits to continue to the east towards downtown Columbia and towards Charleston. Of the four eastbound lanes approaching this system interchange, the two left lanes continue through as I-126, while the third lane from the inside is a “decision” lane where traffic may continue on I-126 or on I-26. I-126 continues eastbound towards downtown Columbia as a three lane, 60 mph section. Approximately 1.25 miles from its separation from I-26, the on-ramp from Colonial Life Boulevard adds a fourth

lane to the south. I-126 continues as a four lane section to its terminus, where the left two lanes become eastbound Elmwood Avenue and the right two lanes become southbound Huger Street, with the speed limit dropping to 35 mph approximately 800 feet in advance of the split.

Westbound I-126 begins where westbound Elmwood Avenue and northbound Huger Street merge just east of the bridge over the Broad River to create a four lane section with a posted 60 mph speed limit. I-126 continues westbound past the Greystone Boulevard interchange and the off-ramp to Colonial Life Boulevard. Approximately 2,000 feet north of the Colonial Life Boulevard exit, the right lane of I-126 drops as a flyover exit ramp to eastbound I-26. I-126 continues westbound for about 2,000 feet, where the left two lanes continue through to become the inside two lanes of westbound I-26, and the right lane bends right as a ramp directing traffic to eastbound and westbound I-20. Between these split lanes, two lanes from westbound I-26 enter from the curved flyover to create a five lane section of I-26.

2.1.4 INTERCHANGES

There are two system and eleven service interchanges within the study area. The system interchanges are at the junction of I-26 and I-20 (Exit 107 on I-26 and Exit 64 on I-20) and at the junction of I-26 and I-126 (Exit 108). There are seven service interchanges along I-26 (Exits 101, 102, 103, 104, 106, 108, and 110), two along I-20 (Exits 63 and 65) and two on I-126 (Colonial Life Boulevard and Greystone Boulevard).

2.1.4.1 System Interchanges

There are two system interchanges located within the study area. The I-20/I-26 system interchange is numbered as I-20 Exit 64 and I-26 Exit 107. Exit 108 combines elements of the I-26/I-126 system interchange with a service interchange providing for movements to/from Bush River Road.

I-20/I-26 System Interchange - Exit 64/Exit 107

The I-20/I-26 System interchange is a full access cloverleaf interchange. The cloverleaf interchange introduces short weaving sections between the two loop ramps located in each direction on I-20 and I-26. The spacing of the system interchange to the next adjacent interchanges is short. The distance between the weaving gore areas on Exit 107 and Exit 106 is about 1,500 feet. The weaving section distance between the Exit 107 and Exit 108 ramps is about 800 feet in the eastbound direction and about 1,200 feet in the westbound direction. The distance between Exit 63 and Exit 64 ramps is 1,500 feet in the eastbound direction and about 1,100 feet of weaving section in the westbound direction. The distance between Exit 64 and Exit 65 ramps are slightly longer at about 2,600 feet in the eastbound direction and about 2,000 feet in the westbound direction. The interchange configuration, its close spacing to the adjacent interchanges and the numerous complex weaving movements introduced in this area increase vehicle conflicts that can reduce safety and contribute to congestion in the corridor during peak periods. The existing configuration of the Exit 64/Exit 107 system interchange is shown in **Figure 2.1**.

I-26/I-126 System Interchange – Exit 108

The I-26/I-126 interchange provides full access movements between the two interstate routes and includes a flyover ramp from westbound I-126 to eastbound I-26. Westbound I-26 also travels on a flyover ramp prior to its merge with westbound I-126.

Exit 108 also provides full access to/from I-26 to Bush River Road.

The existing configuration of the I-26/I-126 interchange is shown in **Figure 2.2**.

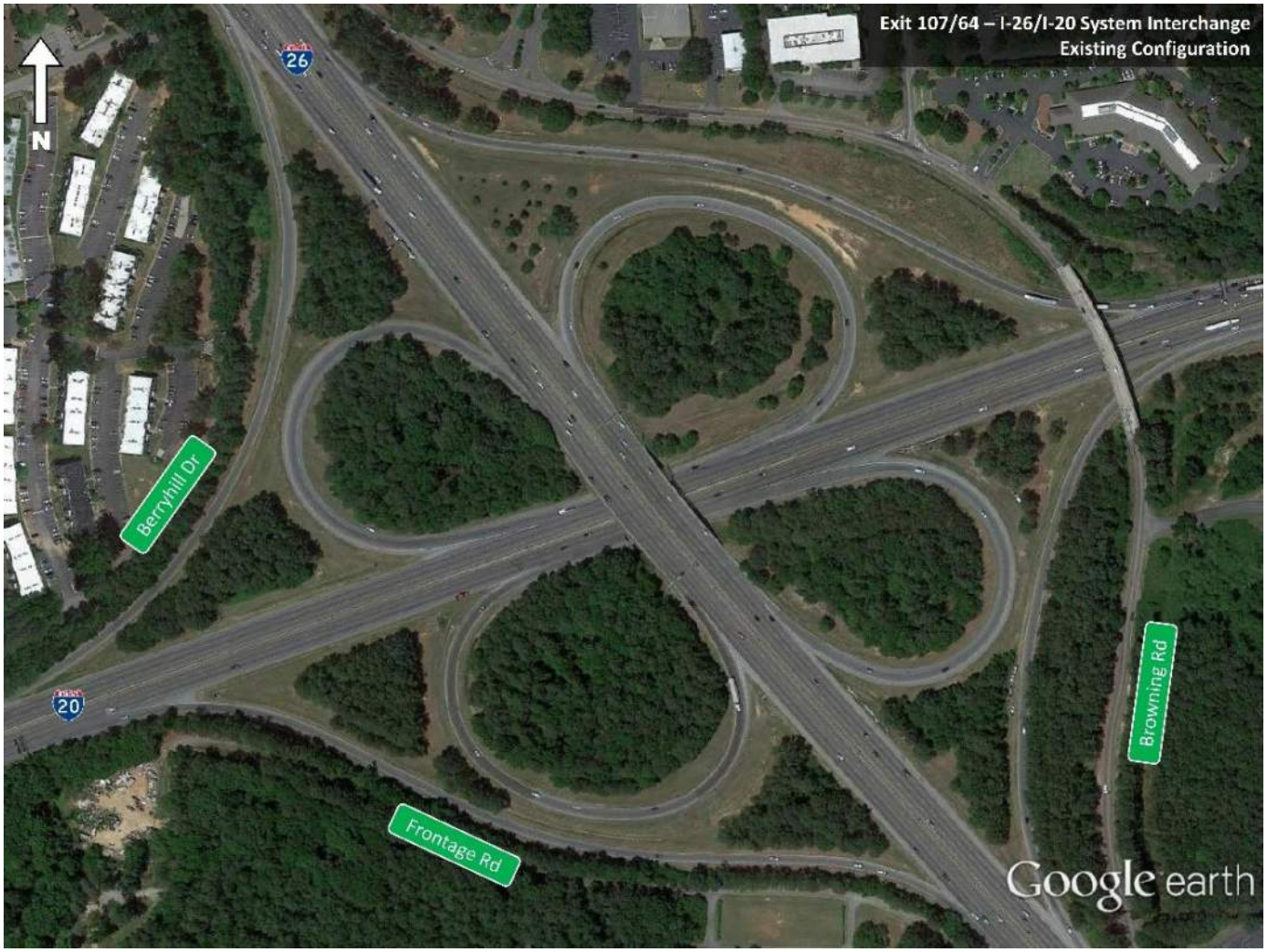

Figure 2-1 - I-20/I-26 System Interchange Existing Configuration

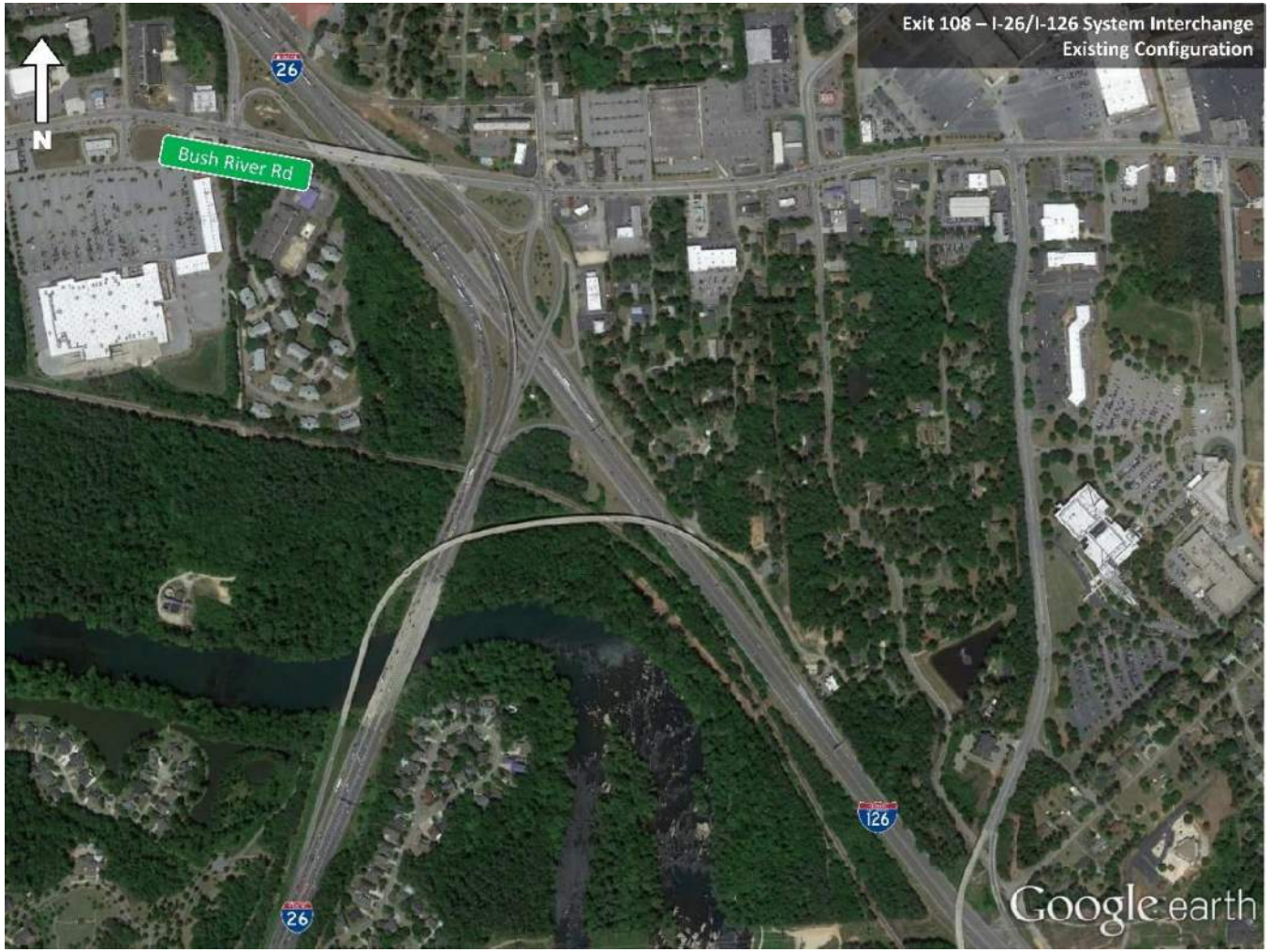

Figure 2-2 - I-26/I-126 System Interchange Existing Configuration

2.1.4.2 I-26 Service Interchanges

Of the seven I-26 service interchanges within the Carolina Crossroads study area, three I-26 service interchanges are located within the I-20/I-26/I-126 IMR study area. Two of these interchanges, Exits 106 and 110, are separate, full access interchanges. Exit 108 combines elements of the I-26/I-126 system interchange with a service interchange providing for movements to/from Bush River Road.

Exit 106 – St. Andrews Road (S-32-36/S-40-42)

Exit 106 is a partial cloverleaf interchange with loop ramps located on the northeast and northwest quadrants. The two westbound off-ramps to eastbound and westbound St. Andrews Road are lane drops from westbound I-26. The two eastbound on-ramps from westbound and eastbound St. Andrews Road are lane additions to eastbound I-26. The westbound on-ramp carries traffic from eastbound and westbound St. Andrews Road with an acceleration lane of about 1,500 feet. A traffic signal controls the eastbound off-ramp intersection with St. Andrews Road. Woodland Hills Road is aligned opposite the eastbound off-ramp at this intersection.

The westbound off-ramp to eastbound St. Andrews Road is divided into two movements. The first ramp movement connects to Burning Tree Road. At the stop sign controlled intersection with Burning Tree Road, right turning traffic can travel east on Burning Tree Road. Traffic that is intending to access Fernandina Road is supposed to use this ramp, turn left onto Burning Tree Road and cross St. Andrews Road. The second ramp is intended primarily for traffic that is traveling east on St. Andrews Road through its intersection with Fernandina Road/Burning Tree Road.

In reality, traffic traveling to Fernandina Road tends to bypass the first ramp movement to Burning Tree Road, travels to the end of the ramp and attempts to cross two lanes of eastbound St. Andrews Road to enter the left turn lane to Fernandina Road, which extends back to where the off-ramp intersects St. Andrews Road.

The existing configuration of Exit 106 is shown in **Figure 2.3**.

Exit 108 – Bush River Road (S-40-31)

The service interchange portion of Exit 108 is mixed in with the system interchange between I-26 and I-126. The service interchange to Bush River Road provides full access between that arterial and I-26. The off-ramps to Bush River Road are both lane drops. The eastbound off-ramp is a lane drop at the end of an approximately 720 feet long weaving section created by the Exit 107 on-ramp from eastbound I-20 to eastbound I-26. The westbound off-ramp drops from westbound I-26 along with the westbound off-ramp to eastbound I-126. The westbound off-ramp to Bush River Road is intersected by Morninghill Drive prior to its intersection with Bush River Road.

The loop on-ramp from Bush River Road to eastbound I-26 includes a long ramp section, approximately 1,400 feet long, that runs parallel to I-26 prior to merging into it. The westbound on-ramp traffic from Bush River Road is mixed with traffic traveling on the approximately 1,525 feet long ramp lane created by the rightmost lane of westbound I-126 that runs parallel to and on the eastside of westbound I-126 and I-26. Both ramp intersections at Bush River Road are controlled by traffic signals.

No direct access is provided from Bush River Road to I-126 within this interchange. Traffic traveling to/from Bush River Road to I-126 must use the Colonial Life Boulevard interchange on I-126.

The existing configuration of Exit 108 is shown in **Figure 2.4**.

Exit 110 – Sunset Boulevard (US 378)

Exit 110 is a single point urban interchange (SPUI). A regional hospital is located in the northwest quadrant of the interchange. The left turn movements to and from the ramps at this interchange are controlled by a traffic signal. The off-ramp right turn movements are controlled by stop signs. This configuration, combined with closely spaced signalized intersections and heavy traffic on Sunset Boulevard, frequently results in traffic queuing back on the off-ramps during peak period congestion. These off-ramp queues can extend back onto the I-26 mainline.

The existing configuration of Exit 110 is shown in **Figure 2.5**.



Figure 2-3 - Exit 106 Existing Configuration



Figure 2-4 - Exit 108 Existing Configuration

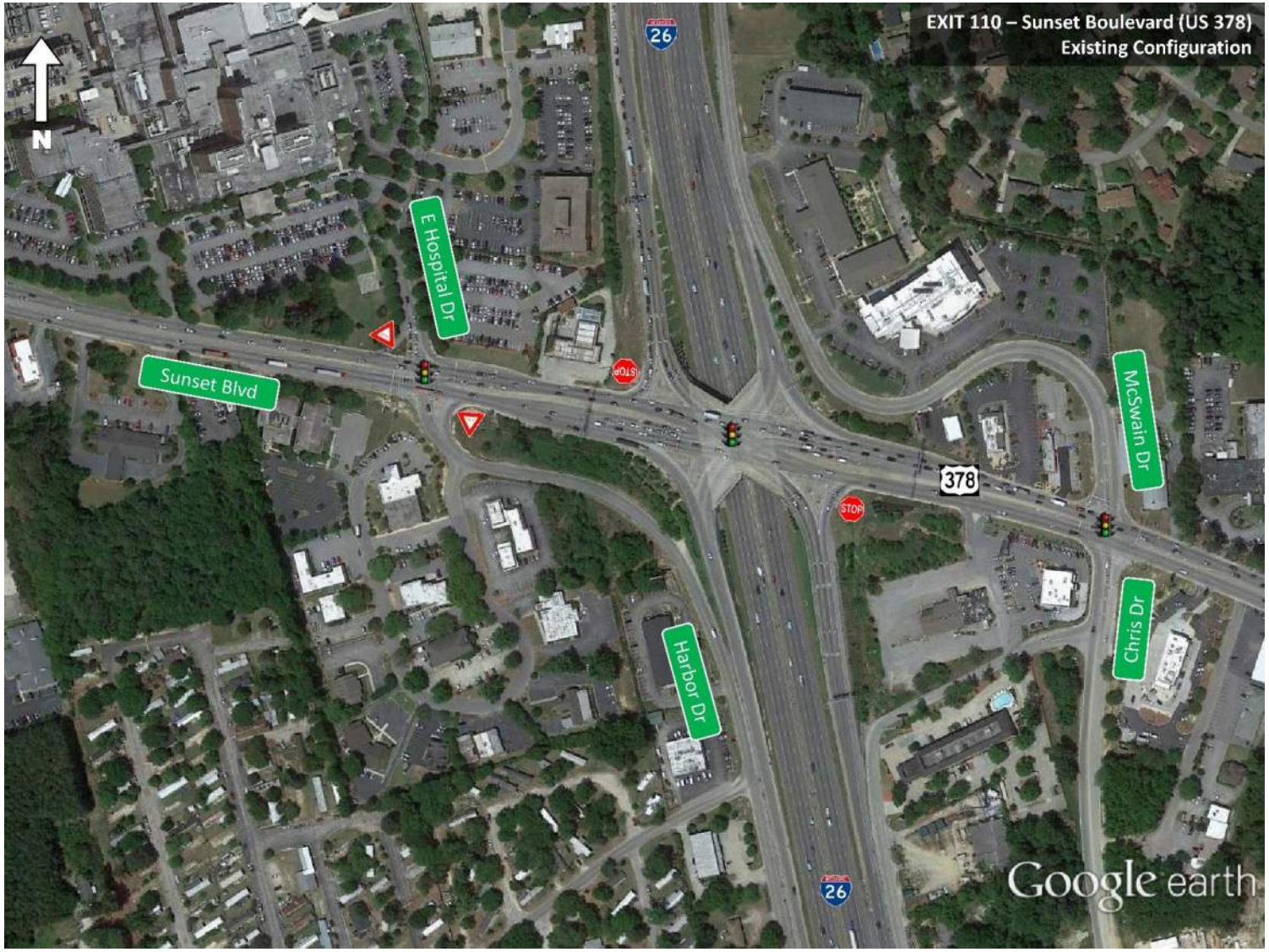

Figure 2-5 - Exit 110 Existing Configuration

2.1.4.3 I-20 Interchanges

There are two service interchanges located within the study area along I-20.

Exit 63 – Bush River Road (S-32-273)

Exit 63 is a modified diamond interchange that includes on-ramps to access eastbound I-20, including a loop ramp in the southeast quadrant. These movements operate without traffic control. The westbound ramps and the eastbound off-ramp intersections along Bush River Road are controlled by traffic signals.

The eastbound loop on-ramp adds a lane onto eastbound I-20. This lane continues eastbound, with the eastbound on-ramp carrying traffic from westbound Bush River Road merging into it before it is dropped at the ramp to eastbound I-26 at Exit 64.

The existing configuration is of Exit 63 is shown in **Figure 2.6**.

Exit 65 – Broad River Road (US 176)

Exit 65 is a diamond interchange. The westbound off-ramp has a two stage, two lane diverge movement, with the initial single lane off ramp forming a two-lane off-ramp to Broad River Road. The first portion of the eastbound on-ramp from Broad River Road, is a two-way, two lane roadway approximately 380 feet long that connects to Garner Lane. Garner Lane is a two lane local roadway with a posted 35 mph speed limit. East of its intersection with Garner Lane, the eastbound on-ramp becomes a one-way ramp that enters eastbound I-20. Traffic from Garner Lane can turn right at its intersection with the on-ramp to enter eastbound I-20. The ramp intersections with Broad River Road are controlled by traffic signals.

The existing configuration of Exit 63 is shown in **Figure 2.7**.



Figure 2-6 - Exit 63 Existing Configuration



Figure 2-7 - Exit 65 Existing Configuration

2.1.4.4 I-126 Interchanges

There is one service interchange located within the study area along I-126. The interchanges along I-126 do not have exit numbers based on the mile marker locations; they are described based on the name of the arterial to which they connect.

Colonial Life Boulevard (S-40-8970)

The Colonial Life Boulevard interchange is a partial interchange, only providing access to and from downtown Columbia via an on-ramp to eastbound I-126 and an off-ramp from westbound I-126. The Colonial Life Boulevard interchange ramps become Colonial Life Boulevard W, which ends at its intersection with Bush River Road.

The existing interchange configuration of Colonial Life Boulevard is shown in **Figure 2.8**.



Figure 2-8 **- Colonial Life Boulevard Existing Configuration**

2.1.5 FRONTAGE ROAD SYSTEM

An extensive system of Frontage Roads are present adjacent to I-26, I-20, and I-126 within the study area. These frontage roads provide alternatives for local traffic to avoid using interstates for short distance and/or local trips, and can be used to relieve congested interstate traffic during normal congestion or incidents.

2.1.5.1 I-26 Frontage Roads

Extensive frontage roads are present on both sides of I-26 between Exit 101 (Broad River Road) and Exit 110 (US 378). The frontage road network parallel to I-26 does not extend between Exit 108 (Bush River Road) and Exit 110 (US 378) due to the need to cross the Saluda River. For the IMR, the frontage roads adjacent to the Exit 107 system interchange with I-20, and accessible via the existing adjacent interchanges at Exit 106, Exit 108 and Exit 110 are summarized as follows.

Jamil Road (S-32-1791)

Jamil Road begins at Piney Grove Road opposite Bower Parkway. Jamil Road continues to run generally parallel to eastbound I-26 to its terminus at Saint Andrews Road approximately 815 feet west of the eastbound off-ramp at Exit 106 (St Andrews Road).

Fernandina Road (S-32-1842/1925, S-40-2893/3021/3045)

Fernandina Road begins at its intersection with Woodcross Drive near Exit 103 (Harbison Boulevard). Woodcross Drive begins opposite the westbound loop off-ramp at Exit 103. Fernandina Road runs generally parallel to the westbound lanes of I-26 and intersects Piney Grove Road approximately 800 feet east of the westbound ramp intersection at Exit 104.

Fernandina Road continues south of Piney Grove Road to its terminus at its intersection with St Andrews Road approximately 275 feet east of the westbound ramp intersection at Exit 106.

Berryhill Drive (S-32-1551)

Berryhill Drive begins at its intersection with Woodland Hills Road approximately 100 feet south of St. Andrews Road. Woodland Hills Road begins opposite the eastbound off-ramp to Exit 106. Berryhill Drive runs parallel to the eastbound lanes of I-26 and curves to the west at Exit 107. At this point, it runs generally parallel to the westbound lanes of I-20 to its intersection at Bush River Road. The intersection with Bush River Road is located approximately 300 feet west of the Exit 63 westbound ramp intersection of I-20.

Burning Tree Drive (S-32-1841/S-40-2893)/Browning Road (S-40-2892)

Burning Tree Drive begins at St. Andrews Road opposite Fernandina Road. Burning Tree Drive runs generally parallel to westbound I-26 towards Exit 107. At Center Point Road, Burning Tree Drive becomes Browning Road. Browning Road continues towards the south, crossing over I-20 and continuing parallel to the westbound lanes of I-26. As it approaches Bush River Road, Browning Road curves to the east and intersects Morninghill Drive approximately 450 feet north of the intersection of Morninghill Drive and Bush River Road. Morninghill Drive intersects Bush River Road opposite the intersection of the westbound ramps from I-26.

McSwain Drive (S-32-1814)

McSwain Drive is a frontage road that begins at Sunset Boulevard approximately 830 feet east of the SPUI interchange at Exit 110. McSwain Drive runs parallel to westbound I-26 but does not provide a connection to other frontage roads. It ends in a residential area south of the Saluda River.

2.1.5.2 I-20 Frontage Roads

There are limited frontage roads located along I-20 within the study area.

Berryhill Drive (S-32-1551)

As mentioned in the I-26 Frontage Road section, Berryhill Drive runs parallel to the westbound lanes of I-20 after it bends west from I-26. It ends at its intersection with Bush River Road approximately 300 feet west of the Exit 63 westbound ramp intersection of Bush River Road and I-20.

Garner Lane (S-40-2906)

Garner Lane is a frontage road that begins at about 380 feet from Broad River Road at its intersection with the Exit 65 eastbound on-ramp. Garner Lane runs parallel to eastbound I-20, but does not provide any other connection to other frontage roads in the study area.

2.1.5.3 I-126 Frontage Roads

There is extensive frontage road coverage along I-126 within the study area. Most of the coverage occurs east of I-126 with frontage roads running parallel to I-126 between Bush River Road and Greystone Boulevard.

Frontage Road (S-40-2891)/Lawand Drive (S-40-1019)

A frontage road begins at the I-26 westbound on-ramp from Bush River Road at Exit 108. This frontage road is a one-way pair running away from Bush River Road, becoming a two-way frontage road about 1,050 feet south of Bush River Road. The frontage road intersects and continues as Lawand Drive to its terminus at Arrowwood Road.

Arrowwood Road (S-40-287)

Arrowwood Road begins at Bush River Road and runs towards the south. At its intersection with Lawand Drive, Arrowwood Road acts as a frontage road for approximately 1,400 feet to its intersection with Gracern Road. At this intersection, Arrowwood Road turns to the east and continues to its terminus with Broad River Road.

Gracern Road (S-40-2890)

Gracern Road begins at Arrowwood Road and runs towards the south along the westbound side of I-126 towards the Greystone Boulevard interchange. Gracern Road continues approximately 1,600 feet past its intersection with Stoneridge Drive, where is bends to the north away from I-126 and terminates at Stoneridge Drive.

2.2 Purpose and Need

The primary purpose of the proposed Carolina Crossroads project is to implement a transportation solution(s) that would improve mobility and enhance traffic operations by reducing existing traffic congestion within the I-20/I-26/I-126 corridor while accommodating future traffic needs. Secondary purposes of the proposed Carolina Crossroads project are to enhance safety throughout the corridor, improve freight mobility, and improve system linkages, while minimizing community and environmental impacts.

The needs for this project were identified through a comprehensive review of previous studies along with the analysis of current data compiled for this study. This includes information in the Traffic Technical Memo and the Accident Analysis Report, as well as that collected through meetings with SCDOT; federal, state and local agencies; project stakeholders, and the public.

2.3 Conceptual Design

As described in the March 2018 *Alternatives Traffic Analysis*, analyses evaluating 2040 Build conditions for the interchanges and adjacent intersections for ten representative alternatives were completed for Level 1B screening as part of the environmental process. Through the screening process, four reasonable alternatives were progressed to Level 3 screening:

- Reasonable Alternative 1 (RA1) replaces Exit 64/Exit 107 with a Turbine Interchange, Exit 106 (St Andrews Road) with a Single Point Urban Interchange (SPUI), Exit 63 (Bush River Road) with a Diverging Diamond Interchange (DDI), Exit 65 (Broad River Road) with a SPUI, and removes access to Bush River Road at Exit 108. Colonial Life Boulevard interchange is reconfigured to a full interchange to provide access to Bush River Road from direction of I-126.
- Reasonable Alternative 5 (RA5) replaces Exit 64/Exit 107 with a Directional Interchange with 2 loops, Exit 106 with a SPUI, Exit 63 with a Partial Cloverleaf Interchange, Exit 65 with a SPUI, and removes access to Bush River Road at Exit 108. Colonial Life Boulevard interchange is reconfigured to a full interchange to provide access to Bush River Road from direction of I-126
- Reasonable Alternative 1 Modified (RA1M) is similar to RA1 with the exception of Exit 63 which is replaced with a Partial Cloverleaf Interchange.
- Reasonable Alternative 5 Modified (RA5M) is similar to RA5 with the exception of Exit 63 which is replaced with a DDI.

As documented in the DEIS, RA1 was chosen as the Refined Recommended Preferred Alternative (RRPA) and is depicted in **Figure 2-9**.

2.4 Interchange Modification Report Applicant

The interchange policy is administered by the Federal Highway Administration (FHWA). Therefore, FHWA is required to approve all new access or changes in access points pursuant to this policy.

As the owner and operator of the Interstate System, SCDOT is responsible for submitting a formal request to the FHWA in the form of an IMR that documents the analysis, the rationale for the proposed change in access, and the recommended action.

SCDOT is the sponsoring agency for the Carolina Crossroads project. The contact information for the Carolina Crossroads IMR study is provided below:

Brian Klauk, P.E.
Project Manager for Carolina Crossroads
SC Department of Transportation
955 Park St., Columbia, SC 29201

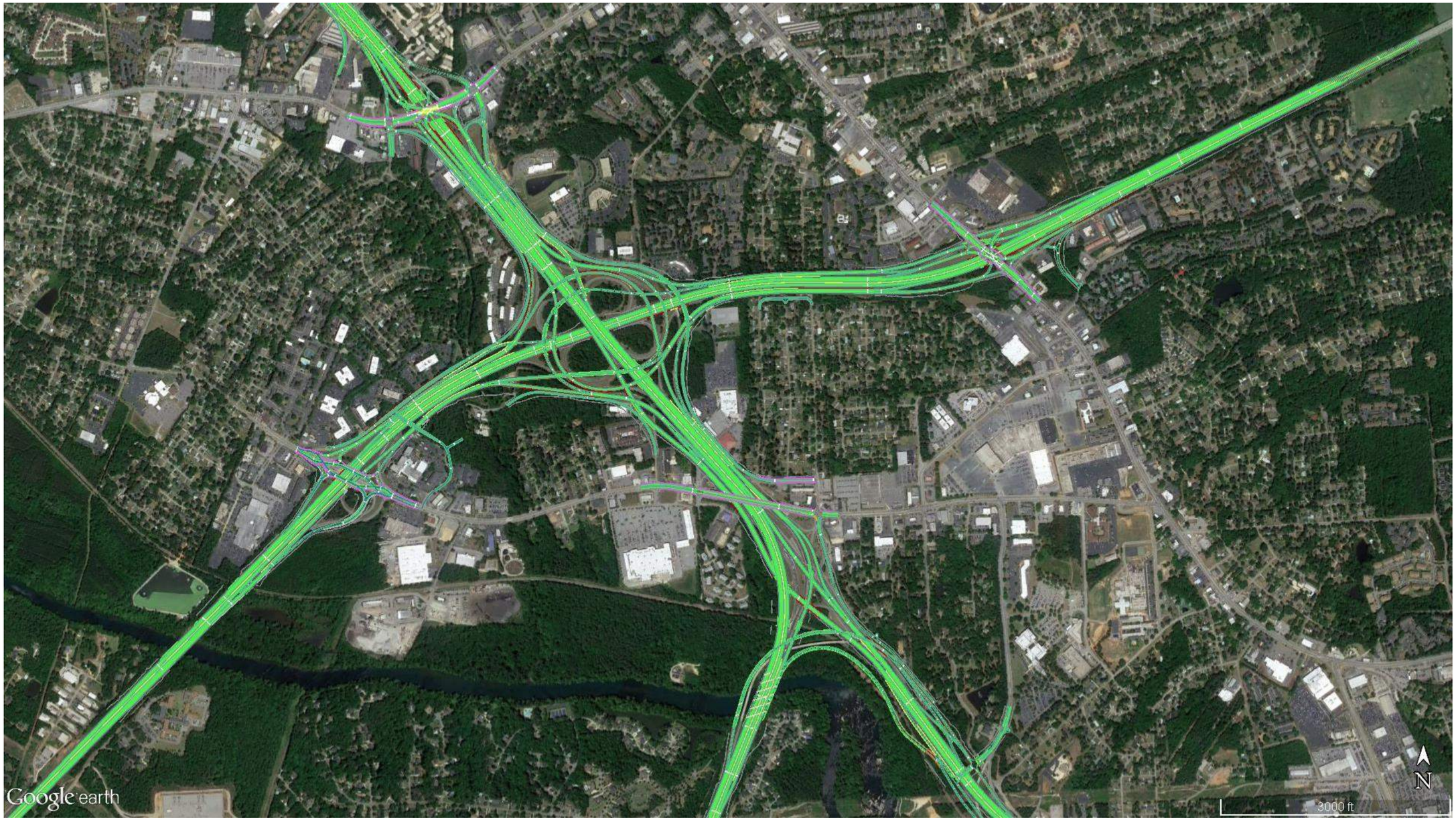

Figure 2-9 - Refined Recommended Preferred Alternative

3 Study Area

The proposed project is a transportation corridor improvement project located in Lexington and Richland counties. The project study area has been defined as a mainline corridor including I-20 from the Saluda River to the Broad River (approximately four miles), I-26 from Broad River Road to US-378 (approximately nine miles), and I-126 from I-26 to Colonial Life Boulevard (approximately one mile). **Figure 1.1** illustrates the extent of the Carolina Crossroads study area.

3.1 Demographics

According the the 2010 United State Census Bureau, Lexington County has approximately 262,500 residents and Richland County has approximately 384,500 residents. The counties have seen a steady increase in population since the 1950's. Between 2000 to 2010, Lexington County saw a 17.7% increase in population and Richland County saw a 16.6% increase in population. Select demographics including race, age, poverty and growth percentages of Lexington County and Richland County compared to the state of South Carolina are provided in **Table 3.1.**

Table 3-1 – Population Demographic

Characteristic	Population Demographic		
	South Carolina	Lexington County	Richland County
Minority Population	35.9%	23.3%	55.1%
Percent age 65 and over	14.2%	12.8%	32.5%
Percent income below poverty level	17.7%	23.1%	27.9%
Percent change in population (2000-2010)	15.3%	17.7%	16.6%

Source: U.S. Census Bureau, 2010 Demographic Profile and American Community Survey 5-year Estimates (2009-2013) Tract and Block Group data

Comparisons of the data indicate the percentage minority population in Lexington County (23.3%) is below the reported State percentage (35.9%) while the percentage minority population in Richland County (55.1%) is higher. The Lexington County population age 65 and older is slightly lower when comparing to the State percentage while the Richland County population age 65 and older percentage is more than double compared to the State percentage.

According to the South Carolina Revenue and Fiscal Affairs Office, both Lexington and Richland counties are expected to see a significant population growth by 2040. **Table 3.2** presents the population growth and projections for Lexington County and Richland County.

Table 3-2 – Population Growth

County	Population Growth				
	2000 Population	2010 Population	2040 Population	2000-2010 % Growth	2010-2040 % Growth
Lexington County	216,000	262,400	384,400	17.7%	46.5%
Richland County	320,700	384,500	464,600	16.6%	20.8%

Source: http//www.sccommunityprofiles.org/census/proj_c2010.html and DEIS. Population numbers have been rounded to the nearest hundred.

3.2 Land Use

Existing land uses immediately fronting the I-20/I-26 system interchange and the adjacent services interchanges and their arterials are predominantly mature commercial developments . A multi-family residential area is located in the northwest quadrant of the system interchange. Behind these commercial developments are established, mature single family and multi-family developments. Single family residential development is present along I-26 south of the I-26/I-126 system interchange starting at the Saluda River. The land uses transition to multi-family, commerical, and institutional as I-26 approaces Exit 110 (US 378). Along the north side of I-126, land uses are a mix of single and multi-family residential and commercial uses. To the south of I-126 and north of the Saluda River, the land use is dominated by the Riverbanks Zoo and Gardens, with a pocket of commercial uses along Candi Lane west of Greystone Boulevard.

The northwest, northeast and southeast quadrants of the I-20/I-26 and I-26/I-126 system interchanges are largely built out. There are few opportunities for additional, new development of large traffic generating land uses. The southwest quadrant of the interchange, which is bounded by Bush River Road running between Exits 63 and 108, has some undeveloped land mixed in with commercial developments and a residential subdivision. This area constitutes what is likely the largest single undeveloped area of land in the study area.

Section 3 of the I-20/I-26/I-126 Corridor Improvement Project ***DEIS*** contains additional information concerning land uses adjacent to the system and service interchanges within the larger Carolina Crossroads study area. *Figure 3.1-3 Existing land use within a half mile radius of the interchanges*, categorizes and quantifies the existing land use with a half mile radius of each of the service and system interchanges. Land uses quantified include commercial, industrial, institutional, municpal/county owned, office, parks/recreation, residential, and undeveloped. Based on this figure, the most prevalent land uses and the amount of undeveloped land adjacent to the system and service interchanges being analyzed in this study can be described as follows:

- I-20/I-26 system interchange: 47 percent residential, 25 percent commercial, 20 percent office, five percent undeveloped
- I-26/I-126 system interchange: 44 percent residential, 27 precent commercial, 19 percent industrial, two percent undeveloped
- Exit 106 (St Andrews Road): 59 percrent residential, 19 percent commercial, nine percent industrial, five percent undeveloped
- Exit 63 (Bush River Road): 35 percent residential, 28 percent commercial, 19 percent industrial, 16 percent office, one percent undeveloped

- Exit 65 (Broad River Road): 51 percent residential, 30 percent commercial, seven percent institutional, five percent undeveloped
- Colonial Life Boulevard: 42 percent residential, 35 percent undeveloped, 11 percent office.

All the interchanges, with the exception of the Colonial Life Boulevard interchange, have no more than five percent undeveloped land. The high amount of undeveloped land (35 percent) surrounding the Colonial Life interchange is due to the inclusion of the area containing the Saluda River and adjacent flood plain. It bears noting, therefore, that not all the 'undeveloped' land is necessarily able to be developed into a traffic generating land use. In this context, 'undeveloped' land has no development on it, and does not discern between developable and undevelopable land. Therefore, undevelopable land, such as the Saluda River, its floodplains, and even the land within the loop ramps at the I-20/I-26 system interchange are classified as "undeveloped".

3.3 Transportation System

The Project study area roadway transportation system is part of the Carolina Crossroads study area depicted in **Figure 1.1**. This region of Lexington and Richland counties is accessed via I-20, I-26 and I-126.

For this IMR, a focused roadway system was evaluated, centering around the I-20/I-26 and I-26/I-126 system interchanges.

External regional traffic enters and exits the network west of Exit 101 (Broad River Road), east of Exit 110 (US 378), west of Exit 61 (US 378), east of Exit 68 (Monticello Road) and east of Greystone Boulevard from Downtown Columbia. Based on the origin-destination matrices data from the microsimulation network (discussed in Section 6.1), external-to-external traffic, which includes commuting interstate traffic as well as longer distance through traffic, accounts for approximately 15 percent of the total trips within the network during the morning and afternoon peak periods.

Internal-to-internal trips account for approximately 40 percent of trips within the peak hour network. These trips are local trips having both an origin and a destination within the network. These local trips include traffic to and from arterials from the interchanges along I-20, I-26, and I-126. External-to-internal trips account for approximately 20 percent of the traffic within the network. These trips are generated outside the study area and have a destination that is reached via study area interchanges. The remaining 25% percent of the network trips are internal-to-external trips. These trips originate within the study area, access the freeway system via the interchanges and have destimations outside of the study area network.

Regional external trip ends (either origins or destinations) account for approximately 40 percent of the volume entering or exiting the network during the morning peak period. During the afternoon peak period, approximately 35 percent of volume entering or exiting the network have an external trip end.

The system-to-system interchanges process all of the external-external trips, and many of the other trip between the remaining origin-destination pairs (internal-external, external-internal, and internal-internal). Some trips with external origins or destinations may not travel through the system interchanges. Examples of such trips are those entering or exiting from the east on I-20 to/from Exit 65 (Broad River Road), and trips entering or

existing from the west on I-26 to/from the interchanges west of Exit 106 (St Andrews Road). A portion of local, internal-internal trips, such as those occuring between the I-26 interchanges west of Exit 106 (St Andrews Road) will also not travel through the system interchanges.

4 Methodology

4.1 Scenarios Analyzed

In March 2018, STV prepared the Alternatives Traffic Analysis report that incorporated the following scenarios:

- Existing Conditions
- 2040 No-Build Conditions (RA10)
- Representative Alternative 1 (RA1)
- Representative Alternative 2 (RA2)
- Representative Alternative 3 (RA3)
- Representative Alternative 4 (RA4)
- Representative Alternative 5 (RA5)
- Representative Alternative 6 (RA6)
- Representative Alternative 7 (RA7)
- Representative Alternative 8 (RA8)
- Representative Alternative 9 (RA9)
- Reasonable Alternative 1
- Reasonable Alternative 1 Modified
- Reasonable Alternative 5
- Reasonable Alternative 5 Modified

Analyses were performed for existing conditions (2015 existing traffic, intersection traffic control and geometry), No-Build conditions (2020, 2025, 2030 and 2040 traffic, and existing intersection traffic control and geometry), each of the nine Representative Alternatives (2040 traffic, and modified intersection traffic control and geometry) and the four Reasonable Alternatives (2020, 2025, 2030 and 2040 traffic and modified intersection traffic control and geometry). Additional measures of effectiveness such as mainline and arterial travel times, and external-to-external speeds/travel times were evaluated for the representative alternatives. The results of these analyses for the various alternatives were compared against one another to determine which best met the purpose and need with the least impacts and were used to help determine the RRPA for the project.

The 2040 No-Build Alternative for the I-20/I-26/I-126 System Interchange represents the existing interchange configuration, intersection traffic control and geometric conditions with no changes to those conditions which would not satisfy the purpose and need for the project. The final reasonable alternatives were selected to be moved forward in the selection process. Though traffic operations were a consideration in the evaluation of alternatives, other factors, such as construction costs, business and residential relocations, and environmental impacts were used to identify the reasonable alternatives. RA1 and RA5 were the alternatives which were identified as the reasonable alternatives from the representative alternatives. In addition, RA1 Modified and RA5 Modified were created as reasonable alternatives. The main difference between RA1 and RA1 Modified and

between RA5 and RA5 Modified was the interchange type at Exit 63, I-20 at Bush River Road. RA1 Modified included the ParClo design from RA5 and RA5 Modified included the DDI design from RA1. As documented in the DEIS, RA1 was chosen as the RRPA which will be referred to as 2040 Build RRPA.

4.2 Traffic Forecasts

Projected traffic volumes were developed using the existing traffic volume data along the mainline interstate and at the interchanges and applying a general uniform annual growth rate to those volumes to estimate 2040 morning and afternoon peak hour traffic. According to the I-20/27/77 CMP study, the AM and PM peak hour 2040 trip tables for the Columbia network were developed based on the subarea analysis of the South Carolina Statewide Model (SCSWM) trip tables. The zonal growth rates between the subarea base year and subarea future year matrices were applied to the calibrated Columbia Network existing trip tables to develop the 2040 trip tables. Any intrazonal shifts in traffic over time from the current and future year subarea matrices were distributed to ensure that the intended 2040 growth forecasts from the SCSWM were reflected in the 2040 trip tables for the peak hour operational analyses. These 2040 auto trip tables were acquired from the I-20/I-26/77 CMP study model which were then aggregated to match the Carolina Crossroads matrix developed for the Existing Conditions model. An average growth rate of 0.70 percent was then confirmed within the Carolina Crossroads study area and applied to the existing trip tables.

The 2040 peak hour traffic volumes were applied to the freeway, ramp, and intersection traffic to develop the 2040 No-Build and 2040 Build Conditions traffic volumes for use in the assessments of the interchange concepts in the Level 1A and 1B screening. The estimated 2040 volumes along the interstate and at the interchanges are contained in **Appendix B**. The trip tables developed from the CMP were used in the microsimulation analysis of the alternatives, including the reasonable alternatives and the RRPA.

4.3 Traffic Analysis

A series of capacity analyses were performed based on the methodologies and guidelines contained in the Transportation Research Board's publication **HCM 2010 Highway Capacity Manual** (HCM). Various analysis and simulation software packages, consistent with the HCM methodologies, were used in performing the analyses. These included:

- Trafficware's *Synchro* (Version 9.1.910.24)
  - Unsignalized Intersections
  - Signalized Intersections
- Caliper's *TransModeler* (Version 4.0 Build 6275)
  - Unsignalized Intersections
  - Signalized Intersections
  - Network Simulation
  - Freeway Segments
  - Weaving Segments
  - Ramp Merge/Diverge Areas

Level of Service Criteria

The analysis methodologies contained in the HCM for the various facility types and users describe the operational conditions in terms of a Level of Service (LOS). The HCM defines LOS as

"…a quality measure describing operational conditions within a traffic stream, generally in terms of such service measures as speed and travel time, freedom to maneuver, traffic interruptions, comfort and convenience. Six LOS are defined for each type of facility that has analysis procedures available. Letters designate each level, from A to F, with LOS A representing the best operating conditions and LOS F the worst. Each level of service represents a range of operating conditions and the driver's perception of those conditions. Safety is not included in the measures that establish service levels."

The following discussions and tables describe the HCM LOS criteria for freeway segments, ramp merge/diverge areas, weaving segments, unsignalized intersections and signalization intersections.

Freeway Segments

The HCM characterizes the capacity of a basic freeway segment *"…by three performance measures: density in passenger cars per mile per lane (pc/mi/ln), space mean speed in miles per hour (mi/h), and the ratio of demand flow rate to capacity (v/c). Each of these measures is an indication of how well traffic is being accommodated by the basic freeway segment."* **Table 4-1** shows the HCM LOS criteria for basic freeway segments. LOS F occurs when either the segment density exceeds 45 pc/mi/ln or when the segment v/c ratio exceeds 1.0 (regardless of the segment density).

Table 4-1 - Freeway Segment LOS Criteria

Basic Freeway Segments	
LOS	**Density (pc/mi/ln)**
A	< 11
B	> 11-18
C	> 18-26
D	> 26-35
E	> 35-45
F	> 45 v/c > 1.0

Weaving Segments

Weaving segments occur where two or more streams of traffic traveling in the same direction are able to cross each other without traffic control devices. This typically occurs where a merge area is followed by a diverge area within a relative short distance (usually less than 2,800 feet). The LOS of a weaving segment is also related to the

density of the segment. Regardless of the density, the weaving segment is considered to operate at LOS F when the v/c exceeds 1.0. **Table 4-2** shows the HCM LOS criteria for Freeway Weaving Segments.

Table 4-2 - Weaving Segment LOS Criteria

Freeway Weaving Segments	
LOS	Density (pc/mi/ln)
A	< 10
B	> 10-20
C	> 20-28
D	> 28-35
E	> 35
F	v/c > 1.0

Ramp Merge and Diverge Areas

Ramp-freeway junctions occur when merging maneuvers occur (on-ramps) or when diverging maneuvers occur (off-ramps). The operation of these merge and diverge areas are affected by several factors, including the operation of the adjacent freeway segment and the proximity and flow on adjacent ramps. Typically, the influence area of the ramps is 1,500 feet upstream of a diverge point and downstream from a merge point. As with freeway segments and weaving segments, the LOS of a merge or diverge area is related to the density of the segment. Regardless of the density, the merge or diverge areas are considered to operate at LOS F when the freeway demand exceeds the capacity of the upstream freeway segment (at diverge areas) or the downstream freeway segment (at merge areas), as well as when the ramp demand exceeds the ramp capacity. **Table 4-3** shows the HCM LOS criteria for Ramp Merge and Diverge areas.

Table 4-3 - Merge/Diverge LOS Criteria

Ramp Merge and Diverge Areas	
LOS	Density (pc/mi/ln)
A	< 10
B	> 10-20
C	> 20-28
D	> 28-35
E	> 35
F	v/c > 1.0

Unsignalized Intersections

The LOS for unsignalized intersections is based on the average control delay per vehicle. Since major street traffic is seldom controlled by STOP signs (except at intersections with ALL-WAY STOP control or in special circumstances), major street traffic generally will experience virtually no delay. Most of the delay will be

encountered by traffic on approaches controlled by STOP signs. Under certain conditions, delay will also be encountered by left turning traffic on the major street waiting for appropriately sized gaps in the opposing traffic flow to complete their turn. Therefore, the delay experienced by STOP controlled movements and major street left turns, rather than the entire average intersection delay, are used to identify the critical LOS at these intersections. **Table 4-4** shows the HCM LOS criteria for unsignalized intersections.

Table 4-4 - Unsignalized Intersection LOS Criteria

Unsignalized Intersections	
LOS	**Control Delay (sec/vehicle)**
A	< 10
B	> 10-15
C	> 15-25
D	> 25-35
E	> 35-50
F	> 50

Signalized Intersections

The LOS for signalized intersections is based on the average control delay per vehicle. LOS can be identified for the entire intersection, individual intersection approaches, and each movement/lane-group. **Table 4-5** shows the HCM LOS criteria for signalized intersections.

Table 4-5 - Signalized Intersection LOS Criteria

Signalized Intersections	
LOS	**Control Delay (sec/vehicle)**
A	< 10
B	> 10-20
C	> 20-35
D	> 35-55
E	> 55-80
F	> 80

5 Traffic Volumes

The traffic volumes used in the analysis for the I-20/I-26/I-126 System Interchange consisted of Existing (2015) conditions, and Future (2020, 2025, 2030 and 2040) No-Build and Build Conditions.

5.1 Existing Traffic Volumes

Extensive traffic data collection was performed as part of the Carolina Crossroads project. The data collection effort is summarized in a separate technical report *Traffic Data Collection, Carolina Crossroads*. Data that was collected included vehicle classification/volume counts at the I-20/I-26/I-126 system interchanges, ramp termini turning movement counts, data from mainline Automatic Traffic Recorders (ATR), and regional and ramp-to-ramp origin-destination information.

Additional turning movement count data was collected by SCDOT to extend coverage to include certain intersections adjacent to the ramp termini intersections where the original turning movement counts were collected. Collecting data at these adjacent intersections allowed for accurate traffic volumes to be used in preparing the arterial interchange and the overall network microsimulation models.

A review of the combined turning movement count and system interchange counts indicated that the system-wide morning peak hour was 7:30 to 8:30 AM and the system-wide afternoon peak hour was 4:45 to 5:45 PM. At the system ramps, the morning peak hour was found to be between 7:00 and 8:00 AM, while the afternoon peak hour was found to be 4:00 to 5:00 PM. The design peak hours used for this study was 7:15 to 8:15 AM and 4:45 to 5:45 PM, consistent with the I-20/27/77 CMP Study, and was based on a combination of the turning movement peak hour data collected in 15-minute intervals and the ramp-termini volumes collected in 60-minute intervals.

The collected ATR data, generally covering the period between January 1, 2014 and January 31, 2015, was used to determine the directional freeway volumes by balancing freeway segment volumes selected at an ATR station through the network by adding and subtracting ramp volumes entering and exiting the freeways via service interchange ramps. Mainline volume data derived from the ATR were combined with the system ramp volumes and the turning movement ramp peak hour volumes to develop existing balanced traffic volumes for the study area.

The existing balanced interstate peak hour volumes were based on the 10th highest hour volumes at selected ATR stations. Volumes throughout the network were then determined using volume data collected at the system interchange ramps and turning movement counts at the ramp terminal intersections. The balanced volumes, along with additional turning movement count data at adjacent intersections, were used to establish the observed volumes used during the calibration process of the existing TransModeler network. The calibration of the existing TransModeler network included comparisons of queues observed in the model simulations to field observations of interstate and ramp queuing, local knowledge and familiarity with recurring traffic conditions within the corridor. The existing balanced interstate volumes for Existing Conditions network are also contained in **Appendix A**.

5.2 2040 Traffic Volumes

Two methods were used to develop traffic projections that were applied to elements of the RA development and to the microsimulation of each RA. The first method involved the use of historic traffic data to estimate system-wide annual growth rates to be applied against existing traffic. The second method involved the use of origin-destination data collected as part of the Carolina Crossroads data collection and developed into regional trip tables used in the microsimulation model.

Previously collected existing traffic volume data were used as the basis for the development of the future traffic projections used in the preliminary screening of interchange Accessory Options (AO) and for high level assessment of freeway ramps, and in the microsimulation model network. Traffic projections used to estimate 2040 traffic volumes was based on changes to historic annual average daily traffic (AADT) volumes obtained from SCDOT and from growth forecasts in the South Carolina Statewide Model (SCSWM).

Projected traffic volumes were developed using the existing peak hour volumes along the mainline interstate and at the interchanges and applying a general uniform annual growth rate to those volumes to estimate 2040 morning and afternoon peak hour traffic. For the purposes of the traffic volume projections, a 0.70 percent annual growth rate was used to estimate 2040 peak hour traffic volumes. The 2040 peak hour traffic volumes were applied in the generalized interstate/interchange capacity screenings used to develop the individual RA from a range of prospective AO at each interchange. The 2040 volumes along the interstate and at the interchanges from the TransModeler 2040 No-Build network are contained in **Appendix B**.

6 Traffic Operations

6.1 TransModeler Network Analysis

TransModeler 4.0, a microsimulation software, was used to analyze the Existing, No-Build, and Build alternative freeway networks and interchange operations. A TransModeler microsimulation model consists of a large component database and executable files that are run through the TransModeler software. One single project file is comprised of network files, traffic control and signal timing plans, vehicle detector layout and configuration, trip tables for both autos and trucks, traffic volumes, and driver/roadway parameter files. This section discusses the development of the existing network based on collected O-D and traffic count data.

The Carolina Crossroads TransModeler network was developed based on a larger, regional network developed as part of the I-20/I-26/77 Corridor Management Plan (CMP) Study. The CMP study included a calibrated TransModeler model comprised of 110 miles of interstate and freeway, including six system interchanges and 43 service interchanges, in addition to 70 miles of highway, arterial, and local streets. The CMP network, which included the full project limits of the Carolina Crossroads study area, was used to develop the existing Carolina Crossroads microsimulation network. Once the CMP model was reviewed, the Carolina Crossroads network was extracted. A more detailed review was then conducted to assess the operations of the study area. Additional intersections were added and input volumes were verified and adjusted based on existing traffic count data to better define the existing network. A more detailed discussion of how the Carolina Crossroads network was developed can be found in the *Alternatives Traffic Analysis: Carolina Crossroads I-20/I-26/I-126 Corridor Project*.

FHWA generally prefers the use of McTrans' Highway Capacity Software (HCS) in the assessment of freeway operations (freeway segments, merge/diverge area, and weaving sections). There are several limitations of using HCS, which is a macroscopic, deterministic model that uses HCM Methodologies. The HCS analysis may show differing conditions than existing operations and conditions in the field because it does not consider upstream and downstream traffic impacts and is unable to model interactions between the two. The HCS model is essentially a spot check at a certain location; metering of upstream traffic and queuing resulting from congested downstream operations are not considered and will have no effect on the generated analysis. This is not the case for actual conditions, as upstream and downstream congestion may have direct impacts at a specific segment, causing a ripple effect throughout the network. HCS is also limited in its application in evaluating extremely complex weaving sections, such as those encountered in each direction on I-26 between the Exit 106 service interchange and the Exit 107 system interchange.

TransModeler is a microscopic behavior-based multi-purpose traffic simulation program that takes into consideration vehicle interaction and driver behaviors, as well as the operational impacts for both the upstream and downstream traffic conditions and can measure traffic densities on each segment and lane. For these reasons, TransModeler was used to assess all the freeway segments, merge/diverge areas, and weaving sections instead of HCS.

The design files for each of the Representative Alternatives were converted to KMZ files and imported as a background into the TransModeler microsimulation network. The existing TransModeler network was modified

to match the geometry of the KMZ files while maintaining all the external nodes and centroids of the existing network. Therefore, the same origin-destination trip tables were used for each of the alternatives. After updating the geometry to match the design of the representative alternatives, intersection controls were added for the new geometry. Where necessary, Synchro was utilized to develop basic traffic signal timing plans at the signal-controlled intersections.

A simulation-based, Dynamic Traffic Assignment (DTA) was utilized in TransModeler to create travel paths and assign demand volumes across the network for each of the Representative Alternatives. It is reasonable to assume that simulation models using DTA are better predictors of congested networks and may achieve enhanced results than a static traffic assignment method. With each DTA iteration, TransModeler will compute a relative gap between the previous iteration and an equilibrium solution. The DTA was run for 100 iterations with a goal of reaching a relative gap of 0.001. Each model was not able to converge due to the congestion, especially outside the project limits. Additional adjustments were made to the path assignments to remove unreasonable paths created by the DTA. It was assumed that RA10 (No-Build) network path assignments would be consistent with those from the Existing conditions. Therefore, a DTA was not utilized in the analysis of RA10. 2040 RRPA volumes from the TransModeler analysis are summarized in Appendix B.

The final TransModeler analyses for existing conditions, 2040 No-Build conditions, and 2040 Build RRPA conditions were performed using TransModeler 4.0 Build 6275. The existing conditions scenario includes the existing number of freeway lanes present on the segments within the study area. The 2040 No-Build conditions and 2040 Build RRPA conditions included additional freeway capacity added as part of the I-20 Widening Project (Mile Markers 49-60) and the I-26 Widening Project (Mile Markers 85 – 101) just outside of the study area. The following analysis was conducted to assess the existing and future operations of the I-20/I-26/I-126 study area:

- Freeway segment and ramp merge/diverge area operations analysis
- Signalized and unsignalized intersection analysis
- Signalized and unsignalized queuing analysis (RRPA only)

6.2 Freeway Segment Analyses

The freeway, merge and diverge densities for the I-26, I-20 and I-126 segments were obtained from the TransModeler microsimulation output files, which include an average of ten (10) runs. In calculating density, TransModeler determines the segments and lanes within the influence area for freeway, weaving, merge, and diverge analysis based on roadway classification. The HCM methodology is applied, considering only the vehicles within the influence area. The weaving sections are identified within the basic freeway, merge and diverge area analysis.

Each simulation was run for one hour with a 30-minute warm up time. Similar to the CMP Network, the network was pre-loaded prior to the 30-minute warm up time which simulates peak period congestion.

It should be noted that due to the high demand volumes, the network was not able to accommodate the demand volume in both the Existing and No-Build simulations. Extensive queuing was observed outside of the network at the freeway entry points, particularly in the 2040 No-Build scenario, at the end of the peak hour simulation during both the morning and afternoon peak hours.

The basic freeway, weaving, merge and diverge area analysis outputs for the Existing Conditions, 2040 No-Build conditions and the 2040 Build RRPA conditions are provided in **Appendix C** and a summary of results is shown in **Table 6-1** through **Table 6-9**.

The analysis results for the freeway segment analysis for the Existing Conditions, summarized in the **Table 6-1**, **Table 6-2** and **Table 6-3**, indicate the following:

- During the morning peak hour:
    - I-26 eastbound freeway segments between Exit 104 (Piney Grove Road) and Exit 107 operate at LOS F. All other segments along I-26 eastbound operate at LOS D or better
    - All I-26 westbound segments operate at LOS D or better.
    - I-20 eastbound freeway segment east of Exit 65 (Broad River Road) operates at LOS E, while other I-20 eastbound segments operate at LOS D or better.
    - I-20 westbound segment between Exit 65 (Broad River Road) and Exit 64 operate at LOS E, while other I-20 westbound segments operate at LOS D or better.
    - All I-126 eastbound freeway segments during the morning peak hour operate at LOS D or better.
    - All I-126 westbound freeway segments during the morning peak hour operate at LOS C or better.
- During the afternoon peak hour:
    - I-26 eastbound freeway segments between Exit 104 (Piney Grove Road) and Exit 106 (St Andrews Road), and between Exit 107 and Exit 108 (weaving) operate at LOS E, while the freeway segments from the I-126 diverge to Exit 110 (US 378) operate at LOS F. All other I-26 eastbound freeway segments operate at LOS D or better.
    - I-26 westbound freeway segments operate at LOS F from the I-26/I-126 merge to Exit 104 (Piney Grove Road). All other I-26 westbound segments operate at LOS D or better.
    - All I-20 eastbound freeway segments operate at LOS D or better.
    - I-20 westbound freeway segments east of Exit 65 (Broad River Road) to Exit 63 (Bush River Road) operate at LOS F, while the westbound segment between Exit 63 and Exit 61 (US 378) operates at LOS D.
    - All I-126 eastbound freeway segments operate at LOS B.
    - All I-126 westbound freeway segments operate at LOS F.

With traffic volumes projected to increase at an annual rate of 0.70 percent per year, and with no increase in freeway capacity within the IMR study area or modification to the system interchange, the increased traffic volumes traveling on I-26, I-20 and I-126 will result in increased density and reduce freeway segment LOS under 2040 No-Build conditions. The analysis results for the freeway segment analysis for the 2040 No-Build, summarized in the **Table 6-1**, **Table 6-2** and **Table 6-3**, indicate the following:

- During the morning peak hour:
    - All I-26 eastbound freeway segments operate at LOS E and F.

  - All I-26 westbound freeway segments operate at LOS D or E.
  - I-20 eastbound freeway segments from west of Exit 61 (US 378) to Exit 63 (Bush River Road) operate at LOS F, and the eastbound segment east of Exit 65 (Broad River Road) operates at LOS E. All other I-20 eastbound segments operate at LOS D or better.
  - I-20 westbound segments from east of Exit 65 to Exit 63 operate at LOS F. I-20 westbound freeway segment between Exit 63 and Exit 61 operates at LOS C.
  - All I-126 eastbound freeway segments during the morning peak hour operate at LOS D or better.
  - All I-126 westbound freeway segments during the morning peak hour operate at LOS C or better.
- During the afternoon peak hour:
  - All I-26 eastbound freeway segments operate at LOS F, except the eastbound segment east of Exit 110 (US 378) which operates at LOS C.
  - All I-26 westbound freeway segments operate at LOS F.
  - I-20 eastbound freeway segment between Exit 64 and Exit 65 operates at LOS F. All other eastbound segments operate at LOS D or better.
  - I-20 westbound freeway segments east of Exit 65 to Exit 63 operate at LOS F, while the westbound segment between Exit 63 and Exit 61 operates at LOS D.
  - All I-126 eastbound freeway segments operate at LOS B.
  - All I-126 westbound freeway segments operate at LOS F.

The increased capacity provided by the RRPA will result in generally better LOS in the morning and afternoon peak hours compared to the Existing Conditions, and improved LOS over the 2040 No-Build conditions. With improved throughput volume within the system-to-system interchange, the RRPA design pushes more volume along the freeway mainlines which may result in increased density to mainline segments not modified under Build conditions. In addition, the RRPA proposes I-26 and I-20 mainline collector-distributor roads to separate the closely spaced exit ramps resulting in a shift of volume from mainline to the frontage road systems. The analysis results for the freeway segment analysis for the 2040 Build RRPA Conditions, summarized in the **Table 6-1**, **Table 6-2** and **Table 6-3**, indicate that:

- During the morning peak hour:
  - The I-26 eastbound freeway segment between Exit 107 to the I-126 exit operates at LOS E due to the downstream congestion from the I-26/I-126 split and volume traveling in the right-most lanes in anticipation of the system diverge towards Downtown Columbia. The average speed reported along this segment is greater than 40 mph. All other I-26 eastbound segments operate at LOS D or better.
  - All I-26 westbound freeway segments operate at LOS D or better.
  - The I-20 eastbound freeway segment east of Exit 65 (Broad River Road) operates at LOS F due to capacity constraints downstream of the project limits. However, as traffic merges down to three lanes prior to the bridge over the Broad River, the average speed along I-20 eastbound is greater than 50 mph while the average speed along the CD road is less than 20 mph. All other eastbound segments operate at LOS D or better.
  - All I-20 westbound freeway segments operate at LOS D or better.
  - The I-126 eastbound freeway segment between Colonial Life Boulevard and Greystone Boulevard operates at LOS E this is the result of increased segment density due to improved throughput volume from the system-system interchange congestion downstream of project

limits toward downtown Columbia. An acceptable average speed is maintained at 54 mph. The eastbound segment from I-26 to Colonial Life Blvd operates at LOS D.
    - All I-126 westbound freeway segments operate at LOS B.
- During the afternoon peak hour:
    - All I-26 eastbound freeway segments operate at LOS C.
    - The I-26 westbound freeway segment between Exit 106 (St Andrews Road) and Exit 104 (Piney Grove Road) operates at LOS F due to increased density resulting from increased volume throughput. The average speed along this segment is greater than 40 mph. All other westbound freeway segments operate at LOS D or better.
    - The I-20 eastbound freeway segment east of Exit 65 (Broad River Road) operates at LOS E due to capacity constraints downstream of the project limits, while all other eastbound segments operate at LOS B or better. The I-20 eastbound average speed east of Exit 65 is greater than 55 mph.
    - The I-20 westbound segments east of Exit 65 operate at LOS E with an average speed of greater than 40 mph. The I-20 westbound segment between Exit 63 (Bush River Road) and Exit 61 (US 378) operate at LOS F, with an average speed of less than 20 mph due to downstream congestion resulting from capacity constraints just west of the project limits. With the capacity constraints removed between Exit 63 and Exit 61, average speed is greater than 40 mph. All other westbound segments operate at LOS A.
    - I-126 eastbound freeway segments operate at LOS B or better.
    - All I-126 westbound freeway segments operate at LOS D.

Heavy queuing and ramp backups along I-20 eastbound were identified at the eastern project limits during the AM peak hour and along I-20 westbound between Exit 63 (Bush River Road) and Exit 61 (US 378) during the PM peak hour. Additional simulation runs were made to assess the need to include an additional upstream merge location from the eastbound CD road prior to Exit 65. These additional simulation runs indicated the congestion and queue backup observed along I-20 eastbound was due to the capacity constraints created by the transitioning of the four-lane freeway section into the existing three lane section at the Broad River Bridge just east of Exit 65(Broad River Road). With the removal of the capacity constraints, the merge from the eastbound CD road functions acceptably and no additional upstream merge location should be necessary.

The heavy queuing along I-20 westbound was due to the capacity constraints created by the transitioning of the four-lane freeway section into the existing three lane section prior to the Exit 61 (US 378) interchange in addition to Exit 61 westbound off-ramp spillback onto the mainline. With these capacity constraints opened, acceptable LOS is obtained within the RRPA design. **Attachment D** includes a summary of the basic freeway density with the capacity restraints removed outside of project limits along I-20, in addition to average peak hour speeds for all freeway segments for the RRPA externally constrained and unconstrained.

Table 6-1 - I-26 Freeway Segment Capacity Analysis – Existing, 2040 No-Build, and 2040 Build RRPA

Freeway Segment	Existing Conditions				2040 No Build Conditions				2040 Build RRPA Conditions			
	AM Peak Hour		PM Peak Hour		AM Peak Hour		PM Peak Hour		AM Peak Hour		PM Peak Hour	
	LOS[1]	Density[2]	LOS[1]	Density[2]	LOS[1]	Density[2]	LOS[1]	Density[2]	LOS[1]	Density[2]	LOS[1]	Density[2]
I-26 Eastbound												
Exit 104 to Exit 106	F	67.8	E	40.4	F	84.5	F	59.9	D	27.9	C	20.2
Exit 106 to Exit 107[W]	F	85.7	D	31.3	F	108.7	F	72.3	E	37.0	C	20.5
Exit 107 to Exit 108[W]	F	74.3	E	36.9	F	94.6	F	103.9				
I-126 Diverge to I-126 Merge	D	31.2	F	53.4	E	36.6	F	112.9				
Exit 108 to Exit 110	D	26.3	F	94.6	E	38.6	F	123.7	C	20.2	C	22.6
east of Exit 110	C	19.7	C	23.3	C	20.2	C	24.3	C	21.1	C	25.5
I-26 Westbound												
east of Exit 110	C	21.1	C	23.5	E	36.7	F	93.3	D	34.6	D	29.9
Exit 110 to Exit 108	B	15.6	D	25.1	C	19.9	F	92.5	B	17.0	C	20.3
I-126 Diverge to I-126 Merge	D	33.7	F	97.7	E	44.1	F	155.1	B	15.4	B	16.2
Exit 108 to Exit 107[W]	D	34.7	F	98.7	F	45.1	F	156.1	C	21.8	D	33.9
Exit 107 to Exit 106[W]	D	34.7	F	98.7	F	45.1	F	156.1				
I-126 Merge to Exit 106	Freeway Segment reported as part of RRPA											
Exit 106 to Exit 104	D	33.7	F	49.3	F	47.2	F	50.7	D	27.5	F	46.8

[1] Per Highway Capacity Manual 2010 criteria.

[2] Density expressed as PCE/per mile/per lane.

[W] Weaving Section

Table 6-2 - I-20 Freeway Segment Capacity Analysis – Existing and 2040 No-Build, and 2040 Build RRPA

Freeway Segment	Existing Conditions				2040 No Build Conditions				2040 Build RRPA Conditions			
	AM Peak Hour		PM Peak Hour		AM Peak Hour		PM Peak Hour		AM Peak Hour		PM Peak Hour	
	LOS[1]	Density[2]	LOS[1]	Density[2]	LOS[1]	Density[2]	LOS[1]	Density[2]	LOS[1]	Density[2]	LOS[1]	Density[2]
I-20 Eastbound												
Exit 61 to Exit 63	D	32.6	C	18.7	F	75.9	C	24.8	D	31.2	B	16.3
Exit 63 to Exit 64	C	19.0	B	13.5	C	20.7	D	29.3	C	19.2	A	10.9
Exit 64 to Exit 65	C	25.3	C	22.5	D	28.0	F	68.8				
east of Exit 65	E	35.5	D	26.6	E	39.5	D	29.5	F[+]	57.1	E[+]	37.1
I-20 Westbound												
east of Exit 65	D	29.3	F	56.8	F	46.7	F	123.4	D	32.4	E[+]	41.8
Exit 65 to Exit 64	E	36.5	F	58.7	F	73.0	F	58.4	A	8.0	A	7.8
Exit 64 to Exit 63[W]	B	15.5	F	51.5	F	49.6	F	56.3				
Exit 63 to Exit 61	B	14.6	D	26.6	C	18.8	D	26.2	B	15.6	F[+]	127.4

[1] Per Highway Capacity Manual 2010 criteria.

[2] Density expressed as PCE/per mile/per lane.

[W] Weaving Section

[+] Poor LOS is a result of downstream congestion outside of study area

Table 6-3 - I-126 Freeway Segment Capacity Analysis – Existing and 2040 No-Build, and 2040 Build RRPA

Freeway Segment	Existing Conditions				2040 No Build Conditions				2040 Build RRPA Conditions			
	AM Peak Hour		PM Peak Hour		AM Peak Hour		PM Peak Hour		AM Peak Hour		PM Peak Hour	
	LOS[1]	Density[2]	LOS[1]	Density[2]	LOS[1]	Density[2]	LOS[1]	Density[2]	LOS[1]	Density[2]	LOS[1]	Density[2]
I-126 Eastbound												
I-26 to Colonial Life Blvd	D	29.4	B	15.3	D	29.7	B	17.3	D	29.2	A	10.8
Colonial Life Blvd to Greystone Blvd	C	24.9	B	13.7	C	25.1	B	15.0	E[+]	38.8	B	16.9
I-126 Westbound												
Greystone Blvd to Colonial Life Blvd	B	14.4	F	48.6	B	13.4	F	113.2	B	14.4	D	31.2
Colonial Life Blvd to I-26	C	19.1	F	90.7	C	24.7	F	115.9	B	12.6	D	30.1

[1] Per Highway Capacity Manual 2010 criteria.

[2] Density expressed as PCE/per mile/per lane.

[+]Poor LOS is a result of downstream congestion outside of study area

6.3 Freeway Merge Area Analyses

The analysis results for the ramp merge areas for Existing Conditions, summarized in **Table 6-4**, **Table 6-5** and **Table 6-6**, indicate the following:

- During the morning peak hour:
  - I-26 eastbound merge areas between Exit 101 (Broad River Road) and Exit 107 operate at LOS F. All other eastbound merge areas operate at LOS D or better.
  - I-26 westbound merge areas operate at LOS D or better.
  - I-20 eastbound merge areas operate at LOS D or better.
  - I-20 westbound merge areas operate at LOS D or better except for Exit 65 (Broad River Road), where the merge area operates at LOS E.
  - I-126 eastbound merge area operates at LOS C.
  - I-126 westbound merge area operates at LOS B.
- During the afternoon peak hour:
  - I-26 eastbound merge areas of Exit 108 and Exit 108 (I-126) operate at LOS F, while the merge area of Exit 107 (weaving) operates at LOS E. All other eastbound merge areas operate at LOS D or better.
  - I-26 westbound merge areas better Exit 108 (I-126) and Exit 107 operate at LOS F. The merge area of Exit 106 (St Andrews Road) operates at LOS E. Exit 110 merge area operates at LOS B.
  - I-20 eastbound merge areas operate at LOS C or better.
  - I-20 westbound merge areas operate at LOS C, except Exit 65 (Broad River Road) and Exit 64 merge areas which operate at LOS F.
  - I-126 eastbound merge area operates at LOS B.
  - I-126 westbound merge area operates at LOS C.

With traffic volumes projected to increase at an annual rate of 0.70 percent per year, and with no increase in freeway capacity or modification to the system interchange, the increased traffic volumes traveling on I-26, I-20 and I-126 will results in increased density and reductions of merge area LOS under 2040 No-Build conditions. The analysis results for the ramp merge areas for 2040 No-Build Conditions, summarized in **Table 6-4**, **Table 6-5** and **Table 6-6**, indicate the following:

- During the morning peak hour:
  - I-26 eastbound merge areas between Exit 104 (Piney Grove Road) and Exit 107 operate at LOS F, while the Exit 108 merge area operates at LOS E. All other eastbound ramp merge areas operate at LOS C or better.
  - I-26 westbound merge areas of Exit 108 (I-126) and Exit 107 operates at LOS E. All other westbound ramp merge areas operate at LOS D or better.
  - I-20 eastbound merge areas of Exit 61 (US 378) operate at LOS F. Exit 65 (Broad River Road) and Exit 64 loop ramp merge areas operate at LOS E. All other eastbound ramp merge areas operate at LOS C.
  - I-20 westbound merge areas of Exit 65 (Broad River Road) and Exit 64 operate at LOS F All other westbound ramp merge areas operate at LOS C or better.
  - All I-126 merge areas operate at LOS B.
- During the afternoon peak hour:

- I-126 eastbound merge area operates at LOS C.
- I-126 westbound merge area operates at LOS A.
- I-26 westbound merge areas between Exit 110 (US 378) and Exit 107 operate at LOS F. The Exit 106 (St Andrews Road) merge area operates at LOS E.
- I-20 eastbound merge areas of Exit 64 and Exit 64 Loop operate at LOS F and LOS E, respectively. All other ramp merge areas operate at LOS D or better.
- I-20 westbound merge areas of Exit 65 (Broad River Road) and Exit 64 operate at LOS F All other westbound ramp merge areas operate at LOS C.
- I-126 eastbound merge area operates at LOS B.
- I-126 westbound merge area operates at LOS F.

The additional capacity provided by the RRPA will result in generally better LOS in the morning and afternoon peak hours compared to the Existing Conditions, and improved LOS over the 2040 No-Build conditions. With improved throughput volume within the system-to-system interchange, the RRPA design pushes more volume along the freeway mainlines which may result in increased density and worse levels of service in merge areas not modified under Build conditions. In addition, the RRPA includes I-26 and I-20 mainline collector-distributor roads to separate the closely spaced exit ramps resulting in a decrease in the number of merge ramps along I-26 and I-20. The 2040 Build RRPA Conditions analysis results, summarized in **Table 6-4**, **Table 6-5** and **Table 6-6**, indicate that:

- During the morning peak hour:
  - I-26 eastbound merge area of Exit 106 (St Andrews Road) operates at LOS E due to the downstream congestion at the I-26/I-126 split. The average speed at this merge area is above 35 mph. All other eastbound ramp merge areas operate at LOS C or better.
  - All I-26 westbound merge areas operate at LOS C or better.
  - I-20 eastbound merge areas of the CD Road and Exit 65 (Broad River Road) operate at LOS F due to capacity constraints downstream of the project limits. As traffic merges down to three lanes prior to the bridge over the Broad River, the average speed along I-20 eastbound in this merge area is between 10-20 mph. With the capacity constraints removed between Exit 65 (Broad River Road) and Exit 68 (Monticello Road), average speed increases to greater than 40 mph and the CD Road merge area operates at LOS C, while the Exit 65 merge area operates at LOS E. The Exit 61 merge area operates at LOS D.
  - All I-20 westbound merge areas operate at LOS B or better.
  - I-126 eastbound merge area from the I-20 ramp operates at LOS E due to existing congestion downstream of project limits toward downtown Columbia. The average speed at this merge area is greater than 40 mph. The Colonial Life Blvd merge area operates at LOS D.
  - I-126 westbound merge areas operate at LOS B or better.
- During the afternoon peak hour:
  - All I-26 eastbound merge areas operate at LOS C or better.
  - I-26 westbound merge areas of Exit 107 and Exit 106 (St Andrews Road) operate at LOS E due to increased volume and downstream congestion between Exit 104 (Piney Grove Road) and Exit 106. The average speed at these merge areas are greater than 40 mph. All other westbound merge areas operate at LOS C.
  - All I-20 eastbound merge areas operate at LOS D or better

- I-20 westbound merge areas of the CD Road and Exit 63 (Bush River Road) operate at LOS F with an average speed of 20 mph, due to downstream congestion and capacity constraints just west of the project limits. With the capacity constraints removed between Exit 63 (Bush River Road) and Exit 61 (US 378), the average speed is greater than 55 mph around these merge areas. The Exit 65 (Broad River Road) merge area operates at LOS A.
- I-126 eastbound merge areas operate at LOS C or better.
- I-126 westbound merge areas operate at LOS D or better.

As part of this analysis, the Exit 61 eastbound on-ramp acceleration lane was extended as an added lane to increase capacity and reduce congestion identified in the analysis. However, the Exit 61 (US 378) westbound off-ramp, outside of the project limits, may substantially affect the westbound mainline density and Exit 63 (Bush River Road) westbound merge operations due to high ramp volumes and congestion identified along US 378 at Exit 61. An extension of the Exit 61 off-ramp and/or increasing capacity to a two-lane off ramp outside of this project may keep the ramp queues from spilling back to the mainline and improve the reported density within the study area.

As mentioned in the freeway segment analysis, increased volumes and improved volume throughput within the system-to-system interchange resulted in heavy queuing and ramp backup along I-20 eastbound which affected the eastbound merge area at Exit 65 and the CD Road merge. The need to include an additional upstream merge location for the CD road prior to Exit 65 was considered and assessed. However, the congestion at the eastbound merge area at Exit 65 was due to the capacity constraints at the project limit transition at the Broad River crossing just east of Exit 65. With the capacity constraints removed, the congestion decreases so an acceptable LOS is obtained within the RRPA design without an additional upstream merge from the CD road. **Attachment D** includes a summary of the merge density with the capacity restraints removed outside of project limits along I-20, in addition to average peak hour speeds for all merge areas for the RRPA externally constrained and unconstrained.

Also, it should be noted that the Greystone Boulevard Interchange merge area along I-126 westbound operates at an acceptable LOS during both the morning and afternoon peak hours as shown in the table below. The distance between the Colonial Life Blvd westbound off-ramp and the Greystone Boulevard westbound on-ramp is sufficient and will not affect ramp operations.

Table 6-4 - I-26 Ramp Merge Capacity Analysis – Existing and 2040 No-Build, and 2040 Build RRPA

Merge Area	Existing Conditions				2040 No Build Conditions				2040 Build RRPA Conditions			
	AM Peak Hour		PM Peak Hour		AM Peak Hour		PM Peak Hour		AM Peak Hour		PM Peak Hour	
	LOS[1]	Density[2]	LOS[1]	Density[2]	LOS[1]	Density[2]	LOS[1]	Density[2]	LOS[1]	Density[2]	LOS[1]	Density[2]
I-26 Eastbound												
Exit 104	F	64.5	D	29.5	F	89.2	F	58.1	C	27.9	C	20.2
Exit 106 Loop	F	51.3	D	34.7	F	61.5	F	78.6	E	37.0	C	20.5
Exit 106[W]	F	85.7	D	31.3	F	108.7	F	72.3				
Exit 107 Loop[W]	F	51.3	D	34.7	F	61.5	F	78.6	B	13.9	B	13.1
Exit 107[W]	F	74.3	E	36.9	F	94.6	F	103.9				
Exit 108	D	32.1	F	52.2	E	38.6	F	115.0	Removed as part of RRPA			
Exit 108 (I-126)	C	25.5	F	75.8	C	25.2	F	122.0	C	20.2	C	22.6
Exit 110	B	15.2	B	17.5	B	15.3	B	18.6	C	21.1	C	25.5
I-26 Westbound												
Exit 110	B	15.6	B	25.1	B	19.9	F	92.5	B	17.0	C	20.3
Exit 108 (I-126)	D	30.2	F	121.3	E	39.2	F	157.8	B	15.1	C	23.3
Exit 108[W]	C	24.3	F	100.8	D	31.9	F	128.8	Removed as part of RRPA			
Exit 107 Loop[W]	C	25.9	F	96.4	D	34.8	F	111.7	C	25.9	E	39.7
Exit 107[W]	C	27.2	F	104.6	E	35.6	F	113.3				
Exit 106	C	23.4	E	36.7	D	32.4	E	37.8	C	27.9	E	42.4

[1] Per Highway Capacity Manual 2010 criteria.

[2] Density expressed as PCE/per mile/per lane.

[W] Weaving Section

Table 6-5 - I-20 Ramp Merge Capacity Analysis – Existing and 2040 No-Build, and 2040 Build RRPA

Merge Area	Existing Conditions				2040 No Build Conditions				2040 Build RRPA Conditions			
	AM Peak Hour		PM Peak Hour		AM Peak Hour		PM Peak Hour		AM Peak Hour		PM Peak Hour	
	LOS[1]	Density[2]	LOS[1]	Density[2]	LOS[1]	Density[2]	LOS[1]	Density[2]	LOS[1]	Density[2]	LOS[1]	Density[2]
I-20 Eastbound												
Exit 61	D	29.0	B	16.4	F	74.9	C	21.0	D	31.2	B	16.3
Exit 63 Loop	C	21.6	B	14.2	C	24.2	B	19.9	Removed as part of RRPA			
Exit 63	B	19.0	B	13.5	C	20.7	D	29.3	Removed as part of RRPA			
Exit 64 Loop[W]	D	33.2	C	23.9	E	37.2	E	38.0	Removed as part of RRPA			
Exit 64	C	24.5	C	22.3	C	27.1	F	71.4	Removed as part of RRPA			
CD Road	CD Ramp added as part of RRPA								F[+]	95.6	B	19.8
Exit 65	D	32.6	C	23.5	E	37.4	C	23.7	F[+]	93.5	D	34.2
I-20 Westbound												
Exit 65	E	36.5	F	58.7	F	73.0	F	58.4	A	8.0	A	7.8
Exit 64 Loop[W]	B	19.5	C	26.1	C	26.6	C	23.2	Removed as part of RRPA			
Exit 64[W]	B	15.5	F	51.5	F	49.6	F	56.3	Removed as part of RRPA			
CD Road	CD Ramp added as part of RRPA								B	11.4	F[+]	92.0
Exit 63	B	12.3	C	20.3	B	14.2	C	21.0	B	12.5	F[+]	119.6

[1] Per Highway Capacity Manual 2010 criteria.

[2] Density expressed as PCE/per mile/per lane.

[W] Weaving Section

[+]Poor LOS is a result of downstream congestion outside of study area

Table 6-6 - I-126 Ramp Merge Capacity Analysis – Existing and 2040 No-Build, and 2040 Build RRPA

Merge Area	Existing Conditions				2040 No Build Conditions				2040 Build RRPA Conditions			
	AM Peak Hour		PM Peak Hour		AM Peak Hour		PM Peak Hour		AM Peak Hour		PM Peak Hour	
	LOS[1]	Density[2]	LOS[1]	Density[2]	LOS[1]	Density[2]	LOS[1]	Density[2]	LOS[1]	Density[2]	LOS[1]	Density[2]
I-126 Eastbound												
Exit from I-20 EB/WB	Ramp added as part of RRPA								E	38.3	C	21.6
Colonial Life Blvd	C	24.9	B	13.7	C	25.1	B	15.0	D	33.2	B	15.9
I-126 Westbound												
Greystone Blvd	B	12.8	C	25.4	A	8.4	F	75.4	B	12.0	D	28.7
Colonial Life Blvd	Ramp added as part of RRPA								A	6.2	B	16.2

[1] Per Highway Capacity Manual 2010 criteria.

[2] Density expressed as PCE/per mile/per lane.

[+]Poor LOS is a result of downstream congestion outside of study area

6.4 Freeway Diverge Area Analyses

The analysis results for the ramp diverge areas for Existing Conditions, summarized in **Table 6-7**, **Table 6-8** and **Table 6-9**, indicate the following:

- During the morning peak hour:
  - I-26 eastbound diverge areas between Exit 104 and Exit 110 operate at LOS F. The Exit 110 diverge area operates at LOS D.
  - I-26 westbound diverge areas operate at LOS D or better.
  - I-20 eastbound diverge area of Exit 63 operates at LOS F. All other eastbound diverge areas operate at LOS D or better.
  - I-20 westbound diverge area of Exit 64 operates at LOS E. All other westbound diverge areas operate at LOS B.
  - I-126 eastbound diverge area operates at LOS B.
  - I-126 westbound diverge areas operate at LOS B.
- During the afternoon peak hour:
  - I-26 eastbound diverge areas between Exit 104 and Exit 108 operate at LOS D or E, while the diverge area of Exit 110 operates at LOS F.
  - I-26 westbound diverge areas between Exit 108 and the Exit 106 loop operate at LOS F, while the diverge area of Exit 104 operates at LOS E. Exit 110 diverge area operates at Exit 110.
  - I-20 eastbound diverge areas operate at LOS C or better.
  - I-20 westbound diverge areas of Exit 65, Exit 64 and Exit 63 operate at LOS F, while Exit 61 operates at LOS E. All other westbound diverge areas operate at LOS C.
  - I-126 eastbound diverge area operates at LOS B
  - I-126 westbound diverge area to I-26 westbound operates at LOS F, while all other diverge areas operate at LOS D or better.

With traffic volumes projected to increase at an annual rate of 0.70 percent per year, and with no increase in freeway capacity or modification to the system interchange, the increased traffic volumes traveling on I-26, I-20 and I-126 will results in increased density and reductions of diverge area LOS. The analysis results for the ramp diverge areas for 2040 No-Build Conditions, summarized in **Table 6-7**, **Table 6-8** and **Table 6-9**, indicate the following:

- During the 2040 No-Build morning peak hour:
  - All I-26 eastbound diverge areas operate at LOS F.
  - I-26 westbound diverge area of Exit 110 (US 378) operates at LOS F. I-26 westbound diverge areas between Exit 106 (St Andrews Road) and Exit 104 (Piney Grove Road) operate at LOS E. All other westbound ramp diverge areas operate at LOS D.
  - I-20 eastbound diverge areas of Exit 63 (Bush River Road) and Exit 64 operate at LOS F and LOS E, respectively. All other eastbound diverge areas operate at LOS C.
  - I-20 westbound diverge area of Exit 64 and Exit 63 (Bush River Road) operates at LOS F. All other westbound diverge areas operate at LOS D or better.
  - I-126 eastbound diverge area operates at LOS B.
  - I-126 westbound diverge areas operate at LOS B or better.
- During the afternoon peak hour:

- All I-26 eastbound diverge areas operate at LOS F.
- All I-26 westbound diverge areas operate at LOS F.
- I-20 eastbound diverge area (weaving) of the Exit 64 loop operates at LOS E, while the eastbound Exit 63 (Bush River Road) diverge area operates at LOS F. All other eastbound ramp diverge areas operate at LOS D.
- All I-20 westbound diverge areas operate at LOS F, except Exit 64 loop diverge (weaving) area which operates at LOS C.
- I-126 eastbound diverge area operates at LOS B.
- I-126 westbound diverge areas operate at LOS F.

The additional capacity provided by the RRPA will result in generally better LOS in the morning and afternoon peak hours compared to the Existing Conditions, and improved LOS over the 2040 No-Build conditions. In addition, the RRPA proposes I-26 and I-20 mainline collector-distributor roads to separate the closely spaced exit ramps resulting in a decrease in the number of diverge ramps along I-26 and I-20. The 2040 Build RRPA analysis results, summarized in **Table 6-7**, **Table 6-8** and **Table 6-9**, indicate that:

- During the morning peak hour:
  - I-26 eastbound diverge area of the CD Road operates at LOS F due to the increased volume processed by the RRPA, resulting in increased congestion accessing I-20. In addition, the volume now traveling in the right-most lanes in anticipation of the system diverge towards Downtown Columbia causes additional queuing at this diverge area. The diverge area of the I-26/I-126 split operates at LOS E due to the weaving conflicts between the Exit 106 (St. Andrews Road) eastbound on-ramp and the volume exiting to I-126 eastbound. This is caused by the majority of traffic traveling to downtown Columbia that now exit to the right to access I-126. The average speed at the CD Road diverge area is less than 25 mph while average speed at the I-26/I-126 split diverge is less than 40 mph. This diverge area is expected to operate at an acceptable LOS at opening year (2020) and projected to be operating at a failing LOS by 2025. All other eastbound ramp diverge areas operate at LOS C.
  - I-26 westbound diverge area of Exit 110 (US 378) operates at LOS F with an average speed of greater than 30 mph. All other westbound diverge areas operate at LOS C or better.
  - I-20 eastbound diverge area of the CD road area operates at LOS D.
  - I-20 westbound diverge area of Exit 61 (US 378) operates at LOS E due to westbound off-ramp spill back from Exit 61 congestion and other network capacity constraints outside the study area. With the capacity constraints removed, the diverge area operates at LOS D at Exit 61. All other westbound diverge areas operate at LOS D or better.
  - I-126 eastbound diverge areas operate at LOS D.
  - I-126 westbound diverge areas operate at LOS B or better.
- During the afternoon peak hour:
  - All I-26 eastbound diverge areas operate at LOS C or better.
  - I-26 westbound diverge area of Exit 104 (Piney Grove Road) operates at LOS F due to the increased volume processed by the RRPA, resulting in congestion. The average speed of the diverge area is greater than 40 mph. All other diverge areas operate at LOS D or better.
  - I-20 eastbound diverge area of the CD road area operates at LOS B.
  - I-20 westbound merge areas operate at LOS B or better except for Exit 65 (Broad River Road) and Exit 61 (US 378) diverge areas, which operate at LOS F due to westbound off-ramp spill back

from Exit 61 and capacity constraints outside of the project area. The average speed at the diverge area of Exit 61 is less than 25 mph. With the capacity constraints removed along I-20 westbound, the Exit 61 diverge area will continue to operate at LOS F due to US 378 arterial queuing that extends onto the mainline.

- I-126 eastbound diverge areas operate at LOS B.
- I-126 westbound diverge areas operate at LOS D or better.

As part of this project the Exit 110 off-ramp was lengthened and the diverge area was relocated to keep the off-ramp queues from spilling back to the mainline. The spacing between the relocated diverge area and merge area (from I-126 westbound fly-over ramp) has been shortened to about 2,500 feet which is sufficient and will not adversely affect mainline and ramp operations. The Exit 61 westbound off-ramp, outside of the project limits, may substantially affect the westbound mainline density and Exit 63 westbound merge operations due to high ramp volumes and congestion identified along the Exit 61 arterial. **Attachment D** includes a summary of the basic freeway density with the capacity restraints removed outside of project limits along I-20, in addition to average peak hour speeds for all diverge areas for the RRPA externally constrained and unconstrained.

Also, it should be noted that the Greystone Boulevard Interchange diverge area along I-126 eastbound operates at an acceptable LOS during both the morning and afternoon peak hours as shown in the table below. The distance between the Colonial Life Blvd eastbound on-ramp and the Greystone Boulevard eastbound off-ramp is sufficient and will not affect ramp operations.

Table 6-7 - I-26 Ramp Diverge Capacity Analysis – Existing and 2040 No-Build, and 2040 Build RRPA

Diverge Area	Existing Conditions				2040 No Build Conditions				2040 Build RRPA Conditions			
	AM Peak Hour		PM Peak Hour		AM Peak Hour		PM Peak Hour		AM Peak Hour		PM Peak Hour	
	LOS[1]	Density[2]	LOS[1]	Density[2]	LOS[1]	Density[2]	LOS[1]	Density[2]	LOS[1]	Density[2]	LOS[1]	Density[2]
I-26 Eastbound												
Exit 106	F	56.3	D	29.1	F	73.4	F	50.6	C	24.3	B	17.4
CD Road	Ramp added as part of RRPA								F	71.9	C	26.9
Exit 107[W]	F	85.7	D	31.3	F	108.7	F	72.3	Removed as part of RRPA			
Exit 107 Loop[W]	F	51.3	D	34.7	F	61.5	F	78.6	Removed as part of RRPA			
Exit 108[W]	F	74.3	E	36.9	F	94.6	F	103.9	Removed as part of RRPA			
I-26 EB to I-26 EB	F	52.0	E	40.6	F	58.5	F	103.7	E	37.0	C	20.5
Exit 110	D	32.6	F	106.1	F	54.6	F	140.0	C	21.5	C	24.6
I-26 Westbound												
Exit 110	C	22.6	C	24.3	F	49.4	F	103.0	F	48.1	D	32.5
Exit 108 (Existing-No Build) / To I-20 (Build RRPA)	C	24.3	F	100.8	D	31.9	F	128.8	B	17.0	C	20.3
Exit 107[W]	C	24.3	F	100.8	D	31.9	F	128.8	Removed as part of RRPA			
Exit 107 Loop[W]	C	25.9	F	96.4	D	34.8	F	111.7	Removed as part of RRPA			
Exit 106[W]	C	27.2	F	104.6	E	35.6	F	113.3	B	15.1	C	23.3
Exit 106 Loop	D	28.4	F	83.7	E	37.1	F	92.5				
Exit 104	D	28.4	E	43.6	E	42.1	F	47.8	C	26.3	F	46.8

[1] Per Highway Capacity Manual 2010 criteria.

[2] Density expressed as PCE/per mile/per lane.

[W] Weaving Section

Table 6-8 - I-20 Ramp Diverge Capacity Analysis – Existing and 2040 No-Build, and 2040 Build RRPA

Diverge Area	Existing Conditions				2040 No Build Conditions				2040 Build RRPA Conditions			
	AM Peak Hour		PM Peak Hour		AM Peak Hour		PM Peak Hour		AM Peak Hour		PM Peak Hour	
	LOS[1]	Density[2]	LOS[1]	Density[2]	LOS[1]	Density[2]	LOS[1]	Density[2]	LOS[1]	Density[2]	LOS[1]	Density[2]
I-20 Eastbound												
Exit 63 (Existing-No Build) / CD Road (Build RRPA)	F	52.5	C	22.9	F	71.6	D	29.7	D	31.2	B	16.3
Exit 64	B	19.0	B	13.5	C	20.7	D	29.3	Removed as part of RRPA			
Exit 64 Loop[W]	D	33.2	C	23.9	E	37.2	E	38.0	Removed as part of RRPA			
Exit 65	C	25.3	C	22.5	C	28.0	F	68.8	Removed as part of RRPA			
I-20 Westbound												
Exit 65	B	19.8	F	53.6	C	26.1	F	121.4	D	34.0	F[+]	44.7
CD Road	Ramp added as part of RRPA								B	14.6	B	16.7
Exit 64	E	36.9	F	59.3	F	73.7	F	58.9	Removed as part of RRPA			
Exit 64 Loop[W]	B	19.5	C	26.1	C	26.6	C	23.2	Removed as part of RRPA			
Exit 63	B[W]	15.5[W]	F[W]	51.5[W]	F[W]	49.6[W]	F[W]	56.3[W]	A	8.0	A	7.8
Exit 61	B	19.7	E	43.4	D	29.4	F	91.0	E[+]	42.5	F[+]	124.7

[1] Per Highway Capacity Manual 2010 criteria.

[2] Density expressed as PCE/per mile/per lane.

[W] Weaving Section

[+]Poor LOS is a result of downstream congestion outside of study area

Table 6-9 - I-126 Ramp Diverge Capacity Analysis – Existing and 2040 No-Build, and 2040 Build RRPA

Diverge Area	Existing Conditions				2040 No Build Conditions				2040 Build RRPA Conditions			
	AM Peak Hour		PM Peak Hour		AM Peak Hour		PM Peak Hour		AM Peak Hour		PM Peak Hour	
	LOS[1]	Density[2]	LOS[1]	Density[2]	LOS[1]	Density[2]	LOS[1]	Density[2]	LOS[1]	Density[2]	LOS[1]	Density[2]
I-126 Eastbound												
Colonial Life Blvd	Ramp added as part of RRPA								D	29.2	B	10.8
Greystone Blvd	B	15.6	B	11.3	B	15.9	B	17.0	D	33.9	B	16.2
I-126 Westbound												
Greystone Blvd	B	15.3	C	27.0	B	16.1	F	90.1	B	14.6	D	31.4
Colonial Life Blvd	B	12.2	D	29.6	A	8.7	F	76.1	B	10.1	C	23.5
Exit to I-26 EB	B	12.1	F	63.6	B	13.0	F	108.4	B	10.4	C	23.0
Exit to I-20 EB/WB (CD Road)	Ramp added as part of RRPA								A	6.3	B	16.4

[1] Per Highway Capacity Manual 2010 criteria.

[2] Density expressed as PCE/per mile/per lane.

6.5 Intersection Capacity Analysis

Capacity analyses for the signalized and unsignalized intersections at the study interchanges were performed using TransModeler software for Existing, 2040 No-Build, and 2040 Build RRPA conditions. Preminary interchange alternatives capacity screening analysis was completed and documented in the *Alternatives Traffic Analysis Technical Memo.* Detailed analyses for Exit 106, Exit 108, Exit 110, Exit 63 and Exit 65 under existing conditions (existing traffic, intersection traffic control and geometry) and 2040 No-Build conditions (2040 traffic, and existing interection traffic control and geometry) are summarized in the following sections.

The signalized and unsignalized intersection analyses for Existing and 2040 No-Build conditions were obtained from the TransModeler microsimulation output files, which include an average delay of ten (10) runs. For unsignalized intersections, the intersection operation is represented by the worst approach delay and LOS of all of the STOP-controlled appraches to the intersection. TransModeler measures control delay in accordance with HCM methodology and considers vehicles as soon as they begin to brake to join the back of a queue forming at an intersection until it has passed through the intersection and returned to speed. The comparision results of the capacity analyses for existing conditions and the 2040 No-Build conditions are shown in **Table 6-10** and in **Figure 6-1** through **Figure 6-5**. The TransModeler control delay outputs are provided in **Appendix E**.

Under Existing Conditions:

- At Exit 106 (St. Andrews Road – S-32-36/S-40-42), the study interestions operate at LOS D or better during the morning peak hour and afternoon peak hour.
- At Exit 108 (Bush River Road – S-40-31), the intersection of Bush River Road at I-26 eastbound off-ramp/driveway operates at LOS E during both the morning and afternoon peak hour. All other intersections operate at LOS C or better during both the morning and afternoon peak hours.
- At Exit 110 (US 378 – Sunset Boulevard), the intersection of Sunset Boulevard at the I-26 eastbound off-ramp operates at LOS E and LOS F during the morning and afternoon peak hours, respectively, while the other intersections operate at LOS D or better during the morning and afternoon peak hours.
- At Exit 63 (Bush River Road – S-32-273), the study intersections operate at LOS C or better during the morning and afternoon peak hours.
- At Exit 65 (Broad River Road – US 176), the intersection of Broad River Road at the I-20 westbound ramps operates at LOS F during the afternoon peak hour. All other intersections operate at LOS D or better during the morning and afternoon peak hours.

In general, with forecast increases in traffic and without improvements to the intersections, the delay in the 2040 No-Build analyses can be expected to be higher comparing to the Existing Conditions. Improvements such as additional storage to turning movements and/or signal timing adjustments would be necessary to provide acceptable LOS during the 2040 No-Build operating conditions at these interesections.

For the RRPA, the individual interchanges were modeled using Synchro/SimTraffic to analyze and simulate the arterial and intersection operations and to aid in the development of traffic control and geometric recommendations. As discussed in the *Alternative Traffic Analysis Technical Memo Report*, the arterials coded

into the TransModeler network were verified and adjusted based on existing conditions and collected traffic data. Due to the limitations of Synchro's dynamic assignment of volumes and modeling of static volumes only, intersection capacity analysis for the RRPA was also conducted in the Transmodeler network to account for shifted traffic from existing interchange configurations to 2040 Build interchange configurations. Those analyses will be discussed below.

Table 6-10 - Intersection Capacity Analysis Results - Existing Vs. 2040 No Build

Intersection #	Intersection Name	2015 Existing Conditions				2040 No Build Conditions			
		AM Peak		PM Peak		AM Peak		PM Peak	
		LOS	Delay	LOS	Delay	LOS	Delay	LOS	Delay
Exit 106									
100000348	St. Andrews Road at Jamil Road	B	13.5	B	11.1	B	18.8	B	13.9
100000178	St. Andrews Road at I-26 EB Ramps / Woodland Hills Road	A	8.4	B	10.3	A	9.3	B	10.8
100000182	St. Andrews Road at I-26 WB Ramps[1]	A	3.3	A	3.9	A	4.1	A	5.9
100000358	St. Andrews Road at Fernandina Road / Burning Tree Drive	B	15.7	C	28.3	B	17.7	D	37.3
100000354	St. Andrews Road at Kay Street / Chartwell Road	B	19.6	B	12.6	D	51.0	C	34.1
100000360	Burning Tree Road at I-26 WB Off-Ramp[1]	B	11.2	A	10.0	B	14.1	D	30.5
Exit 108									
100000256	Bush River Road at Zimalcrest Drive	A	9.5	A	6.2	B	10.3	A	7.6
100000898	Bush River Road at I-26 EB Off-Ramp / Driveway	B	11.3	E	55.2	B	11.5	E	64.5
100000252	Bush River Road at Morninghill Drive	C	21.5	C	34.9	C	26.2	E	73.0
100000184	Bush River Road at Arrowwood Road	B	10.3	B	17.7	B	12.5	E	60.4
Exit 110									
100000186	Sunset Boulevard (US 378) at E. Hospital Drive / Harbor Drive	B	17.0	D	37.5	C	28.0	E	68.5
100000093	Sunset Boulevard (US 378) at I-26 EBR Off-Ramp[1]	E	38.6	F	53.2	F	54.4	F	100.9
100000903	Sunset Boulevard (US 378) at I-26 Ramps	C	26.1	C	25.6	C	26.6	C	28.0
100000902	Sunset Boulevard (US 378) at I-26 WBR Off-Ramp[1]	C	24.1	D	26.3	E	44.5	E	42.2
100000163	Sunset Boulevard (US 378) at Chris Drive / McSwain Drive	A	6.4	A	8.1	A	7.1	B	13.7
Exit 63									
100000250	Bush River Road at Outlet Point Blvd	B	17.5	A	9.9	D	36.6	C	23.4
100000455	Bush River Road at Berryhill Drive	A	5.3	B	12.3	A	7.7	C	27.9
100000139	Bush River Road at I-20 WB Ramps	A	7.2	A	6.9	A	9.9	A	8.0
100000142	Bush River Road at I-20 EB Off-Ramp	A	6.5	A	9.1	A	6.4	A	8.9
100000255	Bush River Road at Independence Avenue	C	23.7	B	12.1	C	33.7	B	14.3
Exit 65									
100000187	Broad River Road at Marley Drive / Briargate Circle	B	19.6	D	47.4	D	51.5	F	100.3
100000189	Broad River Road at I-20 WB Ramps	C	33.9	F	99.4	D	53.4	F	222.9
100000190	Broad River Road at I-20 EB Ramps / Garner Lane	A	9.9	B	13.6	B	10.6	D	37.2
100000195	Broad River Road at Longcreek Drive	A	5.5	A	6.8	A	6.4	B	12.0

[1] Intersection unsignalized under all scenarios; worst approach LOS and delay reported.



Figure 6-1 - Exit 106 - St. Andrews Road Intersection LOS Summary



Figure 6-2 - Exit 108 - Bush River Road Intersection LOS Summary



Figure 6-3 - Exit 110 - Sunset Boulevard (US 378) Intersection LOS Summary

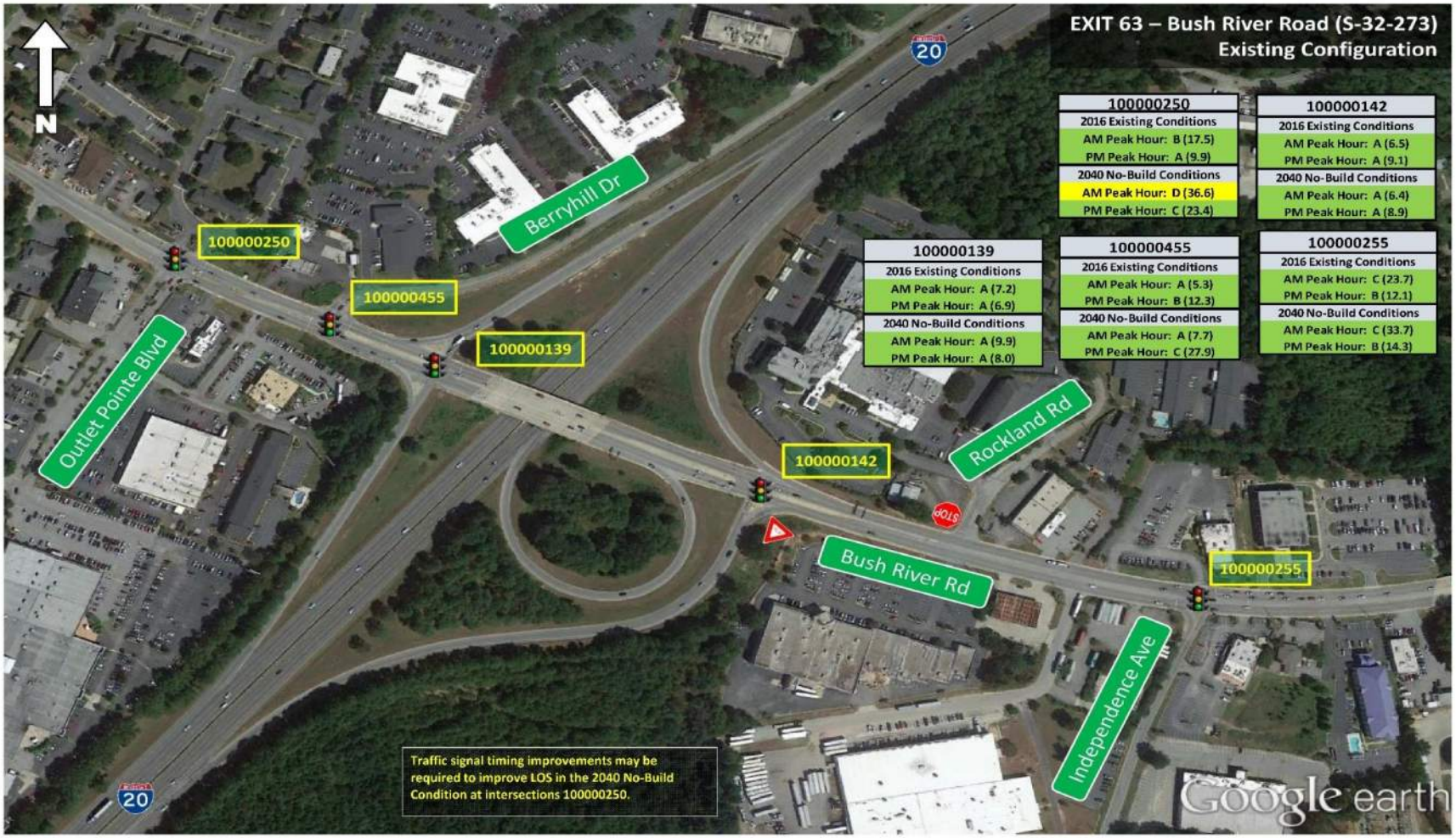

Figure 6-4 - Exit 63 - Bush River Road Intersection LOS Summary

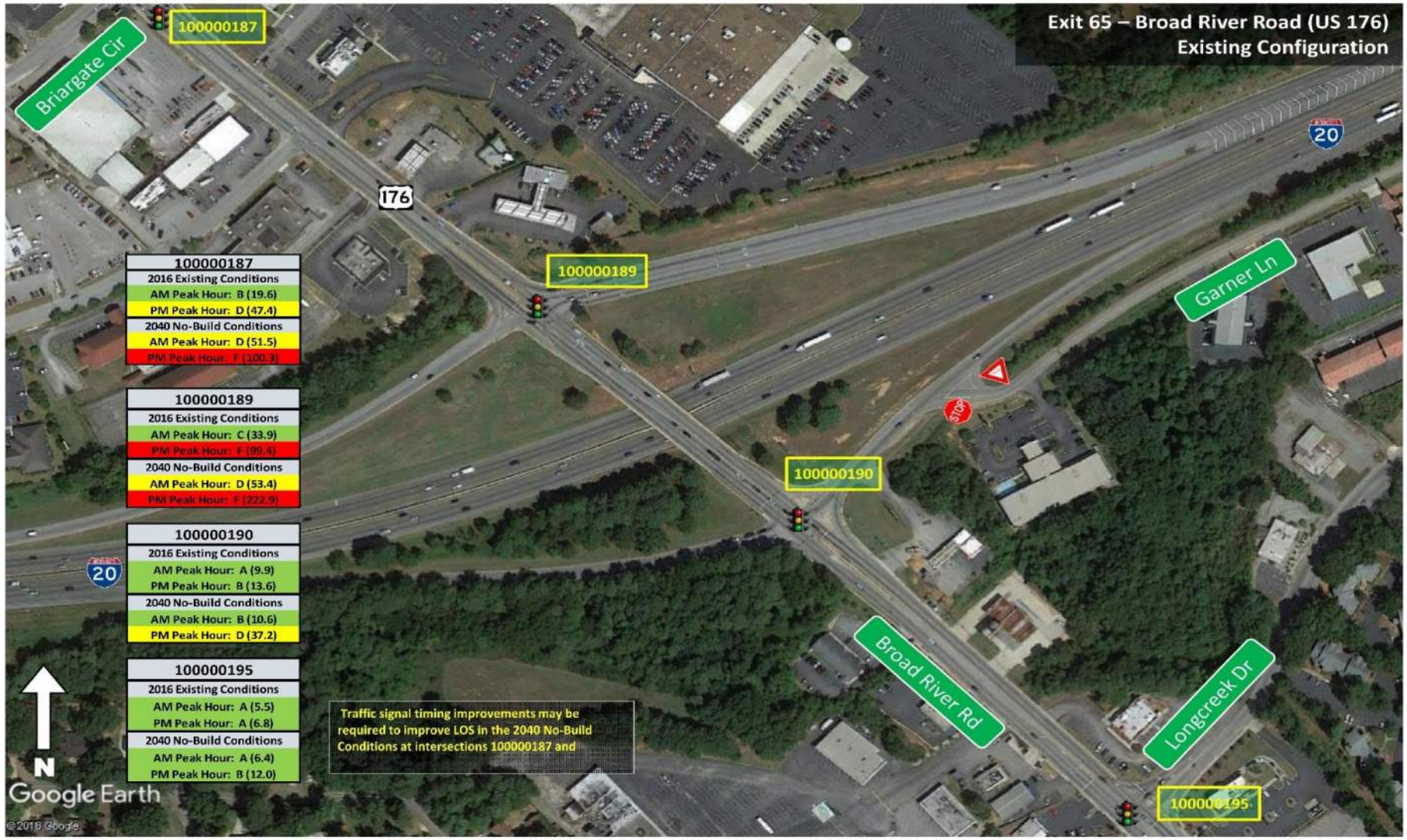

Figure 6-5 - Exit 65 - Broad River Road (US 176) Intersection LOS Summary

The signalized and unsignalized intersection analyses for 2040 Build RRPA conditions were obtained from the TransModeler microsimulation output files, which include an average delay of ten (10) runs. As part of the 2040 Build intersection capacity analysis, queue reports were obtained from the TransModeler output files. TransModeler reports queue lengths in two ways, as lane queues and as spillback queues. Lane queues are measured by lane, but do not measure beyond the upstream superlink approach. However, spillback queues capture the full, dynamic length even if queues branch in different directions. Both lane queues and spillback queues are provided at the ramp terminal intersections and adjacent intersections along the arterials.

Capacity Analysis results at Exit 106, Exit 108, Exit 63, Exit 65, and Colonial Life Blvd for 2040 Build Conditions are summarized in **Table 6-11** and below. **Table 6-12** through **Table 6-16** summarize queue length results for the above interchanges, excluding Exit 108.

Exit 106 – St. Andrews Road

The existing configuration of Exit 106 is expected to be replaced with a Single Point Urban Interchange (SPUI) as part of the RRPA. Other elements of the concept include:

- Converting the I-26 westbound right turn off-ramp to eastbound St Andrews Road from yield-controlled to STOP-controlled.
- Modifying the intersection of St. Andrews Road at Fernandina Road to include northbound dual left turn lanes

The 2040 Build configuration for Exit 106 is depicted in **Figure 6.6**.

Under the 2040 Build conditions, all intersections operate at LOS D or better except the intersection of St. Andrews Road with the I-26 westbound right turn off-ramp to eastbound St Andrews Road, which operate at LOS F during both the morning and afternoon peak hours. This insection has been converted from a yield controlled intersection to STOP-controlled consistent with SCDOT guidelines for the treatment of channelized right turns at ramp termini interesction.

Exit 108 – Bush River Road

The existing configuration of Exit 108 is expected to be modified to remove the interstate access ramps as part of the RRPA. The 2040 Build configuration for Exit 108 is depicted in **Figure 6.7.**

Under the 2040 Build conditions, all intersections operate at LOS D or better.

Exit 110 – Sunset Boulevard

The existing SPUI configuration of Exit 110 is expected to be unchanged. The only modification included in the RRPA is the extension of the I-26 westbound off-ramp. Due to congestion and queuing on the off-ramps that were identified under 2040 No-Build conditions, the right turn movements on the off ramps were converted from STOP-control and incorporated into the SPUI signalization. No geometric modifications to the arterial were proposed.

Under the 2040 Build conditions, all intersections operate at LOS D or better except the intersection of Sunset Boulevard at Chris Drive/McSwain Drive that operates at LOS E.

Exit 63 – Bush River Road

The existing configuration of Exit 63 is expected to be replaced with a Diverging Diamond Interchange (DDI) as part of the RRPA. Other elements of the concept include:

- Removing the intersection of Bush River Road at Berryhill Drive and creating a cul de sac at the end of Berryhill Drive.
- Adding an overpass bridge connection of Berryhill Drive and Rockland Road.
- Installation of a signal at the intersection of Bush River Road and Rockland Road with an exclusive eastbound left turn phase.

The 2040 Build RRPA configuration for Exit 106 is depicted in **Figure 6.8**.

Under the 2040 Build RRPA conditions, all intersections operate at LOS C or better except the intersection of Bush River Road at Outlet Point Boulevard which operates at LOS E.

Exit 65 – Broad River Road

The existing configuration of Exit 65 is expected to be replaced with a Single Point Urban Interchange (SPUI) as part of the RRPA. The 2040 Build configuration for Exit 106 is depicted in **Figure 6.9**.

Under the 2040 Build conditions, all intersections operate at LOS D or better.

Colonial Life Boulevard Interchange

As part of the RRPA, the existing configuration of Colonial Life Boulevard is expected to be replaced with a full access tight urban diamond interchange (TUDI) with braided ramps providing access to/from Colonial Life Boulevard instead of the partial interchange providing access to/from I-126 to the east towards the City of Columbia. Both the eastbound and westbound ramp intersections will be signalized.

The 2040 Build RRPA configuration for Exit 106 is depicted in **Figure 6.10**.

Under the 2040 Build RRPA conditions, both intersections operate at LOS C or better.

Table 6-11 - Intersection Capacity Analysis Results – 2040 Build RRPA

TransModeler Node #	Intersection Name	AM LOS	AM Delay	PM LOS	PM Delay
	Exit 106				
100000348	St. Andrews Road at Jamil Road	C	23.7	C	20.8
127	St. Andrews Road at Woodland Hills Road	C	26.6	B	13.1
40	St. Andrews Road at I-26 SPUI Intersection	D	44.0	D	37.6
100000182	St. Andrews Road at I-26 WBR Off-ramp[1] (STOP-controlled)	F	120.3	F	100.7
100000358	St. Andrews Road at Fernandina Road/Burning Tree Drive	D	35.0	C	31.2
100000354	St. Andrews Road at Kay Street / Chartwell Road	C	30.1	C	20.9
	Exit 108				
100000256	Bush River Road at Zimalcrest Drive	A	7.5	A	8.9
100000898	Bush River Road at Driveway	A	4.0	A	2.5
100000252	Bush River Road at Morninghill Drive	D	36.3	C	24.5
100000184	Bush River Road at Arrowwood Road	B	11.2	B	12.6
	Exit 110				
100000186	Sunset Boulevard (US 378) at E. Hospital Drive / Harbor Drive	D	42.1	D	41.3
100000093	Sunset Boulevard (US 378) at I-26 EBR Off-Ramp (signal controlled)	B	14.8	B	12.9
100000903	Sunset Boulevard (US 378) at I-26 Single Point Ramps Intersection	C	27.0	C	24.2
100000902	Sunset Boulevard (US 378) at I-26 WBR Off-Ramp (signal controlled)	A	7.0	B	19.0
100000163	Sunset Boulevard (US 378) at Chris Drive / McSwain Drive	A	8.6	E	59.4
	Exit 63				
141	Bush River Road at Outlet Pointe Boulevard	E	59.5	B	15.5
52	Bush River Road at I-20 WB Ramps DDI Intersection	A	9.4	C	21.6
150	Bush River Road at I-20 EB Ramps DDI Intersection	C	23.5	C	22.3
120	Bush River Road at Rockland Road	A	8.8	B	16.2
100000255	Bush River Road at Independence Avenue	B	14.4	C	24.5
	Exit 65				
100000187	Broad River Road at Marley Drive / Briargate Circle	B	19.7	D	35.9
54	Broad River Road at I-20 WBR Off-Ramp (signal controlled)	B	12.6	B	19.7
79	Broad River Road at I-20 Single Point Ramps Intersection	D	43.5	D	36.2
100000190	Broad River Road at I-20 EBR Off-Ramp (signal controlled)	A	5.8	B	10.3
100000195	Broad River Road at Longcreek Drive	B	13.3	B	12.9
	Colonial Life Boulevard				
108	Colonial Life Boulevard at I-126 EB Ramps	C	21.4	C	20.8
107	Colonial Life Boulevard at I-126 WB Ramps	A	7.3	B	15.5

[1] Intersection unsignalized; worst approach LOS and delay reported.

Table 6-12 - 2040 Build RRPA Intersection Queue Lengths - Exit 106

Intersection #	Intersection Name	Lane Group	AM Peak Hour 95th Percentile Queue Length (ft)	AM Peak Hour Maximum Spillback Queue Length (ft)	PM Peak Hour 95th Percentile Queue Length (ft)	PM Peak Hour Maximum Spillback Queue Length (ft)	Available Storage Length (ft)
100000348	**St. Andrews Road at Jamil Road**	SBL	175	225	150	200	972
		SBR	25		50		1,450
		EBL	125	750	500	625	200
		EBT	425		125		1,050
		WBT	125	275	175	325	725
		WBR	175		125		725
127	**St. Andrews Road at I-26 EB Ramps / Woodland Hills Road**	NBL	50	250	50	200	400
		NBR	50		50		625
		SBL	500	925	75	100	150
		SBR	50		50		900
		EBT	75	275	100	325	725
		EBTR	650		325		150
		WBL	125	225	125	200	200
		WBT	100		75		275
40	**St. Andrews Road at I-26 SPUI Ramps**	NBL*	175	1,425	225	875	1,575
		NBR*	0		0		575
		SBL	500	925	75	100	2,225
		EBL	75	225	150	200	300
		EBT	150		150		300
		EBR	-		-		-
		WBL	250	1,250	200	1,000	425
		WBT	150		250		425
		WBR	0		25		-
100000358	**St. Andrews Road at Fernandina Road / Burning Tree Drive**	NBL	75	200	175	350	200
		NBT	125		200		325
		NBR	125		150		250
		SBL	25	200	75	125	300
		SBT	150		100		>3,000
		SBR	0		0		225
		EBL	125	1,250	150	1,000	175
		EBTR	150		150		375
		WBL	50	925	50	425	125
		WBT	575		375		575
		WBTR	175		100		575
10000354	**St. Andrews Road at Kay Street / Chartwell Road**	NBLTR	125	150	75	75	300
		SBLTR	275	500	150	200	>1,000
		EBL	100	925	175	425	200
		EBT	125		150		575
		EBTR	100		125		575
		WBL	25	0	25	0	175
		WBT	425		125		850
		WBTR	250		150		850
100000360	**Burning Tree Road at I-26 WB Off-Ramp[1]**	NBT	0	0	75	325	>1,000
		SBT	0	200	0	350	325
		EBL	225	275	325	1,000	300
		EBR	75		25		300

Table 6-13 - 2040 Build RRPA Intersection Queue Lengths - Exit 110

Intersection #	Intersection Name	Lane Group	AM Peak Hour 95th Percentile Queue Length (ft)	AM Peak Hour Maximum Spillback Queue Length (ft)	PM Peak Hour 95th Percentile Queue Length (ft)	PM Peak Hour Maximum Spillback Queue Length (ft)	Available Storage Length (ft)
100000144	Sunset Boulevard (US 378) at W. Hospital Drive /Sunset Ct	NBL	0	0	0	0	125
		NBTR	0		0		725
		SBL	150	200	300	450	500
		SBLT	125		275		1,350
		SBR	100		350		150
		EBL	350	1,300	125	725	125
		EBT	825		525		1,400
		EBTR	850		525		1,400
		WBL	0	1,200	0	1,175	150
		WBT	75		150		950
		WBR	0		0		150
100000186	Sunset Boulevard (US 378) at E. Hospital Drive / Harbor Drive	NBLT	50	375	25	500	>3,000
		NBR	325		450		50
		SBL	125	150	250	325	225
		SBLT	75		200		425
		SBR	75		175		75
		EBL	125	1,200	75	1,175	225
		EBT	775		725		950
		EBR	0		0		225
		WBL	225	1,775	200	750	100
		WBT	375		275		400
		WBR	0		25		100
100000903	Sunset Boulevard (US 378) at I-26 SPUI Intersection	NBL	175	1,625	175	300	350
		NBR	125		125		1,650
		SBL	100	2,025	100	650	3,425
		SBR	100		100		3,425
		EBL	75	1,775	75	750	300
		EBT	75		75		500
		EBR	0		0		425
		WBL	100	325	100	400	200
		WBT	100		100		625
		WBR	175		125		425
100000163	Sunset Boulevard (US 378) at Chris Drive / McSwain Drive	NBL	100	150	150	200	400
		NBTR	0		0		>3,000
		SBL	0	75	0	175	160
		SBTR	75		125		600
		EBL	75	325	50	400	400
		EBT	200		150		650
		EBTR	200		175		650
		WBL	0	225	0	1,975	175
		WBT	150		1,000		550
		WBTR	175		1,225		550

Table 6-14 - 2040 Build RRPA Intersection Queue Lengths - Exit 63

Intersection #	Intersection Name	Lane Group	AM Peak Hour 95th Percentile Queue Length (ft)	AM Peak Hour Maximum Spillback Queue Length (ft)	PM Peak Hour 95th Percentile Queue Length (ft)	PM Peak Hour Maximum Spillback Queue Length (ft)	Available Storage Length (ft)
141	Bush River Road at Outlet Pointe Boulevard / Ease Meadow Ct	NBLT	0	50	0	475	650
		NBTR	50		375		650
		SBLT	50	50	25	25	75
		SBTR	0		0		75
		EBL	0	2,200	0	750	125
		EBT	250		75		2,200
		EBTR	650		525		125
		WBL	275	300	75	225	200
		WBT	50		150		500
		WBTR	100		175		500
52	Bush River Road at SB I-20 Ramps	SBL	125	0	150	0	1,000
		SBR	125		125		1,000
		EBT	75	0	75	0	500
		EBR	50		250		100
		WBL	0	175	25	325	500
		WBT	100		200		500
150	Bush River Road at NB I-20 Ramps	NBL	100	125	125	275	1,750
		NBR	175		125		1,750
		EBL	0	300	0	400	475
		EBT	200		275		475
		WBT	50	0	50	0	575
		WBR	100		175		350
120	Bush River Road at Rockland Park	SBL	75	125	100	300	150
		SBR	50		200		850
		EBL	175	250	75	300	225
		EBT	175		125		575
		WBT	100	200	200	650	475
		WBTR	150		325		475
100000255	Bush River Road at Independence Avenue	NBLR	125	175	575	675	900
		EBT	175	425	100	625	475
		EBTR	275		300		475
		WBL	175	175	125	225	175
		WBT	75		175		2,475

Table 6-15 - 2040 Build RRPA Intersection Queue Lengths - Exit 65

Intersection #	Intersection Name	Lane Group	AM Peak Hour 95th Percentile Queue Length (ft)	AM Peak Hour Maximum Spillback Queue Length (ft)	PM Peak Hour 95th Percentile Queue Length (ft)	PM Peak Hour Maximum Spillback Queue Length (ft)	Available Storage Length (ft)
100000187	**Broad River Road (US 176) at Marley Dr/Briargate Circle**	NBL	125	275	25	1,025	150
		NBT	150		750		900
		NBTR	225		800		900
		SBT	50	1,425	100	250	150
		SBT	775		225		775
		SBTR	625		200		775
		EBL	50	75	75	125	150
		EBTR	75		75		550
		WBL	275	325	175	250	225
		WBTR	50		75		>3,000
79	**Broad River Road (US 176) at I-20 SPUI Intersection**	NBL	100	300	75	175	475
		NBT	100		125		925
		NBR	200		0		300
		SBL	225	275	225	1,025	525
		SBT	200		100		1,175
		SBR	50		25		275
		EBL	175	225	200	350	1,625
		EBR	225		225		1,625
		WBL	200	0	250	0	1,725
		WBR	200		375		1,725
100000195	**Broad River Road (US 176) at Longcreek Drive**	NBT	100	125	250	300	625
		NBR	0		0		225
		SBL	175	300	125	175	175
		SBT	175		125		925
		WBL	0	250	25	175	375
		WBLR	175		125		375
		WBR	75		125		50

Table 6-16 - 2040 Build RRPA Intersection Queue Lengths - Colonial Life Boulevard

Intersection #	Intersection Name	Lane Group	AM Peak Hour 95th Percentile Queue Length (ft)	AM Peak Hour Maximum Spillback Queue Length (ft)	PM Peak Hour 95th Percentile Queue Length (ft)	PM Peak Hour Maximum Spillback Queue Length (ft)	Available Storage Length (ft)
107	Colonial Life Boulevard at I-126 WB Ramp	NBT	50	25	100	75	225
		SBT	125	200	75	400	525
		SBR	75		175		525
		WBR*	150	250	275	450	1,025
108	Colonial Life Boulevard at I-126 EB Ramp	SBL	225	325	150	200	225
		EBL	150	150	125	150	1,350
		EBL	150	150	125	150	3,100

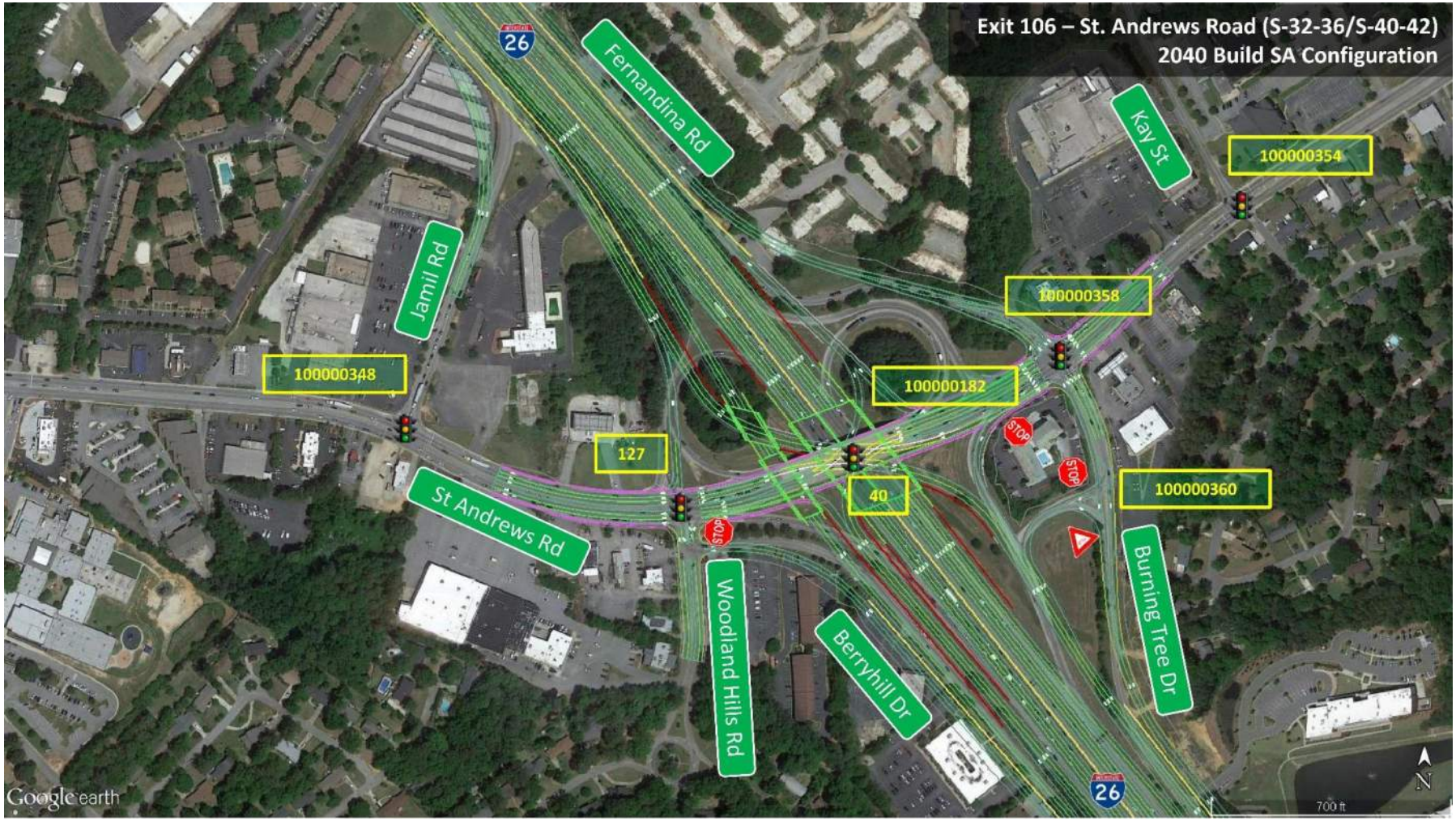

Figure 6-6 - Exit 106 - St. Andrews Road 2040 Build RRPA Configuration



Figure 6-7 - Exit 108 - Bush River Road 2040 Build RRPA Configuration

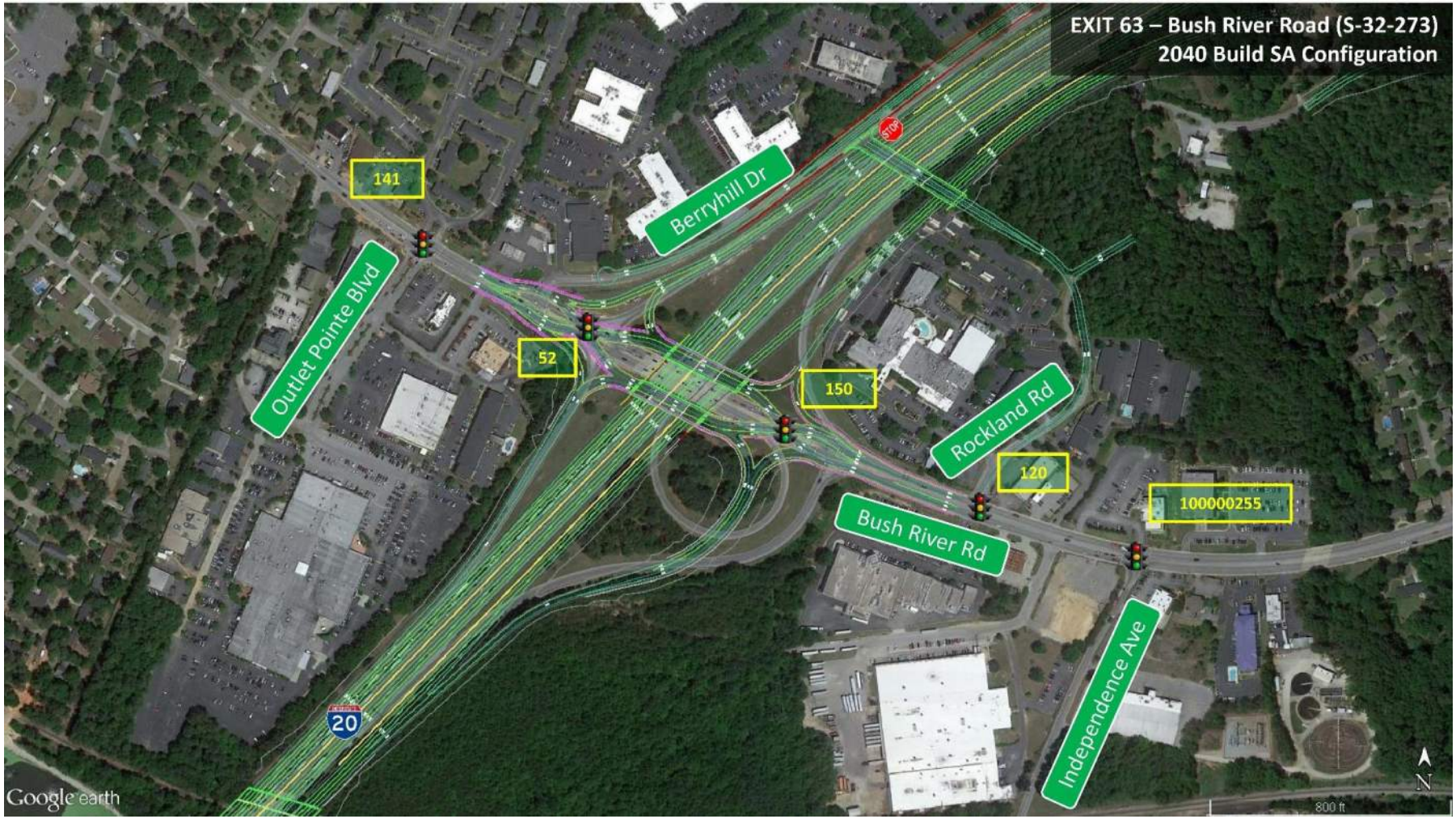

Figure 6-8 - Exit 63 - Bush River Road 2040 Build RRPA Configuration

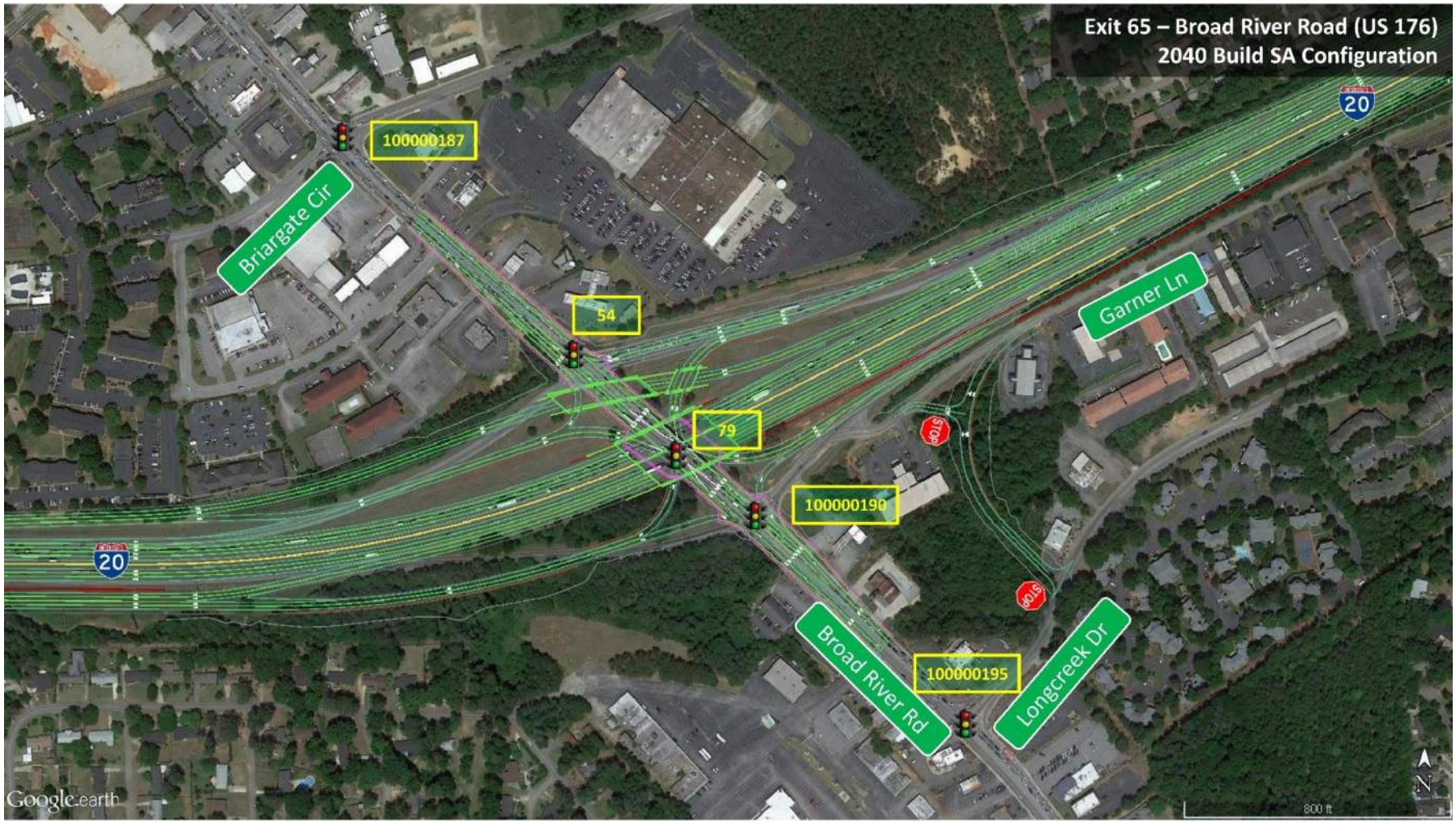

Figure 6-9 - Exit 65 - Broad River Road 2040 Build RRPA Configuration



Figure 6-10 - Colonial Life Boulevard Interchange 2040 Build RRPA Configuration

7 Interchange Justification

A policy statement for justifying the need for additional or modified access to the existing sections of an Interstate System was first published in the Federal Register on October 22, 1990 entitled "Access to the Interstate System". It was then modified and updated on February 11, 1998, on August 27, 2009, and on May 22, 2017. The objections of this policy are to ensure that all new or revised access points do not adversely impact the operations and safety of the Interstate System, and all new or revised access points have been vetted through a systematic evaluation process.

In order to explain the intent and requirements of this new policy, FHWA published a Memorandum on May 22, 2017. This FHWA Guide was followed in preparing the current Interchange Modification Report (IMR) for the I-20/I-26/I-126 Interchange in Lexington and Richland Counties, South Carolina.

7.1 Policy Point 1

An operational and safety analysis has concluded that the proposed change in access does not have a significant adverse impact on the safety and operation of the Interstate facility (which includes mainline lanes, existing, new, or modified ramps, ramp intersections with crossroad) or on the local street network based on both the current and the planned future traffic projections. The analysis should, particularly in urbanized areas, include at least the first adjacent existing or proposed interchange on either side of the proposed change in access (23 CFR 625.2(a), 655.603(d) and 771.111(f)). The crossroads and the local street network, to at least the first major intersection on either side of the proposed change in access, should be included in this analysis to the extent necessary to fully evaluate the safety and operational impacts that the proposed change in access and other transportation improvements may have on the local street network (23 CFR 625.2(a) and 655.603(d)). Requests for a proposed change in access should include a description and assessment of the impacts and ability of the proposed changes to safely and efficiently collect, distribute, and accommodate traffic on the Interstate facility, ramps, intersection of ramps with crossroad, and local street network (23 CFR 625.2(a) and 655.603(d)). Each request should also include a conceptual plan of the type and location of the signs proposed to support each design alternative (23 U.S.C. 109(d) and 23 CFR 655.603(d)).

The intent of Policy Point 1 is to require detailed operational and safety analysis of the relevent interstate segments and provide a comparison of the no-build and build conditions that are anticipated to occur through the design year of the project.

The analysis of the I-20, I-26, and I-126 interstate facilities, the I-20/I-26 system interchange (Exit 64/Exit 107), the I-26/I-126 system interchange (Exit 108), and the adjacent and closely interconnected interchanges at I-20 Exits 63 and 65, I-26 Exit 106, and the I-126 interchange at Coloinal Life Boulevard is an extension of the previous project wide traffic operations and safety analyses as summarized in the *Alternatives Traffic Analysis: Carolina Crossroads I-20/I-26/I-126 Corridor Project, Crash Analysis: Carolina Crossroads I-20/I-26/I-126 Corridor Project*.

The analysis of the interstate facilities includes the portion of I-20 between the crossings of the Saluda River and Broad River, the portion of I-26 between Exit 103 (Piney Grove Road) and Exit 110 (US 378), and the portion of I-

126 between I-26 and the interchange at Greystone Boulevard, and includes the proposed modification of the system interchanges of I-20/I-26 (Exit 64/Exit 107) and of I-26/I-126 (Exit 108), and the services interchanges at Exit 106 (St Andrews Road), Exit 63 (Bush River Road), Exit 64 (Broad River Road) and Colonial Life Boulevard. The analysis was performed using methodologies and procedures outlined in the Transportation Research Board's *Highway Capacity Manual* and used the TransModeler micro-simulation modeling software.

The Refined Recommended Preferred Alternative (RRPA) replaces the existing full cloverleaf I-20/I-26 system interchange with a directional turbine interchange, eliminating the four short congested weaving sections between the heavily traveled loop ramps. The RRPA also revises the I-26/I-126 system interchange to provide improved continuity for traffic traveling on I-26. The proposed collector-distributor system relocates from the mainline facilities the many complex, multi-lane weaving areas and the merge and diverge movements to and from the adjacent service interchanges at Exit 106, Exit 63, and Exit 65. The collector distributor road system eliminates multiple existing conflict points with mainline traffic, improving safety and operations on the interstate routes.

The analysis of the 2040 Build condition of the RRPA illustrates that the project would not have any significant negative impact on the safety and the operation of the facilities within the project area. The increased capacity provided by the RRPA will result in generally comparable LOS in the morning and afternoon peak hours compared to the Existing Conditions, and improved LOS over the 2040 No-Build conditions.

Exit 106 (St Andrews Road), the interchange adjacent to, and to the north of, the I-20/I-26 system interchange, is proposed to be modified to provide a Single Point Urban Interchange. Exit 104 (Piney Grove Road), the next adjacent interchange to the west of Exit 106, is not expected to be modified as part of this project. Exit 104 is located approximately two miles west of the Exit 106 interchange. There are no anticipated operations concerns related to the spacing between the two interchanges. Sufficient distance exists between upstream and downstream merging/diverging areas at the adjacent interchanges to eliminate the influence of traffic movements within these areas. The analysis shows the eastbound freeway segments are projected to operate at LOS D and LOS C in the during the morning and afternoon peak hours, respectively. In the westbound direction, the freeway segment is expected to operate at LOS D and LOS F during the morning and afternoon peak hours, respectively. However, the density of these segments in the RRPA are generally better than the density of the same segments under existing conditions.

Exit 110 (US 378), the interchange adjacent to, and to the south of, the I-26/I-126 system interchange, is not proposed to be modified from its existing Single Point Urban Interchange configuration. However, due to extensive recurring queuing on the westbound off-ramp, the deceleration lane is proposed to be extended by approximately 2,500 feet as part of this project. The spacing between the relocated diverge area and merge area (from the I-126 westbound fly-over ramp) has been shortened to about 2,500 feet which is sufficient and will not adversely affect mainline and ramp operations. All freeway, merge and diverge areas in the eastbound direction between the I-126 westbound fly-over on ramp and the Exit 110 off-ramp operate at LOS D or better during both the morning and afternoon peak hours.

Exit 63 (Bush River Road), the interchange adjacent to, and to the west of, the I-20/I-26 system interchange, is proposed to be modified to provide a Diverging Diamond Interchange. Exit 61 (US 1), the next adjacent interchange to the west of Exit 63, is not expected to be modified as part of this project. Exit 61 is located approximately 2.1 miles west of Exit 63 and is west of the Saluda River crossing that makes up the western Carolina Crossroads study area limits on I-20. There is a potential project outside of the Carolina Crossroads improvements that may extend the deceleration lane for the westbound off-ramp to Exit 61. The Exit 61 westbound off-ramp, outside of the project limits, may substantially affect the westbound mainline density and Exit 63 westbound merge operations due to high ramp volumes and congestion identified along the Exit 61 arterial.

Exit 65 (Broad River Road), the interchange adjacent to, and to the east of, the I-20/I-26 system interchange is proposed to be modified to provide a Single Point Urban Interchange. Exit 68 (Monticello Road), the next adjacent interchange to the east of Exit 65, is not expected to be modified as part of the project. Exit 68 is located approximately 3.2 miles east of Exit 65 and is east of the Broad River crossing that makes up the eastern Carolina Crossroads study area limits on I-20. Because of the distance between Exits 65 and 68, and the bridge crossing the Broad River creating a barrier, and that the widening of I-20 ends east of the Broad River crossing, FHWA and SCDOT agreed that the Exit 68 interchange would not influence operations at Exit 65. However, with increased volumes and improved throughput within the system-to-system interchange, heavy queuing and ramp backup along I-20 eastbound was identified, due to the mainline capacity constraint that occurs at the eastern project limits as the proposed four lane section transitions into the existing three lane section at the bridge across Broad River just east of Exit 65.

The Colonial Life Boulevard interchange on I-126 is the interchange adjacent to, and to the south of the I-26/I-126 interchange. This interchange is proposed to be modified from the eastern-oriented partial interchange to a full access interchange. The interchange at Greystone Boulevard is the next adjacent interchange and is located about one mile east of the Colonial Life Boulevard interchange. Sufficient distance will be provided between the upstream and downstream merging/diverging areas at the adjacent interchanges to eliminate the influence of traffic movement within these areas.

The *Crash Analysis: Carolina Crossroads I-20/I-26/I-126 Corridor Project* identified a total of 3,351 crashes occurring between January 1, 2012 and December 31, 2014 along the three interstate routes within the study area.

I-26 experienced the most crashes within the study area. A total of 2,370 crashes occurred along I-26. There were 796 crashes along I-20. I-126 experienced the fewest crashes, with 185 crashes. Along I-20 and I-26, rear end collisions (about 62 percent) were most frequent, followed by same direction sideswipe accidents (approximately 18 percent) and no collision with motor vehicle (approximately 17 percent). Rear end collisions were also the most frequent type of collision (approximately 44 percent) along I-126. However, the no collision with motor vehicle crashes on I-126 were about double (approximately 31 percent) the percentage of similar type collisions reported on I-26 (about 17 percent) and I-20 (about 14 percent).

There were 609 crashes resulting in injury (about 18 percent). Twelve crashes resulted in fatalities. Of the 12 fatal crashes along the interstate routes within the study area, seven took place along I-26, three on I-20, and two on I-126.

The recurring congestion, the close spacing of the service interchanges adjacent to the I-20/I-26 and I-26/I-126 system interchanges, and the multiple complex weaving movements within and adjacent to the system interchanges contribute to the frequency of crashes within the study area. The proposed interchange improvements at the system interchanges and the addition of the collector-distributor road systems along I-20 and I-26 should improve safety and improve traffic operations by removing the numerous existing vehicle conflict points and relocating merge/diverge areas and weaving sections within the study area from the mainline lanes to the collector-distributor lanes. By removing the Bush River Road ramps at Exit 108, the short weaving section between the ramp from eastbound I-20 to eastbound I-26 and the eastbound off-ramp to Exit 108 is eliminated. The congestion caused by the complex westbound weaving movements to travel to I-20 and to Exit 106 after I-126 merges with I-126 is also eliminated.

Pedestrian facilities will be incorporated into the proposed service interchanges at Exits 106, 63 and 65.

A conceptual signing plan for the RRPA is provided in **Appendix F**.

7.2 Policy Point 2

The proposed access connects to a public road only and will provide for all traffic movements. Less than "full interchanges" may be considered on a case-by-case basis for applications requiring special access, such as managed lanes (e.g., transit, HOVs, HOT lanes) or park and ride lots. The proposed access will be designed to meet or exceed current standards (23 CFR 625.2(a), 625.4(a)(2), and 655.603(d)). In rare instances where all basic movements are not provided by the proposed design, the report should include a full-interchange option with a comparison of the operational and safety analyses to the partial-interchange option. The report should also include the mitigation proposed to compensate for the missing movements, including wayfinding signage, impacts on local intersections, mitigation of driver expectation leading to wrong-way movements on ramps, etc. The report should describe whether future provision of a full interchange is precluded by the proposed design.

The intent of Policy Point 2 is to require implementation of interchange design for interstate acces that allows for all relevant movements for general purpose traffic, whenever feasible.

The existing system interchanges at I-20/I-26 (Exit 64/Exit 107) and at I-26/I-126 (Exit 108) provide for all traffic movements between the respective interstate routes. The proposed modificaitons of the system interchanges will continue to provide for all traffic movements between the interstate routes.

The existing service interchanges at Exit 106, Exit 63, and Exit 65 currently provide full access for all traffic movements. As illustrated by the design concepts for these interchanges, the proposed modifications to Exits 106, 63, and 65 will continue to provide full access for all traffic movements.

The existing configuration of the Exit 106 westbound off-ramp will be continued in the proposed interchange configuration. The proximity along St Andrews Road of the westbound off-ramp intersection and the Fernandina Road/Burning Tree Road frontage road intersection makes it desireable to maintain the connection from the off-ramp to Burning Tree Road and a separate connection to eastbound St Andrews Road. The ramp connecting to Burning Tree Road will continue to provide access to the south on Burning Tree Road, and to encourage safer access to northbound Fernandina Road.

Appendix A—Existing Peak Hour Volumes

Balanced 2015 Existing
Peak Hour Volumes

Carolina Crossroads
Existing Interchange Volumes

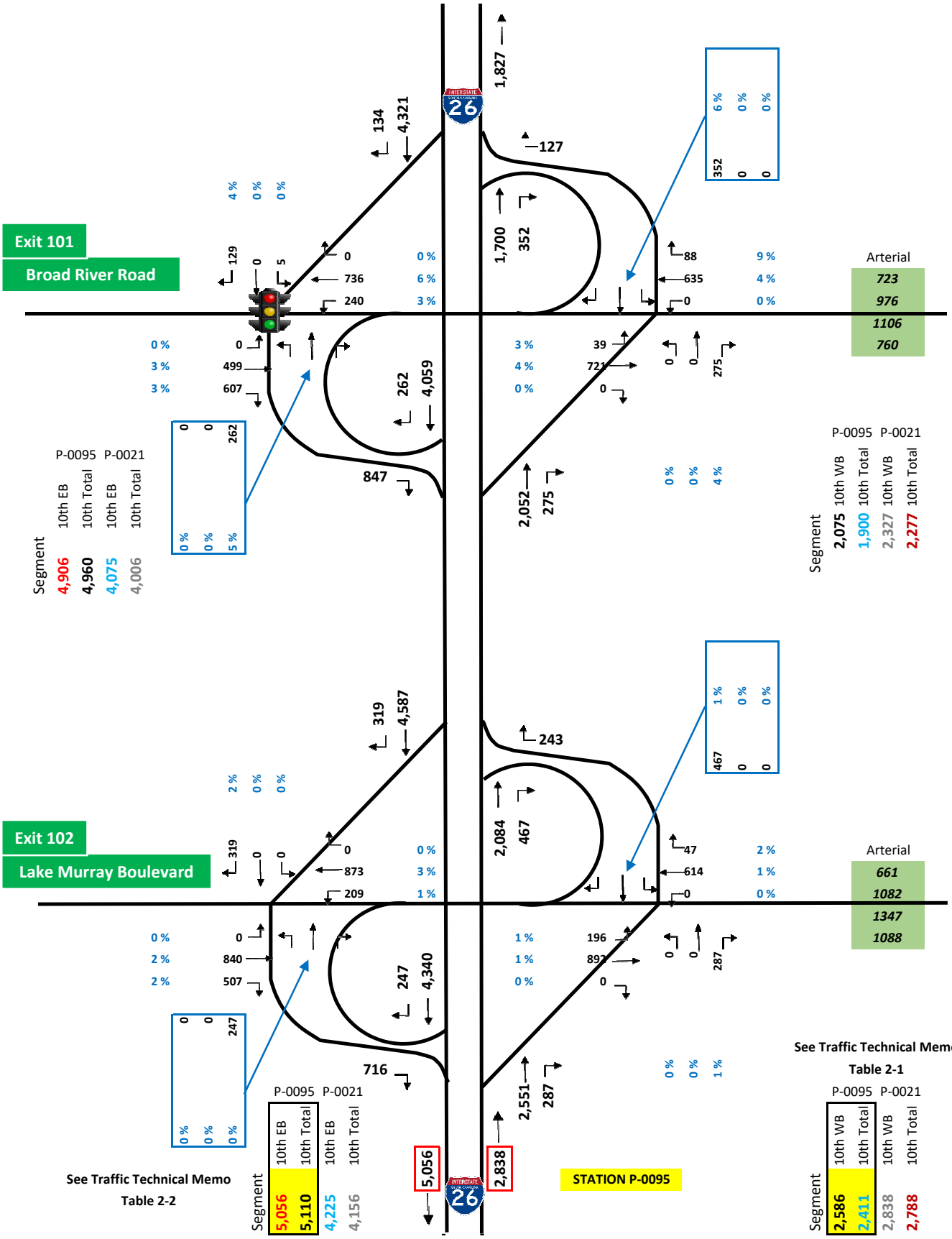

AM MAINLINE VOLUME BALANCING

Carolina Crossroads
Existing Interchange Volumes

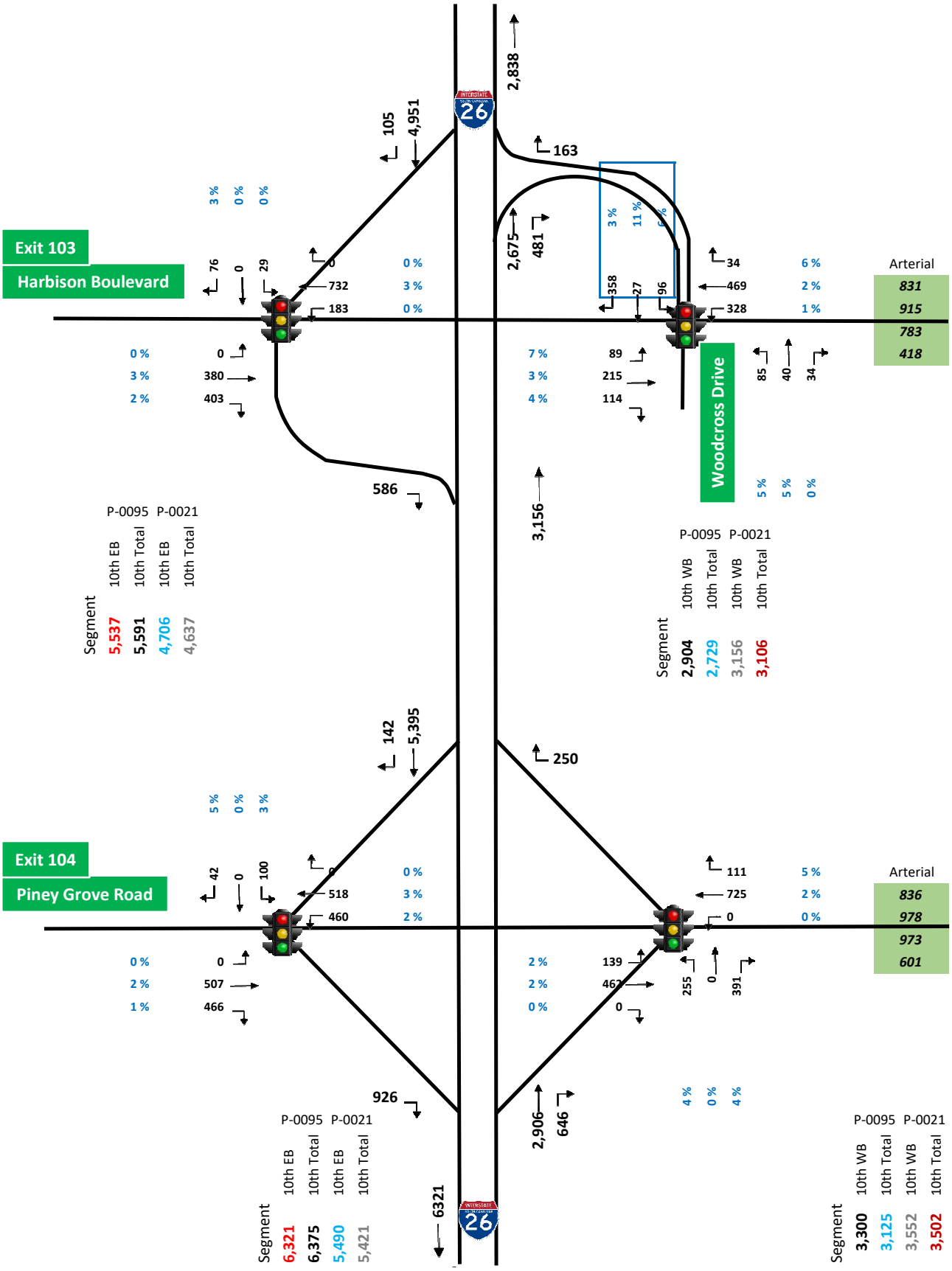

AM MAINLINE VOLUME BALANCING

Carolina Crossroads
Existing Interchange Volumes

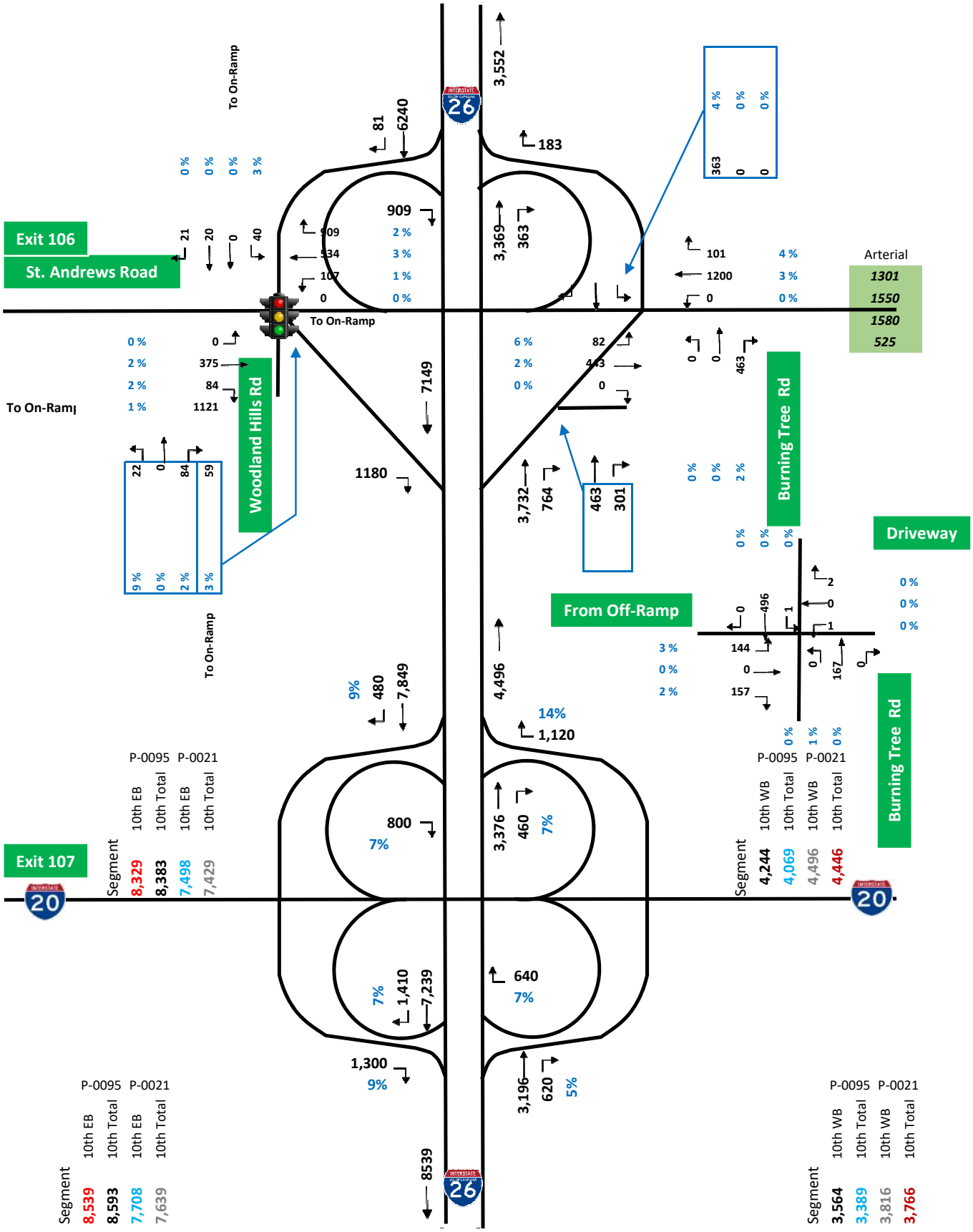

AM MAINLINE VOLUME BALANCING

Carolina Crossroads
Existing Interchange Volumes

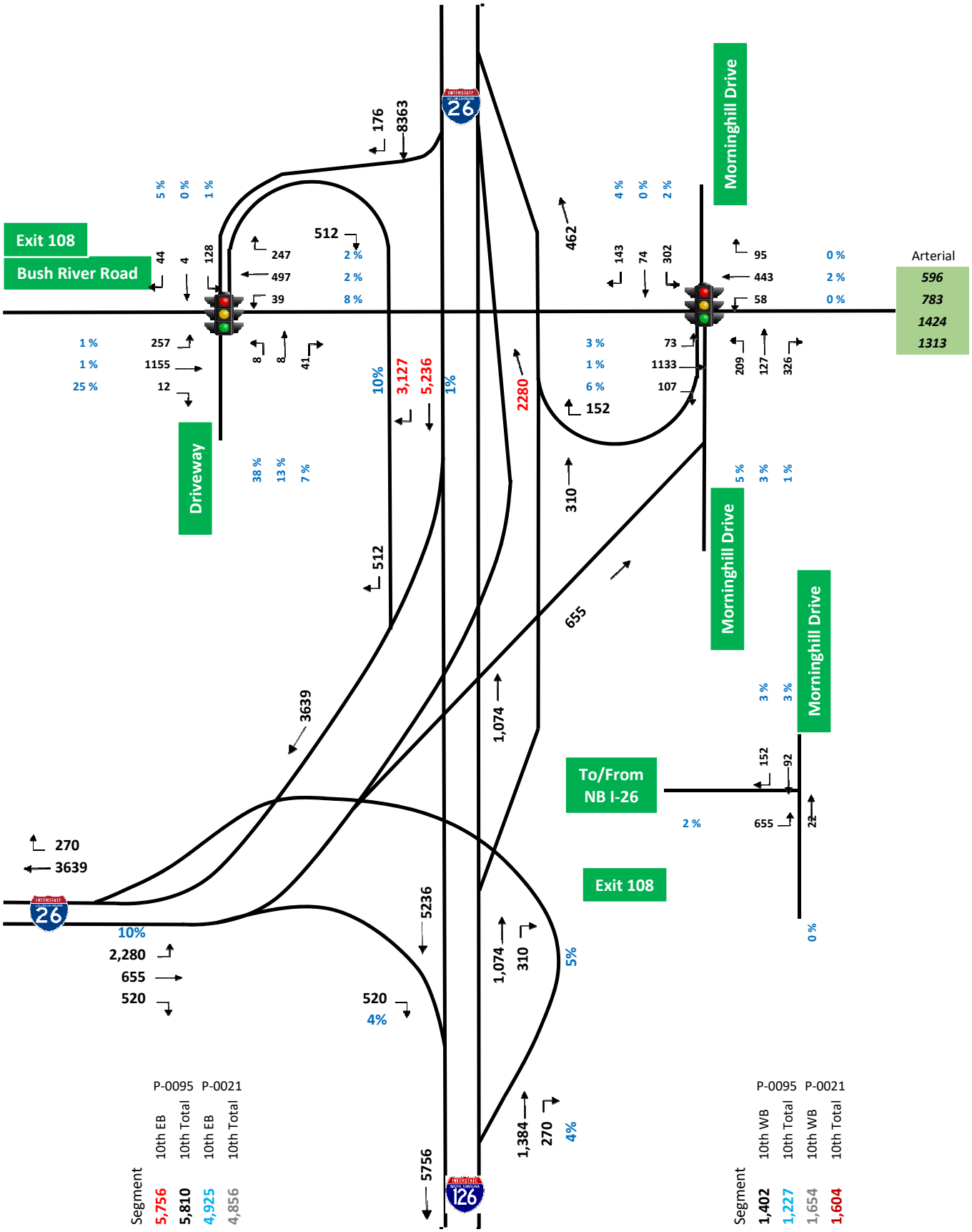

AM MAINLINE VOLUME BALANCING

Carolina Crossroads
Existing Interchange Volumes

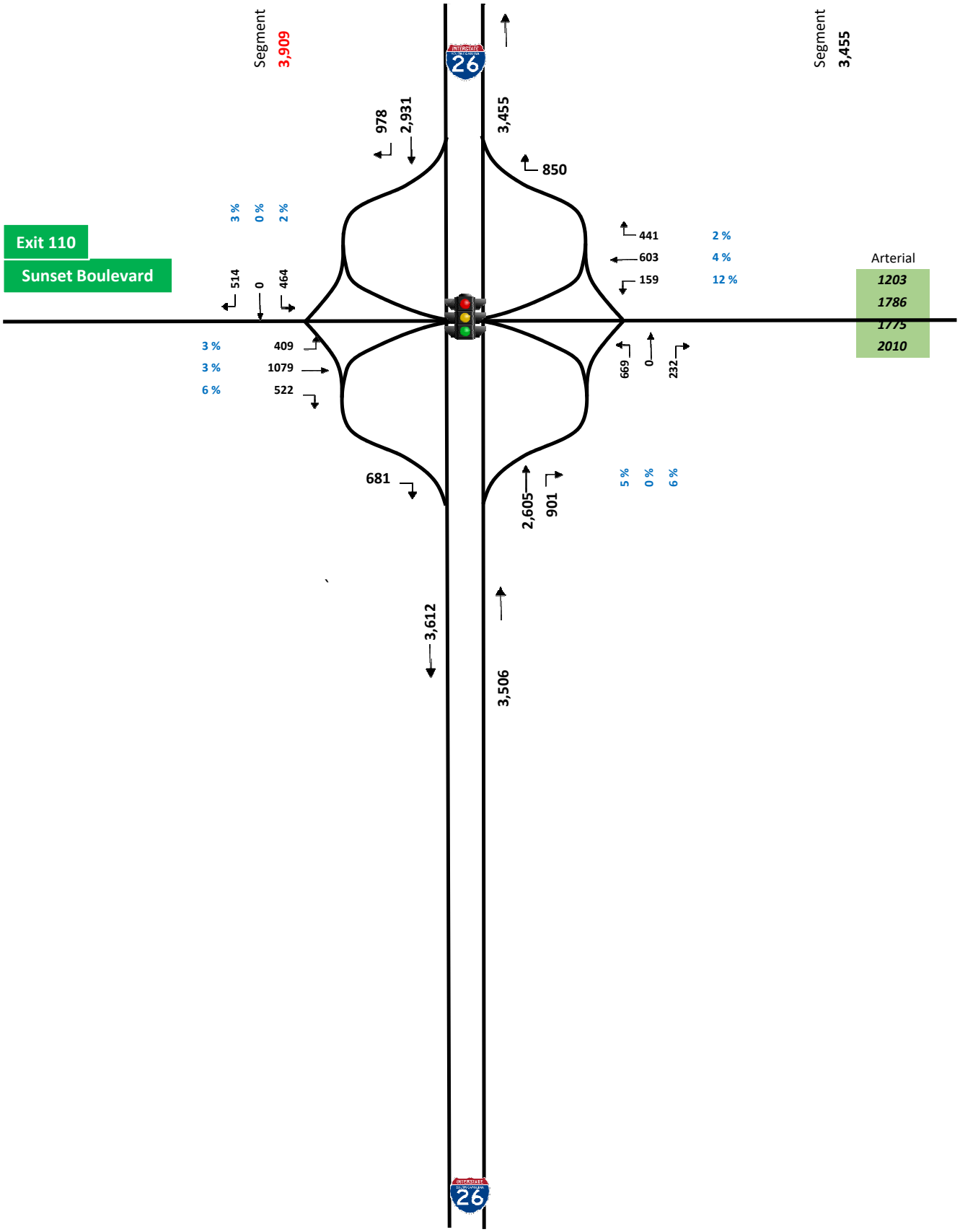

AM MAINLINE VOLUME BALANCING

Carolina Crossroads
Existing Interchange Volumes

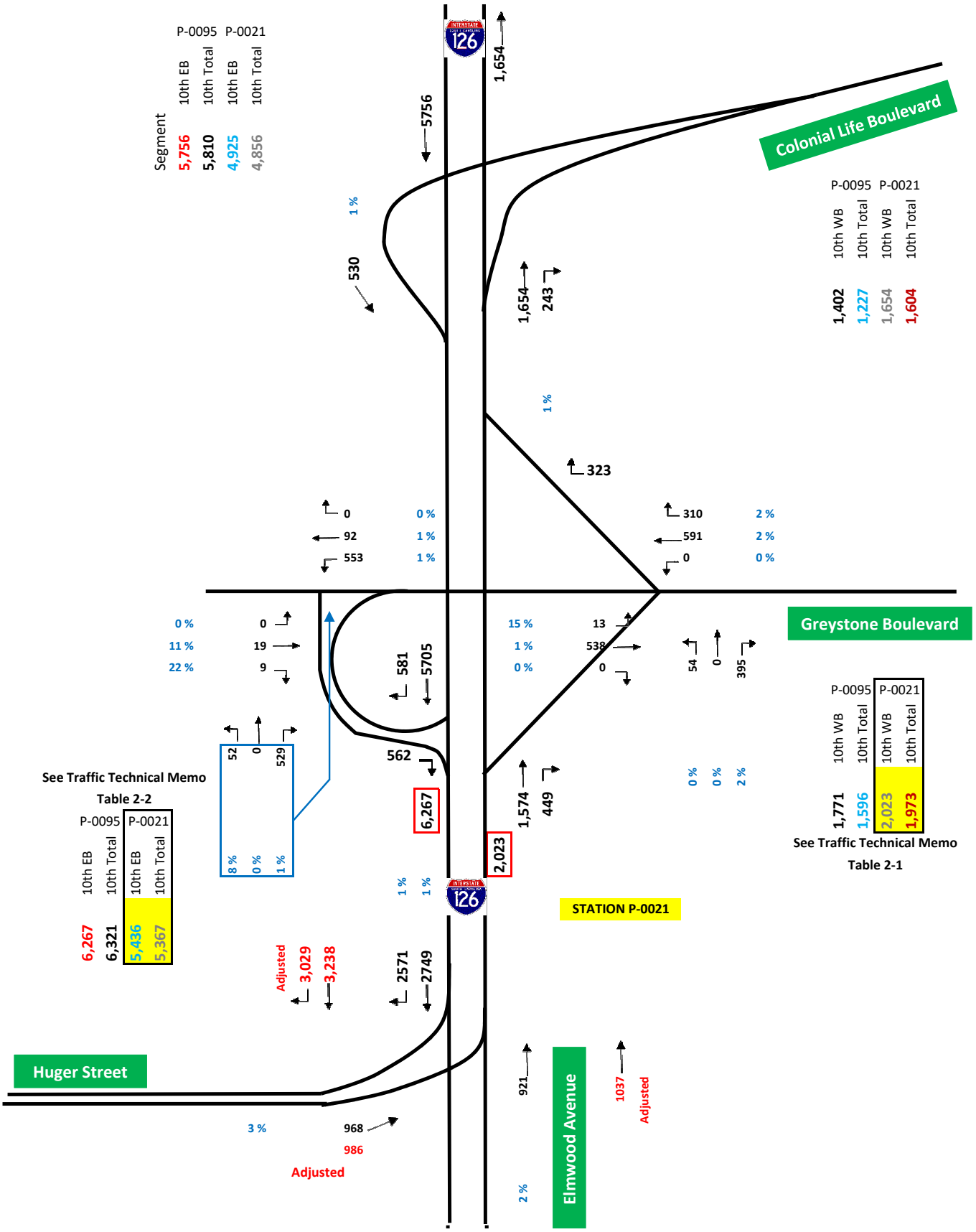

AM MAINLINE VOLUME BALANCING

Carolina Crossroads
Existing Interchange Volumes

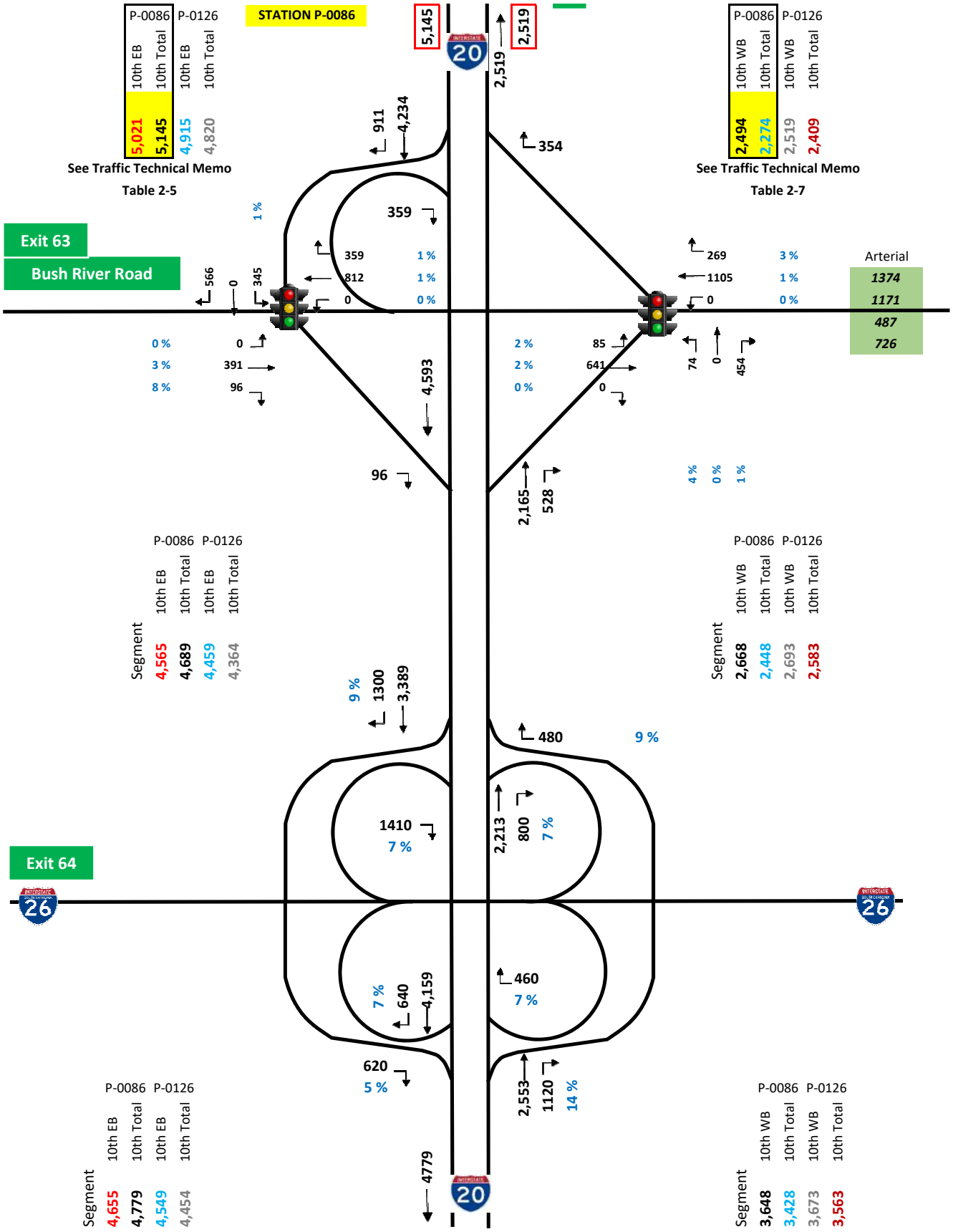

AM MAINLINE VOLUME BALANCING

Carolina Crossroads
Existing Interchange Volumes

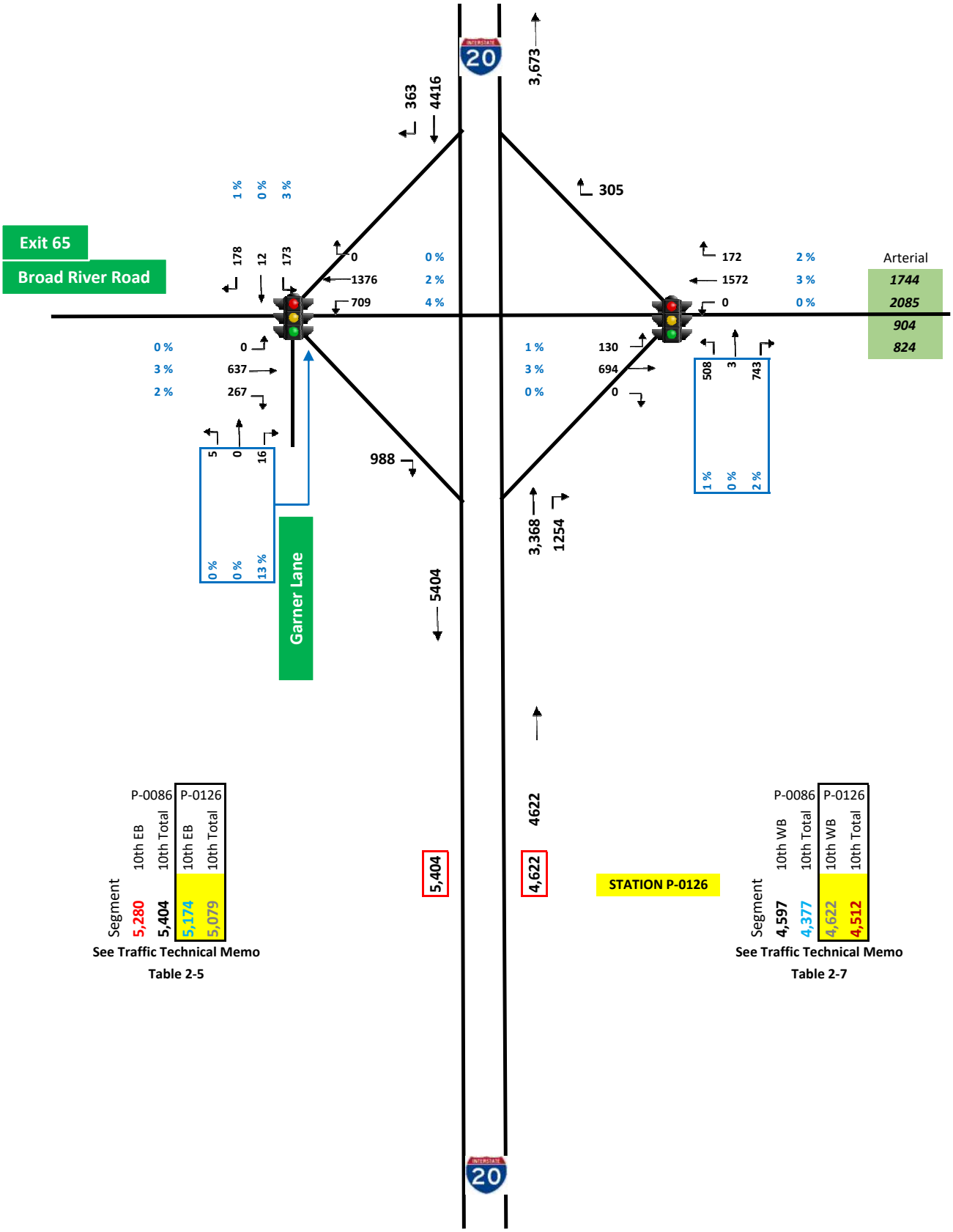

Segment	P-0086 10th EB	P-0086 10th Total	P-0126 10th EB	P-0126 10th Total
	5,280	5,404	5,174	5,079

See Traffic Technical Memo
Table 2-5

Segment	P-0086 10th WB	P-0086 10th Total	P-0126 10th WB	P-0126 10th Total
	4,597	4,377	4,622	4,512

See Traffic Technical Memo
Table 2-7

AM MAINLINE VOLUME BALANCING

Carolina Crossroads
Existing Interchange Volumes

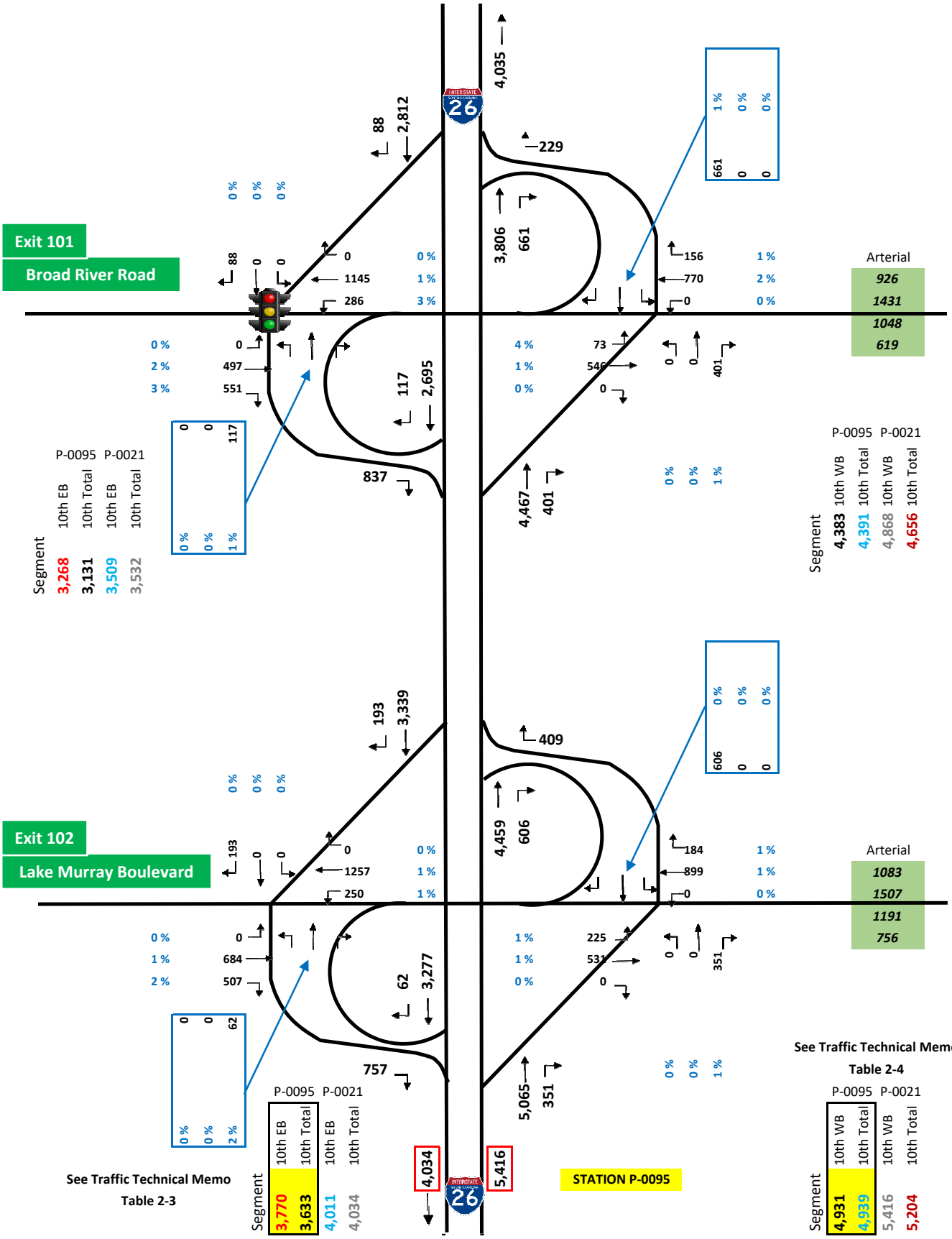

PM MAINLINE VOLUME BALANCING

Carolina Crossroads
Existing Interchange Volumes

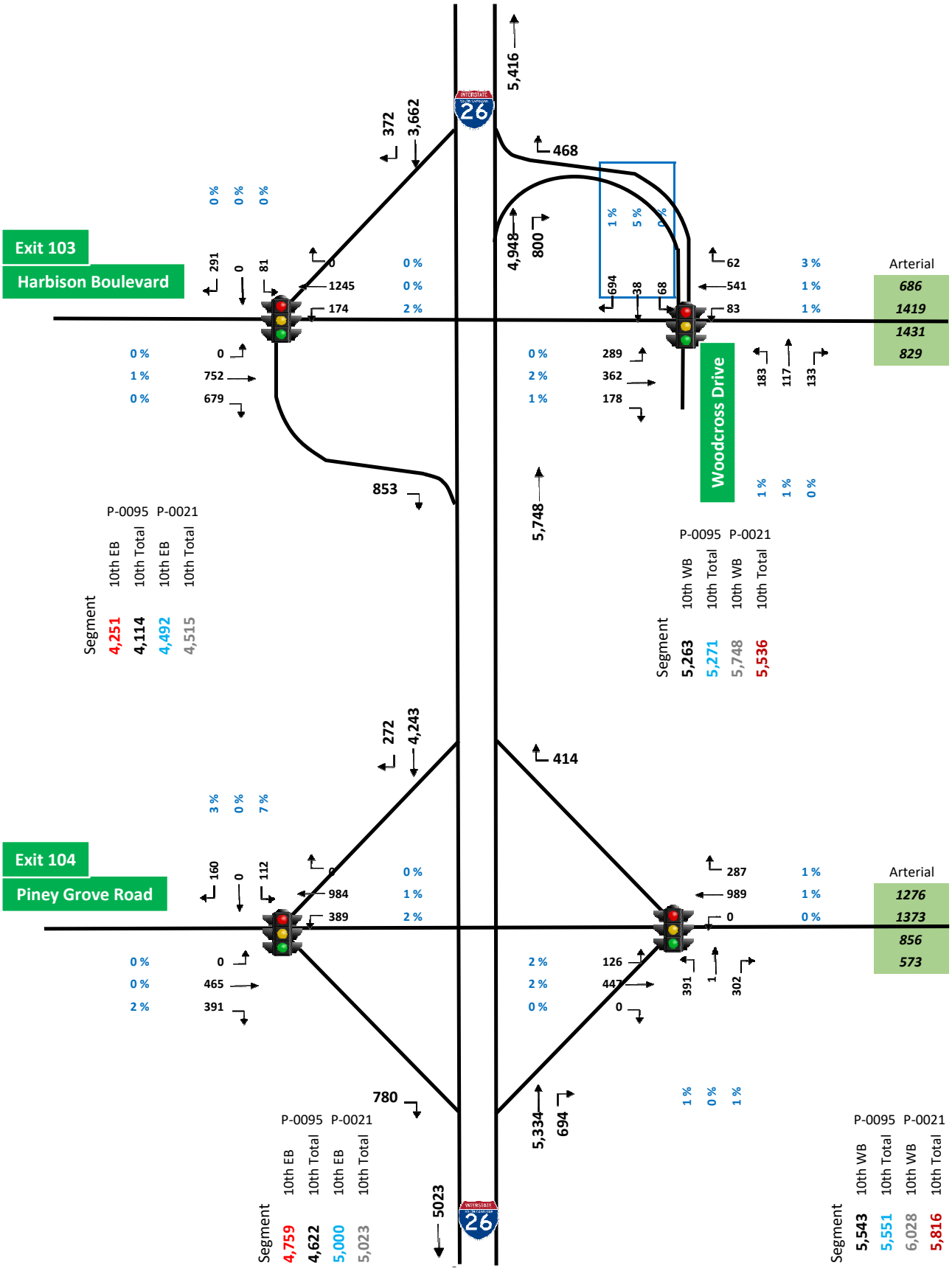

PM MAINLINE VOLUME BALANCING

Carolina Crossroads
Existing Interchange Volumes

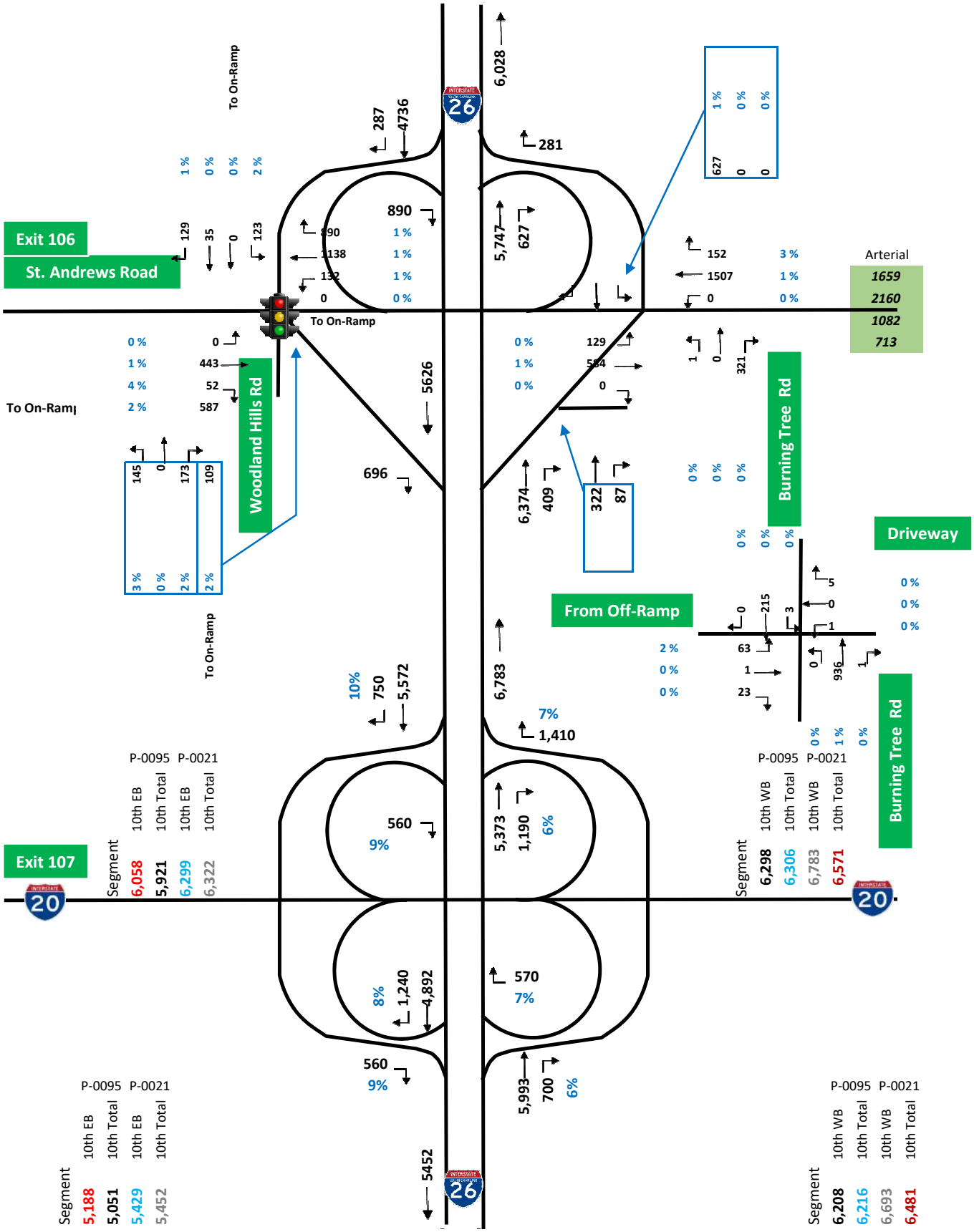

PM MAINLINE VOLUME BALANCING

Carolina Crossroads
Existing Interchange Volumes

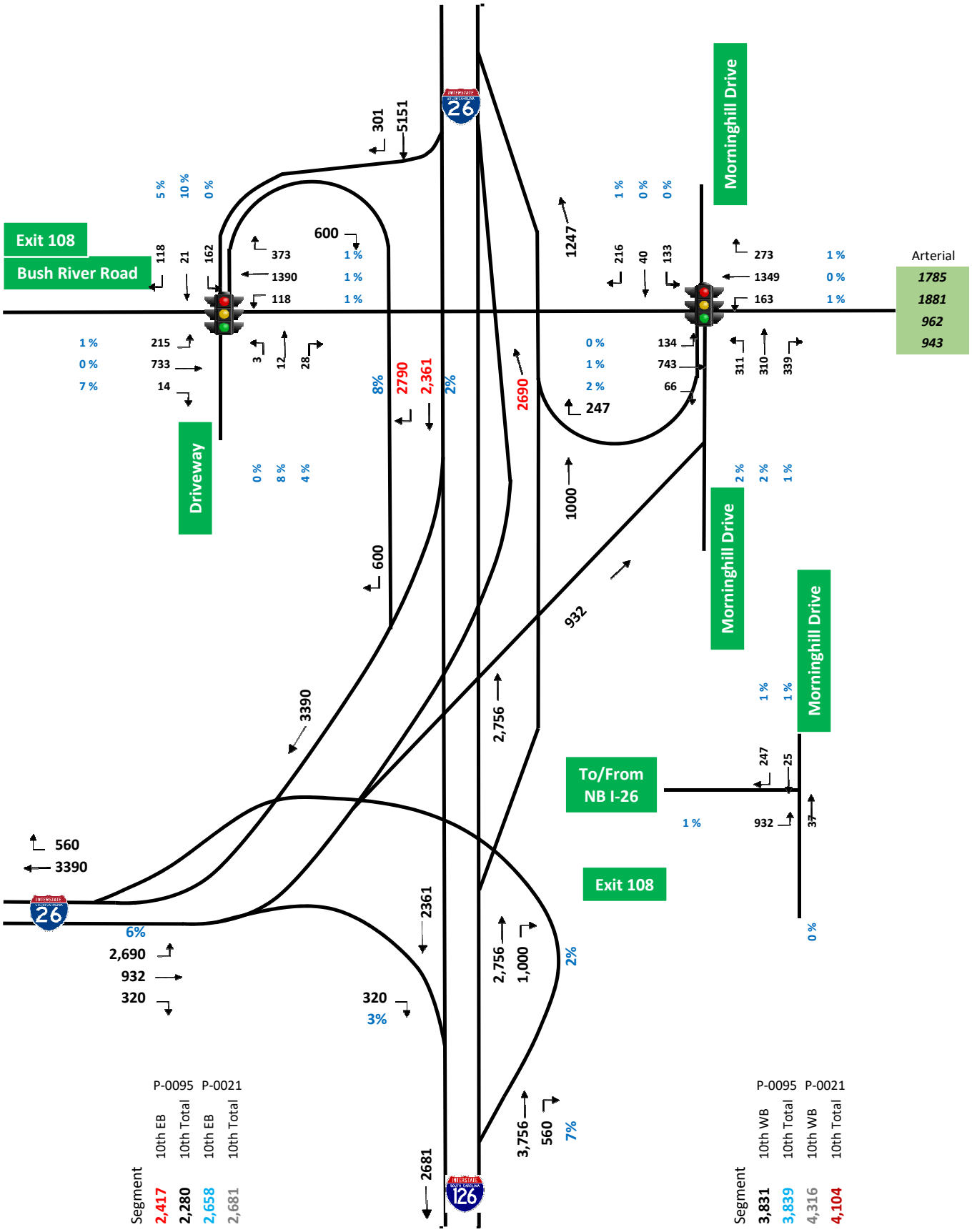

PM MAINLINE VOLUME BALANCING

Carolina Crossroads
Existing Interchange Volumes

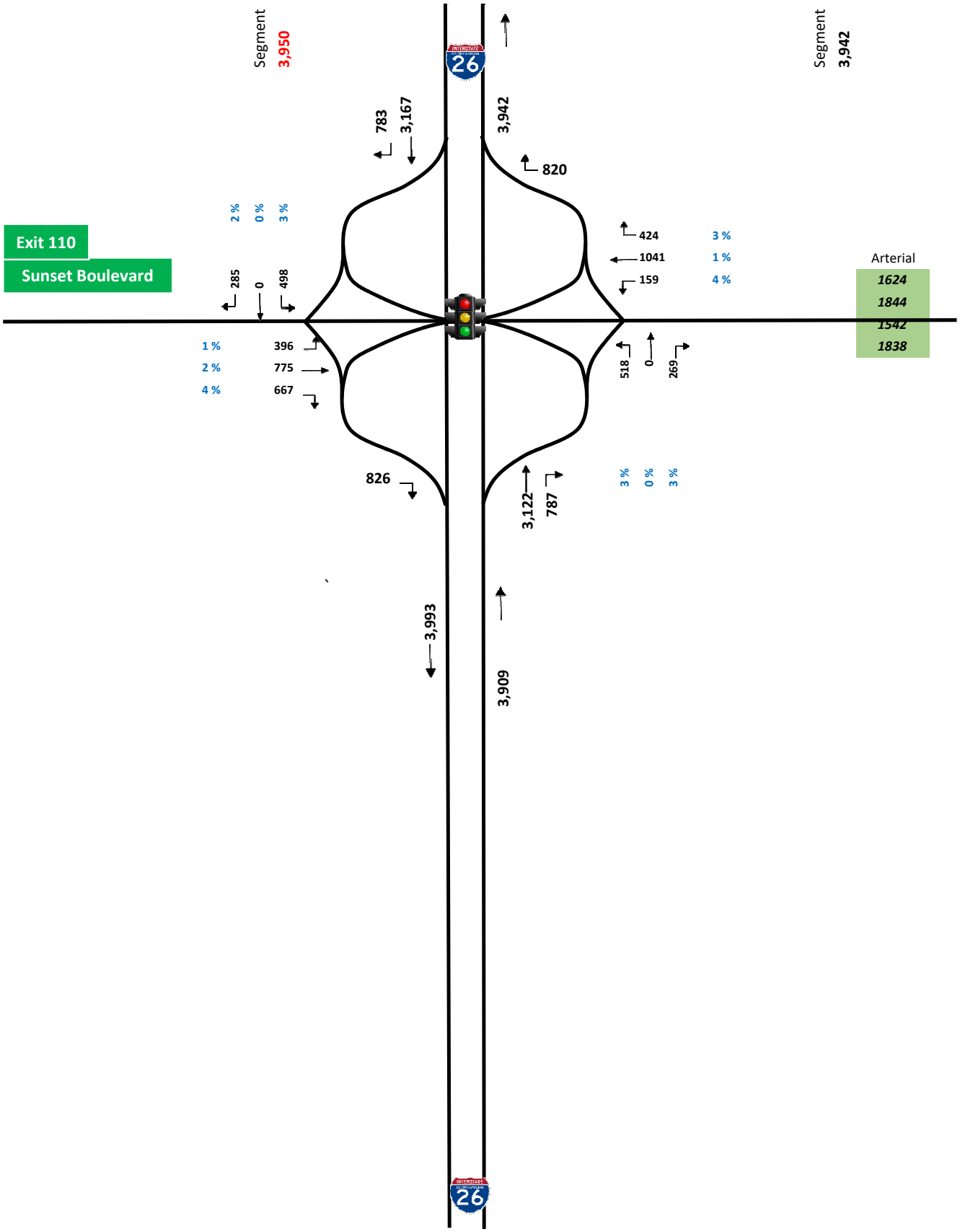

PM MAINLINE VOLUME BALANCING

Carolina Crossroads
Existing Interchange Volumes

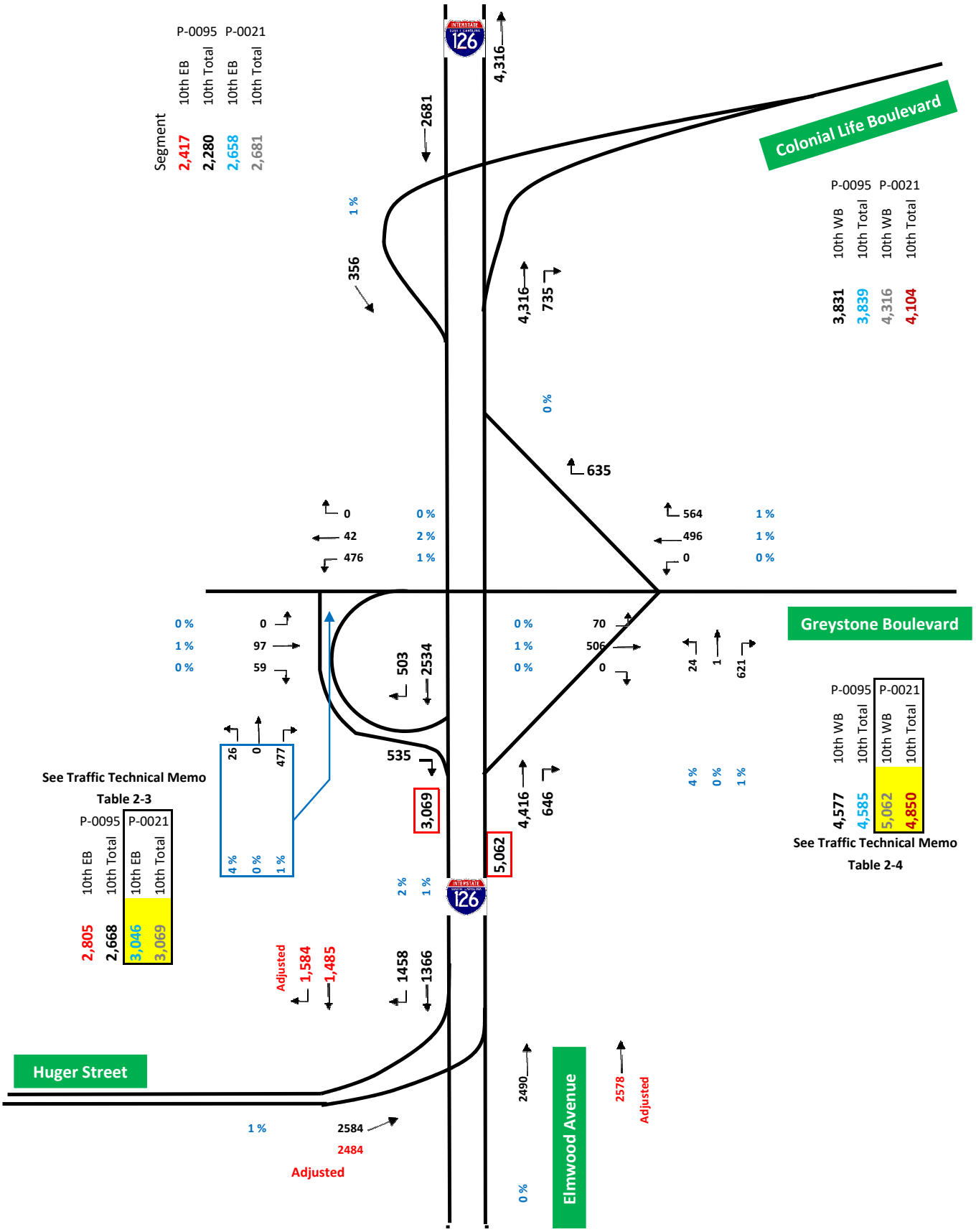

PM MAINLINE VOLUME BALANCING

Carolina Crossroads
Existing Interchange Volumes

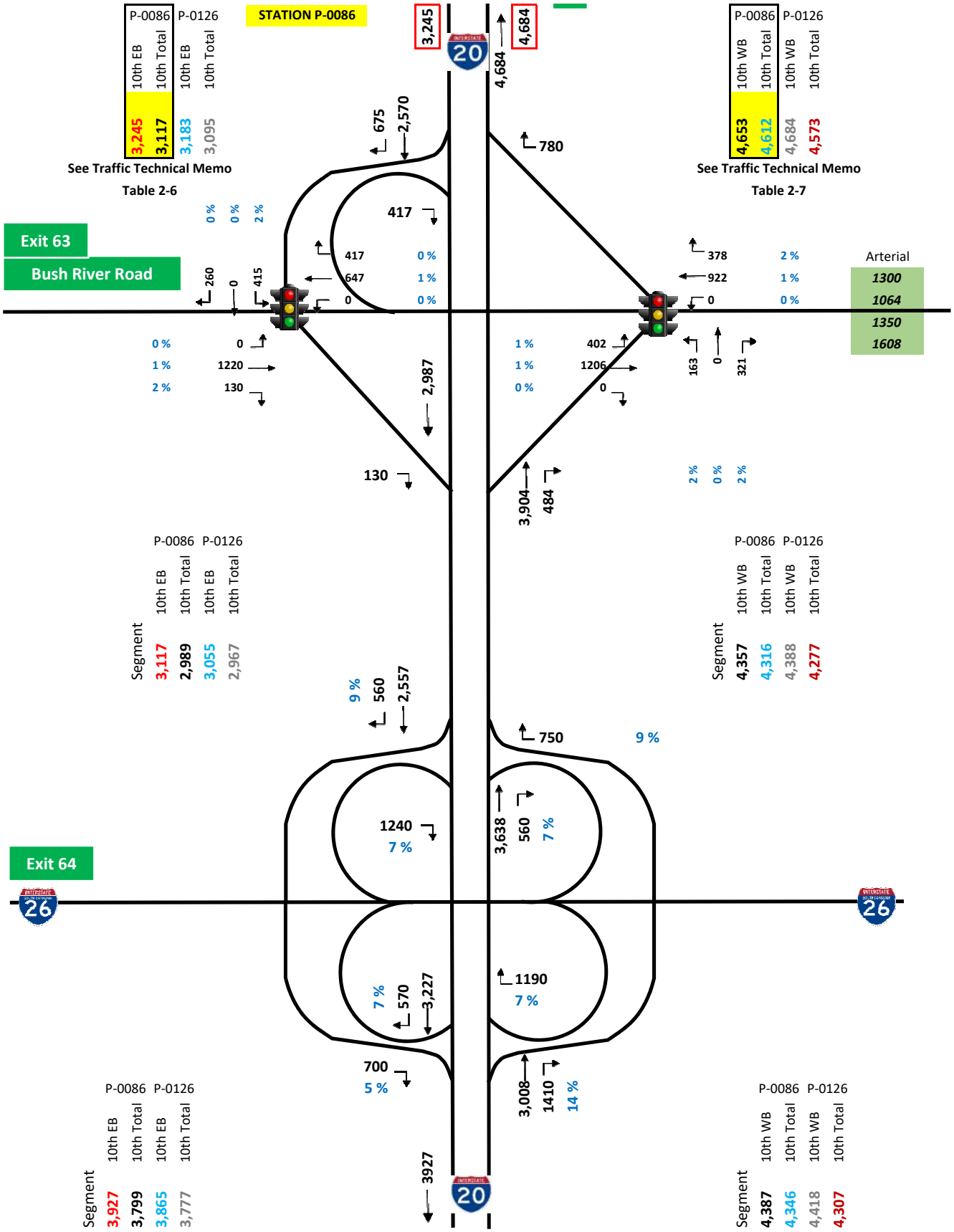

PM MAINLINE VOLUME BALANCING

Carolina Crossroads
Existing Interchange Volumes

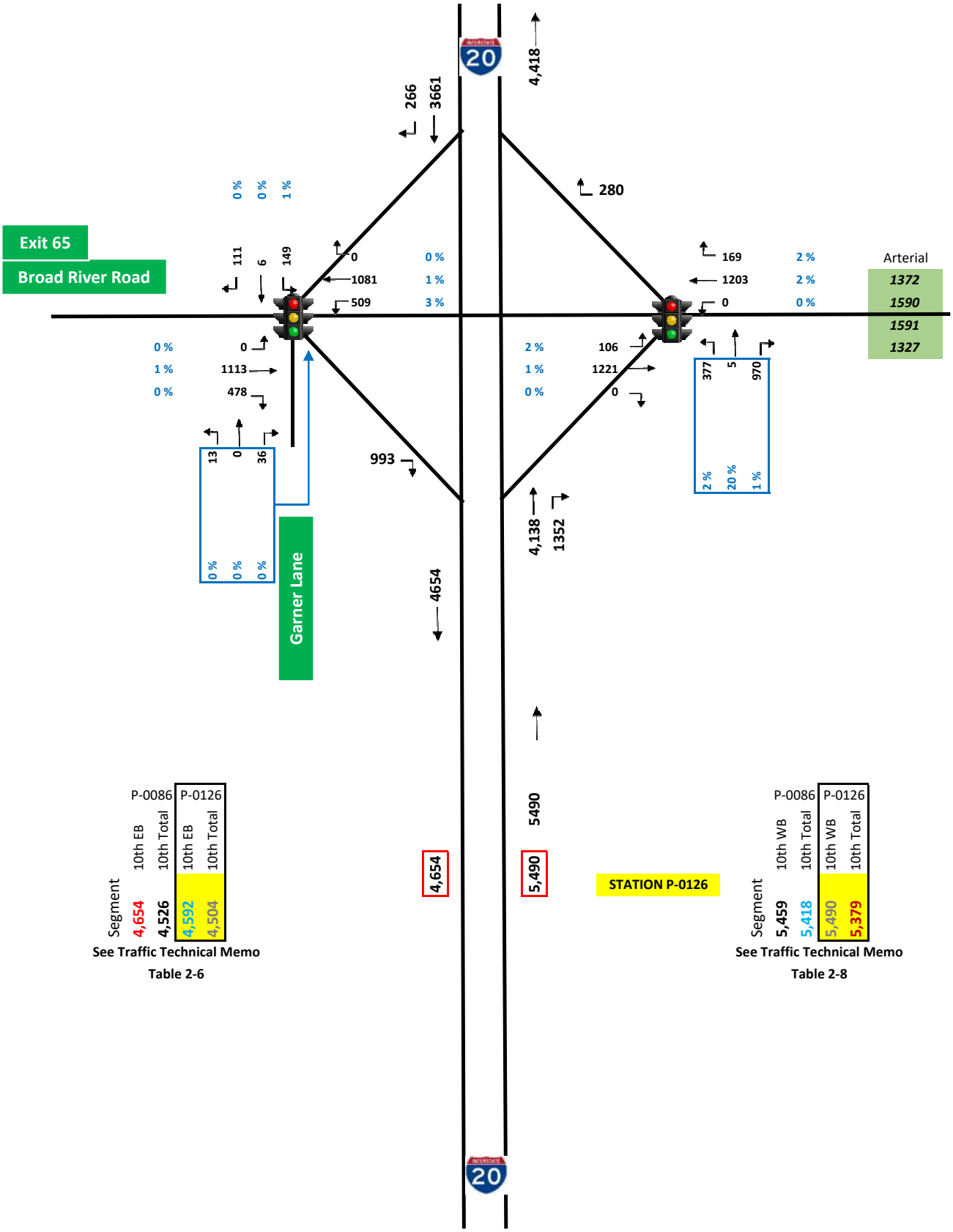

PM MAINLINE VOLUME BALANCING

TransModeler Network
2015 Existing Peak Hour Volumes

Carolina Crossroads
Existing Interchange Volumes

Exit 101
Broad River Road

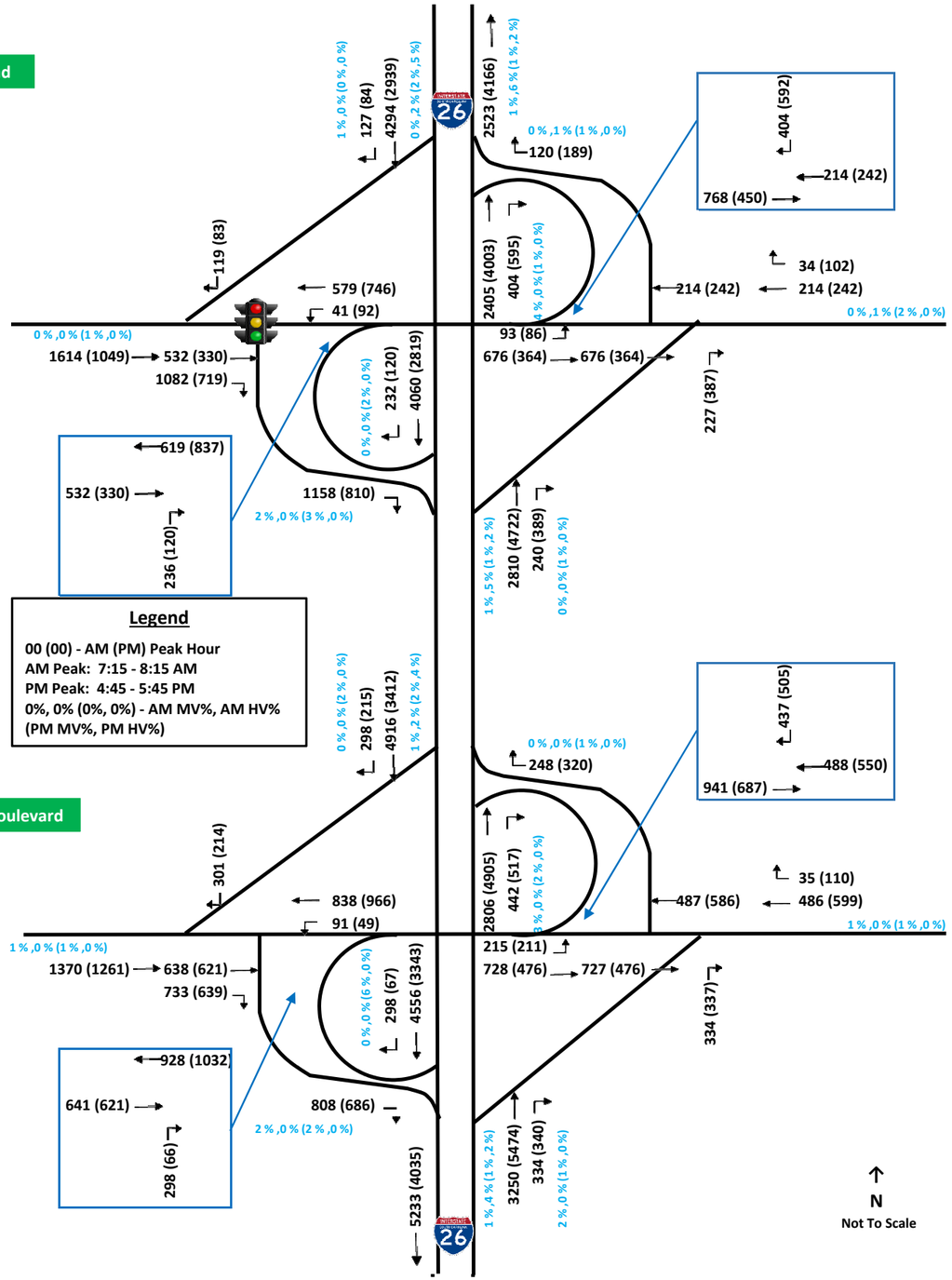

Exit 102
Lake Murray Boulevard

Carolina Crossroads
Existing Interchange Volumes

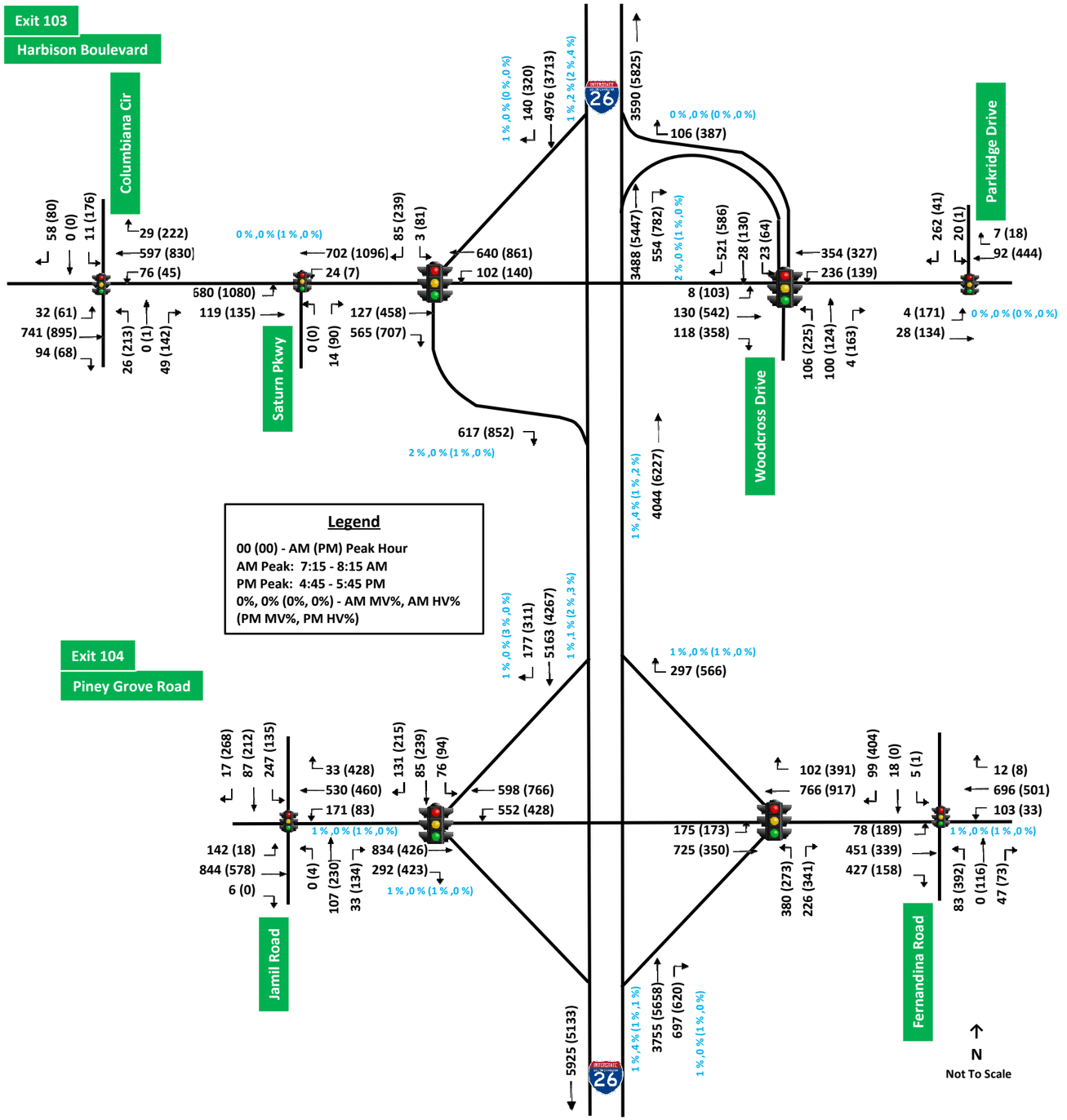

Carolina Crossroads
Existing Interchange Volumes

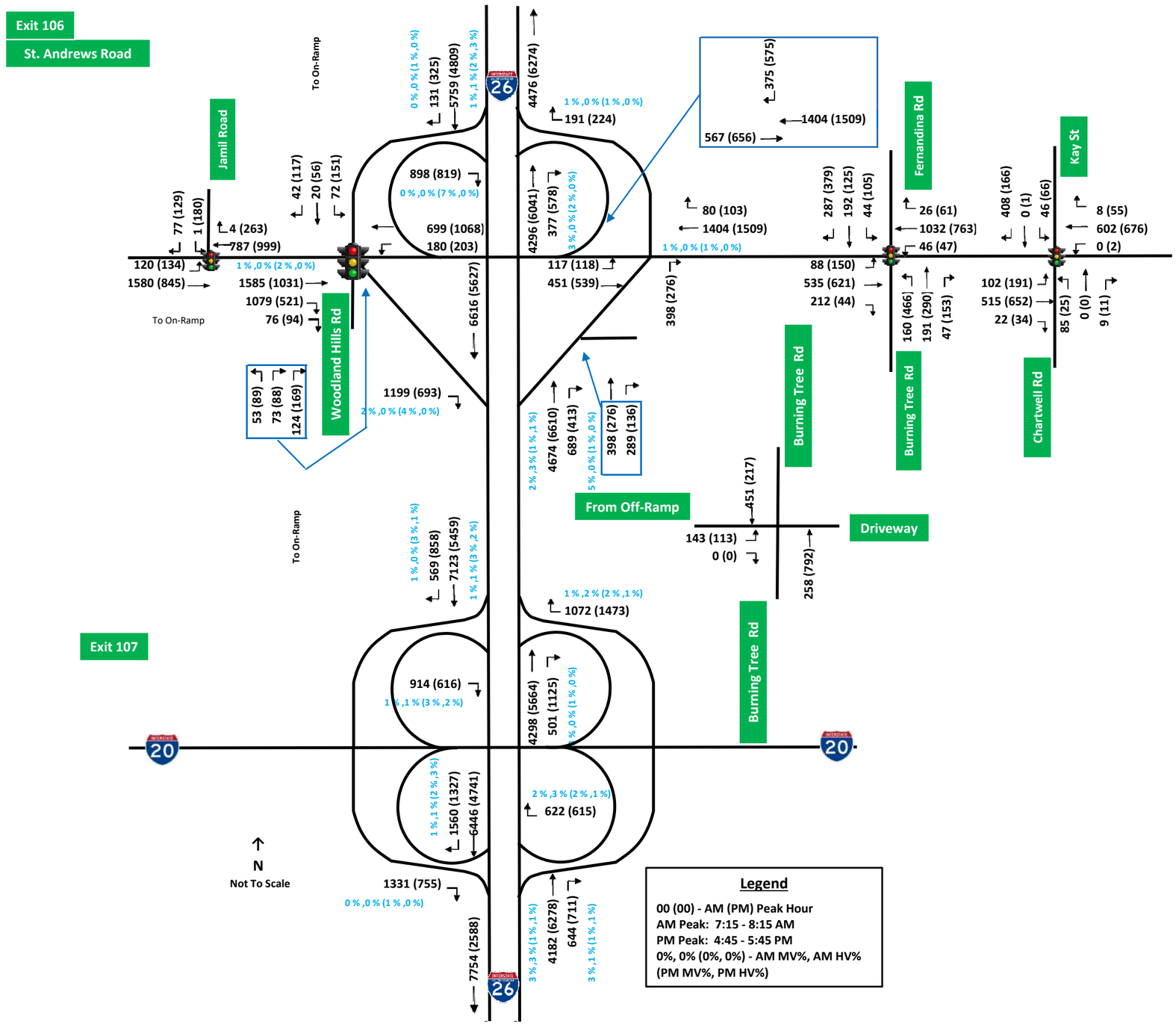

Carolina Crossroads
Existing Interchange Volumes

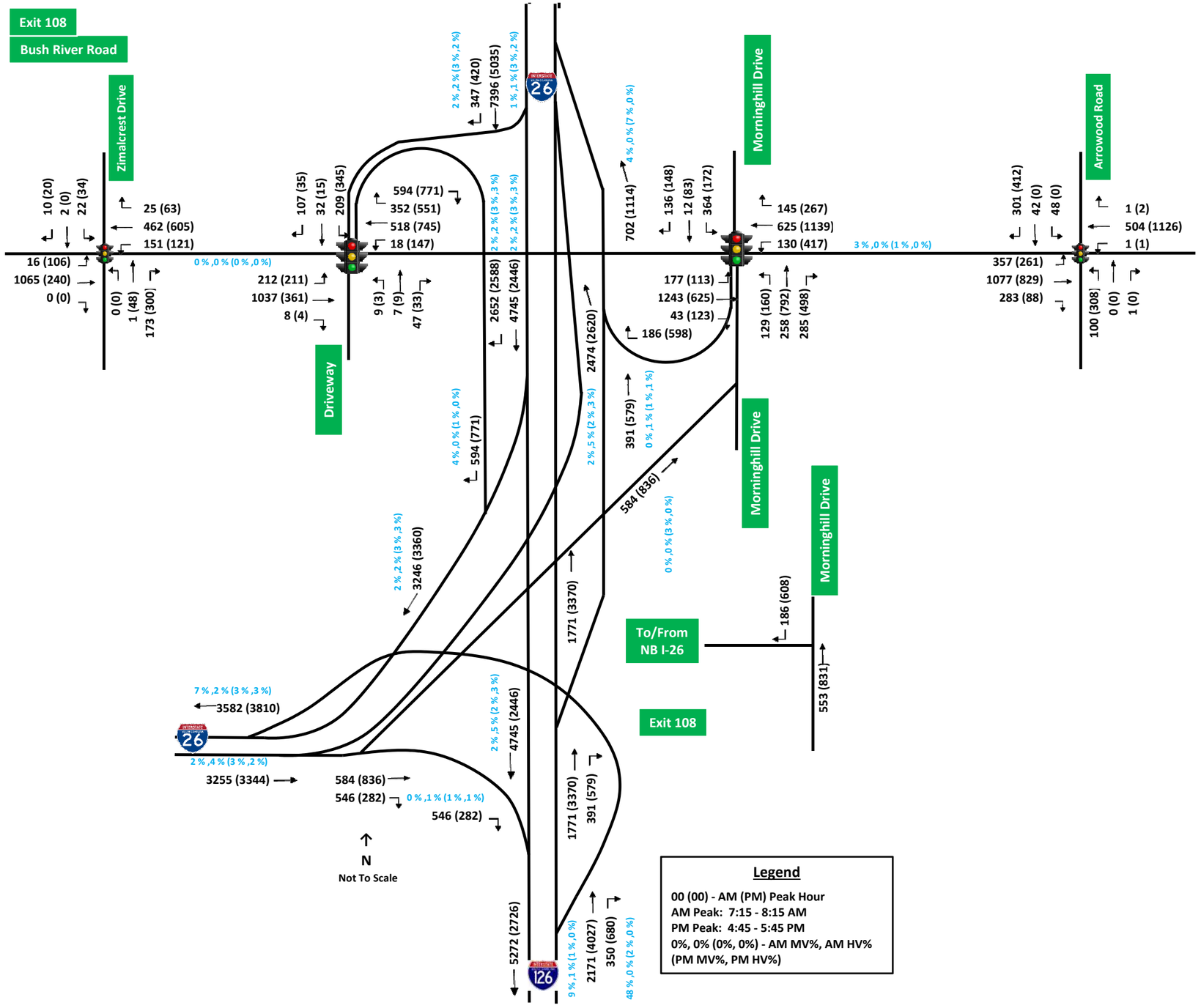

Legend

00 (00) - AM (PM) Peak Hour
AM Peak: 7:15 - 8:15 AM
PM Peak: 4:45 - 5:45 PM
0%, 0% (0%, 0%) - AM MV%, AM HV%
(PM MV%, PM HV%)

Carolina Crossroads
Existing Interchange Volumes

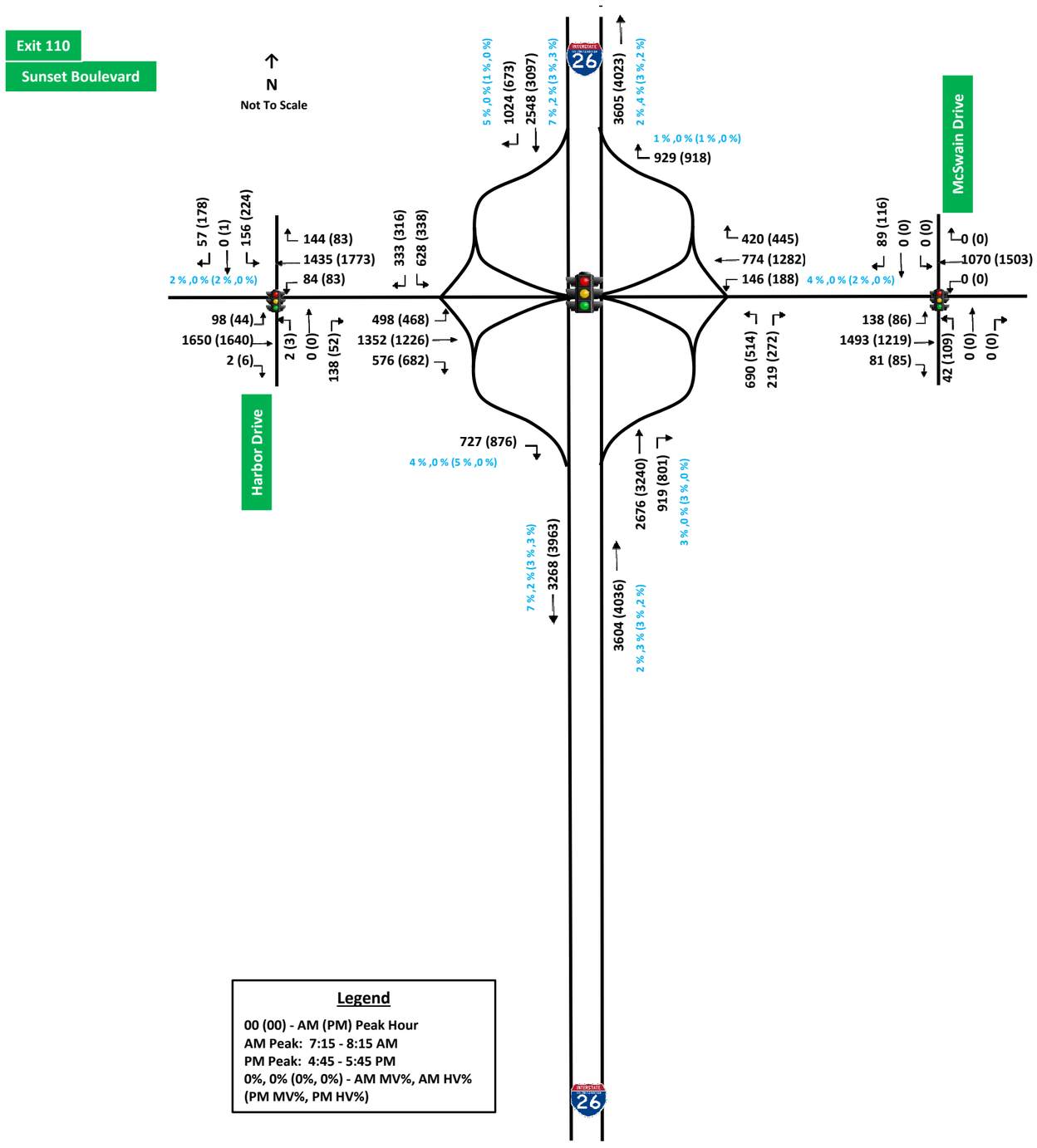

Legend

00 (00) - AM (PM) Peak Hour
AM Peak: 7:15 - 8:15 AM
PM Peak: 4:45 - 5:45 PM
0%, 0% (0%, 0%) - AM MV%, AM HV%
(PM MV%, PM HV%)

Carolina Crossroads
Existing Interchange Volumes

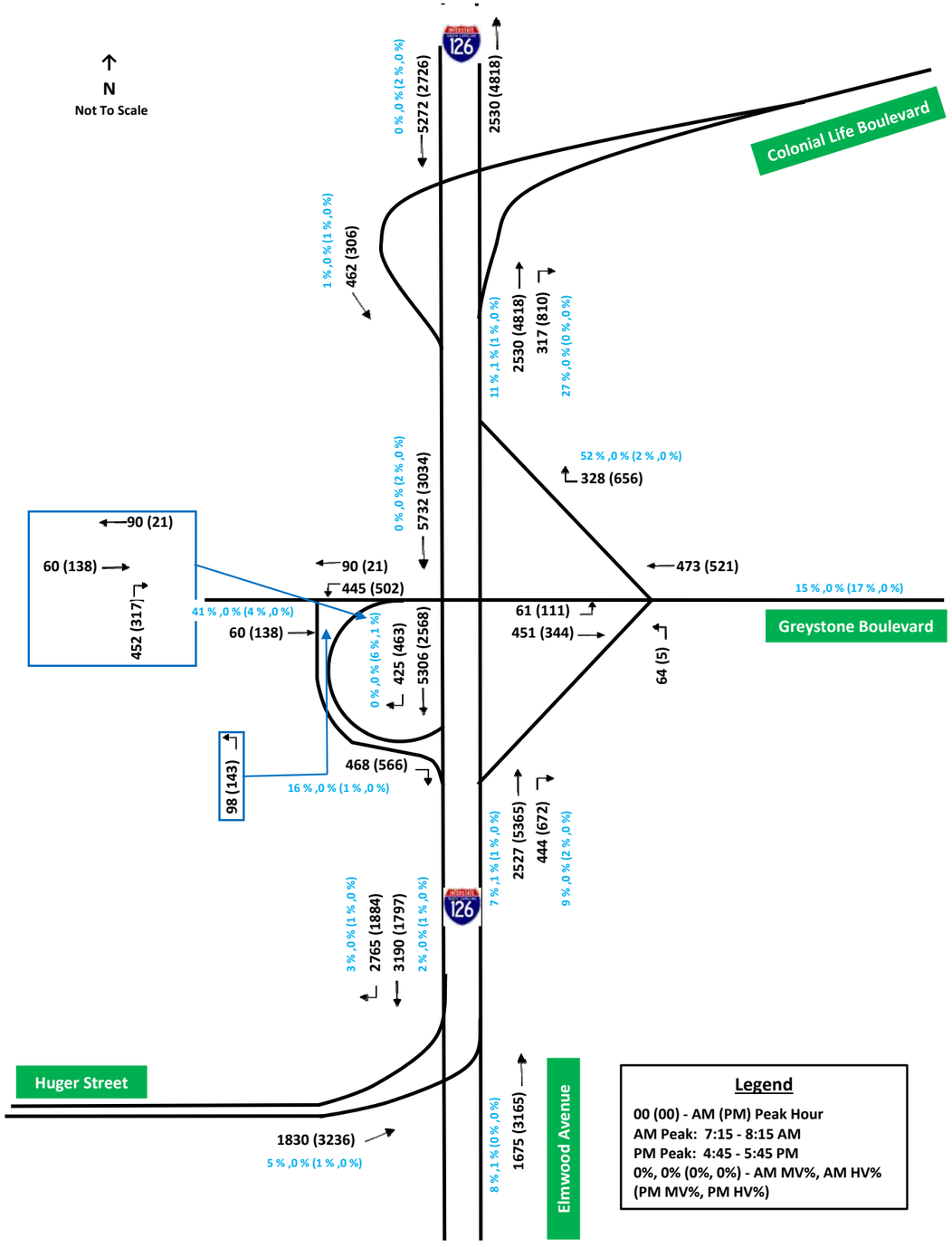

Carolina Crossroads
Existing Interchange Volumes

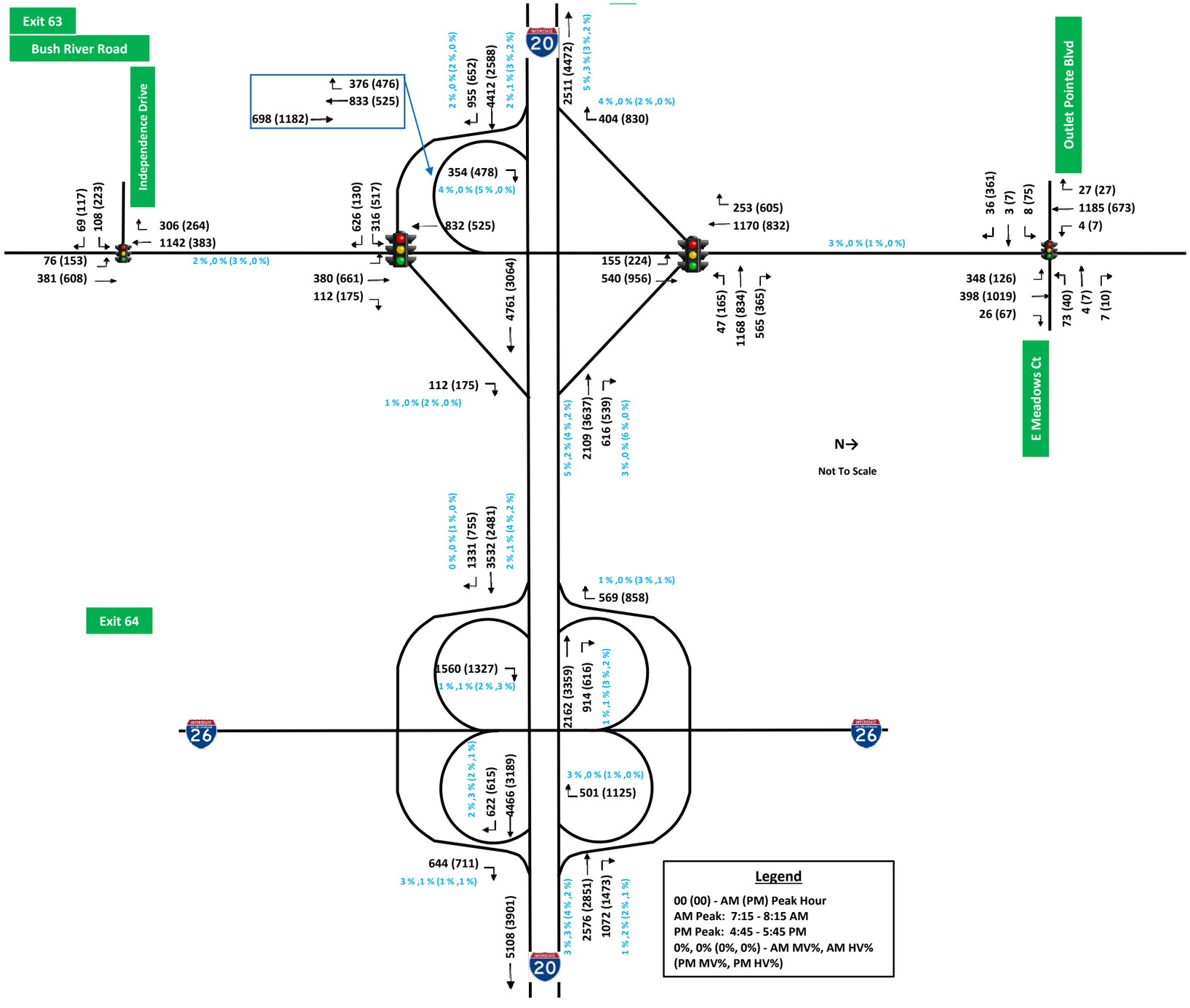

Carolina Crossroads
Existing Interchange Volumes

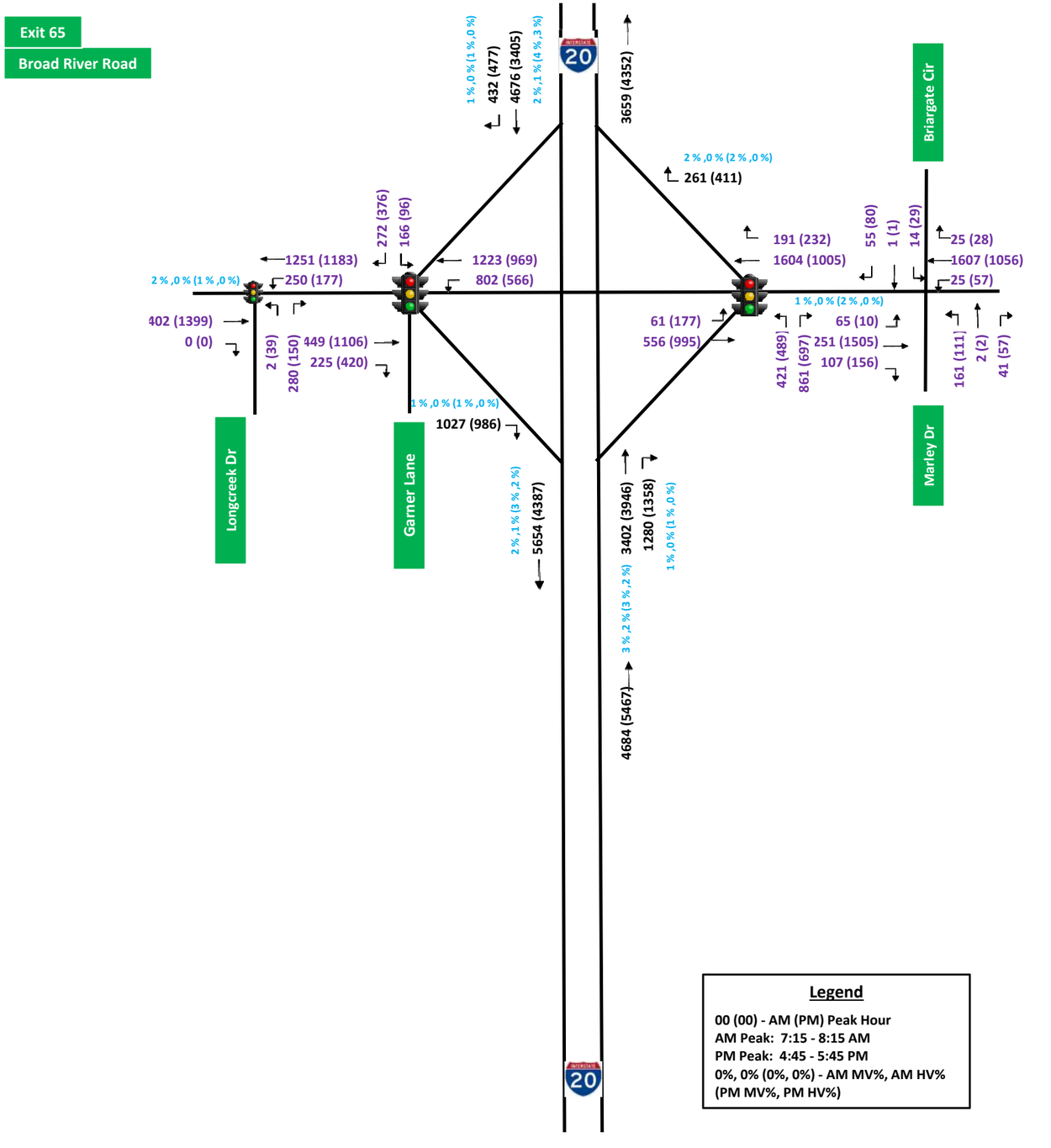

Additional turning movement counts were collected at the following locations:

1. Exit 102
    - Lake Murray Boulevard at College Street (signal) – Tuesday, November 22, 2016
    - Lake Murray Boulevard at Columbiana Drive (signal) Monday, November 21, 2016
    - Lake Murray Boulevard at Kinley/Parkridge Hospital (signal) – Tuesday, November 22, 2016
    - Lake Murray Boulevard at Parkridge Drive (signal) Monday, November 28, 2016
2. Exit 102 – 103
    - Columbiana Drive and Columbia Avenue/Gateway Academy (signal) Monday, November 28, 2016
    - Columbiana Drive and Crossbow Drive/Texas Roadhouse (signal) Wednesday, November 30, 2016
    - Columbiana Drive and Columbiana Circle (signal) Tuesday, November 29, 2016
3. Exit 103
    - Harbison Boulevard at Parkridge Drive (unsignalized) Wednesday, November 30, 2016
    - Woodcross Drive at Fernandina Road (unsignalized) Thursday, December 1, 2016
    - Harbison Boulevard at Saturn Parkway (signal) Friday, December 2, 2016
    - Harbison Boulevard at Columbiana Circle/Park Terrace Drive (signal) Monday, November 21, 2016
    - Harbison Boulevard at Columbiana Drive/Chik-Fil-A (signal) Tuesday, November 22, 2016
    - Harbison Boulevard at Rooms 2 Go/Pier One Driveways (signal) Monday, November 21, 2016
    - Harbison Boulevard at Bower Parkway (signal) Monday, November 21, 2016
    - Harbison Boulevard/Emory Lane at St. Andrews Road (signal) Monday, November 21, 2016
4. Exit 103 – 104
    - Bower Parkway at Park Terrace Drive (signal) Monday, November 21, 2016
    - Bower Parkway at Saturn Parkway (unsignalized) Tuesday, November 22, 2016
5. Exit 104
    - Piney Grove Road at Bower Parkway/Jamil Road (signal) Monday, November 21, 2016
    - Piney Grove Road at Foxfire Drive/Country Walk Apartments (unsignalized) Monday, November 21, 2016
    - Piney Grove Road at Fernandina Road (signal) Tuesday, November 22, 2016
    - Piney Grove Road at Piney Woods Road (roundabout) Tuesday, November 22, 2016
6. Exit 104 – Exit 106
    - Jamil Tram Road at Sidney Road (unsignalized) Tuesday, November 22, 2016
    - Jamil Road at Tram Road (unsignalized) Tuesday, November 22, 2016
    - Sidney Road at Tram Road (unsignalized) Tuesday, November 22, 2016
    - Fernandina Road and Beatty Road (unsignalized) Tuesday, November 22, 2016
    - Broad River Road and Beatty Road (unsignalized) Tuesday, November 22, 2016
    - Beatty Road and Evelyn Drive (unsignalized) Tuesday, November 22, 2016
    - Fernandina Road and Evelyn Drive (unsignalized) Monday, November 21, 2016
7. Exit 106
    - St. Andrews Road and Sidney Road (signal) Monday, November 28, 2016
    - St. Andrews Road and Ashland Road (signal) Monday, November 28, 2016

- St. Andrews Road and Kilbrannon Drive ((unsignalized) Monday, November 28, 2016
- St. Andrews Road and Jamil Road (signal) Monday, November 28, 2016
- Woodland Hills Road and Berry Hill Road (unsignalized) Monday, November 28, 2016
- St. Andrews Road at Kay Street/Chartwell Road (signal) Monday, November 28, 2016
- St. Andrews Road at Broad River Road (signal) Monday, November 28, 2016

8. Exit 106 – 108
    - Burning Tree Drive/Browning Road at Center Point Road (unsignalized) Tuesday, November 22, 2016
    - Browning Road at Zimalcrest Drive (unsignalized) Monday, November 28, 2016
9. Exit 108/Exit 63
    - Bush River Road at Ashland Road/Marydale Lane (signal) Tuesday, November 29, 2016
    - Bush River Road at Outlet Pointe Boulevard/E Meadow Court (signal) Monday, November 28, 2016
    - Bush River Road at Berryhill Road (signal) Wednesday, November 30, 2016
    - Bush River Road at Rockland Road (unsignalized) Tuesday, November 29, 2016
    - Bush River Road at Independence Avenue (signal) Wednesday, November 30, 2016
    - Bush River Road and Zimalcrest Drive (signal) Tuesday, November 29, 2016
    - Morninghill Drive and Burnette Drive (unsignalized) Thursday, December 1, 2016
    - Bush River Road at Arrowwood Road (signal) Tuesday, November 29, 2016
    - Bush River Road at Colonial Life Boulevard (signal) Tuesday, November 29, 2016
    - Bush River Road at Broad River Road (signal) Tuesday, November 29, 2016
10. Broad River Road (east of Exit 65)
    - Broad River Road at Arrowwood Road (signal) Tuesday, November 29, 2016
    - Broad River Road at Greystone Boulevard (signal) Tuesday, November 29, 2016
11. Exit 110
    - Sunset Boulevard at West Hospital Drive/Sunset Court (signal) Thursday, December 1, 2016
    - Sunset Boulevard at East Hospital Drive/Harbor Drive (signal) Thursday, December 1, 2016
    - Sunset Boulevard at McSwain Drive/Chris Drive (signal) Thursday, December 1, 2016
    - Sunset Boulevard at Whippoorwill Drive/Keckley Drive (signal) Thursday, December 1, 2016
12. Exit 65
    - Broad River Road at Marley Drive/Menlo Drive (signal) Thursday, December 1, 2016
    - Garner Lane at Eastbound on-ramp (unsignalized) Friday, December 2, 2016
    - Broad River Road at Longcreek Drive (signal) Thursday, December 1, 2016
    - Broad River Road at Dutch Square Boulevard (signal) Monday, November 28, 2016
    - Broad River Rd at Omarest Drive (signal) Friday, December 2, 2016

SOUTH CAROLINA DEPARTMENT OF TRANSPORTATION
DISTRICT 1
TRAFFIC ENGINEERING

County: Richland City: Columbia Date: 11/22/2016

Major Rt: Lake Murray Blvd * Not on State System Minor Rt: College St * Not on State System

Day of Week: Tuesday Weather: Clear Office: Short Counts JMS

Type of Control: Signal Speed Limit (major st) 40

Direction of Minor Street: N-S Intersection ADT - 26120 (Calc)

Number of Lanes (major st)* 2 Number of Lanes (minor st)* 1

* Each Direction

INTERSECTION VOLUME SUMMARY

	From N College St				From S College St				From E Lake Murray Blvd				From W Lake Murray Blvd				Total	Total
	LT	STR	RT	TOT	LT	STR	RT	TOT	LT	STR	RT	TOT	LT	STR	RT	TOT	Vol	Peds
7:00 - 7:15	8	0	2	10	6	0	16	22	4	151	8	163	3	245	5	253	448	0
7:15 - 7:30	18	3	3	24	13	1	25	39	7	159	11	177	7	272	4	283	523	1
7:30 - 7:45	7	2	4	13	14	0	23	37	6	181	9	196	0	270	8	278	524	0
7:45 - 8:00	21	0	2	23	11	1	13	25	17	191	17	225	4	240	11	255	528	2
8:00 - 8:15	24	1	4	29	8	1	17	26	9	164	13	186	3	224	11	238	479	2
8:15 - 8:30	16	1	3	20	9	0	12	21	11	161	12	184	3	214	6	223	448	0
8:30 - 8:45	13	2	5	20	11	0	13	24	15	176	14	205	4	222	9	235	484	0
8:45 - 9:00	16	1	3	20	17	3	15	35	29	173	4	206	9	234	16	259	520	0
9:00 - 9:15	13	1	2	16	14	1	16	31	14	181	10	205	5	233	20	258	510	0
9:15 - 9:30	11	0	9	20	12	0	21	33	8	152	8	168	3	196	6	205	426	0
9:30 - 9:45	15	1	8	24	14	4	27	45	14	157	6	177	4	200	8	212	458	0
9:45 - 10:00	14	2	3	19	15	3	25	43	12	180	11	203	4	247	16	267	532	2
10:00 - 10:15	17	4	3	24	12	4	10	26	17	169	9	195	10	200	12	222	467	0
10:15 - 10:30	15	1	6	22	12	1	17	30	13	143	4	160	8	193	15	216	428	0
10:30 - 10:45	9	2	5	16	17	3	17	37	13	205	16	234	8	270	9	287	574	0
10:45 - 11:00	12	4	4	20	16	4	14	34	23	197	18	238	6	218	15	239	531	0
11:00 - 11:15	14	1	4	19	11	2	13	26	21	152	14	187	2	176	12	190	422	0
11:15 - 11:30	14	1	6	21	17	4	19	40	9	187	10	206	4	235	15	254	521	0
11:30 - 11:45	22	3	4	29	14	5	8	27	15	159	11	185	1	172	11	184	425	0
11:45 - 12:00	16	1	4	21	15	5	18	38	29	234	13	276	1	261	19	281	616	0
12:00 - 12:15	6	5	7	18	25	1	21	47	22	256	18	296	4	266	19	289	650	0
12:15 - 12:30	24	3	5	32	19	3	19	41	22	224	10	256	2	272	18	292	621	0
12:30 - 12:45	10	1	6	17	21	3	24	48	15	244	12	271	7	261	14	282	618	0
12:45 - 13:00	13	2	2	17	17	2	18	37	23	195	11	229	7	234	14	255	538	0
13:00 - 13:15	22	3	2	27	17	3	19	39	27	195	12	234	5	230	20	255	555	0
13:15 - 13:30	12	4	3	19	16	5	9	30	18	141	13	172	12	161	18	191	412	0
13:30 - 13:45	9	7	3	19	12	4	9	25	16	201	15	232	4	238	14	256	532	0
13:45 - 14:00	15	6	2	23	24	2	15	41	23	239	19	281	4	254	11	269	614	0
14:00 - 14:15	18	4	4	26	16	2	14	32	16	245	24	285	6	233	10	249	592	0
14:15 - 14:30	20	8	2	30	22	4	23	49	9	232	13	254	8	216	20	244	577	0
14:30 - 14:45	12	2	5	19	23	5	23	51	18	160	15	193	6	162	9	177	440	0
14:45 - 15:00	23	1	7	31	25	2	26	53	11	224	16	251	13	219	16	248	583	0
15:00 - 15:15	18	4	6	28	30	7	17	54	36	253	17	306	8	241	17	266	654	0
15:15 - 15:30	17	3	2	22	21	4	15	40	17	235	23	275	13	254	19	286	623	0
15:30 - 15:45	12	2	2	16	19	2	12	33	19	233	21	273	9	232	16	257	579	0
15:45 - 16:00	15	5	2	22	18	3	19	40	23	237	21	281	6	219	17	242	585	1
16:00 - 16:15	17	5	7	29	26	1	10	37	34	239	8	281	6	238	14	258	605	0
16:15 - 16:30	18	8	6	32	24	1	14	39	22	216	18	256	4	248	15	267	594	1
16:30 - 16:45	32	6	4	42	24	0	16	40	30	240	18	288	5	272	21	298	668	0
16:45 - 17:00	15	4	6	25	18	1	14	33	27	267	15	309	13	268	22	303	670	0
17:00 - 17:15	20	10	6	36	27	6	28	61	29	248	14	291	11	265	16	292	680	0
17:15 - 17:30	12	9	1	22	20	1	9	30	30	168	5	203	0	228	11	239	494	0
17:30 - 17:45	14	8	0	22	14	4	10	28	27	100	3	130	6	153	6	165	345	0
17:45 - 18:00	21	7	8	36	23	5	24	52	38	230	15	283	4	216	21	241	612	0
18:00 - 18:15	16	1	6	23	11	6	17	34	23	240	10	273	6	199	10	215	545	0
18:15 - 18:30	21	1	2	24	14	4	14	32	25	246	13	284	5	205	8	218	558	0
18:30 - 18:45	21	5	7	33	11	3	18	32	34	281	14	329	5	199	12	216	610	0
18:45 - 19:00	20	3	2	25	12	0	14	26	24	265	16	305	12	178	5	195	551	0
TOTAL	768	158	199	1125	807	126	810	1743	944	9726	627	11297	280	10883	641	11804	25969	9
Trucks	5	0	2	7	1	0	3	4	0	50	3	53	0	60	1	61	125	0.5%
School Buses	0	0	5	5	1	0	6	7	2	14	0	16	2	16	0	18	46	0.2%

TOTAL AND PEAK HOUR VOLUME DIAGRAMS

Lake Murray Blvd AT College St Date: 11/22/2016

12.0 HOUR TOTAL VOLUME
FROM 7:00 TO 15:00

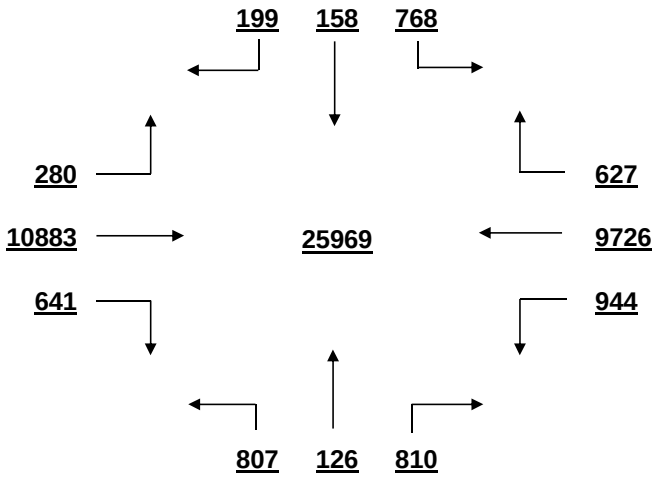

OVERALL PEAK HOUR VOLUME
FROM 16:15 TO 17:15

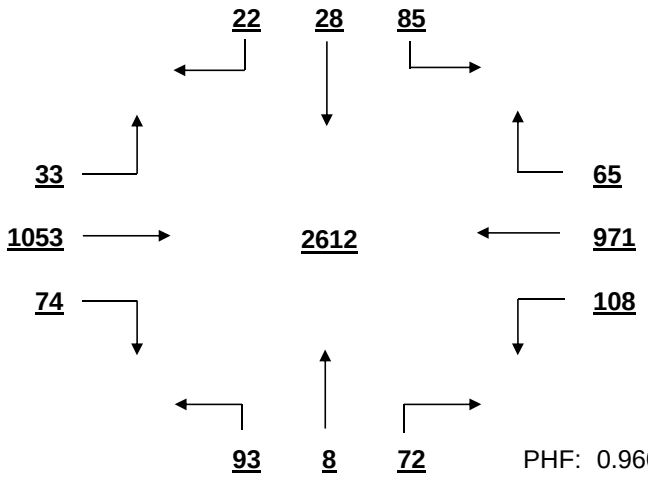

PHF: 0.960

AM PEAK HOUR VOLUME (0:00-10:45)
FROM 7:15 TO 8:15

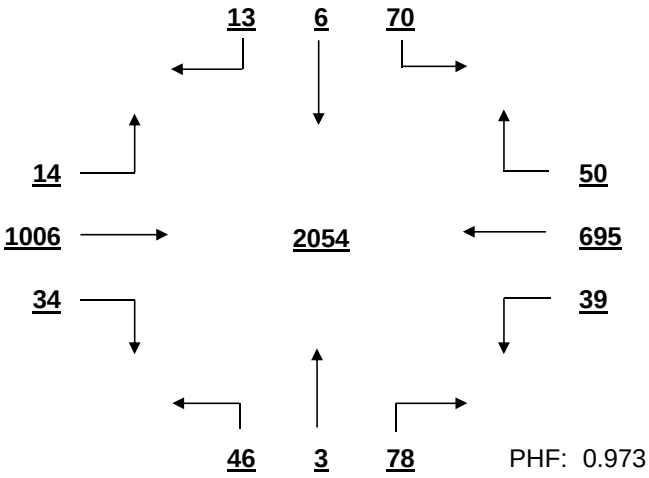

PHF: 0.973

PM PEAK HOUR VOLUME (14:15-23:45)
FROM 16:15 TO 17:15

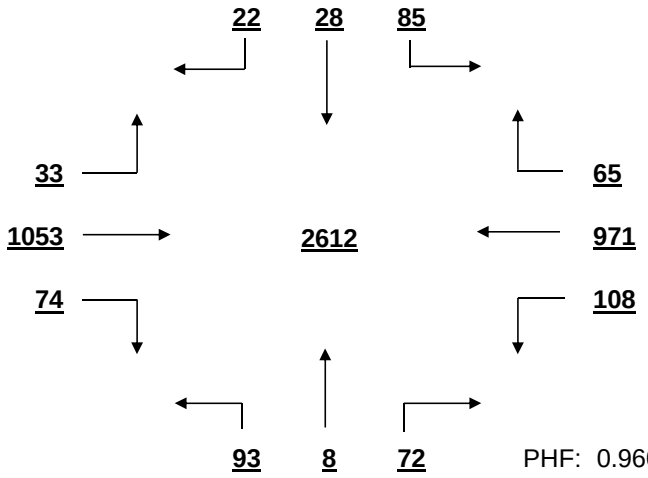

PHF: 0.960

MID-DAY PEAK HOUR VOLUME (11:00-14:00)
FROM 11:45 TO 12:45

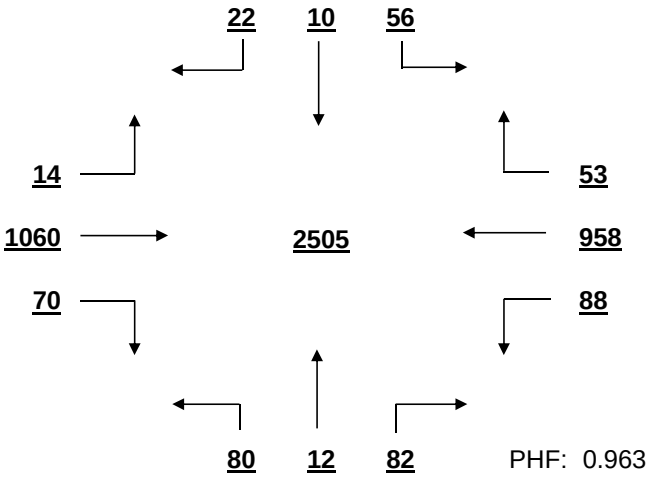

PHF: 0.963

OTHER HOUR VOLUME
FROM 7:00 TO 8:00

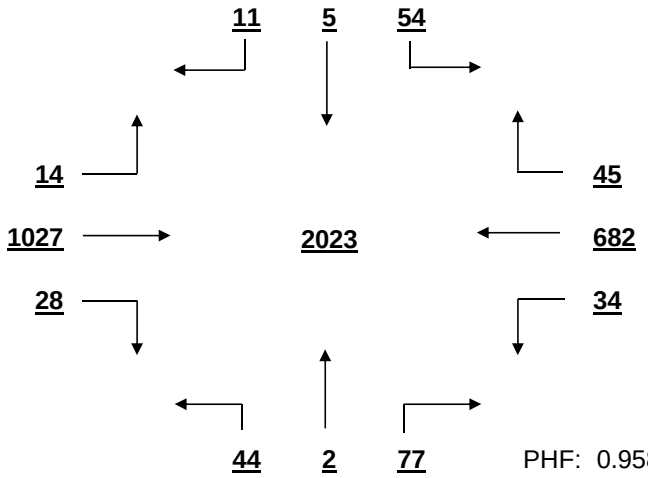

PHF: 0.958

SIGNAL WARRANT ANALYSIS

Lake Murray Blvd AT College St Date: 11/22/2016

Minor Street Volume, percent of total = 11.0%
Percent of Left Turns from Minor Street = 54.9%
Percent of Right Turns from Minor Street = 35.2%
Percent of Minor Street Right Turns to Remove from Warrant Analysis = 0%
WARRANT BASIS = **100%**

Warrant No. 1 - Vehicular Volume is met

Condition A - Minimum Vehicular Volume is not met

Average Major Street % of Warrant				Average Minor Street % of Warrant			
1925.1	/	600	= 321%	145.3	/	150	= 97%

Hourly percent of warrant

	7:00 - 8:00	8:00 - 9:00	9:00 - 10:00	10:00 - 11:00	11:00 - 12:00	12:00 - 13:00	13:00 - 14:00	14:00 - 15:00	15:00 - 16:00	16:00 - 17:00	17:00 - 18:00	18:00 - 19:00
Major St.	305%	289%	283%	299%	294%	362%	315%	317%	364%	377%	307%	339%
Minor St.	82%	71%	101%	85%	87%	115%	90%	123%	111%	99%	114%	83%

Condition B - Interruption to Continuous Traffic is met

Average Major Street % of Warrant				Average Minor Street % of Warrant			
1925.1	/	900	= 214%	145.3	/	75	= 194%

Hourly percent of warrant

	7:00 - 8:00	8:00 - 9:00	9:00 - 10:00	10:00 - 11:00	11:00 - 12:00	12:00 - 13:00	13:00 - 14:00	14:00 - 15:00	15:00 - 16:00	16:00 - 17:00	17:00 - 18:00	18:00 - 19:00
Major St.	203%	193%	188%	199%	196%	241%	210%	211%	243%	251%	205%	226%
Minor St.	164%	141%	203%	169%	175%	231%	180%	247%	223%	199%	228%	165%

80% Combination of Conditions A & B is met

Warrant No. 2 - Four Hour Vehicular Volume is met

Hourly percent of warrant

	7:00 - 8:00	8:00 - 9:00	9:00 - 10:00	10:00 - 11:00	11:00 - 12:00	12:00 - 13:00	13:00 - 14:00	14:00 - 15:00	15:00 - 16:00	16:00 - 17:00	17:00 - 18:00	18:00 - 19:00
Minor St.	154%	133%	190%	159%	164%	216%	169%	231%	209%	186%	214%	155%

Warrant No. 3 - Peak Hour is met

Percent of warrant		Percent of warrant	
Overall Peak Hour: 16:15 - 17:15		Higher Volume Side Street Peak Hour: 14:15 - 15:15	
Minor St.	173%	Minor St.	207%

Warrant No. 4 - Pedestrian Volume. Pedestrian volume shown are minumum volumes assuming heavy major street traffic. If these volumes are met, warrant 4 requires further engineering analysis

Minimum 4 hour ped. volume crossing major street	Minimum peak hour ped. volume crossing major street
107	133

Number of pedestrians crossing major street

	7:00 - 8:00	8:00 - 9:00	9:00 - 10:00	10:00 - 11:00	11:00 - 12:00	12:00 - 13:00	13:00 - 14:00	14:00 - 15:00	15:00 - 16:00	16:00 - 17:00	17:00 - 18:00	18:00 - 19:00
Major St.	3	1	2	0	0	0	0	0	1	1	0	0

Warrant No. 7 - Crash Experience (Requires 3 criteria analysis by engineering)

Total Number: 0 From: 1/1/2005 to 1/1/2008
Accident Rate: 0.00 per million entering vehicles

Types of Accidents	No.	/	Avg.		No.	/	Avg.
Right Angle	0	/	0.0	Rear End	0	/	0.0
Lost Control	0	/	0.0	Side Swipe	0	/	0.0
Left Turn	0	/	0.0	Other	0	/	0.0

SOUTH CAROLINA DEPARTMENT OF TRANSPORTATION
DISTRICT 1
TRAFFIC ENGINEERING

County: Richland City: Columbia Date: 11/21/2016

Major Rt: Lake Murray Blvd * Not on State System Minor Rt: Columbiana Dr * Not on State System

Day of Week: Monday Weather: Clear Office: Short Counts JMS

Type of Control: Signal Speed Limit (major st) 40

Direction of Minor Street: N-S Intersection ADT - 37170 (Calc)

Number of Lanes (major st)* 2 Number of Lanes (minor st)* 1

* Each Direction

INTERSECTION VOLUME SUMMARY

	From N Columbiana Dr				From S Columbiana Dr				From E Lake Murray Blvd				From W Lake Murray Blvd				Total	Total
	LT	STR	RT	TOT	LT	STR	RT	TOT	LT	STR	RT	TOT	LT	STR	RT	TOT	Vol	Peds
7:00 - 7:15	17	15	10	42	8	11	30	49	22	163	5	190	14	233	27	274	555	0
7:15 - 7:30	20	40	18	78	22	14	35	71	41	155	9	205	23	263	37	323	677	0
7:30 - 7:45	29	54	23	106	14	10	35	59	53	176	11	240	21	210	36	267	672	0
7:45 - 8:00	19	50	25	94	12	12	22	46	33	181	11	225	24	253	17	294	659	0
8:00 - 8:15	24	46	28	98	11	8	24	43	28	179	9	216	24	218	42	284	641	0
8:15 - 8:30	15	50	29	94	20	9	31	60	52	208	16	276	26	255	35	316	746	0
8:30 - 8:45	11	27	29	67	17	12	33	62	28	177	15	220	18	194	29	241	590	0
8:45 - 9:00	20	32	25	77	14	7	18	39	25	201	12	238	27	227	31	285	639	0
9:00 - 9:15	10	43	31	84	22	20	16	58	31	181	19	231	21	226	35	282	655	0
9:15 - 9:30	10	38	17	65	18	10	36	64	36	154	16	206	18	192	35	245	580	0
9:30 - 9:45	9	32	31	72	22	16	23	61	26	194	14	234	20	221	49	290	657	0
9:45 - 10:00	6	52	25	83	15	17	24	56	42	183	15	240	24	233	42	299	678	0
10:00 - 10:15	19	32	38	89	23	25	25	73	44	182	19	245	23	182	43	248	655	0
10:15 - 10:30	15	28	22	65	23	17	28	68	23	162	10	195	25	207	55	287	615	0
10:30 - 10:45	9	34	22	65	43	28	21	92	38	186	17	241	20	224	61	305	703	2
10:45 - 11:00	15	36	28	79	33	24	23	80	30	197	16	243	20	174	48	242	644	0
11:00 - 11:15	13	34	27	74	41	26	37	104	43	205	19	267	19	225	63	307	752	0
11:15 - 11:30	5	37	15	57	38	27	17	82	61	187	22	270	19	199	64	282	691	0
11:30 - 11:45	7	19	22	48	34	15	17	66	25	131	9	165	15	141	38	194	473	0
11:45 - 12:00	10	43	35	88	39	33	36	108	52	226	20	298	26	222	68	316	810	0
12:00 - 12:15	17	46	41	104	46	38	40	124	47	224	20	291	41	205	70	316	835	0
12:15 - 12:30	14	51	43	108	43	34	47	124	49	209	25	283	33	230	67	330	845	0
12:30 - 12:45	8	35	54	97	34	32	33	99	39	168	13	220	21	194	40	255	671	0
12:45 - 13:00	17	41	23	81	56	49	55	160	40	234	29	303	26	247	77	350	894	0
13:00 - 13:15	20	36	41	97	65	50	63	178	35	210	19	264	39	204	61	304	843	0
13:15 - 13:30	17	33	32	82	49	35	58	142	31	183	17	231	29	182	44	255	710	3
13:30 - 13:45	13	27	16	56	45	26	34	105	25	170	9	204	44	120	42	206	571	0
13:45 - 14:00	12	37	30	79	50	46	43	139	24	193	14	231	29	218	48	295	744	0
14:00 - 14:15	13	13	29	55	38	28	34	100	33	192	12	237	19	172	42	233	625	0
14:15 - 14:30	10	33	29	72	54	45	38	137	54	205	24	283	33	225	58	316	808	0
14:30 - 14:45	13	31	29	73	50	45	60	155	41	254	16	311	32	215	82	329	868	0
14:45 - 15:00	10	39	25	74	48	39	55	142	52	218	17	287	24	214	60	298	801	0
15:00 - 15:15	18	29	22	69	39	33	54	126	39	108	6	153	25	174	29	228	576	1
15:15 - 15:30	13	33	21	67	55	46	48	149	38	154	15	207	28	207	37	272	695	0
15:30 - 15:45	9	33	24	66	68	46	47	161	38	178	19	235	30	203	53	286	748	0
15:45 - 16:00	11	41	30	82	57	31	53	141	47	209	31	287	34	204	44	282	792	2
16:00 - 16:15	11	39	34	84	45	42	45	132	56	245	33	334	40	219	54	313	863	0
16:15 - 16:30	9	39	39	87	59	45	42	146	50	202	26	278	23	169	33	225	736	0
16:30 - 16:45	12	45	27	84	52	46	58	156	66	296	43	405	46	239	59	344	989	0
16:45 - 17:00	10	41	35	86	48	55	50	153	66	303	41	410	40	223	46	309	958	2
17:00 - 17:15	9	33	23	65	34	33	43	110	52	252	29	333	26	251	32	309	817	0
17:15 - 17:30	13	58	28	99	44	49	68	161	66	246	27	339	44	262	48	354	953	0
17:30 - 17:45	13	53	25	91	42	35	48	125	62	247	46	355	66	267	47	380	951	0
17:45 - 18:00	18	37	32	87	53	53	72	178	71	233	24	328	52	197	40	289	882	0
18:00 - 18:15	18	34	20	72	53	36	45	134	56	227	29	312	16	179	44	239	757	0
18:15 - 18:30	16	43	26	85	57	50	42	149	57	257	26	340	26	232	68	326	900	0
18:30 - 18:45	20	34	38	92	56	35	50	141	56	206	15	277	22	191	45	258	768	0
18:45 - 19:00	10	25	16	51	30	25	30	85	29	127	6	162	16	111	29	156	454	0
TOTAL	657	1781	1332	3770	1839	1468	1886	5193	2052	9578	915	12545	1331	10053	2254	13638	35146	10
Trucks	1	3	4	8	4	3	6	13	1	55	2	58	4	49	6	59	138	0.4%
School Buses	1	7	2	10	3	4	7	14	7	11	2	20	1	16	8	25	69	0.2%

TOTAL AND PEAK HOUR VOLUME DIAGRAMS

Lake Murray Blvd AT Columbiana Dr Date: 11/21/2016

12.0 HOUR TOTAL VOLUME
FROM 7:00 TO 15:00

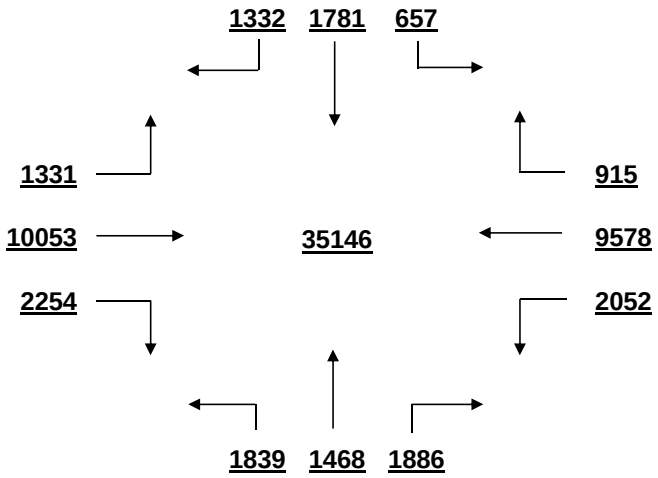

OVERALL PEAK HOUR VOLUME
FROM 16:30 TO 17:30

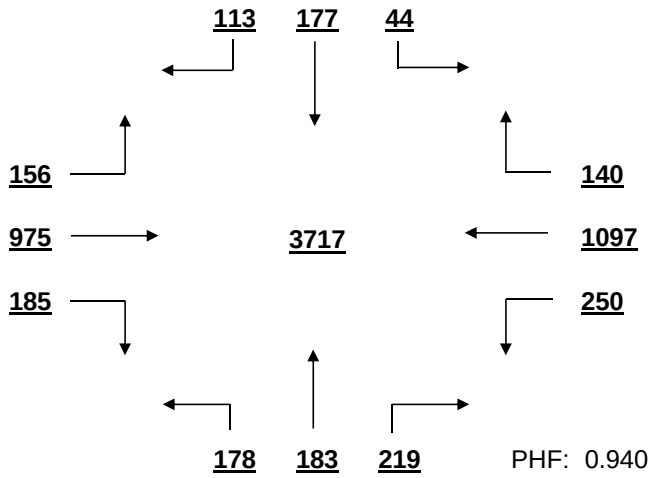

PHF: 0.940

AM PEAK HOUR VOLUME (0:00-10:45)
FROM 7:30 TO 8:30

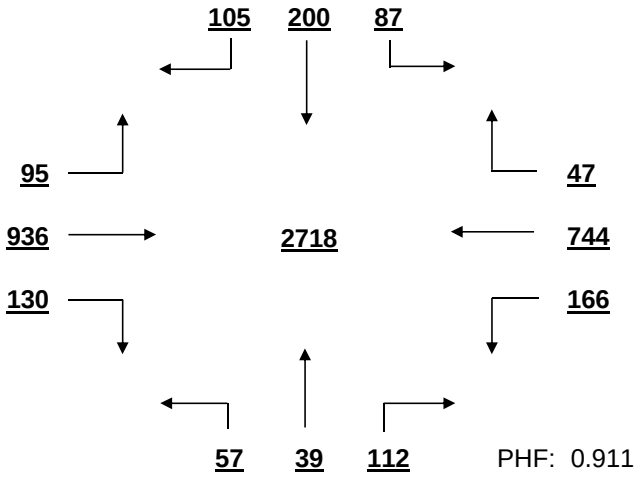

PHF: 0.911

PM PEAK HOUR VOLUME (14:15-23:45)
FROM 16:30 TO 17:30

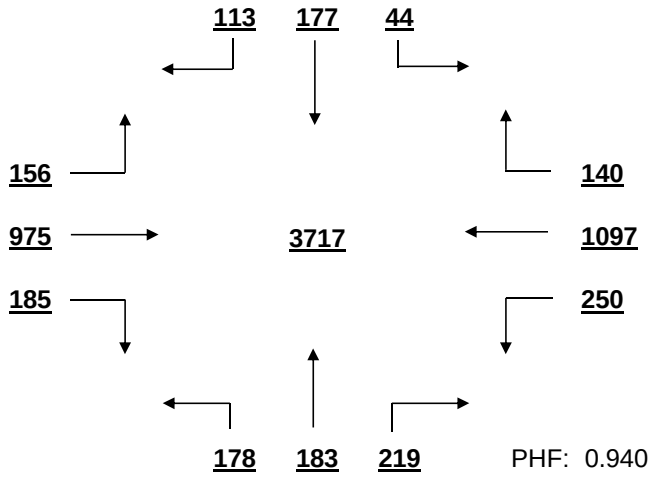

PHF: 0.940

MID-DAY PEAK HOUR VOLUME (11:00-14:00)
FROM 12:15 TO 13:15

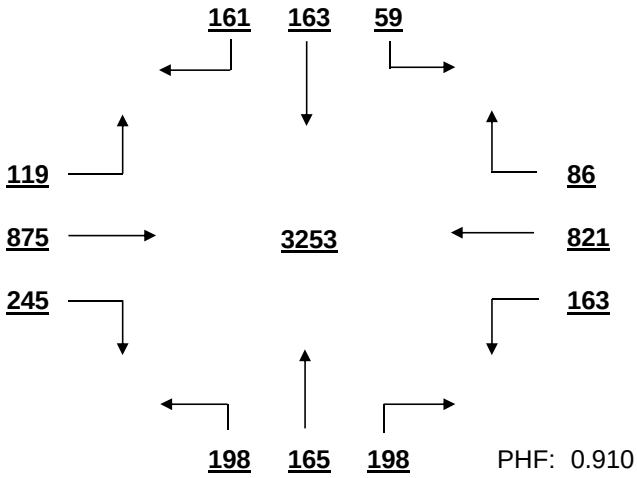

PHF: 0.910

OTHER HOUR VOLUME
FROM 7:00 TO 8:00

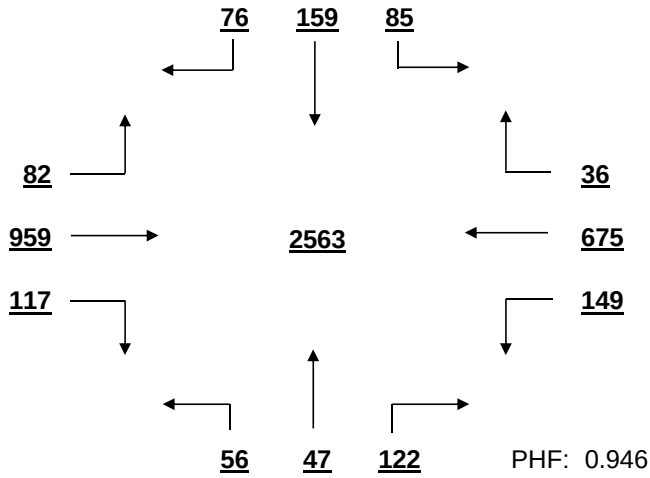

PHF: 0.946

SIGNAL WARRANT ANALYSIS

Lake Murray Blvd AT Columbiana Dr Date: 11/21/2016

Minor Street Volume, percent of total = 25.5%
Percent of Left Turns from Minor Street = 27.8%
Percent of Right Turns from Minor Street = 35.9%
Percent of Minor Street Right Turns to Remove from Warrant Analysis = 0%
WARRANT BASIS = **100%**

Warrant No. 1 - Vehicular Volume is met

Condition A - Minimum Vehicular Volume is met

Average Major Street % of Warrant				Average Minor Street % of Warrant			
2181.9	/ 600	=	364%	432.8	/ 150	=	289%

Hourly percent of warrant

	7:00 - 8:00	8:00 - 9:00	9:00 - 10:00	10:00 - 11:00	11:00 - 12:00	12:00 - 13:00	13:00 - 14:00	14:00 - 15:00	15:00 - 16:00	16:00 - 17:00	17:00 - 18:00	18:00 - 19:00
Major St.	336%	346%	338%	334%	350%	391%	332%	382%	325%	436%	448%	345%
Minor St.	213%	224%	203%	209%	240%	338%	376%	356%	385%	391%	383%	339%

Condition B - Interruption to Continuous Traffic is met

Average Major Street % of Warrant				Average Minor Street % of Warrant			
2181.9	/ 900	=	242%	432.8	/ 75	=	577%

Hourly percent of warrant

	7:00 - 8:00	8:00 - 9:00	9:00 - 10:00	10:00 - 11:00	11:00 - 12:00	12:00 - 13:00	13:00 - 14:00	14:00 - 15:00	15:00 - 16:00	16:00 - 17:00	17:00 - 18:00	18:00 - 19:00
Major St.	224%	231%	225%	223%	233%	261%	221%	255%	217%	291%	299%	230%
Minor St.	427%	448%	405%	417%	480%	676%	752%	712%	769%	783%	765%	679%

80% Combination of Conditions A & B is met

Warrant No. 2 - Four Hour Vehicular Volume is met

Hourly percent of warrant

	7:00 - 8:00	8:00 - 9:00	9:00 - 10:00	10:00 - 11:00	11:00 - 12:00	12:00 - 13:00	13:00 - 14:00	14:00 - 15:00	15:00 - 16:00	16:00 - 17:00	17:00 - 18:00	18:00 - 19:00
Minor St.	400%	420%	380%	391%	450%	634%	705%	668%	721%	734%	718%	636%

Warrant No. 3 - Peak Hour is met

	Percent of warrant		Percent of warrant
Overall Peak Hour:	16:30 - 17:30	Higher Volume Side Street Peak Hour:	17:45 - 18:45
Minor St.	580%	Minor St.	602%

Warrant No. 4 - Pedestrian Volume. Pedestrian volume shown are minumum volumes assuming heavy major street traffic. If these volumes are met, warrant 4 requires further engineering analysis

Minimum 4 hour ped. volume crossing major street: 107

Minimum peak hour ped. volume crossing major street: 133

Number of pedestrians crossing major street

	7:00 - 8:00	8:00 - 9:00	9:00 - 10:00	10:00 - 11:00	11:00 - 12:00	12:00 - 13:00	13:00 - 14:00	14:00 - 15:00	15:00 - 16:00	16:00 - 17:00	17:00 - 18:00	18:00 - 19:00
Major St.	0	0	0	2	0	0	2	0	1	1	0	0

Warrant No. 7 - Crash Experience (Requires 3 criteria analysis by engineering)

Total Number: 0 From: 1/1/2005 to 1/1/2008

Accident Rate: 0.00 per million entering vehicles

Types of Accidents	No.	/	Avg.		No.	/	Avg.
Right Angle	0	/	0.0	Rear End	0	/	0.0
Lost Control	0	/	0.0	Side Swipe	0	/	0.0
Left Turn	0	/	0.0	Other	0	/	0.0

SOUTH CAROLINA DEPARTMENT OF TRANSPORTATION
DISTRICT 1
TRAFFIC ENGINEERING

County: Richland City: Columbia Date: 11/22/2016

Major Rt: Lake Murray Blvd * Not on State System Minor Rt: Kinley-Parkridge Dr * Not on State System

Day of Week: Tuesday Weather: Clear Office: Short Counts JMS

Type of Control: Signal Speed Limit (major st) 45

Direction of Minor Street: N-S Intersection ADT - 23250 (Calc)

Number of Lanes (major st)* 2 Number of Lanes (minor st)* 1

* Each Direction

INTERSECTION VOLUME SUMMARY

	From N Kinley-Parkridge D				From S Kinley-Parkridge D				From E Lake Murray Blvd				From W Lake Murray Blvd				Total	Total
	LT	STR	RT	TOT	LT	STR	RT	TOT	LT	STR	RT	TOT	LT	STR	RT	TOT	Vol	Peds
7:00 - 7:15	10	3	151	164	5	1	1	7	1	44	8	53	55	59	21	135	359	0
7:15 - 7:30	31	9	133	173	7	0	2	9	3	48	9	60	83	87	24	194	436	0
7:30 - 7:45	49	10	135	194	5	1	1	7	5	49	6	60	96	138	48	282	543	0
7:45 - 8:00	58	8	113	179	14	3	5	22	4	40	10	54	93	150	46	289	544	0
8:00 - 8:15	62	7	93	162	6	1	5	12	0	45	9	54	57	116	54	227	455	1
8:15 - 8:30	29	13	98	140	13	0	3	16	5	44	13	62	59	85	38	182	400	0
8:30 - 8:45	22	7	84	113	14	5	5	24	3	45	8	56	85	66	38	189	382	0
8:45 - 9:00	35	5	77	117	22	1	3	26	2	51	12	65	72	65	31	168	376	1
9:00 - 9:15	29	5	88	122	21	1	1	23	3	59	9	71	72	63	18	153	369	0
9:15 - 9:30	23	2	106	131	21	6	3	30	1	50	16	67	73	49	34	156	384	0
9:30 - 9:45	13	3	88	104	17	4	2	23	1	42	14	57	79	40	37	156	340	0
9:45 - 10:00	28	7	81	116	22	6	4	32	2	47	14	63	82	52	22	156	367	0
10:00 - 10:15	15	8	97	120	23	2	8	33	2	42	17	61	55	50	26	131	345	0
10:15 - 10:30	23	13	78	114	31	4	8	43	1	48	20	69	62	40	31	133	359	0
10:30 - 10:45	13	5	54	72	18	3	2	23	1	48	9	58	50	46	20	116	269	0
10:45 - 11:00	24	10	88	122	24	7	5	36	0	48	19	67	62	60	29	151	376	0
11:00 - 11:15	20	7	104	131	31	6	9	46	0	43	19	62	76	65	17	158	397	0
11:15 - 11:30	18	5	83	106	25	2	3	30	5	54	21	80	62	61	15	138	354	0
11:30 - 11:45	23	7	74	104	38	2	3	43	2	44	22	68	75	34	11	120	335	0
11:45 - 12:00	13	3	44	60	9	2	0	11	2	26	5	33	29	25	15	69	173	0
12:00 - 12:15	27	3	104	134	30	11	4	45	0	96	28	124	94	59	14	167	470	0
12:15 - 12:30	29	11	77	117	33	10	2	45	0	53	21	74	98	67	20	185	421	1
12:30 - 12:45	10	2	51	63	2	0	1	3	0	17	7	24	56	21	6	83	173	1
12:45 - 13:00	16	4	74	94	22	2	3	27	1	40	22	63	91	61	23	175	359	0
13:00 - 13:15	23	2	96	121	23	7	2	32	1	84	34	119	96	71	33	200	472	0
13:15 - 13:30	15	4	108	127	35	11	4	50	1	66	29	96	96	59	28	183	456	0
13:30 - 13:45	16	8	89	113	21	3	4	28	3	50	22	75	98	62	34	194	410	0
13:45 - 14:00	14	1	96	111	26	1	4	31	4	61	27	92	108	58	26	192	426	0
14:00 - 14:15	28	2	83	113	27	2	3	32	0	52	28	80	109	56	19	184	409	0
14:15 - 14:30	13	5	83	101	20	2	2	24	1	44	14	59	52	47	18	117	301	0
14:30 - 14:45	15	5	93	113	26	4	4	34	5	53	23	81	109	61	29	199	427	1
14:45 - 15:00	21	12	125	158	46	6	7	59	2	66	39	107	146	54	22	222	546	0
15:00 - 15:15	21	4	111	136	43	7	1	51	7	75	22	104	125	61	30	216	507	1
15:15 - 15:30	12	3	101	116	34	6	2	42	0	81	32	113	105	68	15	188	459	0
15:30 - 15:45	18	6	85	109	51	6	9	66	1	77	25	103	118	68	22	208	486	0
15:45 - 16:00	16	9	90	115	37	6	6	49	3	78	37	118	110	65	29	204	486	0
16:00 - 16:15	23	6	106	135	42	7	9	58	2	90	38	130	118	68	19	205	528	0
16:15 - 16:30	22	2	80	104	29	8	9	46	0	91	30	121	126	76	10	212	483	1
16:30 - 16:45	27	1	95	123	63	15	7	85	0	108	50	158	127	53	11	191	557	0
16:45 - 17:00	16	4	127	147	58	11	2	71	1	128	48	177	146	53	14	213	608	0
17:00 - 17:15	22	2	108	132	48	16	6	70	1	129	62	192	151	72	6	229	623	0
17:15 - 17:30	22	0	83	105	28	9	2	39	0	107	59	166	143	73	11	227	537	0
17:30 - 17:45	31	1	118	150	42	5	3	50	0	79	21	100	132	54	6	192	492	0
17:45 - 18:00	10	0	87	97	26	0	1	27	0	73	35	108	147	78	5	230	462	0
18:00 - 18:15	13	1	88	102	18	3	2	23	1	56	24	81	122	115	4	241	447	3
18:15 - 18:30	18	1	98	117	12	2	0	14	10	48	9	67	96	121	6	223	421	0
18:30 - 18:45	17	4	89	110	14	0	2	16	0	81	45	126	152	127	11	290	542	0
18:45 - 19:00	10	1	57	68	5	4	2	11	0	64	13	77	100	86	9	195	351	0
TOTAL	1063	241	4471	5775	1227	221	176	1624	87	2964	1104	4155	4548	3265	1055	8868	20422	10
Trucks	2	1	8	11	1	1	0	2	0	9	2	11	17	14	2	33	57	0.3%
School Buses	1	0	13	14	2	1	0	3	0	6	1	7	16	7	0	23	47	0.2%

TOTAL AND PEAK HOUR VOLUME DIAGRAMS

Lake Murray Blvd AT Kinley-Parkridge Dr Date: 11/22/2016

12.0 HOUR TOTAL VOLUME
FROM 7:00 TO 15:00

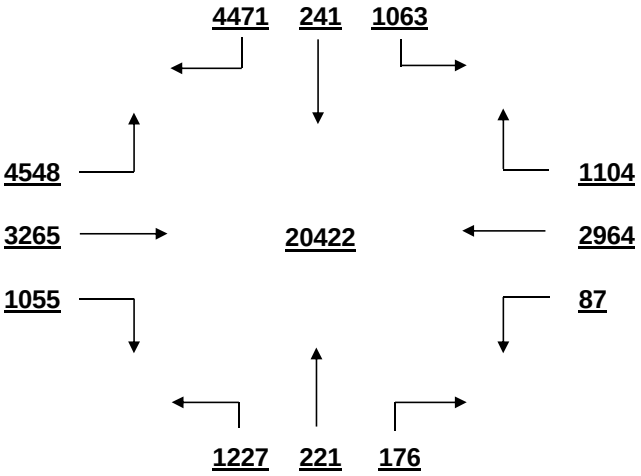

OVERALL PEAK HOUR VOLUME
FROM 16:30 TO 17:30

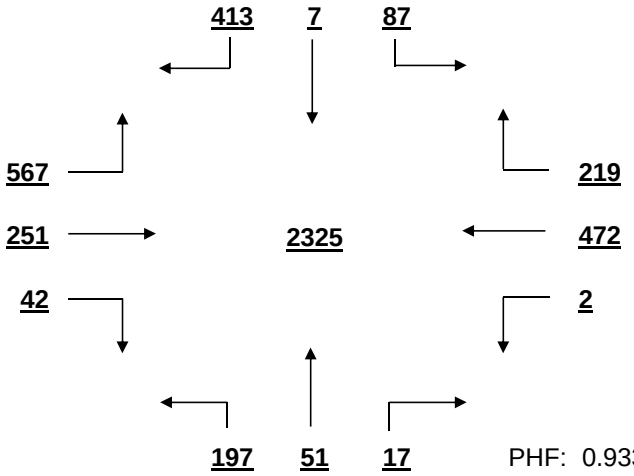

PHF: 0.933

AM PEAK HOUR VOLUME (0:00-10:45)
FROM 7:15 TO 8:15

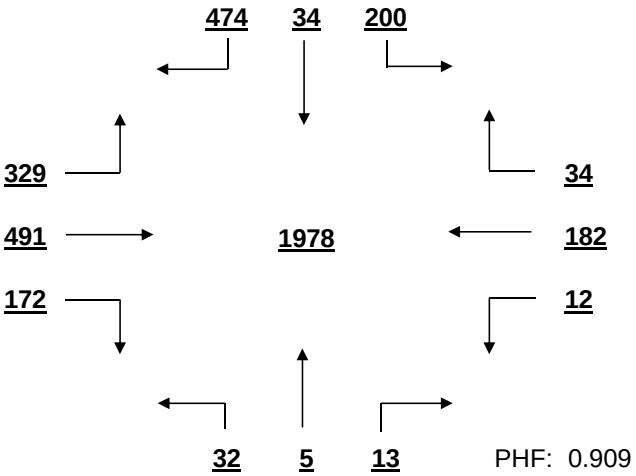

PHF: 0.909

PM PEAK HOUR VOLUME (14:15-23:45)
FROM 16:30 TO 17:30

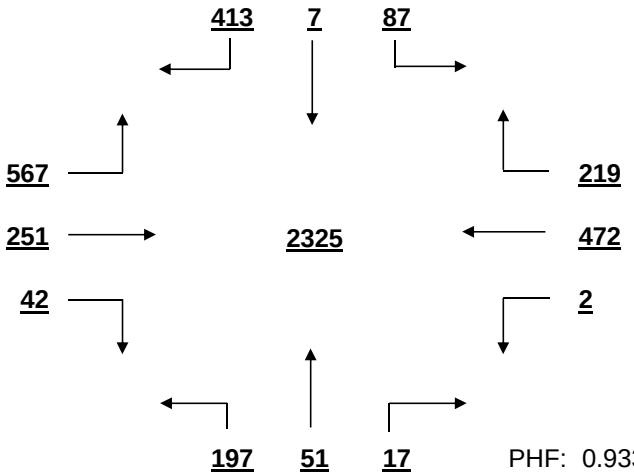

PHF: 0.933

MID-DAY PEAK HOUR VOLUME (11:00-14:00)
FROM 13:00 TO 14:00

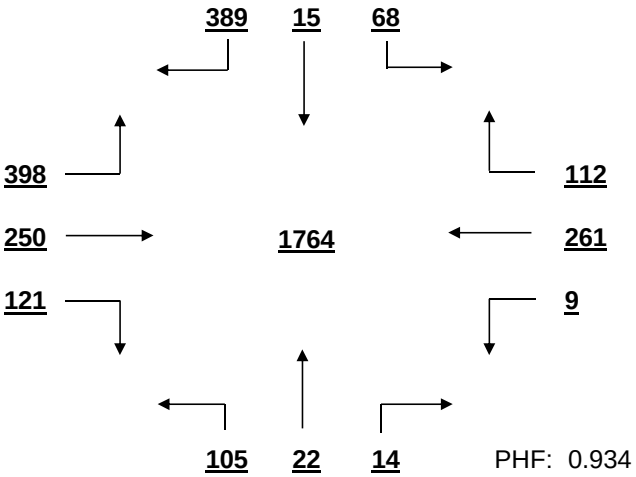

PHF: 0.934

OTHER HOUR VOLUME
FROM 7:00 TO 8:00

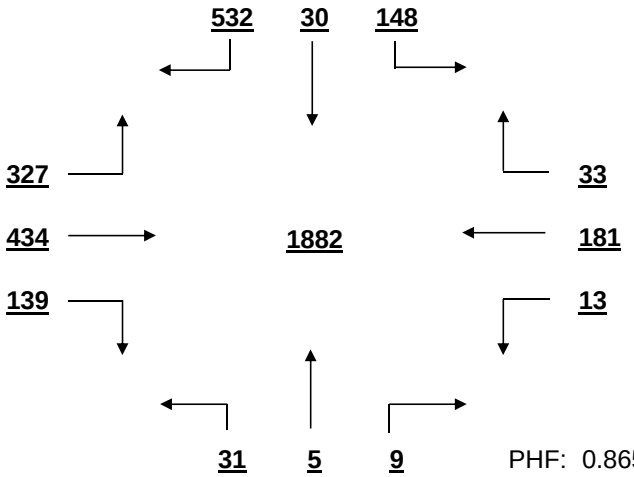

PHF: 0.865

SIGNAL WARRANT ANALYSIS

Lake Murray Blvd AT Kinley-Parkridge Dr Date: 11/22/2016

Minor Street Volume, percent of total = 36.2%
Percent of Left Turns from Minor Street = 31.0%
Percent of Right Turns from Minor Street = 62.8%
Percent of Minor Street Right Turns to Remove from Warrant Analysis = 0%
WARRANT BASIS = **70%**

Warrant No. 1 - Vehicular Volume is met

Condition A - Minimum Vehicular Volume is met

Average Major Street % of Warrant				Average Minor Street % of Warrant			
1085.3	/ 420	=	258%	481.3	/ 105	=	458%

Hourly percent of warrant

	7:00 - 8:00	8:00 - 9:00	9:00 - 10:00	10:00 - 11:00	11:00 - 12:00	12:00 - 13:00	13:00 - 14:00	14:00 - 15:00	15:00 - 16:00	16:00 - 17:00	17:00 - 18:00	18:00 - 19:00
Major St.	268%	239%	209%	187%	173%	213%	274%	250%	299%	335%	344%	310%
Minor St.	676%	507%	450%	408%	382%	389%	450%	462%	453%	485%	461%	378%

Condition B - Interruption to Continuous Traffic is met

Average Major Street % of Warrant				Average Minor Street % of Warrant			
1085.3	/ 630	=	172%	481.3	/ 53	=	917%

Hourly percent of warrant

	7:00 - 8:00	8:00 - 9:00	9:00 - 10:00	10:00 - 11:00	11:00 - 12:00	12:00 - 13:00	13:00 - 14:00	14:00 - 15:00	15:00 - 16:00	16:00 - 17:00	17:00 - 18:00	18:00 - 19:00
Major St.	179%	159%	140%	125%	116%	142%	183%	167%	199%	223%	229%	206%
Minor St.	1352%	1013%	901%	815%	764%	777%	899%	924%	907%	970%	922%	756%

80% Combination of Conditions A & B is not applicable

Warrant No. 2 - Four Hour Vehicular Volume is met

Hourly percent of warrant

	7:00 - 8:00	8:00 - 9:00	9:00 - 10:00	10:00 - 11:00	11:00 - 12:00	12:00 - 13:00	13:00 - 14:00	14:00 - 15:00	15:00 - 16:00	16:00 - 17:00	17:00 - 18:00	18:00 - 19:00
Minor St.	1183%	887%	763%	538%	430%	686%	787%	808%	793%	848%	807%	662%

Warrant No. 3 - Peak Hour is met

	Percent of warrant		Percent of warrant
Overall Peak Hour:	16:30 - 17:30	Higher Volume Side Street Peak Hour:	7:00 - 8:00
Minor St.	676%	Minor St.	855%

Warrant No. 4 - Pedestrian Volume. Pedestrian volume shown are minumum volumes assuming heavy major street traffic. If these volumes are met, warrant 4 requires further engineering analysis

Minimum 4 hour ped. volume crossing major street: 75

Minimum peak hour ped. volume crossing major street: 93

Number of pedestrians crossing major street

	7:00 - 8:00	8:00 - 9:00	9:00 - 10:00	10:00 - 11:00	11:00 - 12:00	12:00 - 13:00	13:00 - 14:00	14:00 - 15:00	15:00 - 16:00	16:00 - 17:00	17:00 - 18:00	18:00 - 19:00
Major St.	0	0	0	0	0	2	0	1	1	1	0	0

Warrant No. 7 - Crash Experience (Requires 3 criteria analysis by engineering)

Total Number: 0 From: 1/1/2005 to 1/1/2008
Accident Rate: 0.00 per million entering vehicles

Types of Accidents	No.	/	Avg.		No.	/	Avg.
Right Angle	0	/	0.0	Rear End	0	/	0.0
Lost Control	0	/	0.0	Side Swipe	0	/	0.0
Left Turn	0	/	0.0	Other	0	/	0.0

SOUTH CAROLINA DEPARTMENT OF TRANSPORTATION
DISTRICT 1
TRAFFIC ENGINEERING

County: Richland City: Columbia Date: 11/28/2016

Major Rt: Lake Murray Blvd * Not on State System Minor Rt: Parkridge Dr * Not on State System

Day of Week: Monday Weather: Clear Office: Short Counts JMS

Type of Control: Signal Speed Limit (major st) 45

Direction of Minor Street: N-S Intersection ADT - 11730 (Calc)

Number of Lanes (major st)* 2 Number of Lanes (minor st)* 1

* Each Direction

INTERSECTION VOLUME SUMMARY

	From N Parkridge Dr				From S Parkridge Dr				From E Lake Murray Blvd				From W Lake Murray Blvd				Total	Total
	LT	STR	RT	TOT	LT	STR	RT	TOT	LT	STR	RT	TOT	LT	STR	RT	TOT	Vol	Peds
7:00 - 7:15	0	0	0	0	10	0	3	13	3	47	0	50	0	43	30	73	136	0
7:15 - 7:30	0	0	0	0	5	0	4	9	2	61	0	63	0	89	56	145	217	0
7:30 - 7:45	0	0	0	0	20	0	1	21	5	46	0	51	0	115	96	211	283	0
7:45 - 8:00	0	0	0	0	18	0	1	19	4	49	0	53	0	109	119	228	300	0
8:00 - 8:15	0	0	0	0	17	0	2	19	4	53	0	57	0	92	97	189	265	0
8:15 - 8:30	0	0	0	0	16	0	2	18	5	43	0	48	0	81	51	132	198	0
8:30 - 8:45	0	0	0	0	14	0	0	14	3	35	0	38	0	64	53	117	169	2
8:45 - 9:00	0	0	0	0	22	0	2	24	2	54	0	56	0	77	50	127	207	0
9:00 - 9:15	0	0	0	0	16	0	1	17	3	36	0	39	0	58	33	91	147	1
9:15 - 9:30	0	0	0	0	19	0	0	19	1	41	0	42	0	29	31	60	121	0
9:30 - 9:45	0	0	0	0	20	0	0	20	4	31	0	35	0	32	30	62	117	0
9:45 - 10:00	0	0	0	0	24	0	2	26	0	40	0	40	0	25	37	62	128	0
10:00 - 10:15	0	0	0	0	24	0	0	24	1	39	0	40	0	41	26	67	131	0
10:15 - 10:30	0	0	0	0	21	0	2	23	3	28	0	31	0	35	37	72	126	0
10:30 - 10:45	0	0	0	0	18	0	0	18	4	17	0	21	0	15	26	41	80	0
10:45 - 11:00	0	0	0	0	36	0	3	39	3	20	0	23	0	20	32	52	114	0
11:00 - 11:15	0	0	0	0	35	0	2	37	4	39	0	43	0	29	26	55	135	0
11:15 - 11:30	0	0	0	0	26	0	1	27	3	46	0	49	0	30	41	71	147	0
11:30 - 11:45	0	0	0	0	24	0	4	28	2	49	0	51	0	31	45	76	155	0
11:45 - 12:00	0	0	0	0	32	0	4	36	4	55	0	59	0	53	44	97	192	0
12:00 - 12:15	0	0	0	0	44	0	2	46	0	53	0	53	0	44	43	87	186	0
12:15 - 12:30	0	0	0	0	45	0	1	46	1	54	0	55	0	46	53	99	200	0
12:30 - 12:45	0	0	0	0	34	0	3	37	4	49	0	53	0	54	39	93	183	0
12:45 - 13:00	0	0	0	0	26	0	0	26	3	39	0	42	0	39	44	83	151	0
13:00 - 13:15	0	0	0	0	39	0	2	41	1	55	0	56	0	46	52	98	195	0
13:15 - 13:30	0	0	0	0	35	0	4	39	3	25	0	28	0	36	26	62	129	0
13:30 - 13:45	0	0	0	0	51	0	1	52	4	32	0	36	0	36	36	72	160	0
13:45 - 14:00	0	0	0	0	45	0	6	51	0	37	0	37	0	37	32	69	157	0
14:00 - 14:15	0	0	0	0	45	0	5	50	1	42	0	43	0	32	30	62	155	0
14:15 - 14:30	0	0	0	0	46	0	5	51	2	55	0	57	0	52	38	90	198	0
14:30 - 14:45	0	0	0	0	41	0	3	44	0	35	0	35	0	40	33	73	152	0
14:45 - 15:00	0	0	0	0	45	0	3	48	2	46	0	48	0	43	33	76	172	0
15:00 - 15:15	0	0	0	0	44	0	3	47	2	51	0	53	0	53	26	79	179	0
15:15 - 15:30	0	0	0	0	39	0	2	41	6	59	0	65	0	40	38	78	184	0
15:30 - 15:45	0	0	0	0	52	0	5	57	2	60	0	62	0	40	31	71	190	0
15:45 - 16:00	0	0	0	0	58	0	2	60	3	63	0	66	0	48	29	77	203	0
16:00 - 16:15	0	0	0	0	49	0	5	54	1	66	0	67	0	62	32	94	215	0
16:15 - 16:30	0	0	0	0	58	0	3	61	3	102	0	105	0	78	37	115	281	0
16:30 - 16:45	0	0	0	0	72	0	8	80	0	90	0	90	0	69	32	101	271	0
16:45 - 17:00	0	0	0	0	34	0	3	37	1	91	0	92	0	59	28	87	216	0
17:00 - 17:15	0	0	0	0	60	0	5	65	1	137	0	138	0	76	27	103	306	0
17:15 - 17:30	0	0	0	0	79	0	8	87	4	138	0	142	0	75	32	107	336	0
17:30 - 17:45	0	0	0	0	55	0	4	59	2	101	0	103	0	90	28	118	280	0
17:45 - 18:00	0	0	0	0	55	0	5	60	3	94	0	97	0	62	32	94	251	0
18:00 - 18:15	0	0	0	0	52	0	2	54	3	65	0	68	0	69	28	97	219	0
18:15 - 18:30	0	0	0	0	45	0	2	47	3	53	0	56	0	66	21	87	190	0
18:30 - 18:45	0	0	0	0	36	0	2	38	2	43	0	45	0	45	31	76	159	0
18:45 - 19:00	0	0	0	0	42	0	3	45	1	44	0	45	0	57	27	84	174	0
TOTAL	0	0	0	0	1743	0	131	1874	118	2608	0	2726	0	2562	1898	4460	9060	3
Trucks	0	0	0	0	3	0	0	3	0	9	0	9	0	9	2	11	23	0.3%
School Buses	0	0	0	0	1	0	0	1	0	8	0	8	0	13	0	13	22	0.2%

TOTAL AND PEAK HOUR VOLUME DIAGRAMS

Lake Murray Blvd AT Parkridge Dr Date: 11/28/2016

12.0 HOUR TOTAL VOLUME
FROM 7:00 TO 15:00

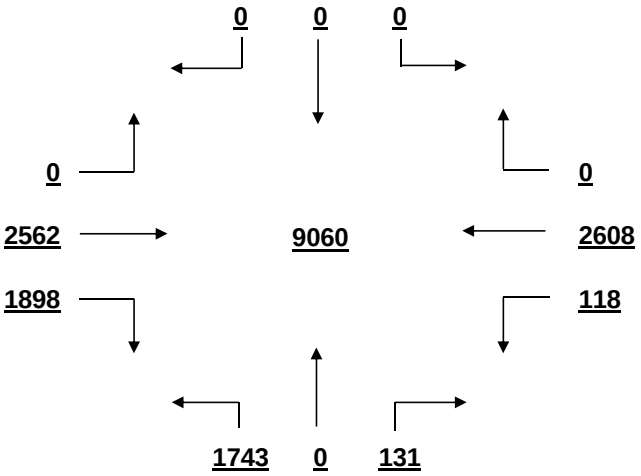

OVERALL PEAK HOUR VOLUME
FROM 17:00 TO 18:00

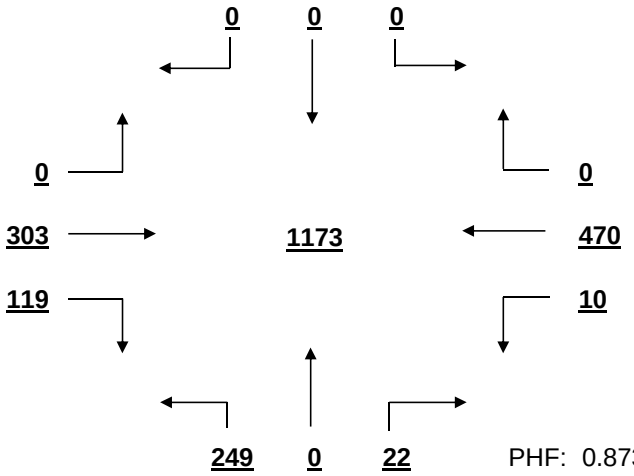

PHF: 0.873

AM PEAK HOUR VOLUME (0:00-10:45)
FROM 7:15 TO 8:15

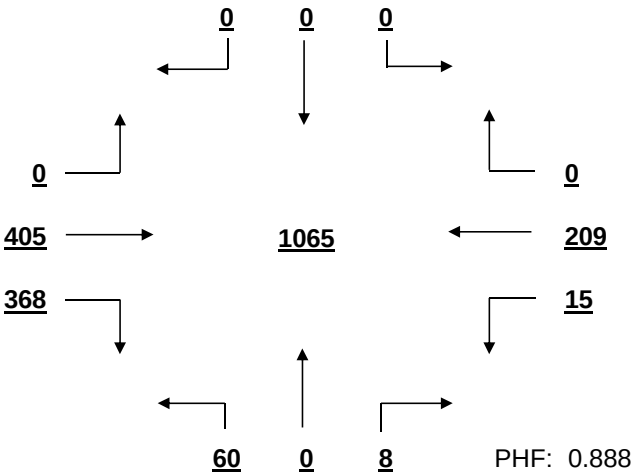

PHF: 0.888

PM PEAK HOUR VOLUME (14:15-23:45)
FROM 17:00 TO 18:00

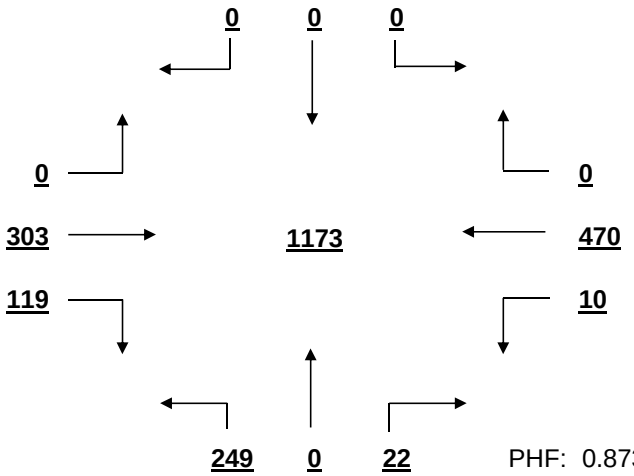

PHF: 0.873

MID-DAY PEAK HOUR VOLUME (11:00-14:00)
FROM 11:45 TO 12:45

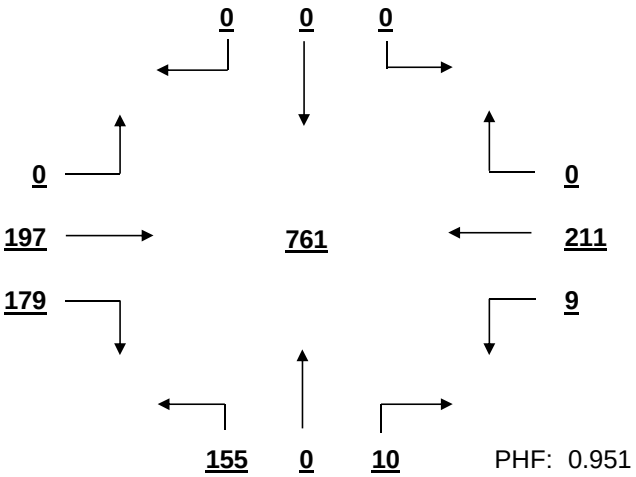

PHF: 0.951

OTHER HOUR VOLUME
FROM 7:00 TO 8:00

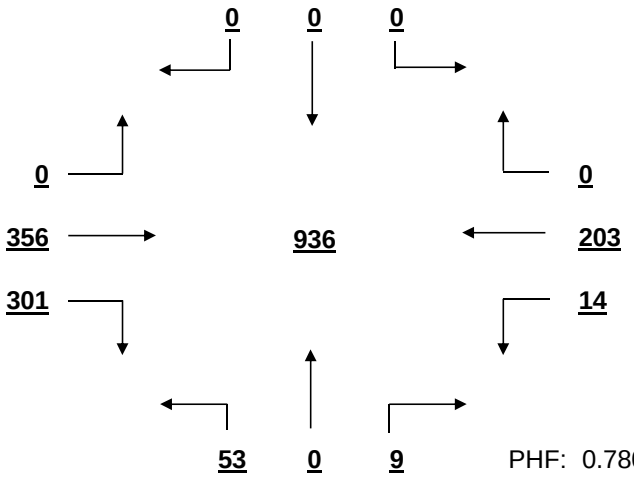

PHF: 0.780

SIGNAL WARRANT ANALYSIS

Lake Murray Blvd AT Parkridge Dr Date: 11/28/2016

Minor Street Volume, percent of total = 20.7%
Percent of Left Turns from Minor Street = 93.0%
Percent of Right Turns from Minor Street = 7.0%
Percent of Minor Street Right Turns to Remove from Warrant Analysis = 0%
WARRANT BASIS = **70%**

Warrant No. 1 - Vehicular Volume is met

Condition A - Minimum Vehicular Volume is met

Average Major Street % of Warrant				Average Minor Street % of Warrant			
598.8	/ 420	=	143%	156.2	/ 105	=	149%

Hourly percent of warrant

	7:00 - 8:00	8:00 - 9:00	9:00 - 10:00	10:00 - 11:00	11:00 - 12:00	12:00 - 13:00	13:00 - 14:00	14:00 - 15:00	15:00 - 16:00	16:00 - 17:00	17:00 - 18:00	18:00 - 19:00
Major St.	208%	182%	103%	83%	119%	135%	109%	115%	131%	179%	215%	133%
Minor St.	59%	71%	78%	99%	122%	148%	174%	184%	195%	221%	258%	175%

Condition B - Interruption to Continuous Traffic is not met

Average Major Street % of Warrant				Average Minor Street % of Warrant			
598.8	/ 630	=	95%	156.2	/ 53	=	297%

Hourly percent of warrant

	7:00 - 8:00	8:00 - 9:00	9:00 - 10:00	10:00 - 11:00	11:00 - 12:00	12:00 - 13:00	13:00 - 14:00	14:00 - 15:00	15:00 - 16:00	16:00 - 17:00	17:00 - 18:00	18:00 - 19:00
Major St.	139%	121%	68%	55%	80%	90%	73%	77%	87%	119%	143%	89%
Minor St.	118%	143%	156%	198%	244%	295%	349%	368%	390%	442%	516%	350%

80% Combination of Conditions A & B is not applicable

Warrant No. 2 - Four Hour Vehicular Volume is met

Hourly percent of warrant

	7:00 - 8:00	8:00 - 9:00	9:00 - 10:00	10:00 - 11:00	11:00 - 12:00	12:00 - 13:00	13:00 - 14:00	14:00 - 15:00	15:00 - 16:00	16:00 - 17:00	17:00 - 18:00	18:00 - 19:00
Minor St.	99%	89%	41%	44%	76%	108%	98%	110%	138%	265%	463%	126%

Warrant No. 3 - Peak Hour is met

Percent of warrant			Percent of warrant	
Overall Peak Hour:	17:00 - 18:00	Higher Volume Side Street Peak Hour:	17:00 - 18:00	
Minor St.	206%	Minor St.	206%	

Warrant No. 4 - Pedestrian Volume. Pedestrian volume shown are minumum volumes assuming heavy major street traffic. If these volumes are met, warrant 4 requires further engineering analysis

Minimum 4 hour ped. volume crossing major street: 75

Minimum peak hour ped. volume crossing major street: 93

Number of pedestrians crossing major street

	7:00 - 8:00	8:00 - 9:00	9:00 - 10:00	10:00 - 11:00	11:00 - 12:00	12:00 - 13:00	13:00 - 14:00	14:00 - 15:00	15:00 - 16:00	16:00 - 17:00	17:00 - 18:00	18:00 - 19:00
Major St.	0	2	1	0	0	0	0	0	0	0	0	0

Warrant No. 7 - Crash Experience (Requires 3 criteria analysis by engineering)

Total Number: 0 From: 1/1/2005 to 1/1/2008
Accident Rate: 0.00 per million entering vehicles

Types of Accidents	No.	/	Avg.		No.	/	Avg.
Right Angle	0	/	0.0	Rear End	0	/	0.0
Lost Control	0	/	0.0	Side Swipe	0	/	0.0
Left Turn	0	/	0.0	Other	0	/	0.0

SOUTH CAROLINA DEPARTMENT OF TRANSPORTATION
DISTRICT 1
TRAFFIC ENGINEERING

County: Richland City: Columbia Date: 11/28/2016

Major Rt: Columbiana Dr * Not on State System Minor Rt: Columbia Ave-Gateway Academy * Not on State System

Day of Week: Monday Weather: Clear Office: Short Counts JMS

Type of Control: Signal Speed Limit (major st) 30

Direction of Minor Street: N-S Intersection ADT - 12900 (Calc)

Number of Lanes (major st)* 1 Number of Lanes (minor st)* 1

* Each Direction

INTERSECTION VOLUME SUMMARY

	From N Columbia Ave-Gatew				From S Columbia Ave-Gatew				From E Columbiana Dr				From W Columbiana Dr				Total	Total
	LT	STR	RT	TOT	LT	STR	RT	TOT	LT	STR	RT	TOT	LT	STR	RT	TOT	Vol	Peds
7:00 - 7:15	1	0	6	7	4	0	5	9	3	40	0	43	0	63	0	63	122	0
7:15 - 7:30	4	0	9	13	3	0	4	7	1	67	0	68	3	111	1	115	203	0
7:30 - 7:45	4	0	10	14	5	0	7	12	2	58	0	60	1	169	4	174	260	0
7:45 - 8:00	5	0	8	13	3	0	4	7	2	27	0	29	1	85	0	86	135	0
8:00 - 8:15	5	0	5	10	5	0	9	14	3	40	0	43	1	91	3	95	162	0
8:15 - 8:30	5	2	6	13	6	0	6	12	4	35	0	39	1	80	2	83	147	0
8:30 - 8:45	3	0	6	9	8	0	3	11	5	32	0	37	0	72	3	75	132	0
8:45 - 9:00	0	0	2	2	5	0	10	15	7	27	1	35	0	86	3	89	141	1
9:00 - 9:15	0	0	1	1	3	0	3	6	2	24	0	26	0	53	1	54	87	0
9:15 - 9:30	1	0	2	3	1	0	9	10	3	48	0	51	1	80	3	84	148	0
9:30 - 9:45	0	0	1	1	2	0	3	5	1	36	0	37	0	113	0	113	156	0
9:45 - 10:00	0	0	2	2	1	0	4	5	4	44	0	48	0	95	7	102	157	0
10:00 - 10:15	1	0	2	3	1	0	8	9	3	41	1	45	0	99	1	100	157	0
10:15 - 10:30	0	0	0	0	3	0	3	6	3	60	0	63	0	108	0	108	177	0
10:30 - 10:45	1	0	0	1	4	0	5	9	6	45	0	51	0	93	2	95	156	0
10:45 - 11:00	2	0	0	2	5	0	5	10	7	69	0	76	0	127	3	130	218	0
11:00 - 11:15	0	0	0	0	6	0	9	15	8	106	0	114	0	116	5	121	250	0
11:15 - 11:30	0	0	0	0	6	0	13	19	10	86	0	96	1	126	3	130	245	0
11:30 - 11:45	1	0	3	4	7	0	16	23	6	101	0	107	0	137	1	138	272	0
11:45 - 12:00	2	0	2	4	4	0	18	22	6	109	0	115	0	120	3	123	264	0
12:00 - 12:15	0	0	0	0	4	0	13	17	7	108	0	115	0	178	4	182	314	0
12:15 - 12:30	1	0	1	2	4	0	15	19	9	116	0	125	0	145	6	151	297	0
12:30 - 12:45	1	0	1	2	9	0	12	21	9	117	0	126	0	145	4	149	298	0
12:45 - 13:00	1	0	0	1	3	0	6	9	20	151	0	171	0	131	4	135	316	0
13:00 - 13:15	0	0	1	1	2	0	7	9	1	93	0	94	0	105	1	106	210	0
13:15 - 13:30	0	0	1	1	3	0	9	12	7	109	0	116	0	89	2	91	220	0
13:30 - 13:45	0	0	1	1	3	0	5	8	6	121	0	127	0	118	2	120	256	0
13:45 - 14:00	1	0	0	1	2	0	7	9	11	137	0	148	0	126	9	135	293	0
14:00 - 14:15	0	0	1	1	2	0	7	9	13	134	0	147	0	111	5	116	273	0
14:15 - 14:30	0	0	0	0	5	0	7	12	10	115	0	125	0	133	5	138	275	0
14:30 - 14:45	0	0	1	1	2	0	9	11	8	134	1	143	1	108	6	115	270	0
14:45 - 15:00	1	0	2	3	6	0	7	13	8	113	0	121	0	117	4	121	258	0
15:00 - 15:15	0	0	2	2	4	0	2	6	4	124	0	128	1	90	2	93	229	0
15:15 - 15:30	0	2	1	3	5	0	5	10	20	115	0	135	0	100	4	104	252	0
15:30 - 15:45	1	0	3	4	3	0	8	11	9	103	0	112	0	97	5	102	229	0
15:45 - 16:00	0	0	0	0	3	0	8	11	2	93	0	95	0	109	4	113	219	0
16:00 - 16:15	3	0	6	9	1	0	6	7	7	114	0	121	0	137	3	140	277	0
16:15 - 16:30	2	0	3	5	5	0	8	13	5	143	0	148	0	160	10	170	336	0
16:30 - 16:45	1	1	11	13	3	0	9	12	5	143	0	148	2	112	15	129	302	0
16:45 - 17:00	2	0	7	9	3	0	13	16	9	130	0	139	0	139	3	142	306	0
17:00 - 17:15	3	1	19	23	5	0	16	21	7	134	0	141	0	149	8	157	342	0
17:15 - 17:30	2	2	4	8	6	0	9	15	9	114	0	123	0	142	5	147	293	0
17:30 - 17:45	1	2	10	13	6	0	17	23	13	123	0	136	0	136	4	140	312	0
17:45 - 18:00	2	0	14	16	2	0	5	7	11	117	0	128	0	155	6	161	312	0
18:00 - 18:15	2	1	11	14	5	0	5	10	9	141	0	150	0	143	5	148	322	0
18:15 - 18:30	1	1	9	11	6	0	5	11	11	133	0	144	0	173	5	178	344	0
18:30 - 18:45	1	0	4	5	0	0	2	2	6	138	0	144	0	157	2	159	310	0
18:45 - 19:00	0	0	0	0	0	0	0	0	7	81	0	88	0	85	3	88	176	0
TOTAL	61	12	178	251	184	0	366	550	329	4489	3	4821	13	5614	181	5808	11430	1
Trucks	0	0	0	0	0	0	2	2	0	16	0	16	0	9	1	10	28	0.2%
School Buses	0	0	0	0	1	0	1	2	2	9	0	11	0	15	0	15	28	0.2%

TOTAL AND PEAK HOUR VOLUME DIAGRAMS

Columbiana Dr AT Columbia Ave-Gateway Academy Date: 11/28/2016

12.0 HOUR TOTAL VOLUME
FROM 7:00 TO 15:00

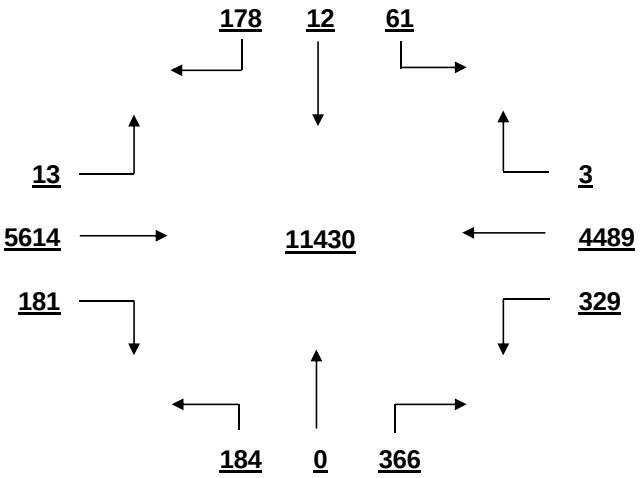

OVERALL PEAK HOUR VOLUME
FROM 17:30 TO 18:30

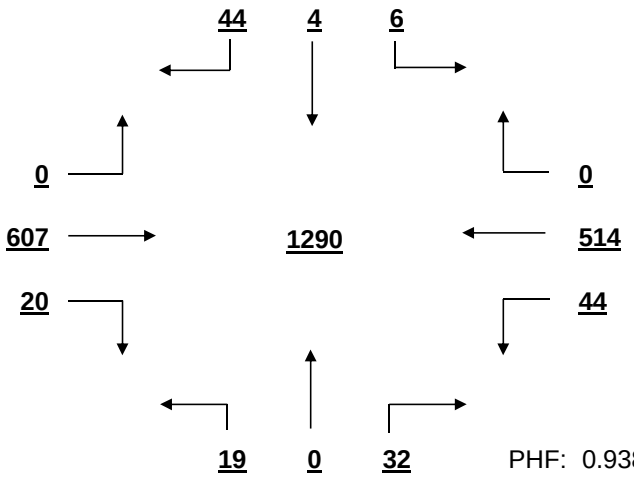

PHF: 0.938

AM PEAK HOUR VOLUME (0:00-10:45)
FROM 7:15 TO 8:15

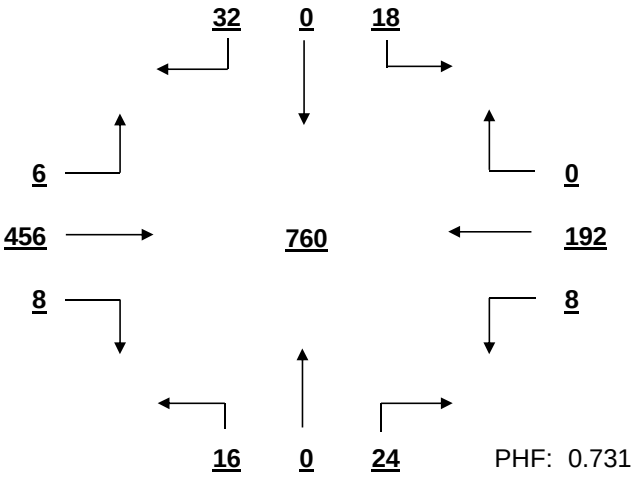

PHF: 0.731

PM PEAK HOUR VOLUME (14:15-23:45)
FROM 17:30 TO 18:30

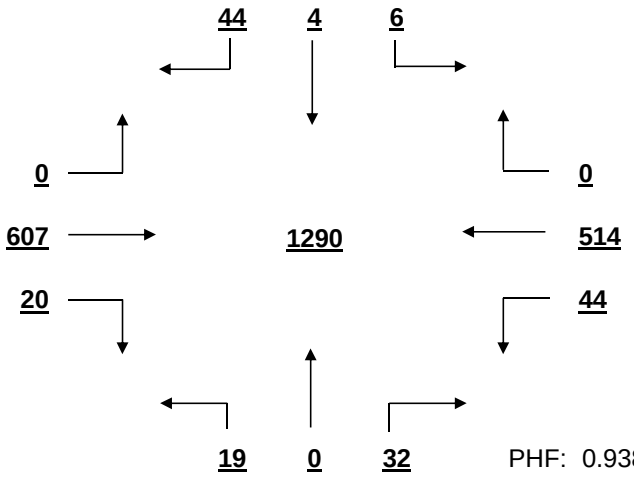

PHF: 0.938

MID-DAY PEAK HOUR VOLUME (11:00-14:00)
FROM 12:00 TO 13:00

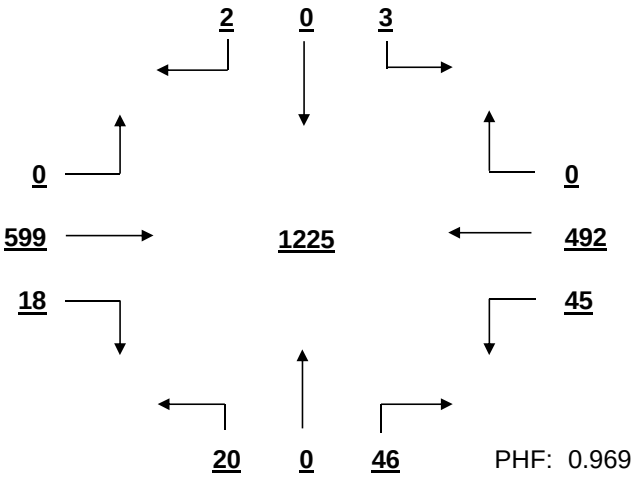

PHF: 0.969

OTHER HOUR VOLUME
FROM 7:00 TO 8:00

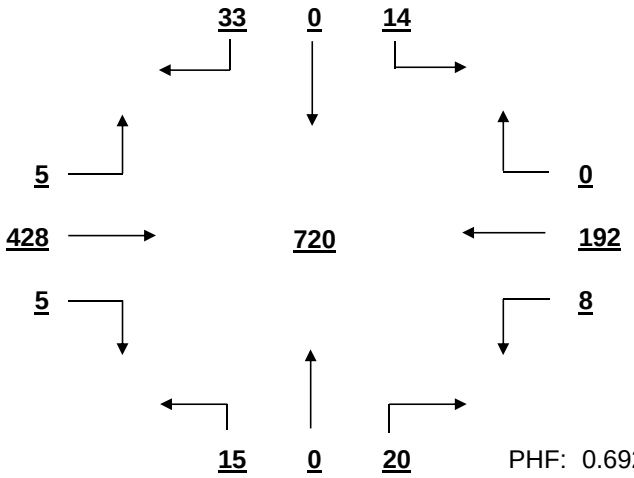

PHF: 0.692

SIGNAL WARRANT ANALYSIS

Columbiana Dr AT Columbia Ave-Gateway Academy Date: 11/28/2016

Minor Street Volume, percent of total = 7.0%
Percent of Left Turns from Minor Street = 30.6%
Percent of Right Turns from Minor Street = 67.9%
Percent of Minor Street Right Turns to Remove from Warrant Analysis = 0%
WARRANT BASIS = **100%**

Warrant No. 1 - Vehicular Volume is not met

Condition A - Minimum Vehicular Volume is not met

Average Major Street % of Warrant				Average Minor Street % of Warrant			
885.8	/ 500	=	177%	45.8	/ 150	=	31%

Hourly percent of warrant

	7:00 - 8:00	8:00 - 9:00	9:00 - 10:00	10:00 - 11:00	11:00 - 12:00	12:00 - 13:00	13:00 - 14:00	14:00 - 15:00	15:00 - 16:00	16:00 - 17:00	17:00 - 18:00	18:00 - 19:00
Major St.	128%	99%	103%	134%	189%	231%	187%	205%	176%	227%	227%	220%
Minor St.	31%	35%	17%	23%	53%	44%	25%	30%	25%	32%	44%	20%

Condition B - Interruption to Continuous Traffic is not met

Average Major Street % of Warrant				Average Minor Street % of Warrant			
885.8	/ 750	=	118%	45.8	/ 75	=	61%

Hourly percent of warrant

	7:00 - 8:00	8:00 - 9:00	9:00 - 10:00	10:00 - 11:00	11:00 - 12:00	12:00 - 13:00	13:00 - 14:00	14:00 - 15:00	15:00 - 16:00	16:00 - 17:00	17:00 - 18:00	18:00 - 19:00
Major St.	85%	66%	69%	89%	126%	154%	125%	137%	118%	152%	151%	147%
Minor St.	63%	69%	35%	45%	105%	88%	51%	60%	51%	64%	88%	40%

80% Combination of Conditions A & B is not met

Warrant No. 2 - Four Hour Vehicular Volume is not met

Hourly percent of warrant

	7:00 - 8:00	8:00 - 9:00	9:00 - 10:00	10:00 - 11:00	11:00 - 12:00	12:00 - 13:00	13:00 - 14:00	14:00 - 15:00	15:00 - 16:00	16:00 - 17:00	17:00 - 18:00	18:00 - 19:00
Minor St.	23%	20%	10%	18%	71%	83%	34%	48%	30%	64%	87%	37%

Warrant No. 3 - Peak Hour is not met

Percent of warrant			Percent of warrant	
Overall Peak Hour: 17:30 - 18:30		Higher Volume Side Street Peak Hour: 11:15 - 12:15		
Minor St.	36%		Minor St.	40%

Warrant No. 4 - Pedestrian Volume. Pedestrian volume shown are minumum volumes assuming heavy major street traffic. If these volumes are met, warrant 4 requires further engineering analysis

Minimum 4 hour ped. volume crossing major street	Minimum peak hour ped. volume crossing major street
107	133

Number of pedestrians crossing major street

	7:00 - 8:00	8:00 - 9:00	9:00 - 10:00	10:00 - 11:00	11:00 - 12:00	12:00 - 13:00	13:00 - 14:00	14:00 - 15:00	15:00 - 16:00	16:00 - 17:00	17:00 - 18:00	18:00 - 19:00
Major St.	0	1	0	0	0	0	0	0	0	0	0	0

Warrant No. 7 - Crash Experience (Requires 3 criteria analysis by engineering)

Total Number: 0 From: 1/1/2005 to 1/1/2008
Accident Rate: 0.00 per million entering vehicles

Types of Accidents	No.	/	Avg.		No.	/	Avg.
Right Angle	0	/	0.0	Rear End	0	/	0.0
Lost Control	0	/	0.0	Side Swipe	0	/	0.0
Left Turn	0	/	0.0	Other	0	/	0.0

SOUTH CAROLINA DEPARTMENT OF TRANSPORTATION
DISTRICT 1
TRAFFIC ENGINEERING

County: Richland City: Columbia Date: 11/30/2016

Major Rt: Columbiana Dr * Not on State System Minor Rt: Crossbow Dr-Texas Roadhouse * Not on State System

Day of Week: Wednesday Weather: Rain Office: Short Counts JMS

Type of Control: Signal Speed Limit (major st) 30

Direction of Minor Street: N-S Intersection ADT - 15540 (Calc)

Number of Lanes (major st)* 1 Number of Lanes (minor st)* 1

* Each Direction

INTERSECTION VOLUME SUMMARY

	From N Crossbow Dr-Texas				From S Crossbow Dr-Texas				From E Columbiana Dr				From W Columbiana Dr				Total	Total
	LT	STR	RT	TOT	LT	STR	RT	TOT	LT	STR	RT	TOT	LT	STR	RT	TOT	Vol	Peds
7:00 - 7:15	0	0	0	0	18	0	10	28	15	28	0	43	0	50	40	90	161	0
7:15 - 7:30	0	0	0	0	25	0	27	52	26	26	1	53	0	59	43	102	207	0
7:30 - 7:45	0	0	0	0	29	0	26	55	38	34	0	72	0	108	63	171	298	0
7:45 - 8:00	0	0	0	0	26	0	28	54	21	30	0	51	1	141	34	176	281	0
8:00 - 8:15	0	0	0	0	10	0	17	27	0	32	1	33	1	154	8	163	223	0
8:15 - 8:30	0	0	0	0	12	0	13	25	4	38	1	43	1	179	5	185	253	0
8:30 - 8:45	0	0	0	0	7	0	8	15	4	37	0	41	1	159	9	169	225	0
8:45 - 9:00	0	0	0	0	9	0	8	17	3	17	0	20	0	77	4	81	118	0
9:00 - 9:15	0	0	0	0	5	0	6	11	1	17	0	18	0	65	3	68	97	0
9:15 - 9:30	1	0	0	1	5	0	3	8	2	12	2	16	2	53	2	57	82	0
9:30 - 9:45	0	0	1	1	6	0	4	10	2	37	1	40	0	97	2	99	150	0
9:45 - 10:00	0	0	0	0	4	0	10	14	0	43	4	47	2	121	6	129	190	0
10:00 - 10:15	2	0	1	3	16	1	4	21	4	36	2	42	5	122	3	130	196	0
10:15 - 10:30	2	0	0	2	11	0	10	21	3	47	3	53	0	114	11	125	201	0
10:30 - 10:45	2	0	1	3	15	0	3	18	1	61	7	69	1	131	2	134	224	0
10:45 - 11:00	2	0	1	3	5	1	6	12	5	66	3	74	3	124	5	132	221	0
11:00 - 11:15	1	0	1	2	6	0	9	15	6	67	12	85	2	131	3	136	238	1
11:15 - 11:30	2	0	2	4	7	0	0	7	3	89	12	104	8	134	6	148	263	0
11:30 - 11:45	3	0	6	9	9	0	5	14	3	89	7	99	6	136	4	146	268	0
11:45 - 12:00	2	0	4	6	8	0	7	15	7	102	6	115	17	138	11	166	302	0
12:00 - 12:15	6	0	5	11	8	0	12	20	5	113	5	123	4	179	7	190	344	0
12:15 - 12:30	6	0	12	18	11	0	4	15	3	118	15	136	8	180	4	192	361	0
12:30 - 12:45	5	0	10	15	7	0	8	15	5	114	8	127	10	183	4	197	354	1
12:45 - 13:00	2	0	6	8	10	0	10	20	3	119	7	129	6	157	5	168	325	0
13:00 - 13:15	6	0	8	14	10	0	4	14	11	120	8	139	4	155	3	162	329	1
13:15 - 13:30	8	0	4	12	4	0	1	5	6	118	6	130	4	107	4	115	262	1
13:30 - 13:45	5	0	7	12	11	0	5	16	2	154	8	164	9	124	7	140	332	1
13:45 - 14:00	4	0	2	6	5	0	8	13	7	106	7	120	9	77	2	88	227	0
14:00 - 14:15	5	0	5	10	4	0	8	12	19	124	4	147	5	106	12	123	292	1
14:15 - 14:30	6	0	2	8	18	0	13	31	19	163	7	189	6	130	15	151	379	0
14:30 - 14:45	6	0	10	16	11	0	7	18	7	133	6	146	3	119	15	137	317	1
14:45 - 15:00	3	0	7	10	40	0	11	51	12	127	9	148	5	107	18	130	339	0
15:00 - 15:15	8	0	2	10	34	1	18	53	5	127	10	142	1	129	13	143	348	1
15:15 - 15:30	5	1	11	17	23	0	10	33	13	115	6	134	8	103	6	117	301	0
15:30 - 15:45	7	0	4	11	10	0	8	18	9	123	6	138	6	127	6	139	306	0
15:45 - 16:00	3	0	6	9	21	0	7	28	11	112	5	128	5	138	10	153	318	0
16:00 - 16:15	6	0	6	12	23	1	10	34	12	128	10	150	10	118	14	142	338	1
16:15 - 16:30	6	0	8	14	23	0	22	45	8	126	13	147	6	120	10	136	342	0
16:30 - 16:45	7	0	10	17	11	0	16	27	8	130	14	152	9	151	12	172	368	5
16:45 - 17:00	7	1	9	17	18	0	15	33	11	152	13	176	5	166	9	180	406	0
17:00 - 17:15	3	0	7	10	10	0	9	19	9	135	7	151	10	144	6	160	340	1
17:15 - 17:30	4	0	6	10	16	1	12	29	10	147	15	172	15	152	13	180	391	0
17:30 - 17:45	6	0	10	16	16	0	17	33	25	132	7	164	14	150	11	175	388	0
17:45 - 18:00	7	0	10	17	20	0	14	34	21	142	10	173	14	171	16	201	425	0
18:00 - 18:15	12	0	16	28	16	0	10	26	10	115	10	135	12	144	5	161	350	0
18:15 - 18:30	7	1	6	14	7	1	6	14	18	120	11	149	16	128	6	150	327	0
18:30 - 18:45	5	0	13	18	7	4	11	22	9	144	17	170	7	141	2	150	360	0
18:45 - 19:00	10	2	10	22	10	0	9	19	5	139	12	156	8	103	3	114	311	0
TOTAL	182	5	229	416	637	10	489	1136	431	4504	318	5253	269	6102	502	6873	13678	15
Trucks	0	0	0	0	1	0	1	2	1	5	2	8	1	10	0	11	21	0.2%
School Buses	0	0	0	0	13	0	2	15	2	7	0	9	0	10	6	16	40	0.3%

TOTAL AND PEAK HOUR VOLUME DIAGRAMS

Columbiana Dr AT Crossbow Dr-Texas Roadhouse Date: 11/30/2016

12.0 HOUR TOTAL VOLUME
FROM 7:00 TO 15:00

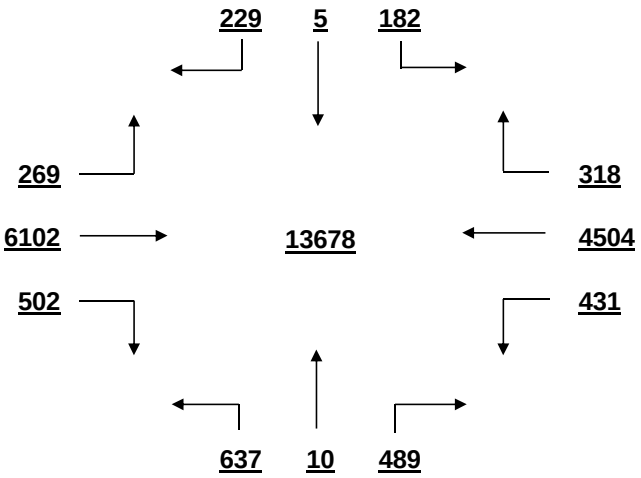

OVERALL PEAK HOUR VOLUME
FROM 17:15 TO 18:15

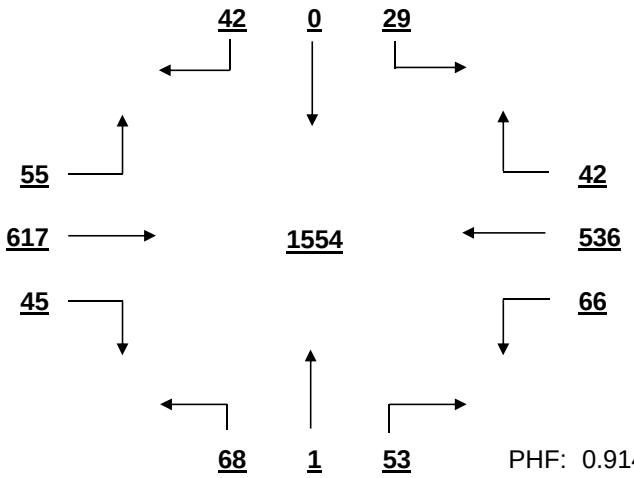

PHF: 0.914

AM PEAK HOUR VOLUME (0:00-10:45)
FROM 7:30 TO 8:30

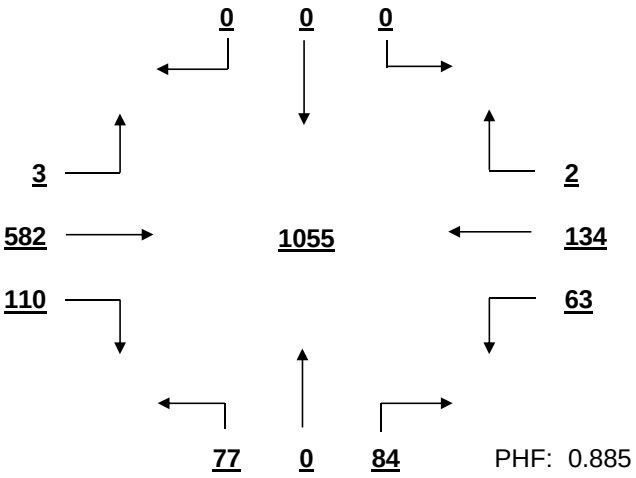

PHF: 0.885

PM PEAK HOUR VOLUME (14:15-23:45)
FROM 17:15 TO 18:15

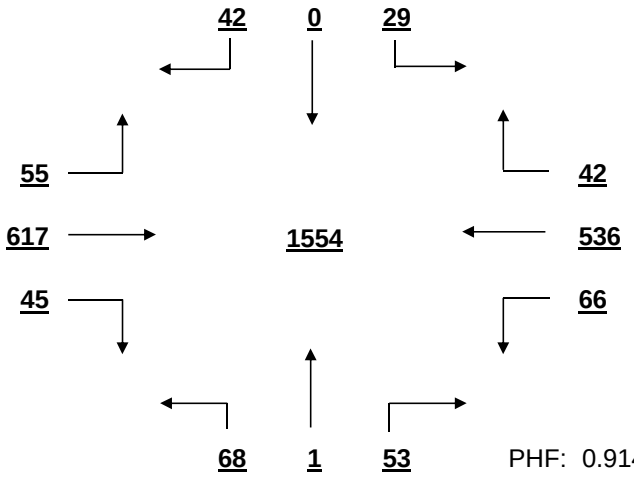

PHF: 0.914

MID-DAY PEAK HOUR VOLUME (11:00-14:00)
FROM 12:00 TO 13:00

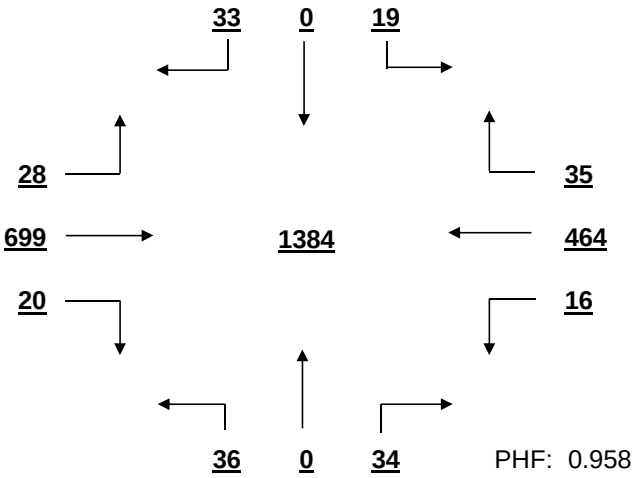

PHF: 0.958

OTHER HOUR VOLUME
FROM 7:00 TO 8:00

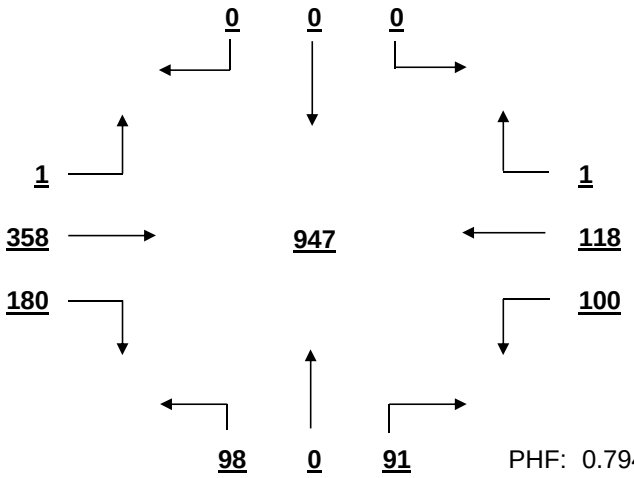

PHF: 0.794

SIGNAL WARRANT ANALYSIS

Columbiana Dr AT Crossbow Dr-Texas Roadhouse Date: 11/30/2016

Minor Street Volume, percent of total = 11.3%
Percent of Left Turns from Minor Street = 52.8%
Percent of Right Turns from Minor Street = 46.3%
Percent of Minor Street Right Turns to Remove from Warrant Analysis = 0%
WARRANT BASIS = **100%**

Warrant No. 1 - Vehicular Volume is not met

Condition A - Minimum Vehicular Volume is not met

Average Major Street % of Warrant				Average Minor Street % of Warrant			
1010.5	/	500	= 202%	94.7	/	150	= 63%

Hourly percent of warrant

	7:00 - 8:00	8:00 - 9:00	9:00 - 10:00	10:00 - 11:00	11:00 - 12:00	12:00 - 13:00	13:00 - 14:00	14:00 - 15:00	15:00 - 16:00	16:00 - 17:00	17:00 - 18:00	18:00 - 19:00
Major St.	152%	147%	95%	152%	200%	252%	212%	234%	219%	251%	275%	237%
Minor St.	126%	56%	29%	48%	34%	47%	32%	75%	88%	93%	77%	55%

Condition B - Interruption to Continuous Traffic is not met

Average Major Street % of Warrant				Average Minor Street % of Warrant			
1010.5	/	750	= 135%	94.7	/	75	= 126%

Hourly percent of warrant

	7:00 - 8:00	8:00 - 9:00	9:00 - 10:00	10:00 - 11:00	11:00 - 12:00	12:00 - 13:00	13:00 - 14:00	14:00 - 15:00	15:00 - 16:00	16:00 - 17:00	17:00 - 18:00	18:00 - 19:00
Major St.	101%	98%	63%	101%	133%	168%	141%	156%	146%	167%	183%	158%
Minor St.	252%	112%	57%	96%	68%	93%	64%	149%	176%	185%	153%	109%

80% Combination of Conditions A & B is not met

Warrant No. 2 - Four Hour Vehicular Volume is met

Hourly percent of warrant

	7:00 - 8:00	8:00 - 9:00	9:00 - 10:00	10:00 - 11:00	11:00 - 12:00	12:00 - 13:00	13:00 - 14:00	14:00 - 15:00	15:00 - 16:00	16:00 - 17:00	17:00 - 18:00	18:00 - 19:00
Minor St.	117%	50%	16%	45%	52%	88%	55%	140%	162%	174%	144%	103%

Warrant No. 3 - Peak Hour is met

	Percent of warrant		Percent of warrant
Overall Peak Hour:	17:15 - 18:15	Higher Volume Side Street Peak Hour:	7:00 - 8:00
Minor St.	105%	Minor St.	64%

Warrant No. 4 - Pedestrian Volume. Pedestrian volume shown are minumum volumes assuming heavy major street traffic. If these volumes are met, warrant 4 requires further engineering analysis

Minimum 4 hour ped. volume crossing major street: 107

Minimum peak hour ped. volume crossing major street: 133

Number of pedestrians crossing major street

	7:00 - 8:00	8:00 - 9:00	9:00 - 10:00	10:00 - 11:00	11:00 - 12:00	12:00 - 13:00	13:00 - 14:00	14:00 - 15:00	15:00 - 16:00	16:00 - 17:00	17:00 - 18:00	18:00 - 19:00
Major St.	0	0	0	0	1	1	3	2	0	6	1	0

Warrant No. 7 - Crash Experience (Requires 3 criteria analysis by engineering)

Total Number: 0 From: 1/1/2005 to 1/1/2008

Accident Rate: 0.00 per million entering vehicles

Types of Accidents	No.	/	Avg.		No.	/	Avg.
Right Angle	0	/	0.0	Rear End	0	/	0.0
Lost Control	0	/	0.0	Side Swipe	0	/	0.0
Left Turn	0	/	0.0	Other	0	/	0.0

SOUTH CAROLINA DEPARTMENT OF TRANSPORTATION
DISTRICT 1
TRAFFIC ENGINEERING

County: Richland City: Columbia Date: 11/29/2016

Major Rt: Columbiana Dr * Not on State System Minor Rt: Columbiana Cir-Lanneau Ct * Not on State System

Day of Week: Tuesday Weather: Rain Office: Short Counts JMS

Type of Control: Signal Speed Limit (major st) 30

Direction of Minor Street: E-W Intersection ADT - 13720 (Calc)

Number of Lanes (major st)* 2 Number of Lanes (minor st)* 1 * Each Direction

INTERSECTION VOLUME SUMMARY

	From N Columbiana Dr				From S Columbiana Dr				From E Columbiana Cir-Lan				From W Columbiana Cir-Lan				Total	Total
	LT	STR	RT	TOT	LT	STR	RT	TOT	LT	STR	RT	TOT	LT	STR	RT	TOT	Vol	Peds
7:00 - 7:15	2	62	0	64	1	27	0	28	0	0	0	0	0	0	3	3	95	0
7:15 - 7:30	1	168	1	170	3	53	2	58	1	0	2	3	0	0	8	8	239	0
7:30 - 7:45	4	235	0	239	2	66	2	70	1	0	3	4	0	0	4	4	317	0
7:45 - 8:00	8	239	0	247	3	42	4	49	1	0	1	2	1	1	3	5	303	0
8:00 - 8:15	9	186	2	197	3	42	3	48	0	0	5	5	1	1	3	5	255	0
8:15 - 8:30	2	166	3	171	8	43	1	52	0	0	5	5	0	0	10	10	238	1
8:30 - 8:45	5	149	1	155	3	48	0	51	0	0	5	5	1	0	5	6	217	2
8:45 - 9:00	6	98	2	106	5	54	3	62	1	0	4	5	1	0	5	6	179	0
9:00 - 9:15	2	57	0	59	2	29	4	35	0	0	4	4	0	0	3	3	101	0
9:15 - 9:30	2	89	2	93	1	27	7	35	2	1	1	4	1	1	2	4	136	0
9:30 - 9:45	4	105	1	110	1	56	4	61	3	0	4	7	1	0	0	1	179	0
9:45 - 10:00	5	99	1	105	5	52	12	69	3	1	5	9	1	1	3	5	188	0
10:00 - 10:15	3	100	3	106	2	50	10	62	3	0	5	8	1	1	3	5	181	0
10:15 - 10:30	6	103	4	113	3	56	12	71	9	0	11	20	1	0	1	2	206	1
10:30 - 10:45	6	96	3	105	5	72	11	88	12	0	8	20	0	2	9	11	224	0
10:45 - 11:00	6	92	0	98	5	70	19	94	15	0	8	23	1	0	4	5	220	0
11:00 - 11:15	4	103	2	109	7	0	25	32	16	0	8	24	1	0	3	4	169	0
11:15 - 11:30	8	106	4	118	5	104	16	125	9	2	13	24	2	1	9	12	279	0
11:30 - 11:45	2	116	4	122	2	95	20	117	20	3	10	33	1	0	9	10	282	0
11:45 - 12:00	6	144	2	152	6	120	14	140	15	1	8	24	0	3	9	12	328	0
12:00 - 12:15	2	131	2	135	10	99	17	126	32	4	13	49	3	1	2	6	316	0
12:15 - 12:30	5	108	2	115	13	113	17	143	31	1	11	43	2	2	5	9	310	0
12:30 - 12:45	4	139	1	144	10	93	21	124	17	1	14	32	0	0	4	4	304	0
12:45 - 13:00	9	143	4	156	10	122	17	149	27	2	12	41	2	2	9	13	359	0
13:00 - 13:15	4	145	3	152	7	95	22	124	34	3	17	54	6	0	7	13	343	1
13:15 - 13:30	8	124	2	134	5	103	24	132	23	1	19	43	5	0	14	19	328	0
13:30 - 13:45	3	133	1	137	9	105	19	133	33	2	24	59	6	0	7	13	342	0
13:45 - 14:00	4	142	1	147	10	140	23	173	15	1	9	25	3	0	7	10	355	1
14:00 - 14:15	5	92	1	98	11	81	15	107	22	2	12	36	4	0	5	9	250	0
14:15 - 14:30	7	102	2	111	6	110	18	134	21	2	15	38	4	2	9	15	298	0
14:30 - 14:45	5	128	6	139	4	106	13	123	14	3	11	28	4	1	7	12	302	0
14:45 - 15:00	8	131	4	143	6	100	14	120	17	0	13	30	1	2	8	11	304	0
15:00 - 15:15	5	78	2	85	9	72	11	92	16	2	9	27	2	0	9	11	215	0
15:15 - 15:30	4	118	3	125	14	108	7	129	21	2	13	36	5	1	15	21	311	0
15:30 - 15:45	4	121	2	127	11	86	16	113	15	2	15	32	6	0	6	12	284	0
15:45 - 16:00	7	99	3	109	8	96	17	121	17	1	13	31	3	1	2	6	267	0
16:00 - 16:15	8	112	8	128	8	120	11	139	23	0	14	37	5	0	6	11	315	0
16:15 - 16:30	6	121	6	133	12	117	12	141	18	0	10	28	5	1	5	11	313	1
16:30 - 16:45	5	116	2	123	6	120	15	141	18	2	21	41	6	0	6	12	317	0
16:45 - 17:00	6	86	1	93	3	112	16	131	10	0	13	23	1	1	8	10	257	1
17:00 - 17:15	6	100	3	109	11	117	9	137	16	0	7	23	3	1	3	7	276	0
17:15 - 17:30	1	103	3	107	16	138	16	170	17	2	14	33	4	0	11	15	325	0
17:30 - 17:45	2	50	2	54	5	84	7	96	9	1	3	13	1	0	4	5	168	0
17:45 - 18:00	7	114	4	125	7	155	11	173	9	2	16	27	6	0	2	8	333	0
18:00 - 18:15	5	111	2	118	7	153	10	170	15	3	4	22	5	0	5	10	320	0
18:15 - 18:30	8	102	9	119	3	159	7	169	19	4	16	39	7	0	8	15	342	0
18:30 - 18:45	5	95	3	103	7	129	11	147	20	6	10	36	6	2	6	14	300	0
18:45 - 19:00	6	89	3	98	2	107	5	114	9	3	7	19	3	2	6	11	242	0
TOTAL	240	5646	120	6006	302	4246	570	5118	649	60	465	1174	122	30	282	434	12732	8
Trucks	0	18	1	19	1	13	4	18	1	0	3	4	0	0	2	2	43	0.3%
School Buses	0	21	0	21	1	11	1	13	1	0	0	1	0	0	0	0	35	0.3%

TOTAL AND PEAK HOUR VOLUME DIAGRAMS

Columbiana Dr AT Columbiana Cir-Lanneau Ct Date: 11/29/2016

12.0 HOUR TOTAL VOLUME
FROM 7:00 TO 15:00

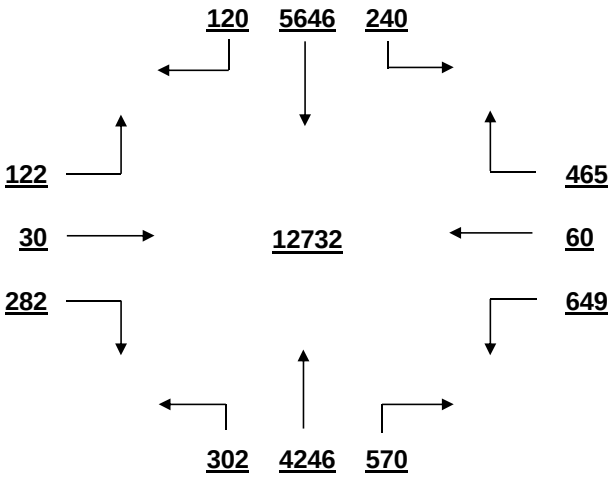

OVERALL PEAK HOUR VOLUME
FROM 12:45 TO 13:45

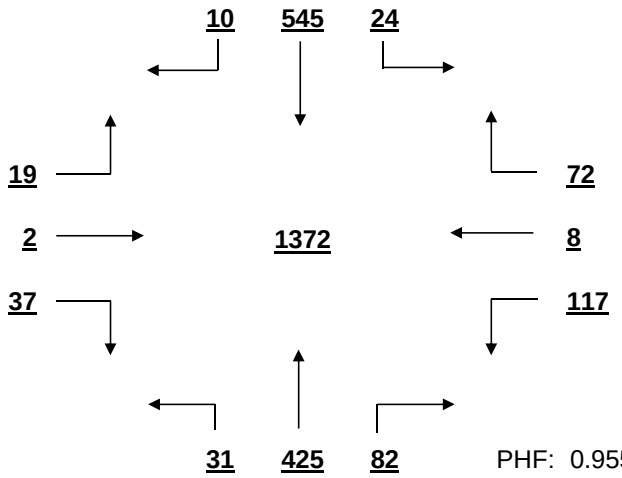

PHF: 0.955

AM PEAK HOUR VOLUME (0:00-10:45)
FROM 7:15 TO 8:15

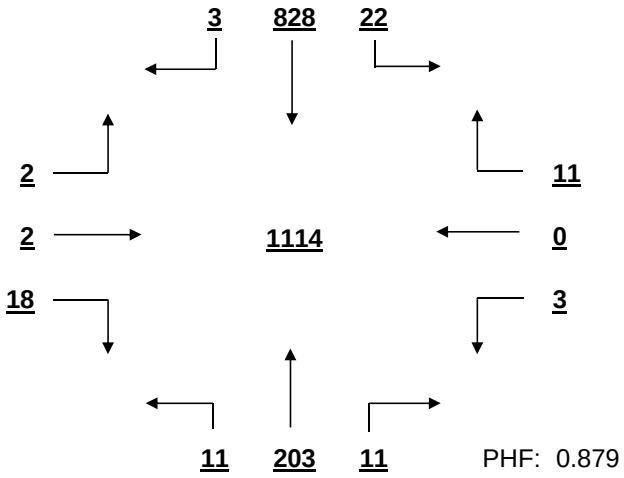

PHF: 0.879

PM PEAK HOUR VOLUME (14:15-23:45)
FROM 17:45 TO 18:45

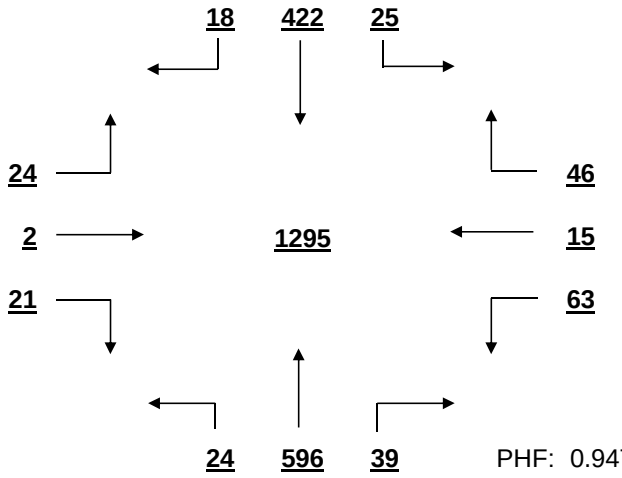

PHF: 0.947

MID-DAY PEAK HOUR VOLUME (11:00-14:00)
FROM 12:45 TO 13:45

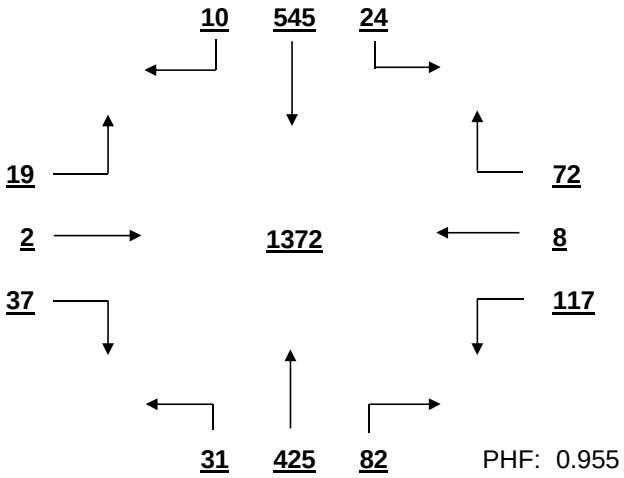

PHF: 0.955

OTHER HOUR VOLUME
FROM 7:00 TO 8:00

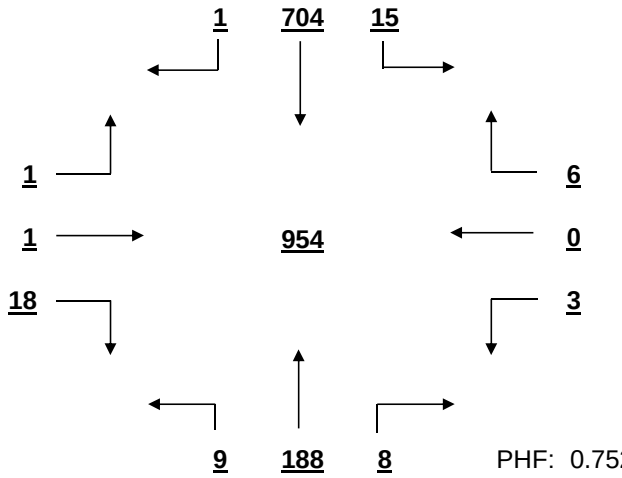

PHF: 0.752

SIGNAL WARRANT ANALYSIS

Columbiana Dr AT Columbiana Cir-Lanneau Ct Date: 11/29/2016

Minor Street Volume, percent of total = 12.6%
Percent of Left Turns from Minor Street = 47.9%
Percent of Right Turns from Minor Street = 46.5%
Percent of Minor Street Right Turns to Remove from Warrant Analysis = 0%
WARRANT BASIS = **100%**

Warrant No. 1 - Vehicular Volume is met

Condition A - Minimum Vehicular Volume is not met

Average Major Street % of Warrant				Average Minor Street % of Warrant			
927.0	/ 600	=	155%	97.8	/ 150	=	65%

Hourly percent of warrant

	7:00 - 8:00	8:00 - 9:00	9:00 - 10:00	10:00 - 11:00	11:00 - 12:00	12:00 - 13:00	13:00 - 14:00	14:00 - 15:00	15:00 - 16:00	16:00 - 17:00	17:00 - 18:00	18:00 - 19:00
Major St.	154%	140%	95%	123%	153%	182%	189%	163%	150%	172%	162%	173%
Minor St.	13%	18%	16%	47%	70%	110%	121%	88%	84%	86%	64%	77%

Condition B - Interruption to Continuous Traffic is met

Average Major Street % of Warrant				Average Minor Street % of Warrant			
927.0	/ 900	=	103%	97.8	/ 75	=	130%

Hourly percent of warrant

	7:00 - 8:00	8:00 - 9:00	9:00 - 10:00	10:00 - 11:00	11:00 - 12:00	12:00 - 13:00	13:00 - 14:00	14:00 - 15:00	15:00 - 16:00	16:00 - 17:00	17:00 - 18:00	18:00 - 19:00
Major St.	103%	94%	63%	82%	102%	121%	126%	108%	100%	114%	108%	115%
Minor St.	27%	36%	32%	95%	140%	220%	241%	176%	168%	172%	128%	155%

80% Combination of Conditions A & B is not met

Warrant No. 2 - Four Hour Vehicular Volume is not met

Hourly percent of warrant

	7:00 - 8:00	8:00 - 9:00	9:00 - 10:00	10:00 - 11:00	11:00 - 12:00	12:00 - 13:00	13:00 - 14:00	14:00 - 15:00	15:00 - 16:00	16:00 - 17:00	17:00 - 18:00	18:00 - 19:00
Minor St.	12%	14%	8%	31%	63%	135%	158%	88%	74%	95%	64%	87%

Warrant No. 3 - Peak Hour is not met

	Percent of warrant		Percent of warrant
Overall Peak Hour:	12:45 - 13:45	Higher Volume Side Street Peak Hour:	12:45 - 13:45
Minor St.	81%	Minor St.	81%

Warrant No. 4 - Pedestrian Volume. Pedestrian volume shown are minumum volumes assuming heavy major street traffic. If these volumes are met, warrant 4 requires further engineering analysis

Minimum 4 hour ped. volume crossing major street: 107

Minimum peak hour ped. volume crossing major street: 133

Number of pedestrians crossing major street

	7:00 - 8:00	8:00 - 9:00	9:00 - 10:00	10:00 - 11:00	11:00 - 12:00	12:00 - 13:00	13:00 - 14:00	14:00 - 15:00	15:00 - 16:00	16:00 - 17:00	17:00 - 18:00	18:00 - 19:00
Major St.	0	3	0	1	0	0	1	0	0	2	0	0

Warrant No. 7 - Crash Experience (Requires 3 criteria analysis by engineering)

Total Number: 0 From: 1/1/2005 to 1/1/2008
Accident Rate: 0.00 per million entering vehicles

Types of Accidents	No.	/	Avg.		No.	/	Avg.
Right Angle	0	/	0.0	Rear End	0	/	0.0
Lost Control	0	/	0.0	Side Swipe	0	/	0.0
Left Turn	0	/	0.0	Other	0	/	0.0

SOUTH CAROLINA DEPARTMENT OF TRANSPORTATION
DISTRICT 1
TRAFFIC ENGINEERING

County: Richland City: Columbia Date: 11/30/2016

Major Rt: Harbison Blvd * Not on State System Minor Rt: Parkridge Dr * Not on State System

Day of Week: Wednesday Weather: Rain Office: Short Counts JMS

Type of Control: Signal Speed Limit (major st) 40

Direction of Minor Street: N-S Intersection ADT - 13190 (Calc)

Number of Lanes (major st)* 2 Number of Lanes (minor st)* 1

* Each Direction

INTERSECTION VOLUME SUMMARY

	From N Parkridge Dr				From S Parkridge Dr				From E Harbison Blvd				From W Harbison Blvd				Total	Total
	LT	STR	RT	TOT	LT	STR	RT	TOT	LT	STR	RT	TOT	LT	STR	RT	TOT	Vol	Peds
7:00 - 7:15	3	0	22	25	0	0	0	0	0	92	3	95	11	27	0	38	158	0
7:15 - 7:30	4	0	58	62	0	0	0	0	0	94	6	100	26	48	0	74	236	1
7:30 - 7:45	4	0	124	128	0	0	0	0	0	105	4	109	12	39	0	51	288	0
7:45 - 8:00	3	0	155	158	0	0	0	0	0	91	9	100	25	55	0	80	338	2
8:00 - 8:15	10	0	130	140	0	0	0	0	0	79	5	84	28	45	0	73	297	0
8:15 - 8:30	4	0	124	128	0	0	0	0	0	81	4	85	25	49	0	74	287	2
8:30 - 8:45	4	0	101	105	0	0	0	0	0	96	8	104	17	51	0	68	277	0
8:45 - 9:00	6	0	77	83	0	0	0	0	0	103	3	106	20	47	0	67	256	0
9:00 - 9:15	4	0	43	47	0	0	0	0	0	67	3	70	11	35	0	46	163	1
9:15 - 9:30	2	0	21	23	0	0	0	0	0	53	1	54	21	37	0	58	135	0
9:30 - 9:45	2	0	23	25	0	0	0	0	0	92	4	96	32	46	0	78	199	0
9:45 - 10:00	2	0	25	27	0	0	0	0	0	74	1	75	12	50	0	62	164	0
10:00 - 10:15	7	0	40	47	0	0	0	0	0	75	2	77	30	63	0	93	217	0
10:15 - 10:30	5	0	28	33	0	0	0	0	0	95	5	100	24	55	0	79	212	2
10:30 - 10:45	3	0	29	32	0	0	0	0	0	76	2	78	29	59	0	88	198	0
10:45 - 11:00	3	0	33	36	0	0	0	0	0	81	4	85	28	63	0	91	212	0
11:00 - 11:15	2	0	18	20	0	0	0	0	0	79	2	81	22	53	0	75	176	1
11:15 - 11:30	2	0	25	27	0	0	0	0	0	88	2	90	25	61	0	86	203	0
11:30 - 11:45	4	0	35	39	0	0	0	0	0	93	1	94	32	65	0	97	230	0
11:45 - 12:00	4	0	55	59	0	0	0	0	0	96	3	99	48	82	0	130	288	0
12:00 - 12:15	6	0	66	72	0	0	0	0	0	100	1	101	26	69	0	95	268	0
12:15 - 12:30	5	0	43	48	0	0	0	0	0	90	6	96	34	91	0	125	269	0
12:30 - 12:45	9	0	34	43	0	0	0	0	0	73	4	77	40	88	0	128	248	2
12:45 - 13:00	9	0	48	57	0	0	0	0	0	98	4	102	39	90	0	129	288	0
13:00 - 13:15	6	0	45	51	0	0	0	0	0	108	7	115	32	95	0	127	293	2
13:15 - 13:30	5	0	38	43	0	0	0	0	0	80	6	86	28	86	0	114	243	0
13:30 - 13:45	5	0	18	23	0	0	0	0	0	78	4	82	23	76	0	99	204	0
13:45 - 14:00	4	0	35	39	0	0	0	0	0	85	5	90	32	79	0	111	240	0
14:00 - 14:15	4	0	36	40	0	0	0	0	0	83	5	88	30	102	0	132	260	0
14:15 - 14:30	3	0	34	37	0	0	0	0	0	54	3	57	36	77	0	113	207	0
14:30 - 14:45	5	0	31	36	0	0	0	0	0	85	4	89	32	83	0	115	240	0
14:45 - 15:00	6	0	34	40	0	0	0	0	0	99	5	104	32	73	0	105	249	0
15:00 - 15:15	6	0	42	48	0	0	0	0	0	84	4	88	35	90	0	125	261	0
15:15 - 15:30	10	0	37	47	0	0	0	0	0	84	3	87	40	70	0	110	244	0
15:30 - 15:45	3	0	36	39	0	0	0	0	0	92	7	99	33	79	0	112	250	0
15:45 - 16:00	7	0	30	37	0	0	0	0	0	101	3	104	41	83	0	124	265	0
16:00 - 16:15	7	0	31	38	0	0	0	0	0	100	7	107	53	98	0	151	296	0
16:15 - 16:30	3	0	37	40	0	0	0	0	0	112	5	117	42	93	0	135	292	1
16:30 - 16:45	9	0	51	60	0	0	0	0	0	121	3	124	58	86	0	144	328	0
16:45 - 17:00	6	0	40	46	0	0	0	0	0	119	6	125	64	91	0	155	326	1
17:00 - 17:15	3	0	42	45	0	0	0	0	0	128	6	134	58	95	0	153	332	1
17:15 - 17:30	2	0	36	38	0	0	0	0	0	114	11	125	60	79	0	139	302	0
17:30 - 17:45	6	0	49	55	0	0	0	0	0	111	7	118	52	117	0	169	342	1
17:45 - 18:00	4	0	33	37	0	0	0	0	0	117	8	125	74	107	0	181	343	0
18:00 - 18:15	7	0	49	56	0	0	0	0	0	90	10	100	37	91	0	128	284	0
18:15 - 18:30	2	0	40	42	0	0	0	0	0	94	7	101	48	107	0	155	298	0
18:30 - 18:45	9	0	34	43	0	0	0	0	0	76	5	81	46	103	0	149	273	0
18:45 - 19:00	1	0	33	34	0	0	0	0	0	75	9	84	46	97	0	143	261	0
TOTAL	230	0	2248	2478	0	0	0	0	0	4361	227	4588	1649	3525	0	5174	12240	17
Trucks	0	0	5	5	0	0	0	0	0	6	0	6	5	12	0	17	28	0.2%
School Buses	1	0	2	3	0	0	0	0	0	27	1	28	0	35	0	35	66	0.5%

TOTAL AND PEAK HOUR VOLUME DIAGRAMS

Harbison Blvd AT Parkridge Dr Date: 11/30/2016

12.0 HOUR TOTAL VOLUME
FROM 7:00 TO 15:00

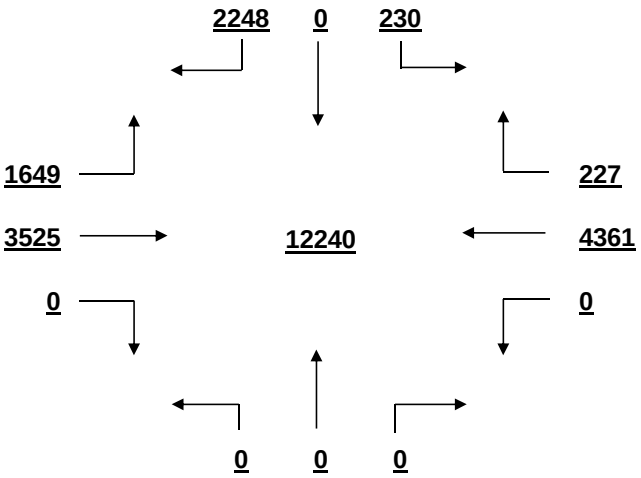

OVERALL PEAK HOUR VOLUME
FROM 17:00 TO 18:00

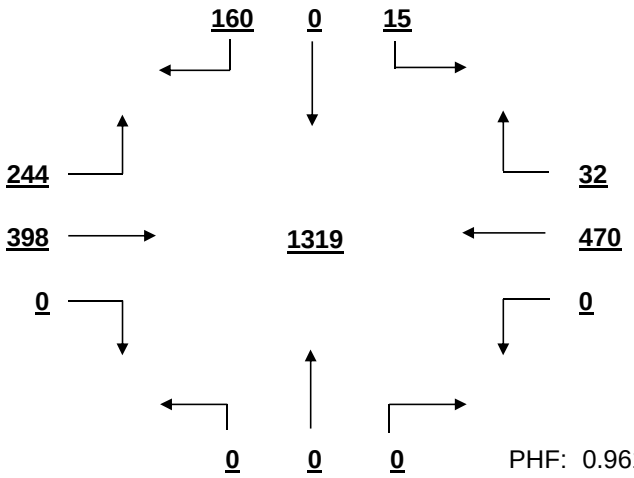

PHF: 0.961

AM PEAK HOUR VOLUME (0:00-10:45)
FROM 7:30 TO 8:30

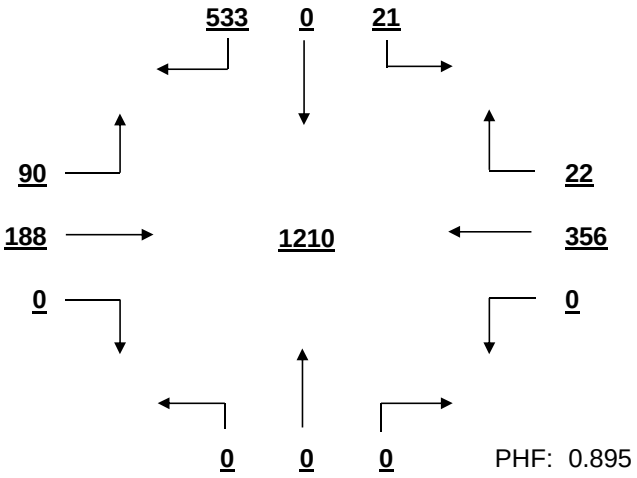

PHF: 0.895

PM PEAK HOUR VOLUME (14:15-23:45)
FROM 17:00 TO 18:00

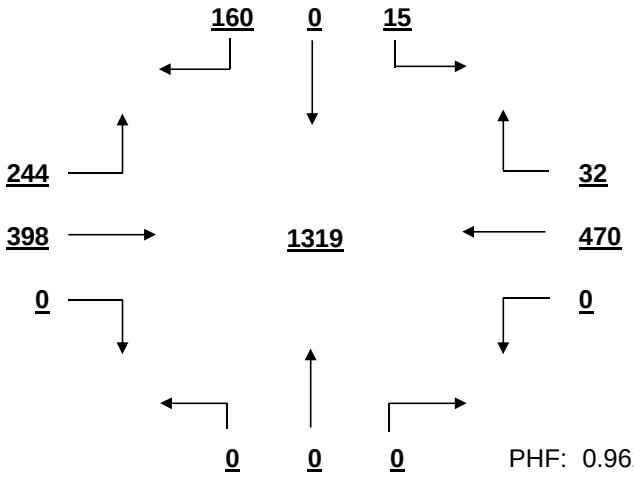

PHF: 0.961

MID-DAY PEAK HOUR VOLUME (11:00-14:00)
FROM 12:15 TO 13:15

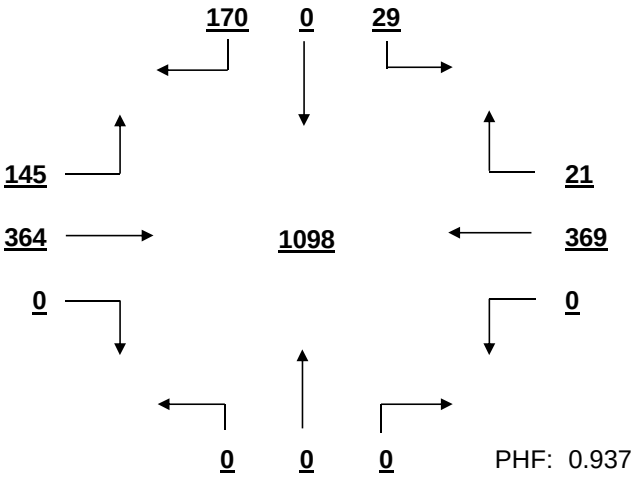

PHF: 0.937

OTHER HOUR VOLUME
FROM 7:00 TO 8:00

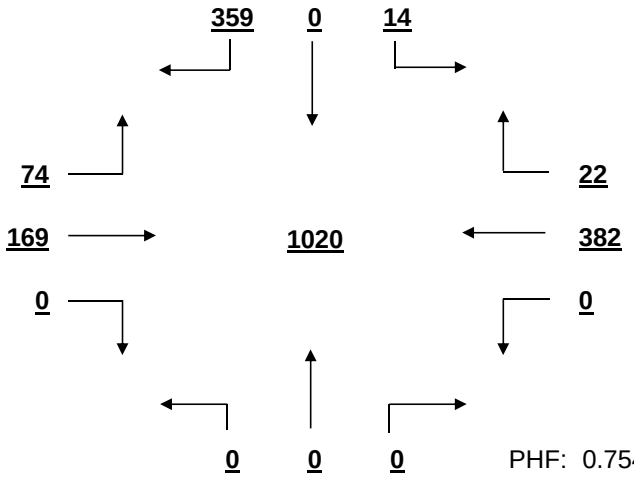

PHF: 0.754

SIGNAL WARRANT ANALYSIS

Harbison Blvd AT Parkridge Dr Date: 11/30/2016

Minor Street Volume, percent of total = 20.2%
Percent of Left Turns from Minor Street = 9.3%
Percent of Right Turns from Minor Street = 90.7%
Percent of Minor Street Right Turns to Remove from Warrant Analysis = 0%
WARRANT BASIS = **100%**

Warrant No. 1 - Vehicular Volume is met

Condition A - Minimum Vehicular Volume is met

Average Major Street % of Warrant	Average Minor Street % of Warrant
813.5 / 600 = 136%	206.5 / 150 = 138%

Hourly percent of warrant

	7:00 - 8:00	8:00 - 9:00	9:00 - 10:00	10:00 - 11:00	11:00 - 12:00	12:00 - 13:00	13:00 - 14:00	14:00 - 15:00	15:00 - 16:00	16:00 - 17:00	17:00 - 18:00	18:00 - 19:00
Major St.	108%	110%	90%	115%	125%	142%	137%	134%	142%	176%	191%	157%
Minor St.	249%	304%	81%	99%	97%	147%	104%	102%	114%	123%	117%	117%

Condition B - Interruption to Continuous Traffic is not met

Average Major Street % of Warrant	Average Minor Street % of Warrant
813.5 / 900 = 90%	206.5 / 75 = 275%

Hourly percent of warrant

	7:00 - 8:00	8:00 - 9:00	9:00 - 10:00	10:00 - 11:00	11:00 - 12:00	12:00 - 13:00	13:00 - 14:00	14:00 - 15:00	15:00 - 16:00	16:00 - 17:00	17:00 - 18:00	18:00 - 19:00
Major St.	72%	73%	60%	77%	84%	95%	92%	89%	94%	118%	127%	105%
Minor St.	497%	608%	163%	197%	193%	293%	208%	204%	228%	245%	233%	233%

80% Combination of Conditions A & B is met

Warrant No. 2 - Four Hour Vehicular Volume is met

Hourly percent of warrant

	7:00 - 8:00	8:00 - 9:00	9:00 - 10:00	10:00 - 11:00	11:00 - 12:00	12:00 - 13:00	13:00 - 14:00	14:00 - 15:00	15:00 - 16:00	16:00 - 17:00	17:00 - 18:00	18:00 - 19:00
Minor St.	141%	176%	39%	60%	65%	118%	80%	75%	91%	142%	155%	110%

Warrant No. 3 - Peak Hour is met

Overall Peak Hour: 17:00 - 18:00 — Percent of warrant — Minor St. 75%

Higher Volume Side Street Peak Hour: 7:30 - 8:30 — Percent of warrant — Minor St. 127%

Warrant No. 4 - Pedestrian Volume. Pedestrian volume shown are minumum volumes assuming heavy major street traffic. If these volumes are met, warrant 4 requires further engineering analysis

Minimum 4 hour ped. volume crossing major street: 107

Minimum peak hour ped. volume crossing major street: 133

Number of pedestrians crossing major street

	7:00 - 8:00	8:00 - 9:00	9:00 - 10:00	10:00 - 11:00	11:00 - 12:00	12:00 - 13:00	13:00 - 14:00	14:00 - 15:00	15:00 - 16:00	16:00 - 17:00	17:00 - 18:00	18:00 - 19:00
Major St.	1	1	0	2	1	2	2	0	0	1	2	0

Warrant No. 7 - Crash Experience (Requires 3 criteria analysis by engineering)

Total Number: 0 From: 1/1/2005 to 1/1/2008

Accident Rate: 0.00 per million entering vehicles

Types of Accidents	No.	/	Avg.		No.	/	Avg.
Right Angle	0	/	0.0	Rear End	0	/	0.0
Lost Control	0	/	0.0	Side Swipe	0	/	0.0
Left Turn	0	/	0.0	Other	0	/	0.0

SOUTH CAROLINA DEPARTMENT OF TRANSPORTATION
DISTRICT 1
TRAFFIC ENGINEERING

County: Richland City: Columbia Date: 12/1/2016

Major Rt: Woodcross Dr * Not on State System Minor Rt: Fernandina Rd-Wendy's/Hotel * Not on State System

Day of Week: Thursday Weather: Clear Office: Short Counts JMS

Type of Control: Stop Sign Speed Limit (major st) 35

Direction of Minor Street: E-W Intersection ADT - 8900 (Calc)

Number of Lanes (major st)* 1 Number of Lanes (minor st)* 1 * Each Direction

INTERSECTION VOLUME SUMMARY

	From N Woodcross Dr				From S Woodcross Dr				From E Fernandina Rd-Wend				From W Fernandina Rd-Wend				Total	Total
	LT	STR	RT	TOT	LT	STR	RT	TOT	LT	STR	RT	TOT	LT	STR	RT	TOT	Vol	Peds
7:00 - 7:15	0	0	12	12	1	0	0	1	0	31	0	31	2	10	19	31	75	0
7:15 - 7:30	0	0	7	7	2	0	0	2	2	35	1	38	1	17	48	66	113	0
7:30 - 7:45	0	0	7	7	3	0	0	3	4	35	0	39	1	30	95	126	175	0
7:45 - 8:00	1	1	6	8	8	1	1	10	0	22	0	22	1	34	94	129	169	0
8:00 - 8:15	0	2	11	13	4	0	0	4	0	34	1	35	1	34	108	143	195	0
8:15 - 8:30	0	0	3	3	8	0	0	8	0	22	0	22	3	32	82	117	150	0
8:30 - 8:45	0	0	3	3	15	0	0	15	0	32	0	32	1	37	48	86	136	1
8:45 - 9:00	0	0	2	2	12	0	0	12	1	36	0	37	4	31	33	68	119	0
9:00 - 9:15	0	1	5	6	14	0	0	14	1	39	4	44	2	32	11	45	109	0
9:15 - 9:30	4	1	3	8	17	0	0	17	1	42	0	43	3	44	17	64	132	0
9:30 - 9:45	0	0	2	2	8	1	0	9	0	32	0	32	1	38	18	57	100	0
9:45 - 10:00	0	0	3	3	15	1	1	17	1	46	0	47	2	31	16	49	116	0
10:00 - 10:15	2	0	3	5	11	0	0	11	2	35	0	37	2	31	15	48	101	0
10:15 - 10:30	0	0	4	4	16	0	0	16	0	45	0	45	3	29	9	41	106	0
10:30 - 10:45	0	0	1	1	11	2	0	13	0	35	0	35	1	38	11	50	99	0
10:45 - 11:00	1	0	2	3	19	1	0	20	1	48	1	50	4	43	25	72	145	0
11:00 - 11:15	2	0	5	7	16	0	0	16	0	29	2	31	8	52	19	79	133	0
11:15 - 11:30	1	1	9	11	22	1	1	24	0	48	2	50	8	48	12	68	153	0
11:30 - 11:45	2	1	9	12	18	1	1	20	0	56	7	63	8	36	19	63	158	0
11:45 - 12:00	3	0	12	15	22	1	1	24	0	50	4	54	6	63	22	91	184	0
12:00 - 12:15	2	3	9	14	26	5	0	31	0	55	7	62	8	48	32	88	195	0
12:15 - 12:30	4	2	21	27	30	2	1	33	0	37	2	39	24	52	30	106	205	2
12:30 - 12:45	5	5	18	28	32	3	0	35	0	44	8	52	16	45	27	88	203	1
12:45 - 13:00	8	3	13	24	39	4	0	43	1	37	4	42	13	42	23	78	187	0
13:00 - 13:15	6	4	16	26	27	2	0	29	0	51	13	64	16	52	28	96	215	0
13:15 - 13:30	3	2	17	22	24	5	2	31	0	48	6	54	4	53	31	88	195	0
13:30 - 13:45	1	2	16	19	29	5	1	35	0	40	3	43	8	37	20	65	162	0
13:45 - 14:00	2	6	6	14	18	3	0	21	3	46	3	52	8	37	10	55	142	0
14:00 - 14:15	2	4	12	18	30	1	1	32	1	47	3	51	6	46	11	63	164	0
14:15 - 14:30	3	2	9	14	24	4	2	30	2	43	4	49	9	51	27	87	180	0
14:30 - 14:45	1	0	9	10	17	2	1	20	1	35	3	39	6	29	10	45	114	0
14:45 - 15:00	2	0	6	8	15	1	1	17	1	30	4	35	1	36	11	48	108	0
15:00 - 15:15	3	0	8	11	32	1	1	34	2	51	5	58	11	53	14	78	181	0
15:15 - 15:30	5	0	14	19	24	0	0	24	0	42	3	45	11	44	23	78	166	0
15:30 - 15:45	0	0	10	10	30	4	0	34	0	52	1	53	7	34	20	61	158	0
15:45 - 16:00	1	1	12	14	24	0	1	25	0	39	1	40	17	53	21	91	170	0
16:00 - 16:15	3	1	15	19	35	2	1	38	1	36	5	42	12	47	19	78	177	0
16:15 - 16:30	3	2	18	23	28	3	5	36	3	38	2	43	13	49	22	84	186	0
16:30 - 16:45	5	1	5	11	33	3	1	37	2	71	2	75	13	45	20	78	201	1
16:45 - 17:00	4	0	12	16	48	1	1	50	1	40	5	46	15	52	18	85	197	3
17:00 - 17:15	3	0	14	17	56	3	1	60	3	62	0	65	9	48	26	83	225	3
17:15 - 17:30	2	0	12	14	68	6	3	77	1	57	7	65	13	42	27	82	238	1
17:30 - 17:45	5	3	13	21	63	2	3	68	1	60	2	63	8	41	24	73	225	0
17:45 - 18:00	3	0	13	16	54	0	1	55	4	44	4	52	13	51	15	79	202	0
18:00 - 18:15	1	0	14	15	42	1	0	43	1	47	1	49	7	45	17	69	176	0
18:15 - 18:30	2	1	13	16	42	2	0	44	0	35	2	37	12	37	15	64	161	2
18:30 - 18:45	4	1	13	18	39	5	1	45	2	31	2	35	11	46	16	73	171	3
18:45 - 19:00	4	0	14	18	27	4	0	31	0	43	0	43	8	36	12	56	148	0
TOTAL	103	50	461	614	1198	83	33	1314	43	2013	124	2180	361	1961	1290	3612	7720	17
Trucks	1	0	2	3	6	0	0	6	0	5	0	5	2	5	8	15	29	0.4%
School Buses	0	0	0	0	0	0	0	0	0	5	0	5	0	5	3	8	13	0.2%

TOTAL AND PEAK HOUR VOLUME DIAGRAMS

Woodcross Dr AT Fernandina Rd-Wendy's/Hotel Date: 12/1/2016

12.0 HOUR TOTAL VOLUME
FROM 7:00 TO 15:00

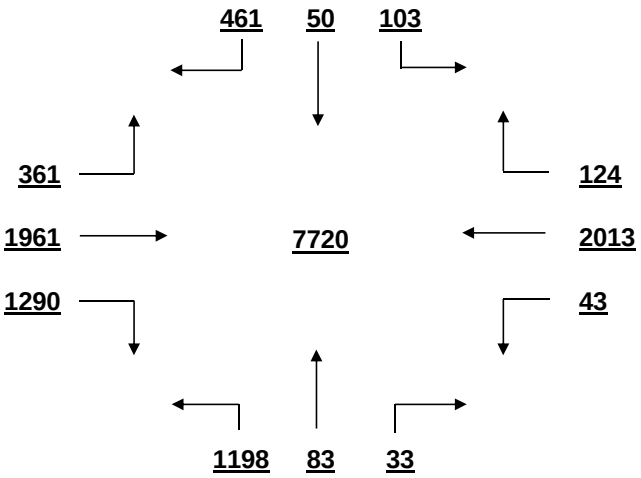

OVERALL PEAK HOUR VOLUME
FROM 17:00 TO 18:00

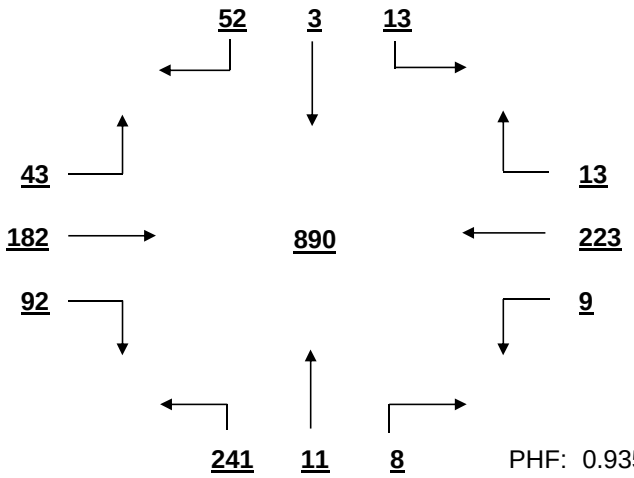

PHF: 0.935

AM PEAK HOUR VOLUME (0:00-10:45)
FROM 7:30 TO 8:30

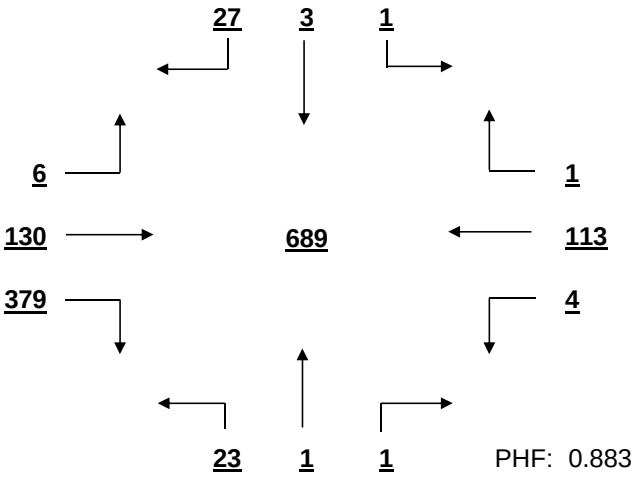

PHF: 0.883

PM PEAK HOUR VOLUME (14:15-23:45)
FROM 17:00 TO 18:00

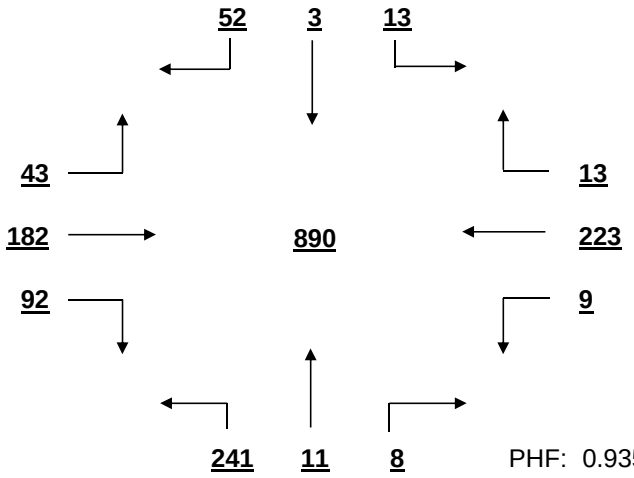

PHF: 0.935

MID-DAY PEAK HOUR VOLUME (11:00-14:00)
FROM 12:15 TO 13:15

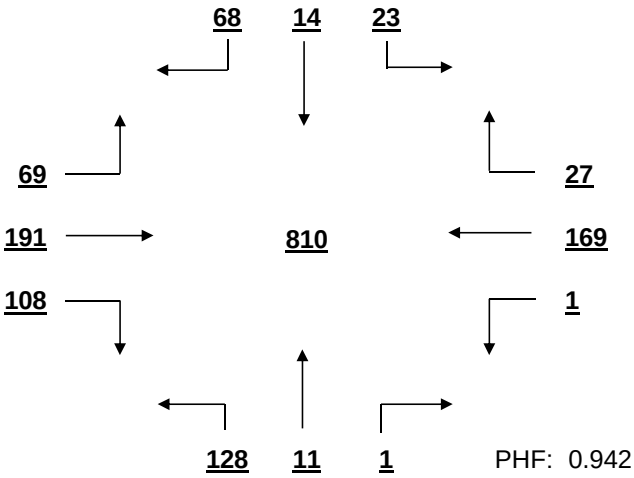

PHF: 0.942

OTHER HOUR VOLUME
FROM 7:00 TO 8:00

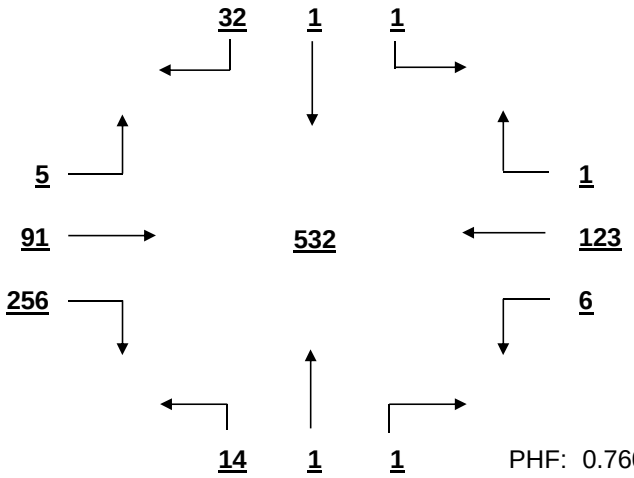

PHF: 0.760

SIGNAL WARRANT ANALYSIS

Woodcross Dr AT Fernandina Rd-Wendy's/Hotel Date: 12/1/2016

Minor Street Volume, percent of total = 75.0%
Percent of Left Turns from Minor Street = 7.0%
Percent of Right Turns from Minor Street = 24.4%
Percent of Minor Street Right Turns to Remove from Warrant Analysis = 0%
WARRANT BASIS = **100%**

Warrant No. 1 - Vehicular Volume is not met

Condition A - Minimum Vehicular Volume is not met

Average Major Street % of Warrant				Average Minor Street % of Warrant			
160.7	/	500	= 32%	301.0	/	150	= 201%

Hourly percent of warrant

	7:00 - 8:00	8:00 - 9:00	9:00 - 10:00	10:00 - 11:00	11:00 - 12:00	12:00 - 13:00	13:00 - 14:00	14:00 - 15:00	15:00 - 16:00	16:00 - 17:00	17:00 - 18:00	18:00 - 19:00
Major St.	10%	12%	15%	15%	26%	47%	39%	30%	34%	46%	66%	46%
Minor St.	235%	276%	143%	141%	201%	240%	203%	162%	205%	217%	211%	175%

Condition B - Interruption to Continuous Traffic is not met

Average Major Street % of Warrant				Average Minor Street % of Warrant			
160.7	/	750	= 21%	301.0	/	75	= 401%

Hourly percent of warrant

	7:00 - 8:00	8:00 - 9:00	9:00 - 10:00	10:00 - 11:00	11:00 - 12:00	12:00 - 13:00	13:00 - 14:00	14:00 - 15:00	15:00 - 16:00	16:00 - 17:00	17:00 - 18:00	18:00 - 19:00
Major St.	7%	8%	10%	10%	17%	31%	26%	20%	23%	31%	44%	31%
Minor St.	469%	552%	287%	281%	401%	480%	405%	324%	411%	433%	423%	349%

80% Combination of Conditions A & B is not met

Warrant No. 2 - Four Hour Vehicular Volume is not met

Hourly percent of warrant

	7:00 - 8:00	8:00 - 9:00	9:00 - 10:00	10:00 - 11:00	11:00 - 12:00	12:00 - 13:00	13:00 - 14:00	14:00 - 15:00	15:00 - 16:00	16:00 - 17:00	17:00 - 18:00	18:00 - 19:00
Minor St.	69%	82%	44%	43%	66%	91%	73%	54%	71%	82%	92%	66%

Warrant No. 3 - Peak Hour is not met

Percent of warrant			Percent of warrant	
Overall Peak Hour: 17:00 - 18:00		Higher Volume Side Street Peak Hour:	7:30 - 8:30	
Minor St.	60%	Minor St.	71%	

Warrant No. 4 - Pedestrian Volume. Pedestrian volume shown are minumum volumes assuming heavy major street traffic. If these volumes are met, warrant 4 requires further engineering analysis

Minimum 4 hour ped. volume crossing major street	Minimum peak hour ped. volume crossing major street
107	133

Number of pedestrians crossing major street

	7:00 - 8:00	8:00 - 9:00	9:00 - 10:00	10:00 - 11:00	11:00 - 12:00	12:00 - 13:00	13:00 - 14:00	14:00 - 15:00	15:00 - 16:00	16:00 - 17:00	17:00 - 18:00	18:00 - 19:00
Major St.	0	0	0	0	0	0	0	0	0	0	0	0

Warrant No. 7 - Crash Experience (Requires 3 criteria analysis by engineering)

Total Number: 0 From: 1/1/2005 to 1/1/2008
Accident Rate: 0.00 per million entering vehicles

Types of Accidents	No.	/	Avg.		No.	/	Avg.
Right Angle	0	/	0.0	Rear End	0	/	0.0
Lost Control	0	/	0.0	Side Swipe	0	/	0.0
Left Turn	0	/	0.0	Other	0	/	0.0

SOUTH CAROLINA DEPARTMENT OF TRANSPORTATION
DISTRICT 1
TRAFFIC ENGINEERING

County: Richland City: Columbia Date: 12/2/2016

Major Rt: Harbison Blvd * Not on State System Minor Rt: Saturn Pkwy * Not on State System

Day of Week: Friday Weather: Clear Office: Short Counts JMS

Type of Control: Signal Speed Limit (major st) 35

Direction of Minor Street: E-W Intersection ADT - 31850 (Calc)

Number of Lanes (major st)* 2 Number of Lanes (minor st)* 1

* Each Direction

INTERSECTION VOLUME SUMMARY

	From N Harbison Blvd				From S Harbison Blvd				From E Saturn Pkwy				From W Saturn Pkwy				Total	Total
	LT	STR	RT	TOT	LT	STR	RT	TOT	LT	STR	RT	TOT	LT	STR	RT	TOT	Vol	Peds
7:00 - 7:15	23	137	0	160	0	126	3	129	0	0	9	9	0	0	0	0	298	0
7:15 - 7:30	14	163	0	177	0	158	5	163	0	0	16	16	0	0	0	0	356	0
7:30 - 7:45	21	204	0	225	0	188	6	194	0	0	13	13	0	0	0	0	432	3
7:45 - 8:00	26	217	0	243	0	180	5	185	0	0	12	12	0	0	0	0	440	0
8:00 - 8:15	37	181	0	218	0	189	5	194	0	0	12	12	0	0	0	0	424	0
8:15 - 8:30	30	188	0	218	0	159	5	164	0	0	19	19	0	0	0	0	401	0
8:30 - 8:45	27	187	0	214	0	156	3	159	0	0	23	23	0	0	0	0	396	0
8:45 - 9:00	23	232	0	255	0	142	7	149	0	0	24	24	0	0	0	0	428	1
9:00 - 9:15	31	211	0	242	0	144	12	156	0	0	14	14	0	0	0	0	412	0
9:15 - 9:30	39	280	0	319	0	180	9	189	0	0	25	25	0	0	0	0	533	0
9:30 - 9:45	39	282	0	321	0	163	17	180	0	0	34	34	0	0	0	0	535	0
9:45 - 10:00	49	340	0	389	0	180	9	189	0	0	18	18	0	0	0	0	596	0
10:00 - 10:15	56	295	0	351	0	159	14	173	0	0	49	49	0	0	0	0	573	1
10:15 - 10:30	56	307	0	363	0	198	19	217	0	0	43	43	0	0	0	0	623	0
10:30 - 10:45	46	308	0	354	0	267	21	288	0	0	42	42	0	0	0	0	684	0
10:45 - 11:00	48	358	0	406	0	227	16	243	0	0	52	52	0	0	0	0	701	1
11:00 - 11:15	53	329	0	382	0	0	30	30	0	0	46	46	0	0	0	0	458	0
11:15 - 11:30	52	344	0	396	0	255	17	272	0	0	58	58	0	0	0	0	726	0
11:30 - 11:45	59	363	0	422	0	298	13	311	0	0	45	45	0	0	0	0	778	0
11:45 - 12:00	51	382	0	433	0	289	17	306	0	0	51	51	0	0	0	0	790	0
12:00 - 12:15	64	371	0	435	0	296	24	320	0	0	52	52	0	0	0	0	807	0
12:15 - 12:30	62	298	0	360	0	236	9	245	0	0	47	47	0	0	0	0	652	0
12:30 - 12:45	22	301	0	323	0	325	7	332	0	0	31	31	0	0	0	0	686	0
12:45 - 13:00	34	359	0	393	0	327	15	342	0	0	36	36	0	0	0	0	771	0
13:00 - 13:15	31	329	0	360	0	324	12	336	0	0	42	42	0	0	0	0	738	0
13:15 - 13:30	40	312	0	352	0	308	10	318	0	0	31	31	0	0	0	0	701	0
13:30 - 13:45	41	310	0	351	0	289	11	300	0	0	44	44	0	0	0	0	695	0
13:45 - 14:00	52	292	0	344	0	321	15	336	0	0	46	46	0	0	0	0	726	0
14:00 - 14:15	54	311	0	365	0	316	23	339	0	0	50	50	0	0	0	0	754	1
14:15 - 14:30	50	315	0	365	0	416	20	436	0	0	59	59	0	0	0	0	860	0
14:30 - 14:45	57	274	0	331	0	372	21	393	0	0	72	72	0	0	0	0	796	0
14:45 - 15:00	47	294	0	341	0	333	24	357	0	0	49	49	0	0	0	0	747	0
15:00 - 15:15	72	261	0	333	0	364	15	379	0	0	70	70	0	0	0	0	782	0
15:15 - 15:30	60	214	0	274	0	348	23	371	0	0	70	70	0	0	0	0	715	0
15:30 - 15:45	49	288	0	337	0	362	22	384	0	0	61	61	0	0	0	0	782	1
15:45 - 16:00	55	306	0	361	0	358	20	378	0	0	62	62	0	0	0	0	801	0
16:00 - 16:15	63	271	0	334	0	324	9	333	0	0	61	61	0	0	0	0	728	0
16:15 - 16:30	60	244	0	304	0	346	12	358	0	0	75	75	0	0	0	0	737	0
16:30 - 16:45	54	314	0	368	0	353	10	363	0	0	66	66	0	0	0	0	797	0
16:45 - 17:00	67	279	0	346	0	325	15	340	0	0	77	77	0	0	0	0	763	1
17:00 - 17:15	53	299	0	352	0	267	12	279	0	0	59	59	0	0	0	0	690	0
17:15 - 17:30	54	282	0	336	0	341	10	351	0	0	49	49	0	0	0	0	736	1
17:30 - 17:45	50	293	0	343	0	296	9	305	0	0	46	46	0	0	0	0	694	0
17:45 - 18:00	84	253	0	337	0	289	6	295	0	0	72	72	0	0	0	0	704	0
18:00 - 18:15	56	250	0	306	0	307	15	322	0	0	53	53	0	0	0	0	681	4
18:15 - 18:30	58	248	0	306	0	298	16	314	0	0	52	52	0	0	0	0	672	0
18:30 - 18:45	71	251	0	322	0	278	13	291	0	0	61	61	0	0	0	0	674	0
18:45 - 19:00	27	264	0	291	0	261	10	271	0	0	55	55	0	0	0	0	617	0
TOTAL	2267	13391	0	15658	0	12638	641	13279	0	0	2153	2153	0	0	0	0	31090	14
Trucks	19	39	0	58	0	41	2	43	0	0	15	15	0	0	0	0	116	0.4%
School Buses	4	35	0	39	0	35	0	35	0	0	4	4	0	0	0	0	78	0.3%

TOTAL AND PEAK HOUR VOLUME DIAGRAMS

Harbison Blvd AT Saturn Pkwy Date: 12/2/2016

12.0 HOUR TOTAL VOLUME
FROM 7:00 TO 15:00

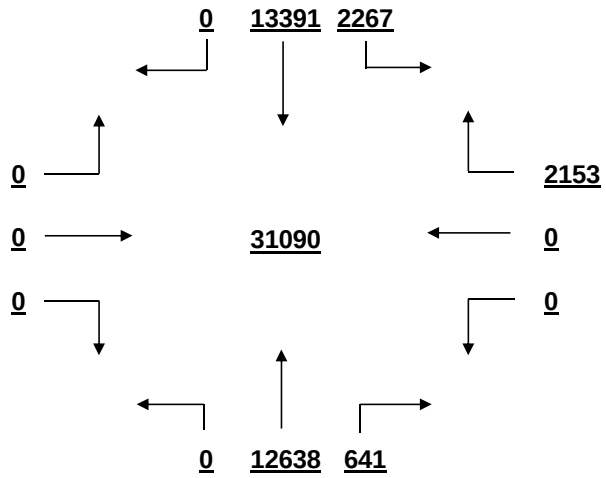

OVERALL PEAK HOUR VOLUME
FROM 14:15 TO 15:15

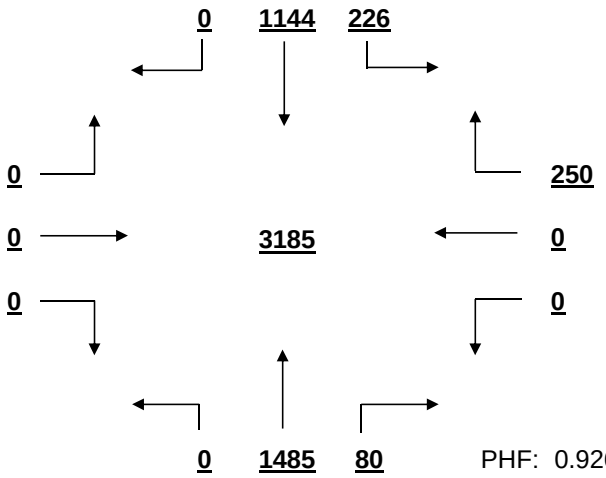

PHF: 0.926

AM PEAK HOUR VOLUME (0:00-10:45)
FROM 9:45 TO 10:45

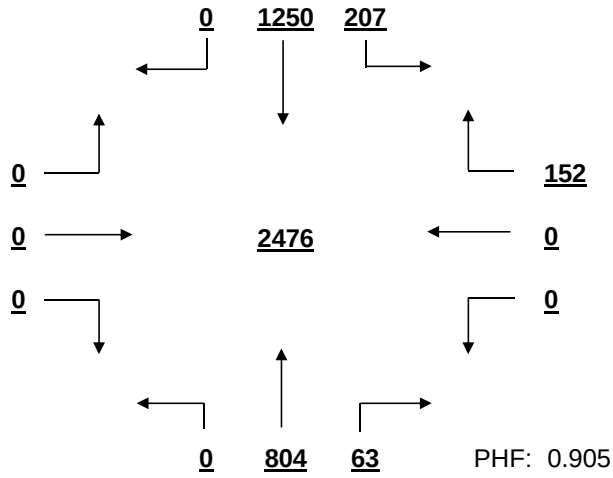

PHF: 0.905

PM PEAK HOUR VOLUME (14:15-23:45)
FROM 14:15 TO 15:15

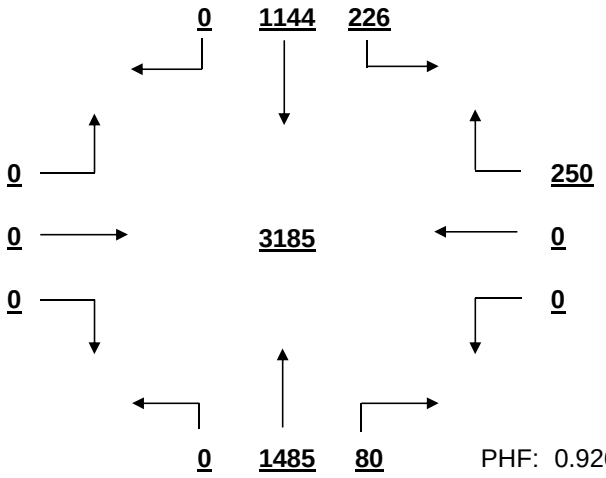

PHF: 0.926

MID-DAY PEAK HOUR VOLUME (11:00-14:00)
FROM 11:15 TO 12:15

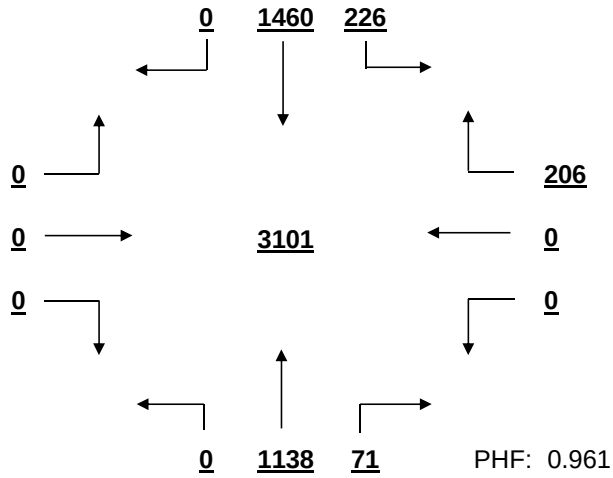

PHF: 0.961

OTHER HOUR VOLUME
FROM 7:00 TO 8:00

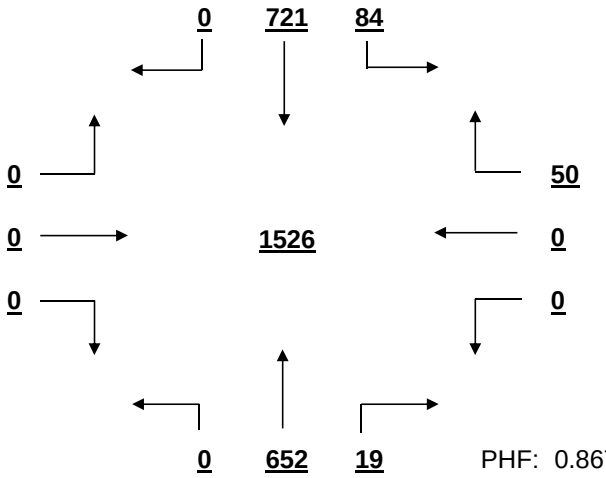

PHF: 0.867

SIGNAL WARRANT ANALYSIS

Harbison Blvd AT Saturn Pkwy Date: 12/2/2016

Minor Street Volume, percent of total = 6.9%
Percent of Left Turns from Minor Street = 0.0%
Percent of Right Turns from Minor Street = 100.0%
Percent of Minor Street Right Turns to Remove from Warrant Analysis = 0%
WARRANT BASIS = **100%**

Warrant No. 1 - Vehicular Volume is met

Condition A - Minimum Vehicular Volume is met

Average Major Street % of Warrant				Average Minor Street % of Warrant			
2411.4	/ 600	=	402%	179.4	/ 150	=	120%

Hourly percent of warrant

	7:00 - 8:00	8:00 - 9:00	9:00 - 10:00	10:00 - 11:00	11:00 - 12:00	12:00 - 13:00	13:00 - 14:00	14:00 - 15:00	15:00 - 16:00	16:00 - 17:00	17:00 - 18:00	18:00 - 19:00
Major St.	246%	262%	331%	399%	425%	458%	450%	488%	470%	458%	433%	404%
Minor St.	33%	52%	61%	124%	133%	111%	109%	153%	175%	186%	151%	147%

Condition B - Interruption to Continuous Traffic is met

Average Major Street % of Warrant				Average Minor Street % of Warrant			
2411.4	/ 900	=	268%	179.4	/ 75	=	239%

Hourly percent of warrant

	7:00 - 8:00	8:00 - 9:00	9:00 - 10:00	10:00 - 11:00	11:00 - 12:00	12:00 - 13:00	13:00 - 14:00	14:00 - 15:00	15:00 - 16:00	16:00 - 17:00	17:00 - 18:00	18:00 - 19:00
Major St.	164%	175%	221%	266%	284%	306%	300%	325%	313%	305%	289%	269%
Minor St.	67%	104%	121%	248%	267%	221%	217%	307%	351%	372%	301%	295%

80% Combination of Conditions A & B is met

Warrant No. 2 - Four Hour Vehicular Volume is met

Hourly percent of warrant

	7:00 - 8:00	8:00 - 9:00	9:00 - 10:00	10:00 - 11:00	11:00 - 12:00	12:00 - 13:00	13:00 - 14:00	14:00 - 15:00	15:00 - 16:00	16:00 - 17:00	17:00 - 18:00	18:00 - 19:00
Minor St.	63%	98%	114%	233%	250%	208%	204%	288%	329%	349%	283%	276%

Warrant No. 3 - Peak Hour is met

	Percent of warrant		Percent of warrant
Overall Peak Hour:	14:15 - 15:15	Higher Volume Side Street Peak Hour:	16:00 - 17:00
Minor St.	250%	Minor St.	279%

Warrant No. 4 - Pedestrian Volume. Pedestrian volume shown are minumum volumes assuming heavy major street traffic. If these volumes are met, warrant 4 requires further engineering analysis

Minimum 4 hour ped. volume crossing major street: 107

Minimum peak hour ped. volume crossing major street: 133

Number of pedestrians crossing major street

	7:00 - 8:00	8:00 - 9:00	9:00 - 10:00	10:00 - 11:00	11:00 - 12:00	12:00 - 13:00	13:00 - 14:00	14:00 - 15:00	15:00 - 16:00	16:00 - 17:00	17:00 - 18:00	18:00 - 19:00
Major St.	2	1	0	2	0	0	0	1	1	0	1	0

Warrant No. 7 - Crash Experience (Requires 3 criteria analysis by engineering)

Total Number: 0 From: 1/1/2005 to 1/1/2008

Accident Rate: 0.00 per million entering vehicles

Types of Accidents	No.	/	Avg.		No.	/	Avg.
Right Angle	0	/	0.0	Rear End	0	/	0.0
Lost Control	0	/	0.0	Side Swipe	0	/	0.0
Left Turn	0	/	0.0	Other	0	/	0.0

SOUTH CAROLINA DEPARTMENT OF TRANSPORTATION
DISTRICT 1
TRAFFIC ENGINEERING

County: Richland City: Columbia Date: 11/21/2016

Major Rt: Harbison Blvd * Not on State System Minor Rt: Columbiana Cir-Park Terrace Dr * Not on State System

Day of Week: Monday Weather: Clear Office: Short Counts JMS

Type of Control: Signal Speed Limit (major st) 35

Direction of Minor Street: E-W Intersection ADT - 39140 (Calc)

Number of Lanes (major st)* 2 Number of Lanes (minor st)* 2

* Each Direction

INTERSECTION VOLUME SUMMARY

	From N Harbison Blvd				From S Harbison Blvd				From E Columbiana Cir-Par				From W Columbiana Cir-Par				Total	Total
	LT	STR	RT	TOT	LT	STR	RT	TOT	LT	STR	RT	TOT	LT	STR	RT	TOT	Vol	Peds
7:00 - 7:15	24	93	12	129	2	110	14	126	13	0	2	15	1	1	1	3	273	0
7:15 - 7:30	13	115	16	144	3	143	20	166	31	3	8	42	0	1	0	1	353	0
7:30 - 7:45	21	137	15	173	5	169	39	213	26	2	9	37	9	3	1	13	436	7
7:45 - 8:00	21	141	15	177	6	182	41	229	26	9	16	51	7	5	1	13	470	1
8:00 - 8:15	15	148	15	178	1	135	35	171	13	3	8	24	1	3	1	5	378	2
8:15 - 8:30	28	116	19	163	3	158	53	214	28	4	11	43	3	2	5	10	430	1
8:30 - 8:45	33	114	22	169	7	125	30	162	21	9	11	41	4	3	3	10	382	8
8:45 - 9:00	26	136	47	209	5	122	33	160	41	7	20	68	7	6	4	17	454	5
9:00 - 9:15	23	136	28	187	9	121	35	165	41	13	17	71	9	3	8	20	443	0
9:15 - 9:30	29	160	0	189	6	128	39	173	30	5	9	44	15	5	11	31	437	0
9:30 - 9:45	16	152	0	168	11	162	39	212	41	12	26	79	7	4	10	21	480	1
9:45 - 10:00	28	171	100	299	9	121	52	182	45	22	23	90	24	6	13	43	614	1
10:00 - 10:15	24	168	14	206	20	162	29	211	47	17	39	103	15	8	5	28	548	0
10:15 - 10:30	24	154	50	228	15	152	48	215	58	24	24	106	27	11	14	52	601	1
10:30 - 10:45	30	175	75	280	17	170	45	232	58	14	27	99	36	12	15	63	674	0
10:45 - 11:00	31	215	86	332	17	171	49	237	54	19	31	104	35	16	19	70	743	4
11:00 - 11:15	35	210	114	359	19	0	36	55	53	24	41	118	30	11	20	61	593	0
11:15 - 11:30	41	223	93	357	29	193	33	255	50	21	40	111	34	26	22	82	805	2
11:30 - 11:45	33	197	86	316	24	229	40	293	82	27	29	138	48	10	28	86	833	0
11:45 - 12:00	43	253	111	407	21	201	41	263	78	27	37	142	44	18	19	81	893	5
12:00 - 12:15	10	277	109	396	16	202	58	276	79	21	47	147	72	21	19	112	931	2
12:15 - 12:30	29	254	129	412	24	247	55	326	74	33	41	148	58	21	22	101	987	4
12:30 - 12:45	39	238	103	380	22	234	43	299	76	31	48	155	76	18	43	137	971	1
12:45 - 13:00	51	221	124	396	21	248	37	306	69	34	55	158	79	30	36	145	1005	1
13:00 - 13:15	19	219	88	326	13	275	69	357	72	38	28	138	70	29	31	130	951	0
13:15 - 13:30	28	196	75	299	19	307	34	360	60	37	58	155	62	31	35	128	942	0
13:30 - 13:45	42	221	99	362	22	239	49	310	80	16	56	152	71	29	21	121	945	0
13:45 - 14:00	29	203	89	321	21	242	53	316	75	32	59	166	74	28	27	129	932	2
14:00 - 14:15	21	199	92	312	19	262	53	334	68	24	69	161	75	27	33	135	942	1
14:15 - 14:30	36	203	94	333	24	254	59	337	71	35	55	161	64	23	34	121	952	2
14:30 - 14:45	24	166	83	273	22	268	50	340	70	20	43	133	75	21	24	120	866	2
14:45 - 15:00	29	193	66	288	22	243	52	317	63	23	49	135	66	29	31	126	866	0
15:00 - 15:15	26	151	55	232	30	261	50	341	58	25	50	133	63	25	28	116	822	1
15:15 - 15:30	17	127	0	144	17	223	44	284	65	34	38	137	75	23	17	115	680	1
15:30 - 15:45	28	175	68	271	17	211	59	287	67	27	36	130	63	22	25	110	798	1
15:45 - 16:00	43	174	64	281	47	206	48	301	57	30	58	145	62	13	27	102	829	5
16:00 - 16:15	31	243	91	365	16	238	43	297	71	33	42	146	74	21	21	116	924	6
16:15 - 16:30	24	210	97	331	17	227	48	292	77	11	59	147	60	17	26	103	873	3
16:30 - 16:45	34	232	88	354	26	231	37	294	68	24	45	137	57	16	33	106	891	0
16:45 - 17:00	37	209	85	331	23	184	38	245	75	25	35	135	65	26	17	108	819	0
17:00 - 17:15	23	228	73	324	14	253	61	328	54	28	54	136	81	16	20	117	905	1
17:15 - 17:30	41	221	71	333	16	227	48	291	68	22	66	156	59	15	31	105	885	1
17:30 - 17:45	31	204	75	310	12	210	43	265	77	27	45	149	68	24	20	112	836	1
17:45 - 18:00	24	207	79	310	18	192	61	271	74	27	40	141	48	11	12	71	793	1
18:00 - 18:15	30	212	86	328	13	239	55	307	57	21	51	129	77	13	13	103	867	1
18:15 - 18:30	36	216	76	328	17	184	42	243	71	27	53	151	89	17	18	124	846	0
18:30 - 18:45	35	228	89	352	12	203	39	254	70	26	43	139	67	22	30	119	864	0
18:45 - 19:00	30	195	66	291	12	214	55	281	60	18	41	119	47	10	19	76	767	0
TOTAL	1385	9036	3232	13653	781	9478	2134	12393	2762	1011	1792	5565	2253	752	913	3918	35529	75
Trucks	17	97	24	138	3	79	8	90	18	7	16	41	15	4	6	25	294	0.8%
School Buses	0	18	0	18	16	0	4	20	5	0	12	17	1	1	0	2	57	0.2%

TOTAL AND PEAK HOUR VOLUME DIAGRAMS

Harbison Blvd AT Columbiana Cir-Park Terrace Dr Date: 11/21/2016

12.0 HOUR TOTAL VOLUME
FROM 7:00 TO 15:00

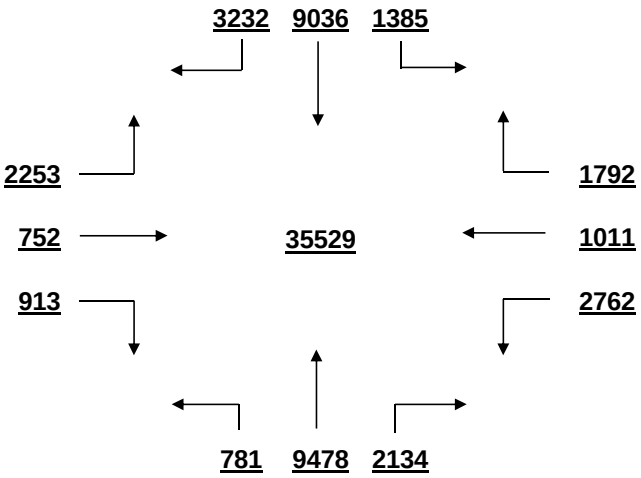

OVERALL PEAK HOUR VOLUME
FROM 12:15 TO 13:15

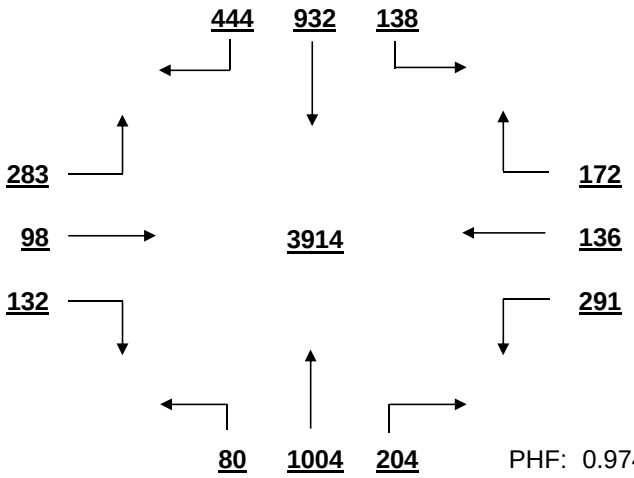

PHF: 0.974

AM PEAK HOUR VOLUME (0:00-10:45)
FROM 9:45 TO 10:45

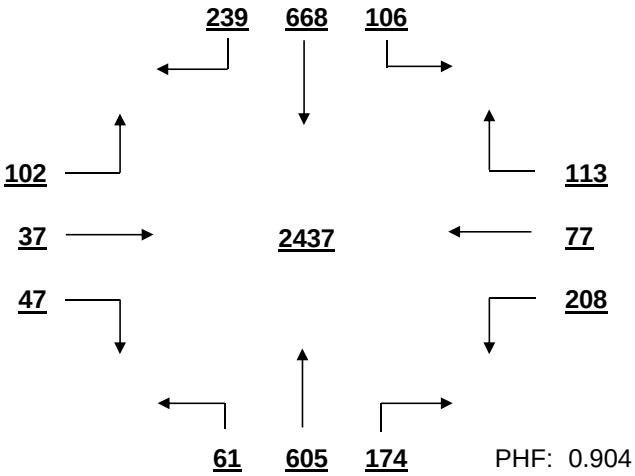

PHF: 0.904

PM PEAK HOUR VOLUME (14:15-23:45)
FROM 15:45 TO 16:45

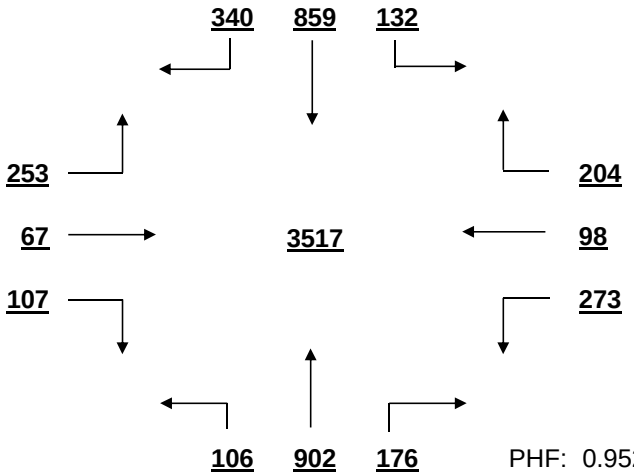

PHF: 0.952

MID-DAY PEAK HOUR VOLUME (11:00-14:00)
FROM 12:15 TO 13:15

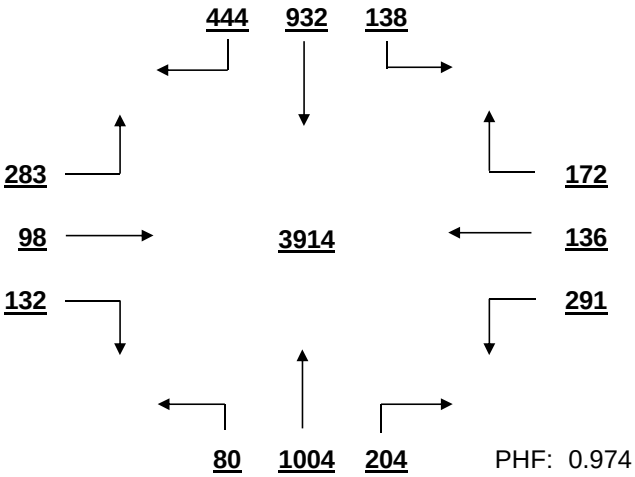

PHF: 0.974

OTHER HOUR VOLUME
FROM 7:00 TO 8:00

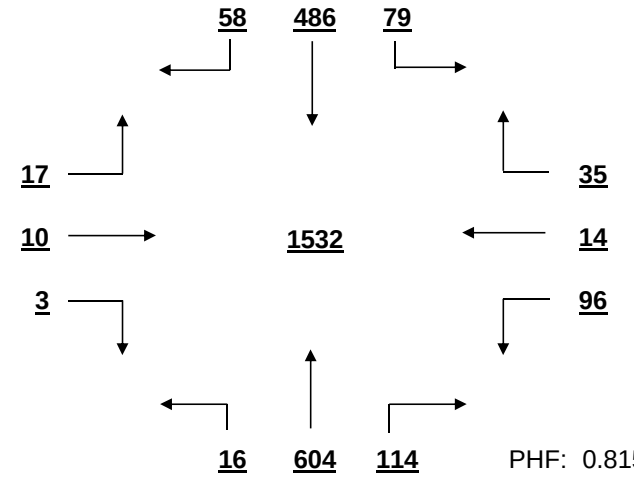

PHF: 0.815

SIGNAL WARRANT ANALYSIS

Harbison Blvd AT Columbiana Cir-Park Terrace Dr Date: 11/21/2016

Minor Street Volume, percent of total = 26.7%
Percent of Left Turns from Minor Street = 52.9%
Percent of Right Turns from Minor Street = 28.5%
Percent of Minor Street Right Turns to Remove from Warrant Analysis = 0%
WARRANT BASIS = **100%**

Warrant No. 1 - Vehicular Volume is met

Condition A - Minimum Vehicular Volume is met

Average Major Street % of Warrant				Average Minor Street % of Warrant			
2170.5	/ 600	=	362%	463.8	/ 200	=	232%

Hourly percent of warrant

	7:00 - 8:00	8:00 - 9:00	9:00 - 10:00	10:00 - 11:00	11:00 - 12:00	12:00 - 13:00	13:00 - 14:00	14:00 - 15:00	15:00 - 16:00	16:00 - 17:00	17:00 - 18:00	18:00 - 19:00
Major St.	226%	238%	263%	324%	384%	465%	442%	422%	357%	418%	405%	397%
Minor St.	73%	88%	142%	206%	255%	304%	306%	295%	273%	283%	291%	269%

Condition B - Interruption to Continuous Traffic is met

Average Major Street % of Warrant				Average Minor Street % of Warrant			
2170.5	/ 900	=	241%	463.8	/ 100	=	464%

Hourly percent of warrant

	7:00 - 8:00	8:00 - 9:00	9:00 - 10:00	10:00 - 11:00	11:00 - 12:00	12:00 - 13:00	13:00 - 14:00	14:00 - 15:00	15:00 - 16:00	16:00 - 17:00	17:00 - 18:00	18:00 - 19:00
Major St.	151%	158%	175%	216%	256%	310%	295%	282%	238%	279%	270%	265%
Minor St.	145%	176%	284%	412%	509%	608%	611%	590%	545%	565%	582%	538%

80% Combination of Conditions A & B is met

Warrant No. 2 - Four Hour Vehicular Volume is met

Hourly percent of warrant

	7:00 - 8:00	8:00 - 9:00	9:00 - 10:00	10:00 - 11:00	11:00 - 12:00	12:00 - 13:00	13:00 - 14:00	14:00 - 15:00	15:00 - 16:00	16:00 - 17:00	17:00 - 18:00	18:00 - 19:00
Minor St.	126%	153%	247%	358%	443%	529%	531%	513%	474%	491%	506%	468%

Warrant No. 3 - Peak Hour is met

	Percent of warrant		Percent of warrant
Overall Peak Hour:	12:15 - 13:15	Higher Volume Side Street Peak Hour:	13:30 - 14:30
Minor St.	399%	Minor St.	427%

Warrant No. 4 - Pedestrian Volume. Pedestrian volume shown are minumum volumes assuming heavy major street traffic. If these volumes are met, warrant 4 requires further engineering analysis

Minimum 4 hour ped. volume crossing major street	Minimum peak hour ped. volume crossing major street
107	133

Number of pedestrians crossing major street

	7:00 - 8:00	8:00 - 9:00	9:00 - 10:00	10:00 - 11:00	11:00 - 12:00	12:00 - 13:00	13:00 - 14:00	14:00 - 15:00	15:00 - 16:00	16:00 - 17:00	17:00 - 18:00	18:00 - 19:00
Major St.	4	9	2	5	6	8	1	5	3	4	4	1

Warrant No. 7 - Crash Experience (Requires 3 criteria analysis by engineering)

Total Number: 0 From: 1/1/2005 to 1/1/2008
Accident Rate: 0.00 per million entering vehicles

Types of Accidents	No.	/	Avg.		No.	/	Avg.
Right Angle	0	/	0.0	Rear End	0	/	0.0
Lost Control	0	/	0.0	Side Swipe	0	/	0.0
Left Turn	0	/	0.0	Other	0	/	0.0

SOUTH CAROLINA DEPARTMENT OF TRANSPORTATION
DISTRICT 1
TRAFFIC ENGINEERING

County: Richland City: Columbia Date: 11/22/2016

Major Rt: Harbison Blvd * Not on State System Minor Rt: Columbiana Dr-Chick Fil A * Not on State System

Day of Week: Tuesday Weather: Clear Office: Short Counts JMS

Type of Control: Signal Speed Limit (major st) 35

Direction of Minor Street: E-W Intersection ADT - 34400 (Calc)

Number of Lanes (major st)* 2 Number of Lanes (minor st)* 2

* Each Direction

INTERSECTION VOLUME SUMMARY

	From N Harbison Blvd				From S Harbison Blvd				From E Columbiana Dr-Chic				From W Columbiana Dr-Chic				Total	Total
	LT	STR	RT	TOT	LT	STR	RT	TOT	LT	STR	RT	TOT	LT	STR	RT	TOT	Vol	Peds
7:00 - 7:15	13	66	26	105	7	59	9	75	2	2	16	20	46	5	19	70	270	0
7:15 - 7:30	14	89	50	153	13	78	12	103	3	5	16	24	79	3	32	114	394	0
7:30 - 7:45	7	99	44	150	11	78	8	97	9	3	14	26	117	5	37	159	432	1
7:45 - 8:00	11	138	44	193	10	108	14	132	6	2	23	31	105	9	53	167	523	1
8:00 - 8:15	13	123	17	153	25	85	11	121	5	3	20	28	74	6	48	128	430	1
8:15 - 8:30	20	100	32	152	13	104	7	124	4	5	24	33	87	9	43	139	448	1
8:30 - 8:45	15	71	40	126	8	84	2	94	6	2	18	26	62	9	37	108	354	2
8:45 - 9:00	13	121	48	182	10	88	8	106	7	5	18	30	54	6	36	96	414	3
9:00 - 9:15	12	125	39	176	11	81	7	99	4	5	14	23	68	2	39	109	407	2
9:15 - 9:30	21	141	0	162	19	115	6	140	5	1	14	20	73	4	36	113	435	5
9:30 - 9:45	13	144	0	157	25	140	9	174	7	3	20	30	49	11	52	112	473	0
9:45 - 10:00	19	153	47	219	34	121	6	161	8	10	20	38	60	11	54	125	543	0
10:00 - 10:15	17	146	57	220	38	145	14	197	10	12	15	37	55	4	63	122	576	2
10:15 - 10:30	11	159	57	227	42	149	12	203	7	3	16	26	67	5	47	119	575	0
10:30 - 10:45	12	169	65	246	38	161	5	204	6	3	19	28	71	6	72	149	627	2
10:45 - 11:00	15	200	67	282	45	167	11	223	6	2	23	31	77	4	58	139	675	1
11:00 - 11:15	11	220	57	288	44	0	12	56	7	4	17	28	75	5	55	135	507	0
11:15 - 11:30	18	208	57	283	51	198	14	263	4	10	18	32	63	5	60	128	706	0
11:30 - 11:45	21	227	70	318	49	214	16	279	6	3	21	30	78	1	83	162	789	2
11:45 - 12:00	13	239	74	326	53	184	16	253	3	4	30	37	81	6	85	172	788	0
12:00 - 12:15	20	256	69	345	65	171	22	258	7	6	29	42	89	7	89	185	830	1
12:15 - 12:30	17	251	80	348	60	243	17	320	8	8	22	38	91	4	75	170	876	0
12:30 - 12:45	22	253	65	340	63	203	12	278	8	6	19	33	94	6	87	187	838	2
12:45 - 13:00	13	244	70	327	60	213	25	298	11	5	20	36	77	7	91	175	836	0
13:00 - 13:15	14	236	51	301	67	265	16	348	7	5	25	37	96	6	102	204	890	1
13:15 - 13:30	14	215	62	291	56	261	8	325	11	7	30	48	81	7	103	191	855	0
13:30 - 13:45	18	224	70	312	61	218	18	297	10	2	26	38	80	2	83	165	812	1
13:45 - 14:00	12	227	71	310	55	219	17	291	4	2	24	30	90	5	81	176	807	2
14:00 - 14:15	20	296	70	386	65	225	12	302	12	7	21	40	87	4	65	156	884	3
14:15 - 14:30	14	220	83	317	63	246	16	325	12	6	23	41	80	5	57	142	825	0
14:30 - 14:45	15	200	64	279	64	233	16	313	6	5	27	38	93	4	78	175	805	0
14:45 - 15:00	10	219	48	277	55	215	18	288	7	6	22	35	97	5	89	191	791	2
15:00 - 15:15	9	158	59	226	48	239	13	300	6	1	24	31	87	4	85	176	733	0
15:15 - 15:30	8	149	0	157	54	215	10	279	7	7	17	31	71	8	63	142	609	0
15:30 - 15:45	13	181	68	262	49	201	10	260	7	3	14	24	83	5	60	148	694	3
15:45 - 16:00	5	174	55	234	52	236	9	297	1	3	20	24	79	4	79	162	717	0
16:00 - 16:15	7	237	86	330	50	209	16	275	8	4	11	23	88	3	75	166	794	0
16:15 - 16:30	12	209	96	317	56	239	13	308	3	5	18	26	65	1	65	131	782	3
16:30 - 16:45	10	210	89	309	62	212	8	282	3	6	10	19	73	4	79	156	766	1
16:45 - 17:00	4	199	94	297	62	186	11	259	6	3	16	25	76	4	66	146	727	0
17:00 - 17:15	7	222	81	310	56	237	9	302	2	5	14	21	82	6	65	153	786	1
17:15 - 17:30	14	198	90	302	68	206	7	281	4	1	14	19	73	3	73	149	751	4
17:30 - 17:45	12	210	93	315	45	204	20	269	4	4	20	28	76	1	61	138	750	0
17:45 - 18:00	9	192	91	292	52	184	8	244	0	5	17	22	71	2	82	155	713	0
18:00 - 18:15	11	186	87	284	61	255	18	334	6	5	18	29	82	6	70	158	805	0
18:15 - 18:30	18	183	108	309	53	187	9	249	4	1	22	27	66	6	76	148	733	0
18:30 - 18:45	16	222	94	332	49	176	11	236	3	4	20	27	88	2	74	164	759	0
18:45 - 19:00	9	176	80	265	50	179	9	238	3	6	17	26	78	5	78	161	690	0
TOTAL	642	8885	2965	12492	2147	8436	577	11160	285	215	936	1436	3734	242	3160	7136	32224	47
Trucks	2	80	37	119	11	49	1	61	0	1	3	4	21	0	22	43	227	0.7%
School Buses	0	20	14	34	1	12	0	13	0	0	0	0	10	0	12	22	69	0.2%

TOTAL AND PEAK HOUR VOLUME DIAGRAMS

Harbison Blvd AT Columbiana Dr-Chick Fil A Date: 11/22/2016

12.0 HOUR TOTAL VOLUME
FROM 7:00 TO 15:00

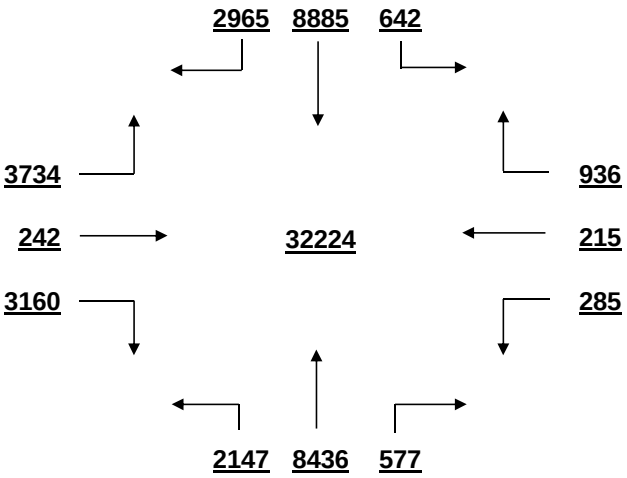

OVERALL PEAK HOUR VOLUME
FROM 12:15 TO 13:15

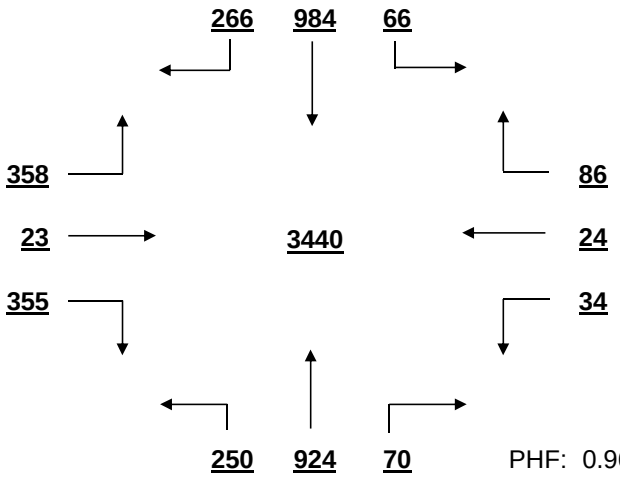

PHF: 0.966

AM PEAK HOUR VOLUME (0:00-10:45)
FROM 9:45 TO 10:45

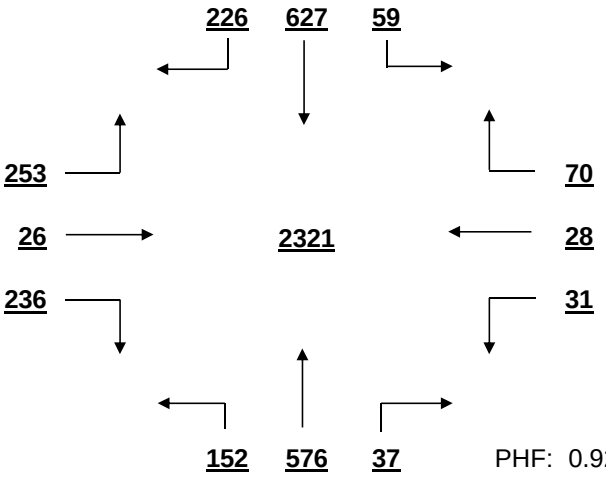

PHF: 0.925

PM PEAK HOUR VOLUME (14:15-23:45)
FROM 14:15 TO 15:15

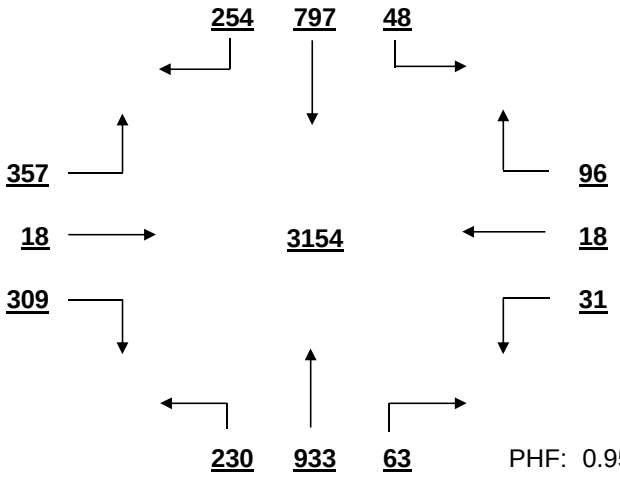

PHF: 0.956

MID-DAY PEAK HOUR VOLUME (11:00-14:00)
FROM 12:15 TO 13:15

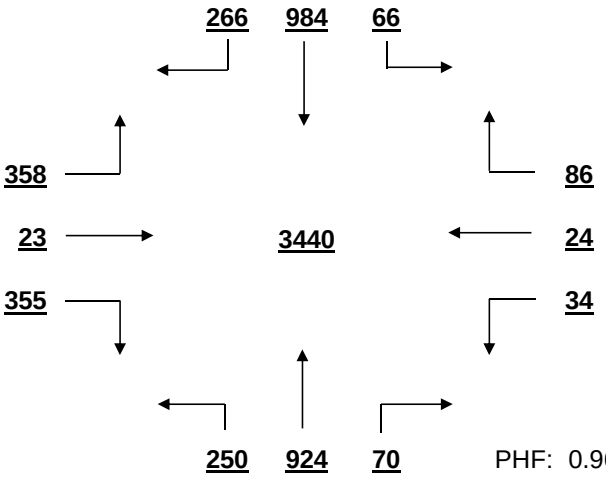

PHF: 0.966

OTHER HOUR VOLUME
FROM 7:00 TO 8:00

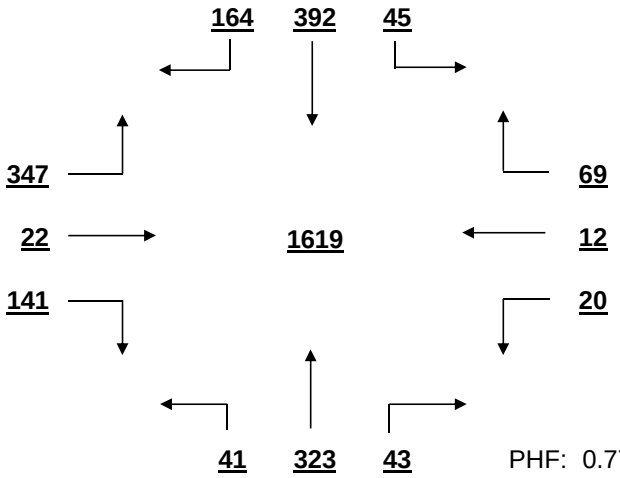

PHF: 0.774

SIGNAL WARRANT ANALYSIS

Harbison Blvd AT Columbiana Dr-Chick Fil A Date: 11/22/2016

Minor Street Volume, percent of total = 26.6%
Percent of Left Turns from Minor Street = 46.9%
Percent of Right Turns from Minor Street = 47.8%
Percent of Minor Street Right Turns to Remove from Warrant Analysis = 0%
WARRANT BASIS = **100%**

Warrant No. 1 - Vehicular Volume is met

Condition A - Minimum Vehicular Volume is met

Average Major Street % of Warrant				Average Minor Street % of Warrant			
1971.0	/ 600	=	329%	594.7	/ 200	=	297%

Hourly percent of warrant

	7:00 - 8:00	8:00 - 9:00	9:00 - 10:00	10:00 - 11:00	11:00 - 12:00	12:00 - 13:00	13:00 - 14:00	14:00 - 15:00	15:00 - 16:00	16:00 - 17:00	17:00 - 18:00	18:00 - 19:00
Major St.	168%	176%	215%	300%	344%	419%	413%	415%	336%	396%	386%	375%
Minor St.	255%	236%	230%	265%	299%	359%	368%	332%	314%	300%	298%	316%

Condition B - Interruption to Continuous Traffic is met

Average Major Street % of Warrant				Average Minor Street % of Warrant			
1971.0	/ 900	=	219%	594.7	/ 100	=	595%

Hourly percent of warrant

	7:00 - 8:00	8:00 - 9:00	9:00 - 10:00	10:00 - 11:00	11:00 - 12:00	12:00 - 13:00	13:00 - 14:00	14:00 - 15:00	15:00 - 16:00	16:00 - 17:00	17:00 - 18:00	18:00 - 19:00
Major St.	112%	118%	143%	200%	230%	279%	275%	276%	224%	264%	257%	250%
Minor St.	510%	471%	459%	529%	597%	717%	736%	664%	628%	599%	595%	631%

80% Combination of Conditions A & B is met

Warrant No. 2 - Four Hour Vehicular Volume is met

Hourly percent of warrant

	7:00 - 8:00	8:00 - 9:00	9:00 - 10:00	10:00 - 11:00	11:00 - 12:00	12:00 - 13:00	13:00 - 14:00	14:00 - 15:00	15:00 - 16:00	16:00 - 17:00	17:00 - 18:00	18:00 - 19:00
Minor St.	267%	271%	399%	460%	519%	623%	640%	577%	546%	521%	517%	549%

Warrant No. 3 - Peak Hour is met

	Percent of warrant		Percent of warrant
Overall Peak Hour:	12:15 - 13:15	Higher Volume Side Street Peak Hour:	12:30 - 13:30
Minor St.	491%	Minor St.	505%

Warrant No. 4 - Pedestrian Volume. Pedestrian volume shown are minumum volumes assuming heavy major street traffic. If these volumes are met, warrant 4 requires further engineering analysis

Minimum 4 hour ped. volume crossing major street: 107

Minimum peak hour ped. volume crossing major street: 133

Number of pedestrians crossing major street

	7:00 - 8:00	8:00 - 9:00	9:00 - 10:00	10:00 - 11:00	11:00 - 12:00	12:00 - 13:00	13:00 - 14:00	14:00 - 15:00	15:00 - 16:00	16:00 - 17:00	17:00 - 18:00	18:00 - 19:00
Major St.	0	1	2	0	0	2	0	0	0	0	0	0

Warrant No. 7 - Crash Experience (Requires 3 criteria analysis by engineering)

Total Number: 0 From: 1/1/2005 to 1/1/2008

Accident Rate: 0.00 per million entering vehicles

Types of Accidents	No.	/	Avg.		No.	/	Avg.
Right Angle	0	/	0.0	Rear End	0	/	0.0
Lost Control	0	/	0.0	Side Swipe	0	/	0.0
Left Turn	0	/	0.0	Other	0	/	0.0

SOUTH CAROLINA DEPARTMENT OF TRANSPORTATION
DISTRICT 1
TRAFFIC ENGINEERING

County: Richland City: Columbia Date: 11/21/2016

Major Rt: Harbison Blvd * Not on State System Minor Rt: Rooms 2 Go-Pier 1 DW's * Not on State System

Day of Week: Monday Weather: Clear Office: Short Counts JMS

Type of Control: Signal Speed Limit (major st) 35

Direction of Minor Street: E-W Intersection ADT - 28160 (Calc)

Number of Lanes (major st)* 2 Number of Lanes (minor st)* 1 * Each Direction

INTERSECTION VOLUME SUMMARY

	From N Harbison Blvd				From S Harbison Blvd				From E Rooms 2 Go-Pier 1				From W Rooms 2 Go-Pier 1				Total	Total
	LT	STR	RT	TOT	LT	STR	RT	TOT	LT	STR	RT	TOT	LT	STR	RT	TOT	Vol	Peds
7:00 - 7:15	1	83	0	84	0	72	2	74	3	0	0	3	0	0	0	0	161	0
7:15 - 7:30	3	107	0	110	0	89	4	93	0	0	1	1	0	0	1	1	205	0
7:30 - 7:45	2	128	1	131	0	90	4	94	1	0	1	2	0	0	0	0	227	0
7:45 - 8:00	2	159	1	162	2	118	9	129	2	0	2	4	0	0	1	1	296	0
8:00 - 8:15	1	143	1	145	4	105	3	112	3	0	6	9	0	0	0	0	266	0
8:15 - 8:30	3	120	0	123	0	104	1	105	2	0	3	5	0	0	0	0	233	0
8:30 - 8:45	1	103	0	104	1	79	6	86	3	0	1	4	0	0	1	1	195	0
8:45 - 9:00	7	123	1	131	0	101	10	111	1	0	1	2	0	0	0	0	244	0
9:00 - 9:15	9	140	3	152	7	88	16	111	8	0	3	11	0	0	2	2	276	0
9:15 - 9:30	17	130	0	147	3	111	24	138	8	2	11	21	2	1	1	4	310	0
9:30 - 9:45	11	167	0	178	4	139	18	161	11	2	11	24	3	1	4	8	371	0
9:45 - 10:00	13	159	2	174	7	129	16	152	7	2	10	19	2	1	3	6	351	0
10:00 - 10:15	23	162	1	186	8	150	18	176	11	0	17	28	3	0	1	4	394	0
10:15 - 10:30	25	150	2	177	8	177	25	210	18	5	13	36	3	3	4	10	433	0
10:30 - 10:45	23	171	6	200	10	152	29	191	18	1	19	38	5	1	8	14	443	0
10:45 - 11:00	25	199	2	226	6	184	32	222	25	2	17	44	5	1	10	16	508	0
11:00 - 11:15	31	197	5	233	7	0	42	49	25	2	15	42	5	2	8	15	339	0
11:15 - 11:30	37	186	2	225	11	214	30	255	24	5	21	50	9	5	10	24	554	0
11:30 - 11:45	36	223	3	262	18	208	36	262	35	1	30	66	3	4	7	14	604	0
11:45 - 12:00	48	236	1	285	23	193	31	247	27	4	29	60	1	4	11	16	608	0
12:00 - 12:15	50	258	4	312	10	212	35	257	26	5	29	60	3	2	20	25	654	0
12:15 - 12:30	53	264	6	323	20	209	43	272	26	3	46	75	9	3	15	27	697	0
12:30 - 12:45	36	244	0	280	19	233	42	294	33	3	35	71	13	4	20	37	682	0
12:45 - 13:00	56	248	2	306	16	219	49	284	42	7	46	95	7	1	24	32	717	0
13:00 - 13:15	48	265	4	317	12	223	31	266	38	8	47	93	12	1	26	39	715	0
13:15 - 13:30	47	251	5	303	13	221	39	273	33	4	62	99	13	4	10	27	702	0
13:30 - 13:45	37	237	4	278	15	237	29	281	36	4	44	84	5	4	18	27	670	1
13:45 - 14:00	32	229	9	270	12	176	41	229	35	6	38	79	10	3	16	29	607	0
14:00 - 14:15	38	202	3	243	17	218	35	270	30	7	40	77	5	3	27	35	625	0
14:15 - 14:30	36	212	6	254	16	194	33	243	32	3	53	88	9	4	19	32	617	0
14:30 - 14:45	26	206	4	236	17	224	28	269	24	1	42	67	7	1	14	22	594	0
14:45 - 15:00	31	259	0	290	13	205	32	250	24	1	36	61	7	2	14	23	624	0
15:00 - 15:15	15	203	4	222	19	211	35	265	32	3	23	58	5	0	13	18	563	0
15:15 - 15:30	24	156	0	180	10	202	22	234	20	2	36	58	9	3	5	17	489	0
15:30 - 15:45	27	197	1	225	15	201	19	235	21	7	32	60	6	0	12	18	538	1
15:45 - 16:00	35	195	2	232	13	205	25	243	19	1	38	58	6	4	14	24	557	0
16:00 - 16:15	30	228	4	262	14	207	33	254	27	1	26	54	9	5	5	19	589	0
16:15 - 16:30	30	218	1	249	14	204	37	255	18	3	42	63	5	4	13	22	589	0
16:30 - 16:45	26	216	4	246	6	218	27	251	27	4	33	64	3	2	12	17	578	0
16:45 - 17:00	19	219	1	239	14	184	28	226	37	1	30	68	6	2	10	18	551	1
17:00 - 17:15	21	224	1	246	6	226	33	265	26	2	26	54	7	2	10	19	584	0
17:15 - 17:30	24	222	3	249	8	203	38	249	34	1	25	60	6	1	8	15	573	0
17:30 - 17:45	30	204	4	238	13	199	33	245	23	3	31	57	11	1	7	19	559	0
17:45 - 18:00	29	215	1	245	12	185	35	232	26	0	37	63	3	1	6	10	550	0
18:00 - 18:15	28	198	4	230	5	228	38	271	20	1	30	51	5	4	5	14	566	0
18:15 - 18:30	18	190	3	211	12	184	17	213	31	2	17	50	7	2	8	17	491	0
18:30 - 18:45	45	220	4	269	11	159	42	212	19	5	38	62	4	2	9	15	558	0
18:45 - 19:00	25	178	2	205	9	152	30	191	28	0	33	61	5	0	5	10	467	0
TOTAL	1234	9244	117	10595	480	8242	1285	10007	1019	114	1226	2359	238	88	437	763	23724	3
Trucks	9	83	1	93	2	115	4	121	5	2	3	10	0	0	0	0	224	0.9%
School Buses	1	32	0	33	0	11	0	11	0	0	0	0	0	0	0	0	44	0.2%

TOTAL AND PEAK HOUR VOLUME DIAGRAMS

Harbison Blvd AT Rooms 2 Go-Pier 1 DW's Date: 11/21/2016

12.0 HOUR TOTAL VOLUME
FROM 7:00 TO 15:00

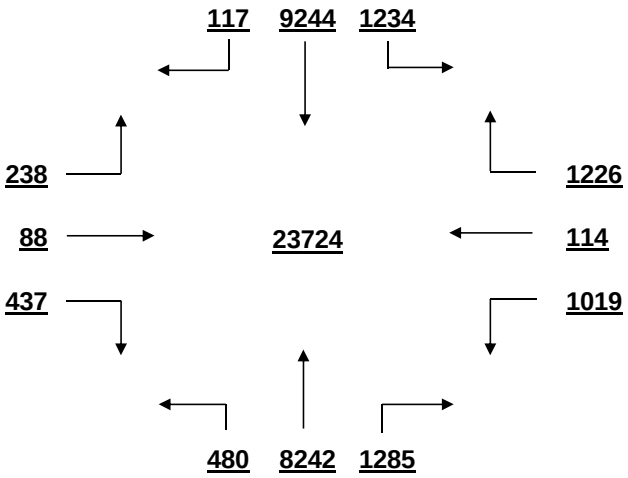

OVERALL PEAK HOUR VOLUME
FROM 12:30 TO 13:30

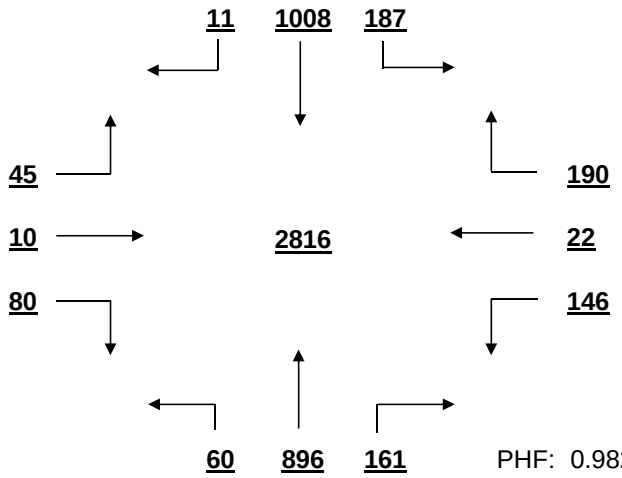

PHF: 0.982

AM PEAK HOUR VOLUME (0:00-10:45)
FROM 9:45 TO 10:45

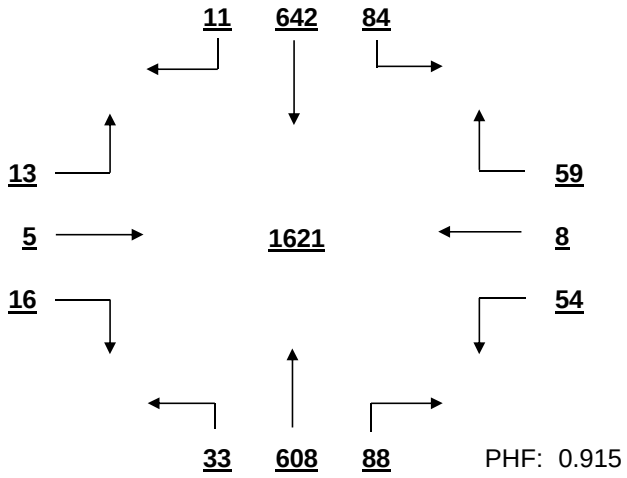

PHF: 0.915

PM PEAK HOUR VOLUME (14:15-23:45)
FROM 14:15 TO 15:15

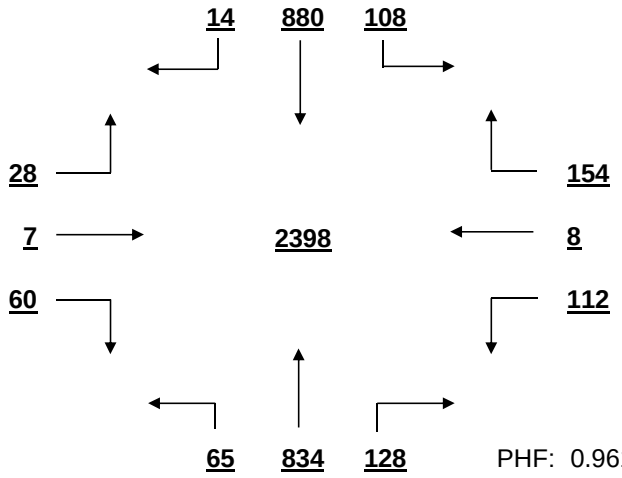

PHF: 0.961

MID-DAY PEAK HOUR VOLUME (11:00-14:00)
FROM 12:30 TO 13:30

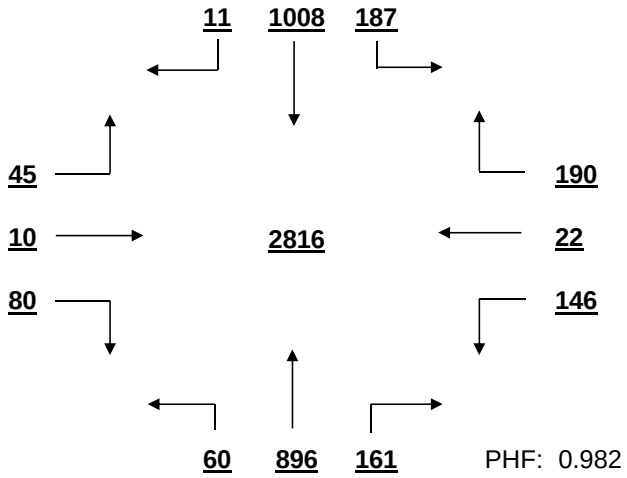

PHF: 0.982

OTHER HOUR VOLUME
FROM 7:00 TO 8:00

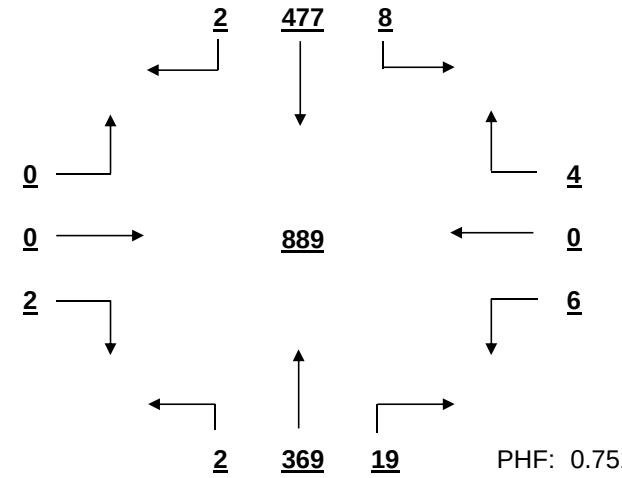

PHF: 0.751

SIGNAL WARRANT ANALYSIS

Harbison Blvd AT Rooms 2 Go-Pier 1 DW's Date: 11/21/2016

Minor Street Volume, percent of total = 13.2%
Percent of Left Turns from Minor Street = 40.3%
Percent of Right Turns from Minor Street = 53.3%
Percent of Minor Street Right Turns to Remove from Warrant Analysis = 0%
WARRANT BASIS = **100%**

Warrant No. 1 - Vehicular Volume is met

Condition A - Minimum Vehicular Volume is met

Average Major Street % of Warrant				Average Minor Street % of Warrant			
1716.8	/	600 =	286%	196.6	/	150 =	131%

Hourly percent of warrant

	7:00 - 8:00	8:00 - 9:00	9:00 - 10:00	10:00 - 11:00	11:00 - 12:00	12:00 - 13:00	13:00 - 14:00	14:00 - 15:00	15:00 - 16:00	16:00 - 17:00	17:00 - 18:00	18:00 - 19:00
Major St.	146%	153%	202%	265%	303%	388%	370%	343%	306%	330%	328%	300%
Minor St.	7%	13%	50%	97%	145%	201%	237%	195%	156%	166%	156%	149%

Condition B - Interruption to Continuous Traffic is met

Average Major Street % of Warrant				Average Minor Street % of Warrant			
1716.8	/	900 =	191%	196.6	/	75 =	262%

Hourly percent of warrant

	7:00 - 8:00	8:00 - 9:00	9:00 - 10:00	10:00 - 11:00	11:00 - 12:00	12:00 - 13:00	13:00 - 14:00	14:00 - 15:00	15:00 - 16:00	16:00 - 17:00	17:00 - 18:00	18:00 - 19:00
Major St.	97%	102%	135%	176%	202%	259%	246%	228%	204%	220%	219%	200%
Minor St.	13%	27%	100%	195%	291%	401%	473%	391%	312%	332%	312%	299%

80% Combination of Conditions A & B is met

Warrant No. 2 - Four Hour Vehicular Volume is met

Hourly percent of warrant

	7:00 - 8:00	8:00 - 9:00	9:00 - 10:00	10:00 - 11:00	11:00 - 12:00	12:00 - 13:00	13:00 - 14:00	14:00 - 15:00	15:00 - 16:00	16:00 - 17:00	17:00 - 18:00	18:00 - 19:00
Minor St.	6%	12%	74%	183%	273%	376%	444%	366%	293%	311%	293%	280%

Warrant No. 3 - Peak Hour is met

	Percent of warrant		Percent of warrant
Overall Peak Hour:	12:30 - 13:30	Higher Volume Side Street Peak Hour:	12:45 - 13:45
Minor St.	358%	Minor St.	371%

Warrant No. 4 - Pedestrian Volume. Pedestrian volume shown are minumum volumes assuming heavy major street traffic. If these volumes are met, warrant 4 requires further engineering analysis

Minimum 4 hour ped. volume crossing major street: 107

Minimum peak hour ped. volume crossing major street: 133

Number of pedestrians crossing major street

	7:00 - 8:00	8:00 - 9:00	9:00 - 10:00	10:00 - 11:00	11:00 - 12:00	12:00 - 13:00	13:00 - 14:00	14:00 - 15:00	15:00 - 16:00	16:00 - 17:00	17:00 - 18:00	18:00 - 19:00
Major St.	0	0	0	0	0	0	0	0	0	0	0	0

Warrant No. 7 - Crash Experience (Requires 3 criteria analysis by engineering)

Total Number: 0 From: 1/1/2005 to 1/1/2008

Accident Rate: 0.00 per million entering vehicles

Types of Accidents	No.	/	Avg.		No.	/	Avg.
Right Angle	0	/	0.0	Rear End	0	/	0.0
Lost Control	0	/	0.0	Side Swipe	0	/	0.0
Left Turn	0	/	0.0	Other	0	/	0.0

SOUTH CAROLINA DEPARTMENT OF TRANSPORTATION
DISTRICT 1
TRAFFIC ENGINEERING

County: Richland City: Columbia Date: 11/21/2016

Major Rt: Harbison Blvd * Not on State System Minor Rt: Bower Pkwy-Shopping Center * Not on State System

Day of Week: Monday Weather: Clear Office: Short Counts JMS

Type of Control: Signal Speed Limit (major st) 35

Direction of Minor Street: E-W Intersection ADT - 28380 (Calc)

Number of Lanes (major st)* 2 Number of Lanes (minor st)* 2

* Each Direction

INTERSECTION VOLUME SUMMARY

	From N Harbison Blvd				From S Harbison Blvd				From E Bower Pkwy-Shoppin				From W Bower Pkwy-Shoppin				Total	Total
	LT	STR	RT	TOT	LT	STR	RT	TOT	LT	STR	RT	TOT	LT	STR	RT	TOT	Vol	Peds
7:00 - 7:15	17	75	0	92	0	63	15	78	10	0	8	18	0	0	0	0	188	0
7:15 - 7:30	11	89	0	100	0	82	23	105	6	0	7	13	0	0	0	0	218	0
7:30 - 7:45	16	112	0	128	0	92	27	119	9	1	6	16	0	0	0	0	263	0
7:45 - 8:00	18	125	0	143	1	107	41	149	26	0	18	44	0	0	1	1	337	0
8:00 - 8:15	17	119	0	136	0	96	29	125	14	0	6	20	0	0	1	1	282	0
8:15 - 8:30	22	92	0	114	0	92	23	115	12	0	10	22	0	0	0	0	251	0
8:30 - 8:45	23	76	0	99	2	75	33	110	26	1	13	40	0	0	0	0	249	0
8:45 - 9:00	16	102	0	118	0	82	32	114	20	1	16	37	0	0	0	0	269	0
9:00 - 9:15	35	88	3	126	0	103	24	127	22	0	17	39	1	0	0	1	293	0
9:15 - 9:30	32	94	0	126	4	104	25	133	22	0	19	41	0	0	0	0	300	0
9:30 - 9:45	37	104	0	141	0	126	41	167	19	0	27	46	4	0	1	5	359	0
9:45 - 10:00	40	114	1	155	0	117	47	164	19	2	26	47	3	1	1	5	371	0
10:00 - 10:15	28	119	3	150	2	129	37	168	32	1	35	68	3	1	1	5	391	0
10:15 - 10:30	45	113	3	161	0	153	48	201	31	4	46	81	5	1	3	9	452	0
10:30 - 10:45	47	132	4	183	3	136	46	185	65	1	46	112	3	1	1	5	485	0
10:45 - 11:00	65	154	1	220	0	158	46	204	38	0	52	90	1	2	0	3	517	0
11:00 - 11:15	60	139	3	202	0	0	37	37	39	0	50	89	4	1	2	7	335	0
11:15 - 11:30	57	157	1	215	1	177	48	226	46	2	59	107	6	1	2	9	557	0
11:30 - 11:45	65	174	4	243	3	169	50	222	70	4	63	137	4	3	0	7	609	0
11:45 - 12:00	71	196	4	271	0	167	42	209	66	0	69	135	3	0	2	5	620	0
12:00 - 12:15	78	215	1	294	1	202	59	262	49	15	52	116	3	3	0	6	678	0
12:15 - 12:30	68	212	2	282	0	180	69	249	72	6	66	144	2	3	2	7	682	1
12:30 - 12:45	85	193	4	282	2	204	74	280	72	1	90	163	3	0	3	6	731	0
12:45 - 13:00	87	218	5	310	1	193	61	255	60	2	71	133	8	0	0	8	706	0
13:00 - 13:15	93	214	4	311	1	170	52	223	80	3	90	173	4	3	5	12	719	0
13:15 - 13:30	66	201	2	269	2	182	45	229	61	2	74	137	7	0	0	7	642	0
13:30 - 13:45	64	204	9	277	0	198	59	257	76	2	63	141	2	0	0	2	677	2
13:45 - 14:00	62	220	5	287	1	169	57	227	83	0	50	133	6	0	0	6	653	0
14:00 - 14:15	51	196	5	252	0	189	55	244	85	2	59	146	7	1	0	8	650	0
14:15 - 14:30	65	183	3	251	0	166	53	219	56	1	62	119	1	1	2	4	593	0
14:30 - 14:45	63	166	5	234	2	165	42	209	76	0	58	134	3	1	2	6	583	0
14:45 - 15:00	59	192	6	257	3	179	46	228	56	1	62	119	4	1	3	8	612	0
15:00 - 15:15	76	194	1	271	2	161	49	212	48	1	71	120	5	0	3	8	611	0
15:15 - 15:30	38	148	0	186	2	172	43	217	78	3	52	133	7	0	1	8	544	0
15:30 - 15:45	51	175	2	228	0	159	31	190	60	2	49	111	3	2	5	10	539	0
15:45 - 16:00	54	155	2	211	2	170	54	226	78	1	63	142	4	4	1	9	588	0
16:00 - 16:15	56	187	4	247	0	173	42	215	74	2	47	123	4	2	3	9	594	3
16:15 - 16:30	63	164	1	228	2	172	50	224	93	2	52	147	4	0	6	10	609	2
16:30 - 16:45	64	217	1	282	1	173	46	220	68	3	61	132	2	2	3	7	641	1
16:45 - 17:00	52	238	6	296	0	167	48	215	56	1	43	100	1	0	2	3	614	2
17:00 - 17:15	51	239	4	294	2	186	55	243	86	0	59	145	6	0	1	7	689	0
17:15 - 17:30	60	219	1	280	1	174	44	219	65	4	62	131	3	2	3	8	638	0
17:30 - 17:45	57	157	2	216	1	164	51	216	72	0	56	128	4	1	2	7	567	0
17:45 - 18:00	78	189	1	268	1	172	61	234	64	2	42	108	3	1	2	6	616	0
18:00 - 18:15	50	181	5	236	2	176	53	231	77	0	59	136	1	0	3	4	607	0
18:15 - 18:30	51	214	1	266	2	145	47	194	64	0	62	126	3	2	0	5	591	0
18:30 - 18:45	61	213	2	276	0	149	44	193	77	2	38	117	4	3	1	8	594	0
18:45 - 19:00	55	192	0	247	0	110	39	149	75	1	61	137	2	2	0	4	537	0
TOTAL	2480	7870	111	10461	47	7048	2143	9238	2553	76	2267	4896	143	45	68	256	24851	11
Trucks	28	45	0	73	0	36	5	41	16	0	22	38	0	0	2	2	154	0.6%
School Buses	0	30	0	30	0	10	4	14	14	0	3	17	0	0	0	0	61	0.2%

TOTAL AND PEAK HOUR VOLUME DIAGRAMS

Harbison Blvd AT Bower Pkwy-Shopping Center Date: 11/21/2016

12.0 HOUR TOTAL VOLUME
FROM 7:00 TO 15:00

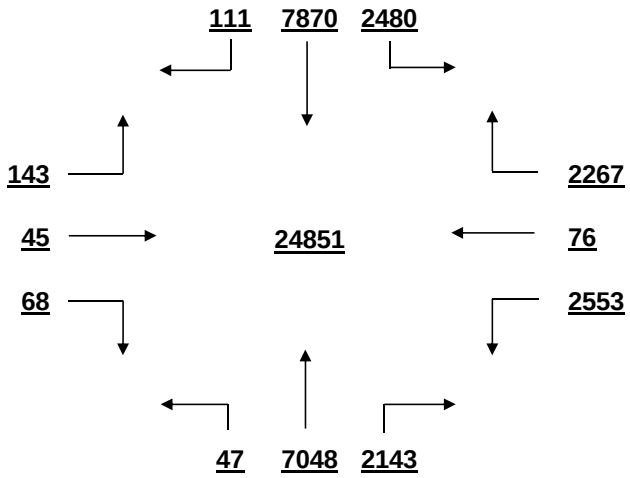

OVERALL PEAK HOUR VOLUME
FROM 12:15 TO 13:15

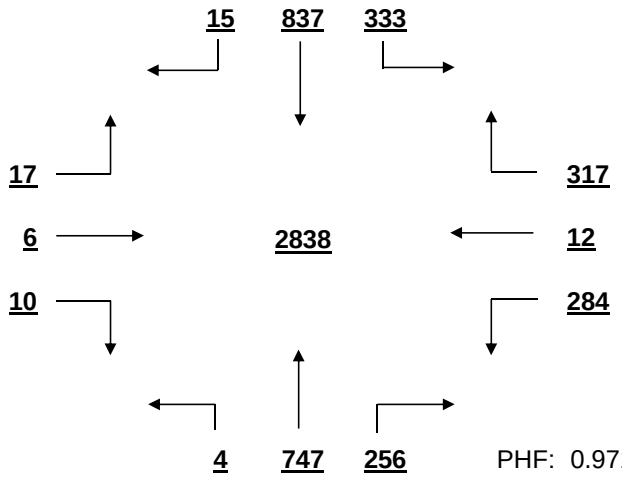

PHF: 0.971

AM PEAK HOUR VOLUME (0:00-10:45)
FROM 9:45 TO 10:45

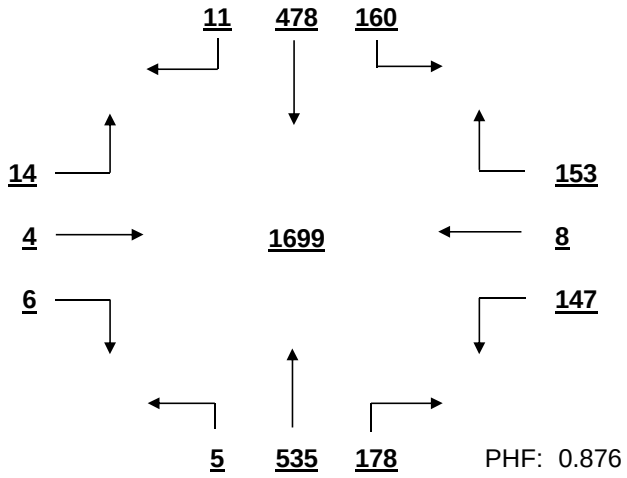

PHF: 0.876

PM PEAK HOUR VOLUME (14:15-23:45)
FROM 16:30 TO 17:30

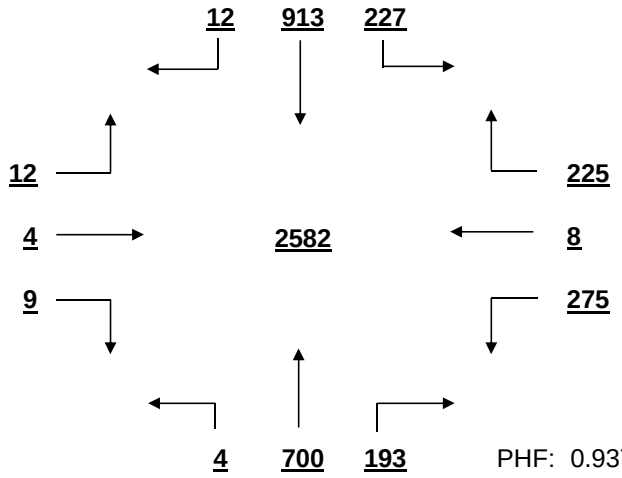

PHF: 0.937

MID-DAY PEAK HOUR VOLUME (11:00-14:00)
FROM 12:15 TO 13:15

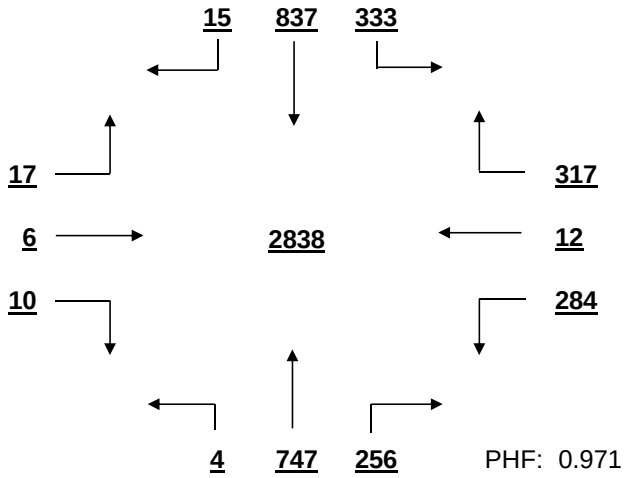

PHF: 0.971

OTHER HOUR VOLUME
FROM 7:00 TO 8:00

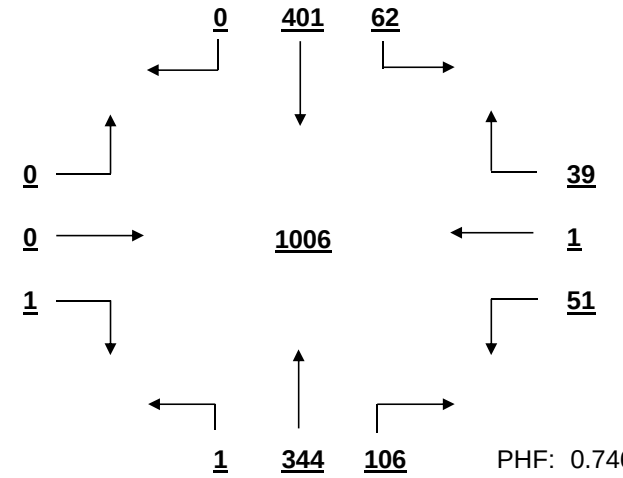

PHF: 0.746

SIGNAL WARRANT ANALYSIS

Harbison Blvd AT Bower Pkwy-Shopping Center Date: 11/21/2016

Minor Street Volume, percent of total = 20.7%
Percent of Left Turns from Minor Street = 52.3%
Percent of Right Turns from Minor Street = 45.3%
Percent of Minor Street Right Turns to Remove from Warrant Analysis = 0%
WARRANT BASIS = **100%**

Warrant No. 1 - Vehicular Volume is met

Condition A - Minimum Vehicular Volume is met

Average Major Street % of Warrant				Average Minor Street % of Warrant			
1641.6	/ 600	=	274%	408.0	/ 200	=	204%

Hourly percent of warrant

	7:00 - 8:00	8:00 - 9:00	9:00 - 10:00	10:00 - 11:00	11:00 - 12:00	12:00 - 13:00	13:00 - 14:00	14:00 - 15:00	15:00 - 16:00	16:00 - 17:00	17:00 - 18:00	18:00 - 19:00
Major St.	152%	155%	190%	245%	271%	369%	347%	316%	290%	321%	328%	299%
Minor St.	46%	60%	87%	176%	234%	278%	292%	259%	253%	251%	256%	258%

Condition B - Interruption to Continuous Traffic is met

Average Major Street % of Warrant				Average Minor Street % of Warrant			
1641.6	/ 900	=	182%	408.0	/ 100	=	408%

Hourly percent of warrant

	7:00 - 8:00	8:00 - 9:00	9:00 - 10:00	10:00 - 11:00	11:00 - 12:00	12:00 - 13:00	13:00 - 14:00	14:00 - 15:00	15:00 - 16:00	16:00 - 17:00	17:00 - 18:00	18:00 - 19:00
Major St.	102%	103%	127%	164%	181%	246%	231%	210%	193%	214%	219%	199%
Minor St.	91%	119%	173%	351%	468%	556%	584%	518%	506%	502%	512%	516%

80% Combination of Conditions A & B is met

Warrant No. 2 - Four Hour Vehicular Volume is met

Hourly percent of warrant

	7:00 - 8:00	8:00 - 9:00	9:00 - 10:00	10:00 - 11:00	11:00 - 12:00	12:00 - 13:00	13:00 - 14:00	14:00 - 15:00	15:00 - 16:00	16:00 - 17:00	17:00 - 18:00	18:00 - 19:00
Minor St.	40%	54%	116%	305%	407%	483%	508%	450%	440%	437%	445%	449%

Warrant No. 3 - Peak Hour is met

Percent of warrant
Overall Peak Hour: 12:15 - 13:15
Minor St. 409%

Percent of warrant
Higher Volume Side Street Peak Hour: 12:15 - 13:15
Minor St. 409%

Warrant No. 4 - Pedestrian Volume. Pedestrian volume shown are minumum volumes assuming heavy major street traffic. If these volumes are met, warrant 4 requires further engineering analysis

Minimum 4 hour ped. volume crossing major street: 107

Minimum peak hour ped. volume crossing major street: 133

Number of pedestrians crossing major street

	7:00 - 8:00	8:00 - 9:00	9:00 - 10:00	10:00 - 11:00	11:00 - 12:00	12:00 - 13:00	13:00 - 14:00	14:00 - 15:00	15:00 - 16:00	16:00 - 17:00	17:00 - 18:00	18:00 - 19:00
Major St.	0	0	0	0	0	1	0	0	0	0	0	0

Warrant No. 7 - Crash Experience (Requires 3 criteria analysis by engineering)

Total Number: 0 From: 1/1/2005 to 1/1/2008
Accident Rate: 0.00 per million entering vehicles

Types of Accidents	No.	/	Avg.		No.	/	Avg.
Right Angle	0	/	0.0	Rear End	0	/	0.0
Lost Control	0	/	0.0	Side Swipe	0	/	0.0
Left Turn	0	/	0.0	Other	0	/	0.0

SOUTH CAROLINA DEPARTMENT OF TRANSPORTATION
DISTRICT 1
TRAFFIC ENGINEERING

County: Richland City: Columbia Date: 11/21/2016

Major Rt: St. Andrews Rd * Not on State System Minor Rt: Harbison Blvd-Emory Ln * Not on State System

Day of Week: Monday Weather: Clear Office: Short Counts JMS

Type of Control: Signal Speed Limit (major st) 40

Direction of Minor Street: E-W Intersection ADT - 32050 (Calc)

Number of Lanes (major st)* 2 Number of Lanes (minor st)* 2

* Each Direction

INTERSECTION VOLUME SUMMARY

	From N St. Andrews Rd				From S St. Andrews Rd				From E Harbison Blvd-Emor				From W Harbison Blvd-Emor				Total	Total
	LT	STR	RT	TOT	LT	STR	RT	TOT	LT	STR	RT	TOT	LT	STR	RT	TOT	Vol	Peds
7:00 - 7:15	37	119	0	156	2	52	26	80	15	7	42	64	2	21	3	26	326	0
7:15 - 7:30	58	183	2	243	1	76	37	114	38	23	57	118	4	28	5	37	512	0
7:30 - 7:45	86	242	4	332	4	100	19	123	39	15	75	129	5	47	11	63	647	0
7:45 - 8:00	75	198	5	278	5	125	29	159	27	17	109	153	13	52	21	86	676	1
8:00 - 8:15	68	197	10	275	2	113	13	128	44	22	94	160	30	49	21	100	663	0
8:15 - 8:30	86	209	4	299	2	59	21	82	44	8	59	111	5	33	6	44	536	0
8:30 - 8:45	55	132	3	190	0	53	34	87	37	16	37	90	6	35	5	46	413	0
8:45 - 9:00	73	180	4	257	0	65	31	96	41	7	47	95	7	21	3	31	479	1
9:00 - 9:15	73	118	0	191	2	74	33	109	47	13	39	99	2	25	1	28	427	0
9:15 - 9:30	73	105	0	178	2	90	43	135	33	11	40	84	1	28	4	33	430	0
9:30 - 9:45	73	108	0	181	0	92	60	152	27	18	51	96	10	44	0	54	483	0
9:45 - 10:00	78	105	5	188	3	77	63	143	31	22	62	115	2	40	0	42	488	0
10:00 - 10:15	83	98	7	188	0	80	68	148	30	17	69	116	1	36	2	39	491	0
10:15 - 10:30	80	102	2	184	0	80	58	138	41	19	71	131	1	37	2	40	493	0
10:30 - 10:45	92	112	2	206	0	77	56	133	50	24	84	158	0	42	3	45	542	0
10:45 - 11:00	94	109	3	206	2	100	69	171	35	21	84	140	1	33	1	35	552	0
11:00 - 11:15	102	107	3	212	1	0	57	58	45	24	80	149	3	27	2	32	451	0
11:15 - 11:30	91	107	2	200	3	79	59	141	39	31	92	162	1	43	4	48	551	1
11:30 - 11:45	98	100	5	203	0	103	82	185	60	39	83	182	3	35	4	42	612	0
11:45 - 12:00	113	147	4	264	2	115	85	202	72	33	112	217	3	22	7	32	715	0
12:00 - 12:15	109	129	5	243	5	113	100	218	63	41	114	218	3	38	2	43	722	0
12:15 - 12:30	94	113	3	210	4	116	84	204	80	43	112	235	3	47	5	55	704	0
12:30 - 12:45	103	125	4	232	3	93	84	180	78	37	126	241	5	39	7	51	704	0
12:45 - 13:00	100	129	5	234	2	96	74	172	65	42	115	222	4	43	3	50	678	0
13:00 - 13:15	87	126	1	214	1	97	79	177	69	35	129	233	3	29	1	33	657	0
13:15 - 13:30	83	112	9	204	1	94	66	161	77	33	114	224	0	38	2	40	629	0
13:30 - 13:45	87	127	0	214	1	129	87	217	67	43	125	235	3	53	1	57	723	0
13:45 - 14:00	90	105	6	201	2	116	76	194	72	53	140	265	2	44	2	48	708	0
14:00 - 14:15	102	118	4	224	0	96	76	172	75	53	142	270	2	45	1	48	714	0
14:15 - 14:30	78	100	3	181	1	112	72	185	75	44	125	244	5	41	0	46	656	0
14:30 - 14:45	102	137	3	242	4	116	76	196	48	45	101	194	3	20	0	23	655	1
14:45 - 15:00	98	140	2	240	4	108	73	185	72	64	110	246	5	36	1	42	713	1
15:00 - 15:15	80	92	5	177	5	146	84	235	53	30	115	198	1	37	2	40	650	0
15:15 - 15:30	82	110	0	192	0	172	86	258	54	50	97	201	2	33	3	38	689	1
15:30 - 15:45	75	139	8	222	6	178	87	271	64	44	132	240	5	30	7	42	775	0
15:45 - 16:00	100	211	20	331	10	148	86	244	49	33	124	206	13	48	10	71	852	3
16:00 - 16:15	86	138	6	230	7	167	94	268	67	62	119	248	10	44	8	62	808	5
16:15 - 16:30	89	108	1	198	4	181	93	278	56	57	126	239	7	44	4	55	770	4
16:30 - 16:45	84	135	4	223	2	192	104	298	57	41	113	211	4	32	3	39	771	0
16:45 - 17:00	75	179	4	258	7	147	76	230	47	46	122	215	5	34	3	42	745	1
17:00 - 17:15	85	152	8	245	2	150	78	230	60	68	130	258	2	38	4	44	777	0
17:15 - 17:30	84	143	3	230	3	186	92	281	53	47	122	222	2	37	1	40	773	0
17:30 - 17:45	80	115	1	196	1	167	102	270	41	37	124	202	1	41	4	46	714	0
17:45 - 18:00	75	131	1	207	2	150	98	250	49	39	138	226	3	38	2	43	726	0
18:00 - 18:15	92	143	2	237	11	127	69	207	56	49	136	241	6	49	3	58	743	0
18:15 - 18:30	43	113	1	157	7	149	71	227	52	56	121	229	3	32	8	43	656	0
18:30 - 18:45	66	97	5	168	6	92	65	163	55	39	125	219	0	39	2	41	591	0
18:45 - 19:00	55	71	2	128	2	81	47	130	39	36	109	184	2	26	1	29	471	0
TOTAL	3972	6316	181	10469	134	5329	3222	8685	2488	1654	4793	8935	204	1773	195	2172	30261	19
Trucks	16	24	1	41	3	44	16	63	4	8	40	52	1	12	0	13	169	0.6%
School Buses	13	34	6	53	4	29	6	39	20	16	39	75	56	6	1	63	230	0.8%

TOTAL AND PEAK HOUR VOLUME DIAGRAMS

St. Andrews Rd AT Harbison Blvd-Emory Ln Date: 11/21/2016

12.0 HOUR TOTAL VOLUME
FROM 7:00 TO 15:00

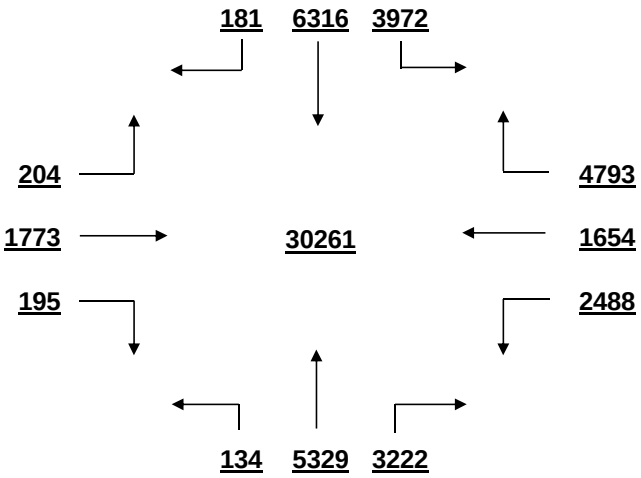

OVERALL PEAK HOUR VOLUME
FROM 15:30 TO 16:30

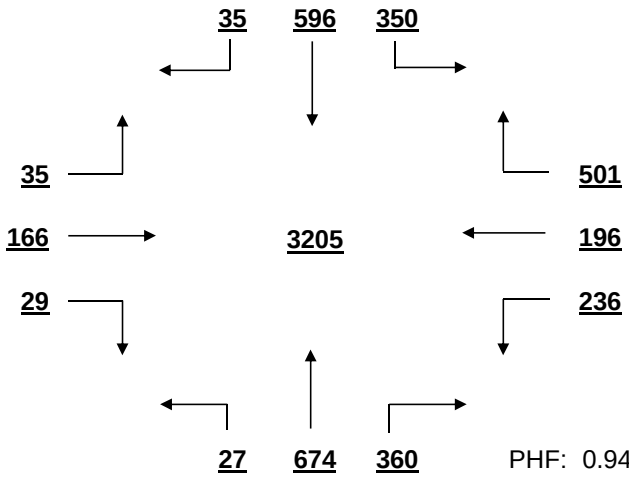

PHF: 0.940

AM PEAK HOUR VOLUME (0:00-10:45)
FROM 7:30 TO 8:30

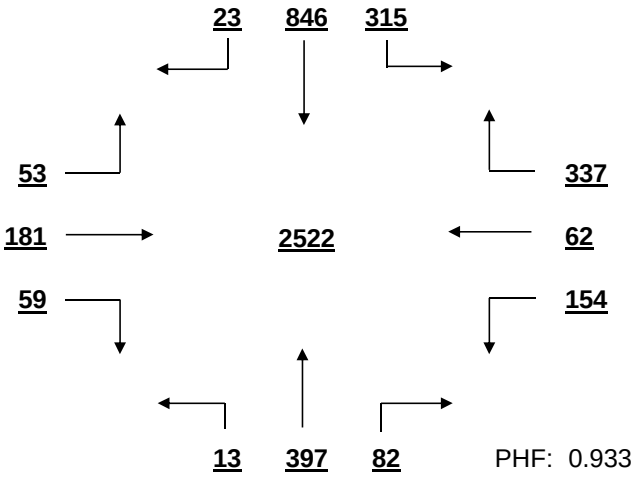

PHF: 0.933

PM PEAK HOUR VOLUME (14:15-23:45)
FROM 15:30 TO 16:30

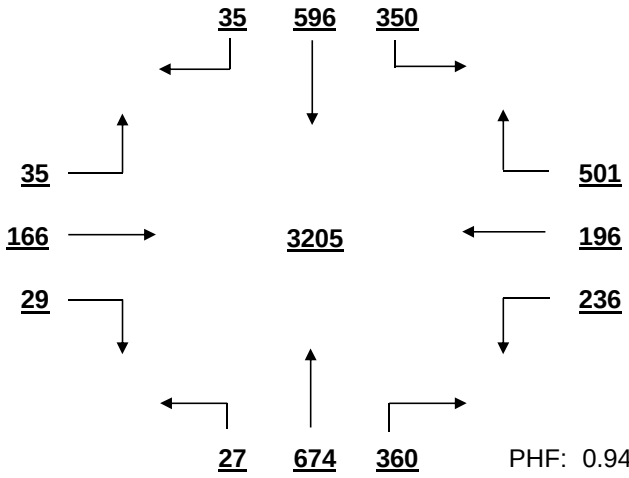

PHF: 0.940

MID-DAY PEAK HOUR VOLUME (11:00-14:00)
FROM 11:45 TO 12:45

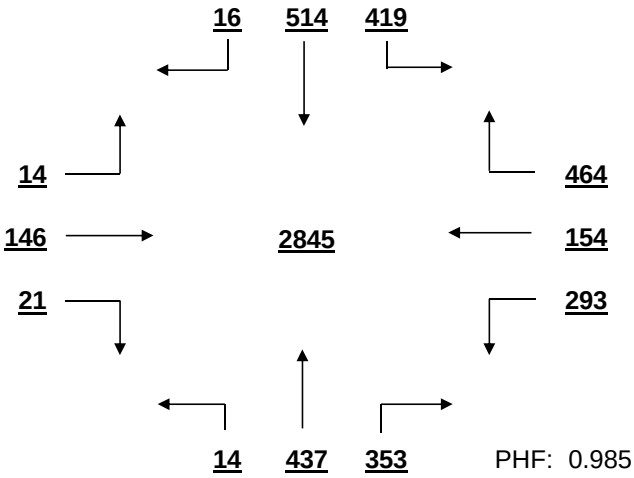

PHF: 0.985

OTHER HOUR VOLUME
FROM 7:00 TO 8:00

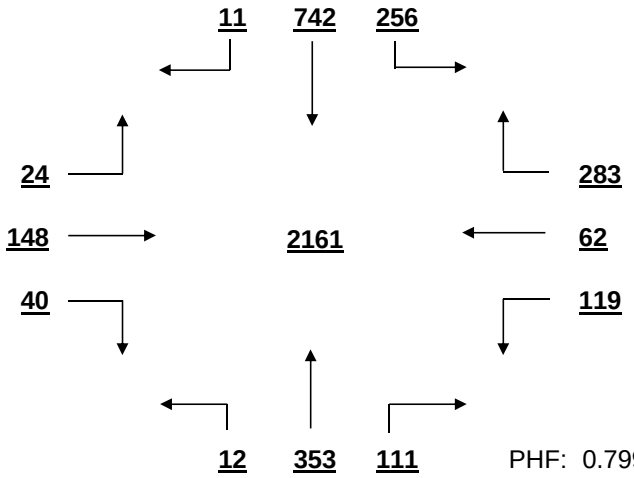

PHF: 0.799

SIGNAL WARRANT ANALYSIS

St. Andrews Rd AT Harbison Blvd-Emory Ln Date: 11/21/2016

Minor Street Volume, percent of total = 36.7%
Percent of Left Turns from Minor Street = 24.2%
Percent of Right Turns from Minor Street = 44.9%
Percent of Minor Street Right Turns to Remove from Warrant Analysis = 0%
WARRANT BASIS = **100%**

Warrant No. 1 - Vehicular Volume is met

Condition A - Minimum Vehicular Volume is met

Average Major Street % of Warrant				Average Minor Street % of Warrant			
1596.2	/ 600	=	266%	744.6	/ 200	=	372%

Hourly percent of warrant

	7:00 - 8:00	8:00 - 9:00	9:00 - 10:00	10:00 - 11:00	11:00 - 12:00	12:00 - 13:00	13:00 - 14:00	14:00 - 15:00	15:00 - 16:00	16:00 - 17:00	17:00 - 18:00	18:00 - 19:00
Major St.	248%	236%	213%	229%	244%	282%	264%	271%	322%	331%	318%	236%
Minor St.	232%	228%	197%	273%	355%	458%	479%	477%	423%	457%	454%	437%

Condition B - Interruption to Continuous Traffic is met

Average Major Street % of Warrant				Average Minor Street % of Warrant			
1596.2	/ 900	=	177%	744.6	/ 100	=	745%

Hourly percent of warrant

	7:00 - 8:00	8:00 - 9:00	9:00 - 10:00	10:00 - 11:00	11:00 - 12:00	12:00 - 13:00	13:00 - 14:00	14:00 - 15:00	15:00 - 16:00	16:00 - 17:00	17:00 - 18:00	18:00 - 19:00
Major St.	165%	157%	142%	153%	163%	188%	176%	181%	214%	220%	212%	157%
Minor St.	464%	456%	394%	545%	710%	916%	957%	954%	845%	913%	908%	873%

80% Combination of Conditions A & B is met

Warrant No. 2 - Four Hour Vehicular Volume is met

Hourly percent of warrant

	7:00 - 8:00	8:00 - 9:00	9:00 - 10:00	10:00 - 11:00	11:00 - 12:00	12:00 - 13:00	13:00 - 14:00	14:00 - 15:00	15:00 - 16:00	16:00 - 17:00	17:00 - 18:00	18:00 - 19:00
Minor St.	403%	397%	336%	474%	617%	797%	832%	830%	735%	794%	790%	759%

Warrant No. 3 - Peak Hour is met

Percent of warrant			Percent of warrant	
Overall Peak Hour:	15:30 - 16:30	Higher Volume Side Street Peak Hour:	13:30 - 14:30	
Minor St.	622%	Minor St.	611%	

Warrant No. 4 - Pedestrian Volume. Pedestrian volume shown are minumum volumes assuming heavy major street traffic. If these volumes are met, warrant 4 requires further engineering analysis

Minimum 4 hour ped. volume crossing major street: 107

Minimum peak hour ped. volume crossing major street: 133

Number of pedestrians crossing major street

	7:00 - 8:00	8:00 - 9:00	9:00 - 10:00	10:00 - 11:00	11:00 - 12:00	12:00 - 13:00	13:00 - 14:00	14:00 - 15:00	15:00 - 16:00	16:00 - 17:00	17:00 - 18:00	18:00 - 19:00
Major St.	0	0	0	0	0	0	0	1	0	0	0	0

Warrant No. 7 - Crash Experience (Requires 3 criteria analysis by engineering)

Total Number: 0 From: 1/1/2005 to 1/1/2008

Accident Rate: 0.00 per million entering vehicles

Types of Accidents	No.	/	Avg.		No.	/	Avg.
Right Angle	0	/	0.0	Rear End	0	/	0.0
Lost Control	0	/	0.0	Side Swipe	0	/	0.0
Left Turn	0	/	0.0	Other	0	/	0.0

SOUTH CAROLINA DEPARTMENT OF TRANSPORTATION
DISTRICT 1
TRAFFIC ENGINEERING

County: Richland City: Columbia Date: 11/21/2016

Major Rt: Bower Pkwy * Not on State System Minor Rt: Park Terrace Dr * Not on State System

Day of Week: Monday Weather: Clear Office: Short Counts JMS

Type of Control: Signal Speed Limit (major st) 35

Direction of Minor Street: N-S Intersection ADT - 17080 (Calc)

Number of Lanes (major st)* 1 Number of Lanes (minor st)* 1

* Each Direction

INTERSECTION VOLUME SUMMARY

	From N Park Terrace Dr				From S Park Terrace Dr				From E Bower Pkwy				From W Bower Pkwy				Total	Total
	LT	STR	RT	TOT	LT	STR	RT	TOT	LT	STR	RT	TOT	LT	STR	RT	TOT	Vol	Peds
7:00 - 7:15	14	0	6	20	0	0	0	0	2	17	13	32	3	10	0	13	65	0
7:15 - 7:30	19	0	0	19	0	2	1	3	1	27	20	48	4	18	0	22	92	0
7:30 - 7:45	36	0	1	37	0	0	0	0	0	34	22	56	2	25	0	27	120	0
7:45 - 8:00	44	1	8	53	1	0	0	1	0	65	24	89	2	30	0	32	175	0
8:00 - 8:15	34	1	4	39	0	1	2	3	1	42	19	62	3	23	0	26	130	0
8:15 - 8:30	31	1	6	38	0	1	0	1	0	29	13	42	5	24	0	29	110	0
8:30 - 8:45	32	1	14	47	0	0	0	0	1	35	21	57	5	30	0	35	139	0
8:45 - 9:00	22	0	15	37	0	0	0	0	4	64	24	92	9	29	0	38	167	0
9:00 - 9:15	17	1	17	35	0	0	2	2	3	58	30	91	18	31	2	51	179	0
9:15 - 9:30	16	2	11	29	0	1	0	1	3	58	21	82	12	18	0	30	142	1
9:30 - 9:45	17	0	13	30	0	0	1	1	2	49	35	86	15	33	1	49	166	0
9:45 - 10:00	28	1	19	48	3	0	1	4	3	80	41	124	27	39	0	66	242	0
10:00 - 10:15	21	0	23	44	0	1	0	1	2	54	31	87	21	37	0	58	190	0
10:15 - 10:30	24	0	23	47	0	1	0	1	3	70	42	115	28	47	0	75	238	0
10:30 - 10:45	38	1	29	68	1	0	0	1	0	85	38	123	31	54	0	85	277	0
10:45 - 11:00	37	0	30	67	0	2	0	2	2	73	46	121	32	38	1	71	261	0
11:00 - 11:15	26	0	32	58	0	3	0	3	1	90	52	143	31	45	1	77	281	0
11:15 - 11:30	46	0	37	83	0	0	1	1	4	87	45	136	31	52	0	83	303	0
11:30 - 11:45	24	2	48	74	1	3	2	6	1	95	49	145	33	60	1	94	319	0
11:45 - 12:00	47	1	70	118	1	1	0	2	2	116	47	165	30	68	1	99	384	0
12:00 - 12:15	46	2	50	98	0	0	5	5	4	110	55	169	28	77	1	106	378	0
12:15 - 12:30	44	0	49	93	2	1	3	6	2	134	56	192	48	80	1	129	420	0
12:30 - 12:45	55	2	53	110	2	1	3	6	2	113	58	173	34	94	2	130	419	0
12:45 - 13:00	72	2	62	136	0	5	5	10	1	111	59	171	45	110	0	155	472	0
13:00 - 13:15	62	2	46	110	0	3	1	4	1	84	47	132	50	101	0	151	397	0
13:15 - 13:30	56	0	46	102	0	5	2	7	0	88	43	131	52	86	2	140	380	0
13:30 - 13:45	54	2	42	98	0	1	3	4	0	73	47	120	43	68	2	113	335	0
13:45 - 14:00	45	0	60	105	2	1	1	4	3	93	48	144	52	99	0	151	404	0
14:00 - 14:15	50	1	41	92	0	2	2	4	0	83	35	118	52	82	0	134	348	0
14:15 - 14:30	52	0	50	102	0	0	4	4	2	97	60	159	36	105	2	143	408	0
14:30 - 14:45	64	0	34	98	0	0	1	1	0	103	55	158	38	106	0	144	401	0
14:45 - 15:00	58	1	51	110	0	0	1	1	1	83	47	131	61	78	1	140	382	0
15:00 - 15:15	50	0	29	79	1	1	2	4	1	76	44	121	38	75	2	115	319	0
15:15 - 15:30	41	3	37	81	0	1	1	2	2	89	47	138	40	86	0	126	347	0
15:30 - 15:45	46	2	40	88	0	0	1	1	6	55	41	102	33	57	0	90	281	0
15:45 - 16:00	56	3	23	82	0	4	2	6	1	85	41	127	29	61	0	90	305	0
16:00 - 16:15	33	0	14	47	0	0	3	3	3	74	41	118	29	48	1	78	246	0
16:15 - 16:30	49	0	44	93	0	1	1	2	6	105	43	154	36	63	1	100	349	0
16:30 - 16:45	32	0	30	62	0	0	1	1	1	96	49	146	35	76	1	112	321	0
16:45 - 17:00	37	0	11	48	0	0	3	3	0	90	34	124	36	51	0	87	262	0
17:00 - 17:15	42	2	25	69	0	2	4	6	3	88	41	132	42	71	1	114	321	0
17:15 - 17:30	37	6	45	88	0	1	0	1	7	104	52	163	29	68	0	97	349	0
17:30 - 17:45	63	7	40	110	0	2	2	4	3	108	48	159	31	69	0	100	373	0
17:45 - 18:00	43	4	46	93	1	2	2	5	3	95	46	144	29	83	2	114	356	0
18:00 - 18:15	39	2	33	74	0	3	4	7	7	84	35	126	30	49	2	81	288	0
18:15 - 18:30	47	5	38	90	0	0	5	5	8	96	42	146	39	49	1	89	330	0
18:30 - 18:45	38	6	40	84	3	2	2	7	5	98	33	136	33	77	1	111	338	0
18:45 - 19:00	38	5	35	78	0	3	6	9	3	72	38	113	22	48	3	73	273	0
TOTAL	1922	69	1520	3511	18	57	80	155	110	3815	1918	5843	1412	2828	33	4273	13782	1
Trucks	7	1	1	9	0	1	0	1	1	11	10	22	2	16	0	18	50	0.4%
School Buses	4	0	0	4	0	0	0	0	0	13	15	28	0	5	0	5	37	0.3%

TOTAL AND PEAK HOUR VOLUME DIAGRAMS

Bower Pkwy AT Park Terrace Dr Date: 11/21/2016

12.0 HOUR TOTAL VOLUME
FROM 7:00 TO 15:00

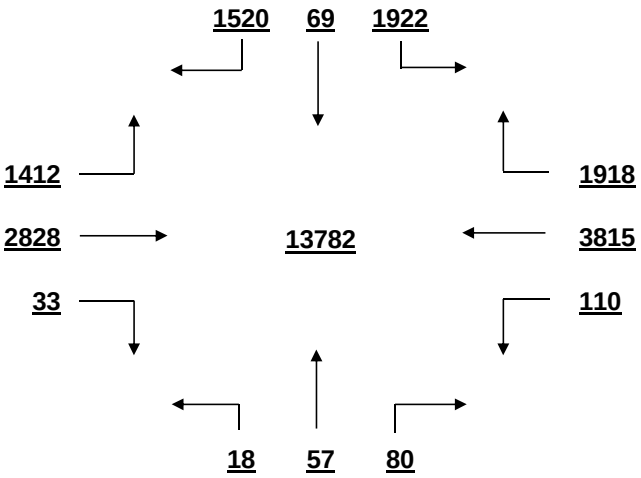

OVERALL PEAK HOUR VOLUME
FROM 12:15 TO 13:15

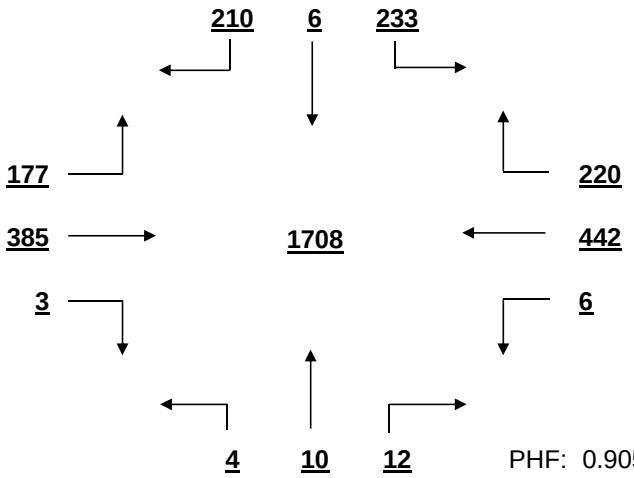

PHF: 0.905

AM PEAK HOUR VOLUME (0:00-10:45)
FROM 9:45 TO 10:45

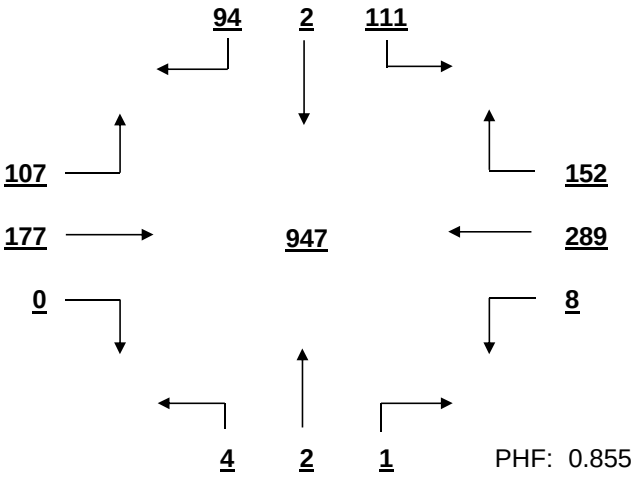

PHF: 0.855

PM PEAK HOUR VOLUME (14:15-23:45)
FROM 14:15 TO 15:15

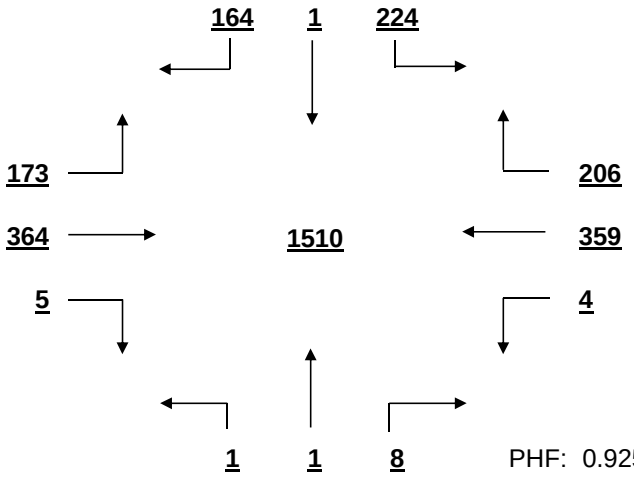

PHF: 0.925

MID-DAY PEAK HOUR VOLUME (11:00-14:00)
FROM 12:15 TO 13:15

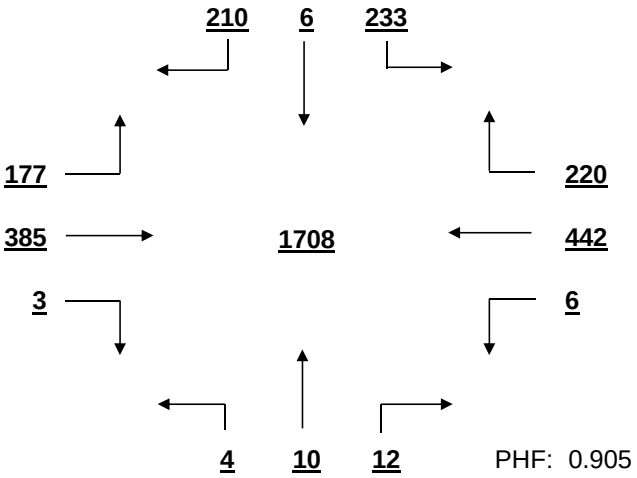

PHF: 0.905

OTHER HOUR VOLUME
FROM 7:00 TO 8:00

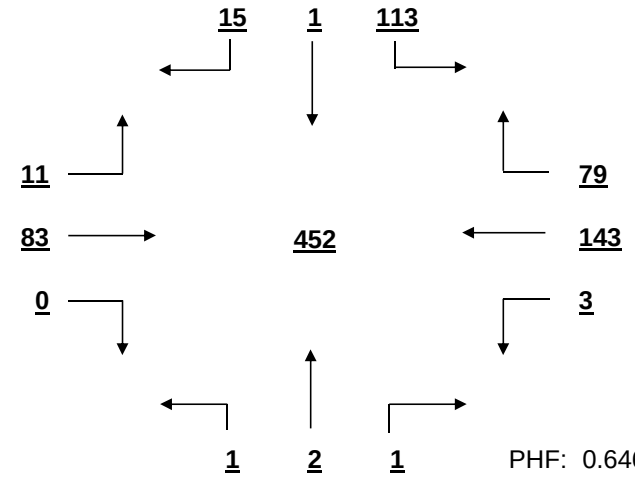

PHF: 0.646

SIGNAL WARRANT ANALYSIS

Bower Pkwy AT Park Terrace Dr Date: 11/21/2016

Minor Street Volume, percent of total = 26.6%
Percent of Left Turns from Minor Street = 52.9%
Percent of Right Turns from Minor Street = 43.6%
Percent of Minor Street Right Turns to Remove from Warrant Analysis = 0%
WARRANT BASIS = **100%**

Warrant No. 1 - Vehicular Volume is met

Condition A - Minimum Vehicular Volume is met

Average Major Street % of Warrant	Average Minor Street % of Warrant
843.0 / 500 = 169%	292.6 / 150 = 195%

Hourly percent of warrant

	7:00 - 8:00	8:00 - 9:00	9:00 - 10:00	10:00 - 11:00	11:00 - 12:00	12:00 - 13:00	13:00 - 14:00	14:00 - 15:00	15:00 - 16:00	16:00 - 17:00	17:00 - 18:00	18:00 - 19:00
Major St.	64%	76%	116%	147%	188%	245%	216%	225%	182%	184%	205%	175%
Minor St.	86%	107%	95%	151%	222%	291%	277%	268%	220%	167%	240%	217%

Condition B - Interruption to Continuous Traffic is met

Average Major Street % of Warrant	Average Minor Street % of Warrant
843.0 / 750 = 112%	292.6 / 75 = 390%

Hourly percent of warrant

	7:00 - 8:00	8:00 - 9:00	9:00 - 10:00	10:00 - 11:00	11:00 - 12:00	12:00 - 13:00	13:00 - 14:00	14:00 - 15:00	15:00 - 16:00	16:00 - 17:00	17:00 - 18:00	18:00 - 19:00
Major St.	43%	51%	77%	98%	126%	163%	144%	150%	121%	123%	136%	117%
Minor St.	172%	215%	189%	301%	444%	583%	553%	536%	440%	333%	480%	435%

80% Combination of Conditions A & B is met

Warrant No. 2 - Four Hour Vehicular Volume is met

Hourly percent of warrant

	7:00 - 8:00	8:00 - 9:00	9:00 - 10:00	10:00 - 11:00	11:00 - 12:00	12:00 - 13:00	13:00 - 14:00	14:00 - 15:00	15:00 - 16:00	16:00 - 17:00	17:00 - 18:00	18:00 - 19:00
Minor St.	37%	51%	63%	133%	299%	546%	496%	524%	277%	214%	382%	255%

Warrant No. 3 - Peak Hour is met

Percent of warrant		Percent of warrant	
Overall Peak Hour: 12:15 - 13:15		Higher Volume Side Street Peak Hour: 12:30 - 13:30	
Minor St.	320%	Minor St.	302%

Warrant No. 4 - Pedestrian Volume. Pedestrian volume shown are minumum volumes assuming heavy major street traffic. If these volumes are met, warrant 4 requires further engineering analysis

Minimum 4 hour ped. volume crossing major street: 107

Minimum peak hour ped. volume crossing major street: 133

Number of pedestrians crossing major street

	7:00 - 8:00	8:00 - 9:00	9:00 - 10:00	10:00 - 11:00	11:00 - 12:00	12:00 - 13:00	13:00 - 14:00	14:00 - 15:00	15:00 - 16:00	16:00 - 17:00	17:00 - 18:00	18:00 - 19:00
Major St.	0	0	0	0	0	0	0	0	0	0	0	0

Warrant No. 7 - Crash Experience (Requires 3 criteria analysis by engineering)

Total Number: 0 From: 1/1/2005 to 1/1/2008
Accident Rate: 0.00 per million entering vehicles

Types of Accidents	No.	/	Avg.		No.	/	Avg.
Right Angle	0	/	0.0	Rear End	0	/	0.0
Lost Control	0	/	0.0	Side Swipe	0	/	0.0
Left Turn	0	/	0.0	Other	0	/	0.0

SOUTH CAROLINA DEPARTMENT OF TRANSPORTATION
DISTRICT 1
TRAFFIC ENGINEERING

County: Richland City: Columbia Date: 11/22/2016

Major Rt: Bower Pkwy * Not on State System Minor Rt: Saturn Pkwy * Not on State System

Day of Week: Tuesday Weather: Clear Office: Short Counts JMS

Type of Control: Stop Sign Speed Limit (major st) 35

Direction of Minor Street: E-W Intersection ADT - 14560 (Calc)

Number of Lanes (major st)* 1 Number of Lanes (minor st)* 1

* Each Direction

INTERSECTION VOLUME SUMMARY

	From N Bower Pkwy				From S Bower Pkwy				From E Saturn Pkwy				From W Saturn Pkwy				Total	Total
	LT	STR	RT	TOT	LT	STR	RT	TOT	LT	STR	RT	TOT	LT	STR	RT	TOT	Vol	Peds
7:00 - 7:15	2	29	0	31	0	58	4	62	5	0	1	6	0	0	0	0	99	0
7:15 - 7:30	1	49	0	50	0	53	7	60	12	0	0	12	0	0	0	0	122	0
7:30 - 7:45	1	72	0	73	0	71	11	82	12	0	4	16	0	0	0	0	171	0
7:45 - 8:00	2	77	0	79	0	91	15	106	9	0	4	13	0	0	0	0	198	0
8:00 - 8:15	2	62	0	64	0	70	11	81	20	0	2	22	0	0	0	0	167	0
8:15 - 8:30	1	47	0	48	0	57	9	66	7	0	6	13	0	0	0	0	127	0
8:30 - 8:45	0	50	0	50	0	81	9	90	9	0	1	10	0	0	0	0	150	0
8:45 - 9:00	4	57	0	61	0	92	16	108	13	0	3	16	0	0	0	0	185	0
9:00 - 9:15	2	49	0	51	0	84	13	97	16	0	2	18	0	0	0	0	166	0
9:15 - 9:30	0	58	0	58	0	114	11	125	8	0	0	8	0	0	0	0	191	0
9:30 - 9:45	0	53	0	53	0	110	17	127	9	0	6	15	0	0	0	0	195	0
9:45 - 10:00	1	57	0	58	0	133	16	149	7	0	2	9	0	0	0	0	216	0
10:00 - 10:15	4	68	0	72	0	141	22	163	13	0	3	16	0	0	0	0	251	0
10:15 - 10:30	1	74	0	75	0	117	14	131	14	0	5	19	0	0	0	0	225	0
10:30 - 10:45	1	96	0	97	0	126	18	144	13	0	1	14	0	0	0	0	255	0
10:45 - 11:00	0	89	0	89	0	149	16	165	16	0	2	18	0	0	0	0	272	0
11:00 - 11:15	1	107	0	108	0	175	18	193	15	0	3	18	0	0	0	0	319	0
11:15 - 11:30	2	99	0	101	0	133	7	140	8	0	1	9	0	0	0	0	250	0
11:30 - 11:45	3	117	0	120	0	167	14	181	12	0	3	15	0	0	0	0	316	0
11:45 - 12:00	1	99	0	100	0	197	18	215	18	0	5	23	0	0	0	0	338	0
12:00 - 12:15	1	112	0	113	0	188	15	203	11	0	1	12	0	0	0	0	328	0
12:15 - 12:30	5	95	0	100	0	155	12	167	6	0	6	12	0	0	0	0	279	0
12:30 - 12:45	0	108	0	108	0	157	13	170	5	0	4	9	0	0	0	0	287	0
12:45 - 13:00	3	122	0	125	0	166	30	196	14	0	6	20	0	0	0	0	341	0
13:00 - 13:15	4	152	0	156	0	124	13	137	14	0	1	15	0	0	0	0	308	0
13:15 - 13:30	6	67	0	73	0	88	7	95	14	0	2	16	0	0	0	0	184	0
13:30 - 13:45	4	78	0	82	0	97	18	115	5	0	1	6	0	0	0	0	203	0
13:45 - 14:00	4	114	0	118	0	153	15	168	13	0	2	15	0	0	0	0	301	0
14:00 - 14:15	3	138	0	141	0	129	27	156	17	0	1	18	0	0	0	0	315	0
14:15 - 14:30	4	149	0	153	0	171	16	187	19	0	4	23	0	0	0	0	363	0
14:30 - 14:45	6	125	0	131	0	116	14	130	14	0	5	19	0	0	0	0	280	0
14:45 - 15:00	2	125	0	127	0	183	8	191	18	0	3	21	0	0	0	0	339	0
15:00 - 15:15	2	131	0	133	0	142	22	164	12	0	0	12	0	0	0	0	309	0
15:15 - 15:30	1	113	0	114	0	140	17	157	12	0	3	15	0	0	0	0	286	0
15:30 - 15:45	0	127	0	127	0	172	12	184	13	0	3	16	0	0	0	0	327	0
15:45 - 16:00	2	97	0	99	0	127	23	150	11	0	3	14	0	0	0	0	263	0
16:00 - 16:15	3	102	0	105	0	130	22	152	9	0	6	15	0	0	0	0	272	0
16:15 - 16:30	2	122	0	124	0	168	19	187	16	0	3	19	0	0	0	0	330	0
16:30 - 16:45	3	134	0	137	0	177	23	200	24	0	2	26	0	0	0	0	363	0
16:45 - 17:00	1	122	0	123	0	211	17	228	16	0	4	20	0	0	0	0	371	0
17:00 - 17:15	3	133	0	136	0	184	18	202	29	0	0	29	0	0	0	0	367	0
17:15 - 17:30	1	133	0	134	0	173	17	190	26	0	5	31	0	0	0	0	355	0
17:30 - 17:45	6	112	0	118	0	198	16	214	25	0	2	27	0	0	0	0	359	0
17:45 - 18:00	3	122	0	125	0	149	19	168	26	0	8	34	0	0	0	0	327	0
18:00 - 18:15	9	117	0	126	0	196	13	209	34	0	6	40	0	0	0	0	375	0
18:15 - 18:30	4	149	0	153	0	137	12	149	30	0	8	38	0	0	0	0	340	0
18:30 - 18:45	3	122	0	125	0	159	18	177	47	0	4	51	0	0	0	0	353	0
18:45 - 19:00	10	124	0	134	0	128	12	140	28	0	0	28	0	0	0	0	302	0
TOTAL	124	4754	0	4878	0	6537	734	7271	744	0	147	891	0	0	0	0	13040	0
Trucks	0	20	0	20	0	16	12	28	11	0	1	12	0	0	0	0	60	0.5%
School Buses	0	6	0	6	0	21	3	24	2	0	5	7	0	0	0	0	37	0.3%

TOTAL AND PEAK HOUR VOLUME DIAGRAMS

Bower Pkwy AT Saturn Pkwy Date: 11/22/2016

12.0 HOUR TOTAL VOLUME
FROM 7:00 TO 15:00

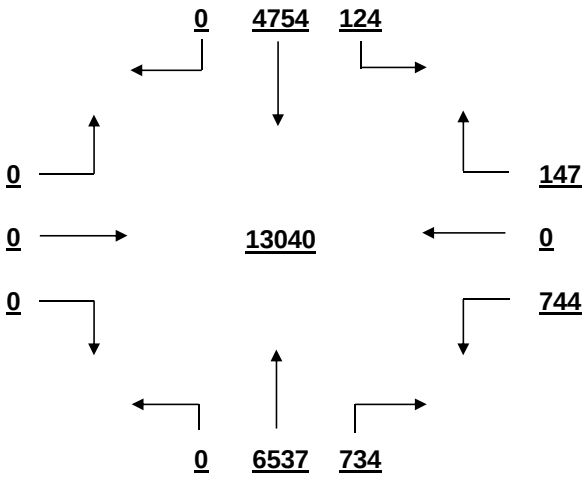

OVERALL PEAK HOUR VOLUME
FROM 16:30 TO 17:30

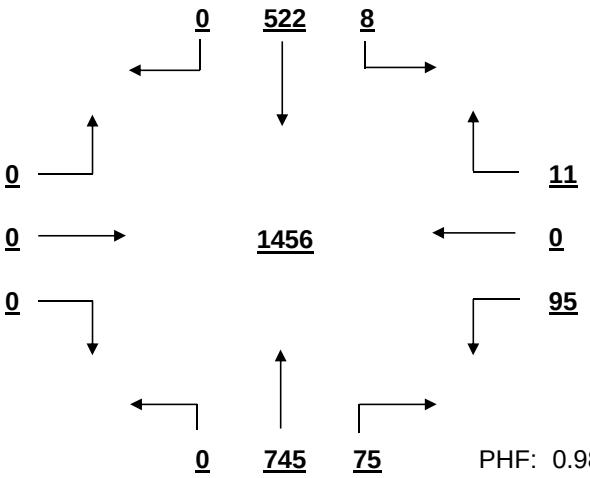

PHF: 0.981

AM PEAK HOUR VOLUME (0:00-10:45)
FROM 9:45 TO 10:45

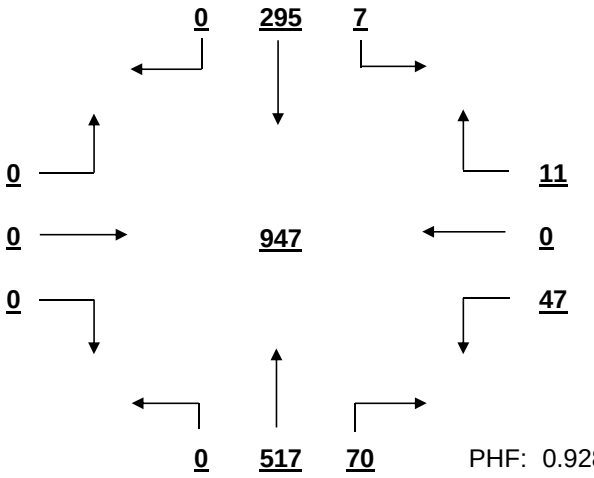

PHF: 0.928

PM PEAK HOUR VOLUME (14:15-23:45)
FROM 16:30 TO 17:30

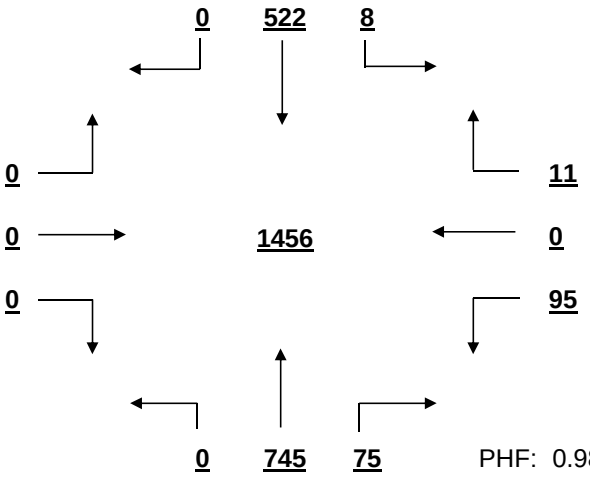

PHF: 0.981

MID-DAY PEAK HOUR VOLUME (11:00-14:00)
FROM 11:30 TO 12:30

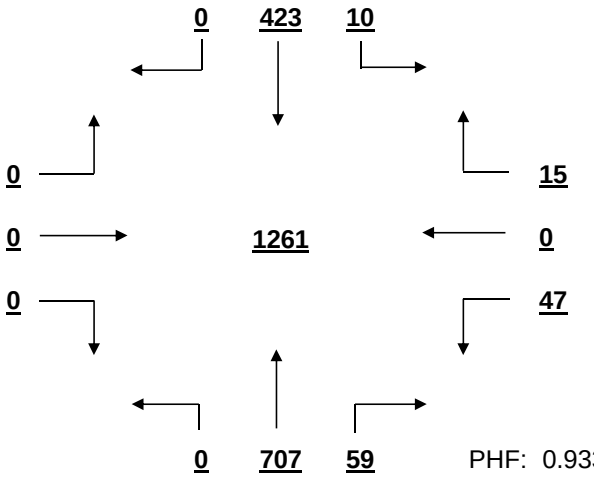

PHF: 0.933

OTHER HOUR VOLUME
FROM 7:00 TO 8:00

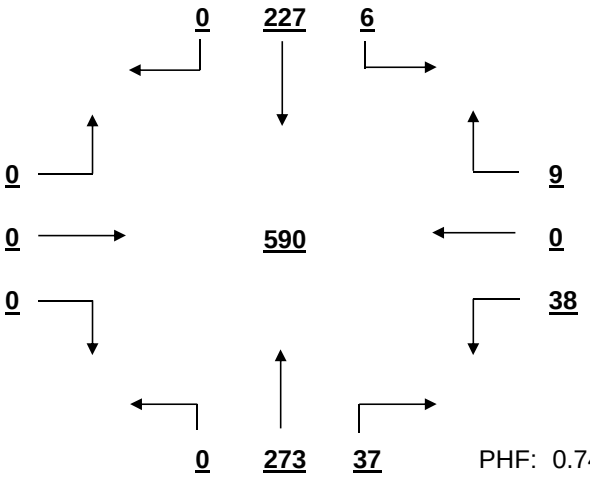

PHF: 0.745

SIGNAL WARRANT ANALYSIS

Bower Pkwy AT Saturn Pkwy Date: 11/22/2016

Minor Street Volume, percent of total = 6.8%
Percent of Left Turns from Minor Street = 83.5%
Percent of Right Turns from Minor Street = 16.5%
Percent of Minor Street Right Turns to Remove from Warrant Analysis = 0%
WARRANT BASIS = **100%**

Warrant No. 1 - Vehicular Volume is not met

Condition A - Minimum Vehicular Volume is not met

Average Major Street % of Warrant				Average Minor Street % of Warrant			
1012.4	/	500	= 202%	74.3	/	150	= 50%

Hourly percent of warrant

	7:00 - 8:00	8:00 - 9:00	9:00 - 10:00	10:00 - 11:00	11:00 - 12:00	12:00 - 13:00	13:00 - 14:00	14:00 - 15:00	15:00 - 16:00	16:00 - 17:00	17:00 - 18:00	18:00 - 19:00
Major St.	109%	114%	144%	187%	232%	236%	189%	243%	226%	251%	257%	243%
Minor St.	31%	41%	33%	45%	43%	35%	35%	54%	38%	53%	81%	105%

Condition B - Interruption to Continuous Traffic is not met

Average Major Street % of Warrant				Average Minor Street % of Warrant			
1012.4	/	750	= 135%	74.3	/	75	= 99%

Hourly percent of warrant

	7:00 - 8:00	8:00 - 9:00	9:00 - 10:00	10:00 - 11:00	11:00 - 12:00	12:00 - 13:00	13:00 - 14:00	14:00 - 15:00	15:00 - 16:00	16:00 - 17:00	17:00 - 18:00	18:00 - 19:00
Major St.	72%	76%	96%	125%	154%	158%	126%	162%	150%	167%	172%	162%
Minor St.	63%	81%	67%	89%	87%	71%	69%	108%	76%	107%	161%	209%

80% Combination of Conditions A & B is not met

Warrant No. 2 - Four Hour Vehicular Volume is met

Hourly percent of warrant

	7:00 - 8:00	8:00 - 9:00	9:00 - 10:00	10:00 - 11:00	11:00 - 12:00	12:00 - 13:00	13:00 - 14:00	14:00 - 15:00	15:00 - 16:00	16:00 - 17:00	17:00 - 18:00	18:00 - 19:00
Minor St.	19%	26%	29%	59%	81%	66%	47%	101%	74%	100%	151%	196%

Warrant No. 3 - Peak Hour is met

Percent of warrant			Percent of warrant		
Overall Peak Hour:	16:30 - 17:30		Higher Volume Side Street Peak Hour:	17:45 - 18:45	
Minor St.	90%		Minor St.	116%	

Warrant No. 4 - Pedestrian Volume. Pedestrian volume shown are minumum volumes assuming heavy major street traffic. If these volumes are met, warrant 4 requires further engineering analysis

Minimum 4 hour ped. volume crossing major street	Minimum peak hour ped. volume crossing major street
107	133

Number of pedestrians crossing major street

	7:00 - 8:00	8:00 - 9:00	9:00 - 10:00	10:00 - 11:00	11:00 - 12:00	12:00 - 13:00	13:00 - 14:00	14:00 - 15:00	15:00 - 16:00	16:00 - 17:00	17:00 - 18:00	18:00 - 19:00
Major St.	0	0	0	0	0	0	0	0	0	0	0	0

Warrant No. 7 - Crash Experience (Requires 3 criteria analysis by engineering)

Total Number: 0 From: 1/1/2005 to 1/1/2008
Accident Rate: 0.00 per million entering vehicles

Types of Accidents	No.	/	Avg.		No.	/	Avg.
Right Angle	0	/	0.0	Rear End	0	/	0.0
Lost Control	0	/	0.0	Side Swipe	0	/	0.0
Left Turn	0	/	0.0	Other	0	/	0.0

SOUTH CAROLINA DEPARTMENT OF TRANSPORTATION
DISTRICT 1
TRAFFIC ENGINEERING

County: Richland City: Columbia Date: 11/21/2016

Major Rt: Piney Grove Rd * Not on State System Minor Rt: Bower Pkwy-Jamil Rd * Not on State System

Day of Week: Monday Weather: Clear Office: Short Counts JMS

Type of Control: Signal Speed Limit (major st) 35

Direction of Minor Street: N-S Intersection ADT - 28910 (Calc)

Number of Lanes (major st)* 2 Number of Lanes (minor st)* 1

* Each Direction

INTERSECTION VOLUME SUMMARY

	From N Bower Pkwy-Jamil R				From S Bower Pkwy-Jamil R				From E Piney Grove Rd				From W Piney Grove Rd				Total	Total
	LT	STR	RT	TOT	LT	STR	RT	TOT	LT	STR	RT	TOT	LT	STR	RT	TOT	Vol	Peds
7:00 - 7:15	13	12	9	34	7	11	23	41	29	48	24	101	9	96	5	110	286	1
7:15 - 7:30	30	15	15	60	2	13	27	42	31	49	42	122	19	176	5	200	424	0
7:30 - 7:45	42	37	16	95	4	16	20	40	27	77	49	153	13	157	16	186	474	0
7:45 - 8:00	40	40	11	91	6	15	24	45	41	42	68	151	18	165	8	191	478	0
8:00 - 8:15	46	34	10	90	3	10	21	34	34	53	50	137	14	126	4	144	405	1
8:15 - 8:30	36	34	15	85	2	4	22	28	19	53	66	138	12	126	8	146	397	0
8:30 - 8:45	35	27	6	68	4	9	17	30	22	62	55	139	14	101	6	121	358	0
8:45 - 9:00	34	21	15	70	4	13	19	36	33	58	104	195	26	100	3	129	430	1
9:00 - 9:15	42	11	15	68	2	18	20	40	20	59	74	153	17	83	3	103	364	1
9:15 - 9:30	19	15	0	34	4	15	23	42	16	61	87	164	20	83	4	107	347	0
9:30 - 9:45	45	11	0	56	3	19	22	44	24	61	102	187	10	73	1	84	371	0
9:45 - 10:00	40	28	15	83	3	25	24	52	29	68	109	206	17	70	2	89	430	2
10:00 - 10:15	56	13	10	79	3	17	21	41	16	62	104	182	17	71	5	93	395	0
10:15 - 10:30	60	14	13	87	6	20	20	46	21	62	120	203	25	76	5	106	442	0
10:30 - 10:45	54	26	17	97	6	15	25	46	10	70	119	199	22	67	2	91	433	0
10:45 - 11:00	59	20	24	103	4	24	24	52	24	83	125	232	22	90	10	122	509	0
11:00 - 11:15	62	20	17	99	7	0	36	43	23	63	135	221	20	58	3	81	444	0
11:15 - 11:30	80	21	18	119	2	22	24	48	16	85	128	229	25	86	3	114	510	2
11:30 - 11:45	64	25	15	104	5	27	22	54	32	82	168	282	22	133	6	161	601	0
11:45 - 12:00	77	35	20	132	2	32	20	54	36	86	183	305	36	103	2	141	632	0
12:00 - 12:15	95	48	24	167	6	33	25	64	33	102	208	343	20	88	4	112	686	0
12:15 - 12:30	95	38	30	163	6	35	24	65	20	103	204	327	28	74	3	105	660	0
12:30 - 12:45	104	56	36	196	9	31	29	69	31	88	160	279	29	95	2	126	670	1
12:45 - 13:00	109	74	35	218	5	25	30	60	44	76	155	275	36	92	4	132	685	1
13:00 - 13:15	111	58	32	201	4	29	26	59	29	84	134	247	19	104	4	127	634	1
13:15 - 13:30	108	49	20	177	4	29	18	51	37	91	115	243	29	93	9	131	602	2
13:30 - 13:45	107	36	31	174	5	27	25	57	36	97	117	250	30	91	9	130	611	3
13:45 - 14:00	101	52	35	188	6	31	25	62	26	82	156	264	17	106	5	128	642	0
14:00 - 14:15	108	57	28	193	9	32	48	89	34	104	129	267	29	87	6	122	671	0
14:15 - 14:30	114	48	32	194	6	21	31	58	39	101	117	257	19	85	9	113	622	1
14:30 - 14:45	101	52	27	180	4	24	27	55	30	100	156	286	25	86	7	118	639	0
14:45 - 15:00	95	46	38	179	14	39	35	88	22	87	91	200	26	104	5	135	602	0
15:00 - 15:15	24	39	43	106	11	54	52	117	23	62	83	168	34	102	4	140	531	2
15:15 - 15:30	88	43	0	131	8	63	42	113	55	56	71	182	43	83	7	133	559	0
15:30 - 15:45	77	32	28	137	6	32	33	71	94	117	76	287	46	112	3	161	656	0
15:45 - 16:00	88	46	34	168	16	43	38	97	35	105	105	245	30	118	8	156	666	0
16:00 - 16:15	87	46	37	170	6	49	25	80	32	95	162	289	51	122	6	179	718	0
16:15 - 16:30	93	50	18	161	14	38	34	86	31	109	139	279	45	108	9	162	688	1
16:30 - 16:45	91	39	27	157	12	52	20	84	20	123	134	277	37	70	5	112	630	0
16:45 - 17:00	87	42	38	167	7	28	25	60	37	158	153	348	33	104	10	147	722	0
17:00 - 17:15	90	50	33	173	16	38	41	95	25	162	120	307	34	119	10	163	738	1
17:15 - 17:30	72	41	35	148	13	44	44	101	35	139	144	318	38	114	13	165	732	1
17:30 - 17:45	93	47	36	176	11	40	24	75	23	163	120	306	33	99	10	142	699	1
17:45 - 18:00	90	43	38	171	14	51	25	90	23	117	125	265	27	111	9	147	673	0
18:00 - 18:15	76	46	26	148	14	36	35	85	29	141	130	300	34	117	8	159	692	3
18:15 - 18:30	77	35	30	142	9	26	29	64	24	133	140	297	32	88	9	129	632	0
18:30 - 18:45	73	34	31	138	5	22	20	47	21	133	132	286	24	92	8	124	595	0
18:45 - 19:00	73	39	21	133	4	20	18	42	12	108	136	256	31	76	5	112	543	0
TOTAL	3461	1745	1104	6310	323	1317	1302	2942	1403	4320	5624	11347	1257	4780	292	6329	26928	26
Trucks	38	11	6	55	6	10	29	45	38	67	50	155	3	51	3	57	312	1.2%
School Buses	5	6	4	15	2	5	12	19	4	9	5	18	21	11	4	36	88	0.3%

TOTAL AND PEAK HOUR VOLUME DIAGRAMS

Piney Grove Rd AT Bower Pkwy-Jamil Rd Date: 11/21/2016

12.0 HOUR TOTAL VOLUME
FROM 7:00 TO 15:00

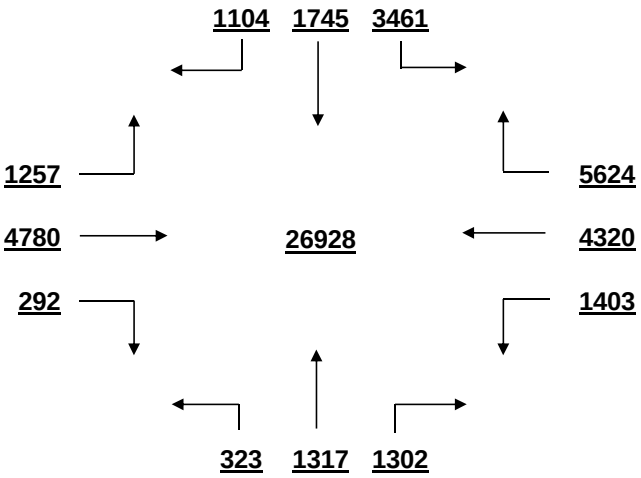

OVERALL PEAK HOUR VOLUME
FROM 16:45 TO 17:45

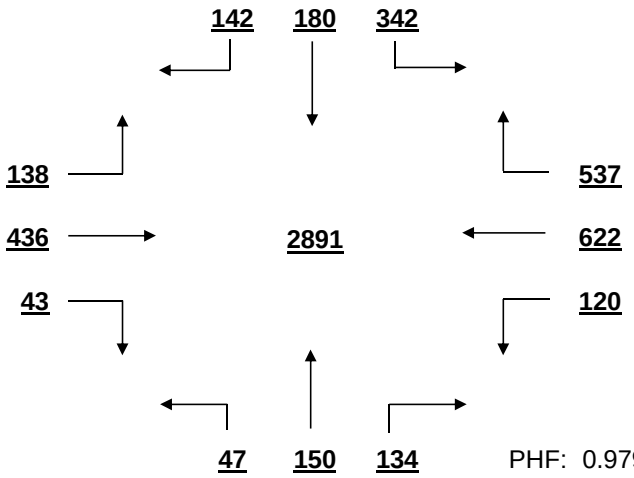

PHF: 0.979

AM PEAK HOUR VOLUME (0:00-10:45)
FROM 7:15 TO 8:15

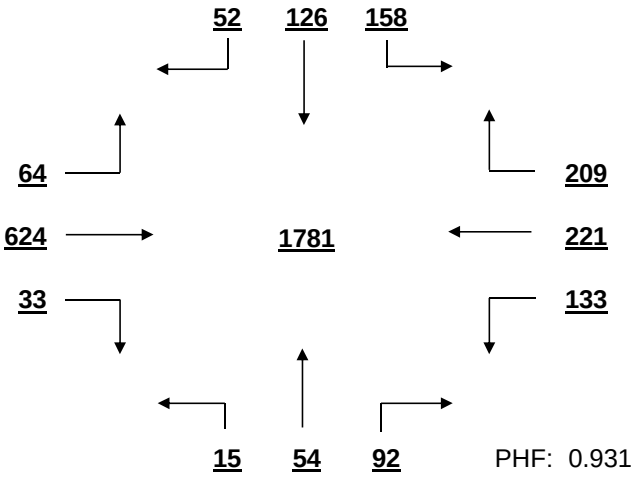

PHF: 0.931

PM PEAK HOUR VOLUME (14:15-23:45)
FROM 16:45 TO 17:45

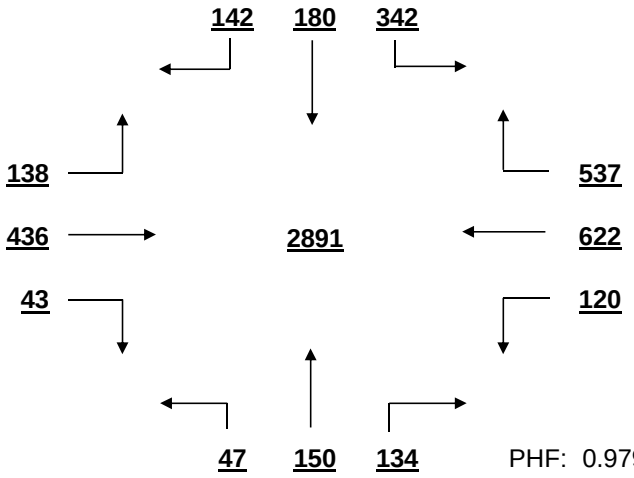

PHF: 0.979

MID-DAY PEAK HOUR VOLUME (11:00-14:00)
FROM 12:00 TO 13:00

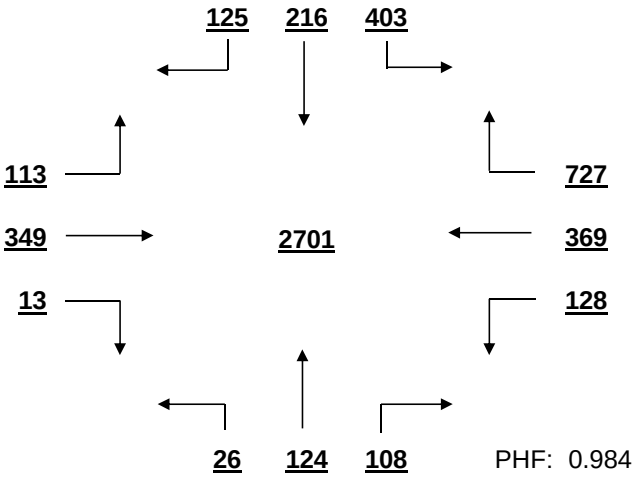

PHF: 0.984

OTHER HOUR VOLUME
FROM 7:00 TO 8:00

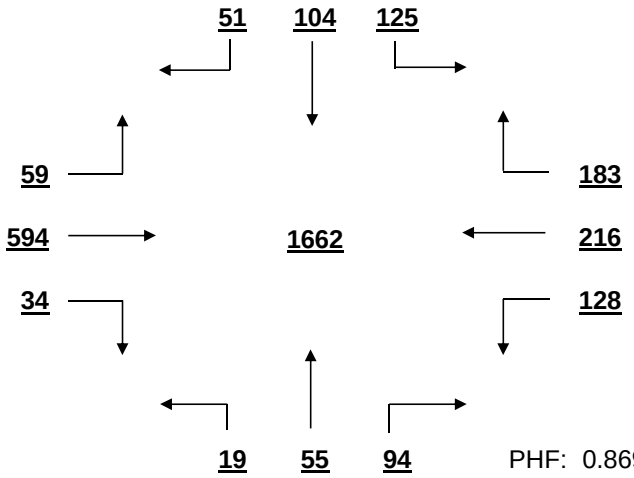

PHF: 0.869

SIGNAL WARRANT ANALYSIS

Piney Grove Rd AT Bower Pkwy-Jamil Rd Date: 11/21/2016

Minor Street Volume, percent of total = 34.4%
Percent of Left Turns from Minor Street = 40.9%
Percent of Right Turns from Minor Street = 26.0%
Percent of Minor Street Right Turns to Remove from Warrant Analysis = 0%
WARRANT BASIS = **100%**

Warrant No. 1 - Vehicular Volume is met

Condition A - Minimum Vehicular Volume is met

Average Major Street % of Warrant				Average Minor Street % of Warrant			
1473.0	/ 600	=	246%	525.8	/ 150	=	351%

Hourly percent of warrant

	7:00 - 8:00	8:00 - 9:00	9:00 - 10:00	10:00 - 11:00	11:00 - 12:00	12:00 - 13:00	13:00 - 14:00	14:00 - 15:00	15:00 - 16:00	16:00 - 17:00	17:00 - 18:00	18:00 - 19:00
Major St.	202%	192%	182%	205%	256%	283%	253%	250%	245%	299%	302%	277%
Minor St.	187%	209%	161%	244%	303%	496%	493%	497%	361%	437%	445%	374%

Condition B - Interruption to Continuous Traffic is met

Average Major Street % of Warrant				Average Minor Street % of Warrant			
1473.0	/ 900	=	164%	525.8	/ 75	=	701%

Hourly percent of warrant

	7:00 - 8:00	8:00 - 9:00	9:00 - 10:00	10:00 - 11:00	11:00 - 12:00	12:00 - 13:00	13:00 - 14:00	14:00 - 15:00	15:00 - 16:00	16:00 - 17:00	17:00 - 18:00	18:00 - 19:00
Major St.	135%	128%	121%	136%	170%	189%	169%	166%	164%	199%	201%	185%
Minor St.	373%	417%	321%	488%	605%	992%	987%	995%	723%	873%	891%	748%

80% Combination of Conditions A & B is met

Warrant No. 2 - Four Hour Vehicular Volume is met

Hourly percent of warrant

	7:00 - 8:00	8:00 - 9:00	9:00 - 10:00	10:00 - 11:00	11:00 - 12:00	12:00 - 13:00	13:00 - 14:00	14:00 - 15:00	15:00 - 16:00	16:00 - 17:00	17:00 - 18:00	18:00 - 19:00
Minor St.	275%	280%	197%	367%	568%	930%	925%	933%	678%	819%	835%	701%

Warrant No. 3 - Peak Hour is met

	Percent of warrant		Percent of warrant
Overall Peak Hour:	16:45 - 17:45	Higher Volume Side Street Peak Hour:	12:30 - 13:30
Minor St.	664%	Minor St.	626%

Warrant No. 4 - Pedestrian Volume. Pedestrian volume shown are minumum volumes assuming heavy major street traffic. If these volumes are met, warrant 4 requires further engineering analysis

Minimum 4 hour ped. volume crossing major street: 107

Minimum peak hour ped. volume crossing major street: 133

Number of pedestrians crossing major street

	7:00 - 8:00	8:00 - 9:00	9:00 - 10:00	10:00 - 11:00	11:00 - 12:00	12:00 - 13:00	13:00 - 14:00	14:00 - 15:00	15:00 - 16:00	16:00 - 17:00	17:00 - 18:00	18:00 - 19:00
Major St.	1	0	1	0	0	1	1	1	0	0	1	0

Warrant No. 7 - Crash Experience (Requires 3 criteria analysis by engineering)

Total Number: 0 From: 1/1/2005 to 1/1/2008

Accident Rate: 0.00 per million entering vehicles

Types of Accidents	No.	/	Avg.		No.	/	Avg.
Right Angle	0	/	0.0	Rear End	0	/	0.0
Lost Control	0	/	0.0	Side Swipe	0	/	0.0
Left Turn	0	/	0.0	Other	0	/	0.0

SOUTH CAROLINA DEPARTMENT OF TRANSPORTATION
DISTRICT 1
TRAFFIC ENGINEERING

County: Richland City: Columbia Date: 11/21/2016

Major Rt: Piney Grove Rd * Not on State System Minor Rt: Foxfire Dr-Country Walk Apts * Not on State System

Day of Week: Monday Weather: Clear Office: Short Counts JMS

Type of Control: Stop Sign Speed Limit (major st) 35

Direction of Minor Street: N-S Intersection ADT - 23840 (Calc)

Number of Lanes (major st)* 2 Number of Lanes (minor st)* 1 * Each Direction

INTERSECTION VOLUME SUMMARY

	From N Foxfire Dr-Country				From S Foxfire Dr-Country				From E Piney Grove Rd				From W Piney Grove Rd				Total	Total
	LT	STR	RT	TOT	LT	STR	RT	TOT	LT	STR	RT	TOT	LT	STR	RT	TOT	Vol	Peds
7:00 - 7:15	8	0	3	11	0	0	0	0	0	103	1	104	0	124	0	124	239	0
7:15 - 7:30	3	0	4	7	0	0	0	0	0	124	0	124	2	215	0	217	348	0
7:30 - 7:45	9	0	5	14	0	0	0	0	0	153	3	156	3	213	0	216	386	0
7:45 - 8:00	7	0	3	10	0	0	0	0	0	182	1	183	3	241	0	244	437	0
8:00 - 8:15	3	0	2	5	0	0	0	0	0	133	2	135	0	208	0	208	348	0
8:15 - 8:30	3	0	2	5	0	0	0	0	0	146	1	147	0	188	0	188	340	0
8:30 - 8:45	6	0	4	10	0	0	0	0	0	127	2	129	1	164	0	165	304	0
8:45 - 9:00	3	0	0	3	0	0	0	0	0	185	4	189	0	155	0	155	347	1
9:00 - 9:15	5	0	2	7	0	0	0	0	0	159	0	159	0	146	0	146	312	0
9:15 - 9:30	2	0	0	2	0	0	0	0	0	205	5	210	3	117	0	120	332	1
9:30 - 9:45	7	0	0	7	0	0	0	0	0	172	1	173	0	134	0	134	314	0
9:45 - 10:00	5	0	3	8	0	0	0	0	0	234	5	239	0	137	0	137	384	2
10:00 - 10:15	2	0	1	3	0	0	0	0	0	220	3	223	0	138	0	138	364	1
10:15 - 10:30	0	0	1	1	0	0	0	0	0	199	5	204	1	160	0	161	366	0
10:30 - 10:45	4	0	2	6	0	0	0	0	0	203	6	209	0	148	0	148	363	0
10:45 - 11:00	3	0	1	4	0	0	0	0	0	239	4	243	0	173	0	173	420	0
11:00 - 11:15	4	0	2	6	0	0	0	0	0	248	3	251	2	159	0	161	418	0
11:15 - 11:30	1	0	0	1	0	0	0	0	0	239	5	244	0	183	0	183	428	1
11:30 - 11:45	4	0	3	7	0	0	0	0	0	288	4	292	0	161	0	161	460	0
11:45 - 12:00	1	0	2	3	0	0	0	0	0	360	2	362	1	200	0	201	566	0
12:00 - 12:15	3	0	3	6	0	0	0	0	0	373	7	380	3	223	0	226	612	0
12:15 - 12:30	5	0	2	7	0	0	0	0	0	392	2	394	0	181	0	181	582	0
12:30 - 12:45	2	0	0	2	0	0	0	0	0	350	4	354	2	223	0	225	581	0
12:45 - 13:00	3	0	0	3	0	0	0	0	0	319	5	324	1	230	0	231	558	1
13:00 - 13:15	2	0	2	4	0	0	0	0	0	312	7	319	2	247	0	249	572	0
13:15 - 13:30	5	0	1	6	0	0	0	0	0	347	6	353	0	219	0	219	578	1
13:30 - 13:45	5	0	2	7	0	0	0	0	0	371	4	375	1	213	0	214	596	1
13:45 - 14:00	4	0	0	4	0	0	0	0	0	308	5	313	0	240	0	240	557	0
14:00 - 14:15	5	0	1	6	0	0	0	0	0	399	4	403	1	243	0	244	653	0
14:15 - 14:30	2	0	1	3	0	0	0	0	0	286	3	289	2	230	0	232	524	0
14:30 - 14:45	3	0	2	5	0	0	0	0	0	301	5	306	3	209	0	212	523	1
14:45 - 15:00	1	0	0	1	0	0	0	0	0	250	8	258	1	244	0	245	504	0
15:00 - 15:15	7	0	4	11	0	0	0	0	0	160	3	163	3	221	0	224	398	4
15:15 - 15:30	6	0	0	6	0	0	0	0	0	192	3	195	2	220	0	222	423	0
15:30 - 15:45	3	0	1	4	0	0	0	0	0	256	4	260	2	218	0	220	484	0
15:45 - 16:00	2	0	1	3	0	0	0	0	0	264	12	276	2	237	0	239	518	0
16:00 - 16:15	6	0	3	9	0	0	0	0	0	250	5	255	2	226	0	228	492	1
16:15 - 16:30	1	0	2	3	0	0	0	0	0	278	4	282	2	224	0	226	511	0
16:30 - 16:45	3	0	5	8	0	0	0	0	0	216	10	226	3	200	0	203	437	0
16:45 - 17:00	9	0	2	11	0	0	0	0	0	346	6	352	3	196	0	199	562	0
17:00 - 17:15	4	0	1	5	0	0	0	0	0	313	4	317	4	257	0	261	583	1
17:15 - 17:30	5	0	2	7	0	0	0	0	0	320	5	325	0	240	0	240	572	0
17:30 - 17:45	1	0	2	3	0	0	0	0	0	296	10	306	1	214	0	215	524	0
17:45 - 18:00	7	0	0	7	0	0	0	0	0	282	9	291	3	235	0	238	536	0
18:00 - 18:15	3	0	2	5	0	0	0	0	0	277	7	284	3	245	0	248	537	1
18:15 - 18:30	6	0	1	7	0	0	0	0	0	291	7	298	5	213	0	218	523	0
18:30 - 18:45	3	0	2	5	0	0	0	0	0	255	5	260	0	186	0	186	451	0
18:45 - 19:00	3	0	2	5	0	0	0	0	0	256	7	263	2	161	0	163	431	0
TOTAL	189	0	84	273	0	0	0	0	0	12179	218	12397	69	9559	0	9628	22298	17
Trucks	3	0	0	3	0	0	0	0	0	138	1	139	1	151	0	152	294	1.3%
School Buses	2	0	1	3	0	0	0	0	0	12	5	17	3	21	0	24	44	0.2%

TOTAL AND PEAK HOUR VOLUME DIAGRAMS

Piney Grove Rd AT Foxfire Dr-Country Walk Apts Date: 11/21/2016

12.0 HOUR TOTAL VOLUME
FROM 7:00 TO 15:00

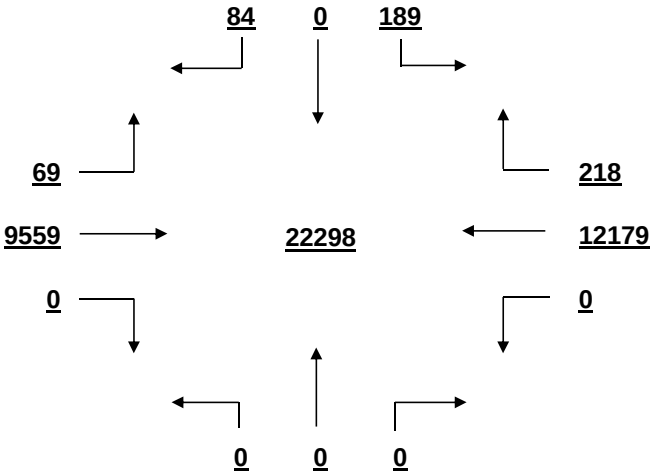

OVERALL PEAK HOUR VOLUME
FROM 13:15 TO 14:15

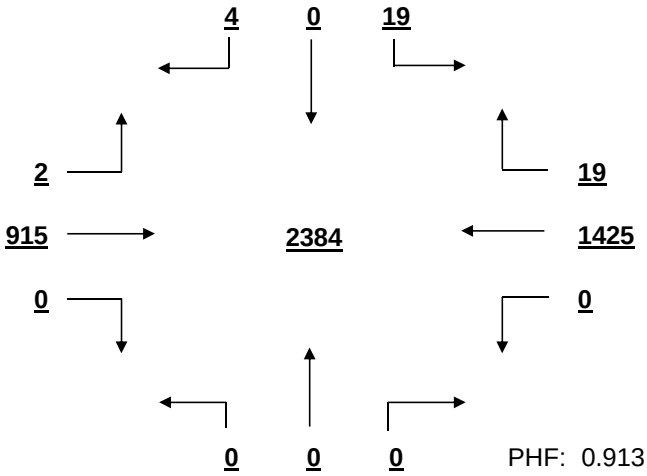

PHF: 0.913

AM PEAK HOUR VOLUME (0:00-10:45)
FROM 7:15 TO 8:15

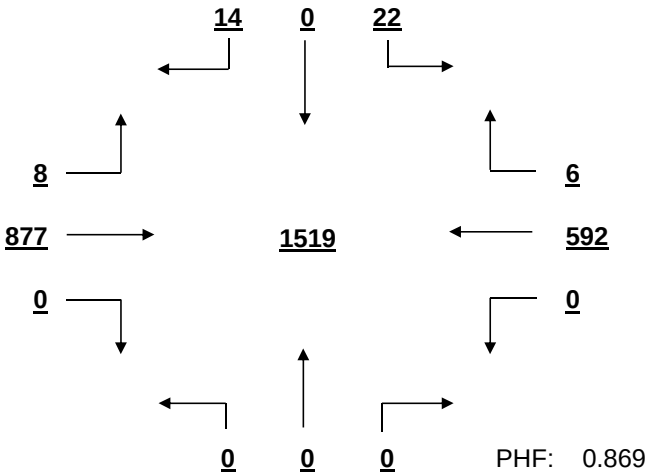

PHF: 0.869

PM PEAK HOUR VOLUME (14:15-23:45)
FROM 16:45 TO 17:45

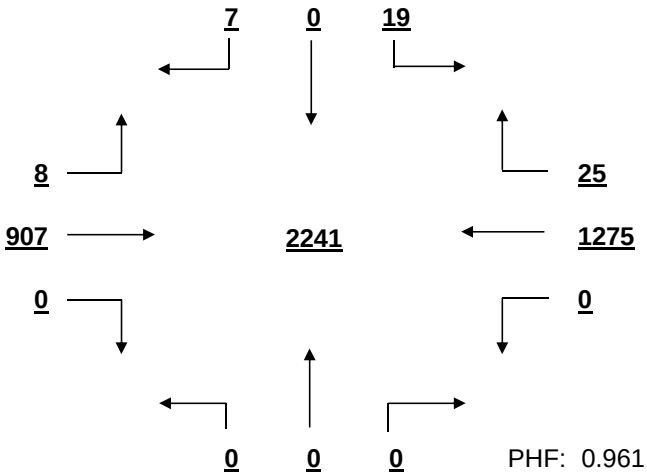

PHF: 0.961

MID-DAY PEAK HOUR VOLUME (11:00-14:00)
FROM 11:45 TO 12:45

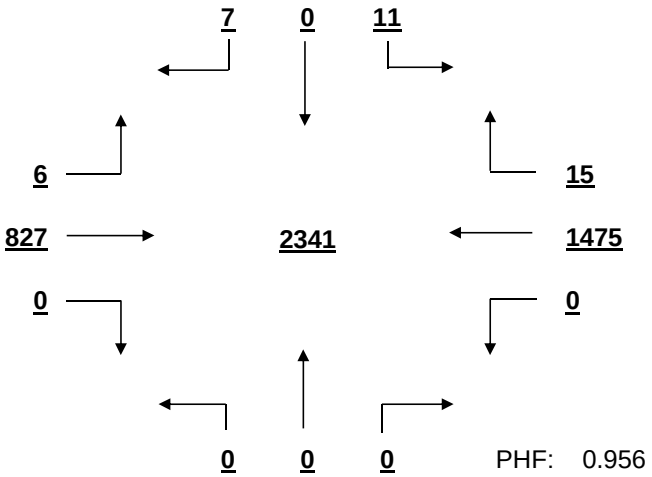

PHF: 0.956

OTHER HOUR VOLUME
FROM 7:00 TO 8:00

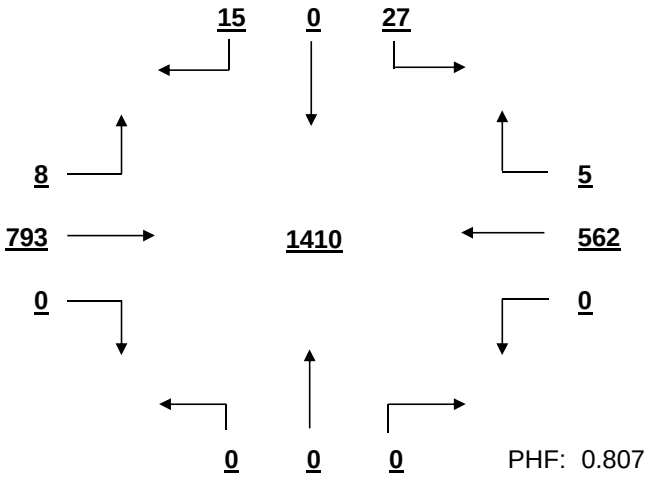

PHF: 0.807

SIGNAL WARRANT ANALYSIS

Piney Grove Rd AT Foxfire Dr-Country Walk Apts Date: 11/21/2016

Minor Street Volume, percent of total = 1.2%
Percent of Left Turns from Minor Street = 69.2%
Percent of Right Turns from Minor Street = 30.8%
Percent of Minor Street Right Turns to Remove from Warrant Analysis = 0%
WARRANT BASIS = **100%**

Warrant No. 1 - Vehicular Volume is not met

Condition A - Minimum Vehicular Volume is not met

Average Major Street % of Warrant				Average Minor Street % of Warrant			
1835.4	/	600	= 306%	22.8	/	150	= 15%

Hourly percent of warrant

	7:00 - 8:00	8:00 - 9:00	9:00 - 10:00	10:00 - 11:00	11:00 - 12:00	12:00 - 13:00	13:00 - 14:00	14:00 - 15:00	15:00 - 16:00	16:00 - 17:00	17:00 - 18:00	18:00 - 19:00
Major St.	228%	219%	220%	250%	309%	386%	380%	365%	300%	329%	366%	320%
Minor St.	28%	15%	16%	9%	11%	12%	14%	10%	16%	21%	15%	15%

Condition B - Interruption to Continuous Traffic is not met

Average Major Street % of Warrant				Average Minor Street % of Warrant			
1835.4	/	900	= 204%	22.8	/	75	= 30%

Hourly percent of warrant

	7:00 - 8:00	8:00 - 9:00	9:00 - 10:00	10:00 - 11:00	11:00 - 12:00	12:00 - 13:00	13:00 - 14:00	14:00 - 15:00	15:00 - 16:00	16:00 - 17:00	17:00 - 18:00	18:00 - 19:00
Major St.	152%	146%	146%	167%	206%	257%	254%	243%	200%	219%	244%	213%
Minor St.	56%	31%	32%	19%	23%	24%	28%	20%	32%	41%	29%	29%

80% Combination of Conditions A & B is not met

Warrant No. 2 - Four Hour Vehicular Volume is not met

Hourly percent of warrant

	7:00 - 8:00	8:00 - 9:00	9:00 - 10:00	10:00 - 11:00	11:00 - 12:00	12:00 - 13:00	13:00 - 14:00	14:00 - 15:00	15:00 - 16:00	16:00 - 17:00	17:00 - 18:00	18:00 - 19:00
Minor St.	53%	25%	27%	18%	21%	23%	26%	19%	30%	39%	28%	28%

Warrant No. 3 - Peak Hour is not met

Percent of warrant			Percent of warrant	
Overall Peak Hour: 13:15 - 14:15		Higher Volume Side Street Peak Hour:	7:00 - 8:00	
Minor St.	23%	Minor St.	25%	

Warrant No. 4 - Pedestrian Volume. Pedestrian volume shown are minumum volumes assuming heavy major street traffic. If these volumes are met, warrant 4 requires further engineering analysis

Minimum 4 hour ped. volume crossing major street	Minimum peak hour ped. volume crossing major street
107	133

Number of pedestrians crossing major street

	7:00 - 8:00	8:00 - 9:00	9:00 - 10:00	10:00 - 11:00	11:00 - 12:00	12:00 - 13:00	13:00 - 14:00	14:00 - 15:00	15:00 - 16:00	16:00 - 17:00	17:00 - 18:00	18:00 - 19:00
Major St.	0	0	0	0	0	0	0	0	0	0	1	0

Warrant No. 7 - Crash Experience (Requires 3 criteria analysis by engineering)

Total Number: 0 From: 1/1/2005 to 1/1/2008
Accident Rate: 0.00 per million entering vehicles

Types of Accidents	No.	/	Avg.		No.	/	Avg.
Right Angle	0	/	0.0	Rear End	0	/	0.0
Lost Control	0	/	0.0	Side Swipe	0	/	0.0
Left Turn	0	/	0.0	Other	0	/	0.0

SOUTH CAROLINA DEPARTMENT OF TRANSPORTATION
DISTRICT 1
TRAFFIC ENGINEERING

County: Richland City: Columbia Date: 11/22/2016

Major Rt: Piney Grove Rd * Not on State System Minor Rt: Fernandina Rd * Not on State System

Day of Week: Tuesday Weather: Clear Office: Short Counts JMS

Type of Control: Signal Speed Limit (major st) 35

Direction of Minor Street: N-S Intersection ADT - 24530 (Calc)

Number of Lanes (major st)* 2 Number of Lanes (minor st)* 1

* Each Direction

INTERSECTION VOLUME SUMMARY

	From N Fernandina Rd				From S Fernandina Rd				From E Piney Grove Rd				From W Piney Grove Rd				Total	Total
	LT	STR	RT	TOT	LT	STR	RT	TOT	LT	STR	RT	TOT	LT	STR	RT	TOT	Vol	Peds
7:00 - 7:15	1	7	8	16	14	0	0	14	9	108	0	117	4	52	42	98	245	0
7:15 - 7:30	1	21	10	32	14	2	4	20	25	124	3	152	8	75	41	124	328	0
7:30 - 7:45	3	71	32	106	20	1	0	21	37	158	5	200	13	71	63	147	474	0
7:45 - 8:00	0	65	13	78	15	4	2	21	50	167	0	217	27	78	78	183	499	0
8:00 - 8:15	2	43	21	66	25	3	3	31	37	142	0	179	22	94	68	184	460	0
8:15 - 8:30	1	21	11	33	30	5	10	45	29	138	2	169	39	93	88	220	467	1
8:30 - 8:45	2	24	12	38	27	3	3	33	17	90	1	108	36	65	63	164	343	0
8:45 - 9:00	0	17	22	39	24	6	4	34	19	92	1	112	27	63	53	143	328	0
9:00 - 9:15	1	6	13	20	31	9	3	43	12	79	2	93	26	65	41	132	288	0
9:15 - 9:30	1	3	21	25	33	9	6	48	8	104	3	115	31	61	42	134	322	0
9:30 - 9:45	1	6	23	30	32	5	4	41	7	90	7	104	36	56	39	131	306	0
9:45 - 10:00	2	3	19	24	32	4	5	41	8	68	2	78	51	62	21	134	277	1
10:00 - 10:15	2	3	29	34	29	9	4	42	3	93	6	102	66	70	47	183	361	0
10:15 - 10:30	5	8	34	47	46	12	7	65	11	85	4	100	79	67	40	186	398	0
10:30 - 10:45	3	5	34	42	38	11	4	53	3	111	6	120	58	68	32	158	373	0
10:45 - 11:00	3	7	36	46	39	18	3	60	5	92	6	103	72	58	35	165	374	0
11:00 - 11:15	2	5	33	40	44	11	10	65	11	112	5	128	72	65	33	170	403	0
11:15 - 11:30	2	10	42	54	52	12	10	74	11	123	2	136	69	57	35	161	425	0
11:30 - 11:45	4	10	44	58	50	14	10	74	8	127	1	136	93	74	39	206	474	0
11:45 - 12:00	3	10	49	62	65	23	9	97	6	135	7	148	84	76	38	198	505	0
12:00 - 12:15	2	18	43	63	73	18	13	104	4	142	11	157	84	85	36	205	529	1
12:15 - 12:30	3	14	38	55	63	43	9	115	11	126	5	142	88	86	43	217	529	0
12:30 - 12:45	5	16	31	52	59	26	14	99	16	142	10	168	83	83	36	202	521	1
12:45 - 13:00	5	19	42	66	61	21	12	94	14	140	6	160	65	82	50	197	517	1
13:00 - 13:15	4	16	53	73	63	16	6	85	20	126	7	153	95	76	64	235	546	0
13:15 - 13:30	2	18	42	62	53	17	9	79	23	138	10	171	70	82	50	202	514	0
13:30 - 13:45	4	22	45	71	59	18	7	84	16	136	3	155	60	97	45	202	512	0
13:45 - 14:00	4	10	42	56	49	11	9	69	12	142	11	165	79	78	41	198	488	1
14:00 - 14:15	2	12	49	63	58	16	10	84	11	122	8	141	52	91	52	195	483	2
14:15 - 14:30	4	11	39	54	53	14	13	80	10	138	2	150	66	88	43	197	481	1
14:30 - 14:45	1	5	44	50	45	9	7	61	6	147	7	160	69	85	51	205	476	0
14:45 - 15:00	7	14	33	54	58	23	16	97	9	120	8	137	62	99	32	193	481	0
15:00 - 15:15	4	18	43	65	49	16	11	76	9	118	3	130	72	86	37	195	466	0
15:15 - 15:30	5	10	38	53	56	16	10	82	8	129	9	146	62	92	31	185	466	0
15:30 - 15:45	7	14	48	69	60	20	15	95	5	152	7	164	49	82	34	165	493	0
15:45 - 16:00	3	11	29	43	51	34	20	105	6	143	6	155	50	101	38	189	492	1
16:00 - 16:15	8	10	37	55	66	34	14	114	13	153	6	172	59	97	34	190	531	1
16:15 - 16:30	6	8	45	59	63	44	21	128	18	145	9	172	51	105	38	194	553	0
16:30 - 16:45	6	12	48	66	97	48	13	158	14	154	8	176	42	103	41	186	586	1
16:45 - 17:00	5	22	27	54	88	41	24	153	17	155	5	177	63	106	49	218	602	0
17:00 - 17:15	5	9	76	90	129	64	29	222	8	176	7	191	47	96	33	176	679	0
17:15 - 17:30	10	14	42	66	82	36	25	143	7	144	16	167	40	132	38	210	586	0
17:30 - 17:45	8	23	35	66	94	37	32	163	11	138	7	156	45	104	42	191	576	0
17:45 - 18:00	9	22	38	69	81	47	27	155	12	133	8	153	51	106	36	193	570	1
18:00 - 18:15	2	38	30	70	72	71	27	170	19	157	1	177	33	117	42	192	609	0
18:15 - 18:30	5	40	31	76	65	65	19	149	20	153	4	177	37	116	48	201	603	0
18:30 - 18:45	5	40	34	79	61	61	23	145	42	146	7	195	43	116	49	208	627	0
18:45 - 19:00	4	28	31	63	58	58	23	139	64	140	6	210	26	95	43	164	576	0
TOTAL	174	839	1639	2652	2526	1085	559	4170	741	6193	260	7194	2556	4056	2114	8726	22742	13
Trucks	3	6	0	9	37	7	2	46	9	33	2	44	31	35	26	92	191	0.8%
School Buses	0	1	2	3	9	0	1	10	3	10	1	14	5	10	8	23	50	0.2%

TOTAL AND PEAK HOUR VOLUME DIAGRAMS

Piney Grove Rd AT Fernandina Rd Date: 11/22/2016

12.0 HOUR TOTAL VOLUME
FROM 7:00 TO 15:00

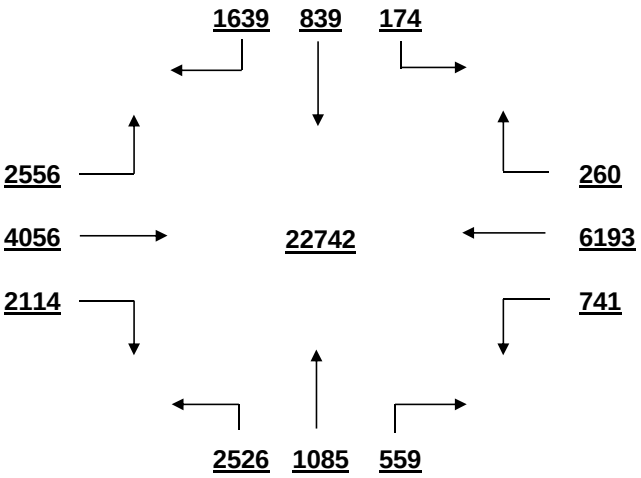

OVERALL PEAK HOUR VOLUME
FROM 16:30 TO 17:30

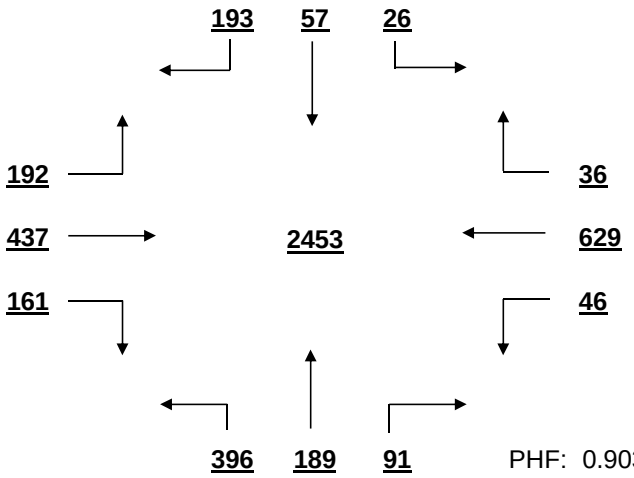

PHF: 0.903

AM PEAK HOUR VOLUME (0:00-10:45)
FROM 7:30 TO 8:30

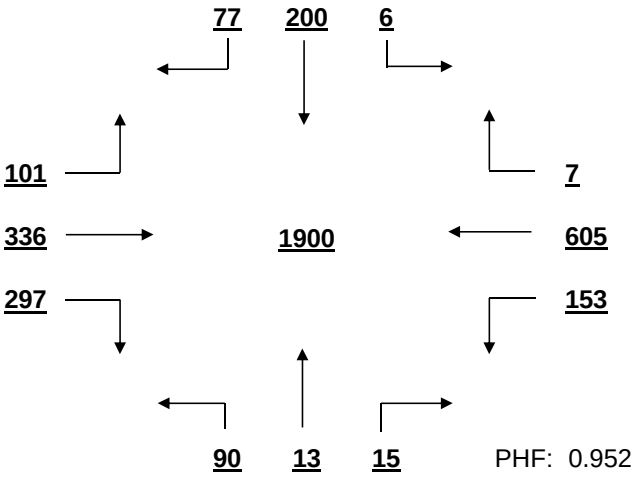

PHF: 0.952

PM PEAK HOUR VOLUME (14:15-23:45)
FROM 16:30 TO 17:30

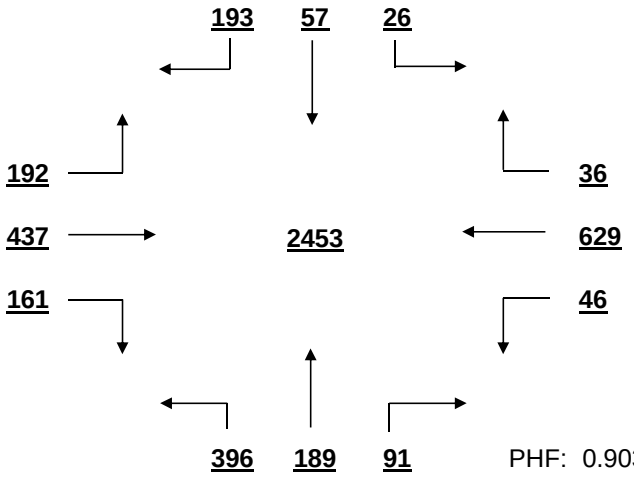

PHF: 0.903

MID-DAY PEAK HOUR VOLUME (11:00-14:00)
FROM 12:15 TO 13:15

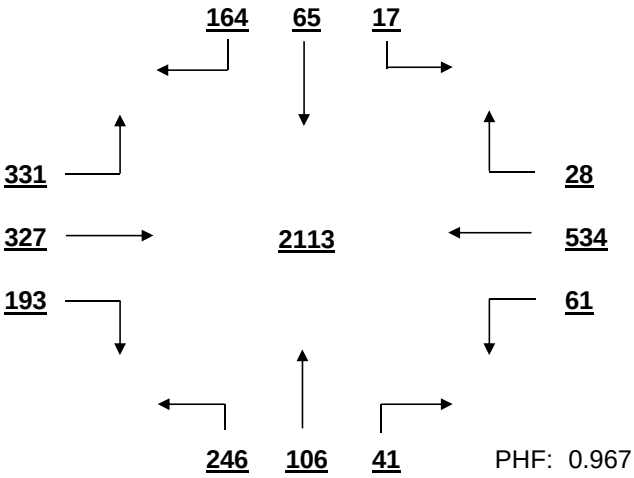

PHF: 0.967

OTHER HOUR VOLUME
FROM 7:00 TO 8:00

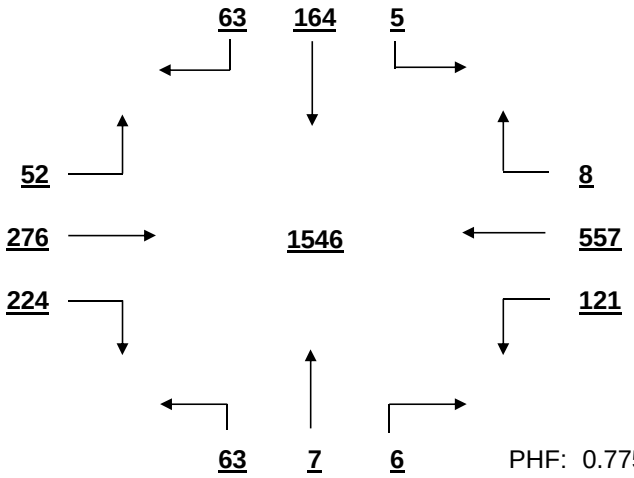

PHF: 0.775

SIGNAL WARRANT ANALYSIS

Piney Grove Rd AT Fernandina Rd Date: 11/22/2016

Minor Street Volume, percent of total = 30.0%
Percent of Left Turns from Minor Street = 39.6%
Percent of Right Turns from Minor Street = 32.2%
Percent of Minor Street Right Turns to Remove from Warrant Analysis = 0%
WARRANT BASIS = **100%**

Warrant No. 1 - Vehicular Volume is met

Condition A - Minimum Vehicular Volume is met

Average Major Street % of Warrant				Average Minor Street % of Warrant			
1326.7	/ 600	=	221%	347.5	/ 150	=	232%

Hourly percent of warrant

	7:00 - 8:00	8:00 - 9:00	9:00 - 10:00	10:00 - 11:00	11:00 - 12:00	12:00 - 13:00	13:00 - 14:00	14:00 - 15:00	15:00 - 16:00	16:00 - 17:00	17:00 - 18:00	18:00 - 19:00
Major St.	206%	213%	154%	186%	214%	241%	247%	230%	222%	248%	240%	254%
Minor St.	155%	117%	115%	147%	207%	275%	211%	215%	239%	369%	455%	402%

Condition B - Interruption to Continuous Traffic is met

Average Major Street % of Warrant				Average Minor Street % of Warrant			
1326.7	/ 900	=	147%	347.5	/ 75	=	463%

Hourly percent of warrant

	7:00 - 8:00	8:00 - 9:00	9:00 - 10:00	10:00 - 11:00	11:00 - 12:00	12:00 - 13:00	13:00 - 14:00	14:00 - 15:00	15:00 - 16:00	16:00 - 17:00	17:00 - 18:00	18:00 - 19:00
Major St.	138%	142%	102%	124%	143%	161%	165%	153%	148%	165%	160%	169%
Minor St.	309%	235%	231%	293%	413%	549%	423%	429%	477%	737%	911%	804%

80% Combination of Conditions A & B is met

Warrant No. 2 - Four Hour Vehicular Volume is met

Hourly percent of warrant

	7:00 - 8:00	8:00 - 9:00	9:00 - 10:00	10:00 - 11:00	11:00 - 12:00	12:00 - 13:00	13:00 - 14:00	14:00 - 15:00	15:00 - 16:00	16:00 - 17:00	17:00 - 18:00	18:00 - 19:00
Minor St.	236%	188%	105%	187%	332%	515%	396%	403%	401%	691%	854%	754%

Warrant No. 3 - Peak Hour is met

	Percent of warrant		Percent of warrant
Overall Peak Hour:	16:30 - 17:30	Higher Volume Side Street Peak Hour:	17:00 - 18:00
Minor St.	490%	Minor St.	451%

Warrant No. 4 - Pedestrian Volume. Pedestrian volume shown are minumum volumes assuming heavy major street traffic. If these volumes are met, warrant 4 requires further engineering analysis

Minimum 4 hour ped. volume crossing major street: 107

Minimum peak hour ped. volume crossing major street: 133

Number of pedestrians crossing major street

	7:00 - 8:00	8:00 - 9:00	9:00 - 10:00	10:00 - 11:00	11:00 - 12:00	12:00 - 13:00	13:00 - 14:00	14:00 - 15:00	15:00 - 16:00	16:00 - 17:00	17:00 - 18:00	18:00 - 19:00
Major St.	0	1	0	0	0	3	1	2	1	1	1	0

Warrant No. 7 - Crash Experience (Requires 3 criteria analysis by engineering)

Total Number: 0 From: 1/1/2005 to 1/1/2008

Accident Rate: 0.00 per million entering vehicles

Types of Accidents	No.	/	Avg.		No.	/	Avg.
Right Angle	0	/	0.0	Rear End	0	/	0.0
Lost Control	0	/	0.0	Side Swipe	0	/	0.0
Left Turn	0	/	0.0	Other	0	/	0.0

SOUTH CAROLINA DEPARTMENT OF TRANSPORTATION
DISTRICT 1
TRAFFIC ENGINEERING

County: Richland City: Columbia Date: 11/22/2016

Major Rt: Piney Grove Rd * Not on State System Minor Rt: Piney Woods Rd * Not on State System

Day of Week: Tuesday Weather: Clear Office: Short Counts JMS

Type of Control: Other Speed Limit (major st) 35

Direction of Minor Street: N-S Intersection ADT - 12950 (Calc)

Number of Lanes (major st)* 2 Number of Lanes (minor st)* 1

* Each Direction

INTERSECTION VOLUME SUMMARY

	From N Piney Woods Rd				From S Piney Woods Rd				From E Piney Grove Rd				From W Piney Grove Rd				Total	Total
	LT	STR	RT	TOT	LT	STR	RT	TOT	LT	STR	RT	TOT	LT	STR	RT	TOT	Vol	Peds
7:00 - 7:15	1	3	82	86	9	0	0	9	0	36	3	39	14	36	9	59	193	0
7:15 - 7:30	2	4	108	114	11	2	0	13	1	31	4	36	30	37	10	77	240	0
7:30 - 7:45	5	6	142	153	13	2	0	15	0	51	3	54	28	41	10	79	301	0
7:45 - 8:00	3	3	127	133	13	3	0	16	1	52	4	57	31	42	17	90	296	0
8:00 - 8:15	3	5	121	129	5	2	0	7	0	36	3	39	32	46	10	88	263	0
8:15 - 8:30	5	4	102	111	8	2	1	11	0	32	2	34	23	65	15	103	259	0
8:30 - 8:45	1	5	69	75	7	2	0	9	0	26	2	28	19	34	6	59	171	0
8:45 - 9:00	2	2	61	65	16	0	0	16	0	30	4	34	27	27	13	67	182	0
9:00 - 9:15	3	5	123	131	6	4	0	10	0	35	3	38	24	35	12	71	250	0
9:15 - 9:30	5	4	104	113	7	2	0	9	0	38	3	41	32	24	4	60	223	1
9:30 - 9:45	3	3	71	77	11	3	0	14	0	39	2	41	32	25	10	67	199	0
9:45 - 10:00	2	2	61	65	6	3	0	9	0	30	5	35	30	28	15	73	182	0
10:00 - 10:15	1	4	67	72	9	2	0	11	1	40	6	47	37	19	11	67	197	0
10:15 - 10:30	1	2	41	44	12	1	3	16	1	34	3	38	37	27	14	78	176	0
10:30 - 10:45	3	1	45	49	11	5	2	18	0	29	6	35	32	26	6	64	166	0
10:45 - 11:00	7	2	40	49	6	4	1	11	1	36	2	39	31	22	13	66	165	0
11:00 - 11:15	5	2	50	57	6	2	0	8	0	46	4	50	35	23	14	72	187	0
11:15 - 11:30	2	6	51	59	11	0	1	12	0	28	4	32	36	26	5	67	170	0
11:30 - 11:45	2	3	48	53	15	3	0	18	0	44	7	51	44	30	10	84	206	0
11:45 - 12:00	3	4	46	53	6	1	0	7	0	51	3	54	33	41	13	87	201	0
12:00 - 12:15	5	1	63	69	11	4	0	15	0	45	14	59	48	41	9	98	241	0
12:15 - 12:30	2	2	43	47	11	1	0	12	0	56	5	61	37	48	13	98	218	0
12:30 - 12:45	6	5	48	59	7	3	0	10	1	49	5	55	49	43	16	108	232	0
12:45 - 13:00	10	1	51	62	13	5	0	18	1	46	6	53	41	52	10	103	236	0
13:00 - 13:15	5	4	54	63	10	3	1	14	2	44	5	51	39	36	7	82	210	0
13:15 - 13:30	5	5	40	50	11	2	1	14	1	33	5	39	42	38	17	97	200	0
13:30 - 13:45	3	4	51	58	15	3	0	18	2	52	7	61	48	41	16	105	242	1
13:45 - 14:00	2	4	49	55	19	4	2	25	1	45	9	55	33	41	13	87	222	0
14:00 - 14:15	6	2	44	52	12	1	2	15	0	52	3	55	57	48	13	118	240	0
14:15 - 14:30	8	3	50	61	21	2	0	23	0	38	7	45	55	46	18	119	248	0
14:30 - 14:45	4	2	56	62	13	3	0	16	2	55	6	63	37	43	9	89	230	0
14:45 - 15:00	6	0	46	52	15	5	2	22	0	43	6	49	61	47	13	121	244	0
15:00 - 15:15	3	4	32	39	5	3	1	9	0	55	7	62	54	43	7	104	214	0
15:15 - 15:30	6	4	45	55	9	4	0	13	1	49	5	55	54	44	16	114	237	0
15:30 - 15:45	4	2	47	53	18	3	2	23	0	80	12	92	57	38	8	103	271	0
15:45 - 16:00	7	4	45	56	11	1	0	12	0	49	5	54	56	44	13	113	235	0
16:00 - 16:15	8	3	62	73	23	1	0	24	1	74	4	79	63	33	17	113	289	0
16:15 - 16:30	7	4	58	69	15	3	0	18	0	64	4	68	62	40	15	117	272	0
16:30 - 16:45	5	3	57	65	16	8	0	24	0	70	12	82	62	42	20	124	295	0
16:45 - 17:00	7	2	49	58	20	5	2	27	0	83	5	88	70	43	18	131	304	0
17:00 - 17:15	5	4	73	82	8	9	0	17	0	84	13	97	76	42	17	135	331	0
17:15 - 17:30	7	9	53	69	21	6	1	28	0	67	12	79	80	50	25	155	331	0
17:30 - 17:45	5	6	57	68	21	3	0	24	0	39	5	44	74	42	25	141	277	0
17:45 - 18:00	7	6	66	79	16	8	0	24	0	52	4	56	83	36	16	135	294	0
18:00 - 18:15	5	5	71	81	15	4	1	20	0	61	12	73	76	45	21	142	316	0
18:15 - 18:30	4	7	87	98	18	2	0	20	0	55	4	59	74	40	29	143	320	0
18:30 - 18:45	8	5	83	96	19	6	1	26	0	51	11	62	72	51	25	148	332	0
18:45 - 19:00	2	3	93	98	28	3	1	32	1	67	9	77	76	29	15	120	327	0
TOTAL	211	174	3132	3517	609	148	25	782	18	2302	275	2595	2243	1840	658	4741	11635	2
Trucks	6	4	21	31	1	1	2	4	1	18	4	23	18	16	6	40	98	0.8%
School Buses	0	0	4	4	5	2	2	9	0	2	4	6	8	1	0	9	28	0.2%

TOTAL AND PEAK HOUR VOLUME DIAGRAMS

Piney Grove Rd AT Piney Woods Rd Date: 11/22/2016

12.0 HOUR TOTAL VOLUME
FROM 7:00 TO 15:00

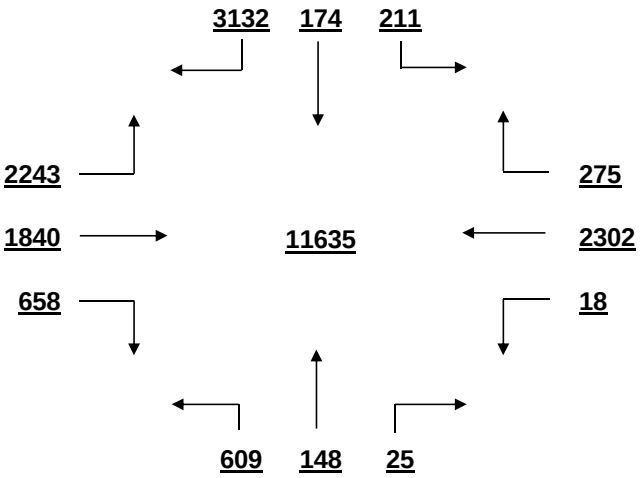

OVERALL PEAK HOUR VOLUME
FROM 18:00 TO 19:00

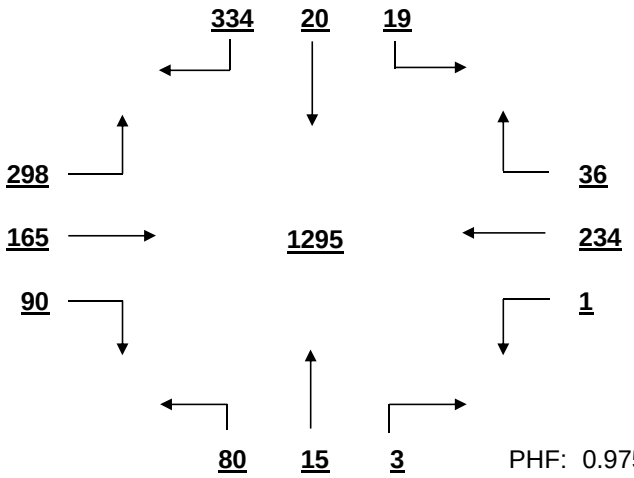

PHF: 0.975

AM PEAK HOUR VOLUME (0:00-10:45)
FROM 7:30 TO 8:30

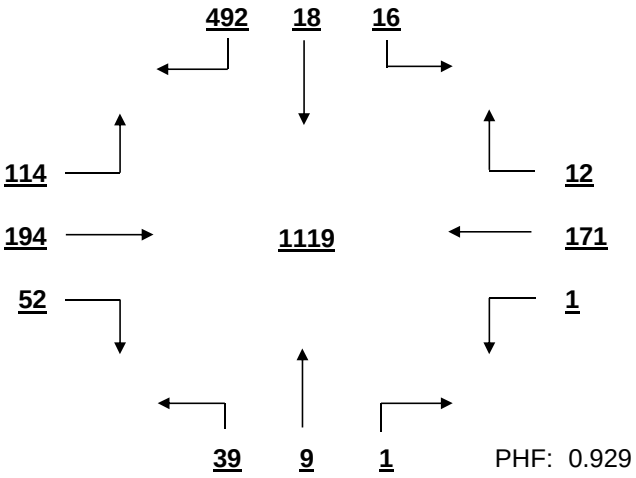

PHF: 0.929

PM PEAK HOUR VOLUME (14:15-23:45)
FROM 18:00 TO 19:00

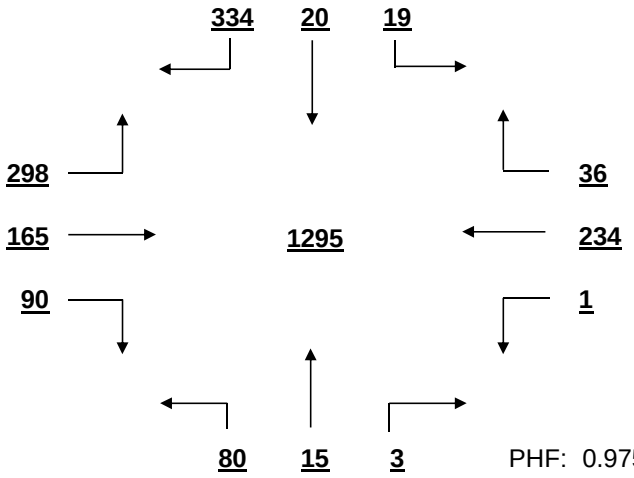

PHF: 0.975

MID-DAY PEAK HOUR VOLUME (11:00-14:00)
FROM 12:00 TO 13:00

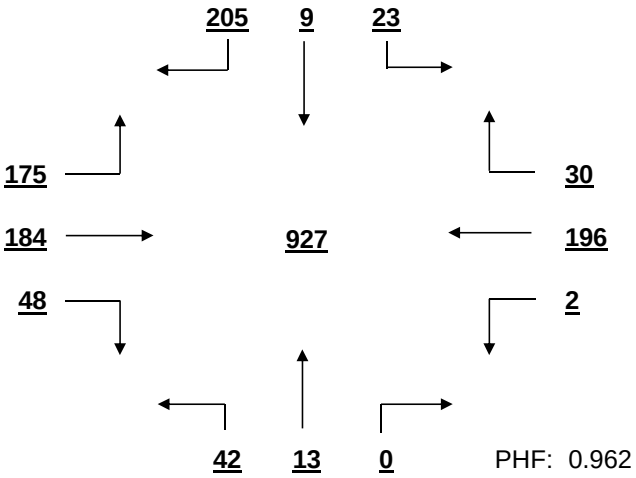

PHF: 0.962

OTHER HOUR VOLUME
FROM 7:00 TO 8:00

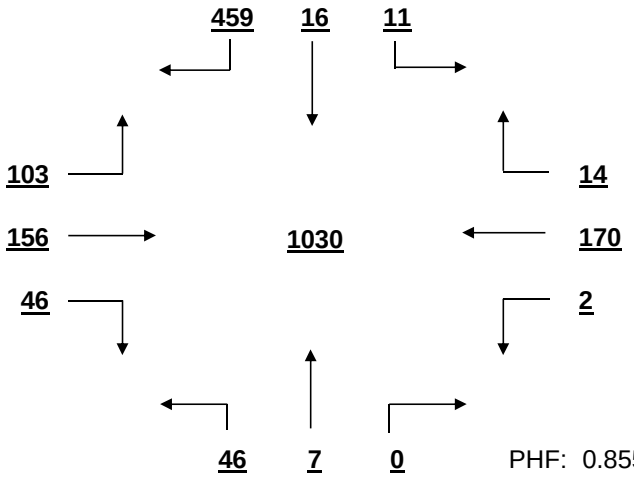

PHF: 0.855

SIGNAL WARRANT ANALYSIS

Piney Grove Rd AT Piney Woods Rd Date: 11/22/2016

Minor Street Volume, percent of total = 36.9%
Percent of Left Turns from Minor Street = 19.1%
Percent of Right Turns from Minor Street = 73.4%
Percent of Minor Street Right Turns to Remove from Warrant Analysis = 0%
WARRANT BASIS = **100%**

Warrant No. 1 - Vehicular Volume is not met

Condition A - Minimum Vehicular Volume is not met

Average Major Street % of Warrant	Average Minor Street % of Warrant
611.3 / 600 = 102%	293.1 / 150 = 195%

Hourly percent of warrant

	7:00 - 8:00	8:00 - 9:00	9:00 - 10:00	10:00 - 11:00	11:00 - 12:00	12:00 - 13:00	13:00 - 14:00	14:00 - 15:00	15:00 - 16:00	16:00 - 17:00	17:00 - 18:00	18:00 - 19:00
Major St.	82%	75%	71%	72%	83%	106%	96%	110%	116%	134%	140%	137%
Minor St.	324%	253%	257%	143%	148%	158%	151%	151%	135%	177%	199%	249%

Condition B - Interruption to Continuous Traffic is not met

Average Major Street % of Warrant	Average Minor Street % of Warrant
611.3 / 900 = 68%	293.1 / 75 = 391%

Hourly percent of warrant

	7:00 - 8:00	8:00 - 9:00	9:00 - 10:00	10:00 - 11:00	11:00 - 12:00	12:00 - 13:00	13:00 - 14:00	14:00 - 15:00	15:00 - 16:00	16:00 - 17:00	17:00 - 18:00	18:00 - 19:00
Major St.	55%	50%	47%	48%	55%	71%	64%	73%	77%	89%	94%	92%
Minor St.	648%	507%	515%	285%	296%	316%	301%	303%	271%	353%	397%	497%

80% Combination of Conditions A & B is not met

Warrant No. 2 - Four Hour Vehicular Volume is met

Hourly percent of warrant

	7:00 - 8:00	8:00 - 9:00	9:00 - 10:00	10:00 - 11:00	11:00 - 12:00	12:00 - 13:00	13:00 - 14:00	14:00 - 15:00	15:00 - 16:00	16:00 - 17:00	17:00 - 18:00	18:00 - 19:00
Minor St.	143%	105%	103%	58%	66%	88%	76%	87%	83%	130%	157%	191%

Warrant No. 3 - Peak Hour is met

Percent of warrant		Percent of warrant	
Overall Peak Hour:	18:00 - 19:00	Higher Volume Side Street Peak Hour:	7:15 - 8:15
Minor St.	104%	Minor St.	104%

Warrant No. 4 - Pedestrian Volume. Pedestrian volume shown are minumum volumes assuming heavy major street traffic. If these volumes are met, warrant 4 requires further engineering analysis

Minimum 4 hour ped. volume crossing major street	Minimum peak hour ped. volume crossing major street
107	133

Number of pedestrians crossing major street

	7:00 - 8:00	8:00 - 9:00	9:00 - 10:00	10:00 - 11:00	11:00 - 12:00	12:00 - 13:00	13:00 - 14:00	14:00 - 15:00	15:00 - 16:00	16:00 - 17:00	17:00 - 18:00	18:00 - 19:00
Major St.	0	0	1	0	0	0	0	0	0	0	0	0

Warrant No. 7 - Crash Experience (Requires 3 criteria analysis by engineering)

Total Number: 0 From: 1/1/2005 to 1/1/2008
Accident Rate: 0.00 per million entering vehicles

Types of Accidents	No.	/	Avg.		No.	/	Avg.
Right Angle	0	/	0.0	Rear End	0	/	0.0
Lost Control	0	/	0.0	Side Swipe	0	/	0.0
Left Turn	0	/	0.0	Other	0	/	0.0

SOUTH CAROLINA DEPARTMENT OF TRANSPORTATION
DISTRICT 1
TRAFFIC ENGINEERING

County: Richland City: Columbia Date: 11/22/2016

Major Rt: Jamil Rd * Not on State System Minor Rt: Tram Rd * Not on State System

Day of Week: Tuesday Weather: Clear Office: Short Counts JMS

Type of Control: Stop Sign Speed Limit (major st) 35

Direction of Minor Street: E-W Intersection ADT - 8960 (Calc)

Number of Lanes (major st)* 1 Number of Lanes (minor st)* 1

* Each Direction

INTERSECTION VOLUME SUMMARY

	From N Jamil Rd				From S Jamil Rd				From E Tram Rd				From W Tram Rd				Total	Total
	LT	STR	RT	TOT	LT	STR	RT	TOT	LT	STR	RT	TOT	LT	STR	RT	TOT	Vol	Peds
7:00 - 7:15	0	7	4	11	3	6	0	9	0	0	0	0	12	0	4	16	36	1
7:15 - 7:30	0	37	7	44	1	18	0	19	0	0	0	0	15	0	6	21	84	0
7:30 - 7:45	0	46	3	49	2	22	0	24	0	0	0	0	18	0	10	28	101	0
7:45 - 8:00	0	54	7	61	4	19	0	23	0	0	0	0	4	0	14	18	102	0
8:00 - 8:15	0	56	13	69	2	16	0	18	0	0	0	0	16	0	12	28	115	0
8:15 - 8:30	0	38	8	46	1	16	0	17	0	0	0	0	9	0	4	13	76	0
8:30 - 8:45	0	28	10	38	2	14	0	16	0	0	0	0	10	0	4	14	68	0
8:45 - 9:00	0	24	7	31	3	25	0	28	0	0	0	0	20	0	8	28	87	0
9:00 - 9:15	0	17	4	21	7	16	0	23	0	0	0	0	14	0	5	19	63	0
9:15 - 9:30	0	14	7	21	3	21	0	24	0	0	0	0	10	0	6	16	61	0
9:30 - 9:45	0	11	3	14	1	24	0	25	0	0	0	0	14	0	3	17	56	0
9:45 - 10:00	0	20	12	32	4	23	0	27	0	0	0	0	13	0	2	15	74	0
10:00 - 10:15	0	16	4	20	2	21	0	23	0	0	0	0	20	0	6	26	69	0
10:15 - 10:30	0	24	10	34	0	15	0	15	0	0	0	0	7	0	4	11	60	0
10:30 - 10:45	0	20	7	27	8	22	0	30	0	0	0	0	12	0	2	14	71	0
10:45 - 11:00	0	13	15	28	2	27	0	29	0	0	0	0	17	0	5	22	79	0
11:00 - 11:15	0	18	13	31	5	27	0	32	0	0	0	0	15	0	4	19	82	0
11:15 - 11:30	0	24	11	35	3	27	0	30	0	0	0	0	12	0	7	19	84	0
11:30 - 11:45	0	19	25	44	3	31	0	34	0	0	0	0	10	0	10	20	98	0
11:45 - 12:00	0	21	15	36	4	34	0	38	0	0	0	0	13	0	4	17	91	0
12:00 - 12:15	0	34	14	48	11	36	0	47	0	0	0	0	10	0	6	16	111	0
12:15 - 12:30	0	44	11	55	5	37	1	43	0	0	0	0	21	0	6	27	125	0
12:30 - 12:45	0	47	19	66	4	39	0	43	0	0	0	0	12	0	7	19	128	0
12:45 - 13:00	0	54	12	66	5	34	0	39	0	0	0	0	16	0	4	20	125	0
13:00 - 13:15	0	67	14	81	4	28	0	32	0	0	0	0	14	0	2	16	129	0
13:15 - 13:30	0	53	16	69	3	40	0	43	0	0	0	0	11	0	7	18	130	0
13:30 - 13:45	0	52	19	71	7	34	0	41	0	0	0	0	23	0	5	28	140	0
13:45 - 14:00	0	47	14	61	5	32	0	37	0	0	0	0	17	0	7	24	122	0
14:00 - 14:15	0	50	10	60	4	42	0	46	0	0	0	0	15	0	3	18	124	0
14:15 - 14:30	0	61	26	87	6	35	0	41	0	0	0	0	10	0	1	11	139	0
14:30 - 14:45	0	49	14	63	10	48	0	58	0	0	0	0	27	0	4	31	152	0
14:45 - 15:00	0	36	16	52	9	51	0	60	0	0	0	0	26	0	6	32	144	0
15:00 - 15:15	0	45	19	64	4	44	0	48	0	0	0	0	14	0	6	20	132	0
15:15 - 15:30	0	34	28	62	4	47	0	51	0	0	0	0	10	0	3	13	126	0
15:30 - 15:45	0	45	23	68	8	40	0	48	0	0	0	0	23	0	3	26	142	0
15:45 - 16:00	0	42	20	62	8	53	0	61	0	0	0	0	15	0	3	18	141	0
16:00 - 16:15	0	41	19	60	10	44	0	54	0	0	0	0	12	0	4	16	130	0
16:15 - 16:30	0	52	28	80	17	49	0	66	0	0	0	0	14	0	7	21	167	0
16:30 - 16:45	0	59	25	84	19	66	0	85	0	0	0	0	17	0	3	20	189	0
16:45 - 17:00	0	75	23	98	13	53	0	66	0	0	0	0	12	0	4	16	180	0
17:00 - 17:15	0	67	24	91	10	52	0	62	0	0	0	0	14	0	9	23	176	0
17:15 - 17:30	0	89	31	120	6	44	0	50	0	0	0	0	12	0	6	18	188	0
17:30 - 17:45	0	90	24	114	19	59	0	78	0	0	0	0	18	0	4	22	214	0
17:45 - 18:00	0	94	20	114	12	53	0	65	0	0	0	0	12	0	6	18	197	0
18:00 - 18:15	0	95	21	116	14	58	0	72	0	0	0	0	14	0	2	16	204	0
18:15 - 18:30	0	117	26	143	16	66	0	82	0	0	0	0	19	0	2	21	246	0
18:30 - 18:45	0	111	24	135	10	62	0	72	0	0	0	0	16	0	5	21	228	0
18:45 - 19:00	0	124	18	142	5	52	0	57	0	0	0	0	17	0	2	19	218	0
TOTAL	0	2281	743	3024	308	1722	1	2031	0	0	0	0	702	0	247	949	6004	1
Trucks	0	12	1	13	5	8	0	13	0	0	0	0	5	0	1	6	32	0.5%
School Buses	0	5	4	9	0	3	0	3	0	0	0	0	2	0	5	7	19	0.3%

TOTAL AND PEAK HOUR VOLUME DIAGRAMS

Jamil Rd AT Tram Rd

Date: 11/22/2016

12.0 HOUR TOTAL VOLUME

FROM 7:00 TO 15:00

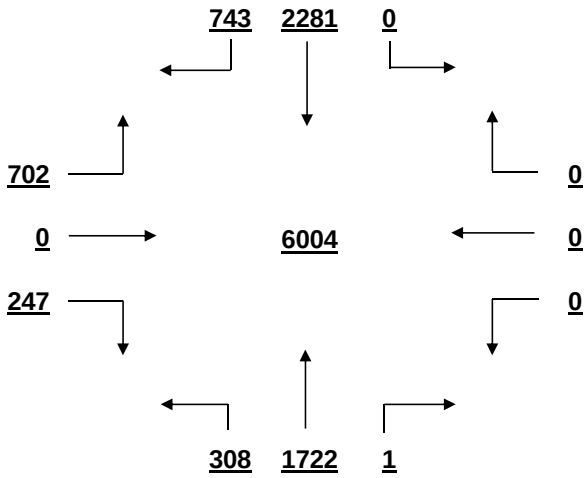

OVERALL PEAK HOUR VOLUME

FROM 18:00 TO 19:00

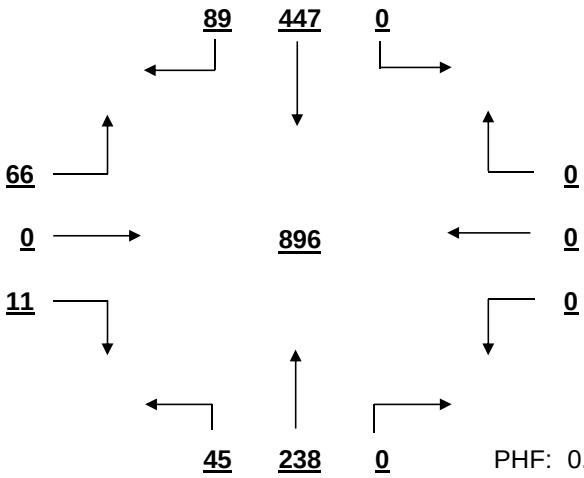

PHF: 0.911

AM PEAK HOUR VOLUME (0:00-10:45)

FROM 7:15 TO 8:15

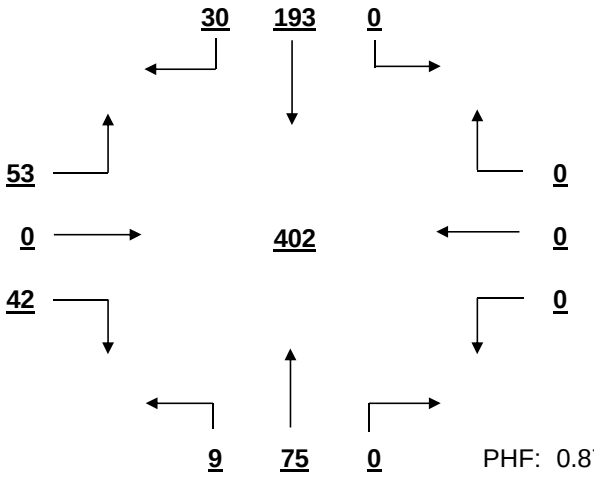

PHF: 0.874

PM PEAK HOUR VOLUME (14:15-23:45)

FROM 18:00 TO 19:00

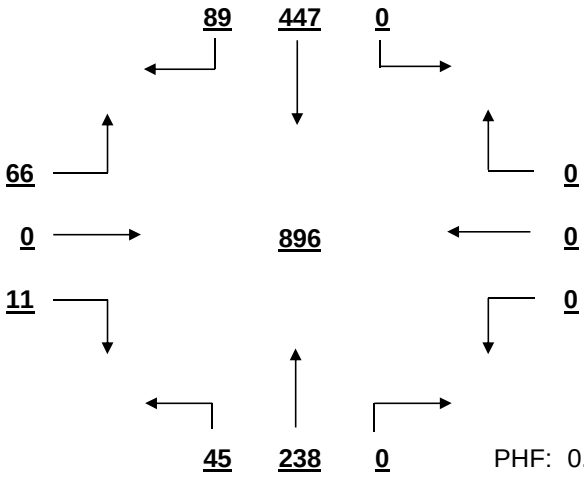

PHF: 0.911

MID-DAY PEAK HOUR VOLUME (11:00-14:00)

FROM 12:45 TO 13:45

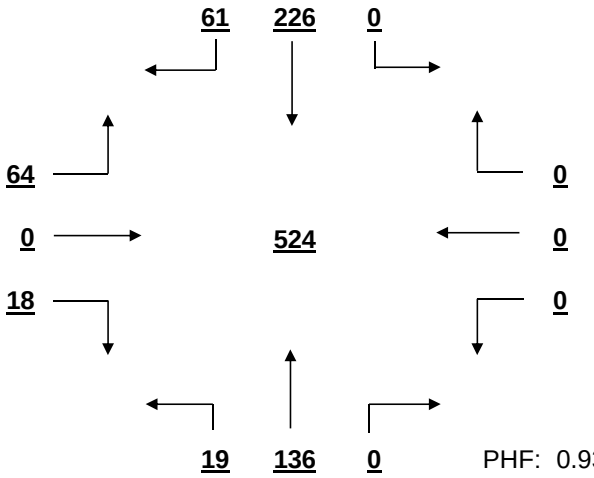

PHF: 0.936

OTHER HOUR VOLUME

FROM 7:00 TO 8:00

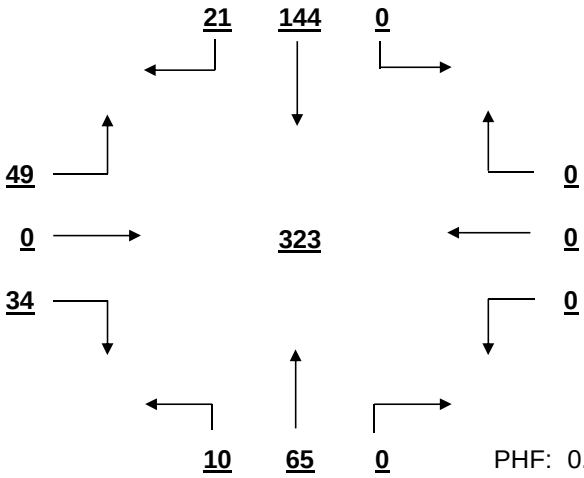

PHF: 0.792

SIGNAL WARRANT ANALYSIS

Jamil Rd AT Tram Rd Date: 11/22/2016

Minor Street Volume, percent of total = 15.8%
Percent of Left Turns from Minor Street = 74.0%
Percent of Right Turns from Minor Street = 26.0%
Percent of Minor Street Right Turns to Remove from Warrant Analysis = 0%
WARRANT BASIS = **100%**

Warrant No. 1 - Vehicular Volume is not met

Condition A - Minimum Vehicular Volume is not met

Average Major Street % of Warrant				Average Minor Street % of Warrant			
421.3	/ 500	=	84%	79.1	/ 150	=	53%

Hourly percent of warrant

	7:00 - 8:00	8:00 - 9:00	9:00 - 10:00	10:00 - 11:00	11:00 - 12:00	12:00 - 13:00	13:00 - 14:00	14:00 - 15:00	15:00 - 16:00	16:00 - 17:00	17:00 - 18:00	18:00 - 19:00
Major St.	48%	53%	37%	41%	56%	81%	87%	93%	93%	119%	139%	164%
Minor St.	55%	55%	45%	49%	50%	55%	57%	61%	51%	49%	54%	51%

Condition B - Interruption to Continuous Traffic is not met

Average Major Street % of Warrant				Average Minor Street % of Warrant			
421.3	/ 750	=	56%	79.1	/ 75	=	105%

Hourly percent of warrant

	7:00 - 8:00	8:00 - 9:00	9:00 - 10:00	10:00 - 11:00	11:00 - 12:00	12:00 - 13:00	13:00 - 14:00	14:00 - 15:00	15:00 - 16:00	16:00 - 17:00	17:00 - 18:00	18:00 - 19:00
Major St.	32%	35%	25%	27%	37%	54%	58%	62%	62%	79%	93%	109%
Minor St.	111%	111%	89%	97%	100%	109%	115%	123%	103%	97%	108%	103%

80% Combination of Conditions A & B is not met

Warrant No. 2 - Four Hour Vehicular Volume is not met

Hourly percent of warrant

	7:00 - 8:00	8:00 - 9:00	9:00 - 10:00	10:00 - 11:00	11:00 - 12:00	12:00 - 13:00	13:00 - 14:00	14:00 - 15:00	15:00 - 16:00	16:00 - 17:00	17:00 - 18:00	18:00 - 19:00
Minor St.	21%	22%	16%	18%	20%	27%	30%	33%	28%	33%	44%	54%

Warrant No. 3 - Peak Hour is not met

Percent of warrant			Percent of warrant	
Overall Peak Hour:	18:00 - 19:00	Higher Volume Side Street Peak Hour:	14:30 - 15:30	
Minor St.	28%	Minor St.	21%	

Warrant No. 4 - Pedestrian Volume. Pedestrian volume shown are minumum volumes assuming heavy major street traffic. If these volumes are met, warrant 4 requires further engineering analysis

Minimum 4 hour ped. volume crossing major street: 107

Minimum peak hour ped. volume crossing major street: 133

Number of pedestrians crossing major street

	7:00 - 8:00	8:00 - 9:00	9:00 - 10:00	10:00 - 11:00	11:00 - 12:00	12:00 - 13:00	13:00 - 14:00	14:00 - 15:00	15:00 - 16:00	16:00 - 17:00	17:00 - 18:00	18:00 - 19:00
Major St.	0	0	0	0	0	0	0	0	0	0	0	0

Warrant No. 7 - Crash Experience (Requires 3 criteria analysis by engineering)

Total Number: 0 From: 1/1/2005 to 1/1/2008
Accident Rate: 0.00 per million entering vehicles

Types of Accidents	No.	/	Avg.		No.	/	Avg.
Right Angle	0	/	0.0	Rear End	0	/	0.0
Lost Control	0	/	0.0	Side Swipe	0	/	0.0
Left Turn	0	/	0.0	Other	0	/	0.0

SOUTH CAROLINA DEPARTMENT OF TRANSPORTATION
DISTRICT 1
TRAFFIC ENGINEERING

County: Richland City: Columbia Date: 11/22/2016

Major Rt: Tram Rd * Not on State System Minor Rt: Sidney Rd * Not on State System

Day of Week: Tuesday Weather: Clear Office: Short Counts JMS

Type of Control: Stop Sign Speed Limit (major st) 35

Direction of Minor Street: E-W Intersection ADT - 2830 (Calc)

Number of Lanes (major st)* 1 Number of Lanes (minor st)* 1

* Each Direction

INTERSECTION VOLUME SUMMARY

	From N Tram Rd				From S Tram Rd				From E Sidney Rd				From W Sidney Rd				Total	Total
	LT	STR	RT	TOT	LT	STR	RT	TOT	LT	STR	RT	TOT	LT	STR	RT	TOT	Vol	Peds
7:00 - 7:15	3	3	0	6	0	7	11	18	2	0	7	9	0	0	0	0	33	0
7:15 - 7:30	5	5	0	10	0	12	12	24	1	0	7	8	0	0	0	0	42	0
7:30 - 7:45	6	3	0	9	0	15	22	37	3	0	7	10	0	0	0	0	56	0
7:45 - 8:00	5	5	0	10	0	14	13	27	3	0	2	5	0	0	0	0	42	0
8:00 - 8:15	5	11	0	16	0	14	15	29	2	0	9	11	0	0	0	0	56	0
8:15 - 8:30	5	3	0	8	0	7	14	21	0	0	5	5	0	0	0	0	34	0
8:30 - 8:45	3	8	0	11	0	6	9	15	1	0	3	4	0	0	0	0	30	0
8:45 - 9:00	5	5	0	10	0	19	8	27	4	0	7	11	0	0	0	0	48	0
9:00 - 9:15	4	7	0	11	0	12	10	22	1	0	4	5	0	0	0	0	38	0
9:15 - 9:30	2	6	0	8	0	11	8	19	6	0	3	9	0	0	0	0	36	0
9:30 - 9:45	4	4	0	8	0	9	8	17	4	0	8	12	0	0	0	0	37	0
9:45 - 10:00	8	5	0	13	0	8	6	14	2	0	7	9	0	0	0	0	36	0
10:00 - 10:15	1	10	0	11	0	15	2	17	4	0	5	9	0	0	0	0	37	0
10:15 - 10:30	3	8	0	11	0	7	6	13	3	0	6	9	0	0	0	0	33	0
10:30 - 10:45	3	9	0	12	0	5	2	7	1	0	8	9	0	0	0	0	28	0
10:45 - 11:00	7	11	0	18	0	13	10	23	4	0	9	13	0	0	0	0	54	0
11:00 - 11:15	11	13	0	24	0	8	7	15	3	0	8	11	0	0	0	0	50	0
11:15 - 11:30	6	7	0	13	0	8	8	16	7	0	7	14	0	0	0	0	43	0
11:30 - 11:45	13	12	0	25	0	11	5	16	2	0	5	7	0	0	0	0	48	0
11:45 - 12:00	8	7	0	15	0	7	2	9	2	0	9	11	0	0	0	0	35	0
12:00 - 12:15	5	18	0	23	0	7	4	11	5	0	6	11	0	0	0	0	45	0
12:15 - 12:30	6	9	0	15	0	18	6	24	4	0	13	17	0	0	0	0	56	0
12:30 - 12:45	8	12	0	20	0	14	6	20	6	0	1	7	0	0	0	0	47	0
12:45 - 13:00	9	6	0	15	0	11	1	12	6	0	8	14	0	0	0	0	41	0
13:00 - 13:15	12	10	0	22	0	11	1	12	3	0	8	11	0	0	0	0	45	0
13:15 - 13:30	7	10	0	17	0	13	3	16	4	0	7	11	0	0	0	0	44	0
13:30 - 13:45	8	15	0	23	0	14	6	20	5	0	9	14	0	0	0	0	57	0
13:45 - 14:00	11	11	0	22	0	11	11	22	2	0	8	10	0	0	0	0	54	0
14:00 - 14:15	6	6	0	12	0	12	6	18	6	0	5	11	0	0	0	0	41	0
14:15 - 14:30	13	15	0	28	0	5	1	6	6	0	6	12	0	0	0	0	46	1
14:30 - 14:45	9	17	0	26	0	12	8	20	5	0	14	19	0	0	0	0	65	0
14:45 - 15:00	7	15	0	22	0	16	6	22	5	0	15	20	0	0	0	0	64	0
15:00 - 15:15	13	11	0	24	0	13	3	16	6	0	5	11	0	0	0	0	51	0
15:15 - 15:30	12	18	0	30	0	9	6	15	5	0	4	9	0	0	0	0	54	0
15:30 - 15:45	9	22	0	31	0	10	3	13	6	0	12	18	0	0	0	0	62	0
15:45 - 16:00	9	12	0	21	0	5	3	8	8	0	14	22	0	0	0	0	51	0
16:00 - 16:15	8	17	0	25	0	11	9	20	13	0	7	20	0	0	0	0	65	0
16:15 - 16:30	16	25	0	41	0	12	5	17	8	0	13	21	0	0	0	0	79	0
16:30 - 16:45	8	31	0	39	0	10	4	14	8	0	12	20	0	0	0	0	73	0
16:45 - 17:00	6	29	0	35	0	9	6	15	8	0	6	14	0	0	0	0	64	0
17:00 - 17:15	10	16	0	26	0	9	5	14	12	0	14	26	0	0	0	0	66	0
17:15 - 17:30	15	18	0	33	0	8	5	13	6	0	10	16	0	0	0	0	62	0
17:30 - 17:45	11	32	0	43	0	12	12	24	13	0	11	24	0	0	0	0	91	0
17:45 - 18:00	4	21	0	25	0	9	8	17	5	0	10	15	0	0	0	0	57	0
18:00 - 18:15	16	15	0	31	0	11	4	15	9	0	6	15	0	0	0	0	61	0
18:15 - 18:30	14	19	0	33	0	8	9	17	5	0	12	17	0	0	0	0	67	0
18:30 - 18:45	14	23	0	37	0	13	4	17	10	0	7	17	0	0	0	0	71	0
18:45 - 19:00	14	9	0	23	0	6	4	10	6	0	12	18	0	0	0	0	51	0
TOTAL	387	604	0	991	0	507	327	834	240	0	381	621	0	0	0	0	2446	1
Trucks	3	5	0	8	0	7	5	12	2	0	5	7	0	0	0	0	27	1.1%
School Buses	2	0	0	2	0	2	1	3	6	0	4	10	0	0	0	0	15	0.6%

TOTAL AND PEAK HOUR VOLUME DIAGRAMS

Tram Rd AT Sidney Rd Date: 11/22/2016

12.0 HOUR TOTAL VOLUME
FROM 7:00 TO 15:00

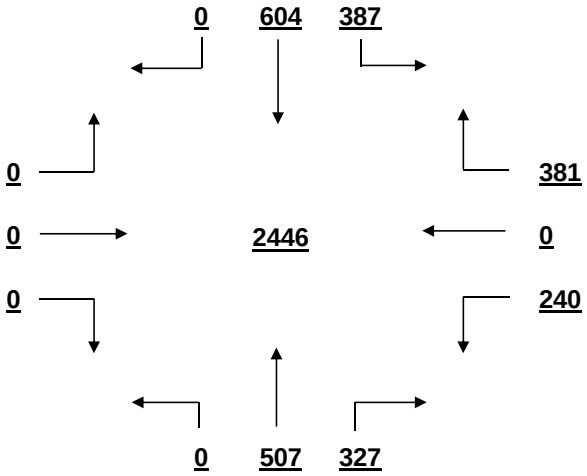

OVERALL PEAK HOUR VOLUME
FROM 16:45 TO 17:45

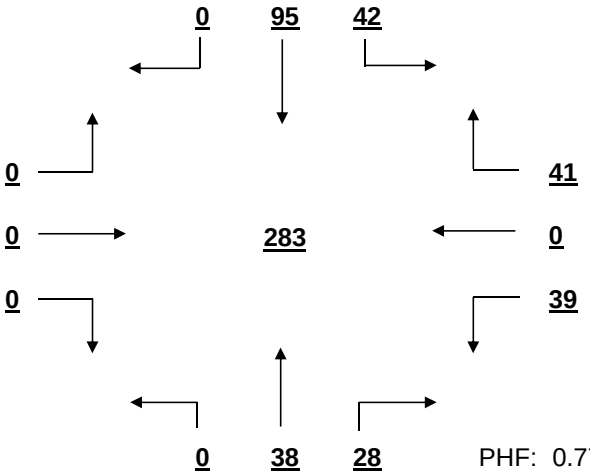

PHF: 0.777

AM PEAK HOUR VOLUME (0:00-10:45)
FROM 7:15 TO 8:15

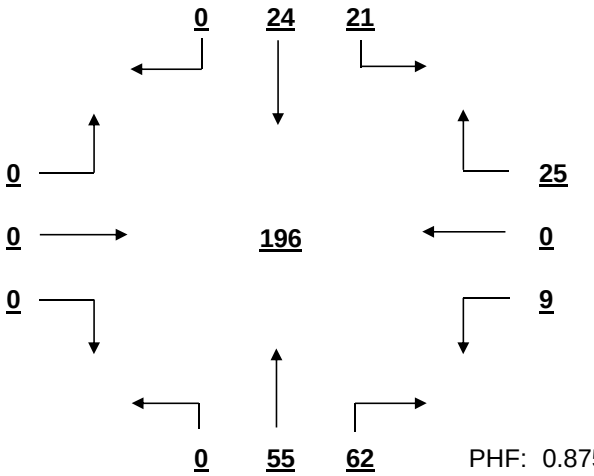

PHF: 0.875

PM PEAK HOUR VOLUME (14:15-23:45)
FROM 16:45 TO 17:45

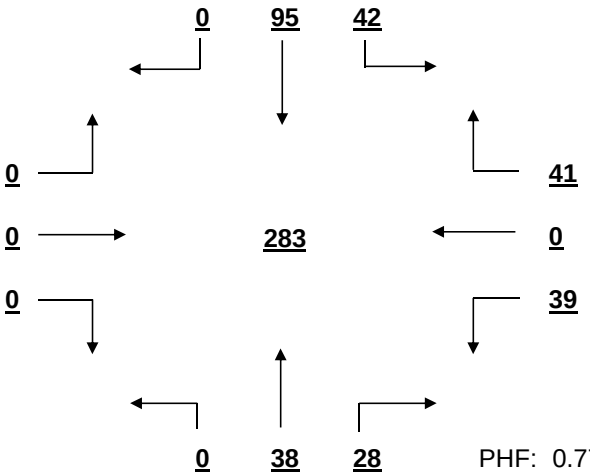

PHF: 0.777

MID-DAY PEAK HOUR VOLUME (11:00-14:00)
FROM 13:00 TO 14:00

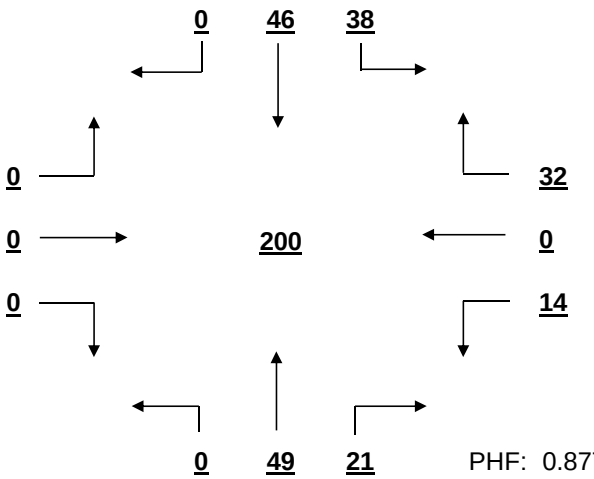

PHF: 0.877

OTHER HOUR VOLUME
FROM 7:00 TO 8:00

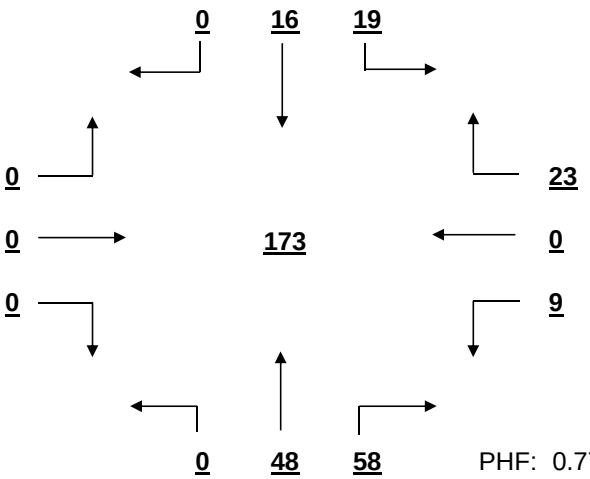

PHF: 0.772

SIGNAL WARRANT ANALYSIS

Tram Rd AT Sidney Rd Date: 11/22/2016

Minor Street Volume, percent of total = 25.4%
Percent of Left Turns from Minor Street = 38.6%
Percent of Right Turns from Minor Street = 61.4%
Percent of Minor Street Right Turns to Remove from Warrant Analysis = 0%
WARRANT BASIS = **100%**

Warrant No. 1 - Vehicular Volume is not met

Condition A - Minimum Vehicular Volume is not met

Average Major Street % of Warrant				Average Minor Street % of Warrant			
152.1	/ 500	=	30%	51.8	/ 150	=	35%

Hourly percent of warrant

	7:00 - 8:00	8:00 - 9:00	9:00 - 10:00	10:00 - 11:00	11:00 - 12:00	12:00 - 13:00	13:00 - 14:00	14:00 - 15:00	15:00 - 16:00	16:00 - 17:00	17:00 - 18:00	18:00 - 19:00
Major St.	28%	27%	22%	22%	27%	28%	31%	31%	32%	41%	39%	37%
Minor St.	21%	21%	23%	27%	29%	33%	31%	41%	40%	50%	54%	45%

Condition B - Interruption to Continuous Traffic is not met

Average Major Street % of Warrant				Average Minor Street % of Warrant			
152.1	/ 750	=	20%	51.8	/ 75	=	69%

Hourly percent of warrant

	7:00 - 8:00	8:00 - 9:00	9:00 - 10:00	10:00 - 11:00	11:00 - 12:00	12:00 - 13:00	13:00 - 14:00	14:00 - 15:00	15:00 - 16:00	16:00 - 17:00	17:00 - 18:00	18:00 - 19:00
Major St.	19%	18%	15%	15%	18%	19%	21%	21%	21%	27%	26%	24%
Minor St.	43%	41%	47%	53%	57%	65%	61%	83%	80%	100%	108%	89%

80% Combination of Conditions A & B is not met

Warrant No. 2 - Four Hour Vehicular Volume is not met

Hourly percent of warrant

	7:00 - 8:00	8:00 - 9:00	9:00 - 10:00	10:00 - 11:00	11:00 - 12:00	12:00 - 13:00	13:00 - 14:00	14:00 - 15:00	15:00 - 16:00	16:00 - 17:00	17:00 - 18:00	18:00 - 19:00
Minor St.	7%	7%	7%	9%	9%	11%	10%	14%	14%	18%	19%	16%

Warrant No. 3 - Peak Hour is not met

	Percent of warrant		Percent of warrant
Overall Peak Hour:	16:45 - 17:45	Higher Volume Side Street Peak Hour:	15:45 - 16:45
Minor St.	13%	Minor St.	13%

Warrant No. 4 - Pedestrian Volume. Pedestrian volume shown are minumum volumes assuming heavy major street traffic. If these volumes are met, warrant 4 requires further engineering analysis

Minimum 4 hour ped. volume crossing major street: 107

Minimum peak hour ped. volume crossing major street: 133

Number of pedestrians crossing major street

	7:00 - 8:00	8:00 - 9:00	9:00 - 10:00	10:00 - 11:00	11:00 - 12:00	12:00 - 13:00	13:00 - 14:00	14:00 - 15:00	15:00 - 16:00	16:00 - 17:00	17:00 - 18:00	18:00 - 19:00
Major St.	0	0	0	0	0	0	0	1	0	0	0	0

Warrant No. 7 - Crash Experience (Requires 3 criteria analysis by engineering)

Total Number: 0 From: 1/1/2005 to 1/1/2008
Accident Rate: 0.00 per million entering vehicles

Types of Accidents	No.	/	Avg.		No.	/	Avg.
Right Angle	0	/	0.0	Rear End	0	/	0.0
Lost Control	0	/	0.0	Side Swipe	0	/	0.0
Left Turn	0	/	0.0	Other	0	/	0.0

SOUTH CAROLINA DEPARTMENT OF TRANSPORTATION
DISTRICT 1
TRAFFIC ENGINEERING

County: Richland City: Columbia Date: 11/22/2016

Major Rt: Fernandina Rd * Not on State System Minor Rt: Beatty Rd * Not on State System

Day of Week: Tuesday Weather: Clear Office: Short Counts JMS

Type of Control: Stop Sign Speed Limit (major st) 35

Direction of Minor Street: E-W Intersection ADT - 9810 (Calc)

Number of Lanes (major st)* 1 Number of Lanes (minor st)* 1

* Each Direction

INTERSECTION VOLUME SUMMARY

	From N Fernandina Rd				From S Fernandina Rd				From E Beatty Rd				From W Beatty Rd				Total	Total
	LT	STR	RT	TOT	LT	STR	RT	TOT	LT	STR	RT	TOT	LT	STR	RT	TOT	Vol	Peds
7:00 - 7:15	6	33	0	39	0	21	1	22	7	0	4	11	0	0	0	0	72	0
7:15 - 7:30	4	58	0	62	0	35	3	38	9	0	7	16	0	0	0	0	116	0
7:30 - 7:45	6	125	0	131	0	43	2	45	11	0	12	23	0	0	0	0	199	0
7:45 - 8:00	5	123	0	128	0	44	2	46	10	0	11	21	0	0	0	0	195	0
8:00 - 8:15	3	98	0	101	0	56	2	58	7	0	7	14	0	0	0	0	173	0
8:15 - 8:30	12	78	0	90	0	68	0	68	5	0	9	14	0	0	0	0	172	0
8:30 - 8:45	6	61	0	67	0	36	6	42	1	0	10	11	0	0	0	0	120	0
8:45 - 9:00	6	45	0	51	0	51	1	52	9	0	9	18	0	0	0	0	121	0
9:00 - 9:15	10	54	0	64	0	32	3	35	5	0	10	15	0	0	0	0	114	0
9:15 - 9:30	6	24	0	30	0	47	5	52	2	0	14	16	0	0	0	0	98	0
9:30 - 9:45	5	34	0	39	0	42	1	43	4	0	7	11	0	0	0	0	93	0
9:45 - 10:00	5	26	0	31	0	33	6	39	5	0	8	13	0	0	0	0	83	0
10:00 - 10:15	4	28	0	32	0	37	6	43	5	0	9	14	0	0	0	0	89	0
10:15 - 10:30	4	37	0	41	0	30	2	32	6	0	16	22	0	0	0	0	95	0
10:30 - 10:45	8	36	0	44	0	34	0	34	2	0	12	14	0	0	0	0	92	0
10:45 - 11:00	6	38	0	44	0	53	1	54	3	0	8	11	0	0	0	0	109	0
11:00 - 11:15	8	39	0	47	0	43	4	47	2	0	6	8	0	0	0	0	102	0
11:15 - 11:30	6	52	0	58	0	46	1	47	5	0	7	12	0	0	0	0	117	0
11:30 - 11:45	9	44	0	53	0	57	2	59	5	0	18	23	0	0	0	0	135	0
11:45 - 12:00	7	44	0	51	0	58	2	60	5	0	14	19	0	0	0	0	130	0
12:00 - 12:15	9	52	0	61	0	66	5	71	5	0	9	14	0	0	0	0	146	0
12:15 - 12:30	9	56	0	65	0	50	7	57	4	0	10	14	0	0	0	0	136	0
12:30 - 12:45	7	49	0	56	0	62	5	67	6	0	19	25	0	0	0	0	148	0
12:45 - 13:00	11	6	0	17	0	60	1	61	5	0	7	12	0	0	0	0	90	0
13:00 - 13:15	4	76	0	80	0	44	8	52	10	0	11	21	0	0	0	0	153	0
13:15 - 13:30	9	45	0	54	0	53	3	56	4	0	13	17	0	0	0	0	127	0
13:30 - 13:45	3	57	0	60	0	37	3	40	4	0	13	17	0	0	0	0	117	0
13:45 - 14:00	9	47	0	56	0	65	4	69	7	0	9	16	0	0	0	0	141	0
14:00 - 14:15	6	46	0	52	0	51	3	54	8	0	13	21	0	0	0	0	127	0
14:15 - 14:30	10	39	0	49	0	38	3	41	5	0	10	15	0	0	0	0	105	0
14:30 - 14:45	10	38	0	48	0	52	1	53	6	0	10	16	0	0	0	0	117	0
14:45 - 15:00	4	59	0	63	0	63	7	70	5	0	17	22	0	0	0	0	155	0
15:00 - 15:15	17	42	0	59	0	50	3	53	6	0	15	21	0	0	0	0	133	0
15:15 - 15:30	7	36	0	43	0	77	6	83	3	0	13	16	0	0	0	0	142	0
15:30 - 15:45	8	48	0	56	0	79	4	83	6	0	15	21	0	0	0	0	160	0
15:45 - 16:00	12	47	0	59	0	83	0	83	10	0	12	22	0	0	0	0	164	0
16:00 - 16:15	9	61	0	70	0	85	6	91	6	0	8	14	0	0	0	0	175	0
16:15 - 16:30	10	58	0	68	0	97	3	100	5	0	14	19	0	0	0	0	187	0
16:30 - 16:45	15	79	0	94	0	119	14	133	6	0	15	21	0	0	0	0	248	0
16:45 - 17:00	10	98	0	108	0	113	9	122	6	0	20	26	0	0	0	0	256	0
17:00 - 17:15	14	93	0	107	0	126	5	131	4	0	16	20	0	0	0	0	258	0
17:15 - 17:30	12	72	0	84	0	106	12	118	3	0	14	17	0	0	0	0	219	0
17:30 - 17:45	11	84	0	95	0	113	4	117	3	0	14	17	0	0	0	0	229	0
17:45 - 18:00	8	71	0	79	0	120	8	128	2	0	13	15	0	0	0	0	222	0
18:00 - 18:15	10	111	0	121	0	100	9	109	5	0	14	19	0	0	0	0	249	0
18:15 - 18:30	8	92	0	100	0	74	4	78	3	0	7	10	0	0	0	0	188	0
18:30 - 18:45	6	134	0	140	0	95	4	99	8	0	10	18	0	0	0	0	257	0
18:45 - 19:00	9	125	0	134	0	65	5	70	11	0	10	21	0	0	0	0	225	0
TOTAL	383	2898	0	3281	0	3009	196	3205	264	0	549	813	0	0	0	0	7299	0
Trucks	7	37	0	44	0	37	3	40	4	0	6	10	0	0	0	0	94	1.3%
School Buses	3	14	0	17	0	15	2	17	0	0	4	4	0	0	0	0	38	0.5%

TOTAL AND PEAK HOUR VOLUME DIAGRAMS

Fernandina Rd AT Beatty Rd Date: 11/22/2016

12.0 HOUR TOTAL VOLUME
FROM 7:00 TO 15:00

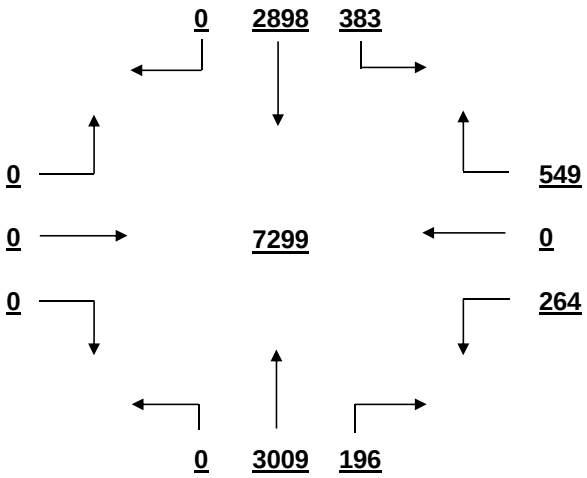

OVERALL PEAK HOUR VOLUME
FROM 16:30 TO 17:30

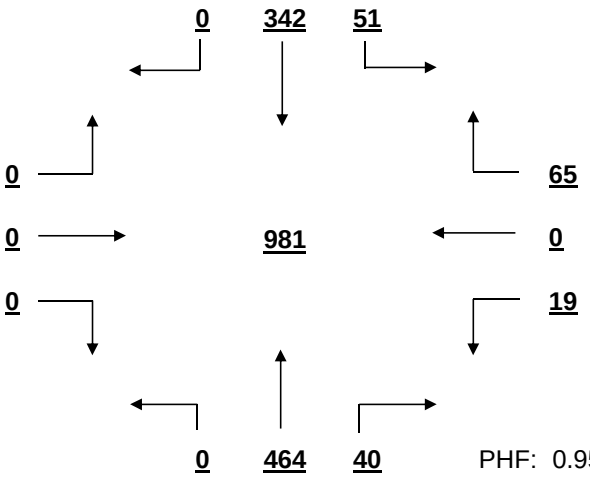

PHF: 0.951

AM PEAK HOUR VOLUME (0:00-10:45)
FROM 7:30 TO 8:30

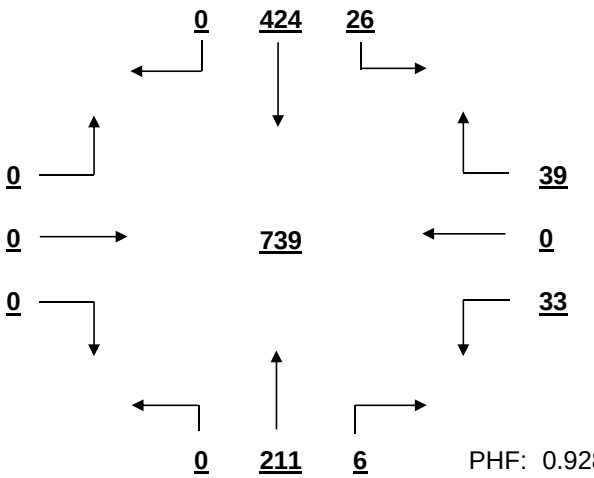

PHF: 0.928

PM PEAK HOUR VOLUME (14:15-23:45)
FROM 16:30 TO 17:30

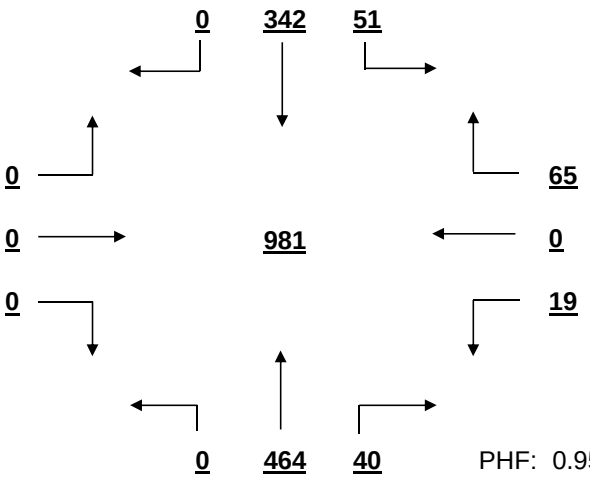

PHF: 0.951

MID-DAY PEAK HOUR VOLUME (11:00-14:00)
FROM 11:45 TO 12:45

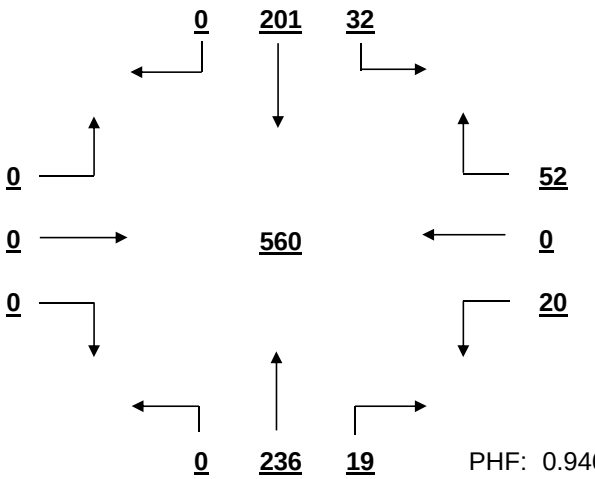

PHF: 0.946

OTHER HOUR VOLUME
FROM 7:00 TO 8:00

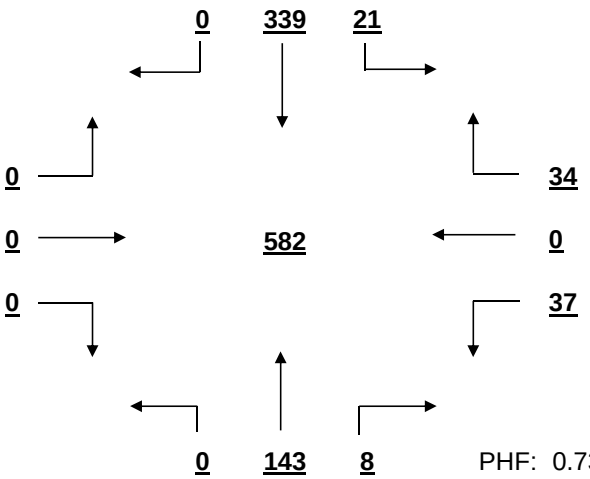

PHF: 0.731

SIGNAL WARRANT ANALYSIS

Fernandina Rd AT Beatty Rd Date: 11/22/2016

Minor Street Volume, percent of total = 11.1%
Percent of Left Turns from Minor Street = 32.5%
Percent of Right Turns from Minor Street = 67.5%
Percent of Minor Street Right Turns to Remove from Warrant Analysis = 0%
WARRANT BASIS = **100%**

Warrant No. 1 - Vehicular Volume is not met

Condition A - Minimum Vehicular Volume is not met

Average Major Street % of Warrant				Average Minor Street % of Warrant			
540.5	/	500	= 108%	67.8	/	150	= 45%

Hourly percent of warrant

	7:00 - 8:00	8:00 - 9:00	9:00 - 10:00	10:00 - 11:00	11:00 - 12:00	12:00 - 13:00	13:00 - 14:00	14:00 - 15:00	15:00 - 16:00	16:00 - 17:00	17:00 - 18:00	18:00 - 19:00
Major St.	102%	106%	67%	65%	84%	91%	93%	86%	104%	157%	172%	170%
Minor St.	47%	38%	37%	41%	41%	43%	47%	49%	53%	53%	46%	45%

Condition B - Interruption to Continuous Traffic is not met

Average Major Street % of Warrant				Average Minor Street % of Warrant			
540.5	/	750	= 72%	67.8	/	75	= 90%

Hourly percent of warrant

	7:00 - 8:00	8:00 - 9:00	9:00 - 10:00	10:00 - 11:00	11:00 - 12:00	12:00 - 13:00	13:00 - 14:00	14:00 - 15:00	15:00 - 16:00	16:00 - 17:00	17:00 - 18:00	18:00 - 19:00
Major St.	68%	71%	44%	43%	56%	61%	62%	57%	69%	105%	115%	113%
Minor St.	95%	76%	73%	81%	83%	87%	95%	99%	107%	107%	92%	91%

80% Combination of Conditions A & B is not met

Warrant No. 2 - Four Hour Vehicular Volume is not met

Hourly percent of warrant

	7:00 - 8:00	8:00 - 9:00	9:00 - 10:00	10:00 - 11:00	11:00 - 12:00	12:00 - 13:00	13:00 - 14:00	14:00 - 15:00	15:00 - 16:00	16:00 - 17:00	17:00 - 18:00	18:00 - 19:00
Minor St.	28%	23%	16%	18%	21%	23%	26%	25%	32%	52%	52%	51%

Warrant No. 3 - Peak Hour is not met

Percent of warrant			Percent of warrant		
Overall Peak Hour: 16:30 - 17:30			Higher Volume Side Street Peak Hour: 16:15 - 17:15		
Minor St.	35%		Minor St.	34%	

Warrant No. 4 - Pedestrian Volume. Pedestrian volume shown are minumum volumes assuming heavy major street traffic. If these volumes are met, warrant 4 requires further engineering analysis

Minimum 4 hour ped. volume crossing major street: 107

Minimum peak hour ped. volume crossing major street: 133

Number of pedestrians crossing major street

	7:00 - 8:00	8:00 - 9:00	9:00 - 10:00	10:00 - 11:00	11:00 - 12:00	12:00 - 13:00	13:00 - 14:00	14:00 - 15:00	15:00 - 16:00	16:00 - 17:00	17:00 - 18:00	18:00 - 19:00
Major St.	0	0	0	0	0	0	0	0	0	0	0	0

Warrant No. 7 - Crash Experience (Requires 3 criteria analysis by engineering)

Total Number: 0 From: 1/1/2005 to 1/1/2008
Accident Rate: 0.00 per million entering vehicles

Types of Accidents	No.	/	Avg.		No.	/	Avg.
Right Angle	0	/	0.0	Rear End	0	/	0.0
Lost Control	0	/	0.0	Side Swipe	0	/	0.0
Left Turn	0	/	0.0	Other	0	/	0.0

SOUTH CAROLINA DEPARTMENT OF TRANSPORTATION
DISTRICT 1
TRAFFIC ENGINEERING

County: Richland City: Columbia Date: 11/22/2016

Major Rt: Broad River Rd * Not on State System Minor Rt: Beatty Rd * Not on State System

Day of Week: Tuesday Weather: Clear Office: Short Counts JMS

Type of Control: Signal Speed Limit (major st) 40

Direction of Minor Street: E-W Intersection ADT - 28800 (Calc)

Number of Lanes (major st)* 2 Number of Lanes (minor st)* 1

* Each Direction

INTERSECTION VOLUME SUMMARY

	From N Broad River Rd				From S Broad River Rd				From E Beatty Rd				From W Beatty Rd				Total	Total
	LT	STR	RT	TOT	LT	STR	RT	TOT	LT	STR	RT	TOT	LT	STR	RT	TOT	Vol	Peds
7:00 - 7:15	0	252	10	262	7	173	0	180	0	0	0	0	14	0	3	17	459	1
7:15 - 7:30	0	373	30	403	11	225	0	236	0	0	0	0	20	0	10	30	669	3
7:30 - 7:45	0	385	26	411	8	263	0	271	0	0	0	0	16	0	2	18	700	0
7:45 - 8:00	0	309	30	339	20	302	0	322	0	0	0	0	25	0	14	39	700	0
8:00 - 8:15	0	300	15	315	10	228	0	238	0	0	0	0	13	0	9	22	575	2
8:15 - 8:30	0	227	20	247	12	235	0	247	0	0	0	0	22	0	11	33	527	3
8:30 - 8:45	0	233	17	250	16	182	0	198	0	0	0	0	15	0	10	25	473	0
8:45 - 9:00	0	212	6	218	7	171	0	178	0	0	0	0	15	0	12	27	423	0
9:00 - 9:15	0	157	9	166	3	140	0	143	0	0	0	0	4	0	11	15	324	4
9:15 - 9:30	0	161	9	170	11	147	0	158	0	0	0	0	10	0	20	30	358	0
9:30 - 9:45	0	176	4	180	9	160	0	169	0	0	0	0	11	0	8	19	368	0
9:45 - 10:00	0	177	8	185	9	167	0	176	0	0	0	0	7	0	16	23	384	1
10:00 - 10:15	0	155	7	162	12	145	0	157	0	0	0	0	6	0	13	19	338	0
10:15 - 10:30	0	180	8	188	8	171	0	179	0	0	0	0	8	0	7	15	382	0
10:30 - 10:45	0	167	11	178	10	147	0	157	0	0	0	0	11	0	13	24	359	0
10:45 - 11:00	0	167	9	176	17	155	0	172	0	0	0	0	10	0	9	19	367	1
11:00 - 11:15	0	170	12	182	10	144	0	154	0	0	0	0	13	0	15	28	364	1
11:15 - 11:30	0	210	13	223	14	182	0	196	0	0	0	0	15	0	8	23	442	0
11:30 - 11:45	0	198	10	208	13	178	0	191	0	0	0	0	8	0	13	21	420	5
11:45 - 12:00	0	190	16	206	11	196	0	207	0	0	0	0	13	0	15	28	441	2
12:00 - 12:15	0	231	8	239	11	202	0	213	0	0	0	0	23	0	15	38	490	0
12:15 - 12:30	0	175	6	181	0	227	0	227	0	0	0	0	9	0	13	22	430	0
12:30 - 12:45	0	206	12	218	0	193	0	193	0	0	0	0	13	0	16	29	440	0
12:45 - 13:00	0	191	13	204	23	226	0	249	0	0	0	0	15	0	12	27	480	2
13:00 - 13:15	0	209	4	213	20	225	0	245	0	0	0	0	15	0	16	31	489	1
13:15 - 13:30	0	203	13	216	10	193	0	203	0	0	0	0	14	0	12	26	445	0
13:30 - 13:45	0	183	14	197	0	229	0	229	0	0	0	0	19	0	16	35	461	0
13:45 - 14:00	0	192	8	200	22	233	0	255	0	0	0	0	13	0	13	26	481	4
14:00 - 14:15	0	226	9	235	13	238	0	251	0	0	0	0	13	0	15	28	514	1
14:15 - 14:30	0	217	19	236	20	209	0	229	0	0	0	0	16	0	10	26	491	1
14:30 - 14:45	0	262	26	288	14	261	0	275	0	0	0	0	14	0	13	27	590	1
14:45 - 15:00	0	236	13	249	22	215	0	237	0	0	0	0	19	0	14	33	519	0
15:00 - 15:15	0	239	9	248	14	229	0	243	0	0	0	0	20	0	13	33	524	0
15:15 - 15:30	0	251	10	261	18	227	0	245	0	0	0	0	14	0	11	25	531	0
15:30 - 15:45	0	236	15	251	0	253	0	253	0	0	0	0	5	0	14	19	523	3
15:45 - 16:00	0	198	17	215	0	266	0	266	0	0	0	0	25	0	14	39	520	1
16:00 - 16:15	0	315	24	339	11	276	0	287	0	0	0	0	21	0	20	41	667	1
16:15 - 16:30	0	249	21	270	0	345	0	345	0	0	0	0	20	0	11	31	646	0
16:30 - 16:45	0	302	25	327	18	363	0	381	0	0	0	0	25	0	14	39	747	2
16:45 - 17:00	0	254	29	283	24	351	0	375	0	0	0	0	16	0	13	29	687	0
17:00 - 17:15	0	247	35	282	11	417	0	428	0	0	0	0	28	0	12	40	750	1
17:15 - 17:30	0	216	22	238	13	408	0	421	0	0	0	0	20	0	17	37	696	1
17:30 - 17:45	0	224	19	243	22	378	0	400	0	0	0	0	27	0	21	48	691	1
17:45 - 18:00	0	267	24	291	18	323	0	341	0	0	0	0	15	0	11	26	658	1
18:00 - 18:15	0	314	17	331	22	345	0	367	0	0	0	0	40	0	24	64	762	5
18:15 - 18:30	0	266	18	284	37	355	0	392	0	0	0	0	37	0	17	54	730	0
18:30 - 18:45	0	172	40	212	34	321	0	355	0	0	0	0	34	0	15	49	616	2
18:45 - 19:00	0	157	33	190	31	297	0	328	0	0	0	0	21	0	20	41	559	0
TOTAL	0	10837	773	11610	646	11516	0	12162	0	0	0	0	807	0	631	1438	25210	51
Trucks	0	136	5	141	21	230	0	251	0	0	0	0	8	14	0	22	414	1.6%
School Buses	0	81	11	92	5	2	38	45	0	0	0	0	4	0	8	12	149	0.6%

TOTAL AND PEAK HOUR VOLUME DIAGRAMS

Broad River Rd AT Beatty Rd Date: 11/22/2016

12.0 HOUR TOTAL VOLUME
FROM 7:00 TO 15:00

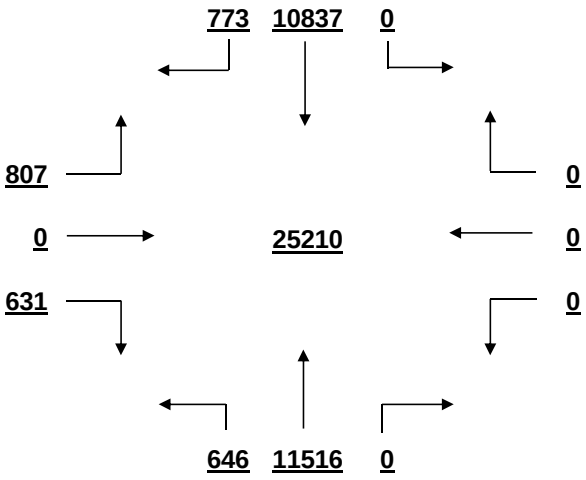

OVERALL PEAK HOUR VOLUME
FROM 16:30 TO 17:30

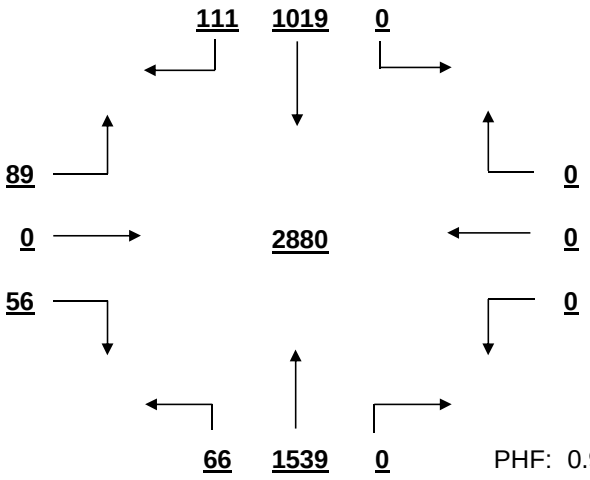

PHF: 0.960

AM PEAK HOUR VOLUME (0:00-10:45)
FROM 7:15 TO 8:15

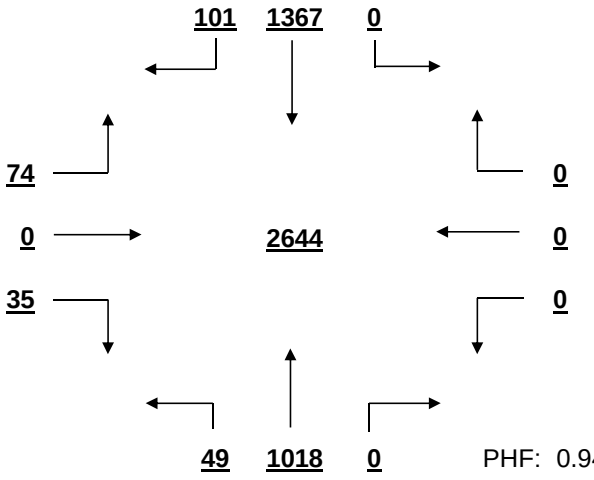

PHF: 0.944

PM PEAK HOUR VOLUME (14:15-23:45)
FROM 16:30 TO 17:30

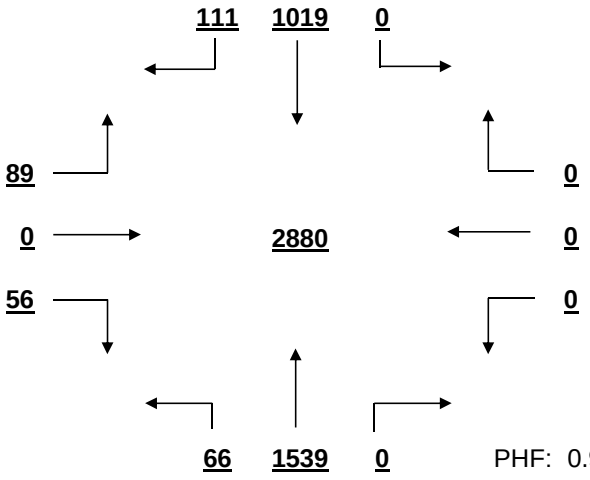

PHF: 0.960

MID-DAY PEAK HOUR VOLUME (11:00-14:00)
FROM 13:00 TO 14:00

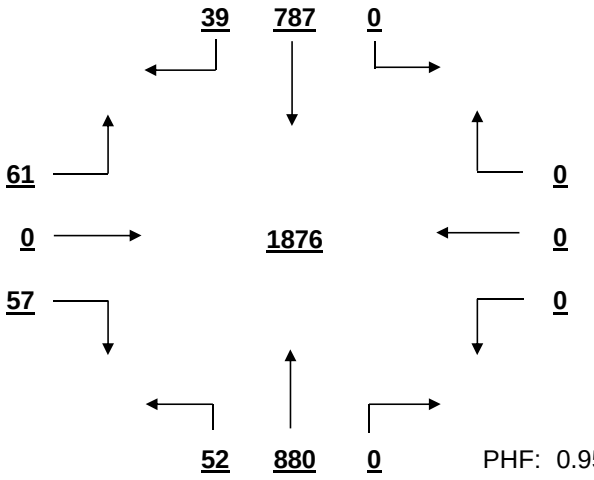

PHF: 0.959

OTHER HOUR VOLUME
FROM 7:00 TO 8:00

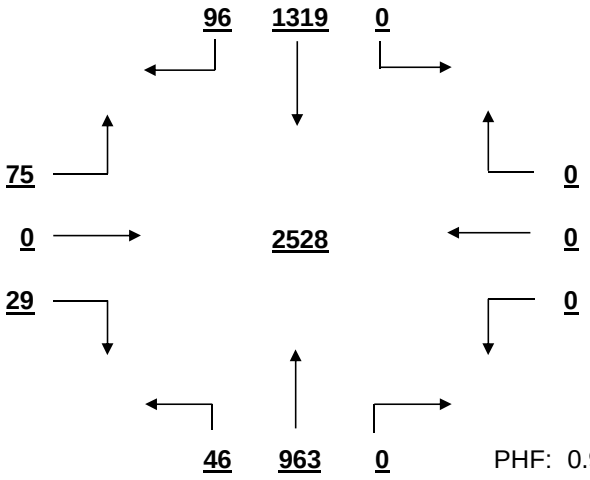

PHF: 0.903

SIGNAL WARRANT ANALYSIS

Broad River Rd AT Beatty Rd Date: 11/22/2016

Minor Street Volume, percent of total = 5.7%
Percent of Left Turns from Minor Street = 56.1%
Percent of Right Turns from Minor Street = 43.9%
Percent of Minor Street Right Turns to Remove from Warrant Analysis = 0%
WARRANT BASIS = **100%**

Warrant No. 1 - Vehicular Volume is met

Condition A - Minimum Vehicular Volume is not met

Average Major Street % of Warrant				Average Minor Street % of Warrant			
1981.0	/ 600	=	330%	119.8	/ 150	=	80%

Hourly percent of warrant

	7:00 - 8:00	8:00 - 9:00	9:00 - 10:00	10:00 - 11:00	11:00 - 12:00	12:00 - 13:00	13:00 - 14:00	14:00 - 15:00	15:00 - 16:00	16:00 - 17:00	17:00 - 18:00	18:00 - 19:00
Major St.	404%	315%	225%	228%	261%	287%	293%	333%	330%	435%	441%	410%
Minor St.	69%	71%	58%	51%	67%	77%	79%	76%	77%	93%	101%	139%

Condition B - Interruption to Continuous Traffic is met

Average Major Street % of Warrant				Average Minor Street % of Warrant			
1981.0	/ 900	=	220%	119.8	/ 75	=	160%

Hourly percent of warrant

	7:00 - 8:00	8:00 - 9:00	9:00 - 10:00	10:00 - 11:00	11:00 - 12:00	12:00 - 13:00	13:00 - 14:00	14:00 - 15:00	15:00 - 16:00	16:00 - 17:00	17:00 - 18:00	18:00 - 19:00
Major St.	269%	210%	150%	152%	174%	192%	195%	222%	220%	290%	294%	273%
Minor St.	139%	143%	116%	103%	133%	155%	157%	152%	155%	187%	201%	277%

80% Combination of Conditions A & B is not met

Warrant No. 2 - Four Hour Vehicular Volume is met

Hourly percent of warrant

	7:00 - 8:00	8:00 - 9:00	9:00 - 10:00	10:00 - 11:00	11:00 - 12:00	12:00 - 13:00	13:00 - 14:00	14:00 - 15:00	15:00 - 16:00	16:00 - 17:00	17:00 - 18:00	18:00 - 19:00
Minor St.	130%	134%	99%	96%	125%	145%	148%	143%	145%	175%	189%	260%

Warrant No. 3 - Peak Hour is met

	Percent of warrant		Percent of warrant
Overall Peak Hour:	16:30 - 17:30	Higher Volume Side Street Peak Hour:	18:00 - 19:00
Minor St.	145%	Minor St.	208%

Warrant No. 4 - Pedestrian Volume. Pedestrian volume shown are minumum volumes assuming heavy major street traffic. If these volumes are met, warrant 4 requires further engineering analysis

Minimum 4 hour ped. volume crossing major street: 107

Minimum peak hour ped. volume crossing major street: 133

Number of pedestrians crossing major street

	7:00 - 8:00	8:00 - 9:00	9:00 - 10:00	10:00 - 11:00	11:00 - 12:00	12:00 - 13:00	13:00 - 14:00	14:00 - 15:00	15:00 - 16:00	16:00 - 17:00	17:00 - 18:00	18:00 - 19:00
Major St.	4	0	3	0	8	1	2	0	1	2	2	6

Warrant No. 7 - Crash Experience (Requires 3 criteria analysis by engineering)

Total Number: 0 From: 1/1/2005 to 1/1/2008
Accident Rate: 0.00 per million entering vehicles

Types of Accidents	No.	/	Avg.		No.	/	Avg.
Right Angle	0	/	0.0	Rear End	0	/	0.0
Lost Control	0	/	0.0	Side Swipe	0	/	0.0
Left Turn	0	/	0.0	Other	0	/	0.0

SOUTH CAROLINA DEPARTMENT OF TRANSPORTATION
DISTRICT 1
TRAFFIC ENGINEERING

County: Richland City: Columbia Date: 11/22/2016

Major Rt: Beatty Rd-Evelyn * Not on State System Minor Rt: Evelyn Rd-Beatty * Not on State System

Day of Week: Tuesday Weather: Clear Office: Short Counts JMS

Type of Control: Stop Sign Speed Limit (major st) 35

Direction of Minor Street: E-W Intersection ADT - 3610 (Calc)

Number of Lanes (major st)* 1 Number of Lanes (minor st)* 1

* Each Direction

INTERSECTION VOLUME SUMMARY

	From N Beatty Rd-Evelyn				From S Beatty Rd-Evelyn				From E Evelyn Rd-Beatty				From W Evelyn Rd-Beatty				Total	Total
	LT	STR	RT	TOT	LT	STR	RT	TOT	LT	STR	RT	TOT	LT	STR	RT	TOT	Vol	Peds
7:00 - 7:15	16	0	2	18	0	0	0	0	0	6	9	15	2	1	0	3	36	0
7:15 - 7:30	14	0	3	17	0	0	0	0	0	6	10	16	2	8	0	10	43	0
7:30 - 7:45	17	0	5	22	0	0	0	0	0	6	18	24	2	3	0	5	51	0
7:45 - 8:00	14	0	1	15	0	0	0	0	0	10	12	22	1	15	0	16	53	0
8:00 - 8:15	12	0	2	14	0	0	0	0	0	11	14	25	1	7	0	8	47	0
8:15 - 8:30	12	0	4	16	0	0	0	0	0	11	10	21	4	10	0	14	51	0
8:30 - 8:45	18	0	2	20	0	0	0	0	0	6	13	19	0	5	0	5	44	0
8:45 - 9:00	18	0	0	18	0	0	0	0	0	7	16	23	3	7	0	10	51	0
9:00 - 9:15	8	0	0	8	0	0	0	0	0	4	13	17	1	6	0	7	32	0
9:15 - 9:30	20	0	0	20	0	0	0	0	0	6	14	20	1	10	0	11	51	1
9:30 - 9:45	10	0	1	11	0	0	0	0	0	6	10	16	0	8	0	8	35	0
9:45 - 10:00	13	0	3	16	0	0	0	0	0	3	13	16	0	5	0	5	37	0
10:00 - 10:15	12	0	0	12	0	0	0	0	0	2	9	11	1	6	0	7	30	0
10:15 - 10:30	15	0	1	16	0	0	0	0	0	4	18	22	0	2	0	2	40	0
10:30 - 10:45	13	0	2	15	0	0	0	0	0	4	14	18	0	10	0	10	43	1
10:45 - 11:00	11	0	3	14	0	0	0	0	0	10	19	29	0	9	0	9	52	0
11:00 - 11:15	16	0	3	19	0	0	0	0	0	9	14	23	3	13	0	16	58	0
11:15 - 11:30	11	0	3	14	0	0	0	0	0	9	11	20	1	2	0	3	37	0
11:30 - 11:45	14	0	1	15	0	0	0	0	0	11	16	27	0	4	0	4	46	0
11:45 - 12:00	14	0	0	14	0	0	0	0	0	8	13	21	2	3	0	5	40	0
12:00 - 12:15	15	0	0	15	0	0	0	0	0	9	15	24	3	5	0	8	47	0
12:15 - 12:30	20	0	3	23	0	0	0	0	0	3	25	28	2	13	0	15	66	1
12:30 - 12:45	17	0	2	19	0	0	0	0	0	13	29	42	3	5	0	8	69	0
12:45 - 13:00	27	0	1	28	0	0	0	0	0	11	14	25	2	8	0	10	63	1
13:00 - 13:15	15	0	3	18	0	0	0	0	0	6	14	20	2	6	0	8	46	0
13:15 - 13:30	9	0	0	9	0	0	0	0	0	8	19	27	0	9	0	9	45	0
13:30 - 13:45	10	0	0	10	0	0	0	0	0	10	13	23	1	6	0	7	40	0
13:45 - 14:00	17	0	1	18	0	0	0	0	0	15	14	29	1	12	0	13	60	0
14:00 - 14:15	13	0	1	14	0	0	0	0	0	13	24	37	2	8	0	10	61	0
14:15 - 14:30	15	0	2	17	0	0	0	0	0	13	19	32	3	11	0	14	63	0
14:30 - 14:45	17	0	0	17	0	0	0	0	0	16	30	46	2	15	0	17	80	0
14:45 - 15:00	26	0	2	28	0	0	0	0	0	11	23	34	4	15	0	19	81	0
15:00 - 15:15	17	0	3	20	0	0	0	0	0	7	19	26	2	9	0	11	57	0
15:15 - 15:30	14	0	1	15	0	0	0	0	0	10	22	32	1	6	0	7	54	0
15:30 - 15:45	19	0	4	23	0	0	0	0	0	12	26	38	3	9	0	12	73	0
15:45 - 16:00	25	0	1	26	0	0	0	0	0	9	21	30	1	3	0	4	60	0
16:00 - 16:15	18	0	2	20	0	0	0	0	0	11	19	30	2	15	0	17	67	0
16:15 - 16:30	18	0	3	21	0	0	0	0	0	8	27	35	1	10	0	11	67	0
16:30 - 16:45	24	0	5	29	0	0	0	0	0	10	30	40	3	15	0	18	87	0
16:45 - 17:00	22	0	6	28	0	0	0	0	0	19	33	52	3	9	0	12	92	0
17:00 - 17:15	19	0	2	21	0	0	0	0	0	16	25	41	4	10	0	14	76	0
17:15 - 17:30	29	0	4	33	0	0	0	0	0	16	26	42	2	15	0	17	92	0
17:30 - 17:45	24	0	1	25	0	0	0	0	0	19	26	45	1	14	0	15	85	0
17:45 - 18:00	23	0	2	25	0	0	0	0	0	14	41	55	4	9	0	13	93	0
18:00 - 18:15	28	0	2	30	0	0	0	0	0	15	20	35	1	17	0	18	83	0
18:15 - 18:30	22	0	1	23	0	0	0	0	0	17	28	45	7	12	0	19	87	0
18:30 - 18:45	24	0	1	25	0	0	0	0	0	27	27	54	2	16	0	18	97	0
18:45 - 19:00	34	0	4	38	0	0	0	0	0	18	26	44	4	8	0	12	94	0
TOTAL	839	0	93	932	0	0	0	0	0	495	921	1416	90	424	0	514	2862	4
Trucks	15	0	1	16	0	0	0	0	0	12	10	22	6	9	0	15	53	1.9%
School Buses	3	0	1	4	0	0	0	0	0	4	5	9	5	8	0	13	26	0.9%

TOTAL AND PEAK HOUR VOLUME DIAGRAMS

Beatty Rd-Evelyn AT Evelyn Rd-Beatty Date: 11/22/2016

12.0 HOUR TOTAL VOLUME
FROM 7:00 TO 15:00

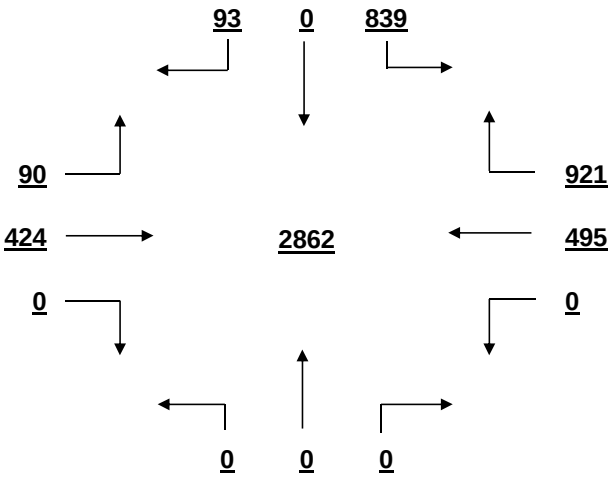

OVERALL PEAK HOUR VOLUME
FROM 18:00 TO 19:00

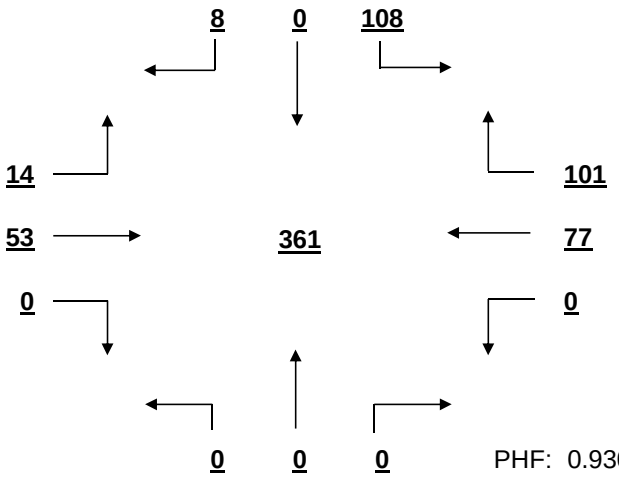

PHF: 0.930

AM PEAK HOUR VOLUME (0:00-10:45)
FROM 7:30 TO 8:30

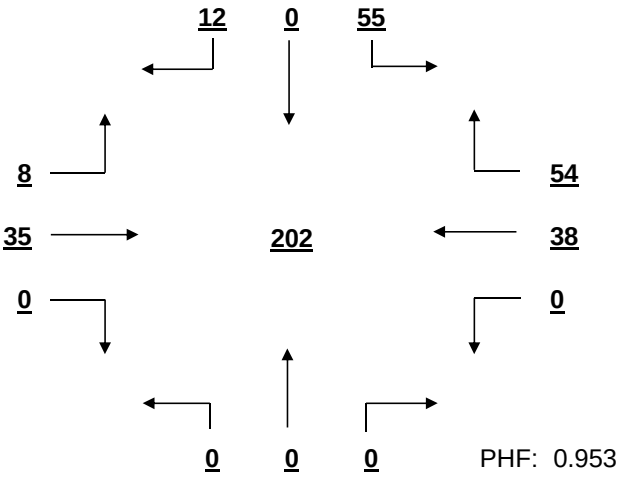

PHF: 0.953

PM PEAK HOUR VOLUME (14:15-23:45)
FROM 18:00 TO 19:00

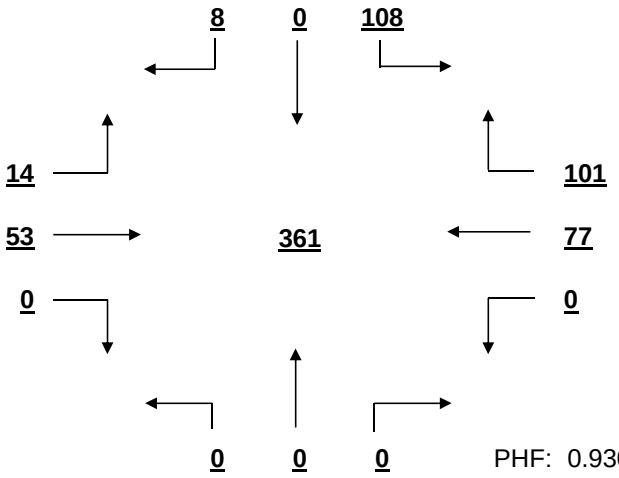

PHF: 0.930

MID-DAY PEAK HOUR VOLUME (11:00-14:00)
FROM 12:00 TO 13:00

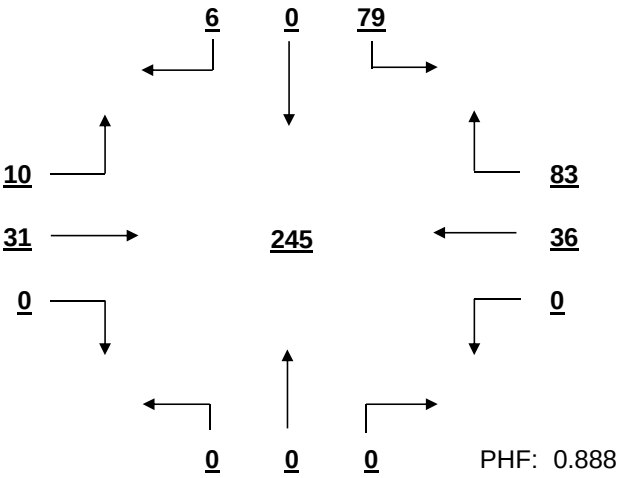

PHF: 0.888

OTHER HOUR VOLUME
FROM 7:00 TO 8:00

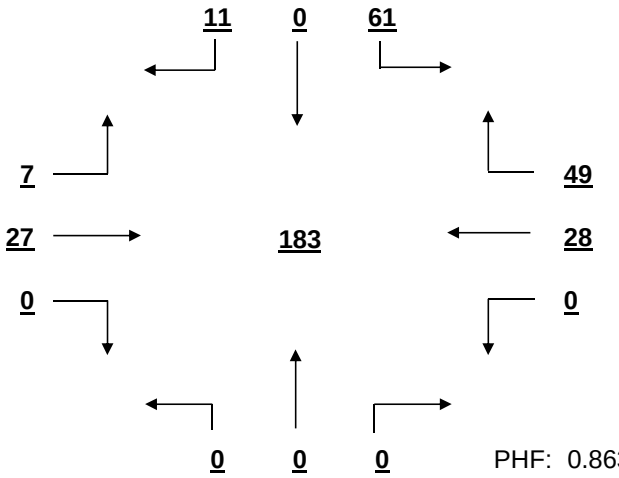

PHF: 0.863

SIGNAL WARRANT ANALYSIS

Beatty Rd-Evelyn AT Evelyn Rd-Beatty Date: 11/22/2016

Minor Street Volume, percent of total = 67.4%
Percent of Left Turns from Minor Street = 4.7%
Percent of Right Turns from Minor Street = 47.7%
Percent of Minor Street Right Turns to Remove from Warrant Analysis = 0%
WARRANT BASIS = **100%**

Warrant No. 1 - Vehicular Volume is not met

Condition A - Minimum Vehicular Volume is not met

Average Major Street % of Warrant				Average Minor Street % of Warrant			
77.7	/ 500	=	16%	118.0	/ 150	=	79%

Hourly percent of warrant

	7:00 - 8:00	8:00 - 9:00	9:00 - 10:00	10:00 - 11:00	11:00 - 12:00	12:00 - 13:00	13:00 - 14:00	14:00 - 15:00	15:00 - 16:00	16:00 - 17:00	17:00 - 18:00	18:00 - 19:00
Major St.	14%	14%	11%	11%	12%	17%	11%	15%	17%	20%	21%	23%
Minor St.	51%	59%	46%	53%	61%	79%	66%	99%	84%	105%	122%	119%

Condition B - Interruption to Continuous Traffic is not met

Average Major Street % of Warrant				Average Minor Street % of Warrant			
77.7	/ 750	=	10%	118.0	/ 75	=	157%

Hourly percent of warrant

	7:00 - 8:00	8:00 - 9:00	9:00 - 10:00	10:00 - 11:00	11:00 - 12:00	12:00 - 13:00	13:00 - 14:00	14:00 - 15:00	15:00 - 16:00	16:00 - 17:00	17:00 - 18:00	18:00 - 19:00
Major St.	10%	9%	7%	8%	8%	11%	7%	10%	11%	13%	14%	15%
Minor St.	103%	117%	92%	107%	121%	159%	132%	199%	168%	209%	244%	237%

80% Combination of Conditions A & B is not met

Warrant No. 2 - Four Hour Vehicular Volume is not met

Hourly percent of warrant

	7:00 - 8:00	8:00 - 9:00	9:00 - 10:00	10:00 - 11:00	11:00 - 12:00	12:00 - 13:00	13:00 - 14:00	14:00 - 15:00	15:00 - 16:00	16:00 - 17:00	17:00 - 18:00	18:00 - 19:00
Minor St.	16%	18%	14%	16%	18%	24%	20%	30%	26%	33%	39%	38%

Warrant No. 3 - Peak Hour is not met

	Percent of warrant		Percent of warrant
Overall Peak Hour:	18:00 - 19:00	Higher Volume Side Street Peak Hour:	17:45 - 18:45
Minor St.	26%	Minor St.	28%

Warrant No. 4 - Pedestrian Volume. Pedestrian volume shown are minumum volumes assuming heavy major street traffic. If these volumes are met, warrant 4 requires further engineering analysis

Minimum 4 hour ped. volume crossing major street: 107

Minimum peak hour ped. volume crossing major street: 133

Number of pedestrians crossing major street

	7:00 - 8:00	8:00 - 9:00	9:00 - 10:00	10:00 - 11:00	11:00 - 12:00	12:00 - 13:00	13:00 - 14:00	14:00 - 15:00	15:00 - 16:00	16:00 - 17:00	17:00 - 18:00	18:00 - 19:00
Major St.	0	0	1	0	0	2	0	0	0	0	0	0

Warrant No. 7 - Crash Experience (Requires 3 criteria analysis by engineering)

Total Number: 0 From: 1/1/2005 to 1/1/2008

Accident Rate: 0.00 per million entering vehicles

Types of Accidents	No.	/	Avg.		No.	/	Avg.
Right Angle	0	/	0.0	Rear End	0	/	0.0
Lost Control	0	/	0.0	Side Swipe	0	/	0.0
Left Turn	0	/	0.0	Other	0	/	0.0

SOUTH CAROLINA DEPARTMENT OF TRANSPORTATION
DISTRICT 1
TRAFFIC ENGINEERING

County: Richland City: Columbia Date: 11/21/2016

Major Rt: Fernandina Rd * Not on State System Minor Rt: Evelyn Dr * Not on State System

Day of Week: Monday Weather: Clear Office: Short Counts JMS

Type of Control: Stop Sign Speed Limit (major st) 35

Direction of Minor Street: E-W Intersection ADT - 9670 (Calc)

Number of Lanes (major st)* 1 Number of Lanes (minor st)* 1

* Each Direction

INTERSECTION VOLUME SUMMARY

	From N Fernandina Rd				From S Fernandina Rd				From E Evelyn Dr				From W Evelyn Dr				Total	Total
	LT	STR	RT	TOT	LT	STR	RT	TOT	LT	STR	RT	TOT	LT	STR	RT	TOT	Vol	Peds
7:00 - 7:15	1	27	0	28	0	24	5	29	20	0	4	24	0	0	0	0	81	1
7:15 - 7:30	0	48	0	48	0	43	10	53	13	0	3	16	0	0	0	0	117	0
7:30 - 7:45	4	101	0	105	0	70	12	82	28	0	4	32	0	0	0	0	219	0
7:45 - 8:00	4	133	0	137	0	79	9	88	16	0	10	26	0	0	0	0	251	0
8:00 - 8:15	5	123	0	128	0	75	11	86	21	0	3	24	0	0	0	0	238	0
8:15 - 8:30	4	99	0	103	0	83	9	92	7	0	2	9	0	0	0	0	204	0
8:30 - 8:45	0	94	0	94	0	57	12	69	16	0	6	22	0	0	0	0	185	0
8:45 - 9:00	3	58	0	61	0	69	10	79	12	0	7	19	0	0	0	0	159	0
9:00 - 9:15	0	37	0	37	0	54	7	61	9	0	2	11	0	0	0	0	109	0
9:15 - 9:30	4	21	0	25	0	41	3	44	5	0	6	11	0	0	0	0	80	0
9:30 - 9:45	3	27	0	30	0	45	6	51	5	0	5	10	0	0	0	0	91	0
9:45 - 10:00	0	0	0	0	0	0	0	0	0	0	0	0	0	0	0	0	0	0
10:00 - 10:15	1	36	0	37	0	43	7	50	5	0	5	10	0	0	0	0	97	0
10:15 - 10:30	5	22	0	27	0	35	8	43	8	0	7	15	0	0	0	0	85	0
10:30 - 10:45	3	34	0	37	0	41	4	45	6	0	4	10	0	0	0	0	92	0
10:45 - 11:00	3	38	0	41	0	29	3	32	11	0	5	16	0	0	0	0	89	0
11:00 - 11:15	2	34	0	36	0	39	9	48	4	0	9	13	0	0	0	0	97	0
11:15 - 11:30	5	49	0	54	0	54	8	62	9	0	1	10	0	0	0	0	126	0
11:30 - 11:45	3	49	0	52	0	53	8	61	6	0	3	9	0	0	0	0	122	0
11:45 - 12:00	7	36	0	43	0	47	9	56	14	0	5	19	0	0	0	0	118	0
12:00 - 12:15	3	64	0	67	0	49	4	53	11	0	12	23	0	0	0	0	143	0
12:15 - 12:30	6	59	0	65	0	65	12	77	8	0	3	11	0	0	0	0	153	0
12:30 - 12:45	3	50	0	53	0	75	7	82	11	0	6	17	0	0	0	0	152	0
12:45 - 13:00	6	54	0	60	0	52	10	62	12	0	2	14	0	0	0	0	136	0
13:00 - 13:15	5	37	0	42	0	67	11	78	3	0	3	6	0	0	0	0	126	0
13:15 - 13:30	5	61	0	66	0	46	7	53	5	0	3	8	0	0	0	0	127	0
13:30 - 13:45	0	0	0	0	0	0	0	0	0	0	0	0	0	0	0	0	0	0
13:45 - 14:00	2	57	0	59	0	60	9	69	9	0	10	19	0	0	0	0	147	1
14:00 - 14:15	6	50	0	56	0	52	7	59	8	0	2	10	0	0	0	0	125	0
14:15 - 14:30	2	46	0	48	0	46	8	54	5	0	6	11	0	0	0	0	113	0
14:30 - 14:45	4	46	0	50	0	52	7	59	13	0	11	24	0	0	0	0	133	0
14:45 - 15:00	5	31	0	36	0	53	28	81	11	0	9	20	0	0	0	0	137	0
15:00 - 15:15	14	11	0	25	0	29	101	130	16	0	2	18	0	0	0	0	173	0
15:15 - 15:30	15	4	0	19	0	11	139	150	21	0	3	24	0	0	0	0	193	0
15:30 - 15:45	6	29	0	35	0	66	91	157	31	0	6	37	0	0	0	0	229	1
15:45 - 16:00	3	61	0	64	0	147	6	153	15	0	5	20	0	0	0	0	237	0
16:00 - 16:15	12	55	0	67	0	156	11	167	13	0	9	22	0	0	0	0	256	0
16:15 - 16:30	1	62	0	63	0	127	15	142	13	0	6	19	0	0	0	0	224	0
16:30 - 16:45	5	90	0	95	0	93	15	108	12	0	10	22	0	0	0	0	225	0
16:45 - 17:00	4	83	0	87	0	98	11	109	8	0	10	18	0	0	0	0	214	0
17:00 - 17:15	9	125	0	134	0	118	12	130	19	0	8	27	0	0	0	0	291	0
17:15 - 17:30	6	83	0	89	0	112	19	131	9	0	8	17	0	0	0	0	237	0
17:30 - 17:45	7	61	0	68	0	119	19	138	5	0	4	9	0	0	0	0	215	0
17:45 - 18:00	6	55	0	61	0	114	14	128	11	0	7	18	0	0	0	0	207	0
18:00 - 18:15	10	47	0	57	0	98	25	123	10	0	5	15	0	0	0	0	195	0
18:15 - 18:30	9	28	0	37	0	71	15	86	14	0	11	25	0	0	0	0	148	0
18:30 - 18:45	8	42	0	50	0	42	12	54	16	0	6	22	0	0	0	0	126	0
18:45 - 19:00	5	25	0	30	0	18	12	30	8	0	4	12	0	0	0	0	72	0
TOTAL	224	2482	0	2706	0	3017	777	3794	532	0	262	794	0	0	0	0	7294	3
Trucks	0	16	0	16	0	19	11	30	2	0	0	2	0	0	0	0	48	0.7%
School Buses	1	6	0	7	0	12	13	25	7	0	1	8	0	0	0	0	40	0.5%

TOTAL AND PEAK HOUR VOLUME DIAGRAMS

Fernandina Rd AT Evelyn Dr Date: 11/21/2016

12.0 HOUR TOTAL VOLUME
FROM 7:00 TO 15:00

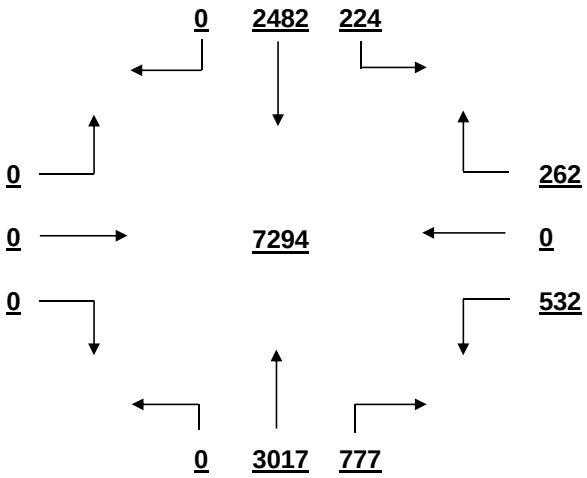

OVERALL PEAK HOUR VOLUME
FROM 16:30 TO 17:30

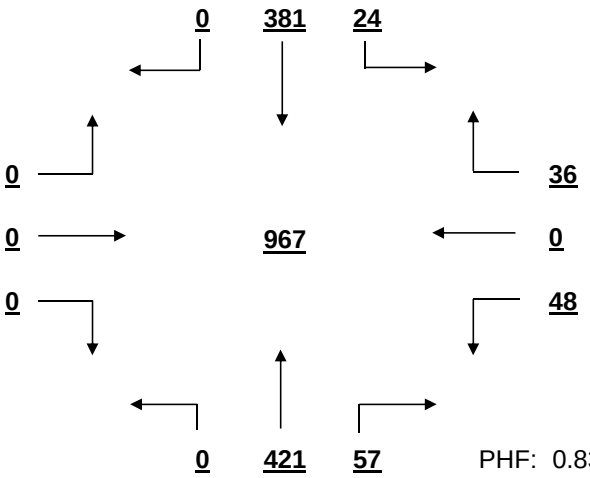

PHF: 0.831

AM PEAK HOUR VOLUME (0:00-10:45)
FROM 7:30 TO 8:30

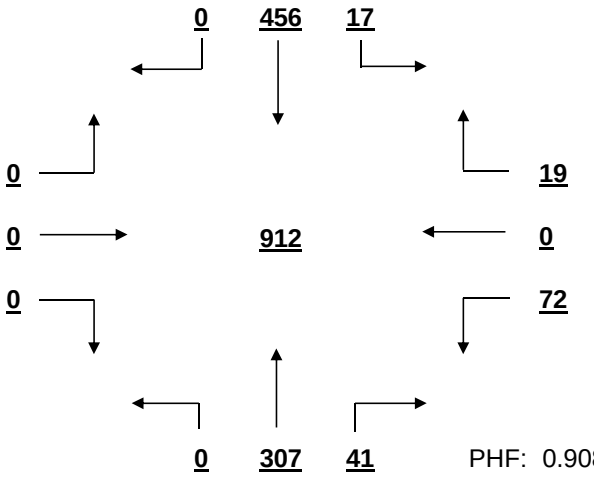

PHF: 0.908

PM PEAK HOUR VOLUME (14:15-23:45)
FROM 16:30 TO 17:30

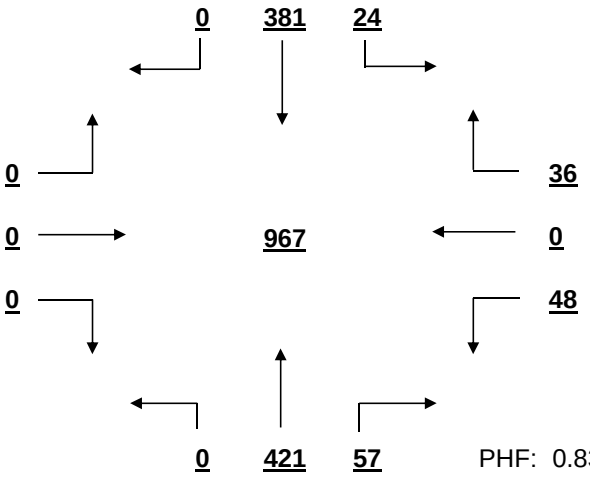

PHF: 0.831

MID-DAY PEAK HOUR VOLUME (11:00-14:00)
FROM 12:00 TO 13:00

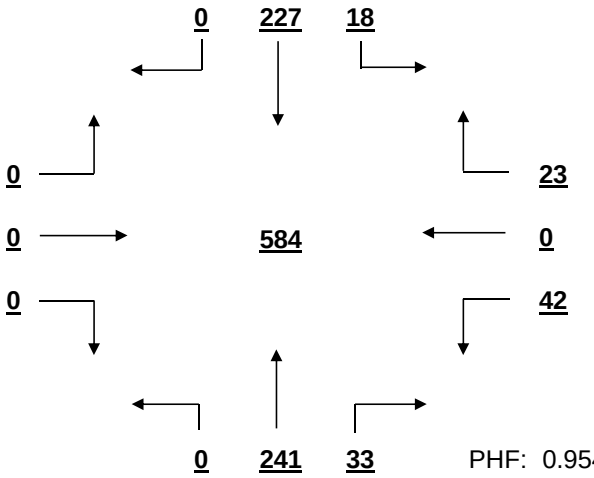

PHF: 0.954

OTHER HOUR VOLUME
FROM 7:00 TO 8:00

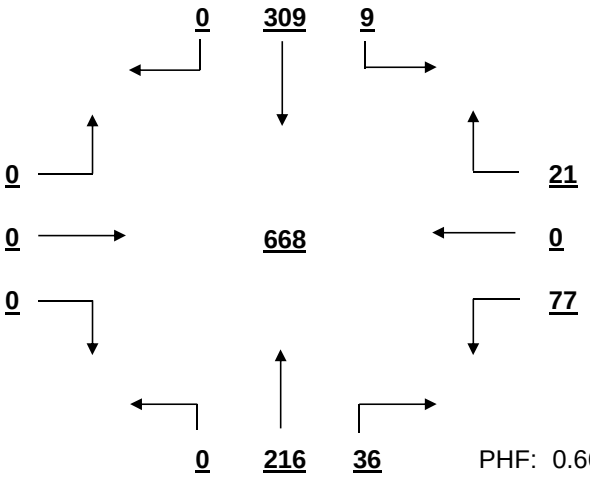

PHF: 0.665

SIGNAL WARRANT ANALYSIS

Fernandina Rd AT Evelyn Dr Date: 11/21/2016

Minor Street Volume, percent of total = 10.9%
Percent of Left Turns from Minor Street = 67.0%
Percent of Right Turns from Minor Street = 33.0%
Percent of Minor Street Right Turns to Remove from Warrant Analysis = 0%
WARRANT BASIS = **100%**

Warrant No. 1 - Vehicular Volume is not met

Condition A - Minimum Vehicular Volume is not met

Average Major Street % of Warrant				Average Minor Street % of Warrant			
541.7	/ 500	=	108%	66.2	/ 150	=	44%

Hourly percent of warrant

	7:00 - 8:00	8:00 - 9:00	9:00 - 10:00	10:00 - 11:00	11:00 - 12:00	12:00 - 13:00	13:00 - 14:00	14:00 - 15:00	15:00 - 16:00	16:00 - 17:00	17:00 - 18:00	18:00 - 19:00
Major St.	114%	142%	50%	62%	82%	104%	73%	89%	147%	168%	176%	93%
Minor St.	65%	49%	21%	34%	34%	43%	22%	43%	66%	54%	47%	49%

Condition B - Interruption to Continuous Traffic is not met

Average Major Street % of Warrant				Average Minor Street % of Warrant			
541.7	/ 750	=	72%	66.2	/ 75	=	88%

Hourly percent of warrant

	7:00 - 8:00	8:00 - 9:00	9:00 - 10:00	10:00 - 11:00	11:00 - 12:00	12:00 - 13:00	13:00 - 14:00	14:00 - 15:00	15:00 - 16:00	16:00 - 17:00	17:00 - 18:00	18:00 - 19:00
Major St.	76%	95%	33%	42%	55%	69%	49%	59%	98%	112%	117%	62%
Minor St.	131%	99%	43%	68%	68%	87%	44%	87%	132%	108%	95%	99%

80% Combination of Conditions A & B is not met

Warrant No. 2 - Four Hour Vehicular Volume is not met

Hourly percent of warrant

	7:00 - 8:00	8:00 - 9:00	9:00 - 10:00	10:00 - 11:00	11:00 - 12:00	12:00 - 13:00	13:00 - 14:00	14:00 - 15:00	15:00 - 16:00	16:00 - 17:00	17:00 - 18:00	18:00 - 19:00
Minor St.	42%	42%	8%	14%	17%	26%	10%	23%	58%	59%	56%	27%

Warrant No. 3 - Peak Hour is not met

	Percent of warrant		Percent of warrant
Overall Peak Hour:	16:30 - 17:30	Higher Volume Side Street Peak Hour:	15:15 - 16:15
Minor St.	34%	Minor St.	38%

Warrant No. 4 - Pedestrian Volume. Pedestrian volume shown are minumum volumes assuming heavy major street traffic. If these volumes are met, warrant 4 requires further engineering analysis

Minimum 4 hour ped. volume crossing major street	Minimum peak hour ped. volume crossing major street
107	133

Number of pedestrians crossing major street

	7:00 - 8:00	8:00 - 9:00	9:00 - 10:00	10:00 - 11:00	11:00 - 12:00	12:00 - 13:00	13:00 - 14:00	14:00 - 15:00	15:00 - 16:00	16:00 - 17:00	17:00 - 18:00	18:00 - 19:00
Major St.	1	0	0	0	0	0	1	0	1	0	0	0

Warrant No. 7 - Crash Experience (Requires 3 criteria analysis by engineering)

Total Number: 0 From: 1/1/2005 to 1/1/2008
Accident Rate: 0.00 per million entering vehicles

Types of Accidents	No.	/	Avg.		No.	/	Avg.
Right Angle	0	/	0.0	Rear End	0	/	0.0
Lost Control	0	/	0.0	Side Swipe	0	/	0.0
Left Turn	0	/	0.0	Other	0	/	0.0

SOUTH CAROLINA DEPARTMENT OF TRANSPORTATION
DISTRICT 1
TRAFFIC ENGINEERING

County: Richland City: Columbia Date: 11/28/2016

Major Rt: St. Andrews Rd * Not on State System Minor Rt: Sidney Rd * Not on State System

Day of Week: Monday Weather: Clear Office: Short Counts JMS

Type of Control: Signal Speed Limit (major st) 40

Direction of Minor Street: N-S Intersection ADT - 17170 (Calc)

Number of Lanes (major st)* 2 Number of Lanes (minor st)* 1 * Each Direction

INTERSECTION VOLUME SUMMARY

	From N Sidney Rd				From S Sidney Rd				From E St. Andrews Rd				From W St. Andrews Rd				Total	Total
	LT	STR	RT	TOT	LT	STR	RT	TOT	LT	STR	RT	TOT	LT	STR	RT	TOT	Vol	Peds
7:00 - 7:15	32	0	4	36	0	0	0	0	0	57	7	64	2	167	0	169	269	0
7:15 - 7:30	40	0	2	42	0	0	0	0	0	85	15	100	3	210	0	213	355	0
7:30 - 7:45	44	0	7	51	0	0	0	0	0	100	19	119	0	263	0	263	433	0
7:45 - 8:00	30	0	3	33	0	0	0	0	0	112	11	123	6	260	0	266	422	0
8:00 - 8:15	24	0	2	26	0	0	0	0	0	89	9	98	2	241	0	243	367	0
8:15 - 8:30	24	0	0	24	0	0	0	0	0	80	11	91	0	197	0	197	312	0
8:30 - 8:45	24	0	0	24	0	0	0	0	0	81	7	88	1	183	0	184	296	0
8:45 - 9:00	21	0	3	24	0	0	0	0	0	100	13	113	2	146	0	148	285	0
9:00 - 9:15	16	0	3	19	0	0	0	0	0	88	10	98	4	147	0	151	268	0
9:15 - 9:30	17	0	2	19	0	0	0	0	0	80	6	86	1	166	0	167	272	0
9:30 - 9:45	8	0	6	14	0	0	0	0	0	90	14	104	1	96	0	97	215	0
9:45 - 10:00	12	0	6	18	0	0	0	0	0	97	11	108	1	101	0	102	228	0
10:00 - 10:15	10	0	0	10	0	0	0	0	0	94	10	104	3	113	0	116	230	0
10:15 - 10:30	13	0	6	19	0	0	0	0	0	90	10	100	4	116	0	120	239	0
10:30 - 10:45	12	0	3	15	0	0	0	0	0	92	15	107	3	112	0	115	237	0
10:45 - 11:00	17	0	4	21	0	0	0	0	0	98	6	104	1	108	0	109	234	0
11:00 - 11:15	13	0	4	17	0	0	0	0	0	101	13	114	1	106	0	107	238	0
11:15 - 11:30	18	0	6	24	0	0	0	0	0	96	16	112	1	105	0	106	242	0
11:30 - 11:45	15	0	2	17	0	0	0	0	0	118	11	129	8	110	0	118	264	0
11:45 - 12:00	13	0	4	17	0	0	0	0	0	116	13	129	4	125	0	129	275	0
12:00 - 12:15	11	0	7	18	0	0	0	0	0	120	11	131	3	130	0	133	282	0
12:15 - 12:30	14	0	2	16	0	0	0	0	0	132	15	147	4	138	0	142	305	0
12:30 - 12:45	20	0	2	22	0	0	0	0	0	128	20	148	2	151	0	153	323	0
12:45 - 13:00	15	0	4	19	0	0	0	0	0	115	14	129	4	141	0	145	293	0
13:00 - 13:15	13	0	4	17	0	0	0	0	0	119	15	134	5	134	0	139	290	3
13:15 - 13:30	19	0	5	24	0	0	0	0	0	123	14	137	4	145	0	149	310	0
13:30 - 13:45	15	0	6	21	0	0	0	0	0	122	15	137	4	135	0	139	297	0
13:45 - 14:00	21	0	5	26	0	0	0	0	0	118	12	130	1	129	0	130	286	0
14:00 - 14:15	12	0	6	18	0	0	0	0	0	109	13	122	1	132	0	133	273	0
14:15 - 14:30	20	0	2	22	0	0	0	0	0	138	12	150	2	115	0	117	289	0
14:30 - 14:45	12	0	4	16	0	0	0	0	0	125	13	138	5	129	0	134	288	0
14:45 - 15:00	17	0	6	23	0	0	0	0	0	121	17	138	4	130	0	134	295	0
15:00 - 15:15	21	0	6	27	0	0	0	0	0	158	9	167	3	167	0	170	364	1
15:15 - 15:30	16	0	3	19	0	0	0	0	0	138	20	158	3	115	0	118	295	0
15:30 - 15:45	16	0	5	21	0	0	0	0	0	143	13	156	6	141	0	147	324	0
15:45 - 16:00	11	0	4	15	0	0	0	0	0	153	18	171	6	145	0	151	337	0
16:00 - 16:15	17	0	5	22	0	0	0	0	0	154	26	180	6	148	0	154	356	0
16:15 - 16:30	21	0	7	28	0	0	0	0	0	171	15	186	1	137	0	138	352	1
16:30 - 16:45	14	0	6	20	0	0	0	0	0	176	26	202	6	120	0	126	348	0
16:45 - 17:00	24	0	2	26	0	0	0	0	0	205	23	228	3	134	0	137	391	0
17:00 - 17:15	20	0	3	23	0	0	0	0	0	229	3	232	5	170	0	175	430	0
17:15 - 17:30	20	0	6	26	0	0	0	0	0	254	20	274	4	162	0	166	466	0
17:30 - 17:45	20	0	5	25	0	0	0	0	0	236	18	254	3	118	0	121	400	0
17:45 - 18:00	19	0	3	22	0	0	0	0	0	217	34	251	4	144	0	148	421	0
18:00 - 18:15	14	0	4	18	0	0	0	0	0	152	31	183	5	135	0	140	341	1
18:15 - 18:30	14	0	3	17	0	0	0	0	0	174	25	199	5	93	0	98	314	0
18:30 - 18:45	9	0	5	14	0	0	0	0	0	135	20	155	4	91	0	95	264	0
18:45 - 19:00	13	0	4	17	0	0	0	0	0	109	13	122	2	80	0	82	221	0
TOTAL	861	0	191	1052	0	0	0	0	0	6138	712	6850	153	6781	0	6934	14836	6
Trucks	4	0	1	5	0	0	0	0	0	103	2	105	0	109	0	109	219	1.5%
School Buses	3	0	3	6	0	0	0	0	0	28	7	35	2	26	0	28	69	0.5%

TOTAL AND PEAK HOUR VOLUME DIAGRAMS

St. Andrews Rd AT Sidney Rd Date: 11/28/2016

12.0 HOUR TOTAL VOLUME
FROM 7:00 TO 15:00

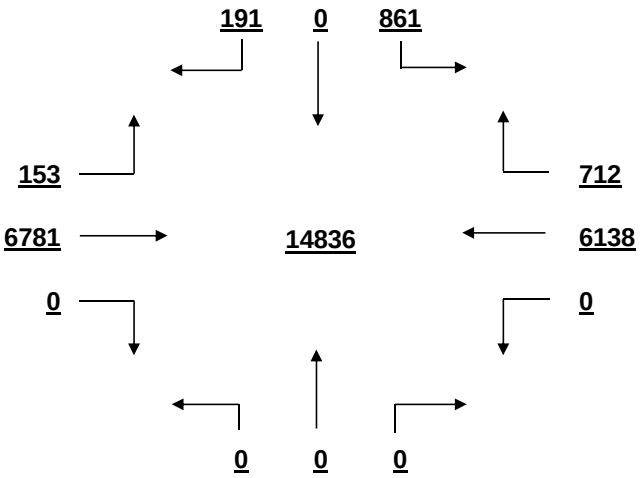

OVERALL PEAK HOUR VOLUME
FROM 17:00 TO 18:00

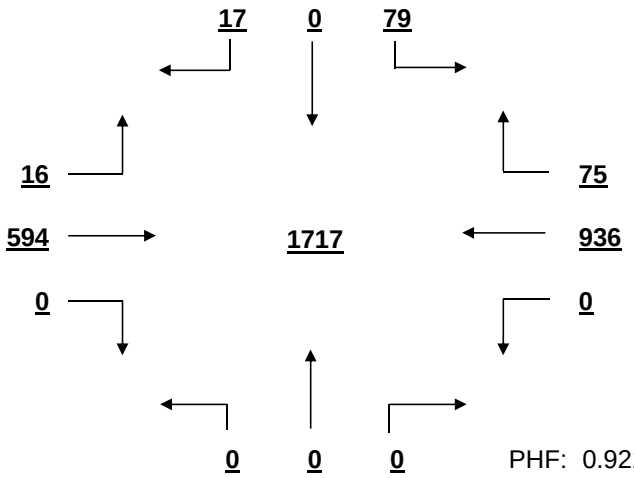

PHF: 0.921

AM PEAK HOUR VOLUME (0:00-10:45)
FROM 7:15 TO 8:15

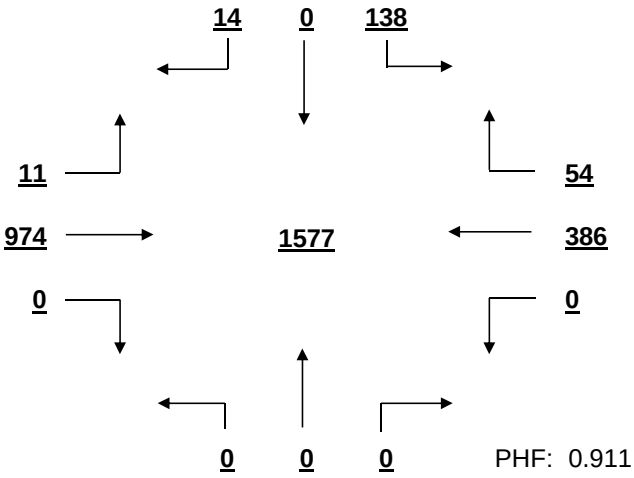

PHF: 0.911

PM PEAK HOUR VOLUME (14:15-23:45)
FROM 17:00 TO 18:00

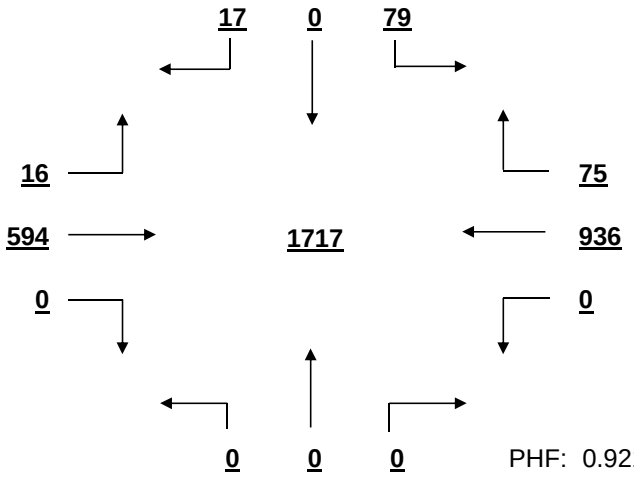

PHF: 0.921

MID-DAY PEAK HOUR VOLUME (11:00-14:00)
FROM 12:30 TO 13:30

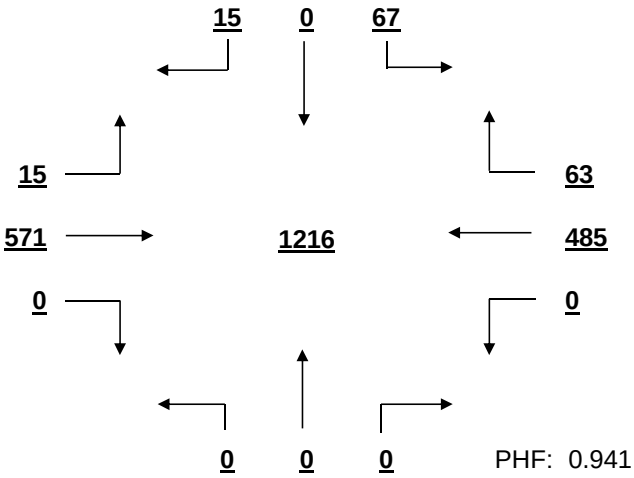

PHF: 0.941

OTHER HOUR VOLUME
FROM 7:00 TO 8:00

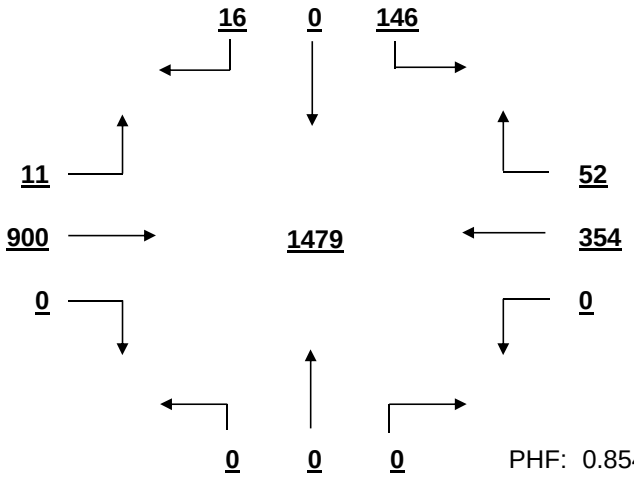

PHF: 0.854

SIGNAL WARRANT ANALYSIS

St. Andrews Rd AT Sidney Rd Date: 11/28/2016

Minor Street Volume, percent of total = 7.1%
Percent of Left Turns from Minor Street = 81.8%
Percent of Right Turns from Minor Street = 18.2%
Percent of Minor Street Right Turns to Remove from Warrant Analysis = 0%
WARRANT BASIS = **100%**

Warrant No. 1 - Vehicular Volume is met

Condition A - Minimum Vehicular Volume is not met

Average Major Street % of Warrant				Average Minor Street % of Warrant			
1148.7	/	600	= 191%	87.7	/	150	= 58%

Hourly percent of warrant

	7:00 - 8:00	8:00 - 9:00	9:00 - 10:00	10:00 - 11:00	11:00 - 12:00	12:00 - 13:00	13:00 - 14:00	14:00 - 15:00	15:00 - 16:00	16:00 - 17:00	17:00 - 18:00	18:00 - 19:00
Major St.	220%	194%	152%	146%	157%	188%	183%	178%	206%	225%	270%	179%
Minor St.	108%	65%	47%	43%	50%	50%	59%	53%	55%	64%	64%	44%

Condition B - Interruption to Continuous Traffic is met

Average Major Street % of Warrant				Average Minor Street % of Warrant			
1148.7	/	900	= 128%	87.7	/	75	= 117%

Hourly percent of warrant

	7:00 - 8:00	8:00 - 9:00	9:00 - 10:00	10:00 - 11:00	11:00 - 12:00	12:00 - 13:00	13:00 - 14:00	14:00 - 15:00	15:00 - 16:00	16:00 - 17:00	17:00 - 18:00	18:00 - 19:00
Major St.	146%	129%	101%	97%	105%	125%	122%	118%	138%	150%	180%	119%
Minor St.	216%	131%	93%	87%	100%	100%	117%	105%	109%	128%	128%	88%

80% Combination of Conditions A & B is not met

Warrant No. 2 - Four Hour Vehicular Volume is not met

Hourly percent of warrant

	7:00 - 8:00	8:00 - 9:00	9:00 - 10:00	10:00 - 11:00	11:00 - 12:00	12:00 - 13:00	13:00 - 14:00	14:00 - 15:00	15:00 - 16:00	16:00 - 17:00	17:00 - 18:00	18:00 - 19:00
Minor St.	179%	90%	42%	36%	47%	65%	72%	62%	83%	120%	120%	52%

Warrant No. 3 - Peak Hour is not met

	Percent of warrant		Percent of warrant
Overall Peak Hour:	17:00 - 18:00	Higher Volume Side Street Peak Hour:	7:00 - 8:00
Minor St.	83%	Minor St.	90%

Warrant No. 4 - Pedestrian Volume. Pedestrian volume shown are minumum volumes assuming heavy major street traffic. If these volumes are met, warrant 4 requires further engineering analysis

Minimum 4 hour ped. volume crossing major street: 107

Minimum peak hour ped. volume crossing major street: 133

Number of pedestrians crossing major street

	7:00 - 8:00	8:00 - 9:00	9:00 - 10:00	10:00 - 11:00	11:00 - 12:00	12:00 - 13:00	13:00 - 14:00	14:00 - 15:00	15:00 - 16:00	16:00 - 17:00	17:00 - 18:00	18:00 - 19:00
Major St.	0	0	0	0	0	0	0	0	0	0	0	0

Warrant No. 7 - Crash Experience (Requires 3 criteria analysis by engineering)

Total Number: 0 From: 1/1/2005 to 1/1/2008
Accident Rate: 0.00 per million entering vehicles

Types of Accidents	No.	/	Avg.		No.	/	Avg.
Right Angle	0	/	0.0	Rear End	0	/	0.0
Lost Control	0	/	0.0	Side Swipe	0	/	0.0
Left Turn	0	/	0.0	Other	0	/	0.0

SOUTH CAROLINA DEPARTMENT OF TRANSPORTATION
DISTRICT 1
TRAFFIC ENGINEERING

County: Richland City: Columbia Date: 11/28/2016

Major Rt: St. Andrews Rd * Not on State System Minor Rt: Ashland Rd * Not on State System

Day of Week: Monday Weather: Clear Office: Short Counts JMS

Type of Control: Signal Speed Limit (major st) 40

Direction of Minor Street: N-S Intersection ADT - 21960 (Calc)

Number of Lanes (major st)* 2 Number of Lanes (minor st)* 1 * Each Direction

INTERSECTION VOLUME SUMMARY

	From N Ashland Rd				From S Ashland Rd				From E St. Andrews Rd				From W St. Andrews Rd				Total	Total
	LT	STR	RT	TOT	LT	STR	RT	TOT	LT	STR	RT	TOT	LT	STR	RT	TOT	Vol	Peds
7:00 - 7:15	0	0	0	0	10	0	26	36	27	69	0	96	0	181	31	212	344	4
7:15 - 7:30	0	0	0	0	32	1	49	82	37	84	0	121	0	220	49	269	472	2
7:30 - 7:45	0	0	0	0	37	0	65	102	42	93	0	135	1	271	47	319	556	2
7:45 - 8:00	0	0	0	0	23	0	45	68	17	121	0	138	0	262	29	291	497	1
8:00 - 8:15	0	0	0	0	15	0	33	48	21	111	1	133	0	259	26	285	466	1
8:15 - 8:30	0	0	0	0	14	0	39	53	25	107	0	132	1	224	14	239	424	7
8:30 - 8:45	0	0	0	0	10	0	16	26	17	90	0	107	0	189	17	206	339	0
8:45 - 9:00	0	0	0	0	17	0	21	38	16	118	0	134	1	161	10	172	344	2
9:00 - 9:15	0	0	0	0	20	0	23	43	15	93	0	108	0	153	15	168	319	1
9:15 - 9:30	1	0	0	1	13	0	20	33	13	97	0	110	0	115	16	131	275	6
9:30 - 9:45	0	0	1	1	15	0	24	39	12	110	0	122	1	127	11	139	301	5
9:45 - 10:00	0	0	0	0	12	0	12	24	8	117	0	125	0	113	5	118	267	0
10:00 - 10:15	0	0	1	1	12	0	19	31	7	124	0	131	0	112	14	126	289	1
10:15 - 10:30	0	0	0	0	17	0	27	44	17	104	0	121	0	138	15	153	318	6
10:30 - 10:45	1	0	0	1	16	0	10	26	12	111	0	123	1	119	8	128	278	0
10:45 - 11:00	1	0	1	2	19	0	23	42	7	112	0	119	0	133	11	144	307	5
11:00 - 11:15	0	0	0	0	11	0	17	28	14	128	0	142	0	129	10	139	309	0
11:15 - 11:30	0	0	0	0	20	0	18	38	10	142	0	152	3	126	17	146	336	4
11:30 - 11:45	0	0	2	2	19	0	21	40	11	136	1	148	0	150	25	175	365	4
11:45 - 12:00	0	0	0	0	22	0	28	50	26	145	0	171	0	146	18	164	385	2
12:00 - 12:15	0	0	2	2	26	0	29	55	18	146	0	164	0	151	22	173	394	8
12:15 - 12:30	1	0	1	2	35	0	19	54	33	161	0	194	0	171	20	191	441	5
12:30 - 12:45	0	0	0	0	18	0	29	47	22	171	1	194	0	174	25	199	440	5
12:45 - 13:00	0	0	0	0	22	0	28	50	25	150	0	175	0	169	23	192	417	8
13:00 - 13:15	0	1	0	1	26	0	26	52	23	152	0	175	0	170	19	189	417	2
13:15 - 13:30	0	0	0	0	31	0	27	58	21	147	0	168	1	192	21	214	440	2
13:30 - 13:45	0	0	0	0	28	0	37	65	20	157	1	178	0	161	27	188	431	2
13:45 - 14:00	0	1	0	1	18	1	29	48	26	161	0	187	0	159	21	180	416	6
14:00 - 14:15	0	0	0	0	11	0	33	44	21	130	1	152	0	164	19	183	379	2
14:15 - 14:30	0	1	0	1	22	0	25	47	20	163	0	183	0	141	29	170	401	4
14:30 - 14:45	0	0	0	0	29	0	30	59	19	154	0	173	0	148	21	169	401	5
14:45 - 15:00	1	3	1	5	30	1	45	76	33	144	0	177	0	153	19	172	430	2
15:00 - 15:15	1	0	0	1	33	0	29	62	23	172	0	195	0	202	17	219	477	8
15:15 - 15:30	0	3	0	3	28	0	27	55	22	163	0	185	0	141	24	165	408	0
15:30 - 15:45	0	1	0	1	32	0	29	61	28	200	0	228	0	181	15	196	486	4
15:45 - 16:00	0	0	0	0	23	0	26	49	27	194	0	221	2	166	18	186	456	2
16:00 - 16:15	0	1	0	1	36	0	34	70	21	182	0	203	0	186	19	205	479	10
16:15 - 16:30	1	2	0	3	30	0	35	65	23	185	0	208	0	166	30	196	472	4
16:30 - 16:45	0	1	0	1	30	0	23	53	31	218	0	249	0	139	20	159	462	3
16:45 - 17:00	0	1	0	1	35	0	32	67	26	238	0	264	0	177	30	207	539	1
17:00 - 17:15	1	0	2	3	36	0	39	75	27	215	0	242	0	188	27	215	535	6
17:15 - 17:30	0	1	0	1	41	0	36	77	17	291	0	308	1	183	29	213	599	7
17:30 - 17:45	3	1	0	4	36	0	31	67	41	249	0	290	1	148	13	162	523	1
17:45 - 18:00	0	0	1	1	42	0	39	81	20	218	0	238	0	161	21	182	502	1
18:00 - 18:15	1	0	2	3	25	0	33	58	15	182	0	197	0	159	13	172	430	1
18:15 - 18:30	0	2	0	2	21	1	26	48	25	218	0	243	0	136	12	148	441	0
18:30 - 18:45	0	0	0	0	23	0	24	47	20	181	0	201	0	126	12	138	386	3
18:45 - 19:00	0	0	0	0	16	0	18	34	12	142	0	154	0	116	15	131	319	2
TOTAL	12	19	14	45	1137	4	1374	2515	1013	7296	5	8314	13	7856	969	8838	19712	157
Trucks	0	0	0	0	3	0	11	14	10	122	1	133	0	139	6	145	292	1.5%
School Buses	1	17	0	18	9	0	5	14	2	13	0	15	0	27	11	38	85	0.4%

TOTAL AND PEAK HOUR VOLUME DIAGRAMS

St. Andrews Rd AT Ashland Rd Date: 11/28/2016

12.0 HOUR TOTAL VOLUME
FROM 7:00 TO 15:00

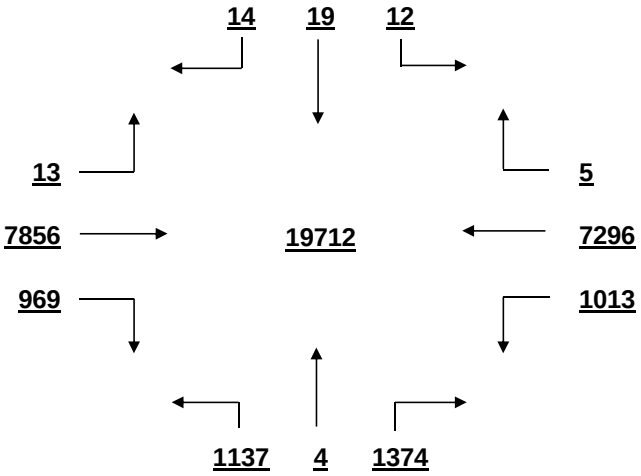

OVERALL PEAK HOUR VOLUME
FROM 16:45 TO 17:45

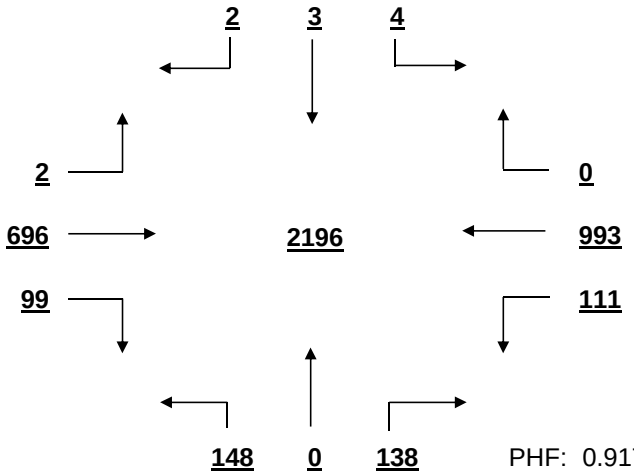

PHF: 0.917

AM PEAK HOUR VOLUME (0:00-10:45)
FROM 7:15 TO 8:15

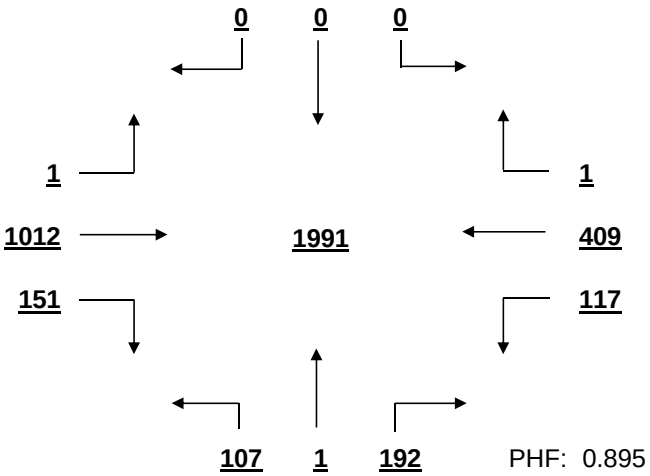

PHF: 0.895

PM PEAK HOUR VOLUME (14:15-23:45)
FROM 16:45 TO 17:45

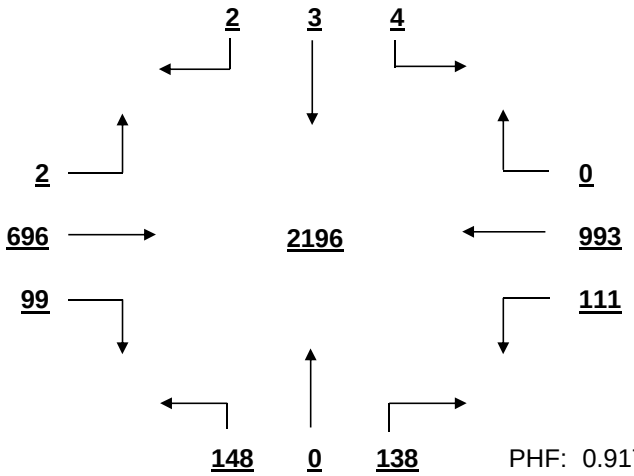

PHF: 0.917

MID-DAY PEAK HOUR VOLUME (11:00-14:00)
FROM 12:15 TO 13:15

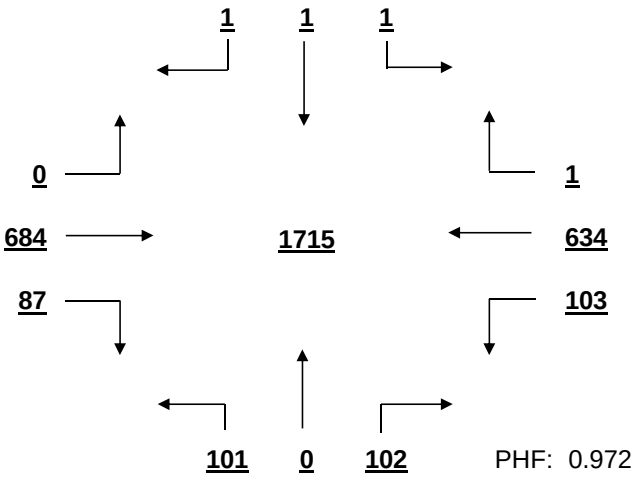

PHF: 0.972

OTHER HOUR VOLUME
FROM 7:00 TO 8:00

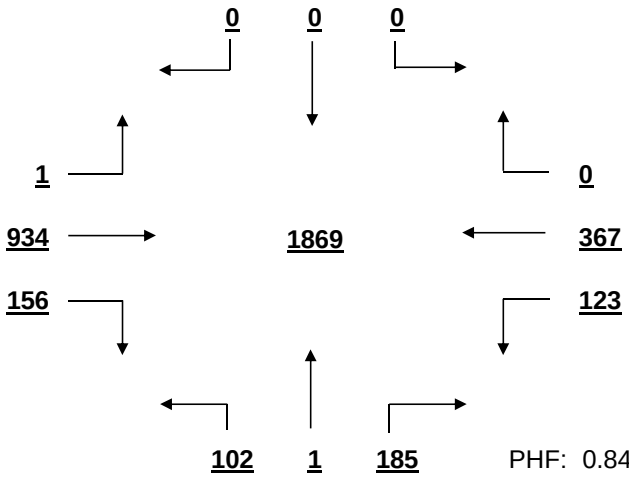

PHF: 0.840

SIGNAL WARRANT ANALYSIS

St. Andrews Rd AT Ashland Rd Date: 11/28/2016

Minor Street Volume, percent of total = 13.0%
Percent of Left Turns from Minor Street = 44.9%
Percent of Right Turns from Minor Street = 54.2%
Percent of Minor Street Right Turns to Remove from Warrant Analysis = 0%
WARRANT BASIS = **100%**

Warrant No. 1 - Vehicular Volume is met

Condition A - Minimum Vehicular Volume is met

Average Major Street % of Warrant				Average Minor Street % of Warrant			
1429.3	/ 600	=	238%	209.6	/ 150	=	140%

Hourly percent of warrant

	7:00 - 8:00	8:00 - 9:00	9:00 - 10:00	10:00 - 11:00	11:00 - 12:00	12:00 - 13:00	13:00 - 14:00	14:00 - 15:00	15:00 - 16:00	16:00 - 17:00	17:00 - 18:00	18:00 - 19:00
Major St.	264%	235%	170%	174%	206%	247%	247%	230%	266%	282%	308%	231%
Minor St.	192%	110%	93%	95%	104%	137%	149%	151%	151%	170%	200%	125%

Condition B - Interruption to Continuous Traffic is met

Average Major Street % of Warrant				Average Minor Street % of Warrant			
1429.3	/ 900	=	159%	209.6	/ 75	=	279%

Hourly percent of warrant

	7:00 - 8:00	8:00 - 9:00	9:00 - 10:00	10:00 - 11:00	11:00 - 12:00	12:00 - 13:00	13:00 - 14:00	14:00 - 15:00	15:00 - 16:00	16:00 - 17:00	17:00 - 18:00	18:00 - 19:00
Major St.	176%	156%	113%	116%	137%	165%	164%	153%	177%	188%	206%	154%
Minor St.	384%	220%	185%	191%	208%	275%	297%	301%	303%	340%	400%	249%

80% Combination of Conditions A & B is met

Warrant No. 2 - Four Hour Vehicular Volume is met

Hourly percent of warrant

	7:00 - 8:00	8:00 - 9:00	9:00 - 10:00	10:00 - 11:00	11:00 - 12:00	12:00 - 13:00	13:00 - 14:00	14:00 - 15:00	15:00 - 16:00	16:00 - 17:00	17:00 - 18:00	18:00 - 19:00
Minor St.	360%	206%	101%	108%	158%	258%	279%	283%	284%	319%	375%	234%

Warrant No. 3 - Peak Hour is met

	Percent of warrant		Percent of warrant
Overall Peak Hour:	16:45 - 17:45	Higher Volume Side Street Peak Hour:	7:15 - 8:15
Minor St.	286%	Minor St.	283%

Warrant No. 4 - Pedestrian Volume. Pedestrian volume shown are minumum volumes assuming heavy major street traffic. If these volumes are met, warrant 4 requires further engineering analysis

Minimum 4 hour ped. volume crossing major street: 107

Minimum peak hour ped. volume crossing major street: 133

Number of pedestrians crossing major street

	7:00 - 8:00	8:00 - 9:00	9:00 - 10:00	10:00 - 11:00	11:00 - 12:00	12:00 - 13:00	13:00 - 14:00	14:00 - 15:00	15:00 - 16:00	16:00 - 17:00	17:00 - 18:00	18:00 - 19:00
Major St.	0	6	3	5	2	5	2	0	0	0	2	0

Warrant No. 7 - Crash Experience (Requires 3 criteria analysis by engineering)

Total Number: 0 From: 1/1/2005 to 1/1/2008
Accident Rate: 0.00 per million entering vehicles

Types of Accidents	No.	/	Avg.		No.	/	Avg.
Right Angle	0	/	0.0	Rear End	0	/	0.0
Lost Control	0	/	0.0	Side Swipe	0	/	0.0
Left Turn	0	/	0.0	Other	0	/	0.0

SOUTH CAROLINA DEPARTMENT OF TRANSPORTATION
DISTRICT 1
TRAFFIC ENGINEERING

County: Richland City: Columbia Date: 11/28/2016

Major Rt: St. Andrews Rd * Not on State System Minor Rt: Kilbrannon Dr-St Andrews Apts * Not on State System

Day of Week: Monday Weather: Clear Office: Short Counts JMS

Type of Control: Signal Speed Limit (major st) 40

Direction of Minor Street: N-S Intersection ADT - 20170 (Calc)

Number of Lanes (major st)* 2 Number of Lanes (minor st)* 1 * Each Direction

INTERSECTION VOLUME SUMMARY

	From N Kilbrannon Dr-St A				From S Kilbrannon Dr-St A				From E St. Andrews Rd				From W St. Andrews Rd				Total	Total
	LT	STR	RT	TOT	LT	STR	RT	TOT	LT	STR	RT	TOT	LT	STR	RT	TOT	Vol	Peds
7:00 - 7:15	3	0	1	4	1	0	10	11	8	94	5	107	3	189	5	197	319	2
7:15 - 7:30	6	0	5	11	0	1	15	16	11	108	4	123	3	254	3	260	410	1
7:30 - 7:45	7	0	7	14	1	0	20	21	17	129	3	149	7	325	7	339	523	0
7:45 - 8:00	7	1	2	10	3	1	11	15	7	130	6	143	2	297	12	311	479	1
8:00 - 8:15	1	0	10	11	0	0	11	11	10	124	7	141	2	274	3	279	442	0
8:15 - 8:30	5	0	0	5	0	0	21	21	10	125	3	138	2	266	7	275	439	0
8:30 - 8:45	5	0	3	8	3	0	11	14	8	105	1	114	2	203	2	207	343	0
8:45 - 9:00	1	0	3	4	3	0	13	16	7	128	1	136	1	168	9	178	334	1
9:00 - 9:15	3	0	3	6	2	0	12	14	13	102	1	116	2	178	6	186	322	0
9:15 - 9:30	3	0	3	6	2	0	12	14	12	101	5	118	1	133	2	136	274	3
9:30 - 9:45	5	0	3	8	2	0	8	10	12	119	3	134	2	140	2	144	296	3
9:45 - 10:00	1	0	1	2	2	0	13	15	10	127	1	138	1	125	5	131	286	3
10:00 - 10:15	4	1	1	6	5	0	7	12	12	125	1	138	4	120	5	129	285	1
10:15 - 10:30	6	0	3	9	4	0	5	9	12	114	1	127	1	156	1	158	303	0
10:30 - 10:45	4	0	4	8	9	0	5	14	8	111	4	123	2	130	4	136	281	0
10:45 - 11:00	3	0	2	5	1	0	12	13	9	113	4	126	1	140	7	148	292	2
11:00 - 11:15	2	0	2	4	0	0	15	15	14	148	1	163	0	139	2	141	323	1
11:15 - 11:30	2	0	3	5	2	0	12	14	15	134	3	152	0	118	7	125	296	0
11:30 - 11:45	6	0	2	8	2	0	12	14	14	145	4	163	2	144	5	151	336	6
11:45 - 12:00	4	0	0	4	2	0	12	14	6	169	6	181	5	171	6	182	381	1
12:00 - 12:15	1	2	1	4	3	0	14	17	20	152	10	182	0	165	5	170	373	6
12:15 - 12:30	1	1	4	6	9	0	23	32	14	170	7	191	2	184	3	189	418	0
12:30 - 12:45	2	0	0	2	6	0	17	23	13	182	4	199	1	173	4	178	402	1
12:45 - 13:00	6	0	2	8	5	0	32	37	12	173	3	188	3	190	6	199	432	1
13:00 - 13:15	4	1	4	9	2	0	24	26	20	166	8	194	1	183	6	190	419	2
13:15 - 13:30	4	2	2	8	5	0	16	21	16	163	2	181	1	198	5	204	414	2
13:30 - 13:45	5	0	1	6	2	1	15	18	8	159	4	171	4	192	9	205	400	0
13:45 - 14:00	5	0	3	8	5	0	22	27	13	182	1	196	4	184	2	190	421	0
14:00 - 14:15	5	1	1	7	2	0	17	19	11	154	4	169	0	182	3	185	380	1
14:15 - 14:30	6	0	2	8	1	0	16	17	16	174	4	194	1	162	4	167	386	1
14:30 - 14:45	2	0	5	7	5	2	25	32	10	163	5	178	3	170	5	178	395	1
14:45 - 15:00	4	0	3	7	1	2	13	16	4	176	7	187	2	184	4	190	400	0
15:00 - 15:15	5	0	6	11	2	0	11	13	11	185	5	201	3	219	7	229	454	2
15:15 - 15:30	5	0	4	9	2	1	14	17	12	180	3	195	6	162	2	170	391	1
15:30 - 15:45	6	0	7	13	1	0	16	17	10	191	8	209	3	185	2	190	429	3
15:45 - 16:00	5	1	2	8	5	0	11	16	6	206	2	214	3	183	3	189	427	3
16:00 - 16:15	6	0	5	11	8	1	1	10	7	199	9	215	4	187	1	192	428	4
16:15 - 16:30	5	0	1	6	6	0	2	8	6	216	10	232	2	157	0	159	405	1
16:30 - 16:45	6	0	5	11	9	0	4	13	11	231	8	250	1	144	0	145	419	1
16:45 - 17:00	3	0	3	6	11	0	1	12	11	256	10	277	2	165	5	172	467	0
17:00 - 17:15	5	0	4	9	1	0	20	21	5	243	3	251	3	210	6	219	500	1
17:15 - 17:30	0	0	7	7	3	0	9	12	7	291	4	302	2	198	3	203	524	2
17:30 - 17:45	10	0	6	16	1	0	12	13	5	283	8	296	2	183	2	187	512	1
17:45 - 18:00	3	0	3	6	3	0	7	10	8	237	12	257	7	197	4	208	481	2
18:00 - 18:15	8	1	2	11	4	1	12	17	18	241	4	263	5	180	3	188	479	1
18:15 - 18:30	12	0	3	15	2	0	6	8	3	293	4	300	2	150	5	157	480	0
18:30 - 18:45	5	0	3	8	2	0	14	16	10	284	8	302	5	147	4	156	482	2
18:45 - 19:00	5	0	6	11	4	0	8	12	3	248	12	263	5	120	5	130	416	3
TOTAL	212	11	153	376	154	10	619	783	505	8249	233	8987	120	8624	208	8952	19098	67
Trucks	0	0	0	0	1	0	3	4	4	171	7	182	0	172	0	172	358	1.9%
School Buses	0	0	1	1	0	0	0	0	0	20	2	22	1	19	0	20	43	0.2%

TOTAL AND PEAK HOUR VOLUME DIAGRAMS

St. Andrews Rd AT Kilbrannon Dr-St Andrews Apts Date: 11/28/2016

12.0 HOUR TOTAL VOLUME
FROM 7:00 TO 15:00

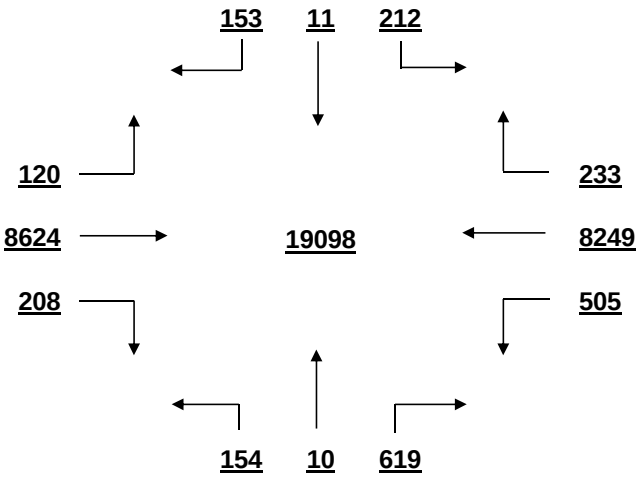

OVERALL PEAK HOUR VOLUME
FROM 17:00 TO 18:00

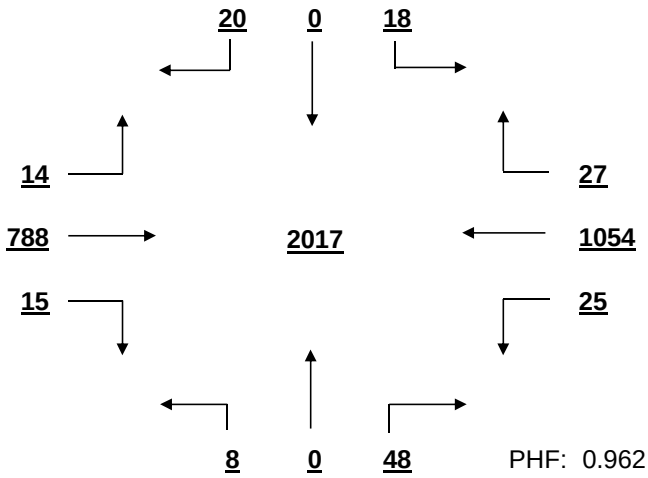

PHF: 0.962

AM PEAK HOUR VOLUME (0:00-10:45)
FROM 7:30 TO 8:30

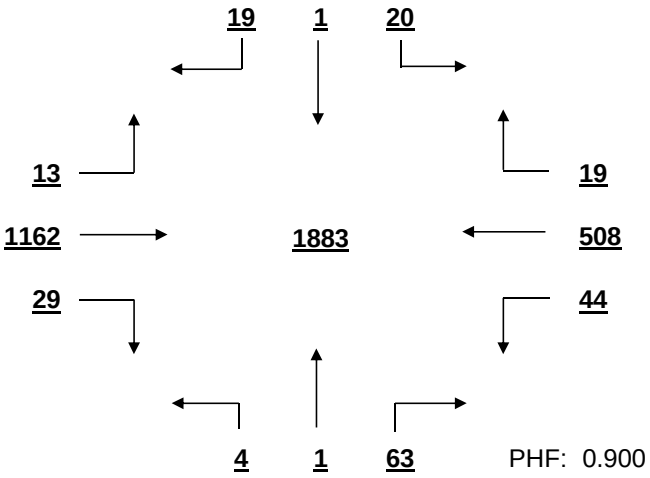

PHF: 0.900

PM PEAK HOUR VOLUME (14:15-23:45)
FROM 17:00 TO 18:00

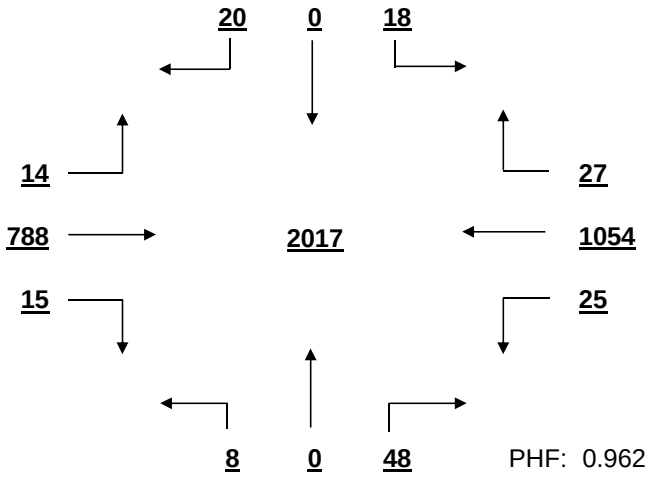

PHF: 0.962

MID-DAY PEAK HOUR VOLUME (11:00-14:00)
FROM 12:15 TO 13:15

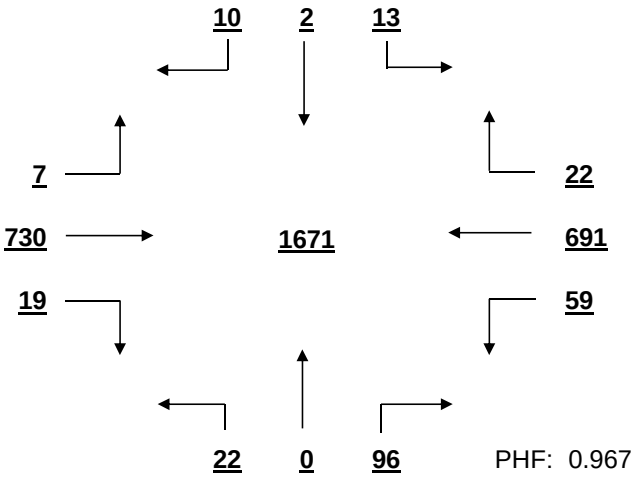

PHF: 0.967

OTHER HOUR VOLUME
FROM 7:00 TO 8:00

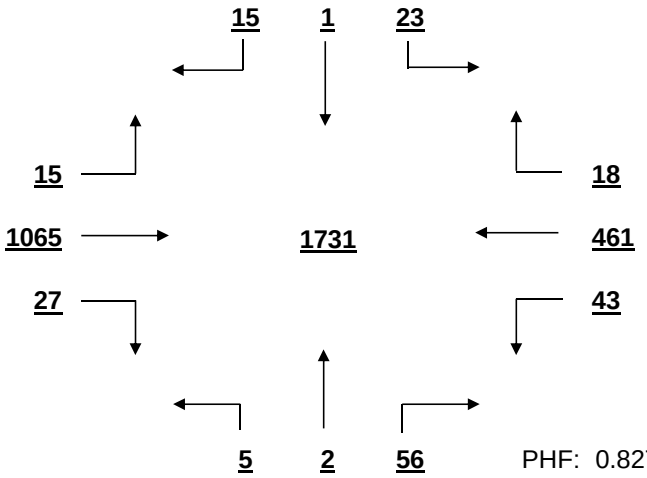

PHF: 0.827

SIGNAL WARRANT ANALYSIS

St. Andrews Rd AT Kilbrannon Dr-St Andrews Apts Date: 11/28/2016

Minor Street Volume, percent of total = 6.1%
Percent of Left Turns from Minor Street = 31.6%
Percent of Right Turns from Minor Street = 66.6%
Percent of Minor Street Right Turns to Remove from Warrant Analysis = 0%
WARRANT BASIS = **100%**

Warrant No. 1 - Vehicular Volume is not met

Condition A - Minimum Vehicular Volume is not met

Average Major Street % of Warrant				Average Minor Street % of Warrant			
1494.9	/ 600	=	249%	65.3	/ 150	=	44%

Hourly percent of warrant

	7:00 - 8:00	8:00 - 9:00	9:00 - 10:00	10:00 - 11:00	11:00 - 12:00	12:00 - 13:00	13:00 - 14:00	14:00 - 15:00	15:00 - 16:00	16:00 - 17:00	17:00 - 18:00	18:00 - 19:00
Major St.	272%	245%	184%	181%	210%	249%	255%	241%	266%	274%	321%	293%
Minor St.	42%	41%	35%	32%	38%	73%	61%	56%	42%	29%	37%	35%

Condition B - Interruption to Continuous Traffic is not met

Average Major Street % of Warrant				Average Minor Street % of Warrant			
1494.9	/ 900	=	166%	65.3	/ 75	=	87%

Hourly percent of warrant

	7:00 - 8:00	8:00 - 9:00	9:00 - 10:00	10:00 - 11:00	11:00 - 12:00	12:00 - 13:00	13:00 - 14:00	14:00 - 15:00	15:00 - 16:00	16:00 - 17:00	17:00 - 18:00	18:00 - 19:00
Major St.	181%	163%	123%	121%	140%	166%	170%	161%	177%	182%	214%	195%
Minor St.	84%	83%	71%	64%	76%	145%	123%	112%	84%	57%	75%	71%

80% Combination of Conditions A & B is not met

Warrant No. 2 - Four Hour Vehicular Volume is not met

Hourly percent of warrant

	7:00 - 8:00	8:00 - 9:00	9:00 - 10:00	10:00 - 11:00	11:00 - 12:00	12:00 - 13:00	13:00 - 14:00	14:00 - 15:00	15:00 - 16:00	16:00 - 17:00	17:00 - 18:00	18:00 - 19:00
Minor St.	79%	78%	44%	39%	59%	136%	115%	105%	79%	54%	70%	66%

Warrant No. 3 - Peak Hour is not met

	Percent of warrant		Percent of warrant
Overall Peak Hour:	17:00 - 18:00	Higher Volume Side Street Peak Hour:	12:15 - 13:15
Minor St.	56%	Minor St.	89%

Warrant No. 4 - Pedestrian Volume. Pedestrian volume shown are minumum volumes assuming heavy major street traffic. If these volumes are met, warrant 4 requires further engineering analysis

Minimum 4 hour ped. volume crossing major street	Minimum peak hour ped. volume crossing major street
107	133

Number of pedestrians crossing major street

	7:00 - 8:00	8:00 - 9:00	9:00 - 10:00	10:00 - 11:00	11:00 - 12:00	12:00 - 13:00	13:00 - 14:00	14:00 - 15:00	15:00 - 16:00	16:00 - 17:00	17:00 - 18:00	18:00 - 19:00
Major St.	0	0	1	0	4	1	2	1	0	0	0	0

Warrant No. 7 - Crash Experience (Requires 3 criteria analysis by engineering)

Total Number: 0 From: 1/1/2005 to 1/1/2008
Accident Rate: 0.00 per million entering vehicles

Types of Accidents	No.	/	Avg.		No.	/	Avg.
Right Angle	0	/	0.0	Rear End	0	/	0.0
Lost Control	0	/	0.0	Side Swipe	0	/	0.0
Left Turn	0	/	0.0	Other	0	/	0.0

SOUTH CAROLINA DEPARTMENT OF TRANSPORTATION
DISTRICT 1
TRAFFIC ENGINEERING

County: Richland City: Columbia Date: 11/28/2016

Major Rt: St. Andrews Rd * Not on State System Minor Rt: Jamil Rd * Not on State System

Day of Week: Monday Weather: Clear Office: Short Counts JMS

Type of Control: Signal Speed Limit (major st) 40

Direction of Minor Street: N-S Intersection ADT - 23890 (Calc)

Number of Lanes (major st)* 2 Number of Lanes (minor st)* 1

* Each Direction

INTERSECTION VOLUME SUMMARY

	From N Jamil Rd				From S Jamil Rd				From E St. Andrews Rd				From W St. Andrews Rd				Total	Total
	LT	STR	RT	TOT	LT	STR	RT	TOT	LT	STR	RT	TOT	LT	STR	RT	TOT	Vol	Peds
7:00 - 7:15	17	0	9	26	0	0	0	0	0	91	12	103	2	193	0	195	324	3
7:15 - 7:30	30	0	14	44	0	0	0	0	1	114	15	130	7	263	1	271	445	1
7:30 - 7:45	54	0	17	71	0	0	0	0	0	123	27	150	5	337	0	342	563	0
7:45 - 8:00	62	0	8	70	0	0	0	0	0	144	18	162	4	313	0	317	549	1
8:00 - 8:15	60	0	13	73	0	0	0	0	0	131	18	149	4	296	0	300	522	0
8:15 - 8:30	47	0	0	47	0	0	0	0	0	127	25	152	5	285	0	290	489	0
8:30 - 8:45	25	0	7	32	0	0	0	0	0	108	24	132	3	217	0	220	384	1
8:45 - 9:00	33	0	5	38	0	0	0	0	0	147	31	178	5	184	0	189	405	1
9:00 - 9:15	26	0	5	31	0	0	0	0	0	117	37	154	7	187	0	194	379	0
9:15 - 9:30	38	0	4	42	0	0	0	0	0	112	31	143	2	147	0	149	334	1
9:30 - 9:45	33	0	6	39	0	0	0	0	0	135	25	160	10	153	0	163	362	2
9:45 - 10:00	34	0	9	43	0	0	0	0	0	137	45	182	3	133	0	136	361	1
10:00 - 10:15	26	0	9	35	0	0	0	0	0	122	23	145	5	124	0	129	309	0
10:15 - 10:30	29	0	9	38	0	0	0	0	0	118	32	150	9	165	0	174	362	1
10:30 - 10:45	38	0	9	47	0	0	0	0	0	130	31	161	5	140	0	145	353	2
10:45 - 11:00	28	0	11	39	0	0	0	0	0	115	24	139	9	152	0	161	339	1
11:00 - 11:15	32	0	12	44	0	0	0	0	0	155	25	180	15	158	0	173	397	1
11:15 - 11:30	28	0	9	37	0	0	0	0	0	163	31	194	12	146	0	158	389	1
11:30 - 11:45	29	0	14	43	0	0	0	0	0	167	55	222	15	175	0	190	455	0
11:45 - 12:00	43	0	18	61	0	0	0	0	0	165	43	208	9	184	0	193	462	2
12:00 - 12:15	41	0	7	48	0	0	0	0	0	193	44	237	9	163	0	172	457	4
12:15 - 12:30	44	0	9	53	0	0	0	0	0	211	33	244	10	206	0	216	513	0
12:30 - 12:45	40	0	24	64	0	0	0	0	0	203	36	239	10	205	0	215	518	0
12:45 - 13:00	46	0	20	66	0	0	0	0	0	182	45	227	12	239	0	251	544	1
13:00 - 13:15	54	0	9	63	0	0	0	0	0	191	42	233	13	225	0	238	534	0
13:15 - 13:30	57	0	19	76	0	0	1	1	0	177	60	237	8	213	1	222	536	1
13:30 - 13:45	43	0	19	62	1	0	0	1	0	166	42	208	11	220	1	232	503	1
13:45 - 14:00	58	0	21	79	0	0	1	1	0	186	44	230	12	230	1	243	553	3
14:00 - 14:15	51	0	13	64	0	0	0	0	0	166	39	205	15	206	0	221	490	2
14:15 - 14:30	49	0	18	67	0	0	0	0	0	195	59	254	12	168	0	180	501	0
14:30 - 14:45	38	0	17	55	0	0	0	0	0	170	49	219	17	190	0	207	481	3
14:45 - 15:00	43	0	14	57	0	0	0	0	0	176	41	217	18	199	0	217	491	3
15:00 - 15:15	60	0	18	78	0	0	0	0	0	193	35	228	11	238	0	249	555	3
15:15 - 15:30	60	0	13	73	0	0	0	0	0	201	33	234	10	183	1	194	501	1
15:30 - 15:45	47	0	8	55	0	0	0	0	0	202	51	253	14	216	0	230	538	5
15:45 - 16:00	31	0	11	42	0	0	1	1	0	201	53	254	8	212	1	221	518	3
16:00 - 16:15	61	0	22	83	0	0	0	0	1	211	62	274	9	208	0	217	574	2
16:15 - 16:30	62	0	12	74	0	0	0	0	0	234	62	296	14	221	0	235	605	5
16:30 - 16:45	52	0	24	76	0	0	0	0	0	229	72	301	16	188	0	204	581	3
16:45 - 17:00	43	0	19	62	0	0	0	0	0	274	54	328	9	194	0	203	593	1
17:00 - 17:15	55	1	14	70	0	0	0	0	0	244	51	295	13	206	0	219	584	3
17:15 - 17:30	40	0	10	50	0	0	0	0	0	294	74	368	9	204	0	213	631	2
17:30 - 17:45	41	0	15	56	0	0	0	0	0	242	54	296	10	187	0	197	549	4
17:45 - 18:00	33	0	13	46	0	0	0	0	0	260	67	327	20	206	0	226	599	0
18:00 - 18:15	54	0	10	64	0	0	0	0	0	210	65	275	16	195	0	211	550	0
18:15 - 18:30	36	0	9	45	0	0	0	0	0	249	63	312	12	176	0	188	545	1
18:30 - 18:45	36	0	10	46	0	0	0	0	0	209	43	252	10	167	0	177	475	2
18:45 - 19:00	23	0	6	29	0	0	0	0	0	166	30	196	7	146	0	153	378	2
TOTAL	2010	1	592	2603	1	0	3	4	2	8456	1975	10433	471	9563	6	10040	23080	74
Trucks	26	1	6	33	0	0	0	0	0	123	22	145	5	156	2	163	341	1.5%
School Buses	8	0	3	11	0	0	0	0	0	13	15	28	1	30	0	31	70	0.3%

TOTAL AND PEAK HOUR VOLUME DIAGRAMS

St. Andrews Rd AT Jamil Rd Date: 11/28/2016

12.0 HOUR TOTAL VOLUME
FROM 7:00 TO 15:00

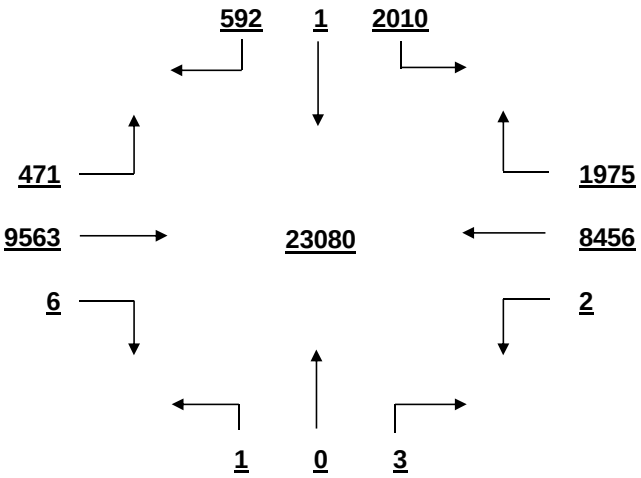

OVERALL PEAK HOUR VOLUME
FROM 16:30 TO 17:30

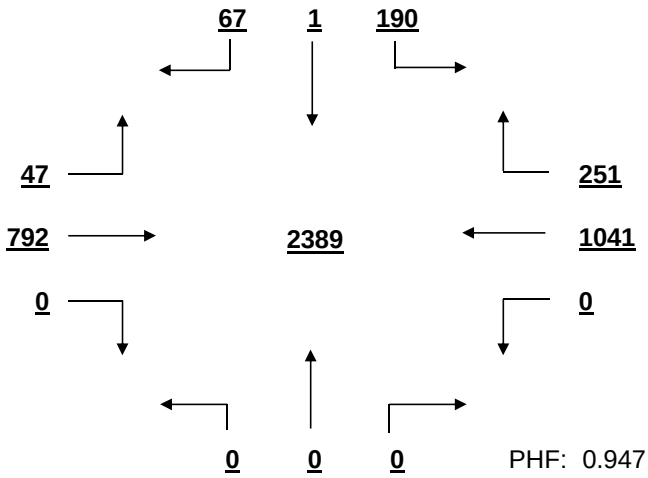

PHF: 0.947

AM PEAK HOUR VOLUME (0:00-10:45)
FROM 7:30 TO 8:30

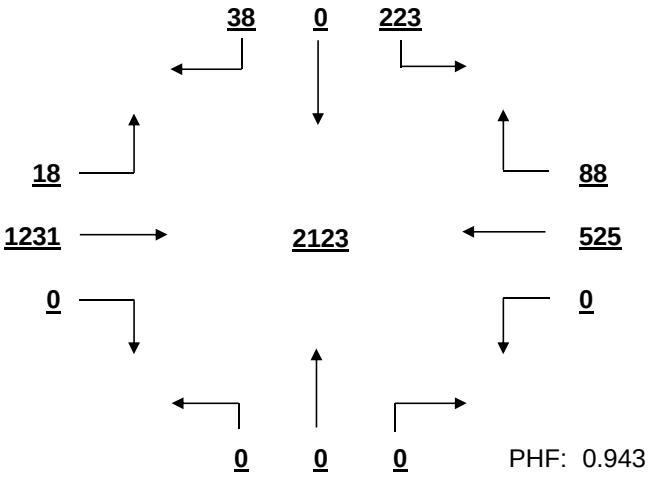

PHF: 0.943

PM PEAK HOUR VOLUME (14:15-23:45)
FROM 16:30 TO 17:30

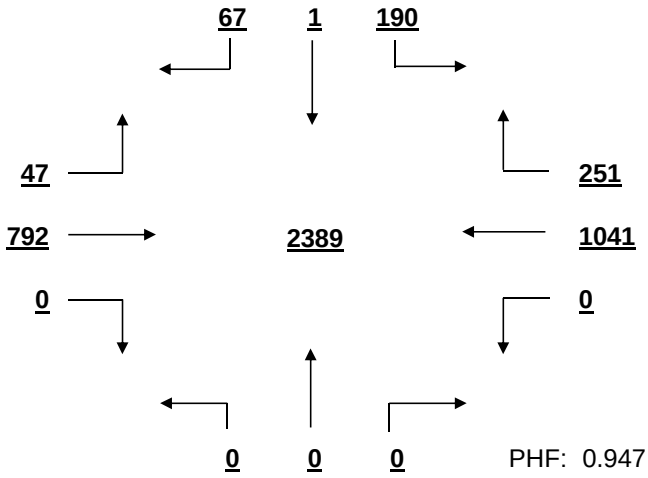

PHF: 0.947

MID-DAY PEAK HOUR VOLUME (11:00-14:00)
FROM 12:30 TO 13:30

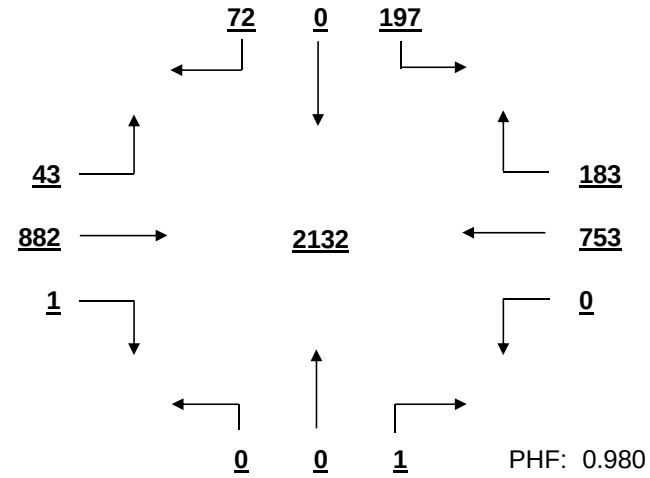

PHF: 0.980

OTHER HOUR VOLUME
FROM 7:00 TO 8:00

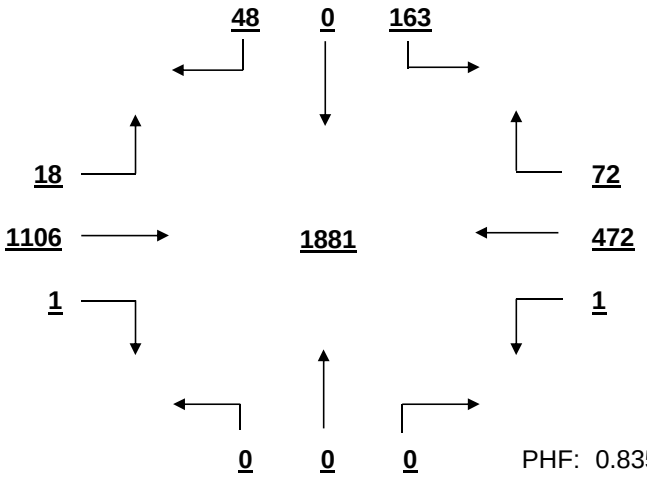

PHF: 0.835

SIGNAL WARRANT ANALYSIS

St. Andrews Rd AT Jamil Rd Date: 11/28/2016

Minor Street Volume, percent of total = 11.3%
Percent of Left Turns from Minor Street = 77.1%
Percent of Right Turns from Minor Street = 22.8%
Percent of Minor Street Right Turns to Remove from Warrant Analysis = 0%
WARRANT BASIS = **100%**

Warrant No. 1 - Vehicular Volume is met

Condition A - Minimum Vehicular Volume is met

Average Major Street % of Warrant				Average Minor Street % of Warrant			
1706.1	/ 600	=	284%	216.9	/ 150	=	145%

Hourly percent of warrant

	7:00 - 8:00	8:00 - 9:00	9:00 - 10:00	10:00 - 11:00	11:00 - 12:00	12:00 - 13:00	13:00 - 14:00	14:00 - 15:00	15:00 - 16:00	16:00 - 17:00	17:00 - 18:00	18:00 - 19:00
Major St.	278%	268%	214%	201%	253%	300%	307%	287%	311%	343%	357%	294%
Minor St.	141%	127%	103%	106%	123%	154%	187%	162%	165%	197%	148%	123%

Condition B - Interruption to Continuous Traffic is met

Average Major Street % of Warrant				Average Minor Street % of Warrant			
1706.1	/ 900	=	190%	216.9	/ 75	=	289%

Hourly percent of warrant

	7:00 - 8:00	8:00 - 9:00	9:00 - 10:00	10:00 - 11:00	11:00 - 12:00	12:00 - 13:00	13:00 - 14:00	14:00 - 15:00	15:00 - 16:00	16:00 - 17:00	17:00 - 18:00	18:00 - 19:00
Major St.	186%	179%	142%	134%	169%	200%	205%	191%	207%	229%	238%	196%
Minor St.	281%	253%	207%	212%	247%	308%	373%	324%	331%	393%	296%	245%

80% Combination of Conditions A & B is met

Warrant No. 2 - Four Hour Vehicular Volume is met

Hourly percent of warrant

	7:00 - 8:00	8:00 - 9:00	9:00 - 10:00	10:00 - 11:00	11:00 - 12:00	12:00 - 13:00	13:00 - 14:00	14:00 - 15:00	15:00 - 16:00	16:00 - 17:00	17:00 - 18:00	18:00 - 19:00
Minor St.	264%	238%	166%	154%	231%	289%	350%	304%	310%	369%	278%	230%

Warrant No. 3 - Peak Hour is met

Percent of warrant			Percent of warrant	
Overall Peak Hour: 16:30 - 17:30		Higher Volume Side Street Peak Hour: 16:00 - 17:00		
Minor St.	258%		Minor St.	295%

Warrant No. 4 - Pedestrian Volume. Pedestrian volume shown are minumum volumes assuming heavy major street traffic. If these volumes are met, warrant 4 requires further engineering analysis

Minimum 4 hour ped. volume crossing major street: 107

Minimum peak hour ped. volume crossing major street: 133

Number of pedestrians crossing major street

	7:00 - 8:00	8:00 - 9:00	9:00 - 10:00	10:00 - 11:00	11:00 - 12:00	12:00 - 13:00	13:00 - 14:00	14:00 - 15:00	15:00 - 16:00	16:00 - 17:00	17:00 - 18:00	18:00 - 19:00
Major St.	0	0	0	2	0	0	0	0	0	0	0	0

Warrant No. 7 - Crash Experience (Requires 3 criteria analysis by engineering)

Total Number: 0 From: 1/1/2005 to 1/1/2008
Accident Rate: 0.00 per million entering vehicles

Types of Accidents	No.	/	Avg.		No.	/	Avg.
Right Angle	0	/	0.0	Rear End	0	/	0.0
Lost Control	0	/	0.0	Side Swipe	0	/	0.0
Left Turn	0	/	0.0	Other	0	/	0.0

SOUTH CAROLINA DEPARTMENT OF TRANSPORTATION
DISTRICT 1
TRAFFIC ENGINEERING

County: Richland City: Columbia Date: 11/28/2016

Major Rt: Woodland Hills Rd * Not on State System Minor Rt: Berry Hill Rd-Restaurant * Not on State System

Day of Week: Monday Weather: Clear Office: Short Counts JMS

Type of Control: Stop Sign Speed Limit (major st) 35

Direction of Minor Street: E-W Intersection ADT - 4820 (Calc)

Number of Lanes (major st)* 1 Number of Lanes (minor st)* 1

* Each Direction

INTERSECTION VOLUME SUMMARY

	From N Woodland Hills Rd				From S Woodland Hills Rd				From E Berry Hill Rd-Rest				From W Berry Hill Rd-Rest				Total	Total
	LT	STR	RT	TOT	LT	STR	RT	TOT	LT	STR	RT	TOT	LT	STR	RT	TOT	Vol	Peds
7:00 - 7:15	6	10	0	16	0	7	0	7	1	0	15	16	0	0	0	0	39	0
7:15 - 7:30	28	16	0	44	0	17	2	19	4	0	14	18	1	0	1	2	83	0
7:30 - 7:45	22	13	0	35	1	9	3	13	2	0	7	9	0	0	0	0	57	0
7:45 - 8:00	33	4	0	37	1	3	4	8	0	2	4	6	0	2	3	5	56	0
8:00 - 8:15	9	1	0	10	0	1	0	1	0	1	2	3	0	1	2	3	17	0
8:15 - 8:30	38	4	0	42	2	19	0	21	6	0	12	18	0	2	1	3	84	0
8:30 - 8:45	24	6	0	30	0	4	3	7	4	3	9	16	0	8	1	9	62	0
8:45 - 9:00	27	3	1	31	0	5	1	6	0	1	16	17	0	14	1	15	69	0
9:00 - 9:15	23	6	0	29	0	7	0	7	0	0	8	8	0	0	0	0	44	0
9:15 - 9:30	18	4	0	22	0	8	0	8	1	1	13	15	0	0	0	0	45	0
9:30 - 9:45	13	7	0	20	0	14	1	15	2	0	14	16	0	1	1	2	53	0
9:45 - 10:00	22	11	2	35	0	14	0	14	1	0	17	18	0	0	0	0	67	0
10:00 - 10:15	11	6	1	18	0	8	1	9	0	4	22	26	2	0	0	2	55	0
10:15 - 10:30	20	4	6	30	0	7	0	7	0	1	20	21	1	1	0	2	60	0
10:30 - 10:45	13	7	0	20	1	10	0	11	0	1	18	19	1	0	0	1	51	0
10:45 - 11:00	15	10	0	25	0	18	0	18	1	0	22	23	2	0	0	2	68	0
11:00 - 11:15	11	17	2	30	1	13	0	14	1	0	22	23	0	0	0	0	67	2
11:15 - 11:30	20	11	1	32	1	9	1	11	1	0	20	21	1	0	0	1	65	0
11:30 - 11:45	9	12	1	22	1	9	2	12	0	0	11	11	1	2	0	3	48	0
11:45 - 12:00	6	11	2	19	1	10	2	13	1	1	23	25	2	3	2	7	64	0
12:00 - 12:15	22	12	0	34	0	8	0	8	2	0	33	35	2	0	2	4	81	0
12:15 - 12:30	7	5	3	15	0	10	3	13	3	1	15	19	3	1	2	6	53	0
12:30 - 12:45	31	7	3	41	3	11	0	14	3	3	18	24	1	1	1	3	82	0
12:45 - 13:00	10	5	2	17	2	8	3	13	1	2	17	20	1	0	3	4	54	2
13:00 - 13:15	6	4	0	10	9	15	10	34	1	1	12	14	0	6	3	9	67	0
13:15 - 13:30	39	13	1	53	1	16	2	19	2	0	34	36	0	1	0	1	109	0
13:30 - 13:45	13	10	1	24	0	4	2	6	1	0	15	16	0	0	0	0	46	5
13:45 - 14:00	26	4	3	33	0	8	3	11	1	0	31	32	1	2	0	3	79	0
14:00 - 14:15	33	11	1	45	0	12	4	16	2	0	24	26	1	1	0	2	89	0
14:15 - 14:30	22	11	1	34	1	3	1	5	3	0	10	13	3	1	0	4	56	0
14:30 - 14:45	7	3	0	10	0	11	9	20	1	0	9	10	0	1	1	2	42	0
14:45 - 15:00	21	14	1	36	0	16	4	20	3	0	18	21	0	0	0	0	77	0
15:00 - 15:15	34	8	2	44	0	14	2	16	0	0	32	32	2	0	1	3	95	0
15:15 - 15:30	31	7	1	39	1	10	1	12	1	0	32	33	2	1	2	5	89	0
15:30 - 15:45	20	16	0	36	0	16	1	17	3	0	25	28	2	0	2	4	85	0
15:45 - 16:00	18	15	3	36	2	7	0	9	1	0	25	26	1	1	0	2	73	0
16:00 - 16:15	25	17	0	42	0	16	1	17	2	0	28	30	2	1	0	3	92	0
16:15 - 16:30	28	13	0	41	1	8	1	10	2	0	38	40	2	0	0	2	93	0
16:30 - 16:45	24	23	1	48	0	12	3	15	2	1	40	43	1	0	0	1	107	0
16:45 - 17:00	29	19	3	51	0	14	1	15	2	0	34	36	1	1	0	2	104	0
17:00 - 17:15	26	18	1	45	0	16	1	17	0	1	72	73	0	1	0	1	136	0
17:15 - 17:30	20	25	1	46	0	20	7	27	3	1	57	61	0	0	1	1	135	0
17:30 - 17:45	21	14	3	38	0	14	4	18	5	1	41	47	1	0	0	1	104	0
17:45 - 18:00	15	10	5	30	0	9	0	9	0	1	19	20	0	1	0	1	60	0
18:00 - 18:15	21	11	3	35	0	13	0	13	0	1	24	25	2	0	2	4	77	0
18:15 - 18:30	27	22	1	50	0	10	1	11	2	1	15	18	2	0	1	3	82	0
18:30 - 18:45	16	14	0	30	0	8	1	9	1	0	13	14	4	1	0	5	58	0
18:45 - 19:00	12	12	1	25	0	6	2	8	1	1	10	12	2	1	0	3	48	0
TOTAL	972	506	57	1535	29	507	87	623	73	30	1030	1133	47	56	33	136	3427	9
Trucks	4	7	0	11	0	3	1	4	0	0	2	2	0	1	1	2	19	0.6%
School Buses	7	0	0	7	0	3	0	3	0	0	5	5	0	0	0	0	15	0.4%

TOTAL AND PEAK HOUR VOLUME DIAGRAMS

Woodland Hills Rd AT Berry Hill Rd-Restaurant Date: 11/28/2016

12.0 HOUR TOTAL VOLUME
FROM 7:00 TO 15:00

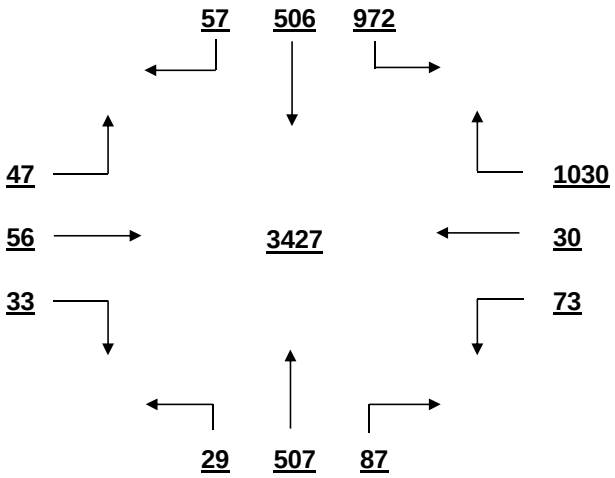

OVERALL PEAK HOUR VOLUME
FROM 16:30 TO 17:30

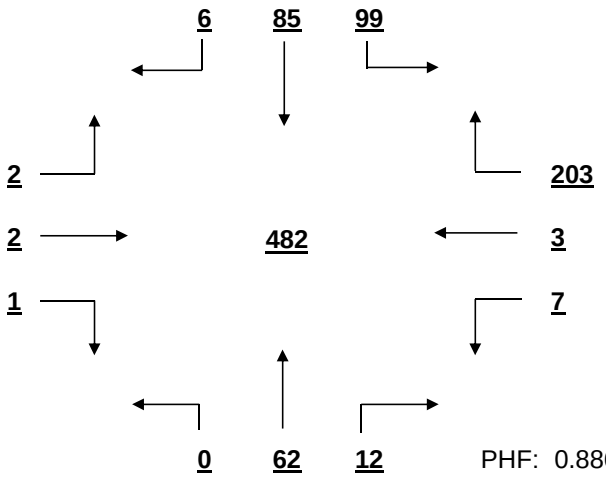

PHF: 0.886

AM PEAK HOUR VOLUME (0:00-10:45)
FROM 8:15 TO 9:15

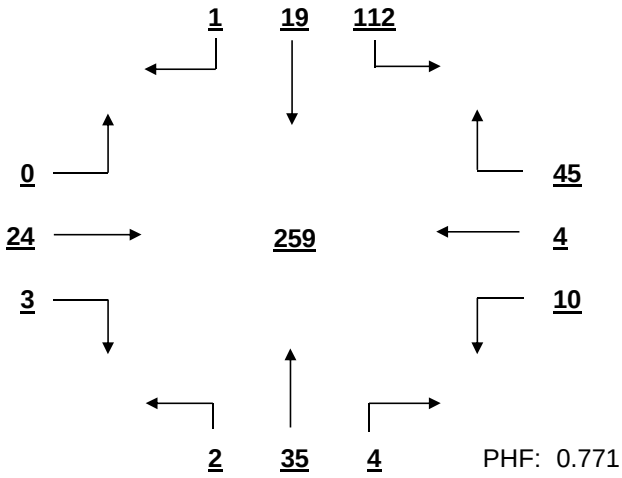

PHF: 0.771

PM PEAK HOUR VOLUME (14:15-23:45)
FROM 16:30 TO 17:30

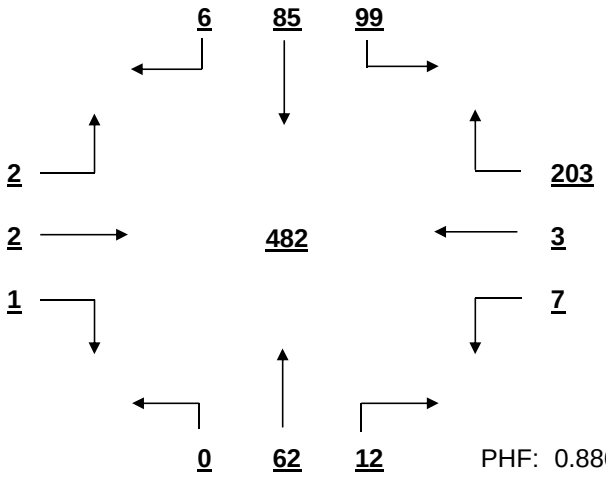

PHF: 0.886

MID-DAY PEAK HOUR VOLUME (11:00-14:00)
FROM 12:30 TO 13:30

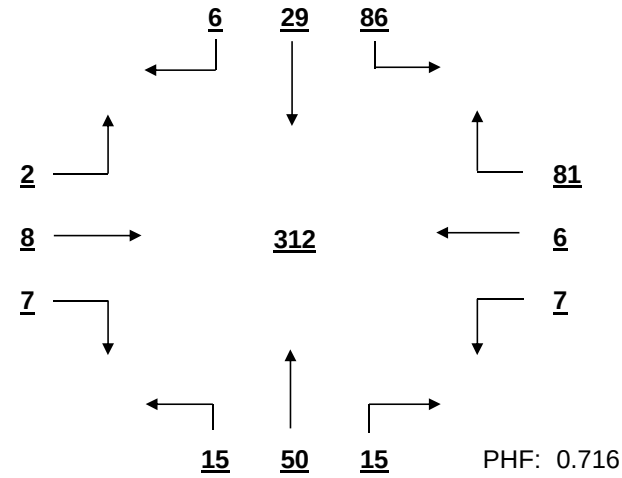

PHF: 0.716

OTHER HOUR VOLUME
FROM 7:00 TO 8:00

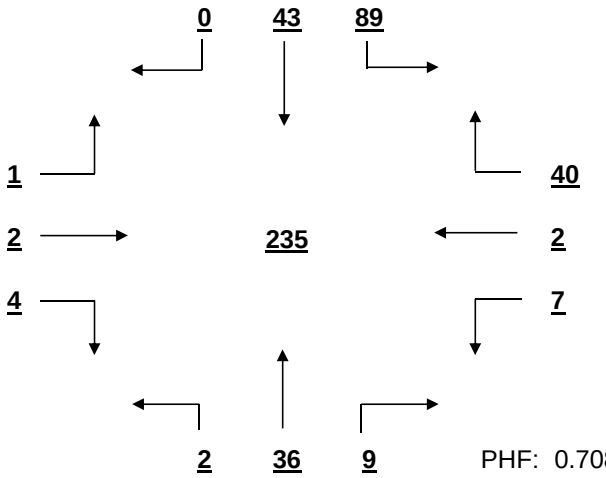

PHF: 0.708

SIGNAL WARRANT ANALYSIS

Woodland Hills Rd AT Berry Hill Rd-Restaurant Date: 11/28/2016

Minor Street Volume, percent of total = 37.0%
Percent of Left Turns from Minor Street = 9.5%
Percent of Right Turns from Minor Street = 83.8%
Percent of Minor Street Right Turns to Remove from Warrant Analysis = 0%
WARRANT BASIS = **100%**

Warrant No. 1 - Vehicular Volume is not met

Condition A - Minimum Vehicular Volume is not met

Average Major Street % of Warrant				Average Minor Street % of Warrant			
179.8	/ 500	=	36%	94.4	/ 150	=	63%

Hourly percent of warrant

	7:00 - 8:00	8:00 - 9:00	9:00 - 10:00	10:00 - 11:00	11:00 - 12:00	12:00 - 13:00	13:00 - 14:00	14:00 - 15:00	15:00 - 16:00	16:00 - 17:00	17:00 - 18:00	18:00 - 19:00
Major St.	36%	30%	30%	28%	31%	31%	38%	37%	42%	48%	46%	36%
Minor St.	33%	36%	38%	59%	53%	65%	65%	47%	79%	99%	134%	46%

Condition B - Interruption to Continuous Traffic is not met

Average Major Street % of Warrant				Average Minor Street % of Warrant			
179.8	/ 750	=	24%	94.4	/ 75	=	126%

Hourly percent of warrant

	7:00 - 8:00	8:00 - 9:00	9:00 - 10:00	10:00 - 11:00	11:00 - 12:00	12:00 - 13:00	13:00 - 14:00	14:00 - 15:00	15:00 - 16:00	16:00 - 17:00	17:00 - 18:00	18:00 - 19:00
Major St.	24%	20%	20%	18%	20%	21%	25%	25%	28%	32%	31%	24%
Minor St.	65%	72%	76%	119%	107%	131%	131%	93%	159%	199%	268%	92%

80% Combination of Conditions A & B is not met

Warrant No. 2 - Four Hour Vehicular Volume is not met

Hourly percent of warrant

	7:00 - 8:00	8:00 - 9:00	9:00 - 10:00	10:00 - 11:00	11:00 - 12:00	12:00 - 13:00	13:00 - 14:00	14:00 - 15:00	15:00 - 16:00	16:00 - 17:00	17:00 - 18:00	18:00 - 19:00
Minor St.	11%	12%	13%	20%	18%	22%	23%	17%	29%	38%	51%	16%

Warrant No. 3 - Peak Hour is not met

	Percent of warrant		Percent of warrant
Overall Peak Hour:	16:30 - 17:30	Higher Volume Side Street Peak Hour:	16:45 - 17:45
Minor St.	37%	Minor St.	38%

Warrant No. 4 - Pedestrian Volume. Pedestrian volume shown are minumum volumes assuming heavy major street traffic. If these volumes are met, warrant 4 requires further engineering analysis

Minimum 4 hour ped. volume crossing major street: 107

Minimum peak hour ped. volume crossing major street: 133

Number of pedestrians crossing major street

	7:00 - 8:00	8:00 - 9:00	9:00 - 10:00	10:00 - 11:00	11:00 - 12:00	12:00 - 13:00	13:00 - 14:00	14:00 - 15:00	15:00 - 16:00	16:00 - 17:00	17:00 - 18:00	18:00 - 19:00
Major St.	0	0	0	0	2	0	0	0	0	0	0	0

Warrant No. 7 - Crash Experience (Requires 3 criteria analysis by engineering)

Total Number: 0 From: 1/1/2005 to 1/1/2008

Accident Rate: 0.00 per million entering vehicles

Types of Accidents	No.	/	Avg.		No.	/	Avg.
Right Angle	0	/	0.0	Rear End	0	/	0.0
Lost Control	0	/	0.0	Side Swipe	0	/	0.0
Left Turn	0	/	0.0	Other	0	/	0.0

SOUTH CAROLINA DEPARTMENT OF TRANSPORTATION
DISTRICT 1
TRAFFIC ENGINEERING

County: Richland City: Columbia Date: 11/28/2016

Major Rt: St. Andrews Rd * Not on State System Minor Rt: Kay St-Chartwell Rd * Not on State System

Day of Week: Monday Weather: Clear Office: Short Counts JMS

Type of Control: Signal Speed Limit (major st) 40

Direction of Minor Street: N-S Intersection ADT - 18950 (Calc)

Number of Lanes (major st)* 2 Number of Lanes (minor st)* 1

* Each Direction

INTERSECTION VOLUME SUMMARY

	From N Kay St-Chartwell R				From S Kay St-Chartwell R				From E St. Andrews Rd				From W St. Andrews Rd				Total	Total
	LT	STR	RT	TOT	LT	STR	RT	TOT	LT	STR	RT	TOT	LT	STR	RT	TOT	Vol	Peds
7:00 - 7:15	5	0	37	42	3	0	2	5	2	96	1	99	22	86	1	109	255	0
7:15 - 7:30	8	0	45	53	6	1	1	8	2	110	2	114	20	107	1	128	303	1
7:30 - 7:45	10	0	60	70	3	0	1	4	0	162	5	167	28	97	2	127	368	0
7:45 - 8:00	10	1	64	75	3	1	2	6	1	181	4	186	18	118	1	137	404	1
8:00 - 8:15	5	0	60	65	2	0	1	3	2	136	6	144	21	121	3	145	357	0
8:15 - 8:30	6	0	0	6	4	0	2	6	0	130	6	136	22	122	1	145	293	0
8:30 - 8:45	4	0	29	33	1	0	1	2	0	119	1	120	23	116	2	141	296	0
8:45 - 9:00	5	0	16	21	3	0	0	3	0	112	3	115	23	118	2	143	282	0
9:00 - 9:15	7	0	20	27	3	0	1	4	0	110	3	113	14	100	1	115	259	0
9:15 - 9:30	8	0	19	27	1	0	0	1	1	96	7	104	14	89	0	103	235	1
9:30 - 9:45	9	0	28	37	0	0	1	1	1	95	2	98	10	94	0	104	240	1
9:45 - 10:00	3	0	25	28	1	0	2	3	2	117	4	123	11	94	1	106	260	0
10:00 - 10:15	1	0	20	21	1	0	0	1	0	88	11	99	15	98	0	113	234	0
10:15 - 10:30	6	0	19	25	2	0	0	2	0	109	4	113	17	104	1	122	262	0
10:30 - 10:45	10	0	20	30	3	0	0	3	1	97	7	105	25	101	4	130	268	0
10:45 - 11:00	5	0	20	25	0	0	0	0	0	99	10	109	17	106	1	124	258	0
11:00 - 11:15	7	0	25	32	0	1	0	1	0	109	10	119	17	103	3	123	275	2
11:15 - 11:30	9	1	16	26	2	0	1	3	1	108	15	124	21	113	3	137	290	1
11:30 - 11:45	13	1	14	28	3	1	0	4	1	116	6	123	21	107	1	129	284	0
11:45 - 12:00	11	0	25	36	3	0	1	4	0	116	14	130	19	126	4	149	319	2
12:00 - 12:15	16	1	34	51	1	0	0	1	1	115	16	132	26	128	3	157	341	0
12:15 - 12:30	13	1	29	43	4	0	1	5	1	148	12	161	25	156	3	184	393	0
12:30 - 12:45	13	0	26	39	3	0	0	3	1	138	9	148	19	129	2	150	340	2
12:45 - 13:00	11	0	25	36	2	1	1	4	1	136	15	152	34	151	1	186	378	0
13:00 - 13:15	12	0	22	34	7	0	1	8	4	138	15	157	32	176	2	210	409	0
13:15 - 13:30	8	0	23	31	6	0	0	6	2	134	15	151	23	133	1	157	345	0
13:30 - 13:45	14	1	25	40	8	2	2	12	2	142	10	154	25	140	2	167	373	1
13:45 - 14:00	11	0	16	27	3	0	1	4	1	126	7	134	28	146	3	177	342	0
14:00 - 14:15	17	0	29	46	7	1	2	10	0	136	13	149	33	129	1	163	368	2
14:15 - 14:30	13	3	27	43	0	1	0	1	2	167	9	178	24	146	1	171	393	1
14:30 - 14:45	8	0	32	40	2	0	0	2	2	170	9	181	23	140	3	166	389	1
14:45 - 15:00	9	1	29	39	3	1	3	7	3	129	10	142	29	123	3	155	343	2
15:00 - 15:15	15	0	34	49	5	0	1	6	2	145	7	154	26	125	7	158	367	0
15:15 - 15:30	12	0	34	46	3	1	1	5	1	129	7	137	29	130	4	163	351	3
15:30 - 15:45	10	0	33	43	3	0	2	5	0	154	10	164	30	138	9	177	389	3
15:45 - 16:00	9	0	35	44	2	1	1	4	1	168	11	180	23	164	4	191	419	0
16:00 - 16:15	6	3	35	44	3	0	2	5	1	187	15	203	32	155	2	189	441	1
16:15 - 16:30	9	1	46	56	1	0	1	2	2	161	10	173	38	163	3	204	435	0
16:30 - 16:45	11	0	53	64	1	0	3	4	3	206	19	228	39	136	5	180	476	2
16:45 - 17:00	10	1	48	59	2	1	2	5	0	167	11	178	53	144	4	201	443	0
17:00 - 17:15	12	1	63	76	4	1	1	6	2	183	17	202	32	151	8	191	475	0
17:15 - 17:30	12	0	58	70	4	0	2	6	4	159	15	178	59	182	6	247	501	1
17:30 - 17:45	10	0	33	43	6	0	1	7	3	181	22	206	49	146	4	199	455	0
17:45 - 18:00	13	1	31	45	5	0	0	5	3	149	13	165	43	173	7	223	438	0
18:00 - 18:15	10	1	20	31	2	0	1	3	3	169	13	185	40	166	7	213	432	2
18:15 - 18:30	14	0	37	51	1	0	2	3	1	139	22	162	43	179	4	226	442	0
18:30 - 18:45	16	0	32	48	3	1	1	5	0	124	21	145	31	144	4	179	377	1
18:45 - 19:00	8	1	24	33	6	1	0	7	1	108	4	113	33	116	1	150	303	1
TOTAL	464	19	1495	1978	141	16	48	205	61	6514	478	7053	1299	6229	136	7664	16900	32
Trucks	5	0	8	13	1	1	2	4	1	110	8	119	15	99	2	116	252	1.5%
School Buses	4	0	8	12	0	0	4	4	2	20	3	25	2	22	3	27	68	0.4%

TOTAL AND PEAK HOUR VOLUME DIAGRAMS

St. Andrews Rd AT Kay St-Chartwell Rd Date: 11/28/2016

12.0 HOUR TOTAL VOLUME
FROM 7:00 TO 15:00

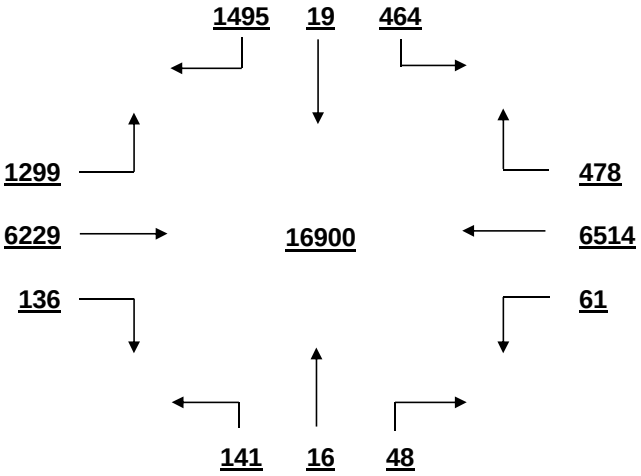

OVERALL PEAK HOUR VOLUME
FROM 16:30 TO 17:30

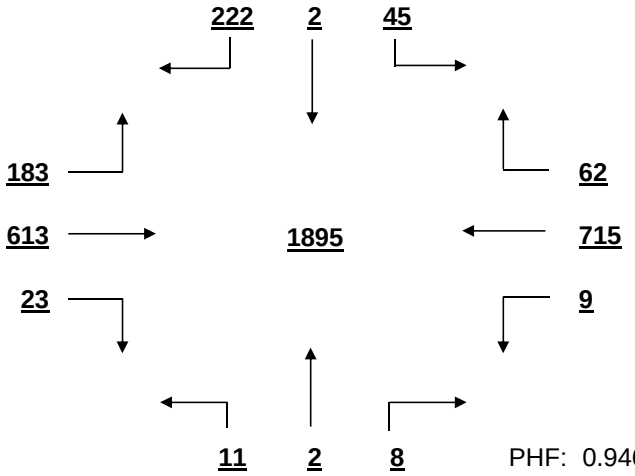

PHF: 0.946

AM PEAK HOUR VOLUME (0:00-10:45)
FROM 7:15 TO 8:15

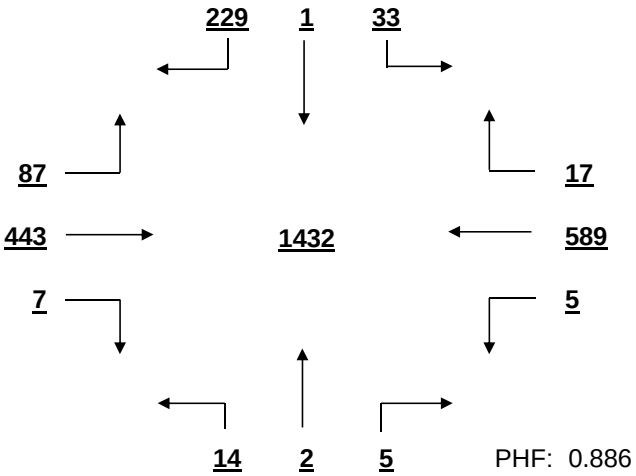

PHF: 0.886

PM PEAK HOUR VOLUME (14:15-23:45)
FROM 16:30 TO 17:30

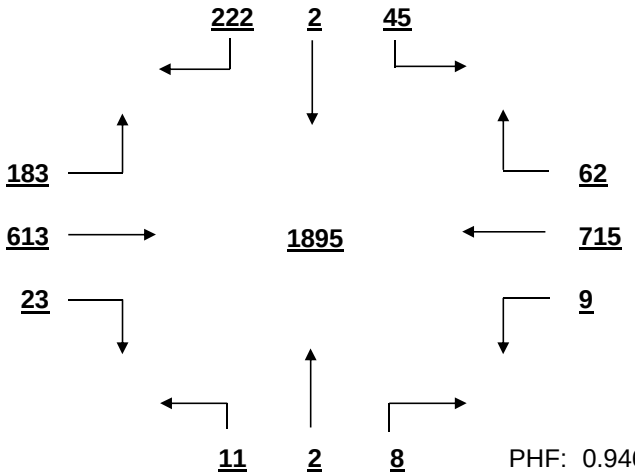

PHF: 0.946

MID-DAY PEAK HOUR VOLUME (11:00-14:00)
FROM 12:15 TO 13:15

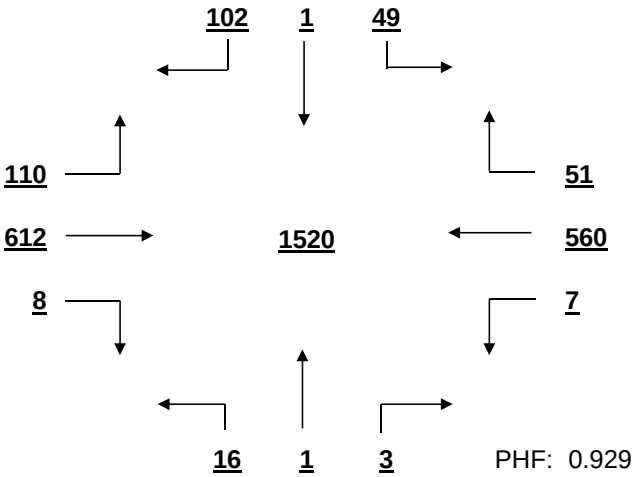

PHF: 0.929

OTHER HOUR VOLUME
FROM 7:00 TO 8:00

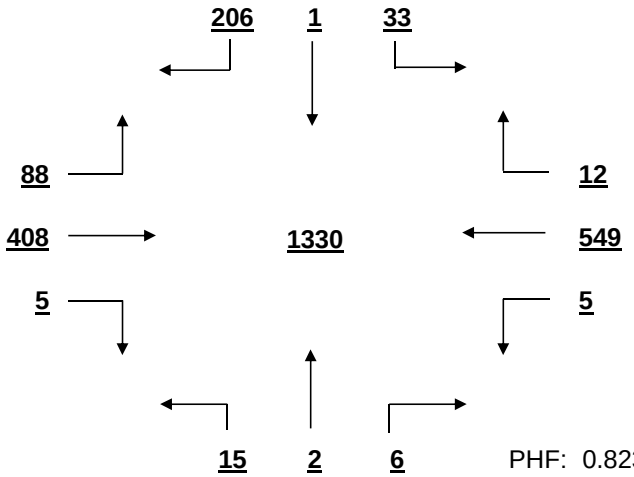

PHF: 0.823

SIGNAL WARRANT ANALYSIS

St. Andrews Rd AT Kay St-Chartwell Rd Date: 11/28/2016

Minor Street Volume, percent of total = 12.9%
Percent of Left Turns from Minor Street = 27.7%
Percent of Right Turns from Minor Street = 70.7%
Percent of Minor Street Right Turns to Remove from Warrant Analysis = 0%
WARRANT BASIS = **100%**

Warrant No. 1 - Vehicular Volume is met

Condition A - Minimum Vehicular Volume is not met

Average Major Street % of Warrant				Average Minor Street % of Warrant			
1226.4	/ 600	=	204%	164.8	/ 150	=	110%

Hourly percent of warrant

	7:00 - 8:00	8:00 - 9:00	9:00 - 10:00	10:00 - 11:00	11:00 - 12:00	12:00 - 13:00	13:00 - 14:00	14:00 - 15:00	15:00 - 16:00	16:00 - 17:00	17:00 - 18:00	18:00 - 19:00
Major St.	178%	182%	144%	153%	172%	212%	218%	218%	221%	259%	269%	229%
Minor St.	160%	83%	79%	67%	81%	113%	88%	112%	121%	149%	156%	109%

Condition B - Interruption to Continuous Traffic is met

Average Major Street % of Warrant				Average Minor Street % of Warrant			
1226.4	/ 900	=	136%	164.8	/ 75	=	220%

Hourly percent of warrant

	7:00 - 8:00	8:00 - 9:00	9:00 - 10:00	10:00 - 11:00	11:00 - 12:00	12:00 - 13:00	13:00 - 14:00	14:00 - 15:00	15:00 - 16:00	16:00 - 17:00	17:00 - 18:00	18:00 - 19:00
Major St.	119%	121%	96%	102%	115%	141%	145%	145%	147%	173%	179%	153%
Minor St.	320%	167%	159%	135%	163%	225%	176%	224%	243%	297%	312%	217%

80% Combination of Conditions A & B is met

Warrant No. 2 - Four Hour Vehicular Volume is met

Hourly percent of warrant

	7:00 - 8:00	8:00 - 9:00	9:00 - 10:00	10:00 - 11:00	11:00 - 12:00	12:00 - 13:00	13:00 - 14:00	14:00 - 15:00	15:00 - 16:00	16:00 - 17:00	17:00 - 18:00	18:00 - 19:00
Minor St.	188%	102%	65%	61%	90%	178%	145%	184%	203%	279%	293%	204%

Warrant No. 3 - Peak Hour is met

Percent of warrant			Percent of warrant		
Overall Peak Hour:	16:30 - 17:30		Higher Volume Side Street Peak Hour:	16:30 - 17:30	
Minor St.	226%		Minor St.	226%	

Warrant No. 4 - Pedestrian Volume. Pedestrian volume shown are minumum volumes assuming heavy major street traffic. If these volumes are met, warrant 4 requires further engineering analysis

Minimum 4 hour ped. volume crossing major street: 107

Minimum peak hour ped. volume crossing major street: 133

Number of pedestrians crossing major street

	7:00 - 8:00	8:00 - 9:00	9:00 - 10:00	10:00 - 11:00	11:00 - 12:00	12:00 - 13:00	13:00 - 14:00	14:00 - 15:00	15:00 - 16:00	16:00 - 17:00	17:00 - 18:00	18:00 - 19:00
Major St.	0	0	0	0	0	0	0	2	0	0	0	1

Warrant No. 7 - Crash Experience (Requires 3 criteria analysis by engineering)

Total Number: 0 From: 1/1/2005 to 1/1/2008

Accident Rate: 0.00 per million entering vehicles

Types of Accidents	No.	/	Avg.		No.	/	Avg.
Right Angle	0	/	0.0	Rear End	0	/	0.0
Lost Control	0	/	0.0	Side Swipe	0	/	0.0
Left Turn	0	/	0.0	Other	0	/	0.0

SOUTH CAROLINA DEPARTMENT OF TRANSPORTATION
DISTRICT 1
TRAFFIC ENGINEERING

County: Richland City: Columbia Date: 11/28/2016

Major Rt: Broad River Rd * Not on State System Minor Rt: St. Andrews Rd * Not on State System

Day of Week: Monday Weather: Clear Office: Short Counts JMS

Type of Control: Signal Speed Limit (major st) 40

Direction of Minor Street: E-W Intersection ADT - 36170 (Calc)

Number of Lanes (major st)* 2 Number of Lanes (minor st)* 2

* Each Direction

INTERSECTION VOLUME SUMMARY

	From N Broad River Rd				From S Broad River Rd				From E St. Andrews Rd				From W St. Andrews Rd				Total	Total
	LT	STR	RT	TOT	LT	STR	RT	TOT	LT	STR	RT	TOT	LT	STR	RT	TOT	Vol	Peds
7:00 - 7:15	3	236	48	287	26	174	13	213	13	8	1	22	50	5	36	91	613	0
7:15 - 7:30	1	271	35	307	37	224	9	270	23	8	3	34	67	8	48	123	734	0
7:30 - 7:45	2	303	42	347	57	243	29	329	19	10	3	32	60	6	35	101	809	0
7:45 - 8:00	2	288	51	341	57	248	27	332	24	13	8	45	65	12	45	122	840	2
8:00 - 8:15	6	207	59	272	47	213	22	282	26	9	10	45	65	15	41	121	720	0
8:15 - 8:30	4	221	0	225	49	200	25	274	20	12	4	36	62	9	42	113	648	0
8:30 - 8:45	3	204	46	253	32	193	6	231	23	8	4	35	65	15	41	121	640	1
8:45 - 9:00	1	172	47	220	41	181	9	231	12	5	2	19	35	7	43	85	555	1
9:00 - 9:15	1	154	34	189	40	131	4	175	13	8	0	21	32	7	42	81	466	1
9:15 - 9:30	3	134	40	177	43	143	8	194	3	5	3	11	46	7	35	88	470	3
9:30 - 9:45	2	149	32	183	38	133	4	175	13	7	4	24	30	5	41	76	458	1
9:45 - 10:00	2	171	35	208	53	150	8	211	10	6	5	21	29	6	38	73	513	1
10:00 - 10:15	1	138	32	171	45	143	10	198	11	6	3	20	35	10	47	92	481	3
10:15 - 10:30	0	173	42	215	45	167	5	217	15	11	4	30	33	9	51	93	555	1
10:30 - 10:45	2	120	30	152	54	134	14	202	12	10	5	27	32	10	63	105	486	0
10:45 - 11:00	2	158	41	201	48	173	16	237	18	8	6	32	33	11	54	98	568	1
11:00 - 11:15	1	182	33	216	60	144	10	214	9	9	5	23	38	9	59	106	559	0
11:15 - 11:30	2	148	45	195	50	169	9	228	12	8	5	25	33	8	62	103	551	3
11:30 - 11:45	1	179	43	223	59	151	6	216	8	9	4	21	31	7	55	93	553	0
11:45 - 12:00	0	150	40	190	41	160	5	206	12	9	1	22	43	8	72	123	541	1
12:00 - 12:15	3	222	47	272	68	197	8	273	7	9	4	20	35	7	75	117	682	1
12:15 - 12:30	1	167	42	210	67	187	9	263	7	8	5	20	62	8	77	147	640	0
12:30 - 12:45	0	176	40	216	79	209	12	300	19	9	6	34	41	7	62	110	660	3
12:45 - 13:00	1	198	47	246	58	219	9	286	18	16	5	39	47	16	70	133	704	3
13:00 - 13:15	1	154	41	196	60	199	21	280	14	15	3	32	61	14	82	157	665	3
13:15 - 13:30	4	163	52	219	67	215	15	297	20	14	6	40	57	10	60	127	683	3
13:30 - 13:45	2	154	42	198	61	170	12	243	15	15	6	36	48	9	71	128	605	0
13:45 - 14:00	7	210	35	252	62	214	11	287	25	5	6	36	44	12	55	111	686	2
14:00 - 14:15	9	188	41	238	53	195	26	274	31	19	9	59	38	24	86	148	719	1
14:15 - 14:30	1	193	34	228	91	209	32	332	33	26	6	65	53	12	78	143	768	4
14:30 - 14:45	2	196	57	255	67	232	21	320	28	11	11	50	47	14	62	123	748	4
14:45 - 15:00	2	172	35	209	60	223	14	297	24	16	2	42	38	6	74	118	666	4
15:00 - 15:15	0	203	50	253	59	180	9	248	14	16	4	34	29	8	81	118	653	1
15:15 - 15:30	1	212	49	262	53	225	10	288	15	10	4	29	36	10	58	104	683	2
15:30 - 15:45	1	181	48	230	65	256	17	338	19	17	8	44	54	12	64	130	742	4
15:45 - 16:00	0	197	61	258	56	218	15	289	18	12	2	32	69	8	60	137	716	5
16:00 - 16:15	0	198	66	264	76	252	11	339	19	16	5	40	52	15	72	139	782	5
16:15 - 16:30	2	186	66	254	62	296	9	367	12	16	9	37	53	15	67	135	793	3
16:30 - 16:45	2	196	88	286	78	354	12	444	19	11	2	32	47	9	66	122	884	3
16:45 - 17:00	1	183	39	223	87	364	13	464	14	13	10	37	77	10	60	147	871	3
17:00 - 17:15	1	201	72	274	76	372	10	458	18	13	6	37	71	13	68	152	921	7
17:15 - 17:30	1	220	50	271	87	391	10	488	13	9	6	28	65	10	60	135	922	4
17:30 - 17:45	3	181	62	246	98	374	17	489	18	10	5	33	60	13	62	135	903	3
17:45 - 18:00	5	170	59	234	64	354	17	435	10	14	6	30	63	15	67	145	844	0
18:00 - 18:15	4	156	53	213	90	316	17	423	16	13	3	32	57	6	72	135	803	5
18:15 - 18:30	4	170	42	216	74	259	6	339	21	12	4	37	79	12	73	164	756	2
18:30 - 18:45	4	168	42	214	77	226	9	312	16	7	6	29	46	7	69	122	677	5
18:45 - 19:00	2	155	26	183	59	209	14	282	10	11	3	24	42	5	62	109	598	0
TOTAL	103	8928	2161	11192	2876	10589	625	14090	789	532	232	1553	2355	481	2863	5699	32534	99
Trucks	1	130	52	183	45	145	11	201	6	4	4	14	49	4	40	93	491	1.5%
School Buses	0	44	5	49	21	32	7	60	2	1	4	7	7	0	13	20	136	0.4%

TOTAL AND PEAK HOUR VOLUME DIAGRAMS

Broad River Rd AT St. Andrews Rd Date: 11/28/2016

12.0 HOUR TOTAL VOLUME
FROM 7:00 TO 15:00

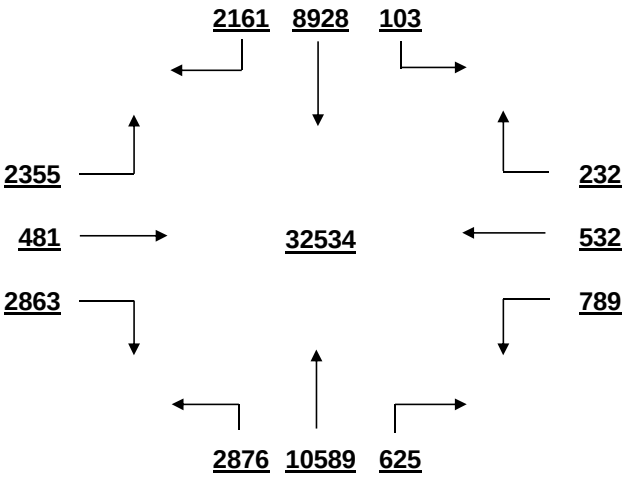

OVERALL PEAK HOUR VOLUME
FROM 16:45 TO 17:45

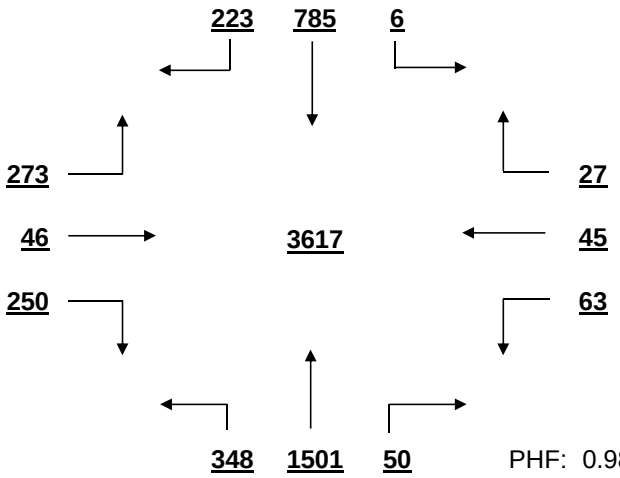

PHF: 0.981

AM PEAK HOUR VOLUME (0:00-10:45)
FROM 7:15 TO 8:15

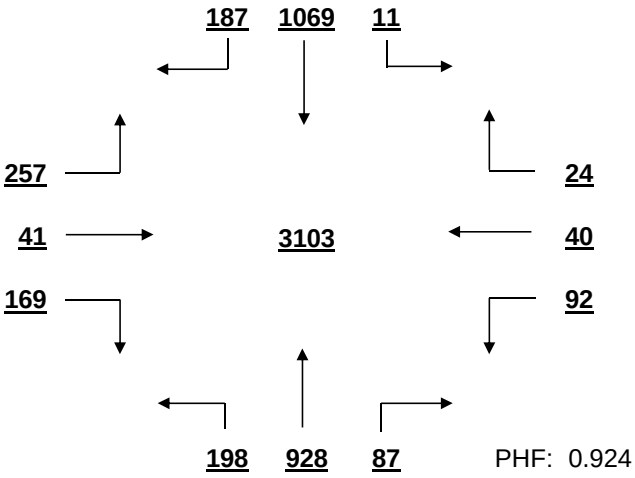

PHF: 0.924

PM PEAK HOUR VOLUME (14:15-23:45)
FROM 16:45 TO 17:45

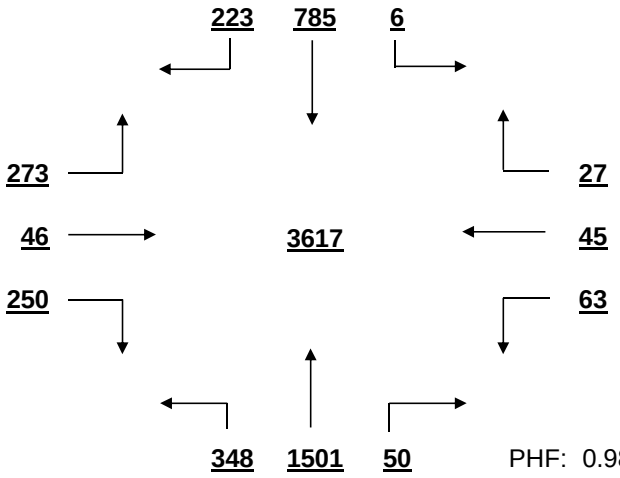

PHF: 0.981

MID-DAY PEAK HOUR VOLUME (11:00-14:00)
FROM 12:30 TO 13:30

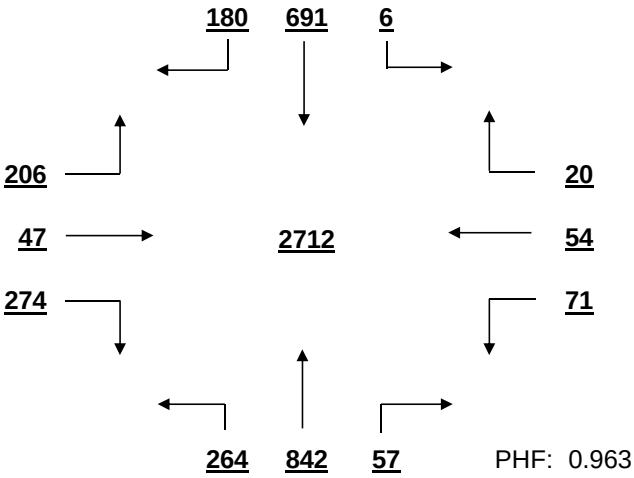

PHF: 0.963

OTHER HOUR VOLUME
FROM 7:00 TO 8:00

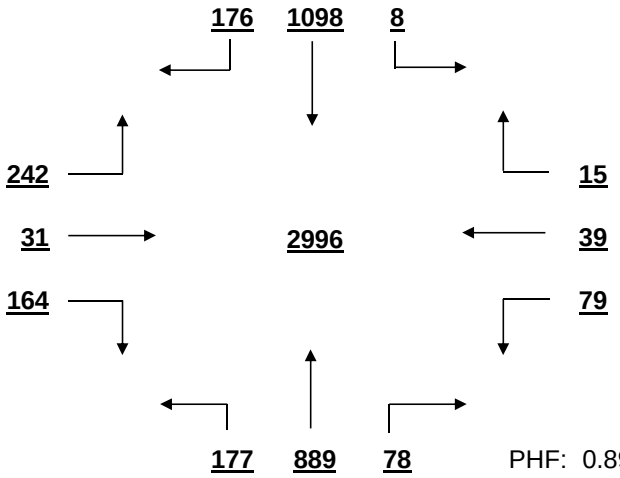

PHF: 0.892

SIGNAL WARRANT ANALYSIS

Broad River Rd AT St. Andrews Rd Date: 11/28/2016

Minor Street Volume, percent of total = 22.3%
Percent of Left Turns from Minor Street = 43.4%
Percent of Right Turns from Minor Street = 42.7%
Percent of Minor Street Right Turns to Remove from Warrant Analysis = 0%
WARRANT BASIS = **100%**

Warrant No. 1 - Vehicular Volume is met

Condition A - Minimum Vehicular Volume is met

Average Major Street % of Warrant				Average Minor Street % of Warrant			
2106.8	/ 600	=	351%	474.9	/ 200	=	237%

Hourly percent of warrant

	7:00 - 8:00	8:00 - 9:00	9:00 - 10:00	10:00 - 11:00	11:00 - 12:00	12:00 - 13:00	13:00 - 14:00	14:00 - 15:00	15:00 - 16:00	16:00 - 17:00	17:00 - 18:00	18:00 - 19:00
Major St.	404%	331%	252%	266%	281%	344%	329%	359%	361%	440%	483%	364%
Minor St.	219%	220%	159%	194%	213%	254%	262%	266%	245%	272%	284%	265%

Condition B - Interruption to Continuous Traffic is met

Average Major Street % of Warrant				Average Minor Street % of Warrant			
2106.8	/ 900	=	234%	474.9	/ 100	=	475%

Hourly percent of warrant

	7:00 - 8:00	8:00 - 9:00	9:00 - 10:00	10:00 - 11:00	11:00 - 12:00	12:00 - 13:00	13:00 - 14:00	14:00 - 15:00	15:00 - 16:00	16:00 - 17:00	17:00 - 18:00	18:00 - 19:00
Major St.	270%	221%	168%	177%	188%	230%	219%	239%	241%	293%	322%	242%
Minor St.	437%	440%	318%	388%	425%	507%	523%	532%	489%	543%	567%	530%

80% Combination of Conditions A & B is met

Warrant No. 2 - Four Hour Vehicular Volume is met

Hourly percent of warrant

	7:00 - 8:00	8:00 - 9:00	9:00 - 10:00	10:00 - 11:00	11:00 - 12:00	12:00 - 13:00	13:00 - 14:00	14:00 - 15:00	15:00 - 16:00	16:00 - 17:00	17:00 - 18:00	18:00 - 19:00
Minor St.	380%	383%	277%	337%	370%	441%	455%	463%	425%	472%	493%	461%

Warrant No. 3 - Peak Hour is met

	Percent of warrant		Percent of warrant
Overall Peak Hour:	16:45 - 17:45	Higher Volume Side Street Peak Hour:	17:30 - 18:30
Minor St.	379%	Minor St.	386%

Warrant No. 4 - Pedestrian Volume. Pedestrian volume shown are minumum volumes assuming heavy major street traffic. If these volumes are met, warrant 4 requires further engineering analysis

Minimum 4 hour ped. volume crossing major street: 107

Minimum peak hour ped. volume crossing major street: 133

Number of pedestrians crossing major street

	7:00 - 8:00	8:00 - 9:00	9:00 - 10:00	10:00 - 11:00	11:00 - 12:00	12:00 - 13:00	13:00 - 14:00	14:00 - 15:00	15:00 - 16:00	16:00 - 17:00	17:00 - 18:00	18:00 - 19:00
Major St.	0	0	2	1	0	2	4	1	5	5	4	4

Warrant No. 7 - Crash Experience (Requires 3 criteria analysis by engineering)

Total Number: 0 From: 1/1/2005 to 1/1/2008
Accident Rate: 0.00 per million entering vehicles

Types of Accidents	No.	/	Avg.		No.	/	Avg.
Right Angle	0	/	0.0	Rear End	0	/	0.0
Lost Control	0	/	0.0	Side Swipe	0	/	0.0
Left Turn	0	/	0.0	Other	0	/	0.0

SOUTH CAROLINA DEPARTMENT OF TRANSPORTATION
DISTRICT 1
TRAFFIC ENGINEERING

County: Richland City: Columbia Date: 11/22/2016

Major Rt: Browning-Burning Tree * Not on State System Minor Rt: Center Point Rd Clear

Day of Week: Tuesday Weather: Clear Office: Short Counts JMS

Type of Control: Stop Sign Speed Limit (major st) 40

Direction of Minor Street: N-S Intersection ADT - 12490 (Calc)

Number of Lanes (major st)* 1 Number of Lanes (minor st)* 1

* Each Direction

INTERSECTION VOLUME SUMMARY

	From N Center Point Rd				From S Center Point Rd				From E Browning-Burning T				From W Browning-Burning T				Total	Total
	LT	STR	RT	TOT	LT	STR	RT	TOT	LT	STR	RT	TOT	LT	STR	RT	TOT	Vol	Peds
7:00 - 7:15	1	0	0	1	0	0	0	0	0	32	3	35	9	42	0	51	87	1
7:15 - 7:30	0	0	1	1	0	0	0	0	0	47	0	47	27	64	0	91	139	0
7:30 - 7:45	0	0	1	1	0	0	0	0	0	38	7	45	30	108	0	138	184	0
7:45 - 8:00	0	0	2	2	0	0	0	0	0	28	7	35	50	130	0	180	217	0
8:00 - 8:15	0	0	4	4	0	0	0	0	0	38	6	44	37	98	0	135	183	0
8:15 - 8:30	0	0	0	0	0	0	0	0	0	40	4	44	29	93	0	122	166	0
8:30 - 8:45	1	0	2	3	0	0	0	0	0	33	6	39	21	60	0	81	123	0
8:45 - 9:00	1	0	1	2	0	0	0	0	0	29	1	30	19	53	0	72	104	0
9:00 - 9:15	1	0	5	6	0	0	0	0	0	41	1	42	19	56	0	75	123	0
9:15 - 9:30	0	0	2	2	0	0	0	0	0	34	2	36	28	40	0	68	106	0
9:30 - 9:45	2	0	4	6	0	0	0	0	0	34	2	36	14	38	0	52	94	1
9:45 - 10:00	0	0	7	7	0	0	0	0	0	31	2	33	25	31	0	56	96	0
10:00 - 10:15	1	0	4	5	0	0	0	0	0	29	1	30	11	26	0	37	72	0
10:15 - 10:30	1	0	8	9	0	0	0	0	0	26	1	27	12	37	0	49	85	1
10:30 - 10:45	2	0	2	4	0	0	0	0	0	36	2	38	9	29	0	38	80	0
10:45 - 11:00	2	0	6	8	0	0	0	0	0	41	2	43	7	23	0	30	81	0
11:00 - 11:15	3	0	10	13	0	0	0	0	0	41	1	42	0	38	0	38	93	1
11:15 - 11:30	2	0	9	11	0	0	0	0	0	52	2	54	5	32	0	37	102	0
11:30 - 11:45	9	0	20	29	0	0	0	0	0	62	2	64	8	22	0	30	123	0
11:45 - 12:00	2	0	24	26	0	0	0	0	0	51	0	51	9	38	0	47	124	0
12:00 - 12:15	4	0	40	44	0	0	0	0	0	63	3	66	3	34	0	37	147	0
12:15 - 12:30	2	0	23	25	0	0	0	0	0	52	3	55	14	41	0	55	135	0
12:30 - 12:45	2	0	8	10	0	0	0	0	0	65	4	69	18	50	0	68	147	0
12:45 - 13:00	6	0	11	17	0	0	0	0	0	66	5	71	19	69	0	88	176	1
13:00 - 13:15	5	0	11	16	0	0	0	0	0	56	6	62	38	58	0	96	174	0
13:15 - 13:30	0	0	10	10	0	0	0	0	0	52	6	58	20	50	0	70	138	0
13:30 - 13:45	2	0	6	8	0	0	0	0	0	51	4	55	15	51	0	66	129	2
13:45 - 14:00	3	0	5	8	0	0	0	0	0	56	4	60	16	61	0	77	145	2
14:00 - 14:15	4	0	4	8	0	0	0	0	0	50	1	51	4	64	0	68	127	1
14:15 - 14:30	2	0	11	13	0	0	0	0	0	41	3	44	12	60	0	72	129	2
14:30 - 14:45	2	0	7	9	0	0	0	0	0	67	3	70	8	34	0	42	121	0
14:45 - 15:00	0	0	8	8	0	0	0	0	0	69	0	69	8	67	0	75	152	0
15:00 - 15:15	2	0	9	11	0	0	0	0	0	57	0	57	7	57	0	64	132	0
15:15 - 15:30	0	0	12	12	0	0	0	0	0	74	0	74	8	46	0	54	140	1
15:30 - 15:45	1	0	14	15	0	0	0	0	0	65	1	66	3	40	0	43	124	0
15:45 - 16:00	3	0	13	16	0	0	0	0	0	94	2	96	2	56	0	58	170	0
16:00 - 16:15	2	0	18	20	0	0	0	0	0	119	2	121	0	55	0	55	196	0
16:15 - 16:30	0	0	18	18	0	0	0	0	0	158	1	159	2	62	0	64	241	1
16:30 - 16:45	9	0	32	41	0	0	0	0	0	160	2	162	0	82	0	82	285	1
16:45 - 17:00	7	0	33	40	0	0	0	0	0	174	0	174	5	71	0	76	290	0
17:00 - 17:15	8	0	41	49	0	0	0	0	0	195	1	196	3	71	0	74	319	0
17:15 - 17:30	8	0	20	28	0	0	0	0	0	199	0	199	3	71	0	74	301	0
17:30 - 17:45	3	0	24	27	0	0	0	0	0	177	1	178	7	64	0	71	276	0
17:45 - 18:00	1	0	16	17	0	0	0	0	0	206	1	207	4	77	0	81	305	0
18:00 - 18:15	1	0	20	21	0	0	0	0	0	175	0	175	3	106	0	109	305	0
18:15 - 18:30	0	0	7	7	0	0	0	0	0	165	1	166	2	143	0	145	318	0
18:30 - 18:45	1	0	6	7	0	0	0	0	0	164	1	165	2	147	0	149	321	0
18:45 - 19:00	0	0	5	5	0	0	0	0	0	117	1	118	1	110	0	111	234	0
TOTAL	106	0	544	650	0	0	0	0	0	3750	108	3858	596	2955	0	3551	8059	15
Trucks	0	0	2	2	0	0	0	0	0	16	0	16	2	10	0	12	30	0.4%
School Buses	0	0	0	0	0	0	0	0	0	18	0	18	1	14	0	15	33	0.4%

TOTAL AND PEAK HOUR VOLUME DIAGRAMS

Browning-Burning Tree AT Center Point Rd Date: 11/22/2016

12.0 HOUR TOTAL VOLUME
FROM 7:00 TO 15:00

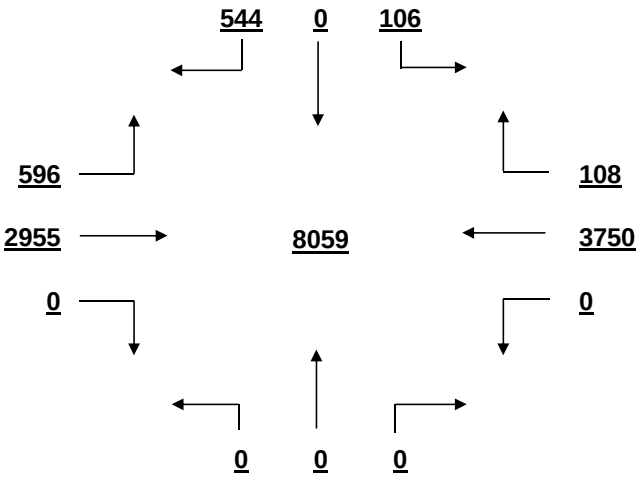

OVERALL PEAK HOUR VOLUME
FROM 17:45 TO 18:45

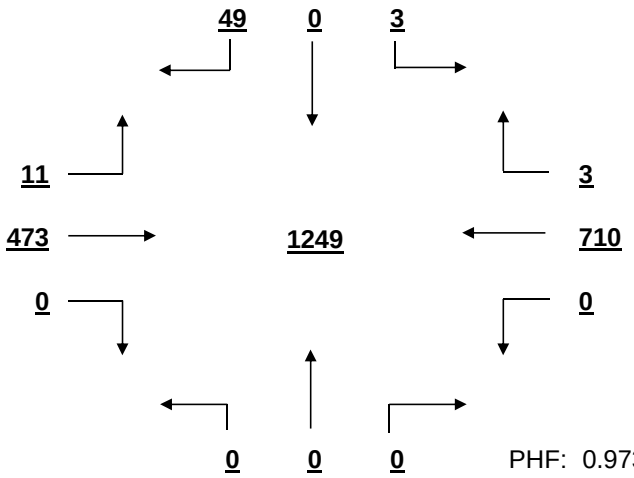

PHF: 0.973

AM PEAK HOUR VOLUME (0:00-10:45)
FROM 7:30 TO 8:30

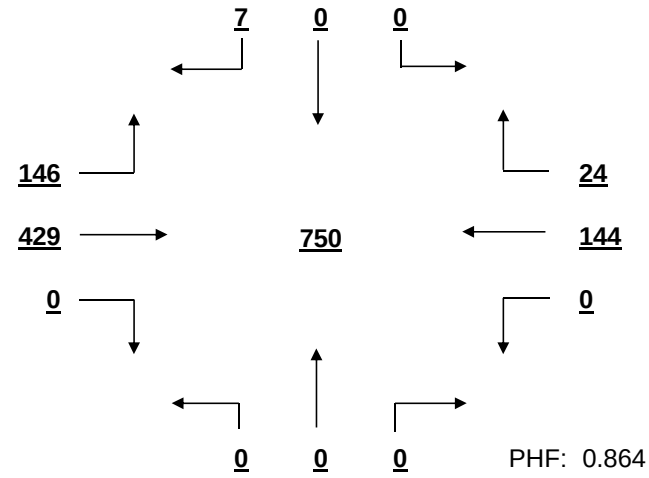

PHF: 0.864

PM PEAK HOUR VOLUME (14:15-23:45)
FROM 17:45 TO 18:45

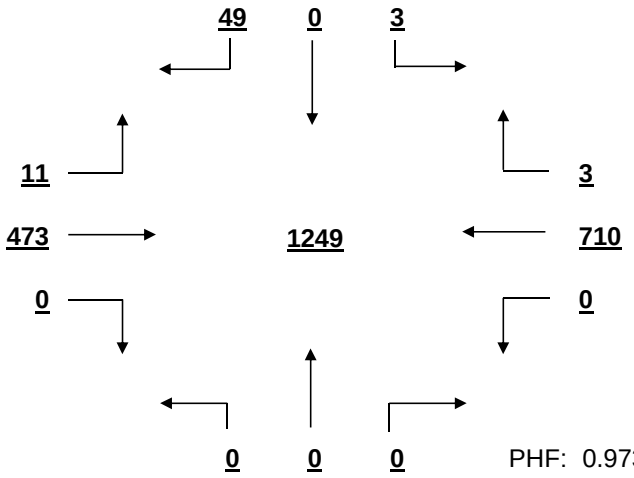

PHF: 0.973

MID-DAY PEAK HOUR VOLUME (11:00-14:00)
FROM 12:30 TO 13:30

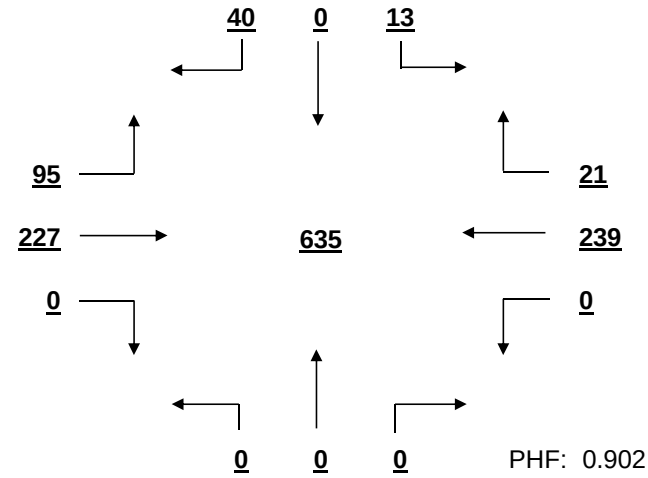

PHF: 0.902

OTHER HOUR VOLUME
FROM 7:00 TO 8:00

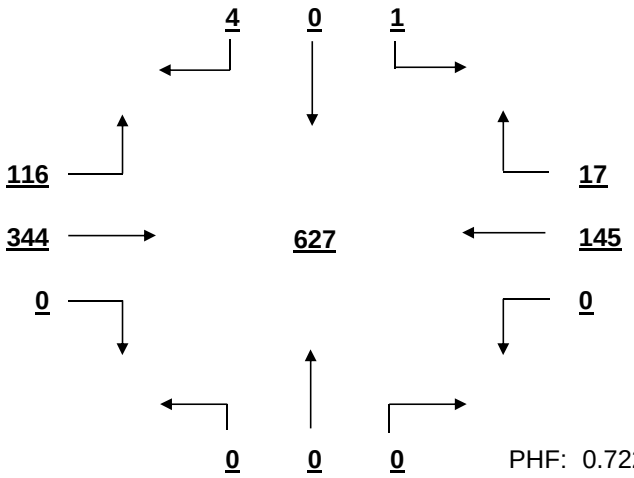

PHF: 0.722

SIGNAL WARRANT ANALYSIS

Browning-Burning Tree AT Center Point Rd Date: 11/22/2016

Minor Street Volume, percent of total = 8.1%
Percent of Left Turns from Minor Street = 16.3%
Percent of Right Turns from Minor Street = 83.7%
Percent of Minor Street Right Turns to Remove from Warrant Analysis = 0%
WARRANT BASIS = **100%**

Warrant No. 1 - Vehicular Volume is not met

Condition A - Minimum Vehicular Volume is not met

Average Major Street % of Warrant				Average Minor Street % of Warrant			
617.4	/ 500	=	123%	54.2	/ 150	=	36%

Hourly percent of warrant

	7:00 - 8:00	8:00 - 9:00	9:00 - 10:00	10:00 - 11:00	11:00 - 12:00	12:00 - 13:00	13:00 - 14:00	14:00 - 15:00	15:00 - 16:00	16:00 - 17:00	17:00 - 18:00	18:00 - 19:00
Major St.	124%	113%	80%	58%	73%	102%	109%	98%	102%	179%	216%	228%
Minor St.	3%	6%	14%	17%	53%	64%	28%	25%	36%	79%	81%	27%

Condition B - Interruption to Continuous Traffic is not met

Average Major Street % of Warrant				Average Minor Street % of Warrant			
617.4	/ 750	=	82%	54.2	/ 75	=	72%

Hourly percent of warrant

	7:00 - 8:00	8:00 - 9:00	9:00 - 10:00	10:00 - 11:00	11:00 - 12:00	12:00 - 13:00	13:00 - 14:00	14:00 - 15:00	15:00 - 16:00	16:00 - 17:00	17:00 - 18:00	18:00 - 19:00
Major St.	83%	76%	53%	39%	48%	68%	73%	65%	68%	119%	144%	152%
Minor St.	7%	12%	28%	35%	105%	128%	56%	51%	72%	159%	161%	53%

80% Combination of Conditions A & B is not met

Warrant No. 2 - Four Hour Vehicular Volume is not met

Hourly percent of warrant

	7:00 - 8:00	8:00 - 9:00	9:00 - 10:00	10:00 - 11:00	11:00 - 12:00	12:00 - 13:00	13:00 - 14:00	14:00 - 15:00	15:00 - 16:00	16:00 - 17:00	17:00 - 18:00	18:00 - 19:00
Minor St.	2%	4%	7%	7%	24%	37%	17%	14%	21%	97%	144%	53%

Warrant No. 3 - Peak Hour is not met

Percent of warrant			Percent of warrant	
Overall Peak Hour:	17:45 - 18:45	Higher Volume Side Street Peak Hour:	16:30 - 17:30	
Minor St.	35%	Minor St.	82%	

Warrant No. 4 - Pedestrian Volume. Pedestrian volume shown are minumum volumes assuming heavy major street traffic. If these volumes are met, warrant 4 requires further engineering analysis

Minimum 4 hour ped. volume crossing major street	Minimum peak hour ped. volume crossing major street
107	133

Number of pedestrians crossing major street

	7:00 - 8:00	8:00 - 9:00	9:00 - 10:00	10:00 - 11:00	11:00 - 12:00	12:00 - 13:00	13:00 - 14:00	14:00 - 15:00	15:00 - 16:00	16:00 - 17:00	17:00 - 18:00	18:00 - 19:00
Major St.	0	0	1	1	1	0	2	3	1	1	0	0

Warrant No. 7 - Crash Experience (Requires 3 criteria analysis by engineering)

Total Number: 0 From: 1/1/2005 to 1/1/2008
Accident Rate: 0.00 per million entering vehicles

Types of Accidents	No.	/	Avg.		No.	/	Avg.
Right Angle	0	/	0.0	Rear End	0	/	0.0
Lost Control	0	/	0.0	Side Swipe	0	/	0.0
Left Turn	0	/	0.0	Other	0	/	0.0

SOUTH CAROLINA DEPARTMENT OF TRANSPORTATION
DISTRICT 1
TRAFFIC ENGINEERING

County: Richland City: Columbia Date: 11/28/2016

Major Rt: Browning Rd * Not on State System Minor Rt: Zimalcrest Dr Clear

Day of Week: Monday Weather: Clear Office: Short Counts JMS

Type of Control: Stop Sign Speed Limit (major st) 40

Direction of Minor Street: N-S Intersection ADT - 12220 (Calc)

Number of Lanes (major st)* 1 Number of Lanes (minor st)* 1

* Each Direction

INTERSECTION VOLUME SUMMARY

	From N Zimalcrest Dr				From S Zimalcrest Dr				From E Browning Rd				From W Browning Rd				Total	Total
	LT	STR	RT	TOT	LT	STR	RT	TOT	LT	STR	RT	TOT	LT	STR	RT	TOT	Vol	Peds
7:00 - 7:15	22	0	31	53	0	0	0	0	0	8	26	34	15	29	0	44	131	1
7:15 - 7:30	36	0	31	67	0	0	0	0	0	16	23	39	18	43	0	61	167	0
7:30 - 7:45	40	0	23	63	0	0	0	0	0	25	21	46	16	74	0	90	199	0
7:45 - 8:00	48	0	18	66	0	0	0	0	0	23	23	46	27	113	0	140	252	0
8:00 - 8:15	26	0	17	43	0	0	0	0	0	21	14	35	8	73	0	81	159	0
8:15 - 8:30	29	0	0	29	0	0	0	0	0	28	18	46	10	64	0	74	149	0
8:30 - 8:45	27	0	10	37	0	0	0	0	0	22	16	38	9	47	0	56	131	0
8:45 - 9:00	21	0	12	33	0	0	0	0	0	22	17	39	17	46	0	63	135	0
9:00 - 9:15	19	0	11	30	0	0	0	0	0	14	8	22	13	36	0	49	101	0
9:15 - 9:30	17	0	10	27	0	0	0	0	0	21	22	43	13	25	0	38	108	0
9:30 - 9:45	15	0	12	27	0	0	0	0	0	22	10	32	5	28	0	33	92	1
9:45 - 10:00	12	0	11	23	0	0	0	0	0	12	11	23	10	21	0	31	77	0
10:00 - 10:15	10	0	9	19	0	0	0	0	0	13	10	23	9	16	0	25	67	0
10:15 - 10:30	12	0	11	23	0	0	0	0	0	17	12	29	5	13	0	18	70	1
10:30 - 10:45	14	0	9	23	0	0	0	0	0	14	14	28	11	12	0	23	74	0
10:45 - 11:00	10	0	19	29	0	0	0	0	0	23	17	40	10	11	0	21	90	0
11:00 - 11:15	11	0	9	20	0	0	0	0	0	25	16	41	17	13	0	30	91	0
11:15 - 11:30	23	0	15	38	0	0	0	0	0	26	11	37	11	23	0	34	109	0
11:30 - 11:45	10	0	11	21	0	0	0	0	0	29	22	51	14	25	0	39	111	0
11:45 - 12:00	18	0	15	33	0	0	0	0	0	37	13	50	21	33	0	54	137	0
12:00 - 12:15	9	0	22	31	0	0	0	0	0	58	17	75	14	26	0	40	146	1
12:15 - 12:30	21	0	19	40	0	0	0	0	0	42	12	54	10	33	0	43	137	0
12:30 - 12:45	11	0	13	24	0	0	0	0	0	31	27	58	27	31	0	58	140	0
12:45 - 13:00	27	0	15	42	0	0	0	0	0	36	21	57	20	29	0	49	148	1
13:00 - 13:15	19	0	20	39	0	0	0	0	0	45	23	68	15	41	0	56	163	0
13:15 - 13:30	13	0	24	37	0	0	0	0	0	32	17	49	15	33	0	48	134	0
13:30 - 13:45	26	0	17	43	0	0	0	0	0	30	21	51	17	36	0	53	147	0
13:45 - 14:00	16	0	19	35	0	0	0	0	0	39	24	63	26	29	0	55	153	0
14:00 - 14:15	21	0	19	40	0	0	0	0	0	31	32	63	19	37	0	56	159	0
14:15 - 14:30	17	0	20	37	0	0	0	0	0	42	27	69	14	22	0	36	142	1
14:30 - 14:45	21	0	25	46	0	0	0	0	0	37	22	59	20	26	0	46	151	0
14:45 - 15:00	27	0	29	56	0	0	0	0	0	32	33	65	15	25	0	40	161	0
15:00 - 15:15	25	0	27	52	0	0	0	0	0	25	14	39	18	38	0	56	147	0
15:15 - 15:30	17	0	17	34	0	0	0	0	0	36	21	57	11	31	0	42	133	0
15:30 - 15:45	24	0	30	54	0	0	0	0	0	39	28	67	21	28	0	49	170	0
15:45 - 16:00	15	0	23	38	0	0	0	0	0	34	27	61	22	23	0	45	144	0
16:00 - 16:15	28	0	24	52	0	0	0	0	0	68	26	94	26	32	0	58	204	0
16:15 - 16:30	21	0	25	46	0	0	0	0	0	72	31	103	31	38	0	69	218	0
16:30 - 16:45	29	0	21	50	0	0	0	0	0	95	32	127	22	32	0	54	231	0
16:45 - 17:00	22	0	31	53	0	0	0	0	0	117	45	162	21	41	0	62	277	0
17:00 - 17:15	21	0	24	45	0	0	0	0	0	126	46	172	32	37	0	69	286	0
17:15 - 17:30	28	0	28	56	0	0	0	0	0	153	58	211	21	38	0	59	326	0
17:30 - 17:45	20	0	20	40	0	0	0	0	0	159	38	197	28	31	0	59	296	0
17:45 - 18:00	19	0	29	48	0	0	0	0	0	150	54	204	27	35	0	62	314	0
18:00 - 18:15	18	0	28	46	0	0	0	0	0	94	37	131	26	22	0	48	225	0
18:15 - 18:30	11	0	20	31	0	0	0	0	0	67	32	99	36	15	0	51	181	0
18:30 - 18:45	19	0	23	42	0	0	0	0	0	30	30	60	26	18	0	44	146	0
18:45 - 19:00	10	0	23	33	0	0	0	0	0	27	34	61	18	18	0	36	130	0
TOTAL	975	0	919	1894	0	0	0	0	0	2165	1153	3318	857	1590	0	2447	7659	6
Trucks	6	0	5	11	0	0	0	0	0	6	10	16	3	6	0	9	36	0.5%
School Buses	4	0	8	12	0	0	0	0	0	5	3	8	1	10	0	11	31	0.4%

TOTAL AND PEAK HOUR VOLUME DIAGRAMS

Browning Rd AT Zimalcrest Dr Date: 11/28/2016

12.0 HOUR TOTAL VOLUME
FROM 7:00 TO 15:00

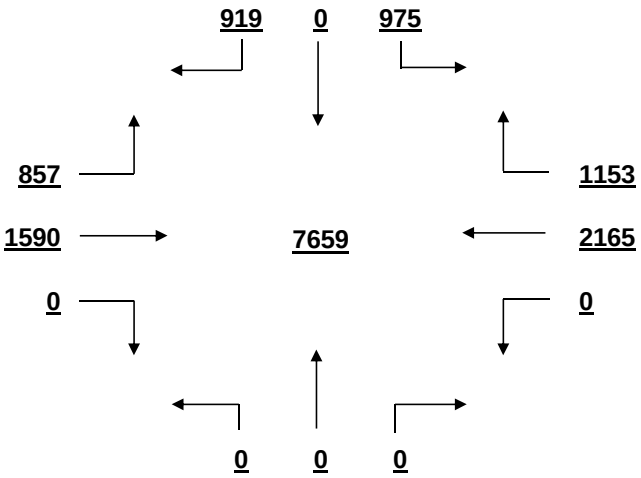

OVERALL PEAK HOUR VOLUME
FROM 17:00 TO 18:00

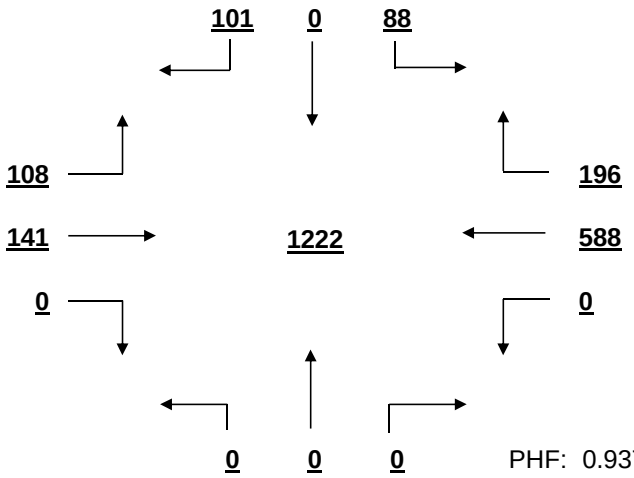

PHF: 0.937

AM PEAK HOUR VOLUME (0:00-10:45)
FROM 7:15 TO 8:15

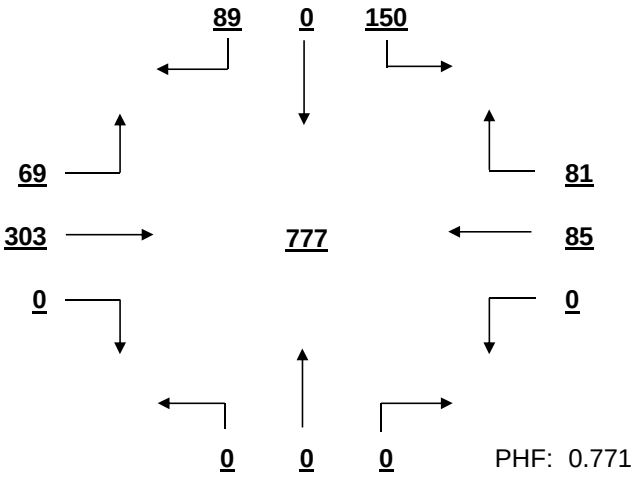

PHF: 0.771

PM PEAK HOUR VOLUME (14:15-23:45)
FROM 17:00 TO 18:00

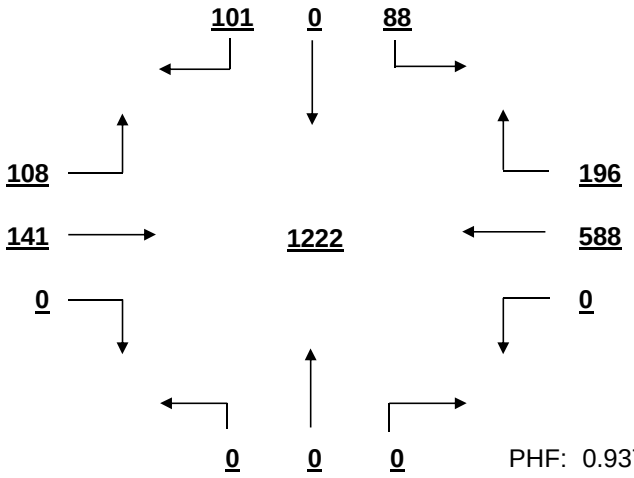

PHF: 0.937

MID-DAY PEAK HOUR VOLUME (11:00-14:00)
FROM 13:00 TO 14:00

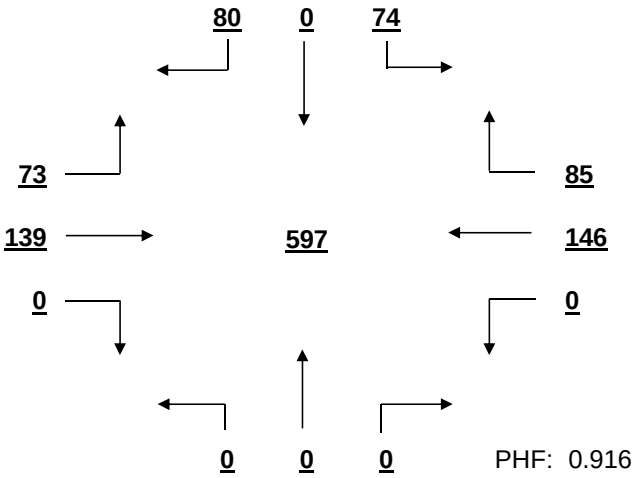

PHF: 0.916

OTHER HOUR VOLUME
FROM 7:00 TO 8:00

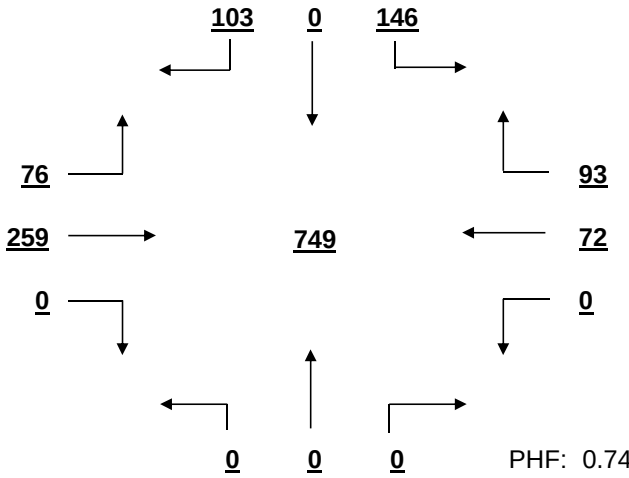

PHF: 0.743

SIGNAL WARRANT ANALYSIS

Browning Rd AT Zimalcrest Dr Date: 11/28/2016

Minor Street Volume, percent of total = 24.7%
Percent of Left Turns from Minor Street = 51.5%
Percent of Right Turns from Minor Street = 48.5%
Percent of Minor Street Right Turns to Remove from Warrant Analysis = 0%
WARRANT BASIS = **100%**

Warrant No. 1 - Vehicular Volume is not met

Condition A - Minimum Vehicular Volume is not met

Average Major Street % of Warrant				Average Minor Street % of Warrant			
480.4	/ 500	=	96%	157.8	/ 150	=	105%

Hourly percent of warrant

	7:00 - 8:00	8:00 - 9:00	9:00 - 10:00	10:00 - 11:00	11:00 - 12:00	12:00 - 13:00	13:00 - 14:00	14:00 - 15:00	15:00 - 16:00	16:00 - 17:00	17:00 - 18:00	18:00 - 19:00
Major St.	100%	86%	54%	41%	67%	87%	89%	87%	83%	146%	207%	106%
Minor St.	166%	95%	71%	63%	75%	91%	103%	119%	119%	134%	126%	101%

Condition B - Interruption to Continuous Traffic is not met

Average Major Street % of Warrant				Average Minor Street % of Warrant			
480.4	/ 750	=	64%	157.8	/ 75	=	210%

Hourly percent of warrant

	7:00 - 8:00	8:00 - 9:00	9:00 - 10:00	10:00 - 11:00	11:00 - 12:00	12:00 - 13:00	13:00 - 14:00	14:00 - 15:00	15:00 - 16:00	16:00 - 17:00	17:00 - 18:00	18:00 - 19:00
Major St.	67%	58%	36%	28%	45%	58%	59%	58%	55%	97%	138%	71%
Minor St.	332%	189%	143%	125%	149%	183%	205%	239%	237%	268%	252%	203%

80% Combination of Conditions A & B is not met

Warrant No. 2 - Four Hour Vehicular Volume is not met

Hourly percent of warrant

	7:00 - 8:00	8:00 - 9:00	9:00 - 10:00	10:00 - 11:00	11:00 - 12:00	12:00 - 13:00	13:00 - 14:00	14:00 - 15:00	15:00 - 16:00	16:00 - 17:00	17:00 - 18:00	18:00 - 19:00
Minor St.	96%	49%	29%	23%	33%	47%	54%	62%	59%	117%	205%	61%

Warrant No. 3 - Peak Hour is not met

Percent of warrant			Percent of warrant	
Overall Peak Hour: 17:00 - 18:00		Higher Volume Side Street Peak Hour:	7:00 - 8:00	
Minor St.	98%	Minor St.	58%	

Warrant No. 4 - Pedestrian Volume. Pedestrian volume shown are minumum volumes assuming heavy major street traffic. If these volumes are met, warrant 4 requires further engineering analysis

Minimum 4 hour ped. volume crossing major street	Minimum peak hour ped. volume crossing major street
107	133

Number of pedestrians crossing major street

	7:00 - 8:00	8:00 - 9:00	9:00 - 10:00	10:00 - 11:00	11:00 - 12:00	12:00 - 13:00	13:00 - 14:00	14:00 - 15:00	15:00 - 16:00	16:00 - 17:00	17:00 - 18:00	18:00 - 19:00
Major St.	1	0	1	1	0	2	0	1	0	0	0	0

Warrant No. 7 - Crash Experience (Requires 3 criteria analysis by engineering)

Total Number: 0 From: 1/1/2005 to 1/1/2008
Accident Rate: 0.00 per million entering vehicles

Types of Accidents	No.	/	Avg.		No.	/	Avg.
Right Angle	0	/	0.0	Rear End	0	/	0.0
Lost Control	0	/	0.0	Side Swipe	0	/	0.0
Left Turn	0	/	0.0	Other	0	/	0.0

SOUTH CAROLINA DEPARTMENT OF TRANSPORTATION
DISTRICT 1
TRAFFIC ENGINEERING

County: Richland City: Columbia Date: 11/29/2016

Major Rt: Bush River Rd * Not on State System Minor Rt: Ashland Rd-Marydale Ln Clear

Day of Week: Tuesday Weather: Rain Office: Short Counts JMS

Type of Control: Stop Sign Speed Limit (major st) 40

Direction of Minor Street: N-S Intersection ADT - 14340 (Calc)

Number of Lanes (major st)* 1 Number of Lanes (minor st)* 1

* Each Direction

INTERSECTION VOLUME SUMMARY

	From N Ashland Rd-Marydal				From S Ashland Rd-Marydal				From E Bush River Rd				From W Bush River Rd				Total	Total
	LT	STR	RT	TOT	LT	STR	RT	TOT	LT	STR	RT	TOT	LT	STR	RT	TOT	Vol	Peds
7:00 - 7:15	26	0	2	28	0	0	0	0	0	49	16	65	4	141	0	145	238	0
7:15 - 7:30	24	0	3	27	0	0	0	0	2	38	9	49	9	173	0	182	258	0
7:30 - 7:45	56	0	2	58	1	0	0	1	2	64	12	78	6	189	2	197	334	1
7:45 - 8:00	84	0	7	91	0	0	0	0	2	82	19	103	1	219	1	221	415	0
8:00 - 8:15	42	0	0	42	0	0	1	1	4	55	15	74	1	149	5	155	272	0
8:15 - 8:30	67	3	0	70	2	4	0	6	6	53	16	75	0	177	2	179	330	0
8:30 - 8:45	33	4	1	38	0	1	3	4	2	46	13	61	0	155	5	160	263	0
8:45 - 9:00	35	0	1	36	0	0	1	1	0	58	17	75	3	114	2	119	231	0
9:00 - 9:15	14	1	1	16	0	0	0	0	0	42	18	60	3	86	1	90	166	0
9:15 - 9:30	13	0	1	14	0	0	1	1	1	69	15	85	1	62	1	64	164	0
9:30 - 9:45	16	0	2	18	0	3	0	3	1	55	16	72	6	52	0	58	151	0
9:45 - 10:00	26	2	3	31	0	0	0	0	2	47	11	60	23	32	2	57	148	0
10:00 - 10:15	28	7	4	39	0	4	1	5	2	63	15	80	1	68	3	72	196	0
10:15 - 10:30	20	2	1	23	1	1	1	3	4	46	14	64	1	61	1	63	153	0
10:30 - 10:45	12	1	4	17	2	1	0	3	2	51	10	63	1	62	2	65	148	0
10:45 - 11:00	21	1	2	24	0	1	1	2	1	71	13	85	1	76	3	80	191	0
11:00 - 11:15	10	1	0	11	0	2	0	2	2	76	21	99	2	59	0	61	173	0
11:15 - 11:30	19	0	3	22	3	0	1	4	1	61	14	76	1	50	0	51	153	0
11:30 - 11:45	14	0	1	15	1	2	2	5	2	90	29	121	5	82	0	87	228	0
11:45 - 12:00	17	1	4	22	4	1	0	5	1	57	28	86	2	69	2	73	186	0
12:00 - 12:15	14	2	1	17	1	0	3	4	5	86	22	113	3	73	4	80	214	0
12:15 - 12:30	12	1	2	15	1	2	3	6	2	80	24	106	2	70	2	74	201	0
12:30 - 12:45	17	1	3	21	2	0	0	2	1	88	30	119	1	82	2	85	227	0
12:45 - 13:00	24	0	7	31	0	2	2	4	0	95	25	120	6	100	0	106	261	0
13:00 - 13:15	19	1	2	22	1	1	1	3	3	94	31	128	5	83	1	89	242	0
13:15 - 13:30	22	0	2	24	1	1	1	3	0	74	27	101	9	80	1	90	218	0
13:30 - 13:45	23	1	1	25	0	1	2	3	1	84	19	104	3	71	0	74	206	0
13:45 - 14:00	29	0	5	34	0	0	2	2	2	82	13	97	4	90	1	95	228	0
14:00 - 14:15	16	2	0	18	0	2	2	4	2	62	12	76	4	58	1	63	161	0
14:15 - 14:30	21	1	1	23	0	0	2	2	0	69	9	78	3	64	0	67	170	0
14:30 - 14:45	20	1	0	21	1	3	0	4	1	97	21	119	2	70	1	73	217	0
14:45 - 15:00	26	2	6	34	3	1	1	5	1	99	19	119	2	84	1	87	245	0
15:00 - 15:15	30	0	6	36	1	0	2	3	1	93	23	117	3	82	0	85	241	0
15:15 - 15:30	16	0	0	16	0	1	0	1	3	104	25	132	2	81	0	83	232	0
15:30 - 15:45	10	0	3	13	0	0	0	0	0	68	11	79	0	53	0	53	145	1
15:45 - 16:00	11	1	2	14	0	1	1	2	1	110	15	126	1	59	0	60	202	0
16:00 - 16:15	14	2	7	23	1	1	2	4	0	75	17	92	1	60	1	62	181	0
16:15 - 16:30	21	1	6	28	0	2	1	3	0	181	34	215	5	89	1	95	341	0
16:30 - 16:45	24	0	5	29	1	1	3	5	0	148	19	167	0	79	0	79	280	0
16:45 - 17:00	24	0	7	31	1	0	0	1	3	156	32	191	1	51	0	52	275	0
17:00 - 17:15	23	1	4	28	5	0	2	7	2	205	41	248	1	82	0	83	366	0
17:15 - 17:30	32	0	2	34	3	1	0	4	2	196	44	242	0	87	1	88	368	0
17:30 - 17:45	22	0	2	24	0	0	0	0	1	221	33	255	2	80	1	83	362	0
17:45 - 18:00	15	0	4	19	1	1	0	2	3	207	32	242	2	73	0	75	338	0
18:00 - 18:15	15	3	2	20	0	0	1	1	3	140	36	179	2	52	0	54	254	0
18:15 - 18:30	8	0	8	16	0	0	0	0	2	176	46	224	0	59	0	59	299	0
18:30 - 18:45	16	4	2	22	3	3	3	9	2	157	34	193	1	63	1	65	289	0
18:45 - 19:00	11	4	8	23	0	2	3	5	19	97	28	144	2	47	1	50	222	0
TOTAL	1112	51	140	1303	40	46	49	135	97	4517	1043	5657	138	4098	52	4288	11383	2
Trucks	2	0	1	3	0	0	1	1	0	36	3	39	1	29	0	30	73	0.6%
School Buses	2	0	8	10	0	0	0	0	0	14	1	15	3	6	0	9	34	0.3%

TOTAL AND PEAK HOUR VOLUME DIAGRAMS

Bush River Rd AT Ashland Rd-Marydale Ln Date: 11/29/2016

12.0 HOUR TOTAL VOLUME
FROM 7:00 TO 15:00

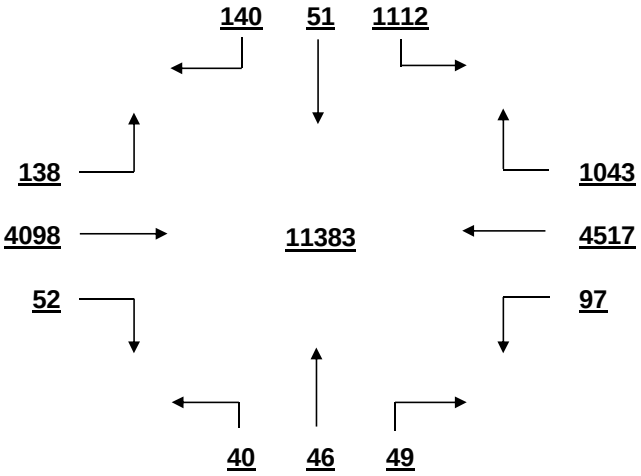

OVERALL PEAK HOUR VOLUME
FROM 17:00 TO 18:00

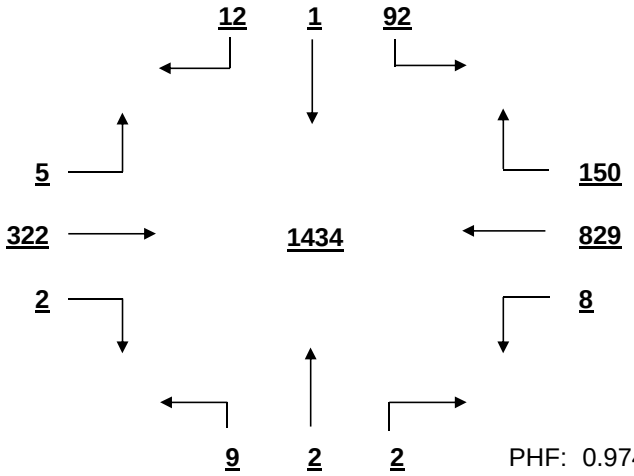

PHF: 0.974

AM PEAK HOUR VOLUME (0:00-10:45)
FROM 7:30 TO 8:30

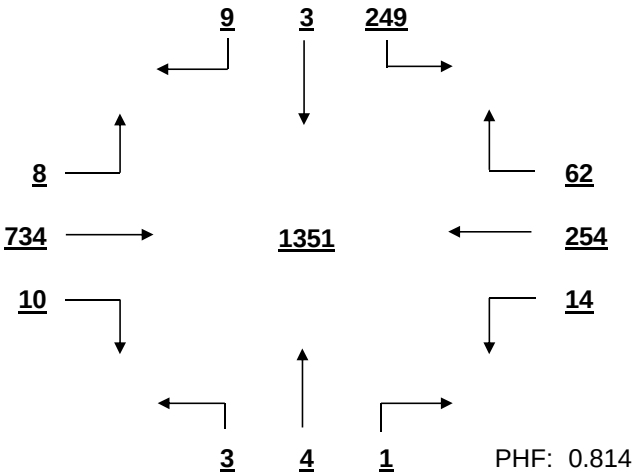

PHF: 0.814

PM PEAK HOUR VOLUME (14:15-23:45)
FROM 17:00 TO 18:00

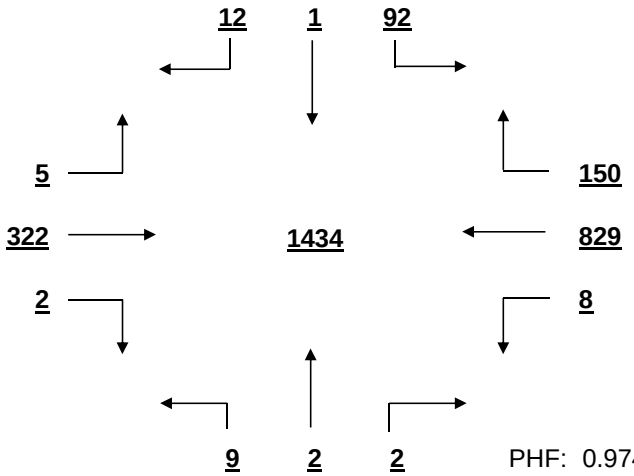

PHF: 0.974

MID-DAY PEAK HOUR VOLUME (11:00-14:00)
FROM 12:30 TO 13:30

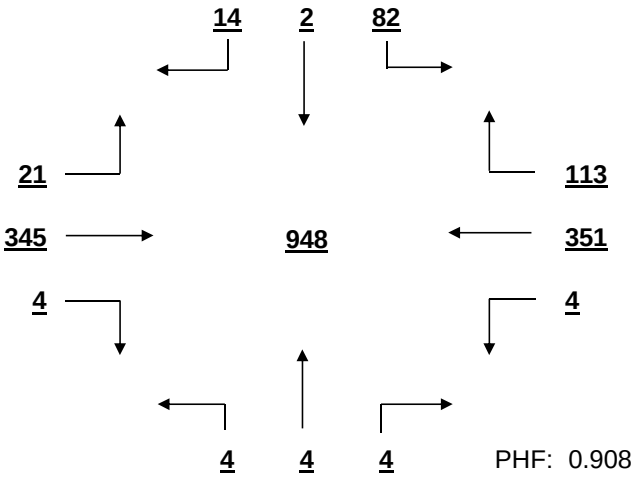

PHF: 0.908

OTHER HOUR VOLUME
FROM 7:00 TO 8:00

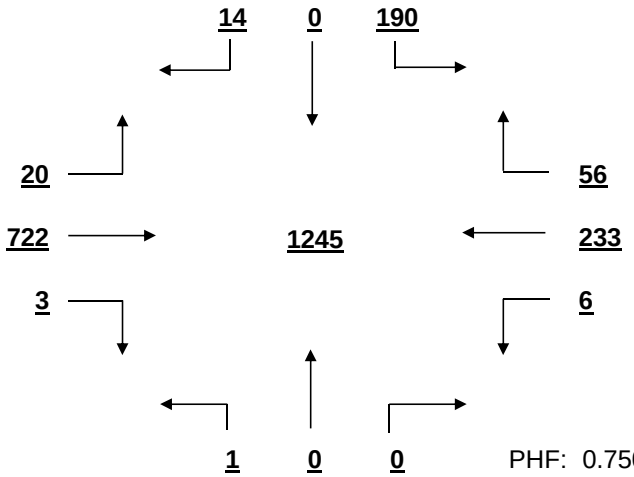

PHF: 0.750

SIGNAL WARRANT ANALYSIS

Bush River Rd AT Ashland Rd-Marydale Ln Date: 11/29/2016

Minor Street Volume, percent of total = 12.6%
Percent of Left Turns from Minor Street = 80.1%
Percent of Right Turns from Minor Street = 13.1%
Percent of Minor Street Right Turns to Remove from Warrant Analysis = 0%
WARRANT BASIS = **100%**

Warrant No. 1 - Vehicular Volume is not met

Condition A - Minimum Vehicular Volume is not met

Average Major Street % of Warrant				Average Minor Street % of Warrant			
828.8	/	500	= 166%	108.6	/	150	= 72%

Hourly percent of warrant

	7:00 - 8:00	8:00 - 9:00	9:00 - 10:00	10:00 - 11:00	11:00 - 12:00	12:00 - 13:00	13:00 - 14:00	14:00 - 15:00	15:00 - 16:00	16:00 - 17:00	17:00 - 18:00	18:00 - 19:00
Major St.	208%	180%	109%	114%	131%	161%	156%	136%	147%	191%	263%	194%
Minor St.	136%	124%	53%	69%	47%	56%	70%	64%	53%	74%	70%	54%

Condition B - Interruption to Continuous Traffic is not met

Average Major Street % of Warrant				Average Minor Street % of Warrant			
828.8	/	750	= 111%	108.6	/	75	= 145%

Hourly percent of warrant

	7:00 - 8:00	8:00 - 9:00	9:00 - 10:00	10:00 - 11:00	11:00 - 12:00	12:00 - 13:00	13:00 - 14:00	14:00 - 15:00	15:00 - 16:00	16:00 - 17:00	17:00 - 18:00	18:00 - 19:00
Major St.	139%	120%	73%	76%	87%	107%	104%	91%	98%	127%	175%	129%
Minor St.	272%	248%	105%	137%	93%	112%	140%	128%	105%	148%	140%	108%

80% Combination of Conditions A & B is not met

Warrant No. 2 - Four Hour Vehicular Volume is met

Hourly percent of warrant

	7:00 - 8:00	8:00 - 9:00	9:00 - 10:00	10:00 - 11:00	11:00 - 12:00	12:00 - 13:00	13:00 - 14:00	14:00 - 15:00	15:00 - 16:00	16:00 - 17:00	17:00 - 18:00	18:00 - 19:00
Minor St.	224%	152%	33%	45%	35%	57%	67%	51%	47%	102%	131%	77%

Warrant No. 3 - Peak Hour is met

	Percent of warrant		Percent of warrant
Overall Peak Hour:	17:00 - 18:00	Higher Volume Side Street Peak Hour:	7:30 - 8:30
Minor St.	85%	Minor St.	146%

Warrant No. 4 - Pedestrian Volume. Pedestrian volume shown are minumum volumes assuming heavy major street traffic. If these volumes are met, warrant 4 requires further engineering analysis

Minimum 4 hour ped. volume crossing major street	Minimum peak hour ped. volume crossing major street
107	133

Number of pedestrians crossing major street

	7:00 - 8:00	8:00 - 9:00	9:00 - 10:00	10:00 - 11:00	11:00 - 12:00	12:00 - 13:00	13:00 - 14:00	14:00 - 15:00	15:00 - 16:00	16:00 - 17:00	17:00 - 18:00	18:00 - 19:00
Major St.	0	0	0	0	0	0	0	0	0	0	0	0

Warrant No. 7 - Crash Experience (Requires 3 criteria analysis by engineering)

Total Number: 0 From: 1/1/2005 to 1/1/2008
Accident Rate: 0.00 per million entering vehicles

Types of Accidents	No.	/	Avg.		No.	/	Avg.
Right Angle	0	/	0.0	Rear End	0	/	0.0
Lost Control	0	/	0.0	Side Swipe	0	/	0.0
Left Turn	0	/	0.0	Other	0	/	0.0

SOUTH CAROLINA DEPARTMENT OF TRANSPORTATION
DISTRICT 1
TRAFFIC ENGINEERING

County: Richland City: Columbia Date: 11/28/2016

Major Rt: Bush River Rd * Not on State System Minor Rt: Outlet Pointe Blvd-Meadow Ct

Day of Week: Monday Weather: Rain (Clear) Office: Short Counts JMS

Type of Control: Signal Speed Limit (major st) 40

Direction of Minor Street: N-S Intersection ADT - 24460 (Calc)

Number of Lanes (major st)* 2 Number of Lanes (minor st)* 2

* Each Direction

INTERSECTION VOLUME SUMMARY

	From N Outlet Pointe Blvd				From S Outlet Pointe Blvd				From E Bush River Rd				From W Bush River Rd				Total	Total
	LT	STR	RT	TOT	LT	STR	RT	TOT	LT	STR	RT	TOT	LT	STR	RT	TOT	Vol	Peds
7:00 - 7:15	10	1	1	12	1	0	2	3	21	46	6	73	1	141	1	143	231	0
7:15 - 7:30	19	1	1	21	2	0	0	2	55	87	5	147	1	236	8	245	415	0
7:30 - 7:45	21	2	4	27	2	0	5	7	56	87	4	147	1	273	8	282	463	0
7:45 - 8:00	22	0	3	25	1	0	4	5	87	75	10	172	0	287	9	296	498	0
8:00 - 8:15	16	0	3	19	4	1	3	8	100	107	5	212	1	188	12	201	440	1
8:15 - 8:30	11	1	0	12	2	0	17	19	113	117	4	234	0	185	10	195	460	0
8:30 - 8:45	14	1	0	15	4	0	8	12	77	89	6	172	0	171	12	183	382	2
8:45 - 9:00	16	0	1	17	2	0	10	12	62	78	4	144	1	149	5	155	328	1
9:00 - 9:15	7	2	0	9	3	0	18	21	59	76	1	136	0	114	7	121	287	2
9:15 - 9:30	8	1	2	11	4	0	16	20	48	88	1	137	1	90	8	99	267	0
9:30 - 9:45	5	0	1	6	9	2	17	28	30	85	3	118	1	73	10	84	236	0
9:45 - 10:00	8	1	0	9	8	0	20	28	35	91	3	129	0	75	8	83	249	2
10:00 - 10:15	8	0	1	9	6	1	23	30	34	87	5	126	0	70	11	81	246	0
10:15 - 10:30	7	0	1	8	7	0	21	28	33	90	3	126	2	76	6	84	246	0
10:30 - 10:45	6	0	1	7	6	0	26	32	32	96	3	131	1	67	5	73	243	0
10:45 - 11:00	5	0	0	5	6	0	27	33	41	83	7	131	1	76	11	88	257	2
11:00 - 11:15	2	1	1	4	10	0	32	42	40	101	4	145	0	89	6	95	286	0
11:15 - 11:30	8	0	0	8	10	0	30	40	56	88	2	146	0	86	7	93	287	1
11:30 - 11:45	4	0	0	4	8	0	50	58	61	123	4	188	0	85	6	91	341	1
11:45 - 12:00	8	0	2	10	7	2	54	63	66	136	6	208	1	96	11	108	389	0
12:00 - 12:15	6	1	1	8	30	1	88	119	66	132	10	208	1	99	24	124	459	0
12:15 - 12:30	5	1	3	9	15	2	56	73	57	140	9	206	0	106	17	123	411	2
12:30 - 12:45	7	1	1	9	21	5	68	94	82	164	6	252	0	122	17	139	494	2
12:45 - 13:00	5	0	1	6	18	0	53	71	92	150	4	246	0	104	11	115	438	2
13:00 - 13:15	9	1	1	11	28	2	86	116	77	146	8	231	3	123	16	142	500	1
13:15 - 13:30	6	2	2	10	17	1	54	72	82	131	10	223	0	119	22	141	446	1
13:30 - 13:45	7	0	0	7	17	0	51	68	67	116	7	190	0	109	24	133	398	0
13:45 - 14:00	4	1	0	5	12	1	32	45	67	133	10	210	1	106	14	121	381	1
14:00 - 14:15	6	3	2	11	11	1	35	47	73	109	8	190	0	93	8	101	349	0
14:15 - 14:30	7	3	1	11	22	0	39	61	45	124	5	174	0	137	12	149	395	3
14:30 - 14:45	11	0	0	11	5	1	35	41	45	125	4	174	1	116	12	129	355	0
14:45 - 15:00	9	1	2	12	12	3	35	50	48	150	6	204	1	146	14	161	427	1
15:00 - 15:15	7	3	1	11	9	0	28	37	35	118	9	162	0	117	6	123	333	0
15:15 - 15:30	11	0	2	13	12	0	35	47	40	140	9	189	2	110	8	120	369	1
15:30 - 15:45	5	0	0	5	10	1	51	62	44	150	13	207	0	109	8	117	391	0
15:45 - 16:00	8	0	0	8	17	1	36	54	46	140	7	193	2	107	8	117	372	0
16:00 - 16:15	5	1	1	7	25	1	88	114	36	185	16	237	1	105	7	113	471	1
16:15 - 16:30	10	1	0	11	16	6	39	61	41	219	14	274	2	107	14	123	469	0
16:30 - 16:45	4	0	3	7	25	0	86	111	36	198	16	250	2	140	13	155	523	0
16:45 - 17:00	7	2	2	11	20	1	80	101	31	269	6	306	2	118	10	130	548	0
17:00 - 17:15	7	2	5	14	52	1	108	161	34	252	20	306	2	190	8	200	681	2
17:15 - 17:30	10	0	3	13	20	1	79	100	47	298	28	373	1	161	11	173	659	3
17:30 - 17:45	7	2	2	11	21	3	57	81	38	297	16	351	2	102	11	115	558	0
17:45 - 18:00	16	1	2	19	15	1	32	48	27	261	20	308	3	112	9	124	499	0
18:00 - 18:15	3	0	2	5	14	0	20	34	27	220	13	260	3	101	9	113	412	1
18:15 - 18:30	7	0	4	11	15	0	15	30	27	185	18	230	1	86	7	94	365	0
18:30 - 18:45	7	2	2	11	12	1	20	33	25	135	9	169	0	83	7	90	303	0
18:45 - 19:00	13	0	0	13	9	1	21	31	24	101	9	134	0	77	6	83	261	0
TOTAL	414	39	65	518	602	41	1810	2453	2465	6618	396	9479	42	5832	494	6368	18818	33
Trucks	4	0	0	4	3	1	10	14	19	84	3	106	0	54	2	56	180	1.0%
School Buses	1	0	0	1	0	0	1	1	1	21	4	26	2	5	0	7	35	0.2%

TOTAL AND PEAK HOUR VOLUME DIAGRAMS

Bush River Rd AT Outlet Pointe Blvd-Meadow Ct Date: 11/28/2016

12.0 HOUR TOTAL VOLUME
FROM 7:00 TO 15:00

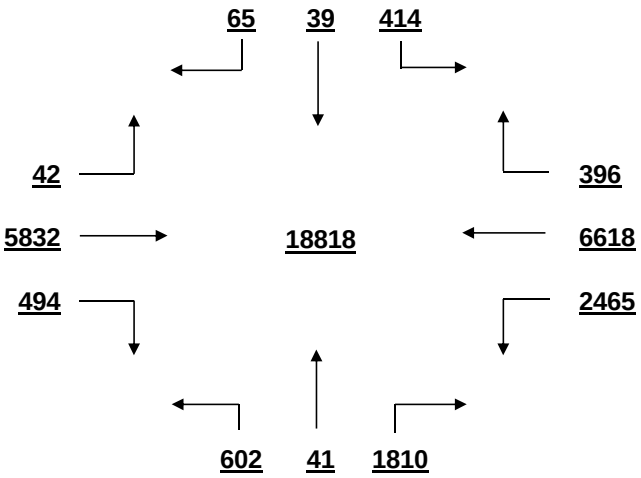

OVERALL PEAK HOUR VOLUME
FROM 16:45 TO 17:45

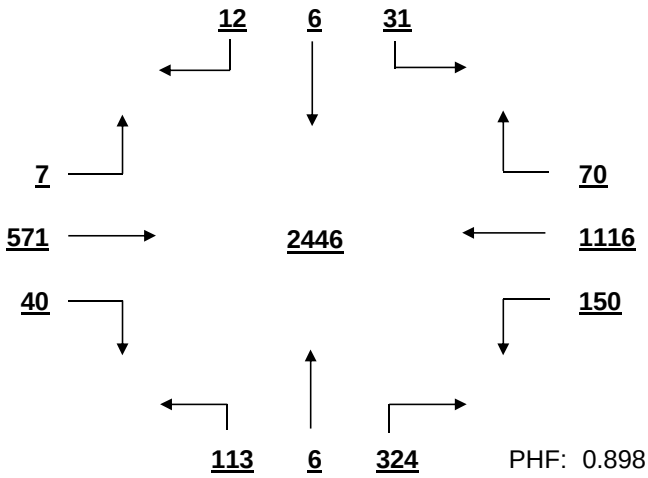

PHF: 0.898

AM PEAK HOUR VOLUME (0:00-10:45)
FROM 7:30 TO 8:30

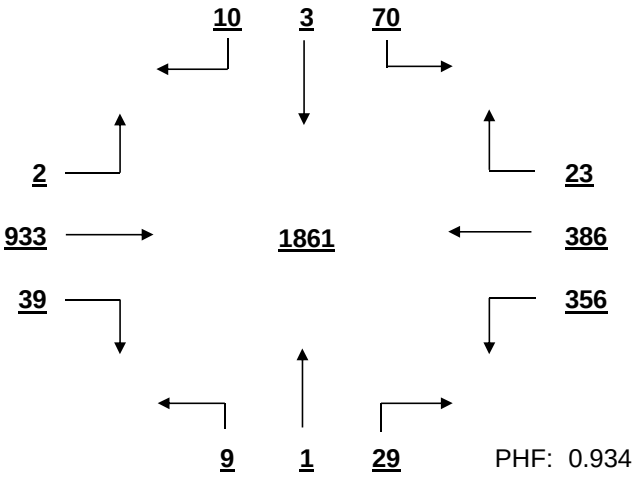

PHF: 0.934

PM PEAK HOUR VOLUME (14:15-23:45)
FROM 16:45 TO 17:45

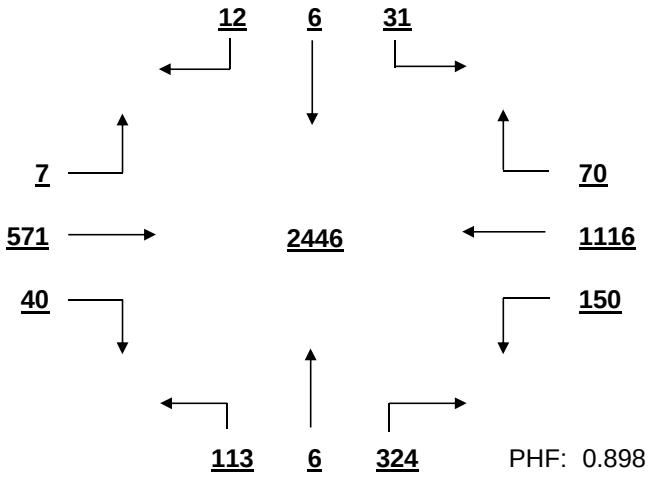

PHF: 0.898

MID-DAY PEAK HOUR VOLUME (11:00-14:00)
FROM 12:30 TO 13:30

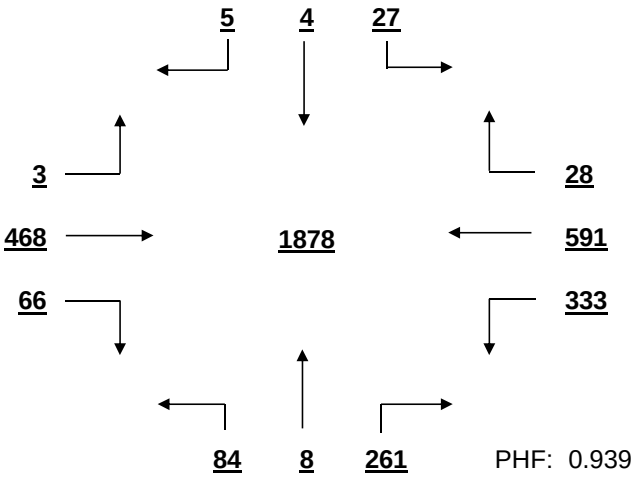

PHF: 0.939

OTHER HOUR VOLUME
FROM 7:00 TO 8:00

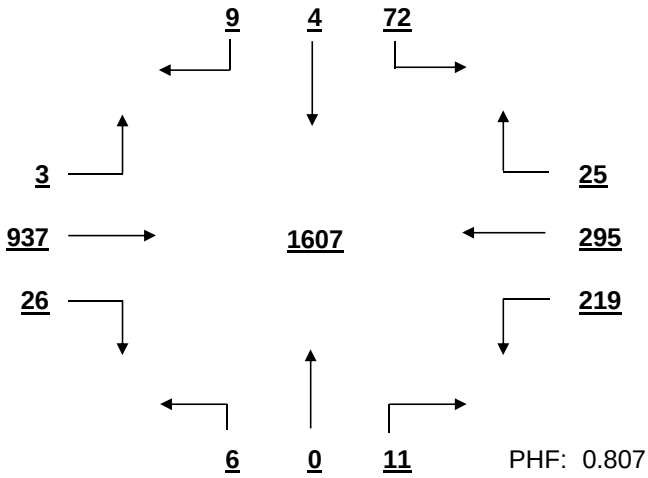

PHF: 0.807

SIGNAL WARRANT ANALYSIS

Bush River Rd AT Outlet Pointe Blvd-Meadow Ct Date: 11/28/2016

Minor Street Volume, percent of total = 15.8%
Percent of Left Turns from Minor Street = 34.2%
Percent of Right Turns from Minor Street = 63.1%
Percent of Minor Street Right Turns to Remove from Warrant Analysis = 0%
WARRANT BASIS = **100%**

Warrant No. 1 - Vehicular Volume is met

Condition A - Minimum Vehicular Volume is not met

Average Major Street % of Warrant				Average Minor Street % of Warrant			
1320.6	/	600 =	220%	204.4	/	200 =	102%

Hourly percent of warrant

	7:00 - 8:00	8:00 - 9:00	9:00 - 10:00	10:00 - 11:00	11:00 - 12:00	12:00 - 13:00	13:00 - 14:00	14:00 - 15:00	15:00 - 16:00	16:00 - 17:00	17:00 - 18:00	18:00 - 19:00
Major St.	251%	249%	151%	140%	179%	236%	232%	214%	205%	265%	325%	196%
Minor St.	43%	32%	49%	62%	102%	179%	151%	100%	100%	194%	195%	64%

Condition B - Interruption to Continuous Traffic is met

Average Major Street % of Warrant				Average Minor Street % of Warrant			
1320.6	/	900 =	147%	204.4	/	100 =	204%

Hourly percent of warrant

	7:00 - 8:00	8:00 - 9:00	9:00 - 10:00	10:00 - 11:00	11:00 - 12:00	12:00 - 13:00	13:00 - 14:00	14:00 - 15:00	15:00 - 16:00	16:00 - 17:00	17:00 - 18:00	18:00 - 19:00
Major St.	167%	166%	101%	93%	119%	157%	155%	142%	136%	176%	217%	130%
Minor St.	85%	63%	97%	123%	203%	357%	301%	199%	200%	387%	390%	128%

80% Combination of Conditions A & B is not met

Warrant No. 2 - Four Hour Vehicular Volume is met

Hourly percent of warrant

	7:00 - 8:00	8:00 - 9:00	9:00 - 10:00	10:00 - 11:00	11:00 - 12:00	12:00 - 13:00	13:00 - 14:00	14:00 - 15:00	15:00 - 16:00	16:00 - 17:00	17:00 - 18:00	18:00 - 19:00
Minor St.	74%	55%	42%	47%	120%	310%	262%	171%	157%	337%	339%	91%

Warrant No. 3 - Peak Hour is met

	Percent of warrant		Percent of warrant
Overall Peak Hour:	16:45 - 17:45	Higher Volume Side Street Peak Hour:	16:30 - 17:30
Minor St.	295%	Minor St.	315%

Warrant No. 4 - Pedestrian Volume. Pedestrian volume shown are minumum volumes assuming heavy major street traffic. If these volumes are met, warrant 4 requires further engineering analysis

Minimum 4 hour ped. volume crossing major street: 107

Minimum peak hour ped. volume crossing major street: 133

Number of pedestrians crossing major street

	7:00 - 8:00	8:00 - 9:00	9:00 - 10:00	10:00 - 11:00	11:00 - 12:00	12:00 - 13:00	13:00 - 14:00	14:00 - 15:00	15:00 - 16:00	16:00 - 17:00	17:00 - 18:00	18:00 - 19:00
Major St.	0	1	2	2	0	4	3	3	1	1	4	0

Warrant No. 7 - Crash Experience (Requires 3 criteria analysis by engineering)

Total Number: 0 From: 1/1/2005 to 1/1/2008

Accident Rate: 0.00 per million entering vehicles

Types of Accidents	No.	/	Avg.		No.	/	Avg.
Right Angle	0	/	0.0	Rear End	0	/	0.0
Lost Control	0	/	0.0	Side Swipe	0	/	0.0
Left Turn	0	/	0.0	Other	0	/	0.0

SOUTH CAROLINA DEPARTMENT OF TRANSPORTATION
DISTRICT 1
TRAFFIC ENGINEERING

County: Richland City: Columbia Date: 11/30/2016

Major Rt: Bush River Rd * Not on State System Minor Rt: Berryhill Dr Clear

Day of Week: Wednesday Weather: Rain Office: Short Counts JMS

Type of Control: Signal Speed Limit (major st) 40

Direction of Minor Street: N-S Intersection ADT - 27690 (Calc)

Number of Lanes (major st)* 2 Number of Lanes (minor st)* 1

* Each Direction

INTERSECTION VOLUME SUMMARY

	From N Berryhill Dr				From S Berryhill Dr				From E Bush River Rd				From W Bush River Rd				Total	Total
	LT	STR	RT	TOT	LT	STR	RT	TOT	LT	STR	RT	TOT	LT	STR	RT	TOT	Vol	Peds
7:00 - 7:15	12	0	1	13	0	0	0	0	0	80	33	113	11	112	0	123	249	0
7:15 - 7:30	51	0	2	53	0	0	0	0	0	144	65	209	10	258	0	268	530	0
7:30 - 7:45	48	0	7	55	0	0	0	0	0	185	103	288	14	309	0	323	666	0
7:45 - 8:00	46	0	5	51	0	0	0	0	0	193	87	280	12	287	0	299	630	0
8:00 - 8:15	33	0	4	37	0	0	0	0	0	180	106	286	7	267	0	274	597	0
8:15 - 8:30	13	0	0	13	0	0	0	0	0	95	49	144	4	116	0	120	277	0
8:30 - 8:45	35	0	16	51	0	0	0	0	0	190	104	294	18	206	0	224	569	0
8:45 - 9:00	25	0	6	31	0	0	0	0	0	167	94	261	11	181	0	192	484	0
9:00 - 9:15	18	0	5	23	0	0	0	0	0	128	51	179	13	156	0	169	371	0
9:15 - 9:30	19	0	4	23	0	0	0	0	0	118	54	172	9	133	0	142	337	0
9:30 - 9:45	31	0	3	34	0	0	0	0	0	112	46	158	12	128	0	140	332	0
9:45 - 10:00	17	0	4	21	0	0	0	0	0	126	38	164	10	130	0	140	325	0
10:00 - 10:15	29	0	6	35	0	0	0	0	0	106	21	127	12	96	0	108	270	0
10:15 - 10:30	19	0	4	23	0	0	0	0	0	115	32	147	13	111	0	124	294	1
10:30 - 10:45	35	0	3	38	0	0	0	0	0	96	21	117	11	82	0	93	248	0
10:45 - 11:00	22	0	6	28	0	0	0	0	0	125	25	150	11	97	0	108	286	0
11:00 - 11:15	40	0	10	50	0	0	0	0	0	143	28	171	10	110	0	120	341	0
11:15 - 11:30	33	0	7	40	0	0	0	0	0	131	25	156	14	115	0	129	325	0
11:30 - 11:45	46	0	17	63	0	0	0	0	0	164	35	199	12	149	0	161	423	0
11:45 - 12:00	53	0	18	71	0	0	0	0	0	158	37	195	15	176	0	191	457	0
12:00 - 12:15	71	0	27	98	0	0	0	0	0	188	23	211	18	210	0	228	537	1
12:15 - 12:30	47	0	17	64	0	0	0	0	0	223	39	262	15	206	0	221	547	0
12:30 - 12:45	41	0	10	51	0	0	0	0	0	184	35	219	24	214	0	238	508	0
12:45 - 13:00	48	0	12	60	0	0	0	0	0	211	53	264	19	191	0	210	534	0
13:00 - 13:15	60	0	23	83	0	0	0	0	0	166	47	213	29	225	0	254	550	0
13:15 - 13:30	46	0	20	66	0	0	0	0	0	218	55	273	18	168	0	186	525	0
13:30 - 13:45	42	0	10	52	0	0	0	0	0	194	51	245	21	219	0	240	537	0
13:45 - 14:00	42	0	8	50	0	0	0	0	0	207	64	271	20	187	0	207	528	0
14:00 - 14:15	40	0	14	54	0	0	0	0	0	165	32	197	27	156	0	183	434	1
14:15 - 14:30	32	0	7	39	0	0	0	0	0	142	35	177	12	129	0	141	357	0
14:30 - 14:45	28	0	5	33	0	0	0	0	0	130	23	153	8	110	0	118	304	0
14:45 - 15:00	52	0	8	60	0	0	0	0	0	154	18	172	13	154	0	167	399	0
15:00 - 15:15	53	0	7	60	0	0	0	0	0	169	15	184	10	149	0	159	403	0
15:15 - 15:30	51	0	7	58	0	0	0	0	0	172	17	189	3	108	0	111	358	0
15:30 - 15:45	45	0	7	52	0	0	0	0	0	172	26	198	6	164	0	170	420	0
15:45 - 16:00	48	0	12	60	0	0	0	0	0	208	38	246	6	158	0	164	470	0
16:00 - 16:15	73	0	17	90	0	0	0	0	0	214	23	237	11	193	0	204	531	0
16:15 - 16:30	68	0	3	71	0	0	0	0	0	194	19	213	6	139	0	145	429	0
16:30 - 16:45	111	0	18	129	0	0	0	0	0	214	38	252	2	192	0	194	575	2
16:45 - 17:00	89	0	10	99	0	0	0	0	0	326	31	357	13	168	0	181	637	0
17:00 - 17:15	131	0	16	147	0	0	0	0	0	321	32	353	9	302	0	311	811	1
17:15 - 17:30	90	0	10	100	0	0	0	0	0	341	61	402	7	237	0	244	746	0
17:30 - 17:45	87	0	9	96	0	0	0	0	0	265	51	316	8	137	0	145	557	0
17:45 - 18:00	60	0	10	70	0	0	0	0	0	288	29	317	6	164	0	170	557	0
18:00 - 18:15	58	0	5	63	0	0	0	0	0	329	34	363	8	149	0	157	583	0
18:15 - 18:30	31	0	2	33	0	0	0	0	0	251	32	283	8	122	0	130	446	1
18:30 - 18:45	21	0	6	27	0	0	0	0	0	227	15	242	8	105	0	113	382	0
18:45 - 19:00	20	0	5	25	0	0	0	0	0	207	16	223	6	92	0	98	346	1
TOTAL	2210	0	433	2643	0	0	0	0	0	8836	2006	10842	570	7967	0	8537	22022	8
Trucks	8	0	2	10	0	0	0	0	0	61	13	74	2	56	0	58	142	0.6%
School Buses	2	0	5	7	0	0	0	0	0	17	1	18	2	6	0	8	33	0.1%

TOTAL AND PEAK HOUR VOLUME DIAGRAMS

Bush River Rd AT Berryhill Dr Date: 11/30/2016

12.0 HOUR TOTAL VOLUME
FROM 7:00 TO 15:00

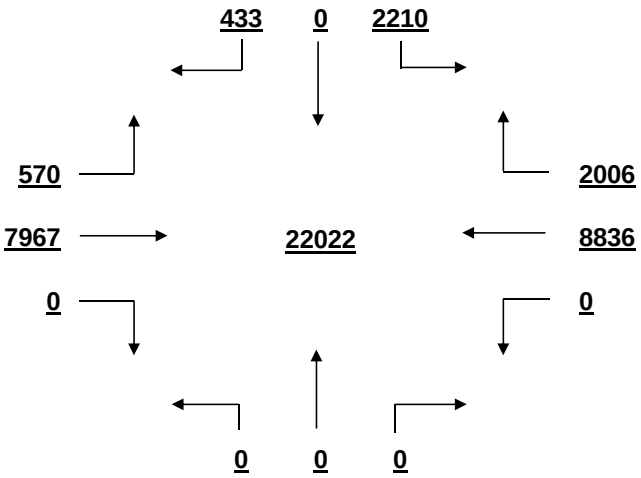

OVERALL PEAK HOUR VOLUME
FROM 16:30 TO 17:30

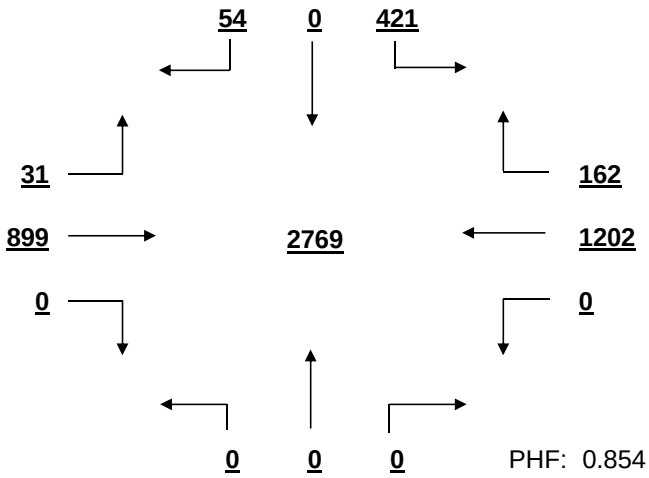

PHF: 0.854

AM PEAK HOUR VOLUME (0:00-10:45)
FROM 7:15 TO 8:15

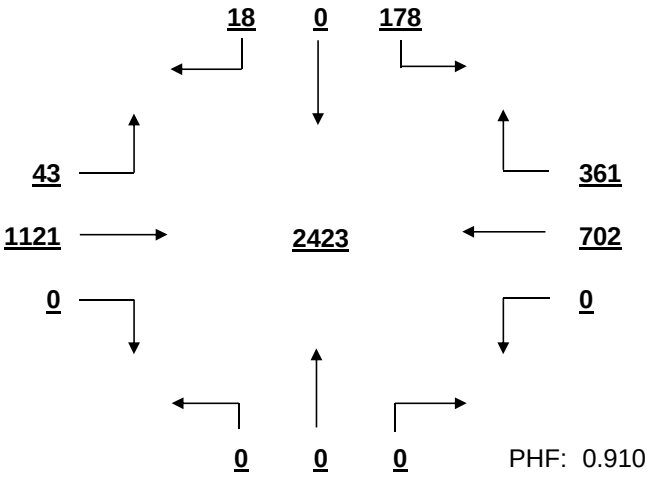

PHF: 0.910

PM PEAK HOUR VOLUME (14:15-23:45)
FROM 16:30 TO 17:30

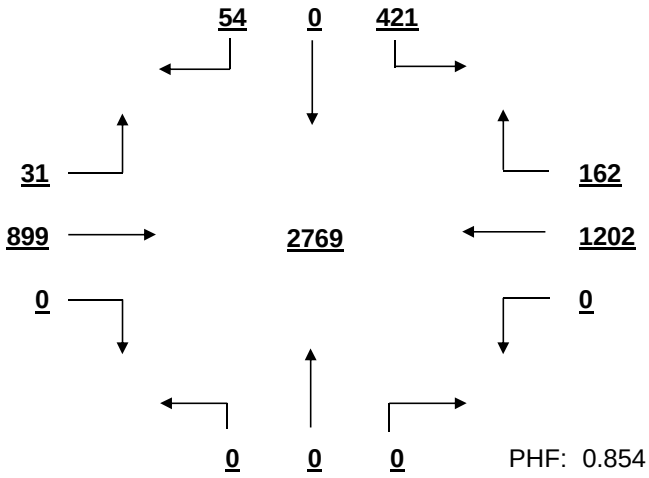

PHF: 0.854

MID-DAY PEAK HOUR VOLUME (11:00-14:00)
FROM 12:45 TO 13:45

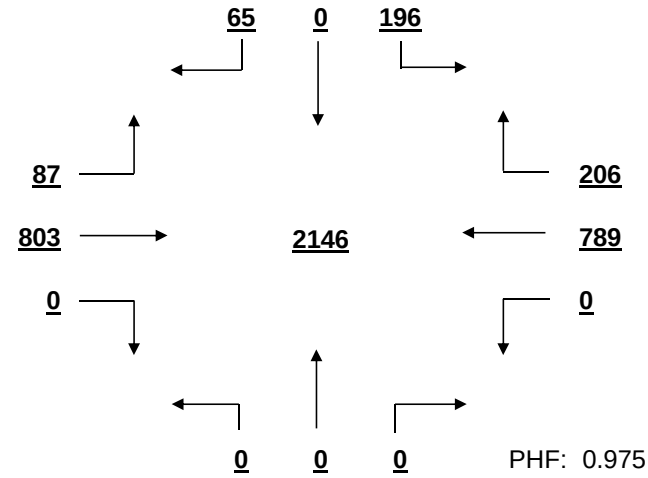

PHF: 0.975

OTHER HOUR VOLUME
FROM 7:00 TO 8:00

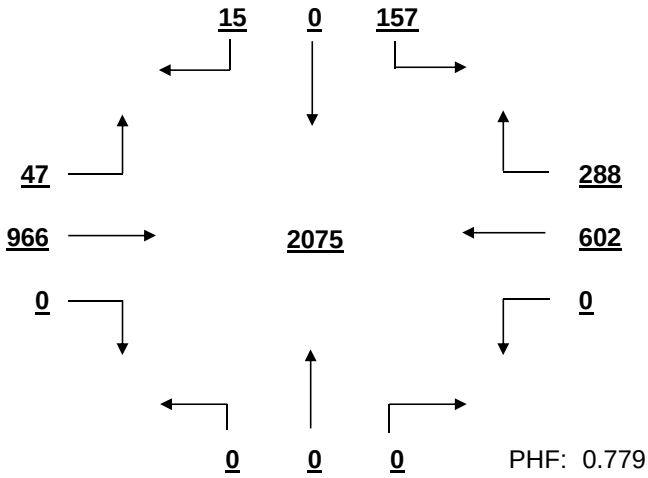

PHF: 0.779

SIGNAL WARRANT ANALYSIS

Bush River Rd AT Berryhill Dr Date: 11/30/2016

Minor Street Volume, percent of total = 12.0%
Percent of Left Turns from Minor Street = 83.6%
Percent of Right Turns from Minor Street = 16.4%
Percent of Minor Street Right Turns to Remove from Warrant Analysis = 0%
WARRANT BASIS = **100%**

Warrant No. 1 - Vehicular Volume is met

Condition A - Minimum Vehicular Volume is met

Average Major Street % of Warrant				Average Minor Street % of Warrant			
1614.9	/	600 =	269%	220.3	/	150 =	147%

Hourly percent of warrant

	7:00 - 8:00	8:00 - 9:00	9:00 - 10:00	10:00 - 11:00	11:00 - 12:00	12:00 - 13:00	13:00 - 14:00	14:00 - 15:00	15:00 - 16:00	16:00 - 17:00	17:00 - 18:00	18:00 - 19:00
Major St.	317%	299%	211%	162%	220%	309%	315%	218%	237%	297%	376%	268%
Minor St.	115%	88%	67%	83%	149%	182%	167%	124%	153%	259%	275%	99%

Condition B - Interruption to Continuous Traffic is met

Average Major Street % of Warrant				Average Minor Street % of Warrant			
1614.9	/	900 =	179%	220.3	/	75 =	294%

Hourly percent of warrant

	7:00 - 8:00	8:00 - 9:00	9:00 - 10:00	10:00 - 11:00	11:00 - 12:00	12:00 - 13:00	13:00 - 14:00	14:00 - 15:00	15:00 - 16:00	16:00 - 17:00	17:00 - 18:00	18:00 - 19:00
Major St.	211%	199%	140%	108%	147%	206%	210%	145%	158%	198%	251%	179%
Minor St.	229%	176%	135%	165%	299%	364%	335%	248%	307%	519%	551%	197%

80% Combination of Conditions A & B is met

Warrant No. 2 - Four Hour Vehicular Volume is met

Hourly percent of warrant

	7:00 - 8:00	8:00 - 9:00	9:00 - 10:00	10:00 - 11:00	11:00 - 12:00	12:00 - 13:00	13:00 - 14:00	14:00 - 15:00	15:00 - 16:00	16:00 - 17:00	17:00 - 18:00	18:00 - 19:00
Minor St.	215%	165%	106%	83%	249%	341%	314%	204%	288%	486%	516%	185%

Warrant No. 3 - Peak Hour is met

	Percent of warrant		Percent of warrant
Overall Peak Hour:	16:30 - 17:30	Higher Volume Side Street Peak Hour:	16:30 - 17:30
Minor St.	475%	Minor St.	475%

Warrant No. 4 - Pedestrian Volume. Pedestrian volume shown are minumum volumes assuming heavy major street traffic. If these volumes are met, warrant 4 requires further engineering analysis

Minimum 4 hour ped. volume crossing major street: 107

Minimum peak hour ped. volume crossing major street: 133

Number of pedestrians crossing major street

	7:00 - 8:00	8:00 - 9:00	9:00 - 10:00	10:00 - 11:00	11:00 - 12:00	12:00 - 13:00	13:00 - 14:00	14:00 - 15:00	15:00 - 16:00	16:00 - 17:00	17:00 - 18:00	18:00 - 19:00
Major St.	0	0	0	0	0	0	0	1	0	0	0	0

Warrant No. 7 - Crash Experience (Requires 3 criteria analysis by engineering)

Total Number: 0 From: 1/1/2005 to 1/1/2008

Accident Rate: 0.00 per million entering vehicles

Types of Accidents	No.	/	Avg.		No.	/	Avg.
Right Angle	0	/	0.0	Rear End	0	/	0.0
Lost Control	0	/	0.0	Side Swipe	0	/	0.0
Left Turn	0	/	0.0	Other	0	/	0.0

SOUTH CAROLINA DEPARTMENT OF TRANSPORTATION
DISTRICT 1
TRAFFIC ENGINEERING

County: Richland City: Columbia Date: 11/29/2016

Major Rt: Bush River Rd * Not on State System Minor Rt: Rockland Rd Clear

Day of Week: Tuesday Weather: Rain Office: Short Counts JMS

Type of Control: Stop Sign Speed Limit (major st) 40

Direction of Minor Street: N-S Intersection ADT - 21150 (Calc)

Number of Lanes (major st)* 2 Number of Lanes (minor st)* 1

* Each Direction

INTERSECTION VOLUME SUMMARY

	From N Rockland Rd				From S Rockland Rd				From E Bush River Rd				From W Bush River Rd				Total	Total
	LT	STR	RT	TOT	LT	STR	RT	TOT	LT	STR	RT	TOT	LT	STR	RT	TOT	Vol	Peds
7:00 - 7:15	2	0	6	8	0	0	1	1	2	79	3	84	10	215	1	226	319	1
7:15 - 7:30	3	0	6	9	0	0	1	1	0	96	2	98	8	321	0	329	437	0
7:30 - 7:45	3	0	14	17	1	0	0	1	2	120	3	125	7	343	1	351	494	5
7:45 - 8:00	2	0	13	15	0	0	1	1	2	117	6	125	5	355	0	360	501	0
8:00 - 8:15	3	0	13	16	0	0	1	1	1	125	3	129	1	361	1	363	509	0
8:15 - 8:30	2	0	0	2	0	0	1	1	2	117	0	119	8	361	4	373	495	0
8:30 - 8:45	5	0	7	12	1	0	2	3	3	115	5	123	8	248	1	257	395	1
8:45 - 9:00	1	0	9	10	1	0	1	2	4	99	0	103	8	181	8	197	312	0
9:00 - 9:15	3	0	8	11	1	0	0	1	6	95	3	104	10	143	11	164	280	1
9:15 - 9:30	0	0	3	3	3	0	1	4	5	94	5	104	3	111	9	123	234	1
9:30 - 9:45	3	0	5	8	6	0	2	8	9	71	5	85	6	113	15	134	235	1
9:45 - 10:00	2	0	5	7	6	0	4	10	6	85	6	97	7	116	13	136	250	2
10:00 - 10:15	3	0	4	7	0	0	0	0	10	82	2	94	1	101	13	115	216	0
10:15 - 10:30	0	0	1	1	7	0	7	14	7	76	1	84	3	104	17	124	223	0
10:30 - 10:45	1	0	2	3	10	1	8	19	13	77	3	93	3	87	24	114	229	0
10:45 - 11:00	2	0	5	7	11	0	6	17	18	94	3	115	3	107	19	129	268	0
11:00 - 11:15	0	0	7	7	10	0	17	27	12	113	1	126	6	99	26	131	291	0
11:15 - 11:30	3	0	2	5	14	1	12	27	11	103	2	116	2	115	21	138	286	0
11:30 - 11:45	2	0	10	12	12	1	12	25	16	125	2	143	2	127	18	147	327	0
11:45 - 12:00	2	0	7	9	11	0	14	25	11	129	0	140	4	141	20	165	339	2
12:00 - 12:15	2	0	9	11	18	0	16	34	15	133	4	152	3	180	20	203	400	0
12:15 - 12:30	2	0	6	8	22	0	12	34	9	175	4	188	10	170	24	204	434	0
12:30 - 12:45	3	0	5	8	25	0	12	37	16	181	5	202	1	158	23	182	429	0
12:45 - 13:00	1	0	7	8	17	0	13	30	8	164	1	173	5	150	25	180	391	0
13:00 - 13:15	2	0	5	7	16	0	12	28	11	155	2	168	3	144	26	173	376	1
13:15 - 13:30	2	0	6	8	18	0	16	34	16	158	3	177	2	142	29	173	392	1
13:30 - 13:45	3	0	8	11	17	0	13	30	15	170	6	191	7	138	21	166	398	0
13:45 - 14:00	3	1	7	11	24	0	17	41	14	166	4	184	5	131	14	150	386	1
14:00 - 14:15	3	0	3	6	21	0	15	36	7	128	3	138	6	124	23	153	333	2
14:15 - 14:30	0	1	1	2	19	0	8	27	14	147	6	167	1	119	0	120	316	0
14:30 - 14:45	7	0	4	11	19	1	20	40	9	145	6	160	4	112	15	131	342	0
14:45 - 15:00	5	0	2	7	17	0	11	28	8	129	3	140	5	123	13	141	316	0
15:00 - 15:15	5	0	12	17	21	0	9	30	9	154	11	174	7	139	13	159	380	0
15:15 - 15:30	6	0	6	12	18	0	14	32	10	152	2	164	8	121	9	138	346	0
15:30 - 15:45	3	0	8	11	14	1	16	31	5	137	2	144	6	113	4	123	309	0
15:45 - 16:00	3	1	10	14	11	0	5	16	3	145	11	159	3	107	15	125	314	3
16:00 - 16:15	8	0	10	18	10	0	9	19	7	203	4	214	8	125	9	142	393	0
16:15 - 16:30	2	0	4	6	8	0	11	19	7	252	9	268	9	140	2	151	444	0
16:30 - 16:45	2	0	16	18	7	1	8	16	5	274	8	287	14	148	6	168	489	0
16:45 - 17:00	0	0	6	6	5	1	8	14	6	325	4	335	12	138	7	157	512	0
17:00 - 17:15	3	0	15	18	5	0	12	17	4	319	7	330	9	181	9	199	564	0
17:15 - 17:30	1	0	13	14	1	0	9	10	5	289	2	296	5	150	9	164	484	0
17:30 - 17:45	3	0	10	13	2	0	9	11	1	348	7	356	1	164	7	172	552	1
17:45 - 18:00	5	0	9	14	8	0	8	16	9	317	9	335	8	133	9	150	515	0
18:00 - 18:15	2	0	7	9	8	0	11	19	2	249	8	259	5	131	10	146	433	0
18:15 - 18:30	2	0	7	9	7	0	10	17	3	237	10	250	13	98	6	117	393	0
18:30 - 18:45	5	0	6	11	7	0	4	11	2	195	9	206	5	70	9	84	312	0
18:45 - 19:00	2	0	4	6	8	0	6	14	4	154	14	172	6	80	3	89	281	0
TOTAL	127	3	333	463	467	7	405	879	364	7613	219	8196	276	7478	582	8336	17874	23
Trucks	1	0	8	9	0	0	0	0	0	134	1	135	8	134	1	143	287	1.6%
School Buses	0	0	0	0	1	0	0	1	0	24	0	24	0	11	1	12	37	0.2%

TOTAL AND PEAK HOUR VOLUME DIAGRAMS

Bush River Rd AT Rockland Rd Date: 11/29/2016

12.0 HOUR TOTAL VOLUME
FROM 7:00 TO 15:00

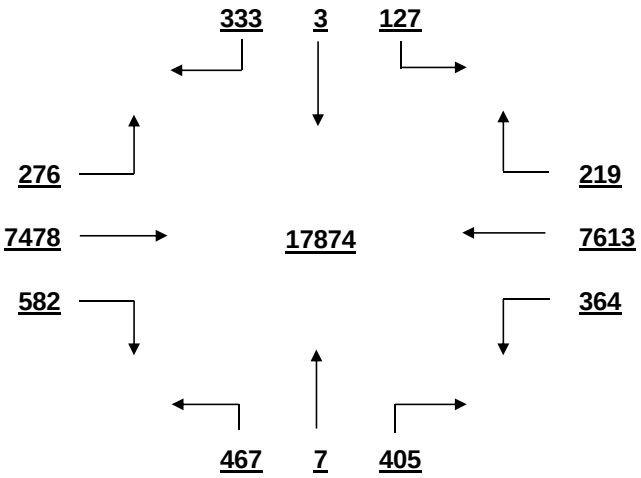

OVERALL PEAK HOUR VOLUME
FROM 17:00 TO 18:00

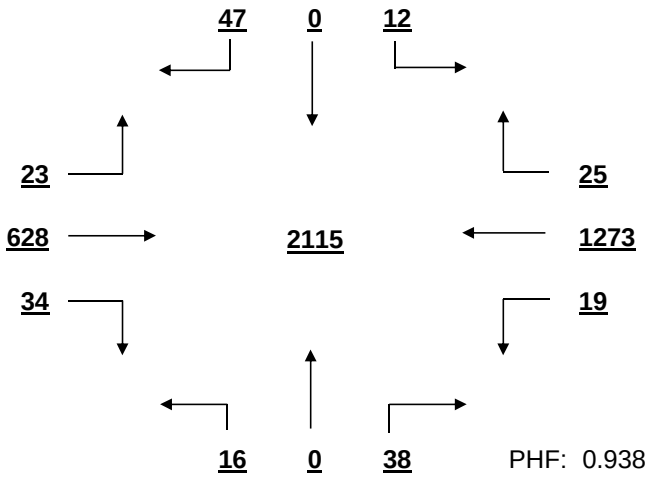

PHF: 0.938

AM PEAK HOUR VOLUME (0:00-10:45)
FROM 7:30 TO 8:30

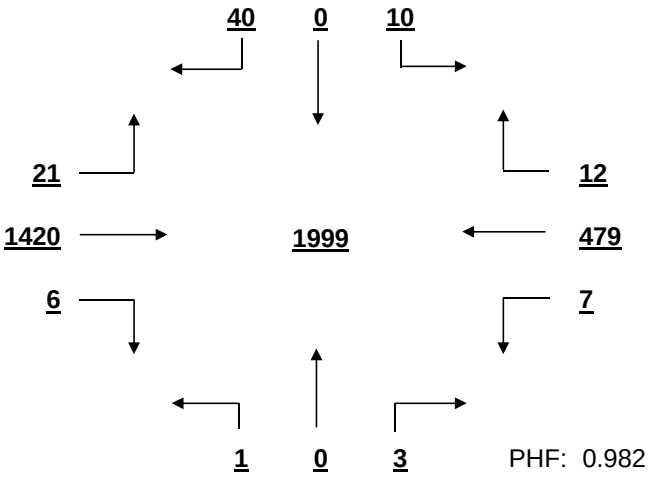

PHF: 0.982

PM PEAK HOUR VOLUME (14:15-23:45)
FROM 17:00 TO 18:00

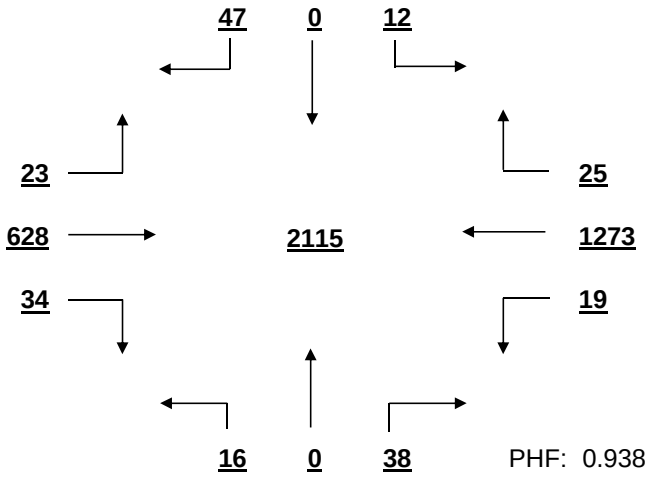

PHF: 0.938

MID-DAY PEAK HOUR VOLUME (11:00-14:00)
FROM 12:00 TO 13:00

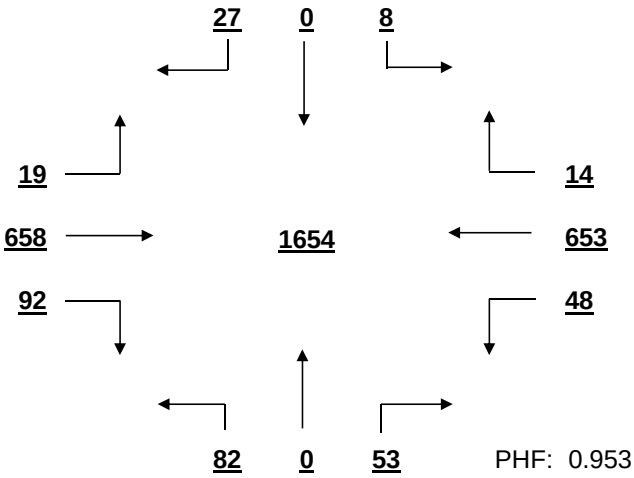

PHF: 0.953

OTHER HOUR VOLUME
FROM 7:00 TO 8:00

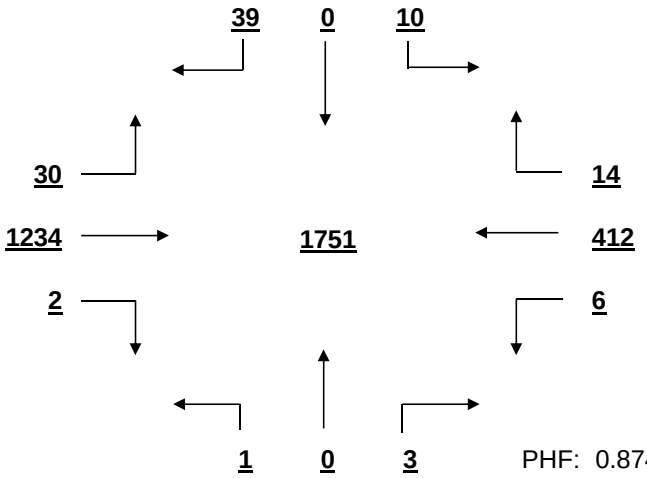

PHF: 0.874

SIGNAL WARRANT ANALYSIS

Bush River Rd AT Rockland Rd Date: 11/29/2016

Minor Street Volume, percent of total = 7.5%
Percent of Left Turns from Minor Street = 44.3%
Percent of Right Turns from Minor Street = 55.0%
Percent of Minor Street Right Turns to Remove from Warrant Analysis = 0%
WARRANT BASIS = **100%**

Warrant No. 1 - Vehicular Volume is not met

Condition A - Minimum Vehicular Volume is not met

Average Major Street % of Warrant				Average Minor Street % of Warrant			
1377.7	/	600	= 230%	73.3	/	150	= 49%

Hourly percent of warrant

	7:00 - 8:00	8:00 - 9:00	9:00 - 10:00	10:00 - 11:00	11:00 - 12:00	12:00 - 13:00	13:00 - 14:00	14:00 - 15:00	15:00 - 16:00	16:00 - 17:00	17:00 - 18:00	18:00 - 19:00
Major St.	283%	277%	158%	145%	184%	247%	230%	192%	198%	287%	334%	221%
Minor St.	33%	27%	19%	33%	69%	90%	89%	87%	73%	45%	39%	41%

Condition B - Interruption to Continuous Traffic is not met

Average Major Street % of Warrant				Average Minor Street % of Warrant			
1377.7	/	900	= 153%	73.3	/	75	= 98%

Hourly percent of warrant

	7:00 - 8:00	8:00 - 9:00	9:00 - 10:00	10:00 - 11:00	11:00 - 12:00	12:00 - 13:00	13:00 - 14:00	14:00 - 15:00	15:00 - 16:00	16:00 - 17:00	17:00 - 18:00	18:00 - 19:00
Major St.	189%	185%	105%	96%	123%	165%	154%	128%	132%	191%	222%	147%
Minor St.	65%	53%	39%	67%	139%	180%	177%	175%	145%	91%	79%	81%

80% Combination of Conditions A & B is not met

Warrant No. 2 - Four Hour Vehicular Volume is met

Hourly percent of warrant

	7:00 - 8:00	8:00 - 9:00	9:00 - 10:00	10:00 - 11:00	11:00 - 12:00	12:00 - 13:00	13:00 - 14:00	14:00 - 15:00	15:00 - 16:00	16:00 - 17:00	17:00 - 18:00	18:00 - 19:00
Minor St.	61%	50%	18%	28%	87%	169%	166%	117%	103%	85%	74%	68%

Warrant No. 3 - Peak Hour is not met

Overall Peak Hour: 17:00 - 18:00 — Percent of warrant
Minor St. 59%

Higher Volume Side Street Peak Hour: 13:45 - 14:45 — Percent of warrant
Minor St. 67%

Warrant No. 4 - Pedestrian Volume. Pedestrian volume shown are minumum volumes assuming heavy major street traffic. If these volumes are met, warrant 4 requires further engineering analysis

Minimum 4 hour ped. volume crossing major street: 107

Minimum peak hour ped. volume crossing major street: 133

Number of pedestrians crossing major street

	7:00 - 8:00	8:00 - 9:00	9:00 - 10:00	10:00 - 11:00	11:00 - 12:00	12:00 - 13:00	13:00 - 14:00	14:00 - 15:00	15:00 - 16:00	16:00 - 17:00	17:00 - 18:00	18:00 - 19:00
Major St.	3	1	5	0	0	0	3	1	3	0	1	0

Warrant No. 7 - Crash Experience (Requires 3 criteria analysis by engineering)

Total Number: 0 From: 1/1/2005 to 1/1/2008
Accident Rate: 0.00 per million entering vehicles

Types of Accidents	No.	/	Avg.		No.	/	Avg.
Right Angle	0	/	0.0	Rear End	0	/	0.0
Lost Control	0	/	0.0	Side Swipe	0	/	0.0
Left Turn	0	/	0.0	Other	0	/	0.0

SOUTH CAROLINA DEPARTMENT OF TRANSPORTATION
DISTRICT 1
TRAFFIC ENGINEERING

County: Richland City: Columbia Date: 11/30/2016

Major Rt: Bush River Rd * Not on State System Minor Rt: Independence Ave-Fuddruckers Clear

Day of Week: Wednesday Weather: Rain Office: Short Counts JMS

Type of Control: Signal Speed Limit (major st) 40

Direction of Minor Street: N-S Intersection ADT - 21420 (Calc)

Number of Lanes (major st)* 2 Number of Lanes (minor st)* 1

* Each Direction

INTERSECTION VOLUME SUMMARY

	From N Independence Ave-F				From S Independence Ave-F				From E Bush River Rd				From W Bush River Rd				Total	Total
	LT	STR	RT	TOT	LT	STR	RT	TOT	LT	STR	RT	TOT	LT	STR	RT	TOT	Vol	Peds
7:00 - 7:15	0	0	1	1	5	0	1	6	4	58	0	62	0	213	8	221	290	1
7:15 - 7:30	0	0	0	0	2	0	3	5	1	99	0	100	0	299	0	299	404	0
7:30 - 7:45	2	0	0	2	1	0	0	1	1	161	2	164	0	345	10	355	522	1
7:45 - 8:00	0	0	0	0	4	0	5	9	2	146	0	148	0	354	9	363	520	0
8:00 - 8:15	1	0	0	1	1	0	6	7	3	135	1	139	0	359	4	363	510	1
8:15 - 8:30	0	0	0	0	5	0	4	9	1	142	0	143	0	337	0	337	489	0
8:30 - 8:45	0	0	0	0	2	0	2	4	2	130	0	132	0	287	2	289	425	3
8:45 - 9:00	0	0	0	0	4	0	1	5	3	106	1	110	0	196	3	199	314	1
9:00 - 9:15	0	0	0	0	5	0	2	7	4	90	2	96	1	174	2	177	280	0
9:15 - 9:30	1	0	0	1	2	0	3	5	6	100	0	106	0	130	5	135	247	0
9:30 - 9:45	0	0	0	0	0	0	3	3	2	97	0	99	0	124	7	131	233	1
9:45 - 10:00	0	0	0	0	4	0	4	8	0	80	0	80	0	131	3	134	222	3
10:00 - 10:15	0	0	0	0	0	0	0	0	3	87	1	91	0	98	4	102	193	0
10:15 - 10:30	1	0	1	2	2	0	1	3	2	112	1	115	0	119	0	119	239	1
10:30 - 10:45	0	0	0	0	1	0	1	2	1	97	1	99	0	108	1	109	210	1
10:45 - 11:00	0	0	0	0	4	0	1	5	2	104	3	109	0	119	4	123	237	1
11:00 - 11:15	0	0	0	0	4	0	2	6	3	143	0	146	1	117	5	123	275	1
11:15 - 11:30	1	0	0	1	5	0	6	11	2	133	4	139	0	131	0	131	282	1
11:30 - 11:45	1	0	0	1	6	0	2	8	3	155	4	162	0	128	4	132	303	0
11:45 - 12:00	0	0	0	0	6	0	2	8	1	123	1	125	0	147	3	150	283	1
12:00 - 12:15	2	0	1	3	5	0	2	7	4	158	5	167	1	210	6	217	394	0
12:15 - 12:30	4	0	1	5	2	0	5	7	5	189	5	199	2	189	7	198	409	0
12:30 - 12:45	1	0	0	1	5	0	2	7	2	170	3	175	0	170	8	178	361	0
12:45 - 13:00	4	0	1	5	7	0	3	10	2	181	3	186	2	188	4	194	395	1
13:00 - 13:15	1	0	0	1	3	0	3	6	1	164	7	172	3	202	2	207	386	1
13:15 - 13:30	1	0	1	2	3	0	6	9	5	175	3	183	0	170	5	175	369	4
13:30 - 13:45	2	0	1	3	1	0	2	3	3	155	2	160	1	171	4	176	342	2
13:45 - 14:00	3	0	3	6	1	0	1	2	11	174	4	189	0	174	6	180	377	1
14:00 - 14:15	0	0	1	1	3	0	1	4	1	158	3	162	0	128	7	135	302	0
14:15 - 14:30	0	0	2	2	1	0	6	7	2	181	0	183	1	125	0	126	318	3
14:30 - 14:45	1	0	0	1	4	0	2	6	1	152	1	154	0	152	5	157	318	0
14:45 - 15:00	1	0	0	1	5	0	2	7	2	154	1	157	0	138	6	144	309	0
15:00 - 15:15	0	0	0	0	4	0	2	6	0	148	1	149	0	121	3	124	279	0
15:15 - 15:30	1	0	0	1	4	0	1	5	3	157	1	161	0	149	5	154	321	0
15:30 - 15:45	0	0	0	0	9	0	2	11	2	161	1	164	0	139	8	147	322	1
15:45 - 16:00	1	0	0	1	2	0	3	5	5	164	3	172	0	128	5	133	311	0
16:00 - 16:15	1	0	0	1	13	0	7	20	2	197	0	199	0	146	5	151	371	1
16:15 - 16:30	0	0	1	1	6	0	3	9	4	238	3	245	2	137	9	148	403	0
16:30 - 16:45	2	0	0	2	4	0	7	11	10	267	0	277	0	171	7	178	468	1
16:45 - 17:00	2	0	0	2	5	0	7	12	7	294	2	303	1	165	2	168	485	1
17:00 - 17:15	3	0	0	3	12	1	9	22	8	321	4	333	0	214	2	216	574	1
17:15 - 17:30	0	1	0	1	5	0	6	11	2	326	0	328	0	201	2	203	543	5
17:30 - 17:45	0	0	3	3	11	0	6	17	8	333	2	343	2	166	1	169	532	0
17:45 - 18:00	1	0	0	1	9	0	3	12	5	309	2	316	0	157	7	164	493	2
18:00 - 18:15	2	0	0	2	4	1	3	8	3	285	3	291	1	149	6	156	457	6
18:15 - 18:30	0	0	0	0	3	0	3	6	3	256	2	261	0	138	1	139	406	0
18:30 - 18:45	4	0	0	4	3	0	1	4	3	203	0	206	0	117	4	121	335	0
18:45 - 19:00	1	0	0	1	0	0	0	0	1	183	1	185	0	114	1	115	301	0
TOTAL	45	1	17	63	197	2	147	346	151	8151	83	8385	18	8345	202	8565	17359	47
Trucks	0	0	0	0	19	0	28	47	54	72	0	126	0	56	51	107	280	1.6%
School Buses	0	0	0	0	0	0	0	0	2	24	0	26	0	11	0	11	37	0.2%

TOTAL AND PEAK HOUR VOLUME DIAGRAMS

Bush River Rd AT Independence Ave-Fuddruckers Date: 11/30/2016

12.0 HOUR TOTAL VOLUME
FROM 7:00 TO 15:00

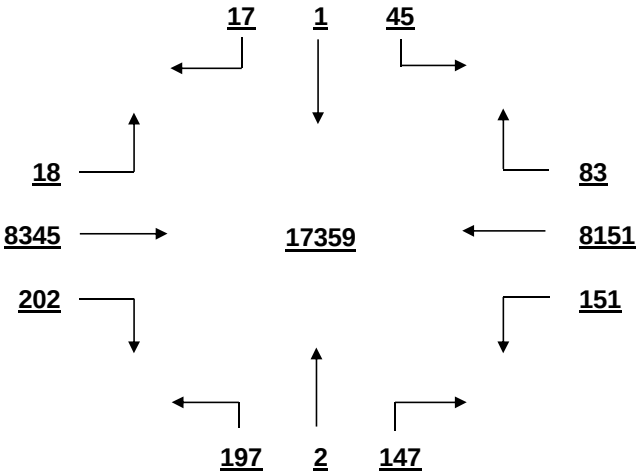

OVERALL PEAK HOUR VOLUME
FROM 17:00 TO 18:00

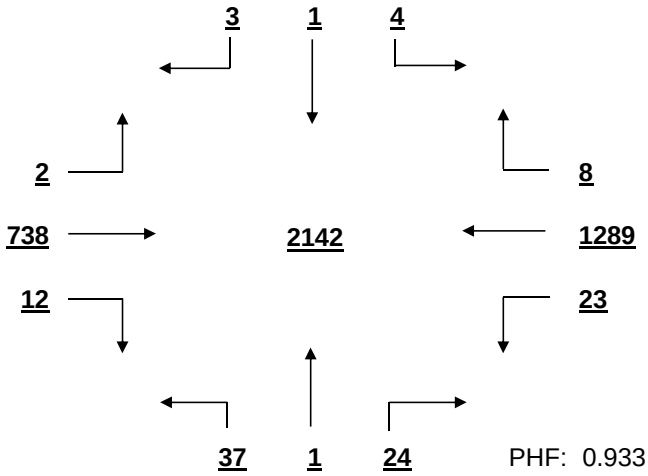

PHF: 0.933

AM PEAK HOUR VOLUME (0:00-10:45)
FROM 7:30 TO 8:30

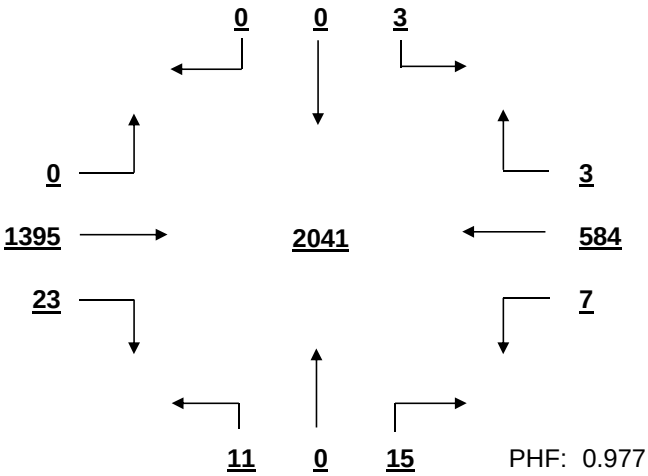

PHF: 0.977

PM PEAK HOUR VOLUME (14:15-23:45)
FROM 17:00 TO 18:00

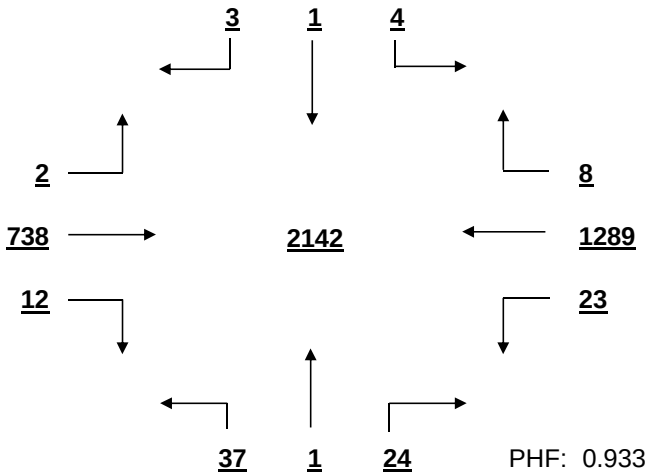

PHF: 0.933

MID-DAY PEAK HOUR VOLUME (11:00-14:00)
FROM 12:00 TO 13:00

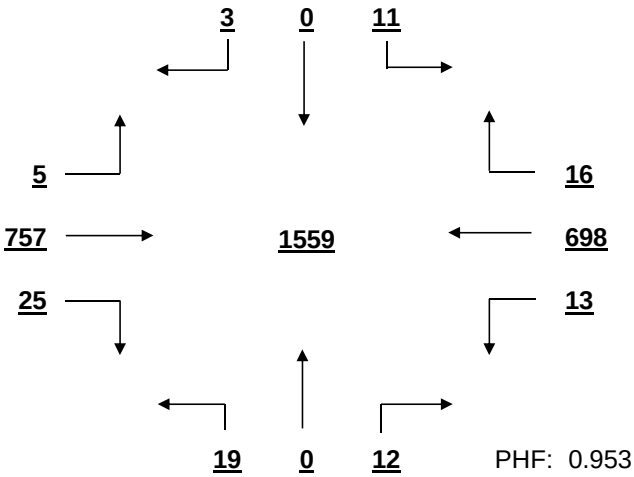

PHF: 0.953

OTHER HOUR VOLUME
FROM 7:00 TO 8:00

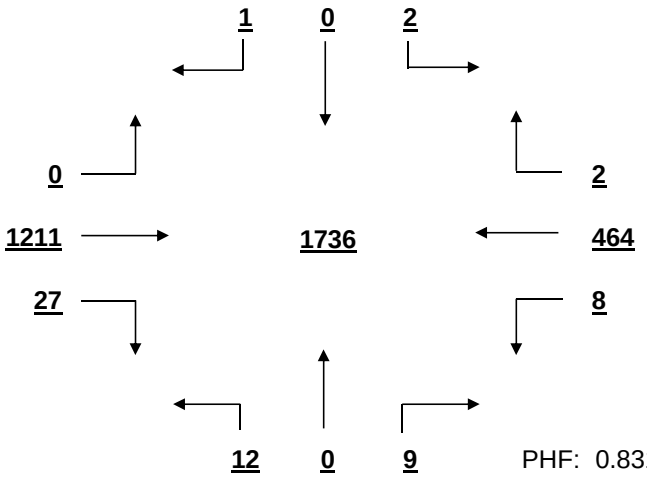

PHF: 0.831

SIGNAL WARRANT ANALYSIS

Bush River Rd AT Independence Ave-Fuddruckers Date: 11/30/2016

Minor Street Volume, percent of total = 2.4%
Percent of Left Turns from Minor Street = 59.2%
Percent of Right Turns from Minor Street = 40.1%
Percent of Minor Street Right Turns to Remove from Warrant Analysis = 0%
WARRANT BASIS = **100%**

Warrant No. 1 - Vehicular Volume is not met

Condition A - Minimum Vehicular Volume is not met

Average Major Street % of Warrant				Average Minor Street % of Warrant			
1412.5	/	600	= 235%	28.8	/	150	= 19%

Hourly percent of warrant

	7:00 - 8:00	8:00 - 9:00	9:00 - 10:00	10:00 - 11:00	11:00 - 12:00	12:00 - 13:00	13:00 - 14:00	14:00 - 15:00	15:00 - 16:00	16:00 - 17:00	17:00 - 18:00	18:00 - 19:00
Major St.	285%	285%	160%	145%	185%	252%	240%	203%	201%	278%	345%	246%
Minor St.	14%	17%	15%	7%	22%	21%	13%	16%	18%	35%	41%	12%

Condition B - Interruption to Continuous Traffic is not met

Average Major Street % of Warrant				Average Minor Street % of Warrant			
1412.5	/	900	= 157%	28.8	/	75	= 38%

Hourly percent of warrant

	7:00 - 8:00	8:00 - 9:00	9:00 - 10:00	10:00 - 11:00	11:00 - 12:00	12:00 - 13:00	13:00 - 14:00	14:00 - 15:00	15:00 - 16:00	16:00 - 17:00	17:00 - 18:00	18:00 - 19:00
Major St.	190%	190%	106%	96%	123%	168%	160%	135%	134%	185%	230%	164%
Minor St.	28%	33%	31%	13%	44%	41%	27%	32%	36%	69%	83%	24%

80% Combination of Conditions A & B is not met

Warrant No. 2 - Four Hour Vehicular Volume is not met

Hourly percent of warrant

	7:00 - 8:00	8:00 - 9:00	9:00 - 10:00	10:00 - 11:00	11:00 - 12:00	12:00 - 13:00	13:00 - 14:00	14:00 - 15:00	15:00 - 16:00	16:00 - 17:00	17:00 - 18:00	18:00 - 19:00
Minor St.	26%	31%	15%	6%	28%	39%	25%	24%	26%	65%	78%	23%

Warrant No. 3 - Peak Hour is not met

	Percent of warrant		Percent of warrant
Overall Peak Hour:	17:00 - 18:00	Higher Volume Side Street Peak Hour:	16:45 - 17:45
Minor St.	62%	Minor St.	62%

Warrant No. 4 - Pedestrian Volume. Pedestrian volume shown are minumum volumes assuming heavy major street traffic. If these volumes are met, warrant 4 requires further engineering analysis

Minimum 4 hour ped. volume crossing major street: 107

Minimum peak hour ped. volume crossing major street: 133

Number of pedestrians crossing major street

	7:00 - 8:00	8:00 - 9:00	9:00 - 10:00	10:00 - 11:00	11:00 - 12:00	12:00 - 13:00	13:00 - 14:00	14:00 - 15:00	15:00 - 16:00	16:00 - 17:00	17:00 - 18:00	18:00 - 19:00
Major St.	2	5	4	3	3	1	8	3	1	3	4	6

Warrant No. 7 - Crash Experience (Requires 3 criteria analysis by engineering)

Total Number: 0 From: 1/1/2005 to 1/1/2008
Accident Rate: 0.00 per million entering vehicles

Types of Accidents	No.	/	Avg.		No.	/	Avg.
Right Angle	0	/	0.0	Rear End	0	/	0.0
Lost Control	0	/	0.0	Side Swipe	0	/	0.0
Left Turn	0	/	0.0	Other	0	/	0.0

SOUTH CAROLINA DEPARTMENT OF TRANSPORTATION
DISTRICT 1
TRAFFIC ENGINEERING

County: Richland City: Columbia Date: 11/29/2016

Major Rt: Bush River Rd * Not on State System Minor Rt: Zimalcrest-Walmart Clear

Day of Week: Tuesday Weather: Rain Office: Short Counts JMS

Type of Control: Signal Speed Limit (major st) 40

Direction of Minor Street: N-S Intersection ADT - 23410 (Calc)

Number of Lanes (major st)* 2 Number of Lanes (minor st)* 1 * Each Direction

INTERSECTION VOLUME SUMMARY

	From N Zimalcrest-Walmart				From S Zimalcrest-Walmart				From E Bush River Rd				From W Bush River Rd				Total	Total
	LT	STR	RT	TOT	LT	STR	RT	TOT	LT	STR	RT	TOT	LT	STR	RT	TOT	Vol	Peds
7:00 - 7:15	3	0	0	3	2	1	31	34	26	69	4	99	0	181	10	191	327	0
7:15 - 7:30	11	1	0	12	6	0	23	29	18	88	3	109	1	293	0	294	444	2
7:30 - 7:45	6	0	1	7	8	0	26	34	38	112	2	152	1	329	8	338	531	0
7:45 - 8:00	12	1	0	13	9	0	40	49	30	113	7	150	1	290	18	309	521	2
8:00 - 8:15	5	1	0	6	6	1	28	35	25	117	7	149	1	330	15	346	536	1
8:15 - 8:30	4	0	0	4	8	0	31	39	35	105	1	141	1	327	17	345	529	1
8:30 - 8:45	3	0	0	3	7	0	33	40	35	101	3	139	2	262	10	274	456	1
8:45 - 9:00	3	1	1	5	9	0	29	38	26	84	5	115	0	141	8	149	307	1
9:00 - 9:15	1	0	0	1	6	0	25	31	38	110	4	152	1	140	9	150	334	2
9:15 - 9:30	6	0	1	7	6	0	29	35	33	88	6	127	0	100	9	109	278	1
9:30 - 9:45	3	0	0	3	6	0	30	36	24	83	0	107	0	95	12	107	253	0
9:45 - 10:00	5	1	3	9	7	0	32	39	33	79	5	117	0	84	9	93	258	1
10:00 - 10:15	6	1	0	7	0	3	0	3	42	76	2	120	1	97	13	111	241	0
10:15 - 10:30	6	0	0	6	9	1	33	43	44	76	5	125	0	84	11	95	269	4
10:30 - 10:45	3	0	0	3	13	1	37	51	48	84	4	136	0	91	16	107	297	3
10:45 - 11:00	3	0	1	4	8	0	37	45	45	99	8	152	0	84	11	95	296	1
11:00 - 11:15	5	0	2	7	11	1	37	49	35	99	1	135	0	93	16	109	300	0
11:15 - 11:30	7	1	0	8	11	1	49	61	44	92	4	140	0	106	20	126	335	1
11:30 - 11:45	3	0	0	3	20	0	34	54	42	129	4	175	0	129	12	141	373	2
11:45 - 12:00	5	0	0	5	14	0	47	61	71	128	5	204	1	128	19	148	418	0
12:00 - 12:15	3	0	1	4	14	0	43	57	63	149	7	219	0	154	24	178	458	0
12:15 - 12:30	5	1	2	8	34	0	58	92	75	137	11	223	1	143	26	170	493	0
12:30 - 12:45	4	1	4	9	17	2	57	76	57	163	5	225	0	149	14	163	473	3
12:45 - 13:00	2	1	3	6	20	1	64	85	55	135	4	194	0	128	27	155	440	0
13:00 - 13:15	5	0	0	5	20	0	54	74	66	173	4	243	0	165	16	181	503	0
13:15 - 13:30	6	0	0	6	35	0	55	90	60	128	4	192	0	136	18	154	442	0
13:30 - 13:45	3	1	0	4	15	1	52	68	71	163	5	239	1	131	12	144	455	1
13:45 - 14:00	5	1	2	8	22	1	58	81	33	141	3	177	2	124	15	141	407	1
14:00 - 14:15	4	1	1	6	8	0	42	50	56	126	5	187	2	114	22	138	381	0
14:15 - 14:30	7	1	0	8	18	0	44	62	37	131	9	177	2	96	0	98	345	1
14:30 - 14:45	6	0	1	7	18	0	38	56	53	139	10	202	0	124	10	134	399	1
14:45 - 15:00	3	0	0	3	19	0	52	71	38	103	6	147	2	108	14	124	345	4
15:00 - 15:15	7	2	2	11	20	0	43	63	51	136	9	196	2	124	18	144	414	1
15:15 - 15:30	6	0	0	6	16	0	40	56	45	143	9	197	0	118	23	141	400	0
15:30 - 15:45	5	0	1	6	19	2	39	60	57	117	5	179	1	117	18	136	381	0
15:45 - 16:00	4	0	1	5	16	1	41	58	39	131	7	177	0	92	15	107	347	2
16:00 - 16:15	3	0	0	3	16	2	49	67	48	178	10	236	0	109	13	122	428	0
16:15 - 16:30	6	0	0	6	21	1	48	70	55	209	6	270	0	120	16	136	482	0
16:30 - 16:45	8	1	5	14	19	0	51	70	55	230	3	288	1	143	19	163	535	1
16:45 - 17:00	4	0	3	7	34	1	41	76	48	275	5	328	0	103	16	119	530	0
17:00 - 17:15	4	0	1	5	23	0	45	68	44	275	2	321	1	170	18	189	583	0
17:15 - 17:30	5	0	1	6	18	1	46	65	48	317	8	373	1	130	21	152	596	0
17:30 - 17:45	5	1	0	6	27	0	44	71	68	313	6	387	1	137	20	158	622	3
17:45 - 18:00	3	1	1	5	20	4	56	80	46	261	13	320	0	117	18	135	540	0
18:00 - 18:15	5	1	1	7	24	2	53	79	38	243	5	286	3	106	12	121	493	0
18:15 - 18:30	7	0	2	9	24	1	50	75	45	231	9	285	3	96	12	111	480	1
18:30 - 18:45	2	1	2	5	17	3	35	55	61	192	6	259	1	59	10	70	389	0
18:45 - 19:00	2	1	2	5	18	2	39	59	52	132	3	187	0	74	9	83	334	1
TOTAL	229	22	45	296	738	34	1968	2740	2196	7003	259	9458	34	6771	699	7504	19998	43
Trucks	2	0	3	5	9	0	30	39	18	138	7	163	2	109	7	118	325	1.6%
School Buses	0	0	0	0	0	0	0	0	0	16	0	16	0	4	0	4	20	0.1%

TOTAL AND PEAK HOUR VOLUME DIAGRAMS

Bush River Rd AT Zimalcrest-Walmart Date: 11/29/2016

12.0 HOUR TOTAL VOLUME
FROM 7:00 TO 15:00

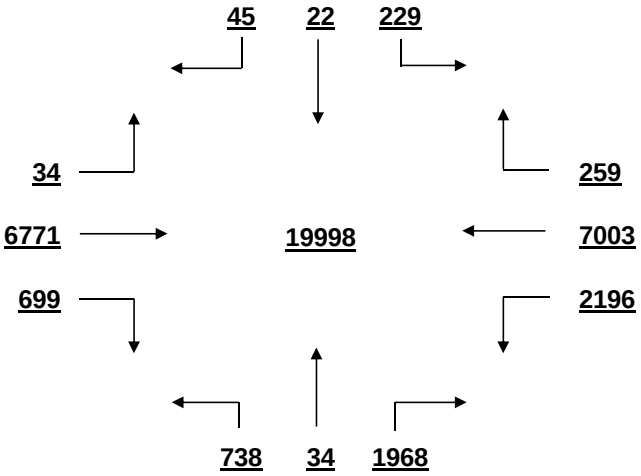

OVERALL PEAK HOUR VOLUME
FROM 17:00 TO 18:00

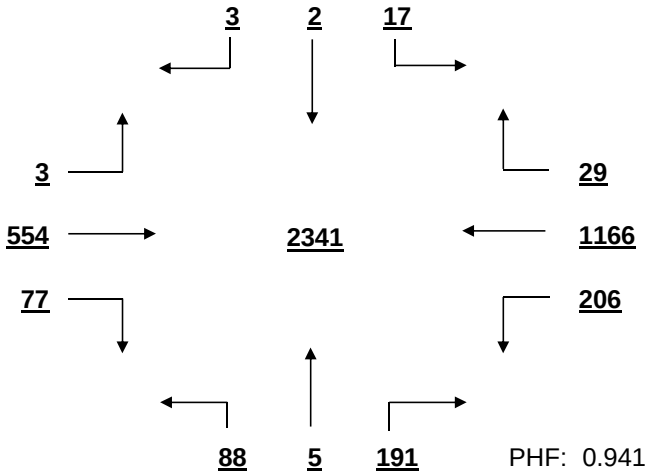

PHF: 0.941

AM PEAK HOUR VOLUME (0:00-10:45)
FROM 7:30 TO 8:30

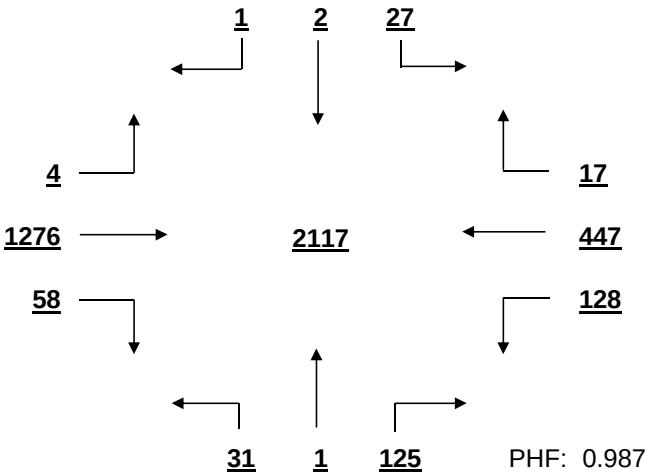

PHF: 0.987

PM PEAK HOUR VOLUME (14:15-23:45)
FROM 17:00 TO 18:00

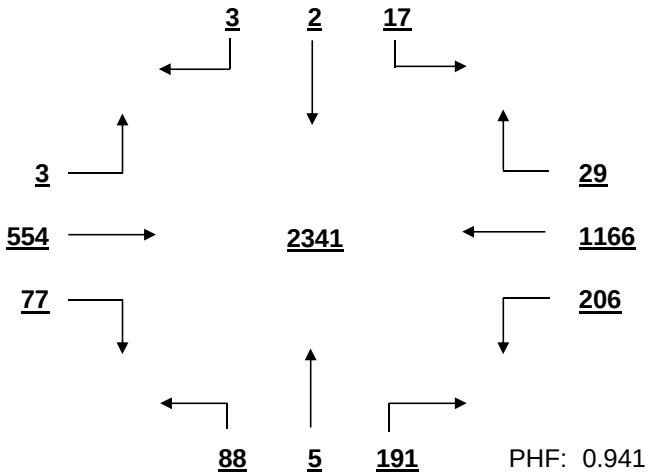

PHF: 0.941

MID-DAY PEAK HOUR VOLUME (11:00-14:00)
FROM 12:15 TO 13:15

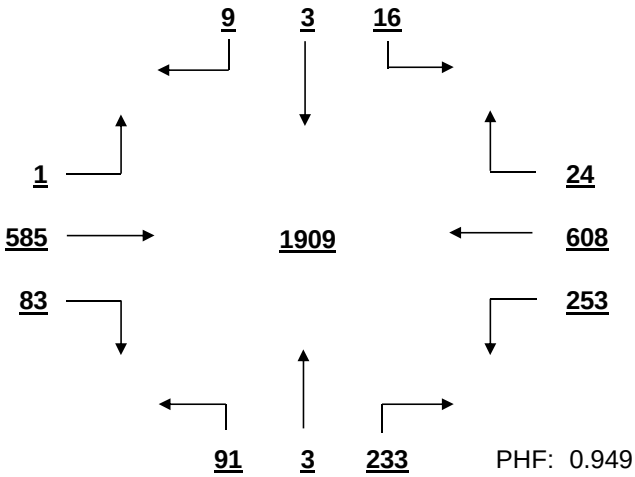

PHF: 0.949

OTHER HOUR VOLUME
FROM 7:00 TO 8:00

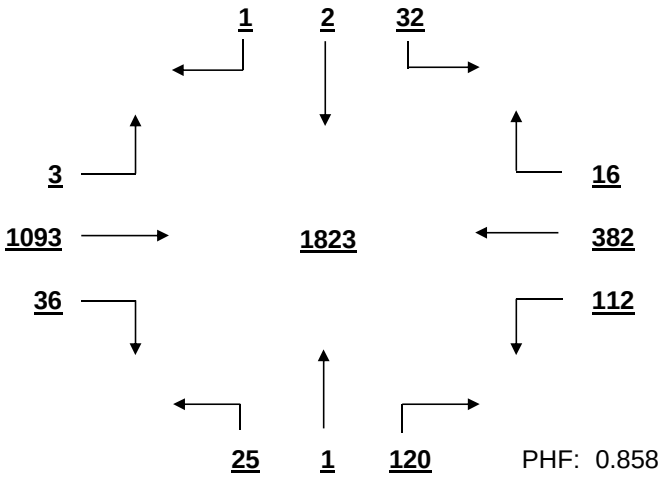

PHF: 0.858

SIGNAL WARRANT ANALYSIS

Bush River Rd AT Zimalcrest-Walmart Date: 11/29/2016

Minor Street Volume, percent of total = 15.2%
Percent of Left Turns from Minor Street = 31.9%
Percent of Right Turns from Minor Street = 66.3%
Percent of Minor Street Right Turns to Remove from Warrant Analysis = 0%
WARRANT BASIS = **100%**

Warrant No. 1 - Vehicular Volume is met

Condition A - Minimum Vehicular Volume is met

Average Major Street % of Warrant				Average Minor Street % of Warrant			
1413.5	/	600	= 236%	228.3	/	150	= 152%

Hourly percent of warrant

	7:00 - 8:00	8:00 - 9:00	9:00 - 10:00	10:00 - 11:00	11:00 - 12:00	12:00 - 13:00	13:00 - 14:00	14:00 - 15:00	15:00 - 16:00	16:00 - 17:00	17:00 - 18:00	18:00 - 19:00
Major St.	274%	276%	160%	157%	196%	255%	245%	201%	213%	277%	339%	234%
Minor St.	97%	101%	94%	95%	150%	207%	209%	159%	158%	189%	189%	179%

Condition B - Interruption to Continuous Traffic is met

Average Major Street % of Warrant				Average Minor Street % of Warrant			
1413.5	/	900	= 157%	228.3	/	75	= 304%

Hourly percent of warrant

	7:00 - 8:00	8:00 - 9:00	9:00 - 10:00	10:00 - 11:00	11:00 - 12:00	12:00 - 13:00	13:00 - 14:00	14:00 - 15:00	15:00 - 16:00	16:00 - 17:00	17:00 - 18:00	18:00 - 19:00
Major St.	182%	184%	107%	105%	131%	170%	163%	134%	142%	185%	226%	156%
Minor St.	195%	203%	188%	189%	300%	413%	417%	319%	316%	377%	379%	357%

80% Combination of Conditions A & B is met

Warrant No. 2 - Four Hour Vehicular Volume is met

Hourly percent of warrant

	7:00 - 8:00	8:00 - 9:00	9:00 - 10:00	10:00 - 11:00	11:00 - 12:00	12:00 - 13:00	13:00 - 14:00	14:00 - 15:00	15:00 - 16:00	16:00 - 17:00	17:00 - 18:00	18:00 - 19:00
Minor St.	183%	190%	92%	89%	210%	388%	391%	233%	252%	354%	355%	335%

Warrant No. 3 - Peak Hour is met

Percent of warrant
Overall Peak Hour: 17:00 - 18:00
Minor St. 284%

Percent of warrant
Higher Volume Side Street Peak Hour: 12:15 - 13:15
Minor St. 256%

Warrant No. 4 - Pedestrian Volume. Pedestrian volume shown are minumum volumes assuming heavy major street traffic. If these volumes are met, warrant 4 requires further engineering analysis

Minimum 4 hour ped. volume crossing major street: 107

Minimum peak hour ped. volume crossing major street: 133

Number of pedestrians crossing major street

	7:00 - 8:00	8:00 - 9:00	9:00 - 10:00	10:00 - 11:00	11:00 - 12:00	12:00 - 13:00	13:00 - 14:00	14:00 - 15:00	15:00 - 16:00	16:00 - 17:00	17:00 - 18:00	18:00 - 19:00
Major St.	2	4	2	4	1	3	1	5	2	0	2	2

Warrant No. 7 - Crash Experience (Requires 3 criteria analysis by engineering)

Total Number: 0 From: 1/1/2005 to 1/1/2008
Accident Rate: 0.00 per million entering vehicles

Types of Accidents	No.	/	Avg.		No.	/	Avg.
Right Angle	0	/	0.0	Rear End	0	/	0.0
Lost Control	0	/	0.0	Side Swipe	0	/	0.0
Left Turn	0	/	0.0	Other	0	/	0.0

SOUTH CAROLINA DEPARTMENT OF TRANSPORTATION
DISTRICT 1
TRAFFIC ENGINEERING

County: Richland City: Columbia Date: 12/1/2016

Major Rt: Morning Hill Dr * Not on State System Minor Rt: Burnette Dr Clear

Day of Week: Thursday Weather: Clear Office: Short Counts JMS

Type of Control: Stop Sign Speed Limit (major st) 35

Direction of Minor Street: E-W Intersection ADT - 10850 (Calc)

Number of Lanes (major st)* 1 Number of Lanes (minor st)* 1

* Each Direction

INTERSECTION VOLUME SUMMARY

	From N Morning Hill Dr				From S Morning Hill Dr				From E Burnette Dr				From W Burnette Dr				Total	Total
	LT	STR	RT	TOT	LT	STR	RT	TOT	LT	STR	RT	TOT	LT	STR	RT	TOT	Vol	Peds
7:00 - 7:15	0	7	3	10	46	3	0	49	0	0	0	0	0	0	46	46	105	1
7:15 - 7:30	0	11	6	17	53	2	0	55	0	0	0	0	4	0	0	4	76	0
7:30 - 7:45	0	14	5	19	55	5	0	60	0	0	0	0	6	0	123	129	208	0
7:45 - 8:00	0	17	4	21	84	5	0	89	0	0	0	0	2	0	124	126	236	0
8:00 - 8:15	0	17	4	21	88	4	0	92	0	0	0	0	1	0	107	108	221	0
8:15 - 8:30	0	11	0	11	85	7	0	92	0	0	0	0	3	0	115	118	221	1
8:30 - 8:45	0	5	6	11	65	2	0	67	0	0	0	0	4	0	98	102	180	0
8:45 - 9:00	0	8	9	17	52	3	0	55	0	0	0	0	2	0	66	68	140	0
9:00 - 9:15	0	4	4	8	44	1	0	45	0	0	0	0	1	0	47	48	101	0
9:15 - 9:30	0	6	3	9	41	4	0	45	0	0	0	0	2	0	33	35	89	0
9:30 - 9:45	0	7	4	11	50	4	0	54	0	0	0	0	0	0	40	40	105	0
9:45 - 10:00	0	3	2	5	42	5	0	47	0	0	0	0	0	0	43	43	95	0
10:00 - 10:15	0	8	1	9	0	4	0	4	0	0	0	0	5	0	28	33	46	0
10:15 - 10:30	0	9	3	12	38	5	0	43	0	0	0	0	2	0	43	45	100	0
10:30 - 10:45	0	6	4	10	37	7	0	44	0	0	0	0	2	0	34	36	90	0
10:45 - 11:00	0	1	5	6	34	2	0	36	0	0	0	0	3	0	44	47	89	0
11:00 - 11:15	0	7	2	9	35	6	0	41	0	0	0	0	3	0	39	42	92	0
11:15 - 11:30	0	3	0	3	47	4	0	51	0	0	0	0	1	0	45	46	100	0
11:30 - 11:45	0	7	2	9	45	5	0	50	0	0	0	0	4	0	57	61	120	1
11:45 - 12:00	0	7	3	10	59	8	0	67	0	0	0	0	4	0	63	67	144	0
12:00 - 12:15	0	5	3	8	67	11	0	78	0	0	0	0	4	0	73	77	163	0
12:15 - 12:30	0	2	2	4	62	8	0	70	0	0	0	0	4	0	71	75	149	0
12:30 - 12:45	0	5	5	10	61	7	0	68	0	0	0	0	6	0	81	87	165	0
12:45 - 13:00	0	8	7	15	73	6	0	79	0	0	0	0	2	0	70	72	166	0
13:00 - 13:15	0	7	9	16	67	7	0	74	0	0	0	0	2	0	56	58	148	0
13:15 - 13:30	0	5	6	11	62	5	0	67	0	0	0	0	3	0	58	61	139	0
13:30 - 13:45	0	5	6	11	61	9	0	70	0	0	0	0	0	0	66	66	147	1
13:45 - 14:00	0	6	3	9	60	6	0	66	0	0	0	0	3	0	47	50	125	1
14:00 - 14:15	0	4	6	10	54	4	0	58	0	0	0	0	4	0	62	66	134	0
14:15 - 14:30	0	6	5	11	76	10	0	86	0	0	0	0	3	0	0	3	100	1
14:30 - 14:45	0	9	5	14	60	7	0	67	0	0	0	0	6	0	46	52	133	1
14:45 - 15:00	0	8	7	15	54	9	0	63	0	0	0	0	3	0	71	74	152	0
15:00 - 15:15	0	5	6	11	63	7	0	70	0	0	0	0	2	0	62	64	145	1
15:15 - 15:30	0	0	0	0	73	9	0	82	0	0	0	0	6	0	58	64	146	1
15:30 - 15:45	0	4	4	8	84	5	0	89	0	0	0	0	4	0	57	61	158	0
15:45 - 16:00	0	6	7	13	87	5	0	92	0	0	0	0	5	0	56	61	166	0
16:00 - 16:15	0	7	7	14	75	9	0	84	0	0	0	0	3	0	77	80	178	0
16:15 - 16:30	0	9	8	17	99	6	0	105	0	0	0	0	4	0	65	69	191	0
16:30 - 16:45	0	13	18	31	137	6	0	143	0	0	0	0	1	0	99	100	274	0
16:45 - 17:00	0	7	13	20	139	6	0	145	0	0	0	0	4	0	70	74	239	1
17:00 - 17:15	0	4	12	16	130	9	0	139	0	0	0	0	0	0	100	100	255	0
17:15 - 17:30	0	27	34	61	144	7	0	151	0	0	0	0	4	0	47	51	263	0
17:30 - 17:45	0	28	36	64	157	9	0	166	0	0	0	0	3	0	83	86	316	0
17:45 - 18:00	0	7	27	34	154	4	0	158	0	0	0	0	2	0	57	59	251	0
18:00 - 18:15	0	11	23	34	123	4	0	127	0	0	0	0	4	0	50	54	215	0
18:15 - 18:30	0	0	10	10	110	6	0	116	0	0	0	0	1	0	45	46	172	1
18:30 - 18:45	0	5	9	14	90	14	0	104	0	0	0	0	4	0	41	45	163	0
18:45 - 19:00	0	7	4	11	72	9	0	81	0	0	0	0	3	0	34	37	129	0
TOTAL	0	368	352	720	3494	290	0	3784	0	0	0	0	139	0	2897	3036	7540	11
Trucks	0	2	1	3	16	1	0	17	0	0	0	0	2	0	14	16	36	0.5%
School Buses	0	3	0	3	14	0	0	14	0	0	0	0	0	0	23	23	40	0.5%

TOTAL AND PEAK HOUR VOLUME DIAGRAMS

Morning Hill Dr AT Burnette Dr Date: 12/1/2016

12.0 HOUR TOTAL VOLUME
FROM 7:00 TO 15:00

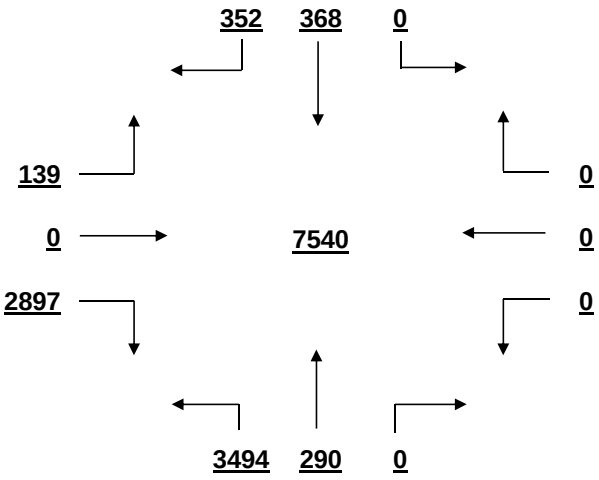

OVERALL PEAK HOUR VOLUME
FROM 17:00 TO 18:00

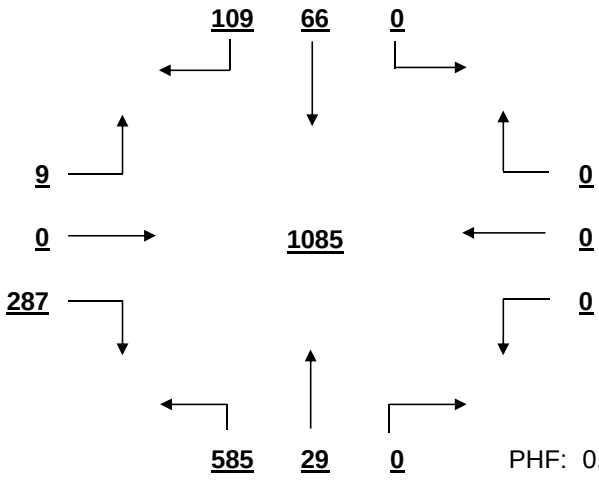

PHF: 0.858

AM PEAK HOUR VOLUME (0:00-10:45)
FROM 7:30 TO 8:30

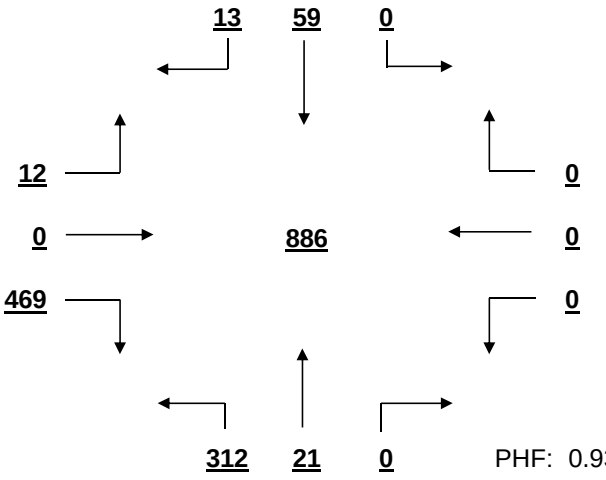

PHF: 0.939

PM PEAK HOUR VOLUME (14:15-23:45)
FROM 17:00 TO 18:00

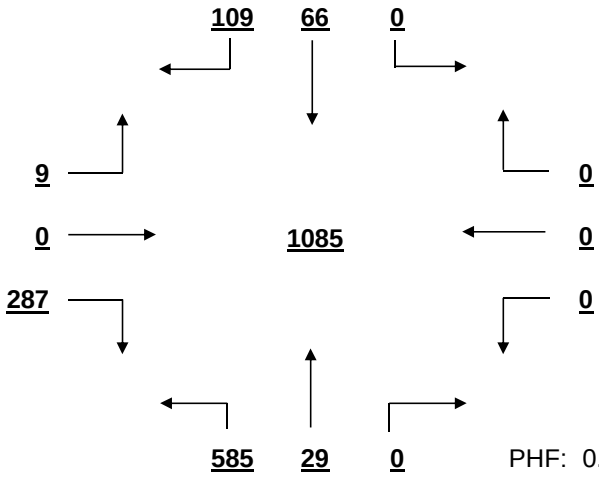

PHF: 0.858

MID-DAY PEAK HOUR VOLUME (11:00-14:00)
FROM 12:00 TO 13:00

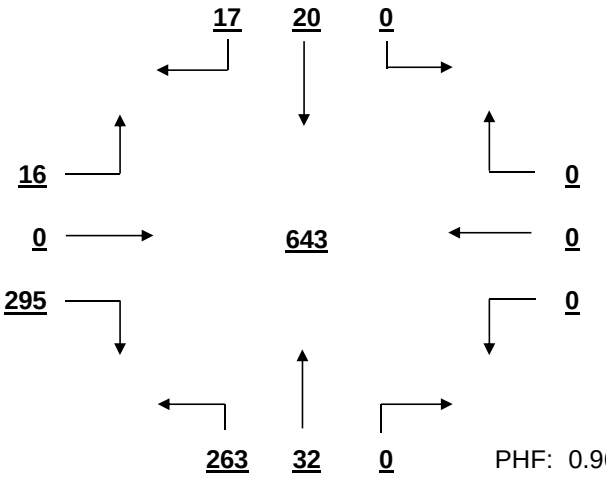

PHF: 0.968

OTHER HOUR VOLUME
FROM 7:00 TO 8:00

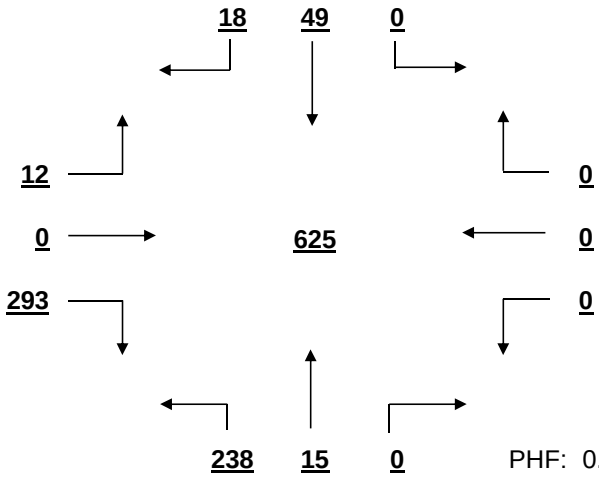

PHF: 0.662

SIGNAL WARRANT ANALYSIS

Morning Hill Dr AT Burnette Dr Date: 12/1/2016

Minor Street Volume, percent of total = 40.3%
Percent of Left Turns from Minor Street = 4.6%
Percent of Right Turns from Minor Street = 95.4%
Percent of Minor Street Right Turns to Remove from Warrant Analysis = 0%
WARRANT BASIS = **100%**

Warrant No. 1 - Vehicular Volume is not met

Condition A - Minimum Vehicular Volume is not met

Average Major Street % of Warrant				Average Minor Street % of Warrant			
375.3	/ 500	=	75%	253.0	/ 150	=	169%

Hourly percent of warrant

	7:00 - 8:00	8:00 - 9:00	9:00 - 10:00	10:00 - 11:00	11:00 - 12:00	12:00 - 13:00	13:00 - 14:00	14:00 - 15:00	15:00 - 16:00	16:00 - 17:00	17:00 - 18:00	18:00 - 19:00
Major St.	64%	73%	45%	33%	48%	66%	65%	65%	73%	112%	158%	99%
Minor St.	203%	264%	111%	107%	144%	207%	157%	130%	167%	215%	197%	121%

Condition B - Interruption to Continuous Traffic is not met

Average Major Street % of Warrant				Average Minor Street % of Warrant			
375.3	/ 750	=	50%	253.0	/ 75	=	337%

Hourly percent of warrant

	7:00 - 8:00	8:00 - 9:00	9:00 - 10:00	10:00 - 11:00	11:00 - 12:00	12:00 - 13:00	13:00 - 14:00	14:00 - 15:00	15:00 - 16:00	16:00 - 17:00	17:00 - 18:00	18:00 - 19:00
Major St.	43%	49%	30%	22%	32%	44%	43%	43%	49%	75%	105%	66%
Minor St.	407%	528%	221%	215%	288%	415%	313%	260%	333%	431%	395%	243%

80% Combination of Conditions A & B is not met

Warrant No. 2 - Four Hour Vehicular Volume is not met

Hourly percent of warrant

	7:00 - 8:00	8:00 - 9:00	9:00 - 10:00	10:00 - 11:00	11:00 - 12:00	12:00 - 13:00	13:00 - 14:00	14:00 - 15:00	15:00 - 16:00	16:00 - 17:00	17:00 - 18:00	18:00 - 19:00
Minor St.	88%	122%	41%	37%	55%	91%	68%	56%	77%	137%	194%	69%

Warrant No. 3 - Peak Hour is met

Percent of warrant			Percent of warrant	
Overall Peak Hour:	17:00 - 18:00	Higher Volume Side Street Peak Hour:	7:30 - 8:30	
Minor St.	105%	Minor St.	100%	

Warrant No. 4 - Pedestrian Volume. Pedestrian volume shown are minumum volumes assuming heavy major street traffic. If these volumes are met, warrant 4 requires further engineering analysis

Minimum 4 hour ped. volume crossing major street: 107

Minimum peak hour ped. volume crossing major street: 133

Number of pedestrians crossing major street

	7:00 - 8:00	8:00 - 9:00	9:00 - 10:00	10:00 - 11:00	11:00 - 12:00	12:00 - 13:00	13:00 - 14:00	14:00 - 15:00	15:00 - 16:00	16:00 - 17:00	17:00 - 18:00	18:00 - 19:00
Major St.	1	1	0	0	0	0	1	2	1	0	0	1

Warrant No. 7 - Crash Experience (Requires 3 criteria analysis by engineering)

Total Number: 0 From: 1/1/2005 to 1/1/2008
Accident Rate: 0.00 per million entering vehicles

Types of Accidents	No.	/	Avg.		No.	/	Avg.
Right Angle	0	/	0.0	Rear End	0	/	0.0
Lost Control	0	/	0.0	Side Swipe	0	/	0.0
Left Turn	0	/	0.0	Other	0	/	0.0

SOUTH CAROLINA DEPARTMENT OF TRANSPORTATION
DISTRICT 1
TRAFFIC ENGINEERING

County: Richland City: Columbia Date: 11/29/2016

Major Rt: Bush River Rd * Not on State System Minor Rt: Arrowwood Rd Clear

Day of Week: Tuesday Weather: Rain Office: Short Counts JMS

Type of Control: Signal Speed Limit (major st) 40

Direction of Minor Street: N-S Intersection ADT - 29680 (Calc)

Number of Lanes (major st)* 2 Number of Lanes (minor st)* 2

* Each Direction

INTERSECTION VOLUME SUMMARY

	From N Arrowwood Rd				From S Arrowwood Rd				From E Bush River Rd				From W Bush River Rd				Total	Total
	LT	STR	RT	TOT	LT	STR	RT	TOT	LT	STR	RT	TOT	LT	STR	RT	TOT	Vol	Peds
7:00 - 7:15	6	2	34	42	10	0	26	36	0	73	1	74	26	199	22	247	399	0
7:15 - 7:30	7	8	36	51	32	1	49	82	0	92	7	99	43	310	0	353	585	0
7:30 - 7:45	12	5	44	61	37	0	66	103	1	99	12	112	63	340	31	434	710	1
7:45 - 8:00	17	2	33	52	20	0	42	62	1	105	12	118	60	0	44	104	336	0
8:00 - 8:15	12	9	34	55	15	0	34	49	1	98	12	111	51	332	36	419	634	0
8:15 - 8:30	9	5	0	14	15	0	38	53	3	125	11	139	70	354	33	457	663	0
8:30 - 8:45	6	6	36	48	10	0	16	26	1	103	10	114	50	270	26	346	534	0
8:45 - 9:00	14	6	42	62	17	0	21	38	3	87	18	108	47	227	18	292	500	0
9:00 - 9:15	10	3	34	47	8	5	1	14	3	85	12	100	37	179	11	227	388	0
9:15 - 9:30	10	5	36	51	9	1	2	12	1	78	10	89	42	129	13	184	336	0
9:30 - 9:45	13	4	32	49	8	3	4	15	0	95	10	105	36	126	11	173	342	0
9:45 - 10:00	11	4	34	49	9	4	4	17	2	84	10	96	41	141	16	198	360	0
10:00 - 10:15	9	3	35	47	0	5	0	5	6	97	7	110	45	138	8	191	353	0
10:15 - 10:30	19	1	33	53	5	6	6	17	3	99	11	113	27	118	10	155	338	0
10:30 - 10:45	11	2	36	49	12	2	1	15	5	133	7	145	51	132	5	188	397	0
10:45 - 11:00	11	3	44	58	11	3	1	15	8	105	9	122	47	131	9	187	382	0
11:00 - 11:15	15	3	40	58	12	7	10	29	5	108	10	123	35	140	12	187	397	0
11:15 - 11:30	15	3	56	74	17	2	11	30	4	111	9	124	40	146	9	195	423	2
11:30 - 11:45	7	4	46	57	17	6	7	30	5	164	16	185	39	172	10	221	493	0
11:45 - 12:00	16	6	55	77	19	13	10	42	9	140	17	166	52	187	19	258	543	1
12:00 - 12:15	22	13	78	113	16	14	15	45	12	208	14	234	64	187	16	267	659	2
12:15 - 12:30	21	14	63	98	28	20	15	63	13	181	16	210	66	0	17	83	454	0
12:30 - 12:45	14	9	54	77	23	9	15	47	8	175	13	196	63	193	14	270	590	2
12:45 - 13:00	18	8	76	102	24	15	13	52	12	187	19	218	63	192	12	267	639	2
13:00 - 13:15	11	7	66	84	12	6	13	31	10	194	19	223	56	175	11	242	580	1
13:15 - 13:30	23	7	71	101	24	7	13	44	12	165	10	187	43	208	16	267	599	1
13:30 - 13:45	16	8	61	85	32	5	13	50	10	166	13	189	47	175	11	233	557	0
13:45 - 14:00	24	14	53	91	23	10	11	44	4	153	16	173	45	173	10	228	536	0
14:00 - 14:15	12	7	57	76	17	3	10	30	2	153	10	165	42	149	10	201	472	0
14:15 - 14:30	21	3	62	86	14	8	6	28	8	153	8	169	41	164	0	205	488	0
14:30 - 14:45	7	5	48	60	21	6	12	39	8	185	8	201	39	151	9	199	499	0
14:45 - 15:00	21	7	57	85	15	4	10	29	6	132	10	148	48	153	10	211	473	0
15:00 - 15:15	6	3	47	56	20	5	5	30	11	187	10	208	38	154	8	200	494	1
15:15 - 15:30	11	0	57	68	15	6	3	24	6	148	11	165	39	173	11	223	480	0
15:30 - 15:45	10	4	59	73	14	5	4	23	1	192	8	201	49	156	9	214	511	1
15:45 - 16:00	11	2	45	58	15	9	5	29	5	156	9	170	59	172	11	242	499	0
16:00 - 16:15	10	3	48	61	27	2	2	31	2	230	12	244	48	186	11	245	581	0
16:15 - 16:30	7	4	59	70	28	7	4	39	13	221	13	247	48	192	8	248	604	1
16:30 - 16:45	10	12	73	95	42	10	14	66	11	275	10	296	74	188	15	277	734	0
16:45 - 17:00	7	6	43	56	40	11	14	65	5	289	10	304	66	161	13	240	665	0
17:00 - 17:15	12	7	82	101	34	21	4	59	3	300	11	314	58	187	11	256	730	0
17:15 - 17:30	12	5	75	92	55	33	3	91	4	326	8	338	57	203	11	271	792	0
17:30 - 17:45	11	5	70	86	52	19	12	83	4	364	13	381	51	174	6	231	781	0
17:45 - 18:00	10	3	57	70	38	9	5	52	7	217	10	234	56	160	6	222	578	0
18:00 - 18:15	8	3	50	61	34	6	4	44	3	269	2	274	49	156	13	218	597	0
18:15 - 18:30	5	0	46	51	20	9	7	36	9	222	8	239	57	143	6	206	532	0
18:30 - 18:45	7	2	52	61	19	5	10	34	1	191	5	197	64	109	4	177	469	0
18:45 - 19:00	6	5	48	59	18	5	7	30	3	185	7	195	42	123	6	171	455	0
TOTAL	583	250	2397	3230	1003	327	598	1928	254	7905	514	8673	2374	8328	628	11330	25161	15
Trucks	8	2	28	38	12	2	9	23	4	86	12	102	15	89	9	113	276	1.1%
School Buses	24	1	1	26	4	1	2	7	0	17	13	30	1	22	0	23	86	0.3%

TOTAL AND PEAK HOUR VOLUME DIAGRAMS

Bush River Rd AT Arrowwood Rd Date: 11/29/2016

12.0 HOUR TOTAL VOLUME
FROM 7:00 TO 15:00

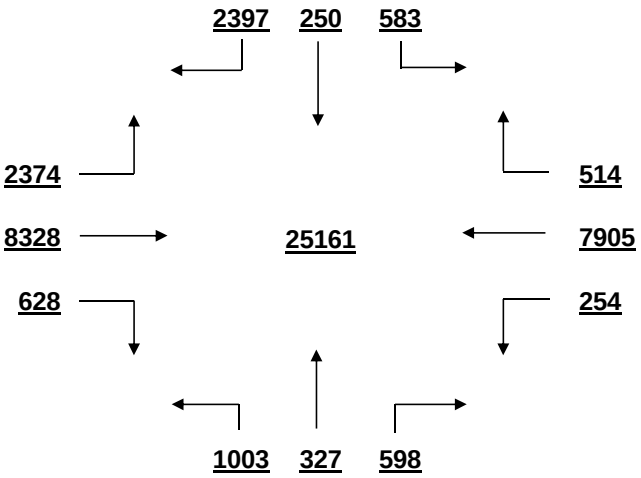

OVERALL PEAK HOUR VOLUME
FROM 16:45 TO 17:45

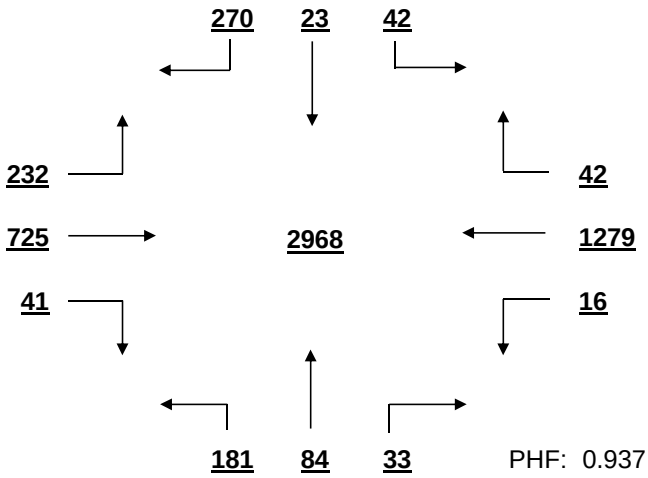

PHF: 0.937

AM PEAK HOUR VOLUME (0:00-10:45)
FROM 7:30 TO 8:30

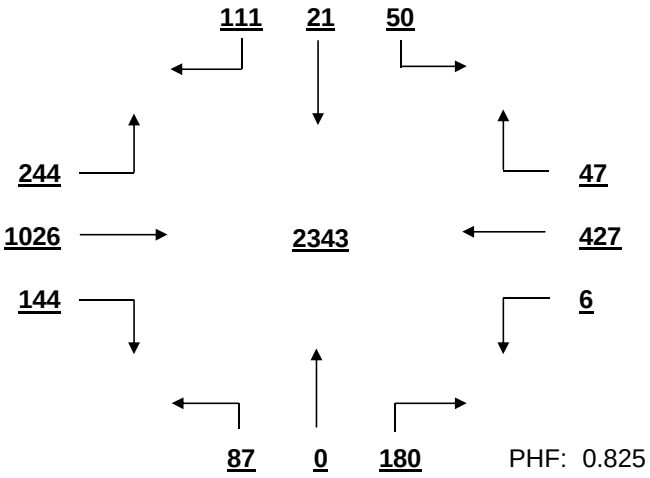

PHF: 0.825

PM PEAK HOUR VOLUME (14:15-23:45)
FROM 16:45 TO 17:45

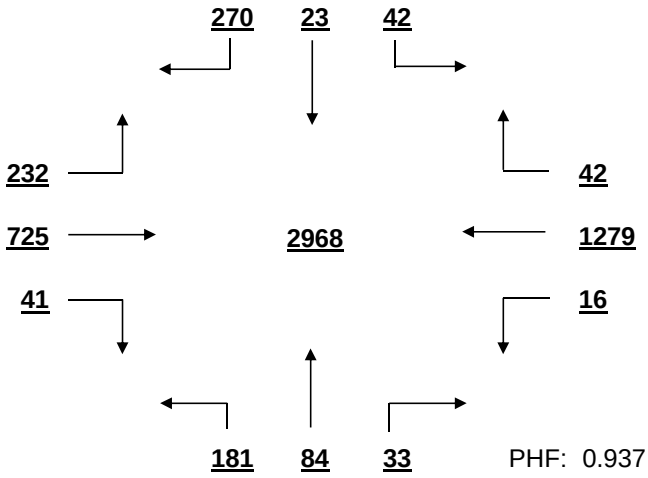

PHF: 0.937

MID-DAY PEAK HOUR VOLUME (11:00-14:00)
FROM 12:30 TO 13:30

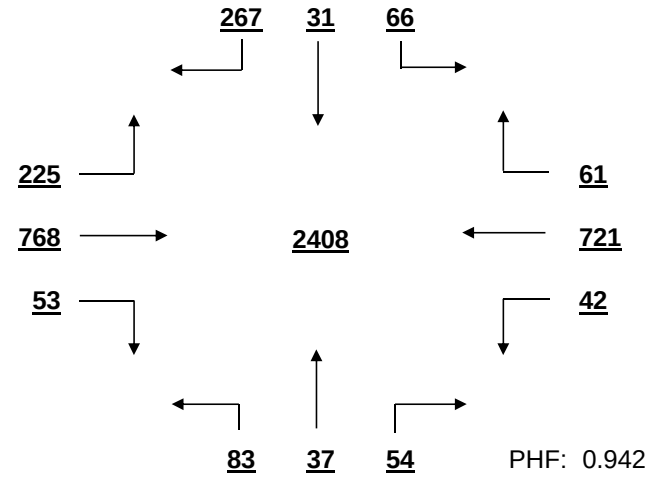

PHF: 0.942

OTHER HOUR VOLUME
FROM 7:00 TO 8:00

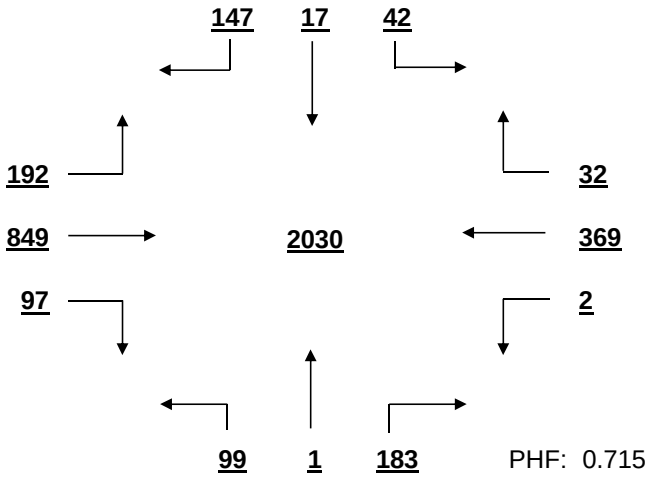

PHF: 0.715

SIGNAL WARRANT ANALYSIS

Bush River Rd AT Arrowwood Rd Date: 11/29/2016

Minor Street Volume, percent of total = 20.5%
Percent of Left Turns from Minor Street = 30.7%
Percent of Right Turns from Minor Street = 58.1%
Percent of Minor Street Right Turns to Remove from Warrant Analysis = 0%
WARRANT BASIS = **100%**

Warrant No. 1 - Vehicular Volume is met

Condition A - Minimum Vehicular Volume is met

Average Major Street % of Warrant				Average Minor Street % of Warrant			
1666.9	/ 600	=	278%	269.2	/ 200	=	135%

Hourly percent of warrant

	7:00 - 8:00	8:00 - 9:00	9:00 - 10:00	10:00 - 11:00	11:00 - 12:00	12:00 - 13:00	13:00 - 14:00	14:00 - 15:00	15:00 - 16:00	16:00 - 17:00	17:00 - 18:00	18:00 - 19:00
Major St.	257%	331%	195%	202%	243%	291%	290%	250%	271%	350%	375%	280%
Minor St.	142%	90%	98%	104%	133%	195%	181%	154%	128%	141%	175%	116%

Condition B - Interruption to Continuous Traffic is met

Average Major Street % of Warrant				Average Minor Street % of Warrant			
1666.9	/ 900	=	185%	269.2	/ 100	=	269%

Hourly percent of warrant

	7:00 - 8:00	8:00 - 9:00	9:00 - 10:00	10:00 - 11:00	11:00 - 12:00	12:00 - 13:00	13:00 - 14:00	14:00 - 15:00	15:00 - 16:00	16:00 - 17:00	17:00 - 18:00	18:00 - 19:00
Major St.	171%	221%	130%	135%	162%	194%	194%	167%	180%	233%	250%	186%
Minor St.	283%	179%	196%	207%	266%	390%	361%	307%	255%	282%	349%	232%

80% Combination of Conditions A & B is met

Warrant No. 2 - Four Hour Vehicular Volume is met

Hourly percent of warrant

	7:00 - 8:00	8:00 - 9:00	9:00 - 10:00	10:00 - 11:00	11:00 - 12:00	12:00 - 13:00	13:00 - 14:00	14:00 - 15:00	15:00 - 16:00	16:00 - 17:00	17:00 - 18:00	18:00 - 19:00
Minor St.	246%	156%	139%	158%	231%	339%	314%	267%	222%	245%	303%	202%

Warrant No. 3 - Peak Hour is met

	Percent of warrant		Percent of warrant
Overall Peak Hour:	16:45 - 17:45	Higher Volume Side Street Peak Hour:	12:00 - 13:00
Minor St.	223%	Minor St.	260%

Warrant No. 4 - Pedestrian Volume. Pedestrian volume shown are minumum volumes assuming heavy major street traffic. If these volumes are met, warrant 4 requires further engineering analysis

Minimum 4 hour ped. volume crossing major street: 107

Minimum peak hour ped. volume crossing major street: 133

Number of pedestrians crossing major street

	7:00 - 8:00	8:00 - 9:00	9:00 - 10:00	10:00 - 11:00	11:00 - 12:00	12:00 - 13:00	13:00 - 14:00	14:00 - 15:00	15:00 - 16:00	16:00 - 17:00	17:00 - 18:00	18:00 - 19:00
Major St.	0	0	0	0	0	1	0	0	0	0	0	0

Warrant No. 7 - Crash Experience (Requires 3 criteria analysis by engineering)

Total Number: 0 From: 1/1/2005 to 1/1/2008

Accident Rate: 0.00 per million entering vehicles

Types of Accidents	No.	/	Avg.		No.	/	Avg.
Right Angle	0	/	0.0	Rear End	0	/	0.0
Lost Control	0	/	0.0	Side Swipe	0	/	0.0
Left Turn	0	/	0.0	Other	0	/	0.0

SOUTH CAROLINA DEPARTMENT OF TRANSPORTATION
DISTRICT 1
TRAFFIC ENGINEERING

County: Richland City: Columbia Date: 11/29/2016

Major Rt: Bush River Rd * Not on State System Minor Rt: Colonial Life Blvd-Mall Clear

Day of Week: Tuesday Weather: Rain Office: Short Counts JMS

Type of Control: Signal Speed Limit (major st) 40

Direction of Minor Street: N-S Intersection ADT - 24450 (Calc)

Number of Lanes (major st)* 2 Number of Lanes (minor st)* 2

* Each Direction

INTERSECTION VOLUME SUMMARY

	From N Colonial Life Blvd				From S Colonial Life Blvd				From E Bush River Rd				From W Bush River Rd				Total	Total
	LT	STR	RT	TOT	LT	STR	RT	TOT	LT	STR	RT	TOT	LT	STR	RT	TOT	Vol	Peds
7:00 - 7:15	2	5	1	8	21	2	4	27	16	61	0	77	1	114	86	201	313	0
7:15 - 7:30	1	4	0	5	24	2	8	34	20	79	0	99	3	162	0	165	303	0
7:30 - 7:45	2	7	0	9	24	3	8	35	9	91	1	101	2	174	161	337	482	0
7:45 - 8:00	0	7	5	12	23	5	8	36	16	108	2	126	3	0	184	187	361	0
8:00 - 8:15	1	8	4	13	40	8	10	58	16	78	5	99	3	149	169	321	491	0
8:15 - 8:30	2	3	0	5	35	6	6	47	16	95	3	114	6	191	168	365	531	0
8:30 - 8:45	2	6	1	9	32	5	16	53	19	91	5	115	3	143	123	269	446	0
8:45 - 9:00	0	0	2	2	31	2	14	47	24	76	0	100	10	115	116	241	390	1
9:00 - 9:15	3	1	2	6	35	3	10	48	11	64	2	77	5	98	76	179	310	1
9:15 - 9:30	3	2	3	8	21	3	9	33	8	69	5	82	10	95	37	142	265	0
9:30 - 9:45	3	3	4	10	24	5	10	39	10	80	1	91	6	67	37	110	250	0
9:45 - 10:00	0	3	4	7	28	3	11	42	12	72	0	84	7	103	48	158	291	0
10:00 - 10:15	2	3	6	11	0	3	0	3	2	79	1	82	16	108	33	157	253	0
10:15 - 10:30	3	3	8	14	34	4	19	57	7	84	3	94	11	96	41	148	313	1
10:30 - 10:45	2	6	12	20	43	5	12	60	11	85	0	96	12	80	44	136	312	0
10:45 - 11:00	3	2	8	13	34	7	15	56	10	77	4	91	19	88	44	151	311	0
11:00 - 11:15	6	4	9	19	33	9	18	60	8	87	2	97	18	94	45	157	333	0
11:15 - 11:30	3	4	12	19	39	6	24	69	9	88	3	100	15	116	45	176	364	0
11:30 - 11:45	3	8	6	17	74	13	32	119	15	104	4	123	18	116	50	184	443	0
11:45 - 12:00	4	3	14	21	66	8	27	101	16	100	2	118	23	131	62	216	456	2
12:00 - 12:15	4	3	13	20	92	12	39	143	8	123	1	132	21	151	55	227	522	2
12:15 - 12:30	2	9	10	21	57	10	26	93	27	143	6	176	34	0	57	91	381	0
12:30 - 12:45	7	8	21	36	67	17	26	110	32	111	4	147	17	130	70	217	510	1
12:45 - 13:00	7	10	18	35	71	12	30	113	21	137	5	163	21	133	65	219	530	1
13:00 - 13:15	7	5	15	27	79	12	35	126	21	125	4	150	13	141	51	205	508	0
13:15 - 13:30	3	7	14	24	59	10	37	106	14	125	2	141	23	155	71	249	520	0
13:30 - 13:45	8	4	16	28	54	11	26	91	20	110	5	135	20	124	49	193	447	2
13:45 - 14:00	9	10	36	55	50	8	22	80	22	118	8	148	14	143	51	208	491	1
14:00 - 14:15	10	8	14	32	49	10	19	78	23	97	4	124	9	116	40	165	399	0
14:15 - 14:30	6	10	17	33	38	13	13	64	19	119	2	140	12	131	0	143	380	0
14:30 - 14:45	6	5	16	27	61	6	32	99	9	121	5	135	17	111	34	162	423	0
14:45 - 15:00	5	6	11	22	45	10	19	74	9	106	4	119	12	138	36	186	401	0
15:00 - 15:15	3	5	8	16	57	10	23	90	16	124	4	144	12	123	29	164	414	0
15:15 - 15:30	6	0	11	17	59	9	20	88	8	107	4	119	12	121	51	184	408	0
15:30 - 15:45	3	5	15	23	67	7	22	96	13	98	1	112	8	127	28	163	394	0
15:45 - 16:00	3	7	14	24	80	11	25	116	10	83	0	93	11	143	36	190	423	0
16:00 - 16:15	5	2	15	22	120	10	21	151	6	141	2	149	13	139	47	199	521	0
16:15 - 16:30	9	7	6	22	104	8	23	135	10	129	6	145	18	137	52	207	509	0
16:30 - 16:45	4	8	13	25	154	19	33	206	6	132	5	143	14	143	57	214	588	0
16:45 - 17:00	6	2	9	17	183	29	37	249	8	130	4	142	14	136	31	181	589	0
17:00 - 17:15	9	13	13	35	191	29	36	256	9	108	5	122	14	135	63	212	625	0
17:15 - 17:30	5	12	15	32	168	31	28	227	7	127	7	141	17	150	53	220	620	0
17:30 - 17:45	5	11	11	27	123	28	18	169	7	170	11	188	20	142	65	227	611	0
17:45 - 18:00	8	7	13	28	79	17	17	113	9	156	10	175	8	122	45	175	491	0
18:00 - 18:15	7	2	13	22	82	14	32	128	11	160	8	179	13	130	32	175	504	0
18:15 - 18:30	3	0	7	10	64	7	19	90	2	157	5	164	13	128	25	166	430	0
18:30 - 18:45	2	2	13	17	69	4	14	87	5	101	6	112	6	99	24	129	345	0
18:45 - 19:00	0	2	16	18	87	14	16	117	3	87	6	96	12	93	30	135	366	0
TOTAL	197	252	494	943	3070	480	969	4519	610	5113	177	5900	609	5781	2816	9206	20568	12
Trucks	1	2	9	12	20	2	5	27	3	65	0	68	7	51	34	92	199	1.0%
School Buses	0	0	0	0	1	0	1	2	1	34	0	35	0	44	1	45	82	0.4%

TOTAL AND PEAK HOUR VOLUME DIAGRAMS

Bush River Rd AT Colonial Life Blvd-Mall Date: 11/29/2016

12.0 HOUR TOTAL VOLUME
FROM 7:00 TO 15:00

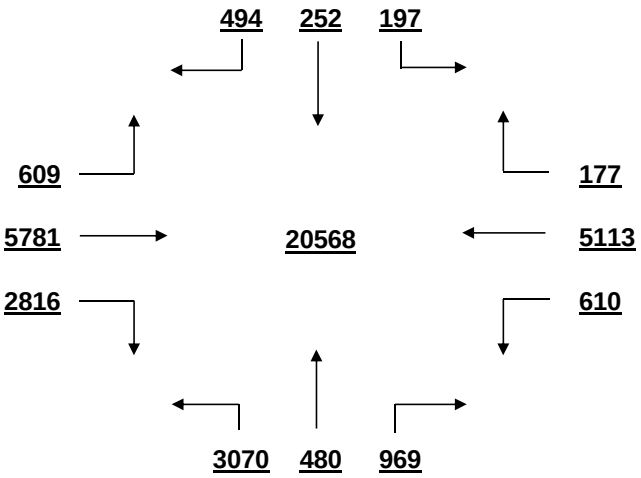

OVERALL PEAK HOUR VOLUME
FROM 16:45 TO 17:45

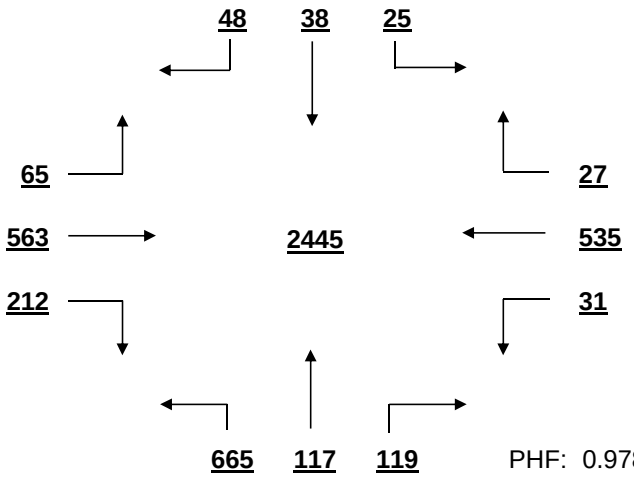

PHF: 0.978

AM PEAK HOUR VOLUME (0:00-10:45)
FROM 7:30 TO 8:30

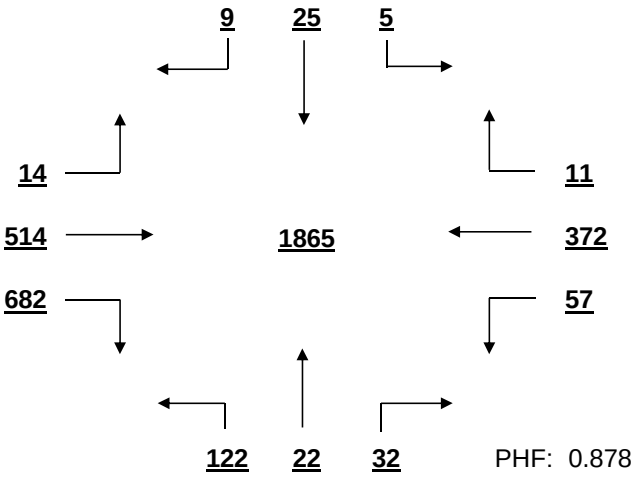

PHF: 0.878

PM PEAK HOUR VOLUME (14:15-23:45)
FROM 16:45 TO 17:45

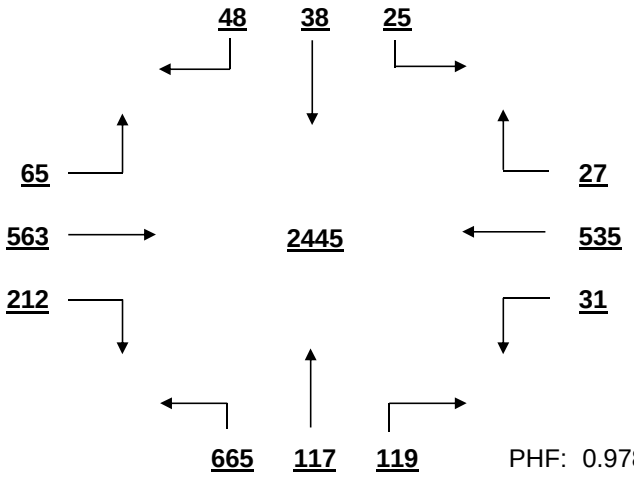

PHF: 0.978

MID-DAY PEAK HOUR VOLUME (11:00-14:00)
FROM 12:30 TO 13:30

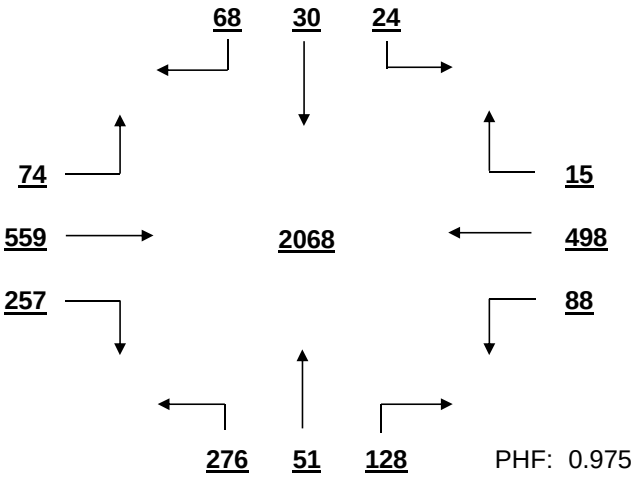

PHF: 0.975

OTHER HOUR VOLUME
FROM 7:00 TO 8:00

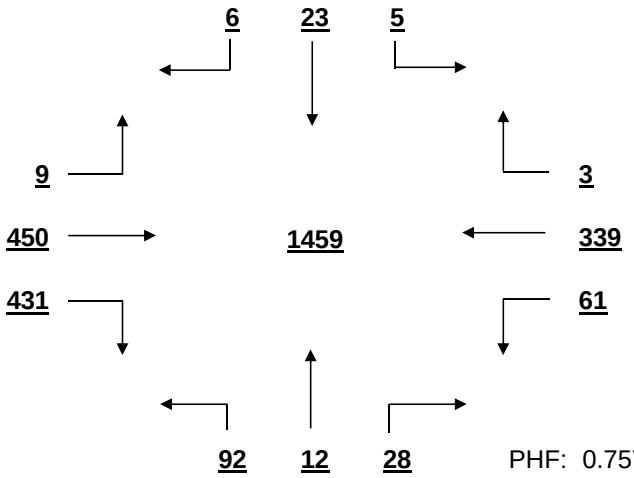

PHF: 0.757

SIGNAL WARRANT ANALYSIS

Bush River Rd AT Colonial Life Blvd-Mall Date: 11/29/2016

Minor Street Volume, percent of total = 26.6%
Percent of Left Turns from Minor Street = 59.8%
Percent of Right Turns from Minor Street = 26.8%
Percent of Minor Street Right Turns to Remove from Warrant Analysis = 0%
WARRANT BASIS = **100%**

Warrant No. 1 - Vehicular Volume is met

Condition A - Minimum Vehicular Volume is met

Average Major Street % of Warrant				Average Minor Street % of Warrant			
1258.8	/ 600	=	210%	376.6	/ 200	=	188%

Hourly percent of warrant

	7:00 - 8:00	8:00 - 9:00	9:00 - 10:00	10:00 - 11:00	11:00 - 12:00	12:00 - 13:00	13:00 - 14:00	14:00 - 15:00	15:00 - 16:00	16:00 - 17:00	17:00 - 18:00	18:00 - 19:00
Major St.	216%	271%	154%	159%	195%	229%	238%	196%	195%	230%	243%	193%
Minor St.	66%	103%	81%	88%	175%	230%	202%	158%	195%	371%	383%	211%

Condition B - Interruption to Continuous Traffic is met

Average Major Street % of Warrant				Average Minor Street % of Warrant			
1258.8	/ 900	=	140%	376.6	/ 100	=	377%

Hourly percent of warrant

	7:00 - 8:00	8:00 - 9:00	9:00 - 10:00	10:00 - 11:00	11:00 - 12:00	12:00 - 13:00	13:00 - 14:00	14:00 - 15:00	15:00 - 16:00	16:00 - 17:00	17:00 - 18:00	18:00 - 19:00
Major St.	144%	180%	103%	106%	130%	152%	159%	130%	130%	153%	162%	128%
Minor St.	132%	205%	162%	176%	349%	459%	403%	315%	390%	741%	765%	422%

80% Combination of Conditions A & B is met

Warrant No. 2 - Four Hour Vehicular Volume is met

Hourly percent of warrant

	7:00 - 8:00	8:00 - 9:00	9:00 - 10:00	10:00 - 11:00	11:00 - 12:00	12:00 - 13:00	13:00 - 14:00	14:00 - 15:00	15:00 - 16:00	16:00 - 17:00	17:00 - 18:00	18:00 - 19:00
Minor St.	116%	178%	72%	83%	248%	399%	350%	225%	276%	644%	665%	291%

Warrant No. 3 - Peak Hour is met

Percent of warrant			Percent of warrant	
Overall Peak Hour:	16:45 - 17:45	Higher Volume Side Street Peak Hour:	16:30 - 17:30	
Minor St.	435%	Minor St.	416%	

Warrant No. 4 - Pedestrian Volume. Pedestrian volume shown are minumum volumes assuming heavy major street traffic. If these volumes are met, warrant 4 requires further engineering analysis

Minimum 4 hour ped. volume crossing major street: 107

Minimum peak hour ped. volume crossing major street: 133

Number of pedestrians crossing major street

	7:00 - 8:00	8:00 - 9:00	9:00 - 10:00	10:00 - 11:00	11:00 - 12:00	12:00 - 13:00	13:00 - 14:00	14:00 - 15:00	15:00 - 16:00	16:00 - 17:00	17:00 - 18:00	18:00 - 19:00
Major St.	0	0	0	1	0	2	1	0	0	0	0	0

Warrant No. 7 - Crash Experience (Requires 3 criteria analysis by engineering)

Total Number: 0 From: 1/1/2005 to 1/1/2008

Accident Rate: 0.00 per million entering vehicles

Types of Accidents	No.	/	Avg.		No.	/	Avg.
Right Angle	0	/	0.0	Rear End	0	/	0.0
Lost Control	0	/	0.0	Side Swipe	0	/	0.0
Left Turn	0	/	0.0	Other	0	/	0.0

SOUTH CAROLINA DEPARTMENT OF TRANSPORTATION
DISTRICT 1
TRAFFIC ENGINEERING

County: Richland City: Columbia Date: 11/29/2016

Major Rt: Broad River Rd * Not on State System Minor Rt: Bush River Rd Clear

Day of Week: Tuesday Weather: Rain Office: Short Counts JMS

Type of Control: Signal Speed Limit (major st) 40

Direction of Minor Street: E-W Intersection ADT - 28070 (Calc)

Number of Lanes (major st)* 2 Number of Lanes (minor st)* 2

* Each Direction

INTERSECTION VOLUME SUMMARY

	From N Broad River Rd				From S Broad River Rd				From E Bush River Rd				From W Bush River Rd				Total	Total
	LT	STR	RT	TOT	LT	STR	RT	TOT	LT	STR	RT	TOT	LT	STR	RT	TOT	Vol	Peds
7:00 - 7:15	0	185	54	239	42	106	0	148	0	0	0	0	30	0	79	109	496	0
7:15 - 7:30	0	256	72	328	48	118	0	166	0	0	0	0	41	0	0	41	535	1
7:30 - 7:45	0	298	68	366	49	142	0	191	0	0	0	0	46	0	131	177	734	0
7:45 - 8:00	0	256	61	317	69	161	0	230	0	0	0	0	50	0	121	171	718	0
8:00 - 8:15	0	285	59	344	59	140	0	199	0	0	0	0	30	0	96	126	669	0
8:15 - 8:30	0	262	0	262	68	154	0	222	0	0	0	0	40	0	121	161	645	0
8:30 - 8:45	0	263	64	327	59	138	0	197	0	0	0	0	36	0	88	124	648	1
8:45 - 9:00	0	237	54	291	47	123	0	170	0	0	0	0	46	0	60	106	567	0
9:00 - 9:15	0	175	35	210	50	113	0	163	0	0	0	0	33	0	72	105	478	0
9:15 - 9:30	0	168	23	191	51	118	0	169	0	0	0	0	30	0	58	88	448	1
9:30 - 9:45	0	172	40	212	51	126	0	177	0	0	0	0	37	0	64	101	490	0
9:45 - 10:00	0	138	43	181	47	137	0	184	0	0	0	0	32	0	55	87	452	2
10:00 - 10:15	0	174	25	199	0	121	0	121	0	0	0	0	39	0	70	109	429	0
10:15 - 10:30	0	140	31	171	56	140	0	196	0	0	0	0	29	0	56	85	452	0
10:30 - 10:45	0	155	37	192	59	138	0	197	0	0	0	0	30	0	62	92	481	0
10:45 - 11:00	0	143	22	165	55	138	0	193	0	0	0	0	52	0	55	107	465	0
11:00 - 11:15	0	141	33	174	63	138	0	201	0	0	0	0	40	0	68	108	483	0
11:15 - 11:30	0	141	42	183	82	133	0	215	0	0	0	0	53	0	74	127	525	0
11:30 - 11:45	0	130	43	173	81	140	0	221	0	0	0	0	48	0	79	127	521	1
11:45 - 12:00	0	167	53	220	70	159	0	229	0	0	0	0	50	0	80	130	579	0
12:00 - 12:15	0	144	52	196	71	159	0	230	0	0	0	0	74	0	94	168	594	0
12:15 - 12:30	0	197	71	268	85	184	0	269	0	0	0	0	44	0	101	145	682	0
12:30 - 12:45	0	180	49	229	88	168	0	256	0	0	0	0	62	0	101	163	648	0
12:45 - 13:00	0	166	49	215	80	182	0	262	0	0	0	0	48	0	108	156	633	0
13:00 - 13:15	0	183	48	231	86	154	0	240	0	0	0	0	58	0	117	175	646	3
13:15 - 13:30	0	164	42	206	72	169	0	241	0	0	0	0	57	0	100	157	604	0
13:30 - 13:45	0	169	45	214	68	162	0	230	0	0	0	0	53	0	95	148	592	0
13:45 - 14:00	0	154	38	192	72	174	0	246	0	0	0	0	51	0	107	158	596	1
14:00 - 14:15	0	162	46	208	68	170	0	238	0	0	0	0	51	0	98	149	595	0
14:15 - 14:30	0	166	51	217	76	144	0	220	0	0	0	0	49	0	0	49	486	0
14:30 - 14:45	0	158	39	197	67	167	0	234	0	0	0	0	49	0	78	127	558	0
14:45 - 15:00	0	176	24	200	79	153	0	232	0	0	0	0	62	0	98	160	592	0
15:00 - 15:15	0	125	46	171	76	170	0	246	0	0	0	0	57	0	96	153	570	2
15:15 - 15:30	0	0	46	46	68	169	0	237	0	0	0	0	44	0	89	133	416	0
15:30 - 15:45	0	147	27	174	59	179	0	238	0	0	0	0	60	0	103	163	575	0
15:45 - 16:00	0	147	40	187	68	203	0	271	0	0	0	0	71	0	84	155	613	0
16:00 - 16:15	0	160	42	202	80	210	0	290	0	0	0	0	82	0	95	177	669	0
16:15 - 16:30	0	135	41	176	85	209	0	294	0	0	0	0	68	0	101	169	639	0
16:30 - 16:45	0	170	42	212	94	246	0	340	0	0	0	0	88	0	95	183	735	0
16:45 - 17:00	0	169	25	194	92	214	0	306	0	0	0	0	87	0	96	183	683	1
17:00 - 17:15	0	165	36	201	73	270	0	343	0	0	0	0	53	0	110	163	707	0
17:15 - 17:30	0	140	36	176	99	206	0	305	0	0	0	0	85	0	92	177	658	0
17:30 - 17:45	0	138	27	165	105	225	0	330	0	0	0	0	65	0	99	164	659	0
17:45 - 18:00	0	154	47	201	113	297	0	410	0	0	0	0	67	0	81	148	759	0
18:00 - 18:15	0	116	37	153	130	279	0	409	0	0	0	0	70	0	99	169	731	0
18:15 - 18:30	0	0	39	39	94	235	0	329	0	0	0	0	62	0	103	165	533	0
18:30 - 18:45	0	174	36	210	78	232	0	310	0	0	0	0	31	0	75	106	626	1
18:45 - 19:00	0	142	21	163	73	225	0	298	0	0	0	0	46	0	84	130	591	0
TOTAL	0	7987	2001	9988	3405	8238	0	11643	0	0	0	0	2486	0	4088	6574	28205	14
Trucks	0	147	21	168	52	118	0	170	0	0	0	0	23	0	60	83	421	1.5%
School Buses	0	22	21	43	25	37	0	62	0	0	0	0	17	0	26	43	148	0.5%

TOTAL AND PEAK HOUR VOLUME DIAGRAMS

Broad River Rd AT Bush River Rd Date: 11/29/2016

12.0 HOUR TOTAL VOLUME
FROM 7:00 TO 15:00

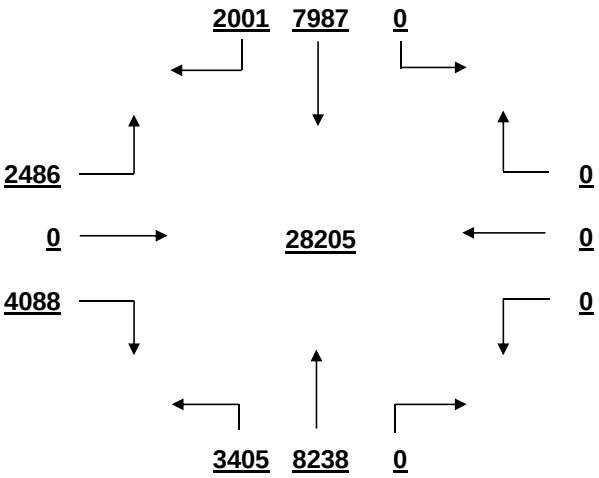

OVERALL PEAK HOUR VOLUME
FROM 17:15 TO 18:15

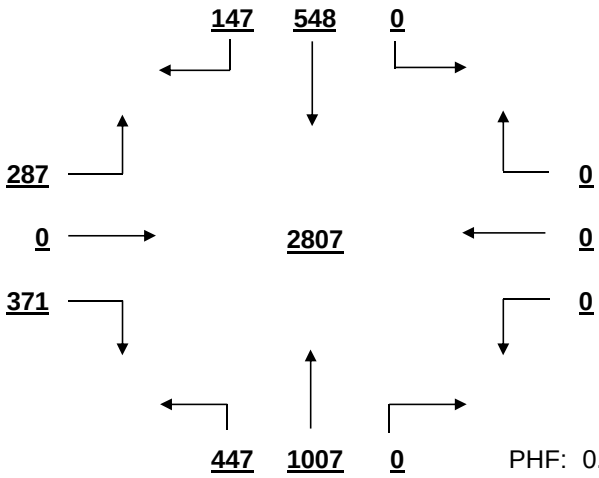

PHF: 0.925

AM PEAK HOUR VOLUME (0:00-10:45)
FROM 7:30 TO 8:30

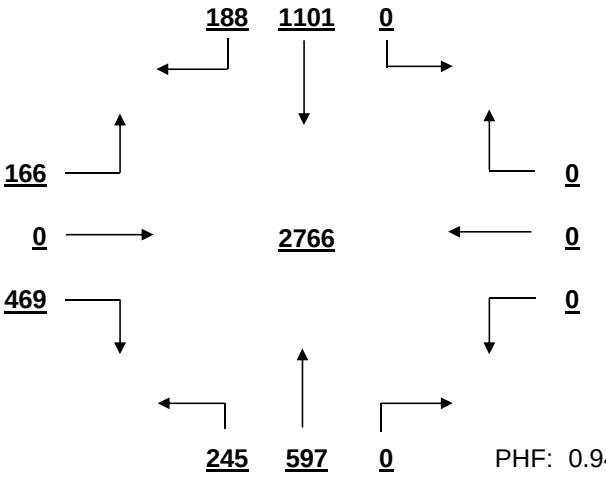

PHF: 0.942

PM PEAK HOUR VOLUME (14:15-23:45)
FROM 17:15 TO 18:15

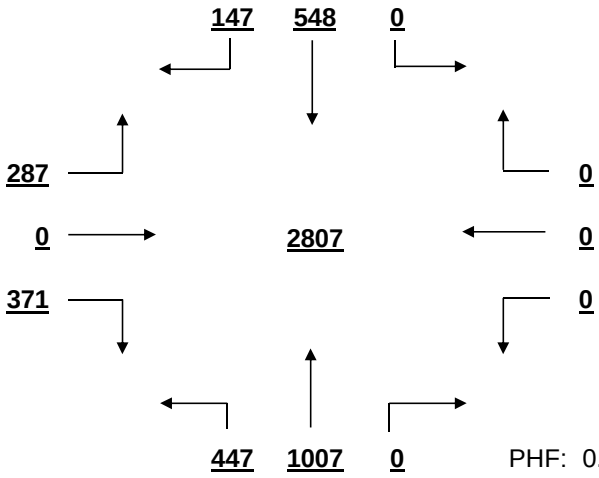

PHF: 0.925

MID-DAY PEAK HOUR VOLUME (11:00-14:00)
FROM 12:15 TO 13:15

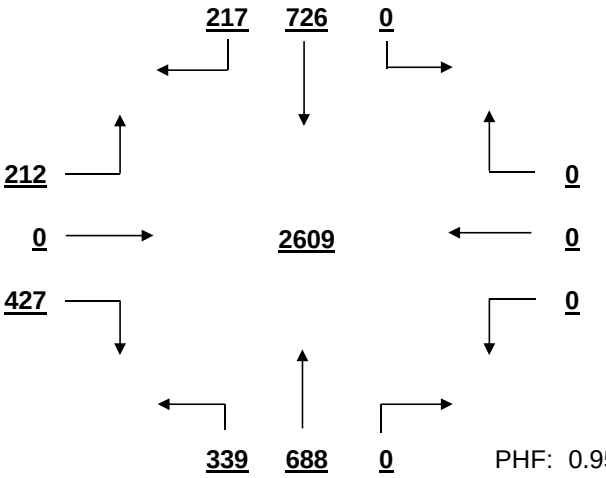

PHF: 0.956

OTHER HOUR VOLUME
FROM 7:00 TO 8:00

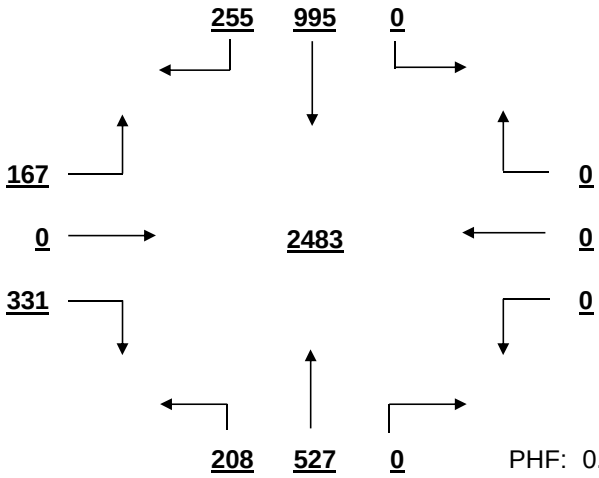

PHF: 0.846

SIGNAL WARRANT ANALYSIS

Broad River Rd AT Bush River Rd Date: 11/29/2016

Minor Street Volume, percent of total = 23.3%
Percent of Left Turns from Minor Street = 37.8%
Percent of Right Turns from Minor Street = 62.2%
Percent of Minor Street Right Turns to Remove from Warrant Analysis = 0%
WARRANT BASIS = **100%**

Warrant No. 1 - Vehicular Volume is met

Condition A - Minimum Vehicular Volume is met

Average Major Street % of Warrant				Average Minor Street % of Warrant			
1802.6	/ 600	=	300%	547.8	/ 200	=	274%

Hourly percent of warrant

	7:00 - 8:00	8:00 - 9:00	9:00 - 10:00	10:00 - 11:00	11:00 - 12:00	12:00 - 13:00	13:00 - 14:00	14:00 - 15:00	15:00 - 16:00	16:00 - 17:00	17:00 - 18:00	18:00 - 19:00
Major St.	331%	335%	248%	239%	269%	321%	300%	291%	262%	336%	355%	319%
Minor St.	249%	259%	191%	197%	246%	316%	319%	243%	302%	356%	326%	285%

Condition B - Interruption to Continuous Traffic is met

Average Major Street % of Warrant				Average Minor Street % of Warrant			
1802.6	/ 900	=	200%	547.8	/ 100	=	548%

Hourly percent of warrant

	7:00 - 8:00	8:00 - 9:00	9:00 - 10:00	10:00 - 11:00	11:00 - 12:00	12:00 - 13:00	13:00 - 14:00	14:00 - 15:00	15:00 - 16:00	16:00 - 17:00	17:00 - 18:00	18:00 - 19:00
Major St.	221%	224%	165%	159%	180%	214%	200%	194%	174%	224%	237%	212%
Minor St.	498%	517%	381%	393%	492%	632%	638%	485%	604%	712%	652%	570%

80% Combination of Conditions A & B is met

Warrant No. 2 - Four Hour Vehicular Volume is met

Hourly percent of warrant

	7:00 - 8:00	8:00 - 9:00	9:00 - 10:00	10:00 - 11:00	11:00 - 12:00	12:00 - 13:00	13:00 - 14:00	14:00 - 15:00	15:00 - 16:00	16:00 - 17:00	17:00 - 18:00	18:00 - 19:00
Minor St.	433%	450%	331%	342%	428%	550%	555%	422%	525%	619%	567%	496%

Warrant No. 3 - Peak Hour is met

	Percent of warrant		Percent of warrant
Overall Peak Hour:	17:15 - 18:15	Higher Volume Side Street Peak Hour:	16:00 - 17:00
Minor St.	439%	Minor St.	475%

Warrant No. 4 - Pedestrian Volume. Pedestrian volume shown are minumum volumes assuming heavy major street traffic. If these volumes are met, warrant 4 requires further engineering analysis

Minimum 4 hour ped. volume crossing major street: 107

Minimum peak hour ped. volume crossing major street: 133

Number of pedestrians crossing major street

	7:00 - 8:00	8:00 - 9:00	9:00 - 10:00	10:00 - 11:00	11:00 - 12:00	12:00 - 13:00	13:00 - 14:00	14:00 - 15:00	15:00 - 16:00	16:00 - 17:00	17:00 - 18:00	18:00 - 19:00
Major St.	0	0	0	0	0	0	1	0	1	0	0	0

Warrant No. 7 - Crash Experience (Requires 3 criteria analysis by engineering)

Total Number: 0 From: 1/1/2005 to 1/1/2008
Accident Rate: 0.00 per million entering vehicles

Types of Accidents	No.	/	Avg.		No.	/	Avg.
Right Angle	0	/	0.0	Rear End	0	/	0.0
Lost Control	0	/	0.0	Side Swipe	0	/	0.0
Left Turn	0	/	0.0	Other	0	/	0.0

SOUTH CAROLINA DEPARTMENT OF TRANSPORTATION
DISTRICT 1
TRAFFIC ENGINEERING

County: Richland City: Columbia Date: 11/29/2016

Major Rt: Broad River Rd * Not on State System Minor Rt: Arrowwood Dr-Means Ave Clear

Day of Week: Tuesday Weather: Rain Office: Short Counts JMS

Type of Control: Signal Speed Limit (major st) 40

Direction of Minor Street: E-W Intersection ADT - 23110 (Calc)

Number of Lanes (major st)* 2 Number of Lanes (minor st)* 1

* Each Direction

INTERSECTION VOLUME SUMMARY

	From N Broad River Rd				From S Broad River Rd				From E Arrowwood Dr-Means				From W Arrowwood Dr-Means				Total	Total
	LT	STR	RT	TOT	LT	STR	RT	TOT	LT	STR	RT	TOT	LT	STR	RT	TOT	Vol	Peds
7:00 - 7:15	1	225	10	236	15	106	0	121	0	0	3	3	10	0	10	20	380	0
7:15 - 7:30	0	321	10	331	21	128	1	150	1	1	0	2	9	0	0	9	492	1
7:30 - 7:45	0	390	7	397	17	150	0	167	0	0	2	2	10	0	19	29	595	0
7:45 - 8:00	4	352	8	364	23	172	0	195	1	0	1	2	5	0	15	20	581	0
8:00 - 8:15	3	325	6	334	20	154	0	174	2	0	0	2	5	0	18	23	533	0
8:15 - 8:30	1	366	0	367	6	194	0	200	2	0	2	4	6	0	7	13	584	0
8:30 - 8:45	0	329	0	329	5	173	1	179	2	1	0	3	7	0	9	16	527	1
8:45 - 9:00	1	266	2	269	15	149	0	164	3	0	1	4	2	0	5	7	444	1
9:00 - 9:15	0	244	1	245	4	129	0	133	1	1	0	2	2	1	6	9	389	1
9:15 - 9:30	0	214	2	216	3	137	0	140	1	1	0	2	1	0	1	2	360	0
9:30 - 9:45	4	197	3	204	1	155	0	156	4	0	2	6	4	0	2	6	372	2
9:45 - 10:00	0	178	4	182	0	165	0	165	0	0	0	0	0	2	4	6	353	0
10:00 - 10:15	0	214	3	217	0	151	0	151	0	0	0	0	3	0	6	9	377	1
10:15 - 10:30	0	190	2	192	4	180	0	184	2	0	2	4	2	0	6	8	388	0
10:30 - 10:45	0	198	1	199	2	178	1	181	0	0	0	0	3	0	2	5	385	0
10:45 - 11:00	0	179	2	181	2	166	4	172	1	0	0	1	0	0	6	6	360	2
11:00 - 11:15	0	178	2	180	2	178	0	180	1	0	1	2	3	0	7	10	372	1
11:15 - 11:30	0	201	6	207	4	199	0	203	1	0	0	1	4	0	6	10	421	0
11:30 - 11:45	1	196	2	199	5	201	0	206	1	0	0	1	1	0	5	6	412	2
11:45 - 12:00	1	208	3	212	3	198	0	201	1	1	1	3	3	0	5	8	424	2
12:00 - 12:15	0	215	0	215	4	225	0	229	0	0	3	3	7	0	10	17	464	2
12:15 - 12:30	0	255	6	261	1	232	0	233	1	0	0	1	3	0	8	11	506	0
12:30 - 12:45	1	253	3	257	2	230	0	232	0	0	4	4	11	1	12	24	517	0
12:45 - 13:00	0	255	5	260	2	217	0	219	1	0	0	1	8	0	10	18	498	2
13:00 - 13:15	2	247	7	256	4	213	0	217	1	0	0	1	2	0	4	6	480	2
13:15 - 13:30	2	246	3	251	4	227	0	231	2	0	2	4	4	0	9	13	499	0
13:30 - 13:45	0	246	8	254	5	196	1	202	0	0	1	1	4	0	5	9	466	1
13:45 - 14:00	1	239	2	242	5	221	2	228	1	0	2	3	1	0	7	8	481	2
14:00 - 14:15	0	211	3	214	9	222	0	231	3	0	1	4	2	0	10	12	461	1
14:15 - 14:30	0	246	4	250	7	202	0	209	2	0	1	3	3	1	0	4	466	0
14:30 - 14:45	1	210	3	214	9	198	0	207	0	0	0	0	8	1	19	28	449	0
14:45 - 15:00	2	249	4	255	5	206	0	211	1	0	0	1	9	0	16	25	492	3
15:00 - 15:15	0	210	2	212	4	202	1	207	1	0	1	2	9	0	7	16	437	2
15:15 - 15:30	1	0	1	2	5	201	1	207	1	0	0	1	6	0	8	14	224	0
15:30 - 15:45	1	213	3	217	7	230	1	238	1	0	0	1	6	0	11	17	473	1
15:45 - 16:00	0	227	3	230	12	224	0	236	0	1	0	1	6	0	13	19	486	0
16:00 - 16:15	1	215	4	220	8	250	2	260	0	0	4	4	8	0	21	29	513	0
16:15 - 16:30	0	204	8	212	9	253	0	262	1	0	2	3	16	0	17	33	510	0
16:30 - 16:45	0	208	5	213	4	277	0	281	4	0	1	5	10	0	26	36	535	0
16:45 - 17:00	2	242	5	249	9	282	0	291	1	0	3	4	4	1	14	19	563	1
17:00 - 17:15	1	241	2	244	10	319	4	333	4	0	1	5	13	0	19	32	614	0
17:15 - 17:30	2	219	3	224	21	269	2	292	4	0	4	8	5	0	18	23	547	0
17:30 - 17:45	0	202	6	208	27	307	0	334	3	1	3	7	6	1	24	31	580	0
17:45 - 18:00	0	206	6	212	20	312	1	333	4	2	1	7	3	0	15	18	570	0
18:00 - 18:15	0	193	7	200	24	334	3	361	5	0	3	8	5	0	15	20	589	1
18:15 - 18:30	0	0	2	2	6	296	0	302	1	0	0	1	5	1	20	26	331	0
18:30 - 18:45	0	203	1	204	8	255	1	264	1	0	0	1	3	0	7	10	479	0
18:45 - 19:00	1	197	0	198	5	266	1	272	1	0	0	1	2	0	3	5	476	0
TOTAL	34	10823	180	11037	388	10129	27	10544	68	9	52	129	249	9	487	745	22455	32
Trucks	0	151	6	157	4	137	0	141	0	0	0	0	4	0	7	11	309	1.4%
School Buses	0	38	2	40	10	43	0	53	0	0	0	0	18	3	12	33	126	0.6%

TOTAL AND PEAK HOUR VOLUME DIAGRAMS

Broad River Rd AT Arrowwood Dr-Means Ave Date: 11/29/2016

12.0 HOUR TOTAL VOLUME
FROM 7:00 TO 15:00

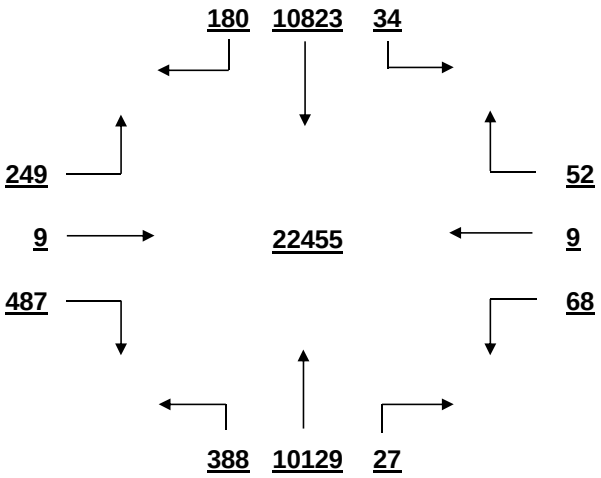

OVERALL PEAK HOUR VOLUME
FROM 17:00 TO 18:00

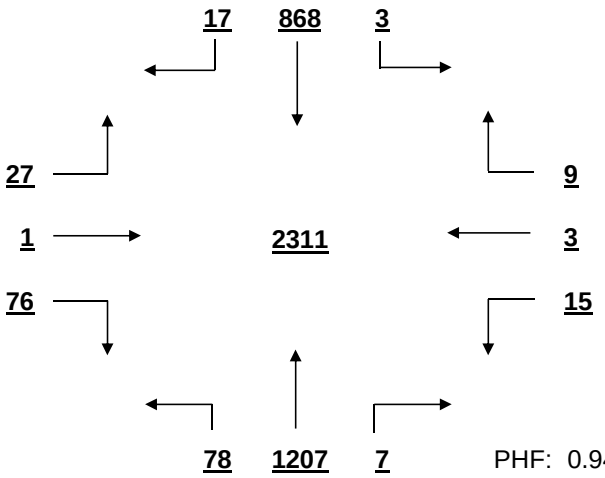

PHF: 0.941

AM PEAK HOUR VOLUME (0:00-10:45)
FROM 7:30 TO 8:30

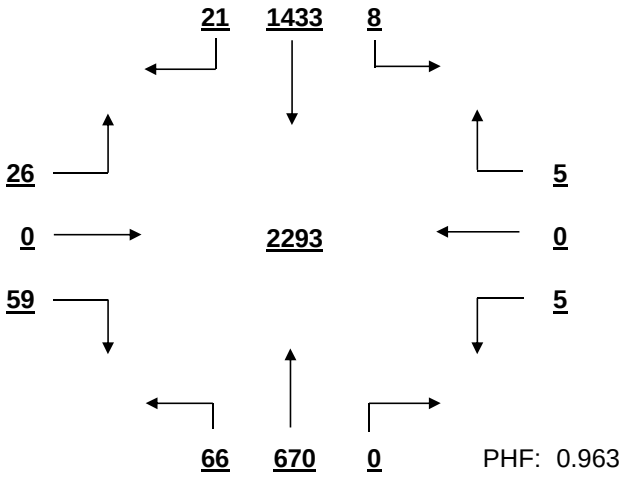

PHF: 0.963

PM PEAK HOUR VOLUME (14:15-23:45)
FROM 17:00 TO 18:00

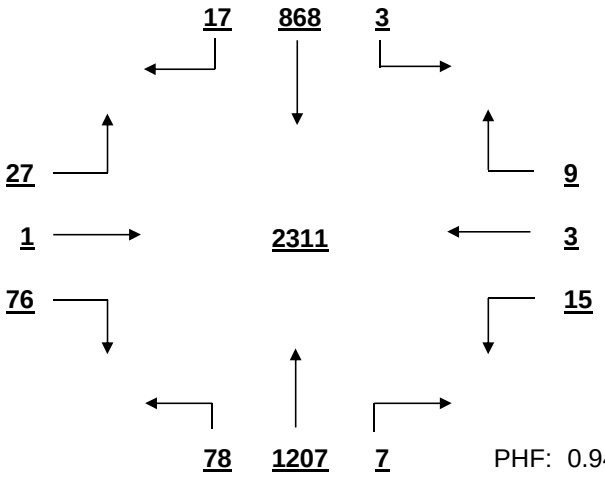

PHF: 0.941

MID-DAY PEAK HOUR VOLUME (11:00-14:00)
FROM 12:15 TO 13:15

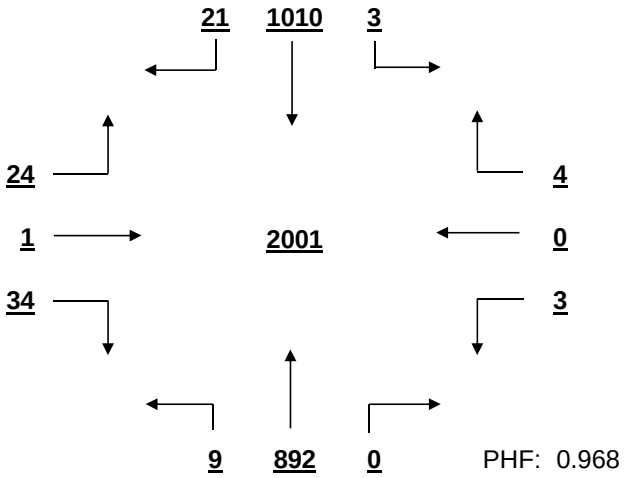

PHF: 0.968

OTHER HOUR VOLUME
FROM 7:00 TO 8:00

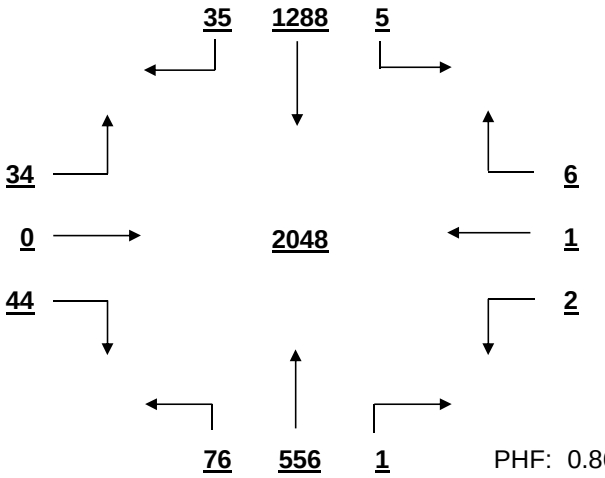

PHF: 0.861

SIGNAL WARRANT ANALYSIS

Broad River Rd AT Arrowwood Dr-Means Ave Date: 11/29/2016

Minor Street Volume, percent of total = 3.9%
Percent of Left Turns from Minor Street = 36.3%
Percent of Right Turns from Minor Street = 61.7%
Percent of Minor Street Right Turns to Remove from Warrant Analysis = 0%
WARRANT BASIS = **100%**

Warrant No. 1 - Vehicular Volume is not met

Condition A - Minimum Vehicular Volume is not met

Average Major Street % of Warrant				Average Minor Street % of Warrant			
1798.4	/	600 =	300%	62.1	/	150 =	41%

Hourly percent of warrant

	7:00 - 8:00	8:00 - 9:00	9:00 - 10:00	10:00 - 11:00	11:00 - 12:00	12:00 - 13:00	13:00 - 14:00	14:00 - 15:00	15:00 - 16:00	16:00 - 17:00	17:00 - 18:00	18:00 - 19:00
Major St.	327%	336%	240%	246%	265%	318%	314%	299%	258%	331%	363%	301%
Minor St.	52%	39%	15%	19%	23%	47%	24%	46%	44%	78%	69%	41%

Condition B - Interruption to Continuous Traffic is not met

Average Major Street % of Warrant				Average Minor Street % of Warrant			
1798.4	/	900 =	200%	62.1	/	75 =	83%

Hourly percent of warrant

	7:00 - 8:00	8:00 - 9:00	9:00 - 10:00	10:00 - 11:00	11:00 - 12:00	12:00 - 13:00	13:00 - 14:00	14:00 - 15:00	15:00 - 16:00	16:00 - 17:00	17:00 - 18:00	18:00 - 19:00
Major St.	218%	224%	160%	164%	176%	212%	209%	199%	172%	221%	242%	200%
Minor St.	104%	79%	31%	37%	45%	93%	48%	92%	88%	156%	139%	81%

80% Combination of Conditions A & B is not met

Warrant No. 2 - Four Hour Vehicular Volume is not met

Hourly percent of warrant

	7:00 - 8:00	8:00 - 9:00	9:00 - 10:00	10:00 - 11:00	11:00 - 12:00	12:00 - 13:00	13:00 - 14:00	14:00 - 15:00	15:00 - 16:00	16:00 - 17:00	17:00 - 18:00	18:00 - 19:00
Minor St.	98%	74%	29%	35%	43%	88%	45%	86%	83%	146%	130%	76%

Warrant No. 3 - Peak Hour is met

Percent of warrant			Percent of warrant	
Overall Peak Hour:	17:00 - 18:00	Higher Volume Side Street Peak Hour:	16:15 - 17:15	
Minor St.	104%	Minor St.	120%	

Warrant No. 4 - Pedestrian Volume. Pedestrian volume shown are minumum volumes assuming heavy major street traffic. If these volumes are met, warrant 4 requires further engineering analysis

Minimum 4 hour ped. volume crossing major street: 107

Minimum peak hour ped. volume crossing major street: 133

Number of pedestrians crossing major street

	7:00 - 8:00	8:00 - 9:00	9:00 - 10:00	10:00 - 11:00	11:00 - 12:00	12:00 - 13:00	13:00 - 14:00	14:00 - 15:00	15:00 - 16:00	16:00 - 17:00	17:00 - 18:00	18:00 - 19:00
Major St.	0	0	1	1	0	0	2	1	0	0	0	0

Warrant No. 7 - Crash Experience (Requires 3 criteria analysis by engineering)

Total Number: 0 From: 1/1/2005 to 1/1/2008

Accident Rate: 0.00 per million entering vehicles

Types of Accidents	No.	/	Avg.		No.	/	Avg.
Right Angle	0	/	0.0	Rear End	0	/	0.0
Lost Control	0	/	0.0	Side Swipe	0	/	0.0
Left Turn	0	/	0.0	Other	0	/	0.0

SOUTH CAROLINA DEPARTMENT OF TRANSPORTATION
DISTRICT 1
TRAFFIC ENGINEERING

County: Richland City: Columbia Date: 11/29/2016

Major Rt: Broad River Rd * Not on State System Minor Rt: Greystone Blvd-Gas Station Clear

Day of Week: Tuesday Weather: Rain Office: Short Counts JMS

Type of Control: Signal Speed Limit (major st) 40

Direction of Minor Street: N-S Intersection ADT - 32150 (Calc)

Number of Lanes (major st)* 2 Number of Lanes (minor st)* 2

* Each Direction

INTERSECTION VOLUME SUMMARY

	From N Greystone Blvd-Gas				From S Greystone Blvd-Gas				From E Broad River Rd				From W Broad River Rd				Total	Total
	LT	STR	RT	TOT	LT	STR	RT	TOT	LT	STR	RT	TOT	LT	STR	RT	TOT	Vol	Peds
7:00 - 7:15	2	0	5	7	24	0	30	54	66	86	8	160	4	173	80	257	478	1
7:15 - 7:30	1	0	11	12	34	1	52	87	101	125	4	230	6	218	0	224	553	0
7:30 - 7:45	1	0	8	9	27	3	52	82	101	129	9	239	4	261	151	416	746	2
7:45 - 8:00	0	1	8	9	40	2	54	96	123	174	7	304	4	0	137	141	550	0
8:00 - 8:15	2	0	7	9	33	2	43	78	103	146	4	253	5	243	135	383	723	0
8:15 - 8:30	2	0	0	2	42	2	36	80	100	173	4	277	2	231	142	375	734	1
8:30 - 8:45	1	0	4	5	32	2	40	74	85	134	4	223	0	200	129	329	631	2
8:45 - 9:00	3	2	2	7	42	0	32	74	81	127	7	215	0	192	119	311	607	1
9:00 - 9:15	0	1	5	6	32	0	40	72	52	99	5	156	3	149	91	243	477	0
9:15 - 9:30	3	1	4	8	42	0	38	80	69	105	3	177	1	118	77	196	461	2
9:30 - 9:45	4	0	7	11	51	1	46	98	57	107	5	169	2	121	85	208	486	1
9:45 - 10:00	1	0	7	8	51	3	29	83	47	124	5	176	2	105	78	185	452	1
10:00 - 10:15	1	1	6	8	0	1	0	1	49	108	3	160	2	146	68	216	385	0
10:15 - 10:30	2	1	6	9	54	2	37	93	41	134	5	180	4	121	63	188	470	0
10:30 - 10:45	2	2	10	14	54	3	36	93	48	125	8	181	5	125	75	205	493	1
10:45 - 11:00	1	1	7	9	35	1	38	74	45	116	4	165	1	125	79	205	453	0
11:00 - 11:15	0	2	7	9	49	1	33	83	37	127	1	165	2	131	57	190	447	0
11:15 - 11:30	4	1	7	12	47	0	37	84	23	137	0	160	1	125	75	201	457	0
11:30 - 11:45	1	0	4	5	80	0	40	120	37	133	0	170	4	119	58	181	476	0
11:45 - 12:00	3	2	4	9	51	3	40	94	50	133	0	183	0	128	88	216	502	0
12:00 - 12:15	3	1	9	13	98	3	59	160	39	108	0	147	6	136	79	221	541	0
12:15 - 12:30	1	1	9	11	74	0	26	100	49	153	0	202	1	0	91	92	405	0
12:30 - 12:45	1	0	14	15	70	4	48	122	60	146	0	206	2	155	128	285	628	1
12:45 - 13:00	1	1	6	8	84	3	40	127	61	146	0	207	1	166	89	256	598	3
13:00 - 13:15	3	2	8	13	85	5	56	146	43	146	6	195	3	172	93	268	622	0
13:15 - 13:30	2	0	9	11	67	2	43	112	48	145	7	200	3	159	85	247	570	0
13:30 - 13:45	1	1	13	15	53	2	51	106	43	142	11	196	4	174	90	268	585	1
13:45 - 14:00	2	1	9	12	78	3	51	132	56	150	7	213	2	147	85	234	591	0
14:00 - 14:15	2	0	12	14	63	2	59	124	39	140	7	186	2	161	67	230	554	3
14:15 - 14:30	3	0	6	9	52	2	58	112	50	158	6	214	1	178	0	179	514	0
14:30 - 14:45	2	1	6	9	62	3	54	119	60	150	7	217	2	155	67	224	569	0
14:45 - 15:00	1	0	10	11	65	0	55	120	44	148	8	200	3	177	80	260	591	0
15:00 - 15:15	1	1	9	11	74	3	50	127	45	151	5	201	4	146	61	211	550	1
15:15 - 15:30	3	0	11	14	53	4	51	108	55	153	7	215	4	172	73	249	586	0
15:30 - 15:45	1	0	5	6	67	2	49	118	55	173	3	231	2	151	76	229	584	0
15:45 - 16:00	3	1	4	8	45	0	73	118	53	190	3	246	5	151	63	219	591	1
16:00 - 16:15	2	0	7	9	77	2	98	177	48	199	5	252	2	187	55	244	682	0
16:15 - 16:30	2	3	7	12	66	4	72	142	55	211	3	269	2	145	72	219	642	0
16:30 - 16:45	0	0	4	4	86	2	87	175	57	201	6	264	2	199	50	251	694	0
16:45 - 17:00	2	1	8	11	82	1	88	171	43	235	4	282	2	190	73	265	729	0
17:00 - 17:15	0	1	7	8	135	0	93	228	59	243	11	313	0	197	83	280	829	0
17:15 - 17:30	1	1	13	15	115	4	74	193	55	266	10	331	2	163	74	239	778	0
17:30 - 17:45	0	0	11	11	80	0	98	178	47	330	4	381	0	175	67	242	812	0
17:45 - 18:00	0	0	14	14	62	1	61	124	63	341	4	408	1	173	76	250	796	0
18:00 - 18:15	1	0	11	12	75	1	66	142	70	285	6	361	5	167	71	243	758	0
18:15 - 18:30	2	0	15	17	84	1	65	150	56	231	2	289	5	161	47	213	669	0
18:30 - 18:45	1	1	18	20	54	4	52	110	51	251	2	304	4	181	51	236	670	0
18:45 - 19:00	1	0	11	12	94	4	37	135	39	193	0	232	2	140	49	191	570	1
TOTAL	76	32	385	493	2920	89	2467	5476	2758	7927	220	10905	124	7509	3782	11415	28289	23
Trucks	0	0	1	1	44	1	47	92	30	75	0	105	0	76	50	126	324	1.1%
School Buses	0	0	0	0	24	0	7	31	3	16	0	19	0	26	27	53	103	0.4%

TOTAL AND PEAK HOUR VOLUME DIAGRAMS

Broad River Rd AT Greystone Blvd-Gas Station Date: 11/29/2016

12.0 HOUR TOTAL VOLUME
FROM 7:00 TO 15:00

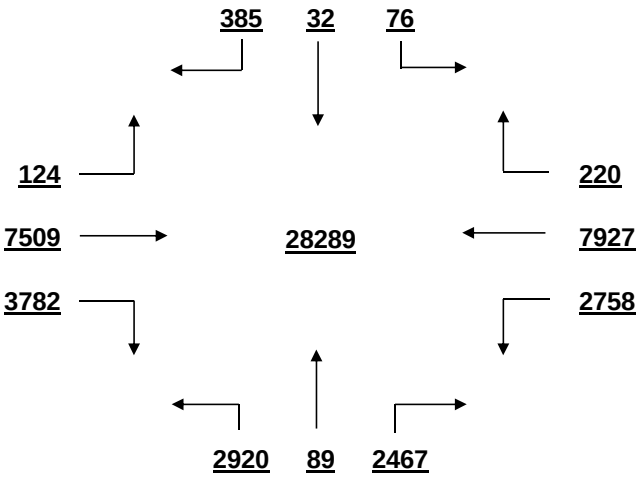

OVERALL PEAK HOUR VOLUME
FROM 17:00 TO 18:00

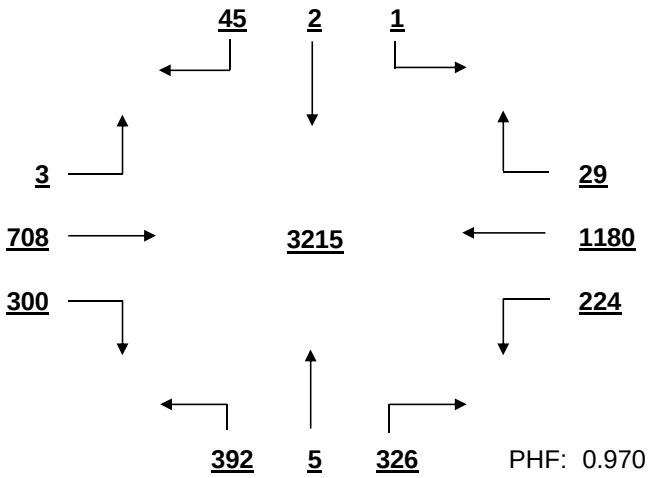

PHF: 0.970

AM PEAK HOUR VOLUME (0:00-10:45)
FROM 7:30 TO 8:30

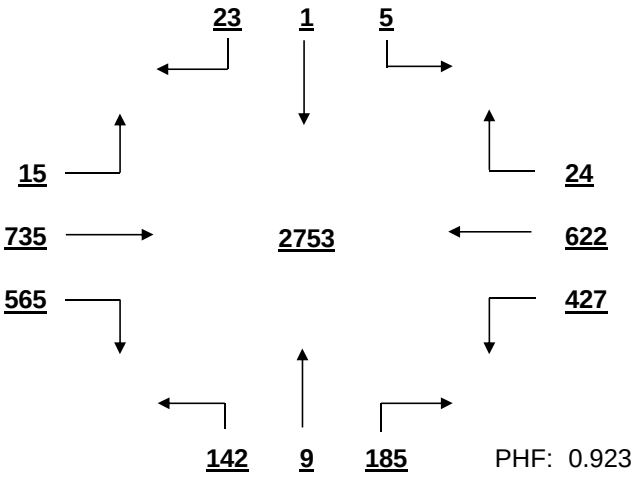

PHF: 0.923

PM PEAK HOUR VOLUME (14:15-23:45)
FROM 17:00 TO 18:00

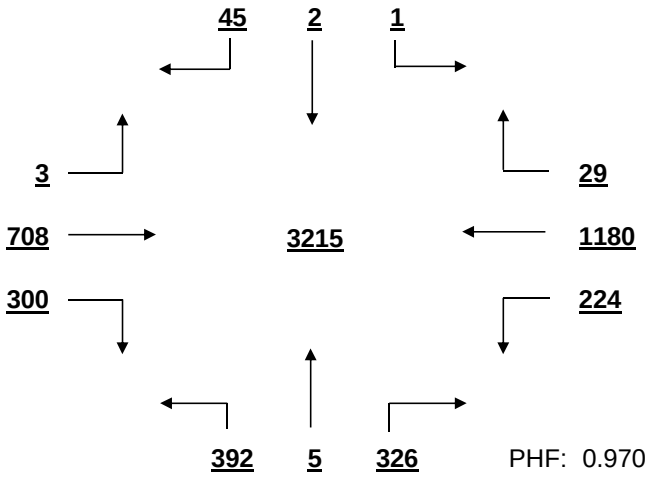

PHF: 0.970

MID-DAY PEAK HOUR VOLUME (11:00-14:00)
FROM 12:30 TO 13:30

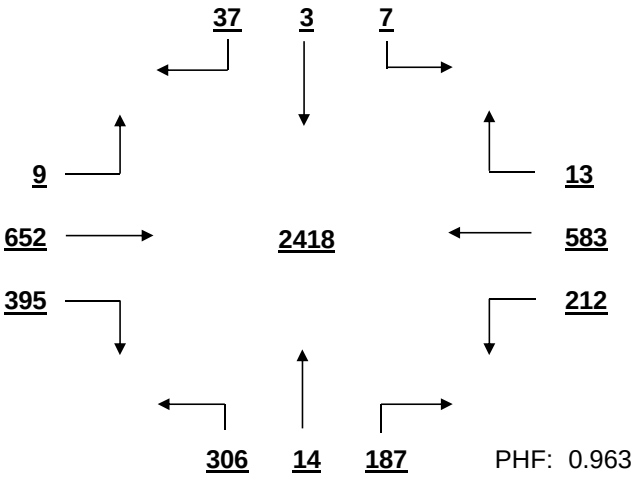

PHF: 0.963

OTHER HOUR VOLUME
FROM 7:00 TO 8:00

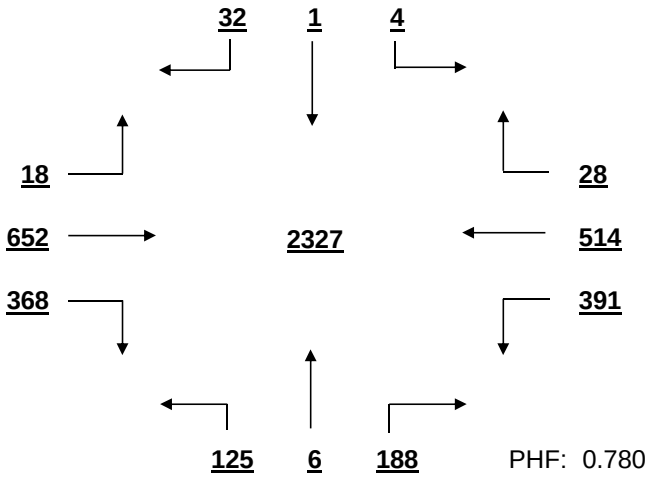

PHF: 0.780

SIGNAL WARRANT ANALYSIS

Broad River Rd AT Greystone Blvd-Gas Station Date: 11/29/2016

Minor Street Volume, percent of total = 21.1%
Percent of Left Turns from Minor Street = 50.2%
Percent of Right Turns from Minor Street = 47.8%
Percent of Minor Street Right Turns to Remove from Warrant Analysis = 0%
WARRANT BASIS = **100%**

Warrant No. 1 - Vehicular Volume is met

Condition A - Minimum Vehicular Volume is met

Average Major Street % of Warrant				Average Minor Street % of Warrant			
1860.0	/	600 =	310%	456.3	/	200 =	228%

Hourly percent of warrant

	7:00 - 8:00	8:00 - 9:00	9:00 - 10:00	10:00 - 11:00	11:00 - 12:00	12:00 - 13:00	13:00 - 14:00	14:00 - 15:00	15:00 - 16:00	16:00 - 17:00	17:00 - 18:00	18:00 - 19:00
Major St.	329%	394%	252%	250%	244%	269%	304%	285%	300%	341%	407%	345%
Minor St.	160%	153%	167%	131%	191%	255%	248%	238%	236%	333%	362%	269%

Condition B - Interruption to Continuous Traffic is met

Average Major Street % of Warrant				Average Minor Street % of Warrant			
1860.0	/	900 =	207%	456.3	/	100 =	456%

Hourly percent of warrant

	7:00 - 8:00	8:00 - 9:00	9:00 - 10:00	10:00 - 11:00	11:00 - 12:00	12:00 - 13:00	13:00 - 14:00	14:00 - 15:00	15:00 - 16:00	16:00 - 17:00	17:00 - 18:00	18:00 - 19:00
Major St.	219%	263%	168%	167%	163%	180%	202%	190%	200%	227%	272%	230%
Minor St.	319%	306%	333%	261%	381%	509%	496%	475%	471%	665%	723%	537%

80% Combination of Conditions A & B is met

Warrant No. 2 - Four Hour Vehicular Volume is met

Hourly percent of warrant

	7:00 - 8:00	8:00 - 9:00	9:00 - 10:00	10:00 - 11:00	11:00 - 12:00	12:00 - 13:00	13:00 - 14:00	14:00 - 15:00	15:00 - 16:00	16:00 - 17:00	17:00 - 18:00	18:00 - 19:00
Minor St.	277%	266%	290%	227%	331%	443%	431%	413%	410%	578%	629%	467%

Warrant No. 3 - Peak Hour is met

	Percent of warrant		Percent of warrant
Overall Peak Hour:	17:00 - 18:00	Higher Volume Side Street Peak Hour:	16:45 - 17:45
Minor St.	482%	Minor St.	513%

Warrant No. 4 - Pedestrian Volume. Pedestrian volume shown are minumum volumes assuming heavy major street traffic. If these volumes are met, warrant 4 requires further engineering analysis

Minimum 4 hour ped. volume crossing major street: 107

Minimum peak hour ped. volume crossing major street: 133

Number of pedestrians crossing major street

	7:00 - 8:00	8:00 - 9:00	9:00 - 10:00	10:00 - 11:00	11:00 - 12:00	12:00 - 13:00	13:00 - 14:00	14:00 - 15:00	15:00 - 16:00	16:00 - 17:00	17:00 - 18:00	18:00 - 19:00
Major St.	2	2	3	0	0	0	1	1	1	0	0	0

Warrant No. 7 - Crash Experience (Requires 3 criteria analysis by engineering)

Total Number: 0 From: 1/1/2005 to 1/1/2008

Accident Rate: 0.00 per million entering vehicles

Types of Accidents	No.	/	Avg.		No.	/	Avg.
Right Angle	0	/	0.0	Rear End	0	/	0.0
Lost Control	0	/	0.0	Side Swipe	0	/	0.0
Left Turn	0	/	0.0	Other	0	/	0.0

SOUTH CAROLINA DEPARTMENT OF TRANSPORTATION
DISTRICT 1
TRAFFIC ENGINEERING

County: Richland City: Columbia Date: 12/1/2016

Major Rt: Sunset Blvd * Not on State System Minor Rt: W. Hospital Dr-Sunset Ct

Day of Week: Thursday Weather: Clear Office: Short Counts JMS

Type of Control: Signal Speed Limit (major st) 40

Direction of Minor Street: N-S Intersection ADT - 40670 (Calc)

Number of Lanes (major st)* 2 Number of Lanes (minor st)* 1

* Each Direction

INTERSECTION VOLUME SUMMARY

	From N W. Hospital Dr-Sun				From S W. Hospital Dr-Sun				From E Sunset Blvd				From W Sunset Blvd				Total	Total
	LT	STR	RT	TOT	LT	STR	RT	TOT	LT	STR	RT	TOT	LT	STR	RT	TOT	Vol	Peds
7:00 - 7:15	26	1	16	43	2	3	0	5	9	164	85	258	71	348	9	428	734	1
7:15 - 7:30	63	3	21	87	3	4	5	12	20	209	97	326	112	389	0	501	926	0
7:30 - 7:45	49	1	42	92	2	5	6	13	20	249	70	339	87	460	9	556	1000	0
7:45 - 8:00	45	3	22	70	1	6	6	13	17	266	103	386	83	0	23	106	575	0
8:00 - 8:15	59	3	21	83	2	5	4	11	16	258	70	344	74	363	9	446	884	0
8:15 - 8:30	35	1	0	36	1	4	7	12	18	242	71	331	96	424	16	536	915	1
8:30 - 8:45	45	0	28	73	2	4	4	10	17	242	68	327	67	369	7	443	853	0
8:45 - 9:00	49	0	29	78	2	6	7	15	14	223	52	289	38	309	4	351	733	2
9:00 - 9:15	46	2	28	76	6	3	7	16	7	206	40	253	37	272	4	313	658	2
9:15 - 9:30	47	7	27	81	4	5	13	22	11	230	51	292	41	321	6	368	763	0
9:30 - 9:45	33	7	32	72	7	6	7	20	9	240	29	278	38	301	10	349	719	0
9:45 - 10:00	44	1	24	69	7	0	7	14	11	216	38	265	30	278	2	310	658	0
10:00 - 10:15	53	1	27	81	0	4	0	4	10	225	29	264	34	253	6	293	642	0
10:15 - 10:30	68	0	32	100	3	1	14	18	9	228	45	282	34	305	7	346	746	0
10:30 - 10:45	61	0	22	83	7	1	9	17	12	294	47	353	33	291	2	326	779	0
10:45 - 11:00	54	3	37	94	2	3	8	13	10	225	29	264	28	278	4	310	681	0
11:00 - 11:15	59	3	26	88	5	4	8	17	16	271	43	330	32	264	3	299	734	2
11:15 - 11:30	68	3	34	105	7	0	10	17	12	240	38	290	27	261	3	291	703	1
11:30 - 11:45	66	4	42	112	8	1	17	26	15	296	41	352	25	298	5	328	818	0
11:45 - 12:00	69	7	40	116	6	3	11	20	14	255	53	322	31	311	4	346	804	2
12:00 - 12:15	74	4	44	122	11	3	13	27	21	286	43	350	25	309	2	336	835	1
12:15 - 12:30	69	4	51	124	20	6	17	43	16	299	49	364	38	0	10	48	579	3
12:30 - 12:45	59	2	43	104	11	3	14	28	13	309	53	375	30	311	4	345	852	0
12:45 - 13:00	43	3	34	80	13	2	21	36	16	300	56	372	44	295	6	345	833	3
13:00 - 13:15	58	4	33	95	13	2	11	26	19	319	46	384	35	274	1	310	815	0
13:15 - 13:30	43	4	23	70	7	4	23	34	16	316	57	389	35	283	4	322	815	0
13:30 - 13:45	48	7	37	92	12	6	5	23	9	297	53	359	36	277	12	325	799	0
13:45 - 14:00	55	2	25	82	7	3	9	19	18	319	44	381	30	266	4	300	782	1
14:00 - 14:15	54	1	37	92	5	5	20	30	12	338	51	401	29	261	1	291	814	0
14:15 - 14:30	37	1	37	75	3	4	14	21	12	306	44	362	49	273	0	322	780	1
14:30 - 14:45	63	0	31	94	9	1	7	17	15	317	44	376	20	281	3	304	791	1
14:45 - 15:00	93	4	79	176	6	4	11	21	7	332	54	393	29	287	2	318	908	0
15:00 - 15:15	53	0	61	114	10	6	11	27	7	339	43	389	24	302	3	329	859	1
15:15 - 15:30	88	0	64	152	8	3	15	26	14	316	44	374	22	246	2	270	822	0
15:30 - 15:45	108	7	76	191	16	7	21	44	14	368	31	413	16	272	5	293	941	0
15:45 - 16:00	80	2	69	151	11	5	15	31	17	362	57	436	31	271	5	307	925	0
16:00 - 16:15	97	4	97	198	7	4	14	25	12	368	41	421	17	257	3	277	921	0
16:15 - 16:30	85	0	81	166	13	6	23	42	10	414	46	470	12	278	4	294	972	1
16:30 - 16:45	106	1	115	222	15	4	18	37	7	402	29	438	29	303	0	332	1029	0
16:45 - 17:00	97	3	84	184	12	6	13	31	8	433	49	490	12	285	2	299	1004	3
17:00 - 17:15	118	1	98	217	15	5	13	33	11	368	36	415	26	350	1	377	1042	1
17:15 - 17:30	96	2	56	154	16	5	18	39	13	379	46	438	29	331	1	361	992	0
17:30 - 17:45	108	0	66	174	3	4	11	18	3	348	36	387	26	314	0	340	919	0
17:45 - 18:00	56	1	45	102	15	4	9	28	10	344	49	403	23	317	1	341	874	1
18:00 - 18:15	56	3	38	97	10	2	9	21	3	352	32	387	19	272	1	292	797	2
18:15 - 18:30	43	0	24	67	9	1	3	13	9	324	31	364	19	245	1	265	709	0
18:30 - 18:45	37	1	29	67	7	0	3	10	5	277	38	320	35	196	0	231	628	0
18:45 - 19:00	23	0	20	43	5	0	6	11	8	218	34	260	20	151	0	171	485	0
TOTAL	2986	111	2047	5144	366	173	517	1056	592	14129	2335	17056	1778	13602	211	15591	38847	30
Trucks	53	4	17	74	2	1	6	9	4	486	48	538	15	505	3	523	1144	2.9%
School Buses	3	0	3	6	0	0	0	0	0	9	5	14	1	15	0	16	36	0.1%

TOTAL AND PEAK HOUR VOLUME DIAGRAMS

Sunset Blvd AT W. Hospital Dr-Sunset Ct Date: 12/1/2016

12.0 HOUR TOTAL VOLUME
FROM 7:00 TO 15:00

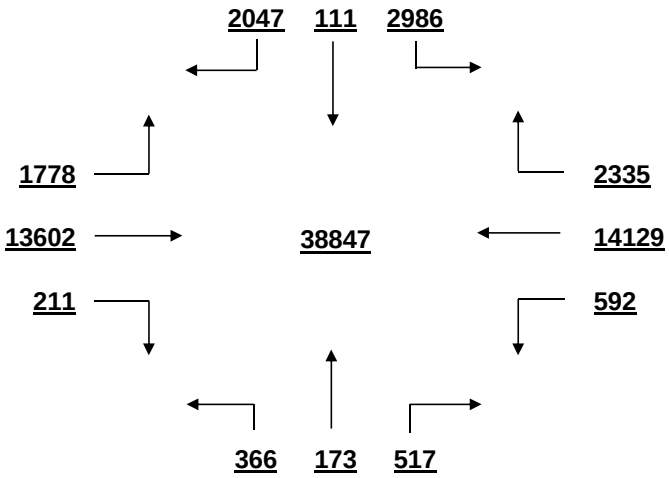

OVERALL PEAK HOUR VOLUME
FROM 16:30 TO 17:30

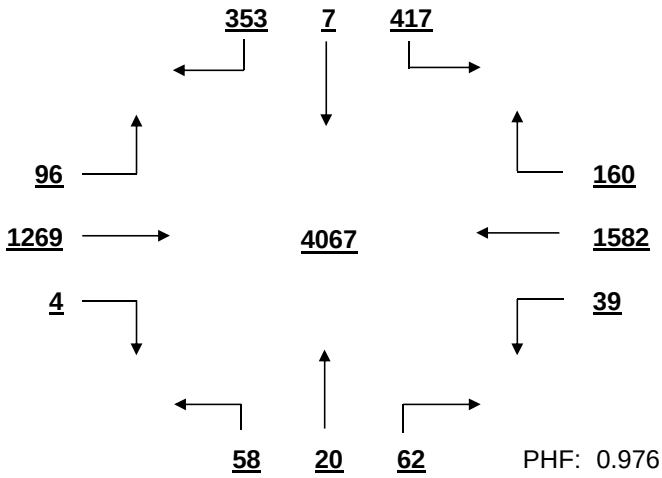

PHF: 0.976

AM PEAK HOUR VOLUME (0:00-10:45)
FROM 7:15 TO 8:15

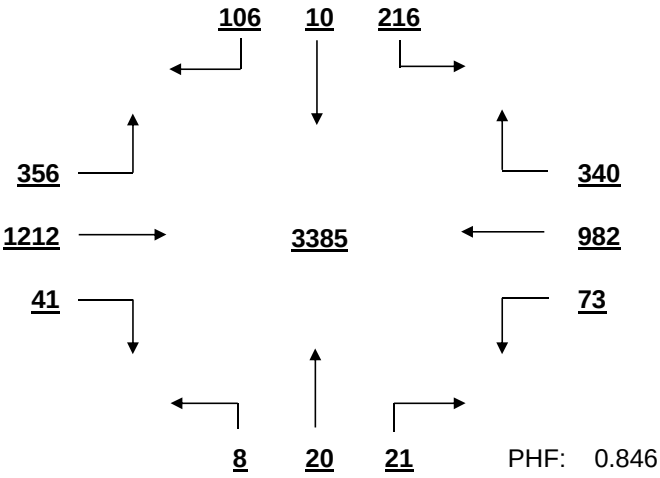

PHF: 0.846

PM PEAK HOUR VOLUME (14:15-23:45)
FROM 16:30 TO 17:30

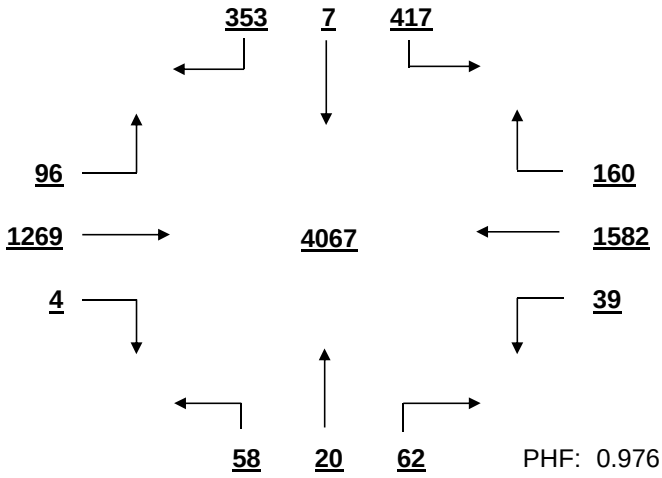

PHF: 0.976

MID-DAY PEAK HOUR VOLUME (11:00-14:00)
FROM 12:30 TO 13:30

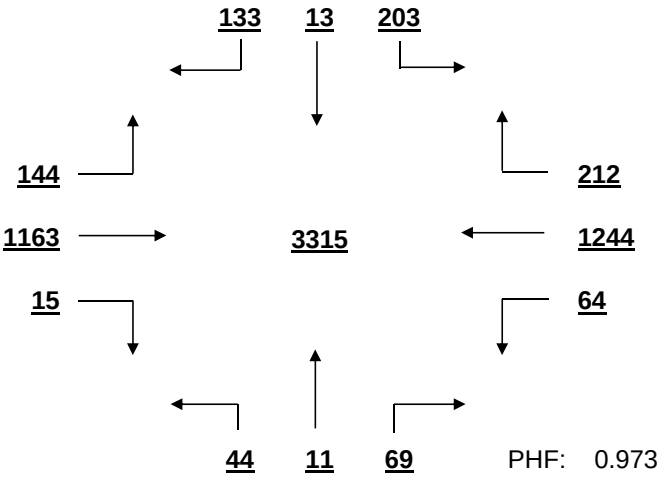

PHF: 0.973

OTHER HOUR VOLUME
FROM 7:00 TO 8:00

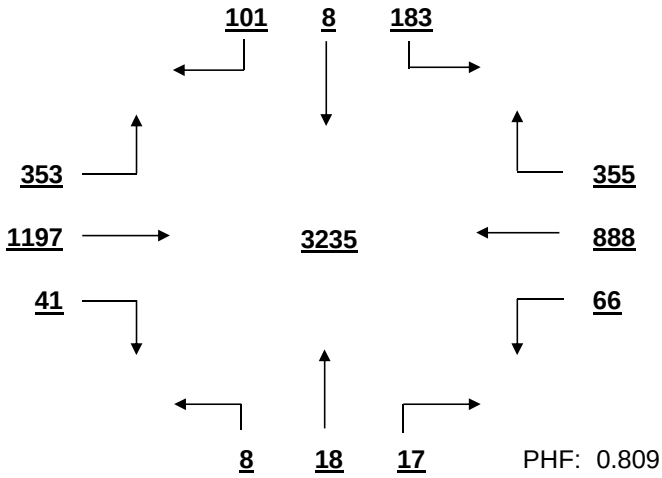

PHF: 0.809

SIGNAL WARRANT ANALYSIS

Sunset Blvd AT W. Hospital Dr-Sunset Ct Date: 12/1/2016

Minor Street Volume, percent of total = 16.0%
Percent of Left Turns from Minor Street = 54.1%
Percent of Right Turns from Minor Street = 41.4%
Percent of Minor Street Right Turns to Remove from Warrant Analysis = 0%
WARRANT BASIS = **100%**

Warrant No. 1 - Vehicular Volume is met

Condition A - Minimum Vehicular Volume is met

Average Major Street % of Warrant				Average Minor Street % of Warrant			
2720.6	/	600 =	453%	428.7	/	150 =	286%

Hourly percent of warrant

	7:00 - 8:00	8:00 - 9:00	9:00 - 10:00	10:00 - 11:00	11:00 - 12:00	12:00 - 13:00	13:00 - 14:00	14:00 - 15:00	15:00 - 16:00	16:00 - 17:00	17:00 - 18:00	18:00 - 19:00
Major St.	483%	511%	405%	406%	426%	423%	462%	461%	469%	504%	510%	382%
Minor St.	195%	180%	199%	239%	281%	287%	226%	291%	405%	513%	431%	183%

Condition B - Interruption to Continuous Traffic is met

Average Major Street % of Warrant				Average Minor Street % of Warrant			
2720.6	/	900 =	302%	428.7	/	75 =	572%

Hourly percent of warrant

	7:00 - 8:00	8:00 - 9:00	9:00 - 10:00	10:00 - 11:00	11:00 - 12:00	12:00 - 13:00	13:00 - 14:00	14:00 - 15:00	15:00 - 16:00	16:00 - 17:00	17:00 - 18:00	18:00 - 19:00
Major St.	322%	341%	270%	271%	284%	282%	308%	307%	312%	336%	340%	254%
Minor St.	389%	360%	397%	477%	561%	573%	452%	583%	811%	1027%	863%	365%

80% Combination of Conditions A & B is met

Warrant No. 2 - Four Hour Vehicular Volume is met

Hourly percent of warrant

	7:00 - 8:00	8:00 - 9:00	9:00 - 10:00	10:00 - 11:00	11:00 - 12:00	12:00 - 13:00	13:00 - 14:00	14:00 - 15:00	15:00 - 16:00	16:00 - 17:00	17:00 - 18:00	18:00 - 19:00
Minor St.	365%	338%	373%	448%	526%	538%	424%	546%	760%	963%	809%	343%

Warrant No. 3 - Peak Hour is met

Percent of warrant			Percent of warrant		
Overall Peak Hour: 16:30 - 17:30			Higher Volume Side Street Peak Hour: 16:15 - 17:15		
Minor St.	777%		Minor St.	789%	

Warrant No. 4 - Pedestrian Volume. Pedestrian volume shown are minumum volumes assuming heavy major street traffic. If these volumes are met, warrant 4 requires further engineering analysis

Minimum 4 hour ped. volume crossing major street	Minimum peak hour ped. volume crossing major street
107	133

Number of pedestrians crossing major street

	7:00 - 8:00	8:00 - 9:00	9:00 - 10:00	10:00 - 11:00	11:00 - 12:00	12:00 - 13:00	13:00 - 14:00	14:00 - 15:00	15:00 - 16:00	16:00 - 17:00	17:00 - 18:00	18:00 - 19:00
Major St.	0	2	1	0	2	4	0	0	0	0	0	1

Warrant No. 7 - Crash Experience (Requires 3 criteria analysis by engineering)

Total Number: 0 From: 1/1/2005 to 1/1/2008
Accident Rate: 0.00 per million entering vehicles

Types of Accidents	No.	/	Avg.		No.	/	Avg.
Right Angle	0	/	0.0	Rear End	0	/	0.0
Lost Control	0	/	0.0	Side Swipe	0	/	0.0
Left Turn	0	/	0.0	Other	0	/	0.0

SOUTH CAROLINA DEPARTMENT OF TRANSPORTATION
DISTRICT 1
TRAFFIC ENGINEERING

County: Richland City: Columbia Date: 12/1/2016

Major Rt: Sunset Blvd * Not on State System Minor Rt: E. Hospital Dr-Harbor Dr Clear

Day of Week: Thursday Weather: Clear Office: Short Counts JMS

Type of Control: Signal Speed Limit (major st) 40

Direction of Minor Street: N-S Intersection ADT - 40930 (Calc)

Number of Lanes (major st)* 2 Number of Lanes (minor st)* 1

* Each Direction

INTERSECTION VOLUME SUMMARY

	From N E. Hospital Dr-Har				From S E. Hospital Dr-Har				From E Sunset Blvd				From W Sunset Blvd				Total	Total
	LT	STR	RT	TOT	LT	STR	RT	TOT	LT	STR	RT	TOT	LT	STR	RT	TOT	Vol	Peds
7:00 - 7:15	23	0	9	32	6	12	26	44	19	229	89	337	21	329	10	360	773	0
7:15 - 7:30	37	2	8	47	17	9	39	65	15	317	84	416	25	414	18	457	985	0
7:30 - 7:45	52	3	10	65	8	9	44	61	26	341	86	453	28	423	21	472	1051	0
7:45 - 8:00	39	2	6	47	13	9	57	79	26	347	89	462	17	430	19	466	1054	0
8:00 - 8:15	43	4	18	65	17	6	53	76	29	301	74	404	40	352	13	405	950	1
8:15 - 8:30	31	2	0	33	11	7	55	73	28	343	79	450	37	438	7	482	1038	0
8:30 - 8:45	31	3	18	52	12	6	29	47	23	279	98	400	30	339	17	386	885	0
8:45 - 9:00	38	1	17	56	5	5	27	37	23	273	70	366	31	333	18	382	841	0
9:00 - 9:15	44	4	13	61	13	4	17	34	29	234	65	328	23	287	16	326	749	0
9:15 - 9:30	41	4	21	66	10	3	30	43	20	247	67	334	34	304	18	356	799	0
9:30 - 9:45	30	7	16	53	16	4	27	47	15	247	71	333	35	290	12	337	770	0
9:45 - 10:00	56	6	31	93	18	2	32	52	23	247	72	342	19	292	16	327	814	0
10:00 - 10:15	51	2	28	81	0	5	0	5	17	223	55	295	25	283	15	323	704	4
10:15 - 10:30	54	1	13	68	13	6	21	40	18	260	74	352	31	298	17	346	806	2
10:30 - 10:45	48	2	30	80	16	11	44	71	21	277	50	348	26	286	21	333	832	0
10:45 - 11:00	48	8	27	83	10	3	17	30	20	259	71	350	36	304	18	358	821	3
11:00 - 11:15	54	4	34	92	13	5	26	44	18	291	55	364	19	318	16	353	853	2
11:15 - 11:30	40	7	26	73	14	3	20	37	18	256	63	337	13	303	15	331	778	2
11:30 - 11:45	71	2	44	117	17	5	24	46	27	278	42	347	21	340	17	378	888	1
11:45 - 12:00	78	1	40	119	12	8	25	45	23	254	58	335	13	344	17	374	873	2
12:00 - 12:15	76	1	31	108	18	3	27	48	20	297	48	365	20	353	16	389	910	0
12:15 - 12:30	61	6	22	89	23	7	28	58	14	309	68	391	27	347	22	396	934	7
12:30 - 12:45	65	2	28	95	16	4	22	42	28	330	64	422	18	346	14	378	937	0
12:45 - 13:00	47	4	21	72	14	5	23	42	35	342	69	446	29	295	19	343	903	0
13:00 - 13:15	36	4	25	65	13	5	28	46	23	342	73	438	34	297	23	354	903	0
13:15 - 13:30	44	4	37	85	14	6	16	36	22	330	75	427	31	315	10	356	904	0
13:30 - 13:45	68	2	33	103	12	9	29	50	12	330	57	399	26	288	16	330	882	0
13:45 - 14:00	50	1	27	78	16	8	24	48	30	348	75	453	21	283	16	320	899	6
14:00 - 14:15	61	4	34	99	16	5	34	55	20	356	72	448	16	332	14	362	964	0
14:15 - 14:30	68	4	34	106	6	3	30	39	27	321	52	400	26	269	23	318	863	1
14:30 - 14:45	69	3	40	112	17	5	27	49	19	331	53	403	20	308	15	343	907	0
14:45 - 15:00	75	3	28	106	22	2	30	54	17	329	55	401	26	321	14	361	922	0
15:00 - 15:15	81	6	28	115	11	1	35	47	34	336	53	423	10	340	12	362	947	1
15:15 - 15:30	84	0	27	111	13	3	25	41	36	321	65	422	16	324	9	349	923	0
15:30 - 15:45	81	2	28	111	18	3	33	54	28	357	48	433	9	358	19	386	984	0
15:45 - 16:00	75	5	35	115	23	4	28	55	26	345	38	409	17	339	18	374	953	0
16:00 - 16:15	72	14	31	117	14	4	36	54	17	342	41	400	9	335	12	356	927	1
16:15 - 16:30	74	9	38	121	16	2	28	46	23	379	43	445	18	348	14	380	992	0
16:30 - 16:45	81	3	33	117	9	1	28	38	25	347	39	411	12	368	15	395	961	0
16:45 - 17:00	70	8	33	111	8	3	41	52	33	402	38	473	10	380	19	409	1045	0
17:00 - 17:15	86	4	21	111	18	2	23	43	25	350	36	411	8	405	25	438	1003	0
17:15 - 17:30	72	9	20	101	16	3	23	42	43	379	30	452	11	426	22	459	1054	0
17:30 - 17:45	63	6	20	89	12	2	24	38	43	362	39	444	7	393	17	417	988	0
17:45 - 18:00	31	2	9	42	10	4	19	33	31	358	42	431	10	346	19	375	881	0
18:00 - 18:15	43	8	15	66	14	5	20	39	30	303	57	390	7	301	17	325	820	0
18:15 - 18:30	43	0	18	61	14	6	30	50	33	326	36	395	12	274	15	301	807	1
18:30 - 18:45	44	1	14	59	12	2	16	30	23	292	56	371	14	218	9	241	701	2
18:45 - 19:00	33	0	17	50	9	5	20	34	14	239	41	294	8	172	4	184	562	0
TOTAL	2662	180	1156	3998	645	234	1360	2239	1169	14906	2875	18950	996	15788	769	17553	42740	36
Trucks	19	4	19	42	19	2	55	76	47	493	16	556	14	500	21	535	1209	2.8%
School Buses	2	0	0	2	2	0	15	17	9	24	1	34	0	27	3	30	83	0.2%

TOTAL AND PEAK HOUR VOLUME DIAGRAMS

Sunset Blvd AT E. Hospital Dr-Harbor Dr Date: 12/1/2016

12.0 HOUR TOTAL VOLUME
FROM 7:00 TO 15:00

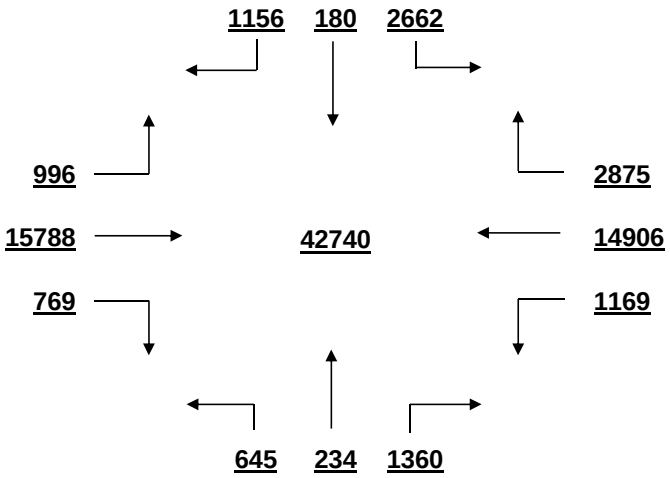

OVERALL PEAK HOUR VOLUME
FROM 7:30 TO 8:30

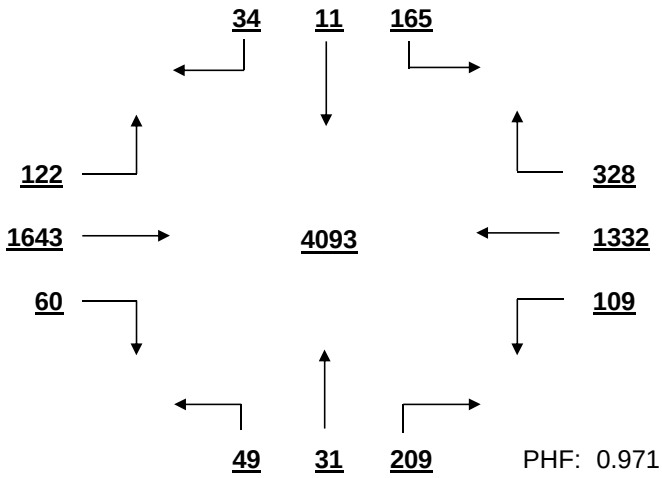

PHF: 0.971

AM PEAK HOUR VOLUME (0:00-10:45)
FROM 7:30 TO 8:30

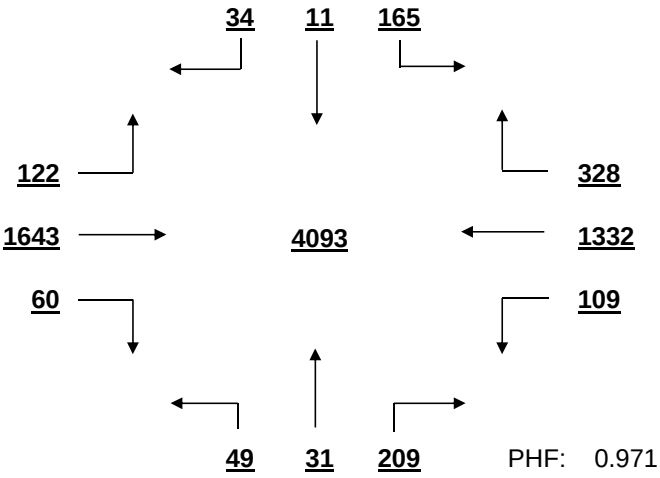

PHF: 0.971

PM PEAK HOUR VOLUME (14:15-23:45)
FROM 16:45 TO 17:45

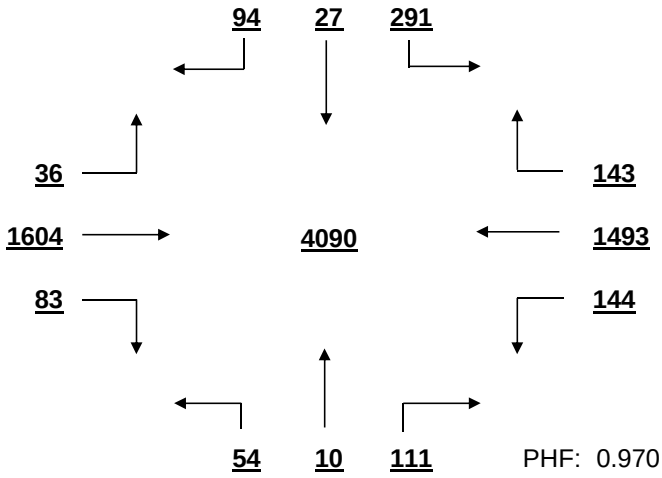

PHF: 0.970

MID-DAY PEAK HOUR VOLUME (11:00-14:00)
FROM 12:00 TO 13:00

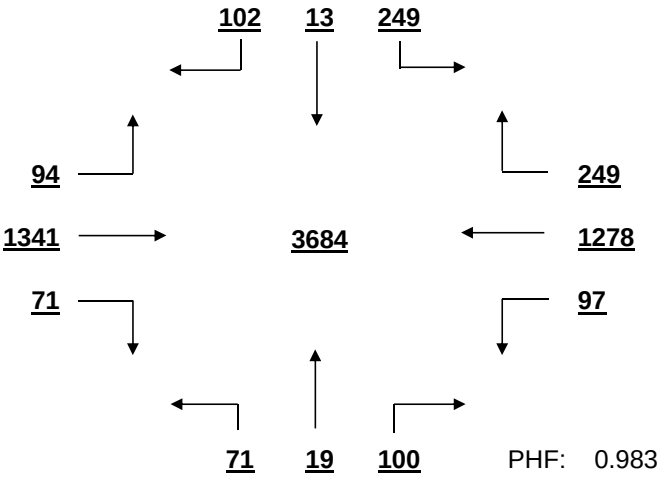

PHF: 0.983

OTHER HOUR VOLUME
FROM 7:00 TO 8:00

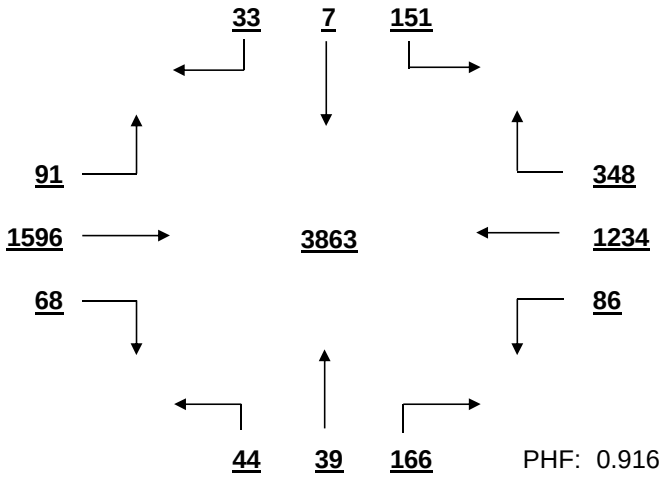

PHF: 0.916

SIGNAL WARRANT ANALYSIS

Sunset Blvd AT E. Hospital Dr-Harbor Dr Date: 12/1/2016

Minor Street Volume, percent of total = 14.6%
Percent of Left Turns from Minor Street = 53.0%
Percent of Right Turns from Minor Street = 40.3%
Percent of Minor Street Right Turns to Remove from Warrant Analysis = 0%
WARRANT BASIS = **100%**

Warrant No. 1 - Vehicular Volume is met

Condition A - Minimum Vehicular Volume is met

Average Major Street % of Warrant				Average Minor Street % of Warrant			
3041.9	/	600	= 507%	333.2	/	150	= 222%

Hourly percent of warrant

	7:00 - 8:00	8:00 - 9:00	9:00 - 10:00	10:00 - 11:00	11:00 - 12:00	12:00 - 13:00	13:00 - 14:00	14:00 - 15:00	15:00 - 16:00	16:00 - 17:00	17:00 - 18:00	18:00 - 19:00
Major St.	571%	546%	447%	451%	470%	522%	513%	506%	526%	545%	571%	417%
Minor St.	166%	155%	182%	208%	267%	243%	221%	282%	301%	311%	229%	157%

Condition B - Interruption to Continuous Traffic is met

Average Major Street % of Warrant				Average Minor Street % of Warrant			
3041.9	/	900	= 338%	333.2	/	75	= 444%

Hourly percent of warrant

	7:00 - 8:00	8:00 - 9:00	9:00 - 10:00	10:00 - 11:00	11:00 - 12:00	12:00 - 13:00	13:00 - 14:00	14:00 - 15:00	15:00 - 16:00	16:00 - 17:00	17:00 - 18:00	18:00 - 19:00
Major St.	380%	364%	298%	301%	313%	348%	342%	337%	351%	363%	381%	278%
Minor St.	332%	311%	364%	416%	535%	485%	441%	564%	603%	621%	457%	315%

80% Combination of Conditions A & B is met

Warrant No. 2 - Four Hour Vehicular Volume is met

Hourly percent of warrant

	7:00 - 8:00	8:00 - 9:00	9:00 - 10:00	10:00 - 11:00	11:00 - 12:00	12:00 - 13:00	13:00 - 14:00	14:00 - 15:00	15:00 - 16:00	16:00 - 17:00	17:00 - 18:00	18:00 - 19:00
Minor St.	311%	291%	341%	390%	501%	455%	414%	529%	565%	583%	429%	295%

Warrant No. 3 - Peak Hour is met

		Percent of warrant			Percent of warrant
Overall Peak Hour:	7:30 - 8:30		Higher Volume Side Street Peak Hour:	15:45 - 16:45	
Minor St.		289%	Minor St.		470%

Warrant No. 4 - Pedestrian Volume. Pedestrian volume shown are minumum volumes assuming heavy major street traffic. If these volumes are met, warrant 4 requires further engineering analysis

Minimum 4 hour ped. volume crossing major street: 107

Minimum peak hour ped. volume crossing major street: 133

Number of pedestrians crossing major street

	7:00 - 8:00	8:00 - 9:00	9:00 - 10:00	10:00 - 11:00	11:00 - 12:00	12:00 - 13:00	13:00 - 14:00	14:00 - 15:00	15:00 - 16:00	16:00 - 17:00	17:00 - 18:00	18:00 - 19:00
Major St.	0	0	0	5	4	4	3	0	0	0	0	1

Warrant No. 7 - Crash Experience (Requires 3 criteria analysis by engineering)

Total Number: 0 From: 1/1/2005 to 1/1/2008

Accident Rate: 0.00 per million entering vehicles

Types of Accidents	No.	/	Avg.		No.	/	Avg.
Right Angle	0	/	0.0	Rear End	0	/	0.0
Lost Control	0	/	0.0	Side Swipe	0	/	0.0
Left Turn	0	/	0.0	Other	0	/	0.0

SOUTH CAROLINA DEPARTMENT OF TRANSPORTATION
DISTRICT 1
TRAFFIC ENGINEERING

County: Richland City: Columbia Date: 12/1/2016

Major Rt: Sunset Blvd * Not on State System Minor Rt: McSwain Dr-Chris Dr Clear

Day of Week: Thursday Weather: Clear Office: Short Counts JMS

Type of Control: Signal Speed Limit (major st) 40

Direction of Minor Street: N-S Intersection ADT - 34870 (Calc)

Number of Lanes (major st)* 2 Number of Lanes (minor st)* 1

* Each Direction

INTERSECTION VOLUME SUMMARY

	From N McSwain Dr-Chris D				From S McSwain Dr-Chris D				From E Sunset Blvd				From W Sunset Blvd				Total	Total
	LT	STR	RT	TOT	LT	STR	RT	TOT	LT	STR	RT	TOT	LT	STR	RT	TOT	Vol	Peds
7:00 - 7:15	12	7	23	42	42	2	13	57	15	146	3	164	13	280	24	317	580	2
7:15 - 7:30	6	7	21	34	30	3	12	45	13	220	2	235	18	350	0	368	682	0
7:30 - 7:45	13	2	28	43	48	4	21	73	20	250	7	277	14	416	42	472	865	1
7:45 - 8:00	9	3	22	34	45	6	19	70	14	264	6	284	31	0	49	80	468	0
8:00 - 8:15	7	4	14	25	41	8	16	65	17	218	4	239	33	371	35	439	768	1
8:15 - 8:30	7	6	0	13	53	3	13	69	8	246	8	262	28	372	52	452	796	0
8:30 - 8:45	5	1	32	38	39	3	17	59	5	210	6	221	37	320	44	401	719	3
8:45 - 9:00	5	0	26	31	46	4	15	65	13	168	9	190	22	297	48	367	653	1
9:00 - 9:15	5	3	19	27	41	2	11	54	9	176	4	189	25	239	39	303	573	2
9:15 - 9:30	5	3	18	26	49	6	18	73	15	183	4	202	14	250	36	300	601	0
9:30 - 9:45	9	5	15	29	43	2	14	59	11	234	5	250	10	244	36	290	628	0
9:45 - 10:00	2	2	10	14	48	2	12	62	13	188	5	206	18	269	29	316	598	3
10:00 - 10:15	4	6	12	22	0	5	0	5	14	192	8	214	16	214	30	260	501	0
10:15 - 10:30	8	3	14	25	45	1	11	57	12	211	10	233	22	258	44	324	639	0
10:30 - 10:45	12	5	20	37	66	8	16	90	17	229	8	254	20	241	27	288	669	1
10:45 - 11:00	12	3	19	34	40	4	20	64	9	212	7	228	12	255	33	300	626	2
11:00 - 11:15	14	5	44	63	30	3	23	56	10	213	3	226	14	258	34	306	651	1
11:15 - 11:30	8	4	22	34	29	1	24	54	14	272	6	292	18	299	36	353	733	1
11:30 - 11:45	7	6	15	28	42	4	20	66	6	269	5	280	19	313	36	368	742	0
11:45 - 12:00	14	3	21	38	47	4	19	70	14	239	2	255	20	312	40	372	735	1
12:00 - 12:15	8	3	19	30	45	4	21	70	14	296	6	316	26	358	38	422	838	3
12:15 - 12:30	9	2	17	28	37	6	15	58	13	292	7	312	20	0	28	48	446	0
12:30 - 12:45	14	6	15	35	56	1	31	88	18	348	5	371	25	359	30	414	908	2
12:45 - 13:00	7	7	20	34	58	6	38	102	18	345	6	369	19	295	41	355	860	7
13:00 - 13:15	6	4	16	26	49	4	25	78	32	313	5	350	24	288	42	354	808	1
13:15 - 13:30	6	3	17	26	47	5	19	71	20	337	11	368	25	281	41	347	812	2
13:30 - 13:45	3	9	18	30	44	1	13	58	22	322	15	359	24	252	35	311	758	3
13:45 - 14:00	8	2	19	29	49	6	14	69	16	320	13	349	27	253	32	312	759	0
14:00 - 14:15	6	2	22	30	44	6	17	67	17	298	6	321	19	297	39	355	773	0
14:15 - 14:30	6	2	19	27	38	2	13	53	18	305	5	328	27	263	0	290	698	1
14:30 - 14:45	3	4	16	23	37	5	17	59	16	300	3	319	21	249	41	311	712	0
14:45 - 15:00	7	7	18	32	46	3	30	79	22	339	4	365	20	287	31	338	814	3
15:00 - 15:15	9	5	33	47	40	4	9	53	12	322	9	343	20	287	35	342	785	0
15:15 - 15:30	11	0	15	26	39	5	23	67	18	305	7	330	23	300	29	352	775	0
15:30 - 15:45	11	3	20	34	36	5	14	55	12	340	8	360	24	320	33	377	826	1
15:45 - 16:00	6	3	21	30	38	9	20	67	16	322	8	346	18	332	27	377	820	1
16:00 - 16:15	9	4	35	48	43	2	16	61	13	363	5	381	25	267	34	326	816	1
16:15 - 16:30	12	4	31	47	31	4	15	50	13	354	3	370	16	312	26	354	821	3
16:30 - 16:45	2	3	22	27	55	4	32	91	16	356	10	382	17	291	31	339	839	0
16:45 - 17:00	7	6	29	42	35	1	18	54	18	366	9	393	20	330	32	382	871	0
17:00 - 17:15	12	8	38	58	60	4	23	87	15	368	7	390	31	308	23	362	897	2
17:15 - 17:30	13	5	21	39	35	5	24	64	20	360	8	388	24	333	32	389	880	6
17:30 - 17:45	8	3	19	30	36	0	26	62	17	333	5	355	10	307	28	345	792	1
17:45 - 18:00	4	8	18	30	29	1	20	50	15	302	7	324	17	321	21	359	763	1
18:00 - 18:15	3	2	17	22	45	3	20	68	11	310	8	329	18	290	25	333	752	0
18:15 - 18:30	6	0	11	17	18	3	19	40	16	295	4	315	17	273	13	303	675	3
18:30 - 18:45	3	3	13	19	29	6	11	46	15	263	3	281	12	221	16	249	595	6
18:45 - 19:00	7	0	8	15	21	0	16	37	12	230	7	249	15	198	17	230	531	11
TOTAL	370	186	962	1518	1964	180	873	3017	714	13344	306	14364	988	13430	1534	15952	34851	77
Trucks	3	1	14	18	105	1	23	129	11	278	5	294	9	252	125	386	827	2.4%
School Buses	0	1	1	2	0	1	1	2	0	22	2	24	0	25	3	28	56	0.2%

TOTAL AND PEAK HOUR VOLUME DIAGRAMS

Sunset Blvd AT McSwain Dr-Chris Dr Date: 12/1/2016

12.0 HOUR TOTAL VOLUME
FROM 7:00 TO 15:00

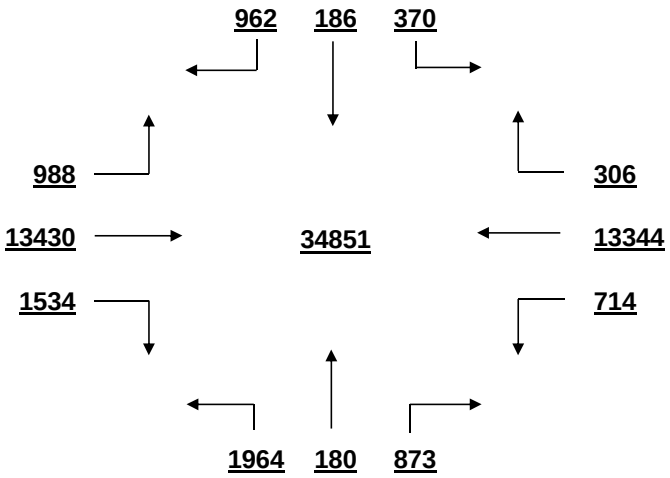

OVERALL PEAK HOUR VOLUME
FROM 16:30 TO 17:30

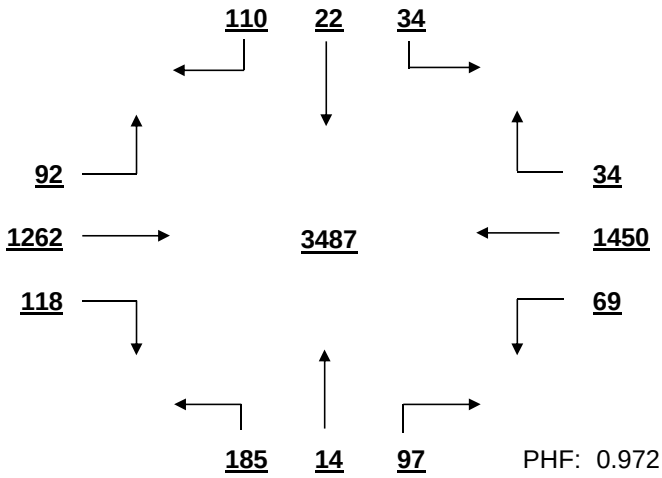

PHF: 0.972

AM PEAK HOUR VOLUME (0:00-10:45)
FROM 8:00 TO 9:00

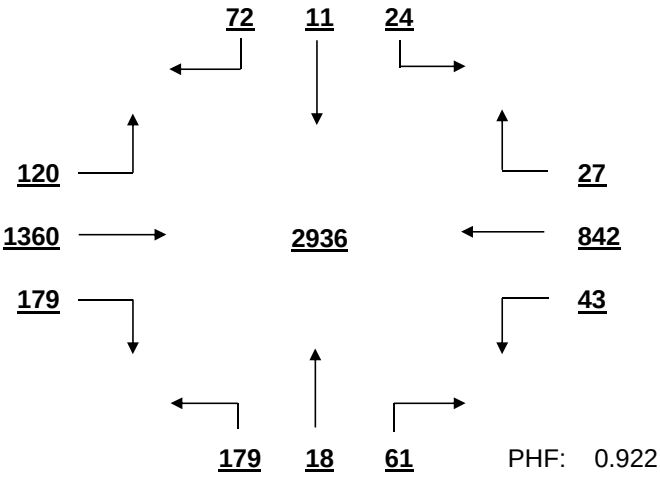

PHF: 0.922

PM PEAK HOUR VOLUME (14:15-23:45)
FROM 16:30 TO 17:30

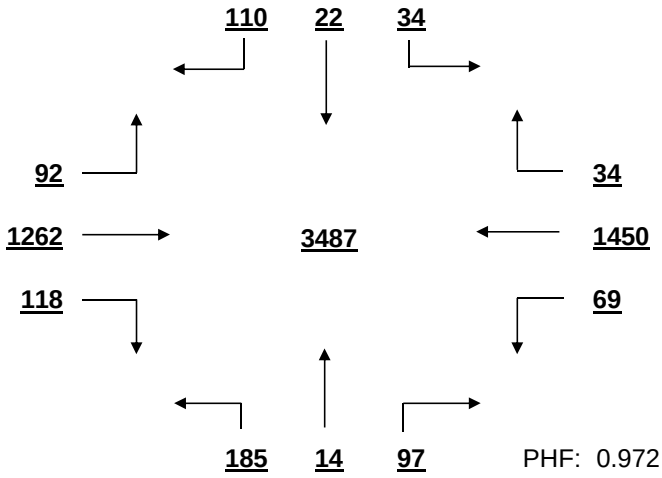

PHF: 0.972

MID-DAY PEAK HOUR VOLUME (11:00-14:00)
FROM 12:30 TO 13:30

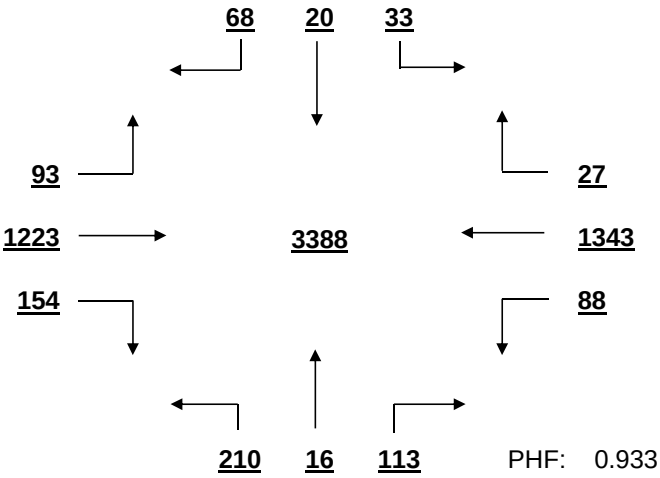

PHF: 0.933

OTHER HOUR VOLUME
FROM 7:00 TO 8:00

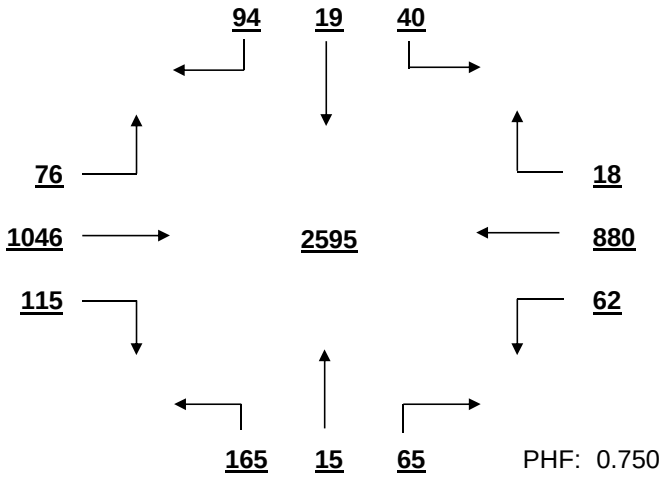

PHF: 0.750

SIGNAL WARRANT ANALYSIS

Sunset Blvd AT McSwain Dr-Chris Dr Date: 12/1/2016

Minor Street Volume, percent of total = 13.0%
Percent of Left Turns from Minor Street = 51.5%
Percent of Right Turns from Minor Street = 40.5%
Percent of Minor Street Right Turns to Remove from Warrant Analysis = 0%
WARRANT BASIS = **100%**

Warrant No. 1 - Vehicular Volume is met

Condition A - Minimum Vehicular Volume is met

Average Major Street % of Warrant				Average Minor Street % of Warrant			
2526.3	/	600 =	421%	251.4	/	150 =	168%

Hourly percent of warrant

	7:00 - 8:00	8:00 - 9:00	9:00 - 10:00	10:00 - 11:00	11:00 - 12:00	12:00 - 13:00	13:00 - 14:00	14:00 - 15:00	15:00 - 16:00	16:00 - 17:00	17:00 - 18:00	18:00 - 19:00
Major St.	366%	429%	343%	350%	409%	435%	458%	438%	471%	488%	485%	382%
Minor St.	163%	172%	165%	144%	164%	212%	184%	172%	161%	171%	175%	127%

Condition B - Interruption to Continuous Traffic is met

Average Major Street % of Warrant				Average Minor Street % of Warrant			
2526.3	/	900 =	281%	251.4	/	75 =	335%

Hourly percent of warrant

	7:00 - 8:00	8:00 - 9:00	9:00 - 10:00	10:00 - 11:00	11:00 - 12:00	12:00 - 13:00	13:00 - 14:00	14:00 - 15:00	15:00 - 16:00	16:00 - 17:00	17:00 - 18:00	18:00 - 19:00
Major St.	244%	286%	228%	233%	272%	290%	306%	292%	314%	325%	324%	254%
Minor St.	327%	344%	331%	288%	328%	424%	368%	344%	323%	341%	351%	255%

80% Combination of Conditions A & B is met

Warrant No. 2 - Four Hour Vehicular Volume is met

Hourly percent of warrant

	7:00 - 8:00	8:00 - 9:00	9:00 - 10:00	10:00 - 11:00	11:00 - 12:00	12:00 - 13:00	13:00 - 14:00	14:00 - 15:00	15:00 - 16:00	16:00 - 17:00	17:00 - 18:00	18:00 - 19:00
Minor St.	306%	323%	310%	270%	308%	398%	345%	323%	303%	320%	329%	239%

Warrant No. 3 - Peak Hour is met

Percent of warrant			Percent of warrant		
Overall Peak Hour: 16:30 - 17:30			Higher Volume Side Street Peak Hour: 12:30 - 13:30		
Minor St.	296%		Minor St.	339%	

Warrant No. 4 - Pedestrian Volume. Pedestrian volume shown are minumum volumes assuming heavy major street traffic. If these volumes are met, warrant 4 requires further engineering analysis

Minimum 4 hour ped. volume crossing major street	Minimum peak hour ped. volume crossing major street
107	133

Number of pedestrians crossing major street

	7:00 - 8:00	8:00 - 9:00	9:00 - 10:00	10:00 - 11:00	11:00 - 12:00	12:00 - 13:00	13:00 - 14:00	14:00 - 15:00	15:00 - 16:00	16:00 - 17:00	17:00 - 18:00	18:00 - 19:00
Major St.	1	3	3	1	0	4	2	1	0	0	5	6

Warrant No. 7 - Crash Experience (Requires 3 criteria analysis by engineering)

Total Number: 0 From: 1/1/2005 to 1/1/2008
Accident Rate: 0.00 per million entering vehicles

Types of Accidents	No.	/	Avg.		No.	/	Avg.
Right Angle	0	/	0.0	Rear End	0	/	0.0
Lost Control	0	/	0.0	Side Swipe	0	/	0.0
Left Turn	0	/	0.0	Other	0	/	0.0

SOUTH CAROLINA DEPARTMENT OF TRANSPORTATION
DISTRICT 1
TRAFFIC ENGINEERING

County: Richland City: Columbia Date: 12/1/2016

Major Rt: Sunset Blvd * Not on State System Minor Rt: Whippoorwill Dr-Kleckley Dr Clear

Day of Week: Thursday Weather: Clear Office: Short Counts JMS

Type of Control: Signal Speed Limit (major st) 40

Direction of Minor Street: N-S Intersection ADT - 30760 (Calc)

Number of Lanes (major st)* 2 Number of Lanes (minor st)* 1

* Each Direction

INTERSECTION VOLUME SUMMARY

	From N Whippoorwill Dr-Kl				From S Whippoorwill Dr-Kl				From E Sunset Blvd				From W Sunset Blvd				Total	Total
	LT	STR	RT	TOT	LT	STR	RT	TOT	LT	STR	RT	TOT	LT	STR	RT	TOT	Vol	Peds
7:00 - 7:15	5	0	23	28	0	0	0	0	0	140	0	140	11	285	0	296	464	1
7:15 - 7:30	6	0	25	31	0	0	1	1	1	191	4	196	4	342	0	346	574	2
7:30 - 7:45	13	0	28	41	1	0	0	1	1	232	6	239	11	405	0	416	697	0
7:45 - 8:00	9	0	23	32	0	0	0	0	1	283	6	290	10	0	2	12	334	0
8:00 - 8:15	4	0	24	28	3	0	1	4	1	223	3	227	12	390	1	403	662	0
8:15 - 8:30	11	0	0	11	5	0	1	6	1	224	6	231	5	366	2	373	621	0
8:30 - 8:45	10	0	6	16	1	0	1	2	2	227	5	234	13	301	1	315	567	0
8:45 - 9:00	7	0	13	20	1	0	4	5	2	168	6	176	15	300	1	316	517	2
9:00 - 9:15	8	0	14	22	5	0	2	7	2	182	2	186	9	228	2	239	454	0
9:15 - 9:30	13	0	17	30	5	0	2	7	1	187	4	192	16	242	2	260	489	0
9:30 - 9:45	3	1	22	26	9	0	3	12	2	205	6	213	9	268	0	277	528	0
9:45 - 10:00	10	2	22	34	3	0	1	4	3	180	8	191	11	258	1	270	499	3
10:00 - 10:15	12	1	19	32	0	1	0	1	7	176	8	191	14	206	2	222	446	0
10:15 - 10:30	5	1	20	26	6	0	2	8	1	189	7	197	13	257	1	271	502	0
10:30 - 10:45	10	0	26	36	4	0	3	7	1	224	3	228	20	239	0	259	530	2
10:45 - 11:00	7	1	15	23	5	0	3	8	9	202	4	215	22	268	3	293	539	3
11:00 - 11:15	12	2	15	29	9	0	12	21	1	226	6	233	14	271	2	287	570	0
11:15 - 11:30	9	0	20	29	7	1	10	18	3	260	12	275	22	278	0	300	622	0
11:30 - 11:45	10	2	23	35	10	1	4	15	4	238	9	251	21	311	1	333	634	2
11:45 - 12:00	6	3	31	40	3	1	1	5	0	208	10	218	25	302	1	328	591	0
12:00 - 12:15	12	1	27	40	6	4	5	15	3	261	10	274	38	329	1	368	697	2
12:15 - 12:30	17	0	30	47	2	1	4	7	4	293	7	304	27	0	3	30	388	0
12:30 - 12:45	21	0	27	48	5	2	8	15	3	333	10	346	36	359	2	397	806	0
12:45 - 13:00	21	1	37	59	9	2	6	17	5	313	15	333	25	291	0	316	725	0
13:00 - 13:15	18	0	31	49	8	2	3	13	3	315	11	329	28	287	0	315	706	0
13:15 - 13:30	14	0	29	43	6	1	7	14	4	306	10	320	25	269	2	296	673	1
13:30 - 13:45	25	3	44	72	9	1	8	18	2	313	15	330	21	236	3	260	680	0
13:45 - 14:00	14	5	28	47	7	2	5	14	6	309	19	334	15	236	2	253	648	0
14:00 - 14:15	21	0	37	58	7	1	8	16	5	294	10	309	20	280	3	303	686	2
14:15 - 14:30	7	0	16	23	6	4	3	13	4	277	19	300	25	245	0	270	606	2
14:30 - 14:45	16	0	26	42	2	0	7	9	3	290	8	301	21	232	0	253	605	0
14:45 - 15:00	10	1	44	55	5	2	10	17	6	280	9	295	22	283	0	305	672	2
15:00 - 15:15	10	0	19	29	5	1	3	9	2	342	13	357	28	267	0	295	690	2
15:15 - 15:30	12	0	19	31	7	4	6	17	2	288	14	304	26	299	2	327	679	1
15:30 - 15:45	10	0	25	35	3	0	7	10	7	339	14	360	15	308	1	324	729	2
15:45 - 16:00	9	1	31	41	7	1	5	13	5	294	12	311	29	322	0	351	716	1
16:00 - 16:15	18	1	23	42	6	4	8	18	7	358	12	377	21	259	2	282	719	0
16:15 - 16:30	13	0	24	37	5	1	7	13	4	321	9	334	33	290	0	323	707	1
16:30 - 16:45	8	0	27	35	5	0	5	10	8	342	9	359	28	288	1	317	721	4
16:45 - 17:00	18	1	28	47	12	3	10	25	5	352	12	369	32	317	1	350	791	0
17:00 - 17:15	13	1	18	32	6	1	12	19	7	355	12	374	24	328	1	353	778	3
17:15 - 17:30	15	1	17	33	11	2	7	20	3	364	12	379	25	319	2	346	778	0
17:30 - 17:45	12	2	19	33	7	3	4	14	5	326	15	346	36	300	0	336	729	1
17:45 - 18:00	16	2	26	44	3	3	4	10	4	286	11	301	22	314	3	339	694	2
18:00 - 18:15	10	2	13	25	9	4	8	21	8	302	15	325	26	295	0	321	692	4
18:15 - 18:30	11	0	22	33	7	2	7	16	4	289	5	298	25	253	0	278	625	1
18:30 - 18:45	9	3	18	30	11	0	3	14	5	257	12	274	16	229	2	247	565	1
18:45 - 19:00	4	1	12	17	2	1	2	5	2	218	15	235	19	185	1	205	462	3
TOTAL	554	39	1103	1696	255	56	223	534	169	12782	450	13401	985	13137	54	14176	29807	50
Trucks	3	0	16	19	0	0	3	3	1	270	7	278	12	259	1	272	572	1.9%
School Buses	0	0	2	2	0	0	0	0	0	60	1	61	2	51	0	53	116	0.4%

TOTAL AND PEAK HOUR VOLUME DIAGRAMS

Sunset Blvd AT Whippoorwill Dr-Kleckley Dr Date: 12/1/2016

12.0 HOUR TOTAL VOLUME
FROM 7:00 TO 15:00

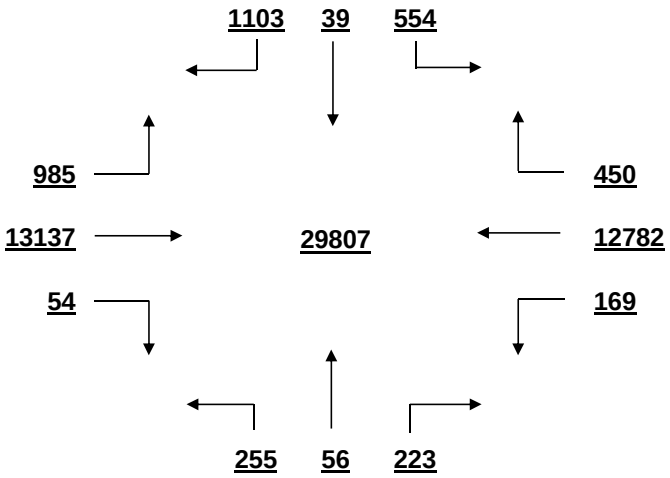

OVERALL PEAK HOUR VOLUME
FROM 16:45 TO 17:45

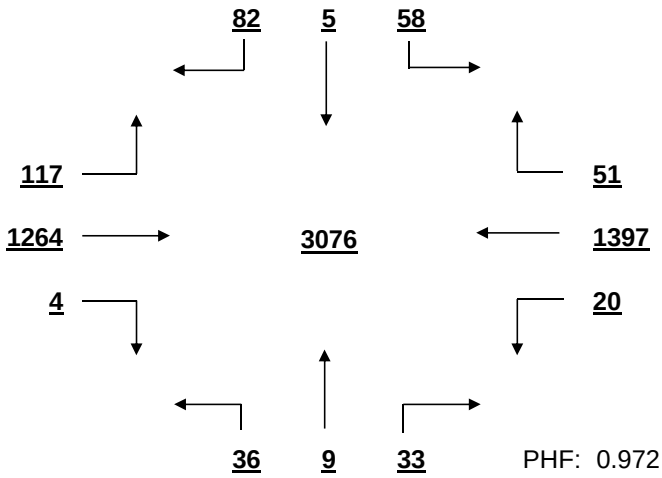

PHF: 0.972

AM PEAK HOUR VOLUME (0:00-10:45)
FROM 8:00 TO 9:00

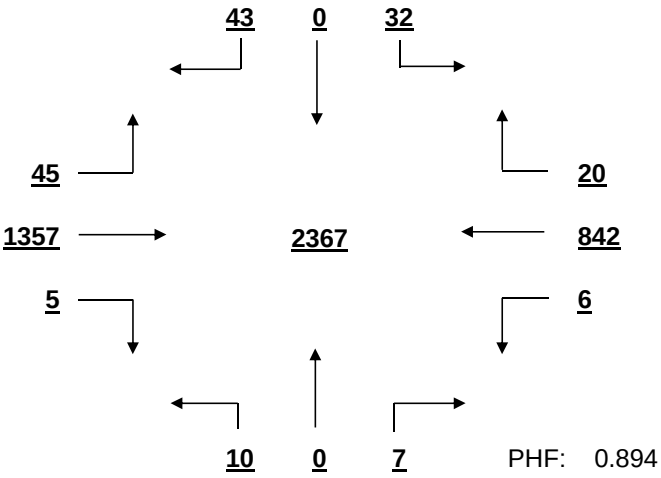

PHF: 0.894

PM PEAK HOUR VOLUME (14:15-23:45)
FROM 16:45 TO 17:45

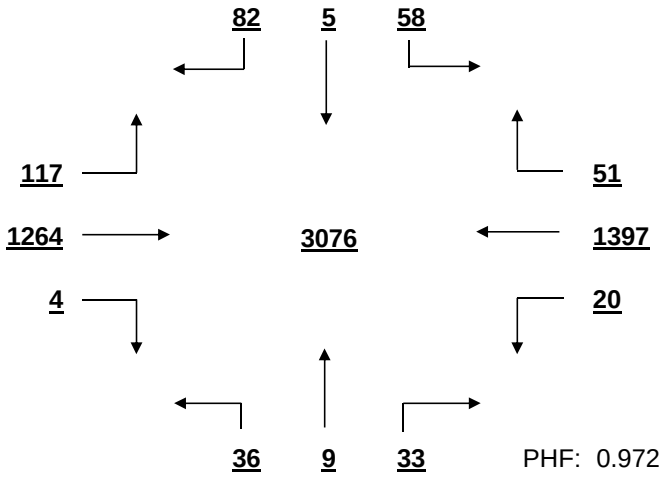

PHF: 0.972

MID-DAY PEAK HOUR VOLUME (11:00-14:00)
FROM 12:30 TO 13:30

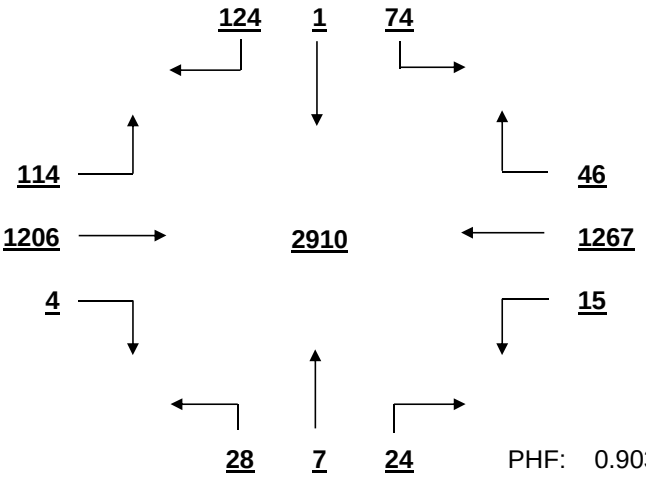

PHF: 0.903

OTHER HOUR VOLUME
FROM 7:00 TO 8:00

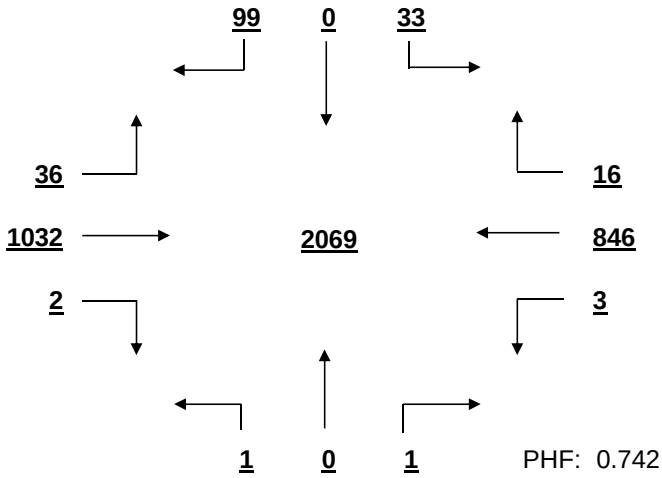

PHF: 0.742

SIGNAL WARRANT ANALYSIS

Sunset Blvd AT Whippoorwill Dr-Kleckley Dr Date: 12/1/2016

Minor Street Volume, percent of total = 7.5%
Percent of Left Turns from Minor Street = 36.3%
Percent of Right Turns from Minor Street = 59.5%
Percent of Minor Street Right Turns to Remove from Warrant Analysis = 0%
WARRANT BASIS = **100%**

Warrant No. 1 - Vehicular Volume is met

Condition A - Minimum Vehicular Volume is not met

Average Major Street % of Warrant	Average Minor Street % of Warrant
2298.1 / 600 = 383%	141.3 / 150 = 94%

Hourly percent of warrant

	7:00 - 8:00	8:00 - 9:00	9:00 - 10:00	10:00 - 11:00	11:00 - 12:00	12:00 - 13:00	13:00 - 14:00	14:00 - 15:00	15:00 - 16:00	16:00 - 17:00	17:00 - 18:00	18:00 - 19:00
Major St.	323%	379%	305%	313%	371%	395%	406%	389%	438%	452%	462%	364%
Minor St.	88%	50%	75%	78%	89%	129%	141%	119%	91%	107%	95%	70%

Condition B - Interruption to Continuous Traffic is met

Average Major Street % of Warrant	Average Minor Street % of Warrant
2298.1 / 900 = 255%	141.3 / 75 = 188%

Hourly percent of warrant

	7:00 - 8:00	8:00 - 9:00	9:00 - 10:00	10:00 - 11:00	11:00 - 12:00	12:00 - 13:00	13:00 - 14:00	14:00 - 15:00	15:00 - 16:00	16:00 - 17:00	17:00 - 18:00	18:00 - 19:00
Major St.	215%	253%	203%	208%	247%	263%	271%	260%	292%	301%	308%	243%
Minor St.	176%	100%	149%	156%	177%	259%	281%	237%	181%	215%	189%	140%

80% Combination of Conditions A & B is met

Warrant No. 2 - Four Hour Vehicular Volume is met

Hourly percent of warrant

	7:00 - 8:00	8:00 - 9:00	9:00 - 10:00	10:00 - 11:00	11:00 - 12:00	12:00 - 13:00	13:00 - 14:00	14:00 - 15:00	15:00 - 16:00	16:00 - 17:00	17:00 - 18:00	18:00 - 19:00
Minor St.	165%	94%	140%	146%	166%	243%	264%	223%	170%	201%	178%	131%

Warrant No. 3 - Peak Hour is met

Percent of warrant		Percent of warrant	
Overall Peak Hour: 16:45 - 17:45		Higher Volume Side Street Peak Hour: 12:45 - 13:45	
Minor St.	145%	Minor St.	223%

Warrant No. 4 - Pedestrian Volume. Pedestrian volume shown are minumum volumes assuming heavy major street traffic. If these volumes are met, warrant 4 requires further engineering analysis

Minimum 4 hour ped. volume crossing major street: 107

Minimum peak hour ped. volume crossing major street: 133

Number of pedestrians crossing major street

	7:00 - 8:00	8:00 - 9:00	9:00 - 10:00	10:00 - 11:00	11:00 - 12:00	12:00 - 13:00	13:00 - 14:00	14:00 - 15:00	15:00 - 16:00	16:00 - 17:00	17:00 - 18:00	18:00 - 19:00
Major St.	0	1	0	1	0	1	0	1	0	1	0	1

Warrant No. 7 - Crash Experience (Requires 3 criteria analysis by engineering)

Total Number: 0 From: 1/1/2005 to 1/1/2008

Accident Rate: 0.00 per million entering vehicles

Types of Accidents	No.	/	Avg.		No.	/	Avg.
Right Angle	0	/	0.0	Rear End	0	/	0.0
Lost Control	0	/	0.0	Side Swipe	0	/	0.0
Left Turn	0	/	0.0	Other	0	/	0.0

SOUTH CAROLINA DEPARTMENT OF TRANSPORTATION
DISTRICT 1
TRAFFIC ENGINEERING

County: Richland City: Columbia Date: 12/1/2016

Major Rt: Broad River Rd * Not on State System Minor Rt: Marley Dr-Menlo (Briarsgate) Dr

Day of Week: Thursday Weather: Clear Office: Short Counts JMS

Type of Control: Signal Speed Limit (major st) 40

Direction of Minor Street: E-W Intersection ADT - 34950 (Calc)

Number of Lanes (major st)* 2 Number of Lanes (minor st)* 1

* Each Direction

INTERSECTION VOLUME SUMMARY

	From N Broad River Rd				From S Broad River Rd				From E Marley Dr-Menlo (B				From W Marley Dr-Menlo (B				Total	Total
	LT	STR	RT	TOT	LT	STR	RT	TOT	LT	STR	RT	TOT	LT	STR	RT	TOT	Vol	Peds
7:00 - 7:15	6	344	8	358	5	246	4	255	7	0	8	15	12	0	11	23	651	4
7:15 - 7:30	4	454	10	468	9	299	4	312	10	0	7	17	22	1	0	23	820	0
7:30 - 7:45	11	352	5	368	14	312	4	330	13	0	6	19	14	2	31	47	764	0
7:45 - 8:00	11	328	4	343	21	359	2	382	16	0	10	26	21	0	24	45	796	3
8:00 - 8:15	9	348	12	369	11	254	4	269	13	0	7	20	12	1	19	32	690	4
8:15 - 8:30	8	371	0	379	8	296	9	313	15	0	5	20	13	1	10	24	736	1
8:30 - 8:45	9	359	10	378	9	244	7	260	8	3	4	15	15	4	27	46	699	2
8:45 - 9:00	12	328	12	352	14	263	8	285	10	0	11	21	12	1	21	34	692	3
9:00 - 9:15	11	245	6	262	8	224	5	237	10	0	6	16	14	0	16	30	545	3
9:15 - 9:30	15	234	13	262	6	248	4	258	7	0	6	13	13	1	18	32	565	0
9:30 - 9:45	15	223	13	251	5	218	2	225	8	1	8	17	14	1	10	25	518	6
9:45 - 10:00	18	240	6	264	4	245	3	252	5	0	6	11	15	2	7	24	551	4
10:00 - 10:15	9	230	7	246	0	237	0	237	10	1	10	21	13	0	7	20	524	2
10:15 - 10:30	14	229	14	257	9	244	4	257	8	1	10	19	21	1	15	37	570	3
10:30 - 10:45	10	243	17	270	4	236	6	246	8	0	5	13	17	1	13	31	560	2
10:45 - 11:00	13	245	18	276	8	258	10	276	11	1	10	22	16	3	8	27	601	0
11:00 - 11:15	7	268	10	285	5	243	6	254	13	0	7	20	16	2	6	24	583	3
11:15 - 11:30	7	224	6	237	6	246	2	254	9	2	6	17	27	4	11	42	550	1
11:30 - 11:45	8	291	9	308	13	240	9	262	7	3	11	21	27	1	18	46	637	1
11:45 - 12:00	10	278	7	295	6	273	5	284	10	1	5	16	13	0	13	26	621	2
12:00 - 12:15	7	269	14	290	9	277	12	298	21	2	6	29	20	0	14	34	651	2
12:15 - 12:30	18	308	9	335	13	301	4	318	9	0	8	17	21	0	13	34	704	1
12:30 - 12:45	9	266	19	294	10	282	8	300	17	0	8	25	13	3	15	31	650	3
12:45 - 13:00	8	275	15	298	6	307	9	322	10	1	10	21	19	1	22	42	683	0
13:00 - 13:15	8	258	15	281	8	283	9	300	14	2	10	26	16	4	15	35	642	0
13:15 - 13:30	9	300	13	322	15	338	6	359	12	1	10	23	24	1	21	46	750	3
13:30 - 13:45	15	307	17	339	12	346	5	363	10	1	8	19	21	1	11	33	754	3
13:45 - 14:00	11	304	5	320	8	300	7	315	13	1	11	25	20	0	11	31	691	3
14:00 - 14:15	2	324	20	346	14	314	7	335	8	0	6	14	14	0	11	25	720	7
14:15 - 14:30	14	295	13	322	6	312	13	331	13	0	7	20	20	1	0	21	694	2
14:30 - 14:45	8	322	17	347	14	344	13	371	16	0	14	30	21	0	14	35	783	0
14:45 - 15:00	19	284	20	323	15	361	10	386	19	2	10	31	22	2	18	42	782	6
15:00 - 15:15	8	315	11	334	8	322	8	338	15	0	15	30	16	0	9	25	727	5
15:15 - 15:30	17	0	14	31	10	315	15	340	14	4	18	36	14	1	23	38	445	5
15:30 - 15:45	11	326	12	349	19	341	7	367	40	0	16	56	16	3	16	35	807	1
15:45 - 16:00	11	283	11	305	8	379	12	399	22	2	11	35	11	2	14	27	766	2
16:00 - 16:15	11	334	14	359	12	399	12	423	19	1	13	33	22	0	8	30	845	1
16:15 - 16:30	8	320	9	337	18	436	15	469	19	1	8	28	20	0	13	33	867	1
16:30 - 16:45	8	319	15	342	13	446	12	471	44	1	10	55	17	1	16	34	902	3
16:45 - 17:00	12	301	15	328	11	424	16	451	22	0	9	31	16	0	14	30	840	3
17:00 - 17:15	7	285	5	297	12	492	14	518	26	1	8	35	17	0	13	30	880	6
17:15 - 17:30	12	322	15	349	14	435	16	465	15	0	7	22	22	0	15	37	873	4
17:30 - 17:45	10	276	4	290	12	499	8	519	27	1	14	42	20	1	12	33	884	2
17:45 - 18:00	12	291	12	315	13	461	12	486	12	0	12	24	17	1	9	27	852	1
18:00 - 18:15	10	283	5	298	18	446	12	476	27	0	18	45	20	1	14	35	854	1
18:15 - 18:30	9	0	14	23	14	504	10	528	12	2	7	21	13	0	11	24	596	0
18:30 - 18:45	13	243	10	266	10	385	8	403	28	0	21	49	9	1	11	21	739	7
18:45 - 19:00	9	228	7	244	4	172	4	180	15	0	7	22	11	3	7	21	467	1
TOTAL	503	13472	537	14512	491	15406	382	16279	717	36	450	1203	819	53	655	1527	33521	117
Trucks	5	198	7	210	13	172	3	188	7	3	2	12	12	0	14	26	436	1.3%
School Buses	2	86	4	92	2	68	3	73	1	0	5	6	2	4	3	9	180	0.5%

TOTAL AND PEAK HOUR VOLUME DIAGRAMS

Broad River Rd AT Marley Dr-Menlo (Briarsgate) Dr Date: 12/1/2016

12.0 HOUR TOTAL VOLUME
FROM 7:00 TO 15:00

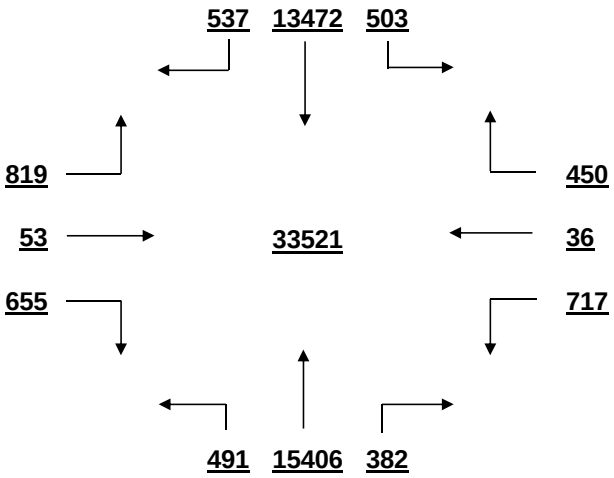

OVERALL PEAK HOUR VOLUME
FROM 16:30 TO 17:30

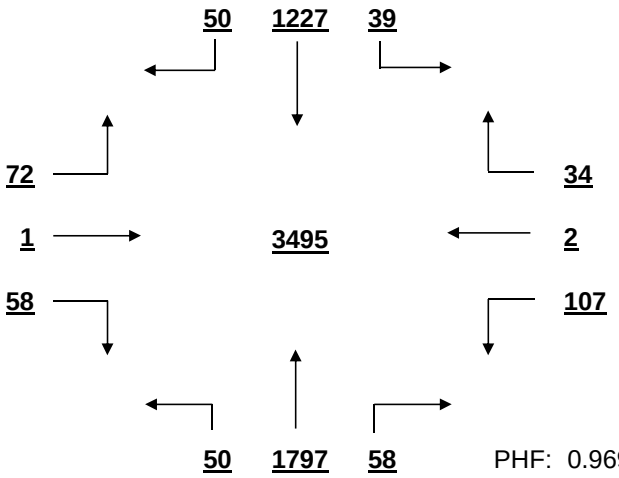

PHF: 0.969

AM PEAK HOUR VOLUME (0:00-10:45)
FROM 7:15 TO 8:15

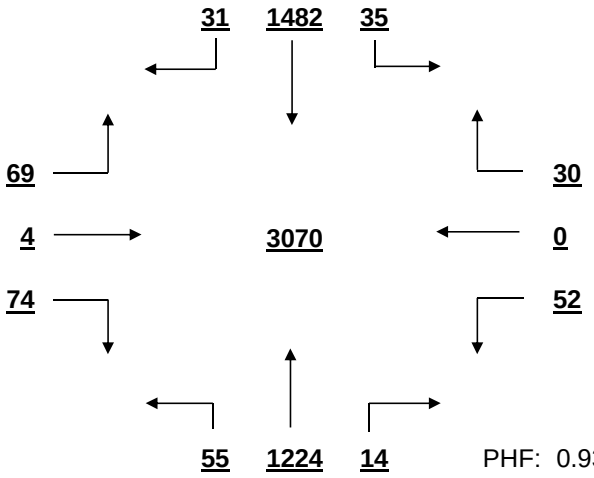

PHF: 0.936

PM PEAK HOUR VOLUME (14:15-23:45)
FROM 16:30 TO 17:30

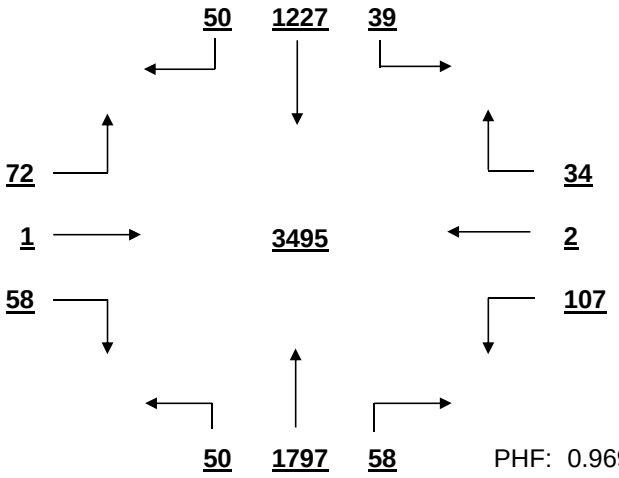

PHF: 0.969

MID-DAY PEAK HOUR VOLUME (11:00-14:00)
FROM 13:00 TO 14:00

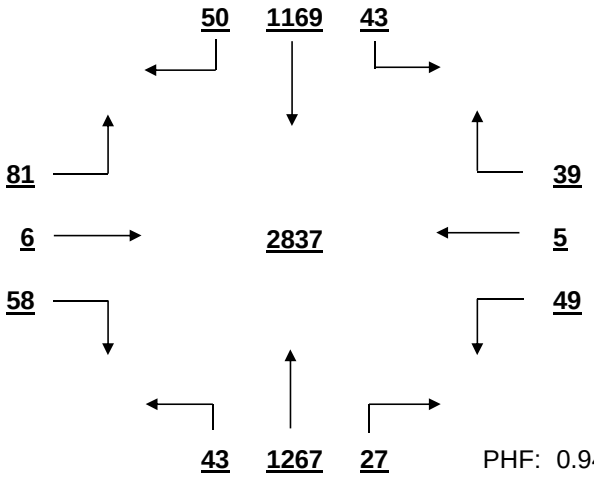

PHF: 0.941

OTHER HOUR VOLUME
FROM 7:00 TO 8:00

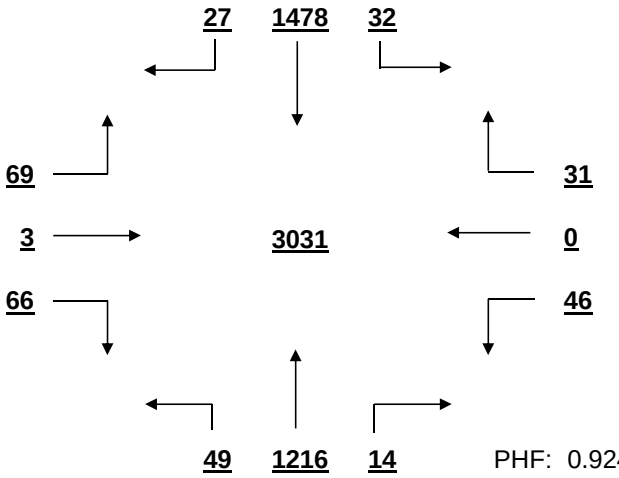

PHF: 0.924

SIGNAL WARRANT ANALYSIS

Broad River Rd AT Marley Dr-Menlo (Briarsgate) Dr Date: 12/1/2016

Minor Street Volume, percent of total = 8.1%
Percent of Left Turns from Minor Street = 56.3%
Percent of Right Turns from Minor Street = 40.5%
Percent of Minor Street Right Turns to Remove from Warrant Analysis = 0%
WARRANT BASIS = **100%**

Warrant No. 1 - Vehicular Volume is met

Condition A - Minimum Vehicular Volume is not met

Average Major Street % of Warrant				Average Minor Street % of Warrant			
2565.9	/	600 =	428%	127.3	/	150 =	85%

Hourly percent of warrant

	7:00 - 8:00	8:00 - 9:00	9:00 - 10:00	10:00 - 11:00	11:00 - 12:00	12:00 - 13:00	13:00 - 14:00	14:00 - 15:00	15:00 - 16:00	16:00 - 17:00	17:00 - 18:00	18:00 - 19:00
Major St.	469%	434%	335%	344%	363%	409%	433%	460%	411%	530%	540%	403%
Minor St.	92%	91%	74%	77%	92%	94%	97%	82%	105%	98%	85%	91%

Condition B - Interruption to Continuous Traffic is met

Average Major Street % of Warrant				Average Minor Street % of Warrant			
2565.9	/	900 =	285%	127.3	/	75 =	170%

Hourly percent of warrant

	7:00 - 8:00	8:00 - 9:00	9:00 - 10:00	10:00 - 11:00	11:00 - 12:00	12:00 - 13:00	13:00 - 14:00	14:00 - 15:00	15:00 - 16:00	16:00 - 17:00	17:00 - 18:00	18:00 - 19:00
Major St.	313%	289%	223%	229%	242%	273%	289%	307%	274%	353%	360%	269%
Minor St.	184%	181%	148%	153%	184%	188%	193%	164%	209%	196%	169%	183%

80% Combination of Conditions A & B is met

Warrant No. 2 - Four Hour Vehicular Volume is met

Hourly percent of warrant

	7:00 - 8:00	8:00 - 9:00	9:00 - 10:00	10:00 - 11:00	11:00 - 12:00	12:00 - 13:00	13:00 - 14:00	14:00 - 15:00	15:00 - 16:00	16:00 - 17:00	17:00 - 18:00	18:00 - 19:00
Minor St.	173%	170%	139%	144%	173%	176%	181%	154%	196%	184%	159%	171%

Warrant No. 3 - Peak Hour is met

Percent of warrant			Percent of warrant	
Overall Peak Hour:	16:30 - 17:30	Higher Volume Side Street Peak Hour:	15:15 - 16:15	
Minor St.	143%	Minor St.	160%	

Warrant No. 4 - Pedestrian Volume. Pedestrian volume shown are minumum volumes assuming heavy major street traffic. If these volumes are met, warrant 4 requires further engineering analysis

Minimum 4 hour ped. volume crossing major street: 107

Minimum peak hour ped. volume crossing major street: 133

Number of pedestrians crossing major street

	7:00 - 8:00	8:00 - 9:00	9:00 - 10:00	10:00 - 11:00	11:00 - 12:00	12:00 - 13:00	13:00 - 14:00	14:00 - 15:00	15:00 - 16:00	16:00 - 17:00	17:00 - 18:00	18:00 - 19:00
Major St.	1	1	2	1	0	1	3	2	2	0	3	0

Warrant No. 7 - Crash Experience (Requires 3 criteria analysis by engineering)

Total Number: 0 From: 1/1/2005 to 1/1/2008

Accident Rate: 0.00 per million entering vehicles

Types of Accidents	No.	/	Avg.		No.	/	Avg.
Right Angle	0	/	0.0	Rear End	0	/	0.0
Lost Control	0	/	0.0	Side Swipe	0	/	0.0
Left Turn	0	/	0.0	Other	0	/	0.0

SOUTH CAROLINA DEPARTMENT OF TRANSPORTATION
DISTRICT 1
TRAFFIC ENGINEERING

County: Richland City: Columbia Date: 12/2/2016

Major Rt: I-20 EB On-Ramp Minor Rt: Garner Ln

Clear

Day of Week: Friday Weather: Clear Office: Short Counts JMS

Type of Control: Stop Sign Speed Limit (major st) NPSL

Direction of Minor Street: E-W Intersection ADT - 11070 (Calc)

Number of Lanes (major st)* 1 Number of Lanes (minor st)* 1

* Each Direction

INTERSECTION VOLUME SUMMARY

	From N I-20 EB On-Ramp				From S I-20 EB On-Ramp				From E Garner Ln				From W Garner Ln				Total	Total
	LT	STR	RT	TOT	LT	STR	RT	TOT	LT	STR	RT	TOT	LT	STR	RT	TOT	Vol	Peds
7:00 - 7:15	0	0	0	0	0	175	7	182	4	0	1	5	0	0	0	0	187	1
7:15 - 7:30	0	0	0	0	0	237	5	242	7	0	5	12	0	0	0	0	254	1
7:30 - 7:45	0	0	0	0	0	249	22	271	6	0	3	9	0	0	0	0	280	0
7:45 - 8:00	0	0	0	0	0	169	43	212	8	0	11	19	0	0	0	0	231	1
8:00 - 8:15	0	0	0	0	0	163	23	186	4	0	2	6	0	0	0	0	192	0
8:15 - 8:30	0	0	0	0	0	140	18	158	6	0	5	11	0	0	0	0	169	1
8:30 - 8:45	0	0	0	0	0	194	16	210	3	0	5	8	0	0	0	0	218	0
8:45 - 9:00	0	0	0	0	0	149	9	158	4	0	0	4	0	0	0	0	162	0
9:00 - 9:15	0	0	0	0	0	154	16	170	3	0	2	5	0	0	0	0	175	1
9:15 - 9:30	0	0	0	0	0	159	14	173	7	0	7	14	0	0	0	0	187	0
9:30 - 9:45	0	0	0	0	0	138	12	150	10	0	3	13	0	0	0	0	163	1
9:45 - 10:00	0	0	0	0	0	133	13	146	8	0	1	9	0	0	0	0	155	1
10:00 - 10:15	0	0	0	0	0	126	0	126	16	0	2	18	0	0	0	0	144	2
10:15 - 10:30	0	0	0	0	0	127	15	142	13	0	2	15	0	0	0	0	157	0
10:30 - 10:45	0	0	0	0	0	133	20	153	9	0	2	11	0	0	0	0	164	1
10:45 - 11:00	0	0	0	0	0	153	17	170	12	0	4	16	0	0	0	0	186	0
11:00 - 11:15	0	0	0	0	0	151	21	172	9	0	5	14	0	0	0	0	186	0
11:15 - 11:30	0	0	0	0	0	169	16	185	10	0	2	12	0	0	0	0	197	1
11:30 - 11:45	0	0	0	0	0	177	9	186	10	0	4	14	0	0	0	0	200	0
11:45 - 12:00	0	0	0	0	0	165	21	186	15	0	9	24	0	0	0	0	210	0
12:00 - 12:15	0	0	0	0	0	203	7	210	27	0	1	28	0	0	0	0	238	1
12:15 - 12:30	0	0	0	0	0	168	21	189	9	0	3	12	0	0	0	0	201	0
12:30 - 12:45	0	0	0	0	0	170	15	185	12	0	7	19	0	0	0	0	204	0
12:45 - 13:00	0	0	0	0	0	192	14	206	8	0	10	18	0	0	0	0	224	0
13:00 - 13:15	0	0	0	0	0	164	15	179	20	0	7	27	0	0	0	0	206	0
13:15 - 13:30	0	0	0	0	0	166	15	181	12	0	6	18	0	0	0	0	199	0
13:30 - 13:45	0	0	0	0	0	181	17	198	15	0	6	21	0	0	0	0	219	1
13:45 - 14:00	0	0	0	0	0	199	24	223	16	0	2	18	0	0	0	0	241	1
14:00 - 14:15	0	0	0	0	0	200	16	216	12	0	1	13	0	0	0	0	229	2
14:15 - 14:30	0	0	0	0	0	209	15	224	12	0	2	14	0	0	0	0	238	0
14:30 - 14:45	0	0	0	0	0	196	11	207	9	0	7	16	0	0	0	0	223	0
14:45 - 15:00	0	0	0	0	0	200	16	216	9	0	6	15	0	0	0	0	231	0
15:00 - 15:15	0	0	0	0	0	209	10	219	17	0	2	19	0	0	0	0	238	0
15:15 - 15:30	0	0	0	0	0	243	13	256	7	0	5	12	0	0	0	0	268	0
15:30 - 15:45	0	0	0	0	0	213	12	225	11	0	4	15	0	0	0	0	240	5
15:45 - 16:00	0	0	0	0	0	241	9	250	12	0	4	16	0	0	0	0	266	3
16:00 - 16:15	0	0	0	0	0	239	12	251	9	0	5	14	0	0	0	0	265	0
16:15 - 16:30	0	0	0	0	0	238	8	246	4	0	8	12	0	0	0	0	258	1
16:30 - 16:45	0	0	0	0	0	238	10	248	7	0	4	11	0	0	0	0	259	0
16:45 - 17:00	0	0	0	0	0	230	13	243	10	0	5	15	0	0	0	0	258	2
17:00 - 17:15	0	0	0	0	0	267	13	280	31	0	19	50	0	0	0	0	330	0
17:15 - 17:30	0	0	0	0	0	233	12	245	7	0	8	15	0	0	0	0	260	0
17:30 - 17:45	0	0	0	0	0	192	15	207	11	0	12	23	0	0	0	0	230	0
17:45 - 18:00	0	0	0	0	0	216	10	226	12	0	4	16	0	0	0	0	242	0
18:00 - 18:15	0	0	0	0	0	164	12	176	16	0	9	25	0	0	0	0	201	0
18:15 - 18:30	0	0	0	0	0	194	8	202	8	0	5	13	0	0	0	0	215	5
18:30 - 18:45	0	0	0	0	0	216	9	225	15	0	5	20	0	0	0	0	245	2
18:45 - 19:00	0	0	0	0	0	171	9	180	13	0	2	15	0	0	0	0	195	0
TOTAL	0	0	0	0	0	9013	678	9691	515	0	234	749	0	0	0	0	10440	34
Trucks	0	0	0	0	0	103	6	109	5	0	2	7	0	0	0	0	116	1.1%
School Buses	0	0	0	0	0	56	0	56	1	0	0	1	0	0	0	0	57	0.5%

TOTAL AND PEAK HOUR VOLUME DIAGRAMS

I-20 EB On-Ramp AT Garner Ln Date: 12/2/2016

12.0 HOUR TOTAL VOLUME
FROM 7:00 TO 15:00

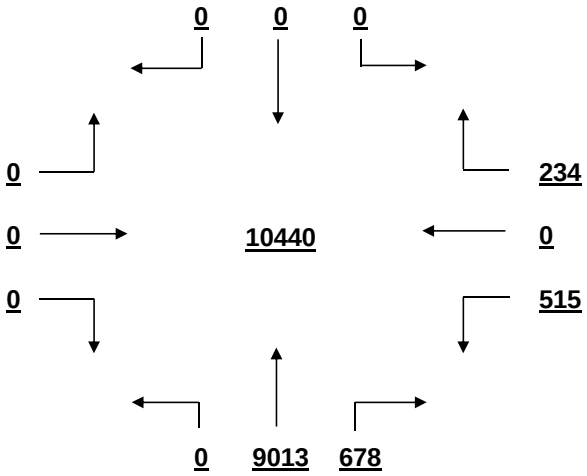

OVERALL PEAK HOUR VOLUME
FROM 16:30 TO 17:30

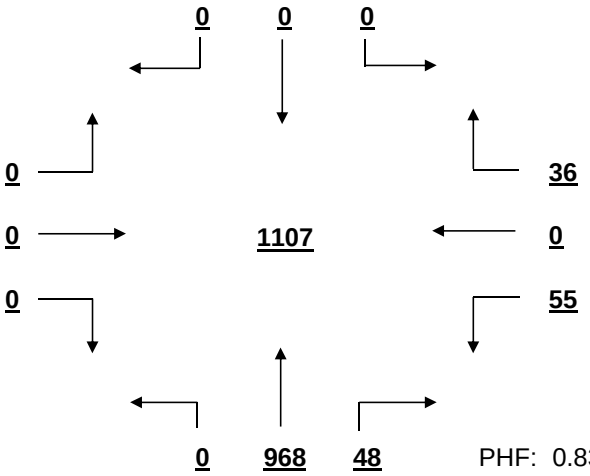

PHF: 0.839

AM PEAK HOUR VOLUME (0:00-10:45)
FROM 7:15 TO 8:15

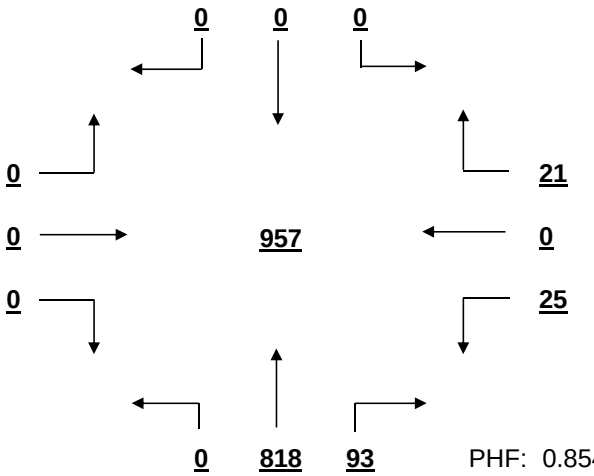

PHF: 0.854

PM PEAK HOUR VOLUME (14:15-23:45)
FROM 16:30 TO 17:30

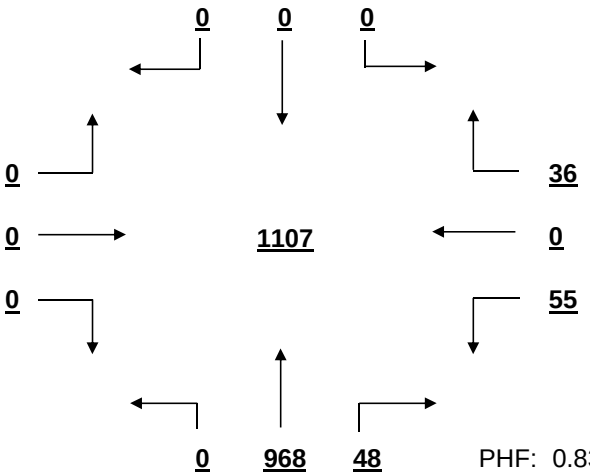

PHF: 0.839

MID-DAY PEAK HOUR VOLUME (11:00-14:00)
FROM 12:00 TO 13:00

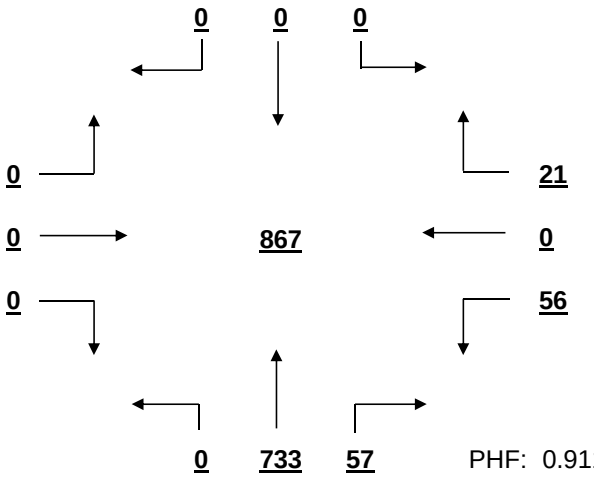

PHF: 0.911

OTHER HOUR VOLUME
FROM 7:00 TO 8:00

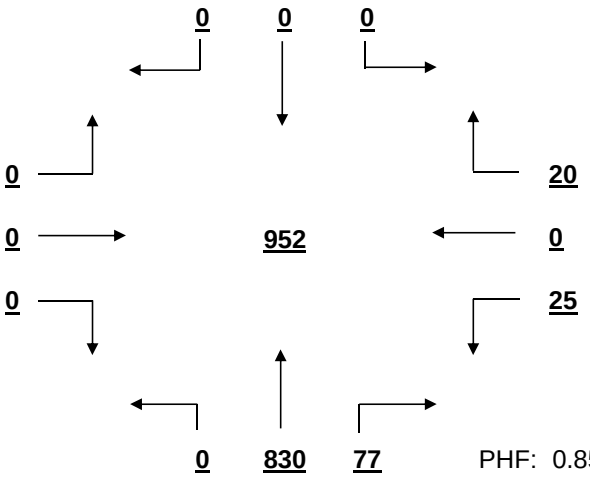

PHF: 0.850

SIGNAL WARRANT ANALYSIS

I-20 EB On-Ramp AT Garner Ln Date: 12/2/2016

Minor Street Volume, percent of total = 7.2%
Percent of Left Turns from Minor Street = 68.8%
Percent of Right Turns from Minor Street = 31.2%
Percent of Minor Street Right Turns to Remove from Warrant Analysis = 0%
WARRANT BASIS = **70%**

Warrant No. 1 - Vehicular Volume is met

Condition A - Minimum Vehicular Volume is not met

Average Major Street % of Warrant				Average Minor Street % of Warrant			
807.6	/ 350	=	231%	62.4	/ 105	=	59%

Hourly percent of warrant

	7:00 - 8:00	8:00 - 9:00	9:00 - 10:00	10:00 - 11:00	11:00 - 12:00	12:00 - 13:00	13:00 - 14:00	14:00 - 15:00	15:00 - 16:00	16:00 - 17:00	17:00 - 18:00	18:00 - 19:00
Major St.	259%	203%	183%	169%	208%	226%	223%	247%	271%	282%	274%	224%
Minor St.	43%	28%	39%	57%	61%	73%	80%	55%	59%	50%	99%	70%

Condition B - Interruption to Continuous Traffic is met

Average Major Street % of Warrant				Average Minor Street % of Warrant			
807.6	/ 525	=	154%	62.4	/ 53	=	119%

Hourly percent of warrant

	7:00 - 8:00	8:00 - 9:00	9:00 - 10:00	10:00 - 11:00	11:00 - 12:00	12:00 - 13:00	13:00 - 14:00	14:00 - 15:00	15:00 - 16:00	16:00 - 17:00	17:00 - 18:00	18:00 - 19:00
Major St.	173%	136%	122%	113%	139%	150%	149%	164%	181%	188%	182%	149%
Minor St.	86%	55%	78%	114%	122%	147%	160%	110%	118%	99%	198%	139%

80% Combination of Conditions A & B is not applicable

Warrant No. 2 - Four Hour Vehicular Volume is met

Hourly percent of warrant

	7:00 - 8:00	8:00 - 9:00	9:00 - 10:00	10:00 - 11:00	11:00 - 12:00	12:00 - 13:00	13:00 - 14:00	14:00 - 15:00	15:00 - 16:00	16:00 - 17:00	17:00 - 18:00	18:00 - 19:00
Minor St.	75%	43%	49%	62%	101%	147%	156%	97%	103%	87%	173%	137%

Warrant No. 3 - Peak Hour is met

	Percent of warrant		Percent of warrant
Overall Peak Hour:	16:30 - 17:30	Higher Volume Side Street Peak Hour:	17:00 - 18:00
Minor St.	119%	Minor St.	125%

Warrant No. 4 - Pedestrian Volume. Pedestrian volume shown are minumum volumes assuming heavy major street traffic. If these volumes are met, warrant 4 requires further engineering analysis

Minimum 4 hour ped. volume crossing major street: 75

Minimum peak hour ped. volume crossing major street: 93

Number of pedestrians crossing major street

	7:00 - 8:00	8:00 - 9:00	9:00 - 10:00	10:00 - 11:00	11:00 - 12:00	12:00 - 13:00	13:00 - 14:00	14:00 - 15:00	15:00 - 16:00	16:00 - 17:00	17:00 - 18:00	18:00 - 19:00
Major St.	3	1	3	3	1	1	2	2	8	3	0	7

Warrant No. 7 - Crash Experience (Requires 3 criteria analysis by engineering)

Total Number: 0 From: 1/1/2005 to 1/1/2008
Accident Rate: 0.00 per million entering vehicles

Types of Accidents	No.	/	Avg.		No.	/	Avg.
Right Angle	0	/	0.0	Rear End	0	/	0.0
Lost Control	0	/	0.0	Side Swipe	0	/	0.0
Left Turn	0	/	0.0	Other	0	/	0.0

SOUTH CAROLINA DEPARTMENT OF TRANSPORTATION
DISTRICT 1
TRAFFIC ENGINEERING

County: Richland City: Columbia Date: 12/1/2016

Major Rt: Broad River Rd * Not on State System Minor Rt: Longcreek Dr Clear

Day of Week: Thursday Weather: Clear Office: Short Counts JMS

Type of Control: Signal Speed Limit (major st) 40

Direction of Minor Street: E-W Intersection ADT - 30830 (Calc)

Number of Lanes (major st)* 2 Number of Lanes (minor st)* 1

* Each Direction

INTERSECTION VOLUME SUMMARY

	From N Broad River Rd				From S Broad River Rd				From E Longcreek Dr				From W Longcreek Dr				Total	Total
	LT	STR	RT	TOT	LT	STR	RT	TOT	LT	STR	RT	TOT	LT	STR	RT	TOT	Vol	Peds
7:00 - 7:15	7	258	1	266	0	153	10	163	32	0	37	69	0	0	0	0	498	1
7:15 - 7:30	22	357	3	382	0	175	26	201	42	0	36	78	0	0	0	0	661	0
7:30 - 7:45	31	331	0	362	0	221	26	247	33	0	56	89	0	0	0	0	698	0
7:45 - 8:00	21	355	0	376	0	215	18	233	34	0	56	90	0	0	0	0	699	0
8:00 - 8:15	18	364	1	383	0	171	14	185	39	0	31	70	0	0	0	0	638	0
8:15 - 8:30	21	354	0	375	1	188	17	206	26	0	27	53	0	0	0	0	634	3
8:30 - 8:45	12	395	2	409	0	192	18	210	27	0	29	56	0	0	0	0	675	3
8:45 - 9:00	23	339	2	364	0	190	21	211	31	0	25	56	0	0	0	0	631	1
9:00 - 9:15	21	260	1	282	1	185	8	194	17	0	32	49	0	0	0	0	525	0
9:15 - 9:30	14	232	1	247	0	182	14	196	29	0	26	55	0	0	0	0	498	3
9:30 - 9:45	15	224	1	240	0	176	14	190	15	0	22	37	0	0	0	0	467	1
9:45 - 10:00	19	244	2	265	0	182	11	193	20	1	33	54	0	0	0	0	512	0
10:00 - 10:15	24	226	1	251	0	207	0	207	25	0	25	50	0	0	0	0	508	1
10:15 - 10:30	27	238	0	265	1	176	14	191	17	0	35	52	0	0	0	0	508	2
10:30 - 10:45	23	223	1	247	0	206	16	222	15	0	16	31	0	0	0	0	500	0
10:45 - 11:00	21	238	6	265	1	212	16	229	21	1	33	55	0	0	0	0	549	3
11:00 - 11:15	23	242	4	269	2	222	21	245	30	0	21	51	0	0	0	0	565	1
11:15 - 11:30	26	211	1	238	2	207	18	227	24	0	32	56	0	0	0	0	521	1
11:30 - 11:45	21	271	1	293	4	228	29	261	24	0	25	49	0	0	0	0	603	0
11:45 - 12:00	22	246	16	284	5	248	26	279	21	0	18	39	0	0	0	0	602	0
12:00 - 12:15	33	280	3	316	8	259	34	301	38	0	33	71	0	0	0	0	688	0
12:15 - 12:30	32	262	11	305	8	286	27	321	32	0	31	63	0	0	0	0	689	2
12:30 - 12:45	31	287	9	327	4	281	26	311	31	0	31	62	0	0	0	0	700	0
12:45 - 13:00	21	246	7	274	2	254	17	273	41	0	26	67	0	0	0	0	614	4
13:00 - 13:15	38	286	8	332	8	276	34	318	35	0	36	71	0	0	0	0	721	2
13:15 - 13:30	32	271	4	307	6	286	39	331	27	0	26	53	0	0	0	0	691	2
13:30 - 13:45	38	273	6	317	4	319	27	350	34	0	30	64	0	0	0	0	731	0
13:45 - 14:00	36	238	5	279	4	295	30	329	30	0	31	61	0	0	0	0	669	2
14:00 - 14:15	33	274	8	315	8	274	32	314	35	0	40	75	0	0	0	0	704	2
14:15 - 14:30	39	255	3	297	2	306	36	344	26	0	47	73	0	0	0	0	714	1
14:30 - 14:45	24	249	4	277	0	271	25	296	20	0	42	62	0	0	0	0	635	0
14:45 - 15:00	44	277	5	326	1	294	32	327	35	0	29	64	0	0	0	0	717	2
15:00 - 15:15	50	266	3	319	0	288	35	323	36	0	30	66	0	0	0	0	708	1
15:15 - 15:30	32	0	3	35	4	293	29	326	31	1	49	81	0	0	0	0	442	3
15:30 - 15:45	43	290	4	337	2	277	43	322	28	0	26	54	0	0	0	0	713	0
15:45 - 16:00	42	259	7	308	2	281	36	319	29	0	45	74	0	0	0	0	701	0
16:00 - 16:15	36	262	4	302	3	328	21	352	22	1	32	55	0	0	0	0	709	2
16:15 - 16:30	56	286	7	349	5	308	37	350	28	0	27	55	0	0	0	0	754	0
16:30 - 16:45	37	256	0	293	1	371	36	408	31	0	46	77	0	0	0	0	778	1
16:45 - 17:00	47	233	2	282	1	388	22	411	22	0	26	48	0	0	0	0	741	2
17:00 - 17:15	41	219	1	261	1	398	33	432	37	0	36	73	0	0	0	0	766	0
17:15 - 17:30	37	259	0	296	1	394	36	431	43	0	28	71	0	0	0	0	798	1
17:30 - 17:45	52	235	5	292	2	349	39	390	37	0	38	75	0	0	0	0	757	2
17:45 - 18:00	60	205	2	267	2	291	54	347	48	0	54	102	0	0	0	0	716	3
18:00 - 18:15	40	247	3	290	2	320	32	354	27	0	29	56	0	0	0	0	700	1
18:15 - 18:30	59	0	7	66	1	303	35	339	39	0	41	80	0	0	0	0	485	3
18:30 - 18:45	53	225	6	284	1	284	36	321	39	0	31	70	0	0	0	0	675	0
18:45 - 19:00	51	175	5	231	1	236	46	283	20	0	37	57	0	0	0	0	571	0
TOTAL	1548	12223	176	13947	101	12446	1266	13813	1423	4	1592	3019	0	0	0	0	30779	56
Trucks	22	137	2	161	0	118	11	129	10	0	16	26	0	0	0	0	316	1.0%
School Buses	6	75	0	81	0	72	9	81	4	0	9	13	0	0	0	0	175	0.6%

TOTAL AND PEAK HOUR VOLUME DIAGRAMS

Broad River Rd AT Longcreek Dr Date: 12/1/2016

12.0 HOUR TOTAL VOLUME
FROM 7:00 TO 15:00

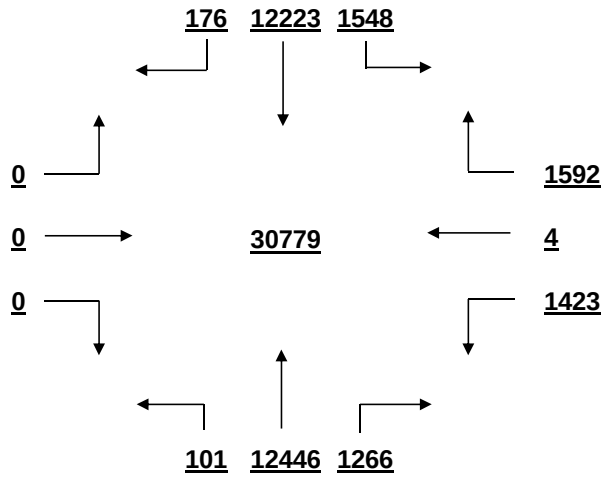

OVERALL PEAK HOUR VOLUME
FROM 16:30 TO 17:30

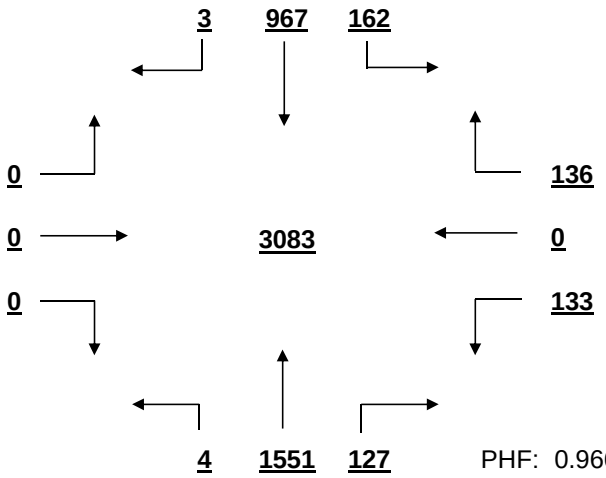

PHF: 0.966

AM PEAK HOUR VOLUME (0:00-10:45)
FROM 7:15 TO 8:15

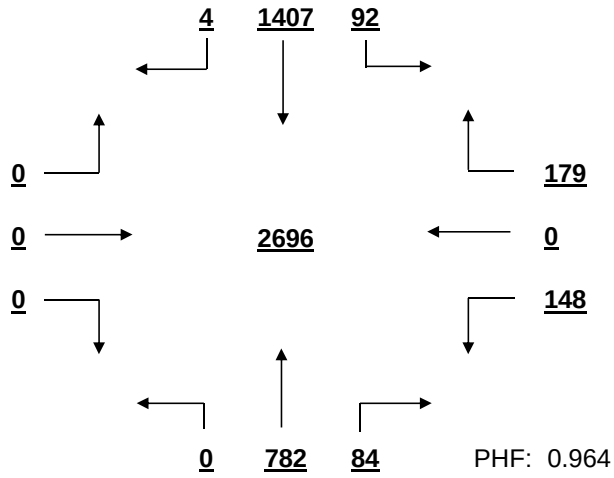

PHF: 0.964

PM PEAK HOUR VOLUME (14:15-23:45)
FROM 16:30 TO 17:30

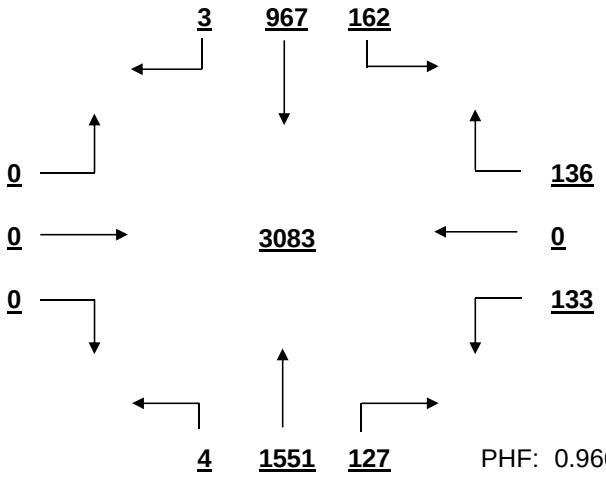

PHF: 0.966

MID-DAY PEAK HOUR VOLUME (11:00-14:00)
FROM 13:00 TO 14:00

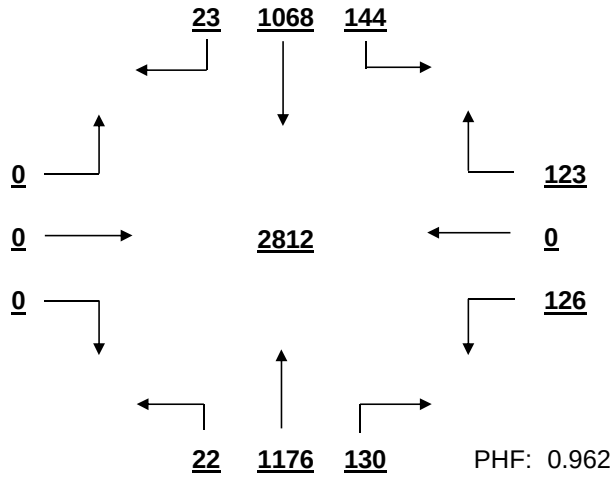

PHF: 0.962

OTHER HOUR VOLUME
FROM 7:00 TO 8:00

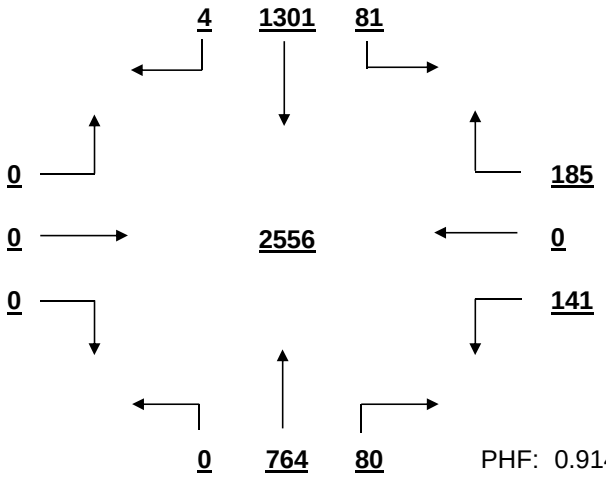

PHF: 0.914

SIGNAL WARRANT ANALYSIS

Broad River Rd AT Longcreek Dr Date: 12/1/2016

Minor Street Volume, percent of total = 9.8%
Percent of Left Turns from Minor Street = 47.1%
Percent of Right Turns from Minor Street = 52.7%
Percent of Minor Street Right Turns to Remove from Warrant Analysis = 0%
WARRANT BASIS = **100%**

Warrant No. 1 - Vehicular Volume is met

Condition A - Minimum Vehicular Volume is met

Average Major Street % of Warrant				Average Minor Street % of Warrant			
2313.3	/ 600	=	386%	251.6	/ 150	=	168%

Hourly percent of warrant

	7:00 - 8:00	8:00 - 9:00	9:00 - 10:00	10:00 - 11:00	11:00 - 12:00	12:00 - 13:00	13:00 - 14:00	14:00 - 15:00	15:00 - 16:00	16:00 - 17:00	17:00 - 18:00	18:00 - 19:00
Major St.	372%	391%	301%	313%	349%	405%	427%	416%	382%	458%	453%	361%
Minor St.	217%	157%	130%	125%	130%	175%	166%	183%	183%	157%	214%	175%

Condition B - Interruption to Continuous Traffic is met

Average Major Street % of Warrant				Average Minor Street % of Warrant			
2313.3	/ 900	=	257%	251.6	/ 75	=	335%

Hourly percent of warrant

	7:00 - 8:00	8:00 - 9:00	9:00 - 10:00	10:00 - 11:00	11:00 - 12:00	12:00 - 13:00	13:00 - 14:00	14:00 - 15:00	15:00 - 16:00	16:00 - 17:00	17:00 - 18:00	18:00 - 19:00
Major St.	248%	260%	201%	209%	233%	270%	285%	277%	254%	305%	302%	241%
Minor St.	435%	313%	260%	251%	260%	351%	332%	365%	367%	313%	428%	351%

80% Combination of Conditions A & B is met

Warrant No. 2 - Four Hour Vehicular Volume is met

Hourly percent of warrant

	7:00 - 8:00	8:00 - 9:00	9:00 - 10:00	10:00 - 11:00	11:00 - 12:00	12:00 - 13:00	13:00 - 14:00	14:00 - 15:00	15:00 - 16:00	16:00 - 17:00	17:00 - 18:00	18:00 - 19:00
Minor St.	408%	294%	244%	235%	244%	329%	311%	343%	344%	294%	401%	329%

Warrant No. 3 - Peak Hour is met

Percent of warrant			Percent of warrant	
Overall Peak Hour:	16:30 - 17:30	Higher Volume Side Street Peak Hour:	7:15 - 8:15	
Minor St.	269%	Minor St.	327%	

Warrant No. 4 - Pedestrian Volume. Pedestrian volume shown are minumum volumes assuming heavy major street traffic. If these volumes are met, warrant 4 requires further engineering analysis

Minimum 4 hour ped. volume crossing major street: 107

Minimum peak hour ped. volume crossing major street: 133

Number of pedestrians crossing major street

	7:00 - 8:00	8:00 - 9:00	9:00 - 10:00	10:00 - 11:00	11:00 - 12:00	12:00 - 13:00	13:00 - 14:00	14:00 - 15:00	15:00 - 16:00	16:00 - 17:00	17:00 - 18:00	18:00 - 19:00
Major St.	1	4	1	2	0	4	4	3	2	1	3	3

Warrant No. 7 - Crash Experience (Requires 3 criteria analysis by engineering)

Total Number: 0 From: 1/1/2005 to 1/1/2008

Accident Rate: 0.00 per million entering vehicles

Types of Accidents	No.	/	Avg.		No.	/	Avg.
Right Angle	0	/	0.0	Rear End	0	/	0.0
Lost Control	0	/	0.0	Side Swipe	0	/	0.0
Left Turn	0	/	0.0	Other	0	/	0.0

SOUTH CAROLINA DEPARTMENT OF TRANSPORTATION
DISTRICT 1
TRAFFIC ENGINEERING

County: Richland City: Columbia Date: 11/28/2016

Major Rt: Broad River Rd * Not on State System Minor Rt: Dutch Square Blvd * Not on State System

Day of Week: Monday Weather: Clear Office: Short Counts JMS

Type of Control: Signal Speed Limit (major st) 40

Direction of Minor Street: E-W Intersection ADT - 25260 (Calc)

Number of Lanes (major st)* 2 Number of Lanes (minor st)* 1

* Each Direction

INTERSECTION VOLUME SUMMARY

	From N Broad River Rd				From S Broad River Rd				From E Dutch Square Blvd				From W Dutch Square Blvd				Total	Total
	LT	STR	RT	TOT	LT	STR	RT	TOT	LT	STR	RT	TOT	LT	STR	RT	TOT	Vol	Peds
7:00 - 7:15	0	178	28	206	1	99	0	100	0	0	0	0	33	0	2	35	341	1
7:15 - 7:30	0	311	38	349	3	139	0	142	0	0	0	0	40	0	3	43	534	0
7:30 - 7:45	0	168	23	191	5	105	0	110	0	0	0	0	42	0	7	49	350	0
7:45 - 8:00	0	256	39	295	4	146	0	150	0	0	0	0	44	0	16	60	505	0
8:00 - 8:15	0	246	31	277	4	134	0	138	0	0	0	0	38	0	5	43	458	0
8:15 - 8:30	0	267	35	302	0	102	0	102	0	0	0	0	32	0	7	39	443	0
8:30 - 8:45	0	322	41	363	11	148	0	159	0	0	0	0	40	0	13	53	575	0
8:45 - 9:00	0	309	50	359	15	158	0	173	0	0	0	0	42	0	8	50	582	0
9:00 - 9:15	0	218	54	272	7	157	0	164	0	0	0	0	20	0	11	31	467	0
9:15 - 9:30	0	197	57	254	8	121	0	129	0	0	0	0	48	0	19	67	450	0
9:30 - 9:45	0	188	53	241	11	117	0	128	0	0	0	0	60	0	22	82	451	0
9:45 - 10:00	0	195	57	252	18	143	0	161	0	0	0	0	36	0	14	50	463	0
10:00 - 10:15	0	189	41	230	15	157	0	172	0	0	0	0	50	0	14	64	466	0
10:15 - 10:30	0	163	48	211	13	123	0	136	0	0	0	0	35	0	12	47	394	0
10:30 - 10:45	0	171	51	222	17	136	0	153	0	0	0	0	52	0	25	77	452	0
10:45 - 11:00	0	191	59	250	10	138	0	148	0	0	0	0	42	0	18	60	458	0
11:00 - 11:15	0	162	54	216	7	127	0	134	0	0	0	0	54	0	17	71	421	0
11:15 - 11:30	0	161	62	223	13	164	0	177	0	0	0	0	61	0	26	87	487	0
11:30 - 11:45	0	200	67	267	12	187	0	199	0	0	0	0	49	0	17	66	532	0
11:45 - 12:00	0	201	47	248	6	182	0	188	0	0	0	0	80	0	15	95	531	0
12:00 - 12:15	0	194	64	258	16	209	0	225	0	0	0	0	64	0	24	88	571	0
12:15 - 12:30	0	181	60	241	14	157	0	171	0	0	0	0	102	0	22	124	536	1
12:30 - 12:45	0	238	72	310	13	195	0	208	0	0	0	0	74	0	40	114	632	0
12:45 - 13:00	0	202	66	268	12	156	0	168	0	0	0	0	77	0	16	93	529	0
13:00 - 13:15	0	211	71	282	9	147	0	156	0	0	0	0	81	0	11	92	530	0
13:15 - 13:30	0	202	66	268	9	183	0	192	0	0	0	0	79	0	8	87	547	0
13:30 - 13:45	0	145	35	180	5	109	0	114	0	0	0	0	59	0	4	63	357	2
13:45 - 14:00	0	181	53	234	12	181	0	193	0	0	0	0	84	0	13	97	524	2
14:00 - 14:15	0	206	56	262	18	170	0	188	0	0	0	0	82	0	11	93	543	0
14:15 - 14:30	0	185	71	256	6	199	0	205	0	0	0	0	73	0	17	90	551	2
14:30 - 14:45	0	200	55	255	9	208	0	217	0	0	0	0	43	0	17	60	532	0
14:45 - 15:00	0	132	37	169	5	88	0	93	0	0	0	0	54	0	7	61	323	0
15:00 - 15:15	0	208	64	272	10	186	0	196	0	0	0	0	65	0	12	77	545	0
15:15 - 15:30	0	252	76	328	17	235	0	252	0	0	0	0	68	0	15	83	663	1
15:30 - 15:45	0	242	55	297	7	197	0	204	0	0	0	0	61	0	13	74	575	0
15:45 - 16:00	0	163	50	213	12	175	0	187	0	0	0	0	58	0	11	69	469	0
16:00 - 16:15	0	175	45	220	14	182	0	196	0	0	0	0	79	0	8	87	503	0
16:15 - 16:30	0	228	57	285	16	223	0	239	0	0	0	0	63	0	14	77	601	0
16:30 - 16:45	0	204	55	259	12	251	0	263	0	0	0	0	94	0	15	109	631	0
16:45 - 17:00	0	165	47	212	15	263	0	278	0	0	0	0	87	0	11	98	588	0
17:00 - 17:15	0	178	50	228	8	285	0	293	0	0	0	0	120	0	21	141	662	1
17:15 - 17:30	0	200	51	251	17	254	0	271	0	0	0	0	105	0	18	123	645	0
17:30 - 17:45	0	200	51	251	20	255	0	275	0	0	0	0	75	0	15	90	616	0
17:45 - 18:00	0	153	43	196	14	213	0	227	0	0	0	0	84	0	8	92	515	0
18:00 - 18:15	0	155	38	193	12	245	0	257	0	0	0	0	54	0	9	63	513	0
18:15 - 18:30	0	147	30	177	10	159	0	169	0	0	0	0	47	0	6	53	399	0
18:30 - 18:45	0	147	42	189	8	155	0	163	0	0	0	0	66	0	11	77	429	1
18:45 - 19:00	0	128	37	165	9	144	0	153	0	0	0	0	58	0	12	70	388	0
TOTAL	0	9515	2432	11947	509	8207	0	8716	0	0	0	0	2954	0	660	3614	24277	11
Trucks	0	34	9	43	2	31	0	33	0	0	0	0	7	0	3	10	86	0.4%
School Buses	0	38	25	63	0	43	0	43	0	0	0	0	19	0	6	25	131	0.5%

TOTAL AND PEAK HOUR VOLUME DIAGRAMS

Broad River Rd AT Dutch Square Blvd Date: 11/28/2016

12.0 HOUR TOTAL VOLUME
FROM 7:00 TO 15:00

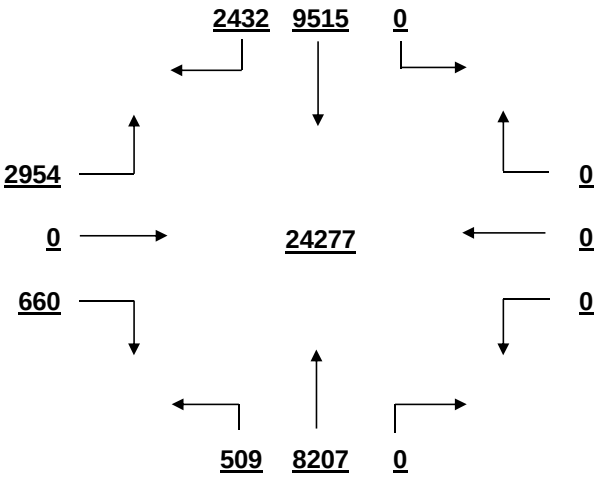

OVERALL PEAK HOUR VOLUME
FROM 16:30 TO 17:30

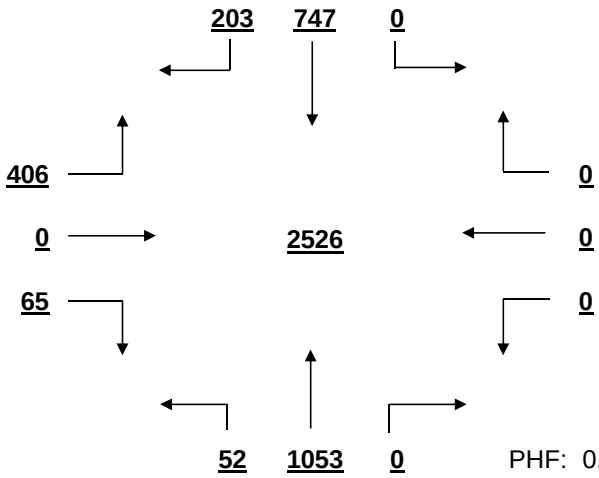

PHF: 0.954

AM PEAK HOUR VOLUME (0:00-10:45)
FROM 8:30 TO 9:30

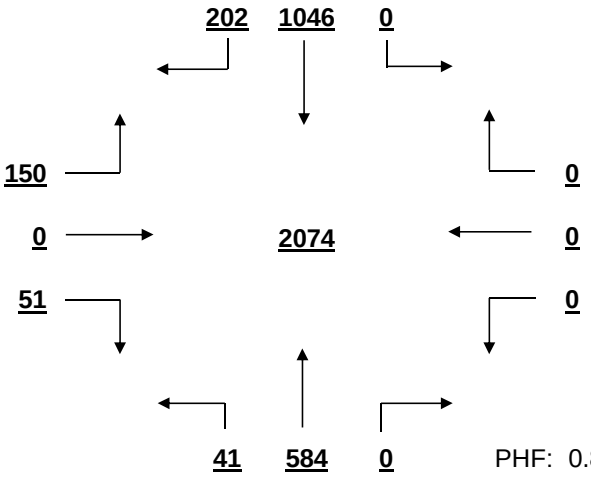

PHF: 0.891

PM PEAK HOUR VOLUME (14:15-23:45)
FROM 16:30 TO 17:30

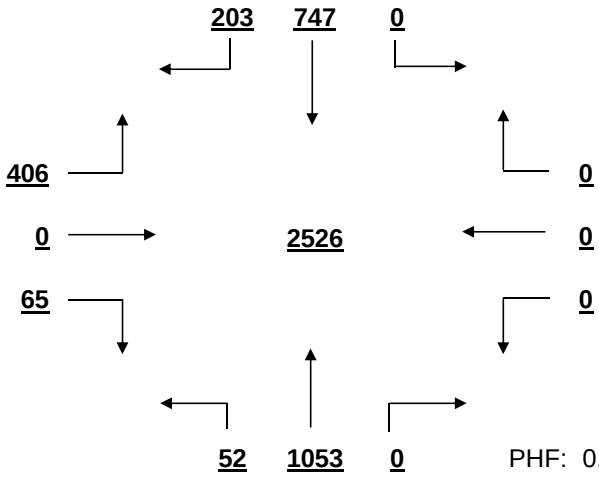

PHF: 0.954

MID-DAY PEAK HOUR VOLUME (11:00-14:00)
FROM 11:45 TO 12:45

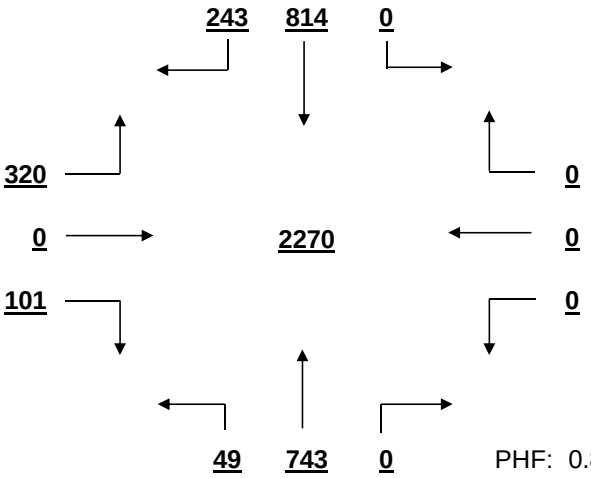

PHF: 0.898

OTHER HOUR VOLUME
FROM 7:00 TO 8:00

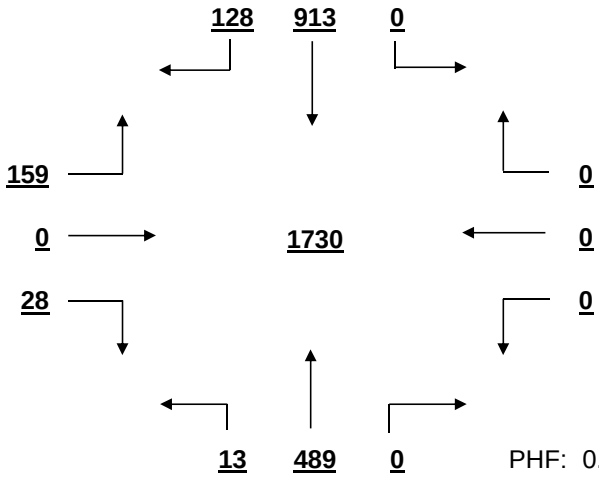

PHF: 0.810

SIGNAL WARRANT ANALYSIS

Broad River Rd AT Dutch Square Blvd Date: 11/28/2016

Minor Street Volume, percent of total = 14.9%
Percent of Left Turns from Minor Street = 81.7%
Percent of Right Turns from Minor Street = 18.3%
Percent of Minor Street Right Turns to Remove from Warrant Analysis = 0%
WARRANT BASIS = **100%**

Warrant No. 1 - Vehicular Volume is met

Condition A - Minimum Vehicular Volume is met

Average Major Street % of Warrant				Average Minor Street % of Warrant			
1721.9	/ 600	=	287%	301.2	/ 150	=	201%

Hourly percent of warrant

	7:00 - 8:00	8:00 - 9:00	9:00 - 10:00	10:00 - 11:00	11:00 - 12:00	12:00 - 13:00	13:00 - 14:00	14:00 - 15:00	15:00 - 16:00	16:00 - 17:00	17:00 - 18:00	18:00 - 19:00
Major St.	257%	312%	267%	254%	275%	308%	270%	274%	325%	325%	332%	244%
Minor St.	125%	123%	153%	165%	213%	279%	226%	203%	202%	247%	297%	175%

Condition B - Interruption to Continuous Traffic is met

Average Major Street % of Warrant				Average Minor Street % of Warrant			
1721.9	/ 900	=	191%	301.2	/ 75	=	402%

Hourly percent of warrant

	7:00 - 8:00	8:00 - 9:00	9:00 - 10:00	10:00 - 11:00	11:00 - 12:00	12:00 - 13:00	13:00 - 14:00	14:00 - 15:00	15:00 - 16:00	16:00 - 17:00	17:00 - 18:00	18:00 - 19:00
Major St.	171%	208%	178%	169%	184%	205%	180%	183%	217%	217%	221%	163%
Minor St.	249%	247%	307%	331%	425%	559%	452%	405%	404%	495%	595%	351%

80% Combination of Conditions A & B is met

Warrant No. 2 - Four Hour Vehicular Volume is met

Hourly percent of warrant

	7:00 - 8:00	8:00 - 9:00	9:00 - 10:00	10:00 - 11:00	11:00 - 12:00	12:00 - 13:00	13:00 - 14:00	14:00 - 15:00	15:00 - 16:00	16:00 - 17:00	17:00 - 18:00	18:00 - 19:00
Minor St.	234%	231%	288%	310%	399%	524%	424%	380%	379%	464%	558%	329%

Warrant No. 3 - Peak Hour is met

	Percent of warrant		Percent of warrant
Overall Peak Hour:	16:30 - 17:30	Higher Volume Side Street Peak Hour:	16:30 - 17:30
Minor St.	471%	Minor St.	471%

Warrant No. 4 - Pedestrian Volume. Pedestrian volume shown are minumum volumes assuming heavy major street traffic. If these volumes are met, warrant 4 requires further engineering analysis

Minimum 4 hour ped. volume crossing major street: 107

Minimum peak hour ped. volume crossing major street: 133

Number of pedestrians crossing major street

	7:00 - 8:00	8:00 - 9:00	9:00 - 10:00	10:00 - 11:00	11:00 - 12:00	12:00 - 13:00	13:00 - 14:00	14:00 - 15:00	15:00 - 16:00	16:00 - 17:00	17:00 - 18:00	18:00 - 19:00
Major St.	0	0	0	0	0	0	0	0	0	0	0	0

Warrant No. 7 - Crash Experience (Requires 3 criteria analysis by engineering)

Total Number: 0 From: 1/1/2005 to 1/1/2008

Accident Rate: 0.00 per million entering vehicles

Types of Accidents	No.	/	Avg.		No.	/	Avg.
Right Angle	0	/	0.0	Rear End	0	/	0.0
Lost Control	0	/	0.0	Side Swipe	0	/	0.0
Left Turn	0	/	0.0	Other	0	/	0.0

SOUTH CAROLINA DEPARTMENT OF TRANSPORTATION
DISTRICT 1
TRAFFIC ENGINEERING

County: Richland City: Columbia Date: 12/2/2016

Major Rt: Broad River Rd * Not on State System Minor Rt: Omarest Dr-Private Dr Clear

Day of Week: Friday Weather: Clear Office: Short Counts JMS

Type of Control: Signal Speed Limit (major st) 40

Direction of Minor Street: E-W Intersection ADT - 24170 (Calc)

Number of Lanes (major st)* 2 Number of Lanes (minor st)* 1

* Each Direction

INTERSECTION VOLUME SUMMARY

	From N Broad River Rd				From S Broad River Rd				From E Omarest Dr-Private				From W Omarest Dr-Private				Total	Total
	LT	STR	RT	TOT	LT	STR	RT	TOT	LT	STR	RT	TOT	LT	STR	RT	TOT	Vol	Peds
7:00 - 7:15	5	262	0	267	0	140	5	145	23	0	8	31	0	0	0	0	443	1
7:15 - 7:30	5	321	0	326	1	156	10	167	24	0	8	32	0	0	0	0	525	0
7:30 - 7:45	5	309	3	317	0	198	14	212	17	0	5	22	0	0	2	2	553	1
7:45 - 8:00	9	259	2	270	2	183	8	193	26	0	10	36	0	0	3	3	502	2
8:00 - 8:15	8	246	0	254	1	149	9	159	14	0	10	24	0	0	1	1	438	3
8:15 - 8:30	4	261	0	265	2	154	8	164	16	0	5	21	0	0	1	1	451	0
8:30 - 8:45	7	245	0	252	3	170	7	180	7	0	7	14	1	0	1	2	448	4
8:45 - 9:00	6	204	0	210	5	170	7	182	23	0	8	31	1	0	2	3	426	3
9:00 - 9:15	9	222	1	232	2	162	8	172	10	0	8	18	0	1	3	4	426	2
9:15 - 9:30	5	194	1	200	4	165	7	176	19	0	10	29	0	0	5	5	410	4
9:30 - 9:45	4	224	1	229	3	192	8	203	10	0	5	15	1	0	7	8	455	3
9:45 - 10:00	4	197	2	203	7	187	13	207	8	0	8	16	1	0	5	6	432	4
10:00 - 10:15	4	208	2	214	0	183	0	183	10	0	6	16	0	0	6	6	419	6
10:15 - 10:30	8	197	1	206	7	173	10	190	9	0	7	16	0	0	7	7	419	7
10:30 - 10:45	12	215	1	228	3	187	8	198	11	0	5	16	0	0	1	1	443	5
10:45 - 11:00	7	188	3	198	3	203	10	216	12	1	6	19	1	0	0	1	434	2
11:00 - 11:15	7	212	0	219	0	204	9	213	8	0	10	18	0	0	2	2	452	0
11:15 - 11:30	4	196	2	202	8	216	12	236	13	0	7	20	1	0	3	4	462	3
11:30 - 11:45	6	207	0	213	2	257	14	273	15	0	7	22	0	0	4	4	512	2
11:45 - 12:00	3	231	2	236	7	221	14	242	15	1	4	20	0	0	3	3	501	0
12:00 - 12:15	6	213	2	221	3	270	14	287	12	1	5	18	0	0	3	3	529	5
12:15 - 12:30	5	257	2	264	5	269	11	285	17	2	5	24	0	0	6	6	579	8
12:30 - 12:45	7	254	2	263	7	247	8	262	14	0	7	21	0	0	5	5	551	0
12:45 - 13:00	4	222	3	229	6	273	13	292	4	1	3	8	0	1	3	4	533	2
13:00 - 13:15	8	271	0	279	4	267	10	281	11	1	12	24	0	1	10	11	595	2
13:15 - 13:30	8	265	2	275	6	221	17	244	10	0	9	19	0	1	5	6	544	3
13:30 - 13:45	12	259	0	271	2	286	10	298	14	0	12	26	1	0	11	12	607	2
13:45 - 14:00	9	239	1	249	3	276	17	296	17	0	12	29	0	0	6	6	580	4
14:00 - 14:15	7	244	0	251	4	278	18	300	11	1	8	20	0	0	7	7	578	2
14:15 - 14:30	10	265	1	276	3	232	8	243	14	0	8	22	0	0	0	0	541	4
14:30 - 14:45	10	230	3	243	2	262	15	279	12	1	7	20	0	0	4	4	546	2
14:45 - 15:00	11	249	2	262	6	275	17	298	8	0	10	18	0	0	6	6	584	2
15:00 - 15:15	11	220	0	231	4	259	18	281	21	4	10	35	1	1	3	5	552	5
15:15 - 15:30	9	0	0	9	4	280	25	309	16	0	7	23	0	0	4	4	345	1
15:30 - 15:45	16	210	3	229	3	281	19	303	7	1	6	14	0	0	9	9	555	6
15:45 - 16:00	10	206	0	216	6	289	24	319	18	2	7	27	1	0	5	6	568	5
16:00 - 16:15	10	219	0	229	1	299	23	323	12	0	4	16	2	1	9	12	580	12
16:15 - 16:30	7	223	1	231	2	321	24	347	13	0	7	20	0	0	5	5	603	13
16:30 - 16:45	8	187	1	196	8	315	20	343	16	3	2	21	0	0	6	6	566	11
16:45 - 17:00	14	213	1	228	5	334	36	375	11	2	8	21	0	1	9	10	634	6
17:00 - 17:15	14	210	4	228	9	316	27	352	17	1	9	27	0	2	5	7	614	10
17:15 - 17:30	10	194	2	206	13	295	23	331	16	2	5	23	1	0	5	6	566	0
17:30 - 17:45	13	184	0	197	5	275	21	301	12	0	13	25	0	0	5	5	528	4
17:45 - 18:00	11	186	3	200	9	300	38	347	16	0	9	25	0	1	6	7	579	0
18:00 - 18:15	8	183	0	191	7	290	39	336	19	1	13	33	0	1	4	5	565	2
18:15 - 18:30	5	0	1	6	4	252	17	273	15	0	8	23	0	0	3	3	305	0
18:30 - 18:45	13	173	1	187	6	229	14	249	18	2	9	29	0	1	6	7	472	0
18:45 - 19:00	11	203	1	215	0	187	12	199	13	0	4	17	0	0	3	3	434	1
TOTAL	389	10377	57	10823	197	11348	719	12264	674	27	363	1064	12	12	209	233	24384	164
Trucks	3	103	1	107	3	122	1	126	5	1	8	14	0	1	3	4	251	1.0%
School Buses	2	53	1	56	2	61	4	67	3	0	0	3	0	1	0	1	127	0.5%

TOTAL AND PEAK HOUR VOLUME DIAGRAMS

Broad River Rd AT Omarest Dr-Private Dr Date: 12/2/2016

12.0 HOUR TOTAL VOLUME
FROM 7:00 TO 15:00

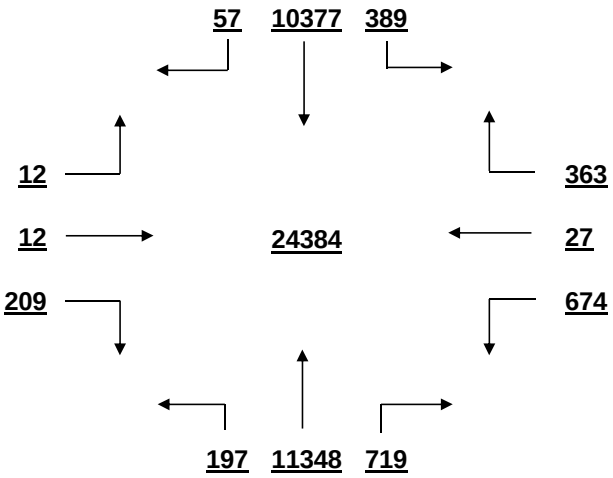

OVERALL PEAK HOUR VOLUME
FROM 16:15 TO 17:15

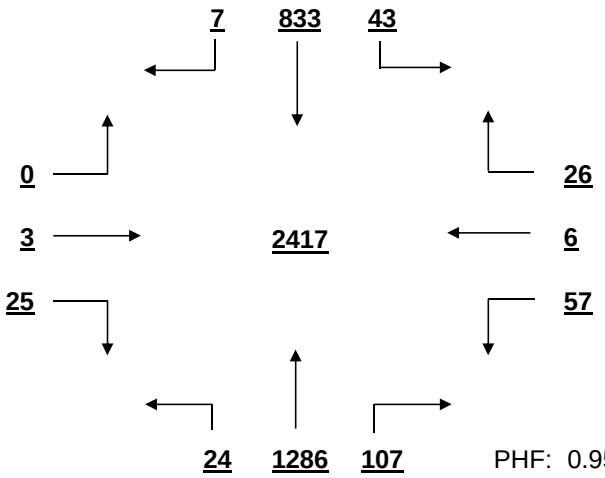

PHF: 0.953

AM PEAK HOUR VOLUME (0:00-10:45)
FROM 7:00 TO 8:00

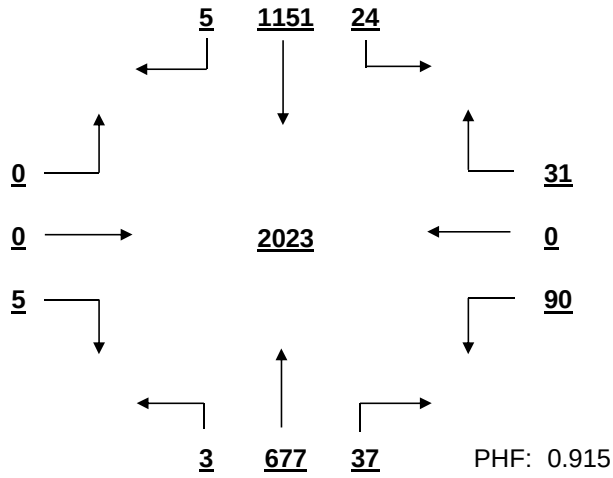

PHF: 0.915

PM PEAK HOUR VOLUME (14:15-23:45)
FROM 16:15 TO 17:15

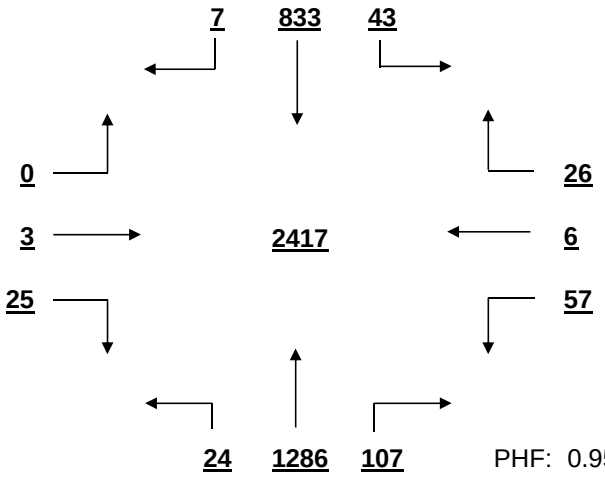

PHF: 0.953

MID-DAY PEAK HOUR VOLUME (11:00-14:00)
FROM 13:00 TO 14:00

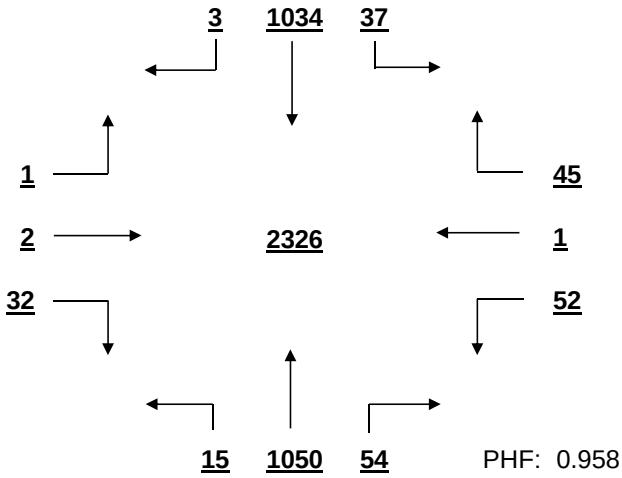

PHF: 0.958

OTHER HOUR VOLUME
FROM 7:00 TO 8:00

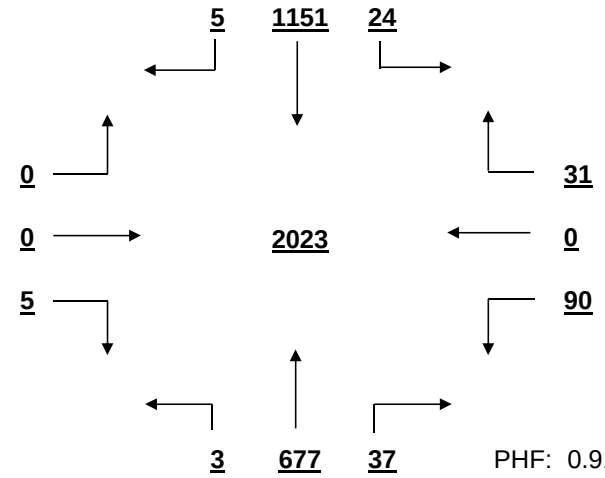

PHF: 0.915

SIGNAL WARRANT ANALYSIS

Broad River Rd AT Omarest Dr-Private Dr Date: 12/2/2016

Minor Street Volume, percent of total = 5.3%
Percent of Left Turns from Minor Street = 52.9%
Percent of Right Turns from Minor Street = 44.1%
Percent of Minor Street Right Turns to Remove from Warrant Analysis = 0%
WARRANT BASIS = **100%**

Warrant No. 1 - Vehicular Volume is met

Condition A - Minimum Vehicular Volume is not met

Average Major Street % of Warrant				Average Minor Street % of Warrant			
1923.9	/ 600	=	321%	88.7	/ 150	=	59%

Hourly percent of warrant

	7:00 - 8:00	8:00 - 9:00	9:00 - 10:00	10:00 - 11:00	11:00 - 12:00	12:00 - 13:00	13:00 - 14:00	14:00 - 15:00	15:00 - 16:00	16:00 - 17:00	17:00 - 18:00	18:00 - 19:00
Major St.	316%	278%	270%	272%	306%	351%	366%	359%	316%	379%	360%	276%
Minor St.	81%	60%	52%	45%	53%	47%	65%	53%	66%	52%	67%	68%

Condition B - Interruption to Continuous Traffic is met

Average Major Street % of Warrant				Average Minor Street % of Warrant			
1923.9	/ 900	=	214%	88.7	/ 75	=	118%

Hourly percent of warrant

	7:00 - 8:00	8:00 - 9:00	9:00 - 10:00	10:00 - 11:00	11:00 - 12:00	12:00 - 13:00	13:00 - 14:00	14:00 - 15:00	15:00 - 16:00	16:00 - 17:00	17:00 - 18:00	18:00 - 19:00
Major St.	211%	185%	180%	181%	204%	234%	244%	239%	211%	252%	240%	184%
Minor St.	161%	120%	104%	89%	107%	95%	131%	107%	132%	104%	133%	136%

80% Combination of Conditions A & B is not met

Warrant No. 2 - Four Hour Vehicular Volume is met

Hourly percent of warrant

	7:00 - 8:00	8:00 - 9:00	9:00 - 10:00	10:00 - 11:00	11:00 - 12:00	12:00 - 13:00	13:00 - 14:00	14:00 - 15:00	15:00 - 16:00	16:00 - 17:00	17:00 - 18:00	18:00 - 19:00
Minor St.	151%	113%	98%	84%	100%	89%	123%	100%	124%	98%	125%	128%

Warrant No. 3 - Peak Hour is met

	Percent of warrant		Percent of warrant
Overall Peak Hour:	16:15 - 17:15	Higher Volume Side Street Peak Hour:	7:00 - 8:00
Minor St.	89%	Minor St.	121%

Warrant No. 4 - Pedestrian Volume. Pedestrian volume shown are minumum volumes assuming heavy major street traffic. If these volumes are met, warrant 4 requires further engineering analysis

Minimum 4 hour ped. volume crossing major street: 107

Minimum peak hour ped. volume crossing major street: 133

Number of pedestrians crossing major street

	7:00 - 8:00	8:00 - 9:00	9:00 - 10:00	10:00 - 11:00	11:00 - 12:00	12:00 - 13:00	13:00 - 14:00	14:00 - 15:00	15:00 - 16:00	16:00 - 17:00	17:00 - 18:00	18:00 - 19:00
Major St.	1	1	2	2	0	3	0	3	4	16	3	1

Warrant No. 7 - Crash Experience (Requires 3 criteria analysis by engineering)

Total Number: 0 From: 1/1/2005 to 1/1/2008

Accident Rate: 0.00 per million entering vehicles

Types of Accidents	No.	/	Avg.		No.	/	Avg.
Right Angle	0	/	0.0	Rear End	0	/	0.0
Lost Control	0	/	0.0	Side Swipe	0	/	0.0
Left Turn	0	/	0.0	Other	0	/	0.0

Appendix B—2040 Peak Hour Volumes

TransModeler 2040 No-Build
Peak Hour Volumes

Carolina Crossroads
2040 No-Build Interchange Volumes

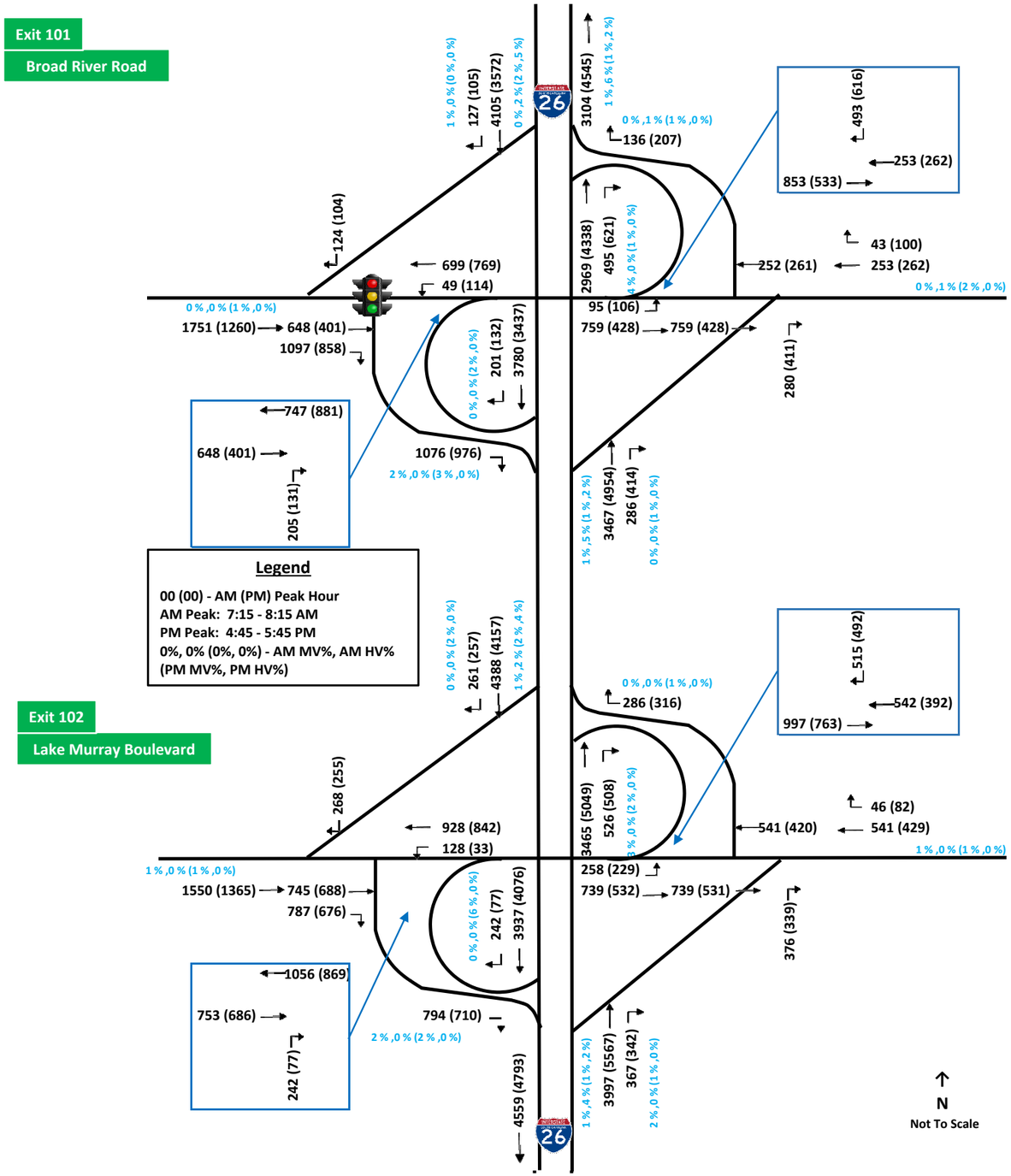

Carolina Crossroads
2040 No-Build Interchange Volumes

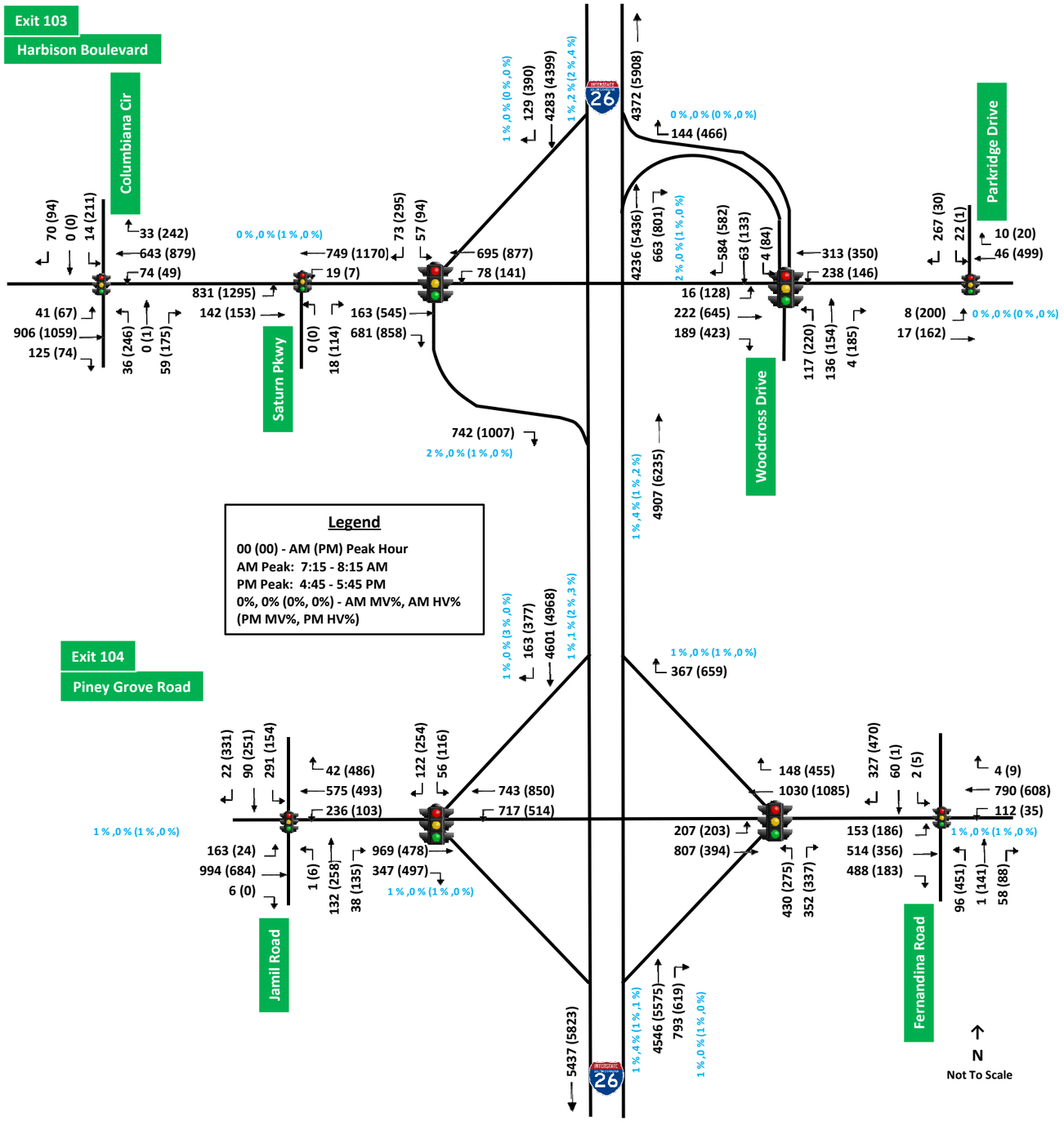

Carolina Crossroads
2040 No-Build Interchange Volumes

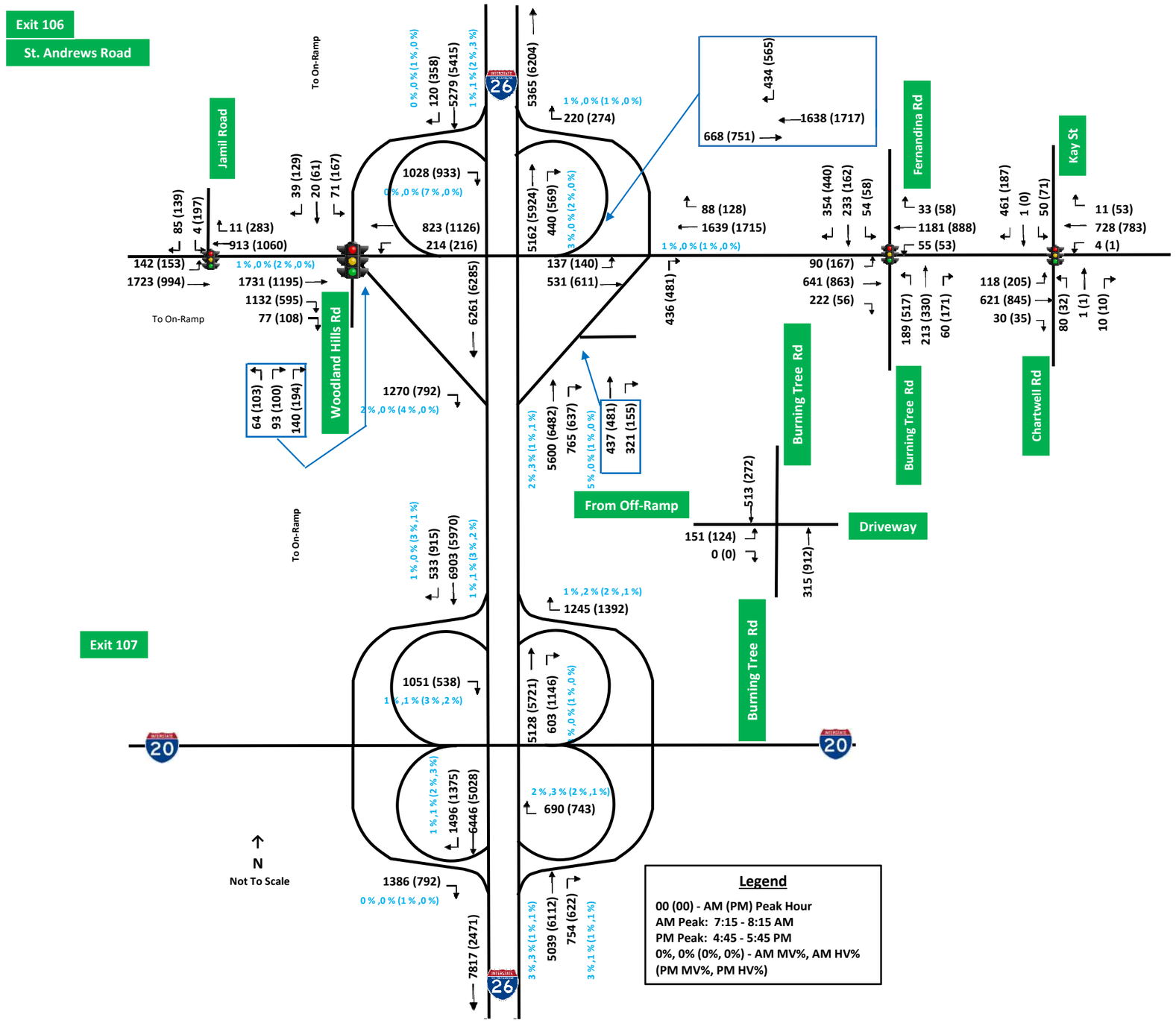

Carolina Crossroads
2040 No-Build Interchange Volumes

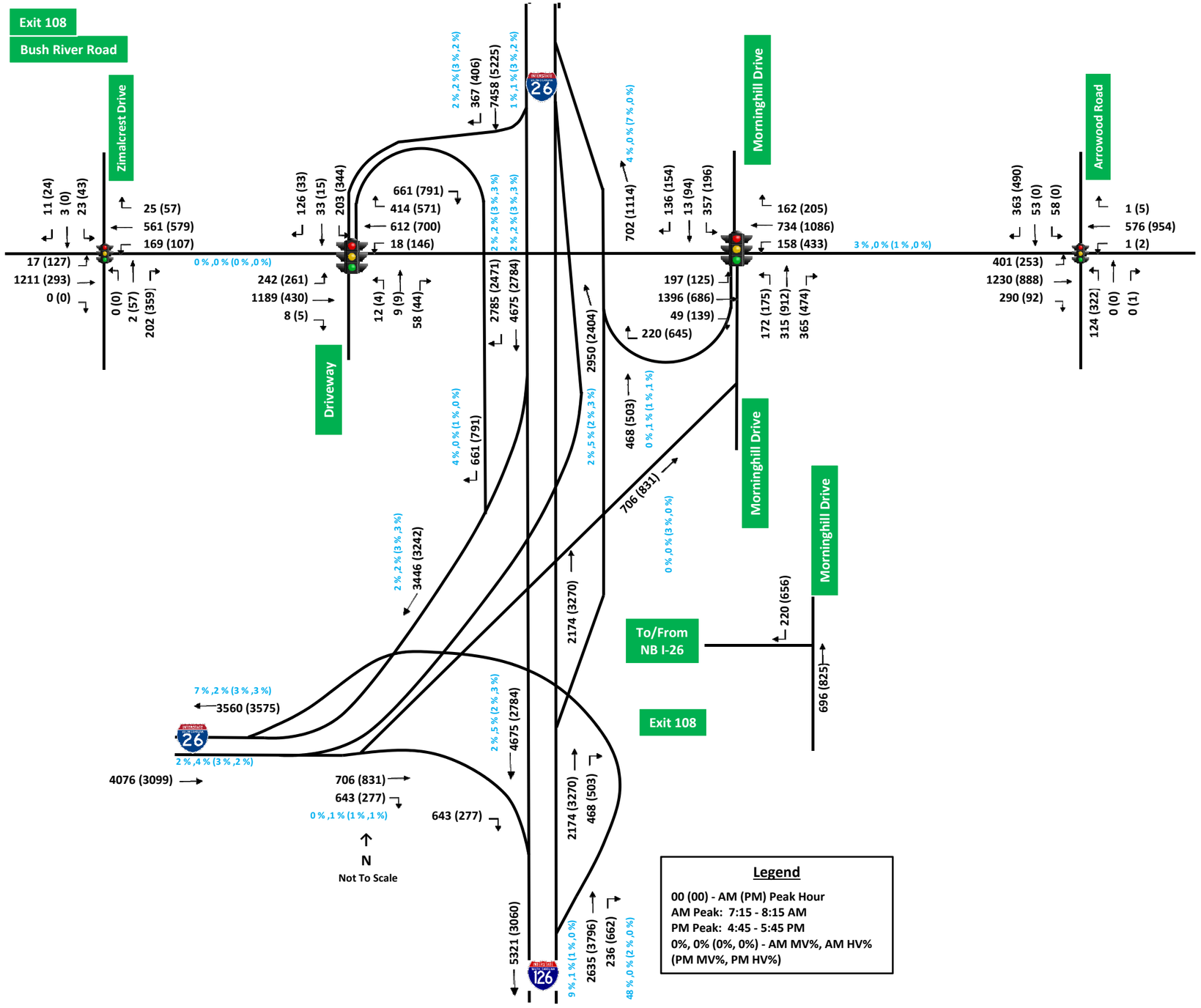

Carolina Crossroads
2040 No-Build Interchange Volumes

Exit 110
Sunset Boulevard

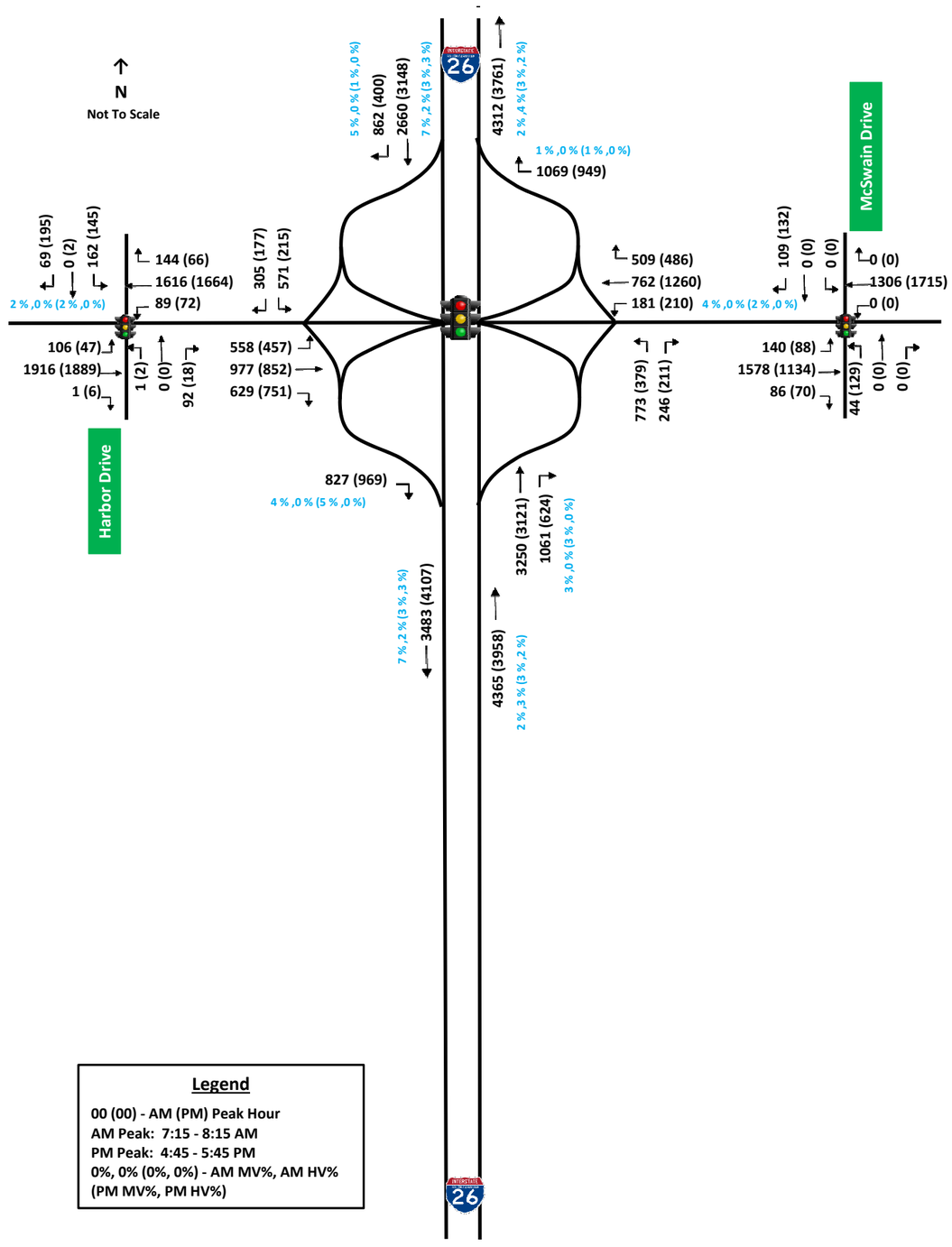

Legend

00 (00) - AM (PM) Peak Hour
AM Peak: 7:15 - 8:15 AM
PM Peak: 4:45 - 5:45 PM
0%, 0% (0%, 0%) - AM MV%, AM HV%
(PM MV%, PM HV%)

Carolina Crossroads
2040 No-Build Interchange Volumes

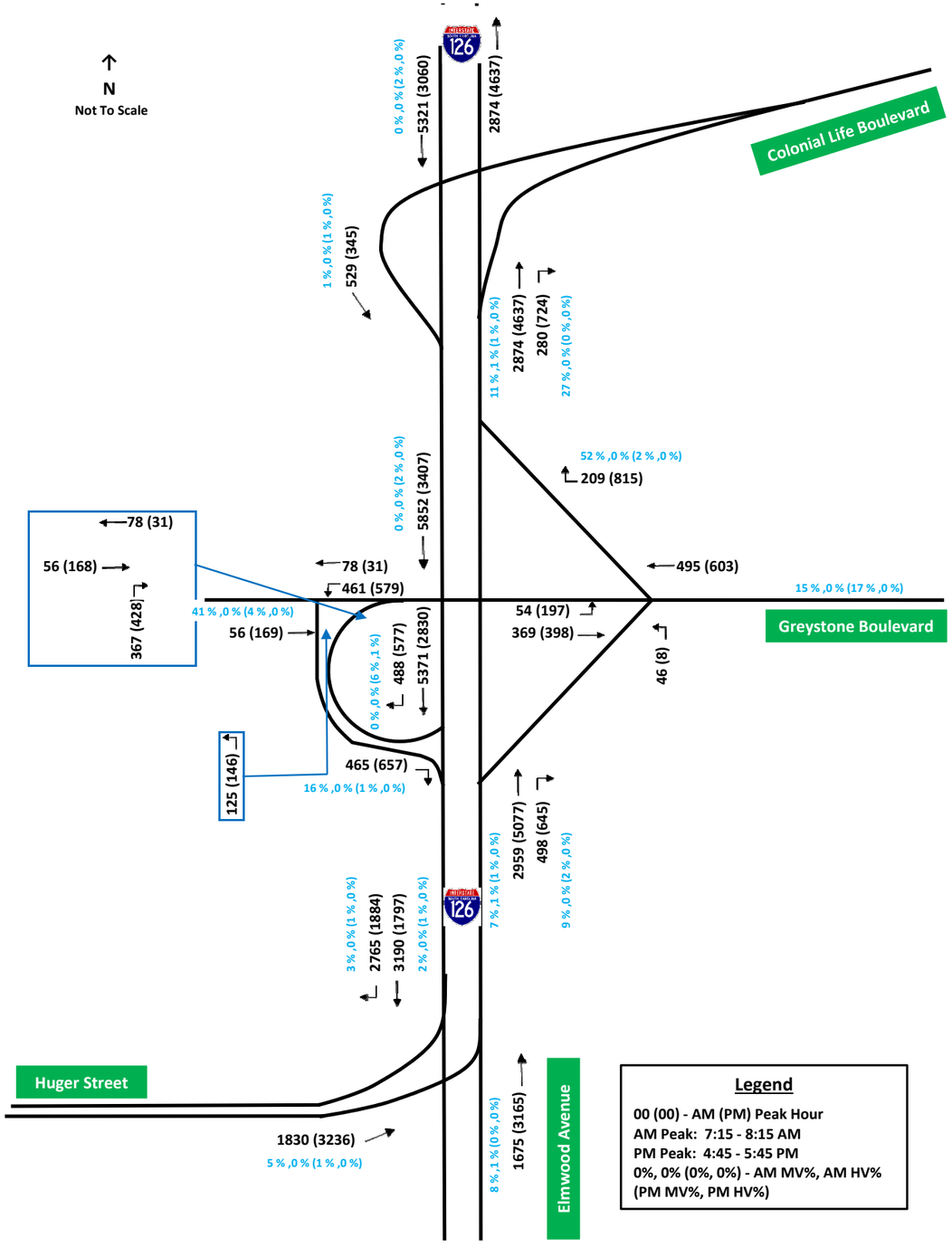

Carolina Crossroads
2040 No-Build Interchange Volumes

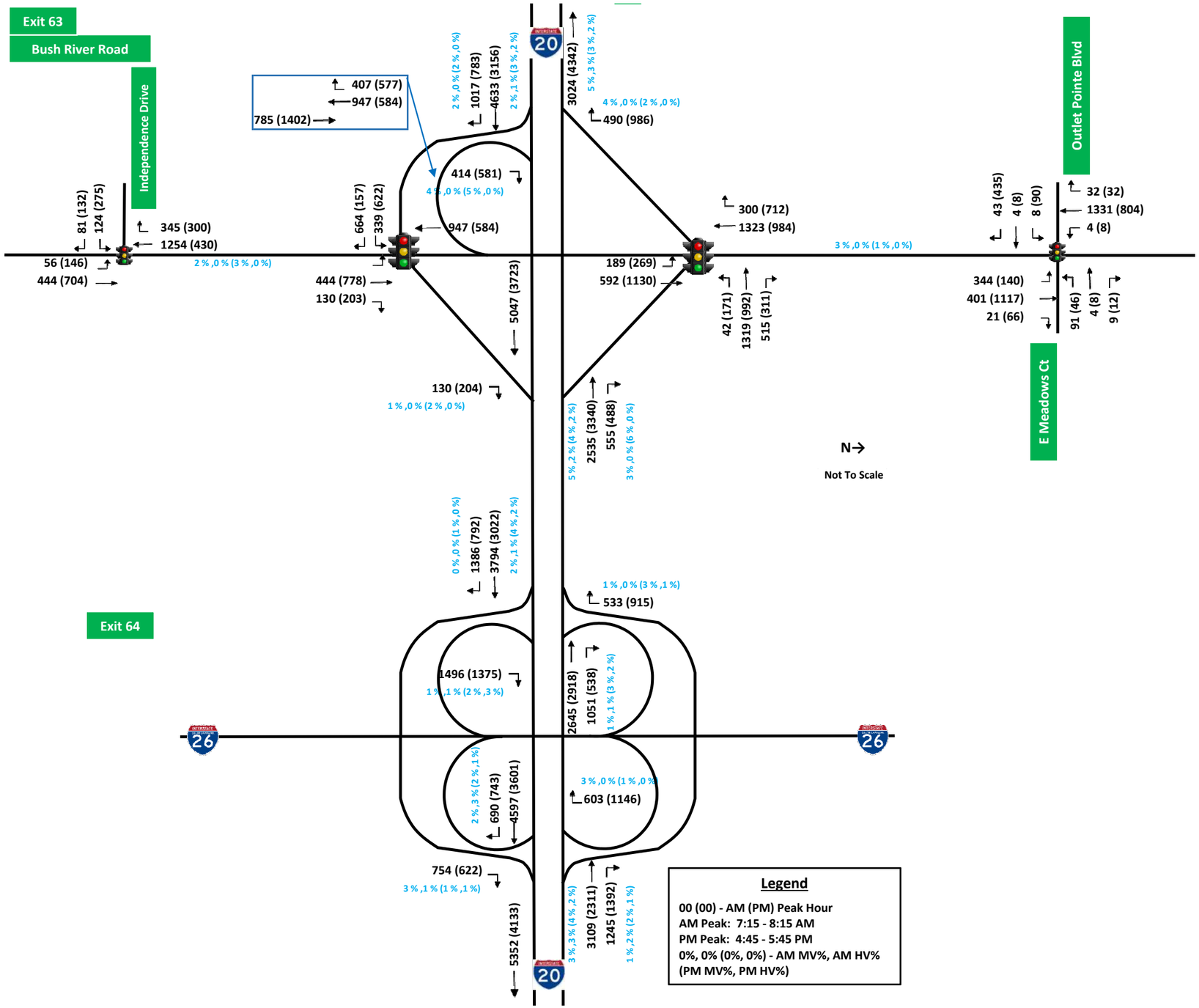

Carolina Crossroads
2040 No-Build Interchange Volumes

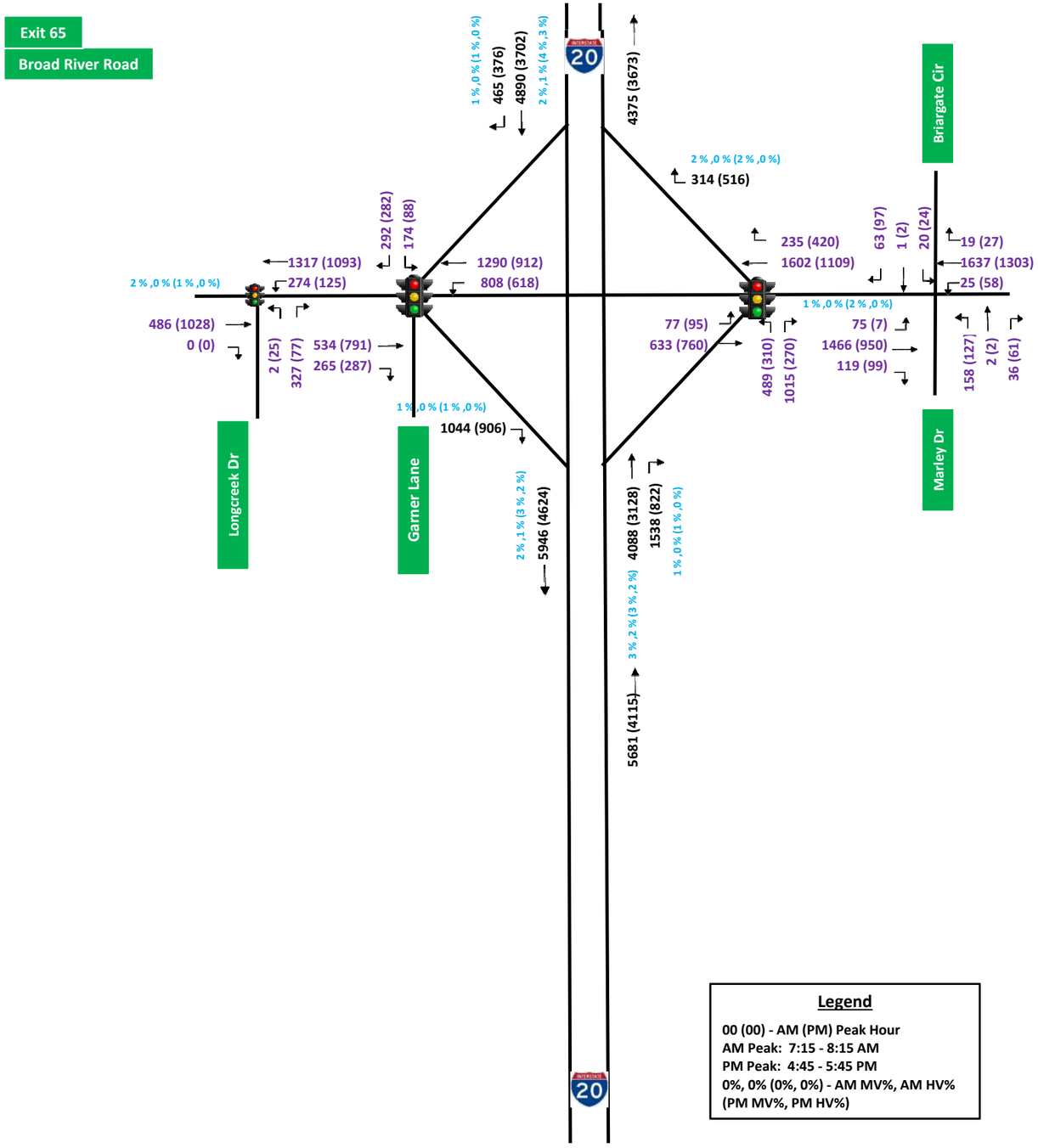

Legend

00 (00) - AM (PM) Peak Hour
AM Peak: 7:15 - 8:15 AM
PM Peak: 4:45 - 5:45 PM
0%, 0% (0%, 0%) - AM MV%, AM HV% (PM MV%, PM HV%)

TransModeler 2040 Build RRPA
Peak Hour Volumes

Carolina Crossroads
2040 RRPA Interchange Volumes

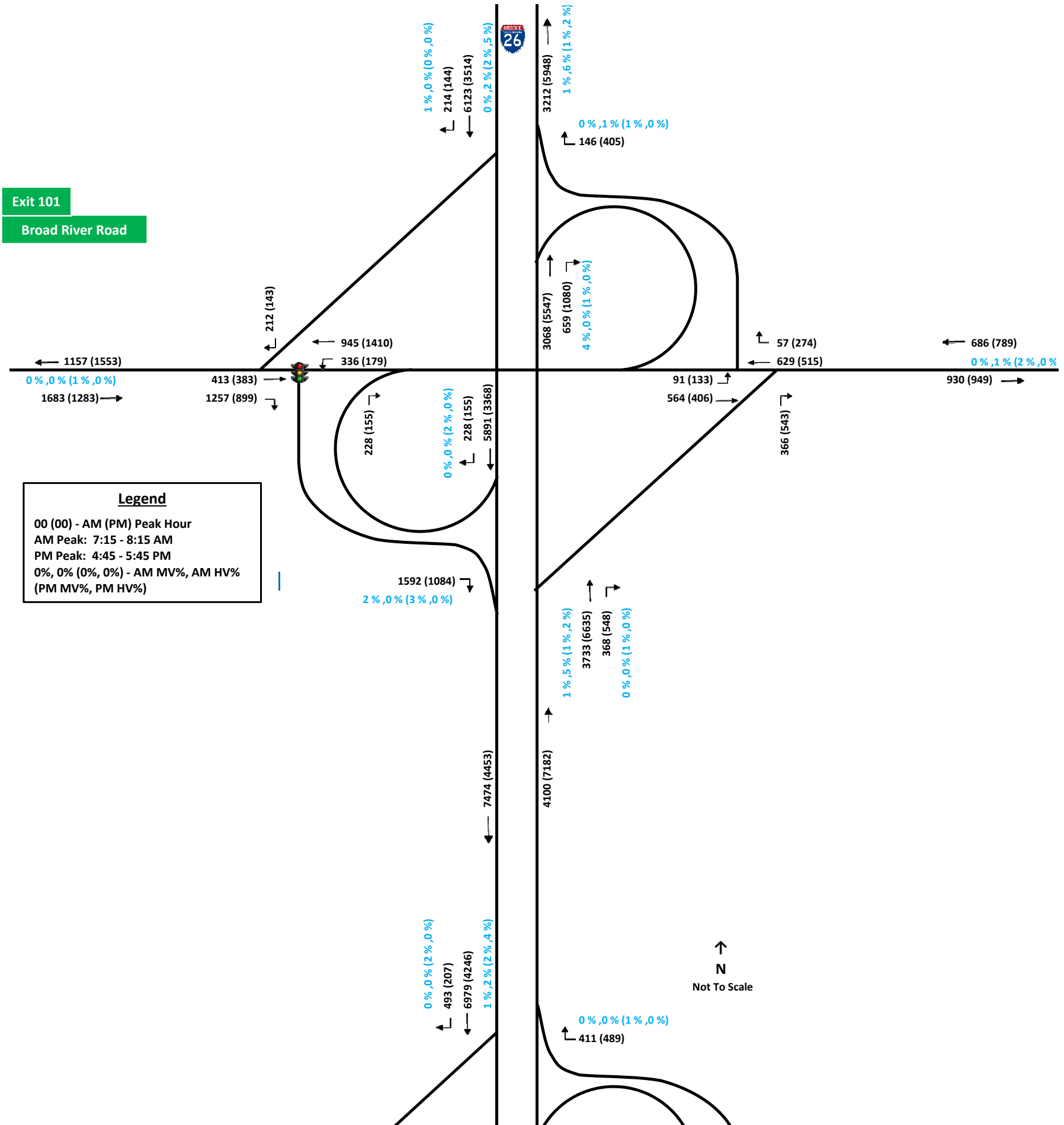

Carolina Crossroads
2040 RRPA Interchange Volumes

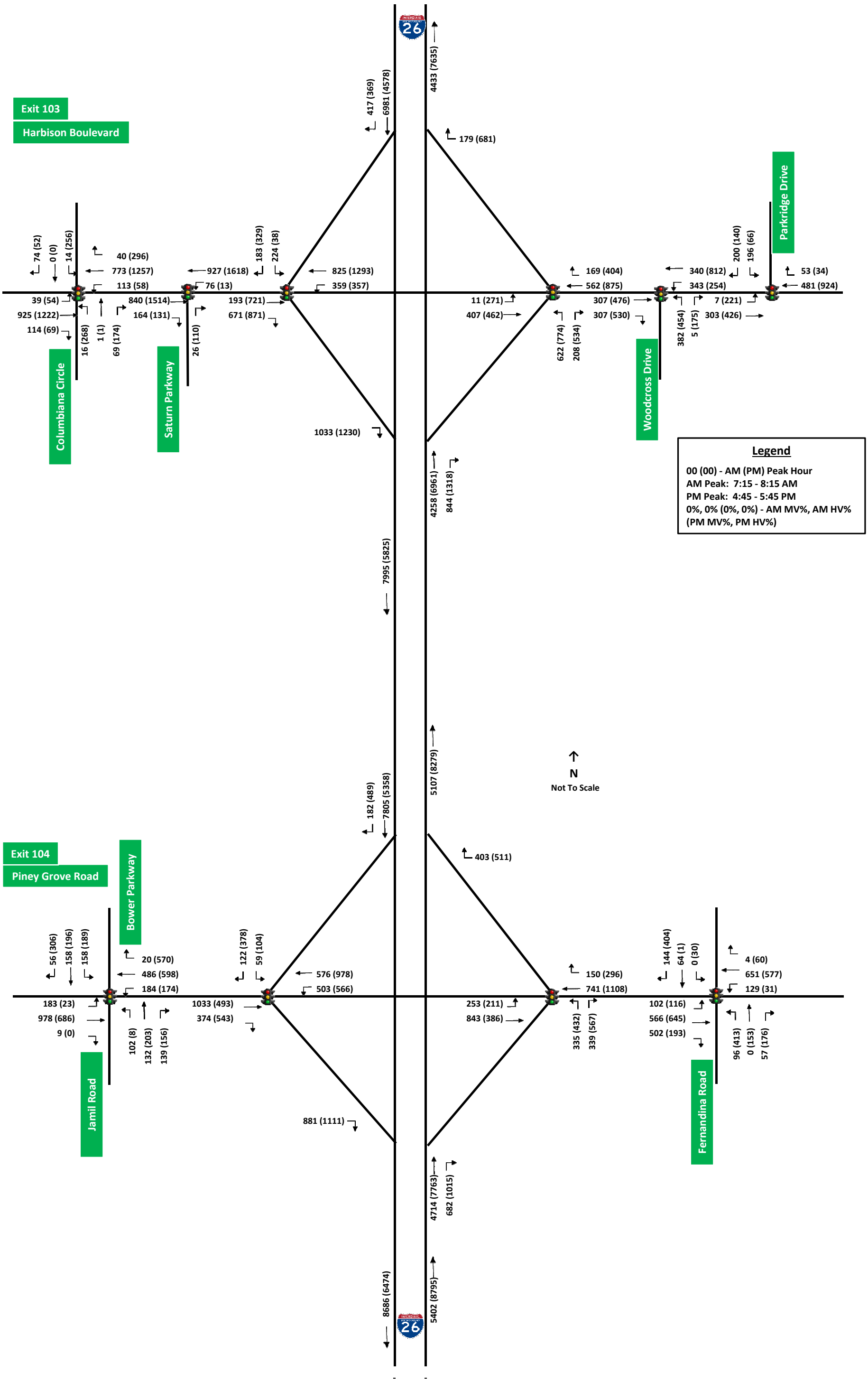

Carolina Crossroads
2040 RRPA Interchange Volumes

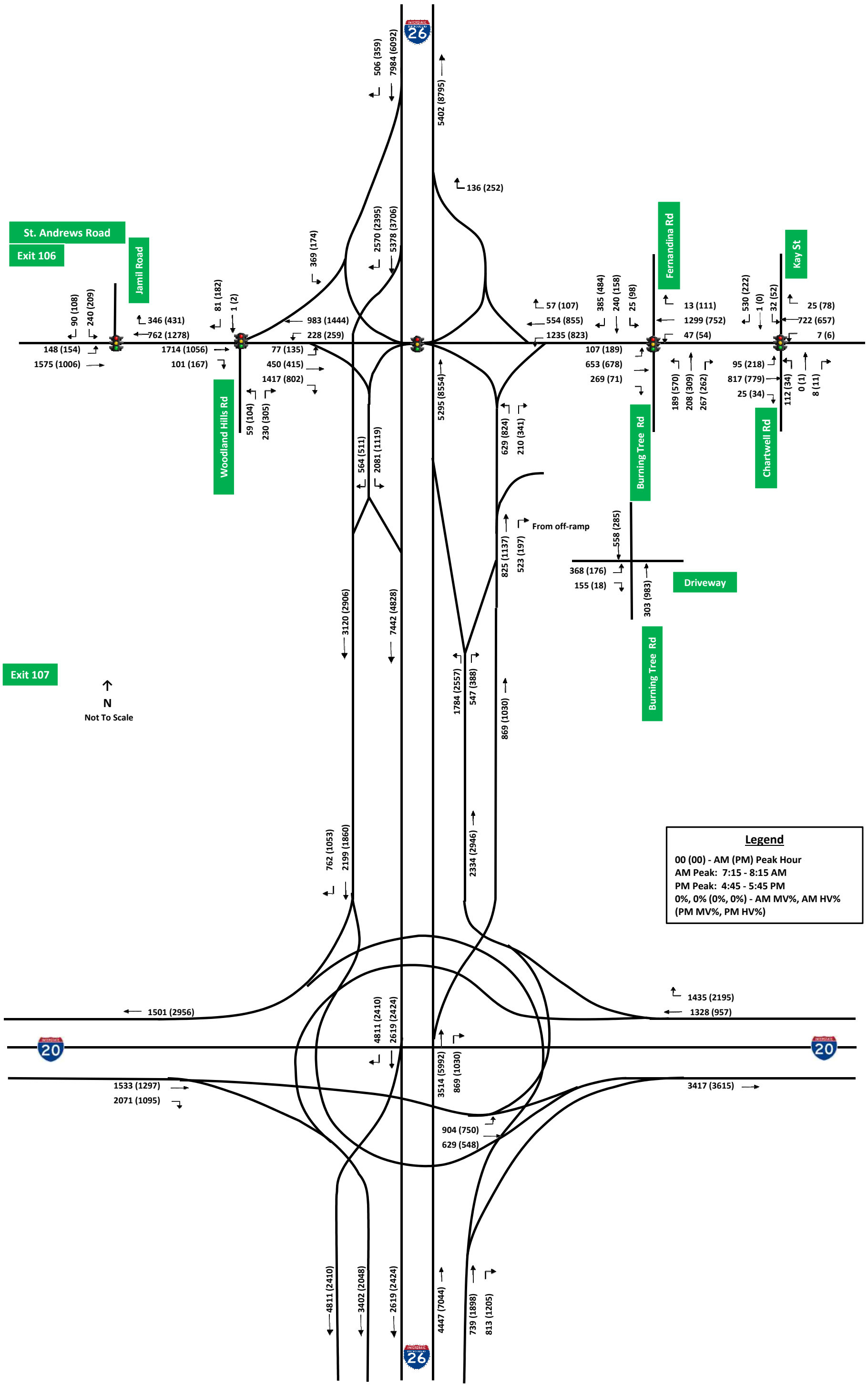

Carolina Crossroads
2040 RRPA Interchange Volumes

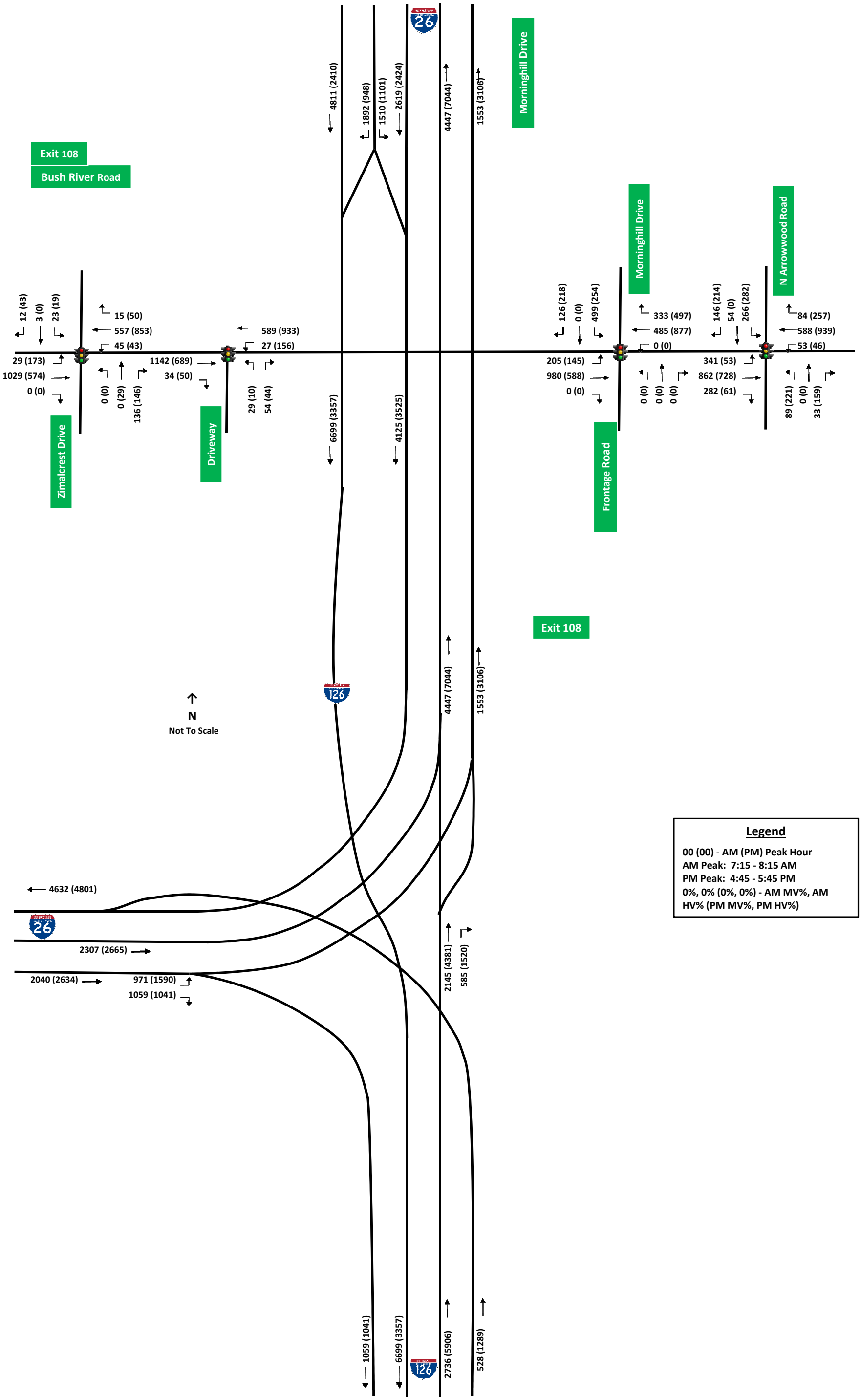

Legend

00 (00) - AM (PM) Peak Hour
AM Peak: 7:15 - 8:15 AM
PM Peak: 4:45 - 5:45 PM
0%, 0% (0%, 0%) - AM MV%, AM HV% (PM MV%, PM HV%)

Carolina Crossroads
2040 RRPA Interchange Volumes

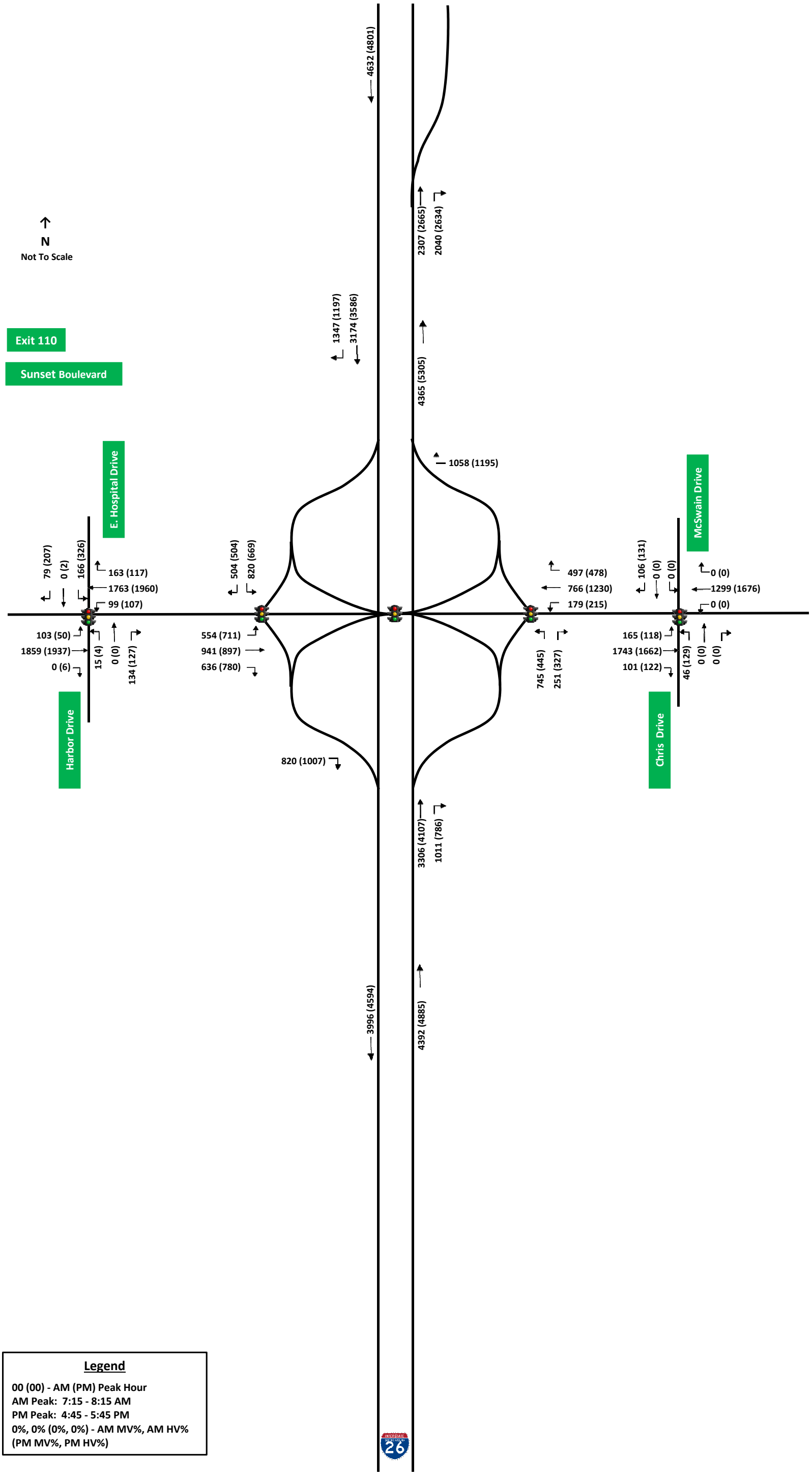

Legend

00 (00) - AM (PM) Peak Hour
AM Peak: 7:15 - 8:15 AM
PM Peak: 4:45 - 5:45 PM
0%, 0% (0%, 0%) - AM MV%, AM HV%
(PM MV%, PM HV%)

Carolina Crossroads
2040 RRPA Interchange Volumes

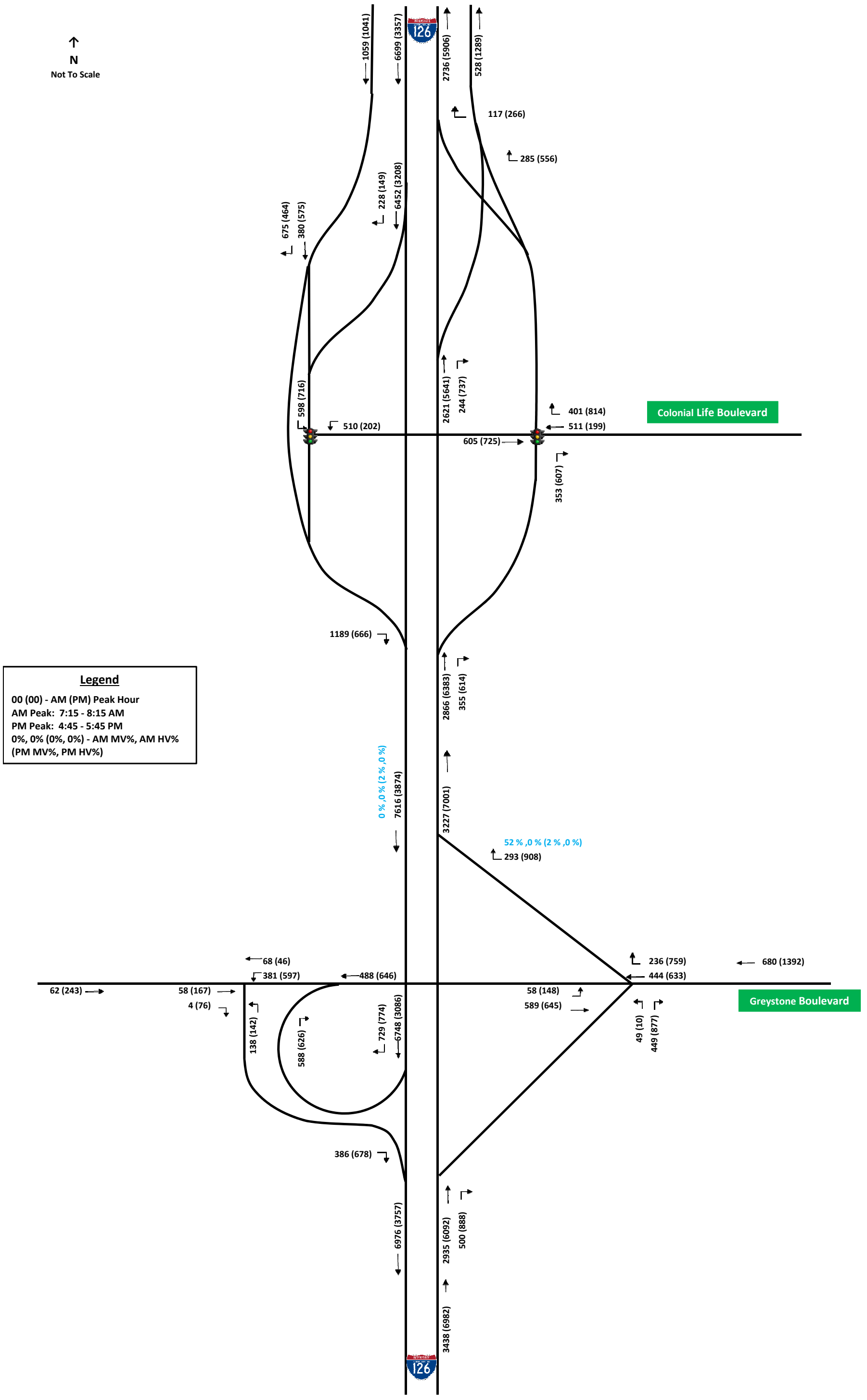

Carolina Crossroads
2040 RRPA Interchange Volumes

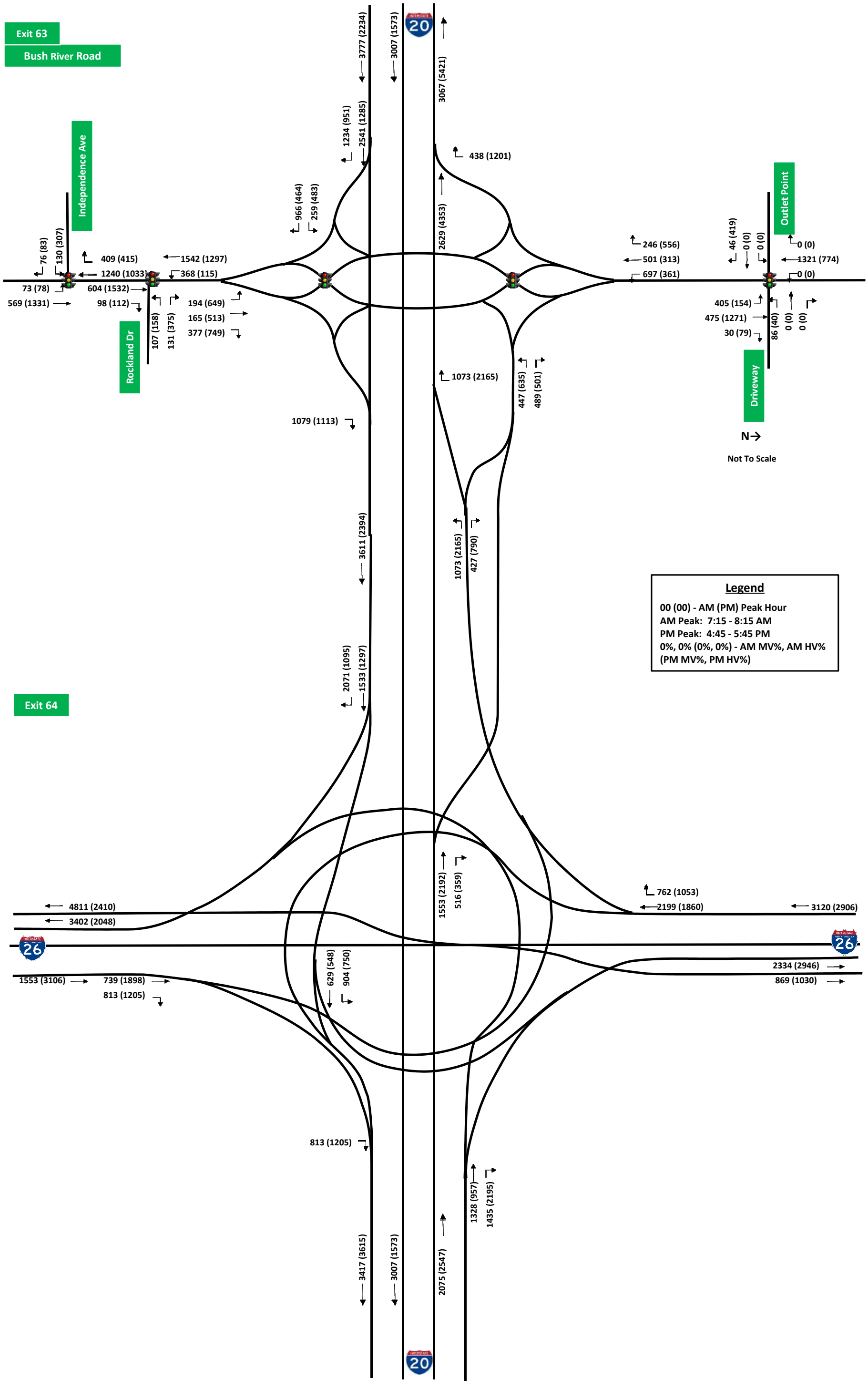

Carolina Crossroads
2040 RRPA Interchange Volumes

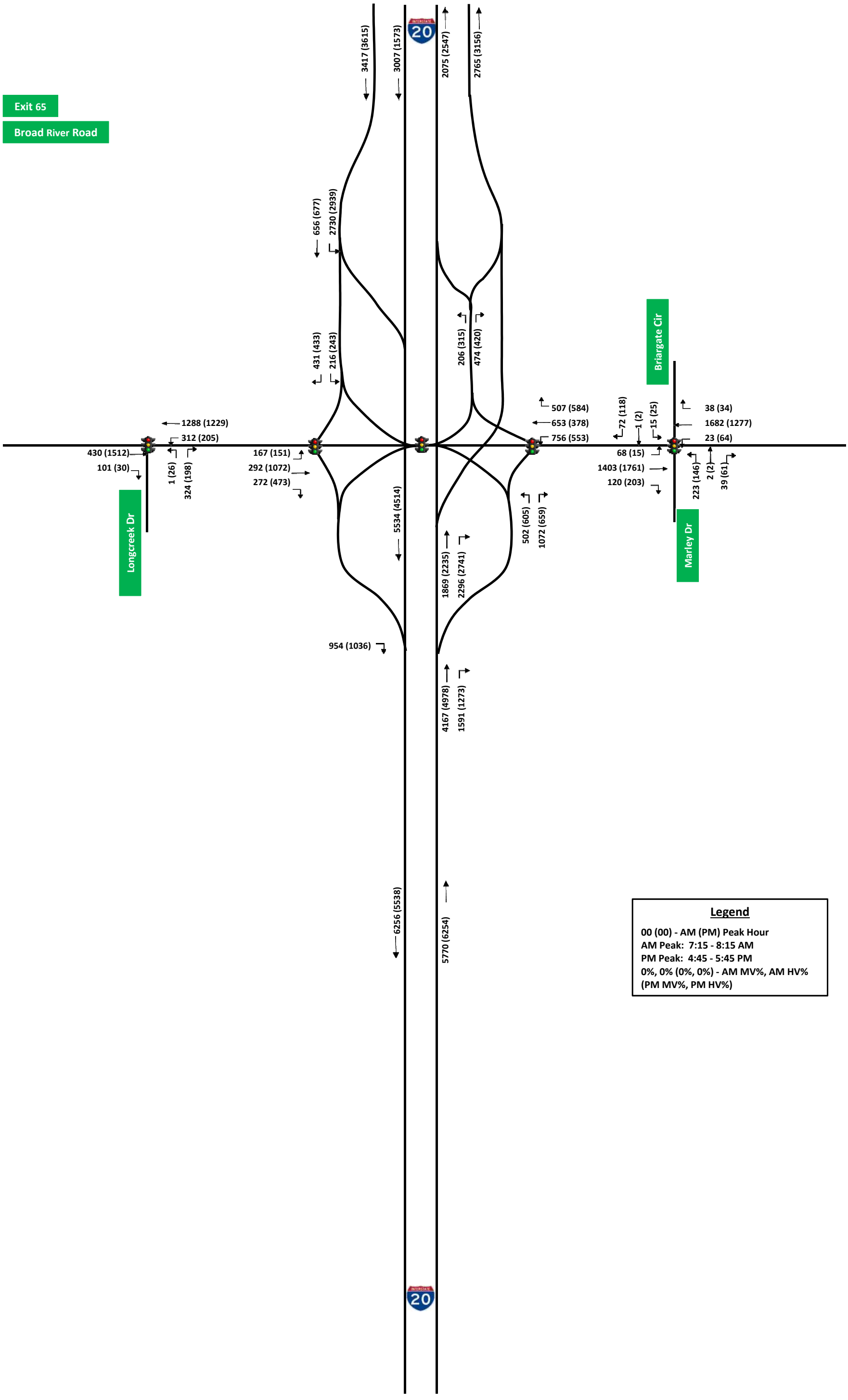

Appendix C— TransModeler Density Outputs

Existing AM

ID	Run	Density	Name (Type)	Direction
2466	1	32.864322	I-20 EB (Weaving Analysis)	E
2466	2	34.265022	I-20 EB (Weaving Analysis)	E
2466	3	31.880658	I-20 EB (Weaving Analysis)	E
2466	4	34.999369	I-20 EB (Weaving Analysis)	E
2466	5	35.080963	I-20 EB (Weaving Analysis)	E
2466	6	31.608678	I-20 EB (Weaving Analysis)	E
2466	7	33.603202	I-20 EB (Weaving Analysis)	E
2466	8	32.846189	I-20 EB (Weaving Analysis)	E
2466	9	33.557872	I-20 EB (Weaving Analysis)	E
2466	10	31.576947	I-20 EB (Weaving Analysis)	E
2467	1	19.6053	I-20 WB (Weaving Analysis)	W
2467	2	19.15774	I-20 WB (Weaving Analysis)	W
2467	3	19.894576	I-20 WB (Weaving Analysis)	W
2467	4	17.886015	I-20 WB (Weaving Analysis)	W
2467	5	22.028672	I-20 WB (Weaving Analysis)	W
2467	6	19.108618	I-20 WB (Weaving Analysis)	W
2467	7	18.699264	I-20 WB (Weaving Analysis)	W
2467	8	19.528887	I-20 WB (Weaving Analysis)	W
2467	9	20.707825	I-20 WB (Weaving Analysis)	W
2467	10	18.355407	I-20 WB (Weaving Analysis)	W
2806	1	43.533556	I-20 EB (Basic Analysis)	NE
2806	2	43.678865	I-20 EB (Basic Analysis)	NE
2806	3	43.307263	I-20 EB (Basic Analysis)	NE
2806	4	43.59055	I-20 EB (Basic Analysis)	NE
2806	5	43.666997	I-20 EB (Basic Analysis)	NE
2806	6	44.127079	I-20 EB (Basic Analysis)	NE
2806	7	43.881854	I-20 EB (Basic Analysis)	NE
2806	8	43.895512	I-20 EB (Basic Analysis)	NE
2806	9	43.292905	I-20 EB (Basic Analysis)	NE
2806	10	43.405572	I-20 EB (Basic Analysis)	NE
2807	1	43.533556	I-20 EB (Basic Analysis)	NE
2807	2	43.678865	I-20 EB (Basic Analysis)	NE
2807	3	43.307263	I-20 EB (Basic Analysis)	NE
2807	4	43.59055	I-20 EB (Basic Analysis)	NE
2807	5	43.666997	I-20 EB (Basic Analysis)	NE
2807	6	44.127079	I-20 EB (Basic Analysis)	NE
2807	7	43.881854	I-20 EB (Basic Analysis)	NE
2807	8	43.895512	I-20 EB (Basic Analysis)	NE
2807	9	43.292905	I-20 EB (Basic Analysis)	NE
2807	10	43.405572	I-20 EB (Basic Analysis)	NE
2808	1	35.977092	I-20 EB (Diverge Analysis)	NE
2808	2	37.407976	I-20 EB (Diverge Analysis)	NE
2808	3	36.211752	I-20 EB (Diverge Analysis)	NE
2808	4	36.114651	I-20 EB (Diverge Analysis)	NE
2808	5	36.423485	I-20 EB (Diverge Analysis)	NE
2808	6	38.130836	I-20 EB (Diverge Analysis)	NE
2808	7	37.131509	I-20 EB (Diverge Analysis)	NE
2808	8	37.039803	I-20 EB (Diverge Analysis)	NE
2808	9	35.456526	I-20 EB (Diverge Analysis)	NE
2808	10	36.869878	I-20 EB (Diverge Analysis)	NE
2813	1	12.106883	I-20 WB (Merge Analysis)	S
2813	2	11.252617	I-20 WB (Merge Analysis)	S
2813	3	11.504532	I-20 WB (Merge Analysis)	S
2813	4	13.004798	I-20 WB (Merge Analysis)	S
2813	5	12.589512	I-20 WB (Merge Analysis)	S
2813	6	12.22037	I-20 WB (Merge Analysis)	S
2813	7	11.840003	I-20 WB (Merge Analysis)	S
2813	8	13.57223	I-20 WB (Merge Analysis)	S
2813	9	13.11579	I-20 WB (Merge Analysis)	S
2813	10	12.328868	I-20 WB (Merge Analysis)	S
2814	1	15.367391	I-20 WB (Basic Analysis)	S
2814	2	15.657885	I-20 WB (Basic Analysis)	S
2814	3	15.07052	I-20 WB (Basic Analysis)	S
2814	4	15.575541	I-20 WB (Basic Analysis)	S

Existing AM

ID	Run	Density	Name (Type)	Direction
2814	5	16.153315	I-20 WB (Basic Analysis)	S
2814	6	15.595604	I-20 WB (Basic Analysis)	S
2814	7	15.212511	I-20 WB (Basic Analysis)	S
2814	8	15.53972	I-20 WB (Basic Analysis)	S
2814	9	15.48028	I-20 WB (Basic Analysis)	S
2814	10	15.540299	I-20 WB (Basic Analysis)	S
2815	1	15.367391	I-20 WB (Basic Analysis)	S
2815	2	15.657885	I-20 WB (Basic Analysis)	S
2815	3	15.07052	I-20 WB (Basic Analysis)	S
2815	4	15.575541	I-20 WB (Basic Analysis)	S
2815	5	16.153315	I-20 WB (Basic Analysis)	S
2815	6	15.595604	I-20 WB (Basic Analysis)	S
2815	7	15.212511	I-20 WB (Basic Analysis)	S
2815	8	15.53972	I-20 WB (Basic Analysis)	S
2815	9	15.48028	I-20 WB (Basic Analysis)	S
2815	10	15.540299	I-20 WB (Basic Analysis)	S
2822	1	7.25058	I-20 WB (Merge Analysis)	SW
2822	2	7.44819	I-20 WB (Merge Analysis)	SW
2822	3	6.909032	I-20 WB (Merge Analysis)	SW
2822	4	10.095188	I-20 WB (Merge Analysis)	SW
2822	5	6.450381	I-20 WB (Merge Analysis)	SW
2822	6	7.348165	I-20 WB (Merge Analysis)	SW
2822	7	8.738754	I-20 WB (Merge Analysis)	SW
2822	8	8.075175	I-20 WB (Merge Analysis)	SW
2822	9	8.409404	I-20 WB (Merge Analysis)	SW
2822	10	7.340846	I-20 WB (Merge Analysis)	SW
2823	1	474.487431	I-20 WB (Basic Analysis)	SW
2823	2	139.555127	I-20 WB (Basic Analysis)	SW
2823	3	358.191492	I-20 WB (Basic Analysis)	SW
2823	4	297.717603	I-20 WB (Basic Analysis)	SW
2823	5	302.369442	I-20 WB (Basic Analysis)	SW
2823	6	139.555127	I-20 WB (Basic Analysis)	SW
2823	7	576.827856	I-20 WB (Basic Analysis)	SW
2823	8	395.406193	I-20 WB (Basic Analysis)	SW
2823	9	441.924569	I-20 WB (Basic Analysis)	SW
2823	10	325.62863	I-20 WB (Basic Analysis)	SW
2826	1	21.899824	I-20 EB (Basic Analysis)	NE
2826	2	20.825607	I-20 EB (Basic Analysis)	NE
2826	3	21.910758	I-20 EB (Basic Analysis)	NE
2826	4	21.511685	I-20 EB (Basic Analysis)	NE
2826	5	23.733921	I-20 EB (Basic Analysis)	NE
2826	6	21.027877	I-20 EB (Basic Analysis)	NE
2826	7	22.233296	I-20 EB (Basic Analysis)	NE
2826	8	21.897091	I-20 EB (Basic Analysis)	NE
2826	9	19.901725	I-20 EB (Basic Analysis)	NE
2826	10	21.243814	I-20 EB (Basic Analysis)	NE
2829	1	24.283208	I-20 EB (Merge Analysis)	NE
2829	2	25.865062	I-20 EB (Merge Analysis)	NE
2829	3	26.013826	I-20 EB (Merge Analysis)	NE
2829	4	23.938572	I-20 EB (Merge Analysis)	NE
2829	5	26.232013	I-20 EB (Merge Analysis)	NE
2829	6	25.825392	I-20 EB (Merge Analysis)	NE
2829	7	25.150996	I-20 EB (Merge Analysis)	NE
2829	8	24.317919	I-20 EB (Merge Analysis)	NE
2829	9	25.5477	I-20 EB (Merge Analysis)	NE
2829	10	24.68487	I-20 EB (Merge Analysis)	NE
2830	1	29.810077	I-20 EB (Basic Analysis)	NE
2830	2	32.752816	I-20 EB (Basic Analysis)	NE
2830	3	31.433202	I-20 EB (Basic Analysis)	NE
2830	4	31.98744	I-20 EB (Basic Analysis)	NE
2830	5	31.604752	I-20 EB (Basic Analysis)	NE
2830	6	32.97715	I-20 EB (Basic Analysis)	NE
2830	7	30.971337	I-20 EB (Basic Analysis)	NE
2830	8	29.335016	I-20 EB (Basic Analysis)	NE

Existing AM

ID	Run	Density	Name (Type)	Direction
2830	9	33.029935	I-20 EB (Basic Analysis)	NE
2830	10	31.142887	I-20 EB (Basic Analysis)	NE
2831	1	10.209618	I-20 WB (Basic Analysis)	SW
2831	2	8.355973	I-20 WB (Basic Analysis)	SW
2831	3	9.519264	I-20 WB (Basic Analysis)	SW
2831	4	9.821854	I-20 WB (Basic Analysis)	SW
2831	5	9.440815	I-20 WB (Basic Analysis)	SW
2831	6	8.936498	I-20 WB (Basic Analysis)	SW
2831	7	9.156156	I-20 WB (Basic Analysis)	SW
2831	8	9.826337	I-20 WB (Basic Analysis)	SW
2831	9	9.965305	I-20 WB (Basic Analysis)	SW
2831	10	9.55961	I-20 WB (Basic Analysis)	SW
2837	1	12.732043	I-20 WB (Merge Analysis)	SW
2837	2	11.780769	I-20 WB (Merge Analysis)	SW
2837	3	11.743219	I-20 WB (Merge Analysis)	SW
2837	4	12.451667	I-20 WB (Merge Analysis)	SW
2837	5	11.966017	I-20 WB (Merge Analysis)	SW
2837	6	11.8033	I-20 WB (Merge Analysis)	SW
2837	7	13.377907	I-20 WB (Merge Analysis)	SW
2837	8	13.337854	I-20 WB (Merge Analysis)	SW
2837	9	12.699499	I-20 WB (Merge Analysis)	SW
2837	10	11.067314	I-20 WB (Merge Analysis)	SW
2838	1	18.460258	I-20 WB (Basic Analysis)	SW
2838	2	16.948981	I-20 WB (Basic Analysis)	SW
2838	3	16.951005	I-20 WB (Basic Analysis)	SW
2838	4	18.354985	I-20 WB (Basic Analysis)	SW
2838	5	16.814353	I-20 WB (Basic Analysis)	SW
2838	6	17.003642	I-20 WB (Basic Analysis)	SW
2838	7	17.477371	I-20 WB (Basic Analysis)	SW
2838	8	18.422805	I-20 WB (Basic Analysis)	SW
2838	9	18.613107	I-20 WB (Basic Analysis)	SW
2838	10	17.70715	I-20 WB (Basic Analysis)	SW
2839	1	19.738436	I-20 WB (Diverge Analysis)	SW
2839	2	19.536715	I-20 WB (Diverge Analysis)	SW
2839	3	18.825647	I-20 WB (Diverge Analysis)	SW
2839	4	18.934072	I-20 WB (Diverge Analysis)	SW
2839	5	20.678962	I-20 WB (Diverge Analysis)	SW
2839	6	19.972938	I-20 WB (Diverge Analysis)	SW
2839	7	19.269434	I-20 WB (Diverge Analysis)	SW
2839	8	19.211439	I-20 WB (Diverge Analysis)	SW
2839	9	21.750607	I-20 WB (Diverge Analysis)	SW
2839	10	19.198832	I-20 WB (Diverge Analysis)	SW
2840	1	19.738436	I-20 WB (Diverge Analysis)	SW
2840	2	19.536715	I-20 WB (Diverge Analysis)	SW
2840	3	18.825647	I-20 WB (Diverge Analysis)	SW
2840	4	18.934072	I-20 WB (Diverge Analysis)	SW
2840	5	20.678962	I-20 WB (Diverge Analysis)	SW
2840	6	19.972938	I-20 WB (Diverge Analysis)	SW
2840	7	19.269434	I-20 WB (Diverge Analysis)	SW
2840	8	19.211439	I-20 WB (Diverge Analysis)	SW
2840	9	21.750607	I-20 WB (Diverge Analysis)	SW
2840	10	19.198832	I-20 WB (Diverge Analysis)	SW
2843	1	29.17255	I-20 EB (Merge Analysis)	NE
2843	2	29.315891	I-20 EB (Merge Analysis)	NE
2843	3	27.962115	I-20 EB (Merge Analysis)	NE
2843	4	31.230644	I-20 EB (Merge Analysis)	NE
2843	5	30.31043	I-20 EB (Merge Analysis)	NE
2843	6	29.800774	I-20 EB (Merge Analysis)	NE
2843	7	28.537249	I-20 EB (Merge Analysis)	NE
2843	8	28.002817	I-20 EB (Merge Analysis)	NE
2843	9	28.301886	I-20 EB (Merge Analysis)	NE
2843	10	27.418835	I-20 EB (Merge Analysis)	NE
2844	1	29.17255	I-20 EB (Merge Analysis)	NE
2844	2	29.315891	I-20 EB (Merge Analysis)	NE

Existing AM

ID	Run	Density	Name (Type)	Direction
2844	3	27.962115	I-20 EB (Merge Analysis)	NE
2844	4	31.230644	I-20 EB (Merge Analysis)	NE
2844	5	30.31043	I-20 EB (Merge Analysis)	NE
2844	6	29.800774	I-20 EB (Merge Analysis)	NE
2844	7	28.537249	I-20 EB (Merge Analysis)	NE
2844	8	28.002817	I-20 EB (Merge Analysis)	NE
2844	9	28.301886	I-20 EB (Merge Analysis)	NE
2844	10	27.418835	I-20 EB (Merge Analysis)	NE
2848	1	27.373298	I-20 EB (Basic Analysis)	NE
2848	2	28.291444	I-20 EB (Basic Analysis)	NE
2848	3	27.847529	I-20 EB (Basic Analysis)	NE
2848	4	28.516649	I-20 EB (Basic Analysis)	NE
2848	5	30.708072	I-20 EB (Basic Analysis)	NE
2848	6	28.741855	I-20 EB (Basic Analysis)	NE
2848	7	27.637481	I-20 EB (Basic Analysis)	NE
2848	8	28.202661	I-20 EB (Basic Analysis)	NE
2848	9	27.682956	I-20 EB (Basic Analysis)	NE
2848	10	28.737524	I-20 EB (Basic Analysis)	NE
2852	1	12.932373	I-20 WB (Basic Analysis)	SW
2852	2	13.009227	I-20 WB (Basic Analysis)	SW
2852	3	12.623561	I-20 WB (Basic Analysis)	SW
2852	4	13.596109	I-20 WB (Basic Analysis)	SW
2852	5	13.081888	I-20 WB (Basic Analysis)	SW
2852	6	12.788447	I-20 WB (Basic Analysis)	SW
2852	7	12.170823	I-20 WB (Basic Analysis)	SW
2852	8	12.862506	I-20 WB (Basic Analysis)	SW
2852	9	12.549502	I-20 WB (Basic Analysis)	SW
2852	10	13.551394	I-20 WB (Basic Analysis)	SW
2856	1	21.534431	I-20 EB (Basic Analysis)	NE
2856	2	21.586433	I-20 EB (Basic Analysis)	NE
2856	3	21.580655	I-20 EB (Basic Analysis)	NE
2856	4	21.555617	I-20 EB (Basic Analysis)	NE
2856	5	22.437717	I-20 EB (Basic Analysis)	NE
2856	6	22.094892	I-20 EB (Basic Analysis)	NE
2856	7	21.545987	I-20 EB (Basic Analysis)	NE
2856	8	21.307165	I-20 EB (Basic Analysis)	NE
2856	9	21.651916	I-20 EB (Basic Analysis)	NE
2856	10	21.183902	I-20 EB (Basic Analysis)	NE
2859	1	13.344386	I-20 WB (Weaving Analysis)	SW
2859	2	13.35285	I-20 WB (Weaving Analysis)	SW
2859	3	13.879769	I-20 WB (Weaving Analysis)	SW
2859	4	12.356148	I-20 WB (Weaving Analysis)	SW
2859	5	27.556389	I-20 WB (Weaving Analysis)	SW
2859	6	13.600439	I-20 WB (Weaving Analysis)	SW
2859	7	13.274553	I-20 WB (Weaving Analysis)	SW
2859	8	12.474652	I-20 WB (Weaving Analysis)	SW
2859	9	13.001571	I-20 WB (Weaving Analysis)	SW
2859	10	22.257572	I-20 WB (Weaving Analysis)	SW
2863	1	19.541484	I-20 EB (Merge Analysis)	E
2863	2	17.891811	I-20 EB (Merge Analysis)	E
2863	3	18.956954	I-20 EB (Merge Analysis)	E
2863	4	18.717946	I-20 EB (Merge Analysis)	E
2863	5	19.133612	I-20 EB (Merge Analysis)	E
2863	6	18.917985	I-20 EB (Merge Analysis)	E
2863	7	19.094643	I-20 EB (Merge Analysis)	E
2863	8	19.105035	I-20 EB (Merge Analysis)	E
2863	9	19.647998	I-20 EB (Merge Analysis)	E
2863	10	18.842646	I-20 EB (Merge Analysis)	E
4563	1	18.796794	I-126 SB (Merge Analysis)	E
4563	2	18.717594	I-126 SB (Merge Analysis)	E
4563	3	18.283461	I-126 SB (Merge Analysis)	E
4563	4	19.395194	I-126 SB (Merge Analysis)	E
4563	5	19.359994	I-126 SB (Merge Analysis)	E
4563	6	15.628795	I-126 SB (Merge Analysis)	E

Existing AM

ID	Run	Density	Name (Type)	Direction
4563	7	20.049327	I-126 SB (Merge Analysis)	E
4563	8	18.664794	I-126 SB (Merge Analysis)	E
4563	9	18.298128	I-126 SB (Merge Analysis)	E
4563	10	20.706394	I-126 SB (Merge Analysis)	E
4566	1	14.441357	I-126 NB (Basic Analysis)	W
4566	2	14.413461	I-126 NB (Basic Analysis)	W
4566	3	13.755807	I-126 NB (Basic Analysis)	W
4566	4	13.57829	I-126 NB (Basic Analysis)	W
4566	5	14.133662	I-126 NB (Basic Analysis)	W
4566	6	14.233409	I-126 NB (Basic Analysis)	W
4566	7	13.557158	I-126 NB (Basic Analysis)	W
4566	8	12.984879	I-126 NB (Basic Analysis)	W
4566	9	13.716077	I-126 NB (Basic Analysis)	W
4566	10	12.992487	I-126 NB (Basic Analysis)	W
4570	1	11.556613	I-126 NB (Basic Analysis)	NW
4570	2	10.828516	I-126 NB (Basic Analysis)	NW
4570	3	11.930791	I-126 NB (Basic Analysis)	NW
4570	4	10.774892	I-126 NB (Basic Analysis)	NW
4570	5	11.653137	I-126 NB (Basic Analysis)	NW
4570	6	11.617388	I-126 NB (Basic Analysis)	NW
4570	7	11.957008	I-126 NB (Basic Analysis)	NW
4570	8	10.220775	I-126 NB (Basic Analysis)	NW
4570	9	10.964364	I-126 NB (Basic Analysis)	NW
4570	10	11.752044	I-126 NB (Basic Analysis)	NW
4573	1	25.553797	I-126 SB (Basic Analysis)	E
4573	2	24.932834	I-126 SB (Basic Analysis)	E
4573	3	22.724093	I-126 SB (Basic Analysis)	E
4573	4	22.773875	I-126 SB (Basic Analysis)	E
4573	5	25.388731	I-126 SB (Basic Analysis)	E
4573	6	25.417552	I-126 SB (Basic Analysis)	E
4573	7	24.676065	I-126 SB (Basic Analysis)	E
4573	8	25.07956	I-126 SB (Basic Analysis)	E
4573	9	24.482178	I-126 SB (Basic Analysis)	E
4573	10	26.45773	I-126 SB (Basic Analysis)	E
4578	1	24.825253	I-126 SB (Basic Analysis)	E
4578	2	25.442166	I-126 SB (Basic Analysis)	E
4578	3	24.588629	I-126 SB (Basic Analysis)	E
4578	4	25.596816	I-126 SB (Basic Analysis)	E
4578	5	25.748087	I-126 SB (Basic Analysis)	E
4578	6	23.567764	I-126 SB (Basic Analysis)	E
4578	7	24.908071	I-126 SB (Basic Analysis)	E
4578	8	25.071173	I-126 SB (Basic Analysis)	E
4578	9	24.586938	I-126 SB (Basic Analysis)	E
4578	10	25.131174	I-126 SB (Basic Analysis)	E
4579	1	15.935704	I-126 SB (Diverge Analysis)	E
4579	2	16.262577	I-126 SB (Diverge Analysis)	E
4579	3	15.266268	I-126 SB (Diverge Analysis)	E
4579	4	15.577451	I-126 SB (Diverge Analysis)	E
4579	5	14.98908	I-126 SB (Diverge Analysis)	E
4579	6	16.762038	I-126 SB (Diverge Analysis)	E
4579	7	15.177359	I-126 SB (Diverge Analysis)	E
4579	8	16.239042	I-126 SB (Diverge Analysis)	E
4579	9	14.445164	I-126 SB (Diverge Analysis)	E
4579	10	15.394402	I-126 SB (Diverge Analysis)	E
4586	1	12.384687	I-126 NB (Merge Analysis)	NW
4586	2	12.657024	I-126 NB (Merge Analysis)	NW
4586	3	13.241443	I-126 NB (Merge Analysis)	NW
4586	4	12.926416	I-126 NB (Merge Analysis)	NW
4586	5	13.048599	I-126 NB (Merge Analysis)	NW
4586	6	12.639359	I-126 NB (Merge Analysis)	NW
4586	7	12.780679	I-126 NB (Merge Analysis)	NW
4586	8	12.517175	I-126 NB (Merge Analysis)	NW
4586	9	12.261032	I-126 NB (Merge Analysis)	NW
4586	10	13.12662	I-126 NB (Merge Analysis)	NW

Existing AM

ID	Run	Density	Name (Type)	Direction
4587	1	14.741533	I-126 NB (Basic Analysis)	NW
4587	2	14.791134	I-126 NB (Basic Analysis)	NW
4587	3	12.053137	I-126 NB (Basic Analysis)	NW
4587	4	15.55698	I-126 NB (Basic Analysis)	NW
4587	5	15.239531	I-126 NB (Basic Analysis)	NW
4587	6	14.239567	I-126 NB (Basic Analysis)	NW
4587	7	13.949894	I-126 NB (Basic Analysis)	NW
4587	8	13.541179	I-126 NB (Basic Analysis)	NW
4587	9	14.703836	I-126 NB (Basic Analysis)	NW
4587	10	14.99946	I-126 NB (Basic Analysis)	NW
4588	1	11.72512	I-126 NB (Diverge Analysis)	NW
4588	2	12.229884	I-126 NB (Diverge Analysis)	NW
4588	3	12.067589	I-126 NB (Diverge Analysis)	NW
4588	4	12.610217	I-126 NB (Diverge Analysis)	NW
4588	5	12.512403	I-126 NB (Diverge Analysis)	NW
4588	6	11.937864	I-126 NB (Diverge Analysis)	NW
4588	7	11.829649	I-126 NB (Diverge Analysis)	NW
4588	8	11.796201	I-126 NB (Diverge Analysis)	NW
4588	9	12.189738	I-126 NB (Diverge Analysis)	NW
4588	10	13.475979	I-126 NB (Diverge Analysis)	NW
4589	1	11.72512	I-126 NB (Diverge Analysis)	NW
4589	2	12.229884	I-126 NB (Diverge Analysis)	NW
4589	3	12.067589	I-126 NB (Diverge Analysis)	NW
4589	4	12.610217	I-126 NB (Diverge Analysis)	NW
4589	5	12.512403	I-126 NB (Diverge Analysis)	NW
4589	6	11.937864	I-126 NB (Diverge Analysis)	NW
4589	7	11.829649	I-126 NB (Diverge Analysis)	NW
4589	8	11.796201	I-126 NB (Diverge Analysis)	NW
4589	9	12.189738	I-126 NB (Diverge Analysis)	NW
4589	10	13.475979	I-126 NB (Diverge Analysis)	NW
4593	1	25.895332	I-126 SB (Merge Analysis)	SE
4593	2	26.157477	I-126 SB (Merge Analysis)	SE
4593	3	24.942782	I-126 SB (Merge Analysis)	SE
4593	4	25.020647	I-126 SB (Merge Analysis)	SE
4593	5	25.713646	I-126 SB (Merge Analysis)	SE
4593	6	24.23421	I-126 SB (Merge Analysis)	SE
4593	7	24.296502	I-126 SB (Merge Analysis)	SE
4593	8	25.11149	I-126 SB (Merge Analysis)	SE
4593	9	23.595716	I-126 SB (Merge Analysis)	SE
4593	10	25.031029	I-126 SB (Merge Analysis)	SE
4594	1	29.361073	I-126 SB (Basic Analysis)	SE
4594	2	29.69741	I-126 SB (Basic Analysis)	SE
4594	3	28.799989	I-126 SB (Basic Analysis)	SE
4594	4	29.11275	I-126 SB (Basic Analysis)	SE
4594	5	30.343364	I-126 SB (Basic Analysis)	SE
4594	6	29.035739	I-126 SB (Basic Analysis)	SE
4594	7	29.475805	I-126 SB (Basic Analysis)	SE
4594	8	29.786209	I-126 SB (Basic Analysis)	SE
4594	9	28.285268	I-126 SB (Basic Analysis)	SE
4594	10	30.043962	I-126 SB (Basic Analysis)	SE
4599	1	13.374223	I-126 NB (Basic Analysis)	NW
4599	2	11.913039	I-126 NB (Basic Analysis)	NW
4599	3	12.698953	I-126 NB (Basic Analysis)	NW
4599	4	11.266286	I-126 NB (Basic Analysis)	NW
4599	5	12.777659	I-126 NB (Basic Analysis)	NW
4599	6	10.838539	I-126 NB (Basic Analysis)	NW
4599	7	12.562074	I-126 NB (Basic Analysis)	NW
4599	8	11.295943	I-126 NB (Basic Analysis)	NW
4599	9	11.902774	I-126 NB (Basic Analysis)	NW
4599	10	12.17311	I-126 NB (Basic Analysis)	NW
4601	1	13.315677	I-126 NB (Basic Analysis)	NW
4601	2	13.46239	I-126 NB (Basic Analysis)	NW
4601	3	12.416325	I-126 NB (Basic Analysis)	NW
4601	4	13.072133	I-126 NB (Basic Analysis)	NW

Existing AM

ID	Run	Density	Name (Type)	Direction
4601	5	12.869669	I-126 NB (Basic Analysis)	NW
4601	6	13.757283	I-126 NB (Basic Analysis)	NW
4601	7	12.62906	I-126 NB (Basic Analysis)	NW
4601	8	12.530762	I-126 NB (Basic Analysis)	NW
4601	9	13.240853	I-126 NB (Basic Analysis)	NW
4601	10	12.454471	I-126 NB (Basic Analysis)	NW
4602	1	7.54246	WB EXPRESSWAY TO I-26 WB (Basic Anal	NW
4602	2	5.830605	WB EXPRESSWAY TO I-26 WB (Basic Anal	NW
4602	3	8.520664	WB EXPRESSWAY TO I-26 WB (Basic Anal	NW
4602	4	6.487031	WB EXPRESSWAY TO I-26 WB (Basic Anal	NW
4602	5	7.130586	WB EXPRESSWAY TO I-26 WB (Basic Anal	NW
4602	6	7.285039	WB EXPRESSWAY TO I-26 WB (Basic Anal	NW
4602	7	7.362265	WB EXPRESSWAY TO I-26 WB (Basic Anal	NW
4602	8	6.989003	WB EXPRESSWAY TO I-26 WB (Basic Anal	NW
4602	9	5.457343	WB EXPRESSWAY TO I-26 WB (Basic Anal	NW
4602	10	7.671171	WB EXPRESSWAY TO I-26 WB (Basic Anal	NW
4603	1	19.511169	I-126 NB (Basic Analysis)	NW
4603	2	18.842777	I-126 NB (Basic Analysis)	NW
4603	3	18.960112	I-126 NB (Basic Analysis)	NW
4603	4	19.861079	I-126 NB (Basic Analysis)	NW
4603	5	19.603361	I-126 NB (Basic Analysis)	NW
4603	6	18.876301	I-126 NB (Basic Analysis)	NW
4603	7	17.946001	I-126 NB (Basic Analysis)	NW
4603	8	18.28753	I-126 NB (Basic Analysis)	NW
4603	9	18.754776	I-126 NB (Basic Analysis)	NW
4603	10	20.37023	I-126 NB (Basic Analysis)	NW
4609	1	30.609742	I-126 SB (Basic Analysis)	SE
4609	2	30.489389	I-126 SB (Basic Analysis)	SE
4609	3	29.167868	I-126 SB (Basic Analysis)	SE
4609	4	30.13305	I-126 SB (Basic Analysis)	SE
4609	5	31.782592	I-126 SB (Basic Analysis)	SE
4609	6	29.63512	I-126 SB (Basic Analysis)	SE
4609	7	31.166669	I-126 SB (Basic Analysis)	SE
4609	8	30.772572	I-126 SB (Basic Analysis)	SE
4609	9	29.363736	I-126 SB (Basic Analysis)	SE
4609	10	30.98024	I-126 SB (Basic Analysis)	SE
4611	1	52.908518	I-26 EB (Diverge Analysis)	SE
4611	2	52.779451	I-26 EB (Diverge Analysis)	SE
4611	3	52.521318	I-26 EB (Diverge Analysis)	SE
4611	4	49.725852	I-26 EB (Diverge Analysis)	SE
4611	5	53.729851	I-26 EB (Diverge Analysis)	SE
4611	6	51.529851	I-26 EB (Diverge Analysis)	SE
4611	7	53.301584	I-26 EB (Diverge Analysis)	SE
4611	8	49.379719	I-26 EB (Diverge Analysis)	SE
4611	9	50.042651	I-26 EB (Diverge Analysis)	SE
4611	10	53.79145	I-26 EB (Diverge Analysis)	SE
4619	1	32.576595	I-26 WB (Basic Analysis)	NW
4619	2	28.540557	I-26 WB (Basic Analysis)	NW
4619	3	31.201681	I-26 WB (Basic Analysis)	NW
4619	4	27.010411	I-26 WB (Basic Analysis)	NW
4619	5	29.383246	I-26 WB (Basic Analysis)	NW
4619	6	28.717965	I-26 WB (Basic Analysis)	NW
4619	7	28.673613	I-26 WB (Basic Analysis)	NW
4619	8	36.546106	I-26 WB (Basic Analysis)	NW
4619	9	30.824689	I-26 WB (Basic Analysis)	NW
4619	10	28.407501	I-26 WB (Basic Analysis)	NW
4624	1	78.588809	I-26 EB (Weaving Analysis)	SE
4624	2	75.373242	I-26 EB (Weaving Analysis)	SE
4624	3	75.358652	I-26 EB (Weaving Analysis)	SE
4624	4	67.465632	I-26 EB (Weaving Analysis)	SE
4624	5	83.134956	I-26 EB (Weaving Analysis)	SE
4624	6	70.374815	I-26 EB (Weaving Analysis)	SE
4624	7	77.188199	I-26 EB (Weaving Analysis)	SE
4624	8	63.581857	I-26 EB (Weaving Analysis)	SE

Existing AM

ID	Run	Density	Name (Type)	Direction
4624	9	69.271836	I-26 EB (Weaving Analysis)	SE
4624	10	83.105776	I-26 EB (Weaving Analysis)	SE
4639	1	47.314223	I-26 EB (Basic Analysis)	SE
4639	2	46.767583	I-26 EB (Basic Analysis)	SE
4639	3	47.376341	I-26 EB (Basic Analysis)	SE
4639	4	43.947415	I-26 EB (Basic Analysis)	SE
4639	5	56.167316	I-26 EB (Basic Analysis)	SE
4639	6	47.177563	I-26 EB (Basic Analysis)	SE
4639	7	55.936236	I-26 EB (Basic Analysis)	SE
4639	8	40.170625	I-26 EB (Basic Analysis)	SE
4639	9	41.368265	I-26 EB (Basic Analysis)	SE
4639	10	63.904763	I-26 EB (Basic Analysis)	SE
4641	1	72.690325	I-26 EB (Basic Analysis)	SE
4641	2	70.286471	I-26 EB (Basic Analysis)	SE
4641	3	75.153631	I-26 EB (Basic Analysis)	SE
4641	4	72.416845	I-26 EB (Basic Analysis)	SE
4641	5	71.134657	I-26 EB (Basic Analysis)	SE
4641	6	74.767191	I-26 EB (Basic Analysis)	SE
4641	7	75.347842	I-26 EB (Basic Analysis)	SE
4641	8	71.802504	I-26 EB (Basic Analysis)	SE
4641	9	76.342677	I-26 EB (Basic Analysis)	SE
4641	10	74.263829	I-26 EB (Basic Analysis)	SE
4643	1	24.985681	I-26 WB (Weaving Analysis)	NW
4643	2	25.15294	I-26 WB (Weaving Analysis)	NW
4643	3	25.37358	I-26 WB (Weaving Analysis)	NW
4643	4	28.864671	I-26 WB (Weaving Analysis)	NW
4643	5	26.498131	I-26 WB (Weaving Analysis)	NW
4643	6	25.259701	I-26 WB (Weaving Analysis)	NW
4643	7	26.124467	I-26 WB (Weaving Analysis)	NW
4643	8	25.4839	I-26 WB (Weaving Analysis)	NW
4643	9	26.1992	I-26 WB (Weaving Analysis)	NW
4643	10	25.348669	I-26 WB (Weaving Analysis)	NW
4646	1	26.065835	I-26 WB (Basic Analysis)	NW
4646	2	24.936841	I-26 WB (Basic Analysis)	NW
4646	3	25.247202	I-26 WB (Basic Analysis)	NW
4646	4	26.549369	I-26 WB (Basic Analysis)	NW
4646	5	26.5921	I-26 WB (Basic Analysis)	NW
4646	6	24.950334	I-26 WB (Basic Analysis)	NW
4646	7	24.185677	I-26 WB (Basic Analysis)	NW
4646	8	25.436117	I-26 WB (Basic Analysis)	NW
4646	9	25.047041	I-26 WB (Basic Analysis)	NW
4646	10	25.726237	I-26 WB (Basic Analysis)	NW
4649	1	81.960807	I-26 EB (Basic Analysis)	SE
4649	2	74.242684	I-26 EB (Basic Analysis)	SE
4649	3	81.461944	I-26 EB (Basic Analysis)	SE
4649	4	77.140841	I-26 EB (Basic Analysis)	SE
4649	5	76.508947	I-26 EB (Basic Analysis)	SE
4649	6	81.865785	I-26 EB (Basic Analysis)	SE
4649	7	83.212715	I-26 EB (Basic Analysis)	SE
4649	8	79.226563	I-26 EB (Basic Analysis)	SE
4649	9	86.30329	I-26 EB (Basic Analysis)	SE
4649	10	71.612964	I-26 EB (Basic Analysis)	SE
4650	1	86.71441	I-26 EB (Weaving Analysis)	SE
4650	2	81.26579	I-26 EB (Weaving Analysis)	SE
4650	3	90.715213	I-26 EB (Weaving Analysis)	SE
4650	4	83.842453	I-26 EB (Weaving Analysis)	SE
4650	5	80.877048	I-26 EB (Weaving Analysis)	SE
4650	6	89.872939	I-26 EB (Weaving Analysis)	SE
4650	7	88.440076	I-26 EB (Weaving Analysis)	SE
4650	8	85.470934	I-26 EB (Weaving Analysis)	SE
4650	9	90.588126	I-26 EB (Weaving Analysis)	SE
4650	10	79.690886	I-26 EB (Weaving Analysis)	SE
4651	1	28.665885	I-26 WB (Weaving Analysis)	NW
4651	2	26.899479	I-26 WB (Weaving Analysis)	NW

Existing AM

ID	Run	Density	Name (Type)	Direction
4651	3	26.970834	I-26 WB (Weaving Analysis)	NW
4651	4	26.723275	I-26 WB (Weaving Analysis)	NW
4651	5	28.396483	I-26 WB (Weaving Analysis)	NW
4651	6	26.967921	I-26 WB (Weaving Analysis)	NW
4651	7	26.692694	I-26 WB (Weaving Analysis)	NW
4651	8	26.899479	I-26 WB (Weaving Analysis)	NW
4651	9	27.827097	I-26 WB (Weaving Analysis)	NW
4651	10	25.980598	I-26 WB (Weaving Analysis)	NW
4654	1	27.449857	I-26 WB (Basic Analysis)	NW
4654	2	29.011003	I-26 WB (Basic Analysis)	NW
4654	3	27.908796	I-26 WB (Basic Analysis)	NW
4654	4	28.395949	I-26 WB (Basic Analysis)	NW
4654	5	27.886225	I-26 WB (Basic Analysis)	NW
4654	6	29.921359	I-26 WB (Basic Analysis)	NW
4654	7	27.81287	I-26 WB (Basic Analysis)	NW
4654	8	28.531374	I-26 WB (Basic Analysis)	NW
4654	9	28.046102	I-26 WB (Basic Analysis)	NW
4654	10	29.313829	I-26 WB (Basic Analysis)	NW
4659	1	32.301759	I-26 WB (Basic Analysis)	NW
4659	2	34.973828	I-26 WB (Basic Analysis)	NW
4659	3	33.815492	I-26 WB (Basic Analysis)	NW
4659	4	36.862704	I-26 WB (Basic Analysis)	NW
4659	5	37.685386	I-26 WB (Basic Analysis)	NW
4659	6	32.387318	I-26 WB (Basic Analysis)	NW
4659	7	34.506545	I-26 WB (Basic Analysis)	NW
4659	8	36.02686	I-26 WB (Basic Analysis)	NW
4659	9	36.961426	I-26 WB (Basic Analysis)	NW
4659	10	34.236706	I-26 WB (Basic Analysis)	NW
4665	1	79.046462	I-26 EB (Basic Analysis)	SE
4665	2	72.380217	I-26 EB (Basic Analysis)	SE
4665	3	77.479121	I-26 EB (Basic Analysis)	SE
4665	4	76.268299	I-26 EB (Basic Analysis)	SE
4665	5	72.151506	I-26 EB (Basic Analysis)	SE
4665	6	76.685359	I-26 EB (Basic Analysis)	SE
4665	7	78.743756	I-26 EB (Basic Analysis)	SE
4665	8	76.127037	I-26 EB (Basic Analysis)	SE
4665	9	80.903054	I-26 EB (Basic Analysis)	SE
4665	10	71.176122	I-26 EB (Basic Analysis)	SE
4667	1	68.039503	I-26 EB (Merge Analysis)	SE
4667	2	59.151941	I-26 EB (Merge Analysis)	SE
4667	3	67.728829	I-26 EB (Merge Analysis)	SE
4667	4	65.224378	I-26 EB (Merge Analysis)	SE
4667	5	61.261855	I-26 EB (Merge Analysis)	SE
4667	6	64.684987	I-26 EB (Merge Analysis)	SE
4667	7	66.819679	I-26 EB (Merge Analysis)	SE
4667	8	62.807601	I-26 EB (Merge Analysis)	SE
4667	9	68.380673	I-26 EB (Merge Analysis)	SE
4667	10	60.878755	I-26 EB (Merge Analysis)	SE
4668	1	68.039503	I-26 EB (Merge Analysis)	SE
4668	2	59.151941	I-26 EB (Merge Analysis)	SE
4668	3	67.728829	I-26 EB (Merge Analysis)	SE
4668	4	65.224378	I-26 EB (Merge Analysis)	SE
4668	5	61.261855	I-26 EB (Merge Analysis)	SE
4668	6	64.684987	I-26 EB (Merge Analysis)	SE
4668	7	66.819679	I-26 EB (Merge Analysis)	SE
4668	8	62.807601	I-26 EB (Merge Analysis)	SE
4668	9	68.380673	I-26 EB (Merge Analysis)	SE
4668	10	60.878755	I-26 EB (Merge Analysis)	SE
4669	1	64.105087	I-26 EB (Basic Analysis)	SE
4669	2	54.182472	I-26 EB (Basic Analysis)	SE
4669	3	66.186132	I-26 EB (Basic Analysis)	SE
4669	4	62.700039	I-26 EB (Basic Analysis)	SE
4669	5	55.493393	I-26 EB (Basic Analysis)	SE
4669	6	61.010901	I-26 EB (Basic Analysis)	SE

Existing AM

ID	Run	Density	Name (Type)	Direction
4669	7	65.188394	I-26 EB (Basic Analysis)	SE
4669	8	57.004547	I-26 EB (Basic Analysis)	SE
4669	9	66.43086	I-26 EB (Basic Analysis)	SE
4669	10	57.105519	I-26 EB (Basic Analysis)	SE
4670	1	57.271722	I-26 EB (Diverge Analysis)	SE
4670	2	53.620238	I-26 EB (Diverge Analysis)	SE
4670	3	57.789791	I-26 EB (Diverge Analysis)	SE
4670	4	57.00587	I-26 EB (Diverge Analysis)	SE
4670	5	51.586586	I-26 EB (Diverge Analysis)	SE
4670	6	56.678668	I-26 EB (Diverge Analysis)	SE
4670	7	58.360123	I-26 EB (Diverge Analysis)	SE
4670	8	56.287843	I-26 EB (Diverge Analysis)	SE
4670	9	60.098384	I-26 EB (Diverge Analysis)	SE
4670	10	53.961073	I-26 EB (Diverge Analysis)	SE
4675	1	24.012261	I-26 WB (Merge Analysis)	NW
4675	2	23.986839	I-26 WB (Merge Analysis)	NW
4675	3	23.226128	I-26 WB (Merge Analysis)	NW
4675	4	24.454217	I-26 WB (Merge Analysis)	NW
4675	5	23.194839	I-26 WB (Merge Analysis)	NW
4675	6	22.971906	I-26 WB (Merge Analysis)	NW
4675	7	23.079461	I-26 WB (Merge Analysis)	NW
4675	8	23.556617	I-26 WB (Merge Analysis)	NW
4675	9	23.220261	I-26 WB (Merge Analysis)	NW
4675	10	22.774395	I-26 WB (Merge Analysis)	NW
4676	1	33.762377	I-26 WB (Basic Analysis)	NW
4676	2	33.803873	I-26 WB (Basic Analysis)	NW
4676	3	32.810447	I-26 WB (Basic Analysis)	NW
4676	4	33.686023	I-26 WB (Basic Analysis)	NW
4676	5	34.608075	I-26 WB (Basic Analysis)	NW
4676	6	34.08273	I-26 WB (Basic Analysis)	NW
4676	7	33.091793	I-26 WB (Basic Analysis)	NW
4676	8	33.664445	I-26 WB (Basic Analysis)	NW
4676	9	33.60552	I-26 WB (Basic Analysis)	NW
4676	10	33.414636	I-26 WB (Basic Analysis)	NW
4677	1	33.762377	I-26 WB (Basic Analysis)	NW
4677	2	33.803873	I-26 WB (Basic Analysis)	NW
4677	3	32.810447	I-26 WB (Basic Analysis)	NW
4677	4	33.686023	I-26 WB (Basic Analysis)	NW
4677	5	34.608075	I-26 WB (Basic Analysis)	NW
4677	6	34.08273	I-26 WB (Basic Analysis)	NW
4677	7	33.091793	I-26 WB (Basic Analysis)	NW
4677	8	33.664445	I-26 WB (Basic Analysis)	NW
4677	9	33.60552	I-26 WB (Basic Analysis)	NW
4677	10	33.414636	I-26 WB (Basic Analysis)	NW
4687	1	78.491778	I-26 EB (Basic Analysis)	SE
4687	2	72.442701	I-26 EB (Basic Analysis)	SE
4687	3	75.387929	I-26 EB (Basic Analysis)	SE
4687	4	81.42544	I-26 EB (Basic Analysis)	SE
4687	5	77.173241	I-26 EB (Basic Analysis)	SE
4687	6	73.244067	I-26 EB (Basic Analysis)	SE
4687	7	75.652297	I-26 EB (Basic Analysis)	SE
4687	8	76.061242	I-26 EB (Basic Analysis)	SE
4687	9	75.272268	I-26 EB (Basic Analysis)	SE
4687	10	72.77977	I-26 EB (Basic Analysis)	SE
4689	1	24.593683	I-26 WB (Basic Analysis)	NW
4689	2	24.590913	I-26 WB (Basic Analysis)	NW
4689	3	23.303702	I-26 WB (Basic Analysis)	NW
4689	4	24.202164	I-26 WB (Basic Analysis)	NW
4689	5	24.59276	I-26 WB (Basic Analysis)	NW
4689	6	24.311125	I-26 WB (Basic Analysis)	NW
4689	7	23.818956	I-26 WB (Basic Analysis)	NW
4689	8	23.610268	I-26 WB (Basic Analysis)	NW
4689	9	23.658285	I-26 WB (Basic Analysis)	NW
4689	10	24.246487	I-26 WB (Basic Analysis)	NW

Existing AM

ID	Run	Density	Name (Type)	Direction
4700	1	18.346976	I-26 WB (Merge Analysis)	NW
4700	2	19.470348	I-26 WB (Merge Analysis)	NW
4700	3	18.197193	I-26 WB (Merge Analysis)	NW
4700	4	18.238959	I-26 WB (Merge Analysis)	NW
4700	5	18.673906	I-26 WB (Merge Analysis)	NW
4700	6	19.301842	I-26 WB (Merge Analysis)	NW
4700	7	18.126622	I-26 WB (Merge Analysis)	NW
4700	8	18.159747	I-26 WB (Merge Analysis)	NW
4700	9	18.753118	I-26 WB (Merge Analysis)	NW
4700	10	18.76464	I-26 WB (Merge Analysis)	NW
4701	1	25.105502	I-26 WB (Basic Analysis)	NW
4701	2	28.926206	I-26 WB (Basic Analysis)	NW
4701	3	26.404541	I-26 WB (Basic Analysis)	NW
4701	4	24.612283	I-26 WB (Basic Analysis)	NW
4701	5	28.523295	I-26 WB (Basic Analysis)	NW
4701	6	25.93911	I-26 WB (Basic Analysis)	NW
4701	7	25.029088	I-26 WB (Basic Analysis)	NW
4701	8	27.932823	I-26 WB (Basic Analysis)	NW
4701	9	29.252703	I-26 WB (Basic Analysis)	NW
4701	10	27.849462	I-26 WB (Basic Analysis)	NW
4702	1	17.144456	I-26 WB (Diverge Analysis)	NW
4702	2	19.448826	I-26 WB (Diverge Analysis)	NW
4702	3	17.072442	I-26 WB (Diverge Analysis)	NW
4702	4	17.999159	I-26 WB (Diverge Analysis)	NW
4702	5	18.854684	I-26 WB (Diverge Analysis)	NW
4702	6	18.209963	I-26 WB (Diverge Analysis)	NW
4702	7	17.770771	I-26 WB (Diverge Analysis)	NW
4702	8	17.869157	I-26 WB (Diverge Analysis)	NW
4702	9	18.916654	I-26 WB (Diverge Analysis)	NW
4702	10	17.624035	I-26 WB (Diverge Analysis)	NW
4703	1	17.144456	I-26 WB (Diverge Analysis)	NW
4703	2	19.448826	I-26 WB (Diverge Analysis)	NW
4703	3	17.072442	I-26 WB (Diverge Analysis)	NW
4703	4	17.999159	I-26 WB (Diverge Analysis)	NW
4703	5	18.854684	I-26 WB (Diverge Analysis)	NW
4703	6	18.209963	I-26 WB (Diverge Analysis)	NW
4703	7	17.770771	I-26 WB (Diverge Analysis)	NW
4703	8	17.869157	I-26 WB (Diverge Analysis)	NW
4703	9	18.916654	I-26 WB (Diverge Analysis)	NW
4703	10	17.624035	I-26 WB (Diverge Analysis)	NW
4705	1	63.529746	I-26 EB (Merge Analysis)	SE
4705	2	57.557211	I-26 EB (Merge Analysis)	SE
4705	3	63.531999	I-26 EB (Merge Analysis)	SE
4705	4	65.864669	I-26 EB (Merge Analysis)	SE
4705	5	67.271032	I-26 EB (Merge Analysis)	SE
4705	6	60.563762	I-26 EB (Merge Analysis)	SE
4705	7	60.982967	I-26 EB (Merge Analysis)	SE
4705	8	58.33026	I-26 EB (Merge Analysis)	SE
4705	9	62.758951	I-26 EB (Merge Analysis)	SE
4705	10	62.380315	I-26 EB (Merge Analysis)	SE
4706	1	63.529746	I-26 EB (Merge Analysis)	SE
4706	2	57.557211	I-26 EB (Merge Analysis)	SE
4706	3	63.531999	I-26 EB (Merge Analysis)	SE
4706	4	65.864669	I-26 EB (Merge Analysis)	SE
4706	5	67.271032	I-26 EB (Merge Analysis)	SE
4706	6	60.563762	I-26 EB (Merge Analysis)	SE
4706	7	60.982967	I-26 EB (Merge Analysis)	SE
4706	8	58.33026	I-26 EB (Merge Analysis)	SE
4706	9	62.758951	I-26 EB (Merge Analysis)	SE
4706	10	62.380315	I-26 EB (Merge Analysis)	SE
4707	1	65.457314	I-26 EB (Diverge Analysis)	SE
4707	2	59.963182	I-26 EB (Diverge Analysis)	SE
4707	3	64.113847	I-26 EB (Diverge Analysis)	SE
4707	4	69.393846	I-26 EB (Diverge Analysis)	SE

Existing AM

ID	Run	Density	Name (Type)	Direction
4707	5	67.545846	I-26 EB (Diverge Analysis)	SE
4707	6	60.828515	I-26 EB (Diverge Analysis)	SE
4707	7	61.555981	I-26 EB (Diverge Analysis)	SE
4707	8	59.910382	I-26 EB (Diverge Analysis)	SE
4707	9	63.999447	I-26 EB (Diverge Analysis)	SE
4707	10	62.870115	I-26 EB (Diverge Analysis)	SE
4712	1	24.353938	I-26 WB (Basic Analysis)	NW
4712	2	21.314587	I-26 WB (Basic Analysis)	NW
4712	3	21.160663	I-26 WB (Basic Analysis)	NW
4712	4	22.33727	I-26 WB (Basic Analysis)	NW
4712	5	22.624247	I-26 WB (Basic Analysis)	NW
4712	6	22.245959	I-26 WB (Basic Analysis)	NW
4712	7	22.715558	I-26 WB (Basic Analysis)	NW
4712	8	22.094644	I-26 WB (Basic Analysis)	NW
4712	9	22.295528	I-26 WB (Basic Analysis)	NW
4712	10	23.967823	I-26 WB (Basic Analysis)	NW
4714	1	67.1668	I-26 EB (Basic Analysis)	SE
4714	2	53.63737	I-26 EB (Basic Analysis)	SE
4714	3	67.695956	I-26 EB (Basic Analysis)	SE
4714	4	64.338643	I-26 EB (Basic Analysis)	SE
4714	5	65.84648	I-26 EB (Basic Analysis)	SE
4714	6	63.971317	I-26 EB (Basic Analysis)	SE
4714	7	55.846467	I-26 EB (Basic Analysis)	SE
4714	8	58.637377	I-26 EB (Basic Analysis)	SE
4714	9	68.868575	I-26 EB (Basic Analysis)	SE
4714	10	64.414421	I-26 EB (Basic Analysis)	SE
4718	1	49.171496	I-26 EB (Merge Analysis)	SE
4718	2	35.597533	I-26 EB (Merge Analysis)	SE
4718	3	48.362597	I-26 EB (Merge Analysis)	SE
4718	4	43.250196	I-26 EB (Merge Analysis)	SE
4718	5	41.831634	I-26 EB (Merge Analysis)	SE
4718	6	43.851889	I-26 EB (Merge Analysis)	SE
4718	7	33.69682	I-26 EB (Merge Analysis)	SE
4718	8	47.173157	I-26 EB (Merge Analysis)	SE
4718	9	53.797761	I-26 EB (Merge Analysis)	SE
4718	10	45.814366	I-26 EB (Merge Analysis)	SE
4719	1	49.171496	I-26 EB (Merge Analysis)	SE
4719	2	35.597533	I-26 EB (Merge Analysis)	SE
4719	3	48.362597	I-26 EB (Merge Analysis)	SE
4719	4	43.250196	I-26 EB (Merge Analysis)	SE
4719	5	41.831634	I-26 EB (Merge Analysis)	SE
4719	6	43.851889	I-26 EB (Merge Analysis)	SE
4719	7	33.69682	I-26 EB (Merge Analysis)	SE
4719	8	47.173157	I-26 EB (Merge Analysis)	SE
4719	9	53.797761	I-26 EB (Merge Analysis)	SE
4719	10	45.814366	I-26 EB (Merge Analysis)	SE
4720	1	55.27865	I-26 EB (Diverge Analysis)	SE
4720	2	38.587988	I-26 EB (Diverge Analysis)	SE
4720	3	53.794384	I-26 EB (Diverge Analysis)	SE
4720	4	50.954918	I-26 EB (Diverge Analysis)	SE
4720	5	48.270919	I-26 EB (Diverge Analysis)	SE
4720	6	50.916785	I-26 EB (Diverge Analysis)	SE
4720	7	38.274122	I-26 EB (Diverge Analysis)	SE
4720	8	46.771986	I-26 EB (Diverge Analysis)	SE
4720	9	55.777316	I-26 EB (Diverge Analysis)	SE
4720	10	49.411985	I-26 EB (Diverge Analysis)	SE
4725	1	20.267334	I-26 WB (Merge Analysis)	NW
4725	2	20.749221	I-26 WB (Merge Analysis)	NW
4725	3	21.252161	I-26 WB (Merge Analysis)	NW
4725	4	18.395927	I-26 WB (Merge Analysis)	NW
4725	5	18.962027	I-26 WB (Merge Analysis)	NW
4725	6	20.21587	I-26 WB (Merge Analysis)	NW
4725	7	19.542164	I-26 WB (Merge Analysis)	NW
4725	8	19.291863	I-26 WB (Merge Analysis)	NW

Existing AM

ID	Run	Density	Name (Type)	Direction
4725	9	20.131657	I-26 WB (Merge Analysis)	NW
4725	10	19.380755	I-26 WB (Merge Analysis)	NW
4726	1		I-26 WB (Basic Analysis)	NW
4726	2		I-26 WB (Basic Analysis)	NW
4726	3		I-26 WB (Basic Analysis)	NW
4726	4		I-26 WB (Basic Analysis)	NW
4726	5		I-26 WB (Basic Analysis)	NW
4726	6		I-26 WB (Basic Analysis)	NW
4726	7		I-26 WB (Basic Analysis)	NW
4726	8		I-26 WB (Basic Analysis)	NW
4726	9		I-26 WB (Basic Analysis)	NW
4726	10		I-26 WB (Basic Analysis)	NW
4727	1	21.887568	I-26 WB (Diverge Analysis)	NW
4727	2	21.506779	I-26 WB (Diverge Analysis)	NW
4727	3	21.404941	I-26 WB (Diverge Analysis)	NW
4727	4	21.486629	I-26 WB (Diverge Analysis)	NW
4727	5	22.917942	I-26 WB (Diverge Analysis)	NW
4727	6	22.636909	I-26 WB (Diverge Analysis)	NW
4727	7	20.825021	I-26 WB (Diverge Analysis)	NW
4727	8	22.344272	I-26 WB (Diverge Analysis)	NW
4727	9	21.973984	I-26 WB (Diverge Analysis)	NW
4727	10	23.487662	I-26 WB (Diverge Analysis)	NW
4728	1	20.956092	I-26 WB (Basic Analysis)	NW
4728	2	25.230477	I-26 WB (Basic Analysis)	NW
4728	3	21.149503	I-26 WB (Basic Analysis)	NW
4728	4	22.928885	I-26 WB (Basic Analysis)	NW
4728	5	23.963634	I-26 WB (Basic Analysis)	NW
4728	6	24.950031	I-26 WB (Basic Analysis)	NW
4728	7	19.36045	I-26 WB (Basic Analysis)	NW
4728	8	19.553861	I-26 WB (Basic Analysis)	NW
4728	9	23.499448	I-26 WB (Basic Analysis)	NW
4728	10	21.826442	I-26 WB (Basic Analysis)	NW
4729	1	15.604653	I-26 WB (Diverge Analysis)	NW
4729	2	15.862708	I-26 WB (Diverge Analysis)	NW
4729	3	15.040018	I-26 WB (Diverge Analysis)	NW
4729	4	17.415454	I-26 WB (Diverge Analysis)	NW
4729	5	16.319269	I-26 WB (Diverge Analysis)	NW
4729	6	16.023718	I-26 WB (Diverge Analysis)	NW
4729	7	16.257512	I-26 WB (Diverge Analysis)	NW
4729	8	15.037812	I-26 WB (Diverge Analysis)	NW
4729	9	17.785996	I-26 WB (Diverge Analysis)	NW
4729	10	15.309102	I-26 WB (Diverge Analysis)	NW
4730	1	15.604653	I-26 WB (Diverge Analysis)	NW
4730	2	15.862708	I-26 WB (Diverge Analysis)	NW
4730	3	15.040018	I-26 WB (Diverge Analysis)	NW
4730	4	17.415454	I-26 WB (Diverge Analysis)	NW
4730	5	16.319269	I-26 WB (Diverge Analysis)	NW
4730	6	16.023718	I-26 WB (Diverge Analysis)	NW
4730	7	16.257512	I-26 WB (Diverge Analysis)	NW
4730	8	15.037812	I-26 WB (Diverge Analysis)	NW
4730	9	17.785996	I-26 WB (Diverge Analysis)	NW
4730	10	15.309102	I-26 WB (Diverge Analysis)	NW
4732	1	18.929821	I-26 WB (Basic Analysis)	NW
4732	2	17.312308	I-26 WB (Basic Analysis)	NW
4732	3	17.245755	I-26 WB (Basic Analysis)	NW
4732	4	16.933248	I-26 WB (Basic Analysis)	NW
4732	5	16.901419	I-26 WB (Basic Analysis)	NW
4732	6	18.290339	I-26 WB (Basic Analysis)	NW
4732	7	18.168808	I-26 WB (Basic Analysis)	NW
4732	8	17.190777	I-26 WB (Basic Analysis)	NW
4732	9	16.967971	I-26 WB (Basic Analysis)	NW
4732	10	18.359785	I-26 WB (Basic Analysis)	NW
4733	1	29.67477	I-26 EB (Basic Analysis)	SE
4733	2	26.512822	I-26 EB (Basic Analysis)	SE

Existing AM

ID	Run	Density	Name (Type)	Direction
4733	3	29.355198	I-26 EB (Basic Analysis)	SE
4733	4	27.475436	I-26 EB (Basic Analysis)	SE
4733	5	27.722261	I-26 EB (Basic Analysis)	SE
4733	6	26.438774	I-26 EB (Basic Analysis)	SE
4733	7	27.471539	I-26 EB (Basic Analysis)	SE
4733	8	30.6153	I-26 EB (Basic Analysis)	SE
4733	9	37.496501	I-26 EB (Basic Analysis)	SE
4733	10	29.035625	I-26 EB (Basic Analysis)	SE
4736	1	30.606956	I-26 EB (Basic Analysis)	SE
4736	2	30.536606	I-26 EB (Basic Analysis)	SE
4736	3	30.436107	I-26 EB (Basic Analysis)	SE
4736	4	30.059236	I-26 EB (Basic Analysis)	SE
4736	5	28.908523	I-26 EB (Basic Analysis)	SE
4736	6	30.149685	I-26 EB (Basic Analysis)	SE
4736	7	30.767754	I-26 EB (Basic Analysis)	SE
4736	8	30.777804	I-26 EB (Basic Analysis)	SE
4736	9	30.375808	I-26 EB (Basic Analysis)	SE
4736	10	30.742629	I-26 EB (Basic Analysis)	SE
4737	1	23.747727	I-26 EB (Diverge Analysis)	SE
4737	2	25.190577	I-26 EB (Diverge Analysis)	SE
4737	3	24.323384	I-26 EB (Diverge Analysis)	SE
4737	4	25.185635	I-26 EB (Diverge Analysis)	SE
4737	5	24.185029	I-26 EB (Diverge Analysis)	SE
4737	6	24.175146	I-26 EB (Diverge Analysis)	SE
4737	7	25.294343	I-26 EB (Diverge Analysis)	SE
4737	8	24.46174	I-26 EB (Diverge Analysis)	SE
4737	9	24.73598	I-26 EB (Diverge Analysis)	SE
4737	10	24.97069	I-26 EB (Diverge Analysis)	SE
4739	1	14.847262	I-26 WB (Weaving Analysis)	NW
4739	2	16.080988	I-26 WB (Weaving Analysis)	NW
4739	3	16.591496	I-26 WB (Weaving Analysis)	NW
4739	4	13.258307	I-26 WB (Weaving Analysis)	NW
4739	5	16.006539	I-26 WB (Weaving Analysis)	NW
4739	6	14.998287	I-26 WB (Weaving Analysis)	NW
4739	7	15.240778	I-26 WB (Weaving Analysis)	NW
4739	8	15.489651	I-26 WB (Weaving Analysis)	NW
4739	9	15.02594	I-26 WB (Weaving Analysis)	NW
4739	10	15.355642	I-26 WB (Weaving Analysis)	NW
4741	1	18.115412	I-26 WB (Basic Analysis)	NW
4741	2	18.729768	I-26 WB (Basic Analysis)	NW
4741	3	19.327956	I-26 WB (Basic Analysis)	NW
4741	4	19.376458	I-26 WB (Basic Analysis)	NW
4741	5	20.306075	I-26 WB (Basic Analysis)	NW
4741	6	21.179107	I-26 WB (Basic Analysis)	NW
4741	7	17.169627	I-26 WB (Basic Analysis)	NW
4741	8	17.589976	I-26 WB (Basic Analysis)	NW
4741	9	18.551928	I-26 WB (Basic Analysis)	NW
4741	10	18.681266	I-26 WB (Basic Analysis)	NW
4742	1	13.417991	I-26 WB (Diverge Analysis)	NW
4742	2	13.510226	I-26 WB (Diverge Analysis)	NW
4742	3	12.539445	I-26 WB (Diverge Analysis)	NW
4742	4	12.61554	I-26 WB (Diverge Analysis)	NW
4742	5	13.489473	I-26 WB (Diverge Analysis)	NW
4742	6	14.029052	I-26 WB (Diverge Analysis)	NW
4742	7	12.00909	I-26 WB (Diverge Analysis)	NW
4742	8	12.331915	I-26 WB (Diverge Analysis)	NW
4742	9	13.383402	I-26 WB (Diverge Analysis)	NW
4742	10	13.337284	I-26 WB (Diverge Analysis)	NW
4745	1	24.419118	I-26 EB (Basic Analysis)	SE
4745	2	24.271939	I-26 EB (Basic Analysis)	SE
4745	3	22.518322	I-26 EB (Basic Analysis)	SE
4745	4	24.300122	I-26 EB (Basic Analysis)	SE
4745	5	23.207243	I-26 EB (Basic Analysis)	SE
4745	6	23.366948	I-26 EB (Basic Analysis)	SE

Existing AM

ID	Run	Density	Name (Type)	Direction
4745	7	24.550639	I-26 EB (Basic Analysis)	SE
4745	8	24.860654	I-26 EB (Basic Analysis)	SE
4745	9	24.481747	I-26 EB (Basic Analysis)	SE
4745	10	23.642516	I-26 EB (Basic Analysis)	SE
4748	1	26.213736	I-26 EB (Weaving Analysis)	SE
4748	2	26.433486	I-26 EB (Weaving Analysis)	SE
4748	3	25.672289	I-26 EB (Weaving Analysis)	SE
4748	4	25.307549	I-26 EB (Weaving Analysis)	SE
4748	5	27.011181	I-26 EB (Weaving Analysis)	SE
4748	6	26.014375	I-26 EB (Weaving Analysis)	SE
4748	7	25.549954	I-26 EB (Weaving Analysis)	SE
4748	8	25.799155	I-26 EB (Weaving Analysis)	SE
4748	9	24.818207	I-26 EB (Weaving Analysis)	SE
4748	10	25.441211	I-26 EB (Weaving Analysis)	SE
4753	1	15.108537	I-26 WB (Basic Analysis)	NW
4753	2	16.687947	I-26 WB (Basic Analysis)	NW
4753	3	13.716337	I-26 WB (Basic Analysis)	NW
4753	4	16.977988	I-26 WB (Basic Analysis)	NW
4753	5	15.849462	I-26 WB (Basic Analysis)	NW
4753	6	14.61283	I-26 WB (Basic Analysis)	NW
4753	7	16.498101	I-26 WB (Basic Analysis)	NW
4753	8	15.190277	I-26 WB (Basic Analysis)	NW
4753	9	16.964805	I-26 WB (Basic Analysis)	NW
4753	10	15.105901	I-26 WB (Basic Analysis)	NW
4755	1	25.973501	I-26 EB (Basic Analysis)	SE
4755	2	25.245975	I-26 EB (Basic Analysis)	SE
4755	3	25.521933	I-26 EB (Basic Analysis)	SE
4755	4	26.646671	I-26 EB (Basic Analysis)	SE
4755	5	24.995104	I-26 EB (Basic Analysis)	SE
4755	6	24.781864	I-26 EB (Basic Analysis)	SE
4755	7	26.780469	I-26 EB (Basic Analysis)	SE
4755	8	27.077333	I-26 EB (Basic Analysis)	SE
4755	9	25.559564	I-26 EB (Basic Analysis)	SE
4755	10	26.082211	I-26 EB (Basic Analysis)	SE
4756	1	22.443535	I-26 EB (Diverge Analysis)	SE
4756	2	22.89994	I-26 EB (Diverge Analysis)	SE
4756	3	22.771953	I-26 EB (Diverge Analysis)	SE
4756	4	21.743231	I-26 EB (Diverge Analysis)	SE
4756	5	22.851643	I-26 EB (Diverge Analysis)	SE
4756	6	22.636722	I-26 EB (Diverge Analysis)	SE
4756	7	22.991704	I-26 EB (Diverge Analysis)	SE
4756	8	22.694678	I-26 EB (Diverge Analysis)	SE
4756	9	22.460439	I-26 EB (Diverge Analysis)	SE
4756	10	22.557032	I-26 EB (Diverge Analysis)	SE
4760	1	19.017707	I-26 WB (Merge Analysis)	NW
4760	2	18.669092	I-26 WB (Merge Analysis)	NW
4760	3	19.434762	I-26 WB (Merge Analysis)	NW
4760	4	18.256315	I-26 WB (Merge Analysis)	NW
4760	5	18.731116	I-26 WB (Merge Analysis)	NW
4760	6	19.682856	I-26 WB (Merge Analysis)	NW
4760	7	20.395058	I-26 WB (Merge Analysis)	NW
4760	8	18.874411	I-26 WB (Merge Analysis)	NW
4760	9	17.757987	I-26 WB (Merge Analysis)	NW
4760	10	19.719215	I-26 WB (Merge Analysis)	NW
4761	1	19.017707	I-26 WB (Merge Analysis)	NW
4761	2	18.669092	I-26 WB (Merge Analysis)	NW
4761	3	19.434762	I-26 WB (Merge Analysis)	NW
4761	4	18.256315	I-26 WB (Merge Analysis)	NW
4761	5	18.731116	I-26 WB (Merge Analysis)	NW
4761	6	19.682856	I-26 WB (Merge Analysis)	NW
4761	7	20.395058	I-26 WB (Merge Analysis)	NW
4761	8	18.874411	I-26 WB (Merge Analysis)	NW
4761	9	17.757987	I-26 WB (Merge Analysis)	NW
4761	10	19.719215	I-26 WB (Merge Analysis)	NW

Existing AM

ID	Run	Density	Name (Type)	Direction
4764	1	23.598368	I-26 WB (Basic Analysis)	NW
4764	2	23.700192	I-26 WB (Basic Analysis)	NW
4764	3	22.94908	I-26 WB (Basic Analysis)	NW
4764	4	24.087771	I-26 WB (Basic Analysis)	NW
4764	5	23.261051	I-26 WB (Basic Analysis)	NW
4764	6	23.895173	I-26 WB (Basic Analysis)	NW
4764	7	22.994576	I-26 WB (Basic Analysis)	NW
4764	8	22.733735	I-26 WB (Basic Analysis)	NW
4764	9	23.548973	I-26 WB (Basic Analysis)	NW
4764	10	23.633681	I-26 WB (Basic Analysis)	NW
4768	1	50.28308	I-26 EB (Basic Analysis)	SE
4768	2	50.020927	I-26 EB (Basic Analysis)	SE
4768	3	49.949312	I-26 EB (Basic Analysis)	SE
4768	4	52.730567	I-26 EB (Basic Analysis)	SE
4768	5	51.27961	I-26 EB (Basic Analysis)	SE
4768	6	48.492061	I-26 EB (Basic Analysis)	SE
4768	7	50.893324	I-26 EB (Basic Analysis)	SE
4768	8	49.071055	I-26 EB (Basic Analysis)	SE
4768	9	47.405688	I-26 EB (Basic Analysis)	SE
4768	10	50.279174	I-26 EB (Basic Analysis)	SE
4769	1	42.858321	I-26 EB (Diverge Analysis)	SE
4769	2	39.240563	I-26 EB (Diverge Analysis)	SE
4769	3	41.569055	I-26 EB (Diverge Analysis)	SE
4769	4	40.907493	I-26 EB (Diverge Analysis)	SE
4769	5	42.946877	I-26 EB (Diverge Analysis)	SE
4769	6	39.795338	I-26 EB (Diverge Analysis)	SE
4769	7	42.037879	I-26 EB (Diverge Analysis)	SE
4769	8	42.269687	I-26 EB (Diverge Analysis)	SE
4769	9	38.469608	I-26 EB (Diverge Analysis)	SE
4769	10	42.261873	I-26 EB (Diverge Analysis)	SE
6149	1	15.569621	I-26 EB (Merge Analysis)	S
6149	2	15.472117	I-26 EB (Merge Analysis)	S
6149	3	15.058464	I-26 EB (Merge Analysis)	S
6149	4	14.962437	I-26 EB (Merge Analysis)	S
6149	5	15.723264	I-26 EB (Merge Analysis)	S
6149	6	14.4956	I-26 EB (Merge Analysis)	S
6149	7	16.269878	I-26 EB (Merge Analysis)	S
6149	8	14.770384	I-26 EB (Merge Analysis)	S
6149	9	15.023008	I-26 EB (Merge Analysis)	S
6149	10	14.828	I-26 EB (Merge Analysis)	S
6150	1	15.569621	I-26 EB (Merge Analysis)	S
6150	2	15.472117	I-26 EB (Merge Analysis)	S
6150	3	15.058464	I-26 EB (Merge Analysis)	S
6150	4	14.962437	I-26 EB (Merge Analysis)	S
6150	5	15.723264	I-26 EB (Merge Analysis)	S
6150	6	14.4956	I-26 EB (Merge Analysis)	S
6150	7	16.269878	I-26 EB (Merge Analysis)	S
6150	8	14.770384	I-26 EB (Merge Analysis)	S
6150	9	15.023008	I-26 EB (Merge Analysis)	S
6150	10	14.828	I-26 EB (Merge Analysis)	S
6151	1	19.283785	I-26 EB (Basic Analysis)	S
6151	2	20.000932	I-26 EB (Basic Analysis)	S
6151	3	19.711558	I-26 EB (Basic Analysis)	S
6151	4	19.78666	I-26 EB (Basic Analysis)	S
6151	5	20.155199	I-26 EB (Basic Analysis)	S
6151	6	18.993239	I-26 EB (Basic Analysis)	S
6151	7	21.051255	I-26 EB (Basic Analysis)	S
6151	8	18.937773	I-26 EB (Basic Analysis)	S
6151	9	19.589701	I-26 EB (Basic Analysis)	S
6151	10	19.781365	I-26 EB (Basic Analysis)	S
6152	1	19.283785	I-26 EB (Basic Analysis)	S
6152	2	20.000932	I-26 EB (Basic Analysis)	S
6152	3	19.711558	I-26 EB (Basic Analysis)	S
6152	4	19.78666	I-26 EB (Basic Analysis)	S

Existing AM

ID	Run	Density	Name (Type)	Direction
6152	5	20.155199	I-26 EB (Basic Analysis)	S
6152	6	18.993239	I-26 EB (Basic Analysis)	S
6152	7	21.051255	I-26 EB (Basic Analysis)	S
6152	8	18.937773	I-26 EB (Basic Analysis)	S
6152	9	19.589701	I-26 EB (Basic Analysis)	S
6152	10	19.781365	I-26 EB (Basic Analysis)	S
6159	1	23.361453	I-26 WB (Diverge Analysis)	N
6159	2	23.256918	I-26 WB (Diverge Analysis)	N
6159	3	22.286835	I-26 WB (Diverge Analysis)	N
6159	4	22.408095	I-26 WB (Diverge Analysis)	N
6159	5	23.340546	I-26 WB (Diverge Analysis)	N
6159	6	23.0813	I-26 WB (Diverge Analysis)	N
6159	7	21.199672	I-26 WB (Diverge Analysis)	N
6159	8	22.615074	I-26 WB (Diverge Analysis)	N
6159	9	22.548172	I-26 WB (Diverge Analysis)	N
6159	10	22.270109	I-26 WB (Diverge Analysis)	N
6160	1	23.361453	I-26 WB (Diverge Analysis)	N
6160	2	23.256918	I-26 WB (Diverge Analysis)	N
6160	3	22.286835	I-26 WB (Diverge Analysis)	N
6160	4	22.408095	I-26 WB (Diverge Analysis)	N
6160	5	23.340546	I-26 WB (Diverge Analysis)	N
6160	6	23.0813	I-26 WB (Diverge Analysis)	N
6160	7	21.199672	I-26 WB (Diverge Analysis)	N
6160	8	22.615074	I-26 WB (Diverge Analysis)	N
6160	9	22.548172	I-26 WB (Diverge Analysis)	N
6160	10	22.270109	I-26 WB (Diverge Analysis)	N
6165	1	16.285886	I-26 WB (Basic Analysis)	N
6165	2	15.36372	I-26 WB (Basic Analysis)	N
6165	3	16.459578	I-26 WB (Basic Analysis)	N
6165	4	16.499573	I-26 WB (Basic Analysis)	N
6165	5	15.139749	I-26 WB (Basic Analysis)	N
6165	6	16.424154	I-26 WB (Basic Analysis)	N
6165	7	15.212882	I-26 WB (Basic Analysis)	N
6165	8	15.850514	I-26 WB (Basic Analysis)	N
6165	9	16.367018	I-26 WB (Basic Analysis)	N
6165	10	16.385302	I-26 WB (Basic Analysis)	N
6166	1	15.750011	I-26 EB (Basic Analysis)	S
6166	2	15.532116	I-26 EB (Basic Analysis)	S
6166	3	15.718421	I-26 EB (Basic Analysis)	S
6166	4	16.483889	I-26 EB (Basic Analysis)	S
6166	5	15.453544	I-26 EB (Basic Analysis)	S
6166	6	15.6844	I-26 EB (Basic Analysis)	S
6166	7	16.168791	I-26 EB (Basic Analysis)	S
6166	8	15.24618	I-26 EB (Basic Analysis)	S
6166	9	16.186612	I-26 EB (Basic Analysis)	S
6166	10	15.617978	I-26 EB (Basic Analysis)	S
6174	1	16.036653	I-26 WB (Basic Analysis)	N
6174	2	15.341654	I-26 WB (Basic Analysis)	N
6174	3	15.673861	I-26 WB (Basic Analysis)	N
6174	4	16.442157	I-26 WB (Basic Analysis)	N
6174	5	15.530959	I-26 WB (Basic Analysis)	N
6174	6	15.375402	I-26 WB (Basic Analysis)	N
6174	7	15.090653	I-26 WB (Basic Analysis)	N
6174	8	15.756122	I-26 WB (Basic Analysis)	N
6174	9	15.446589	I-26 WB (Basic Analysis)	N
6174	10	15.555215	I-26 WB (Basic Analysis)	N
6175	1	16.036653	I-26 WB (Basic Analysis)	N
6175	2	15.341654	I-26 WB (Basic Analysis)	N
6175	3	15.673861	I-26 WB (Basic Analysis)	N
6175	4	16.442157	I-26 WB (Basic Analysis)	N
6175	5	15.530959	I-26 WB (Basic Analysis)	N
6175	6	15.375402	I-26 WB (Basic Analysis)	N
6175	7	15.090653	I-26 WB (Basic Analysis)	N
6175	8	15.756122	I-26 WB (Basic Analysis)	N

Existing AM

ID	Run	Density	Name (Type)	Direction
6175	9	15.446589	I-26 WB (Basic Analysis)	N
6175	10	15.555215	I-26 WB (Basic Analysis)	N
6177	1	26.171807	I-26 EB (Basic Analysis)	S
6177	2	25.400858	I-26 EB (Basic Analysis)	S
6177	3	26.389831	I-26 EB (Basic Analysis)	S
6177	4	24.971554	I-26 EB (Basic Analysis)	S
6177	5	25.108662	I-26 EB (Basic Analysis)	S
6177	6	24.87041	I-26 EB (Basic Analysis)	S
6177	7	25.466041	I-26 EB (Basic Analysis)	S
6177	8	25.441316	I-26 EB (Basic Analysis)	S
6177	9	26.239237	I-26 EB (Basic Analysis)	S
6177	10	25.315447	I-26 EB (Basic Analysis)	S
6178	1	23.733695	I-26 EB (Diverge Analysis)	S
6178	2	25.195923	I-26 EB (Diverge Analysis)	S
6178	3	33.919504	I-26 EB (Diverge Analysis)	S
6178	4	34.160588	I-26 EB (Diverge Analysis)	S
6178	5	35.635919	I-26 EB (Diverge Analysis)	S
6178	6	27.596284	I-26 EB (Diverge Analysis)	S
6178	7	23.178153	I-26 EB (Diverge Analysis)	S
6178	8	28.240922	I-26 EB (Diverge Analysis)	S
6178	9	55.250218	I-26 EB (Diverge Analysis)	S
6178	10	38.819803	I-26 EB (Diverge Analysis)	S
6185	1	32.92185	I-26 EB (Merge Analysis)	S
6185	2	32.537972	I-26 EB (Merge Analysis)	S
6185	3	32.727046	I-26 EB (Merge Analysis)	S
6185	4	31.331907	I-26 EB (Merge Analysis)	S
6185	5	32.182741	I-26 EB (Merge Analysis)	S
6185	6	31.629842	I-26 EB (Merge Analysis)	S
6185	7	31.271747	I-26 EB (Merge Analysis)	S
6185	8	31.515251	I-26 EB (Merge Analysis)	S
6185	9	34.534711	I-26 EB (Merge Analysis)	S
6185	10	30.131571	I-26 EB (Merge Analysis)	S
6186	1	31.363499	I-26 EB (Basic Analysis)	S
6186	2	31.188141	I-26 EB (Basic Analysis)	S
6186	3	32.568683	I-26 EB (Basic Analysis)	S
6186	4	30.909163	I-26 EB (Basic Analysis)	S
6186	5	30.71627	I-26 EB (Basic Analysis)	S
6186	6	31.510162	I-26 EB (Basic Analysis)	S
6186	7	30.542506	I-26 EB (Basic Analysis)	S
6186	8	30.435698	I-26 EB (Basic Analysis)	S
6186	9	32.913022	I-26 EB (Basic Analysis)	S
6186	10	29.992521	I-26 EB (Basic Analysis)	S
6200	1	25.432518	I-26 WB (Weaving Analysis)	NW
6200	2	24.834721	I-26 WB (Weaving Analysis)	NW
6200	3	23.869425	I-26 WB (Weaving Analysis)	NW
6200	4	23.407194	I-26 WB (Weaving Analysis)	NW
6200	5	24.735088	I-26 WB (Weaving Analysis)	NW
6200	6	24.864121	I-26 WB (Weaving Analysis)	NW
6200	7	23.784493	I-26 WB (Weaving Analysis)	NW
6200	8	24.592989	I-26 WB (Weaving Analysis)	NW
6200	9	24.246724	I-26 WB (Weaving Analysis)	NW
6200	10	23.113196	I-26 WB (Weaving Analysis)	NW
6204	1	25.158437	I-26 WB (Basic Analysis)	NW
6204	2	26.446901	I-26 WB (Basic Analysis)	NW
6204	3	25.938193	I-26 WB (Basic Analysis)	NW
6204	4	26.258345	I-26 WB (Basic Analysis)	NW
6204	5	24.639908	I-26 WB (Basic Analysis)	NW
6204	6	26.142462	I-26 WB (Basic Analysis)	NW
6204	7	26.124785	I-26 WB (Basic Analysis)	NW
6204	8	25.209504	I-26 WB (Basic Analysis)	NW
6204	9	27.191303	I-26 WB (Basic Analysis)	NW
6204	10	26.715985	I-26 WB (Basic Analysis)	NW
6205	1	27.704282	I-20 EB (Basic Analysis)	E
6205	2	28.522626	I-20 EB (Basic Analysis)	E

Existing AM

ID	Run	Density	Name (Type)	Direction
6205	3	27.737458	I-20 EB (Basic Analysis)	E
6205	4	29.02248	I-20 EB (Basic Analysis)	E
6205	5	28.593402	I-20 EB (Basic Analysis)	E
6205	6	29.219325	I-20 EB (Basic Analysis)	E
6205	7	26.379448	I-20 EB (Basic Analysis)	E
6205	8	28.038255	I-20 EB (Basic Analysis)	E
6205	9	27.51186	I-20 EB (Basic Analysis)	E
6205	10	28.469544	I-20 EB (Basic Analysis)	E
6206	1	24.040128	I-20 EB (Merge Analysis)	E
6206	2	24.33818	I-20 EB (Merge Analysis)	E
6206	3	25.358682	I-20 EB (Merge Analysis)	E
6206	4	24.309022	I-20 EB (Merge Analysis)	E
6206	5	25.118945	I-20 EB (Merge Analysis)	E
6206	6	24.723703	I-20 EB (Merge Analysis)	E
6206	7	24.475866	I-20 EB (Merge Analysis)	E
6206	8	23.826308	I-20 EB (Merge Analysis)	E
6206	9	24.273386	I-20 EB (Merge Analysis)	E
6206	10	24.174575	I-20 EB (Merge Analysis)	E
6207	1	24.040128	I-20 EB (Merge Analysis)	E
6207	2	24.33818	I-20 EB (Merge Analysis)	E
6207	3	25.358682	I-20 EB (Merge Analysis)	E
6207	4	24.309022	I-20 EB (Merge Analysis)	E
6207	5	25.118945	I-20 EB (Merge Analysis)	E
6207	6	24.723703	I-20 EB (Merge Analysis)	E
6207	7	24.475866	I-20 EB (Merge Analysis)	E
6207	8	23.826308	I-20 EB (Merge Analysis)	E
6207	9	24.273386	I-20 EB (Merge Analysis)	E
6207	10	24.174575	I-20 EB (Merge Analysis)	E
6208	1	24.769871	I-20 EB (Diverge Analysis)	E
6208	2	25.180661	I-20 EB (Diverge Analysis)	E
6208	3	26.12473	I-20 EB (Diverge Analysis)	E
6208	4	25.461492	I-20 EB (Diverge Analysis)	E
6208	5	25.8678	I-20 EB (Diverge Analysis)	E
6208	6	25.21203	I-20 EB (Diverge Analysis)	E
6208	7	25.459998	I-20 EB (Diverge Analysis)	E
6208	8	24.71012	I-20 EB (Diverge Analysis)	E
6208	9	24.837091	I-20 EB (Diverge Analysis)	E
6208	10	24.973025	I-20 EB (Diverge Analysis)	E
6209	1	24.769871	I-20 EB (Diverge Analysis)	E
6209	2	25.180661	I-20 EB (Diverge Analysis)	E
6209	3	26.12473	I-20 EB (Diverge Analysis)	E
6209	4	25.461492	I-20 EB (Diverge Analysis)	E
6209	5	25.8678	I-20 EB (Diverge Analysis)	E
6209	6	25.21203	I-20 EB (Diverge Analysis)	E
6209	7	25.459998	I-20 EB (Diverge Analysis)	E
6209	8	24.71012	I-20 EB (Diverge Analysis)	E
6209	9	24.837091	I-20 EB (Diverge Analysis)	E
6209	10	24.973025	I-20 EB (Diverge Analysis)	E
6216	1	19.541484	I-20 EB (Merge Analysis)	E
6216	2	17.891811	I-20 EB (Merge Analysis)	E
6216	3	18.956954	I-20 EB (Merge Analysis)	E
6216	4	18.717946	I-20 EB (Merge Analysis)	E
6216	5	19.133612	I-20 EB (Merge Analysis)	E
6216	6	18.917985	I-20 EB (Merge Analysis)	E
6216	7	19.094643	I-20 EB (Merge Analysis)	E
6216	8	19.105035	I-20 EB (Merge Analysis)	E
6216	9	19.647998	I-20 EB (Merge Analysis)	E
6216	10	18.842646	I-20 EB (Merge Analysis)	E
6217	1	21.842512	I-20 EB (Basic Analysis)	E
6217	2	22.47764	I-20 EB (Basic Analysis)	E
6217	3	20.587025	I-20 EB (Basic Analysis)	E
6217	4	23.056641	I-20 EB (Basic Analysis)	E
6217	5	23.254565	I-20 EB (Basic Analysis)	E
6217	6	21.405307	I-20 EB (Basic Analysis)	E

Existing AM

ID	Run	Density	Name (Type)	Direction
6217	7	23.000514	I-20 EB (Basic Analysis)	E
6217	8	20.654969	I-20 EB (Basic Analysis)	E
6217	9	20.802673	I-20 EB (Basic Analysis)	E
6217	10	19.984392	I-20 EB (Basic Analysis)	E
6220	1	14.369732	I-20 WB (Basic Analysis)	W
6220	2	13.596875	I-20 WB (Basic Analysis)	W
6220	3	13.661453	I-20 WB (Basic Analysis)	W
6220	4	13.628122	I-20 WB (Basic Analysis)	W
6220	5	14.594715	I-20 WB (Basic Analysis)	W
6220	6	13.255234	I-20 WB (Basic Analysis)	W
6220	7	13.049	I-20 WB (Basic Analysis)	W
6220	8	14.263491	I-20 WB (Basic Analysis)	W
6220	9	15.292578	I-20 WB (Basic Analysis)	W
6220	10	12.224063	I-20 WB (Basic Analysis)	W
6223	1	49.990598	I-26 EB (Weaving Analysis)	SE
6223	2	49.370206	I-26 EB (Weaving Analysis)	SE
6223	3	51.531784	I-26 EB (Weaving Analysis)	SE
6223	4	50.878739	I-26 EB (Weaving Analysis)	SE
6223	5	50.940779	I-26 EB (Weaving Analysis)	SE
6223	6	51.437093	I-26 EB (Weaving Analysis)	SE
6223	7	50.882005	I-26 EB (Weaving Analysis)	SE
6223	8	49.72938	I-26 EB (Weaving Analysis)	SE
6223	9	50.519565	I-26 EB (Weaving Analysis)	SE
6223	10	57.892443	I-26 EB (Weaving Analysis)	SE
6227	1	16.789538	I-20 WB (Basic Analysis)	W
6227	2	16.247674	I-20 WB (Basic Analysis)	W
6227	3	16.720774	I-20 WB (Basic Analysis)	W
6227	4	18.195085	I-20 WB (Basic Analysis)	W
6227	5	16.17891	I-20 WB (Basic Analysis)	W
6227	6	17.611962	I-20 WB (Basic Analysis)	W
6227	7	18.272101	I-20 WB (Basic Analysis)	W
6227	8	15.936859	I-20 WB (Basic Analysis)	W
6227	9	18.940492	I-20 WB (Basic Analysis)	W
6227	10	18.544408	I-20 WB (Basic Analysis)	W
6229	1	34.445199	I-20 WB (Merge Analysis)	W
6229	2	36.906366	I-20 WB (Merge Analysis)	W
6229	3	38.026698	I-20 WB (Merge Analysis)	W
6229	4	32.367128	I-20 WB (Merge Analysis)	W
6229	5	40.218361	I-20 WB (Merge Analysis)	W
6229	6	40.405454	I-20 WB (Merge Analysis)	W
6229	7	35.734806	I-20 WB (Merge Analysis)	W
6229	8	36.316131	I-20 WB (Merge Analysis)	W
6229	9	38.449885	I-20 WB (Merge Analysis)	W
6229	10	32.099852	I-20 WB (Merge Analysis)	W
6230	1	34.445199	I-20 WB (Merge+Diverge Analysis)	W
6230	2	36.906366	I-20 WB (Merge+Diverge Analysis)	W
6230	3	38.026698	I-20 WB (Merge+Diverge Analysis)	W
6230	4	32.367128	I-20 WB (Merge+Diverge Analysis)	W
6230	5	40.218361	I-20 WB (Merge+Diverge Analysis)	W
6230	6	40.405454	I-20 WB (Merge+Diverge Analysis)	W
6230	7	35.734806	I-20 WB (Merge+Diverge Analysis)	W
6230	8	36.316131	I-20 WB (Merge+Diverge Analysis)	W
6230	9	38.449885	I-20 WB (Merge+Diverge Analysis)	W
6230	10	32.099852	I-20 WB (Merge+Diverge Analysis)	W
6231	1	34.822371	I-20 WB (Diverge Analysis)	W
6231	2	37.251717	I-20 WB (Diverge Analysis)	W
6231	3	38.411872	I-20 WB (Diverge Analysis)	W
6231	4	32.677019	I-20 WB (Diverge Analysis)	W
6231	5	40.594705	I-20 WB (Diverge Analysis)	W
6231	6	40.862955	I-20 WB (Diverge Analysis)	W
6231	7	36.069194	I-20 WB (Diverge Analysis)	W
6231	8	36.65596	I-20 WB (Diverge Analysis)	W
6231	9	38.809679	I-20 WB (Diverge Analysis)	W
6231	10	32.428927	I-20 WB (Diverge Analysis)	W

Existing AM

ID	Run	Density	Name (Type)	Direction
6234	1	21.032604	I-20 WB (Basic Analysis)	W
6234	2	21.257034	I-20 WB (Basic Analysis)	W
6234	3	21.891889	I-20 WB (Basic Analysis)	W
6234	4	20.411474	I-20 WB (Basic Analysis)	W
6234	5	21.677754	I-20 WB (Basic Analysis)	W
6234	6	23.007863	I-20 WB (Basic Analysis)	W
6234	7	20.873375	I-20 WB (Basic Analysis)	W
6234	8	21.114963	I-20 WB (Basic Analysis)	W
6234	9	21.495877	I-20 WB (Basic Analysis)	W
6234	10	20.265286	I-20 WB (Basic Analysis)	W
6238	1	27.787705	I-20 EB (Basic Analysis)	NE
6238	2	28.91514	I-20 EB (Basic Analysis)	NE
6238	3	28.138124	I-20 EB (Basic Analysis)	NE
6238	4	28.863339	I-20 EB (Basic Analysis)	NE
6238	5	29.258448	I-20 EB (Basic Analysis)	NE
6238	6	28.063977	I-20 EB (Basic Analysis)	NE
6238	7	27.372281	I-20 EB (Basic Analysis)	NE
6238	8	28.037569	I-20 EB (Basic Analysis)	NE
6238	9	27.90959	I-20 EB (Basic Analysis)	NE
6238	10	27.971548	I-20 EB (Basic Analysis)	NE
6241	1	32.65101	I-20 EB (Merge Analysis)	NE
6241	2	32.904922	I-20 EB (Merge Analysis)	NE
6241	3	32.627169	I-20 EB (Merge Analysis)	NE
6241	4	32.715382	I-20 EB (Merge Analysis)	NE
6241	5	34.390251	I-20 EB (Merge Analysis)	NE
6241	6	32.07166	I-20 EB (Merge Analysis)	NE
6241	7	33.11592	I-20 EB (Merge Analysis)	NE
6241	8	31.45774	I-20 EB (Merge Analysis)	NE
6241	9	31.705692	I-20 EB (Merge Analysis)	NE
6241	10	32.758297	I-20 EB (Merge Analysis)	NE
6242	1	32.65101	I-20 EB (Merge Analysis)	NE
6242	2	32.904922	I-20 EB (Merge Analysis)	NE
6242	3	32.627169	I-20 EB (Merge Analysis)	NE
6242	4	32.715382	I-20 EB (Merge Analysis)	NE
6242	5	34.390251	I-20 EB (Merge Analysis)	NE
6242	6	32.07166	I-20 EB (Merge Analysis)	NE
6242	7	33.11592	I-20 EB (Merge Analysis)	NE
6242	8	31.45774	I-20 EB (Merge Analysis)	NE
6242	9	31.705692	I-20 EB (Merge Analysis)	NE
6242	10	32.758297	I-20 EB (Merge Analysis)	NE
6246	1	21.244532	I-20 WB (Merge Analysis)	SW
6246	2	21.024181	I-20 WB (Merge Analysis)	SW
6246	3	21.317983	I-20 WB (Merge Analysis)	SW
6246	4	20.925357	I-20 WB (Merge Analysis)	SW
6246	5	21.67188	I-20 WB (Merge Analysis)	SW
6246	6	21.531656	I-20 WB (Merge Analysis)	SW
6246	7	22.288863	I-20 WB (Merge Analysis)	SW
6246	8	21.439509	I-20 WB (Merge Analysis)	SW
6246	9	21.942979	I-20 WB (Merge Analysis)	SW
6246	10	21.016168	I-20 WB (Merge Analysis)	SW
6247	1	21.244532	I-20 WB (Merge Analysis)	SW
6247	2	21.024181	I-20 WB (Merge Analysis)	SW
6247	3	21.317983	I-20 WB (Merge Analysis)	SW
6247	4	20.925357	I-20 WB (Merge Analysis)	SW
6247	5	21.67188	I-20 WB (Merge Analysis)	SW
6247	6	21.531656	I-20 WB (Merge Analysis)	SW
6247	7	22.288863	I-20 WB (Merge Analysis)	SW
6247	8	21.439509	I-20 WB (Merge Analysis)	SW
6247	9	21.942979	I-20 WB (Merge Analysis)	SW
6247	10	21.016168	I-20 WB (Merge Analysis)	SW
6249	1	20.25564	I-20 WB (Diverge Analysis)	SW
6249	2	19.690484	I-20 WB (Diverge Analysis)	SW
6249	3	18.65404	I-20 WB (Diverge Analysis)	SW
6249	4	19.931018	I-20 WB (Diverge Analysis)	SW

Existing AM

ID	Run	Density	Name (Type)	Direction
6249	5	20.693684	I-20 WB (Diverge Analysis)	SW
6249	6	18.826129	I-20 WB (Diverge Analysis)	SW
6249	7	19.846929	I-20 WB (Diverge Analysis)	SW
6249	8	20.013151	I-20 WB (Diverge Analysis)	SW
6249	9	20.482484	I-20 WB (Diverge Analysis)	SW
6249	10	19.541862	I-20 WB (Diverge Analysis)	SW
6251	1	25.440882	I-20 WB (Basic Analysis)	SW
6251	2	26.111491	I-20 WB (Basic Analysis)	SW
6251	3	25.529055	I-20 WB (Basic Analysis)	SW
6251	4	25.550167	I-20 WB (Basic Analysis)	SW
6251	5	25.76501	I-20 WB (Basic Analysis)	SW
6251	6	25.955015	I-20 WB (Basic Analysis)	SW
6251	7	25.2397	I-20 WB (Basic Analysis)	SW
6251	8	25.935145	I-20 WB (Basic Analysis)	SW
6251	9	26.002206	I-20 WB (Basic Analysis)	SW
6251	10	25.85815	I-20 WB (Basic Analysis)	SW
6254	1	29.566756	I-20 EB (Basic Analysis)	NE
6254	2	30.432791	I-20 EB (Basic Analysis)	NE
6254	3	29.976588	I-20 EB (Basic Analysis)	NE
6254	4	30.224742	I-20 EB (Basic Analysis)	NE
6254	5	31.58082	I-20 EB (Basic Analysis)	NE
6254	6	29.997894	I-20 EB (Basic Analysis)	NE
6254	7	28.785946	I-20 EB (Basic Analysis)	NE
6254	8	29.195778	I-20 EB (Basic Analysis)	NE
6254	9	30.043013	I-20 EB (Basic Analysis)	NE
6254	10	29.677048	I-20 EB (Basic Analysis)	NE
6258	1	26.38816	I-20 EB (Merge Analysis)	E
6258	2	25.944573	I-20 EB (Merge Analysis)	E
6258	3	28.032038	I-20 EB (Merge Analysis)	E
6258	4	26.395987	I-20 EB (Merge Analysis)	E
6258	5	26.896979	I-20 EB (Merge Analysis)	E
6258	6	26.456002	I-20 EB (Merge Analysis)	E
6258	7	25.621016	I-20 EB (Merge Analysis)	E
6258	8	23.708377	I-20 EB (Merge Analysis)	E
6258	9	25.780185	I-20 EB (Merge Analysis)	E
6258	10	27.027446	I-20 EB (Merge Analysis)	E
6259	1	31.090951	I-20 EB (Basic Analysis)	E
6259	2	30.528563	I-20 EB (Basic Analysis)	E
6259	3	31.600141	I-20 EB (Basic Analysis)	E
6259	4	31.945174	I-20 EB (Basic Analysis)	E
6259	5	31.755177	I-20 EB (Basic Analysis)	E
6259	6	31.13807	I-20 EB (Basic Analysis)	E
6259	7	30.286888	I-20 EB (Basic Analysis)	E
6259	8	31.051432	I-20 EB (Basic Analysis)	E
6259	9	32.088051	I-20 EB (Basic Analysis)	E
6259	10	31.259668	I-20 EB (Basic Analysis)	E
8539	1	14.721017	I-20 WB (Basic Analysis)	SW
8539	2	14.566202	I-20 WB (Basic Analysis)	SW
8539	3	14.765412	I-20 WB (Basic Analysis)	SW
8539	4	14.484242	I-20 WB (Basic Analysis)	SW
8539	5	15.970914	I-20 WB (Basic Analysis)	SW
8539	6	14.412526	I-20 WB (Basic Analysis)	SW
8539	7	14.193965	I-20 WB (Basic Analysis)	SW
8539	8	14.352194	I-20 WB (Basic Analysis)	SW
8539	9	14.963483	I-20 WB (Basic Analysis)	SW
8539	10	13.97085	I-20 WB (Basic Analysis)	SW
8542	1	32.344074	I-20 EB (Basic Analysis)	NE
8542	2	33.972009	I-20 EB (Basic Analysis)	NE
8542	3	32.569462	I-20 EB (Basic Analysis)	NE
8542	4	32.995128	I-20 EB (Basic Analysis)	NE
8542	5	34.010869	I-20 EB (Basic Analysis)	NE
8542	6	33.130839	I-20 EB (Basic Analysis)	NE
8542	7	32.191623	I-20 EB (Basic Analysis)	NE
8542	8	31.574646	I-20 EB (Basic Analysis)	NE

Existing AM

ID	Run	Density	Name (Type)	Direction
8542	9	31.376161	I-20 EB (Basic Analysis)	NE
8542	10	31.61231	I-20 EB (Basic Analysis)	NE
8543	1	51.729318	I-20 EB (Diverge Analysis)	NE
8543	2	52.735451	I-20 EB (Diverge Analysis)	NE
8543	3	56.12345	I-20 EB (Diverge Analysis)	NE
8543	4	52.216251	I-20 EB (Diverge Analysis)	NE
8543	5	62.025315	I-20 EB (Diverge Analysis)	NE
8543	6	53.231184	I-20 EB (Diverge Analysis)	NE
8543	7	49.233052	I-20 EB (Diverge Analysis)	NE
8543	8	48.625852	I-20 EB (Diverge Analysis)	NE
8543	9	47.798652	I-20 EB (Diverge Analysis)	NE
8543	10	50.814118	I-20 EB (Diverge Analysis)	NE
8551	1	28.755458	I-26 WB (Diverge Analysis)	NW
8551	2	28.309592	I-26 WB (Diverge Analysis)	NW
8551	3	27.033592	I-26 WB (Diverge Analysis)	NW
8551	4	28.767191	I-26 WB (Diverge Analysis)	NW
8551	5	28.330125	I-26 WB (Diverge Analysis)	NW
8551	6	28.277325	I-26 WB (Diverge Analysis)	NW
8551	7	26.869325	I-26 WB (Diverge Analysis)	NW
8551	8	29.171991	I-26 WB (Diverge Analysis)	NW
8551	9	28.673325	I-26 WB (Diverge Analysis)	NW
8551	10	29.327458	I-26 WB (Diverge Analysis)	NW
8552	1	69.976357	I-26 EB (Basic Analysis)	SE
8552	2	62.573155	I-26 EB (Basic Analysis)	SE
8552	3	71.220901	I-26 EB (Basic Analysis)	SE
8552	4	68.657499	I-26 EB (Basic Analysis)	SE
8552	5	63.51959	I-26 EB (Basic Analysis)	SE
8552	6	68.156094	I-26 EB (Basic Analysis)	SE
8552	7	70.51193	I-26 EB (Basic Analysis)	SE
8552	8	65.459439	I-26 EB (Basic Analysis)	SE
8552	9	72.514134	I-26 EB (Basic Analysis)	SE
8552	10	65.469689	I-26 EB (Basic Analysis)	SE
8553	1	25.451131	I-26 EB (Basic Analysis)	S
8553	2	24.937562	I-26 EB (Basic Analysis)	S
8553	3	26.59277	I-26 EB (Basic Analysis)	S
8553	4	27.491936	I-26 EB (Basic Analysis)	S
8553	5	24.858422	I-26 EB (Basic Analysis)	S
8553	6	24.935878	I-26 EB (Basic Analysis)	S
8553	7	25.422506	I-26 EB (Basic Analysis)	S
8553	8	25.144673	I-26 EB (Basic Analysis)	S
8553	9	33.589094	I-26 EB (Basic Analysis)	S
8553	10	25.013334	I-26 EB (Basic Analysis)	S
8554	1	17.992722	I-26 WB (Basic Analysis)	N
8554	2	17.177558	I-26 WB (Basic Analysis)	N
8554	3	17.345966	I-26 WB (Basic Analysis)	N
8554	4	17.949724	I-26 WB (Basic Analysis)	N
8554	5	16.718917	I-26 WB (Basic Analysis)	N
8554	6	17.258179	I-26 WB (Basic Analysis)	N
8554	7	17.84223	I-26 WB (Basic Analysis)	N
8554	8	18.325954	I-26 WB (Basic Analysis)	N
8554	9	18.472862	I-26 WB (Basic Analysis)	N
8554	10	17.870895	I-26 WB (Basic Analysis)	N
8559	1	15.649329	I-126 NB (Diverge Analysis)	W
8559	2	15.555462	I-126 NB (Diverge Analysis)	W
8559	3	14.951196	I-126 NB (Diverge Analysis)	W
8559	4	16.802128	I-126 NB (Diverge Analysis)	W
8559	5	14.678396	I-126 NB (Diverge Analysis)	W
8559	6	13.707463	I-126 NB (Diverge Analysis)	W
8559	7	14.962929	I-126 NB (Diverge Analysis)	W
8559	8	15.071462	I-126 NB (Diverge Analysis)	W
8559	9	14.569862	I-126 NB (Diverge Analysis)	W
8559	10	17.330128	I-126 NB (Diverge Analysis)	W
8560	1	26.637017	I-126 SB (Basic Analysis)	E
8560	2	26.54838	I-126 SB (Basic Analysis)	E

Existing AM

ID	Run	Density	Name (Type)	Direction
8560	3	26.024503	I-126 SB (Basic Analysis)	E
8560	4	26.324647	I-126 SB (Basic Analysis)	E
8560	5	26.892537	I-126 SB (Basic Analysis)	E
8560	6	25.739641	I-126 SB (Basic Analysis)	E
8560	7	26.865029	I-126 SB (Basic Analysis)	E
8560	8	26.712206	I-126 SB (Basic Analysis)	E
8560	9	25.849674	I-126 SB (Basic Analysis)	E
8560	10	27.733674	I-126 SB (Basic Analysis)	E
8658	1	29.233434	I-20 WB (Basic Analysis)	SW
8658	2	29.502792	I-20 WB (Basic Analysis)	SW
8658	3	29.517885	I-20 WB (Basic Analysis)	SW
8658	4	28.912701	I-20 WB (Basic Analysis)	SW
8658	5	29.658369	I-20 WB (Basic Analysis)	SW
8658	6	29.705391	I-20 WB (Basic Analysis)	SW
8658	7	29.60293	I-20 WB (Basic Analysis)	SW
8658	8	29.097304	I-20 WB (Basic Analysis)	SW
8658	9	29.6247	I-20 WB (Basic Analysis)	SW
8658	10	28.624477	I-20 WB (Basic Analysis)	SW
8659	1	35.261576	I-20 EB (Basic Analysis)	NE
8659	2	35.664763	I-20 EB (Basic Analysis)	NE
8659	3	35.352522	I-20 EB (Basic Analysis)	NE
8659	4	36.002641	I-20 EB (Basic Analysis)	NE
8659	5	36.127051	I-20 EB (Basic Analysis)	NE
8659	6	35.73304	I-20 EB (Basic Analysis)	NE
8659	7	35.009517	I-20 EB (Basic Analysis)	NE
8659	8	35.16955	I-20 EB (Basic Analysis)	NE
8659	9	35.292341	I-20 EB (Basic Analysis)	NE
8659	10	35.502301	I-20 EB (Basic Analysis)	NE
8763	1	50.28308	I-26 EB (Basic Analysis)	SE
8763	2	50.020927	I-26 EB (Basic Analysis)	SE
8763	3	49.949312	I-26 EB (Basic Analysis)	SE
8763	4	52.730567	I-26 EB (Basic Analysis)	SE
8763	5	51.27961	I-26 EB (Basic Analysis)	SE
8763	6	48.492061	I-26 EB (Basic Analysis)	SE
8763	7	50.893324	I-26 EB (Basic Analysis)	SE
8763	8	49.071055	I-26 EB (Basic Analysis)	SE
8763	9	47.405688	I-26 EB (Basic Analysis)	SE
8763	10	50.279174	I-26 EB (Basic Analysis)	SE
8764	1	15.367391	I-20 WB (Basic Analysis)	S
8764	2	15.657885	I-20 WB (Basic Analysis)	S
8764	3	15.07052	I-20 WB (Basic Analysis)	S
8764	4	15.575541	I-20 WB (Basic Analysis)	S
8764	5	16.153315	I-20 WB (Basic Analysis)	S
8764	6	15.595604	I-20 WB (Basic Analysis)	S
8764	7	15.212511	I-20 WB (Basic Analysis)	S
8764	8	15.53972	I-20 WB (Basic Analysis)	S
8764	9	15.48028	I-20 WB (Basic Analysis)	S
8764	10	15.540299	I-20 WB (Basic Analysis)	S
8765	1	43.533556	I-20 EB (Basic Analysis)	NE
8765	2	43.678865	I-20 EB (Basic Analysis)	NE
8765	3	43.307263	I-20 EB (Basic Analysis)	NE
8765	4	43.59055	I-20 EB (Basic Analysis)	NE
8765	5	43.666997	I-20 EB (Basic Analysis)	NE
8765	6	44.127079	I-20 EB (Basic Analysis)	NE
8765	7	43.881854	I-20 EB (Basic Analysis)	NE
8765	8	43.895512	I-20 EB (Basic Analysis)	NE
8765	9	43.292905	I-20 EB (Basic Analysis)	NE
8765	10	43.405572	I-20 EB (Basic Analysis)	NE
8770	1	30.227991	I-20 WB (Diverge Analysis)	SW
8770	2	29.435991	I-20 WB (Diverge Analysis)	SW
8770	3	29.201324	I-20 WB (Diverge Analysis)	SW
8770	4	30.905591	I-20 WB (Diverge Analysis)	SW
8770	5	31.281057	I-20 WB (Diverge Analysis)	SW
8770	6	30.629857	I-20 WB (Diverge Analysis)	SW

Existing AM

ID	Run	Density	Name (Type)	Direction
8770	7	30.902658	I-20 WB (Diverge Analysis)	SW
8770	8	31.30159	I-20 WB (Diverge Analysis)	SW
8770	9	29.925858	I-20 WB (Diverge Analysis)	SW
8770	10	28.350658	I-20 WB (Diverge Analysis)	SW
8773	1	21.661332	I-26 WB (Basic Analysis)	N
8773	2	20.121671	I-26 WB (Basic Analysis)	N
8773	3	20.750795	I-26 WB (Basic Analysis)	N
8773	4	22.31403	I-26 WB (Basic Analysis)	N
8773	5	20.964433	I-26 WB (Basic Analysis)	N
8773	6	20.464964	I-26 WB (Basic Analysis)	N
8773	7	20.764056	I-26 WB (Basic Analysis)	N
8773	8	20.80531	I-26 WB (Basic Analysis)	N
8773	9	22.094499	I-26 WB (Basic Analysis)	N
8773	10	20.932019	I-26 WB (Basic Analysis)	N
8774	1	34.847973	I-20 EB (Diverge Analysis)	NE
8774	2	34.581586	I-20 EB (Diverge Analysis)	NE
8774	3	36.125484	I-20 EB (Diverge Analysis)	NE
8774	4	35.392204	I-20 EB (Diverge Analysis)	NE
8774	5	36.515039	I-20 EB (Diverge Analysis)	NE
8774	6	35.965079	I-20 EB (Diverge Analysis)	NE
8774	7	35.899198	I-20 EB (Diverge Analysis)	NE
8774	8	33.198094	I-20 EB (Diverge Analysis)	NE
8774	9	34.33525	I-20 EB (Diverge Analysis)	NE
8774	10	34.47274	I-20 EB (Diverge Analysis)	NE
8783	1	23.598368	I-26 WB (Basic Analysis)	NW
8783	2	23.700192	I-26 WB (Basic Analysis)	NW
8783	3	22.94908	I-26 WB (Basic Analysis)	NW
8783	4	24.087771	I-26 WB (Basic Analysis)	NW
8783	5	23.261051	I-26 WB (Basic Analysis)	NW
8783	6	23.895173	I-26 WB (Basic Analysis)	NW
8783	7	22.994576	I-26 WB (Basic Analysis)	NW
8783	8	22.733735	I-26 WB (Basic Analysis)	NW
8783	9	23.548973	I-26 WB (Basic Analysis)	NW
8783	10	23.633681	I-26 WB (Basic Analysis)	NW
8784	1	58.433725	I-26 EB (Basic Analysis)	SE
8784	2	54.115272	I-26 EB (Basic Analysis)	SE
8784	3	58.067572	I-26 EB (Basic Analysis)	SE
8784	4	56.549113	I-26 EB (Basic Analysis)	SE
8784	5	61.653719	I-26 EB (Basic Analysis)	SE
8784	6	54.707579	I-26 EB (Basic Analysis)	SE
8784	7	52.359892	I-26 EB (Basic Analysis)	SE
8784	8	51.002971	I-26 EB (Basic Analysis)	SE
8784	9	45.941443	I-26 EB (Basic Analysis)	SE
8784	10	57.28142	I-26 EB (Basic Analysis)	SE
8817	1	25.310136	I-26 WB (Basic Analysis)	NW
8817	2	25.690908	I-26 WB (Basic Analysis)	NW
8817	3	25.626912	I-26 WB (Basic Analysis)	NW
8817	4	24.452599	I-26 WB (Basic Analysis)	NW
8817	5	26.46845	I-26 WB (Basic Analysis)	NW
8817	6	26.990012	I-26 WB (Basic Analysis)	NW
8817	7	24.938963	I-26 WB (Basic Analysis)	NW
8817	8	27.297189	I-26 WB (Basic Analysis)	NW
8817	9	26.593241	I-26 WB (Basic Analysis)	NW
8817	10	27.901945	I-26 WB (Basic Analysis)	NW

Existing PM

ID	Run	Density	Name (Type)	Direction
2466	1	24.278801	I-20 EB (Weaving Analysis)	E
2466	2	23.87083	I-20 EB (Weaving Analysis)	E
2466	3	24.09748	I-20 EB (Weaving Analysis)	E
2466	4	26.771956	I-20 EB (Weaving Analysis)	E
2466	5	24.42839	I-20 EB (Weaving Analysis)	E
2466	6	23.331402	I-20 EB (Weaving Analysis)	E
2466	7	22.646917	I-20 EB (Weaving Analysis)	E
2466	8	23.703109	I-20 EB (Weaving Analysis)	E
2466	9	23.766571	I-20 EB (Weaving Analysis)	E
2466	10	21.821909	I-20 EB (Weaving Analysis)	E
2467	1	27.710497	I-20 WB (Weaving Analysis)	W
2467	2	26.007587	I-20 WB (Weaving Analysis)	W
2467	3	25.461782	I-20 WB (Weaving Analysis)	W
2467	4	27.666833	I-20 WB (Weaving Analysis)	W
2467	5	27.039158	I-20 WB (Weaving Analysis)	W
2467	6	27.683207	I-20 WB (Weaving Analysis)	W
2467	7	23.305854	I-20 WB (Weaving Analysis)	W
2467	8	26.979119	I-20 WB (Weaving Analysis)	W
2467	9	25.942091	I-20 WB (Weaving Analysis)	W
2467	10	23.420473	I-20 WB (Weaving Analysis)	W
2806	1	21.061298	I-20 EB (Basic Analysis)	NE
2806	2	20.293476	I-20 EB (Basic Analysis)	NE
2806	3	21.593464	I-20 EB (Basic Analysis)	NE
2806	4	20.873201	I-20 EB (Basic Analysis)	NE
2806	5	21.235293	I-20 EB (Basic Analysis)	NE
2806	6	21.552997	I-20 EB (Basic Analysis)	NE
2806	7	20.866546	I-20 EB (Basic Analysis)	NE
2806	8	20.96225	I-20 EB (Basic Analysis)	NE
2806	9	20.416161	I-20 EB (Basic Analysis)	NE
2806	10	20.60993	I-20 EB (Basic Analysis)	NE
2807	1	21.061298	I-20 EB (Basic Analysis)	NE
2807	2	20.293476	I-20 EB (Basic Analysis)	NE
2807	3	21.593464	I-20 EB (Basic Analysis)	NE
2807	4	20.873201	I-20 EB (Basic Analysis)	NE
2807	5	21.235293	I-20 EB (Basic Analysis)	NE
2807	6	21.552997	I-20 EB (Basic Analysis)	NE
2807	7	20.866546	I-20 EB (Basic Analysis)	NE
2807	8	20.96225	I-20 EB (Basic Analysis)	NE
2807	9	20.416161	I-20 EB (Basic Analysis)	NE
2807	10	20.60993	I-20 EB (Basic Analysis)	NE
2808	1	19.889424	I-20 EB (Diverge Analysis)	NE
2808	2	19.250179	I-20 EB (Diverge Analysis)	NE
2808	3	19.155775	I-20 EB (Diverge Analysis)	NE
2808	4	18.574521	I-20 EB (Diverge Analysis)	NE
2808	5	20.418082	I-20 EB (Diverge Analysis)	NE
2808	6	20.668925	I-20 EB (Diverge Analysis)	NE
2808	7	19.144986	I-20 EB (Diverge Analysis)	NE
2808	8	19.256922	I-20 EB (Diverge Analysis)	NE
2808	9	19.345931	I-20 EB (Diverge Analysis)	NE
2808	10	17.831432	I-20 EB (Diverge Analysis)	NE
2813	1	30.078896	I-20 WB (Merge Analysis)	S
2813	2	27.118271	I-20 WB (Merge Analysis)	S
2813	3	28.001221	I-20 WB (Merge Analysis)	S
2813	4	27.761777	I-20 WB (Merge Analysis)	S
2813	5	28.919089	I-20 WB (Merge Analysis)	S
2813	6	29.627444	I-20 WB (Merge Analysis)	S
2813	7	28.38907	I-20 WB (Merge Analysis)	S
2813	8	30.142498	I-20 WB (Merge Analysis)	S
2813	9	30.754826	I-20 WB (Merge Analysis)	S
2813	10	29.325645	I-20 WB (Merge Analysis)	S
2814	1	34.343185	I-20 WB (Basic Analysis)	S
2814	2	31.908932	I-20 WB (Basic Analysis)	S
2814	3	32.83189	I-20 WB (Basic Analysis)	S
2814	4	31.645274	I-20 WB (Basic Analysis)	S

Existing PM

ID	Run	Density	Name (Type)	Direction
2814	5	33.31308	I-20 WB (Basic Analysis)	S
2814	6	34.619752	I-20 WB (Basic Analysis)	S
2814	7	32.752166	I-20 WB (Basic Analysis)	S
2814	8	34.492634	I-20 WB (Basic Analysis)	S
2814	9	34.227621	I-20 WB (Basic Analysis)	S
2814	10	33.223562	I-20 WB (Basic Analysis)	S
2815	1	34.343185	I-20 WB (Basic Analysis)	S
2815	2	31.908932	I-20 WB (Basic Analysis)	S
2815	3	32.83189	I-20 WB (Basic Analysis)	S
2815	4	31.645274	I-20 WB (Basic Analysis)	S
2815	5	33.31308	I-20 WB (Basic Analysis)	S
2815	6	34.619752	I-20 WB (Basic Analysis)	S
2815	7	32.752166	I-20 WB (Basic Analysis)	S
2815	8	34.492634	I-20 WB (Basic Analysis)	S
2815	9	34.227621	I-20 WB (Basic Analysis)	S
2815	10	33.223562	I-20 WB (Basic Analysis)	S
2822	1	14.127896	I-20 WB (Merge Analysis)	SW
2822	2	14.098621	I-20 WB (Merge Analysis)	SW
2822	3	13.935165	I-20 WB (Merge Analysis)	SW
2822	4	13.630212	I-20 WB (Merge Analysis)	SW
2822	5	13.056899	I-20 WB (Merge Analysis)	SW
2822	6	13.942484	I-20 WB (Merge Analysis)	SW
2822	7	13.430162	I-20 WB (Merge Analysis)	SW
2822	8	14.262076	I-20 WB (Merge Analysis)	SW
2822	9	13.920528	I-20 WB (Merge Analysis)	SW
2822	10	14.420652	I-20 WB (Merge Analysis)	SW
2823	1	986.189563	I-20 WB (Basic Analysis)	SW
2823	2	427.969055	I-20 WB (Basic Analysis)	SW
2823	3	427.969051	I-20 WB (Basic Analysis)	SW
2823	4	497.746615	I-20 WB (Basic Analysis)	SW
2823	5	800.11606	I-20 WB (Basic Analysis)	SW
2823	6	679.168282	I-20 WB (Basic Analysis)	SW
2823	7	325.62863	I-20 WB (Basic Analysis)	SW
2823	8	451.228243	I-20 WB (Basic Analysis)	SW
2823	9	441.924569	I-20 WB (Basic Analysis)	SW
2823	10	953.626701	I-20 WB (Basic Analysis)	SW
2826	1	14.303767	I-20 EB (Basic Analysis)	NE
2826	2	13.240483	I-20 EB (Basic Analysis)	NE
2826	3	14.164365	I-20 EB (Basic Analysis)	NE
2826	4	12.967145	I-20 EB (Basic Analysis)	NE
2826	5	14.844976	I-20 EB (Basic Analysis)	NE
2826	6	13.317017	I-20 EB (Basic Analysis)	NE
2826	7	11.720725	I-20 EB (Basic Analysis)	NE
2826	8	14.180765	I-20 EB (Basic Analysis)	NE
2826	9	13.207682	I-20 EB (Basic Analysis)	NE
2826	10	12.294734	I-20 EB (Basic Analysis)	NE
2829	1	16.272278	I-20 EB (Merge Analysis)	NE
2829	2	13.988754	I-20 EB (Merge Analysis)	NE
2829	3	16.376413	I-20 EB (Merge Analysis)	NE
2829	4	15.81359	I-20 EB (Merge Analysis)	NE
2829	5	15.481351	I-20 EB (Merge Analysis)	NE
2829	6	16.656585	I-20 EB (Merge Analysis)	NE
2829	7	15.337546	I-20 EB (Merge Analysis)	NE
2829	8	14.630918	I-20 EB (Merge Analysis)	NE
2829	9	15.317711	I-20 EB (Merge Analysis)	NE
2829	10	15.059853	I-20 EB (Merge Analysis)	NE
2830	1	18.065514	I-20 EB (Basic Analysis)	NE
2830	2	17.392511	I-20 EB (Basic Analysis)	NE
2830	3	17.392511	I-20 EB (Basic Analysis)	NE
2830	4	15.624228	I-20 EB (Basic Analysis)	NE
2830	5	18.355829	I-20 EB (Basic Analysis)	NE
2830	6	17.247353	I-20 EB (Basic Analysis)	NE
2830	7	20.625564	I-20 EB (Basic Analysis)	NE
2830	8	18.435006	I-20 EB (Basic Analysis)	NE

Existing PM

ID	Run	Density	Name (Type)	Direction
2830	9	17.577256	I-20 EB (Basic Analysis)	NE
2830	10	17.748806	I-20 EB (Basic Analysis)	NE
2831	1	19.428534	I-20 WB (Basic Analysis)	SW
2831	2	18.041102	I-20 WB (Basic Analysis)	SW
2831	3	18.520763	I-20 WB (Basic Analysis)	SW
2831	4	18.103861	I-20 WB (Basic Analysis)	SW
2831	5	18.641799	I-20 WB (Basic Analysis)	SW
2831	6	20.475272	I-20 WB (Basic Analysis)	SW
2831	7	18.785249	I-20 WB (Basic Analysis)	SW
2831	8	21.434595	I-20 WB (Basic Analysis)	SW
2831	9	19.446465	I-20 WB (Basic Analysis)	SW
2831	10	17.796788	I-20 WB (Basic Analysis)	SW
2837	1	20.632618	I-20 WB (Merge Analysis)	SW
2837	2	19.986754	I-20 WB (Merge Analysis)	SW
2837	3	19.793996	I-20 WB (Merge Analysis)	SW
2837	4	20.129445	I-20 WB (Merge Analysis)	SW
2837	5	20.427343	I-20 WB (Merge Analysis)	SW
2837	6	19.571198	I-20 WB (Merge Analysis)	SW
2837	7	19.929177	I-20 WB (Merge Analysis)	SW
2837	8	20.837893	I-20 WB (Merge Analysis)	SW
2837	9	20.562524	I-20 WB (Merge Analysis)	SW
2837	10	21.023141	I-20 WB (Merge Analysis)	SW
2838	1	33.677293	I-20 WB (Basic Analysis)	SW
2838	2	29.845957	I-20 WB (Basic Analysis)	SW
2838	3	33.877717	I-20 WB (Basic Analysis)	SW
2838	4	33.306813	I-20 WB (Basic Analysis)	SW
2838	5	32.333036	I-20 WB (Basic Analysis)	SW
2838	6	32.055681	I-20 WB (Basic Analysis)	SW
2838	7	30.342968	I-20 WB (Basic Analysis)	SW
2838	8	64.45755	I-20 WB (Basic Analysis)	SW
2838	9	31.556646	I-20 WB (Basic Analysis)	SW
2838	10	32.598243	I-20 WB (Basic Analysis)	SW
2839	1	34.282547	I-20 WB (Diverge Analysis)	SW
2839	2	35.472703	I-20 WB (Diverge Analysis)	SW
2839	3	49.020815	I-20 WB (Diverge Analysis)	SW
2839	4	52.523203	I-20 WB (Diverge Analysis)	SW
2839	5	35.039003	I-20 WB (Diverge Analysis)	SW
2839	6	41.758846	I-20 WB (Diverge Analysis)	SW
2839	7	31.972838	I-20 WB (Diverge Analysis)	SW
2839	8	81.268499	I-20 WB (Diverge Analysis)	SW
2839	9	39.436529	I-20 WB (Diverge Analysis)	SW
2839	10	33.626953	I-20 WB (Diverge Analysis)	SW
2840	1	34.282547	I-20 WB (Diverge Analysis)	SW
2840	2	35.472703	I-20 WB (Diverge Analysis)	SW
2840	3	49.020815	I-20 WB (Diverge Analysis)	SW
2840	4	52.523203	I-20 WB (Diverge Analysis)	SW
2840	5	35.039003	I-20 WB (Diverge Analysis)	SW
2840	6	41.758846	I-20 WB (Diverge Analysis)	SW
2840	7	31.972838	I-20 WB (Diverge Analysis)	SW
2840	8	81.268499	I-20 WB (Diverge Analysis)	SW
2840	9	39.436529	I-20 WB (Diverge Analysis)	SW
2840	10	33.626953	I-20 WB (Diverge Analysis)	SW
2843	1	16.307252	I-20 EB (Merge Analysis)	NE
2843	2	16.491295	I-20 EB (Merge Analysis)	NE
2843	3	16.139136	I-20 EB (Merge Analysis)	NE
2843	4	16.215231	I-20 EB (Merge Analysis)	NE
2843	5	16.985025	I-20 EB (Merge Analysis)	NE
2843	6	16.303713	I-20 EB (Merge Analysis)	NE
2843	7	16.484216	I-20 EB (Merge Analysis)	NE
2843	8	17.101822	I-20 EB (Merge Analysis)	NE
2843	9	16.707191	I-20 EB (Merge Analysis)	NE
2843	10	15.314483	I-20 EB (Merge Analysis)	NE
2844	1	16.307252	I-20 EB (Merge Analysis)	NE
2844	2	16.491295	I-20 EB (Merge Analysis)	NE

Existing PM

ID	Run	Density	Name (Type)	Direction
2844	3	16.139136	I-20 EB (Merge Analysis)	NE
2844	4	16.215231	I-20 EB (Merge Analysis)	NE
2844	5	16.985025	I-20 EB (Merge Analysis)	NE
2844	6	16.303713	I-20 EB (Merge Analysis)	NE
2844	7	16.484216	I-20 EB (Merge Analysis)	NE
2844	8	17.101822	I-20 EB (Merge Analysis)	NE
2844	9	16.707191	I-20 EB (Merge Analysis)	NE
2844	10	15.314483	I-20 EB (Merge Analysis)	NE
2848	1	18.705051	I-20 EB (Basic Analysis)	NE
2848	2	15.201373	I-20 EB (Basic Analysis)	NE
2848	3	16.49847	I-20 EB (Basic Analysis)	NE
2848	4	15.915967	I-20 EB (Basic Analysis)	NE
2848	5	16.39886	I-20 EB (Basic Analysis)	NE
2848	6	15.591151	I-20 EB (Basic Analysis)	NE
2848	7	15.725409	I-20 EB (Basic Analysis)	NE
2848	8	16.704186	I-20 EB (Basic Analysis)	NE
2848	9	15.775214	I-20 EB (Basic Analysis)	NE
2848	10	14.735803	I-20 EB (Basic Analysis)	NE
2852	1	24.277369	I-20 WB (Basic Analysis)	SW
2852	2	21.165495	I-20 WB (Basic Analysis)	SW
2852	3	22.001104	I-20 WB (Basic Analysis)	SW
2852	4	22.868851	I-20 WB (Basic Analysis)	SW
2852	5	22.984831	I-20 WB (Basic Analysis)	SW
2852	6	23.828823	I-20 WB (Basic Analysis)	SW
2852	7	20.894411	I-20 WB (Basic Analysis)	SW
2852	8	22.608946	I-20 WB (Basic Analysis)	SW
2852	9	22.794792	I-20 WB (Basic Analysis)	SW
2852	10	23.331371	I-20 WB (Basic Analysis)	SW
2856	1	15.134385	I-20 EB (Basic Analysis)	NE
2856	2	13.984572	I-20 EB (Basic Analysis)	NE
2856	3	14.27347	I-20 EB (Basic Analysis)	NE
2856	4	14.032722	I-20 EB (Basic Analysis)	NE
2856	5	13.657155	I-20 EB (Basic Analysis)	NE
2856	6	14.74341	I-20 EB (Basic Analysis)	NE
2856	7	14.192579	I-20 EB (Basic Analysis)	NE
2856	8	14.071242	I-20 EB (Basic Analysis)	NE
2856	9	14.142503	I-20 EB (Basic Analysis)	NE
2856	10	13.379813	I-20 EB (Basic Analysis)	NE
2859	1	67.451997	I-20 WB (Weaving Analysis)	SW
2859	2	60.752294	I-20 WB (Weaving Analysis)	SW
2859	3	38.264063	I-20 WB (Weaving Analysis)	SW
2859	4	50.931283	I-20 WB (Weaving Analysis)	SW
2859	5	53.297129	I-20 WB (Weaving Analysis)	SW
2859	6	49.295506	I-20 WB (Weaving Analysis)	SW
2859	7	39.77922	I-20 WB (Weaving Analysis)	SW
2859	8	54.033546	I-20 WB (Weaving Analysis)	SW
2859	9	51.020161	I-20 WB (Weaving Analysis)	SW
2859	10	50.042504	I-20 WB (Weaving Analysis)	SW
2863	1	13.288313	I-20 EB (Merge Analysis)	E
2863	2	12.701185	I-20 EB (Merge Analysis)	E
2863	3	13.737751	I-20 EB (Merge Analysis)	E
2863	4	13.929997	I-20 EB (Merge Analysis)	E
2863	5	13.496146	I-20 EB (Merge Analysis)	E
2863	6	14.143025	I-20 EB (Merge Analysis)	E
2863	7	14.75873	I-20 EB (Merge Analysis)	E
2863	8	13.672803	I-20 EB (Merge Analysis)	E
2863	9	12.745349	I-20 EB (Merge Analysis)	E
2863	10	12.823287	I-20 EB (Merge Analysis)	E
4563	1	8.955464	I-126 SB (Merge Analysis)	E
4563	2	9.905864	I-126 SB (Merge Analysis)	E
4563	3	10.480797	I-126 SB (Merge Analysis)	E
4563	4	8.621064	I-126 SB (Merge Analysis)	E
4563	5	9.803197	I-126 SB (Merge Analysis)	E
4563	6	10.46613	I-126 SB (Merge Analysis)	E

Existing PM

ID	Run	Density	Name (Type)	Direction
4563	7	10.020264	I-126 SB (Merge Analysis)	E
4563	8	9.63013	I-126 SB (Merge Analysis)	E
4563	9	10.647997	I-126 SB (Merge Analysis)	E
4563	10	9.627197	I-126 SB (Merge Analysis)	E
4566	1	25.391564	I-126 NB (Basic Analysis)	W
4566	2	26.1608	I-126 NB (Basic Analysis)	W
4566	3	25.820983	I-126 NB (Basic Analysis)	W
4566	4	26.626568	I-126 NB (Basic Analysis)	W
4566	5	26.253785	I-126 NB (Basic Analysis)	W
4566	6	24.875922	I-126 NB (Basic Analysis)	W
4566	7	26.272382	I-126 NB (Basic Analysis)	W
4566	8	25.281673	I-126 NB (Basic Analysis)	W
4566	9	25.110919	I-126 NB (Basic Analysis)	W
4566	10	25.722927	I-126 NB (Basic Analysis)	W
4570	1	22.632992	I-126 NB (Basic Analysis)	NW
4570	2	25.512017	I-126 NB (Basic Analysis)	NW
4570	3	24.490773	I-126 NB (Basic Analysis)	NW
4570	4	24.135662	I-126 NB (Basic Analysis)	NW
4570	5	24.347775	I-126 NB (Basic Analysis)	NW
4570	6	22.849872	I-126 NB (Basic Analysis)	NW
4570	7	24.306068	I-126 NB (Basic Analysis)	NW
4570	8	23.077477	I-126 NB (Basic Analysis)	NW
4570	9	23.91044	I-126 NB (Basic Analysis)	NW
4570	10	25.931477	I-126 NB (Basic Analysis)	NW
4573	1	10.179073	I-126 SB (Basic Analysis)	E
4573	2	12.466417	I-126 SB (Basic Analysis)	E
4573	3	11.44982	I-126 SB (Basic Analysis)	E
4573	4	9.843701	I-126 SB (Basic Analysis)	E
4573	5	11.669908	I-126 SB (Basic Analysis)	E
4573	6	11.059426	I-126 SB (Basic Analysis)	E
4573	7	12.458557	I-126 SB (Basic Analysis)	E
4573	8	11.145889	I-126 SB (Basic Analysis)	E
4573	9	9.935404	I-126 SB (Basic Analysis)	E
4573	10	10.268157	I-126 SB (Basic Analysis)	E
4578	1	13.77575	I-126 SB (Basic Analysis)	E
4578	2	13.364193	I-126 SB (Basic Analysis)	E
4578	3	14.174631	I-126 SB (Basic Analysis)	E
4578	4	13.786737	I-126 SB (Basic Analysis)	E
4578	5	14.103644	I-126 SB (Basic Analysis)	E
4578	6	13.681946	I-126 SB (Basic Analysis)	E
4578	7	13.452082	I-126 SB (Basic Analysis)	E
4578	8	13.097146	I-126 SB (Basic Analysis)	E
4578	9	13.312643	I-126 SB (Basic Analysis)	E
4578	10	13.759694	I-126 SB (Basic Analysis)	E
4579	1	10.718814	I-126 SB (Diverge Analysis)	E
4579	2	12.136134	I-126 SB (Diverge Analysis)	E
4579	3	11.029996	I-126 SB (Diverge Analysis)	E
4579	4	11.725582	I-126 SB (Diverge Analysis)	E
4579	5	10.632519	I-126 SB (Diverge Analysis)	E
4579	6	11.634057	I-126 SB (Diverge Analysis)	E
4579	7	10.263807	I-126 SB (Diverge Analysis)	E
4579	8	11.369944	I-126 SB (Diverge Analysis)	E
4579	9	11.474544	I-126 SB (Diverge Analysis)	E
4579	10	12.222428	I-126 SB (Diverge Analysis)	E
4586	1	21.72951	I-126 NB (Merge Analysis)	NW
4586	2	29.349044	I-126 NB (Merge Analysis)	NW
4586	3	24.926888	I-126 NB (Merge Analysis)	NW
4586	4	25.353794	I-126 NB (Merge Analysis)	NW
4586	5	25.91466	I-126 NB (Merge Analysis)	NW
4586	6	21.436564	I-126 NB (Merge Analysis)	NW
4586	7	25.029934	I-126 NB (Merge Analysis)	NW
4586	8	23.027893	I-126 NB (Merge Analysis)	NW
4586	9	24.535312	I-126 NB (Merge Analysis)	NW
4586	10	32.493427	I-126 NB (Merge Analysis)	NW

Existing PM

ID	Run	Density	Name (Type)	Direction
4587	1	37.191121	I-126 NB (Basic Analysis)	NW
4587	2	59.924429	I-126 NB (Basic Analysis)	NW
4587	3	52.313592	I-126 NB (Basic Analysis)	NW
4587	4	51.974319	I-126 NB (Basic Analysis)	NW
4587	5	54.686523	I-126 NB (Basic Analysis)	NW
4587	6	27.457345	I-126 NB (Basic Analysis)	NW
4587	7	50.069626	I-126 NB (Basic Analysis)	NW
4587	8	36.966923	I-126 NB (Basic Analysis)	NW
4587	9	49.49425	I-126 NB (Basic Analysis)	NW
4587	10	65.614701	I-126 NB (Basic Analysis)	NW
4588	1	24.498279	I-126 NB (Diverge Analysis)	NW
4588	2	34.314371	I-126 NB (Diverge Analysis)	NW
4588	3	30.486686	I-126 NB (Diverge Analysis)	NW
4588	4	30.168974	I-126 NB (Diverge Analysis)	NW
4588	5	30.002552	I-126 NB (Diverge Analysis)	NW
4588	6	22.634638	I-126 NB (Diverge Analysis)	NW
4588	7	29.550052	I-126 NB (Diverge Analysis)	NW
4588	8	27.030355	I-126 NB (Diverge Analysis)	NW
4588	9	30.576485	I-126 NB (Diverge Analysis)	NW
4588	10	36.490223	I-126 NB (Diverge Analysis)	NW
4589	1	24.498279	I-126 NB (Diverge Analysis)	NW
4589	2	34.314371	I-126 NB (Diverge Analysis)	NW
4589	3	30.486686	I-126 NB (Diverge Analysis)	NW
4589	4	30.168974	I-126 NB (Diverge Analysis)	NW
4589	5	30.002552	I-126 NB (Diverge Analysis)	NW
4589	6	22.634638	I-126 NB (Diverge Analysis)	NW
4589	7	29.550052	I-126 NB (Diverge Analysis)	NW
4589	8	27.030355	I-126 NB (Diverge Analysis)	NW
4589	9	30.576485	I-126 NB (Diverge Analysis)	NW
4589	10	36.490223	I-126 NB (Diverge Analysis)	NW
4593	1	12.899649	I-126 SB (Merge Analysis)	SE
4593	2	13.569289	I-126 SB (Merge Analysis)	SE
4593	3	14.423209	I-126 SB (Merge Analysis)	SE
4593	4	12.040538	I-126 SB (Merge Analysis)	SE
4593	5	13.862581	I-126 SB (Merge Analysis)	SE
4593	6	12.492155	I-126 SB (Merge Analysis)	SE
4593	7	13.361648	I-126 SB (Merge Analysis)	SE
4593	8	13.224087	I-126 SB (Merge Analysis)	SE
4593	9	13.457682	I-126 SB (Merge Analysis)	SE
4593	10	13.590053	I-126 SB (Merge Analysis)	SE
4594	1	16.03492	I-126 SB (Basic Analysis)	SE
4594	2	15.557133	I-126 SB (Basic Analysis)	SE
4594	3	15.263232	I-126 SB (Basic Analysis)	SE
4594	4	15.288378	I-126 SB (Basic Analysis)	SE
4594	5	15.381107	I-126 SB (Basic Analysis)	SE
4594	6	15.550061	I-126 SB (Basic Analysis)	SE
4594	7	15.538273	I-126 SB (Basic Analysis)	SE
4594	8	14.418461	I-126 SB (Basic Analysis)	SE
4594	9	15.337886	I-126 SB (Basic Analysis)	SE
4594	10	15.002335	I-126 SB (Basic Analysis)	SE
4599	1	57.218862	I-126 NB (Basic Analysis)	NW
4599	2	71.618537	I-126 NB (Basic Analysis)	NW
4599	3	63.653318	I-126 NB (Basic Analysis)	NW
4599	4	61.984534	I-126 NB (Basic Analysis)	NW
4599	5	63.18793	I-126 NB (Basic Analysis)	NW
4599	6	51.842938	I-126 NB (Basic Analysis)	NW
4599	7	64.565845	I-126 NB (Basic Analysis)	NW
4599	8	62.971204	I-126 NB (Basic Analysis)	NW
4599	9	63.767384	I-126 NB (Basic Analysis)	NW
4599	10	74.740521	I-126 NB (Basic Analysis)	NW
4601	1	70.130305	I-126 NB (Basic Analysis)	NW
4601	2	81.990589	I-126 NB (Basic Analysis)	NW
4601	3	74.596252	I-126 NB (Basic Analysis)	NW
4601	4	74.487683	I-126 NB (Basic Analysis)	NW

Existing PM

ID	Run	Density	Name (Type)	Direction
4601	5	73.55899	I-126 NB (Basic Analysis)	NW
4601	6	68.359479	I-126 NB (Basic Analysis)	NW
4601	7	73.911101	I-126 NB (Basic Analysis)	NW
4601	8	77.678692	I-126 NB (Basic Analysis)	NW
4601	9	75.637914	I-126 NB (Basic Analysis)	NW
4601	10	84.192752	I-126 NB (Basic Analysis)	NW
4602	1	11.944374	WB EXPRESSWAY TO I-26 WB (Basic Anal	NW
4602	2	10.644394	WB EXPRESSWAY TO I-26 WB (Basic Anal	NW
4602	3	13.488905	WB EXPRESSWAY TO I-26 WB (Basic Anal	NW
4602	4	60.468395	WB EXPRESSWAY TO I-26 WB (Basic Anal	NW
4602	5	14.13246	WB EXPRESSWAY TO I-26 WB (Basic Anal	NW
4602	6	13.411679	WB EXPRESSWAY TO I-26 WB (Basic Anal	NW
4602	7	11.339433	WB EXPRESSWAY TO I-26 WB (Basic Anal	NW
4602	8	12.060214	WB EXPRESSWAY TO I-26 WB (Basic Anal	NW
4602	9	14.685917	WB EXPRESSWAY TO I-26 WB (Basic Anal	NW
4602	10	13.064159	WB EXPRESSWAY TO I-26 WB (Basic Anal	NW
4603	1	82.941324	I-126 NB (Basic Analysis)	NW
4603	2	97.585177	I-126 NB (Basic Analysis)	NW
4603	3	88.998754	I-126 NB (Basic Analysis)	NW
4603	4	97.673179	I-126 NB (Basic Analysis)	NW
4603	5	88.665606	I-126 NB (Basic Analysis)	NW
4603	6	87.284822	I-126 NB (Basic Analysis)	NW
4603	7	85.313172	I-126 NB (Basic Analysis)	NW
4603	8	89.294187	I-126 NB (Basic Analysis)	NW
4603	9	90.578589	I-126 NB (Basic Analysis)	NW
4603	10	98.387666	I-126 NB (Basic Analysis)	NW
4609	1	16.641731	I-126 SB (Basic Analysis)	SE
4609	2	15.888936	I-126 SB (Basic Analysis)	SE
4609	3	14.701927	I-126 SB (Basic Analysis)	SE
4609	4	15.395725	I-126 SB (Basic Analysis)	SE
4609	5	16.549697	I-126 SB (Basic Analysis)	SE
4609	6	15.178618	I-126 SB (Basic Analysis)	SE
4609	7	16.117843	I-126 SB (Basic Analysis)	SE
4609	8	15.173898	I-126 SB (Basic Analysis)	SE
4609	9	15.539677	I-126 SB (Basic Analysis)	SE
4609	10	15.565635	I-126 SB (Basic Analysis)	SE
4611	1	41.491988	I-26 EB (Diverge Analysis)	SE
4611	2	39.312521	I-26 EB (Diverge Analysis)	SE
4611	3	40.301055	I-26 EB (Diverge Analysis)	SE
4611	4	40.427188	I-26 EB (Diverge Analysis)	SE
4611	5	41.471454	I-26 EB (Diverge Analysis)	SE
4611	6	40.975721	I-26 EB (Diverge Analysis)	SE
4611	7	40.207188	I-26 EB (Diverge Analysis)	SE
4611	8	41.398121	I-26 EB (Diverge Analysis)	SE
4611	9	40.949321	I-26 EB (Diverge Analysis)	SE
4611	10	39.949055	I-26 EB (Diverge Analysis)	SE
4619	1	106.422792	I-26 WB (Basic Analysis)	NW
4619	2	130.395085	I-26 WB (Basic Analysis)	NW
4619	3	123.476162	I-26 WB (Basic Analysis)	NW
4619	4	129.219755	I-26 WB (Basic Analysis)	NW
4619	5	122.056895	I-26 WB (Basic Analysis)	NW
4619	6	116.379831	I-26 WB (Basic Analysis)	NW
4619	7	114.894037	I-26 WB (Basic Analysis)	NW
4619	8	119.972348	I-26 WB (Basic Analysis)	NW
4619	9	115.404086	I-26 WB (Basic Analysis)	NW
4619	10	134.741587	I-26 WB (Basic Analysis)	NW
4624	1	34.694276	I-26 EB (Weaving Analysis)	SE
4624	2	37.054888	I-26 EB (Weaving Analysis)	SE
4624	3	35.461694	I-26 EB (Weaving Analysis)	SE
4624	4	53.29321	I-26 EB (Weaving Analysis)	SE
4624	5	32.599197	I-26 EB (Weaving Analysis)	SE
4624	6	32.380352	I-26 EB (Weaving Analysis)	SE
4624	7	30.168555	I-26 EB (Weaving Analysis)	SE
4624	8	31.860959	I-26 EB (Weaving Analysis)	SE

Existing PM

ID	Run	Density	Name (Type)	Direction
4624	9	47.013808	I-26 EB (Weaving Analysis)	SE
4624	10	34.764307	I-26 EB (Weaving Analysis)	SE
4639	1	29.257692	I-26 EB (Basic Analysis)	SE
4639	2	29.195574	I-26 EB (Basic Analysis)	SE
4639	3	28.407915	I-26 EB (Basic Analysis)	SE
4639	4	29.481318	I-26 EB (Basic Analysis)	SE
4639	5	29.543436	I-26 EB (Basic Analysis)	SE
4639	6	28.166896	I-26 EB (Basic Analysis)	SE
4639	7	28.0849	I-26 EB (Basic Analysis)	SE
4639	8	28.653903	I-26 EB (Basic Analysis)	SE
4639	9	28.711052	I-26 EB (Basic Analysis)	SE
4639	10	27.652557	I-26 EB (Basic Analysis)	SE
4641	1	33.186265	I-26 EB (Basic Analysis)	SE
4641	2	33.749079	I-26 EB (Basic Analysis)	SE
4641	3	34.286132	I-26 EB (Basic Analysis)	SE
4641	4	34.502141	I-26 EB (Basic Analysis)	SE
4641	5	34.549704	I-26 EB (Basic Analysis)	SE
4641	6	34.169209	I-26 EB (Basic Analysis)	SE
4641	7	33.798623	I-26 EB (Basic Analysis)	SE
4641	8	34.187045	I-26 EB (Basic Analysis)	SE
4641	9	34.890563	I-26 EB (Basic Analysis)	SE
4641	10	33.035652	I-26 EB (Basic Analysis)	SE
4643	1	88.401838	I-26 WB (Weaving Analysis)	NW
4643	2	100.80749	I-26 WB (Weaving Analysis)	NW
4643	3	94.319967	I-26 WB (Weaving Analysis)	NW
4643	4	104.035236	I-26 WB (Weaving Analysis)	NW
4643	5	97.042378	I-26 WB (Weaving Analysis)	NW
4643	6	95.113558	I-26 WB (Weaving Analysis)	NW
4643	7	89.038846	I-26 WB (Weaving Analysis)	NW
4643	8	93.067302	I-26 WB (Weaving Analysis)	NW
4643	9	99.362655	I-26 WB (Weaving Analysis)	NW
4643	10	103.262997	I-26 WB (Weaving Analysis)	NW
4646	1	104.677156	I-26 WB (Basic Analysis)	NW
4646	2	122.129346	I-26 WB (Basic Analysis)	NW
4646	3	114.651441	I-26 WB (Basic Analysis)	NW
4646	4	133.230379	I-26 WB (Basic Analysis)	NW
4646	5	117.127584	I-26 WB (Basic Analysis)	NW
4646	6	114.336584	I-26 WB (Basic Analysis)	NW
4646	7	112.227027	I-26 WB (Basic Analysis)	NW
4646	8	118.036178	I-26 WB (Basic Analysis)	NW
4646	9	124.857375	I-26 WB (Basic Analysis)	NW
4646	10	127.8193	I-26 WB (Basic Analysis)	NW
4649	1	37.699786	I-26 EB (Basic Analysis)	SE
4649	2	36.224577	I-26 EB (Basic Analysis)	SE
4649	3	36.139057	I-26 EB (Basic Analysis)	SE
4649	4	36.428873	I-26 EB (Basic Analysis)	SE
4649	5	36.12718	I-26 EB (Basic Analysis)	SE
4649	6	34.528443	I-26 EB (Basic Analysis)	SE
4649	7	35.309994	I-26 EB (Basic Analysis)	SE
4649	8	35.559426	I-26 EB (Basic Analysis)	SE
4649	9	36.445502	I-26 EB (Basic Analysis)	SE
4649	10	36.837466	I-26 EB (Basic Analysis)	SE
4650	1	31.641365	I-26 EB (Weaving Analysis)	SE
4650	2	31.759732	I-26 EB (Weaving Analysis)	SE
4650	3	31.90551	I-26 EB (Weaving Analysis)	SE
4650	4	32.052534	I-26 EB (Weaving Analysis)	SE
4650	5	31.263837	I-26 EB (Weaving Analysis)	SE
4650	6	30.551143	I-26 EB (Weaving Analysis)	SE
4650	7	30.890046	I-26 EB (Weaving Analysis)	SE
4650	8	30.998445	I-26 EB (Weaving Analysis)	SE
4650	9	31.258853	I-26 EB (Weaving Analysis)	SE
4650	10	31.054514	I-26 EB (Weaving Analysis)	SE
4651	1	94.62145	I-26 WB (Weaving Analysis)	NW
4651	2	105.573755	I-26 WB (Weaving Analysis)	NW

Existing PM

ID	Run	Density	Name (Type)	Direction
4651	3	101.507961	I-26 WB (Weaving Analysis)	NW
4651	4	113.409728	I-26 WB (Weaving Analysis)	NW
4651	5	103.805891	I-26 WB (Weaving Analysis)	NW
4651	6	99.176537	I-26 WB (Weaving Analysis)	NW
4651	7	101.574948	I-26 WB (Weaving Analysis)	NW
4651	8	104.073838	I-26 WB (Weaving Analysis)	NW
4651	9	109.670129	I-26 WB (Weaving Analysis)	NW
4651	10	112.28115	I-26 WB (Weaving Analysis)	NW
4654	1	77.521298	I-26 WB (Basic Analysis)	NW
4654	2	81.68373	I-26 WB (Basic Analysis)	NW
4654	3	79.953303	I-26 WB (Basic Analysis)	NW
4654	4	88.144622	I-26 WB (Basic Analysis)	NW
4654	5	83.380303	I-26 WB (Basic Analysis)	NW
4654	6	80.933251	I-26 WB (Basic Analysis)	NW
4654	7	87.616089	I-26 WB (Basic Analysis)	NW
4654	8	84.450535	I-26 WB (Basic Analysis)	NW
4654	9	84.222946	I-26 WB (Basic Analysis)	NW
4654	10	89.365327	I-26 WB (Basic Analysis)	NW
4659	1	65.630225	I-26 WB (Basic Analysis)	NW
4659	2	65.307735	I-26 WB (Basic Analysis)	NW
4659	3	68.078525	I-26 WB (Basic Analysis)	NW
4659	4	72.205095	I-26 WB (Basic Analysis)	NW
4659	5	65.209012	I-26 WB (Basic Analysis)	NW
4659	6	72.850077	I-26 WB (Basic Analysis)	NW
4659	7	69.131557	I-26 WB (Basic Analysis)	NW
4659	8	68.499738	I-26 WB (Basic Analysis)	NW
4659	9	69.895005	I-26 WB (Basic Analysis)	NW
4659	10	68.407597	I-26 WB (Basic Analysis)	NW
4665	1	38.261958	I-26 EB (Basic Analysis)	SE
4665	2	40.892131	I-26 EB (Basic Analysis)	SE
4665	3	37.313481	I-26 EB (Basic Analysis)	SE
4665	4	39.88984	I-26 EB (Basic Analysis)	SE
4665	5	40.865224	I-26 EB (Basic Analysis)	SE
4665	6	43.46849	I-26 EB (Basic Analysis)	SE
4665	7	43.811556	I-26 EB (Basic Analysis)	SE
4665	8	42.52674	I-26 EB (Basic Analysis)	SE
4665	9	41.046847	I-26 EB (Basic Analysis)	SE
4665	10	44.154623	I-26 EB (Basic Analysis)	SE
4667	1	30.343125	I-26 EB (Merge Analysis)	SE
4667	2	29.231942	I-26 EB (Merge Analysis)	SE
4667	3	29.588359	I-26 EB (Merge Analysis)	SE
4667	4	28.997507	I-26 EB (Merge Analysis)	SE
4667	5	27.133463	I-26 EB (Merge Analysis)	SE
4667	6	28.747824	I-26 EB (Merge Analysis)	SE
4667	7	29.864726	I-26 EB (Merge Analysis)	SE
4667	8	30.41174	I-26 EB (Merge Analysis)	SE
4667	9	29.514026	I-26 EB (Merge Analysis)	SE
4667	10	31.25037	I-26 EB (Merge Analysis)	SE
4668	1	30.343125	I-26 EB (Merge Analysis)	SE
4668	2	29.231942	I-26 EB (Merge Analysis)	SE
4668	3	29.588359	I-26 EB (Merge Analysis)	SE
4668	4	28.997507	I-26 EB (Merge Analysis)	SE
4668	5	27.133463	I-26 EB (Merge Analysis)	SE
4668	6	28.747824	I-26 EB (Merge Analysis)	SE
4668	7	29.864726	I-26 EB (Merge Analysis)	SE
4668	8	30.41174	I-26 EB (Merge Analysis)	SE
4668	9	29.514026	I-26 EB (Merge Analysis)	SE
4668	10	31.25037	I-26 EB (Merge Analysis)	SE
4669	1	34.734285	I-26 EB (Basic Analysis)	SE
4669	2	34.785626	I-26 EB (Basic Analysis)	SE
4669	3	34.116475	I-26 EB (Basic Analysis)	SE
4669	4	34.23456	I-26 EB (Basic Analysis)	SE
4669	5	34.725728	I-26 EB (Basic Analysis)	SE
4669	6	35.028643	I-26 EB (Basic Analysis)	SE

Existing PM

ID	Run	Density	Name (Type)	Direction
4669	7	34.599085	I-26 EB (Basic Analysis)	SE
4669	8	35.365786	I-26 EB (Basic Analysis)	SE
4669	9	35.069716	I-26 EB (Basic Analysis)	SE
4669	10	33.911108	I-26 EB (Basic Analysis)	SE
4670	1	28.537018	I-26 EB (Diverge Analysis)	SE
4670	2	29.34139	I-26 EB (Diverge Analysis)	SE
4670	3	28.509752	I-26 EB (Diverge Analysis)	SE
4670	4	28.898304	I-26 EB (Diverge Analysis)	SE
4670	5	29.166428	I-26 EB (Diverge Analysis)	SE
4670	6	28.418862	I-26 EB (Diverge Analysis)	SE
4670	7	29.789021	I-26 EB (Diverge Analysis)	SE
4670	8	28.82332	I-26 EB (Diverge Analysis)	SE
4670	9	30.352535	I-26 EB (Diverge Analysis)	SE
4670	10	29.411829	I-26 EB (Diverge Analysis)	SE
4675	1	37.165325	I-26 WB (Merge Analysis)	NW
4675	2	36.668614	I-26 WB (Merge Analysis)	NW
4675	3	36.373325	I-26 WB (Merge Analysis)	NW
4675	4	37.929947	I-26 WB (Merge Analysis)	NW
4675	5	34.891014	I-26 WB (Merge Analysis)	NW
4675	6	38.942924	I-26 WB (Merge Analysis)	NW
4675	7	36.21688	I-26 WB (Merge Analysis)	NW
4675	8	36.232525	I-26 WB (Merge Analysis)	NW
4675	9	36.813325	I-26 WB (Merge Analysis)	NW
4675	10	36.230569	I-26 WB (Merge Analysis)	NW
4676	1	48.797386	I-26 WB (Basic Analysis)	NW
4676	2	49.000719	I-26 WB (Basic Analysis)	NW
4676	3	48.75589	I-26 WB (Basic Analysis)	NW
4676	4	49.430623	I-26 WB (Basic Analysis)	NW
4676	5	48.177429	I-26 WB (Basic Analysis)	NW
4676	6	53.039988	I-26 WB (Basic Analysis)	NW
4676	7	49.642255	I-26 WB (Basic Analysis)	NW
4676	8	48.261252	I-26 WB (Basic Analysis)	NW
4676	9	49.149276	I-26 WB (Basic Analysis)	NW
4676	10	48.657958	I-26 WB (Basic Analysis)	NW
4677	1	48.797386	I-26 WB (Basic Analysis)	NW
4677	2	49.000719	I-26 WB (Basic Analysis)	NW
4677	3	48.75589	I-26 WB (Basic Analysis)	NW
4677	4	49.430623	I-26 WB (Basic Analysis)	NW
4677	5	48.177429	I-26 WB (Basic Analysis)	NW
4677	6	53.039988	I-26 WB (Basic Analysis)	NW
4677	7	49.642255	I-26 WB (Basic Analysis)	NW
4677	8	48.261252	I-26 WB (Basic Analysis)	NW
4677	9	49.149276	I-26 WB (Basic Analysis)	NW
4677	10	48.657958	I-26 WB (Basic Analysis)	NW
4687	1	27.530655	I-26 EB (Basic Analysis)	SE
4687	2	27.93299	I-26 EB (Basic Analysis)	SE
4687	3	27.397645	I-26 EB (Basic Analysis)	SE
4687	4	27.189455	I-26 EB (Basic Analysis)	SE
4687	5	27.811546	I-26 EB (Basic Analysis)	SE
4687	6	27.369556	I-26 EB (Basic Analysis)	SE
4687	7	27.880117	I-26 EB (Basic Analysis)	SE
4687	8	27.872682	I-26 EB (Basic Analysis)	SE
4687	9	27.549656	I-26 EB (Basic Analysis)	SE
4687	10	27.835505	I-26 EB (Basic Analysis)	SE
4689	1	39.869395	I-26 WB (Basic Analysis)	NW
4689	2	36.85636	I-26 WB (Basic Analysis)	NW
4689	3	39.665325	I-26 WB (Basic Analysis)	NW
4689	4	39.263648	I-26 WB (Basic Analysis)	NW
4689	5	39.915565	I-26 WB (Basic Analysis)	NW
4689	6	65.160241	I-26 WB (Basic Analysis)	NW
4689	7	65.078982	I-26 WB (Basic Analysis)	NW
4689	8	41.003323	I-26 WB (Basic Analysis)	NW
4689	9	39.311665	I-26 WB (Basic Analysis)	NW
4689	10	45.292489	I-26 WB (Basic Analysis)	NW

Existing PM

ID	Run	Density	Name (Type)	Direction
4700	1	36.16395	I-26 WB (Merge Analysis)	NW
4700	2	33.940249	I-26 WB (Merge Analysis)	NW
4700	3	36.22588	I-26 WB (Merge Analysis)	NW
4700	4	36.246043	I-26 WB (Merge Analysis)	NW
4700	5	36.297891	I-26 WB (Merge Analysis)	NW
4700	6	42.109182	I-26 WB (Merge Analysis)	NW
4700	7	43.602692	I-26 WB (Merge Analysis)	NW
4700	8	37.720829	I-26 WB (Merge Analysis)	NW
4700	9	35.327182	I-26 WB (Merge Analysis)	NW
4700	10	39.54847	I-26 WB (Merge Analysis)	NW
4701	1	41.993015	I-26 WB (Basic Analysis)	NW
4701	2	42.423712	I-26 WB (Basic Analysis)	NW
4701	3	42.694635	I-26 WB (Basic Analysis)	NW
4701	4	41.124673	I-26 WB (Basic Analysis)	NW
4701	5	43.333735	I-26 WB (Basic Analysis)	NW
4701	6	43.604657	I-26 WB (Basic Analysis)	NW
4701	7	44.681402	I-26 WB (Basic Analysis)	NW
4701	8	45.438596	I-26 WB (Basic Analysis)	NW
4701	9	43.347628	I-26 WB (Basic Analysis)	NW
4701	10	44.125662	I-26 WB (Basic Analysis)	NW
4702	1	31.445126	I-26 WB (Diverge Analysis)	NW
4702	2	30.348924	I-26 WB (Diverge Analysis)	NW
4702	3	31.335506	I-26 WB (Diverge Analysis)	NW
4702	4	31.125798	I-26 WB (Diverge Analysis)	NW
4702	5	31.683431	I-26 WB (Diverge Analysis)	NW
4702	6	34.779806	I-26 WB (Diverge Analysis)	NW
4702	7	35.839469	I-26 WB (Diverge Analysis)	NW
4702	8	32.965511	I-26 WB (Diverge Analysis)	NW
4702	9	31.327563	I-26 WB (Diverge Analysis)	NW
4702	10	34.083956	I-26 WB (Diverge Analysis)	NW
4703	1	31.445126	I-26 WB (Diverge Analysis)	NW
4703	2	30.348924	I-26 WB (Diverge Analysis)	NW
4703	3	31.335506	I-26 WB (Diverge Analysis)	NW
4703	4	31.125798	I-26 WB (Diverge Analysis)	NW
4703	5	31.683431	I-26 WB (Diverge Analysis)	NW
4703	6	34.779806	I-26 WB (Diverge Analysis)	NW
4703	7	35.839469	I-26 WB (Diverge Analysis)	NW
4703	8	32.965511	I-26 WB (Diverge Analysis)	NW
4703	9	31.327563	I-26 WB (Diverge Analysis)	NW
4703	10	34.083956	I-26 WB (Diverge Analysis)	NW
4705	1	27.892867	I-26 EB (Merge Analysis)	SE
4705	2	26.409875	I-26 EB (Merge Analysis)	SE
4705	3	26.227318	I-26 EB (Merge Analysis)	SE
4705	4	25.080141	I-26 EB (Merge Analysis)	SE
4705	5	26.590178	I-26 EB (Merge Analysis)	SE
4705	6	28.046125	I-26 EB (Merge Analysis)	SE
4705	7	28.300802	I-26 EB (Merge Analysis)	SE
4705	8	28.521674	I-26 EB (Merge Analysis)	SE
4705	9	28.134022	I-26 EB (Merge Analysis)	SE
4705	10	27.985272	I-26 EB (Merge Analysis)	SE
4706	1	27.892867	I-26 EB (Merge Analysis)	SE
4706	2	26.409875	I-26 EB (Merge Analysis)	SE
4706	3	26.227318	I-26 EB (Merge Analysis)	SE
4706	4	25.080141	I-26 EB (Merge Analysis)	SE
4706	5	26.590178	I-26 EB (Merge Analysis)	SE
4706	6	28.046125	I-26 EB (Merge Analysis)	SE
4706	7	28.300802	I-26 EB (Merge Analysis)	SE
4706	8	28.521674	I-26 EB (Merge Analysis)	SE
4706	9	28.134022	I-26 EB (Merge Analysis)	SE
4706	10	27.985272	I-26 EB (Merge Analysis)	SE
4707	1	28.315458	I-26 EB (Diverge Analysis)	SE
4707	2	28.315458	I-26 EB (Diverge Analysis)	SE
4707	3	27.403192	I-26 EB (Diverge Analysis)	SE
4707	4	26.913325	I-26 EB (Diverge Analysis)	SE

Existing PM

ID	Run	Density	Name (Type)	Direction
4707	5	27.344525	I-26 EB (Diverge Analysis)	SE
4707	6	28.060258	I-26 EB (Diverge Analysis)	SE
4707	7	29.037058	I-26 EB (Diverge Analysis)	SE
4707	8	29.667725	I-26 EB (Diverge Analysis)	SE
4707	9	28.453325	I-26 EB (Diverge Analysis)	SE
4707	10	28.095458	I-26 EB (Diverge Analysis)	SE
4712	1	34.622508	I-26 WB (Basic Analysis)	NW
4712	2	33.505905	I-26 WB (Basic Analysis)	NW
4712	3	34.54685	I-26 WB (Basic Analysis)	NW
4712	4	34.679903	I-26 WB (Basic Analysis)	NW
4712	5	34.257264	I-26 WB (Basic Analysis)	NW
4712	6	35.042539	I-26 WB (Basic Analysis)	NW
4712	7	34.184216	I-26 WB (Basic Analysis)	NW
4712	8	35.916515	I-26 WB (Basic Analysis)	NW
4712	9	33.65983	I-26 WB (Basic Analysis)	NW
4712	10	34.752952	I-26 WB (Basic Analysis)	NW
4714	1	24.098414	I-26 EB (Basic Analysis)	SE
4714	2	24.301343	I-26 EB (Basic Analysis)	SE
4714	3	24.373267	I-26 EB (Basic Analysis)	SE
4714	4	23.710538	I-26 EB (Basic Analysis)	SE
4714	5	23.176245	I-26 EB (Basic Analysis)	SE
4714	6	23.334221	I-26 EB (Basic Analysis)	SE
4714	7	24.699494	I-26 EB (Basic Analysis)	SE
4714	8	24.483722	I-26 EB (Basic Analysis)	SE
4714	9	22.463426	I-26 EB (Basic Analysis)	SE
4714	10	23.851818	I-26 EB (Basic Analysis)	SE
4718	1	23.543743	I-26 EB (Merge Analysis)	SE
4718	2	24.282909	I-26 EB (Merge Analysis)	SE
4718	3	23.304659	I-26 EB (Merge Analysis)	SE
4718	4	22.896225	I-26 EB (Merge Analysis)	SE
4718	5	23.679223	I-26 EB (Merge Analysis)	SE
4718	6	25.980402	I-26 EB (Merge Analysis)	SE
4718	7	23.890414	I-26 EB (Merge Analysis)	SE
4718	8	25.324914	I-26 EB (Merge Analysis)	SE
4718	9	23.489949	I-26 EB (Merge Analysis)	SE
4718	10	25.0679	I-26 EB (Merge Analysis)	SE
4719	1	23.543743	I-26 EB (Merge Analysis)	SE
4719	2	24.282909	I-26 EB (Merge Analysis)	SE
4719	3	23.304659	I-26 EB (Merge Analysis)	SE
4719	4	22.896225	I-26 EB (Merge Analysis)	SE
4719	5	23.679223	I-26 EB (Merge Analysis)	SE
4719	6	25.980402	I-26 EB (Merge Analysis)	SE
4719	7	23.890414	I-26 EB (Merge Analysis)	SE
4719	8	25.324914	I-26 EB (Merge Analysis)	SE
4719	9	23.489949	I-26 EB (Merge Analysis)	SE
4719	10	25.0679	I-26 EB (Merge Analysis)	SE
4720	1	23.718926	I-26 EB (Diverge Analysis)	SE
4720	2	25.115193	I-26 EB (Diverge Analysis)	SE
4720	3	25.018393	I-26 EB (Diverge Analysis)	SE
4720	4	23.979993	I-26 EB (Diverge Analysis)	SE
4720	5	24.358393	I-26 EB (Diverge Analysis)	SE
4720	6	23.812793	I-26 EB (Diverge Analysis)	SE
4720	7	25.654926	I-26 EB (Diverge Analysis)	SE
4720	8	26.168259	I-26 EB (Diverge Analysis)	SE
4720	9	24.094393	I-26 EB (Diverge Analysis)	SE
4720	10	25.376259	I-26 EB (Diverge Analysis)	SE
4725	1	35.888901	I-26 WB (Merge Analysis)	NW
4725	2	33.109862	I-26 WB (Merge Analysis)	NW
4725	3	36.202361	I-26 WB (Merge Analysis)	NW
4725	4	38.143946	I-26 WB (Merge Analysis)	NW
4725	5	34.291187	I-26 WB (Merge Analysis)	NW
4725	6	35.217533	I-26 WB (Merge Analysis)	NW
4725	7	34.047904	I-26 WB (Merge Analysis)	NW
4725	8	36.050309	I-26 WB (Merge Analysis)	NW

ID	Run	Density	Name (Type)	Direction
4725	9	34.737986	I-26 WB (Merge Analysis)	NW
4725	10	34.7567	I-26 WB (Merge Analysis)	NW
4726	1		I-26 WB (Basic Analysis)	NW
4726	2		I-26 WB (Basic Analysis)	NW
4726	3		I-26 WB (Basic Analysis)	NW
4726	4		I-26 WB (Basic Analysis)	NW
4726	5		I-26 WB (Basic Analysis)	NW
4726	6		I-26 WB (Basic Analysis)	NW
4726	7		I-26 WB (Basic Analysis)	NW
4726	8		I-26 WB (Basic Analysis)	NW
4726	9		I-26 WB (Basic Analysis)	NW
4726	10		I-26 WB (Basic Analysis)	NW
4727	1	35.432683	I-26 WB (Diverge Analysis)	NW
4727	2	34.648711	I-26 WB (Diverge Analysis)	NW
4727	3	37.132895	I-26 WB (Diverge Analysis)	NW
4727	4	40.848348	I-26 WB (Diverge Analysis)	NW
4727	5	35.367754	I-26 WB (Diverge Analysis)	NW
4727	6	35.82467	I-26 WB (Diverge Analysis)	NW
4727	7	34.340893	I-26 WB (Diverge Analysis)	NW
4727	8	36.16375	I-26 WB (Diverge Analysis)	NW
4727	9	35.038293	I-26 WB (Diverge Analysis)	NW
4727	10	36.688002	I-26 WB (Diverge Analysis)	NW
4728	1	40.761388	I-26 WB (Basic Analysis)	NW
4728	2	37.947256	I-26 WB (Basic Analysis)	NW
4728	3	45.229184	I-26 WB (Basic Analysis)	NW
4728	4	46.979554	I-26 WB (Basic Analysis)	NW
4728	5	37.038224	I-26 WB (Basic Analysis)	NW
4728	6	39.359157	I-26 WB (Basic Analysis)	NW
4728	7	40.780729	I-26 WB (Basic Analysis)	NW
4728	8	37.792527	I-26 WB (Basic Analysis)	NW
4728	9	35.858417	I-26 WB (Basic Analysis)	NW
4728	10	37.270317	I-26 WB (Basic Analysis)	NW
4729	1	30.560858	I-26 WB (Diverge Analysis)	NW
4729	2	26.703255	I-26 WB (Diverge Analysis)	NW
4729	3	36.339542	I-26 WB (Diverge Analysis)	NW
4729	4	37.060775	I-26 WB (Diverge Analysis)	NW
4729	5	29.396298	I-26 WB (Diverge Analysis)	NW
4729	6	31.767323	I-26 WB (Diverge Analysis)	NW
4729	7	27.755329	I-26 WB (Diverge Analysis)	NW
4729	8	26.910582	I-26 WB (Diverge Analysis)	NW
4729	9	27.060563	I-26 WB (Diverge Analysis)	NW
4729	10	30.373381	I-26 WB (Diverge Analysis)	NW
4730	1	30.560858	I-26 WB (Diverge Analysis)	NW
4730	2	26.703255	I-26 WB (Diverge Analysis)	NW
4730	3	36.339542	I-26 WB (Diverge Analysis)	NW
4730	4	37.060775	I-26 WB (Diverge Analysis)	NW
4730	5	29.396298	I-26 WB (Diverge Analysis)	NW
4730	6	31.767323	I-26 WB (Diverge Analysis)	NW
4730	7	27.755329	I-26 WB (Diverge Analysis)	NW
4730	8	26.910582	I-26 WB (Diverge Analysis)	NW
4730	9	27.060563	I-26 WB (Diverge Analysis)	NW
4730	10	30.373381	I-26 WB (Diverge Analysis)	NW
4732	1	51.511567	I-26 WB (Basic Analysis)	NW
4732	2	42.90605	I-26 WB (Basic Analysis)	NW
4732	3	58.867055	I-26 WB (Basic Analysis)	NW
4732	4	70.178071	I-26 WB (Basic Analysis)	NW
4732	5	50.776596	I-26 WB (Basic Analysis)	NW
4732	6	58.239147	I-26 WB (Basic Analysis)	NW
4732	7	45.006792	I-26 WB (Basic Analysis)	NW

Existing PM

ID	Run	Density	Name (Type)	Direction
4732	8	38.768226	I-26 WB (Basic Analysis)	NW
4732	9	52.119219	I-26 WB (Basic Analysis)	NW
4732	10	48.34888	I-26 WB (Basic Analysis)	NW
4733	1	21.438635	I-26 EB (Basic Analysis)	SE
4733	2	20.972267	I-26 EB (Basic Analysis)	SE
4733	3	21.55815	I-26 EB (Basic Analysis)	SE
4733	4	21.468513	I-26 EB (Basic Analysis)	SE
4733	5	20.881332	I-26 EB (Basic Analysis)	SE
4733	6	20.54617	I-26 EB (Basic Analysis)	SE
4733	7	22.199893	I-26 EB (Basic Analysis)	SE
4733	8	21.230783	I-26 EB (Basic Analysis)	SE
4733	9	20.859247	I-26 EB (Basic Analysis)	SE
4733	10	20.859247	I-26 EB (Basic Analysis)	SE
4736	1	22.763012	I-26 EB (Basic Analysis)	SE
4736	2	22.948935	I-26 EB (Basic Analysis)	SE
4736	3	20.411337	I-26 EB (Basic Analysis)	SE
4736	4	23.903676	I-26 EB (Basic Analysis)	SE
4736	5	23.888601	I-26 EB (Basic Analysis)	SE
4736	6	24.767966	I-26 EB (Basic Analysis)	SE
4736	7	19.587246	I-26 EB (Basic Analysis)	SE
4736	8	22.290667	I-26 EB (Basic Analysis)	SE
4736	9	24.39612	I-26 EB (Basic Analysis)	SE
4736	10	24.41622	I-26 EB (Basic Analysis)	SE
4737	1	17.840443	I-26 EB (Diverge Analysis)	SE
4737	2	18.996699	I-26 EB (Diverge Analysis)	SE
4737	3	17.632909	I-26 EB (Diverge Analysis)	SE
4737	4	17.383375	I-26 EB (Diverge Analysis)	SE
4737	5	18.060329	I-26 EB (Diverge Analysis)	SE
4737	6	17.991151	I-26 EB (Diverge Analysis)	SE
4737	7	19.574827	I-26 EB (Diverge Analysis)	SE
4737	8	18.974463	I-26 EB (Diverge Analysis)	SE
4737	9	17.104194	I-26 EB (Diverge Analysis)	SE
4737	10	17.408082	I-26 EB (Diverge Analysis)	SE
4739	1	54.498811	I-26 WB (Weaving Analysis)	NW
4739	2	51.197528	I-26 WB (Weaving Analysis)	NW
4739	3	62.711601	I-26 WB (Weaving Analysis)	NW
4739	4	69.688537	I-26 WB (Weaving Analysis)	NW
4739	5	58.306346	I-26 WB (Weaving Analysis)	NW
4739	6	55.615546	I-26 WB (Weaving Analysis)	NW
4739	7	47.968568	I-26 WB (Weaving Analysis)	NW
4739	8	40.840606	I-26 WB (Weaving Analysis)	NW
4739	9	60.116521	I-26 WB (Weaving Analysis)	NW
4739	10	48.647118	I-26 WB (Weaving Analysis)	NW
4741	1	79.462067	I-26 WB (Basic Analysis)	NW
4741	2	78.112102	I-26 WB (Basic Analysis)	NW
4741	3	90.568974	I-26 WB (Basic Analysis)	NW
4741	4	98.806191	I-26 WB (Basic Analysis)	NW
4741	5	85.743047	I-26 WB (Basic Analysis)	NW
4741	6	83.148203	I-26 WB (Basic Analysis)	NW
4741	7	71.063178	I-26 WB (Basic Analysis)	NW
4741	8	59.915855	I-26 WB (Basic Analysis)	NW
4741	9	83.819144	I-26 WB (Basic Analysis)	NW
4741	10	77.020812	I-26 WB (Basic Analysis)	NW
4742	1	74.549516	I-26 WB (Diverge Analysis)	NW
4742	2	74.876952	I-26 WB (Diverge Analysis)	NW
4742	3	81.861502	I-26 WB (Diverge Analysis)	NW
4742	4	82.96833	I-26 WB (Diverge Analysis)	NW

Existing PM

ID	Run	Density	Name (Type)	Direction
4742	5	77.081386	I-26 WB (Diverge Analysis)	NW
4742	6	79.168219	I-26 WB (Diverge Analysis)	NW
4742	7	68.625677	I-26 WB (Diverge Analysis)	NW
4742	8	58.943233	I-26 WB (Diverge Analysis)	NW
4742	9	74.946129	I-26 WB (Diverge Analysis)	NW
4742	10	74.284338	I-26 WB (Diverge Analysis)	NW
4745	1	17.501725	I-26 EB (Basic Analysis)	SE
4745	2	17.000692	I-26 EB (Basic Analysis)	SE
4745	3	19.674958	I-26 EB (Basic Analysis)	SE
4745	4	17.630115	I-26 EB (Basic Analysis)	SE
4745	5	18.531975	I-26 EB (Basic Analysis)	SE
4745	6	16.959982	I-26 EB (Basic Analysis)	SE
4745	7	19.095638	I-26 EB (Basic Analysis)	SE
4745	8	16.543498	I-26 EB (Basic Analysis)	SE
4745	9	19.067454	I-26 EB (Basic Analysis)	SE
4745	10	17.194842	I-26 EB (Basic Analysis)	SE
4748	1	18.998219	I-26 EB (Weaving Analysis)	SE
4748	2	17.002341	I-26 EB (Weaving Analysis)	SE
4748	3	18.626682	I-26 EB (Weaving Analysis)	SE
4748	4	16.596822	I-26 EB (Weaving Analysis)	SE
4748	5	19.797929	I-26 EB (Weaving Analysis)	SE
4748	6	19.111492	I-26 EB (Weaving Analysis)	SE
4748	7	16.705565	I-26 EB (Weaving Analysis)	SE
4748	8	19.27234	I-26 EB (Weaving Analysis)	SE
4748	9	19.526073	I-26 EB (Weaving Analysis)	SE
4748	10	19.686921	I-26 EB (Weaving Analysis)	SE
4753	1	131.845062	I-26 WB (Basic Analysis)	NW
4753	2	130.426494	I-26 WB (Basic Analysis)	NW
4753	3	134.911595	I-26 WB (Basic Analysis)	NW
4753	4	137.17392	I-26 WB (Basic Analysis)	NW
4753	5	128.533313	I-26 WB (Basic Analysis)	NW
4753	6	132.480518	I-26 WB (Basic Analysis)	NW
4753	7	139.378237	I-26 WB (Basic Analysis)	NW
4753	8	108.533617	I-26 WB (Basic Analysis)	NW
4753	9	129.891236	I-26 WB (Basic Analysis)	NW
4753	10	131.225428	I-26 WB (Basic Analysis)	NW
4755	1	18.464098	I-26 EB (Basic Analysis)	SE
4755	2	18.740056	I-26 EB (Basic Analysis)	SE
4755	3	19.325422	I-26 EB (Basic Analysis)	SE
4755	4	18.819499	I-26 EB (Basic Analysis)	SE
4755	5	17.908001	I-26 EB (Basic Analysis)	SE
4755	6	18.735875	I-26 EB (Basic Analysis)	SE
4755	7	19.994411	I-26 EB (Basic Analysis)	SE
4755	8	18.551903	I-26 EB (Basic Analysis)	SE
4755	9	19.325422	I-26 EB (Basic Analysis)	SE
4755	10	19.726815	I-26 EB (Basic Analysis)	SE
4756	1	17.075343	I-26 EB (Diverge Analysis)	SE
4756	2	16.949771	I-26 EB (Diverge Analysis)	SE
4756	3	17.227478	I-26 EB (Diverge Analysis)	SE
4756	4	17.232307	I-26 EB (Diverge Analysis)	SE
4756	5	13.808062	I-26 EB (Diverge Analysis)	SE
4756	6	15.256967	I-26 EB (Diverge Analysis)	SE
4756	7	17.543822	I-26 EB (Diverge Analysis)	SE
4756	8	16.167362	I-26 EB (Diverge Analysis)	SE
4756	9	15.199011	I-26 EB (Diverge Analysis)	SE
4756	10	15.529844	I-26 EB (Diverge Analysis)	SE
4760	1	93.788181	I-26 WB (Merge Analysis)	NW

Existing PM

ID	Run	Density	Name (Type)	Direction
4760	2	97.391963	I-26 WB (Merge Analysis)	NW
4760	3	95.355879	I-26 WB (Merge Analysis)	NW
4760	4	95.894843	I-26 WB (Merge Analysis)	NW
4760	5	95.060733	I-26 WB (Merge Analysis)	NW
4760	6	96.502246	I-26 WB (Merge Analysis)	NW
4760	7	97.537398	I-26 WB (Merge Analysis)	NW
4760	8	94.399862	I-26 WB (Merge Analysis)	NW
4760	9	95.257497	I-26 WB (Merge Analysis)	NW
4760	10	94.772003	I-26 WB (Merge Analysis)	NW
4761	1	93.788181	I-26 WB (Merge Analysis)	NW
4761	2	97.391963	I-26 WB (Merge Analysis)	NW
4761	3	95.355879	I-26 WB (Merge Analysis)	NW
4761	4	95.894843	I-26 WB (Merge Analysis)	NW
4761	5	95.060733	I-26 WB (Merge Analysis)	NW
4761	6	96.502246	I-26 WB (Merge Analysis)	NW
4761	7	97.537398	I-26 WB (Merge Analysis)	NW
4761	8	94.399862	I-26 WB (Merge Analysis)	NW
4761	9	95.257497	I-26 WB (Merge Analysis)	NW
4761	10	94.772003	I-26 WB (Merge Analysis)	NW
4764	1	35.688291	I-26 WB (Basic Analysis)	NW
4764	2	36.131981	I-26 WB (Basic Analysis)	NW
4764	3	36.098618	I-26 WB (Basic Analysis)	NW
4764	4	36.206941	I-26 WB (Basic Analysis)	NW
4764	5	35.911003	I-26 WB (Basic Analysis)	NW
4764	6	36.504613	I-26 WB (Basic Analysis)	NW
4764	7	36.261319	I-26 WB (Basic Analysis)	NW
4764	8	36.153863	I-26 WB (Basic Analysis)	NW
4764	9	35.888472	I-26 WB (Basic Analysis)	NW
4764	10	36.021276	I-26 WB (Basic Analysis)	NW
4768	1	27.208167	I-26 EB (Basic Analysis)	SE
4768	2	26.896101	I-26 EB (Basic Analysis)	SE
4768	3	27.627656	I-26 EB (Basic Analysis)	SE
4768	4	26.903913	I-26 EB (Basic Analysis)	SE
4768	5	27.485077	I-26 EB (Basic Analysis)	SE
4768	6	26.811899	I-26 EB (Basic Analysis)	SE
4768	7	27.781302	I-26 EB (Basic Analysis)	SE
4768	8	27.977266	I-26 EB (Basic Analysis)	SE
4768	9	27.224009	I-26 EB (Basic Analysis)	SE
4768	10	27.234643	I-26 EB (Basic Analysis)	SE
4769	1	25.91815	I-26 EB (Diverge Analysis)	SE
4769	2	25.571741	I-26 EB (Diverge Analysis)	SE
4769	3	24.266848	I-26 EB (Diverge Analysis)	SE
4769	4	26.321859	I-26 EB (Diverge Analysis)	SE
4769	5	28.204969	I-26 EB (Diverge Analysis)	SE
4769	6	28.186737	I-26 EB (Diverge Analysis)	SE
4769	7	24.027227	I-26 EB (Diverge Analysis)	SE
4769	8	27.809073	I-26 EB (Diverge Analysis)	SE
4769	9	24.764322	I-26 EB (Diverge Analysis)	SE
4769	10	28.72328	I-26 EB (Diverge Analysis)	SE
6149	1	17.60391	I-26 EB (Merge Analysis)	S
6149	2	17.453222	I-26 EB (Merge Analysis)	S
6149	3	17.444358	I-26 EB (Merge Analysis)	S
6149	4	17.165142	I-26 EB (Merge Analysis)	S
6149	5	17.637889	I-26 EB (Merge Analysis)	S
6149	6	17.782668	I-26 EB (Merge Analysis)	S
6149	7	17.200598	I-26 EB (Merge Analysis)	S
6149	8	17.689596	I-26 EB (Merge Analysis)	S

Existing PM

ID	Run	Density	Name (Type)	Direction
6149	9	16.940587	I-26 EB (Merge Analysis)	S
6149	10	18.156433	I-26 EB (Merge Analysis)	S
6150	1	17.60391	I-26 EB (Merge Analysis)	S
6150	2	17.453222	I-26 EB (Merge Analysis)	S
6150	3	17.444358	I-26 EB (Merge Analysis)	S
6150	4	17.165142	I-26 EB (Merge Analysis)	S
6150	5	17.637889	I-26 EB (Merge Analysis)	S
6150	6	17.782668	I-26 EB (Merge Analysis)	S
6150	7	17.200598	I-26 EB (Merge Analysis)	S
6150	8	17.689596	I-26 EB (Merge Analysis)	S
6150	9	16.940587	I-26 EB (Merge Analysis)	S
6150	10	18.156433	I-26 EB (Merge Analysis)	S
6151	1	22.800489	I-26 EB (Basic Analysis)	S
6151	2	22.834844	I-26 EB (Basic Analysis)	S
6151	3	24.100514	I-26 EB (Basic Analysis)	S
6151	4	23.391164	I-26 EB (Basic Analysis)	S
6151	5	22.656916	I-26 EB (Basic Analysis)	S
6151	6	24.57496	I-26 EB (Basic Analysis)	S
6151	7	21.674373	I-26 EB (Basic Analysis)	S
6151	8	23.830914	I-26 EB (Basic Analysis)	S
6151	9	22.899159	I-26 EB (Basic Analysis)	S
6151	10	24.266863	I-26 EB (Basic Analysis)	S
6152	1	22.800489	I-26 EB (Basic Analysis)	S
6152	2	22.834844	I-26 EB (Basic Analysis)	S
6152	3	24.100514	I-26 EB (Basic Analysis)	S
6152	4	23.391164	I-26 EB (Basic Analysis)	S
6152	5	22.656916	I-26 EB (Basic Analysis)	S
6152	6	24.57496	I-26 EB (Basic Analysis)	S
6152	7	21.674373	I-26 EB (Basic Analysis)	S
6152	8	23.830914	I-26 EB (Basic Analysis)	S
6152	9	22.899159	I-26 EB (Basic Analysis)	S
6152	10	24.266863	I-26 EB (Basic Analysis)	S
6159	1	23.248556	I-26 WB (Diverge Analysis)	N
6159	2	25.211721	I-26 WB (Diverge Analysis)	N
6159	3	23.896672	I-26 WB (Diverge Analysis)	N
6159	4	24.91066	I-26 WB (Diverge Analysis)	N
6159	5	23.328002	I-26 WB (Diverge Analysis)	N
6159	6	23.685511	I-26 WB (Diverge Analysis)	N
6159	7	24.475795	I-26 WB (Diverge Analysis)	N
6159	8	24.672321	I-26 WB (Diverge Analysis)	N
6159	9	24.312721	I-26 WB (Diverge Analysis)	N
6159	10	25.667493	I-26 WB (Diverge Analysis)	N
6160	1	23.248556	I-26 WB (Diverge Analysis)	N
6160	2	25.211721	I-26 WB (Diverge Analysis)	N
6160	3	23.896672	I-26 WB (Diverge Analysis)	N
6160	4	24.91066	I-26 WB (Diverge Analysis)	N
6160	5	23.328002	I-26 WB (Diverge Analysis)	N
6160	6	23.685511	I-26 WB (Diverge Analysis)	N
6160	7	24.475795	I-26 WB (Diverge Analysis)	N
6160	8	24.672321	I-26 WB (Diverge Analysis)	N
6160	9	24.312721	I-26 WB (Diverge Analysis)	N
6160	10	25.667493	I-26 WB (Diverge Analysis)	N
6165	1	18.313051	I-26 WB (Basic Analysis)	N
6165	2	18.614726	I-26 WB (Basic Analysis)	N
6165	3	19.063811	I-26 WB (Basic Analysis)	N
6165	4	18.804416	I-26 WB (Basic Analysis)	N
6165	5	18.500456	I-26 WB (Basic Analysis)	N

Existing PM

ID	Run	Density	Name (Type)	Direction
6165	6	19.352916	I-26 WB (Basic Analysis)	N
6165	7	20.22366	I-26 WB (Basic Analysis)	N
6165	8	18.867265	I-26 WB (Basic Analysis)	N
6165	9	18.805559	I-26 WB (Basic Analysis)	N
6165	10	19.5906	I-26 WB (Basic Analysis)	N
6166	1	19.027349	I-26 EB (Basic Analysis)	S
6166	2	19.274405	I-26 EB (Basic Analysis)	S
6166	3	19.835748	I-26 EB (Basic Analysis)	S
6166	4	20.161375	I-26 EB (Basic Analysis)	S
6166	5	19.723965	I-26 EB (Basic Analysis)	S
6166	6	19.92647	I-26 EB (Basic Analysis)	S
6166	7	19.116451	I-26 EB (Basic Analysis)	S
6166	8	20.078754	I-26 EB (Basic Analysis)	S
6166	9	19.609752	I-26 EB (Basic Analysis)	S
6166	10	19.796867	I-26 EB (Basic Analysis)	S
6174	1	17.436142	I-26 WB (Basic Analysis)	N
6174	2	26.373576	I-26 WB (Basic Analysis)	N
6174	3	23.270864	I-26 WB (Basic Analysis)	N
6174	4	38.326186	I-26 WB (Basic Analysis)	N
6174	5	18.656345	I-26 WB (Basic Analysis)	N
6174	6	19.44046	I-26 WB (Basic Analysis)	N
6174	7	21.686815	I-26 WB (Basic Analysis)	N
6174	8	18.621542	I-26 WB (Basic Analysis)	N
6174	9	25.553076	I-26 WB (Basic Analysis)	N
6174	10	41.756887	I-26 WB (Basic Analysis)	N
6175	1	17.436142	I-26 WB (Basic Analysis)	N
6175	2	26.373576	I-26 WB (Basic Analysis)	N
6175	3	23.270864	I-26 WB (Basic Analysis)	N
6175	4	38.326186	I-26 WB (Basic Analysis)	N
6175	5	18.656345	I-26 WB (Basic Analysis)	N
6175	6	19.44046	I-26 WB (Basic Analysis)	N
6175	7	21.686815	I-26 WB (Basic Analysis)	N
6175	8	18.621542	I-26 WB (Basic Analysis)	N
6175	9	25.553076	I-26 WB (Basic Analysis)	N
6175	10	41.756887	I-26 WB (Basic Analysis)	N
6177	1	84.981953	I-26 EB (Basic Analysis)	S
6177	2	58.956243	I-26 EB (Basic Analysis)	S
6177	3	68.582992	I-26 EB (Basic Analysis)	S
6177	4	84.478476	I-26 EB (Basic Analysis)	S
6177	5	68.679641	I-26 EB (Basic Analysis)	S
6177	6	75.622678	I-26 EB (Basic Analysis)	S
6177	7	86.818295	I-26 EB (Basic Analysis)	S
6177	8	75.501304	I-26 EB (Basic Analysis)	S
6177	9	74.6382	I-26 EB (Basic Analysis)	S
6177	10	80.214656	I-26 EB (Basic Analysis)	S
6178	1	109.48631	I-26 EB (Diverge Analysis)	S
6178	2	106.179263	I-26 EB (Diverge Analysis)	S
6178	3	105.131071	I-26 EB (Diverge Analysis)	S
6178	4	106.519925	I-26 EB (Diverge Analysis)	S
6178	5	104.787788	I-26 EB (Diverge Analysis)	S
6178	6	103.123782	I-26 EB (Diverge Analysis)	S
6178	7	112.444833	I-26 EB (Diverge Analysis)	S
6178	8	104.682968	I-26 EB (Diverge Analysis)	S
6178	9	104.161493	I-26 EB (Diverge Analysis)	S
6178	10	104.659384	I-26 EB (Diverge Analysis)	S
6185	1	77.345722	I-26 EB (Merge Analysis)	S
6185	2	36.413996	I-26 EB (Merge Analysis)	S

Existing PM

ID	Run	Density	Name (Type)	Direction
6185	3	41.206743	I-26 EB (Merge Analysis)	S
6185	4	75.43206	I-26 EB (Merge Analysis)	S
6185	5	44.936664	I-26 EB (Merge Analysis)	S
6185	6	37.516929	I-26 EB (Merge Analysis)	S
6185	7	70.604935	I-26 EB (Merge Analysis)	S
6185	8	43.086027	I-26 EB (Merge Analysis)	S
6185	9	41.135124	I-26 EB (Merge Analysis)	S
6185	10	54.055203	I-26 EB (Merge Analysis)	S
6186	1	74.327698	I-26 EB (Basic Analysis)	S
6186	2	34.293565	I-26 EB (Basic Analysis)	S
6186	3	40.751506	I-26 EB (Basic Analysis)	S
6186	4	73.750612	I-26 EB (Basic Analysis)	S
6186	5	45.070084	I-26 EB (Basic Analysis)	S
6186	6	41.167581	I-26 EB (Basic Analysis)	S
6186	7	72.365288	I-26 EB (Basic Analysis)	S
6186	8	46.70091	I-26 EB (Basic Analysis)	S
6186	9	46.975105	I-26 EB (Basic Analysis)	S
6186	10	58.392477	I-26 EB (Basic Analysis)	S
6200	1	90.752489	I-26 WB (Weaving Analysis)	NW
6200	2	107.03185	I-26 WB (Weaving Analysis)	NW
6200	3	99.660649	I-26 WB (Weaving Analysis)	NW
6200	4	108.106579	I-26 WB (Weaving Analysis)	NW
6200	5	100.361347	I-26 WB (Weaving Analysis)	NW
6200	6	99.941581	I-26 WB (Weaving Analysis)	NW
6200	7	94.659406	I-26 WB (Weaving Analysis)	NW
6200	8	99.431984	I-26 WB (Weaving Analysis)	NW
6200	9	101.875439	I-26 WB (Weaving Analysis)	NW
6200	10	106.582685	I-26 WB (Weaving Analysis)	NW
6204	1	90.769927	I-26 WB (Basic Analysis)	NW
6204	2	104.705371	I-26 WB (Basic Analysis)	NW
6204	3	99.785246	I-26 WB (Basic Analysis)	NW
6204	4	107.710477	I-26 WB (Basic Analysis)	NW
6204	5	98.587131	I-26 WB (Basic Analysis)	NW
6204	6	99.791138	I-26 WB (Basic Analysis)	NW
6204	7	90.938841	I-26 WB (Basic Analysis)	NW
6204	8	97.687563	I-26 WB (Basic Analysis)	NW
6204	9	100.873369	I-26 WB (Basic Analysis)	NW
6204	10	104.895891	I-26 WB (Basic Analysis)	NW
6205	1	21.628626	I-20 EB (Basic Analysis)	E
6205	2	19.001076	I-20 EB (Basic Analysis)	E
6205	3	20.980586	I-20 EB (Basic Analysis)	E
6205	4	21.126561	I-20 EB (Basic Analysis)	E
6205	5	18.974536	I-20 EB (Basic Analysis)	E
6205	6	20.609013	I-20 EB (Basic Analysis)	E
6205	7	19.930008	I-20 EB (Basic Analysis)	E
6205	8	19.540742	I-20 EB (Basic Analysis)	E
6205	9	21.16416	I-20 EB (Basic Analysis)	E
6205	10	19.268697	I-20 EB (Basic Analysis)	E
6206	1	19.127136	I-20 EB (Merge Analysis)	E
6206	2	20.606055	I-20 EB (Merge Analysis)	E
6206	3	21.022356	I-20 EB (Merge Analysis)	E
6206	4	20.090944	I-20 EB (Merge Analysis)	E
6206	5	19.710281	I-20 EB (Merge Analysis)	E
6206	6	20.314483	I-20 EB (Merge Analysis)	E
6206	7	43.147826	I-20 EB (Merge Analysis)	E
6206	8	20.112002	I-20 EB (Merge Analysis)	E
6206	9	19.622809	I-20 EB (Merge Analysis)	E

ID	Run	Density	Name (Type)	Direction
6206	10	19.3037	I-20 EB (Merge Analysis)	E
6207	1	19.127136	I-20 EB (Merge Analysis)	E
6207	2	20.606055	I-20 EB (Merge Analysis)	E
6207	3	21.022356	I-20 EB (Merge Analysis)	E
6207	4	20.090944	I-20 EB (Merge Analysis)	E
6207	5	19.710281	I-20 EB (Merge Analysis)	E
6207	6	20.314483	I-20 EB (Merge Analysis)	E
6207	7	43.147826	I-20 EB (Merge Analysis)	E
6207	8	20.112002	I-20 EB (Merge Analysis)	E
6207	9	19.622809	I-20 EB (Merge Analysis)	E
6207	10	19.3037	I-20 EB (Merge Analysis)	E
6208	1	19.390767	I-20 EB (Diverge Analysis)	E
6208	2	21.017494	I-20 EB (Diverge Analysis)	E
6208	3	21.479775	I-20 EB (Diverge Analysis)	E
6208	4	20.243716	I-20 EB (Diverge Analysis)	E
6208	5	20.219815	I-20 EB (Diverge Analysis)	E
6208	6	20.449112	I-20 EB (Diverge Analysis)	E
6208	7	42.300881	I-20 EB (Diverge Analysis)	E
6208	8	20.532015	I-20 EB (Diverge Analysis)	E
6208	9	19.970354	I-20 EB (Diverge Analysis)	E
6208	10	19.647697	I-20 EB (Diverge Analysis)	E
6209	1	19.390767	I-20 EB (Diverge Analysis)	E
6209	2	21.017494	I-20 EB (Diverge Analysis)	E
6209	3	21.479775	I-20 EB (Diverge Analysis)	E
6209	4	20.243716	I-20 EB (Diverge Analysis)	E
6209	5	20.219815	I-20 EB (Diverge Analysis)	E
6209	6	20.449112	I-20 EB (Diverge Analysis)	E
6209	7	42.300881	I-20 EB (Diverge Analysis)	E
6209	8	20.532015	I-20 EB (Diverge Analysis)	E
6209	9	19.970354	I-20 EB (Diverge Analysis)	E
6209	10	19.647697	I-20 EB (Diverge Analysis)	E
6216	1	13.288313	I-20 EB (Merge Analysis)	E
6216	2	12.701185	I-20 EB (Merge Analysis)	E
6216	3	13.737751	I-20 EB (Merge Analysis)	E
6216	4	13.929997	I-20 EB (Merge Analysis)	E
6216	5	13.496146	I-20 EB (Merge Analysis)	E
6216	6	14.143025	I-20 EB (Merge Analysis)	E
6216	7	14.75873	I-20 EB (Merge Analysis)	E
6216	8	13.672803	I-20 EB (Merge Analysis)	E
6216	9	12.745349	I-20 EB (Merge Analysis)	E
6216	10	12.823287	I-20 EB (Merge Analysis)	E
6217	1	14.62568	I-20 EB (Basic Analysis)	E
6217	2	15.520768	I-20 EB (Basic Analysis)	E
6217	3	14.652267	I-20 EB (Basic Analysis)	E
6217	4	14.424802	I-20 EB (Basic Analysis)	E
6217	5	15.048114	I-20 EB (Basic Analysis)	E
6217	6	15.703921	I-20 EB (Basic Analysis)	E
6217	7	15.266716	I-20 EB (Basic Analysis)	E
6217	8	15.328752	I-20 EB (Basic Analysis)	E
6217	9	14.339133	I-20 EB (Basic Analysis)	E
6217	10	16.69354	I-20 EB (Basic Analysis)	E
6220	1	22.248295	I-20 WB (Basic Analysis)	W
6220	2	19.379765	I-20 WB (Basic Analysis)	W
6220	3	20.085961	I-20 WB (Basic Analysis)	W
6220	4	21.671256	I-20 WB (Basic Analysis)	W
6220	5	21.656674	I-20 WB (Basic Analysis)	W
6220	6	20.985892	I-20 WB (Basic Analysis)	W

Existing PM

ID	Run	Density	Name (Type)	Direction
6220	7	20.608838	I-20 WB (Basic Analysis)	W
6220	8	21.944152	I-20 WB (Basic Analysis)	W
6220	9	21.200459	I-20 WB (Basic Analysis)	W
6220	10	21.640009	I-20 WB (Basic Analysis)	W
6223	1	34.072625	I-26 EB (Weaving Analysis)	SE
6223	2	33.746103	I-26 EB (Weaving Analysis)	SE
6223	3	33.226932	I-26 EB (Weaving Analysis)	SE
6223	4	35.871764	I-26 EB (Weaving Analysis)	SE
6223	5	36.335426	I-26 EB (Weaving Analysis)	SE
6223	6	32.779596	I-26 EB (Weaving Analysis)	SE
6223	7	33.817938	I-26 EB (Weaving Analysis)	SE
6223	8	34.072625	I-26 EB (Weaving Analysis)	SE
6223	9	35.826051	I-26 EB (Weaving Analysis)	SE
6223	10	36.835006	I-26 EB (Weaving Analysis)	SE
6227	1	20.227763	I-20 WB (Basic Analysis)	W
6227	2	18.769956	I-20 WB (Basic Analysis)	W
6227	3	18.756203	I-20 WB (Basic Analysis)	W
6227	4	20.255269	I-20 WB (Basic Analysis)	W
6227	5	19.102776	I-20 WB (Basic Analysis)	W
6227	6	17.532195	I-20 WB (Basic Analysis)	W
6227	7	15.667302	I-20 WB (Basic Analysis)	W
6227	8	17.595458	I-20 WB (Basic Analysis)	W
6227	9	18.371122	I-20 WB (Basic Analysis)	W
6227	10	20.153498	I-20 WB (Basic Analysis)	W
6229	1	55.495414	I-20 WB (Merge Analysis)	W
6229	2	59.319689	I-20 WB (Merge Analysis)	W
6229	3	58.0724	I-20 WB (Merge Analysis)	W
6229	4	75.875212	I-20 WB (Merge Analysis)	W
6229	5	57.052297	I-20 WB (Merge Analysis)	W
6229	6	47.99164	I-20 WB (Merge Analysis)	W
6229	7	39.910994	I-20 WB (Merge Analysis)	W
6229	8	62.224088	I-20 WB (Merge Analysis)	W
6229	9	62.199588	I-20 WB (Merge Analysis)	W
6229	10	68.890398	I-20 WB (Merge Analysis)	W
6230	1	55.495414	I-20 WB (Merge+Diverge Analysis)	W
6230	2	59.319689	I-20 WB (Merge+Diverge Analysis)	W
6230	3	58.0724	I-20 WB (Merge+Diverge Analysis)	W
6230	4	75.875212	I-20 WB (Merge+Diverge Analysis)	W
6230	5	57.052297	I-20 WB (Merge+Diverge Analysis)	W
6230	6	47.99164	I-20 WB (Merge+Diverge Analysis)	W
6230	7	39.910994	I-20 WB (Merge+Diverge Analysis)	W
6230	8	62.224088	I-20 WB (Merge+Diverge Analysis)	W
6230	9	62.199588	I-20 WB (Merge+Diverge Analysis)	W
6230	10	68.890398	I-20 WB (Merge+Diverge Analysis)	W
6231	1	56.014712	I-20 WB (Diverge Analysis)	W
6231	2	59.874772	I-20 WB (Diverge Analysis)	W
6231	3	58.615813	I-20 WB (Diverge Analysis)	W
6231	4	76.585213	I-20 WB (Diverge Analysis)	W
6231	5	57.586164	I-20 WB (Diverge Analysis)	W
6231	6	48.440721	I-20 WB (Diverge Analysis)	W
6231	7	40.284461	I-20 WB (Diverge Analysis)	W
6231	8	62.80635	I-20 WB (Diverge Analysis)	W
6231	9	62.78162	I-20 WB (Diverge Analysis)	W
6231	10	69.53504	I-20 WB (Diverge Analysis)	W
6234	1	30.245907	I-20 WB (Basic Analysis)	W
6234	2	29.650172	I-20 WB (Basic Analysis)	W
6234	3	27.822473	I-20 WB (Basic Analysis)	W

Existing PM

ID	Run	Density	Name (Type)	Direction
6234	4	38.26774	I-20 WB (Basic Analysis)	W
6234	5	28.994726	I-20 WB (Basic Analysis)	W
6234	6	27.100453	I-20 WB (Basic Analysis)	W
6234	7	23.06826	I-20 WB (Basic Analysis)	W
6234	8	30.948023	I-20 WB (Basic Analysis)	W
6234	9	31.327564	I-20 WB (Basic Analysis)	W
6234	10	32.828569	I-20 WB (Basic Analysis)	W
6238	1	21.277025	I-20 EB (Basic Analysis)	NE
6238	2	19.300459	I-20 EB (Basic Analysis)	NE
6238	3	19.745339	I-20 EB (Basic Analysis)	NE
6238	4	20.136386	I-20 EB (Basic Analysis)	NE
6238	5	19.673224	I-20 EB (Basic Analysis)	NE
6238	6	19.439611	I-20 EB (Basic Analysis)	NE
6238	7	20.894103	I-20 EB (Basic Analysis)	NE
6238	8	20.064271	I-20 EB (Basic Analysis)	NE
6238	9	20.707213	I-20 EB (Basic Analysis)	NE
6238	10	20.807768	I-20 EB (Basic Analysis)	NE
6241	1	23.722347	I-20 EB (Merge Analysis)	NE
6241	2	23.508966	I-20 EB (Merge Analysis)	NE
6241	3	24.276664	I-20 EB (Merge Analysis)	NE
6241	4	23.140613	I-20 EB (Merge Analysis)	NE
6241	5	23.43148	I-20 EB (Merge Analysis)	NE
6241	6	24.534152	I-20 EB (Merge Analysis)	NE
6241	7	21.910389	I-20 EB (Merge Analysis)	NE
6241	8	23.2932	I-20 EB (Merge Analysis)	NE
6241	9	23.835595	I-20 EB (Merge Analysis)	NE
6241	10	22.953457	I-20 EB (Merge Analysis)	NE
6242	1	23.722347	I-20 EB (Merge Analysis)	NE
6242	2	23.508966	I-20 EB (Merge Analysis)	NE
6242	3	24.276664	I-20 EB (Merge Analysis)	NE
6242	4	23.140613	I-20 EB (Merge Analysis)	NE
6242	5	23.43148	I-20 EB (Merge Analysis)	NE
6242	6	24.534152	I-20 EB (Merge Analysis)	NE
6242	7	21.910389	I-20 EB (Merge Analysis)	NE
6242	8	23.2932	I-20 EB (Merge Analysis)	NE
6242	9	23.835595	I-20 EB (Merge Analysis)	NE
6242	10	22.953457	I-20 EB (Merge Analysis)	NE
6246	1	32.85504	I-20 WB (Merge Analysis)	SW
6246	2	44.709937	I-20 WB (Merge Analysis)	SW
6246	3	41.073474	I-20 WB (Merge Analysis)	SW
6246	4	34.633876	I-20 WB (Merge Analysis)	SW
6246	5	40.781008	I-20 WB (Merge Analysis)	SW
6246	6	39.601795	I-20 WB (Merge Analysis)	SW
6246	7	64.481454	I-20 WB (Merge Analysis)	SW
6246	8	43.06999	I-20 WB (Merge Analysis)	SW
6246	9	40.277539	I-20 WB (Merge Analysis)	SW
6246	10	35.773025	I-20 WB (Merge Analysis)	SW
6247	1	32.85504	I-20 WB (Merge Analysis)	SW
6247	2	44.709937	I-20 WB (Merge Analysis)	SW
6247	3	41.073474	I-20 WB (Merge Analysis)	SW
6247	4	34.633876	I-20 WB (Merge Analysis)	SW
6247	5	40.781008	I-20 WB (Merge Analysis)	SW
6247	6	39.601795	I-20 WB (Merge Analysis)	SW
6247	7	64.481454	I-20 WB (Merge Analysis)	SW
6247	8	43.06999	I-20 WB (Merge Analysis)	SW
6247	9	40.277539	I-20 WB (Merge Analysis)	SW
6247	10	35.773025	I-20 WB (Merge Analysis)	SW

Existing PM

ID	Run	Density	Name (Type)	Direction
6249	1	36.801592	I-20 WB (Diverge Analysis)	SW
6249	2	63.520341	I-20 WB (Diverge Analysis)	SW
6249	3	52.326743	I-20 WB (Diverge Analysis)	SW
6249	4	38.968347	I-20 WB (Diverge Analysis)	SW
6249	5	52.803899	I-20 WB (Diverge Analysis)	SW
6249	6	56.345409	I-20 WB (Diverge Analysis)	SW
6249	7	83.549137	I-20 WB (Diverge Analysis)	SW
6249	8	60.526386	I-20 WB (Diverge Analysis)	SW
6249	9	49.598744	I-20 WB (Diverge Analysis)	SW
6249	10	41.43039	I-20 WB (Diverge Analysis)	SW
6251	1	31.419229	I-20 WB (Basic Analysis)	SW
6251	2	32.292261	I-20 WB (Basic Analysis)	SW
6251	3	31.067781	I-20 WB (Basic Analysis)	SW
6251	4	31.529755	I-20 WB (Basic Analysis)	SW
6251	5	32.113433	I-20 WB (Basic Analysis)	SW
6251	6	30.599597	I-20 WB (Basic Analysis)	SW
6251	7	33.273336	I-20 WB (Basic Analysis)	SW
6251	8	32.266182	I-20 WB (Basic Analysis)	SW
6251	9	31.668844	I-20 WB (Basic Analysis)	SW
6251	10	31.591848	I-20 WB (Basic Analysis)	SW
6254	1	24.700167	I-20 EB (Basic Analysis)	NE
6254	2	23.429314	I-20 EB (Basic Analysis)	NE
6254	3	23.716321	I-20 EB (Basic Analysis)	NE
6254	4	24.270283	I-20 EB (Basic Analysis)	NE
6254	5	23.543365	I-20 EB (Basic Analysis)	NE
6254	6	24.354254	I-20 EB (Basic Analysis)	NE
6254	7	23.926877	I-20 EB (Basic Analysis)	NE
6254	8	24.69014	I-20 EB (Basic Analysis)	NE
6254	9	24.029648	I-20 EB (Basic Analysis)	NE
6254	10	23.915597	I-20 EB (Basic Analysis)	NE
6258	1	21.699192	I-20 EB (Merge Analysis)	E
6258	2	20.942487	I-20 EB (Merge Analysis)	E
6258	3	23.742298	I-20 EB (Merge Analysis)	E
6258	4	21.90272	I-20 EB (Merge Analysis)	E
6258	5	23.682284	I-20 EB (Merge Analysis)	E
6258	6	23.943217	I-20 EB (Merge Analysis)	E
6258	7	22.87861	I-20 EB (Merge Analysis)	E
6258	8	21.049469	I-20 EB (Merge Analysis)	E
6258	9	21.12514	I-20 EB (Merge Analysis)	E
6258	10	23.209995	I-20 EB (Merge Analysis)	E
6259	1	27.131434	I-20 EB (Basic Analysis)	E
6259	2	27.122314	I-20 EB (Basic Analysis)	E
6259	3	26.84112	I-20 EB (Basic Analysis)	E
6259	4	25.536987	I-20 EB (Basic Analysis)	E
6259	5	25.672264	I-20 EB (Basic Analysis)	E
6259	6	26.781841	I-20 EB (Basic Analysis)	E
6259	7	25.837941	I-20 EB (Basic Analysis)	E
6259	8	26.34561	I-20 EB (Basic Analysis)	E
6259	9	27.607184	I-20 EB (Basic Analysis)	E
6259	10	25.41387	I-20 EB (Basic Analysis)	E
8539	1	26.918333	I-20 WB (Basic Analysis)	SW
8539	2	25.761779	I-20 WB (Basic Analysis)	SW
8539	3	26.303629	I-20 WB (Basic Analysis)	SW
8539	4	26.418601	I-20 WB (Basic Analysis)	SW
8539	5	26.533574	I-20 WB (Basic Analysis)	SW
8539	6	27.038997	I-20 WB (Basic Analysis)	SW
8539	7	25.988309	I-20 WB (Basic Analysis)	SW

Existing PM

ID	Run	Density	Name (Type)	Direction
8539	8	27.266665	I-20 WB (Basic Analysis)	SW
8539	9	26.886459	I-20 WB (Basic Analysis)	SW
8539	10	26.853447	I-20 WB (Basic Analysis)	SW
8542	1	19.657181	I-20 EB (Basic Analysis)	NE
8542	2	18.793294	I-20 EB (Basic Analysis)	NE
8542	3	19.225536	I-20 EB (Basic Analysis)	NE
8542	4	18.52785	I-20 EB (Basic Analysis)	NE
8542	5	18.850089	I-20 EB (Basic Analysis)	NE
8542	6	19.138848	I-20 EB (Basic Analysis)	NE
8542	7	18.513501	I-20 EB (Basic Analysis)	NE
8542	8	18.453717	I-20 EB (Basic Analysis)	NE
8542	9	18.606765	I-20 EB (Basic Analysis)	NE
8542	10	17.506728	I-20 EB (Basic Analysis)	NE
8543	1	21.841594	I-20 EB (Diverge Analysis)	NE
8543	2	23.311193	I-20 EB (Diverge Analysis)	NE
8543	3	23.00906	I-20 EB (Diverge Analysis)	NE
8543	4	23.915459	I-20 EB (Diverge Analysis)	NE
8543	5	23.94186	I-20 EB (Diverge Analysis)	NE
8543	6	23.014926	I-20 EB (Diverge Analysis)	NE
8543	7	22.46346	I-20 EB (Diverge Analysis)	NE
8543	8	22.627727	I-20 EB (Diverge Analysis)	NE
8543	9	22.92986	I-20 EB (Diverge Analysis)	NE
8543	10	21.87386	I-20 EB (Diverge Analysis)	NE
8551	1	40.101588	I-26 WB (Diverge Analysis)	NW
8551	2	40.606121	I-26 WB (Diverge Analysis)	NW
8551	3	42.058121	I-26 WB (Diverge Analysis)	NW
8551	4	42.395454	I-26 WB (Diverge Analysis)	NW
8551	5	40.770388	I-26 WB (Diverge Analysis)	NW
8551	6	54.621584	I-26 WB (Diverge Analysis)	NW
8551	7	50.051451	I-26 WB (Diverge Analysis)	NW
8551	8	41.964254	I-26 WB (Diverge Analysis)	NW
8551	9	41.993588	I-26 WB (Diverge Analysis)	NW
8551	10	41.609321	I-26 WB (Diverge Analysis)	NW
8552	1	40.971729	I-26 EB (Basic Analysis)	SE
8552	2	40.50022	I-26 EB (Basic Analysis)	SE
8552	3	39.605036	I-26 EB (Basic Analysis)	SE
8552	4	40.110712	I-26 EB (Basic Analysis)	SE
8552	5	39.622974	I-26 EB (Basic Analysis)	SE
8552	6	39.839082	I-26 EB (Basic Analysis)	SE
8552	7	40.519866	I-26 EB (Basic Analysis)	SE
8552	8	40.738537	I-26 EB (Basic Analysis)	SE
8552	9	40.984542	I-26 EB (Basic Analysis)	SE
8552	10	40.850435	I-26 EB (Basic Analysis)	SE
8553	1	93.786112	I-26 EB (Basic Analysis)	S
8553	2	95.623174	I-26 EB (Basic Analysis)	S
8553	3	96.823746	I-26 EB (Basic Analysis)	S
8553	4	97.135255	I-26 EB (Basic Analysis)	S
8553	5	93.333161	I-26 EB (Basic Analysis)	S
8553	6	93.49481	I-26 EB (Basic Analysis)	S
8553	7	97.704391	I-26 EB (Basic Analysis)	S
8553	8	93.375257	I-26 EB (Basic Analysis)	S
8553	9	89.899826	I-26 EB (Basic Analysis)	S
8553	10	94.885655	I-26 EB (Basic Analysis)	S
8554	1	20.776819	I-26 WB (Basic Analysis)	N
8554	2	44.249949	I-26 WB (Basic Analysis)	N
8554	3	42.902689	I-26 WB (Basic Analysis)	N
8554	4	53.463985	I-26 WB (Basic Analysis)	N

Existing PM

ID	Run	Density	Name (Type)	Direction
8554	5	36.048149	I-26 WB (Basic Analysis)	N
8554	6	37.334494	I-26 WB (Basic Analysis)	N
8554	7	40.684728	I-26 WB (Basic Analysis)	N
8554	8	39.808651	I-26 WB (Basic Analysis)	N
8554	9	46.003894	I-26 WB (Basic Analysis)	N
8554	10	54.890074	I-26 WB (Basic Analysis)	N
8559	1	25.170926	I-126 NB (Diverge Analysis)	W
8559	2	27.805058	I-126 NB (Diverge Analysis)	W
8559	3	26.388259	I-126 NB (Diverge Analysis)	W
8559	4	26.948525	I-126 NB (Diverge Analysis)	W
8559	5	27.453058	I-126 NB (Diverge Analysis)	W
8559	6	26.109592	I-126 NB (Diverge Analysis)	W
8559	7	27.367992	I-126 NB (Diverge Analysis)	W
8559	8	26.326659	I-126 NB (Diverge Analysis)	W
8559	9	27.796258	I-126 NB (Diverge Analysis)	W
8559	10	28.547191	I-126 NB (Diverge Analysis)	W
8560	1	13.611623	I-126 SB (Basic Analysis)	E
8560	2	13.497311	I-126 SB (Basic Analysis)	E
8560	3	13.388501	I-126 SB (Basic Analysis)	E
8560	4	13.229566	I-126 SB (Basic Analysis)	E
8560	5	13.016836	I-126 SB (Basic Analysis)	E
8560	6	12.933089	I-126 SB (Basic Analysis)	E
8560	7	13.445963	I-126 SB (Basic Analysis)	E
8560	8	12.716692	I-126 SB (Basic Analysis)	E
8560	9	13.384222	I-126 SB (Basic Analysis)	E
8560	10	12.936757	I-126 SB (Basic Analysis)	E
8658	1	40.38014	I-20 WB (Basic Analysis)	SW
8658	2	64.204071	I-20 WB (Basic Analysis)	SW
8658	3	55.246767	I-20 WB (Basic Analysis)	SW
8658	4	43.675127	I-20 WB (Basic Analysis)	SW
8658	5	61.536327	I-20 WB (Basic Analysis)	SW
8658	6	50.624439	I-20 WB (Basic Analysis)	SW
8658	7	82.136675	I-20 WB (Basic Analysis)	SW
8658	8	64.401736	I-20 WB (Basic Analysis)	SW
8658	9	60.012482	I-20 WB (Basic Analysis)	SW
8658	10	45.306947	I-20 WB (Basic Analysis)	SW
8659	1	27.284198	I-20 EB (Basic Analysis)	NE
8659	2	26.279739	I-20 EB (Basic Analysis)	NE
8659	3	26.829466	I-20 EB (Basic Analysis)	NE
8659	4	26.147502	I-20 EB (Basic Analysis)	NE
8659	5	26.345588	I-20 EB (Basic Analysis)	NE
8659	6	27.178679	I-20 EB (Basic Analysis)	NE
8659	7	26.539085	I-20 EB (Basic Analysis)	NE
8659	8	26.438963	I-20 EB (Basic Analysis)	NE
8659	9	26.984102	I-20 EB (Basic Analysis)	NE
8659	10	26.309695	I-20 EB (Basic Analysis)	NE
8763	1	27.208167	I-26 EB (Basic Analysis)	SE
8763	2	26.896101	I-26 EB (Basic Analysis)	SE
8763	3	27.627656	I-26 EB (Basic Analysis)	SE
8763	4	26.903913	I-26 EB (Basic Analysis)	SE
8763	5	27.485077	I-26 EB (Basic Analysis)	SE
8763	6	26.811899	I-26 EB (Basic Analysis)	SE
8763	7	27.781302	I-26 EB (Basic Analysis)	SE
8763	8	27.977266	I-26 EB (Basic Analysis)	SE
8763	9	27.224009	I-26 EB (Basic Analysis)	SE
8763	10	27.234643	I-26 EB (Basic Analysis)	SE
8764	1	34.343185	I-20 WB (Basic Analysis)	S

Existing PM

ID	Run	Density	Name (Type)	Direction
8764	2	31.908932	I-20 WB (Basic Analysis)	S
8764	3	32.83189	I-20 WB (Basic Analysis)	S
8764	4	31.645274	I-20 WB (Basic Analysis)	S
8764	5	33.31308	I-20 WB (Basic Analysis)	S
8764	6	34.619752	I-20 WB (Basic Analysis)	S
8764	7	32.752166	I-20 WB (Basic Analysis)	S
8764	8	34.492634	I-20 WB (Basic Analysis)	S
8764	9	34.227621	I-20 WB (Basic Analysis)	S
8764	10	33.223562	I-20 WB (Basic Analysis)	S
8765	1	21.061298	I-20 EB (Basic Analysis)	NE
8765	2	20.293476	I-20 EB (Basic Analysis)	NE
8765	3	21.593464	I-20 EB (Basic Analysis)	NE
8765	4	20.873201	I-20 EB (Basic Analysis)	NE
8765	5	21.235293	I-20 EB (Basic Analysis)	NE
8765	6	21.552997	I-20 EB (Basic Analysis)	NE
8765	7	20.866546	I-20 EB (Basic Analysis)	NE
8765	8	20.96225	I-20 EB (Basic Analysis)	NE
8765	9	20.416161	I-20 EB (Basic Analysis)	NE
8765	10	20.60993	I-20 EB (Basic Analysis)	NE
8770	1	32.554123	I-20 WB (Diverge Analysis)	SW
8770	2	34.006123	I-20 WB (Diverge Analysis)	SW
8770	3	34.287723	I-20 WB (Diverge Analysis)	SW
8770	4	34.850923	I-20 WB (Diverge Analysis)	SW
8770	5	34.006123	I-20 WB (Diverge Analysis)	SW
8770	6	33.041057	I-20 WB (Diverge Analysis)	SW
8770	7	32.686123	I-20 WB (Diverge Analysis)	SW
8770	8	35.637056	I-20 WB (Diverge Analysis)	SW
8770	9	36.414389	I-20 WB (Diverge Analysis)	SW
8770	10	34.528256	I-20 WB (Diverge Analysis)	SW
8773	1	22.492306	I-26 WB (Basic Analysis)	N
8773	2	22.956414	I-26 WB (Basic Analysis)	N
8773	3	22.894533	I-26 WB (Basic Analysis)	N
8773	4	22.959361	I-26 WB (Basic Analysis)	N
8773	5	22.91516	I-26 WB (Basic Analysis)	N
8773	6	23.464724	I-26 WB (Basic Analysis)	N
8773	7	23.799176	I-26 WB (Basic Analysis)	N
8773	8	23.939145	I-26 WB (Basic Analysis)	N
8773	9	24.21761	I-26 WB (Basic Analysis)	N
8773	10	23.164158	I-26 WB (Basic Analysis)	N
8774	1	25.584588	I-20 EB (Diverge Analysis)	NE
8774	2	24.756784	I-20 EB (Diverge Analysis)	NE
8774	3	26.552746	I-20 EB (Diverge Analysis)	NE
8774	4	23.685508	I-20 EB (Diverge Analysis)	NE
8774	5	24.175316	I-20 EB (Diverge Analysis)	NE
8774	6	25.630418	I-20 EB (Diverge Analysis)	NE
8774	7	23.221479	I-20 EB (Diverge Analysis)	NE
8774	8	23.482137	I-20 EB (Diverge Analysis)	NE
8774	9	25.160661	I-20 EB (Diverge Analysis)	NE
8774	10	25.593181	I-20 EB (Diverge Analysis)	NE
8783	1	35.688291	I-26 WB (Basic Analysis)	NW
8783	2	36.131981	I-26 WB (Basic Analysis)	NW
8783	3	36.098618	I-26 WB (Basic Analysis)	NW
8783	4	36.206941	I-26 WB (Basic Analysis)	NW
8783	5	35.911003	I-26 WB (Basic Analysis)	NW
8783	6	36.504613	I-26 WB (Basic Analysis)	NW
8783	7	36.261319	I-26 WB (Basic Analysis)	NW
8783	8	36.153863	I-26 WB (Basic Analysis)	NW

Existing PM

ID	Run	Density	Name (Type)	Direction
8783	9	35.888472	I-26 WB (Basic Analysis)	NW
8783	10	36.021276	I-26 WB (Basic Analysis)	NW
8784	1	29.496862	I-26 EB (Basic Analysis)	SE
8784	2	33.126085	I-26 EB (Basic Analysis)	SE
8784	3	36.399924	I-26 EB (Basic Analysis)	SE
8784	4	26.750714	I-26 EB (Basic Analysis)	SE
8784	5	34.68762	I-26 EB (Basic Analysis)	SE
8784	6	32.953778	I-26 EB (Basic Analysis)	SE
8784	7	31.15532	I-26 EB (Basic Analysis)	SE
8784	8	33.287623	I-26 EB (Basic Analysis)	SE
8784	9	33.621469	I-26 EB (Basic Analysis)	SE
8784	10	34.267621	I-26 EB (Basic Analysis)	SE
8817	1	51.836182	I-26 WB (Basic Analysis)	NW
8817	2	51.583401	I-26 WB (Basic Analysis)	NW
8817	3	51.04584	I-26 WB (Basic Analysis)	NW
8817	4	51.282622	I-26 WB (Basic Analysis)	NW
8817	5	52.255351	I-26 WB (Basic Analysis)	NW
8817	6	52.14016	I-26 WB (Basic Analysis)	NW
8817	7	52.610525	I-26 WB (Basic Analysis)	NW
8817	8	51.330619	I-26 WB (Basic Analysis)	NW
8817	9	51.692193	I-26 WB (Basic Analysis)	NW
8817	10	51.32102	I-26 WB (Basic Analysis)	NW

No Build AM

ID	Run	Density	Name (Type)	Direction
2466	1	38.389827	I-20 EB (Weaving Analysis)	E
2466	2	34.459731	I-20 EB (Weaving Analysis)	E
2466	3	39.613732	I-20 EB (Weaving Analysis)	E
2466	4	38.548481	I-20 EB (Weaving Analysis)	E
2466	5	34.940228	I-20 EB (Weaving Analysis)	E
2466	6	39.042577	I-20 EB (Weaving Analysis)	E
2466	7	35.624708	I-20 EB (Weaving Analysis)	E
2466	8	36.037209	I-20 EB (Weaving Analysis)	E
2466	9	38.734334	I-20 EB (Weaving Analysis)	E
2466	10	36.812349	I-20 EB (Weaving Analysis)	E
2467	1	25.95285	I-20 WB (Weaving Analysis)	W
2467	2	26.193002	I-20 WB (Weaving Analysis)	W
2467	3	26.531399	I-20 WB (Weaving Analysis)	W
2467	4	25.396133	I-20 WB (Weaving Analysis)	W
2467	5	26.214834	I-20 WB (Weaving Analysis)	W
2467	6	25.860063	I-20 WB (Weaving Analysis)	W
2467	7	31.476358	I-20 WB (Weaving Analysis)	W
2467	8	26.460445	I-20 WB (Weaving Analysis)	W
2467	9	27.224567	I-20 WB (Weaving Analysis)	W
2467	10	24.964949	I-20 WB (Weaving Analysis)	W
2806	1	66.363772	I-20 EB (Basic Analysis)	NE
2806	2	55.198165	I-20 EB (Basic Analysis)	NE
2806	3	66.658498	I-20 EB (Basic Analysis)	NE
2806	4	62.684211	I-20 EB (Basic Analysis)	NE
2806	5	61.632874	I-20 EB (Basic Analysis)	NE
2806	6	57.478226	I-20 EB (Basic Analysis)	NE
2806	7	55.129925	I-20 EB (Basic Analysis)	NE
2806	8	69.131416	I-20 EB (Basic Analysis)	NE
2806	9	60.147247	I-20 EB (Basic Analysis)	NE
2806	10	63.032819	I-20 EB (Basic Analysis)	NE
2807	1	66.363772	I-20 EB (Basic Analysis)	NE
2807	2	55.198165	I-20 EB (Basic Analysis)	NE
2807	3	66.658498	I-20 EB (Basic Analysis)	NE
2807	4	62.684211	I-20 EB (Basic Analysis)	NE
2807	5	61.632874	I-20 EB (Basic Analysis)	NE
2807	6	57.478226	I-20 EB (Basic Analysis)	NE
2807	7	55.129925	I-20 EB (Basic Analysis)	NE
2807	8	69.131416	I-20 EB (Basic Analysis)	NE
2807	9	60.147247	I-20 EB (Basic Analysis)	NE
2807	10	63.032819	I-20 EB (Basic Analysis)	NE
2808	1	71.963066	I-20 EB (Diverge Analysis)	NE
2808	2	66.582323	I-20 EB (Diverge Analysis)	NE
2808	3	71.861925	I-20 EB (Diverge Analysis)	NE
2808	4	72.130287	I-20 EB (Diverge Analysis)	NE
2808	5	75.365477	I-20 EB (Diverge Analysis)	NE
2808	6	71.039304	I-20 EB (Diverge Analysis)	NE
2808	7	68.775077	I-20 EB (Diverge Analysis)	NE
2808	8	75.47471	I-20 EB (Diverge Analysis)	NE
2808	9	71.949581	I-20 EB (Diverge Analysis)	NE
2808	10	74.753232	I-20 EB (Diverge Analysis)	NE
2813	1	11.87153	I-20 WB (Merge Analysis)	S
2813	2	11.048158	I-20 WB (Merge Analysis)	S
2813	3	11.232793	I-20 WB (Merge Analysis)	S
2813	4	11.283942	I-20 WB (Merge Analysis)	S
2813	5	12.729833	I-20 WB (Merge Analysis)	S
2813	6	11.809153	I-20 WB (Merge Analysis)	S
2813	7	11.020712	I-20 WB (Merge Analysis)	S
2813	8	11.781708	I-20 WB (Merge Analysis)	S
2813	9	11.981313	I-20 WB (Merge Analysis)	S
2813	10	11.4823	I-20 WB (Merge Analysis)	S
2814	1	14.428174	I-20 WB (Basic Analysis)	S
2814	2	13.859158	I-20 WB (Basic Analysis)	S
2814	3	14.150978	I-20 WB (Basic Analysis)	S
2814	4	13.47664	I-20 WB (Basic Analysis)	S

No Build AM

ID	Run	Density	Name (Type)	Direction
2814	5	14.766198	I-20 WB (Basic Analysis)	S
2814	6	14.851557	I-20 WB (Basic Analysis)	S
2814	7	14.26055	I-20 WB (Basic Analysis)	S
2814	8	13.773373	I-20 WB (Basic Analysis)	S
2814	9	14.163176	I-20 WB (Basic Analysis)	S
2814	10	14.256332	I-20 WB (Basic Analysis)	S
2815	1	14.428174	I-20 WB (Basic Analysis)	S
2815	2	13.859158	I-20 WB (Basic Analysis)	S
2815	3	14.150978	I-20 WB (Basic Analysis)	S
2815	4	13.47664	I-20 WB (Basic Analysis)	S
2815	5	14.766198	I-20 WB (Basic Analysis)	S
2815	6	14.851557	I-20 WB (Basic Analysis)	S
2815	7	14.26055	I-20 WB (Basic Analysis)	S
2815	8	13.773373	I-20 WB (Basic Analysis)	S
2815	9	14.163176	I-20 WB (Basic Analysis)	S
2815	10	14.256332	I-20 WB (Basic Analysis)	S
2822	1	10.539474	I-20 WB (Merge Analysis)	SW
2822	2	9.712226	I-20 WB (Merge Analysis)	SW
2822	3	9.499924	I-20 WB (Merge Analysis)	SW
2822	4	9.058237	I-20 WB (Merge Analysis)	SW
2822	5	9.241257	I-20 WB (Merge Analysis)	SW
2822	6	9.636578	I-20 WB (Merge Analysis)	SW
2822	7	8.719041	I-20 WB (Merge Analysis)	SW
2822	8	10.295448	I-20 WB (Merge Analysis)	SW
2822	9	10.234442	I-20 WB (Merge Analysis)	SW
2822	10	9.172929	I-20 WB (Merge Analysis)	SW
2823	1	349.887817	I-20 WB (Basic Analysis)	SW
2823	2	1049.663452	I-20 WB (Basic Analysis)	SW
2823	3	1399.551261	I-20 WB (Basic Analysis)	SW
2823	4	1749.439079	I-20 WB (Basic Analysis)	SW
2823	5	1072.989307	I-20 WB (Basic Analysis)	SW
2823	6	699.775635	I-20 WB (Basic Analysis)	SW
2823	7	816.404907	I-20 WB (Basic Analysis)	SW
2823	8	2530.8552	I-20 WB (Basic Analysis)	SW
2823	9	956.360034	I-20 WB (Basic Analysis)	SW
2823	10	933.034172	I-20 WB (Basic Analysis)	SW
2826	1	111.953085	I-20 EB (Basic Analysis)	NE
2826	2	101.798641	I-20 EB (Basic Analysis)	NE
2826	3	107.645305	I-20 EB (Basic Analysis)	NE
2826	4	117.392477	I-20 EB (Basic Analysis)	NE
2826	5	114.044107	I-20 EB (Basic Analysis)	NE
2826	6	111.548548	I-20 EB (Basic Analysis)	NE
2826	7	100.426493	I-20 EB (Basic Analysis)	NE
2826	8	114.618114	I-20 EB (Basic Analysis)	NE
2826	9	113.2897	I-20 EB (Basic Analysis)	NE
2826	10	115.358856	I-20 EB (Basic Analysis)	NE
2829	1	108.731235	I-20 EB (Merge Analysis)	NE
2829	2	102.547632	I-20 EB (Merge Analysis)	NE
2829	3	104.7171	I-20 EB (Merge Analysis)	NE
2829	4	116.030563	I-20 EB (Merge Analysis)	NE
2829	5	109.35852	I-20 EB (Merge Analysis)	NE
2829	6	111.937088	I-20 EB (Merge Analysis)	NE
2829	7	104.275768	I-20 EB (Merge Analysis)	NE
2829	8	110.99244	I-20 EB (Merge Analysis)	NE
2829	9	107.781628	I-20 EB (Merge Analysis)	NE
2829	10	110.171761	I-20 EB (Merge Analysis)	NE
2830	1	94.084559	I-20 EB (Basic Analysis)	NE
2830	2	98.082824	I-20 EB (Basic Analysis)	NE
2830	3	101.68522	I-20 EB (Basic Analysis)	NE
2830	4	110.209572	I-20 EB (Basic Analysis)	NE
2830	5	103.690949	I-20 EB (Basic Analysis)	NE
2830	6	98.267563	I-20 EB (Basic Analysis)	NE
2830	7	104.799379	I-20 EB (Basic Analysis)	NE
2830	8	106.989847	I-20 EB (Basic Analysis)	NE

No Build AM

ID	Run	Density	Name (Type)	Direction
2830	9	103.347864	I-20 EB (Basic Analysis)	NE
2830	10	106.71274	I-20 EB (Basic Analysis)	NE
2831	1	13.369934	I-20 WB (Basic Analysis)	SW
2831	2	13.163726	I-20 WB (Basic Analysis)	SW
2831	3	12.601135	I-20 WB (Basic Analysis)	SW
2831	4	10.642154	I-20 WB (Basic Analysis)	SW
2831	5	14.864946	I-20 WB (Basic Analysis)	SW
2831	6	13.880973	I-20 WB (Basic Analysis)	SW
2831	7	13.468556	I-20 WB (Basic Analysis)	SW
2831	8	12.157338	I-20 WB (Basic Analysis)	SW
2831	9	14.463736	I-20 WB (Basic Analysis)	SW
2831	10	13.98856	I-20 WB (Basic Analysis)	SW
2837	1	12.929771	I-20 WB (Merge Analysis)	SW
2837	2	13.916088	I-20 WB (Merge Analysis)	SW
2837	3	14.221496	I-20 WB (Merge Analysis)	SW
2837	4	14.659581	I-20 WB (Merge Analysis)	SW
2837	5	13.548096	I-20 WB (Merge Analysis)	SW
2837	6	14.817292	I-20 WB (Merge Analysis)	SW
2837	7	15.10768	I-20 WB (Merge Analysis)	SW
2837	8	14.221496	I-20 WB (Merge Analysis)	SW
2837	9	14.203972	I-20 WB (Merge Analysis)	SW
2837	10	13.911081	I-20 WB (Merge Analysis)	SW
2838	1	23.465666	I-20 WB (Basic Analysis)	SW
2838	2	23.641795	I-20 WB (Basic Analysis)	SW
2838	3	24.300761	I-20 WB (Basic Analysis)	SW
2838	4	22.198346	I-20 WB (Basic Analysis)	SW
2838	5	23.878659	I-20 WB (Basic Analysis)	SW
2838	6	33.933204	I-20 WB (Basic Analysis)	SW
2838	7	24.11451	I-20 WB (Basic Analysis)	SW
2838	8	22.561739	I-20 WB (Basic Analysis)	SW
2838	9	23.427201	I-20 WB (Basic Analysis)	SW
2838	10	23.841206	I-20 WB (Basic Analysis)	SW
2839	1	25.996783	I-20 WB (Diverge Analysis)	SW
2839	2	24.655339	I-20 WB (Diverge Analysis)	SW
2839	3	27.171808	I-20 WB (Diverge Analysis)	SW
2839	4	24.700726	I-20 WB (Diverge Analysis)	SW
2839	5	25.542911	I-20 WB (Diverge Analysis)	SW
2839	6	66.076208	I-20 WB (Diverge Analysis)	SW
2839	7	26.770887	I-20 WB (Diverge Analysis)	SW
2839	8	22.907932	I-20 WB (Diverge Analysis)	SW
2839	9	25.313454	I-20 WB (Diverge Analysis)	SW
2839	10	25.192421	I-20 WB (Diverge Analysis)	SW
2840	1	25.996783	I-20 WB (Diverge Analysis)	SW
2840	2	24.655339	I-20 WB (Diverge Analysis)	SW
2840	3	27.171808	I-20 WB (Diverge Analysis)	SW
2840	4	24.700726	I-20 WB (Diverge Analysis)	SW
2840	5	25.542911	I-20 WB (Diverge Analysis)	SW
2840	6	66.076208	I-20 WB (Diverge Analysis)	SW
2840	7	26.770887	I-20 WB (Diverge Analysis)	SW
2840	8	22.907932	I-20 WB (Diverge Analysis)	SW
2840	9	25.313454	I-20 WB (Diverge Analysis)	SW
2840	10	25.192421	I-20 WB (Diverge Analysis)	SW
2843	1	74.42365	I-20 EB (Merge Analysis)	NE
2843	2	72.195683	I-20 EB (Merge Analysis)	NE
2843	3	74.030792	I-20 EB (Merge Analysis)	NE
2843	4	75.809272	I-20 EB (Merge Analysis)	NE
2843	5	72.241693	I-20 EB (Merge Analysis)	NE
2843	6	75.404026	I-20 EB (Merge Analysis)	NE
2843	7	72.204532	I-20 EB (Merge Analysis)	NE
2843	8	79.261824	I-20 EB (Merge Analysis)	NE
2843	9	75.630539	I-20 EB (Merge Analysis)	NE
2843	10	77.681543	I-20 EB (Merge Analysis)	NE
2844	1	74.42365	I-20 EB (Merge Analysis)	NE
2844	2	72.195683	I-20 EB (Merge Analysis)	NE

No Build AM

ID	Run	Density	Name (Type)	Direction
2844	3	74.030792	I-20 EB (Merge Analysis)	NE
2844	4	75.809272	I-20 EB (Merge Analysis)	NE
2844	5	72.241693	I-20 EB (Merge Analysis)	NE
2844	6	75.404026	I-20 EB (Merge Analysis)	NE
2844	7	72.204532	I-20 EB (Merge Analysis)	NE
2844	8	79.261824	I-20 EB (Merge Analysis)	NE
2844	9	75.630539	I-20 EB (Merge Analysis)	NE
2844	10	77.681543	I-20 EB (Merge Analysis)	NE
2848	1	32.076522	I-20 EB (Basic Analysis)	NE
2848	2	31.353268	I-20 EB (Basic Analysis)	NE
2848	3	33.126756	I-20 EB (Basic Analysis)	NE
2848	4	32.379682	I-20 EB (Basic Analysis)	NE
2848	5	31.704068	I-20 EB (Basic Analysis)	NE
2848	6	30.85955	I-20 EB (Basic Analysis)	NE
2848	7	30.134131	I-20 EB (Basic Analysis)	NE
2848	8	30.950498	I-20 EB (Basic Analysis)	NE
2848	9	32.340704	I-20 EB (Basic Analysis)	NE
2848	10	30.772933	I-20 EB (Basic Analysis)	NE
2852	1	17.799245	I-20 WB (Basic Analysis)	SW
2852	2	17.84396	I-20 WB (Basic Analysis)	SW
2852	3	18.360974	I-20 WB (Basic Analysis)	SW
2852	4	15.914241	I-20 WB (Basic Analysis)	SW
2852	5	16.737271	I-20 WB (Basic Analysis)	SW
2852	6	18.504899	I-20 WB (Basic Analysis)	SW
2852	7	17.890072	I-20 WB (Basic Analysis)	SW
2852	8	16.284535	I-20 WB (Basic Analysis)	SW
2852	9	18.496515	I-20 WB (Basic Analysis)	SW
2852	10	19.628356	I-20 WB (Basic Analysis)	SW
2856	1	24.714147	I-20 EB (Basic Analysis)	NE
2856	2	24.56392	I-20 EB (Basic Analysis)	NE
2856	3	24.710295	I-20 EB (Basic Analysis)	NE
2856	4	24.026573	I-20 EB (Basic Analysis)	NE
2856	5	24.910597	I-20 EB (Basic Analysis)	NE
2856	6	24.226874	I-20 EB (Basic Analysis)	NE
2856	7	23.853235	I-20 EB (Basic Analysis)	NE
2856	8	23.304331	I-20 EB (Basic Analysis)	NE
2856	9	24.369397	I-20 EB (Basic Analysis)	NE
2856	10	23.743454	I-20 EB (Basic Analysis)	NE
2859	1	36.570974	I-20 WB (Weaving Analysis)	SW
2859	2	60.991125	I-20 WB (Weaving Analysis)	SW
2859	3	65.913246	I-20 WB (Weaving Analysis)	SW
2859	4	46.749564	I-20 WB (Weaving Analysis)	SW
2859	5	32.440287	I-20 WB (Weaving Analysis)	SW
2859	6	42.838954	I-20 WB (Weaving Analysis)	SW
2859	7	71.355934	I-20 WB (Weaving Analysis)	SW
2859	8	36.763542	I-20 WB (Weaving Analysis)	SW
2859	9	36.953994	I-20 WB (Weaving Analysis)	SW
2859	10	65.054096	I-20 WB (Weaving Analysis)	SW
2863	1	20.840271	I-20 EB (Merge Analysis)	E
2863	2	20.481762	I-20 EB (Merge Analysis)	E
2863	3	21.097462	I-20 EB (Merge Analysis)	E
2863	4	20.926001	I-20 EB (Merge Analysis)	E
2863	5	20.770128	I-20 EB (Merge Analysis)	E
2863	6	20.91561	I-20 EB (Merge Analysis)	E
2863	7	20.577884	I-20 EB (Merge Analysis)	E
2863	8	20.375249	I-20 EB (Merge Analysis)	E
2863	9	21.016927	I-20 EB (Merge Analysis)	E
2863	10	20.481762	I-20 EB (Merge Analysis)	E
4563	1	20.163727	I-126 SB (Merge Analysis)	E
4563	2	17.494395	I-126 SB (Merge Analysis)	E
4563	3	19.776527	I-126 SB (Merge Analysis)	E
4563	4	18.072261	I-126 SB (Merge Analysis)	E
4563	5	17.523728	I-126 SB (Merge Analysis)	E
4563	6	19.732527	I-126 SB (Merge Analysis)	E

No Build AM

ID	Run	Density	Name (Type)	Direction
4563	7	18.741061	I-126 SB (Merge Analysis)	E
4563	8	18.359728	I-126 SB (Merge Analysis)	E
4563	9	17.875728	I-126 SB (Merge Analysis)	E
4563	10	17.907995	I-126 SB (Merge Analysis)	E
4566	1	16.083705	I-126 NB (Basic Analysis)	W
4566	2	15.780239	I-126 NB (Basic Analysis)	W
4566	3	14.472545	I-126 NB (Basic Analysis)	W
4566	4	15.348286	I-126 NB (Basic Analysis)	W
4566	5	15.084549	I-126 NB (Basic Analysis)	W
4566	6	16.108219	I-126 NB (Basic Analysis)	W
4566	7	14.787	I-126 NB (Basic Analysis)	W
4566	8	14.688945	I-126 NB (Basic Analysis)	W
4566	9	15.041439	I-126 NB (Basic Analysis)	W
4566	10	15.595116	I-126 NB (Basic Analysis)	W
4570	1	13.618078	I-126 NB (Basic Analysis)	NW
4570	2	13.243902	I-126 NB (Basic Analysis)	NW
4570	3	13.345192	I-126 NB (Basic Analysis)	NW
4570	4	14.154316	I-126 NB (Basic Analysis)	NW
4570	5	13.313017	I-126 NB (Basic Analysis)	NW
4570	6	13.664551	I-126 NB (Basic Analysis)	NW
4570	7	14.124525	I-126 NB (Basic Analysis)	NW
4570	8	12.811336	I-126 NB (Basic Analysis)	NW
4570	9	13.616886	I-126 NB (Basic Analysis)	NW
4570	10	13.216494	I-126 NB (Basic Analysis)	NW
4573	1	24.458434	I-126 SB (Basic Analysis)	E
4573	2	25.789434	I-126 SB (Basic Analysis)	E
4573	3	24.99555	I-126 SB (Basic Analysis)	E
4573	4	24.547516	I-126 SB (Basic Analysis)	E
4573	5	25.178956	I-126 SB (Basic Analysis)	E
4573	6	24.01302	I-126 SB (Basic Analysis)	E
4573	7	25.307339	I-126 SB (Basic Analysis)	E
4573	8	25.163235	I-126 SB (Basic Analysis)	E
4573	9	25.810394	I-126 SB (Basic Analysis)	E
4573	10	24.123064	I-126 SB (Basic Analysis)	E
4578	1	25.775746	I-126 SB (Basic Analysis)	E
4578	2	24.776863	I-126 SB (Basic Analysis)	E
4578	3	26.044481	I-126 SB (Basic Analysis)	E
4578	4	24.925596	I-126 SB (Basic Analysis)	E
4578	5	24.705031	I-126 SB (Basic Analysis)	E
4578	6	25.349826	I-126 SB (Basic Analysis)	E
4578	7	24.80813	I-126 SB (Basic Analysis)	E
4578	8	25.23405	I-126 SB (Basic Analysis)	E
4578	9	25.352361	I-126 SB (Basic Analysis)	E
4578	10	24.340802	I-126 SB (Basic Analysis)	E
4579	1	15.598355	I-126 SB (Diverge Analysis)	E
4579	2	15.63758	I-126 SB (Diverge Analysis)	E
4579	3	15.449301	I-126 SB (Diverge Analysis)	E
4579	4	16.615582	I-126 SB (Diverge Analysis)	E
4579	5	15.62189	I-126 SB (Diverge Analysis)	E
4579	6	13.872468	I-126 SB (Diverge Analysis)	E
4579	7	17.292862	I-126 SB (Diverge Analysis)	E
4579	8	16.550208	I-126 SB (Diverge Analysis)	E
4579	9	17.062744	I-126 SB (Diverge Analysis)	E
4579	10	14.842626	I-126 SB (Diverge Analysis)	E
4586	1	7.852129	I-126 NB (Merge Analysis)	NW
4586	2	8.729495	I-126 NB (Merge Analysis)	NW
4586	3	7.752027	I-126 NB (Merge Analysis)	NW
4586	4	8.18335	I-126 NB (Merge Analysis)	NW
4586	5	8.389442	I-126 NB (Merge Analysis)	NW
4586	6	9.16965	I-126 NB (Merge Analysis)	NW
4586	7	8.06411	I-126 NB (Merge Analysis)	NW
4586	8	8.826653	I-126 NB (Merge Analysis)	NW
4586	9	8.829597	I-126 NB (Merge Analysis)	NW
4586	10	8.305533	I-126 NB (Merge Analysis)	NW

No Build AM

ID	Run	Density	Name (Type)	Direction
4587	1	14.130164	I-126 NB (Basic Analysis)	NW
4587	2	14.455542	I-126 NB (Basic Analysis)	NW
4587	3	13.419886	I-126 NB (Basic Analysis)	NW
4587	4	12.233444	I-126 NB (Basic Analysis)	NW
4587	5	13.616304	I-126 NB (Basic Analysis)	NW
4587	6	13.17982	I-126 NB (Basic Analysis)	NW
4587	7	13.374254	I-126 NB (Basic Analysis)	NW
4587	8	12.465574	I-126 NB (Basic Analysis)	NW
4587	9	13.241325	I-126 NB (Basic Analysis)	NW
4587	10	14.116276	I-126 NB (Basic Analysis)	NW
4588	1	8.850614	I-126 NB (Diverge Analysis)	NW
4588	2	8.129912	I-126 NB (Diverge Analysis)	NW
4588	3	8.268921	I-126 NB (Diverge Analysis)	NW
4588	4	8.557657	I-126 NB (Diverge Analysis)	NW
4588	5	8.189503	I-126 NB (Diverge Analysis)	NW
4588	6	8.882248	I-126 NB (Diverge Analysis)	NW
4588	7	9.097921	I-126 NB (Diverge Analysis)	NW
4588	8	9.208068	I-126 NB (Diverge Analysis)	NW
4588	9	9.115463	I-126 NB (Diverge Analysis)	NW
4588	10	8.582381	I-126 NB (Diverge Analysis)	NW
4589	1	8.850614	I-126 NB (Diverge Analysis)	NW
4589	2	8.129912	I-126 NB (Diverge Analysis)	NW
4589	3	8.268921	I-126 NB (Diverge Analysis)	NW
4589	4	8.557657	I-126 NB (Diverge Analysis)	NW
4589	5	8.189503	I-126 NB (Diverge Analysis)	NW
4589	6	8.882248	I-126 NB (Diverge Analysis)	NW
4589	7	9.097921	I-126 NB (Diverge Analysis)	NW
4589	8	9.208068	I-126 NB (Diverge Analysis)	NW
4589	9	9.115463	I-126 NB (Diverge Analysis)	NW
4589	10	8.582381	I-126 NB (Diverge Analysis)	NW
4593	1	24.38467	I-126 SB (Merge Analysis)	SE
4593	2	24.138098	I-126 SB (Merge Analysis)	SE
4593	3	25.858911	I-126 SB (Merge Analysis)	SE
4593	4	25.360576	I-126 SB (Merge Analysis)	SE
4593	5	23.826639	I-126 SB (Merge Analysis)	SE
4593	6	24.581927	I-126 SB (Merge Analysis)	SE
4593	7	24.400243	I-126 SB (Merge Analysis)	SE
4593	8	24.068019	I-126 SB (Merge Analysis)	SE
4593	9	26.811457	I-126 SB (Merge Analysis)	SE
4593	10	24.132907	I-126 SB (Merge Analysis)	SE
4594	1	30.072893	I-126 SB (Basic Analysis)	SE
4594	2	29.612397	I-126 SB (Basic Analysis)	SE
4594	3	29.448158	I-126 SB (Basic Analysis)	SE
4594	4	29.42144	I-126 SB (Basic Analysis)	SE
4594	5	29.893723	I-126 SB (Basic Analysis)	SE
4594	6	29.271347	I-126 SB (Basic Analysis)	SE
4594	7	29.463089	I-126 SB (Basic Analysis)	SE
4594	8	29.638329	I-126 SB (Basic Analysis)	SE
4594	9	30.369936	I-126 SB (Basic Analysis)	SE
4594	10	29.385292	I-126 SB (Basic Analysis)	SE
4599	1	13.423229	I-126 NB (Basic Analysis)	NW
4599	2	13.905726	I-126 NB (Basic Analysis)	NW
4599	3	11.731638	I-126 NB (Basic Analysis)	NW
4599	4	13.920555	I-126 NB (Basic Analysis)	NW
4599	5	12.651006	I-126 NB (Basic Analysis)	NW
4599	6	13.278366	I-126 NB (Basic Analysis)	NW
4599	7	12.25862	I-126 NB (Basic Analysis)	NW
4599	8	13.130081	I-126 NB (Basic Analysis)	NW
4599	9	12.581426	I-126 NB (Basic Analysis)	NW
4599	10	13.136925	I-126 NB (Basic Analysis)	NW
4601	1	16.895433	I-126 NB (Basic Analysis)	NW
4601	2	16.283641	I-126 NB (Basic Analysis)	NW
4601	3	16.040098	I-126 NB (Basic Analysis)	NW
4601	4	14.322092	I-126 NB (Basic Analysis)	NW

No Build AM

ID	Run	Density	Name (Type)	Direction
4601	5	14.91041	I-126 NB (Basic Analysis)	NW
4601	6	16.117856	I-126 NB (Basic Analysis)	NW
4601	7	15.131946	I-126 NB (Basic Analysis)	NW
4601	8	14.6654	I-126 NB (Basic Analysis)	NW
4601	9	15.184763	I-126 NB (Basic Analysis)	NW
4601	10	15.6205	I-126 NB (Basic Analysis)	NW
4602	1	9.112716	WB EXPRESSWAY TO I-26 WB (Basic Anal	NW
4602	2	8.031546	WB EXPRESSWAY TO I-26 WB (Basic Anal	NW
4602	3	8.353323	WB EXPRESSWAY TO I-26 WB (Basic Anal	NW
4602	4	7.95432	WB EXPRESSWAY TO I-26 WB (Basic Anal	NW
4602	5	8.739455	WB EXPRESSWAY TO I-26 WB (Basic Anal	NW
4602	6	8.881037	WB EXPRESSWAY TO I-26 WB (Basic Anal	NW
4602	7	10.090917	WB EXPRESSWAY TO I-26 WB (Basic Anal	NW
4602	8	8.083031	WB EXPRESSWAY TO I-26 WB (Basic Anal	NW
4602	9	8.610744	WB EXPRESSWAY TO I-26 WB (Basic Anal	NW
4602	10	7.439477	WB EXPRESSWAY TO I-26 WB (Basic Anal	NW
4603	1	25.568531	I-126 NB (Basic Analysis)	NW
4603	2	24.66128	I-126 NB (Basic Analysis)	NW
4603	3	24.315562	I-126 NB (Basic Analysis)	NW
4603	4	24.221274	I-126 NB (Basic Analysis)	NW
4603	5	24.977666	I-126 NB (Basic Analysis)	NW
4603	6	25.352718	I-126 NB (Basic Analysis)	NW
4603	7	26.048346	I-126 NB (Basic Analysis)	NW
4603	8	23.219737	I-126 NB (Basic Analysis)	NW
4603	9	24.711566	I-126 NB (Basic Analysis)	NW
4603	10	24.254799	I-126 NB (Basic Analysis)	NW
4609	1	30.614384	I-126 SB (Basic Analysis)	SE
4609	2	30.328841	I-126 SB (Basic Analysis)	SE
4609	3	30.366599	I-126 SB (Basic Analysis)	SE
4609	4	29.151274	I-126 SB (Basic Analysis)	SE
4609	5	30.446834	I-126 SB (Basic Analysis)	SE
4609	6	30.66394	I-126 SB (Basic Analysis)	SE
4609	7	29.203191	I-126 SB (Basic Analysis)	SE
4609	8	30.18725	I-126 SB (Basic Analysis)	SE
4609	9	30.791373	I-126 SB (Basic Analysis)	SE
4609	10	29.351862	I-126 SB (Basic Analysis)	SE
4611	1	59.599449	I-26 EB (Diverge Analysis)	SE
4611	2	60.391448	I-26 EB (Diverge Analysis)	SE
4611	3	60.523449	I-26 EB (Diverge Analysis)	SE
4611	4	55.791983	I-26 EB (Diverge Analysis)	SE
4611	5	57.815982	I-26 EB (Diverge Analysis)	SE
4611	6	57.616516	I-26 EB (Diverge Analysis)	SE
4611	7	59.529049	I-26 EB (Diverge Analysis)	SE
4611	8	57.399449	I-26 EB (Diverge Analysis)	SE
4611	9	58.437849	I-26 EB (Diverge Analysis)	SE
4611	10	57.824783	I-26 EB (Diverge Analysis)	SE
4619	1	40.803785	I-26 WB (Basic Analysis)	NW
4619	2	40.692905	I-26 WB (Basic Analysis)	NW
4619	3	41.269481	I-26 WB (Basic Analysis)	NW
4619	4	39.628459	I-26 WB (Basic Analysis)	NW
4619	5	36.169007	I-26 WB (Basic Analysis)	NW
4619	6	46.148194	I-26 WB (Basic Analysis)	NW
4619	7	32.310389	I-26 WB (Basic Analysis)	NW
4619	8	38.785772	I-26 WB (Basic Analysis)	NW
4619	9	38.586188	I-26 WB (Basic Analysis)	NW
4619	10	37.854381	I-26 WB (Basic Analysis)	NW
4624	1	94.876458	I-26 EB (Weaving Analysis)	SE
4624	2	100.94575	I-26 EB (Weaving Analysis)	SE
4624	3	100.586845	I-26 EB (Weaving Analysis)	SE
4624	4	86.338598	I-26 EB (Weaving Analysis)	SE
4624	5	94.041931	I-26 EB (Weaving Analysis)	SE
4624	6	90.204854	I-26 EB (Weaving Analysis)	SE
4624	7	94.266611	I-26 EB (Weaving Analysis)	SE
4624	8	92.32327	I-26 EB (Weaving Analysis)	SE

No Build AM

ID	Run	Density	Name (Type)	Direction
4624	9	97.657244	I-26 EB (Weaving Analysis)	SE
4624	10	94.330806	I-26 EB (Weaving Analysis)	SE
4639	1	73.947817	I-26 EB (Basic Analysis)	SE
4639	2	90.615334	I-26 EB (Basic Analysis)	SE
4639	3	91.912359	I-26 EB (Basic Analysis)	SE
4639	4	57.23806	I-26 EB (Basic Analysis)	SE
4639	5	81.069031	I-26 EB (Basic Analysis)	SE
4639	6	72.929081	I-26 EB (Basic Analysis)	SE
4639	7	77.980521	I-26 EB (Basic Analysis)	SE
4639	8	61.737892	I-26 EB (Basic Analysis)	SE
4639	9	76.820156	I-26 EB (Basic Analysis)	SE
4639	10	73.967695	I-26 EB (Basic Analysis)	SE
4641	1	86.764434	I-26 EB (Basic Analysis)	SE
4641	2	90.924101	I-26 EB (Basic Analysis)	SE
4641	3	84.503271	I-26 EB (Basic Analysis)	SE
4641	4	83.36179	I-26 EB (Basic Analysis)	SE
4641	5	88.292353	I-26 EB (Basic Analysis)	SE
4641	6	85.077975	I-26 EB (Basic Analysis)	SE
4641	7	84.62812	I-26 EB (Basic Analysis)	SE
4641	8	86.786233	I-26 EB (Basic Analysis)	SE
4641	9	84.695499	I-26 EB (Basic Analysis)	SE
4641	10	87.913842	I-26 EB (Basic Analysis)	SE
4643	1	34.508689	I-26 WB (Weaving Analysis)	NW
4643	2	33.508695	I-26 WB (Weaving Analysis)	NW
4643	3	36.668819	I-26 WB (Weaving Analysis)	NW
4643	4	34.067411	I-26 WB (Weaving Analysis)	NW
4643	5	33.736452	I-26 WB (Weaving Analysis)	NW
4643	6	35.444627	I-26 WB (Weaving Analysis)	NW
4643	7	36.142131	I-26 WB (Weaving Analysis)	NW
4643	8	32.850336	I-26 WB (Weaving Analysis)	NW
4643	9	35.163489	I-26 WB (Weaving Analysis)	NW
4643	10	35.907258	I-26 WB (Weaving Analysis)	NW
4646	1	35.104451	I-26 WB (Basic Analysis)	NW
4646	2	34.436502	I-26 WB (Basic Analysis)	NW
4646	3	34.665898	I-26 WB (Basic Analysis)	NW
4646	4	30.473785	I-26 WB (Basic Analysis)	NW
4646	5	34.710878	I-26 WB (Basic Analysis)	NW
4646	6	35.851115	I-26 WB (Basic Analysis)	NW
4646	7	33.042129	I-26 WB (Basic Analysis)	NW
4646	8	32.362935	I-26 WB (Basic Analysis)	NW
4646	9	35.477783	I-26 WB (Basic Analysis)	NW
4646	10	33.878752	I-26 WB (Basic Analysis)	NW
4649	1	109.31722	I-26 EB (Basic Analysis)	SE
4649	2	118.819348	I-26 EB (Basic Analysis)	SE
4649	3	105.635146	I-26 EB (Basic Analysis)	SE
4649	4	109.854091	I-26 EB (Basic Analysis)	SE
4649	5	109.3386	I-26 EB (Basic Analysis)	SE
4649	6	105.929712	I-26 EB (Basic Analysis)	SE
4649	7	105.309698	I-26 EB (Basic Analysis)	SE
4649	8	113.493405	I-26 EB (Basic Analysis)	SE
4649	9	101.815291	I-26 EB (Basic Analysis)	SE
4649	10	112.939906	I-26 EB (Basic Analysis)	SE
4650	1	110.969397	I-26 EB (Weaving Analysis)	SE
4650	2	114.075588	I-26 EB (Weaving Analysis)	SE
4650	3	104.388209	I-26 EB (Weaving Analysis)	SE
4650	4	108.695511	I-26 EB (Weaving Analysis)	SE
4650	5	106.562419	I-26 EB (Weaving Analysis)	SE
4650	6	108.498648	I-26 EB (Weaving Analysis)	SE
4650	7	105.266615	I-26 EB (Weaving Analysis)	SE
4650	8	111.778029	I-26 EB (Weaving Analysis)	SE
4650	9	104.590055	I-26 EB (Weaving Analysis)	SE
4650	10	112.20664	I-26 EB (Weaving Analysis)	SE
4651	1	35.23485	I-26 WB (Weaving Analysis)	NW
4651	2	35.623662	I-26 WB (Weaving Analysis)	NW

No Build AM

ID	Run	Density	Name (Type)	Direction
4651	3	35.226112	I-26 WB (Weaving Analysis)	NW
4651	4	36.079461	I-26 WB (Weaving Analysis)	NW
4651	5	35.344067	I-26 WB (Weaving Analysis)	NW
4651	6	36.258577	I-26 WB (Weaving Analysis)	NW
4651	7	35.205725	I-26 WB (Weaving Analysis)	NW
4651	8	35.067384	I-26 WB (Weaving Analysis)	NW
4651	9	36.791556	I-26 WB (Weaving Analysis)	NW
4651	10	35.658611	I-26 WB (Weaving Analysis)	NW
4654	1	36.74705	I-26 WB (Basic Analysis)	NW
4654	2	38.242362	I-26 WB (Basic Analysis)	NW
4654	3	38.161483	I-26 WB (Basic Analysis)	NW
4654	4	35.945789	I-26 WB (Basic Analysis)	NW
4654	5	36.948306	I-26 WB (Basic Analysis)	NW
4654	6	35.979645	I-26 WB (Basic Analysis)	NW
4654	7	36.639839	I-26 WB (Basic Analysis)	NW
4654	8	35.17086	I-26 WB (Basic Analysis)	NW
4654	9	38.503806	I-26 WB (Basic Analysis)	NW
4654	10	38.663682	I-26 WB (Basic Analysis)	NW
4659	1	47.090163	I-26 WB (Basic Analysis)	NW
4659	2	47.860191	I-26 WB (Basic Analysis)	NW
4659	3	48.656544	I-26 WB (Basic Analysis)	NW
4659	4	48.209006	I-26 WB (Basic Analysis)	NW
4659	5	46.965115	I-26 WB (Basic Analysis)	NW
4659	6	46.333298	I-26 WB (Basic Analysis)	NW
4659	7	49.446316	I-26 WB (Basic Analysis)	NW
4659	8	48.307728	I-26 WB (Basic Analysis)	NW
4659	9	46.129273	I-26 WB (Basic Analysis)	NW
4659	10	45.536944	I-26 WB (Basic Analysis)	NW
4665	1	97.968664	I-26 EB (Basic Analysis)	SE
4665	2	111.711454	I-26 EB (Basic Analysis)	SE
4665	3	96.81166	I-26 EB (Basic Analysis)	SE
4665	4	98.305002	I-26 EB (Basic Analysis)	SE
4665	5	103.168456	I-26 EB (Basic Analysis)	SE
4665	6	96.778026	I-26 EB (Basic Analysis)	SE
4665	7	96.905835	I-26 EB (Basic Analysis)	SE
4665	8	102.704309	I-26 EB (Basic Analysis)	SE
4665	9	92.654516	I-26 EB (Basic Analysis)	SE
4665	10	104.971231	I-26 EB (Basic Analysis)	SE
4667	1	90.968279	I-26 EB (Merge Analysis)	SE
4667	2	95.270061	I-26 EB (Merge Analysis)	SE
4667	3	85.017832	I-26 EB (Merge Analysis)	SE
4667	4	85.034986	I-26 EB (Merge Analysis)	SE
4667	5	91.151253	I-26 EB (Merge Analysis)	SE
4667	6	88.753539	I-26 EB (Merge Analysis)	SE
4667	7	86.279586	I-26 EB (Merge Analysis)	SE
4667	8	89.836131	I-26 EB (Merge Analysis)	SE
4667	9	85.656333	I-26 EB (Merge Analysis)	SE
4667	10	94.448586	I-26 EB (Merge Analysis)	SE
4668	1	90.968279	I-26 EB (Merge Analysis)	SE
4668	2	95.270061	I-26 EB (Merge Analysis)	SE
4668	3	85.017832	I-26 EB (Merge Analysis)	SE
4668	4	85.034986	I-26 EB (Merge Analysis)	SE
4668	5	91.151253	I-26 EB (Merge Analysis)	SE
4668	6	88.753539	I-26 EB (Merge Analysis)	SE
4668	7	86.279586	I-26 EB (Merge Analysis)	SE
4668	8	89.836131	I-26 EB (Merge Analysis)	SE
4668	9	85.656333	I-26 EB (Merge Analysis)	SE
4668	10	94.448586	I-26 EB (Merge Analysis)	SE
4669	1	79.147716	I-26 EB (Basic Analysis)	SE
4669	2	83.907053	I-26 EB (Basic Analysis)	SE
4669	3	74.20184	I-26 EB (Basic Analysis)	SE
4669	4	77.405536	I-26 EB (Basic Analysis)	SE
4669	5	77.961733	I-26 EB (Basic Analysis)	SE
4669	6	76.113447	I-26 EB (Basic Analysis)	SE

No Build AM

ID	Run	Density	Name (Type)	Direction
4669	7	71.393472	I-26 EB (Basic Analysis)	SE
4669	8	78.892722	I-26 EB (Basic Analysis)	SE
4669	9	73.183571	I-26 EB (Basic Analysis)	SE
4669	10	82.690264	I-26 EB (Basic Analysis)	SE
4670	1	71.22541	I-26 EB (Diverge Analysis)	SE
4670	2	80.54611	I-26 EB (Diverge Analysis)	SE
4670	3	70.97092	I-26 EB (Diverge Analysis)	SE
4670	4	73.293142	I-26 EB (Diverge Analysis)	SE
4670	5	76.044816	I-26 EB (Diverge Analysis)	SE
4670	6	70.984554	I-26 EB (Diverge Analysis)	SE
4670	7	67.976117	I-26 EB (Diverge Analysis)	SE
4670	8	75.081389	I-26 EB (Diverge Analysis)	SE
4670	9	69.514419	I-26 EB (Diverge Analysis)	SE
4670	10	78.298871	I-26 EB (Diverge Analysis)	SE
4675	1	30.668971	I-26 WB (Merge Analysis)	NW
4675	2	31.832526	I-26 WB (Merge Analysis)	NW
4675	3	32.782926	I-26 WB (Merge Analysis)	NW
4675	4	36.371369	I-26 WB (Merge Analysis)	NW
4675	5	32.620615	I-26 WB (Merge Analysis)	NW
4675	6	32.225593	I-26 WB (Merge Analysis)	NW
4675	7	32.636259	I-26 WB (Merge Analysis)	NW
4675	8	30.033415	I-26 WB (Merge Analysis)	NW
4675	9	33.373503	I-26 WB (Merge Analysis)	NW
4675	10	31.529415	I-26 WB (Merge Analysis)	NW
4676	1	45.011942	I-26 WB (Basic Analysis)	NW
4676	2	45.136431	I-26 WB (Basic Analysis)	NW
4676	3	46.353104	I-26 WB (Basic Analysis)	NW
4676	4	64.610677	I-26 WB (Basic Analysis)	NW
4676	5	45.322334	I-26 WB (Basic Analysis)	NW
4676	6	45.660115	I-26 WB (Basic Analysis)	NW
4676	7	44.91318	I-26 WB (Basic Analysis)	NW
4676	8	43.907308	I-26 WB (Basic Analysis)	NW
4676	9	46.027773	I-26 WB (Basic Analysis)	NW
4676	10	45.179587	I-26 WB (Basic Analysis)	NW
4677	1	45.011942	I-26 WB (Basic Analysis)	NW
4677	2	45.136431	I-26 WB (Basic Analysis)	NW
4677	3	46.353104	I-26 WB (Basic Analysis)	NW
4677	4	64.610677	I-26 WB (Basic Analysis)	NW
4677	5	45.322334	I-26 WB (Basic Analysis)	NW
4677	6	45.660115	I-26 WB (Basic Analysis)	NW
4677	7	44.91318	I-26 WB (Basic Analysis)	NW
4677	8	43.907308	I-26 WB (Basic Analysis)	NW
4677	9	46.027773	I-26 WB (Basic Analysis)	NW
4677	10	45.179587	I-26 WB (Basic Analysis)	NW
4687	1	123.070538	I-26 EB (Basic Analysis)	SE
4687	2	126.361089	I-26 EB (Basic Analysis)	SE
4687	3	115.288218	I-26 EB (Basic Analysis)	SE
4687	4	113.741667	I-26 EB (Basic Analysis)	SE
4687	5	123.092019	I-26 EB (Basic Analysis)	SE
4687	6	120.215369	I-26 EB (Basic Analysis)	SE
4687	7	120.896116	I-26 EB (Basic Analysis)	SE
4687	8	119.585843	I-26 EB (Basic Analysis)	SE
4687	9	118.354056	I-26 EB (Basic Analysis)	SE
4687	10	127.46978	I-26 EB (Basic Analysis)	SE
4689	1	31.77391	I-26 WB (Basic Analysis)	NW
4689	2	32.73516	I-26 WB (Basic Analysis)	NW
4689	3	33.061118	I-26 WB (Basic Analysis)	NW
4689	4	30.424834	I-26 WB (Basic Analysis)	NW
4689	5	31.445182	I-26 WB (Basic Analysis)	NW
4689	6	33.095283	I-26 WB (Basic Analysis)	NW
4689	7	31.184786	I-26 WB (Basic Analysis)	NW
4689	8	30.871756	I-26 WB (Basic Analysis)	NW
4689	9	33.36399	I-26 WB (Basic Analysis)	NW
4689	10	32.5117	I-26 WB (Basic Analysis)	NW

No Build AM

ID	Run	Density	Name (Type)	Direction
4700	1	26.608105	I-26 WB (Merge Analysis)	NW
4700	2	24.832312	I-26 WB (Merge Analysis)	NW
4700	3	24.061793	I-26 WB (Merge Analysis)	NW
4700	4	22.854886	I-26 WB (Merge Analysis)	NW
4700	5	25.53658	I-26 WB (Merge Analysis)	NW
4700	6	25.185166	I-26 WB (Merge Analysis)	NW
4700	7	24.410326	I-26 WB (Merge Analysis)	NW
4700	8	24.276386	I-26 WB (Merge Analysis)	NW
4700	9	25.401199	I-26 WB (Merge Analysis)	NW
4700	10	25.932641	I-26 WB (Merge Analysis)	NW
4701	1	37.143349	I-26 WB (Basic Analysis)	NW
4701	2	35.8235	I-26 WB (Basic Analysis)	NW
4701	3	35.566476	I-26 WB (Basic Analysis)	NW
4701	4	28.23089	I-26 WB (Basic Analysis)	NW
4701	5	34.684261	I-26 WB (Basic Analysis)	NW
4701	6	34.892658	I-26 WB (Basic Analysis)	NW
4701	7	34.906551	I-26 WB (Basic Analysis)	NW
4701	8	32.71838	I-26 WB (Basic Analysis)	NW
4701	9	35.205254	I-26 WB (Basic Analysis)	NW
4701	10	32.426623	I-26 WB (Basic Analysis)	NW
4702	1	25.24285	I-26 WB (Diverge Analysis)	NW
4702	2	24.199074	I-26 WB (Diverge Analysis)	NW
4702	3	24.003664	I-26 WB (Diverge Analysis)	NW
4702	4	21.605606	I-26 WB (Diverge Analysis)	NW
4702	5	24.971182	I-26 WB (Diverge Analysis)	NW
4702	6	24.498867	I-26 WB (Diverge Analysis)	NW
4702	7	23.231556	I-26 WB (Diverge Analysis)	NW
4702	8	22.755206	I-26 WB (Diverge Analysis)	NW
4702	9	24.658208	I-26 WB (Diverge Analysis)	NW
4702	10	25.541525	I-26 WB (Diverge Analysis)	NW
4703	1	25.24285	I-26 WB (Diverge Analysis)	NW
4703	2	24.199074	I-26 WB (Diverge Analysis)	NW
4703	3	24.003664	I-26 WB (Diverge Analysis)	NW
4703	4	21.605606	I-26 WB (Diverge Analysis)	NW
4703	5	24.971182	I-26 WB (Diverge Analysis)	NW
4703	6	24.498867	I-26 WB (Diverge Analysis)	NW
4703	7	23.231556	I-26 WB (Diverge Analysis)	NW
4703	8	22.755206	I-26 WB (Diverge Analysis)	NW
4703	9	24.658208	I-26 WB (Diverge Analysis)	NW
4703	10	25.541525	I-26 WB (Diverge Analysis)	NW
4705	1	116.35175	I-26 EB (Merge Analysis)	SE
4705	2	120.120082	I-26 EB (Merge Analysis)	SE
4705	3	105.206774	I-26 EB (Merge Analysis)	SE
4705	4	102.52026	I-26 EB (Merge Analysis)	SE
4705	5	115.72069	I-26 EB (Merge Analysis)	SE
4705	6	108.961584	I-26 EB (Merge Analysis)	SE
4705	7	111.742756	I-26 EB (Merge Analysis)	SE
4705	8	108.952568	I-26 EB (Merge Analysis)	SE
4705	9	112.069556	I-26 EB (Merge Analysis)	SE
4705	10	121.2312	I-26 EB (Merge Analysis)	SE
4706	1	116.35175	I-26 EB (Merge Analysis)	SE
4706	2	120.120082	I-26 EB (Merge Analysis)	SE
4706	3	105.206774	I-26 EB (Merge Analysis)	SE
4706	4	102.52026	I-26 EB (Merge Analysis)	SE
4706	5	115.72069	I-26 EB (Merge Analysis)	SE
4706	6	108.961584	I-26 EB (Merge Analysis)	SE
4706	7	111.742756	I-26 EB (Merge Analysis)	SE
4706	8	108.952568	I-26 EB (Merge Analysis)	SE
4706	9	112.069556	I-26 EB (Merge Analysis)	SE
4706	10	121.2312	I-26 EB (Merge Analysis)	SE
4707	1	114.335432	I-26 EB (Diverge Analysis)	SE
4707	2	119.612498	I-26 EB (Diverge Analysis)	SE
4707	3	104.373835	I-26 EB (Diverge Analysis)	SE
4707	4	100.243703	I-26 EB (Diverge Analysis)	SE

No Build AM

ID	Run	Density	Name (Type)	Direction
4707	5	114.886898	I-26 EB (Diverge Analysis)	SE
4707	6	106.031168	I-26 EB (Diverge Analysis)	SE
4707	7	110.903433	I-26 EB (Diverge Analysis)	SE
4707	8	105.849301	I-26 EB (Diverge Analysis)	SE
4707	9	109.6509	I-26 EB (Diverge Analysis)	SE
4707	10	119.750364	I-26 EB (Diverge Analysis)	SE
4712	1	28.846359	I-26 WB (Basic Analysis)	NW
4712	2	31.520459	I-26 WB (Basic Analysis)	NW
4712	3	30.63344	I-26 WB (Basic Analysis)	NW
4712	4	28.676782	I-26 WB (Basic Analysis)	NW
4712	5	27.513223	I-26 WB (Basic Analysis)	NW
4712	6	29.44901	I-26 WB (Basic Analysis)	NW
4712	7	28.616778	I-26 WB (Basic Analysis)	NW
4712	8	30.748231	I-26 WB (Basic Analysis)	NW
4712	9	31.901355	I-26 WB (Basic Analysis)	NW
4712	10	29.58989	I-26 WB (Basic Analysis)	NW
4714	1	138.710324	I-26 EB (Basic Analysis)	SE
4714	2	135.814104	I-26 EB (Basic Analysis)	SE
4714	3	122.463235	I-26 EB (Basic Analysis)	SE
4714	4	126.883984	I-26 EB (Basic Analysis)	SE
4714	5	132.401572	I-26 EB (Basic Analysis)	SE
4714	6	131.209692	I-26 EB (Basic Analysis)	SE
4714	7	130.268259	I-26 EB (Basic Analysis)	SE
4714	8	134.189395	I-26 EB (Basic Analysis)	SE
4714	9	133.783539	I-26 EB (Basic Analysis)	SE
4714	10	138.547211	I-26 EB (Basic Analysis)	SE
4718	1	129.684877	I-26 EB (Merge Analysis)	SE
4718	2	130.537608	I-26 EB (Merge Analysis)	SE
4718	3	118.26864	I-26 EB (Merge Analysis)	SE
4718	4	120.882619	I-26 EB (Merge Analysis)	SE
4718	5	128.170681	I-26 EB (Merge Analysis)	SE
4718	6	127.608836	I-26 EB (Merge Analysis)	SE
4718	7	121.882785	I-26 EB (Merge Analysis)	SE
4718	8	128.923794	I-26 EB (Merge Analysis)	SE
4718	9	128.132827	I-26 EB (Merge Analysis)	SE
4718	10	131.918316	I-26 EB (Merge Analysis)	SE
4719	1	129.684877	I-26 EB (Merge Analysis)	SE
4719	2	130.537608	I-26 EB (Merge Analysis)	SE
4719	3	118.26864	I-26 EB (Merge Analysis)	SE
4719	4	120.882619	I-26 EB (Merge Analysis)	SE
4719	5	128.170681	I-26 EB (Merge Analysis)	SE
4719	6	127.608836	I-26 EB (Merge Analysis)	SE
4719	7	121.882785	I-26 EB (Merge Analysis)	SE
4719	8	128.923794	I-26 EB (Merge Analysis)	SE
4719	9	128.132827	I-26 EB (Merge Analysis)	SE
4719	10	131.918316	I-26 EB (Merge Analysis)	SE
4720	1	127.462095	I-26 EB (Diverge Analysis)	SE
4720	2	126.555696	I-26 EB (Diverge Analysis)	SE
4720	3	111.519433	I-26 EB (Diverge Analysis)	SE
4720	4	114.669832	I-26 EB (Diverge Analysis)	SE
4720	5	123.595964	I-26 EB (Diverge Analysis)	SE
4720	6	123.202897	I-26 EB (Diverge Analysis)	SE
4720	7	117.063432	I-26 EB (Diverge Analysis)	SE
4720	8	123.657563	I-26 EB (Diverge Analysis)	SE
4720	9	123.088497	I-26 EB (Diverge Analysis)	SE
4720	10	128.943429	I-26 EB (Diverge Analysis)	SE
4725	1	28.918015	I-26 WB (Merge Analysis)	NW
4725	2	27.186957	I-26 WB (Merge Analysis)	NW
4725	3	25.956503	I-26 WB (Merge Analysis)	NW
4725	4	25.119046	I-26 WB (Merge Analysis)	NW
4725	5	27.481705	I-26 WB (Merge Analysis)	NW
4725	6	30.078291	I-26 WB (Merge Analysis)	NW
4725	7	28.150735	I-26 WB (Merge Analysis)	NW
4725	8	26.698051	I-26 WB (Merge Analysis)	NW

ID	Run	Density	Name (Type)	Direction
4725	9	26.12727	I-26 WB (Merge Analysis)	NW
4725	10	30.047881	I-26 WB (Merge Analysis)	NW
4726	1		I-26 WB (Basic Analysis)	NW
4726	2		I-26 WB (Basic Analysis)	NW
4726	3		I-26 WB (Basic Analysis)	NW
4726	4		I-26 WB (Basic Analysis)	NW
4726	5		I-26 WB (Basic Analysis)	NW
4726	6		I-26 WB (Basic Analysis)	NW
4726	7		I-26 WB (Basic Analysis)	NW
4726	8		I-26 WB (Basic Analysis)	NW
4726	9		I-26 WB (Basic Analysis)	NW
4726	10		I-26 WB (Basic Analysis)	NW
4727	1	29.223421	I-26 WB (Diverge Analysis)	NW
4727	2	29.120813	I-26 WB (Diverge Analysis)	NW
4727	3	28.594191	I-26 WB (Diverge Analysis)	NW
4727	4	24.867254	I-26 WB (Diverge Analysis)	NW
4727	5	30.22908	I-26 WB (Diverge Analysis)	NW
4727	6	28.844705	I-26 WB (Diverge Analysis)	NW
4727	7	28.681512	I-26 WB (Diverge Analysis)	NW
4727	8	27.388613	I-26 WB (Diverge Analysis)	NW
4727	9	27.405142	I-26 WB (Diverge Analysis)	NW
4727	10	28.616165	I-26 WB (Diverge Analysis)	NW
4728	1	31.564158	I-26 WB (Basic Analysis)	NW
4728	2	29.968544	I-26 WB (Basic Analysis)	NW
4728	3	32.202404	I-26 WB (Basic Analysis)	NW
4728	4	25.752253	I-26 WB (Basic Analysis)	NW
4728	5	28.169851	I-26 WB (Basic Analysis)	NW
4728	6	32.09603	I-26 WB (Basic Analysis)	NW
4728	7	32.84065	I-26 WB (Basic Analysis)	NW
4728	8	27.957102	I-26 WB (Basic Analysis)	NW
4728	9	30.597119	I-26 WB (Basic Analysis)	NW
4728	10	30.809868	I-26 WB (Basic Analysis)	NW
4729	1	20.739315	I-26 WB (Diverge Analysis)	NW
4729	2	22.459688	I-26 WB (Diverge Analysis)	NW
4729	3	23.172098	I-26 WB (Diverge Analysis)	NW
4729	4	20.84739	I-26 WB (Diverge Analysis)	NW
4729	5	21.337034	I-26 WB (Diverge Analysis)	NW
4729	6	21.22896	I-26 WB (Diverge Analysis)	NW
4729	7	20.053371	I-26 WB (Diverge Analysis)	NW
4729	8	22.027389	I-26 WB (Diverge Analysis)	NW
4729	9	24.089631	I-26 WB (Diverge Analysis)	NW
4729	10	22.616286	I-26 WB (Diverge Analysis)	NW
4730	1	20.739315	I-26 WB (Diverge Analysis)	NW
4730	2	22.459688	I-26 WB (Diverge Analysis)	NW
4730	3	23.172098	I-26 WB (Diverge Analysis)	NW
4730	4	20.84739	I-26 WB (Diverge Analysis)	NW
4730	5	21.337034	I-26 WB (Diverge Analysis)	NW
4730	6	21.22896	I-26 WB (Diverge Analysis)	NW
4730	7	20.053371	I-26 WB (Diverge Analysis)	NW
4730	8	22.027389	I-26 WB (Diverge Analysis)	NW
4730	9	24.089631	I-26 WB (Diverge Analysis)	NW
4730	10	22.616286	I-26 WB (Diverge Analysis)	NW
4732	1	23.851733	I-26 WB (Basic Analysis)	NW
4732	2	25.451879	I-26 WB (Basic Analysis)	NW
4732	3	22.98366	I-26 WB (Basic Analysis)	NW
4732	4	22.480178	I-26 WB (Basic Analysis)	NW
4732	5	25.414262	I-26 WB (Basic Analysis)	NW
4732	6	26.458843	I-26 WB (Basic Analysis)	NW
4732	7	24.109261	I-26 WB (Basic Analysis)	NW

No Build AM

ID	Run	Density	Name (Type)	Direction
4732	8	24.42466	I-26 WB (Basic Analysis)	NW
4732	9	23.66365	I-26 WB (Basic Analysis)	NW
4732	10	25.014949	I-26 WB (Basic Analysis)	NW
4733	1	143.187542	I-26 EB (Basic Analysis)	SE
4733	2	147.657646	I-26 EB (Basic Analysis)	SE
4733	3	133.84592	I-26 EB (Basic Analysis)	SE
4733	4	141.264916	I-26 EB (Basic Analysis)	SE
4733	5	138.557652	I-26 EB (Basic Analysis)	SE
4733	6	141.053168	I-26 EB (Basic Analysis)	SE
4733	7	136.27908	I-26 EB (Basic Analysis)	SE
4733	8	143.382404	I-26 EB (Basic Analysis)	SE
4733	9	144.871138	I-26 EB (Basic Analysis)	SE
4733	10	140.050284	I-26 EB (Basic Analysis)	SE
4736	1	136.144462	I-26 EB (Basic Analysis)	SE
4736	2	138.918203	I-26 EB (Basic Analysis)	SE
4736	3	124.65253	I-26 EB (Basic Analysis)	SE
4736	4	134.787741	I-26 EB (Basic Analysis)	SE
4736	5	131.94365	I-26 EB (Basic Analysis)	SE
4736	6	132.17982	I-26 EB (Basic Analysis)	SE
4736	7	130.069365	I-26 EB (Basic Analysis)	SE
4736	8	132.687336	I-26 EB (Basic Analysis)	SE
4736	9	137.822775	I-26 EB (Basic Analysis)	SE
4736	10	132.91848	I-26 EB (Basic Analysis)	SE
4737	1	117.320646	I-26 EB (Diverge Analysis)	SE
4737	2	120.01364	I-26 EB (Diverge Analysis)	SE
4737	3	106.983503	I-26 EB (Diverge Analysis)	SE
4737	4	116.245919	I-26 EB (Diverge Analysis)	SE
4737	5	114.224939	I-26 EB (Diverge Analysis)	SE
4737	6	114.514003	I-26 EB (Diverge Analysis)	SE
4737	7	113.64928	I-26 EB (Diverge Analysis)	SE
4737	8	115.603553	I-26 EB (Diverge Analysis)	SE
4737	9	122.190271	I-26 EB (Diverge Analysis)	SE
4737	10	114.259527	I-26 EB (Diverge Analysis)	SE
4739	1	20.975418	I-26 WB (Weaving Analysis)	NW
4739	2	19.65023	I-26 WB (Weaving Analysis)	NW
4739	3	20.752072	I-26 WB (Weaving Analysis)	NW
4739	4	17.844314	I-26 WB (Weaving Analysis)	NW
4739	5	20.492565	I-26 WB (Weaving Analysis)	NW
4739	6	20.092668	I-26 WB (Weaving Analysis)	NW
4739	7	19.97355	I-26 WB (Weaving Analysis)	NW
4739	8	19.592798	I-26 WB (Weaving Analysis)	NW
4739	9	20.537234	I-26 WB (Weaving Analysis)	NW
4739	10	20.726546	I-26 WB (Weaving Analysis)	NW
4741	1	27.742574	I-26 WB (Basic Analysis)	NW
4741	2	26.788721	I-26 WB (Basic Analysis)	NW
4741	3	24.889098	I-26 WB (Basic Analysis)	NW
4741	4	21.582947	I-26 WB (Basic Analysis)	NW
4741	5	26.934224	I-26 WB (Basic Analysis)	NW
4741	6	24.484923	I-26 WB (Basic Analysis)	NW
4741	7	24.50109	I-26 WB (Basic Analysis)	NW
4741	8	24.590009	I-26 WB (Basic Analysis)	NW
4741	9	25.325607	I-26 WB (Basic Analysis)	NW
4741	10	21.679949	I-26 WB (Basic Analysis)	NW
4742	1	17.492531	I-26 WB (Diverge Analysis)	NW
4742	2	17.474083	I-26 WB (Diverge Analysis)	NW
4742	3	18.965999	I-26 WB (Diverge Analysis)	NW
4742	4	16.637043	I-26 WB (Diverge Analysis)	NW

No Build AM

ID	Run	Density	Name (Type)	Direction
4742	5	18.968304	I-26 WB (Diverge Analysis)	NW
4742	6	18.587831	I-26 WB (Diverge Analysis)	NW
4742	7	17.743873	I-26 WB (Diverge Analysis)	NW
4742	8	15.580942	I-26 WB (Diverge Analysis)	NW
4742	9	17.372624	I-26 WB (Diverge Analysis)	NW
4742	10	17.972157	I-26 WB (Diverge Analysis)	NW
4745	1	139.812958	I-26 EB (Basic Analysis)	SE
4745	2	147.149946	I-26 EB (Basic Analysis)	SE
4745	3	133.762998	I-26 EB (Basic Analysis)	SE
4745	4	145.574827	I-26 EB (Basic Analysis)	SE
4745	5	144.190725	I-26 EB (Basic Analysis)	SE
4745	6	140.580164	I-26 EB (Basic Analysis)	SE
4745	7	147.149945	I-26 EB (Basic Analysis)	SE
4745	8	135.619948	I-26 EB (Basic Analysis)	SE
4745	9	147.826338	I-26 EB (Basic Analysis)	SE
4745	10	142.878648	I-26 EB (Basic Analysis)	SE
4748	1	132.022044	I-26 EB (Weaving Analysis)	SE
4748	2	138.48314	I-26 EB (Weaving Analysis)	SE
4748	3	126.804686	I-26 EB (Weaving Analysis)	SE
4748	4	136.994733	I-26 EB (Weaving Analysis)	SE
4748	5	134.004323	I-26 EB (Weaving Analysis)	SE
4748	6	133.732468	I-26 EB (Weaving Analysis)	SE
4748	7	133.542169	I-26 EB (Weaving Analysis)	SE
4748	8	128.653303	I-26 EB (Weaving Analysis)	SE
4748	9	137.194093	I-26 EB (Weaving Analysis)	SE
4748	10	133.449284	I-26 EB (Weaving Analysis)	SE
4753	1	20.611359	I-26 WB (Basic Analysis)	NW
4753	2	21.28109	I-26 WB (Basic Analysis)	NW
4753	3	21.460388	I-26 WB (Basic Analysis)	NW
4753	4	18.900118	I-26 WB (Basic Analysis)	NW
4753	5	19.002951	I-26 WB (Basic Analysis)	NW
4753	6	19.451196	I-26 WB (Basic Analysis)	NW
4753	7	21.035874	I-26 WB (Basic Analysis)	NW
4753	8	21.38656	I-26 WB (Basic Analysis)	NW
4753	9	23.751711	I-26 WB (Basic Analysis)	NW
4753	10	21.979825	I-26 WB (Basic Analysis)	NW
4755	1	132.316468	I-26 EB (Basic Analysis)	SE
4755	2	134.298331	I-26 EB (Basic Analysis)	SE
4755	3	126.747186	I-26 EB (Basic Analysis)	SE
4755	4	130.886518	I-26 EB (Basic Analysis)	SE
4755	5	131.29209	I-26 EB (Basic Analysis)	SE
4755	6	132.224484	I-26 EB (Basic Analysis)	SE
4755	7	129.83287	I-26 EB (Basic Analysis)	SE
4755	8	126.053116	I-26 EB (Basic Analysis)	SE
4755	9	134.653727	I-26 EB (Basic Analysis)	SE
4755	10	130.046108	I-26 EB (Basic Analysis)	SE
4756	1	116.385901	I-26 EB (Diverge Analysis)	SE
4756	2	119.078455	I-26 EB (Diverge Analysis)	SE
4756	3	111.090145	I-26 EB (Diverge Analysis)	SE
4756	4	116.525963	I-26 EB (Diverge Analysis)	SE
4756	5	115.325784	I-26 EB (Diverge Analysis)	SE
4756	6	116.695001	I-26 EB (Diverge Analysis)	SE
4756	7	118.052145	I-26 EB (Diverge Analysis)	SE
4756	8	112.753973	I-26 EB (Diverge Analysis)	SE
4756	9	121.828964	I-26 EB (Diverge Analysis)	SE
4756	10	114.321209	I-26 EB (Diverge Analysis)	SE
4760	1	16.173466	I-26 WB (Basic Analysis)	NW

No Build AM

ID	Run	Density	Name (Type)	Direction
4760	2	16.387979	I-26 WB (Basic Analysis)	NW
4760	3	16.257682	I-26 WB (Basic Analysis)	NW
4760	4	14.675849	I-26 WB (Basic Analysis)	NW
4760	5	16.463455	I-26 WB (Basic Analysis)	NW
4760	6	17.067269	I-26 WB (Basic Analysis)	NW
4760	7	15.254239	I-26 WB (Basic Analysis)	NW
4760	8	16.33157	I-26 WB (Basic Analysis)	NW
4760	9	16.353816	I-26 WB (Basic Analysis)	NW
4760	10	16.046347	I-26 WB (Basic Analysis)	NW
4761	1	16.173466	I-26 WB (Basic Analysis)	NW
4761	2	16.387979	I-26 WB (Basic Analysis)	NW
4761	3	16.257682	I-26 WB (Basic Analysis)	NW
4761	4	14.675849	I-26 WB (Basic Analysis)	NW
4761	5	16.463455	I-26 WB (Basic Analysis)	NW
4761	6	17.067269	I-26 WB (Basic Analysis)	NW
4761	7	15.254239	I-26 WB (Basic Analysis)	NW
4761	8	16.33157	I-26 WB (Basic Analysis)	NW
4761	9	16.353816	I-26 WB (Basic Analysis)	NW
4761	10	16.046347	I-26 WB (Basic Analysis)	NW
4764	1	14.73989	I-26 WB (Basic Analysis)	NW
4764	2	14.997306	I-26 WB (Basic Analysis)	NW
4764	3	15.159383	I-26 WB (Basic Analysis)	NW
4764	4	13.815857	I-26 WB (Basic Analysis)	NW
4764	5	14.989072	I-26 WB (Basic Analysis)	NW
4764	6	15.169675	I-26 WB (Basic Analysis)	NW
4764	7	14.806736	I-26 WB (Basic Analysis)	NW
4764	8	14.703163	I-26 WB (Basic Analysis)	NW
4764	9	15.354503	I-26 WB (Basic Analysis)	NW
4764	10	15.335869	I-26 WB (Basic Analysis)	NW
4768	1	73.313244	I-26 EB (Basic Analysis)	SE
4768	2	67.62363	I-26 EB (Basic Analysis)	SE
4768	3	66.625843	I-26 EB (Basic Analysis)	SE
4768	4	74.422801	I-26 EB (Basic Analysis)	SE
4768	5	69.533154	I-26 EB (Basic Analysis)	SE
4768	6	63.980267	I-26 EB (Basic Analysis)	SE
4768	7	69.208154	I-26 EB (Basic Analysis)	SE
4768	8	64.050259	I-26 EB (Basic Analysis)	SE
4768	9	73.814254	I-26 EB (Basic Analysis)	SE
4768	10	67.686569	I-26 EB (Basic Analysis)	SE
4769	1	103.599257	I-26 EB (Diverge Analysis)	SE
4769	2	107.498392	I-26 EB (Diverge Analysis)	SE
4769	3	97.389813	I-26 EB (Diverge Analysis)	SE
4769	4	99.515193	I-26 EB (Diverge Analysis)	SE
4769	5	99.809517	I-26 EB (Diverge Analysis)	SE
4769	6	99.267754	I-26 EB (Diverge Analysis)	SE
4769	7	98.358736	I-26 EB (Diverge Analysis)	SE
4769	8	101.494713	I-26 EB (Diverge Analysis)	SE
4769	9	103.383072	I-26 EB (Diverge Analysis)	SE
4769	10	100.405977	I-26 EB (Diverge Analysis)	SE
6149	1	16.025965	I-26 EB (Merge Analysis)	S
6149	2	14.499894	I-26 EB (Merge Analysis)	S
6149	3	15.567996	I-26 EB (Merge Analysis)	S
6149	4	15.971304	I-26 EB (Merge Analysis)	S
6149	5	14.948999	I-26 EB (Merge Analysis)	S
6149	6	14.479211	I-26 EB (Merge Analysis)	S
6149	7	14.95934	I-26 EB (Merge Analysis)	S
6149	8	15.237077	I-26 EB (Merge Analysis)	S

No Build AM

ID	Run	Density	Name (Type)	Direction
6149	9	15.51629	I-26 EB (Merge Analysis)	S
6149	10	15.504471	I-26 EB (Merge Analysis)	S
6150	1	16.025965	I-26 EB (Merge Analysis)	S
6150	2	14.499894	I-26 EB (Merge Analysis)	S
6150	3	15.567996	I-26 EB (Merge Analysis)	S
6150	4	15.971304	I-26 EB (Merge Analysis)	S
6150	5	14.948999	I-26 EB (Merge Analysis)	S
6150	6	14.479211	I-26 EB (Merge Analysis)	S
6150	7	14.95934	I-26 EB (Merge Analysis)	S
6150	8	15.237077	I-26 EB (Merge Analysis)	S
6150	9	15.51629	I-26 EB (Merge Analysis)	S
6150	10	15.504471	I-26 EB (Merge Analysis)	S
6151	1	19.943197	I-26 EB (Basic Analysis)	S
6151	2	21.201796	I-26 EB (Basic Analysis)	S
6151	3	20.442166	I-26 EB (Basic Analysis)	S
6151	4	19.837138	I-26 EB (Basic Analysis)	S
6151	5	20.081546	I-26 EB (Basic Analysis)	S
6151	6	21.2418	I-26 EB (Basic Analysis)	S
6151	7	19.512173	I-26 EB (Basic Analysis)	S
6151	8	20.004107	I-26 EB (Basic Analysis)	S
6151	9	20.263014	I-26 EB (Basic Analysis)	S
6151	10	19.71707	I-26 EB (Basic Analysis)	S
6152	1	19.943197	I-26 EB (Basic Analysis)	S
6152	2	21.201796	I-26 EB (Basic Analysis)	S
6152	3	20.442166	I-26 EB (Basic Analysis)	S
6152	4	19.837138	I-26 EB (Basic Analysis)	S
6152	5	20.081546	I-26 EB (Basic Analysis)	S
6152	6	21.2418	I-26 EB (Basic Analysis)	S
6152	7	19.512173	I-26 EB (Basic Analysis)	S
6152	8	20.004107	I-26 EB (Basic Analysis)	S
6152	9	20.263014	I-26 EB (Basic Analysis)	S
6152	10	19.71707	I-26 EB (Basic Analysis)	S
6159	1	47.061297	I-26 WB (Diverge Analysis)	N
6159	2	31.891294	I-26 WB (Diverge Analysis)	N
6159	3	30.935851	I-26 WB (Diverge Analysis)	N
6159	4	75.927371	I-26 WB (Diverge Analysis)	N
6159	5	70.573129	I-26 WB (Diverge Analysis)	N
6159	6	41.665242	I-26 WB (Diverge Analysis)	N
6159	7	55.957157	I-26 WB (Diverge Analysis)	N
6159	8	76.81173	I-26 WB (Diverge Analysis)	N
6159	9	33.984069	I-26 WB (Diverge Analysis)	N
6159	10	29.382473	I-26 WB (Diverge Analysis)	N
6160	1	47.061297	I-26 WB (Diverge Analysis)	N
6160	2	31.891294	I-26 WB (Diverge Analysis)	N
6160	3	30.935851	I-26 WB (Diverge Analysis)	N
6160	4	75.927371	I-26 WB (Diverge Analysis)	N
6160	5	70.573129	I-26 WB (Diverge Analysis)	N
6160	6	41.665242	I-26 WB (Diverge Analysis)	N
6160	7	55.957157	I-26 WB (Diverge Analysis)	N
6160	8	76.81173	I-26 WB (Diverge Analysis)	N
6160	9	33.984069	I-26 WB (Diverge Analysis)	N
6160	10	29.382473	I-26 WB (Diverge Analysis)	N
6165	1	22.071414	I-26 WB (Basic Analysis)	N
6165	2	22.037133	I-26 WB (Basic Analysis)	N
6165	3	22.710188	I-26 WB (Basic Analysis)	N
6165	4	22.842743	I-26 WB (Basic Analysis)	N
6165	5	21.430355	I-26 WB (Basic Analysis)	N

ID	Run	Density	Name (Type)	Direction
6165	6	21.942288	I-26 WB (Basic Analysis)	N
6165	7	22.278244	I-26 WB (Basic Analysis)	N
6165	8	23.043859	I-26 WB (Basic Analysis)	N
6165	9	20.620174	I-26 WB (Basic Analysis)	N
6165	10	20.767584	I-26 WB (Basic Analysis)	N
6166	1	15.770258	I-26 EB (Basic Analysis)	S
6166	2	16.434473	I-26 EB (Basic Analysis)	S
6166	3	16.28543	I-26 EB (Basic Analysis)	S
6166	4	16.208478	I-26 EB (Basic Analysis)	S
6166	5	16.105606	I-26 EB (Basic Analysis)	S
6166	6	16.217388	I-26 EB (Basic Analysis)	S
6166	7	16.347801	I-26 EB (Basic Analysis)	S
6166	8	15.807518	I-26 EB (Basic Analysis)	S
6166	9	15.529682	I-26 EB (Basic Analysis)	S
6166	10	16.789261	I-26 EB (Basic Analysis)	S
6174	1	19.014906	I-26 WB (Basic Analysis)	N
6174	2	19.28489	I-26 WB (Basic Analysis)	N
6174	3	20.524076	I-26 WB (Basic Analysis)	N
6174	4	20.093261	I-26 WB (Basic Analysis)	N
6174	5	20.220343	I-26 WB (Basic Analysis)	N
6174	6	20.183432	I-26 WB (Basic Analysis)	N
6174	7	19.390353	I-26 WB (Basic Analysis)	N
6174	8	19.992017	I-26 WB (Basic Analysis)	N
6174	9	20.182904	I-26 WB (Basic Analysis)	N
6174	10	19.932431	I-26 WB (Basic Analysis)	N
6175	1	19.014906	I-26 WB (Basic Analysis)	N
6175	2	19.28489	I-26 WB (Basic Analysis)	N
6175	3	20.524076	I-26 WB (Basic Analysis)	N
6175	4	20.093261	I-26 WB (Basic Analysis)	N
6175	5	20.220343	I-26 WB (Basic Analysis)	N
6175	6	20.183432	I-26 WB (Basic Analysis)	N
6175	7	19.390353	I-26 WB (Basic Analysis)	N
6175	8	19.992017	I-26 WB (Basic Analysis)	N
6175	9	20.182904	I-26 WB (Basic Analysis)	N
6175	10	19.932431	I-26 WB (Basic Analysis)	N
6177	1	25.140106	I-26 EB (Basic Analysis)	S
6177	2	23.964578	I-26 EB (Basic Analysis)	S
6177	3	25.292947	I-26 EB (Basic Analysis)	S
6177	4	26.261689	I-26 EB (Basic Analysis)	S
6177	5	24.587181	I-26 EB (Basic Analysis)	S
6177	6	23.746555	I-26 EB (Basic Analysis)	S
6177	7	25.158087	I-26 EB (Basic Analysis)	S
6177	8	25.295195	I-26 EB (Basic Analysis)	S
6177	9	25.268222	I-26 EB (Basic Analysis)	S
6177	10	26.843834	I-26 EB (Basic Analysis)	S
6178	1	45.357597	I-26 EB (Diverge Analysis)	S
6178	2	68.535593	I-26 EB (Diverge Analysis)	S
6178	3	50.134701	I-26 EB (Diverge Analysis)	S
6178	4	59.348249	I-26 EB (Diverge Analysis)	S
6178	5	49.175612	I-26 EB (Diverge Analysis)	S
6178	6	64.686133	I-26 EB (Diverge Analysis)	S
6178	7	55.585265	I-26 EB (Diverge Analysis)	S
6178	8	33.969064	I-26 EB (Diverge Analysis)	S
6178	9	47.246951	I-26 EB (Diverge Analysis)	S
6178	10	72.374572	I-26 EB (Diverge Analysis)	S
6185	1	37.89488	I-26 EB (Merge Analysis)	S
6185	2	38.940513	I-26 EB (Merge Analysis)	S

No Build AM

ID	Run	Density	Name (Type)	Direction
6185	3	36.995349	I-26 EB (Merge Analysis)	S
6185	4	40.940107	I-26 EB (Merge Analysis)	S
6185	5	39.948904	I-26 EB (Merge Analysis)	S
6185	6	38.098277	I-26 EB (Merge Analysis)	S
6185	7	40.819787	I-26 EB (Merge Analysis)	S
6185	8	37.003943	I-26 EB (Merge Analysis)	S
6185	9	35.737725	I-26 EB (Merge Analysis)	S
6185	10	39.570757	I-26 EB (Merge Analysis)	S
6186	1	35.605526	I-26 EB (Basic Analysis)	S
6186	2	36.587528	I-26 EB (Basic Analysis)	S
6186	3	36.139569	I-26 EB (Basic Analysis)	S
6186	4	37.988793	I-26 EB (Basic Analysis)	S
6186	5	37.677932	I-26 EB (Basic Analysis)	S
6186	6	36.010443	I-26 EB (Basic Analysis)	S
6186	7	38.387333	I-26 EB (Basic Analysis)	S
6186	8	35.611903	I-26 EB (Basic Analysis)	S
6186	9	34.583671	I-26 EB (Basic Analysis)	S
6186	10	37.53127	I-26 EB (Basic Analysis)	S
6200	1	32.153556	I-26 WB (Weaving Analysis)	NW
6200	2	32.470421	I-26 WB (Weaving Analysis)	NW
6200	3	33.303414	I-26 WB (Weaving Analysis)	NW
6200	4	31.121298	I-26 WB (Weaving Analysis)	NW
6200	5	31.759926	I-26 WB (Weaving Analysis)	NW
6200	6	32.292389	I-26 WB (Weaving Analysis)	NW
6200	7	32.383855	I-26 WB (Weaving Analysis)	NW
6200	8	31.348329	I-26 WB (Weaving Analysis)	NW
6200	9	29.88814	I-26 WB (Weaving Analysis)	NW
6200	10	32.331589	I-26 WB (Weaving Analysis)	NW
6204	1	33.305516	I-26 WB (Basic Analysis)	NW
6204	2	32.134903	I-26 WB (Basic Analysis)	NW
6204	3	33.069822	I-26 WB (Basic Analysis)	NW
6204	4	32.855733	I-26 WB (Basic Analysis)	NW
6204	5	32.164365	I-26 WB (Basic Analysis)	NW
6204	6	32.136867	I-26 WB (Basic Analysis)	NW
6204	7	31.514242	I-26 WB (Basic Analysis)	NW
6204	8	31.239266	I-26 WB (Basic Analysis)	NW
6204	9	33.425327	I-26 WB (Basic Analysis)	NW
6204	10	34.597905	I-26 WB (Basic Analysis)	NW
6205	1	31.603392	I-20 EB (Basic Analysis)	E
6205	2	29.72121	I-20 EB (Basic Analysis)	E
6205	3	31.200857	I-20 EB (Basic Analysis)	E
6205	4	32.328839	I-20 EB (Basic Analysis)	E
6205	5	29.382816	I-20 EB (Basic Analysis)	E
6205	6	28.874118	I-20 EB (Basic Analysis)	E
6205	7	30.227696	I-20 EB (Basic Analysis)	E
6205	8	31.258362	I-20 EB (Basic Analysis)	E
6205	9	29.982194	I-20 EB (Basic Analysis)	E
6205	10	31.096906	I-20 EB (Basic Analysis)	E
6206	1	26.656012	I-20 EB (Merge Analysis)	E
6206	2	27.096607	I-20 EB (Merge Analysis)	E
6206	3	27.822293	I-20 EB (Merge Analysis)	E
6206	4	26.981599	I-20 EB (Merge Analysis)	E
6206	5	27.295847	I-20 EB (Merge Analysis)	E
6206	6	27.840111	I-20 EB (Merge Analysis)	E
6206	7	26.929764	I-20 EB (Merge Analysis)	E
6206	8	26.915185	I-20 EB (Merge Analysis)	E
6206	9	26.641433	I-20 EB (Merge Analysis)	E

No Build AM

ID	Run	Density	Name (Type)	Direction
6206	10	26.730524	I-20 EB (Merge Analysis)	E
6207	1	26.656012	I-20 EB (Merge Analysis)	E
6207	2	27.096607	I-20 EB (Merge Analysis)	E
6207	3	27.822293	I-20 EB (Merge Analysis)	E
6207	4	26.981599	I-20 EB (Merge Analysis)	E
6207	5	27.295847	I-20 EB (Merge Analysis)	E
6207	6	27.840111	I-20 EB (Merge Analysis)	E
6207	7	26.929764	I-20 EB (Merge Analysis)	E
6207	8	26.915185	I-20 EB (Merge Analysis)	E
6207	9	26.641433	I-20 EB (Merge Analysis)	E
6207	10	26.730524	I-20 EB (Merge Analysis)	E
6208	1	27.630287	I-20 EB (Diverge Analysis)	E
6208	2	27.755764	I-20 EB (Diverge Analysis)	E
6208	3	28.783478	I-20 EB (Diverge Analysis)	E
6208	4	27.966386	I-20 EB (Diverge Analysis)	E
6208	5	28.196426	I-20 EB (Diverge Analysis)	E
6208	6	28.457836	I-20 EB (Diverge Analysis)	E
6208	7	27.808046	I-20 EB (Diverge Analysis)	E
6208	8	27.800577	I-20 EB (Diverge Analysis)	E
6208	9	27.706469	I-20 EB (Diverge Analysis)	E
6208	10	27.603399	I-20 EB (Diverge Analysis)	E
6209	1	27.630287	I-20 EB (Diverge Analysis)	E
6209	2	27.755764	I-20 EB (Diverge Analysis)	E
6209	3	28.783478	I-20 EB (Diverge Analysis)	E
6209	4	27.966386	I-20 EB (Diverge Analysis)	E
6209	5	28.196426	I-20 EB (Diverge Analysis)	E
6209	6	28.457836	I-20 EB (Diverge Analysis)	E
6209	7	27.808046	I-20 EB (Diverge Analysis)	E
6209	8	27.800577	I-20 EB (Diverge Analysis)	E
6209	9	27.706469	I-20 EB (Diverge Analysis)	E
6209	10	27.603399	I-20 EB (Diverge Analysis)	E
6216	1	20.840271	I-20 EB (Merge Analysis)	E
6216	2	20.481762	I-20 EB (Merge Analysis)	E
6216	3	21.097462	I-20 EB (Merge Analysis)	E
6216	4	20.926001	I-20 EB (Merge Analysis)	E
6216	5	20.770128	I-20 EB (Merge Analysis)	E
6216	6	20.91561	I-20 EB (Merge Analysis)	E
6216	7	20.577884	I-20 EB (Merge Analysis)	E
6216	8	20.375249	I-20 EB (Merge Analysis)	E
6216	9	21.016927	I-20 EB (Merge Analysis)	E
6216	10	20.481762	I-20 EB (Merge Analysis)	E
6217	1	23.502565	I-20 EB (Basic Analysis)	E
6217	2	24.436051	I-20 EB (Basic Analysis)	E
6217	3	25.133211	I-20 EB (Basic Analysis)	E
6217	4	25.224787	I-20 EB (Basic Analysis)	E
6217	5	26.725454	I-20 EB (Basic Analysis)	E
6217	6	24.468546	I-20 EB (Basic Analysis)	E
6217	7	22.90289	I-20 EB (Basic Analysis)	E
6217	8	24.220404	I-20 EB (Basic Analysis)	E
6217	9	25.198201	I-20 EB (Basic Analysis)	E
6217	10	24.196772	I-20 EB (Basic Analysis)	E
6220	1	18.375564	I-20 WB (Basic Analysis)	W
6220	2	28.872613	I-20 WB (Basic Analysis)	W
6220	3	19.250492	I-20 WB (Basic Analysis)	W
6220	4	18.265157	I-20 WB (Basic Analysis)	W
6220	5	18.858858	I-20 WB (Basic Analysis)	W
6220	6	17.927685	I-20 WB (Basic Analysis)	W

No Build AM

ID	Run	Density	Name (Type)	Direction
6220	7	47.104439	I-20 WB (Basic Analysis)	W
6220	8	18.47139	I-20 WB (Basic Analysis)	W
6220	9	18.015177	I-20 WB (Basic Analysis)	W
6220	10	18.86719	I-20 WB (Basic Analysis)	W
6223	1	60.266105	I-26 EB (Weaving Analysis)	SE
6223	2	68.422617	I-26 EB (Weaving Analysis)	SE
6223	3	67.753247	I-26 EB (Weaving Analysis)	SE
6223	4	54.434428	I-26 EB (Weaving Analysis)	SE
6223	5	65.353313	I-26 EB (Weaving Analysis)	SE
6223	6	62.701956	I-26 EB (Weaving Analysis)	SE
6223	7	59.916727	I-26 EB (Weaving Analysis)	SE
6223	8	54.365858	I-26 EB (Weaving Analysis)	SE
6223	9	61.053022	I-26 EB (Weaving Analysis)	SE
6223	10	61.000779	I-26 EB (Weaving Analysis)	SE
6227	1	24.480014	I-20 WB (Basic Analysis)	W
6227	2	24.788077	I-20 WB (Basic Analysis)	W
6227	3	23.121236	I-20 WB (Basic Analysis)	W
6227	4	22.593128	I-20 WB (Basic Analysis)	W
6227	5	25.789282	I-20 WB (Basic Analysis)	W
6227	6	23.748364	I-20 WB (Basic Analysis)	W
6227	7	27.43687	I-20 WB (Basic Analysis)	W
6227	8	23.4348	I-20 WB (Basic Analysis)	W
6227	9	25.228168	I-20 WB (Basic Analysis)	W
6227	10	24.268221	I-20 WB (Basic Analysis)	W
6229	1	71.538179	I-20 WB (Merge Analysis)	W
6229	2	79.431679	I-20 WB (Merge Analysis)	W
6229	3	72.642913	I-20 WB (Merge Analysis)	W
6229	4	71.199632	I-20 WB (Merge Analysis)	W
6229	5	77.404849	I-20 WB (Merge Analysis)	W
6229	6	66.152603	I-20 WB (Merge Analysis)	W
6229	7	69.081484	I-20 WB (Merge Analysis)	W
6229	8	74.894699	I-20 WB (Merge Analysis)	W
6229	9	77.335803	I-20 WB (Merge Analysis)	W
6229	10	70.3644	I-20 WB (Merge Analysis)	W
6230	1	71.538179	I-20 WB (Merge+Diverge Analysis)	W
6230	2	79.431679	I-20 WB (Merge+Diverge Analysis)	W
6230	3	72.642913	I-20 WB (Merge+Diverge Analysis)	W
6230	4	71.199632	I-20 WB (Merge+Diverge Analysis)	W
6230	5	77.404849	I-20 WB (Merge+Diverge Analysis)	W
6230	6	66.152603	I-20 WB (Merge+Diverge Analysis)	W
6230	7	69.081484	I-20 WB (Merge+Diverge Analysis)	W
6230	8	74.894699	I-20 WB (Merge+Diverge Analysis)	W
6230	9	77.335803	I-20 WB (Merge+Diverge Analysis)	W
6230	10	70.3644	I-20 WB (Merge+Diverge Analysis)	W
6231	1	72.207599	I-20 WB (Diverge Analysis)	W
6231	2	80.174961	I-20 WB (Diverge Analysis)	W
6231	3	73.32267	I-20 WB (Diverge Analysis)	W
6231	4	71.865883	I-20 WB (Diverge Analysis)	W
6231	5	78.17445	I-20 WB (Diverge Analysis)	W
6231	6	66.771627	I-20 WB (Diverge Analysis)	W
6231	7	69.773199	I-20 WB (Diverge Analysis)	W
6231	8	75.595527	I-20 WB (Diverge Analysis)	W
6231	9	78.059474	I-20 WB (Diverge Analysis)	W
6231	10	71.022836	I-20 WB (Diverge Analysis)	W
6234	1	37.18518	I-20 WB (Basic Analysis)	W
6234	2	41.503547	I-20 WB (Basic Analysis)	W
6234	3	38.392428	I-20 WB (Basic Analysis)	W

No Build AM

ID	Run	Density	Name (Type)	Direction
6234	4	35.801545	I-20 WB (Basic Analysis)	W
6234	5	40.730744	I-20 WB (Basic Analysis)	W
6234	6	34.636849	I-20 WB (Basic Analysis)	W
6234	7	37.646391	I-20 WB (Basic Analysis)	W
6234	8	38.950412	I-20 WB (Basic Analysis)	W
6234	9	40.666915	I-20 WB (Basic Analysis)	W
6234	10	35.57643	I-20 WB (Basic Analysis)	W
6238	1	31.299839	I-20 EB (Basic Analysis)	NE
6238	2	29.850434	I-20 EB (Basic Analysis)	NE
6238	3	31.405472	I-20 EB (Basic Analysis)	NE
6238	4	31.33031	I-20 EB (Basic Analysis)	NE
6238	5	30.593927	I-20 EB (Basic Analysis)	NE
6238	6	30.628461	I-20 EB (Basic Analysis)	NE
6238	7	30.832617	I-20 EB (Basic Analysis)	NE
6238	8	31.412582	I-20 EB (Basic Analysis)	NE
6238	9	30.400944	I-20 EB (Basic Analysis)	NE
6238	10	30.729016	I-20 EB (Basic Analysis)	NE
6241	1	38.032039	I-20 EB (Merge Analysis)	NE
6241	2	37.946209	I-20 EB (Merge Analysis)	NE
6241	3	37.871109	I-20 EB (Merge Analysis)	NE
6241	4	38.287144	I-20 EB (Merge Analysis)	NE
6241	5	36.662342	I-20 EB (Merge Analysis)	NE
6241	6	38.672185	I-20 EB (Merge Analysis)	NE
6241	7	35.904181	I-20 EB (Merge Analysis)	NE
6241	8	37.680376	I-20 EB (Merge Analysis)	NE
6241	9	36.535982	I-20 EB (Merge Analysis)	NE
6241	10	36.320216	I-20 EB (Merge Analysis)	NE
6242	1	38.032039	I-20 EB (Merge Analysis)	NE
6242	2	37.946209	I-20 EB (Merge Analysis)	NE
6242	3	37.871109	I-20 EB (Merge Analysis)	NE
6242	4	38.287144	I-20 EB (Merge Analysis)	NE
6242	5	36.662342	I-20 EB (Merge Analysis)	NE
6242	6	38.672185	I-20 EB (Merge Analysis)	NE
6242	7	35.904181	I-20 EB (Merge Analysis)	NE
6242	8	37.680376	I-20 EB (Merge Analysis)	NE
6242	9	36.535982	I-20 EB (Merge Analysis)	NE
6242	10	36.320216	I-20 EB (Merge Analysis)	NE
6246	1	38.955442	I-20 WB (Merge Analysis)	SW
6246	2	30.439198	I-20 WB (Merge Analysis)	SW
6246	3	29.337441	I-20 WB (Merge Analysis)	SW
6246	4	28.152886	I-20 WB (Merge Analysis)	SW
6246	5	30.942667	I-20 WB (Merge Analysis)	SW
6246	6	32.250085	I-20 WB (Merge Analysis)	SW
6246	7	30.878565	I-20 WB (Merge Analysis)	SW
6246	8	29.46431	I-20 WB (Merge Analysis)	SW
6246	9	31.966967	I-20 WB (Merge Analysis)	SW
6246	10	30.477926	I-20 WB (Merge Analysis)	SW
6247	1	38.955442	I-20 WB (Merge Analysis)	SW
6247	2	30.439198	I-20 WB (Merge Analysis)	SW
6247	3	29.337441	I-20 WB (Merge Analysis)	SW
6247	4	28.152886	I-20 WB (Merge Analysis)	SW
6247	5	30.942667	I-20 WB (Merge Analysis)	SW
6247	6	32.250085	I-20 WB (Merge Analysis)	SW
6247	7	30.878565	I-20 WB (Merge Analysis)	SW
6247	8	29.46431	I-20 WB (Merge Analysis)	SW
6247	9	31.966967	I-20 WB (Merge Analysis)	SW
6247	10	30.477926	I-20 WB (Merge Analysis)	SW

No Build AM

ID	Run	Density	Name (Type)	Direction
6249	1	25.860261	I-20 WB (Diverge Analysis)	SW
6249	2	26.237683	I-20 WB (Diverge Analysis)	SW
6249	3	24.950927	I-20 WB (Diverge Analysis)	SW
6249	4	26.241594	I-20 WB (Diverge Analysis)	SW
6249	5	26.750038	I-20 WB (Diverge Analysis)	SW
6249	6	27.041416	I-20 WB (Diverge Analysis)	SW
6249	7	27.512705	I-20 WB (Diverge Analysis)	SW
6249	8	25.38115	I-20 WB (Diverge Analysis)	SW
6249	9	26.094927	I-20 WB (Diverge Analysis)	SW
6249	10	25.212972	I-20 WB (Diverge Analysis)	SW
6251	1	39.353373	I-20 WB (Basic Analysis)	SW
6251	2	34.077943	I-20 WB (Basic Analysis)	SW
6251	3	34.697632	I-20 WB (Basic Analysis)	SW
6251	4	33.941338	I-20 WB (Basic Analysis)	SW
6251	5	35.624061	I-20 WB (Basic Analysis)	SW
6251	6	36.30336	I-20 WB (Basic Analysis)	SW
6251	7	35.586806	I-20 WB (Basic Analysis)	SW
6251	8	32.828629	I-20 WB (Basic Analysis)	SW
6251	9	37.198743	I-20 WB (Basic Analysis)	SW
6251	10	33.7563	I-20 WB (Basic Analysis)	SW
6254	1	34.165007	I-20 EB (Basic Analysis)	NE
6254	2	33.474438	I-20 EB (Basic Analysis)	NE
6254	3	34.345482	I-20 EB (Basic Analysis)	NE
6254	4	34.509665	I-20 EB (Basic Analysis)	NE
6254	5	33.435585	I-20 EB (Basic Analysis)	NE
6254	6	34.261511	I-20 EB (Basic Analysis)	NE
6254	7	34.913228	I-20 EB (Basic Analysis)	NE
6254	8	33.592248	I-20 EB (Basic Analysis)	NE
6254	9	33.309002	I-20 EB (Basic Analysis)	NE
6254	10	33.177405	I-20 EB (Basic Analysis)	NE
6258	1	31.729444	I-20 EB (Merge Analysis)	E
6258	2	30.445654	I-20 EB (Merge Analysis)	E
6258	3	30.839663	I-20 EB (Merge Analysis)	E
6258	4	32.243482	I-20 EB (Merge Analysis)	E
6258	5	29.477593	I-20 EB (Merge Analysis)	E
6258	6	30.855319	I-20 EB (Merge Analysis)	E
6258	7	28.705232	I-20 EB (Merge Analysis)	E
6258	8	32.191295	I-20 EB (Merge Analysis)	E
6258	9	29.803759	I-20 EB (Merge Analysis)	E
6258	10	32.540946	I-20 EB (Merge Analysis)	E
6259	1	33.327964	I-20 EB (Basic Analysis)	E
6259	2	35.030309	I-20 EB (Basic Analysis)	E
6259	3	35.726447	I-20 EB (Basic Analysis)	E
6259	4	34.977111	I-20 EB (Basic Analysis)	E
6259	5	34.241455	I-20 EB (Basic Analysis)	E
6259	6	34.490727	I-20 EB (Basic Analysis)	E
6259	7	34.977111	I-20 EB (Basic Analysis)	E
6259	8	35.791805	I-20 EB (Basic Analysis)	E
6259	9	35.227903	I-20 EB (Basic Analysis)	E
6259	10	35.300861	I-20 EB (Basic Analysis)	E
8539	1	19.331192	I-20 WB (Basic Analysis)	SW
8539	2	18.484272	I-20 WB (Basic Analysis)	SW
8539	3	19.459824	I-20 WB (Basic Analysis)	SW
8539	4	18.203103	I-20 WB (Basic Analysis)	SW
8539	5	19.935648	I-20 WB (Basic Analysis)	SW
8539	6	19.235572	I-20 WB (Basic Analysis)	SW
8539	7	19.345991	I-20 WB (Basic Analysis)	SW

No Build AM

ID	Run	Density	Name (Type)	Direction
8539	8	17.838836	I-20 WB (Basic Analysis)	SW
8539	9	18.329458	I-20 WB (Basic Analysis)	SW
8539	10	18.05512	I-20 WB (Basic Analysis)	SW
8542	1	75.797566	I-20 EB (Basic Analysis)	NE
8542	2	74.877485	I-20 EB (Basic Analysis)	NE
8542	3	75.407772	I-20 EB (Basic Analysis)	NE
8542	4	75.679791	I-20 EB (Basic Analysis)	NE
8542	5	72.789816	I-20 EB (Basic Analysis)	NE
8542	6	75.955397	I-20 EB (Basic Analysis)	NE
8542	7	73.056455	I-20 EB (Basic Analysis)	NE
8542	8	79.769039	I-20 EB (Basic Analysis)	NE
8542	9	77.143311	I-20 EB (Basic Analysis)	NE
8542	10	78.553624	I-20 EB (Basic Analysis)	NE
8543	1	72.676244	I-20 EB (Diverge Analysis)	NE
8543	2	71.180245	I-20 EB (Diverge Analysis)	NE
8543	3	71.755178	I-20 EB (Diverge Analysis)	NE
8543	4	70.728512	I-20 EB (Diverge Analysis)	NE
8543	5	69.892512	I-20 EB (Diverge Analysis)	NE
8543	6	70.795979	I-20 EB (Diverge Analysis)	NE
8543	7	69.813313	I-20 EB (Diverge Analysis)	NE
8543	8	74.747177	I-20 EB (Diverge Analysis)	NE
8543	9	72.300778	I-20 EB (Diverge Analysis)	NE
8543	10	72.145312	I-20 EB (Diverge Analysis)	NE
8551	1	38.787455	I-26 WB (Diverge Analysis)	NW
8551	2	36.742922	I-26 WB (Diverge Analysis)	NW
8551	3	38.256522	I-26 WB (Diverge Analysis)	NW
8551	4	74.005044	I-26 WB (Diverge Analysis)	NW
8551	5	39.811188	I-26 WB (Diverge Analysis)	NW
8551	6	39.083721	I-26 WB (Diverge Analysis)	NW
8551	7	38.813855	I-26 WB (Diverge Analysis)	NW
8551	8	39.303722	I-26 WB (Diverge Analysis)	NW
8551	9	37.790122	I-26 WB (Diverge Analysis)	NW
8551	10	38.309322	I-26 WB (Diverge Analysis)	NW
8552	1	83.911979	I-26 EB (Basic Analysis)	SE
8552	2	91.58934	I-26 EB (Basic Analysis)	SE
8552	3	81.859387	I-26 EB (Basic Analysis)	SE
8552	4	83.671955	I-26 EB (Basic Analysis)	SE
8552	5	86.787146	I-26 EB (Basic Analysis)	SE
8552	6	82.051577	I-26 EB (Basic Analysis)	SE
8552	7	79.318204	I-26 EB (Basic Analysis)	SE
8552	8	85.916737	I-26 EB (Basic Analysis)	SE
8552	9	80.120278	I-26 EB (Basic Analysis)	SE
8552	10	89.776772	I-26 EB (Basic Analysis)	SE
8553	1	31.128966	I-26 EB (Basic Analysis)	S
8553	2	49.757178	I-26 EB (Basic Analysis)	S
8553	3	37.581403	I-26 EB (Basic Analysis)	S
8553	4	41.604073	I-26 EB (Basic Analysis)	S
8553	5	31.423636	I-26 EB (Basic Analysis)	S
8553	6	40.01117	I-26 EB (Basic Analysis)	S
8553	7	38.699466	I-26 EB (Basic Analysis)	S
8553	8	27.71921	I-26 EB (Basic Analysis)	S
8553	9	31.389959	I-26 EB (Basic Analysis)	S
8553	10	57.137404	I-26 EB (Basic Analysis)	S
8554	1	23.324409	I-26 WB (Basic Analysis)	N
8554	2	23.999829	I-26 WB (Basic Analysis)	N
8554	3	23.363823	I-26 WB (Basic Analysis)	N
8554	4	23.768717	I-26 WB (Basic Analysis)	N

No Build AM

ID	Run	Density	Name (Type)	Direction
8554	5	22.665112	I-26 WB (Basic Analysis)	N
8554	6	22.720651	I-26 WB (Basic Analysis)	N
8554	7	22.992969	I-26 WB (Basic Analysis)	N
8554	8	22.99476	I-26 WB (Basic Analysis)	N
8554	9	22.303216	I-26 WB (Basic Analysis)	N
8554	10	23.310076	I-26 WB (Basic Analysis)	N
8559	1	17.315461	I-126 NB (Diverge Analysis)	W
8559	2	15.942662	I-126 NB (Diverge Analysis)	W
8559	3	16.502928	I-126 NB (Diverge Analysis)	W
8559	4	15.118395	I-126 NB (Diverge Analysis)	W
8559	5	15.954395	I-126 NB (Diverge Analysis)	W
8559	6	15.364795	I-126 NB (Diverge Analysis)	W
8559	7	17.643995	I-126 NB (Diverge Analysis)	W
8559	8	15.089062	I-126 NB (Diverge Analysis)	W
8559	9	16.127462	I-126 NB (Diverge Analysis)	W
8559	10	15.945595	I-126 NB (Diverge Analysis)	W
8560	1	26.984066	I-126 SB (Basic Analysis)	E
8560	2	26.716933	I-126 SB (Basic Analysis)	E
8560	3	26.861808	I-126 SB (Basic Analysis)	E
8560	4	26.820241	I-126 SB (Basic Analysis)	E
8560	5	26.242574	I-126 SB (Basic Analysis)	E
8560	6	27.148502	I-126 SB (Basic Analysis)	E
8560	7	26.712043	I-126 SB (Basic Analysis)	E
8560	8	26.576948	I-126 SB (Basic Analysis)	E
8560	9	27.391795	I-126 SB (Basic Analysis)	E
8560	10	26.85325	I-126 SB (Basic Analysis)	E
8658	1	57.865408	I-20 WB (Basic Analysis)	SW
8658	2	40.718338	I-20 WB (Basic Analysis)	SW
8658	3	43.750336	I-20 WB (Basic Analysis)	SW
8658	4	42.334765	I-20 WB (Basic Analysis)	SW
8658	5	48.998135	I-20 WB (Basic Analysis)	SW
8658	6	49.33396	I-20 WB (Basic Analysis)	SW
8658	7	45.838136	I-20 WB (Basic Analysis)	SW
8658	8	39.3167	I-20 WB (Basic Analysis)	SW
8658	9	53.29361	I-20 WB (Basic Analysis)	SW
8658	10	45.639602	I-20 WB (Basic Analysis)	SW
8659	1	38.864907	I-20 EB (Basic Analysis)	NE
8659	2	39.359037	I-20 EB (Basic Analysis)	NE
8659	3	40.356203	I-20 EB (Basic Analysis)	NE
8659	4	39.594093	I-20 EB (Basic Analysis)	NE
8659	5	39.382786	I-20 EB (Basic Analysis)	NE
8659	6	40.378332	I-20 EB (Basic Analysis)	NE
8659	7	39.116425	I-20 EB (Basic Analysis)	NE
8659	8	39.671276	I-20 EB (Basic Analysis)	NE
8659	9	38.730243	I-20 EB (Basic Analysis)	NE
8659	10	39.321526	I-20 EB (Basic Analysis)	NE
8763	1	73.313244	I-26 EB (Basic Analysis)	SE
8763	2	67.62363	I-26 EB (Basic Analysis)	SE
8763	3	66.625843	I-26 EB (Basic Analysis)	SE
8763	4	74.422801	I-26 EB (Basic Analysis)	SE
8763	5	69.533154	I-26 EB (Basic Analysis)	SE
8763	6	63.980267	I-26 EB (Basic Analysis)	SE
8763	7	69.208154	I-26 EB (Basic Analysis)	SE
8763	8	64.050259	I-26 EB (Basic Analysis)	SE
8763	9	73.814254	I-26 EB (Basic Analysis)	SE
8763	10	67.686569	I-26 EB (Basic Analysis)	SE
8764	1	14.428174	I-20 WB (Basic Analysis)	S

No Build AM

ID	Run	Density	Name (Type)	Direction
8764	2	13.859158	I-20 WB (Basic Analysis)	S
8764	3	14.150978	I-20 WB (Basic Analysis)	S
8764	4	13.47664	I-20 WB (Basic Analysis)	S
8764	5	14.766198	I-20 WB (Basic Analysis)	S
8764	6	14.851557	I-20 WB (Basic Analysis)	S
8764	7	14.26055	I-20 WB (Basic Analysis)	S
8764	8	13.773373	I-20 WB (Basic Analysis)	S
8764	9	14.163176	I-20 WB (Basic Analysis)	S
8764	10	14.256332	I-20 WB (Basic Analysis)	S
8765	1	66.363772	I-20 EB (Basic Analysis)	NE
8765	2	55.198165	I-20 EB (Basic Analysis)	NE
8765	3	66.658498	I-20 EB (Basic Analysis)	NE
8765	4	62.684211	I-20 EB (Basic Analysis)	NE
8765	5	61.632874	I-20 EB (Basic Analysis)	NE
8765	6	57.478226	I-20 EB (Basic Analysis)	NE
8765	7	55.129925	I-20 EB (Basic Analysis)	NE
8765	8	69.131416	I-20 EB (Basic Analysis)	NE
8765	9	60.147247	I-20 EB (Basic Analysis)	NE
8765	10	63.032819	I-20 EB (Basic Analysis)	NE
8770	1	41.389321	I-20 WB (Diverge Analysis)	SW
8770	2	38.981055	I-20 WB (Diverge Analysis)	SW
8770	3	41.016787	I-20 WB (Diverge Analysis)	SW
8770	4	38.549855	I-20 WB (Diverge Analysis)	SW
8770	5	41.377588	I-20 WB (Diverge Analysis)	SW
8770	6	40.925854	I-20 WB (Diverge Analysis)	SW
8770	7	39.614655	I-20 WB (Diverge Analysis)	SW
8770	8	38.013055	I-20 WB (Diverge Analysis)	SW
8770	9	42.471721	I-20 WB (Diverge Analysis)	SW
8770	10	40.975721	I-20 WB (Diverge Analysis)	SW
8773	1	29.160722	I-26 WB (Basic Analysis)	N
8773	2	27.324917	I-26 WB (Basic Analysis)	N
8773	3	28.988339	I-26 WB (Basic Analysis)	N
8773	4	58.213889	I-26 WB (Basic Analysis)	N
8773	5	52.379387	I-26 WB (Basic Analysis)	N
8773	6	29.392039	I-26 WB (Basic Analysis)	N
8773	7	32.313711	I-26 WB (Basic Analysis)	N
8773	8	55.931657	I-26 WB (Basic Analysis)	N
8773	9	26.028361	I-26 WB (Basic Analysis)	N
8773	10	26.952157	I-26 WB (Basic Analysis)	N
8774	1	38.952577	I-20 EB (Diverge Analysis)	NE
8774	2	39.746008	I-20 EB (Diverge Analysis)	NE
8774	3	39.62284	I-20 EB (Diverge Analysis)	NE
8774	4	40.098325	I-20 EB (Diverge Analysis)	NE
8774	5	38.737749	I-20 EB (Diverge Analysis)	NE
8774	6	40.943315	I-20 EB (Diverge Analysis)	NE
8774	7	37.268327	I-20 EB (Diverge Analysis)	NE
8774	8	40.78291	I-20 EB (Diverge Analysis)	NE
8774	9	40.906078	I-20 EB (Diverge Analysis)	NE
8774	10	40.542303	I-20 EB (Diverge Analysis)	NE
8783	1	14.73989	I-26 WB (Basic Analysis)	NW
8783	2	14.997306	I-26 WB (Basic Analysis)	NW
8783	3	15.159383	I-26 WB (Basic Analysis)	NW
8783	4	13.815857	I-26 WB (Basic Analysis)	NW
8783	5	14.989072	I-26 WB (Basic Analysis)	NW
8783	6	15.169675	I-26 WB (Basic Analysis)	NW
8783	7	14.806736	I-26 WB (Basic Analysis)	NW
8783	8	14.703163	I-26 WB (Basic Analysis)	NW

No Build AM

ID	Run	Density	Name (Type)	Direction
8783	9	15.354503	I-26 WB (Basic Analysis)	NW
8783	10	15.335869	I-26 WB (Basic Analysis)	NW
8784	1	122.018909	I-26 EB (Basic Analysis)	SE
8784	2	120.861234	I-26 EB (Basic Analysis)	SE
8784	3	115.66516	I-26 EB (Basic Analysis)	SE
8784	4	113.075199	I-26 EB (Basic Analysis)	SE
8784	5	112.488285	I-26 EB (Basic Analysis)	SE
8784	6	118.055892	I-26 EB (Basic Analysis)	SE
8784	7	116.908987	I-26 EB (Basic Analysis)	SE
8784	8	115.869772	I-26 EB (Basic Analysis)	SE
8784	9	118.255121	I-26 EB (Basic Analysis)	SE
8784	10	119.445103	I-26 EB (Basic Analysis)	SE
8817	1	16.173466	I-26 WB (Basic Analysis)	NW
8817	2	16.387979	I-26 WB (Basic Analysis)	NW
8817	3	16.257682	I-26 WB (Basic Analysis)	NW
8817	4	14.675849	I-26 WB (Basic Analysis)	NW
8817	5	16.463455	I-26 WB (Basic Analysis)	NW
8817	6	17.067269	I-26 WB (Basic Analysis)	NW
8817	7	15.254239	I-26 WB (Basic Analysis)	NW
8817	8	16.33157	I-26 WB (Basic Analysis)	NW
8817	9	16.353816	I-26 WB (Basic Analysis)	NW
8817	10	16.046347	I-26 WB (Basic Analysis)	NW

No Build PM

ID	Run	Density	Name (Type)	Direction
2466	1	32.365493	I-20 EB (Weaving Analysis)	E
2466	2	31.912195	I-20 EB (Weaving Analysis)	E
2466	3	34.536792	I-20 EB (Weaving Analysis)	E
2466	4	34.133357	I-20 EB (Weaving Analysis)	E
2466	5	33.476074	I-20 EB (Weaving Analysis)	E
2466	6	32.175108	I-20 EB (Weaving Analysis)	E
2466	7	50.62888	I-20 EB (Weaving Analysis)	E
2466	8	37.8776	I-20 EB (Weaving Analysis)	E
2466	9	38.924719	I-20 EB (Weaving Analysis)	E
2466	10	53.928891	I-20 EB (Weaving Analysis)	E
2467	1	26.700597	I-20 WB (Weaving Analysis)	W
2467	2	23.873347	I-20 WB (Weaving Analysis)	W
2467	3	23.644111	I-20 WB (Weaving Analysis)	W
2467	4	22.967317	I-20 WB (Weaving Analysis)	W
2467	5	20.729532	I-20 WB (Weaving Analysis)	W
2467	6	21.651936	I-20 WB (Weaving Analysis)	W
2467	7	22.81995	I-20 WB (Weaving Analysis)	W
2467	8	22.077661	I-20 WB (Weaving Analysis)	W
2467	9	25.26514	I-20 WB (Weaving Analysis)	W
2467	10	22.470638	I-20 WB (Weaving Analysis)	W
2806	1	19.561025	I-20 EB (Basic Analysis)	NE
2806	2	20.16503	I-20 EB (Basic Analysis)	NE
2806	3	18.956959	I-20 EB (Basic Analysis)	NE
2806	4	19.403031	I-20 EB (Basic Analysis)	NE
2806	5	18.846363	I-20 EB (Basic Analysis)	NE
2806	6	19.526886	I-20 EB (Basic Analysis)	NE
2806	7	20.497263	I-20 EB (Basic Analysis)	NE
2806	8	20.370314	I-20 EB (Basic Analysis)	NE
2806	9	20.01817	I-20 EB (Basic Analysis)	NE
2806	10	18.994295	I-20 EB (Basic Analysis)	NE
2807	1	19.561025	I-20 EB (Basic Analysis)	NE
2807	2	20.16503	I-20 EB (Basic Analysis)	NE
2807	3	18.956959	I-20 EB (Basic Analysis)	NE
2807	4	19.403031	I-20 EB (Basic Analysis)	NE
2807	5	18.846363	I-20 EB (Basic Analysis)	NE
2807	6	19.526886	I-20 EB (Basic Analysis)	NE
2807	7	20.497263	I-20 EB (Basic Analysis)	NE
2807	8	20.370314	I-20 EB (Basic Analysis)	NE
2807	9	20.01817	I-20 EB (Basic Analysis)	NE
2807	10	18.994295	I-20 EB (Basic Analysis)	NE
2808	1	17.79826	I-20 EB (Diverge Analysis)	NE
2808	2	19.603978	I-20 EB (Diverge Analysis)	NE
2808	3	17.624296	I-20 EB (Diverge Analysis)	NE
2808	4	18.221707	I-20 EB (Diverge Analysis)	NE
2808	5	18.305318	I-20 EB (Diverge Analysis)	NE
2808	6	18.765176	I-20 EB (Diverge Analysis)	NE
2808	7	20.628882	I-20 EB (Diverge Analysis)	NE
2808	8	18.693702	I-20 EB (Diverge Analysis)	NE
2808	9	18.726068	I-20 EB (Diverge Analysis)	NE
2808	10	17.521806	I-20 EB (Diverge Analysis)	NE
2813	1	18.100465	I-20 WB (Merge Analysis)	S
2813	2	18.063039	I-20 WB (Merge Analysis)	S
2813	3	17.023844	I-20 WB (Merge Analysis)	S
2813	4	16.917803	I-20 WB (Merge Analysis)	S
2813	5	17.500402	I-20 WB (Merge Analysis)	S
2813	6	16.78806	I-20 WB (Merge Analysis)	S
2813	7	17.279588	I-20 WB (Merge Analysis)	S
2813	8	16.544791	I-20 WB (Merge Analysis)	S
2813	9	16.896595	I-20 WB (Merge Analysis)	S
2813	10	17.325747	I-20 WB (Merge Analysis)	S
2814	1	22.674304	I-20 WB (Basic Analysis)	S
2814	2	21.972839	I-20 WB (Basic Analysis)	S
2814	3	22.226837	I-20 WB (Basic Analysis)	S
2814	4	21.800273	I-20 WB (Basic Analysis)	S

No Build PM

ID	Run	Density	Name (Type)	Direction
2814	5	22.564077	I-20 WB (Basic Analysis)	S
2814	6	21.493974	I-20 WB (Basic Analysis)	S
2814	7	21.756585	I-20 WB (Basic Analysis)	S
2814	8	21.705806	I-20 WB (Basic Analysis)	S
2814	9	22.562877	I-20 WB (Basic Analysis)	S
2814	10	21.891511	I-20 WB (Basic Analysis)	S
2815	1	22.674304	I-20 WB (Basic Analysis)	S
2815	2	21.972839	I-20 WB (Basic Analysis)	S
2815	3	22.226837	I-20 WB (Basic Analysis)	S
2815	4	21.800273	I-20 WB (Basic Analysis)	S
2815	5	22.564077	I-20 WB (Basic Analysis)	S
2815	6	21.493974	I-20 WB (Basic Analysis)	S
2815	7	21.756585	I-20 WB (Basic Analysis)	S
2815	8	21.705806	I-20 WB (Basic Analysis)	S
2815	9	22.562877	I-20 WB (Basic Analysis)	S
2815	10	21.891511	I-20 WB (Basic Analysis)	S
2822	1	13.555633	I-20 WB (Merge Analysis)	SW
2822	2	13.650803	I-20 WB (Merge Analysis)	SW
2822	3	12.721064	I-20 WB (Merge Analysis)	SW
2822	4	13.753293	I-20 WB (Merge Analysis)	SW
2822	5	14.119332	I-20 WB (Merge Analysis)	SW
2822	6	13.087103	I-20 WB (Merge Analysis)	SW
2822	7	13.924112	I-20 WB (Merge Analysis)	SW
2822	8	13.040738	I-20 WB (Merge Analysis)	SW
2822	9	14.600063	I-20 WB (Merge Analysis)	SW
2822	10	14.343836	I-20 WB (Merge Analysis)	SW
2823	1	1691.124447	I-20 WB (Basic Analysis)	SW
2823	2	781.416121	I-20 WB (Basic Analysis)	SW
2823	3	1271.25907	I-20 WB (Basic Analysis)	SW
2823	4	1399.551261	I-20 WB (Basic Analysis)	SW
2823	5	1562.832251	I-20 WB (Basic Analysis)	SW
2823	6	2006.023486	I-20 WB (Basic Analysis)	SW
2823	7	1329.573706	I-20 WB (Basic Analysis)	SW
2823	8	1107.978088	I-20 WB (Basic Analysis)	SW
2823	9	2635.821549	I-20 WB (Basic Analysis)	SW
2823	10	3568.855729	I-20 WB (Basic Analysis)	SW
2826	1	18.414667	I-20 EB (Basic Analysis)	NE
2826	2	18.455668	I-20 EB (Basic Analysis)	NE
2826	3	18.105797	I-20 EB (Basic Analysis)	NE
2826	4	18.226065	I-20 EB (Basic Analysis)	NE
2826	5	17.099919	I-20 EB (Basic Analysis)	NE
2826	6	20.500223	I-20 EB (Basic Analysis)	NE
2826	7	20.336221	I-20 EB (Basic Analysis)	NE
2826	8	20.880161	I-20 EB (Basic Analysis)	NE
2826	9	18.950406	I-20 EB (Basic Analysis)	NE
2826	10	17.796927	I-20 EB (Basic Analysis)	NE
2829	1	18.367332	I-20 EB (Merge Analysis)	NE
2829	2	18.193775	I-20 EB (Merge Analysis)	NE
2829	3	19.036768	I-20 EB (Merge Analysis)	NE
2829	4	18.015259	I-20 EB (Merge Analysis)	NE
2829	5	17.422684	I-20 EB (Merge Analysis)	NE
2829	6	18.508657	I-20 EB (Merge Analysis)	NE
2829	7	17.001187	I-20 EB (Merge Analysis)	NE
2829	8	19.066521	I-20 EB (Merge Analysis)	NE
2829	9	19.716121	I-20 EB (Merge Analysis)	NE
2829	10	18.240883	I-20 EB (Merge Analysis)	NE
2830	1	28.330932	I-20 EB (Basic Analysis)	NE
2830	2	27.143329	I-20 EB (Basic Analysis)	NE
2830	3	25.836966	I-20 EB (Basic Analysis)	NE
2830	4	23.184652	I-20 EB (Basic Analysis)	NE
2830	5	23.13187	I-20 EB (Basic Analysis)	NE
2830	6	26.417572	I-20 EB (Basic Analysis)	NE
2830	7	23.884019	I-20 EB (Basic Analysis)	NE
2830	8	22.736002	I-20 EB (Basic Analysis)	NE

No Build PM

ID	Run	Density	Name (Type)	Direction
2830	9	28.739996	I-20 EB (Basic Analysis)	NE
2830	10	25.348729	I-20 EB (Basic Analysis)	NE
2831	1	22.530524	I-20 WB (Basic Analysis)	SW
2831	2	21.161031	I-20 WB (Basic Analysis)	SW
2831	3	22.526042	I-20 WB (Basic Analysis)	SW
2831	4	20.717234	I-20 WB (Basic Analysis)	SW
2831	5	21.696725	I-20 WB (Basic Analysis)	SW
2831	6	20.040332	I-20 WB (Basic Analysis)	SW
2831	7	20.811373	I-20 WB (Basic Analysis)	SW
2831	8	21.559999	I-20 WB (Basic Analysis)	SW
2831	9	21.761725	I-20 WB (Basic Analysis)	SW
2831	10	20.862925	I-20 WB (Basic Analysis)	SW
2837	1	20.682626	I-20 WB (Merge Analysis)	SW
2837	2	19.258223	I-20 WB (Merge Analysis)	SW
2837	3	22.222182	I-20 WB (Merge Analysis)	SW
2837	4	22.107029	I-20 WB (Merge Analysis)	SW
2837	5	20.937967	I-20 WB (Merge Analysis)	SW
2837	6	21.7115	I-20 WB (Merge Analysis)	SW
2837	7	20.765236	I-20 WB (Merge Analysis)	SW
2837	8	21.190805	I-20 WB (Merge Analysis)	SW
2837	9	20.973014	I-20 WB (Merge Analysis)	SW
2837	10	20.081824	I-20 WB (Merge Analysis)	SW
2838	1	86.579623	I-20 WB (Basic Analysis)	SW
2838	2	62.189785	I-20 WB (Basic Analysis)	SW
2838	3	64.530076	I-20 WB (Basic Analysis)	SW
2838	4	44.488806	I-20 WB (Basic Analysis)	SW
2838	5	48.037707	I-20 WB (Basic Analysis)	SW
2838	6	36.181381	I-20 WB (Basic Analysis)	SW
2838	7	43.642576	I-20 WB (Basic Analysis)	SW
2838	8	48.047829	I-20 WB (Basic Analysis)	SW
2838	9	52.393361	I-20 WB (Basic Analysis)	SW
2838	10	46.926271	I-20 WB (Basic Analysis)	SW
2839	1	116.07526	I-20 WB (Diverge Analysis)	SW
2839	2	89.014398	I-20 WB (Diverge Analysis)	SW
2839	3	92.640332	I-20 WB (Diverge Analysis)	SW
2839	4	80.173979	I-20 WB (Diverge Analysis)	SW
2839	5	94.536508	I-20 WB (Diverge Analysis)	SW
2839	6	65.42818	I-20 WB (Diverge Analysis)	SW
2839	7	91.783018	I-20 WB (Diverge Analysis)	SW
2839	8	100.497362	I-20 WB (Diverge Analysis)	SW
2839	9	91.15264	I-20 WB (Diverge Analysis)	SW
2839	10	88.462188	I-20 WB (Diverge Analysis)	SW
2840	1	116.07526	I-20 WB (Diverge Analysis)	SW
2840	2	89.014398	I-20 WB (Diverge Analysis)	SW
2840	3	92.640332	I-20 WB (Diverge Analysis)	SW
2840	4	80.173979	I-20 WB (Diverge Analysis)	SW
2840	5	94.536508	I-20 WB (Diverge Analysis)	SW
2840	6	65.42818	I-20 WB (Diverge Analysis)	SW
2840	7	91.783018	I-20 WB (Diverge Analysis)	SW
2840	8	100.497362	I-20 WB (Diverge Analysis)	SW
2840	9	91.15264	I-20 WB (Diverge Analysis)	SW
2840	10	88.462188	I-20 WB (Diverge Analysis)	SW
2843	1	19.945524	I-20 EB (Merge Analysis)	NE
2843	2	22.27259	I-20 EB (Merge Analysis)	NE
2843	3	19.589828	I-20 EB (Merge Analysis)	NE
2843	4	21.943439	I-20 EB (Merge Analysis)	NE
2843	5	21.617826	I-20 EB (Merge Analysis)	NE
2843	6	21.343533	I-20 EB (Merge Analysis)	NE
2843	7	21.256821	I-20 EB (Merge Analysis)	NE
2843	8	21.605439	I-20 EB (Merge Analysis)	NE
2843	9	21.117021	I-20 EB (Merge Analysis)	NE
2843	10	19.135032	I-20 EB (Merge Analysis)	NE
2844	1	19.945524	I-20 EB (Merge Analysis)	NE
2844	2	22.27259	I-20 EB (Merge Analysis)	NE

No Build PM

ID	Run	Density	Name (Type)	Direction
2844	3	19.589828	I-20 EB (Merge Analysis)	NE
2844	4	21.943439	I-20 EB (Merge Analysis)	NE
2844	5	21.617826	I-20 EB (Merge Analysis)	NE
2844	6	21.343533	I-20 EB (Merge Analysis)	NE
2844	7	21.256821	I-20 EB (Merge Analysis)	NE
2844	8	21.605439	I-20 EB (Merge Analysis)	NE
2844	9	21.117021	I-20 EB (Merge Analysis)	NE
2844	10	19.135032	I-20 EB (Merge Analysis)	NE
2848	1	22.516146	I-20 EB (Basic Analysis)	NE
2848	2	20.701516	I-20 EB (Basic Analysis)	NE
2848	3	21.62832	I-20 EB (Basic Analysis)	NE
2848	4	22.68505	I-20 EB (Basic Analysis)	NE
2848	5	21.530875	I-20 EB (Basic Analysis)	NE
2848	6	21.55253	I-20 EB (Basic Analysis)	NE
2848	7	21.180076	I-20 EB (Basic Analysis)	NE
2848	8	22.838796	I-20 EB (Basic Analysis)	NE
2848	9	22.70887	I-20 EB (Basic Analysis)	NE
2848	10	20.469814	I-20 EB (Basic Analysis)	NE
2852	1	21.669861	I-20 WB (Basic Analysis)	SW
2852	2	22.520838	I-20 WB (Basic Analysis)	SW
2852	3	23.311729	I-20 WB (Basic Analysis)	SW
2852	4	20.095066	I-20 WB (Basic Analysis)	SW
2852	5	22.302854	I-20 WB (Basic Analysis)	SW
2852	6	21.808198	I-20 WB (Basic Analysis)	SW
2852	7	19.404782	I-20 WB (Basic Analysis)	SW
2852	8	20.881765	I-20 WB (Basic Analysis)	SW
2852	9	23.332689	I-20 WB (Basic Analysis)	SW
2852	10	19.579449	I-20 WB (Basic Analysis)	SW
2856	1	21.476578	I-20 EB (Basic Analysis)	NE
2856	2	19.517859	I-20 EB (Basic Analysis)	NE
2856	3	18.707022	I-20 EB (Basic Analysis)	NE
2856	4	20.952712	I-20 EB (Basic Analysis)	NE
2856	5	17.480174	I-20 EB (Basic Analysis)	NE
2856	6	19.612232	I-20 EB (Basic Analysis)	NE
2856	7	22.401047	I-20 EB (Basic Analysis)	NE
2856	8	19.213554	I-20 EB (Basic Analysis)	NE
2856	9	20.476996	I-20 EB (Basic Analysis)	NE
2856	10	19.487043	I-20 EB (Basic Analysis)	NE
2859	1	58.015845	I-20 WB (Weaving Analysis)	SW
2859	2	73.101742	I-20 WB (Weaving Analysis)	SW
2859	3	81.76095	I-20 WB (Weaving Analysis)	SW
2859	4	46.675499	I-20 WB (Weaving Analysis)	SW
2859	5	55.400307	I-20 WB (Weaving Analysis)	SW
2859	6	69.83232	I-20 WB (Weaving Analysis)	SW
2859	7	29.492516	I-20 WB (Weaving Analysis)	SW
2859	8	61.219667	I-20 WB (Weaving Analysis)	SW
2859	9	63.024727	I-20 WB (Weaving Analysis)	SW
2859	10	24.405338	I-20 WB (Weaving Analysis)	SW
2863	1	55.202557	I-20 EB (Merge Analysis)	E
2863	2	16.990198	I-20 EB (Merge Analysis)	E
2863	3	26.449115	I-20 EB (Merge Analysis)	E
2863	4	51.292733	I-20 EB (Merge Analysis)	E
2863	5	25.95032	I-20 EB (Merge Analysis)	E
2863	6	15.849725	I-20 EB (Merge Analysis)	E
2863	7	47.330951	I-20 EB (Merge Analysis)	E
2863	8	15.95364	I-20 EB (Merge Analysis)	E
2863	9	16.057556	I-20 EB (Merge Analysis)	E
2863	10	21.549495	I-20 EB (Merge Analysis)	E
4563	1	9.591997	I-126 SB (Merge Analysis)	E
4563	2	9.662397	I-126 SB (Merge Analysis)	E
4563	3	11.008797	I-126 SB (Merge Analysis)	E
4563	4	10.997063	I-126 SB (Merge Analysis)	E
4563	5	10.777063	I-126 SB (Merge Analysis)	E
4563	6	11.219997	I-126 SB (Merge Analysis)	E

No Build PM

ID	Run	Density	Name (Type)	Direction
4563	7	9.650664	I-126 SB (Merge Analysis)	E
4563	8	10.565863	I-126 SB (Merge Analysis)	E
4563	9	10.750664	I-126 SB (Merge Analysis)	E
4563	10	9.899997	I-126 SB (Merge Analysis)	E
4566	1	78.400773	I-126 NB (Basic Analysis)	W
4566	2	89.642545	I-126 NB (Basic Analysis)	W
4566	3	84.44051	I-126 NB (Basic Analysis)	W
4566	4	90.279908	I-126 NB (Basic Analysis)	W
4566	5	82.783702	I-126 NB (Basic Analysis)	W
4566	6	96.148892	I-126 NB (Basic Analysis)	W
4566	7	90.865708	I-126 NB (Basic Analysis)	W
4566	8	84.108302	I-126 NB (Basic Analysis)	W
4566	9	84.794694	I-126 NB (Basic Analysis)	W
4566	10	91.970528	I-126 NB (Basic Analysis)	W
4570	1	107.755361	I-126 NB (Basic Analysis)	NW
4570	2	116.622365	I-126 NB (Basic Analysis)	NW
4570	3	114.388038	I-126 NB (Basic Analysis)	NW
4570	4	118.18699	I-126 NB (Basic Analysis)	NW
4570	5	109.66318	I-126 NB (Basic Analysis)	NW
4570	6	120.300962	I-126 NB (Basic Analysis)	NW
4570	7	116.996541	I-126 NB (Basic Analysis)	NW
4570	8	111.431576	I-126 NB (Basic Analysis)	NW
4570	9	115.138772	I-126 NB (Basic Analysis)	NW
4570	10	115.918105	I-126 NB (Basic Analysis)	NW
4573	1	11.99472	I-126 SB (Basic Analysis)	E
4573	2	13.283798	I-126 SB (Basic Analysis)	E
4573	3	12.403452	I-126 SB (Basic Analysis)	E
4573	4	13.556287	I-126 SB (Basic Analysis)	E
4573	5	12.00258	I-126 SB (Basic Analysis)	E
4573	6	13.464584	I-126 SB (Basic Analysis)	E
4573	7	13.089913	I-126 SB (Basic Analysis)	E
4573	8	11.963279	I-126 SB (Basic Analysis)	E
4573	9	13.797334	I-126 SB (Basic Analysis)	E
4573	10	14.01742	I-126 SB (Basic Analysis)	E
4578	1	13.95732	I-126 SB (Basic Analysis)	E
4578	2	14.800708	I-126 SB (Basic Analysis)	E
4578	3	14.440705	I-126 SB (Basic Analysis)	E
4578	4	13.822107	I-126 SB (Basic Analysis)	E
4578	5	14.140702	I-126 SB (Basic Analysis)	E
4578	6	14.452536	I-126 SB (Basic Analysis)	E
4578	7	14.38662	I-126 SB (Basic Analysis)	E
4578	8	19.902448	I-126 SB (Basic Analysis)	E
4578	9	14.455916	I-126 SB (Basic Analysis)	E
4578	10	15.1886	I-126 SB (Basic Analysis)	E
4579	1	10.9803	I-126 SB (Diverge Analysis)	E
4579	2	11.63143	I-126 SB (Diverge Analysis)	E
4579	3	9.568211	I-126 SB (Diverge Analysis)	E
4579	4	10.331786	I-126 SB (Diverge Analysis)	E
4579	5	11.435307	I-126 SB (Diverge Analysis)	E
4579	6	11.963533	I-126 SB (Diverge Analysis)	E
4579	7	12.520524	I-126 SB (Diverge Analysis)	E
4579	8	68.930869	I-126 SB (Diverge Analysis)	E
4579	9	10.3867	I-126 SB (Diverge Analysis)	E
4579	10	12.38193	I-126 SB (Diverge Analysis)	E
4586	1	75.028022	I-126 NB (Merge Analysis)	NW
4586	2	77.820577	I-126 NB (Merge Analysis)	NW
4586	3	77.02712	I-126 NB (Merge Analysis)	NW
4586	4	79.927139	I-126 NB (Merge Analysis)	NW
4586	5	70.471903	I-126 NB (Merge Analysis)	NW
4586	6	76.392649	I-126 NB (Merge Analysis)	NW
4586	7	75.398988	I-126 NB (Merge Analysis)	NW
4586	8	71.530335	I-126 NB (Merge Analysis)	NW
4586	9	75.064824	I-126 NB (Merge Analysis)	NW
4586	10	75.572695	I-126 NB (Merge Analysis)	NW

No Build PM

ID	Run	Density	Name (Type)	Direction
4587	1	106.023845	I-126 NB (Basic Analysis)	NW
4587	2	112.922269	I-126 NB (Basic Analysis)	NW
4587	3	115.344753	I-126 NB (Basic Analysis)	NW
4587	4	118.743374	I-126 NB (Basic Analysis)	NW
4587	5	107.662642	I-126 NB (Basic Analysis)	NW
4587	6	117.509314	I-126 NB (Basic Analysis)	NW
4587	7	116.156216	I-126 NB (Basic Analysis)	NW
4587	8	108.781628	I-126 NB (Basic Analysis)	NW
4587	9	114.03927	I-126 NB (Basic Analysis)	NW
4587	10	114.481706	I-126 NB (Basic Analysis)	NW
4588	1	75.658654	I-126 NB (Diverge Analysis)	NW
4588	2	77.728611	I-126 NB (Diverge Analysis)	NW
4588	3	77.885405	I-126 NB (Diverge Analysis)	NW
4588	4	81.805257	I-126 NB (Diverge Analysis)	NW
4588	5	71.30693	I-126 NB (Diverge Analysis)	NW
4588	6	75.686162	I-126 NB (Diverge Analysis)	NW
4588	7	76.505893	I-126 NB (Diverge Analysis)	NW
4588	8	72.280704	I-126 NB (Diverge Analysis)	NW
4588	9	76.241818	I-126 NB (Diverge Analysis)	NW
4588	10	75.840205	I-126 NB (Diverge Analysis)	NW
4589	1	75.658654	I-126 NB (Diverge Analysis)	NW
4589	2	77.728611	I-126 NB (Diverge Analysis)	NW
4589	3	77.885405	I-126 NB (Diverge Analysis)	NW
4589	4	81.805257	I-126 NB (Diverge Analysis)	NW
4589	5	71.30693	I-126 NB (Diverge Analysis)	NW
4589	6	75.686162	I-126 NB (Diverge Analysis)	NW
4589	7	76.505893	I-126 NB (Diverge Analysis)	NW
4589	8	72.280704	I-126 NB (Diverge Analysis)	NW
4589	9	76.241818	I-126 NB (Diverge Analysis)	NW
4589	10	75.840205	I-126 NB (Diverge Analysis)	NW
4593	1	11.433153	I-126 SB (Merge Analysis)	SE
4593	2	13.340841	I-126 SB (Merge Analysis)	SE
4593	3	12.416845	I-126 SB (Merge Analysis)	SE
4593	4	11.770567	I-126 SB (Merge Analysis)	SE
4593	5	11.627815	I-126 SB (Merge Analysis)	SE
4593	6	11.324142	I-126 SB (Merge Analysis)	SE
4593	7	12.100195	I-126 SB (Merge Analysis)	SE
4593	8	12.499901	I-126 SB (Merge Analysis)	SE
4593	9	11.440939	I-126 SB (Merge Analysis)	SE
4593	10	12.751664	I-126 SB (Merge Analysis)	SE
4594	1	17.314172	I-126 SB (Basic Analysis)	SE
4594	2	16.892182	I-126 SB (Basic Analysis)	SE
4594	3	16.808098	I-126 SB (Basic Analysis)	SE
4594	4	17.240304	I-126 SB (Basic Analysis)	SE
4594	5	17.081566	I-126 SB (Basic Analysis)	SE
4594	6	18.367969	I-126 SB (Basic Analysis)	SE
4594	7	17.217515	I-126 SB (Basic Analysis)	SE
4594	8	17.56328	I-126 SB (Basic Analysis)	SE
4594	9	17.496484	I-126 SB (Basic Analysis)	SE
4594	10	17.297669	I-126 SB (Basic Analysis)	SE
4599	1	103.609125	I-126 NB (Basic Analysis)	NW
4599	2	109.517718	I-126 NB (Basic Analysis)	NW
4599	3	107.142873	I-126 NB (Basic Analysis)	NW
4599	4	112.023737	I-126 NB (Basic Analysis)	NW
4599	5	106.322742	I-126 NB (Basic Analysis)	NW
4599	6	109.721895	I-126 NB (Basic Analysis)	NW
4599	7	111.396377	I-126 NB (Basic Analysis)	NW
4599	8	106.153926	I-126 NB (Basic Analysis)	NW
4599	9	108.639413	I-126 NB (Basic Analysis)	NW
4599	10	109.971698	I-126 NB (Basic Analysis)	NW
4601	1	104.884899	I-126 NB (Basic Analysis)	NW
4601	2	107.968799	I-126 NB (Basic Analysis)	NW
4601	3	106.947679	I-126 NB (Basic Analysis)	NW
4601	4	109.716147	I-126 NB (Basic Analysis)	NW

No Build PM

ID	Run	Density	Name (Type)	Direction
4601	5	110.200298	I-126 NB (Basic Analysis)	NW
4601	6	113.379563	I-126 NB (Basic Analysis)	NW
4601	7	112.742829	I-126 NB (Basic Analysis)	NW
4601	8	108.124315	I-126 NB (Basic Analysis)	NW
4601	9	110.452644	I-126 NB (Basic Analysis)	NW
4601	10	111.294776	I-126 NB (Basic Analysis)	NW
4602	1	9.807754	WB EXPRESSWAY TO I-26 WB (Basic Anal	NW
4602	2	10.502791	WB EXPRESSWAY TO I-26 WB (Basic Anal	NW
4602	3	11.789898	WB EXPRESSWAY TO I-26 WB (Basic Anal	NW
4602	4	14.22253	WB EXPRESSWAY TO I-26 WB (Basic Anal	NW
4602	5	12.510678	WB EXPRESSWAY TO I-26 WB (Basic Anal	NW
4602	6	9.936464	WB EXPRESSWAY TO I-26 WB (Basic Anal	NW
4602	7	12.562162	WB EXPRESSWAY TO I-26 WB (Basic Anal	NW
4602	8	11.944351	WB EXPRESSWAY TO I-26 WB (Basic Anal	NW
4602	9	11.738414	WB EXPRESSWAY TO I-26 WB (Basic Anal	NW
4602	10	49.965485	WB EXPRESSWAY TO I-26 WB (Basic Anal	NW
4603	1	111.805487	I-126 NB (Basic Analysis)	NW
4603	2	113.393699	I-126 NB (Basic Analysis)	NW
4603	3	110.544137	I-126 NB (Basic Analysis)	NW
4603	4	117.613564	I-126 NB (Basic Analysis)	NW
4603	5	116.691647	I-126 NB (Basic Analysis)	NW
4603	6	119.35892	I-126 NB (Basic Analysis)	NW
4603	7	119.021583	I-126 NB (Basic Analysis)	NW
4603	8	117.372609	I-126 NB (Basic Analysis)	NW
4603	9	115.606299	I-126 NB (Basic Analysis)	NW
4603	10	118.001188	I-126 NB (Basic Analysis)	NW
4609	1	20.474092	I-126 SB (Basic Analysis)	SE
4609	2	20.266425	I-126 SB (Basic Analysis)	SE
4609	3	19.704779	I-126 SB (Basic Analysis)	SE
4609	4	19.874689	I-126 SB (Basic Analysis)	SE
4609	5	18.874111	I-126 SB (Basic Analysis)	SE
4609	6	21.163169	I-126 SB (Basic Analysis)	SE
4609	7	19.723658	I-126 SB (Basic Analysis)	SE
4609	8	20.049318	I-126 SB (Basic Analysis)	SE
4609	9	20.360819	I-126 SB (Basic Analysis)	SE
4609	10	20.311262	I-126 SB (Basic Analysis)	SE
4611	1	110.061567	I-26 EB (Diverge Analysis)	SE
4611	2	116.450365	I-26 EB (Diverge Analysis)	SE
4611	3	98.507171	I-26 EB (Diverge Analysis)	SE
4611	4	101.047437	I-26 EB (Diverge Analysis)	SE
4611	5	92.238639	I-26 EB (Diverge Analysis)	SE
4611	6	105.925568	I-26 EB (Diverge Analysis)	SE
4611	7	96.600504	I-26 EB (Diverge Analysis)	SE
4611	8	103.992503	I-26 EB (Diverge Analysis)	SE
4611	9	95.911172	I-26 EB (Diverge Analysis)	SE
4611	10	115.957566	I-26 EB (Diverge Analysis)	SE
4619	1	149.84303	I-26 WB (Basic Analysis)	NW
4619	2	155.032208	I-26 WB (Basic Analysis)	NW
4619	3	152.770258	I-26 WB (Basic Analysis)	NW
4619	4	156.739758	I-26 WB (Basic Analysis)	NW
4619	5	156.93934	I-26 WB (Basic Analysis)	NW
4619	6	164.013475	I-26 WB (Basic Analysis)	NW
4619	7	162.904677	I-26 WB (Basic Analysis)	NW
4619	8	161.485414	I-26 WB (Basic Analysis)	NW
4619	9	156.22971	I-26 WB (Basic Analysis)	NW
4619	10	161.973286	I-26 WB (Basic Analysis)	NW
4624	1	109.115951	I-26 EB (Weaving Analysis)	SE
4624	2	95.270379	I-26 EB (Weaving Analysis)	SE
4624	3	100.43803	I-26 EB (Weaving Analysis)	SE
4624	4	110.875463	I-26 EB (Weaving Analysis)	SE
4624	5	108.266834	I-26 EB (Weaving Analysis)	SE
4624	6	98.179553	I-26 EB (Weaving Analysis)	SE
4624	7	106.571517	I-26 EB (Weaving Analysis)	SE
4624	8	101.380522	I-26 EB (Weaving Analysis)	SE

No Build PM

ID	Run	Density	Name (Type)	Direction
4624	9	106.13091	I-26 EB (Weaving Analysis)	SE
4624	10	102.378454	I-26 EB (Weaving Analysis)	SE
4639	1	99.45349	I-26 EB (Basic Analysis)	SE
4639	2	90.625273	I-26 EB (Basic Analysis)	SE
4639	3	88.920753	I-26 EB (Basic Analysis)	SE
4639	4	108.751321	I-26 EB (Basic Analysis)	SE
4639	5	90.96071	I-26 EB (Basic Analysis)	SE
4639	6	78.102273	I-26 EB (Basic Analysis)	SE
4639	7	88.95057	I-26 EB (Basic Analysis)	SE
4639	8	85.645889	I-26 EB (Basic Analysis)	SE
4639	9	95.30152	I-26 EB (Basic Analysis)	SE
4639	10	89.884826	I-26 EB (Basic Analysis)	SE
4641	1	83.096237	I-26 EB (Basic Analysis)	SE
4641	2	87.788992	I-26 EB (Basic Analysis)	SE
4641	3	71.152305	I-26 EB (Basic Analysis)	SE
4641	4	96.593852	I-26 EB (Basic Analysis)	SE
4641	5	71.449565	I-26 EB (Basic Analysis)	SE
4641	6	72.430526	I-26 EB (Basic Analysis)	SE
4641	7	65.763961	I-26 EB (Basic Analysis)	SE
4641	8	73.070627	I-26 EB (Basic Analysis)	SE
4641	9	77.577098	I-26 EB (Basic Analysis)	SE
4641	10	87.953476	I-26 EB (Basic Analysis)	SE
4643	1	108.664826	I-26 WB (Weaving Analysis)	NW
4643	2	113.106081	I-26 WB (Weaving Analysis)	NW
4643	3	106.152385	I-26 WB (Weaving Analysis)	NW
4643	4	116.639867	I-26 WB (Weaving Analysis)	NW
4643	5	112.775122	I-26 WB (Weaving Analysis)	NW
4643	6	116.668337	I-26 WB (Weaving Analysis)	NW
4643	7	111.17015	I-26 WB (Weaving Analysis)	NW
4643	8	114.390771	I-26 WB (Weaving Analysis)	NW
4643	9	112.604305	I-26 WB (Weaving Analysis)	NW
4643	10	104.988692	I-26 WB (Weaving Analysis)	NW
4646	1	134.876297	I-26 WB (Basic Analysis)	NW
4646	2	137.928173	I-26 WB (Basic Analysis)	NW
4646	3	132.334941	I-26 WB (Basic Analysis)	NW
4646	4	137.273718	I-26 WB (Basic Analysis)	NW
4646	5	135.850109	I-26 WB (Basic Analysis)	NW
4646	6	138.310502	I-26 WB (Basic Analysis)	NW
4646	7	136.387617	I-26 WB (Basic Analysis)	NW
4646	8	136.655247	I-26 WB (Basic Analysis)	NW
4646	9	138.076606	I-26 WB (Basic Analysis)	NW
4646	10	129.845311	I-26 WB (Basic Analysis)	NW
4649	1	81.73017	I-26 EB (Basic Analysis)	SE
4649	2	76.827073	I-26 EB (Basic Analysis)	SE
4649	3	65.538546	I-26 EB (Basic Analysis)	SE
4649	4	90.058784	I-26 EB (Basic Analysis)	SE
4649	5	66.970991	I-26 EB (Basic Analysis)	SE
4649	6	60.811238	I-26 EB (Basic Analysis)	SE
4649	7	59.946544	I-26 EB (Basic Analysis)	SE
4649	8	67.574376	I-26 EB (Basic Analysis)	SE
4649	9	67.066012	I-26 EB (Basic Analysis)	SE
4649	10	87.20102	I-26 EB (Basic Analysis)	SE
4650	1	80.216484	I-26 EB (Weaving Analysis)	SE
4650	2	78.53194	I-26 EB (Weaving Analysis)	SE
4650	3	62.632178	I-26 EB (Weaving Analysis)	SE
4650	4	95.683896	I-26 EB (Weaving Analysis)	SE
4650	5	64.442565	I-26 EB (Weaving Analysis)	SE
4650	6	60.766968	I-26 EB (Weaving Analysis)	SE
4650	7	57.59474	I-26 EB (Weaving Analysis)	SE
4650	8	68.389783	I-26 EB (Weaving Analysis)	SE
4650	9	68.110687	I-26 EB (Weaving Analysis)	SE
4650	10	86.923515	I-26 EB (Weaving Analysis)	SE
4651	1	112.882288	I-26 WB (Weaving Analysis)	NW
4651	2	116.260733	I-26 WB (Weaving Analysis)	NW

No Build PM

ID	Run	Density	Name (Type)	Direction
4651	3	113.272557	I-26 WB (Weaving Analysis)	NW
4651	4	112.282323	I-26 WB (Weaving Analysis)	NW
4651	5	112.838601	I-26 WB (Weaving Analysis)	NW
4651	6	114.816157	I-26 WB (Weaving Analysis)	NW
4651	7	112.751228	I-26 WB (Weaving Analysis)	NW
4651	8	113.399248	I-26 WB (Weaving Analysis)	NW
4651	9	116.518486	I-26 WB (Weaving Analysis)	NW
4651	10	107.715598	I-26 WB (Weaving Analysis)	NW
4654	1	92.468571	I-26 WB (Basic Analysis)	NW
4654	2	95.568286	I-26 WB (Basic Analysis)	NW
4654	3	92.540046	I-26 WB (Basic Analysis)	NW
4654	4	89.767606	I-26 WB (Basic Analysis)	NW
4654	5	93.108075	I-26 WB (Basic Analysis)	NW
4654	6	91.987061	I-26 WB (Basic Analysis)	NW
4654	7	92.145057	I-26 WB (Basic Analysis)	NW
4654	8	94.449154	I-26 WB (Basic Analysis)	NW
4654	9	94.723765	I-26 WB (Basic Analysis)	NW
4654	10	87.911162	I-26 WB (Basic Analysis)	NW
4659	1	72.046962	I-26 WB (Basic Analysis)	NW
4659	2	72.139103	I-26 WB (Basic Analysis)	NW
4659	3	71.362493	I-26 WB (Basic Analysis)	NW
4659	4	71.296679	I-26 WB (Basic Analysis)	NW
4659	5	69.453877	I-26 WB (Basic Analysis)	NW
4659	6	68.190242	I-26 WB (Basic Analysis)	NW
4659	7	71.974567	I-26 WB (Basic Analysis)	NW
4659	8	72.35629	I-26 WB (Basic Analysis)	NW
4659	9	74.738769	I-26 WB (Basic Analysis)	NW
4659	10	71.132143	I-26 WB (Basic Analysis)	NW
4665	1	81.044113	I-26 EB (Basic Analysis)	SE
4665	2	74.902573	I-26 EB (Basic Analysis)	SE
4665	3	67.577122	I-26 EB (Basic Analysis)	SE
4665	4	88.0265	I-26 EB (Basic Analysis)	SE
4665	5	68.276705	I-26 EB (Basic Analysis)	SE
4665	6	63.507426	I-26 EB (Basic Analysis)	SE
4665	7	60.594735	I-26 EB (Basic Analysis)	SE
4665	8	67.361864	I-26 EB (Basic Analysis)	SE
4665	9	69.527885	I-26 EB (Basic Analysis)	SE
4665	10	84.010618	I-26 EB (Basic Analysis)	SE
4667	1	65.756068	I-26 EB (Merge Analysis)	SE
4667	2	60.466993	I-26 EB (Merge Analysis)	SE
4667	3	53.95619	I-26 EB (Merge Analysis)	SE
4667	4	64.797364	I-26 EB (Merge Analysis)	SE
4667	5	54.266863	I-26 EB (Merge Analysis)	SE
4667	6	58.825951	I-26 EB (Merge Analysis)	SE
4667	7	50.963812	I-26 EB (Merge Analysis)	SE
4667	8	51.951107	I-26 EB (Merge Analysis)	SE
4667	9	54.876775	I-26 EB (Merge Analysis)	SE
4667	10	65.277669	I-26 EB (Merge Analysis)	SE
4668	1	65.756068	I-26 EB (Merge Analysis)	SE
4668	2	60.466993	I-26 EB (Merge Analysis)	SE
4668	3	53.95619	I-26 EB (Merge Analysis)	SE
4668	4	64.797364	I-26 EB (Merge Analysis)	SE
4668	5	54.266863	I-26 EB (Merge Analysis)	SE
4668	6	58.825951	I-26 EB (Merge Analysis)	SE
4668	7	50.963812	I-26 EB (Merge Analysis)	SE
4668	8	51.951107	I-26 EB (Merge Analysis)	SE
4668	9	54.876775	I-26 EB (Merge Analysis)	SE
4668	10	65.277669	I-26 EB (Merge Analysis)	SE
4669	1	59.940944	I-26 EB (Basic Analysis)	SE
4669	2	52.739474	I-26 EB (Basic Analysis)	SE
4669	3	44.346886	I-26 EB (Basic Analysis)	SE
4669	4	58.434933	I-26 EB (Basic Analysis)	SE
4669	5	44.654934	I-26 EB (Basic Analysis)	SE
4669	6	43.393649	I-26 EB (Basic Analysis)	SE

No Build PM

ID	Run	Density	Name (Type)	Direction
4669	7	43.823205	I-26 EB (Basic Analysis)	SE
4669	8	44.006322	I-26 EB (Basic Analysis)	SE
4669	9	42.974362	I-26 EB (Basic Analysis)	SE
4669	10	55.830219	I-26 EB (Basic Analysis)	SE
4670	1	59.784718	I-26 EB (Diverge Analysis)	SE
4670	2	56.660398	I-26 EB (Diverge Analysis)	SE
4670	3	43.801832	I-26 EB (Diverge Analysis)	SE
4670	4	61.550243	I-26 EB (Diverge Analysis)	SE
4670	5	47.830501	I-26 EB (Diverge Analysis)	SE
4670	6	41.718195	I-26 EB (Diverge Analysis)	SE
4670	7	43.808649	I-26 EB (Diverge Analysis)	SE
4670	8	45.015205	I-26 EB (Diverge Analysis)	SE
4670	9	46.594406	I-26 EB (Diverge Analysis)	SE
4670	10	58.816747	I-26 EB (Diverge Analysis)	SE
4675	1	39.382924	I-26 WB (Merge Analysis)	NW
4675	2	38.180258	I-26 WB (Merge Analysis)	NW
4675	3	36.08977	I-26 WB (Merge Analysis)	NW
4675	4	38.358213	I-26 WB (Merge Analysis)	NW
4675	5	36.185592	I-26 WB (Merge Analysis)	NW
4675	6	36.834836	I-26 WB (Merge Analysis)	NW
4675	7	37.315903	I-26 WB (Merge Analysis)	NW
4675	8	38.383635	I-26 WB (Merge Analysis)	NW
4675	9	38.512702	I-26 WB (Merge Analysis)	NW
4675	10	39.22648	I-26 WB (Merge Analysis)	NW
4676	1	49.787343	I-26 WB (Basic Analysis)	NW
4676	2	49.775725	I-26 WB (Basic Analysis)	NW
4676	3	49.552474	I-26 WB (Basic Analysis)	NW
4676	4	50.663747	I-26 WB (Basic Analysis)	NW
4676	5	49.471971	I-26 WB (Basic Analysis)	NW
4676	6	49.960799	I-26 WB (Basic Analysis)	NW
4676	7	50.114335	I-26 WB (Basic Analysis)	NW
4676	8	50.752549	I-26 WB (Basic Analysis)	NW
4676	9	51.855523	I-26 WB (Basic Analysis)	NW
4676	10	54.804255	I-26 WB (Basic Analysis)	NW
4677	1	49.787343	I-26 WB (Basic Analysis)	NW
4677	2	49.775725	I-26 WB (Basic Analysis)	NW
4677	3	49.552474	I-26 WB (Basic Analysis)	NW
4677	4	50.663747	I-26 WB (Basic Analysis)	NW
4677	5	49.471971	I-26 WB (Basic Analysis)	NW
4677	6	49.960799	I-26 WB (Basic Analysis)	NW
4677	7	50.114335	I-26 WB (Basic Analysis)	NW
4677	8	50.752549	I-26 WB (Basic Analysis)	NW
4677	9	51.855523	I-26 WB (Basic Analysis)	NW
4677	10	54.804255	I-26 WB (Basic Analysis)	NW
4687	1	68.020123	I-26 EB (Basic Analysis)	SE
4687	2	75.921409	I-26 EB (Basic Analysis)	SE
4687	3	48.392483	I-26 EB (Basic Analysis)	SE
4687	4	68.234922	I-26 EB (Basic Analysis)	SE
4687	5	67.422818	I-26 EB (Basic Analysis)	SE
4687	6	72.972884	I-26 EB (Basic Analysis)	SE
4687	7	58.975447	I-26 EB (Basic Analysis)	SE
4687	8	55.218123	I-26 EB (Basic Analysis)	SE
4687	9	67.120447	I-26 EB (Basic Analysis)	SE
4687	10	79.50772	I-26 EB (Basic Analysis)	SE
4689	1	62.14057	I-26 WB (Basic Analysis)	NW
4689	2	40.32267	I-26 WB (Basic Analysis)	NW
4689	3	60.638212	I-26 WB (Basic Analysis)	NW
4689	4	65.127742	I-26 WB (Basic Analysis)	NW
4689	5	41.379954	I-26 WB (Basic Analysis)	NW
4689	6	41.456595	I-26 WB (Basic Analysis)	NW
4689	7	44.75218	I-26 WB (Basic Analysis)	NW
4689	8	65.120355	I-26 WB (Basic Analysis)	NW
4689	9	67.370661	I-26 WB (Basic Analysis)	NW
4689	10	76.958237	I-26 WB (Basic Analysis)	NW

No Build PM

ID	Run	Density	Name (Type)	Direction
4700	1	46.692004	I-26 WB (Merge Analysis)	NW
4700	2	38.711733	I-26 WB (Merge Analysis)	NW
4700	3	45.070314	I-26 WB (Merge Analysis)	NW
4700	4	46.605591	I-26 WB (Merge Analysis)	NW
4700	5	39.773177	I-26 WB (Merge Analysis)	NW
4700	6	40.457282	I-26 WB (Merge Analysis)	NW
4700	7	40.1822	I-26 WB (Merge Analysis)	NW
4700	8	45.849474	I-26 WB (Merge Analysis)	NW
4700	9	46.231133	I-26 WB (Merge Analysis)	NW
4700	10	47.152875	I-26 WB (Merge Analysis)	NW
4701	1	45.819624	I-26 WB (Basic Analysis)	NW
4701	2	44.284431	I-26 WB (Basic Analysis)	NW
4701	3	44.930463	I-26 WB (Basic Analysis)	NW
4701	4	48.382911	I-26 WB (Basic Analysis)	NW
4701	5	45.173593	I-26 WB (Basic Analysis)	NW
4701	6	46.632374	I-26 WB (Basic Analysis)	NW
4701	7	45.131913	I-26 WB (Basic Analysis)	NW
4701	8	47.299245	I-26 WB (Basic Analysis)	NW
4701	9	46.236419	I-26 WB (Basic Analysis)	NW
4701	10	44.61092	I-26 WB (Basic Analysis)	NW
4702	1	38.189163	I-26 WB (Diverge Analysis)	NW
4702	2	32.987761	I-26 WB (Diverge Analysis)	NW
4702	3	37.442475	I-26 WB (Diverge Analysis)	NW
4702	4	38.031882	I-26 WB (Diverge Analysis)	NW
4702	5	33.621652	I-26 WB (Diverge Analysis)	NW
4702	6	34.352454	I-26 WB (Diverge Analysis)	NW
4702	7	34.94345	I-26 WB (Diverge Analysis)	NW
4702	8	37.121557	I-26 WB (Diverge Analysis)	NW
4702	9	38.15739	I-26 WB (Diverge Analysis)	NW
4702	10	38.475129	I-26 WB (Diverge Analysis)	NW
4703	1	38.189163	I-26 WB (Diverge Analysis)	NW
4703	2	32.987761	I-26 WB (Diverge Analysis)	NW
4703	3	37.442475	I-26 WB (Diverge Analysis)	NW
4703	4	38.031882	I-26 WB (Diverge Analysis)	NW
4703	5	33.621652	I-26 WB (Diverge Analysis)	NW
4703	6	34.352454	I-26 WB (Diverge Analysis)	NW
4703	7	34.94345	I-26 WB (Diverge Analysis)	NW
4703	8	37.121557	I-26 WB (Diverge Analysis)	NW
4703	9	38.15739	I-26 WB (Diverge Analysis)	NW
4703	10	38.475129	I-26 WB (Diverge Analysis)	NW
4705	1	36.691651	I-26 EB (Merge Analysis)	SE
4705	2	43.502595	I-26 EB (Merge Analysis)	SE
4705	3	34.778186	I-26 EB (Merge Analysis)	SE
4705	4	37.516537	I-26 EB (Merge Analysis)	SE
4705	5	55.071284	I-26 EB (Merge Analysis)	SE
4705	6	39.932596	I-26 EB (Merge Analysis)	SE
4705	7	37.802768	I-26 EB (Merge Analysis)	SE
4705	8	34.992296	I-26 EB (Merge Analysis)	SE
4705	9	48.828294	I-26 EB (Merge Analysis)	SE
4705	10	67.248494	I-26 EB (Merge Analysis)	SE
4706	1	36.691651	I-26 EB (Merge Analysis)	SE
4706	2	43.502595	I-26 EB (Merge Analysis)	SE
4706	3	34.778186	I-26 EB (Merge Analysis)	SE
4706	4	37.516537	I-26 EB (Merge Analysis)	SE
4706	5	55.071284	I-26 EB (Merge Analysis)	SE
4706	6	39.932596	I-26 EB (Merge Analysis)	SE
4706	7	37.802768	I-26 EB (Merge Analysis)	SE
4706	8	34.992296	I-26 EB (Merge Analysis)	SE
4706	9	48.828294	I-26 EB (Merge Analysis)	SE
4706	10	67.248494	I-26 EB (Merge Analysis)	SE
4707	1	38.629055	I-26 EB (Diverge Analysis)	SE
4707	2	47.094653	I-26 EB (Diverge Analysis)	SE
4707	3	35.255723	I-26 EB (Diverge Analysis)	SE
4707	4	38.083455	I-26 EB (Diverge Analysis)	SE

No Build PM

ID	Run	Density	Name (Type)	Direction
4707	5	52.747184	I-26 EB (Diverge Analysis)	SE
4707	6	45.73652	I-26 EB (Diverge Analysis)	SE
4707	7	37.141855	I-26 EB (Diverge Analysis)	SE
4707	8	35.909856	I-26 EB (Diverge Analysis)	SE
4707	9	51.556251	I-26 EB (Diverge Analysis)	SE
4707	10	64.116781	I-26 EB (Diverge Analysis)	SE
4712	1	35.19115	I-26 WB (Basic Analysis)	NW
4712	2	35.634659	I-26 WB (Basic Analysis)	NW
4712	3	34.058897	I-26 WB (Basic Analysis)	NW
4712	4	34.760685	I-26 WB (Basic Analysis)	NW
4712	5	34.484144	I-26 WB (Basic Analysis)	NW
4712	6	35.418122	I-26 WB (Basic Analysis)	NW
4712	7	35.089403	I-26 WB (Basic Analysis)	NW
4712	8	34.56241	I-26 WB (Basic Analysis)	NW
4712	9	35.407686	I-26 WB (Basic Analysis)	NW
4712	10	33.764094	I-26 WB (Basic Analysis)	NW
4714	1	31.092947	I-26 EB (Basic Analysis)	SE
4714	2	31.18542	I-26 EB (Basic Analysis)	SE
4714	3	29.793179	I-26 EB (Basic Analysis)	SE
4714	4	29.966567	I-26 EB (Basic Analysis)	SE
4714	5	37.564811	I-26 EB (Basic Analysis)	SE
4714	6	30.318481	I-26 EB (Basic Analysis)	SE
4714	7	30.771858	I-26 EB (Basic Analysis)	SE
4714	8	30.357011	I-26 EB (Basic Analysis)	SE
4714	9	30.443063	I-26 EB (Basic Analysis)	SE
4714	10	50.76541	I-26 EB (Basic Analysis)	SE
4718	1	32.780343	I-26 EB (Merge Analysis)	SE
4718	2	30.311805	I-26 EB (Merge Analysis)	SE
4718	3	30.797942	I-26 EB (Merge Analysis)	SE
4718	4	31.170514	I-26 EB (Merge Analysis)	SE
4718	5	31.654658	I-26 EB (Merge Analysis)	SE
4718	6	30.849743	I-26 EB (Merge Analysis)	SE
4718	7	30.770049	I-26 EB (Merge Analysis)	SE
4718	8	29.490952	I-26 EB (Merge Analysis)	SE
4718	9	31.901711	I-26 EB (Merge Analysis)	SE
4718	10	32.357962	I-26 EB (Merge Analysis)	SE
4719	1	32.780343	I-26 EB (Merge Analysis)	SE
4719	2	30.311805	I-26 EB (Merge Analysis)	SE
4719	3	30.797942	I-26 EB (Merge Analysis)	SE
4719	4	31.170514	I-26 EB (Merge Analysis)	SE
4719	5	31.654658	I-26 EB (Merge Analysis)	SE
4719	6	30.849743	I-26 EB (Merge Analysis)	SE
4719	7	30.770049	I-26 EB (Merge Analysis)	SE
4719	8	29.490952	I-26 EB (Merge Analysis)	SE
4719	9	31.901711	I-26 EB (Merge Analysis)	SE
4719	10	32.357962	I-26 EB (Merge Analysis)	SE
4720	1	31.902924	I-26 EB (Diverge Analysis)	SE
4720	2	30.544791	I-26 EB (Diverge Analysis)	SE
4720	3	30.084258	I-26 EB (Diverge Analysis)	SE
4720	4	30.902657	I-26 EB (Diverge Analysis)	SE
4720	5	31.627191	I-26 EB (Diverge Analysis)	SE
4720	6	31.503991	I-26 EB (Diverge Analysis)	SE
4720	7	30.266124	I-26 EB (Diverge Analysis)	SE
4720	8	31.87359	I-26 EB (Diverge Analysis)	SE
4720	9	31.081591	I-26 EB (Diverge Analysis)	SE
4720	10	33.90639	I-26 EB (Diverge Analysis)	SE
4725	1	37.491427	I-26 WB (Merge Analysis)	NW
4725	2	35.884351	I-26 WB (Merge Analysis)	NW
4725	3	36.625899	I-26 WB (Merge Analysis)	NW
4725	4	37.213055	I-26 WB (Merge Analysis)	NW
4725	5	35.243392	I-26 WB (Merge Analysis)	NW
4725	6	37.301947	I-26 WB (Merge Analysis)	NW
4725	7	36.532328	I-26 WB (Merge Analysis)	NW
4725	8	37.659854	I-26 WB (Merge Analysis)	NW

ID	Run	Density	Name (Type)	Direction
4725	9	35.315909	I-26 WB (Merge Analysis)	NW
4725	10	35.818852	I-26 WB (Merge Analysis)	NW
4726	1		I-26 WB (Basic Analysis)	NW
4726	2		I-26 WB (Basic Analysis)	NW
4726	3		I-26 WB (Basic Analysis)	NW
4726	4		I-26 WB (Basic Analysis)	NW
4726	5		I-26 WB (Basic Analysis)	NW
4726	6		I-26 WB (Basic Analysis)	NW
4726	7		I-26 WB (Basic Analysis)	NW
4726	8		I-26 WB (Basic Analysis)	NW
4726	9		I-26 WB (Basic Analysis)	NW
4726	10		I-26 WB (Basic Analysis)	NW
4727	1	38.758626	I-26 WB (Diverge Analysis)	NW
4727	2	35.819925	I-26 WB (Diverge Analysis)	NW
4727	3	36.017121	I-26 WB (Diverge Analysis)	NW
4727	4	38.6961	I-26 WB (Diverge Analysis)	NW
4727	5	36.849192	I-26 WB (Diverge Analysis)	NW
4727	6	38.833176	I-26 WB (Diverge Analysis)	NW
4727	7	38.395497	I-26 WB (Diverge Analysis)	NW
4727	8	38.308923	I-26 WB (Diverge Analysis)	NW
4727	9	37.572741	I-26 WB (Diverge Analysis)	NW
4727	10	36.077242	I-26 WB (Diverge Analysis)	NW
4728	1	38.903986	I-26 WB (Basic Analysis)	NW
4728	2	37.28903	I-26 WB (Basic Analysis)	NW
4728	3	38.314092	I-26 WB (Basic Analysis)	NW
4728	4	41.108835	I-26 WB (Basic Analysis)	NW
4728	5	39.880695	I-26 WB (Basic Analysis)	NW
4728	6	37.666175	I-26 WB (Basic Analysis)	NW
4728	7	41.466639	I-26 WB (Basic Analysis)	NW
4728	8	38.5075	I-26 WB (Basic Analysis)	NW
4728	9	39.609924	I-26 WB (Basic Analysis)	NW
4728	10	38.565522	I-26 WB (Basic Analysis)	NW
4729	1	28.917703	I-26 WB (Diverge Analysis)	NW
4729	2	28.664058	I-26 WB (Diverge Analysis)	NW
4729	3	26.915012	I-26 WB (Diverge Analysis)	NW
4729	4	27.828133	I-26 WB (Diverge Analysis)	NW
4729	5	27.907535	I-26 WB (Diverge Analysis)	NW
4729	6	28.525105	I-26 WB (Diverge Analysis)	NW
4729	7	29.032394	I-26 WB (Diverge Analysis)	NW
4729	8	27.519348	I-26 WB (Diverge Analysis)	NW
4729	9	27.435535	I-26 WB (Diverge Analysis)	NW
4729	10	27.757554	I-26 WB (Diverge Analysis)	NW
4730	1	28.917703	I-26 WB (Diverge Analysis)	NW
4730	2	28.664058	I-26 WB (Diverge Analysis)	NW
4730	3	26.915012	I-26 WB (Diverge Analysis)	NW
4730	4	27.828133	I-26 WB (Diverge Analysis)	NW
4730	5	27.907535	I-26 WB (Diverge Analysis)	NW
4730	6	28.525105	I-26 WB (Diverge Analysis)	NW
4730	7	29.032394	I-26 WB (Diverge Analysis)	NW
4730	8	27.519348	I-26 WB (Diverge Analysis)	NW
4730	9	27.435535	I-26 WB (Diverge Analysis)	NW
4730	10	27.757554	I-26 WB (Diverge Analysis)	NW
4732	1	31.294005	I-26 WB (Basic Analysis)	NW
4732	2	31.609405	I-26 WB (Basic Analysis)	NW
4732	3	31.3866	I-26 WB (Basic Analysis)	NW
4732	4	31.623873	I-26 WB (Basic Analysis)	NW
4732	5	30.784736	I-26 WB (Basic Analysis)	NW
4732	6	30.405678	I-26 WB (Basic Analysis)	NW
4732	7	31.788807	I-26 WB (Basic Analysis)	NW

ID	Run	Density	Name (Type)	Direction
4732	8	31.597831	I-26 WB (Basic Analysis)	NW
4732	9	30.680568	I-26 WB (Basic Analysis)	NW
4732	10	31.502343	I-26 WB (Basic Analysis)	NW
4733	1	27.587079	I-26 EB (Basic Analysis)	SE
4733	2	28.836786	I-26 EB (Basic Analysis)	SE
4733	3	27.714388	I-26 EB (Basic Analysis)	SE
4733	4	26.905067	I-26 EB (Basic Analysis)	SE
4733	5	26.997301	I-26 EB (Basic Analysis)	SE
4733	6	27.522126	I-26 EB (Basic Analysis)	SE
4733	7	25.832034	I-26 EB (Basic Analysis)	SE
4733	8	27.953417	I-26 EB (Basic Analysis)	SE
4733	9	27.331162	I-26 EB (Basic Analysis)	SE
4733	10	28.506822	I-26 EB (Basic Analysis)	SE
4736	1	31.053841	I-26 EB (Basic Analysis)	SE
4736	2	25.571682	I-26 EB (Basic Analysis)	SE
4736	3	29.330303	I-26 EB (Basic Analysis)	SE
4736	4	28.888112	I-26 EB (Basic Analysis)	SE
4736	5	29.506174	I-26 EB (Basic Analysis)	SE
4736	6	29.767468	I-26 EB (Basic Analysis)	SE
4736	7	30.244833	I-26 EB (Basic Analysis)	SE
4736	8	27.154524	I-26 EB (Basic Analysis)	SE
4736	9	27.928357	I-26 EB (Basic Analysis)	SE
4736	10	28.099204	I-26 EB (Basic Analysis)	SE
4737	1	24.493891	I-26 EB (Diverge Analysis)	SE
4737	2	23.280808	I-26 EB (Diverge Analysis)	SE
4737	3	21.988665	I-26 EB (Diverge Analysis)	SE
4737	4	21.534068	I-26 EB (Diverge Analysis)	SE
4737	5	23.107864	I-26 EB (Diverge Analysis)	SE
4737	6	23.720582	I-26 EB (Diverge Analysis)	SE
4737	7	22.93739	I-26 EB (Diverge Analysis)	SE
4737	8	22.505028	I-26 EB (Diverge Analysis)	SE
4737	9	22.361731	I-26 EB (Diverge Analysis)	SE
4737	10	24.963312	I-26 EB (Diverge Analysis)	SE
4739	1	24.357521	I-26 WB (Weaving Analysis)	NW
4739	2	25.308338	I-26 WB (Weaving Analysis)	NW
4739	3	26.346367	I-26 WB (Weaving Analysis)	NW
4739	4	26.642036	I-26 WB (Weaving Analysis)	NW
4739	5	25.982632	I-26 WB (Weaving Analysis)	NW
4739	6	25.119026	I-26 WB (Weaving Analysis)	NW
4739	7	25.291322	I-26 WB (Weaving Analysis)	NW
4739	8	24.638299	I-26 WB (Weaving Analysis)	NW
4739	9	25.467872	I-26 WB (Weaving Analysis)	NW
4739	10	24.916951	I-26 WB (Weaving Analysis)	NW
4741	1	32.067247	I-26 WB (Basic Analysis)	NW
4741	2	32.802845	I-26 WB (Basic Analysis)	NW
4741	3	31.10531	I-26 WB (Basic Analysis)	NW
4741	4	31.929827	I-26 WB (Basic Analysis)	NW
4741	5	31.687322	I-26 WB (Basic Analysis)	NW
4741	6	34.257875	I-26 WB (Basic Analysis)	NW
4741	7	31.832825	I-26 WB (Basic Analysis)	NW
4741	8	30.183791	I-26 WB (Basic Analysis)	NW
4741	9	34.338711	I-26 WB (Basic Analysis)	NW
4741	10	31.590321	I-26 WB (Basic Analysis)	NW
4742	1	21.28573	I-26 WB (Diverge Analysis)	NW
4742	2	20.693115	I-26 WB (Diverge Analysis)	NW
4742	3	21.1566	I-26 WB (Diverge Analysis)	NW
4742	4	22.143524	I-26 WB (Diverge Analysis)	NW

No Build PM

ID	Run	Density	Name (Type)	Direction
4742	5	20.889116	I-26 WB (Diverge Analysis)	NW
4742	6	21.873734	I-26 WB (Diverge Analysis)	NW
4742	7	22.761504	I-26 WB (Diverge Analysis)	NW
4742	8	21.244224	I-26 WB (Diverge Analysis)	NW
4742	9	21.716933	I-26 WB (Diverge Analysis)	NW
4742	10	20.861445	I-26 WB (Diverge Analysis)	NW
4745	1	25.862642	I-26 EB (Basic Analysis)	SE
4745	2	26.867837	I-26 EB (Basic Analysis)	SE
4745	3	22.292789	I-26 EB (Basic Analysis)	SE
4745	4	23.69881	I-26 EB (Basic Analysis)	SE
4745	5	24.240551	I-26 EB (Basic Analysis)	SE
4745	6	22.543305	I-26 EB (Basic Analysis)	SE
4745	7	23.63305	I-26 EB (Basic Analysis)	SE
4745	8	24.074584	I-26 EB (Basic Analysis)	SE
4745	9	22.577751	I-26 EB (Basic Analysis)	SE
4745	10	23.432637	I-26 EB (Basic Analysis)	SE
4748	1	24.072796	I-26 EB (Weaving Analysis)	SE
4748	2	24.763762	I-26 EB (Weaving Analysis)	SE
4748	3	26.206861	I-26 EB (Weaving Analysis)	SE
4748	4	23.409015	I-26 EB (Weaving Analysis)	SE
4748	5	24.503234	I-26 EB (Weaving Analysis)	SE
4748	6	22.964985	I-26 EB (Weaving Analysis)	SE
4748	7	23.655951	I-26 EB (Weaving Analysis)	SE
4748	8	22.831323	I-26 EB (Weaving Analysis)	SE
4748	9	24.906486	I-26 EB (Weaving Analysis)	SE
4748	10	22.756562	I-26 EB (Weaving Analysis)	SE
4753	1	26.92634	I-26 WB (Basic Analysis)	NW
4753	2	26.834055	I-26 WB (Basic Analysis)	NW
4753	3	24.360797	I-26 WB (Basic Analysis)	NW
4753	4	26.26452	I-26 WB (Basic Analysis)	NW
4753	5	26.164324	I-26 WB (Basic Analysis)	NW
4753	6	26.546651	I-26 WB (Basic Analysis)	NW
4753	7	27.574977	I-26 WB (Basic Analysis)	NW
4753	8	25.223009	I-26 WB (Basic Analysis)	NW
4753	9	26.702218	I-26 WB (Basic Analysis)	NW
4753	10	26.172234	I-26 WB (Basic Analysis)	NW
4755	1	26.111241	I-26 EB (Basic Analysis)	SE
4755	2	22.824862	I-26 EB (Basic Analysis)	SE
4755	3	23.113362	I-26 EB (Basic Analysis)	SE
4755	4	24.744007	I-26 EB (Basic Analysis)	SE
4755	5	22.406748	I-26 EB (Basic Analysis)	SE
4755	6	29.02968	I-26 EB (Basic Analysis)	SE
4755	7	26.098698	I-26 EB (Basic Analysis)	SE
4755	8	23.636004	I-26 EB (Basic Analysis)	SE
4755	9	25.162122	I-26 EB (Basic Analysis)	SE
4755	10	26.320299	I-26 EB (Basic Analysis)	SE
4756	1	22.344567	I-26 EB (Diverge Analysis)	SE
4756	2	21.368969	I-26 EB (Diverge Analysis)	SE
4756	3	18.362486	I-26 EB (Diverge Analysis)	SE
4756	4	18.93722	I-26 EB (Diverge Analysis)	SE
4756	5	20.878755	I-26 EB (Diverge Analysis)	SE
4756	6	20.922223	I-26 EB (Diverge Analysis)	SE
4756	7	18.572578	I-26 EB (Diverge Analysis)	SE
4756	8	19.147311	I-26 EB (Diverge Analysis)	SE
4756	9	18.601556	I-26 EB (Diverge Analysis)	SE
4756	10	21.789152	I-26 EB (Diverge Analysis)	SE
4760	1	19.81621	I-26 WB (Basic Analysis)	NW

ID	Run	Density	Name (Type)	Direction
4760	2	20.584483	I-26 WB (Basic Analysis)	NW
4760	3	21.433	I-26 WB (Basic Analysis)	NW
4760	4	21.114409	I-26 WB (Basic Analysis)	NW
4760	5	20.565416	I-26 WB (Basic Analysis)	NW
4760	6	20.248413	I-26 WB (Basic Analysis)	NW
4760	7	20.431146	I-26 WB (Basic Analysis)	NW
4760	8	19.967958	I-26 WB (Basic Analysis)	NW
4760	9	20.718752	I-26 WB (Basic Analysis)	NW
4760	10	20.655193	I-26 WB (Basic Analysis)	NW
4761	1	19.81621	I-26 WB (Basic Analysis)	NW
4761	2	20.584483	I-26 WB (Basic Analysis)	NW
4761	3	21.433	I-26 WB (Basic Analysis)	NW
4761	4	21.114409	I-26 WB (Basic Analysis)	NW
4761	5	20.565416	I-26 WB (Basic Analysis)	NW
4761	6	20.248413	I-26 WB (Basic Analysis)	NW
4761	7	20.431146	I-26 WB (Basic Analysis)	NW
4761	8	19.967958	I-26 WB (Basic Analysis)	NW
4761	9	20.718752	I-26 WB (Basic Analysis)	NW
4761	10	20.655193	I-26 WB (Basic Analysis)	NW
4764	1	18.739374	I-26 WB (Basic Analysis)	NW
4764	2	19.061035	I-26 WB (Basic Analysis)	NW
4764	3	19.290825	I-26 WB (Basic Analysis)	NW
4764	4	19.501113	I-26 WB (Basic Analysis)	NW
4764	5	18.935686	I-26 WB (Basic Analysis)	NW
4764	6	18.989531	I-26 WB (Basic Analysis)	NW
4764	7	19.471428	I-26 WB (Basic Analysis)	NW
4764	8	18.531252	I-26 WB (Basic Analysis)	NW
4764	9	19.391689	I-26 WB (Basic Analysis)	NW
4764	10	18.759958	I-26 WB (Basic Analysis)	NW
4768	1	17.71016	I-26 EB (Basic Analysis)	SE
4768	2	17.076546	I-26 EB (Basic Analysis)	SE
4768	3	16.328232	I-26 EB (Basic Analysis)	SE
4768	4	16.386722	I-26 EB (Basic Analysis)	SE
4768	5	16.734184	I-26 EB (Basic Analysis)	SE
4768	6	17.05289	I-26 EB (Basic Analysis)	SE
4768	7	16.669509	I-26 EB (Basic Analysis)	SE
4768	8	16.768908	I-26 EB (Basic Analysis)	SE
4768	9	16.551446	I-26 EB (Basic Analysis)	SE
4768	10	16.991254	I-26 EB (Basic Analysis)	SE
4769	1	15.635609	I-26 EB (Diverge Analysis)	SE
4769	2	15.802305	I-26 EB (Diverge Analysis)	SE
4769	3	16.448254	I-26 EB (Diverge Analysis)	SE
4769	4	14.9558	I-26 EB (Diverge Analysis)	SE
4769	5	16.312813	I-26 EB (Diverge Analysis)	SE
4769	6	16.904065	I-26 EB (Diverge Analysis)	SE
4769	7	15.273565	I-26 EB (Diverge Analysis)	SE
4769	8	15.481935	I-26 EB (Diverge Analysis)	SE
4769	9	14.893289	I-26 EB (Diverge Analysis)	SE
4769	10	15.170744	I-26 EB (Diverge Analysis)	SE
6149	1	18.556614	I-26 EB (Merge Analysis)	S
6149	2	17.928753	I-26 EB (Merge Analysis)	S
6149	3	18.815145	I-26 EB (Merge Analysis)	S
6149	4	17.925799	I-26 EB (Merge Analysis)	S
6149	5	18.776735	I-26 EB (Merge Analysis)	S
6149	6	19.67199	I-26 EB (Merge Analysis)	S
6149	7	19.813813	I-26 EB (Merge Analysis)	S
6149	8	18.215353	I-26 EB (Merge Analysis)	S

ID	Run	Density	Name (Type)	Direction
6149	9	18.175466	I-26 EB (Merge Analysis)	S
6149	10	18.556614	I-26 EB (Merge Analysis)	S
6150	1	18.556614	I-26 EB (Merge Analysis)	S
6150	2	17.928753	I-26 EB (Merge Analysis)	S
6150	3	18.815145	I-26 EB (Merge Analysis)	S
6150	4	17.925799	I-26 EB (Merge Analysis)	S
6150	5	18.776735	I-26 EB (Merge Analysis)	S
6150	6	19.67199	I-26 EB (Merge Analysis)	S
6150	7	19.813813	I-26 EB (Merge Analysis)	S
6150	8	18.215353	I-26 EB (Merge Analysis)	S
6150	9	18.175466	I-26 EB (Merge Analysis)	S
6150	10	18.556614	I-26 EB (Merge Analysis)	S
6151	1	23.968994	I-26 EB (Basic Analysis)	S
6151	2	23.156068	I-26 EB (Basic Analysis)	S
6151	3	24.240218	I-26 EB (Basic Analysis)	S
6151	4	24.071838	I-26 EB (Basic Analysis)	S
6151	5	24.220829	I-26 EB (Basic Analysis)	S
6151	6	24.784941	I-26 EB (Basic Analysis)	S
6151	7	26.785804	I-26 EB (Basic Analysis)	S
6151	8	23.54397	I-26 EB (Basic Analysis)	S
6151	9	24.296356	I-26 EB (Basic Analysis)	S
6151	10	23.909831	I-26 EB (Basic Analysis)	S
6152	1	23.968994	I-26 EB (Basic Analysis)	S
6152	2	23.156068	I-26 EB (Basic Analysis)	S
6152	3	24.240218	I-26 EB (Basic Analysis)	S
6152	4	24.071838	I-26 EB (Basic Analysis)	S
6152	5	24.220829	I-26 EB (Basic Analysis)	S
6152	6	24.784941	I-26 EB (Basic Analysis)	S
6152	7	26.785804	I-26 EB (Basic Analysis)	S
6152	8	23.54397	I-26 EB (Basic Analysis)	S
6152	9	24.296356	I-26 EB (Basic Analysis)	S
6152	10	23.909831	I-26 EB (Basic Analysis)	S
6159	1	98.163886	I-26 WB (Diverge Analysis)	N
6159	2	93.231963	I-26 WB (Diverge Analysis)	N
6159	3	87.553664	I-26 WB (Diverge Analysis)	N
6159	4	110.227133	I-26 WB (Diverge Analysis)	N
6159	5	118.399617	I-26 WB (Diverge Analysis)	N
6159	6	113.053738	I-26 WB (Diverge Analysis)	N
6159	7	102.543869	I-26 WB (Diverge Analysis)	N
6159	8	97.083002	I-26 WB (Diverge Analysis)	N
6159	9	105.951684	I-26 WB (Diverge Analysis)	N
6159	10	103.971806	I-26 WB (Diverge Analysis)	N
6160	1	98.163886	I-26 WB (Diverge Analysis)	N
6160	2	93.231963	I-26 WB (Diverge Analysis)	N
6160	3	87.553664	I-26 WB (Diverge Analysis)	N
6160	4	110.227133	I-26 WB (Diverge Analysis)	N
6160	5	118.399617	I-26 WB (Diverge Analysis)	N
6160	6	113.053738	I-26 WB (Diverge Analysis)	N
6160	7	102.543869	I-26 WB (Diverge Analysis)	N
6160	8	97.083002	I-26 WB (Diverge Analysis)	N
6160	9	105.951684	I-26 WB (Diverge Analysis)	N
6160	10	103.971806	I-26 WB (Diverge Analysis)	N
6165	1	87.514329	I-26 WB (Basic Analysis)	N
6165	2	67.892882	I-26 WB (Basic Analysis)	N
6165	3	64.864704	I-26 WB (Basic Analysis)	N
6165	4	58.532956	I-26 WB (Basic Analysis)	N
6165	5	54.843151	I-26 WB (Basic Analysis)	N

ID	Run	Density	Name (Type)	Direction
6165	6	84.015356	I-26 WB (Basic Analysis)	N
6165	7	108.049943	I-26 WB (Basic Analysis)	N
6165	8	93.023326	I-26 WB (Basic Analysis)	N
6165	9	94.45971	I-26 WB (Basic Analysis)	N
6165	10	86.075659	I-26 WB (Basic Analysis)	N
6166	1	20.819915	I-26 EB (Basic Analysis)	S
6166	2	20.465937	I-26 EB (Basic Analysis)	S
6166	3	20.15651	I-26 EB (Basic Analysis)	S
6166	4	20.222932	I-26 EB (Basic Analysis)	S
6166	5	20.346864	I-26 EB (Basic Analysis)	S
6166	6	20.346864	I-26 EB (Basic Analysis)	S
6166	7	20.920358	I-26 EB (Basic Analysis)	S
6166	8	19.398332	I-26 EB (Basic Analysis)	S
6166	9	20.022047	I-26 EB (Basic Analysis)	S
6166	10	20.856366	I-26 EB (Basic Analysis)	S
6174	1	89.958013	I-26 WB (Basic Analysis)	N
6174	2	85.290238	I-26 WB (Basic Analysis)	N
6174	3	85.996837	I-26 WB (Basic Analysis)	N
6174	4	88.820598	I-26 WB (Basic Analysis)	N
6174	5	88.348653	I-26 WB (Basic Analysis)	N
6174	6	95.280182	I-26 WB (Basic Analysis)	N
6174	7	98.388692	I-26 WB (Basic Analysis)	N
6174	8	96.095408	I-26 WB (Basic Analysis)	N
6174	9	100.038127	I-26 WB (Basic Analysis)	N
6174	10	96.66016	I-26 WB (Basic Analysis)	N
6175	1	89.958013	I-26 WB (Basic Analysis)	N
6175	2	85.290238	I-26 WB (Basic Analysis)	N
6175	3	85.996837	I-26 WB (Basic Analysis)	N
6175	4	88.820598	I-26 WB (Basic Analysis)	N
6175	5	88.348653	I-26 WB (Basic Analysis)	N
6175	6	95.280182	I-26 WB (Basic Analysis)	N
6175	7	98.388692	I-26 WB (Basic Analysis)	N
6175	8	96.095408	I-26 WB (Basic Analysis)	N
6175	9	100.038127	I-26 WB (Basic Analysis)	N
6175	10	96.66016	I-26 WB (Basic Analysis)	N
6177	1	134.151739	I-26 EB (Basic Analysis)	S
6177	2	123.924875	I-26 EB (Basic Analysis)	S
6177	3	115.282612	I-26 EB (Basic Analysis)	S
6177	4	122.012115	I-26 EB (Basic Analysis)	S
6177	5	108.38004	I-26 EB (Basic Analysis)	S
6177	6	122.495362	I-26 EB (Basic Analysis)	S
6177	7	121.441209	I-26 EB (Basic Analysis)	S
6177	8	120.616316	I-26 EB (Basic Analysis)	S
6177	9	117.80449	I-26 EB (Basic Analysis)	S
6177	10	133.924726	I-26 EB (Basic Analysis)	S
6178	1	143.093011	I-26 EB (Diverge Analysis)	S
6178	2	140.113545	I-26 EB (Diverge Analysis)	S
6178	3	139.138732	I-26 EB (Diverge Analysis)	S
6178	4	141.342541	I-26 EB (Diverge Analysis)	S
6178	5	128.124926	I-26 EB (Diverge Analysis)	S
6178	6	139.314304	I-26 EB (Diverge Analysis)	S
6178	7	142.390727	I-26 EB (Diverge Analysis)	S
6178	8	145.354471	I-26 EB (Diverge Analysis)	S
6178	9	140.118784	I-26 EB (Diverge Analysis)	S
6178	10	141.460463	I-26 EB (Diverge Analysis)	S
6185	1	121.683015	I-26 EB (Merge Analysis)	S
6185	2	121.067093	I-26 EB (Merge Analysis)	S

ID	Run	Density	Name (Type)	Direction
6185	3	108.602577	I-26 EB (Merge Analysis)	S
6185	4	112.684843	I-26 EB (Merge Analysis)	S
6185	5	100.853435	I-26 EB (Merge Analysis)	S
6185	6	109.911767	I-26 EB (Merge Analysis)	S
6185	7	115.417811	I-26 EB (Merge Analysis)	S
6185	8	118.6693	I-26 EB (Merge Analysis)	S
6185	9	113.091636	I-26 EB (Merge Analysis)	S
6185	10	127.825033	I-26 EB (Merge Analysis)	S
6186	1	122.187454	I-26 EB (Basic Analysis)	S
6186	2	117.760476	I-26 EB (Basic Analysis)	S
6186	3	105.32126	I-26 EB (Basic Analysis)	S
6186	4	110.34764	I-26 EB (Basic Analysis)	S
6186	5	100.108361	I-26 EB (Basic Analysis)	S
6186	6	108.256105	I-26 EB (Basic Analysis)	S
6186	7	112.482218	I-26 EB (Basic Analysis)	S
6186	8	116.271533	I-26 EB (Basic Analysis)	S
6186	9	112.16498	I-26 EB (Basic Analysis)	S
6186	10	123.941028	I-26 EB (Basic Analysis)	S
6200	1	124.550523	I-26 WB (Weaving Analysis)	NW
6200	2	128.361062	I-26 WB (Weaving Analysis)	NW
6200	3	122.572572	I-26 WB (Weaving Analysis)	NW
6200	4	129.143423	I-26 WB (Weaving Analysis)	NW
6200	5	127.270003	I-26 WB (Weaving Analysis)	NW
6200	6	131.433339	I-26 WB (Weaving Analysis)	NW
6200	7	133.053593	I-26 WB (Weaving Analysis)	NW
6200	8	131.082173	I-26 WB (Weaving Analysis)	NW
6200	9	128.197728	I-26 WB (Weaving Analysis)	NW
6200	10	132.761228	I-26 WB (Weaving Analysis)	NW
6204	1	117.707512	I-26 WB (Basic Analysis)	NW
6204	2	118.750457	I-26 WB (Basic Analysis)	NW
6204	3	115.47824	I-26 WB (Basic Analysis)	NW
6204	4	123.690209	I-26 WB (Basic Analysis)	NW
6204	5	120.659578	I-26 WB (Basic Analysis)	NW
6204	6	126.009831	I-26 WB (Basic Analysis)	NW
6204	7	117.530741	I-26 WB (Basic Analysis)	NW
6204	8	122.884921	I-26 WB (Basic Analysis)	NW
6204	9	121.67699	I-26 WB (Basic Analysis)	NW
6204	10	108.438848	I-26 WB (Basic Analysis)	NW
6205	1	35.296978	I-20 EB (Basic Analysis)	E
6205	2	46.426397	I-20 EB (Basic Analysis)	E
6205	3	78.180186	I-20 EB (Basic Analysis)	E
6205	4	24.521436	I-20 EB (Basic Analysis)	E
6205	5	24.674045	I-20 EB (Basic Analysis)	E
6205	6	26.695565	I-20 EB (Basic Analysis)	E
6205	7	63.474402	I-20 EB (Basic Analysis)	E
6205	8	49.624557	I-20 EB (Basic Analysis)	E
6205	9	72.684041	I-20 EB (Basic Analysis)	E
6205	10	76.114432	I-20 EB (Basic Analysis)	E
6206	1	54.010173	I-20 EB (Merge Analysis)	E
6206	2	82.608367	I-20 EB (Merge Analysis)	E
6206	3	102.122525	I-20 EB (Merge Analysis)	E
6206	4	51.157642	I-20 EB (Merge Analysis)	E
6206	5	23.306192	I-20 EB (Merge Analysis)	E
6206	6	48.190104	I-20 EB (Merge Analysis)	E
6206	7	86.881493	I-20 EB (Merge Analysis)	E
6206	8	77.682447	I-20 EB (Merge Analysis)	E
6206	9	87.21032	I-20 EB (Merge Analysis)	E

ID	Run	Density	Name (Type)	Direction
6206	10	101.064772	I-20 EB (Merge Analysis)	E
6207	1	54.010173	I-20 EB (Merge Analysis)	E
6207	2	82.608367	I-20 EB (Merge Analysis)	E
6207	3	102.122525	I-20 EB (Merge Analysis)	E
6207	4	51.157642	I-20 EB (Merge Analysis)	E
6207	5	23.306192	I-20 EB (Merge Analysis)	E
6207	6	48.190104	I-20 EB (Merge Analysis)	E
6207	7	86.881493	I-20 EB (Merge Analysis)	E
6207	8	77.682447	I-20 EB (Merge Analysis)	E
6207	9	87.21032	I-20 EB (Merge Analysis)	E
6207	10	101.064772	I-20 EB (Merge Analysis)	E
6208	1	52.252119	I-20 EB (Diverge Analysis)	E
6208	2	78.895023	I-20 EB (Diverge Analysis)	E
6208	3	97.670234	I-20 EB (Diverge Analysis)	E
6208	4	50.042831	I-20 EB (Diverge Analysis)	E
6208	5	23.83312	I-20 EB (Diverge Analysis)	E
6208	6	47.282342	I-20 EB (Diverge Analysis)	E
6208	7	83.229947	I-20 EB (Diverge Analysis)	E
6208	8	75.038106	I-20 EB (Diverge Analysis)	E
6208	9	83.540652	I-20 EB (Diverge Analysis)	E
6208	10	96.530488	I-20 EB (Diverge Analysis)	E
6209	1	52.252119	I-20 EB (Diverge Analysis)	E
6209	2	78.895023	I-20 EB (Diverge Analysis)	E
6209	3	97.670234	I-20 EB (Diverge Analysis)	E
6209	4	50.042831	I-20 EB (Diverge Analysis)	E
6209	5	23.83312	I-20 EB (Diverge Analysis)	E
6209	6	47.282342	I-20 EB (Diverge Analysis)	E
6209	7	83.229947	I-20 EB (Diverge Analysis)	E
6209	8	75.038106	I-20 EB (Diverge Analysis)	E
6209	9	83.540652	I-20 EB (Diverge Analysis)	E
6209	10	96.530488	I-20 EB (Diverge Analysis)	E
6216	1	55.202557	I-20 EB (Merge Analysis)	E
6216	2	16.990198	I-20 EB (Merge Analysis)	E
6216	3	26.449115	I-20 EB (Merge Analysis)	E
6216	4	51.292733	I-20 EB (Merge Analysis)	E
6216	5	25.95032	I-20 EB (Merge Analysis)	E
6216	6	15.849725	I-20 EB (Merge Analysis)	E
6216	7	47.330951	I-20 EB (Merge Analysis)	E
6216	8	15.95364	I-20 EB (Merge Analysis)	E
6216	9	16.057556	I-20 EB (Merge Analysis)	E
6216	10	21.549495	I-20 EB (Merge Analysis)	E
6217	1	21.883736	I-20 EB (Basic Analysis)	E
6217	2	21.121587	I-20 EB (Basic Analysis)	E
6217	3	19.880878	I-20 EB (Basic Analysis)	E
6217	4	22.137786	I-20 EB (Basic Analysis)	E
6217	5	22.075751	I-20 EB (Basic Analysis)	E
6217	6	22.453871	I-20 EB (Basic Analysis)	E
6217	7	23.871824	I-20 EB (Basic Analysis)	E
6217	8	22.359341	I-20 EB (Basic Analysis)	E
6217	9	21.490845	I-20 EB (Basic Analysis)	E
6217	10	24.781677	I-20 EB (Basic Analysis)	E
6220	1	18.848442	I-20 WB (Basic Analysis)	W
6220	2	19.127585	I-20 WB (Basic Analysis)	W
6220	3	19.562966	I-20 WB (Basic Analysis)	W
6220	4	20.129586	I-20 WB (Basic Analysis)	W
6220	5	20.381648	I-20 WB (Basic Analysis)	W
6220	6	20.175415	I-20 WB (Basic Analysis)	W

ID	Run	Density	Name (Type)	Direction
6220	7	17.236075	I-20 WB (Basic Analysis)	W
6220	8	18.298487	I-20 WB (Basic Analysis)	W
6220	9	18.533884	I-20 WB (Basic Analysis)	W
6220	10	17.117335	I-20 WB (Basic Analysis)	W
6223	1	84.311161	I-26 EB (Weaving Analysis)	SE
6223	2	83.896479	I-26 EB (Weaving Analysis)	SE
6223	3	72.873107	I-26 EB (Weaving Analysis)	SE
6223	4	92.461142	I-26 EB (Weaving Analysis)	SE
6223	5	75.204472	I-26 EB (Weaving Analysis)	SE
6223	6	71.550694	I-26 EB (Weaving Analysis)	SE
6223	7	66.620217	I-26 EB (Weaving Analysis)	SE
6223	8	74.198785	I-26 EB (Weaving Analysis)	SE
6223	9	81.434505	I-26 EB (Weaving Analysis)	SE
6223	10	83.214048	I-26 EB (Weaving Analysis)	SE
6227	1	15.76898	I-20 WB (Basic Analysis)	W
6227	2	16.877457	I-20 WB (Basic Analysis)	W
6227	3	14.201159	I-20 WB (Basic Analysis)	W
6227	4	16.954473	I-20 WB (Basic Analysis)	W
6227	5	16.019281	I-20 WB (Basic Analysis)	W
6227	6	16.06054	I-20 WB (Basic Analysis)	W
6227	7	15.590193	I-20 WB (Basic Analysis)	W
6227	8	15.095092	I-20 WB (Basic Analysis)	W
6227	9	18.084954	I-20 WB (Basic Analysis)	W
6227	10	17.686122	I-20 WB (Basic Analysis)	W
6229	1	58.461787	I-20 WB (Merge Analysis)	W
6229	2	67.130382	I-20 WB (Merge Analysis)	W
6229	3	45.737305	I-20 WB (Merge Analysis)	W
6229	4	66.047921	I-20 WB (Merge Analysis)	W
6229	5	50.194104	I-20 WB (Merge Analysis)	W
6229	6	65.255007	I-20 WB (Merge Analysis)	W
6229	7	52.167478	I-20 WB (Merge Analysis)	W
6229	8	49.274235	I-20 WB (Merge Analysis)	W
6229	9	66.468878	I-20 WB (Merge Analysis)	W
6229	10	62.802766	I-20 WB (Merge Analysis)	W
6230	1	58.461787	I-20 WB (Merge+Diverge Analysis)	W
6230	2	67.130382	I-20 WB (Merge+Diverge Analysis)	W
6230	3	45.737305	I-20 WB (Merge+Diverge Analysis)	W
6230	4	66.047921	I-20 WB (Merge+Diverge Analysis)	W
6230	5	50.194104	I-20 WB (Merge+Diverge Analysis)	W
6230	6	65.255007	I-20 WB (Merge+Diverge Analysis)	W
6230	7	52.167478	I-20 WB (Merge+Diverge Analysis)	W
6230	8	49.274235	I-20 WB (Merge+Diverge Analysis)	W
6230	9	66.468878	I-20 WB (Merge+Diverge Analysis)	W
6230	10	62.802766	I-20 WB (Merge+Diverge Analysis)	W
6231	1	59.024789	I-20 WB (Diverge Analysis)	W
6231	2	67.758555	I-20 WB (Diverge Analysis)	W
6231	3	46.165293	I-20 WB (Diverge Analysis)	W
6231	4	66.665965	I-20 WB (Diverge Analysis)	W
6231	5	50.663796	I-20 WB (Diverge Analysis)	W
6231	6	65.865632	I-20 WB (Diverge Analysis)	W
6231	7	52.655636	I-20 WB (Diverge Analysis)	W
6231	8	49.735319	I-20 WB (Diverge Analysis)	W
6231	9	67.132318	I-20 WB (Diverge Analysis)	W
6231	10	63.390444	I-20 WB (Diverge Analysis)	W
6234	1	26.442795	I-20 WB (Basic Analysis)	W
6234	2	33.207917	I-20 WB (Basic Analysis)	W
6234	3	24.305573	I-20 WB (Basic Analysis)	W

No Build PM

ID	Run	Density	Name (Type)	Direction
6234	4	31.88262	I-20 WB (Basic Analysis)	W
6234	5	25.81206	I-20 WB (Basic Analysis)	W
6234	6	30.50928	I-20 WB (Basic Analysis)	W
6234	7	26.413969	I-20 WB (Basic Analysis)	W
6234	8	22.887622	I-20 WB (Basic Analysis)	W
6234	9	31.679467	I-20 WB (Basic Analysis)	W
6234	10	28.978772	I-20 WB (Basic Analysis)	W
6238	1	24.503785	I-20 EB (Basic Analysis)	NE
6238	2	23.238221	I-20 EB (Basic Analysis)	NE
6238	3	25.53269	I-20 EB (Basic Analysis)	NE
6238	4	25.373225	I-20 EB (Basic Analysis)	NE
6238	5	23.999997	I-20 EB (Basic Analysis)	NE
6238	6	24.966944	I-20 EB (Basic Analysis)	NE
6238	7	23.659737	I-20 EB (Basic Analysis)	NE
6238	8	23.972573	I-20 EB (Basic Analysis)	NE
6238	9	25.781536	I-20 EB (Basic Analysis)	NE
6238	10	23.585591	I-20 EB (Basic Analysis)	NE
6241	1	24.629512	I-20 EB (Merge Analysis)	NE
6241	2	22.474236	I-20 EB (Merge Analysis)	NE
6241	3	22.718612	I-20 EB (Merge Analysis)	NE
6241	4	23.637704	I-20 EB (Merge Analysis)	NE
6241	5	25.751257	I-20 EB (Merge Analysis)	NE
6241	6	26.230472	I-20 EB (Merge Analysis)	NE
6241	7	22.890271	I-20 EB (Merge Analysis)	NE
6241	8	23.663929	I-20 EB (Merge Analysis)	NE
6241	9	23.396904	I-20 EB (Merge Analysis)	NE
6241	10	21.254741	I-20 EB (Merge Analysis)	NE
6242	1	24.629512	I-20 EB (Merge Analysis)	NE
6242	2	22.474236	I-20 EB (Merge Analysis)	NE
6242	3	22.718612	I-20 EB (Merge Analysis)	NE
6242	4	23.637704	I-20 EB (Merge Analysis)	NE
6242	5	25.751257	I-20 EB (Merge Analysis)	NE
6242	6	26.230472	I-20 EB (Merge Analysis)	NE
6242	7	22.890271	I-20 EB (Merge Analysis)	NE
6242	8	23.663929	I-20 EB (Merge Analysis)	NE
6242	9	23.396904	I-20 EB (Merge Analysis)	NE
6242	10	21.254741	I-20 EB (Merge Analysis)	NE
6246	1	122.520676	I-20 WB (Merge Analysis)	SW
6246	2	119.618714	I-20 WB (Merge Analysis)	SW
6246	3	128.618397	I-20 WB (Merge Analysis)	SW
6246	4	121.14782	I-20 WB (Merge Analysis)	SW
6246	5	129.175285	I-20 WB (Merge Analysis)	SW
6246	6	117.671611	I-20 WB (Merge Analysis)	SW
6246	7	133.502183	I-20 WB (Merge Analysis)	SW
6246	8	126.985126	I-20 WB (Merge Analysis)	SW
6246	9	118.714607	I-20 WB (Merge Analysis)	SW
6246	10	131.942363	I-20 WB (Merge Analysis)	SW
6247	1	122.520676	I-20 WB (Merge Analysis)	SW
6247	2	119.618714	I-20 WB (Merge Analysis)	SW
6247	3	128.618397	I-20 WB (Merge Analysis)	SW
6247	4	121.14782	I-20 WB (Merge Analysis)	SW
6247	5	129.175285	I-20 WB (Merge Analysis)	SW
6247	6	117.671611	I-20 WB (Merge Analysis)	SW
6247	7	133.502183	I-20 WB (Merge Analysis)	SW
6247	8	126.985126	I-20 WB (Merge Analysis)	SW
6247	9	118.714607	I-20 WB (Merge Analysis)	SW
6247	10	131.942363	I-20 WB (Merge Analysis)	SW

No Build PM

ID	Run	Density	Name (Type)	Direction
6249	1	118.334551	I-20 WB (Diverge Analysis)	SW
6249	2	116.154106	I-20 WB (Diverge Analysis)	SW
6249	3	118.309128	I-20 WB (Diverge Analysis)	SW
6249	4	116.531528	I-20 WB (Diverge Analysis)	SW
6249	5	120.81615	I-20 WB (Diverge Analysis)	SW
6249	6	115.172418	I-20 WB (Diverge Analysis)	SW
6249	7	132.019525	I-20 WB (Diverge Analysis)	SW
6249	8	118.588773	I-20 WB (Diverge Analysis)	SW
6249	9	122.847972	I-20 WB (Diverge Analysis)	SW
6249	10	134.970458	I-20 WB (Diverge Analysis)	SW
6251	1	131.407657	I-20 WB (Basic Analysis)	SW
6251	2	125.308871	I-20 WB (Basic Analysis)	SW
6251	3	135.160564	I-20 WB (Basic Analysis)	SW
6251	4	128.468169	I-20 WB (Basic Analysis)	SW
6251	5	138.57817	I-20 WB (Basic Analysis)	SW
6251	6	125.184685	I-20 WB (Basic Analysis)	SW
6251	7	134.775588	I-20 WB (Basic Analysis)	SW
6251	8	131.899435	I-20 WB (Basic Analysis)	SW
6251	9	120.822024	I-20 WB (Basic Analysis)	SW
6251	10	137.123949	I-20 WB (Basic Analysis)	SW
6254	1	27.186622	I-20 EB (Basic Analysis)	NE
6254	2	27.522507	I-20 EB (Basic Analysis)	NE
6254	3	29.154306	I-20 EB (Basic Analysis)	NE
6254	4	28.111559	I-20 EB (Basic Analysis)	NE
6254	5	27.250541	I-20 EB (Basic Analysis)	NE
6254	6	28.365979	I-20 EB (Basic Analysis)	NE
6254	7	27.174089	I-20 EB (Basic Analysis)	NE
6254	8	27.187876	I-20 EB (Basic Analysis)	NE
6254	9	28.307074	I-20 EB (Basic Analysis)	NE
6254	10	25.426987	I-20 EB (Basic Analysis)	NE
6258	1	25.391383	I-20 EB (Merge Analysis)	E
6258	2	22.99341	I-20 EB (Merge Analysis)	E
6258	3	25.216558	I-20 EB (Merge Analysis)	E
6258	4	24.605975	I-20 EB (Merge Analysis)	E
6258	5	25.005202	I-20 EB (Merge Analysis)	E
6258	6	25.138278	I-20 EB (Merge Analysis)	E
6258	7	23.416121	I-20 EB (Merge Analysis)	E
6258	8	24.402447	I-20 EB (Merge Analysis)	E
6258	9	24.433759	I-20 EB (Merge Analysis)	E
6258	10	22.583745	I-20 EB (Merge Analysis)	E
6259	1	29.570646	I-20 EB (Basic Analysis)	E
6259	2	29.801678	I-20 EB (Basic Analysis)	E
6259	3	29.552406	I-20 EB (Basic Analysis)	E
6259	4	30.889963	I-20 EB (Basic Analysis)	E
6259	5	30.03879	I-20 EB (Basic Analysis)	E
6259	6	30.493256	I-20 EB (Basic Analysis)	E
6259	7	29.684642	I-20 EB (Basic Analysis)	E
6259	8	29.458169	I-20 EB (Basic Analysis)	E
6259	9	31.127075	I-20 EB (Basic Analysis)	E
6259	10	27.793823	I-20 EB (Basic Analysis)	E
8539	1	27.700226	I-20 WB (Basic Analysis)	SW
8539	2	25.861816	I-20 WB (Basic Analysis)	SW
8539	3	29.850539	I-20 WB (Basic Analysis)	SW
8539	4	25.983618	I-20 WB (Basic Analysis)	SW
8539	5	25.807176	I-20 WB (Basic Analysis)	SW
8539	6	25.842464	I-20 WB (Basic Analysis)	SW
8539	7	24.129271	I-20 WB (Basic Analysis)	SW

ID	Run	Density	Name (Type)	Direction
8539	8	25.760504	I-20 WB (Basic Analysis)	SW
8539	9	25.835634	I-20 WB (Basic Analysis)	SW
8539	10	25.454292	I-20 WB (Basic Analysis)	SW
8542	1	24.580328	I-20 EB (Basic Analysis)	NE
8542	2	25.304915	I-20 EB (Basic Analysis)	NE
8542	3	24.085912	I-20 EB (Basic Analysis)	NE
8542	4	24.771638	I-20 EB (Basic Analysis)	NE
8542	5	24.447607	I-20 EB (Basic Analysis)	NE
8542	6	25.382634	I-20 EB (Basic Analysis)	NE
8542	7	24.228796	I-20 EB (Basic Analysis)	NE
8542	8	25.733568	I-20 EB (Basic Analysis)	NE
8542	9	25.461549	I-20 EB (Basic Analysis)	NE
8542	10	23.725412	I-20 EB (Basic Analysis)	NE
8543	1	29.160258	I-20 EB (Diverge Analysis)	NE
8543	2	28.946125	I-20 EB (Diverge Analysis)	NE
8543	3	27.828525	I-20 EB (Diverge Analysis)	NE
8543	4	29.054658	I-20 EB (Diverge Analysis)	NE
8543	5	29.456525	I-20 EB (Diverge Analysis)	NE
8543	6	33.33439	I-20 EB (Diverge Analysis)	NE
8543	7	30.245591	I-20 EB (Diverge Analysis)	NE
8543	8	31.967457	I-20 EB (Diverge Analysis)	NE
8543	9	28.168792	I-20 EB (Diverge Analysis)	NE
8543	10	28.852258	I-20 EB (Diverge Analysis)	NE
8551	1	49.860785	I-26 WB (Diverge Analysis)	NW
8551	2	42.785587	I-26 WB (Diverge Analysis)	NW
8551	3	47.308786	I-26 WB (Diverge Analysis)	NW
8551	4	49.564518	I-26 WB (Diverge Analysis)	NW
8551	5	42.166654	I-26 WB (Diverge Analysis)	NW
8551	6	42.190121	I-26 WB (Diverge Analysis)	NW
8551	7	41.603454	I-26 WB (Diverge Analysis)	NW
8551	8	52.066651	I-26 WB (Diverge Analysis)	NW
8551	9	52.753051	I-26 WB (Diverge Analysis)	NW
8551	10	57.695716	I-26 WB (Diverge Analysis)	NW
8552	1	70.112718	I-26 EB (Basic Analysis)	SE
8552	2	66.453415	I-26 EB (Basic Analysis)	SE
8552	3	52.750677	I-26 EB (Basic Analysis)	SE
8552	4	70.222053	I-26 EB (Basic Analysis)	SE
8552	5	56.497105	I-26 EB (Basic Analysis)	SE
8552	6	52.308212	I-26 EB (Basic Analysis)	SE
8552	7	53.630481	I-26 EB (Basic Analysis)	SE
8552	8	53.222183	I-26 EB (Basic Analysis)	SE
8552	9	55.346526	I-26 EB (Basic Analysis)	SE
8552	10	68.467569	I-26 EB (Basic Analysis)	SE
8553	1	129.840134	I-26 EB (Basic Analysis)	S
8553	2	122.091148	I-26 EB (Basic Analysis)	S
8553	3	119.516572	I-26 EB (Basic Analysis)	S
8553	4	124.792013	I-26 EB (Basic Analysis)	S
8553	5	114.22261	I-26 EB (Basic Analysis)	S
8553	6	126.23337	I-26 EB (Basic Analysis)	S
8553	7	121.033703	I-26 EB (Basic Analysis)	S
8553	8	126.834497	I-26 EB (Basic Analysis)	S
8553	9	119.913956	I-26 EB (Basic Analysis)	S
8553	10	132.93333	I-26 EB (Basic Analysis)	S
8554	1	81.878188	I-26 WB (Basic Analysis)	N
8554	2	80.274735	I-26 WB (Basic Analysis)	N
8554	3	81.304886	I-26 WB (Basic Analysis)	N
8554	4	83.967154	I-26 WB (Basic Analysis)	N

No Build PM

ID	Run	Density	Name (Type)	Direction
8554	5	81.362216	I-26 WB (Basic Analysis)	N
8554	6	82.607355	I-26 WB (Basic Analysis)	N
8554	7	87.670323	I-26 WB (Basic Analysis)	N
8554	8	85.360993	I-26 WB (Basic Analysis)	N
8554	9	81.851314	I-26 WB (Basic Analysis)	N
8554	10	85.086884	I-26 WB (Basic Analysis)	N
8559	1	84.233575	I-126 NB (Diverge Analysis)	W
8559	2	93.376772	I-126 NB (Diverge Analysis)	W
8559	3	90.243974	I-126 NB (Diverge Analysis)	W
8559	4	91.745839	I-126 NB (Diverge Analysis)	W
8559	5	84.154375	I-126 NB (Diverge Analysis)	W
8559	6	94.206905	I-126 NB (Diverge Analysis)	W
8559	7	93.321038	I-126 NB (Diverge Analysis)	W
8559	8	90.425839	I-126 NB (Diverge Analysis)	W
8559	9	87.627441	I-126 NB (Diverge Analysis)	W
8559	10	91.983439	I-126 NB (Diverge Analysis)	W
8560	1	14.952705	I-126 SB (Basic Analysis)	E
8560	2	14.619553	I-126 SB (Basic Analysis)	E
8560	3	14.937422	I-126 SB (Basic Analysis)	E
8560	4	14.230774	I-126 SB (Basic Analysis)	E
8560	5	14.994272	I-126 SB (Basic Analysis)	E
8560	6	15.835404	I-126 SB (Basic Analysis)	E
8560	7	15.565215	I-126 SB (Basic Analysis)	E
8560	8	15.843962	I-126 SB (Basic Analysis)	E
8560	9	15.036451	I-126 SB (Basic Analysis)	E
8560	10	14.920306	I-126 SB (Basic Analysis)	E
8658	1	121.011123	I-20 WB (Basic Analysis)	SW
8658	2	117.445928	I-20 WB (Basic Analysis)	SW
8658	3	129.034916	I-20 WB (Basic Analysis)	SW
8658	4	120.028031	I-20 WB (Basic Analysis)	SW
8658	5	127.234468	I-20 WB (Basic Analysis)	SW
8658	6	117.485693	I-20 WB (Basic Analysis)	SW
8658	7	132.029761	I-20 WB (Basic Analysis)	SW
8658	8	124.817228	I-20 WB (Basic Analysis)	SW
8658	9	116.107275	I-20 WB (Basic Analysis)	SW
8658	10	128.319148	I-20 WB (Basic Analysis)	SW
8659	1	30.113597	I-20 EB (Basic Analysis)	NE
8659	2	28.400469	I-20 EB (Basic Analysis)	NE
8659	3	29.472658	I-20 EB (Basic Analysis)	NE
8659	4	30.06529	I-20 EB (Basic Analysis)	NE
8659	5	30.326523	I-20 EB (Basic Analysis)	NE
8659	6	30.556182	I-20 EB (Basic Analysis)	NE
8659	7	28.696245	I-20 EB (Basic Analysis)	NE
8659	8	29.316674	I-20 EB (Basic Analysis)	NE
8659	9	30.162443	I-20 EB (Basic Analysis)	NE
8659	10	27.812964	I-20 EB (Basic Analysis)	NE
8763	1	17.71016	I-26 EB (Basic Analysis)	SE
8763	2	17.076546	I-26 EB (Basic Analysis)	SE
8763	3	16.328232	I-26 EB (Basic Analysis)	SE
8763	4	16.386722	I-26 EB (Basic Analysis)	SE
8763	5	16.734184	I-26 EB (Basic Analysis)	SE
8763	6	17.05289	I-26 EB (Basic Analysis)	SE
8763	7	16.669509	I-26 EB (Basic Analysis)	SE
8763	8	16.768908	I-26 EB (Basic Analysis)	SE
8763	9	16.551446	I-26 EB (Basic Analysis)	SE
8763	10	16.991254	I-26 EB (Basic Analysis)	SE
8764	1	22.674304	I-20 WB (Basic Analysis)	S

ID	Run	Density	Name (Type)	Direction
8764	2	21.972839	I-20 WB (Basic Analysis)	S
8764	3	22.226837	I-20 WB (Basic Analysis)	S
8764	4	21.800273	I-20 WB (Basic Analysis)	S
8764	5	22.564077	I-20 WB (Basic Analysis)	S
8764	6	21.493974	I-20 WB (Basic Analysis)	S
8764	7	21.756585	I-20 WB (Basic Analysis)	S
8764	8	21.705806	I-20 WB (Basic Analysis)	S
8764	9	22.562877	I-20 WB (Basic Analysis)	S
8764	10	21.891511	I-20 WB (Basic Analysis)	S
8765	1	19.561025	I-20 EB (Basic Analysis)	NE
8765	2	20.16503	I-20 EB (Basic Analysis)	NE
8765	3	18.956959	I-20 EB (Basic Analysis)	NE
8765	4	19.403031	I-20 EB (Basic Analysis)	NE
8765	5	18.846363	I-20 EB (Basic Analysis)	NE
8765	6	19.526886	I-20 EB (Basic Analysis)	NE
8765	7	20.497263	I-20 EB (Basic Analysis)	NE
8765	8	20.370314	I-20 EB (Basic Analysis)	NE
8765	9	20.01817	I-20 EB (Basic Analysis)	NE
8765	10	18.994295	I-20 EB (Basic Analysis)	NE
8770	1	113.035966	I-20 WB (Diverge Analysis)	SW
8770	2	115.831431	I-20 WB (Diverge Analysis)	SW
8770	3	122.586896	I-20 WB (Diverge Analysis)	SW
8770	4	114.910365	I-20 WB (Diverge Analysis)	SW
8770	5	125.353029	I-20 WB (Diverge Analysis)	SW
8770	6	110.991434	I-20 WB (Diverge Analysis)	SW
8770	7	122.792229	I-20 WB (Diverge Analysis)	SW
8770	8	116.535432	I-20 WB (Diverge Analysis)	SW
8770	9	109.955967	I-20 WB (Diverge Analysis)	SW
8770	10	124.898362	I-20 WB (Diverge Analysis)	SW
8773	1	89.608224	I-26 WB (Basic Analysis)	N
8773	2	80.788696	I-26 WB (Basic Analysis)	N
8773	3	78.241259	I-26 WB (Basic Analysis)	N
8773	4	100.211989	I-26 WB (Basic Analysis)	N
8773	5	106.495865	I-26 WB (Basic Analysis)	N
8773	6	98.311356	I-26 WB (Basic Analysis)	N
8773	7	99.781768	I-26 WB (Basic Analysis)	N
8773	8	87.499847	I-26 WB (Basic Analysis)	N
8773	9	98.302515	I-26 WB (Basic Analysis)	N
8773	10	93.519992	I-26 WB (Basic Analysis)	N
8774	1	26.776137	I-20 EB (Diverge Analysis)	NE
8774	2	24.579165	I-20 EB (Diverge Analysis)	NE
8774	3	24.865602	I-20 EB (Diverge Analysis)	NE
8774	4	25.885318	I-20 EB (Diverge Analysis)	NE
8774	5	28.766875	I-20 EB (Diverge Analysis)	NE
8774	6	27.678414	I-20 EB (Diverge Analysis)	NE
8774	7	26.638647	I-20 EB (Diverge Analysis)	NE
8774	8	27.260216	I-20 EB (Diverge Analysis)	NE
8774	9	27.174285	I-20 EB (Diverge Analysis)	NE
8774	10	25.515814	I-20 EB (Diverge Analysis)	NE
8783	1	18.739374	I-26 WB (Basic Analysis)	NW
8783	2	19.061035	I-26 WB (Basic Analysis)	NW
8783	3	19.290825	I-26 WB (Basic Analysis)	NW
8783	4	19.501113	I-26 WB (Basic Analysis)	NW
8783	5	18.935686	I-26 WB (Basic Analysis)	NW
8783	6	18.989531	I-26 WB (Basic Analysis)	NW
8783	7	19.471428	I-26 WB (Basic Analysis)	NW
8783	8	18.531252	I-26 WB (Basic Analysis)	NW

No Build PM

ID	Run	Density	Name (Type)	Direction
8783	9	19.391689	I-26 WB (Basic Analysis)	NW
8783	10	18.759958	I-26 WB (Basic Analysis)	NW
8784	1	18.538948	I-26 EB (Basic Analysis)	SE
8784	2	22.291968	I-26 EB (Basic Analysis)	SE
8784	3	21.414289	I-26 EB (Basic Analysis)	SE
8784	4	18.048956	I-26 EB (Basic Analysis)	SE
8784	5	18.657408	I-26 EB (Basic Analysis)	SE
8784	6	17.720499	I-26 EB (Basic Analysis)	SE
8784	7	20.590455	I-26 EB (Basic Analysis)	SE
8784	8	19.023556	I-26 EB (Basic Analysis)	SE
8784	9	21.398135	I-26 EB (Basic Analysis)	SE
8784	10	21.091217	I-26 EB (Basic Analysis)	SE
8817	1	19.81621	I-26 WB (Basic Analysis)	NW
8817	2	20.584483	I-26 WB (Basic Analysis)	NW
8817	3	21.433	I-26 WB (Basic Analysis)	NW
8817	4	21.114409	I-26 WB (Basic Analysis)	NW
8817	5	20.565416	I-26 WB (Basic Analysis)	NW
8817	6	20.248413	I-26 WB (Basic Analysis)	NW
8817	7	20.431146	I-26 WB (Basic Analysis)	NW
8817	8	19.967958	I-26 WB (Basic Analysis)	NW
8817	9	20.718752	I-26 WB (Basic Analysis)	NW
8817	10	20.655193	I-26 WB (Basic Analysis)	NW

RPA AM

ID	Run	Density	Name (Type)	Direction
2806	1	37.671435	I-20 EB (Basic Analysis)	NE
2806	2	42.555665	I-20 EB (Basic Analysis)	NE
2806	3	37.582901	I-20 EB (Basic Analysis)	NE
2806	4	37.923211	I-20 EB (Basic Analysis)	NE
2806	5	40.717901	I-20 EB (Basic Analysis)	NE
2806	6	37.740555	I-20 EB (Basic Analysis)	NE
2806	7	40.669128	I-20 EB (Basic Analysis)	NE
2806	8	38.393887	I-20 EB (Basic Analysis)	NE
2806	9	36.496668	I-20 EB (Basic Analysis)	NE
2806	10	38.355338	I-20 EB (Basic Analysis)	NE
2807	1	37.671435	I-20 EB (Basic Analysis)	NE
2807	2	42.555665	I-20 EB (Basic Analysis)	NE
2807	3	37.582901	I-20 EB (Basic Analysis)	NE
2807	4	37.923211	I-20 EB (Basic Analysis)	NE
2807	5	40.717901	I-20 EB (Basic Analysis)	NE
2807	6	37.740555	I-20 EB (Basic Analysis)	NE
2807	7	40.669128	I-20 EB (Basic Analysis)	NE
2807	8	38.393887	I-20 EB (Basic Analysis)	NE
2807	9	36.496668	I-20 EB (Basic Analysis)	NE
2807	10	38.355338	I-20 EB (Basic Analysis)	NE
2808	1	39.847983	I-20 EB (Diverge Analysis)	NE
2808	2	47.40616	I-20 EB (Diverge Analysis)	NE
2808	3	40.078307	I-20 EB (Diverge Analysis)	NE
2808	4	40.211756	I-20 EB (Diverge Analysis)	NE
2808	5	44.634367	I-20 EB (Diverge Analysis)	NE
2808	6	38.798181	I-20 EB (Diverge Analysis)	NE
2808	7	44.372411	I-20 EB (Diverge Analysis)	NE
2808	8	39.707614	I-20 EB (Diverge Analysis)	NE
2808	9	36.909131	I-20 EB (Diverge Analysis)	NE
2808	10	42.391429	I-20 EB (Diverge Analysis)	NE
2813	1	14.163418	I-20 WB (Merge Analysis)	S
2813	2	12.383929	I-20 WB (Merge Analysis)	S
2813	3	12.997859	I-20 WB (Merge Analysis)	S
2813	4	11.990879	I-20 WB (Merge Analysis)	S
2813	5	13.068087	I-20 WB (Merge Analysis)	S
2813	6	12.936692	I-20 WB (Merge Analysis)	S
2813	7	13.535896	I-20 WB (Merge Analysis)	S
2813	8	12.006737	I-20 WB (Merge Analysis)	S
2813	9	12.488139	I-20 WB (Merge Analysis)	S
2813	10	14.072801	I-20 WB (Merge Analysis)	S
2814	1	15.51989	I-20 WB (Basic Analysis)	S
2814	2	14.826592	I-20 WB (Basic Analysis)	S
2814	3	15.303573	I-20 WB (Basic Analysis)	S
2814	4	15.040722	I-20 WB (Basic Analysis)	S
2814	5	15.065812	I-20 WB (Basic Analysis)	S
2814	6	15.527117	I-20 WB (Basic Analysis)	S
2814	7	15.996618	I-20 WB (Basic Analysis)	S
2814	8	15.376429	I-20 WB (Basic Analysis)	S
2814	9	15.29834	I-20 WB (Basic Analysis)	S
2814	10	16.144402	I-20 WB (Basic Analysis)	S
2822	1	10.644008	I-20 WB (Merge Analysis)	SW
2822	2	11.158176	I-20 WB (Merge Analysis)	SW
2822	3	11.250775	I-20 WB (Merge Analysis)	SW
2822	4	10.046989	I-20 WB (Merge Analysis)	SW
2822	5	10.94861	I-20 WB (Merge Analysis)	SW
2822	6	9.403669	I-20 WB (Merge Analysis)	SW
2822	7	10.166393	I-20 WB (Merge Analysis)	SW
2822	8	10.636698	I-20 WB (Merge Analysis)	SW
2822	9	10.190761	I-20 WB (Merge Analysis)	SW
2822	10	10.736607	I-20 WB (Merge Analysis)	SW
2823	1	98.81845	I-20 WB (Basic Analysis)	SW
2823	2	253.683181	I-20 WB (Basic Analysis)	SW
2823	3	265.482398	I-20 WB (Basic Analysis)	SW
2823	4	103.243157	I-20 WB (Basic Analysis)	SW

RPA AM

ID	Run	Density	Name (Type)	Direction
2823	5	0	I-20 WB (Basic Analysis)	SW
2823	6	101.768256	I-20 WB (Basic Analysis)	SW
2823	7	95.868644	I-20 WB (Basic Analysis)	SW
2823	8	140.115711	I-20 WB (Basic Analysis)	SW
2823	9	76.694918	I-20 WB (Basic Analysis)	SW
2823	10	194.687097	I-20 WB (Basic Analysis)	SW
2826	1	29.468817	I-20 EB (Basic Analysis)	NE
2826	2	55.147459	I-20 EB (Basic Analysis)	NE
2826	3	29.138167	I-20 EB (Basic Analysis)	NE
2826	4	29.381372	I-20 EB (Basic Analysis)	NE
2826	5	31.613942	I-20 EB (Basic Analysis)	NE
2826	6	35.898725	I-20 EB (Basic Analysis)	NE
2826	7	34.281	I-20 EB (Basic Analysis)	NE
2826	8	35.319405	I-20 EB (Basic Analysis)	NE
2826	9	30.67118	I-20 EB (Basic Analysis)	NE
2826	10	30.993631	I-20 EB (Basic Analysis)	NE
2829	1	45.529159	I-20 EB (Merge Analysis)	NE
2829	2	77.461307	I-20 EB (Merge Analysis)	NE
2829	3	45.858918	I-20 EB (Merge Analysis)	NE
2829	4	46.46885	I-20 EB (Merge Analysis)	NE
2829	5	49.382141	I-20 EB (Merge Analysis)	NE
2829	6	67.035444	I-20 EB (Merge Analysis)	NE
2829	7	62.803114	I-20 EB (Merge Analysis)	NE
2829	8	61.932846	I-20 EB (Merge Analysis)	NE
2829	9	47.014317	I-20 EB (Merge Analysis)	NE
2829	10	46.225869	I-20 EB (Merge Analysis)	NE
2830	1	43.993854	I-20 EB (Basic Analysis)	NE
2830	2	52.168654	I-20 EB (Basic Analysis)	NE
2830	3	45.994771	I-20 EB (Basic Analysis)	NE
2830	4	44.915329	I-20 EB (Basic Analysis)	NE
2830	5	47.298	I-20 EB (Basic Analysis)	NE
2830	6	47.837721	I-20 EB (Basic Analysis)	NE
2830	7	51.365654	I-20 EB (Basic Analysis)	NE
2830	8	46.652967	I-20 EB (Basic Analysis)	NE
2830	9	42.585313	I-20 EB (Basic Analysis)	NE
2830	10	47.311164	I-20 EB (Basic Analysis)	NE
2831	1	14.771339	I-20 WB (Basic Analysis)	SW
2831	2	14.027394	I-20 WB (Basic Analysis)	SW
2831	3	15.033512	I-20 WB (Basic Analysis)	SW
2831	4	14.616724	I-20 WB (Basic Analysis)	SW
2831	5	13.489602	I-20 WB (Basic Analysis)	SW
2831	6	15.584748	I-20 WB (Basic Analysis)	SW
2831	7	16.745481	I-20 WB (Basic Analysis)	SW
2831	8	15.098495	I-20 WB (Basic Analysis)	SW
2831	9	16.707388	I-20 WB (Basic Analysis)	SW
2831	10	14.524851	I-20 WB (Basic Analysis)	SW
2837	1	12.784213	I-20 WB (Merge Analysis)	SW
2837	2	12.528107	I-20 WB (Merge Analysis)	SW
2837	3	12.886656	I-20 WB (Merge Analysis)	SW
2837	4	12.351846	I-20 WB (Merge Analysis)	SW
2837	5	12.639588	I-20 WB (Merge Analysis)	SW
2837	6	13.094553	I-20 WB (Merge Analysis)	SW
2837	7	12.482912	I-20 WB (Merge Analysis)	SW
2837	8	13.183437	I-20 WB (Merge Analysis)	SW
2837	9	12.65616	I-20 WB (Merge Analysis)	SW
2837	10	13.391335	I-20 WB (Merge Analysis)	SW
2838	1	30.091117	I-20 WB (Diverge Analysis)	SW
2838	2	40.200419	I-20 WB (Diverge Analysis)	SW
2838	3	44.13439	I-20 WB (Diverge Analysis)	SW
2838	4	41.632434	I-20 WB (Diverge Analysis)	SW
2838	5	40.754182	I-20 WB (Diverge Analysis)	SW
2838	6	46.345682	I-20 WB (Diverge Analysis)	SW
2838	7	34.150373	I-20 WB (Diverge Analysis)	SW
2838	8	55.366252	I-20 WB (Diverge Analysis)	SW

RPA AM

ID	Run	Density	Name (Type)	Direction
2838	9	43.505455	I-20 WB (Diverge Analysis)	SW
2838	10	48.727363	I-20 WB (Diverge Analysis)	SW
2839	1	30.091117	I-20 WB (Diverge Analysis)	SW
2839	2	40.200419	I-20 WB (Diverge Analysis)	SW
2839	3	44.13439	I-20 WB (Diverge Analysis)	SW
2839	4	41.632434	I-20 WB (Diverge Analysis)	SW
2839	5	40.754182	I-20 WB (Diverge Analysis)	SW
2839	6	46.345682	I-20 WB (Diverge Analysis)	SW
2839	7	34.150373	I-20 WB (Diverge Analysis)	SW
2839	8	55.366252	I-20 WB (Diverge Analysis)	SW
2839	9	43.505455	I-20 WB (Diverge Analysis)	SW
2839	10	48.727363	I-20 WB (Diverge Analysis)	SW
2840	1	30.091117	I-20 WB (Diverge Analysis)	SW
2840	2	40.200419	I-20 WB (Diverge Analysis)	SW
2840	3	44.13439	I-20 WB (Diverge Analysis)	SW
2840	4	41.632434	I-20 WB (Diverge Analysis)	SW
2840	5	40.754182	I-20 WB (Diverge Analysis)	SW
2840	6	46.345682	I-20 WB (Diverge Analysis)	SW
2840	7	34.150373	I-20 WB (Diverge Analysis)	SW
2840	8	55.366252	I-20 WB (Diverge Analysis)	SW
2840	9	43.505455	I-20 WB (Diverge Analysis)	SW
2840	10	48.727363	I-20 WB (Diverge Analysis)	SW
2843	1	31.130778	I-20 EB (Basic Analysis)	NE
2843	2	33.559032	I-20 EB (Basic Analysis)	NE
2843	3	30.760785	I-20 EB (Basic Analysis)	NE
2843	4	28.675294	I-20 EB (Basic Analysis)	NE
2843	5	31.156604	I-20 EB (Basic Analysis)	NE
2843	6	33.929025	I-20 EB (Basic Analysis)	NE
2843	7	31.77251	I-20 EB (Basic Analysis)	NE
2843	8	31.565056	I-20 EB (Basic Analysis)	NE
2843	9	29.561536	I-20 EB (Basic Analysis)	NE
2843	10	29.618242	I-20 EB (Basic Analysis)	NE
2848	1	17.96126	I-20 EB (Basic Analysis)	NE
2848	2	18.825502	I-20 EB (Basic Analysis)	NE
2848	3	18.367962	I-20 EB (Basic Analysis)	NE
2848	4	18.621445	I-20 EB (Basic Analysis)	NE
2848	5	18.949066	I-20 EB (Basic Analysis)	NE
2848	6	18.679344	I-20 EB (Basic Analysis)	NE
2848	7	19.187015	I-20 EB (Basic Analysis)	NE
2848	8	18.442101	I-20 EB (Basic Analysis)	NE
2848	9	18.525418	I-20 EB (Basic Analysis)	NE
2848	10	18.592496	I-20 EB (Basic Analysis)	NE
2852	1	10.78486	I-20 WB (Merge Analysis)	SW
2852	2	10.39179	I-20 WB (Merge Analysis)	SW
2852	3	11.486771	I-20 WB (Merge Analysis)	SW
2852	4	11.462205	I-20 WB (Merge Analysis)	SW
2852	5	9.984682	I-20 WB (Merge Analysis)	SW
2852	6	11.511338	I-20 WB (Merge Analysis)	SW
2852	7	12.729154	I-20 WB (Merge Analysis)	SW
2852	8	11.676287	I-20 WB (Merge Analysis)	SW
2852	9	12.290459	I-20 WB (Merge Analysis)	SW
2852	10	11.476243	I-20 WB (Merge Analysis)	SW
2863	1	19.975697	I-20 EB (Basic Analysis)	NE
2863	2	22.421621	I-20 EB (Basic Analysis)	NE
2863	3	20.226964	I-20 EB (Basic Analysis)	NE
2863	4	20.811944	I-20 EB (Basic Analysis)	NE
2863	5	23.469873	I-20 EB (Basic Analysis)	NE
2863	6	20.215185	I-20 EB (Basic Analysis)	NE
2863	7	21.302699	I-20 EB (Basic Analysis)	NE
2863	8	21.051432	I-20 EB (Basic Analysis)	NE
2863	9	19.225823	I-20 EB (Basic Analysis)	NE
2863	10	20.643124	I-20 EB (Basic Analysis)	NE
4563	1	46.453022	I-126 SB (Merge Analysis)	E
4563	2	46.735131	I-126 SB (Merge Analysis)	E

RPA AM

ID	Run	Density	Name (Type)	Direction
4563	3	44.61011	I-126 SB (Merge Analysis)	E
4563	4	46.223041	I-126 SB (Merge Analysis)	E
4563	5	40.41833	I-126 SB (Merge Analysis)	E
4563	6	40.314072	I-126 SB (Merge Analysis)	E
4563	7	43.230227	I-126 SB (Merge Analysis)	E
4563	8	41.221729	I-126 SB (Merge Analysis)	E
4563	9	43.607395	I-126 SB (Merge Analysis)	E
4563	10	44.794094	I-126 SB (Merge Analysis)	E
4566	1	15.272677	I-126 NB (Basic Analysis)	W
4566	2	15.744056	I-126 NB (Basic Analysis)	W
4566	3	15.580135	I-126 NB (Basic Analysis)	W
4566	4	14.970315	I-126 NB (Basic Analysis)	W
4566	5	14.870094	I-126 NB (Basic Analysis)	W
4566	6	14.777517	I-126 NB (Basic Analysis)	W
4566	7	15.152922	I-126 NB (Basic Analysis)	W
4566	8	15.495202	I-126 NB (Basic Analysis)	W
4566	9	15.949595	I-126 NB (Basic Analysis)	W
4566	10	15.915621	I-126 NB (Basic Analysis)	W
4570	1	12.842359	I-126 NB (Basic Analysis)	W
4570	2	12.975477	I-126 NB (Basic Analysis)	W
4570	3	13.60779	I-126 NB (Basic Analysis)	W
4570	4	12.772234	I-126 NB (Basic Analysis)	W
4570	5	13.039659	I-126 NB (Basic Analysis)	W
4570	6	13.881158	I-126 NB (Basic Analysis)	W
4570	7	13.354627	I-126 NB (Basic Analysis)	W
4570	8	13.859764	I-126 NB (Basic Analysis)	W
4570	9	13.758736	I-126 NB (Basic Analysis)	W
4570	10	13.491311	I-126 NB (Basic Analysis)	W
4573	1	52.104154	I-126 SB (Basic Analysis)	E
4573	2	52.703866	I-126 SB (Basic Analysis)	E
4573	3	50.048376	I-126 SB (Basic Analysis)	E
4573	4	53.096689	I-126 SB (Basic Analysis)	E
4573	5	47.350986	I-126 SB (Basic Analysis)	E
4573	6	47.762141	I-126 SB (Basic Analysis)	E
4573	7	52.261284	I-126 SB (Basic Analysis)	E
4573	8	48.484937	I-126 SB (Basic Analysis)	E
4573	9	52.368656	I-126 SB (Basic Analysis)	E
4573	10	52.041302	I-126 SB (Basic Analysis)	E
4579	1	34.613279	I-126 SB (Diverge Analysis)	E
4579	2	37.599272	I-126 SB (Diverge Analysis)	E
4579	3	33.413065	I-126 SB (Diverge Analysis)	E
4579	4	34.898306	I-126 SB (Diverge Analysis)	E
4579	5	32.478488	I-126 SB (Diverge Analysis)	E
4579	6	31.755257	I-126 SB (Diverge Analysis)	E
4579	7	34.217732	I-126 SB (Diverge Analysis)	E
4579	8	33.346171	I-126 SB (Diverge Analysis)	E
4579	9	34.176044	I-126 SB (Diverge Analysis)	E
4579	10	32.009261	I-126 SB (Diverge Analysis)	E
4589	1	12.213396	I-126 NB (Merge Analysis)	NW
4589	2	11.214589	I-126 NB (Merge Analysis)	NW
4589	3	13.062124	I-126 NB (Merge Analysis)	NW
4589	4	12.218571	I-126 NB (Merge Analysis)	NW
4589	5	11.9417	I-126 NB (Merge Analysis)	NW
4589	6	10.797988	I-126 NB (Merge Analysis)	NW
4589	7	11.654478	I-126 NB (Merge Analysis)	NW
4589	8	12.151294	I-126 NB (Merge Analysis)	NW
4589	9	12.195283	I-126 NB (Merge Analysis)	NW
4589	10	12.081429	I-126 NB (Merge Analysis)	NW
4599	1	9.801944	I-126 NB (Basic Analysis)	NW
4599	2	9.716561	I-126 NB (Basic Analysis)	NW
4599	3	11.754881	I-126 NB (Basic Analysis)	NW
4599	4	10.59678	I-126 NB (Basic Analysis)	NW
4599	5	10.795489	I-126 NB (Basic Analysis)	NW
4599	6	9.610997	I-126 NB (Basic Analysis)	NW

RPA AM

ID	Run	Density	Name (Type)	Direction
4599	7	10.710106	I-126 NB (Basic Analysis)	NW
4599	8	10.573494	I-126 NB (Basic Analysis)	NW
4599	9	10.041015	I-126 NB (Basic Analysis)	NW
4599	10	10.306478	I-126 NB (Basic Analysis)	NW
4601	1	11.509104	I-126 NB (Basic Analysis)	NW
4601	2	11.972947	I-126 NB (Basic Analysis)	NW
4601	3	10.747076	I-126 NB (Basic Analysis)	NW
4601	4	10.912734	I-126 NB (Basic Analysis)	NW
4601	5	11.343446	I-126 NB (Basic Analysis)	NW
4601	6	11.695469	I-126 NB (Basic Analysis)	NW
4601	7	9.678581	I-126 NB (Basic Analysis)	NW
4601	8	11.64163	I-126 NB (Basic Analysis)	NW
4601	9	11.745167	I-126 NB (Basic Analysis)	NW
4601	10	11.15708	I-126 NB (Basic Analysis)	NW
4604	1	15.648117	I-26 WB (Basic Analysis)	NW
4604	2	16.084022	I-26 WB (Basic Analysis)	NW
4604	3	15.747773	I-26 WB (Basic Analysis)	NW
4604	4	15.186402	I-26 WB (Basic Analysis)	NW
4604	5	15.5205	I-26 WB (Basic Analysis)	NW
4604	6	15.161309	I-26 WB (Basic Analysis)	NW
4604	7	15.345565	I-26 WB (Basic Analysis)	NW
4604	8	14.508886	I-26 WB (Basic Analysis)	NW
4604	9	15.186402	I-26 WB (Basic Analysis)	NW
4604	10	15.768564	I-26 WB (Basic Analysis)	NW
4610	1	14.854131	I-26 EB (Basic Analysis)	SE
4610	2	15.45747	I-26 EB (Basic Analysis)	SE
4610	3	14.507531	I-26 EB (Basic Analysis)	SE
4610	4	14.84215	I-26 EB (Basic Analysis)	SE
4610	5	14.784811	I-26 EB (Basic Analysis)	SE
4610	6	13.690242	I-26 EB (Basic Analysis)	SE
4610	7	14.130979	I-26 EB (Basic Analysis)	SE
4610	8	13.975223	I-26 EB (Basic Analysis)	SE
4610	9	14.260205	I-26 EB (Basic Analysis)	SE
4610	10	14.433933	I-26 EB (Basic Analysis)	SE
4646	1	24.101639	I-26 WB (Basic Analysis)	NW
4646	2	24.430328	I-26 WB (Basic Analysis)	NW
4646	3	22.431361	I-26 WB (Basic Analysis)	NW
4646	4	19.770544	I-26 WB (Basic Analysis)	NW
4646	5	24.374429	I-26 WB (Basic Analysis)	NW
4646	6	23.289978	I-26 WB (Basic Analysis)	NW
4646	7	22.147392	I-26 WB (Basic Analysis)	NW
4646	8	22.652723	I-26 WB (Basic Analysis)	NW
4646	9	23.155819	I-26 WB (Basic Analysis)	NW
4646	10	22.236831	I-26 WB (Basic Analysis)	NW
4651	1	20.987681	I-26 WB (Basic Analysis)	NW
4651	2	21.963916	I-26 WB (Basic Analysis)	NW
4651	3	22.319778	I-26 WB (Basic Analysis)	NW
4651	4	21.444439	I-26 WB (Basic Analysis)	NW
4651	5	23.379184	I-26 WB (Basic Analysis)	NW
4651	6	21.959826	I-26 WB (Basic Analysis)	NW
4651	7	20.669996	I-26 WB (Basic Analysis)	NW
4651	8	20.226873	I-26 WB (Basic Analysis)	NW
4651	9	23.270107	I-26 WB (Basic Analysis)	NW
4651	10	21.89847	I-26 WB (Basic Analysis)	NW
4654	1	28.062819	I-26 WB (Merge Analysis)	NW
4654	2	27.173657	I-26 WB (Merge Analysis)	NW
4654	3	26.202085	I-26 WB (Merge Analysis)	NW
4654	4	24.577738	I-26 WB (Merge Analysis)	NW
4654	5	25.215332	I-26 WB (Merge Analysis)	NW
4654	6	25.8963	I-26 WB (Merge Analysis)	NW
4654	7	24.994126	I-26 WB (Merge Analysis)	NW
4654	8	25.8963	I-26 WB (Merge Analysis)	NW
4654	9	24.278459	I-26 WB (Merge Analysis)	NW
4654	10	26.343049	I-26 WB (Merge Analysis)	NW

RPA AM

ID	Run	Density	Name (Type)	Direction
4677	1	28.293626	I-26 WB (Basic Analysis)	NW
4677	2	27.787719	I-26 WB (Basic Analysis)	NW
4677	3	27.835412	I-26 WB (Basic Analysis)	NW
4677	4	26.653659	I-26 WB (Basic Analysis)	NW
4677	5	27.683122	I-26 WB (Basic Analysis)	NW
4677	6	27.287443	I-26 WB (Basic Analysis)	NW
4677	7	26.633129	I-26 WB (Basic Analysis)	NW
4677	8	27.417191	I-26 WB (Basic Analysis)	NW
4677	9	27.412658	I-26 WB (Basic Analysis)	NW
4677	10	27.653471	I-26 WB (Basic Analysis)	NW
4687	1	41.406467	I-26 EB (Basic Analysis)	SE
4687	2	40.850799	I-26 EB (Basic Analysis)	SE
4687	3	40.220612	I-26 EB (Basic Analysis)	SE
4687	4	39.093636	I-26 EB (Basic Analysis)	SE
4687	5	40.615283	I-26 EB (Basic Analysis)	SE
4687	6	40.807559	I-26 EB (Basic Analysis)	SE
4687	7	39.886659	I-26 EB (Basic Analysis)	SE
4687	8	39.38067	I-26 EB (Basic Analysis)	SE
4687	9	42.830596	I-26 EB (Basic Analysis)	SE
4687	10	40.445087	I-26 EB (Basic Analysis)	SE
4701	1	21.237826	I-26 WB (Weaving Analysis)	NW
4701	2	22.124691	I-26 WB (Weaving Analysis)	NW
4701	3	21.812612	I-26 WB (Weaving Analysis)	NW
4701	4	20.503953	I-26 WB (Weaving Analysis)	NW
4701	5	21.648039	I-26 WB (Weaving Analysis)	NW
4701	6	21.075691	I-26 WB (Weaving Analysis)	NW
4701	7	21.338398	I-26 WB (Weaving Analysis)	NW
4701	8	21.464571	I-26 WB (Weaving Analysis)	NW
4701	9	21.654134	I-26 WB (Weaving Analysis)	NW
4701	10	21.293903	I-26 WB (Weaving Analysis)	NW
4712	1	21.806338	I-26 WB (Basic Analysis)	NW
4712	2	21.710021	I-26 WB (Basic Analysis)	NW
4712	3	22.214268	I-26 WB (Basic Analysis)	NW
4712	4	20.747796	I-26 WB (Basic Analysis)	NW
4712	5	21.544771	I-26 WB (Basic Analysis)	NW
4712	6	21.294536	I-26 WB (Basic Analysis)	NW
4712	7	20.535332	I-26 WB (Basic Analysis)	NW
4712	8	20.331367	I-26 WB (Basic Analysis)	NW
4712	9	20.930042	I-26 WB (Basic Analysis)	NW
4712	10	22.186884	I-26 WB (Basic Analysis)	NW
4714	1	34.362478	I-26 EB (Basic Analysis)	SE
4714	2	34.58529	I-26 EB (Basic Analysis)	SE
4714	3	33.628992	I-26 EB (Basic Analysis)	SE
4714	4	34.157558	I-26 EB (Basic Analysis)	SE
4714	5	34.366545	I-26 EB (Basic Analysis)	SE
4714	6	35.835145	I-26 EB (Basic Analysis)	SE
4714	7	34.503972	I-26 EB (Basic Analysis)	SE
4714	8	34.285227	I-26 EB (Basic Analysis)	SE
4714	9	35.127679	I-26 EB (Basic Analysis)	SE
4714	10	34.167316	I-26 EB (Basic Analysis)	SE
4720	1	28.313759	I-26 EB (Merge Analysis)	SE
4720	2	27.29118	I-26 EB (Merge Analysis)	SE
4720	3	28.33145	I-26 EB (Merge Analysis)	SE
4720	4	28.660516	I-26 EB (Merge Analysis)	SE
4720	5	28.99135	I-26 EB (Merge Analysis)	SE
4720	6	27.278796	I-26 EB (Merge Analysis)	SE
4720	7	28.556135	I-26 EB (Merge Analysis)	SE
4720	8	25.891768	I-26 EB (Merge Analysis)	SE
4720	9	27.466327	I-26 EB (Merge Analysis)	SE
4720	10	27.1638	I-26 EB (Merge Analysis)	SE
4725	1	19.739428	I-26 WB (Merge Analysis)	NW
4725	2	20.815677	I-26 WB (Merge Analysis)	NW
4725	3	21.561823	I-26 WB (Merge Analysis)	NW
4725	4	19.448881	I-26 WB (Merge Analysis)	NW

RPA AM

ID	Run	Density	Name (Type)	Direction
4725	5	19.184252	I-26 WB (Merge Analysis)	NW
4725	6	20.459656	I-26 WB (Merge Analysis)	NW
4725	7	20.190934	I-26 WB (Merge Analysis)	NW
4725	8	21.178519	I-26 WB (Merge Analysis)	NW
4725	9	21.767797	I-26 WB (Merge Analysis)	NW
4725	10	20.345074	I-26 WB (Merge Analysis)	NW
4727	1	23.126665	I-26 WB (Basic Analysis)	NW
4727	2	24.614065	I-26 WB (Basic Analysis)	NW
4727	3	23.829438	I-26 WB (Basic Analysis)	NW
4727	4	20.41676	I-26 WB (Basic Analysis)	NW
4727	5	22.840241	I-26 WB (Basic Analysis)	NW
4727	6	25.042357	I-26 WB (Basic Analysis)	NW
4727	7	20.993183	I-26 WB (Basic Analysis)	NW
4727	8	21.458962	I-26 WB (Basic Analysis)	NW
4727	9	22.660038	I-26 WB (Basic Analysis)	NW
4727	10	21.226932	I-26 WB (Basic Analysis)	NW
4728	1	20.601878	I-26 WB (Diverge Analysis)	NW
4728	2	20.573405	I-26 WB (Diverge Analysis)	NW
4728	3	21.469026	I-26 WB (Diverge Analysis)	NW
4728	4	19.928868	I-26 WB (Diverge Analysis)	NW
4728	5	20.128183	I-26 WB (Diverge Analysis)	NW
4728	6	20.182541	I-26 WB (Diverge Analysis)	NW
4728	7	20.006523	I-26 WB (Diverge Analysis)	NW
4728	8	19.607894	I-26 WB (Diverge Analysis)	NW
4728	9	19.962519	I-26 WB (Diverge Analysis)	NW
4728	10	21.595863	I-26 WB (Diverge Analysis)	NW
4729	1	20.601878	I-26 WB (Diverge Analysis)	NW
4729	2	20.573405	I-26 WB (Diverge Analysis)	NW
4729	3	21.469026	I-26 WB (Diverge Analysis)	NW
4729	4	19.928868	I-26 WB (Diverge Analysis)	NW
4729	5	20.128183	I-26 WB (Diverge Analysis)	NW
4729	6	20.182541	I-26 WB (Diverge Analysis)	NW
4729	7	20.006523	I-26 WB (Diverge Analysis)	NW
4729	8	19.607894	I-26 WB (Diverge Analysis)	NW
4729	9	19.962519	I-26 WB (Diverge Analysis)	NW
4729	10	21.595863	I-26 WB (Diverge Analysis)	NW
4730	1	20.601878	I-26 WB (Diverge Analysis)	NW
4730	2	20.573405	I-26 WB (Diverge Analysis)	NW
4730	3	21.469026	I-26 WB (Diverge Analysis)	NW
4730	4	19.928868	I-26 WB (Diverge Analysis)	NW
4730	5	20.128183	I-26 WB (Diverge Analysis)	NW
4730	6	20.182541	I-26 WB (Diverge Analysis)	NW
4730	7	20.006523	I-26 WB (Diverge Analysis)	NW
4730	8	19.607894	I-26 WB (Diverge Analysis)	NW
4730	9	19.962519	I-26 WB (Diverge Analysis)	NW
4730	10	21.595863	I-26 WB (Diverge Analysis)	NW
4732	1	18.241613	I-26 WB (Basic Analysis)	NW
4732	2	18.428538	I-26 WB (Basic Analysis)	NW
4732	3	18.067884	I-26 WB (Basic Analysis)	NW
4732	4	18.309786	I-26 WB (Basic Analysis)	NW
4732	5	17.705031	I-26 WB (Basic Analysis)	NW
4732	6	17.23882	I-26 WB (Basic Analysis)	NW
4732	7	18.246012	I-26 WB (Basic Analysis)	NW
4732	8	19.314779	I-26 WB (Basic Analysis)	NW
4732	9	19.466517	I-26 WB (Basic Analysis)	NW
4732	10	19.624853	I-26 WB (Basic Analysis)	NW
4733	1	30.991764	I-26 EB (Basic Analysis)	SE
4733	2	33.619791	I-26 EB (Basic Analysis)	SE
4733	3	32.294754	I-26 EB (Basic Analysis)	SE
4733	4	30.482473	I-26 EB (Basic Analysis)	SE
4733	5	32.144833	I-26 EB (Basic Analysis)	SE
4733	6	31.240897	I-26 EB (Basic Analysis)	SE
4733	7	32.138219	I-26 EB (Basic Analysis)	SE
4733	8	31.366566	I-26 EB (Basic Analysis)	SE

RPA AM

ID	Run	Density	Name (Type)	Direction
4733	9	31.313653	I-26 EB (Basic Analysis)	SE
4733	10	33.203099	I-26 EB (Basic Analysis)	SE
4736	1	38.295875	I-26 EB (Basic Analysis)	SE
4736	2	38.461658	I-26 EB (Basic Analysis)	SE
4736	3	38.984512	I-26 EB (Basic Analysis)	SE
4736	4	41.751813	I-26 EB (Basic Analysis)	SE
4736	5	37.683753	I-26 EB (Basic Analysis)	SE
4736	6	40.336281	I-26 EB (Basic Analysis)	SE
4736	7	36.127944	I-26 EB (Basic Analysis)	SE
4736	8	37.645496	I-26 EB (Basic Analysis)	SE
4736	9	41.981359	I-26 EB (Basic Analysis)	SE
4736	10	37.811279	I-26 EB (Basic Analysis)	SE
4737	1	29.401439	I-26 EB (Diverge Analysis)	SE
4737	2	30.671109	I-26 EB (Diverge Analysis)	SE
4737	3	29.643935	I-26 EB (Diverge Analysis)	SE
4737	4	30.069445	I-26 EB (Diverge Analysis)	SE
4737	5	29.717141	I-26 EB (Diverge Analysis)	SE
4737	6	29.518111	I-26 EB (Diverge Analysis)	SE
4737	7	29.12234	I-26 EB (Diverge Analysis)	SE
4737	8	29.785772	I-26 EB (Diverge Analysis)	SE
4737	9	29.433467	I-26 EB (Diverge Analysis)	SE
4737	10	28.273606	I-26 EB (Diverge Analysis)	SE
4739	1	17.584096	I-26 WB (Weaving Analysis)	NW
4739	2	19.1649	I-26 WB (Weaving Analysis)	NW
4739	3	17.501959	I-26 WB (Weaving Analysis)	NW
4739	4	16.256435	I-26 WB (Weaving Analysis)	NW
4739	5	16.850247	I-26 WB (Weaving Analysis)	NW
4739	6	17.192261	I-26 WB (Weaving Analysis)	NW
4739	7	17.291903	I-26 WB (Weaving Analysis)	NW
4739	8	18.887519	I-26 WB (Weaving Analysis)	NW
4739	9	18.940033	I-26 WB (Weaving Analysis)	NW
4739	10	16.622686	I-26 WB (Weaving Analysis)	NW
4741	1	26.300831	I-26 WB (Basic Analysis)	NW
4741	2	19.798494	I-26 WB (Basic Analysis)	NW
4741	3	22.780601	I-26 WB (Basic Analysis)	NW
4741	4	20.269353	I-26 WB (Basic Analysis)	NW
4741	5	24.798567	I-26 WB (Basic Analysis)	NW
4741	6	24.35013	I-26 WB (Basic Analysis)	NW
4741	7	23.699896	I-26 WB (Basic Analysis)	NW
4741	8	18.946464	I-26 WB (Basic Analysis)	NW
4741	9	19.01373	I-26 WB (Basic Analysis)	NW
4741	10	21.569821	I-26 WB (Basic Analysis)	NW
4742	1	15.584002	I-26 WB (Diverge Analysis)	NW
4742	2	14.910061	I-26 WB (Diverge Analysis)	NW
4742	3	17.527239	I-26 WB (Diverge Analysis)	NW
4742	4	14.376623	I-26 WB (Diverge Analysis)	NW
4742	5	15.322046	I-26 WB (Diverge Analysis)	NW
4742	6	16.75566	I-26 WB (Diverge Analysis)	NW
4742	7	16.36987	I-26 WB (Diverge Analysis)	NW
4742	8	15.207738	I-26 WB (Diverge Analysis)	NW
4742	9	14.852907	I-26 WB (Diverge Analysis)	NW
4742	10	16.13411	I-26 WB (Diverge Analysis)	NW
4745	1	29.283843	I-26 EB (Basic Analysis)	SE
4745	2	31.441671	I-26 EB (Basic Analysis)	SE
4745	3	29.108153	I-26 EB (Basic Analysis)	SE
4745	4	30.038407	I-26 EB (Basic Analysis)	SE
4745	5	31.281748	I-26 EB (Basic Analysis)	SE
4745	6	30.069941	I-26 EB (Basic Analysis)	SE
4745	7	30.045164	I-26 EB (Basic Analysis)	SE
4745	8	30.121747	I-26 EB (Basic Analysis)	SE
4745	9	29.822173	I-26 EB (Basic Analysis)	SE
4745	10	31.995768	I-26 EB (Basic Analysis)	SE
4753	1	16.305311	I-26 WB (Basic Analysis)	NW
4753	2	17.734282	I-26 WB (Basic Analysis)	NW

RPA AM

ID	Run	Density	Name (Type)	Direction
4753	3	18.080243	I-26 WB (Basic Analysis)	NW
4753	4	15.802485	I-26 WB (Basic Analysis)	NW
4753	5	19.300778	I-26 WB (Basic Analysis)	NW
4753	6	16.610444	I-26 WB (Basic Analysis)	NW
4753	7	14.728071	I-26 WB (Basic Analysis)	NW
4753	8	16.700695	I-26 WB (Basic Analysis)	NW
4753	9	16.047452	I-26 WB (Basic Analysis)	NW
4753	10	17.156247	I-26 WB (Basic Analysis)	NW
4755	1	28.273583	I-26 EB (Basic Analysis)	SE
4755	2	32.803604	I-26 EB (Basic Analysis)	SE
4755	3	30.935361	I-26 EB (Basic Analysis)	SE
4755	4	29.285808	I-26 EB (Basic Analysis)	SE
4755	5	32.053807	I-26 EB (Basic Analysis)	SE
4755	6	30.897871	I-26 EB (Basic Analysis)	SE
4755	7	29.6857	I-26 EB (Basic Analysis)	SE
4755	8	30.354268	I-26 EB (Basic Analysis)	SE
4755	9	31.778882	I-26 EB (Basic Analysis)	SE
4755	10	30.304282	I-26 EB (Basic Analysis)	SE
4756	1	21.798925	I-26 EB (Diverge Analysis)	SE
4756	2	24.609675	I-26 EB (Diverge Analysis)	SE
4756	3	24.615921	I-26 EB (Diverge Analysis)	SE
4756	4	22.167446	I-26 EB (Diverge Analysis)	SE
4756	5	23.895536	I-26 EB (Diverge Analysis)	SE
4756	6	23.129347	I-26 EB (Diverge Analysis)	SE
4756	7	23.608215	I-26 EB (Diverge Analysis)	SE
4756	8	22.854518	I-26 EB (Diverge Analysis)	SE
4756	9	23.152249	I-26 EB (Diverge Analysis)	SE
4756	10	24.085002	I-26 EB (Diverge Analysis)	SE
4760	1	9.366162	I-26 WB (Merge Analysis)	NW
4760	2	9.533415	I-26 WB (Merge Analysis)	NW
4760	3	9.301037	I-26 WB (Merge Analysis)	NW
4760	4	8.908807	I-26 WB (Merge Analysis)	NW
4760	5	9.579299	I-26 WB (Merge Analysis)	NW
4760	6	9.039057	I-26 WB (Merge Analysis)	NW
4760	7	9.517134	I-26 WB (Merge Analysis)	NW
4760	8	10.680504	I-26 WB (Merge Analysis)	NW
4760	9	10.280873	I-26 WB (Merge Analysis)	NW
4760	10	9.07902	I-26 WB (Merge Analysis)	NW
4761	1	16.585013	I-26 WB (Basic Analysis)	NW
4761	2	16.827869	I-26 WB (Basic Analysis)	NW
4761	3	16.868233	I-26 WB (Basic Analysis)	NW
4761	4	15.819777	I-26 WB (Basic Analysis)	NW
4761	5	17.015939	I-26 WB (Basic Analysis)	NW
4761	6	16.554567	I-26 WB (Basic Analysis)	NW
4761	7	16.119247	I-26 WB (Basic Analysis)	NW
4761	8	16.48356	I-26 WB (Basic Analysis)	NW
4761	9	17.036563	I-26 WB (Basic Analysis)	NW
4761	10	16.546768	I-26 WB (Basic Analysis)	NW
4762	1	16.585013	I-26 WB (Basic Analysis)	NW
4762	2	16.827869	I-26 WB (Basic Analysis)	NW
4762	3	16.868233	I-26 WB (Basic Analysis)	NW
4762	4	15.819777	I-26 WB (Basic Analysis)	NW
4762	5	17.015939	I-26 WB (Basic Analysis)	NW
4762	6	16.554567	I-26 WB (Basic Analysis)	NW
4762	7	16.119247	I-26 WB (Basic Analysis)	NW
4762	8	16.48356	I-26 WB (Basic Analysis)	NW
4762	9	17.036563	I-26 WB (Basic Analysis)	NW
4762	10	16.546768	I-26 WB (Basic Analysis)	NW
4763	1	16.585013	I-26 WB (Basic Analysis)	NW
4763	2	16.827869	I-26 WB (Basic Analysis)	NW
4763	3	16.868233	I-26 WB (Basic Analysis)	NW
4763	4	15.819777	I-26 WB (Basic Analysis)	NW
4763	5	17.015939	I-26 WB (Basic Analysis)	NW
4763	6	16.554567	I-26 WB (Basic Analysis)	NW

RPA AM

ID	Run	Density	Name (Type)	Direction
4763	7	16.119247	I-26 WB (Basic Analysis)	NW
4763	8	16.48356	I-26 WB (Basic Analysis)	NW
4763	9	17.036563	I-26 WB (Basic Analysis)	NW
4763	10	16.546768	I-26 WB (Basic Analysis)	NW
4764	1	16.585013	I-26 WB (Basic Analysis)	NW
4764	2	16.827869	I-26 WB (Basic Analysis)	NW
4764	3	16.868233	I-26 WB (Basic Analysis)	NW
4764	4	15.819777	I-26 WB (Basic Analysis)	NW
4764	5	17.015939	I-26 WB (Basic Analysis)	NW
4764	6	16.554567	I-26 WB (Basic Analysis)	NW
4764	7	16.119247	I-26 WB (Basic Analysis)	NW
4764	8	16.48356	I-26 WB (Basic Analysis)	NW
4764	9	17.036563	I-26 WB (Basic Analysis)	NW
4764	10	16.546768	I-26 WB (Basic Analysis)	NW
4769	1	28.042624	I-26 EB (Basic Analysis)	SE
4769	2	29.000495	I-26 EB (Basic Analysis)	SE
4769	3	28.376622	I-26 EB (Basic Analysis)	SE
4769	4	28.256211	I-26 EB (Basic Analysis)	SE
4769	5	28.517794	I-26 EB (Basic Analysis)	SE
4769	6	28.484506	I-26 EB (Basic Analysis)	SE
4769	7	28.48519	I-26 EB (Basic Analysis)	SE
4769	8	27.785845	I-26 EB (Basic Analysis)	SE
4769	9	28.264737	I-26 EB (Basic Analysis)	SE
4769	10	28.33844	I-26 EB (Basic Analysis)	SE
6079	1	10.092827	CD ROAD I-20 WB TO I-20 (Basic Analysis)	NW
6079	2	12.128301	CD ROAD I-20 WB TO I-20 (Basic Analysis)	NW
6079	3	10.856943	CD ROAD I-20 WB TO I-20 (Basic Analysis)	NW
6079	4	11.295902	CD ROAD I-20 WB TO I-20 (Basic Analysis)	NW
6079	5	11.120318	CD ROAD I-20 WB TO I-20 (Basic Analysis)	NW
6079	6	11.451977	CD ROAD I-20 WB TO I-20 (Basic Analysis)	NW
6079	7	9.403497	CD ROAD I-20 WB TO I-20 (Basic Analysis)	NW
6079	8	10.398473	CD ROAD I-20 WB TO I-20 (Basic Analysis)	NW
6079	9	11.250381	CD ROAD I-20 WB TO I-20 (Basic Analysis)	NW
6079	10	12.281124	CD ROAD I-20 WB TO I-20 (Basic Analysis)	NW
6149	1	20.751695	I-26 EB (Merge Analysis)	S
6149	2	22.465039	I-26 EB (Merge Analysis)	S
6149	3	21.380023	I-26 EB (Merge Analysis)	S
6149	4	20.258227	I-26 EB (Merge Analysis)	S
6149	5	20.276617	I-26 EB (Merge Analysis)	S
6149	6	22.348568	I-26 EB (Merge Analysis)	S
6149	7	21.684992	I-26 EB (Merge Analysis)	S
6149	8	20.233707	I-26 EB (Merge Analysis)	S
6149	9	21.338645	I-26 EB (Merge Analysis)	S
6149	10	20.71185	I-26 EB (Merge Analysis)	S
6150	1	20.751695	I-26 EB (Merge Analysis)	S
6150	2	22.465039	I-26 EB (Merge Analysis)	S
6150	3	21.380023	I-26 EB (Merge Analysis)	S
6150	4	20.258227	I-26 EB (Merge Analysis)	S
6150	5	20.276617	I-26 EB (Merge Analysis)	S
6150	6	22.348568	I-26 EB (Merge Analysis)	S
6150	7	21.684992	I-26 EB (Merge Analysis)	S
6150	8	20.233707	I-26 EB (Merge Analysis)	S
6150	9	21.338645	I-26 EB (Merge Analysis)	S
6150	10	20.71185	I-26 EB (Merge Analysis)	S
6151	1	20.751695	I-26 EB (Merge Analysis)	S
6151	2	22.465039	I-26 EB (Merge Analysis)	S
6151	3	21.380023	I-26 EB (Merge Analysis)	S
6151	4	20.258227	I-26 EB (Merge Analysis)	S
6151	5	20.276617	I-26 EB (Merge Analysis)	S
6151	6	22.348568	I-26 EB (Merge Analysis)	S
6151	7	21.684992	I-26 EB (Merge Analysis)	S
6151	8	20.233707	I-26 EB (Merge Analysis)	S
6151	9	21.338645	I-26 EB (Merge Analysis)	S
6151	10	20.71185	I-26 EB (Merge Analysis)	S

RPA AM

ID	Run	Density	Name (Type)	Direction
6152	1	23.437537	I-26 EB (Basic Analysis)	S
6152	2	25.325395	I-26 EB (Basic Analysis)	S
6152	3	23.077527	I-26 EB (Basic Analysis)	S
6152	4	25.086559	I-26 EB (Basic Analysis)	S
6152	5	23.77823	I-26 EB (Basic Analysis)	S
6152	6	25.337688	I-26 EB (Basic Analysis)	S
6152	7	25.216514	I-26 EB (Basic Analysis)	S
6152	8	23.279484	I-26 EB (Basic Analysis)	S
6152	9	24.770453	I-26 EB (Basic Analysis)	S
6152	10	24.141752	I-26 EB (Basic Analysis)	S
6159	1	63.563758	I-26 WB (Diverge Analysis)	N
6159	2	49.258758	I-26 WB (Diverge Analysis)	N
6159	3	32.47289	I-26 WB (Diverge Analysis)	N
6159	4	57.470859	I-26 WB (Diverge Analysis)	N
6159	5	32.043509	I-26 WB (Diverge Analysis)	N
6159	6	49.951307	I-26 WB (Diverge Analysis)	N
6159	7	32.957674	I-26 WB (Diverge Analysis)	N
6159	8	65.736825	I-26 WB (Diverge Analysis)	N
6159	9	57.750957	I-26 WB (Diverge Analysis)	N
6159	10	39.633854	I-26 WB (Diverge Analysis)	N
6160	1	63.563758	I-26 WB (Diverge Analysis)	N
6160	2	49.258758	I-26 WB (Diverge Analysis)	N
6160	3	32.47289	I-26 WB (Diverge Analysis)	N
6160	4	57.470859	I-26 WB (Diverge Analysis)	N
6160	5	32.043509	I-26 WB (Diverge Analysis)	N
6160	6	49.951307	I-26 WB (Diverge Analysis)	N
6160	7	32.957674	I-26 WB (Diverge Analysis)	N
6160	8	65.736825	I-26 WB (Diverge Analysis)	N
6160	9	57.750957	I-26 WB (Diverge Analysis)	N
6160	10	39.633854	I-26 WB (Diverge Analysis)	N
6165	1	22.00789	I-26 WB (Basic Analysis)	N
6165	2	21.421911	I-26 WB (Basic Analysis)	N
6165	3	20.958154	I-26 WB (Basic Analysis)	N
6165	4	22.479642	I-26 WB (Basic Analysis)	N
6165	5	21.983902	I-26 WB (Basic Analysis)	N
6165	6	21.574974	I-26 WB (Basic Analysis)	N
6165	7	21.347664	I-26 WB (Basic Analysis)	N
6165	8	21.847974	I-26 WB (Basic Analysis)	N
6165	9	21.772585	I-26 WB (Basic Analysis)	N
6165	10	21.750882	I-26 WB (Basic Analysis)	N
6178	1	21.325831	I-26 EB (Basic Analysis)	S
6178	2	22.019893	I-26 EB (Basic Analysis)	S
6178	3	21.087383	I-26 EB (Basic Analysis)	S
6178	4	22.195947	I-26 EB (Basic Analysis)	S
6178	5	21.191372	I-26 EB (Basic Analysis)	S
6178	6	21.587978	I-26 EB (Basic Analysis)	S
6178	7	21.424983	I-26 EB (Basic Analysis)	S
6178	8	21.60007	I-26 EB (Basic Analysis)	S
6178	9	20.917133	I-26 EB (Basic Analysis)	S
6178	10	21.400316	I-26 EB (Basic Analysis)	S
6207	1	18.334229	I-20 EB (Basic Analysis)	E
6207	2	19.607123	I-20 EB (Basic Analysis)	E
6207	3	18.910086	I-20 EB (Basic Analysis)	E
6207	4	18.59264	I-20 EB (Basic Analysis)	E
6207	5	19.775426	I-20 EB (Basic Analysis)	E
6207	6	19.287087	I-20 EB (Basic Analysis)	E
6207	7	19.92923	I-20 EB (Basic Analysis)	E
6207	8	19.16539	I-20 EB (Basic Analysis)	E
6207	9	18.643907	I-20 EB (Basic Analysis)	E
6207	10	19.322301	I-20 EB (Basic Analysis)	E
6216	1	19.975697	I-20 EB (Basic Analysis)	NE
6216	2	22.421621	I-20 EB (Basic Analysis)	NE
6216	3	20.226964	I-20 EB (Basic Analysis)	NE
6216	4	20.811944	I-20 EB (Basic Analysis)	NE

RPA AM

ID	Run	Density	Name (Type)	Direction
6216	5	23.469873	I-20 EB (Basic Analysis)	NE
6216	6	20.215185	I-20 EB (Basic Analysis)	NE
6216	7	21.302699	I-20 EB (Basic Analysis)	NE
6216	8	21.051432	I-20 EB (Basic Analysis)	NE
6216	9	19.225823	I-20 EB (Basic Analysis)	NE
6216	10	20.643124	I-20 EB (Basic Analysis)	NE
6223	1	38.071854	I-26 EB (Basic Analysis)	SE
6223	2	37.168307	I-26 EB (Basic Analysis)	SE
6223	3	37.765072	I-26 EB (Basic Analysis)	SE
6223	4	37.440609	I-26 EB (Basic Analysis)	SE
6223	5	37.050722	I-26 EB (Basic Analysis)	SE
6223	6	37.204555	I-26 EB (Basic Analysis)	SE
6223	7	36.450421	I-26 EB (Basic Analysis)	SE
6223	8	37.090507	I-26 EB (Basic Analysis)	SE
6223	9	36.146291	I-26 EB (Basic Analysis)	SE
6223	10	35.899629	I-26 EB (Basic Analysis)	SE
6234	1	14.635059	I-20 WB (Basic Analysis)	SW
6234	2	14.386365	I-20 WB (Basic Analysis)	SW
6234	3	14.602743	I-20 WB (Basic Analysis)	SW
6234	4	14.739034	I-20 WB (Basic Analysis)	SW
6234	5	13.974683	I-20 WB (Basic Analysis)	SW
6234	6	14.087088	I-20 WB (Basic Analysis)	SW
6234	7	15.185841	I-20 WB (Basic Analysis)	SW
6234	8	14.973678	I-20 WB (Basic Analysis)	SW
6234	9	14.977893	I-20 WB (Basic Analysis)	SW
6234	10	14.757299	I-20 WB (Basic Analysis)	SW
6238	1	90.252779	I-20 EB (Merge Analysis)	NE
6238	2	109.030019	I-20 EB (Merge Analysis)	NE
6238	3	100.319977	I-20 EB (Merge Analysis)	NE
6238	4	92.308068	I-20 EB (Merge Analysis)	NE
6238	5	103.390198	I-20 EB (Merge Analysis)	NE
6238	6	94.756423	I-20 EB (Merge Analysis)	NE
6238	7	98.8318	I-20 EB (Merge Analysis)	NE
6238	8	86.906824	I-20 EB (Merge Analysis)	NE
6238	9	85.590736	I-20 EB (Merge Analysis)	NE
6238	10	94.433757	I-20 EB (Merge Analysis)	NE
6241	1	106.495011	I-20 EB (Basic Analysis)	NE
6241	2	121.865619	I-20 EB (Basic Analysis)	NE
6241	3	114.797465	I-20 EB (Basic Analysis)	NE
6241	4	116.189336	I-20 EB (Basic Analysis)	NE
6241	5	126.318856	I-20 EB (Basic Analysis)	NE
6241	6	111.394697	I-20 EB (Basic Analysis)	NE
6241	7	118.691702	I-20 EB (Basic Analysis)	NE
6241	8	105.624622	I-20 EB (Basic Analysis)	NE
6241	9	102.199345	I-20 EB (Basic Analysis)	NE
6241	10	111.124577	I-20 EB (Basic Analysis)	NE
6242	1	90.871763	I-20 EB (Merge Analysis)	NE
6242	2	98.685477	I-20 EB (Merge Analysis)	NE
6242	3	92.755176	I-20 EB (Merge Analysis)	NE
6242	4	96.208102	I-20 EB (Merge Analysis)	NE
6242	5	97.64393	I-20 EB (Merge Analysis)	NE
6242	6	92.454812	I-20 EB (Merge Analysis)	NE
6242	7	93.569123	I-20 EB (Merge Analysis)	NE
6242	8	89.594155	I-20 EB (Merge Analysis)	NE
6242	9	90.45379	I-20 EB (Merge Analysis)	NE
6242	10	92.613878	I-20 EB (Merge Analysis)	NE
6246	1	32.465696	I-20 WB (Merge Analysis)	SW
6246	2	30.448027	I-20 WB (Merge Analysis)	SW
6246	3	34.370597	I-20 WB (Merge Analysis)	SW
6246	4	30.645877	I-20 WB (Merge Analysis)	SW
6246	5	31.732366	I-20 WB (Merge Analysis)	SW
6246	6	31.523712	I-20 WB (Merge Analysis)	SW
6246	7	32.747278	I-20 WB (Merge Analysis)	SW
6246	8	33.486685	I-20 WB (Merge Analysis)	SW

RPA AM

ID	Run	Density	Name (Type)	Direction
6246	9	33.436041	I-20 WB (Merge Analysis)	SW
6246	10	32.904613	I-20 WB (Merge Analysis)	SW
6247	1	32.465696	I-20 WB (Merge Analysis)	SW
6247	2	30.448027	I-20 WB (Merge Analysis)	SW
6247	3	34.370597	I-20 WB (Merge Analysis)	SW
6247	4	30.645877	I-20 WB (Merge Analysis)	SW
6247	5	31.732366	I-20 WB (Merge Analysis)	SW
6247	6	31.523712	I-20 WB (Merge Analysis)	SW
6247	7	32.747278	I-20 WB (Merge Analysis)	SW
6247	8	33.486685	I-20 WB (Merge Analysis)	SW
6247	9	33.436041	I-20 WB (Merge Analysis)	SW
6247	10	32.904613	I-20 WB (Merge Analysis)	SW
6249	1	36.867171	I-20 WB (Basic Analysis)	SW
6249	2	35.051371	I-20 WB (Basic Analysis)	SW
6249	3	38.062191	I-20 WB (Basic Analysis)	SW
6249	4	34.770279	I-20 WB (Basic Analysis)	SW
6249	5	35.004311	I-20 WB (Basic Analysis)	SW
6249	6	35.962388	I-20 WB (Basic Analysis)	SW
6249	7	36.876816	I-20 WB (Basic Analysis)	SW
6249	8	37.862518	I-20 WB (Basic Analysis)	SW
6249	9	38.162918	I-20 WB (Basic Analysis)	SW
6249	10	36.608717	I-20 WB (Basic Analysis)	SW
6251	1	36.733863	I-20 WB (Basic Analysis)	SW
6251	2	35.997621	I-20 WB (Basic Analysis)	SW
6251	3	40.244978	I-20 WB (Basic Analysis)	SW
6251	4	34.350079	I-20 WB (Basic Analysis)	SW
6251	5	35.4054	I-20 WB (Basic Analysis)	SW
6251	6	35.91692	I-20 WB (Basic Analysis)	SW
6251	7	36.961068	I-20 WB (Basic Analysis)	SW
6251	8	37.155991	I-20 WB (Basic Analysis)	SW
6251	9	38.443483	I-20 WB (Basic Analysis)	SW
6251	10	35.695924	I-20 WB (Basic Analysis)	SW
6254	1	35.688184	I-20 EB (Basic Analysis)	NE
6254	2	34.930141	I-20 EB (Basic Analysis)	NE
6254	3	34.940164	I-20 EB (Basic Analysis)	NE
6254	4	36.030244	I-20 EB (Basic Analysis)	NE
6254	5	35.280971	I-20 EB (Basic Analysis)	NE
6254	6	36.050291	I-20 EB (Basic Analysis)	NE
6254	7	35.933765	I-20 EB (Basic Analysis)	NE
6254	8	36.186864	I-20 EB (Basic Analysis)	NE
6254	9	36.387338	I-20 EB (Basic Analysis)	NE
6254	10	35.289742	I-20 EB (Basic Analysis)	NE
6258	1	33.678207	I-20 EB (Merge Analysis)	NE
6258	2	34.183533	I-20 EB (Merge Analysis)	NE
6258	3	34.16583	I-20 EB (Merge Analysis)	NE
6258	4	34.877149	I-20 EB (Merge Analysis)	NE
6258	5	32.342472	I-20 EB (Merge Analysis)	NE
6258	6	33.853623	I-20 EB (Merge Analysis)	NE
6258	7	34.299404	I-20 EB (Merge Analysis)	NE
6258	8	34.806339	I-20 EB (Merge Analysis)	NE
6258	9	35.234418	I-20 EB (Merge Analysis)	NE
6258	10	35.123375	I-20 EB (Merge Analysis)	NE
6259	1	33.678207	I-20 EB (Merge Analysis)	NE
6259	2	34.183533	I-20 EB (Merge Analysis)	NE
6259	3	34.16583	I-20 EB (Merge Analysis)	NE
6259	4	34.877149	I-20 EB (Merge Analysis)	NE
6259	5	32.342472	I-20 EB (Merge Analysis)	NE
6259	6	33.853623	I-20 EB (Merge Analysis)	NE
6259	7	34.299404	I-20 EB (Merge Analysis)	NE

RPA AM

ID	Run	Density	Name (Type)	Direction
6259	8	34.806339	I-20 EB (Merge Analysis)	NE
6259	9	35.234418	I-20 EB (Merge Analysis)	NE
6259	10	35.123375	I-20 EB (Merge Analysis)	NE
8539	1	15.97033	I-20 WB (Basic Analysis)	SW
8539	2	15.174863	I-20 WB (Basic Analysis)	SW
8539	3	15.627026	I-20 WB (Basic Analysis)	SW
8539	4	15.058248	I-20 WB (Basic Analysis)	SW
8539	5	15.36323	I-20 WB (Basic Analysis)	SW
8539	6	16.368238	I-20 WB (Basic Analysis)	SW
8539	7	15.056384	I-20 WB (Basic Analysis)	SW
8539	8	15.502303	I-20 WB (Basic Analysis)	SW
8539	9	15.273805	I-20 WB (Basic Analysis)	SW
8539	10	16.285397	I-20 WB (Basic Analysis)	SW
8542	1	31.130778	I-20 EB (Basic Analysis)	NE
8542	2	33.559032	I-20 EB (Basic Analysis)	NE
8542	3	30.760785	I-20 EB (Basic Analysis)	NE
8542	4	28.675294	I-20 EB (Basic Analysis)	NE
8542	5	31.156604	I-20 EB (Basic Analysis)	NE
8542	6	33.929025	I-20 EB (Basic Analysis)	NE
8542	7	31.77251	I-20 EB (Basic Analysis)	NE
8542	8	31.565056	I-20 EB (Basic Analysis)	NE
8542	9	29.561536	I-20 EB (Basic Analysis)	NE
8542	10	29.618242	I-20 EB (Basic Analysis)	NE
8554	1	16.636042	I-26 WB (Basic Analysis)	N
8554	2	17.282771	I-26 WB (Basic Analysis)	N
8554	3	16.665071	I-26 WB (Basic Analysis)	N
8554	4	17.160581	I-26 WB (Basic Analysis)	N
8554	5	17.305049	I-26 WB (Basic Analysis)	N
8554	6	16.803125	I-26 WB (Basic Analysis)	N
8554	7	17.020839	I-26 WB (Basic Analysis)	N
8554	8	16.642456	I-26 WB (Basic Analysis)	N
8554	9	17.291547	I-26 WB (Basic Analysis)	N
8554	10	17.362093	I-26 WB (Basic Analysis)	N
8559	1	15.530516	I-126 NB (Basic Analysis)	W
8559	2	14.892974	I-126 NB (Basic Analysis)	W
8559	3	14.06842	I-126 NB (Basic Analysis)	W
8559	4	13.588139	I-126 NB (Basic Analysis)	W
8559	5	15.564518	I-126 NB (Basic Analysis)	W
8559	6	14.710212	I-126 NB (Basic Analysis)	W
8559	7	14.391441	I-126 NB (Basic Analysis)	W
8559	8	13.945162	I-126 NB (Basic Analysis)	W
8559	9	15.526266	I-126 NB (Basic Analysis)	W
8559	10	13.75815	I-126 NB (Basic Analysis)	W
8560	1	53.390994	I-126 SB (Basic Analysis)	E
8560	2	52.647832	I-126 SB (Basic Analysis)	E
8560	3	48.568498	I-126 SB (Basic Analysis)	E
8560	4	51.526966	I-126 SB (Basic Analysis)	E
8560	5	47.839517	I-126 SB (Basic Analysis)	E
8560	6	48.373201	I-126 SB (Basic Analysis)	E
8560	7	48.202396	I-126 SB (Basic Analysis)	E
8560	8	46.843048	I-126 SB (Basic Analysis)	E
8560	9	50.017439	I-126 SB (Basic Analysis)	E
8560	10	50.134102	I-126 SB (Basic Analysis)	E
8658	1	32.465696	I-20 WB (Merge Analysis)	SW
8658	2	30.448027	I-20 WB (Merge Analysis)	SW
8658	3	34.370597	I-20 WB (Merge Analysis)	SW
8658	4	30.645877	I-20 WB (Merge Analysis)	SW

RPA AM

ID	Run	Density	Name (Type)	Direction
8658	5	31.732366	I-20 WB (Merge Analysis)	SW
8658	6	31.523712	I-20 WB (Merge Analysis)	SW
8658	7	32.747278	I-20 WB (Merge Analysis)	SW
8658	8	33.486685	I-20 WB (Merge Analysis)	SW
8658	9	33.436041	I-20 WB (Merge Analysis)	SW
8658	10	32.904613	I-20 WB (Merge Analysis)	SW
8659	1	56.628549	I-20 EB (Basic Analysis)	NE
8659	2	57.493605	I-20 EB (Basic Analysis)	NE
8659	3	56.630433	I-20 EB (Basic Analysis)	NE
8659	4	58.540352	I-20 EB (Basic Analysis)	NE
8659	5	58.210903	I-20 EB (Basic Analysis)	NE
8659	6	56.449472	I-20 EB (Basic Analysis)	NE
8659	7	56.53323	I-20 EB (Basic Analysis)	NE
8659	8	56.564499	I-20 EB (Basic Analysis)	NE
8659	9	56.99883	I-20 EB (Basic Analysis)	NE
8659	10	56.641015	I-20 EB (Basic Analysis)	NE
8763	1	28.042624	I-26 EB (Basic Analysis)	SE
8763	2	29.000495	I-26 EB (Basic Analysis)	SE
8763	3	28.376622	I-26 EB (Basic Analysis)	SE
8763	4	28.256211	I-26 EB (Basic Analysis)	SE
8763	5	28.517794	I-26 EB (Basic Analysis)	SE
8763	6	28.484506	I-26 EB (Basic Analysis)	SE
8763	7	28.48519	I-26 EB (Basic Analysis)	SE
8763	8	27.785845	I-26 EB (Basic Analysis)	SE
8763	9	28.264737	I-26 EB (Basic Analysis)	SE
8763	10	28.33844	I-26 EB (Basic Analysis)	SE
8764	1	15.51989	I-20 WB (Basic Analysis)	S
8764	2	14.826592	I-20 WB (Basic Analysis)	S
8764	3	15.303573	I-20 WB (Basic Analysis)	S
8764	4	15.040722	I-20 WB (Basic Analysis)	S
8764	5	15.065812	I-20 WB (Basic Analysis)	S
8764	6	15.527117	I-20 WB (Basic Analysis)	S
8764	7	15.996618	I-20 WB (Basic Analysis)	S
8764	8	15.376429	I-20 WB (Basic Analysis)	S
8764	9	15.29834	I-20 WB (Basic Analysis)	S
8764	10	16.144402	I-20 WB (Basic Analysis)	S
8765	1	37.671435	I-20 EB (Basic Analysis)	NE
8765	2	42.555665	I-20 EB (Basic Analysis)	NE
8765	3	37.582901	I-20 EB (Basic Analysis)	NE
8765	4	37.923211	I-20 EB (Basic Analysis)	NE
8765	5	40.717901	I-20 EB (Basic Analysis)	NE
8765	6	37.740555	I-20 EB (Basic Analysis)	NE
8765	7	40.669128	I-20 EB (Basic Analysis)	NE
8765	8	38.393887	I-20 EB (Basic Analysis)	NE
8765	9	36.496668	I-20 EB (Basic Analysis)	NE
8765	10	38.355338	I-20 EB (Basic Analysis)	NE
8770	1	38.491465	I-20 WB (Basic Analysis)	SW
8770	2	39.361001	I-20 WB (Basic Analysis)	SW
8770	3	38.575391	I-20 WB (Basic Analysis)	SW
8770	4	36.735954	I-20 WB (Basic Analysis)	SW
8770	5	38.076597	I-20 WB (Basic Analysis)	SW
8770	6	37.891875	I-20 WB (Basic Analysis)	SW
8770	7	38.369471	I-20 WB (Basic Analysis)	SW
8770	8	39.279239	I-20 WB (Basic Analysis)	SW
8770	9	39.046065	I-20 WB (Basic Analysis)	SW
8770	10	39.198775	I-20 WB (Basic Analysis)	SW
8773	1	44.981454	I-26 WB (Basic Analysis)	N

RPA AM

ID	Run	Density	Name (Type)	Direction
8773	2	33.27755	I-26 WB (Basic Analysis)	N
8773	3	27.148842	I-26 WB (Basic Analysis)	N
8773	4	34.862408	I-26 WB (Basic Analysis)	N
8773	5	28.230641	I-26 WB (Basic Analysis)	N
8773	6	32.370858	I-26 WB (Basic Analysis)	N
8773	7	27.775069	I-26 WB (Basic Analysis)	N
8773	8	42.365253	I-26 WB (Basic Analysis)	N
8773	9	45.646263	I-26 WB (Basic Analysis)	N
8773	10	29.040877	I-26 WB (Basic Analysis)	N
8774	1	45.030082	I-20 EB (Diverge Analysis)	NE
8774	2	45.320744	I-20 EB (Diverge Analysis)	NE
8774	3	44.314609	I-20 EB (Diverge Analysis)	NE
8774	4	44.549374	I-20 EB (Diverge Analysis)	NE
8774	5	46.846713	I-20 EB (Diverge Analysis)	NE
8774	6	45.636558	I-20 EB (Diverge Analysis)	NE
8774	7	44.037923	I-20 EB (Diverge Analysis)	NE
8774	8	44.149715	I-20 EB (Diverge Analysis)	NE
8774	9	43.909361	I-20 EB (Diverge Analysis)	NE
8774	10	45.544329	I-20 EB (Diverge Analysis)	NE
8784	1	28.249856	I-126 SB (Basic Analysis)	SE
8784	2	28.888759	I-126 SB (Basic Analysis)	SE
8784	3	28.4227	I-126 SB (Basic Analysis)	SE
8784	4	28.728262	I-126 SB (Basic Analysis)	SE
8784	5	28.328562	I-126 SB (Basic Analysis)	SE
8784	6	27.104769	I-126 SB (Basic Analysis)	SE
8784	7	28.169608	I-126 SB (Basic Analysis)	SE
8784	8	28.753725	I-126 SB (Basic Analysis)	SE
8784	9	27.495982	I-126 SB (Basic Analysis)	SE
8784	10	28.256029	I-126 SB (Basic Analysis)	SE
8789	1	21.325831	I-26 EB (Basic Analysis)	S
8789	2	22.019893	I-26 EB (Basic Analysis)	S
8789	3	21.087383	I-26 EB (Basic Analysis)	S
8789	4	22.195947	I-26 EB (Basic Analysis)	S
8789	5	21.191372	I-26 EB (Basic Analysis)	S
8789	6	21.587978	I-26 EB (Basic Analysis)	S
8789	7	21.424983	I-26 EB (Basic Analysis)	S
8789	8	21.60007	I-26 EB (Basic Analysis)	S
8789	9	20.917133	I-26 EB (Basic Analysis)	S
8789	10	21.400316	I-26 EB (Basic Analysis)	S
8790	1	25.882748	CD ROAD I-26 WB TO I-20 (Basic Analysis)	NE
8790	2	30.380723	CD ROAD I-26 WB TO I-20 (Basic Analysis)	NE
8790	3	26.48377	CD ROAD I-26 WB TO I-20 (Basic Analysis)	NE
8790	4	30.0996	CD ROAD I-26 WB TO I-20 (Basic Analysis)	NE
8790	5	28.71337	CD ROAD I-26 WB TO I-20 (Basic Analysis)	NE
8790	6	27.42408	CD ROAD I-26 WB TO I-20 (Basic Analysis)	NE
8790	7	27.59857	CD ROAD I-26 WB TO I-20 (Basic Analysis)	NE
8790	8	26.183259	CD ROAD I-26 WB TO I-20 (Basic Analysis)	NE
8790	9	25.46591	CD ROAD I-26 WB TO I-20 (Basic Analysis)	NE
8790	10	26.697037	CD ROAD I-26 WB TO I-20 (Basic Analysis)	NE
8791	1	11.618618	CD ROAD I-20 WB TO I-20 (Basic Analysis)	NE
8791	2	11.879385	CD ROAD I-20 WB TO I-20 (Basic Analysis)	NE
8791	3	12.625468	CD ROAD I-20 WB TO I-20 (Basic Analysis)	NE
8791	4	10.691446	CD ROAD I-20 WB TO I-20 (Basic Analysis)	NE
8791	5	12.668929	CD ROAD I-20 WB TO I-20 (Basic Analysis)	NE
8791	6	10.264078	CD ROAD I-20 WB TO I-20 (Basic Analysis)	NE
8791	7	11.33612	CD ROAD I-20 WB TO I-20 (Basic Analysis)	NE
8791	8	11.155032	CD ROAD I-20 WB TO I-20 (Basic Analysis)	NE

RPA AM

ID	Run	Density	Name (Type)	Direction
8791	9	10.778368	CD ROAD I-20 WB TO I-20 (Basic Analysis)	NE
8791	10	12.09669	CD ROAD I-20 WB TO I-20 (Basic Analysis)	NE
8792	1	17.443336	I-26 EB (Basic Analysis)	S
8792	2	17.28203	I-26 EB (Basic Analysis)	S
8792	3	16.932525	I-26 EB (Basic Analysis)	S
8792	4	17.901837	I-26 EB (Basic Analysis)	S
8792	5	17.098118	I-26 EB (Basic Analysis)	S
8792	6	17.55076	I-26 EB (Basic Analysis)	S
8792	7	17.090004	I-26 EB (Basic Analysis)	S
8792	8	17.336907	I-26 EB (Basic Analysis)	S
8792	9	16.242395	I-26 EB (Basic Analysis)	S
8792	10	16.808694	I-26 EB (Basic Analysis)	S
8802	1	28.960967	CD ROAD I-20 EB (Basic Analysis)	NE
8802	2	28.312401	CD ROAD I-20 EB (Basic Analysis)	NE
8802	3	27.85404	CD ROAD I-20 EB (Basic Analysis)	NE
8802	4	28.390354	CD ROAD I-20 EB (Basic Analysis)	NE
8802	5	28.826889	CD ROAD I-20 EB (Basic Analysis)	NE
8802	6	28.833125	CD ROAD I-20 EB (Basic Analysis)	NE
8802	7	28.589913	CD ROAD I-20 EB (Basic Analysis)	NE
8802	8	29.013975	CD ROAD I-20 EB (Basic Analysis)	NE
8802	9	27.654481	CD ROAD I-20 EB (Basic Analysis)	NE
8802	10	27.386324	CD ROAD I-20 EB (Basic Analysis)	NE
8819	1	11.425469	CD ROAD I-20 WB (Weaving Analysis)	SW
8819	2	11.268894	CD ROAD I-20 WB (Weaving Analysis)	SW
8819	3	11.339654	CD ROAD I-20 WB (Weaving Analysis)	SW
8819	4	10.665177	CD ROAD I-20 WB (Weaving Analysis)	SW
8819	5	11.286961	CD ROAD I-20 WB (Weaving Analysis)	SW
8819	6	11.792819	CD ROAD I-20 WB (Weaving Analysis)	SW
8819	7	11.279433	CD ROAD I-20 WB (Weaving Analysis)	SW
8819	8	10.931655	CD ROAD I-20 WB (Weaving Analysis)	SW
8819	9	10.60345	CD ROAD I-20 WB (Weaving Analysis)	SW
8819	10	12.026176	CD ROAD I-20 WB (Weaving Analysis)	SW
8826	1	16.822925	CD ROAD I-20 EB (Basic Analysis)	E
8826	2	16.939536	CD ROAD I-20 EB (Basic Analysis)	E
8826	3	16.463573	CD ROAD I-20 EB (Basic Analysis)	E
8826	4	16.311264	CD ROAD I-20 EB (Basic Analysis)	E
8826	5	17.006171	CD ROAD I-20 EB (Basic Analysis)	E
8826	6	16.256529	CD ROAD I-20 EB (Basic Analysis)	E
8826	7	15.918595	CD ROAD I-20 EB (Basic Analysis)	E
8826	8	18.598269	CD ROAD I-20 EB (Basic Analysis)	E
8826	9	16.518309	CD ROAD I-20 EB (Basic Analysis)	E
8826	10	17.872424	CD ROAD I-20 EB (Basic Analysis)	E
8828	1	20.214473	(Weaving Analysis)	NW
8828	2	18.650895	(Weaving Analysis)	NW
8828	3	18.495374	(Weaving Analysis)	NW
8828	4	18.446878	(Weaving Analysis)	NW
8828	5	17.803051	(Weaving Analysis)	NW
8828	6	18.856585	(Weaving Analysis)	NW
8828	7	18.717786	(Weaving Analysis)	NW
8828	8	20.304776	(Weaving Analysis)	NW
8828	9	19.376663	(Weaving Analysis)	NW
8828	10	18.568954	(Weaving Analysis)	NW
8829	1	38.78584	CD ROAD I-20 EB (Basic Analysis)	E
8829	2	77.905159	CD ROAD I-20 EB (Basic Analysis)	E
8829	3	63.753787	CD ROAD I-20 EB (Basic Analysis)	E
8829	4	62.718387	CD ROAD I-20 EB (Basic Analysis)	E
8829	5	66.40011	CD ROAD I-20 EB (Basic Analysis)	E

RPA AM

ID	Run	Density	Name (Type)	Direction
8829	6	64.705818	CD ROAD I-20 EB (Basic Analysis)	E
8829	7	70.565917	CD ROAD I-20 EB (Basic Analysis)	E
8829	8	44.584084	CD ROAD I-20 EB (Basic Analysis)	E
8829	9	36.136828	CD ROAD I-20 EB (Basic Analysis)	E
8829	10	66.322119	CD ROAD I-20 EB (Basic Analysis)	E
8830	1	27.853338	CD ROAD I-26 EB (Weaving Analysis)	SE
8830	2	50.341885	CD ROAD I-26 EB (Weaving Analysis)	SE
8830	3	28.585925	CD ROAD I-26 EB (Weaving Analysis)	SE
8830	4	26.771363	CD ROAD I-26 EB (Weaving Analysis)	SE
8830	5	28.116318	CD ROAD I-26 EB (Weaving Analysis)	SE
8830	6	29.397406	CD ROAD I-26 EB (Weaving Analysis)	SE
8830	7	29.01045	CD ROAD I-26 EB (Weaving Analysis)	SE
8830	8	26.196564	CD ROAD I-26 EB (Weaving Analysis)	SE
8830	9	28.037424	CD ROAD I-26 EB (Weaving Analysis)	SE
8830	10	31.910744	CD ROAD I-26 EB (Weaving Analysis)	SE
8831	1	34.125173	I-20 WB (Diverge Analysis)	SW
8831	2	32.501259	I-20 WB (Diverge Analysis)	SW
8831	3	36.651857	I-20 WB (Diverge Analysis)	SW
8831	4	32.003127	I-20 WB (Diverge Analysis)	SW
8831	5	33.466086	I-20 WB (Diverge Analysis)	SW
8831	6	33.243861	I-20 WB (Diverge Analysis)	SW
8831	7	33.950829	I-20 WB (Diverge Analysis)	SW
8831	8	34.876204	I-20 WB (Diverge Analysis)	SW
8831	9	35.490057	I-20 WB (Diverge Analysis)	SW
8831	10	34.184949	I-20 WB (Diverge Analysis)	SW
8832	1	34.125173	I-20 WB (Diverge Analysis)	SW
8832	2	32.501259	I-20 WB (Diverge Analysis)	SW
8832	3	36.651857	I-20 WB (Diverge Analysis)	SW
8832	4	32.003127	I-20 WB (Diverge Analysis)	SW
8832	5	33.466086	I-20 WB (Diverge Analysis)	SW
8832	6	33.243861	I-20 WB (Diverge Analysis)	SW
8832	7	33.950829	I-20 WB (Diverge Analysis)	SW
8832	8	34.876204	I-20 WB (Diverge Analysis)	SW
8832	9	35.490057	I-20 WB (Diverge Analysis)	SW
8832	10	34.184949	I-20 WB (Diverge Analysis)	SW
8837	1	11.575568	I-20 WB (Basic Analysis)	W
8837	2	10.951307	I-20 WB (Basic Analysis)	W
8837	3	10.633938	I-20 WB (Basic Analysis)	W
8837	4	10.944095	I-20 WB (Basic Analysis)	W
8837	5	9.594311	I-20 WB (Basic Analysis)	W
8837	6	10.519112	I-20 WB (Basic Analysis)	W
8837	7	11.995802	I-20 WB (Basic Analysis)	W
8837	8	11.23369	I-20 WB (Basic Analysis)	W
8837	9	11.598612	I-20 WB (Basic Analysis)	W
8837	10	12.077895	I-20 WB (Basic Analysis)	W
8838	1	9.166049	I-20 WB (Basic Analysis)	SW
8838	2	9.717536	I-20 WB (Basic Analysis)	SW
8838	3	9.546412	I-20 WB (Basic Analysis)	SW
8838	4	9.008147	I-20 WB (Basic Analysis)	SW
8838	5	9.033816	I-20 WB (Basic Analysis)	SW
8838	6	9.405623	I-20 WB (Basic Analysis)	SW
8838	7	9.400956	I-20 WB (Basic Analysis)	SW
8838	8	9.38851	I-20 WB (Basic Analysis)	SW
8838	9	9.331728	I-20 WB (Basic Analysis)	SW
8838	10	9.747094	I-20 WB (Basic Analysis)	SW
8839	1	56.628549	I-20 EB (Basic Analysis)	NE
8839	2	57.493605	I-20 EB (Basic Analysis)	NE

RPA AM

ID	Run	Density	Name (Type)	Direction
8839	3	56.630433	I-20 EB (Basic Analysis)	NE
8839	4	58.540352	I-20 EB (Basic Analysis)	NE
8839	5	58.210903	I-20 EB (Basic Analysis)	NE
8839	6	56.449472	I-20 EB (Basic Analysis)	NE
8839	7	56.53323	I-20 EB (Basic Analysis)	NE
8839	8	56.564499	I-20 EB (Basic Analysis)	NE
8839	9	56.99883	I-20 EB (Basic Analysis)	NE
8839	10	56.641015	I-20 EB (Basic Analysis)	NE
8845	1	7.965131	I-20 WB (Merge Analysis)	W
8845	2	7.738723	I-20 WB (Merge Analysis)	W
8845	3	7.926476	I-20 WB (Merge Analysis)	W
8845	4	7.997159	I-20 WB (Merge Analysis)	W
8845	5	7.567537	I-20 WB (Merge Analysis)	W
8845	6	7.998264	I-20 WB (Merge Analysis)	W
8845	7	8.987831	I-20 WB (Merge Analysis)	W
8845	8	8.146257	I-20 WB (Merge Analysis)	W
8845	9	7.865732	I-20 WB (Merge Analysis)	W
8845	10	7.722157	I-20 WB (Merge Analysis)	W
8849	1	21.009314	CD ROAD I-20 WB (Weaving Analysis)	W
8849	2	20.155355	CD ROAD I-20 WB (Weaving Analysis)	W
8849	3	20.751363	CD ROAD I-20 WB (Weaving Analysis)	W
8849	4	20.405294	CD ROAD I-20 WB (Weaving Analysis)	W
8849	5	20.754568	CD ROAD I-20 WB (Weaving Analysis)	W
8849	6	20.942022	CD ROAD I-20 WB (Weaving Analysis)	W
8849	7	21.046164	CD ROAD I-20 WB (Weaving Analysis)	W
8849	8	21.467536	CD ROAD I-20 WB (Weaving Analysis)	W
8849	9	20.735342	CD ROAD I-20 WB (Weaving Analysis)	W
8849	10	19.790059	CD ROAD I-20 WB (Weaving Analysis)	W
8852	1	22.353691	(Basic Analysis)	E
8852	2	22.423743	(Basic Analysis)	E
8852	3	21.558597	(Basic Analysis)	E
8852	4	21.884341	(Basic Analysis)	E
8852	5	20.493802	(Basic Analysis)	E
8852	6	21.075236	(Basic Analysis)	E
8852	7	22.00343	(Basic Analysis)	E
8852	8	21.824796	(Basic Analysis)	E
8852	9	21.309912	(Basic Analysis)	E
8852	10	21.845812	(Basic Analysis)	E
8853	1	30.290505	CD ROAD I-20 EB (Basic Analysis)	E
8853	2	30.825613	CD ROAD I-20 EB (Basic Analysis)	E
8853	3	28.476614	CD ROAD I-20 EB (Basic Analysis)	E
8853	4	29.237142	CD ROAD I-20 EB (Basic Analysis)	E
8853	5	28.225914	CD ROAD I-20 EB (Basic Analysis)	E
8853	6	29.557364	CD ROAD I-20 EB (Basic Analysis)	E
8853	7	28.632512	CD ROAD I-20 EB (Basic Analysis)	E
8853	8	28.034202	CD ROAD I-20 EB (Basic Analysis)	E
8853	9	28.887426	CD ROAD I-20 EB (Basic Analysis)	E
8853	10	29.6311	CD ROAD I-20 EB (Basic Analysis)	E
8855	1	11.409735	CD ROAD I-20 WB TO I-20 (Basic Analysis)	NW
8855	2	10.902528	CD ROAD I-20 WB TO I-20 (Basic Analysis)	NW
8855	3	12.095672	CD ROAD I-20 WB TO I-20 (Basic Analysis)	NW
8855	4	11.536939	CD ROAD I-20 WB TO I-20 (Basic Analysis)	NW
8855	5	10.991088	CD ROAD I-20 WB TO I-20 (Basic Analysis)	NW
8855	6	10.574052	CD ROAD I-20 WB TO I-20 (Basic Analysis)	NW
8855	7	10.689985	CD ROAD I-20 WB TO I-20 (Basic Analysis)	NW
8855	8	11.264819	CD ROAD I-20 WB TO I-20 (Basic Analysis)	NW
8855	9	11.179479	CD ROAD I-20 WB TO I-20 (Basic Analysis)	NW

RPA AM

ID	Run	Density	Name (Type)	Direction
8855	10	11.173039	CD ROAD I-20 WB TO I-20 (Basic Analysis)	NW
8863	1	35.020623	(Basic Analysis)	SE
8863	2	33.603972	(Basic Analysis)	SE
8863	3	34.15787	(Basic Analysis)	SE
8863	4	34.868748	(Basic Analysis)	SE
8863	5	33.473794	(Basic Analysis)	SE
8863	6	33.649917	(Basic Analysis)	SE
8863	7	33.646089	(Basic Analysis)	SE
8863	8	33.828594	(Basic Analysis)	SE
8863	9	34.238274	(Basic Analysis)	SE
8863	10	33.597591	(Basic Analysis)	SE
8869	1	26.446216	(Weaving Analysis)	SE
8869	2	26.304561	(Weaving Analysis)	SE
8869	3	26.220529	(Weaving Analysis)	SE
8869	4	25.639504	(Weaving Analysis)	SE
8869	5	26.218128	(Weaving Analysis)	SE
8869	6	25.457034	(Weaving Analysis)	SE
8869	7	26.782346	(Weaving Analysis)	SE
8869	8	26.04286	(Weaving Analysis)	SE
8869	9	26.021252	(Weaving Analysis)	SE
8869	10	26.314165	(Weaving Analysis)	SE
8871	1	17.480042	(Basic Analysis)	W
8871	2	17.829888	(Basic Analysis)	W
8871	3	16.722042	(Basic Analysis)	W
8871	4	13.766761	(Basic Analysis)	W
8871	5	14.742648	(Basic Analysis)	W
8871	6	14.785612	(Basic Analysis)	W
8871	7	15.562025	(Basic Analysis)	W
8871	8	16.154309	(Basic Analysis)	W
8871	9	15.635677	(Basic Analysis)	W
8871	10	15.41779	(Basic Analysis)	W
8877	1	7.81117	I-20 WB (Diverge Analysis)	W
8877	2	7.620283	I-20 WB (Diverge Analysis)	W
8877	3	7.910647	I-20 WB (Diverge Analysis)	W
8877	4	7.937578	I-20 WB (Diverge Analysis)	W
8877	5	7.569211	I-20 WB (Diverge Analysis)	W
8877	6	8.194058	I-20 WB (Diverge Analysis)	W
8877	7	8.933693	I-20 WB (Diverge Analysis)	W
8877	8	7.946949	I-20 WB (Diverge Analysis)	W
8877	9	8.068365	I-20 WB (Diverge Analysis)	W
8877	10	7.674505	I-20 WB (Diverge Analysis)	W
8878	1	11.575568	I-20 WB (Basic Analysis)	W
8878	2	10.951307	I-20 WB (Basic Analysis)	W
8878	3	10.633938	I-20 WB (Basic Analysis)	W
8878	4	10.944095	I-20 WB (Basic Analysis)	W
8878	5	9.594311	I-20 WB (Basic Analysis)	W
8878	6	10.519112	I-20 WB (Basic Analysis)	W
8878	7	11.995802	I-20 WB (Basic Analysis)	W
8878	8	11.23369	I-20 WB (Basic Analysis)	W
8878	9	11.598612	I-20 WB (Basic Analysis)	W
8878	10	12.077895	I-20 WB (Basic Analysis)	W
8883	1	35.07253	I-26 WB (Basic Analysis)	NW
8883	2	33.897541	I-26 WB (Basic Analysis)	NW
8883	3	36.379589	I-26 WB (Basic Analysis)	NW
8883	4	35.509392	I-26 WB (Basic Analysis)	NW
8883	5	30.45493	I-26 WB (Basic Analysis)	NW
8883	6	37.360375	I-26 WB (Basic Analysis)	NW

RPA AM

ID	Run	Density	Name (Type)	Direction
8883	7	36.733467	I-26 WB (Basic Analysis)	NW
8883	8	35.760714	I-26 WB (Basic Analysis)	NW
8883	9	37.768851	I-26 WB (Basic Analysis)	NW
8883	10	35.783178	I-26 WB (Basic Analysis)	NW
8886	1	28.293626	I-26 WB (Basic Analysis)	NW
8886	2	27.787719	I-26 WB (Basic Analysis)	NW
8886	3	27.835412	I-26 WB (Basic Analysis)	NW
8886	4	26.653659	I-26 WB (Basic Analysis)	NW
8886	5	27.683122	I-26 WB (Basic Analysis)	NW
8886	6	27.287443	I-26 WB (Basic Analysis)	NW
8886	7	26.633129	I-26 WB (Basic Analysis)	NW
8886	8	27.417191	I-26 WB (Basic Analysis)	NW
8886	9	27.412658	I-26 WB (Basic Analysis)	NW
8886	10	27.653471	I-26 WB (Basic Analysis)	NW
8887	1	28.000625	I-26 WB (Merge Analysis)	NW
8887	2	28.264606	I-26 WB (Merge Analysis)	NW
8887	3	28.393508	I-26 WB (Merge Analysis)	NW
8887	4	26.774301	I-26 WB (Merge Analysis)	NW
8887	5	27.504445	I-26 WB (Merge Analysis)	NW
8887	6	27.557417	I-26 WB (Merge Analysis)	NW
8887	7	27.756066	I-26 WB (Merge Analysis)	NW
8887	8	28.424408	I-26 WB (Merge Analysis)	NW
8887	9	28.314931	I-26 WB (Merge Analysis)	NW
8887	10	27.666895	I-26 WB (Merge Analysis)	NW
8910	1	74.424249	I-26 EB (Basic Analysis)	SE
8910	2	74.358389	I-26 EB (Basic Analysis)	SE
8910	3	77.546944	I-26 EB (Basic Analysis)	SE
8910	4	71.330467	I-26 EB (Basic Analysis)	SE
8910	5	68.556344	I-26 EB (Basic Analysis)	SE
8910	6	77.80235	I-26 EB (Basic Analysis)	SE
8910	7	69.208511	I-26 EB (Basic Analysis)	SE
8910	8	68.453538	I-26 EB (Basic Analysis)	SE
8910	9	66.003893	I-26 EB (Basic Analysis)	SE
8910	10	71.099156	I-26 EB (Basic Analysis)	SE
8915	1	28.003625	I-26 EB (Basic Analysis)	SE
8915	2	28.760074	I-26 EB (Basic Analysis)	SE
8915	3	28.503803	I-26 EB (Basic Analysis)	SE
8915	4	27.821059	I-26 EB (Basic Analysis)	SE
8915	5	27.457867	I-26 EB (Basic Analysis)	SE
8915	6	29.283284	I-26 EB (Basic Analysis)	SE
8915	7	27.112131	I-26 EB (Basic Analysis)	SE
8915	8	26.762031	I-26 EB (Basic Analysis)	SE
8915	9	27.439926	I-26 EB (Basic Analysis)	SE
8915	10	27.897432	I-26 EB (Basic Analysis)	SE
8940	1	41.947796	I-26 EB (Basic Analysis)	SE
8940	2	40.090777	I-26 EB (Basic Analysis)	SE
8940	3	43.179054	I-26 EB (Basic Analysis)	SE
8940	4	41.215348	I-26 EB (Basic Analysis)	SE
8940	5	39.90211	I-26 EB (Basic Analysis)	SE
8940	6	40.863382	I-26 EB (Basic Analysis)	SE
8940	7	42.631172	I-26 EB (Basic Analysis)	SE
8940	8	37.140236	I-26 EB (Basic Analysis)	SE
8940	9	42.544421	I-26 EB (Basic Analysis)	SE
8940	10	39.706194	I-26 EB (Basic Analysis)	SE
8955	1	102.945406	I-20 EB (Basic Analysis)	NE
8955	2	115.267583	I-20 EB (Basic Analysis)	NE
8955	3	112.146002	I-20 EB (Basic Analysis)	NE

RPA AM

ID	Run	Density	Name (Type)	Direction
8955	4	107.599956	I-20 EB (Basic Analysis)	NE
8955	5	117.407063	I-20 EB (Basic Analysis)	NE
8955	6	101.601623	I-20 EB (Basic Analysis)	NE
8955	7	113.052986	I-20 EB (Basic Analysis)	NE
8955	8	97.439516	I-20 EB (Basic Analysis)	NE
8955	9	95.542084	I-20 EB (Basic Analysis)	NE
8955	10	105.043153	I-20 EB (Basic Analysis)	NE
8959	1	15.97033	I-20 WB (Basic Analysis)	SW
8959	2	15.174863	I-20 WB (Basic Analysis)	SW
8959	3	15.627026	I-20 WB (Basic Analysis)	SW
8959	4	15.058248	I-20 WB (Basic Analysis)	SW
8959	5	15.36323	I-20 WB (Basic Analysis)	SW
8959	6	16.368238	I-20 WB (Basic Analysis)	SW
8959	7	15.056384	I-20 WB (Basic Analysis)	SW
8959	8	15.502303	I-20 WB (Basic Analysis)	SW
8959	9	15.273805	I-20 WB (Basic Analysis)	SW
8959	10	16.285397	I-20 WB (Basic Analysis)	SW
8975	1	35.861184	I-26 EB (Weaving Analysis)	SE
8975	2	35.067941	I-26 EB (Weaving Analysis)	SE
8975	3	35.375467	I-26 EB (Weaving Analysis)	SE
8975	4	36.960515	I-26 EB (Weaving Analysis)	SE
8975	5	34.984594	I-26 EB (Weaving Analysis)	SE
8975	6	36.934649	I-26 EB (Weaving Analysis)	SE
8975	7	35.588148	I-26 EB (Weaving Analysis)	SE
8975	8	33.704196	I-26 EB (Weaving Analysis)	SE
8975	9	36.492042	I-26 EB (Weaving Analysis)	SE
8975	10	35.899984	I-26 EB (Weaving Analysis)	SE
8986	1	73.182952	I-26 EB (Basic Analysis)	SE
8986	2	74.398582	I-26 EB (Basic Analysis)	SE
8986	3	74.919042	I-26 EB (Basic Analysis)	SE
8986	4	74.858113	I-26 EB (Basic Analysis)	SE
8986	5	71.323538	I-26 EB (Basic Analysis)	SE
8986	6	74.28113	I-26 EB (Basic Analysis)	SE
8986	7	72.113404	I-26 EB (Basic Analysis)	SE
8986	8	72.178737	I-26 EB (Basic Analysis)	SE
8986	9	71.224438	I-26 EB (Basic Analysis)	SE
8986	10	71.269951	I-26 EB (Basic Analysis)	SE
8994	1	32.160905	I-126 SB (Basic Analysis)	SE
8994	2	30.433887	I-126 SB (Basic Analysis)	SE
8994	3	31.239829	I-126 SB (Basic Analysis)	SE
8994	4	31.217442	I-126 SB (Basic Analysis)	SE
8994	5	30.142853	I-126 SB (Basic Analysis)	SE
8994	6	31.374152	I-126 SB (Basic Analysis)	SE
8994	7	30.724922	I-126 SB (Basic Analysis)	SE
8994	8	30.190826	I-126 SB (Basic Analysis)	SE
8994	9	30.533031	I-126 SB (Basic Analysis)	SE
8994	10	29.832629	I-126 SB (Basic Analysis)	SE
8996	1	11.618618	CD ROAD I-20 WB TO I-20 (Basic Analysis)	NE
8996	2	11.879385	CD ROAD I-20 WB TO I-20 (Basic Analysis)	NE
8996	3	12.625468	CD ROAD I-20 WB TO I-20 (Basic Analysis)	NE
8996	4	10.691446	CD ROAD I-20 WB TO I-20 (Basic Analysis)	NE
8996	5	12.668929	CD ROAD I-20 WB TO I-20 (Basic Analysis)	NE
8996	6	10.264078	CD ROAD I-20 WB TO I-20 (Basic Analysis)	NE
8996	7	11.33612	CD ROAD I-20 WB TO I-20 (Basic Analysis)	NE
8996	8	11.155032	CD ROAD I-20 WB TO I-20 (Basic Analysis)	NE
8996	9	10.778368	CD ROAD I-20 WB TO I-20 (Basic Analysis)	NE
8996	10	12.09669	CD ROAD I-20 WB TO I-20 (Basic Analysis)	NE

RPA AM

ID	Run	Density	Name (Type)	Direction
9001	1	6.364619	I-126 NB (Merge Analysis)	NW
9001	2	6.671309	I-126 NB (Merge Analysis)	NW
9001	3	6.740868	I-126 NB (Merge Analysis)	NW
9001	4	5.997855	I-126 NB (Merge Analysis)	NW
9001	5	5.220062	I-126 NB (Merge Analysis)	NW
9001	6	6.744029	I-126 NB (Merge Analysis)	NW
9001	7	6.791456	I-126 NB (Merge Analysis)	NW
9001	8	5.561532	I-126 NB (Merge Analysis)	NW
9001	9	6.054766	I-126 NB (Merge Analysis)	NW
9001	10	5.729105	I-126 NB (Merge Analysis)	NW
9005	1	11.983149	I-126 NB (Basic Analysis)	NW
9005	2	11.962613	I-126 NB (Basic Analysis)	NW
9005	3	12.113215	I-126 NB (Basic Analysis)	NW
9005	4	11.07269	I-126 NB (Basic Analysis)	NW
9005	5	11.425236	I-126 NB (Basic Analysis)	NW
9005	6	10.223841	I-126 NB (Basic Analysis)	NW
9005	7	11.480001	I-126 NB (Basic Analysis)	NW
9005	8	11.260943	I-126 NB (Basic Analysis)	NW
9005	9	12.08241	I-126 NB (Basic Analysis)	NW
9005	10	12.410997	I-126 NB (Basic Analysis)	NW
9012	1	33.963609	I-126 SB (Merge Analysis)	E
9012	2	37.422434	I-126 SB (Merge Analysis)	E
9012	3	32.823264	I-126 SB (Merge Analysis)	E
9012	4	33.968055	I-126 SB (Merge Analysis)	E
9012	5	31.480636	I-126 SB (Merge Analysis)	E
9012	6	31.158316	I-126 SB (Merge Analysis)	E
9012	7	33.589052	I-126 SB (Merge Analysis)	E
9012	8	32.585415	I-126 SB (Merge Analysis)	E
9012	9	33.422335	I-126 SB (Merge Analysis)	E
9012	10	31.412838	I-126 SB (Merge Analysis)	E
9017	1	40.705605	I-126 SB (Basic Analysis)	E
9017	2	40.420623	I-126 SB (Basic Analysis)	E
9017	3	37.564961	I-126 SB (Basic Analysis)	E
9017	4	42.146589	I-126 SB (Basic Analysis)	E
9017	5	37.129451	I-126 SB (Basic Analysis)	E
9017	6	36.746552	I-126 SB (Basic Analysis)	E
9017	7	39.722053	I-126 SB (Basic Analysis)	E
9017	8	37.744719	I-126 SB (Basic Analysis)	E
9017	9	39.030789	I-126 SB (Basic Analysis)	E
9017	10	37.154295	I-126 SB (Basic Analysis)	E
9018	1	40.705605	I-126 SB (Basic Analysis)	E
9018	2	40.420623	I-126 SB (Basic Analysis)	E
9018	3	37.564961	I-126 SB (Basic Analysis)	E
9018	4	42.146589	I-126 SB (Basic Analysis)	E
9018	5	37.129451	I-126 SB (Basic Analysis)	E
9018	6	36.746552	I-126 SB (Basic Analysis)	E
9018	7	39.722053	I-126 SB (Basic Analysis)	E
9018	8	37.744719	I-126 SB (Basic Analysis)	E
9018	9	39.030789	I-126 SB (Basic Analysis)	E
9018	10	37.154295	I-126 SB (Basic Analysis)	E
9019	1	10.279993	I-126 NB (Diverge Analysis)	NW
9019	2	9.999744	I-126 NB (Diverge Analysis)	NW
9019	3	10.509974	I-126 NB (Diverge Analysis)	NW
9019	4	9.98592	I-126 NB (Diverge Analysis)	NW
9019	5	9.890409	I-126 NB (Diverge Analysis)	NW
9019	6	10.542648	I-126 NB (Diverge Analysis)	NW
9019	7	9.75217	I-126 NB (Diverge Analysis)	NW

RPA AM

ID	Run	Density	Name (Type)	Direction
9019	8	10.556472	I-126 NB (Diverge Analysis)	NW
9019	9	9.587539	I-126 NB (Diverge Analysis)	NW
9019	10	9.936908	I-126 NB (Diverge Analysis)	NW
9022	1	4.793579	107 (Basic Analysis)	NW
9022	2	4.670989	107 (Basic Analysis)	NW
9022	3	5.321658	107 (Basic Analysis)	NW
9022	4	4.435239	107 (Basic Analysis)	NW
9022	5	4.328366	107 (Basic Analysis)	NW
9022	6	6.412394	107 (Basic Analysis)	NW
9022	7	4.913025	107 (Basic Analysis)	NW
9022	8	5.780584	107 (Basic Analysis)	NW
9022	9	4.941315	107 (Basic Analysis)	NW
9022	10	5.768011	107 (Basic Analysis)	NW
9023	1	12.411951	I-126 NB (Basic Analysis)	NW
9023	2	13.315438	I-126 NB (Basic Analysis)	NW
9023	3	11.794399	I-126 NB (Basic Analysis)	NW
9023	4	11.430635	I-126 NB (Basic Analysis)	NW
9023	5	13.024427	I-126 NB (Basic Analysis)	NW
9023	6	13.949909	I-126 NB (Basic Analysis)	NW
9023	7	11.958515	I-126 NB (Basic Analysis)	NW
9023	8	13.215615	I-126 NB (Basic Analysis)	NW
9023	9	11.853616	I-126 NB (Basic Analysis)	NW
9023	10	12.689426	I-126 NB (Basic Analysis)	NW
9025	1	22.206737	CD ROAD I-26 WB TO I-20 (Diverge Analysis)	NE
9025	2	21.961669	CD ROAD I-26 WB TO I-20 (Diverge Analysis)	NE
9025	3	21.223912	CD ROAD I-26 WB TO I-20 (Diverge Analysis)	NE
9025	4	23.552058	CD ROAD I-26 WB TO I-20 (Diverge Analysis)	NE
9025	5	22.260346	CD ROAD I-26 WB TO I-20 (Diverge Analysis)	NE
9025	6	20.766962	CD ROAD I-26 WB TO I-20 (Diverge Analysis)	NE
9025	7	23.368257	CD ROAD I-26 WB TO I-20 (Diverge Analysis)	NE
9025	8	22.967469	CD ROAD I-26 WB TO I-20 (Diverge Analysis)	NE
9025	9	23.52653	CD ROAD I-26 WB TO I-20 (Diverge Analysis)	NE
9025	10	23.426971	CD ROAD I-26 WB TO I-20 (Diverge Analysis)	NE
9033	1	28.293626	I-26 WB (Basic Analysis)	NW
9033	2	27.787719	I-26 WB (Basic Analysis)	NW
9033	3	27.835412	I-26 WB (Basic Analysis)	NW
9033	4	26.653659	I-26 WB (Basic Analysis)	NW
9033	5	27.683122	I-26 WB (Basic Analysis)	NW
9033	6	27.287443	I-26 WB (Basic Analysis)	NW
9033	7	26.633129	I-26 WB (Basic Analysis)	NW
9033	8	27.417191	I-26 WB (Basic Analysis)	NW
9033	9	27.412658	I-26 WB (Basic Analysis)	NW
9033	10	27.653471	I-26 WB (Basic Analysis)	NW
9039	1	56.628549	I-20 EB (Basic Analysis)	NE
9039	2	57.493605	I-20 EB (Basic Analysis)	NE
9039	3	56.630433	I-20 EB (Basic Analysis)	NE
9039	4	58.540352	I-20 EB (Basic Analysis)	NE
9039	5	58.210903	I-20 EB (Basic Analysis)	NE
9039	6	56.449472	I-20 EB (Basic Analysis)	NE
9039	7	56.53323	I-20 EB (Basic Analysis)	NE
9039	8	56.564499	I-20 EB (Basic Analysis)	NE
9039	9	56.99883	I-20 EB (Basic Analysis)	NE
9039	10	56.641015	I-20 EB (Basic Analysis)	NE
9040	1	36.867171	I-20 WB (Basic Analysis)	SW
9040	2	35.051371	I-20 WB (Basic Analysis)	SW
9040	3	38.062191	I-20 WB (Basic Analysis)	SW
9040	4	34.770279	I-20 WB (Basic Analysis)	SW

RPA AM

ID	Run	Density	Name (Type)	Direction
9040	5	35.004311	I-20 WB (Basic Analysis)	SW
9040	6	35.962388	I-20 WB (Basic Analysis)	SW
9040	7	36.876816	I-20 WB (Basic Analysis)	SW
9040	8	37.862518	I-20 WB (Basic Analysis)	SW
9040	9	38.162918	I-20 WB (Basic Analysis)	SW
9040	10	36.608717	I-20 WB (Basic Analysis)	SW
9042	1	9.355259	I-20 WB (Basic Analysis)	W
9042	2	9.713301	I-20 WB (Basic Analysis)	W
9042	3	10.249421	I-20 WB (Basic Analysis)	W
9042	4	8.859653	I-20 WB (Basic Analysis)	W
9042	5	9.556893	I-20 WB (Basic Analysis)	W
9042	6	9.576679	I-20 WB (Basic Analysis)	W
9042	7	10.352123	I-20 WB (Basic Analysis)	W
9042	8	8.772027	I-20 WB (Basic Analysis)	W
9042	9	10.211733	I-20 WB (Basic Analysis)	W
9042	10	10.4275	I-20 WB (Basic Analysis)	W
9043	1	26.676646	CD ROAD I-20 WB (Basic Analysis)	W
9043	2	25.459949	CD ROAD I-20 WB (Basic Analysis)	W
9043	3	25.365485	CD ROAD I-20 WB (Basic Analysis)	W
9043	4	23.691582	CD ROAD I-20 WB (Basic Analysis)	W
9043	5	23.504544	CD ROAD I-20 WB (Basic Analysis)	W
9043	6	24.912058	CD ROAD I-20 WB (Basic Analysis)	W
9043	7	24.963068	CD ROAD I-20 WB (Basic Analysis)	W
9043	8	26.446154	CD ROAD I-20 WB (Basic Analysis)	W
9043	9	25.121768	CD ROAD I-20 WB (Basic Analysis)	W
9043	10	24.929061	CD ROAD I-20 WB (Basic Analysis)	W
9045	1	53.113719	CD ROAD I-20 EB (Weaving Analysis)	E
9045	2	66.819488	CD ROAD I-20 EB (Weaving Analysis)	E
9045	3	60.884318	CD ROAD I-20 EB (Weaving Analysis)	E
9045	4	57.800551	CD ROAD I-20 EB (Weaving Analysis)	E
9045	5	61.681524	CD ROAD I-20 EB (Weaving Analysis)	E
9045	6	56.993457	CD ROAD I-20 EB (Weaving Analysis)	E
9045	7	61.098142	CD ROAD I-20 EB (Weaving Analysis)	E
9045	8	50.167145	CD ROAD I-20 EB (Weaving Analysis)	E
9045	9	50.382206	CD ROAD I-20 EB (Weaving Analysis)	E
9045	10	60.109359	CD ROAD I-20 EB (Weaving Analysis)	E
9052	1	29.952384	CD ROAD I-20 EB (Basic Analysis)	NE
9052	2	31.138838	CD ROAD I-20 EB (Basic Analysis)	NE
9052	3	29.379677	CD ROAD I-20 EB (Basic Analysis)	NE
9052	4	29.049484	CD ROAD I-20 EB (Basic Analysis)	NE
9052	5	29.911343	CD ROAD I-20 EB (Basic Analysis)	NE
9052	6	29.094256	CD ROAD I-20 EB (Basic Analysis)	NE
9052	7	29.926267	CD ROAD I-20 EB (Basic Analysis)	NE
9052	8	30.63702	CD ROAD I-20 EB (Basic Analysis)	NE
9052	9	29.793817	CD ROAD I-20 EB (Basic Analysis)	NE
9052	10	30.012079	CD ROAD I-20 EB (Basic Analysis)	NE
9054	1	9.166049	I-20 WB (Basic Analysis)	SW
9054	2	9.717536	I-20 WB (Basic Analysis)	SW
9054	3	9.546412	I-20 WB (Basic Analysis)	SW
9054	4	9.008147	I-20 WB (Basic Analysis)	SW
9054	5	9.033816	I-20 WB (Basic Analysis)	SW
9054	6	9.405623	I-20 WB (Basic Analysis)	SW
9054	7	9.400956	I-20 WB (Basic Analysis)	SW
9054	8	9.38851	I-20 WB (Basic Analysis)	SW
9054	9	9.331728	I-20 WB (Basic Analysis)	SW
9054	10	9.747094	I-20 WB (Basic Analysis)	SW
9055	1	9.166049	I-20 WB (Basic Analysis)	SW

RPA AM

ID	Run	Density	Name (Type)	Direction
9055	2	9.717536	I-20 WB (Basic Analysis)	SW
9055	3	9.546412	I-20 WB (Basic Analysis)	SW
9055	4	9.008147	I-20 WB (Basic Analysis)	SW
9055	5	9.033816	I-20 WB (Basic Analysis)	SW
9055	6	9.405623	I-20 WB (Basic Analysis)	SW
9055	7	9.400956	I-20 WB (Basic Analysis)	SW
9055	8	9.38851	I-20 WB (Basic Analysis)	SW
9055	9	9.331728	I-20 WB (Basic Analysis)	SW
9055	10	9.747094	I-20 WB (Basic Analysis)	SW
9059	1	10.78486	I-20 WB (Merge Analysis)	SW
9059	2	10.39179	I-20 WB (Merge Analysis)	SW
9059	3	11.486771	I-20 WB (Merge Analysis)	SW
9059	4	11.462205	I-20 WB (Merge Analysis)	SW
9059	5	9.984682	I-20 WB (Merge Analysis)	SW
9059	6	11.511338	I-20 WB (Merge Analysis)	SW
9059	7	12.729154	I-20 WB (Merge Analysis)	SW
9059	8	11.676287	I-20 WB (Merge Analysis)	SW
9059	9	12.290459	I-20 WB (Merge Analysis)	SW
9059	10	11.476243	I-20 WB (Merge Analysis)	SW
9061	1	31.130778	I-20 EB (Basic Analysis)	NE
9061	2	33.559032	I-20 EB (Basic Analysis)	NE
9061	3	30.760785	I-20 EB (Basic Analysis)	NE
9061	4	28.675294	I-20 EB (Basic Analysis)	NE
9061	5	31.156604	I-20 EB (Basic Analysis)	NE
9061	6	33.929025	I-20 EB (Basic Analysis)	NE
9061	7	31.77251	I-20 EB (Basic Analysis)	NE
9061	8	31.565056	I-20 EB (Basic Analysis)	NE
9061	9	29.561536	I-20 EB (Basic Analysis)	NE
9061	10	29.618242	I-20 EB (Basic Analysis)	NE
9063	1	25.500085	I-26 WB (Basic Analysis)	NW
9063	2	23.874939	I-26 WB (Basic Analysis)	NW
9063	3	24.810864	I-26 WB (Basic Analysis)	NW
9063	4	23.566283	I-26 WB (Basic Analysis)	NW
9063	5	24.046415	I-26 WB (Basic Analysis)	NW
9063	6	25.04208	I-26 WB (Basic Analysis)	NW
9063	7	23.083938	I-26 WB (Basic Analysis)	NW
9063	8	22.691204	I-26 WB (Basic Analysis)	NW
9063	9	24.348433	I-26 WB (Basic Analysis)	NW
9063	10	24.036458	I-26 WB (Basic Analysis)	NW
9064	1	25.599192	I-26 WB (Diverge Analysis)	NW
9064	2	27.318125	I-26 WB (Diverge Analysis)	NW
9064	3	27.306392	I-26 WB (Diverge Analysis)	NW
9064	4	24.848259	I-26 WB (Diverge Analysis)	NW
9064	5	24.428793	I-26 WB (Diverge Analysis)	NW
9064	6	25.613859	I-26 WB (Diverge Analysis)	NW
9064	7	25.763459	I-26 WB (Diverge Analysis)	NW
9064	8	27.291725	I-26 WB (Diverge Analysis)	NW
9064	9	27.561592	I-26 WB (Diverge Analysis)	NW
9064	10	26.960259	I-26 WB (Diverge Analysis)	NW
9067	1	20.131121	I-26 EB (Merge Analysis)	SW
9067	2	20.053784	I-26 EB (Merge Analysis)	SW
9067	3	20.951258	I-26 EB (Merge Analysis)	SW
9067	4	19.825369	I-26 EB (Merge Analysis)	SW
9067	5	19.550191	I-26 EB (Merge Analysis)	SW
9067	6	19.773211	I-26 EB (Merge Analysis)	SW
9067	7	20.066374	I-26 EB (Merge Analysis)	SW
9067	8	20.55378	I-26 EB (Merge Analysis)	SW

RPA AM

ID	Run	Density	Name (Type)	Direction
9067	9	20.929676	I-26 EB (Merge Analysis)	SW
9067	10	20.50342	I-26 EB (Merge Analysis)	SW
9089	1	25.656883	I-26 EB (Diverge Analysis)	SE
9089	2	25.424172	I-26 EB (Diverge Analysis)	SE
9089	3	26.259194	I-26 EB (Diverge Analysis)	SE
9089	4	24.260617	I-26 EB (Diverge Analysis)	SE
9089	5	23.441239	I-26 EB (Diverge Analysis)	SE
9089	6	24.596972	I-26 EB (Diverge Analysis)	SE
9089	7	22.70595	I-26 EB (Diverge Analysis)	SE
9089	8	22.54755	I-26 EB (Diverge Analysis)	SE
9089	9	24.108083	I-26 EB (Diverge Analysis)	SE
9089	10	23.959461	I-26 EB (Diverge Analysis)	SE
9110	1	20.131121	I-26 EB (Merge Analysis)	SW
9110	2	20.053784	I-26 EB (Merge Analysis)	SW
9110	3	20.951258	I-26 EB (Merge Analysis)	SW
9110	4	19.825369	I-26 EB (Merge Analysis)	SW
9110	5	19.550191	I-26 EB (Merge Analysis)	SW
9110	6	19.773211	I-26 EB (Merge Analysis)	SW
9110	7	20.066374	I-26 EB (Merge Analysis)	SW
9110	8	20.55378	I-26 EB (Merge Analysis)	SW
9110	9	20.929676	I-26 EB (Merge Analysis)	SW
9110	10	20.50342	I-26 EB (Merge Analysis)	SW
9111	1	38.457977	(Merge Analysis)	SE
9111	2	38.96553	(Merge Analysis)	SE
9111	3	38.525471	(Merge Analysis)	SE
9111	4	38.736051	(Merge Analysis)	SE
9111	5	38.710404	(Merge Analysis)	SE
9111	6	37.76954	(Merge Analysis)	SE
9111	7	38.2069	(Merge Analysis)	SE
9111	8	38.085411	(Merge Analysis)	SE
9111	9	37.387525	(Merge Analysis)	SE
9111	10	38.003068	(Merge Analysis)	SE
9112	1	17.443336	I-26 EB (Basic Analysis)	S
9112	2	17.28203	I-26 EB (Basic Analysis)	S
9112	3	16.932525	I-26 EB (Basic Analysis)	S
9112	4	17.901837	I-26 EB (Basic Analysis)	S
9112	5	17.098118	I-26 EB (Basic Analysis)	S
9112	6	17.55076	I-26 EB (Basic Analysis)	S
9112	7	17.090004	I-26 EB (Basic Analysis)	S
9112	8	17.336907	I-26 EB (Basic Analysis)	S
9112	9	16.242395	I-26 EB (Basic Analysis)	S
9112	10	16.808694	I-26 EB (Basic Analysis)	S
9113	1	6.364619	I-126 NB (Merge+Diverge Analysis)	NW
9113	2	6.671309	I-126 NB (Merge+Diverge Analysis)	NW
9113	3	6.740868	I-126 NB (Merge+Diverge Analysis)	NW
9113	4	5.997855	I-126 NB (Merge+Diverge Analysis)	NW
9113	5	5.220062	I-126 NB (Merge+Diverge Analysis)	NW
9113	6	6.744029	I-126 NB (Merge+Diverge Analysis)	NW
9113	7	6.791456	I-126 NB (Merge+Diverge Analysis)	NW
9113	8	5.561532	I-126 NB (Merge+Diverge Analysis)	NW
9113	9	6.054766	I-126 NB (Merge+Diverge Analysis)	NW
9113	10	5.729105	I-126 NB (Merge+Diverge Analysis)	NW
9114	1	10.279993	I-126 NB (Diverge Analysis)	NW
9114	2	9.999744	I-126 NB (Diverge Analysis)	NW
9114	3	10.509974	I-126 NB (Diverge Analysis)	NW
9114	4	9.98592	I-126 NB (Diverge Analysis)	NW
9114	5	9.890409	I-126 NB (Diverge Analysis)	NW

RPA AM

ID	Run	Density	Name (Type)	Direction
9114	6	10.542648	I-126 NB (Diverge Analysis)	NW
9114	7	9.75217	I-126 NB (Diverge Analysis)	NW
9114	8	10.556472	I-126 NB (Diverge Analysis)	NW
9114	9	9.587539	I-126 NB (Diverge Analysis)	NW
9114	10	9.936908	I-126 NB (Diverge Analysis)	NW
9115	1	20.131121	I-26 EB (Merge Analysis)	SW
9115	2	20.053784	I-26 EB (Merge Analysis)	SW
9115	3	20.951258	I-26 EB (Merge Analysis)	SW
9115	4	19.825369	I-26 EB (Merge Analysis)	SW
9115	5	19.550191	I-26 EB (Merge Analysis)	SW
9115	6	19.773211	I-26 EB (Merge Analysis)	SW
9115	7	20.066374	I-26 EB (Merge Analysis)	SW
9115	8	20.55378	I-26 EB (Merge Analysis)	SW
9115	9	20.929676	I-26 EB (Merge Analysis)	SW
9115	10	20.50342	I-26 EB (Merge Analysis)	SW
9118	1	28.240171	I-26 EB (Diverge Analysis)	SE
9118	2	28.036628	I-26 EB (Diverge Analysis)	SE
9118	3	26.614733	I-26 EB (Diverge Analysis)	SE
9118	4	30.179648	I-26 EB (Diverge Analysis)	SE
9118	5	24.899154	I-26 EB (Diverge Analysis)	SE
9118	6	26.745583	I-26 EB (Diverge Analysis)	SE
9118	7	28.275065	I-26 EB (Diverge Analysis)	SE
9118	8	25.818007	I-26 EB (Diverge Analysis)	SE
9118	9	29.135762	I-26 EB (Diverge Analysis)	SE
9118	10	25.24227	I-26 EB (Diverge Analysis)	SE
9119	1	21.798925	I-26 EB (Diverge Analysis)	SE
9119	2	24.609675	I-26 EB (Diverge Analysis)	SE
9119	3	24.615921	I-26 EB (Diverge Analysis)	SE
9119	4	22.167446	I-26 EB (Diverge Analysis)	SE
9119	5	23.895536	I-26 EB (Diverge Analysis)	SE
9119	6	23.129347	I-26 EB (Diverge Analysis)	SE
9119	7	23.608215	I-26 EB (Diverge Analysis)	SE
9119	8	22.854518	I-26 EB (Diverge Analysis)	SE
9119	9	23.152249	I-26 EB (Diverge Analysis)	SE
9119	10	24.085002	I-26 EB (Diverge Analysis)	SE
9120	1	29.401439	I-26 EB (Diverge Analysis)	SE
9120	2	30.671109	I-26 EB (Diverge Analysis)	SE
9120	3	29.643935	I-26 EB (Diverge Analysis)	SE
9120	4	30.069445	I-26 EB (Diverge Analysis)	SE
9120	5	29.717141	I-26 EB (Diverge Analysis)	SE
9120	6	29.518111	I-26 EB (Diverge Analysis)	SE
9120	7	29.12234	I-26 EB (Diverge Analysis)	SE
9120	8	29.785772	I-26 EB (Diverge Analysis)	SE
9120	9	29.433467	I-26 EB (Diverge Analysis)	SE
9120	10	28.273606	I-26 EB (Diverge Analysis)	SE
9121	1	41.947796	I-26 EB (Basic Analysis)	SE
9121	2	40.090777	I-26 EB (Basic Analysis)	SE
9121	3	43.179054	I-26 EB (Basic Analysis)	SE
9121	4	41.215348	I-26 EB (Basic Analysis)	SE
9121	5	39.90211	I-26 EB (Basic Analysis)	SE
9121	6	40.863382	I-26 EB (Basic Analysis)	SE
9121	7	42.631172	I-26 EB (Basic Analysis)	SE
9121	8	37.140236	I-26 EB (Basic Analysis)	SE
9121	9	42.544421	I-26 EB (Basic Analysis)	SE
9121	10	39.706194	I-26 EB (Basic Analysis)	SE
9122	1	33.61599	I-26 EB (Diverge Analysis)	SE
9122	2	33.46639	I-26 EB (Diverge Analysis)	SE

RPA AM

ID	Run	Density	Name (Type)	Direction
9122	3	33.926923	I-26 EB (Diverge Analysis)	SE
9122	4	33.469323	I-26 EB (Diverge Analysis)	SE
9122	5	33.29039	I-26 EB (Diverge Analysis)	SE
9122	6	32.228523	I-26 EB (Diverge Analysis)	SE
9122	7	34.041323	I-26 EB (Diverge Analysis)	SE
9122	8	32.14639	I-26 EB (Diverge Analysis)	SE
9122	9	33.076257	I-26 EB (Diverge Analysis)	SE
9122	10	33.59839	I-26 EB (Diverge Analysis)	SE
9123	1	35.278651	I-26 EB (Weaving Analysis)	SE
9123	2	36.724343	I-26 EB (Weaving Analysis)	SE
9123	3	35.288849	I-26 EB (Weaving Analysis)	SE
9123	4	34.946056	I-26 EB (Weaving Analysis)	SE
9123	5	36.236432	I-26 EB (Weaving Analysis)	SE
9123	6	37.105573	I-26 EB (Weaving Analysis)	SE
9123	7	35.632426	I-26 EB (Weaving Analysis)	SE
9123	8	33.084619	I-26 EB (Weaving Analysis)	SE
9123	9	38.382614	I-26 EB (Weaving Analysis)	SE
9123	10	34.521683	I-26 EB (Weaving Analysis)	SE
9125	1	28.003625	I-26 EB (Basic Analysis)	SE
9125	2	28.760074	I-26 EB (Basic Analysis)	SE
9125	3	28.503803	I-26 EB (Basic Analysis)	SE
9125	4	27.821059	I-26 EB (Basic Analysis)	SE
9125	5	27.457867	I-26 EB (Basic Analysis)	SE
9125	6	29.283284	I-26 EB (Basic Analysis)	SE
9125	7	27.112131	I-26 EB (Basic Analysis)	SE
9125	8	26.762031	I-26 EB (Basic Analysis)	SE
9125	9	27.439926	I-26 EB (Basic Analysis)	SE
9125	10	27.897432	I-26 EB (Basic Analysis)	SE
9126	1	28.003625	I-26 EB (Basic Analysis)	SE
9126	2	28.760074	I-26 EB (Basic Analysis)	SE
9126	3	28.503803	I-26 EB (Basic Analysis)	SE
9126	4	27.821059	I-26 EB (Basic Analysis)	SE
9126	5	27.457867	I-26 EB (Basic Analysis)	SE
9126	6	29.283284	I-26 EB (Basic Analysis)	SE
9126	7	27.112131	I-26 EB (Basic Analysis)	SE
9126	8	26.762031	I-26 EB (Basic Analysis)	SE
9126	9	27.439926	I-26 EB (Basic Analysis)	SE
9126	10	27.897432	I-26 EB (Basic Analysis)	SE
9127	1	74.424249	I-26 EB (Basic Analysis)	SE
9127	2	74.358389	I-26 EB (Basic Analysis)	SE
9127	3	77.546944	I-26 EB (Basic Analysis)	SE
9127	4	71.330467	I-26 EB (Basic Analysis)	SE
9127	5	68.556344	I-26 EB (Basic Analysis)	SE
9127	6	77.80235	I-26 EB (Basic Analysis)	SE
9127	7	69.208511	I-26 EB (Basic Analysis)	SE
9127	8	68.453538	I-26 EB (Basic Analysis)	SE
9127	9	66.003893	I-26 EB (Basic Analysis)	SE
9127	10	71.099156	I-26 EB (Basic Analysis)	SE
9128	1	21.522576	I-26 EB (Diverge Analysis)	SW
9128	2	21.517392	I-26 EB (Diverge Analysis)	SW
9128	3	22.777777	I-26 EB (Diverge Analysis)	SW
9128	4	21.586734	I-26 EB (Diverge Analysis)	SW
9128	5	21.159953	I-26 EB (Diverge Analysis)	SW
9128	6	21.369087	I-26 EB (Diverge Analysis)	SW
9128	7	21.65002	I-26 EB (Diverge Analysis)	SW
9128	8	22.104849	I-26 EB (Diverge Analysis)	SW
9128	9	21.801147	I-26 EB (Diverge Analysis)	SW

RPA AM

ID	Run	Density	Name (Type)	Direction
9128	10	21.936452	I-26 EB (Diverge Analysis)	SW
9130	1	38.457977	(Merge Analysis)	SE
9130	2	38.96553	(Merge Analysis)	SE
9130	3	38.525471	(Merge Analysis)	SE
9130	4	38.736051	(Merge Analysis)	SE
9130	5	38.710404	(Merge Analysis)	SE
9130	6	37.76954	(Merge Analysis)	SE
9130	7	38.2069	(Merge Analysis)	SE
9130	8	38.085411	(Merge Analysis)	SE
9130	9	37.387525	(Merge Analysis)	SE
9130	10	38.003068	(Merge Analysis)	SE
9131	1	30.926777	(Diverge Analysis)	SE
9131	2	29.53465	(Diverge Analysis)	SE
9131	3	29.065754	(Diverge Analysis)	SE
9131	4	28.803637	(Diverge Analysis)	SE
9131	5	29.051192	(Diverge Analysis)	SE
9131	6	30.312261	(Diverge Analysis)	SE
9131	7	27.609553	(Diverge Analysis)	SE
9131	8	28.547347	(Diverge Analysis)	SE
9131	9	30.530691	(Diverge Analysis)	SE
9131	10	27.894969	(Diverge Analysis)	SE
9132	1	34.613279	I-126 SB (Diverge Analysis)	E
9132	2	37.599272	I-126 SB (Diverge Analysis)	E
9132	3	33.413065	I-126 SB (Diverge Analysis)	E
9132	4	34.898306	I-126 SB (Diverge Analysis)	E
9132	5	32.478488	I-126 SB (Diverge Analysis)	E
9132	6	31.755257	I-126 SB (Diverge Analysis)	E
9132	7	34.217732	I-126 SB (Diverge Analysis)	E
9132	8	33.346171	I-126 SB (Diverge Analysis)	E
9132	9	34.176044	I-126 SB (Diverge Analysis)	E
9132	10	32.009261	I-126 SB (Diverge Analysis)	E
9133	1	15.272677	I-126 NB (Basic Analysis)	W
9133	2	15.744056	I-126 NB (Basic Analysis)	W
9133	3	15.580135	I-126 NB (Basic Analysis)	W
9133	4	14.970315	I-126 NB (Basic Analysis)	W
9133	5	14.870094	I-126 NB (Basic Analysis)	W
9133	6	14.777517	I-126 NB (Basic Analysis)	W
9133	7	15.152922	I-126 NB (Basic Analysis)	W
9133	8	15.495202	I-126 NB (Basic Analysis)	W
9133	9	15.949595	I-126 NB (Basic Analysis)	W
9133	10	15.915621	I-126 NB (Basic Analysis)	W
9134	1	16.802128	I-126 NB (Diverge Analysis)	W
9134	2	16.227195	I-126 NB (Diverge Analysis)	W
9134	3	15.526129	I-126 NB (Diverge Analysis)	W
9134	4	14.710662	I-126 NB (Diverge Analysis)	W
9134	5	16.285862	I-126 NB (Diverge Analysis)	W
9134	6	17.544261	I-126 NB (Diverge Analysis)	W
9134	7	15.989595	I-126 NB (Diverge Analysis)	W
9134	8	16.781595	I-126 NB (Diverge Analysis)	W
9134	9	14.167996	I-126 NB (Diverge Analysis)	W
9134	10	15.989595	I-126 NB (Diverge Analysis)	W
9135	1	15.511811	I-126 NB (Basic Analysis)	NW
9135	2	14.883175	I-126 NB (Basic Analysis)	NW
9135	3	14.114115	I-126 NB (Basic Analysis)	NW
9135	4	13.583448	I-126 NB (Basic Analysis)	NW
9135	5	13.402205	I-126 NB (Basic Analysis)	NW
9135	6	14.368836	I-126 NB (Basic Analysis)	NW

RPA AM

ID	Run	Density	Name (Type)	Direction
9135	7	14.50436	I-126 NB (Basic Analysis)	NW
9135	8	15.222802	I-126 NB (Basic Analysis)	NW
9135	9	14.236577	I-126 NB (Basic Analysis)	NW
9135	10	13.7353	I-126 NB (Basic Analysis)	NW
9136	1	15.511811	I-126 NB (Basic Analysis)	NW
9136	2	14.883175	I-126 NB (Basic Analysis)	NW
9136	3	14.114115	I-126 NB (Basic Analysis)	NW
9136	4	13.583448	I-126 NB (Basic Analysis)	NW
9136	5	13.402205	I-126 NB (Basic Analysis)	NW
9136	6	14.368836	I-126 NB (Basic Analysis)	NW
9136	7	14.50436	I-126 NB (Basic Analysis)	NW
9136	8	15.222802	I-126 NB (Basic Analysis)	NW
9136	9	14.236577	I-126 NB (Basic Analysis)	NW
9136	10	13.7353	I-126 NB (Basic Analysis)	NW
9137	1	63.563758	I-26 WB (Diverge Analysis)	N
9137	2	49.258758	I-26 WB (Diverge Analysis)	N
9137	3	32.47289	I-26 WB (Diverge Analysis)	N
9137	4	57.470859	I-26 WB (Diverge Analysis)	N
9137	5	32.043509	I-26 WB (Diverge Analysis)	N
9137	6	49.951307	I-26 WB (Diverge Analysis)	N
9137	7	32.957674	I-26 WB (Diverge Analysis)	N
9137	8	65.736825	I-26 WB (Diverge Analysis)	N
9137	9	57.750957	I-26 WB (Diverge Analysis)	N
9137	10	39.633854	I-26 WB (Diverge Analysis)	N
9138	1	16.636042	I-26 WB (Basic Analysis)	N
9138	2	17.282771	I-26 WB (Basic Analysis)	N
9138	3	16.665071	I-26 WB (Basic Analysis)	N
9138	4	17.160581	I-26 WB (Basic Analysis)	N
9138	5	17.305049	I-26 WB (Basic Analysis)	N
9138	6	16.803125	I-26 WB (Basic Analysis)	N
9138	7	17.020839	I-26 WB (Basic Analysis)	N
9138	8	16.642456	I-26 WB (Basic Analysis)	N
9138	9	17.291547	I-26 WB (Basic Analysis)	N
9138	10	17.362093	I-26 WB (Basic Analysis)	N
9139	1	16.636042	I-26 WB (Basic Analysis)	N
9139	2	17.282771	I-26 WB (Basic Analysis)	N
9139	3	16.665071	I-26 WB (Basic Analysis)	N
9139	4	17.160581	I-26 WB (Basic Analysis)	N
9139	5	17.305049	I-26 WB (Basic Analysis)	N
9139	6	16.803125	I-26 WB (Basic Analysis)	N
9139	7	17.020839	I-26 WB (Basic Analysis)	N
9139	8	16.642456	I-26 WB (Basic Analysis)	N
9139	9	17.291547	I-26 WB (Basic Analysis)	N
9139	10	17.362093	I-26 WB (Basic Analysis)	N
9140	1	15.236131	I-26 WB (Basic Analysis)	NW
9140	2	15.303813	I-26 WB (Basic Analysis)	NW
9140	3	15.063808	I-26 WB (Basic Analysis)	NW
9140	4	15.212976	I-26 WB (Basic Analysis)	NW
9140	5	14.993008	I-26 WB (Basic Analysis)	NW
9140	6	14.707139	I-26 WB (Basic Analysis)	NW
9140	7	15.041098	I-26 WB (Basic Analysis)	NW
9140	8	14.59003	I-26 WB (Basic Analysis)	NW
9140	9	15.470793	I-26 WB (Basic Analysis)	NW
9140	10	15.460107	I-26 WB (Basic Analysis)	NW
9141	1	15.236131	I-26 WB (Basic Analysis)	NW
9141	2	15.303813	I-26 WB (Basic Analysis)	NW
9141	3	15.063808	I-26 WB (Basic Analysis)	NW

RPA AM

ID	Run	Density	Name (Type)	Direction
9141	4	15.212976	I-26 WB (Basic Analysis)	NW
9141	5	14.993008	I-26 WB (Basic Analysis)	NW
9141	6	14.707139	I-26 WB (Basic Analysis)	NW
9141	7	15.041098	I-26 WB (Basic Analysis)	NW
9141	8	14.59003	I-26 WB (Basic Analysis)	NW
9141	9	15.470793	I-26 WB (Basic Analysis)	NW
9141	10	15.460107	I-26 WB (Basic Analysis)	NW
9142	1	35.07253	I-26 WB (Basic Analysis)	NW
9142	2	33.897541	I-26 WB (Basic Analysis)	NW
9142	3	36.379589	I-26 WB (Basic Analysis)	NW
9142	4	35.509392	I-26 WB (Basic Analysis)	NW
9142	5	30.45493	I-26 WB (Basic Analysis)	NW
9142	6	37.360375	I-26 WB (Basic Analysis)	NW
9142	7	36.733467	I-26 WB (Basic Analysis)	NW
9142	8	35.760714	I-26 WB (Basic Analysis)	NW
9142	9	37.768851	I-26 WB (Basic Analysis)	NW
9142	10	35.783178	I-26 WB (Basic Analysis)	NW
9143	1	28.293626	I-26 WB (Basic Analysis)	NW
9143	2	27.787719	I-26 WB (Basic Analysis)	NW
9143	3	27.835412	I-26 WB (Basic Analysis)	NW
9143	4	26.653659	I-26 WB (Basic Analysis)	NW
9143	5	27.683122	I-26 WB (Basic Analysis)	NW
9143	6	27.287443	I-26 WB (Basic Analysis)	NW
9143	7	26.633129	I-26 WB (Basic Analysis)	NW
9143	8	27.417191	I-26 WB (Basic Analysis)	NW
9143	9	27.412658	I-26 WB (Basic Analysis)	NW
9143	10	27.653471	I-26 WB (Basic Analysis)	NW
9147	1	23.126665	I-26 WB (Basic Analysis)	NW
9147	2	24.614065	I-26 WB (Basic Analysis)	NW
9147	3	23.829438	I-26 WB (Basic Analysis)	NW
9147	4	20.41676	I-26 WB (Basic Analysis)	NW
9147	5	22.840241	I-26 WB (Basic Analysis)	NW
9147	6	25.042357	I-26 WB (Basic Analysis)	NW
9147	7	20.993183	I-26 WB (Basic Analysis)	NW
9147	8	21.458962	I-26 WB (Basic Analysis)	NW
9147	9	22.660038	I-26 WB (Basic Analysis)	NW
9147	10	21.226932	I-26 WB (Basic Analysis)	NW
9148	1	23.278926	I-26 WB (Diverge Analysis)	NW
9148	2	22.319727	I-26 WB (Diverge Analysis)	NW
9148	3	25.508259	I-26 WB (Diverge Analysis)	NW
9148	4	21.99706	I-26 WB (Diverge Analysis)	NW
9148	5	23.724793	I-26 WB (Diverge Analysis)	NW
9148	6	25.299992	I-26 WB (Diverge Analysis)	NW
9148	7	24.505059	I-26 WB (Diverge Analysis)	NW
9148	8	23.31706	I-26 WB (Diverge Analysis)	NW
9148	9	24.601859	I-26 WB (Diverge Analysis)	NW
9148	10	24.243993	I-26 WB (Diverge Analysis)	NW
9149	1	15.584002	I-26 WB (Diverge Analysis)	NW
9149	2	14.910061	I-26 WB (Diverge Analysis)	NW
9149	3	17.527239	I-26 WB (Diverge Analysis)	NW
9149	4	14.376623	I-26 WB (Diverge Analysis)	NW
9149	5	15.322046	I-26 WB (Diverge Analysis)	NW
9149	6	16.75566	I-26 WB (Diverge Analysis)	NW
9149	7	16.36987	I-26 WB (Diverge Analysis)	NW
9149	8	15.207738	I-26 WB (Diverge Analysis)	NW
9149	9	14.852907	I-26 WB (Diverge Analysis)	NW
9149	10	16.13411	I-26 WB (Diverge Analysis)	NW

RPA AM

ID	Run	Density	Name (Type)	Direction
9151	1	39.847983	I-20 EB (Diverge Analysis)	NE
9151	2	47.40616	I-20 EB (Diverge Analysis)	NE
9151	3	40.078307	I-20 EB (Diverge Analysis)	NE
9151	4	40.211756	I-20 EB (Diverge Analysis)	NE
9151	5	44.634367	I-20 EB (Diverge Analysis)	NE
9151	6	38.798181	I-20 EB (Diverge Analysis)	NE
9151	7	44.372411	I-20 EB (Diverge Analysis)	NE
9151	8	39.707614	I-20 EB (Diverge Analysis)	NE
9151	9	36.909131	I-20 EB (Diverge Analysis)	NE
9151	10	42.391429	I-20 EB (Diverge Analysis)	NE
9152	1	31.130778	I-20 EB (Basic Analysis)	NE
9152	2	33.559032	I-20 EB (Basic Analysis)	NE
9152	3	30.760785	I-20 EB (Basic Analysis)	NE
9152	4	28.675294	I-20 EB (Basic Analysis)	NE
9152	5	31.156604	I-20 EB (Basic Analysis)	NE
9152	6	33.929025	I-20 EB (Basic Analysis)	NE
9152	7	31.77251	I-20 EB (Basic Analysis)	NE
9152	8	31.565056	I-20 EB (Basic Analysis)	NE
9152	9	29.561536	I-20 EB (Basic Analysis)	NE
9152	10	29.618242	I-20 EB (Basic Analysis)	NE
9153	1	31.130778	I-20 EB (Basic Analysis)	NE
9153	2	33.559032	I-20 EB (Basic Analysis)	NE
9153	3	30.760785	I-20 EB (Basic Analysis)	NE
9153	4	28.675294	I-20 EB (Basic Analysis)	NE
9153	5	31.156604	I-20 EB (Basic Analysis)	NE
9153	6	33.929025	I-20 EB (Basic Analysis)	NE
9153	7	31.77251	I-20 EB (Basic Analysis)	NE
9153	8	31.565056	I-20 EB (Basic Analysis)	NE
9153	9	29.561536	I-20 EB (Basic Analysis)	NE
9153	10	29.618242	I-20 EB (Basic Analysis)	NE
9155	1	56.628549	I-20 EB (Basic Analysis)	NE
9155	2	57.493605	I-20 EB (Basic Analysis)	NE
9155	3	56.630433	I-20 EB (Basic Analysis)	NE
9155	4	58.540352	I-20 EB (Basic Analysis)	NE
9155	5	58.210903	I-20 EB (Basic Analysis)	NE
9155	6	56.449472	I-20 EB (Basic Analysis)	NE
9155	7	56.53323	I-20 EB (Basic Analysis)	NE
9155	8	56.564499	I-20 EB (Basic Analysis)	NE
9155	9	56.99883	I-20 EB (Basic Analysis)	NE
9155	10	56.641015	I-20 EB (Basic Analysis)	NE
9156	1	36.899161	I-20 EB (Basic Analysis)	NE
9156	2	36.918195	I-20 EB (Basic Analysis)	NE
9156	3	37.118049	I-20 EB (Basic Analysis)	NE
9156	4	37.890275	I-20 EB (Basic Analysis)	NE
9156	5	36.29552	I-20 EB (Basic Analysis)	NE
9156	6	37.026053	I-20 EB (Basic Analysis)	NE
9156	7	37.428027	I-20 EB (Basic Analysis)	NE
9156	8	37.038289	I-20 EB (Basic Analysis)	NE
9156	9	37.96505	I-20 EB (Basic Analysis)	NE
9156	10	37.44706	I-20 EB (Basic Analysis)	NE
9157	1	41.662121	I-20 WB (Diverge Analysis)	SW
9157	2	42.322121	I-20 WB (Diverge Analysis)	SW
9157	3	42.615454	I-20 WB (Diverge Analysis)	SW
9157	4	39.902121	I-20 WB (Diverge Analysis)	SW
9157	5	40.353854	I-20 WB (Diverge Analysis)	SW
9157	6	40.142654	I-20 WB (Diverge Analysis)	SW
9157	7	41.447987	I-20 WB (Diverge Analysis)	SW

RPA AM

ID	Run	Density	Name (Type)	Direction
9157	8	43.680254	I-20 WB (Diverge Analysis)	SW
9157	9	42.392521	I-20 WB (Diverge Analysis)	SW
9157	10	43.152254	I-20 WB (Diverge Analysis)	SW
9158	1	36.867171	I-20 WB (Basic Analysis)	SW
9158	2	35.051371	I-20 WB (Basic Analysis)	SW
9158	3	38.062191	I-20 WB (Basic Analysis)	SW
9158	4	34.770279	I-20 WB (Basic Analysis)	SW
9158	5	35.004311	I-20 WB (Basic Analysis)	SW
9158	6	35.962388	I-20 WB (Basic Analysis)	SW
9158	7	36.876816	I-20 WB (Basic Analysis)	SW
9158	8	37.862518	I-20 WB (Basic Analysis)	SW
9158	9	38.162918	I-20 WB (Basic Analysis)	SW
9158	10	36.608717	I-20 WB (Basic Analysis)	SW
9159	1	11.575568	I-20 WB (Basic Analysis)	W
9159	2	10.951307	I-20 WB (Basic Analysis)	W
9159	3	10.633938	I-20 WB (Basic Analysis)	W
9159	4	10.944095	I-20 WB (Basic Analysis)	W
9159	5	9.594311	I-20 WB (Basic Analysis)	W
9159	6	10.519112	I-20 WB (Basic Analysis)	W
9159	7	11.995802	I-20 WB (Basic Analysis)	W
9159	8	11.23369	I-20 WB (Basic Analysis)	W
9159	9	11.598612	I-20 WB (Basic Analysis)	W
9159	10	12.077895	I-20 WB (Basic Analysis)	W
9160	1	12.784213	I-20 WB (Merge Analysis)	SW
9160	2	12.528107	I-20 WB (Merge Analysis)	SW
9160	3	12.886656	I-20 WB (Merge Analysis)	SW
9160	4	12.351846	I-20 WB (Merge Analysis)	SW
9160	5	12.639588	I-20 WB (Merge Analysis)	SW
9160	6	13.094553	I-20 WB (Merge Analysis)	SW
9160	7	12.482912	I-20 WB (Merge Analysis)	SW
9160	8	13.183437	I-20 WB (Merge Analysis)	SW
9160	9	12.65616	I-20 WB (Merge Analysis)	SW
9160	10	13.391335	I-20 WB (Merge Analysis)	SW
9162	1	10.644008	I-20 WB (Merge Analysis)	SW
9162	2	11.158176	I-20 WB (Merge Analysis)	SW
9162	3	11.250775	I-20 WB (Merge Analysis)	SW
9162	4	10.046989	I-20 WB (Merge Analysis)	SW
9162	5	10.94861	I-20 WB (Merge Analysis)	SW
9162	6	9.403669	I-20 WB (Merge Analysis)	SW
9162	7	10.166393	I-20 WB (Merge Analysis)	SW
9162	8	10.636698	I-20 WB (Merge Analysis)	SW
9162	9	10.190761	I-20 WB (Merge Analysis)	SW
9162	10	10.736607	I-20 WB (Merge Analysis)	SW
9163	1	14.163418	I-20 WB (Merge Analysis)	S
9163	2	12.383929	I-20 WB (Merge Analysis)	S
9163	3	12.997859	I-20 WB (Merge Analysis)	S
9163	4	11.990879	I-20 WB (Merge Analysis)	S
9163	5	13.068087	I-20 WB (Merge Analysis)	S
9163	6	12.936692	I-20 WB (Merge Analysis)	S
9163	7	13.535896	I-20 WB (Merge Analysis)	S
9163	8	12.006737	I-20 WB (Merge Analysis)	S
9163	9	12.488139	I-20 WB (Merge Analysis)	S
9163	10	14.072801	I-20 WB (Merge Analysis)	S
9182	1	13.745557	I-26 EB (Merge Analysis)	S
9182	2	13.555165	I-26 EB (Merge Analysis)	S
9182	3	13.601242	I-26 EB (Merge Analysis)	S
9182	4	14.075916	I-26 EB (Merge Analysis)	S

RPA AM

ID	Run	Density	Name (Type)	Direction
9182	5	13.627323	I-26 EB (Merge Analysis)	S
9182	6	14.158506	I-26 EB (Merge Analysis)	S
9182	7	13.935079	I-26 EB (Merge Analysis)	S
9182	8	14.143727	I-26 EB (Merge Analysis)	S
9182	9	14.209799	I-26 EB (Merge Analysis)	S
9182	10	14.231533	I-26 EB (Merge Analysis)	S
9183	1	18.334229	I-20 EB (Basic Analysis)	E
9183	2	19.607123	I-20 EB (Basic Analysis)	E
9183	3	18.910086	I-20 EB (Basic Analysis)	E
9183	4	18.59264	I-20 EB (Basic Analysis)	E
9183	5	19.775426	I-20 EB (Basic Analysis)	E
9183	6	19.287087	I-20 EB (Basic Analysis)	E
9183	7	19.92923	I-20 EB (Basic Analysis)	E
9183	8	19.16539	I-20 EB (Basic Analysis)	E
9183	9	18.643907	I-20 EB (Basic Analysis)	E
9183	10	19.322301	I-20 EB (Basic Analysis)	E
9185	1	24.477168	I-20 WB (Basic Analysis)	SW
9185	2	26.713577	I-20 WB (Basic Analysis)	SW
9185	3	29.664378	I-20 WB (Basic Analysis)	SW
9185	4	25.408746	I-20 WB (Basic Analysis)	SW
9185	5	26.892492	I-20 WB (Basic Analysis)	SW
9185	6	29.013325	I-20 WB (Basic Analysis)	SW
9185	7	25.708742	I-20 WB (Basic Analysis)	SW
9185	8	31.882463	I-20 WB (Basic Analysis)	SW
9185	9	26.880879	I-20 WB (Basic Analysis)	SW
9185	10	32.181649	I-20 WB (Basic Analysis)	SW
9186	1	24.477168	I-20 WB (Basic Analysis)	SW
9186	2	26.713577	I-20 WB (Basic Analysis)	SW
9186	3	29.664378	I-20 WB (Basic Analysis)	SW
9186	4	25.408746	I-20 WB (Basic Analysis)	SW
9186	5	26.892492	I-20 WB (Basic Analysis)	SW
9186	6	29.013325	I-20 WB (Basic Analysis)	SW
9186	7	25.708742	I-20 WB (Basic Analysis)	SW
9186	8	31.882463	I-20 WB (Basic Analysis)	SW
9186	9	26.880879	I-20 WB (Basic Analysis)	SW
9186	10	32.181649	I-20 WB (Basic Analysis)	SW
9204	1	39.09961	CD ROAD I-26 EB (Basic Analysis)	SE
9204	2	53.122754	CD ROAD I-26 EB (Basic Analysis)	SE
9204	3	46.691186	CD ROAD I-26 EB (Basic Analysis)	SE
9204	4	42.145879	CD ROAD I-26 EB (Basic Analysis)	SE
9204	5	43.983945	CD ROAD I-26 EB (Basic Analysis)	SE
9204	6	47.67171	CD ROAD I-26 EB (Basic Analysis)	SE
9204	7	46.327229	CD ROAD I-26 EB (Basic Analysis)	SE
9204	8	30.589001	CD ROAD I-26 EB (Basic Analysis)	SE
9204	9	45.31513	CD ROAD I-26 EB (Basic Analysis)	SE
9204	10	45.188825	CD ROAD I-26 EB (Basic Analysis)	SE
9206	1	17.443336	I-26 EB (Basic Analysis)	S
9206	2	17.28203	I-26 EB (Basic Analysis)	S
9206	3	16.932525	I-26 EB (Basic Analysis)	S
9206	4	17.901837	I-26 EB (Basic Analysis)	S
9206	5	17.098118	I-26 EB (Basic Analysis)	S
9206	6	17.55076	I-26 EB (Basic Analysis)	S
9206	7	17.090004	I-26 EB (Basic Analysis)	S
9206	8	17.336907	I-26 EB (Basic Analysis)	S
9206	9	16.242395	I-26 EB (Basic Analysis)	S
9206	10	16.808694	I-26 EB (Basic Analysis)	S
9207	1	17.443336	I-26 EB (Basic Analysis)	S

RPA AM

ID	Run	Density	Name (Type)	Direction
9207	2	17.28203	I-26 EB (Basic Analysis)	S
9207	3	16.932525	I-26 EB (Basic Analysis)	S
9207	4	17.901837	I-26 EB (Basic Analysis)	S
9207	5	17.098118	I-26 EB (Basic Analysis)	S
9207	6	17.55076	I-26 EB (Basic Analysis)	S
9207	7	17.090004	I-26 EB (Basic Analysis)	S
9207	8	17.336907	I-26 EB (Basic Analysis)	S
9207	9	16.242395	I-26 EB (Basic Analysis)	S
9207	10	16.808694	I-26 EB (Basic Analysis)	S
9208	1	35.514631	(Basic Analysis)	SE
9208	2	37.175361	(Basic Analysis)	SE
9208	3	36.86673	(Basic Analysis)	SE
9208	4	37.310081	(Basic Analysis)	SE
9208	5	36.967157	(Basic Analysis)	SE
9208	6	35.073729	(Basic Analysis)	SE
9208	7	36.976955	(Basic Analysis)	SE
9208	8	36.722212	(Basic Analysis)	SE
9208	9	35.762026	(Basic Analysis)	SE
9208	10	37.439902	(Basic Analysis)	SE
9211	1	17.96126	I-20 EB (Basic Analysis)	NE
9211	2	18.825502	I-20 EB (Basic Analysis)	NE
9211	3	18.367962	I-20 EB (Basic Analysis)	NE
9211	4	18.621445	I-20 EB (Basic Analysis)	NE
9211	5	18.949066	I-20 EB (Basic Analysis)	NE
9211	6	18.679344	I-20 EB (Basic Analysis)	NE
9211	7	19.187015	I-20 EB (Basic Analysis)	NE
9211	8	18.442101	I-20 EB (Basic Analysis)	NE
9211	9	18.525418	I-20 EB (Basic Analysis)	NE
9211	10	18.592496	I-20 EB (Basic Analysis)	NE
9225	1	31.130778	I-20 EB (Basic Analysis)	NE
9225	2	33.559032	I-20 EB (Basic Analysis)	NE
9225	3	30.760785	I-20 EB (Basic Analysis)	NE
9225	4	28.675294	I-20 EB (Basic Analysis)	NE
9225	5	31.156604	I-20 EB (Basic Analysis)	NE
9225	6	33.929025	I-20 EB (Basic Analysis)	NE
9225	7	31.77251	I-20 EB (Basic Analysis)	NE
9225	8	31.565056	I-20 EB (Basic Analysis)	NE
9225	9	29.561536	I-20 EB (Basic Analysis)	NE
9225	10	29.618242	I-20 EB (Basic Analysis)	NE
9243	1	36.867171	I-20 WB (Basic Analysis)	SW
9243	2	35.051371	I-20 WB (Basic Analysis)	SW
9243	3	38.062191	I-20 WB (Basic Analysis)	SW
9243	4	34.770279	I-20 WB (Basic Analysis)	SW
9243	5	35.004311	I-20 WB (Basic Analysis)	SW
9243	6	35.962388	I-20 WB (Basic Analysis)	SW
9243	7	36.876816	I-20 WB (Basic Analysis)	SW
9243	8	37.862518	I-20 WB (Basic Analysis)	SW
9243	9	38.162918	I-20 WB (Basic Analysis)	SW
9243	10	36.608717	I-20 WB (Basic Analysis)	SW
9245	1	11.409735	CD ROAD I-20 WB TO I-20 (Basic Analysis)	NW
9245	2	10.902528	CD ROAD I-20 WB TO I-20 (Basic Analysis)	NW
9245	3	12.095672	CD ROAD I-20 WB TO I-20 (Basic Analysis)	NW
9245	4	11.536939	CD ROAD I-20 WB TO I-20 (Basic Analysis)	NW
9245	5	10.991088	CD ROAD I-20 WB TO I-20 (Basic Analysis)	NW
9245	6	10.574052	CD ROAD I-20 WB TO I-20 (Basic Analysis)	NW
9245	7	10.689985	CD ROAD I-20 WB TO I-20 (Basic Analysis)	NW
9245	8	11.264819	CD ROAD I-20 WB TO I-20 (Basic Analysis)	NW

RPA AM

ID	Run	Density	Name (Type)	Direction
9245	9	11.179479	CD ROAD I-20 WB TO I-20 (Basic Analysis)	NW
9245	10	11.173039	CD ROAD I-20 WB TO I-20 (Basic Analysis)	NW
9246	1	6.465011	I-126 NB (Diverge Analysis)	NW
9246	2	6.80045	I-126 NB (Diverge Analysis)	NW
9246	3	6.856824	I-126 NB (Diverge Analysis)	NW
9246	4	6.102646	I-126 NB (Diverge Analysis)	NW
9246	5	5.380482	I-126 NB (Diverge Analysis)	NW
9246	6	6.853101	I-126 NB (Diverge Analysis)	NW
9246	7	6.931785	I-126 NB (Diverge Analysis)	NW
9246	8	5.725098	I-126 NB (Diverge Analysis)	NW
9246	9	6.127821	I-126 NB (Diverge Analysis)	NW
9246	10	5.879812	I-126 NB (Diverge Analysis)	NW
9248	1	16.585013	I-26 WB (Basic Analysis)	NW
9248	2	16.827869	I-26 WB (Basic Analysis)	NW
9248	3	16.868233	I-26 WB (Basic Analysis)	NW
9248	4	15.819777	I-26 WB (Basic Analysis)	NW
9248	5	17.015939	I-26 WB (Basic Analysis)	NW
9248	6	16.554567	I-26 WB (Basic Analysis)	NW
9248	7	16.119247	I-26 WB (Basic Analysis)	NW
9248	8	16.48356	I-26 WB (Basic Analysis)	NW
9248	9	17.036563	I-26 WB (Basic Analysis)	NW
9248	10	16.546768	I-26 WB (Basic Analysis)	NW
9249	1	28.042624	I-26 EB (Basic Analysis)	SE
9249	2	29.000495	I-26 EB (Basic Analysis)	SE
9249	3	28.376622	I-26 EB (Basic Analysis)	SE
9249	4	28.256211	I-26 EB (Basic Analysis)	SE
9249	5	28.517794	I-26 EB (Basic Analysis)	SE
9249	6	28.484506	I-26 EB (Basic Analysis)	SE
9249	7	28.48519	I-26 EB (Basic Analysis)	SE
9249	8	27.785845	I-26 EB (Basic Analysis)	SE
9249	9	28.264737	I-26 EB (Basic Analysis)	SE
9249	10	28.33844	I-26 EB (Basic Analysis)	SE

RPA AM

ID	Run	Density	Name (Type)	Direction
2806	1	20.364017	I-20 EB (Basic Analysis)	NE
2806	2	19.34068	I-20 EB (Basic Analysis)	NE
2806	3	20.036881	I-20 EB (Basic Analysis)	NE
2806	4	19.118964	I-20 EB (Basic Analysis)	NE
2806	5	19.147074	I-20 EB (Basic Analysis)	NE
2806	6	19.057025	I-20 EB (Basic Analysis)	NE
2806	7	19.793904	I-20 EB (Basic Analysis)	NE
2806	8	19.570878	I-20 EB (Basic Analysis)	NE
2806	9	19.025684	I-20 EB (Basic Analysis)	NE
2806	10	19.523985	I-20 EB (Basic Analysis)	NE
2807	1	20.364017	I-20 EB (Basic Analysis)	NE
2807	2	19.34068	I-20 EB (Basic Analysis)	NE
2807	3	20.036881	I-20 EB (Basic Analysis)	NE
2807	4	19.118964	I-20 EB (Basic Analysis)	NE
2807	5	19.147074	I-20 EB (Basic Analysis)	NE
2807	6	19.057025	I-20 EB (Basic Analysis)	NE
2807	7	19.793904	I-20 EB (Basic Analysis)	NE
2807	8	19.570878	I-20 EB (Basic Analysis)	NE
2807	9	19.025684	I-20 EB (Basic Analysis)	NE
2807	10	19.523985	I-20 EB (Basic Analysis)	NE
2808	1	20.271454	I-20 EB (Diverge Analysis)	NE
2808	2	19.339286	I-20 EB (Diverge Analysis)	NE
2808	3	19.73568	I-20 EB (Diverge Analysis)	NE
2808	4	18.391301	I-20 EB (Diverge Analysis)	NE
2808	5	18.975512	I-20 EB (Diverge Analysis)	NE
2808	6	18.516842	I-20 EB (Diverge Analysis)	NE
2808	7	19.139606	I-20 EB (Diverge Analysis)	NE
2808	8	19.689219	I-20 EB (Diverge Analysis)	NE
2808	9	18.761993	I-20 EB (Diverge Analysis)	NE
2808	10	19.657587	I-20 EB (Diverge Analysis)	NE
2813	1	19.32405	I-20 WB (Merge Analysis)	S
2813	2	19.52454	I-20 WB (Merge Analysis)	S
2813	3	18.7475	I-20 WB (Merge Analysis)	S
2813	4	19.233433	I-20 WB (Merge Analysis)	S
2813	5	20.024065	I-20 WB (Merge Analysis)	S
2813	6	19.267414	I-20 WB (Merge Analysis)	S
2813	7	18.746367	I-20 WB (Merge Analysis)	S
2813	8	20.227953	I-20 WB (Merge Analysis)	S
2813	9	18.713519	I-20 WB (Merge Analysis)	S
2813	10	19.868884	I-20 WB (Merge Analysis)	S
2814	1	23.236886	I-20 WB (Basic Analysis)	S
2814	2	23.782904	I-20 WB (Basic Analysis)	S
2814	3	23.296673	I-20 WB (Basic Analysis)	S
2814	4	23.429035	I-20 WB (Basic Analysis)	S
2814	5	24.485506	I-20 WB (Basic Analysis)	S
2814	6	23.842751	I-20 WB (Basic Analysis)	S
2814	7	23.305241	I-20 WB (Basic Analysis)	S
2814	8	23.957645	I-20 WB (Basic Analysis)	S
2814	9	23.247343	I-20 WB (Basic Analysis)	S
2814	10	24.357661	I-20 WB (Basic Analysis)	S
2822	1	14.918182	I-20 WB (Merge Analysis)	SW
2822	2	16.260867	I-20 WB (Merge Analysis)	SW
2822	3	16.584964	I-20 WB (Merge Analysis)	SW
2822	4	16.701931	I-20 WB (Merge Analysis)	SW
2822	5	16.03668	I-20 WB (Merge Analysis)	SW
2822	6	15.987944	I-20 WB (Merge Analysis)	SW
2822	7	16.333972	I-20 WB (Merge Analysis)	SW
2822	8	16.217004	I-20 WB (Merge Analysis)	SW
2822	9	15.641916	I-20 WB (Merge Analysis)	SW
2822	10	16.372961	I-20 WB (Merge Analysis)	SW
2823	1	206.486314	I-20 WB (Basic Analysis)	SW
2823	2	265.482401	I-20 WB (Basic Analysis)	SW
2823	3	250.733378	I-20 WB (Basic Analysis)	SW
2823	4	300.88006	I-20 WB (Basic Analysis)	SW

RPA AM

ID	Run	Density	Name (Type)	Direction
2823	5	206.486311	I-20 WB (Basic Analysis)	SW
2823	6	169.613756	I-20 WB (Basic Analysis)	SW
2823	7	200.586709	I-20 WB (Basic Analysis)	SW
2823	8	312.67927	I-20 WB (Basic Analysis)	SW
2823	9	175.513368	I-20 WB (Basic Analysis)	SW
2823	10	157.81454	I-20 WB (Basic Analysis)	SW
2826	1	19.142161	I-20 EB (Basic Analysis)	NE
2826	2	17.710256	I-20 EB (Basic Analysis)	NE
2826	3	19.188616	I-20 EB (Basic Analysis)	NE
2826	4	15.835663	I-20 EB (Basic Analysis)	NE
2826	5	17.103609	I-20 EB (Basic Analysis)	NE
2826	6	17.406933	I-20 EB (Basic Analysis)	NE
2826	7	18.759591	I-20 EB (Basic Analysis)	NE
2826	8	19.716016	I-20 EB (Basic Analysis)	NE
2826	9	18.939945	I-20 EB (Basic Analysis)	NE
2826	10	20.440166	I-20 EB (Basic Analysis)	NE
2829	1	22.736066	I-20 EB (Merge Analysis)	NE
2829	2	23.098058	I-20 EB (Merge Analysis)	NE
2829	3	22.341842	I-20 EB (Merge Analysis)	NE
2829	4	21.69224	I-20 EB (Merge Analysis)	NE
2829	5	23.586499	I-20 EB (Merge Analysis)	NE
2829	6	23.593937	I-20 EB (Merge Analysis)	NE
2829	7	24.025352	I-20 EB (Merge Analysis)	NE
2829	8	21.622817	I-20 EB (Merge Analysis)	NE
2829	9	19.822775	I-20 EB (Merge Analysis)	NE
2829	10	23.053429	I-20 EB (Merge Analysis)	NE
2830	1	26.814925	I-20 EB (Basic Analysis)	NE
2830	2	22.339189	I-20 EB (Basic Analysis)	NE
2830	3	27.038712	I-20 EB (Basic Analysis)	NE
2830	4	26.551647	I-20 EB (Basic Analysis)	NE
2830	5	26.735942	I-20 EB (Basic Analysis)	NE
2830	6	23.905697	I-20 EB (Basic Analysis)	NE
2830	7	25.459041	I-20 EB (Basic Analysis)	NE
2830	8	22.707779	I-20 EB (Basic Analysis)	NE
2830	9	23.497615	I-20 EB (Basic Analysis)	NE
2830	10	20.272452	I-20 EB (Basic Analysis)	NE
2831	1	22.681355	I-20 WB (Basic Analysis)	SW
2831	2	24.110984	I-20 WB (Basic Analysis)	SW
2831	3	22.385569	I-20 WB (Basic Analysis)	SW
2831	4	22.535703	I-20 WB (Basic Analysis)	SW
2831	5	23.882422	I-20 WB (Basic Analysis)	SW
2831	6	23.08918	I-20 WB (Basic Analysis)	SW
2831	7	23.172089	I-20 WB (Basic Analysis)	SW
2831	8	23.889145	I-20 WB (Basic Analysis)	SW
2831	9	22.94801	I-20 WB (Basic Analysis)	SW
2831	10	23.353594	I-20 WB (Basic Analysis)	SW
2837	1	133.556309	I-20 WB (Merge Analysis)	SW
2837	2	119.193278	I-20 WB (Merge Analysis)	SW
2837	3	120.174013	I-20 WB (Merge Analysis)	SW
2837	4	124.353063	I-20 WB (Merge Analysis)	SW
2837	5	104.333099	I-20 WB (Merge Analysis)	SW
2837	6	106.990576	I-20 WB (Merge Analysis)	SW
2837	7	132.10705	I-20 WB (Merge Analysis)	SW
2837	8	127.369087	I-20 WB (Merge Analysis)	SW
2837	9	121.923067	I-20 WB (Merge Analysis)	SW
2837	10	106.253895	I-20 WB (Merge Analysis)	SW
2838	1	132.36433	I-20 WB (Diverge Analysis)	SW
2838	2	121.540899	I-20 WB (Diverge Analysis)	SW
2838	3	125.712914	I-20 WB (Diverge Analysis)	SW
2838	4	129.641872	I-20 WB (Diverge Analysis)	SW
2838	5	115.30919	I-20 WB (Diverge Analysis)	SW
2838	6	120.823014	I-20 WB (Diverge Analysis)	SW
2838	7	130.918534	I-20 WB (Diverge Analysis)	SW
2838	8	127.976826	I-20 WB (Diverge Analysis)	SW

RPA AM

ID	Run	Density	Name (Type)	Direction
2838	9	123.970189	I-20 WB (Diverge Analysis)	SW
2838	10	118.517757	I-20 WB (Diverge Analysis)	SW
2839	1	132.36433	I-20 WB (Diverge Analysis)	SW
2839	2	121.540899	I-20 WB (Diverge Analysis)	SW
2839	3	125.712914	I-20 WB (Diverge Analysis)	SW
2839	4	129.641872	I-20 WB (Diverge Analysis)	SW
2839	5	115.30919	I-20 WB (Diverge Analysis)	SW
2839	6	120.823014	I-20 WB (Diverge Analysis)	SW
2839	7	130.918534	I-20 WB (Diverge Analysis)	SW
2839	8	127.976826	I-20 WB (Diverge Analysis)	SW
2839	9	123.970189	I-20 WB (Diverge Analysis)	SW
2839	10	118.517757	I-20 WB (Diverge Analysis)	SW
2840	1	132.36433	I-20 WB (Diverge Analysis)	SW
2840	2	121.540899	I-20 WB (Diverge Analysis)	SW
2840	3	125.712914	I-20 WB (Diverge Analysis)	SW
2840	4	129.641872	I-20 WB (Diverge Analysis)	SW
2840	5	115.30919	I-20 WB (Diverge Analysis)	SW
2840	6	120.823014	I-20 WB (Diverge Analysis)	SW
2840	7	130.918534	I-20 WB (Diverge Analysis)	SW
2840	8	127.976826	I-20 WB (Diverge Analysis)	SW
2840	9	123.970189	I-20 WB (Diverge Analysis)	SW
2840	10	118.517757	I-20 WB (Diverge Analysis)	SW
2843	1	16.754672	I-20 EB (Basic Analysis)	NE
2843	2	16.145784	I-20 EB (Basic Analysis)	NE
2843	3	16.558727	I-20 EB (Basic Analysis)	NE
2843	4	16.101429	I-20 EB (Basic Analysis)	NE
2843	5	15.866464	I-20 EB (Basic Analysis)	NE
2843	6	16.499214	I-20 EB (Basic Analysis)	NE
2843	7	16.573606	I-20 EB (Basic Analysis)	NE
2843	8	16.484336	I-20 EB (Basic Analysis)	NE
2843	9	16.097499	I-20 EB (Basic Analysis)	NE
2843	10	16.002615	I-20 EB (Basic Analysis)	NE
2848	1	11.911568	I-20 EB (Basic Analysis)	NE
2848	2	10.762776	I-20 EB (Basic Analysis)	NE
2848	3	10.786783	I-20 EB (Basic Analysis)	NE
2848	4	10.342658	I-20 EB (Basic Analysis)	NE
2848	5	10.860215	I-20 EB (Basic Analysis)	NE
2848	6	11.000019	I-20 EB (Basic Analysis)	NE
2848	7	11.164535	I-20 EB (Basic Analysis)	NE
2848	8	11.146883	I-20 EB (Basic Analysis)	NE
2848	9	10.968951	I-20 EB (Basic Analysis)	NE
2848	10	10.855272	I-20 EB (Basic Analysis)	NE
2852	1	111.860026	I-20 WB (Merge Analysis)	SW
2852	2	97.411191	I-20 WB (Merge Analysis)	SW
2852	3	93.526113	I-20 WB (Merge Analysis)	SW
2852	4	91.490572	I-20 WB (Merge Analysis)	SW
2852	5	64.526666	I-20 WB (Merge Analysis)	SW
2852	6	81.474304	I-20 WB (Merge Analysis)	SW
2852	7	107.301115	I-20 WB (Merge Analysis)	SW
2852	8	105.114662	I-20 WB (Merge Analysis)	SW
2852	9	95.273872	I-20 WB (Merge Analysis)	SW
2852	10	72.233648	I-20 WB (Merge Analysis)	SW
2863	1	11.570043	I-20 EB (Basic Analysis)	NE
2863	2	10.890838	I-20 EB (Basic Analysis)	NE
2863	3	12.877415	I-20 EB (Basic Analysis)	NE
2863	4	12.045094	I-20 EB (Basic Analysis)	NE
2863	5	11.585747	I-20 EB (Basic Analysis)	NE
2863	6	11.393371	I-20 EB (Basic Analysis)	NE
2863	7	11.083214	I-20 EB (Basic Analysis)	NE
2863	8	13.101199	I-20 EB (Basic Analysis)	NE
2863	9	11.42478	I-20 EB (Basic Analysis)	NE
2863	10	9.838659	I-20 EB (Basic Analysis)	NE
4563	1	14.237334	I-126 SB (Merge Analysis)	E
4563	2	14.577706	I-126 SB (Merge Analysis)	E

ID	Run	Density	Name (Type)	Direction
4563	3	13.722178	I-126 SB (Merge Analysis)	E
4563	4	14.485714	I-126 SB (Merge Analysis)	E
4563	5	15.218585	I-126 SB (Merge Analysis)	E
4563	6	13.700713	I-126 SB (Merge Analysis)	E
4563	7	13.930694	I-126 SB (Merge Analysis)	E
4563	8	14.657432	I-126 SB (Merge Analysis)	E
4563	9	14.237334	I-126 SB (Merge Analysis)	E
4563	10	12.397489	I-126 SB (Merge Analysis)	E
4566	1	30.862155	I-126 NB (Basic Analysis)	W
4566	2	31.702993	I-126 NB (Basic Analysis)	W
4566	3	31.28852	I-126 NB (Basic Analysis)	W
4566	4	30.291405	I-126 NB (Basic Analysis)	W
4566	5	30.569136	I-126 NB (Basic Analysis)	W
4566	6	31.015884	I-126 NB (Basic Analysis)	W
4566	7	31.032871	I-126 NB (Basic Analysis)	W
4566	8	31.043063	I-126 NB (Basic Analysis)	W
4566	9	31.013336	I-126 NB (Basic Analysis)	W
4566	10	30.757687	I-126 NB (Basic Analysis)	W
4570	1	29.432238	I-126 NB (Basic Analysis)	W
4570	2	29.204035	I-126 NB (Basic Analysis)	W
4570	3	28.88669	I-126 NB (Basic Analysis)	W
4570	4	28.818942	I-126 NB (Basic Analysis)	W
4570	5	27.945353	I-126 NB (Basic Analysis)	W
4570	6	29.2076	I-126 NB (Basic Analysis)	W
4570	7	29.157681	I-126 NB (Basic Analysis)	W
4570	8	28.360159	I-126 NB (Basic Analysis)	W
4570	9	28.51586	I-126 NB (Basic Analysis)	W
4570	10	29.920735	I-126 NB (Basic Analysis)	W
4573	1	14.874929	I-126 SB (Basic Analysis)	E
4573	2	13.560279	I-126 SB (Basic Analysis)	E
4573	3	14.262124	I-126 SB (Basic Analysis)	E
4573	4	15.189188	I-126 SB (Basic Analysis)	E
4573	5	13.40053	I-126 SB (Basic Analysis)	E
4573	6	15.00587	I-126 SB (Basic Analysis)	E
4573	7	15.458927	I-126 SB (Basic Analysis)	E
4573	8	14.56067	I-126 SB (Basic Analysis)	E
4573	9	14.429729	I-126 SB (Basic Analysis)	E
4573	10	14.542338	I-126 SB (Basic Analysis)	E
4579	1	13.602256	I-126 SB (Diverge Analysis)	E
4579	2	14.497577	I-126 SB (Diverge Analysis)	E
4579	3	13.597901	I-126 SB (Diverge Analysis)	E
4579	4	14.993949	I-126 SB (Diverge Analysis)	E
4579	5	13.983753	I-126 SB (Diverge Analysis)	E
4579	6	23.285896	I-126 SB (Diverge Analysis)	E
4579	7	15.335563	I-126 SB (Diverge Analysis)	E
4579	8	19.344132	I-126 SB (Diverge Analysis)	E
4579	9	14.119864	I-126 SB (Diverge Analysis)	E
4579	10	19.67362	I-126 SB (Diverge Analysis)	E
4589	1	28.277117	I-126 NB (Merge Analysis)	NW
4589	2	30.021148	I-126 NB (Merge Analysis)	NW
4589	3	27.622458	I-126 NB (Merge Analysis)	NW
4589	4	29.128432	I-126 NB (Merge Analysis)	NW
4589	5	29.413066	I-126 NB (Merge Analysis)	NW
4589	6	29.467405	I-126 NB (Merge Analysis)	NW
4589	7	27.480141	I-126 NB (Merge Analysis)	NW
4589	8	28.582452	I-126 NB (Merge Analysis)	NW
4589	9	28.872261	I-126 NB (Merge Analysis)	NW
4589	10	28.403909	I-126 NB (Merge Analysis)	NW
4599	1	22.856195	I-126 NB (Basic Analysis)	NW
4599	2	24.014296	I-126 NB (Basic Analysis)	NW
4599	3	22.849986	I-126 NB (Basic Analysis)	NW
4599	4	23.736414	I-126 NB (Basic Analysis)	NW
4599	5	23.480266	I-126 NB (Basic Analysis)	NW
4599	6	22.520874	I-126 NB (Basic Analysis)	NW

RPA AM

ID	Run	Density	Name (Type)	Direction
4599	7	22.317507	I-126 NB (Basic Analysis)	NW
4599	8	21.982186	I-126 NB (Basic Analysis)	NW
4599	9	23.089057	I-126 NB (Basic Analysis)	NW
4599	10	23.284661	I-126 NB (Basic Analysis)	NW
4601	1	24.07842	I-126 NB (Basic Analysis)	NW
4601	2	26.099451	I-126 NB (Basic Analysis)	NW
4601	3	26.633698	I-126 NB (Basic Analysis)	NW
4601	4	24.890146	I-126 NB (Basic Analysis)	NW
4601	5	26.898751	I-126 NB (Basic Analysis)	NW
4601	6	27.143097	I-126 NB (Basic Analysis)	NW
4601	7	25.436818	I-126 NB (Basic Analysis)	NW
4601	8	25.345706	I-126 NB (Basic Analysis)	NW
4601	9	25.097218	I-126 NB (Basic Analysis)	NW
4601	10	25.113784	I-126 NB (Basic Analysis)	NW
4604	1	16.34284	I-26 WB (Basic Analysis)	NW
4604	2	16.17149	I-26 WB (Basic Analysis)	NW
4604	3	15.745622	I-26 WB (Basic Analysis)	NW
4604	4	16.160018	I-26 WB (Basic Analysis)	NW
4604	5	16.823913	I-26 WB (Basic Analysis)	NW
4604	6	16.158584	I-26 WB (Basic Analysis)	NW
4604	7	16.585886	I-26 WB (Basic Analysis)	NW
4604	8	15.882559	I-26 WB (Basic Analysis)	NW
4604	9	16.564377	I-26 WB (Basic Analysis)	NW
4604	10	15.929878	I-26 WB (Basic Analysis)	NW
4610	1	13.681684	I-26 EB (Basic Analysis)	SE
4610	2	14.599958	I-26 EB (Basic Analysis)	SE
4610	3	13.828882	I-26 EB (Basic Analysis)	SE
4610	4	14.224262	I-26 EB (Basic Analysis)	SE
4610	5	13.739022	I-26 EB (Basic Analysis)	SE
4610	6	14.229396	I-26 EB (Basic Analysis)	SE
4610	7	13.8169	I-26 EB (Basic Analysis)	SE
4610	8	14.013735	I-26 EB (Basic Analysis)	SE
4610	9	13.621778	I-26 EB (Basic Analysis)	SE
4610	10	14.197732	I-26 EB (Basic Analysis)	SE
4646	1	34.320072	I-26 WB (Basic Analysis)	NW
4646	2	35.663897	I-26 WB (Basic Analysis)	NW
4646	3	34.420691	I-26 WB (Basic Analysis)	NW
4646	4	34.038339	I-26 WB (Basic Analysis)	NW
4646	5	34.288768	I-26 WB (Basic Analysis)	NW
4646	6	34.807516	I-26 WB (Basic Analysis)	NW
4646	7	35.098194	I-26 WB (Basic Analysis)	NW
4646	8	34.049518	I-26 WB (Basic Analysis)	NW
4646	9	35.024406	I-26 WB (Basic Analysis)	NW
4646	10	34.608514	I-26 WB (Basic Analysis)	NW
4651	1	34.228205	I-26 WB (Basic Analysis)	NW
4651	2	33.512391	I-26 WB (Basic Analysis)	NW
4651	3	33.016092	I-26 WB (Basic Analysis)	NW
4651	4	32.69977	I-26 WB (Basic Analysis)	NW
4651	5	34.918114	I-26 WB (Basic Analysis)	NW
4651	6	34.414998	I-26 WB (Basic Analysis)	NW
4651	7	32.924741	I-26 WB (Basic Analysis)	NW
4651	8	34.247293	I-26 WB (Basic Analysis)	NW
4651	9	34.094586	I-26 WB (Basic Analysis)	NW
4651	10	34.469537	I-26 WB (Basic Analysis)	NW
4654	1	38.927944	I-26 WB (Merge Analysis)	NW
4654	2	40.632532	I-26 WB (Merge Analysis)	NW
4654	3	40.914462	I-26 WB (Merge Analysis)	NW
4654	4	40.417832	I-26 WB (Merge Analysis)	NW
4654	5	39.392043	I-26 WB (Merge Analysis)	NW
4654	6	40.758317	I-26 WB (Merge Analysis)	NW
4654	7	40.302892	I-26 WB (Merge Analysis)	NW
4654	8	37.618057	I-26 WB (Merge Analysis)	NW
4654	9	39.882167	I-26 WB (Merge Analysis)	NW
4654	10	37.670105	I-26 WB (Merge Analysis)	NW

RPA AM

ID	Run	Density	Name (Type)	Direction
4677	1	45.422006	I-26 WB (Basic Analysis)	NW
4677	2	46.236181	I-26 WB (Basic Analysis)	NW
4677	3	45.366349	I-26 WB (Basic Analysis)	NW
4677	4	53.399701	I-26 WB (Basic Analysis)	NW
4677	5	46.89025	I-26 WB (Basic Analysis)	NW
4677	6	49.427061	I-26 WB (Basic Analysis)	NW
4677	7	45.989272	I-26 WB (Basic Analysis)	NW
4677	8	44.138725	I-26 WB (Basic Analysis)	NW
4677	9	46.319976	I-26 WB (Basic Analysis)	NW
4677	10	44.510196	I-26 WB (Basic Analysis)	NW
4687	1	26.456789	I-26 EB (Basic Analysis)	SE
4687	2	26.023478	I-26 EB (Basic Analysis)	SE
4687	3	26.028998	I-26 EB (Basic Analysis)	SE
4687	4	27.523046	I-26 EB (Basic Analysis)	SE
4687	5	25.632487	I-26 EB (Basic Analysis)	SE
4687	6	25.94988	I-26 EB (Basic Analysis)	SE
4687	7	26.502788	I-26 EB (Basic Analysis)	SE
4687	8	26.181715	I-26 EB (Basic Analysis)	SE
4687	9	26.095237	I-26 EB (Basic Analysis)	SE
4687	10	27.092495	I-26 EB (Basic Analysis)	SE
4701	1	34.195198	I-26 WB (Weaving Analysis)	NW
4701	2	34.662097	I-26 WB (Weaving Analysis)	NW
4701	3	35.535553	I-26 WB (Weaving Analysis)	NW
4701	4	32.892024	I-26 WB (Weaving Analysis)	NW
4701	5	34.473143	I-26 WB (Weaving Analysis)	NW
4701	6	33.831309	I-26 WB (Weaving Analysis)	NW
4701	7	36.001233	I-26 WB (Weaving Analysis)	NW
4701	8	33.856909	I-26 WB (Weaving Analysis)	NW
4701	9	33.895309	I-26 WB (Weaving Analysis)	NW
4701	10	34.595658	I-26 WB (Weaving Analysis)	NW
4712	1	32.521122	I-26 WB (Basic Analysis)	NW
4712	2	33.85445	I-26 WB (Basic Analysis)	NW
4712	3	34.635372	I-26 WB (Basic Analysis)	NW
4712	4	33.308654	I-26 WB (Basic Analysis)	NW
4712	5	33.648596	I-26 WB (Basic Analysis)	NW
4712	6	33.597605	I-26 WB (Basic Analysis)	NW
4712	7	34.865777	I-26 WB (Basic Analysis)	NW
4712	8	33.428578	I-26 WB (Basic Analysis)	NW
4712	9	33.488068	I-26 WB (Basic Analysis)	NW
4712	10	34.695807	I-26 WB (Basic Analysis)	NW
4714	1	23.321143	I-26 EB (Basic Analysis)	SE
4714	2	22.150166	I-26 EB (Basic Analysis)	SE
4714	3	22.449416	I-26 EB (Basic Analysis)	SE
4714	4	22.886905	I-26 EB (Basic Analysis)	SE
4714	5	22.124957	I-26 EB (Basic Analysis)	SE
4714	6	22.142034	I-26 EB (Basic Analysis)	SE
4714	7	22.043639	I-26 EB (Basic Analysis)	SE
4714	8	21.941179	I-26 EB (Basic Analysis)	SE
4714	9	22.500646	I-26 EB (Basic Analysis)	SE
4714	10	22.747852	I-26 EB (Basic Analysis)	SE
4720	1	19.621838	I-26 EB (Merge Analysis)	SE
4720	2	18.413497	I-26 EB (Merge Analysis)	SE
4720	3	18.931863	I-26 EB (Merge Analysis)	SE
4720	4	19.644837	I-26 EB (Merge Analysis)	SE
4720	5	18.954862	I-26 EB (Merge Analysis)	SE
4720	6	19.096395	I-26 EB (Merge Analysis)	SE
4720	7	18.00128	I-26 EB (Merge Analysis)	SE
4720	8	18.00305	I-26 EB (Merge Analysis)	SE
4720	9	18.749638	I-26 EB (Merge Analysis)	SE
4720	10	19.911982	I-26 EB (Merge Analysis)	SE
4725	1	37.198134	I-26 WB (Merge Analysis)	NW
4725	2	36.00321	I-26 WB (Merge Analysis)	NW
4725	3	40.091322	I-26 WB (Merge Analysis)	NW
4725	4	35.46986	I-26 WB (Merge Analysis)	NW

RPA AM

ID	Run	Density	Name (Type)	Direction
4725	5	38.13252	I-26 WB (Merge Analysis)	NW
4725	6	36.261019	I-26 WB (Merge Analysis)	NW
4725	7	43.191849	I-26 WB (Merge Analysis)	NW
4725	8	37.818785	I-26 WB (Merge Analysis)	NW
4725	9	37.933367	I-26 WB (Merge Analysis)	NW
4725	10	40.110419	I-26 WB (Merge Analysis)	NW
4727	1	40.911476	I-26 WB (Basic Analysis)	NW
4727	2	39.298155	I-26 WB (Basic Analysis)	NW
4727	3	43.881797	I-26 WB (Basic Analysis)	NW
4727	4	39.657076	I-26 WB (Basic Analysis)	NW
4727	5	42.070751	I-26 WB (Basic Analysis)	NW
4727	6	40.922482	I-26 WB (Basic Analysis)	NW
4727	7	47.336353	I-26 WB (Basic Analysis)	NW
4727	8	42.832021	I-26 WB (Basic Analysis)	NW
4727	9	40.94237	I-26 WB (Basic Analysis)	NW
4727	10	46.76004	I-26 WB (Basic Analysis)	NW
4728	1	30.857519	I-26 WB (Diverge Analysis)	NW
4728	2	30.955882	I-26 WB (Diverge Analysis)	NW
4728	3	32.206128	I-26 WB (Diverge Analysis)	NW
4728	4	31.046479	I-26 WB (Diverge Analysis)	NW
4728	5	32.28896	I-26 WB (Diverge Analysis)	NW
4728	6	30.508071	I-26 WB (Diverge Analysis)	NW
4728	7	33.345068	I-26 WB (Diverge Analysis)	NW
4728	8	31.766083	I-26 WB (Diverge Analysis)	NW
4728	9	32.938673	I-26 WB (Diverge Analysis)	NW
4728	10	32.244955	I-26 WB (Diverge Analysis)	NW
4729	1	30.857519	I-26 WB (Diverge Analysis)	NW
4729	2	30.955882	I-26 WB (Diverge Analysis)	NW
4729	3	32.206128	I-26 WB (Diverge Analysis)	NW
4729	4	31.046479	I-26 WB (Diverge Analysis)	NW
4729	5	32.28896	I-26 WB (Diverge Analysis)	NW
4729	6	30.508071	I-26 WB (Diverge Analysis)	NW
4729	7	33.345068	I-26 WB (Diverge Analysis)	NW
4729	8	31.766083	I-26 WB (Diverge Analysis)	NW
4729	9	32.938673	I-26 WB (Diverge Analysis)	NW
4729	10	32.244955	I-26 WB (Diverge Analysis)	NW
4730	1	30.857519	I-26 WB (Diverge Analysis)	NW
4730	2	30.955882	I-26 WB (Diverge Analysis)	NW
4730	3	32.206128	I-26 WB (Diverge Analysis)	NW
4730	4	31.046479	I-26 WB (Diverge Analysis)	NW
4730	5	32.28896	I-26 WB (Diverge Analysis)	NW
4730	6	30.508071	I-26 WB (Diverge Analysis)	NW
4730	7	33.345068	I-26 WB (Diverge Analysis)	NW
4730	8	31.766083	I-26 WB (Diverge Analysis)	NW
4730	9	32.938673	I-26 WB (Diverge Analysis)	NW
4730	10	32.244955	I-26 WB (Diverge Analysis)	NW
4732	1	31.939867	I-26 WB (Basic Analysis)	NW
4732	2	33.281323	I-26 WB (Basic Analysis)	NW
4732	3	32.62379	I-26 WB (Basic Analysis)	NW
4732	4	30.244353	I-26 WB (Basic Analysis)	NW
4732	5	32.234547	I-26 WB (Basic Analysis)	NW
4732	6	32.476449	I-26 WB (Basic Analysis)	NW
4732	7	31.280134	I-26 WB (Basic Analysis)	NW
4732	8	30.686374	I-26 WB (Basic Analysis)	NW
4732	9	31.937668	I-26 WB (Basic Analysis)	NW
4732	10	30.734755	I-26 WB (Basic Analysis)	NW
4733	1	20.365008	I-26 EB (Basic Analysis)	SE
4733	2	20.861071	I-26 EB (Basic Analysis)	SE
4733	3	21.765006	I-26 EB (Basic Analysis)	SE
4733	4	21.53351	I-26 EB (Basic Analysis)	SE
4733	5	20.534772	I-26 EB (Basic Analysis)	SE
4733	6	21.008787	I-26 EB (Basic Analysis)	SE
4733	7	19.99682	I-26 EB (Basic Analysis)	SE
4733	8	21.559967	I-26 EB (Basic Analysis)	SE

RPA AM

ID	Run	Density	Name (Type)	Direction
4733	9	20.616346	I-26 EB (Basic Analysis)	SE
4733	10	19.855718	I-26 EB (Basic Analysis)	SE
4736	1	22.686767	I-26 EB (Basic Analysis)	SE
4736	2	24.064041	I-26 EB (Basic Analysis)	SE
4736	3	20.837649	I-26 EB (Basic Analysis)	SE
4736	4	24.663411	I-26 EB (Basic Analysis)	SE
4736	5	27.800535	I-26 EB (Basic Analysis)	SE
4736	6	23.337147	I-26 EB (Basic Analysis)	SE
4736	7	27.915308	I-26 EB (Basic Analysis)	SE
4736	8	23.668713	I-26 EB (Basic Analysis)	SE
4736	9	20.824897	I-26 EB (Basic Analysis)	SE
4736	10	23.566692	I-26 EB (Basic Analysis)	SE
4737	1	16.542313	I-26 EB (Diverge Analysis)	SE
4737	2	18.738499	I-26 EB (Diverge Analysis)	SE
4737	3	16.674999	I-26 EB (Diverge Analysis)	SE
4737	4	16.681862	I-26 EB (Diverge Analysis)	SE
4737	5	18.260371	I-26 EB (Diverge Analysis)	SE
4737	6	17.013578	I-26 EB (Diverge Analysis)	SE
4737	7	18.045328	I-26 EB (Diverge Analysis)	SE
4737	8	17.754791	I-26 EB (Diverge Analysis)	SE
4737	9	17.789106	I-26 EB (Diverge Analysis)	SE
4737	10	15.757634	I-26 EB (Diverge Analysis)	SE
4739	1	29.324331	I-26 WB (Weaving Analysis)	NW
4739	2	29.028098	I-26 WB (Weaving Analysis)	NW
4739	3	29.402428	I-26 WB (Weaving Analysis)	NW
4739	4	28.519117	I-26 WB (Weaving Analysis)	NW
4739	5	30.078377	I-26 WB (Weaving Analysis)	NW
4739	6	28.884021	I-26 WB (Weaving Analysis)	NW
4739	7	28.733212	I-26 WB (Weaving Analysis)	NW
4739	8	28.87325	I-26 WB (Weaving Analysis)	NW
4739	9	27.941463	I-26 WB (Weaving Analysis)	NW
4739	10	30.171287	I-26 WB (Weaving Analysis)	NW
4741	1	40.516285	I-26 WB (Basic Analysis)	NW
4741	2	37.06332	I-26 WB (Basic Analysis)	NW
4741	3	39.260662	I-26 WB (Basic Analysis)	NW
4741	4	37.040898	I-26 WB (Basic Analysis)	NW
4741	5	40.493863	I-26 WB (Basic Analysis)	NW
4741	6	35.49379	I-26 WB (Basic Analysis)	NW
4741	7	32.152935	I-26 WB (Basic Analysis)	NW
4741	8	33.924261	I-26 WB (Basic Analysis)	NW
4741	9	35.448947	I-26 WB (Basic Analysis)	NW
4741	10	36.659727	I-26 WB (Basic Analysis)	NW
4742	1	23.175964	I-26 WB (Diverge Analysis)	NW
4742	2	23.647485	I-26 WB (Diverge Analysis)	NW
4742	3	24.685783	I-26 WB (Diverge Analysis)	NW
4742	4	23.183108	I-26 WB (Diverge Analysis)	NW
4742	5	25.640732	I-26 WB (Diverge Analysis)	NW
4742	6	24.400013	I-26 WB (Diverge Analysis)	NW
4742	7	24.504795	I-26 WB (Diverge Analysis)	NW
4742	8	23.711783	I-26 WB (Diverge Analysis)	NW
4742	9	25.82172	I-26 WB (Diverge Analysis)	NW
4742	10	24.750082	I-26 WB (Diverge Analysis)	NW
4745	1	18.73346	I-26 EB (Basic Analysis)	SE
4745	2	17.082429	I-26 EB (Basic Analysis)	SE
4745	3	15.095786	I-26 EB (Basic Analysis)	SE
4745	4	17.805459	I-26 EB (Basic Analysis)	SE
4745	5	16.746817	I-26 EB (Basic Analysis)	SE
4745	6	17.210818	I-26 EB (Basic Analysis)	SE
4745	7	15.712952	I-26 EB (Basic Analysis)	SE
4745	8	17.345964	I-26 EB (Basic Analysis)	SE
4745	9	14.784951	I-26 EB (Basic Analysis)	SE
4745	10	19.030781	I-26 EB (Basic Analysis)	SE
4753	1	26.548777	I-26 WB (Basic Analysis)	NW
4753	2	27.318057	I-26 WB (Basic Analysis)	NW

RPA AM

ID	Run	Density	Name (Type)	Direction
4753	3	28.078742	I-26 WB (Basic Analysis)	NW
4753	4	27.333099	I-26 WB (Basic Analysis)	NW
4753	5	25.57106	I-26 WB (Basic Analysis)	NW
4753	6	25.968593	I-26 WB (Basic Analysis)	NW
4753	7	27.823032	I-26 WB (Basic Analysis)	NW
4753	8	26.952756	I-26 WB (Basic Analysis)	NW
4753	9	26.602497	I-26 WB (Basic Analysis)	NW
4753	10	25.663459	I-26 WB (Basic Analysis)	NW
4755	1	17.357793	I-26 EB (Basic Analysis)	SE
4755	2	17.439021	I-26 EB (Basic Analysis)	SE
4755	3	19.744646	I-26 EB (Basic Analysis)	SE
4755	4	18.432502	I-26 EB (Basic Analysis)	SE
4755	5	20.13204	I-26 EB (Basic Analysis)	SE
4755	6	21.950297	I-26 EB (Basic Analysis)	SE
4755	7	17.813919	I-26 EB (Basic Analysis)	SE
4755	8	17.670208	I-26 EB (Basic Analysis)	SE
4755	9	20.525684	I-26 EB (Basic Analysis)	SE
4755	10	17.601477	I-26 EB (Basic Analysis)	SE
4756	1	12.65462	I-26 EB (Diverge Analysis)	SE
4756	2	14.266116	I-26 EB (Diverge Analysis)	SE
4756	3	12.648373	I-26 EB (Diverge Analysis)	SE
4756	4	12.4714	I-26 EB (Diverge Analysis)	SE
4756	5	13.000238	I-26 EB (Diverge Analysis)	SE
4756	6	13.853873	I-26 EB (Diverge Analysis)	SE
4756	7	13.325035	I-26 EB (Diverge Analysis)	SE
4756	8	13.699802	I-26 EB (Diverge Analysis)	SE
4756	9	13.868447	I-26 EB (Diverge Analysis)	SE
4756	10	11.413726	I-26 EB (Diverge Analysis)	SE
4760	1	17.170804	I-26 WB (Merge Analysis)	NW
4760	2	17.24185	I-26 WB (Merge Analysis)	NW
4760	3	16.08144	I-26 WB (Merge Analysis)	NW
4760	4	15.911227	I-26 WB (Merge Analysis)	NW
4760	5	15.81206	I-26 WB (Merge Analysis)	NW
4760	6	15.718812	I-26 WB (Merge Analysis)	NW
4760	7	15.897906	I-26 WB (Merge Analysis)	NW
4760	8	14.990596	I-26 WB (Merge Analysis)	NW
4760	9	15.743974	I-26 WB (Merge Analysis)	NW
4760	10	16.626122	I-26 WB (Merge Analysis)	NW
4761	1	28.109286	I-26 WB (Basic Analysis)	NW
4761	2	28.249428	I-26 WB (Basic Analysis)	NW
4761	3	28.347983	I-26 WB (Basic Analysis)	NW
4761	4	27.695762	I-26 WB (Basic Analysis)	NW
4761	5	27.970469	I-26 WB (Basic Analysis)	NW
4761	6	28.257832	I-26 WB (Basic Analysis)	NW
4761	7	27.867198	I-26 WB (Basic Analysis)	NW
4761	8	27.406342	I-26 WB (Basic Analysis)	NW
4761	9	28.213458	I-26 WB (Basic Analysis)	NW
4761	10	28.059986	I-26 WB (Basic Analysis)	NW
4762	1	28.109286	I-26 WB (Basic Analysis)	NW
4762	2	28.249428	I-26 WB (Basic Analysis)	NW
4762	3	28.347983	I-26 WB (Basic Analysis)	NW
4762	4	27.695762	I-26 WB (Basic Analysis)	NW
4762	5	27.970469	I-26 WB (Basic Analysis)	NW
4762	6	28.257832	I-26 WB (Basic Analysis)	NW
4762	7	27.867198	I-26 WB (Basic Analysis)	NW
4762	8	27.406342	I-26 WB (Basic Analysis)	NW
4762	9	28.213458	I-26 WB (Basic Analysis)	NW
4762	10	28.059986	I-26 WB (Basic Analysis)	NW
4763	1	28.109286	I-26 WB (Basic Analysis)	NW
4763	2	28.249428	I-26 WB (Basic Analysis)	NW
4763	3	28.347983	I-26 WB (Basic Analysis)	NW
4763	4	27.695762	I-26 WB (Basic Analysis)	NW
4763	5	27.970469	I-26 WB (Basic Analysis)	NW
4763	6	28.257832	I-26 WB (Basic Analysis)	NW

RPA AM

ID	Run	Density	Name (Type)	Direction
4763	7	27.867198	I-26 WB (Basic Analysis)	NW
4763	8	27.406342	I-26 WB (Basic Analysis)	NW
4763	9	28.213458	I-26 WB (Basic Analysis)	NW
4763	10	28.059986	I-26 WB (Basic Analysis)	NW
4764	1	28.109286	I-26 WB (Basic Analysis)	NW
4764	2	28.249428	I-26 WB (Basic Analysis)	NW
4764	3	28.347983	I-26 WB (Basic Analysis)	NW
4764	4	27.695762	I-26 WB (Basic Analysis)	NW
4764	5	27.970469	I-26 WB (Basic Analysis)	NW
4764	6	28.257832	I-26 WB (Basic Analysis)	NW
4764	7	27.867198	I-26 WB (Basic Analysis)	NW
4764	8	27.406342	I-26 WB (Basic Analysis)	NW
4764	9	28.213458	I-26 WB (Basic Analysis)	NW
4764	10	28.059986	I-26 WB (Basic Analysis)	NW
4769	1	16.366581	I-26 EB (Basic Analysis)	SE
4769	2	17.064354	I-26 EB (Basic Analysis)	SE
4769	3	16.480922	I-26 EB (Basic Analysis)	SE
4769	4	16.844498	I-26 EB (Basic Analysis)	SE
4769	5	16.793503	I-26 EB (Basic Analysis)	SE
4769	6	16.778019	I-26 EB (Basic Analysis)	SE
4769	7	17.034505	I-26 EB (Basic Analysis)	SE
4769	8	16.734856	I-26 EB (Basic Analysis)	SE
4769	9	17.060276	I-26 EB (Basic Analysis)	SE
4769	10	16.959894	I-26 EB (Basic Analysis)	SE
6079	1	17.434838	CD ROAD I-20 WB TO I-20 (Basic Analysis)	NW
6079	2	19.271967	CD ROAD I-20 WB TO I-20 (Basic Analysis)	NW
6079	3	17.769749	CD ROAD I-20 WB TO I-20 (Basic Analysis)	NW
6079	4	17.727478	CD ROAD I-20 WB TO I-20 (Basic Analysis)	NW
6079	5	17.737233	CD ROAD I-20 WB TO I-20 (Basic Analysis)	NW
6079	6	17.571404	CD ROAD I-20 WB TO I-20 (Basic Analysis)	NW
6079	7	17.269009	CD ROAD I-20 WB TO I-20 (Basic Analysis)	NW
6079	8	17.311279	CD ROAD I-20 WB TO I-20 (Basic Analysis)	NW
6079	9	17.386065	CD ROAD I-20 WB TO I-20 (Basic Analysis)	NW
6079	10	17.025143	CD ROAD I-20 WB TO I-20 (Basic Analysis)	NW
6149	1	24.460365	I-26 EB (Merge Analysis)	S
6149	2	25.212827	I-26 EB (Merge Analysis)	S
6149	3	26.881728	I-26 EB (Merge Analysis)	S
6149	4	25.554576	I-26 EB (Merge Analysis)	S
6149	5	25.097888	I-26 EB (Merge Analysis)	S
6149	6	24.769932	I-26 EB (Merge Analysis)	S
6149	7	25.723152	I-26 EB (Merge Analysis)	S
6149	8	25.680242	I-26 EB (Merge Analysis)	S
6149	9	26.539979	I-26 EB (Merge Analysis)	S
6149	10	25.571433	I-26 EB (Merge Analysis)	S
6150	1	24.460365	I-26 EB (Merge Analysis)	S
6150	2	25.212827	I-26 EB (Merge Analysis)	S
6150	3	26.881728	I-26 EB (Merge Analysis)	S
6150	4	25.554576	I-26 EB (Merge Analysis)	S
6150	5	25.097888	I-26 EB (Merge Analysis)	S
6150	6	24.769932	I-26 EB (Merge Analysis)	S
6150	7	25.723152	I-26 EB (Merge Analysis)	S
6150	8	25.680242	I-26 EB (Merge Analysis)	S
6150	9	26.539979	I-26 EB (Merge Analysis)	S
6150	10	25.571433	I-26 EB (Merge Analysis)	S
6151	1	24.460365	I-26 EB (Merge Analysis)	S
6151	2	25.212827	I-26 EB (Merge Analysis)	S
6151	3	26.881728	I-26 EB (Merge Analysis)	S
6151	4	25.554576	I-26 EB (Merge Analysis)	S
6151	5	25.097888	I-26 EB (Merge Analysis)	S
6151	6	24.769932	I-26 EB (Merge Analysis)	S
6151	7	25.723152	I-26 EB (Merge Analysis)	S
6151	8	25.680242	I-26 EB (Merge Analysis)	S
6151	9	26.539979	I-26 EB (Merge Analysis)	S
6151	10	25.571433	I-26 EB (Merge Analysis)	S

RPA AM

ID	Run	Density	Name (Type)	Direction
6152	1	28.001763	I-26 EB (Basic Analysis)	S
6152	2	28.628707	I-26 EB (Basic Analysis)	S
6152	3	29.28375	I-26 EB (Basic Analysis)	S
6152	4	29.494488	I-26 EB (Basic Analysis)	S
6152	5	28.809591	I-26 EB (Basic Analysis)	S
6152	6	28.848226	I-26 EB (Basic Analysis)	S
6152	7	29.076525	I-26 EB (Basic Analysis)	S
6152	8	28.393384	I-26 EB (Basic Analysis)	S
6152	9	30.110896	I-26 EB (Basic Analysis)	S
6152	10	28.10362	I-26 EB (Basic Analysis)	S
6159	1	33.025391	I-26 WB (Diverge Analysis)	N
6159	2	32.338997	I-26 WB (Diverge Analysis)	N
6159	3	32.943824	I-26 WB (Diverge Analysis)	N
6159	4	32.800697	I-26 WB (Diverge Analysis)	N
6159	5	32.249735	I-26 WB (Diverge Analysis)	N
6159	6	32.163551	I-26 WB (Diverge Analysis)	N
6159	7	32.648336	I-26 WB (Diverge Analysis)	N
6159	8	31.935779	I-26 WB (Diverge Analysis)	N
6159	9	33.223921	I-26 WB (Diverge Analysis)	N
6159	10	32.128154	I-26 WB (Diverge Analysis)	N
6160	1	33.025391	I-26 WB (Diverge Analysis)	N
6160	2	32.338997	I-26 WB (Diverge Analysis)	N
6160	3	32.943824	I-26 WB (Diverge Analysis)	N
6160	4	32.800697	I-26 WB (Diverge Analysis)	N
6160	5	32.249735	I-26 WB (Diverge Analysis)	N
6160	6	32.163551	I-26 WB (Diverge Analysis)	N
6160	7	32.648336	I-26 WB (Diverge Analysis)	N
6160	8	31.935779	I-26 WB (Diverge Analysis)	N
6160	9	33.223921	I-26 WB (Diverge Analysis)	N
6160	10	32.128154	I-26 WB (Diverge Analysis)	N
6165	1	25.091987	I-26 WB (Basic Analysis)	N
6165	2	26.284505	I-26 WB (Basic Analysis)	N
6165	3	24.869247	I-26 WB (Basic Analysis)	N
6165	4	24.97205	I-26 WB (Basic Analysis)	N
6165	5	25.744216	I-26 WB (Basic Analysis)	N
6165	6	25.603719	I-26 WB (Basic Analysis)	N
6165	7	26.270797	I-26 WB (Basic Analysis)	N
6165	8	24.543703	I-26 WB (Basic Analysis)	N
6165	9	25.363844	I-26 WB (Basic Analysis)	N
6165	10	25.211924	I-26 WB (Basic Analysis)	N
6178	1	24.017436	I-26 EB (Basic Analysis)	S
6178	2	24.954782	I-26 EB (Basic Analysis)	S
6178	3	24.178497	I-26 EB (Basic Analysis)	S
6178	4	24.800976	I-26 EB (Basic Analysis)	S
6178	5	24.607993	I-26 EB (Basic Analysis)	S
6178	6	24.682961	I-26 EB (Basic Analysis)	S
6178	7	24.724073	I-26 EB (Basic Analysis)	S
6178	8	24.547535	I-26 EB (Basic Analysis)	S
6178	9	25.460214	I-26 EB (Basic Analysis)	S
6178	10	24.249596	I-26 EB (Basic Analysis)	S
6207	1	11.753813	I-20 EB (Basic Analysis)	E
6207	2	10.622812	I-20 EB (Basic Analysis)	E
6207	3	10.823741	I-20 EB (Basic Analysis)	E
6207	4	10.534776	I-20 EB (Basic Analysis)	E
6207	5	10.940259	I-20 EB (Basic Analysis)	E
6207	6	11.144295	I-20 EB (Basic Analysis)	E
6207	7	11.025705	I-20 EB (Basic Analysis)	E
6207	8	10.947509	I-20 EB (Basic Analysis)	E
6207	9	10.882259	I-20 EB (Basic Analysis)	E
6207	10	10.642491	I-20 EB (Basic Analysis)	E
6216	1	11.570043	I-20 EB (Basic Analysis)	NE
6216	2	10.890838	I-20 EB (Basic Analysis)	NE
6216	3	12.877415	I-20 EB (Basic Analysis)	NE
6216	4	12.045094	I-20 EB (Basic Analysis)	NE

RPA AM

ID	Run	Density	Name (Type)	Direction
6216	5	11.585747	I-20 EB (Basic Analysis)	NE
6216	6	11.393371	I-20 EB (Basic Analysis)	NE
6216	7	11.083214	I-20 EB (Basic Analysis)	NE
6216	8	13.101199	I-20 EB (Basic Analysis)	NE
6216	9	11.42478	I-20 EB (Basic Analysis)	NE
6216	10	9.838659	I-20 EB (Basic Analysis)	NE
6223	1	19.233523	I-26 EB (Basic Analysis)	SE
6223	2	19.963786	I-26 EB (Basic Analysis)	SE
6223	3	20.45446	I-26 EB (Basic Analysis)	SE
6223	4	20.94867	I-26 EB (Basic Analysis)	SE
6223	5	19.951409	I-26 EB (Basic Analysis)	SE
6223	6	20.632164	I-26 EB (Basic Analysis)	SE
6223	7	21.179419	I-26 EB (Basic Analysis)	SE
6223	8	20.698471	I-26 EB (Basic Analysis)	SE
6223	9	21.762039	I-26 EB (Basic Analysis)	SE
6223	10	19.862999	I-26 EB (Basic Analysis)	SE
6234	1	16.464442	I-20 WB (Basic Analysis)	SW
6234	2	17.025059	I-20 WB (Basic Analysis)	SW
6234	3	16.433531	I-20 WB (Basic Analysis)	SW
6234	4	16.441961	I-20 WB (Basic Analysis)	SW
6234	5	17.987522	I-20 WB (Basic Analysis)	SW
6234	6	16.588087	I-20 WB (Basic Analysis)	SW
6234	7	15.978293	I-20 WB (Basic Analysis)	SW
6234	8	17.324336	I-20 WB (Basic Analysis)	SW
6234	9	16.588087	I-20 WB (Basic Analysis)	SW
6234	10	16.062596	I-20 WB (Basic Analysis)	SW
6238	1	19.056884	I-20 EB (Merge Analysis)	NE
6238	2	19.348262	I-20 EB (Merge Analysis)	NE
6238	3	19.356084	I-20 EB (Merge Analysis)	NE
6238	4	19.889951	I-20 EB (Merge Analysis)	NE
6238	5	19.291551	I-20 EB (Merge Analysis)	NE
6238	6	20.627195	I-20 EB (Merge Analysis)	NE
6238	7	20.488351	I-20 EB (Merge Analysis)	NE
6238	8	19.790218	I-20 EB (Merge Analysis)	NE
6238	9	20.241951	I-20 EB (Merge Analysis)	NE
6238	10	19.995551	I-20 EB (Merge Analysis)	NE
6241	1	25.496375	I-20 EB (Basic Analysis)	NE
6241	2	24.228309	I-20 EB (Basic Analysis)	NE
6241	3	22.765156	I-20 EB (Basic Analysis)	NE
6241	4	22.037332	I-20 EB (Basic Analysis)	NE
6241	5	25.143717	I-20 EB (Basic Analysis)	NE
6241	6	23.462968	I-20 EB (Basic Analysis)	NE
6241	7	22.825183	I-20 EB (Basic Analysis)	NE
6241	8	21.92103	I-20 EB (Basic Analysis)	NE
6241	9	24.033222	I-20 EB (Basic Analysis)	NE
6241	10	24.168282	I-20 EB (Basic Analysis)	NE
6242	1	35.225595	I-20 EB (Merge Analysis)	NE
6242	2	36.500664	I-20 EB (Merge Analysis)	NE
6242	3	31.879277	I-20 EB (Merge Analysis)	NE
6242	4	34.101977	I-20 EB (Merge Analysis)	NE
6242	5	34.546178	I-20 EB (Merge Analysis)	NE
6242	6	34.230583	I-20 EB (Merge Analysis)	NE
6242	7	34.874464	I-20 EB (Merge Analysis)	NE
6242	8	33.807535	I-20 EB (Merge Analysis)	NE
6242	9	34.261043	I-20 EB (Merge Analysis)	NE
6242	10	32.732144	I-20 EB (Merge Analysis)	NE
6246	1	41.36086	I-20 WB (Merge Analysis)	SW
6246	2	40.564057	I-20 WB (Merge Analysis)	SW
6246	3	40.404696	I-20 WB (Merge Analysis)	SW
6246	4	41.746432	I-20 WB (Merge Analysis)	SW
6246	5	45.741255	I-20 WB (Merge Analysis)	SW
6246	6	41.493886	I-20 WB (Merge Analysis)	SW
6246	7	41.199474	I-20 WB (Merge Analysis)	SW
6246	8	42.412236	I-20 WB (Merge Analysis)	SW

RPA AM

ID	Run	Density	Name (Type)	Direction
6246	9	41.980071	I-20 WB (Merge Analysis)	SW
6246	10	40.601196	I-20 WB (Merge Analysis)	SW
6247	1	41.36086	I-20 WB (Merge Analysis)	SW
6247	2	40.564057	I-20 WB (Merge Analysis)	SW
6247	3	40.404696	I-20 WB (Merge Analysis)	SW
6247	4	41.746432	I-20 WB (Merge Analysis)	SW
6247	5	45.741255	I-20 WB (Merge Analysis)	SW
6247	6	41.493886	I-20 WB (Merge Analysis)	SW
6247	7	41.199474	I-20 WB (Merge Analysis)	SW
6247	8	42.412236	I-20 WB (Merge Analysis)	SW
6247	9	41.980071	I-20 WB (Merge Analysis)	SW
6247	10	40.601196	I-20 WB (Merge Analysis)	SW
6249	1	39.097776	I-20 WB (Basic Analysis)	SW
6249	2	39.726475	I-20 WB (Basic Analysis)	SW
6249	3	37.389193	I-20 WB (Basic Analysis)	SW
6249	4	38.513346	I-20 WB (Basic Analysis)	SW
6249	5	38.779105	I-20 WB (Basic Analysis)	SW
6249	6	40.170337	I-20 WB (Basic Analysis)	SW
6249	7	38.46213	I-20 WB (Basic Analysis)	SW
6249	8	38.991124	I-20 WB (Basic Analysis)	SW
6249	9	38.022282	I-20 WB (Basic Analysis)	SW
6249	10	37.818311	I-20 WB (Basic Analysis)	SW
6251	1	85.854711	I-20 WB (Basic Analysis)	SW
6251	2	76.166865	I-20 WB (Basic Analysis)	SW
6251	3	85.020388	I-20 WB (Basic Analysis)	SW
6251	4	89.583099	I-20 WB (Basic Analysis)	SW
6251	5	82.719787	I-20 WB (Basic Analysis)	SW
6251	6	81.751375	I-20 WB (Basic Analysis)	SW
6251	7	83.117085	I-20 WB (Basic Analysis)	SW
6251	8	84.849053	I-20 WB (Basic Analysis)	SW
6251	9	88.830718	I-20 WB (Basic Analysis)	SW
6251	10	85.221519	I-20 WB (Basic Analysis)	SW
6254	1	35.277212	I-20 EB (Basic Analysis)	NE
6254	2	33.774908	I-20 EB (Basic Analysis)	NE
6254	3	32.392888	I-20 EB (Basic Analysis)	NE
6254	4	32.57958	I-20 EB (Basic Analysis)	NE
6254	5	33.232374	I-20 EB (Basic Analysis)	NE
6254	6	33.741078	I-20 EB (Basic Analysis)	NE
6254	7	33.233627	I-20 EB (Basic Analysis)	NE
6254	8	31.974398	I-20 EB (Basic Analysis)	NE
6254	9	33.668406	I-20 EB (Basic Analysis)	NE
6254	10	33.333864	I-20 EB (Basic Analysis)	NE
6258	1	33.309673	I-20 EB (Merge Analysis)	NE
6258	2	32.113949	I-20 EB (Merge Analysis)	NE
6258	3	30.700968	I-20 EB (Merge Analysis)	NE
6258	4	32.083372	I-20 EB (Merge Analysis)	NE
6258	5	33.549461	I-20 EB (Merge Analysis)	NE
6258	6	32.767333	I-20 EB (Merge Analysis)	NE
6258	7	33.333812	I-20 EB (Merge Analysis)	NE
6258	8	34.651845	I-20 EB (Merge Analysis)	NE
6258	9	32.873548	I-20 EB (Merge Analysis)	NE
6258	10	32.601573	I-20 EB (Merge Analysis)	NE
6259	1	33.309673	I-20 EB (Merge Analysis)	NE
6259	2	32.113949	I-20 EB (Merge Analysis)	NE
6259	3	30.700968	I-20 EB (Merge Analysis)	NE
6259	4	32.083372	I-20 EB (Merge Analysis)	NE
6259	5	33.549461	I-20 EB (Merge Analysis)	NE
6259	6	32.767333	I-20 EB (Merge Analysis)	NE
6259	7	33.333812	I-20 EB (Merge Analysis)	NE

RPA AM

ID	Run	Density	Name (Type)	Direction
6259	8	34.651845	I-20 EB (Merge Analysis)	NE
6259	9	32.873548	I-20 EB (Merge Analysis)	NE
6259	10	32.601573	I-20 EB (Merge Analysis)	NE
8539	1	136.908782	I-20 WB (Basic Analysis)	SW
8539	2	124.67181	I-20 WB (Basic Analysis)	SW
8539	3	124.295178	I-20 WB (Basic Analysis)	SW
8539	4	136.466461	I-20 WB (Basic Analysis)	SW
8539	5	121.712499	I-20 WB (Basic Analysis)	SW
8539	6	115.498301	I-20 WB (Basic Analysis)	SW
8539	7	138.449867	I-20 WB (Basic Analysis)	SW
8539	8	130.719956	I-20 WB (Basic Analysis)	SW
8539	9	125.037842	I-20 WB (Basic Analysis)	SW
8539	10	120.481115	I-20 WB (Basic Analysis)	SW
8542	1	16.754672	I-20 EB (Basic Analysis)	NE
8542	2	16.145784	I-20 EB (Basic Analysis)	NE
8542	3	16.558727	I-20 EB (Basic Analysis)	NE
8542	4	16.101429	I-20 EB (Basic Analysis)	NE
8542	5	15.866464	I-20 EB (Basic Analysis)	NE
8542	6	16.499214	I-20 EB (Basic Analysis)	NE
8542	7	16.573606	I-20 EB (Basic Analysis)	NE
8542	8	16.484336	I-20 EB (Basic Analysis)	NE
8542	9	16.097499	I-20 EB (Basic Analysis)	NE
8542	10	16.002615	I-20 EB (Basic Analysis)	NE
8554	1	19.956095	I-26 WB (Basic Analysis)	N
8554	2	20.214651	I-26 WB (Basic Analysis)	N
8554	3	20.250431	I-26 WB (Basic Analysis)	N
8554	4	20.511687	I-26 WB (Basic Analysis)	N
8554	5	20.74054	I-26 WB (Basic Analysis)	N
8554	6	20.453293	I-26 WB (Basic Analysis)	N
8554	7	20.064446	I-26 WB (Basic Analysis)	N
8554	8	19.681674	I-26 WB (Basic Analysis)	N
8554	9	20.352706	I-26 WB (Basic Analysis)	N
8554	10	20.388485	I-26 WB (Basic Analysis)	N
8559	1	30.997278	I-126 NB (Basic Analysis)	W
8559	2	32.234109	I-126 NB (Basic Analysis)	W
8559	3	33.071413	I-126 NB (Basic Analysis)	W
8559	4	31.868585	I-126 NB (Basic Analysis)	W
8559	5	30.895271	I-126 NB (Basic Analysis)	W
8559	6	31.294797	I-126 NB (Basic Analysis)	W
8559	7	29.556434	I-126 NB (Basic Analysis)	W
8559	8	31.843083	I-126 NB (Basic Analysis)	W
8559	9	30.482994	I-126 NB (Basic Analysis)	W
8559	10	31.770828	I-126 NB (Basic Analysis)	W
8560	1	16.69375	I-126 SB (Basic Analysis)	E
8560	2	16.085298	I-126 SB (Basic Analysis)	E
8560	3	16.623494	I-126 SB (Basic Analysis)	E
8560	4	16.528101	I-126 SB (Basic Analysis)	E
8560	5	16.499741	I-126 SB (Basic Analysis)	E
8560	6	16.740157	I-126 SB (Basic Analysis)	E
8560	7	16.603513	I-126 SB (Basic Analysis)	E
8560	8	17.110126	I-126 SB (Basic Analysis)	E
8560	9	17.110771	I-126 SB (Basic Analysis)	E
8560	10	16.415306	I-126 SB (Basic Analysis)	E
8658	1	41.36086	I-20 WB (Merge Analysis)	SW
8658	2	40.564057	I-20 WB (Merge Analysis)	SW
8658	3	40.404696	I-20 WB (Merge Analysis)	SW
8658	4	41.746432	I-20 WB (Merge Analysis)	SW

RPA AM

ID	Run	Density	Name (Type)	Direction
8658	5	45.741255	I-20 WB (Merge Analysis)	SW
8658	6	41.493886	I-20 WB (Merge Analysis)	SW
8658	7	41.199474	I-20 WB (Merge Analysis)	SW
8658	8	42.412236	I-20 WB (Merge Analysis)	SW
8658	9	41.980071	I-20 WB (Merge Analysis)	SW
8658	10	40.601196	I-20 WB (Merge Analysis)	SW
8659	1	38.145301	I-20 EB (Basic Analysis)	NE
8659	2	38.21376	I-20 EB (Basic Analysis)	NE
8659	3	35.69342	I-20 EB (Basic Analysis)	NE
8659	4	36.059237	I-20 EB (Basic Analysis)	NE
8659	5	37.390883	I-20 EB (Basic Analysis)	NE
8659	6	37.275152	I-20 EB (Basic Analysis)	NE
8659	7	37.98798	I-20 EB (Basic Analysis)	NE
8659	8	36.345593	I-20 EB (Basic Analysis)	NE
8659	9	37.245972	I-20 EB (Basic Analysis)	NE
8659	10	36.431462	I-20 EB (Basic Analysis)	NE
8763	1	16.366581	I-26 EB (Basic Analysis)	SE
8763	2	17.064354	I-26 EB (Basic Analysis)	SE
8763	3	16.480922	I-26 EB (Basic Analysis)	SE
8763	4	16.844498	I-26 EB (Basic Analysis)	SE
8763	5	16.793503	I-26 EB (Basic Analysis)	SE
8763	6	16.778019	I-26 EB (Basic Analysis)	SE
8763	7	17.034505	I-26 EB (Basic Analysis)	SE
8763	8	16.734856	I-26 EB (Basic Analysis)	SE
8763	9	17.060276	I-26 EB (Basic Analysis)	SE
8763	10	16.959894	I-26 EB (Basic Analysis)	SE
8764	1	23.236886	I-20 WB (Basic Analysis)	S
8764	2	23.782904	I-20 WB (Basic Analysis)	S
8764	3	23.296673	I-20 WB (Basic Analysis)	S
8764	4	23.429035	I-20 WB (Basic Analysis)	S
8764	5	24.485506	I-20 WB (Basic Analysis)	S
8764	6	23.842751	I-20 WB (Basic Analysis)	S
8764	7	23.305241	I-20 WB (Basic Analysis)	S
8764	8	23.957645	I-20 WB (Basic Analysis)	S
8764	9	23.247343	I-20 WB (Basic Analysis)	S
8764	10	24.357661	I-20 WB (Basic Analysis)	S
8765	1	20.364017	I-20 EB (Basic Analysis)	NE
8765	2	19.34068	I-20 EB (Basic Analysis)	NE
8765	3	20.036881	I-20 EB (Basic Analysis)	NE
8765	4	19.118964	I-20 EB (Basic Analysis)	NE
8765	5	19.147074	I-20 EB (Basic Analysis)	NE
8765	6	19.057025	I-20 EB (Basic Analysis)	NE
8765	7	19.793904	I-20 EB (Basic Analysis)	NE
8765	8	19.570878	I-20 EB (Basic Analysis)	NE
8765	9	19.025684	I-20 EB (Basic Analysis)	NE
8765	10	19.523985	I-20 EB (Basic Analysis)	NE
8770	1	75.545384	I-20 WB (Basic Analysis)	SW
8770	2	69.923249	I-20 WB (Basic Analysis)	SW
8770	3	72.465237	I-20 WB (Basic Analysis)	SW
8770	4	78.661006	I-20 WB (Basic Analysis)	SW
8770	5	74.590192	I-20 WB (Basic Analysis)	SW
8770	6	74.737278	I-20 WB (Basic Analysis)	SW
8770	7	73.645816	I-20 WB (Basic Analysis)	SW
8770	8	70.582972	I-20 WB (Basic Analysis)	SW
8770	9	75.101964	I-20 WB (Basic Analysis)	SW
8770	10	77.007589	I-20 WB (Basic Analysis)	SW
8773	1	29.619617	I-26 WB (Basic Analysis)	N

RPA AM

ID	Run	Density	Name (Type)	Direction
8773	2	31.625915	I-26 WB (Basic Analysis)	N
8773	3	29.29018	I-26 WB (Basic Analysis)	N
8773	4	30.452112	I-26 WB (Basic Analysis)	N
8773	5	28.788605	I-26 WB (Basic Analysis)	N
8773	6	29.779883	I-26 WB (Basic Analysis)	N
8773	7	29.972796	I-26 WB (Basic Analysis)	N
8773	8	28.70402	I-26 WB (Basic Analysis)	N
8773	9	30.661349	I-26 WB (Basic Analysis)	N
8773	10	30.044026	I-26 WB (Basic Analysis)	N
8774	1	40.935677	I-20 EB (Diverge Analysis)	NE
8774	2	40.04413	I-20 EB (Diverge Analysis)	NE
8774	3	36.159335	I-20 EB (Diverge Analysis)	NE
8774	4	38.205141	I-20 EB (Diverge Analysis)	NE
8774	5	38.255448	I-20 EB (Diverge Analysis)	NE
8774	6	38.062605	I-20 EB (Diverge Analysis)	NE
8774	7	38.068195	I-20 EB (Diverge Analysis)	NE
8774	8	40.337586	I-20 EB (Diverge Analysis)	NE
8774	9	51.326804	I-20 EB (Diverge Analysis)	NE
8774	10	40.776372	I-20 EB (Diverge Analysis)	NE
8784	1	13.077451	I-126 SB (Basic Analysis)	SE
8784	2	13.218658	I-126 SB (Basic Analysis)	SE
8784	3	13.35292	I-126 SB (Basic Analysis)	SE
8784	4	13.376069	I-126 SB (Basic Analysis)	SE
8784	5	12.43469	I-126 SB (Basic Analysis)	SE
8784	6	13.206312	I-126 SB (Basic Analysis)	SE
8784	7	14.121456	I-126 SB (Basic Analysis)	SE
8784	8	13.805862	I-126 SB (Basic Analysis)	SE
8784	9	14.151549	I-126 SB (Basic Analysis)	SE
8784	10	13.113717	I-126 SB (Basic Analysis)	SE
8789	1	24.017436	I-26 EB (Basic Analysis)	S
8789	2	24.954782	I-26 EB (Basic Analysis)	S
8789	3	24.178497	I-26 EB (Basic Analysis)	S
8789	4	24.800976	I-26 EB (Basic Analysis)	S
8789	5	24.607993	I-26 EB (Basic Analysis)	S
8789	6	24.682961	I-26 EB (Basic Analysis)	S
8789	7	24.724073	I-26 EB (Basic Analysis)	S
8789	8	24.547535	I-26 EB (Basic Analysis)	S
8789	9	25.460214	I-26 EB (Basic Analysis)	S
8789	10	24.249596	I-26 EB (Basic Analysis)	S
8790	1	37.622076	CD ROAD I-26 WB TO I-20 (Basic Analysis)	NE
8790	2	37.001666	CD ROAD I-26 WB TO I-20 (Basic Analysis)	NE
8790	3	44.688939	CD ROAD I-26 WB TO I-20 (Basic Analysis)	NE
8790	4	41.460866	CD ROAD I-26 WB TO I-20 (Basic Analysis)	NE
8790	5	41.548111	CD ROAD I-26 WB TO I-20 (Basic Analysis)	NE
8790	6	36.584828	CD ROAD I-26 WB TO I-20 (Basic Analysis)	NE
8790	7	38.542998	CD ROAD I-26 WB TO I-20 (Basic Analysis)	NE
8790	8	41.102191	CD ROAD I-26 WB TO I-20 (Basic Analysis)	NE
8790	9	38.397589	CD ROAD I-26 WB TO I-20 (Basic Analysis)	NE
8790	10	39.609328	CD ROAD I-26 WB TO I-20 (Basic Analysis)	NE
8791	1	18.630352	CD ROAD I-20 WB TO I-20 (Basic Analysis)	NE
8791	2	18.079844	CD ROAD I-20 WB TO I-20 (Basic Analysis)	NE
8791	3	19.028746	CD ROAD I-20 WB TO I-20 (Basic Analysis)	NE
8791	4	18.731761	CD ROAD I-20 WB TO I-20 (Basic Analysis)	NE
8791	5	17.398952	CD ROAD I-20 WB TO I-20 (Basic Analysis)	NE
8791	6	17.427926	CD ROAD I-20 WB TO I-20 (Basic Analysis)	NE
8791	7	19.44887	CD ROAD I-20 WB TO I-20 (Basic Analysis)	NE
8791	8	18.347854	CD ROAD I-20 WB TO I-20 (Basic Analysis)	NE

RPA AM

ID	Run	Density	Name (Type)	Direction
8791	9	18.036383	CD ROAD I-20 WB TO I-20 (Basic Analysis)	NE
8791	10	16.073387	CD ROAD I-20 WB TO I-20 (Basic Analysis)	NE
8792	1	14.101103	I-26 EB (Basic Analysis)	S
8792	2	15.384589	I-26 EB (Basic Analysis)	S
8792	3	15.429418	I-26 EB (Basic Analysis)	S
8792	4	14.744058	I-26 EB (Basic Analysis)	S
8792	5	15.146497	I-26 EB (Basic Analysis)	S
8792	6	15.374947	I-26 EB (Basic Analysis)	S
8792	7	15.441644	I-26 EB (Basic Analysis)	S
8792	8	15.053203	I-26 EB (Basic Analysis)	S
8792	9	15.539747	I-26 EB (Basic Analysis)	S
8792	10	14.821482	I-26 EB (Basic Analysis)	S
8802	1	17.819975	CD ROAD I-20 EB (Basic Analysis)	NE
8802	2	17.377204	CD ROAD I-20 EB (Basic Analysis)	NE
8802	3	17.44892	CD ROAD I-20 EB (Basic Analysis)	NE
8802	4	15.496986	CD ROAD I-20 EB (Basic Analysis)	NE
8802	5	15.001207	CD ROAD I-20 EB (Basic Analysis)	NE
8802	6	17.352259	CD ROAD I-20 EB (Basic Analysis)	NE
8802	7	18.290809	CD ROAD I-20 EB (Basic Analysis)	NE
8802	8	17.757613	CD ROAD I-20 EB (Basic Analysis)	NE
8802	9	18.053833	CD ROAD I-20 EB (Basic Analysis)	NE
8802	10	17.991471	CD ROAD I-20 EB (Basic Analysis)	NE
8819	1	72.263949	CD ROAD I-20 WB (Weaving Analysis)	SW
8819	2	45.736505	CD ROAD I-20 WB (Weaving Analysis)	SW
8819	3	38.561148	CD ROAD I-20 WB (Weaving Analysis)	SW
8819	4	47.413666	CD ROAD I-20 WB (Weaving Analysis)	SW
8819	5	22.784696	CD ROAD I-20 WB (Weaving Analysis)	SW
8819	6	34.214682	CD ROAD I-20 WB (Weaving Analysis)	SW
8819	7	66.877162	CD ROAD I-20 WB (Weaving Analysis)	SW
8819	8	61.859229	CD ROAD I-20 WB (Weaving Analysis)	SW
8819	9	38.512971	CD ROAD I-20 WB (Weaving Analysis)	SW
8819	10	22.604032	CD ROAD I-20 WB (Weaving Analysis)	SW
8826	1	14.652532	CD ROAD I-20 EB (Basic Analysis)	E
8826	2	14.571618	CD ROAD I-20 EB (Basic Analysis)	E
8826	3	13.553057	CD ROAD I-20 EB (Basic Analysis)	E
8826	4	13.931448	CD ROAD I-20 EB (Basic Analysis)	E
8826	5	13.986183	CD ROAD I-20 EB (Basic Analysis)	E
8826	6	14.300319	CD ROAD I-20 EB (Basic Analysis)	E
8826	7	13.281758	CD ROAD I-20 EB (Basic Analysis)	E
8826	8	13.450725	CD ROAD I-20 EB (Basic Analysis)	E
8826	9	14.002842	CD ROAD I-20 EB (Basic Analysis)	E
8826	10	14.03378	CD ROAD I-20 EB (Basic Analysis)	E
8828	1	24.8333	(Weaving Analysis)	NW
8828	2	26.142692	(Weaving Analysis)	NW
8828	3	26.069112	(Weaving Analysis)	NW
8828	4	26.301558	(Weaving Analysis)	NW
8828	5	25.906901	(Weaving Analysis)	NW
8828	6	27.152747	(Weaving Analysis)	NW
8828	7	23.813212	(Weaving Analysis)	NW
8828	8	24.709552	(Weaving Analysis)	NW
8828	9	24.577442	(Weaving Analysis)	NW
8828	10	24.159373	(Weaving Analysis)	NW
8829	1	17.085456	CD ROAD I-20 EB (Basic Analysis)	E
8829	2	18.258013	CD ROAD I-20 EB (Basic Analysis)	E
8829	3	17.093524	CD ROAD I-20 EB (Basic Analysis)	E
8829	4	18.142371	CD ROAD I-20 EB (Basic Analysis)	E
8829	5	16.878375	CD ROAD I-20 EB (Basic Analysis)	E

RPA AM

ID	Run	Density	Name (Type)	Direction
8829	6	19.444018	CD ROAD I-20 EB (Basic Analysis)	E
8829	7	19.134742	CD ROAD I-20 EB (Basic Analysis)	E
8829	8	17.574918	CD ROAD I-20 EB (Basic Analysis)	E
8829	9	18.309111	CD ROAD I-20 EB (Basic Analysis)	E
8829	10	17.806202	CD ROAD I-20 EB (Basic Analysis)	E
8830	1	35.164182	CD ROAD I-26 EB (Weaving Analysis)	SE
8830	2	25.569169	CD ROAD I-26 EB (Weaving Analysis)	SE
8830	3	25.415138	CD ROAD I-26 EB (Weaving Analysis)	SE
8830	4	26.147725	CD ROAD I-26 EB (Weaving Analysis)	SE
8830	5	24.194159	CD ROAD I-26 EB (Weaving Analysis)	SE
8830	6	27.297323	CD ROAD I-26 EB (Weaving Analysis)	SE
8830	7	29.344811	CD ROAD I-26 EB (Weaving Analysis)	SE
8830	8	24.881664	CD ROAD I-26 EB (Weaving Analysis)	SE
8830	9	26.647387	CD ROAD I-26 EB (Weaving Analysis)	SE
8830	10	24.859123	CD ROAD I-26 EB (Weaving Analysis)	SE
8831	1	45.002098	I-20 WB (Diverge Analysis)	SW
8831	2	43.213417	I-20 WB (Diverge Analysis)	SW
8831	3	42.704555	I-20 WB (Diverge Analysis)	SW
8831	4	44.269459	I-20 WB (Diverge Analysis)	SW
8831	5	49.648529	I-20 WB (Diverge Analysis)	SW
8831	6	44.737704	I-20 WB (Diverge Analysis)	SW
8831	7	43.556746	I-20 WB (Diverge Analysis)	SW
8831	8	45.630511	I-20 WB (Diverge Analysis)	SW
8831	9	44.910135	I-20 WB (Diverge Analysis)	SW
8831	10	43.183529	I-20 WB (Diverge Analysis)	SW
8832	1	45.002098	I-20 WB (Diverge Analysis)	SW
8832	2	43.213417	I-20 WB (Diverge Analysis)	SW
8832	3	42.704555	I-20 WB (Diverge Analysis)	SW
8832	4	44.269459	I-20 WB (Diverge Analysis)	SW
8832	5	49.648529	I-20 WB (Diverge Analysis)	SW
8832	6	44.737704	I-20 WB (Diverge Analysis)	SW
8832	7	43.556746	I-20 WB (Diverge Analysis)	SW
8832	8	45.630511	I-20 WB (Diverge Analysis)	SW
8832	9	44.910135	I-20 WB (Diverge Analysis)	SW
8832	10	43.183529	I-20 WB (Diverge Analysis)	SW
8837	1	11.815463	I-20 WB (Basic Analysis)	W
8837	2	11.92464	I-20 WB (Basic Analysis)	W
8837	3	12.139344	I-20 WB (Basic Analysis)	W
8837	4	11.899137	I-20 WB (Basic Analysis)	W
8837	5	12.336188	I-20 WB (Basic Analysis)	W
8837	6	13.119491	I-20 WB (Basic Analysis)	W
8837	7	13.169798	I-20 WB (Basic Analysis)	W
8837	8	12.482566	I-20 WB (Basic Analysis)	W
8837	9	13.440172	I-20 WB (Basic Analysis)	W
8837	10	12.066291	I-20 WB (Basic Analysis)	W
8838	1	11.858925	I-20 WB (Basic Analysis)	SW
8838	2	12.36452	I-20 WB (Basic Analysis)	SW
8838	3	11.453671	I-20 WB (Basic Analysis)	SW
8838	4	11.336996	I-20 WB (Basic Analysis)	SW
8838	5	11.933598	I-20 WB (Basic Analysis)	SW
8838	6	11.724359	I-20 WB (Basic Analysis)	SW
8838	7	12.166172	I-20 WB (Basic Analysis)	SW
8838	8	12.152948	I-20 WB (Basic Analysis)	SW
8838	9	12.159171	I-20 WB (Basic Analysis)	SW
8838	10	12.101611	I-20 WB (Basic Analysis)	SW
8839	1	38.145301	I-20 EB (Basic Analysis)	NE
8839	2	38.21376	I-20 EB (Basic Analysis)	NE

RPA AM

ID	Run	Density	Name (Type)	Direction
8839	3	35.69342	I-20 EB (Basic Analysis)	NE
8839	4	36.059237	I-20 EB (Basic Analysis)	NE
8839	5	37.390883	I-20 EB (Basic Analysis)	NE
8839	6	37.275152	I-20 EB (Basic Analysis)	NE
8839	7	37.98798	I-20 EB (Basic Analysis)	NE
8839	8	36.345593	I-20 EB (Basic Analysis)	NE
8839	9	37.245972	I-20 EB (Basic Analysis)	NE
8839	10	36.431462	I-20 EB (Basic Analysis)	NE
8845	1	7.567537	I-20 WB (Merge Analysis)	W
8845	2	7.334503	I-20 WB (Merge Analysis)	W
8845	3	7.62828	I-20 WB (Merge Analysis)	W
8845	4	7.808302	I-20 WB (Merge Analysis)	W
8845	5	7.647056	I-20 WB (Merge Analysis)	W
8845	6	8.375978	I-20 WB (Merge Analysis)	W
8845	7	7.958504	I-20 WB (Merge Analysis)	W
8845	8	7.723261	I-20 WB (Merge Analysis)	W
8845	9	7.920954	I-20 WB (Merge Analysis)	W
8845	10	8.012621	I-20 WB (Merge Analysis)	W
8849	1	23.021645	CD ROAD I-20 WB (Weaving Analysis)	W
8849	2	23.553567	CD ROAD I-20 WB (Weaving Analysis)	W
8849	3	23.12098	CD ROAD I-20 WB (Weaving Analysis)	W
8849	4	23.516717	CD ROAD I-20 WB (Weaving Analysis)	W
8849	5	23.628869	CD ROAD I-20 WB (Weaving Analysis)	W
8849	6	24.282556	CD ROAD I-20 WB (Weaving Analysis)	W
8849	7	23.074516	CD ROAD I-20 WB (Weaving Analysis)	W
8849	8	23.431801	CD ROAD I-20 WB (Weaving Analysis)	W
8849	9	22.231773	CD ROAD I-20 WB (Weaving Analysis)	W
8849	10	23.332466	CD ROAD I-20 WB (Weaving Analysis)	W
8852	1	11.040244	(Basic Analysis)	E
8852	2	9.985956	(Basic Analysis)	E
8852	3	11.85285	(Basic Analysis)	E
8852	4	12.315196	(Basic Analysis)	E
8852	5	10.238145	(Basic Analysis)	E
8852	6	11.646196	(Basic Analysis)	E
8852	7	10.763537	(Basic Analysis)	E
8852	8	11.369489	(Basic Analysis)	E
8852	9	11.085778	(Basic Analysis)	E
8852	10	10.32571	(Basic Analysis)	E
8853	1	15.861539	CD ROAD I-20 EB (Basic Analysis)	E
8853	2	16.700016	CD ROAD I-20 EB (Basic Analysis)	E
8853	3	16.544118	CD ROAD I-20 EB (Basic Analysis)	E
8853	4	15.04413	CD ROAD I-20 EB (Basic Analysis)	E
8853	5	16.156481	CD ROAD I-20 EB (Basic Analysis)	E
8853	6	16.417715	CD ROAD I-20 EB (Basic Analysis)	E
8853	7	16.72319	CD ROAD I-20 EB (Basic Analysis)	E
8853	8	16.504091	CD ROAD I-20 EB (Basic Analysis)	E
8853	9	17.502679	CD ROAD I-20 EB (Basic Analysis)	E
8853	10	17.702818	CD ROAD I-20 EB (Basic Analysis)	E
8855	1	24.131767	CD ROAD I-20 WB TO I-20 (Basic Analysis)	NW
8855	2	24.51982	CD ROAD I-20 WB TO I-20 (Basic Analysis)	NW
8855	3	23.758205	CD ROAD I-20 WB TO I-20 (Basic Analysis)	NW
8855	4	23.943376	CD ROAD I-20 WB TO I-20 (Basic Analysis)	NW
8855	5	23.579475	CD ROAD I-20 WB TO I-20 (Basic Analysis)	NW
8855	6	23.386254	CD ROAD I-20 WB TO I-20 (Basic Analysis)	NW
8855	7	23.843545	CD ROAD I-20 WB TO I-20 (Basic Analysis)	NW
8855	8	22.584384	CD ROAD I-20 WB TO I-20 (Basic Analysis)	NW
8855	9	24.212276	CD ROAD I-20 WB TO I-20 (Basic Analysis)	NW

RPA AM

ID	Run	Density	Name (Type)	Direction
8855	10	22.983709	CD ROAD I-20 WB TO I-20 (Basic Analysis)	NW
8863	1	15.677599	(Basic Analysis)	SE
8863	2	16.665426	(Basic Analysis)	SE
8863	3	15.847342	(Basic Analysis)	SE
8863	4	16.313178	(Basic Analysis)	SE
8863	5	16.707543	(Basic Analysis)	SE
8863	6	16.712648	(Basic Analysis)	SE
8863	7	15.907327	(Basic Analysis)	SE
8863	8	16.970453	(Basic Analysis)	SE
8863	9	17.178483	(Basic Analysis)	SE
8863	10	17.12488	(Basic Analysis)	SE
8869	1	16.134232	(Weaving Analysis)	SE
8869	2	13.934983	(Weaving Analysis)	SE
8869	3	16.136633	(Weaving Analysis)	SE
8869	4	14.628851	(Weaving Analysis)	SE
8869	5	16.391132	(Weaving Analysis)	SE
8869	6	13.987803	(Weaving Analysis)	SE
8869	7	15.296309	(Weaving Analysis)	SE
8869	8	14.518408	(Weaving Analysis)	SE
8869	9	14.542417	(Weaving Analysis)	SE
8869	10	13.620461	(Weaving Analysis)	SE
8871	1	25.793496	(Basic Analysis)	W
8871	2	26.812347	(Basic Analysis)	W
8871	3	28.092048	(Basic Analysis)	W
8871	4	28.085911	(Basic Analysis)	W
8871	5	27.736064	(Basic Analysis)	W
8871	6	27.779028	(Basic Analysis)	W
8871	7	26.701869	(Basic Analysis)	W
8871	8	26.008314	(Basic Analysis)	W
8871	9	26.760177	(Basic Analysis)	W
8871	10	24.320459	(Basic Analysis)	W
8877	1	7.549939	I-20 WB (Diverge Analysis)	W
8877	2	7.406479	I-20 WB (Diverge Analysis)	W
8877	3	7.554757	I-20 WB (Diverge Analysis)	W
8877	4	7.534658	I-20 WB (Diverge Analysis)	W
8877	5	7.551866	I-20 WB (Diverge Analysis)	W
8877	6	8.262052	I-20 WB (Diverge Analysis)	W
8877	7	8.159816	I-20 WB (Diverge Analysis)	W
8877	8	8.340349	I-20 WB (Diverge Analysis)	W
8877	9	7.982603	I-20 WB (Diverge Analysis)	W
8877	10	8.020339	I-20 WB (Diverge Analysis)	W
8878	1	11.815463	I-20 WB (Basic Analysis)	W
8878	2	11.92464	I-20 WB (Basic Analysis)	W
8878	3	12.139344	I-20 WB (Basic Analysis)	W
8878	4	11.899137	I-20 WB (Basic Analysis)	W
8878	5	12.336188	I-20 WB (Basic Analysis)	W
8878	6	13.119491	I-20 WB (Basic Analysis)	W
8878	7	13.169798	I-20 WB (Basic Analysis)	W
8878	8	12.482566	I-20 WB (Basic Analysis)	W
8878	9	13.440172	I-20 WB (Basic Analysis)	W
8878	10	12.066291	I-20 WB (Basic Analysis)	W
8883	1	54.945739	I-26 WB (Basic Analysis)	NW
8883	2	56.785716	I-26 WB (Basic Analysis)	NW
8883	3	55.430251	I-26 WB (Basic Analysis)	NW
8883	4	52.484744	I-26 WB (Basic Analysis)	NW
8883	5	54.509985	I-26 WB (Basic Analysis)	NW
8883	6	56.457981	I-26 WB (Basic Analysis)	NW

RPA AM

ID	Run	Density	Name (Type)	Direction
8883	7	56.50674	I-26 WB (Basic Analysis)	NW
8883	8	56.577081	I-26 WB (Basic Analysis)	NW
8883	9	58.612672	I-26 WB (Basic Analysis)	NW
8883	10	50.353349	I-26 WB (Basic Analysis)	NW
8886	1	45.422006	I-26 WB (Basic Analysis)	NW
8886	2	46.236181	I-26 WB (Basic Analysis)	NW
8886	3	45.366349	I-26 WB (Basic Analysis)	NW
8886	4	53.399701	I-26 WB (Basic Analysis)	NW
8886	5	46.89025	I-26 WB (Basic Analysis)	NW
8886	6	49.427061	I-26 WB (Basic Analysis)	NW
8886	7	45.989272	I-26 WB (Basic Analysis)	NW
8886	8	44.138725	I-26 WB (Basic Analysis)	NW
8886	9	46.319976	I-26 WB (Basic Analysis)	NW
8886	10	44.510196	I-26 WB (Basic Analysis)	NW
8887	1	43.013162	I-26 WB (Merge Analysis)	NW
8887	2	41.67118	I-26 WB (Merge Analysis)	NW
8887	3	42.121451	I-26 WB (Merge Analysis)	NW
8887	4	44.934315	I-26 WB (Merge Analysis)	NW
8887	5	44.454027	I-26 WB (Merge Analysis)	NW
8887	6	44.461973	I-26 WB (Merge Analysis)	NW
8887	7	40.924262	I-26 WB (Merge Analysis)	NW
8887	8	40.318604	I-26 WB (Merge Analysis)	NW
8887	9	41.194424	I-26 WB (Merge Analysis)	NW
8887	10	41.238568	I-26 WB (Merge Analysis)	NW
8910	1	25.659435	I-26 EB (Basic Analysis)	SE
8910	2	26.191129	I-26 EB (Basic Analysis)	SE
8910	3	25.824887	I-26 EB (Basic Analysis)	SE
8910	4	27.310737	I-26 EB (Basic Analysis)	SE
8910	5	25.460251	I-26 EB (Basic Analysis)	SE
8910	6	27.787816	I-26 EB (Basic Analysis)	SE
8910	7	28.338785	I-26 EB (Basic Analysis)	SE
8910	8	26.57504	I-26 EB (Basic Analysis)	SE
8910	9	28.973283	I-26 EB (Basic Analysis)	SE
8910	10	26.941282	I-26 EB (Basic Analysis)	SE
8915	1	19.794462	I-26 EB (Basic Analysis)	SE
8915	2	20.73978	I-26 EB (Basic Analysis)	SE
8915	3	19.880775	I-26 EB (Basic Analysis)	SE
8915	4	20.397924	I-26 EB (Basic Analysis)	SE
8915	5	19.663054	I-26 EB (Basic Analysis)	SE
8915	6	20.76548	I-26 EB (Basic Analysis)	SE
8915	7	20.262878	I-26 EB (Basic Analysis)	SE
8915	8	19.787189	I-26 EB (Basic Analysis)	SE
8915	9	20.481085	I-26 EB (Basic Analysis)	SE
8915	10	19.922719	I-26 EB (Basic Analysis)	SE
8940	1	22.540124	I-26 EB (Basic Analysis)	SE
8940	2	26.078577	I-26 EB (Basic Analysis)	SE
8940	3	25.060857	I-26 EB (Basic Analysis)	SE
8940	4	27.198749	I-26 EB (Basic Analysis)	SE
8940	5	27.256707	I-26 EB (Basic Analysis)	SE
8940	6	27.17824	I-26 EB (Basic Analysis)	SE
8940	7	27.298403	I-26 EB (Basic Analysis)	SE
8940	8	25.608152	I-26 EB (Basic Analysis)	SE
8940	9	24.700691	I-26 EB (Basic Analysis)	SE
8940	10	26.515961	I-26 EB (Basic Analysis)	SE
8955	1	24.115745	I-20 EB (Basic Analysis)	NE
8955	2	25.370498	I-20 EB (Basic Analysis)	NE
8955	3	22.087551	I-20 EB (Basic Analysis)	NE

RPA AM

ID	Run	Density	Name (Type)	Direction
8955	4	21.291854	I-20 EB (Basic Analysis)	NE
8955	5	22.70519	I-20 EB (Basic Analysis)	NE
8955	6	22.755269	I-20 EB (Basic Analysis)	NE
8955	7	23.717896	I-20 EB (Basic Analysis)	NE
8955	8	23.100257	I-20 EB (Basic Analysis)	NE
8955	9	22.624508	I-20 EB (Basic Analysis)	NE
8955	10	23.467502	I-20 EB (Basic Analysis)	NE
8959	1	136.908782	I-20 WB (Basic Analysis)	SW
8959	2	124.67181	I-20 WB (Basic Analysis)	SW
8959	3	124.295178	I-20 WB (Basic Analysis)	SW
8959	4	136.466461	I-20 WB (Basic Analysis)	SW
8959	5	121.712499	I-20 WB (Basic Analysis)	SW
8959	6	115.498301	I-20 WB (Basic Analysis)	SW
8959	7	138.449867	I-20 WB (Basic Analysis)	SW
8959	8	130.719956	I-20 WB (Basic Analysis)	SW
8959	9	125.037842	I-20 WB (Basic Analysis)	SW
8959	10	120.481115	I-20 WB (Basic Analysis)	SW
8975	1	18.054896	I-26 EB (Weaving Analysis)	SE
8975	2	20.250684	I-26 EB (Weaving Analysis)	SE
8975	3	19.97621	I-26 EB (Weaving Analysis)	SE
8975	4	20.358461	I-26 EB (Weaving Analysis)	SE
8975	5	20.229128	I-26 EB (Weaving Analysis)	SE
8975	6	19.980521	I-26 EB (Weaving Analysis)	SE
8975	7	20.059558	I-26 EB (Weaving Analysis)	SE
8975	8	17.914066	I-26 EB (Weaving Analysis)	SE
8975	9	19.602581	I-26 EB (Weaving Analysis)	SE
8975	10	20.779512	I-26 EB (Weaving Analysis)	SE
8986	1	22.884079	I-26 EB (Basic Analysis)	SE
8986	2	24.747163	I-26 EB (Basic Analysis)	SE
8986	3	23.835441	I-26 EB (Basic Analysis)	SE
8986	4	24.500514	I-26 EB (Basic Analysis)	SE
8986	5	22.959689	I-26 EB (Basic Analysis)	SE
8986	6	24.143753	I-26 EB (Basic Analysis)	SE
8986	7	23.818557	I-26 EB (Basic Analysis)	SE
8986	8	23.599803	I-26 EB (Basic Analysis)	SE
8986	9	24.270748	I-26 EB (Basic Analysis)	SE
8986	10	24.070346	I-26 EB (Basic Analysis)	SE
8994	1	13.800149	I-126 SB (Basic Analysis)	SE
8994	2	14.267084	I-126 SB (Basic Analysis)	SE
8994	3	15.527167	I-126 SB (Basic Analysis)	SE
8994	4	14.877936	I-126 SB (Basic Analysis)	SE
8994	5	15.191358	I-126 SB (Basic Analysis)	SE
8994	6	14.593298	I-126 SB (Basic Analysis)	SE
8994	7	14.51974	I-126 SB (Basic Analysis)	SE
8994	8	15.952525	I-126 SB (Basic Analysis)	SE
8994	9	14.989873	I-126 SB (Basic Analysis)	SE
8994	10	15.191358	I-126 SB (Basic Analysis)	SE
8996	1	18.630352	CD ROAD I-20 WB TO I-20 (Basic Analysis)	NE
8996	2	18.079844	CD ROAD I-20 WB TO I-20 (Basic Analysis)	NE
8996	3	19.028746	CD ROAD I-20 WB TO I-20 (Basic Analysis)	NE
8996	4	18.731761	CD ROAD I-20 WB TO I-20 (Basic Analysis)	NE
8996	5	17.398952	CD ROAD I-20 WB TO I-20 (Basic Analysis)	NE
8996	6	17.427926	CD ROAD I-20 WB TO I-20 (Basic Analysis)	NE
8996	7	19.44887	CD ROAD I-20 WB TO I-20 (Basic Analysis)	NE
8996	8	18.347854	CD ROAD I-20 WB TO I-20 (Basic Analysis)	NE
8996	9	18.036383	CD ROAD I-20 WB TO I-20 (Basic Analysis)	NE
8996	10	16.073387	CD ROAD I-20 WB TO I-20 (Basic Analysis)	NE

RPA AM

ID	Run	Density	Name (Type)	Direction
9001	1	18.02202	I-126 NB (Merge Analysis)	NW
9001	2	16.156583	I-126 NB (Merge Analysis)	NW
9001	3	14.888718	I-126 NB (Merge Analysis)	NW
9001	4	16.450626	I-126 NB (Merge Analysis)	NW
9001	5	15.328202	I-126 NB (Merge Analysis)	NW
9001	6	16.333641	I-126 NB (Merge Analysis)	NW
9001	7	16.586582	I-126 NB (Merge Analysis)	NW
9001	8	15.928936	I-126 NB (Merge Analysis)	NW
9001	9	16.374744	I-126 NB (Merge Analysis)	NW
9001	10	15.909965	I-126 NB (Merge Analysis)	NW
9005	1	26.533383	I-126 NB (Basic Analysis)	NW
9005	2	24.890449	I-126 NB (Basic Analysis)	NW
9005	3	24.541325	I-126 NB (Basic Analysis)	NW
9005	4	23.514491	I-126 NB (Basic Analysis)	NW
9005	5	24.644008	I-126 NB (Basic Analysis)	NW
9005	6	24.602935	I-126 NB (Basic Analysis)	NW
9005	7	23.175636	I-126 NB (Basic Analysis)	NW
9005	8	25.691379	I-126 NB (Basic Analysis)	NW
9005	9	24.674814	I-126 NB (Basic Analysis)	NW
9005	10	24.835684	I-126 NB (Basic Analysis)	NW
9012	1	13.375158	I-126 SB (Merge Analysis)	E
9012	2	14.268762	I-126 SB (Merge Analysis)	E
9012	3	13.687475	I-126 SB (Merge Analysis)	E
9012	4	14.653322	I-126 SB (Merge Analysis)	E
9012	5	14.040915	I-126 SB (Merge Analysis)	E
9012	6	22.315641	I-126 SB (Merge Analysis)	E
9012	7	15.211269	I-126 SB (Merge Analysis)	E
9012	8	18.704548	I-126 SB (Merge Analysis)	E
9012	9	13.866418	I-126 SB (Merge Analysis)	E
9012	10	19.057988	I-126 SB (Merge Analysis)	E
9017	1	15.516153	I-126 SB (Basic Analysis)	E
9017	2	16.891372	I-126 SB (Basic Analysis)	E
9017	3	16.667771	I-126 SB (Basic Analysis)	E
9017	4	17.323959	I-126 SB (Basic Analysis)	E
9017	5	17.752162	I-126 SB (Basic Analysis)	E
9017	6	17.198275	I-126 SB (Basic Analysis)	E
9017	7	16.390096	I-126 SB (Basic Analysis)	E
9017	8	18.067834	I-126 SB (Basic Analysis)	E
9017	9	16.429555	I-126 SB (Basic Analysis)	E
9017	10	17.167585	I-126 SB (Basic Analysis)	E
9018	1	15.516153	I-126 SB (Basic Analysis)	E
9018	2	16.891372	I-126 SB (Basic Analysis)	E
9018	3	16.667771	I-126 SB (Basic Analysis)	E
9018	4	17.323959	I-126 SB (Basic Analysis)	E
9018	5	17.752162	I-126 SB (Basic Analysis)	E
9018	6	17.198275	I-126 SB (Basic Analysis)	E
9018	7	16.390096	I-126 SB (Basic Analysis)	E
9018	8	18.067834	I-126 SB (Basic Analysis)	E
9018	9	16.429555	I-126 SB (Basic Analysis)	E
9018	10	17.167585	I-126 SB (Basic Analysis)	E
9019	1	23.68797	I-126 NB (Diverge Analysis)	NW
9019	2	23.850087	I-126 NB (Diverge Analysis)	NW
9019	3	23.277022	I-126 NB (Diverge Analysis)	NW
9019	4	23.224239	I-126 NB (Diverge Analysis)	NW
9019	5	23.498205	I-126 NB (Diverge Analysis)	NW
9019	6	23.505745	I-126 NB (Diverge Analysis)	NW
9019	7	22.819575	I-126 NB (Diverge Analysis)	NW

RPA AM

ID	Run	Density	Name (Type)	Direction
9019	8	23.798562	I-126 NB (Diverge Analysis)	NW
9019	9	24.190659	I-126 NB (Diverge Analysis)	NW
9019	10	23.111134	I-126 NB (Diverge Analysis)	NW
9022	1	13.14855	107 (Basic Analysis)	NW
9022	2	13.434593	107 (Basic Analysis)	NW
9022	3	14.210996	107 (Basic Analysis)	NW
9022	4	13.623193	107 (Basic Analysis)	NW
9022	5	13.076254	107 (Basic Analysis)	NW
9022	6	13.18627	107 (Basic Analysis)	NW
9022	7	13.62005	107 (Basic Analysis)	NW
9022	8	13.774073	107 (Basic Analysis)	NW
9022	9	13.928096	107 (Basic Analysis)	NW
9022	10	12.994527	107 (Basic Analysis)	NW
9023	1	30.341265	I-126 NB (Basic Analysis)	NW
9023	2	31.679576	I-126 NB (Basic Analysis)	NW
9023	3	29.671263	I-126 NB (Basic Analysis)	NW
9023	4	29.415782	I-126 NB (Basic Analysis)	NW
9023	5	29.568055	I-126 NB (Basic Analysis)	NW
9023	6	31.253211	I-126 NB (Basic Analysis)	NW
9023	7	29.552828	I-126 NB (Basic Analysis)	NW
9023	8	29.170454	I-126 NB (Basic Analysis)	NW
9023	9	30.679649	I-126 NB (Basic Analysis)	NW
9023	10	29.539293	I-126 NB (Basic Analysis)	NW
9025	1	29.229468	CD ROAD I-26 WB TO I-20 (Diverge Analysis)	NE
9025	2	30.199528	CD ROAD I-26 WB TO I-20 (Diverge Analysis)	NE
9025	3	31.095559	CD ROAD I-26 WB TO I-20 (Diverge Analysis)	NE
9025	4	30.955155	CD ROAD I-26 WB TO I-20 (Diverge Analysis)	NE
9025	5	32.407694	CD ROAD I-26 WB TO I-20 (Diverge Analysis)	NE
9025	6	29.785976	CD ROAD I-26 WB TO I-20 (Diverge Analysis)	NE
9025	7	30.536497	CD ROAD I-26 WB TO I-20 (Diverge Analysis)	NE
9025	8	28.621903	CD ROAD I-26 WB TO I-20 (Diverge Analysis)	NE
9025	9	30.396093	CD ROAD I-26 WB TO I-20 (Diverge Analysis)	NE
9025	10	30.413963	CD ROAD I-26 WB TO I-20 (Diverge Analysis)	NE
9033	1	45.422006	I-26 WB (Basic Analysis)	NW
9033	2	46.236181	I-26 WB (Basic Analysis)	NW
9033	3	45.366349	I-26 WB (Basic Analysis)	NW
9033	4	53.399701	I-26 WB (Basic Analysis)	NW
9033	5	46.89025	I-26 WB (Basic Analysis)	NW
9033	6	49.427061	I-26 WB (Basic Analysis)	NW
9033	7	45.989272	I-26 WB (Basic Analysis)	NW
9033	8	44.138725	I-26 WB (Basic Analysis)	NW
9033	9	46.319976	I-26 WB (Basic Analysis)	NW
9033	10	44.510196	I-26 WB (Basic Analysis)	NW
9039	1	38.145301	I-20 EB (Basic Analysis)	NE
9039	2	38.21376	I-20 EB (Basic Analysis)	NE
9039	3	35.69342	I-20 EB (Basic Analysis)	NE
9039	4	36.059237	I-20 EB (Basic Analysis)	NE
9039	5	37.390883	I-20 EB (Basic Analysis)	NE
9039	6	37.275152	I-20 EB (Basic Analysis)	NE
9039	7	37.98798	I-20 EB (Basic Analysis)	NE
9039	8	36.345593	I-20 EB (Basic Analysis)	NE
9039	9	37.245972	I-20 EB (Basic Analysis)	NE
9039	10	36.431462	I-20 EB (Basic Analysis)	NE
9040	1	39.097776	I-20 WB (Basic Analysis)	SW
9040	2	39.726475	I-20 WB (Basic Analysis)	SW
9040	3	37.389193	I-20 WB (Basic Analysis)	SW
9040	4	38.513346	I-20 WB (Basic Analysis)	SW

RPA AM

ID	Run	Density	Name (Type)	Direction
9040	5	38.779105	I-20 WB (Basic Analysis)	SW
9040	6	40.170337	I-20 WB (Basic Analysis)	SW
9040	7	38.46213	I-20 WB (Basic Analysis)	SW
9040	8	38.991124	I-20 WB (Basic Analysis)	SW
9040	9	38.022282	I-20 WB (Basic Analysis)	SW
9040	10	37.818311	I-20 WB (Basic Analysis)	SW
9042	1	10.815693	I-20 WB (Basic Analysis)	W
9042	2	11.120971	I-20 WB (Basic Analysis)	W
9042	3	10.124107	I-20 WB (Basic Analysis)	W
9042	4	11.236863	I-20 WB (Basic Analysis)	W
9042	5	10.957968	I-20 WB (Basic Analysis)	W
9042	6	10.223982	I-20 WB (Basic Analysis)	W
9042	7	11.187868	I-20 WB (Basic Analysis)	W
9042	8	11.56287	I-20 WB (Basic Analysis)	W
9042	9	10.632903	I-20 WB (Basic Analysis)	W
9042	10	11.177504	I-20 WB (Basic Analysis)	W
9043	1	30.256834	CD ROAD I-20 WB (Basic Analysis)	W
9043	2	29.888423	CD ROAD I-20 WB (Basic Analysis)	W
9043	3	31.416852	CD ROAD I-20 WB (Basic Analysis)	W
9043	4	30.899189	CD ROAD I-20 WB (Basic Analysis)	W
9043	5	30.253055	CD ROAD I-20 WB (Basic Analysis)	W
9043	6	31.760701	CD ROAD I-20 WB (Basic Analysis)	W
9043	7	29.856306	CD ROAD I-20 WB (Basic Analysis)	W
9043	8	28.594266	CD ROAD I-20 WB (Basic Analysis)	W
9043	9	30.725375	CD ROAD I-20 WB (Basic Analysis)	W
9043	10	29.053361	CD ROAD I-20 WB (Basic Analysis)	W
9045	1	25.351162	CD ROAD I-20 EB (Weaving Analysis)	E
9045	2	25.183069	CD ROAD I-20 EB (Weaving Analysis)	E
9045	3	23.693715	CD ROAD I-20 EB (Weaving Analysis)	E
9045	4	23.325393	CD ROAD I-20 EB (Weaving Analysis)	E
9045	5	23.582476	CD ROAD I-20 EB (Weaving Analysis)	E
9045	6	24.059564	CD ROAD I-20 EB (Weaving Analysis)	E
9045	7	24.036081	CD ROAD I-20 EB (Weaving Analysis)	E
9045	8	23.411911	CD ROAD I-20 EB (Weaving Analysis)	E
9045	9	24.307996	CD ROAD I-20 EB (Weaving Analysis)	E
9045	10	23.872931	CD ROAD I-20 EB (Weaving Analysis)	E
9052	1	15.209379	CD ROAD I-20 EB (Basic Analysis)	NE
9052	2	14.545262	CD ROAD I-20 EB (Basic Analysis)	NE
9052	3	14.220666	CD ROAD I-20 EB (Basic Analysis)	NE
9052	4	14.437064	CD ROAD I-20 EB (Basic Analysis)	NE
9052	5	13.754293	CD ROAD I-20 EB (Basic Analysis)	NE
9052	6	14.642268	CD ROAD I-20 EB (Basic Analysis)	NE
9052	7	14.507953	CD ROAD I-20 EB (Basic Analysis)	NE
9052	8	13.55655	CD ROAD I-20 EB (Basic Analysis)	NE
9052	9	13.27113	CD ROAD I-20 EB (Basic Analysis)	NE
9052	10	13.509913	CD ROAD I-20 EB (Basic Analysis)	NE
9054	1	11.858925	I-20 WB (Basic Analysis)	SW
9054	2	12.36452	I-20 WB (Basic Analysis)	SW
9054	3	11.453671	I-20 WB (Basic Analysis)	SW
9054	4	11.336996	I-20 WB (Basic Analysis)	SW
9054	5	11.933598	I-20 WB (Basic Analysis)	SW
9054	6	11.724359	I-20 WB (Basic Analysis)	SW
9054	7	12.166172	I-20 WB (Basic Analysis)	SW
9054	8	12.152948	I-20 WB (Basic Analysis)	SW
9054	9	12.159171	I-20 WB (Basic Analysis)	SW
9054	10	12.101611	I-20 WB (Basic Analysis)	SW
9055	1	11.858925	I-20 WB (Basic Analysis)	SW

RPA AM

ID	Run	Density	Name (Type)	Direction
9055	2	12.36452	I-20 WB (Basic Analysis)	SW
9055	3	11.453671	I-20 WB (Basic Analysis)	SW
9055	4	11.336996	I-20 WB (Basic Analysis)	SW
9055	5	11.933598	I-20 WB (Basic Analysis)	SW
9055	6	11.724359	I-20 WB (Basic Analysis)	SW
9055	7	12.166172	I-20 WB (Basic Analysis)	SW
9055	8	12.152948	I-20 WB (Basic Analysis)	SW
9055	9	12.159171	I-20 WB (Basic Analysis)	SW
9055	10	12.101611	I-20 WB (Basic Analysis)	SW
9059	1	111.860026	I-20 WB (Merge Analysis)	SW
9059	2	97.411191	I-20 WB (Merge Analysis)	SW
9059	3	93.526113	I-20 WB (Merge Analysis)	SW
9059	4	91.490572	I-20 WB (Merge Analysis)	SW
9059	5	64.526666	I-20 WB (Merge Analysis)	SW
9059	6	81.474304	I-20 WB (Merge Analysis)	SW
9059	7	107.301115	I-20 WB (Merge Analysis)	SW
9059	8	105.114662	I-20 WB (Merge Analysis)	SW
9059	9	95.273872	I-20 WB (Merge Analysis)	SW
9059	10	72.233648	I-20 WB (Merge Analysis)	SW
9061	1	16.754672	I-20 EB (Basic Analysis)	NE
9061	2	16.145784	I-20 EB (Basic Analysis)	NE
9061	3	16.558727	I-20 EB (Basic Analysis)	NE
9061	4	16.101429	I-20 EB (Basic Analysis)	NE
9061	5	15.866464	I-20 EB (Basic Analysis)	NE
9061	6	16.499214	I-20 EB (Basic Analysis)	NE
9061	7	16.573606	I-20 EB (Basic Analysis)	NE
9061	8	16.484336	I-20 EB (Basic Analysis)	NE
9061	9	16.097499	I-20 EB (Basic Analysis)	NE
9061	10	16.002615	I-20 EB (Basic Analysis)	NE
9063	1	38.469174	I-26 WB (Basic Analysis)	NW
9063	2	38.827614	I-26 WB (Basic Analysis)	NW
9063	3	38.754598	I-26 WB (Basic Analysis)	NW
9063	4	39.916207	I-26 WB (Basic Analysis)	NW
9063	5	38.42271	I-26 WB (Basic Analysis)	NW
9063	6	38.70924	I-26 WB (Basic Analysis)	NW
9063	7	38.889566	I-26 WB (Basic Analysis)	NW
9063	8	37.583033	I-26 WB (Basic Analysis)	NW
9063	9	38.26451	I-26 WB (Basic Analysis)	NW
9063	10	39.02564	I-26 WB (Basic Analysis)	NW
9064	1	56.240783	I-26 WB (Diverge Analysis)	NW
9064	2	39.291988	I-26 WB (Diverge Analysis)	NW
9064	3	41.946654	I-26 WB (Diverge Analysis)	NW
9064	4	64.037581	I-26 WB (Diverge Analysis)	NW
9064	5	56.69545	I-26 WB (Diverge Analysis)	NW
9064	6	57.877583	I-26 WB (Diverge Analysis)	NW
9064	7	37.974922	I-26 WB (Diverge Analysis)	NW
9064	8	37.881055	I-26 WB (Diverge Analysis)	NW
9064	9	37.895722	I-26 WB (Diverge Analysis)	NW
9064	10	38.579188	I-26 WB (Diverge Analysis)	NW
9067	1	21.902689	I-26 EB (Merge Analysis)	SW
9067	2	22.156284	I-26 EB (Merge Analysis)	SW
9067	3	23.668861	I-26 EB (Merge Analysis)	SW
9067	4	21.41888	I-26 EB (Merge Analysis)	SW
9067	5	22.003407	I-26 EB (Merge Analysis)	SW
9067	6	23.712026	I-26 EB (Merge Analysis)	SW
9067	7	22.658078	I-26 EB (Merge Analysis)	SW
9067	8	22.713833	I-26 EB (Merge Analysis)	SW

RPA AM

ID	Run	Density	Name (Type)	Direction
9067	9	23.165268	I-26 EB (Merge Analysis)	SW
9067	10	22.938651	I-26 EB (Merge Analysis)	SW
9089	1	16.645685	I-26 EB (Diverge Analysis)	SE
9089	2	17.337952	I-26 EB (Diverge Analysis)	SE
9089	3	17.134574	I-26 EB (Diverge Analysis)	SE
9089	4	17.203018	I-26 EB (Diverge Analysis)	SE
9089	5	17.165863	I-26 EB (Diverge Analysis)	SE
9089	6	18.579729	I-26 EB (Diverge Analysis)	SE
9089	7	17.66844	I-26 EB (Diverge Analysis)	SE
9089	8	17.969596	I-26 EB (Diverge Analysis)	SE
9089	9	17.558929	I-26 EB (Diverge Analysis)	SE
9089	10	17.212796	I-26 EB (Diverge Analysis)	SE
9110	1	21.902689	I-26 EB (Merge Analysis)	SW
9110	2	22.156284	I-26 EB (Merge Analysis)	SW
9110	3	23.668861	I-26 EB (Merge Analysis)	SW
9110	4	21.41888	I-26 EB (Merge Analysis)	SW
9110	5	22.003407	I-26 EB (Merge Analysis)	SW
9110	6	23.712026	I-26 EB (Merge Analysis)	SW
9110	7	22.658078	I-26 EB (Merge Analysis)	SW
9110	8	22.713833	I-26 EB (Merge Analysis)	SW
9110	9	23.165268	I-26 EB (Merge Analysis)	SW
9110	10	22.938651	I-26 EB (Merge Analysis)	SW
9111	1	21.639867	(Merge Analysis)	SE
9111	2	20.761098	(Merge Analysis)	SE
9111	3	21.683063	(Merge Analysis)	SE
9111	4	21.476532	(Merge Analysis)	SE
9111	5	21.06752	(Merge Analysis)	SE
9111	6	22.024582	(Merge Analysis)	SE
9111	7	22.233813	(Merge Analysis)	SE
9111	8	21.863947	(Merge Analysis)	SE
9111	9	22.479491	(Merge Analysis)	SE
9111	10	21.195758	(Merge Analysis)	SE
9112	1	14.101103	I-26 EB (Basic Analysis)	S
9112	2	15.384589	I-26 EB (Basic Analysis)	S
9112	3	15.429418	I-26 EB (Basic Analysis)	S
9112	4	14.744058	I-26 EB (Basic Analysis)	S
9112	5	15.146497	I-26 EB (Basic Analysis)	S
9112	6	15.374947	I-26 EB (Basic Analysis)	S
9112	7	15.441644	I-26 EB (Basic Analysis)	S
9112	8	15.053203	I-26 EB (Basic Analysis)	S
9112	9	15.539747	I-26 EB (Basic Analysis)	S
9112	10	14.821482	I-26 EB (Basic Analysis)	S
9113	1	18.02202	I-126 NB (Merge+Diverge Analysis)	NW
9113	2	16.156583	I-126 NB (Merge+Diverge Analysis)	NW
9113	3	14.888718	I-126 NB (Merge+Diverge Analysis)	NW
9113	4	16.450626	I-126 NB (Merge+Diverge Analysis)	NW
9113	5	15.328202	I-126 NB (Merge+Diverge Analysis)	NW
9113	6	16.333641	I-126 NB (Merge+Diverge Analysis)	NW
9113	7	16.586582	I-126 NB (Merge+Diverge Analysis)	NW
9113	8	15.928936	I-126 NB (Merge+Diverge Analysis)	NW
9113	9	16.374744	I-126 NB (Merge+Diverge Analysis)	NW
9113	10	15.909965	I-126 NB (Merge+Diverge Analysis)	NW
9114	1	23.68797	I-126 NB (Diverge Analysis)	NW
9114	2	23.850087	I-126 NB (Diverge Analysis)	NW
9114	3	23.277022	I-126 NB (Diverge Analysis)	NW
9114	4	23.224239	I-126 NB (Diverge Analysis)	NW
9114	5	23.498205	I-126 NB (Diverge Analysis)	NW

RPA AM

ID	Run	Density	Name (Type)	Direction
9114	6	23.505745	I-126 NB (Diverge Analysis)	NW
9114	7	22.819575	I-126 NB (Diverge Analysis)	NW
9114	8	23.798562	I-126 NB (Diverge Analysis)	NW
9114	9	24.190659	I-126 NB (Diverge Analysis)	NW
9114	10	23.111134	I-126 NB (Diverge Analysis)	NW
9115	1	21.902689	I-26 EB (Merge Analysis)	SW
9115	2	22.156284	I-26 EB (Merge Analysis)	SW
9115	3	23.668861	I-26 EB (Merge Analysis)	SW
9115	4	21.41888	I-26 EB (Merge Analysis)	SW
9115	5	22.003407	I-26 EB (Merge Analysis)	SW
9115	6	23.712026	I-26 EB (Merge Analysis)	SW
9115	7	22.658078	I-26 EB (Merge Analysis)	SW
9115	8	22.713833	I-26 EB (Merge Analysis)	SW
9115	9	23.165268	I-26 EB (Merge Analysis)	SW
9115	10	22.938651	I-26 EB (Merge Analysis)	SW
9118	1	15.001137	I-26 EB (Diverge Analysis)	SE
9118	2	15.512903	I-26 EB (Diverge Analysis)	SE
9118	3	15.687369	I-26 EB (Diverge Analysis)	SE
9118	4	16.335799	I-26 EB (Diverge Analysis)	SE
9118	5	17.685	I-26 EB (Diverge Analysis)	SE
9118	6	15.091278	I-26 EB (Diverge Analysis)	SE
9118	7	16.01013	I-26 EB (Diverge Analysis)	SE
9118	8	14.532988	I-26 EB (Diverge Analysis)	SE
9118	9	16.891182	I-26 EB (Diverge Analysis)	SE
9118	10	15.521626	I-26 EB (Diverge Analysis)	SE
9119	1	12.65462	I-26 EB (Diverge Analysis)	SE
9119	2	14.266116	I-26 EB (Diverge Analysis)	SE
9119	3	12.648373	I-26 EB (Diverge Analysis)	SE
9119	4	12.4714	I-26 EB (Diverge Analysis)	SE
9119	5	13.000238	I-26 EB (Diverge Analysis)	SE
9119	6	13.853873	I-26 EB (Diverge Analysis)	SE
9119	7	13.325035	I-26 EB (Diverge Analysis)	SE
9119	8	13.699802	I-26 EB (Diverge Analysis)	SE
9119	9	13.868447	I-26 EB (Diverge Analysis)	SE
9119	10	11.413726	I-26 EB (Diverge Analysis)	SE
9120	1	16.542313	I-26 EB (Diverge Analysis)	SE
9120	2	18.738499	I-26 EB (Diverge Analysis)	SE
9120	3	16.674999	I-26 EB (Diverge Analysis)	SE
9120	4	16.681862	I-26 EB (Diverge Analysis)	SE
9120	5	18.260371	I-26 EB (Diverge Analysis)	SE
9120	6	17.013578	I-26 EB (Diverge Analysis)	SE
9120	7	18.045328	I-26 EB (Diverge Analysis)	SE
9120	8	17.754791	I-26 EB (Diverge Analysis)	SE
9120	9	17.789106	I-26 EB (Diverge Analysis)	SE
9120	10	15.757634	I-26 EB (Diverge Analysis)	SE
9121	1	22.540124	I-26 EB (Basic Analysis)	SE
9121	2	26.078577	I-26 EB (Basic Analysis)	SE
9121	3	25.060857	I-26 EB (Basic Analysis)	SE
9121	4	27.198749	I-26 EB (Basic Analysis)	SE
9121	5	27.256707	I-26 EB (Basic Analysis)	SE
9121	6	27.17824	I-26 EB (Basic Analysis)	SE
9121	7	27.298403	I-26 EB (Basic Analysis)	SE
9121	8	25.608152	I-26 EB (Basic Analysis)	SE
9121	9	24.700691	I-26 EB (Basic Analysis)	SE
9121	10	26.515961	I-26 EB (Basic Analysis)	SE
9122	1	21.86506	I-26 EB (Diverge Analysis)	SE
9122	2	23.164526	I-26 EB (Diverge Analysis)	SE

RPA AM

ID	Run	Density	Name (Type)	Direction
9122	3	22.686393	I-26 EB (Diverge Analysis)	SE
9122	4	22.431193	I-26 EB (Diverge Analysis)	SE
9122	5	24.895193	I-26 EB (Diverge Analysis)	SE
9122	6	24.150126	I-26 EB (Diverge Analysis)	SE
9122	7	23.29066	I-26 EB (Diverge Analysis)	SE
9122	8	22.967993	I-26 EB (Diverge Analysis)	SE
9122	9	22.17306	I-26 EB (Diverge Analysis)	SE
9122	10	22.61306	I-26 EB (Diverge Analysis)	SE
9123	1	21.581052	I-26 EB (Weaving Analysis)	SE
9123	2	24.075518	I-26 EB (Weaving Analysis)	SE
9123	3	23.178138	I-26 EB (Weaving Analysis)	SE
9123	4	23.483279	I-26 EB (Weaving Analysis)	SE
9123	5	23.702133	I-26 EB (Weaving Analysis)	SE
9123	6	24.743062	I-26 EB (Weaving Analysis)	SE
9123	7	24.172787	I-26 EB (Weaving Analysis)	SE
9123	8	22.486277	I-26 EB (Weaving Analysis)	SE
9123	9	23.644086	I-26 EB (Weaving Analysis)	SE
9123	10	23.276191	I-26 EB (Weaving Analysis)	SE
9125	1	19.794462	I-26 EB (Basic Analysis)	SE
9125	2	20.73978	I-26 EB (Basic Analysis)	SE
9125	3	19.880775	I-26 EB (Basic Analysis)	SE
9125	4	20.397924	I-26 EB (Basic Analysis)	SE
9125	5	19.663054	I-26 EB (Basic Analysis)	SE
9125	6	20.76548	I-26 EB (Basic Analysis)	SE
9125	7	20.262878	I-26 EB (Basic Analysis)	SE
9125	8	19.787189	I-26 EB (Basic Analysis)	SE
9125	9	20.481085	I-26 EB (Basic Analysis)	SE
9125	10	19.922719	I-26 EB (Basic Analysis)	SE
9126	1	19.794462	I-26 EB (Basic Analysis)	SE
9126	2	20.73978	I-26 EB (Basic Analysis)	SE
9126	3	19.880775	I-26 EB (Basic Analysis)	SE
9126	4	20.397924	I-26 EB (Basic Analysis)	SE
9126	5	19.663054	I-26 EB (Basic Analysis)	SE
9126	6	20.76548	I-26 EB (Basic Analysis)	SE
9126	7	20.262878	I-26 EB (Basic Analysis)	SE
9126	8	19.787189	I-26 EB (Basic Analysis)	SE
9126	9	20.481085	I-26 EB (Basic Analysis)	SE
9126	10	19.922719	I-26 EB (Basic Analysis)	SE
9127	1	25.659435	I-26 EB (Basic Analysis)	SE
9127	2	26.191129	I-26 EB (Basic Analysis)	SE
9127	3	25.824887	I-26 EB (Basic Analysis)	SE
9127	4	27.310737	I-26 EB (Basic Analysis)	SE
9127	5	25.460251	I-26 EB (Basic Analysis)	SE
9127	6	27.787816	I-26 EB (Basic Analysis)	SE
9127	7	28.338785	I-26 EB (Basic Analysis)	SE
9127	8	26.57504	I-26 EB (Basic Analysis)	SE
9127	9	28.973283	I-26 EB (Basic Analysis)	SE
9127	10	26.941282	I-26 EB (Basic Analysis)	SE
9128	1	23.049299	I-26 EB (Diverge Analysis)	SW
9128	2	23.051909	I-26 EB (Diverge Analysis)	SW
9128	3	24.670226	I-26 EB (Diverge Analysis)	SW
9128	4	21.97423	I-26 EB (Diverge Analysis)	SW
9128	5	23.579775	I-26 EB (Diverge Analysis)	SW
9128	6	24.576044	I-26 EB (Diverge Analysis)	SW
9128	7	24.516218	I-26 EB (Diverge Analysis)	SW
9128	8	23.866016	I-26 EB (Diverge Analysis)	SW
9128	9	24.589504	I-26 EB (Diverge Analysis)	SW

RPA AM

ID	Run	Density	Name (Type)	Direction
9128	10	23.856726	I-26 EB (Diverge Analysis)	SW
9130	1	21.639867	(Merge Analysis)	SE
9130	2	20.761098	(Merge Analysis)	SE
9130	3	21.683063	(Merge Analysis)	SE
9130	4	21.476532	(Merge Analysis)	SE
9130	5	21.06752	(Merge Analysis)	SE
9130	6	22.024582	(Merge Analysis)	SE
9130	7	22.233813	(Merge Analysis)	SE
9130	8	21.863947	(Merge Analysis)	SE
9130	9	22.479491	(Merge Analysis)	SE
9130	10	21.195758	(Merge Analysis)	SE
9131	1	10.033219	(Diverge Analysis)	SE
9131	2	11.131193	(Diverge Analysis)	SE
9131	3	9.698293	(Diverge Analysis)	SE
9131	4	10.770056	(Diverge Analysis)	SE
9131	5	10.810829	(Diverge Analysis)	SE
9131	6	11.16323	(Diverge Analysis)	SE
9131	7	10.630261	(Diverge Analysis)	SE
9131	8	11.014697	(Diverge Analysis)	SE
9131	9	11.448645	(Diverge Analysis)	SE
9131	10	11.731148	(Diverge Analysis)	SE
9132	1	13.602256	I-126 SB (Diverge Analysis)	E
9132	2	14.497577	I-126 SB (Diverge Analysis)	E
9132	3	13.597901	I-126 SB (Diverge Analysis)	E
9132	4	14.993949	I-126 SB (Diverge Analysis)	E
9132	5	13.983753	I-126 SB (Diverge Analysis)	E
9132	6	23.285896	I-126 SB (Diverge Analysis)	E
9132	7	15.335563	I-126 SB (Diverge Analysis)	E
9132	8	19.344132	I-126 SB (Diverge Analysis)	E
9132	9	14.119864	I-126 SB (Diverge Analysis)	E
9132	10	19.67362	I-126 SB (Diverge Analysis)	E
9133	1	30.862155	I-126 NB (Basic Analysis)	W
9133	2	31.702993	I-126 NB (Basic Analysis)	W
9133	3	31.28852	I-126 NB (Basic Analysis)	W
9133	4	30.291405	I-126 NB (Basic Analysis)	W
9133	5	30.569136	I-126 NB (Basic Analysis)	W
9133	6	31.015884	I-126 NB (Basic Analysis)	W
9133	7	31.032871	I-126 NB (Basic Analysis)	W
9133	8	31.043063	I-126 NB (Basic Analysis)	W
9133	9	31.013336	I-126 NB (Basic Analysis)	W
9133	10	30.757687	I-126 NB (Basic Analysis)	W
9134	1	31.600791	I-126 NB (Diverge Analysis)	W
9134	2	34.08239	I-126 NB (Diverge Analysis)	W
9134	3	32.54239	I-126 NB (Diverge Analysis)	W
9134	4	32.381057	I-126 NB (Diverge Analysis)	W
9134	5	33.041057	I-126 NB (Diverge Analysis)	W
9134	6	33.98559	I-126 NB (Diverge Analysis)	W
9134	7	32.562924	I-126 NB (Diverge Analysis)	W
9134	8	31.949857	I-126 NB (Diverge Analysis)	W
9134	9	32.25199	I-126 NB (Diverge Analysis)	W
9134	10	32.187457	I-126 NB (Diverge Analysis)	W
9135	1	31.756759	I-126 NB (Basic Analysis)	NW
9135	2	30.883199	I-126 NB (Basic Analysis)	NW
9135	3	31.020357	I-126 NB (Basic Analysis)	NW
9135	4	31.332225	I-126 NB (Basic Analysis)	NW
9135	5	31.307733	I-126 NB (Basic Analysis)	NW
9135	6	30.946879	I-126 NB (Basic Analysis)	NW

RPA AM

ID	Run	Density	Name (Type)	Direction
9135	7	30.680729	I-126 NB (Basic Analysis)	NW
9135	8	31.678384	I-126 NB (Basic Analysis)	NW
9135	9	31.701243	I-126 NB (Basic Analysis)	NW
9135	10	30.817886	I-126 NB (Basic Analysis)	NW
9136	1	31.756759	I-126 NB (Basic Analysis)	NW
9136	2	30.883199	I-126 NB (Basic Analysis)	NW
9136	3	31.020357	I-126 NB (Basic Analysis)	NW
9136	4	31.332225	I-126 NB (Basic Analysis)	NW
9136	5	31.307733	I-126 NB (Basic Analysis)	NW
9136	6	30.946879	I-126 NB (Basic Analysis)	NW
9136	7	30.680729	I-126 NB (Basic Analysis)	NW
9136	8	31.678384	I-126 NB (Basic Analysis)	NW
9136	9	31.701243	I-126 NB (Basic Analysis)	NW
9136	10	30.817886	I-126 NB (Basic Analysis)	NW
9137	1	33.025391	I-26 WB (Diverge Analysis)	N
9137	2	32.338997	I-26 WB (Diverge Analysis)	N
9137	3	32.943824	I-26 WB (Diverge Analysis)	N
9137	4	32.800697	I-26 WB (Diverge Analysis)	N
9137	5	32.249735	I-26 WB (Diverge Analysis)	N
9137	6	32.163551	I-26 WB (Diverge Analysis)	N
9137	7	32.648336	I-26 WB (Diverge Analysis)	N
9137	8	31.935779	I-26 WB (Diverge Analysis)	N
9137	9	33.223921	I-26 WB (Diverge Analysis)	N
9137	10	32.128154	I-26 WB (Diverge Analysis)	N
9138	1	19.956095	I-26 WB (Basic Analysis)	N
9138	2	20.214651	I-26 WB (Basic Analysis)	N
9138	3	20.250431	I-26 WB (Basic Analysis)	N
9138	4	20.511687	I-26 WB (Basic Analysis)	N
9138	5	20.74054	I-26 WB (Basic Analysis)	N
9138	6	20.453293	I-26 WB (Basic Analysis)	N
9138	7	20.064446	I-26 WB (Basic Analysis)	N
9138	8	19.681674	I-26 WB (Basic Analysis)	N
9138	9	20.352706	I-26 WB (Basic Analysis)	N
9138	10	20.388485	I-26 WB (Basic Analysis)	N
9139	1	19.956095	I-26 WB (Basic Analysis)	N
9139	2	20.214651	I-26 WB (Basic Analysis)	N
9139	3	20.250431	I-26 WB (Basic Analysis)	N
9139	4	20.511687	I-26 WB (Basic Analysis)	N
9139	5	20.74054	I-26 WB (Basic Analysis)	N
9139	6	20.453293	I-26 WB (Basic Analysis)	N
9139	7	20.064446	I-26 WB (Basic Analysis)	N
9139	8	19.681674	I-26 WB (Basic Analysis)	N
9139	9	20.352706	I-26 WB (Basic Analysis)	N
9139	10	20.388485	I-26 WB (Basic Analysis)	N
9140	1	23.435954	I-26 WB (Basic Analysis)	NW
9140	2	23.461335	I-26 WB (Basic Analysis)	NW
9140	3	22.727514	I-26 WB (Basic Analysis)	NW
9140	4	23.367381	I-26 WB (Basic Analysis)	NW
9140	5	23.411018	I-26 WB (Basic Analysis)	NW
9140	6	23.644345	I-26 WB (Basic Analysis)	NW
9140	7	23.419033	I-26 WB (Basic Analysis)	NW
9140	8	23.283668	I-26 WB (Basic Analysis)	NW
9140	9	23.3892	I-26 WB (Basic Analysis)	NW
9140	10	23.297027	I-26 WB (Basic Analysis)	NW
9141	1	23.435954	I-26 WB (Basic Analysis)	NW
9141	2	23.461335	I-26 WB (Basic Analysis)	NW
9141	3	22.727514	I-26 WB (Basic Analysis)	NW

RPA AM

ID	Run	Density	Name (Type)	Direction
9141	4	23.367381	I-26 WB (Basic Analysis)	NW
9141	5	23.411018	I-26 WB (Basic Analysis)	NW
9141	6	23.644345	I-26 WB (Basic Analysis)	NW
9141	7	23.419033	I-26 WB (Basic Analysis)	NW
9141	8	23.283668	I-26 WB (Basic Analysis)	NW
9141	9	23.3892	I-26 WB (Basic Analysis)	NW
9141	10	23.297027	I-26 WB (Basic Analysis)	NW
9142	1	54.945739	I-26 WB (Basic Analysis)	NW
9142	2	56.785716	I-26 WB (Basic Analysis)	NW
9142	3	55.430251	I-26 WB (Basic Analysis)	NW
9142	4	52.484744	I-26 WB (Basic Analysis)	NW
9142	5	54.509985	I-26 WB (Basic Analysis)	NW
9142	6	56.457981	I-26 WB (Basic Analysis)	NW
9142	7	56.50674	I-26 WB (Basic Analysis)	NW
9142	8	56.577081	I-26 WB (Basic Analysis)	NW
9142	9	58.612672	I-26 WB (Basic Analysis)	NW
9142	10	50.353349	I-26 WB (Basic Analysis)	NW
9143	1	45.422006	I-26 WB (Basic Analysis)	NW
9143	2	46.236181	I-26 WB (Basic Analysis)	NW
9143	3	45.366349	I-26 WB (Basic Analysis)	NW
9143	4	53.399701	I-26 WB (Basic Analysis)	NW
9143	5	46.89025	I-26 WB (Basic Analysis)	NW
9143	6	49.427061	I-26 WB (Basic Analysis)	NW
9143	7	45.989272	I-26 WB (Basic Analysis)	NW
9143	8	44.138725	I-26 WB (Basic Analysis)	NW
9143	9	46.319976	I-26 WB (Basic Analysis)	NW
9143	10	44.510196	I-26 WB (Basic Analysis)	NW
9147	1	40.911476	I-26 WB (Basic Analysis)	NW
9147	2	39.298155	I-26 WB (Basic Analysis)	NW
9147	3	43.881797	I-26 WB (Basic Analysis)	NW
9147	4	39.657076	I-26 WB (Basic Analysis)	NW
9147	5	42.070751	I-26 WB (Basic Analysis)	NW
9147	6	40.922482	I-26 WB (Basic Analysis)	NW
9147	7	47.336353	I-26 WB (Basic Analysis)	NW
9147	8	42.832021	I-26 WB (Basic Analysis)	NW
9147	9	40.94237	I-26 WB (Basic Analysis)	NW
9147	10	46.76004	I-26 WB (Basic Analysis)	NW
9148	1	41.189854	I-26 WB (Diverge Analysis)	NW
9148	2	39.233322	I-26 WB (Diverge Analysis)	NW
9148	3	44.234654	I-26 WB (Diverge Analysis)	NW
9148	4	39.758388	I-26 WB (Diverge Analysis)	NW
9148	5	42.119721	I-26 WB (Diverge Analysis)	NW
9148	6	40.884788	I-26 WB (Diverge Analysis)	NW
9148	7	47.329319	I-26 WB (Diverge Analysis)	NW
9148	8	42.864787	I-26 WB (Diverge Analysis)	NW
9148	9	41.406921	I-26 WB (Diverge Analysis)	NW
9148	10	43.093587	I-26 WB (Diverge Analysis)	NW
9149	1	23.175964	I-26 WB (Diverge Analysis)	NW
9149	2	23.647485	I-26 WB (Diverge Analysis)	NW
9149	3	24.685783	I-26 WB (Diverge Analysis)	NW
9149	4	23.183108	I-26 WB (Diverge Analysis)	NW
9149	5	25.640732	I-26 WB (Diverge Analysis)	NW
9149	6	24.400013	I-26 WB (Diverge Analysis)	NW
9149	7	24.504795	I-26 WB (Diverge Analysis)	NW
9149	8	23.711783	I-26 WB (Diverge Analysis)	NW
9149	9	25.82172	I-26 WB (Diverge Analysis)	NW
9149	10	24.750082	I-26 WB (Diverge Analysis)	NW

RPA AM

ID	Run	Density	Name (Type)	Direction
9151	1	20.271454	I-20 EB (Diverge Analysis)	NE
9151	2	19.339286	I-20 EB (Diverge Analysis)	NE
9151	3	19.73568	I-20 EB (Diverge Analysis)	NE
9151	4	18.391301	I-20 EB (Diverge Analysis)	NE
9151	5	18.975512	I-20 EB (Diverge Analysis)	NE
9151	6	18.516842	I-20 EB (Diverge Analysis)	NE
9151	7	19.139606	I-20 EB (Diverge Analysis)	NE
9151	8	19.689219	I-20 EB (Diverge Analysis)	NE
9151	9	18.761993	I-20 EB (Diverge Analysis)	NE
9151	10	19.657587	I-20 EB (Diverge Analysis)	NE
9152	1	16.754672	I-20 EB (Basic Analysis)	NE
9152	2	16.145784	I-20 EB (Basic Analysis)	NE
9152	3	16.558727	I-20 EB (Basic Analysis)	NE
9152	4	16.101429	I-20 EB (Basic Analysis)	NE
9152	5	15.866464	I-20 EB (Basic Analysis)	NE
9152	6	16.499214	I-20 EB (Basic Analysis)	NE
9152	7	16.573606	I-20 EB (Basic Analysis)	NE
9152	8	16.484336	I-20 EB (Basic Analysis)	NE
9152	9	16.097499	I-20 EB (Basic Analysis)	NE
9152	10	16.002615	I-20 EB (Basic Analysis)	NE
9153	1	16.754672	I-20 EB (Basic Analysis)	NE
9153	2	16.145784	I-20 EB (Basic Analysis)	NE
9153	3	16.558727	I-20 EB (Basic Analysis)	NE
9153	4	16.101429	I-20 EB (Basic Analysis)	NE
9153	5	15.866464	I-20 EB (Basic Analysis)	NE
9153	6	16.499214	I-20 EB (Basic Analysis)	NE
9153	7	16.573606	I-20 EB (Basic Analysis)	NE
9153	8	16.484336	I-20 EB (Basic Analysis)	NE
9153	9	16.097499	I-20 EB (Basic Analysis)	NE
9153	10	16.002615	I-20 EB (Basic Analysis)	NE
9155	1	38.145301	I-20 EB (Basic Analysis)	NE
9155	2	38.21376	I-20 EB (Basic Analysis)	NE
9155	3	35.69342	I-20 EB (Basic Analysis)	NE
9155	4	36.059237	I-20 EB (Basic Analysis)	NE
9155	5	37.390883	I-20 EB (Basic Analysis)	NE
9155	6	37.275152	I-20 EB (Basic Analysis)	NE
9155	7	37.98798	I-20 EB (Basic Analysis)	NE
9155	8	36.345593	I-20 EB (Basic Analysis)	NE
9155	9	37.245972	I-20 EB (Basic Analysis)	NE
9155	10	36.431462	I-20 EB (Basic Analysis)	NE
9156	1	35.829193	I-20 EB (Basic Analysis)	NE
9156	2	35.7091	I-20 EB (Basic Analysis)	NE
9156	3	34.097577	I-20 EB (Basic Analysis)	NE
9156	4	34.782338	I-20 EB (Basic Analysis)	NE
9156	5	35.510152	I-20 EB (Basic Analysis)	NE
9156	6	35.845961	I-20 EB (Basic Analysis)	NE
9156	7	35.815598	I-20 EB (Basic Analysis)	NE
9156	8	35.662875	I-20 EB (Basic Analysis)	NE
9156	9	34.946844	I-20 EB (Basic Analysis)	NE
9156	10	35.10138	I-20 EB (Basic Analysis)	NE
9157	1	73.890644	I-20 WB (Diverge Analysis)	SW
9157	2	67.891979	I-20 WB (Diverge Analysis)	SW
9157	3	70.672779	I-20 WB (Diverge Analysis)	SW
9157	4	75.694644	I-20 WB (Diverge Analysis)	SW
9157	5	73.259978	I-20 WB (Diverge Analysis)	SW
9157	6	70.731445	I-20 WB (Diverge Analysis)	SW
9157	7	72.060245	I-20 WB (Diverge Analysis)	SW

RPA AM

ID	Run	Density	Name (Type)	Direction
9157	8	71.564512	I-20 WB (Diverge Analysis)	SW
9157	9	73.875978	I-20 WB (Diverge Analysis)	SW
9157	10	72.318379	I-20 WB (Diverge Analysis)	SW
9158	1	39.097776	I-20 WB (Basic Analysis)	SW
9158	2	39.726475	I-20 WB (Basic Analysis)	SW
9158	3	37.389193	I-20 WB (Basic Analysis)	SW
9158	4	38.513346	I-20 WB (Basic Analysis)	SW
9158	5	38.779105	I-20 WB (Basic Analysis)	SW
9158	6	40.170337	I-20 WB (Basic Analysis)	SW
9158	7	38.46213	I-20 WB (Basic Analysis)	SW
9158	8	38.991124	I-20 WB (Basic Analysis)	SW
9158	9	38.022282	I-20 WB (Basic Analysis)	SW
9158	10	37.818311	I-20 WB (Basic Analysis)	SW
9159	1	11.815463	I-20 WB (Basic Analysis)	W
9159	2	11.92464	I-20 WB (Basic Analysis)	W
9159	3	12.139344	I-20 WB (Basic Analysis)	W
9159	4	11.899137	I-20 WB (Basic Analysis)	W
9159	5	12.336188	I-20 WB (Basic Analysis)	W
9159	6	13.119491	I-20 WB (Basic Analysis)	W
9159	7	13.169798	I-20 WB (Basic Analysis)	W
9159	8	12.482566	I-20 WB (Basic Analysis)	W
9159	9	13.440172	I-20 WB (Basic Analysis)	W
9159	10	12.066291	I-20 WB (Basic Analysis)	W
9160	1	133.556309	I-20 WB (Merge Analysis)	SW
9160	2	119.193278	I-20 WB (Merge Analysis)	SW
9160	3	120.174013	I-20 WB (Merge Analysis)	SW
9160	4	124.353063	I-20 WB (Merge Analysis)	SW
9160	5	104.333099	I-20 WB (Merge Analysis)	SW
9160	6	106.990576	I-20 WB (Merge Analysis)	SW
9160	7	132.10705	I-20 WB (Merge Analysis)	SW
9160	8	127.369087	I-20 WB (Merge Analysis)	SW
9160	9	121.923067	I-20 WB (Merge Analysis)	SW
9160	10	106.253895	I-20 WB (Merge Analysis)	SW
9162	1	14.918182	I-20 WB (Merge Analysis)	SW
9162	2	16.260867	I-20 WB (Merge Analysis)	SW
9162	3	16.584964	I-20 WB (Merge Analysis)	SW
9162	4	16.701931	I-20 WB (Merge Analysis)	SW
9162	5	16.03668	I-20 WB (Merge Analysis)	SW
9162	6	15.987944	I-20 WB (Merge Analysis)	SW
9162	7	16.333972	I-20 WB (Merge Analysis)	SW
9162	8	16.217004	I-20 WB (Merge Analysis)	SW
9162	9	15.641916	I-20 WB (Merge Analysis)	SW
9162	10	16.372961	I-20 WB (Merge Analysis)	SW
9163	1	19.32405	I-20 WB (Merge Analysis)	S
9163	2	19.52454	I-20 WB (Merge Analysis)	S
9163	3	18.7475	I-20 WB (Merge Analysis)	S
9163	4	19.233433	I-20 WB (Merge Analysis)	S
9163	5	20.024065	I-20 WB (Merge Analysis)	S
9163	6	19.267414	I-20 WB (Merge Analysis)	S
9163	7	18.746367	I-20 WB (Merge Analysis)	S
9163	8	20.227953	I-20 WB (Merge Analysis)	S
9163	9	18.713519	I-20 WB (Merge Analysis)	S
9163	10	19.868884	I-20 WB (Merge Analysis)	S
9182	1	13.019636	I-26 EB (Merge Analysis)	S
9182	2	12.892708	I-26 EB (Merge Analysis)	S
9182	3	13.017897	I-26 EB (Merge Analysis)	S
9182	4	12.276327	I-26 EB (Merge Analysis)	S

RPA AM

ID	Run	Density	Name (Type)	Direction
9182	5	12.950956	I-26 EB (Merge Analysis)	S
9182	6	13.287401	I-26 EB (Merge Analysis)	S
9182	7	13.388247	I-26 EB (Merge Analysis)	S
9182	8	13.083969	I-26 EB (Merge Analysis)	S
9182	9	13.609066	I-26 EB (Merge Analysis)	S
9182	10	13.0405	I-26 EB (Merge Analysis)	S
9183	1	11.753813	I-20 EB (Basic Analysis)	E
9183	2	10.622812	I-20 EB (Basic Analysis)	E
9183	3	10.823741	I-20 EB (Basic Analysis)	E
9183	4	10.534776	I-20 EB (Basic Analysis)	E
9183	5	10.940259	I-20 EB (Basic Analysis)	E
9183	6	11.144295	I-20 EB (Basic Analysis)	E
9183	7	11.025705	I-20 EB (Basic Analysis)	E
9183	8	10.947509	I-20 EB (Basic Analysis)	E
9183	9	10.882259	I-20 EB (Basic Analysis)	E
9183	10	10.642491	I-20 EB (Basic Analysis)	E
9185	1	125.722346	I-20 WB (Basic Analysis)	SW
9185	2	118.748204	I-20 WB (Basic Analysis)	SW
9185	3	120.892438	I-20 WB (Basic Analysis)	SW
9185	4	126.387631	I-20 WB (Basic Analysis)	SW
9185	5	110.638265	I-20 WB (Basic Analysis)	SW
9185	6	116.58289	I-20 WB (Basic Analysis)	SW
9185	7	128.040756	I-20 WB (Basic Analysis)	SW
9185	8	122.769327	I-20 WB (Basic Analysis)	SW
9185	9	119.397517	I-20 WB (Basic Analysis)	SW
9185	10	114.442693	I-20 WB (Basic Analysis)	SW
9186	1	125.722346	I-20 WB (Basic Analysis)	SW
9186	2	118.748204	I-20 WB (Basic Analysis)	SW
9186	3	120.892438	I-20 WB (Basic Analysis)	SW
9186	4	126.387631	I-20 WB (Basic Analysis)	SW
9186	5	110.638265	I-20 WB (Basic Analysis)	SW
9186	6	116.58289	I-20 WB (Basic Analysis)	SW
9186	7	128.040756	I-20 WB (Basic Analysis)	SW
9186	8	122.769327	I-20 WB (Basic Analysis)	SW
9186	9	119.397517	I-20 WB (Basic Analysis)	SW
9186	10	114.442693	I-20 WB (Basic Analysis)	SW
9204	1	29.492144	CD ROAD I-26 EB (Basic Analysis)	SE
9204	2	30.662125	CD ROAD I-26 EB (Basic Analysis)	SE
9204	3	29.246182	CD ROAD I-26 EB (Basic Analysis)	SE
9204	4	28.917126	CD ROAD I-26 EB (Basic Analysis)	SE
9204	5	29.222916	CD ROAD I-26 EB (Basic Analysis)	SE
9204	6	31.149062	CD ROAD I-26 EB (Basic Analysis)	SE
9204	7	28.905492	CD ROAD I-26 EB (Basic Analysis)	SE
9204	8	28.011388	CD ROAD I-26 EB (Basic Analysis)	SE
9204	9	28.844002	CD ROAD I-26 EB (Basic Analysis)	SE
9204	10	28.300559	CD ROAD I-26 EB (Basic Analysis)	SE
9206	1	14.101103	I-26 EB (Basic Analysis)	S
9206	2	15.384589	I-26 EB (Basic Analysis)	S
9206	3	15.429418	I-26 EB (Basic Analysis)	S
9206	4	14.744058	I-26 EB (Basic Analysis)	S
9206	5	15.146497	I-26 EB (Basic Analysis)	S
9206	6	15.374947	I-26 EB (Basic Analysis)	S
9206	7	15.441644	I-26 EB (Basic Analysis)	S
9206	8	15.053203	I-26 EB (Basic Analysis)	S
9206	9	15.539747	I-26 EB (Basic Analysis)	S
9206	10	14.821482	I-26 EB (Basic Analysis)	S
9207	1	14.101103	I-26 EB (Basic Analysis)	S

RPA AM

ID	Run	Density	Name (Type)	Direction
9207	2	15.384589	I-26 EB (Basic Analysis)	S
9207	3	15.429418	I-26 EB (Basic Analysis)	S
9207	4	14.744058	I-26 EB (Basic Analysis)	S
9207	5	15.146497	I-26 EB (Basic Analysis)	S
9207	6	15.374947	I-26 EB (Basic Analysis)	S
9207	7	15.441644	I-26 EB (Basic Analysis)	S
9207	8	15.053203	I-26 EB (Basic Analysis)	S
9207	9	15.539747	I-26 EB (Basic Analysis)	S
9207	10	14.821482	I-26 EB (Basic Analysis)	S
9208	1	17.699753	(Basic Analysis)	SE
9208	2	16.670983	(Basic Analysis)	SE
9208	3	17.704652	(Basic Analysis)	SE
9208	4	17.738945	(Basic Analysis)	SE
9208	5	16.433386	(Basic Analysis)	SE
9208	6	16.688129	(Basic Analysis)	SE
9208	7	18.532568	(Basic Analysis)	SE
9208	8	17.905507	(Basic Analysis)	SE
9208	9	17.748742	(Basic Analysis)	SE
9208	10	17.349481	(Basic Analysis)	SE
9211	1	11.911568	I-20 EB (Basic Analysis)	NE
9211	2	10.762776	I-20 EB (Basic Analysis)	NE
9211	3	10.786783	I-20 EB (Basic Analysis)	NE
9211	4	10.342658	I-20 EB (Basic Analysis)	NE
9211	5	10.860215	I-20 EB (Basic Analysis)	NE
9211	6	11.000019	I-20 EB (Basic Analysis)	NE
9211	7	11.164535	I-20 EB (Basic Analysis)	NE
9211	8	11.146883	I-20 EB (Basic Analysis)	NE
9211	9	10.968951	I-20 EB (Basic Analysis)	NE
9211	10	10.855272	I-20 EB (Basic Analysis)	NE
9225	1	16.754672	I-20 EB (Basic Analysis)	NE
9225	2	16.145784	I-20 EB (Basic Analysis)	NE
9225	3	16.558727	I-20 EB (Basic Analysis)	NE
9225	4	16.101429	I-20 EB (Basic Analysis)	NE
9225	5	15.866464	I-20 EB (Basic Analysis)	NE
9225	6	16.499214	I-20 EB (Basic Analysis)	NE
9225	7	16.573606	I-20 EB (Basic Analysis)	NE
9225	8	16.484336	I-20 EB (Basic Analysis)	NE
9225	9	16.097499	I-20 EB (Basic Analysis)	NE
9225	10	16.002615	I-20 EB (Basic Analysis)	NE
9243	1	39.097776	I-20 WB (Basic Analysis)	SW
9243	2	39.726475	I-20 WB (Basic Analysis)	SW
9243	3	37.389193	I-20 WB (Basic Analysis)	SW
9243	4	38.513346	I-20 WB (Basic Analysis)	SW
9243	5	38.779105	I-20 WB (Basic Analysis)	SW
9243	6	40.170337	I-20 WB (Basic Analysis)	SW
9243	7	38.46213	I-20 WB (Basic Analysis)	SW
9243	8	38.991124	I-20 WB (Basic Analysis)	SW
9243	9	38.022282	I-20 WB (Basic Analysis)	SW
9243	10	37.818311	I-20 WB (Basic Analysis)	SW
9245	1	24.131767	CD ROAD I-20 WB TO I-20 (Basic Analysis)	NW
9245	2	24.51982	CD ROAD I-20 WB TO I-20 (Basic Analysis)	NW
9245	3	23.758205	CD ROAD I-20 WB TO I-20 (Basic Analysis)	NW
9245	4	23.943376	CD ROAD I-20 WB TO I-20 (Basic Analysis)	NW
9245	5	23.579475	CD ROAD I-20 WB TO I-20 (Basic Analysis)	NW
9245	6	23.386254	CD ROAD I-20 WB TO I-20 (Basic Analysis)	NW
9245	7	23.843545	CD ROAD I-20 WB TO I-20 (Basic Analysis)	NW
9245	8	22.584384	CD ROAD I-20 WB TO I-20 (Basic Analysis)	NW

RPA AM

ID	Run	Density	Name (Type)	Direction
9245	9	24.212276	CD ROAD I-20 WB TO I-20 (Basic Analysis)	NW
9245	10	22.983709	CD ROAD I-20 WB TO I-20 (Basic Analysis)	NW
9246	1	18.188025	I-126 NB (Diverge Analysis)	NW
9246	2	16.305405	I-126 NB (Diverge Analysis)	NW
9246	3	15.025861	I-126 NB (Diverge Analysis)	NW
9246	4	16.622896	I-126 NB (Diverge Analysis)	NW
9246	5	15.469394	I-126 NB (Diverge Analysis)	NW
9246	6	16.497632	I-126 NB (Diverge Analysis)	NW
9246	7	16.767305	I-126 NB (Diverge Analysis)	NW
9246	8	16.075661	I-126 NB (Diverge Analysis)	NW
9246	9	16.525575	I-126 NB (Diverge Analysis)	NW
9246	10	16.056516	I-126 NB (Diverge Analysis)	NW
9248	1	28.109286	I-26 WB (Basic Analysis)	NW
9248	2	28.249428	I-26 WB (Basic Analysis)	NW
9248	3	28.347983	I-26 WB (Basic Analysis)	NW
9248	4	27.695762	I-26 WB (Basic Analysis)	NW
9248	5	27.970469	I-26 WB (Basic Analysis)	NW
9248	6	28.257832	I-26 WB (Basic Analysis)	NW
9248	7	27.867198	I-26 WB (Basic Analysis)	NW
9248	8	27.406342	I-26 WB (Basic Analysis)	NW
9248	9	28.213458	I-26 WB (Basic Analysis)	NW
9248	10	28.059986	I-26 WB (Basic Analysis)	NW
9249	1	16.366581	I-26 EB (Basic Analysis)	SE
9249	2	17.064354	I-26 EB (Basic Analysis)	SE
9249	3	16.480922	I-26 EB (Basic Analysis)	SE
9249	4	16.844498	I-26 EB (Basic Analysis)	SE
9249	5	16.793503	I-26 EB (Basic Analysis)	SE
9249	6	16.778019	I-26 EB (Basic Analysis)	SE
9249	7	17.034505	I-26 EB (Basic Analysis)	SE
9249	8	16.734856	I-26 EB (Basic Analysis)	SE
9249	9	17.060276	I-26 EB (Basic Analysis)	SE
9249	10	16.959894	I-26 EB (Basic Analysis)	SE

Appendix D—2040 Build Unconstrained Summary

TransModeler 2040 Build RRPA (unconstrained) Freeway Density Tables

Mainline

Freeway Segment	Existing Conditions				2040 No Build Conditions				2040 Build RRPA Conditions (unconstrained)			
	AM Peak Hour		PM Peak Hour		AM Peak Hour		PM Peak Hour		AM Peak Hour		PM Peak Hour	
	LOS[1]	Density[2]	LOS[1]	Density[2]	LOS[1]	Density[2]	LOS[1]	Density[2]	LOS[1]	Density[2]	LOS[1]	Density[2]
I-26 Eastbound												
west of Exit 101	F	50.0	D	27.3	F	69.0	B	16.8	D	28.4	B	16.6
Exit 101 to Exit 102[W]	C	25.8	B	18.5	F	133.5	C	24.0	E	37.0	B	19.2
Exit 102 to Exit 103	F	48.8	C	24.7	F	122.0	D	31.4	E	41.7	C	25.1
Exit 103 to Exit 104	E	44.3	C	24.1	F	126.6	D	31.2	E	35.8	C	23.2
Exit 104 to Exit 106	F	67.8	E	40.4	F	84.5	F	59.9	D	28.3	C	20.0
Exit 107 to Exit 108[W]	F	85.7	D	31.3	F	108.7	F	72.3	E	36.7	C	20.4
Exit 106 to Exit 107[W]	F	74.3	E	36.9	F	94.6	F	103.9				
I-126 Diverge to I-126 Merge	D	31.2	F	53.4	E	36.6	F	112.9				
Exit 108 to Exit 110	D	26.3	F	94.6	E	38.6	F	123.7	C	20.3	C	22.9
east of Exit 110	C	19.7	C	23.3	C	20.2	C	24.3	C	20.8	C	25.9
I-26 Westbound												
east of Exit 110	C	21.1	C	23.3	E	36.7	F	93.3	D	32.1	D	29.8
Exit 110 to Exit 108	B	15.6	C	25.1	C	19.9	F	92.5	B	17.1	C	20.3
I-126 Diverge to I-126 Merge	D	33.7	F	97.7	E	44.1	F	155.1	B	15.4	B	16.4
Exit 108 to Exit 107[W]	D	34.7	F	98.7	F	45.1	F	156.1	C	21.8	D	34.0
Exit 107 to Exit 106[W]	D	34.7	F	98.7	F	45.1	F	156.1				
I-26 Merge to Exit 106	-	-	-	-	-	-	-	-				
Exit 106 to Exit 104	D	33.7	F	49.3	F	47.2	F	50.7	D	27.3	F	51.8
Exit 104 to Exit 103	D	27.0	E	43.3	D	34.2	F	45.9	C	20.9	E	35.3
Exit 103 to Exit 102	D	27.2	E	38.0	D	30.4	E	39.1	C	23.6	E	43.9
Exit 102 to Exit 101[W]	B	15.3	F	55.0	C	20.1	C	25.4	B	17.6	D	29.5
West of Exit 101	C	23.4	E	36.1	B	14.9	C	19.1	B	16.4	D	28.5

[1] Per Highway Capacity Manual 2010 criteria.

[2] Density expressed as PCE/per mile/per lane.

[W] Weaving Section

Mainline

Freeway Segment	Existing Conditions				2040 No Build Conditions				2040 Build RRPA Conditions (unconstrained)			
	AM Peak Hour		PM Peak Hour		AM Peak Hour		PM Peak Hour		AM Peak Hour		PM Peak Hour	
	LOS[1]	Density[2]	LOS[1]	Density[2]	LOS[1]	Density[2]	LOS[1]	Density[2]	LOS[1]	Density[2]	LOS[1]	Density[2]
I-20 Eastbound												
west of Exit 61	E	43.6	C	20.9	F	61.7	C	19.6	E	38.0	C	19.6
Exit 61 to Exit 63	D	32.6	C	18.7	F	75.9	C	24.8	D	31.6	B	16.6
Exit 63 to Exit 64	C	19.0	B	13.5	C	20.7	D	29.3	C	18.6	B	11.0
Exit 64 to Exit 65	C	25.3	C	22.5	D	28.0	F	68.8				
Exit 65 to Exit 68	E	35.5	D	26.6	E	39.5	D	29.5	E	39.9	D	27.4
east of Exit 68	D	31.3	D	26.4	D	34.9	D	29.8	D	30.6	E	35.9
I-20 Westbound												
east of Exit 68	D	30.2	D	34.2	E	40.3	F	117.7	D	26.9	F	54.4
Exit 68 to Exit 65	D	29.3	F	56.8	F	46.7	F	123.4	D	30.9	D	34.6
Exit 65 to Exit 64	E	36.5	F	58.7	F	73.0	F	58.4	A	8.7	A	7.9
Exit 64 to Exit 63[W]	B	15.5	F	51.5	F	49.6	F	56.3				
Exit 63 to Exit 61	B	14.6	D	26.6	C	18.8	D	26.2	B	15.0	E	41.3
west of Exit 61	B	15.5	D	33.3	B	14.2	C	22.1	B	15.2	D	27.6

[1] Per Highway Capacity Manual 2010 criteria.

[2] Density expressed as PCE/per mile/per lane.

Mainline

Freeway Segment	Existing Conditions				2040 No Build Conditions				2040 Build RRPA Conditions (unconstrained)			
	AM Peak Hour		PM Peak Hour		AM Peak Hour		PM Peak Hour		AM Peak Hour		PM Peak Hour	
	LOS[1]	Density[2]	LOS[1]	Density[2]	LOS[1]	Density[2]	LOS[1]	Density[2]	LOS[1]	Density[2]	LOS[1]	Density[2]
I-126 Eastbound												
I-26 to Colonial Life Blvd	D	29.4	B	15.3	D	29.7	B	17.3	D	29.4	B	11.1
Colonial Life Blvd to Greystone Blvd	C	24.9	B	13.7	C	25.1	B	15.0	E	38.0	B	17.8
Greystone Blvd to Huger St	D	26.5	B	13.2	D	26.8	B	15.1	F	48.7	B	16.7
I-126 Westbound												
Huger St to Greystone Blvd	B	13.8	C	25.8	B	15.3	F	87.3	B	15.4	D	31.2
Greystone Blvd to Colonial Life Blvd	B	14.4	F	48.6	B	13.4	F	113.2	B	14.3	D	30.7
Colonial Life Blvd to I-26	C	19.1	F	90.7	C	24.7	F	115.9	B	12.4	D	29.9

[1] Per Highway Capacity Manual 2010 criteria.

[2] Density expressed as PCE/per mile/per lane.

Merge

Merge Area	Existing Conditions				2040 No Build Conditions				2040 Build RRPA Conditions (unconstrained)			
	AM Peak Hour		PM Peak Hour		AM Peak Hour		PM Peak Hour		AM Peak Hour		PM Peak Hour	
	LOS[1]	Density[2]	LOS[1]	Density[2]	LOS[1]	Density[2]	LOS[1]	Density[2]	LOS[1]	Density[2]	LOS[1]	Density[2]
I-26 Eastbound												
Exit 102	F	50.0	C	27.3	F	69.0	B	16.8	D	28.4	B	16.6
Exit 103	F	62.3	C	27.3	F	112.3	E	43.6	E	35.8	C	23.2
Exit 104	F	64.5	D	29.5	F	89.2	F	58.1	D	28.3	B	20.0
Exit 106 Loop	F	51.3	D	34.7	F	61.5	F	78.6	E	36.7	C	20.4
Exit 106W	F	85.7	D	31.3	F	108.7	F	72.3				
Exit 107 LoopW	F	51.3	D	34.7	F	61.5	F	78.6	B	13.8	B	13.2
Exit 107W	F	74.3	E	36.9	F	94.6	F	103.9				
Exit 108	D	32.1	F	52.2	E	38.6	F	115.0	-	-	-	-
Exit 108 (I-126)	C	25.5	F	75.8	C	25.2	F	122.0	C	20.3	C	22.9
Exit 110	B	15.2	B	17.5	B	15.3	B	18.6	C	20.8	C	25.9
I-26 Westbound												
Exit 110	B	15.6	C	25.1	B	19.9	F	92.5	B	17.1	C	20.3
Exit 108 (I-126)	D	30.2	F	121.3	E	39.2	F	157.8	B	14.8	C	23.5
Exit 108W	C	24.3	F	100.8	D	31.9	F	128.8	-	-	-	-
Exit 107 LoopW	C	25.9	F	96.4	D	34.8	F	111.7	C	25.8	E	42.4
Exit 107W	C	27.2	F	104.6	E	35.6	F	113.3				
Exit 106	C	23.4	E	36.7	D	32.4	E	37.8	C	27.0	E	45.0
Exit 104	B	18.6	E	37.7	C	24.9	E	43.7	C	20.9	E	35.3
Exit 103	B	19.8	E	35.2	C	27.6	E	36.5	C	23.6	E	43.9
Exit 102W	B	15.3	F	55.0	C	20.1	C	25.4	B	17.6	D	29.5
Exit 101	B	19.1	F	95.6	B	16.1	C	20.6	A	9.6	B	16.1

[1] Per Highway Capacity Manual 2010 criteria.

[2] Density expressed as PCE/per mile/per lane.

[W] Weaving Section

Merge

Merge Area	Existing Conditions				2040 No Build Conditions				2040 Build RRPA Conditions (unconstrained)			
	AM Peak Hour		PM Peak Hour		AM Peak Hour		PM Peak Hour		AM Peak Hour		PM Peak Hour	
	LOS[1]	Density[2]	LOS[1]	Density[2]	LOS[1]	Density[2]	LOS[1]	Density[2]	LOS[1]	Density[2]	LOS[1]	Density[2]
I-20 Eastbound												
Exit 61	D	29.0	B	16.4	F	74.9	C	21.0	D	31.6	B	16.6
Exit 63 Loop	C	21.6	B	14.2	C	24.2	B	19.9	-	-	-	-
Exit 63	B	19.0	B	13.5	C	20.7	D	29.3	-	-	-	-
Exit 64 Loop	D	33.2	C	23.9	E	37.2	E	38.0	-	-	-	-
Exit 64	C	24.5	C	22.3	C	27.1	F	71.4	-	-	-	-
CD Road	-	-	-	-	-	-	-	-	C	22.5	C	20.2
Exit 65	D	32.6	C	23.5	E	37.4	C	23.7	E	37.9	C	23.8
I-20 Westbound												
Exit 68	C	21.4	E	41.7	D	31.3	F	125.0	D	30.9	D	34.6
Exit 65	E	36.5	F	58.7	F	73.0	F	58.4	A	8.7	A	7.9
Exit 64 Loop	B	19.5	C	26.1	C	26.6	C	23.2	-	-	-	-
Exit 64	B	15.5	F	51.5	F	49.6	F	56.3	-	-	-	-
CD Road	-	-	-	-	-	-	-	-	B	11.6	C	21.3
Exit 63	B	12.3	C	20.3	B	14.2	C	21.0	B	12.0	D	30.5
Exit 61	B	12.4	D	29.0	B	11.6	B	17.2	B	14.1	C	22.7

[1] Per Highway Capacity Manual 2010 criteria.

[2] Density expressed as PCE/per mile/per lane.

[W] Weaving Section

Merge

Merge Area	Existing Conditions				2040 No Build Conditions				2040 Build RRPA Conditions (unconstrained)			
	AM Peak Hour		PM Peak Hour		AM Peak Hour		PM Peak Hour		AM Peak Hour		PM Peak Hour	
	LOS[1]	Density[2]	LOS[1]	Density[2]	LOS[1]	Density[2]	LOS[1]	Density[2]	LOS[1]	Density[2]	LOS[1]	Density[2]
I-126 Eastbound												
From I-20	-	-	-	-	-	-	-	-	**E**	38.1	**C**	21.6
Colonial Life Blvd	**C**	24.9	**B**	13.7	**C**	25.1	**B**	15.0	**D**	32.6	**B**	16.9
Greystone Blvd	**B**	18.8	**A**	9.8	**B**	18.6	**B**	10.4	**E**	42.5	**B**	14.3
I-126 Westbound												
Greystone Blvd	**B**	12.8	**C**	25.4	**A**	8.4	**F**	75.4	**B**	12.4	**D**	28.1
Colonial Life Blvd	-	-	-	-	-	-	-	-	**A**	6.2	**B**	15.6

[1] Per Highway Capacity Manual 2010 criteria.

[2] Density expressed as PCE/per mile/per lane.

Diverge

Diverge Area	Existing Conditions				2040 No Build Conditions				2040 Build RRPA Conditions (unconstrained)			
	AM Peak Hour		PM Peak Hour		AM Peak Hour		PM Peak Hour		AM Peak Hour		PM Peak Hour	
	LOS[1]	Density[2]	LOS[1]	Density[2]	LOS[1]	Density[2]	LOS[1]	Density[2]	LOS[1]	Density[2]	LOS[1]	Density[2]
I-26 Eastbound												
Exit 101	E	41.2	C	26.4	F	101.1	B	15.7	D	28.4	B	16.6
Exit 101 Loop	C	22.6	B	16.2	F	116.2	C	20.1	C	23.7	B	12.8
Exit 102W	C	25.8	B	18.5	F	133.5	C	24.0	E	37.0	B	19.2
Exit 102 Loop	C	24.6	B	18.1	F	115.5	C	23.1	D	29.7	B	17.0
Exit 103	F	48.8	C	24.7	F	122.0	D	31.4	D	33.8	C	23.2
Exit 104	F	63.6	D	28.2	F	110.6	E	44.6	E	35.8	C	23.2
Exit 106	F	56.3	D	29.1	F	73.4	F	50.6	C	23.6	B	17.1
CD Road	-	-	-	-	-	-	-	-	F	72.2	C	26.3
Exit 107W	F	85.7	D	31.3	F	108.7	F	72.3	-	-	-	-
Exit 107 LoopW	F	51.3	D	34.7	F	61.5	F	78.6	-	-	-	-
Exit 108W	F	74.3	E	36.9	F	94.6	F	103.9	-	-	-	-
I-26 to I-26	F	52.0	E	40.6	F	58.5	F	103.7	E	36.7	C	20.4
Exit 110	D	32.6	F	106.1	F	54.6	F	140.0	C	21.2	C	24.4
I-26 Westbound												
Exit 110	C	22.6	C	24.3	F	49.4	F	103.0	F	46.9	D	32.6
Exit 108 (Existing) / To I-20 (RPA)	C	24.3	F	100.8	D	31.9	F	128.8	B	17.1	C	20.3
Exit 107W	C	24.3	F	100.8	D	31.9	F	128.8	-	-	-	-
Exit 107 LoopW	C	25.9	F	96.4	D	34.8	F	111.7	-	-	-	-
Exit 106W	C	27.2	F	104.6	E	35.6	F	113.3	B	14.8	C	23.5
Exit 106 Loop	D	28.4	F	83.7	E	37.1	F	92.5				
Exit 104	D	28.4	E	43.6	E	42.1	F	47.8	C	24.7	E	44.8
Exit 103	B	18.1	D	32.5	C	24.1	E	36.3	C	20.9	E	35.3
Exit 102	C	22.0	E	36.1	D	28.3	E	37.5	C	23.6	E	43.9
Exit 102 Loop	B	16.1	D	30.4	C	21.9	D	28.1	C	20.1	D	33.0
Exit 101W	B	15.3	F	55.0	C	20.1	C	25.4	B	17.6	D	29.5
Exit 101 Loop	B	13.1	F	74.7	B	17.7	C	21.5	B	15.5	C	25.3

[1] Per Highway Capacity Manual 2010 criteria.

[2] Density expressed as PCE/per mile/per lane.

Diverge

Diverge Area	Existing Conditions				2040 No Build Conditions				2040 Build RRPA Conditions (unconstrained)			
	AM Peak Hour		PM Peak Hour		AM Peak Hour		PM Peak Hour		AM Peak Hour		PM Peak Hour	
	LOS[1]	Density[2]	LOS[1]	Density[2]	LOS[1]	Density[2]	LOS[1]	Density[2]	LOS[1]	Density[2]	LOS[1]	Density[2]
I-20 Eastbound												
Exit 61	E	36.7	B	19.4	F	72.0	B	18.6	E	40.1	B	19.2
Exit 63 (Existing) / CD Road (RPA)	F	52.5	C	22.9	F	71.6	D	29.7	D	31.6	B	16.6
Exit 64	B	19.0	B	13.5	C	20.7	D	29.3	-	-	-	-
Exit 64 Loop	D	33.2	C	23.9	E	37.2	E	38.0	-	-	-	-
Exit 65	C	25.3	C	22.5	C	28.0	F	68.8	-	-	-	-
Exit 68	E	35.1	C	24.8	E	39.8	C	26.5	F	64.1	C	27.4
I-20 Westbound												
Exit 68	D	30.2	D	34.2	E	40.3	F	117.7	C	26.9	F	54.4
Exit 65	B	19.8	F	53.6	C	26.1	F	121.4	D	32.4	E	37.5
CD Road	-	-	-	-	-	-	-	-	B	14.7	B	19.5
Exit 64	E	36.9	F	59.3	F	73.7	F	58.9	-	-	-	-
Exit 64 Loop	B	19.5	C	26.1	C	26.6	C	23.2	-	-	-	-
Exit 63	B	15.5	F	51.5	F	49.6	F	56.3	A	8.7	A	7.9
Exit 61	B	19.7	E	43.4	D	29.4	F	91.0	D	28.3	F	107.2

[1] Per Highway Capacity Manual 2010 criteria.

[2] Density expressed as PCE/per mile/per lane.

Diverge

Diverge Area	Existing Conditions				2040 No Build Conditions				2040 Build RRPA Conditions (unconstrained)			
	AM Peak Hour		PM Peak Hour		AM Peak Hour		PM Peak Hour		AM Peak Hour		PM Peak Hour	
	LOS[1]	Density[2]	LOS[1]	Density[2]	LOS[1]	Density[2]	LOS[1]	Density[2]	LOS[1]	Density[2]	LOS[1]	Density[2]
I-126 Eastbound												
Colonial Life Blvd	-	-	-	-	-	-	-	-	D	29.4	B	11.1
Greystone Blvd	B	15.6	B	11.3	B	15.9	B	17.0	D	33.3	B	17.6
I-126 Westbound												
Greystone Blvd	B	15.3	C	27.0	B	16.1	F	90.1	B	15.5	D	31.5
Colonial Life Blvd	B	12.2	D	29.6	A	8.7	F	76.1	B	10.0	C	23.2
To I-26 WB	B	12.1	F	63.6	B	13.0	F	108.4	B	10.1	C	23.2
To I-20	-	-	-	-	-	-	-	-	A	6.3	B	15.8

[1] Per Highway Capacity Manual 2010 criteria.

[2] Density expressed as PCE/per mile/per lane.

TransModeler 2040 Build RRPA (unconstrained) Freeway Speed Tables

Mainline

Freeway Segment	2040 Build RRPA Conditions (unconstrained) AM Peak Hour LOS[1]	AM Peak Hour Speed (mph)	PM Peak Hour LOS[1]	PM Peak Hour Speed (mph)
I-26 Eastbound				
Exit 104 to Exit 106	D	49	C	61
CD Road	-	34	-	48
Exit 107 to Exit 108[W]	E	38	C	47
Exit 106 to Exit 107[W]				
I-126 Diverge to I-126 Merge				
Exit 108 to Exit 110	C	61	C	60
east of Exit 110	C	62	C	60
I-26 Westbound				
east of Exit 110	D	56	D	62
Exit 110 to Exit 108	B	63	C	61
I-126 Diverge to I-126 Merge	B	66	B	65
Exit 108 to Exit 107[W]	C	52	D	50
Exit 107 to Exit 106[W]				
I-26 Merge to Exit 106				
CD Road	-	48	-	42
Exit 106 to Exit 104	D	49	F	37

[1] Per Highway Capacity Manual 2010 crite

[2] Density expressed as PCE/per mile/per l

[W] Weaving Section

Mainline

Freeway Segment	2040 Build RRPA Conditions (unconstrained) AM Peak Hour LOS[1]	AM Peak Hour Speed (mph)	PM Peak Hour LOS[1]	PM Peak Hour Speed (mph)
I-20 Eastbound				
Exit 61 to Exit 63	D	57	B	64
CD Road (east of Exit 63 on ramp)	-	46	-	51
Exit 63 to Exit 64	C	65	B	67
Exit 64 to Exit 65				
CD Road (west of Exit 65 on ramp)	-	43	-	43
Exit 65 to Exit 68	E	50	D	61
I-20 Westbound				
Exit 68 to Exit 65	D	61	D	60
CD Road (west of Exit 65 on ramp)	-	50	-	49
Exit 65 to Exit 64	A	63	A	62
Exit 64 to Exit 63[W]				
CD Road (east of Exit 63 on ramp)	-	50	-	47
Exit 63 to Exit 61	B	66	E	44

[1] Per Highway Capacity Manual 2010 crite

[2] Density expressed as PCE/per mile/per l

Mainline

Freeway Segment	2040 Build RRPA Conditions (unconstrained) AM Peak Hour LOS[1]	AM Peak Hour Speed (mph)	PM Peak Hour LOS[1]	PM Peak Hour Speed (mph)
I-126 Eastbound				
I-26 to Colonial Life Blvd	D	52	B	56
Colonial Life Blvd to Greystone Blvd	E	53	B	61
I-126 Westbound				
Greystone Blvd to Colonial Life Blvd	B	65	D	60
Colonial Life Blvd to I-26	B	66	D	52

[1] Per Highway Capacity Manual 2010 crite

[2] Density expressed as PCE/per mile/per l

Merge

Merge Area	2040 Build RRPA Conditions (unconstrained) AM Peak Hour		PM Peak Hour	
	LOS[1]	Speed (mph)	LOS[1]	Speed (mph)
I-26 Eastbound				
Exit 104	D	58	B	62
Exit 106 Loop	E	38	C	47
Exit 106W				
Exit 107 LoopW	B	63	B	63
Exit 107W				
Exit 108	-	-	-	-
Exit 108 (I-126)	C	59	C	57
Exit 110	C	62	C	61
I-26 Westbound				
Exit 110	B	63	C	62
Exit 108 (I-126)	B	62	C	54
Exit 108W	-	-	-	-
Exit 107 LoopW	C	49	E	43
Exit 107W				
Exit 106	C	50	E	45

[1] Per Highway Capacity Manual 2010 cri

[2] Density expressed as PCE/per mile/pe

[W] Weaving Section

Merge

Merge Area	2040 Build RRPA Conditions (unconstrained) AM Peak Hour		PM Peak Hour	
	LOS[1]	Speed (mph)	LOS[1]	Speed (mph)
I-20 Eastbound				
Exit 61	D	56	B	64
Exit 63 Loop	-	-	-	-
Exit 63	-	-	-	-
Exit 64 Loop	-	-	-	-
Exit 64	-	-	-	-
CD Road	C	57	C	58
Exit 65	E	44	C	50
I-20 Westbound				
Exit 68	D	60	D	60
Exit 65	A	63	A	62
Exit 64 Loop	-	-	-	-
Exit 64	-	-	-	-
CD Road	B	63	C	57
Exit 63	B	64	D	55

[1] Per Highway Capacity Manual 2010 cri

[2] Density expressed as PCE/per mile/pe

[W] Weaving Section

Merge

Merge Area	2040 Build RRPA Conditions (unconstrained) AM Peak Hour		PM Peak Hour	
	LOS[1]	Speed (mph)	LOS[1]	Speed (mph)
I-126 Eastbound				
From I-20	E	45	C	49
Colonial Life Blvd	D	49	B	62
I-126 Westbound				
Greystone Blvd	B	63	D	56
Colonial Life Blvd	A	65	B	58

[1] Per Highway Capacity Manual 2010 cri

[2] Density expressed as PCE/per mile/pe

Diverge

Diverge Area	2040 Build RRPA Conditions (unconstrained) AM Peak Hour LOS[1]	AM Peak Hour Speed (mph)	PM Peak Hour LOS[1]	PM Peak Hour Speed (mph)
I-26 Eastbound				
Exit 106	C	31	B	59
CD Road	F	**23**	C	51
Exit 107W	-	-	-	-
Exit 107 LoopW	-	-	-	-
Exit 108W	-	-	-	-
I-26 to I-26	E	38	C	47
Exit 110	C	64	C	63
I-26 Westbound				
Exit 110	F	36	D	58
Exit 108 (Existing) / To I-20 (RPA)	B	58	C	56
Exit 107W	-	-	-	-
Exit 107 LoopW	-	-	-	-
Exit 106W	B	60	C	58
Exit 106 Loop				
Exit 104	C	52	E	42

[1] Per Highway Capacity Manual 2010 cri

[2] Density expressed as PCE/per mile/pe

Diverge

Diverge Area	2040 Build RRPA Conditions (unconstrained) AM Peak Hour LOS[1]	AM Peak Hour Speed (mph)	PM Peak Hour LOS[1]	PM Peak Hour Speed (mph)
I-20 Eastbound				
Exit 63 (Existing) / CD Road (RPA)	D	61	B	62
Exit 64	-	-	-	-
Exit 64 Loop	-	-	-	-
Exit 65	-	-	-	-
Exit 68	F	32	C	56
I-20 Westbound				
Exit 65	D	57	E	49
CD Road	B	60	B	57
Exit 64	-	-	-	-
Exit 64 Loop	-	-	-	-
Exit 63	A	62	A	64
Exit 61	D	36	F	18

[1] Per Highway Capacity Manual 2010 cri

[2] Density expressed as PCE/per mile/pe

Diverge

Diverge Area	2040 Build RRPA Conditions (unconstrained) AM Peak Hour LOS[1]	AM Peak Hour Speed (mph)	PM Peak Hour LOS[1]	PM Peak Hour Speed (mph)
I-126 Eastbound				
Colonial Life Blvd	D	52	B	56
Greystone Blvd	D	43	B	46
I-126 Westbound				
Greystone Blvd	B	64	D	59
Colonial Life Blvd	B	61	C	57
To I-26 WB	B	63	C	59
To I-20	A	65	B	50

[1] Per Highway Capacity Manual 2010 cri

[2] Density expressed as PCE/per mile/pe

TransModeler 2040 Build RRPA (constrained) Freeway Speed Tables

Refined Recommended Preferred Alternative (constrained)
Segment Speeds

Mainline

Freeway Segment	2040 Build RRPA Conditions (constrained) AM Peak Hour LOS[1]	AM Peak Hour Speed (mph)	PM Peak Hour LOS[1]	PM Peak Hour Speed (mph)
I-26 Eastbound				
Exit 104 to Exit 106	D	49	C	61
CD Road	-	34	-	48
Exit 107 to Exit 108[W]	E	38	C	47
Exit 106 to Exit 107[W]				
I-126 Diverge to I-126 Merge				
Exit 108 to Exit 110	C	61	C	60
east of Exit 110	C	63	C	60
I-26 Westbound				
east of Exit 110	D	52	D	62
Exit 110 to Exit 108	B	63	C	61
I-126 Diverge to I-126 Merge	B	65	B	65
Exit 108 to Exit 107[W]	C	52	D	50
Exit 107 to Exit 106[W]				
I-26 Merge to Exit 106				
CD Road	-	48	-	44
Exit 106 to Exit 104	D	48	F	42

[1] Per Highway Capacity Manual 2010 crit

[2] Density expressed as PCE/per mile/per

[W] Weaving Section

Mainline

Freeway Segment	2040 Build RRPA Conditions (constrained) AM Peak Hour LOS[1]	AM Peak Hour Speed (mph)	PM Peak Hour LOS[1]	PM Peak Hour Speed (mph)
I-20 Eastbound				
Exit 61 to Exit 63	D	59	B	65
CD Road (east of Exit 63 on ramp)	-	46	-	51
Exit 63 to Exit 64	C	64	A	67
Exit 64 to Exit 65				
CD Road (west of Exit 65 off ramp)	-	16	-	44
Exit 65 to Exit 68	F	53	E	57
I-20 Westbound				
Exit 68 to Exit 65	D	54	E	43
CD Road (west of Exit 65 on ramp)	-	50	-	50
Exit 65 to Exit 64	A	64	A	62
Exit 64 to Exit 63[W]				
CD Road (east of Exit 63 off ramp)	-	50	-	46
Exit 63 to Exit 61	B	64	F	14

[1] Per Highway Capacity Manual 2010 crit

[2] Density expressed as PCE/per mile/per

Mainline

Freeway Segment	2040 Build RRPA Conditions (constrained) AM Peak Hour LOS[1]	AM Peak Hour Speed (mph)	PM Peak Hour LOS[1]	PM Peak Hour Speed (mph)
I-126 Eastbound				
I-26 to Colonial Life Blvd	D	52	A	56
Colonial Life Blvd to Greystone Blvd	E	54	B	61
I-126 Westbound				
Greystone Blvd to Colonial Life Blvd	B	65	D	60
Colonial Life Blvd to I-26	B	66	D	52

[1] Per Highway Capacity Manual 2010 crit

[2] Density expressed as PCE/per mile/per

Refined Recommended Preferred Alternative (constrained)
Segment Speeds

Merge

Merge Area	2040 Build RRPA Conditions (constrained) AM Peak Hour LOS[1]	AM Peak Hour Speed (mph)	PM Peak Hour LOS[1]	PM Peak Hour Speed (mph)
I-26 Eastbound				
Exit 104	C	58	C	62
Exit 106 Loop	E	38	C	47
Exit 106W				
Exit 107 LoopW	B	63	B	63
Exit 107W				
Exit 108	-	-	-	-
Exit 108 (I-126)	C	60	C	57
Exit 110	C	63	C	61
I-26 Westbound				
Exit 110	B	63	C	62
Exit 108 (I-126)	B	62	C	54
Exit 108W	-	-	-	-
Exit 107 LoopW	C	49	E	45
Exit 107W				
Exit 106	C	49	E	45

[1] Per Highway Capacity Manual 2010 cri
[2] Density expressed as PCE/per mile/pe
[W] Weaving Section

Merge

Merge Area	2040 Build RRPA Conditions (constrained) AM Peak Hour LOS[1]	AM Peak Hour Speed (mph)	PM Peak Hour LOS[1]	PM Peak Hour Speed (mph)
I-20 Eastbound				
Exit 61	D	57	B	64
Exit 63 Loop	-	-	-	-
Exit 63	-	-	-	-
CD Road (east of Exit 63 on ramp)	-	-	-	-
Exit 64	-	-	-	-
CD Road	F	14	B	58
Exit 65	F	13	D	48
I-20 Westbound				
Exit 68	F	52	E	33
Exit 65	F	64	A	62
Exit 64 Loop	-	-	-	-
Exit 64	-	-	-	-
CD Road	B	63	F	51
Exit 63	B	64	F	20

[1] Per Highway Capacity Manual 2010 cri
[2] Density expressed as PCE/per mile/pe
[W] Weaving Section

Merge

Merge Area	2040 Build RRPA Conditions (constrained) AM Peak Hour LOS[1]	AM Peak Hour Speed (mph)	PM Peak Hour LOS[1]	PM Peak Hour Speed (mph)
I-126 Eastbound				
From I-20	E	45	C	49
Colonial Life Blvd	D	50	B	62
I-126 Westbound				
Greystone Blvd	B	63	D	56
Colonial Life Blvd	A	65	B	57

[1] Per Highway Capacity Manual 2010 cri
[2] Density expressed as PCE/per mile/pe

Refined Recommended Preferred Alternative (constrained)
Segment Speeds

Diverge

Diverge Area	2040 Build RRPA Conditions (constrained) AM Peak Hour LOS[1]	AM Peak Hour Speed (mph)	PM Peak Hour LOS[1]	PM Peak Hour Speed (mph)
I-26 Eastbound				
Exit 106	C	30	B	59
CD Road	F	23	C	51
Exit 107W	-	-	-	-
Exit 107 LoopW	-	-	-	-
Exit 108W	-	-	-	-
I-26 to I-26	E	38	C	47
Exit 110	C	64	C	63
I-26 Westbound				
Exit 110	F	32	D	58
Exit 108 (Existing) / To I-20 (RPA)	B	58	C	56
Exit 107W	-	-	-	-
Exit 107 LoopW	-	-	-	-
Exit 106W	B	60	C	58
Exit 106 Loop				
Exit 104	C	51	F	45

[1] Per Highway Capacity Manual 2010 cri

[2] Density expressed as PCE/per mile/per lane.

Diverge

Diverge Area	2040 Build RRPA Conditions (constrained) AM Peak Hour LOS[1]	AM Peak Hour Speed (mph)	PM Peak Hour LOS[1]	PM Peak Hour Speed (mph)
I-20 Eastbound				
Exit 63 (Existing) / CD Road (RPA)	D	61	B	63
Exit 64	-	-	-	-
Exit 64 Loop	-	-	-	-
Exit 65	-	-	-	-
Exit 68	F	51	E	54
I-20 Westbound				
Exit 65	D	57	F	57
CD Road	B	60	B	59
Exit 64	-	-	-	-
Exit 64 Loop	-	-	-	-
Exit 63	A	62	A	64
Exit 61	E	45	F	23

[1] Per Highway Capacity Manual 2010 cri

[2] Density expressed as PCE/per mile/per

Diverge

Diverge Area	2040 Build RRPA Conditions (constrained) AM Peak Hour LOS[1]	AM Peak Hour Speed (mph)	PM Peak Hour LOS[1]	PM Peak Hour Speed (mph)
I-126 Eastbound				
Colonial Life Blvd	D	52	B	56
Greystone Blvd	D	43	B	45
I-126 Westbound				
Greystone Blvd	B	64	D	59
Colonial Life Blvd	B	61	C	57
To I-26 WB	B	63	C	59
To I-20	A	64	B	51

[1] Per Highway Capacity Manual 2010 cri

[2] Density expressed as PCE/per mile/per

Appendix E—TransModeler Intersection Analysis Outputs

2015 Existing AM

Node	Superlink	Run	Average Control Delay	Approach Street Name	Direction	Intersection
4	5081	1	4.053475	BROAD RIVER RD	W	WESTERN LN & BROAD RIVER RD
4	5081	2	3.691578			
4	5081	3	4.5			
4	5081	4	4.3			
4	5081	5	3.6			
4	5081	6	3.770289			
4	5081	7	3.662427			
4	5081	8	3.3			
4	5081	9	3.0			
4	5081	10	3.6			
4	6465	1	6.791705	WESTERN LN	S	WESTERN LN & BROAD RIVER RD
4	6465	2	6.255169			
4	6465	3	6.4			
4	6465	4	6.7			
4	6465	5	5.824553			
4	6465	6	7.05323			
4	6465	7	6.5			
4	6465	8	6.4			
4	6465	9	7.0			
4	6465	10	5.96254			
4	6466	1	4.45747	BROAD RIVER RD	E	WESTERN LN & BROAD RIVER RD
4	6466	2	4.6			
4	6466	3	4.2			
4	6466	4	4.005102			
4	6466	5	4.735423			
4	6466	6	4.2			
4	6466	7	4.5			
4	6466	8	4.137388			
4	6466	9	4.349327			
4	6466	10	4.7			
4	6467	1	6.7	WESTERN LN	N	WESTERN LN & BROAD RIVER RD
4	6467	2	6.5			
4	6467	3	7.17641			
4	6467	4	7.668935			
4	6467	5	6.3			
4	6467	6	7.1			
4	6467	7	6.8			
4	6467	8	7.318074			
4	6467	9	6.163217			
4	6467	10	6.6			
11	5487	1	0.0	MORNINGHILL DR	N	MORNINGHILL DR & BURNETTE DR
11	5487	2	0			
11	5487	3	0			
11	5487	4	0.0			
11	5487	5	0.0			
11	5487	6	0.0			
11	5487	7	0			
11	5487	8	0			
11	5487	9	0.0			
11	5487	10	0.0			
11	6536	1		MORNINGHILL DR	S	MORNINGHILL DR & BURNETTE DR
11	6536	2				
11	6536	3				
11	6536	4				
11	6536	5				
11	6536	6				
11	6536	7				
11	6536	8				
11	6536	9				
11	6536	10				
11	6537	1	0	BURNETTE DR	E	MORNINGHILL DR & BURNETTE DR
11	6537	2	0.0			
11	6537	3	0.0			
11	6537	4	0.0			
11	6537	5	0.0			
11	6537	6	0			
11	6537	7	0			
11	6537	8	0.0			
11	6537	9	0.0			
11	6537	10	0.0			
26	5488	1	0	RAMP	S	RAMP & 6502 (NW)
26	5488	2	0			
26	5488	3	0.0			
26	5488	4	0.0			
26	5488	5	0.0			
26	5488	6	0			
26	5488	7	0			
26	5488	8	0.0			
26	5488	9	0.0			
26	5488	10	0.0			
26	6501	1	10.078743	RAMP	N	RAMP & 6502 (NW)
26	6501	2	8.151267			
26	6501	3	9.8			
26	6501	4	8.5			
26	6501	5	9.7			
26	6501	6	8.057293			
26	6501	7	8.65725			
26	6501	8	9.0			
26	6501	9	8.7			
26	6501	10	8.2			
26	6502	1	0		SE	RAMP & 6502 (NW)
26	6502	2	0			
26	6502	3	0.0			
26	6502	4	0.0			
26	6502	5	0.0			
26	6502	6	0			

Node	Superlink	Run	Average Control Delay	Approach Street Name	Direction	Intersection
26	6502	7	0			
26	6502	8	0.0			
26	6502	9	0.0			
26	6502	10	0.0			
28	5140	1	0	GREYSTONE BLVD	S	GREYSTONE BLVD & CANDI LN
28	5140	2	0			
28	5140	3	0.0			
28	5140	4	0			
28	5140	5	0			
28	5140	6	0.0			
28	5140	7	0.0			
28	5140	8	0			
28	5140	9	0			
28	5140	10	0.0			
28	6506	1	7.0	GREYSTONE BLVD	W	GREYSTONE BLVD & CANDI LN
28	6506	2	6.665477			
28	6506	3	6.458674			
28	6506	4	6.5			
28	6506	5	6.4			
28	6506	6	6.8			
28	6506	7	6.685291			
28	6506	8	6.505632			
28	6506	9	6.7			
28	6506	10	6.8			
28	6507	1		CANDI LN	E	GREYSTONE BLVD & CANDI LN
28	6507	2				
28	6507	3				
28	6507	4				
28	6507	5				
28	6507	6				
28	6507	7				
28	6507	8				
28	6507	9				
28	6507	10				
41	6518	1	1.916767	BROAD RIVER RD	NW	DUTCH SQUARE BLVD & BROAD RIVER RD
41	6518	2	1.484282			
41	6518	3	2.0			
41	6518	4	1.3			
41	6518	5	1.4			
41	6518	6	1.332684			
41	6518	7	1.29434			
41	6518	8	1.3			
41	6518	9	2.1			
41	6518	10	2.2			
41	6519	1	44.814382	DUTCH SQUARE BLVD	E	DUTCH SQUARE BLVD & BROAD RIVER RD
41	6519	2	42.421504			
41	6519	3	39.0			
41	6519	4	46.7			
41	6519	5	42.2			
41	6519	6	44.718741			
41	6519	7	41.075583			
41	6519	8	40.6			
41	6519	9	41.4			
41	6519	10	42.369209			
41	6521	1	0.62158	BROAD RIVER RD	SE	DUTCH SQUARE BLVD & BROAD RIVER RD
41	6521	2	0.6			
41	6521	3	0.7			
41	6521	4	0.7			
41	6521	5	0.964764			
41	6521	6	0.846938			
41	6521	7	0.8			
41	6521	8	1.0			
41	6521	9	0.752756			
41	6521	10	1.064855			
43	6519	1		DUTCH SQUARE BLVD	W	DUTCH SQUARE BLVD & 6522 (N)
43	6519	2				
43	6519	3				
43	6519	4				
43	6519	5				
43	6519	6				
43	6519	7				
43	6519	8				
43	6519	9				
43	6519	10				
43	6520	1	17.069966	DUTCH SQUARE BLVD	E	DUTCH SQUARE BLVD & 6522 (N)
43	6520	2	17.0			
43	6520	3	16.5			
43	6520	4	14.2			
43	6520	5	12.282679			
43	6520	6	15.060517			
43	6520	7	19.8			
43	6520	8	18.1			
43	6520	9	20.188677			
43	6520	10	19.881294			
43	6522	1	0.0		SW	DUTCH SQUARE BLVD & 6522 (N)
43	6522	2	0.0			
43	6522	3	0			
43	6522	4	0			
43	6522	5	0.0			
43	6522	6	0.0			
43	6522	7	0.0			
43	6522	8	0			
43	6522	9	0			
43	6522	10	0			
46	6273	1	0.0	PARKRIDGE DR	NE	PARKRIDGE DR & 6555 (NE)
46	6273	2	0.0			
46	6273	3	0			
46	6273	4	0			
46	6273	5	0.0			
46	6273	6	0.0			
46	6273	7	0.0			
46	6273	8	0			
46	6273	9	0			
46	6273	10	0.0			
46	6555	1			SW	PARKRIDGE DR & 6555 (NE)
46	6555	2				
46	6555	3				
46	6555	4				
46	6555	5				
46	6555	6				
46	6555	7				
46	6555	8				

Node	Superlink	Run	Average Control Delay	Approach Street Name	Direction	Intersection
46	6555	9				
46	6555	10				
46	6556	1	26.834216	PARKRIDGE DR	SE	PARKRIDGE DR & 6555 (NE)
46	6556	2	25.269403			
46	6556	3	24.555727			
46	6556	4	25.3252			
46	6556	5	29.461545			
46	6556	6	28.261439			
46	6556	7	26.963476			
46	6556	8	20.524273			
46	6556	9	23.902378			
46	6556	10	22.69317			
100000012	5081	1	30.052793	BROAD RIVER RD	SE	KINLEY RD, BROAD RIVER RD & KENNERLY RD
100000012	5081	2	32.036483			
100000012	5081	3	28.79136			
100000012	5081	4	28.456142			
100000012	5081	5	32.898263			
100000012	5081	6	31.036821			
100000012	5081	7	29.027517			
100000012	5081	8	25.485975			
100000012	5081	9	25.814645			
100000012	5081	10	28.518273			
100000012	6276	1	36.951203	KINLEY RD	N	KINLEY RD, BROAD RIVER RD & KENNERLY RD
100000012	6276	2	45.558761			
100000012	6276	3	55.545282			
100000012	6276	4	39.866875			
100000012	6276	5	41.821727			
100000012	6276	6	44.692414			
100000012	6276	7	48.728065			
100000012	6276	8	35.42195			
100000012	6276	9	39.46841			
100000012	6276	10	41.835876			
100000012	6307	1	190.567557	KENNERLY RD	S	KINLEY RD, BROAD RIVER RD & KENNERLY RD
100000012	6307	2	204.947154			
100000012	6307	3	200.669135			
100000012	6307	4	226.827703			
100000012	6307	5	210.947665			
100000012	6307	6	165.197102			
100000012	6307	7	186.394143			
100000012	6307	8	211.202795			
100000012	6307	9	198.346193			
100000012	6307	10	188.497613			
100000012	6308	1	21.102292	BROAD RIVER RD	NW	KINLEY RD, BROAD RIVER RD & KENNERLY RD
100000012	6308	2	24.116709			
100000012	6308	3	23.971598			
100000012	6308	4	22.397916			
100000012	6308	5	22.803142			
100000012	6308	6	24.290182			
100000012	6308	7	23.808231			
100000012	6308	8	20.806895			
100000012	6308	9	22.6048			
100000012	6308	10	23.13655			
100000025	6267	1	0	PARKRIDGE DR	NW	CLUB RD & PARKRIDGE DR
100000025	6267	2	0			
100000025	6267	3	0			
100000025	6267	4	0			
100000025	6267	5	0			
100000025	6267	6	0			
100000025	6267	7	0			
100000025	6267	8	0			
100000025	6267	9	0			
100000025	6267	10	0			
100000025	6273	1	0	PARKRIDGE DR	SE	CLUB RD & PARKRIDGE DR
100000025	6273	2	0			
100000025	6273	3	0			
100000025	6273	4	0			
100000025	6273	5	0			
100000025	6273	6	0			
100000025	6273	7	0			
100000025	6273	8	0			
100000025	6273	9	0			
100000025	6273	10	0			
100000025	6304	1		CLUB RD	S	CLUB RD & PARKRIDGE DR
100000025	6304	2				
100000025	6304	3				
100000025	6304	4				
100000025	6304	5				
100000025	6304	6				
100000025	6304	7				
100000025	6304	8				
100000025	6304	9				
100000025	6304	10				
100000037	5101	1	17.553771	HARBISON BLVD	NE	BROAD RIVER RD & HARBISON BLVD
100000037	5101	2	15.905319			
100000037	5101	3	17.915507			
100000037	5101	4	16.283069			
100000037	5101	5	18.93931			
100000037	5101	6	18.994126			
100000037	5101	7	19.347293			
100000037	5101	8	16.741527			
100000037	5101	9	17.554325			
100000037	5101	10	19.008742			
100000037	6317	1	9.754298	BROAD RIVER RD	SE	BROAD RIVER RD & HARBISON BLVD
100000037	6317	2	9.989346			
100000037	6317	3	11.191422			
100000037	6317	4	13.084619			
100000037	6317	5	11.105328			
100000037	6317	6	11.194395			
100000037	6317	7	11.507067			
100000037	6317	8	11.799339			
100000037	6317	9	11.601799			
100000037	6317	10	11.41888			
100000037	6320	1	5.236666	BROAD RIVER RD	NW	BROAD RIVER RD & HARBISON BLVD
100000037	6320	2	4.390264			
100000037	6320	3	4.503016			
100000037	6320	4	3.009614			
100000037	6320	5	5.309062			
100000037	6320	6	4.664188			
100000037	6320	7	3.345425			
100000037	6320	8	5.201537			
100000037	6320	9	4.86552			
100000037	6320	10	4.360873			

Node	Superlink	Run	Average Control Delay	Approach Street Name	Direction	Intersection
100000038	6232	1	0	BROAD RIVER RD	NW	BROAD RIVER RD & 6311 (S)
100000038	6232	2	0			
100000038	6232	3	0			
100000038	6232	4	0			
100000038	6232	5	0			
100000038	6232	6	0			
100000038	6232	7	0			
100000038	6232	8	0			
100000038	6232	9	0			
100000038	6232	10	0			
100000038	6311	1	9.6364		N	BROAD RIVER RD & 6311 (S)
100000038	6311	2	8.154519			
100000038	6311	3				
100000038	6311	4	28.178238			
100000038	6311	5				
100000038	6311	6				
100000038	6311	7	5.657135			
100000038	6311	8				
100000038	6311	9	7.871399			
100000038	6311	10				
100000038	6312	1	0	BROAD RIVER RD	SE	BROAD RIVER RD & 6311 (S)
100000038	6312	2	0.011094			
100000038	6312	3	0			
100000038	6312	4	0			
100000038	6312	5	0			
100000038	6312	6	0			
100000038	6312	7	0.027541			
100000038	6312	8	0			
100000038	6312	9	0			
100000038	6312	10	0			
100000041	6281	1	0	LAKE MURRAY BLVD	W	LAKE MURRAY BLVD & 6311 (N)
100000041	6281	2	0			
100000041	6281	3	0			
100000041	6281	4	0			
100000041	6281	5	0			
100000041	6281	6	0			
100000041	6281	7	0			
100000041	6281	8	0			
100000041	6281	9	0			
100000041	6281	10	0			
100000041	6311	1			SW	LAKE MURRAY BLVD & 6311 (N)
100000041	6311	2				
100000041	6311	3				
100000041	6311	4				
100000041	6311	5				
100000041	6311	6				
100000041	6311	7				
100000041	6311	8				
100000041	6311	9				
100000041	6311	10				
100000041	6313	1	0.084892	LAKE MURRAY BLVD	E	LAKE MURRAY BLVD & 6311 (N)
100000041	6313	2	0.043843			
100000041	6313	3	0			
100000041	6313	4	0.025148			
100000041	6313	5	0			
100000041	6313	6	0			
100000041	6313	7	0.269182			
100000041	6313	8	0			
100000041	6313	9	0.403418			
100000041	6313	10	0			
100000046	5511	1	24.486187	BUSH RIVER RD	E	BUSH RIVER RD, BROAD RIVER RD & ELM ABODE TER
100000046	5511	2	24.801094			
100000046	5511	3	26.469303			
100000046	5511	4	27.267728			
100000046	5511	5	28.944789			
100000046	5511	6	27.113446			
100000046	5511	7	30.293289			
100000046	5511	8	27.013799			
100000046	5511	9	27.005246			
100000046	5511	10	26.913172			
100000046	6323	1	154.606766	BROAD RIVER RD	NW	BUSH RIVER RD, BROAD RIVER RD & ELM ABODE TER
100000046	6323	2	174.797798			
100000046	6323	3	121.070221			
100000046	6323	4	153.56638			
100000046	6323	5	169.991633			
100000046	6323	6	203.489625			
100000046	6323	7	146.491599			
100000046	6323	8	166.560816			
100000046	6323	9	134.334289			
100000046	6323	10	103.454308			
100000046	6324	1	71.787387	ELM ABODE TER	SW	BUSH RIVER RD, BROAD RIVER RD & ELM ABODE TER
100000046	6324	2	47.461018			
100000046	6324	3	56.800238			
100000046	6324	4	51.025552			
100000046	6324	5	89.590386			
100000046	6324	6	50.627874			
100000046	6324	7	85.381279			
100000046	6324	8	40.917128			
100000046	6324	9	47.083017			
100000046	6324	10	46.301909			
100000046	6518	1	22.088302	BROAD RIVER RD	SE	BUSH RIVER RD, BROAD RIVER RD & ELM ABODE TER
100000046	6518	2	22.677685			
100000046	6518	3	21.246872			
100000046	6518	4	24.295066			
100000046	6518	5	25.51602			
100000046	6518	6	24.026278			
100000046	6518	7	27.530483			
100000046	6518	8	21.735141			
100000046	6518	9	23.294457			
100000046	6518	10	23.105674			
100000049	6318	1	73.774931	LOST CREEK DR	S	LOST CREEK DR, BROAD RIVER RD & PINEY WOODS RD
100000049	6318	2	62.824281			
100000049	6318	3	76.049805			
100000049	6318	4	76.009402			
100000049	6318	5	63.86191			
100000049	6318	6	71.367944			
100000049	6318	7	67.711146			
100000049	6318	8	68.303344			
100000049	6318	9	77.798784			
100000049	6318	10	66.429866			
100000049	6319	1	20.5592	PINEY WOODS RD	N	LOST CREEK DR, BROAD RIVER RD & PINEY WOODS RD
100000049	6319	2	19.713045			

Node	Superlink	Run	Average Control Delay	Approach Street Name	Direction	Intersection
100000049	6319	3	18.12807			
100000049	6319	4	17.045097			
100000049	6319	5	18.342933			
100000049	6319	6	19.914077			
100000049	6319	7	17.607886			
100000049	6319	8	21.619286			
100000049	6319	9	19.065286			
100000049	6319	10	17.826069			
100000049	6320	1	12.0655	BROAD RIVER RD	SE	LOST CREEK DR, BROAD RIVER RD & PINEY WOODS RD
100000049	6320	2	12.028341			
100000049	6320	3	12.336024			
100000049	6320	4	13.053846			
100000049	6320	5	8.653137			
100000049	6320	6	10.652277			
100000049	6320	7	15.646124			
100000049	6320	8	11.501573			
100000049	6320	9	13.890235			
100000049	6320	10	12.010395			
100000049	6322	1	8.765103	BROAD RIVER RD	NW	LOST CREEK DR, BROAD RIVER RD & PINEY WOODS RD
100000049	6322	2	6.641061			
100000049	6322	3	7.200488			
100000049	6322	4	8.152131			
100000049	6322	5	7.439303			
100000049	6322	6	9.36003			
100000049	6322	7	7.44594			
100000049	6322	8	7.459336			
100000049	6322	9	7.593564			
100000049	6322	10	9.050521			
100000068	6321	1	9.980311	PINEY GROVE RD	E	BROAD RIVER RD & PINEY GROVE RD
100000068	6321	2	10.888484			
100000068	6321	3	9.314896			
100000068	6321	4	11.024547			
100000068	6321	5	9.793986			
100000068	6321	6	12.853679			
100000068	6321	7	9.924431			
100000068	6321	8	13.024579			
100000068	6321	9	9.988737			
100000068	6321	10	12.878387			
100000068	6322	1	2.904667	BROAD RIVER RD	SE	BROAD RIVER RD & PINEY GROVE RD
100000068	6322	2	2.863228			
100000068	6322	3	2.747439			
100000068	6322	4	2.968537			
100000068	6322	5	2.657897			
100000068	6322	6	2.835053			
100000068	6322	7	2.711095			
100000068	6322	8	2.336182			
100000068	6322	9	2.278681			
100000068	6322	10	2.705387			
100000068	6357	1	3.187238	BROAD RIVER RD	NW	BROAD RIVER RD & PINEY GROVE RD
100000068	6357	2	2.650426			
100000068	6357	3	3.767907			
100000068	6357	4	4.220662			
100000068	6357	5	3.099178			
100000068	6357	6	3.61339			
100000068	6357	7	4.038323			
100000068	6357	8	2.455816			
100000068	6357	9	3.760328			
100000068	6357	10	3.616453			
100000085	6325	1	0.039015	BROAD RIVER RD	E	BROAD RIVER RD, RIVERHILL CIR & RT
100000085	6325	2	0.083197			
100000085	6325	3	0.051368			
100000085	6325	4	0.058507			
100000085	6325	5	0.042537			
100000085	6325	6	0.035625			
100000085	6325	7	0.085777			
100000085	6325	8	0.068824			
100000085	6325	9	0.051483			
100000085	6325	10	0.061009			
100000085	6329	1	5.103786	RT	E	BROAD RIVER RD, RIVERHILL CIR & RT
100000085	6329	2	5.104957			
100000085	6329	3	4.67461			
100000085	6329	4	3.409965			
100000085	6329	5	5.146657			
100000085	6329	6	5.121843			
100000085	6329	7	4.826756			
100000085	6329	8	5.224156			
100000085	6329	9	4.115345			
100000085	6329	10	6.254469			
100000085	6330	1	1.808346	BROAD RIVER RD	W	BROAD RIVER RD, RIVERHILL CIR & RT
100000085	6330	2	2.367701			
100000085	6330	3	1.30313			
100000085	6330	4	1.264091			
100000085	6330	5	2.605834			
100000085	6330	6	1.84915			
100000085	6330	7	2.55966			
100000085	6330	8	2.127169			
100000085	6330	9	1.420798			
100000085	6330	10	2.551566			
100000085	6331	1	5.32564	RIVERHILL CIR	W	BROAD RIVER RD, RIVERHILL CIR & RT
100000085	6331	2	5.519401			
100000085	6331	3	3.952896			
100000085	6331	4	5.508616			
100000085	6331	5	4.649449			
100000085	6331	6	3.507532			
100000085	6331	7	5.525246			
100000085	6331	8	2.803116			
100000085	6331	9	3.37169			
100000085	6331	10	2.733385			
100000093	4299	1	33.848792	RAMP	SW	SUNSET BLVD & RAMP
100000093	4299	2	40.940227			
100000093	4299	3	33.75952			
100000093	4299	4	39.430191			
100000093	4299	5	38.610839			
100000093	4299	6	42.059087			
100000093	4299	7	39.823217			
100000093	4299	8	38.5931			
100000093	4299	9	41.13302			
100000093	4299	10	37.794795			
100000093	4949	1	13.687634	SUNSET BLVD	E	SUNSET BLVD & RAMP
100000093	4949	2	13.792468			
100000093	4949	3	10.468259			
100000093	4949	4	13.272343			

Node	Superlink	Run	Average Control Delay	Approach Street Name	Direction	Intersection
100000093	4949	5	14.169239			
100000093	4949	6	11.367672			
100000093	4949	7	11.113769			
100000093	4949	8	12.273302			
100000093	4949	9	13.546875			
100000093	4949	10	10.62564			
100000093	4950	1	0.090979	SUNSET BLVD	W	SUNSET BLVD & RAMP
100000093	4950	2	0.0964			
100000093	4950	3	0.041573			
100000093	4950	4	0.126827			
100000093	4950	5	0.050186			
100000093	4950	6	0.013136			
100000093	4950	7	0.019912			
100000093	4950	8	0.030063			
100000093	4950	9	0.036721			
100000093	4950	10	0.087157			
100000120	5031	1	11.580091	SUNSET BLVD	W	CORLEY MILL RD, SUNSET BLVD & GINNY LN
100000120	5031	2	11.251568			
100000120	5031	3	11.617075			
100000120	5031	4	11.365916			
100000120	5031	5	11.269333			
100000120	5031	6	11.748848			
100000120	5031	7	11.169557			
100000120	5031	8	11.290056			
100000120	5031	9	11.354672			
100000120	5031	10	10.966971			
100000120	5352	1	14.193418	CORLEY MILL RD	S	CORLEY MILL RD, SUNSET BLVD & GINNY LN
100000120	5352	2	14.201777			
100000120	5352	3	13.726885			
100000120	5352	4	14.731614			
100000120	5352	5	14.114036			
100000120	5352	6	13.513407			
100000120	5352	7	13.746702			
100000120	5352	8	13.833211			
100000120	5352	9	14.318289			
100000120	5352	10	13.494154			
100000120	5353	1	27.56779	GINNY LN	N	CORLEY MILL RD, SUNSET BLVD & GINNY LN
100000120	5353	2	29.046788			
100000120	5353	3	29.100833			
100000120	5353	4	27.920681			
100000120	5353	5	32.382511			
100000120	5353	6	32.240923			
100000120	5353	7	29.878876			
100000120	5353	8	27.736852			
100000120	5353	9	27.828659			
100000120	5353	10	34.062109			
100000120	5355	1	32.620623	SUNSET BLVD	E	CORLEY MILL RD, SUNSET BLVD & GINNY LN
100000120	5355	2	30.666224			
100000120	5355	3	32.05063			
100000120	5355	4	32.526639			
100000120	5355	5	35.945077			
100000120	5355	6	43.26107			
100000120	5355	7	35.797859			
100000120	5355	8	30.570943			
100000120	5355	9	27.691806			
100000120	5355	10	28.724946			
100000134	2048	1	25.854202	RAMP	SW	SUNSET BLVD & RAMP
100000134	2048	2	23.663142			
100000134	2048	3	24.539477			
100000134	2048	4	24.096057			
100000134	2048	5	24.648146			
100000134	2048	6	23.150256			
100000134	2048	7	26.017686			
100000134	2048	8	23.259061			
100000134	2048	9	23.700191			
100000134	2048	10	23.025156			
100000134	5027	1	4.303223	SUNSET BLVD	NW	SUNSET BLVD & RAMP
100000134	5027	2	4.453312			
100000134	5027	3	4.45668			
100000134	5027	4	4.361924			
100000134	5027	5	4.569486			
100000134	5027	6	5.107332			
100000134	5027	7	3.742612			
100000134	5027	8	4.231276			
100000134	5027	9	4.1237			
100000134	5027	10	4.589635			
100000134	5030	1	3.78278	SUNSET BLVD	SE	SUNSET BLVD & RAMP
100000134	5030	2	3.699464			
100000134	5030	3	3.884836			
100000134	5030	4	3.645628			
100000134	5030	5	3.898926			
100000134	5030	6	4.246387			
100000134	5030	7	3.923378			
100000134	5030	8	3.686358			
100000134	5030	9	3.659854			
100000134	5030	10	4.051848			
100000135	2039	1	12.146383	I-20 EB OFF-RAMP	NE	SUNSET BLVD & I-20 EB OFF-RAMP
100000135	2039	2	12.760306			
100000135	2039	3	13.509274			
100000135	2039	4	11.744697			
100000135	2039	5	11.981939			
100000135	2039	6	13.545581			
100000135	2039	7	11.902616			
100000135	2039	8	13.216761			
100000135	2039	9	12.884112			
100000135	2039	10	11.8843			
100000135	5022	1	5.415962	SUNSET BLVD	SE	SUNSET BLVD & I-20 EB OFF-RAMP
100000135	5022	2	6.648378			
100000135	5022	3	5.44561			
100000135	5022	4	5.673594			
100000135	5022	5	5.268435			
100000135	5022	6	7.025449			
100000135	5022	7	5.248598			
100000135	5022	8	5.527496			
100000135	5022	9	4.711816			
100000135	5022	10	5.11813			
100000135	5023	1	4.281547	SUNSET BLVD	NW	SUNSET BLVD & I-20 EB OFF-RAMP
100000135	5023	2	5.382638			
100000135	5023	3	5.154917			
100000135	5023	4	5.247721			
100000135	5023	5	5.406418			
100000135	5023	6	5.245215			

Node	Superlink	Run	Average Control Delay	Approach Street Name	Direction	Intersection
100000135	5023	7	5.039261			
100000135	5023	8	4.695579			
100000135	5023	9	4.498328			
100000135	5023	10	4.640819			
100000136	5021	1	28.449074	SUNSET BLVD	SE	SUNSET BLVD, CROMER RD & DAVEGA DR
100000136	5021	2	29.4825			
100000136	5021	3	27.374226			
100000136	5021	4	29.999804			
100000136	5021	5	26.710376			
100000136	5021	6	30.824954			
100000136	5021	7	25.261075			
100000136	5021	8	29.353478			
100000136	5021	9	27.93496			
100000136	5021	10	27.335717			
100000136	5362	1	267.999294	CROMER RD	NE	SUNSET BLVD, CROMER RD & DAVEGA DR
100000136	5362	2	224.740869			
100000136	5362	3	216.424309			
100000136	5362	4	207.693798			
100000136	5362	5	277.915232			
100000136	5362	6	317.928042			
100000136	5362	7	189.099349			
100000136	5362	8	190.335505			
100000136	5362	9	288.151039			
100000136	5362	10	256.150898			
100000136	5364	1	30.307103	SUNSET BLVD	NW	SUNSET BLVD, CROMER RD & DAVEGA DR
100000136	5364	2	32.657131			
100000136	5364	3	42.563398			
100000136	5364	4	33.364867			
100000136	5364	5	30.805197			
100000136	5364	6	38.053758			
100000136	5364	7	30.404542			
100000136	5364	8	27.111781			
100000136	5364	9	30.717911			
100000136	5364	10	35.508144			
100000136	6459	1	12.68464	DAVEGA DR	SW	SUNSET BLVD, CROMER RD & DAVEGA DR
100000136	6459	2	12.549157			
100000136	6459	3	20.900024			
100000136	6459	4	12.510695			
100000136	6459	5	14.326146			
100000136	6459	6	13.532362			
100000136	6459	7	16.079964			
100000136	6459	8	12.670714			
100000136	6459	9	13.755716			
100000136	6459	10	14.991772			
100000138	2052	1	0	RAMP	NW	RAMP, SUNSET BLVD & I-20 EXIT 61 WB ON RAMP
100000138	2052	2	0			
100000138	2052	3	0			
100000138	2052	4	0			
100000138	2052	5	0			
100000138	2052	6	0			
100000138	2052	7	0			
100000138	2052	8	0			
100000138	2052	9	0			
100000138	2052	10	0			
100000138	5030	1	0	SUNSET BLVD	NW	RAMP, SUNSET BLVD & I-20 EXIT 61 WB ON RAMP
100000138	5030	2	0			
100000138	5030	3	0			
100000138	5030	4	0			
100000138	5030	5	0			
100000138	5030	6	0			
100000138	5030	7	0			
100000138	5030	8	0			
100000138	5030	9	0			
100000138	5030	10	0			
100000138	6553	1	7.073289	SUNSET BLVD	SE	RAMP, SUNSET BLVD & I-20 EXIT 61 WB ON RAMP
100000138	6553	2	8.253304			
100000138	6553	3	7.356029			
100000138	6553	4	7.865228			
100000138	6553	5	7.347754			
100000138	6553	6	8.512637			
100000138	6553	7	7.757131			
100000138	6553	8	6.24963			
100000138	6553	9	6.187803			
100000138	6553	10	7.87826			
100000139	2065	1	27.859616	RAMP	S	RAMP & BUSH RIVER RD
100000139	2065	2	30.283374			
100000139	2065	3	27.449455			
100000139	2065	4	30.662701			
100000139	2065	5	36.0603			
100000139	2065	6	28.094956			
100000139	2065	7	29.6601			
100000139	2065	8	34.255203			
100000139	2065	9	27.965462			
100000139	2065	10	32.851753			
100000139	5033	1	8.244705	BUSH RIVER RD	NW	RAMP & BUSH RIVER RD
100000139	5033	2	7.360616			
100000139	5033	3	4.494167			
100000139	5033	4	5.900479			
100000139	5033	5	10.074751			
100000139	5033	6	7.853022			
100000139	5033	7	9.833433			
100000139	5033	8	7.435242			
100000139	5033	9	9.349014			
100000139	5033	10	6.786071			
100000139	5034	1	5.691085	BUSH RIVER RD	SE	RAMP & BUSH RIVER RD
100000139	5034	2	5.663389			
100000139	5034	3	4.7178			
100000139	5034	4	5.196783			
100000139	5034	5	6.615973			
100000139	5034	6	6.679112			
100000139	5034	7	6.979039			
100000139	5034	8	5.514796			
100000139	5034	9	6.957863			
100000139	5034	10	5.532693			
100000140	5376	1	5.077537	SUNSET BLVD	W	SUMMER PLACE DR, SUNSET BLVD & FAIRLANE DR
100000140	5376	2	4.395646			
100000140	5376	3	6.085122			
100000140	5376	4	5.899777			
100000140	5376	5	5.357844			
100000140	5376	6	5.106257			
100000140	5376	7	5.974719			
100000140	5376	8	5.61837			

Node	Superlink	Run	Average Control Delay	Approach Street Name	Direction	Intersection
100000140	5376	9	5.639877			
100000140	5376	10	5.475013			
100000140	5378	1	44.31958	SUMMER PLACE DR	N	SUMMER PLACE DR, SUNSET BLVD & FAIRLANE DR
100000140	5378	2	41.042747			
100000140	5378	3	42.654243			
100000140	5378	4	43.645595			
100000140	5378	5	41.973732			
100000140	5378	6	43.710141			
100000140	5378	7	45.047504			
100000140	5378	8	42.1695			
100000140	5378	9	40.925304			
100000140	5378	10	45.127176			
100000140	6489	1		FAIRLANE DR	S	SUMMER PLACE DR, SUNSET BLVD & FAIRLANE DR
100000140	6489	2				
100000140	6489	3				
100000140	6489	4				
100000140	6489	5				
100000140	6489	6				
100000140	6489	7				
100000140	6489	8				
100000140	6489	9				
100000140	6489	10				
100000140	6764	1	6.325141	SUNSET BLVD	E	SUMMER PLACE DR, SUNSET BLVD & FAIRLANE DR
100000140	6764	2	4.104452			
100000140	6764	3	6.883595			
100000140	6764	4	6.156924			
100000140	6764	5	5.847226			
100000140	6764	6	5.014672			
100000140	6764	7	7.243027			
100000140	6764	8	5.980306			
100000140	6764	9	5.885446			
100000140	6764	10	8.258923			
100000142	2053	1	14.803771	RAMP	NE	BUSH RIVER RD & RAMP
100000142	2053	2	13.415449			
100000142	2053	3	14.338793			
100000142	2053	4	13.59845			
100000142	2053	5	12.572438			
100000142	2053	6	14.886546			
100000142	2053	7	14.518178			
100000142	2053	8	13.326392			
100000142	2053	9	12.099919			
100000142	2053	10	13.649647			
100000142	5036	1	4.088257	BUSH RIVER RD	SE	BUSH RIVER RD & RAMP
100000142	5036	2	4.096154			
100000142	5036	3	3.544252			
100000142	5036	4	4.164165			
100000142	5036	5	2.655196			
100000142	5036	6	3.036269			
100000142	5036	7	2.155207			
100000142	5036	8	4.137992			
100000142	5036	9	3.741094			
100000142	5036	10	4.571031			
100000142	5037	1	5.471532	BUSH RIVER RD	NW	BUSH RIVER RD & RAMP
100000142	5037	2	7.039562			
100000142	5037	3	6.347793			
100000142	5037	4	8.6486			
100000142	5037	5	8.371515			
100000142	5037	6	5.992114			
100000142	5037	7	5.620971			
100000142	5037	8	7.534235			
100000142	5037	9	7.789129			
100000142	5037	10	8.006894			
100000143	5372	1	0	SUNSET BLVD	E	SUNSET BLVD & HEBRON DR
100000143	5372	2	0			
100000143	5372	3	0			
100000143	5372	4	0			
100000143	5372	5	0			
100000143	5372	6	0			
100000143	5372	7	0			
100000143	5372	8	0			
100000143	5372	9	0			
100000143	5372	10	0			
100000143	6763	1		HEBRON DR	N	SUNSET BLVD & HEBRON DR
100000143	6763	2				
100000143	6763	3				
100000143	6763	4				
100000143	6763	5				
100000143	6763	6				
100000143	6763	7				
100000143	6763	8				
100000143	6763	9				
100000143	6763	10				
100000143	6764	1	0	SUNSET BLVD	W	SUNSET BLVD & HEBRON DR
100000143	6764	2	0			
100000143	6764	3	0			
100000143	6764	4	0			
100000143	6764	5	0			
100000143	6764	6	0			
100000143	6764	7	0			
100000143	6764	8	0			
100000143	6764	9	0			
100000143	6764	10	0			
100000144	5376	1	4.213905	SUNSET BLVD	E	SUNSET BLVD, W. HOSPTIAL DR & SUNSET CT
100000144	5376	2	2.907773			
100000144	5376	3	2.498477			
100000144	5376	4	3.118545			
100000144	5376	5	2.88679			
100000144	5376	6	3.428176			
100000144	5376	7	2.616356			
100000144	5376	8	3.542391			
100000144	5376	9	3.313327			
100000144	5376	10	2.511717			
100000144	6760	1	57.730226	W. HOSPTIAL DR	S	SUNSET BLVD, W. HOSPTIAL DR & SUNSET CT
100000144	6760	2	58.836807			
100000144	6760	3	56.881325			
100000144	6760	4	56.128143			
100000144	6760	5	58.84011			
100000144	6760	6	52.363557			
100000144	6760	7	59.123351			
100000144	6760	8	57.69831			
100000144	6760	9	53.486006			
100000144	6760	10	55.652433			

Node	Superlink	Run	Average Control Delay	Approach Street Name	Direction	Intersection
100000144	6761	1		SUNSET CT	N	SUNSET BLVD, W. HOSPTIAL DR & SUNSET CT
100000144	6761	2				
100000144	6761	3				
100000144	6761	4				
100000144	6761	5				
100000144	6761	6				
100000144	6761	7				
100000144	6761	8				
100000144	6761	9				
100000144	6761	10				
100000144	6762	1	12.633003	SUNSET BLVD	W	SUNSET BLVD, W. HOSPTIAL DR & SUNSET CT
100000144	6762	2	14.952563			
100000144	6762	3	10.926221			
100000144	6762	4	12.157322			
100000144	6762	5	14.858029			
100000144	6762	6	15.22649			
100000144	6762	7	14.490623			
100000144	6762	8	10.893625			
100000144	6762	9	12.53794			
100000144	6762	10	8.858011			
100000150	3361	1	13.667221	I-26 EXIT 101 EB OFF RAMP	SW	I-26 EXIT 101 EB OFF RAMP & BROAD RIVER RD
100000150	3361	2	12.32801			
100000150	3361	3	14.859368			
100000150	3361	4	13.300484			
100000150	3361	5	13.073944			
100000150	3361	6	13.369437			
100000150	3361	7	12.940067			
100000150	3361	8	12.527455			
100000150	3361	9	17.627641			
100000150	3361	10	13.105588			
100000150	5071	1	0	BROAD RIVER RD	E	I-26 EXIT 101 EB OFF RAMP & BROAD RIVER RD
100000150	5071	2	0			
100000150	5071	3	0			
100000150	5071	4	0			
100000150	5071	5	0			
100000150	5071	6	0			
100000150	5071	7	0			
100000150	5071	8	0			
100000150	5071	9	0			
100000150	5071	10	0			
100000150	5073	1	0.065576	BROAD RIVER RD	W	I-26 EXIT 101 EB OFF RAMP & BROAD RIVER RD
100000150	5073	2	0.055839			
100000150	5073	3	0.068686			
100000150	5073	4	0.085994			
100000150	5073	5	0.083744			
100000150	5073	6	0.058651			
100000150	5073	7	0.076933			
100000150	5073	8	0.075702			
100000150	5073	9	0.04816			
100000150	5073	10	0.071747			
100000151	5072	1	0.298097	BROAD RIVER RD	E	BROAD RIVER RD & ON-RAMP from WB
100000151	5072	2	0.222459			
100000151	5072	3	0.32384			
100000151	5072	4	0.172092			
100000151	5072	5	0.343788			
100000151	5072	6	0.142751			
100000151	5072	7	0.220193			
100000151	5072	8	0.19505			
100000151	5072	9	0.164151			
100000151	5072	10	0.145001			
100000151	5075	1	2.045445	BROAD RIVER RD	W	BROAD RIVER RD & ON-RAMP from WB
100000151	5075	2	2.310435			
100000151	5075	3	3.53624			
100000151	5075	4	3.242842			
100000151	5075	5	2.997339			
100000151	5075	6	2.865514			
100000151	5075	7	2.124133			
100000151	5075	8	3.005185			
100000151	5075	9	2.544567			
100000151	5075	10	2.297362			
100000155	6084	1	4.330922	BROAD RIVER RD	N	BEATTY RD & BROAD RIVER RD
100000155	6084	2	3.24034			
100000155	6084	3	3.269435			
100000155	6084	4	2.775133			
100000155	6084	5	4.772119			
100000155	6084	6	3.871405			
100000155	6084	7	3.455716			
100000155	6084	8	4.911312			
100000155	6084	9	3.960574			
100000155	6084	10	4.406968			
100000155	6355	1	23.819007	BEATTY RD	E	BEATTY RD & BROAD RIVER RD
100000155	6355	2	18.198447			
100000155	6355	3	34.6292			
100000155	6355	4	23.869611			
100000155	6355	5	25.905325			
100000155	6355	6	21.613739			
100000155	6355	7	30.271964			
100000155	6355	8	27.225343			
100000155	6355	9	26.889862			
100000155	6355	10	23.897919			
100000155	6357	1	9.687351	BROAD RIVER RD	S	BEATTY RD & BROAD RIVER RD
100000155	6357	2	10.285435			
100000155	6357	3	9.08375			
100000155	6357	4	9.769596			
100000155	6357	5	11.162194			
100000155	6357	6	11.836209			
100000155	6357	7	11.203426			
100000155	6357	8	12.559041			
100000155	6357	9	10.482707			
100000155	6357	10	12.011823			
100000163	4947	1	5.288786	SUNSET BLVD	E	MCSWAIN DR, SUNSET BLVD & CHRIS DR
100000163	4947	2	5.350454			
100000163	4947	3	4.931019			
100000163	4947	4	5.491802			
100000163	4947	5	4.645172			
100000163	4947	6	5.288937			
100000163	4947	7	5.804853			
100000163	4947	8	5.942528			
100000163	4947	9	5.554682			
100000163	4947	10	6.24799			
100000163	5388	1	4.434068	SUNSET BLVD	W	MCSWAIN DR, SUNSET BLVD & CHRIS DR
100000163	5388	2	4.235747			

Node	Superlink	Run	Average Control Delay	Approach Street Name	Direction	Intersection
100000163	5388	3	4.902402			
100000163	5388	4	4.383065			
100000163	5388	5	5.180779			
100000163	5388	6	4.598673			
100000163	5388	7	3.734271			
100000163	5388	8	3.731549			
100000163	5388	9	4.151174			
100000163	5388	10	4.520848			
100000163	5389	1	19.192236	MCSWAIN DR	S	MCSWAIN DR, SUNSET BLVD & CHRIS DR
100000163	5389	2	16.348812			
100000163	5389	3	15.003023			
100000163	5389	4	15.921292			
100000163	5389	5	16.863825			
100000163	5389	6	16.87775			
100000163	5389	7	16.00382			
100000163	5389	8	15.960786			
100000163	5389	9	19.233055			
100000163	5389	10	15.97821			
100000163	5418	1	74.060053	CHRIS DR	N	MCSWAIN DR, SUNSET BLVD & CHRIS DR
100000163	5418	2	84.210783			
100000163	5418	3	74.309635			
100000163	5418	4	84.49525			
100000163	5418	5	77.630815			
100000163	5418	6	68.682583			
100000163	5418	7	89.047702			
100000163	5418	8	82.912482			
100000163	5418	9	82.908604			
100000163	5418	10	74.150135			
100000164	3354	1	0	I-26 EXIT 102 EB OFF RAMP	W	LAKE MURRAY BLVD & I-26 EXIT 102 EB OFF RAMF
100000164	3354	2	0			
100000164	3354	3	0			
100000164	3354	4	0			
100000164	3354	5	0			
100000164	3354	6	0			
100000164	3354	7	0			
100000164	3354	8	0			
100000164	3354	9	0			
100000164	3354	10	0			
100000164	5084	1	0	LAKE MURRAY BLVD	E	LAKE MURRAY BLVD & I-26 EXIT 102 EB OFF RAMF
100000164	5084	2	0			
100000164	5084	3	0			
100000164	5084	4	0			
100000164	5084	5	0			
100000164	5084	6	0			
100000164	5084	7	0			
100000164	5084	8	0			
100000164	5084	9	0			
100000164	5084	10	0			
100000164	5085	1	0.000478	LAKE MURRAY BLVD	W	LAKE MURRAY BLVD & I-26 EXIT 102 EB OFF RAMF
100000164	5085	2	0			
100000164	5085	3	0			
100000164	5085	4	0			
100000164	5085	5	0.0015			
100000164	5085	6	0.001353			
100000164	5085	7	0			
100000164	5085	8	0			
100000164	5085	9	0			
100000164	5085	10	0.000336			
100000165	3330	1	40.09247	EXIT 103 WB OFF RAMP	SE	HARBISON BLVD, EXIT 103 WB OFF RAMP, WOODCROSS DR & EXIT 103 WB ON RAMP
100000165	3330	2	44.696739			
100000165	3330	3	46.190661			
100000165	3330	4	42.759288			
100000165	3330	5	40.199048			
100000165	3330	6	39.223155			
100000165	3330	7	43.138714			
100000165	3330	8	39.613612			
100000165	3330	9	49.682278			
100000165	3330	10	49.610395			
100000165	5096	1	7.22074	HARBISON BLVD	NE	HARBISON BLVD, EXIT 103 WB OFF RAMP, WOODCROSS DR & EXIT 103 WB ON RAMP
100000165	5096	2	6.512188			
100000165	5096	3	3.896929			
100000165	5096	4	8.595872			
100000165	5096	5	9.865616			
100000165	5096	6	4.791446			
100000165	5096	7	4.147367			
100000165	5096	8	5.679627			
100000165	5096	9	8.327518			
100000165	5096	10	2.309097			
100000165	5102	1	3.441029	HARBISON BLVD	SW	HARBISON BLVD, EXIT 103 WB OFF RAMP, WOODCROSS DR & EXIT 103 WB ON RAMP
100000165	5102	2	3.091927			
100000165	5102	3	3.551091			
100000165	5102	4	3.632393			
100000165	5102	5	3.551507			
100000165	5102	6	3.383209			
100000165	5102	7	2.949901			
100000165	5102	8	3.313433			
100000165	5102	9	2.515896			
100000165	5102	10	3.38064			
100000165	5103	1	50.388168	WOODCROSS DR	NW	HARBISON BLVD, EXIT 103 WB OFF RAMP, WOODCROSS DR & EXIT 103 WB ON RAMP
100000165	5103	2	48.858246			
100000165	5103	3	50.88297			
100000165	5103	4	51.478897			
100000165	5103	5	48.408074			
100000165	5103	6	47.758238			
100000165	5103	7	45.643456			
100000165	5103	8	48.938263			
100000165	5103	9	47.139167			
100000165	5103	10	52.643296			
100000166	3343	1	0	I-26 EXIT 102 EBL OFF RAMP	E	LAKE MURRAY BLVD & I-26 EXIT 102 EBL OFF RAMF
100000166	3343	2	0			
100000166	3343	3	0			
100000166	3343	4	0			
100000166	3343	5	0			
100000166	3343	6	0			
100000166	3343	7	0			
100000166	3343	8	0			
100000166	3343	9	0			
100000166	3343	10	0			
100000166	5087	1	0	LAKE MURRAY BLVD	E	LAKE MURRAY BLVD & I-26 EXIT 102 EBL OFF RAMF
100000166	5087	2	0			
100000166	5087	3	0			
100000166	5087	4	0			

Node	Superlink	Run	Average Control Delay	Approach Street Name	Direction	Intersection
100000166	5087	5	0			
100000166	5087	6	0			
100000166	5087	7	0			
100000166	5087	8	0			
100000166	5087	9	0			
100000166	5087	10	0			
100000166	5088	1	0	LAKE MURRAY BLVD	W	LAKE MURRAY BLVD & I-26 EXIT 102 EBL OFF RAMP
100000166	5088	2	0			
100000166	5088	3	0			
100000166	5088	4	0			
100000166	5088	5	0			
100000166	5088	6	0			
100000166	5088	7	0			
100000166	5088	8	0			
100000166	5088	9	0			
100000166	5088	10	0			
100000167	3339	1	0	I-26 EXIT 102 WBL OFF RAMP	W	I-26 EXIT 102 WBL OFF RAMP & LAKE MURRAY BLVD
100000167	3339	2	0			
100000167	3339	3	0			
100000167	3339	4	0			
100000167	3339	5	0			
100000167	3339	6	0			
100000167	3339	7	0			
100000167	3339	8	0			
100000167	3339	9	0			
100000167	3339	10	0			
100000167	5088	1	0	LAKE MURRAY BLVD	E	I-26 EXIT 102 WBL OFF RAMP & LAKE MURRAY BLVD
100000167	5088	2	0			
100000167	5088	3	0			
100000167	5088	4	0			
100000167	5088	5	0			
100000167	5088	6	0			
100000167	5088	7	0			
100000167	5088	8	0			
100000167	5088	9	0			
100000167	5088	10	0			
100000167	5090	1	0	LAKE MURRAY BLVD	W	I-26 EXIT 102 WBL OFF RAMP & LAKE MURRAY BLVD
100000167	5090	2	0			
100000167	5090	3	0			
100000167	5090	4	0			
100000167	5090	5	0			
100000167	5090	6	0			
100000167	5090	7	0			
100000167	5090	8	0			
100000167	5090	9	0			
100000167	5090	10	0			
100000168	5366	1	22.35275	LEAPHART RD	N	SUNSET BLVD & LEAPHART RD
100000168	5366	2	21.59068			
100000168	5366	3	21.732891			
100000168	5366	4	21.777484			
100000168	5366	5	22.053769			
100000168	5366	6	20.730336			
100000168	5366	7	22.529638			
100000168	5366	8	20.247928			
100000168	5366	9	20.436296			
100000168	5366	10	22.445935			
100000168	5368	1	3.617801	SUNSET BLVD	E	SUNSET BLVD & LEAPHART RD
100000168	5368	2	4.011488			
100000168	5368	3	4.42789			
100000168	5368	4	4.131434			
100000168	5368	5	3.907015			
100000168	5368	6	4.211294			
100000168	5368	7	3.529406			
100000168	5368	8	4.025533			
100000168	5368	9	4.260914			
100000168	5368	10	4.077499			
100000168	5372	1	6.57923	SUNSET BLVD	W	SUNSET BLVD & LEAPHART RD
100000168	5372	2	7.454486			
100000168	5372	3	7.093111			
100000168	5372	4	7.085626			
100000168	5372	5	6.208775			
100000168	5372	6	9.026727			
100000168	5372	7	7.10014			
100000168	5372	8	6.728324			
100000168	5372	9	7.487828			
100000168	5372	10	6.171406			
100000171	3342	1	0	I-26 EXIT 102 WB OFF RAMP	E	LAKE MURRAY BLVD & I-26 EXIT 102 WB OFF RAMP
100000171	3342	2	0			
100000171	3342	3	0			
100000171	3342	4	0			
100000171	3342	5	0			
100000171	3342	6	0			
100000171	3342	7	0			
100000171	3342	8	0			
100000171	3342	9	0			
100000171	3342	10	0			
100000171	5092	1	0.007808	LAKE MURRAY BLVD	E	LAKE MURRAY BLVD & I-26 EXIT 102 WB OFF RAMP
100000171	5092	2	0.012378			
100000171	5092	3	0.004082			
100000171	5092	4	0.009716			
100000171	5092	5	0.002565			
100000171	5092	6	0.007059			
100000171	5092	7	0.005566			
100000171	5092	8	0.007673			
100000171	5092	9	0.010048			
100000171	5092	10	0.011162			
100000171	5093	1	0	LAKE MURRAY BLVD	W	LAKE MURRAY BLVD & I-26 EXIT 102 WB OFF RAMP
100000171	5093	2	0			
100000171	5093	3	0			
100000171	5093	4	0			
100000171	5093	5	0			
100000171	5093	6	0			
100000171	5093	7	0			
100000171	5093	8	0			
100000171	5093	9	0			
100000171	5093	10	0			
100000173	3212	1	56.755167		103 SE	HARBISON BLVD, 103 & RAMP
100000173	3212	2	51.819448			
100000173	3212	3	49.471488			
100000173	3212	4	35.768866			
100000173	3212	5	46.49046			
100000173	3212	6	47.017107			

Node	Superlink	Run	Average Control Delay	Approach Street Name	Direction	Intersection
100000173	3212	7	49.715321			
100000173	3212	8	46.347053			
100000173	3212	9	54.814769			
100000173	3212	10	45.778391			
100000173	3213	1	8.653458		103 S	HARBISON BLVD, 103 & RAMP
100000173	3213	2	7.879314			
100000173	3213	3	8.606622			
100000173	3213	4	6.986359			
100000173	3213	5	7.267008			
100000173	3213	6	8.451475			
100000173	3213	7	7.752075			
100000173	3213	8	7.265711			
100000173	3213	9	7.829828			
100000173	3213	10	8.098757			
100000173	5097	1	2.359343	HARBISON BLVD	NE	HARBISON BLVD, 103 & RAMP
100000173	5097	2	2.930487			
100000173	5097	3	2.871413			
100000173	5097	4	3.519626			
100000173	5097	5	4.622509			
100000173	5097	6	3.360294			
100000173	5097	7	3.63876			
100000173	5097	8	3.093854			
100000173	5097	9	2.471019			
100000173	5097	10	3.540076			
100000173	5099	1	6.693044	HARBISON BLVD	SW	HARBISON BLVD, 103 & RAMP
100000173	5099	2	4.946501			
100000173	5099	3	5.876871			
100000173	5099	4	6.751432			
100000173	5099	5	5.163975			
100000173	5099	6	5.619948			
100000173	5099	7	4.997286			
100000173	5099	8	6.097601			
100000173	5099	9	6.469298			
100000173	5099	10	5.789833			
100000175	3234	1	45.201434	RAMP	SE	PINEY GROVE RD & RAMP
100000175	3234	2	41.682025			
100000175	3234	3	43.476219			
100000175	3234	4	43.159705			
100000175	3234	5	55.146144			
100000175	3234	6	42.460875			
100000175	3234	7	42.816537			
100000175	3234	8	41.44491			
100000175	3234	9	40.935568			
100000175	3234	10	38.16562			
100000175	5112	1	8.878641	PINEY GROVE RD	W	PINEY GROVE RD & RAMP
100000175	5112	2	7.784696			
100000175	5112	3	4.998621			
100000175	5112	4	8.789075			
100000175	5112	5	5.943804			
100000175	5112	6	6.658243			
100000175	5112	7	8.077838			
100000175	5112	8	7.098155			
100000175	5112	9	7.921265			
100000175	5112	10	6.385905			
100000175	6544	1	7.324527	PINEY GROVE RD	E	PINEY GROVE RD & RAMP
100000175	6544	2	8.153873			
100000175	6544	3	6.955254			
100000175	6544	4	7.002384			
100000175	6544	5	6.95479			
100000175	6544	6	9.225513			
100000175	6544	7	7.715835			
100000175	6544	8	8.193022			
100000175	6544	9	7.809623			
100000175	6544	10	7.983386			
100000177	5112	1	13.755621	PINEY GROVE RD	E	PINEY GROVE RD, EXIT 104 WB OFF RAMP & EXIT 104 WB ON RAMP
100000177	5112	2	12.504833			
100000177	5112	3	11.189552			
100000177	5112	4	12.971045			
100000177	5112	5	11.435591			
100000177	5112	6	13.002633			
100000177	5112	7	14.82243			
100000177	5112	8	13.590451			
100000177	5112	9	12.214593			
100000177	5112	10	14.078207			
100000177	5113	1	24.210853	PINEY GROVE RD	W	PINEY GROVE RD, EXIT 104 WB OFF RAMP & EXIT 104 WB ON RAMP
100000177	5113	2	24.733751			
100000177	5113	3	21.185397			
100000177	5113	4	27.236553			
100000177	5113	5	21.83595			
100000177	5113	6	21.360223			
100000177	5113	7	24.610028			
100000177	5113	8	20.500674			
100000177	5113	9	27.47294			
100000177	5113	10	23.155324			
100000177	6513	1	6.53187	EXIT 104 WB OFF RAMP	N	PINEY GROVE RD, EXIT 104 WB OFF RAMP & EXIT 104 WB ON RAMP
100000177	6513	2	7.192			
100000177	6513	3	6.895313			
100000177	6513	4	6.717692			
100000177	6513	5	7.378954			
100000177	6513	6	6.735385			
100000177	6513	7	6.891039			
100000177	6513	8	7.905487			
100000177	6513	9	6.811806			
100000177	6513	10	6.491139			
100000177	6514	1	17.6017	EXIT 104 WB OFF RAMP	N	PINEY GROVE RD, EXIT 104 WB OFF RAMP & EXIT 104 WB ON RAMP
100000177	6514	2	16.612548			
100000177	6514	3	16.907587			
100000177	6514	4	16.725941			
100000177	6514	5	16.79476			
100000177	6514	6	17.266416			
100000177	6514	7	17.429783			
100000177	6514	8	15.650082			
100000177	6514	9	15.624501			
100000177	6514	10	18.370928			
100000178	3301	1	34.496399	RAMP	SE	ST ANDREWS RD, RAMP, WOODLAND HILLS RD & I-26 EXIT 106 EB ON RAMP
100000178	3301	2	32.788526			
100000178	3301	3	30.787403			
100000178	3301	4	34.080214			
100000178	3301	5	32.177544			
100000178	3301	6	32.823132			
100000178	3301	7	34.384176			
100000178	3301	8	31.974963			

Node	Superlink	Run	Average Control Delay	Approach Street Name	Direction	Intersection
100000178	3301	9	33.370986			
100000178	3301	10	33.802775			
100000178	5118	1	3.150552	ST ANDREWS RD	E	ST ANDREWS RD, RAMP, WOODLAND HILLS RD & I-26 EXIT 106 EB ON RAMP
100000178	5118	2	2.983392			
100000178	5118	3	2.963635			
100000178	5118	4	3.188629			
100000178	5118	5	3.329987			
100000178	5118	6	3.152964			
100000178	5118	7	3.282855			
100000178	5118	8	3.301294			
100000178	5118	9	3.252613			
100000178	5118	10	3.117398			
100000178	5119	1	23.200117	WOODLAND HILLS RD	N	ST ANDREWS RD, RAMP, WOODLAND HILLS RD & I-26 EXIT 106 EB ON RAMP
100000178	5119	2	24.917569			
100000178	5119	3	22.691877			
100000178	5119	4	26.538946			
100000178	5119	5	22.893243			
100000178	5119	6	22.597977			
100000178	5119	7	24.393941			
100000178	5119	8	23.836304			
100000178	5119	9	23.683692			
100000178	5119	10	23.651592			
100000178	5120	1	12.632688	ST ANDREWS RD	W	ST ANDREWS RD, RAMP, WOODLAND HILLS RD & I-26 EXIT 106 EB ON RAMP
100000178	5120	2	10.133622			
100000178	5120	3	8.917807			
100000178	5120	4	8.018588			
100000178	5120	5	10.381747			
100000178	5120	6	9.427605			
100000178	5120	7	10.965587			
100000178	5120	8	12.310366			
100000178	5120	9	10.122768			
100000178	5120	10	13.551038			
100000179	3219	1	0	RAMP	S	ST ANDREWS RD & RAMP
100000179	3219	2	0			
100000179	3219	3	0			
100000179	3219	4	0			
100000179	3219	5	0			
100000179	3219	6	0			
100000179	3219	7	0			
100000179	3219	8	0			
100000179	3219	9	0			
100000179	3219	10	0			
100000179	5116	1	22.183619	ST ANDREWS RD	E	ST ANDREWS RD & RAMP
100000179	5116	2	25.704006			
100000179	5116	3	19.745452			
100000179	5116	4	18.537713			
100000179	5116	5	21.679452			
100000179	5116	6	22.052669			
100000179	5116	7	23.971218			
100000179	5116	8	25.352491			
100000179	5116	9	20.119995			
100000179	5116	10	23.792011			
100000179	5118	1	0	ST ANDREWS RD	W	ST ANDREWS RD & RAMP
100000179	5118	2	0			
100000179	5118	3	0			
100000179	5118	4	0			
100000179	5118	5	0			
100000179	5118	6	0			
100000179	5118	7	0			
100000179	5118	8	0			
100000179	5118	9	0			
100000179	5118	10	0			
100000182	3292	1	0	EXIT 106 WB OFF RAMP	NE	ST ANDREWS RD, EXIT 106 WB OFF RAMP & EXIT 106 WB ON RAMP
100000182	3292	2	0			
100000182	3292	3	0			
100000182	3292	4	0			
100000182	3292	5	0			
100000182	3292	6	0			
100000182	3292	7	0			
100000182	3292	8	0			
100000182	3292	9	0			
100000182	3292	10	0			
100000182	5123	1	0	ST ANDREWS RD	E	ST ANDREWS RD, EXIT 106 WB OFF RAMP & EXIT 106 WB ON RAMP
100000182	5123	2	0			
100000182	5123	3	0			
100000182	5123	4	0			
100000182	5123	5	0			
100000182	5123	6	0			
100000182	5123	7	0			
100000182	5123	8	0			
100000182	5123	9	0			
100000182	5123	10	0			
100000182	5124	1	0	ST ANDREWS RD	SW	ST ANDREWS RD, EXIT 106 WB OFF RAMP & EXIT 106 WB ON RAMP
100000182	5124	2	0			
100000182	5124	3	0			
100000182	5124	4	0			
100000182	5124	5	0			
100000182	5124	6	0			
100000182	5124	7	0			
100000182	5124	8	0			
100000182	5124	9	0			
100000182	5124	10	0			
100000184	5499	1	14.06618	N ARROWWOOD RD	S	ARROWWOOD RD, BUSH RIVER RD & N ARROWWOOD RD
100000184	5499	2	14.262297			
100000184	5499	3	15.511202			
100000184	5499	4	16.237134			
100000184	5499	5	16.239366			
100000184	5499	6	14.354694			
100000184	5499	7	16.508431			
100000184	5499	8	17.295147			
100000184	5499	9	14.377151			
100000184	5499	10	16.579977			
100000184	5500	1	36.239888	ARROWWOOD RD	N	ARROWWOOD RD, BUSH RIVER RD & N ARROWWOOD RD
100000184	5500	2	37.512739			
100000184	5500	3	40.872903			
100000184	5500	4	38.875384			
100000184	5500	5	38.848064			
100000184	5500	6	34.341074			
100000184	5500	7	37.682548			
100000184	5500	8	40.250685			
100000184	5500	9	36.277084			
100000184	5500	10	39.943286			

Node	Superlink	Run	Average Control Delay	Approach Street Name	Direction	Intersection
100000184	6497	1	7.563826	BUSH RIVER RD	W	ARROWWOOD RD, BUSH RIVER RD & N ARROWWOOD RD
100000184	6497	2	6.971629			
100000184	6497	3	7.384399			
100000184	6497	4	9.05904			
100000184	6497	5	7.304131			
100000184	6497	6	8.413767			
100000184	6497	7	7.816229			
100000184	6497	8	8.20352			
100000184	6497	9	8.469605			
100000184	6497	10	6.369013			
100000184	6505	1	8.679359	BUSH RIVER RD	E	ARROWWOOD RD, BUSH RIVER RD & N ARROWWOOD RD
100000184	6505	2	7.908492			
100000184	6505	3	8.526207			
100000184	6505	4	9.264424			
100000184	6505	5	8.496449			
100000184	6505	6	9.214275			
100000184	6505	7	7.94867			
100000184	6505	8	7.819061			
100000184	6505	9	7.890537			
100000184	6505	10	7.714252			
100000185	3230	1	18.467112	RAMP	W	GREYSTONE BLVD, RAMP & I-126 EB ON RAMP FROM GREYSTONE BLVD
100000185	3230	2	19.624089			
100000185	3230	3	22.749029			
100000185	3230	4	15.207455			
100000185	3230	5	20.060629			
100000185	3230	6	15.420597			
100000185	3230	7	20.561357			
100000185	3230	8	21.197878			
100000185	3230	9	16.36878			
100000185	3230	10	21.830971			
100000185	5140	1	0.388318	GREYSTONE BLVD	N	GREYSTONE BLVD, RAMP & I-126 EB ON RAMP FROM GREYSTONE BLVD
100000185	5140	2	0.148497			
100000185	5140	3	0.322408			
100000185	5140	4	0.34796			
100000185	5140	5	0.414763			
100000185	5140	6	0.221174			
100000185	5140	7	0.239021			
100000185	5140	8	0.032855			
100000185	5140	9	0.31862			
100000185	5140	10	0.196417			
100000185	5141	1	0.935206	GREYSTONE BLVD	S	GREYSTONE BLVD, RAMP & I-126 EB ON RAMP FROM GREYSTONE BLVD
100000185	5141	2	0.636299			
100000185	5141	3	0.819046			
100000185	5141	4	0.742576			
100000185	5141	5	0.491849			
100000185	5141	6	0.710265			
100000185	5141	7	0.761131			
100000185	5141	8	0.629402			
100000185	5141	9	0.657959			
100000185	5141	10	0.902323			
100000186	4949	1	9.114013	SUNSET BLVD	W	HARBOR DR, SUNSET BLVD & E HOSPITAL DR
100000186	4949	2	8.212892			
100000186	4949	3	7.458124			
100000186	4949	4	9.710458			
100000186	4949	5	8.236809			
100000186	4949	6	6.849009			
100000186	4949	7	8.467954			
100000186	4949	8	7.347807			
100000186	4949	9	10.441526			
100000186	4949	10	8.45281			
100000186	5386	1	94.280318	HARBOR DR	N	HARBOR DR, SUNSET BLVD & E HOSPITAL DR
100000186	5386	2	81.772069			
100000186	5386	3	63.60831			
100000186	5386	4	77.3046			
100000186	5386	5	102.841799			
100000186	5386	6	50.874353			
100000186	5386	7	103.40695			
100000186	5386	8	59.764829			
100000186	5386	9	89.275422			
100000186	5386	10	70.610222			
100000186	5387	1	66.764623	E HOSPITAL DR	S	HARBOR DR, SUNSET BLVD & E HOSPITAL DR
100000186	5387	2	62.840658			
100000186	5387	3	62.035878			
100000186	5387	4	59.901941			
100000186	5387	5	59.080834			
100000186	5387	6	54.185853			
100000186	5387	7	59.030516			
100000186	5387	8	57.445846			
100000186	5387	9	64.876875			
100000186	5387	10	60.659679			
100000186	6762	1	20.736123	SUNSET BLVD	E	HARBOR DR, SUNSET BLVD & E HOSPITAL DR
100000186	6762	2	14.635942			
100000186	6762	3	13.15085			
100000186	6762	4	15.227796			
100000186	6762	5	17.15933			
100000186	6762	6	11.621362			
100000186	6762	7	15.154974			
100000186	6762	8	12.170517			
100000186	6762	9	17.480588			
100000186	6762	10	13.148732			
100000187	6057	1	16.902553	BROAD RIVER RD	NW	BROAD RIVER RD, BRIARGATE CIR & MARLEY DR
100000187	6057	2	18.111674			
100000187	6057	3	13.571062			
100000187	6057	4	16.384331			
100000187	6057	5	18.849608			
100000187	6057	6	19.168774			
100000187	6057	7	15.479017			
100000187	6057	8	21.704562			
100000187	6057	9	14.86299			
100000187	6057	10	22.356568			
100000187	6059	1	5.942072	BROAD RIVER RD	SE	BROAD RIVER RD, BRIARGATE CIR & MARLEY DR
100000187	6059	2	7.201066			
100000187	6059	3	11.169705			
100000187	6059	4	9.687269			
100000187	6059	5	14.453731			
100000187	6059	6	16.005435			
100000187	6059	7	14.587561			
100000187	6059	8	21.622154			
100000187	6059	9	5.566484			
100000187	6059	10	12.327547			
100000187	6060	1	74.094515	MARLEY DR	SW	BROAD RIVER RD, BRIARGATE CIR & MARLEY DR
100000187	6060	2	64.293191			

Node	Superlink	Run	Average Control Delay	Approach Street Name	Direction	Intersection
100000187	6060	3	99.040977			
100000187	6060	4	83.821667			
100000187	6060	5	104.526232			
100000187	6060	6	100.132186			
100000187	6060	7	65.681851			
100000187	6060	8	135.895854			
100000187	6060	9	59.059201			
100000187	6060	10	141.720525			
100000187	6061	1	26.30015	BRIARGATE CIR	NE	BROAD RIVER RD, BRIARGATE CIR & MARLEY DR
100000187	6061	2	27.953885			
100000187	6061	3	23.782678			
100000187	6061	4	34.856325			
100000187	6061	5	34.634674			
100000187	6061	6	30.977864			
100000187	6061	7	24.448238			
100000187	6061	8	29.340256			
100000187	6061	9	25.309413			
100000187	6061	10	28.366013			
100000188	3221	1	15.148172	RAMP	W	GREYSTONE BLVD & RAMP
100000188	3221	2	22.525976			
100000188	3221	3	17.900086			
100000188	3221	4	25.841678			
100000188	3221	5	21.266228			
100000188	3221	6	21.878673			
100000188	3221	7	21.097464			
100000188	3221	8	18.676127			
100000188	3221	9	27.665331			
100000188	3221	10	20.606934			
100000188	5143	1	1.160661	GREYSTONE BLVD	N	GREYSTONE BLVD & RAMP
100000188	5143	2	0.826964			
100000188	5143	3	1.027557			
100000188	5143	4	0.93509			
100000188	5143	5	0.894827			
100000188	5143	6	0.813737			
100000188	5143	7	0.6809			
100000188	5143	8	0.626072			
100000188	5143	9	0.723009			
100000188	5143	10	1.171601			
100000188	5144	1	0.039622	GREYSTONE BLVD	S	GREYSTONE BLVD & RAMP
100000188	5144	2	0.084997			
100000188	5144	3	0.065178			
100000188	5144	4	0.158611			
100000188	5144	5	0.050861			
100000188	5144	6	0.075069			
100000188	5144	7	0.086166			
100000188	5144	8	0.034417			
100000188	5144	9	0.098003			
100000188	5144	10	0.09098			
100000189	4346	1	39.1952	I-20 EXIT 65 WB OFF RAMP	SW	I-20 EXIT 65 WB OFF RAMP, BROAD RIVER RD & RAMF
100000189	4346	2	40.416275			
100000189	4346	3	39.840129			
100000189	4346	4	39.159805			
100000189	4346	5	41.626163			
100000189	4346	6	44.2075			
100000189	4346	7	44.656361			
100000189	4346	8	40.744493			
100000189	4346	9	40.20525			
100000189	4346	10	42.585945			
100000189	6057	1	39.5529	BROAD RIVER RD	SE	I-20 EXIT 65 WB OFF RAMP, BROAD RIVER RD & RAMF
100000189	6057	2	30.936438			
100000189	6057	3	32.846251			
100000189	6057	4	34.079107			
100000189	6057	5	44.842924			
100000189	6057	6	48.411276			
100000189	6057	7	40.742659			
100000189	6057	8	51.407855			
100000189	6057	9	11.682442			
100000189	6057	10	47.187548			
100000189	6447	1	6.49561	BROAD RIVER RD	NW	I-20 EXIT 65 WB OFF RAMP, BROAD RIVER RD & RAMF
100000189	6447	2	8.164897			
100000189	6447	3	6.446334			
100000189	6447	4	6.509727			
100000189	6447	5	6.053119			
100000189	6447	6	6.773599			
100000189	6447	7	6.719825			
100000189	6447	8	5.454121			
100000189	6447	9	5.7253			
100000189	6447	10	7.672662			
100000190	4341	1	46.145712	I-20 EXIT 65 EB OFF RAMP	E	BROAD RIVER RD, I-20 EXIT 65 EB OFF RAMP & SERVICE RD
100000190	4341	2	45.506018			
100000190	4341	3	42.393618			
100000190	4341	4	45.340552			
100000190	4341	5	43.740566			
100000190	4341	6	46.165687			
100000190	4341	7	38.68965			
100000190	4341	8	42.952997			
100000190	4341	9	47.274207			
100000190	4341	10	40.827255			
100000190	5148	1	1.683607	BROAD RIVER RD	SE	BROAD RIVER RD, I-20 EXIT 65 EB OFF RAMP & SERVICE RD
100000190	5148	2	1.636512			
100000190	5148	3	1.758572			
100000190	5148	4	1.695347			
100000190	5148	5	1.635794			
100000190	5148	6	1.758956			
100000190	5148	7	1.688756			
100000190	5148	8	1.579829			
100000190	5148	9	1.685994			
100000190	5148	10	1.596166			
100000190	6445	1	13.258956	BROAD RIVER RD	NW	BROAD RIVER RD, I-20 EXIT 65 EB OFF RAMP & SERVICE RD
100000190	6445	2	14.731953			
100000190	6445	3	15.788126			
100000190	6445	4	14.045256			
100000190	6445	5	15.054169			
100000190	6445	6	13.16199			
100000190	6445	7	15.467945			
100000190	6445	8	14.825355			
100000190	6445	9	15.064912			
100000190	6445	10	14.525519			
100000190	6446	1		SERVICE RD	SW	BROAD RIVER RD, I-20 EXIT 65 EB OFF RAMP & SERVICE RD
100000190	6446	2				
100000190	6446	3				
100000190	6446	4				

Node	Superlink	Run	Average Control Delay	Approach Street Name	Direction	Intersection
100000190	6446	5				
100000190	6446	6				
100000190	6446	7				
100000190	6446	8				
100000190	6446	9				
100000190	6446	10				
100000191	5399	1	0.05573	HARBOR DR	S	HARBOR DR & OAKWOOD DR
100000191	5399	2	0.232663			
100000191	5399	3	0.007825			
100000191	5399	4	0.148136			
100000191	5399	5	0.040834			
100000191	5399	6	0.075645			
100000191	5399	7	0.040615			
100000191	5399	8	0.067827			
100000191	5399	9	0.05177			
100000191	5399	10	0.072613			
100000191	5414	1	6.373331	OAKWOOD DR	NE	HARBOR DR & OAKWOOD DR
100000191	5414	2	6.731315			
100000191	5414	3	6.614375			
100000191	5414	4	6.595993			
100000191	5414	5	6.508679			
100000191	5414	6	6.140628			
100000191	5414	7	6.872897			
100000191	5414	8	6.327859			
100000191	5414	9	6.166731			
100000191	5414	10	6.354646			
100000191	5420	1	0	HARBOR DR	N	HARBOR DR & OAKWOOD DR
100000191	5420	2	0			
100000191	5420	3	0			
100000191	5420	4	0			
100000191	5420	5	0			
100000191	5420	6	0			
100000191	5420	7	0			
100000191	5420	8	0			
100000191	5420	9	0			
100000191	5420	10	0			
100000193	4350	1	22.256054	I-20 EXIT 68 EB OFF RAMP	E	BUCKNER RD, MONTICELLO RD & I-20 EXIT 68 EB OFF RAMP
100000193	4350	2	21.40935			
100000193	4350	3	21.06749			
100000193	4350	4	20.633533			
100000193	4350	5	24.430332			
100000193	4350	6	26.610217			
100000193	4350	7	23.798115			
100000193	4350	8	27.160858			
100000193	4350	9	23.496629			
100000193	4350	10	23.059843			
100000193	5154	1	18.028028	MONTICELLO RD	N	BUCKNER RD, MONTICELLO RD & I-20 EXIT 68 EB OFF RAMP
100000193	5154	2	20.873519			
100000193	5154	3	18.972011			
100000193	5154	4	20.767662			
100000193	5154	5	21.345904			
100000193	5154	6	20.468281			
100000193	5154	7	19.56373			
100000193	5154	8	17.073202			
100000193	5154	9	20.113485			
100000193	5154	10	21.531941			
100000193	5155	1	15.3242	MONTICELLO RD	SE	BUCKNER RD, MONTICELLO RD & I-20 EXIT 68 EB OFF RAMP
100000193	5155	2	15.253938			
100000193	5155	3	13.89289			
100000193	5155	4	13.987737			
100000193	5155	5	14.408824			
100000193	5155	6	14.243154			
100000193	5155	7	12.74325			
100000193	5155	8	13.19391			
100000193	5155	9	14.541405			
100000193	5155	10	14.902962			
100000193	5163	1	11.527586	BUCKNER RD	SW	BUCKNER RD, MONTICELLO RD & I-20 EXIT 68 EB OFF RAMP
100000193	5163	2	8.522987			
100000193	5163	3	9.7367			
100000193	5163	4	8.979714			
100000193	5163	5	10.904648			
100000193	5163	6	12.746745			
100000193	5163	7	13.124112			
100000193	5163	8	9.43293			
100000193	5163	9	12.557652			
100000193	5163	10	10.763524			
100000195	5150	1	3.431162	BROAD RIVER RD	SE	LONGCREEK DR & BROAD RIVER RD
100000195	5150	2	3.303913			
100000195	5150	3	3.219866			
100000195	5150	4	3.666774			
100000195	5150	5	3.294554			
100000195	5150	6	4.320123			
100000195	5150	7	3.621074			
100000195	5150	8	3.545507			
100000195	5150	9	3.425342			
100000195	5150	10	3.970703			
100000195	6049	1	4.520604	BROAD RIVER RD	NW	LONGCREEK DR & BROAD RIVER RD
100000195	6049	2	5.221694			
100000195	6049	3	5.274626			
100000195	6049	4	6.276616			
100000195	6049	5	5.756367			
100000195	6049	6	5.605695			
100000195	6049	7	6.395549			
100000195	6049	8	4.791454			
100000195	6049	9	5.969247			
100000195	6049	10	4.796669			
100000195	6052	1	16.166451	LONGCREEK DR	SW	LONGCREEK DR & BROAD RIVER RD
100000195	6052	2	17.385176			
100000195	6052	3	15.405509			
100000195	6052	4	16.159667			
100000195	6052	5	15.539597			
100000195	6052	6	14.525583			
100000195	6052	7	17.451416			
100000195	6052	8	14.803253			
100000195	6052	9	15.474883			
100000195	6052	10	15.463225			
100000196	5166	1	1.369556	MONTICELLO RD	SE	SERVICE RD, MONTICELLO RD & RAMP
100000196	5166	2	2.035314			
100000196	5166	3	1.974751			
100000196	5166	4	1.375054			
100000196	5166	5	1.781378			
100000196	5166	6	1.075301			

Node	Superlink	Run	Average Control Delay	Approach Street Name	Direction	Intersection
100000196	5166	7	1.292951			
100000196	5166	8	1.59482			
100000196	5166	9	1.938167			
100000196	5166	10	1.65514			
100000196	5169	1	9.172391	SERVICE RD	SW	SERVICE RD, MONTICELLO RD & RAMP
100000196	5169	2	15.350011			
100000196	5169	3	13.258059			
100000196	5169	4	12.940434			
100000196	5169	5	15.342147			
100000196	5169	6	15.521572			
100000196	5169	7	13.531417			
100000196	5169	8	12.599825			
100000196	5169	9	10.788868			
100000196	5169	10	11.4211			
100000196	5172	1	0.905672	MONTICELLO RD	NW	SERVICE RD, MONTICELLO RD & RAMP
100000196	5172	2	1.304574			
100000196	5172	3	1.450365			
100000196	5172	4	1.166441			
100000196	5172	5	1.543914			
100000196	5172	6	1.29165			
100000196	5172	7	1.335899			
100000196	5172	8	1.423407			
100000196	5172	9	1.610178			
100000196	5172	10	1.565789			
100000198	4354	1	0	RAMP	N	RAMP & I-20 EXIT 68 EB ON RAMP
100000198	4354	2	0			
100000198	4354	3	0			
100000198	4354	4	0			
100000198	4354	5	0			
100000198	4354	6	0			
100000198	4354	7	0			
100000198	4354	8	0			
100000198	4354	9	0			
100000198	4354	10	0			
100000198	5158	1		RAMP	NW	RAMP & I-20 EXIT 68 EB ON RAMP
100000198	5158	2				
100000198	5158	3				
100000198	5158	4				
100000198	5158	5				
100000198	5158	6				
100000198	5158	7				
100000198	5158	8				
100000198	5158	9				
100000198	5158	10				
100000200	5174	1	6.379624	MONTICELLO RD	NW	MONTICELLO RD, PEEPLES ST & BLUE RIDGE TER
100000200	5174	2	5.396276			
100000200	5174	3	6.392142			
100000200	5174	4	5.844041			
100000200	5174	5	6.060181			
100000200	5174	6	5.269916			
100000200	5174	7	5.98113			
100000200	5174	8	6.903349			
100000200	5174	9	6.444967			
100000200	5174	10	6.696249			
100000200	6041	1	4.858061	MONTICELLO RD	SE	MONTICELLO RD, PEEPLES ST & BLUE RIDGE TER
100000200	6041	2	4.444337			
100000200	6041	3	4.234233			
100000200	6041	4	4.473743			
100000200	6041	5	4.561465			
100000200	6041	6	3.8381			
100000200	6041	7	3.974126			
100000200	6041	8	4.924241			
100000200	6041	9	4.840633			
100000200	6041	10	4.422565			
100000200	6044	1	13.375243	PEEPLES ST	NE	MONTICELLO RD, PEEPLES ST & BLUE RIDGE TER
100000200	6044	2	12.825116			
100000200	6044	3	12.262287			
100000200	6044	4	11.063909			
100000200	6044	5	13.177714			
100000200	6044	6	14.36926			
100000200	6044	7	10.733941			
100000200	6044	8	13.208713			
100000200	6044	9	13.278482			
100000200	6044	10	12.673144			
100000200	6046	1	25.753603	BLUE RIDGE TER	S	MONTICELLO RD, PEEPLES ST & BLUE RIDGE TER
100000200	6046	2	26.463299			
100000200	6046	3	25.704378			
100000200	6046	4	25.085392			
100000200	6046	5	24.811509			
100000200	6046	6	25.358811			
100000200	6046	7	27.86775			
100000200	6046	8	24.279038			
100000200	6046	9	23.399857			
100000200	6046	10	24.382293			
100000201	5157	1	1.708338	BUCKNER RD	SW	BUCKNER RD & TO BUCKNER ROAD
100000201	5157	2	1.418226			
100000201	5157	3	1.824232			
100000201	5157	4	1.066435			
100000201	5157	5	2.099229			
100000201	5157	6	1.495714			
100000201	5157	7	2.011227			
100000201	5157	8	1.145922			
100000201	5157	9	1.557994			
100000201	5157	10	2.6656			
100000201	5161	1	0.082508	TO BUCKNER ROAD	N	BUCKNER RD & TO BUCKNER ROAD
100000201	5161	2	0.438567			
100000201	5161	3	0.660988			
100000201	5161	4	0.003328			
100000201	5161	5	0			
100000201	5161	6	0.006301			
100000201	5161	7	0.062958			
100000201	5161	8	0.00377			
100000201	5161	9	0.858905			
100000201	5161	10	0.01635			
100000201	5163	1	0.00065	BUCKNER RD	NE	BUCKNER RD & TO BUCKNER ROAD
100000201	5163	2	0.000087			
100000201	5163	3	0.000571			
100000201	5163	4	0.000499			
100000201	5163	5	0.001242			
100000201	5163	6	0.00016			
100000201	5163	7	0.000508			
100000201	5163	8	0.000458			

Node	Superlink	Run	Average Control Delay	Approach Street Name	Direction	Intersection
100000201	5163	9	0.000247			
100000201	5163	10	0.000267			
100000203	5169	1		SERVICE RD	E	SERVICE RD & MONTICELLO RD
100000203	5169	2				
100000203	5169	3				
100000203	5169	4				
100000203	5169	5				
100000203	5169	6				
100000203	5169	7				
100000203	5169	8				
100000203	5169	9				
100000203	5169	10				
100000203	5171	1		MONTICELLO RD	N	SERVICE RD & MONTICELLO RD
100000203	5171	2				
100000203	5171	3				
100000203	5171	4				
100000203	5171	5				
100000203	5171	6				
100000203	5171	7				
100000203	5171	8				
100000203	5171	9				
100000203	5171	10				
100000203	5173	1	0.183186	SERVICE RD	W	SERVICE RD & MONTICELLO RD
100000203	5173	2	0.397668			
100000203	5173	3	0.284121			
100000203	5173	4	0.263373			
100000203	5173	5	0.32566			
100000203	5173	6	0.275067			
100000203	5173	7	0.400254			
100000203	5173	8	0.352341			
100000203	5173	9	0.292038			
100000203	5173	10	0.408849			
100000250	6539	1	14.076454	BUSH RIVER RD	NW	E MEADOW CT/WOODLAND VILLAGE DR, BUSH RIVER RD & OUTLET POINTE BLVD
100000250	6539	2	18.215123			
100000250	6539	3	8.266531			
100000250	6539	4	19.358541			
100000250	6539	5	16.525688			
100000250	6539	6	27.564369			
100000250	6539	7	18.330303			
100000250	6539	8	20.827731			
100000250	6539	9	23.282608			
100000250	6539	10	15.576747			
100000250	6546	1	22.965385	OUTLET POINTE BLVD	NE	E MEADOW CT/WOODLAND VILLAGE DR, BUSH RIVER RD & OUTLET POINTE BLVD
100000250	6546	2	18.390427			
100000250	6546	3	23.1197			
100000250	6546	4	23.872617			
100000250	6546	5	24.834628			
100000250	6546	6	20.200319			
100000250	6546	7	20.164263			
100000250	6546	8	24.669945			
100000250	6546	9	25.274535			
100000250	6546	10	28.186083			
100000250	6547	1	30.726581	E MEADOW CT/WOODLAND VILLAGE DR	SW	E MEADOW CT/WOODLAND VILLAGE DR, BUSH RIVER RD & OUTLET POINTE BLVD
100000250	6547	2	23.7552			
100000250	6547	3	22.321771			
100000250	6547	4	25.917877			
100000250	6547	5	28.566507			
100000250	6547	6	29.572146			
100000250	6547	7	26.930145			
100000250	6547	8	21.070758			
100000250	6547	9	23.462485			
100000250	6547	10	24.443025			
100000250	6548	1	14.484741	BUSH RIVER RD	SE	E MEADOW CT/WOODLAND VILLAGE DR, BUSH RIVER RD & OUTLET POINTE BLVD
100000250	6548	2	15.428369			
100000250	6548	3	11.217901			
100000250	6548	4	15.53791			
100000250	6548	5	13.685749			
100000250	6548	6	19.705972			
100000250	6548	7	18.093724			
100000250	6548	8	21.744382			
100000250	6548	9	20.153678			
100000250	6548	10	13.44617			
100000252	5125	1	7.275038	BUSH RIVER RD	E	MORNINGHILL DR, BUSH RIVER RD & RAMP
100000252	5125	2	7.416001			
100000252	5125	3	6.818104			
100000252	5125	4	7.000502			
100000252	5125	5	6.990728			
100000252	5125	6	6.7827			
100000252	5125	7	7.105139			
100000252	5125	8	6.735238			
100000252	5125	9	6.720451			
100000252	5125	10	6.97362			
100000252	5487	1	58.426627	MORNINGHILL DR	S	MORNINGHILL DR, BUSH RIVER RD & RAMP
100000252	5487	2	60.902746			
100000252	5487	3	63.917452			
100000252	5487	4	66.55031			
100000252	5487	5	70.071671			
100000252	5487	6	47.893433			
100000252	5487	7	58.486228			
100000252	5487	8	54.805528			
100000252	5487	9	54.214157			
100000252	5487	10	46.064729			
100000252	5488	1	21.637209	RAMP	N	MORNINGHILL DR, BUSH RIVER RD & RAMP
100000252	5488	2	20.762776			
100000252	5488	3	21.550455			
100000252	5488	4	21.070566			
100000252	5488	5	20.518996			
100000252	5488	6	20.199929			
100000252	5488	7	21.390831			
100000252	5488	8	21.151624			
100000252	5488	9	22.656766			
100000252	5488	10	21.999904			
100000252	6505	1	22.316047	BUSH RIVER RD	W	MORNINGHILL DR, BUSH RIVER RD & RAMP
100000252	6505	2	21.929007			
100000252	6505	3	22.018995			
100000252	6505	4	20.236275			
100000252	6505	5	19.951537			
100000252	6505	6	22.708389			
100000252	6505	7	22.651527			
100000252	6505	8	23.168564			
100000252	6505	9	19.631211			
100000252	6505	10	21.905407			

Node	Superlink	Run	Average Control Delay	Approach Street Name	Direction	Intersection
100000255	5038	1	3.53175	BUSH RIVER RD	E	BUSH RIVER RD & INDEPENDENCE AVE
100000255	5038	2	3.359599			
100000255	5038	3	3.365136			
100000255	5038	4	3.796615			
100000255	5038	5	3.689355			
100000255	5038	6	3.677221			
100000255	5038	7	3.979176			
100000255	5038	8	3.54364			
100000255	5038	9	4.330112			
100000255	5038	10	4.113599			
100000255	5470	1	33.957618	INDEPENDENCE AVE	N	BUSH RIVER RD & INDEPENDENCE AVE
100000255	5470	2	29.607919			
100000255	5470	3	31.660634			
100000255	5470	4	29.586205			
100000255	5470	5	35.250797			
100000255	5470	6	29.594408			
100000255	5470	7	32.686789			
100000255	5470	8	37.480346			
100000255	5470	9	33.100186			
100000255	5470	10	31.4834			
100000255	5471	1	68.730178	BUSH RIVER RD	W	BUSH RIVER RD & INDEPENDENCE AVE
100000255	5471	2	93.279774			
100000255	5471	3	150.587433			
100000255	5471	4	69.212904			
100000255	5471	5	62.569124			
100000255	5471	6	120.867638			
100000255	5471	7	85.842728			
100000255	5471	8	65.011331			
100000255	5471	9	67.207197			
100000255	5471	10	76.870483			
100000256	5131	1	6.768711	BUSH RIVER RD	W	BUSH RIVER RD & ZIMALCREST DR
100000256	5131	2	6.882298			
100000256	5131	3	6.841476			
100000256	5131	4	7.27076			
100000256	5131	5	7.552449			
100000256	5131	6	7.952217			
100000256	5131	7	7.457946			
100000256	5131	8	6.954038			
100000256	5131	9	8.603616			
100000256	5131	10	8.409564			
100000256	5465	1	9.898288	BUSH RIVER RD	E	BUSH RIVER RD & ZIMALCREST DR
100000256	5465	2	12.097797			
100000256	5465	3	8.958316			
100000256	5465	4	9.759942			
100000256	5465	5	9.96836			
100000256	5465	6	11.209933			
100000256	5465	7	9.153779			
100000256	5465	8	9.552652			
100000256	5465	9	9.101983			
100000256	5465	10	10.005791			
100000256	5484	1	42.522092	ZIMALCREST DR	S	BUSH RIVER RD & ZIMALCREST DR
100000256	5484	2	48.674088			
100000256	5484	3	32.142575			
100000256	5484	4	46.5832			
100000256	5484	5	42.204543			
100000256	5484	6	29.852926			
100000256	5484	7	36.185824			
100000256	5484	8	42.895017			
100000256	5484	9	36.247607			
100000256	5484	10	29.966661			
100000256	5485	1	7.647691	ZIMALCREST DR	N	BUSH RIVER RD & ZIMALCREST DR
100000256	5485	2	8.121399			
100000256	5485	3	7.955613			
100000256	5485	4	8.49485			
100000256	5485	5	8.860086			
100000256	5485	6	8.929142			
100000256	5485	7	8.541223			
100000256	5485	8	11.336408			
100000256	5485	9	10.287793			
100000256	5485	10	9.439731			
100000259	5465	1	0	BUSH RIVER RD	W	NOTTINGWOOD DR & BUSH RIVER RD
100000259	5465	2	0			
100000259	5465	3	0			
100000259	5465	4	0			
100000259	5465	5	0			
100000259	5465	6	0			
100000259	5465	7	0			
100000259	5465	8	0			
100000259	5465	9	0			
100000259	5465	10	0			
100000259	5471	1	0	BUSH RIVER RD	E	NOTTINGWOOD DR & BUSH RIVER RD
100000259	5471	2	0			
100000259	5471	3	0			
100000259	5471	4	0			
100000259	5471	5	0			
100000259	5471	6	0			
100000259	5471	7	0			
100000259	5471	8	0			
100000259	5471	9	0			
100000259	5471	10	0			
100000259	5472	1		NOTTINGWOOD DR	S	NOTTINGWOOD DR & BUSH RIVER RD
100000259	5472	2				
100000259	5472	3				
100000259	5472	4				
100000259	5472	5				
100000259	5472	6				
100000259	5472	7				
100000259	5472	8				
100000259	5472	9				
100000259	5472	10				
100000262	5502	1	0.375501	BUSH RIVER RD	E	DUTCH SQUARE ENTRANCE, BUSH RIVER RD & COLONIAL LIFE BLVD W
100000262	5502	2	0.331991			
100000262	5502	3	0.527688			
100000262	5502	4	0.467661			
100000262	5502	5	0.448703			
100000262	5502	6	0.354243			
100000262	5502	7	0.681328			
100000262	5502	8	0.498364			
100000262	5502	9	0.773496			
100000262	5502	10	0.693563			
100000262	5506	1	30.130847	COLONIAL LIFE BLVD W	N	DUTCH SQUARE ENTRANCE, BUSH RIVER RD & COLONIAL LIFE BLVD W
100000262	5506	2	29.20165			

Node	Superlink	Run	Average Control Delay	Approach Street Name	Direction	Intersection
100000262	5506	3	29.797857			
100000262	5506	4	30.425965			
100000262	5506	5	33.975977			
100000262	5506	6	30.699784			
100000262	5506	7	29.681044			
100000262	5506	8	25.462343			
100000262	5506	9	29.558533			
100000262	5506	10	27.729691			
100000262	5509	1	61.999419	DUTCH SQUARE ENTRANCE	S	DUTCH SQUARE ENTRANCE, BUSH RIVER RD & COLONIAL LIFE BLVD W
100000262	5509	2	51.289812			
100000262	5509	3	54.016351			
100000262	5509	4	59.317507			
100000262	5509	5	64.189568			
100000262	5509	6	56.131378			
100000262	5509	7	63.551812			
100000262	5509	8	59.980727			
100000262	5509	9	62.965331			
100000262	5509	10	53.581231			
100000262	5511	1	14.828358	BUSH RIVER RD	W	DUTCH SQUARE ENTRANCE, BUSH RIVER RD & COLONIAL LIFE BLVD W
100000262	5511	2	17.288495			
100000262	5511	3	14.353614			
100000262	5511	4	14.01638			
100000262	5511	5	13.801942			
100000262	5511	6	15.969723			
100000262	5511	7	17.173015			
100000262	5511	8	15.805037			
100000262	5511	9	19.700724			
100000262	5511	10	13.690983			
100000263	5516	1	0.198417	COLONIAL LIFE BLVD W	N	COLONIAL LIFE BLVD W
100000263	5516	2	0.109842			
100000263	5516	3	0.208385			
100000263	5516	4	0.260727			
100000263	5516	5	0.185656			
100000263	5516	6	0.184355			
100000263	5516	7	0.219017			
100000263	5516	8	0.191453			
100000263	5516	9	0.23159			
100000263	5516	10	0.160702			
100000263	5520	1	9.547264	COLONIAL LIFE BLVD W	W	COLONIAL LIFE BLVD W
100000263	5520	2	8.308617			
100000263	5520	3	8.552273			
100000263	5520	4	8.426694			
100000263	5520	5	9.76616			
100000263	5520	6	11.011789			
100000263	5520	7	7.867745			
100000263	5520	8	10.85428			
100000263	5520	9	9.64186			
100000263	5520	10	9.753528			
100000263	6495	1	0.527442	COLONIAL LIFE BLVD W	S	COLONIAL LIFE BLVD W
100000263	6495	2	0.511728			
100000263	6495	3	0.53815			
100000263	6495	4	0.697493			
100000263	6495	5	0.43751			
100000263	6495	6	0.514361			
100000263	6495	7	0.485418			
100000263	6495	8	0.784065			
100000263	6495	9	0.487952			
100000263	6495	10	0.526035			
100000265	5139	1	13.222741	GREYSTONE BLVD	N	GREYSTONE BLVD & STONERIDGE DR
100000265	5139	2	15.638556			
100000265	5139	3	15.681393			
100000265	5139	4	14.555511			
100000265	5139	5	13.211485			
100000265	5139	6	15.258837			
100000265	5139	7	17.961757			
100000265	5139	8	15.813139			
100000265	5139	9	15.437358			
100000265	5139	10	13.662972			
100000265	5537	1	21.87067	STONERIDGE DR	W	GREYSTONE BLVD & STONERIDGE DR
100000265	5537	2	27.356981			
100000265	5537	3	27.607706			
100000265	5537	4	23.586167			
100000265	5537	5	22.379736			
100000265	5537	6	20.695053			
100000265	5537	7	21.900695			
100000265	5537	8	21.795972			
100000265	5537	9	22.884736			
100000265	5537	10	24.899567			
100000265	5556	1	12.637233	STONERIDGE DR	E	GREYSTONE BLVD & STONERIDGE DR
100000265	5556	2	11.8752			
100000265	5556	3	11.841879			
100000265	5556	4	12.538115			
100000265	5556	5	11.794688			
100000265	5556	6	12.772862			
100000265	5556	7	13.208545			
100000265	5556	8	12.428447			
100000265	5556	9	11.787016			
100000265	5556	10	13.250365			
100000265	6328	1	18.759846	GREYSTONE BLVD	S	GREYSTONE BLVD & STONERIDGE DR
100000265	6328	2	18.612607			
100000265	6328	3	17.548806			
100000265	6328	4	16.449166			
100000265	6328	5	17.888624			
100000265	6328	6	18.771565			
100000265	6328	7	18.996343			
100000265	6328	8	17.819754			
100000265	6328	9	17.347964			
100000265	6328	10	16.972153			
100000266	5545	1	58.212619	GREYSTONE BLVD	N	GREYSTONE BLVD & BROAD RIVER RD
100000266	5545	2	63.387314			
100000266	5545	3	56.603726			
100000266	5545	4	55.89241			
100000266	5545	5	60.942453			
100000266	5545	6	60.699179			
100000266	5545	7	58.514763			
100000266	5545	8	57.937149			
100000266	5545	9	54.365979			
100000266	5545	10	60.313938			
100000266	6325	1	4.774964	BROAD RIVER RD	W	GREYSTONE BLVD & BROAD RIVER RD
100000266	6325	2	4.8721			
100000266	6325	3	4.461473			
100000266	6325	4	4.382299			

Node	Superlink	Run	Average Control Delay	Approach Street Name	Direction	Intersection
100000266	6325	5	5.657933			
100000266	6325	6	5.74663			
100000266	6325	7	5.520983			
100000266	6325	8	4.919937			
100000266	6325	9	4.092641			
100000266	6325	10	5.442967			
100000266	6327	1	6.497072	BROAD RIVER RD	E	GREYSTONE BLVD & BROAD RIVER RD
100000266	6327	2	7.598829			
100000266	6327	3	7.284528			
100000266	6327	4	6.225618			
100000266	6327	5	7.552106			
100000266	6327	6	6.821094			
100000266	6327	7	7.009617			
100000266	6327	8	7.237833			
100000266	6327	9	6.73227			
100000266	6327	10	7.327579			
100000268	5565	1	31.4957	HUGER ST	N	HUGER ST & LAUREL ST
100000268	5565	2	33.118311			
100000268	5565	3	33.326985			
100000268	5565	4	33.028657			
100000268	5565	5	34.08627			
100000268	5565	6	32.764008			
100000268	5565	7	31.723812			
100000268	5565	8	32.397535			
100000268	5565	9	31.720651			
100000268	5565	10	31.62394			
100000268	5570	1	29.537968	LAUREL ST	E	HUGER ST & LAUREL ST
100000268	5570	2	30.495204			
100000268	5570	3	30.455322			
100000268	5570	4	29.978184			
100000268	5570	5	30.001913			
100000268	5570	6	30.048586			
100000268	5570	7	31.657348			
100000268	5570	8	29.848895			
100000268	5570	9	29.595698			
100000268	5570	10	30.103447			
100000268	5571	1	22.396083	HUGER ST	S	HUGER ST & LAUREL ST
100000268	5571	2	22.742829			
100000268	5571	3	24.543435			
100000268	5571	4	24.178943			
100000268	5571	5	21.89541			
100000268	5571	6	22.913783			
100000268	5571	7	22.081107			
100000268	5571	8	22.569458			
100000268	5571	9	22.749154			
100000268	5571	10	22.752699			
100000268	5581	1	48.330619	LAUREL ST	W	HUGER ST & LAUREL ST
100000268	5581	2	50.051139			
100000268	5581	3	49.699977			
100000268	5581	4	48.538536			
100000268	5581	5	48.021869			
100000268	5581	6	48.095815			
100000268	5581	7	47.166331			
100000268	5581	8	50.011748			
100000268	5581	9	49.223581			
100000268	5581	10	49.915964			
100000339	6083	1	19.049925	BROAD RIVER RD	NW	BROAD RIVER RD & ST ANDREWS RD
100000339	6083	2	14.713915			
100000339	6083	3	17.559364			
100000339	6083	4	20.201253			
100000339	6083	5	18.780892			
100000339	6083	6	17.241722			
100000339	6083	7	18.480545			
100000339	6083	8	15.351561			
100000339	6083	9	20.47823			
100000339	6083	10	17.675598			
100000339	6084	1	21.671376	BROAD RIVER RD	SE	BROAD RIVER RD & ST ANDREWS RD
100000339	6084	2	23.051809			
100000339	6084	3	26.118757			
100000339	6084	4	23.758055			
100000339	6084	5	25.407368			
100000339	6084	6	28.314565			
100000339	6084	7	26.638735			
100000339	6084	8	24.906641			
100000339	6084	9	23.079888			
100000339	6084	10	22.872075			
100000339	6085	1	67.024914	ST ANDREWS RD	SW	BROAD RIVER RD & ST ANDREWS RD
100000339	6085	2	57.36834			
100000339	6085	3	60.214942			
100000339	6085	4	66.751283			
100000339	6085	5	62.574012			
100000339	6085	6	66.817738			
100000339	6085	7	67.877161			
100000339	6085	8	57.524543			
100000339	6085	9	54.886272			
100000339	6085	10	65.140565			
100000339	6086	1	38.376009	ST ANDREWS RD	E	BROAD RIVER RD & ST ANDREWS RD
100000339	6086	2	35.677784			
100000339	6086	3	39.843545			
100000339	6086	4	36.610021			
100000339	6086	5	36.723126			
100000339	6086	6	39.587287			
100000339	6086	7	35.849824			
100000339	6086	8	39.067383			
100000339	6086	9	45.536733			
100000339	6086	10	36.43627			
100000343	6059	1	0.011273	BROAD RIVER RD	NW	NUNAMAKER DR & BROAD RIVER RD
100000343	6059	2	0.003108			
100000343	6059	3	0.006805			
100000343	6059	4	0.036381			
100000343	6059	5	0.025137			
100000343	6059	6	0.001037			
100000343	6059	7	0.003093			
100000343	6059	8	0.000603			
100000343	6059	9	0.002631			
100000343	6059	10	0.002805			
100000343	6063	1		NUNAMAKER DR	SW	NUNAMAKER DR & BROAD RIVER RD
100000343	6063	2				
100000343	6063	3				
100000343	6063	4				
100000343	6063	5				
100000343	6063	6				

Node	Superlink	Run	Average Control Delay	Approach Street Name	Direction	Intersection
100000343	6063	7				
100000343	6063	8				
100000343	6063	9				
100000343	6063	10				
100000343	6065	1	0.020427	BROAD RIVER RD	SE	NUNAMAKER DR & BROAD RIVER RD
100000343	6065	2	0.0151			
100000343	6065	3	0.007179			
100000343	6065	4	0.01122			
100000343	6065	5	0.005365			
100000343	6065	6	0.001916			
100000343	6065	7	0.015215			
100000343	6065	8	0.005449			
100000343	6065	9	0.005206			
100000343	6065	10	0.007948			
100000344	6065	1	2.211898	BROAD RIVER RD	NW	YOUNG DR, BROAD RIVER RD & SEMINOLE RD
100000344	6065	2	2.252806			
100000344	6065	3	2.210078			
100000344	6065	4	3.240427			
100000344	6065	5	2.813235			
100000344	6065	6	2.611915			
100000344	6065	7	3.225485			
100000344	6065	8	2.68475			
100000344	6065	9	2.722332			
100000344	6065	10	2.530672			
100000344	6066	1	13.807297	BROAD RIVER RD	SE	YOUNG DR, BROAD RIVER RD & SEMINOLE RD
100000344	6066	2	16.116108			
100000344	6066	3	15.790653			
100000344	6066	4	15.573744			
100000344	6066	5	15.742156			
100000344	6066	6	16.518927			
100000344	6066	7	19.519538			
100000344	6066	8	18.811328			
100000344	6066	9	14.288244			
100000344	6066	10	14.94907			
100000344	6067	1	51.32163	YOUNG DR	SW	YOUNG DR, BROAD RIVER RD & SEMINOLE RD
100000344	6067	2	49.028517			
100000344	6067	3	48.303018			
100000344	6067	4	56.465512			
100000344	6067	5	50.338551			
100000344	6067	6	53.166537			
100000344	6067	7	66.060908			
100000344	6067	8	50.302937			
100000344	6067	9	50.871527			
100000344	6067	10	60.152592			
100000344	6068	1	25.246262	SEMINOLE RD	NE	YOUNG DR, BROAD RIVER RD & SEMINOLE RD
100000344	6068	2	25.927196			
100000344	6068	3	31.759468			
100000344	6068	4	30.919251			
100000344	6068	5	29.093522			
100000344	6068	6	28.607961			
100000344	6068	7	23.112072			
100000344	6068	8	33.646467			
100000344	6068	9	19.609515			
100000344	6068	10	25.500077			
100000348	5116	1	6.300665	ST ANDREWS RD	NW	ST ANDREWS RD & JAMIL RD
100000348	5116	2	5.296664			
100000348	5116	3	4.873943			
100000348	5116	4	5.217941			
100000348	5116	5	4.99649			
100000348	5116	6	5.314861			
100000348	5116	7	4.47396			
100000348	5116	8	5.470222			
100000348	5116	9	4.797861			
100000348	5116	10	5.782387			
100000348	6114	1	7.240919	ST ANDREWS RD	E	ST ANDREWS RD & JAMIL RD
100000348	6114	2	8.795765			
100000348	6114	3	5.247028			
100000348	6114	4	5.530459			
100000348	6114	5	6.700948			
100000348	6114	6	7.626815			
100000348	6114	7	7.170251			
100000348	6114	8	7.166957			
100000348	6114	9	5.025324			
100000348	6114	10	6.375402			
100000348	6119	1	65.996241	JAMIL RD	S	ST ANDREWS RD & JAMIL RD
100000348	6119	2	68.672364			
100000348	6119	3	71.341009			
100000348	6119	4	67.750047			
100000348	6119	5	71.947829			
100000348	6119	6	66.594517			
100000348	6119	7	64.925735			
100000348	6119	8	66.311633			
100000348	6119	9	68.066203			
100000348	6119	10	65.27735			
100000349	6066	1	3.689311	BROAD RIVER RD	NW	ST ANDREWS PKY & BROAD RIVER RD
100000349	6066	2	2.708221			
100000349	6066	3	2.086735			
100000349	6066	4	2.138718			
100000349	6066	5	2.457306			
100000349	6066	6	3.706132			
100000349	6066	7	3.242016			
100000349	6066	8	2.129857			
100000349	6066	9	2.219346			
100000349	6066	10	2.593362			
100000349	6078	1	43.047983	ST ANDREWS PKY	SW	ST ANDREWS PKY & BROAD RIVER RD
100000349	6078	2	52.730333			
100000349	6078	3	57.298625			
100000349	6078	4	49.912694			
100000349	6078	5	48.512508			
100000349	6078	6	51.282309			
100000349	6078	7	48.247198			
100000349	6078	8	55.525662			
100000349	6078	9	56.443984			
100000349	6078	10	53.050856			
100000349	6079	1		BROAD RIVER RD	NE	ST ANDREWS PKY & BROAD RIVER RD
100000349	6079	2				
100000349	6079	3				
100000349	6079	4				
100000349	6079	5				
100000349	6079	6				
100000349	6079	7				
100000349	6079	8				

Node	Superlink	Run	Average Control Delay	Approach Street Name	Direction	Intersection
100000349	6079	9				
100000349	6079	10				
100000349	6083	1	3.249971	BROAD RIVER RD	SE	ST ANDREWS PKY & BROAD RIVER RD
100000349	6083	2	4.445515			
100000349	6083	3	3.622733			
100000349	6083	4	2.198329			
100000349	6083	5	3.782522			
100000349	6083	6	3.493529			
100000349	6083	7	3.476969			
100000349	6083	8	3.590289			
100000349	6083	9	3.079046			
100000349	6083	10	3.463053			
100000353	5104	1	24.735192	PINEY GROVE RD	W	BOWER PKY, PINEY GROVE RD & JAMIL RD
100000353	5104	2	22.144058			
100000353	5104	3	26.378829			
100000353	5104	4	25.600155			
100000353	5104	5	25.943678			
100000353	5104	6	21.269442			
100000353	5104	7	23.320679			
100000353	5104	8	20.224991			
100000353	5104	9	27.368623			
100000353	5104	10	25.39386			
100000353	6125	1	26.164118	BOWER PKY	SE	BOWER PKY, PINEY GROVE RD & JAMIL RD
100000353	6125	2	28.82459			
100000353	6125	3	29.180145			
100000353	6125	4	28.352094			
100000353	6125	5	28.110102			
100000353	6125	6	25.644257			
100000353	6125	7	25.595071			
100000353	6125	8	29.053671			
100000353	6125	9	25.462962			
100000353	6125	10	23.786581			
100000353	6126	1	23.160638	PINEY GROVE RD	E	BOWER PKY, PINEY GROVE RD & JAMIL RD
100000353	6126	2	20.542401			
100000353	6126	3	21.146938			
100000353	6126	4	24.234483			
100000353	6126	5	22.471457			
100000353	6126	6	19.271163			
100000353	6126	7	20.930356			
100000353	6126	8	21.151101			
100000353	6126	9	23.224877			
100000353	6126	10	22.12422			
100000353	6127	1	49.210797	JAMIL RD	NW	BOWER PKY, PINEY GROVE RD & JAMIL RD
100000353	6127	2	35.476484			
100000353	6127	3	42.791598			
100000353	6127	4	43.642601			
100000353	6127	5	49.776653			
100000353	6127	6	33.060019			
100000353	6127	7	39.93723			
100000353	6127	8	44.273966			
100000353	6127	9	37.986312			
100000353	6127	10	47.488733			
100000354	6095	1	15.854454	ST ANDREWS RD	SW	ST ANDREWS RD, KAY ST & CHARTWELL RD
100000354	6095	2	11.556523			
100000354	6095	3	13.508657			
100000354	6095	4	16.098161			
100000354	6095	5	12.414101			
100000354	6095	6	14.224604			
100000354	6095	7	13.436862			
100000354	6095	8	13.598698			
100000354	6095	9	13.395713			
100000354	6095	10	12.84723			
100000354	6096	1	8.398002	ST ANDREWS RD	NE	ST ANDREWS RD, KAY ST & CHARTWELL RD
100000354	6096	2	6.310259			
100000354	6096	3	7.484709			
100000354	6096	4	8.594886			
100000354	6096	5	6.559843			
100000354	6096	6	6.243286			
100000354	6096	7	7.748129			
100000354	6096	8	6.959372			
100000354	6096	9	6.534849			
100000354	6096	10	8.015212			
100000354	6098	1	121.864529	CHARTWELL RD	NW	ST ANDREWS RD, KAY ST & CHARTWELL RD
100000354	6098	2	122.407518			
100000354	6098	3	84.391559			
100000354	6098	4	173.852618			
100000354	6098	5	79.865363			
100000354	6098	6	80.01547			
100000354	6098	7	88.037596			
100000354	6098	8	121.083858			
100000354	6098	9	59.966936			
100000354	6098	10	82.574933			
100000354	6099	1	25.432902	KAY ST	SE	ST ANDREWS RD, KAY ST & CHARTWELL RD
100000354	6099	2	25.030309			
100000354	6099	3	28.473755			
100000354	6099	4	47.906812			
100000354	6099	5	28.196914			
100000354	6099	6	25.416597			
100000354	6099	7	23.828767			
100000354	6099	8	23.68804			
100000354	6099	9	23.050658			
100000354	6099	10	28.906058			
100000356	6086	1	0.137876	ST ANDREWS RD	SW	LAWRENCE ST & ST ANDREWS RD
100000356	6086	2	0.149043			
100000356	6086	3	0.135508			
100000356	6086	4	0.15194			
100000356	6086	5	0.167446			
100000356	6086	6	0.159392			
100000356	6086	7	0.164409			
100000356	6086	8	0.140113			
100000356	6086	9	0.117377			
100000356	6086	10	0.102345			
100000356	6092	1	8.231196	LAWRENCE ST	SE	LAWRENCE ST & ST ANDREWS RD
100000356	6092	2	9.043185			
100000356	6092	3	9.875449			
100000356	6092	4	9.798087			
100000356	6092	5	7.409687			
100000356	6092	6	8.471139			
100000356	6092	7	8.372579			
100000356	6092	8	8.964061			
100000356	6092	9	9.166158			
100000356	6092	10	10.176478			

Node	Superlink	Run	Average Control Delay	Approach Street Name	Direction	Intersection
100000356	6094	1	0.696143	ST ANDREWS RD	NE	LAWRENCE ST & ST ANDREWS RD
100000356	6094	2	0.744316			
100000356	6094	3	0.722323			
100000356	6094	4	0.693203			
100000356	6094	5	0.50231			
100000356	6094	6	0.850922			
100000356	6094	7	0.66002			
100000356	6094	8	0.929256			
100000356	6094	9	0.54678			
100000356	6094	10	0.600892			
100000357	6119	1	0.808857	JAMIL RD	NW	JAMIL RD & PAISLEY LN
100000357	6119	2	0.996149			
100000357	6119	3	0.947905			
100000357	6119	4	0.83869			
100000357	6119	5	0.756404			
100000357	6119	6	0.67813			
100000357	6119	7	1.113049			
100000357	6119	8	0.95568			
100000357	6119	9	0.743304			
100000357	6119	10	0.864856			
100000357	6120	1	11.968952	PAISLEY LN	NE	JAMIL RD & PAISLEY LN
100000357	6120	2	10.41085			
100000357	6120	3	13.566336			
100000357	6120	4	12.230411			
100000357	6120	5	11.787482			
100000357	6120	6	14.075473			
100000357	6120	7	11.384654			
100000357	6120	8	10.588802			
100000357	6120	9	11.627002			
100000357	6120	10	13.51685			
100000357	6121	1	1.471576	JAMIL RD	SE	JAMIL RD & PAISLEY LN
100000357	6121	2	0.992849			
100000357	6121	3	0.63753			
100000357	6121	4	0.821354			
100000357	6121	5	1.055835			
100000357	6121	6	0.971557			
100000357	6121	7	1.603569			
100000357	6121	8	0.810536			
100000357	6121	9	1.36214			
100000357	6121	10	0.770708			
100000358	5117	1	9.856361	ST ANDREWS RD	NE	ST ANDREWS RD, FERNANDINA RD & BURNING TREE RD
100000358	5117	2	9.984019			
100000358	5117	3	10.848208			
100000358	5117	4	9.990055			
100000358	5117	5	9.180519			
100000358	5117	6	9.571302			
100000358	5117	7	9.509434			
100000358	5117	8	9.635226			
100000358	5117	9	10.571444			
100000358	5117	10	10.711536			
100000358	6100	1	12.242019	ST ANDREWS RD	SW	ST ANDREWS RD, FERNANDINA RD & BURNING TREE RD
100000358	6100	2	11.378539			
100000358	6100	3	13.579093			
100000358	6100	4	12.856397			
100000358	6100	5	12.023192			
100000358	6100	6	11.340524			
100000358	6100	7	11.764052			
100000358	6100	8	12.227238			
100000358	6100	9	12.060514			
100000358	6100	10	11.4058			
100000358	6101	1	29.542819	BURNING TREE RD	NW	ST ANDREWS RD, FERNANDINA RD & BURNING TREE RD
100000358	6101	2	28.299276			
100000358	6101	3	25.764319			
100000358	6101	4	33.208715			
100000358	6101	5	31.541514			
100000358	6101	6	29.129322			
100000358	6101	7	27.000907			
100000358	6101	8	31.943702			
100000358	6101	9	27.893972			
100000358	6101	10	33.009618			
100000358	6102	1	24.588191	FERNANDINA RD	SE	ST ANDREWS RD, FERNANDINA RD & BURNING TREE RD
100000358	6102	2	21.549179			
100000358	6102	3	21.813075			
100000358	6102	4	22.874546			
100000358	6102	5	21.688666			
100000358	6102	6	22.789908			
100000358	6102	7	21.238273			
100000358	6102	8	22.111494			
100000358	6102	9	21.515799			
100000358	6102	10	21.769742			
100000360	3294	1	11.771776	EXIT 106 WB OFF RAMP	NE	EXIT 106 WB OFF RAMP & BURNING TREE RD
100000360	3294	2	11.353456			
100000360	3294	3	12.230579			
100000360	3294	4	10.661842			
100000360	3294	5	10.640358			
100000360	3294	6	13.355582			
100000360	3294	7	10.663067			
100000360	3294	8	10.973642			
100000360	3294	9	10.609475			
100000360	3294	10	10.214617			
100000360	6101	1	0.078347	BURNING TREE RD	S	EXIT 106 WB OFF RAMP & BURNING TREE RD
100000360	6101	2	0.048735			
100000360	6101	3	0.089855			
100000360	6101	4	0.027194			
100000360	6101	5	0.049328			
100000360	6101	6	0.043103			
100000360	6101	7	0.050601			
100000360	6101	8	0.061361			
100000360	6101	9	0.060705			
100000360	6101	10	0.037286			
100000360	6105	1	0.03881	BURNING TREE RD	N	EXIT 106 WB OFF RAMP & BURNING TREE RD
100000360	6105	2	0.017907			
100000360	6105	3	0.020475			
100000360	6105	4	0.022219			
100000360	6105	5	0.034234			
100000360	6105	6	0.020829			
100000360	6105	7	0.022286			
100000360	6105	8	0.02731			
100000360	6105	9	0.022353			
100000360	6105	10	0.027239			
100000362	6134	1	10.522659	JAMIL RD	NW	HARBISON BLVD & JAMIL RD
100000362	6134	2	19.216967			

Node	Superlink	Run	Average Control Delay	Approach Street Name	Direction	Intersection
100000362	6134	3	11.514222			
100000362	6134	4	11.585127			
100000362	6134	5	10.518956			
100000362	6134	6	8.620709			
100000362	6134	7	14.02197			
100000362	6134	8	12.17664			
100000362	6134	9	7.77461			
100000362	6134	10	10.723394			
100000362	6137	1	0.847889	HARBISON BLVD	NE	HARBISON BLVD & JAMIL RD
100000362	6137	2	0.919796			
100000362	6137	3	0.430715			
100000362	6137	4	0.830909			
100000362	6137	5	0.648699			
100000362	6137	6	0.55287			
100000362	6137	7	0.873865			
100000362	6137	8	0.592409			
100000362	6137	9	0.691362			
100000362	6137	10	0.859429			
100000362	6473	1	0.000877	HARBISON BLVD	SW	HARBISON BLVD & JAMIL RD
100000362	6473	2	0.00272			
100000362	6473	3	0.002452			
100000362	6473	4	0.002753			
100000362	6473	5	0.001882			
100000362	6473	6	0.00265			
100000362	6473	7	0.003022			
100000362	6473	8	0.001963			
100000362	6473	9	0.015804			
100000362	6473	10	0.001959			
100000363	6125	1	0.301419	BOWER PKY	NW	BOWER PKY & JAMIL RD
100000363	6125	2	0.319532			
100000363	6125	3	0.43936			
100000363	6125	4	0.460994			
100000363	6125	5	0.346036			
100000363	6125	6	0.263616			
100000363	6125	7	0.161795			
100000363	6125	8	0.230817			
100000363	6125	9	0.232842			
100000363	6125	10	0.114146			
100000363	6134	1	11.043962	JAMIL RD	SW	BOWER PKY & JAMIL RD
100000363	6134	2	11.491612			
100000363	6134	3	10.346736			
100000363	6134	4	10.283738			
100000363	6134	5	10.185982			
100000363	6134	6	10.971718			
100000363	6134	7	10.878151			
100000363	6134	8	9.606352			
100000363	6134	9	9.779898			
100000363	6134	10	10.555			
100000363	6160	1	0.515503	BOWER PKY	SE	BOWER PKY & JAMIL RD
100000363	6160	2	0.456325			
100000363	6160	3	0.52606			
100000363	6160	4	0.481809			
100000363	6160	5	0.500836			
100000363	6160	6	0.50258			
100000363	6160	7	0.380803			
100000363	6160	8	0.313673			
100000363	6160	9	0.474308			
100000363	6160	10	0.416184			
100000364	6145	1	1.815159	HARBISON BLVD	SW	HARBISON BLVD & COLUMBIANA DR
100000364	6145	2	2.328862			
100000364	6145	3	2.5601			
100000364	6145	4	2.763028			
100000364	6145	5	2.394682			
100000364	6145	6	2.329234			
100000364	6145	7	2.266334			
100000364	6145	8	2.693228			
100000364	6145	9	2.176646			
100000364	6145	10	2.351868			
100000364	6176	1	2.517313	HARBISON BLVD	NE	HARBISON BLVD & COLUMBIANA DR
100000364	6176	2	2.628444			
100000364	6176	3	3.160182			
100000364	6176	4	2.762445			
100000364	6176	5	2.749689			
100000364	6176	6	2.874268			
100000364	6176	7	3.571657			
100000364	6176	8	3.24982			
100000364	6176	9	2.744256			
100000364	6176	10	3.163764			
100000364	6177	1		COLUMBIANA DR	NW	HARBISON BLVD & COLUMBIANA DR
100000364	6177	2				
100000364	6177	3				
100000364	6177	4				
100000364	6177	5				
100000364	6177	6				
100000364	6177	7				
100000364	6177	8				
100000364	6177	9				
100000364	6177	10				
100000364	6196	1	47.901805	COLUMBIANA DR	SE	HARBISON BLVD & COLUMBIANA DR
100000364	6196	2	46.027609			
100000364	6196	3	47.856956			
100000364	6196	4	47.647959			
100000364	6196	5	44.556277			
100000364	6196	6	49.109841			
100000364	6196	7	49.652868			
100000364	6196	8	48.343832			
100000364	6196	9	48.37565			
100000364	6196	10	48.263223			
100000365	6137	1	5.543229	HARBISON BLVD	SW	COLUMBIANA CIR, HARBISON BLVD & PARK TERRACE DR
100000365	6137	2	5.669849			
100000365	6137	3	5.500191			
100000365	6137	4	5.47062			
100000365	6137	5	5.781438			
100000365	6137	6	6.50284			
100000365	6137	7	7.34985			
100000365	6137	8	7.325713			
100000365	6137	9	6.92057			
100000365	6137	10	6.894558			
100000365	6140	1	17.395807	COLUMBIANA CIR	SE	COLUMBIANA CIR, HARBISON BLVD & PARK TERRACE DR
100000365	6140	2	19.655409			
100000365	6140	3	11.903281			
100000365	6140	4	21.156147			

Node	Superlink	Run	Average Control Delay	Approach Street Name	Direction	Intersection
100000365	6140	5	19.689397			
100000365	6140	6	21.402871			
100000365	6140	7	17.397971			
100000365	6140	8	15.593433			
100000365	6140	9	17.443293			
100000365	6140	10	15.082014			
100000365	6145	1	8.849181	HARBISON BLVD	NE	COLUMBIANA CIR, HARBISON BLVD & PARK TERRACE DR
100000365	6145	2	9.003203			
100000365	6145	3	8.411214			
100000365	6145	4	10.294088			
100000365	6145	5	10.301877			
100000365	6145	6	9.982251			
100000365	6145	7	11.875079			
100000365	6145	8	9.98206			
100000365	6145	9	10.15039			
100000365	6145	10	10.372966			
100000365	6151	1	25.537491	PARK TERRACE DR	NW	COLUMBIANA CIR, HARBISON BLVD & PARK TERRACE DR
100000365	6151	2	27.8872			
100000365	6151	3	22.908835			
100000365	6151	4	26.918986			
100000365	6151	5	24.876793			
100000365	6151	6	29.623739			
100000365	6151	7	22.798973			
100000365	6151	8	28.433851			
100000365	6151	9	29.042951			
100000365	6151	10	30.284836			
100000374	6151	1	32.701975	PARK TERRACE DR	S	BOWER PKY, PARK TERRACE DR & 6161 (S)
100000374	6151	2	31.473351			
100000374	6151	3	36.407528			
100000374	6151	4	36.471245			
100000374	6151	5	35.850878			
100000374	6151	6	32.498619			
100000374	6151	7	34.983172			
100000374	6151	8	35.289999			
100000374	6151	9	41.787782			
100000374	6151	10	30.126371			
100000374	6160	1	8.872327	BOWER PKY	W	BOWER PKY, PARK TERRACE DR & 6161 (S)
100000374	6160	2	7.634407			
100000374	6160	3	9.276104			
100000374	6160	4	7.29809			
100000374	6160	5	6.710586			
100000374	6160	6	5.929249			
100000374	6160	7	8.229121			
100000374	6160	8	6.075192			
100000374	6160	9	7.292201			
100000374	6160	10	5.972022			
100000374	6161	1	3.804685		N	BOWER PKY, PARK TERRACE DR & 6161 (S)
100000374	6161	2	3.781892			
100000374	6161	3	4.205575			
100000374	6161	4	3.935545			
100000374	6161	5	4.071905			
100000374	6161	6	3.9445			
100000374	6161	7	4.353522			
100000374	6161	8	4.100378			
100000374	6161	9	3.989269			
100000374	6161	10	3.986923			
100000374	6162	1		BOWER PKY	E	BOWER PKY, PARK TERRACE DR & 6161 (S)
100000374	6162	2				
100000374	6162	3				
100000374	6162	4				
100000374	6162	5				
100000374	6162	6				
100000374	6162	7				
100000374	6162	8				
100000374	6162	9				
100000374	6162	10				
100000375	6196	1	1.232245	COLUMBIANA DR	NW	COLUMBIANA DR, CROSSBOW DR & DRIVEWAY
100000375	6196	2	1.873128			
100000375	6196	3	2.401053			
100000375	6196	4	1.770858			
100000375	6196	5	2.691336			
100000375	6196	6	2.28135			
100000375	6196	7	1.034043			
100000375	6196	8	2.269807			
100000375	6196	9	2.891859			
100000375	6196	10	2.487508			
100000375	6204	1	2.447464	COLUMBIANA DR	SE	COLUMBIANA DR, CROSSBOW DR & DRIVEWAY
100000375	6204	2	2.421529			
100000375	6204	3	2.667277			
100000375	6204	4	2.132527			
100000375	6204	5	2.569792			
100000375	6204	6	2.339024			
100000375	6204	7	2.232103			
100000375	6204	8	1.70929			
100000375	6204	9	1.980985			
100000375	6204	10	2.66061			
100000375	6550	1	9.189493	CROSSBOW DR	NE	COLUMBIANA DR, CROSSBOW DR & DRIVEWAY
100000375	6550	2	9.821291			
100000375	6550	3	15.331876			
100000375	6550	4	13.373304			
100000375	6550	5	8.533775			
100000375	6550	6	6.483385			
100000375	6550	7	16.936274			
100000375	6550	8	11.459084			
100000375	6550	9	11.956767			
100000375	6550	10	13.951281			
100000375	6551	1	9.724709	DRIVEWAY	SW	COLUMBIANA DR, CROSSBOW DR & DRIVEWAY
100000375	6551	2	8.651478			
100000375	6551	3	10.338503			
100000375	6551	4	12.484211			
100000375	6551	5	13.845851			
100000375	6551	6	10.798106			
100000375	6551	7	14.394942			
100000375	6551	8	14.584514			
100000375	6551	9	8.615347			
100000375	6551	10	13.111133			
100000391	5071	1	4.155478	BROAD RIVER RD	NW	BROAD RIVER RD & COLUMBIANA DR
100000391	5071	2	3.941357			
100000391	5071	3	2.866353			
100000391	5071	4	3.544821			
100000391	5071	5	3.151783			
100000391	5071	6	3.652109			

Node	Superlink	Run	Average Control Delay	Approach Street Name	Direction	Intersection
100000391	5071	7	2.807328			
100000391	5071	8	3.45913			
100000391	5071	9	3.362407			
100000391	5071	10	3.481905			
100000391	6214	1	45.367045	COLUMBIANA DR	NE	BROAD RIVER RD & COLUMBIANA DR
100000391	6214	2	40.310634			
100000391	6214	3	48.956801			
100000391	6214	4	55.761964			
100000391	6214	5	43.716985			
100000391	6214	6	46.571323			
100000391	6214	7	42.668993			
100000391	6214	8	55.307053			
100000391	6214	9	48.084386			
100000391	6214	10	48.534074			
100000391	6224	1	11.677695	BROAD RIVER RD	SE	BROAD RIVER RD & COLUMBIANA DR
100000391	6224	2	10.078238			
100000391	6224	3	7.956516			
100000391	6224	4	10.067605			
100000391	6224	5	10.189401			
100000391	6224	6	10.526165			
100000391	6224	7	8.131515			
100000391	6224	8	10.080035			
100000391	6224	9	9.239288			
100000391	6224	10	8.688243			
100000392	6121	1	0.793851	JAMIL RD	NW	TRAM RD & JAMIL RD
100000392	6121	2	0.59121			
100000392	6121	3	0.394834			
100000392	6121	4	0.807159			
100000392	6121	5	0.38662			
100000392	6121	6	0.688875			
100000392	6121	7	0.662581			
100000392	6121	8	1.149858			
100000392	6121	9	2.776806			
100000392	6121	10	0.560386			
100000392	6127	1	0.290381	JAMIL RD	SE	TRAM RD & JAMIL RD
100000392	6127	2	0.166666			
100000392	6127	3	0.052684			
100000392	6127	4	0.15419			
100000392	6127	5	0.155079			
100000392	6127	6	0.350868			
100000392	6127	7	0.068396			
100000392	6127	8	0.21307			
100000392	6127	9	0.220599			
100000392	6127	10	0.394533			
100000392	6261	1	7.108564	TRAM RD	NE	TRAM RD & JAMIL RD
100000392	6261	2	7.668901			
100000392	6261	3	7.286121			
100000392	6261	4	7.421667			
100000392	6261	5	7.147912			
100000392	6261	6	7.772962			
100000392	6261	7	7.146305			
100000392	6261	8	7.6124			
100000392	6261	9	7.615859			
100000392	6261	10	7.433709			
100000394	6204	1	0	COLUMBIANA DR	NW	COLUMBIANA DR, COLUMBIA AVE & DRIVEWAY
100000394	6204	2	0			
100000394	6204	3	0			
100000394	6204	4	0			
100000394	6204	5	0			
100000394	6204	6	0			
100000394	6204	7	0			
100000394	6204	8	0			
100000394	6204	9	0			
100000394	6204	10	0			
100000394	6208	1	0	COLUMBIANA DR	SE	COLUMBIANA DR, COLUMBIA AVE & DRIVEWAY
100000394	6208	2	0			
100000394	6208	3	0			
100000394	6208	4	0			
100000394	6208	5	0			
100000394	6208	6	0			
100000394	6208	7	0			
100000394	6208	8	0			
100000394	6208	9	0			
100000394	6208	10	0			
100000394	6210	1		COLUMBIA AVE	NE	COLUMBIANA DR, COLUMBIA AVE & DRIVEWAY
100000394	6210	2				
100000394	6210	3				
100000394	6210	4				
100000394	6210	5				
100000394	6210	6				
100000394	6210	7				
100000394	6210	8				
100000394	6210	9				
100000394	6210	10				
100000394	6549	1		DRIVEWAY	SW	COLUMBIANA DR, COLUMBIA AVE & DRIVEWAY
100000394	6549	2				
100000394	6549	3				
100000394	6549	4				
100000394	6549	5				
100000394	6549	6				
100000394	6549	7				
100000394	6549	8				
100000394	6549	9				
100000394	6549	10				
100000395	5084	1	31.259775	LAKE MURRAY BLVD	W	LAKE MURRAY BLVD & COLUMBIANA DR
100000395	5084	2	34.688696			
100000395	5084	3	40.484405			
100000395	5084	4	33.577385			
100000395	5084	5	34.239681			
100000395	5084	6	64.34021			
100000395	5084	7	32.864627			
100000395	5084	8	61.109689			
100000395	5084	9	68.512842			
100000395	5084	10	63.564926			
100000395	6208	1	38.436377	COLUMBIANA DR	NW	LAKE MURRAY BLVD & COLUMBIANA DR
100000395	6208	2	35.225666			
100000395	6208	3	42.52561			
100000395	6208	4	42.369707			
100000395	6208	5	39.705118			
100000395	6208	6	34.779124			
100000395	6208	7	42.12476			
100000395	6208	8	38.417751			

Node	Superlink	Run	Average Control Delay	Approach Street Name	Direction	Intersection
100000395	6208	9	37.060482			
100000395	6208	10	39.421006			
100000395	6214	1	49.385555	COLUMBIANA DR	S	LAKE MURRAY BLVD & COLUMBIANA DR
100000395	6214	2	58.440319			
100000395	6214	3	27.401218			
100000395	6214	4	35.146809			
100000395	6214	5	39.143186			
100000395	6214	6	33.853068			
100000395	6214	7	31.239109			
100000395	6214	8	28.41374			
100000395	6214	9	25.377523			
100000395	6214	10	11.558799			
100000395	6215	1	22.634975	LAKE MURRAY BLVD	E	LAKE MURRAY BLVD & COLUMBIANA DR
100000395	6215	2	19.467008			
100000395	6215	3	23.666287			
100000395	6215	4	25.205826			
100000395	6215	5	22.646566			
100000395	6215	6	21.6855			
100000395	6215	7	20.711326			
100000395	6215	8	27.684067			
100000395	6215	9	21.280871			
100000395	6215	10	23.183237			
100000398	5101	1	0	HARBISON BLVD	W	HARBISON BLVD & PARKRIDGE DR
100000398	5101	2	0.067009			
100000398	5101	3	0			
100000398	5101	4	0.004669			
100000398	5101	5	0.002339			
100000398	5101	6	0.005009			
100000398	5101	7	0			
100000398	5101	8	0.002584			
100000398	5101	9	0.064414			
100000398	5101	10	0			
100000398	6267	1	9.135289	PARKRIDGE DR	SE	HARBISON BLVD & PARKRIDGE DR
100000398	6267	2	9.449934			
100000398	6267	3	8.585055			
100000398	6267	4	9.027575			
100000398	6267	5	8.361757			
100000398	6267	6	9.200737			
100000398	6267	7	8.603411			
100000398	6267	8	8.357962			
100000398	6267	9	8.886228			
100000398	6267	10	8.515158			
100000398	6268	1	0	HARBISON BLVD	NE	HARBISON BLVD & PARKRIDGE DR
100000398	6268	2	0			
100000398	6268	3	0			
100000398	6268	4	0			
100000398	6268	5	0.265634			
100000398	6268	6	0.392265			
100000398	6268	7	0			
100000398	6268	8	0			
100000398	6268	9	0			
100000398	6268	10	0.043206			
100000399	5113	1	29.724347	PINEY GROVE RD	E	PINEY GROVE RD & FERNANDINA RD
100000399	5113	2	34.444542			
100000399	5113	3	27.351037			
100000399	5113	4	31.727972			
100000399	5113	5	27.737922			
100000399	5113	6	26.625892			
100000399	5113	7	30.973179			
100000399	5113	8	29.248158			
100000399	5113	9	27.359111			
100000399	5113	10	32.673126			
100000399	6263	1	14.605243	PINEY GROVE RD	W	PINEY GROVE RD & FERNANDINA RD
100000399	6263	2	19.537217			
100000399	6263	3	17.159069			
100000399	6263	4	18.284995			
100000399	6263	5	15.549111			
100000399	6263	6	16.204923			
100000399	6263	7	17.30763			
100000399	6263	8	16.873096			
100000399	6263	9	17.858271			
100000399	6263	10	17.856341			
100000399	6265	1	9.983057	FERNANDINA RD	SE	PINEY GROVE RD & FERNANDINA RD
100000399	6265	2	7.76076			
100000399	6265	3	7.626983			
100000399	6265	4	10.31618			
100000399	6265	5	10.984186			
100000399	6265	6	9.640782			
100000399	6265	7	7.459755			
100000399	6265	8	7.671578			
100000399	6265	9	7.542071			
100000399	6265	10	7.783807			
100000399	6266	1	21.090035	FERNANDINA RD	N	PINEY GROVE RD & FERNANDINA RD
100000399	6266	2	22.801105			
100000399	6266	3	21.143981			
100000399	6266	4	21.052304			
100000399	6266	5	24.373063			
100000399	6266	6	20.103306			
100000399	6266	7	20.9643			
100000399	6266	8	21.563127			
100000399	6266	9	21.822229			
100000399	6266	10	19.426634			
100000401	5093	1	9.749765	LAKE MURRAY BLVD	E	KINLEY RD, LAKE MURRAY BLVD & PARKRIDGE DR
100000401	5093	2	10.374998			
100000401	5093	3	10.393006			
100000401	5093	4	8.653384			
100000401	5093	5	8.823642			
100000401	5093	6	10.278849			
100000401	5093	7	10.15607			
100000401	5093	8	9.354197			
100000401	5093	9	9.656984			
100000401	5093	10	7.693911			
100000401	6276	1	23.41039	KINLEY RD	S	KINLEY RD, LAKE MURRAY BLVD & PARKRIDGE DR
100000401	6276	2	23.867309			
100000401	6276	3	28.062469			
100000401	6276	4	25.518366			
100000401	6276	5	22.926247			
100000401	6276	6	22.720945			
100000401	6276	7	25.729632			
100000401	6276	8	20.678312			
100000401	6276	9	19.662983			
100000401	6276	10	22.959728			

Node	Superlink	Run	Average Control Delay	Approach Street Name	Direction	Intersection
100000401	6313	1	17.948422	LAKE MURRAY BLVD	W	KINLEY RD, LAKE MURRAY BLVD & PARKRIDGE DR
100000401	6313	2	13.566984			
100000401	6313	3	16.840871			
100000401	6313	4	18.28825			
100000401	6313	5	21.614751			
100000401	6313	6	20.311245			
100000401	6313	7	13.188689			
100000401	6313	8	11.947287			
100000401	6313	9	18.636107			
100000401	6313	10	19.076236			
100000401	6556	1	29.321445	PARKRIDGE DR	N	KINLEY RD, LAKE MURRAY BLVD & PARKRIDGE DR
100000401	6556	2	34.782448			
100000401	6556	3	27.099966			
100000401	6556	4	37.009942			
100000401	6556	5	38.018173			
100000401	6556	6	44.752278			
100000401	6556	7	35.648898			
100000401	6556	8	45.842784			
100000401	6556	9	35.413077			
100000401	6556	10	27.225491			
100000438	2044	1	0	RAMP	SE	RAMP, SUNSET BLVD & I-20 EXIT 61 EB ON RAMP
100000438	2044	2	0			
100000438	2044	3	0			
100000438	2044	4	0			
100000438	2044	5	0			
100000438	2044	6	0			
100000438	2044	7	0			
100000438	2044	8	0			
100000438	2044	9	0			
100000438	2044	10	0			
100000438	5021	1	3.066888	SUNSET BLVD	NW	RAMP, SUNSET BLVD & I-20 EXIT 61 EB ON RAMP
100000438	5021	2	3.632696			
100000438	5021	3	3.808816			
100000438	5021	4	3.458896			
100000438	5021	5	3.98564			
100000438	5021	6	3.840679			
100000438	5021	7	3.859763			
100000438	5021	8	3.13253			
100000438	5021	9	3.356136			
100000438	5021	10	3.395049			
100000438	5023	1	0.525842	SUNSET BLVD	SE	RAMP, SUNSET BLVD & I-20 EXIT 61 EB ON RAMP
100000438	5023	2	0.409567			
100000438	5023	3	0.395331			
100000438	5023	4	0.525896			
100000438	5023	5	0.319911			
100000438	5023	6	0.181134			
100000438	5023	7	0.306343			
100000438	5023	8	0.711804			
100000438	5023	9	0.380326			
100000438	5023	10	0.563571			
100000446	2047	1	0	RAMP	S	RAMP & I-20 EXIT 63 WB ON RAMP
100000446	2047	2	0			
100000446	2047	3	0			
100000446	2047	4	0			
100000446	2047	5	0			
100000446	2047	6	0			
100000446	2047	7	0			
100000446	2047	8	0			
100000446	2047	9	0			
100000446	2047	10	0			
100000446	2059	1	0	RAMP	SW	RAMP & I-20 EXIT 63 WB ON RAMP
100000446	2059	2	0			
100000446	2059	3	0			
100000446	2059	4	0			
100000446	2059	5	0			
100000446	2059	6	0			
100000446	2059	7	0			
100000446	2059	8	0			
100000446	2059	9	0			
100000446	2059	10	0			
100000450	2060	1	0	RAMP	E	BUSH RIVER RD, RAMP & I-20 EXIT 63 EB ON RAMP
100000450	2060	2	0			
100000450	2060	3	0			
100000450	2060	4	0			
100000450	2060	5	0			
100000450	2060	6	0			
100000450	2060	7	0			
100000450	2060	8	0			
100000450	2060	9	0			
100000450	2060	10	0			
100000450	5037	1	0	BUSH RIVER RD	E	BUSH RIVER RD, RAMP & I-20 EXIT 63 EB ON RAMP
100000450	5037	2	0			
100000450	5037	3	0			
100000450	5037	4	0			
100000450	5037	5	0			
100000450	5037	6	0			
100000450	5037	7	0			
100000450	5037	8	0			
100000450	5037	9	0			
100000450	5037	10	0			
100000450	5038	1	0.958611	BUSH RIVER RD	NW	BUSH RIVER RD, RAMP & I-20 EXIT 63 EB ON RAMP
100000450	5038	2	1.155221			
100000450	5038	3	0.925483			
100000450	5038	4	1.086191			
100000450	5038	5	1.606809			
100000450	5038	6	1.455927			
100000450	5038	7	0.889968			
100000450	5038	8	1.054537			
100000450	5038	9	1.10375			
100000450	5038	10	1.365422			
100000452	2071	1	17.400745	RAMP	W	RAMP & BUSH RIVER RD
100000452	2071	2	16.40255			
100000452	2071	3	17.823485			
100000452	2071	4	18.253486			
100000452	2071	5	17.246195			
100000452	2071	6	19.094651			
100000452	2071	7	15.850254			
100000452	2071	8	18.173413			
100000452	2071	9	19.155388			
100000452	2071	10	17.258156			
100000452	5034	1	0.065993	BUSH RIVER RD	NW	RAMP & BUSH RIVER RD
100000452	5034	2	0.092389			

Node	Superlink	Run	Average Control Delay	Approach Street Name	Direction	Intersection
100000452	5034	3	0.104428			
100000452	5034	4	0.08905			
100000452	5034	5	0.02332			
100000452	5034	6	0.156645			
100000452	5034	7	0.020587			
100000452	5034	8	0.149923			
100000452	5034	9	0.48787			
100000452	5034	10	0.017999			
100000452	5457	1	3.706231	BUSH RIVER RD	SE	RAMP & BUSH RIVER RD
100000452	5457	2	3.167106			
100000452	5457	3	2.358			
100000452	5457	4	2.499109			
100000452	5457	5	3.705645			
100000452	5457	6	4.549741			
100000452	5457	7	5.213647			
100000452	5457	8	3.9434			
100000452	5457	9	4.983644			
100000452	5457	10	3.583802			
100000455	5457	1	2.476222	BUSH RIVER RD	NW	FRONTAGE RD & BUSH RIVER RD
100000455	5457	2	2.430963			
100000455	5457	3	2.56498			
100000455	5457	4	2.415733			
100000455	5457	5	2.619427			
100000455	5457	6	3.355673			
100000455	5457	7	2.783477			
100000455	5457	8	3.210159			
100000455	5457	9	3.467898			
100000455	5457	10	2.54308			
100000455	6538	1	38.832677	FRONTAGE RD	SW	FRONTAGE RD & BUSH RIVER RD
100000455	6538	2	38.663412			
100000455	6538	3	37.379			
100000455	6538	4	40.34768			
100000455	6538	5	36.839449			
100000455	6538	6	32.940571			
100000455	6538	7	36.650494			
100000455	6538	8	39.646875			
100000455	6538	9	39.84358			
100000455	6538	10	39.310458			
100000455	6539	1	1.91813	BUSH RIVER RD	SE	FRONTAGE RD & BUSH RIVER RD
100000455	6539	2	2.881573			
100000455	6539	3	2.08191			
100000455	6539	4	1.5437			
100000455	6539	5	1.89036			
100000455	6539	6	2.344067			
100000455	6539	7	2.809859			
100000455	6539	8	3.131109			
100000455	6539	9	2.919232			
100000455	6539	10	1.958654			
100000467	3225	1		RAMP	SW	RAMP & I-126 WB ON RAMP FROM GREYSTONE BLVD
100000467	3225	2				
100000467	3225	3				
100000467	3225	4				
100000467	3225	5				
100000467	3225	6				
100000467	3225	7				
100000467	3225	8				
100000467	3225	9				
100000467	3225	10				
100000467	3238	1	0	RAMP	W	RAMP & I-126 WB ON RAMP FROM GREYSTONE BLVD
100000467	3238	2	0			
100000467	3238	3	0			
100000467	3238	4	0			
100000467	3238	5	0			
100000467	3238	6	0			
100000467	3238	7	0			
100000467	3238	8	0			
100000467	3238	9	0			
100000467	3238	10	0			
100000468	3228	1	0	EXIT 103 WB ON RAMP	NW	EXIT 103 WB ON RAMP & I-26 EXIT 103 WB ON RAMP
100000468	3228	2	0			
100000468	3228	3	0			
100000468	3228	4	0			
100000468	3228	5	0			
100000468	3228	6	0			
100000468	3228	7	0			
100000468	3228	8	0			
100000468	3228	9	0			
100000468	3228	10	0			
100000468	3241	1		EXIT 103 WB ON RAMP	W	EXIT 103 WB ON RAMP & I-26 EXIT 103 WB ON RAMP
100000468	3241	2	0			
100000468	3241	3	0			
100000468	3241	4	0			
100000468	3241	5				
100000468	3241	6				
100000468	3241	7				
100000468	3241	8	0			
100000468	3241	9	0			
100000468	3241	10				
100000476	3257	1	0	RAMP	N	RAMP
100000476	3257	2	0			
100000476	3257	3	0			
100000476	3257	4	0			
100000476	3257	5	0			
100000476	3257	6	0			
100000476	3257	7	0			
100000476	3257	8	0			
100000476	3257	9	0			
100000476	3257	10	0			
100000476	3262	1	0	RAMP	N	RAMP
100000476	3262	2	0			
100000476	3262	3	0			
100000476	3262	4	0			
100000476	3262	5	0			
100000476	3262	6	0			
100000476	3262	7	0			
100000476	3262	8	0			
100000476	3262	9	0			
100000476	3262	10	0			
100000494	3302	1	0	EXIT 106 WB ON RAMP	NW	EXIT 106 WB ON RAMP & I-26 EXIT 106 WB ON RAMP
100000494	3302	2	0			
100000494	3302	3	0			
100000494	3302	4	0			

Node	Superlink	Run	Average Control Delay	Approach Street Name	Direction	Intersection
100000494	3302	5	0			
100000494	3302	6	0			
100000494	3302	7	0			
100000494	3302	8	0			
100000494	3302	9	0			
100000494	3302	10	0			
100000494	3306	1	0	EXIT 106 WB ON RAMP	NW	EXIT 106 WB ON RAMP & I-26 EXIT 106 WB ON RAMP
100000494	3306	2	0			
100000494	3306	3	0			
100000494	3306	4	0			
100000494	3306	5	0			
100000494	3306	6	0			
100000494	3306	7	0			
100000494	3306	8	0			
100000494	3306	9	0			
100000494	3306	10	0			
100000497	3310	1	0	RAMP	SE	RAMP & I-26 EXIT 104 EB ON RAMP
100000497	3310	2	0			
100000497	3310	3	0			
100000497	3310	4	0			
100000497	3310	5	0			
100000497	3310	6	0			
100000497	3310	7	0			
100000497	3310	8	0			
100000497	3310	9	0			
100000497	3310	10	0			
100000497	6545	1	0	RAMP	SE	RAMP & I-26 EXIT 104 EB ON RAMP
100000497	6545	2	0			
100000497	6545	3	0			
100000497	6545	4	0			
100000497	6545	5	0			
100000497	6545	6	0			
100000497	6545	7	0			
100000497	6545	8	0			
100000497	6545	9	0			
100000497	6545	10	0			
100000503	3325	1	0	RAMP	SE	RAMP, 6472 (W) & I-26 EXIT 103 EB ON RAMP
100000503	3325	2	0			
100000503	3325	3	0			
100000503	3325	4	0			
100000503	3325	5	0			
100000503	3325	6	0			
100000503	3325	7	0			
100000503	3325	8	0			
100000503	3325	9	0			
100000503	3325	10	0			
100000503	6472	1	0		E	RAMP, 6472 (W) & I-26 EXIT 103 EB ON RAMP
100000503	6472	2	0			
100000503	6472	3	0			
100000503	6472	4	0			
100000503	6472	5	0			
100000503	6472	6	0			
100000503	6472	7	0			
100000503	6472	8	0			
100000503	6472	9	0			
100000503	6472	10	0			
100000520	3345	1		EXIT 102 WB ON RAMP	N	EXIT 102 WB ON RAMP & I-26 EXIT 102 WB ON RAMP
100000520	3345	2				
100000520	3345	3				
100000520	3345	4				
100000520	3345	5				
100000520	3345	6				
100000520	3345	7				
100000520	3345	8				
100000520	3345	9				
100000520	3345	10				
100000520	3350	1	0	EXIT 102 WB ON RAMP	N	EXIT 102 WB ON RAMP & I-26 EXIT 102 WB ON RAMP
100000520	3350	2	0			
100000520	3350	3	0			
100000520	3350	4	0			
100000520	3350	5	0			
100000520	3350	6	0			
100000520	3350	7	0			
100000520	3350	8	0			
100000520	3350	9	0			
100000520	3350	10	0			
100000523	3355	1	0	ON-RAMP from WB	S	ON-RAMP from WB, ON-RAMP from EB & I-26 EXIT 101 EB ON RAMP
100000523	3355	2	0			
100000523	3355	3	0			
100000523	3355	4	0			
100000523	3355	5	0			
100000523	3355	6	0			
100000523	3355	7	0			
100000523	3355	8	0			
100000523	3355	9	0			
100000523	3355	10	0			
100000523	3356	1	0	ON-RAMP from EB	S	ON-RAMP from WB, ON-RAMP from EB & I-26 EXIT 101 EB ON RAMP
100000523	3356	2	0			
100000523	3356	3	0			
100000523	3356	4	0			
100000523	3356	5	0			
100000523	3356	6	0			
100000523	3356	7	0			
100000523	3356	8	0			
100000523	3356	9	0			
100000523	3356	10	0			
100000528	3360	1		EXIT 101 WB ON RAMP	N	EXIT 101 WB ON RAMP & I-26 EXIT 101 WB ON RAMP
100000528	3360	2				
100000528	3360	3				
100000528	3360	4				
100000528	3360	5				
100000528	3360	6				
100000528	3360	7				
100000528	3360	8				
100000528	3360	9				
100000528	3360	10				
100000528	3364	1	0	EXIT 101 WB ON RAMP	N	EXIT 101 WB ON RAMP & I-26 EXIT 101 WB ON RAMP
100000528	3364	2	0			
100000528	3364	3	0			
100000528	3364	4	0			
100000528	3364	5	0			
100000528	3364	6	0			

Node	Superlink	Run	Average Control Delay	Approach Street Name	Direction	Intersection
100000528	3364	7	0			
100000528	3364	8	0			
100000528	3364	9	0			
100000528	3364	10	0			
100000702	4338	1	0	RAMP	SW	RAMP & I-20 EXIT 65 WB ON RAMP
100000702	4338	2	0			
100000702	4338	3	0			
100000702	4338	4	0			
100000702	4338	5	0			
100000702	4338	6	0			
100000702	4338	7	0			
100000702	4338	8	0			
100000702	4338	9	0			
100000702	4338	10	0			
100000702	4343	1	0	RAMP	SW	RAMP & I-20 EXIT 65 WB ON RAMP
100000702	4343	2	0			
100000702	4343	3	0			
100000702	4343	4	0			
100000702	4343	5	0			
100000702	4343	6	0			
100000702	4343	7	0			
100000702	4343	8	0			
100000702	4343	9	0			
100000702	4343	10	0			
100000707	5166	1	0	MONTICELLO RD	NW	MONTICELLO RD, SERVICE RD & RAMP
100000707	5166	2	0			
100000707	5166	3	0			
100000707	5166	4	0			
100000707	5166	5	0			
100000707	5166	6	0			
100000707	5166	7	0			
100000707	5166	8	0			
100000707	5166	9	0			
100000707	5166	10	0			
100000707	5168	1	0	SERVICE RD	W	MONTICELLO RD, SERVICE RD & RAMP
100000707	5168	2	0			
100000707	5168	3	0			
100000707	5168	4	0			
100000707	5168	5	0			
100000707	5168	6	0			
100000707	5168	7	0			
100000707	5168	8	0			
100000707	5168	9	0			
100000707	5168	10	0			
100000707	5174	1	0.669219	MONTICELLO RD	SE	MONTICELLO RD, SERVICE RD & RAMP
100000707	5174	2	1.196805			
100000707	5174	3	1.283036			
100000707	5174	4	0.72072			
100000707	5174	5	0.791178			
100000707	5174	6	0.537258			
100000707	5174	7	0.802041			
100000707	5174	8	0.923239			
100000707	5174	9	1.238394			
100000707	5174	10	1.089145			
100000709	4352	1	0	RAMP	S	RAMP & I-20 EXIT 68 WB ON RAMP
100000709	4352	2	0			
100000709	4352	3	0			
100000709	4352	4	0			
100000709	4352	5	0			
100000709	4352	6	0			
100000709	4352	7	0			
100000709	4352	8	0			
100000709	4352	9	0			
100000709	4352	10	0			
100000709	4353	1	0	RAMP	S	RAMP & I-20 EXIT 68 WB ON RAMP
100000709	4353	2	0			
100000709	4353	3	0			
100000709	4353	4	0			
100000709	4353	5	0			
100000709	4353	6	0			
100000709	4353	7	0			
100000709	4353	8	0			
100000709	4353	9	0			
100000709	4353	10	0			
100000710	4356	1	0	I-20 EXIT 68 WB OFF RAMP	W	I-20 EXIT 68 WB OFF RAMP & SERVICE RD
100000710	4356	2	0			
100000710	4356	3	0			
100000710	4356	4	0			
100000710	4356	5	0			
100000710	4356	6	0			
100000710	4356	7	0			
100000710	4356	8	0			
100000710	4356	9	0			
100000710	4356	10	0			
100000712	5157	1	0.065173	BUCKNER RD	NE	BUCKNER RD & RAMP
100000712	5157	2	0.08012			
100000712	5157	3	0.055099			
100000712	5157	4	0.069276			
100000712	5157	5	0.043878			
100000712	5157	6	0.038111			
100000712	5157	7	0.050173			
100000712	5157	8	0.044552			
100000712	5157	9	0.050043			
100000712	5157	10	0.063141			
100000712	5160	1	11.413688	BUCKNER RD	SW	BUCKNER RD & RAMP
100000712	5160	2	11.938114			
100000712	5160	3	13.39835			
100000712	5160	4	11.818943			
100000712	5160	5	10.299576			
100000712	5160	6	11.506174			
100000712	5160	7	8.929863			
100000712	5160	8	10.237247			
100000712	5160	9	12.6728			
100000712	5160	10	12.166929			
100000804	6261	1	19.099487	TRAM RD	SW	TRAM RD & SIDNEY RD
100000804	6261	2	14.481462			
100000804	6261	3	19.481273			
100000804	6261	4	19.31641			
100000804	6261	5	15.986382			
100000804	6261	6	19.767848			
100000804	6261	7	12.368413			
100000804	6261	8	15.425771			

Node	Superlink	Run	Average Control Delay	Approach Street Name	Direction	Intersection
100000804	6261	9	21.197417			
100000804	6261	10	27.114279			
100000804	6457	1	20.581034	SIDNEY RD	NW	TRAM RD & SIDNEY RD
100000804	6457	2	20.314447			
100000804	6457	3	18.935647			
100000804	6457	4	48.449956			
100000804	6457	5	19.464437			
100000804	6457	6	24.409414			
100000804	6457	7	16.672553			
100000804	6457	8	16.168232			
100000804	6457	9	22.085314			
100000804	6457	10	26.258363			
100000804	6458	1	2.049391	TRAM RD	NE	TRAM RD & SIDNEY RD
100000804	6458	2	2.236877			
100000804	6458	3	2.092804			
100000804	6458	4	2.217669			
100000804	6458	5	2.389853			
100000804	6458	6	1.885022			
100000804	6458	7	2.131112			
100000804	6458	8	2.067517			
100000804	6458	9	2.36847			
100000804	6458	10	1.962264			
100000882	5151	1		SERVICE RD	SW	SERVICE RD, 6449 (S) & 6448 (W)
100000882	5151	2				
100000882	5151	3				
100000882	5151	4				
100000882	5151	5				
100000882	5151	6				
100000882	5151	7				
100000882	5151	8				
100000882	5151	9				
100000882	5151	10				
100000882	6446	1	0	SERVICE RD	NE	SERVICE RD, 6449 (S) & 6448 (W)
100000882	6446	2	0			
100000882	6446	3	0			
100000882	6446	4	0			
100000882	6446	5	0			
100000882	6446	6	0			
100000882	6446	7	0			
100000882	6446	8	0			
100000882	6446	9	0			
100000882	6446	10	0			
100000882	6449	1	0		N	SERVICE RD, 6449 (S) & 6448 (W)
100000882	6449	2	0			
100000882	6449	3	0			
100000882	6449	4	0			
100000882	6449	5	0			
100000882	6449	6	0			
100000882	6449	7	0			
100000882	6449	8	0			
100000882	6449	9	0			
100000882	6449	10	0			
100000883	5148	1	0	BROAD RIVER RD	NW	BROAD RIVER RD & 6448 (E)
100000883	5148	2	0			
100000883	5148	3	0			
100000883	5148	4	0			
100000883	5148	5	0.000052			
100000883	5148	6	0			
100000883	5148	7	0			
100000883	5148	8	0			
100000883	5148	9	0.000071			
100000883	5148	10	0			
100000883	6447	1	10.669476	BROAD RIVER RD	SE	BROAD RIVER RD & 6448 (E)
100000883	6447	2	9.804722			
100000883	6447	3	10.207409			
100000883	6447	4	10.240508			
100000883	6447	5	10.440002			
100000883	6447	6	11.032872			
100000883	6447	7	10.730527			
100000883	6447	8	11.122107			
100000883	6447	9	8.583115			
100000883	6447	10	11.58722			
100000883	6448	1			W	BROAD RIVER RD & 6448 (E)
100000883	6448	2				
100000883	6448	3				
100000883	6448	4				
100000883	6448	5				
100000883	6448	6				
100000883	6448	7				
100000883	6448	8				
100000883	6448	9				
100000883	6448	10				
100000895	3229	1	0	RAMP	SW	RAMP & PINEY GROVE RD
100000895	3229	2	0			
100000895	3229	3	0			
100000895	3229	4	0			
100000895	3229	5	0			
100000895	3229	6	0			
100000895	3229	7	0			
100000895	3229	8	0			
100000895	3229	9	0			
100000895	3229	10	0			
100000895	6543	1	8.199821	PINEY GROVE RD	E	RAMP & PINEY GROVE RD
100000895	6543	2	6.582363			
100000895	6543	3	5.818253			
100000895	6543	4	6.247297			
100000895	6543	5	6.540874			
100000895	6543	6	5.894443			
100000895	6543	7	8.216757			
100000895	6543	8	6.965159			
100000895	6543	9	6.755744			
100000895	6543	10	6.83377			
100000895	6544	1	0	PINEY GROVE RD	W	RAMP & PINEY GROVE RD
100000895	6544	2	0			
100000895	6544	3	0			
100000895	6544	4	0			
100000895	6544	5	0			
100000895	6544	6	0			
100000895	6544	7	0			
100000895	6544	8	0			
100000895	6544	9	0			
100000895	6544	10	0			

Node	Superlink	Run	Average Control Delay	Approach Street Name	Direction	Intersection
100000897	3243	1	4.049559	I-126 WB OFF RAMP TO COLONIAL LIFE BLVD	NE	I-126 WB OFF RAMP TO COLONIAL LIFE BLVD, W COLONIAL LIFE BLVD, COLONIAL LIFE BLVD W & I-126 EB ON RA
100000897	3243	2	4.580667			
100000897	3243	3	2.673512			
100000897	3243	4	5.395766			
100000897	3243	5	4.243945			
100000897	3243	6	5.132029			
100000897	3243	7	7.114619			
100000897	3243	8	3.592918			
100000897	3243	9	4.342561			
100000897	3243	10	4.839221			
100000897	5134	1	7.521105	W COLONIAL LIFE BLVD	NW	I-126 WB OFF RAMP TO COLONIAL LIFE BLVD, W COLONIAL LIFE BLVD, COLONIAL LIFE BLVD W & I-126 EB ON RA
100000897	5134	2	7.772147			
100000897	5134	3	7.706188			
100000897	5134	4	7.504508			
100000897	5134	5	6.591481			
100000897	5134	6	6.938751			
100000897	5134	7	6.93704			
100000897	5134	8	7.382006			
100000897	5134	9	7.588717			
100000897	5134	10	7.163211			
100000897	6471	1	0.364518	COLONIAL LIFE BLVD W	S	I-126 WB OFF RAMP TO COLONIAL LIFE BLVD, W COLONIAL LIFE BLVD, COLONIAL LIFE BLVD W & I-126 EB ON RA
100000897	6471	2	0.251818			
100000897	6471	3	0.320518			
100000897	6471	4	0.28302			
100000897	6471	5	0.219434			
100000897	6471	6	0.30716			
100000897	6471	7	0.288036			
100000897	6471	8	0.269381			
100000897	6471	9	0.281064			
100000897	6471	10	0.330678			
100000898	51	1	34.960103	I-26 EXIT 108 EB OFF RAMP	S	I-26 EXIT 108 EB OFF RAMP, BUSH RIVER RD & RAMF
100000898	51	2	38.583927			
100000898	51	3	42.696917			
100000898	51	4	43.758758			
100000898	51	5	39.600954			
100000898	51	6	46.972507			
100000898	51	7	38.899804			
100000898	51	8	42.361565			
100000898	51	9	37.36562			
100000898	51	10	40.533457			
100000898	5130	1	24.749584	BUSH RIVER RD	N	I-26 EXIT 108 EB OFF RAMP, BUSH RIVER RD & RAMF
100000898	5130	2	17.895357			
100000898	5130	3	21.792044			
100000898	5130	4	22.892252			
100000898	5130	5	17.081384			
100000898	5130	6	22.613121			
100000898	5130	7	19.248726			
100000898	5130	8	18.689127			
100000898	5130	9	22.47761			
100000898	5130	10	16.783401			
100000898	5131	1	5.496546	BUSH RIVER RD	E	I-26 EXIT 108 EB OFF RAMP, BUSH RIVER RD & RAMF
100000898	5131	2	6.169249			
100000898	5131	3	5.525234			
100000898	5131	4	5.032874			
100000898	5131	5	6.041556			
100000898	5131	6	5.42113			
100000898	5131	7	4.686054			
100000898	5131	8	6.368073			
100000898	5131	9	5.691841			
100000898	5131	10	6.024457			
100000898	6503	1	7.49908	BUSH RIVER RD	W	I-26 EXIT 108 EB OFF RAMP, BUSH RIVER RD & RAMF
100000898	6503	2	8.062566			
100000898	6503	3	7.627096			
100000898	6503	4	6.223433			
100000898	6503	5	7.826788			
100000898	6503	6	6.703905			
100000898	6503	7	6.206044			
100000898	6503	8	8.97493			
100000898	6503	9	9.224224			
100000898	6503	10	8.350507			
100000899	3298	1	9.211356	EXIT 106 WB OFF RAMP	SE	EXIT 106 WB OFF RAMP & BURNING TREE RD
100000899	3298	2	8.589651			
100000899	3298	3	9.313532			
100000899	3298	4	10.443769			
100000899	3298	5	8.849406			
100000899	3298	6	10.24071			
100000899	3298	7	9.628803			
100000899	3298	8	8.582685			
100000899	3298	9	9.24753			
100000899	3298	10	8.755911			
100000899	6105	1	0	BURNING TREE RD	S	EXIT 106 WB OFF RAMP & BURNING TREE RD
100000899	6105	2	0			
100000899	6105	3	0			
100000899	6105	4	0			
100000899	6105	5	0			
100000899	6105	6	0			
100000899	6105	7	0			
100000899	6105	8	0			
100000899	6105	9	0			
100000899	6105	10	0			
100000899	6106	1	0	BURNING TREE RD	N	EXIT 106 WB OFF RAMP & BURNING TREE RD
100000899	6106	2	0			
100000899	6106	3	0			
100000899	6106	4	0			
100000899	6106	5	0			
100000899	6106	6	0			
100000899	6106	7	0			
100000899	6106	8	0			
100000899	6106	9	0			
100000899	6106	10	0			
100000902	4292	1	27.679237	EXIT 110 WB OFF RAMP	NE	SUNSET BLVD, EXIT 110 WB OFF RAMP & EXIT 108 WB ON RAMP
100000902	4292	2	22.39076			
100000902	4292	3	25.309923			
100000902	4292	4	20.16603			
100000902	4292	5	24.235075			
100000902	4292	6	24.318592			
100000902	4292	7	22.519119			
100000902	4292	8	20.558132			
100000902	4292	9	28.98318			
100000902	4292	10	24.694568			
100000902	4947	1	4.425856	SUNSET BLVD	W	SUNSET BLVD, EXIT 110 WB OFF RAMP & EXIT 108 WB ON RAMP
100000902	4947	2	7.321088			

Node	Superlink	Run	Average Control Delay	Approach Street Name	Direction	Intersection
100000902	4947	3	5.726837			
100000902	4947	4	5.888615			
100000902	4947	5	5.265197			
100000902	4947	6	5.634297			
100000902	4947	7	4.191211			
100000902	4947	8	5.964259			
100000902	4947	9	4.691405			
100000902	4947	10	4.975155			
100000902	4951	1	0.008156	SUNSET BLVD	E	SUNSET BLVD, EXIT 110 WB OFF RAMP & EXIT 108 WB ON RAMP
100000902	4951	2	0.03138			
100000902	4951	3	0.024242			
100000902	4951	4	0.008889			
100000902	4951	5	0.014809			
100000902	4951	6	0.014975			
100000902	4951	7	0.006594			
100000902	4951	8	0.029122			
100000902	4951	9	0.015076			
100000902	4951	10	0.018687			
100000903	4289	1	46.339058	EXIT 110 WB OFF RAMP	NW	RAMP, SUNSET BLVD, EXIT 110 WB OFF RAMP & EXIT 108 WB ON RAMP
100000903	4289	2	42.760773			
100000903	4289	3	42.941468			
100000903	4289	4	44.48757			
100000903	4289	5	43.386108			
100000903	4289	6	44.421419			
100000903	4289	7	45.310652			
100000903	4289	8	41.911013			
100000903	4289	9	45.37644			
100000903	4289	10	44.167595			
100000903	4298	1	28.160446	RAMP	SE	RAMP, SUNSET BLVD, EXIT 110 WB OFF RAMP & EXIT 108 WB ON RAMP
100000903	4298	2	28.858996			
100000903	4298	3	27.764927			
100000903	4298	4	29.528821			
100000903	4298	5	27.895175			
100000903	4298	6	28.021051			
100000903	4298	7	27.259974			
100000903	4298	8	28.00683			
100000903	4298	9	29.01264			
100000903	4298	10	27.663613			
100000903	4950	1	13.585817	SUNSET BLVD	E	RAMP, SUNSET BLVD, EXIT 110 WB OFF RAMP & EXIT 108 WB ON RAMP
100000903	4950	2	14.153209			
100000903	4950	3	13.468588			
100000903	4950	4	14.142249			
100000903	4950	5	13.102235			
100000903	4950	6	13.749313			
100000903	4950	7	12.79538			
100000903	4950	8	13.37083			
100000903	4950	9	13.151272			
100000903	4950	10	13.799137			
100000903	4951	1	31.825416	SUNSET BLVD	W	RAMP, SUNSET BLVD, EXIT 110 WB OFF RAMP & EXIT 108 WB ON RAMP
100000903	4951	2	31.2429			
100000903	4951	3	29.041336			
100000903	4951	4	31.310207			
100000903	4951	5	29.813795			
100000903	4951	6	29.527379			
100000903	4951	7	29.212459			
100000903	4951	8	29.194856			
100000903	4951	9	30.856931			
100000903	4951	10	30.307862			

2015 Existing PM

Node	Superlink	Run	Average Control Delay	Approach Street Name	Direction	Intersection
4	5081	1	3.190454	BROAD RIVER RD	W	WESTERN LN & BROAD RIVER RD
4	5081	2	3.483236			
4	5081	3	3.0			
4	5081	4	3.6			
4	5081	5	3.9			
4	5081	6	3.595102			
4	5081	7	3.986893			
4	5081	8	4.0			
4	5081	9	3.1			
4	5081	10	3.0			
4	6465	1	7.656442	WESTERN LN	S	WESTERN LN & BROAD RIVER RD
4	6465	2	7.641848			
4	6465	3	6.9			
4	6465	4	7.2			
4	6465	5	7.140844			
4	6465	6	7.009156			
4	6465	7	7.0			
4	6465	8	6.9			
4	6465	9	6.9			
4	6465	10	7.18534			
4	6466	1	3.859707	BROAD RIVER RD	E	WESTERN LN & BROAD RIVER RD
4	6466	2	4.3			
4	6466	3	4.7			
4	6466	4	4.504507			
4	6466	5	4.494138			
4	6466	6	4.3			
4	6466	7	4.5			
4	6466	8	4.214322			
4	6466	9	4.442414			
4	6466	10	3.8			
4	6467	1	5.3	WESTERN LN	N	WESTERN LN & BROAD RIVER RD
4	6467	2	6.8			
4	6467	3	5.723124			
4	6467	4	6.887955			
4	6467	5	6.4			
4	6467	6	5.8			
4	6467	7	5.4			
4	6467	8	5.915914			
4	6467	9	6.056252			
4	6467	10	6.2			
11	5487	1	0.0	MORNINGHILL DR	N	MORNINGHILL DR & BURNETTE DR
11	5487	2	0			
11	5487	3	0			
11	5487	4	0.0			
11	5487	5	0.0			
11	5487	6	0.0			
11	5487	7	0			
11	5487	8	0			
11	5487	9	0.0			
11	5487	10	0.0			
11	6536	1		MORNINGHILL DR	S	MORNINGHILL DR & BURNETTE DR
11	6536	2				
11	6536	3				
11	6536	4				
11	6536	5				
11	6536	6				
11	6536	7				
11	6536	8				
11	6536	9				
11	6536	10				
11	6537	1	0	BURNETTE DR	E	MORNINGHILL DR & BURNETTE DR
11	6537	2	0.0			
11	6537	3	0.0			
11	6537	4	0.0			
11	6537	5	0.0			
11	6537	6	0			
11	6537	7	0			
11	6537	8	0.0			
11	6537	9	0.0			
11	6537	10	0.0			
26	5488	1	0	RAMP	S	RAMP & 6502 (NW)
26	5488	2	0			
26	5488	3	0.0			
26	5488	4	0.0			
26	5488	5	0.0			
26	5488	6	0			
26	5488	7	0			
26	5488	8	0.0			
26	5488	9	0.0			
26	5488	10	0.0			
26	6501	1	9.498242	RAMP	N	RAMP & 6502 (NW)
26	6501	2	9.444127			
26	6501	3	9.1			
26	6501	4	10.0			
26	6501	5	9.5			
26	6501	6	8.847524			
26	6501	7	9.25274			
26	6501	8	9.9			
26	6501	9	9.5			
26	6501	10	9.6			
26	6502	1	0		SE	RAMP & 6502 (NW)
26	6502	2	0			
26	6502	3	0.0			
26	6502	4	0.0			
26	6502	5	0.0			
26	6502	6	0			

Node	Superlink	Run	Average Control Delay	Approach Street Name	Direction	Intersection
26	6502	7	0			
26	6502	8	0.0			
26	6502	9	0.0			
26	6502	10	0.0			
28	5140	1	0	GREYSTONE BLVD	S	GREYSTONE BLVD & CANDI LN
28	5140	2	0			
28	5140	3	0.0			
28	5140	4	0			
28	5140	5	0			
28	5140	6	0.0			
28	5140	7	0.0			
28	5140	8	0			
28	5140	9	0			
28	5140	10	0.0			
28	6506	1	6.8	GREYSTONE BLVD	W	GREYSTONE BLVD & CANDI LN
28	6506	2	6.75232			
28	6506	3	6.965107			
28	6506	4	6.9			
28	6506	5	6.8			
28	6506	6	6.6			
28	6506	7	6.445052			
28	6506	8	6.822938			
28	6506	9	6.9			
28	6506	10	6.7			
28	6507	1		CANDI LN	E	GREYSTONE BLVD & CANDI LN
28	6507	2				
28	6507	3				
28	6507	4				
28	6507	5				
28	6507	6				
28	6507	7				
28	6507	8				
28	6507	9				
28	6507	10				
41	6518	1	193.991413	BROAD RIVER RD	NW	DUTCH SQUARE BLVD & BROAD RIVER RD
41	6518	2	156.318002			
41	6518	3	159.4			
41	6518	4	108.4			
41	6518	5	112.3			
41	6518	6	103.856678			
41	6518	7	192.342725			
41	6518	8	185.8			
41	6518	9	163.9			
41	6518	10	147.5			
41	6519	1	32.253152	DUTCH SQUARE BLVD	E	DUTCH SQUARE BLVD & BROAD RIVER RD
41	6519	2	32.601552			
41	6519	3	32.2			
41	6519	4	32.1			
41	6519	5	58.3			
41	6519	6	38.48857			
41	6519	7	37.813374			
41	6519	8	33.2			
41	6519	9	35.8			
41	6519	10	32.522997			
41	6521	1	4.334239	BROAD RIVER RD	SE	DUTCH SQUARE BLVD & BROAD RIVER RD
41	6521	2	3.6			
41	6521	3	3.2			
41	6521	4	3.4			
41	6521	5	3.069544			
41	6521	6	2.889576			
41	6521	7	3.6			
41	6521	8	3.6			
41	6521	9	3.286374			
41	6521	10	4.161584			
43	6519	1	0.0	DUTCH SQUARE BLVD	W	DUTCH SQUARE BLVD & 6522 (N)
43	6519	2	0.0			
43	6519	3	0			
43	6519	4	0			
43	6519	5	0.0			
43	6519	6	0			
43	6519	7	0			
43	6519	8	0.0			
43	6519	9	0.0			
43	6519	10	0			
43	6520	1	53.380283	DUTCH SQUARE BLVD	E	DUTCH SQUARE BLVD & 6522 (N)
43	6520	2	33.1			
43	6520	3	31.7			
43	6520	4	30.8			
43	6520	5	44.618764			
43	6520	6	31.992361			
43	6520	7	86.8			
43	6520	8	35.7			
43	6520	9	29.625449			
43	6520	10	36.182174			
43	6522	1	0.0		SW	DUTCH SQUARE BLVD & 6522 (N)
43	6522	2	0.0			
43	6522	3	0			
43	6522	4	0			
43	6522	5	0.0			
43	6522	6	0.0			
43	6522	7	0.0			
43	6522	8	0			
43	6522	9	0			
43	6522	10	0			
46	6273	1	0.0	PARKRIDGE DR	NE	PARKRIDGE DR & 6555 (NE)
46	6273	2	0.0			
46	6273	3	0			
46	6273	4	0			
46	6273	5	0.0			
46	6273	6	0.0			
46	6273	7	0.0			
46	6273	8	0			
46	6273	9	0			
46	6273	10	0.0			
46	6555	1			SW	PARKRIDGE DR & 6555 (NE)
46	6555	2				
46	6555	3				
46	6555	4				
46	6555	5				
46	6555	6				
46	6555	7				
46	6555	8				

Node	Superlink	Run	Average Control Delay	Approach Street Name	Direction	Intersection
46	6555	9				
46	6555	10				
46	6556	1	8.554598	PARKRIDGE DR	SE	PARKRIDGE DR & 6555 (NE)
46	6556	2	7.776139			
46	6556	3	7.642063			
46	6556	4	9.240823			
46	6556	5	8.60098			
46	6556	6	8.008165			
46	6556	7	8.327437			
46	6556	8	8.799437			
46	6556	9	7.338017			
46	6556	10	7.886398			
100000012	5081	1	26.721163	BROAD RIVER RD	SE	KINLEY RD, BROAD RIVER RD & KENNERLY RD
100000012	5081	2	28.314354			
100000012	5081	3	21.771239			
100000012	5081	4	24.21962			
100000012	5081	5	22.643607			
100000012	5081	6	26.697034			
100000012	5081	7	23.380026			
100000012	5081	8	24.962007			
100000012	5081	9	22.924534			
100000012	5081	10	26.099373			
100000012	6276	1	56.818397	KINLEY RD	N	KINLEY RD, BROAD RIVER RD & KENNERLY RD
100000012	6276	2	53.641595			
100000012	6276	3	41.239448			
100000012	6276	4	54.515953			
100000012	6276	5	48.092748			
100000012	6276	6	49.649831			
100000012	6276	7	44.061325			
100000012	6276	8	42.546602			
100000012	6276	9	44.413395			
100000012	6276	10	46.335737			
100000012	6307	1	37.528138	KENNERLY RD	S	KINLEY RD, BROAD RIVER RD & KENNERLY RD
100000012	6307	2	81.851478			
100000012	6307	3	136.16824			
100000012	6307	4	93.515278			
100000012	6307	5	101.713841			
100000012	6307	6	106.270646			
100000012	6307	7	101.535002			
100000012	6307	8	103.432302			
100000012	6307	9	154.277672			
100000012	6307	10	122.915536			
100000012	6308	1	35.620388	BROAD RIVER RD	NW	KINLEY RD, BROAD RIVER RD & KENNERLY RD
100000012	6308	2	91.217399			
100000012	6308	3	99.368569			
100000012	6308	4	81.552734			
100000012	6308	5	84.659183			
100000012	6308	6	90.648335			
100000012	6308	7	57.739831			
100000012	6308	8	111.699739			
100000012	6308	9	56.250475			
100000012	6308	10	105.042942			
100000025	6267	1	0	PARKRIDGE DR	NW	CLUB RD & PARKRIDGE DR
100000025	6267	2	0			
100000025	6267	3	0			
100000025	6267	4	0			
100000025	6267	5	0			
100000025	6267	6	0			
100000025	6267	7	0			
100000025	6267	8	0			
100000025	6267	9	0			
100000025	6267	10	0			
100000025	6273	1	0	PARKRIDGE DR	SE	CLUB RD & PARKRIDGE DR
100000025	6273	2	0			
100000025	6273	3	0			
100000025	6273	4	0			
100000025	6273	5	0			
100000025	6273	6	0			
100000025	6273	7	0			
100000025	6273	8	0			
100000025	6273	9	0			
100000025	6273	10	0			
100000025	6304	1		CLUB RD	S	CLUB RD & PARKRIDGE DR
100000025	6304	2				
100000025	6304	3				
100000025	6304	4				
100000025	6304	5				
100000025	6304	6				
100000025	6304	7				
100000025	6304	8				
100000025	6304	9				
100000025	6304	10				
100000037	5101	1	24.975702	HARBISON BLVD	NE	BROAD RIVER RD & HARBISON BLVD
100000037	5101	2	22.322141			
100000037	5101	3	18.674801			
100000037	5101	4	21.285083			
100000037	5101	5	19.25947			
100000037	5101	6	24.750364			
100000037	5101	7	19.708985			
100000037	5101	8	22.255874			
100000037	5101	9	20.817268			
100000037	5101	10	21.599357			
100000037	6317	1	9.216188	BROAD RIVER RD	SE	BROAD RIVER RD & HARBISON BLVD
100000037	6317	2	10.539255			
100000037	6317	3	8.329348			
100000037	6317	4	10.732093			
100000037	6317	5	9.384485			
100000037	6317	6	12.020416			
100000037	6317	7	11.725522			
100000037	6317	8	10.847215			
100000037	6317	9	10.903616			
100000037	6317	10	10.295903			
100000037	6320	1	5.05291	BROAD RIVER RD	NW	BROAD RIVER RD & HARBISON BLVD
100000037	6320	2	5.247905			
100000037	6320	3	5.398214			
100000037	6320	4	5.516422			
100000037	6320	5	5.401354			
100000037	6320	6	12.211305			
100000037	6320	7	5.928619			
100000037	6320	8	6.264443			
100000037	6320	9	5.587672			
100000037	6320	10	5.661426			

Node	Superlink	Run	Average Control Delay	Approach Street Name	Direction	Intersection
100000038	6232	1	0	BROAD RIVER RD	NW	BROAD RIVER RD & 6311 (S)
100000038	6232	2	0			
100000038	6232	3	0			
100000038	6232	4	0			
100000038	6232	5	0			
100000038	6232	6	0			
100000038	6232	7	0			
100000038	6232	8	0			
100000038	6232	9	0			
100000038	6232	10	0			
100000038	6311	1	19.337475		N	BROAD RIVER RD & 6311 (S)
100000038	6311	2	9.334062			
100000038	6311	3	6.112635			
100000038	6311	4	12.491357			
100000038	6311	5	6.221417			
100000038	6311	6	10.497292			
100000038	6311	7	10.790799			
100000038	6311	8	3.458093			
100000038	6311	9	8.411087			
100000038	6311	10	7.412252			
100000038	6312	1	0	BROAD RIVER RD	SE	BROAD RIVER RD & 6311 (S)
100000038	6312	2	0.003427			
100000038	6312	3	0.004545			
100000038	6312	4	0.010169			
100000038	6312	5	0			
100000038	6312	6	0.005865			
100000038	6312	7	0.001667			
100000038	6312	8	0.005585			
100000038	6312	9	0			
100000038	6312	10	0			
100000041	6281	1	0	LAKE MURRAY BLVD	W	LAKE MURRAY BLVD & 6311 (N)
100000041	6281	2	0.037603			
100000041	6281	3	0.006639			
100000041	6281	4	0.019949			
100000041	6281	5	0			
100000041	6281	6	0.735889			
100000041	6281	7	0.0019			
100000041	6281	8	0			
100000041	6281	9	0			
100000041	6281	10	0			
100000041	6311	1			SW	LAKE MURRAY BLVD & 6311 (N)
100000041	6311	2				
100000041	6311	3				
100000041	6311	4	18.783485			
100000041	6311	5				
100000041	6311	6				
100000041	6311	7				
100000041	6311	8				
100000041	6311	9				
100000041	6311	10				
100000041	6313	1	0.060616	LAKE MURRAY BLVD	E	LAKE MURRAY BLVD & 6311 (N)
100000041	6313	2	0.36162			
100000041	6313	3	0.038853			
100000041	6313	4	0.090596			
100000041	6313	5	0.188793			
100000041	6313	6	0.276515			
100000041	6313	7	0.228532			
100000041	6313	8	0.13333			
100000041	6313	9	0.129404			
100000041	6313	10	0.274508			
100000046	5511	1	77.542422	BUSH RIVER RD	E	BUSH RIVER RD, BROAD RIVER RD & ELM ABODE TER
100000046	5511	2	66.490606			
100000046	5511	3	85.718669			
100000046	5511	4	54.368294			
100000046	5511	5	55.502243			
100000046	5511	6	75.709376			
100000046	5511	7	70.800528			
100000046	5511	8	87.916318			
100000046	5511	9	73.72612			
100000046	5511	10	47.807201			
100000046	6323	1	91.519775	BROAD RIVER RD	NW	BUSH RIVER RD, BROAD RIVER RD & ELM ABODE TER
100000046	6323	2	87.214255			
100000046	6323	3	77.961326			
100000046	6323	4	30.234358			
100000046	6323	5	74.617175			
100000046	6323	6	37.968116			
100000046	6323	7	93.467358			
100000046	6323	8	75.976764			
100000046	6323	9	69.954779			
100000046	6323	10	43.33705			
100000046	6324	1	99.726563	ELM ABODE TER	SW	BUSH RIVER RD, BROAD RIVER RD & ELM ABODE TER
100000046	6324	2	89.999296			
100000046	6324	3	84.326289			
100000046	6324	4	80.727345			
100000046	6324	5	160.269189			
100000046	6324	6	62.991048			
100000046	6324	7	75.505592			
100000046	6324	8	62.819101			
100000046	6324	9	53.434908			
100000046	6324	10	121.338923			
100000046	6518	1	33.182434	BROAD RIVER RD	SE	BUSH RIVER RD, BROAD RIVER RD & ELM ABODE TER
100000046	6518	2	35.586323			
100000046	6518	3	36.658243			
100000046	6518	4	35.689553			
100000046	6518	5	40.232309			
100000046	6518	6	35.55433			
100000046	6518	7	31.730771			
100000046	6518	8	29.241537			
100000046	6518	9	45.198134			
100000046	6518	10	37.813398			
100000049	6318	1	24.386802	LOST CREEK DR	S	LOST CREEK DR, BROAD RIVER RD & PINEY WOODS RD
100000049	6318	2	25.61083			
100000049	6318	3	23.784662			
100000049	6318	4	23.072507			
100000049	6318	5	23.894055			
100000049	6318	6	24.610026			
100000049	6318	7	23.304556			
100000049	6318	8	25.480734			
100000049	6318	9	21.053574			
100000049	6318	10	26.829837			
100000049	6319	1	20.86838	PINEY WOODS RD	N	LOST CREEK DR, BROAD RIVER RD & PINEY WOODS RD
100000049	6319	2	22.59725			

Node	Superlink	Run	Average Control Delay	Approach Street Name	Direction	Intersection
100000049	6319	3	22.376917			
100000049	6319	4	22.493455			
100000049	6319	5	25.067741			
100000049	6319	6	22.231443			
100000049	6319	7	25.464006			
100000049	6319	8	25.81553			
100000049	6319	9	20.661994			
100000049	6319	10	23.840463			
100000049	6320	1	12.041079	BROAD RIVER RD	SE	LOST CREEK DR, BROAD RIVER RD & PINEY WOODS RD
100000049	6320	2	15.189398			
100000049	6320	3	9.243583			
100000049	6320	4	17.735609			
100000049	6320	5	14.85271			
100000049	6320	6	13.927634			
100000049	6320	7	12.163545			
100000049	6320	8	10.047371			
100000049	6320	9	15.993869			
100000049	6320	10	14.613512			
100000049	6322	1	7.127136	BROAD RIVER RD	NW	LOST CREEK DR, BROAD RIVER RD & PINEY WOODS RD
100000049	6322	2	9.83579			
100000049	6322	3	8.605947			
100000049	6322	4	9.252243			
100000049	6322	5	10.99132			
100000049	6322	6	8.965846			
100000049	6322	7	8.293993			
100000049	6322	8	9.590722			
100000049	6322	9	9.350423			
100000049	6322	10	8.989614			
100000068	6321	1	17.436794	PINEY GROVE RD	E	BROAD RIVER RD & PINEY GROVE RD
100000068	6321	2	16.796044			
100000068	6321	3	18.369756			
100000068	6321	4	18.32827			
100000068	6321	5	16.129478			
100000068	6321	6	18.851661			
100000068	6321	7	17.188665			
100000068	6321	8	18.258849			
100000068	6321	9	16.471406			
100000068	6321	10	16.479598			
100000068	6322	1	2.045794	BROAD RIVER RD	SE	BROAD RIVER RD & PINEY GROVE RD
100000068	6322	2	2.825655			
100000068	6322	3	2.616391			
100000068	6322	4	2.778181			
100000068	6322	5	1.702285			
100000068	6322	6	1.81522			
100000068	6322	7	1.302289			
100000068	6322	8	1.798653			
100000068	6322	9	1.965836			
100000068	6322	10	1.941085			
100000068	6357	1	3.063594	BROAD RIVER RD	NW	BROAD RIVER RD & PINEY GROVE RD
100000068	6357	2	3.991123			
100000068	6357	3	3.239382			
100000068	6357	4	2.76388			
100000068	6357	5	4.122393			
100000068	6357	6	3.281375			
100000068	6357	7	2.544364			
100000068	6357	8	3.366165			
100000068	6357	9	3.335959			
100000068	6357	10	2.538459			
100000085	6325	1	0.121995	BROAD RIVER RD	E	BROAD RIVER RD, RIVERHILL CIR & RT
100000085	6325	2	0.089106			
100000085	6325	3	0.106646			
100000085	6325	4	0.076256			
100000085	6325	5	0.162408			
100000085	6325	6	0.096045			
100000085	6325	7	0.090906			
100000085	6325	8	0.165302			
100000085	6325	9	0.082307			
100000085	6325	10	0.099667			
100000085	6329	1	4.253146	RT	E	BROAD RIVER RD, RIVERHILL CIR & RT
100000085	6329	2	4.065518			
100000085	6329	3	3.719638			
100000085	6329	4	4.135828			
100000085	6329	5	3.783994			
100000085	6329	6	4.108101			
100000085	6329	7	3.481939			
100000085	6329	8	5.164123			
100000085	6329	9	4.175616			
100000085	6329	10	4.732218			
100000085	6330	1	4.049441	BROAD RIVER RD	W	BROAD RIVER RD, RIVERHILL CIR & RT
100000085	6330	2	9.632386			
100000085	6330	3	5.857083			
100000085	6330	4	4.876			
100000085	6330	5	5.607557			
100000085	6330	6	6.949703			
100000085	6330	7	8.586461			
100000085	6330	8	4.282661			
100000085	6330	9	4.482105			
100000085	6330	10	4.804486			
100000085	6331	1	13.947728	RIVERHILL CIR	W	BROAD RIVER RD, RIVERHILL CIR & RT
100000085	6331	2	15.70359			
100000085	6331	3	14.035262			
100000085	6331	4	12.380695			
100000085	6331	5	15.038005			
100000085	6331	6	18.708318			
100000085	6331	7	15.925032			
100000085	6331	8	12.635225			
100000085	6331	9	10.017757			
100000085	6331	10	11.472937			
100000093	4299	1	51.850933	RAMP	SW	SUNSET BLVD & RAMP
100000093	4299	2	57.073616			
100000093	4299	3	51.959546			
100000093	4299	4	52.611909			
100000093	4299	5	51.937759			
100000093	4299	6	51.78408			
100000093	4299	7	57.715934			
100000093	4299	8	52.323138			
100000093	4299	9	51.488502			
100000093	4299	10	52.855818			
100000093	4949	1	28.593742	SUNSET BLVD	E	SUNSET BLVD & RAMP
100000093	4949	2	33.432333			
100000093	4949	3	34.760791			
100000093	4949	4	38.703178			

Node	Superlink	Run	Average Control Delay	Approach Street Name	Direction	Intersection
100000093	4949	5	34.58654			
100000093	4949	6	32.968771			
100000093	4949	7	35.633413			
100000093	4949	8	37.938144			
100000093	4949	9	38.013911			
100000093	4949	10	36.692985			
100000093	4950	1	0.191091	SUNSET BLVD	W	SUNSET BLVD & RAMP
100000093	4950	2	0.15533			
100000093	4950	3	0.091051			
100000093	4950	4	0.125973			
100000093	4950	5	0.052402			
100000093	4950	6	0.125038			
100000093	4950	7	0.123082			
100000093	4950	8	0.098293			
100000093	4950	9	0.087947			
100000093	4950	10	0.208003			
100000120	5031	1	9.208789	SUNSET BLVD	W	CORLEY MILL RD, SUNSET BLVD & GINNY LN
100000120	5031	2	8.788304			
100000120	5031	3	8.757867			
100000120	5031	4	9.209688			
100000120	5031	5	9.125887			
100000120	5031	6	9.86484			
100000120	5031	7	9.390151			
100000120	5031	8	8.781197			
100000120	5031	9	8.94935			
100000120	5031	10	9.718955			
100000120	5352	1	14.913957	CORLEY MILL RD	S	CORLEY MILL RD, SUNSET BLVD & GINNY LN
100000120	5352	2	14.191869			
100000120	5352	3	13.741563			
100000120	5352	4	14.207093			
100000120	5352	5	14.022029			
100000120	5352	6	13.943988			
100000120	5352	7	13.69461			
100000120	5352	8	14.372509			
100000120	5352	9	13.406544			
100000120	5352	10	14.353581			
100000120	5353	1	34.921715	GINNY LN	N	CORLEY MILL RD, SUNSET BLVD & GINNY LN
100000120	5353	2	39.293372			
100000120	5353	3	35.514754			
100000120	5353	4	34.023144			
100000120	5353	5	41.412343			
100000120	5353	6	30.873086			
100000120	5353	7	33.176141			
100000120	5353	8	33.050581			
100000120	5353	9	32.917836			
100000120	5353	10	37.298378			
100000120	5355	1	28.941985	SUNSET BLVD	E	CORLEY MILL RD, SUNSET BLVD & GINNY LN
100000120	5355	2	32.484061			
100000120	5355	3	28.841675			
100000120	5355	4	30.826894			
100000120	5355	5	30.301401			
100000120	5355	6	30.091243			
100000120	5355	7	31.390904			
100000120	5355	8	28.728745			
100000120	5355	9	29.698258			
100000120	5355	10	33.087562			
100000134	2048	1	23.463003	RAMP	SW	SUNSET BLVD & RAMP
100000134	2048	2	22.773041			
100000134	2048	3	21.404796			
100000134	2048	4	22.43772			
100000134	2048	5	20.840285			
100000134	2048	6	22.65623			
100000134	2048	7	23.511966			
100000134	2048	8	23.772357			
100000134	2048	9	23.205255			
100000134	2048	10	22.804558			
100000134	5027	1	6.626973	SUNSET BLVD	NW	SUNSET BLVD & RAMP
100000134	5027	2	5.433927			
100000134	5027	3	7.135615			
100000134	5027	4	7.087149			
100000134	5027	5	5.966027			
100000134	5027	6	6.241781			
100000134	5027	7	4.895853			
100000134	5027	8	5.652461			
100000134	5027	9	6.309017			
100000134	5027	10	6.802806			
100000134	5030	1	4.290897	SUNSET BLVD	SE	SUNSET BLVD & RAMP
100000134	5030	2	4.799644			
100000134	5030	3	5.160486			
100000134	5030	4	5.022245			
100000134	5030	5	4.931049			
100000134	5030	6	4.65277			
100000134	5030	7	4.710022			
100000134	5030	8	4.889698			
100000134	5030	9	5.090002			
100000134	5030	10	5.077119			
100000135	2039	1	10.642482	I-20 EB OFF-RAMP	NE	SUNSET BLVD & I-20 EB OFF-RAMP
100000135	2039	2	10.607467			
100000135	2039	3	10.971726			
100000135	2039	4	11.110682			
100000135	2039	5	11.532326			
100000135	2039	6	12.988392			
100000135	2039	7	11.651362			
100000135	2039	8	11.45954			
100000135	2039	9	12.464511			
100000135	2039	10	10.1231			
100000135	5022	1	3.729022	SUNSET BLVD	SE	SUNSET BLVD & I-20 EB OFF-RAMP
100000135	5022	2	3.540949			
100000135	5022	3	3.595898			
100000135	5022	4	3.571382			
100000135	5022	5	4.62313			
100000135	5022	6	4.294809			
100000135	5022	7	3.807931			
100000135	5022	8	3.269176			
100000135	5022	9	4.176783			
100000135	5022	10	3.604843			
100000135	5023	1	3.830156	SUNSET BLVD	NW	SUNSET BLVD & I-20 EB OFF-RAMP
100000135	5023	2	4.132863			
100000135	5023	3	3.806933			
100000135	5023	4	3.879014			
100000135	5023	5	4.492947			
100000135	5023	6	4.981802			

Node	Superlink	Run	Average Control Delay	Approach Street Name	Direction	Intersection
100000135	5023	7	4.21619			
100000135	5023	8	3.747862			
100000135	5023	9	4.393439			
100000135	5023	10	4.132954			
100000136	5021	1	17.534165	SUNSET BLVD	SE	SUNSET BLVD, CROMER RD & DAVEGA DR
100000136	5021	2	18.081674			
100000136	5021	3	19.836188			
100000136	5021	4	19.879316			
100000136	5021	5	17.471767			
100000136	5021	6	18.788021			
100000136	5021	7	19.901195			
100000136	5021	8	19.205809			
100000136	5021	9	19.906794			
100000136	5021	10	16.729753			
100000136	5362	1	27.218749	CROMER RD	NE	SUNSET BLVD, CROMER RD & DAVEGA DR
100000136	5362	2	27.43458			
100000136	5362	3	27.660709			
100000136	5362	4	29.808314			
100000136	5362	5	30.464406			
100000136	5362	6	29.299853			
100000136	5362	7	29.313849			
100000136	5362	8	29.751591			
100000136	5362	9	31.757106			
100000136	5362	10	30.753359			
100000136	5364	1	78.828322	SUNSET BLVD	NW	SUNSET BLVD, CROMER RD & DAVEGA DR
100000136	5364	2	90.731466			
100000136	5364	3	77.382726			
100000136	5364	4	89.592284			
100000136	5364	5	88.901864			
100000136	5364	6	92.488708			
100000136	5364	7	89.948391			
100000136	5364	8	88.523555			
100000136	5364	9	80.837638			
100000136	5364	10	84.560631			
100000136	6459	1	22.719301	DAVEGA DR	SW	SUNSET BLVD, CROMER RD & DAVEGA DR
100000136	6459	2	24.299833			
100000136	6459	3	26.679699			
100000136	6459	4	23.366231			
100000136	6459	5	25.117215			
100000136	6459	6	23.930409			
100000136	6459	7	24.912668			
100000136	6459	8	22.590092			
100000136	6459	9	24.300181			
100000136	6459	10	27.856073			
100000138	2052	1	0	RAMP	NW	RAMP, SUNSET BLVD & I-20 EXIT 61 WB ON RAMP
100000138	2052	2	0			
100000138	2052	3	0			
100000138	2052	4	0			
100000138	2052	5	0			
100000138	2052	6	0			
100000138	2052	7	0			
100000138	2052	8	0			
100000138	2052	9	0			
100000138	2052	10	0			
100000138	5030	1	0	SUNSET BLVD	NW	RAMP, SUNSET BLVD & I-20 EXIT 61 WB ON RAMP
100000138	5030	2	0			
100000138	5030	3	0			
100000138	5030	4	0			
100000138	5030	5	0			
100000138	5030	6	0			
100000138	5030	7	0			
100000138	5030	8	0			
100000138	5030	9	0			
100000138	5030	10	0			
100000138	6553	1	4.127313	SUNSET BLVD	SE	RAMP, SUNSET BLVD & I-20 EXIT 61 WB ON RAMP
100000138	6553	2	5.199538			
100000138	6553	3	5.610676			
100000138	6553	4	5.122306			
100000138	6553	5	4.7651			
100000138	6553	6	4.972315			
100000138	6553	7	4.43457			
100000138	6553	8	5.268406			
100000138	6553	9	5.701508			
100000138	6553	10	5.568192			
100000139	2065	1	28.000306	RAMP	S	RAMP & BUSH RIVER RD
100000139	2065	2	27.036902			
100000139	2065	3	26.069295			
100000139	2065	4	28.457887			
100000139	2065	5	23.109255			
100000139	2065	6	25.007131			
100000139	2065	7	22.630052			
100000139	2065	8	22.416276			
100000139	2065	9	24.590864			
100000139	2065	10	24.68154			
100000139	5033	1	5.176931	BUSH RIVER RD	NW	RAMP & BUSH RIVER RD
100000139	5033	2	4.549673			
100000139	5033	3	4.762133			
100000139	5033	4	5.928422			
100000139	5033	5	4.896998			
100000139	5033	6	4.327245			
100000139	5033	7	4.992489			
100000139	5033	8	4.007361			
100000139	5033	9	4.749057			
100000139	5033	10	5.108223			
100000139	5034	1	6.168335	BUSH RIVER RD	SE	RAMP & BUSH RIVER RD
100000139	5034	2	6.05127			
100000139	5034	3	6.048844			
100000139	5034	4	5.658916			
100000139	5034	5	6.793748			
100000139	5034	6	6.306492			
100000139	5034	7	6.016888			
100000139	5034	8	5.909928			
100000139	5034	9	6.220486			
100000139	5034	10	6.124181			
100000140	5376	1	4.193444	SUNSET BLVD	W	SUMMER PLACE DR, SUNSET BLVD & FAIRLANE DR
100000140	5376	2	4.1268			
100000140	5376	3	4.93493			
100000140	5376	4	6.605225			
100000140	5376	5	3.584026			
100000140	5376	6	3.089073			
100000140	5376	7	3.727523			
100000140	5376	8	6.700674			

Node	Superlink	Run	Average Control Delay	Approach Street Name	Direction	Intersection
100000140	5376	9	3.857914			
100000140	5376	10	2.979738			
100000140	5378	1	40.174052	SUMMER PLACE DR	N	SUMMER PLACE DR, SUNSET BLVD & FAIRLANE DR
100000140	5378	2	33.635265			
100000140	5378	3	37.31805			
100000140	5378	4	38.733213			
100000140	5378	5	36.809248			
100000140	5378	6	35.529796			
100000140	5378	7	38.349997			
100000140	5378	8	40.613359			
100000140	5378	9	36.843193			
100000140	5378	10	35.265207			
100000140	6489	1		FAIRLANE DR	S	SUMMER PLACE DR, SUNSET BLVD & FAIRLANE DR
100000140	6489	2				
100000140	6489	3				
100000140	6489	4				
100000140	6489	5				
100000140	6489	6				
100000140	6489	7				
100000140	6489	8				
100000140	6489	9				
100000140	6489	10				
100000140	6764	1	5.129883	SUNSET BLVD	E	SUMMER PLACE DR, SUNSET BLVD & FAIRLANE DR
100000140	6764	2	5.291851			
100000140	6764	3	6.176335			
100000140	6764	4	4.998063			
100000140	6764	5	4.8728			
100000140	6764	6	4.760395			
100000140	6764	7	5.314791			
100000140	6764	8	5.104518			
100000140	6764	9	5.012516			
100000140	6764	10	4.745966			
100000142	2053	1	11.766385	RAMP	NE	BUSH RIVER RD & RAMP
100000142	2053	2	10.966819			
100000142	2053	3	9.64797			
100000142	2053	4	11.157578			
100000142	2053	5	9.083495			
100000142	2053	6	11.885311			
100000142	2053	7	11.430365			
100000142	2053	8	9.312782			
100000142	2053	9	10.260485			
100000142	2053	10	10.519428			
100000142	5036	1	11.37856	BUSH RIVER RD	SE	BUSH RIVER RD & RAMP
100000142	5036	2	12.012456			
100000142	5036	3	13.564212			
100000142	5036	4	11.447228			
100000142	5036	5	13.849129			
100000142	5036	6	12.49332			
100000142	5036	7	11.096949			
100000142	5036	8	13.827534			
100000142	5036	9	12.930406			
100000142	5036	10	11.405926			
100000142	5037	1	5.126983	BUSH RIVER RD	NW	BUSH RIVER RD & RAMP
100000142	5037	2	5.461812			
100000142	5037	3	5.444869			
100000142	5037	4	4.813564			
100000142	5037	5	6.045885			
100000142	5037	6	5.193446			
100000142	5037	7	4.859867			
100000142	5037	8	5.732697			
100000142	5037	9	5.321601			
100000142	5037	10	4.739224			
100000143	5372	1	0	SUNSET BLVD	E	SUNSET BLVD & HEBRON DR
100000143	5372	2	0			
100000143	5372	3	0			
100000143	5372	4	0			
100000143	5372	5	0			
100000143	5372	6	0			
100000143	5372	7	0			
100000143	5372	8	0			
100000143	5372	9	0			
100000143	5372	10	0			
100000143	6763	1		HEBRON DR	N	SUNSET BLVD & HEBRON DR
100000143	6763	2				
100000143	6763	3				
100000143	6763	4				
100000143	6763	5				
100000143	6763	6				
100000143	6763	7				
100000143	6763	8				
100000143	6763	9				
100000143	6763	10				
100000143	6764	1	0	SUNSET BLVD	W	SUNSET BLVD & HEBRON DR
100000143	6764	2	0			
100000143	6764	3	0			
100000143	6764	4	0			
100000143	6764	5	0			
100000143	6764	6	0			
100000143	6764	7	0			
100000143	6764	8	0			
100000143	6764	9	0			
100000143	6764	10	0			
100000144	5376	1	9.215305	SUNSET BLVD	E	SUNSET BLVD, W. HOSPTIAL DR & SUNSET CT
100000144	5376	2	10.402239			
100000144	5376	3	9.670768			
100000144	5376	4	9.04982			
100000144	5376	5	10.067212			
100000144	5376	6	11.871584			
100000144	5376	7	11.948457			
100000144	5376	8	10.694437			
100000144	5376	9	8.280552			
100000144	5376	10	11.104505			
100000144	6760	1	60.467865	W. HOSPTIAL DR	S	SUNSET BLVD, W. HOSPTIAL DR & SUNSET CT
100000144	6760	2	68.123478			
100000144	6760	3	58.68913			
100000144	6760	4	56.948225			
100000144	6760	5	50.25436			
100000144	6760	6	57.23545			
100000144	6760	7	61.836971			
100000144	6760	8	56.02983			
100000144	6760	9	51.655208			
100000144	6760	10	64.54224			

Node	Superlink	Run	Average Control Delay	Approach Street Name	Direction	Intersection
100000144	6761	1		SUNSET CT	N	SUNSET BLVD, W. HOSPTIAL DR & SUNSET CT
100000144	6761	2				
100000144	6761	3				
100000144	6761	4				
100000144	6761	5				
100000144	6761	6				
100000144	6761	7				
100000144	6761	8				
100000144	6761	9				
100000144	6761	10				
100000144	6762	1	9.721619	SUNSET BLVD	W	SUNSET BLVD, W. HOSPTIAL DR & SUNSET CT
100000144	6762	2	9.842754			
100000144	6762	3	10.659471			
100000144	6762	4	10.506738			
100000144	6762	5	11.19394			
100000144	6762	6	9.097589			
100000144	6762	7	10.185542			
100000144	6762	8	8.944825			
100000144	6762	9	9.922236			
100000144	6762	10	9.18764			
100000150	3361	1	17.837135	I-26 EXIT 101 EB OFF RAMP	SW	I-26 EXIT 101 EB OFF RAMP & BROAD RIVER RD
100000150	3361	2	13.909552			
100000150	3361	3	13.166991			
100000150	3361	4	16.464015			
100000150	3361	5	17.125548			
100000150	3361	6	23.834711			
100000150	3361	7	17.046154			
100000150	3361	8	14.295034			
100000150	3361	9	15.257587			
100000150	3361	10	14.987627			
100000150	5071	1	0	BROAD RIVER RD	E	I-26 EXIT 101 EB OFF RAMP & BROAD RIVER RD
100000150	5071	2	0			
100000150	5071	3	0			
100000150	5071	4	0			
100000150	5071	5	0			
100000150	5071	6	0			
100000150	5071	7	0			
100000150	5071	8	0			
100000150	5071	9	0			
100000150	5071	10	0			
100000150	5073	1	0.075646	BROAD RIVER RD	W	I-26 EXIT 101 EB OFF RAMP & BROAD RIVER RD
100000150	5073	2	0.069208			
100000150	5073	3	0.075487			
100000150	5073	4	0.068191			
100000150	5073	5	0.063017			
100000150	5073	6	0.065282			
100000150	5073	7	0.060697			
100000150	5073	8	0.089244			
100000150	5073	9	0.08632			
100000150	5073	10	0.071608			
100000151	5072	1	1.358092	BROAD RIVER RD	E	BROAD RIVER RD & ON-RAMP from WB
100000151	5072	2	2.265061			
100000151	5072	3	2.458167			
100000151	5072	4	2.040028			
100000151	5072	5	1.640884			
100000151	5072	6	1.996026			
100000151	5072	7	1.96625			
100000151	5072	8	1.543348			
100000151	5072	9	2.042873			
100000151	5072	10	2.237601			
100000151	5075	1	1.272481	BROAD RIVER RD	W	BROAD RIVER RD & ON-RAMP from WB
100000151	5075	2	1.311891			
100000151	5075	3	1.830721			
100000151	5075	4	1.234071			
100000151	5075	5	1.341093			
100000151	5075	6	1.336401			
100000151	5075	7	1.328967			
100000151	5075	8	1.355249			
100000151	5075	9	1.479295			
100000151	5075	10	1.253224			
100000155	6084	1	4.688187	BROAD RIVER RD	N	BEATTY RD & BROAD RIVER RD
100000155	6084	2	4.085474			
100000155	6084	3	4.640462			
100000155	6084	4	5.220302			
100000155	6084	5	4.233984			
100000155	6084	6	4.406239			
100000155	6084	7	4.127441			
100000155	6084	8	4.377153			
100000155	6084	9	4.176843			
100000155	6084	10	4.059717			
100000155	6355	1	24.057964	BEATTY RD	E	BEATTY RD & BROAD RIVER RD
100000155	6355	2	20.384557			
100000155	6355	3	30.904026			
100000155	6355	4	35.252345			
100000155	6355	5	25.278909			
100000155	6355	6	29.206066			
100000155	6355	7	28.461986			
100000155	6355	8	27.406086			
100000155	6355	9	31.525006			
100000155	6355	10	24.98014			
100000155	6357	1	11.060897	BROAD RIVER RD	S	BEATTY RD & BROAD RIVER RD
100000155	6357	2	9.162273			
100000155	6357	3	11.549049			
100000155	6357	4	10.665728			
100000155	6357	5	8.620324			
100000155	6357	6	9.854417			
100000155	6357	7	12.33952			
100000155	6357	8	11.731848			
100000155	6357	9	9.996138			
100000155	6357	10	10.690782			
100000163	4947	1	4.663587	SUNSET BLVD	E	MCSWAIN DR, SUNSET BLVD & CHRIS DR
100000163	4947	2	4.401247			
100000163	4947	3	3.987252			
100000163	4947	4	4.214276			
100000163	4947	5	3.749525			
100000163	4947	6	3.776933			
100000163	4947	7	4.85254			
100000163	4947	8	4.420575			
100000163	4947	9	4.223234			
100000163	4947	10	3.400477			
100000163	5388	1	7.235411	SUNSET BLVD	W	MCSWAIN DR, SUNSET BLVD & CHRIS DR
100000163	5388	2	6.814116			

Node	Superlink	Run	Average Control Delay	Approach Street Name	Direction	Intersection
100000163	5388	3	6.674849			
100000163	5388	4	6.280277			
100000163	5388	5	5.798161			
100000163	5388	6	6.679964			
100000163	5388	7	6.946307			
100000163	5388	8	6.467475			
100000163	5388	9	5.832623			
100000163	5388	10	5.824853			
100000163	5389	1	23.825658	MCSWAIN DR	S	MCSWAIN DR, SUNSET BLVD & CHRIS DR
100000163	5389	2	23.424775			
100000163	5389	3	22.059584			
100000163	5389	4	24.462577			
100000163	5389	5	23.166694			
100000163	5389	6	26.249967			
100000163	5389	7	27.201481			
100000163	5389	8	23.557952			
100000163	5389	9	24.90485			
100000163	5389	10	19.608384			
100000163	5418	1	64.117112	CHRIS DR	N	MCSWAIN DR, SUNSET BLVD & CHRIS DR
100000163	5418	2	69.869684			
100000163	5418	3	64.135145			
100000163	5418	4	61.741668			
100000163	5418	5	68.120776			
100000163	5418	6	60.648676			
100000163	5418	7	60.907777			
100000163	5418	8	58.811853			
100000163	5418	9	59.282849			
100000163	5418	10	59.318672			
100000164	3354	1	0	I-26 EXIT 102 EB OFF RAMP	W	LAKE MURRAY BLVD & I-26 EXIT 102 EB OFF RAMP
100000164	3354	2	0			
100000164	3354	3	0			
100000164	3354	4	0			
100000164	3354	5	0			
100000164	3354	6	0			
100000164	3354	7	0			
100000164	3354	8	0			
100000164	3354	9	0			
100000164	3354	10	0			
100000164	5084	1	0	LAKE MURRAY BLVD	E	LAKE MURRAY BLVD & I-26 EXIT 102 EB OFF RAMP
100000164	5084	2	0			
100000164	5084	3	0			
100000164	5084	4	0			
100000164	5084	5	0			
100000164	5084	6	0			
100000164	5084	7	0			
100000164	5084	8	0			
100000164	5084	9	0			
100000164	5084	10	0			
100000164	5085	1	0	LAKE MURRAY BLVD	W	LAKE MURRAY BLVD & I-26 EXIT 102 EB OFF RAMP
100000164	5085	2	0			
100000164	5085	3	0			
100000164	5085	4	0			
100000164	5085	5	0			
100000164	5085	6	0			
100000164	5085	7	0			
100000164	5085	8	0			
100000164	5085	9	0			
100000164	5085	10	0			
100000165	3330	1	50.552905	EXIT 103 WB OFF RAMP	SE	HARBISON BLVD, EXIT 103 WB OFF RAMP, WOODCROSS DR & EXIT 103 WB ON RAMP
100000165	3330	2	47.266352			
100000165	3330	3	50.410064			
100000165	3330	4	54.178892			
100000165	3330	5	47.992241			
100000165	3330	6	47.394325			
100000165	3330	7	45.813382			
100000165	3330	8	44.853511			
100000165	3330	9	39.576814			
100000165	3330	10	49.066097			
100000165	5096	1	13.386924	HARBISON BLVD	NE	HARBISON BLVD, EXIT 103 WB OFF RAMP, WOODCROSS DR & EXIT 103 WB ON RAMP
100000165	5096	2	12.987482			
100000165	5096	3	13.903007			
100000165	5096	4	14.311574			
100000165	5096	5	13.52017			
100000165	5096	6	16.077195			
100000165	5096	7	13.127089			
100000165	5096	8	14.191308			
100000165	5096	9	13.352518			
100000165	5096	10	14.023486			
100000165	5102	1	8.507341	HARBISON BLVD	SW	HARBISON BLVD, EXIT 103 WB OFF RAMP, WOODCROSS DR & EXIT 103 WB ON RAMP
100000165	5102	2	9.13278			
100000165	5102	3	7.386804			
100000165	5102	4	7.096761			
100000165	5102	5	6.90104			
100000165	5102	6	7.493244			
100000165	5102	7	7.404767			
100000165	5102	8	6.812409			
100000165	5102	9	7.918121			
100000165	5102	10	8.345937			
100000165	5103	1	113.834153	WOODCROSS DR	NW	HARBISON BLVD, EXIT 103 WB OFF RAMP, WOODCROSS DR & EXIT 103 WB ON RAMP
100000165	5103	2	110.641301			
100000165	5103	3	100.370354			
100000165	5103	4	122.105157			
100000165	5103	5	112.36372			
100000165	5103	6	138.646782			
100000165	5103	7	97.619861			
100000165	5103	8	129.570424			
100000165	5103	9	126.088095			
100000165	5103	10	101.330457			
100000166	3343	1	0	I-26 EXIT 102 EBL OFF RAMP	E	LAKE MURRAY BLVD & I-26 EXIT 102 EBL OFF RAMP
100000166	3343	2	0			
100000166	3343	3	0			
100000166	3343	4	0			
100000166	3343	5	0			
100000166	3343	6	0			
100000166	3343	7	0			
100000166	3343	8	0			
100000166	3343	9	0			
100000166	3343	10	0			
100000166	5087	1	0	LAKE MURRAY BLVD	E	LAKE MURRAY BLVD & I-26 EXIT 102 EBL OFF RAMP
100000166	5087	2	0			
100000166	5087	3	0			
100000166	5087	4	0			

Node	Superlink	Run	Average Control Delay	Approach Street Name	Direction	Intersection
100000166	5087	5	0			
100000166	5087	6	0			
100000166	5087	7	0			
100000166	5087	8	0			
100000166	5087	9	0			
100000166	5087	10	0			
100000166	5088	1	0	LAKE MURRAY BLVD	W	LAKE MURRAY BLVD & I-26 EXIT 102 EBL OFF RAMP
100000166	5088	2	0			
100000166	5088	3	0			
100000166	5088	4	0			
100000166	5088	5	0			
100000166	5088	6	0			
100000166	5088	7	0			
100000166	5088	8	0			
100000166	5088	9	0			
100000166	5088	10	0			
100000167	3339	1	0	I-26 EXIT 102 WBL OFF RAMP	W	I-26 EXIT 102 WBL OFF RAMP & LAKE MURRAY BLVD
100000167	3339	2	0			
100000167	3339	3	0			
100000167	3339	4	0			
100000167	3339	5	0			
100000167	3339	6	0			
100000167	3339	7	0			
100000167	3339	8	0			
100000167	3339	9	0			
100000167	3339	10	0			
100000167	5088	1	0	LAKE MURRAY BLVD	E	I-26 EXIT 102 WBL OFF RAMP & LAKE MURRAY BLVD
100000167	5088	2	0			
100000167	5088	3	0			
100000167	5088	4	0			
100000167	5088	5	0			
100000167	5088	6	0			
100000167	5088	7	0			
100000167	5088	8	0			
100000167	5088	9	0			
100000167	5088	10	0			
100000167	5090	1	0	LAKE MURRAY BLVD	W	I-26 EXIT 102 WBL OFF RAMP & LAKE MURRAY BLVD
100000167	5090	2	0			
100000167	5090	3	0			
100000167	5090	4	0			
100000167	5090	5	0			
100000167	5090	6	0			
100000167	5090	7	0			
100000167	5090	8	0			
100000167	5090	9	0			
100000167	5090	10	0			
100000168	5366	1	28.952643	LEAPHART RD	N	SUNSET BLVD & LEAPHART RD
100000168	5366	2	28.672018			
100000168	5366	3	26.094152			
100000168	5366	4	28.643885			
100000168	5366	5	35.112611			
100000168	5366	6	29.308172			
100000168	5366	7	32.898693			
100000168	5366	8	29.080206			
100000168	5366	9	27.993276			
100000168	5366	10	27.955762			
100000168	5368	1	4.743508	SUNSET BLVD	E	SUNSET BLVD & LEAPHART RD
100000168	5368	2	5.897256			
100000168	5368	3	4.943206			
100000168	5368	4	5.502223			
100000168	5368	5	4.718772			
100000168	5368	6	5.429112			
100000168	5368	7	4.201957			
100000168	5368	8	4.612372			
100000168	5368	9	5.338826			
100000168	5368	10	5.085833			
100000168	5372	1	166.333023	SUNSET BLVD	W	SUNSET BLVD & LEAPHART RD
100000168	5372	2	260.209826			
100000168	5372	3	157.007225			
100000168	5372	4	165.44334			
100000168	5372	5	186.675476			
100000168	5372	6	235.064268			
100000168	5372	7	259.012885			
100000168	5372	8	172.475861			
100000168	5372	9	156.247423			
100000168	5372	10	152.023431			
100000171	3342	1	0	I-26 EXIT 102 WB OFF RAMP	E	LAKE MURRAY BLVD & I-26 EXIT 102 WB OFF RAMP
100000171	3342	2	0			
100000171	3342	3	0			
100000171	3342	4	0			
100000171	3342	5	0			
100000171	3342	6	0			
100000171	3342	7	0			
100000171	3342	8	0			
100000171	3342	9	0			
100000171	3342	10	0			
100000171	5092	1	0.008385	LAKE MURRAY BLVD	E	LAKE MURRAY BLVD & I-26 EXIT 102 WB OFF RAMP
100000171	5092	2	0.013901			
100000171	5092	3	0.015287			
100000171	5092	4	0.011402			
100000171	5092	5	0.022184			
100000171	5092	6	0.011998			
100000171	5092	7	0.01029			
100000171	5092	8	0.012726			
100000171	5092	9	0.013361			
100000171	5092	10	0.013493			
100000171	5093	1	0	LAKE MURRAY BLVD	W	LAKE MURRAY BLVD & I-26 EXIT 102 WB OFF RAMP
100000171	5093	2	0			
100000171	5093	3	0			
100000171	5093	4	0			
100000171	5093	5	0			
100000171	5093	6	0			
100000171	5093	7	0			
100000171	5093	8	0			
100000171	5093	9	0			
100000171	5093	10	0			
100000173	3212	1	59.259891		103 SE	HARBISON BLVD, 103 & RAMP
100000173	3212	2	60.419338			
100000173	3212	3	57.910824			
100000173	3212	4	55.122705			
100000173	3212	5	57.085911			
100000173	3212	6	67.292156			

Node	Superlink	Run	Average Control Delay	Approach Street Name	Direction	Intersection
100000173	3212	7	62.246322			
100000173	3212	8	54.002458			
100000173	3212	9	58.308919			
100000173	3212	10	55.533471			
100000173	3213	1	11.318052	103	S	HARBISON BLVD, 103 & RAMP
100000173	3213	2	11.384582			
100000173	3213	3	13.972025			
100000173	3213	4	14.857586			
100000173	3213	5	11.34943			
100000173	3213	6	12.676251			
100000173	3213	7	13.333537			
100000173	3213	8	11.302747			
100000173	3213	9	12.815434			
100000173	3213	10	12.913481			
100000173	5097	1	2.968892	HARBISON BLVD	NE	HARBISON BLVD, 103 & RAMP
100000173	5097	2	2.947197			
100000173	5097	3	2.477099			
100000173	5097	4	3.385537			
100000173	5097	5	2.860154			
100000173	5097	6	2.921532			
100000173	5097	7	3.197584			
100000173	5097	8	2.542861			
100000173	5097	9	3.292717			
100000173	5097	10	3.144401			
100000173	5099	1	7.610471	HARBISON BLVD	SW	HARBISON BLVD, 103 & RAMP
100000173	5099	2	7.547555			
100000173	5099	3	7.288197			
100000173	5099	4	7.054546			
100000173	5099	5	7.878173			
100000173	5099	6	6.642417			
100000173	5099	7	7.508997			
100000173	5099	8	7.525734			
100000173	5099	9	6.845446			
100000173	5099	10	7.768576			
100000175	3234	1	64.226016	RAMP	SE	PINEY GROVE RD & RAMP
100000175	3234	2	65.228192			
100000175	3234	3	59.426375			
100000175	3234	4	56.173147			
100000175	3234	5	67.459776			
100000175	3234	6	65.833119			
100000175	3234	7	70.724981			
100000175	3234	8	56.416549			
100000175	3234	9	73.308629			
100000175	3234	10	61.151284			
100000175	5112	1	1.629572	PINEY GROVE RD	W	PINEY GROVE RD & RAMP
100000175	5112	2	1.321776			
100000175	5112	3	1.104101			
100000175	5112	4	1.180128			
100000175	5112	5	1.433918			
100000175	5112	6	1.483891			
100000175	5112	7	1.45105			
100000175	5112	8	0.985707			
100000175	5112	9	1.168871			
100000175	5112	10	1.565119			
100000175	6544	1	3.636888	PINEY GROVE RD	E	PINEY GROVE RD & RAMP
100000175	6544	2	3.26457			
100000175	6544	3	3.498878			
100000175	6544	4	3.312299			
100000175	6544	5	3.625586			
100000175	6544	6	2.977196			
100000175	6544	7	3.620729			
100000175	6544	8	3.138094			
100000175	6544	9	2.980047			
100000175	6544	10	3.59841			
100000177	5112	1	8.509866	PINEY GROVE RD	E	PINEY GROVE RD, EXIT 104 WB OFF RAMP & EXIT 104 WB ON RAMP
100000177	5112	2	9.237273			
100000177	5112	3	8.53847			
100000177	5112	4	11.162622			
100000177	5112	5	10.941126			
100000177	5112	6	8.282014			
100000177	5112	7	9.943272			
100000177	5112	8	9.656514			
100000177	5112	9	10.88343			
100000177	5112	10	9.316575			
100000177	5113	1	11.245271	PINEY GROVE RD	W	PINEY GROVE RD, EXIT 104 WB OFF RAMP & EXIT 104 WB ON RAMP
100000177	5113	2	12.333281			
100000177	5113	3	11.554285			
100000177	5113	4	12.338411			
100000177	5113	5	10.598659			
100000177	5113	6	10.822704			
100000177	5113	7	11.635049			
100000177	5113	8	11.140518			
100000177	5113	9	11.312037			
100000177	5113	10	11.026534			
100000177	6513	1	5.961565	EXIT 104 WB OFF RAMP	N	PINEY GROVE RD, EXIT 104 WB OFF RAMP & EXIT 104 WB ON RAMP
100000177	6513	2	5.384479			
100000177	6513	3	6.099735			
100000177	6513	4	5.894695			
100000177	6513	5	6.003638			
100000177	6513	6	6.235908			
100000177	6513	7	6.084956			
100000177	6513	8	6.309259			
100000177	6513	9	5.573565			
100000177	6513	10	5.912541			
100000177	6514	1	27.056066	EXIT 104 WB OFF RAMP	N	PINEY GROVE RD, EXIT 104 WB OFF RAMP & EXIT 104 WB ON RAMP
100000177	6514	2	25.852869			
100000177	6514	3	25.093463			
100000177	6514	4	27.910737			
100000177	6514	5	29.835111			
100000177	6514	6	30.886797			
100000177	6514	7	30.682256			
100000177	6514	8	27.052676			
100000177	6514	9	29.383531			
100000177	6514	10	28.176204			
100000178	3301	1	22.276372	RAMP	SE	ST ANDREWS RD, RAMP, WOODLAND HILLS RD & I-26 EXIT 106 EB ON RAMP
100000178	3301	2	26.266952			
100000178	3301	3	25.278677			
100000178	3301	4	23.681194			
100000178	3301	5	24.758064			
100000178	3301	6	25.514169			
100000178	3301	7	23.918592			
100000178	3301	8	24.403523			

Node	Superlink	Run	Average Control Delay	Approach Street Name	Direction	Intersection
100000178	3301	9	25.561994			
100000178	3301	10	24.672333			
100000178	5118	1	6.228581	ST ANDREWS RD	E	ST ANDREWS RD, RAMP, WOODLAND HILLS RD & I-26 EXIT 106 EB ON RAMP
100000178	5118	2	6.035811			
100000178	5118	3	6.0269			
100000178	5118	4	5.648393			
100000178	5118	5	6.163729			
100000178	5118	6	5.906761			
100000178	5118	7	5.83371			
100000178	5118	8	6.013057			
100000178	5118	9	5.726965			
100000178	5118	10	5.959349			
100000178	5119	1	23.210175	WOODLAND HILLS RD	N	ST ANDREWS RD, RAMP, WOODLAND HILLS RD & I-26 EXIT 106 EB ON RAMP
100000178	5119	2	22.612226			
100000178	5119	3	21.394888			
100000178	5119	4	23.339984			
100000178	5119	5	20.798166			
100000178	5119	6	24.463846			
100000178	5119	7	19.037937			
100000178	5119	8	20.521541			
100000178	5119	9	19.658027			
100000178	5119	10	24.113634			
100000178	5120	1	8.108388	ST ANDREWS RD	W	ST ANDREWS RD, RAMP, WOODLAND HILLS RD & I-26 EXIT 106 EB ON RAMP
100000178	5120	2	8.987533			
100000178	5120	3	8.073329			
100000178	5120	4	7.834388			
100000178	5120	5	7.982396			
100000178	5120	6	8.637479			
100000178	5120	7	7.816768			
100000178	5120	8	9.297396			
100000178	5120	9	8.510584			
100000178	5120	10	8.037955			
100000179	3219	1	0	RAMP	S	ST ANDREWS RD & RAMP
100000179	3219	2	0			
100000179	3219	3	0			
100000179	3219	4	0			
100000179	3219	5	0			
100000179	3219	6	0			
100000179	3219	7	0			
100000179	3219	8	0			
100000179	3219	9	0			
100000179	3219	10	0			
100000179	5116	1	12.676817	ST ANDREWS RD	E	ST ANDREWS RD & RAMP
100000179	5116	2	10.951523			
100000179	5116	3	11.711055			
100000179	5116	4	12.104439			
100000179	5116	5	11.085407			
100000179	5116	6	10.803882			
100000179	5116	7	12.377003			
100000179	5116	8	11.944526			
100000179	5116	9	10.395616			
100000179	5116	10	11.250283			
100000179	5118	1	0	ST ANDREWS RD	W	ST ANDREWS RD & RAMP
100000179	5118	2	0			
100000179	5118	3	0			
100000179	5118	4	0			
100000179	5118	5	0.000168			
100000179	5118	6	0.004612			
100000179	5118	7	0			
100000179	5118	8	0			
100000179	5118	9	0			
100000179	5118	10	0			
100000182	3292	1	0	EXIT 106 WB OFF RAMP	NE	ST ANDREWS RD, EXIT 106 WB OFF RAMP & EXIT 106 WB ON RAMP
100000182	3292	2	0			
100000182	3292	3	0			
100000182	3292	4	0			
100000182	3292	5	0			
100000182	3292	6	0			
100000182	3292	7	0			
100000182	3292	8	0			
100000182	3292	9	0			
100000182	3292	10	0			
100000182	5123	1	0	ST ANDREWS RD	E	ST ANDREWS RD, EXIT 106 WB OFF RAMP & EXIT 106 WB ON RAMP
100000182	5123	2	0			
100000182	5123	3	0			
100000182	5123	4	0			
100000182	5123	5	0			
100000182	5123	6	0			
100000182	5123	7	0			
100000182	5123	8	0			
100000182	5123	9	0			
100000182	5123	10	0			
100000182	5124	1	0	ST ANDREWS RD	SW	ST ANDREWS RD, EXIT 106 WB OFF RAMP & EXIT 106 WB ON RAMP
100000182	5124	2	0			
100000182	5124	3	0			
100000182	5124	4	0			
100000182	5124	5	0			
100000182	5124	6	0			
100000182	5124	7	0			
100000182	5124	8	0			
100000182	5124	9	0			
100000182	5124	10	0			
100000184	5499	1	17.024802	N ARROWWOOD RD	S	ARROWWOOD RD, BUSH RIVER RD & N ARROWWOOD RD
100000184	5499	2	18.640274			
100000184	5499	3	21.447186			
100000184	5499	4	18.055766			
100000184	5499	5	17.570745			
100000184	5499	6	18.666792			
100000184	5499	7	19.893261			
100000184	5499	8	16.854791			
100000184	5499	9	18.188571			
100000184	5499	10	15.524969			
100000184	5500	1	31.290876	ARROWWOOD RD	N	ARROWWOOD RD, BUSH RIVER RD & N ARROWWOOD RD
100000184	5500	2	34.088221			
100000184	5500	3	32.465408			
100000184	5500	4	32.036031			
100000184	5500	5	35.130345			
100000184	5500	6	30.614693			
100000184	5500	7	37.802981			
100000184	5500	8	32.261086			
100000184	5500	9	32.756686			
100000184	5500	10	29.401086			

Node	Superlink	Run	Average Control Delay	Approach Street Name	Direction	Intersection
100000184	6497	1	12.980845	BUSH RIVER RD	W	ARROWWOOD RD, BUSH RIVER RD & N ARROWWOOD RD
100000184	6497	2	13.030215			
100000184	6497	3	30.647778			
100000184	6497	4	33.310918			
100000184	6497	5	16.153535			
100000184	6497	6	16.510994			
100000184	6497	7	36.724129			
100000184	6497	8	11.638198			
100000184	6497	9	14.725602			
100000184	6497	10	12.367888			
100000184	6505	1	10.462518	BUSH RIVER RD	E	ARROWWOOD RD, BUSH RIVER RD & N ARROWWOOD RD
100000184	6505	2	10.731122			
100000184	6505	3	11.603674			
100000184	6505	4	14.93066			
100000184	6505	5	11.048265			
100000184	6505	6	11.989622			
100000184	6505	7	12.354542			
100000184	6505	8	11.719485			
100000184	6505	9	11.407108			
100000184	6505	10	10.901975			
100000185	3230	1	54.494207	RAMP	W	GREYSTONE BLVD, RAMP & I-126 EB ON RAMP FROM GREYSTONE BLVD
100000185	3230	2	39.50581			
100000185	3230	3	26.049197			
100000185	3230	4	34.705185			
100000185	3230	5	36.74498			
100000185	3230	6	44.883125			
100000185	3230	7	33.350426			
100000185	3230	8	36.515798			
100000185	3230	9	34.287878			
100000185	3230	10	44.14681			
100000185	5140	1	0.370613	GREYSTONE BLVD	N	GREYSTONE BLVD, RAMP & I-126 EB ON RAMP FROM GREYSTONE BLVD
100000185	5140	2	0.425031			
100000185	5140	3	0.500773			
100000185	5140	4	0.318815			
100000185	5140	5	0.469386			
100000185	5140	6	0.283975			
100000185	5140	7	0.344948			
100000185	5140	8	0.439093			
100000185	5140	9	0.266732			
100000185	5140	10	0.350602			
100000185	5141	1	5.296891	GREYSTONE BLVD	S	GREYSTONE BLVD, RAMP & I-126 EB ON RAMP FROM GREYSTONE BLVD
100000185	5141	2	4.152055			
100000185	5141	3	3.760586			
100000185	5141	4	4.584942			
100000185	5141	5	4.169817			
100000185	5141	6	2.847366			
100000185	5141	7	3.642279			
100000185	5141	8	3.332798			
100000185	5141	9	3.154476			
100000185	5141	10	4.252372			
100000186	4949	1	12.402727	SUNSET BLVD	W	HARBOR DR, SUNSET BLVD & E HOSPITAL DR
100000186	4949	2	13.954282			
100000186	4949	3	11.167513			
100000186	4949	4	11.836635			
100000186	4949	5	9.556775			
100000186	4949	6	11.529158			
100000186	4949	7	13.013456			
100000186	4949	8	11.355904			
100000186	4949	9	12.067799			
100000186	4949	10	13.248433			
100000186	5386	1	190.043617	HARBOR DR	N	HARBOR DR, SUNSET BLVD & E HOSPITAL DR
100000186	5386	2	255.26702			
100000186	5386	3	328.841209			
100000186	5386	4	320.978577			
100000186	5386	5	310.607557			
100000186	5386	6	329.963917			
100000186	5386	7	411.985681			
100000186	5386	8	374.93558			
100000186	5386	9	403.105867			
100000186	5386	10	378.972121			
100000186	5387	1	142.000258	E HOSPITAL DR	S	HARBOR DR, SUNSET BLVD & E HOSPITAL DR
100000186	5387	2	182.327997			
100000186	5387	3	98.758246			
100000186	5387	4	181.586669			
100000186	5387	5	81.265985			
100000186	5387	6	140.972187			
100000186	5387	7	206.283325			
100000186	5387	8	145.98293			
100000186	5387	9	217.791907			
100000186	5387	10	132.738957			
100000186	6762	1	25.353644	SUNSET BLVD	E	HARBOR DR, SUNSET BLVD & E HOSPITAL DR
100000186	6762	2	29.759436			
100000186	6762	3	24.200857			
100000186	6762	4	30.356423			
100000186	6762	5	22.453461			
100000186	6762	6	25.985593			
100000186	6762	7	32.929052			
100000186	6762	8	34.659941			
100000186	6762	9	31.04099			
100000186	6762	10	34.235344			
100000187	6057	1	87.531438	BROAD RIVER RD	NW	BROAD RIVER RD, BRIARGATE CIR & MARLEY DR
100000187	6057	2	75.136814			
100000187	6057	3	82.109058			
100000187	6057	4	83.313163			
100000187	6057	5	86.028958			
100000187	6057	6	84.644998			
100000187	6057	7	74.260724			
100000187	6057	8	69.044955			
100000187	6057	9	39.736702			
100000187	6057	10	67.175972			
100000187	6059	1	14.046412	BROAD RIVER RD	SE	BROAD RIVER RD, BRIARGATE CIR & MARLEY DR
100000187	6059	2	5.707724			
100000187	6059	3	8.821207			
100000187	6059	4	4.843569			
100000187	6059	5	3.037155			
100000187	6059	6	6.354935			
100000187	6059	7	3.932696			
100000187	6059	8	5.462261			
100000187	6059	9	3.646738			
100000187	6059	10	4.71653			
100000187	6060	1	80.960409	MARLEY DR	SW	BROAD RIVER RD, BRIARGATE CIR & MARLEY DR
100000187	6060	2	62.082584			

Node	Superlink	Run	Average Control Delay	Approach Street Name	Direction	Intersection
100000187	6060	3	61.849998			
100000187	6060	4	59.822117			
100000187	6060	5	65.486766			
100000187	6060	6	60.736604			
100000187	6060	7	56.538646			
100000187	6060	8	59.821764			
100000187	6060	9	61.186599			
100000187	6060	10	60.316979			
100000187	6061	1	36.224403	BRIARGATE CIR	NE	BROAD RIVER RD, BRIARGATE CIR & MARLEY DR
100000187	6061	2	45.028053			
100000187	6061	3	36.790537			
100000187	6061	4	35.892561			
100000187	6061	5	31.031196			
100000187	6061	6	38.639985			
100000187	6061	7	45.340545			
100000187	6061	8	38.985019			
100000187	6061	9	28.761036			
100000187	6061	10	33.87621			
100000188	3221	1	6.777478	RAMP	W	GREYSTONE BLVD & RAMP
100000188	3221	2	24.866105			
100000188	3221	3	19.409088			
100000188	3221	4	24.04798			
100000188	3221	5	14.600149			
100000188	3221	6	13.425728			
100000188	3221	7	11.115529			
100000188	3221	8	26.452775			
100000188	3221	9	20.624045			
100000188	3221	10	18.575866			
100000188	5143	1	1.382636	GREYSTONE BLVD	N	GREYSTONE BLVD & RAMP
100000188	5143	2	1.026723			
100000188	5143	3	1.476434			
100000188	5143	4	1.045668			
100000188	5143	5	0.872916			
100000188	5143	6	1.205547			
100000188	5143	7	1.300116			
100000188	5143	8	1.218419			
100000188	5143	9	1.524648			
100000188	5143	10	0.851075			
100000188	5144	1	0.002612	GREYSTONE BLVD	S	GREYSTONE BLVD & RAMP
100000188	5144	2	0.007781			
100000188	5144	3	0.005835			
100000188	5144	4	0.009553			
100000188	5144	5	0.023435			
100000188	5144	6	0.021615			
100000188	5144	7	0			
100000188	5144	8	0.009917			
100000188	5144	9	0.013819			
100000188	5144	10	0.027026			
100000189	4346	1	205.157418	I-20 EXIT 65 WB OFF RAMP	SW	I-20 EXIT 65 WB OFF RAMP, BROAD RIVER RD & RAMP
100000189	4346	2	168.719972			
100000189	4346	3	248.634956			
100000189	4346	4	319.485167			
100000189	4346	5	233.545068			
100000189	4346	6	287.488732			
100000189	4346	7	173.618825			
100000189	4346	8	152.444268			
100000189	4346	9	130.583723			
100000189	4346	10	200.100821			
100000189	6057	1	63.716486	BROAD RIVER RD	SE	I-20 EXIT 65 WB OFF RAMP, BROAD RIVER RD & RAMP
100000189	6057	2	45.693361			
100000189	6057	3	76.860941			
100000189	6057	4	52.760764			
100000189	6057	5	35.107761			
100000189	6057	6	52.99736			
100000189	6057	7	44.022503			
100000189	6057	8	50.799719			
100000189	6057	9	38.424374			
100000189	6057	10	30.567353			
100000189	6447	1	39.088709	BROAD RIVER RD	NW	I-20 EXIT 65 WB OFF RAMP, BROAD RIVER RD & RAMP
100000189	6447	2	33.523626			
100000189	6447	3	40.720772			
100000189	6447	4	27.181934			
100000189	6447	5	41.314126			
100000189	6447	6	42.618189			
100000189	6447	7	58.16006			
100000189	6447	8	32.081892			
100000189	6447	9	20.682564			
100000189	6447	10	31.290562			
100000190	4341	1	73.187921	I-20 EXIT 65 EB OFF RAMP	E	BROAD RIVER RD, I-20 EXIT 65 EB OFF RAMP & SERVICE RD
100000190	4341	2	58.189947			
100000190	4341	3	67.707081			
100000190	4341	4	42.616128			
100000190	4341	5	61.612403			
100000190	4341	6	151.870488			
100000190	4341	7	76.607185			
100000190	4341	8	71.385082			
100000190	4341	9	55.782621			
100000190	4341	10	53.865237			
100000190	5148	1	1.914198	BROAD RIVER RD	SE	BROAD RIVER RD, I-20 EXIT 65 EB OFF RAMP & SERVICE RD
100000190	5148	2	1.546223			
100000190	5148	3	1.670484			
100000190	5148	4	1.326768			
100000190	5148	5	1.455769			
100000190	5148	6	1.538226			
100000190	5148	7	1.449907			
100000190	5148	8	1.502355			
100000190	5148	9	1.594269			
100000190	5148	10	1.593652			
100000190	6445	1	5.767584	BROAD RIVER RD	NW	BROAD RIVER RD, I-20 EXIT 65 EB OFF RAMP & SERVICE RD
100000190	6445	2	5.926975			
100000190	6445	3	6.038598			
100000190	6445	4	4.95386			
100000190	6445	5	5.662756			
100000190	6445	6	5.8226			
100000190	6445	7	8.007452			
100000190	6445	8	5.872			
100000190	6445	9	5.328868			
100000190	6445	10	5.895828			
100000190	6446	1		SERVICE RD	SW	BROAD RIVER RD, I-20 EXIT 65 EB OFF RAMP & SERVICE RD
100000190	6446	2				
100000190	6446	3				
100000190	6446	4				

Node	Superlink	Run	Average Control Delay	Approach Street Name	Direction	Intersection
100000190	6446	5				
100000190	6446	6				
100000190	6446	7				
100000190	6446	8				
100000190	6446	9				
100000190	6446	10				
100000191	5399	1	0.008572	HARBOR DR	S	HARBOR DR & OAKWOOD DR
100000191	5399	2	0.06566			
100000191	5399	3	0.01744			
100000191	5399	4	0.054897			
100000191	5399	5	0.047569			
100000191	5399	6	0.047446			
100000191	5399	7	0.062068			
100000191	5399	8	0.056062			
100000191	5399	9	0			
100000191	5399	10	0.040851			
100000191	5414	1	6.488551	OAKWOOD DR	NE	HARBOR DR & OAKWOOD DR
100000191	5414	2	64.803616			
100000191	5414	3	23.196562			
100000191	5414	4	14.561382			
100000191	5414	5	59.631727			
100000191	5414	6	52.417032			
100000191	5414	7	154.765835			
100000191	5414	8	49.746552			
100000191	5414	9	106.107224			
100000191	5414	10	130.178082			
100000191	5420	1	0	HARBOR DR	N	HARBOR DR & OAKWOOD DR
100000191	5420	2	0			
100000191	5420	3	0			
100000191	5420	4	0			
100000191	5420	5	0			
100000191	5420	6	0			
100000191	5420	7	0.343089			
100000191	5420	8	0			
100000191	5420	9	0			
100000191	5420	10	0			
100000193	4350	1	22.488287	I-20 EXIT 68 EB OFF RAMP	E	BUCKNER RD, MONTICELLO RD & I-20 EXIT 68 EB OFF RAMP
100000193	4350	2	24.18631			
100000193	4350	3	24.893038			
100000193	4350	4	25.839305			
100000193	4350	5	23.320015			
100000193	4350	6	22.091			
100000193	4350	7	21.859006			
100000193	4350	8	25.105952			
100000193	4350	9	21.761214			
100000193	4350	10	25.592664			
100000193	5154	1	16.891813	MONTICELLO RD	N	BUCKNER RD, MONTICELLO RD & I-20 EXIT 68 EB OFF RAMP
100000193	5154	2	20.856816			
100000193	5154	3	17.957711			
100000193	5154	4	18.588085			
100000193	5154	5	18.328423			
100000193	5154	6	18.739731			
100000193	5154	7	18.533765			
100000193	5154	8	18.535045			
100000193	5154	9	17.035663			
100000193	5154	10	18.850355			
100000193	5155	1	21.049641	MONTICELLO RD	SE	BUCKNER RD, MONTICELLO RD & I-20 EXIT 68 EB OFF RAMP
100000193	5155	2	18.100679			
100000193	5155	3	16.907939			
100000193	5155	4	20.026114			
100000193	5155	5	17.787758			
100000193	5155	6	17.982029			
100000193	5155	7	18.323913			
100000193	5155	8	21.335804			
100000193	5155	9	16.348224			
100000193	5155	10	18.545266			
100000193	5163	1	11.760011	BUCKNER RD	SW	BUCKNER RD, MONTICELLO RD & I-20 EXIT 68 EB OFF RAMP
100000193	5163	2	9.556973			
100000193	5163	3	11.175281			
100000193	5163	4	10.930454			
100000193	5163	5	12.205027			
100000193	5163	6	10.548532			
100000193	5163	7	9.735959			
100000193	5163	8	10.807825			
100000193	5163	9	11.17119			
100000193	5163	10	10.579043			
100000195	5150	1	8.593847	BROAD RIVER RD	SE	LONGCREEK DR & BROAD RIVER RD
100000195	5150	2	5.760952			
100000195	5150	3	5.00518			
100000195	5150	4	5.233229			
100000195	5150	5	6.890893			
100000195	5150	6	7.844362			
100000195	5150	7	8.5557			
100000195	5150	8	6.758795			
100000195	5150	9	5.855057			
100000195	5150	10	5.579926			
100000195	6049	1	3.834068	BROAD RIVER RD	NW	LONGCREEK DR & BROAD RIVER RD
100000195	6049	2	3.138647			
100000195	6049	3	2.618423			
100000195	6049	4	2.611113			
100000195	6049	5	3.877401			
100000195	6049	6	3.239885			
100000195	6049	7	5.148329			
100000195	6049	8	3.49689			
100000195	6049	9	2.712281			
100000195	6049	10	3.110221			
100000195	6052	1	39.630024	LONGCREEK DR	SW	LONGCREEK DR & BROAD RIVER RD
100000195	6052	2	32.556235			
100000195	6052	3	28.239049			
100000195	6052	4	28.634437			
100000195	6052	5	35.001197			
100000195	6052	6	35.525846			
100000195	6052	7	46.715793			
100000195	6052	8	35.061102			
100000195	6052	9	29.970376			
100000195	6052	10	33.546781			
100000196	5166	1	0.965957	MONTICELLO RD	SE	SERVICE RD, MONTICELLO RD & RAMP
100000196	5166	2	1.615378			
100000196	5166	3	0.946727			
100000196	5166	4	1.070426			
100000196	5166	5	1.438613			
100000196	5166	6	1.486072			

Node	Superlink	Run	Average Control Delay	Approach Street Name	Direction	Intersection
100000196	5166	7	1.495564			
100000196	5166	8	1.397458			
100000196	5166	9	1.138394			
100000196	5166	10	1.825621			
100000196	5169	1	12.029939	SERVICE RD	SW	SERVICE RD, MONTICELLO RD & RAMP
100000196	5169	2	15.166549			
100000196	5169	3	13.815938			
100000196	5169	4	15.343251			
100000196	5169	5	15.209148			
100000196	5169	6	13.080632			
100000196	5169	7	17.187356			
100000196	5169	8	13.452293			
100000196	5169	9	10.763767			
100000196	5169	10	14.017519			
100000196	5172	1	1.111694	MONTICELLO RD	NW	SERVICE RD, MONTICELLO RD & RAMP
100000196	5172	2	1.924921			
100000196	5172	3	1.474695			
100000196	5172	4	1.213467			
100000196	5172	5	1.361255			
100000196	5172	6	1.49884			
100000196	5172	7	1.348753			
100000196	5172	8	1.315659			
100000196	5172	9	1.64609			
100000196	5172	10	1.086449			
100000198	4354	1	0	RAMP	N	RAMP & I-20 EXIT 68 EB ON RAMP
100000198	4354	2	0			
100000198	4354	3	0			
100000198	4354	4	0			
100000198	4354	5	0			
100000198	4354	6	0			
100000198	4354	7	0			
100000198	4354	8	0			
100000198	4354	9	0			
100000198	4354	10	0			
100000198	5158	1		RAMP	NW	RAMP & I-20 EXIT 68 EB ON RAMP
100000198	5158	2				
100000198	5158	3				
100000198	5158	4				
100000198	5158	5				
100000198	5158	6				
100000198	5158	7				
100000198	5158	8				
100000198	5158	9				
100000198	5158	10				
100000200	5174	1	6.684004	MONTICELLO RD	NW	MONTICELLO RD, PEEPLES ST & BLUE RIDGE TER
100000200	5174	2	6.254715			
100000200	5174	3	4.979063			
100000200	5174	4	5.186423			
100000200	5174	5	6.025841			
100000200	5174	6	5.192748			
100000200	5174	7	5.791576			
100000200	5174	8	6.351744			
100000200	5174	9	5.308589			
100000200	5174	10	5.721914			
100000200	6041	1	4.740598	MONTICELLO RD	SE	MONTICELLO RD, PEEPLES ST & BLUE RIDGE TER
100000200	6041	2	4.856552			
100000200	6041	3	4.356618			
100000200	6041	4	4.118362			
100000200	6041	5	4.911296			
100000200	6041	6	4.830527			
100000200	6041	7	4.8314			
100000200	6041	8	4.95012			
100000200	6041	9	4.50274			
100000200	6041	10	4.447185			
100000200	6044	1	13.952853	PEEPLES ST	NE	MONTICELLO RD, PEEPLES ST & BLUE RIDGE TER
100000200	6044	2	9.735081			
100000200	6044	3	12.645059			
100000200	6044	4	13.393706			
100000200	6044	5	10.180757			
100000200	6044	6	12.155293			
100000200	6044	7	10.592186			
100000200	6044	8	11.902997			
100000200	6044	9	11.063576			
100000200	6044	10	12.809545			
100000200	6046	1	25.23458	BLUE RIDGE TER	S	MONTICELLO RD, PEEPLES ST & BLUE RIDGE TER
100000200	6046	2	25.707963			
100000200	6046	3	25.527086			
100000200	6046	4	23.052509			
100000200	6046	5	23.539511			
100000200	6046	6	26.444096			
100000200	6046	7	26.030441			
100000200	6046	8	23.945241			
100000200	6046	9	22.422049			
100000200	6046	10	25.081077			
100000201	5157	1	2.216167	BUCKNER RD	SW	BUCKNER RD & TO BUCKNER ROAD
100000201	5157	2	1.716976			
100000201	5157	3	3.22403			
100000201	5157	4	3.148526			
100000201	5157	5	2.649208			
100000201	5157	6	3.056744			
100000201	5157	7	2.55359			
100000201	5157	8	3.032802			
100000201	5157	9	3.823661			
100000201	5157	10	2.619409			
100000201	5161	1	0.016041	TO BUCKNER ROAD	N	BUCKNER RD & TO BUCKNER ROAD
100000201	5161	2	0.278472			
100000201	5161	3	0.05248			
100000201	5161	4	0.513345			
100000201	5161	5	2.843348			
100000201	5161	6	0.977934			
100000201	5161	7	0.014449			
100000201	5161	8	0.063548			
100000201	5161	9	1.371173			
100000201	5161	10	0			
100000201	5163	1	0.0004	BUCKNER RD	NE	BUCKNER RD & TO BUCKNER ROAD
100000201	5163	2	0.000723			
100000201	5163	3	0.001073			
100000201	5163	4	0.000978			
100000201	5163	5	0.000694			
100000201	5163	6	0.000981			
100000201	5163	7	0.002194			
100000201	5163	8	0.000617			

Node	Superlink	Run	Average Control Delay	Approach Street Name	Direction	Intersection
100000201	5163	9	0.001907			
100000201	5163	10	0.000699			
100000203	5169	1		SERVICE RD	E	SERVICE RD & MONTICELLO RD
100000203	5169	2				
100000203	5169	3				
100000203	5169	4				
100000203	5169	5				
100000203	5169	6				
100000203	5169	7				
100000203	5169	8				
100000203	5169	9				
100000203	5169	10				
100000203	5171	1		MONTICELLO RD	N	SERVICE RD & MONTICELLO RD
100000203	5171	2				
100000203	5171	3				
100000203	5171	4				
100000203	5171	5				
100000203	5171	6				
100000203	5171	7				
100000203	5171	8				
100000203	5171	9				
100000203	5171	10				
100000203	5173	1	0.225287	SERVICE RD	W	SERVICE RD & MONTICELLO RD
100000203	5173	2	0.268178			
100000203	5173	3	0.200016			
100000203	5173	4	0.18347			
100000203	5173	5	0.316609			
100000203	5173	6	0.256059			
100000203	5173	7	0.25585			
100000203	5173	8	0.208955			
100000203	5173	9	0.284386			
100000203	5173	10	0.368297			
100000250	6539	1	2.336965	BUSH RIVER RD	NW	E MEADOW CT/WOODLAND VILLAGE DR, BUSH RIVER RD & OUTLET POINTE BLVD
100000250	6539	2	2.292439			
100000250	6539	3	1.818378			
100000250	6539	4	1.812259			
100000250	6539	5	2.444835			
100000250	6539	6	2.328799			
100000250	6539	7	2.726785			
100000250	6539	8	2.197245			
100000250	6539	9	1.742658			
100000250	6539	10	2.794764			
100000250	6546	1	23.314872	OUTLET POINTE BLVD	NE	E MEADOW CT/WOODLAND VILLAGE DR, BUSH RIVER RD & OUTLET POINTE BLVD
100000250	6546	2	25.399982			
100000250	6546	3	25.901554			
100000250	6546	4	26.430137			
100000250	6546	5	24.25721			
100000250	6546	6	25.052854			
100000250	6546	7	23.615084			
100000250	6546	8	26.29429			
100000250	6546	9	25.618523			
100000250	6546	10	27.359752			
100000250	6547	1	34.759205	E MEADOW CT/WOODLAND VILLAGE DR	SW	E MEADOW CT/WOODLAND VILLAGE DR, BUSH RIVER RD & OUTLET POINTE BLVD
100000250	6547	2	36.04651			
100000250	6547	3	32.270879			
100000250	6547	4	34.266889			
100000250	6547	5	31.050301			
100000250	6547	6	41.395157			
100000250	6547	7	32.070359			
100000250	6547	8	32.92319			
100000250	6547	9	40.453604			
100000250	6547	10	32.658212			
100000250	6548	1	9.759228	BUSH RIVER RD	SE	E MEADOW CT/WOODLAND VILLAGE DR, BUSH RIVER RD & OUTLET POINTE BLVD
100000250	6548	2	11.988286			
100000250	6548	3	12.76948			
100000250	6548	4	11.368602			
100000250	6548	5	11.126569			
100000250	6548	6	11.87741			
100000250	6548	7	10.830058			
100000250	6548	8	9.942334			
100000250	6548	9	9.222843			
100000250	6548	10	14.049252			
100000252	5125	1	14.57782	BUSH RIVER RD	E	MORNINGHILL DR, BUSH RIVER RD & RAMP
100000252	5125	2	14.817776			
100000252	5125	3	14.267441			
100000252	5125	4	15.95235			
100000252	5125	5	14.545975			
100000252	5125	6	14.139031			
100000252	5125	7	13.494759			
100000252	5125	8	14.498124			
100000252	5125	9	13.441499			
100000252	5125	10	14.111056			
100000252	5487	1	80.979767	MORNINGHILL DR	S	MORNINGHILL DR, BUSH RIVER RD & RAMP
100000252	5487	2	65.060607			
100000252	5487	3	87.951478			
100000252	5487	4	87.430837			
100000252	5487	5	63.041809			
100000252	5487	6	62.688266			
100000252	5487	7	82.601366			
100000252	5487	8	59.125135			
100000252	5487	9	57.119591			
100000252	5487	10	66.12986			
100000252	5488	1	17.893923	RAMP	N	MORNINGHILL DR, BUSH RIVER RD & RAMP
100000252	5488	2	17.565667			
100000252	5488	3	17.628978			
100000252	5488	4	17.107154			
100000252	5488	5	18.526631			
100000252	5488	6	18.139578			
100000252	5488	7	17.387618			
100000252	5488	8	17.014179			
100000252	5488	9	17.327205			
100000252	5488	10	17.475651			
100000252	6505	1	29.467723	BUSH RIVER RD	W	MORNINGHILL DR, BUSH RIVER RD & RAMP
100000252	6505	2	28.880743			
100000252	6505	3	56.661004			
100000252	6505	4	63.592507			
100000252	6505	5	36.531576			
100000252	6505	6	33.112238			
100000252	6505	7	69.766208			
100000252	6505	8	33.282514			
100000252	6505	9	27.820128			
100000252	6505	10	38.408187			

Node	Superlink	Run	Average Control Delay	Approach Street Name	Direction	Intersection
100000255	5038	1	1.168149	BUSH RIVER RD	E	BUSH RIVER RD & INDEPENDENCE AVE
100000255	5038	2	0.845319			
100000255	5038	3	0.242655			
100000255	5038	4	0.508556			
100000255	5038	5	0.308473			
100000255	5038	6	0.495743			
100000255	5038	7	0.70646			
100000255	5038	8	0.921298			
100000255	5038	9	0.62464			
100000255	5038	10	0.565678			
100000255	5470	1	38.95162	INDEPENDENCE AVE	N	BUSH RIVER RD & INDEPENDENCE AVE
100000255	5470	2	37.30163			
100000255	5470	3	35.775716			
100000255	5470	4	44.273378			
100000255	5470	5	39.211089			
100000255	5470	6	41.146609			
100000255	5470	7	41.640551			
100000255	5470	8	41.843133			
100000255	5470	9	48.745726			
100000255	5470	10	38.714292			
100000255	5471	1	8.072173	BUSH RIVER RD	W	BUSH RIVER RD & INDEPENDENCE AVE
100000255	5471	2	9.260147			
100000255	5471	3	9.352845			
100000255	5471	4	7.402467			
100000255	5471	5	7.451566			
100000255	5471	6	9.738759			
100000255	5471	7	8.584925			
100000255	5471	8	7.916951			
100000255	5471	9	10.881569			
100000255	5471	10	12.04808			
100000256	5131	1	1.384337	BUSH RIVER RD	W	BUSH RIVER RD & ZIMALCREST DR
100000256	5131	2	0.840272			
100000256	5131	3	1.093677			
100000256	5131	4	1.267479			
100000256	5131	5	1.208089			
100000256	5131	6	1.074026			
100000256	5131	7	1.830004			
100000256	5131	8	1.485151			
100000256	5131	9	1.45105			
100000256	5131	10	1.069859			
100000256	5465	1	5.707608	BUSH RIVER RD	E	BUSH RIVER RD & ZIMALCREST DR
100000256	5465	2	5.446481			
100000256	5465	3	6.016399			
100000256	5465	4	4.895816			
100000256	5465	5	4.550364			
100000256	5465	6	5.832324			
100000256	5465	7	7.010452			
100000256	5465	8	7.197168			
100000256	5465	9	4.996332			
100000256	5465	10	4.863796			
100000256	5484	1	56.142323	ZIMALCREST DR	S	BUSH RIVER RD & ZIMALCREST DR
100000256	5484	2	47.635468			
100000256	5484	3	55.86612			
100000256	5484	4	40.035399			
100000256	5484	5	47.397514			
100000256	5484	6	47.753643			
100000256	5484	7	58.531797			
100000256	5484	8	53.394393			
100000256	5484	9	61.367869			
100000256	5484	10	47.857346			
100000256	5485	1	10.806985	ZIMALCREST DR	N	BUSH RIVER RD & ZIMALCREST DR
100000256	5485	2	11.200388			
100000256	5485	3	10.853331			
100000256	5485	4	10.071716			
100000256	5485	5	11.597865			
100000256	5485	6	10.494932			
100000256	5485	7	10.104136			
100000256	5485	8	11.016866			
100000256	5485	9	11.485687			
100000256	5485	10	11.870969			
100000259	5465	1	0	BUSH RIVER RD	W	NOTTINGWOOD DR & BUSH RIVER RD
100000259	5465	2	0			
100000259	5465	3	0			
100000259	5465	4	0			
100000259	5465	5	0			
100000259	5465	6	0			
100000259	5465	7	0			
100000259	5465	8	0			
100000259	5465	9	0			
100000259	5465	10	0			
100000259	5471	1	0	BUSH RIVER RD	E	NOTTINGWOOD DR & BUSH RIVER RD
100000259	5471	2	0			
100000259	5471	3	0			
100000259	5471	4	0			
100000259	5471	5	0			
100000259	5471	6	0			
100000259	5471	7	0			
100000259	5471	8	0			
100000259	5471	9	0			
100000259	5471	10	0			
100000259	5472	1		NOTTINGWOOD DR	S	NOTTINGWOOD DR & BUSH RIVER RD
100000259	5472	2				
100000259	5472	3				
100000259	5472	4				
100000259	5472	5				
100000259	5472	6				
100000259	5472	7				
100000259	5472	8				
100000259	5472	9				
100000259	5472	10				
100000262	5502	1	5.989586	BUSH RIVER RD	E	DUTCH SQUARE ENTRANCE, BUSH RIVER RD & COLONIAL LIFE BLVD W
100000262	5502	2	7.641057			
100000262	5502	3	7.9731			
100000262	5502	4	7.487133			
100000262	5502	5	7.562647			
100000262	5502	6	7.491832			
100000262	5502	7	8.515644			
100000262	5502	8	6.856862			
100000262	5502	9	7.476644			
100000262	5502	10	7.601297			
100000262	5506	1	13.558407	COLONIAL LIFE BLVD W	N	DUTCH SQUARE ENTRANCE, BUSH RIVER RD & COLONIAL LIFE BLVD W
100000262	5506	2	13.579374			

Node	Superlink	Run	Average Control Delay	Approach Street Name	Direction	Intersection
100000262	5506	3	13.481172			
100000262	5506	4	13.242789			
100000262	5506	5	13.666179			
100000262	5506	6	13.506677			
100000262	5506	7	14.052268			
100000262	5506	8	15.099393			
100000262	5506	9	13.850814			
100000262	5506	10	13.41112			
100000262	5509	1	63.346271	DUTCH SQUARE ENTRANCE	S	DUTCH SQUARE ENTRANCE, BUSH RIVER RD & COLONIAL LIFE BLVD W
100000262	5509	2	60.901847			
100000262	5509	3	65.130308			
100000262	5509	4	69.381218			
100000262	5509	5	58.398361			
100000262	5509	6	60.005228			
100000262	5509	7	60.578333			
100000262	5509	8	56.088722			
100000262	5509	9	64.246544			
100000262	5509	10	59.433197			
100000262	5511	1	23.75886	BUSH RIVER RD	W	DUTCH SQUARE ENTRANCE, BUSH RIVER RD & COLONIAL LIFE BLVD W
100000262	5511	2	22.881373			
100000262	5511	3	21.61997			
100000262	5511	4	23.883119			
100000262	5511	5	21.326329			
100000262	5511	6	24.057696			
100000262	5511	7	25.607857			
100000262	5511	8	24.509254			
100000262	5511	9	22.256011			
100000262	5511	10	23.451873			
100000263	5516	1	0.761167	COLONIAL LIFE BLVD W	N	COLONIAL LIFE BLVD W
100000263	5516	2	1.554601			
100000263	5516	3	0.791014			
100000263	5516	4	0.598914			
100000263	5516	5	0.855628			
100000263	5516	6	3.177096			
100000263	5516	7	0.616027			
100000263	5516	8	1.308493			
100000263	5516	9	0.591408			
100000263	5516	10	0.426455			
100000263	5520	1	68.028698	COLONIAL LIFE BLVD W	W	COLONIAL LIFE BLVD W
100000263	5520	2	72.926451			
100000263	5520	3	33.041491			
100000263	5520	4	63.547409			
100000263	5520	5	45.031002			
100000263	5520	6	53.936182			
100000263	5520	7	67.936088			
100000263	5520	8	116.839627			
100000263	5520	9	29.505045			
100000263	5520	10	43.182271			
100000263	6495	1	1.97022	COLONIAL LIFE BLVD W	S	COLONIAL LIFE BLVD W
100000263	6495	2	3.378706			
100000263	6495	3	2.159433			
100000263	6495	4	2.920379			
100000263	6495	5	2.725113			
100000263	6495	6	2.042577			
100000263	6495	7	2.288118			
100000263	6495	8	2.523182			
100000263	6495	9	2.100427			
100000263	6495	10	2.056811			
100000265	5139	1	11.931449	GREYSTONE BLVD	N	GREYSTONE BLVD & STONERIDGE DR
100000265	5139	2	12.986183			
100000265	5139	3	11.986802			
100000265	5139	4	12.60807			
100000265	5139	5	12.915045			
100000265	5139	6	12.129162			
100000265	5139	7	12.278673			
100000265	5139	8	12.986608			
100000265	5139	9	11.514658			
100000265	5139	10	13.598388			
100000265	5537	1	22.15747	STONERIDGE DR	W	GREYSTONE BLVD & STONERIDGE DR
100000265	5537	2	19.830067			
100000265	5537	3	21.83058			
100000265	5537	4	21.632538			
100000265	5537	5	22.413367			
100000265	5537	6	21.11875			
100000265	5537	7	18.055406			
100000265	5537	8	21.768236			
100000265	5537	9	20.642406			
100000265	5537	10	21.257846			
100000265	5556	1	13.074613	STONERIDGE DR	E	GREYSTONE BLVD & STONERIDGE DR
100000265	5556	2	12.762677			
100000265	5556	3	12.060149			
100000265	5556	4	12.874422			
100000265	5556	5	10.389753			
100000265	5556	6	11.700105			
100000265	5556	7	11.073339			
100000265	5556	8	11.795028			
100000265	5556	9	11.986316			
100000265	5556	10	11.303986			
100000265	6328	1	17.822085	GREYSTONE BLVD	S	GREYSTONE BLVD & STONERIDGE DR
100000265	6328	2	18.563799			
100000265	6328	3	17.465548			
100000265	6328	4	18.426073			
100000265	6328	5	17.664247			
100000265	6328	6	19.052014			
100000265	6328	7	19.193069			
100000265	6328	8	18.794642			
100000265	6328	9	19.102687			
100000265	6328	10	17.422219			
100000266	5545	1	31.355036	GREYSTONE BLVD	N	GREYSTONE BLVD & BROAD RIVER RD
100000266	5545	2	31.320175			
100000266	5545	3	30.327764			
100000266	5545	4	30.669477			
100000266	5545	5	32.853609			
100000266	5545	6	30.374326			
100000266	5545	7	31.934707			
100000266	5545	8	32.064211			
100000266	5545	9	31.802556			
100000266	5545	10	31.761095			
100000266	6325	1	8.124312	BROAD RIVER RD	W	GREYSTONE BLVD & BROAD RIVER RD
100000266	6325	2	7.424941			
100000266	6325	3	7.990677			
100000266	6325	4	7.318723			

Node	Superlink	Run	Average Control Delay	Approach Street Name	Direction	Intersection
100000266	6325	5	7.875949			
100000266	6325	6	7.83444			
100000266	6325	7	9.804323			
100000266	6325	8	7.569616			
100000266	6325	9	6.841651			
100000266	6325	10	6.879825			
100000266	6327	1	11.918525	BROAD RIVER RD	E	GREYSTONE BLVD & BROAD RIVER RD
100000266	6327	2	10.782946			
100000266	6327	3	12.053811			
100000266	6327	4	11.920423			
100000266	6327	5	11.415112			
100000266	6327	6	12.046886			
100000266	6327	7	11.817206			
100000266	6327	8	11.755369			
100000266	6327	9	11.04104			
100000266	6327	10	10.636941			
100000268	5565	1	29.404279	HUGER ST	N	HUGER ST & LAUREL ST
100000268	5565	2	34.356249			
100000268	5565	3	29.011856			
100000268	5565	4	24.784586			
100000268	5565	5	31.044803			
100000268	5565	6	26.785139			
100000268	5565	7	24.342428			
100000268	5565	8	25.926823			
100000268	5565	9	22.689379			
100000268	5565	10	28.528552			
100000268	5570	1		LAUREL ST	E	HUGER ST & LAUREL ST
100000268	5570	2				
100000268	5570	3				
100000268	5570	4				
100000268	5570	5				
100000268	5570	6				
100000268	5570	7				
100000268	5570	8				
100000268	5570	9				
100000268	5570	10				
100000268	5571	1	19.625228	HUGER ST	S	HUGER ST & LAUREL ST
100000268	5571	2	20.760809			
100000268	5571	3	20.469008			
100000268	5571	4	19.762218			
100000268	5571	5	17.370274			
100000268	5571	6	19.064591			
100000268	5571	7	20.790207			
100000268	5571	8	18.790733			
100000268	5571	9	19.708746			
100000268	5571	10	20.058945			
100000268	5581	1	57.815887	LAUREL ST	W	HUGER ST & LAUREL ST
100000268	5581	2	56.443481			
100000268	5581	3	53.633549			
100000268	5581	4	61.497502			
100000268	5581	5	52.477554			
100000268	5581	6	59.618745			
100000268	5581	7	57.984944			
100000268	5581	8	60.090806			
100000268	5581	9	51.782707			
100000268	5581	10	65.495117			
100000339	6083	1	8.320599	BROAD RIVER RD	NW	BROAD RIVER RD & ST ANDREWS RD
100000339	6083	2	8.549129			
100000339	6083	3	8.225413			
100000339	6083	4	8.87645			
100000339	6083	5	8.012433			
100000339	6083	6	10.080344			
100000339	6083	7	8.28663			
100000339	6083	8	9.267916			
100000339	6083	9	9.276456			
100000339	6083	10	8.118571			
100000339	6084	1	17.353924	BROAD RIVER RD	SE	BROAD RIVER RD & ST ANDREWS RD
100000339	6084	2	16.854233			
100000339	6084	3	16.3139			
100000339	6084	4	16.917868			
100000339	6084	5	21.716586			
100000339	6084	6	16.585697			
100000339	6084	7	18.977926			
100000339	6084	8	19.656264			
100000339	6084	9	16.939942			
100000339	6084	10	17.21232			
100000339	6085	1	81.228445	ST ANDREWS RD	SW	BROAD RIVER RD & ST ANDREWS RD
100000339	6085	2	75.587887			
100000339	6085	3	86.984319			
100000339	6085	4	77.900598			
100000339	6085	5	72.890545			
100000339	6085	6	69.42773			
100000339	6085	7	76.968998			
100000339	6085	8	69.903312			
100000339	6085	9	104.553066			
100000339	6085	10	80.253397			
100000339	6086	1	27.113904	ST ANDREWS RD	E	BROAD RIVER RD & ST ANDREWS RD
100000339	6086	2	32.042665			
100000339	6086	3	25.363792			
100000339	6086	4	26.746204			
100000339	6086	5	26.641164			
100000339	6086	6	28.414634			
100000339	6086	7	26.909063			
100000339	6086	8	28.923603			
100000339	6086	9	24.708898			
100000339	6086	10	30.538488			
100000343	6059	1	0.000556	BROAD RIVER RD	NW	NUNAMAKER DR & BROAD RIVER RD
100000343	6059	2	0.000258			
100000343	6059	3	0.000292			
100000343	6059	4	0.000165			
100000343	6059	5	0			
100000343	6059	6	0.000209			
100000343	6059	7	0.002922			
100000343	6059	8	0.000423			
100000343	6059	9	0.000452			
100000343	6059	10	0.000943			
100000343	6063	1		NUNAMAKER DR	SW	NUNAMAKER DR & BROAD RIVER RD
100000343	6063	2				
100000343	6063	3				
100000343	6063	4				
100000343	6063	5				
100000343	6063	6				

Node	Superlink	Run	Average Control Delay	Approach Street Name	Direction	Intersection
100000343	6063	7				
100000343	6063	8				
100000343	6063	9				
100000343	6063	10				
100000343	6065	1	0.008442	BROAD RIVER RD	SE	NUNAMAKER DR & BROAD RIVER RD
100000343	6065	2	0.010282			
100000343	6065	3	0.008467			
100000343	6065	4	0.005528			
100000343	6065	5	0.005627			
100000343	6065	6	0.00833			
100000343	6065	7	0.008174			
100000343	6065	8	0.010998			
100000343	6065	9	0.004994			
100000343	6065	10	0.010508			
100000344	6065	1	37.487668	BROAD RIVER RD	NW	YOUNG DR, BROAD RIVER RD & SEMINOLE RD
100000344	6065	2	33.085303			
100000344	6065	3	35.380267			
100000344	6065	4	31.710529			
100000344	6065	5	40.22156			
100000344	6065	6	37.07553			
100000344	6065	7	38.054008			
100000344	6065	8	29.6268			
100000344	6065	9	24.062026			
100000344	6065	10	28.543223			
100000344	6066	1	33.903575	BROAD RIVER RD	SE	YOUNG DR, BROAD RIVER RD & SEMINOLE RD
100000344	6066	2	49.843358			
100000344	6066	3	46.162125			
100000344	6066	4	23.782113			
100000344	6066	5	77.118646			
100000344	6066	6	36.994267			
100000344	6066	7	102.563169			
100000344	6066	8	47.974233			
100000344	6066	9	33.59782			
100000344	6066	10	50.620358			
100000344	6067	1	169.075751	YOUNG DR	SW	YOUNG DR, BROAD RIVER RD & SEMINOLE RD
100000344	6067	2	233.475844			
100000344	6067	3	223.194905			
100000344	6067	4	213.715305			
100000344	6067	5	232.056501			
100000344	6067	6	190.765879			
100000344	6067	7	214.084763			
100000344	6067	8	238.807926			
100000344	6067	9	237.797572			
100000344	6067	10	240.096485			
100000344	6068	1	197.145342	SEMINOLE RD	NE	YOUNG DR, BROAD RIVER RD & SEMINOLE RD
100000344	6068	2	209.973933			
100000344	6068	3	178.428448			
100000344	6068	4	193.897839			
100000344	6068	5	187.411893			
100000344	6068	6	208.418313			
100000344	6068	7	182.362879			
100000344	6068	8	191.610224			
100000344	6068	9	174.106807			
100000344	6068	10	187.650175			
100000348	5116	1	8.144159	ST ANDREWS RD	NW	ST ANDREWS RD & JAMIL RD
100000348	5116	2	7.965443			
100000348	5116	3	6.837994			
100000348	5116	4	7.772441			
100000348	5116	5	7.971133			
100000348	5116	6	9.214797			
100000348	5116	7	8.849525			
100000348	5116	8	8.942606			
100000348	5116	9	8.11047			
100000348	5116	10	8.472471			
100000348	6114	1	7.811306	ST ANDREWS RD	E	ST ANDREWS RD & JAMIL RD
100000348	6114	2	12.155884			
100000348	6114	3	6.538668			
100000348	6114	4	8.562827			
100000348	6114	5	7.273994			
100000348	6114	6	8.533991			
100000348	6114	7	9.759419			
100000348	6114	8	12.110768			
100000348	6114	9	7.612076			
100000348	6114	10	8.93974			
100000348	6119	1	32.73054	JAMIL RD	S	ST ANDREWS RD & JAMIL RD
100000348	6119	2	29.762985			
100000348	6119	3	27.767997			
100000348	6119	4	30.794778			
100000348	6119	5	30.194387			
100000348	6119	6	30.255744			
100000348	6119	7	29.444991			
100000348	6119	8	28.749714			
100000348	6119	9	30.82996			
100000348	6119	10	30.332971			
100000349	6066	1	3.181057	BROAD RIVER RD	NW	ST ANDREWS PKY & BROAD RIVER RD
100000349	6066	2	3.167169			
100000349	6066	3	2.718298			
100000349	6066	4	2.380495			
100000349	6066	5	2.716942			
100000349	6066	6	3.252997			
100000349	6066	7	2.534414			
100000349	6066	8	2.758342			
100000349	6066	9	2.680934			
100000349	6066	10	2.522103			
100000349	6078	1	60.866507	ST ANDREWS PKY	SW	ST ANDREWS PKY & BROAD RIVER RD
100000349	6078	2	56.114118			
100000349	6078	3	54.895562			
100000349	6078	4	61.398212			
100000349	6078	5	65.730596			
100000349	6078	6	63.73752			
100000349	6078	7	57.287049			
100000349	6078	8	56.325457			
100000349	6078	9	59.3079			
100000349	6078	10	63.748993			
100000349	6079	1	299.084741	BROAD RIVER RD	NE	ST ANDREWS PKY & BROAD RIVER RD
100000349	6079	2	294.881679			
100000349	6079	3	351.775083			
100000349	6079	4	378.522555			
100000349	6079	5	322.295086			
100000349	6079	6	296.692088			
100000349	6079	7	330.092285			
100000349	6079	8	355.492445			

Node	Superlink	Run	Average Control Delay	Approach Street Name	Direction	Intersection
100000349	6079	9	278.296608			
100000349	6079	10	289.207514			
100000349	6083	1	3.260535	BROAD RIVER RD	SE	ST ANDREWS PKY & BROAD RIVER RD
100000349	6083	2	3.325513			
100000349	6083	3	2.343775			
100000349	6083	4	2.138177			
100000349	6083	5	2.971849			
100000349	6083	6	2.301386			
100000349	6083	7	2.602548			
100000349	6083	8	2.810114			
100000349	6083	9	2.977945			
100000349	6083	10	2.501473			
100000353	5104	1	15.606859	PINEY GROVE RD	W	BOWER PKY, PINEY GROVE RD & JAMIL RD
100000353	5104	2	12.821755			
100000353	5104	3	13.275328			
100000353	5104	4	16.131918			
100000353	5104	5	15.033089			
100000353	5104	6	13.770984			
100000353	5104	7	13.680167			
100000353	5104	8	14.340739			
100000353	5104	9	15.387294			
100000353	5104	10	13.247104			
100000353	6125	1	40.007302	BOWER PKY	SE	BOWER PKY, PINEY GROVE RD & JAMIL RD
100000353	6125	2	47.538003			
100000353	6125	3	47.707802			
100000353	6125	4	44.243413			
100000353	6125	5	38.524505			
100000353	6125	6	46.226459			
100000353	6125	7	46.034203			
100000353	6125	8	42.781498			
100000353	6125	9	42.670199			
100000353	6125	10	47.353448			
100000353	6126	1	25.123396	PINEY GROVE RD	E	BOWER PKY, PINEY GROVE RD & JAMIL RD
100000353	6126	2	27.236692			
100000353	6126	3	25.076062			
100000353	6126	4	26.744766			
100000353	6126	5	25.048646			
100000353	6126	6	25.773437			
100000353	6126	7	24.765727			
100000353	6126	8	23.98043			
100000353	6126	9	30.132365			
100000353	6126	10	26.154815			
100000353	6127	1	90.848413	JAMIL RD	NW	BOWER PKY, PINEY GROVE RD & JAMIL RD
100000353	6127	2	63.746058			
100000353	6127	3	83.376284			
100000353	6127	4	64.889867			
100000353	6127	5	87.328396			
100000353	6127	6	128.306548			
100000353	6127	7	170.557773			
100000353	6127	8	84.761498			
100000353	6127	9	59.084617			
100000353	6127	10	142.914777			
100000354	6095	1	14.197111	ST ANDREWS RD	SW	ST ANDREWS RD, KAY ST & CHARTWELL RD
100000354	6095	2	9.163894			
100000354	6095	3	10.613679			
100000354	6095	4	10.8771			
100000354	6095	5	16.168032			
100000354	6095	6	12.860143			
100000354	6095	7	12.02117			
100000354	6095	8	12.206522			
100000354	6095	9	11.670865			
100000354	6095	10	12.351874			
100000354	6096	1	7.734328	ST ANDREWS RD	NE	ST ANDREWS RD, KAY ST & CHARTWELL RD
100000354	6096	2	4.766244			
100000354	6096	3	7.099362			
100000354	6096	4	7.25551			
100000354	6096	5	7.463876			
100000354	6096	6	5.653904			
100000354	6096	7	6.802309			
100000354	6096	8	6.785901			
100000354	6096	9	5.898954			
100000354	6096	10	6.41544			
100000354	6098	1	24.161399	CHARTWELL RD	NW	ST ANDREWS RD, KAY ST & CHARTWELL RD
100000354	6098	2	33.792207			
100000354	6098	3	32.41498			
100000354	6098	4	32.946001			
100000354	6098	5	56.099153			
100000354	6098	6	35.385715			
100000354	6098	7	50.305633			
100000354	6098	8	29.085034			
100000354	6098	9	41.25707			
100000354	6098	10	26.209161			
100000354	6099	1	46.361249	KAY ST	SE	ST ANDREWS RD, KAY ST & CHARTWELL RD
100000354	6099	2	30.264296			
100000354	6099	3	27.614686			
100000354	6099	4	29.899528			
100000354	6099	5	32.821291			
100000354	6099	6	30.681431			
100000354	6099	7	29.973491			
100000354	6099	8	32.19693			
100000354	6099	9	35.255941			
100000354	6099	10	31.141365			
100000356	6086	1	0.384237	ST ANDREWS RD	SW	LAWRENCE ST & ST ANDREWS RD
100000356	6086	2	0.312254			
100000356	6086	3	0.356602			
100000356	6086	4	0.374643			
100000356	6086	5	0.333817			
100000356	6086	6	0.406587			
100000356	6086	7	0.392514			
100000356	6086	8	0.311918			
100000356	6086	9	0.360005			
100000356	6086	10	0.39651			
100000356	6092	1	12.165598	LAWRENCE ST	SE	LAWRENCE ST & ST ANDREWS RD
100000356	6092	2	10.36258			
100000356	6092	3	10.036644			
100000356	6092	4	12.069746			
100000356	6092	5	11.359138			
100000356	6092	6	9.599603			
100000356	6092	7	9.971553			
100000356	6092	8	10.240374			
100000356	6092	9	9.768868			
100000356	6092	10	10.598798			

Node	Superlink	Run	Average Control Delay	Approach Street Name	Direction	Intersection
100000356	6094	1	2.808251	ST ANDREWS RD	NE	LAWRENCE ST & ST ANDREWS RD
100000356	6094	2	3.176569			
100000356	6094	3	3.852499			
100000356	6094	4	2.605589			
100000356	6094	5	3.260804			
100000356	6094	6	2.678025			
100000356	6094	7	2.664688			
100000356	6094	8	3.034673			
100000356	6094	9	2.740581			
100000356	6094	10	3.178142			
100000357	6119	1	2.404493	JAMIL RD	NW	JAMIL RD & PAISLEY LN
100000357	6119	2	2.222355			
100000357	6119	3	1.624687			
100000357	6119	4	1.463315			
100000357	6119	5	2.058525			
100000357	6119	6	1.810477			
100000357	6119	7	1.614856			
100000357	6119	8	1.779874			
100000357	6119	9	1.922165			
100000357	6119	10	1.659045			
100000357	6120	1	52.962588	PAISLEY LN	NE	JAMIL RD & PAISLEY LN
100000357	6120	2	26.137461			
100000357	6120	3	23.926943			
100000357	6120	4	25.232991			
100000357	6120	5	33.677999			
100000357	6120	6	84.88199			
100000357	6120	7	58.865805			
100000357	6120	8	102.088942			
100000357	6120	9	43.400637			
100000357	6120	10	64.338038			
100000357	6121	1	1.71436	JAMIL RD	SE	JAMIL RD & PAISLEY LN
100000357	6121	2	1.114619			
100000357	6121	3	1.297379			
100000357	6121	4	1.029295			
100000357	6121	5	1.490539			
100000357	6121	6	1.584875			
100000357	6121	7	1.219551			
100000357	6121	8	1.116812			
100000357	6121	9	1.216024			
100000357	6121	10	1.499121			
100000358	5117	1	15.355496	ST ANDREWS RD	NE	ST ANDREWS RD, FERNANDINA RD & BURNING TREE RD
100000358	5117	2	16.656136			
100000358	5117	3	14.257162			
100000358	5117	4	14.45734			
100000358	5117	5	14.365577			
100000358	5117	6	13.630287			
100000358	5117	7	13.629297			
100000358	5117	8	14.378529			
100000358	5117	9	14.255186			
100000358	5117	10	13.561301			
100000358	6100	1	19.72208	ST ANDREWS RD	SW	ST ANDREWS RD, FERNANDINA RD & BURNING TREE RD
100000358	6100	2	18.99476			
100000358	6100	3	19.68484			
100000358	6100	4	19.537009			
100000358	6100	5	19.995804			
100000358	6100	6	20.334275			
100000358	6100	7	19.560393			
100000358	6100	8	20.798349			
100000358	6100	9	20.722603			
100000358	6100	10	20.329475			
100000358	6101	1	32.021792	BURNING TREE RD	NW	ST ANDREWS RD, FERNANDINA RD & BURNING TREE RD
100000358	6101	2	30.607008			
100000358	6101	3	26.765792			
100000358	6101	4	27.191132			
100000358	6101	5	36.414766			
100000358	6101	6	35.894644			
100000358	6101	7	32.406585			
100000358	6101	8	28.402535			
100000358	6101	9	26.765151			
100000358	6101	10	38.15114			
100000358	6102	1	44.790938	FERNANDINA RD	SE	ST ANDREWS RD, FERNANDINA RD & BURNING TREE RD
100000358	6102	2	51.106585			
100000358	6102	3	61.519157			
100000358	6102	4	32.985322			
100000358	6102	5	62.6793			
100000358	6102	6	66.808866			
100000358	6102	7	51.779398			
100000358	6102	8	52.326121			
100000358	6102	9	52.605475			
100000358	6102	10	61.290054			
100000360	3294	1	9.138093	EXIT 106 WB OFF RAMP	NE	EXIT 106 WB OFF RAMP & BURNING TREE RD
100000360	3294	2	9.983291			
100000360	3294	3	7.536977			
100000360	3294	4	8.251912			
100000360	3294	5	11.55017			
100000360	3294	6	11.668463			
100000360	3294	7	9.712804			
100000360	3294	8	8.301898			
100000360	3294	9	8.273177			
100000360	3294	10	15.226393			
100000360	6101	1	0.051709	BURNING TREE RD	S	EXIT 106 WB OFF RAMP & BURNING TREE RD
100000360	6101	2	0.054296			
100000360	6101	3	0.0696			
100000360	6101	4	0.026154			
100000360	6101	5	0.042798			
100000360	6101	6	0.101541			
100000360	6101	7	0.035106			
100000360	6101	8	0.069626			
100000360	6101	9	0.015888			
100000360	6101	10	0.0572			
100000360	6105	1	0.007142	BURNING TREE RD	N	EXIT 106 WB OFF RAMP & BURNING TREE RD
100000360	6105	2	0.005849			
100000360	6105	3	0.007872			
100000360	6105	4	0.011659			
100000360	6105	5	0.005121			
100000360	6105	6	0.004231			
100000360	6105	7	0.002426			
100000360	6105	8	0.005663			
100000360	6105	9	0.006316			
100000360	6105	10	0.001184			
100000362	6134	1	18.531549	JAMIL RD	NW	HARBISON BLVD & JAMIL RD
100000362	6134	2	21.937833			

Node	Superlink	Run	Average Control Delay	Approach Street Name	Direction	Intersection
100000362	6134	3	16.466573			
100000362	6134	4	17.669505			
100000362	6134	5	15.73308			
100000362	6134	6	18.147322			
100000362	6134	7	17.280936			
100000362	6134	8	17.389634			
100000362	6134	9	21.027124			
100000362	6134	10	20.109202			
100000362	6137	1	1.373257	HARBISON BLVD	NE	HARBISON BLVD & JAMIL RD
100000362	6137	2	1.074659			
100000362	6137	3	1.239837			
100000362	6137	4	1.417347			
100000362	6137	5	1.094671			
100000362	6137	6	1.145417			
100000362	6137	7	1.16279			
100000362	6137	8	1.09321			
100000362	6137	9	1.159472			
100000362	6137	10	1.40894			
100000362	6473	1	0.005352	HARBISON BLVD	SW	HARBISON BLVD & JAMIL RD
100000362	6473	2	0.009776			
100000362	6473	3	0.02337			
100000362	6473	4	0.002588			
100000362	6473	5	0.005631			
100000362	6473	6	0.002404			
100000362	6473	7	0.007424			
100000362	6473	8	0.006241			
100000362	6473	9	0.023336			
100000362	6473	10	0.001792			
100000363	6125	1	0.538666	BOWER PKY	NW	BOWER PKY & JAMIL RD
100000363	6125	2	0.547863			
100000363	6125	3	0.608482			
100000363	6125	4	0.799188			
100000363	6125	5	0.606574			
100000363	6125	6	0.754356			
100000363	6125	7	0.527338			
100000363	6125	8	0.594147			
100000363	6125	9	0.548157			
100000363	6125	10	0.625427			
100000363	6134	1	25.28642	JAMIL RD	SW	BOWER PKY & JAMIL RD
100000363	6134	2	30.990818			
100000363	6134	3	24.167136			
100000363	6134	4	27.489238			
100000363	6134	5	31.651702			
100000363	6134	6	25.701673			
100000363	6134	7	20.203169			
100000363	6134	8	29.054906			
100000363	6134	9	28.574463			
100000363	6134	10	21.885374			
100000363	6160	1	0.478832	BOWER PKY	SE	BOWER PKY & JAMIL RD
100000363	6160	2	0.441681			
100000363	6160	3	0.679125			
100000363	6160	4	0.317924			
100000363	6160	5	0.570095			
100000363	6160	6	0.518482			
100000363	6160	7	0.521134			
100000363	6160	8	0.497257			
100000363	6160	9	0.590213			
100000363	6160	10	0.447975			
100000364	6145	1	4.401823	HARBISON BLVD	SW	HARBISON BLVD & COLUMBIANA DR
100000364	6145	2	4.40526			
100000364	6145	3	3.979269			
100000364	6145	4	4.32564			
100000364	6145	5	3.747358			
100000364	6145	6	4.117431			
100000364	6145	7	3.450227			
100000364	6145	8	3.954804			
100000364	6145	9	3.913081			
100000364	6145	10	3.899759			
100000364	6176	1	2.808578	HARBISON BLVD	NE	HARBISON BLVD & COLUMBIANA DR
100000364	6176	2	3.02594			
100000364	6176	3	2.826824			
100000364	6176	4	2.839882			
100000364	6176	5	2.199493			
100000364	6176	6	2.546882			
100000364	6176	7	2.914599			
100000364	6176	8	3.245975			
100000364	6176	9	2.778949			
100000364	6176	10	3.166055			
100000364	6177	1		COLUMBIANA DR	NW	HARBISON BLVD & COLUMBIANA DR
100000364	6177	2				
100000364	6177	3				
100000364	6177	4				
100000364	6177	5				
100000364	6177	6				
100000364	6177	7				
100000364	6177	8				
100000364	6177	9				
100000364	6177	10				
100000364	6196	1	52.458148	COLUMBIANA DR	SE	HARBISON BLVD & COLUMBIANA DR
100000364	6196	2	53.436737			
100000364	6196	3	58.769472			
100000364	6196	4	57.042514			
100000364	6196	5	56.592625			
100000364	6196	6	56.274027			
100000364	6196	7	58.251116			
100000364	6196	8	52.195863			
100000364	6196	9	55.175129			
100000364	6196	10	57.738753			
100000365	6137	1	10.187925	HARBISON BLVD	SW	COLUMBIANA CIR, HARBISON BLVD & PARK TERRACE DR
100000365	6137	2	10.01249			
100000365	6137	3	9.8954			
100000365	6137	4	11.730834			
100000365	6137	5	9.008662			
100000365	6137	6	9.702684			
100000365	6137	7	10.10946			
100000365	6137	8	9.431994			
100000365	6137	9	9.888462			
100000365	6137	10	9.999338			
100000365	6140	1	53.550878	COLUMBIANA CIR	SE	COLUMBIANA CIR, HARBISON BLVD & PARK TERRACE DR
100000365	6140	2	44.659138			
100000365	6140	3	49.974241			
100000365	6140	4	48.462212			

Node	Superlink	Run	Average Control Delay	Approach Street Name	Direction	Intersection
100000365	6140	5	48.156568			
100000365	6140	6	52.814972			
100000365	6140	7	46.36634			
100000365	6140	8	47.198178			
100000365	6140	9	46.403931			
100000365	6140	10	49.62379			
100000365	6145	1	11.520049	HARBISON BLVD	NE	COLUMBIANA CIR, HARBISON BLVD & PARK TERRACE DR
100000365	6145	2	10.031054			
100000365	6145	3	10.988706			
100000365	6145	4	11.717921			
100000365	6145	5	10.731384			
100000365	6145	6	11.333033			
100000365	6145	7	10.293175			
100000365	6145	8	10.541866			
100000365	6145	9	10.133286			
100000365	6145	10	12.118609			
100000365	6151	1	48.349539	PARK TERRACE DR	NW	COLUMBIANA CIR, HARBISON BLVD & PARK TERRACE DR
100000365	6151	2	48.250558			
100000365	6151	3	43.893638			
100000365	6151	4	49.257633			
100000365	6151	5	44.833047			
100000365	6151	6	47.030731			
100000365	6151	7	44.097443			
100000365	6151	8	48.372082			
100000365	6151	9	44.778816			
100000365	6151	10	43.383179			
100000374	6151	1	42.256684	PARK TERRACE DR	S	BOWER PKY, PARK TERRACE DR & 6161 (S)
100000374	6151	2	40.587538			
100000374	6151	3	49.305058			
100000374	6151	4	40.672258			
100000374	6151	5	59.572464			
100000374	6151	6	37.152255			
100000374	6151	7	39.777469			
100000374	6151	8	56.757578			
100000374	6151	9	38.925532			
100000374	6151	10	45.420832			
100000374	6160	1	14.900981	BOWER PKY	W	BOWER PKY, PARK TERRACE DR & 6161 (S)
100000374	6160	2	14.789273			
100000374	6160	3	16.334561			
100000374	6160	4	11.963305			
100000374	6160	5	17.109251			
100000374	6160	6	15.840227			
100000374	6160	7	15.62996			
100000374	6160	8	16.114167			
100000374	6160	9	17.605057			
100000374	6160	10	15.172578			
100000374	6161	1	3.494737		N	BOWER PKY, PARK TERRACE DR & 6161 (S)
100000374	6161	2	4.037347			
100000374	6161	3	3.433383			
100000374	6161	4	4.223888			
100000374	6161	5	3.785261			
100000374	6161	6	3.325932			
100000374	6161	7	3.942735			
100000374	6161	8	3.668329			
100000374	6161	9	4.115649			
100000374	6161	10	3.500762			
100000374	6162	1		BOWER PKY	E	BOWER PKY, PARK TERRACE DR & 6161 (S)
100000374	6162	2				
100000374	6162	3				
100000374	6162	4				
100000374	6162	5				
100000374	6162	6				
100000374	6162	7				
100000374	6162	8				
100000374	6162	9				
100000374	6162	10				
100000375	6196	1	5.286143	COLUMBIANA DR	NW	COLUMBIANA DR, CROSSBOW DR & DRIVEWAY
100000375	6196	2	4.809939			
100000375	6196	3	4.565974			
100000375	6196	4	4.486778			
100000375	6196	5	4.327834			
100000375	6196	6	4.589447			
100000375	6196	7	3.566703			
100000375	6196	8	4.221217			
100000375	6196	9	3.359472			
100000375	6196	10	4.652204			
100000375	6204	1	6.817698	COLUMBIANA DR	SE	COLUMBIANA DR, CROSSBOW DR & DRIVEWAY
100000375	6204	2	4.893852			
100000375	6204	3	5.180498			
100000375	6204	4	4.397033			
100000375	6204	5	5.464892			
100000375	6204	6	4.199985			
100000375	6204	7	4.528435			
100000375	6204	8	4.194874			
100000375	6204	9	4.630979			
100000375	6204	10	5.27704			
100000375	6550	1	25.974692	CROSSBOW DR	NE	COLUMBIANA DR, CROSSBOW DR & DRIVEWAY
100000375	6550	2	21.899199			
100000375	6550	3	24.209049			
100000375	6550	4	22.098784			
100000375	6550	5	22.472445			
100000375	6550	6	23.183874			
100000375	6550	7	23.474028			
100000375	6550	8	23.09912			
100000375	6550	9	24.529154			
100000375	6550	10	27.749961			
100000375	6551	1	6.40075	DRIVEWAY	SW	COLUMBIANA DR, CROSSBOW DR & DRIVEWAY
100000375	6551	2	6.269003			
100000375	6551	3	5.963022			
100000375	6551	4	6.600422			
100000375	6551	5	7.209621			
100000375	6551	6	7.197543			
100000375	6551	7	7.194546			
100000375	6551	8	5.551687			
100000375	6551	9	6.58723			
100000375	6551	10	5.824513			
100000391	5071	1	4.779266	BROAD RIVER RD	NW	BROAD RIVER RD & COLUMBIANA DR
100000391	5071	2	5.013216			
100000391	5071	3	4.911289			
100000391	5071	4	5.358274			
100000391	5071	5	5.113992			
100000391	5071	6	4.70534			

Node	Superlink	Run	Average Control Delay	Approach Street Name	Direction	Intersection
100000391	5071	7	5.280487			
100000391	5071	8	5.26252			
100000391	5071	9	4.751723			
100000391	5071	10	5.907784			
100000391	6214	1	53.873603	COLUMBIANA DR	NE	BROAD RIVER RD & COLUMBIANA DR
100000391	6214	2	46.236736			
100000391	6214	3	56.91712			
100000391	6214	4	51.156668			
100000391	6214	5	53.397916			
100000391	6214	6	50.209047			
100000391	6214	7	60.359651			
100000391	6214	8	73.231066			
100000391	6214	9	53.466026			
100000391	6214	10	62.557396			
100000391	6224	1	8.192995	BROAD RIVER RD	SE	BROAD RIVER RD & COLUMBIANA DR
100000391	6224	2	7.914415			
100000391	6224	3	7.990537			
100000391	6224	4	7.294789			
100000391	6224	5	6.337918			
100000391	6224	6	7.754009			
100000391	6224	7	8.729391			
100000391	6224	8	8.772375			
100000391	6224	9	8.304942			
100000391	6224	10	7.978174			
100000392	6121	1	0.162712	JAMIL RD	NW	TRAM RD & JAMIL RD
100000392	6121	2	0.387545			
100000392	6121	3	0.365166			
100000392	6121	4	0.795073			
100000392	6121	5	0.045168			
100000392	6121	6	0.775181			
100000392	6121	7	0.410188			
100000392	6121	8	0.394746			
100000392	6121	9	0.82942			
100000392	6121	10	0.171185			
100000392	6127	1	0.31646	JAMIL RD	SE	TRAM RD & JAMIL RD
100000392	6127	2	0.156914			
100000392	6127	3	0.15293			
100000392	6127	4	0.209735			
100000392	6127	5	0.451576			
100000392	6127	6	0.378795			
100000392	6127	7	0.338729			
100000392	6127	8	0.274874			
100000392	6127	9	0.495838			
100000392	6127	10	0.247594			
100000392	6261	1	9.775081	TRAM RD	NE	TRAM RD & JAMIL RD
100000392	6261	2	9.19816			
100000392	6261	3	9.190338			
100000392	6261	4	8.951684			
100000392	6261	5	9.216807			
100000392	6261	6	8.785196			
100000392	6261	7	8.965648			
100000392	6261	8	9.480471			
100000392	6261	9	10.057529			
100000392	6261	10	9.098908			
100000394	6204	1	0	COLUMBIANA DR	NW	COLUMBIANA DR, COLUMBIA AVE & DRIVEWAY
100000394	6204	2	0			
100000394	6204	3	0			
100000394	6204	4	0			
100000394	6204	5	0			
100000394	6204	6	0			
100000394	6204	7	0			
100000394	6204	8	0			
100000394	6204	9	0			
100000394	6204	10	0			
100000394	6208	1	0	COLUMBIANA DR	SE	COLUMBIANA DR, COLUMBIA AVE & DRIVEWAY
100000394	6208	2	0			
100000394	6208	3	0			
100000394	6208	4	0			
100000394	6208	5	0			
100000394	6208	6	0			
100000394	6208	7	0			
100000394	6208	8	0			
100000394	6208	9	0			
100000394	6208	10	0			
100000394	6210	1		COLUMBIA AVE	NE	COLUMBIANA DR, COLUMBIA AVE & DRIVEWAY
100000394	6210	2				
100000394	6210	3				
100000394	6210	4				
100000394	6210	5				
100000394	6210	6				
100000394	6210	7				
100000394	6210	8				
100000394	6210	9				
100000394	6210	10				
100000394	6549	1		DRIVEWAY	SW	COLUMBIANA DR, COLUMBIA AVE & DRIVEWAY
100000394	6549	2				
100000394	6549	3				
100000394	6549	4				
100000394	6549	5				
100000394	6549	6				
100000394	6549	7				
100000394	6549	8				
100000394	6549	9				
100000394	6549	10				
100000395	5084	1	128.791283	LAKE MURRAY BLVD	W	LAKE MURRAY BLVD & COLUMBIANA DR
100000395	5084	2	128.63663			
100000395	5084	3	139.097582			
100000395	5084	4	133.621714			
100000395	5084	5	124.704485			
100000395	5084	6	131.363152			
100000395	5084	7	128.557984			
100000395	5084	8	131.723294			
100000395	5084	9	128.842332			
100000395	5084	10	132.447827			
100000395	6208	1	198.495628	COLUMBIANA DR	NW	LAKE MURRAY BLVD & COLUMBIANA DR
100000395	6208	2	131.057028			
100000395	6208	3	163.862109			
100000395	6208	4	221.816317			
100000395	6208	5	167.982415			
100000395	6208	6	223.428185			
100000395	6208	7	173.70418			
100000395	6208	8	185.588004			

Node	Superlink	Run	Average Control Delay	Approach Street Name	Direction	Intersection
100000395	6208	9	207.036213			
100000395	6208	10	126.236644			
100000395	6214	1	30.790855	COLUMBIANA DR	S	LAKE MURRAY BLVD & COLUMBIANA DR
100000395	6214	2	40.947385			
100000395	6214	3	28.010592			
100000395	6214	4	40.891657			
100000395	6214	5	29.473544			
100000395	6214	6	26.179394			
100000395	6214	7	35.146381			
100000395	6214	8	29.914098			
100000395	6214	9	38.407908			
100000395	6214	10	43.991932			
100000395	6215	1	51.114547	LAKE MURRAY BLVD	E	LAKE MURRAY BLVD & COLUMBIANA DR
100000395	6215	2	42.776972			
100000395	6215	3	56.590791			
100000395	6215	4	44.917963			
100000395	6215	5	44.838798			
100000395	6215	6	43.000328			
100000395	6215	7	43.114136			
100000395	6215	8	43.367216			
100000395	6215	9	57.683648			
100000395	6215	10	75.107594			
100000398	5101	1	0.23257	HARBISON BLVD	W	HARBISON BLVD & PARKRIDGE DR
100000398	5101	2	0.147773			
100000398	5101	3	0.212863			
100000398	5101	4	0.293617			
100000398	5101	5	0.211958			
100000398	5101	6	0.224397			
100000398	5101	7	0.137291			
100000398	5101	8	0.165781			
100000398	5101	9	0.249079			
100000398	5101	10	0.254633			
100000398	6267	1	9.242971	PARKRIDGE DR	SE	HARBISON BLVD & PARKRIDGE DR
100000398	6267	2	8.303547			
100000398	6267	3	10.479335			
100000398	6267	4	10.886597			
100000398	6267	5	9.152044			
100000398	6267	6	8.820459			
100000398	6267	7	9.259504			
100000398	6267	8	10.227242			
100000398	6267	9	9.349151			
100000398	6267	10	9.809992			
100000398	6268	1	3.931666	HARBISON BLVD	NE	HARBISON BLVD & PARKRIDGE DR
100000398	6268	2	3.528017			
100000398	6268	3	5.899545			
100000398	6268	4	4.789023			
100000398	6268	5	4.571629			
100000398	6268	6	4.39405			
100000398	6268	7	5.343142			
100000398	6268	8	5.305927			
100000398	6268	9	4.092111			
100000398	6268	10	4.696737			
100000399	5113	1	30.396856	PINEY GROVE RD	E	PINEY GROVE RD & FERNANDINA RD
100000399	5113	2	32.645352			
100000399	5113	3	35.80988			
100000399	5113	4	27.192862			
100000399	5113	5	30.150914			
100000399	5113	6	35.309072			
100000399	5113	7	32.928389			
100000399	5113	8	31.644543			
100000399	5113	9	28.644361			
100000399	5113	10	31.10545			
100000399	6263	1	18.97419	PINEY GROVE RD	W	PINEY GROVE RD & FERNANDINA RD
100000399	6263	2	19.06927			
100000399	6263	3	16.140151			
100000399	6263	4	16.606601			
100000399	6263	5	17.926293			
100000399	6263	6	21.958802			
100000399	6263	7	18.449351			
100000399	6263	8	17.351209			
100000399	6263	9	17.812372			
100000399	6263	10	20.550663			
100000399	6265	1	13.294635	FERNANDINA RD	SE	PINEY GROVE RD & FERNANDINA RD
100000399	6265	2	13.598404			
100000399	6265	3	12.058527			
100000399	6265	4	10.897289			
100000399	6265	5	11.486156			
100000399	6265	6	13.029108			
100000399	6265	7	12.064692			
100000399	6265	8	13.169836			
100000399	6265	9	12.821481			
100000399	6265	10	11.786276			
100000399	6266	1	60.444043	FERNANDINA RD	N	PINEY GROVE RD & FERNANDINA RD
100000399	6266	2	54.58992			
100000399	6266	3	63.83401			
100000399	6266	4	63.87557			
100000399	6266	5	54.855567			
100000399	6266	6	53.236952			
100000399	6266	7	57.261111			
100000399	6266	8	56.463458			
100000399	6266	9	52.816696			
100000399	6266	10	52.239506			
100000401	5093	1	20.020357	LAKE MURRAY BLVD	E	KINLEY RD, LAKE MURRAY BLVD & PARKRIDGE DR
100000401	5093	2	19.929159			
100000401	5093	3	19.464881			
100000401	5093	4	16.512908			
100000401	5093	5	17.700954			
100000401	5093	6	18.001235			
100000401	5093	7	19.719799			
100000401	5093	8	17.612364			
100000401	5093	9	20.608771			
100000401	5093	10	15.540433			
100000401	6276	1	219.855013	KINLEY RD	S	KINLEY RD, LAKE MURRAY BLVD & PARKRIDGE DR
100000401	6276	2	227.150892			
100000401	6276	3	460.462342			
100000401	6276	4	323.025592			
100000401	6276	5	345.546172			
100000401	6276	6	483.972553			
100000401	6276	7	250.935989			
100000401	6276	8	258.531048			
100000401	6276	9	372.88578			
100000401	6276	10	357.451854			

Node	Superlink	Run	Average Control Delay	Approach Street Name	Direction	Intersection
100000401	6313	1	242.637013	LAKE MURRAY BLVD	W	KINLEY RD, LAKE MURRAY BLVD & PARKRIDGE DR
100000401	6313	2	322.186827			
100000401	6313	3	481.804183			
100000401	6313	4	250.712142			
100000401	6313	5	340.323583			
100000401	6313	6	443.067344			
100000401	6313	7	281.607307			
100000401	6313	8	219.225438			
100000401	6313	9	392.720105			
100000401	6313	10	248.409194			
100000401	6556	1	103.249531	PARKRIDGE DR	N	KINLEY RD, LAKE MURRAY BLVD & PARKRIDGE DR
100000401	6556	2	166.335267			
100000401	6556	3	110.635425			
100000401	6556	4	84.02614			
100000401	6556	5	83.005999			
100000401	6556	6	142.354431			
100000401	6556	7	111.008944			
100000401	6556	8	61.585518			
100000401	6556	9	91.93374			
100000401	6556	10	46.499659			
100000438	2044	1	0	RAMP	SE	RAMP, SUNSET BLVD & I-20 EXIT 61 EB ON RAMP
100000438	2044	2	0			
100000438	2044	3	0			
100000438	2044	4	0			
100000438	2044	5	0			
100000438	2044	6	0			
100000438	2044	7	0			
100000438	2044	8	0			
100000438	2044	9	0			
100000438	2044	10	0			
100000438	5021	1	6.74139	SUNSET BLVD	NW	RAMP, SUNSET BLVD & I-20 EXIT 61 EB ON RAMP
100000438	5021	2	6.615194			
100000438	5021	3	6.294328			
100000438	5021	4	6.731214			
100000438	5021	5	7.52231			
100000438	5021	6	7.91728			
100000438	5021	7	6.07826			
100000438	5021	8	5.923778			
100000438	5021	9	6.829488			
100000438	5021	10	6.883761			
100000438	5023	1	0.757989	SUNSET BLVD	SE	RAMP, SUNSET BLVD & I-20 EXIT 61 EB ON RAMP
100000438	5023	2	0.618574			
100000438	5023	3	0.586577			
100000438	5023	4	0.661918			
100000438	5023	5	0.471049			
100000438	5023	6	0.430188			
100000438	5023	7	0.51929			
100000438	5023	8	0.558735			
100000438	5023	9	0.494289			
100000438	5023	10	0.439801			
100000446	2047	1	0	RAMP	S	RAMP & I-20 EXIT 63 WB ON RAMP
100000446	2047	2	0			
100000446	2047	3	0			
100000446	2047	4	0			
100000446	2047	5	0			
100000446	2047	6	0			
100000446	2047	7	0			
100000446	2047	8	0			
100000446	2047	9	0			
100000446	2047	10	0			
100000446	2059	1	0	RAMP	SW	RAMP & I-20 EXIT 63 WB ON RAMP
100000446	2059	2	0			
100000446	2059	3	0			
100000446	2059	4	0			
100000446	2059	5	0			
100000446	2059	6	0			
100000446	2059	7	0			
100000446	2059	8	0			
100000446	2059	9	0			
100000446	2059	10	0			
100000450	2060	1	0	RAMP	E	BUSH RIVER RD, RAMP & I-20 EXIT 63 EB ON RAMP
100000450	2060	2	0			
100000450	2060	3	0			
100000450	2060	4	0			
100000450	2060	5	0			
100000450	2060	6	0			
100000450	2060	7	0			
100000450	2060	8	0			
100000450	2060	9	0			
100000450	2060	10	0			
100000450	5037	1	0	BUSH RIVER RD	E	BUSH RIVER RD, RAMP & I-20 EXIT 63 EB ON RAMP
100000450	5037	2	0			
100000450	5037	3	0			
100000450	5037	4	0			
100000450	5037	5	0			
100000450	5037	6	0			
100000450	5037	7	0			
100000450	5037	8	0			
100000450	5037	9	0			
100000450	5037	10	0			
100000450	5038	1	1.192028	BUSH RIVER RD	NW	BUSH RIVER RD, RAMP & I-20 EXIT 63 EB ON RAMP
100000450	5038	2	1.090244			
100000450	5038	3	1.247748			
100000450	5038	4	1.232129			
100000450	5038	5	1.496308			
100000450	5038	6	1.714567			
100000450	5038	7	1.225566			
100000450	5038	8	1.434189			
100000450	5038	9	1.207043			
100000450	5038	10	1.028563			
100000452	2071	1	31.867651	RAMP	W	RAMP & BUSH RIVER RD
100000452	2071	2	30.550351			
100000452	2071	3	33.171616			
100000452	2071	4	30.87661			
100000452	2071	5	35.075504			
100000452	2071	6	31.423638			
100000452	2071	7	29.472391			
100000452	2071	8	32.358839			
100000452	2071	9	32.31365			
100000452	2071	10	30.668593			
100000452	5034	1	0.922991	BUSH RIVER RD	NW	RAMP & BUSH RIVER RD
100000452	5034	2	1.390536			

Node	Superlink	Run	Average Control Delay	Approach Street Name	Direction	Intersection
100000452	5034	3	1.107066			
100000452	5034	4	0.776			
100000452	5034	5	1.048242			
100000452	5034	6	0.90206			
100000452	5034	7	0.684304			
100000452	5034	8	0.97009			
100000452	5034	9	0.817379			
100000452	5034	10	1.110803			
100000452	5457	1	2.611615	BUSH RIVER RD	SE	RAMP & BUSH RIVER RD
100000452	5457	2	2.467553			
100000452	5457	3	2.748207			
100000452	5457	4	2.046874			
100000452	5457	5	3.174971			
100000452	5457	6	2.087063			
100000452	5457	7	2.091311			
100000452	5457	8	2.077493			
100000452	5457	9	2.568623			
100000452	5457	10	2.545829			
100000455	5457	1	5.28501	BUSH RIVER RD	NW	FRONTAGE RD & BUSH RIVER RD
100000455	5457	2	5.901052			
100000455	5457	3	5.645305			
100000455	5457	4	5.31861			
100000455	5457	5	5.266527			
100000455	5457	6	5.339527			
100000455	5457	7	4.983817			
100000455	5457	8	5.098941			
100000455	5457	9	5.415672			
100000455	5457	10	5.403315			
100000455	6538	1	41.987897	FRONTAGE RD	SW	FRONTAGE RD & BUSH RIVER RD
100000455	6538	2	39.235469			
100000455	6538	3	37.43251			
100000455	6538	4	38.368414			
100000455	6538	5	42.95127			
100000455	6538	6	40.867632			
100000455	6538	7	36.216845			
100000455	6538	8	38.430407			
100000455	6538	9	40.311214			
100000455	6538	10	39.428765			
100000455	6539	1	9.093401	BUSH RIVER RD	SE	FRONTAGE RD & BUSH RIVER RD
100000455	6539	2	11.648438			
100000455	6539	3	11.164005			
100000455	6539	4	9.211769			
100000455	6539	5	10.50301			
100000455	6539	6	9.065275			
100000455	6539	7	7.8085			
100000455	6539	8	8.458337			
100000455	6539	9	8.96174			
100000455	6539	10	10.199298			
100000467	3225	1		RAMP	SW	RAMP & I-126 WB ON RAMP FROM GREYSTONE BLVD
100000467	3225	2				
100000467	3225	3				
100000467	3225	4				
100000467	3225	5				
100000467	3225	6				
100000467	3225	7				
100000467	3225	8				
100000467	3225	9				
100000467	3225	10				
100000467	3238	1	0	RAMP	W	RAMP & I-126 WB ON RAMP FROM GREYSTONE BLVD
100000467	3238	2	0			
100000467	3238	3	0			
100000467	3238	4	0			
100000467	3238	5	0			
100000467	3238	6	0			
100000467	3238	7	0			
100000467	3238	8	0			
100000467	3238	9	0			
100000467	3238	10	0			
100000468	3228	1	0	EXIT 103 WB ON RAMP	NW	EXIT 103 WB ON RAMP & I-26 EXIT 103 WB ON RAMP
100000468	3228	2	0			
100000468	3228	3	0			
100000468	3228	4	0			
100000468	3228	5	0			
100000468	3228	6	0			
100000468	3228	7	0			
100000468	3228	8	0			
100000468	3228	9	0			
100000468	3228	10	0			
100000468	3241	1	0	EXIT 103 WB ON RAMP	W	EXIT 103 WB ON RAMP & I-26 EXIT 103 WB ON RAMP
100000468	3241	2	0			
100000468	3241	3	0			
100000468	3241	4	0			
100000468	3241	5	0			
100000468	3241	6	0			
100000468	3241	7	0			
100000468	3241	8	0			
100000468	3241	9	0			
100000468	3241	10	0			
100000476	3257	1	0	RAMP	N	RAMP
100000476	3257	2	0			
100000476	3257	3	0			
100000476	3257	4	0			
100000476	3257	5	0			
100000476	3257	6	0			
100000476	3257	7	0			
100000476	3257	8	0			
100000476	3257	9	0			
100000476	3257	10	0			
100000476	3262	1	0	RAMP	N	RAMP
100000476	3262	2	0			
100000476	3262	3	0			
100000476	3262	4	0			
100000476	3262	5	0			
100000476	3262	6	0			
100000476	3262	7	0			
100000476	3262	8	0			
100000476	3262	9	0			
100000476	3262	10	0			
100000494	3302	1	0	EXIT 106 WB ON RAMP	NW	EXIT 106 WB ON RAMP & I-26 EXIT 106 WB ON RAMP
100000494	3302	2	0			
100000494	3302	3	0			
100000494	3302	4	0			

Node	Superlink	Run	Average Control Delay	Approach Street Name	Direction	Intersection
100000494	3302	5	0			
100000494	3302	6	0			
100000494	3302	7	0			
100000494	3302	8	0			
100000494	3302	9	0			
100000494	3302	10	0			
100000494	3306	1	0	EXIT 106 WB ON RAMP	NW	EXIT 106 WB ON RAMP & I-26 EXIT 106 WB ON RAMP
100000494	3306	2	0			
100000494	3306	3	0			
100000494	3306	4	0			
100000494	3306	5	0			
100000494	3306	6	0			
100000494	3306	7	0			
100000494	3306	8	0			
100000494	3306	9	0			
100000494	3306	10	0			
100000497	3310	1	0	RAMP	SE	RAMP & I-26 EXIT 104 EB ON RAMP
100000497	3310	2	0			
100000497	3310	3	0			
100000497	3310	4	0			
100000497	3310	5	0			
100000497	3310	6	0			
100000497	3310	7	0			
100000497	3310	8	0			
100000497	3310	9	0			
100000497	3310	10	0			
100000497	6545	1	0	RAMP	SE	RAMP & I-26 EXIT 104 EB ON RAMP
100000497	6545	2	0			
100000497	6545	3	0			
100000497	6545	4	0			
100000497	6545	5	0			
100000497	6545	6	0			
100000497	6545	7	0			
100000497	6545	8	0			
100000497	6545	9	0			
100000497	6545	10	0			
100000503	3325	1	0	RAMP	SE	RAMP, 6472 (W) & I-26 EXIT 103 EB ON RAMP
100000503	3325	2	0			
100000503	3325	3	0			
100000503	3325	4	0			
100000503	3325	5	0			
100000503	3325	6	0			
100000503	3325	7	0			
100000503	3325	8	0			
100000503	3325	9	0			
100000503	3325	10	0			
100000503	6472	1	0		E	RAMP, 6472 (W) & I-26 EXIT 103 EB ON RAMP
100000503	6472	2	0			
100000503	6472	3	0			
100000503	6472	4	0			
100000503	6472	5	0			
100000503	6472	6	0			
100000503	6472	7	0			
100000503	6472	8	0			
100000503	6472	9	0			
100000503	6472	10	0			
100000520	3345	1		EXIT 102 WB ON RAMP	N	EXIT 102 WB ON RAMP & I-26 EXIT 102 WB ON RAMP
100000520	3345	2				
100000520	3345	3				
100000520	3345	4				
100000520	3345	5				
100000520	3345	6				
100000520	3345	7				
100000520	3345	8				
100000520	3345	9				
100000520	3345	10				
100000520	3350	1	0	EXIT 102 WB ON RAMP	N	EXIT 102 WB ON RAMP & I-26 EXIT 102 WB ON RAMP
100000520	3350	2	0			
100000520	3350	3	0			
100000520	3350	4	0			
100000520	3350	5	0			
100000520	3350	6	0			
100000520	3350	7	0			
100000520	3350	8	0			
100000520	3350	9	0			
100000520	3350	10	0			
100000523	3355	1	0	ON-RAMP from WB	S	ON-RAMP from WB, ON-RAMP from EB & I-26 EXIT 101 EB ON RAMP
100000523	3355	2	0			
100000523	3355	3	0			
100000523	3355	4	0			
100000523	3355	5	0			
100000523	3355	6	0			
100000523	3355	7	0			
100000523	3355	8	0			
100000523	3355	9	0			
100000523	3355	10	0			
100000523	3356	1	0	ON-RAMP from EB	S	ON-RAMP from WB, ON-RAMP from EB & I-26 EXIT 101 EB ON RAMP
100000523	3356	2	0			
100000523	3356	3	0			
100000523	3356	4	0			
100000523	3356	5	0			
100000523	3356	6	0			
100000523	3356	7	0			
100000523	3356	8	0			
100000523	3356	9	0			
100000523	3356	10	0			
100000528	3360	1		EXIT 101 WB ON RAMP	N	EXIT 101 WB ON RAMP & I-26 EXIT 101 WB ON RAMP
100000528	3360	2				
100000528	3360	3				
100000528	3360	4				
100000528	3360	5				
100000528	3360	6				
100000528	3360	7				
100000528	3360	8				
100000528	3360	9				
100000528	3360	10				
100000528	3364	1	0	EXIT 101 WB ON RAMP	N	EXIT 101 WB ON RAMP & I-26 EXIT 101 WB ON RAMP
100000528	3364	2	0			
100000528	3364	3	0			
100000528	3364	4	0			
100000528	3364	5	0			
100000528	3364	6	0			

Node	Superlink	Run	Average Control Delay	Approach Street Name	Direction	Intersection
100000528	3364	7	0			
100000528	3364	8	0			
100000528	3364	9	0			
100000528	3364	10	0			
100000702	4338	1	0	RAMP	SW	RAMP & I-20 EXIT 65 WB ON RAMP
100000702	4338	2	0			
100000702	4338	3	0			
100000702	4338	4	0			
100000702	4338	5	0			
100000702	4338	6	0			
100000702	4338	7	0			
100000702	4338	8	0			
100000702	4338	9	0			
100000702	4338	10	0			
100000702	4343	1	0	RAMP	SW	RAMP & I-20 EXIT 65 WB ON RAMP
100000702	4343	2	0			
100000702	4343	3	0			
100000702	4343	4	0			
100000702	4343	5	0			
100000702	4343	6	0			
100000702	4343	7	0			
100000702	4343	8	0			
100000702	4343	9	0			
100000702	4343	10	0			
100000707	5166	1	0	MONTICELLO RD	NW	MONTICELLO RD, SERVICE RD & RAMP
100000707	5166	2	0			
100000707	5166	3	0			
100000707	5166	4	0			
100000707	5166	5	0			
100000707	5166	6	0			
100000707	5166	7	0			
100000707	5166	8	0			
100000707	5166	9	0			
100000707	5166	10	0			
100000707	5168	1	0	SERVICE RD	W	MONTICELLO RD, SERVICE RD & RAMP
100000707	5168	2	0			
100000707	5168	3	0			
100000707	5168	4	0			
100000707	5168	5	0			
100000707	5168	6	0			
100000707	5168	7	0			
100000707	5168	8	0			
100000707	5168	9	0			
100000707	5168	10	0			
100000707	5174	1	0.729677	MONTICELLO RD	SE	MONTICELLO RD, SERVICE RD & RAMP
100000707	5174	2	1.015817			
100000707	5174	3	0.576864			
100000707	5174	4	0.576736			
100000707	5174	5	0.794467			
100000707	5174	6	0.872014			
100000707	5174	7	0.812204			
100000707	5174	8	0.824575			
100000707	5174	9	0.627749			
100000707	5174	10	1.181917			
100000709	4352	1	0	RAMP	S	RAMP & I-20 EXIT 68 WB ON RAMP
100000709	4352	2	0			
100000709	4352	3	0			
100000709	4352	4	0			
100000709	4352	5	0			
100000709	4352	6	0			
100000709	4352	7	0			
100000709	4352	8	0			
100000709	4352	9	0			
100000709	4352	10	0			
100000709	4353	1	0	RAMP	S	RAMP & I-20 EXIT 68 WB ON RAMP
100000709	4353	2	0			
100000709	4353	3	0			
100000709	4353	4	0			
100000709	4353	5	0			
100000709	4353	6	0			
100000709	4353	7	0			
100000709	4353	8	0			
100000709	4353	9	0			
100000709	4353	10	0			
100000710	4356	1	0	I-20 EXIT 68 WB OFF RAMP	W	I-20 EXIT 68 WB OFF RAMP & SERVICE RD
100000710	4356	2	0			
100000710	4356	3	0			
100000710	4356	4	0			
100000710	4356	5	0			
100000710	4356	6	0			
100000710	4356	7	0			
100000710	4356	8	0			
100000710	4356	9	0			
100000710	4356	10	0			
100000712	5157	1	0.078861	BUCKNER RD	NE	BUCKNER RD & RAMP
100000712	5157	2	0.098134			
100000712	5157	3	0.181395			
100000712	5157	4	0.078087			
100000712	5157	5	0.103494			
100000712	5157	6	0.077931			
100000712	5157	7	0.067669			
100000712	5157	8	0.082213			
100000712	5157	9	0.103334			
100000712	5157	10	0.061262			
100000712	5160	1	17.218192	BUCKNER RD	SW	BUCKNER RD & RAMP
100000712	5160	2	16.769751			
100000712	5160	3	16.142209			
100000712	5160	4	18.677082			
100000712	5160	5	15.009422			
100000712	5160	6	17.335027			
100000712	5160	7	14.22525			
100000712	5160	8	17.159631			
100000712	5160	9	15.233838			
100000712	5160	10	15.333256			
100000804	6261	1	17.507968	TRAM RD	SW	TRAM RD & SIDNEY RD
100000804	6261	2	18.906764			
100000804	6261	3	14.051166			
100000804	6261	4	16.359853			
100000804	6261	5	12.725731			
100000804	6261	6	16.573497			
100000804	6261	7	17.987564			
100000804	6261	8	17.074291			

Node	Superlink	Run	Average Control Delay	Approach Street Name	Direction	Intersection
100000804	6261	9	16.392725			
100000804	6261	10	19.446798			
100000804	6457	1	136.656962	SIDNEY RD	NW	TRAM RD & SIDNEY RD
100000804	6457	2	48.195164			
100000804	6457	3	138.183428			
100000804	6457	4	171.152737			
100000804	6457	5	76.606458			
100000804	6457	6	45.999087			
100000804	6457	7	120.955415			
100000804	6457	8	140.764117			
100000804	6457	9	150.48536			
100000804	6457	10	94.412919			
100000804	6458	1	1.554957	TRAM RD	NE	TRAM RD & SIDNEY RD
100000804	6458	2	2.218723			
100000804	6458	3	2.439558			
100000804	6458	4	1.696409			
100000804	6458	5	1.942834			
100000804	6458	6	1.654411			
100000804	6458	7	2.262756			
100000804	6458	8	2.436773			
100000804	6458	9	1.941072			
100000804	6458	10	1.852732			
100000882	5151	1		SERVICE RD	SW	SERVICE RD, 6449 (S) & 6448 (W)
100000882	5151	2				
100000882	5151	3				
100000882	5151	4				
100000882	5151	5				
100000882	5151	6				
100000882	5151	7				
100000882	5151	8				
100000882	5151	9				
100000882	5151	10				
100000882	6446	1	0	SERVICE RD	NE	SERVICE RD, 6449 (S) & 6448 (W)
100000882	6446	2	0			
100000882	6446	3	0			
100000882	6446	4	0			
100000882	6446	5	0			
100000882	6446	6	0			
100000882	6446	7	0			
100000882	6446	8	0			
100000882	6446	9	0			
100000882	6446	10	0			
100000882	6449	1	0		N	SERVICE RD, 6449 (S) & 6448 (W)
100000882	6449	2	0			
100000882	6449	3	0			
100000882	6449	4	0			
100000882	6449	5	0			
100000882	6449	6	0			
100000882	6449	7	0			
100000882	6449	8	0			
100000882	6449	9	0			
100000882	6449	10	0			
100000883	5148	1	0	BROAD RIVER RD	NW	BROAD RIVER RD & 6448 (E)
100000883	5148	2	0.000008			
100000883	5148	3	0			
100000883	5148	4	0			
100000883	5148	5	0			
100000883	5148	6	0			
100000883	5148	7	0			
100000883	5148	8	0			
100000883	5148	9	0.000083			
100000883	5148	10	0			
100000883	6447	1	11.819467	BROAD RIVER RD	SE	BROAD RIVER RD & 6448 (E)
100000883	6447	2	9.652521			
100000883	6447	3	7.076341			
100000883	6447	4	7.352031			
100000883	6447	5	10.382646			
100000883	6447	6	10.002515			
100000883	6447	7	9.018406			
100000883	6447	8	7.974463			
100000883	6447	9	7.419345			
100000883	6447	10	8.013883			
100000883	6448	1			W	BROAD RIVER RD & 6448 (E)
100000883	6448	2				
100000883	6448	3				
100000883	6448	4				
100000883	6448	5				
100000883	6448	6				
100000883	6448	7				
100000883	6448	8				
100000883	6448	9				
100000883	6448	10				
100000895	3229	1	0	RAMP	SW	RAMP & PINEY GROVE RD
100000895	3229	2	0			
100000895	3229	3	0			
100000895	3229	4	0			
100000895	3229	5	0			
100000895	3229	6	0			
100000895	3229	7	0			
100000895	3229	8	0			
100000895	3229	9	0			
100000895	3229	10	0			
100000895	6543	1	1.288708	PINEY GROVE RD	E	RAMP & PINEY GROVE RD
100000895	6543	2	1.273811			
100000895	6543	3	0.991979			
100000895	6543	4	1.337079			
100000895	6543	5	2.02064			
100000895	6543	6	1.295401			
100000895	6543	7	1.203508			
100000895	6543	8	1.6825			
100000895	6543	9	1.227096			
100000895	6543	10	1.132836			
100000895	6544	1	0	PINEY GROVE RD	W	RAMP & PINEY GROVE RD
100000895	6544	2	0			
100000895	6544	3	0			
100000895	6544	4	0			
100000895	6544	5	0			
100000895	6544	6	0			
100000895	6544	7	0			
100000895	6544	8	0			
100000895	6544	9	0			
100000895	6544	10	0			

Node	Superlink	Run	Average Control Delay	Approach Street Name	Direction	Intersection
100000897	3243	1	8.888498	I-126 WB OFF RAMP TO COLONIAL LIFE BLVD	NE	I-126 WB OFF RAMP TO COLONIAL LIFE BLVD, W COLONIAL LIFE BLVD, COLONIAL LIFE BLVD W & I-126 EB ON RA
100000897	3243	2	7.028221			
100000897	3243	3	8.42071			
100000897	3243	4	8.301022			
100000897	3243	5	7.205745			
100000897	3243	6	8.617292			
100000897	3243	7	7.503696			
100000897	3243	8	7.962131			
100000897	3243	9	7.672044			
100000897	3243	10	4.970425			
100000897	5134	1	15.729334	W COLONIAL LIFE BLVD	NW	I-126 WB OFF RAMP TO COLONIAL LIFE BLVD, W COLONIAL LIFE BLVD, COLONIAL LIFE BLVD W & I-126 EB ON RA
100000897	5134	2	14.854235			
100000897	5134	3	14.941788			
100000897	5134	4	15.807195			
100000897	5134	5	14.603481			
100000897	5134	6	15.467938			
100000897	5134	7	18.458757			
100000897	5134	8	12.743407			
100000897	5134	9	13.391882			
100000897	5134	10	10.79374			
100000897	6471	1	0.754709	COLONIAL LIFE BLVD W	S	I-126 WB OFF RAMP TO COLONIAL LIFE BLVD, W COLONIAL LIFE BLVD, COLONIAL LIFE BLVD W & I-126 EB ON RA
100000897	6471	2	0.761692			
100000897	6471	3	0.745156			
100000897	6471	4	0.610372			
100000897	6471	5	0.773248			
100000897	6471	6	0.658531			
100000897	6471	7	0.678584			
100000897	6471	8	0.715637			
100000897	6471	9	0.668658			
100000897	6471	10	0.666223			
100000898	51	1	247.965133	I-26 EXIT 108 EB OFF RAMP	S	I-26 EXIT 108 EB OFF RAMP, BUSH RIVER RD & RAMP
100000898	51	2	319.126812			
100000898	51	3	265.931915			
100000898	51	4	283.965294			
100000898	51	5	298.295647			
100000898	51	6	299.509404			
100000898	51	7	311.744456			
100000898	51	8	239.505534			
100000898	51	9	289.562744			
100000898	51	10	273.877138			
100000898	5130	1	21.419609	BUSH RIVER RD	N	I-26 EXIT 108 EB OFF RAMP, BUSH RIVER RD & RAMP
100000898	5130	2	31.287323			
100000898	5130	3	27.491911			
100000898	5130	4	21.943876			
100000898	5130	5	26.266561			
100000898	5130	6	16.555538			
100000898	5130	7	32.353734			

Node	Superlink	Run	Average Control Delay	Approach Street Name	Direction	Intersection
100000898	5130	8	16.872485			
100000898	5130	9	21.844962			
100000898	5130	10	19.017215			
100000898	5131	1	9.739128	BUSH RIVER RD	E	I-26 EXIT 108 EB OFF RAMP, BUSH RIVER RD & RAMP
100000898	5131	2	8.596973			
100000898	5131	3	9.977445			
100000898	5131	4	10.274809			
100000898	5131	5	9.780867			
100000898	5131	6	8.026924			
100000898	5131	7	11.336081			
100000898	5131	8	7.362272			
100000898	5131	9	8.474693			
100000898	5131	10	8.604491			
100000898	6503	1	10.273072	BUSH RIVER RD	W	I-26 EXIT 108 EB OFF RAMP, BUSH RIVER RD & RAMP
100000898	6503	2	9.793689			
100000898	6503	3	10.72404			
100000898	6503	4	10.98909			
100000898	6503	5	11.172484			
100000898	6503	6	11.936798			
100000898	6503	7	11.630302			
100000898	6503	8	11.388964			
100000898	6503	9	11.324324			
100000898	6503	10	10.349658			
100000899	3298	1	5.619797	EXIT 106 WB OFF RAMP	SE	EXIT 106 WB OFF RAMP & BURNING TREE RD
100000899	3298	2	5.629227			
100000899	3298	3	5.997469			
100000899	3298	4	6.143656			
100000899	3298	5	5.472261			
100000899	3298	6	6.626501			
100000899	3298	7	5.279338			
100000899	3298	8	5.800094			
100000899	3298	9	6.472663			
100000899	3298	10	5.506714			
100000899	6105	1	0	BURNING TREE RD	S	EXIT 106 WB OFF RAMP & BURNING TREE RD
100000899	6105	2	0			
100000899	6105	3	0			
100000899	6105	4	0			
100000899	6105	5	0			
100000899	6105	6	0			
100000899	6105	7	0			
100000899	6105	8	0			
100000899	6105	9	0			
100000899	6105	10	0			
100000899	6106	1	0	BURNING TREE RD	N	EXIT 106 WB OFF RAMP & BURNING TREE RD
100000899	6106	2	0			
100000899	6106	3	0			
100000899	6106	4	0			
100000899	6106	5	0			
100000899	6106	6	0			
100000899	6106	7	0			
100000899	6106	8	0			
100000899	6106	9	0			
100000899	6106	10	0			
100000902	4292	1	26.781956	EXIT 110 WB OFF RAMP	NE	SUNSET BLVD, EXIT 110 WB OFF RAMP & EXIT 108 WB ON RAMP
100000902	4292	2	31.810166			
100000902	4292	3	27.463433			
100000902	4292	4	23.088875			
100000902	4292	5	28.80056			
100000902	4292	6	21.777421			
100000902	4292	7	26.297045			
100000902	4292	8	26.312932			
100000902	4292	9	23.329886			
100000902	4292	10	27.543705			
100000902	4947	1	4.846664	SUNSET BLVD	W	SUNSET BLVD, EXIT 110 WB OFF RAMP & EXIT 108 WB ON RAMP
100000902	4947	2	6.123039			
100000902	4947	3	5.882064			
100000902	4947	4	5.513152			
100000902	4947	5	5.220174			
100000902	4947	6	5.371592			
100000902	4947	7	7.458355			
100000902	4947	8	5.560451			
100000902	4947	9	5.643124			
100000902	4947	10	5.344164			
100000902	4951	1	0.013157	SUNSET BLVD	E	SUNSET BLVD, EXIT 110 WB OFF RAMP & EXIT 108 WB ON RAMP
100000902	4951	2	0.014833			
100000902	4951	3	0.018715			
100000902	4951	4	0.031547			
100000902	4951	5	0.023731			
100000902	4951	6	0.017488			
100000902	4951	7	0.02308			
100000902	4951	8	0.035681			
100000902	4951	9	0.018949			
100000902	4951	10	0.018098			
100000903	4289	1	53.24679	EXIT 110 WB OFF RAMP	NW	RAMP, SUNSET BLVD, EXIT 110 WB OFF RAMP & EXIT 108 WB ON RAMP
100000903	4289	2	54.838826			
100000903	4289	3	50.621824			
100000903	4289	4	51.522271			
100000903	4289	5	50.293407			
100000903	4289	6	52.131527			
100000903	4289	7	53.976512			
100000903	4289	8	49.981654			
100000903	4289	9	50.128758			
100000903	4289	10	49.204318			
100000903	4298	1	43.974326	RAMP	SE	RAMP, SUNSET BLVD, EXIT 110 WB OFF RAMP & EXIT 108 WB ON RAMP
100000903	4298	2	42.176602			
100000903	4298	3	37.497237			
100000903	4298	4	42.436676			
100000903	4298	5	44.196161			
100000903	4298	6	43.376722			
100000903	4298	7	37.710596			
100000903	4298	8	42.311159			
100000903	4298	9	40.183741			
100000903	4298	10	38.495972			
100000903	4950	1	19.763856	SUNSET BLVD	E	RAMP, SUNSET BLVD, EXIT 110 WB OFF RAMP & EXIT 108 WB ON RAMP
100000903	4950	2	18.244516			
100000903	4950	3	19.188991			
100000903	4950	4	20.623935			
100000903	4950	5	18.960787			
100000903	4950	6	19.556103			
100000903	4950	7	18.415283			
100000903	4950	8	19.462562			
100000903	4950	9	20.298494			

Node	Superlink	Run	Average Control Delay	Approach Street Name	Direction	Intersection
100000903	4950	10	19.276835			
100000903	4951	1	16.156539	SUNSET BLVD	W	RAMP, SUNSET BLVD, EXIT 110 WB OFF RAMP & EXIT 108 WB ON RAMP
100000903	4951	2	17.204086			
100000903	4951	3	17.022901			
100000903	4951	4	17.46827			
100000903	4951	5	15.701195			
100000903	4951	6	15.91191			
100000903	4951	7	16.911996			
100000903	4951	8	17.073415			
100000903	4951	9	17.332394			
100000903	4951	10	16.044547			

2040 No-Build AM

Node	Superlink	Run	Average Control Delay	Approach Street Name	Direction	Intersection
4	5081	1	3.669287	BROAD RIVER RD	W	WESTERN LN & BROAD RIVER RD
4	5081	2	4.084377			
4	5081	3	3.452328			
4	5081	4	4.4729			
4	5081	5	3.43626			
4	5081	6	3.794515			
4	5081	7	3.340191			
4	5081	8	4.644486			
4	5081	9	3.848753			
4	5081	10	4.181383			
4	6465	1	6.793653	WESTERN LN	S	WESTERN LN & BROAD RIVER RD
4	6465	2	6.365041			
4	6465	3	7.016826			
4	6465	4	6.584901			
4	6465	5	6.579586			
4	6465	6	6.537121			
4	6465	7	6.752842			
4	6465	8	6.527694			
4	6465	9	6.586134			
4	6465	10	6.560754			
4	6466	1	4.791612	BROAD RIVER RD	E	WESTERN LN & BROAD RIVER RD
4	6466	2	4.938805			
4	6466	3	5.309273			
4	6466	4	5.094533			
4	6466	5	5.121975			
4	6466	6	4.5785			
4	6466	7	5.296047			
4	6466	8	4.783436			
4	6466	9	4.758704			
4	6466	10	4.757214			
4	6467	1	7.121773	WESTERN LN	N	WESTERN LN & BROAD RIVER RD
4	6467	2	7.094426			
4	6467	3	7.093047			
4	6467	4	8.009622			
4	6467	5	7.49505			
4	6467	6	8.033057			
4	6467	7	7.830043			
4	6467	8	7.818272			
4	6467	9	7.260993			
4	6467	10	7.139836			
11	5487	1	0	MORNINGHILL DR	N	MORNINGHILL DR & BURNETTE DR
11	5487	2	0			
11	5487	3	0			
11	5487	4	0			
11	5487	5	0			
11	5487	6	0			
11	5487	7	0			
11	5487	8	0			
11	5487	9	0			
11	5487	10	0			
11	6536	1		MORNINGHILL DR	S	MORNINGHILL DR & BURNETTE DR
11	6536	2				
11	6536	3				
11	6536	4				
11	6536	5				
11	6536	6				
11	6536	7				
11	6536	8				
11	6536	9				
11	6536	10				
11	6537	1	0	BURNETTE DR	E	MORNINGHILL DR & BURNETTE DR
11	6537	2	0			
11	6537	3	0			
11	6537	4	0			
11	6537	5	0			
11	6537	6	0			
11	6537	7	0			
11	6537	8	0			
11	6537	9	0			
11	6537	10	0			
26	5488	1	0	RAMP	S	RAMP & 6502 (NW)
26	5488	2	0			
26	5488	3	0			
26	5488	4	0			
26	5488	5	0			
26	5488	6	0			
26	5488	7	0			
26	5488	8	0			
26	5488	9	0			
26	5488	10	0			
26	6501	1	12.934632	RAMP	N	RAMP & 6502 (NW)
26	6501	2	13.186299			
26	6501	3	11.811664			
26	6501	4	11.781505			
26	6501	5	12.291603			
26	6501	6	11.428652			
26	6501	7	13.93254			
26	6501	8	13.521901			
26	6501	9	10.224434			
26	6501	10	12.634152			
26	6502	1	0		SE	RAMP & 6502 (NW)
26	6502	2	0			
26	6502	3	0			
26	6502	4	0			

Node	Superlink	Run	Average Control Delay	Approach Street Name	Direction	Intersection
26	6502	5	0			
26	6502	6	0			
26	6502	7	0			
26	6502	8	0			
26	6502	9	0			
26	6502	10	0			
28	5140	1	0	GREYSTONE BLVD	S	GREYSTONE BLVD & CANDI LN
28	5140	2	0			
28	5140	3	0			
28	5140	4	0			
28	5140	5	0			
28	5140	6	0			
28	5140	7	0			
28	5140	8	0			
28	5140	9	0			
28	5140	10	0			
28	6506	1	6.830887	GREYSTONE BLVD	W	GREYSTONE BLVD & CANDI LN
28	6506	2	6.410245			
28	6506	3	6.592754			
28	6506	4	6.30098			
28	6506	5	6.620824			
28	6506	6	6.372267			
28	6506	7	6.39434			
28	6506	8	6.074121			
28	6506	9	6.147795			
28	6506	10	6.729483			
28	6507	1		CANDI LN	E	GREYSTONE BLVD & CANDI LN
28	6507	2				
28	6507	3				
28	6507	4				
28	6507	5				
28	6507	6				
28	6507	7				
28	6507	8				
28	6507	9				
28	6507	10				
41	6518	1	3.76719	BROAD RIVER RD	NW	DUTCH SQUARE BLVD & BROAD RIVER RD
41	6518	2	2.936637			
41	6518	3	3.769331			
41	6518	4	2.414624			
41	6518	5	3.548469			
41	6518	6	2.823736			
41	6518	7	2.324855			
41	6518	8	1.792291			
41	6518	9	2.888322			
41	6518	10	2.800931			
41	6519	1	39.442664	DUTCH SQUARE BLVD	E	DUTCH SQUARE BLVD & BROAD RIVER RD
41	6519	2	38.887892			
41	6519	3	39.530782			
41	6519	4	33.633395			
41	6519	5	36.712273			
41	6519	6	37.52298			
41	6519	7	37.354197			
41	6519	8	39.609735			
41	6519	9	39.440208			
41	6519	10	35.661096			
41	6521	1	0.913147	BROAD RIVER RD	SE	DUTCH SQUARE BLVD & BROAD RIVER RD
41	6521	2	1.17955			
41	6521	3	0.847223			
41	6521	4	1.03947			
41	6521	5	1.337208			
41	6521	6	1.276886			
41	6521	7	0.858162			
41	6521	8	1.285718			
41	6521	9	0.993697			
41	6521	10	1.225601			
43	6519	1	0	DUTCH SQUARE BLVD	W	DUTCH SQUARE BLVD & 6522 (N)
43	6519	2				
43	6519	3				
43	6519	4	0			
43	6519	5				
43	6519	6				
43	6519	7				
43	6519	8				
43	6519	9				
43	6519	10				
43	6520	1	20.811615	DUTCH SQUARE BLVD	E	DUTCH SQUARE BLVD & 6522 (N)
43	6520	2	19.590095			
43	6520	3	23.06417			
43	6520	4	20.969446			
43	6520	5	21.883161			
43	6520	6	20.363243			
43	6520	7	17.418879			
43	6520	8	14.907046			
43	6520	9	18.839508			
43	6520	10	18.239908			
43	6522	1	0		SW	DUTCH SQUARE BLVD & 6522 (N)
43	6522	2	0			
43	6522	3	0			
43	6522	4	0			
43	6522	5	0			
43	6522	6	0			
43	6522	7	0			
43	6522	8	0			
43	6522	9	0			
43	6522	10	0			
46	6273	1	0	PARKRIDGE DR	NE	PARKRIDGE DR & 6555 (NE)
46	6273	2	0			
46	6273	3	0			
46	6273	4	0			
46	6273	5	0			
46	6273	6	0			
46	6273	7	0			
46	6273	8	0			
46	6273	9	0			
46	6273	10	0			
46	6555	1			SW	PARKRIDGE DR & 6555 (NE)
46	6555	2				
46	6555	3				

Node	Superlink	Run	Average Control Delay	Approach Street Name	Direction	Intersection
46	6555	4				
46	6555	5				
46	6555	6				
46	6555	7				
46	6555	8				
46	6555	9				
46	6555	10				
46	6556	1	28.560532	PARKRIDGE DR	SE	PARKRIDGE DR & 6555 (NE)
46	6556	2	22.703358			
46	6556	3	25.631848			
46	6556	4	24.420449			
46	6556	5	24.762			
46	6556	6	21.293745			
46	6556	7	21.854314			
46	6556	8	30.993588			
46	6556	9	28.436273			
46	6556	10	24.716115			
100000012	5081	1	36.660363	BROAD RIVER RD	SE	KINLEY RD
100000012	5081	2	38.403295			
100000012	5081	3	38.992209			
100000012	5081	4	35.695969			
100000012	5081	5	55.85325			
100000012	5081	6	57.04366			
100000012	5081	7	50.478545			
100000012	5081	8	33.263207			
100000012	5081	9	34.186873			
100000012	5081	10	39.017612			
100000012	6276	1	35.780961	KINLEY RD	N	KINLEY RD
100000012	6276	2	46.698579			
100000012	6276	3	44.017707			
100000012	6276	4	34.338084			
100000012	6276	5	42.270577			
100000012	6276	6	56.075937			
100000012	6276	7	49.492549			
100000012	6276	8	48.093803			
100000012	6276	9	49.988833			
100000012	6276	10	51.141129			
100000012	6307	1	216.73377	KENNERLY RD	S	KINLEY RD
100000012	6307	2	205.498741			
100000012	6307	3	222.732029			
100000012	6307	4	212.497796			
100000012	6307	5	215.133894			
100000012	6307	6	214.598952			
100000012	6307	7	211.188204			
100000012	6307	8	205.697095			
100000012	6307	9	206.336797			
100000012	6307	10	192.259769			
100000012	6308	1	25.35171	BROAD RIVER RD	NW	KINLEY RD
100000012	6308	2	24.21928			
100000012	6308	3	27.603045			
100000012	6308	4	28.183547			
100000012	6308	5	26.342848			
100000012	6308	6	25.010968			
100000012	6308	7	27.300886			
100000012	6308	8	27.132588			
100000012	6308	9	29.127886			
100000012	6308	10	26.777104			
100000025	6267	1	0	PARKRIDGE DR	NW	CLUB RD & PARKRIDGE DR
100000025	6267	2	0			
100000025	6267	3	0			
100000025	6267	4	0			
100000025	6267	5	0			
100000025	6267	6	0			
100000025	6267	7	0			
100000025	6267	8	0			
100000025	6267	9	0			
100000025	6267	10	0			
100000025	6273	1	0	PARKRIDGE DR	SE	CLUB RD & PARKRIDGE DR
100000025	6273	2	0			
100000025	6273	3	0			
100000025	6273	4	0			
100000025	6273	5	0			
100000025	6273	6	0			
100000025	6273	7	0			
100000025	6273	8	0			
100000025	6273	9	0			
100000025	6273	10	0			
100000025	6304	1		CLUB RD	S	CLUB RD & PARKRIDGE DR
100000025	6304	2				
100000025	6304	3				
100000025	6304	4				
100000025	6304	5				
100000025	6304	6				
100000025	6304	7				
100000025	6304	8				
100000025	6304	9				
100000025	6304	10				
100000037	5101	1	18.179124	HARBISON BLVD	NE	BROAD RIVER RD & HARBISON BLVD
100000037	5101	2	19.847627			
100000037	5101	3	18.964314			
100000037	5101	4	19.81886			
100000037	5101	5	20.624681			
100000037	5101	6	20.954646			
100000037	5101	7	18.363276			
100000037	5101	8	20.410767			
100000037	5101	9	19.479723			
100000037	5101	10	18.571144			
100000037	6317	1	12.52772	BROAD RIVER RD	SE	BROAD RIVER RD & HARBISON BLVD
100000037	6317	2	11.371191			
100000037	6317	3	11.849976			
100000037	6317	4	11.766016			
100000037	6317	5	12.867558			
100000037	6317	6	15.357882			
100000037	6317	7	12.26273			
100000037	6317	8	10.250847			
100000037	6317	9	11.371564			
100000037	6317	10	12.200311			
100000037	6320	1	5.212357	BROAD RIVER RD	NW	BROAD RIVER RD & HARBISON BLVD
100000037	6320	2	5.422534			
100000037	6320	3	4.878209			

Node	Superlink	Run	Average Control Delay	Approach Street Name	Direction	Intersection
100000037	6320	4	4.727249			
100000037	6320	5	4.529463			
100000037	6320	6	5.737			
100000037	6320	7	4.345088			
100000037	6320	8	5.009992			
100000037	6320	9	5.635437			
100000037	6320	10	4.58337			
100000038	6232	1	0	BROAD RIVER RD	NW	BROAD RIVER RD & 6311 (S)
100000038	6232	2	0			
100000038	6232	3	0			
100000038	6232	4	0			
100000038	6232	5	0			
100000038	6232	6	0			
100000038	6232	7	0			
100000038	6232	8	0			
100000038	6232	9	0			
100000038	6232	10	0			
100000038	6311	1	5.322813		N	BROAD RIVER RD & 6311 (S)
100000038	6311	2	10.073665			
100000038	6311	3	17.347988			
100000038	6311	4	5.20909			
100000038	6311	5	14.657183			
100000038	6311	6	3.574841			
100000038	6311	7	9.724176			
100000038	6311	8	3.458295			
100000038	6311	9	6.235752			
100000038	6311	10	27.058842			
100000038	6312	1	0.078794	BROAD RIVER RD	SE	BROAD RIVER RD & 6311 (S)
100000038	6312	2	0			
100000038	6312	3	0			
100000038	6312	4	0.005424			
100000038	6312	5	0			
100000038	6312	6	0			
100000038	6312	7	0			
100000038	6312	8	0			
100000038	6312	9	0			
100000038	6312	10	0			
100000041	6281	1	0	LAKE MURRAY BLVD	W	LAKE MURRAY BLVD & 6311 (N)
100000041	6281	2	0			
100000041	6281	3	0			
100000041	6281	4	0			
100000041	6281	5	0			
100000041	6281	6	0			
100000041	6281	7	0			
100000041	6281	8	0			
100000041	6281	9	0			
100000041	6281	10	0			
100000041	6311	1	4.964755		SW	LAKE MURRAY BLVD & 6311 (N)
100000041	6311	2				
100000041	6311	3				
100000041	6311	4				
100000041	6311	5				
100000041	6311	6				
100000041	6311	7				
100000041	6311	8				
100000041	6311	9				
100000041	6311	10				
100000041	6313	1	0.108325	LAKE MURRAY BLVD	E	LAKE MURRAY BLVD & 6311 (N)
100000041	6313	2	0.027971			
100000041	6313	3	0.041584			
100000041	6313	4	0.156641			
100000041	6313	5	0.030854			
100000041	6313	6	0.012565			
100000041	6313	7	0.077311			
100000041	6313	8	0.027368			
100000041	6313	9	0.030222			
100000041	6313	10	0.01234			
100000046	5511	1	28.483497	BUSH RIVER RD	E	BUSH RIVER RD
100000046	5511	2	29.462125			
100000046	5511	3	28.802486			
100000046	5511	4	27.32895			
100000046	5511	5	32.780682			
100000046	5511	6	28.635825			
100000046	5511	7	27.621336			
100000046	5511	8	28.888571			
100000046	5511	9	29.366469			
100000046	5511	10	28.322698			
100000046	6323	1	323.59871	BROAD RIVER RD	NW	BUSH RIVER RD
100000046	6323	2	355.568206			
100000046	6323	3	357.163123			
100000046	6323	4	325.257204			
100000046	6323	5	289.166862			
100000046	6323	6	354.855403			
100000046	6323	7	210.476414			
100000046	6323	8	261.836963			
100000046	6323	9	339.896213			
100000046	6323	10	248.241037			
100000046	6324	1	64.997316	ELM ABODE TER	SW	BUSH RIVER RD
100000046	6324	2	55.448649			
100000046	6324	3	109.492618			
100000046	6324	4	124.298079			
100000046	6324	5	102.676013			
100000046	6324	6	73.958185			
100000046	6324	7	74.433754			
100000046	6324	8	55.379891			
100000046	6324	9	63.788091			
100000046	6324	10	78.414731			
100000046	6518	1	24.573181	BROAD RIVER RD	SE	BUSH RIVER RD
100000046	6518	2	22.948954			
100000046	6518	3	29.406212			
100000046	6518	4	24.987198			
100000046	6518	5	28.16662			
100000046	6518	6	29.704228			
100000046	6518	7	25.371543			
100000046	6518	8	30.015036			
100000046	6518	9	22.40859			
100000046	6518	10	30.805506			
100000049	6318	1	81.816074	LOST CREEK DR	S	LOST CREEK DR
100000049	6318	2	75.218834			
100000049	6318	3	78.60835			

Node	Superlink	Run	Average Control Delay	Approach Street Name	Direction	Intersection
100000049	6318	4	77.407965			
100000049	6318	5	77.599102			
100000049	6318	6	81.361632			
100000049	6318	7	83.056896			
100000049	6318	8	75.237274			
100000049	6318	9	77.584383			
100000049	6318	10	83.312939			
100000049	6319	1	19.571005	PINEY WOODS RD	N	LOST CREEK DR
100000049	6319	2	17.776644			
100000049	6319	3	19.606844			
100000049	6319	4	19.180558			
100000049	6319	5	17.258076			
100000049	6319	6	19.8807			
100000049	6319	7	22.042355			
100000049	6319	8	17.415468			
100000049	6319	9	17.544621			
100000049	6319	10	20.322028			
100000049	6320	1	13.167576	BROAD RIVER RD	SE	LOST CREEK DR
100000049	6320	2	12.231441			
100000049	6320	3	12.550337			
100000049	6320	4	12.794144			
100000049	6320	5	13.558893			
100000049	6320	6	14.814254			
100000049	6320	7	11.662911			
100000049	6320	8	9.643033			
100000049	6320	9	12.434224			
100000049	6320	10	12.459693			
100000049	6322	1	7.372376	BROAD RIVER RD	NW	LOST CREEK DR
100000049	6322	2	7.470843			
100000049	6322	3	7.932162			
100000049	6322	4	7.466232			
100000049	6322	5	7.684949			
100000049	6322	6	7.78425			
100000049	6322	7	8.580916			
100000049	6322	8	8.507713			
100000049	6322	9	8.936715			
100000049	6322	10	7.603116			
100000068	6321	1	11.196756	PINEY GROVE RD	E	BROAD RIVER RD & PINEY GROVE RD
100000068	6321	2	12.460156			
100000068	6321	3	12.635162			
100000068	6321	4	13.725089			
100000068	6321	5	14.067352			
100000068	6321	6	13.853073			
100000068	6321	7	15.620199			
100000068	6321	8	16.520099			
100000068	6321	9	16.702127			
100000068	6321	10	13.347532			
100000068	6322	1	2.377723	BROAD RIVER RD	SE	BROAD RIVER RD & PINEY GROVE RD
100000068	6322	2	3.525217			
100000068	6322	3	3.016124			
100000068	6322	4	3.034435			
100000068	6322	5	3.279833			
100000068	6322	6	3.071729			
100000068	6322	7	2.318788			
100000068	6322	8	3.342806			
100000068	6322	9	2.743835			
100000068	6322	10	3.078676			
100000068	6357	1	3.336046	BROAD RIVER RD	NW	BROAD RIVER RD & PINEY GROVE RD
100000068	6357	2	3.426508			
100000068	6357	3	4.23118			
100000068	6357	4	5.360071			
100000068	6357	5	4.658594			
100000068	6357	6	3.250486			
100000068	6357	7	3.073925			
100000068	6357	8	3.485675			
100000068	6357	9	4.107685			
100000068	6357	10	4.540346			
100000085	6325	1	0.025399	BROAD RIVER RD	E	BROAD RIVER RD
100000085	6325	2	0.02328			
100000085	6325	3	0.061394			
100000085	6325	4	0.034164			
100000085	6325	5	0.050253			
100000085	6325	6	0.019528			
100000085	6325	7	0.043483			
100000085	6325	8	0.042123			
100000085	6325	9	0.043581			
100000085	6325	10	0.040869			
100000085	6329	1	3.100101	RT	E	BROAD RIVER RD
100000085	6329	2	3.378241			
100000085	6329	3	2.948278			
100000085	6329	4	3.938367			
100000085	6329	5	4.116965			
100000085	6329	6	3.342006			
100000085	6329	7	4.378055			
100000085	6329	8	4.310957			
100000085	6329	9	3.161568			
100000085	6329	10	3.783175			
100000085	6330	1	1.364367	BROAD RIVER RD	W	BROAD RIVER RD
100000085	6330	2	2.415547			
100000085	6330	3	5.8951			
100000085	6330	4	1.987065			
100000085	6330	5	2.308001			
100000085	6330	6	2.436262			
100000085	6330	7	3.318003			
100000085	6330	8	2.932467			
100000085	6330	9	2.468417			
100000085	6330	10	2.526873			
100000085	6331	1	4.583874	RIVERHILL CIR	W	BROAD RIVER RD
100000085	6331	2	4.766055			
100000085	6331	3	4.280951			
100000085	6331	4	6.615487			
100000085	6331	5	6.641915			
100000085	6331	6	4.863619			
100000085	6331	7	6.826051			
100000085	6331	8	6.709153			
100000085	6331	9	4.927978			
100000085	6331	10	8.139385			
100000093	4299	1	56.441332	RAMP	SW	SUNSET BLVD & RAMP
100000093	4299	2	54.218644			
100000093	4299	3	51.515087			

Node	Superlink	Run	Average Control Delay	Approach Street Name	Direction	Intersection
100000093	4299	4	55.490651			
100000093	4299	5	54.810857			
100000093	4299	6	51.738591			
100000093	4299	7	55.451263			
100000093	4299	8	53.584123			
100000093	4299	9	56.809682			
100000093	4299	10	54.220291			
100000093	4949	1	18.054488	SUNSET BLVD	E	SUNSET BLVD & RAMP
100000093	4949	2	24.180305			
100000093	4949	3	18.828991			
100000093	4949	4	15.476736			
100000093	4949	5	17.433018			
100000093	4949	6	20.368392			
100000093	4949	7	18.644981			
100000093	4949	8	20.379803			
100000093	4949	9	17.524005			
100000093	4949	10	17.003016			
100000093	4950	1	0.001263	SUNSET BLVD	W	SUNSET BLVD & RAMP
100000093	4950	2	0.002107			
100000093	4950	3	0.002635			
100000093	4950	4	0.021326			
100000093	4950	5	0.023804			
100000093	4950	6	0.001625			
100000093	4950	7	0.001952			
100000093	4950	8	0.001107			
100000093	4950	9	0.027328			
100000093	4950	10	0.002162			
100000120	5031	1	12.024357	SUNSET BLVD	W	CORLEY MILL RD
100000120	5031	2	11.585623			
100000120	5031	3	12.174694			
100000120	5031	4	10.821452			
100000120	5031	5	12.025573			
100000120	5031	6	11.462155			
100000120	5031	7	12.355689			
100000120	5031	8	11.096582			
100000120	5031	9	11.191167			
100000120	5031	10	11.736798			
100000120	5352	1	13.946269	CORLEY MILL RD	S	CORLEY MILL RD
100000120	5352	2	14.843244			
100000120	5352	3	15.823309			
100000120	5352	4	13.754419			
100000120	5352	5	13.894036			
100000120	5352	6	13.81214			
100000120	5352	7	14.668374			
100000120	5352	8	13.991808			
100000120	5352	9	13.111026			
100000120	5352	10	15.880472			
100000120	5353	1	30.873292	GINNY LN	N	CORLEY MILL RD
100000120	5353	2	35.513452			
100000120	5353	3	44.531428			
100000120	5353	4	31.861186			
100000120	5353	5	32.304233			
100000120	5353	6	31.321784			
100000120	5353	7	36.069591			
100000120	5353	8	36.042862			
100000120	5353	9	31.175995			
100000120	5353	10	36.34567			
100000120	5355	1	127.839373	SUNSET BLVD	E	CORLEY MILL RD
100000120	5355	2	154.3594			
100000120	5355	3	124.667978			
100000120	5355	4	123.225275			
100000120	5355	5	149.648381			
100000120	5355	6	113.237222			
100000120	5355	7	164.078013			
100000120	5355	8	78.037695			
100000120	5355	9	101.518229			
100000120	5355	10	119.893817			
100000134	2048	1	21.127539	RAMP	SW	SUNSET BLVD & RAMP
100000134	2048	2	23.555237			
100000134	2048	3	23.99869			
100000134	2048	4	25.666383			
100000134	2048	5	25.632905			
100000134	2048	6	24.604618			
100000134	2048	7	24.668767			
100000134	2048	8	23.178347			
100000134	2048	9	24.302121			
100000134	2048	10	23.461617			
100000134	5027	1	5.796631	SUNSET BLVD	NW	SUNSET BLVD & RAMP
100000134	5027	2	7.160019			
100000134	5027	3	6.90333			
100000134	5027	4	6.970519			
100000134	5027	5	5.862344			
100000134	5027	6	5.889349			
100000134	5027	7	7.327447			
100000134	5027	8	5.972894			
100000134	5027	9	4.999216			
100000134	5027	10	6.434503			
100000134	5030	1	7.731397	SUNSET BLVD	SE	SUNSET BLVD & RAMP
100000134	5030	2	10.734158			
100000134	5030	3	10.888807			
100000134	5030	4	12.186597			
100000134	5030	5	10.539033			
100000134	5030	6	7.756904			
100000134	5030	7	10.135417			
100000134	5030	8	8.521508			
100000134	5030	9	9.672227			
100000134	5030	10	10.474211			
100000135	2039	1	13.161695	I-20 EB OFF-RAMP	NE	SUNSET BLVD & I-20 EB OFF-RAMP
100000135	2039	2	12.386856			
100000135	2039	3	12.805583			
100000135	2039	4	13.256092			
100000135	2039	5	13.173389			
100000135	2039	6	11.646911			
100000135	2039	7	12.274463			
100000135	2039	8	12.701703			
100000135	2039	9	11.881719			
100000135	2039	10	13.261945			
100000135	5022	1	11.480069	SUNSET BLVD	SE	SUNSET BLVD & I-20 EB OFF-RAMP
100000135	5022	2	12.544826			
100000135	5022	3	10.868017			

Node	Superlink	Run	Average Control Delay	Approach Street Name	Direction	Intersection
100000135	5022	4	13.376145			
100000135	5022	5	12.432258			
100000135	5022	6	10.854829			
100000135	5022	7	11.590184			
100000135	5022	8	11.266121			
100000135	5022	9	14.060085			
100000135	5022	10	12.292871			
100000135	5023	1	5.44239	SUNSET BLVD	NW	SUNSET BLVD & I-20 EB OFF-RAMP
100000135	5023	2	5.336052			
100000135	5023	3	5.343607			
100000135	5023	4	5.284629			
100000135	5023	5	5.717804			
100000135	5023	6	6.167235			
100000135	5023	7	5.456187			
100000135	5023	8	5.156486			
100000135	5023	9	6.027699			
100000135	5023	10	6.267189			
100000136	5021	1	32.4582	SUNSET BLVD	SE	SUNSET BLVD
100000136	5021	2	34.442055			
100000136	5021	3	35.270837			
100000136	5021	4	35.417196			
100000136	5021	5	32.952692			
100000136	5021	6	31.714127			
100000136	5021	7	31.879632			
100000136	5021	8	34.092556			
100000136	5021	9	34.625301			
100000136	5021	10	34.570985			
100000136	5362	1	397.173479	CROMER RD	NE	SUNSET BLVD
100000136	5362	2	388.52443			
100000136	5362	3	381.95682			
100000136	5362	4	383.2382			
100000136	5362	5	444.452954			
100000136	5362	6	420.46685			
100000136	5362	7	348.586026			
100000136	5362	8	425.729691			
100000136	5362	9	385.557558			
100000136	5362	10	429.826595			
100000136	5364	1	84.723766	SUNSET BLVD	NW	SUNSET BLVD
100000136	5364	2	84.282383			
100000136	5364	3	56.948638			
100000136	5364	4	86.272597			
100000136	5364	5	93.918406			
100000136	5364	6	79.62681			
100000136	5364	7	81.030535			
100000136	5364	8	65.630221			
100000136	5364	9	85.082174			
100000136	5364	10	71.163751			
100000136	6459	1	11.554698	DAVEGA DR	SW	SUNSET BLVD
100000136	6459	2	19.906081			
100000136	6459	3	19.908368			
100000136	6459	4	21.527401			
100000136	6459	5	20.227868			
100000136	6459	6	19.38058			
100000136	6459	7	17.332347			
100000136	6459	8	12.338649			
100000136	6459	9	12.274323			
100000136	6459	10	16.169118			
100000138	2052	1	0	RAMP	NW	RAMP
100000138	2052	2	0			
100000138	2052	3	0			
100000138	2052	4	0			
100000138	2052	5	0			
100000138	2052	6	0			
100000138	2052	7	0			
100000138	2052	8	0			
100000138	2052	9	0			
100000138	2052	10	0			
100000138	5030	1	0	SUNSET BLVD	NW	RAMP
100000138	5030	2	0			
100000138	5030	3	0			
100000138	5030	4	0			
100000138	5030	5	0			
100000138	5030	6	0			
100000138	5030	7	0			
100000138	5030	8	0			
100000138	5030	9	0			
100000138	5030	10	0			
100000138	6553	1	20.483038	SUNSET BLVD	SE	RAMP
100000138	6553	2	31.241477			
100000138	6553	3	31.965081			
100000138	6553	4	41.304043			
100000138	6553	5	30.326224			
100000138	6553	6	20.480435			
100000138	6553	7	28.262287			
100000138	6553	8	24.579296			
100000138	6553	9	27.614396			
100000138	6553	10	30.398463			
100000139	2065	1	27.809858	RAMP	S	RAMP & BUSH RIVER RD
100000139	2065	2	36.469902			
100000139	2065	3	32.558733			
100000139	2065	4	29.307812			
100000139	2065	5	32.552486			
100000139	2065	6	29.577636			
100000139	2065	7	31.446313			
100000139	2065	8	23.226053			
100000139	2065	9	35.156792			
100000139	2065	10	30.659823			
100000139	5033	1	12.634436	BUSH RIVER RD	NW	RAMP & BUSH RIVER RD
100000139	5033	2	14.580521			
100000139	5033	3	11.767737			
100000139	5033	4	12.478895			
100000139	5033	5	11.115315			
100000139	5033	6	9.898142			
100000139	5033	7	11.857951			
100000139	5033	8	13.624693			
100000139	5033	9	10.64889			
100000139	5033	10	12.325521			
100000139	5034	1	7.956919	BUSH RIVER RD	SE	RAMP & BUSH RIVER RD
100000139	5034	2	8.104185			
100000139	5034	3	8.01845			

Node	Superlink	Run	Average Control Delay	Approach Street Name	Direction	Intersection
100000139	5034	4	8.669877			
100000139	5034	5	7.466122			
100000139	5034	6	7.027314			
100000139	5034	7	7.866412			
100000139	5034	8	8.58575			
100000139	5034	9	7.731253			
100000139	5034	10	8.258221			
100000140	5376	1	9.655279	SUNSET BLVD	W	SUMMER PLACE DR
100000140	5376	2	14.52217			
100000140	5376	3	10.482727			
100000140	5376	4	13.374726			
100000140	5376	5	10.518342			
100000140	5376	6	11.60168			
100000140	5376	7	11.435203			
100000140	5376	8	9.378193			
100000140	5376	9	10.233965			
100000140	5376	10	13.320102			
100000140	5378	1	49.000717	SUMMER PLACE DR	N	SUMMER PLACE DR
100000140	5378	2	44.875923			
100000140	5378	3	43.716402			
100000140	5378	4	45.809335			
100000140	5378	5	46.27098			
100000140	5378	6	44.659529			
100000140	5378	7	44.265787			
100000140	5378	8	43.771304			
100000140	5378	9	46.283684			
100000140	5378	10	44.43316			
100000140	6489	1		FAIRLANE DR	S	SUMMER PLACE DR
100000140	6489	2				
100000140	6489	3				
100000140	6489	4				
100000140	6489	5				
100000140	6489	6				
100000140	6489	7				
100000140	6489	8				
100000140	6489	9				
100000140	6489	10				
100000140	6764	1	9.743394	SUNSET BLVD	E	SUMMER PLACE DR
100000140	6764	2	10.941672			
100000140	6764	3	9.381138			
100000140	6764	4	9.963618			
100000140	6764	5	9.306964			
100000140	6764	6	7.840586			
100000140	6764	7	10.387764			
100000140	6764	8	8.872006			
100000140	6764	9	9.475265			
100000140	6764	10	9.944259			
100000142	2053	1	12.701307	RAMP	NE	BUSH RIVER RD & RAMP
100000142	2053	2	9.350116			
100000142	2053	3	11.84023			
100000142	2053	4	13.210314			
100000142	2053	5	10.819407			
100000142	2053	6	11.291947			
100000142	2053	7	10.192148			
100000142	2053	8	11.913574			
100000142	2053	9	12.041096			
100000142	2053	10	11.087424			
100000142	5036	1	2.875747	BUSH RIVER RD	SE	BUSH RIVER RD & RAMP
100000142	5036	2	3.469294			
100000142	5036	3	3.877994			
100000142	5036	4	2.405042			
100000142	5036	5	4.199982			
100000142	5036	6	4.791818			
100000142	5036	7	4.388194			
100000142	5036	8	3.281311			
100000142	5036	9	4.239463			
100000142	5036	10	3.078219			
100000142	5037	1	6.801565	BUSH RIVER RD	NW	BUSH RIVER RD & RAMP
100000142	5037	2	8.271407			
100000142	5037	3	8.870978			
100000142	5037	4	8.055926			
100000142	5037	5	7.734082			
100000142	5037	6	8.962564			
100000142	5037	7	8.202273			
100000142	5037	8	9.072853			
100000142	5037	9	8.232129			
100000142	5037	10	8.111247			
100000143	5372	1	0	SUNSET BLVD	E	SUNSET BLVD & HEBRON DR
100000143	5372	2	0			
100000143	5372	3	0			
100000143	5372	4	0			
100000143	5372	5	0			
100000143	5372	6	0			
100000143	5372	7	0			
100000143	5372	8	0			
100000143	5372	9	0			
100000143	5372	10	0			
100000143	6763	1		HEBRON DR	N	SUNSET BLVD & HEBRON DR
100000143	6763	2				
100000143	6763	3				
100000143	6763	4				
100000143	6763	5				
100000143	6763	6				
100000143	6763	7				
100000143	6763	8				
100000143	6763	9				
100000143	6763	10				
100000143	6764	1	0	SUNSET BLVD	W	SUNSET BLVD & HEBRON DR
100000143	6764	2	0			
100000143	6764	3	0			
100000143	6764	4	0			
100000143	6764	5	0			
100000143	6764	6	0			
100000143	6764	7	0			
100000143	6764	8	0			
100000143	6764	9	0			
100000143	6764	10	0			
100000144	5376	1	4.50987	SUNSET BLVD	E	SUNSET BLVD
100000144	5376	2	15.926067			
100000144	5376	3	9.956101			

Node	Superlink	Run	Average Control Delay	Approach Street Name	Direction	Intersection
100000144	5376	4	8.07362			
100000144	5376	5	8.468662			
100000144	5376	6	10.430739			
100000144	5376	7	8.438887			
100000144	5376	8	15.009944			
100000144	5376	9	6.323797			
100000144	5376	10	4.348199			
100000144	6760	1	57.633694	W. HOSPTIAL DR	S	SUNSET BLVD
100000144	6760	2	69.149509			
100000144	6760	3	60.146841			
100000144	6760	4	54.051125			
100000144	6760	5	60.742453			
100000144	6760	6	59.678929			
100000144	6760	7	61.800613			
100000144	6760	8	57.01166			
100000144	6760	9	58.311481			
100000144	6760	10	55.588425			
100000144	6761	1		SUNSET CT	N	SUNSET BLVD
100000144	6761	2				
100000144	6761	3				
100000144	6761	4				
100000144	6761	5				
100000144	6761	6				
100000144	6761	7				
100000144	6761	8				
100000144	6761	9				
100000144	6761	10				
100000144	6762	1	19.698346	SUNSET BLVD	W	SUNSET BLVD
100000144	6762	2	25.029666			
100000144	6762	3	22.460347			
100000144	6762	4	23.476853			
100000144	6762	5	24.600034			
100000144	6762	6	21.434156			
100000144	6762	7	26.541021			
100000144	6762	8	24.128714			
100000144	6762	9	20.57762			
100000144	6762	10	22.543572			
100000150	3361	1	17.229772	I-26 EXIT 101 EB OFF RAMP	SW	I-26 EXIT 101 EB OFF RAMP & BROAD RIVER RD
100000150	3361	2	20.381202			
100000150	3361	3	21.764945			
100000150	3361	4	20.796916			
100000150	3361	5	20.302917			
100000150	3361	6	17.102931			
100000150	3361	7	20.26629			
100000150	3361	8	16.778226			
100000150	3361	9	17.481079			
100000150	3361	10	20.80137			
100000150	5071	1	0	BROAD RIVER RD	E	I-26 EXIT 101 EB OFF RAMP & BROAD RIVER RD
100000150	5071	2	0			
100000150	5071	3	0			
100000150	5071	4	0			
100000150	5071	5	0			
100000150	5071	6	0			
100000150	5071	7	0			
100000150	5071	8	0			
100000150	5071	9	0			
100000150	5071	10	0			
100000150	5073	1	0.049507	BROAD RIVER RD	W	I-26 EXIT 101 EB OFF RAMP & BROAD RIVER RD
100000150	5073	2	0.048294			
100000150	5073	3	0.035433			
100000150	5073	4	0.05034			
100000150	5073	5	0.03702			
100000150	5073	6	0.048434			
100000150	5073	7	0.039902			
100000150	5073	8	0.040485			
100000150	5073	9	0.056208			
100000150	5073	10	0.033057			
100000151	5072	1	0.382998	BROAD RIVER RD	E	BROAD RIVER RD & ON-RAMP from WB
100000151	5072	2	0.398408			
100000151	5072	3	0.654338			
100000151	5072	4	0.553399			
100000151	5072	5	0.747793			
100000151	5072	6	0.539795			
100000151	5072	7	0.492098			
100000151	5072	8	0.571683			
100000151	5072	9	0.681948			
100000151	5072	10	0.541663			
100000151	5075	1	3.282413	BROAD RIVER RD	W	BROAD RIVER RD & ON-RAMP from WB
100000151	5075	2	2.669448			
100000151	5075	3	4.006632			
100000151	5075	4	3.729017			
100000151	5075	5	3.983574			
100000151	5075	6	3.934544			
100000151	5075	7	2.976244			
100000151	5075	8	3.717601			
100000151	5075	9	3.706184			
100000151	5075	10	2.767417			
100000155	6084	1	4.280481	BROAD RIVER RD	N	BEATTY RD & BROAD RIVER RD
100000155	6084	2	4.650009			
100000155	6084	3	4.547393			
100000155	6084	4	3.21341			
100000155	6084	5	5.522375			
100000155	6084	6	7.19824			
100000155	6084	7	5.512656			
100000155	6084	8	4.487868			
100000155	6084	9	4.768575			
100000155	6084	10	4.378721			
100000155	6355	1	30.983849	BEATTY RD	E	BEATTY RD & BROAD RIVER RD
100000155	6355	2	28.684348			
100000155	6355	3	31.456908			
100000155	6355	4	27.875288			
100000155	6355	5	30.003249			
100000155	6355	6	28.08561			
100000155	6355	7	30.468532			
100000155	6355	8	25.352967			
100000155	6355	9	30.720027			
100000155	6355	10	24.206239			
100000155	6357	1	12.691197	BROAD RIVER RD	S	BEATTY RD & BROAD RIVER RD
100000155	6357	2	13.888467			
100000155	6357	3	12.361163			

Node	Superlink	Run	Average Control Delay	Approach Street Name	Direction	Intersection
100000155	6357	4	14.538786			
100000155	6357	5	15.179852			
100000155	6357	6	13.362167			
100000155	6357	7	13.235451			
100000155	6357	8	12.817712			
100000155	6357	9	12.613017			
100000155	6357	10	12.65192			
100000163	4947	1	5.307964	SUNSET BLVD	E	MCSWAIN DR
100000163	4947	2	5.206281			
100000163	4947	3	4.695235			
100000163	4947	4	6.07018			
100000163	4947	5	6.906012			
100000163	4947	6	6.210628			
100000163	4947	7	5.227942			
100000163	4947	8	5.313421			
100000163	4947	9	6.110714			
100000163	4947	10	6.327235			
100000163	5388	1	5.375811	SUNSET BLVD	W	MCSWAIN DR
100000163	5388	2	4.960754			
100000163	5388	3	4.178947			
100000163	5388	4	4.989513			
100000163	5388	5	6.002627			
100000163	5388	6	5.430109			
100000163	5388	7	4.440595			
100000163	5388	8	5.305245			
100000163	5388	9	5.346402			
100000163	5388	10	5.040221			
100000163	5389	1	22.529643	MCSWAIN DR	S	MCSWAIN DR
100000163	5389	2	17.151081			
100000163	5389	3	15.552161			
100000163	5389	4	24.875283			
100000163	5389	5	22.187095			
100000163	5389	6	20.989146			
100000163	5389	7	20.869146			
100000163	5389	8	23.904416			
100000163	5389	9	19.966586			
100000163	5389	10	20.028827			
100000163	5418	1	84.381958	CHRIS DR	N	MCSWAIN DR
100000163	5418	2	79.80489			
100000163	5418	3	82.213411			
100000163	5418	4	66.569247			
100000163	5418	5	65.684231			
100000163	5418	6	80.904353			
100000163	5418	7	85.100227			
100000163	5418	8	76.143618			
100000163	5418	9	83.343609			
100000163	5418	10	88.112859			
100000164	3354	1	0	I-26 EXIT 102 EB OFF RAMP	W	LAKE MURRAY BLVD & I-26 EXIT 102 EB OFF RAMP
100000164	3354	2	0			
100000164	3354	3	0			
100000164	3354	4	0			
100000164	3354	5	0			
100000164	3354	6	0			
100000164	3354	7	0			
100000164	3354	8	0			
100000164	3354	9	0			
100000164	3354	10	0			
100000164	5084	1	0	LAKE MURRAY BLVD	E	LAKE MURRAY BLVD & I-26 EXIT 102 EB OFF RAMP
100000164	5084	2	0			
100000164	5084	3	0			
100000164	5084	4	0			
100000164	5084	5	0			
100000164	5084	6	0			
100000164	5084	7	0			
100000164	5084	8	0			
100000164	5084	9	0			
100000164	5084	10	0			
100000164	5085	1	0.000341	LAKE MURRAY BLVD	W	LAKE MURRAY BLVD & I-26 EXIT 102 EB OFF RAMP
100000164	5085	2	0			
100000164	5085	3	0.001636			
100000164	5085	4	0.001814			
100000164	5085	5	0.000316			
100000164	5085	6	0.000527			
100000164	5085	7	0			
100000164	5085	8	0.000318			
100000164	5085	9	0			
100000164	5085	10	0.000207			
100000165	3330	1	44.050765	EXIT 103 WB OFF RAMP	SE	HARBISON BLVD
100000165	3330	2	46.214571			
100000165	3330	3	40.812446			
100000165	3330	4	43.598696			
100000165	3330	5	45.865274			
100000165	3330	6	40.353448			
100000165	3330	7	47.020457			
100000165	3330	8	50.163516			
100000165	3330	9	43.254524			
100000165	3330	10	39.232727			
100000165	5096	1	6.372936	HARBISON BLVD	NE	HARBISON BLVD
100000165	5096	2	8.049817			
100000165	5096	3	6.602267			
100000165	5096	4	10.284159			
100000165	5096	5	7.749928			
100000165	5096	6	7.040858			
100000165	5096	7	9.127176			
100000165	5096	8	7.382112			
100000165	5096	9	6.848994			
100000165	5096	10	7.326911			
100000165	5102	1	3.261967	HARBISON BLVD	SW	HARBISON BLVD
100000165	5102	2	5.591679			
100000165	5102	3	4.706111			
100000165	5102	4	4.262774			
100000165	5102	5	4.522495			
100000165	5102	6	4.218869			
100000165	5102	7	4.119837			
100000165	5102	8	4.401897			
100000165	5102	9	5.78307			
100000165	5102	10	4.087309			
100000165	5103	1	50.282527	WOODCROSS DR	NW	HARBISON BLVD
100000165	5103	2	46.349364			
100000165	5103	3	48.083722			

Node	Superlink	Run	Average Control Delay	Approach Street Name	Direction	Intersection
100000165	5103	4	47.868432			
100000165	5103	5	47.613681			
100000165	5103	6	51.519366			
100000165	5103	7	50.029875			
100000165	5103	8	52.674273			
100000165	5103	9	49.859308			
100000165	5103	10	50.567995			
100000166	3343	1	0	I-26 EXIT 102 EBL OFF RAMP	E	LAKE MURRAY BLVD & I-26 EXIT 102 EBL OFF RAMP
100000166	3343	2	0			
100000166	3343	3	0			
100000166	3343	4	0			
100000166	3343	5	0			
100000166	3343	6	0			
100000166	3343	7	0			
100000166	3343	8	0			
100000166	3343	9	0			
100000166	3343	10	0			
100000166	5087	1	0	LAKE MURRAY BLVD	E	LAKE MURRAY BLVD & I-26 EXIT 102 EBL OFF RAMP
100000166	5087	2	0			
100000166	5087	3	0			
100000166	5087	4	0			
100000166	5087	5	0			
100000166	5087	6	0			
100000166	5087	7	0			
100000166	5087	8	0			
100000166	5087	9	0			
100000166	5087	10	0			
100000166	5088	1	0	LAKE MURRAY BLVD	W	LAKE MURRAY BLVD & I-26 EXIT 102 EBL OFF RAMP
100000166	5088	2	0			
100000166	5088	3	0			
100000166	5088	4	0			
100000166	5088	5	0			
100000166	5088	6	0			
100000166	5088	7	0			
100000166	5088	8	0			
100000166	5088	9	0			
100000166	5088	10	0			
100000167	3339	1	0	I-26 EXIT 102 WBL OFF RAMP	W	I-26 EXIT 102 WBL OFF RAMP & LAKE MURRAY BLVD
100000167	3339	2	0			
100000167	3339	3	0			
100000167	3339	4	0			
100000167	3339	5	0			
100000167	3339	6	0			
100000167	3339	7	0			
100000167	3339	8	0			
100000167	3339	9	0			
100000167	3339	10	0			
100000167	5088	1	0	LAKE MURRAY BLVD	E	I-26 EXIT 102 WBL OFF RAMP & LAKE MURRAY BLVD
100000167	5088	2	0			
100000167	5088	3	0			
100000167	5088	4	0			
100000167	5088	5	0			
100000167	5088	6	0			
100000167	5088	7	0			
100000167	5088	8	0			
100000167	5088	9	0			
100000167	5088	10	0			
100000167	5090	1	0	LAKE MURRAY BLVD	W	I-26 EXIT 102 WBL OFF RAMP & LAKE MURRAY BLVD
100000167	5090	2	0			
100000167	5090	3	0			
100000167	5090	4	0			
100000167	5090	5	0			
100000167	5090	6	0			
100000167	5090	7	0			
100000167	5090	8	0			
100000167	5090	9	0			
100000167	5090	10	0			
100000168	5366	1	21.62448	LEAPHART RD	N	SUNSET BLVD & LEAPHART RD
100000168	5366	2	24.447123			
100000168	5366	3	20.810055			
100000168	5366	4	23.185042			
100000168	5366	5	26.990395			
100000168	5366	6	23.661295			
100000168	5366	7	22.186617			
100000168	5366	8	20.987922			
100000168	5366	9	23.671033			
100000168	5366	10	21.660504			
100000168	5368	1	5.259214	SUNSET BLVD	E	SUNSET BLVD & LEAPHART RD
100000168	5368	2	6.233057			
100000168	5368	3	5.136743			
100000168	5368	4	6.327365			
100000168	5368	5	6.261643			
100000168	5368	6	5.898192			
100000168	5368	7	5.859671			
100000168	5368	8	5.386167			
100000168	5368	9	6.251778			
100000168	5368	10	5.060848			
100000168	5372	1	28.523048	SUNSET BLVD	W	SUNSET BLVD & LEAPHART RD
100000168	5372	2	43.825411			
100000168	5372	3	10.6656			
100000168	5372	4	49.782602			
100000168	5372	5	93.972074			
100000168	5372	6	65.283348			
100000168	5372	7	40.774864			
100000168	5372	8	11.868232			
100000168	5372	9	59.604725			
100000168	5372	10	14.110196			
100000171	3342	1	0	I-26 EXIT 102 WB OFF RAMP	E	LAKE MURRAY BLVD & I-26 EXIT 102 WB OFF RAMP
100000171	3342	2	0			
100000171	3342	3	0			
100000171	3342	4	0			
100000171	3342	5	0			
100000171	3342	6	0			
100000171	3342	7	0			
100000171	3342	8	0			
100000171	3342	9	0			
100000171	3342	10	0			
100000171	5092	1	0.008187	LAKE MURRAY BLVD	E	LAKE MURRAY BLVD & I-26 EXIT 102 WB OFF RAMP
100000171	5092	2	0.012457			
100000171	5092	3	0.00446			

Node	Superlink	Run	Average Control Delay	Approach Street Name	Direction	Intersection
100000171	5092	4	0.009673			
100000171	5092	5	0.013956			
100000171	5092	6	0.007959			
100000171	5092	7	0.007484			
100000171	5092	8	0.004669			
100000171	5092	9	0.005749			
100000171	5092	10	0.004569			
100000171	5093	1	0	LAKE MURRAY BLVD	W	LAKE MURRAY BLVD & I-26 EXIT 102 WB OFF RAMP
100000171	5093	2	0			
100000171	5093	3	0			
100000171	5093	4	0			
100000171	5093	5	0			
100000171	5093	6	0			
100000171	5093	7	0			
100000171	5093	8	0			
100000171	5093	9	0			
100000171	5093	10	0			
100000173	3212	1	51.970871		103 SE	HARBISON BLVD
100000173	3212	2	53.29775			
100000173	3212	3	49.663197			
100000173	3212	4	60.975814			
100000173	3212	5	43.20326			
100000173	3212	6	46.815512			
100000173	3212	7	50.986258			
100000173	3212	8	41.034826			
100000173	3212	9	50.256761			
100000173	3212	10	46.286287			
100000173	3213	1	8.422716		103 S	HARBISON BLVD
100000173	3213	2	8.674786			
100000173	3213	3	8.086402			
100000173	3213	4	8.601336			
100000173	3213	5	9.605033			
100000173	3213	6	8.42267			
100000173	3213	7	8.198767			
100000173	3213	8	7.936039			
100000173	3213	9	8.107957			
100000173	3213	10	9.849601			
100000173	5097	1	3.309956	HARBISON BLVD	NE	HARBISON BLVD
100000173	5097	2	3.831376			
100000173	5097	3	3.462685			
100000173	5097	4	3.205661			
100000173	5097	5	5.693671			
100000173	5097	6	4.30626			
100000173	5097	7	3.799889			
100000173	5097	8	3.605823			
100000173	5097	9	4.381119			
100000173	5097	10	3.198088			
100000173	5099	1	5.875035	HARBISON BLVD	SW	HARBISON BLVD
100000173	5099	2	5.09997			
100000173	5099	3	6.242937			
100000173	5099	4	5.579739			
100000173	5099	5	6.524148			
100000173	5099	6	5.979043			
100000173	5099	7	7.266395			
100000173	5099	8	5.816292			
100000173	5099	9	7.30071			
100000173	5099	10	8.167141			
100000175	3234	1	42.470741	RAMP	SE	PINEY GROVE RD & RAMP
100000175	3234	2	45.498163			
100000175	3234	3	38.604459			
100000175	3234	4	41.744637			
100000175	3234	5	44.400688			
100000175	3234	6	42.777219			
100000175	3234	7	45.570498			
100000175	3234	8	40.810277			
100000175	3234	9	44.121836			
100000175	3234	10	41.573185			
100000175	5112	1	16.879345	PINEY GROVE RD	W	PINEY GROVE RD & RAMP
100000175	5112	2	12.719207			
100000175	5112	3	14.640693			
100000175	5112	4	11.017131			
100000175	5112	5	15.381348			
100000175	5112	6	22.37102			
100000175	5112	7	32.967281			
100000175	5112	8	39.17406			
100000175	5112	9	12.663569			
100000175	5112	10	31.181178			
100000175	6544	1	8.021069	PINEY GROVE RD	E	PINEY GROVE RD & RAMP
100000175	6544	2	8.334662			
100000175	6544	3	9.534238			
100000175	6544	4	7.618192			
100000175	6544	5	7.448031			
100000175	6544	6	7.150149			
100000175	6544	7	7.492705			
100000175	6544	8	7.084104			
100000175	6544	9	7.835513			
100000175	6544	10	8.337877			
100000177	5112	1	15.426903	PINEY GROVE RD	E	PINEY GROVE RD
100000177	5112	2	20.346237			
100000177	5112	3	18.287904			
100000177	5112	4	15.626122			
100000177	5112	5	16.629747			
100000177	5112	6	15.848594			
100000177	5112	7	19.111082			
100000177	5112	8	19.847334			
100000177	5112	9	19.250688			
100000177	5112	10	25.925372			
100000177	5113	1	51.20712	PINEY GROVE RD	W	PINEY GROVE RD
100000177	5113	2	46.839548			
100000177	5113	3	53.213228			
100000177	5113	4	31.551637			
100000177	5113	5	45.296796			
100000177	5113	6	39.025729			
100000177	5113	7	55.92459			
100000177	5113	8	80.50452			
100000177	5113	9	44.790129			
100000177	5113	10	66.53959			
100000177	6513	1	7.627413	EXIT 104 WB OFF RAMP	N	PINEY GROVE RD
100000177	6513	2	8.341159			
100000177	6513	3	8.005963			

Node	Superlink	Run	Average Control Delay	Approach Street Name	Direction	Intersection
100000177	6513	4	8.896572			
100000177	6513	5	7.512342			
100000177	6513	6	7.416334			
100000177	6513	7	8.993471			
100000177	6513	8	7.23442			
100000177	6513	9	8.484035			
100000177	6513	10	9.107947			
100000177	6514	1	15.153727	EXIT 104 WB OFF RAMP	N	PINEY GROVE RD
100000177	6514	2	13.859959			
100000177	6514	3	16.060754			
100000177	6514	4	15.692225			
100000177	6514	5	13.944177			
100000177	6514	6	14.227928			
100000177	6514	7	13.87963			
100000177	6514	8	14.094707			
100000177	6514	9	15.176166			
100000177	6514	10	12.039978			
100000178	3301	1	36.698932	RAMP	SE	ST ANDREWS RD
100000178	3301	2	35.631339			
100000178	3301	3	31.957907			
100000178	3301	4	30.860294			
100000178	3301	5	33.642321			
100000178	3301	6	32.030754			
100000178	3301	7	32.074524			
100000178	3301	8	34.343558			
100000178	3301	9	33.641752			
100000178	3301	10	29.897476			
100000178	5118	1	3.426165	ST ANDREWS RD	E	ST ANDREWS RD
100000178	5118	2	3.423171			
100000178	5118	3	3.165963			
100000178	5118	4	3.237556			
100000178	5118	5	3.271373			
100000178	5118	6	3.408524			
100000178	5118	7	3.161379			
100000178	5118	8	3.579635			
100000178	5118	9	3.557687			
100000178	5118	10	3.477919			
100000178	5119	1	22.812059	WOODLAND HILLS RD	N	ST ANDREWS RD
100000178	5119	2	21.673907			
100000178	5119	3	22.923782			
100000178	5119	4	24.250995			
100000178	5119	5	22.758986			
100000178	5119	6	22.050913			
100000178	5119	7	21.844402			
100000178	5119	8	22.185937			
100000178	5119	9	23.646879			
100000178	5119	10	20.860982			
100000178	5120	1	11.666761	ST ANDREWS RD	W	ST ANDREWS RD
100000178	5120	2	15.506267			
100000178	5120	3	13.533142			
100000178	5120	4	16.14561			
100000178	5120	5	11.799592			
100000178	5120	6	14.094846			
100000178	5120	7	14.139742			
100000178	5120	8	13.971493			
100000178	5120	9	12.109115			
100000178	5120	10	11.980367			
100000179	3219	1	0	RAMP	S	ST ANDREWS RD & RAMP
100000179	3219	2	0			
100000179	3219	3	0			
100000179	3219	4	0			
100000179	3219	5	0			
100000179	3219	6	0			
100000179	3219	7	0			
100000179	3219	8	0			
100000179	3219	9	0			
100000179	3219	10	0			
100000179	5116	1	30.068963	ST ANDREWS RD	E	ST ANDREWS RD & RAMP
100000179	5116	2	31.799652			
100000179	5116	3	33.217283			
100000179	5116	4	33.025858			
100000179	5116	5	35.140602			
100000179	5116	6	30.675573			
100000179	5116	7	31.359452			
100000179	5116	8	35.663918			
100000179	5116	9	31.720512			
100000179	5116	10	35.415901			
100000179	5118	1	0	ST ANDREWS RD	W	ST ANDREWS RD & RAMP
100000179	5118	2	0			
100000179	5118	3	0			
100000179	5118	4	0			
100000179	5118	5	0			
100000179	5118	6	0			
100000179	5118	7	0			
100000179	5118	8	0			
100000179	5118	9	0			
100000179	5118	10	0			
100000182	3292	1	0	EXIT 106 WB OFF RAMP	NE	ST ANDREWS RD
100000182	3292	2	0			
100000182	3292	3	0			
100000182	3292	4	0			
100000182	3292	5	0			
100000182	3292	6	0			
100000182	3292	7	0			
100000182	3292	8	0			
100000182	3292	9	0			
100000182	3292	10	0			
100000182	5123	1	0	ST ANDREWS RD	E	ST ANDREWS RD
100000182	5123	2	0			
100000182	5123	3	0			
100000182	5123	4	0			
100000182	5123	5	0			
100000182	5123	6	0			
100000182	5123	7	0			
100000182	5123	8	0			
100000182	5123	9	0			
100000182	5123	10	0			
100000182	5124	1	0	ST ANDREWS RD	SW	ST ANDREWS RD
100000182	5124	2	0			
100000182	5124	3	0			

Node	Superlink	Run	Average Control Delay	Approach Street Name	Direction	Intersection
100000182	5124	4	0			
100000182	5124	5	0			
100000182	5124	6	0			
100000182	5124	7	0			
100000182	5124	8	0			
100000182	5124	9	0			
100000182	5124	10	0			
100000184	5499	1	14.926277	N ARROWWOOD RD	S	ARROWWOOD RD
100000184	5499	2	15.384611			
100000184	5499	3	16.166694			
100000184	5499	4	16.707209			
100000184	5499	5	15.844921			
100000184	5499	6	18.299989			
100000184	5499	7	16.883326			
100000184	5499	8	17.969924			
100000184	5499	9	15.616818			
100000184	5499	10	15.24264			
100000184	5500	1	37.994839	ARROWWOOD RD	N	ARROWWOOD RD
100000184	5500	2	35.271508			
100000184	5500	3	36.019582			
100000184	5500	4	39.287191			
100000184	5500	5	34.492718			
100000184	5500	6	37.898511			
100000184	5500	7	40.155014			
100000184	5500	8	34.960072			
100000184	5500	9	37.845256			
100000184	5500	10	35.90826			
100000184	6497	1	9.571252	BUSH RIVER RD	W	ARROWWOOD RD
100000184	6497	2	8.740355			
100000184	6497	3	9.085887			
100000184	6497	4	7.998122			
100000184	6497	5	9.225334			
100000184	6497	6	9.769137			
100000184	6497	7	9.138748			
100000184	6497	8	9.880853			
100000184	6497	9	10.274839			
100000184	6497	10	9.665182			
100000184	6505	1	11.004291	BUSH RIVER RD	E	ARROWWOOD RD
100000184	6505	2	10.858343			
100000184	6505	3	12.021154			
100000184	6505	4	10.455526			
100000184	6505	5	11.812592			
100000184	6505	6	9.226489			
100000184	6505	7	10.853978			
100000184	6505	8	10.120553			
100000184	6505	9	10.414067			
100000184	6505	10	12.344073			
100000185	3230	1	24.205427	RAMP	W	GREYSTONE BLVD
100000185	3230	2	18.408389			
100000185	3230	3	22.779032			
100000185	3230	4	23.611368			
100000185	3230	5	25.585023			
100000185	3230	6	31.034209			
100000185	3230	7	16.670094			
100000185	3230	8	19.04905			
100000185	3230	9	20.169138			
100000185	3230	10	25.692104			
100000185	5140	1	0.216356	GREYSTONE BLVD	N	GREYSTONE BLVD
100000185	5140	2	0.349058			
100000185	5140	3	0.121238			
100000185	5140	4	0.248933			
100000185	5140	5	0.170971			
100000185	5140	6	0.345921			
100000185	5140	7	0.165109			
100000185	5140	8	0.107105			
100000185	5140	9	0			
100000185	5140	10	0.416838			
100000185	5141	1	0.297957	GREYSTONE BLVD	S	GREYSTONE BLVD
100000185	5141	2	0.788558			
100000185	5141	3	0.345806			
100000185	5141	4	0.66792			
100000185	5141	5	0.552055			
100000185	5141	6	0.826833			
100000185	5141	7	0.462494			
100000185	5141	8	0.545617			
100000185	5141	9	0.784223			
100000185	5141	10	0.923129			
100000186	4949	1	12.522201	SUNSET BLVD	W	HARBOR DR
100000186	4949	2	14.011233			
100000186	4949	3	9.551694			
100000186	4949	4	10.332491			
100000186	4949	5	12.100437			
100000186	4949	6	10.244918			
100000186	4949	7	11.249627			
100000186	4949	8	15.040831			
100000186	4949	9	12.925511			
100000186	4949	10	12.170851			
100000186	5386	1	169.237117	HARBOR DR	N	HARBOR DR
100000186	5386	2	246.814947			
100000186	5386	3	149.767245			
100000186	5386	4	136.968253			
100000186	5386	5	149.715186			
100000186	5386	6	165.685228			
100000186	5386	7	183.242727			
100000186	5386	8	230.287732			
100000186	5386	9	182.658251			
100000186	5386	10	168.525925			
100000186	5387	1	67.310099	E HOSPITAL DR	S	HARBOR DR
100000186	5387	2	73.61722			
100000186	5387	3	72.576151			
100000186	5387	4	60.328238			
100000186	5387	5	61.804945			
100000186	5387	6	76.221763			
100000186	5387	7	68.999691			
100000186	5387	8	83.743279			
100000186	5387	9	62.605005			
100000186	5387	10	60.008198			
100000186	6762	1	30.214514	SUNSET BLVD	E	HARBOR DR
100000186	6762	2	44.514599			
100000186	6762	3	33.094368			

Node	Superlink	Run	Average Control Delay	Approach Street Name	Direction	Intersection
100000186	6762	4	23.603819			
100000186	6762	5	26.801141			
100000186	6762	6	32.240349			
100000186	6762	7	31.498448			
100000186	6762	8	40.768486			
100000186	6762	9	22.380346			
100000186	6762	10	23.709371			
100000187	6057	1	25.031813	BROAD RIVER RD	NW	BROAD RIVER RD
100000187	6057	2	29.385681			
100000187	6057	3	24.789972			
100000187	6057	4	22.184506			
100000187	6057	5	22.942477			
100000187	6057	6	23.680311			
100000187	6057	7	26.789302			
100000187	6057	8	25.822349			
100000187	6057	9	23.734025			
100000187	6057	10	24.286713			
100000187	6059	1	41.084417	BROAD RIVER RD	SE	BROAD RIVER RD
100000187	6059	2	38.303315			
100000187	6059	3	33.559032			
100000187	6059	4	39.016536			
100000187	6059	5	37.440497			
100000187	6059	6	37.096643			
100000187	6059	7	37.755725			
100000187	6059	8	39.166873			
100000187	6059	9	39.844201			
100000187	6059	10	35.878244			
100000187	6060	1	511.463098	MARLEY DR	SW	BROAD RIVER RD
100000187	6060	2	358.359415			
100000187	6060	3	445.432885			
100000187	6060	4	376.948642			
100000187	6060	5	337.652391			
100000187	6060	6	457.889404			
100000187	6060	7	324.783472			
100000187	6060	8	581.014971			
100000187	6060	9	442.385192			
100000187	6060	10	254.137615			
100000187	6061	1	35.816641	BRIARGATE CIR	NE	BROAD RIVER RD
100000187	6061	2	39.595605			
100000187	6061	3	43.895086			
100000187	6061	4	43.227115			
100000187	6061	5	36.000476			
100000187	6061	6	37.683814			
100000187	6061	7	38.557904			
100000187	6061	8	48.063453			
100000187	6061	9	34.197186			
100000187	6061	10	41.674898			
100000188	3221	1	17.25889	RAMP	W	GREYSTONE BLVD & RAMP
100000188	3221	2	14.251144			
100000188	3221	3	15.029972			
100000188	3221	4	13.115302			
100000188	3221	5	10.60698			
100000188	3221	6	18.077381			
100000188	3221	7	18.334247			
100000188	3221	8	17.169383			
100000188	3221	9	15.538971			
100000188	3221	10	24.344009			
100000188	5143	1	0.504156	GREYSTONE BLVD	N	GREYSTONE BLVD & RAMP
100000188	5143	2	0.89586			
100000188	5143	3	0.715147			
100000188	5143	4	1.017033			
100000188	5143	5	0.414783			
100000188	5143	6	0.584676			
100000188	5143	7	0.585588			
100000188	5143	8	0.488723			
100000188	5143	9	0.716723			
100000188	5143	10	0.494983			
100000188	5144	1	0.014015	GREYSTONE BLVD	S	GREYSTONE BLVD & RAMP
100000188	5144	2	0.030364			
100000188	5144	3	0.028472			
100000188	5144	4	0.029649			
100000188	5144	5	0.039604			
100000188	5144	6	0.060603			
100000188	5144	7	0.031493			
100000188	5144	8	0.074621			
100000188	5144	9	0.048314			
100000188	5144	10	0.118317			
100000189	4346	1	46.439983	I-20 EXIT 65 WB OFF RAMP	SW	I-20 EXIT 65 WB OFF RAMP
100000189	4346	2	48.164048			
100000189	4346	3	52.79932			
100000189	4346	4	47.551846			
100000189	4346	5	48.244492			
100000189	4346	6	45.178646			
100000189	4346	7	45.880934			
100000189	4346	8	44.687662			
100000189	4346	9	51.918489			
100000189	4346	10	41.014701			
100000189	6057	1	79.22603	BROAD RIVER RD	SE	I-20 EXIT 65 WB OFF RAMP
100000189	6057	2	75.193371			
100000189	6057	3	69.179636			
100000189	6057	4	77.364519			
100000189	6057	5	77.514165			
100000189	6057	6	73.247834			
100000189	6057	7	77.729762			
100000189	6057	8	78.093817			
100000189	6057	9	78.760728			
100000189	6057	10	70.336653			
100000189	6447	1	10.955645	BROAD RIVER RD	NW	I-20 EXIT 65 WB OFF RAMP
100000189	6447	2	10.214582			
100000189	6447	3	10.363706			
100000189	6447	4	8.960695			
100000189	6447	5	11.073435			
100000189	6447	6	9.037722			
100000189	6447	7	7.993707			
100000189	6447	8	9.845755			
100000189	6447	9	9.223728			
100000189	6447	10	7.755572			
100000190	4341	1	44.673267	I-20 EXIT 65 EB OFF RAMP	E	BROAD RIVER RD
100000190	4341	2	46.382102			
100000190	4341	3	43.838345			

Node	Superlink	Run	Average Control Delay	Approach Street Name	Direction	Intersection
100000190	4341	4	43.915005			
100000190	4341	5	52.87			
100000190	4341	6	47.455307			
100000190	4341	7	48.70979			
100000190	4341	8	48.361938			
100000190	4341	9	47.490289			
100000190	4341	10	45.468118			
100000190	5148	1	1.726421	BROAD RIVER RD	SE	BROAD RIVER RD
100000190	5148	2	1.635962			
100000190	5148	3	1.6221			
100000190	5148	4	1.846072			
100000190	5148	5	1.716322			
100000190	5148	6	1.597215			
100000190	5148	7	1.695981			
100000190	5148	8	1.681938			
100000190	5148	9	1.736935			
100000190	5148	10	1.691858			
100000190	6445	1	13.58474	BROAD RIVER RD	NW	BROAD RIVER RD
100000190	6445	2	13.735447			
100000190	6445	3	14.29153			
100000190	6445	4	13.58886			
100000190	6445	5	12.399928			
100000190	6445	6	12.956504			
100000190	6445	7	14.363601			
100000190	6445	8	15.052062			
100000190	6445	9	12.986874			
100000190	6445	10	13.647963			
100000190	6446	1		SERVICE RD	SW	BROAD RIVER RD
100000190	6446	2				
100000190	6446	3				
100000190	6446	4				
100000190	6446	5				
100000190	6446	6				
100000190	6446	7				
100000190	6446	8				
100000190	6446	9				
100000190	6446	10				
100000191	5399	1	0.082774	HARBOR DR	S	HARBOR DR & OAKWOOD DR
100000191	5399	2	0.105249			
100000191	5399	3	0.031901			
100000191	5399	4	0.179893			
100000191	5399	5	0.324781			
100000191	5399	6	0			
100000191	5399	7	0.009161			
100000191	5399	8	0.001787			
100000191	5399	9	0.070893			
100000191	5399	10	0.138506			
100000191	5414	1	30.661653	OAKWOOD DR	NE	HARBOR DR & OAKWOOD DR
100000191	5414	2	36.134237			
100000191	5414	3	18.774454			
100000191	5414	4	6.491701			
100000191	5414	5	6.82492			
100000191	5414	6	6.683416			
100000191	5414	7	18.111152			
100000191	5414	8	38.82973			
100000191	5414	9	6.348297			
100000191	5414	10	10.856847			
100000191	5420	1	19.282328	HARBOR DR	N	HARBOR DR & OAKWOOD DR
100000191	5420	2	41.050734			
100000191	5420	3	19.457166			
100000191	5420	4	0.066036			
100000191	5420	5	0.070925			
100000191	5420	6	0.046988			
100000191	5420	7	0.045528			
100000191	5420	8	97.080048			
100000191	5420	9	0.043907			
100000191	5420	10	0.021767			
100000193	4350	1	32.159778	I-20 EXIT 68 EB OFF RAMP	E	BUCKNER RD
100000193	4350	2	45.260868			
100000193	4350	3	33.313126			
100000193	4350	4	37.005468			
100000193	4350	5	32.212929			
100000193	4350	6	32.282635			
100000193	4350	7	31.701927			
100000193	4350	8	38.513002			
100000193	4350	9	37.380636			
100000193	4350	10	33.345059			
100000193	5154	1	22.941068	MONTICELLO RD	N	BUCKNER RD
100000193	5154	2	21.743534			
100000193	5154	3	21.229506			
100000193	5154	4	23.707684			
100000193	5154	5	22.806375			
100000193	5154	6	20.868697			
100000193	5154	7	22.069527			
100000193	5154	8	21.813615			
100000193	5154	9	21.481425			
100000193	5154	10	23.190043			
100000193	5155	1	17.551652	MONTICELLO RD	SE	BUCKNER RD
100000193	5155	2	16.520653			
100000193	5155	3	16.541006			
100000193	5155	4	16.361941			
100000193	5155	5	16.713579			
100000193	5155	6	16.429801			
100000193	5155	7	15.553868			
100000193	5155	8	15.567197			
100000193	5155	9	18.266519			
100000193	5155	10	16.635542			
100000193	5163	1	9.693373	BUCKNER RD	SW	BUCKNER RD
100000193	5163	2	8.888066			
100000193	5163	3	10.924521			
100000193	5163	4	9.635895			
100000193	5163	5	10.600664			
100000193	5163	6	10.936704			
100000193	5163	7	10.89096			
100000193	5163	8	9.721542			
100000193	5163	9	10.372243			
100000193	5163	10	9.335373			
100000195	5150	1	4.979542	BROAD RIVER RD	SE	LONGCREEK DR & BROAD RIVER RD
100000195	5150	2	4.583904			
100000195	5150	3	4.987175			

Node	Superlink	Run	Average Control Delay	Approach Street Name	Direction	Intersection
100000195	5150	4	4.214702			
100000195	5150	5	5.491018			
100000195	5150	6	5.286231			
100000195	5150	7	4.886866			
100000195	5150	8	4.594966			
100000195	5150	9	4.825985			
100000195	5150	10	4.887737			
100000195	6049	1	5.200271	BROAD RIVER RD	NW	LONGCREEK DR & BROAD RIVER RD
100000195	6049	2	5.179983			
100000195	6049	3	6.621802			
100000195	6049	4	5.258333			
100000195	6049	5	6.70457			
100000195	6049	6	6.366502			
100000195	6049	7	5.918606			
100000195	6049	8	6.496394			
100000195	6049	9	5.57866			
100000195	6049	10	5.043459			
100000195	6052	1	14.342047	LONGCREEK DR	SW	LONGCREEK DR & BROAD RIVER RD
100000195	6052	2	14.683195			
100000195	6052	3	12.891718			
100000195	6052	4	15.01242			
100000195	6052	5	15.722436			
100000195	6052	6	16.474669			
100000195	6052	7	14.599653			
100000195	6052	8	15.517446			
100000195	6052	9	15.721452			
100000195	6052	10	14.858944			
100000196	5166	1	1.728825	MONTICELLO RD	SE	SERVICE RD
100000196	5166	2	1.852928			
100000196	5166	3	1.662882			
100000196	5166	4	1.528599			
100000196	5166	5	1.942351			
100000196	5166	6	1.955746			
100000196	5166	7	2.181769			
100000196	5166	8	1.812989			
100000196	5166	9	1.780405			
100000196	5166	10	1.462007			
100000196	5169	1	15.77181	SERVICE RD	SW	SERVICE RD
100000196	5169	2	11.590159			
100000196	5169	3	15.094389			
100000196	5169	4	16.056084			
100000196	5169	5	14.65349			
100000196	5169	6	19.689426			
100000196	5169	7	13.240354			
100000196	5169	8	13.071832			
100000196	5169	9	16.553834			
100000196	5169	10	15.517673			
100000196	5172	1	1.730602	MONTICELLO RD	NW	SERVICE RD
100000196	5172	2	1.708197			
100000196	5172	3	1.371693			
100000196	5172	4	1.463048			
100000196	5172	5	1.778472			
100000196	5172	6	1.615685			
100000196	5172	7	2.056937			
100000196	5172	8	1.784115			
100000196	5172	9	1.422726			
100000196	5172	10	1.418264			
100000198	4354	1	0	RAMP	N	RAMP & I-20 EXIT 68 EB ON RAMP
100000198	4354	2	0			
100000198	4354	3	0			
100000198	4354	4	0			
100000198	4354	5	0			
100000198	4354	6	0			
100000198	4354	7	0			
100000198	4354	8	0			
100000198	4354	9	0			
100000198	4354	10	0			
100000198	5158	1		RAMP	NW	RAMP & I-20 EXIT 68 EB ON RAMP
100000198	5158	2				
100000198	5158	3				
100000198	5158	4				
100000198	5158	5				
100000198	5158	6				
100000198	5158	7				
100000198	5158	8				
100000198	5158	9				
100000198	5158	10				
100000200	5174	1	8.756252	MONTICELLO RD	NW	MONTICELLO RD
100000200	5174	2	7.491982			
100000200	5174	3	7.731578			
100000200	5174	4	7.079236			
100000200	5174	5	7.637009			
100000200	5174	6	6.967813			
100000200	5174	7	6.955595			
100000200	5174	8	8.585981			
100000200	5174	9	7.98395			
100000200	5174	10	8.782068			
100000200	6041	1	5.98004	MONTICELLO RD	SE	MONTICELLO RD
100000200	6041	2	6.106563			
100000200	6041	3	5.235206			
100000200	6041	4	4.856279			
100000200	6041	5	5.062869			
100000200	6041	6	5.848582			
100000200	6041	7	5.842864			
100000200	6041	8	5.823549			
100000200	6041	9	5.041583			
100000200	6041	10	5.983876			
100000200	6044	1	14.12401	PEEPLES ST	NE	MONTICELLO RD
100000200	6044	2	13.428062			
100000200	6044	3	14.219152			
100000200	6044	4	13.638188			
100000200	6044	5	15.342388			
100000200	6044	6	15.895915			
100000200	6044	7	13.919791			
100000200	6044	8	15.054005			
100000200	6044	9	14.466857			
100000200	6044	10	11.42658			
100000200	6046	1	26.730194	BLUE RIDGE TER	S	MONTICELLO RD
100000200	6046	2	26.22914			
100000200	6046	3	25.635437			

Node	Superlink	Run	Average Control Delay	Approach Street Name	Direction	Intersection
100000200	6046	4	26.837449			
100000200	6046	5	25.585203			
100000200	6046	6	24.396253			
100000200	6046	7	26.459634			
100000200	6046	8	23.77576			
100000200	6046	9	27.274363			
100000200	6046	10	24.886228			
100000201	5157	1	1.656679	BUCKNER RD	SW	BUCKNER RD & TO BUCKNER ROAD
100000201	5157	2	1.364174			
100000201	5157	3	1.477983			
100000201	5157	4	1.736824			
100000201	5157	5	2.100394			
100000201	5157	6	1.480043			
100000201	5157	7	1.577102			
100000201	5157	8	1.748697			
100000201	5157	9	1.596998			
100000201	5157	10	1.72866			
100000201	5161	1	0.688601	TO BUCKNER ROAD	N	BUCKNER RD & TO BUCKNER ROAD
100000201	5161	2	2.295882			
100000201	5161	3	0.048573			
100000201	5161	4	0.058602			
100000201	5161	5	1.075859			
100000201	5161	6	0.563442			
100000201	5161	7	0			
100000201	5161	8	0.512476			
100000201	5161	9	0.016035			
100000201	5161	10	0.012			
100000201	5163	1	0.002433	BUCKNER RD	NE	BUCKNER RD & TO BUCKNER ROAD
100000201	5163	2	0.002434			
100000201	5163	3	0.004247			
100000201	5163	4	0.004568			
100000201	5163	5	0.003397			
100000201	5163	6	0.002648			
100000201	5163	7	0.004514			
100000201	5163	8	0.003506			
100000201	5163	9	0.003515			
100000201	5163	10	0.003124			
100000203	5169	1		SERVICE RD	E	SERVICE RD & MONTICELLO RD
100000203	5169	2				
100000203	5169	3				
100000203	5169	4				
100000203	5169	5				
100000203	5169	6				
100000203	5169	7				
100000203	5169	8				
100000203	5169	9				
100000203	5169	10				
100000203	5171	1		MONTICELLO RD	N	SERVICE RD & MONTICELLO RD
100000203	5171	2				
100000203	5171	3				
100000203	5171	4				
100000203	5171	5				
100000203	5171	6				
100000203	5171	7				
100000203	5171	8				
100000203	5171	9				
100000203	5171	10				
100000203	5173	1	0.367241	SERVICE RD	W	SERVICE RD & MONTICELLO RD
100000203	5173	2	0.694497			
100000203	5173	3	0.436909			
100000203	5173	4	0.335101			
100000203	5173	5	0.380621			
100000203	5173	6	0.369364			
100000203	5173	7	0.368546			
100000203	5173	8	0.554539			
100000203	5173	9	0.628113			
100000203	5173	10	0.35162			
100000250	6539	1	27.529848	BUSH RIVER RD	NW	E MEADOW CT/WOODLAND VILLAGE DR
100000250	6539	2	41.401287			
100000250	6539	3	44.490721			
100000250	6539	4	36.686303			
100000250	6539	5	32.711401			
100000250	6539	6	36.660606			
100000250	6539	7	37.016088			
100000250	6539	8	40.66532			
100000250	6539	9	23.969711			
100000250	6539	10	36.841512			
100000250	6546	1	23.817762	OUTLET POINTE BLVD	NE	E MEADOW CT/WOODLAND VILLAGE DR
100000250	6546	2	23.169105			
100000250	6546	3	28.390209			
100000250	6546	4	25.850408			
100000250	6546	5	28.408797			
100000250	6546	6	27.00709			
100000250	6546	7	20.612238			
100000250	6546	8	19.358917			
100000250	6546	9	25.633366			
100000250	6546	10	27.202172			
100000250	6547	1	27.36644	E MEADOW CT/WOODLAND VILLAGE DR	SW	E MEADOW CT/WOODLAND VILLAGE DR
100000250	6547	2	22.364426			
100000250	6547	3	22.866511			
100000250	6547	4	25.698898			
100000250	6547	5	27.863509			
100000250	6547	6	21.497805			
100000250	6547	7	19.411712			
100000250	6547	8	22.191568			
100000250	6547	9	24.204559			
100000250	6547	10	25.880381			
100000250	6548	1	35.189818	BUSH RIVER RD	SE	E MEADOW CT/WOODLAND VILLAGE DR
100000250	6548	2	41.563433			
100000250	6548	3	39.023446			
100000250	6548	4	42.010535			
100000250	6548	5	36.830176			
100000250	6548	6	40.060195			
100000250	6548	7	40.880876			
100000250	6548	8	35.7012			
100000250	6548	9	35.65869			
100000250	6548	10	38.280098			
100000252	5125	1	7.097471	BUSH RIVER RD	E	MORNINGHILL DR
100000252	5125	2	6.592178			
100000252	5125	3	6.628366			

Node	Superlink	Run	Average Control Delay	Approach Street Name	Direction	Intersection
100000252	5125	4	7.095531			
100000252	5125	5	6.587661			
100000252	5125	6	7.070317			
100000252	5125	7	6.720882			
100000252	5125	8	7.103062			
100000252	5125	9	6.78532			
100000252	5125	10	7.303385			
100000252	5487	1	84.075381	MORNINGHILL DR	S	MORNINGHILL DR
100000252	5487	2	88.437113			
100000252	5487	3	82.823354			
100000252	5487	4	82.911669			
100000252	5487	5	83.237026			
100000252	5487	6	77.45592			
100000252	5487	7	85.944376			
100000252	5487	8	83.580989			
100000252	5487	9	85.083182			
100000252	5487	10	88.837273			
100000252	5488	1	21.891141	RAMP	N	MORNINGHILL DR
100000252	5488	2	21.482787			
100000252	5488	3	20.970421			
100000252	5488	4	20.679042			
100000252	5488	5	20.946893			
100000252	5488	6	18.840177			
100000252	5488	7	22.073006			
100000252	5488	8	23.393015			
100000252	5488	9	21.293318			
100000252	5488	10	20.619946			
100000252	6505	1	28.509036	BUSH RIVER RD	W	MORNINGHILL DR
100000252	6505	2	28.075541			
100000252	6505	3	26.430246			
100000252	6505	4	24.65544			
100000252	6505	5	27.970721			
100000252	6505	6	27.593022			
100000252	6505	7	29.955512			
100000252	6505	8	27.199446			
100000252	6505	9	23.799577			
100000252	6505	10	24.207959			
100000255	5038	1	4.925964	BUSH RIVER RD	E	BUSH RIVER RD & INDEPENDENCE AVE
100000255	5038	2	4.980626			
100000255	5038	3	5.582222			
100000255	5038	4	5.02934			
100000255	5038	5	5.019891			
100000255	5038	6	4.472131			
100000255	5038	7	5.090786			
100000255	5038	8	4.868983			
100000255	5038	9	5.70912			
100000255	5038	10	4.22481			
100000255	5470	1	28.500276	INDEPENDENCE AVE	N	BUSH RIVER RD & INDEPENDENCE AVE
100000255	5470	2	34.504151			
100000255	5470	3	28.17051			
100000255	5470	4	30.59868			
100000255	5470	5	32.076529			
100000255	5470	6	32.559752			
100000255	5470	7	31.074544			
100000255	5470	8	32.300097			
100000255	5470	9	30.22109			
100000255	5470	10	33.398719			
100000255	5471	1	67.949962	BUSH RIVER RD	W	BUSH RIVER RD & INDEPENDENCE AVE
100000255	5471	2	126.932696			
100000255	5471	3	101.391888			
100000255	5471	4	116.664471			
100000255	5471	5	169.525494			
100000255	5471	6	176.097907			
100000255	5471	7	169.5278			
100000255	5471	8	113.856694			
100000255	5471	9	87.62763			
100000255	5471	10	88.967869			
100000256	5131	1	7.988859	BUSH RIVER RD	W	BUSH RIVER RD & ZIMALCREST DR
100000256	5131	2	8.454211			
100000256	5131	3	8.851805			
100000256	5131	4	7.071815			
100000256	5131	5	7.154571			
100000256	5131	6	7.053362			
100000256	5131	7	8.228677			
100000256	5131	8	7.775446			
100000256	5131	9	6.851479			
100000256	5131	10	7.055471			
100000256	5465	1	11.047592	BUSH RIVER RD	E	BUSH RIVER RD & ZIMALCREST DR
100000256	5465	2	10.701296			
100000256	5465	3	11.198807			
100000256	5465	4	11.026988			
100000256	5465	5	10.870309			
100000256	5465	6	10.667115			
100000256	5465	7	12.918762			
100000256	5465	8	10.374833			
100000256	5465	9	11.747463			
100000256	5465	10	10.087788			
100000256	5484	1	41.76394	ZIMALCREST DR	S	BUSH RIVER RD & ZIMALCREST DR
100000256	5484	2	37.8606			
100000256	5484	3	41.752055			
100000256	5484	4	49.456124			
100000256	5484	5	32.776374			
100000256	5484	6	46.214512			
100000256	5484	7	24.280371			
100000256	5484	8	35.85465			
100000256	5484	9	34.160049			
100000256	5484	10	42.926564			
100000256	5485	1	8.365163	ZIMALCREST DR	N	BUSH RIVER RD & ZIMALCREST DR
100000256	5485	2	9.802036			
100000256	5485	3	10.891722			
100000256	5485	4	8.699745			
100000256	5485	5	11.010285			
100000256	5485	6	11.62231			
100000256	5485	7	11.967505			
100000256	5485	8	12.45286			
100000256	5485	9	12.222443			
100000256	5485	10	10.05867			
100000259	5465	1	0	BUSH RIVER RD	W	NOTTINGWOOD DR & BUSH RIVER RD
100000259	5465	2	0			
100000259	5465	3	0			

Node	Superlink	Run	Average Control Delay	Approach Street Name	Direction	Intersection
100000259	5465	4	0			
100000259	5465	5	0			
100000259	5465	6	0			
100000259	5465	7	0			
100000259	5465	8	0			
100000259	5465	9	0			
100000259	5465	10	0			
100000259	5471	1	0	BUSH RIVER RD	E	NOTTINGWOOD DR & BUSH RIVER RD
100000259	5471	2	0			
100000259	5471	3	0			
100000259	5471	4	0			
100000259	5471	5	0			
100000259	5471	6	0			
100000259	5471	7	0			
100000259	5471	8	0			
100000259	5471	9	0			
100000259	5471	10	0			
100000259	5472	1		NOTTINGWOOD DR	S	NOTTINGWOOD DR & BUSH RIVER RD
100000259	5472	2				
100000259	5472	3				
100000259	5472	4				
100000259	5472	5				
100000259	5472	6				
100000259	5472	7				
100000259	5472	8				
100000259	5472	9				
100000259	5472	10				
100000262	5502	1	0.437615	BUSH RIVER RD	E	DUTCH SQUARE ENTRANCE
100000262	5502	2	0.583837			
100000262	5502	3	0.493697			
100000262	5502	4	0.66771			
100000262	5502	5	0.388447			
100000262	5502	6	0.6599			
100000262	5502	7	0.536339			
100000262	5502	8	0.367271			
100000262	5502	9	0.411803			
100000262	5502	10	0.394356			
100000262	5506	1	27.15993	COLONIAL LIFE BLVD W	N	DUTCH SQUARE ENTRANCE
100000262	5506	2	29.135162			
100000262	5506	3	27.710909			
100000262	5506	4	28.695019			
100000262	5506	5	27.076895			
100000262	5506	6	27.638473			
100000262	5506	7	26.54419			
100000262	5506	8	27.348006			
100000262	5506	9	27.806035			
100000262	5506	10	27.617122			
100000262	5509	1	58.167503	DUTCH SQUARE ENTRANCE	S	DUTCH SQUARE ENTRANCE
100000262	5509	2	53.510319			
100000262	5509	3	55.994134			
100000262	5509	4	55.752913			
100000262	5509	5	51.408688			
100000262	5509	6	63.493076			
100000262	5509	7	56.643934			
100000262	5509	8	60.444044			
100000262	5509	9	65.396266			
100000262	5509	10	59.697384			
100000262	5511	1	31.869472	BUSH RIVER RD	W	DUTCH SQUARE ENTRANCE
100000262	5511	2	21.105932			
100000262	5511	3	18.017685			
100000262	5511	4	19.858538			
100000262	5511	5	26.134967			
100000262	5511	6	21.318022			
100000262	5511	7	27.509963			
100000262	5511	8	24.438413			
100000262	5511	9	17.22877			
100000262	5511	10	18.879954			
100000263	5516	1	0.184938	COLONIAL LIFE BLVD W	N	COLONIAL LIFE BLVD W
100000263	5516	2	0.201136			
100000263	5516	3	0.208055			
100000263	5516	4	0.134929			
100000263	5516	5	0.20369			
100000263	5516	6	0.137249			
100000263	5516	7	0.173331			
100000263	5516	8	0.175942			
100000263	5516	9	0.119198			
100000263	5516	10	0.095587			
100000263	5520	1	12.420115	COLONIAL LIFE BLVD W	W	COLONIAL LIFE BLVD W
100000263	5520	2	9.604014			
100000263	5520	3	12.025061			
100000263	5520	4	10.332531			
100000263	5520	5	8.523287			
100000263	5520	6	10.249655			
100000263	5520	7	9.724089			
100000263	5520	8	11.447118			
100000263	5520	9	8.9785			
100000263	5520	10	10.416285			
100000263	6495	1	0.490827	COLONIAL LIFE BLVD W	S	COLONIAL LIFE BLVD W
100000263	6495	2	0.564272			
100000263	6495	3	0.842927			
100000263	6495	4	0.51114			
100000263	6495	5	0.590847			
100000263	6495	6	0.391183			
100000263	6495	7	0.668323			
100000263	6495	8	0.52336			
100000263	6495	9	0.409748			
100000263	6495	10	0.434057			
100000265	5139	1	15.657021	GREYSTONE BLVD	N	GREYSTONE BLVD & STONERIDGE DR
100000265	5139	2	12.379539			
100000265	5139	3	13.155876			
100000265	5139	4	13.457273			
100000265	5139	5	16.343493			
100000265	5139	6	15.178984			
100000265	5139	7	16.962412			
100000265	5139	8	16.580819			
100000265	5139	9	14.780091			
100000265	5139	10	11.913354			
100000265	5537	1	20.91805	STONERIDGE DR	W	GREYSTONE BLVD & STONERIDGE DR
100000265	5537	2	27.881363			
100000265	5537	3	26.470226			

Node	Superlink	Run	Average Control Delay	Approach Street Name	Direction	Intersection
100000265	5537	4	27.91242			
100000265	5537	5	22.504312			
100000265	5537	6	21.211141			
100000265	5537	7	27.463817			
100000265	5537	8	24.298189			
100000265	5537	9	26.799662			
100000265	5537	10	18.573116			
100000265	5556	1	17.053406	STONERIDGE DR	E	GREYSTONE BLVD & STONERIDGE DR
100000265	5556	2	14.891928			
100000265	5556	3	15.233509			
100000265	5556	4	12.659787			
100000265	5556	5	17.233727			
100000265	5556	6	14.434476			
100000265	5556	7	16.577648			
100000265	5556	8	16.653127			
100000265	5556	9	13.770602			
100000265	5556	10	14.469981			
100000265	6328	1	14.83207	GREYSTONE BLVD	S	GREYSTONE BLVD & STONERIDGE DR
100000265	6328	2	13.591916			
100000265	6328	3	15.041008			
100000265	6328	4	15.134813			
100000265	6328	5	16.483091			
100000265	6328	6	16.070057			
100000265	6328	7	17.300282			
100000265	6328	8	15.934094			
100000265	6328	9	15.044981			
100000265	6328	10	13.391143			
100000266	5545	1	60.409639	GREYSTONE BLVD	N	GREYSTONE BLVD & BROAD RIVER RD
100000266	5545	2	61.405309			
100000266	5545	3	64.995496			
100000266	5545	4	61.746917			
100000266	5545	5	65.588507			
100000266	5545	6	58.925686			
100000266	5545	7	58.45721			
100000266	5545	8	51.547017			
100000266	5545	9	60.993808			
100000266	5545	10	53.451216			
100000266	6325	1	3.770384	BROAD RIVER RD	W	GREYSTONE BLVD & BROAD RIVER RD
100000266	6325	2	4.719258			
100000266	6325	3	5.109593			
100000266	6325	4	3.97257			
100000266	6325	5	4.595669			
100000266	6325	6	4.833639			
100000266	6325	7	4.883484			
100000266	6325	8	5.04008			
100000266	6325	9	4.49529			
100000266	6325	10	4.324544			
100000266	6327	1	7.616574	BROAD RIVER RD	E	GREYSTONE BLVD & BROAD RIVER RD
100000266	6327	2	7.77912			
100000266	6327	3	8.044839			
100000266	6327	4	7.437599			
100000266	6327	5	7.466779			
100000266	6327	6	6.934274			
100000266	6327	7	8.424964			
100000266	6327	8	7.886964			
100000266	6327	9	9.017812			
100000266	6327	10	7.623598			
100000268	5565	1	31.06614	HUGER ST	N	HUGER ST & LAUREL ST
100000268	5565	2	30.208846			
100000268	5565	3	30.103322			
100000268	5565	4	30.112057			
100000268	5565	5	28.778004			
100000268	5565	6	28.922972			
100000268	5565	7	29.979481			
100000268	5565	8	30.27511			
100000268	5565	9	29.892018			
100000268	5565	10	31.93441			
100000268	5570	1	33.408606	LAUREL ST	E	HUGER ST & LAUREL ST
100000268	5570	2	33.040792			
100000268	5570	3	33.256704			
100000268	5570	4	32.441668			
100000268	5570	5	33.176636			
100000268	5570	6	33.378431			
100000268	5570	7	33.582847			
100000268	5570	8	32.727403			
100000268	5570	9	33.416673			
100000268	5570	10	33.074012			
100000268	5571	1	17.831655	HUGER ST	S	HUGER ST & LAUREL ST
100000268	5571	2	17.710893			
100000268	5571	3	17.245158			
100000268	5571	4	18.567779			
100000268	5571	5	17.946382			
100000268	5571	6	16.985913			
100000268	5571	7	17.57962			
100000268	5571	8	18.113548			
100000268	5571	9	18.581387			
100000268	5571	10	17.657478			
100000268	5581	1	49.174443	LAUREL ST	W	HUGER ST & LAUREL ST
100000268	5581	2	47.22448			
100000268	5581	3	46.155525			
100000268	5581	4	48.939522			
100000268	5581	5	47.933118			
100000268	5581	6	47.063318			
100000268	5581	7	47.713056			
100000268	5581	8	46.85133			
100000268	5581	9	46.528743			
100000268	5581	10	44.624217			
100000339	6083	1	26.89743	BROAD RIVER RD	NW	BROAD RIVER RD & ST ANDREWS RD
100000339	6083	2	22.000873			
100000339	6083	3	22.364812			
100000339	6083	4	28.518478			
100000339	6083	5	28.568177			
100000339	6083	6	25.959807			
100000339	6083	7	25.612331			
100000339	6083	8	27.342538			
100000339	6083	9	27.993328			
100000339	6083	10	27.49634			
100000339	6084	1	91.72605	BROAD RIVER RD	SE	BROAD RIVER RD & ST ANDREWS RD
100000339	6084	2	41.161608			
100000339	6084	3	48.258329			

Node	Superlink	Run	Average Control Delay	Approach Street Name	Direction	Intersection
100000339	6084	4	73.246935			
100000339	6084	5	71.761125			
100000339	6084	6	43.335041			
100000339	6084	7	65.246967			
100000339	6084	8	77.614475			
100000339	6084	9	85.634822			
100000339	6084	10	44.062191			
100000339	6085	1	67.267269	ST ANDREWS RD	SW	BROAD RIVER RD & ST ANDREWS RD
100000339	6085	2	67.459365			
100000339	6085	3	66.330286			
100000339	6085	4	65.55141			
100000339	6085	5	62.85536			
100000339	6085	6	63.638297			
100000339	6085	7	58.96115			
100000339	6085	8	81.009964			
100000339	6085	9	67.783144			
100000339	6085	10	60.617687			
100000339	6086	1	40.89417	ST ANDREWS RD	E	BROAD RIVER RD & ST ANDREWS RD
100000339	6086	2	38.138442			
100000339	6086	3	39.373197			
100000339	6086	4	45.400486			
100000339	6086	5	42.747379			
100000339	6086	6	39.250738			
100000339	6086	7	41.002892			
100000339	6086	8	50.36493			
100000339	6086	9	40.63368			
100000339	6086	10	40.490363			
100000343	6059	1	0.003841	BROAD RIVER RD	NW	NUNAMAKER DR & BROAD RIVER RD
100000343	6059	2	0.024234			
100000343	6059	3	0.007909			
100000343	6059	4	0.006558			
100000343	6059	5	0.009386			
100000343	6059	6	0.043826			
100000343	6059	7	0.002023			
100000343	6059	8	0.003632			
100000343	6059	9	0.006664			
100000343	6059	10	0.003667			
100000343	6063	1		NUNAMAKER DR	SW	NUNAMAKER DR & BROAD RIVER RD
100000343	6063	2				
100000343	6063	3				
100000343	6063	4				
100000343	6063	5				
100000343	6063	6				
100000343	6063	7				
100000343	6063	8				
100000343	6063	9				
100000343	6063	10				
100000343	6065	1	0.000531	BROAD RIVER RD	SE	NUNAMAKER DR & BROAD RIVER RD
100000343	6065	2	0.000228			
100000343	6065	3	0.001246			
100000343	6065	4	0.00082			
100000343	6065	5	0.00215			
100000343	6065	6	0.001662			
100000343	6065	7	0.005507			
100000343	6065	8	0.000593			
100000343	6065	9	0.000757			
100000343	6065	10	0.0006			
100000344	6065	1	5.604636	BROAD RIVER RD	NW	YOUNG DR
100000344	6065	2	6.089298			
100000344	6065	3	6.269995			
100000344	6065	4	5.640466			
100000344	6065	5	6.53349			
100000344	6065	6	5.391911			
100000344	6065	7	3.950953			
100000344	6065	8	6.393609			
100000344	6065	9	6.339985			
100000344	6065	10	6.836225			
100000344	6066	1	176.283082	BROAD RIVER RD	SE	YOUNG DR
100000344	6066	2	146.266224			
100000344	6066	3	134.360555			
100000344	6066	4	131.971582			
100000344	6066	5	158.080233			
100000344	6066	6	142.373712			
100000344	6066	7	153.438356			
100000344	6066	8	170.801528			
100000344	6066	9	142.197971			
100000344	6066	10	125.670808			
100000344	6067	1	104.042802	YOUNG DR	SW	YOUNG DR
100000344	6067	2	89.056686			
100000344	6067	3	88.849445			
100000344	6067	4	95.611346			
100000344	6067	5	100.339016			
100000344	6067	6	123.566042			
100000344	6067	7	74.649408			
100000344	6067	8	86.178127			
100000344	6067	9	116.008972			
100000344	6067	10	100.417209			
100000344	6068	1	39.752975	SEMINOLE RD	NE	YOUNG DR
100000344	6068	2	45.304791			
100000344	6068	3	36.590271			
100000344	6068	4	37.969822			
100000344	6068	5	39.314229			
100000344	6068	6	46.313878			
100000344	6068	7	38.300862			
100000344	6068	8	32.608798			
100000344	6068	9	52.926405			
100000344	6068	10	41.491224			
100000348	5116	1	6.499839	ST ANDREWS RD	NW	ST ANDREWS RD & JAMIL RD
100000348	5116	2	5.373201			
100000348	5116	3	6.619888			
100000348	5116	4	5.378619			
100000348	5116	5	4.818547			
100000348	5116	6	6.802032			
100000348	5116	7	5.81797			
100000348	5116	8	6.63756			
100000348	5116	9	6.289986			
100000348	5116	10	7.547032			
100000348	6114	1	12.057224	ST ANDREWS RD	E	ST ANDREWS RD & JAMIL RD
100000348	6114	2	13.449396			
100000348	6114	3	18.60294			

Node	Superlink	Run	Average Control Delay	Approach Street Name	Direction	Intersection
100000348	6114	4	15.984075			
100000348	6114	5	14.468137			
100000348	6114	6	15.685044			
100000348	6114	7	13.474232			
100000348	6114	8	20.023792			
100000348	6114	9	14.56689			
100000348	6114	10	16.889316			
100000348	6119	1	63.747053	JAMIL RD	S	ST ANDREWS RD & JAMIL RD
100000348	6119	2	64.552808			
100000348	6119	3	64.687392			
100000348	6119	4	58.835064			
100000348	6119	5	62.07424			
100000348	6119	6	63.155209			
100000348	6119	7	63.772829			
100000348	6119	8	66.00347			
100000348	6119	9	64.845495			
100000348	6119	10	62.484622			
100000349	6066	1	7.863746	BROAD RIVER RD	NW	ST ANDREWS PKY & BROAD RIVER RD
100000349	6066	2	6.533216			
100000349	6066	3	4.887974			
100000349	6066	4	6.150758			
100000349	6066	5	3.918546			
100000349	6066	6	3.15574			
100000349	6066	7	4.519063			
100000349	6066	8	4.981937			
100000349	6066	9	5.695658			
100000349	6066	10	6.671206			
100000349	6078	1	61.181371	ST ANDREWS PKY	SW	ST ANDREWS PKY & BROAD RIVER RD
100000349	6078	2	56.737507			
100000349	6078	3	72.57615			
100000349	6078	4	55.357217			
100000349	6078	5	68.518			
100000349	6078	6	61.632119			
100000349	6078	7	55.953626			
100000349	6078	8	53.982351			
100000349	6078	9	66.78794			
100000349	6078	10	67.485335			
100000349	6079	1		BROAD RIVER RD	NE	ST ANDREWS PKY & BROAD RIVER RD
100000349	6079	2				
100000349	6079	3				
100000349	6079	4				
100000349	6079	5				
100000349	6079	6				
100000349	6079	7				
100000349	6079	8				
100000349	6079	9				
100000349	6079	10				
100000349	6083	1	44.446817	BROAD RIVER RD	SE	ST ANDREWS PKY & BROAD RIVER RD
100000349	6083	2	30.905835			
100000349	6083	3	26.48022			
100000349	6083	4	33.992562			
100000349	6083	5	35.587505			
100000349	6083	6	27.363046			
100000349	6083	7	39.716641			
100000349	6083	8	38.103051			
100000349	6083	9	31.67772			
100000349	6083	10	22.324901			
100000353	5104	1	37.081867	PINEY GROVE RD	W	BOWER PKY
100000353	5104	2	33.130157			
100000353	5104	3	36.686648			
100000353	5104	4	35.457569			
100000353	5104	5	37.332617			
100000353	5104	6	39.891229			
100000353	5104	7	39.110977			
100000353	5104	8	44.241777			
100000353	5104	9	33.156947			
100000353	5104	10	41.718879			
100000353	6125	1	26.778192	BOWER PKY	SE	BOWER PKY
100000353	6125	2	28.471923			
100000353	6125	3	27.578936			
100000353	6125	4	28.190305			
100000353	6125	5	24.9229			
100000353	6125	6	23.524792			
100000353	6125	7	27.560011			
100000353	6125	8	26.211418			
100000353	6125	9	30.231527			
100000353	6125	10	24.630899			
100000353	6126	1	27.794981	PINEY GROVE RD	E	BOWER PKY
100000353	6126	2	30.145151			
100000353	6126	3	29.290524			
100000353	6126	4	28.666369			
100000353	6126	5	29.978414			
100000353	6126	6	30.531182			
100000353	6126	7	28.59605			
100000353	6126	8	35.264121			
100000353	6126	9	29.928979			
100000353	6126	10	29.614519			
100000353	6127	1	46.977805	JAMIL RD	NW	BOWER PKY
100000353	6127	2	39.880934			
100000353	6127	3	54.291429			
100000353	6127	4	46.019327			
100000353	6127	5	37.916873			
100000353	6127	6	44.302045			
100000353	6127	7	47.663654			
100000353	6127	8	41.604828			
100000353	6127	9	49.64835			
100000353	6127	10	44.114857			
100000354	6095	1	20.160265	ST ANDREWS RD	SW	ST ANDREWS RD
100000354	6095	2	19.125756			
100000354	6095	3	21.536892			
100000354	6095	4	20.129124			
100000354	6095	5	17.453347			
100000354	6095	6	21.249941			
100000354	6095	7	22.109711			
100000354	6095	8	19.37877			
100000354	6095	9	19.95582			
100000354	6095	10	17.344737			
100000354	6096	1	9.628363	ST ANDREWS RD	NE	ST ANDREWS RD
100000354	6096	2	9.943313			
100000354	6096	3	9.957412			

Node	Superlink	Run	Average Control Delay	Approach Street Name	Direction	Intersection
100000354	6096	4	10.148636			
100000354	6096	5	8.547601			
100000354	6096	6	9.76843			
100000354	6096	7	10.671051			
100000354	6096	8	11.152422			
100000354	6096	9	9.931106			
100000354	6096	10	9.800803			
100000354	6098	1	446.149902	CHARTWELL RD	NW	ST ANDREWS RD
100000354	6098	2	151.082928			
100000354	6098	3	373.692426			
100000354	6098	4	182.622394			
100000354	6098	5	393.821805			
100000354	6098	6	470.963436			
100000354	6098	7	431.834654			
100000354	6098	8	207.119147			
100000354	6098	9	255.490665			
100000354	6098	10	380.293205			
100000354	6099	1	99.301065	KAY ST	SE	ST ANDREWS RD
100000354	6099	2	101.087596			
100000354	6099	3	98.912191			
100000354	6099	4	111.046751			
100000354	6099	5	133.519482			
100000354	6099	6	116.161019			
100000354	6099	7	142.23259			
100000354	6099	8	113.64087			
100000354	6099	9	34.965841			
100000354	6099	10	111.730047			
100000356	6086	1	0.122295	ST ANDREWS RD	SW	LAWRENCE ST & ST ANDREWS RD
100000356	6086	2	0.190337			
100000356	6086	3	0.214458			
100000356	6086	4	0.228719			
100000356	6086	5	0.182275			
100000356	6086	6	0.207794			
100000356	6086	7	0.292101			
100000356	6086	8	0.261375			
100000356	6086	9	0.23288			
100000356	6086	10	0.207729			
100000356	6092	1	9.281758	LAWRENCE ST	SE	LAWRENCE ST & ST ANDREWS RD
100000356	6092	2	11.577576			
100000356	6092	3	9.07763			
100000356	6092	4	9.687633			
100000356	6092	5	10.261667			
100000356	6092	6	10.009346			
100000356	6092	7	10.15661			
100000356	6092	8	9.683914			
100000356	6092	9	11.107098			
100000356	6092	10	12.243766			
100000356	6094	1	0.687613	ST ANDREWS RD	NE	LAWRENCE ST & ST ANDREWS RD
100000356	6094	2	1.107561			
100000356	6094	3	0.6247			
100000356	6094	4	0.768381			
100000356	6094	5	0.744918			
100000356	6094	6	0.898911			
100000356	6094	7	0.780574			
100000356	6094	8	0.649371			
100000356	6094	9	0.671486			
100000356	6094	10	0.672141			
100000357	6119	1	1.405896	JAMIL RD	NW	JAMIL RD & PAISLEY LN
100000357	6119	2	1.579174			
100000357	6119	3	1.189315			
100000357	6119	4	1.146384			
100000357	6119	5	1.270879			
100000357	6119	6	1.369892			
100000357	6119	7	1.072938			
100000357	6119	8	1.162218			
100000357	6119	9	1.074963			
100000357	6119	10	0.993046			
100000357	6120	1	16.376938	PAISLEY LN	NE	JAMIL RD & PAISLEY LN
100000357	6120	2	15.273912			
100000357	6120	3	19.745046			
100000357	6120	4	15.475946			
100000357	6120	5	14.581999			
100000357	6120	6	33.603775			
100000357	6120	7	13.395479			
100000357	6120	8	18.249427			
100000357	6120	9	13.87716			
100000357	6120	10	17.540776			
100000357	6121	1	0.866727	JAMIL RD	SE	JAMIL RD & PAISLEY LN
100000357	6121	2	1.521024			
100000357	6121	3	1.210135			
100000357	6121	4	0.781077			
100000357	6121	5	1.027384			
100000357	6121	6	1.31466			
100000357	6121	7	1.317134			
100000357	6121	8	1.295765			
100000357	6121	9	1.63047			
100000357	6121	10	1.224246			
100000358	5117	1	12.116998	ST ANDREWS RD	NE	ST ANDREWS RD
100000358	5117	2	10.696276			
100000358	5117	3	11.34008			
100000358	5117	4	12.078988			
100000358	5117	5	10.653773			
100000358	5117	6	11.054829			
100000358	5117	7	11.905162			
100000358	5117	8	11.384569			
100000358	5117	9	11.122235			
100000358	5117	10	10.583442			
100000358	6100	1	16.27008	ST ANDREWS RD	SW	ST ANDREWS RD
100000358	6100	2	12.699603			
100000358	6100	3	15.41618			
100000358	6100	4	14.480133			
100000358	6100	5	15.44686			
100000358	6100	6	15.235309			
100000358	6100	7	15.180611			
100000358	6100	8	14.657479			
100000358	6100	9	15.072206			
100000358	6100	10	14.609164			
100000358	6101	1	28.112356	BURNING TREE RD	NW	ST ANDREWS RD
100000358	6101	2	35.586237			
100000358	6101	3	29.921597			

Node	Superlink	Run	Average Control Delay	Approach Street Name	Direction	Intersection
100000358	6101	4	28.119263			
100000358	6101	5	27.852836			
100000358	6101	6	27.672029			
100000358	6101	7	30.670414			
100000358	6101	8	30.644799			
100000358	6101	9	29.419183			
100000358	6101	10	32.587061			
100000358	6102	1	25.429546	FERNANDINA RD	SE	ST ANDREWS RD
100000358	6102	2	23.347732			
100000358	6102	3	22.589889			
100000358	6102	4	23.754029			
100000358	6102	5	20.943416			
100000358	6102	6	23.186259			
100000358	6102	7	28.165105			
100000358	6102	8	23.47421			
100000358	6102	9	22.556941			
100000358	6102	10	20.853145			
100000360	3294	1	17.697855	EXIT 106 WB OFF RAMP	NE	EXIT 106 WB OFF RAMP & BURNING TREE RD
100000360	3294	2	12.955081			
100000360	3294	3	13.565864			
100000360	3294	4	15.167303			
100000360	3294	5	11.780458			
100000360	3294	6	16.106854			
100000360	3294	7	14.336159			
100000360	3294	8	14.691232			
100000360	3294	9	13.568716			
100000360	3294	10	11.616605			
100000360	6101	1	0.051478	BURNING TREE RD	S	EXIT 106 WB OFF RAMP & BURNING TREE RD
100000360	6101	2	0.051412			
100000360	6101	3	0.052991			
100000360	6101	4	0.046522			
100000360	6101	5	0.132167			
100000360	6101	6	0.119281			
100000360	6101	7	0.043305			
100000360	6101	8	0.042286			
100000360	6101	9	0.090994			
100000360	6101	10	0.041182			
100000360	6105	1	0.017065	BURNING TREE RD	N	EXIT 106 WB OFF RAMP & BURNING TREE RD
100000360	6105	2	0.018863			
100000360	6105	3	0.025872			
100000360	6105	4	0.029587			
100000360	6105	5	0.030223			
100000360	6105	6	0.022744			
100000360	6105	7	0.030213			
100000360	6105	8	0.022035			
100000360	6105	9	0.022254			
100000360	6105	10	0.011008			
100000362	6134	1	12.640813	JAMIL RD	NW	HARBISON BLVD & JAMIL RD
100000362	6134	2	11.812937			
100000362	6134	3	8.44918			
100000362	6134	4	10.913548			
100000362	6134	5	13.704737			
100000362	6134	6	12.223742			
100000362	6134	7	10.93803			
100000362	6134	8	10.853024			
100000362	6134	9	12.098148			
100000362	6134	10	12.578707			
100000362	6137	1	1.591768	HARBISON BLVD	NE	HARBISON BLVD & JAMIL RD
100000362	6137	2	1.156001			
100000362	6137	3	1.09929			
100000362	6137	4	1.261751			
100000362	6137	5	1.270117			
100000362	6137	6	1.657408			
100000362	6137	7	1.419843			
100000362	6137	8	1.291695			
100000362	6137	9	0.935184			
100000362	6137	10	1.562158			
100000362	6473	1	0.047941	HARBISON BLVD	SW	HARBISON BLVD & JAMIL RD
100000362	6473	2	0.001391			
100000362	6473	3	0.001539			
100000362	6473	4	0.00369			
100000362	6473	5	0.003098			
100000362	6473	6	0.001593			
100000362	6473	7	0.002276			
100000362	6473	8	0.002194			
100000362	6473	9	0.001686			
100000362	6473	10	0.002516			
100000363	6125	1	0.479689	BOWER PKY	NW	BOWER PKY & JAMIL RD
100000363	6125	2	0.2924			
100000363	6125	3	0.235777			
100000363	6125	4	0.309554			
100000363	6125	5	0.361695			
100000363	6125	6	0.353258			
100000363	6125	7	0.357973			
100000363	6125	8	0.416831			
100000363	6125	9	0.264866			
100000363	6125	10	0.301636			
100000363	6134	1	12.790736	JAMIL RD	SW	BOWER PKY & JAMIL RD
100000363	6134	2	11.982745			
100000363	6134	3	10.95332			
100000363	6134	4	10.813412			
100000363	6134	5	10.678778			
100000363	6134	6	10.528995			
100000363	6134	7	10.198734			
100000363	6134	8	10.672031			
100000363	6134	9	11.124958			
100000363	6134	10	11.268498			
100000363	6160	1	0.523848	BOWER PKY	SE	BOWER PKY & JAMIL RD
100000363	6160	2	0.516742			
100000363	6160	3	0.534125			
100000363	6160	4	0.429221			
100000363	6160	5	0.467048			
100000363	6160	6	0.39856			
100000363	6160	7	0.348185			
100000363	6160	8	0.666693			
100000363	6160	9	0.484718			
100000363	6160	10	0.654421			
100000364	6145	1	3.561282	HARBISON BLVD	SW	HARBISON BLVD & COLUMBIANA DR
100000364	6145	2	2.88618			
100000364	6145	3	2.493524			

Node	Superlink	Run	Average Control Delay	Approach Street Name	Direction	Intersection
100000364	6145	4	2.371105			
100000364	6145	5	2.143394			
100000364	6145	6	2.775035			
100000364	6145	7	2.974472			
100000364	6145	8	3.223593			
100000364	6145	9	2.854742			
100000364	6145	10	2.88489			
100000364	6176	1	3.825322	HARBISON BLVD	NE	HARBISON BLVD & COLUMBIANA DR
100000364	6176	2	3.718805			
100000364	6176	3	3.575589			
100000364	6176	4	3.711763			
100000364	6176	5	4.140016			
100000364	6176	6	3.825251			
100000364	6176	7	3.528126			
100000364	6176	8	4.040667			
100000364	6176	9	3.38598			
100000364	6176	10	2.952163			
100000364	6177	1		COLUMBIANA DR	NW	HARBISON BLVD & COLUMBIANA DR
100000364	6177	2				
100000364	6177	3				
100000364	6177	4				
100000364	6177	5				
100000364	6177	6				
100000364	6177	7				
100000364	6177	8				
100000364	6177	9				
100000364	6177	10				
100000364	6196	1	48.161995	COLUMBIANA DR	SE	HARBISON BLVD & COLUMBIANA DR
100000364	6196	2	43.492655			
100000364	6196	3	42.21227			
100000364	6196	4	43.982942			
100000364	6196	5	44.444806			
100000364	6196	6	46.889875			
100000364	6196	7	46.604336			
100000364	6196	8	45.577043			
100000364	6196	9	44.470947			
100000364	6196	10	48.006894			
100000365	6137	1	7.670167	HARBISON BLVD	SW	COLUMBIANA CIR
100000365	6137	2	6.153712			
100000365	6137	3	8.222521			
100000365	6137	4	7.377472			
100000365	6137	5	8.809091			
100000365	6137	6	7.422993			
100000365	6137	7	8.210174			
100000365	6137	8	7.299796			
100000365	6137	9	9.386402			
100000365	6137	10	7.258114			
100000365	6140	1	16.570366	COLUMBIANA CIR	SE	COLUMBIANA CIR
100000365	6140	2	20.015646			
100000365	6140	3	19.907477			
100000365	6140	4	17.430055			
100000365	6140	5	18.008147			
100000365	6140	6	18.404027			
100000365	6140	7	18.399439			
100000365	6140	8	20.584349			
100000365	6140	9	15.319134			
100000365	6140	10	17.193719			
100000365	6145	1	12.345435	HARBISON BLVD	NE	COLUMBIANA CIR
100000365	6145	2	11.974414			
100000365	6145	3	12.734261			
100000365	6145	4	11.634825			
100000365	6145	5	11.803359			
100000365	6145	6	12.792466			
100000365	6145	7	12.530433			
100000365	6145	8	12.066689			
100000365	6145	9	11.192289			
100000365	6145	10	10.871846			
100000365	6151	1	28.108205	PARK TERRACE DR	NW	COLUMBIANA CIR
100000365	6151	2	30.60701			
100000365	6151	3	31.64295			
100000365	6151	4	33.735913			
100000365	6151	5	31.055823			
100000365	6151	6	26.932215			
100000365	6151	7	33.066758			
100000365	6151	8	26.705167			
100000365	6151	9	29.688146			
100000365	6151	10	33.066678			
100000374	6151	1	35.464648	PARK TERRACE DR	S	BOWER PKY
100000374	6151	2	37.235533			
100000374	6151	3	33.679867			
100000374	6151	4	38.176205			
100000374	6151	5	33.405367			
100000374	6151	6	41.896223			
100000374	6151	7	33.756731			
100000374	6151	8	36.226479			
100000374	6151	9	35.385998			
100000374	6151	10	37.007977			
100000374	6160	1	7.529844	BOWER PKY	W	BOWER PKY
100000374	6160	2	8.040373			
100000374	6160	3	7.609519			
100000374	6160	4	7.056383			
100000374	6160	5	8.25172			
100000374	6160	6	8.472988			
100000374	6160	7	7.954821			
100000374	6160	8	9.572246			
100000374	6160	9	9.09511			
100000374	6160	10	8.768834			
100000374	6161	1	4.243927		N	BOWER PKY
100000374	6161	2	4.153871			
100000374	6161	3	3.739287			
100000374	6161	4	4.751614			
100000374	6161	5	4.430348			
100000374	6161	6	4.326764			
100000374	6161	7	4.24812			
100000374	6161	8	4.595052			
100000374	6161	9	3.731224			
100000374	6161	10	3.976505			
100000374	6162	1		BOWER PKY	E	BOWER PKY
100000374	6162	2				
100000374	6162	3				

Node	Superlink	Run	Average Control Delay	Approach Street Name	Direction	Intersection
100000374	6162	4				
100000374	6162	5				
100000374	6162	6				
100000374	6162	7				
100000374	6162	8				
100000374	6162	9				
100000374	6162	10				
100000375	6196	1	3.865219	COLUMBIANA DR	NW	COLUMBIANA DR
100000375	6196	2	1.726568			
100000375	6196	3	2.850172			
100000375	6196	4	2.680514			
100000375	6196	5	4.182298			
100000375	6196	6	1.850997			
100000375	6196	7	3.103039			
100000375	6196	8	2.663729			
100000375	6196	9	3.267801			
100000375	6196	10	1.309753			
100000375	6204	1	3.331743	COLUMBIANA DR	SE	COLUMBIANA DR
100000375	6204	2	2.801			
100000375	6204	3	2.278629			
100000375	6204	4	2.53726			
100000375	6204	5	2.518004			
100000375	6204	6	2.653799			
100000375	6204	7	2.912583			
100000375	6204	8	2.313584			
100000375	6204	9	3.080628			
100000375	6204	10	2.685711			
100000375	6550	1	14.230621	CROSSBOW DR	NE	COLUMBIANA DR
100000375	6550	2	10.729398			
100000375	6550	3	9.479531			
100000375	6550	4	12.931903			
100000375	6550	5	11.602829			
100000375	6550	6	12.706341			
100000375	6550	7	11.600397			
100000375	6550	8	13.415859			
100000375	6550	9	12.672749			
100000375	6550	10	8.631629			
100000375	6551	1	15.324042	DRIVEWAY	SW	COLUMBIANA DR
100000375	6551	2	13.287367			
100000375	6551	3	13.588741			
100000375	6551	4	11.718079			
100000375	6551	5	10.019019			
100000375	6551	6	8.076237			
100000375	6551	7	13.460759			
100000375	6551	8	9.724309			
100000375	6551	9	12.416984			
100000375	6551	10	13.29792			
100000391	5071	1	5.263048	BROAD RIVER RD	NW	BROAD RIVER RD & COLUMBIANA DR
100000391	5071	2	5.576676			
100000391	5071	3	4.662073			
100000391	5071	4	4.616058			
100000391	5071	5	4.921804			
100000391	5071	6	4.362167			
100000391	5071	7	4.787345			
100000391	5071	8	3.682559			
100000391	5071	9	4.998469			
100000391	5071	10	4.409894			
100000391	6214	1	48.359536	COLUMBIANA DR	NE	BROAD RIVER RD & COLUMBIANA DR
100000391	6214	2	54.256119			
100000391	6214	3	43.274842			
100000391	6214	4	50.65955			
100000391	6214	5	53.672948			
100000391	6214	6	45.348288			
100000391	6214	7	62.056889			
100000391	6214	8	65.045037			
100000391	6214	9	48.300524			
100000391	6214	10	43.635372			
100000391	6224	1	31.010931	BROAD RIVER RD	SE	BROAD RIVER RD & COLUMBIANA DR
100000391	6224	2	30.151133			
100000391	6224	3	31.042308			
100000391	6224	4	34.080335			
100000391	6224	5	30.014312			
100000391	6224	6	32.076255			
100000391	6224	7	31.674842			
100000391	6224	8	32.822328			
100000391	6224	9	33.907503			
100000391	6224	10	33.476619			
100000392	6121	1	0.754508	JAMIL RD	NW	TRAM RD & JAMIL RD
100000392	6121	2	0.556982			
100000392	6121	3	0.70267			
100000392	6121	4	0.542946			
100000392	6121	5	0.860788			
100000392	6121	6	1.286085			
100000392	6121	7	0.74259			
100000392	6121	8	0.564517			
100000392	6121	9	0.484361			
100000392	6121	10	0.823195			
100000392	6127	1	0.634361	JAMIL RD	SE	TRAM RD & JAMIL RD
100000392	6127	2	0.076578			
100000392	6127	3	0.058291			
100000392	6127	4	0.029386			
100000392	6127	5	0.149408			
100000392	6127	6	0.341592			
100000392	6127	7	0.047255			
100000392	6127	8	0.352071			
100000392	6127	9	0.032318			
100000392	6127	10	0.404711			
100000392	6261	1	7.707756	TRAM RD	NE	TRAM RD & JAMIL RD
100000392	6261	2	7.758841			
100000392	6261	3	7.470479			
100000392	6261	4	7.510844			
100000392	6261	5	7.985481			
100000392	6261	6	8.158479			
100000392	6261	7	7.80556			
100000392	6261	8	8.061919			
100000392	6261	9	7.663667			
100000392	6261	10	7.541046			
100000394	6204	1	0	COLUMBIANA DR	NW	COLUMBIANA DR
100000394	6204	2	0			
100000394	6204	3	0			

Node	Superlink	Run	Average Control Delay	Approach Street Name	Direction	Intersection
100000394	6204	4	0			
100000394	6204	5	0			
100000394	6204	6	0			
100000394	6204	7	0			
100000394	6204	8	0			
100000394	6204	9	0			
100000394	6204	10	0			
100000394	6208	1	0	COLUMBIANA DR	SE	COLUMBIANA DR
100000394	6208	2	0			
100000394	6208	3	0			
100000394	6208	4	0			
100000394	6208	5	0			
100000394	6208	6	0			
100000394	6208	7	0			
100000394	6208	8	0			
100000394	6208	9	0			
100000394	6208	10	0			
100000394	6210	1		COLUMBIA AVE	NE	COLUMBIANA DR
100000394	6210	2				
100000394	6210	3				
100000394	6210	4				
100000394	6210	5				
100000394	6210	6				
100000394	6210	7				
100000394	6210	8				
100000394	6210	9				
100000394	6210	10				
100000394	6549	1		DRIVEWAY	SW	COLUMBIANA DR
100000394	6549	2				
100000394	6549	3				
100000394	6549	4				
100000394	6549	5				
100000394	6549	6				
100000394	6549	7				
100000394	6549	8				
100000394	6549	9				
100000394	6549	10				
100000395	5084	1	70.800254	LAKE MURRAY BLVD	W	LAKE MURRAY BLVD & COLUMBIANA DR
100000395	5084	2	82.977731			
100000395	5084	3	100.561342			
100000395	5084	4	80.818891			
100000395	5084	5	70.901034			
100000395	5084	6	62.619462			
100000395	5084	7	75.287621			
100000395	5084	8	66.679415			
100000395	5084	9	50.371368			
100000395	5084	10	74.188258			
100000395	6208	1	36.632015	COLUMBIANA DR	NW	LAKE MURRAY BLVD & COLUMBIANA DR
100000395	6208	2	35.969438			
100000395	6208	3	37.279542			
100000395	6208	4	36.008004			
100000395	6208	5	38.341222			
100000395	6208	6	38.90493			
100000395	6208	7	40.349519			
100000395	6208	8	38.003975			
100000395	6208	9	34.886178			
100000395	6208	10	39.945714			
100000395	6214	1	50.032829	COLUMBIANA DR	S	LAKE MURRAY BLVD & COLUMBIANA DR
100000395	6214	2	47.007632			
100000395	6214	3	86.973287			
100000395	6214	4	104.891391			
100000395	6214	5	35.161908			
100000395	6214	6	40.79851			
100000395	6214	7	85.19383			
100000395	6214	8	40.829942			
100000395	6214	9	58.895213			
100000395	6214	10	66.193925			
100000395	6215	1	77.598379	LAKE MURRAY BLVD	E	LAKE MURRAY BLVD & COLUMBIANA DR
100000395	6215	2	57.930174			
100000395	6215	3	68.149686			
100000395	6215	4	40.344287			
100000395	6215	5	49.702728			
100000395	6215	6	54.761192			
100000395	6215	7	65.588079			
100000395	6215	8	73.099127			
100000395	6215	9	67.039195			
100000395	6215	10	76.095809			
100000398	5101	1	0	HARBISON BLVD	W	HARBISON BLVD & PARKRIDGE DR
100000398	5101	2	0.005537			
100000398	5101	3	0.000821			
100000398	5101	4	0			
100000398	5101	5	0.001165			
100000398	5101	6	0.259312			
100000398	5101	7	0			
100000398	5101	8	0.001669			
100000398	5101	9	0.026005			
100000398	5101	10	0.123858			
100000398	6267	1	9.46372	PARKRIDGE DR	SE	HARBISON BLVD & PARKRIDGE DR
100000398	6267	2	9.024678			
100000398	6267	3	8.610144			
100000398	6267	4	8.550854			
100000398	6267	5	8.304559			
100000398	6267	6	9.018782			
100000398	6267	7	8.626638			
100000398	6267	8	9.040517			
100000398	6267	9	8.925801			
100000398	6267	10	9.356195			
100000398	6268	1	0.2957	HARBISON BLVD	NE	HARBISON BLVD & PARKRIDGE DR
100000398	6268	2	0.191889			
100000398	6268	3	0			
100000398	6268	4	0.293083			
100000398	6268	5	1.149574			
100000398	6268	6	0			
100000398	6268	7	0			
100000398	6268	8	0			
100000398	6268	9	0.065643			
100000398	6268	10	0.294076			
100000399	5113	1	44.19011	PINEY GROVE RD	E	PINEY GROVE RD & FERNANDINA RD
100000399	5113	2	42.296123			
100000399	5113	3	45.811948			

Node	Superlink	Run	Average Control Delay	Approach Street Name	Direction	Intersection
100000399	5113	4	48.001196			
100000399	5113	5	35.796582			
100000399	5113	6	36.190922			
100000399	5113	7	47.076655			
100000399	5113	8	39.321223			
100000399	5113	9	44.854094			
100000399	5113	10	49.360402			
100000399	6263	1	22.153959	PINEY GROVE RD	W	PINEY GROVE RD & FERNANDINA RD
100000399	6263	2	24.998282			
100000399	6263	3	29.857749			
100000399	6263	4	23.198528			
100000399	6263	5	22.658865			
100000399	6263	6	20.392787			
100000399	6263	7	25.908549			
100000399	6263	8	42.788505			
100000399	6263	9	26.459901			
100000399	6263	10	30.634276			
100000399	6265	1	10.462585	FERNANDINA RD	SE	PINEY GROVE RD & FERNANDINA RD
100000399	6265	2	9.488691			
100000399	6265	3	10.556856			
100000399	6265	4	7.838242			
100000399	6265	5	10.531379			
100000399	6265	6	10.794552			
100000399	6265	7	9.652012			
100000399	6265	8	9.408769			
100000399	6265	9	9.584114			
100000399	6265	10	9.974134			
100000399	6266	1	20.280553	FERNANDINA RD	N	PINEY GROVE RD & FERNANDINA RD
100000399	6266	2	27.839662			
100000399	6266	3	32.013047			
100000399	6266	4	20.974788			
100000399	6266	5	38.244542			
100000399	6266	6	17.591988			
100000399	6266	7	58.504382			
100000399	6266	8	43.801504			
100000399	6266	9	41.165014			
100000399	6266	10	29.676039			
100000401	5093	1	11.417695	LAKE MURRAY BLVD	E	KINLEY RD
100000401	5093	2	9.934692			
100000401	5093	3	10.859877			
100000401	5093	4	9.696791			
100000401	5093	5	9.188301			
100000401	5093	6	10.823358			
100000401	5093	7	9.771419			
100000401	5093	8	11.101126			
100000401	5093	9	11.234935			
100000401	5093	10	11.659137			
100000401	6276	1	30.20223	KINLEY RD	S	KINLEY RD
100000401	6276	2	26.472191			
100000401	6276	3	22.064378			
100000401	6276	4	21.620549			
100000401	6276	5	27.54567			
100000401	6276	6	23.704091			
100000401	6276	7	21.149696			
100000401	6276	8	24.171307			
100000401	6276	9	25.410169			
100000401	6276	10	25.540362			
100000401	6313	1	17.228222	LAKE MURRAY BLVD	W	KINLEY RD
100000401	6313	2	21.259673			
100000401	6313	3	17.981804			
100000401	6313	4	18.659078			
100000401	6313	5	17.42123			
100000401	6313	6	17.106015			
100000401	6313	7	16.146624			
100000401	6313	8	15.00132			
100000401	6313	9	16.295047			
100000401	6313	10	18.089474			
100000401	6556	1	42.290902	PARKRIDGE DR	N	KINLEY RD
100000401	6556	2	31.291264			
100000401	6556	3	33.430817			
100000401	6556	4	46.238082			
100000401	6556	5	39.07018			
100000401	6556	6	41.628786			
100000401	6556	7	37.353853			
100000401	6556	8	40.453281			
100000401	6556	9	42.49144			
100000401	6556	10	34.68653			
100000438	2044	1	0	RAMP	SE	RAMP
100000438	2044	2	0			
100000438	2044	3	0			
100000438	2044	4	0			
100000438	2044	5	0			
100000438	2044	6	0			
100000438	2044	7	0			
100000438	2044	8	0			
100000438	2044	9	0			
100000438	2044	10	0			
100000438	5021	1	3.94753	SUNSET BLVD	NW	RAMP
100000438	5021	2	4.782709			
100000438	5021	3	4.378834			
100000438	5021	4	4.368887			
100000438	5021	5	4.463146			
100000438	5021	6	4.937494			
100000438	5021	7	4.911321			
100000438	5021	8	3.835412			
100000438	5021	9	4.427274			
100000438	5021	10	5.195776			
100000438	5023	1	0.239754	SUNSET BLVD	SE	RAMP
100000438	5023	2	0.027659			
100000438	5023	3	0.062864			
100000438	5023	4	0.058198			
100000438	5023	5	0.060169			
100000438	5023	6	0.054754			
100000438	5023	7	0.226427			
100000438	5023	8	0.13136			
100000438	5023	9	0.042692			
100000438	5023	10	0.070648			
100000446	2047	1	0	RAMP	S	RAMP & I-20 EXIT 63 WB ON RAMP
100000446	2047	2	0			
100000446	2047	3	0			

Node	Superlink	Run	Average Control Delay	Approach Street Name	Direction	Intersection
100000446	2047	4	0			
100000446	2047	5	0			
100000446	2047	6	0			
100000446	2047	7	0			
100000446	2047	8	0			
100000446	2047	9	0			
100000446	2047	10	0			
100000446	2059	1	0	RAMP	SW	RAMP & I-20 EXIT 63 WB ON RAMP
100000446	2059	2	0			
100000446	2059	3	0			
100000446	2059	4	0			
100000446	2059	5	0			
100000446	2059	6	0			
100000446	2059	7	0			
100000446	2059	8	0			
100000446	2059	9	0			
100000446	2059	10	0			
100000450	2060	1	0	RAMP	E	BUSH RIVER RD
100000450	2060	2	0			
100000450	2060	3	0			
100000450	2060	4	0			
100000450	2060	5	0			
100000450	2060	6	0			
100000450	2060	7	0			
100000450	2060	8	0			
100000450	2060	9	0			
100000450	2060	10	0			
100000450	5037	1	0	BUSH RIVER RD	E	BUSH RIVER RD
100000450	5037	2	0			
100000450	5037	3	0			
100000450	5037	4	0			
100000450	5037	5	0			
100000450	5037	6	0			
100000450	5037	7	0			
100000450	5037	8	0			
100000450	5037	9	0			
100000450	5037	10	0			
100000450	5038	1	1.131718	BUSH RIVER RD	NW	BUSH RIVER RD
100000450	5038	2	1.536568			
100000450	5038	3	1.691			
100000450	5038	4	1.877317			
100000450	5038	5	1.832426			
100000450	5038	6	1.960367			
100000450	5038	7	1.773519			
100000450	5038	8	1.990214			
100000450	5038	9	1.691596			
100000450	5038	10	1.847246			
100000452	2071	1	20.853941	RAMP	W	RAMP & BUSH RIVER RD
100000452	2071	2	26.060937			
100000452	2071	3	27.870371			
100000452	2071	4	20.790697			
100000452	2071	5	22.230833			
100000452	2071	6	18.474444			
100000452	2071	7	23.971202			
100000452	2071	8	19.864894			
100000452	2071	9	18.369254			
100000452	2071	10	20.999162			
100000452	5034	1	0.335855	BUSH RIVER RD	NW	RAMP & BUSH RIVER RD
100000452	5034	2	0.843978			
100000452	5034	3	0.70048			
100000452	5034	4	0.134015			
100000452	5034	5	0.157496			
100000452	5034	6	0.289044			
100000452	5034	7	0.355432			
100000452	5034	8	0.349983			
100000452	5034	9	0.176145			
100000452	5034	10	0.197035			
100000452	5457	1	8.260413	BUSH RIVER RD	SE	RAMP & BUSH RIVER RD
100000452	5457	2	8.45863			
100000452	5457	3	8.062584			
100000452	5457	4	8.51657			
100000452	5457	5	7.400584			
100000452	5457	6	5.58568			
100000452	5457	7	7.374822			
100000452	5457	8	8.921542			
100000452	5457	9	7.441391			
100000452	5457	10	7.692269			
100000455	5457	1	4.384137	BUSH RIVER RD	NW	FRONTAGE RD & BUSH RIVER RD
100000455	5457	2	4.902425			
100000455	5457	3	5.916895			
100000455	5457	4	4.751048			
100000455	5457	5	3.708041			
100000455	5457	6	4.030367			
100000455	5457	7	4.256791			
100000455	5457	8	4.431679			
100000455	5457	9	3.163982			
100000455	5457	10	4.089549			
100000455	6538	1	49.47275	FRONTAGE RD	SW	FRONTAGE RD & BUSH RIVER RD
100000455	6538	2	42.600883			
100000455	6538	3	47.312332			
100000455	6538	4	40.176595			
100000455	6538	5	41.61488			
100000455	6538	6	40.412058			
100000455	6538	7	44.649475			
100000455	6538	8	35.032689			
100000455	6538	9	35.948427			
100000455	6538	10	37.655376			
100000455	6539	1	5.47135	BUSH RIVER RD	SE	FRONTAGE RD & BUSH RIVER RD
100000455	6539	2	6.262291			
100000455	6539	3	4.074432			
100000455	6539	4	5.593152			
100000455	6539	5	4.222594			
100000455	6539	6	3.14483			
100000455	6539	7	5.105433			
100000455	6539	8	5.030189			
100000455	6539	9	5.00068			
100000455	6539	10	5.20712			
100000467	3225	1		RAMP	SW	RAMP & I-126 WB ON RAMP FROM GREYSTONE BLVD
100000467	3225	2				
100000467	3225	3				

Node	Superlink	Run	Average Control Delay	Approach Street Name	Direction	Intersection
100000467	3225	4				
100000467	3225	5				
100000467	3225	6				
100000467	3225	7				
100000467	3225	8				
100000467	3225	9				
100000467	3225	10				
100000467	3238	1	0	RAMP	W	RAMP & I-126 WB ON RAMP FROM GREYSTONE BLVD
100000467	3238	2	0			
100000467	3238	3	0			
100000467	3238	4	0			
100000467	3238	5	0			
100000467	3238	6	0			
100000467	3238	7	0			
100000467	3238	8	0			
100000467	3238	9	0			
100000467	3238	10	0			
100000468	3228	1	0	EXIT 103 WB ON RAMP	NW	EXIT 103 WB ON RAMP & I-26 EXIT 103 WB ON RAMP
100000468	3228	2	0			
100000468	3228	3	0			
100000468	3228	4	0			
100000468	3228	5	0			
100000468	3228	6	0			
100000468	3228	7	0			
100000468	3228	8	0			
100000468	3228	9	0			
100000468	3228	10	0			
100000468	3241	1		EXIT 103 WB ON RAMP	W	EXIT 103 WB ON RAMP & I-26 EXIT 103 WB ON RAMP
100000468	3241	2	0			
100000468	3241	3				
100000468	3241	4				
100000468	3241	5				
100000468	3241	6				
100000468	3241	7				
100000468	3241	8				
100000468	3241	9	0			
100000468	3241	10	0			
100000476	3257	1	0	RAMP	N	RAMP
100000476	3257	2	0			
100000476	3257	3	0			
100000476	3257	4	0			
100000476	3257	5	0			
100000476	3257	6	0			
100000476	3257	7	0			
100000476	3257	8	0			
100000476	3257	9	0			
100000476	3257	10	0			
100000476	3262	1	0	RAMP	N	RAMP
100000476	3262	2	0			
100000476	3262	3	0			
100000476	3262	4	0			
100000476	3262	5	0			
100000476	3262	6	0			
100000476	3262	7	0			
100000476	3262	8	0			
100000476	3262	9	0			
100000476	3262	10	0			
100000494	3302	1		EXIT 106 WB ON RAMP	NW	EXIT 106 WB ON RAMP & I-26 EXIT 106 WB ON RAMP
100000494	3302	2				
100000494	3302	3				
100000494	3302	4				
100000494	3302	5				
100000494	3302	6				
100000494	3302	7				
100000494	3302	8				
100000494	3302	9				
100000494	3302	10				
100000494	3306	1	0	EXIT 106 WB ON RAMP	NW	EXIT 106 WB ON RAMP & I-26 EXIT 106 WB ON RAMP
100000494	3306	2	0			
100000494	3306	3	0			
100000494	3306	4	0			
100000494	3306	5	0			
100000494	3306	6	0			
100000494	3306	7	0			
100000494	3306	8	0			
100000494	3306	9	0			
100000494	3306	10	0			
100000497	3310	1	0	RAMP	SE	RAMP & I-26 EXIT 104 EB ON RAMP
100000497	3310	2	0			
100000497	3310	3	0			
100000497	3310	4	0			
100000497	3310	5	0			
100000497	3310	6	0			
100000497	3310	7	0			
100000497	3310	8	0			
100000497	3310	9	0			
100000497	3310	10	0			
100000497	6545	1	0	RAMP	SE	RAMP & I-26 EXIT 104 EB ON RAMP
100000497	6545	2	0			
100000497	6545	3	0			
100000497	6545	4	0			
100000497	6545	5	0			
100000497	6545	6	0			
100000497	6545	7	0			
100000497	6545	8	0			
100000497	6545	9	0			
100000497	6545	10	0			
100000503	3325	1	0	RAMP	SE	RAMP
100000503	3325	2	0			
100000503	3325	3	0			
100000503	3325	4	0			
100000503	3325	5	0			
100000503	3325	6	0			
100000503	3325	7	0			
100000503	3325	8	0			
100000503	3325	9	0			
100000503	3325	10	0			
100000503	6472	1	0		E	RAMP
100000503	6472	2	0			
100000503	6472	3	0			

Node	Superlink	Run	Average Control Delay	Approach Street Name	Direction	Intersection
100000503	6472	4	0			
100000503	6472	5	0			
100000503	6472	6	0			
100000503	6472	7	0			
100000503	6472	8	0			
100000503	6472	9	0			
100000503	6472	10	0			
100000520	3345	1		EXIT 102 WB ON RAMP	N	EXIT 102 WB ON RAMP & I-26 EXIT 102 WB ON RAMP
100000520	3345	2				
100000520	3345	3				
100000520	3345	4				
100000520	3345	5				
100000520	3345	6				
100000520	3345	7				
100000520	3345	8				
100000520	3345	9				
100000520	3345	10				
100000520	3350	1	0	EXIT 102 WB ON RAMP	N	EXIT 102 WB ON RAMP & I-26 EXIT 102 WB ON RAMP
100000520	3350	2	0			
100000520	3350	3	0			
100000520	3350	4	0			
100000520	3350	5	0			
100000520	3350	6	0			
100000520	3350	7	0			
100000520	3350	8	0			
100000520	3350	9	0			
100000520	3350	10	0			
100000523	3355	1	0	ON-RAMP from WB	S	ON-RAMP from WB
100000523	3355	2	0			
100000523	3355	3	0			
100000523	3355	4	0			
100000523	3355	5	0			
100000523	3355	6	0			
100000523	3355	7	0			
100000523	3355	8	0			
100000523	3355	9	0			
100000523	3355	10	0			
100000523	3356	1	0	ON-RAMP from EB	S	ON-RAMP from WB
100000523	3356	2	0			
100000523	3356	3	0			
100000523	3356	4	0			
100000523	3356	5	0			
100000523	3356	6	0			
100000523	3356	7	0			
100000523	3356	8	0			
100000523	3356	9	0			
100000523	3356	10	0			
100000528	3360	1		EXIT 101 WB ON RAMP	N	EXIT 101 WB ON RAMP & I-26 EXIT 101 WB ON RAMP
100000528	3360	2				
100000528	3360	3				
100000528	3360	4				
100000528	3360	5				
100000528	3360	6				
100000528	3360	7				
100000528	3360	8				
100000528	3360	9				
100000528	3360	10				
100000528	3364	1	0	EXIT 101 WB ON RAMP	N	EXIT 101 WB ON RAMP & I-26 EXIT 101 WB ON RAMP
100000528	3364	2	0			
100000528	3364	3	0			
100000528	3364	4	0			
100000528	3364	5	0			
100000528	3364	6	0			
100000528	3364	7	0			
100000528	3364	8	0			
100000528	3364	9	0			
100000528	3364	10	0			
100000702	4338	1	0	RAMP	SW	RAMP & I-20 EXIT 65 WB ON RAMP
100000702	4338	2	0			
100000702	4338	3	0			
100000702	4338	4	0			
100000702	4338	5	0			
100000702	4338	6	0			
100000702	4338	7	0			
100000702	4338	8	0			
100000702	4338	9	0			
100000702	4338	10	0			
100000702	4343	1	0	RAMP	SW	RAMP & I-20 EXIT 65 WB ON RAMP
100000702	4343	2	0			
100000702	4343	3	0			
100000702	4343	4	0			
100000702	4343	5	0			
100000702	4343	6	0			
100000702	4343	7	0			
100000702	4343	8	0			
100000702	4343	9	0			
100000702	4343	10	0			
100000707	5166	1	0	MONTICELLO RD	NW	MONTICELLO RD
100000707	5166	2	0			
100000707	5166	3	0			
100000707	5166	4	0			
100000707	5166	5	0			
100000707	5166	6	0			
100000707	5166	7	0			
100000707	5166	8	0			
100000707	5166	9	0			
100000707	5166	10	0			
100000707	5168	1	0	SERVICE RD	W	MONTICELLO RD
100000707	5168	2	0			
100000707	5168	3	0			
100000707	5168	4	0			
100000707	5168	5	0			
100000707	5168	6	0			
100000707	5168	7	0			
100000707	5168	8	0			
100000707	5168	9	0			
100000707	5168	10	0			
100000707	5174	1	1.163946	MONTICELLO RD	SE	MONTICELLO RD
100000707	5174	2	1.232041			
100000707	5174	3	1.097124			

Node	Superlink	Run	Average Control Delay	Approach Street Name	Direction	Intersection
100000707	5174	4	1.002089			
100000707	5174	5	1.873764			
100000707	5174	6	1.23943			
100000707	5174	7	1.39572			
100000707	5174	8	1.350737			
100000707	5174	9	1.22239			
100000707	5174	10	0.85485			
100000709	4352	1	0	RAMP	S	RAMP & I-20 EXIT 68 WB ON RAMP
100000709	4352	2	0			
100000709	4352	3	0			
100000709	4352	4	0			
100000709	4352	5	0			
100000709	4352	6	0			
100000709	4352	7	0			
100000709	4352	8	0			
100000709	4352	9	0			
100000709	4352	10	0			
100000709	4353	1	0	RAMP	S	RAMP & I-20 EXIT 68 WB ON RAMP
100000709	4353	2	0			
100000709	4353	3	0			
100000709	4353	4	0			
100000709	4353	5	0			
100000709	4353	6	0			
100000709	4353	7	0			
100000709	4353	8	0			
100000709	4353	9	0			
100000709	4353	10	0			
100000710	4356	1	0	I-20 EXIT 68 WB OFF RAMP	W	I-20 EXIT 68 WB OFF RAMP & SERVICE RD
100000710	4356	2	0			
100000710	4356	3	0			
100000710	4356	4	0			
100000710	4356	5	0			
100000710	4356	6	0			
100000710	4356	7	0			
100000710	4356	8	0			
100000710	4356	9	0			
100000710	4356	10	0			
100000712	5157	1	0.134053	BUCKNER RD	NE	BUCKNER RD & RAMP
100000712	5157	2	0.064766			
100000712	5157	3	0.103171			
100000712	5157	4	0.074248			
100000712	5157	5	0.079093			
100000712	5157	6	0.057726			
100000712	5157	7	0.050169			
100000712	5157	8	0.067611			
100000712	5157	9	0.123508			
100000712	5157	10	0.085063			
100000712	5160	1	13.395175	BUCKNER RD	SW	BUCKNER RD & RAMP
100000712	5160	2	15.765728			
100000712	5160	3	14.111614			
100000712	5160	4	14.28103			
100000712	5160	5	14.038825			
100000712	5160	6	14.853781			
100000712	5160	7	12.669817			
100000712	5160	8	15.641402			
100000712	5160	9	14.271838			
100000712	5160	10	11.992286			
100000804	6261	1	31.013192	TRAM RD	SW	TRAM RD & SIDNEY RD
100000804	6261	2	32.364392			
100000804	6261	3	33.472252			
100000804	6261	4	32.612314			
100000804	6261	5	40.496507			
100000804	6261	6	19.213756			
100000804	6261	7	30.654807			
100000804	6261	8	30.179175			
100000804	6261	9	24.540628			
100000804	6261	10	25.823573			
100000804	6457	1	54.421917	SIDNEY RD	NW	TRAM RD & SIDNEY RD
100000804	6457	2	30.604073			
100000804	6457	3	41.151425			
100000804	6457	4	62.062935			
100000804	6457	5	37.037238			
100000804	6457	6	44.400883			
100000804	6457	7	92.014771			
100000804	6457	8	29.458414			
100000804	6457	9	59.672759			
100000804	6457	10	40.116813			
100000804	6458	1	2.737865	TRAM RD	NE	TRAM RD & SIDNEY RD
100000804	6458	2	3.371484			
100000804	6458	3	1.974012			
100000804	6458	4	2.711858			
100000804	6458	5	3.219316			
100000804	6458	6	2.738796			
100000804	6458	7	2.786191			
100000804	6458	8	2.512804			
100000804	6458	9	2.313209			
100000804	6458	10	2.31656			
100000882	5151	1		SERVICE RD	SW	SERVICE RD
100000882	5151	2				
100000882	5151	3				
100000882	5151	4				
100000882	5151	5				
100000882	5151	6				
100000882	5151	7				
100000882	5151	8				
100000882	5151	9				
100000882	5151	10				
100000882	6446	1	0	SERVICE RD	NE	SERVICE RD
100000882	6446	2	0			
100000882	6446	3	0			
100000882	6446	4	0			
100000882	6446	5	0			
100000882	6446	6	0			
100000882	6446	7	0			
100000882	6446	8	0			
100000882	6446	9	0			
100000882	6446	10	0			
100000882	6449	1	0		N	SERVICE RD
100000882	6449	2	0			
100000882	6449	3	0			

Node	Superlink	Run	Average Control Delay	Approach Street Name	Direction	Intersection
100000882	6449	4	0			
100000882	6449	5	0			
100000882	6449	6	0			
100000882	6449	7	0			
100000882	6449	8	0			
100000882	6449	9	0			
100000882	6449	10	0			
100000883	5148	1	0	BROAD RIVER RD	NW	BROAD RIVER RD & 6448 (E)
100000883	5148	2	0			
100000883	5148	3	0.000037			
100000883	5148	4	0			
100000883	5148	5	0.000038			
100000883	5148	6	0			
100000883	5148	7	0.000041			
100000883	5148	8	0.000033			
100000883	5148	9	0			
100000883	5148	10	0.000011			
100000883	6447	1	11.109737	BROAD RIVER RD	SE	BROAD RIVER RD & 6448 (E)
100000883	6447	2	12.040553			
100000883	6447	3	11.355133			
100000883	6447	4	12.464308			
100000883	6447	5	12.732409			
100000883	6447	6	11.535965			
100000883	6447	7	12.397039			
100000883	6447	8	12.116804			
100000883	6447	9	12.06642			
100000883	6447	10	11.571046			
100000883	6448	1			W	BROAD RIVER RD & 6448 (E)
100000883	6448	2				
100000883	6448	3				
100000883	6448	4				
100000883	6448	5				
100000883	6448	6				
100000883	6448	7				
100000883	6448	8				
100000883	6448	9				
100000883	6448	10				
100000895	3229	1	0	RAMP	SW	RAMP & PINEY GROVE RD
100000895	3229	2	0			
100000895	3229	3	0			
100000895	3229	4	0			
100000895	3229	5	0			
100000895	3229	6	0			
100000895	3229	7	0			
100000895	3229	8	0			
100000895	3229	9	0			
100000895	3229	10	0			
100000895	6543	1	8.194697	PINEY GROVE RD	E	RAMP & PINEY GROVE RD
100000895	6543	2	9.977323			
100000895	6543	3	12.991213			
100000895	6543	4	9.869127			
100000895	6543	5	9.196201			
100000895	6543	6	10.341116			
100000895	6543	7	8.466798			
100000895	6543	8	11.162529			
100000895	6543	9	10.824685			
100000895	6543	10	10.493882			
100000895	6544	1	0	PINEY GROVE RD	W	RAMP & PINEY GROVE RD
100000895	6544	2	0			
100000895	6544	3	0			
100000895	6544	4	0			
100000895	6544	5	0			
100000895	6544	6	0			
100000895	6544	7	0			
100000895	6544	8	0			
100000895	6544	9	0			
100000895	6544	10	0			
100000897	3243	1	4.100407	I-126 WB OFF RAMP TO COLONIAL LIFE BLVD	NE	I-126 WB OFF RAMP TO COLONIAL LIFE BLVD
100000897	3243	2	3.818715			
100000897	3243	3	2.881277			
100000897	3243	4	3.4765			
100000897	3243	5	4.597563			
100000897	3243	6	4.412966			
100000897	3243	7	3.028945			
100000897	3243	8	4.155148			
100000897	3243	9	3.865384			
100000897	3243	10	4.385904			
100000897	5134	1	7.108632	W COLONIAL LIFE BLVD	NW	I-126 WB OFF RAMP TO COLONIAL LIFE BLVD
100000897	5134	2	7.035072			
100000897	5134	3	7.090554			
100000897	5134	4	7.074551			
100000897	5134	5	6.72844			
100000897	5134	6	7.18897			
100000897	5134	7	7.125249			
100000897	5134	8	6.743179			
100000897	5134	9	7.295388			
100000897	5134	10	7.055072			
100000897	6471	1	0.237871	COLONIAL LIFE BLVD W	S	I-126 WB OFF RAMP TO COLONIAL LIFE BLVD
100000897	6471	2	0.264588			
100000897	6471	3	0.18169			
100000897	6471	4	0.200383			
100000897	6471	5	0.304368			
100000897	6471	6	0.180324			
100000897	6471	7	0.184982			
100000897	6471	8	0.167301			
100000897	6471	9	0.246866			
100000897	6471	10	0.270477			
100000898	51	1	37.54792	I-26 EXIT 108 EB OFF RAMP	S	I-26 EXIT 108 EB OFF RAMP
100000898	51	2	37.589515			
100000898	51	3	42.690771			
100000898	51	4	39.074949			
100000898	51	5	39.974967			
100000898	51	6	35.276562			
100000898	51	7	33.887101			
100000898	51	8	37.809933			
100000898	51	9	37.538563			
100000898	51	10	41.102748			
100000898	5130	1	17.585073	BUSH RIVER RD	N	I-26 EXIT 108 EB OFF RAMP
100000898	5130	2	20.459476			
100000898	5130	3	24.279322			

Node	Superlink	Run	Average Control Delay	Approach Street Name	Direction	Intersection
100000898	5130	4	22.52981			
100000898	5130	5	23.715178			
100000898	5130	6	17.249469			
100000898	5130	7	22.060194			
100000898	5130	8	20.125451			
100000898	5130	9	19.81836			
100000898	5130	10	25.796124			
100000898	5131	1	6.334014	BUSH RIVER RD	E	I-26 EXIT 108 EB OFF RAMP
100000898	5131	2	6.984529			
100000898	5131	3	6.919838			
100000898	5131	4	6.386741			
100000898	5131	5	6.264932			
100000898	5131	6	6.701062			
100000898	5131	7	6.033115			
100000898	5131	8	7.374689			
100000898	5131	9	6.993558			
100000898	5131	10	8.306148			
100000898	6503	1	8.64233	BUSH RIVER RD	W	I-26 EXIT 108 EB OFF RAMP
100000898	6503	2	7.74555			
100000898	6503	3	7.840986			
100000898	6503	4	7.403248			
100000898	6503	5	7.365953			
100000898	6503	6	6.740699			
100000898	6503	7	7.554059			
100000898	6503	8	9.022455			
100000898	6503	9	9.084143			
100000898	6503	10	7.48			
100000899	3298	1	10.662477	EXIT 106 WB OFF RAMP	SE	EXIT 106 WB OFF RAMP & BURNING TREE RD
100000899	3298	2	11.485313			
100000899	3298	3	11.239133			
100000899	3298	4	11.260455			
100000899	3298	5	11.784281			
100000899	3298	6	16.890928			
100000899	3298	7	11.784834			
100000899	3298	8	9.906085			
100000899	3298	9	10.167971			
100000899	3298	10	10.868224			
100000899	6105	1	0	BURNING TREE RD	S	EXIT 106 WB OFF RAMP & BURNING TREE RD
100000899	6105	2	0			
100000899	6105	3	0			
100000899	6105	4	0			
100000899	6105	5	0			
100000899	6105	6	0			
100000899	6105	7	0			
100000899	6105	8	0			
100000899	6105	9	0			
100000899	6105	10	0			
100000899	6106	1	0	BURNING TREE RD	N	EXIT 106 WB OFF RAMP & BURNING TREE RD
100000899	6106	2	0			
100000899	6106	3	0			
100000899	6106	4	0			
100000899	6106	5	0			
100000899	6106	6	0			
100000899	6106	7	0			
100000899	6106	8	0			
100000899	6106	9	0			
100000899	6106	10	0			
100000902	4292	1	43.321019	EXIT 110 WB OFF RAMP	NE	SUNSET BLVD
100000902	4292	2	54.17399			
100000902	4292	3	44.018782			
100000902	4292	4	48.283349			
100000902	4292	5	44.311356			
100000902	4292	6	46.514924			
100000902	4292	7	32.290251			
100000902	4292	8	47.567694			
100000902	4292	9	35.87249			
100000902	4292	10	48.626009			
100000902	4947	1	7.927476	SUNSET BLVD	W	SUNSET BLVD
100000902	4947	2	6.707189			
100000902	4947	3	8.477836			
100000902	4947	4	8.265959			
100000902	4947	5	10.234051			
100000902	4947	6	7.020473			
100000902	4947	7	9.452621			
100000902	4947	8	7.852925			
100000902	4947	9	7.650966			
100000902	4947	10	6.932455			
100000902	4951	1	0.00008	SUNSET BLVD	E	SUNSET BLVD
100000902	4951	2	0			
100000902	4951	3	0			
100000902	4951	4	0			
100000902	4951	5	0.001159			
100000902	4951	6	0			
100000902	4951	7	0			
100000902	4951	8	0			
100000902	4951	9	0			
100000902	4951	10	0			
100000903	4289	1	48.580537	EXIT 110 WB OFF RAMP	NW	RAMP
100000903	4289	2	50.572668			
100000903	4289	3	44.661919			
100000903	4289	4	43.5498			
100000903	4289	5	47.341746			
100000903	4289	6	45.897413			
100000903	4289	7	46.543536			
100000903	4289	8	52.188938			
100000903	4289	9	48.831987			
100000903	4289	10	45.012091			
100000903	4298	1	30.623841	RAMP	SE	RAMP
100000903	4298	2	31.706251			
100000903	4298	3	31.137109			
100000903	4298	4	30.817234			
100000903	4298	5	28.510595			
100000903	4298	6	30.086124			
100000903	4298	7	31.851424			
100000903	4298	8	33.57095			
100000903	4298	9	30.833512			
100000903	4298	10	26.875719			
100000903	4950	1	13.085387	SUNSET BLVD	E	RAMP
100000903	4950	2	13.45324			
100000903	4950	3	14.049865			

Node	Superlink	Run	Average Control Delay	Approach Street Name	Direction	Intersection
100000903	4950	4	13.383428			
100000903	4950	5	13.106222			
100000903	4950	6	14.177222			
100000903	4950	7	13.212219			
100000903	4950	8	13.582734			
100000903	4950	9	13.30631			
100000903	4950	10	12.784867			
100000903	4951	1	27.768207	SUNSET BLVD	W	RAMP
100000903	4951	2	26.851207			
100000903	4951	3	30.738583			
100000903	4951	4	31.023441			
100000903	4951	5	28.544542			
100000903	4951	6	28.082785			
100000903	4951	7	26.913237			
100000903	4951	8	27.946153			
100000903	4951	9	26.574955			
100000903	4951	10	27.475203			

2040 No-Build PM

Node	Superlink	Run	Average Control Delay	Approach Street Name	Direction	Intersection
4	5081	1	4.03292	BROAD RIVER RD	W	WESTERN LN & BROAD RIVER RD
4	5081	2	2.771076			
4	5081	3	3.479059			
4	5081	4	3.234602			
4	5081	5	3.79484			
4	5081	6	3.176103			
4	5081	7	3.828813			
4	5081	8	2.951692			
4	5081	9	4.106496			
4	5081	10	3.459221			
4	6465	1	6.790249	WESTERN LN	S	WESTERN LN & BROAD RIVER RD
4	6465	2	7.30403			
4	6465	3	7.334274			
4	6465	4	7.081422			
4	6465	5	7.427878			
4	6465	6	7.6837			
4	6465	7	6.981241			
4	6465	8	7.550631			
4	6465	9	6.832073			
4	6465	10	7.448296			
4	6466	1	4.544879	BROAD RIVER RD	E	WESTERN LN & BROAD RIVER RD
4	6466	2	5.073054			
4	6466	3	4.755054			
4	6466	4	4.691728			
4	6466	5	4.83022			
4	6466	6	5.217668			
4	6466	7	5.106569			
4	6466	8	4.886524			
4	6466	9	4.818535			
4	6466	10	5.009999			
4	6467	1	4.774753	WESTERN LN	N	WESTERN LN & BROAD RIVER RD
4	6467	2	6.653231			
4	6467	3	5.938708			
4	6467	4	6.222529			
4	6467	5	6.11275			
4	6467	6	5.627165			
4	6467	7	6.50984			
4	6467	8	6.574768			
4	6467	9	5.664405			
4	6467	10	5.628894			
11	5487	1	0	MORNINGHILL DR	N	MORNINGHILL DR & BURNETTE DR
11	5487	2	0			
11	5487	3	0			
11	5487	4	0			
11	5487	5	0			
11	5487	6	0			
11	5487	7	0			
11	5487	8	0			
11	5487	9	0			
11	5487	10	0			
11	6536	1		MORNINGHILL DR	S	MORNINGHILL DR & BURNETTE DR
11	6536	2				
11	6536	3				
11	6536	4				
11	6536	5				
11	6536	6				
11	6536	7				
11	6536	8				
11	6536	9				
11	6536	10				
11	6537	1	0	BURNETTE DR	E	MORNINGHILL DR & BURNETTE DR
11	6537	2	0			
11	6537	3	0			
11	6537	4	0			
11	6537	5	0			
11	6537	6	0			
11	6537	7	0			
11	6537	8	0			
11	6537	9	0			
11	6537	10	0			
26	5488	1	0	RAMP	S	RAMP & 6502 (NW)
26	5488	2	0			
26	5488	3	0			
26	5488	4	0			
26	5488	5	0			
26	5488	6	0			
26	5488	7	0			
26	5488	8	0			
26	5488	9	0			
26	5488	10	0			
26	6501	1	11.295062	RAMP	N	RAMP & 6502 (NW)
26	6501	2	10.430841			
26	6501	3	11.337951			
26	6501	4	10.485949			
26	6501	5	10.285184			
26	6501	6	10.60916			
26	6501	7	10.612593			
26	6501	8	10.024493			
26	6501	9	9.886985			
26	6501	10	10.440074			
26	6502	1	0		SE	RAMP & 6502 (NW)
26	6502	2	0			
26	6502	3	0			
26	6502	4	0			

Node	Superlink	Run	Average Control Delay	Approach Street Name	Direction	Intersection
26	6502	5	0			
26	6502	6	0			
26	6502	7	0			
26	6502	8	0			
26	6502	9	0			
26	6502	10	0			
28	5140	1	0	GREYSTONE BLVD	S	GREYSTONE BLVD & CANDI LN
28	5140	2	0			
28	5140	3	0			
28	5140	4	0			
28	5140	5	0			
28	5140	6	0			
28	5140	7	0			
28	5140	8	0			
28	5140	9	0			
28	5140	10	0			
28	6506	1	6.862642	GREYSTONE BLVD	W	GREYSTONE BLVD & CANDI LN
28	6506	2	7.181487			
28	6506	3	7.320944			
28	6506	4	7.331144			
28	6506	5	7.905393			
28	6506	6	7.622012			
28	6506	7	6.951005			
28	6506	8	7.610463			
28	6506	9	7.611977			
28	6506	10	7.104365			
28	6507	1		CANDI LN	E	GREYSTONE BLVD & CANDI LN
28	6507	2				
28	6507	3				
28	6507	4				
28	6507	5				
28	6507	6				
28	6507	7				
28	6507	8				
28	6507	9				
28	6507	10				
41	6518	1	567.692894	BROAD RIVER RD	NW	DUTCH SQUARE BLVD & BROAD RIVER RD
41	6518	2	264.520728			
41	6518	3	306.6112			
41	6518	4	323.565382			
41	6518	5	245.40281			
41	6518	6	315.344152			
41	6518	7	184.392885			
41	6518	8	295.096196			
41	6518	9	513.84976			
41	6518	10	264.74315			
41	6519	1	78.862659	DUTCH SQUARE BLVD	E	DUTCH SQUARE BLVD & BROAD RIVER RD
41	6519	2	61.242107			
41	6519	3	55.006163			
41	6519	4	70.880645			
41	6519	5	59.519356			
41	6519	6	64.451579			
41	6519	7	47.776399			
41	6519	8	60.024378			
41	6519	9	95.005888			
41	6519	10	56.178724			
41	6521	1	4.651143	BROAD RIVER RD	SE	DUTCH SQUARE BLVD & BROAD RIVER RD
41	6521	2	4.038664			
41	6521	3	4.570866			
41	6521	4	3.712165			
41	6521	5	4.61206			
41	6521	6	3.913735			
41	6521	7	4.813695			
41	6521	8	4.99483			
41	6521	9	3.631592			
41	6521	10	4.434179			
43	6519	1	0	DUTCH SQUARE BLVD	W	DUTCH SQUARE BLVD & 6522 (N)
43	6519	2	0			
43	6519	3	0			
43	6519	4	0			
43	6519	5	0			
43	6519	6	0			
43	6519	7	0			
43	6519	8	0			
43	6519	9	0			
43	6519	10	0			
43	6520	1	434.375586	DUTCH SQUARE BLVD	E	DUTCH SQUARE BLVD & 6522 (N)
43	6520	2	278.283053			
43	6520	3	275.665896			
43	6520	4	312.015173			
43	6520	5	278.188507			
43	6520	6	259.78656			
43	6520	7	236.059525			
43	6520	8	279.672085			
43	6520	9	521.421528			
43	6520	10	249.860382			
43	6522	1	0		SW	DUTCH SQUARE BLVD & 6522 (N)
43	6522	2	0			
43	6522	3	0			
43	6522	4	0			
43	6522	5	0			
43	6522	6	0			
43	6522	7	0			
43	6522	8	0			
43	6522	9	0			
43	6522	10	0			
46	6273	1	0	PARKRIDGE DR	NE	PARKRIDGE DR & 6555 (NE)
46	6273	2	0			
46	6273	3	0			
46	6273	4	0			
46	6273	5	0			
46	6273	6	0			
46	6273	7	0			
46	6273	8	0			
46	6273	9	0			
46	6273	10	0			
46	6555	1			SW	PARKRIDGE DR & 6555 (NE)
46	6555	2				
46	6555	3				

Node	Superlink	Run	Average Control Delay	Approach Street Name	Direction	Intersection
46	6555	4				
46	6555	5				
46	6555	6				
46	6555	7				
46	6555	8				
46	6555	9				
46	6555	10				
46	6556	1	8.085512	PARKRIDGE DR	SE	PARKRIDGE DR & 6555 (NE)
46	6556	2	9.320418			
46	6556	3	7.815856			
46	6556	4	7.673263			
46	6556	5	7.486728			
46	6556	6	9.422421			
46	6556	7	7.652679			
46	6556	8	7.444278			
46	6556	9	7.249513			
46	6556	10	9.014777			
100000012	5081	1	30.638471	BROAD RIVER RD	SE	KINLEY RD
100000012	5081	2	26.007601			
100000012	5081	3	32.22489			
100000012	5081	4	31.034779			
100000012	5081	5	26.915698			
100000012	5081	6	24.923386			
100000012	5081	7	27.076866			
100000012	5081	8	27.590147			
100000012	5081	9	28.179523			
100000012	5081	10	25.994772			
100000012	6276	1	51.340718	KINLEY RD	N	KINLEY RD
100000012	6276	2	40.622856			
100000012	6276	3	44.413982			
100000012	6276	4	47.207887			
100000012	6276	5	47.203257			
100000012	6276	6	48.697459			
100000012	6276	7	38.783247			
100000012	6276	8	53.847937			
100000012	6276	9	46.996125			
100000012	6276	10	40.990044			
100000012	6307	1	276.576062	KENNERLY RD	S	KINLEY RD
100000012	6307	2	258.761843			
100000012	6307	3	388.476602			
100000012	6307	4	271.987399			
100000012	6307	5	314.272096			
100000012	6307	6	369.288859			
100000012	6307	7	257.800847			
100000012	6307	8	264.176347			
100000012	6307	9	266.144555			
100000012	6307	10	415.951764			
100000012	6308	1	128.689432	BROAD RIVER RD	NW	KINLEY RD
100000012	6308	2	153.960896			
100000012	6308	3	172.942383			
100000012	6308	4	131.154672			
100000012	6308	5	156.915061			
100000012	6308	6	191.402751			
100000012	6308	7	150.038447			
100000012	6308	8	133.845215			
100000012	6308	9	199.196931			
100000012	6308	10	159.665614			
100000025	6267	1	0	PARKRIDGE DR	NW	CLUB RD & PARKRIDGE DR
100000025	6267	2	0			
100000025	6267	3	0			
100000025	6267	4	0			
100000025	6267	5	0			
100000025	6267	6	0			
100000025	6267	7	0			
100000025	6267	8	0			
100000025	6267	9	0			
100000025	6267	10	0			
100000025	6273	1	0	PARKRIDGE DR	SE	CLUB RD & PARKRIDGE DR
100000025	6273	2	0			
100000025	6273	3	0			
100000025	6273	4	0			
100000025	6273	5	0			
100000025	6273	6	0			
100000025	6273	7	0			
100000025	6273	8	0			
100000025	6273	9	0			
100000025	6273	10	0			
100000025	6304	1		CLUB RD	S	CLUB RD & PARKRIDGE DR
100000025	6304	2				
100000025	6304	3				
100000025	6304	4				
100000025	6304	5				
100000025	6304	6				
100000025	6304	7				
100000025	6304	8				
100000025	6304	9				
100000025	6304	10				
100000037	5101	1	34.325094	HARBISON BLVD	NE	BROAD RIVER RD & HARBISON BLVD
100000037	5101	2	30.636909			
100000037	5101	3	27.904632			
100000037	5101	4	26.476778			
100000037	5101	5	36.854877			
100000037	5101	6	26.811047			
100000037	5101	7	29.823868			
100000037	5101	8	25.390753			
100000037	5101	9	32.235658			
100000037	5101	10	69.455912			
100000037	6317	1	13.598121	BROAD RIVER RD	SE	BROAD RIVER RD & HARBISON BLVD
100000037	6317	2	12.445658			
100000037	6317	3	14.257806			
100000037	6317	4	13.441622			
100000037	6317	5	10.754325			
100000037	6317	6	12.492655			
100000037	6317	7	11.637761			
100000037	6317	8	14.093303			
100000037	6317	9	13.892083			
100000037	6317	10	13.07806			
100000037	6320	1	62.377568	BROAD RIVER RD	NW	BROAD RIVER RD & HARBISON BLVD
100000037	6320	2	81.388975			
100000037	6320	3	53.139344			

Node	Superlink	Run	Average Control Delay	Approach Street Name	Direction	Intersection
100000037	6320	4	89.816351			
100000037	6320	5	59.670936			
100000037	6320	6	116.640559			
100000037	6320	7	102.500768			
100000037	6320	8	54.755334			
100000037	6320	9	58.368778			
100000037	6320	10	118.067714			
100000038	6232	1	0	BROAD RIVER RD	NW	BROAD RIVER RD & 6311 (S)
100000038	6232	2	0			
100000038	6232	3	0			
100000038	6232	4	0			
100000038	6232	5	0			
100000038	6232	6	0			
100000038	6232	7	0			
100000038	6232	8	0			
100000038	6232	9	0			
100000038	6232	10	0			
100000038	6311	1	11.398058		N	BROAD RIVER RD & 6311 (S)
100000038	6311	2	14.14458			
100000038	6311	3	14.045883			
100000038	6311	4	6.511795			
100000038	6311	5	11.897187			
100000038	6311	6	12.619259			
100000038	6311	7	4.886374			
100000038	6311	8	5.951323			
100000038	6311	9	18.488656			
100000038	6311	10	12.698183			
100000038	6312	1	0.0001	BROAD RIVER RD	SE	BROAD RIVER RD & 6311 (S)
100000038	6312	2	0.003678			
100000038	6312	3	0			
100000038	6312	4	0			
100000038	6312	5	0.00053			
100000038	6312	6	0			
100000038	6312	7	0			
100000038	6312	8	0			
100000038	6312	9	0			
100000038	6312	10	0.014197			
100000041	6281	1	10.215478	LAKE MURRAY BLVD	W	LAKE MURRAY BLVD & 6311 (N)
100000041	6281	2	8.409977			
100000041	6281	3	0.003436			
100000041	6281	4	4.951042			
100000041	6281	5	7.76594			
100000041	6281	6	11.033371			
100000041	6281	7	0.061642			
100000041	6281	8	0			
100000041	6281	9	10.764258			
100000041	6281	10	25.58041			
100000041	6311	1			SW	LAKE MURRAY BLVD & 6311 (N)
100000041	6311	2				
100000041	6311	3				
100000041	6311	4				
100000041	6311	5				
100000041	6311	6				
100000041	6311	7				
100000041	6311	8				
100000041	6311	9				
100000041	6311	10				
100000041	6313	1	0.140183	LAKE MURRAY BLVD	E	LAKE MURRAY BLVD & 6311 (N)
100000041	6313	2	1.329804			
100000041	6313	3	0.288384			
100000041	6313	4	0.119447			
100000041	6313	5	0.13948			
100000041	6313	6	0.04913			
100000041	6313	7	0.057814			
100000041	6313	8	0.203834			
100000041	6313	9	0.139495			
100000041	6313	10	0.529734			
100000046	5511	1	225.87948	BUSH RIVER RD	E	BUSH RIVER RD
100000046	5511	2	141.580912			
100000046	5511	3	159.361754			
100000046	5511	4	171.376328			
100000046	5511	5	154.445079			
100000046	5511	6	101.644846			
100000046	5511	7	77.886941			
100000046	5511	8	246.592305			
100000046	5511	9	197.644128			
100000046	5511	10	152.449466			
100000046	6323	1	427.296252	BROAD RIVER RD	NW	BUSH RIVER RD
100000046	6323	2	165.191376			
100000046	6323	3	253.402057			
100000046	6323	4	214.452951			
100000046	6323	5	174.547641			
100000046	6323	6	210.640824			
100000046	6323	7	117.39282			
100000046	6323	8	246.381188			
100000046	6323	9	342.923196			
100000046	6323	10	225.220661			
100000046	6324	1	63.566151	ELM ABODE TER	SW	BUSH RIVER RD
100000046	6324	2	99.399798			
100000046	6324	3	71.498556			
100000046	6324	4	67.609626			
100000046	6324	5	96.226244			
100000046	6324	6	151.302826			
100000046	6324	7	90.634858			
100000046	6324	8	94.348863			
100000046	6324	9	73.112941			
100000046	6324	10	100.056892			
100000046	6518	1	41.510462	BROAD RIVER RD	SE	BUSH RIVER RD
100000046	6518	2	40.85458			
100000046	6518	3	37.655967			
100000046	6518	4	36.371798			
100000046	6518	5	44.723347			
100000046	6518	6	35.345163			
100000046	6518	7	49.76167			
100000046	6518	8	39.044669			
100000046	6518	9	33.462241			
100000046	6518	10	56.988742			
100000049	6318	1	38.944427	LOST CREEK DR	S	LOST CREEK DR
100000049	6318	2	60.734309			
100000049	6318	3	39.899332			

Node	Superlink	Run	Average Control Delay	Approach Street Name	Direction	Intersection
100000049	6318	4	43.637749			
100000049	6318	5	41.17363			
100000049	6318	6	64.736703			
100000049	6318	7	51.582862			
100000049	6318	8	45.211287			
100000049	6318	9	42.622106			
100000049	6318	10	68.978621			
100000049	6319	1	50.499513	PINEY WOODS RD	N	LOST CREEK DR
100000049	6319	2	41.000272			
100000049	6319	3	41.005171			
100000049	6319	4	63.002254			
100000049	6319	5	36.885359			
100000049	6319	6	91.750974			
100000049	6319	7	78.844517			
100000049	6319	8	72.72266			
100000049	6319	9	29.743468			
100000049	6319	10	105.352166			
100000049	6320	1	14.697044	BROAD RIVER RD	SE	LOST CREEK DR
100000049	6320	2	22.474486			
100000049	6320	3	16.193894			
100000049	6320	4	16.637586			
100000049	6320	5	23.933433			
100000049	6320	6	20.018199			
100000049	6320	7	15.17666			
100000049	6320	8	12.175314			
100000049	6320	9	21.871124			
100000049	6320	10	17.575146			
100000049	6322	1	42.994761	BROAD RIVER RD	NW	LOST CREEK DR
100000049	6322	2	48.655311			
100000049	6322	3	24.476658			
100000049	6322	4	40.496534			
100000049	6322	5	32.912509			
100000049	6322	6	107.321616			
100000049	6322	7	76.50987			
100000049	6322	8	34.74958			
100000049	6322	9	26.457882			
100000049	6322	10	49.840165			
100000068	6321	1	19.946724	PINEY GROVE RD	E	BROAD RIVER RD & PINEY GROVE RD
100000068	6321	2	21.051774			
100000068	6321	3	19.094564			
100000068	6321	4	15.857749			
100000068	6321	5	17.485923			
100000068	6321	6	19.085131			
100000068	6321	7	18.848368			
100000068	6321	8	18.044091			
100000068	6321	9	17.140106			
100000068	6321	10	18.530277			
100000068	6322	1	2.609763	BROAD RIVER RD	SE	BROAD RIVER RD & PINEY GROVE RD
100000068	6322	2	1.875065			
100000068	6322	3	2.596718			
100000068	6322	4	2.156884			
100000068	6322	5	1.518193			
100000068	6322	6	2.476729			
100000068	6322	7	2.280812			
100000068	6322	8	1.965415			
100000068	6322	9	2.21218			
100000068	6322	10	2.296214			
100000068	6357	1	3.326539	BROAD RIVER RD	NW	BROAD RIVER RD & PINEY GROVE RD
100000068	6357	2	3.650553			
100000068	6357	3	3.087731			
100000068	6357	4	3.810355			
100000068	6357	5	3.482593			
100000068	6357	6	3.205509			
100000068	6357	7	3.398992			
100000068	6357	8	3.478349			
100000068	6357	9	2.945085			
100000068	6357	10	4.271091			
100000085	6325	1	0.015173	BROAD RIVER RD	E	BROAD RIVER RD
100000085	6325	2	0.113489			
100000085	6325	3	0.122833			
100000085	6325	4	0.120232			
100000085	6325	5	0.074774			
100000085	6325	6	0.165166			
100000085	6325	7	0.132364			
100000085	6325	8	0.076281			
100000085	6325	9	0.07532			
100000085	6325	10	0.056598			
100000085	6329	1	2.428896	RT	E	BROAD RIVER RD
100000085	6329	2	3.751887			
100000085	6329	3	3.430881			
100000085	6329	4	2.262377			
100000085	6329	5	2.559118			
100000085	6329	6	3.159708			
100000085	6329	7	2.442308			
100000085	6329	8	3.068289			
100000085	6329	9	2.233637			
100000085	6329	10	3.036677			
100000085	6330	1	198.647461	BROAD RIVER RD	W	BROAD RIVER RD
100000085	6330	2	49.721242			
100000085	6330	3	72.69873			
100000085	6330	4	81.886082			
100000085	6330	5	99.278322			
100000085	6330	6	138.945173			
100000085	6330	7	15.171711			
100000085	6330	8	85.271075			
100000085	6330	9	246.323963			
100000085	6330	10	68.878993			
100000085	6331	1	93.740181	RIVERHILL CIR	W	BROAD RIVER RD
100000085	6331	2	27.482924			
100000085	6331	3	48.757193			
100000085	6331	4	76.408072			
100000085	6331	5	109.765969			
100000085	6331	6	74.96018			
100000085	6331	7	36.073082			
100000085	6331	8	92.580841			
100000085	6331	9	163.435766			
100000085	6331	10	77.340481			
100000093	4299	1	102.946498	RAMP	SW	SUNSET BLVD & RAMP
100000093	4299	2	116.813733			
100000093	4299	3	90.633227			

Node	Superlink	Run	Average Control Delay	Approach Street Name	Direction	Intersection
100000093	4299	4	104.694276			
100000093	4299	5	89.544568			
100000093	4299	6	93.752596			
100000093	4299	7	102.711475			
100000093	4299	8	118.537637			
100000093	4299	9	91.561694			
100000093	4299	10	98.174609			
100000093	4949	1	39.291373	SUNSET BLVD	E	SUNSET BLVD & RAMP
100000093	4949	2	37.241322			
100000093	4949	3	38.410735			
100000093	4949	4	34.609172			
100000093	4949	5	36.065947			
100000093	4949	6	37.077199			
100000093	4949	7	28.797233			
100000093	4949	8	37.801435			
100000093	4949	9	35.196044			
100000093	4949	10	35.704587			
100000093	4950	1	0.002011	SUNSET BLVD	W	SUNSET BLVD & RAMP
100000093	4950	2	0.109279			
100000093	4950	3	0.02711			
100000093	4950	4	0.001816			
100000093	4950	5	0.118611			
100000093	4950	6	0.001724			
100000093	4950	7	0.001437			
100000093	4950	8	0.003007			
100000093	4950	9	0.003547			
100000093	4950	10	0.001606			
100000120	5031	1	9.656612	SUNSET BLVD	W	CORLEY MILL RD
100000120	5031	2	9.8434			
100000120	5031	3	10.329943			
100000120	5031	4	11.052415			
100000120	5031	5	9.775798			
100000120	5031	6	10.39201			
100000120	5031	7	9.870526			
100000120	5031	8	10.936853			
100000120	5031	9	10.134362			
100000120	5031	10	10.803347			
100000120	5352	1	12.846092	CORLEY MILL RD	S	CORLEY MILL RD
100000120	5352	2	12.555755			
100000120	5352	3	12.355272			
100000120	5352	4	13.179689			
100000120	5352	5	14.062249			
100000120	5352	6	12.728364			
100000120	5352	7	13.208632			
100000120	5352	8	12.6087			
100000120	5352	9	13.142488			
100000120	5352	10	13.147998			
100000120	5353	1	40.226498	GINNY LN	N	CORLEY MILL RD
100000120	5353	2	37.552378			
100000120	5353	3	41.09406			
100000120	5353	4	37.37798			
100000120	5353	5	39.060203			
100000120	5353	6	41.18394			
100000120	5353	7	35.509534			
100000120	5353	8	34.694662			
100000120	5353	9	39.737213			
100000120	5353	10	32.726251			
100000120	5355	1	35.145542	SUNSET BLVD	E	CORLEY MILL RD
100000120	5355	2	33.780824			
100000120	5355	3	35.125107			
100000120	5355	4	36.153474			
100000120	5355	5	35.150937			
100000120	5355	6	33.508513			
100000120	5355	7	34.788834			
100000120	5355	8	33.94972			
100000120	5355	9	36.360918			
100000120	5355	10	36.105586			
100000134	2048	1	21.908706	RAMP	SW	SUNSET BLVD & RAMP
100000134	2048	2	21.29452			
100000134	2048	3	21.638698			
100000134	2048	4	23.340969			
100000134	2048	5	25.286355			
100000134	2048	6	25.809617			
100000134	2048	7	22.485158			
100000134	2048	8	25.52814			
100000134	2048	9	23.084246			
100000134	2048	10	23.760247			
100000134	5027	1	6.76407	SUNSET BLVD	NW	SUNSET BLVD & RAMP
100000134	5027	2	7.307469			
100000134	5027	3	9.855137			
100000134	5027	4	7.875402			
100000134	5027	5	7.565876			
100000134	5027	6	8.752315			
100000134	5027	7	9.715011			
100000134	5027	8	6.409112			
100000134	5027	9	8.332848			
100000134	5027	10	6.294767			
100000134	5030	1	4.478785	SUNSET BLVD	SE	SUNSET BLVD & RAMP
100000134	5030	2	5.154556			
100000134	5030	3	5.406916			
100000134	5030	4	4.359593			
100000134	5030	5	4.248115			
100000134	5030	6	3.5769			
100000134	5030	7	4.211412			
100000134	5030	8	4.205137			
100000134	5030	9	4.441875			
100000134	5030	10	4.942451			
100000135	2039	1	11.984489	I-20 EB OFF-RAMP	NE	SUNSET BLVD & I-20 EB OFF-RAMP
100000135	2039	2	11.448427			
100000135	2039	3	13.12213			
100000135	2039	4	12.118332			
100000135	2039	5	13.367953			
100000135	2039	6	11.799661			
100000135	2039	7	13.009353			
100000135	2039	8	12.467007			
100000135	2039	9	12.865949			
100000135	2039	10	12.657485			
100000135	5022	1	4.394052	SUNSET BLVD	SE	SUNSET BLVD & I-20 EB OFF-RAMP
100000135	5022	2	5.096383			
100000135	5022	3	4.287881			

Node	Superlink	Run	Average Control Delay	Approach Street Name	Direction	Intersection
100000135	5022	4	4.837344			
100000135	5022	5	4.962115			
100000135	5022	6	5.12956			
100000135	5022	7	4.040287			
100000135	5022	8	4.920556			
100000135	5022	9	4.810424			
100000135	5022	10	5.071547			
100000135	5023	1	4.063535	SUNSET BLVD	NW	SUNSET BLVD & I-20 EB OFF-RAMP
100000135	5023	2	5.161759			
100000135	5023	3	5.090181			
100000135	5023	4	4.700486			
100000135	5023	5	4.99009			
100000135	5023	6	4.801347			
100000135	5023	7	4.634928			
100000135	5023	8	5.198196			
100000135	5023	9	5.156			
100000135	5023	10	4.724458			
100000136	5021	1	22.291809	SUNSET BLVD	SE	SUNSET BLVD
100000136	5021	2	21.143555			
100000136	5021	3	20.866801			
100000136	5021	4	19.903833			
100000136	5021	5	22.655615			
100000136	5021	6	22.319201			
100000136	5021	7	19.554193			
100000136	5021	8	21.551716			
100000136	5021	9	20.388432			
100000136	5021	10	23.761498			
100000136	5362	1	31.847947	CROMER RD	NE	SUNSET BLVD
100000136	5362	2	30.146767			
100000136	5362	3	27.881762			
100000136	5362	4	32.34292			
100000136	5362	5	28.767976			
100000136	5362	6	32.10819			
100000136	5362	7	30.037359			
100000136	5362	8	30.267221			
100000136	5362	9	33.045075			
100000136	5362	10	28.211065			
100000136	5364	1	104.924773	SUNSET BLVD	NW	SUNSET BLVD
100000136	5364	2	100.877353			
100000136	5364	3	95.02916			
100000136	5364	4	97.724325			
100000136	5364	5	99.295821			
100000136	5364	6	93.766145			
100000136	5364	7	92.230623			
100000136	5364	8	97.972375			
100000136	5364	9	96.412401			
100000136	5364	10	98.010546			
100000136	6459	1	24.230852	DAVEGA DR	SW	SUNSET BLVD
100000136	6459	2	26.143418			
100000136	6459	3	21.738398			
100000136	6459	4	26.422171			
100000136	6459	5	25.014303			
100000136	6459	6	26.351468			
100000136	6459	7	24.173889			
100000136	6459	8	27.391284			
100000136	6459	9	26.065379			
100000136	6459	10	27.330368			
100000138	2052	1	0	RAMP	NW	RAMP
100000138	2052	2	0			
100000138	2052	3	0			
100000138	2052	4	0			
100000138	2052	5	0			
100000138	2052	6	0			
100000138	2052	7	0			
100000138	2052	8	0			
100000138	2052	9	0			
100000138	2052	10	0			
100000138	5030	1	0	SUNSET BLVD	NW	RAMP
100000138	5030	2	0			
100000138	5030	3	0			
100000138	5030	4	0			
100000138	5030	5	0			
100000138	5030	6	0			
100000138	5030	7	0			
100000138	5030	8	0			
100000138	5030	9	0			
100000138	5030	10	0			
100000138	6553	1	6.33645	SUNSET BLVD	SE	RAMP
100000138	6553	2	6.811019			
100000138	6553	3	5.399312			
100000138	6553	4	6.622974			
100000138	6553	5	6.55766			
100000138	6553	6	4.87554			
100000138	6553	7	5.571562			
100000138	6553	8	6.197625			
100000138	6553	9	6.633268			
100000138	6553	10	6.935366			
100000139	2065	1	24.242404	RAMP	S	RAMP & BUSH RIVER RD
100000139	2065	2	22.8364			
100000139	2065	3	25.655532			
100000139	2065	4	25.519768			
100000139	2065	5	23.752085			
100000139	2065	6	26.475157			
100000139	2065	7	23.41918			
100000139	2065	8	26.356764			
100000139	2065	9	27.737361			
100000139	2065	10	26.560204			
100000139	5033	1	6.337666	BUSH RIVER RD	NW	RAMP & BUSH RIVER RD
100000139	5033	2	6.614515			
100000139	5033	3	6.052418			
100000139	5033	4	6.27122			
100000139	5033	5	6.638223			
100000139	5033	6	6.740491			
100000139	5033	7	5.977631			
100000139	5033	8	7.809739			
100000139	5033	9	6.88013			
100000139	5033	10	6.627029			
100000139	5034	1	6.677823	BUSH RIVER RD	SE	RAMP & BUSH RIVER RD
100000139	5034	2	7.509223			
100000139	5034	3	6.671796			

Node	Superlink	Run	Average Control Delay	Approach Street Name	Direction	Intersection
100000139	5034	4	7.724712			
100000139	5034	5	6.883263			
100000139	5034	6	7.647365			
100000139	5034	7	6.878795			
100000139	5034	8	6.835903			
100000139	5034	9	7.048626			
100000139	5034	10	7.253472			
100000140	5376	1	91.468317	SUNSET BLVD	W	SUMMER PLACE DR
100000140	5376	2	87.295875			
100000140	5376	3	70.281337			
100000140	5376	4	84.32038			
100000140	5376	5	83.498587			
100000140	5376	6	72.0342			
100000140	5376	7	73.444374			
100000140	5376	8	76.530985			
100000140	5376	9	68.62604			
100000140	5376	10	86.259543			
100000140	5378	1	123.851735	SUMMER PLACE DR	N	SUMMER PLACE DR
100000140	5378	2	173.037688			
100000140	5378	3	166.377375			
100000140	5378	4	73.073195			
100000140	5378	5	204.411895			
100000140	5378	6	72.197192			
100000140	5378	7	161.969			
100000140	5378	8	174.38602			
100000140	5378	9	54.929573			
100000140	5378	10	167.266899			
100000140	6489	1		FAIRLANE DR	S	SUMMER PLACE DR
100000140	6489	2				
100000140	6489	3				
100000140	6489	4				
100000140	6489	5				
100000140	6489	6				
100000140	6489	7				
100000140	6489	8				
100000140	6489	9				
100000140	6489	10				
100000140	6764	1	7.148323	SUNSET BLVD	E	SUMMER PLACE DR
100000140	6764	2	7.458754			
100000140	6764	3	5.702519			
100000140	6764	4	7.902449			
100000140	6764	5	6.274306			
100000140	6764	6	9.725101			
100000140	6764	7	8.520372			
100000140	6764	8	7.166014			
100000140	6764	9	6.689918			
100000140	6764	10	8.382112			
100000142	2053	1	9.791127	RAMP	NE	BUSH RIVER RD & RAMP
100000142	2053	2	9.384089			
100000142	2053	3	8.058614			
100000142	2053	4	9.505025			
100000142	2053	5	8.98661			
100000142	2053	6	8.6382			
100000142	2053	7	8.866627			
100000142	2053	8	8.776306			
100000142	2053	9	9.958677			
100000142	2053	10	9.078998			
100000142	5036	1	13.254509	BUSH RIVER RD	SE	BUSH RIVER RD & RAMP
100000142	5036	2	13.378537			
100000142	5036	3	11.736447			
100000142	5036	4	12.682913			
100000142	5036	5	13.480573			
100000142	5036	6	12.447662			
100000142	5036	7	14.081714			
100000142	5036	8	12.663794			
100000142	5036	9	10.114824			
100000142	5036	10	12.804801			
100000142	5037	1	5.756937	BUSH RIVER RD	NW	BUSH RIVER RD & RAMP
100000142	5037	2	5.792047			
100000142	5037	3	7.01581			
100000142	5037	4	6.043182			
100000142	5037	5	5.952424			
100000142	5037	6	5.692137			
100000142	5037	7	6.432112			
100000142	5037	8	6.180726			
100000142	5037	9	4.973677			
100000142	5037	10	5.559797			
100000143	5372	1	0	SUNSET BLVD	E	SUNSET BLVD & HEBRON DR
100000143	5372	2	0			
100000143	5372	3	0			
100000143	5372	4	0			
100000143	5372	5	0			
100000143	5372	6	0			
100000143	5372	7	0			
100000143	5372	8	0			
100000143	5372	9	0			
100000143	5372	10	0			
100000143	6763	1		HEBRON DR	N	SUNSET BLVD & HEBRON DR
100000143	6763	2				
100000143	6763	3				
100000143	6763	4				
100000143	6763	5				
100000143	6763	6				
100000143	6763	7				
100000143	6763	8				
100000143	6763	9				
100000143	6763	10				
100000143	6764	1	0	SUNSET BLVD	W	SUNSET BLVD & HEBRON DR
100000143	6764	2	0			
100000143	6764	3	0			
100000143	6764	4	0			
100000143	6764	5	0			
100000143	6764	6	0			
100000143	6764	7	0			
100000143	6764	8	0			
100000143	6764	9	0			
100000143	6764	10	0			
100000144	5376	1	23.388007	SUNSET BLVD	E	SUNSET BLVD
100000144	5376	2	20.885595			
100000144	5376	3	16.044009			

Node	Superlink	Run	Average Control Delay	Approach Street Name	Direction	Intersection
100000144	5376	4	58.99351			
100000144	5376	5	15.897413			
100000144	5376	6	133.453293			
100000144	5376	7	15.959166			
100000144	5376	8	15.396454			
100000144	5376	9	12.228042			
100000144	5376	10	21.31182			
100000144	6760	1	180.394047	W. HOSPTIAL DR	S	SUNSET BLVD
100000144	6760	2	138.610507			
100000144	6760	3	132.015303			
100000144	6760	4	137.45753			
100000144	6760	5	128.487558			
100000144	6760	6	173.38104			
100000144	6760	7	140.489785			
100000144	6760	8	163.056921			
100000144	6760	9	139.23825			
100000144	6760	10	164.508661			
100000144	6761	1		SUNSET CT	N	SUNSET BLVD
100000144	6761	2				
100000144	6761	3				
100000144	6761	4				
100000144	6761	5				
100000144	6761	6				
100000144	6761	7				
100000144	6761	8				
100000144	6761	9				
100000144	6761	10				
100000144	6762	1	62.900349	SUNSET BLVD	W	SUNSET BLVD
100000144	6762	2	64.452966			
100000144	6762	3	53.695206			
100000144	6762	4	62.392062			
100000144	6762	5	61.94932			
100000144	6762	6	52.200009			
100000144	6762	7	52.057334			
100000144	6762	8	56.741543			
100000144	6762	9	45.538774			
100000144	6762	10	60.829431			
100000150	3361	1	17.773551	I-26 EXIT 101 EB OFF RAMP	SW	I-26 EXIT 101 EB OFF RAMP & BROAD RIVER RD
100000150	3361	2	17.107833			
100000150	3361	3	19.072339			
100000150	3361	4	17.766476			
100000150	3361	5	18.302054			
100000150	3361	6	17.267141			
100000150	3361	7	16.797465			
100000150	3361	8	17.808016			
100000150	3361	9	21.544066			
100000150	3361	10	16.1205			
100000150	5071	1	0	BROAD RIVER RD	E	I-26 EXIT 101 EB OFF RAMP & BROAD RIVER RD
100000150	5071	2	0			
100000150	5071	3	0			
100000150	5071	4	0			
100000150	5071	5	0			
100000150	5071	6	0			
100000150	5071	7	0			
100000150	5071	8	0			
100000150	5071	9	0			
100000150	5071	10	0			
100000150	5073	1	0.041822	BROAD RIVER RD	W	I-26 EXIT 101 EB OFF RAMP & BROAD RIVER RD
100000150	5073	2	0.057453			
100000150	5073	3	0.057366			
100000150	5073	4	0.050534			
100000150	5073	5	0.059919			
100000150	5073	6	0.051478			
100000150	5073	7	0.054572			
100000150	5073	8	0.030509			
100000150	5073	9	0.040881			
100000150	5073	10	0.049683			
100000151	5072	1	2.356931	BROAD RIVER RD	E	BROAD RIVER RD & ON-RAMP from WB
100000151	5072	2	2.23121			
100000151	5072	3	1.937764			
100000151	5072	4	1.874178			
100000151	5072	5	1.897129			
100000151	5072	6	1.892913			
100000151	5072	7	1.707415			
100000151	5072	8	3.112897			
100000151	5072	9	1.971401			
100000151	5072	10	2.115735			
100000151	5075	1	1.474775	BROAD RIVER RD	W	BROAD RIVER RD & ON-RAMP from WB
100000151	5075	2	1.661783			
100000151	5075	3	1.654656			
100000151	5075	4	1.927904			
100000151	5075	5	1.494908			
100000151	5075	6	1.634272			
100000151	5075	7	1.235079			
100000151	5075	8	1.660286			
100000151	5075	9	1.577655			
100000151	5075	10	1.560287			
100000155	6084	1	4.804204	BROAD RIVER RD	N	BEATTY RD & BROAD RIVER RD
100000155	6084	2	4.019732			
100000155	6084	3	3.992117			
100000155	6084	4	4.355846			
100000155	6084	5	5.218935			
100000155	6084	6	3.69254			
100000155	6084	7	5.002255			
100000155	6084	8	4.112107			
100000155	6084	9	4.05951			
100000155	6084	10	3.723922			
100000155	6355	1	28.687339	BEATTY RD	E	BEATTY RD & BROAD RIVER RD
100000155	6355	2	27.758536			
100000155	6355	3	24.532186			
100000155	6355	4	27.620758			
100000155	6355	5	22.38869			
100000155	6355	6	28.184849			
100000155	6355	7	24.501176			
100000155	6355	8	24.722851			
100000155	6355	9	29.979939			
100000155	6355	10	20.076539			
100000155	6357	1	12.915287	BROAD RIVER RD	S	BEATTY RD & BROAD RIVER RD
100000155	6357	2	13.036419			
100000155	6357	3	12.00254			

Node	Superlink	Run	Average Control Delay	Approach Street Name	Direction	Intersection
100000155	6357	4	12.118893			
100000155	6357	5	13.381365			
100000155	6357	6	11.117893			
100000155	6357	7	12.483227			
100000155	6357	8	11.231503			
100000155	6357	9	12.333902			
100000155	6357	10	11.39523			
100000163	4947	1	5.486951	SUNSET BLVD	E	MCSWAIN DR
100000163	4947	2	4.798985			
100000163	4947	3	4.717291			
100000163	4947	4	5.571941			
100000163	4947	5	5.703202			
100000163	4947	6	4.955493			
100000163	4947	7	4.786633			
100000163	4947	8	5.36746			
100000163	4947	9	5.661334			
100000163	4947	10	6.002062			
100000163	5388	1	18.637216	SUNSET BLVD	W	MCSWAIN DR
100000163	5388	2	18.142869			
100000163	5388	3	13.615027			
100000163	5388	4	14.95102			
100000163	5388	5	15.189694			
100000163	5388	6	12.408649			
100000163	5388	7	8.364987			
100000163	5388	8	12.062948			
100000163	5388	9	11.921583			
100000163	5388	10	14.735512			
100000163	5389	1	42.650592	MCSWAIN DR	S	MCSWAIN DR
100000163	5389	2	55.561109			
100000163	5389	3	40.484188			
100000163	5389	4	46.936068			
100000163	5389	5	44.933126			
100000163	5389	6	37.20982			
100000163	5389	7	36.494789			
100000163	5389	8	42.583678			
100000163	5389	9	32.587363			
100000163	5389	10	40.326075			
100000163	5418	1	57.701645	CHRIS DR	N	MCSWAIN DR
100000163	5418	2	68.293837			
100000163	5418	3	61.820872			
100000163	5418	4	71.193304			
100000163	5418	5	61.08319			
100000163	5418	6	53.87807			
100000163	5418	7	60.849961			
100000163	5418	8	67.938781			
100000163	5418	9	64.892275			
100000163	5418	10	57.473363			
100000164	3354	1	0	I-26 EXIT 102 EB OFF RAMP	W	LAKE MURRAY BLVD & I-26 EXIT 102 EB OFF RAMP
100000164	3354	2	0			
100000164	3354	3	0			
100000164	3354	4	0			
100000164	3354	5	0			
100000164	3354	6	0			
100000164	3354	7	0			
100000164	3354	8	0			
100000164	3354	9	0			
100000164	3354	10	0			
100000164	5084	1	0	LAKE MURRAY BLVD	E	LAKE MURRAY BLVD & I-26 EXIT 102 EB OFF RAMP
100000164	5084	2	0			
100000164	5084	3	0			
100000164	5084	4	0			
100000164	5084	5	0			
100000164	5084	6	0			
100000164	5084	7	0			
100000164	5084	8	0			
100000164	5084	9	0			
100000164	5084	10	0			
100000164	5085	1	0	LAKE MURRAY BLVD	W	LAKE MURRAY BLVD & I-26 EXIT 102 EB OFF RAMP
100000164	5085	2	0			
100000164	5085	3	0			
100000164	5085	4	0			
100000164	5085	5	0			
100000164	5085	6	0			
100000164	5085	7	0			
100000164	5085	8	0			
100000164	5085	9	0			
100000164	5085	10	0			
100000165	3330	1	49.86509	EXIT 103 WB OFF RAMP	SE	HARBISON BLVD
100000165	3330	2	48.148516			
100000165	3330	3	49.243121			
100000165	3330	4	47.903207			
100000165	3330	5	49.888098			
100000165	3330	6	49.231022			
100000165	3330	7	50.274217			
100000165	3330	8	46.052087			
100000165	3330	9	48.853005			
100000165	3330	10	47.770904			
100000165	5096	1	14.077222	HARBISON BLVD	NE	HARBISON BLVD
100000165	5096	2	13.061335			
100000165	5096	3	11.882126			
100000165	5096	4	12.277968			
100000165	5096	5	12.337638			
100000165	5096	6	12.749887			
100000165	5096	7	13.306222			
100000165	5096	8	13.060082			
100000165	5096	9	12.745719			
100000165	5096	10	12.53428			
100000165	5102	1	8.458876	HARBISON BLVD	SW	HARBISON BLVD
100000165	5102	2	8.530747			
100000165	5102	3	9.315601			
100000165	5102	4	8.422018			
100000165	5102	5	8.993971			
100000165	5102	6	9.126561			
100000165	5102	7	7.687638			
100000165	5102	8	8.544866			
100000165	5102	9	8.021574			
100000165	5102	10	8.312953			
100000165	5103	1	133.688695	WOODCROSS DR	NW	HARBISON BLVD
100000165	5103	2	129.200152			
100000165	5103	3	125.727745			

Node	Superlink	Run	Average Control Delay	Approach Street Name	Direction	Intersection
100000165	5103	4	135.108985			
100000165	5103	5	126.391216			
100000165	5103	6	126.813952			
100000165	5103	7	128.894326			
100000165	5103	8	138.929336			
100000165	5103	9	135.406301			
100000165	5103	10	138.351877			
100000166	3343	1	0	I-26 EXIT 102 EBL OFF RAMP	E	LAKE MURRAY BLVD & I-26 EXIT 102 EBL OFF RAMP
100000166	3343	2	0			
100000166	3343	3	0			
100000166	3343	4	0			
100000166	3343	5	0			
100000166	3343	6	0			
100000166	3343	7	0			
100000166	3343	8	0			
100000166	3343	9	0			
100000166	3343	10	0			
100000166	5087	1	0	LAKE MURRAY BLVD	E	LAKE MURRAY BLVD & I-26 EXIT 102 EBL OFF RAMP
100000166	5087	2	0			
100000166	5087	3	0			
100000166	5087	4	0			
100000166	5087	5	0			
100000166	5087	6	0			
100000166	5087	7	0			
100000166	5087	8	0			
100000166	5087	9	0			
100000166	5087	10	0			
100000166	5088	1	0	LAKE MURRAY BLVD	W	LAKE MURRAY BLVD & I-26 EXIT 102 EBL OFF RAMP
100000166	5088	2	0			
100000166	5088	3	0			
100000166	5088	4	0			
100000166	5088	5	0			
100000166	5088	6	0			
100000166	5088	7	0			
100000166	5088	8	0			
100000166	5088	9	0			
100000166	5088	10	0			
100000167	3339	1	0	I-26 EXIT 102 WBL OFF RAMP	W	I-26 EXIT 102 WBL OFF RAMP & LAKE MURRAY BLVD
100000167	3339	2	0			
100000167	3339	3	0			
100000167	3339	4	0			
100000167	3339	5	0			
100000167	3339	6	0			
100000167	3339	7	0			
100000167	3339	8	0			
100000167	3339	9	0			
100000167	3339	10	0			
100000167	5088	1	0	LAKE MURRAY BLVD	E	I-26 EXIT 102 WBL OFF RAMP & LAKE MURRAY BLVD
100000167	5088	2	0			
100000167	5088	3	0			
100000167	5088	4	0			
100000167	5088	5	0			
100000167	5088	6	0			
100000167	5088	7	0			
100000167	5088	8	0			
100000167	5088	9	0			
100000167	5088	10	0			
100000167	5090	1	0	LAKE MURRAY BLVD	W	I-26 EXIT 102 WBL OFF RAMP & LAKE MURRAY BLVD
100000167	5090	2	0			
100000167	5090	3	0			
100000167	5090	4	0			
100000167	5090	5	0			
100000167	5090	6	0			
100000167	5090	7	0			
100000167	5090	8	0			
100000167	5090	9	0			
100000167	5090	10	0			
100000168	5366	1	31.107144	LEAPHART RD	N	SUNSET BLVD & LEAPHART RD
100000168	5366	2	32.296581			
100000168	5366	3	32.272365			
100000168	5366	4	29.999649			
100000168	5366	5	33.149003			
100000168	5366	6	27.389289			
100000168	5366	7	27.591062			
100000168	5366	8	33.941402			
100000168	5366	9	30.581527			
100000168	5366	10	30.345255			
100000168	5368	1	5.78072	SUNSET BLVD	E	SUNSET BLVD & LEAPHART RD
100000168	5368	2	6.102981			
100000168	5368	3	5.195671			
100000168	5368	4	5.43089			
100000168	5368	5	6.023574			
100000168	5368	6	5.392985			
100000168	5368	7	4.916041			
100000168	5368	8	5.761006			
100000168	5368	9	5.409502			
100000168	5368	10	5.664269			
100000168	5372	1	593.503155	SUNSET BLVD	W	SUNSET BLVD & LEAPHART RD
100000168	5372	2	475.980294			
100000168	5372	3	508.951063			
100000168	5372	4	509.415908			
100000168	5372	5	530.604813			
100000168	5372	6	488.073714			
100000168	5372	7	462.655207			
100000168	5372	8	452.115548			
100000168	5372	9	427.127131			
100000168	5372	10	511.571785			
100000171	3342	1	0	I-26 EXIT 102 WB OFF RAMP	E	LAKE MURRAY BLVD & I-26 EXIT 102 WB OFF RAMP
100000171	3342	2	0			
100000171	3342	3	0			
100000171	3342	4	0			
100000171	3342	5	0			
100000171	3342	6	0			
100000171	3342	7	0			
100000171	3342	8	0			
100000171	3342	9	0			
100000171	3342	10	0			
100000171	5092	1	0.015187	LAKE MURRAY BLVD	E	LAKE MURRAY BLVD & I-26 EXIT 102 WB OFF RAMP
100000171	5092	2	0.016623			
100000171	5092	3	0.008034			

Node	Superlink	Run	Average Control Delay	Approach Street Name	Direction	Intersection
100000171	5092	4	0.022851			
100000171	5092	5	0.011925			
100000171	5092	6	0.019931			
100000171	5092	7	0.008012			
100000171	5092	8	0.009559			
100000171	5092	9	0.006607			
100000171	5092	10	0.009586			
100000171	5093	1	0	LAKE MURRAY BLVD	W	LAKE MURRAY BLVD & I-26 EXIT 102 WB OFF RAMP
100000171	5093	2	0			
100000171	5093	3	0			
100000171	5093	4	0			
100000171	5093	5	0			
100000171	5093	6	0			
100000171	5093	7	0			
100000171	5093	8	0			
100000171	5093	9	0			
100000171	5093	10	0			
100000173	3212	1	61.600879		103 SE	HARBISON BLVD
100000173	3212	2	55.47582			
100000173	3212	3	54.417114			
100000173	3212	4	53.895589			
100000173	3212	5	53.939488			
100000173	3212	6	50.398573			
100000173	3212	7	57.31914			
100000173	3212	8	57.783827			
100000173	3212	9	58.022647			
100000173	3212	10	54.636738			
100000173	3213	1	15.940295		103 S	HARBISON BLVD
100000173	3213	2	14.919945			
100000173	3213	3	15.11866			
100000173	3213	4	16.126826			
100000173	3213	5	16.897786			
100000173	3213	6	14.536767			
100000173	3213	7	15.412426			
100000173	3213	8	14.374948			
100000173	3213	9	14.990735			
100000173	3213	10	15.11617			
100000173	5097	1	3.409971	HARBISON BLVD	NE	HARBISON BLVD
100000173	5097	2	4.159551			
100000173	5097	3	3.841609			
100000173	5097	4	3.473378			
100000173	5097	5	3.96894			
100000173	5097	6	4.504542			
100000173	5097	7	3.297829			
100000173	5097	8	3.552959			
100000173	5097	9	3.612429			
100000173	5097	10	4.150342			
100000173	5099	1	7.459554	HARBISON BLVD	SW	HARBISON BLVD
100000173	5099	2	7.854438			
100000173	5099	3	9.002403			
100000173	5099	4	7.52642			
100000173	5099	5	7.375155			
100000173	5099	6	8.178152			
100000173	5099	7	7.629216			
100000173	5099	8	7.752714			
100000173	5099	9	7.844624			
100000173	5099	10	7.644667			
100000175	3234	1	54.768921	RAMP	SE	PINEY GROVE RD & RAMP
100000175	3234	2	60.377164			
100000175	3234	3	56.464781			
100000175	3234	4	50.862671			
100000175	3234	5	53.465521			
100000175	3234	6	53.714594			
100000175	3234	7	51.341351			
100000175	3234	8	52.864478			
100000175	3234	9	60.10689			
100000175	3234	10	55.556687			
100000175	5112	1	3.748279	PINEY GROVE RD	W	PINEY GROVE RD & RAMP
100000175	5112	2	6.059605			
100000175	5112	3	2.821939			
100000175	5112	4	2.529787			
100000175	5112	5	6.332714			
100000175	5112	6	4.692899			
100000175	5112	7	7.62282			
100000175	5112	8	9.894442			
100000175	5112	9	1.555988			
100000175	5112	10	5.226474			
100000175	6544	1	4.301656	PINEY GROVE RD	E	PINEY GROVE RD & RAMP
100000175	6544	2	3.820565			
100000175	6544	3	3.362363			
100000175	6544	4	3.437879			
100000175	6544	5	4.246608			
100000175	6544	6	3.132606			
100000175	6544	7	4.120715			
100000175	6544	8	4.139583			
100000175	6544	9	3.85463			
100000175	6544	10	3.808955			
100000177	5112	1	10.589721	PINEY GROVE RD	E	PINEY GROVE RD
100000177	5112	2	13.024896			
100000177	5112	3	19.979403			
100000177	5112	4	12.506994			
100000177	5112	5	12.960875			
100000177	5112	6	12.348138			
100000177	5112	7	18.316686			
100000177	5112	8	18.688714			
100000177	5112	9	8.904021			
100000177	5112	10	13.972495			
100000177	5113	1	15.163817	PINEY GROVE RD	W	PINEY GROVE RD
100000177	5113	2	14.327482			
100000177	5113	3	14.571901			
100000177	5113	4	13.413931			
100000177	5113	5	16.660918			
100000177	5113	6	13.342079			
100000177	5113	7	14.042516			
100000177	5113	8	15.613125			
100000177	5113	9	11.216087			
100000177	5113	10	14.527499			
100000177	6513	1	5.867458	EXIT 104 WB OFF RAMP	N	PINEY GROVE RD
100000177	6513	2	6.258643			
100000177	6513	3	5.902066			

Node	Superlink	Run	Average Control Delay	Approach Street Name	Direction	Intersection
100000177	6513	4	5.869596			
100000177	6513	5	6.215658			
100000177	6513	6	6.265471			
100000177	6513	7	5.831487			
100000177	6513	8	6.011719			
100000177	6513	9	5.891329			
100000177	6513	10	5.963813			
100000177	6514	1	26.286825	EXIT 104 WB OFF RAMP	N	PINEY GROVE RD
100000177	6514	2	27.662844			
100000177	6514	3	27.562636			
100000177	6514	4	28.222463			
100000177	6514	5	29.015048			
100000177	6514	6	30.0693			
100000177	6514	7	27.50622			
100000177	6514	8	28.785927			
100000177	6514	9	29.686457			
100000177	6514	10	27.364026			
100000178	3301	1	26.190911	RAMP	SE	ST ANDREWS RD
100000178	3301	2	26.176049			
100000178	3301	3	25.776831			
100000178	3301	4	24.485134			
100000178	3301	5	25.025951			
100000178	3301	6	22.545843			
100000178	3301	7	25.39608			
100000178	3301	8	25.223609			
100000178	3301	9	26.261532			
100000178	3301	10	23.081786			
100000178	5118	1	5.80514	ST ANDREWS RD	E	ST ANDREWS RD
100000178	5118	2	5.823545			
100000178	5118	3	5.668722			
100000178	5118	4	5.667539			
100000178	5118	5	5.648911			
100000178	5118	6	6.017629			
100000178	5118	7	5.535969			
100000178	5118	8	5.741677			
100000178	5118	9	5.589174			
100000178	5118	10	5.733134			
100000178	5119	1	25.578769	WOODLAND HILLS RD	N	ST ANDREWS RD
100000178	5119	2	22.923442			
100000178	5119	3	22.579956			
100000178	5119	4	21.764028			
100000178	5119	5	21.632775			
100000178	5119	6	23.328807			
100000178	5119	7	20.251248			
100000178	5119	8	23.146476			
100000178	5119	9	21.449266			
100000178	5119	10	25.320801			
100000178	5120	1	9.357841	ST ANDREWS RD	W	ST ANDREWS RD
100000178	5120	2	9.303083			
100000178	5120	3	8.464862			
100000178	5120	4	9.469734			
100000178	5120	5	9.065198			
100000178	5120	6	9.315592			
100000178	5120	7	9.574968			
100000178	5120	8	9.273855			
100000178	5120	9	9.938169			
100000178	5120	10	9.992862			
100000179	3219	1	0	RAMP	S	ST ANDREWS RD & RAMP
100000179	3219	2	0			
100000179	3219	3	0			
100000179	3219	4	0			
100000179	3219	5	0			
100000179	3219	6	0			
100000179	3219	7	0			
100000179	3219	8	0			
100000179	3219	9	0			
100000179	3219	10	0			
100000179	5116	1	17.564903	ST ANDREWS RD	E	ST ANDREWS RD & RAMP
100000179	5116	2	14.889135			
100000179	5116	3	15.363992			
100000179	5116	4	15.429448			
100000179	5116	5	17.319032			
100000179	5116	6	13.035261			
100000179	5116	7	15.914545			
100000179	5116	8	14.864132			
100000179	5116	9	17.222494			
100000179	5116	10	16.490913			
100000179	5118	1	0	ST ANDREWS RD	W	ST ANDREWS RD & RAMP
100000179	5118	2	0			
100000179	5118	3	0			
100000179	5118	4	0			
100000179	5118	5	0			
100000179	5118	6	0			
100000179	5118	7	0			
100000179	5118	8	0			
100000179	5118	9	0			
100000179	5118	10	0			
100000182	3292	1	0	EXIT 106 WB OFF RAMP	NE	ST ANDREWS RD
100000182	3292	2	0			
100000182	3292	3	0			
100000182	3292	4	0			
100000182	3292	5	0			
100000182	3292	6	0			
100000182	3292	7	0			
100000182	3292	8	0			
100000182	3292	9	0			
100000182	3292	10	0			
100000182	5123	1	0	ST ANDREWS RD	E	ST ANDREWS RD
100000182	5123	2	0			
100000182	5123	3	0			
100000182	5123	4	0			
100000182	5123	5	0			
100000182	5123	6	0			
100000182	5123	7	0			
100000182	5123	8	0			
100000182	5123	9	0			
100000182	5123	10	0			
100000182	5124	1	0	ST ANDREWS RD	SW	ST ANDREWS RD
100000182	5124	2	0			
100000182	5124	3	0			

Node	Superlink	Run	Average Control Delay	Approach Street Name	Direction	Intersection
100000182	5124	4	0			
100000182	5124	5	0			
100000182	5124	6	0			
100000182	5124	7	0			
100000182	5124	8	0			
100000182	5124	9	0			
100000182	5124	10	0			
100000184	5499	1	18.39937	N ARROWWOOD RD	S	ARROWWOOD RD
100000184	5499	2	17.154234			
100000184	5499	3	17.378786			
100000184	5499	4	16.770017			
100000184	5499	5	16.277268			
100000184	5499	6	21.724715			
100000184	5499	7	19.082368			
100000184	5499	8	19.300962			
100000184	5499	9	21.359881			
100000184	5499	10	19.735807			
100000184	5500	1	56.603645	ARROWWOOD RD	N	ARROWWOOD RD
100000184	5500	2	48.363767			
100000184	5500	3	54.01798			
100000184	5500	4	46.867687			
100000184	5500	5	45.536123			
100000184	5500	6	43.850509			
100000184	5500	7	48.943319			
100000184	5500	8	51.153916			
100000184	5500	9	62.913386			
100000184	5500	10	38.416234			
100000184	6497	1	164.975389	BUSH RIVER RD	W	ARROWWOOD RD
100000184	6497	2	131.772148			
100000184	6497	3	114.501715			
100000184	6497	4	130.422401			
100000184	6497	5	148.666223			
100000184	6497	6	179.309557			
100000184	6497	7	141.733159			
100000184	6497	8	147.05732			
100000184	6497	9	124.935274			
100000184	6497	10	123.853332			
100000184	6505	1	15.757976	BUSH RIVER RD	E	ARROWWOOD RD
100000184	6505	2	16.628435			
100000184	6505	3	17.760479			
100000184	6505	4	16.775284			
100000184	6505	5	18.22122			
100000184	6505	6	14.798273			
100000184	6505	7	21.214314			
100000184	6505	8	18.434556			
100000184	6505	9	15.927857			
100000184	6505	10	18.202989			
100000185	3230	1	79.258557	RAMP	W	GREYSTONE BLVD
100000185	3230	2	74.572647			
100000185	3230	3	69.248838			
100000185	3230	4	56.438754			
100000185	3230	5	79.861808			
100000185	3230	6	59.95309			
100000185	3230	7	93.395361			
100000185	3230	8	101.097289			
100000185	3230	9	51.669857			
100000185	3230	10	72.254251			
100000185	5140	1	0.463252	GREYSTONE BLVD	N	GREYSTONE BLVD
100000185	5140	2	0.532599			
100000185	5140	3	0.510293			
100000185	5140	4	0.535972			
100000185	5140	5	0.794661			
100000185	5140	6	0.355945			
100000185	5140	7	0.494782			
100000185	5140	8	0.487937			
100000185	5140	9	0.299559			
100000185	5140	10	0.423474			
100000185	5141	1	5.39673	GREYSTONE BLVD	S	GREYSTONE BLVD
100000185	5141	2	4.675411			
100000185	5141	3	5.354241			
100000185	5141	4	5.290821			
100000185	5141	5	6.122561			
100000185	5141	6	4.27121			
100000185	5141	7	4.533549			
100000185	5141	8	7.411892			
100000185	5141	9	4.17006			
100000185	5141	10	6.479215			
100000186	4949	1	34.903594	SUNSET BLVD	W	HARBOR DR
100000186	4949	2	34.366997			
100000186	4949	3	29.016303			
100000186	4949	4	35.527351			
100000186	4949	5	33.143623			
100000186	4949	6	28.183501			
100000186	4949	7	28.882501			
100000186	4949	8	35.698673			
100000186	4949	9	26.575767			
100000186	4949	10	32.359322			
100000186	5386	1	935.751426	HARBOR DR	N	HARBOR DR
100000186	5386	2	1011.238098			
100000186	5386	3	816.985235			
100000186	5386	4	622.191794			
100000186	5386	5	928.05481			
100000186	5386	6	995.285441			
100000186	5386	7	379.87763			
100000186	5386	8	942.48205			
100000186	5386	9	751.305209			
100000186	5386	10	855.406901			
100000186	5387	1	237.252317	E HOSPITAL DR	S	HARBOR DR
100000186	5387	2	292.99678			
100000186	5387	3	307.821944			
100000186	5387	4	274.292332			
100000186	5387	5	286.111962			
100000186	5387	6	274.322506			
100000186	5387	7	161.7907			
100000186	5387	8	367.127818			
100000186	5387	9	309.084321			
100000186	5387	10	290.055772			
100000186	6762	1	60.787106	SUNSET BLVD	E	HARBOR DR
100000186	6762	2	49.950387			
100000186	6762	3	55.590054			

Node	Superlink	Run	Average Control Delay	Approach Street Name	Direction	Intersection
100000186	6762	4	63.395904			
100000186	6762	5	44.17784			
100000186	6762	6	81.734678			
100000186	6762	7	44.699477			
100000186	6762	8	47.927272			
100000186	6762	9	53.475457			
100000186	6762	10	49.733596			
100000187	6057	1	214.880039	BROAD RIVER RD	NW	BROAD RIVER RD
100000187	6057	2	185.099979			
100000187	6057	3	159.454097			
100000187	6057	4	187.163636			
100000187	6057	5	150.907065			
100000187	6057	6	209.356123			
100000187	6057	7	140.455459			
100000187	6057	8	160.251716			
100000187	6057	9	220.738123			
100000187	6057	10	170.811752			
100000187	6059	1	13.713563	BROAD RIVER RD	SE	BROAD RIVER RD
100000187	6059	2	22.197392			
100000187	6059	3	8.054405			
100000187	6059	4	23.214335			
100000187	6059	5	28.532436			
100000187	6059	6	21.566659			
100000187	6059	7	42.050094			
100000187	6059	8	26.573942			
100000187	6059	9	4.785718			
100000187	6059	10	14.988131			
100000187	6060	1	256.2549	MARLEY DR	SW	BROAD RIVER RD
100000187	6060	2	316.455222			
100000187	6060	3	63.679708			
100000187	6060	4	430.759681			
100000187	6060	5	122.373445			
100000187	6060	6	91.295344			
100000187	6060	7	333.957261			
100000187	6060	8	145.162981			
100000187	6060	9	56.093419			
100000187	6060	10	68.197121			
100000187	6061	1	432.367478	BRIARGATE CIR	NE	BROAD RIVER RD
100000187	6061	2	306.771095			
100000187	6061	3	48.718382			
100000187	6061	4	337.783985			
100000187	6061	5	81.35955			
100000187	6061	6	318.878749			
100000187	6061	7	69.616467			
100000187	6061	8	79.760882			
100000187	6061	9	667.111353			
100000187	6061	10	72.036348			
100000188	3221	1	46.786265	RAMP	W	GREYSTONE BLVD & RAMP
100000188	3221	2	19.807864			
100000188	3221	3	37.140052			
100000188	3221	4	32.145246			
100000188	3221	5	42.697841			
100000188	3221	6	18.568915			
100000188	3221	7	16.562147			
100000188	3221	8	36.484897			
100000188	3221	9	26.889253			
100000188	3221	10	25.20579			
100000188	5143	1	2.45606	GREYSTONE BLVD	N	GREYSTONE BLVD & RAMP
100000188	5143	2	3.704555			
100000188	5143	3	2.200037			
100000188	5143	4	3.543311			
100000188	5143	5	2.2464			
100000188	5143	6	2.241169			
100000188	5143	7	8.679943			
100000188	5143	8	4.689167			
100000188	5143	9	3.530925			
100000188	5143	10	2.487852			
100000188	5144	1	0.073891	GREYSTONE BLVD	S	GREYSTONE BLVD & RAMP
100000188	5144	2	0.068819			
100000188	5144	3	0.036425			
100000188	5144	4	0.064435			
100000188	5144	5	0.010422			
100000188	5144	6	0.03929			
100000188	5144	7	0.094809			
100000188	5144	8	0.085101			
100000188	5144	9	0.049246			
100000188	5144	10	0.077962			
100000189	4346	1	765.569581	I-20 EXIT 65 WB OFF RAMP	SW	I-20 EXIT 65 WB OFF RAMP
100000189	4346	2	583.753352			
100000189	4346	3	709.075887			
100000189	4346	4	668.141169			
100000189	4346	5	651.930783			
100000189	4346	6	768.11322			
100000189	4346	7	582.206403			
100000189	4346	8	571.405384			
100000189	4346	9	775.267415			
100000189	4346	10	626.924216			
100000189	6057	1	84.56343	BROAD RIVER RD	SE	I-20 EXIT 65 WB OFF RAMP
100000189	6057	2	73.967694			
100000189	6057	3	74.055309			
100000189	6057	4	91.729458			
100000189	6057	5	95.384098			
100000189	6057	6	72.409376			
100000189	6057	7	111.351432			
100000189	6057	8	82.264038			
100000189	6057	9	21.986772			
100000189	6057	10	73.327362			
100000189	6447	1	165.845155	BROAD RIVER RD	NW	I-20 EXIT 65 WB OFF RAMP
100000189	6447	2	101.208127			
100000189	6447	3	94.534371			
100000189	6447	4	118.661173			
100000189	6447	5	83.762871			
100000189	6447	6	115.869715			
100000189	6447	7	71.243553			
100000189	6447	8	92.100449			
100000189	6447	9	170.397438			
100000189	6447	10	98.696299			
100000190	4341	1	403.29408	I-20 EXIT 65 EB OFF RAMP	E	BROAD RIVER RD
100000190	4341	2	213.669208			
100000190	4341	3	249.125907			

Node	Superlink	Run	Average Control Delay	Approach Street Name	Direction	Intersection
100000190	4341	4	239.642334			
100000190	4341	5	171.827948			
100000190	4341	6	320.195102			
100000190	4341	7	73.824417			
100000190	4341	8	291.994516			
100000190	4341	9	914.847548			
100000190	4341	10	118.540787			
100000190	5148	1	1.9879	BROAD RIVER RD	SE	BROAD RIVER RD
100000190	5148	2	1.554072			
100000190	5148	3	1.934897			
100000190	5148	4	1.794709			
100000190	5148	5	1.998179			
100000190	5148	6	1.786924			
100000190	5148	7	1.842467			
100000190	5148	8	1.830929			
100000190	5148	9	1.685738			
100000190	5148	10	1.809625			
100000190	6445	1	15.511608	BROAD RIVER RD	NW	BROAD RIVER RD
100000190	6445	2	9.724821			
100000190	6445	3	8.685213			
100000190	6445	4	11.70775			
100000190	6445	5	7.888641			
100000190	6445	6	10.605524			
100000190	6445	7	7.15842			
100000190	6445	8	8.426102			
100000190	6445	9	15.485997			
100000190	6445	10	8.935988			
100000190	6446	1		SERVICE RD	SW	BROAD RIVER RD
100000190	6446	2				
100000190	6446	3				
100000190	6446	4				
100000190	6446	5				
100000190	6446	6				
100000190	6446	7				
100000190	6446	8				
100000190	6446	9				
100000190	6446	10				
100000191	5399	1	0.039194	HARBOR DR	S	HARBOR DR & OAKWOOD DR
100000191	5399	2	0.263717			
100000191	5399	3	0			
100000191	5399	4	0.068489			
100000191	5399	5	0			
100000191	5399	6	0.161753			
100000191	5399	7	1.064072			
100000191	5399	8	0.059285			
100000191	5399	9	0			
100000191	5399	10	0.115883			
100000191	5414	1	312.692294	OAKWOOD DR	NE	HARBOR DR & OAKWOOD DR
100000191	5414	2	156.640941			
100000191	5414	3	390.309448			
100000191	5414	4	249.682913			
100000191	5414	5	183.747221			
100000191	5414	6	304.216377			
100000191	5414	7	101.270008			
100000191	5414	8	620.485089			
100000191	5414	9	177.303813			
100000191	5414	10	199.634692			
100000191	5420	1	459.602509	HARBOR DR	N	HARBOR DR & OAKWOOD DR
100000191	5420	2	176.435866			
100000191	5420	3	473.27978			
100000191	5420	4	273.509516			
100000191	5420	5	73.912492			
100000191	5420	6	399.666412			
100000191	5420	7	73.856964			
100000191	5420	8	731.318298			
100000191	5420	9	262.212502			
100000191	5420	10	538.604362			
100000193	4350	1	36.423018	I-20 EXIT 68 EB OFF RAMP	E	BUCKNER RD
100000193	4350	2	29.275479			
100000193	4350	3	26.992496			
100000193	4350	4	25.380573			
100000193	4350	5	25.895305			
100000193	4350	6	29.25673			
100000193	4350	7	23.761972			
100000193	4350	8	26.101658			
100000193	4350	9	78.091045			
100000193	4350	10	28.389715			
100000193	5154	1	21.495595	MONTICELLO RD	N	BUCKNER RD
100000193	5154	2	20.667771			
100000193	5154	3	18.344333			
100000193	5154	4	19.312026			
100000193	5154	5	19.415182			
100000193	5154	6	19.699628			
100000193	5154	7	19.03994			
100000193	5154	8	18.214232			
100000193	5154	9	20.034871			
100000193	5154	10	20.197188			
100000193	5155	1	26.962344	MONTICELLO RD	SE	BUCKNER RD
100000193	5155	2	39.199612			
100000193	5155	3	21.70605			
100000193	5155	4	27.087122			
100000193	5155	5	21.10791			
100000193	5155	6	22.877197			
100000193	5155	7	21.40673			
100000193	5155	8	19.796471			
100000193	5155	9	23.484046			
100000193	5155	10	27.084284			
100000193	5163	1	11.628614	BUCKNER RD	SW	BUCKNER RD
100000193	5163	2	12.631686			
100000193	5163	3	10.315716			
100000193	5163	4	11.944996			
100000193	5163	5	11.079828			
100000193	5163	6	12.790268			
100000193	5163	7	10.2781			
100000193	5163	8	11.706468			
100000193	5163	9	10.623104			
100000193	5163	10	10.372239			
100000195	5150	1	7.874909	BROAD RIVER RD	SE	LONGCREEK DR & BROAD RIVER RD
100000195	5150	2	9.700599			
100000195	5150	3	9.259983			

Node	Superlink	Run	Average Control Delay	Approach Street Name	Direction	Intersection
100000195	5150	4	8.202587			
100000195	5150	5	7.938278			
100000195	5150	6	8.990084			
100000195	5150	7	9.186988			
100000195	5150	8	9.760864			
100000195	5150	9	9.353981			
100000195	5150	10	8.75601			
100000195	6049	1	12.188583	BROAD RIVER RD	NW	LONGCREEK DR & BROAD RIVER RD
100000195	6049	2	7.237024			
100000195	6049	3	6.945747			
100000195	6049	4	8.559851			
100000195	6049	5	5.189868			
100000195	6049	6	7.875546			
100000195	6049	7	5.231661			
100000195	6049	8	6.433105			
100000195	6049	9	11.635305			
100000195	6049	10	7.150817			
100000195	6052	1	101.748779	LONGCREEK DR	SW	LONGCREEK DR & BROAD RIVER RD
100000195	6052	2	86.520338			
100000195	6052	3	81.94004			
100000195	6052	4	105.514812			
100000195	6052	5	86.019804			
100000195	6052	6	90.716519			
100000195	6052	7	71.985464			
100000195	6052	8	80.191377			
100000195	6052	9	132.185923			
100000195	6052	10	81.00265			
100000196	5166	1	1.166477	MONTICELLO RD	SE	SERVICE RD
100000196	5166	2	0.738353			
100000196	5166	3	1.281243			
100000196	5166	4	0.881717			
100000196	5166	5	0.957981			
100000196	5166	6	1.380516			
100000196	5166	7	1.406942			
100000196	5166	8	0.722742			
100000196	5166	9	0.984418			
100000196	5166	10	1.253342			
100000196	5169	1	11.474449	SERVICE RD	SW	SERVICE RD
100000196	5169	2	14.921877			
100000196	5169	3	16.863027			
100000196	5169	4	17.647685			
100000196	5169	5	14.149676			
100000196	5169	6	18.145249			
100000196	5169	7	12.876175			
100000196	5169	8	15.923798			
100000196	5169	9	14.2964			
100000196	5169	10	10.991647			
100000196	5172	1	1.208418	MONTICELLO RD	NW	SERVICE RD
100000196	5172	2	1.367584			
100000196	5172	3	1.035289			
100000196	5172	4	2.446671			
100000196	5172	5	2.061676			
100000196	5172	6	1.484417			
100000196	5172	7	2.108201			
100000196	5172	8	1.209301			
100000196	5172	9	1.765375			
100000196	5172	10	1.558794			
100000198	4354	1	0	RAMP	N	RAMP & I-20 EXIT 68 EB ON RAMP
100000198	4354	2	0			
100000198	4354	3	0			
100000198	4354	4	0			
100000198	4354	5	0			
100000198	4354	6	0			
100000198	4354	7	0			
100000198	4354	8	0			
100000198	4354	9	0			
100000198	4354	10	0			
100000198	5158	1		RAMP	NW	RAMP & I-20 EXIT 68 EB ON RAMP
100000198	5158	2				
100000198	5158	3				
100000198	5158	4				
100000198	5158	5				
100000198	5158	6				
100000198	5158	7				
100000198	5158	8				
100000198	5158	9				
100000198	5158	10				
100000200	5174	1	7.654177	MONTICELLO RD	NW	MONTICELLO RD
100000200	5174	2	7.494289			
100000200	5174	3	7.592044			
100000200	5174	4	9.318478			
100000200	5174	5	8.733484			
100000200	5174	6	7.731369			
100000200	5174	7	7.082506			
100000200	5174	8	7.748559			
100000200	5174	9	7.218162			
100000200	5174	10	7.313444			
100000200	6041	1	9.960327	MONTICELLO RD	SE	MONTICELLO RD
100000200	6041	2	6.868055			
100000200	6041	3	5.424744			
100000200	6041	4	10.402112			
100000200	6041	5	5.87177			
100000200	6041	6	11.392708			
100000200	6041	7	6.066334			
100000200	6041	8	6.214853			
100000200	6041	9	21.508419			
100000200	6041	10	7.331517			
100000200	6044	1	21.241327	PEEPLES ST	NE	MONTICELLO RD
100000200	6044	2	15.995889			
100000200	6044	3	13.438358			
100000200	6044	4	17.023891			
100000200	6044	5	14.03668			
100000200	6044	6	16.252721			
100000200	6044	7	12.275456			
100000200	6044	8	14.262017			
100000200	6044	9	21.789194			
100000200	6044	10	16.55647			
100000200	6046	1	23.744278	BLUE RIDGE TER	S	MONTICELLO RD
100000200	6046	2	25.55661			
100000200	6046	3	24.798008			

Node	Superlink	Run	Average Control Delay	Approach Street Name	Direction	Intersection
100000200	6046	4	23.913519			
100000200	6046	5	26.484959			
100000200	6046	6	26.812387			
100000200	6046	7	22.224171			
100000200	6046	8	26.574647			
100000200	6046	9	22.386396			
100000200	6046	10	24.807982			
100000201	5157	1	3.126104	BUCKNER RD	SW	BUCKNER RD & TO BUCKNER ROAD
100000201	5157	2	4.344594			
100000201	5157	3	2.550029			
100000201	5157	4	4.055004			
100000201	5157	5	3.07029			
100000201	5157	6	3.171145			
100000201	5157	7	3.982635			
100000201	5157	8	4.876394			
100000201	5157	9	3.683081			
100000201	5157	10	2.270283			
100000201	5161	1	0.078834	TO BUCKNER ROAD	N	BUCKNER RD & TO BUCKNER ROAD
100000201	5161	2	0.004411			
100000201	5161	3	0.396702			
100000201	5161	4	0.33494			
100000201	5161	5	0.040631			
100000201	5161	6	0.304542			
100000201	5161	7	0.580128			
100000201	5161	8	0.339532			
100000201	5161	9	1.130257			
100000201	5161	10	0.01169			
100000201	5163	1	0.005123	BUCKNER RD	NE	BUCKNER RD & TO BUCKNER ROAD
100000201	5163	2	0.004979			
100000201	5163	3	0.004696			
100000201	5163	4	0.00419			
100000201	5163	5	0.004788			
100000201	5163	6	0.005123			
100000201	5163	7	0.007376			
100000201	5163	8	0.006418			
100000201	5163	9	0.003737			
100000201	5163	10	0.00364			
100000203	5169	1		SERVICE RD	E	SERVICE RD & MONTICELLO RD
100000203	5169	2				
100000203	5169	3				
100000203	5169	4				
100000203	5169	5				
100000203	5169	6				
100000203	5169	7				
100000203	5169	8				
100000203	5169	9				
100000203	5169	10				
100000203	5171	1		MONTICELLO RD	N	SERVICE RD & MONTICELLO RD
100000203	5171	2				
100000203	5171	3				
100000203	5171	4				
100000203	5171	5				
100000203	5171	6				
100000203	5171	7				
100000203	5171	8				
100000203	5171	9				
100000203	5171	10				
100000203	5173	1	0.185257	SERVICE RD	W	SERVICE RD & MONTICELLO RD
100000203	5173	2	0.168435			
100000203	5173	3	0.432946			
100000203	5173	4	0.196495			
100000203	5173	5	0.208893			
100000203	5173	6	0.352159			
100000203	5173	7	0.622566			
100000203	5173	8	0.421544			
100000203	5173	9	0.247898			
100000203	5173	10	0.411268			
100000250	6539	1	3.733309	BUSH RIVER RD	NW	E MEADOW CT/WOODLAND VILLAGE DR
100000250	6539	2	5.651773			
100000250	6539	3	4.094399			
100000250	6539	4	5.132548			
100000250	6539	5	4.793563			
100000250	6539	6	5.38242			
100000250	6539	7	4.075698			
100000250	6539	8	4.530482			
100000250	6539	9	4.758665			
100000250	6539	10	4.795095			
100000250	6546	1	28.521705	OUTLET POINTE BLVD	NE	E MEADOW CT/WOODLAND VILLAGE DR
100000250	6546	2	39.035941			
100000250	6546	3	31.556798			
100000250	6546	4	33.858978			
100000250	6546	5	45.686238			
100000250	6546	6	36.134584			
100000250	6546	7	28.259507			
100000250	6546	8	39.505806			
100000250	6546	9	44.104343			
100000250	6546	10	44.369173			
100000250	6547	1	35.033567	E MEADOW CT/WOODLAND VILLAGE DR	SW	E MEADOW CT/WOODLAND VILLAGE DR
100000250	6547	2	46.721826			
100000250	6547	3	34.884138			
100000250	6547	4	39.00478			
100000250	6547	5	51.168426			
100000250	6547	6	41.942844			
100000250	6547	7	33.160012			
100000250	6547	8	33.930418			
100000250	6547	9	41.104739			
100000250	6547	10	52.581375			
100000250	6548	1	17.643315	BUSH RIVER RD	SE	E MEADOW CT/WOODLAND VILLAGE DR
100000250	6548	2	54.427114			
100000250	6548	3	25.90334			
100000250	6548	4	33.132152			
100000250	6548	5	65.268719			
100000250	6548	6	31.032524			
100000250	6548	7	21.783436			
100000250	6548	8	61.7642			
100000250	6548	9	38.85469			
100000250	6548	10	73.935747			
100000252	5125	1	15.215924	BUSH RIVER RD	E	MORNINGHILL DR
100000252	5125	2	13.217709			
100000252	5125	3	15.529913			

Node	Superlink	Run	Average Control Delay	Approach Street Name	Direction	Intersection
100000252	5125	4	15.949729			
100000252	5125	5	14.321656			
100000252	5125	6	14.541517			
100000252	5125	7	14.51895			
100000252	5125	8	15.111726			
100000252	5125	9	12.917833			
100000252	5125	10	14.445024			
100000252	5487	1	116.774892	MORNINGHILL DR	S	MORNINGHILL DR
100000252	5487	2	102.258944			
100000252	5487	3	119.264529			
100000252	5487	4	87.578313			
100000252	5487	5	117.167078			
100000252	5487	6	98.759081			
100000252	5487	7	119.522603			
100000252	5487	8	123.843699			
100000252	5487	9	151.316222			
100000252	5487	10	109.564998			
100000252	5488	1	18.62307	RAMP	N	MORNINGHILL DR
100000252	5488	2	16.233308			
100000252	5488	3	17.982285			
100000252	5488	4	17.565027			
100000252	5488	5	17.398698			
100000252	5488	6	17.834122			
100000252	5488	7	16.733743			
100000252	5488	8	17.85032			
100000252	5488	9	16.727705			
100000252	5488	10	17.478017			
100000252	6505	1	122.274419	BUSH RIVER RD	W	MORNINGHILL DR
100000252	6505	2	111.00554			
100000252	6505	3	108.715478			
100000252	6505	4	111.478443			
100000252	6505	5	116.832275			
100000252	6505	6	119.025834			
100000252	6505	7	115.58304			
100000252	6505	8	112.051536			
100000252	6505	9	96.342523			
100000252	6505	10	109.91399			
100000255	5038	1	0.362336	BUSH RIVER RD	E	BUSH RIVER RD & INDEPENDENCE AVE
100000255	5038	2	0.351055			
100000255	5038	3	0.214172			
100000255	5038	4	0.265122			
100000255	5038	5	0.323522			
100000255	5038	6	0.309227			
100000255	5038	7	0.219876			
100000255	5038	8	0.268762			
100000255	5038	9	0.53961			
100000255	5038	10	0.392724			
100000255	5470	1	46.174724	INDEPENDENCE AVE	N	BUSH RIVER RD & INDEPENDENCE AVE
100000255	5470	2	45.944898			
100000255	5470	3	53.185898			
100000255	5470	4	48.603226			
100000255	5470	5	39.263049			
100000255	5470	6	46.401599			
100000255	5470	7	43.227048			
100000255	5470	8	63.414266			
100000255	5470	9	54.025646			
100000255	5470	10	45.904006			
100000255	5471	1	8.522803	BUSH RIVER RD	W	BUSH RIVER RD & INDEPENDENCE AVE
100000255	5471	2	10.47206			
100000255	5471	3	10.035233			
100000255	5471	4	10.261626			
100000255	5471	5	9.316426			
100000255	5471	6	10.100409			
100000255	5471	7	7.220125			
100000255	5471	8	11.449857			
100000255	5471	9	11.775493			
100000255	5471	10	10.895112			
100000256	5131	1	1.733542	BUSH RIVER RD	W	BUSH RIVER RD & ZIMALCREST DR
100000256	5131	2	1.852551			
100000256	5131	3	2.150012			
100000256	5131	4	1.520935			
100000256	5131	5	2.024584			
100000256	5131	6	1.812472			
100000256	5131	7	2.252963			
100000256	5131	8	1.599301			
100000256	5131	9	1.888093			
100000256	5131	10	1.558512			
100000256	5465	1	6.809166	BUSH RIVER RD	E	BUSH RIVER RD & ZIMALCREST DR
100000256	5465	2	5.253013			
100000256	5465	3	6.072361			
100000256	5465	4	7.463893			
100000256	5465	5	6.799512			
100000256	5465	6	6.35431			
100000256	5465	7	6.749674			
100000256	5465	8	7.060795			
100000256	5465	9	6.742432			
100000256	5465	10	6.099618			
100000256	5484	1	62.150381	ZIMALCREST DR	S	BUSH RIVER RD & ZIMALCREST DR
100000256	5484	2	57.808639			
100000256	5484	3	51.03672			
100000256	5484	4	57.00807			
100000256	5484	5	50.610736			
100000256	5484	6	55.308168			
100000256	5484	7	52.889418			
100000256	5484	8	50.606122			
100000256	5484	9	52.519754			
100000256	5484	10	53.669599			
100000256	5485	1	12.159845	ZIMALCREST DR	N	BUSH RIVER RD & ZIMALCREST DR
100000256	5485	2	11.392932			
100000256	5485	3	11.971071			
100000256	5485	4	10.805538			
100000256	5485	5	12.523892			
100000256	5485	6	11.038829			
100000256	5485	7	11.456768			
100000256	5485	8	12.693916			
100000256	5485	9	10.751514			
100000256	5485	10	11.968615			
100000259	5465	1	0	BUSH RIVER RD	W	NOTTINGWOOD DR & BUSH RIVER RD
100000259	5465	2	0			
100000259	5465	3	0			

Node	Superlink	Run	Average Control Delay	Approach Street Name	Direction	Intersection
100000259	5465	4	0			
100000259	5465	5	0			
100000259	5465	6	0			
100000259	5465	7	0			
100000259	5465	8	0			
100000259	5465	9	0			
100000259	5465	10	0			
100000259	5471	1	0	BUSH RIVER RD	E	NOTTINGWOOD DR & BUSH RIVER RD
100000259	5471	2	0			
100000259	5471	3	0			
100000259	5471	4	0			
100000259	5471	5	0			
100000259	5471	6	0			
100000259	5471	7	0			
100000259	5471	8	0			
100000259	5471	9	0			
100000259	5471	10	0			
100000259	5472	1		NOTTINGWOOD DR	S	NOTTINGWOOD DR & BUSH RIVER RD
100000259	5472	2				
100000259	5472	3				
100000259	5472	4				
100000259	5472	5				
100000259	5472	6				
100000259	5472	7				
100000259	5472	8				
100000259	5472	9				
100000259	5472	10				
100000262	5502	1	11.265302	BUSH RIVER RD	E	DUTCH SQUARE ENTRANCE
100000262	5502	2	9.784562			
100000262	5502	3	11.099761			
100000262	5502	4	11.376686			
100000262	5502	5	11.032594			
100000262	5502	6	10.198737			
100000262	5502	7	10.441311			
100000262	5502	8	10.198472			
100000262	5502	9	9.21084			
100000262	5502	10	8.718713			
100000262	5506	1	19.351997	COLONIAL LIFE BLVD W	N	DUTCH SQUARE ENTRANCE
100000262	5506	2	15.988906			
100000262	5506	3	15.054143			
100000262	5506	4	17.638994			
100000262	5506	5	17.991254			
100000262	5506	6	17.632486			
100000262	5506	7	16.812			
100000262	5506	8	17.106693			
100000262	5506	9	16.590279			
100000262	5506	10	15.582676			
100000262	5509	1	66.208505	DUTCH SQUARE ENTRANCE	S	DUTCH SQUARE ENTRANCE
100000262	5509	2	62.467063			
100000262	5509	3	61.939413			
100000262	5509	4	66.879861			
100000262	5509	5	58.610931			
100000262	5509	6	57.154288			
100000262	5509	7	64.468765			
100000262	5509	8	61.97672			
100000262	5509	9	61.653343			
100000262	5509	10	58.717996			
100000262	5511	1	135.280848	BUSH RIVER RD	W	DUTCH SQUARE ENTRANCE
100000262	5511	2	110.957963			
100000262	5511	3	173.772013			
100000262	5511	4	156.681666			
100000262	5511	5	188.3159			
100000262	5511	6	327.796693			
100000262	5511	7	88.409889			
100000262	5511	8	264.697965			
100000262	5511	9	94.804601			
100000262	5511	10	130.812069			
100000263	5516	1	110.108934	COLONIAL LIFE BLVD W	N	COLONIAL LIFE BLVD W
100000263	5516	2	74.427869			
100000263	5516	3	44.015846			
100000263	5516	4	83.392979			
100000263	5516	5	102.360837			
100000263	5516	6	113.309579			
100000263	5516	7	95.696665			
100000263	5516	8	90.755525			
100000263	5516	9	61.598929			
100000263	5516	10	63.953251			
100000263	5520	1	296.367536	COLONIAL LIFE BLVD W	W	COLONIAL LIFE BLVD W
100000263	5520	2	242.906706			
100000263	5520	3	154.319552			
100000263	5520	4	152.916129			
100000263	5520	5	145.69076			
100000263	5520	6	530.01237			
100000263	5520	7	157.921871			
100000263	5520	8	507.501345			
100000263	5520	9	213.312144			
100000263	5520	10	148.62423			
100000263	6495	1	3.433487	COLONIAL LIFE BLVD W	S	COLONIAL LIFE BLVD W
100000263	6495	2	3.115676			
100000263	6495	3	2.791206			
100000263	6495	4	2.325229			
100000263	6495	5	5.101573			
100000263	6495	6	3.796529			
100000263	6495	7	3.0693			
100000263	6495	8	5.57489			
100000263	6495	9	4.362085			
100000263	6495	10	3.672439			
100000265	5139	1	10.074593	GREYSTONE BLVD	N	GREYSTONE BLVD & STONERIDGE DR
100000265	5139	2	10.849279			
100000265	5139	3	11.05101			
100000265	5139	4	10.650698			
100000265	5139	5	11.222209			
100000265	5139	6	11.100674			
100000265	5139	7	11.219843			
100000265	5139	8	11.721181			
100000265	5139	9	10.51282			
100000265	5139	10	9.866588			
100000265	5537	1	52.550051	STONERIDGE DR	W	GREYSTONE BLVD & STONERIDGE DR
100000265	5537	2	51.799171			
100000265	5537	3	35.214321			

Node	Superlink	Run	Average Control Delay	Approach Street Name	Direction	Intersection
100000265	5537	4	32.945854			
100000265	5537	5	43.371588			
100000265	5537	6	46.802654			
100000265	5537	7	40.983668			
100000265	5537	8	52.235286			
100000265	5537	9	42.968277			
100000265	5537	10	39.131675			
100000265	5556	1	14.852751	STONERIDGE DR	E	GREYSTONE BLVD & STONERIDGE DR
100000265	5556	2	14.245685			
100000265	5556	3	14.765716			
100000265	5556	4	14.670313			
100000265	5556	5	16.15582			
100000265	5556	6	16.09105			
100000265	5556	7	15.566491			
100000265	5556	8	15.980675			
100000265	5556	9	16.476763			
100000265	5556	10	14.37681			
100000265	6328	1	19.234694	GREYSTONE BLVD	S	GREYSTONE BLVD & STONERIDGE DR
100000265	6328	2	17.462946			
100000265	6328	3	14.880701			
100000265	6328	4	19.785645			
100000265	6328	5	17.05209			
100000265	6328	6	18.132195			
100000265	6328	7	16.840091			
100000265	6328	8	16.530518			
100000265	6328	9	14.948771			
100000265	6328	10	18.366037			
100000266	5545	1	53.700767	GREYSTONE BLVD	N	GREYSTONE BLVD & BROAD RIVER RD
100000266	5545	2	36.580832			
100000266	5545	3	31.271666			
100000266	5545	4	39.031731			
100000266	5545	5	28.066323			
100000266	5545	6	35.224583			
100000266	5545	7	29.618899			
100000266	5545	8	30.597625			
100000266	5545	9	48.296012			
100000266	5545	10	32.758626			
100000266	6325	1	21.991704	BROAD RIVER RD	W	GREYSTONE BLVD & BROAD RIVER RD
100000266	6325	2	11.525455			
100000266	6325	3	12.284809			
100000266	6325	4	14.737524			
100000266	6325	5	10.761045			
100000266	6325	6	14.106632			
100000266	6325	7	7.971457			
100000266	6325	8	12.377664			
100000266	6325	9	21.738628			
100000266	6325	10	12.935902			
100000266	6327	1	16.291433	BROAD RIVER RD	E	GREYSTONE BLVD & BROAD RIVER RD
100000266	6327	2	15.674388			
100000266	6327	3	17.033771			
100000266	6327	4	16.489057			
100000266	6327	5	15.378405			
100000266	6327	6	16.789557			
100000266	6327	7	15.2555			
100000266	6327	8	15.57312			
100000266	6327	9	18.429121			
100000266	6327	10	15.689339			
100000268	5565	1	42.666358	HUGER ST	N	HUGER ST & LAUREL ST
100000268	5565	2	41.519445			
100000268	5565	3	38.934397			
100000268	5565	4	43.470159			
100000268	5565	5	41.696895			
100000268	5565	6	62.057275			
100000268	5565	7	38.290487			
100000268	5565	8	54.6922			
100000268	5565	9	45.605417			
100000268	5565	10	44.992983			
100000268	5570	1		LAUREL ST	E	HUGER ST & LAUREL ST
100000268	5570	2				
100000268	5570	3				
100000268	5570	4				
100000268	5570	5				
100000268	5570	6				
100000268	5570	7				
100000268	5570	8				
100000268	5570	9				
100000268	5570	10				
100000268	5571	1	9.788686	HUGER ST	S	HUGER ST & LAUREL ST
100000268	5571	2	10.178701			
100000268	5571	3	9.536395			
100000268	5571	4	9.860233			
100000268	5571	5	8.739899			
100000268	5571	6	10.8506			
100000268	5571	7	9.483145			
100000268	5571	8	10.409257			
100000268	5571	9	9.071154			
100000268	5571	10	9.870386			
100000268	5581	1	43.688217	LAUREL ST	W	HUGER ST & LAUREL ST
100000268	5581	2	50.260696			
100000268	5581	3	48.069793			
100000268	5581	4	47.389146			
100000268	5581	5	47.718263			
100000268	5581	6	44.831576			
100000268	5581	7	50.367444			
100000268	5581	8	45.214229			
100000268	5581	9	48.720469			
100000268	5581	10	42.422322			
100000339	6083	1	19.329173	BROAD RIVER RD	NW	BROAD RIVER RD & ST ANDREWS RD
100000339	6083	2	15.494796			
100000339	6083	3	16.149357			
100000339	6083	4	18.304695			
100000339	6083	5	17.84119			
100000339	6083	6	15.508296			
100000339	6083	7	19.034551			
100000339	6083	8	14.683456			
100000339	6083	9	19.178012			
100000339	6083	10	16.476149			
100000339	6084	1	46.194648	BROAD RIVER RD	SE	BROAD RIVER RD & ST ANDREWS RD
100000339	6084	2	28.811344			
100000339	6084	3	27.863583			

Node	Superlink	Run	Average Control Delay	Approach Street Name	Direction	Intersection
100000339	6084	4	32.483346			
100000339	6084	5	33.122985			
100000339	6084	6	32.646331			
100000339	6084	7	29.463451			
100000339	6084	8	27.694332			
100000339	6084	9	80.164081			
100000339	6084	10	29.631021			
100000339	6085	1	115.308891	ST ANDREWS RD	SW	BROAD RIVER RD & ST ANDREWS RD
100000339	6085	2	127.233146			
100000339	6085	3	91.112067			
100000339	6085	4	83.707545			
100000339	6085	5	95.814843			
100000339	6085	6	167.060421			
100000339	6085	7	84.124184			
100000339	6085	8	83.001413			
100000339	6085	9	94.178428			
100000339	6085	10	102.285671			
100000339	6086	1	38.488991	ST ANDREWS RD	E	BROAD RIVER RD & ST ANDREWS RD
100000339	6086	2	39.87562			
100000339	6086	3	39.704236			
100000339	6086	4	40.119836			
100000339	6086	5	36.377013			
100000339	6086	6	38.85762			
100000339	6086	7	34.063381			
100000339	6086	8	43.576543			
100000339	6086	9	55.641339			
100000339	6086	10	37.308766			
100000343	6059	1	0	BROAD RIVER RD	NW	NUNAMAKER DR & BROAD RIVER RD
100000343	6059	2	0			
100000343	6059	3	0			
100000343	6059	4	0			
100000343	6059	5	0			
100000343	6059	6	0			
100000343	6059	7	0			
100000343	6059	8	0			
100000343	6059	9	0			
100000343	6059	10	0			
100000343	6063	1		NUNAMAKER DR	SW	NUNAMAKER DR & BROAD RIVER RD
100000343	6063	2				
100000343	6063	3				
100000343	6063	4				
100000343	6063	5				
100000343	6063	6				
100000343	6063	7				
100000343	6063	8				
100000343	6063	9				
100000343	6063	10				
100000343	6065	1	0.011339	BROAD RIVER RD	SE	NUNAMAKER DR & BROAD RIVER RD
100000343	6065	2	0.005226			
100000343	6065	3	0.005491			
100000343	6065	4	0.003657			
100000343	6065	5	0.006023			
100000343	6065	6	0.003662			
100000343	6065	7	0.001488			
100000343	6065	8	0.004588			
100000343	6065	9	0.007075			
100000343	6065	10	0.003686			
100000344	6065	1	91.875692	BROAD RIVER RD	NW	YOUNG DR
100000344	6065	2	59.867326			
100000344	6065	3	50.015167			
100000344	6065	4	64.25357			
100000344	6065	5	50.476139			
100000344	6065	6	61.196712			
100000344	6065	7	46.288763			
100000344	6065	8	51.21792			
100000344	6065	9	86.382718			
100000344	6065	10	57.259324			
100000344	6066	1	169.909107	BROAD RIVER RD	SE	YOUNG DR
100000344	6066	2	68.044574			
100000344	6066	3	14.61084			
100000344	6066	4	117.027229			
100000344	6066	5	24.533013			
100000344	6066	6	43.475248			
100000344	6066	7	37.928529			
100000344	6066	8	32.422755			
100000344	6066	9	157.130087			
100000344	6066	10	23.410686			
100000344	6067	1	241.649051	YOUNG DR	SW	YOUNG DR
100000344	6067	2	219.34			
100000344	6067	3	215.49614			
100000344	6067	4	255.558095			
100000344	6067	5	232.948287			
100000344	6067	6	229.402223			
100000344	6067	7	258.547901			
100000344	6067	8	223.545344			
100000344	6067	9	234.21875			
100000344	6067	10	234.94873			
100000344	6068	1	183.536531	SEMINOLE RD	NE	YOUNG DR
100000344	6068	2	183.595638			
100000344	6068	3	190.26818			
100000344	6068	4	204.08394			
100000344	6068	5	198.761577			
100000344	6068	6	201.326586			
100000344	6068	7	189.565487			
100000344	6068	8	200.186359			
100000344	6068	9	193.919605			
100000344	6068	10	196.425094			
100000348	5116	1	9.482846	ST ANDREWS RD	NW	ST ANDREWS RD & JAMIL RD
100000348	5116	2	10.10288			
100000348	5116	3	9.145591			
100000348	5116	4	9.739689			
100000348	5116	5	9.762419			
100000348	5116	6	9.25475			
100000348	5116	7	11.218907			
100000348	5116	8	9.908131			
100000348	5116	9	9.505371			
100000348	5116	10	10.17475			
100000348	6114	1	23.183142	ST ANDREWS RD	E	ST ANDREWS RD & JAMIL RD
100000348	6114	2	12.497881			
100000348	6114	3	16.441818			

Node	Superlink	Run	Average Control Delay	Approach Street Name	Direction	Intersection
100000348	6114	4	14.228808			
100000348	6114	5	25.444783			
100000348	6114	6	10.703131			
100000348	6114	7	10.527527			
100000348	6114	8	9.079405			
100000348	6114	9	9.897676			
100000348	6114	10	11.96742			
100000348	6119	1	29.523582	JAMIL RD	S	ST ANDREWS RD & JAMIL RD
100000348	6119	2	29.184051			
100000348	6119	3	26.76046			
100000348	6119	4	28.477919			
100000348	6119	5	26.929164			
100000348	6119	6	30.713063			
100000348	6119	7	29.859856			
100000348	6119	8	28.678286			
100000348	6119	9	28.333173			
100000348	6119	10	29.5922			
100000349	6066	1	9.697053	BROAD RIVER RD	NW	ST ANDREWS PKY & BROAD RIVER RD
100000349	6066	2	5.782836			
100000349	6066	3	4.662906			
100000349	6066	4	7.709224			
100000349	6066	5	4.034279			
100000349	6066	6	5.057174			
100000349	6066	7	4.225031			
100000349	6066	8	4.878641			
100000349	6066	9	10.317871			
100000349	6066	10	5.643374			
100000349	6078	1	228.420003	ST ANDREWS PKY	SW	ST ANDREWS PKY & BROAD RIVER RD
100000349	6078	2	67.96294			
100000349	6078	3	79.109686			
100000349	6078	4	159.212909			
100000349	6078	5	62.394013			
100000349	6078	6	70.830874			
100000349	6078	7	60.941785			
100000349	6078	8	75.286384			
100000349	6078	9	216.807789			
100000349	6078	10	59.59161			
100000349	6079	1	167.941315	BROAD RIVER RD	NE	ST ANDREWS PKY & BROAD RIVER RD
100000349	6079	2	18.75794			
100000349	6079	3	16.589172			
100000349	6079	4	42.64099			
100000349	6079	5	17.357709			
100000349	6079	6	22.309299			
100000349	6079	7	17.661368			
100000349	6079	8	19.595185			
100000349	6079	9	79.446468			
100000349	6079	10	20.215143			
100000349	6083	1	63.095358	BROAD RIVER RD	SE	ST ANDREWS PKY & BROAD RIVER RD
100000349	6083	2	4.142362			
100000349	6083	3	3.766375			
100000349	6083	4	18.165244			
100000349	6083	5	3.991237			
100000349	6083	6	4.563041			
100000349	6083	7	3.808965			
100000349	6083	8	3.829373			
100000349	6083	9	60.544041			
100000349	6083	10	3.351918			
100000353	5104	1	17.264434	PINEY GROVE RD	W	BOWER PKY
100000353	5104	2	18.057024			
100000353	5104	3	18.552266			
100000353	5104	4	16.475371			
100000353	5104	5	17.496795			
100000353	5104	6	20.864099			
100000353	5104	7	19.090091			
100000353	5104	8	18.698944			
100000353	5104	9	14.799581			
100000353	5104	10	18.944585			
100000353	6125	1	46.727551	BOWER PKY	SE	BOWER PKY
100000353	6125	2	51.254415			
100000353	6125	3	48.92275			
100000353	6125	4	47.570347			
100000353	6125	5	45.627413			
100000353	6125	6	44.745566			
100000353	6125	7	49.83779			
100000353	6125	8	46.938196			
100000353	6125	9	52.302283			
100000353	6125	10	47.585449			
100000353	6126	1	31.271977	PINEY GROVE RD	E	BOWER PKY
100000353	6126	2	30.540541			
100000353	6126	3	36.533556			
100000353	6126	4	33.025752			
100000353	6126	5	30.194437			
100000353	6126	6	30.525825			
100000353	6126	7	31.387778			
100000353	6126	8	30.537938			
100000353	6126	9	33.249549			
100000353	6126	10	32.076706			
100000353	6127	1	72.418624	JAMIL RD	NW	BOWER PKY
100000353	6127	2	76.436101			
100000353	6127	3	52.888279			
100000353	6127	4	99.212059			
100000353	6127	5	68.748043			
100000353	6127	6	55.345297			
100000353	6127	7	53.206203			
100000353	6127	8	95.049706			
100000353	6127	9	94.474163			
100000353	6127	10	56.018887			
100000354	6095	1	36.263757	ST ANDREWS RD	SW	ST ANDREWS RD
100000354	6095	2	38.276591			
100000354	6095	3	33.415361			
100000354	6095	4	56.322802			
100000354	6095	5	44.042239			
100000354	6095	6	42.132134			
100000354	6095	7	40.723102			
100000354	6095	8	32.561154			
100000354	6095	9	42.659822			
100000354	6095	10	26.684427			
100000354	6096	1	12.118827	ST ANDREWS RD	NE	ST ANDREWS RD
100000354	6096	2	11.790691			
100000354	6096	3	10.705436			

Node	Superlink	Run	Average Control Delay	Approach Street Name	Direction	Intersection
100000354	6096	4	12.983268			
100000354	6096	5	10.694164			
100000354	6096	6	11.32454			
100000354	6096	7	9.986917			
100000354	6096	8	8.945211			
100000354	6096	9	10.131261			
100000354	6096	10	10.41444			
100000354	6098	1	85.380531	CHARTWELL RD	NW	ST ANDREWS RD
100000354	6098	2	91.001871			
100000354	6098	3	70.351806			
100000354	6098	4	51.746246			
100000354	6098	5	62.411257			
100000354	6098	6	77.859948			
100000354	6098	7	39.932972			
100000354	6098	8	49.723328			
100000354	6098	9	54.361693			
100000354	6098	10	64.857291			
100000354	6099	1	79.950299	KAY ST	SE	ST ANDREWS RD
100000354	6099	2	146.045103			
100000354	6099	3	99.2896			
100000354	6099	4	213.097108			
100000354	6099	5	121.018856			
100000354	6099	6	82.182512			
100000354	6099	7	96.563891			
100000354	6099	8	106.054146			
100000354	6099	9	82.052044			
100000354	6099	10	65.229869			
100000356	6086	1	0.424637	ST ANDREWS RD	SW	LAWRENCE ST & ST ANDREWS RD
100000356	6086	2	0.505802			
100000356	6086	3	0.424108			
100000356	6086	4	0.455891			
100000356	6086	5	0.51592			
100000356	6086	6	0.412192			
100000356	6086	7	0.453969			
100000356	6086	8	0.419666			
100000356	6086	9	0.422831			
100000356	6086	10	0.534221			
100000356	6092	1	13.773156	LAWRENCE ST	SE	LAWRENCE ST & ST ANDREWS RD
100000356	6092	2	14.49343			
100000356	6092	3	11.549076			
100000356	6092	4	12.404131			
100000356	6092	5	12.242198			
100000356	6092	6	12.620386			
100000356	6092	7	11.877908			
100000356	6092	8	11.121954			
100000356	6092	9	11.783244			
100000356	6092	10	12.508177			
100000356	6094	1	3.219495	ST ANDREWS RD	NE	LAWRENCE ST & ST ANDREWS RD
100000356	6094	2	3.06645			
100000356	6094	3	3.039084			
100000356	6094	4	2.873805			
100000356	6094	5	2.581034			
100000356	6094	6	3.33937			
100000356	6094	7	3.346846			
100000356	6094	8	2.74291			
100000356	6094	9	2.467354			
100000356	6094	10	2.858562			
100000357	6119	1	1.958327	JAMIL RD	NW	JAMIL RD & PAISLEY LN
100000357	6119	2	1.742462			
100000357	6119	3	2.220519			
100000357	6119	4	2.303426			
100000357	6119	5	1.964486			
100000357	6119	6	2.270377			
100000357	6119	7	2.454194			
100000357	6119	8	1.904984			
100000357	6119	9	2.256065			
100000357	6119	10	2.350619			
100000357	6120	1	135.239628	PAISLEY LN	NE	JAMIL RD & PAISLEY LN
100000357	6120	2	144.629909			
100000357	6120	3	124.993263			
100000357	6120	4	150.152063			
100000357	6120	5	142.597842			
100000357	6120	6	144.111976			
100000357	6120	7	131.167757			
100000357	6120	8	107.950292			
100000357	6120	9	136.162278			
100000357	6120	10	156.473007			
100000357	6121	1	0.977572	JAMIL RD	SE	JAMIL RD & PAISLEY LN
100000357	6121	2	1.827326			
100000357	6121	3	1.58556			
100000357	6121	4	1.674193			
100000357	6121	5	1.484833			
100000357	6121	6	1.802836			
100000357	6121	7	1.31771			
100000357	6121	8	1.444999			
100000357	6121	9	0.997359			
100000357	6121	10	1.577878			
100000358	5117	1	15.922238	ST ANDREWS RD	NE	ST ANDREWS RD
100000358	5117	2	15.772236			
100000358	5117	3	16.264719			
100000358	5117	4	14.388568			
100000358	5117	5	15.667173			
100000358	5117	6	16.091746			
100000358	5117	7	16.010683			
100000358	5117	8	14.933532			
100000358	5117	9	15.786089			
100000358	5117	10	16.346372			
100000358	6100	1	23.819197	ST ANDREWS RD	SW	ST ANDREWS RD
100000358	6100	2	24.05745			
100000358	6100	3	24.569344			
100000358	6100	4	25.339489			
100000358	6100	5	24.614569			
100000358	6100	6	24.03756			
100000358	6100	7	24.327609			
100000358	6100	8	24.209519			
100000358	6100	9	23.892255			
100000358	6100	10	22.948967			
100000358	6101	1	48.466864	BURNING TREE RD	NW	ST ANDREWS RD
100000358	6101	2	54.500947			
100000358	6101	3	54.159458			

Node	Superlink	Run	Average Control Delay	Approach Street Name	Direction	Intersection
100000358	6101	4	56.257753			
100000358	6101	5	51.87666			
100000358	6101	6	51.57036			
100000358	6101	7	53.698802			
100000358	6101	8	55.273269			
100000358	6101	9	57.132889			
100000358	6101	10	53.846174			
100000358	6102	1	63.019105	FERNANDINA RD	SE	ST ANDREWS RD
100000358	6102	2	73.496127			
100000358	6102	3	65.136865			
100000358	6102	4	65.066046			
100000358	6102	5	67.880609			
100000358	6102	6	62.122396			
100000358	6102	7	65.661815			
100000358	6102	8	67.033337			
100000358	6102	9	70.655945			
100000358	6102	10	67.267927			
100000360	3294	1	19.523624	EXIT 106 WB OFF RAMP	NE	EXIT 106 WB OFF RAMP & BURNING TREE RD
100000360	3294	2	29.1493			
100000360	3294	3	27.894612			
100000360	3294	4	43.892191			
100000360	3294	5	25.705761			
100000360	3294	6	34.710116			
100000360	3294	7	28.363291			
100000360	3294	8	23.706042			
100000360	3294	9	34.342564			
100000360	3294	10	37.538248			
100000360	6101	1	0.05996	BURNING TREE RD	S	EXIT 106 WB OFF RAMP & BURNING TREE RD
100000360	6101	2	0.071173			
100000360	6101	3	0.033093			
100000360	6101	4	0.110237			
100000360	6101	5	0.030353			
100000360	6101	6	0.116908			
100000360	6101	7	0.118897			
100000360	6101	8	0.081865			
100000360	6101	9	0.126536			
100000360	6101	10	0.056213			
100000360	6105	1	0.001445	BURNING TREE RD	N	EXIT 106 WB OFF RAMP & BURNING TREE RD
100000360	6105	2	0			
100000360	6105	3	0			
100000360	6105	4	0.058751			
100000360	6105	5	0.001613			
100000360	6105	6	0.000962			
100000360	6105	7	0			
100000360	6105	8	0			
100000360	6105	9	0			
100000360	6105	10	0			
100000362	6134	1	27.680433	JAMIL RD	NW	HARBISON BLVD & JAMIL RD
100000362	6134	2	19.440376			
100000362	6134	3	20.615707			
100000362	6134	4	26.284473			
100000362	6134	5	27.041353			
100000362	6134	6	18.673197			
100000362	6134	7	26.075238			
100000362	6134	8	20.058411			
100000362	6134	9	23.996569			
100000362	6134	10	24.29209			
100000362	6137	1	2.336291	HARBISON BLVD	NE	HARBISON BLVD & JAMIL RD
100000362	6137	2	1.272882			
100000362	6137	3	1.770003			
100000362	6137	4	1.886447			
100000362	6137	5	2.446736			
100000362	6137	6	2.229839			
100000362	6137	7	1.96893			
100000362	6137	8	1.767058			
100000362	6137	9	2.095432			
100000362	6137	10	2.54197			
100000362	6473	1	0.031242	HARBISON BLVD	SW	HARBISON BLVD & JAMIL RD
100000362	6473	2	0.002029			
100000362	6473	3	0.001525			
100000362	6473	4	0.004941			
100000362	6473	5	0.001616			
100000362	6473	6	0.003928			
100000362	6473	7	0.015848			
100000362	6473	8	0.027553			
100000362	6473	9	0.007354			
100000362	6473	10	0.019023			
100000363	6125	1	0.852925	BOWER PKY	NW	BOWER PKY & JAMIL RD
100000363	6125	2	0.926125			
100000363	6125	3	0.892622			
100000363	6125	4	0.696893			
100000363	6125	5	0.849486			
100000363	6125	6	0.839957			
100000363	6125	7	0.603351			
100000363	6125	8	0.895025			
100000363	6125	9	0.747995			
100000363	6125	10	0.627288			
100000363	6134	1	32.18015	JAMIL RD	SW	BOWER PKY & JAMIL RD
100000363	6134	2	84.762621			
100000363	6134	3	115.632542			
100000363	6134	4	170.495102			
100000363	6134	5	103.216398			
100000363	6134	6	167.480201			
100000363	6134	7	68.630331			
100000363	6134	8	78.654817			
100000363	6134	9	75.259094			
100000363	6134	10	174.53691			
100000363	6160	1	0.402131	BOWER PKY	SE	BOWER PKY & JAMIL RD
100000363	6160	2	0.554008			
100000363	6160	3	0.617771			
100000363	6160	4	0.647661			
100000363	6160	5	0.654846			
100000363	6160	6	0.653412			
100000363	6160	7	0.675759			
100000363	6160	8	0.722004			
100000363	6160	9	0.597858			
100000363	6160	10	0.569381			
100000364	6145	1	4.688908	HARBISON BLVD	SW	HARBISON BLVD & COLUMBIANA DR
100000364	6145	2	3.787072			
100000364	6145	3	3.807328			

Node	Superlink	Run	Average Control Delay	Approach Street Name	Direction	Intersection
100000364	6145	4	4.211205			
100000364	6145	5	5.905064			
100000364	6145	6	4.544429			
100000364	6145	7	3.78783			
100000364	6145	8	3.966226			
100000364	6145	9	5.855563			
100000364	6145	10	4.559245			
100000364	6176	1	3.63455	HARBISON BLVD	NE	HARBISON BLVD & COLUMBIANA DR
100000364	6176	2	3.162258			
100000364	6176	3	4.054898			
100000364	6176	4	3.380817			
100000364	6176	5	4.370288			
100000364	6176	6	4.042875			
100000364	6176	7	3.372895			
100000364	6176	8	3.394463			
100000364	6176	9	4.053184			
100000364	6176	10	3.547051			
100000364	6177	1		COLUMBIANA DR	NW	HARBISON BLVD & COLUMBIANA DR
100000364	6177	2				
100000364	6177	3				
100000364	6177	4				
100000364	6177	5				
100000364	6177	6				
100000364	6177	7				
100000364	6177	8				
100000364	6177	9				
100000364	6177	10				
100000364	6196	1	52.94263	COLUMBIANA DR	SE	HARBISON BLVD & COLUMBIANA DR
100000364	6196	2	48.087481			
100000364	6196	3	57.581804			
100000364	6196	4	50.795924			
100000364	6196	5	55.102459			
100000364	6196	6	56.716844			
100000364	6196	7	60.528465			
100000364	6196	8	59.453752			
100000364	6196	9	58.688731			
100000364	6196	10	61.406766			
100000365	6137	1	13.203983	HARBISON BLVD	SW	COLUMBIANA CIR
100000365	6137	2	11.602367			
100000365	6137	3	12.111962			
100000365	6137	4	12.613886			
100000365	6137	5	13.638338			
100000365	6137	6	11.652424			
100000365	6137	7	11.958426			
100000365	6137	8	11.336534			
100000365	6137	9	11.169383			
100000365	6137	10	11.756064			
100000365	6140	1	50.18792	COLUMBIANA CIR	SE	COLUMBIANA CIR
100000365	6140	2	55.331824			
100000365	6140	3	53.943895			
100000365	6140	4	47.280924			
100000365	6140	5	49.739359			
100000365	6140	6	49.667216			
100000365	6140	7	49.810762			
100000365	6140	8	48.337491			
100000365	6140	9	50.537625			
100000365	6140	10	46.392489			
100000365	6145	1	12.31723	HARBISON BLVD	NE	COLUMBIANA CIR
100000365	6145	2	13.434552			
100000365	6145	3	14.741017			
100000365	6145	4	13.694031			
100000365	6145	5	14.619515			
100000365	6145	6	14.995969			
100000365	6145	7	14.747327			
100000365	6145	8	12.630679			
100000365	6145	9	12.521611			
100000365	6145	10	13.151183			
100000365	6151	1	46.50099	PARK TERRACE DR	NW	COLUMBIANA CIR
100000365	6151	2	49.499719			
100000365	6151	3	43.211567			
100000365	6151	4	44.116703			
100000365	6151	5	49.135022			
100000365	6151	6	47.867873			
100000365	6151	7	44.853137			
100000365	6151	8	46.9753			
100000365	6151	9	51.743484			
100000365	6151	10	47.946377			
100000374	6151	1	62.55521	PARK TERRACE DR	S	BOWER PKY
100000374	6151	2	60.121349			
100000374	6151	3	125.634784			
100000374	6151	4	61.640339			
100000374	6151	5	82.621582			
100000374	6151	6	62.336349			
100000374	6151	7	59.776289			
100000374	6151	8	101.258125			
100000374	6151	9	53.842226			
100000374	6151	10	110.427701			
100000374	6160	1	15.939664	BOWER PKY	W	BOWER PKY
100000374	6160	2	18.079019			
100000374	6160	3	20.61072			
100000374	6160	4	17.265118			
100000374	6160	5	17.44128			
100000374	6160	6	17.735538			
100000374	6160	7	16.048419			
100000374	6160	8	19.025119			
100000374	6160	9	18.155013			
100000374	6160	10	20.097702			
100000374	6161	1	4.068136		N	BOWER PKY
100000374	6161	2	4.678533			
100000374	6161	3	4.95413			
100000374	6161	4	4.774969			
100000374	6161	5	4.76342			
100000374	6161	6	4.676352			
100000374	6161	7	4.89041			
100000374	6161	8	4.392767			
100000374	6161	9	4.446016			
100000374	6161	10	4.629128			
100000374	6162	1		BOWER PKY	E	BOWER PKY
100000374	6162	2				
100000374	6162	3				

Node	Superlink	Run	Average Control Delay	Approach Street Name	Direction	Intersection
100000374	6162	4				
100000374	6162	5				
100000374	6162	6				
100000374	6162	7				
100000374	6162	8				
100000374	6162	9				
100000374	6162	10				
100000375	6196	1	7.140992	COLUMBIANA DR	NW	COLUMBIANA DR
100000375	6196	2	5.306438			
100000375	6196	3	4.760089			
100000375	6196	4	5.861034			
100000375	6196	5	5.775858			
100000375	6196	6	4.600195			
100000375	6196	7	5.209983			
100000375	6196	8	6.798682			
100000375	6196	9	4.944456			
100000375	6196	10	6.44107			
100000375	6204	1	6.219628	COLUMBIANA DR	SE	COLUMBIANA DR
100000375	6204	2	6.839032			
100000375	6204	3	5.110575			
100000375	6204	4	5.405997			
100000375	6204	5	5.19839			
100000375	6204	6	6.979317			
100000375	6204	7	5.974926			
100000375	6204	8	6.149025			
100000375	6204	9	4.97235			
100000375	6204	10	5.327594			
100000375	6550	1	26.43922	CROSSBOW DR	NE	COLUMBIANA DR
100000375	6550	2	25.380341			
100000375	6550	3	27.33934			
100000375	6550	4	25.1496			
100000375	6550	5	26.066844			
100000375	6550	6	25.352186			
100000375	6550	7	24.496665			
100000375	6550	8	23.304543			
100000375	6550	9	24.58405			
100000375	6550	10	26.395885			
100000375	6551	1	6.686465	DRIVEWAY	SW	COLUMBIANA DR
100000375	6551	2	7.476503			
100000375	6551	3	6.720585			
100000375	6551	4	7.002452			
100000375	6551	5	6.403263			
100000375	6551	6	6.438743			
100000375	6551	7	5.924268			
100000375	6551	8	5.96433			
100000375	6551	9	6.364067			
100000375	6551	10	6.397175			
100000391	5071	1	5.346575	BROAD RIVER RD	NW	BROAD RIVER RD & COLUMBIANA DR
100000391	5071	2	5.88586			
100000391	5071	3	5.449567			
100000391	5071	4	5.478072			
100000391	5071	5	5.838297			
100000391	5071	6	5.425886			
100000391	5071	7	5.162076			
100000391	5071	8	4.888623			
100000391	5071	9	5.304318			
100000391	5071	10	5.204499			
100000391	6214	1	53.655072	COLUMBIANA DR	NE	BROAD RIVER RD & COLUMBIANA DR
100000391	6214	2	49.696272			
100000391	6214	3	51.203035			
100000391	6214	4	43.586481			
100000391	6214	5	40.294768			
100000391	6214	6	46.157257			
100000391	6214	7	46.757689			
100000391	6214	8	46.614689			
100000391	6214	9	44.684781			
100000391	6214	10	49.823858			
100000391	6224	1	9.237649	BROAD RIVER RD	SE	BROAD RIVER RD & COLUMBIANA DR
100000391	6224	2	10.826797			
100000391	6224	3	7.754543			
100000391	6224	4	9.078724			
100000391	6224	5	8.934479			
100000391	6224	6	8.453379			
100000391	6224	7	9.880504			
100000391	6224	8	8.893354			
100000391	6224	9	9.608322			
100000391	6224	10	9.532495			
100000392	6121	1	0.461117	JAMIL RD	NW	TRAM RD & JAMIL RD
100000392	6121	2	1.171427			
100000392	6121	3	0.495238			
100000392	6121	4	0.955821			
100000392	6121	5	0.798865			
100000392	6121	6	1.041239			
100000392	6121	7	0.523173			
100000392	6121	8	1.295188			
100000392	6121	9	1.032704			
100000392	6121	10	0.718415			
100000392	6127	1	0.221275	JAMIL RD	SE	TRAM RD & JAMIL RD
100000392	6127	2	0.543082			
100000392	6127	3	0.736795			
100000392	6127	4	0.353627			
100000392	6127	5	0.242276			
100000392	6127	6	0.254465			
100000392	6127	7	0.377608			
100000392	6127	8	0.693335			
100000392	6127	9	0.493856			
100000392	6127	10	0.134253			
100000392	6261	1	9.841201	TRAM RD	NE	TRAM RD & JAMIL RD
100000392	6261	2	9.893968			
100000392	6261	3	9.405133			
100000392	6261	4	9.547131			
100000392	6261	5	10.177608			
100000392	6261	6	9.67856			
100000392	6261	7	10.985226			
100000392	6261	8	9.636672			
100000392	6261	9	11.11332			
100000392	6261	10	8.736093			
100000394	6204	1	0	COLUMBIANA DR	NW	COLUMBIANA DR
100000394	6204	2	0			
100000394	6204	3	0			

Node	Superlink	Run	Average Control Delay	Approach Street Name	Direction	Intersection
100000394	6204	4	0			
100000394	6204	5	0			
100000394	6204	6	0			
100000394	6204	7	0			
100000394	6204	8	0			
100000394	6204	9	0			
100000394	6204	10	0			
100000394	6208	1	0	COLUMBIANA DR	SE	COLUMBIANA DR
100000394	6208	2	0			
100000394	6208	3	0			
100000394	6208	4	0			
100000394	6208	5	0			
100000394	6208	6	0			
100000394	6208	7	0			
100000394	6208	8	0			
100000394	6208	9	0			
100000394	6208	10	0			
100000394	6210	1		COLUMBIA AVE	NE	COLUMBIANA DR
100000394	6210	2				
100000394	6210	3				
100000394	6210	4				
100000394	6210	5				
100000394	6210	6				
100000394	6210	7				
100000394	6210	8				
100000394	6210	9				
100000394	6210	10				
100000394	6549	1		DRIVEWAY	SW	COLUMBIANA DR
100000394	6549	2				
100000394	6549	3				
100000394	6549	4				
100000394	6549	5				
100000394	6549	6				
100000394	6549	7				
100000394	6549	8				
100000394	6549	9				
100000394	6549	10				
100000395	5084	1	148.477113	LAKE MURRAY BLVD	W	LAKE MURRAY BLVD & COLUMBIANA DR
100000395	5084	2	157.940156			
100000395	5084	3	137.722611			
100000395	5084	4	154.181792			
100000395	5084	5	148.082873			
100000395	5084	6	148.199924			
100000395	5084	7	143.382647			
100000395	5084	8	134.13417			
100000395	5084	9	146.695231			
100000395	5084	10	153.823611			
100000395	6208	1	226.293265	COLUMBIANA DR	NW	LAKE MURRAY BLVD & COLUMBIANA DR
100000395	6208	2	215.077443			
100000395	6208	3	228.345893			
100000395	6208	4	242.922844			
100000395	6208	5	240.730057			
100000395	6208	6	237.819709			
100000395	6208	7	228.1652			
100000395	6208	8	236.114704			
100000395	6208	9	230.078008			
100000395	6208	10	230.776338			
100000395	6214	1	30.773517	COLUMBIANA DR	S	LAKE MURRAY BLVD & COLUMBIANA DR
100000395	6214	2	33.098052			
100000395	6214	3	33.591853			
100000395	6214	4	42.12616			
100000395	6214	5	24.581929			
100000395	6214	6	30.931097			
100000395	6214	7	38.095421			
100000395	6214	8	26.101513			
100000395	6214	9	33.798421			
100000395	6214	10	31.742881			
100000395	6215	1	178.002402	LAKE MURRAY BLVD	E	LAKE MURRAY BLVD & COLUMBIANA DR
100000395	6215	2	141.419164			
100000395	6215	3	150.398781			
100000395	6215	4	161.908375			
100000395	6215	5	159.369554			
100000395	6215	6	131.612835			
100000395	6215	7	179.357751			
100000395	6215	8	169.764485			
100000395	6215	9	183.574476			
100000395	6215	10	156.224985			
100000398	5101	1	0.209441	HARBISON BLVD	W	HARBISON BLVD & PARKRIDGE DR
100000398	5101	2	0.244491			
100000398	5101	3	0.141102			
100000398	5101	4	0.23922			
100000398	5101	5	0.263118			
100000398	5101	6	0.158352			
100000398	5101	7	0.249222			
100000398	5101	8	0.246215			
100000398	5101	9	0.180925			
100000398	5101	10	0.200043			
100000398	6267	1	7.964026	PARKRIDGE DR	SE	HARBISON BLVD & PARKRIDGE DR
100000398	6267	2	10.211186			
100000398	6267	3	9.87132			
100000398	6267	4	8.505805			
100000398	6267	5	8.518371			
100000398	6267	6	9.402442			
100000398	6267	7	8.414319			
100000398	6267	8	8.245182			
100000398	6267	9	7.625186			
100000398	6267	10	9.494592			
100000398	6268	1	5.885611	HARBISON BLVD	NE	HARBISON BLVD & PARKRIDGE DR
100000398	6268	2	5.671143			
100000398	6268	3	5.5095			
100000398	6268	4	5.940059			
100000398	6268	5	5.589318			
100000398	6268	6	7.093474			
100000398	6268	7	5.670753			
100000398	6268	8	5.517415			
100000398	6268	9	5.024323			
100000398	6268	10	5.696042			
100000399	5113	1	32.823246	PINEY GROVE RD	E	PINEY GROVE RD & FERNANDINA RD
100000399	5113	2	37.588051			
100000399	5113	3	29.818888			

Node	Superlink	Run	Average Control Delay	Approach Street Name	Direction	Intersection
100000399	5113	4	35.193257			
100000399	5113	5	29.446974			
100000399	5113	6	33.50979			
100000399	5113	7	28.042756			
100000399	5113	8	34.445724			
100000399	5113	9	35.798932			
100000399	5113	10	30.241692			
100000399	6263	1	22.333134	PINEY GROVE RD	W	PINEY GROVE RD & FERNANDINA RD
100000399	6263	2	24.373684			
100000399	6263	3	23.745942			
100000399	6263	4	24.822927			
100000399	6263	5	23.761834			
100000399	6263	6	22.681643			
100000399	6263	7	20.918937			
100000399	6263	8	22.512782			
100000399	6263	9	22.575643			
100000399	6263	10	20.069807			
100000399	6265	1	13.353276	FERNANDINA RD	SE	PINEY GROVE RD & FERNANDINA RD
100000399	6265	2	14.068781			
100000399	6265	3	13.78025			
100000399	6265	4	12.387043			
100000399	6265	5	14.459422			
100000399	6265	6	14.823981			
100000399	6265	7	14.206417			
100000399	6265	8	14.46991			
100000399	6265	9	12.56969			
100000399	6265	10	14.533546			
100000399	6266	1	53.434418	FERNANDINA RD	N	PINEY GROVE RD & FERNANDINA RD
100000399	6266	2	46.455414			
100000399	6266	3	53.073042			
100000399	6266	4	47.460953			
100000399	6266	5	50.729913			
100000399	6266	6	50.709751			
100000399	6266	7	55.072146			
100000399	6266	8	44.323682			
100000399	6266	9	49.954426			
100000399	6266	10	58.266563			
100000401	5093	1	19.836482	LAKE MURRAY BLVD	E	KINLEY RD
100000401	5093	2	21.19752			
100000401	5093	3	19.613333			
100000401	5093	4	19.997194			
100000401	5093	5	21.2138			
100000401	5093	6	19.327955			
100000401	5093	7	20.326559			
100000401	5093	8	18.657002			
100000401	5093	9	21.828679			
100000401	5093	10	23.161901			
100000401	6276	1	552.111582	KINLEY RD	S	KINLEY RD
100000401	6276	2	712.000267			
100000401	6276	3	914.447802			
100000401	6276	4	679.634211			
100000401	6276	5	698.872208			
100000401	6276	6	1013.404449			
100000401	6276	7	618.097806			
100000401	6276	8	621.657025			
100000401	6276	9	719.842797			
100000401	6276	10	960.793421			
100000401	6313	1	618.469741	LAKE MURRAY BLVD	W	KINLEY RD
100000401	6313	2	858.763343			
100000401	6313	3	725.350886			
100000401	6313	4	837.127189			
100000401	6313	5	796.513638			
100000401	6313	6	957.827333			
100000401	6313	7	655.633059			
100000401	6313	8	569.8622			
100000401	6313	9	593.505073			
100000401	6313	10	1017.908244			
100000401	6556	1	138.56505	PARKRIDGE DR	N	KINLEY RD
100000401	6556	2	198.358872			
100000401	6556	3	184.919206			
100000401	6556	4	139.385589			
100000401	6556	5	197.732183			
100000401	6556	6	155.969936			
100000401	6556	7	76.877446			
100000401	6556	8	262.707406			
100000401	6556	9	297.554782			
100000401	6556	10	402.360064			
100000438	2044	1	0	RAMP	SE	RAMP
100000438	2044	2	0			
100000438	2044	3	0			
100000438	2044	4	0			
100000438	2044	5	0			
100000438	2044	6	0			
100000438	2044	7	0			
100000438	2044	8	0			
100000438	2044	9	0			
100000438	2044	10	0			
100000438	5021	1	6.161194	SUNSET BLVD	NW	RAMP
100000438	5021	2	7.034571			
100000438	5021	3	7.920311			
100000438	5021	4	6.800476			
100000438	5021	5	7.395898			
100000438	5021	6	7.681598			
100000438	5021	7	7.446592			
100000438	5021	8	7.503242			
100000438	5021	9	7.768781			
100000438	5021	10	7.166073			
100000438	5023	1	0.735823	SUNSET BLVD	SE	RAMP
100000438	5023	2	0.265807			
100000438	5023	3	0.416173			
100000438	5023	4	0.354217			
100000438	5023	5	0.504951			
100000438	5023	6	0.338662			
100000438	5023	7	0.432688			
100000438	5023	8	0.496391			
100000438	5023	9	0.314044			
100000438	5023	10	0.551057			
100000446	2047	1	0	RAMP	S	RAMP & I-20 EXIT 63 WB ON RAMP
100000446	2047	2	0			
100000446	2047	3	0			

Node	Superlink	Run	Average Control Delay	Approach Street Name	Direction	Intersection
100000446	2047	4	0			
100000446	2047	5	0			
100000446	2047	6	0			
100000446	2047	7	0			
100000446	2047	8	0			
100000446	2047	9	0			
100000446	2047	10	0			
100000446	2059	1	0	RAMP	SW	RAMP & I-20 EXIT 63 WB ON RAMP
100000446	2059	2	0			
100000446	2059	3	0			
100000446	2059	4	0			
100000446	2059	5	0			
100000446	2059	6	0			
100000446	2059	7	0			
100000446	2059	8	0			
100000446	2059	9	0			
100000446	2059	10	0			
100000450	2060	1	0	RAMP	E	BUSH RIVER RD
100000450	2060	2	0			
100000450	2060	3	0			
100000450	2060	4	0			
100000450	2060	5	0			
100000450	2060	6	0			
100000450	2060	7	0			
100000450	2060	8	0			
100000450	2060	9	0			
100000450	2060	10	0			
100000450	5037	1	0	BUSH RIVER RD	E	BUSH RIVER RD
100000450	5037	2	0			
100000450	5037	3	0			
100000450	5037	4	0			
100000450	5037	5	0			
100000450	5037	6	0			
100000450	5037	7	0			
100000450	5037	8	0			
100000450	5037	9	0			
100000450	5037	10	0			
100000450	5038	1	1.639199	BUSH RIVER RD	NW	BUSH RIVER RD
100000450	5038	2	2.079455			
100000450	5038	3	2.898753			
100000450	5038	4	1.793602			
100000450	5038	5	2.19708			
100000450	5038	6	2.206602			
100000450	5038	7	2.035462			
100000450	5038	8	1.860955			
100000450	5038	9	1.302035			
100000450	5038	10	1.792084			
100000452	2071	1	35.516662	RAMP	W	RAMP & BUSH RIVER RD
100000452	2071	2	40.936516			
100000452	2071	3	39.355933			
100000452	2071	4	40.159808			
100000452	2071	5	38.5381			
100000452	2071	6	38.983812			
100000452	2071	7	40.066172			
100000452	2071	8	37.646851			
100000452	2071	9	40.085125			
100000452	2071	10	40.939197			
100000452	5034	1	1.146959	BUSH RIVER RD	NW	RAMP & BUSH RIVER RD
100000452	5034	2	2.580734			
100000452	5034	3	1.806646			
100000452	5034	4	2.10596			
100000452	5034	5	2.007863			
100000452	5034	6	2.176936			
100000452	5034	7	1.68158			
100000452	5034	8	2.72589			
100000452	5034	9	1.908687			
100000452	5034	10	2.534636			
100000452	5457	1	3.372537	BUSH RIVER RD	SE	RAMP & BUSH RIVER RD
100000452	5457	2	5.094211			
100000452	5457	3	3.692718			
100000452	5457	4	3.726321			
100000452	5457	5	3.973153			
100000452	5457	6	4.072699			
100000452	5457	7	3.439464			
100000452	5457	8	4.43247			
100000452	5457	9	3.71646			
100000452	5457	10	4.476108			
100000455	5457	1	5.079129	BUSH RIVER RD	NW	FRONTAGE RD & BUSH RIVER RD
100000455	5457	2	7.247497			
100000455	5457	3	6.283124			
100000455	5457	4	6.721921			
100000455	5457	5	6.76385			
100000455	5457	6	7.019591			
100000455	5457	7	5.947371			
100000455	5457	8	7.12567			
100000455	5457	9	7.14188			
100000455	5457	10	7.260162			
100000455	6538	1	45.19915	FRONTAGE RD	SW	FRONTAGE RD & BUSH RIVER RD
100000455	6538	2	247.690515			
100000455	6538	3	94.866694			
100000455	6538	4	88.656858			
100000455	6538	5	72.203801			
100000455	6538	6	128.979644			
100000455	6538	7	66.988895			
100000455	6538	8	172.566036			
100000455	6538	9	61.736241			
100000455	6538	10	196.627784			
100000455	6539	1	12.283366	BUSH RIVER RD	SE	FRONTAGE RD & BUSH RIVER RD
100000455	6539	2	18.739893			
100000455	6539	3	13.582489			
100000455	6539	4	15.671763			
100000455	6539	5	17.977486			
100000455	6539	6	16.301062			
100000455	6539	7	13.740452			
100000455	6539	8	18.771362			
100000455	6539	9	15.776762			
100000455	6539	10	16.806449			
100000467	3225	1		RAMP	SW	RAMP & I-126 WB ON RAMP FROM GREYSTONE BLVD
100000467	3225	2				
100000467	3225	3				

Node	Superlink	Run	Average Control Delay	Approach Street Name	Direction	Intersection
100000467	3225	4				
100000467	3225	5				
100000467	3225	6				
100000467	3225	7				
100000467	3225	8				
100000467	3225	9				
100000467	3225	10				
100000467	3238	1	0	RAMP	W	RAMP & I-126 WB ON RAMP FROM GREYSTONE BLVD
100000467	3238	2	0			
100000467	3238	3	0			
100000467	3238	4	0			
100000467	3238	5	0			
100000467	3238	6	0			
100000467	3238	7	0			
100000467	3238	8	0			
100000467	3238	9	0			
100000467	3238	10	0			
100000468	3228	1	0	EXIT 103 WB ON RAMP	NW	EXIT 103 WB ON RAMP & I-26 EXIT 103 WB ON RAMP
100000468	3228	2	0			
100000468	3228	3	0			
100000468	3228	4	0			
100000468	3228	5	0			
100000468	3228	6	0			
100000468	3228	7	0			
100000468	3228	8	0			
100000468	3228	9	0			
100000468	3228	10	0			
100000468	3241	1	0	EXIT 103 WB ON RAMP	W	EXIT 103 WB ON RAMP & I-26 EXIT 103 WB ON RAMP
100000468	3241	2	0			
100000468	3241	3	0			
100000468	3241	4	0			
100000468	3241	5	0			
100000468	3241	6	0			
100000468	3241	7	0			
100000468	3241	8	0			
100000468	3241	9	0			
100000468	3241	10	0			
100000476	3257	1	0	RAMP	N	RAMP
100000476	3257	2	0			
100000476	3257	3	0			
100000476	3257	4	0			
100000476	3257	5	0			
100000476	3257	6	0			
100000476	3257	7	0			
100000476	3257	8	0			
100000476	3257	9	0			
100000476	3257	10	0			
100000476	3262	1	0	RAMP	N	RAMP
100000476	3262	2	0			
100000476	3262	3	0			
100000476	3262	4	0			
100000476	3262	5	0			
100000476	3262	6	0			
100000476	3262	7	0			
100000476	3262	8	0			
100000476	3262	9	0			
100000476	3262	10	0			
100000494	3302	1		EXIT 106 WB ON RAMP	NW	EXIT 106 WB ON RAMP & I-26 EXIT 106 WB ON RAMP
100000494	3302	2				
100000494	3302	3				
100000494	3302	4				
100000494	3302	5				
100000494	3302	6				
100000494	3302	7				
100000494	3302	8				
100000494	3302	9				
100000494	3302	10				
100000494	3306	1	0	EXIT 106 WB ON RAMP	NW	EXIT 106 WB ON RAMP & I-26 EXIT 106 WB ON RAMP
100000494	3306	2	0			
100000494	3306	3	0			
100000494	3306	4	0			
100000494	3306	5	0			
100000494	3306	6	0			
100000494	3306	7	0			
100000494	3306	8	0			
100000494	3306	9	0			
100000494	3306	10	0			
100000497	3310	1	0	RAMP	SE	RAMP & I-26 EXIT 104 EB ON RAMP
100000497	3310	2	0			
100000497	3310	3	0			
100000497	3310	4	0			
100000497	3310	5	0			
100000497	3310	6	0			
100000497	3310	7	0			
100000497	3310	8	0			
100000497	3310	9	0			
100000497	3310	10	0			
100000497	6545	1	0	RAMP	SE	RAMP & I-26 EXIT 104 EB ON RAMP
100000497	6545	2	0			
100000497	6545	3	0			
100000497	6545	4	0			
100000497	6545	5	0			
100000497	6545	6	0			
100000497	6545	7	0			
100000497	6545	8	0			
100000497	6545	9	0			
100000497	6545	10	0			
100000503	3325	1	0	RAMP	SE	RAMP
100000503	3325	2	0			
100000503	3325	3	0			
100000503	3325	4	0			
100000503	3325	5	0			
100000503	3325	6	0			
100000503	3325	7	0			
100000503	3325	8	0			
100000503	3325	9	0			
100000503	3325	10	0			
100000503	6472	1	0		E	RAMP
100000503	6472	2	0			
100000503	6472	3	0			

Node	Superlink	Run	Average Control Delay	Approach Street Name	Direction	Intersection
100000503	6472	4	0			
100000503	6472	5	0			
100000503	6472	6	0			
100000503	6472	7	0			
100000503	6472	8	0			
100000503	6472	9	0			
100000503	6472	10	0			
100000520	3345	1		EXIT 102 WB ON RAMP	N	EXIT 102 WB ON RAMP & I-26 EXIT 102 WB ON RAMP
100000520	3345	2				
100000520	3345	3				
100000520	3345	4				
100000520	3345	5				
100000520	3345	6				
100000520	3345	7				
100000520	3345	8				
100000520	3345	9				
100000520	3345	10				
100000520	3350	1	0	EXIT 102 WB ON RAMP	N	EXIT 102 WB ON RAMP & I-26 EXIT 102 WB ON RAMP
100000520	3350	2	0			
100000520	3350	3	0			
100000520	3350	4	0			
100000520	3350	5	0			
100000520	3350	6	0			
100000520	3350	7	0			
100000520	3350	8	0			
100000520	3350	9	0			
100000520	3350	10	0			
100000523	3355	1	0	ON-RAMP from WB	S	ON-RAMP from WB
100000523	3355	2	0			
100000523	3355	3	0			
100000523	3355	4	0			
100000523	3355	5	0			
100000523	3355	6	0			
100000523	3355	7	0			
100000523	3355	8	0			
100000523	3355	9	0			
100000523	3355	10	0			
100000523	3356	1	0	ON-RAMP from EB	S	ON-RAMP from WB
100000523	3356	2	0			
100000523	3356	3	0			
100000523	3356	4	0			
100000523	3356	5	0			
100000523	3356	6	0			
100000523	3356	7	0			
100000523	3356	8	0			
100000523	3356	9	0			
100000523	3356	10	0			
100000528	3360	1		EXIT 101 WB ON RAMP	N	EXIT 101 WB ON RAMP & I-26 EXIT 101 WB ON RAMP
100000528	3360	2				
100000528	3360	3				
100000528	3360	4				
100000528	3360	5				
100000528	3360	6				
100000528	3360	7				
100000528	3360	8				
100000528	3360	9				
100000528	3360	10				
100000528	3364	1	0	EXIT 101 WB ON RAMP	N	EXIT 101 WB ON RAMP & I-26 EXIT 101 WB ON RAMP
100000528	3364	2	0			
100000528	3364	3	0			
100000528	3364	4	0			
100000528	3364	5	0			
100000528	3364	6	0			
100000528	3364	7	0			
100000528	3364	8	0			
100000528	3364	9	0			
100000528	3364	10	0			
100000702	4338	1	0	RAMP	SW	RAMP & I-20 EXIT 65 WB ON RAMP
100000702	4338	2	0			
100000702	4338	3	0			
100000702	4338	4	0			
100000702	4338	5	0			
100000702	4338	6	0			
100000702	4338	7	0			
100000702	4338	8	0			
100000702	4338	9	0			
100000702	4338	10	0			
100000702	4343	1	0	RAMP	SW	RAMP & I-20 EXIT 65 WB ON RAMP
100000702	4343	2	0			
100000702	4343	3	0			
100000702	4343	4	0			
100000702	4343	5	0			
100000702	4343	6	0			
100000702	4343	7	0			
100000702	4343	8	0			
100000702	4343	9	0			
100000702	4343	10	0			
100000707	5166	1	0	MONTICELLO RD	NW	MONTICELLO RD
100000707	5166	2	0			
100000707	5166	3	0			
100000707	5166	4	0			
100000707	5166	5	0			
100000707	5166	6	0			
100000707	5166	7	0			
100000707	5166	8	0			
100000707	5166	9	0			
100000707	5166	10	0			
100000707	5168	1	0	SERVICE RD	W	MONTICELLO RD
100000707	5168	2	0			
100000707	5168	3	0			
100000707	5168	4	0			
100000707	5168	5	0			
100000707	5168	6	0			
100000707	5168	7	0			
100000707	5168	8	0			
100000707	5168	9	0			
100000707	5168	10	0			
100000707	5174	1	0.905632	MONTICELLO RD	SE	MONTICELLO RD
100000707	5174	2	0.698202			
100000707	5174	3	0.786665			

Node	Superlink	Run	Average Control Delay	Approach Street Name	Direction	Intersection
100000707	5174	4	11.248043			
100000707	5174	5	1.139638			
100000707	5174	6	0.90597			
100000707	5174	7	0.83688			
100000707	5174	8	0.516879			
100000707	5174	9	27.483822			
100000707	5174	10	1.070026			
100000709	4352	1	0	RAMP	S	RAMP & I-20 EXIT 68 WB ON RAMP
100000709	4352	2	0			
100000709	4352	3	0			
100000709	4352	4	0			
100000709	4352	5	0			
100000709	4352	6	0			
100000709	4352	7	0			
100000709	4352	8	0			
100000709	4352	9	0			
100000709	4352	10	0			
100000709	4353	1	0	RAMP	S	RAMP & I-20 EXIT 68 WB ON RAMP
100000709	4353	2	0			
100000709	4353	3	0			
100000709	4353	4	0			
100000709	4353	5	0			
100000709	4353	6	0			
100000709	4353	7	0			
100000709	4353	8	0			
100000709	4353	9	0			
100000709	4353	10	0			
100000710	4356	1	0	I-20 EXIT 68 WB OFF RAMP	W	I-20 EXIT 68 WB OFF RAMP & SERVICE RD
100000710	4356	2	0			
100000710	4356	3	0			
100000710	4356	4	0			
100000710	4356	5	0			
100000710	4356	6	0			
100000710	4356	7	0			
100000710	4356	8	0			
100000710	4356	9	0			
100000710	4356	10	0			
100000712	5157	1	0.10822	BUCKNER RD	NE	BUCKNER RD & RAMP
100000712	5157	2	0.088155			
100000712	5157	3	0.080322			
100000712	5157	4	0.068104			
100000712	5157	5	0.094556			
100000712	5157	6	0.146787			
100000712	5157	7	0.095871			
100000712	5157	8	0.090109			
100000712	5157	9	0.084658			
100000712	5157	10	0.107585			
100000712	5160	1	24.59739	BUCKNER RD	SW	BUCKNER RD & RAMP
100000712	5160	2	28.446495			
100000712	5160	3	19.683651			
100000712	5160	4	24.391218			
100000712	5160	5	21.743791			
100000712	5160	6	17.032467			
100000712	5160	7	20.279879			
100000712	5160	8	25.211003			
100000712	5160	9	14.745185			
100000712	5160	10	24.169044			
100000804	6261	1	31.664698	TRAM RD	SW	TRAM RD & SIDNEY RD
100000804	6261	2	23.481655			
100000804	6261	3	26.139741			
100000804	6261	4	17.075293			
100000804	6261	5	24.837765			
100000804	6261	6	23.38164			
100000804	6261	7	21.018648			
100000804	6261	8	22.779265			
100000804	6261	9	25.252236			
100000804	6261	10	27.740849			
100000804	6457	1	207.285132	SIDNEY RD	NW	TRAM RD & SIDNEY RD
100000804	6457	2	191.47118			
100000804	6457	3	212.606077			
100000804	6457	4	195.819537			
100000804	6457	5	212.535486			
100000804	6457	6	220.551379			
100000804	6457	7	196.764471			
100000804	6457	8	187.099704			
100000804	6457	9	191.283198			
100000804	6457	10	184.301648			
100000804	6458	1	2.516789	TRAM RD	NE	TRAM RD & SIDNEY RD
100000804	6458	2	2.404744			
100000804	6458	3	2.182006			
100000804	6458	4	2.510646			
100000804	6458	5	2.305821			
100000804	6458	6	2.78574			
100000804	6458	7	2.10902			
100000804	6458	8	2.97052			
100000804	6458	9	2.083703			
100000804	6458	10	2.899765			
100000882	5151	1		SERVICE RD	SW	SERVICE RD
100000882	5151	2				
100000882	5151	3				
100000882	5151	4				
100000882	5151	5				
100000882	5151	6				
100000882	5151	7				
100000882	5151	8				
100000882	5151	9				
100000882	5151	10				
100000882	6446	1	0	SERVICE RD	NE	SERVICE RD
100000882	6446	2	0			
100000882	6446	3	0			
100000882	6446	4	0			
100000882	6446	5	0			
100000882	6446	6	0			
100000882	6446	7	0			
100000882	6446	8	0			
100000882	6446	9	0			
100000882	6446	10	0			
100000882	6449	1	0		N	SERVICE RD
100000882	6449	2	0			
100000882	6449	3	0			

Node	Superlink	Run	Average Control Delay	Approach Street Name	Direction	Intersection
100000882	6449	4	0			
100000882	6449	5	0			
100000882	6449	6	0			
100000882	6449	7	0			
100000882	6449	8	0			
100000882	6449	9	0			
100000882	6449	10	0			
100000883	5148	1	0	BROAD RIVER RD	NW	BROAD RIVER RD & 6448 (E)
100000883	5148	2	0			
100000883	5148	3	0			
100000883	5148	4	0			
100000883	5148	5	0			
100000883	5148	6	0			
100000883	5148	7	0			
100000883	5148	8	0			
100000883	5148	9	0			
100000883	5148	10	0			
100000883	6447	1	13.817525	BROAD RIVER RD	SE	BROAD RIVER RD & 6448 (E)
100000883	6447	2	10.994233			
100000883	6447	3	11.635456			
100000883	6447	4	11.566972			
100000883	6447	5	10.115116			
100000883	6447	6	10.335562			
100000883	6447	7	11.645096			
100000883	6447	8	10.757999			
100000883	6447	9	12.169327			
100000883	6447	10	13.127321			
100000883	6448	1			W	BROAD RIVER RD & 6448 (E)
100000883	6448	2				
100000883	6448	3				
100000883	6448	4				
100000883	6448	5				
100000883	6448	6				
100000883	6448	7				
100000883	6448	8				
100000883	6448	9				
100000883	6448	10				
100000895	3229	1	0	RAMP	SW	RAMP & PINEY GROVE RD
100000895	3229	2	0			
100000895	3229	3	0			
100000895	3229	4	0			
100000895	3229	5	0			
100000895	3229	6	0			
100000895	3229	7	0			
100000895	3229	8	0			
100000895	3229	9	0			
100000895	3229	10	0			
100000895	6543	1	1.450795	PINEY GROVE RD	E	RAMP & PINEY GROVE RD
100000895	6543	2	1.294592			
100000895	6543	3	3.102652			
100000895	6543	4	1.16057			
100000895	6543	5	1.368026			
100000895	6543	6	1.045703			
100000895	6543	7	1.889899			
100000895	6543	8	1.587722			
100000895	6543	9	2.392015			
100000895	6543	10	1.610208			
100000895	6544	1	0	PINEY GROVE RD	W	RAMP & PINEY GROVE RD
100000895	6544	2	0			
100000895	6544	3	0			
100000895	6544	4	0			
100000895	6544	5	0			
100000895	6544	6	0			
100000895	6544	7	0			
100000895	6544	8	0			
100000895	6544	9	0			
100000895	6544	10	0			
100000897	3243	1	57.562346	I-126 WB OFF RAMP TO COLONIAL LIFE BLVD	NE	I-126 WB OFF RAMP TO COLONIAL LIFE BLVD
100000897	3243	2	10.958618			
100000897	3243	3	11.346828			
100000897	3243	4	7.56413			
100000897	3243	5	13.348506			
100000897	3243	6	9.398101			
100000897	3243	7	7.622641			
100000897	3243	8	7.38807			
100000897	3243	9	8.610205			
100000897	3243	10	8.135712			
100000897	5134	1	22.227255	W COLONIAL LIFE BLVD	NW	I-126 WB OFF RAMP TO COLONIAL LIFE BLVD
100000897	5134	2	16.734145			
100000897	5134	3	20.233708			
100000897	5134	4	21.79662			
100000897	5134	5	14.892465			
100000897	5134	6	23.699312			
100000897	5134	7	13.486766			
100000897	5134	8	20.008261			
100000897	5134	9	20.310352			
100000897	5134	10	20.499753			
100000897	6471	1	0.584407	COLONIAL LIFE BLVD W	S	I-126 WB OFF RAMP TO COLONIAL LIFE BLVD
100000897	6471	2	0.640621			
100000897	6471	3	0.589303			
100000897	6471	4	0.546156			
100000897	6471	5	0.681012			
100000897	6471	6	0.680468			
100000897	6471	7	0.651548			
100000897	6471	8	0.622579			
100000897	6471	9	0.718296			
100000897	6471	10	0.634658			
100000898	51	1	322.43353	I-26 EXIT 108 EB OFF RAMP	S	I-26 EXIT 108 EB OFF RAMP
100000898	51	2	354.862269			
100000898	51	3	350.535678			
100000898	51	4	346.672771			
100000898	51	5	376.147074			
100000898	51	6	361.209285			
100000898	51	7	354.181233			
100000898	51	8	364.081226			
100000898	51	9	345.531465			
100000898	51	10	361.12912			
100000898	5130	1	18.705866	BUSH RIVER RD	N	I-26 EXIT 108 EB OFF RAMP
100000898	5130	2	27.065549			
100000898	5130	3	13.748289			

Node	Superlink	Run	Average Control Delay	Approach Street Name	Direction	Intersection
100000898	5130	4	22.952099			
100000898	5130	5	21.404221			
100000898	5130	6	28.343792			
100000898	5130	7	21.379501			
100000898	5130	8	19.851998			
100000898	5130	9	22.111015			
100000898	5130	10	15.797713			
100000898	5131	1	11.164547	BUSH RIVER RD	E	I-26 EXIT 108 EB OFF RAMP
100000898	5131	2	10.093918			
100000898	5131	3	9.192162			
100000898	5131	4	10.786933			
100000898	5131	5	10.058142			
100000898	5131	6	9.584679			
100000898	5131	7	9.83814			
100000898	5131	8	12.009979			
100000898	5131	9	10.120175			
100000898	5131	10	11.411622			
100000898	6503	1	10.973463	BUSH RIVER RD	W	I-26 EXIT 108 EB OFF RAMP
100000898	6503	2	10.62478			
100000898	6503	3	11.101499			
100000898	6503	4	12.015276			
100000898	6503	5	10.678812			
100000898	6503	6	10.704259			
100000898	6503	7	8.353646			
100000898	6503	8	11.662153			
100000898	6503	9	8.686266			
100000898	6503	10	11.475189			
100000899	3298	1	6.006059	EXIT 106 WB OFF RAMP	SE	EXIT 106 WB OFF RAMP & BURNING TREE RD
100000899	3298	2	7.113311			
100000899	3298	3	7.393846			
100000899	3298	4	7.09182			
100000899	3298	5	6.46958			
100000899	3298	6	6.763808			
100000899	3298	7	6.676113			
100000899	3298	8	6.243328			
100000899	3298	9	6.098482			
100000899	3298	10	9.416907			
100000899	6105	1	0	BURNING TREE RD	S	EXIT 106 WB OFF RAMP & BURNING TREE RD
100000899	6105	2	0			
100000899	6105	3	0			
100000899	6105	4	0			
100000899	6105	5	0			
100000899	6105	6	0			
100000899	6105	7	0			
100000899	6105	8	0			
100000899	6105	9	0			
100000899	6105	10	0			
100000899	6106	1	0	BURNING TREE RD	N	EXIT 106 WB OFF RAMP & BURNING TREE RD
100000899	6106	2	0			
100000899	6106	3	0			
100000899	6106	4	0			
100000899	6106	5	0			
100000899	6106	6	0			
100000899	6106	7	0			
100000899	6106	8	0			
100000899	6106	9	0			
100000899	6106	10	0			
100000902	4292	1	44.92715	EXIT 110 WB OFF RAMP	NE	SUNSET BLVD
100000902	4292	2	43.639585			
100000902	4292	3	40.651439			
100000902	4292	4	39.529634			
100000902	4292	5	48.75092			
100000902	4292	6	37.283218			
100000902	4292	7	41.045528			
100000902	4292	8	36.803598			
100000902	4292	9	40.514594			
100000902	4292	10	49.294735			
100000902	4947	1	29.467555	SUNSET BLVD	W	SUNSET BLVD
100000902	4947	2	30.129202			
100000902	4947	3	23.2908			
100000902	4947	4	22.996428			
100000902	4947	5	23.588285			
100000902	4947	6	18.387106			
100000902	4947	7	16.952191			
100000902	4947	8	20.385101			
100000902	4947	9	16.981181			
100000902	4947	10	22.42159			
100000902	4951	1	0.000042	SUNSET BLVD	E	SUNSET BLVD
100000902	4951	2	0.000037			
100000902	4951	3	0			
100000902	4951	4	0			
100000902	4951	5	0.000006			
100000902	4951	6	0.000173			
100000902	4951	7	0			
100000902	4951	8	0			
100000902	4951	9	0			
100000902	4951	10	0			
100000903	4289	1	102.665189	EXIT 110 WB OFF RAMP	NW	RAMP
100000903	4289	2	108.743175			
100000903	4289	3	56.223201			
100000903	4289	4	95.001019			
100000903	4289	5	73.590693			
100000903	4289	6	65.350929			
100000903	4289	7	79.401566			
100000903	4289	8	102.545784			
100000903	4289	9	58.57237			
100000903	4289	10	99.984505			
100000903	4298	1	35.472863	RAMP	SE	RAMP
100000903	4298	2	41.245694			
100000903	4298	3	40.43098			
100000903	4298	4	37.268113			
100000903	4298	5	36.24398			
100000903	4298	6	40.016216			
100000903	4298	7	40.891028			
100000903	4298	8	35.667015			
100000903	4298	9	43.038207			
100000903	4298	10	42.792026			
100000903	4950	1	18.694823	SUNSET BLVD	E	RAMP
100000903	4950	2	19.057476			
100000903	4950	3	19.687989			

Node	Superlink	Run	Average Control Delay	Approach Street Name	Direction	Intersection
100000903	4950	4	18.082875			
100000903	4950	5	19.461176			
100000903	4950	6	18.774159			
100000903	4950	7	17.84949			
100000903	4950	8	19.049793			
100000903	4950	9	18.78224			
100000903	4950	10	18.458117			
100000903	4951	1	21.402815	SUNSET BLVD	W	RAMP
100000903	4951	2	20.389711			
100000903	4951	3	20.355449			
100000903	4951	4	20.922143			
100000903	4951	5	20.607361			
100000903	4951	6	18.868492			
100000903	4951	7	18.968706			
100000903	4951	8	19.78062			
100000903	4951	9	18.596535			
100000903	4951	10	19.828384			

2040 Build RRPA AM

Node	Superlink	Run	Average Control Delay	Approach Street Name	Direction	Intersection
4	5081	1	10.751828	BROAD RIVER RD	W	WESTERN LN & BROAD RIVER RD
4	5081	2	10.473705			
4	5081	3	11.7			
4	5081	4	12.1			
4	5081	5	11.6			
4	5081	6	12.763148			
4	5081	7	16.555213			
4	5081	8	11.9			
4	5081	9	12.2			
4	5081	10	11.6			
4	6465	1	14.054109	WESTERN LN	S	WESTERN LN & BROAD RIVER RD
4	6465	2	16.00095			
4	6465	3	15.4			
4	6465	4	14.9			
4	6465	5	17.135787			
4	6465	6	13.562748			
4	6465	7	25.1			
4	6465	8	16.7			
4	6465	9	15.3			
4	6465	10	14.215715			
4	6466	1	5.428166	BROAD RIVER RD	E	WESTERN LN & BROAD RIVER RD
4	6466	2	5.8			
4	6466	3	6.0			
4	6466	4	5.277223			
4	6466	5	6.849691			
4	6466	6	6.6			
4	6466	7	60.0			
4	6466	8	6.068344			
4	6466	9	6.440051			
4	6466	10	6.0			
4	6467	1	6.7	WESTERN LN	N	WESTERN LN & BROAD RIVER RD
4	6467	2	7.9			
4	6467	3	7.490676			
4	6467	4	7.062988			
4	6467	5	7.9			
4	6467	6	7.0			
4	6467	7	23.8			
4	6467	8	7.100665			
4	6467	9	7.782463			
4	6467	10	7.7			
40	6624	1	68.9	I-26 EB EXIT 106 OFF RAMP	E	I-26 EB EXIT 106 OFF RAMP, ST ANDREWS RD, I-26 WB TO BURNING TREE RD AND TO ST ANDREWS RD OFF RAMP,
40	6624	2	75.359432			
40	6624	3	103.289243			
40	6624	4	91.1			
40	6624	5	71.9			
40	6624	6	73.7			
40	6624	7	98.911205			
40	6624	8	60.38906			
40	6624	9	83.0			
40	6624	10	68.4			
40	6734	1	43.862551	ST ANDREWS RD	E	I-26 EB EXIT 106 OFF RAMP, ST ANDREWS RD, I-26 WB TO BURNING TREE RD AND TO ST ANDREWS RD OFF RAMP,
40	6734	2	45.979879			
40	6734	3	41.0			
40	6734	4	45.4			
40	6734	5	47.7			
40	6734	6	49.497935			
40	6734	7	48.10126			
40	6734	8	43.6			
40	6734	9	41.9			
40	6734	10	43.419391			
40	6737	1	41.311001	ST ANDREWS RD	W	I-26 EB EXIT 106 OFF RAMP, ST ANDREWS RD, I-26 WB TO BURNING TREE RD AND TO ST ANDREWS RD OFF RAMP,
40	6737	2	38.6			
40	6737	3	41.9			
40	6737	4	38.2			
40	6737	5	37.7			
40	6737	6	36.411711			
40	6737	7	35.273243			
40	6737	8	41.4			
40	6737	9	40.2			
40	6737	10	40.5			
40	6775	1	35.999055	I-26 WB TO BURNING TREE RD AND TO ST AND	W	I-26 EB EXIT 106 OFF RAMP, ST ANDREWS RD, I-26 WB TO BURNING TREE RD AND TO ST ANDREWS RD OFF RAMP,
40	6775	2	37.10658			
40	6775	3	36.4			
40	6775	4	38.5			
40	6775	5	35.7			
40	6775	6	36.062087			
40	6775	7	36.22123			
40	6775	8	36.4			
40	6775	9	34.6			
40	6775	10	35.3			
52	6750	1	6.341453	BUSH RIVER RD	E	BUSH RIVER RD, 6778 (SE) & 6777 (E)
52	6750	2	5.836687			
52	6750	3	5.7			
52	6750	4	6.0			
52	6750	5	5.7			
52	6750	6	6.231889			
52	6750	7	5.821507			
52	6750	8	6.3			
52	6750	9	6.1			
52	6750	10	6.2			
52	6778	1	18.937764		NW	BUSH RIVER RD, 6778 (SE) & 6777 (E)
52	6778	2	18.146943			
52	6778	3	18.9			
52	6778	4	19.8			
52	6778	5	21.6			
52	6778	6	18.179873			
52	6778	7	18.529037			
52	6778	8	18.3			
52	6778	9	18.4			
52	6778	10	19.7			
54	6057	1	14.442412	BROAD RIVER RD	SE	EXIT 65 RAMP TO US 176, BROAD RIVER RD & RAMP
54	6057	2	10.273508			
54	6057	3	17.9			
54	6057	4	16.012644			
54	6057	5	14.097442			
54	6057	6	2.3			
54	6057	7	19.3			
54	6057	8	3.008384			
54	6057	9	13.602387			
54	6057	10	14.0			
54	6575	1	20.4	EXIT 65 RAMP TO US 176	W	EXIT 65 RAMP TO US 176, BROAD RIVER RD & RAMP
54	6575	2	17.883997			
54	6575	3	19.42466			
54	6575	4	19.1			
54	6575	5	17.4			

Node	Superlink	Run	Average Control Delay	Approach Street Name	Direction	Intersection
54	6575	6	17.6			
54	6575	7	19.559959			
54	6575	8	18.093695			
54	6575	9	20.1			
54	6575	10	19.7			
54	6580	1	0	BROAD RIVER RD	NW	EXIT 65 RAMP TO US 176, BROAD RIVER RD & RAMP
54	6580	2	0			
54	6580	3	0.0			
54	6580	4	0.0			
54	6580	5	0.0			
54	6580	6	0			
54	6580	7	0			
54	6580	8	0.0			
54	6580	9	0.0			
54	6580	10	0.0			
65	2067	1	0	RAMP	N	6564 (W) & RAMP
65	2067	2	0			
65	2067	3	0.0			
65	2067	4	0.0			
65	2067	5	0.0			
65	2067	6	0			
65	2067	7	0			
65	2067	8	0.0			
65	2067	9	0.0			
65	2067	10	0.0			
65	6564	1	0		NE	6564 (W) & RAMP
65	6564	2	0			
65	6564	3	0.0			
65	6564	4	0.0			
65	6564	5	0.0			
65	6564	6	0			
65	6564	7	0			
65	6564	8	0.0			
65	6564	9	0.0			
65	6564	10	0			
71	6659	1	15.327751	PINEY GROVE RD	E	PINEY GROVE RD, I-26 EB EXIT 104 OFF RAMP & I-26 EB EXIT 104 ON RAMP
71	6659	2	15.1			
71	6659	3	11.7			
71	6659	4	12.2			
71	6659	5	13.564767			
71	6659	6	12.824579			
71	6659	7	13.5			
71	6659	8	12.4			
71	6659	9	12.143539			
71	6659	10	12.11232			
71	6660	1	0.0	PINEY GROVE RD	W	PINEY GROVE RD, I-26 EB EXIT 104 OFF RAMP & I-26 EB EXIT 104 ON RAMP
71	6660	2	0.0			
71	6660	3	0.001727			
71	6660	4	0.000001			
71	6660	5	0.0			
71	6660	6	0.00339			
71	6660	7	0.001755			
71	6660	8	0.0			
71	6660	9	0.0			
71	6660	10	0.000001			
74	6579	1	0		NE	6579 (SW), 6581 (W) & RAMP
74	6579	2	0.0			
74	6579	3	0.0			
74	6579	4	0.0			
74	6579	5	0			
74	6579	6	0			
74	6579	7	0.0			
74	6579	8	0.0			
74	6579	9	0			
74	6579	10	0			
74	6581	1	0.0		NE	6579 (SW), 6581 (W) & RAMP
74	6581	2	0.0			
74	6581	3	0			
74	6581	4	0			
74	6581	5	0.0			
74	6581	6	0.0			
74	6581	7	0.0			
74	6581	8	0			
74	6581	9	0			
74	6581	10	0			
79	5148	1	48.4	BROAD RIVER RD	NW	6584 (NE), BROAD RIVER RD, 6583 (SW), 6587 (W) & 6581 (E)
79	5148	2	42.8			
79	5148	3	46.249418			
79	5148	4	45.385555			
79	5148	5	46.4			
79	5148	6	43.7			
79	5148	7	44.7			
79	5148	8	43.027204			
79	5148	9	47.295571			
79	5148	10	46.9			
79	6580	1	39.8	BROAD RIVER RD	SE	6584 (NE), BROAD RIVER RD, 6583 (SW), 6587 (W) & 6581 (E)
79	6580	2	39.3			
79	6580	3	37.61442			
79	6580	4	39.362087			
79	6580	5	39.140289			
79	6580	6	38.045225			
79	6580	7	38.975072			
79	6580	8	35.164399			
79	6580	9	39.159667			
79	6580	10	38.795047			
79	6583	1	45.66464		N	6584 (NE), BROAD RIVER RD, 6583 (SW), 6587 (W) & 6581 (E)
79	6583	2	49.476195			
79	6583	3	49.491965			
79	6583	4	52.419542			
79	6583	5	52.38415			
79	6583	6	47.114419			
79	6583	7	47.15198			
79	6583	8	50.19763			
79	6583	9	46.590462			
79	6583	10	50.678736			
79	6584	1	52.754766		S	6584 (NE), BROAD RIVER RD, 6583 (SW), 6587 (W) & 6581 (E)
79	6584	2	53.563835			
79	6584	3	56.471021			
79	6584	4	53.748393			
79	6584	5	53.485205			
79	6584	6	53.701415			
79	6584	7	51.431599			
79	6584	8	51.602627			
79	6584	9	52.875443			
79	6584	10	55.211271			

Node	Superlink	Run	Average Control Delay	Approach Street Name	Direction	Intersection
85	6627	1	0	I-26 WB EXIT 106 ON RAMP	N	I-26 WB EXIT 106 ON RAMP
85	6627	2	0			
85	6627	3	0			
85	6627	4	0			
85	6627	5	0			
85	6627	6	0			
85	6627	7	0			
85	6627	8	0			
85	6627	9	0			
85	6627	10	0			
85	6652	1	0	I-26 WB EXIT 106 ON RAMP	NW	I-26 WB EXIT 106 ON RAMP
85	6652	2	0			
85	6652	3	0			
85	6652	4	0			
85	6652	5	0			
85	6652	6	0			
85	6652	7	0			
85	6652	8	0			
85	6652	9	0			
85	6652	10	0			
99	6647	1	49.579583	I-26 WB EXIT 103 OFF RAMP	NW	I-26 WB EXIT 103 OFF RAMP, HARBISON BLVD, I-26 WB EXIT 103 ON RAMP & 6770 (SW)
99	6647	2	82.995437			
99	6647	3	76.670561			
99	6647	4	49.581898			
99	6647	5	52.985469			
99	6647	6	74.9046			
99	6647	7	73.13266			
99	6647	8	45.788927			
99	6647	9	92.011793			
99	6647	10	56.57083			
99	6719	1	5.640947	HARBISON BLVD	SW	I-26 WB EXIT 103 OFF RAMP, HARBISON BLVD, I-26 WB EXIT 103 ON RAMP & 6770 (SW)
99	6719	2	5.28849			
99	6719	3	5.445526			
99	6719	4	5.763116			
99	6719	5	5.144008			
99	6719	6	5.926885			
99	6719	7	7.076036			
99	6719	8	6.501634			
99	6719	9	6.149883			
99	6719	10	5.635486			
99	6770	1	6.269325		NE	I-26 WB EXIT 103 OFF RAMP, HARBISON BLVD, I-26 WB EXIT 103 ON RAMP & 6770 (SW)
99	6770	2	5.038628			
99	6770	3	5.022198			
99	6770	4	4.828575			
99	6770	5	5.552713			
99	6770	6	4.669901			
99	6770	7	5.507994			
99	6770	8	6.304823			
99	6770	9	4.967972			
99	6770	10	5.773759			
104	3211	1	32.815392	I-26 EB EXIT 103 OFF RAMP	SE	HARBISON BLVD, I-26 EB EXIT 103 OFF RAMP, 6770 (NE) & I-26 EB EXIT 103 ON RAMP
104	3211	2	33.942265			
104	3211	3	33.97542			
104	3211	4	34.757179			
104	3211	5	30.743021			
104	3211	6	42.828935			
104	3211	7	37.510106			
104	3211	8	31.943129			
104	3211	9	43.926194			
104	3211	10	32.924804			
104	6717	1	2.24551	HARBISON BLVD	NE	HARBISON BLVD, I-26 EB EXIT 103 OFF RAMP, 6770 (NE) & I-26 EB EXIT 103 ON RAMP
104	6717	2	2.243254			
104	6717	3	2.700968			
104	6717	4	2.340167			
104	6717	5	2.118759			
104	6717	6	2.201057			
104	6717	7	2.009684			
104	6717	8	2.395708			
104	6717	9	1.700781			
104	6717	10	2.491306			
104	6770	1	5.297499		SW	HARBISON BLVD, I-26 EB EXIT 103 OFF RAMP, 6770 (NE) & I-26 EB EXIT 103 ON RAMP
104	6770	2	6.597077			
104	6770	3	6.611969			
104	6770	4	5.938748			
104	6770	5	6.69752			
104	6770	6	6.996827			
104	6770	7	7.400456			
104	6770	8	6.662451			
104	6770	9	7.2562			
104	6770	10	6.908788			
107	3243	1	20.507469	RAMP	NW	RAMP, COLONIAL LIFE BLVD W & 6681 (NW)
107	3243	2	19.550779			
107	3243	3	19.77235			
107	3243	4	18.781901			
107	3243	5	19.711512			
107	3243	6	20.281322			
107	3243	7	18.665037			
107	3243	8	20.279676			
107	3243	9	19.930943			
107	3243	10	20.035746			
107	6545	1	7.631191	COLONIAL LIFE BLVD W	SW	RAMP, COLONIAL LIFE BLVD W & 6681 (NW)
107	6545	2	7.467574			
107	6545	3	7.432978			
107	6545	4	7.180939			
107	6545	5	6.936827			
107	6545	6	6.896749			
107	6545	7	5.741143			
107	6545	8	6.949301			
107	6545	9	6.028132			
107	6545	10	8.485578			
107	6678	1	1.190609	COLONIAL LIFE BLVD W	NE	RAMP, COLONIAL LIFE BLVD W & 6681 (NW)
107	6678	2	0			
107	6678	3	0.288642			
107	6678	4	0.938316			
107	6678	5	0.73149			
107	6678	6	0.624067			
107	6678	7	0.04355			
107	6678	8	0.117238			
107	6678	9	0			
107	6678	10	0.477353			
108	6676	1	23.476395		SE	COLONIAL LIFE BLVD W, 6676 (NW) & 6688 (SE)
108	6676	2	27.670918			
108	6676	3	23.884396			
108	6676	4	23.324149			
108	6676	5	22.975252			

Node	Superlink	Run	Average Control Delay	Approach Street Name	Direction	Intersection
108	6676	6	24.180862			
108	6676	7	24.689336			
108	6676	8	26.832148			
108	6676	9	27.720859			
108	6676	10	24.330639			
108	6678	1	18.598024	COLONIAL LIFE BLVD W	SW	COLONIAL LIFE BLVD W, 6676 (NW) & 6688 (SE)
108	6678	2	14.915394			
108	6678	3	16.834			
108	6678	4	18.945984			
108	6678	5	20.102665			
108	6678	6	18.375573			
108	6678	7	17.334446			
108	6678	8	17.343329			
108	6678	9	15.733914			
108	6678	10	14.757709			
118	2071	1	18.184549	RAMP	W	BUSH RIVER RD & RAMP
118	2071	2	14.407549			
118	2071	3	14.003613			
118	2071	4	14.601617			
118	2071	5	14.576593			
118	2071	6	13.053622			
118	2071	7	12.939823			
118	2071	8	15.386448			
118	2071	9	16.528632			
118	2071	10	15.986366			
118	6750	1	0	BUSH RIVER RD	NW	BUSH RIVER RD & RAMP
118	6750	2	0			
118	6750	3	0			
118	6750	4	0			
118	6750	5	0			
118	6750	6	0			
118	6750	7	0			
118	6750	8	0			
118	6750	9	0			
118	6750	10	0			
118	6780	1	6.810519	BUSH RIVER RD	SE	BUSH RIVER RD & RAMP
118	6780	2	5.794101			
118	6780	3	5.048872			
118	6780	4	5.532797			
118	6780	5	6.039464			
118	6780	6	4.941737			
118	6780	7	6.271127			
118	6780	8	6.607386			
118	6780	9	6.035893			
118	6780	10	6.147193			
120	6740	1	11.38978	BUSH RIVER RD	W	BUSH RIVER RD & 6741 (NE)
120	6740	2	9.792281			
120	6740	3	10.025768			
120	6740	4	9.261125			
120	6740	5	9.004091			
120	6740	6	11.037061			
120	6740	7	10.233378			
120	6740	8	9.198602			
120	6740	9	8.949563			
120	6740	10	9.452964			
120	6741	1	20.408896		SW	BUSH RIVER RD & 6741 (NE)
120	6741	2	23.773891			
120	6741	3	23.09978			
120	6741	4	24.72125			
120	6741	5	24.192717			
120	6741	6	23.722539			
120	6741	7	23.232765			
120	6741	8	23.763573			
120	6741	9	21.75697			
120	6741	10	23.21395			
120	6781	1	7.523693	BUSH RIVER RD	E	BUSH RIVER RD & 6741 (NE)
120	6781	2	5.793783			
120	6781	3	7.00046			
120	6781	4	6.064398			
120	6781	5	6.731577			
120	6781	6	6.474149			
120	6781	7	6.817093			
120	6781	8	6.204318			
120	6781	9	7.116846			
120	6781	10	6.320627			
123	3328	1	0	I-26 EB EXIT 103 ON RAMP	SE	I-26 EB EXIT 103 ON RAMP & 6718 (W)
123	3328	2	0			
123	3328	3	0			
123	3328	4	0			
123	3328	5	0			
123	3328	6	0			
123	3328	7	0			
123	3328	8	0			
123	3328	9	0			
123	3328	10	0			
127	5116	1	46.736964	ST ANDREWS RD	E	WOODLAND HILLS RD, ST ANDREWS RD, I-26 EB EXIT 106 OFF RAMP & 6772 (NE)
127	5116	2	40.87706			
127	5116	3	40.197431			
127	5116	4	41.715214			
127	5116	5	42.362831			
127	5116	6	42.137686			
127	5116	7	39.910235			
127	5116	8	45.901001			
127	5116	9	40.929678			
127	5116	10	37.580195			
127	5119	1	23.971734	WOODLAND HILLS RD	N	WOODLAND HILLS RD, ST ANDREWS RD, I-26 EB EXIT 106 OFF RAMP & 6772 (NE)
127	5119	2	23.348319			
127	5119	3	20.645818			
127	5119	4	22.71352			
127	5119	5	18.432416			
127	5119	6	22.09399			
127	5119	7	20.94491			
127	5119	8	18.976987			
127	5119	9	26.414843			
127	5119	10	21.148386			
127	6736	1	6.562945	ST ANDREWS RD	W	WOODLAND HILLS RD, ST ANDREWS RD, I-26 EB EXIT 106 OFF RAMP & 6772 (NE)
127	6736	2	4.936298			
127	6736	3	5.508131			
127	6736	4	5.581893			
127	6736	5	5.301011			
127	6736	6	5.903603			
127	6736	7	5.13327			
127	6736	8	5.330806			
127	6736	9	5.033819			
127	6736	10	6.011406			

Node	Superlink	Run	Average Control Delay	Approach Street Name	Direction	Intersection
127	6773	1	13.627615	I-26 EB EXIT 106 OFF RAMP	S	WOODLAND HILLS RD, ST ANDREWS RD, I-26 EB EXIT 106 OFF RAMP & 6772 (NE)
127	6773	2	12.82446			
127	6773	3	16.678034			
127	6773	4	14.828318			
127	6773	5	18.461734			
127	6773	6	12.556092			
127	6773	7	15.186648			
127	6773	8	13.371729			
127	6773	9	15.593644			
127	6773	10	15.836098			
134	6563	1	28.352169		S	6563 (N), 6777 (W) & BUSH RIVER RD
134	6563	2	26.896892			
134	6563	3	26.859345			
134	6563	4	27.763117			
134	6563	5	28.223603			
134	6563	6	27.594667			
134	6563	7	29.822634			
134	6563	8	25.563374			
134	6563	9	26.986904			
134	6563	10	27.959949			
134	6777	1	0		E	6563 (N), 6777 (W) & BUSH RIVER RD
134	6777	2	0			
134	6777	3	0			
134	6777	4	0			
134	6777	5	0			
134	6777	6	0			
134	6777	7	0			
134	6777	8	0			
134	6777	9	0			
134	6777	10	0			
136	6555	1	13.758972	EXIT 63 RAMP TO BUSH RIVER RD	E	EXIT 63 RAMP TO BUSH RIVER RD, BUSH RIVER RD & RAMP
136	6555	2	14.294913			
136	6555	3	12.696623			
136	6555	4	13.859355			
136	6555	5	15.143112			
136	6555	6	13.601875			
136	6555	7	13.948907			
136	6555	8	13.738076			
136	6555	9	14.047617			
136	6555	10	13.476373			
136	6739	1	0	BUSH RIVER RD	SE	EXIT 63 RAMP TO BUSH RIVER RD, BUSH RIVER RD & RAMP
136	6739	2	0			
136	6739	3	0			
136	6739	4	0			
136	6739	5	0			
136	6739	6	0			
136	6739	7	0			
136	6739	8	0			
136	6739	9	0			
136	6739	10	0			
136	6781	1	1.840232	BUSH RIVER RD	NW	EXIT 63 RAMP TO BUSH RIVER RD, BUSH RIVER RD & RAMP
136	6781	2	1.784602			
136	6781	3	1.181676			
136	6781	4	1.692773			
136	6781	5	1.733969			
136	6781	6	1.646989			
136	6781	7	1.713503			
136	6781	8	1.761367			
136	6781	9	1.692119			
136	6781	10	1.879201			
141	6751	1	18.15457		NE	BUSH RIVER RD, 6752 (NE) & 6751 (SW)
141	6751	2	17.561423			
141	6751	3	26.602966			
141	6751	4	21.862374			
141	6751	5	18.944604			
141	6751	6	18.228245			
141	6751	7	18.460892			
141	6751	8	25.130278			
141	6751	9	21.166885			
141	6751	10	21.942651			
141	6752	1	22.804365		SW	BUSH RIVER RD, 6752 (NE) & 6751 (SW)
141	6752	2	27.274729			
141	6752	3	24.81549			
141	6752	4	23.011375			
141	6752	5	23.401116			
141	6752	6	23.996359			
141	6752	7	31.479995			
141	6752	8	25.073563			
141	6752	9	23.078638			
141	6752	10	25.320289			
141	6753	1	103.797274	BUSH RIVER RD	SE	BUSH RIVER RD, 6752 (NE) & 6751 (SW)
141	6753	2	96.725341			
141	6753	3	106.874048			
141	6753	4	105.64221			
141	6753	5	95.837962			
141	6753	6	75.115115			
141	6753	7	76.288135			
141	6753	8	110.073582			
141	6753	9	92.940537			
141	6753	10	76.377411			
141	6780	1	18.809462	BUSH RIVER RD	NW	BUSH RIVER RD, 6752 (NE) & 6751 (SW)
141	6780	2	14.199983			
141	6780	3	12.864337			
141	6780	4	15.28653			
141	6780	5	12.723108			
141	6780	6	13.425441			
141	6780	7	12.861743			
141	6780	8	16.631307			
141	6780	9	16.214488			
141	6780	10	14.968457			
150	6565	1	29.679472	BUSH RIVER RD	SE	BUSH RIVER RD & 6782 (W)
150	6565	2	29.058065			
150	6565	3	30.313137			
150	6565	4	29.821113			
150	6565	5	29.362124			
150	6565	6	31.048603			
150	6565	7	31.542224			
150	6565	8	29.179448			
150	6565	9	29.027465			
150	6565	10	29.620642			
150	6739	1	6.670881	BUSH RIVER RD	W	BUSH RIVER RD & 6782 (W)
150	6739	2	5.835447			
150	6739	3	4.888911			
150	6739	4	6.972985			
150	6739	5	7.216551			

Node	Superlink	Run	Average Control Delay	Approach Street Name	Direction	Intersection
150	6739	6	6.515742			
150	6739	7	7.343901			
150	6739	8	6.381767			
150	6739	9	7.622279			
150	6739	10	6.822878			
151	6554	1	30.38366		NW	6782 (E), 6554 (SE) & BUSH RIVER RD
151	6554	2	28.341281			
151	6554	3	28.888726			
151	6554	4	28.554627			
151	6554	5	27.893815			
151	6554	6	31.646622			
151	6554	7	29.374504			
151	6554	8	29.665229			
151	6554	9	29.267797			
151	6554	10	28.730538			
151	6782	1	0		W	6782 (E), 6554 (SE) & BUSH RIVER RD
151	6782	2	0			
151	6782	3	0			
151	6782	4	0			
151	6782	5	0			
151	6782	6	0			
151	6782	7	0			
151	6782	8	0			
151	6782	9	0			
151	6782	10	0			
100000093	4299	1	26.05998	RAMP	SW	SUNSET BLVD & RAMP
100000093	4299	2	23.788127			
100000093	4299	3	24.266479			
100000093	4299	4	24.469471			
100000093	4299	5	25.727979			
100000093	4299	6	24.205101			
100000093	4299	7	23.556573			
100000093	4299	8	26.943415			
100000093	4299	9	25.854649			
100000093	4299	10	26.554112			
100000093	4949	1	23.935976	SUNSET BLVD	E	SUNSET BLVD & RAMP
100000093	4949	2	24.726998			
100000093	4949	3	21.590284			
100000093	4949	4	22.501711			
100000093	4949	5	22.509526			
100000093	4949	6	22.628348			
100000093	4949	7	23.605662			
100000093	4949	8	22.056846			
100000093	4949	9	22.586827			
100000093	4949	10	22.655751			
100000093	4950	1	0.025245	SUNSET BLVD	W	SUNSET BLVD & RAMP
100000093	4950	2	0.055429			
100000093	4950	3	0.066204			
100000093	4950	4	0.039683			
100000093	4950	5	0.067949			
100000093	4950	6	0.06279			
100000093	4950	7	0.005553			
100000093	4950	8	0.004306			
100000093	4950	9	0.004389			
100000093	4950	10	0.012496			
100000120	5030	1	86.645472	SUNSET BLVD	W	CORLEY MILL RD, SUNSET BLVD & GINNY LN
100000120	5030	2	89.136684			
100000120	5030	3	86.266022			
100000120	5030	4	80.404122			
100000120	5030	5	93.877423			
100000120	5030	6	76.743704			
100000120	5030	7	69.931847			
100000120	5030	8	71.689599			
100000120	5030	9	84.409938			
100000120	5030	10	87.798325			
100000120	5352	1	82.260348	CORLEY MILL RD	S	CORLEY MILL RD, SUNSET BLVD & GINNY LN
100000120	5352	2	80.944156			
100000120	5352	3	70.129323			
100000120	5352	4	98.53115			
100000120	5352	5	75.957576			
100000120	5352	6	77.030962			
100000120	5352	7	79.533806			
100000120	5352	8	78.098759			
100000120	5352	9	75.603495			
100000120	5352	10	93.318806			
100000120	5353	1	50.675831	GINNY LN	N	CORLEY MILL RD, SUNSET BLVD & GINNY LN
100000120	5353	2	57.464766			
100000120	5353	3	53.843858			
100000120	5353	4	67.419248			
100000120	5353	5	63.412017			
100000120	5353	6	59.501518			
100000120	5353	7	48.895701			
100000120	5353	8	61.225762			
100000120	5353	9	58.253581			
100000120	5353	10	57.649576			
100000120	5355	1	55.185453	SUNSET BLVD	E	CORLEY MILL RD, SUNSET BLVD & GINNY LN
100000120	5355	2	51.116209			
100000120	5355	3	104.728123			
100000120	5355	4	52.562665			
100000120	5355	5	59.415916			
100000120	5355	6	53.637417			
100000120	5355	7	47.533022			
100000120	5355	8	57.702779			
100000120	5355	9	103.312127			
100000120	5355	10	77.36249			
100000134	2052	1	18.605467	RAMP	SW	SUNSET BLVD & RAMP
100000134	2052	2	16.700421			
100000134	2052	3	17.403472			
100000134	2052	4	16.982033			
100000134	2052	5	17.337703			
100000134	2052	6	17.483229			
100000134	2052	7	20.053644			
100000134	2052	8	18.16862			
100000134	2052	9	19.027823			
100000134	2052	10	19.288327			
100000134	5022	1	8.130722	SUNSET BLVD	NW	SUNSET BLVD & RAMP
100000134	5022	2	13.34944			
100000134	5022	3	12.730786			
100000134	5022	4	11.206736			
100000134	5022	5	10.718791			
100000134	5022	6	9.604598			
100000134	5022	7	11.769415			
100000134	5022	8	8.377019			
100000134	5022	9	8.619275			
100000134	5022	10	9.462121			

Node	Superlink	Run	Average Control Delay	Approach Street Name	Direction	Intersection
100000134	5030	1	21.91993	SUNSET BLVD	SE	SUNSET BLVD & RAMP
100000134	5030	2	20.332103			
100000134	5030	3	20.626047			
100000134	5030	4	20.149829			
100000134	5030	5	21.157704			
100000134	5030	6	23.677888			
100000134	5030	7	20.190184			
100000134	5030	8	21.279618			
100000134	5030	9	25.191192			
100000134	5030	10	24.580885			
100000135	2039	1	16.766085	RAMP	NE	SUNSET BLVD & RAMP
100000135	2039	2	14.627067			
100000135	2039	3	19.329061			
100000135	2039	4	19.353393			
100000135	2039	5	20.544135			
100000135	2039	6	17.688926			
100000135	2039	7	18.237124			
100000135	2039	8	16.528121			
100000135	2039	9	18.129121			
100000135	2039	10	15.076516			
100000135	5021	1	6.299153	SUNSET BLVD	NW	SUNSET BLVD & RAMP
100000135	5021	2	5.435753			
100000135	5021	3	6.884496			
100000135	5021	4	6.479248			
100000135	5021	5	7.9708			
100000135	5021	6	6.431017			
100000135	5021	7	6.959868			
100000135	5021	8	5.776557			
100000135	5021	9	7.269579			
100000135	5021	10	6.479118			
100000135	5022	1	17.432545	SUNSET BLVD	SE	SUNSET BLVD & RAMP
100000135	5022	2	28.331202			
100000135	5022	3	12.287893			
100000135	5022	4	15.477491			
100000135	5022	5	17.429953			
100000135	5022	6	39.465774			
100000135	5022	7	19.629236			
100000135	5022	8	23.683656			
100000135	5022	9	40.330044			
100000135	5022	10	33.359547			
100000136	5021	1	33.111839	SUNSET BLVD	SE	SUNSET BLVD, CROMER RD & DAVEGA DR
100000136	5021	2	42.123569			
100000136	5021	3	30.767428			
100000136	5021	4	29.621423			
100000136	5021	5	34.48623			
100000136	5021	6	39.736542			
100000136	5021	7	32.499259			
100000136	5021	8	36.190099			
100000136	5021	9	39.082385			
100000136	5021	10	38.26264			
100000136	5362	1	95.352772	CROMER RD	NE	SUNSET BLVD, CROMER RD & DAVEGA DR
100000136	5362	2	95.542454			
100000136	5362	3	114.9721			
100000136	5362	4	106.174981			
100000136	5362	5	146.692895			
100000136	5362	6	127.548798			
100000136	5362	7	164.511336			
100000136	5362	8	147.579816			
100000136	5362	9	135.080596			
100000136	5362	10	87.411552			
100000136	5364	1	35.921996	SUNSET BLVD	NW	SUNSET BLVD, CROMER RD & DAVEGA DR
100000136	5364	2	49.552077			
100000136	5364	3	47.457952			
100000136	5364	4	39.791927			
100000136	5364	5	36.074104			
100000136	5364	6	52.439835			
100000136	5364	7	36.273578			
100000136	5364	8	39.116293			
100000136	5364	9	36.544986			
100000136	5364	10	33.10469			
100000136	6459	1	23.791063	DAVEGA DR	SW	SUNSET BLVD, CROMER RD & DAVEGA DR
100000136	6459	2	22.52177			
100000136	6459	3	23.383205			
100000136	6459	4	31.857159			
100000136	6459	5	19.683571			
100000136	6459	6	34.107365			
100000136	6459	7	17.421292			
100000136	6459	8	26.453819			
100000136	6459	9	22.440607			
100000136	6459	10	23.619902			
100000144	5376	1	51.393858	SUNSET BLVD	E	W. HOSPITAL DR, SUNSET BLVD & SUNSET CT
100000144	5376	2	89.914103			
100000144	5376	3	40.460902			
100000144	5376	4	49.692516			
100000144	5376	5	34.348044			
100000144	5376	6	46.31919			
100000144	5376	7	48.039051			
100000144	5376	8	56.446413			
100000144	5376	9	29.657423			
100000144	5376	10	54.857311			
100000144	6760	1	60.462546	W. HOSPITAL DR	S	W. HOSPITAL DR, SUNSET BLVD & SUNSET CT
100000144	6760	2	70.532227			
100000144	6760	3	60.483987			
100000144	6760	4	54.375774			
100000144	6760	5	53.372749			
100000144	6760	6	59.972804			
100000144	6760	7	63.453649			
100000144	6760	8	54.623807			
100000144	6760	9	61.38482			
100000144	6760	10	60.963549			
100000144	6761	1		SUNSET CT	N	W. HOSPITAL DR, SUNSET BLVD & SUNSET CT
100000144	6761	2				
100000144	6761	3				
100000144	6761	4				
100000144	6761	5				
100000144	6761	6				
100000144	6761	7				
100000144	6761	8				
100000144	6761	9				
100000144	6761	10				
100000144	6762	1	3.296459	SUNSET BLVD	W	W. HOSPITAL DR, SUNSET BLVD & SUNSET CT
100000144	6762	2	3.113277			
100000144	6762	3	4.622277			
100000144	6762	4	2.058287			
100000144	6762	5	4.679766			

Node	Superlink	Run	Average Control Delay	Approach Street Name	Direction	Intersection
100000144	6762	6	3.368158			
100000144	6762	7	2.894059			
100000144	6762	8	1.581337			
100000144	6762	9	2.338282			
100000144	6762	10	4.17245			
100000150	3361	1	30.419369	I-26 EB EXIT 101 OFF RAMP	SW	I-26 EB EXIT 101 OFF RAMP & BROAD RIVER RD
100000150	3361	2	60.129097			
100000150	3361	3	23.472244			
100000150	3361	4	29.434179			
100000150	3361	5	81.573396			
100000150	3361	6	31.444238			
100000150	3361	7	28.889383			
100000150	3361	8	30.718703			
100000150	3361	9	49.684555			
100000150	3361	10	24.964868			
100000150	5071	1	0	BROAD RIVER RD	E	I-26 EB EXIT 101 OFF RAMP & BROAD RIVER RD
100000150	5071	2	0			
100000150	5071	3	0			
100000150	5071	4	0			
100000150	5071	5	0			
100000150	5071	6	0			
100000150	5071	7	0			
100000150	5071	8	0			
100000150	5071	9	0			
100000150	5071	10	0			
100000150	5073	1	0.052453	BROAD RIVER RD	W	I-26 EB EXIT 101 OFF RAMP & BROAD RIVER RD
100000150	5073	2	0.060931			
100000150	5073	3	0.107924			
100000150	5073	4	0.040366			
100000150	5073	5	0.063341			
100000150	5073	6	0.053537			
100000150	5073	7	0.07655			
100000150	5073	8	0.069221			
100000150	5073	9	0.066641			
100000150	5073	10	0.062874			
100000151	5072	1	3.232356	BROAD RIVER RD	E	BROAD RIVER RD & I-26 EB EXIT 101 ON RAMP
100000151	5072	2	3.345499			
100000151	5072	3	3.494071			
100000151	5072	4	3.677546			
100000151	5072	5	3.950984			
100000151	5072	6	4.241951			
100000151	5072	7	3.172921			
100000151	5072	8	2.639824			
100000151	5072	9	3.846492			
100000151	5072	10	3.485731			
100000151	5075	1	5.325179	BROAD RIVER RD	W	BROAD RIVER RD & I-26 EB EXIT 101 ON RAMP
100000151	5075	2	5.73204			
100000151	5075	3	5.458714			
100000151	5075	4	5.965823			
100000151	5075	5	5.4508			
100000151	5075	6	6.187288			
100000151	5075	7	5.936745			
100000151	5075	8	5.385121			
100000151	5075	9	5.935082			
100000151	5075	10	5.017442			
100000163	4947	1	6.588529	SUNSET BLVD	E	MCSWAIN DR, SUNSET BLVD & CHRIS DR
100000163	4947	2	7.271765			
100000163	4947	3	7.840548			
100000163	4947	4	7.614224			
100000163	4947	5	7.368878			
100000163	4947	6	7.900048			
100000163	4947	7	7.647177			
100000163	4947	8	8.082997			
100000163	4947	9	7.623893			
100000163	4947	10	7.086496			
100000163	5388	1	5.356822	SUNSET BLVD	NW	MCSWAIN DR, SUNSET BLVD & CHRIS DR
100000163	5388	2	6.629247			
100000163	5388	3	6.654092			
100000163	5388	4	6.99644			
100000163	5388	5	6.360333			
100000163	5388	6	6.955212			
100000163	5388	7	6.545001			
100000163	5388	8	6.838461			
100000163	5388	9	9.640684			
100000163	5388	10	6.456326			
100000163	5389	1	18.077694	MCSWAIN DR	S	MCSWAIN DR, SUNSET BLVD & CHRIS DR
100000163	5389	2	20.98218			
100000163	5389	3	19.658902			
100000163	5389	4	23.066048			
100000163	5389	5	22.39984			
100000163	5389	6	23.371937			
100000163	5389	7	19.098492			
100000163	5389	8	19.477936			
100000163	5389	9	22.011181			
100000163	5389	10	20.476416			
100000163	5418	1	62.41899	CHRIS DR	N	MCSWAIN DR, SUNSET BLVD & CHRIS DR
100000163	5418	2	78.953625			
100000163	5418	3	90.527274			
100000163	5418	4	80.394766			
100000163	5418	5	76.658544			
100000163	5418	6	81.289625			
100000163	5418	7	70.217564			
100000163	5418	8	72.938651			
100000163	5418	9	78.739365			
100000163	5418	10	95.759017			
100000165	5102	1	11.08697	HARBISON BLVD	SW	HARBISON BLVD & WOODCROSS DR
100000165	5102	2	10.231264			
100000165	5102	3	12.920106			
100000165	5102	4	12.232839			
100000165	5102	5	12.190271			
100000165	5102	6	10.324742			
100000165	5102	7	12.574999			
100000165	5102	8	13.022098			
100000165	5102	9	11.342831			
100000165	5102	10	13.158458			
100000165	5103	1	43.870029	WOODCROSS DR	NW	HARBISON BLVD & WOODCROSS DR
100000165	5103	2	45.612608			
100000165	5103	3	46.916165			
100000165	5103	4	44.308477			
100000165	5103	5	42.95577			
100000165	5103	6	46.083957			
100000165	5103	7	45.914024			
100000165	5103	8	47.053224			
100000165	5103	9	48.741571			
100000165	5103	10	43.402197			

Node	Superlink	Run	Average Control Delay	Approach Street Name	Direction	Intersection
100000165	6719	1	3.949636	HARBISON BLVD	NE	HARBISON BLVD & WOODCROSS DR
100000165	6719	2	4.103955			
100000165	6719	3	4.984603			
100000165	6719	4	5.175528			
100000165	6719	5	4.504053			
100000165	6719	6	4.167642			
100000165	6719	7	4.460485			
100000165	6719	8	3.957135			
100000165	6719	9	4.926276			
100000165	6719	10	4.92899			
100000168	5364	1	16.041454	SUNSET BLVD	E	SUNSET BLVD & LEAPHART RD
100000168	5364	2	15.787035			
100000168	5364	3	13.522824			
100000168	5364	4	13.428239			
100000168	5364	5	11.471163			
100000168	5364	6	15.388615			
100000168	5364	7	12.061749			
100000168	5364	8	19.080414			
100000168	5364	9	13.198399			
100000168	5364	10	9.396929			
100000168	5366	1	74.976449	LEAPHART RD	N	SUNSET BLVD & LEAPHART RD
100000168	5366	2	72.80384			
100000168	5366	3	66.464301			
100000168	5366	4	82.78346			
100000168	5366	5	65.044187			
100000168	5366	6	72.248262			
100000168	5366	7	76.380423			
100000168	5366	8	67.845031			
100000168	5366	9	61.570097			
100000168	5366	10	71.272925			
100000168	5372	1	10.972875	SUNSET BLVD	W	SUNSET BLVD & LEAPHART RD
100000168	5372	2	10.0073			
100000168	5372	3	10.886109			
100000168	5372	4	9.545296			
100000168	5372	5	10.977778			
100000168	5372	6	10.187932			
100000168	5372	7	9.483907			
100000168	5372	8	9.065305			
100000168	5372	9	11.350845			
100000168	5372	10	11.192194			
100000174	3229	1	22.630471	I-26 EB EXIT 104 OFF RAMP	SE	PINEY GROVE RD, I-26 EB EXIT 104 OFF RAMP & I-26 EB EXIT 104 ON RAMP
100000174	3229	2	23.863135			
100000174	3229	3	22.352127			
100000174	3229	4	25.678684			
100000174	3229	5	22.50718			
100000174	3229	6	24.812792			
100000174	3229	7	22.977868			
100000174	3229	8	23.057461			
100000174	3229	9	24.061741			
100000174	3229	10	24.646727			
100000174	5112	1	13.330819	PINEY GROVE RD	W	PINEY GROVE RD, I-26 EB EXIT 104 OFF RAMP & I-26 EB EXIT 104 ON RAMP
100000174	5112	2	14.595468			
100000174	5112	3	11.519168			
100000174	5112	4	12.765576			
100000174	5112	5	13.368414			
100000174	5112	6	12.391895			
100000174	5112	7	11.844197			
100000174	5112	8	14.688852			
100000174	5112	9	14.711086			
100000174	5112	10	11.245554			
100000174	6660	1	7.817404	PINEY GROVE RD	E	PINEY GROVE RD, I-26 EB EXIT 104 OFF RAMP & I-26 EB EXIT 104 ON RAMP
100000174	6660	2	6.324851			
100000174	6660	3	6.163905			
100000174	6660	4	6.566954			
100000174	6660	5	7.485304			
100000174	6660	6	6.238243			
100000174	6660	7	7.291969			
100000174	6660	8	6.748994			
100000174	6660	9	6.447036			
100000174	6660	10	6.214487			
100000177	5112	1	11.841033	PINEY GROVE RD	E	PINEY GROVE RD, I-26 WB EXIT 104 OFF RAMP & I-26 WB EXIT 104 ON RAMP
100000177	5112	2	11.322695			
100000177	5112	3	10.976431			
100000177	5112	4	11.451754			
100000177	5112	5	9.218192			
100000177	5112	6	11.025093			
100000177	5112	7	11.712548			
100000177	5112	8	8.740061			
100000177	5112	9	10.996482			
100000177	5112	10	10.991993			
100000177	6514	1	33.213996	I-26 WB EXIT 104 OFF RAMP	N	PINEY GROVE RD, I-26 WB EXIT 104 OFF RAMP & I-26 WB EXIT 104 ON RAMP
100000177	6514	2	43.623024			
100000177	6514	3	32.332391			
100000177	6514	4	35.484911			
100000177	6514	5	32.809218			
100000177	6514	6	41.851044			
100000177	6514	7	47.743475			
100000177	6514	8	32.2948			
100000177	6514	9	37.021029			
100000177	6514	10	38.45558			
100000177	6662	1	34.598226	PINEY GROVE RD	W	PINEY GROVE RD, I-26 WB EXIT 104 OFF RAMP & I-26 WB EXIT 104 ON RAMP
100000177	6662	2	31.216091			
100000177	6662	3	33.468888			
100000177	6662	4	33.82514			
100000177	6662	5	35.124414			
100000177	6662	6	31.882903			
100000177	6662	7	33.319635			
100000177	6662	8	29.197869			
100000177	6662	9	31.354671			
100000177	6662	10	31.832274			
100000182	5117	1	0	ST ANDREWS RD	SW	ST ANDREWS RD & 6774 (S)
100000182	5117	2	0			
100000182	5117	3	0			
100000182	5117	4	0			
100000182	5117	5	0			
100000182	5117	6	0			
100000182	5117	7	0			
100000182	5117	8	0			
100000182	5117	9	0			
100000182	5117	10	0			
100000182	6737	1	0	ST ANDREWS RD	NE	ST ANDREWS RD & 6774 (S)
100000182	6737	2	0			
100000182	6737	3	0			
100000182	6737	4	0			
100000182	6737	5	0			

Node	Superlink	Run	Average Control Delay	Approach Street Name	Direction	Intersection
100000182	6737	6	0			
100000182	6737	7	0			
100000182	6737	8	0			
100000182	6737	9	0			
100000182	6737	10	0			
100000182	6774	1	124.040285		NE	ST ANDREWS RD & 6774 (S)
100000182	6774	2	139.046695			
100000182	6774	3	145.591563			
100000182	6774	4	132.638155			
100000182	6774	5	96.651222			
100000182	6774	6	99.978065			
100000182	6774	7	90.066195			
100000182	6774	8	145.43617			
100000182	6774	9	106.354561			
100000182	6774	10	123.079539			
100000184	5499	1	13.015355	N ARROWWOOD RD	S	ARROWWOOD RD, BUSH RIVER RD & N ARROWWOOD RD
100000184	5499	2	13.923564			
100000184	5499	3	16.093189			
100000184	5499	4	11.292502			
100000184	5499	5	14.832146			
100000184	5499	6	13.131218			
100000184	5499	7	13.088501			
100000184	5499	8	14.586428			
100000184	5499	9	13.640772			
100000184	5499	10	12.945718			
100000184	5500	1	29.264481	ARROWWOOD RD	N	ARROWWOOD RD, BUSH RIVER RD & N ARROWWOOD RD
100000184	5500	2	30.836667			
100000184	5500	3	32.790823			
100000184	5500	4	30.424544			
100000184	5500	5	30.609017			
100000184	5500	6	30.003255			
100000184	5500	7	31.484983			
100000184	5500	8	30.295901			
100000184	5500	9	27.917423			
100000184	5500	10	27.836161			
100000184	6497	1	3.02808	BUSH RIVER RD	W	ARROWWOOD RD, BUSH RIVER RD & N ARROWWOOD RD
100000184	6497	2	6.341848			
100000184	6497	3	5.357778			
100000184	6497	4	6.77838			
100000184	6497	5	6.053127			
100000184	6497	6	10.398725			
100000184	6497	7	5.798887			
100000184	6497	8	5.114259			
100000184	6497	9	5.22404			
100000184	6497	10	5.899813			
100000184	6505	1	9.688843	BUSH RIVER RD	E	ARROWWOOD RD, BUSH RIVER RD & N ARROWWOOD RD
100000184	6505	2	12.003449			
100000184	6505	3	12.206209			
100000184	6505	4	12.980332			
100000184	6505	5	10.919349			
100000184	6505	6	11.374154			
100000184	6505	7	11.651292			
100000184	6505	8	11.287454			
100000184	6505	9	10.453376			
100000184	6505	10	10.956733			
100000185	3232	1	7.256104	RAMP	W	GREYSTONE BLVD & RAMP
100000185	3232	2	5.326827			
100000185	3232	3	3.951773			
100000185	3232	4	5.206456			
100000185	3232	5	5.97415			
100000185	3232	6	4.74996			
100000185	3232	7	8.143897			
100000185	3232	8	7.882371			
100000185	3232	9	5.672753			
100000185	3232	10	5.488891			
100000185	5140	1	0.503453	GREYSTONE BLVD	N	GREYSTONE BLVD & RAMP
100000185	5140	2	0.206481			
100000185	5140	3	0.240538			
100000185	5140	4	0.330105			
100000185	5140	5	0.21225			
100000185	5140	6	0.125348			
100000185	5140	7	0.209233			
100000185	5140	8	0.201442			
100000185	5140	9	0.302887			
100000185	5140	10	0.409006			
100000185	5143	1	5.499339	GREYSTONE BLVD	S	GREYSTONE BLVD & RAMP
100000185	5143	2	4.497665			
100000185	5143	3	3.691843			
100000185	5143	4	3.861703			
100000185	5143	5	3.441932			
100000185	5143	6	3.702391			
100000185	5143	7	5.010876			
100000185	5143	8	12.662003			
100000185	5143	9	4.880814			
100000185	5143	10	5.037413			
100000186	4949	1	18.580969	SUNSET BLVD	W	HARBOR DR, SUNSET BLVD & E HOSPITAL DR
100000186	4949	2	17.917919			
100000186	4949	3	17.292044			
100000186	4949	4	18.62615			
100000186	4949	5	19.879595			
100000186	4949	6	19.497834			
100000186	4949	7	15.408206			
100000186	4949	8	18.036116			
100000186	4949	9	18.212271			
100000186	4949	10	18.493631			
100000186	5386	1	120.594774	HARBOR DR	N	HARBOR DR, SUNSET BLVD & E HOSPITAL DR
100000186	5386	2	259.574292			
100000186	5386	3	148.995528			
100000186	5386	4	329.619164			
100000186	5386	5	219.64443			
100000186	5386	6	200.904404			
100000186	5386	7	156.168874			
100000186	5386	8	94.922039			
100000186	5386	9	111.989742			
100000186	5386	10	95.390726			
100000186	5387	1	61.253669	E HOSPITAL DR	S	HARBOR DR, SUNSET BLVD & E HOSPITAL DR
100000186	5387	2	72.439621			
100000186	5387	3	65.405857			
100000186	5387	4	62.192547			
100000186	5387	5	65.407762			
100000186	5387	6	66.682876			
100000186	5387	7	56.888282			
100000186	5387	8	69.249807			
100000186	5387	9	65.069875			
100000186	5387	10	57.902308			

Node	Superlink	Run	Average Control Delay	Approach Street Name	Direction	Intersection
100000186	6762	1	58.745468	SUNSET BLVD	E	HARBOR DR, SUNSET BLVD & E HOSPITAL DR
100000186	6762	2	69.409668			
100000186	6762	3	48.923771			
100000186	6762	4	55.793584			
100000186	6762	5	44.085133			
100000186	6762	6	54.998142			
100000186	6762	7	60.277725			
100000186	6762	8	53.649947			
100000186	6762	9	47.234601			
100000186	6762	10	47.980946			
100000187	6057	1	13.026271	BROAD RIVER RD	NW	BROAD RIVER RD, BRIARGATE CIR & MARLEY DR
100000187	6057	2	9.57621			
100000187	6057	3	10.572648			
100000187	6057	4	11.202243			
100000187	6057	5	10.656073			
100000187	6057	6	9.424397			
100000187	6057	7	11.912403			
100000187	6057	8	10.489537			
100000187	6057	9	13.112989			
100000187	6057	10	9.414912			
100000187	6059	1	21.276088	BROAD RIVER RD	SE	BROAD RIVER RD, BRIARGATE CIR & MARLEY DR
100000187	6059	2	17.62498			
100000187	6059	3	19.107531			
100000187	6059	4	19.256268			
100000187	6059	5	18.992542			
100000187	6059	6	17.928642			
100000187	6059	7	21.288642			
100000187	6059	8	16.609862			
100000187	6059	9	17.924119			
100000187	6059	10	21.716419			
100000187	6060	1	66.236089	MARLEY DR	SW	BROAD RIVER RD, BRIARGATE CIR & MARLEY DR
100000187	6060	2	77.561277			
100000187	6060	3	61.671606			
100000187	6060	4	66.108194			
100000187	6060	5	71.904572			
100000187	6060	6	57.201585			
100000187	6060	7	59.532782			
100000187	6060	8	95.198314			
100000187	6060	9	86.082983			
100000187	6060	10	83.161803			
100000187	6061	1	29.781973	BRIARGATE CIR	NE	BROAD RIVER RD, BRIARGATE CIR & MARLEY DR
100000187	6061	2	28.927626			
100000187	6061	3	30.493076			
100000187	6061	4	22.687354			
100000187	6061	5	30.018003			
100000187	6061	6	27.863814			
100000187	6061	7	28.599358			
100000187	6061	8	32.268503			
100000187	6061	9	35.65065			
100000187	6061	10	24.716231			
100000188	3222	1	5.188242	RAMP	W	GREYSTONE BLVD & RAMP
100000188	3222	2	12.820372			
100000188	3222	3	4.79168			
100000188	3222	4	5.275846			
100000188	3222	5	5.516218			
100000188	3222	6	5.172219			
100000188	3222	7	6.003485			
100000188	3222	8	3.807163			
100000188	3222	9	4.290476			
100000188	3222	10	3.771021			
100000188	5139	1	0.932667	GREYSTONE BLVD	S	GREYSTONE BLVD & RAMP
100000188	5139	2	1.045162			
100000188	5139	3	1.029554			
100000188	5139	4	0.821629			
100000188	5139	5	1.675566			
100000188	5139	6	1.028573			
100000188	5139	7	1.656797			
100000188	5139	8	1.192887			
100000188	5139	9	1.44906			
100000188	5139	10	1.290255			
100000188	5143	1	0.694016	GREYSTONE BLVD	N	GREYSTONE BLVD & RAMP
100000188	5143	2	0.654248			
100000188	5143	3	0.615651			
100000188	5143	4	0.590442			
100000188	5143	5	0.557965			
100000188	5143	6	0.574131			
100000188	5143	7	0.697237			
100000188	5143	8	0.458452			
100000188	5143	9	0.854316			
100000188	5143	10	0.63015			
100000190	5148	1	0	BROAD RIVER RD	SE	BROAD RIVER RD, EXIT 65 RAMP TO US 176 & 6579 (NE)
100000190	5148	2	0			
100000190	5148	3	0			
100000190	5148	4	0			
100000190	5148	5	0			
100000190	5148	6	0			
100000190	5148	7	0			
100000190	5148	8	0			
100000190	5148	9	0			
100000190	5148	10	0			
100000190	6445	1	3.048095	BROAD RIVER RD	NW	BROAD RIVER RD, EXIT 65 RAMP TO US 176 & 6579 (NE)
100000190	6445	2	1.719966			
100000190	6445	3	2.27567			
100000190	6445	4	2.21321			
100000190	6445	5	2.320041			
100000190	6445	6	2.134252			
100000190	6445	7	2.424637			
100000190	6445	8	2.79435			
100000190	6445	9	2.600291			
100000190	6445	10	1.517049			
100000190	6574	1	25.208941	EXIT 65 RAMP TO US 176	E	BROAD RIVER RD, EXIT 65 RAMP TO US 176 & 6579 (NE)
100000190	6574	2	27.432122			
100000190	6574	3	26.01885			
100000190	6574	4	29.307114			
100000190	6574	5	31.410334			
100000190	6574	6	25.196767			
100000190	6574	7	26.832962			
100000190	6574	8	28.930698			
100000190	6574	9	28.309241			
100000190	6574	10	25.841125			
100000195	6049	1	13.758666	BROAD RIVER RD	NW	LONGCREEK DR & BROAD RIVER RD
100000195	6049	2	14.275828			
100000195	6049	3	11.982265			
100000195	6049	4	12.078307			
100000195	6049	5	13.633654			

Node	Superlink	Run	Average Control Delay	Approach Street Name	Direction	Intersection
100000195	6049	6	12.517188			
100000195	6049	7	11.88817			
100000195	6049	8	12.845526			
100000195	6049	9	14.139829			
100000195	6049	10	9.811978			
100000195	6052	1	37.373738	LONGCREEK DR	SW	LONGCREEK DR & BROAD RIVER RD
100000195	6052	2	39.367098			
100000195	6052	3	37.614491			
100000195	6052	4	36.82921			
100000195	6052	5	41.88469			
100000195	6052	6	34.037122			
100000195	6052	7	30.324845			
100000195	6052	8	37.803138			
100000195	6052	9	37.434366			
100000195	6052	10	42.579317			
100000195	6445	1	8.222224	BROAD RIVER RD	SE	LONGCREEK DR & BROAD RIVER RD
100000195	6445	2	9.425937			
100000195	6445	3	9.67262			
100000195	6445	4	7.91822			
100000195	6445	5	8.881177			
100000195	6445	6	8.626511			
100000195	6445	7	6.6434			
100000195	6445	8	8.656788			
100000195	6445	9	9.341827			
100000195	6445	10	9.002681			
100000252	5125	1	46.060187	BUSH RIVER RD	E	MORNINGHILL DR, BUSH RIVER RD & RAMP
100000252	5125	2	32.770646			
100000252	5125	3	38.294377			
100000252	5125	4	46.884909			
100000252	5125	5	49.566601			
100000252	5125	6	58.177384			
100000252	5125	7	39.6323			
100000252	5125	8	37.420599			
100000252	5125	9	37.886369			
100000252	5125	10	45.183003			
100000252	5487	1	40.707783	MORNINGHILL DR	S	MORNINGHILL DR, BUSH RIVER RD & RAMP
100000252	5487	2	38.30767			
100000252	5487	3	36.31012			
100000252	5487	4	37.259705			
100000252	5487	5	43.526536			
100000252	5487	6	45.385525			
100000252	5487	7	43.379442			
100000252	5487	8	41.670346			
100000252	5487	9	40.066191			
100000252	5487	10	40.165846			
100000252	5488	1		RAMP	N	MORNINGHILL DR, BUSH RIVER RD & RAMP
100000252	5488	2				
100000252	5488	3				
100000252	5488	4				
100000252	5488	5				
100000252	5488	6				
100000252	5488	7				
100000252	5488	8				
100000252	5488	9				
100000252	5488	10				
100000252	6505	1	22.135328	BUSH RIVER RD	W	MORNINGHILL DR, BUSH RIVER RD & RAMP
100000252	6505	2	26.842981			
100000252	6505	3	22.923219			
100000252	6505	4	21.83488			
100000252	6505	5	20.957664			
100000252	6505	6	25.072759			
100000252	6505	7	20.762141			
100000252	6505	8	20.789614			
100000252	6505	9	24.435638			
100000252	6505	10	23.477608			
100000254	5119	1	0	WOODLAND HILLS RD	S	WOODLAND HILLS RD & FRONTAGE RD
100000254	5119	2	0			
100000254	5119	3	0.001213			
100000254	5119	4	0			
100000254	5119	5	0			
100000254	5119	6	0			
100000254	5119	7	0			
100000254	5119	8	0			
100000254	5119	9	0			
100000254	5119	10	0			
100000254	5607	1	39.253615	WOODLAND HILLS RD	N	WOODLAND HILLS RD & FRONTAGE RD
100000254	5607	2	23.513198			
100000254	5607	3	25.311219			
100000254	5607	4	19.232473			
100000254	5607	5	23.45117			
100000254	5607	6	20.760734			
100000254	5607	7	20.040189			
100000254	5607	8	17.747294			
100000254	5607	9	43.556322			
100000254	5607	10	19.782303			
100000254	6538	1		FRONTAGE RD	W	WOODLAND HILLS RD & FRONTAGE RD
100000254	6538	2				
100000254	6538	3				
100000254	6538	4				
100000254	6538	5				
100000254	6538	6				
100000254	6538	7				
100000254	6538	8				
100000254	6538	9				
100000254	6538	10				
100000255	5470	1	33.110018	INDEPENDENCE AVE	N	BUSH RIVER RD & INDEPENDENCE AVE
100000255	5470	2	32.158055			
100000255	5470	3	32.836923			
100000255	5470	4	30.935827			
100000255	5470	5	32.699163			
100000255	5470	6	30.212915			
100000255	5470	7	32.664367			
100000255	5470	8	32.009471			
100000255	5470	9	31.302505			
100000255	5470	10	32.06151			
100000255	5471	1	12.877748	BUSH RIVER RD	W	BUSH RIVER RD & INDEPENDENCE AVE
100000255	5471	2	27.962607			
100000255	5471	3	11.607921			
100000255	5471	4	18.954613			
100000255	5471	5	11.113998			
100000255	5471	6	28.427025			
100000255	5471	7	35.88967			
100000255	5471	8	15.260466			
100000255	5471	9	16.070384			
100000255	5471	10	13.517361			

Node	Superlink	Run	Average Control Delay	Approach Street Name	Direction	Intersection
100000255	6740	1	10.795734	BUSH RIVER RD	E	BUSH RIVER RD & INDEPENDENCE AVE
100000255	6740	2	10.452025			
100000255	6740	3	9.71136			
100000255	6740	4	10.52305			
100000255	6740	5	9.64069			
100000255	6740	6	9.868957			
100000255	6740	7	11.139043			
100000255	6740	8	10.721972			
100000255	6740	9	10.569079			
100000255	6740	10	9.809098			
100000256	5131	1	8.166568	BUSH RIVER RD	W	BUSH RIVER RD & ZIMALCREST DR
100000256	5131	2	10.978908			
100000256	5131	3	8.596475			
100000256	5131	4	9.818108			
100000256	5131	5	8.729914			
100000256	5131	6	9.800539			
100000256	5131	7	9.330836			
100000256	5131	8	10.190538			
100000256	5131	9	9.549211			
100000256	5131	10	7.439367			
100000256	5465	1	5.542888	BUSH RIVER RD	E	BUSH RIVER RD & ZIMALCREST DR
100000256	5465	2	5.21545			
100000256	5465	3	4.586145			
100000256	5465	4	4.64044			
100000256	5465	5	4.722486			
100000256	5465	6	6.382766			
100000256	5465	7	6.170814			
100000256	5465	8	5.416646			
100000256	5465	9	4.632525			
100000256	5465	10	5.073431			
100000256	5484	1	44.95863	ZIMALCREST DR	S	BUSH RIVER RD & ZIMALCREST DR
100000256	5484	2	45.394917			
100000256	5484	3	45.744006			
100000256	5484	4	35.284976			
100000256	5484	5	39.314575			
100000256	5484	6	43.495294			
100000256	5484	7	38.680901			
100000256	5484	8	36.627976			
100000256	5484	9	45.042801			
100000256	5484	10	34.409615			
100000256	5485	1	8.979264	ZIMALCREST DR	N	BUSH RIVER RD & ZIMALCREST DR
100000256	5485	2	7.278821			
100000256	5485	3	8.262114			
100000256	5485	4	7.560028			
100000256	5485	5	8.035547			
100000256	5485	6	9.481297			
100000256	5485	7	8.921366			
100000256	5485	8	7.340149			
100000256	5485	9	8.215249			
100000256	5485	10	7.438962			
100000348	5116	1	8.48641	ST ANDREWS RD	NW	ST ANDREWS RD & JAMIL RD
100000348	5116	2	10.001514			
100000348	5116	3	12.507144			
100000348	5116	4	10.3494			
100000348	5116	5	9.582769			
100000348	5116	6	10.519803			
100000348	5116	7	9.328237			
100000348	5116	8	9.903331			
100000348	5116	9	9.827015			
100000348	5116	10	10.260815			
100000348	6114	1	34.943384	ST ANDREWS RD	E	ST ANDREWS RD & JAMIL RD
100000348	6114	2	25.632758			
100000348	6114	3	31.944673			
100000348	6114	4	34.134986			
100000348	6114	5	23.907435			
100000348	6114	6	27.233843			
100000348	6114	7	26.580479			
100000348	6114	8	42.981568			
100000348	6114	9	33.221501			
100000348	6114	10	23.943202			
100000348	6119	1	31.923581	JAMIL RD	S	ST ANDREWS RD & JAMIL RD
100000348	6119	2	35.725942			
100000348	6119	3	36.228581			
100000348	6119	4	34.14799			
100000348	6119	5	31.053625			
100000348	6119	6	32.174721			
100000348	6119	7	32.874257			
100000348	6119	8	37.237185			
100000348	6119	9	38.039177			
100000348	6119	10	33.028727			
100000353	6125	1	24.416259	BOWER PKY	SE	BOWER PKY, PINEY GROVE RD & JAMIL RD
100000353	6125	2	23.817469			
100000353	6125	3	22.310482			
100000353	6125	4	20.521732			
100000353	6125	5	22.442447			
100000353	6125	6	22.702423			
100000353	6125	7	23.280767			
100000353	6125	8	20.352643			
100000353	6125	9	22.621214			
100000353	6125	10	21.803721			
100000353	6126	1	41.621613	PINEY GROVE RD	E	BOWER PKY, PINEY GROVE RD & JAMIL RD
100000353	6126	2	56.625724			
100000353	6126	3	92.831101			
100000353	6126	4	85.488049			
100000353	6126	5	32.165081			
100000353	6126	6	77.377385			
100000353	6126	7	39.51479			
100000353	6126	8	69.037792			
100000353	6126	9	44.094951			
100000353	6126	10	41.791763			
100000353	6127	1	43.282508	JAMIL RD	NW	BOWER PKY, PINEY GROVE RD & JAMIL RD
100000353	6127	2	52.371011			
100000353	6127	3	79.322453			
100000353	6127	4	46.223594			
100000353	6127	5	39.555907			
100000353	6127	6	43.800591			
100000353	6127	7	44.10472			
100000353	6127	8	45.762431			
100000353	6127	9	37.864644			
100000353	6127	10	43.652485			
100000353	6659	1	75.415066	PINEY GROVE RD	W	BOWER PKY, PINEY GROVE RD & JAMIL RD
100000353	6659	2	86.679324			
100000353	6659	3	106.831446			
100000353	6659	4	60.545494			
100000353	6659	5	81.094535			

Node	Superlink	Run	Average Control Delay	Approach Street Name	Direction	Intersection
100000353	6659	6	91.571775			
100000353	6659	7	65.818255			
100000353	6659	8	44.445094			
100000353	6659	9	42.766959			
100000353	6659	10	57.34451			
100000354	6094	1	111.793071	ST ANDREWS RD	SW	ST ANDREWS RD, KAY ST & CHARTWELL RD
100000354	6094	2	35.148088			
100000354	6094	3	86.73873			
100000354	6094	4	35.330168			
100000354	6094	5	27.626696			
100000354	6094	6	35.79035			
100000354	6094	7	31.795439			
100000354	6094	8	64.856			
100000354	6094	9	48.66711			
100000354	6094	10	50.593392			
100000354	6098	1	38.427297	CHARTWELL RD	NW	ST ANDREWS RD, KAY ST & CHARTWELL RD
100000354	6098	2	54.891812			
100000354	6098	3	59.364519			
100000354	6098	4	44.736243			
100000354	6098	5	40.276929			
100000354	6098	6	47.375901			
100000354	6098	7	38.814685			
100000354	6098	8	38.95727			
100000354	6098	9	48.006682			
100000354	6098	10	43.586937			
100000354	6099	1	27.015072	KAY ST	SE	ST ANDREWS RD, KAY ST & CHARTWELL RD
100000354	6099	2	18.370294			
100000354	6099	3	25.49208			
100000354	6099	4	23.216142			
100000354	6099	5	21.960454			
100000354	6099	6	21.474234			
100000354	6099	7	20.78169			
100000354	6099	8	27.385101			
100000354	6099	9	29.638279			
100000354	6099	10	26.170816			
100000354	6100	1	17.537005	ST ANDREWS RD	NE	ST ANDREWS RD, KAY ST & CHARTWELL RD
100000354	6100	2	11.501432			
100000354	6100	3	13.741578			
100000354	6100	4	12.296126			
100000354	6100	5	11.012436			
100000354	6100	6	15.695125			
100000354	6100	7	12.924204			
100000354	6100	8	16.276944			
100000354	6100	9	11.301633			
100000354	6100	10	12.664059			
100000358	5117	1	23.440608	ST ANDREWS RD	NE	ST ANDREWS RD, FERNANDINA RD & BURNING TREE RD
100000358	5117	2	22.173175			
100000358	5117	3	24.236374			
100000358	5117	4	23.858238			
100000358	5117	5	21.998085			
100000358	5117	6	24.174463			
100000358	5117	7	24.36814			
100000358	5117	8	24.970501			
100000358	5117	9	23.109303			
100000358	5117	10	22.712722			
100000358	6100	1	64.95759	ST ANDREWS RD	SW	ST ANDREWS RD, FERNANDINA RD & BURNING TREE RD
100000358	6100	2	52.533726			
100000358	6100	3	59.143319			
100000358	6100	4	51.725362			
100000358	6100	5	44.824899			
100000358	6100	6	50.62446			
100000358	6100	7	49.818788			
100000358	6100	8	55.443734			
100000358	6100	9	56.395943			
100000358	6100	10	55.670607			
100000358	6101	1	23.287411	BURNING TREE RD	NW	ST ANDREWS RD, FERNANDINA RD & BURNING TREE RD
100000358	6101	2	25.232225			
100000358	6101	3	25.423818			
100000358	6101	4	26.579409			
100000358	6101	5	22.944831			
100000358	6101	6	25.795056			
100000358	6101	7	24.562347			
100000358	6101	8	21.871161			
100000358	6101	9	26.782885			
100000358	6101	10	25.145392			
100000358	6102	1	22.013503	FERNANDINA RD	SE	ST ANDREWS RD, FERNANDINA RD & BURNING TREE RD
100000358	6102	2	23.455109			
100000358	6102	3	27.806262			
100000358	6102	4	24.138534			
100000358	6102	5	22.466608			
100000358	6102	6	25.428755			
100000358	6102	7	23.368159			
100000358	6102	8	20.316439			
100000358	6102	9	21.840421			
100000358	6102	10	27.750911			
100000360	6101	1	0	BURNING TREE RD	S	I-26 WB TO BURNING TREE RD EXIT 106 OFF RAMP & BURNING TREE RD
100000360	6101	2	0			
100000360	6101	3	0			
100000360	6101	4	0			
100000360	6101	5	0			
100000360	6101	6	0			
100000360	6101	7	0			
100000360	6101	8	0			
100000360	6101	9	0			
100000360	6101	10	0			
100000360	6105	1	0.007055	BURNING TREE RD	N	I-26 WB TO BURNING TREE RD EXIT 106 OFF RAMP & BURNING TREE RD
100000360	6105	2	0.014256			
100000360	6105	3	0.022883			
100000360	6105	4	0.010754			
100000360	6105	5	0.013753			
100000360	6105	6	0.008719			
100000360	6105	7	0.01205			
100000360	6105	8	0.023607			
100000360	6105	9	0.014976			
100000360	6105	10	0.005394			
100000360	6766	1	25.114485	I-26 WB TO BURNING TREE RD EXIT 106 OFF RAI	NE	I-26 WB TO BURNING TREE RD EXIT 106 OFF RAMP & BURNING TREE RD
100000360	6766	2	15.01447			
100000360	6766	3	16.476938			
100000360	6766	4	17.896014			
100000360	6766	5	13.854165			
100000360	6766	6	23.50185			
100000360	6766	7	23.868168			
100000360	6766	8	20.646307			
100000360	6766	9	14.886161			
100000360	6766	10	20.363657			

Node	Superlink	Run	Average Control Delay	Approach Street Name	Direction	Intersection
100000362	6134	1	17.838758	JAMIL RD	NW	HARBISON BLVD & JAMIL RD
100000362	6134	2	20.057256			
100000362	6134	3	14.346454			
100000362	6134	4	20.203898			
100000362	6134	5	22.349709			
100000362	6134	6	14.795247			
100000362	6134	7	22.597678			
100000362	6134	8	18.965751			
100000362	6134	9	16.79911			
100000362	6134	10	18.968981			
100000362	6137	1	0.685591	HARBISON BLVD	NE	HARBISON BLVD & JAMIL RD
100000362	6137	2	0.606587			
100000362	6137	3	1.056301			
100000362	6137	4	0.967331			
100000362	6137	5	1.095183			
100000362	6137	6	1.06411			
100000362	6137	7	0.81378			
100000362	6137	8	0.91755			
100000362	6137	9	1.011495			
100000362	6137	10	0.901948			
100000362	6717	1	0.099772	HARBISON BLVD	SW	HARBISON BLVD & JAMIL RD
100000362	6717	2	0.051197			
100000362	6717	3	0.028871			
100000362	6717	4	0.060203			
100000362	6717	5	0.167926			
100000362	6717	6	0.094292			
100000362	6717	7	0.065555			
100000362	6717	8	0.109309			
100000362	6717	9	0.145861			
100000362	6717	10	0.278175			
100000364	6145	1	10.385531	HARBISON BLVD	SW	HARBISON BLVD & COLUMBIANA DR
100000364	6145	2	12.789278			
100000364	6145	3	11.875264			
100000364	6145	4	10.085695			
100000364	6145	5	11.157973			
100000364	6145	6	11.207624			
100000364	6145	7	11.560016			
100000364	6145	8	10.758879			
100000364	6145	9	10.7974			
100000364	6145	10	11.039022			
100000364	6176	1	5.378475	HARBISON BLVD	NE	HARBISON BLVD & COLUMBIANA DR
100000364	6176	2	5.93152			
100000364	6176	3	5.36515			
100000364	6176	4	5.713837			
100000364	6176	5	5.164421			
100000364	6176	6	5.505767			
100000364	6176	7	6.057253			
100000364	6176	8	6.257684			
100000364	6176	9	5.496309			
100000364	6176	10	4.974556			
100000364	6177	1		COLUMBIANA DR	NW	HARBISON BLVD & COLUMBIANA DR
100000364	6177	2				
100000364	6177	3				
100000364	6177	4				
100000364	6177	5				
100000364	6177	6				
100000364	6177	7				
100000364	6177	8				
100000364	6177	9				
100000364	6177	10				
100000364	6196	1	43.709158	COLUMBIANA DR	SE	HARBISON BLVD & COLUMBIANA DR
100000364	6196	2	41.740198			
100000364	6196	3	47.166404			
100000364	6196	4	45.989097			
100000364	6196	5	45.752735			
100000364	6196	6	47.451326			
100000364	6196	7	60.240593			
100000364	6196	8	45.464964			
100000364	6196	9	46.612618			
100000364	6196	10	45.359945			
100000365	6137	1	11.299207	HARBISON BLVD	SW	COLUMBIANA CIR, HARBISON BLVD & PARK TERRACE DR
100000365	6137	2	12.491432			
100000365	6137	3	13.721607			
100000365	6137	4	12.717307			
100000365	6137	5	13.186958			
100000365	6137	6	14.027253			
100000365	6137	7	13.002683			
100000365	6137	8	12.704817			
100000365	6137	9	13.255218			
100000365	6137	10	12.17738			
100000365	6140	1	21.008216	COLUMBIANA CIR	SE	COLUMBIANA CIR, HARBISON BLVD & PARK TERRACE DR
100000365	6140	2	20.879927			
100000365	6140	3	16.420912			
100000365	6140	4	13.761708			
100000365	6140	5	18.860195			
100000365	6140	6	16.863603			
100000365	6140	7	21.732338			
100000365	6140	8	19.632018			
100000365	6140	9	14.274269			
100000365	6140	10	18.273516			
100000365	6145	1	2.351418	HARBISON BLVD	NE	COLUMBIANA CIR, HARBISON BLVD & PARK TERRACE DR
100000365	6145	2	1.979062			
100000365	6145	3	2.335315			
100000365	6145	4	2.216024			
100000365	6145	5	2.411932			
100000365	6145	6	2.38503			
100000365	6145	7	2.221666			
100000365	6145	8	2.731874			
100000365	6145	9	2.776727			
100000365	6145	10	2.311544			
100000365	6151	1	22.866114	PARK TERRACE DR	NW	COLUMBIANA CIR, HARBISON BLVD & PARK TERRACE DR
100000365	6151	2	22.028232			
100000365	6151	3	23.902135			
100000365	6151	4	26.220445			
100000365	6151	5	21.675306			
100000365	6151	6	25.87331			
100000365	6151	7	18.439346			
100000365	6151	8	26.993568			
100000365	6151	9	21.990589			
100000365	6151	10	23.328764			
100000391	5071	1	6.021448	BROAD RIVER RD	NW	BROAD RIVER RD & COLUMBIANA DR
100000391	5071	2	6.558345			
100000391	5071	3	7.184971			
100000391	5071	4	5.968366			
100000391	5071	5	7.673876			

Node	Superlink	Run	Average Control Delay	Approach Street Name	Direction	Intersection
100000391	5071	6	5.83757			
100000391	5071	7	6.924216			
100000391	5071	8	5.701433			
100000391	5071	9	7.866324			
100000391	5071	10	6.006337			
100000391	6214	1	45.221819	COLUMBIANA DR	NE	BROAD RIVER RD & COLUMBIANA DR
100000391	6214	2	48.064528			
100000391	6214	3	41.134416			
100000391	6214	4	52.660279			
100000391	6214	5	48.279299			
100000391	6214	6	48.478241			
100000391	6214	7	49.615777			
100000391	6214	8	43.684329			
100000391	6214	9	46.746946			
100000391	6214	10	45.057641			
100000391	6224	1	34.97627	BROAD RIVER RD	SE	BROAD RIVER RD & COLUMBIANA DR
100000391	6224	2	38.63477			
100000391	6224	3	39.542447			
100000391	6224	4	37.731353			
100000391	6224	5	39.485273			
100000391	6224	6	35.576711			
100000391	6224	7	38.506936			
100000391	6224	8	37.033241			
100000391	6224	9	41.185652			
100000391	6224	10	29.8968			
100000395	5086	1	40.723009	LAKE MURRAY BLVD	W	LAKE MURRAY BLVD & COLUMBIANA DR
100000395	5086	2	74.161693			
100000395	5086	3	39.83814			
100000395	5086	4	40.025309			
100000395	5086	5	50.345241			
100000395	5086	6	76.735479			
100000395	5086	7	27.65053			
100000395	5086	8	26.063984			
100000395	5086	9	22.462058			
100000395	5086	10	35.489542			
100000395	6208	1	34.735968	COLUMBIANA DR	NW	LAKE MURRAY BLVD & COLUMBIANA DR
100000395	6208	2	52.555619			
100000395	6208	3	50.396825			
100000395	6208	4	44.192453			
100000395	6208	5	38.43385			
100000395	6208	6	51.74852			
100000395	6208	7	41.491834			
100000395	6208	8	42.458231			
100000395	6208	9	56.071225			
100000395	6208	10	41.178199			
100000395	6214	1	68.24525	COLUMBIANA DR	S	LAKE MURRAY BLVD & COLUMBIANA DR
100000395	6214	2	175.909235			
100000395	6214	3	80.544041			
100000395	6214	4	114.404017			
100000395	6214	5	89.11873			
100000395	6214	6	96.271586			
100000395	6214	7	74.195372			
100000395	6214	8	136.629769			
100000395	6214	9	90.35664			
100000395	6214	10	135.224399			
100000395	6215	1	32.166577	LAKE MURRAY BLVD	E	LAKE MURRAY BLVD & COLUMBIANA DR
100000395	6215	2	24.806852			
100000395	6215	3	32.529241			
100000395	6215	4	26.636583			
100000395	6215	5	37.133573			
100000395	6215	6	27.855615			
100000395	6215	7	30.647547			
100000395	6215	8	43.931074			
100000395	6215	9	25.306051			
100000395	6215	10	29.876091			
100000398	5101	1	2.945785	HARBISON BLVD	W	HARBISON BLVD & PARKRIDGE DR
100000398	5101	2	3.733244			
100000398	5101	3	3.013821			
100000398	5101	4	3.758583			
100000398	5101	5	3.320814			
100000398	5101	6	4.965699			
100000398	5101	7	4.957831			
100000398	5101	8	3.942692			
100000398	5101	9	4.138025			
100000398	5101	10	4.247279			
100000398	5102	1	1.606374	HARBISON BLVD	NE	HARBISON BLVD & PARKRIDGE DR
100000398	5102	2	1.534842			
100000398	5102	3	1.009999			
100000398	5102	4	1.824799			
100000398	5102	5	1.372617			
100000398	5102	6	1.766828			
100000398	5102	7	1.700172			
100000398	5102	8	2.000868			
100000398	5102	9	0.959916			
100000398	5102	10	1.293032			
100000398	6267	1	26.423916	PARKRIDGE DR	SE	HARBISON BLVD & PARKRIDGE DR
100000398	6267	2	25.697424			
100000398	6267	3	28.444242			
100000398	6267	4	25.461467			
100000398	6267	5	29.601091			
100000398	6267	6	26.274133			
100000398	6267	7	27.127293			
100000398	6267	8	26.672026			
100000398	6267	9	33.256624			
100000398	6267	10	31.536089			
100000399	6263	1	16.034113	PINEY GROVE RD	W	PINEY GROVE RD & FERNANDINA RD
100000399	6263	2	15.11416			
100000399	6263	3	19.073766			
100000399	6263	4	17.217206			
100000399	6263	5	17.868725			
100000399	6263	6	18.507376			
100000399	6263	7	17.42824			
100000399	6263	8	16.607912			
100000399	6263	9	18.207847			
100000399	6263	10	16.959643			
100000399	6265	1	15.856282	FERNANDINA RD	SE	PINEY GROVE RD & FERNANDINA RD
100000399	6265	2	15.515197			
100000399	6265	3	14.657282			
100000399	6265	4	14.779783			
100000399	6265	5	12.953517			
100000399	6265	6	15.602363			
100000399	6265	7	15.619848			
100000399	6265	8	17.546877			
100000399	6265	9	13.957161			
100000399	6265	10	12.246804			

Node	Superlink	Run	Average Control Delay	Approach Street Name	Direction	Intersection
100000399	6266	1	31.080633	FERNANDINA RD	N	PINEY GROVE RD & FERNANDINA RD
100000399	6266	2	29.941563			
100000399	6266	3	29.904046			
100000399	6266	4	32.300717			
100000399	6266	5	28.853302			
100000399	6266	6	31.493942			
100000399	6266	7	32.542986			
100000399	6266	8	29.30095			
100000399	6266	9	28.550918			
100000399	6266	10	30.843751			
100000399	6662	1	36.779881	PINEY GROVE RD	E	PINEY GROVE RD & FERNANDINA RD
100000399	6662	2	37.457813			
100000399	6662	3	41.044621			
100000399	6662	4	38.091047			
100000399	6662	5	39.068066			
100000399	6662	6	42.975034			
100000399	6662	7	39.6162			
100000399	6662	8	40.733892			
100000399	6662	9	44.897485			
100000399	6662	10	40.444586			
100000401	5093	1	10.246261	LAKE MURRAY BLVD	E	KINLEY RD, LAKE MURRAY BLVD & PARKRIDGE DR
100000401	5093	2	13.270164			
100000401	5093	3	8.679674			
100000401	5093	4	11.908405			
100000401	5093	5	10.135674			
100000401	5093	6	8.799088			
100000401	5093	7	21.922196			
100000401	5093	8	15.540859			
100000401	5093	9	14.435114			
100000401	5093	10	9.38724			
100000401	6276	1	26.446677	KINLEY RD	S	KINLEY RD, LAKE MURRAY BLVD & PARKRIDGE DR
100000401	6276	2	28.957179			
100000401	6276	3	21.792092			
100000401	6276	4	22.724483			
100000401	6276	5	22.675585			
100000401	6276	6	19.290118			
100000401	6276	7	80.599654			
100000401	6276	8	32.74826			
100000401	6276	9	24.842007			
100000401	6276	10	22.883727			
100000401	6313	1	11.502689	LAKE MURRAY BLVD	W	KINLEY RD, LAKE MURRAY BLVD & PARKRIDGE DR
100000401	6313	2	17.058678			
100000401	6313	3	13.200799			
100000401	6313	4	16.952734			
100000401	6313	5	10.934799			
100000401	6313	6	19.662009			
100000401	6313	7	12.767476			
100000401	6313	8	15.092449			
100000401	6313	9	15.871813			
100000401	6313	10	11.985767			
100000401	6745	1	55.523171	PARKRIDGE DR	N	KINLEY RD, LAKE MURRAY BLVD & PARKRIDGE DR
100000401	6745	2	45.33095			
100000401	6745	3	95.965977			
100000401	6745	4	45.617318			
100000401	6745	5	44.347617			
100000401	6745	6	42.808531			
100000401	6745	7	58.155634			
100000401	6745	8	53.060253			
100000401	6745	9	72.815573			
100000401	6745	10	56.512098			
100000446	6732	1	0	RAMP	SW	RAMP
100000446	6732	2	0			
100000446	6732	3	0			
100000446	6732	4	0			
100000446	6732	5	0			
100000446	6732	6	0			
100000446	6732	7	0			
100000446	6732	8	0			
100000446	6732	9	0			
100000446	6732	10	0			
100000446	6779	1	0	RAMP	S	RAMP
100000446	6779	2	0			
100000446	6779	3	0			
100000446	6779	4	0			
100000446	6779	5	0			
100000446	6779	6	0			
100000446	6779	7	0			
100000446	6779	8	0			
100000446	6779	9	0			
100000446	6779	10	0			
100000520	3345	1		I-26 WB EXIT 102 ON RAMP	N	I-26 WB EXIT 102 ON RAMP
100000520	3345	2				
100000520	3345	3				
100000520	3345	4				
100000520	3345	5				
100000520	3345	6				
100000520	3345	7				
100000520	3345	8				
100000520	3345	9				
100000520	3345	10				
100000520	3350	1	0	I-26 WB EXIT 102 ON RAMP	N	I-26 WB EXIT 102 ON RAMP
100000520	3350	2	0			
100000520	3350	3	0			
100000520	3350	4	0			
100000520	3350	5	0			
100000520	3350	6	0			
100000520	3350	7	0			
100000520	3350	8	0			
100000520	3350	9	0			
100000520	3350	10	0			
100000702	4343	1	0	RAMP	SW	RAMP & 6587 (E)
100000702	4343	2	0			
100000702	4343	3	0			
100000702	4343	4	0			
100000702	4343	5	0			
100000702	4343	6	0			
100000702	4343	7	0			
100000702	4343	8	0			
100000702	4343	9	0			
100000702	4343	10	0			
100000702	6587	1	0		W	RAMP & 6587 (E)
100000702	6587	2	0			
100000702	6587	3	0			
100000702	6587	4	0			
100000702	6587	5	0			

Node	Superlink	Run	Average Control Delay	Approach Street Name	Direction	Intersection
100000702	6587	6	0			
100000702	6587	7	0			
100000702	6587	8	0			
100000702	6587	9	0			
100000702	6587	10	0			
100000897	5134	1	0	W COLONIAL LIFE BLVD	NW	COLONIAL LIFE BLVD W & W COLONIAL LIFE BLVD
100000897	5134	2	0			
100000897	5134	3	5.095498			
100000897	5134	4	0			
100000897	5134	5	1.538596			
100000897	5134	6	0.551726			
100000897	5134	7	2.935111			
100000897	5134	8	0			
100000897	5134	9	1.817657			
100000897	5134	10	0			
100000897	6471	1	2.979138	COLONIAL LIFE BLVD W	S	COLONIAL LIFE BLVD W & W COLONIAL LIFE BLVD
100000897	6471	2	2.969352			
100000897	6471	3	2.663633			
100000897	6471	4	2.904228			
100000897	6471	5	2.948604			
100000897	6471	6	2.015615			
100000897	6471	7	2.853871			
100000897	6471	8	2.740088			
100000897	6471	9	2.774388			
100000897	6471	10	2.383975			
100000897	6545	1	1.132599	COLONIAL LIFE BLVD W	NE	COLONIAL LIFE BLVD W & W COLONIAL LIFE BLVD
100000897	6545	2	1.493067			
100000897	6545	3	1.287082			
100000897	6545	4	1.361253			
100000897	6545	5	1.712829			
100000897	6545	6	1.054125			
100000897	6545	7	1.301843			
100000897	6545	8	1.426595			
100000897	6545	9	1.504254			
100000897	6545	10	1.320939			
100000898	5125	1	1.564324	BUSH RIVER RD	W	BUSH RIVER RD
100000898	5125	2	1.68964			
100000898	5125	3	1.676155			
100000898	5125	4	2.073364			
100000898	5125	5	1.803284			
100000898	5125	6	2.246549			
100000898	5125	7	2.234142			
100000898	5125	8	2.619973			
100000898	5125	9	2.133162			
100000898	5125	10	1.871793			
100000898	5130	1	20.541184	BUSH RIVER RD	N	BUSH RIVER RD
100000898	5130	2	20.734315			
100000898	5130	3	22.925815			
100000898	5130	4	22.415505			
100000898	5130	5	27.05591			
100000898	5130	6	24.632592			
100000898	5130	7	21.272958			
100000898	5130	8	21.31587			
100000898	5130	9	24.745386			
100000898	5130	10	21.036838			
100000898	5131	1	3.321021	BUSH RIVER RD	E	BUSH RIVER RD
100000898	5131	2	4.063098			
100000898	5131	3	3.520949			
100000898	5131	4	3.728102			
100000898	5131	5	3.444033			
100000898	5131	6	3.923575			
100000898	5131	7	3.888335			
100000898	5131	8	3.712992			
100000898	5131	9	4.245042			
100000898	5131	10	3.18268			
100000899	6105	1	0	BURNING TREE RD	S	I-26 WB TO BURNING TREE RD EXIT 106 OFF RAMP & BURNING TREE RD
100000899	6105	2	0			
100000899	6105	3	0			
100000899	6105	4	0			
100000899	6105	5	0			
100000899	6105	6	0			
100000899	6105	7	0			
100000899	6105	8	0			
100000899	6105	9	0			
100000899	6105	10	0			
100000899	6106	1	0	BURNING TREE RD	N	I-26 WB TO BURNING TREE RD EXIT 106 OFF RAMP & BURNING TREE RD
100000899	6106	2	0			
100000899	6106	3	0			
100000899	6106	4	0			
100000899	6106	5	0			
100000899	6106	6	0			
100000899	6106	7	0			
100000899	6106	8	0			
100000899	6106	9	0			
100000899	6106	10	0			
100000902	4292	1	26.963041	RAMP	NE	SUNSET BLVD & RAMP
100000902	4292	2	25.459688			
100000902	4292	3	30.646021			
100000902	4292	4	22.983781			
100000902	4292	5	23.265503			
100000902	4292	6	30.551751			
100000902	4292	7	25.266297			
100000902	4292	8	24.195673			
100000902	4292	9	24.100582			
100000902	4292	10	23.838578			
100000902	4947	1	11.732135	SUNSET BLVD	W	SUNSET BLVD & RAMP
100000902	4947	2	11.266415			
100000902	4947	3	12.263985			
100000902	4947	4	13.230093			
100000902	4947	5	12.09463			
100000902	4947	6	11.688199			
100000902	4947	7	10.495945			
100000902	4947	8	10.824784			
100000902	4947	9	17.429552			
100000902	4947	10	10.799817			
100000902	4951	1	0	SUNSET BLVD	E	SUNSET BLVD & RAMP
100000902	4951	2	0			
100000902	4951	3	0			
100000902	4951	4	0			
100000902	4951	5	0			
100000902	4951	6	0			
100000902	4951	7	0			
100000902	4951	8	0			
100000902	4951	9	0			
100000902	4951	10	0			

Node	Superlink	Run	Average Control Delay	Approach Street Name	Direction	Intersection
100000903	4289	1	50.543588	RAMP	NW	RAMP & SUNSET BLVD
100000903	4289	2	53.412869			
100000903	4289	3	52.43415			
100000903	4289	4	51.871266			
100000903	4289	5	51.937434			
100000903	4289	6	50.584275			
100000903	4289	7	48.688158			
100000903	4289	8	50.733812			
100000903	4289	9	52.249328			
100000903	4289	10	52.451459			
100000903	4298	1	24.536299	RAMP	SE	RAMP & SUNSET BLVD
100000903	4298	2	25.200326			
100000903	4298	3	25.155695			
100000903	4298	4	25.592785			
100000903	4298	5	24.066763			
100000903	4298	6	25.326898			
100000903	4298	7	23.777007			
100000903	4298	8	24.998582			
100000903	4298	9	24.810481			
100000903	4298	10	24.101822			
100000903	4950	1	14.707426	SUNSET BLVD	E	RAMP & SUNSET BLVD
100000903	4950	2	14.408268			
100000903	4950	3	13.476138			
100000903	4950	4	14.015108			
100000903	4950	5	14.143749			
100000903	4950	6	13.847756			
100000903	4950	7	14.075033			
100000903	4950	8	14.22571			
100000903	4950	9	13.790815			
100000903	4950	10	14.738819			
100000903	4951	1	30.997966	SUNSET BLVD	W	RAMP & SUNSET BLVD
100000903	4951	2	30.573717			
100000903	4951	3	29.823412			
100000903	4951	4	29.031986			
100000903	4951	5	28.539507			
100000903	4951	6	30.513558			
100000903	4951	7	29.380851			
100000903	4951	8	31.022653			
100000903	4951	9	30.640623			
100000903	4951	10	29.232384			

2040 Build RRPA PM

Node	Superlink	Run	Average Control Delay	Approach Street Name	Direction	Intersection
4	5081	1	11.44778	BROAD RIVER RD	W	WESTERN LN & BROAD RIVER RD
4	5081	2	12.922939			
4	5081	3	12.0			
4	5081	4	12.3			
4	5081	5	14.8			
4	5081	6	11.957746			
4	5081	7	10.887024			
4	5081	8	12.8			
4	5081	9	13.9			
4	5081	10	14.4			
4	6465	1	12.68395	WESTERN LN	S	WESTERN LN & BROAD RIVER RD
4	6465	2	12.088797			
4	6465	3	10.7			
4	6465	4	11.6			
4	6465	5	11.520571			
4	6465	6	12.314321			
4	6465	7	11.5			
4	6465	8	13.3			
4	6465	9	10.9			
4	6465	10	12.18339			
4	6466	1	5.762849	BROAD RIVER RD	E	WESTERN LN & BROAD RIVER RD
4	6466	2	6.3			
4	6466	3	6.5			
4	6466	4	6.440018			
4	6466	5	6.177042			
4	6466	6	6.6			
4	6466	7	6.1			
4	6466	8	6.185215			
4	6466	9	6.575394			
4	6466	10	5.9			
4	6467	1	25.7	WESTERN LN	N	WESTERN LN & BROAD RIVER RD
4	6467	2	21.3			
4	6467	3	20.11742			
4	6467	4	22.679798			
4	6467	5	18.3			
4	6467	6	20.7			
4	6467	7	19.5			
4	6467	8	20.262926			
4	6467	9	19.803461			
4	6467	10	22.9			
40	6624	1	32.8	I-26 EB EXIT 106 OFF RAMP	E	I-26 EB EXIT 106 OFF RAMP, ST ANDREWS RD, I-26 WB TO BURNING TREE RD AND TO ST ANDREWS RD OFF RAMP,
40	6624	2	31.773754			
40	6624	3	28.72852			
40	6624	4	33.2			
40	6624	5	29.4			
40	6624	6	30.5			
40	6624	7	27.976452			
40	6624	8	30.935574			
40	6624	9	35.1			
40	6624	10	29.1			
40	6734	1	41.085258	ST ANDREWS RD	E	I-26 EB EXIT 106 OFF RAMP, ST ANDREWS RD, I-26 WB TO BURNING TREE RD AND TO ST ANDREWS RD OFF RAMP,
40	6734	2	42.116285			
40	6734	3	42.6			
40	6734	4	37.3			
40	6734	5	48.7			
40	6734	6	42.947995			
40	6734	7	42.594337			
40	6734	8	48.0			
40	6734	9	43.0			
40	6734	10	46.456721			
40	6737	1	37.860805	ST ANDREWS RD	W	I-26 EB EXIT 106 OFF RAMP, ST ANDREWS RD, I-26 WB TO BURNING TREE RD AND TO ST ANDREWS RD OFF RAMP,
40	6737	2	36.0			
40	6737	3	34.8			
40	6737	4	37.4			
40	6737	5	33.4			
40	6737	6	34.961929			
40	6737	7	34.40818			
40	6737	8	31.4			
40	6737	9	35.9			
40	6737	10	33.6			
40	6775	1	39.283777	I-26 WB TO BURNING TREE RD AND TO ST AND	W	I-26 EB EXIT 106 OFF RAMP, ST ANDREWS RD, I-26 WB TO BURNING TREE RD AND TO ST ANDREWS RD OFF RAMP,
40	6775	2	44.458899			
40	6775	3	38.4			
40	6775	4	36.7			
40	6775	5	39.3			
40	6775	6	50.271988			
40	6775	7	40.812961			
40	6775	8	38.6			
40	6775	9	39.8			
40	6775	10	38.7			
52	6750	1	13.063985	BUSH RIVER RD	E	BUSH RIVER RD, 6778 (SE) & 6777 (E)
52	6750	2	13.23838			
52	6750	3	14.2			
52	6750	4	12.8			
52	6750	5	13.4			
52	6750	6	12.834299			
52	6750	7	13.705341			
52	6750	8	13.8			
52	6750	9	13.1			
52	6750	10	13.0			
52	6778	1	26.752542		NW	BUSH RIVER RD, 6778 (SE) & 6777 (E)
52	6778	2	27.257368			
52	6778	3	24.8			
52	6778	4	29.4			
52	6778	5	26.9			
52	6778	6	26.921433			
52	6778	7	28.66701			
52	6778	8	26.1			
52	6778	9	29.3			
52	6778	10	27.2			
54	6057	1	18.332856	BROAD RIVER RD	SE	EXIT 65 RAMP TO US 176, BROAD RIVER RD & RAMP
54	6057	2	2.452301			
54	6057	3	17.3			
54	6057	4	12.824612			
54	6057	5	6.538265			
54	6057	6	6.1			
54	6057	7	1.2			
54	6057	8	5.850238			
54	6057	9	2.83892			
54	6057	10	1.1			
54	6575	1	62.6	EXIT 65 RAMP TO US 176	W	EXIT 65 RAMP TO US 176, BROAD RIVER RD & RAMP
54	6575	2	90.556491			
54	6575	3	119.163259			
54	6575	4	96.1			
54	6575	5	109.4			

Node	Superlink	Run	Average Control Delay	Approach Street Name	Direction	Intersection
54	6575	6	35.6			
54	6575	7	71.972544			
54	6575	8	107.745508			
54	6575	9	86.5			
54	6575	10	85.0			
54	6580	1	0	BROAD RIVER RD	NW	EXIT 65 RAMP TO US 176, BROAD RIVER RD & RAMP
54	6580	2	0			
54	6580	3	0.0			
54	6580	4	0.0			
54	6580	5	0.0			
54	6580	6	0			
54	6580	7	0			
54	6580	8	0.0			
54	6580	9	0.0			
54	6580	10	0.0			
65	2067	1	0	RAMP	N	6564 (W) & RAMP
65	2067	2	0			
65	2067	3	0.0			
65	2067	4	0.0			
65	2067	5	0.0			
65	2067	6	0			
65	2067	7	0			
65	2067	8	0.0			
65	2067	9	0.0			
65	2067	10	0.0			
65	6564	1	0		NE	6564 (W) & RAMP
65	6564	2	0			
65	6564	3	0.0			
65	6564	4	0.0			
65	6564	5	0.0			
65	6564	6	0			
65	6564	7	0			
65	6564	8	0.0			
65	6564	9	0.0			
65	6564	10	0			
71	6659	1	3.174864	PINEY GROVE RD	E	PINEY GROVE RD, I-26 EB EXIT 104 OFF RAMP & I-26 EB EXIT 104 ON RAMP
71	6659	2	3.0			
71	6659	3	3.8			
71	6659	4	2.8			
71	6659	5	3.30993			
71	6659	6	2.926487			
71	6659	7	3.2			
71	6659	8	2.5			
71	6659	9	3.741024			
71	6659	10	2.22634			
71	6660	1	0.0	PINEY GROVE RD	W	PINEY GROVE RD, I-26 EB EXIT 104 OFF RAMP & I-26 EB EXIT 104 ON RAMP
71	6660	2	0.0			
71	6660	3	0			
71	6660	4	0.000001			
71	6660	5	0.0			
71	6660	6	0.002695			
71	6660	7	0.00093			
71	6660	8	0.0			
71	6660	9	0.0			
71	6660	10	0.000002			
74	6579	1	0		NE	6579 (SW), 6581 (W) & RAMP
74	6579	2	0.0			
74	6579	3	0.0			
74	6579	4	0.0			
74	6579	5	0			
74	6579	6	0			
74	6579	7	0.0			
74	6579	8	0.0			
74	6579	9	0			
74	6579	10	0			
74	6581	1	0.0		NE	6579 (SW), 6581 (W) & RAMP
74	6581	2	0.0			
74	6581	3	0			
74	6581	4	0			
74	6581	5	0.0			
74	6581	6	0.0			
74	6581	7	0.0			
74	6581	8	0			
74	6581	9	0			
74	6581	10	0			
79	5148	1	14.6	BROAD RIVER RD	NW	6584 (NE), BROAD RIVER RD, 6583 (SW), 6587 (W) & 6581 (E)
79	5148	2	14.1			
79	5148	3	14.39723			
79	5148	4	14.383706			
79	5148	5	14.8			
79	5148	6	13.8			
79	5148	7	13.7			
79	5148	8	14.368983			
79	5148	9	14.309501			
79	5148	10	13.9			
79	6580	1	51.0	BROAD RIVER RD	SE	6584 (NE), BROAD RIVER RD, 6583 (SW), 6587 (W) & 6581 (E)
79	6580	2	54.4			
79	6580	3	56.340767			
79	6580	4	47.026653			
79	6580	5	48.213445			
79	6580	6	48.233995			
79	6580	7	43.965539			
79	6580	8	52.545698			
79	6580	9	44.465627			
79	6580	10	43.553541			
79	6583	1	50.95553		N	6584 (NE), BROAD RIVER RD, 6583 (SW), 6587 (W) & 6581 (E)
79	6583	2	51.273808			
79	6583	3	46.470856			
79	6583	4	42.076302			
79	6583	5	43.199247			
79	6583	6	52.437511			
79	6583	7	49.744658			
79	6583	8	47.9903			
79	6583	9	52.350165			
79	6583	10	51.459671			
79	6584	1	56.100351		S	6584 (NE), BROAD RIVER RD, 6583 (SW), 6587 (W) & 6581 (E)
79	6584	2	54.825458			
79	6584	3	53.402436			
79	6584	4	57.103057			
79	6584	5	55.350441			
79	6584	6	53.342066			
79	6584	7	57.870445			
79	6584	8	53.066529			
79	6584	9	55.779327			
79	6584	10	53.34453			

Node	Superlink	Run	Average Control Delay	Approach Street Name	Direction	Intersection
85	6627	1	0	I-26 WB EXIT 106 ON RAMP	N	I-26 WB EXIT 106 ON RAMP
85	6627	2	0			
85	6627	3	0			
85	6627	4	0			
85	6627	5	0			
85	6627	6	0			
85	6627	7	0			
85	6627	8	0			
85	6627	9	0			
85	6627	10	0			
85	6652	1	0.409945	I-26 WB EXIT 106 ON RAMP	NW	I-26 WB EXIT 106 ON RAMP
85	6652	2	0.498486			
85	6652	3	0.099301			
85	6652	4	0			
85	6652	5	0			
85	6652	6	0.276535			
85	6652	7	0.570091			
85	6652	8	0.127537			
85	6652	9	0			
85	6652	10	0			
99	6647	1	44.764304	I-26 WB EXIT 103 OFF RAMP	NW	I-26 WB EXIT 103 OFF RAMP, HARBISON BLVD, I-26 WB EXIT 103 ON RAMP & 6770 (SW)
99	6647	2	47.009566			
99	6647	3	47.580388			
99	6647	4	49.587652			
99	6647	5	43.689262			
99	6647	6	49.861564			
99	6647	7	43.738876			
99	6647	8	45.635387			
99	6647	9	48.388366			
99	6647	10	48.98358			
99	6719	1	14.266815	HARBISON BLVD	SW	I-26 WB EXIT 103 OFF RAMP, HARBISON BLVD, I-26 WB EXIT 103 ON RAMP & 6770 (SW)
99	6719	2	16.072614			
99	6719	3	12.831175			
99	6719	4	16.314841			
99	6719	5	12.322581			
99	6719	6	16.645839			
99	6719	7	13.806761			
99	6719	8	14.405893			
99	6719	9	17.851198			
99	6719	10	15.363662			
99	6770	1	73.162356		NE	I-26 WB EXIT 103 OFF RAMP, HARBISON BLVD, I-26 WB EXIT 103 ON RAMP & 6770 (SW)
99	6770	2	85.613489			
99	6770	3	85.546835			
99	6770	4	80.280447			
99	6770	5	111.289098			
99	6770	6	74.694051			
99	6770	7	87.089824			
99	6770	8	114.099344			
99	6770	9	63.702141			
99	6770	10	90.61452			
104	3211	1	27.927761	I-26 EB EXIT 103 OFF RAMP	SE	HARBISON BLVD, I-26 EB EXIT 103 OFF RAMP, 6770 (NE) & I-26 EB EXIT 103 ON RAMP
104	3211	2	26.287576			
104	3211	3	28.631176			
104	3211	4	25.555427			
104	3211	5	33.144477			
104	3211	6	23.841342			
104	3211	7	27.902394			
104	3211	8	28.652103			
104	3211	9	28.464785			
104	3211	10	28.629026			
104	6717	1	11.166369	HARBISON BLVD	NE	HARBISON BLVD, I-26 EB EXIT 103 OFF RAMP, 6770 (NE) & I-26 EB EXIT 103 ON RAMP
104	6717	2	22.455093			
104	6717	3	11.448761			
104	6717	4	25.490135			
104	6717	5	30.024573			
104	6717	6	17.212794			
104	6717	7	30.782555			
104	6717	8	34.076549			
104	6717	9	14.659544			
104	6717	10	32.844572			
104	6770	1	6.765651		SW	HARBISON BLVD, I-26 EB EXIT 103 OFF RAMP, 6770 (NE) & I-26 EB EXIT 103 ON RAMP
104	6770	2	6.687514			
104	6770	3	6.854528			
104	6770	4	5.969865			
104	6770	5	8.268098			
104	6770	6	7.140503			
104	6770	7	7.570301			
104	6770	8	7.403612			
104	6770	9	8.597454			
104	6770	10	9.551581			
107	3243	1	31.950752	RAMP	NW	RAMP, COLONIAL LIFE BLVD W & 6681 (NW)
107	3243	2	26.057186			
107	3243	3	25.814379			
107	3243	4	28.703592			
107	3243	5	26.722913			
107	3243	6	25.798794			
107	3243	7	31.598417			
107	3243	8	27.357608			
107	3243	9	36.138596			
107	3243	10	30.871241			
107	6545	1	14.084015	COLONIAL LIFE BLVD W	SW	RAMP, COLONIAL LIFE BLVD W & 6681 (NW)
107	6545	2	17.134001			
107	6545	3	13.808169			
107	6545	4	17.481405			
107	6545	5	16.33373			
107	6545	6	18.991059			
107	6545	7	16.625049			
107	6545	8	17.535971			
107	6545	9	20.060863			
107	6545	10	15.411982			
107	6678	1	2.937656	COLONIAL LIFE BLVD W	NE	RAMP, COLONIAL LIFE BLVD W & 6681 (NW)
107	6678	2	1.626597			
107	6678	3	1.179388			
107	6678	4	1.679075			
107	6678	5	1.343248			
107	6678	6	2.442636			
107	6678	7	3.97427			
107	6678	8	2.164531			
107	6678	9	2.593496			
107	6678	10	0.559126			
108	6676	1	18.422689		SE	COLONIAL LIFE BLVD W, 6676 (NW) & 6688 (SE)
108	6676	2	20.255837			
108	6676	3	16.911365			
108	6676	4	20.231429			
108	6676	5	19.892017			

Node	Superlink	Run	Average Control Delay	Approach Street Name	Direction	Intersection
108	6676	6	18.449741			
108	6676	7	16.685727			
108	6676	8	19.159133			
108	6676	9	17.741859			
108	6676	10	18.23429			
108	6678	1	32.147524	COLONIAL LIFE BLVD W	SW	COLONIAL LIFE BLVD W, 6676 (NW) & 6688 (SE)
108	6678	2	24.800028			
108	6678	3	30.546885			
108	6678	4	23.453383			
108	6678	5	25.130031			
108	6678	6	31.52863			
108	6678	7	35.278939			
108	6678	8	25.007049			
108	6678	9	30.123204			
108	6678	10	26.951028			
118	2071	1	20.836938	RAMP	W	BUSH RIVER RD & RAMP
118	2071	2	19.465666			
118	2071	3	21.722522			
118	2071	4	19.313009			
118	2071	5	22.302402			
118	2071	6	18.472427			
118	2071	7	20.3868			
118	2071	8	22.164786			
118	2071	9	19.735465			
118	2071	10	18.990199			
118	6750	1	0	BUSH RIVER RD	NW	BUSH RIVER RD & RAMP
118	6750	2	0			
118	6750	3	0			
118	6750	4	0			
118	6750	5	0			
118	6750	6	0			
118	6750	7	0			
118	6750	8	0			
118	6750	9	0			
118	6750	10	0			
118	6780	1	7.516399	BUSH RIVER RD	SE	BUSH RIVER RD & RAMP
118	6780	2	3.479815			
118	6780	3	3.369557			
118	6780	4	9.716982			
118	6780	5	13.664659			
118	6780	6	7.07725			
118	6780	7	2.548204			
118	6780	8	3.314124			
118	6780	9	2.998273			
118	6780	10	14.633238			
120	6740	1	12.902032	BUSH RIVER RD	W	BUSH RIVER RD & 6741 (NE)
120	6740	2	14.129071			
120	6740	3	15.612757			
120	6740	4	15.82143			
120	6740	5	16.444393			
120	6740	6	13.052906			
120	6740	7	14.621829			
120	6740	8	16.104607			
120	6740	9	13.765433			
120	6740	10	14.149052			
120	6741	1	39.740509		SW	BUSH RIVER RD & 6741 (NE)
120	6741	2	37.115369			
120	6741	3	32.912595			
120	6741	4	33.492608			
120	6741	5	33.78711			
120	6741	6	34.980241			
120	6741	7	34.966576			
120	6741	8	33.069625			
120	6741	9	31.575549			
120	6741	10	38.064591			
120	6781	1	10.766925	BUSH RIVER RD	E	BUSH RIVER RD & 6741 (NE)
120	6781	2	11.501725			
120	6781	3	11.115127			
120	6781	4	11.572437			
120	6781	5	11.690975			
120	6781	6	9.8334			
120	6781	7	12.128693			
120	6781	8	12.022047			
120	6781	9	10.922225			
120	6781	10	11.327464			
123	3328	1	0	I-26 EB EXIT 103 ON RAMP	SE	I-26 EB EXIT 103 ON RAMP & 6718 (W)
123	3328	2	0			
123	3328	3	0			
123	3328	4	0			
123	3328	5	0			
123	3328	6	0			
123	3328	7	0			
123	3328	8	0			
123	3328	9	0			
123	3328	10	0			
127	5116	1	26.467098	ST ANDREWS RD	E	WOODLAND HILLS RD, ST ANDREWS RD, I-26 EB EXIT 106 OFF RAMP & 6772 (NE)
127	5116	2	23.93239			
127	5116	3	30.016689			
127	5116	4	25.580104			
127	5116	5	29.037864			
127	5116	6	27.45334			
127	5116	7	21.594994			
127	5116	8	23.165952			
127	5116	9	24.333986			
127	5116	10	25.200975			
127	5119	1	13.815263	WOODLAND HILLS RD	N	WOODLAND HILLS RD, ST ANDREWS RD, I-26 EB EXIT 106 OFF RAMP & 6772 (NE)
127	5119	2	12.734427			
127	5119	3	12.779743			
127	5119	4	13.83358			
127	5119	5	13.238328			
127	5119	6	13.012129			
127	5119	7	13.544354			
127	5119	8	13.225296			
127	5119	9	12.763738			
127	5119	10	12.628171			
127	6736	1	4.216595	ST ANDREWS RD	W	WOODLAND HILLS RD, ST ANDREWS RD, I-26 EB EXIT 106 OFF RAMP & 6772 (NE)
127	6736	2	3.640205			
127	6736	3	4.73899			
127	6736	4	4.206341			
127	6736	5	4.404479			
127	6736	6	3.868648			
127	6736	7	2.500935			
127	6736	8	3.813353			
127	6736	9	2.689736			
127	6736	10	3.829361			

Node	Superlink	Run	Average Control Delay	Approach Street Name	Direction	Intersection
127	6773	1	15.091903	I-26 EB EXIT 106 OFF RAMP	S	WOODLAND HILLS RD, ST ANDREWS RD, I-26 EB EXIT 106 OFF RAMP & 6772 (NE)
127	6773	2	16.584498			
127	6773	3	15.464389			
127	6773	4	14.615583			
127	6773	5	13.454606			
127	6773	6	14.556698			
127	6773	7	13.848423			
127	6773	8	14.682483			
127	6773	9	14.62615			
127	6773	10	14.012886			
134	6563	1	24.244442		S	6563 (N), 6777 (W) & BUSH RIVER RD
134	6563	2	26.879636			
134	6563	3	22.631556			
134	6563	4	25.735928			
134	6563	5	22.872821			
134	6563	6	27.433279			
134	6563	7	23.950783			
134	6563	8	23.335703			
134	6563	9	22.257626			
134	6563	10	24.341294			
134	6777	1	0		E	6563 (N), 6777 (W) & BUSH RIVER RD
134	6777	2	0			
134	6777	3	0			
134	6777	4	0			
134	6777	5	0			
134	6777	6	0			
134	6777	7	0			
134	6777	8	0			
134	6777	9	0			
134	6777	10	0			
136	6555	1	14.34922	EXIT 63 RAMP TO BUSH RIVER RD	E	EXIT 63 RAMP TO BUSH RIVER RD, BUSH RIVER RD & RAMP
136	6555	2	16.278728			
136	6555	3	16.582812			
136	6555	4	15.874238			
136	6555	5	16.349524			
136	6555	6	13.796012			
136	6555	7	13.093492			
136	6555	8	15.463528			
136	6555	9	13.380339			
136	6555	10	14.94019			
136	6739	1	0	BUSH RIVER RD	SE	EXIT 63 RAMP TO BUSH RIVER RD, BUSH RIVER RD & RAMP
136	6739	2	0			
136	6739	3	0			
136	6739	4	0			
136	6739	5	0			
136	6739	6	0			
136	6739	7	0			
136	6739	8	0			
136	6739	9	0			
136	6739	10	0			
136	6781	1	4.183403	BUSH RIVER RD	NW	EXIT 63 RAMP TO BUSH RIVER RD, BUSH RIVER RD & RAMP
136	6781	2	6.953992			
136	6781	3	4.55727			
136	6781	4	5.666179			
136	6781	5	5.352055			
136	6781	6	4.766215			
136	6781	7	4.069117			
136	6781	8	4.746038			
136	6781	9	4.602616			
136	6781	10	4.326196			
141	6751	1	23.968364		NE	BUSH RIVER RD, 6752 (NE) & 6751 (SW)
141	6751	2	59.690007			
141	6751	3	22.402943			
141	6751	4	30.464975			
141	6751	5	39.502339			
141	6751	6	23.463711			
141	6751	7	28.313854			
141	6751	8	22.557796			
141	6751	9	22.667767			
141	6751	10	42.777084			
141	6752	1	44.525084		SW	BUSH RIVER RD, 6752 (NE) & 6751 (SW)
141	6752	2	43.941033			
141	6752	3	42.186317			
141	6752	4	25.98585			
141	6752	5	48.997356			
141	6752	6	46.703552			
141	6752	7	36.045766			
141	6752	8	33.739791			
141	6752	9	40.785366			
141	6752	10	40.159697			
141	6753	1	17.028811	BUSH RIVER RD	SE	BUSH RIVER RD, 6752 (NE) & 6751 (SW)
141	6753	2	32.488155			
141	6753	3	10.232252			
141	6753	4	13.405711			
141	6753	5	46.358722			
141	6753	6	11.782402			
141	6753	7	13.21957			
141	6753	8	15.117839			
141	6753	9	11.827408			
141	6753	10	35.093052			
141	6780	1	8.36732	BUSH RIVER RD	NW	BUSH RIVER RD, 6752 (NE) & 6751 (SW)
141	6780	2	8.303411			
141	6780	3	7.368378			
141	6780	4	7.068836			
141	6780	5	8.770402			
141	6780	6	6.441098			
141	6780	7	6.895318			
141	6780	8	9.139654			
141	6780	9	8.0006			
141	6780	10	7.457057			
150	6565	1	42.304549	BUSH RIVER RD	SE	BUSH RIVER RD & 6782 (W)
150	6565	2	38.666855			
150	6565	3	40.638129			
150	6565	4	40.408586			
150	6565	5	39.969806			
150	6565	6	40.733927			
150	6565	7	41.330671			
150	6565	8	39.060477			
150	6565	9	40.865205			
150	6565	10	40.403089			
150	6739	1	7.300051	BUSH RIVER RD	W	BUSH RIVER RD & 6782 (W)
150	6739	2	7.808267			
150	6739	3	7.338272			
150	6739	4	7.502797			
150	6739	5	7.588373			

Node	Superlink	Run	Average Control Delay	Approach Street Name	Direction	Intersection
150	6739	6	6.861764			
150	6739	7	7.033765			
150	6739	8	7.742789			
150	6739	9	7.777567			
150	6739	10	7.082319			
151	6554	1	30.979902		NW	6782 (E), 6554 (SE) & BUSH RIVER RD
151	6554	2	29.906093			
151	6554	3	28.10728			
151	6554	4	27.486539			
151	6554	5	30.530629			
151	6554	6	29.782333			
151	6554	7	29.73439			
151	6554	8	26.828815			
151	6554	9	29.836349			
151	6554	10	29.574711			
151	6782	1	0		W	6782 (E), 6554 (SE) & BUSH RIVER RD
151	6782	2	0			
151	6782	3	0			
151	6782	4	0			
151	6782	5	0			
151	6782	6	0			
151	6782	7	0			
151	6782	8	0			
151	6782	9	0			
151	6782	10	0			
100000093	4299	1	20.670622	RAMP	SW	SUNSET BLVD & RAMP
100000093	4299	2	21.35118			
100000093	4299	3	22.406402			
100000093	4299	4	23.153841			
100000093	4299	5	22.60551			
100000093	4299	6	22.847733			
100000093	4299	7	22.576831			
100000093	4299	8	22.740763			
100000093	4299	9	23.68433			
100000093	4299	10	21.886424			
100000093	4949	1	19.419564	SUNSET BLVD	E	SUNSET BLVD & RAMP
100000093	4949	2	20.288756			
100000093	4949	3	20.948696			
100000093	4949	4	20.139179			
100000093	4949	5	19.776639			
100000093	4949	6	20.345141			
100000093	4949	7	20.366786			
100000093	4949	8	18.721157			
100000093	4949	9	21.128655			
100000093	4949	10	20.162506			
100000093	4950	1	0.002195	SUNSET BLVD	W	SUNSET BLVD & RAMP
100000093	4950	2	0.000862			
100000093	4950	3	0.002648			
100000093	4950	4	0.002607			
100000093	4950	5	0.003036			
100000093	4950	6	0.002196			
100000093	4950	7	0.002329			
100000093	4950	8	0.002899			
100000093	4950	9	0.002715			
100000093	4950	10	0.002998			
100000120	5030	1	73.594171	SUNSET BLVD	W	CORLEY MILL RD, SUNSET BLVD & GINNY LN
100000120	5030	2	69.837773			
100000120	5030	3	66.006055			
100000120	5030	4	69.657461			
100000120	5030	5	67.957214			
100000120	5030	6	74.061316			
100000120	5030	7	67.833953			
100000120	5030	8	67.852558			
100000120	5030	9	69.549734			
100000120	5030	10	69.853613			
100000120	5352	1	568.590633	CORLEY MILL RD	S	CORLEY MILL RD, SUNSET BLVD & GINNY LN
100000120	5352	2	578.488431			
100000120	5352	3	512.280897			
100000120	5352	4	578.244504			
100000120	5352	5	595.252491			
100000120	5352	6	656.615368			
100000120	5352	7	624.022382			
100000120	5352	8	556.973712			
100000120	5352	9	539.223893			
100000120	5352	10	550.258016			
100000120	5353	1	69.393239	GINNY LN	N	CORLEY MILL RD, SUNSET BLVD & GINNY LN
100000120	5353	2	60.945692			
100000120	5353	3	67.224389			
100000120	5353	4	72.211861			
100000120	5353	5	62.87109			
100000120	5353	6	64.364045			
100000120	5353	7	59.951365			
100000120	5353	8	68.360385			
100000120	5353	9	64.805542			
100000120	5353	10	63.491906			
100000120	5355	1	27.126627	SUNSET BLVD	E	CORLEY MILL RD, SUNSET BLVD & GINNY LN
100000120	5355	2	25.782798			
100000120	5355	3	25.454028			
100000120	5355	4	28.898428			
100000120	5355	5	30.476808			
100000120	5355	6	28.271219			
100000120	5355	7	25.082468			
100000120	5355	8	27.327514			
100000120	5355	9	28.12652			
100000120	5355	10	27.305282			
100000134	2052	1	23.358895	RAMP	SW	SUNSET BLVD & RAMP
100000134	2052	2	21.432344			
100000134	2052	3	20.186819			
100000134	2052	4	21.091353			
100000134	2052	5	21.291499			
100000134	2052	6	21.756254			
100000134	2052	7	22.983077			
100000134	2052	8	22.681268			
100000134	2052	9	22.929093			
100000134	2052	10	20.812807			
100000134	5022	1	19.700202	SUNSET BLVD	NW	SUNSET BLVD & RAMP
100000134	5022	2	14.777309			
100000134	5022	3	10.139374			
100000134	5022	4	20.275587			
100000134	5022	5	17.989714			
100000134	5022	6	27.442134			
100000134	5022	7	15.710459			
100000134	5022	8	19.727772			
100000134	5022	9	13.459112			
100000134	5022	10	14.127778			

Node	Superlink	Run	Average Control Delay	Approach Street Name	Direction	Intersection
100000134	5030	1	18.706436	SUNSET BLVD	SE	SUNSET BLVD & RAMP
100000134	5030	2	17.384283			
100000134	5030	3	18.240554			
100000134	5030	4	18.502391			
100000134	5030	5	21.002096			
100000134	5030	6	18.718298			
100000134	5030	7	17.060897			
100000134	5030	8	19.12293			
100000134	5030	9	17.796294			
100000134	5030	10	17.782138			
100000135	2039	1	28.770288	RAMP	NE	SUNSET BLVD & RAMP
100000135	2039	2	28.889257			
100000135	2039	3	24.93414			
100000135	2039	4	26.952851			
100000135	2039	5	28.239777			
100000135	2039	6	28.790386			
100000135	2039	7	32.478495			
100000135	2039	8	26.088219			
100000135	2039	9	33.065782			
100000135	2039	10	30.483061			
100000135	5021	1	4.95073	SUNSET BLVD	NW	SUNSET BLVD & RAMP
100000135	5021	2	4.983622			
100000135	5021	3	5.115839			
100000135	5021	4	5.591757			
100000135	5021	5	5.095718			
100000135	5021	6	5.002944			
100000135	5021	7	4.225923			
100000135	5021	8	4.54529			
100000135	5021	9	4.728227			
100000135	5021	10	4.882221			
100000135	5022	1	1.898083	SUNSET BLVD	SE	SUNSET BLVD & RAMP
100000135	5022	2	2.086955			
100000135	5022	3	2.182736			
100000135	5022	4	2.753591			
100000135	5022	5	2.023048			
100000135	5022	6	2.002316			
100000135	5022	7	2.263281			
100000135	5022	8	2.154082			
100000135	5022	9	2.252358			
100000135	5022	10	2.524607			
100000136	5021	1	14.596579	SUNSET BLVD	SE	SUNSET BLVD, CROMER RD & DAVEGA DR
100000136	5021	2	11.82459			
100000136	5021	3	12.116351			
100000136	5021	4	15.144431			
100000136	5021	5	11.736404			
100000136	5021	6	11.357977			
100000136	5021	7	12.422004			
100000136	5021	8	11.024448			
100000136	5021	9	10.610035			
100000136	5021	10	12.670535			
100000136	5362	1	79.1049	CROMER RD	NE	SUNSET BLVD, CROMER RD & DAVEGA DR
100000136	5362	2	78.625728			
100000136	5362	3	75.057882			
100000136	5362	4	70.853337			
100000136	5362	5	71.957407			
100000136	5362	6	76.722397			
100000136	5362	7	90.89293			
100000136	5362	8	83.443059			
100000136	5362	9	79.01697			
100000136	5362	10	81.750261			
100000136	5364	1	32.81126	SUNSET BLVD	NW	SUNSET BLVD, CROMER RD & DAVEGA DR
100000136	5364	2	31.071337			
100000136	5364	3	27.191215			
100000136	5364	4	34.176233			
100000136	5364	5	24.685137			
100000136	5364	6	24.272699			
100000136	5364	7	23.621447			
100000136	5364	8	26.327493			
100000136	5364	9	24.630848			
100000136	5364	10	33.562221			
100000136	6459	1	22.109359	DAVEGA DR	SW	SUNSET BLVD, CROMER RD & DAVEGA DR
100000136	6459	2	21.760528			
100000136	6459	3	16.769879			
100000136	6459	4	15.698615			
100000136	6459	5	15.927197			
100000136	6459	6	19.858057			
100000136	6459	7	14.78356			
100000136	6459	8	18.32976			
100000136	6459	9	19.885804			
100000136	6459	10	18.841586			
100000144	5376	1	18.358307	SUNSET BLVD	E	W. HOSPITAL DR, SUNSET BLVD & SUNSET CT
100000144	5376	2	38.395248			
100000144	5376	3	57.578646			
100000144	5376	4	12.425882			
100000144	5376	5	17.1946			
100000144	5376	6	47.244597			
100000144	5376	7	15.519967			
100000144	5376	8	59.225699			
100000144	5376	9	46.359805			
100000144	5376	10	50.215052			
100000144	6760	1	71.093261	W. HOSPITAL DR	S	W. HOSPITAL DR, SUNSET BLVD & SUNSET CT
100000144	6760	2	59.6666			
100000144	6760	3	83.763612			
100000144	6760	4	57.761431			
100000144	6760	5	56.978875			
100000144	6760	6	62.400063			
100000144	6760	7	55.927781			
100000144	6760	8	65.304313			
100000144	6760	9	60.77433			
100000144	6760	10	110.083995			
100000144	6761	1		SUNSET CT	N	W. HOSPITAL DR, SUNSET BLVD & SUNSET CT
100000144	6761	2				
100000144	6761	3				
100000144	6761	4				
100000144	6761	5				
100000144	6761	6				
100000144	6761	7				
100000144	6761	8				
100000144	6761	9				
100000144	6761	10				
100000144	6762	1	7.216873	SUNSET BLVD	W	W. HOSPITAL DR, SUNSET BLVD & SUNSET CT
100000144	6762	2	6.654425			
100000144	6762	3	6.355322			
100000144	6762	4	6.000445			
100000144	6762	5	5.49272			

Node	Superlink	Run	Average Control Delay	Approach Street Name	Direction	Intersection
100000144	6762	6	6.320681			
100000144	6762	7	6.216252			
100000144	6762	8	5.863771			
100000144	6762	9	6.294965			
100000144	6762	10	5.252218			
100000150	3361	1	44.33236	I-26 EB EXIT 101 OFF RAMP	SW	I-26 EB EXIT 101 OFF RAMP & BROAD RIVER RD
100000150	3361	2	44.777648			
100000150	3361	3	49.350399			
100000150	3361	4	57.645218			
100000150	3361	5	43.590133			
100000150	3361	6	41.737294			
100000150	3361	7	133.073056			
100000150	3361	8	32.817671			
100000150	3361	9	38.71192			
100000150	3361	10	38.826331			
100000150	5071	1	0	BROAD RIVER RD	E	I-26 EB EXIT 101 OFF RAMP & BROAD RIVER RD
100000150	5071	2	0			
100000150	5071	3	0			
100000150	5071	4	0			
100000150	5071	5	0			
100000150	5071	6	0			
100000150	5071	7	0			
100000150	5071	8	0			
100000150	5071	9	0			
100000150	5071	10	0			
100000150	5073	1	0.072233	BROAD RIVER RD	W	I-26 EB EXIT 101 OFF RAMP & BROAD RIVER RD
100000150	5073	2	0.072185			
100000150	5073	3	0.072943			
100000150	5073	4	0.089755			
100000150	5073	5	0.069019			
100000150	5073	6	0.063122			
100000150	5073	7	0.093036			
100000150	5073	8	0.03016			
100000150	5073	9	0.083986			
100000150	5073	10	0.036222			
100000151	5072	1	1.196419	BROAD RIVER RD	E	BROAD RIVER RD & I-26 EB EXIT 101 ON RAMP
100000151	5072	2	0.558069			
100000151	5072	3	0.835344			
100000151	5072	4	1.415449			
100000151	5072	5	0.764453			
100000151	5072	6	0.78549			
100000151	5072	7	0.862977			
100000151	5072	8	1.154649			
100000151	5072	9	1.114666			
100000151	5072	10	0.891885			
100000151	5075	1	6.304758	BROAD RIVER RD	W	BROAD RIVER RD & I-26 EB EXIT 101 ON RAMP
100000151	5075	2	5.586613			
100000151	5075	3	6.201035			
100000151	5075	4	5.867041			
100000151	5075	5	5.023717			
100000151	5075	6	5.704445			
100000151	5075	7	5.539336			
100000151	5075	8	6.360803			
100000151	5075	9	6.046419			
100000151	5075	10	6.124387			
100000163	4947	1	8.837519	SUNSET BLVD	E	MCSWAIN DR, SUNSET BLVD & CHRIS DR
100000163	4947	2	8.401899			
100000163	4947	3	8.63543			
100000163	4947	4	7.58292			
100000163	4947	5	8.433141			
100000163	4947	6	8.816166			
100000163	4947	7	8.911888			
100000163	4947	8	9.748261			
100000163	4947	9	8.746251			
100000163	4947	10	8.314813			
100000163	5388	1	150.775266	SUNSET BLVD	NW	MCSWAIN DR, SUNSET BLVD & CHRIS DR
100000163	5388	2	29.748132			
100000163	5388	3	144.629436			
100000163	5388	4	167.073884			
100000163	5388	5	66.249589			
100000163	5388	6	118.653486			
100000163	5388	7	70.518006			
100000163	5388	8	176.485024			
100000163	5388	9	169.081847			
100000163	5388	10	90.646205			
100000163	5389	1	43.47718	MCSWAIN DR	S	MCSWAIN DR, SUNSET BLVD & CHRIS DR
100000163	5389	2	45.545463			
100000163	5389	3	40.414382			
100000163	5389	4	38.902356			
100000163	5389	5	38.622928			
100000163	5389	6	48.302419			
100000163	5389	7	45.554882			
100000163	5389	8	47.513103			
100000163	5389	9	38.865235			
100000163	5389	10	31.155868			
100000163	5418	1	59.664261	CHRIS DR	N	MCSWAIN DR, SUNSET BLVD & CHRIS DR
100000163	5418	2	56.339802			
100000163	5418	3	59.100364			
100000163	5418	4	59.481895			
100000163	5418	5	61.032349			
100000163	5418	6	61.393859			
100000163	5418	7	64.406881			
100000163	5418	8	61.209555			
100000163	5418	9	59.769557			
100000163	5418	10	58.713678			
100000165	5102	1	19.87437	HARBISON BLVD	SW	HARBISON BLVD & WOODCROSS DR
100000165	5102	2	42.213124			
100000165	5102	3	27.149725			
100000165	5102	4	29.56354			
100000165	5102	5	20.644121			
100000165	5102	6	54.330512			
100000165	5102	7	26.80065			
100000165	5102	8	28.476395			
100000165	5102	9	97.862775			
100000165	5102	10	41.160362			
100000165	5103	1	57.149677	WOODCROSS DR	NW	HARBISON BLVD & WOODCROSS DR
100000165	5103	2	53.884723			
100000165	5103	3	57.60788			
100000165	5103	4	54.338002			
100000165	5103	5	50.019073			
100000165	5103	6	51.447526			
100000165	5103	7	78.986923			
100000165	5103	8	51.567888			
100000165	5103	9	55.029351			
100000165	5103	10	55.901757			

Node	Superlink	Run	Average Control Delay	Approach Street Name	Direction	Intersection
100000165	6719	1	7.324382	HARBISON BLVD	NE	HARBISON BLVD & WOODCROSS DR
100000165	6719	2	7.004162			
100000165	6719	3	7.265245			
100000165	6719	4	6.88034			
100000165	6719	5	8.199026			
100000165	6719	6	7.189767			
100000165	6719	7	7.533129			
100000165	6719	8	7.382453			
100000165	6719	9	6.550193			
100000165	6719	10	7.407844			
100000168	5364	1	9.567204	SUNSET BLVD	E	SUNSET BLVD & LEAPHART RD
100000168	5364	2	8.268491			
100000168	5364	3	6.246674			
100000168	5364	4	8.182058			
100000168	5364	5	7.913712			
100000168	5364	6	8.327002			
100000168	5364	7	6.573123			
100000168	5364	8	7.153428			
100000168	5364	9	7.067161			
100000168	5364	10	6.411101			
100000168	5366	1	42.077074	LEAPHART RD	N	SUNSET BLVD & LEAPHART RD
100000168	5366	2	44.58016			
100000168	5366	3	46.70269			
100000168	5366	4	38.482152			
100000168	5366	5	41.661364			
100000168	5366	6	39.473128			
100000168	5366	7	40.937456			
100000168	5366	8	43.004643			
100000168	5366	9	38.641474			
100000168	5366	10	44.008897			
100000168	5372	1	7.510078	SUNSET BLVD	W	SUNSET BLVD & LEAPHART RD
100000168	5372	2	9.634564			
100000168	5372	3	8.419751			
100000168	5372	4	8.792563			
100000168	5372	5	8.006732			
100000168	5372	6	9.81047			
100000168	5372	7	8.178813			
100000168	5372	8	9.357851			
100000168	5372	9	7.420652			
100000168	5372	10	9.370026			
100000174	3229	1	31.496633	I-26 EB EXIT 104 OFF RAMP	SE	PINEY GROVE RD, I-26 EB EXIT 104 OFF RAMP & I-26 EB EXIT 104 ON RAMP
100000174	3229	2	28.973422			
100000174	3229	3	33.165256			
100000174	3229	4	30.9171			
100000174	3229	5	32.297453			
100000174	3229	6	32.624602			
100000174	3229	7	33.918298			
100000174	3229	8	30.631945			
100000174	3229	9	32.276472			
100000174	3229	10	29.387603			
100000174	5112	1	3.369821	PINEY GROVE RD	W	PINEY GROVE RD, I-26 EB EXIT 104 OFF RAMP & I-26 EB EXIT 104 ON RAMP
100000174	5112	2	3.355539			
100000174	5112	3	4.112177			
100000174	5112	4	2.983869			
100000174	5112	5	3.742144			
100000174	5112	6	3.914127			
100000174	5112	7	3.879298			
100000174	5112	8	3.476088			
100000174	5112	9	5.042689			
100000174	5112	10	3.3939			
100000174	6660	1	5.252088	PINEY GROVE RD	E	PINEY GROVE RD, I-26 EB EXIT 104 OFF RAMP & I-26 EB EXIT 104 ON RAMP
100000174	6660	2	5.375486			
100000174	6660	3	5.764294			
100000174	6660	4	5.63878			
100000174	6660	5	5.096702			
100000174	6660	6	6.069169			
100000174	6660	7	5.55133			
100000174	6660	8	4.798603			
100000174	6660	9	5.975538			
100000174	6660	10	5.135701			
100000177	5112	1	13.753026	PINEY GROVE RD	E	PINEY GROVE RD, I-26 WB EXIT 104 OFF RAMP & I-26 WB EXIT 104 ON RAMP
100000177	5112	2	19.945527			
100000177	5112	3	17.60546			
100000177	5112	4	13.024362			
100000177	5112	5	18.325224			
100000177	5112	6	15.222349			
100000177	5112	7	15.649116			
100000177	5112	8	14.243141			
100000177	5112	9	18.403126			
100000177	5112	10	13.912654			
100000177	6514	1	49.153653	I-26 WB EXIT 104 OFF RAMP	N	PINEY GROVE RD, I-26 WB EXIT 104 OFF RAMP & I-26 WB EXIT 104 ON RAMP
100000177	6514	2	50.633786			
100000177	6514	3	45.06659			
100000177	6514	4	45.494065			
100000177	6514	5	56.135201			
100000177	6514	6	50.828965			
100000177	6514	7	53.678964			
100000177	6514	8	69.947873			
100000177	6514	9	53.003992			
100000177	6514	10	46.907042			
100000177	6662	1	26.017154	PINEY GROVE RD	W	PINEY GROVE RD, I-26 WB EXIT 104 OFF RAMP & I-26 WB EXIT 104 ON RAMP
100000177	6662	2	26.001782			
100000177	6662	3	26.749011			
100000177	6662	4	22.664274			
100000177	6662	5	25.466078			
100000177	6662	6	25.298678			
100000177	6662	7	23.741729			
100000177	6662	8	25.120476			
100000177	6662	9	25.302856			
100000177	6662	10	23.62952			
100000182	5117	1	0	ST ANDREWS RD	SW	ST ANDREWS RD & 6774 (S)
100000182	5117	2	0			
100000182	5117	3	0			
100000182	5117	4	0			
100000182	5117	5	0			
100000182	5117	6	0			
100000182	5117	7	0			
100000182	5117	8	0			
100000182	5117	9	0			
100000182	5117	10	0			
100000182	6737	1	0	ST ANDREWS RD	NE	ST ANDREWS RD & 6774 (S)
100000182	6737	2	0			
100000182	6737	3	0			
100000182	6737	4	0			
100000182	6737	5	0			

Node	Superlink	Run	Average Control Delay	Approach Street Name	Direction	Intersection
100000182	6737	6	0			
100000182	6737	7	0			
100000182	6737	8	0			
100000182	6737	9	0			
100000182	6737	10	0			
100000182	6774	1	104.654606		NE	ST ANDREWS RD & 6774 (S)
100000182	6774	2	118.601422			
100000182	6774	3	110.756803			
100000182	6774	4	102.046396			
100000182	6774	5	76.761725			
100000182	6774	6	104.253531			
100000182	6774	7	110.401685			
100000182	6774	8	95.836932			
100000182	6774	9	92.293183			
100000182	6774	10	91.250104			
100000184	5499	1	13.133821	N ARROWWOOD RD	S	ARROWWOOD RD, BUSH RIVER RD & N ARROWWOOD RD
100000184	5499	2	11.364344			
100000184	5499	3	14.444298			
100000184	5499	4	14.232901			
100000184	5499	5	12.646583			
100000184	5499	6	12.619776			
100000184	5499	7	12.647379			
100000184	5499	8	15.535704			
100000184	5499	9	12.320263			
100000184	5499	10	13.82851			
100000184	5500	1	27.896748	ARROWWOOD RD	N	ARROWWOOD RD, BUSH RIVER RD & N ARROWWOOD RD
100000184	5500	2	29.221868			
100000184	5500	3	27.064567			
100000184	5500	4	28.074514			
100000184	5500	5	28.380013			
100000184	5500	6	26.95766			
100000184	5500	7	27.660804			
100000184	5500	8	26.06759			
100000184	5500	9	27.555089			
100000184	5500	10	28.372067			
100000184	6497	1	13.156497	BUSH RIVER RD	W	ARROWWOOD RD, BUSH RIVER RD & N ARROWWOOD RD
100000184	6497	2	13.38803			
100000184	6497	3	13.234435			
100000184	6497	4	12.437147			
100000184	6497	5	14.122396			
100000184	6497	6	12.336554			
100000184	6497	7	12.539507			
100000184	6497	8	12.164799			
100000184	6497	9	14.405768			
100000184	6497	10	11.78191			
100000184	6505	1	4.78197	BUSH RIVER RD	E	ARROWWOOD RD, BUSH RIVER RD & N ARROWWOOD RD
100000184	6505	2	4.508399			
100000184	6505	3	5.086291			
100000184	6505	4	5.431859			
100000184	6505	5	5.276115			
100000184	6505	6	5.091926			
100000184	6505	7	6.106031			
100000184	6505	8	5.564201			
100000184	6505	9	5.014884			
100000184	6505	10	4.13019			
100000185	3232	1	55.899305	RAMP	W	GREYSTONE BLVD & RAMP
100000185	3232	2	22.793146			
100000185	3232	3	73.27912			
100000185	3232	4	13.76855			
100000185	3232	5	13.8393			
100000185	3232	6	38.287455			
100000185	3232	7	32.241533			
100000185	3232	8	29.159726			
100000185	3232	9	21.214039			
100000185	3232	10	97.717621			
100000185	5140	1	0.616517	GREYSTONE BLVD	N	GREYSTONE BLVD & RAMP
100000185	5140	2	0.359774			
100000185	5140	3	0.381083			
100000185	5140	4	0.586988			
100000185	5140	5	0.468393			
100000185	5140	6	0.560758			
100000185	5140	7	0.463521			
100000185	5140	8	0.421985			
100000185	5140	9	0.535832			
100000185	5140	10	0.592817			
100000185	5143	1	12.9692	GREYSTONE BLVD	S	GREYSTONE BLVD & RAMP
100000185	5143	2	14.045481			
100000185	5143	3	11.068342			
100000185	5143	4	13.296889			
100000185	5143	5	14.108683			
100000185	5143	6	14.620541			
100000185	5143	7	15.796687			
100000185	5143	8	12.780095			
100000185	5143	9	15.109418			
100000185	5143	10	13.763523			
100000186	4949	1	14.660123	SUNSET BLVD	W	HARBOR DR, SUNSET BLVD & E HOSPITAL DR
100000186	4949	2	12.685915			
100000186	4949	3	16.902514			
100000186	4949	4	19.199857			
100000186	4949	5	16.056874			
100000186	4949	6	16.667124			
100000186	4949	7	15.237219			
100000186	4949	8	16.904225			
100000186	4949	9	16.76199			
100000186	4949	10	16.158457			
100000186	5386	1	297.22415	HARBOR DR	N	HARBOR DR, SUNSET BLVD & E HOSPITAL DR
100000186	5386	2	312.019209			
100000186	5386	3	112.043599			
100000186	5386	4	207.155419			
100000186	5386	5	347.98164			
100000186	5386	6	128.005769			
100000186	5386	7	365.819881			
100000186	5386	8	166.065219			
100000186	5386	9	161.257908			
100000186	5386	10	235.77728			
100000186	5387	1	67.997218	E HOSPITAL DR	S	HARBOR DR, SUNSET BLVD & E HOSPITAL DR
100000186	5387	2	79.401789			
100000186	5387	3	67.004941			
100000186	5387	4	88.323948			
100000186	5387	5	77.841177			
100000186	5387	6	62.205413			
100000186	5387	7	70.750229			
100000186	5387	8	63.281725			
100000186	5387	9	62.946477			
100000186	5387	10	75.74119			

Node	Superlink	Run	Average Control Delay	Approach Street Name	Direction	Intersection
100000186	6762	1	49.919825	SUNSET BLVD	E	HARBOR DR, SUNSET BLVD & E HOSPITAL DR
100000186	6762	2	45.580773			
100000186	6762	3	50.824498			
100000186	6762	4	36.701076			
100000186	6762	5	43.198316			
100000186	6762	6	55.315733			
100000186	6762	7	35.309039			
100000186	6762	8	57.761178			
100000186	6762	9	50.567608			
100000186	6762	10	62.164678			
100000187	6057	1	45.661393	BROAD RIVER RD	NW	BROAD RIVER RD, BRIARGATE CIR & MARLEY DR
100000187	6057	2	54.265484			
100000187	6057	3	55.1499			
100000187	6057	4	59.126536			
100000187	6057	5	54.716617			
100000187	6057	6	41.950173			
100000187	6057	7	43.672444			
100000187	6057	8	57.739624			
100000187	6057	9	46.3912			
100000187	6057	10	48.974688			
100000187	6059	1	9.634226	BROAD RIVER RD	SE	BROAD RIVER RD, BRIARGATE CIR & MARLEY DR
100000187	6059	2	15.164822			
100000187	6059	3	9.42164			
100000187	6059	4	7.864298			
100000187	6059	5	9.90882			
100000187	6059	6	9.176591			
100000187	6059	7	8.925318			
100000187	6059	8	8.820408			
100000187	6059	9	8.751939			
100000187	6059	10	8.983053			
100000187	6060	1	57.743358	MARLEY DR	SW	BROAD RIVER RD, BRIARGATE CIR & MARLEY DR
100000187	6060	2	94.924966			
100000187	6060	3	73.225508			
100000187	6060	4	59.560109			
100000187	6060	5	68.653285			
100000187	6060	6	65.035883			
100000187	6060	7	57.329421			
100000187	6060	8	64.592428			
100000187	6060	9	55.174269			
100000187	6060	10	62.387015			
100000187	6061	1	26.277113	BRIARGATE CIR	NE	BROAD RIVER RD, BRIARGATE CIR & MARLEY DR
100000187	6061	2	39.623959			
100000187	6061	3	26.063423			
100000187	6061	4	26.902958			
100000187	6061	5	24.8067			
100000187	6061	6	30.689426			
100000187	6061	7	35.621332			
100000187	6061	8	33.767372			
100000187	6061	9	36.936709			
100000187	6061	10	26.346742			
100000188	3222	1	1.671035	RAMP	W	GREYSTONE BLVD & RAMP
100000188	3222	2	1.002137			
100000188	3222	3	1.170119			
100000188	3222	4	0.550195			
100000188	3222	5	1.025246			
100000188	3222	6	1.256221			
100000188	3222	7	0.366644			
100000188	3222	8	0.911004			
100000188	3222	9	1.269874			
100000188	3222	10	1.043099			
100000188	5139	1	1.688451	GREYSTONE BLVD	S	GREYSTONE BLVD & RAMP
100000188	5139	2	2.025719			
100000188	5139	3	1.796603			
100000188	5139	4	1.935183			
100000188	5139	5	1.288216			
100000188	5139	6	1.609521			
100000188	5139	7	1.680762			
100000188	5139	8	1.583113			
100000188	5139	9	1.785542			
100000188	5139	10	1.294328			
100000188	5143	1	1.878921	GREYSTONE BLVD	N	GREYSTONE BLVD & RAMP
100000188	5143	2	2.186955			
100000188	5143	3	1.948378			
100000188	5143	4	1.950938			
100000188	5143	5	2.155641			
100000188	5143	6	1.487567			
100000188	5143	7	2.374507			
100000188	5143	8	2.191264			
100000188	5143	9	1.552863			
100000188	5143	10	2.168518			
100000190	5148	1	0	BROAD RIVER RD	SE	BROAD RIVER RD, EXIT 65 RAMP TO US 176 & 6579 (NE)
100000190	5148	2	0			
100000190	5148	3	0			
100000190	5148	4	0			
100000190	5148	5	0			
100000190	5148	6	0			
100000190	5148	7	0			
100000190	5148	8	0			
100000190	5148	9	0			
100000190	5148	10	0			
100000190	6445	1	11.82187	BROAD RIVER RD	NW	BROAD RIVER RD, EXIT 65 RAMP TO US 176 & 6579 (NE)
100000190	6445	2	10.408236			
100000190	6445	3	12.114746			
100000190	6445	4	12.380285			
100000190	6445	5	11.803437			
100000190	6445	6	10.015522			
100000190	6445	7	11.291875			
100000190	6445	8	12.684067			
100000190	6445	9	12.715465			
100000190	6445	10	11.049271			
100000190	6574	1	21.797883	EXIT 65 RAMP TO US 176	E	BROAD RIVER RD, EXIT 65 RAMP TO US 176 & 6579 (NE)
100000190	6574	2	34.062589			
100000190	6574	3	26.59773			
100000190	6574	4	26.928982			
100000190	6574	5	26.259367			
100000190	6574	6	29.73719			
100000190	6574	7	27.302381			
100000190	6574	8	28.047485			
100000190	6574	9	28.871047			
100000190	6574	10	30.699273			
100000195	6049	1	18.532253	BROAD RIVER RD	NW	LONGCREEK DR & BROAD RIVER RD
100000195	6049	2	16.46197			
100000195	6049	3	17.815133			
100000195	6049	4	18.361297			
100000195	6049	5	16.699858			

Node	Superlink	Run	Average Control Delay	Approach Street Name	Direction	Intersection
100000195	6049	6	18.348307			
100000195	6049	7	18.164856			
100000195	6049	8	19.109424			
100000195	6049	9	17.334015			
100000195	6049	10	17.626913			
100000195	6052	1	46.858848	LONGCREEK DR	SW	LONGCREEK DR & BROAD RIVER RD
100000195	6052	2	49.645807			
100000195	6052	3	46.263913			
100000195	6052	4	46.001363			
100000195	6052	5	43.01153			
100000195	6052	6	44.163657			
100000195	6052	7	51.892416			
100000195	6052	8	51.960191			
100000195	6052	9	51.329378			
100000195	6052	10	46.703543			
100000195	6445	1	2.055013	BROAD RIVER RD	SE	LONGCREEK DR & BROAD RIVER RD
100000195	6445	2	2.412579			
100000195	6445	3	2.909684			
100000195	6445	4	2.60488			
100000195	6445	5	2.269939			
100000195	6445	6	1.887519			
100000195	6445	7	2.848476			
100000195	6445	8	2.362377			
100000195	6445	9	1.967876			
100000195	6445	10	2.804503			
100000252	5125	1	23.645515	BUSH RIVER RD	E	MORNINGHILL DR, BUSH RIVER RD & RAMP
100000252	5125	2	26.301979			
100000252	5125	3	20.357257			
100000252	5125	4	23.45217			
100000252	5125	5	21.682863			
100000252	5125	6	26.263326			
100000252	5125	7	23.106909			
100000252	5125	8	45.762305			
100000252	5125	9	23.062129			
100000252	5125	10	21.446295			
100000252	5487	1	48.412394	MORNINGHILL DR	S	MORNINGHILL DR, BUSH RIVER RD & RAMP
100000252	5487	2	83.091598			
100000252	5487	3	67.096101			
100000252	5487	4	53.828625			
100000252	5487	5	42.529954			
100000252	5487	6	51.451325			
100000252	5487	7	51.958253			
100000252	5487	8	51.628803			
100000252	5487	9	54.613827			
100000252	5487	10	49.715409			
100000252	5488	1		RAMP	N	MORNINGHILL DR, BUSH RIVER RD & RAMP
100000252	5488	2				
100000252	5488	3				
100000252	5488	4				
100000252	5488	5				
100000252	5488	6				
100000252	5488	7				
100000252	5488	8				
100000252	5488	9				
100000252	5488	10				
100000252	6505	1	13.460021	BUSH RIVER RD	W	MORNINGHILL DR, BUSH RIVER RD & RAMP
100000252	6505	2	12.229664			
100000252	6505	3	13.072557			
100000252	6505	4	13.801796			
100000252	6505	5	12.082406			
100000252	6505	6	14.09693			
100000252	6505	7	12.711454			
100000252	6505	8	13.563074			
100000252	6505	9	13.636786			
100000252	6505	10	13.530427			
100000254	5119	1	0	WOODLAND HILLS RD	S	WOODLAND HILLS RD & FRONTAGE RD
100000254	5119	2	0			
100000254	5119	3	0			
100000254	5119	4	0			
100000254	5119	5	0			
100000254	5119	6	0			
100000254	5119	7	0			
100000254	5119	8	0			
100000254	5119	9	0			
100000254	5119	10	0			
100000254	5607	1	11.960783	WOODLAND HILLS RD	N	WOODLAND HILLS RD & FRONTAGE RD
100000254	5607	2	11.8429			
100000254	5607	3	13.291803			
100000254	5607	4	10.653672			
100000254	5607	5	12.812199			
100000254	5607	6	14.776			
100000254	5607	7	11.772412			
100000254	5607	8	11.956221			
100000254	5607	9	10.40805			
100000254	5607	10	12.464402			
100000254	6538	1		FRONTAGE RD	W	WOODLAND HILLS RD & FRONTAGE RD
100000254	6538	2				
100000254	6538	3				
100000254	6538	4				
100000254	6538	5				
100000254	6538	6				
100000254	6538	7				
100000254	6538	8				
100000254	6538	9				
100000254	6538	10				
100000255	5470	1	67.331225	INDEPENDENCE AVE	N	BUSH RIVER RD & INDEPENDENCE AVE
100000255	5470	2	75.111078			
100000255	5470	3	52.3855			
100000255	5470	4	61.339983			
100000255	5470	5	162.961519			
100000255	5470	6	65.44559			
100000255	5470	7	157.522391			
100000255	5470	8	144.661583			
100000255	5470	9	127.513516			
100000255	5470	10	55.995729			
100000255	5471	1	12.632271	BUSH RIVER RD	W	BUSH RIVER RD & INDEPENDENCE AVE
100000255	5471	2	11.752876			
100000255	5471	3	12.880436			
100000255	5471	4	13.606045			
100000255	5471	5	13.117467			
100000255	5471	6	11.606673			
100000255	5471	7	10.434445			
100000255	5471	8	13.117294			
100000255	5471	9	12.453117			
100000255	5471	10	13.178958			

Node	Superlink	Run	Average Control Delay	Approach Street Name	Direction	Intersection
100000255	6740	1	17.104143	BUSH RIVER RD	E	BUSH RIVER RD & INDEPENDENCE AVE
100000255	6740	2	16.158265			
100000255	6740	3	15.605921			
100000255	6740	4	14.959191			
100000255	6740	5	16.065158			
100000255	6740	6	15.214811			
100000255	6740	7	16.415644			
100000255	6740	8	16.612339			
100000255	6740	9	15.822828			
100000255	6740	10	15.966292			
100000256	5131	1	5.73311	BUSH RIVER RD	W	BUSH RIVER RD & ZIMALCREST DR
100000256	5131	2	7.954884			
100000256	5131	3	6.618521			
100000256	5131	4	7.543262			
100000256	5131	5	6.3848			
100000256	5131	6	6.407553			
100000256	5131	7	6.416862			
100000256	5131	8	7.347965			
100000256	5131	9	7.315333			
100000256	5131	10	5.756926			
100000256	5465	1	8.377634	BUSH RIVER RD	E	BUSH RIVER RD & ZIMALCREST DR
100000256	5465	2	8.993428			
100000256	5465	3	9.904552			
100000256	5465	4	9.524619			
100000256	5465	5	6.983046			
100000256	5465	6	7.608239			
100000256	5465	7	7.004309			
100000256	5465	8	8.64182			
100000256	5465	9	8.13833			
100000256	5465	10	6.696724			
100000256	5484	1	38.517561	ZIMALCREST DR	S	BUSH RIVER RD & ZIMALCREST DR
100000256	5484	2	34.093673			
100000256	5484	3	38.188433			
100000256	5484	4	41.453876			
100000256	5484	5	38.772229			
100000256	5484	6	36.059262			
100000256	5484	7	45.380192			
100000256	5484	8	23.98772			
100000256	5484	9	31.552685			
100000256	5484	10	40.310577			
100000256	5485	1	11.836832	ZIMALCREST DR	N	BUSH RIVER RD & ZIMALCREST DR
100000256	5485	2	12.903961			
100000256	5485	3	12.185218			
100000256	5485	4	12.670984			
100000256	5485	5	11.85794			
100000256	5485	6	13.041716			
100000256	5485	7	13.998813			
100000256	5485	8	13.409049			
100000256	5485	9	13.585955			
100000256	5485	10	13.167824			
100000348	5116	1	10.237823	ST ANDREWS RD	NW	ST ANDREWS RD & JAMIL RD
100000348	5116	2	9.303805			
100000348	5116	3	10.777811			
100000348	5116	4	11.179564			
100000348	5116	5	9.57297			
100000348	5116	6	10.646821			
100000348	5116	7	10.786552			
100000348	5116	8	10.466025			
100000348	5116	9	10.510647			
100000348	5116	10	9.928094			
100000348	6114	1	48.961232	ST ANDREWS RD	E	ST ANDREWS RD & JAMIL RD
100000348	6114	2	38.595806			
100000348	6114	3	38.261421			
100000348	6114	4	70.888862			
100000348	6114	5	21.504098			
100000348	6114	6	14.985167			
100000348	6114	7	37.497638			
100000348	6114	8	24.87471			
100000348	6114	9	13.335232			
100000348	6114	10	23.795356			
100000348	6119	1	32.66866	JAMIL RD	S	ST ANDREWS RD & JAMIL RD
100000348	6119	2	29.418031			
100000348	6119	3	31.242431			
100000348	6119	4	29.999806			
100000348	6119	5	31.005649			
100000348	6119	6	31.743629			
100000348	6119	7	33.748843			
100000348	6119	8	30.816602			
100000348	6119	9	32.853306			
100000348	6119	10	30.549857			
100000353	6125	1	64.344318	BOWER PKY	SE	BOWER PKY, PINEY GROVE RD & JAMIL RD
100000353	6125	2	88.804663			
100000353	6125	3	50.727633			
100000353	6125	4	62.197513			
100000353	6125	5	56.53992			
100000353	6125	6	57.955898			
100000353	6125	7	72.537154			
100000353	6125	8	68.653259			
100000353	6125	9	60.419426			
100000353	6125	10	79.80547			
100000353	6126	1	31.672728	PINEY GROVE RD	E	BOWER PKY, PINEY GROVE RD & JAMIL RD
100000353	6126	2	34.613788			
100000353	6126	3	30.748873			
100000353	6126	4	30.746302			
100000353	6126	5	31.145993			
100000353	6126	6	27.318171			
100000353	6126	7	30.535479			
100000353	6126	8	30.367007			
100000353	6126	9	30.280089			
100000353	6126	10	32.122052			
100000353	6127	1	354.352795	JAMIL RD	NW	BOWER PKY, PINEY GROVE RD & JAMIL RD
100000353	6127	2	220.977197			
100000353	6127	3	283.168149			
100000353	6127	4	137.861325			
100000353	6127	5	162.739962			
100000353	6127	6	418.39726			
100000353	6127	7	400.258323			
100000353	6127	8	283.59463			
100000353	6127	9	334.160499			
100000353	6127	10	248.224566			
100000353	6659	1	34.147538	PINEY GROVE RD	W	BOWER PKY, PINEY GROVE RD & JAMIL RD
100000353	6659	2	33.542713			
100000353	6659	3	31.33546			
100000353	6659	4	37.116401			
100000353	6659	5	36.968602			

Node	Superlink	Run	Average Control Delay	Approach Street Name	Direction	Intersection
100000353	6659	6	32.740014			
100000353	6659	7	35.154364			
100000353	6659	8	29.347287			
100000353	6659	9	34.845547			
100000353	6659	10	35.681471			
100000354	6094	1	25.828486	ST ANDREWS RD	SW	ST ANDREWS RD, KAY ST & CHARTWELL RD
100000354	6094	2	21.665862			
100000354	6094	3	22.406528			
100000354	6094	4	21.742181			
100000354	6094	5	23.963379			
100000354	6094	6	23.878551			
100000354	6094	7	22.051728			
100000354	6094	8	21.097155			
100000354	6094	9	22.79612			
100000354	6094	10	22.289735			
100000354	6098	1	55.878723	CHARTWELL RD	NW	ST ANDREWS RD, KAY ST & CHARTWELL RD
100000354	6098	2	41.356191			
100000354	6098	3	42.271952			
100000354	6098	4	44.452294			
100000354	6098	5	40.14151			
100000354	6098	6	39.912507			
100000354	6098	7	50.312031			
100000354	6098	8	32.862159			
100000354	6098	9	46.343644			
100000354	6098	10	31.624847			
100000354	6099	1	27.768291	KAY ST	SE	ST ANDREWS RD, KAY ST & CHARTWELL RD
100000354	6099	2	23.796095			
100000354	6099	3	23.994446			
100000354	6099	4	22.37376			
100000354	6099	5	22.447904			
100000354	6099	6	24.311965			
100000354	6099	7	27.573001			
100000354	6099	8	26.084529			
100000354	6099	9	23.126527			
100000354	6099	10	27.72495			
100000354	6100	1	19.531602	ST ANDREWS RD	NE	ST ANDREWS RD, KAY ST & CHARTWELL RD
100000354	6100	2	18.388473			
100000354	6100	3	16.072736			
100000354	6100	4	16.0701			
100000354	6100	5	16.666633			
100000354	6100	6	16.762426			
100000354	6100	7	19.507865			
100000354	6100	8	18.806235			
100000354	6100	9	16.933449			
100000354	6100	10	18.207734			
100000358	5117	1	31.657652	ST ANDREWS RD	NE	ST ANDREWS RD, FERNANDINA RD & BURNING TREE RD
100000358	5117	2	31.105865			
100000358	5117	3	32.601146			
100000358	5117	4	30.303462			
100000358	5117	5	29.173836			
100000358	5117	6	28.944653			
100000358	5117	7	29.841384			
100000358	5117	8	28.92227			
100000358	5117	9	28.089141			
100000358	5117	10	29.508366			
100000358	6100	1	50.680242	ST ANDREWS RD	SW	ST ANDREWS RD, FERNANDINA RD & BURNING TREE RD
100000358	6100	2	49.338398			
100000358	6100	3	51.673147			
100000358	6100	4	43.28847			
100000358	6100	5	53.738437			
100000358	6100	6	41.991773			
100000358	6100	7	40.499415			
100000358	6100	8	41.611872			
100000358	6100	9	39.822554			
100000358	6100	10	42.096261			
100000358	6101	1	29.360603	BURNING TREE RD	NW	ST ANDREWS RD, FERNANDINA RD & BURNING TREE RD
100000358	6101	2	28.958446			
100000358	6101	3	30.266874			
100000358	6101	4	29.633589			
100000358	6101	5	30.631421			
100000358	6101	6	32.349118			
100000358	6101	7	30.881264			
100000358	6101	8	29.488287			
100000358	6101	9	28.512717			
100000358	6101	10	29.102077			
100000358	6102	1	15.540557	FERNANDINA RD	SE	ST ANDREWS RD, FERNANDINA RD & BURNING TREE RD
100000358	6102	2	17.829996			
100000358	6102	3	18.084938			
100000358	6102	4	16.641157			
100000358	6102	5	18.344717			
100000358	6102	6	15.868411			
100000358	6102	7	16.353514			
100000358	6102	8	18.895474			
100000358	6102	9	16.764427			
100000358	6102	10	16.148566			
100000360	6101	1	0	BURNING TREE RD	S	I-26 WB TO BURNING TREE RD EXIT 106 OFF RAMP & BURNING TREE RD
100000360	6101	2	0			
100000360	6101	3	0			
100000360	6101	4	0			
100000360	6101	5	0			
100000360	6101	6	0			
100000360	6101	7	0			
100000360	6101	8	0			
100000360	6101	9	0			
100000360	6101	10	0			
100000360	6105	1	0.000317	BURNING TREE RD	N	I-26 WB TO BURNING TREE RD EXIT 106 OFF RAMP & BURNING TREE RD
100000360	6105	2	0.000737			
100000360	6105	3	0.000361			
100000360	6105	4	0.000322			
100000360	6105	5	0			
100000360	6105	6	0.001031			
100000360	6105	7	0.000912			
100000360	6105	8	0.001207			
100000360	6105	9	0.001333			
100000360	6105	10	0.002135			
100000360	6766	1	39.257075	I-26 WB TO BURNING TREE RD EXIT 106 OFF RAI	NE	I-26 WB TO BURNING TREE RD EXIT 106 OFF RAMP & BURNING TREE RD
100000360	6766	2	13.679091			
100000360	6766	3	84.213918			
100000360	6766	4	110.409206			
100000360	6766	5	137.248826			
100000360	6766	6	52.793327			
100000360	6766	7	102.260088			
100000360	6766	8	30.31462			
100000360	6766	9	51.799283			
100000360	6766	10	72.235936			

Node	Superlink	Run	Average Control Delay	Approach Street Name	Direction	Intersection
100000362	6134	1	35.103449	JAMIL RD	NW	HARBISON BLVD & JAMIL RD
100000362	6134	2	42.044229			
100000362	6134	3	38.643747			
100000362	6134	4	42.036134			
100000362	6134	5	53.122249			
100000362	6134	6	40.510837			
100000362	6134	7	45.978367			
100000362	6134	8	51.704874			
100000362	6134	9	40.768436			
100000362	6134	10	50.941203			
100000362	6137	1	0.888347	HARBISON BLVD	NE	HARBISON BLVD & JAMIL RD
100000362	6137	2	11.279393			
100000362	6137	3	0.969136			
100000362	6137	4	13.317551			
100000362	6137	5	14.803811			
100000362	6137	6	1.616938			
100000362	6137	7	18.488029			
100000362	6137	8	15.064866			
100000362	6137	9	5.169172			
100000362	6137	10	25.288776			
100000362	6717	1	0.127341	HARBISON BLVD	SW	HARBISON BLVD & JAMIL RD
100000362	6717	2	0.018905			
100000362	6717	3	0.117961			
100000362	6717	4	0.237742			
100000362	6717	5	0.176711			
100000362	6717	6	0.010846			
100000362	6717	7	0.093949			
100000362	6717	8	0.090036			
100000362	6717	9	0.023567			
100000362	6717	10	0.145834			
100000364	6145	1	7.578217	HARBISON BLVD	SW	HARBISON BLVD & COLUMBIANA DR
100000364	6145	2	9.586388			
100000364	6145	3	7.96321			
100000364	6145	4	8.40823			
100000364	6145	5	9.73155			
100000364	6145	6	8.454773			
100000364	6145	7	7.821067			
100000364	6145	8	7.946545			
100000364	6145	9	9.830995			
100000364	6145	10	7.769313			
100000364	6176	1	6.373101	HARBISON BLVD	NE	HARBISON BLVD & COLUMBIANA DR
100000364	6176	2	6.95023			
100000364	6176	3	5.764875			
100000364	6176	4	7.134235			
100000364	6176	5	7.423111			
100000364	6176	6	6.214275			
100000364	6176	7	7.225509			
100000364	6176	8	7.530506			
100000364	6176	9	7.03951			
100000364	6176	10	8.403501			
100000364	6177	1		COLUMBIANA DR	NW	HARBISON BLVD & COLUMBIANA DR
100000364	6177	2				
100000364	6177	3				
100000364	6177	4				
100000364	6177	5				
100000364	6177	6				
100000364	6177	7				
100000364	6177	8				
100000364	6177	9				
100000364	6177	10				
100000364	6196	1	186.084558	COLUMBIANA DR	SE	HARBISON BLVD & COLUMBIANA DR
100000364	6196	2	252.722881			
100000364	6196	3	120.357509			
100000364	6196	4	195.524075			
100000364	6196	5	233.286495			
100000364	6196	6	165.001776			
100000364	6196	7	238.017262			
100000364	6196	8	255.021384			
100000364	6196	9	163.996003			
100000364	6196	10	255.814192			
100000365	6137	1	24.223797	HARBISON BLVD	SW	COLUMBIANA CIR, HARBISON BLVD & PARK TERRACE DR
100000365	6137	2	24.022778			
100000365	6137	3	25.01673			
100000365	6137	4	25.394546			
100000365	6137	5	27.945167			
100000365	6137	6	24.755336			
100000365	6137	7	27.673226			
100000365	6137	8	24.718917			
100000365	6137	9	22.991274			
100000365	6137	10	27.729776			
100000365	6140	1	55.909472	COLUMBIANA CIR	SE	COLUMBIANA CIR, HARBISON BLVD & PARK TERRACE DR
100000365	6140	2	58.359271			
100000365	6140	3	56.754995			
100000365	6140	4	57.728298			
100000365	6140	5	60.745275			
100000365	6140	6	54.814245			
100000365	6140	7	66.773713			
100000365	6140	8	62.40003			
100000365	6140	9	59.26039			
100000365	6140	10	58.645446			
100000365	6145	1	8.947958	HARBISON BLVD	NE	COLUMBIANA CIR, HARBISON BLVD & PARK TERRACE DR
100000365	6145	2	11.403248			
100000365	6145	3	9.682348			
100000365	6145	4	11.962121			
100000365	6145	5	16.235079			
100000365	6145	6	9.706365			
100000365	6145	7	19.552325			
100000365	6145	8	16.701456			
100000365	6145	9	9.622634			
100000365	6145	10	20.391799			
100000365	6151	1	53.487314	PARK TERRACE DR	NW	COLUMBIANA CIR, HARBISON BLVD & PARK TERRACE DR
100000365	6151	2	82.731069			
100000365	6151	3	80.386478			
100000365	6151	4	79.457264			
100000365	6151	5	87.277806			
100000365	6151	6	59.209685			
100000365	6151	7	68.252097			
100000365	6151	8	96.721753			
100000365	6151	9	60.539131			
100000365	6151	10	100.602088			
100000391	5071	1	7.359953	BROAD RIVER RD	NW	BROAD RIVER RD & COLUMBIANA DR
100000391	5071	2	6.663464			
100000391	5071	3	5.507919			
100000391	5071	4	7.553152			
100000391	5071	5	6.837778			

Node	Superlink	Run	Average Control Delay	Approach Street Name	Direction	Intersection
100000391	5071	6	6.14036			
100000391	5071	7	7.104215			
100000391	5071	8	6.375326			
100000391	5071	9	7.617655			
100000391	5071	10	5.542257			
100000391	6214	1	46.641993	COLUMBIANA DR	NE	BROAD RIVER RD & COLUMBIANA DR
100000391	6214	2	51.508688			
100000391	6214	3	44.335195			
100000391	6214	4	39.005446			
100000391	6214	5	44.93278			
100000391	6214	6	43.533261			
100000391	6214	7	43.230057			
100000391	6214	8	41.84494			
100000391	6214	9	45.638419			
100000391	6214	10	47.301142			
100000391	6224	1	17.149797	BROAD RIVER RD	SE	BROAD RIVER RD & COLUMBIANA DR
100000391	6224	2	13.259972			
100000391	6224	3	13.221247			
100000391	6224	4	16.351273			
100000391	6224	5	17.758517			
100000391	6224	6	14.534389			
100000391	6224	7	13.556355			
100000391	6224	8	14.157307			
100000391	6224	9	13.936703			
100000391	6224	10	11.826447			
100000395	5086	1	63.941946	LAKE MURRAY BLVD	W	LAKE MURRAY BLVD & COLUMBIANA DR
100000395	5086	2	52.306401			
100000395	5086	3	43.272401			
100000395	5086	4	65.683077			
100000395	5086	5	47.646496			
100000395	5086	6	58.725738			
100000395	5086	7	42.072461			
100000395	5086	8	50.217335			
100000395	5086	9	43.798937			
100000395	5086	10	70.323436			
100000395	6208	1	50.78261	COLUMBIANA DR	NW	LAKE MURRAY BLVD & COLUMBIANA DR
100000395	6208	2	83.527529			
100000395	6208	3	248.935206			
100000395	6208	4	234.523766			
100000395	6208	5	148.168332			
100000395	6208	6	224.864923			
100000395	6208	7	177.654521			
100000395	6208	8	95.512569			
100000395	6208	9	186.353923			
100000395	6208	10	64.488757			
100000395	6214	1	248.677858	COLUMBIANA DR	S	LAKE MURRAY BLVD & COLUMBIANA DR
100000395	6214	2	127.620789			
100000395	6214	3	280.736992			
100000395	6214	4	127.030959			
100000395	6214	5	434.184348			
100000395	6214	6	113.46909			
100000395	6214	7	130.4986			
100000395	6214	8	497.758016			
100000395	6214	9	543.319527			
100000395	6214	10	94.742478			
100000395	6215	1	96.377984	LAKE MURRAY BLVD	E	LAKE MURRAY BLVD & COLUMBIANA DR
100000395	6215	2	51.591549			
100000395	6215	3	67.336189			
100000395	6215	4	78.724543			
100000395	6215	5	139.750327			
100000395	6215	6	67.552809			
100000395	6215	7	52.44257			
100000395	6215	8	49.782082			
100000395	6215	9	69.850763			
100000395	6215	10	106.412869			
100000398	5101	1	2.140097	HARBISON BLVD	W	HARBISON BLVD & PARKRIDGE DR
100000398	5101	2	4.934359			
100000398	5101	3	2.37892			
100000398	5101	4	2.722079			
100000398	5101	5	3.043929			
100000398	5101	6	6.086296			
100000398	5101	7	2.296205			
100000398	5101	8	2.316561			
100000398	5101	9	57.15277			
100000398	5101	10	6.582783			
100000398	5102	1	4.515361	HARBISON BLVD	NE	HARBISON BLVD & PARKRIDGE DR
100000398	5102	2	13.387578			
100000398	5102	3	6.248409			
100000398	5102	4	10.129989			
100000398	5102	5	5.678883			
100000398	5102	6	12.148369			
100000398	5102	7	7.718684			
100000398	5102	8	8.670678			
100000398	5102	9	11.484587			
100000398	5102	10	8.940336			
100000398	6267	1	29.939594	PARKRIDGE DR	SE	HARBISON BLVD & PARKRIDGE DR
100000398	6267	2	35.246462			
100000398	6267	3	32.740565			
100000398	6267	4	32.364256			
100000398	6267	5	34.072508			
100000398	6267	6	32.216201			
100000398	6267	7	40.240872			
100000398	6267	8	32.303908			
100000398	6267	9	94.243435			
100000398	6267	10	37.764054			
100000399	6263	1	28.62786	PINEY GROVE RD	W	PINEY GROVE RD & FERNANDINA RD
100000399	6263	2	28.524456			
100000399	6263	3	23.790437			
100000399	6263	4	26.441858			
100000399	6263	5	28.007099			
100000399	6263	6	29.288512			
100000399	6263	7	25.678497			
100000399	6263	8	28.19928			
100000399	6263	9	29.608462			
100000399	6263	10	28.203426			
100000399	6265	1	23.992251	FERNANDINA RD	SE	PINEY GROVE RD & FERNANDINA RD
100000399	6265	2	26.57519			
100000399	6265	3	24.897373			
100000399	6265	4	29.681031			
100000399	6265	5	27.236299			
100000399	6265	6	24.758084			
100000399	6265	7	22.02579			
100000399	6265	8	21.214148			
100000399	6265	9	25.306527			
100000399	6265	10	27.519477			

Node	Superlink	Run	Average Control Delay	Approach Street Name	Direction	Intersection
100000399	6266	1	82.237651	FERNANDINA RD	N	PINEY GROVE RD & FERNANDINA RD
100000399	6266	2	86.449473			
100000399	6266	3	69.965228			
100000399	6266	4	92.840628			
100000399	6266	5	162.840135			
100000399	6266	6	143.15293			
100000399	6266	7	73.860115			
100000399	6266	8	61.990548			
100000399	6266	9	72.932139			
100000399	6266	10	132.896283			
100000399	6662	1	38.53975	PINEY GROVE RD	E	PINEY GROVE RD & FERNANDINA RD
100000399	6662	2	38.268523			
100000399	6662	3	35.434134			
100000399	6662	4	36.130748			
100000399	6662	5	41.372246			
100000399	6662	6	43.38637			
100000399	6662	7	39.2978			
100000399	6662	8	37.238636			
100000399	6662	9	43.203467			
100000399	6662	10	39.009553			
100000401	5093	1	12.539146	LAKE MURRAY BLVD	E	KINLEY RD, LAKE MURRAY BLVD & PARKRIDGE DR
100000401	5093	2	11.755261			
100000401	5093	3	13.129067			
100000401	5093	4	11.735156			
100000401	5093	5	11.177893			
100000401	5093	6	13.437875			
100000401	5093	7	11.545371			
100000401	5093	8	11.372213			
100000401	5093	9	13.663867			
100000401	5093	10	15.289017			
100000401	6276	1	26.718294	KINLEY RD	S	KINLEY RD, LAKE MURRAY BLVD & PARKRIDGE DR
100000401	6276	2	22.013573			
100000401	6276	3	25.881787			
100000401	6276	4	19.316056			
100000401	6276	5	20.019691			
100000401	6276	6	25.705317			
100000401	6276	7	24.266845			
100000401	6276	8	23.515774			
100000401	6276	9	23.209185			
100000401	6276	10	25.056418			
100000401	6313	1	13.490677	LAKE MURRAY BLVD	W	KINLEY RD, LAKE MURRAY BLVD & PARKRIDGE DR
100000401	6313	2	16.470227			
100000401	6313	3	18.721165			
100000401	6313	4	16.519675			
100000401	6313	5	20.480466			
100000401	6313	6	18.407466			
100000401	6313	7	17.37061			
100000401	6313	8	15.873744			
100000401	6313	9	17.590282			
100000401	6313	10	21.952632			
100000401	6745	1	44.982805	PARKRIDGE DR	N	KINLEY RD, LAKE MURRAY BLVD & PARKRIDGE DR
100000401	6745	2	45.098525			
100000401	6745	3	41.854591			
100000401	6745	4	37.830598			
100000401	6745	5	35.150577			
100000401	6745	6	46.255417			
100000401	6745	7	43.646278			
100000401	6745	8	41.031876			
100000401	6745	9	41.41363			
100000401	6745	10	44.065173			
100000446	6732	1	0	RAMP	SW	RAMP
100000446	6732	2	0			
100000446	6732	3	0			
100000446	6732	4	0			
100000446	6732	5	0			
100000446	6732	6	0			
100000446	6732	7	0			
100000446	6732	8	0			
100000446	6732	9	0			
100000446	6732	10	0			
100000446	6779	1	0	RAMP	S	RAMP
100000446	6779	2	0			
100000446	6779	3	0			
100000446	6779	4	0			
100000446	6779	5	0			
100000446	6779	6	0			
100000446	6779	7	0			
100000446	6779	8	0			
100000446	6779	9	0			
100000446	6779	10	0			
100000520	3345	1		I-26 WB EXIT 102 ON RAMP	N	I-26 WB EXIT 102 ON RAMP
100000520	3345	2				
100000520	3345	3				
100000520	3345	4				
100000520	3345	5				
100000520	3345	6				
100000520	3345	7				
100000520	3345	8				
100000520	3345	9				
100000520	3345	10				
100000520	3350	1	0	I-26 WB EXIT 102 ON RAMP	N	I-26 WB EXIT 102 ON RAMP
100000520	3350	2	0			
100000520	3350	3	0			
100000520	3350	4	0			
100000520	3350	5	0			
100000520	3350	6	0			
100000520	3350	7	0			
100000520	3350	8	0			
100000520	3350	9	0			
100000520	3350	10	0			
100000702	4343	1	0	RAMP	SW	RAMP & 6587 (E)
100000702	4343	2	0			
100000702	4343	3	0			
100000702	4343	4	0			
100000702	4343	5	0			
100000702	4343	6	0			
100000702	4343	7	0			
100000702	4343	8	0			
100000702	4343	9	0			
100000702	4343	10	0			
100000702	6587	1	0		W	RAMP & 6587 (E)
100000702	6587	2	0			
100000702	6587	3	0			
100000702	6587	4	0			
100000702	6587	5	0			

Node	Superlink	Run	Average Control Delay	Approach Street Name	Direction	Intersection
100000702	6587	6	0			
100000702	6587	7	0			
100000702	6587	8	0			
100000702	6587	9	0			
100000702	6587	10	0			
100000897	5134	1	21.379449	W COLONIAL LIFE BLVD	NW	COLONIAL LIFE BLVD W & W COLONIAL LIFE BLVD
100000897	5134	2	71.772888			
100000897	5134	3	45.219612			
100000897	5134	4	69.093647			
100000897	5134	5	58.86918			
100000897	5134	6	288.132529			
100000897	5134	7	26.886492			
100000897	5134	8	22.273506			
100000897	5134	9	30.602442			
100000897	5134	10	26.92646			
100000897	6471	1	6.18562	COLONIAL LIFE BLVD W	S	COLONIAL LIFE BLVD W & W COLONIAL LIFE BLVD
100000897	6471	2	5.792014			
100000897	6471	3	7.277133			
100000897	6471	4	4.132447			
100000897	6471	5	5.864035			
100000897	6471	6	6.382416			
100000897	6471	7	5.302145			
100000897	6471	8	6.000992			
100000897	6471	9	8.254487			
100000897	6471	10	8.217517			
100000897	6545	1	1.637493	COLONIAL LIFE BLVD W	NE	COLONIAL LIFE BLVD W & W COLONIAL LIFE BLVD
100000897	6545	2	2.13254			
100000897	6545	3	2.139118			
100000897	6545	4	2.185781			
100000897	6545	5	2.334024			
100000897	6545	6	1.773255			
100000897	6545	7	1.970126			
100000897	6545	8	2.043766			
100000897	6545	9	1.887667			
100000897	6545	10	1.946342			
100000898	5125	1	0.336583	BUSH RIVER RD	W	BUSH RIVER RD
100000898	5125	2	0.310163			
100000898	5125	3	0.434539			
100000898	5125	4	0.431783			
100000898	5125	5	0.511519			
100000898	5125	6	0.455394			
100000898	5125	7	0.443843			
100000898	5125	8	0.373293			
100000898	5125	9	0.319404			
100000898	5125	10	0.836169			
100000898	5130	1	18.32612	BUSH RIVER RD	N	BUSH RIVER RD
100000898	5130	2	21.839598			
100000898	5130	3	26.752664			
100000898	5130	4	22.399141			
100000898	5130	5	27.187976			
100000898	5130	6	28.267346			
100000898	5130	7	18.828929			
100000898	5130	8	17.957644			
100000898	5130	9	21.915447			
100000898	5130	10	23.840435			
100000898	5131	1	3.212402	BUSH RIVER RD	E	BUSH RIVER RD
100000898	5131	2	4.276806			
100000898	5131	3	3.996118			
100000898	5131	4	4.421386			
100000898	5131	5	4.030677			
100000898	5131	6	4.316317			
100000898	5131	7	5.897662			
100000898	5131	8	4.002461			
100000898	5131	9	3.584152			
100000898	5131	10	3.578749			
100000899	6105	1	0	BURNING TREE RD	S	I-26 WB TO BURNING TREE RD EXIT 106 OFF RAMP & BURNING TREE RD
100000899	6105	2	0			
100000899	6105	3	0			
100000899	6105	4	0			
100000899	6105	5	0			
100000899	6105	6	0			
100000899	6105	7	0			
100000899	6105	8	0			
100000899	6105	9	0			
100000899	6105	10	0			
100000899	6106	1	0	BURNING TREE RD	N	I-26 WB TO BURNING TREE RD EXIT 106 OFF RAMP & BURNING TREE RD
100000899	6106	2	0			
100000899	6106	3	0			
100000899	6106	4	0			
100000899	6106	5	0			
100000899	6106	6	0			
100000899	6106	7	0			
100000899	6106	8	0			
100000899	6106	9	0			
100000899	6106	10	0			
100000902	4292	1	19.633985	RAMP	NE	SUNSET BLVD & RAMP
100000902	4292	2	25.413116			
100000902	4292	3	23.569123			
100000902	4292	4	21.679463			
100000902	4292	5	22.692968			
100000902	4292	6	23.445419			
100000902	4292	7	27.169343			
100000902	4292	8	24.96886			
100000902	4292	9	30.148183			
100000902	4292	10	23.674222			
100000902	4947	1	35.939628	SUNSET BLVD	W	SUNSET BLVD & RAMP
100000902	4947	2	28.701745			
100000902	4947	3	34.626802			
100000902	4947	4	36.599395			
100000902	4947	5	31.856372			
100000902	4947	6	39.436929			
100000902	4947	7	26.349232			
100000902	4947	8	34.37511			
100000902	4947	9	35.49042			
100000902	4947	10	31.961158			
100000902	4951	1	0	SUNSET BLVD	E	SUNSET BLVD & RAMP
100000902	4951	2	0.000133			
100000902	4951	3	0			
100000902	4951	4	0			
100000902	4951	5	0			
100000902	4951	6	0.000248			
100000902	4951	7	0			
100000902	4951	8	0			
100000902	4951	9	0			
100000902	4951	10	0			

Node	Superlink	Run	Average Control Delay	Approach Street Name	Direction	Intersection
100000903	4289	1	55.318864	RAMP	NW	RAMP & SUNSET BLVD
100000903	4289	2	53.983194			
100000903	4289	3	54.19148			
100000903	4289	4	52.601394			
100000903	4289	5	54.649728			
100000903	4289	6	54.881427			
100000903	4289	7	53.745153			
100000903	4289	8	54.390589			
100000903	4289	9	53.491932			
100000903	4289	10	53.305822			
100000903	4298	1	35.250899	RAMP	SE	RAMP & SUNSET BLVD
100000903	4298	2	31.737255			
100000903	4298	3	31.815624			
100000903	4298	4	33.674904			
100000903	4298	5	32.002576			
100000903	4298	6	33.0462			
100000903	4298	7	31.473072			
100000903	4298	8	33.413681			
100000903	4298	9	32.383452			
100000903	4298	10	32.722107			
100000903	4950	1	13.672671	SUNSET BLVD	E	RAMP & SUNSET BLVD
100000903	4950	2	14.285213			
100000903	4950	3	14.175535			
100000903	4950	4	14.31218			
100000903	4950	5	15.330072			
100000903	4950	6	14.414662			
100000903	4950	7	14.132185			
100000903	4950	8	14.523906			
100000903	4950	9	14.455014			
100000903	4950	10	14.280307			
100000903	4951	1	19.952565	SUNSET BLVD	W	RAMP & SUNSET BLVD
100000903	4951	2	20.071706			
100000903	4951	3	22.665444			
100000903	4951	4	21.923933			
100000903	4951	5	20.526194			
100000903	4951	6	20.721978			
100000903	4951	7	20.029444			
100000903	4951	8	19.812849			
100000903	4951	9	27.391318			
100000903	4951	10	21.96724			

Appendix F—Conceptual Signing Plans

ADVANCE OVERHEAD SIGNING FOR I-20 EASTBOUND EXITS 64D-A

CAROLINA CROSSROADS
CONCEPTUAL SIGNING ALONG INTERSTATE 20

0 100 200 400 600 800 1000

SCALE : 1"=400'

SHEET 1

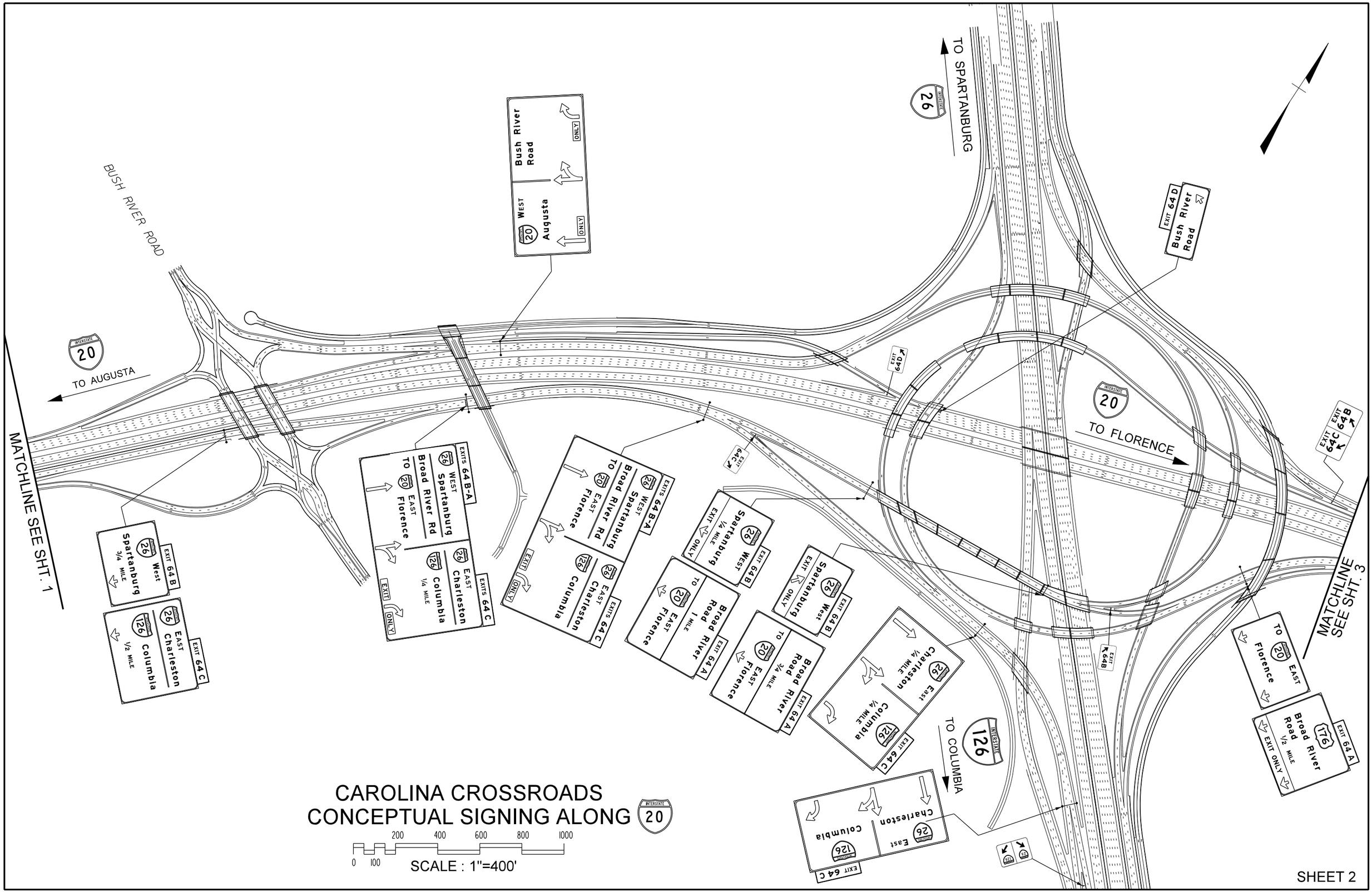
BUSH RIVER ROAD
TO SPARTANBURG
INTERSTATE 26
Bush River Road
ONLY
WEST
Augusta
INTERSTATE 20
ONLY
EXIT 64D
Bush River Road
INTERSTATE 20
TO AUGUSTA
TO FLORENCE
MATCHLINE SEE SHT. 1
MATCHLINE SEE SHT. 3
EXITS 64 B-A
WEST Spartanburg
Broad River Rd
TO EAST Florence
EAST Charleston
Columbia
1/4 MILE
EXIT ONLY
EXIT 64 B
Spartanburg
3/4 MILE
West
EXIT 64 C
Columbia
1/2 MILE
EAST Charleston
EXITS 64 C
Columbia
EAST Florence
Broad River Rd
WEST Spartanburg
EXITS 64 B-A
EXIT 64C
EXIT 64D
EXIT 64B
Spartanburg
1/4 MILE
West
EXIT 64 B
To Florence
1 MILE
Broad River Road
EXIT 64 A
To Florence
3/4 MILE
Broad River Road
EXIT 64 A
Columbia
1/4 MILE
East Charleston
EXIT 64 C
INTERSTATE 126
TO COLUMBIA
Columbia
East Charleston
EXIT 64 C
EXIT 64B
EXIT 64C
TO Florence
EAST
Broad River Road
1/2 MILE
EXIT ONLY
EXIT 64 A
CAROLINA CROSSROADS
CONCEPTUAL SIGNING ALONG INTERSTATE 20
0 100 200 400 600 800 1000
SCALE : 1"=400'
SHEET 2

MATCHLINE SEE SHT. 2

EXIT 64 B
West
26
Spartanburg
EXIT ONLY

EXIT 64 C
EAST
Charleston
26
Columbia
126
EXIT ONLY

INTERSTATE
20
TO AUGUSTA

EXIT 64 C
EAST
Charleston
26
Columbia
126
1/4 MILE
EXIT ONLY

EXIT 64 B
West
26
Spartanburg
1/4 MILE
EXIT ONLY

EXIT 64 D
Bush River
Road
3/4 MILE

EXITS 64 B-C
Spartanburg
Charleston
26
Columbia
126

WEST
20
Augusta

EXITS 64 B-C
Spartanburg
Charleston
26
Columbia
126
EXIT ONLY

WEST
20
Augusta

INTERSTATE
20
TO FLORENCE

MATCHLKINE SEE SHT. 4

EXITS 64 B-C

TO
20
EAST
Florence

Broad River
Road
176
EXIT ONLY
EXIT 64 A

EXIT 64A

TO
20
EAST
Florence

Broad River
Road
176
EXIT ONLY
EXIT 64 A

BROAD RIVER ROAD

CAROLINA CROSSROADS
CONCEPTUAL SIGNING ALONG INTERSTATE 20

0 100 200 400 600 800 1000

SCALE : 1"=400'

SHEET 3

ADVANCE OVERHEAD SIGNING FOR
I-20 WESTBOUND EXITS 64A-D

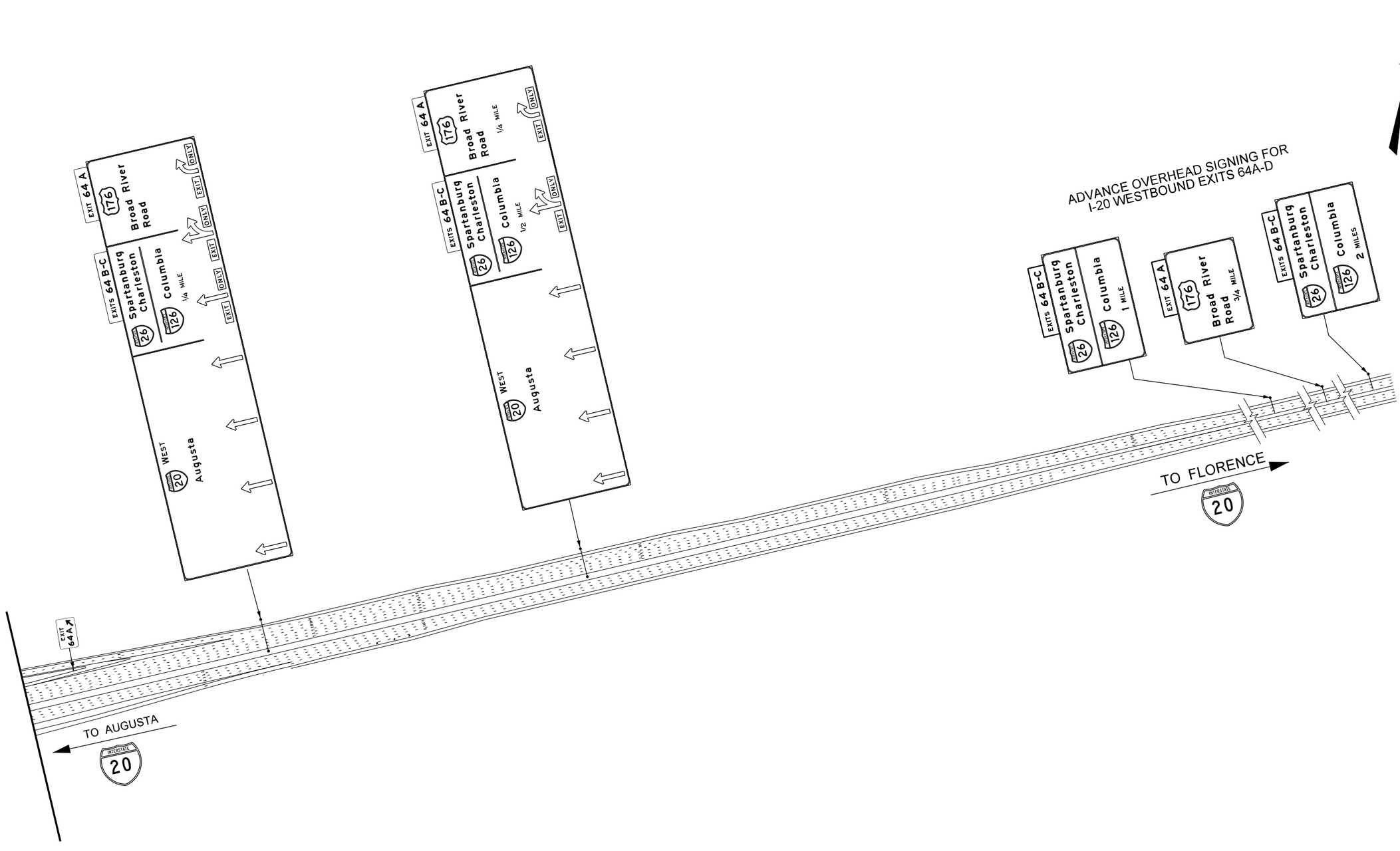

CAROLINA CROSSROADS
CONCEPTUAL SIGNING ALONG INTERSTATE 26

0 100 200 400 600 800 1000

SCALE : 1"=400'

MATCHLINE SEE SHT. 5

TO CHARLESTON

EXITS 107B-A
Florence
Augusta
3/4 MILE

EXIT 108
Columbia
Col. Life Blvd
To Bush River Rd
EXIT ONLY

EXIT 108

Col. Life Blvd
To Bush River
Road

Columbia

Col. Life Blvd
To Bush River
Road

Greystone Blvd
Riverbanks Zoo
1¼ MILE

Columbia

Col. Life Blvd
To Bush River
Road
½ MILE

TO COLUMBIA

MATCHLINE SEE SHT. 7

BUSH RIVER RD.

East
Charleston

Columbia

MATCHLINE SEE SHT. 8

COLONIAL LIFE BLVD.

Spartanburg
Florence
Augusta

East
Charleston

Spartanburg

Florence
Augusta
¼ MILE
EXIT ONLY

EXITS 107 A-B

EXITS 107 A-B
Florence
Augusta
½ MILE

East
Charleston
EXIT ONLY

EXITS 107 A-B

West
Spartanburg

Florence
Augusta
EXIT ONLY

EXIT 107A
West
Augusta

EXIT 107B
East
Florence
¼ MILE

West
Spartanburg

EXIT 107A
West
Augusta

EXIT 107B
East
Florence

TO SPARTANBURG

EXIT 106
St. Andrews
Road
¾ MILE
EXIT ONLY

CAROLINA CROSSROADS
CONCEPTUAL SIGNING ALONG 26

0 100 200 400 600 800 1000

SCALE : 1"=400'

SHEET 6

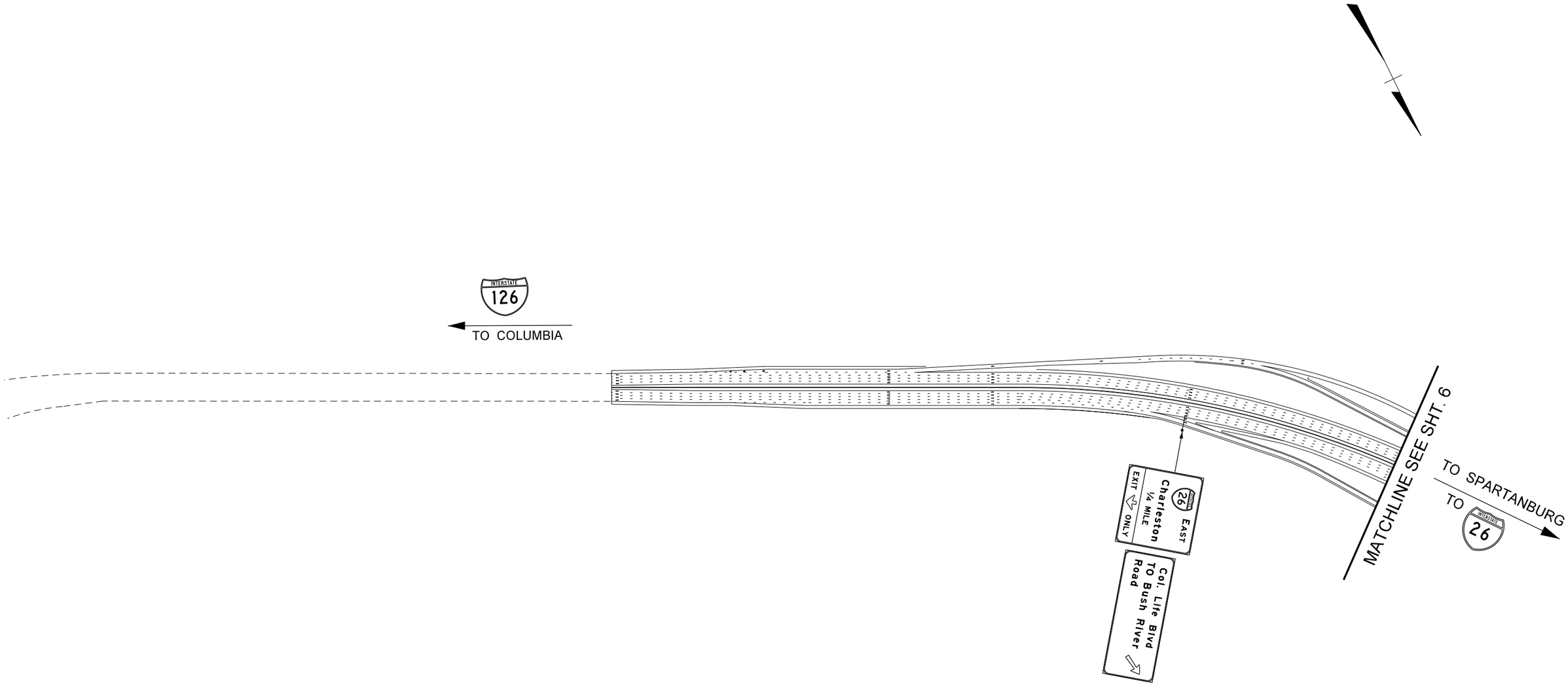

CAROLINA CROSS ROADS
CONCEPTUAL SIGNING ALONG INTERSTATE 126

0 100 200 400 600 800 1000

SCALE : 1"=400'

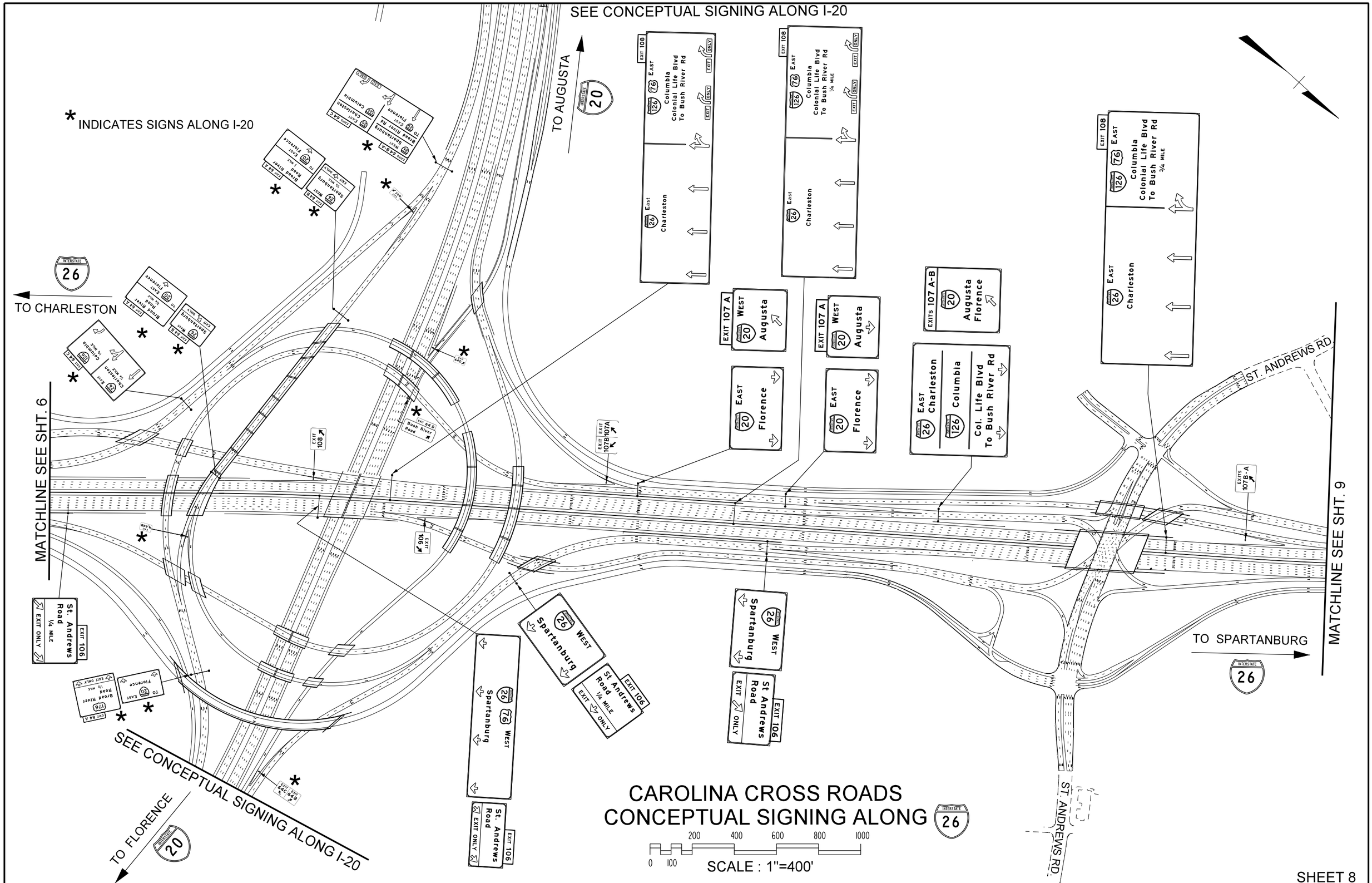
SEE CONCEPTUAL SIGNING ALONG I-20
* INDICATES SIGNS ALONG I-20
TO AUGUSTA
INTERSTATE 20
INTERSTATE 26
TO CHARLESTON
MATCHLINE SEE SHT. 6
MATCHLINE SEE SHT. 9
TO SPARTANBURG
SEE CONCEPTUAL SIGNING ALONG I-20
TO FLORENCE
INTERSTATE 20
ST. ANDREWS RD
ST. ANDREWS RD.
EXIT 108 EAST 126 76 Columbia Colonial Life Blvd To Bush River Rd
EXIT 108 EAST 126 76 Columbia Colonial Life Blvd To Bush River Rd 1/4 MILE
EXIT 108 EAST 126 76 Columbia Colonial Life Blvd To Bush River Rd 3/4 MILE
EAST 26 Charleston
EXIT 107 A WEST 20 Augusta
EAST 20 Florence
EXITS 107 A-B 20 Augusta Florence
EAST 26 Charleston
126 Columbia
Col. Life Blvd To Bush River Rd
EXITS 107 B-A
EXIT 106
EXIT 107B/107A
EXIT 64 D Bush River Road
EXIT 64 B
EXIT 64 A
EXIT 64 C
EXIT 64 B
St. Andrews Road 1/4 MILE EXIT ONLY
WEST 26 Spartanburg
St Andrews Road 1/4 MILE EXIT ONLY
EXIT 106 St Andrews Road EXIT ONLY
CAROLINA CROSS ROADS
CONCEPTUAL SIGNING ALONG INTERSTATE 26
0 100 200 400 600 800 1000
SCALE : 1"=400'

SHEET 8

MATCHLINE SEE SHT. 8

EXITS 107A-B
20
Augusta
Florence
EXIT ONLY

EXIT 106
St Andrews
Road
EXIT ONLY

EXIT 107A-B
20
Augusta
Florence
¼ MILE
EXIT ONLY

26
76
EAST
Charleston

EXIT 108
EXIT
106
26
76
EAST
Columbia
Col. Life Blvd
To Bush River Rd
1 MILE

INTERSTATE
26
TO CHARLESTON

EXIT 106
St Andrews
Road
½ MILE
EXIT ONLY

EXIT 107A-B
20
Augusta
Florence
¾ MILE
EXIT ONLY

26
76
EAST
Charleston

St Andrews Rd ¾
I-20 1
I-126 1¾

TO SPARTANBURG
INTERSTATE
26

Piney Grove Rd 2¼
Harbison Blvd 3½
Lake Murray Blvd 4½

Piney Grove Rd ½
Harbison Blvd 1¾
Lake Murray Blvd 2¾

26
76
WEST
Spartanburg

Piney Grove
Road
1 MILE
EXIT
ONLY

EXIT 104

MATCHLINE SEE SHT. 10

CAROLINA CROSSROADS
CONCEPTUAL SIGNING ALONG INTERSTATE 26

0 100 200 400 600 800 1000

SCALE : 1"=400'

MATCHLINE SEE SHT. 9

TO CHARLESTON

INTERSTATE 26

EXITS 107A-B
AUGUSTA 20
Augusta
Florence
1 1/4 MILE
EXIT ONLY

PINEY GROVE RD

EXIT 104

EXIT 104
Piney Grove
Road
EXIT ONLY

EXIT 107
AUGUSTA 20
Augusta
Florence
2 MILES

TO SPARTANBURG

INTERSTATE 26

MATCHLINE SEE SHT. 11

EXIT 104

Harbison Blvd
3/4 MILE
EXIT 103

PINEY GROVE RD

AUGUSTA 26 26 WEST
Spartanburg
Piney Grove
Road
1/2 MILE
EXIT ONLY
EXIT 104

AUGUSTA 26 26 WEST
Spartanburg
Piney Grove
Road
EXIT ONLY
EXIT 104

AUGUSTA 26 26 WEST
Spartanburg
Harbison Blvd
1/2 MILE
EXIT ONLY
EXIT 103

CAROLINA CROSSROADS
CONCEPTUAL SIGNING ALONG INTERSTATE 26

0 100 200 400 600 800 1000

SCALE : 1"=400'

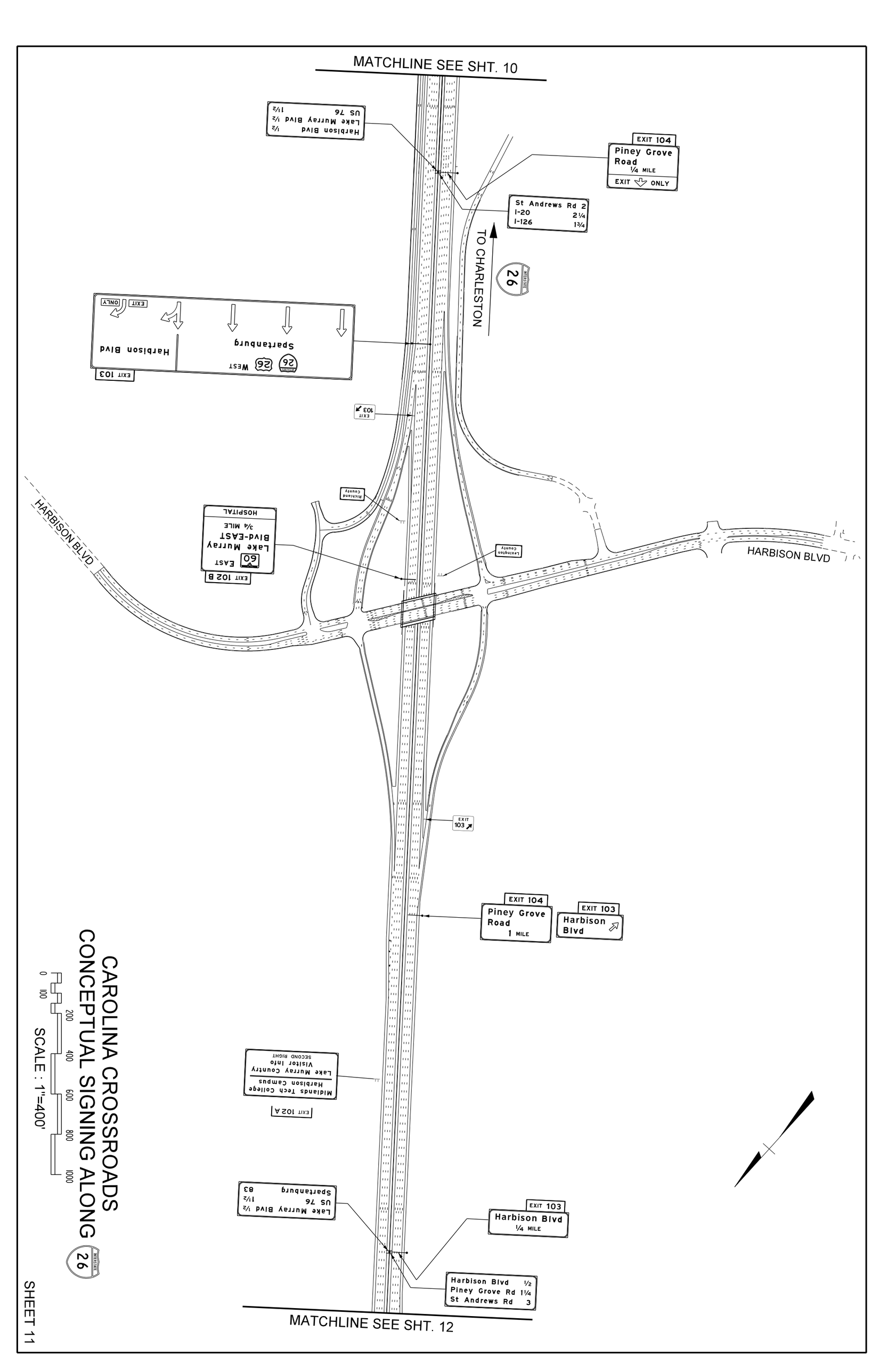

CAROLINA CROSSROADS
CONCEPTUAL SIGNING ALONG 26

SCALE : 1"=400'

0 100 200 400 600 800 1000

SHEET 11

MATCHLINE SEE SHT. 11

TO CHARLESTON

TO SPARTANBURG

MATCHLINE SEE SHT. 13

LAKE MURRAY BLVD

LAKE MURRAY BLVD

EXIT 102 B
60 EAST
Lake Murray Blvd-EAST
HOSPITAL

EXIT 103
Harbison Blvd
1 MILE

EXIT 102 A
60 WEST
Lake Murray Blvd-WEST
Irmo

EXIT 102 B
60 EAST
Lake Murray Blvd-EAST
1/4 MILE
HOSPITAL

EXIT 102 A
60 WEST
Lake Murray Blvd-WEST
1/4 MILE

EXIT 102 B
60 EAST
Lake Murray Blvd-EAST
HOSPITAL

EXITS 101 B-A
76 176
Ballentine
White Rock
3/4 MILE

EXIT 102 A
60 WEST
Lake Murray Blvd-WEST
Irmo

EXIT 101 A
76 176 WEST
Ballentine
White Rock
1/4 MILE

EXIT 101 B
176 EAST
Broad River Road-EAST

CAROLINA CROSSROADS
CONCEPTUAL SIGNING ALONG 26

0 100 200 400 600 800 1000

SCALE : 1"=400'

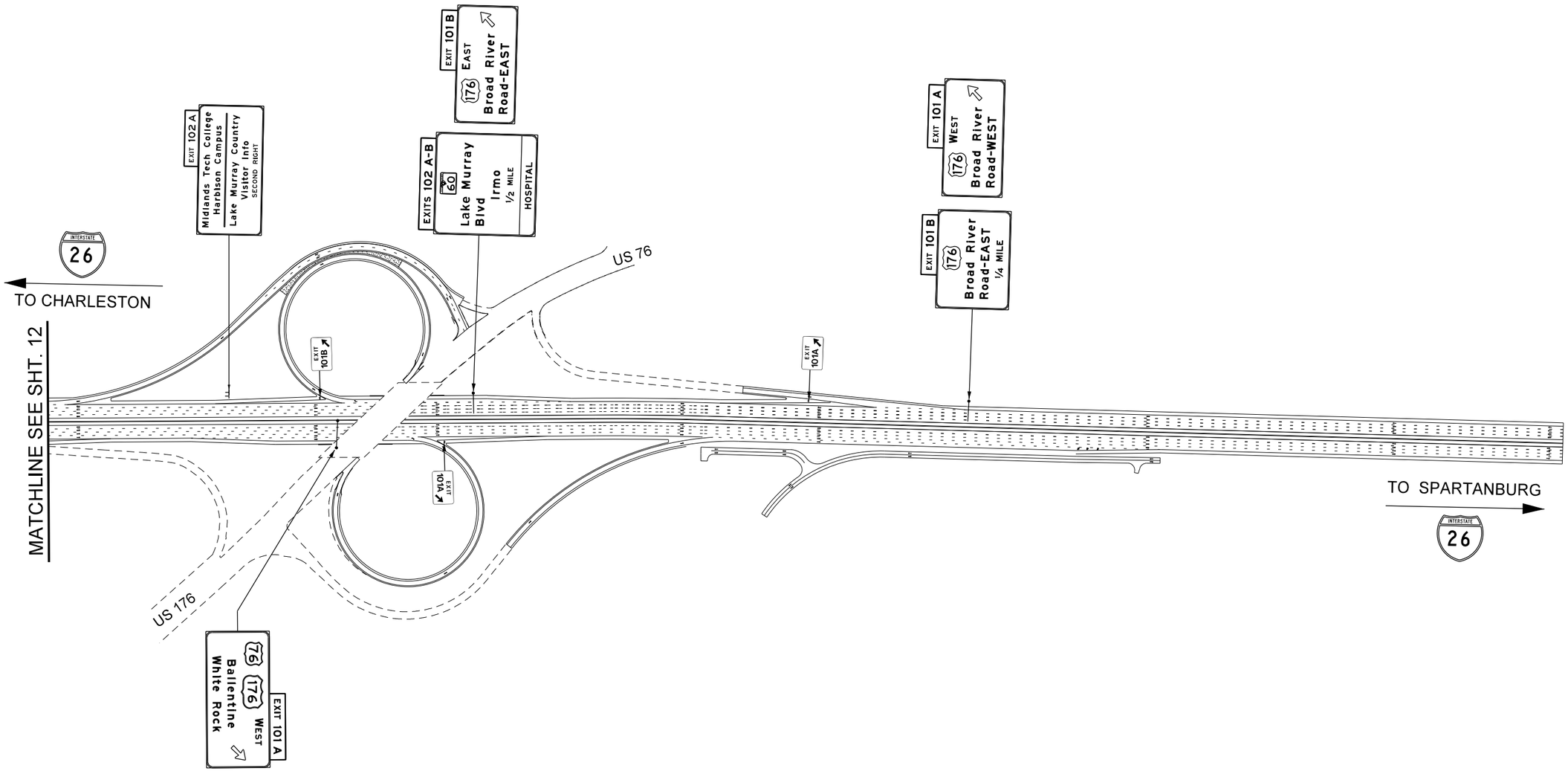

CAROLINA CROSSROADS
CONCEPTUAL SIGNING ALONG INTERSTATE 26

0 100 200 400 600 800 1000

SCALE : 1"=400'

CAROLINA
CROSSROADS
I-20/26/126 Corridor Project

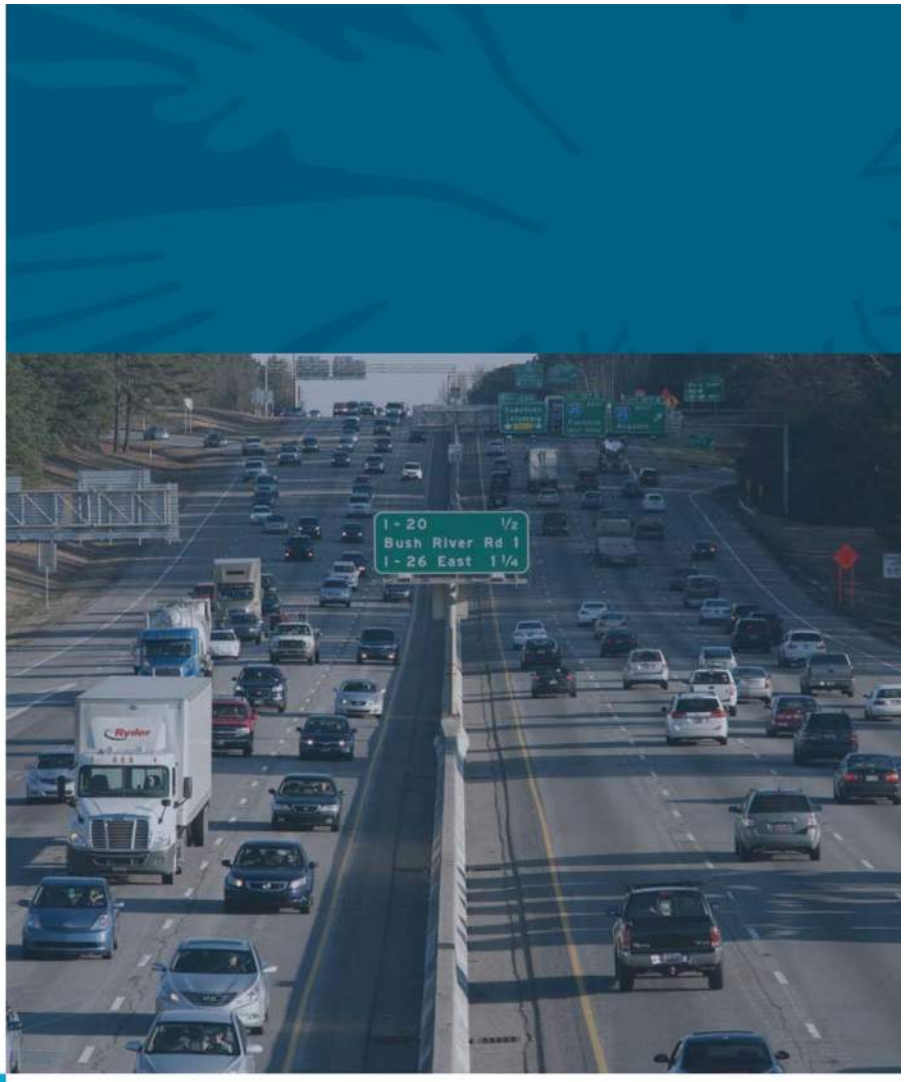

Modified Selected Alternative Phase 1/Phase 2 Traffic Technical Report

Carolina Crossroads
I-20/I-26/I-126 Corridor Project
Lexington and Richland Counties, South Carolina

June 2022



SCDOT South Carolina Department of Transportation

U.S. Department of Transportation Federal Highway Administration

Prepared for South Carolina Department of Transportation and the Federal Highway Administration

Modified Selected Alternative Phase 1/Phase 2 Traffic Technical Report

Carolina Crossroads

I-20/I-26/I-126 Corridor Improvements

Lexington and Richland Counties, South Carolina

August 2022

Prepared for
South Carolina Department of Transportation,
and the Federal Highway Administration





Prepared by

Table of Contents

1 Introduction 1

2 Background 2

3 Traffic Analysis 6

List of Tables

Table 1 – I-26 Basic Freeway Densities....7
Table 2 – I-20 Basic Freeway Densities....7
Table 3 – I-126 Basic Freeway Densities....7
Table 4 – I-26 Merge Densities....8
Table 5 – I-20 Merge Densities....8
Table 6 – I-126 Merge Densities....8
Table 7 – I-26 Diverge Densities....9
Table 8 – I-20 Diverge Densities....9
Table 9 – I-126 Diverge Densities....9
Table 10 - Intersection Capacity Analysis Results –2040 Exit 103 SA, ParClo, and Directional.... 11

List of Figures

Figure 1 – Phase 1 Preferred Concept....3
Figure 2 – Phase 2 Preferred Concept....4
Figure 3 – Exit 63 Bush River Road Existing Tie-In Concept....5
Figure 4 - 2040 Exit 63 Tie-In AM peak hour 12
Figure 5 - 2040 Exit 63 Tie-In PM peak hour 13

Appendices

Appendix A—TransModeler Density Outputs

Appendix B—TransModeler Intersection Analysis Outputs

1 Introduction

The original I-20/I-26/I-126 System Interchange Modification Report (the System IMR), dated May 2019, presented the anticipated interchange modifications as depicted in the Final Environmental Impact Statement (FEIS) for the project. Since the approval of the System IMR, the Carolina Crossroads I-20/I-26/I-126 Corridor Improvement Project (Carolina Crossroads Program) has been separated into five construction phases. The first three phases of the Carolina Crossroads Program comprise most of the work documented in the System IMR. Improvements to the I-126 at Colonial Life Boulevard interchange are now part of Phase 1 of the Carolina Crossroads Project Delivery while the I-20 Exit 65 Interchange at Broad River Road is now part of Phase 2. Phases 1 and 2 are both underway as design-build projects and the design has been substantially completed. The improvements to I-20/I-26/I-126 system interchanges, along with I-20 Exit 63 (Bush River Road) and I-26 Exit 106 (St. Andrews Road) are now part of Phase 3, which will also be a design-build project. Traffic Technical Memoranda addressing changes to the I-126 Colonial Life Boulevard interchange and I-20 Exit 65 (Broad River Road) were submitted as part of the Phase 1 and Phase 2 design-build projects, ID P039718 and ID P039719, respectively.

As the evolution of the Carolina Crossroads Program through the phased construction delivery is discussed, it is important to understand the key terms that define various milestones in the evolution of the design as it relates to the FEIS and the Record of Decision (ROD) for the Carolina Crossroads Program and the System IMR. The design concept depicted in the FEIS was referred to as the **Refined Recommended Preferred Alternative (RRPA)**, which as the name implies was a refinement to the Recommended Preferred Alternative (RPA) presented the in the Draft EIS. Since the System IMR was developed in parallel with the EIS documents, the nomenclature associated with the design concept in the documents was consistent and therefore the System IMR refers to the design concept used in the "Build" analysis as the RRPA. Once the ROD was issued in May of 2019, the RRPA concept became known as the **Selected Alternative (SA)**; however, many of the reference documents to the FEIS/ROD were not updated to reflect this change in nomenclature, including the System IMR. *Therefore, the terms RRPA and SA are synonymous.*

As the Carolina Crossroads Program has advanced through the initial construction phases and right-of-way acquisition, the design concept has been updated periodically. These updates include changes to the design associated with the final design that have been developed during Phases 1 and 2 and changes made to the design concept outside of Phases 1 and 2 based on refinements made during right-of-way acquisition throughout the entire limits of the Carolina Crossroads Program. The version of the design concept that includes all of these changes is referred to as the **Modified Selected Alternative (MSA)**. The MSA is fluid and will continue to evolve as the Carolina Crossroads Program is constructed.

In advance of the procurement of Phase 3, this report provides a summary of the updated MSA network analyses which now includes the final design concepts for Phase 1 and Phase 2 as well as an updated interchange concept at I-20 Exit 63 (Tie-in). These three changes are described below and constitute the major changes from the RRPA/SA as it relates to effects on the System IMR. The results from the MSA network analyses are compared to the original RRPA/SA results that were included in the approved IMR in order to demonstrate that performance within the network is improved or essentially unchanged relative to the Measures of Effectiveness (MOE) presented in the approved System IMR.

2 Background

As part of the Phase 1 construction, the existing configuration of the Colonial Life Boulevard interchange at I-126 was originally expected to be replaced with a full access tight urban diamond interchange under the approved Selected Alternative (SA) network. Due to factors such as design innovation, construability, cost effectiveness, and traffic operations, a partial diverging diamond interchange concept, as shown in **Figure 1**, was chosen. This design incorporates a new single crossover intersection rather than two signalized intersections as part of the SA. The full traffic analysis including the interchange justification for this preferred alternative can be found in the September 2021 *Technical Memorandum I-126 at Colonial Life Boulevard Interchange – Traffic Analysis* prepared by Ramey Kemp Associates.

As part of the Phase 2 construction, the existing configuration of the Exit 65 Broad River Road (US 176) at I-20 was originally expected to be replaced with a single point urban interchange (SPUI) under the approved SA network. Due to factors such as design innovation, constructability, cost effectiveness, and traffic operations, an offset diverging diamond interchange concept, as shown in **Figure 2**, was chosen. This design incorporates two new crossover intersections rather than signal point intersection as part of the SA. The full traffic analysis including the interchange justification for this preferred alternative can be found in the March 2022 *Technical Memorandum I-20 at Broad River Road Interchange – Traffic Analysis* prepared by Ramey Kemp Associates.

Due to design constraints, including right of way impacts, additional alternatives have been analyzed under 2040 conditions at the I-20 Exit 63 Interchange including a Displaced Single Point Urban Interchange (DSPUI), Partial Cloverleaf Interchange (ParClo) and a modified Existing Tie-In Interchange (Tie-in). The modified existing tie-in interchange, as shown in **Figure 3** was chosen to replace the proposed Diverging Diamond Interchange (DDI) that incorporated an overpass bridge connection of Berryhill Road and Rockland Road under the a NPMRDS cted Alternative (SA) network.

Under the Tie-In concept, the existing eastbound off-ramp location is maintained but widened to two lanes shortly after the ramp exit from the C-D road, then expanded to three lanes with dual right turns operating under signalized conditions. The I-20 westbound off-ramp is shifted closer to the mainline and expanded to three lanes at the ramp-terminus including a left turn lane, shared left-right turn lane, and right turn lane. The I-20 westbound ramps no longer operate under one traffic signal controller with the adjacent intersection at Berryhill Road. Based on the preliminary analysis and heavy queuing observed in the simulations, the I-20 westbound on-ramp has been modified to provide two lanes to accommodate traffic from the dual westbound left turn lanes from Bush River Road. The Exit 63 (Tie-in) interchange concept was analyzed initially using a modified version of the SA TransModeler. All other network improvements within the SA network were maintained. Subsequently, the Exit 63 Tie-in concept was incorporated into the MSA network update along with the Phase 1 and Phase 2 interchange updates at I-126 at Colonial Life Boulevard and at I-20 at Broad River Road, respectively.

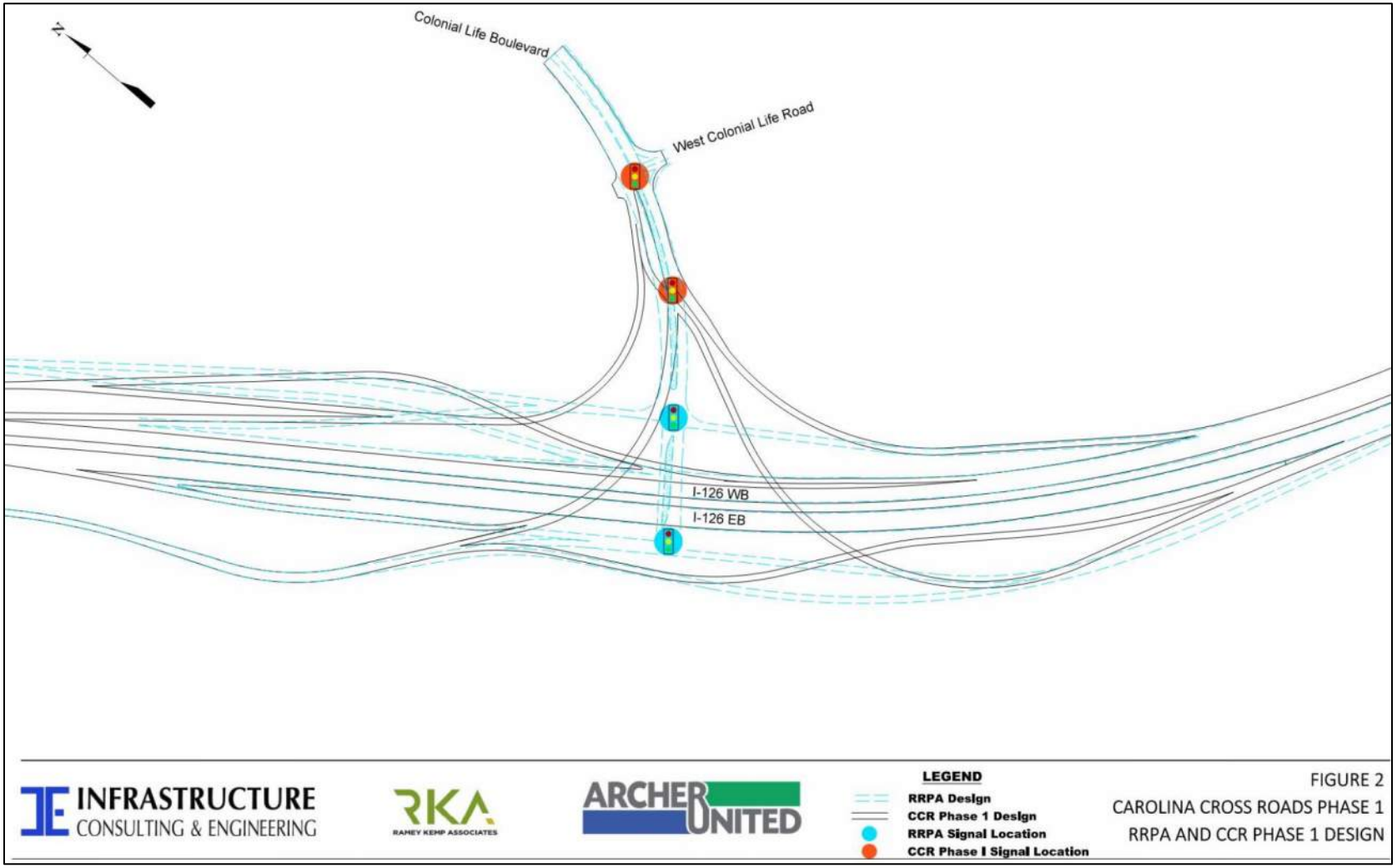

Source: Figure 2 of the *I-126 at Colonial Life Boulevard Interchange – Traffic Analysis Technical Memorandum (page 3)*

Figure 1 – Phase 1 Preferred Concept

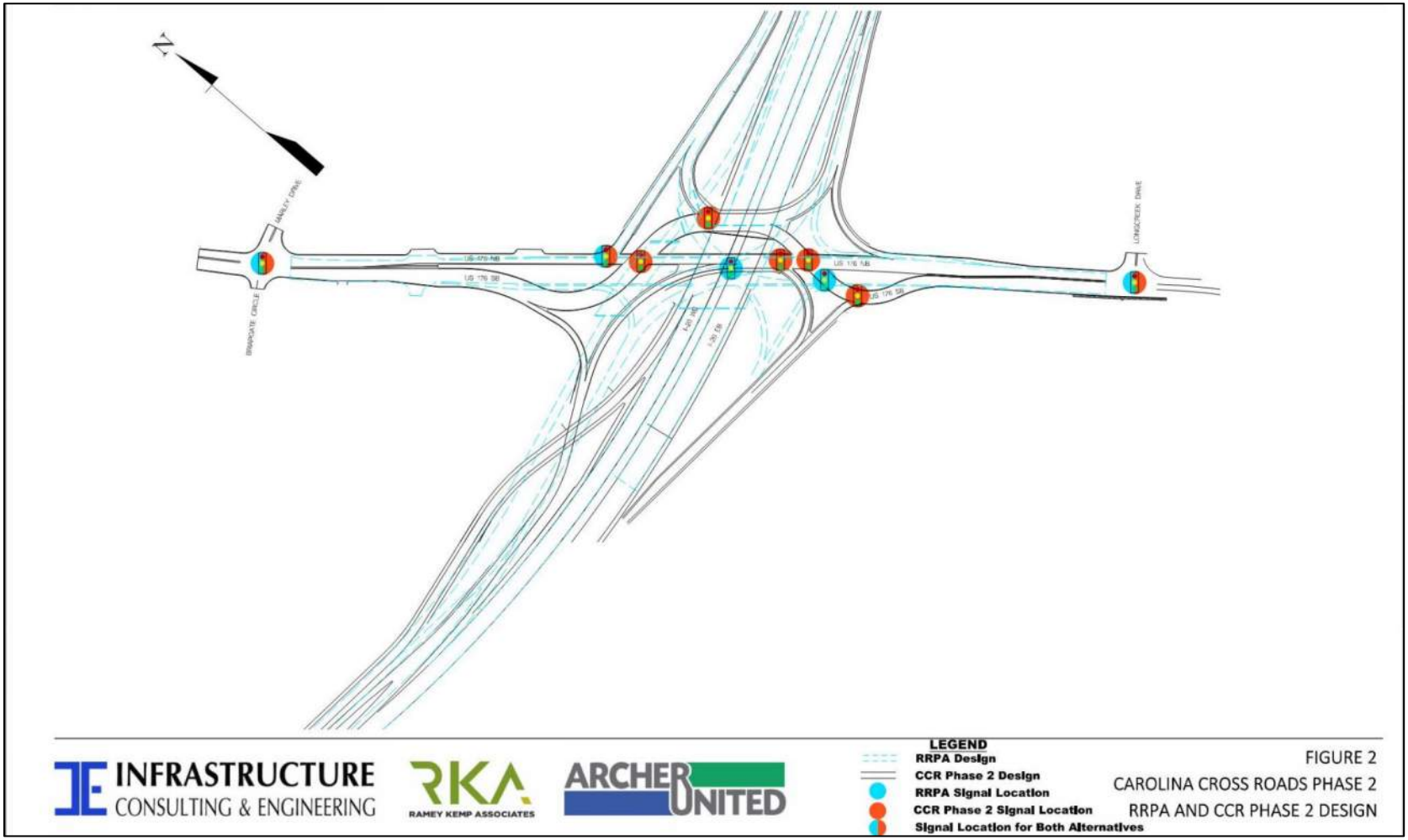

Source: Figure 2 of the *I-20 at Broad River Road Interchange – Traffic Analysis Technical Memorandum (page 3)*

Figure 2 – Phase 2 Preferred Concept



Figure 3 – Exit 63 Bush River Road Existing Tie-In Concept

3 Traffic Analysis

Due to substantial updates to the 2040 SA network, a simulation-based, dynamic traffic assignment (DTA) was completed for the 2040 AM and PM scenarios. The analysis results of the mainline density segments for the 2040 SA (referred to the 2040 Build RRPA as part of the approved IMR) and the 2040 MSA conditions were compared and summarized. **Table 1** through **Table 9** summarize the analysis results for the basic freeway segments, merge segments, and diverge segments, respectively. Density outputs are provided in **Appendix A**.

The 2040 MSA condition LOS, when compared to the 2040 RRPA condition LOS, were the same except for the following:

- During the morning peak hour:
    - The I-26 eastbound merge segment LOS at Exit 104 (Piney Grove Road) declines from LOS C to LOS D
        - Density increases by 2.3 PCE per mile per lane (from 27.9 to 30.2 – the density threshold between LOS C and LOS D is 28.0 PCE per mile per lane).
    - The I-26 westbound merge segment LOS at Exit 106 (St Andrews Road) declines from LOS C to LOS D
        - Density increases by 1.0 PCE per mile per lane (from 27.9 to 28.9 – the density threshold between LOS C and LOS D is 28.0 PCE per mile per lane)
- During the afternoon peak hour:
    - The I-20 westbound segment between Exit 63 (Bush River Road) and Exit 61 (US 378) density improves from 127.7 to 68.9 PCE per mile per lane, although the segment LOS remains at LOS F.
    - The I-20 eastbound merge segment LOS at Exit 65 (Broad River Road) declines from a LOS D to LOS E
        - Density increases by 3.6 PCE per mile per lane (from 34.2 to 37.8 – the density threshold between LOS D and LOS E is 35.0 PCE mile per lane)
    - The I-20 westbound merge segments LOS at the CD road and Exit 63 (Bush River Road) improve from LOS F
        - At the CD Road, density improves from 92.0 PCE per mile per lane (LOS F) to 19.5 (LOS B)
        - At Exit 63 (Bush River Road), density improves from 119.6 PCE per mile per lane (LOS F) to LOS 32.2 (LOS D).
    - The I-20 westbound diverge segment LOS at Exit 65 (Broad River Road) improves from LOS F (44.7) to LOS E (40.4).
    - The I-20 westbound diverge segment at Exit 61 (US 378) density improves from 124.7 to 93.4 although the LOS remains at LOS F.

The reported density improvements around the westbound Exit 63 (Bush River Road) segments may be attributed to the redistribution of the I-20 westbound volume due to the updated dynamic traffic assignment runs completed. Although segment LOS continue to report a LOS F for freeway and diverge segments, the merge segments (CD Road and Exit 63) LOS report improved operations. In general, densities associated with the LOS changes above were noted to be relatively small and do not impact

overall operation of the interchanges and closely match those from the traffic technical memorandums submitted as part of Phase 1 and Phase 2 analyses.

Table 1 – I-26 Basic Freeway Densities

Segment	2040 Build RRPA Conditions				2040 MSA Conditions			
	AM Peak Hour		PM Peak Hour		AM Peak Hour		PM Peak Hour	
	LOS[1]	Density[2]	LOS[1]	Density[2]	LOS[1]	Density[2]	LOS[1]	Density[2]
I-26 Eastbound								
Exit 104 to Exit 106	D	27.9	C	20.2	D	30.2	C	20.3
Exit 107 to Exit 108[W]	E	37.0	C	20.5	E	36.9	C	20.9
Exit 106 to Exit 107[W]								
I-126 Diverge to I-126 Merge								
Exit 108 to Exit 110	C	20.2	C	22.6	C	18.3	C	22.5
east of Exit 110	C	21.1	C	25.5	C	21.0	C	25.7
I-26 Westbound								
east of Exit 110	D	34.6	D	29.9	D	34.8	D	30.6
Exit 110 to Exit 108	B	17.0	C	20.3	B	16.4	C	19.2
I-126 Diverge to I-126 Merge	B	15.4	B	16.2	B	14.9	B	16.1
Exit 108 to Exit 107[W]	C	21.8	D	33.9	C	21.4	D	33.8
Exit 107 to Exit 106[W]								
I-26 Merge to Exit 106								
Exit 106 to Exit 104	D	27.5	F	46.8	D	28.2	F	45.7

[1] Per Highway Capacity Manual 2010 criteria.

[2] Density expressed as PCE/per mile/per lane.

[W] Weaving Section

Table 2 – I-20 Basic Freeway Densities

Segment	2040 Build RRPA Conditions				2040 MSA Conditions			
	AM Peak Hour		PM Peak Hour		AM Peak Hour		PM Peak Hour	
	LOS[1]	Density[2]	LOS[1]	Density[2]	LOS[1]	Density[2]	LOS[1]	Density[2]
I-20 Eastbound								
Exit 61 to Exit 63	D	31.2	B	16.3	D	30.6	B	16.1
Exit 63 to Exit 64	C	19.2	A	10.9	C	18.4	A	10.8
Exit 64 to Exit 65								
Exit 65 to Exit 68	F	57.1	E	37.1	F	56.5	E	38.0
I-20 Westbound								
Exit 68 to Exit 65	D	32.4	E	41.8	D	28.7	E	38.3
Exit 65 to Exit 64	A	8.0	A	7.8	A	10.7	B	12.1
Exit 64 to Exit 63[W]								
Exit 63 to Exit 61	B	15.6	F	127.4	B	15.3	F	68.9

[1] Per Highway Capacity Manual 2010 criteria.

[2] Density expressed as PCE/per mile/per lane.

Table 3 – I-126 Basic Freeway Densities

Segment	2040 Build RRPA Conditions				2040 MSA Conditions			
	AM Peak Hour		PM Peak Hour		AM Peak Hour		PM Peak Hour	
	LOS[1]	Density[2]	LOS[1]	Density[2]	LOS[1]	Density[2]	LOS[1]	Density[2]
I-126 Eastbound								
I-26 to Colonial Life Blvd	D	29.2	A	10.8	D	31.1	B	11.5
Colonial Life Blvd to Greystone Blvd	E	38.8	B	16.9	E	38.4	B	15.8
I-126 Westbound								
Greystone Blvd to Colonial Life Blvd	B	14.4	D	31.2	B	13.7	D	31.7
Colonial Life Blvd to I-26	B	12.6	D	30.1	B	12.9	D	30.3

[1] Per Highway Capacity Manual 2010 criteria.

[2] Density expressed as PCE/per mile/per lane.

Table 4 – I-26 Merge Densities

Segment	2040 Build RRPA Conditions				2040 MSA Conditions			
	AM Peak Hour		PM Peak Hour		AM Peak Hour		PM Peak Hour	
	LOS[1]	Density[2]	LOS[1]	Density[2]	LOS[1]	Density[2]	LOS[1]	Density[2]
I-26 Eastbound								
Exit 104	C	27.9	C	20.2	D	30.2	C	20.3
Exit 106 Loop / **Exit 106[W]**	E	37.0	C	20.5	E	36.9	C	20.9
Exit 107 Loop[W] / **Exit 107[W]**	B	13.9	B	13.1	B	14.1	B	14.0
Exit 108 (I-126)	C	20.2	C	22.6	B	18.3	C	22.5
Exit 110	C	21.1	C	25.5	C	21.0	C	25.7
I-26 Westbound								
Exit 110	B	17.0	C	20.3	B	16.4	B	19.2
Exit 108 (I-126)	B	15.1	C	23.3	B	14.7	C	23.6
Exit 107 Loop[W] / **Exit 107[W]**	C	25.9	E	39.7	C	27.1	E	39.9
Exit 106	C	27.9	E	42.4	D	28.9	E	40.8

[1] Per Highway Capacity Manual 2010 criteria.

[2] Density expressed as PCE/per mile/per lane.

[W] Weaving Section

Table 5 – I-20 Merge Densities

Segment	2040 Build RRPA Conditions				2040 MSA Conditions			
	AM Peak Hour		PM Peak Hour		AM Peak Hour		PM Peak Hour	
	LOS[1]	Density[2]	LOS[1]	Density[2]	LOS[1]	Density[2]	LOS[1]	Density[2]
I-20 Eastbound								
Exit 61	D	31.2	B	16.3	D	30.6	B	16.1
CD Road	F	95.6	B	19.8	F	93.9	C	20.9
Exit 65	F	93.5	D	34.2	F	79.6	E	37.8
I-20 Westbound								
Exit 65	A	8.0	A	7.8	A	7.9	A	8.2
CD Road	B	11.4	F	92.0	B	12.6	B	19.5
Exit 63	B	12.8	F	119.6	B	13.1	D	32.2

[1] Per Highway Capacity Manual 2010 criteria.

[2] Density expressed as PCE/per mile/per lane.

[W] Weaving Section

Table 6 – I-126 Merge Densities

Segment	2040 Build RRPA Conditions				2040 MSA Conditions			
	AM Peak Hour		PM Peak Hour		AM Peak Hour		PM Peak Hour	
	LOS[1]	Density[2]	LOS[1]	Density[2]	LOS[1]	Density[2]	LOS[1]	Density[2]
I-126 Eastbound								
Exit from I-20 EB/WB	E	38.3	C	21.6	E	40.8	C	21.0
Colonial Life Blvd	D	33.2	B	15.9	C	27.8	B	11.6
I-126 Westbound								
Greystone Blvd	B	12.0	D	28.7	B	12.2	D	31.8
Colonial Life Blvd	A	6.2	B	16.2	A	7.7	B	17.4

[1] Per Highway Capacity Manual 2010 criteria.

[2] Density expressed as PCE/per mile/per lane.

Table 7 – I-26 Diverge Densities

Segment	2040 Build RRPA Conditions				2040 MSA Conditions			
	AM Peak Hour		PM Peak Hour		AM Peak Hour		PM Peak Hour	
	LOS[1]	Density[2]	LOS[1]	Density[2]	LOS[1]	Density[2]	LOS[1]	Density[2]
I-26 Eastbound								
Exit 106	C	24.3	B	17.4	C	24.9	B	17.5
CD Road	F	71.9	C	26.9	F	71.2	C	26.2
I-26 to I-26	E	37.0	C	20.5	E	36.9	C	20.9
Exit 110	C	21.5	C	24.6	C	21.7	C	24.6
I-26 Westbound								
Exit 110	F	48.1	D	32.5	F	51.9	D	33.4
Exit 108 (Existing--NB Build) / To I-20 (RRPA--MSA)	B	17.0	C	20.3	B	16.4	B	19.2
Exit 106[W]	B	15.1	C	23.3	B	14.7	C	23.6
Exit 106 Loop								
Exit 104	C	26.3	F	46.8	D	28.2	E	40.3

[1] Per Highway Capacity Manual 2010 criteria.

[2] Density expressed as PCE/per mile/per lane.

Table 8 – I-20 Diverge Densities

Segment	2040 Build RRPA Conditions				2040 MSA Conditions			
	AM Peak Hour		PM Peak Hour		AM Peak Hour		PM Peak Hour	
	LOS[1]	Density[2]	LOS[1]	Density[2]	LOS[1]	Density[2]	LOS[1]	Density[2]
I-20 Eastbound								
Exit 63 (Existing) / CD Road (RRPA and MSA)	D	31.2	B	16.3	D	30.6	B	16.1
I-20 Westbound								
Exit 65	D	34.0	F	44.7	D	29.7	E	40.4
CD Road	B	14.6	B	16.7	B	14.3	B	15.7
Exit 63	A	8.0	A	7.8	A	8.8	A	8.2
Exit 61	E	42.5	F	124.7	E	43.4	F	93.4

[1] Per Highway Capacity Manual 2010 criteria.

[2] Density expressed as PCE/per mile/per lane.

Table 9 – I-126 Diverge Densities

Segment	2040 Build RRPA Conditions				2040 MSA Conditions			
	AM Peak Hour		PM Peak Hour		AM Peak Hour		PM Peak Hour	
	LOS[1]	Density[2]	LOS[1]	Density[2]	LOS[1]	Density[2]	LOS[1]	Density[2]
I-126 Eastbound								
Colonial Life Blvd	D	29.2	B	10.8	D	31.1	B	11.5
Greystone Blvd	D	33.9	B	16.2	D	28.5	B	11.7
I-126 Westbound								
Greystone Blvd	B	14.6	D	31.4	B	15.2	D	30.7
Colonial Life Blvd	B	10.1	C	23.5	A	9.6	C	25.6
Exit to I-26 EB	B	10.4	C	23.0	B	10.2	C	25.7
Exit to I-20 EB/WB (CD Road)	A	6.3	B	16.4	A	7.7	B	17.4

[1] Per Highway Capacity Manual 2010 criteria.

[2] Density expressed as PCE/per mile/per lane.

The results of the arterial intersection capacity analysis for 2040 RRPA and the 2040 MSA are compared in **Table 10**.

Under the 2040 MSA conditions, all intersections operate at LOS C or better during both the morning and afternoon peak hours for the Phase 1 Colonial Life Boulevard and the Phase 2 Exit 65 (Broad River Road) interchanges comparable to the 2040 RRPA. The Exit 63 existing tie-in concept intersections operate at LOS D or better except the intersection of Bush River Road at Outlet Point Boulevard which operates at LOS E during the AM peak hour, similar to 2040 RRPA conditions. TransModeler intersection control delay outputs are provided in **Appendix B**.

Figure 4 and **Figure 6** depict the TransModeler screenshots of morning and afternoon peak hour queuing and intersection operations under the Exit 63 Tie-In conditions from the additional alternative analysis, respectively. During the morning peak hour, there is a heavy queue present along the eastbound approach at the intersection of Bush River Road at Outlet Point Boulevard and moderate queue along the I-20 westbound off-ramp. During the afternoon peak hour, there is moderate queue present along westbound Bush River Road, specifically the westbound left turn lanes at the intersection of Bush River Road and the I-20 WB ramps. In addition, there is moderate queue present on the I-20 westbound off-ramp.

Table 10 - Intersection Capacity Analysis Results –2040 Exit 103 SA, ParClo, and Directional

TransModeler Node #	Intersection Name	2040 Build RRPA Model Outputs				2040 MSA Model Outputs			
		AM		PM		AM		PM	
		LOS	Delay	LOS	Delay	LOS	Delay	LOS	Delay
Exit 106									
100000348	St. Andrews Road at Jamil Road	C	23.7	C	20.8	C	30.9	C	24.1
127	St. Andrews Road at Woodland Hills Road	C	26.6	B	13.1	C	32.4	B	14.8
40	St. Andrews Road at I-26 SPUI Intersection	D	44.0	D	37.6	D	38.6	D	38.8
100000182	St. Andrews Road at I-26 WBR Off-ramp[1]	F	120.3	F	100.7	F	83.3	F	95.7
100000358	St. Andrews Road at Fernandina Road/Burning Tree Drive	D	35.0	C	31.2	C	30.9	C	32.5
100000354	St. Andrews Road at Kay Street / Chartwell Road	C	30.1	C	20.9	C	22.2	B	19.0
Exit 108									
100000256	Bush River Road at Zimalcrest Drive	A	7.5	A	8.9	A	4.7	A	5.6
100000898	Bush River Road at Driveway	A	4.0	A	2.5	A	3.7	A	2.6
100000252	Bush River Road at Morninghill Drive	D	36.3	C	24.5	D	45.3	C	23.8
100000184	Bush River Road at Arrowwood Road	B	11.2	B	12.6	B	10.3	B	13.8
Exit 110									
100000186	Sunset Boulevard (US 378) at E. Hospital Drive / Harbor Drive	D	42.1	D	41.3	D	44.0	D	38.3
100000093	Sunset Boulevard (US 378) at I-26 EBR Off-Ramp	B	14.8	B	12.9	B	14.4	B	12.6
100000903	Sunset Boulevard (US 378) at I-26 Single Point Ramps Intersection	C	27.0	C	24.2	C	26.9	C	25.9
100000902	Sunset Boulevard (US 378) at I-26 WBR Off-Ramp	A	7.0	B	19.0	A	6.2	C	20.1
100000163	Sunset Boulevard (US 378) at Chris Drive / McSwain Drive	A	8.6	E	59.4	A	8.4	E	69.5
Exit 63									
141	Bush River Road at Outlet Pointe Boulevard	E	59.5	B	15.5	E	72.5	B	11.0
52 / 100000139	Bush River Road at I-20 WB Ramps DDI Intersection/I-20 WB Ramps	A	9.4	C	21.6	B	16.6	C	34.6
150 / 30	Bush River Road at I-20 EB Ramps DDI Intersection/I-20 EB Ramps	C	23.5	C	22.3	B	12.9	B	12.6
120	Bush River Road at Rockland Road	A	8.8	B	16.2	-	-	-	-
100000255 / 100000904	Bush River Road at Independence Avenue	B	14.4	C	24.5	B	13.5	D	36.8
Exit 65									
100000187	Broad River Road at Marley Drive / Briargate Circle	B	19.7	D	35.9	C	22.0	C	21.6
54 / 112	Broad River Road at I-20 WBR Off-Ramp/Crossover North of I-20	B	12.6	B	19.7	B	18.1	B	12.7
79	Broad River Road at I-20 Single Point Ramps Intersection	D	43.5	D	36.2	-	-	-	-
100000190 / 148	Broad River Road at I-20 EBR Off-Ramp/Crossover South of I-20	A	5.8	B	10.3	B	10.4	B	11.4
100000195	Broad River Road at Longcreek Drive	B	13.3	B	12.9	A	7.8	B	11.8
Colonial Life Blvd									
108	Colonial Life Boulevard at I-126 EB Ramps	C	21.4	C	20.8	B	16.5	C	27.0
107 / 113	Colonial Life Boulevard at I-126 WB Ramps/I-126 Ramps	A	7.3	B	15.5				

[1] Intersection unsignalized; worst approach LOS and delay reported.

[2] Delay unable to be processed per HCM 2010 methodology; Average control delay reported.

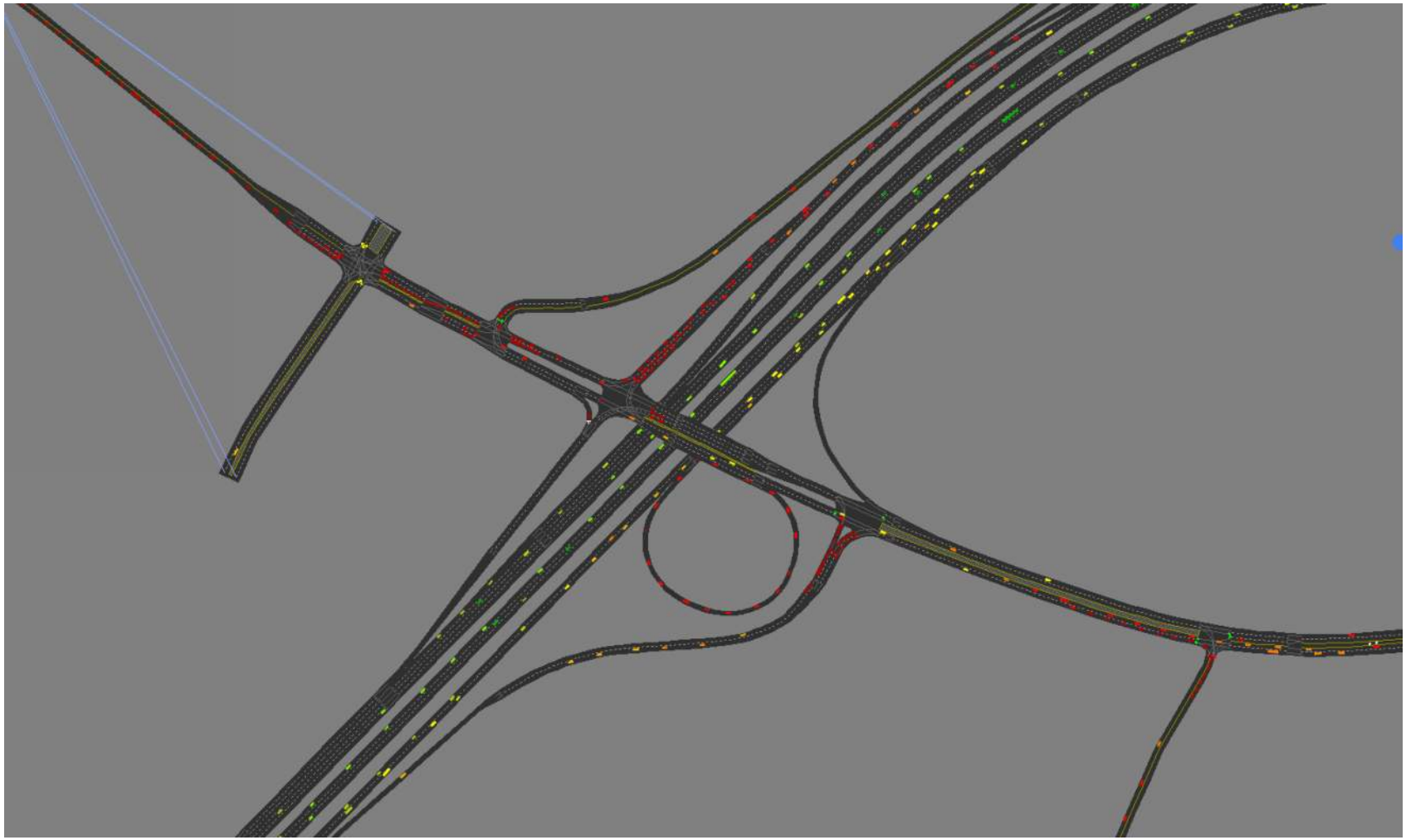

Figure 4 - 2040 Exit 63 Tie-In AM peak hour

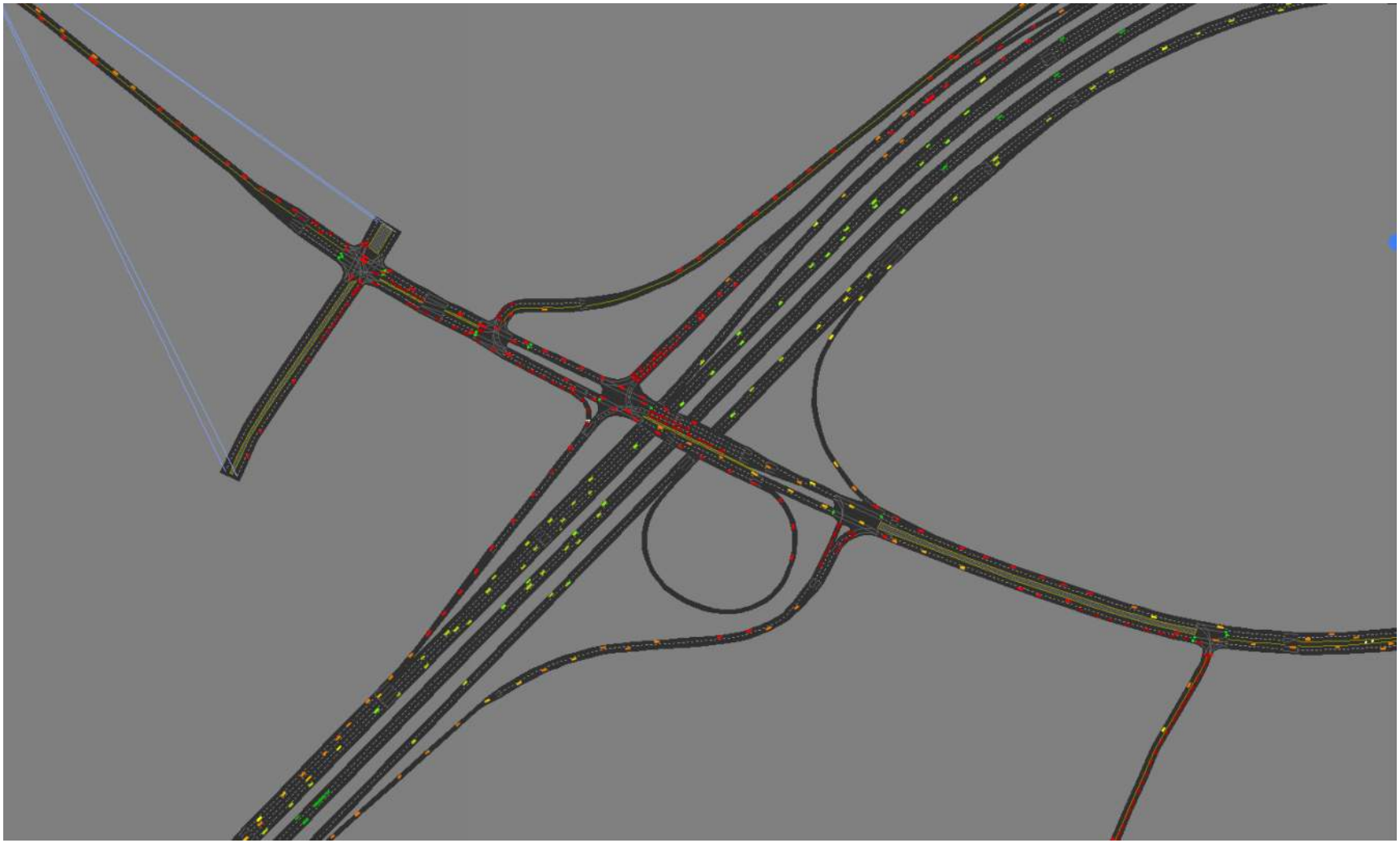

Figure 5 - 2040 Exit 63 Tie-In PM peak hour

Appendix A—TransModeler Density Outputs

ID	Run	Density	Name (Type)	Direction
2806	1	37.671435	I-20 EB (Basic Analysis)	NE
2806	2	42.555665	I-20 EB (Basic Analysis)	NE
2806	3	37.582901	I-20 EB (Basic Analysis)	NE
2806	4	37.923211	I-20 EB (Basic Analysis)	NE
2806	5	40.717901	I-20 EB (Basic Analysis)	NE
2806	6	37.740555	I-20 EB (Basic Analysis)	NE
2806	7	40.669128	I-20 EB (Basic Analysis)	NE
2806	8	38.393887	I-20 EB (Basic Analysis)	NE
2806	9	36.496668	I-20 EB (Basic Analysis)	NE
2806	10	38.355338	I-20 EB (Basic Analysis)	NE
2807	1	37.671435	I-20 EB (Basic Analysis)	NE
2807	2	42.555665	I-20 EB (Basic Analysis)	NE
2807	3	37.582901	I-20 EB (Basic Analysis)	NE
2807	4	37.923211	I-20 EB (Basic Analysis)	NE
2807	5	40.717901	I-20 EB (Basic Analysis)	NE
2807	6	37.740555	I-20 EB (Basic Analysis)	NE
2807	7	40.669128	I-20 EB (Basic Analysis)	NE
2807	8	38.393887	I-20 EB (Basic Analysis)	NE
2807	9	36.496668	I-20 EB (Basic Analysis)	NE
2807	10	38.355338	I-20 EB (Basic Analysis)	NE
2808	1	39.847983	I-20 EB (Diverge Analysis)	NE
2808	2	47.40616	I-20 EB (Diverge Analysis)	NE
2808	3	40.078307	I-20 EB (Diverge Analysis)	NE
2808	4	40.211756	I-20 EB (Diverge Analysis)	NE
2808	5	44.634367	I-20 EB (Diverge Analysis)	NE
2808	6	38.798181	I-20 EB (Diverge Analysis)	NE
2808	7	44.372411	I-20 EB (Diverge Analysis)	NE
2808	8	39.707614	I-20 EB (Diverge Analysis)	NE
2808	9	36.909131	I-20 EB (Diverge Analysis)	NE
2808	10	42.391429	I-20 EB (Diverge Analysis)	NE
2813	1	14.163418	I-20 WB (Merge Analysis)	S
2813	2	12.383929	I-20 WB (Merge Analysis)	S
2813	3	12.997859	I-20 WB (Merge Analysis)	S
2813	4	11.990879	I-20 WB (Merge Analysis)	S
2813	5	13.068087	I-20 WB (Merge Analysis)	S
2813	6	12.936692	I-20 WB (Merge Analysis)	S
2813	7	13.535896	I-20 WB (Merge Analysis)	S
2813	8	12.006737	I-20 WB (Merge Analysis)	S
2813	9	12.488139	I-20 WB (Merge Analysis)	S
2813	10	14.072801	I-20 WB (Merge Analysis)	S
2814	1	15.51989	I-20 WB (Basic Analysis)	S
2814	2	14.826592	I-20 WB (Basic Analysis)	S
2814	3	15.303573	I-20 WB (Basic Analysis)	S
2814	4	15.040722	I-20 WB (Basic Analysis)	S
2814	5	15.065812	I-20 WB (Basic Analysis)	S
2814	6	15.527117	I-20 WB (Basic Analysis)	S
2814	7	15.996618	I-20 WB (Basic Analysis)	S
2814	8	15.376429	I-20 WB (Basic Analysis)	S
2814	9	15.29834	I-20 WB (Basic Analysis)	S
2814	10	16.144402	I-20 WB (Basic Analysis)	S
2822	1	10.644008	I-20 WB (Merge Analysis)	SW
2822	2	11.158176	I-20 WB (Merge Analysis)	SW
2822	3	11.250775	I-20 WB (Merge Analysis)	SW

ID	Run	Density	Name (Type)	Direction
2822	4	10.046989	I-20 WB (Merge Analysis)	SW
2822	5	10.94861	I-20 WB (Merge Analysis)	SW
2822	6	9.403669	I-20 WB (Merge Analysis)	SW
2822	7	10.166393	I-20 WB (Merge Analysis)	SW
2822	8	10.636698	I-20 WB (Merge Analysis)	SW
2822	9	10.190761	I-20 WB (Merge Analysis)	SW
2822	10	10.736607	I-20 WB (Merge Analysis)	SW
2823	1	98.81845	I-20 WB (Basic Analysis)	SW
2823	2	253.683181	I-20 WB (Basic Analysis)	SW
2823	3	265.482398	I-20 WB (Basic Analysis)	SW
2823	4	103.243157	I-20 WB (Basic Analysis)	SW
2823	5	0	I-20 WB (Basic Analysis)	SW
2823	6	101.768256	I-20 WB (Basic Analysis)	SW
2823	7	95.868644	I-20 WB (Basic Analysis)	SW
2823	8	140.115711	I-20 WB (Basic Analysis)	SW
2823	9	76.694918	I-20 WB (Basic Analysis)	SW
2823	10	194.687097	I-20 WB (Basic Analysis)	SW
2826	1	29.468817	I-20 EB (Basic Analysis)	NE
2826	2	55.147459	I-20 EB (Basic Analysis)	NE
2826	3	29.138167	I-20 EB (Basic Analysis)	NE
2826	4	29.381372	I-20 EB (Basic Analysis)	NE
2826	5	31.613942	I-20 EB (Basic Analysis)	NE
2826	6	35.898725	I-20 EB (Basic Analysis)	NE
2826	7	34.281	I-20 EB (Basic Analysis)	NE
2826	8	35.319405	I-20 EB (Basic Analysis)	NE
2826	9	30.67118	I-20 EB (Basic Analysis)	NE
2826	10	30.993631	I-20 EB (Basic Analysis)	NE
2829	1	45.529159	I-20 EB (Merge Analysis)	NE
2829	2	77.461307	I-20 EB (Merge Analysis)	NE
2829	3	45.858918	I-20 EB (Merge Analysis)	NE
2829	4	46.46885	I-20 EB (Merge Analysis)	NE
2829	5	49.382141	I-20 EB (Merge Analysis)	NE
2829	6	67.035444	I-20 EB (Merge Analysis)	NE
2829	7	62.803114	I-20 EB (Merge Analysis)	NE
2829	8	61.932846	I-20 EB (Merge Analysis)	NE
2829	9	47.014317	I-20 EB (Merge Analysis)	NE
2829	10	46.225869	I-20 EB (Merge Analysis)	NE
2830	1	43.993854	I-20 EB (Basic Analysis)	NE
2830	2	52.168654	I-20 EB (Basic Analysis)	NE
2830	3	45.994771	I-20 EB (Basic Analysis)	NE
2830	4	44.915329	I-20 EB (Basic Analysis)	NE
2830	5	47.298	I-20 EB (Basic Analysis)	NE
2830	6	47.837721	I-20 EB (Basic Analysis)	NE
2830	7	51.365654	I-20 EB (Basic Analysis)	NE
2830	8	46.652967	I-20 EB (Basic Analysis)	NE
2830	9	42.585313	I-20 EB (Basic Analysis)	NE
2830	10	47.311164	I-20 EB (Basic Analysis)	NE
2831	1	14.771339	I-20 WB (Basic Analysis)	SW
2831	2	14.027394	I-20 WB (Basic Analysis)	SW
2831	3	15.033512	I-20 WB (Basic Analysis)	SW
2831	4	14.616724	I-20 WB (Basic Analysis)	SW
2831	5	13.489602	I-20 WB (Basic Analysis)	SW
2831	6	15.584748	I-20 WB (Basic Analysis)	SW

ID	Run	Density	Name (Type)	Direction
2831	7	16.745481	I-20 WB (Basic Analysis)	SW
2831	8	15.098495	I-20 WB (Basic Analysis)	SW
2831	9	16.707388	I-20 WB (Basic Analysis)	SW
2831	10	14.524851	I-20 WB (Basic Analysis)	SW
2837	1	12.784213	I-20 WB (Merge Analysis)	SW
2837	2	12.528107	I-20 WB (Merge Analysis)	SW
2837	3	12.886656	I-20 WB (Merge Analysis)	SW
2837	4	12.351846	I-20 WB (Merge Analysis)	SW
2837	5	12.639588	I-20 WB (Merge Analysis)	SW
2837	6	13.094553	I-20 WB (Merge Analysis)	SW
2837	7	12.482912	I-20 WB (Merge Analysis)	SW
2837	8	13.183437	I-20 WB (Merge Analysis)	SW
2837	9	12.65616	I-20 WB (Merge Analysis)	SW
2837	10	13.391335	I-20 WB (Merge Analysis)	SW
2838	1	30.091117	I-20 WB (Diverge Analysis)	SW
2838	2	40.200419	I-20 WB (Diverge Analysis)	SW
2838	3	44.13439	I-20 WB (Diverge Analysis)	SW
2838	4	41.632434	I-20 WB (Diverge Analysis)	SW
2838	5	40.754182	I-20 WB (Diverge Analysis)	SW
2838	6	46.345682	I-20 WB (Diverge Analysis)	SW
2838	7	34.150373	I-20 WB (Diverge Analysis)	SW
2838	8	55.366252	I-20 WB (Diverge Analysis)	SW
2838	9	43.505455	I-20 WB (Diverge Analysis)	SW
2838	10	48.727363	I-20 WB (Diverge Analysis)	SW
2839	1	30.091117	I-20 WB (Diverge Analysis)	SW
2839	2	40.200419	I-20 WB (Diverge Analysis)	SW
2839	3	44.13439	I-20 WB (Diverge Analysis)	SW
2839	4	41.632434	I-20 WB (Diverge Analysis)	SW
2839	5	40.754182	I-20 WB (Diverge Analysis)	SW
2839	6	46.345682	I-20 WB (Diverge Analysis)	SW
2839	7	34.150373	I-20 WB (Diverge Analysis)	SW
2839	8	55.366252	I-20 WB (Diverge Analysis)	SW
2839	9	43.505455	I-20 WB (Diverge Analysis)	SW
2839	10	48.727363	I-20 WB (Diverge Analysis)	SW
2840	1	30.091117	I-20 WB (Diverge Analysis)	SW
2840	2	40.200419	I-20 WB (Diverge Analysis)	SW
2840	3	44.13439	I-20 WB (Diverge Analysis)	SW
2840	4	41.632434	I-20 WB (Diverge Analysis)	SW
2840	5	40.754182	I-20 WB (Diverge Analysis)	SW
2840	6	46.345682	I-20 WB (Diverge Analysis)	SW
2840	7	34.150373	I-20 WB (Diverge Analysis)	SW
2840	8	55.366252	I-20 WB (Diverge Analysis)	SW
2840	9	43.505455	I-20 WB (Diverge Analysis)	SW
2840	10	48.727363	I-20 WB (Diverge Analysis)	SW
2843	1	31.130778	I-20 EB (Basic Analysis)	NE
2843	2	33.559032	I-20 EB (Basic Analysis)	NE
2843	3	30.760785	I-20 EB (Basic Analysis)	NE
2843	4	28.675294	I-20 EB (Basic Analysis)	NE
2843	5	31.156604	I-20 EB (Basic Analysis)	NE
2843	6	33.929025	I-20 EB (Basic Analysis)	NE
2843	7	31.77251	I-20 EB (Basic Analysis)	NE
2843	8	31.565056	I-20 EB (Basic Analysis)	NE
2843	9	29.561536	I-20 EB (Basic Analysis)	NE

ID	Run	Density	Name (Type)	Direction
2843	10	29.618242	I-20 EB (Basic Analysis)	NE
2848	1	17.96126	I-20 EB (Basic Analysis)	NE
2848	2	18.825502	I-20 EB (Basic Analysis)	NE
2848	3	18.367962	I-20 EB (Basic Analysis)	NE
2848	4	18.621445	I-20 EB (Basic Analysis)	NE
2848	5	18.949066	I-20 EB (Basic Analysis)	NE
2848	6	18.679344	I-20 EB (Basic Analysis)	NE
2848	7	19.187015	I-20 EB (Basic Analysis)	NE
2848	8	18.442101	I-20 EB (Basic Analysis)	NE
2848	9	18.525418	I-20 EB (Basic Analysis)	NE
2848	10	18.592496	I-20 EB (Basic Analysis)	NE
2852	1	10.78486	I-20 WB (Merge Analysis)	SW
2852	2	10.39179	I-20 WB (Merge Analysis)	SW
2852	3	11.486771	I-20 WB (Merge Analysis)	SW
2852	4	11.462205	I-20 WB (Merge Analysis)	SW
2852	5	9.984682	I-20 WB (Merge Analysis)	SW
2852	6	11.511338	I-20 WB (Merge Analysis)	SW
2852	7	12.729154	I-20 WB (Merge Analysis)	SW
2852	8	11.676287	I-20 WB (Merge Analysis)	SW
2852	9	12.290459	I-20 WB (Merge Analysis)	SW
2852	10	11.476243	I-20 WB (Merge Analysis)	SW
2863	1	19.975697	I-20 EB (Basic Analysis)	NE
2863	2	22.421621	I-20 EB (Basic Analysis)	NE
2863	3	20.226964	I-20 EB (Basic Analysis)	NE
2863	4	20.811944	I-20 EB (Basic Analysis)	NE
2863	5	23.469873	I-20 EB (Basic Analysis)	NE
2863	6	20.215185	I-20 EB (Basic Analysis)	NE
2863	7	21.302699	I-20 EB (Basic Analysis)	NE
2863	8	21.051432	I-20 EB (Basic Analysis)	NE
2863	9	19.225823	I-20 EB (Basic Analysis)	NE
2863	10	20.643124	I-20 EB (Basic Analysis)	NE
4563	1	46.453022	I-126 SB (Merge Analysis)	E
4563	2	46.735131	I-126 SB (Merge Analysis)	E
4563	3	44.61011	I-126 SB (Merge Analysis)	E
4563	4	46.223041	I-126 SB (Merge Analysis)	E
4563	5	40.41833	I-126 SB (Merge Analysis)	E
4563	6	40.314072	I-126 SB (Merge Analysis)	E
4563	7	43.230227	I-126 SB (Merge Analysis)	E
4563	8	41.221729	I-126 SB (Merge Analysis)	E
4563	9	43.607395	I-126 SB (Merge Analysis)	E
4563	10	44.794094	I-126 SB (Merge Analysis)	E
4566	1	15.272677	I-126 NB (Basic Analysis)	W
4566	2	15.744056	I-126 NB (Basic Analysis)	W
4566	3	15.580135	I-126 NB (Basic Analysis)	W
4566	4	14.970315	I-126 NB (Basic Analysis)	W
4566	5	14.870094	I-126 NB (Basic Analysis)	W
4566	6	14.777517	I-126 NB (Basic Analysis)	W
4566	7	15.152922	I-126 NB (Basic Analysis)	W
4566	8	15.495202	I-126 NB (Basic Analysis)	W
4566	9	15.949595	I-126 NB (Basic Analysis)	W
4566	10	15.915621	I-126 NB (Basic Analysis)	W
4570	1	12.842359	I-126 NB (Basic Analysis)	W
4570	2	12.975477	I-126 NB (Basic Analysis)	W

ID	Run	Density	Name (Type)	Direction
4570	3	13.60779	I-126 NB (Basic Analysis)	W
4570	4	12.772234	I-126 NB (Basic Analysis)	W
4570	5	13.039659	I-126 NB (Basic Analysis)	W
4570	6	13.881158	I-126 NB (Basic Analysis)	W
4570	7	13.354627	I-126 NB (Basic Analysis)	W
4570	8	13.859764	I-126 NB (Basic Analysis)	W
4570	9	13.758736	I-126 NB (Basic Analysis)	W
4570	10	13.491311	I-126 NB (Basic Analysis)	W
4573	1	52.104154	I-126 SB (Basic Analysis)	E
4573	2	52.703866	I-126 SB (Basic Analysis)	E
4573	3	50.048376	I-126 SB (Basic Analysis)	E
4573	4	53.096689	I-126 SB (Basic Analysis)	E
4573	5	47.350986	I-126 SB (Basic Analysis)	E
4573	6	47.762141	I-126 SB (Basic Analysis)	E
4573	7	52.261284	I-126 SB (Basic Analysis)	E
4573	8	48.484937	I-126 SB (Basic Analysis)	E
4573	9	52.368656	I-126 SB (Basic Analysis)	E
4573	10	52.041302	I-126 SB (Basic Analysis)	E
4579	1	34.613279	I-126 SB (Diverge Analysis)	E
4579	2	37.599272	I-126 SB (Diverge Analysis)	E
4579	3	33.413065	I-126 SB (Diverge Analysis)	E
4579	4	34.898306	I-126 SB (Diverge Analysis)	E
4579	5	32.478488	I-126 SB (Diverge Analysis)	E
4579	6	31.755257	I-126 SB (Diverge Analysis)	E
4579	7	34.217732	I-126 SB (Diverge Analysis)	E
4579	8	33.346171	I-126 SB (Diverge Analysis)	E
4579	9	34.176044	I-126 SB (Diverge Analysis)	E
4579	10	32.009261	I-126 SB (Diverge Analysis)	E
4589	1	12.213396	I-126 NB (Merge Analysis)	NW
4589	2	11.214589	I-126 NB (Merge Analysis)	NW
4589	3	13.062124	I-126 NB (Merge Analysis)	NW
4589	4	12.218571	I-126 NB (Merge Analysis)	NW
4589	5	11.9417	I-126 NB (Merge Analysis)	NW
4589	6	10.797988	I-126 NB (Merge Analysis)	NW
4589	7	11.654478	I-126 NB (Merge Analysis)	NW
4589	8	12.151294	I-126 NB (Merge Analysis)	NW
4589	9	12.195283	I-126 NB (Merge Analysis)	NW
4589	10	12.081429	I-126 NB (Merge Analysis)	NW
4599	1	9.801944	I-126 NB (Basic Analysis)	NW
4599	2	9.716561	I-126 NB (Basic Analysis)	NW
4599	3	11.754881	I-126 NB (Basic Analysis)	NW
4599	4	10.59678	I-126 NB (Basic Analysis)	NW
4599	5	10.795489	I-126 NB (Basic Analysis)	NW
4599	6	9.610997	I-126 NB (Basic Analysis)	NW
4599	7	10.710106	I-126 NB (Basic Analysis)	NW
4599	8	10.573494	I-126 NB (Basic Analysis)	NW
4599	9	10.041015	I-126 NB (Basic Analysis)	NW
4599	10	10.306478	I-126 NB (Basic Analysis)	NW
4601	1	11.509104	I-126 NB (Basic Analysis)	NW
4601	2	11.972947	I-126 NB (Basic Analysis)	NW
4601	3	10.747076	I-126 NB (Basic Analysis)	NW
4601	4	10.912734	I-126 NB (Basic Analysis)	NW
4601	5	11.343446	I-126 NB (Basic Analysis)	NW

ID	Run	Density	Name (Type)	Direction
4601	6	11.695469	I-126 NB (Basic Analysis)	NW
4601	7	9.678581	I-126 NB (Basic Analysis)	NW
4601	8	11.64163	I-126 NB (Basic Analysis)	NW
4601	9	11.745167	I-126 NB (Basic Analysis)	NW
4601	10	11.15708	I-126 NB (Basic Analysis)	NW
4604	1	15.648117	I-26 WB (Basic Analysis)	NW
4604	2	16.084022	I-26 WB (Basic Analysis)	NW
4604	3	15.747773	I-26 WB (Basic Analysis)	NW
4604	4	15.186402	I-26 WB (Basic Analysis)	NW
4604	5	15.5205	I-26 WB (Basic Analysis)	NW
4604	6	15.161309	I-26 WB (Basic Analysis)	NW
4604	7	15.345565	I-26 WB (Basic Analysis)	NW
4604	8	14.508886	I-26 WB (Basic Analysis)	NW
4604	9	15.186402	I-26 WB (Basic Analysis)	NW
4604	10	15.768564	I-26 WB (Basic Analysis)	NW
4610	1	14.854131	I-26 EB (Basic Analysis)	SE
4610	2	15.45747	I-26 EB (Basic Analysis)	SE
4610	3	14.507531	I-26 EB (Basic Analysis)	SE
4610	4	14.84215	I-26 EB (Basic Analysis)	SE
4610	5	14.784811	I-26 EB (Basic Analysis)	SE
4610	6	13.690242	I-26 EB (Basic Analysis)	SE
4610	7	14.130979	I-26 EB (Basic Analysis)	SE
4610	8	13.975223	I-26 EB (Basic Analysis)	SE
4610	9	14.260205	I-26 EB (Basic Analysis)	SE
4610	10	14.433933	I-26 EB (Basic Analysis)	SE
4646	1	24.101639	I-26 WB (Basic Analysis)	NW
4646	2	24.430328	I-26 WB (Basic Analysis)	NW
4646	3	22.431361	I-26 WB (Basic Analysis)	NW
4646	4	19.770544	I-26 WB (Basic Analysis)	NW
4646	5	24.374429	I-26 WB (Basic Analysis)	NW
4646	6	23.289978	I-26 WB (Basic Analysis)	NW
4646	7	22.147392	I-26 WB (Basic Analysis)	NW
4646	8	22.652723	I-26 WB (Basic Analysis)	NW
4646	9	23.155819	I-26 WB (Basic Analysis)	NW
4646	10	22.236831	I-26 WB (Basic Analysis)	NW
4651	1	20.987681	I-26 WB (Basic Analysis)	NW
4651	2	21.963916	I-26 WB (Basic Analysis)	NW
4651	3	22.319778	I-26 WB (Basic Analysis)	NW
4651	4	21.444439	I-26 WB (Basic Analysis)	NW
4651	5	23.379184	I-26 WB (Basic Analysis)	NW
4651	6	21.959826	I-26 WB (Basic Analysis)	NW
4651	7	20.669996	I-26 WB (Basic Analysis)	NW
4651	8	20.226873	I-26 WB (Basic Analysis)	NW
4651	9	23.270107	I-26 WB (Basic Analysis)	NW
4651	10	21.89847	I-26 WB (Basic Analysis)	NW
4654	1	28.062819	I-26 WB (Merge Analysis)	NW
4654	2	27.173657	I-26 WB (Merge Analysis)	NW
4654	3	26.202085	I-26 WB (Merge Analysis)	NW
4654	4	24.577738	I-26 WB (Merge Analysis)	NW
4654	5	25.215332	I-26 WB (Merge Analysis)	NW
4654	6	25.8963	I-26 WB (Merge Analysis)	NW
4654	7	24.994126	I-26 WB (Merge Analysis)	NW
4654	8	25.8963	I-26 WB (Merge Analysis)	NW

ID	Run	Density	Name (Type)	Direction
4654	9	24.278459	I-26 WB (Merge Analysis)	NW
4654	10	26.343049	I-26 WB (Merge Analysis)	NW
4677	1	28.293626	I-26 WB (Basic Analysis)	NW
4677	2	27.787719	I-26 WB (Basic Analysis)	NW
4677	3	27.835412	I-26 WB (Basic Analysis)	NW
4677	4	26.653659	I-26 WB (Basic Analysis)	NW
4677	5	27.683122	I-26 WB (Basic Analysis)	NW
4677	6	27.287443	I-26 WB (Basic Analysis)	NW
4677	7	26.633129	I-26 WB (Basic Analysis)	NW
4677	8	27.417191	I-26 WB (Basic Analysis)	NW
4677	9	27.412658	I-26 WB (Basic Analysis)	NW
4677	10	27.653471	I-26 WB (Basic Analysis)	NW
4687	1	41.406467	I-26 EB (Basic Analysis)	SE
4687	2	40.850799	I-26 EB (Basic Analysis)	SE
4687	3	40.220612	I-26 EB (Basic Analysis)	SE
4687	4	39.093636	I-26 EB (Basic Analysis)	SE
4687	5	40.615283	I-26 EB (Basic Analysis)	SE
4687	6	40.807559	I-26 EB (Basic Analysis)	SE
4687	7	39.886659	I-26 EB (Basic Analysis)	SE
4687	8	39.38067	I-26 EB (Basic Analysis)	SE
4687	9	42.830596	I-26 EB (Basic Analysis)	SE
4687	10	40.445087	I-26 EB (Basic Analysis)	SE
4701	1	21.237826	I-26 WB (Weaving Analysis)	NW
4701	2	22.124691	I-26 WB (Weaving Analysis)	NW
4701	3	21.812612	I-26 WB (Weaving Analysis)	NW
4701	4	20.503953	I-26 WB (Weaving Analysis)	NW
4701	5	21.648039	I-26 WB (Weaving Analysis)	NW
4701	6	21.075691	I-26 WB (Weaving Analysis)	NW
4701	7	21.338398	I-26 WB (Weaving Analysis)	NW
4701	8	21.464571	I-26 WB (Weaving Analysis)	NW
4701	9	21.654134	I-26 WB (Weaving Analysis)	NW
4701	10	21.293903	I-26 WB (Weaving Analysis)	NW
4712	1	21.806338	I-26 WB (Basic Analysis)	NW
4712	2	21.710021	I-26 WB (Basic Analysis)	NW
4712	3	22.214268	I-26 WB (Basic Analysis)	NW
4712	4	20.747796	I-26 WB (Basic Analysis)	NW
4712	5	21.544771	I-26 WB (Basic Analysis)	NW
4712	6	21.294536	I-26 WB (Basic Analysis)	NW
4712	7	20.535332	I-26 WB (Basic Analysis)	NW
4712	8	20.331367	I-26 WB (Basic Analysis)	NW
4712	9	20.930042	I-26 WB (Basic Analysis)	NW
4712	10	22.186884	I-26 WB (Basic Analysis)	NW
4714	1	34.362478	I-26 EB (Basic Analysis)	SE
4714	2	34.58529	I-26 EB (Basic Analysis)	SE
4714	3	33.628992	I-26 EB (Basic Analysis)	SE
4714	4	34.157558	I-26 EB (Basic Analysis)	SE
4714	5	34.366545	I-26 EB (Basic Analysis)	SE
4714	6	35.835145	I-26 EB (Basic Analysis)	SE
4714	7	34.503972	I-26 EB (Basic Analysis)	SE
4714	8	34.285227	I-26 EB (Basic Analysis)	SE
4714	9	35.127679	I-26 EB (Basic Analysis)	SE
4714	10	34.167316	I-26 EB (Basic Analysis)	SE
4720	1	28.313759	I-26 EB (Merge Analysis)	SE

ID	Run	Density	Name (Type)	Direction
4720	2	27.29118	I-26 EB (Merge Analysis)	SE
4720	3	28.33145	I-26 EB (Merge Analysis)	SE
4720	4	28.660516	I-26 EB (Merge Analysis)	SE
4720	5	28.99135	I-26 EB (Merge Analysis)	SE
4720	6	27.278796	I-26 EB (Merge Analysis)	SE
4720	7	28.556135	I-26 EB (Merge Analysis)	SE
4720	8	25.891768	I-26 EB (Merge Analysis)	SE
4720	9	27.466327	I-26 EB (Merge Analysis)	SE
4720	10	27.1638	I-26 EB (Merge Analysis)	SE
4725	1	19.739428	I-26 WB (Merge Analysis)	NW
4725	2	20.815677	I-26 WB (Merge Analysis)	NW
4725	3	21.561823	I-26 WB (Merge Analysis)	NW
4725	4	19.448881	I-26 WB (Merge Analysis)	NW
4725	5	19.184252	I-26 WB (Merge Analysis)	NW
4725	6	20.459656	I-26 WB (Merge Analysis)	NW
4725	7	20.190934	I-26 WB (Merge Analysis)	NW
4725	8	21.178519	I-26 WB (Merge Analysis)	NW
4725	9	21.767797	I-26 WB (Merge Analysis)	NW
4725	10	20.345074	I-26 WB (Merge Analysis)	NW
4727	1	23.126665	I-26 WB (Basic Analysis)	NW
4727	2	24.614065	I-26 WB (Basic Analysis)	NW
4727	3	23.829438	I-26 WB (Basic Analysis)	NW
4727	4	20.41676	I-26 WB (Basic Analysis)	NW
4727	5	22.840241	I-26 WB (Basic Analysis)	NW
4727	6	25.042357	I-26 WB (Basic Analysis)	NW
4727	7	20.993183	I-26 WB (Basic Analysis)	NW
4727	8	21.458962	I-26 WB (Basic Analysis)	NW
4727	9	22.660038	I-26 WB (Basic Analysis)	NW
4727	10	21.226932	I-26 WB (Basic Analysis)	NW
4728	1	20.601878	I-26 WB (Diverge Analysis)	NW
4728	2	20.573405	I-26 WB (Diverge Analysis)	NW
4728	3	21.469026	I-26 WB (Diverge Analysis)	NW
4728	4	19.928868	I-26 WB (Diverge Analysis)	NW
4728	5	20.128183	I-26 WB (Diverge Analysis)	NW
4728	6	20.182541	I-26 WB (Diverge Analysis)	NW
4728	7	20.006523	I-26 WB (Diverge Analysis)	NW
4728	8	19.607894	I-26 WB (Diverge Analysis)	NW
4728	9	19.962519	I-26 WB (Diverge Analysis)	NW
4728	10	21.595863	I-26 WB (Diverge Analysis)	NW
4729	1	20.601878	I-26 WB (Diverge Analysis)	NW
4729	2	20.573405	I-26 WB (Diverge Analysis)	NW
4729	3	21.469026	I-26 WB (Diverge Analysis)	NW
4729	4	19.928868	I-26 WB (Diverge Analysis)	NW
4729	5	20.128183	I-26 WB (Diverge Analysis)	NW
4729	6	20.182541	I-26 WB (Diverge Analysis)	NW
4729	7	20.006523	I-26 WB (Diverge Analysis)	NW
4729	8	19.607894	I-26 WB (Diverge Analysis)	NW
4729	9	19.962519	I-26 WB (Diverge Analysis)	NW
4729	10	21.595863	I-26 WB (Diverge Analysis)	NW
4730	1	20.601878	I-26 WB (Diverge Analysis)	NW
4730	2	20.573405	I-26 WB (Diverge Analysis)	NW
4730	3	21.469026	I-26 WB (Diverge Analysis)	NW
4730	4	19.928868	I-26 WB (Diverge Analysis)	NW

ID	Run	Density	Name (Type)	Direction
4730	5	20.128183	I-26 WB (Diverge Analysis)	NW
4730	6	20.182541	I-26 WB (Diverge Analysis)	NW
4730	7	20.006523	I-26 WB (Diverge Analysis)	NW
4730	8	19.607894	I-26 WB (Diverge Analysis)	NW
4730	9	19.962519	I-26 WB (Diverge Analysis)	NW
4730	10	21.595863	I-26 WB (Diverge Analysis)	NW
4732	1	18.241613	I-26 WB (Basic Analysis)	NW
4732	2	18.428538	I-26 WB (Basic Analysis)	NW
4732	3	18.067884	I-26 WB (Basic Analysis)	NW
4732	4	18.309786	I-26 WB (Basic Analysis)	NW
4732	5	17.705031	I-26 WB (Basic Analysis)	NW
4732	6	17.23882	I-26 WB (Basic Analysis)	NW
4732	7	18.246012	I-26 WB (Basic Analysis)	NW
4732	8	19.314779	I-26 WB (Basic Analysis)	NW
4732	9	19.466517	I-26 WB (Basic Analysis)	NW
4732	10	19.624853	I-26 WB (Basic Analysis)	NW
4733	1	30.991764	I-26 EB (Basic Analysis)	SE
4733	2	33.619791	I-26 EB (Basic Analysis)	SE
4733	3	32.294754	I-26 EB (Basic Analysis)	SE
4733	4	30.482473	I-26 EB (Basic Analysis)	SE
4733	5	32.144833	I-26 EB (Basic Analysis)	SE
4733	6	31.240897	I-26 EB (Basic Analysis)	SE
4733	7	32.138219	I-26 EB (Basic Analysis)	SE
4733	8	31.366566	I-26 EB (Basic Analysis)	SE
4733	9	31.313653	I-26 EB (Basic Analysis)	SE
4733	10	33.203099	I-26 EB (Basic Analysis)	SE
4736	1	38.295875	I-26 EB (Basic Analysis)	SE
4736	2	38.461658	I-26 EB (Basic Analysis)	SE
4736	3	38.984512	I-26 EB (Basic Analysis)	SE
4736	4	41.751813	I-26 EB (Basic Analysis)	SE
4736	5	37.683753	I-26 EB (Basic Analysis)	SE
4736	6	40.336281	I-26 EB (Basic Analysis)	SE
4736	7	36.127944	I-26 EB (Basic Analysis)	SE
4736	8	37.645496	I-26 EB (Basic Analysis)	SE
4736	9	41.981359	I-26 EB (Basic Analysis)	SE
4736	10	37.811279	I-26 EB (Basic Analysis)	SE
4737	1	29.401439	I-26 EB (Diverge Analysis)	SE
4737	2	30.671109	I-26 EB (Diverge Analysis)	SE
4737	3	29.643935	I-26 EB (Diverge Analysis)	SE
4737	4	30.069445	I-26 EB (Diverge Analysis)	SE
4737	5	29.717141	I-26 EB (Diverge Analysis)	SE
4737	6	29.518111	I-26 EB (Diverge Analysis)	SE
4737	7	29.12234	I-26 EB (Diverge Analysis)	SE
4737	8	29.785772	I-26 EB (Diverge Analysis)	SE
4737	9	29.433467	I-26 EB (Diverge Analysis)	SE
4737	10	28.273606	I-26 EB (Diverge Analysis)	SE
4739	1	17.584096	I-26 WB (Weaving Analysis)	NW
4739	2	19.1649	I-26 WB (Weaving Analysis)	NW
4739	3	17.501959	I-26 WB (Weaving Analysis)	NW
4739	4	16.256435	I-26 WB (Weaving Analysis)	NW
4739	5	16.850247	I-26 WB (Weaving Analysis)	NW
4739	6	17.192261	I-26 WB (Weaving Analysis)	NW
4739	7	17.291903	I-26 WB (Weaving Analysis)	NW

ID	Run	Density	Name (Type)	Direction
4739	8	18.887519	I-26 WB (Weaving Analysis)	NW
4739	9	18.940033	I-26 WB (Weaving Analysis)	NW
4739	10	16.622686	I-26 WB (Weaving Analysis)	NW
4741	1	26.300831	I-26 WB (Basic Analysis)	NW
4741	2	19.798494	I-26 WB (Basic Analysis)	NW
4741	3	22.780601	I-26 WB (Basic Analysis)	NW
4741	4	20.269353	I-26 WB (Basic Analysis)	NW
4741	5	24.798567	I-26 WB (Basic Analysis)	NW
4741	6	24.35013	I-26 WB (Basic Analysis)	NW
4741	7	23.699896	I-26 WB (Basic Analysis)	NW
4741	8	18.946464	I-26 WB (Basic Analysis)	NW
4741	9	19.01373	I-26 WB (Basic Analysis)	NW
4741	10	21.569821	I-26 WB (Basic Analysis)	NW
4742	1	15.584002	I-26 WB (Diverge Analysis)	NW
4742	2	14.910061	I-26 WB (Diverge Analysis)	NW
4742	3	17.527239	I-26 WB (Diverge Analysis)	NW
4742	4	14.376623	I-26 WB (Diverge Analysis)	NW
4742	5	15.322046	I-26 WB (Diverge Analysis)	NW
4742	6	16.75566	I-26 WB (Diverge Analysis)	NW
4742	7	16.36987	I-26 WB (Diverge Analysis)	NW
4742	8	15.207738	I-26 WB (Diverge Analysis)	NW
4742	9	14.852907	I-26 WB (Diverge Analysis)	NW
4742	10	16.13411	I-26 WB (Diverge Analysis)	NW
4745	1	29.283843	I-26 EB (Basic Analysis)	SE
4745	2	31.441671	I-26 EB (Basic Analysis)	SE
4745	3	29.108153	I-26 EB (Basic Analysis)	SE
4745	4	30.038407	I-26 EB (Basic Analysis)	SE
4745	5	31.281748	I-26 EB (Basic Analysis)	SE
4745	6	30.069941	I-26 EB (Basic Analysis)	SE
4745	7	30.045164	I-26 EB (Basic Analysis)	SE
4745	8	30.121747	I-26 EB (Basic Analysis)	SE
4745	9	29.822173	I-26 EB (Basic Analysis)	SE
4745	10	31.995768	I-26 EB (Basic Analysis)	SE
4753	1	16.305311	I-26 WB (Basic Analysis)	NW
4753	2	17.734282	I-26 WB (Basic Analysis)	NW
4753	3	18.080243	I-26 WB (Basic Analysis)	NW
4753	4	15.802485	I-26 WB (Basic Analysis)	NW
4753	5	19.300778	I-26 WB (Basic Analysis)	NW
4753	6	16.610444	I-26 WB (Basic Analysis)	NW
4753	7	14.728071	I-26 WB (Basic Analysis)	NW
4753	8	16.700695	I-26 WB (Basic Analysis)	NW
4753	9	16.047452	I-26 WB (Basic Analysis)	NW
4753	10	17.156247	I-26 WB (Basic Analysis)	NW
4755	1	28.273583	I-26 EB (Basic Analysis)	SE
4755	2	32.803604	I-26 EB (Basic Analysis)	SE
4755	3	30.935361	I-26 EB (Basic Analysis)	SE
4755	4	29.285808	I-26 EB (Basic Analysis)	SE
4755	5	32.053807	I-26 EB (Basic Analysis)	SE
4755	6	30.897871	I-26 EB (Basic Analysis)	SE
4755	7	29.6857	I-26 EB (Basic Analysis)	SE
4755	8	30.354268	I-26 EB (Basic Analysis)	SE
4755	9	31.778882	I-26 EB (Basic Analysis)	SE
4755	10	30.304282	I-26 EB (Basic Analysis)	SE

ID	Run	Density	Name (Type)	Direction
4756	1	21.798925	I-26 EB (Diverge Analysis)	SE
4756	2	24.609675	I-26 EB (Diverge Analysis)	SE
4756	3	24.615921	I-26 EB (Diverge Analysis)	SE
4756	4	22.167446	I-26 EB (Diverge Analysis)	SE
4756	5	23.895536	I-26 EB (Diverge Analysis)	SE
4756	6	23.129347	I-26 EB (Diverge Analysis)	SE
4756	7	23.608215	I-26 EB (Diverge Analysis)	SE
4756	8	22.854518	I-26 EB (Diverge Analysis)	SE
4756	9	23.152249	I-26 EB (Diverge Analysis)	SE
4756	10	24.085002	I-26 EB (Diverge Analysis)	SE
4760	1	9.366162	I-26 WB (Merge Analysis)	NW
4760	2	9.533415	I-26 WB (Merge Analysis)	NW
4760	3	9.301037	I-26 WB (Merge Analysis)	NW
4760	4	8.908807	I-26 WB (Merge Analysis)	NW
4760	5	9.579299	I-26 WB (Merge Analysis)	NW
4760	6	9.039057	I-26 WB (Merge Analysis)	NW
4760	7	9.517134	I-26 WB (Merge Analysis)	NW
4760	8	10.680504	I-26 WB (Merge Analysis)	NW
4760	9	10.280873	I-26 WB (Merge Analysis)	NW
4760	10	9.07902	I-26 WB (Merge Analysis)	NW
4761	1	16.585013	I-26 WB (Basic Analysis)	NW
4761	2	16.827869	I-26 WB (Basic Analysis)	NW
4761	3	16.868233	I-26 WB (Basic Analysis)	NW
4761	4	15.819777	I-26 WB (Basic Analysis)	NW
4761	5	17.015939	I-26 WB (Basic Analysis)	NW
4761	6	16.554567	I-26 WB (Basic Analysis)	NW
4761	7	16.119247	I-26 WB (Basic Analysis)	NW
4761	8	16.48356	I-26 WB (Basic Analysis)	NW
4761	9	17.036563	I-26 WB (Basic Analysis)	NW
4761	10	16.546768	I-26 WB (Basic Analysis)	NW
4762	1	16.585013	I-26 WB (Basic Analysis)	NW
4762	2	16.827869	I-26 WB (Basic Analysis)	NW
4762	3	16.868233	I-26 WB (Basic Analysis)	NW
4762	4	15.819777	I-26 WB (Basic Analysis)	NW
4762	5	17.015939	I-26 WB (Basic Analysis)	NW
4762	6	16.554567	I-26 WB (Basic Analysis)	NW
4762	7	16.119247	I-26 WB (Basic Analysis)	NW
4762	8	16.48356	I-26 WB (Basic Analysis)	NW
4762	9	17.036563	I-26 WB (Basic Analysis)	NW
4762	10	16.546768	I-26 WB (Basic Analysis)	NW
4763	1	16.585013	I-26 WB (Basic Analysis)	NW
4763	2	16.827869	I-26 WB (Basic Analysis)	NW
4763	3	16.868233	I-26 WB (Basic Analysis)	NW
4763	4	15.819777	I-26 WB (Basic Analysis)	NW
4763	5	17.015939	I-26 WB (Basic Analysis)	NW
4763	6	16.554567	I-26 WB (Basic Analysis)	NW
4763	7	16.119247	I-26 WB (Basic Analysis)	NW
4763	8	16.48356	I-26 WB (Basic Analysis)	NW
4763	9	17.036563	I-26 WB (Basic Analysis)	NW
4763	10	16.546768	I-26 WB (Basic Analysis)	NW
4764	1	16.585013	I-26 WB (Basic Analysis)	NW
4764	2	16.827869	I-26 WB (Basic Analysis)	NW
4764	3	16.868233	I-26 WB (Basic Analysis)	NW

ID	Run	Density	Name (Type)	Direction
4764	4	15.819777	I-26 WB (Basic Analysis)	NW
4764	5	17.015939	I-26 WB (Basic Analysis)	NW
4764	6	16.554567	I-26 WB (Basic Analysis)	NW
4764	7	16.119247	I-26 WB (Basic Analysis)	NW
4764	8	16.48356	I-26 WB (Basic Analysis)	NW
4764	9	17.036563	I-26 WB (Basic Analysis)	NW
4764	10	16.546768	I-26 WB (Basic Analysis)	NW
4769	1	28.042624	I-26 EB (Basic Analysis)	SE
4769	2	29.000495	I-26 EB (Basic Analysis)	SE
4769	3	28.376622	I-26 EB (Basic Analysis)	SE
4769	4	28.256211	I-26 EB (Basic Analysis)	SE
4769	5	28.517794	I-26 EB (Basic Analysis)	SE
4769	6	28.484506	I-26 EB (Basic Analysis)	SE
4769	7	28.48519	I-26 EB (Basic Analysis)	SE
4769	8	27.785845	I-26 EB (Basic Analysis)	SE
4769	9	28.264737	I-26 EB (Basic Analysis)	SE
4769	10	28.33844	I-26 EB (Basic Analysis)	SE
6079	1	10.092827	ROAD I-20 WB TO I-20 (Basic Analy	NW
6079	2	12.128301	ROAD I-20 WB TO I-20 (Basic Analy	NW
6079	3	10.856943	ROAD I-20 WB TO I-20 (Basic Analy	NW
6079	4	11.295902	ROAD I-20 WB TO I-20 (Basic Analy	NW
6079	5	11.120318	ROAD I-20 WB TO I-20 (Basic Analy	NW
6079	6	11.451977	ROAD I-20 WB TO I-20 (Basic Analy	NW
6079	7	9.403497	ROAD I-20 WB TO I-20 (Basic Analy	NW
6079	8	10.398473	ROAD I-20 WB TO I-20 (Basic Analy	NW
6079	9	11.250381	ROAD I-20 WB TO I-20 (Basic Analy	NW
6079	10	12.281124	ROAD I-20 WB TO I-20 (Basic Analy	NW
6149	1	20.751695	I-26 EB (Merge Analysis)	S
6149	2	22.465039	I-26 EB (Merge Analysis)	S
6149	3	21.380023	I-26 EB (Merge Analysis)	S
6149	4	20.258227	I-26 EB (Merge Analysis)	S
6149	5	20.276617	I-26 EB (Merge Analysis)	S
6149	6	22.348568	I-26 EB (Merge Analysis)	S
6149	7	21.684992	I-26 EB (Merge Analysis)	S
6149	8	20.233707	I-26 EB (Merge Analysis)	S
6149	9	21.338645	I-26 EB (Merge Analysis)	S
6149	10	20.71185	I-26 EB (Merge Analysis)	S
6150	1	20.751695	I-26 EB (Merge Analysis)	S
6150	2	22.465039	I-26 EB (Merge Analysis)	S
6150	3	21.380023	I-26 EB (Merge Analysis)	S
6150	4	20.258227	I-26 EB (Merge Analysis)	S
6150	5	20.276617	I-26 EB (Merge Analysis)	S
6150	6	22.348568	I-26 EB (Merge Analysis)	S
6150	7	21.684992	I-26 EB (Merge Analysis)	S
6150	8	20.233707	I-26 EB (Merge Analysis)	S
6150	9	21.338645	I-26 EB (Merge Analysis)	S
6150	10	20.71185	I-26 EB (Merge Analysis)	S
6151	1	20.751695	I-26 EB (Merge Analysis)	S
6151	2	22.465039	I-26 EB (Merge Analysis)	S
6151	3	21.380023	I-26 EB (Merge Analysis)	S
6151	4	20.258227	I-26 EB (Merge Analysis)	S
6151	5	20.276617	I-26 EB (Merge Analysis)	S
6151	6	22.348568	I-26 EB (Merge Analysis)	S

ID	Run	Density	Name (Type)	Direction
6151	7	21.684992	I-26 EB (Merge Analysis)	S
6151	8	20.233707	I-26 EB (Merge Analysis)	S
6151	9	21.338645	I-26 EB (Merge Analysis)	S
6151	10	20.71185	I-26 EB (Merge Analysis)	S
6152	1	23.437537	I-26 EB (Basic Analysis)	S
6152	2	25.325395	I-26 EB (Basic Analysis)	S
6152	3	23.077527	I-26 EB (Basic Analysis)	S
6152	4	25.086559	I-26 EB (Basic Analysis)	S
6152	5	23.77823	I-26 EB (Basic Analysis)	S
6152	6	25.337688	I-26 EB (Basic Analysis)	S
6152	7	25.216514	I-26 EB (Basic Analysis)	S
6152	8	23.279484	I-26 EB (Basic Analysis)	S
6152	9	24.770453	I-26 EB (Basic Analysis)	S
6152	10	24.141752	I-26 EB (Basic Analysis)	S
6159	1	63.563758	I-26 WB (Diverge Analysis)	N
6159	2	49.258758	I-26 WB (Diverge Analysis)	N
6159	3	32.47289	I-26 WB (Diverge Analysis)	N
6159	4	57.470859	I-26 WB (Diverge Analysis)	N
6159	5	32.043509	I-26 WB (Diverge Analysis)	N
6159	6	49.951307	I-26 WB (Diverge Analysis)	N
6159	7	32.957674	I-26 WB (Diverge Analysis)	N
6159	8	65.736825	I-26 WB (Diverge Analysis)	N
6159	9	57.750957	I-26 WB (Diverge Analysis)	N
6159	10	39.633854	I-26 WB (Diverge Analysis)	N
6160	1	63.563758	I-26 WB (Diverge Analysis)	N
6160	2	49.258758	I-26 WB (Diverge Analysis)	N
6160	3	32.47289	I-26 WB (Diverge Analysis)	N
6160	4	57.470859	I-26 WB (Diverge Analysis)	N
6160	5	32.043509	I-26 WB (Diverge Analysis)	N
6160	6	49.951307	I-26 WB (Diverge Analysis)	N
6160	7	32.957674	I-26 WB (Diverge Analysis)	N
6160	8	65.736825	I-26 WB (Diverge Analysis)	N
6160	9	57.750957	I-26 WB (Diverge Analysis)	N
6160	10	39.633854	I-26 WB (Diverge Analysis)	N
6165	1	22.00789	I-26 WB (Basic Analysis)	N
6165	2	21.421911	I-26 WB (Basic Analysis)	N
6165	3	20.958154	I-26 WB (Basic Analysis)	N
6165	4	22.479642	I-26 WB (Basic Analysis)	N
6165	5	21.983902	I-26 WB (Basic Analysis)	N
6165	6	21.574974	I-26 WB (Basic Analysis)	N
6165	7	21.347664	I-26 WB (Basic Analysis)	N
6165	8	21.847974	I-26 WB (Basic Analysis)	N
6165	9	21.772585	I-26 WB (Basic Analysis)	N
6165	10	21.750882	I-26 WB (Basic Analysis)	N
6178	1	21.325831	I-26 EB (Basic Analysis)	S
6178	2	22.019893	I-26 EB (Basic Analysis)	S
6178	3	21.087383	I-26 EB (Basic Analysis)	S
6178	4	22.195947	I-26 EB (Basic Analysis)	S
6178	5	21.191372	I-26 EB (Basic Analysis)	S
6178	6	21.587978	I-26 EB (Basic Analysis)	S
6178	7	21.424983	I-26 EB (Basic Analysis)	S
6178	8	21.60007	I-26 EB (Basic Analysis)	S
6178	9	20.917133	I-26 EB (Basic Analysis)	S

ID	Run	Density	Name (Type)	Direction
6178	10	21.400316	I-26 EB (Basic Analysis)	S
6207	1	18.334229	I-20 EB (Basic Analysis)	E
6207	2	19.607123	I-20 EB (Basic Analysis)	E
6207	3	18.910086	I-20 EB (Basic Analysis)	E
6207	4	18.59264	I-20 EB (Basic Analysis)	E
6207	5	19.775426	I-20 EB (Basic Analysis)	E
6207	6	19.287087	I-20 EB (Basic Analysis)	E
6207	7	19.92923	I-20 EB (Basic Analysis)	E
6207	8	19.16539	I-20 EB (Basic Analysis)	E
6207	9	18.643907	I-20 EB (Basic Analysis)	E
6207	10	19.322301	I-20 EB (Basic Analysis)	E
6216	1	19.975697	I-20 EB (Basic Analysis)	NE
6216	2	22.421621	I-20 EB (Basic Analysis)	NE
6216	3	20.226964	I-20 EB (Basic Analysis)	NE
6216	4	20.811944	I-20 EB (Basic Analysis)	NE
6216	5	23.469873	I-20 EB (Basic Analysis)	NE
6216	6	20.215185	I-20 EB (Basic Analysis)	NE
6216	7	21.302699	I-20 EB (Basic Analysis)	NE
6216	8	21.051432	I-20 EB (Basic Analysis)	NE
6216	9	19.225823	I-20 EB (Basic Analysis)	NE
6216	10	20.643124	I-20 EB (Basic Analysis)	NE
6223	1	38.071854	I-26 EB (Basic Analysis)	SE
6223	2	37.168307	I-26 EB (Basic Analysis)	SE
6223	3	37.765072	I-26 EB (Basic Analysis)	SE
6223	4	37.440609	I-26 EB (Basic Analysis)	SE
6223	5	37.050722	I-26 EB (Basic Analysis)	SE
6223	6	37.204555	I-26 EB (Basic Analysis)	SE
6223	7	36.450421	I-26 EB (Basic Analysis)	SE
6223	8	37.090507	I-26 EB (Basic Analysis)	SE
6223	9	36.146291	I-26 EB (Basic Analysis)	SE
6223	10	35.899629	I-26 EB (Basic Analysis)	SE
6234	1	14.635059	I-20 WB (Basic Analysis)	SW
6234	2	14.386365	I-20 WB (Basic Analysis)	SW
6234	3	14.602743	I-20 WB (Basic Analysis)	SW
6234	4	14.739034	I-20 WB (Basic Analysis)	SW
6234	5	13.974683	I-20 WB (Basic Analysis)	SW
6234	6	14.087088	I-20 WB (Basic Analysis)	SW
6234	7	15.185841	I-20 WB (Basic Analysis)	SW
6234	8	14.973678	I-20 WB (Basic Analysis)	SW
6234	9	14.977893	I-20 WB (Basic Analysis)	SW
6234	10	14.757299	I-20 WB (Basic Analysis)	SW
6238	1	90.252779	I-20 EB (Merge Analysis)	NE
6238	2	109.030019	I-20 EB (Merge Analysis)	NE
6238	3	100.319977	I-20 EB (Merge Analysis)	NE
6238	4	92.308068	I-20 EB (Merge Analysis)	NE
6238	5	103.390198	I-20 EB (Merge Analysis)	NE
6238	6	94.756423	I-20 EB (Merge Analysis)	NE
6238	7	98.8318	I-20 EB (Merge Analysis)	NE
6238	8	86.906824	I-20 EB (Merge Analysis)	NE
6238	9	85.590736	I-20 EB (Merge Analysis)	NE
6238	10	94.433757	I-20 EB (Merge Analysis)	NE
6241	1	106.495011	I-20 EB (Basic Analysis)	NE
6241	2	121.865619	I-20 EB (Basic Analysis)	NE

ID	Run	Density	Name (Type)	Direction
6241	3	114.797465	I-20 EB (Basic Analysis)	NE
6241	4	116.189336	I-20 EB (Basic Analysis)	NE
6241	5	126.318856	I-20 EB (Basic Analysis)	NE
6241	6	111.394697	I-20 EB (Basic Analysis)	NE
6241	7	118.691702	I-20 EB (Basic Analysis)	NE
6241	8	105.624622	I-20 EB (Basic Analysis)	NE
6241	9	102.199345	I-20 EB (Basic Analysis)	NE
6241	10	111.124577	I-20 EB (Basic Analysis)	NE
6242	1	90.871763	I-20 EB (Merge Analysis)	NE
6242	2	98.685477	I-20 EB (Merge Analysis)	NE
6242	3	92.755176	I-20 EB (Merge Analysis)	NE
6242	4	96.208102	I-20 EB (Merge Analysis)	NE
6242	5	97.64393	I-20 EB (Merge Analysis)	NE
6242	6	92.454812	I-20 EB (Merge Analysis)	NE
6242	7	93.569123	I-20 EB (Merge Analysis)	NE
6242	8	89.594155	I-20 EB (Merge Analysis)	NE
6242	9	90.45379	I-20 EB (Merge Analysis)	NE
6242	10	92.613878	I-20 EB (Merge Analysis)	NE
6246	1	32.465696	I-20 WB (Merge Analysis)	SW
6246	2	30.448027	I-20 WB (Merge Analysis)	SW
6246	3	34.370597	I-20 WB (Merge Analysis)	SW
6246	4	30.645877	I-20 WB (Merge Analysis)	SW
6246	5	31.732366	I-20 WB (Merge Analysis)	SW
6246	6	31.523712	I-20 WB (Merge Analysis)	SW
6246	7	32.747278	I-20 WB (Merge Analysis)	SW
6246	8	33.486685	I-20 WB (Merge Analysis)	SW
6246	9	33.436041	I-20 WB (Merge Analysis)	SW
6246	10	32.904613	I-20 WB (Merge Analysis)	SW
6247	1	32.465696	I-20 WB (Merge Analysis)	SW
6247	2	30.448027	I-20 WB (Merge Analysis)	SW
6247	3	34.370597	I-20 WB (Merge Analysis)	SW
6247	4	30.645877	I-20 WB (Merge Analysis)	SW
6247	5	31.732366	I-20 WB (Merge Analysis)	SW
6247	6	31.523712	I-20 WB (Merge Analysis)	SW
6247	7	32.747278	I-20 WB (Merge Analysis)	SW
6247	8	33.486685	I-20 WB (Merge Analysis)	SW
6247	9	33.436041	I-20 WB (Merge Analysis)	SW
6247	10	32.904613	I-20 WB (Merge Analysis)	SW
6249	1	36.867171	I-20 WB (Basic Analysis)	SW
6249	2	35.051371	I-20 WB (Basic Analysis)	SW
6249	3	38.062191	I-20 WB (Basic Analysis)	SW
6249	4	34.770279	I-20 WB (Basic Analysis)	SW
6249	5	35.004311	I-20 WB (Basic Analysis)	SW
6249	6	35.962388	I-20 WB (Basic Analysis)	SW
6249	7	36.876816	I-20 WB (Basic Analysis)	SW
6249	8	37.862518	I-20 WB (Basic Analysis)	SW
6249	9	38.162918	I-20 WB (Basic Analysis)	SW
6249	10	36.608717	I-20 WB (Basic Analysis)	SW
6251	1	36.733863	I-20 WB (Basic Analysis)	SW
6251	2	35.997621	I-20 WB (Basic Analysis)	SW
6251	3	40.244978	I-20 WB (Basic Analysis)	SW
6251	4	34.350079	I-20 WB (Basic Analysis)	SW
6251	5	35.4054	I-20 WB (Basic Analysis)	SW

ID	Run	Density	Name (Type)	Direction
6251	6	35.91692	I-20 WB (Basic Analysis)	SW
6251	7	36.961068	I-20 WB (Basic Analysis)	SW
6251	8	37.155991	I-20 WB (Basic Analysis)	SW
6251	9	38.443483	I-20 WB (Basic Analysis)	SW
6251	10	35.695924	I-20 WB (Basic Analysis)	SW
6254	1	35.688184	I-20 EB (Basic Analysis)	NE
6254	2	34.930141	I-20 EB (Basic Analysis)	NE
6254	3	34.940164	I-20 EB (Basic Analysis)	NE
6254	4	36.030244	I-20 EB (Basic Analysis)	NE
6254	5	35.280971	I-20 EB (Basic Analysis)	NE
6254	6	36.050291	I-20 EB (Basic Analysis)	NE
6254	7	35.933765	I-20 EB (Basic Analysis)	NE
6254	8	36.186864	I-20 EB (Basic Analysis)	NE
6254	9	36.387338	I-20 EB (Basic Analysis)	NE
6254	10	35.289742	I-20 EB (Basic Analysis)	NE
6258	1	33.678207	I-20 EB (Merge Analysis)	NE
6258	2	34.183533	I-20 EB (Merge Analysis)	NE
6258	3	34.16583	I-20 EB (Merge Analysis)	NE
6258	4	34.877149	I-20 EB (Merge Analysis)	NE
6258	5	32.342472	I-20 EB (Merge Analysis)	NE
6258	6	33.853623	I-20 EB (Merge Analysis)	NE
6258	7	34.299404	I-20 EB (Merge Analysis)	NE
6258	8	34.806339	I-20 EB (Merge Analysis)	NE
6258	9	35.234418	I-20 EB (Merge Analysis)	NE
6258	10	35.123375	I-20 EB (Merge Analysis)	NE
6259	1	33.678207	I-20 EB (Merge Analysis)	NE
6259	2	34.183533	I-20 EB (Merge Analysis)	NE
6259	3	34.16583	I-20 EB (Merge Analysis)	NE
6259	4	34.877149	I-20 EB (Merge Analysis)	NE
6259	5	32.342472	I-20 EB (Merge Analysis)	NE
6259	6	33.853623	I-20 EB (Merge Analysis)	NE
6259	7	34.299404	I-20 EB (Merge Analysis)	NE
6259	8	34.806339	I-20 EB (Merge Analysis)	NE
6259	9	35.234418	I-20 EB (Merge Analysis)	NE
6259	10	35.123375	I-20 EB (Merge Analysis)	NE
8539	1	15.97033	I-20 WB (Basic Analysis)	SW
8539	2	15.174863	I-20 WB (Basic Analysis)	SW
8539	3	15.627026	I-20 WB (Basic Analysis)	SW
8539	4	15.058248	I-20 WB (Basic Analysis)	SW
8539	5	15.36323	I-20 WB (Basic Analysis)	SW
8539	6	16.368238	I-20 WB (Basic Analysis)	SW
8539	7	15.056384	I-20 WB (Basic Analysis)	SW
8539	8	15.502303	I-20 WB (Basic Analysis)	SW
8539	9	15.273805	I-20 WB (Basic Analysis)	SW
8539	10	16.285397	I-20 WB (Basic Analysis)	SW
8542	1	31.130778	I-20 EB (Basic Analysis)	NE
8542	2	33.559032	I-20 EB (Basic Analysis)	NE
8542	3	30.760785	I-20 EB (Basic Analysis)	NE
8542	4	28.675294	I-20 EB (Basic Analysis)	NE
8542	5	31.156604	I-20 EB (Basic Analysis)	NE
8542	6	33.929025	I-20 EB (Basic Analysis)	NE
8542	7	31.77251	I-20 EB (Basic Analysis)	NE
8542	8	31.565056	I-20 EB (Basic Analysis)	NE

ID	Run	Density	Name (Type)	Direction
8542	9	29.561536	I-20 EB (Basic Analysis)	NE
8542	10	29.618242	I-20 EB (Basic Analysis)	NE
8554	1	16.636042	I-26 WB (Basic Analysis)	N
8554	2	17.282771	I-26 WB (Basic Analysis)	N
8554	3	16.665071	I-26 WB (Basic Analysis)	N
8554	4	17.160581	I-26 WB (Basic Analysis)	N
8554	5	17.305049	I-26 WB (Basic Analysis)	N
8554	6	16.803125	I-26 WB (Basic Analysis)	N
8554	7	17.020839	I-26 WB (Basic Analysis)	N
8554	8	16.642456	I-26 WB (Basic Analysis)	N
8554	9	17.291547	I-26 WB (Basic Analysis)	N
8554	10	17.362093	I-26 WB (Basic Analysis)	N
8559	1	15.530516	I-126 NB (Basic Analysis)	W
8559	2	14.892974	I-126 NB (Basic Analysis)	W
8559	3	14.06842	I-126 NB (Basic Analysis)	W
8559	4	13.588139	I-126 NB (Basic Analysis)	W
8559	5	15.564518	I-126 NB (Basic Analysis)	W
8559	6	14.710212	I-126 NB (Basic Analysis)	W
8559	7	14.391441	I-126 NB (Basic Analysis)	W
8559	8	13.945162	I-126 NB (Basic Analysis)	W
8559	9	15.526266	I-126 NB (Basic Analysis)	W
8559	10	13.75815	I-126 NB (Basic Analysis)	W
8560	1	53.390994	I-126 SB (Basic Analysis)	E
8560	2	52.647832	I-126 SB (Basic Analysis)	E
8560	3	48.568498	I-126 SB (Basic Analysis)	E
8560	4	51.526966	I-126 SB (Basic Analysis)	E
8560	5	47.839517	I-126 SB (Basic Analysis)	E
8560	6	48.373201	I-126 SB (Basic Analysis)	E
8560	7	48.202396	I-126 SB (Basic Analysis)	E
8560	8	46.843048	I-126 SB (Basic Analysis)	E
8560	9	50.017439	I-126 SB (Basic Analysis)	E
8560	10	50.134102	I-126 SB (Basic Analysis)	E
8658	1	32.465696	I-20 WB (Merge Analysis)	SW
8658	2	30.448027	I-20 WB (Merge Analysis)	SW
8658	3	34.370597	I-20 WB (Merge Analysis)	SW
8658	4	30.645877	I-20 WB (Merge Analysis)	SW
8658	5	31.732366	I-20 WB (Merge Analysis)	SW
8658	6	31.523712	I-20 WB (Merge Analysis)	SW
8658	7	32.747278	I-20 WB (Merge Analysis)	SW
8658	8	33.486685	I-20 WB (Merge Analysis)	SW
8658	9	33.436041	I-20 WB (Merge Analysis)	SW
8658	10	32.904613	I-20 WB (Merge Analysis)	SW
8659	1	56.628549	I-20 EB (Basic Analysis)	NE
8659	2	57.493605	I-20 EB (Basic Analysis)	NE
8659	3	56.630433	I-20 EB (Basic Analysis)	NE
8659	4	58.540352	I-20 EB (Basic Analysis)	NE
8659	5	58.210903	I-20 EB (Basic Analysis)	NE
8659	6	56.449472	I-20 EB (Basic Analysis)	NE
8659	7	56.53323	I-20 EB (Basic Analysis)	NE
8659	8	56.564499	I-20 EB (Basic Analysis)	NE
8659	9	56.99883	I-20 EB (Basic Analysis)	NE
8659	10	56.641015	I-20 EB (Basic Analysis)	NE
8763	1	28.042624	I-26 EB (Basic Analysis)	SE

ID	Run	Density	Name (Type)	Direction
8763	2	29.000495	I-26 EB (Basic Analysis)	SE
8763	3	28.376622	I-26 EB (Basic Analysis)	SE
8763	4	28.256211	I-26 EB (Basic Analysis)	SE
8763	5	28.517794	I-26 EB (Basic Analysis)	SE
8763	6	28.484506	I-26 EB (Basic Analysis)	SE
8763	7	28.48519	I-26 EB (Basic Analysis)	SE
8763	8	27.785845	I-26 EB (Basic Analysis)	SE
8763	9	28.264737	I-26 EB (Basic Analysis)	SE
8763	10	28.33844	I-26 EB (Basic Analysis)	SE
8764	1	15.51989	I-20 WB (Basic Analysis)	S
8764	2	14.826592	I-20 WB (Basic Analysis)	S
8764	3	15.303573	I-20 WB (Basic Analysis)	S
8764	4	15.040722	I-20 WB (Basic Analysis)	S
8764	5	15.065812	I-20 WB (Basic Analysis)	S
8764	6	15.527117	I-20 WB (Basic Analysis)	S
8764	7	15.996618	I-20 WB (Basic Analysis)	S
8764	8	15.376429	I-20 WB (Basic Analysis)	S
8764	9	15.29834	I-20 WB (Basic Analysis)	S
8764	10	16.144402	I-20 WB (Basic Analysis)	S
8765	1	37.671435	I-20 EB (Basic Analysis)	NE
8765	2	42.555665	I-20 EB (Basic Analysis)	NE
8765	3	37.582901	I-20 EB (Basic Analysis)	NE
8765	4	37.923211	I-20 EB (Basic Analysis)	NE
8765	5	40.717901	I-20 EB (Basic Analysis)	NE
8765	6	37.740555	I-20 EB (Basic Analysis)	NE
8765	7	40.669128	I-20 EB (Basic Analysis)	NE
8765	8	38.393887	I-20 EB (Basic Analysis)	NE
8765	9	36.496668	I-20 EB (Basic Analysis)	NE
8765	10	38.355338	I-20 EB (Basic Analysis)	NE
8770	1	38.491465	I-20 WB (Basic Analysis)	SW
8770	2	39.361001	I-20 WB (Basic Analysis)	SW
8770	3	38.575391	I-20 WB (Basic Analysis)	SW
8770	4	36.735954	I-20 WB (Basic Analysis)	SW
8770	5	38.076597	I-20 WB (Basic Analysis)	SW
8770	6	37.891875	I-20 WB (Basic Analysis)	SW
8770	7	38.369471	I-20 WB (Basic Analysis)	SW
8770	8	39.279239	I-20 WB (Basic Analysis)	SW
8770	9	39.046065	I-20 WB (Basic Analysis)	SW
8770	10	39.198775	I-20 WB (Basic Analysis)	SW
8773	1	44.981454	I-26 WB (Basic Analysis)	N
8773	2	33.27755	I-26 WB (Basic Analysis)	N
8773	3	27.148842	I-26 WB (Basic Analysis)	N
8773	4	34.862408	I-26 WB (Basic Analysis)	N
8773	5	28.230641	I-26 WB (Basic Analysis)	N
8773	6	32.370858	I-26 WB (Basic Analysis)	N
8773	7	27.775069	I-26 WB (Basic Analysis)	N
8773	8	42.365253	I-26 WB (Basic Analysis)	N
8773	9	45.646263	I-26 WB (Basic Analysis)	N
8773	10	29.040877	I-26 WB (Basic Analysis)	N
8774	1	45.030082	I-20 EB (Diverge Analysis)	NE
8774	2	45.320744	I-20 EB (Diverge Analysis)	NE
8774	3	44.314609	I-20 EB (Diverge Analysis)	NE
8774	4	44.549374	I-20 EB (Diverge Analysis)	NE

ID	Run	Density	Name (Type)	Direction
8774	5	46.846713	I-20 EB (Diverge Analysis)	NE
8774	6	45.636558	I-20 EB (Diverge Analysis)	NE
8774	7	44.037923	I-20 EB (Diverge Analysis)	NE
8774	8	44.149715	I-20 EB (Diverge Analysis)	NE
8774	9	43.909361	I-20 EB (Diverge Analysis)	NE
8774	10	45.544329	I-20 EB (Diverge Analysis)	NE
8784	1	28.249856	I-126 SB (Basic Analysis)	SE
8784	2	28.888759	I-126 SB (Basic Analysis)	SE
8784	3	28.4227	I-126 SB (Basic Analysis)	SE
8784	4	28.728262	I-126 SB (Basic Analysis)	SE
8784	5	28.328562	I-126 SB (Basic Analysis)	SE
8784	6	27.104769	I-126 SB (Basic Analysis)	SE
8784	7	28.169608	I-126 SB (Basic Analysis)	SE
8784	8	28.753725	I-126 SB (Basic Analysis)	SE
8784	9	27.495982	I-126 SB (Basic Analysis)	SE
8784	10	28.256029	I-126 SB (Basic Analysis)	SE
8789	1	21.325831	I-26 EB (Basic Analysis)	S
8789	2	22.019893	I-26 EB (Basic Analysis)	S
8789	3	21.087383	I-26 EB (Basic Analysis)	S
8789	4	22.195947	I-26 EB (Basic Analysis)	S
8789	5	21.191372	I-26 EB (Basic Analysis)	S
8789	6	21.587978	I-26 EB (Basic Analysis)	S
8789	7	21.424983	I-26 EB (Basic Analysis)	S
8789	8	21.60007	I-26 EB (Basic Analysis)	S
8789	9	20.917133	I-26 EB (Basic Analysis)	S
8789	10	21.400316	I-26 EB (Basic Analysis)	S
8790	1	25.882748	ROAD I-26 WB TO I-20 (Basic Analy	NE
8790	2	30.380723	ROAD I-26 WB TO I-20 (Basic Analy	NE
8790	3	26.48377	ROAD I-26 WB TO I-20 (Basic Analy	NE
8790	4	30.0996	ROAD I-26 WB TO I-20 (Basic Analy	NE
8790	5	28.71337	ROAD I-26 WB TO I-20 (Basic Analy	NE
8790	6	27.42408	ROAD I-26 WB TO I-20 (Basic Analy	NE
8790	7	27.59857	ROAD I-26 WB TO I-20 (Basic Analy	NE
8790	8	26.183259	ROAD I-26 WB TO I-20 (Basic Analy	NE
8790	9	25.46591	ROAD I-26 WB TO I-20 (Basic Analy	NE
8790	10	26.697037	ROAD I-26 WB TO I-20 (Basic Analy	NE
8791	1	11.618618	ROAD I-20 WB TO I-20 (Basic Analy	NE
8791	2	11.879385	ROAD I-20 WB TO I-20 (Basic Analy	NE
8791	3	12.625468	ROAD I-20 WB TO I-20 (Basic Analy	NE
8791	4	10.691446	ROAD I-20 WB TO I-20 (Basic Analy	NE
8791	5	12.668929	ROAD I-20 WB TO I-20 (Basic Analy	NE
8791	6	10.264078	ROAD I-20 WB TO I-20 (Basic Analy	NE
8791	7	11.33612	ROAD I-20 WB TO I-20 (Basic Analy	NE
8791	8	11.155032	ROAD I-20 WB TO I-20 (Basic Analy	NE
8791	9	10.778368	ROAD I-20 WB TO I-20 (Basic Analy	NE
8791	10	12.09669	ROAD I-20 WB TO I-20 (Basic Analy	NE
8792	1	17.443336	I-26 EB (Basic Analysis)	S
8792	2	17.28203	I-26 EB (Basic Analysis)	S
8792	3	16.932525	I-26 EB (Basic Analysis)	S
8792	4	17.901837	I-26 EB (Basic Analysis)	S
8792	5	17.098118	I-26 EB (Basic Analysis)	S
8792	6	17.55076	I-26 EB (Basic Analysis)	S
8792	7	17.090004	I-26 EB (Basic Analysis)	S

ID	Run	Density	Name (Type)	Direction
8792	8	17.336907	I-26 EB (Basic Analysis)	S
8792	9	16.242395	I-26 EB (Basic Analysis)	S
8792	10	16.808694	I-26 EB (Basic Analysis)	S
8802	1	28.960967	CD ROAD I-20 EB (Basic Analysis)	NE
8802	2	28.312401	CD ROAD I-20 EB (Basic Analysis)	NE
8802	3	27.85404	CD ROAD I-20 EB (Basic Analysis)	NE
8802	4	28.390354	CD ROAD I-20 EB (Basic Analysis)	NE
8802	5	28.826889	CD ROAD I-20 EB (Basic Analysis)	NE
8802	6	28.833125	CD ROAD I-20 EB (Basic Analysis)	NE
8802	7	28.589913	CD ROAD I-20 EB (Basic Analysis)	NE
8802	8	29.013975	CD ROAD I-20 EB (Basic Analysis)	NE
8802	9	27.654481	CD ROAD I-20 EB (Basic Analysis)	NE
8802	10	27.386324	CD ROAD I-20 EB (Basic Analysis)	NE
8819	1	11.425469	CD ROAD I-20 WB (Weaving Analysis	SW
8819	2	11.268894	CD ROAD I-20 WB (Weaving Analysis	SW
8819	3	11.339654	CD ROAD I-20 WB (Weaving Analysis	SW
8819	4	10.665177	CD ROAD I-20 WB (Weaving Analysis	SW
8819	5	11.286961	CD ROAD I-20 WB (Weaving Analysis	SW
8819	6	11.792819	CD ROAD I-20 WB (Weaving Analysis	SW
8819	7	11.279433	CD ROAD I-20 WB (Weaving Analysis	SW
8819	8	10.931655	CD ROAD I-20 WB (Weaving Analysis	SW
8819	9	10.60345	CD ROAD I-20 WB (Weaving Analysis	SW
8819	10	12.026176	CD ROAD I-20 WB (Weaving Analysis	SW
8826	1	16.822925	CD ROAD I-20 EB (Basic Analysis)	E
8826	2	16.939536	CD ROAD I-20 EB (Basic Analysis)	E
8826	3	16.463573	CD ROAD I-20 EB (Basic Analysis)	E
8826	4	16.311264	CD ROAD I-20 EB (Basic Analysis)	E
8826	5	17.006171	CD ROAD I-20 EB (Basic Analysis)	E
8826	6	16.256529	CD ROAD I-20 EB (Basic Analysis)	E
8826	7	15.918595	CD ROAD I-20 EB (Basic Analysis)	E
8826	8	18.598269	CD ROAD I-20 EB (Basic Analysis)	E
8826	9	16.518309	CD ROAD I-20 EB (Basic Analysis)	E
8826	10	17.872424	CD ROAD I-20 EB (Basic Analysis)	E
8828	1	20.214473	(Weaving Analysis)	NW
8828	2	18.650895	(Weaving Analysis)	NW
8828	3	18.495374	(Weaving Analysis)	NW
8828	4	18.446878	(Weaving Analysis)	NW
8828	5	17.803051	(Weaving Analysis)	NW
8828	6	18.856585	(Weaving Analysis)	NW
8828	7	18.717786	(Weaving Analysis)	NW
8828	8	20.304776	(Weaving Analysis)	NW
8828	9	19.376663	(Weaving Analysis)	NW
8828	10	18.568954	(Weaving Analysis)	NW
8829	1	38.78584	CD ROAD I-20 EB (Basic Analysis)	E
8829	2	77.905159	CD ROAD I-20 EB (Basic Analysis)	E
8829	3	63.753787	CD ROAD I-20 EB (Basic Analysis)	E
8829	4	62.718387	CD ROAD I-20 EB (Basic Analysis)	E
8829	5	66.40011	CD ROAD I-20 EB (Basic Analysis)	E
8829	6	64.705818	CD ROAD I-20 EB (Basic Analysis)	E
8829	7	70.565917	CD ROAD I-20 EB (Basic Analysis)	E
8829	8	44.584084	CD ROAD I-20 EB (Basic Analysis)	E
8829	9	36.136828	CD ROAD I-20 EB (Basic Analysis)	E
8829	10	66.322119	CD ROAD I-20 EB (Basic Analysis)	E

ID	Run	Density	Name (Type)	Direction
8830	1	27.853338	CD ROAD I-26 EB (Weaving Analysis	SE
8830	2	50.341885	CD ROAD I-26 EB (Weaving Analysis	SE
8830	3	28.585925	CD ROAD I-26 EB (Weaving Analysis	SE
8830	4	26.771363	CD ROAD I-26 EB (Weaving Analysis	SE
8830	5	28.116318	CD ROAD I-26 EB (Weaving Analysis	SE
8830	6	29.397406	CD ROAD I-26 EB (Weaving Analysis	SE
8830	7	29.01045	CD ROAD I-26 EB (Weaving Analysis	SE
8830	8	26.196564	CD ROAD I-26 EB (Weaving Analysis	SE
8830	9	28.037424	CD ROAD I-26 EB (Weaving Analysis	SE
8830	10	31.910744	CD ROAD I-26 EB (Weaving Analysis	SE
8831	1	34.125173	I-20 WB (Diverge Analysis)	SW
8831	2	32.501259	I-20 WB (Diverge Analysis)	SW
8831	3	36.651857	I-20 WB (Diverge Analysis)	SW
8831	4	32.003127	I-20 WB (Diverge Analysis)	SW
8831	5	33.466086	I-20 WB (Diverge Analysis)	SW
8831	6	33.243861	I-20 WB (Diverge Analysis)	SW
8831	7	33.950829	I-20 WB (Diverge Analysis)	SW
8831	8	34.876204	I-20 WB (Diverge Analysis)	SW
8831	9	35.490057	I-20 WB (Diverge Analysis)	SW
8831	10	34.184949	I-20 WB (Diverge Analysis)	SW
8832	1	34.125173	I-20 WB (Diverge Analysis)	SW
8832	2	32.501259	I-20 WB (Diverge Analysis)	SW
8832	3	36.651857	I-20 WB (Diverge Analysis)	SW
8832	4	32.003127	I-20 WB (Diverge Analysis)	SW
8832	5	33.466086	I-20 WB (Diverge Analysis)	SW
8832	6	33.243861	I-20 WB (Diverge Analysis)	SW
8832	7	33.950829	I-20 WB (Diverge Analysis)	SW
8832	8	34.876204	I-20 WB (Diverge Analysis)	SW
8832	9	35.490057	I-20 WB (Diverge Analysis)	SW
8832	10	34.184949	I-20 WB (Diverge Analysis)	SW
8837	1	11.575568	I-20 WB (Basic Analysis)	W
8837	2	10.951307	I-20 WB (Basic Analysis)	W
8837	3	10.633938	I-20 WB (Basic Analysis)	W
8837	4	10.944095	I-20 WB (Basic Analysis)	W
8837	5	9.594311	I-20 WB (Basic Analysis)	W
8837	6	10.519112	I-20 WB (Basic Analysis)	W
8837	7	11.995802	I-20 WB (Basic Analysis)	W
8837	8	11.23369	I-20 WB (Basic Analysis)	W
8837	9	11.598612	I-20 WB (Basic Analysis)	W
8837	10	12.077895	I-20 WB (Basic Analysis)	W
8838	1	9.166049	I-20 WB (Basic Analysis)	SW
8838	2	9.717536	I-20 WB (Basic Analysis)	SW
8838	3	9.546412	I-20 WB (Basic Analysis)	SW
8838	4	9.008147	I-20 WB (Basic Analysis)	SW
8838	5	9.033816	I-20 WB (Basic Analysis)	SW
8838	6	9.405623	I-20 WB (Basic Analysis)	SW
8838	7	9.400956	I-20 WB (Basic Analysis)	SW
8838	8	9.38851	I-20 WB (Basic Analysis)	SW
8838	9	9.331728	I-20 WB (Basic Analysis)	SW
8838	10	9.747094	I-20 WB (Basic Analysis)	SW
8839	1	56.628549	I-20 EB (Basic Analysis)	NE
8839	2	57.493605	I-20 EB (Basic Analysis)	NE
8839	3	56.630433	I-20 EB (Basic Analysis)	NE

ID	Run	Density	Name (Type)	Direction
8839	4	58.540352	I-20 EB (Basic Analysis)	NE
8839	5	58.210903	I-20 EB (Basic Analysis)	NE
8839	6	56.449472	I-20 EB (Basic Analysis)	NE
8839	7	56.53323	I-20 EB (Basic Analysis)	NE
8839	8	56.564499	I-20 EB (Basic Analysis)	NE
8839	9	56.99883	I-20 EB (Basic Analysis)	NE
8839	10	56.641015	I-20 EB (Basic Analysis)	NE
8845	1	7.965131	I-20 WB (Merge Analysis)	W
8845	2	7.738723	I-20 WB (Merge Analysis)	W
8845	3	7.926476	I-20 WB (Merge Analysis)	W
8845	4	7.997159	I-20 WB (Merge Analysis)	W
8845	5	7.567537	I-20 WB (Merge Analysis)	W
8845	6	7.998264	I-20 WB (Merge Analysis)	W
8845	7	8.987831	I-20 WB (Merge Analysis)	W
8845	8	8.146257	I-20 WB (Merge Analysis)	W
8845	9	7.865732	I-20 WB (Merge Analysis)	W
8845	10	7.722157	I-20 WB (Merge Analysis)	W
8849	1	21.009314	CD ROAD I-20 WB (Weaving Analysis	W
8849	2	20.155355	CD ROAD I-20 WB (Weaving Analysis	W
8849	3	20.751363	CD ROAD I-20 WB (Weaving Analysis	W
8849	4	20.405294	CD ROAD I-20 WB (Weaving Analysis	W
8849	5	20.754568	CD ROAD I-20 WB (Weaving Analysis	W
8849	6	20.942022	CD ROAD I-20 WB (Weaving Analysis	W
8849	7	21.046164	CD ROAD I-20 WB (Weaving Analysis	W
8849	8	21.467536	CD ROAD I-20 WB (Weaving Analysis	W
8849	9	20.735342	CD ROAD I-20 WB (Weaving Analysis	W
8849	10	19.790059	CD ROAD I-20 WB (Weaving Analysis	W
8852	1	22.353691	(Basic Analysis)	E
8852	2	22.423743	(Basic Analysis)	E
8852	3	21.558597	(Basic Analysis)	E
8852	4	21.884341	(Basic Analysis)	E
8852	5	20.493802	(Basic Analysis)	E
8852	6	21.075236	(Basic Analysis)	E
8852	7	22.00343	(Basic Analysis)	E
8852	8	21.824796	(Basic Analysis)	E
8852	9	21.309912	(Basic Analysis)	E
8852	10	21.845812	(Basic Analysis)	E
8853	1	30.290505	CD ROAD I-20 EB (Basic Analysis)	E
8853	2	30.825613	CD ROAD I-20 EB (Basic Analysis)	E
8853	3	28.476614	CD ROAD I-20 EB (Basic Analysis)	E
8853	4	29.237142	CD ROAD I-20 EB (Basic Analysis)	E
8853	5	28.225914	CD ROAD I-20 EB (Basic Analysis)	E
8853	6	29.557364	CD ROAD I-20 EB (Basic Analysis)	E
8853	7	28.632512	CD ROAD I-20 EB (Basic Analysis)	E
8853	8	28.034202	CD ROAD I-20 EB (Basic Analysis)	E
8853	9	28.887426	CD ROAD I-20 EB (Basic Analysis)	E
8853	10	29.6311	CD ROAD I-20 EB (Basic Analysis)	E
8855	1	11.409735	ROAD I-20 WB TO I-20 (Basic Analy	NW
8855	2	10.902528	ROAD I-20 WB TO I-20 (Basic Analy	NW
8855	3	12.095672	ROAD I-20 WB TO I-20 (Basic Analy	NW
8855	4	11.536939	ROAD I-20 WB TO I-20 (Basic Analy	NW
8855	5	10.991088	ROAD I-20 WB TO I-20 (Basic Analy	NW
8855	6	10.574052	ROAD I-20 WB TO I-20 (Basic Analy	NW

ID	Run	Density	Name (Type)	Direction
8855	7	10.689985	ROAD I-20 WB TO I-20 (Basic Analy	NW
8855	8	11.264819	ROAD I-20 WB TO I-20 (Basic Analy	NW
8855	9	11.179479	ROAD I-20 WB TO I-20 (Basic Analy	NW
8855	10	11.173039	ROAD I-20 WB TO I-20 (Basic Analy	NW
8863	1	35.020623	(Basic Analysis)	SE
8863	2	33.603972	(Basic Analysis)	SE
8863	3	34.15787	(Basic Analysis)	SE
8863	4	34.868748	(Basic Analysis)	SE
8863	5	33.473794	(Basic Analysis)	SE
8863	6	33.649917	(Basic Analysis)	SE
8863	7	33.646089	(Basic Analysis)	SE
8863	8	33.828594	(Basic Analysis)	SE
8863	9	34.238274	(Basic Analysis)	SE
8863	10	33.597591	(Basic Analysis)	SE
8869	1	26.446216	(Weaving Analysis)	SE
8869	2	26.304561	(Weaving Analysis)	SE
8869	3	26.220529	(Weaving Analysis)	SE
8869	4	25.639504	(Weaving Analysis)	SE
8869	5	26.218128	(Weaving Analysis)	SE
8869	6	25.457034	(Weaving Analysis)	SE
8869	7	26.782346	(Weaving Analysis)	SE
8869	8	26.04286	(Weaving Analysis)	SE
8869	9	26.021252	(Weaving Analysis)	SE
8869	10	26.314165	(Weaving Analysis)	SE
8871	1	17.480042	(Basic Analysis)	W
8871	2	17.829888	(Basic Analysis)	W
8871	3	16.722042	(Basic Analysis)	W
8871	4	13.766761	(Basic Analysis)	W
8871	5	14.742648	(Basic Analysis)	W
8871	6	14.785612	(Basic Analysis)	W
8871	7	15.562025	(Basic Analysis)	W
8871	8	16.154309	(Basic Analysis)	W
8871	9	15.635677	(Basic Analysis)	W
8871	10	15.41779	(Basic Analysis)	W
8877	1	7.81117	I-20 WB (Diverge Analysis)	W
8877	2	7.620283	I-20 WB (Diverge Analysis)	W
8877	3	7.910647	I-20 WB (Diverge Analysis)	W
8877	4	7.937578	I-20 WB (Diverge Analysis)	W
8877	5	7.569211	I-20 WB (Diverge Analysis)	W
8877	6	8.194058	I-20 WB (Diverge Analysis)	W
8877	7	8.933693	I-20 WB (Diverge Analysis)	W
8877	8	7.946949	I-20 WB (Diverge Analysis)	W
8877	9	8.068365	I-20 WB (Diverge Analysis)	W
8877	10	7.674505	I-20 WB (Diverge Analysis)	W
8878	1	11.575568	I-20 WB (Basic Analysis)	W
8878	2	10.951307	I-20 WB (Basic Analysis)	W
8878	3	10.633938	I-20 WB (Basic Analysis)	W
8878	4	10.944095	I-20 WB (Basic Analysis)	W
8878	5	9.594311	I-20 WB (Basic Analysis)	W
8878	6	10.519112	I-20 WB (Basic Analysis)	W
8878	7	11.995802	I-20 WB (Basic Analysis)	W
8878	8	11.23369	I-20 WB (Basic Analysis)	W
8878	9	11.598612	I-20 WB (Basic Analysis)	W

ID	Run	Density	Name (Type)	Direction
8878	10	12.077895	I-20 WB (Basic Analysis)	W
8883	1	35.07253	I-26 WB (Basic Analysis)	NW
8883	2	33.897541	I-26 WB (Basic Analysis)	NW
8883	3	36.379589	I-26 WB (Basic Analysis)	NW
8883	4	35.509392	I-26 WB (Basic Analysis)	NW
8883	5	30.45493	I-26 WB (Basic Analysis)	NW
8883	6	37.360375	I-26 WB (Basic Analysis)	NW
8883	7	36.733467	I-26 WB (Basic Analysis)	NW
8883	8	35.760714	I-26 WB (Basic Analysis)	NW
8883	9	37.768851	I-26 WB (Basic Analysis)	NW
8883	10	35.783178	I-26 WB (Basic Analysis)	NW
8886	1	28.293626	I-26 WB (Basic Analysis)	NW
8886	2	27.787719	I-26 WB (Basic Analysis)	NW
8886	3	27.835412	I-26 WB (Basic Analysis)	NW
8886	4	26.653659	I-26 WB (Basic Analysis)	NW
8886	5	27.683122	I-26 WB (Basic Analysis)	NW
8886	6	27.287443	I-26 WB (Basic Analysis)	NW
8886	7	26.633129	I-26 WB (Basic Analysis)	NW
8886	8	27.417191	I-26 WB (Basic Analysis)	NW
8886	9	27.412658	I-26 WB (Basic Analysis)	NW
8886	10	27.653471	I-26 WB (Basic Analysis)	NW
8887	1	28.000625	I-26 WB (Merge Analysis)	NW
8887	2	28.264606	I-26 WB (Merge Analysis)	NW
8887	3	28.393508	I-26 WB (Merge Analysis)	NW
8887	4	26.774301	I-26 WB (Merge Analysis)	NW
8887	5	27.504445	I-26 WB (Merge Analysis)	NW
8887	6	27.557417	I-26 WB (Merge Analysis)	NW
8887	7	27.756066	I-26 WB (Merge Analysis)	NW
8887	8	28.424408	I-26 WB (Merge Analysis)	NW
8887	9	28.314931	I-26 WB (Merge Analysis)	NW
8887	10	27.666895	I-26 WB (Merge Analysis)	NW
8910	1	74.424249	I-26 EB (Basic Analysis)	SE
8910	2	74.358389	I-26 EB (Basic Analysis)	SE
8910	3	77.546944	I-26 EB (Basic Analysis)	SE
8910	4	71.330467	I-26 EB (Basic Analysis)	SE
8910	5	68.556344	I-26 EB (Basic Analysis)	SE
8910	6	77.80235	I-26 EB (Basic Analysis)	SE
8910	7	69.208511	I-26 EB (Basic Analysis)	SE
8910	8	68.453538	I-26 EB (Basic Analysis)	SE
8910	9	66.003893	I-26 EB (Basic Analysis)	SE
8910	10	71.099156	I-26 EB (Basic Analysis)	SE
8915	1	28.003625	I-26 EB (Basic Analysis)	SE
8915	2	28.760074	I-26 EB (Basic Analysis)	SE
8915	3	28.503803	I-26 EB (Basic Analysis)	SE
8915	4	27.821059	I-26 EB (Basic Analysis)	SE
8915	5	27.457867	I-26 EB (Basic Analysis)	SE
8915	6	29.283284	I-26 EB (Basic Analysis)	SE
8915	7	27.112131	I-26 EB (Basic Analysis)	SE
8915	8	26.762031	I-26 EB (Basic Analysis)	SE
8915	9	27.439926	I-26 EB (Basic Analysis)	SE
8915	10	27.897432	I-26 EB (Basic Analysis)	SE
8940	1	41.947796	I-26 EB (Basic Analysis)	SE
8940	2	40.090777	I-26 EB (Basic Analysis)	SE

ID	Run	Density	Name (Type)	Direction
8940	3	43.179054	I-26 EB (Basic Analysis)	SE
8940	4	41.215348	I-26 EB (Basic Analysis)	SE
8940	5	39.90211	I-26 EB (Basic Analysis)	SE
8940	6	40.863382	I-26 EB (Basic Analysis)	SE
8940	7	42.631172	I-26 EB (Basic Analysis)	SE
8940	8	37.140236	I-26 EB (Basic Analysis)	SE
8940	9	42.544421	I-26 EB (Basic Analysis)	SE
8940	10	39.706194	I-26 EB (Basic Analysis)	SE
8955	1	102.945406	I-20 EB (Basic Analysis)	NE
8955	2	115.267583	I-20 EB (Basic Analysis)	NE
8955	3	112.146002	I-20 EB (Basic Analysis)	NE
8955	4	107.599956	I-20 EB (Basic Analysis)	NE
8955	5	117.407063	I-20 EB (Basic Analysis)	NE
8955	6	101.601623	I-20 EB (Basic Analysis)	NE
8955	7	113.052986	I-20 EB (Basic Analysis)	NE
8955	8	97.439516	I-20 EB (Basic Analysis)	NE
8955	9	95.542084	I-20 EB (Basic Analysis)	NE
8955	10	105.043153	I-20 EB (Basic Analysis)	NE
8959	1	15.97033	I-20 WB (Basic Analysis)	SW
8959	2	15.174863	I-20 WB (Basic Analysis)	SW
8959	3	15.627026	I-20 WB (Basic Analysis)	SW
8959	4	15.058248	I-20 WB (Basic Analysis)	SW
8959	5	15.36323	I-20 WB (Basic Analysis)	SW
8959	6	16.368238	I-20 WB (Basic Analysis)	SW
8959	7	15.056384	I-20 WB (Basic Analysis)	SW
8959	8	15.502303	I-20 WB (Basic Analysis)	SW
8959	9	15.273805	I-20 WB (Basic Analysis)	SW
8959	10	16.285397	I-20 WB (Basic Analysis)	SW
8975	1	35.861184	I-26 EB (Weaving Analysis)	SE
8975	2	35.067941	I-26 EB (Weaving Analysis)	SE
8975	3	35.375467	I-26 EB (Weaving Analysis)	SE
8975	4	36.960515	I-26 EB (Weaving Analysis)	SE
8975	5	34.984594	I-26 EB (Weaving Analysis)	SE
8975	6	36.934649	I-26 EB (Weaving Analysis)	SE
8975	7	35.588148	I-26 EB (Weaving Analysis)	SE
8975	8	33.704196	I-26 EB (Weaving Analysis)	SE
8975	9	36.492042	I-26 EB (Weaving Analysis)	SE
8975	10	35.899984	I-26 EB (Weaving Analysis)	SE
8986	1	73.182952	I-26 EB (Basic Analysis)	SE
8986	2	74.398582	I-26 EB (Basic Analysis)	SE
8986	3	74.919042	I-26 EB (Basic Analysis)	SE
8986	4	74.858113	I-26 EB (Basic Analysis)	SE
8986	5	71.323538	I-26 EB (Basic Analysis)	SE
8986	6	74.28113	I-26 EB (Basic Analysis)	SE
8986	7	72.113404	I-26 EB (Basic Analysis)	SE
8986	8	72.178737	I-26 EB (Basic Analysis)	SE
8986	9	71.224438	I-26 EB (Basic Analysis)	SE
8986	10	71.269951	I-26 EB (Basic Analysis)	SE
8994	1	32.160905	I-126 SB (Basic Analysis)	SE
8994	2	30.433887	I-126 SB (Basic Analysis)	SE
8994	3	31.239829	I-126 SB (Basic Analysis)	SE
8994	4	31.217442	I-126 SB (Basic Analysis)	SE
8994	5	30.142853	I-126 SB (Basic Analysis)	SE

ID	Run	Density	Name (Type)	Direction
8994	6	31.374152	I-126 SB (Basic Analysis)	SE
8994	7	30.724922	I-126 SB (Basic Analysis)	SE
8994	8	30.190826	I-126 SB (Basic Analysis)	SE
8994	9	30.533031	I-126 SB (Basic Analysis)	SE
8994	10	29.832629	I-126 SB (Basic Analysis)	SE
8996	1	11.618618	ROAD I-20 WB TO I-20 (Basic Analy	NE
8996	2	11.879385	ROAD I-20 WB TO I-20 (Basic Analy	NE
8996	3	12.625468	ROAD I-20 WB TO I-20 (Basic Analy	NE
8996	4	10.691446	ROAD I-20 WB TO I-20 (Basic Analy	NE
8996	5	12.668929	ROAD I-20 WB TO I-20 (Basic Analy	NE
8996	6	10.264078	ROAD I-20 WB TO I-20 (Basic Analy	NE
8996	7	11.33612	ROAD I-20 WB TO I-20 (Basic Analy	NE
8996	8	11.155032	ROAD I-20 WB TO I-20 (Basic Analy	NE
8996	9	10.778368	ROAD I-20 WB TO I-20 (Basic Analy	NE
8996	10	12.09669	ROAD I-20 WB TO I-20 (Basic Analy	NE
9001	1	6.364619	I-126 NB (Merge Analysis)	NW
9001	2	6.671309	I-126 NB (Merge Analysis)	NW
9001	3	6.740868	I-126 NB (Merge Analysis)	NW
9001	4	5.997855	I-126 NB (Merge Analysis)	NW
9001	5	5.220062	I-126 NB (Merge Analysis)	NW
9001	6	6.744029	I-126 NB (Merge Analysis)	NW
9001	7	6.791456	I-126 NB (Merge Analysis)	NW
9001	8	5.561532	I-126 NB (Merge Analysis)	NW
9001	9	6.054766	I-126 NB (Merge Analysis)	NW
9001	10	5.729105	I-126 NB (Merge Analysis)	NW
9005	1	11.983149	I-126 NB (Basic Analysis)	NW
9005	2	11.962613	I-126 NB (Basic Analysis)	NW
9005	3	12.113215	I-126 NB (Basic Analysis)	NW
9005	4	11.07269	I-126 NB (Basic Analysis)	NW
9005	5	11.425236	I-126 NB (Basic Analysis)	NW
9005	6	10.223841	I-126 NB (Basic Analysis)	NW
9005	7	11.480001	I-126 NB (Basic Analysis)	NW
9005	8	11.260943	I-126 NB (Basic Analysis)	NW
9005	9	12.08241	I-126 NB (Basic Analysis)	NW
9005	10	12.410997	I-126 NB (Basic Analysis)	NW
9012	1	33.963609	I-126 SB (Merge Analysis)	E
9012	2	37.422434	I-126 SB (Merge Analysis)	E
9012	3	32.823264	I-126 SB (Merge Analysis)	E
9012	4	33.968055	I-126 SB (Merge Analysis)	E
9012	5	31.480636	I-126 SB (Merge Analysis)	E
9012	6	31.158316	I-126 SB (Merge Analysis)	E
9012	7	33.589052	I-126 SB (Merge Analysis)	E
9012	8	32.585415	I-126 SB (Merge Analysis)	E
9012	9	33.422335	I-126 SB (Merge Analysis)	E
9012	10	31.412838	I-126 SB (Merge Analysis)	E
9017	1	40.705605	I-126 SB (Basic Analysis)	E
9017	2	40.420623	I-126 SB (Basic Analysis)	E
9017	3	37.564961	I-126 SB (Basic Analysis)	E
9017	4	42.146589	I-126 SB (Basic Analysis)	E
9017	5	37.129451	I-126 SB (Basic Analysis)	E
9017	6	36.746552	I-126 SB (Basic Analysis)	E
9017	7	39.722053	I-126 SB (Basic Analysis)	E
9017	8	37.744719	I-126 SB (Basic Analysis)	E

ID	Run	Density	Name (Type)	Direction
9017	9	39.030789	I-126 SB (Basic Analysis)	E
9017	10	37.154295	I-126 SB (Basic Analysis)	E
9018	1	40.705605	I-126 SB (Basic Analysis)	E
9018	2	40.420623	I-126 SB (Basic Analysis)	E
9018	3	37.564961	I-126 SB (Basic Analysis)	E
9018	4	42.146589	I-126 SB (Basic Analysis)	E
9018	5	37.129451	I-126 SB (Basic Analysis)	E
9018	6	36.746552	I-126 SB (Basic Analysis)	E
9018	7	39.722053	I-126 SB (Basic Analysis)	E
9018	8	37.744719	I-126 SB (Basic Analysis)	E
9018	9	39.030789	I-126 SB (Basic Analysis)	E
9018	10	37.154295	I-126 SB (Basic Analysis)	E
9019	1	10.279993	I-126 NB (Diverge Analysis)	NW
9019	2	9.999744	I-126 NB (Diverge Analysis)	NW
9019	3	10.509974	I-126 NB (Diverge Analysis)	NW
9019	4	9.98592	I-126 NB (Diverge Analysis)	NW
9019	5	9.890409	I-126 NB (Diverge Analysis)	NW
9019	6	10.542648	I-126 NB (Diverge Analysis)	NW
9019	7	9.75217	I-126 NB (Diverge Analysis)	NW
9019	8	10.556472	I-126 NB (Diverge Analysis)	NW
9019	9	9.587539	I-126 NB (Diverge Analysis)	NW
9019	10	9.936908	I-126 NB (Diverge Analysis)	NW
9022	1	4.793579	107 (Basic Analysis)	NW
9022	2	4.670989	107 (Basic Analysis)	NW
9022	3	5.321658	107 (Basic Analysis)	NW
9022	4	4.435239	107 (Basic Analysis)	NW
9022	5	4.328366	107 (Basic Analysis)	NW
9022	6	6.412394	107 (Basic Analysis)	NW
9022	7	4.913025	107 (Basic Analysis)	NW
9022	8	5.780584	107 (Basic Analysis)	NW
9022	9	4.941315	107 (Basic Analysis)	NW
9022	10	5.768011	107 (Basic Analysis)	NW
9023	1	12.411951	I-126 NB (Basic Analysis)	NW
9023	2	13.315438	I-126 NB (Basic Analysis)	NW
9023	3	11.794399	I-126 NB (Basic Analysis)	NW
9023	4	11.430635	I-126 NB (Basic Analysis)	NW
9023	5	13.024427	I-126 NB (Basic Analysis)	NW
9023	6	13.949909	I-126 NB (Basic Analysis)	NW
9023	7	11.958515	I-126 NB (Basic Analysis)	NW
9023	8	13.215615	I-126 NB (Basic Analysis)	NW
9023	9	11.853616	I-126 NB (Basic Analysis)	NW
9023	10	12.689426	I-126 NB (Basic Analysis)	NW
9025	1	22.206737	ROAD I-26 WB TO I-20 (Diverge Anal	NE
9025	2	21.961669	ROAD I-26 WB TO I-20 (Diverge Anal	NE
9025	3	21.223912	ROAD I-26 WB TO I-20 (Diverge Anal	NE
9025	4	23.552058	ROAD I-26 WB TO I-20 (Diverge Anal	NE
9025	5	22.260346	ROAD I-26 WB TO I-20 (Diverge Anal	NE
9025	6	20.766962	ROAD I-26 WB TO I-20 (Diverge Anal	NE
9025	7	23.368257	ROAD I-26 WB TO I-20 (Diverge Anal	NE
9025	8	22.967469	ROAD I-26 WB TO I-20 (Diverge Anal	NE
9025	9	23.52653	ROAD I-26 WB TO I-20 (Diverge Anal	NE
9025	10	23.426971	ROAD I-26 WB TO I-20 (Diverge Anal	NE
9033	1	28.293626	I-26 WB (Basic Analysis)	NW

ID	Run	Density	Name (Type)	Direction
9033	2	27.787719	I-26 WB (Basic Analysis)	NW
9033	3	27.835412	I-26 WB (Basic Analysis)	NW
9033	4	26.653659	I-26 WB (Basic Analysis)	NW
9033	5	27.683122	I-26 WB (Basic Analysis)	NW
9033	6	27.287443	I-26 WB (Basic Analysis)	NW
9033	7	26.633129	I-26 WB (Basic Analysis)	NW
9033	8	27.417191	I-26 WB (Basic Analysis)	NW
9033	9	27.412658	I-26 WB (Basic Analysis)	NW
9033	10	27.653471	I-26 WB (Basic Analysis)	NW
9039	1	56.628549	I-20 EB (Basic Analysis)	NE
9039	2	57.493605	I-20 EB (Basic Analysis)	NE
9039	3	56.630433	I-20 EB (Basic Analysis)	NE
9039	4	58.540352	I-20 EB (Basic Analysis)	NE
9039	5	58.210903	I-20 EB (Basic Analysis)	NE
9039	6	56.449472	I-20 EB (Basic Analysis)	NE
9039	7	56.53323	I-20 EB (Basic Analysis)	NE
9039	8	56.564499	I-20 EB (Basic Analysis)	NE
9039	9	56.99883	I-20 EB (Basic Analysis)	NE
9039	10	56.641015	I-20 EB (Basic Analysis)	NE
9040	1	36.867171	I-20 WB (Basic Analysis)	SW
9040	2	35.051371	I-20 WB (Basic Analysis)	SW
9040	3	38.062191	I-20 WB (Basic Analysis)	SW
9040	4	34.770279	I-20 WB (Basic Analysis)	SW
9040	5	35.004311	I-20 WB (Basic Analysis)	SW
9040	6	35.962388	I-20 WB (Basic Analysis)	SW
9040	7	36.876816	I-20 WB (Basic Analysis)	SW
9040	8	37.862518	I-20 WB (Basic Analysis)	SW
9040	9	38.162918	I-20 WB (Basic Analysis)	SW
9040	10	36.608717	I-20 WB (Basic Analysis)	SW
9042	1	9.355259	I-20 WB (Basic Analysis)	W
9042	2	9.713301	I-20 WB (Basic Analysis)	W
9042	3	10.249421	I-20 WB (Basic Analysis)	W
9042	4	8.859653	I-20 WB (Basic Analysis)	W
9042	5	9.556893	I-20 WB (Basic Analysis)	W
9042	6	9.576679	I-20 WB (Basic Analysis)	W
9042	7	10.352123	I-20 WB (Basic Analysis)	W
9042	8	8.772027	I-20 WB (Basic Analysis)	W
9042	9	10.211733	I-20 WB (Basic Analysis)	W
9042	10	10.4275	I-20 WB (Basic Analysis)	W
9043	1	26.676646	CD ROAD I-20 WB (Basic Analysis)	W
9043	2	25.459949	CD ROAD I-20 WB (Basic Analysis)	W
9043	3	25.365485	CD ROAD I-20 WB (Basic Analysis)	W
9043	4	23.691582	CD ROAD I-20 WB (Basic Analysis)	W
9043	5	23.504544	CD ROAD I-20 WB (Basic Analysis)	W
9043	6	24.912058	CD ROAD I-20 WB (Basic Analysis)	W
9043	7	24.963068	CD ROAD I-20 WB (Basic Analysis)	W
9043	8	26.446154	CD ROAD I-20 WB (Basic Analysis)	W
9043	9	25.121768	CD ROAD I-20 WB (Basic Analysis)	W
9043	10	24.929061	CD ROAD I-20 WB (Basic Analysis)	W
9045	1	53.113719	CD ROAD I-20 EB (Weaving Analysis	E
9045	2	66.819488	CD ROAD I-20 EB (Weaving Analysis	E
9045	3	60.884318	CD ROAD I-20 EB (Weaving Analysis	E
9045	4	57.800551	CD ROAD I-20 EB (Weaving Analysis	E

ID	Run	Density	Name (Type)	Direction
9045	5	61.681524	CD ROAD I-20 EB (Weaving Analysis	E
9045	6	56.993457	CD ROAD I-20 EB (Weaving Analysis	E
9045	7	61.098142	CD ROAD I-20 EB (Weaving Analysis	E
9045	8	50.167145	CD ROAD I-20 EB (Weaving Analysis	E
9045	9	50.382206	CD ROAD I-20 EB (Weaving Analysis	E
9045	10	60.109359	CD ROAD I-20 EB (Weaving Analysis	E
9052	1	29.952384	CD ROAD I-20 EB (Basic Analysis)	NE
9052	2	31.138838	CD ROAD I-20 EB (Basic Analysis)	NE
9052	3	29.379677	CD ROAD I-20 EB (Basic Analysis)	NE
9052	4	29.049484	CD ROAD I-20 EB (Basic Analysis)	NE
9052	5	29.911343	CD ROAD I-20 EB (Basic Analysis)	NE
9052	6	29.094256	CD ROAD I-20 EB (Basic Analysis)	NE
9052	7	29.926267	CD ROAD I-20 EB (Basic Analysis)	NE
9052	8	30.63702	CD ROAD I-20 EB (Basic Analysis)	NE
9052	9	29.793817	CD ROAD I-20 EB (Basic Analysis)	NE
9052	10	30.012079	CD ROAD I-20 EB (Basic Analysis)	NE
9054	1	9.166049	I-20 WB (Basic Analysis)	SW
9054	2	9.717536	I-20 WB (Basic Analysis)	SW
9054	3	9.546412	I-20 WB (Basic Analysis)	SW
9054	4	9.008147	I-20 WB (Basic Analysis)	SW
9054	5	9.033816	I-20 WB (Basic Analysis)	SW
9054	6	9.405623	I-20 WB (Basic Analysis)	SW
9054	7	9.400956	I-20 WB (Basic Analysis)	SW
9054	8	9.38851	I-20 WB (Basic Analysis)	SW
9054	9	9.331728	I-20 WB (Basic Analysis)	SW
9054	10	9.747094	I-20 WB (Basic Analysis)	SW
9055	1	9.166049	I-20 WB (Basic Analysis)	SW
9055	2	9.717536	I-20 WB (Basic Analysis)	SW
9055	3	9.546412	I-20 WB (Basic Analysis)	SW
9055	4	9.008147	I-20 WB (Basic Analysis)	SW
9055	5	9.033816	I-20 WB (Basic Analysis)	SW
9055	6	9.405623	I-20 WB (Basic Analysis)	SW
9055	7	9.400956	I-20 WB (Basic Analysis)	SW
9055	8	9.38851	I-20 WB (Basic Analysis)	SW
9055	9	9.331728	I-20 WB (Basic Analysis)	SW
9055	10	9.747094	I-20 WB (Basic Analysis)	SW
9059	1	10.78486	I-20 WB (Merge Analysis)	SW
9059	2	10.39179	I-20 WB (Merge Analysis)	SW
9059	3	11.486771	I-20 WB (Merge Analysis)	SW
9059	4	11.462205	I-20 WB (Merge Analysis)	SW
9059	5	9.984682	I-20 WB (Merge Analysis)	SW
9059	6	11.511338	I-20 WB (Merge Analysis)	SW
9059	7	12.729154	I-20 WB (Merge Analysis)	SW
9059	8	11.676287	I-20 WB (Merge Analysis)	SW
9059	9	12.290459	I-20 WB (Merge Analysis)	SW
9059	10	11.476243	I-20 WB (Merge Analysis)	SW
9061	1	31.130778	I-20 EB (Basic Analysis)	NE
9061	2	33.559032	I-20 EB (Basic Analysis)	NE
9061	3	30.760785	I-20 EB (Basic Analysis)	NE
9061	4	28.675294	I-20 EB (Basic Analysis)	NE
9061	5	31.156604	I-20 EB (Basic Analysis)	NE
9061	6	33.929025	I-20 EB (Basic Analysis)	NE
9061	7	31.77251	I-20 EB (Basic Analysis)	NE

ID	Run	Density	Name (Type)	Direction
9061	8	31.565056	I-20 EB (Basic Analysis)	NE
9061	9	29.561536	I-20 EB (Basic Analysis)	NE
9061	10	29.618242	I-20 EB (Basic Analysis)	NE
9063	1	25.500085	I-26 WB (Basic Analysis)	NW
9063	2	23.874939	I-26 WB (Basic Analysis)	NW
9063	3	24.810864	I-26 WB (Basic Analysis)	NW
9063	4	23.566283	I-26 WB (Basic Analysis)	NW
9063	5	24.046415	I-26 WB (Basic Analysis)	NW
9063	6	25.04208	I-26 WB (Basic Analysis)	NW
9063	7	23.083938	I-26 WB (Basic Analysis)	NW
9063	8	22.691204	I-26 WB (Basic Analysis)	NW
9063	9	24.348433	I-26 WB (Basic Analysis)	NW
9063	10	24.036458	I-26 WB (Basic Analysis)	NW
9064	1	25.599192	I-26 WB (Diverge Analysis)	NW
9064	2	27.318125	I-26 WB (Diverge Analysis)	NW
9064	3	27.306392	I-26 WB (Diverge Analysis)	NW
9064	4	24.848259	I-26 WB (Diverge Analysis)	NW
9064	5	24.428793	I-26 WB (Diverge Analysis)	NW
9064	6	25.613859	I-26 WB (Diverge Analysis)	NW
9064	7	25.763459	I-26 WB (Diverge Analysis)	NW
9064	8	27.291725	I-26 WB (Diverge Analysis)	NW
9064	9	27.561592	I-26 WB (Diverge Analysis)	NW
9064	10	26.960259	I-26 WB (Diverge Analysis)	NW
9067	1	20.131121	I-26 EB (Merge Analysis)	SW
9067	2	20.053784	I-26 EB (Merge Analysis)	SW
9067	3	20.951258	I-26 EB (Merge Analysis)	SW
9067	4	19.825369	I-26 EB (Merge Analysis)	SW
9067	5	19.550191	I-26 EB (Merge Analysis)	SW
9067	6	19.773211	I-26 EB (Merge Analysis)	SW
9067	7	20.066374	I-26 EB (Merge Analysis)	SW
9067	8	20.55378	I-26 EB (Merge Analysis)	SW
9067	9	20.929676	I-26 EB (Merge Analysis)	SW
9067	10	20.50342	I-26 EB (Merge Analysis)	SW
9089	1	25.656883	I-26 EB (Diverge Analysis)	SE
9089	2	25.424172	I-26 EB (Diverge Analysis)	SE
9089	3	26.259194	I-26 EB (Diverge Analysis)	SE
9089	4	24.260617	I-26 EB (Diverge Analysis)	SE
9089	5	23.441239	I-26 EB (Diverge Analysis)	SE
9089	6	24.596972	I-26 EB (Diverge Analysis)	SE
9089	7	22.70595	I-26 EB (Diverge Analysis)	SE
9089	8	22.54755	I-26 EB (Diverge Analysis)	SE
9089	9	24.108083	I-26 EB (Diverge Analysis)	SE
9089	10	23.959461	I-26 EB (Diverge Analysis)	SE
9110	1	20.131121	I-26 EB (Merge Analysis)	SW
9110	2	20.053784	I-26 EB (Merge Analysis)	SW
9110	3	20.951258	I-26 EB (Merge Analysis)	SW
9110	4	19.825369	I-26 EB (Merge Analysis)	SW
9110	5	19.550191	I-26 EB (Merge Analysis)	SW
9110	6	19.773211	I-26 EB (Merge Analysis)	SW
9110	7	20.066374	I-26 EB (Merge Analysis)	SW
9110	8	20.55378	I-26 EB (Merge Analysis)	SW
9110	9	20.929676	I-26 EB (Merge Analysis)	SW
9110	10	20.50342	I-26 EB (Merge Analysis)	SW

ID	Run	Density	Name (Type)	Direction
9111	1	38.457977	(Merge Analysis)	SE
9111	2	38.96553	(Merge Analysis)	SE
9111	3	38.525471	(Merge Analysis)	SE
9111	4	38.736051	(Merge Analysis)	SE
9111	5	38.710404	(Merge Analysis)	SE
9111	6	37.76954	(Merge Analysis)	SE
9111	7	38.2069	(Merge Analysis)	SE
9111	8	38.085411	(Merge Analysis)	SE
9111	9	37.387525	(Merge Analysis)	SE
9111	10	38.003068	(Merge Analysis)	SE
9112	1	17.443336	I-26 EB (Basic Analysis)	S
9112	2	17.28203	I-26 EB (Basic Analysis)	S
9112	3	16.932525	I-26 EB (Basic Analysis)	S
9112	4	17.901837	I-26 EB (Basic Analysis)	S
9112	5	17.098118	I-26 EB (Basic Analysis)	S
9112	6	17.55076	I-26 EB (Basic Analysis)	S
9112	7	17.090004	I-26 EB (Basic Analysis)	S
9112	8	17.336907	I-26 EB (Basic Analysis)	S
9112	9	16.242395	I-26 EB (Basic Analysis)	S
9112	10	16.808694	I-26 EB (Basic Analysis)	S
9113	1	6.364619	I-126 NB (Merge+Diverge Analysis)	NW
9113	2	6.671309	I-126 NB (Merge+Diverge Analysis)	NW
9113	3	6.740868	I-126 NB (Merge+Diverge Analysis)	NW
9113	4	5.997855	I-126 NB (Merge+Diverge Analysis)	NW
9113	5	5.220062	I-126 NB (Merge+Diverge Analysis)	NW
9113	6	6.744029	I-126 NB (Merge+Diverge Analysis)	NW
9113	7	6.791456	I-126 NB (Merge+Diverge Analysis)	NW
9113	8	5.561532	I-126 NB (Merge+Diverge Analysis)	NW
9113	9	6.054766	I-126 NB (Merge+Diverge Analysis)	NW
9113	10	5.729105	I-126 NB (Merge+Diverge Analysis)	NW
9114	1	10.279993	I-126 NB (Diverge Analysis)	NW
9114	2	9.999744	I-126 NB (Diverge Analysis)	NW
9114	3	10.509974	I-126 NB (Diverge Analysis)	NW
9114	4	9.98592	I-126 NB (Diverge Analysis)	NW
9114	5	9.890409	I-126 NB (Diverge Analysis)	NW
9114	6	10.542648	I-126 NB (Diverge Analysis)	NW
9114	7	9.75217	I-126 NB (Diverge Analysis)	NW
9114	8	10.556472	I-126 NB (Diverge Analysis)	NW
9114	9	9.587539	I-126 NB (Diverge Analysis)	NW
9114	10	9.936908	I-126 NB (Diverge Analysis)	NW
9115	1	20.131121	I-26 EB (Merge Analysis)	SW
9115	2	20.053784	I-26 EB (Merge Analysis)	SW
9115	3	20.951258	I-26 EB (Merge Analysis)	SW
9115	4	19.825369	I-26 EB (Merge Analysis)	SW
9115	5	19.550191	I-26 EB (Merge Analysis)	SW
9115	6	19.773211	I-26 EB (Merge Analysis)	SW
9115	7	20.066374	I-26 EB (Merge Analysis)	SW
9115	8	20.55378	I-26 EB (Merge Analysis)	SW
9115	9	20.929676	I-26 EB (Merge Analysis)	SW
9115	10	20.50342	I-26 EB (Merge Analysis)	SW
9118	1	28.240171	I-26 EB (Diverge Analysis)	SE
9118	2	28.036628	I-26 EB (Diverge Analysis)	SE
9118	3	26.614733	I-26 EB (Diverge Analysis)	SE

ID	Run	Density	Name (Type)	Direction
9118	4	30.179648	I-26 EB (Diverge Analysis)	SE
9118	5	24.899154	I-26 EB (Diverge Analysis)	SE
9118	6	26.745583	I-26 EB (Diverge Analysis)	SE
9118	7	28.275065	I-26 EB (Diverge Analysis)	SE
9118	8	25.818007	I-26 EB (Diverge Analysis)	SE
9118	9	29.135762	I-26 EB (Diverge Analysis)	SE
9118	10	25.24227	I-26 EB (Diverge Analysis)	SE
9119	1	21.798925	I-26 EB (Diverge Analysis)	SE
9119	2	24.609675	I-26 EB (Diverge Analysis)	SE
9119	3	24.615921	I-26 EB (Diverge Analysis)	SE
9119	4	22.167446	I-26 EB (Diverge Analysis)	SE
9119	5	23.895536	I-26 EB (Diverge Analysis)	SE
9119	6	23.129347	I-26 EB (Diverge Analysis)	SE
9119	7	23.608215	I-26 EB (Diverge Analysis)	SE
9119	8	22.854518	I-26 EB (Diverge Analysis)	SE
9119	9	23.152249	I-26 EB (Diverge Analysis)	SE
9119	10	24.085002	I-26 EB (Diverge Analysis)	SE
9120	1	29.401439	I-26 EB (Diverge Analysis)	SE
9120	2	30.671109	I-26 EB (Diverge Analysis)	SE
9120	3	29.643935	I-26 EB (Diverge Analysis)	SE
9120	4	30.069445	I-26 EB (Diverge Analysis)	SE
9120	5	29.717141	I-26 EB (Diverge Analysis)	SE
9120	6	29.518111	I-26 EB (Diverge Analysis)	SE
9120	7	29.12234	I-26 EB (Diverge Analysis)	SE
9120	8	29.785772	I-26 EB (Diverge Analysis)	SE
9120	9	29.433467	I-26 EB (Diverge Analysis)	SE
9120	10	28.273606	I-26 EB (Diverge Analysis)	SE
9121	1	41.947796	I-26 EB (Basic Analysis)	SE
9121	2	40.090777	I-26 EB (Basic Analysis)	SE
9121	3	43.179054	I-26 EB (Basic Analysis)	SE
9121	4	41.215348	I-26 EB (Basic Analysis)	SE
9121	5	39.90211	I-26 EB (Basic Analysis)	SE
9121	6	40.863382	I-26 EB (Basic Analysis)	SE
9121	7	42.631172	I-26 EB (Basic Analysis)	SE
9121	8	37.140236	I-26 EB (Basic Analysis)	SE
9121	9	42.544421	I-26 EB (Basic Analysis)	SE
9121	10	39.706194	I-26 EB (Basic Analysis)	SE
9122	1	33.61599	I-26 EB (Diverge Analysis)	SE
9122	2	33.46639	I-26 EB (Diverge Analysis)	SE
9122	3	33.926923	I-26 EB (Diverge Analysis)	SE
9122	4	33.469323	I-26 EB (Diverge Analysis)	SE
9122	5	33.29039	I-26 EB (Diverge Analysis)	SE
9122	6	32.228523	I-26 EB (Diverge Analysis)	SE
9122	7	34.041323	I-26 EB (Diverge Analysis)	SE
9122	8	32.14639	I-26 EB (Diverge Analysis)	SE
9122	9	33.076257	I-26 EB (Diverge Analysis)	SE
9122	10	33.59839	I-26 EB (Diverge Analysis)	SE
9123	1	35.278651	I-26 EB (Weaving Analysis)	SE
9123	2	36.724343	I-26 EB (Weaving Analysis)	SE
9123	3	35.288849	I-26 EB (Weaving Analysis)	SE
9123	4	34.946056	I-26 EB (Weaving Analysis)	SE
9123	5	36.236432	I-26 EB (Weaving Analysis)	SE
9123	6	37.105573	I-26 EB (Weaving Analysis)	SE

ID	Run	Density	Name (Type)	Direction
9123	7	35.632426	I-26 EB (Weaving Analysis)	SE
9123	8	33.084619	I-26 EB (Weaving Analysis)	SE
9123	9	38.382614	I-26 EB (Weaving Analysis)	SE
9123	10	34.521683	I-26 EB (Weaving Analysis)	SE
9125	1	28.003625	I-26 EB (Basic Analysis)	SE
9125	2	28.760074	I-26 EB (Basic Analysis)	SE
9125	3	28.503803	I-26 EB (Basic Analysis)	SE
9125	4	27.821059	I-26 EB (Basic Analysis)	SE
9125	5	27.457867	I-26 EB (Basic Analysis)	SE
9125	6	29.283284	I-26 EB (Basic Analysis)	SE
9125	7	27.112131	I-26 EB (Basic Analysis)	SE
9125	8	26.762031	I-26 EB (Basic Analysis)	SE
9125	9	27.439926	I-26 EB (Basic Analysis)	SE
9125	10	27.897432	I-26 EB (Basic Analysis)	SE
9126	1	28.003625	I-26 EB (Basic Analysis)	SE
9126	2	28.760074	I-26 EB (Basic Analysis)	SE
9126	3	28.503803	I-26 EB (Basic Analysis)	SE
9126	4	27.821059	I-26 EB (Basic Analysis)	SE
9126	5	27.457867	I-26 EB (Basic Analysis)	SE
9126	6	29.283284	I-26 EB (Basic Analysis)	SE
9126	7	27.112131	I-26 EB (Basic Analysis)	SE
9126	8	26.762031	I-26 EB (Basic Analysis)	SE
9126	9	27.439926	I-26 EB (Basic Analysis)	SE
9126	10	27.897432	I-26 EB (Basic Analysis)	SE
9127	1	74.424249	I-26 EB (Basic Analysis)	SE
9127	2	74.358389	I-26 EB (Basic Analysis)	SE
9127	3	77.546944	I-26 EB (Basic Analysis)	SE
9127	4	71.330467	I-26 EB (Basic Analysis)	SE
9127	5	68.556344	I-26 EB (Basic Analysis)	SE
9127	6	77.80235	I-26 EB (Basic Analysis)	SE
9127	7	69.208511	I-26 EB (Basic Analysis)	SE
9127	8	68.453538	I-26 EB (Basic Analysis)	SE
9127	9	66.003893	I-26 EB (Basic Analysis)	SE
9127	10	71.099156	I-26 EB (Basic Analysis)	SE
9128	1	21.522576	I-26 EB (Diverge Analysis)	SW
9128	2	21.517392	I-26 EB (Diverge Analysis)	SW
9128	3	22.777777	I-26 EB (Diverge Analysis)	SW
9128	4	21.586734	I-26 EB (Diverge Analysis)	SW
9128	5	21.159953	I-26 EB (Diverge Analysis)	SW
9128	6	21.369087	I-26 EB (Diverge Analysis)	SW
9128	7	21.65002	I-26 EB (Diverge Analysis)	SW
9128	8	22.104849	I-26 EB (Diverge Analysis)	SW
9128	9	21.801147	I-26 EB (Diverge Analysis)	SW
9128	10	21.936452	I-26 EB (Diverge Analysis)	SW
9130	1	38.457977	(Merge Analysis)	SE
9130	2	38.96553	(Merge Analysis)	SE
9130	3	38.525471	(Merge Analysis)	SE
9130	4	38.736051	(Merge Analysis)	SE
9130	5	38.710404	(Merge Analysis)	SE
9130	6	37.76954	(Merge Analysis)	SE
9130	7	38.2069	(Merge Analysis)	SE
9130	8	38.085411	(Merge Analysis)	SE
9130	9	37.387525	(Merge Analysis)	SE

ID	Run	Density	Name (Type)	Direction
9130	10	38.003068	(Merge Analysis)	SE
9131	1	30.926777	(Diverge Analysis)	SE
9131	2	29.53465	(Diverge Analysis)	SE
9131	3	29.065754	(Diverge Analysis)	SE
9131	4	28.803637	(Diverge Analysis)	SE
9131	5	29.051192	(Diverge Analysis)	SE
9131	6	30.312261	(Diverge Analysis)	SE
9131	7	27.609553	(Diverge Analysis)	SE
9131	8	28.547347	(Diverge Analysis)	SE
9131	9	30.530691	(Diverge Analysis)	SE
9131	10	27.894969	(Diverge Analysis)	SE
9132	1	34.613279	I-126 SB (Diverge Analysis)	E
9132	2	37.599272	I-126 SB (Diverge Analysis)	E
9132	3	33.413065	I-126 SB (Diverge Analysis)	E
9132	4	34.898306	I-126 SB (Diverge Analysis)	E
9132	5	32.478488	I-126 SB (Diverge Analysis)	E
9132	6	31.755257	I-126 SB (Diverge Analysis)	E
9132	7	34.217732	I-126 SB (Diverge Analysis)	E
9132	8	33.346171	I-126 SB (Diverge Analysis)	E
9132	9	34.176044	I-126 SB (Diverge Analysis)	E
9132	10	32.009261	I-126 SB (Diverge Analysis)	E
9133	1	15.272677	I-126 NB (Basic Analysis)	W
9133	2	15.744056	I-126 NB (Basic Analysis)	W
9133	3	15.580135	I-126 NB (Basic Analysis)	W
9133	4	14.970315	I-126 NB (Basic Analysis)	W
9133	5	14.870094	I-126 NB (Basic Analysis)	W
9133	6	14.777517	I-126 NB (Basic Analysis)	W
9133	7	15.152922	I-126 NB (Basic Analysis)	W
9133	8	15.495202	I-126 NB (Basic Analysis)	W
9133	9	15.949595	I-126 NB (Basic Analysis)	W
9133	10	15.915621	I-126 NB (Basic Analysis)	W
9134	1	16.802128	I-126 NB (Diverge Analysis)	W
9134	2	16.227195	I-126 NB (Diverge Analysis)	W
9134	3	15.526129	I-126 NB (Diverge Analysis)	W
9134	4	14.710662	I-126 NB (Diverge Analysis)	W
9134	5	16.285862	I-126 NB (Diverge Analysis)	W
9134	6	17.544261	I-126 NB (Diverge Analysis)	W
9134	7	15.989595	I-126 NB (Diverge Analysis)	W
9134	8	16.781595	I-126 NB (Diverge Analysis)	W
9134	9	14.167996	I-126 NB (Diverge Analysis)	W
9134	10	15.989595	I-126 NB (Diverge Analysis)	W
9135	1	15.511811	I-126 NB (Basic Analysis)	NW
9135	2	14.883175	I-126 NB (Basic Analysis)	NW
9135	3	14.114115	I-126 NB (Basic Analysis)	NW
9135	4	13.583448	I-126 NB (Basic Analysis)	NW
9135	5	13.402205	I-126 NB (Basic Analysis)	NW
9135	6	14.368836	I-126 NB (Basic Analysis)	NW
9135	7	14.50436	I-126 NB (Basic Analysis)	NW
9135	8	15.222802	I-126 NB (Basic Analysis)	NW
9135	9	14.236577	I-126 NB (Basic Analysis)	NW
9135	10	13.7353	I-126 NB (Basic Analysis)	NW
9136	1	15.511811	I-126 NB (Basic Analysis)	NW
9136	2	14.883175	I-126 NB (Basic Analysis)	NW

ID	Run	Density	Name (Type)	Direction
9136	3	14.114115	I-126 NB (Basic Analysis)	NW
9136	4	13.583448	I-126 NB (Basic Analysis)	NW
9136	5	13.402205	I-126 NB (Basic Analysis)	NW
9136	6	14.368836	I-126 NB (Basic Analysis)	NW
9136	7	14.50436	I-126 NB (Basic Analysis)	NW
9136	8	15.222802	I-126 NB (Basic Analysis)	NW
9136	9	14.236577	I-126 NB (Basic Analysis)	NW
9136	10	13.7353	I-126 NB (Basic Analysis)	NW
9137	1	63.563758	I-26 WB (Diverge Analysis)	N
9137	2	49.258758	I-26 WB (Diverge Analysis)	N
9137	3	32.47289	I-26 WB (Diverge Analysis)	N
9137	4	57.470859	I-26 WB (Diverge Analysis)	N
9137	5	32.043509	I-26 WB (Diverge Analysis)	N
9137	6	49.951307	I-26 WB (Diverge Analysis)	N
9137	7	32.957674	I-26 WB (Diverge Analysis)	N
9137	8	65.736825	I-26 WB (Diverge Analysis)	N
9137	9	57.750957	I-26 WB (Diverge Analysis)	N
9137	10	39.633854	I-26 WB (Diverge Analysis)	N
9138	1	16.636042	I-26 WB (Basic Analysis)	N
9138	2	17.282771	I-26 WB (Basic Analysis)	N
9138	3	16.665071	I-26 WB (Basic Analysis)	N
9138	4	17.160581	I-26 WB (Basic Analysis)	N
9138	5	17.305049	I-26 WB (Basic Analysis)	N
9138	6	16.803125	I-26 WB (Basic Analysis)	N
9138	7	17.020839	I-26 WB (Basic Analysis)	N
9138	8	16.642456	I-26 WB (Basic Analysis)	N
9138	9	17.291547	I-26 WB (Basic Analysis)	N
9138	10	17.362093	I-26 WB (Basic Analysis)	N
9139	1	16.636042	I-26 WB (Basic Analysis)	N
9139	2	17.282771	I-26 WB (Basic Analysis)	N
9139	3	16.665071	I-26 WB (Basic Analysis)	N
9139	4	17.160581	I-26 WB (Basic Analysis)	N
9139	5	17.305049	I-26 WB (Basic Analysis)	N
9139	6	16.803125	I-26 WB (Basic Analysis)	N
9139	7	17.020839	I-26 WB (Basic Analysis)	N
9139	8	16.642456	I-26 WB (Basic Analysis)	N
9139	9	17.291547	I-26 WB (Basic Analysis)	N
9139	10	17.362093	I-26 WB (Basic Analysis)	N
9140	1	15.236131	I-26 WB (Basic Analysis)	NW
9140	2	15.303813	I-26 WB (Basic Analysis)	NW
9140	3	15.063808	I-26 WB (Basic Analysis)	NW
9140	4	15.212976	I-26 WB (Basic Analysis)	NW
9140	5	14.993008	I-26 WB (Basic Analysis)	NW
9140	6	14.707139	I-26 WB (Basic Analysis)	NW
9140	7	15.041098	I-26 WB (Basic Analysis)	NW
9140	8	14.59003	I-26 WB (Basic Analysis)	NW
9140	9	15.470793	I-26 WB (Basic Analysis)	NW
9140	10	15.460107	I-26 WB (Basic Analysis)	NW
9141	1	15.236131	I-26 WB (Basic Analysis)	NW
9141	2	15.303813	I-26 WB (Basic Analysis)	NW
9141	3	15.063808	I-26 WB (Basic Analysis)	NW
9141	4	15.212976	I-26 WB (Basic Analysis)	NW
9141	5	14.993008	I-26 WB (Basic Analysis)	NW

ID	Run	Density	Name (Type)	Direction
9141	6	14.707139	I-26 WB (Basic Analysis)	NW
9141	7	15.041098	I-26 WB (Basic Analysis)	NW
9141	8	14.59003	I-26 WB (Basic Analysis)	NW
9141	9	15.470793	I-26 WB (Basic Analysis)	NW
9141	10	15.460107	I-26 WB (Basic Analysis)	NW
9142	1	35.07253	I-26 WB (Basic Analysis)	NW
9142	2	33.897541	I-26 WB (Basic Analysis)	NW
9142	3	36.379589	I-26 WB (Basic Analysis)	NW
9142	4	35.509392	I-26 WB (Basic Analysis)	NW
9142	5	30.45493	I-26 WB (Basic Analysis)	NW
9142	6	37.360375	I-26 WB (Basic Analysis)	NW
9142	7	36.733467	I-26 WB (Basic Analysis)	NW
9142	8	35.760714	I-26 WB (Basic Analysis)	NW
9142	9	37.768851	I-26 WB (Basic Analysis)	NW
9142	10	35.783178	I-26 WB (Basic Analysis)	NW
9143	1	28.293626	I-26 WB (Basic Analysis)	NW
9143	2	27.787719	I-26 WB (Basic Analysis)	NW
9143	3	27.835412	I-26 WB (Basic Analysis)	NW
9143	4	26.653659	I-26 WB (Basic Analysis)	NW
9143	5	27.683122	I-26 WB (Basic Analysis)	NW
9143	6	27.287443	I-26 WB (Basic Analysis)	NW
9143	7	26.633129	I-26 WB (Basic Analysis)	NW
9143	8	27.417191	I-26 WB (Basic Analysis)	NW
9143	9	27.412658	I-26 WB (Basic Analysis)	NW
9143	10	27.653471	I-26 WB (Basic Analysis)	NW
9147	1	23.126665	I-26 WB (Basic Analysis)	NW
9147	2	24.614065	I-26 WB (Basic Analysis)	NW
9147	3	23.829438	I-26 WB (Basic Analysis)	NW
9147	4	20.41676	I-26 WB (Basic Analysis)	NW
9147	5	22.840241	I-26 WB (Basic Analysis)	NW
9147	6	25.042357	I-26 WB (Basic Analysis)	NW
9147	7	20.993183	I-26 WB (Basic Analysis)	NW
9147	8	21.458962	I-26 WB (Basic Analysis)	NW
9147	9	22.660038	I-26 WB (Basic Analysis)	NW
9147	10	21.226932	I-26 WB (Basic Analysis)	NW
9148	1	23.278926	I-26 WB (Diverge Analysis)	NW
9148	2	22.319727	I-26 WB (Diverge Analysis)	NW
9148	3	25.508259	I-26 WB (Diverge Analysis)	NW
9148	4	21.99706	I-26 WB (Diverge Analysis)	NW
9148	5	23.724793	I-26 WB (Diverge Analysis)	NW
9148	6	25.299992	I-26 WB (Diverge Analysis)	NW
9148	7	24.505059	I-26 WB (Diverge Analysis)	NW
9148	8	23.31706	I-26 WB (Diverge Analysis)	NW
9148	9	24.601859	I-26 WB (Diverge Analysis)	NW
9148	10	24.243993	I-26 WB (Diverge Analysis)	NW
9149	1	15.584002	I-26 WB (Diverge Analysis)	NW
9149	2	14.910061	I-26 WB (Diverge Analysis)	NW
9149	3	17.527239	I-26 WB (Diverge Analysis)	NW
9149	4	14.376623	I-26 WB (Diverge Analysis)	NW
9149	5	15.322046	I-26 WB (Diverge Analysis)	NW
9149	6	16.75566	I-26 WB (Diverge Analysis)	NW
9149	7	16.36987	I-26 WB (Diverge Analysis)	NW
9149	8	15.207738	I-26 WB (Diverge Analysis)	NW

ID	Run	Density	Name (Type)	Direction
9149	9	14.852907	I-26 WB (Diverge Analysis)	NW
9149	10	16.13411	I-26 WB (Diverge Analysis)	NW
9151	1	39.847983	I-20 EB (Diverge Analysis)	NE
9151	2	47.40616	I-20 EB (Diverge Analysis)	NE
9151	3	40.078307	I-20 EB (Diverge Analysis)	NE
9151	4	40.211756	I-20 EB (Diverge Analysis)	NE
9151	5	44.634367	I-20 EB (Diverge Analysis)	NE
9151	6	38.798181	I-20 EB (Diverge Analysis)	NE
9151	7	44.372411	I-20 EB (Diverge Analysis)	NE
9151	8	39.707614	I-20 EB (Diverge Analysis)	NE
9151	9	36.909131	I-20 EB (Diverge Analysis)	NE
9151	10	42.391429	I-20 EB (Diverge Analysis)	NE
9152	1	31.130778	I-20 EB (Basic Analysis)	NE
9152	2	33.559032	I-20 EB (Basic Analysis)	NE
9152	3	30.760785	I-20 EB (Basic Analysis)	NE
9152	4	28.675294	I-20 EB (Basic Analysis)	NE
9152	5	31.156604	I-20 EB (Basic Analysis)	NE
9152	6	33.929025	I-20 EB (Basic Analysis)	NE
9152	7	31.77251	I-20 EB (Basic Analysis)	NE
9152	8	31.565056	I-20 EB (Basic Analysis)	NE
9152	9	29.561536	I-20 EB (Basic Analysis)	NE
9152	10	29.618242	I-20 EB (Basic Analysis)	NE
9153	1	31.130778	I-20 EB (Basic Analysis)	NE
9153	2	33.559032	I-20 EB (Basic Analysis)	NE
9153	3	30.760785	I-20 EB (Basic Analysis)	NE
9153	4	28.675294	I-20 EB (Basic Analysis)	NE
9153	5	31.156604	I-20 EB (Basic Analysis)	NE
9153	6	33.929025	I-20 EB (Basic Analysis)	NE
9153	7	31.77251	I-20 EB (Basic Analysis)	NE
9153	8	31.565056	I-20 EB (Basic Analysis)	NE
9153	9	29.561536	I-20 EB (Basic Analysis)	NE
9153	10	29.618242	I-20 EB (Basic Analysis)	NE
9155	1	56.628549	I-20 EB (Basic Analysis)	NE
9155	2	57.493605	I-20 EB (Basic Analysis)	NE
9155	3	56.630433	I-20 EB (Basic Analysis)	NE
9155	4	58.540352	I-20 EB (Basic Analysis)	NE
9155	5	58.210903	I-20 EB (Basic Analysis)	NE
9155	6	56.449472	I-20 EB (Basic Analysis)	NE
9155	7	56.53323	I-20 EB (Basic Analysis)	NE
9155	8	56.564499	I-20 EB (Basic Analysis)	NE
9155	9	56.99883	I-20 EB (Basic Analysis)	NE
9155	10	56.641015	I-20 EB (Basic Analysis)	NE
9156	1	36.899161	I-20 EB (Basic Analysis)	NE
9156	2	36.918195	I-20 EB (Basic Analysis)	NE
9156	3	37.118049	I-20 EB (Basic Analysis)	NE
9156	4	37.890275	I-20 EB (Basic Analysis)	NE
9156	5	36.29552	I-20 EB (Basic Analysis)	NE
9156	6	37.026053	I-20 EB (Basic Analysis)	NE
9156	7	37.428027	I-20 EB (Basic Analysis)	NE
9156	8	37.038289	I-20 EB (Basic Analysis)	NE
9156	9	37.96505	I-20 EB (Basic Analysis)	NE
9156	10	37.44706	I-20 EB (Basic Analysis)	NE
9157	1	41.662121	I-20 WB (Diverge Analysis)	SW

ID	Run	Density	Name (Type)	Direction
9157	2	42.322121	I-20 WB (Diverge Analysis)	SW
9157	3	42.615454	I-20 WB (Diverge Analysis)	SW
9157	4	39.902121	I-20 WB (Diverge Analysis)	SW
9157	5	40.353854	I-20 WB (Diverge Analysis)	SW
9157	6	40.142654	I-20 WB (Diverge Analysis)	SW
9157	7	41.447987	I-20 WB (Diverge Analysis)	SW
9157	8	43.680254	I-20 WB (Diverge Analysis)	SW
9157	9	42.392521	I-20 WB (Diverge Analysis)	SW
9157	10	43.152254	I-20 WB (Diverge Analysis)	SW
9158	1	36.867171	I-20 WB (Basic Analysis)	SW
9158	2	35.051371	I-20 WB (Basic Analysis)	SW
9158	3	38.062191	I-20 WB (Basic Analysis)	SW
9158	4	34.770279	I-20 WB (Basic Analysis)	SW
9158	5	35.004311	I-20 WB (Basic Analysis)	SW
9158	6	35.962388	I-20 WB (Basic Analysis)	SW
9158	7	36.876816	I-20 WB (Basic Analysis)	SW
9158	8	37.862518	I-20 WB (Basic Analysis)	SW
9158	9	38.162918	I-20 WB (Basic Analysis)	SW
9158	10	36.608717	I-20 WB (Basic Analysis)	SW
9159	1	11.575568	I-20 WB (Basic Analysis)	W
9159	2	10.951307	I-20 WB (Basic Analysis)	W
9159	3	10.633938	I-20 WB (Basic Analysis)	W
9159	4	10.944095	I-20 WB (Basic Analysis)	W
9159	5	9.594311	I-20 WB (Basic Analysis)	W
9159	6	10.519112	I-20 WB (Basic Analysis)	W
9159	7	11.995802	I-20 WB (Basic Analysis)	W
9159	8	11.23369	I-20 WB (Basic Analysis)	W
9159	9	11.598612	I-20 WB (Basic Analysis)	W
9159	10	12.077895	I-20 WB (Basic Analysis)	W
9160	1	12.784213	I-20 WB (Merge Analysis)	SW
9160	2	12.528107	I-20 WB (Merge Analysis)	SW
9160	3	12.886656	I-20 WB (Merge Analysis)	SW
9160	4	12.351846	I-20 WB (Merge Analysis)	SW
9160	5	12.639588	I-20 WB (Merge Analysis)	SW
9160	6	13.094553	I-20 WB (Merge Analysis)	SW
9160	7	12.482912	I-20 WB (Merge Analysis)	SW
9160	8	13.183437	I-20 WB (Merge Analysis)	SW
9160	9	12.65616	I-20 WB (Merge Analysis)	SW
9160	10	13.391335	I-20 WB (Merge Analysis)	SW
9162	1	10.644008	I-20 WB (Merge Analysis)	SW
9162	2	11.158176	I-20 WB (Merge Analysis)	SW
9162	3	11.250775	I-20 WB (Merge Analysis)	SW
9162	4	10.046989	I-20 WB (Merge Analysis)	SW
9162	5	10.94861	I-20 WB (Merge Analysis)	SW
9162	6	9.403669	I-20 WB (Merge Analysis)	SW
9162	7	10.166393	I-20 WB (Merge Analysis)	SW
9162	8	10.636698	I-20 WB (Merge Analysis)	SW
9162	9	10.190761	I-20 WB (Merge Analysis)	SW
9162	10	10.736607	I-20 WB (Merge Analysis)	SW
9163	1	14.163418	I-20 WB (Merge Analysis)	S
9163	2	12.383929	I-20 WB (Merge Analysis)	S
9163	3	12.997859	I-20 WB (Merge Analysis)	S
9163	4	11.990879	I-20 WB (Merge Analysis)	S

ID	Run	Density	Name (Type)	Direction
9163	5	13.068087	I-20 WB (Merge Analysis)	S
9163	6	12.936692	I-20 WB (Merge Analysis)	S
9163	7	13.535896	I-20 WB (Merge Analysis)	S
9163	8	12.006737	I-20 WB (Merge Analysis)	S
9163	9	12.488139	I-20 WB (Merge Analysis)	S
9163	10	14.072801	I-20 WB (Merge Analysis)	S
9182	1	13.745557	I-26 EB (Merge Analysis)	S
9182	2	13.555165	I-26 EB (Merge Analysis)	S
9182	3	13.601242	I-26 EB (Merge Analysis)	S
9182	4	14.075916	I-26 EB (Merge Analysis)	S
9182	5	13.627323	I-26 EB (Merge Analysis)	S
9182	6	14.158506	I-26 EB (Merge Analysis)	S
9182	7	13.935079	I-26 EB (Merge Analysis)	S
9182	8	14.143727	I-26 EB (Merge Analysis)	S
9182	9	14.209799	I-26 EB (Merge Analysis)	S
9182	10	14.231533	I-26 EB (Merge Analysis)	S
9183	1	18.334229	I-20 EB (Basic Analysis)	E
9183	2	19.607123	I-20 EB (Basic Analysis)	E
9183	3	18.910086	I-20 EB (Basic Analysis)	E
9183	4	18.59264	I-20 EB (Basic Analysis)	E
9183	5	19.775426	I-20 EB (Basic Analysis)	E
9183	6	19.287087	I-20 EB (Basic Analysis)	E
9183	7	19.92923	I-20 EB (Basic Analysis)	E
9183	8	19.16539	I-20 EB (Basic Analysis)	E
9183	9	18.643907	I-20 EB (Basic Analysis)	E
9183	10	19.322301	I-20 EB (Basic Analysis)	E
9185	1	24.477168	I-20 WB (Basic Analysis)	SW
9185	2	26.713577	I-20 WB (Basic Analysis)	SW
9185	3	29.664378	I-20 WB (Basic Analysis)	SW
9185	4	25.408746	I-20 WB (Basic Analysis)	SW
9185	5	26.892492	I-20 WB (Basic Analysis)	SW
9185	6	29.013325	I-20 WB (Basic Analysis)	SW
9185	7	25.708742	I-20 WB (Basic Analysis)	SW
9185	8	31.882463	I-20 WB (Basic Analysis)	SW
9185	9	26.880879	I-20 WB (Basic Analysis)	SW
9185	10	32.181649	I-20 WB (Basic Analysis)	SW
9186	1	24.477168	I-20 WB (Basic Analysis)	SW
9186	2	26.713577	I-20 WB (Basic Analysis)	SW
9186	3	29.664378	I-20 WB (Basic Analysis)	SW
9186	4	25.408746	I-20 WB (Basic Analysis)	SW
9186	5	26.892492	I-20 WB (Basic Analysis)	SW
9186	6	29.013325	I-20 WB (Basic Analysis)	SW
9186	7	25.708742	I-20 WB (Basic Analysis)	SW
9186	8	31.882463	I-20 WB (Basic Analysis)	SW
9186	9	26.880879	I-20 WB (Basic Analysis)	SW
9186	10	32.181649	I-20 WB (Basic Analysis)	SW
9204	1	39.09961	CD ROAD I-26 EB (Basic Analysis)	SE
9204	2	53.122754	CD ROAD I-26 EB (Basic Analysis)	SE
9204	3	46.691186	CD ROAD I-26 EB (Basic Analysis)	SE
9204	4	42.145879	CD ROAD I-26 EB (Basic Analysis)	SE
9204	5	43.983945	CD ROAD I-26 EB (Basic Analysis)	SE
9204	6	47.67171	CD ROAD I-26 EB (Basic Analysis)	SE
9204	7	46.327229	CD ROAD I-26 EB (Basic Analysis)	SE

ID	Run	Density	Name (Type)	Direction
9204	8	30.589001	CD ROAD I-26 EB (Basic Analysis)	SE
9204	9	45.31513	CD ROAD I-26 EB (Basic Analysis)	SE
9204	10	45.188825	CD ROAD I-26 EB (Basic Analysis)	SE
9206	1	17.443336	I-26 EB (Basic Analysis)	S
9206	2	17.28203	I-26 EB (Basic Analysis)	S
9206	3	16.932525	I-26 EB (Basic Analysis)	S
9206	4	17.901837	I-26 EB (Basic Analysis)	S
9206	5	17.098118	I-26 EB (Basic Analysis)	S
9206	6	17.55076	I-26 EB (Basic Analysis)	S
9206	7	17.090004	I-26 EB (Basic Analysis)	S
9206	8	17.336907	I-26 EB (Basic Analysis)	S
9206	9	16.242395	I-26 EB (Basic Analysis)	S
9206	10	16.808694	I-26 EB (Basic Analysis)	S
9207	1	17.443336	I-26 EB (Basic Analysis)	S
9207	2	17.28203	I-26 EB (Basic Analysis)	S
9207	3	16.932525	I-26 EB (Basic Analysis)	S
9207	4	17.901837	I-26 EB (Basic Analysis)	S
9207	5	17.098118	I-26 EB (Basic Analysis)	S
9207	6	17.55076	I-26 EB (Basic Analysis)	S
9207	7	17.090004	I-26 EB (Basic Analysis)	S
9207	8	17.336907	I-26 EB (Basic Analysis)	S
9207	9	16.242395	I-26 EB (Basic Analysis)	S
9207	10	16.808694	I-26 EB (Basic Analysis)	S
9208	1	35.514631	(Basic Analysis)	SE
9208	2	37.175361	(Basic Analysis)	SE
9208	3	36.86673	(Basic Analysis)	SE
9208	4	37.310081	(Basic Analysis)	SE
9208	5	36.967157	(Basic Analysis)	SE
9208	6	35.073729	(Basic Analysis)	SE
9208	7	36.976955	(Basic Analysis)	SE
9208	8	36.722212	(Basic Analysis)	SE
9208	9	35.762026	(Basic Analysis)	SE
9208	10	37.439902	(Basic Analysis)	SE
9211	1	17.96126	I-20 EB (Basic Analysis)	NE
9211	2	18.825502	I-20 EB (Basic Analysis)	NE
9211	3	18.367962	I-20 EB (Basic Analysis)	NE
9211	4	18.621445	I-20 EB (Basic Analysis)	NE
9211	5	18.949066	I-20 EB (Basic Analysis)	NE
9211	6	18.679344	I-20 EB (Basic Analysis)	NE
9211	7	19.187015	I-20 EB (Basic Analysis)	NE
9211	8	18.442101	I-20 EB (Basic Analysis)	NE
9211	9	18.525418	I-20 EB (Basic Analysis)	NE
9211	10	18.592496	I-20 EB (Basic Analysis)	NE
9225	1	31.130778	I-20 EB (Basic Analysis)	NE
9225	2	33.559032	I-20 EB (Basic Analysis)	NE
9225	3	30.760785	I-20 EB (Basic Analysis)	NE
9225	4	28.675294	I-20 EB (Basic Analysis)	NE
9225	5	31.156604	I-20 EB (Basic Analysis)	NE
9225	6	33.929025	I-20 EB (Basic Analysis)	NE
9225	7	31.77251	I-20 EB (Basic Analysis)	NE
9225	8	31.565056	I-20 EB (Basic Analysis)	NE
9225	9	29.561536	I-20 EB (Basic Analysis)	NE
9225	10	29.618242	I-20 EB (Basic Analysis)	NE

ID	Run	Density	Name (Type)	Direction
9243	1	36.867171	I-20 WB (Basic Analysis)	SW
9243	2	35.051371	I-20 WB (Basic Analysis)	SW
9243	3	38.062191	I-20 WB (Basic Analysis)	SW
9243	4	34.770279	I-20 WB (Basic Analysis)	SW
9243	5	35.004311	I-20 WB (Basic Analysis)	SW
9243	6	35.962388	I-20 WB (Basic Analysis)	SW
9243	7	36.876816	I-20 WB (Basic Analysis)	SW
9243	8	37.862518	I-20 WB (Basic Analysis)	SW
9243	9	38.162918	I-20 WB (Basic Analysis)	SW
9243	10	36.608717	I-20 WB (Basic Analysis)	SW
9245	1	11.409735	ROAD I-20 WB TO I-20 (Basic Analy	NW
9245	2	10.902528	ROAD I-20 WB TO I-20 (Basic Analy	NW
9245	3	12.095672	ROAD I-20 WB TO I-20 (Basic Analy	NW
9245	4	11.536939	ROAD I-20 WB TO I-20 (Basic Analy	NW
9245	5	10.991088	ROAD I-20 WB TO I-20 (Basic Analy	NW
9245	6	10.574052	ROAD I-20 WB TO I-20 (Basic Analy	NW
9245	7	10.689985	ROAD I-20 WB TO I-20 (Basic Analy	NW
9245	8	11.264819	ROAD I-20 WB TO I-20 (Basic Analy	NW
9245	9	11.179479	ROAD I-20 WB TO I-20 (Basic Analy	NW
9245	10	11.173039	ROAD I-20 WB TO I-20 (Basic Analy	NW
9246	1	6.465011	I-126 NB (Diverge Analysis)	NW
9246	2	6.80045	I-126 NB (Diverge Analysis)	NW
9246	3	6.856824	I-126 NB (Diverge Analysis)	NW
9246	4	6.102646	I-126 NB (Diverge Analysis)	NW
9246	5	5.380482	I-126 NB (Diverge Analysis)	NW
9246	6	6.853101	I-126 NB (Diverge Analysis)	NW
9246	7	6.931785	I-126 NB (Diverge Analysis)	NW
9246	8	5.725098	I-126 NB (Diverge Analysis)	NW
9246	9	6.127821	I-126 NB (Diverge Analysis)	NW
9246	10	5.879812	I-126 NB (Diverge Analysis)	NW
9248	1	16.585013	I-26 WB (Basic Analysis)	NW
9248	2	16.827869	I-26 WB (Basic Analysis)	NW
9248	3	16.868233	I-26 WB (Basic Analysis)	NW
9248	4	15.819777	I-26 WB (Basic Analysis)	NW
9248	5	17.015939	I-26 WB (Basic Analysis)	NW
9248	6	16.554567	I-26 WB (Basic Analysis)	NW
9248	7	16.119247	I-26 WB (Basic Analysis)	NW
9248	8	16.48356	I-26 WB (Basic Analysis)	NW
9248	9	17.036563	I-26 WB (Basic Analysis)	NW
9248	10	16.546768	I-26 WB (Basic Analysis)	NW
9249	1	28.042624	I-26 EB (Basic Analysis)	SE
9249	2	29.000495	I-26 EB (Basic Analysis)	SE
9249	3	28.376622	I-26 EB (Basic Analysis)	SE
9249	4	28.256211	I-26 EB (Basic Analysis)	SE
9249	5	28.517794	I-26 EB (Basic Analysis)	SE
9249	6	28.484506	I-26 EB (Basic Analysis)	SE
9249	7	28.48519	I-26 EB (Basic Analysis)	SE
9249	8	27.785845	I-26 EB (Basic Analysis)	SE
9249	9	28.264737	I-26 EB (Basic Analysis)	SE
9249	10	28.33844	I-26 EB (Basic Analysis)	SE

ID	Run	Density	Name (Type)	Direction
2806	1	20.364017	I-20 EB (Basic Analysis)	NE
2806	2	19.34068	I-20 EB (Basic Analysis)	NE
2806	3	20.036881	I-20 EB (Basic Analysis)	NE
2806	4	19.118964	I-20 EB (Basic Analysis)	NE
2806	5	19.147074	I-20 EB (Basic Analysis)	NE
2806	6	19.057025	I-20 EB (Basic Analysis)	NE
2806	7	19.793904	I-20 EB (Basic Analysis)	NE
2806	8	19.570878	I-20 EB (Basic Analysis)	NE
2806	9	19.025684	I-20 EB (Basic Analysis)	NE
2806	10	19.523985	I-20 EB (Basic Analysis)	NE
2807	1	20.364017	I-20 EB (Basic Analysis)	NE
2807	2	19.34068	I-20 EB (Basic Analysis)	NE
2807	3	20.036881	I-20 EB (Basic Analysis)	NE
2807	4	19.118964	I-20 EB (Basic Analysis)	NE
2807	5	19.147074	I-20 EB (Basic Analysis)	NE
2807	6	19.057025	I-20 EB (Basic Analysis)	NE
2807	7	19.793904	I-20 EB (Basic Analysis)	NE
2807	8	19.570878	I-20 EB (Basic Analysis)	NE
2807	9	19.025684	I-20 EB (Basic Analysis)	NE
2807	10	19.523985	I-20 EB (Basic Analysis)	NE
2808	1	20.271454	I-20 EB (Diverge Analysis)	NE
2808	2	19.339286	I-20 EB (Diverge Analysis)	NE
2808	3	19.73568	I-20 EB (Diverge Analysis)	NE
2808	4	18.391301	I-20 EB (Diverge Analysis)	NE
2808	5	18.975512	I-20 EB (Diverge Analysis)	NE
2808	6	18.516842	I-20 EB (Diverge Analysis)	NE
2808	7	19.139606	I-20 EB (Diverge Analysis)	NE
2808	8	19.689219	I-20 EB (Diverge Analysis)	NE
2808	9	18.761993	I-20 EB (Diverge Analysis)	NE
2808	10	19.657587	I-20 EB (Diverge Analysis)	NE
2813	1	19.32405	I-20 WB (Merge Analysis)	S
2813	2	19.52454	I-20 WB (Merge Analysis)	S
2813	3	18.7475	I-20 WB (Merge Analysis)	S
2813	4	19.233433	I-20 WB (Merge Analysis)	S
2813	5	20.024065	I-20 WB (Merge Analysis)	S
2813	6	19.267414	I-20 WB (Merge Analysis)	S
2813	7	18.746367	I-20 WB (Merge Analysis)	S
2813	8	20.227953	I-20 WB (Merge Analysis)	S
2813	9	18.713519	I-20 WB (Merge Analysis)	S
2813	10	19.868884	I-20 WB (Merge Analysis)	S
2814	1	23.236886	I-20 WB (Basic Analysis)	S
2814	2	23.782904	I-20 WB (Basic Analysis)	S
2814	3	23.296673	I-20 WB (Basic Analysis)	S
2814	4	23.429035	I-20 WB (Basic Analysis)	S
2814	5	24.485506	I-20 WB (Basic Analysis)	S
2814	6	23.842751	I-20 WB (Basic Analysis)	S
2814	7	23.305241	I-20 WB (Basic Analysis)	S
2814	8	23.957645	I-20 WB (Basic Analysis)	S
2814	9	23.247343	I-20 WB (Basic Analysis)	S
2814	10	24.357661	I-20 WB (Basic Analysis)	S
2822	1	14.918182	I-20 WB (Merge Analysis)	SW
2822	2	16.260867	I-20 WB (Merge Analysis)	SW
2822	3	16.584964	I-20 WB (Merge Analysis)	SW

ID	Run	Density	Name (Type)	Direction
2822	4	16.701931	I-20 WB (Merge Analysis)	SW
2822	5	16.03668	I-20 WB (Merge Analysis)	SW
2822	6	15.987944	I-20 WB (Merge Analysis)	SW
2822	7	16.333972	I-20 WB (Merge Analysis)	SW
2822	8	16.217004	I-20 WB (Merge Analysis)	SW
2822	9	15.641916	I-20 WB (Merge Analysis)	SW
2822	10	16.372961	I-20 WB (Merge Analysis)	SW
2823	1	206.486314	I-20 WB (Basic Analysis)	SW
2823	2	265.482401	I-20 WB (Basic Analysis)	SW
2823	3	250.733378	I-20 WB (Basic Analysis)	SW
2823	4	300.88006	I-20 WB (Basic Analysis)	SW
2823	5	206.486311	I-20 WB (Basic Analysis)	SW
2823	6	169.613756	I-20 WB (Basic Analysis)	SW
2823	7	200.586709	I-20 WB (Basic Analysis)	SW
2823	8	312.67927	I-20 WB (Basic Analysis)	SW
2823	9	175.513368	I-20 WB (Basic Analysis)	SW
2823	10	157.81454	I-20 WB (Basic Analysis)	SW
2826	1	19.142161	I-20 EB (Basic Analysis)	NE
2826	2	17.710256	I-20 EB (Basic Analysis)	NE
2826	3	19.188616	I-20 EB (Basic Analysis)	NE
2826	4	15.835663	I-20 EB (Basic Analysis)	NE
2826	5	17.103609	I-20 EB (Basic Analysis)	NE
2826	6	17.406933	I-20 EB (Basic Analysis)	NE
2826	7	18.759591	I-20 EB (Basic Analysis)	NE
2826	8	19.716016	I-20 EB (Basic Analysis)	NE
2826	9	18.939945	I-20 EB (Basic Analysis)	NE
2826	10	20.440166	I-20 EB (Basic Analysis)	NE
2829	1	22.736066	I-20 EB (Merge Analysis)	NE
2829	2	23.098058	I-20 EB (Merge Analysis)	NE
2829	3	22.341842	I-20 EB (Merge Analysis)	NE
2829	4	21.69224	I-20 EB (Merge Analysis)	NE
2829	5	23.586499	I-20 EB (Merge Analysis)	NE
2829	6	23.593937	I-20 EB (Merge Analysis)	NE
2829	7	24.025352	I-20 EB (Merge Analysis)	NE
2829	8	21.622817	I-20 EB (Merge Analysis)	NE
2829	9	19.822775	I-20 EB (Merge Analysis)	NE
2829	10	23.053429	I-20 EB (Merge Analysis)	NE
2830	1	26.814925	I-20 EB (Basic Analysis)	NE
2830	2	22.339189	I-20 EB (Basic Analysis)	NE
2830	3	27.038712	I-20 EB (Basic Analysis)	NE
2830	4	26.551647	I-20 EB (Basic Analysis)	NE
2830	5	26.735942	I-20 EB (Basic Analysis)	NE
2830	6	23.905697	I-20 EB (Basic Analysis)	NE
2830	7	25.459041	I-20 EB (Basic Analysis)	NE
2830	8	22.707779	I-20 EB (Basic Analysis)	NE
2830	9	23.497615	I-20 EB (Basic Analysis)	NE
2830	10	20.272452	I-20 EB (Basic Analysis)	NE
2831	1	22.681355	I-20 WB (Basic Analysis)	SW
2831	2	24.110984	I-20 WB (Basic Analysis)	SW
2831	3	22.385569	I-20 WB (Basic Analysis)	SW
2831	4	22.535703	I-20 WB (Basic Analysis)	SW
2831	5	23.882422	I-20 WB (Basic Analysis)	SW
2831	6	23.08918	I-20 WB (Basic Analysis)	SW

ID	Run	Density	Name (Type)	Direction
2831	7	23.172089	I-20 WB (Basic Analysis)	SW
2831	8	23.889145	I-20 WB (Basic Analysis)	SW
2831	9	22.94801	I-20 WB (Basic Analysis)	SW
2831	10	23.353594	I-20 WB (Basic Analysis)	SW
2837	1	133.556309	I-20 WB (Merge Analysis)	SW
2837	2	119.193278	I-20 WB (Merge Analysis)	SW
2837	3	120.174013	I-20 WB (Merge Analysis)	SW
2837	4	124.353063	I-20 WB (Merge Analysis)	SW
2837	5	104.333099	I-20 WB (Merge Analysis)	SW
2837	6	106.990576	I-20 WB (Merge Analysis)	SW
2837	7	132.10705	I-20 WB (Merge Analysis)	SW
2837	8	127.369087	I-20 WB (Merge Analysis)	SW
2837	9	121.923067	I-20 WB (Merge Analysis)	SW
2837	10	106.253895	I-20 WB (Merge Analysis)	SW
2838	1	132.36433	I-20 WB (Diverge Analysis)	SW
2838	2	121.540899	I-20 WB (Diverge Analysis)	SW
2838	3	125.712914	I-20 WB (Diverge Analysis)	SW
2838	4	129.641872	I-20 WB (Diverge Analysis)	SW
2838	5	115.30919	I-20 WB (Diverge Analysis)	SW
2838	6	120.823014	I-20 WB (Diverge Analysis)	SW
2838	7	130.918534	I-20 WB (Diverge Analysis)	SW
2838	8	127.976826	I-20 WB (Diverge Analysis)	SW
2838	9	123.970189	I-20 WB (Diverge Analysis)	SW
2838	10	118.517757	I-20 WB (Diverge Analysis)	SW
2839	1	132.36433	I-20 WB (Diverge Analysis)	SW
2839	2	121.540899	I-20 WB (Diverge Analysis)	SW
2839	3	125.712914	I-20 WB (Diverge Analysis)	SW
2839	4	129.641872	I-20 WB (Diverge Analysis)	SW
2839	5	115.30919	I-20 WB (Diverge Analysis)	SW
2839	6	120.823014	I-20 WB (Diverge Analysis)	SW
2839	7	130.918534	I-20 WB (Diverge Analysis)	SW
2839	8	127.976826	I-20 WB (Diverge Analysis)	SW
2839	9	123.970189	I-20 WB (Diverge Analysis)	SW
2839	10	118.517757	I-20 WB (Diverge Analysis)	SW
2840	1	132.36433	I-20 WB (Diverge Analysis)	SW
2840	2	121.540899	I-20 WB (Diverge Analysis)	SW
2840	3	125.712914	I-20 WB (Diverge Analysis)	SW
2840	4	129.641872	I-20 WB (Diverge Analysis)	SW
2840	5	115.30919	I-20 WB (Diverge Analysis)	SW
2840	6	120.823014	I-20 WB (Diverge Analysis)	SW
2840	7	130.918534	I-20 WB (Diverge Analysis)	SW
2840	8	127.976826	I-20 WB (Diverge Analysis)	SW
2840	9	123.970189	I-20 WB (Diverge Analysis)	SW
2840	10	118.517757	I-20 WB (Diverge Analysis)	SW
2843	1	16.754672	I-20 EB (Basic Analysis)	NE
2843	2	16.145784	I-20 EB (Basic Analysis)	NE
2843	3	16.558727	I-20 EB (Basic Analysis)	NE
2843	4	16.101429	I-20 EB (Basic Analysis)	NE
2843	5	15.866464	I-20 EB (Basic Analysis)	NE
2843	6	16.499214	I-20 EB (Basic Analysis)	NE
2843	7	16.573606	I-20 EB (Basic Analysis)	NE
2843	8	16.484336	I-20 EB (Basic Analysis)	NE
2843	9	16.097499	I-20 EB (Basic Analysis)	NE

ID	Run	Density	Name (Type)	Direction
2843	10	16.002615	I-20 EB (Basic Analysis)	NE
2848	1	11.911568	I-20 EB (Basic Analysis)	NE
2848	2	10.762776	I-20 EB (Basic Analysis)	NE
2848	3	10.786783	I-20 EB (Basic Analysis)	NE
2848	4	10.342658	I-20 EB (Basic Analysis)	NE
2848	5	10.860215	I-20 EB (Basic Analysis)	NE
2848	6	11.000019	I-20 EB (Basic Analysis)	NE
2848	7	11.164535	I-20 EB (Basic Analysis)	NE
2848	8	11.146883	I-20 EB (Basic Analysis)	NE
2848	9	10.968951	I-20 EB (Basic Analysis)	NE
2848	10	10.855272	I-20 EB (Basic Analysis)	NE
2852	1	111.860026	I-20 WB (Merge Analysis)	SW
2852	2	97.411191	I-20 WB (Merge Analysis)	SW
2852	3	93.526113	I-20 WB (Merge Analysis)	SW
2852	4	91.490572	I-20 WB (Merge Analysis)	SW
2852	5	64.526666	I-20 WB (Merge Analysis)	SW
2852	6	81.474304	I-20 WB (Merge Analysis)	SW
2852	7	107.301115	I-20 WB (Merge Analysis)	SW
2852	8	105.114662	I-20 WB (Merge Analysis)	SW
2852	9	95.273872	I-20 WB (Merge Analysis)	SW
2852	10	72.233648	I-20 WB (Merge Analysis)	SW
2863	1	11.570043	I-20 EB (Basic Analysis)	NE
2863	2	10.890838	I-20 EB (Basic Analysis)	NE
2863	3	12.877415	I-20 EB (Basic Analysis)	NE
2863	4	12.045094	I-20 EB (Basic Analysis)	NE
2863	5	11.585747	I-20 EB (Basic Analysis)	NE
2863	6	11.393371	I-20 EB (Basic Analysis)	NE
2863	7	11.083214	I-20 EB (Basic Analysis)	NE
2863	8	13.101199	I-20 EB (Basic Analysis)	NE
2863	9	11.42478	I-20 EB (Basic Analysis)	NE
2863	10	9.838659	I-20 EB (Basic Analysis)	NE
4563	1	14.237334	I-126 SB (Merge Analysis)	E
4563	2	14.577706	I-126 SB (Merge Analysis)	E
4563	3	13.722178	I-126 SB (Merge Analysis)	E
4563	4	14.485714	I-126 SB (Merge Analysis)	E
4563	5	15.218585	I-126 SB (Merge Analysis)	E
4563	6	13.700713	I-126 SB (Merge Analysis)	E
4563	7	13.930694	I-126 SB (Merge Analysis)	E
4563	8	14.657432	I-126 SB (Merge Analysis)	E
4563	9	14.237334	I-126 SB (Merge Analysis)	E
4563	10	12.397489	I-126 SB (Merge Analysis)	E
4566	1	30.862155	I-126 NB (Basic Analysis)	W
4566	2	31.702993	I-126 NB (Basic Analysis)	W
4566	3	31.28852	I-126 NB (Basic Analysis)	W
4566	4	30.291405	I-126 NB (Basic Analysis)	W
4566	5	30.569136	I-126 NB (Basic Analysis)	W
4566	6	31.015884	I-126 NB (Basic Analysis)	W
4566	7	31.032871	I-126 NB (Basic Analysis)	W
4566	8	31.043063	I-126 NB (Basic Analysis)	W
4566	9	31.013336	I-126 NB (Basic Analysis)	W
4566	10	30.757687	I-126 NB (Basic Analysis)	W
4570	1	29.432238	I-126 NB (Basic Analysis)	W
4570	2	29.204035	I-126 NB (Basic Analysis)	W

ID	Run	Density	Name (Type)	Direction
4570	3	28.88669	I-126 NB (Basic Analysis)	W
4570	4	28.818942	I-126 NB (Basic Analysis)	W
4570	5	27.945353	I-126 NB (Basic Analysis)	W
4570	6	29.2076	I-126 NB (Basic Analysis)	W
4570	7	29.157681	I-126 NB (Basic Analysis)	W
4570	8	28.360159	I-126 NB (Basic Analysis)	W
4570	9	28.51586	I-126 NB (Basic Analysis)	W
4570	10	29.920735	I-126 NB (Basic Analysis)	W
4573	1	14.874929	I-126 SB (Basic Analysis)	E
4573	2	13.560279	I-126 SB (Basic Analysis)	E
4573	3	14.262124	I-126 SB (Basic Analysis)	E
4573	4	15.189188	I-126 SB (Basic Analysis)	E
4573	5	13.40053	I-126 SB (Basic Analysis)	E
4573	6	15.00587	I-126 SB (Basic Analysis)	E
4573	7	15.458927	I-126 SB (Basic Analysis)	E
4573	8	14.56067	I-126 SB (Basic Analysis)	E
4573	9	14.429729	I-126 SB (Basic Analysis)	E
4573	10	14.542338	I-126 SB (Basic Analysis)	E
4579	1	13.602256	I-126 SB (Diverge Analysis)	E
4579	2	14.497577	I-126 SB (Diverge Analysis)	E
4579	3	13.597901	I-126 SB (Diverge Analysis)	E
4579	4	14.993949	I-126 SB (Diverge Analysis)	E
4579	5	13.983753	I-126 SB (Diverge Analysis)	E
4579	6	23.285896	I-126 SB (Diverge Analysis)	E
4579	7	15.335563	I-126 SB (Diverge Analysis)	E
4579	8	19.344132	I-126 SB (Diverge Analysis)	E
4579	9	14.119864	I-126 SB (Diverge Analysis)	E
4579	10	19.67362	I-126 SB (Diverge Analysis)	E
4589	1	28.277117	I-126 NB (Merge Analysis)	NW
4589	2	30.021148	I-126 NB (Merge Analysis)	NW
4589	3	27.622458	I-126 NB (Merge Analysis)	NW
4589	4	29.128432	I-126 NB (Merge Analysis)	NW
4589	5	29.413066	I-126 NB (Merge Analysis)	NW
4589	6	29.467405	I-126 NB (Merge Analysis)	NW
4589	7	27.480141	I-126 NB (Merge Analysis)	NW
4589	8	28.582452	I-126 NB (Merge Analysis)	NW
4589	9	28.872261	I-126 NB (Merge Analysis)	NW
4589	10	28.403909	I-126 NB (Merge Analysis)	NW
4599	1	22.856195	I-126 NB (Basic Analysis)	NW
4599	2	24.014296	I-126 NB (Basic Analysis)	NW
4599	3	22.849986	I-126 NB (Basic Analysis)	NW
4599	4	23.736414	I-126 NB (Basic Analysis)	NW
4599	5	23.480266	I-126 NB (Basic Analysis)	NW
4599	6	22.520874	I-126 NB (Basic Analysis)	NW
4599	7	22.317507	I-126 NB (Basic Analysis)	NW
4599	8	21.982186	I-126 NB (Basic Analysis)	NW
4599	9	23.089057	I-126 NB (Basic Analysis)	NW
4599	10	23.284661	I-126 NB (Basic Analysis)	NW
4601	1	24.07842	I-126 NB (Basic Analysis)	NW
4601	2	26.099451	I-126 NB (Basic Analysis)	NW
4601	3	26.633698	I-126 NB (Basic Analysis)	NW
4601	4	24.890146	I-126 NB (Basic Analysis)	NW
4601	5	26.898751	I-126 NB (Basic Analysis)	NW

ID	Run	Density	Name (Type)	Direction
4601	6	27.143097	I-126 NB (Basic Analysis)	NW
4601	7	25.436818	I-126 NB (Basic Analysis)	NW
4601	8	25.345706	I-126 NB (Basic Analysis)	NW
4601	9	25.097218	I-126 NB (Basic Analysis)	NW
4601	10	25.113784	I-126 NB (Basic Analysis)	NW
4604	1	16.34284	I-26 WB (Basic Analysis)	NW
4604	2	16.17149	I-26 WB (Basic Analysis)	NW
4604	3	15.745622	I-26 WB (Basic Analysis)	NW
4604	4	16.160018	I-26 WB (Basic Analysis)	NW
4604	5	16.823913	I-26 WB (Basic Analysis)	NW
4604	6	16.158584	I-26 WB (Basic Analysis)	NW
4604	7	16.585886	I-26 WB (Basic Analysis)	NW
4604	8	15.882559	I-26 WB (Basic Analysis)	NW
4604	9	16.564377	I-26 WB (Basic Analysis)	NW
4604	10	15.929878	I-26 WB (Basic Analysis)	NW
4610	1	13.681684	I-26 EB (Basic Analysis)	SE
4610	2	14.599958	I-26 EB (Basic Analysis)	SE
4610	3	13.828882	I-26 EB (Basic Analysis)	SE
4610	4	14.224262	I-26 EB (Basic Analysis)	SE
4610	5	13.739022	I-26 EB (Basic Analysis)	SE
4610	6	14.229396	I-26 EB (Basic Analysis)	SE
4610	7	13.8169	I-26 EB (Basic Analysis)	SE
4610	8	14.013735	I-26 EB (Basic Analysis)	SE
4610	9	13.621778	I-26 EB (Basic Analysis)	SE
4610	10	14.197732	I-26 EB (Basic Analysis)	SE
4646	1	34.320072	I-26 WB (Basic Analysis)	NW
4646	2	35.663897	I-26 WB (Basic Analysis)	NW
4646	3	34.420691	I-26 WB (Basic Analysis)	NW
4646	4	34.038339	I-26 WB (Basic Analysis)	NW
4646	5	34.288768	I-26 WB (Basic Analysis)	NW
4646	6	34.807516	I-26 WB (Basic Analysis)	NW
4646	7	35.098194	I-26 WB (Basic Analysis)	NW
4646	8	34.049518	I-26 WB (Basic Analysis)	NW
4646	9	35.024406	I-26 WB (Basic Analysis)	NW
4646	10	34.608514	I-26 WB (Basic Analysis)	NW
4651	1	34.228205	I-26 WB (Basic Analysis)	NW
4651	2	33.512391	I-26 WB (Basic Analysis)	NW
4651	3	33.016092	I-26 WB (Basic Analysis)	NW
4651	4	32.69977	I-26 WB (Basic Analysis)	NW
4651	5	34.918114	I-26 WB (Basic Analysis)	NW
4651	6	34.414998	I-26 WB (Basic Analysis)	NW
4651	7	32.924741	I-26 WB (Basic Analysis)	NW
4651	8	34.247293	I-26 WB (Basic Analysis)	NW
4651	9	34.094586	I-26 WB (Basic Analysis)	NW
4651	10	34.469537	I-26 WB (Basic Analysis)	NW
4654	1	38.927944	I-26 WB (Merge Analysis)	NW
4654	2	40.632532	I-26 WB (Merge Analysis)	NW
4654	3	40.914462	I-26 WB (Merge Analysis)	NW
4654	4	40.417832	I-26 WB (Merge Analysis)	NW
4654	5	39.392043	I-26 WB (Merge Analysis)	NW
4654	6	40.758317	I-26 WB (Merge Analysis)	NW
4654	7	40.302892	I-26 WB (Merge Analysis)	NW
4654	8	37.618057	I-26 WB (Merge Analysis)	NW

ID	Run	Density	Name (Type)	Direction
4654	9	39.882167	I-26 WB (Merge Analysis)	NW
4654	10	37.670105	I-26 WB (Merge Analysis)	NW
4677	1	45.422006	I-26 WB (Basic Analysis)	NW
4677	2	46.236181	I-26 WB (Basic Analysis)	NW
4677	3	45.366349	I-26 WB (Basic Analysis)	NW
4677	4	53.399701	I-26 WB (Basic Analysis)	NW
4677	5	46.89025	I-26 WB (Basic Analysis)	NW
4677	6	49.427061	I-26 WB (Basic Analysis)	NW
4677	7	45.989272	I-26 WB (Basic Analysis)	NW
4677	8	44.138725	I-26 WB (Basic Analysis)	NW
4677	9	46.319976	I-26 WB (Basic Analysis)	NW
4677	10	44.510196	I-26 WB (Basic Analysis)	NW
4687	1	26.456789	I-26 EB (Basic Analysis)	SE
4687	2	26.023478	I-26 EB (Basic Analysis)	SE
4687	3	26.028998	I-26 EB (Basic Analysis)	SE
4687	4	27.523046	I-26 EB (Basic Analysis)	SE
4687	5	25.632487	I-26 EB (Basic Analysis)	SE
4687	6	25.94988	I-26 EB (Basic Analysis)	SE
4687	7	26.502788	I-26 EB (Basic Analysis)	SE
4687	8	26.181715	I-26 EB (Basic Analysis)	SE
4687	9	26.095237	I-26 EB (Basic Analysis)	SE
4687	10	27.092495	I-26 EB (Basic Analysis)	SE
4701	1	34.195198	I-26 WB (Weaving Analysis)	NW
4701	2	34.662097	I-26 WB (Weaving Analysis)	NW
4701	3	35.535553	I-26 WB (Weaving Analysis)	NW
4701	4	32.892024	I-26 WB (Weaving Analysis)	NW
4701	5	34.473143	I-26 WB (Weaving Analysis)	NW
4701	6	33.831309	I-26 WB (Weaving Analysis)	NW
4701	7	36.001233	I-26 WB (Weaving Analysis)	NW
4701	8	33.856909	I-26 WB (Weaving Analysis)	NW
4701	9	33.895309	I-26 WB (Weaving Analysis)	NW
4701	10	34.595658	I-26 WB (Weaving Analysis)	NW
4712	1	32.521122	I-26 WB (Basic Analysis)	NW
4712	2	33.85445	I-26 WB (Basic Analysis)	NW
4712	3	34.635372	I-26 WB (Basic Analysis)	NW
4712	4	33.308654	I-26 WB (Basic Analysis)	NW
4712	5	33.648596	I-26 WB (Basic Analysis)	NW
4712	6	33.597605	I-26 WB (Basic Analysis)	NW
4712	7	34.865777	I-26 WB (Basic Analysis)	NW
4712	8	33.428578	I-26 WB (Basic Analysis)	NW
4712	9	33.488068	I-26 WB (Basic Analysis)	NW
4712	10	34.695807	I-26 WB (Basic Analysis)	NW
4714	1	23.321143	I-26 EB (Basic Analysis)	SE
4714	2	22.150166	I-26 EB (Basic Analysis)	SE
4714	3	22.449416	I-26 EB (Basic Analysis)	SE
4714	4	22.886905	I-26 EB (Basic Analysis)	SE
4714	5	22.124957	I-26 EB (Basic Analysis)	SE
4714	6	22.142034	I-26 EB (Basic Analysis)	SE
4714	7	22.043639	I-26 EB (Basic Analysis)	SE
4714	8	21.941179	I-26 EB (Basic Analysis)	SE
4714	9	22.500646	I-26 EB (Basic Analysis)	SE
4714	10	22.747852	I-26 EB (Basic Analysis)	SE
4720	1	19.621838	I-26 EB (Merge Analysis)	SE

ID	Run	Density	Name (Type)	Direction
4720	2	18.413497	I-26 EB (Merge Analysis)	SE
4720	3	18.931863	I-26 EB (Merge Analysis)	SE
4720	4	19.644837	I-26 EB (Merge Analysis)	SE
4720	5	18.954862	I-26 EB (Merge Analysis)	SE
4720	6	19.096395	I-26 EB (Merge Analysis)	SE
4720	7	18.00128	I-26 EB (Merge Analysis)	SE
4720	8	18.00305	I-26 EB (Merge Analysis)	SE
4720	9	18.749638	I-26 EB (Merge Analysis)	SE
4720	10	19.911982	I-26 EB (Merge Analysis)	SE
4725	1	37.198134	I-26 WB (Merge Analysis)	NW
4725	2	36.00321	I-26 WB (Merge Analysis)	NW
4725	3	40.091322	I-26 WB (Merge Analysis)	NW
4725	4	35.46986	I-26 WB (Merge Analysis)	NW
4725	5	38.13252	I-26 WB (Merge Analysis)	NW
4725	6	36.261019	I-26 WB (Merge Analysis)	NW
4725	7	43.191849	I-26 WB (Merge Analysis)	NW
4725	8	37.818785	I-26 WB (Merge Analysis)	NW
4725	9	37.933367	I-26 WB (Merge Analysis)	NW
4725	10	40.110419	I-26 WB (Merge Analysis)	NW
4727	1	40.911476	I-26 WB (Basic Analysis)	NW
4727	2	39.298155	I-26 WB (Basic Analysis)	NW
4727	3	43.881797	I-26 WB (Basic Analysis)	NW
4727	4	39.657076	I-26 WB (Basic Analysis)	NW
4727	5	42.070751	I-26 WB (Basic Analysis)	NW
4727	6	40.922482	I-26 WB (Basic Analysis)	NW
4727	7	47.336353	I-26 WB (Basic Analysis)	NW
4727	8	42.832021	I-26 WB (Basic Analysis)	NW
4727	9	40.94237	I-26 WB (Basic Analysis)	NW
4727	10	46.76004	I-26 WB (Basic Analysis)	NW
4728	1	30.857519	I-26 WB (Diverge Analysis)	NW
4728	2	30.955882	I-26 WB (Diverge Analysis)	NW
4728	3	32.206128	I-26 WB (Diverge Analysis)	NW
4728	4	31.046479	I-26 WB (Diverge Analysis)	NW
4728	5	32.28896	I-26 WB (Diverge Analysis)	NW
4728	6	30.508071	I-26 WB (Diverge Analysis)	NW
4728	7	33.345068	I-26 WB (Diverge Analysis)	NW
4728	8	31.766083	I-26 WB (Diverge Analysis)	NW
4728	9	32.938673	I-26 WB (Diverge Analysis)	NW
4728	10	32.244955	I-26 WB (Diverge Analysis)	NW
4729	1	30.857519	I-26 WB (Diverge Analysis)	NW
4729	2	30.955882	I-26 WB (Diverge Analysis)	NW
4729	3	32.206128	I-26 WB (Diverge Analysis)	NW
4729	4	31.046479	I-26 WB (Diverge Analysis)	NW
4729	5	32.28896	I-26 WB (Diverge Analysis)	NW
4729	6	30.508071	I-26 WB (Diverge Analysis)	NW
4729	7	33.345068	I-26 WB (Diverge Analysis)	NW
4729	8	31.766083	I-26 WB (Diverge Analysis)	NW
4729	9	32.938673	I-26 WB (Diverge Analysis)	NW
4729	10	32.244955	I-26 WB (Diverge Analysis)	NW
4730	1	30.857519	I-26 WB (Diverge Analysis)	NW
4730	2	30.955882	I-26 WB (Diverge Analysis)	NW
4730	3	32.206128	I-26 WB (Diverge Analysis)	NW
4730	4	31.046479	I-26 WB (Diverge Analysis)	NW

ID	Run	Density	Name (Type)	Direction
4730	5	32.28896	I-26 WB (Diverge Analysis)	NW
4730	6	30.508071	I-26 WB (Diverge Analysis)	NW
4730	7	33.345068	I-26 WB (Diverge Analysis)	NW
4730	8	31.766083	I-26 WB (Diverge Analysis)	NW
4730	9	32.938673	I-26 WB (Diverge Analysis)	NW
4730	10	32.244955	I-26 WB (Diverge Analysis)	NW
4732	1	31.939867	I-26 WB (Basic Analysis)	NW
4732	2	33.281323	I-26 WB (Basic Analysis)	NW
4732	3	32.62379	I-26 WB (Basic Analysis)	NW
4732	4	30.244353	I-26 WB (Basic Analysis)	NW
4732	5	32.234547	I-26 WB (Basic Analysis)	NW
4732	6	32.476449	I-26 WB (Basic Analysis)	NW
4732	7	31.280134	I-26 WB (Basic Analysis)	NW
4732	8	30.686374	I-26 WB (Basic Analysis)	NW
4732	9	31.937668	I-26 WB (Basic Analysis)	NW
4732	10	30.734755	I-26 WB (Basic Analysis)	NW
4733	1	20.365008	I-26 EB (Basic Analysis)	SE
4733	2	20.861071	I-26 EB (Basic Analysis)	SE
4733	3	21.765006	I-26 EB (Basic Analysis)	SE
4733	4	21.53351	I-26 EB (Basic Analysis)	SE
4733	5	20.534772	I-26 EB (Basic Analysis)	SE
4733	6	21.008787	I-26 EB (Basic Analysis)	SE
4733	7	19.99682	I-26 EB (Basic Analysis)	SE
4733	8	21.559967	I-26 EB (Basic Analysis)	SE
4733	9	20.616346	I-26 EB (Basic Analysis)	SE
4733	10	19.855718	I-26 EB (Basic Analysis)	SE
4736	1	22.686767	I-26 EB (Basic Analysis)	SE
4736	2	24.064041	I-26 EB (Basic Analysis)	SE
4736	3	20.837649	I-26 EB (Basic Analysis)	SE
4736	4	24.663411	I-26 EB (Basic Analysis)	SE
4736	5	27.800535	I-26 EB (Basic Analysis)	SE
4736	6	23.337147	I-26 EB (Basic Analysis)	SE
4736	7	27.915308	I-26 EB (Basic Analysis)	SE
4736	8	23.668713	I-26 EB (Basic Analysis)	SE
4736	9	20.824897	I-26 EB (Basic Analysis)	SE
4736	10	23.566692	I-26 EB (Basic Analysis)	SE
4737	1	16.542313	I-26 EB (Diverge Analysis)	SE
4737	2	18.738499	I-26 EB (Diverge Analysis)	SE
4737	3	16.674999	I-26 EB (Diverge Analysis)	SE
4737	4	16.681862	I-26 EB (Diverge Analysis)	SE
4737	5	18.260371	I-26 EB (Diverge Analysis)	SE
4737	6	17.013578	I-26 EB (Diverge Analysis)	SE
4737	7	18.045328	I-26 EB (Diverge Analysis)	SE
4737	8	17.754791	I-26 EB (Diverge Analysis)	SE
4737	9	17.789106	I-26 EB (Diverge Analysis)	SE
4737	10	15.757634	I-26 EB (Diverge Analysis)	SE
4739	1	29.324331	I-26 WB (Weaving Analysis)	NW
4739	2	29.028098	I-26 WB (Weaving Analysis)	NW
4739	3	29.402428	I-26 WB (Weaving Analysis)	NW
4739	4	28.519117	I-26 WB (Weaving Analysis)	NW
4739	5	30.078377	I-26 WB (Weaving Analysis)	NW
4739	6	28.884021	I-26 WB (Weaving Analysis)	NW
4739	7	28.733212	I-26 WB (Weaving Analysis)	NW

ID	Run	Density	Name (Type)	Direction
4739	8	28.87325	I-26 WB (Weaving Analysis)	NW
4739	9	27.941463	I-26 WB (Weaving Analysis)	NW
4739	10	30.171287	I-26 WB (Weaving Analysis)	NW
4741	1	40.516285	I-26 WB (Basic Analysis)	NW
4741	2	37.06332	I-26 WB (Basic Analysis)	NW
4741	3	39.260662	I-26 WB (Basic Analysis)	NW
4741	4	37.040898	I-26 WB (Basic Analysis)	NW
4741	5	40.493863	I-26 WB (Basic Analysis)	NW
4741	6	35.49379	I-26 WB (Basic Analysis)	NW
4741	7	32.152935	I-26 WB (Basic Analysis)	NW
4741	8	33.924261	I-26 WB (Basic Analysis)	NW
4741	9	35.448947	I-26 WB (Basic Analysis)	NW
4741	10	36.659727	I-26 WB (Basic Analysis)	NW
4742	1	23.175964	I-26 WB (Diverge Analysis)	NW
4742	2	23.647485	I-26 WB (Diverge Analysis)	NW
4742	3	24.685783	I-26 WB (Diverge Analysis)	NW
4742	4	23.183108	I-26 WB (Diverge Analysis)	NW
4742	5	25.640732	I-26 WB (Diverge Analysis)	NW
4742	6	24.400013	I-26 WB (Diverge Analysis)	NW
4742	7	24.504795	I-26 WB (Diverge Analysis)	NW
4742	8	23.711783	I-26 WB (Diverge Analysis)	NW
4742	9	25.82172	I-26 WB (Diverge Analysis)	NW
4742	10	24.750082	I-26 WB (Diverge Analysis)	NW
4745	1	18.73346	I-26 EB (Basic Analysis)	SE
4745	2	17.082429	I-26 EB (Basic Analysis)	SE
4745	3	15.095786	I-26 EB (Basic Analysis)	SE
4745	4	17.805459	I-26 EB (Basic Analysis)	SE
4745	5	16.746817	I-26 EB (Basic Analysis)	SE
4745	6	17.210818	I-26 EB (Basic Analysis)	SE
4745	7	15.712952	I-26 EB (Basic Analysis)	SE
4745	8	17.345964	I-26 EB (Basic Analysis)	SE
4745	9	14.784951	I-26 EB (Basic Analysis)	SE
4745	10	19.030781	I-26 EB (Basic Analysis)	SE
4753	1	26.548777	I-26 WB (Basic Analysis)	NW
4753	2	27.318057	I-26 WB (Basic Analysis)	NW
4753	3	28.078742	I-26 WB (Basic Analysis)	NW
4753	4	27.333099	I-26 WB (Basic Analysis)	NW
4753	5	25.57106	I-26 WB (Basic Analysis)	NW
4753	6	25.968593	I-26 WB (Basic Analysis)	NW
4753	7	27.823032	I-26 WB (Basic Analysis)	NW
4753	8	26.952756	I-26 WB (Basic Analysis)	NW
4753	9	26.602497	I-26 WB (Basic Analysis)	NW
4753	10	25.663459	I-26 WB (Basic Analysis)	NW
4755	1	17.357793	I-26 EB (Basic Analysis)	SE
4755	2	17.439021	I-26 EB (Basic Analysis)	SE
4755	3	19.744646	I-26 EB (Basic Analysis)	SE
4755	4	18.432502	I-26 EB (Basic Analysis)	SE
4755	5	20.13204	I-26 EB (Basic Analysis)	SE
4755	6	21.950297	I-26 EB (Basic Analysis)	SE
4755	7	17.813919	I-26 EB (Basic Analysis)	SE
4755	8	17.670208	I-26 EB (Basic Analysis)	SE
4755	9	20.525684	I-26 EB (Basic Analysis)	SE
4755	10	17.601477	I-26 EB (Basic Analysis)	SE

ID	Run	Density	Name (Type)	Direction
4756	1	12.65462	I-26 EB (Diverge Analysis)	SE
4756	2	14.266116	I-26 EB (Diverge Analysis)	SE
4756	3	12.648373	I-26 EB (Diverge Analysis)	SE
4756	4	12.4714	I-26 EB (Diverge Analysis)	SE
4756	5	13.000238	I-26 EB (Diverge Analysis)	SE
4756	6	13.853873	I-26 EB (Diverge Analysis)	SE
4756	7	13.325035	I-26 EB (Diverge Analysis)	SE
4756	8	13.699802	I-26 EB (Diverge Analysis)	SE
4756	9	13.868447	I-26 EB (Diverge Analysis)	SE
4756	10	11.413726	I-26 EB (Diverge Analysis)	SE
4760	1	17.170804	I-26 WB (Merge Analysis)	NW
4760	2	17.24185	I-26 WB (Merge Analysis)	NW
4760	3	16.08144	I-26 WB (Merge Analysis)	NW
4760	4	15.911227	I-26 WB (Merge Analysis)	NW
4760	5	15.81206	I-26 WB (Merge Analysis)	NW
4760	6	15.718812	I-26 WB (Merge Analysis)	NW
4760	7	15.897906	I-26 WB (Merge Analysis)	NW
4760	8	14.990596	I-26 WB (Merge Analysis)	NW
4760	9	15.743974	I-26 WB (Merge Analysis)	NW
4760	10	16.626122	I-26 WB (Merge Analysis)	NW
4761	1	28.109286	I-26 WB (Basic Analysis)	NW
4761	2	28.249428	I-26 WB (Basic Analysis)	NW
4761	3	28.347983	I-26 WB (Basic Analysis)	NW
4761	4	27.695762	I-26 WB (Basic Analysis)	NW
4761	5	27.970469	I-26 WB (Basic Analysis)	NW
4761	6	28.257832	I-26 WB (Basic Analysis)	NW
4761	7	27.867198	I-26 WB (Basic Analysis)	NW
4761	8	27.406342	I-26 WB (Basic Analysis)	NW
4761	9	28.213458	I-26 WB (Basic Analysis)	NW
4761	10	28.059986	I-26 WB (Basic Analysis)	NW
4762	1	28.109286	I-26 WB (Basic Analysis)	NW
4762	2	28.249428	I-26 WB (Basic Analysis)	NW
4762	3	28.347983	I-26 WB (Basic Analysis)	NW
4762	4	27.695762	I-26 WB (Basic Analysis)	NW
4762	5	27.970469	I-26 WB (Basic Analysis)	NW
4762	6	28.257832	I-26 WB (Basic Analysis)	NW
4762	7	27.867198	I-26 WB (Basic Analysis)	NW
4762	8	27.406342	I-26 WB (Basic Analysis)	NW
4762	9	28.213458	I-26 WB (Basic Analysis)	NW
4762	10	28.059986	I-26 WB (Basic Analysis)	NW
4763	1	28.109286	I-26 WB (Basic Analysis)	NW
4763	2	28.249428	I-26 WB (Basic Analysis)	NW
4763	3	28.347983	I-26 WB (Basic Analysis)	NW
4763	4	27.695762	I-26 WB (Basic Analysis)	NW
4763	5	27.970469	I-26 WB (Basic Analysis)	NW
4763	6	28.257832	I-26 WB (Basic Analysis)	NW
4763	7	27.867198	I-26 WB (Basic Analysis)	NW
4763	8	27.406342	I-26 WB (Basic Analysis)	NW
4763	9	28.213458	I-26 WB (Basic Analysis)	NW
4763	10	28.059986	I-26 WB (Basic Analysis)	NW
4764	1	28.109286	I-26 WB (Basic Analysis)	NW
4764	2	28.249428	I-26 WB (Basic Analysis)	NW
4764	3	28.347983	I-26 WB (Basic Analysis)	NW

ID	Run	Density	Name (Type)	Direction
4764	4	27.695762	I-26 WB (Basic Analysis)	NW
4764	5	27.970469	I-26 WB (Basic Analysis)	NW
4764	6	28.257832	I-26 WB (Basic Analysis)	NW
4764	7	27.867198	I-26 WB (Basic Analysis)	NW
4764	8	27.406342	I-26 WB (Basic Analysis)	NW
4764	9	28.213458	I-26 WB (Basic Analysis)	NW
4764	10	28.059986	I-26 WB (Basic Analysis)	NW
4769	1	16.366581	I-26 EB (Basic Analysis)	SE
4769	2	17.064354	I-26 EB (Basic Analysis)	SE
4769	3	16.480922	I-26 EB (Basic Analysis)	SE
4769	4	16.844498	I-26 EB (Basic Analysis)	SE
4769	5	16.793503	I-26 EB (Basic Analysis)	SE
4769	6	16.778019	I-26 EB (Basic Analysis)	SE
4769	7	17.034505	I-26 EB (Basic Analysis)	SE
4769	8	16.734856	I-26 EB (Basic Analysis)	SE
4769	9	17.060276	I-26 EB (Basic Analysis)	SE
4769	10	16.959894	I-26 EB (Basic Analysis)	SE
6079	1	17.434838	D ROAD I-20 WB TO I-20 (Basic Analysi	NW
6079	2	19.271967	D ROAD I-20 WB TO I-20 (Basic Analysi	NW
6079	3	17.769749	D ROAD I-20 WB TO I-20 (Basic Analysi	NW
6079	4	17.727478	D ROAD I-20 WB TO I-20 (Basic Analysi	NW
6079	5	17.737233	D ROAD I-20 WB TO I-20 (Basic Analysi	NW
6079	6	17.571404	D ROAD I-20 WB TO I-20 (Basic Analysi	NW
6079	7	17.269009	D ROAD I-20 WB TO I-20 (Basic Analysi	NW
6079	8	17.311279	D ROAD I-20 WB TO I-20 (Basic Analysi	NW
6079	9	17.386065	D ROAD I-20 WB TO I-20 (Basic Analysi	NW
6079	10	17.025143	D ROAD I-20 WB TO I-20 (Basic Analysi	NW
6149	1	24.460365	I-26 EB (Merge Analysis)	S
6149	2	25.212827	I-26 EB (Merge Analysis)	S
6149	3	26.881728	I-26 EB (Merge Analysis)	S
6149	4	25.554576	I-26 EB (Merge Analysis)	S
6149	5	25.097888	I-26 EB (Merge Analysis)	S
6149	6	24.769932	I-26 EB (Merge Analysis)	S
6149	7	25.723152	I-26 EB (Merge Analysis)	S
6149	8	25.680242	I-26 EB (Merge Analysis)	S
6149	9	26.539979	I-26 EB (Merge Analysis)	S
6149	10	25.571433	I-26 EB (Merge Analysis)	S
6150	1	24.460365	I-26 EB (Merge Analysis)	S
6150	2	25.212827	I-26 EB (Merge Analysis)	S
6150	3	26.881728	I-26 EB (Merge Analysis)	S
6150	4	25.554576	I-26 EB (Merge Analysis)	S
6150	5	25.097888	I-26 EB (Merge Analysis)	S
6150	6	24.769932	I-26 EB (Merge Analysis)	S
6150	7	25.723152	I-26 EB (Merge Analysis)	S
6150	8	25.680242	I-26 EB (Merge Analysis)	S
6150	9	26.539979	I-26 EB (Merge Analysis)	S
6150	10	25.571433	I-26 EB (Merge Analysis)	S
6151	1	24.460365	I-26 EB (Merge Analysis)	S
6151	2	25.212827	I-26 EB (Merge Analysis)	S
6151	3	26.881728	I-26 EB (Merge Analysis)	S
6151	4	25.554576	I-26 EB (Merge Analysis)	S
6151	5	25.097888	I-26 EB (Merge Analysis)	S
6151	6	24.769932	I-26 EB (Merge Analysis)	S

ID	Run	Density	Name (Type)	Direction
6151	7	25.723152	I-26 EB (Merge Analysis)	S
6151	8	25.680242	I-26 EB (Merge Analysis)	S
6151	9	26.539979	I-26 EB (Merge Analysis)	S
6151	10	25.571433	I-26 EB (Merge Analysis)	S
6152	1	28.001763	I-26 EB (Basic Analysis)	S
6152	2	28.628707	I-26 EB (Basic Analysis)	S
6152	3	29.28375	I-26 EB (Basic Analysis)	S
6152	4	29.494488	I-26 EB (Basic Analysis)	S
6152	5	28.809591	I-26 EB (Basic Analysis)	S
6152	6	28.848226	I-26 EB (Basic Analysis)	S
6152	7	29.076525	I-26 EB (Basic Analysis)	S
6152	8	28.393384	I-26 EB (Basic Analysis)	S
6152	9	30.110896	I-26 EB (Basic Analysis)	S
6152	10	28.10362	I-26 EB (Basic Analysis)	S
6159	1	33.025391	I-26 WB (Diverge Analysis)	N
6159	2	32.338997	I-26 WB (Diverge Analysis)	N
6159	3	32.943824	I-26 WB (Diverge Analysis)	N
6159	4	32.800697	I-26 WB (Diverge Analysis)	N
6159	5	32.249735	I-26 WB (Diverge Analysis)	N
6159	6	32.163551	I-26 WB (Diverge Analysis)	N
6159	7	32.648336	I-26 WB (Diverge Analysis)	N
6159	8	31.935779	I-26 WB (Diverge Analysis)	N
6159	9	33.223921	I-26 WB (Diverge Analysis)	N
6159	10	32.128154	I-26 WB (Diverge Analysis)	N
6160	1	33.025391	I-26 WB (Diverge Analysis)	N
6160	2	32.338997	I-26 WB (Diverge Analysis)	N
6160	3	32.943824	I-26 WB (Diverge Analysis)	N
6160	4	32.800697	I-26 WB (Diverge Analysis)	N
6160	5	32.249735	I-26 WB (Diverge Analysis)	N
6160	6	32.163551	I-26 WB (Diverge Analysis)	N
6160	7	32.648336	I-26 WB (Diverge Analysis)	N
6160	8	31.935779	I-26 WB (Diverge Analysis)	N
6160	9	33.223921	I-26 WB (Diverge Analysis)	N
6160	10	32.128154	I-26 WB (Diverge Analysis)	N
6165	1	25.091987	I-26 WB (Basic Analysis)	N
6165	2	26.284505	I-26 WB (Basic Analysis)	N
6165	3	24.869247	I-26 WB (Basic Analysis)	N
6165	4	24.97205	I-26 WB (Basic Analysis)	N
6165	5	25.744216	I-26 WB (Basic Analysis)	N
6165	6	25.603719	I-26 WB (Basic Analysis)	N
6165	7	26.270797	I-26 WB (Basic Analysis)	N
6165	8	24.543703	I-26 WB (Basic Analysis)	N
6165	9	25.363844	I-26 WB (Basic Analysis)	N
6165	10	25.211924	I-26 WB (Basic Analysis)	N
6178	1	24.017436	I-26 EB (Basic Analysis)	S
6178	2	24.954782	I-26 EB (Basic Analysis)	S
6178	3	24.178497	I-26 EB (Basic Analysis)	S
6178	4	24.800976	I-26 EB (Basic Analysis)	S
6178	5	24.607993	I-26 EB (Basic Analysis)	S
6178	6	24.682961	I-26 EB (Basic Analysis)	S
6178	7	24.724073	I-26 EB (Basic Analysis)	S
6178	8	24.547535	I-26 EB (Basic Analysis)	S
6178	9	25.460214	I-26 EB (Basic Analysis)	S

ID	Run	Density	Name (Type)	Direction
6178	10	24.249596	I-26 EB (Basic Analysis)	S
6207	1	11.753813	I-20 EB (Basic Analysis)	E
6207	2	10.622812	I-20 EB (Basic Analysis)	E
6207	3	10.823741	I-20 EB (Basic Analysis)	E
6207	4	10.534776	I-20 EB (Basic Analysis)	E
6207	5	10.940259	I-20 EB (Basic Analysis)	E
6207	6	11.144295	I-20 EB (Basic Analysis)	E
6207	7	11.025705	I-20 EB (Basic Analysis)	E
6207	8	10.947509	I-20 EB (Basic Analysis)	E
6207	9	10.882259	I-20 EB (Basic Analysis)	E
6207	10	10.642491	I-20 EB (Basic Analysis)	E
6216	1	11.570043	I-20 EB (Basic Analysis)	NE
6216	2	10.890838	I-20 EB (Basic Analysis)	NE
6216	3	12.877415	I-20 EB (Basic Analysis)	NE
6216	4	12.045094	I-20 EB (Basic Analysis)	NE
6216	5	11.585747	I-20 EB (Basic Analysis)	NE
6216	6	11.393371	I-20 EB (Basic Analysis)	NE
6216	7	11.083214	I-20 EB (Basic Analysis)	NE
6216	8	13.101199	I-20 EB (Basic Analysis)	NE
6216	9	11.42478	I-20 EB (Basic Analysis)	NE
6216	10	9.838659	I-20 EB (Basic Analysis)	NE
6223	1	19.233523	I-26 EB (Basic Analysis)	SE
6223	2	19.963786	I-26 EB (Basic Analysis)	SE
6223	3	20.45446	I-26 EB (Basic Analysis)	SE
6223	4	20.94867	I-26 EB (Basic Analysis)	SE
6223	5	19.951409	I-26 EB (Basic Analysis)	SE
6223	6	20.632164	I-26 EB (Basic Analysis)	SE
6223	7	21.179419	I-26 EB (Basic Analysis)	SE
6223	8	20.698471	I-26 EB (Basic Analysis)	SE
6223	9	21.762039	I-26 EB (Basic Analysis)	SE
6223	10	19.862999	I-26 EB (Basic Analysis)	SE
6234	1	16.464442	I-20 WB (Basic Analysis)	SW
6234	2	17.025059	I-20 WB (Basic Analysis)	SW
6234	3	16.433531	I-20 WB (Basic Analysis)	SW
6234	4	16.441961	I-20 WB (Basic Analysis)	SW
6234	5	17.987522	I-20 WB (Basic Analysis)	SW
6234	6	16.588087	I-20 WB (Basic Analysis)	SW
6234	7	15.978293	I-20 WB (Basic Analysis)	SW
6234	8	17.324336	I-20 WB (Basic Analysis)	SW
6234	9	16.588087	I-20 WB (Basic Analysis)	SW
6234	10	16.062596	I-20 WB (Basic Analysis)	SW
6238	1	19.056884	I-20 EB (Merge Analysis)	NE
6238	2	19.348262	I-20 EB (Merge Analysis)	NE
6238	3	19.356084	I-20 EB (Merge Analysis)	NE
6238	4	19.889951	I-20 EB (Merge Analysis)	NE
6238	5	19.291551	I-20 EB (Merge Analysis)	NE
6238	6	20.627195	I-20 EB (Merge Analysis)	NE
6238	7	20.488351	I-20 EB (Merge Analysis)	NE
6238	8	19.790218	I-20 EB (Merge Analysis)	NE
6238	9	20.241951	I-20 EB (Merge Analysis)	NE
6238	10	19.995551	I-20 EB (Merge Analysis)	NE
6241	1	25.496375	I-20 EB (Basic Analysis)	NE
6241	2	24.228309	I-20 EB (Basic Analysis)	NE

ID	Run	Density	Name (Type)	Direction
6241	3	22.765156	I-20 EB (Basic Analysis)	NE
6241	4	22.037332	I-20 EB (Basic Analysis)	NE
6241	5	25.143717	I-20 EB (Basic Analysis)	NE
6241	6	23.462968	I-20 EB (Basic Analysis)	NE
6241	7	22.825183	I-20 EB (Basic Analysis)	NE
6241	8	21.92103	I-20 EB (Basic Analysis)	NE
6241	9	24.033222	I-20 EB (Basic Analysis)	NE
6241	10	24.168282	I-20 EB (Basic Analysis)	NE
6242	1	35.225595	I-20 EB (Merge Analysis)	NE
6242	2	36.500664	I-20 EB (Merge Analysis)	NE
6242	3	31.879277	I-20 EB (Merge Analysis)	NE
6242	4	34.101977	I-20 EB (Merge Analysis)	NE
6242	5	34.546178	I-20 EB (Merge Analysis)	NE
6242	6	34.230583	I-20 EB (Merge Analysis)	NE
6242	7	34.874464	I-20 EB (Merge Analysis)	NE
6242	8	33.807535	I-20 EB (Merge Analysis)	NE
6242	9	34.261043	I-20 EB (Merge Analysis)	NE
6242	10	32.732144	I-20 EB (Merge Analysis)	NE
6246	1	41.36086	I-20 WB (Merge Analysis)	SW
6246	2	40.564057	I-20 WB (Merge Analysis)	SW
6246	3	40.404696	I-20 WB (Merge Analysis)	SW
6246	4	41.746432	I-20 WB (Merge Analysis)	SW
6246	5	45.741255	I-20 WB (Merge Analysis)	SW
6246	6	41.493886	I-20 WB (Merge Analysis)	SW
6246	7	41.199474	I-20 WB (Merge Analysis)	SW
6246	8	42.412236	I-20 WB (Merge Analysis)	SW
6246	9	41.980071	I-20 WB (Merge Analysis)	SW
6246	10	40.601196	I-20 WB (Merge Analysis)	SW
6247	1	41.36086	I-20 WB (Merge Analysis)	SW
6247	2	40.564057	I-20 WB (Merge Analysis)	SW
6247	3	40.404696	I-20 WB (Merge Analysis)	SW
6247	4	41.746432	I-20 WB (Merge Analysis)	SW
6247	5	45.741255	I-20 WB (Merge Analysis)	SW
6247	6	41.493886	I-20 WB (Merge Analysis)	SW
6247	7	41.199474	I-20 WB (Merge Analysis)	SW
6247	8	42.412236	I-20 WB (Merge Analysis)	SW
6247	9	41.980071	I-20 WB (Merge Analysis)	SW
6247	10	40.601196	I-20 WB (Merge Analysis)	SW
6249	1	39.097776	I-20 WB (Basic Analysis)	SW
6249	2	39.726475	I-20 WB (Basic Analysis)	SW
6249	3	37.389193	I-20 WB (Basic Analysis)	SW
6249	4	38.513346	I-20 WB (Basic Analysis)	SW
6249	5	38.779105	I-20 WB (Basic Analysis)	SW
6249	6	40.170337	I-20 WB (Basic Analysis)	SW
6249	7	38.46213	I-20 WB (Basic Analysis)	SW
6249	8	38.991124	I-20 WB (Basic Analysis)	SW
6249	9	38.022282	I-20 WB (Basic Analysis)	SW
6249	10	37.818311	I-20 WB (Basic Analysis)	SW
6251	1	85.854711	I-20 WB (Basic Analysis)	SW
6251	2	76.166865	I-20 WB (Basic Analysis)	SW
6251	3	85.020388	I-20 WB (Basic Analysis)	SW
6251	4	89.583099	I-20 WB (Basic Analysis)	SW
6251	5	82.719787	I-20 WB (Basic Analysis)	SW

ID	Run	Density	Name (Type)	Direction
6251	6	81.751375	I-20 WB (Basic Analysis)	SW
6251	7	83.117085	I-20 WB (Basic Analysis)	SW
6251	8	84.849053	I-20 WB (Basic Analysis)	SW
6251	9	88.830718	I-20 WB (Basic Analysis)	SW
6251	10	85.221519	I-20 WB (Basic Analysis)	SW
6254	1	35.277212	I-20 EB (Basic Analysis)	NE
6254	2	33.774908	I-20 EB (Basic Analysis)	NE
6254	3	32.392888	I-20 EB (Basic Analysis)	NE
6254	4	32.57958	I-20 EB (Basic Analysis)	NE
6254	5	33.232374	I-20 EB (Basic Analysis)	NE
6254	6	33.741078	I-20 EB (Basic Analysis)	NE
6254	7	33.233627	I-20 EB (Basic Analysis)	NE
6254	8	31.974398	I-20 EB (Basic Analysis)	NE
6254	9	33.668406	I-20 EB (Basic Analysis)	NE
6254	10	33.333864	I-20 EB (Basic Analysis)	NE
6258	1	33.309673	I-20 EB (Merge Analysis)	NE
6258	2	32.113949	I-20 EB (Merge Analysis)	NE
6258	3	30.700968	I-20 EB (Merge Analysis)	NE
6258	4	32.083372	I-20 EB (Merge Analysis)	NE
6258	5	33.549461	I-20 EB (Merge Analysis)	NE
6258	6	32.767333	I-20 EB (Merge Analysis)	NE
6258	7	33.333812	I-20 EB (Merge Analysis)	NE
6258	8	34.651845	I-20 EB (Merge Analysis)	NE
6258	9	32.873548	I-20 EB (Merge Analysis)	NE
6258	10	32.601573	I-20 EB (Merge Analysis)	NE
6259	1	33.309673	I-20 EB (Merge Analysis)	NE
6259	2	32.113949	I-20 EB (Merge Analysis)	NE
6259	3	30.700968	I-20 EB (Merge Analysis)	NE
6259	4	32.083372	I-20 EB (Merge Analysis)	NE
6259	5	33.549461	I-20 EB (Merge Analysis)	NE
6259	6	32.767333	I-20 EB (Merge Analysis)	NE
6259	7	33.333812	I-20 EB (Merge Analysis)	NE
6259	8	34.651845	I-20 EB (Merge Analysis)	NE
6259	9	32.873548	I-20 EB (Merge Analysis)	NE
6259	10	32.601573	I-20 EB (Merge Analysis)	NE
8539	1	136.908782	I-20 WB (Basic Analysis)	SW
8539	2	124.67181	I-20 WB (Basic Analysis)	SW
8539	3	124.295178	I-20 WB (Basic Analysis)	SW
8539	4	136.466461	I-20 WB (Basic Analysis)	SW
8539	5	121.712499	I-20 WB (Basic Analysis)	SW
8539	6	115.498301	I-20 WB (Basic Analysis)	SW
8539	7	138.449867	I-20 WB (Basic Analysis)	SW
8539	8	130.719956	I-20 WB (Basic Analysis)	SW
8539	9	125.037842	I-20 WB (Basic Analysis)	SW
8539	10	120.481115	I-20 WB (Basic Analysis)	SW
8542	1	16.754672	I-20 EB (Basic Analysis)	NE
8542	2	16.145784	I-20 EB (Basic Analysis)	NE
8542	3	16.558727	I-20 EB (Basic Analysis)	NE
8542	4	16.101429	I-20 EB (Basic Analysis)	NE
8542	5	15.866464	I-20 EB (Basic Analysis)	NE
8542	6	16.499214	I-20 EB (Basic Analysis)	NE
8542	7	16.573606	I-20 EB (Basic Analysis)	NE
8542	8	16.484336	I-20 EB (Basic Analysis)	NE

ID	Run	Density	Name (Type)	Direction
8542	9	16.097499	I-20 EB (Basic Analysis)	NE
8542	10	16.002615	I-20 EB (Basic Analysis)	NE
8554	1	19.956095	I-26 WB (Basic Analysis)	N
8554	2	20.214651	I-26 WB (Basic Analysis)	N
8554	3	20.250431	I-26 WB (Basic Analysis)	N
8554	4	20.511687	I-26 WB (Basic Analysis)	N
8554	5	20.74054	I-26 WB (Basic Analysis)	N
8554	6	20.453293	I-26 WB (Basic Analysis)	N
8554	7	20.064446	I-26 WB (Basic Analysis)	N
8554	8	19.681674	I-26 WB (Basic Analysis)	N
8554	9	20.352706	I-26 WB (Basic Analysis)	N
8554	10	20.388485	I-26 WB (Basic Analysis)	N
8559	1	30.997278	I-126 NB (Basic Analysis)	W
8559	2	32.234109	I-126 NB (Basic Analysis)	W
8559	3	33.071413	I-126 NB (Basic Analysis)	W
8559	4	31.868585	I-126 NB (Basic Analysis)	W
8559	5	30.895271	I-126 NB (Basic Analysis)	W
8559	6	31.294797	I-126 NB (Basic Analysis)	W
8559	7	29.556434	I-126 NB (Basic Analysis)	W
8559	8	31.843083	I-126 NB (Basic Analysis)	W
8559	9	30.482994	I-126 NB (Basic Analysis)	W
8559	10	31.770828	I-126 NB (Basic Analysis)	W
8560	1	16.69375	I-126 SB (Basic Analysis)	E
8560	2	16.085298	I-126 SB (Basic Analysis)	E
8560	3	16.623494	I-126 SB (Basic Analysis)	E
8560	4	16.528101	I-126 SB (Basic Analysis)	E
8560	5	16.499741	I-126 SB (Basic Analysis)	E
8560	6	16.740157	I-126 SB (Basic Analysis)	E
8560	7	16.603513	I-126 SB (Basic Analysis)	E
8560	8	17.110126	I-126 SB (Basic Analysis)	E
8560	9	17.110771	I-126 SB (Basic Analysis)	E
8560	10	16.415306	I-126 SB (Basic Analysis)	E
8658	1	41.36086	I-20 WB (Merge Analysis)	SW
8658	2	40.564057	I-20 WB (Merge Analysis)	SW
8658	3	40.404696	I-20 WB (Merge Analysis)	SW
8658	4	41.746432	I-20 WB (Merge Analysis)	SW
8658	5	45.741255	I-20 WB (Merge Analysis)	SW
8658	6	41.493886	I-20 WB (Merge Analysis)	SW
8658	7	41.199474	I-20 WB (Merge Analysis)	SW
8658	8	42.412236	I-20 WB (Merge Analysis)	SW
8658	9	41.980071	I-20 WB (Merge Analysis)	SW
8658	10	40.601196	I-20 WB (Merge Analysis)	SW
8659	1	38.145301	I-20 EB (Basic Analysis)	NE
8659	2	38.21376	I-20 EB (Basic Analysis)	NE
8659	3	35.69342	I-20 EB (Basic Analysis)	NE
8659	4	36.059237	I-20 EB (Basic Analysis)	NE
8659	5	37.390883	I-20 EB (Basic Analysis)	NE
8659	6	37.275152	I-20 EB (Basic Analysis)	NE
8659	7	37.98798	I-20 EB (Basic Analysis)	NE
8659	8	36.345593	I-20 EB (Basic Analysis)	NE
8659	9	37.245972	I-20 EB (Basic Analysis)	NE
8659	10	36.431462	I-20 EB (Basic Analysis)	NE
8763	1	16.366581	I-26 EB (Basic Analysis)	SE

ID	Run	Density	Name (Type)	Direction
8763	2	17.064354	I-26 EB (Basic Analysis)	SE
8763	3	16.480922	I-26 EB (Basic Analysis)	SE
8763	4	16.844498	I-26 EB (Basic Analysis)	SE
8763	5	16.793503	I-26 EB (Basic Analysis)	SE
8763	6	16.778019	I-26 EB (Basic Analysis)	SE
8763	7	17.034505	I-26 EB (Basic Analysis)	SE
8763	8	16.734856	I-26 EB (Basic Analysis)	SE
8763	9	17.060276	I-26 EB (Basic Analysis)	SE
8763	10	16.959894	I-26 EB (Basic Analysis)	SE
8764	1	23.236886	I-20 WB (Basic Analysis)	S
8764	2	23.782904	I-20 WB (Basic Analysis)	S
8764	3	23.296673	I-20 WB (Basic Analysis)	S
8764	4	23.429035	I-20 WB (Basic Analysis)	S
8764	5	24.485506	I-20 WB (Basic Analysis)	S
8764	6	23.842751	I-20 WB (Basic Analysis)	S
8764	7	23.305241	I-20 WB (Basic Analysis)	S
8764	8	23.957645	I-20 WB (Basic Analysis)	S
8764	9	23.247343	I-20 WB (Basic Analysis)	S
8764	10	24.357661	I-20 WB (Basic Analysis)	S
8765	1	20.364017	I-20 EB (Basic Analysis)	NE
8765	2	19.34068	I-20 EB (Basic Analysis)	NE
8765	3	20.036881	I-20 EB (Basic Analysis)	NE
8765	4	19.118964	I-20 EB (Basic Analysis)	NE
8765	5	19.147074	I-20 EB (Basic Analysis)	NE
8765	6	19.057025	I-20 EB (Basic Analysis)	NE
8765	7	19.793904	I-20 EB (Basic Analysis)	NE
8765	8	19.570878	I-20 EB (Basic Analysis)	NE
8765	9	19.025684	I-20 EB (Basic Analysis)	NE
8765	10	19.523985	I-20 EB (Basic Analysis)	NE
8770	1	75.545384	I-20 WB (Basic Analysis)	SW
8770	2	69.923249	I-20 WB (Basic Analysis)	SW
8770	3	72.465237	I-20 WB (Basic Analysis)	SW
8770	4	78.661006	I-20 WB (Basic Analysis)	SW
8770	5	74.590192	I-20 WB (Basic Analysis)	SW
8770	6	74.737278	I-20 WB (Basic Analysis)	SW
8770	7	73.645816	I-20 WB (Basic Analysis)	SW
8770	8	70.582972	I-20 WB (Basic Analysis)	SW
8770	9	75.101964	I-20 WB (Basic Analysis)	SW
8770	10	77.007589	I-20 WB (Basic Analysis)	SW
8773	1	29.619617	I-26 WB (Basic Analysis)	N
8773	2	31.625915	I-26 WB (Basic Analysis)	N
8773	3	29.29018	I-26 WB (Basic Analysis)	N
8773	4	30.452112	I-26 WB (Basic Analysis)	N
8773	5	28.788605	I-26 WB (Basic Analysis)	N
8773	6	29.779883	I-26 WB (Basic Analysis)	N
8773	7	29.972796	I-26 WB (Basic Analysis)	N
8773	8	28.70402	I-26 WB (Basic Analysis)	N
8773	9	30.661349	I-26 WB (Basic Analysis)	N
8773	10	30.044026	I-26 WB (Basic Analysis)	N
8774	1	40.935677	I-20 EB (Diverge Analysis)	NE
8774	2	40.04413	I-20 EB (Diverge Analysis)	NE
8774	3	36.159335	I-20 EB (Diverge Analysis)	NE
8774	4	38.205141	I-20 EB (Diverge Analysis)	NE

ID	Run	Density	Name (Type)	Direction
8774	5	38.255448	I-20 EB (Diverge Analysis)	NE
8774	6	38.062605	I-20 EB (Diverge Analysis)	NE
8774	7	38.068195	I-20 EB (Diverge Analysis)	NE
8774	8	40.337586	I-20 EB (Diverge Analysis)	NE
8774	9	51.326804	I-20 EB (Diverge Analysis)	NE
8774	10	40.776372	I-20 EB (Diverge Analysis)	NE
8784	1	13.077451	I-126 SB (Basic Analysis)	SE
8784	2	13.218658	I-126 SB (Basic Analysis)	SE
8784	3	13.35292	I-126 SB (Basic Analysis)	SE
8784	4	13.376069	I-126 SB (Basic Analysis)	SE
8784	5	12.43469	I-126 SB (Basic Analysis)	SE
8784	6	13.206312	I-126 SB (Basic Analysis)	SE
8784	7	14.121456	I-126 SB (Basic Analysis)	SE
8784	8	13.805862	I-126 SB (Basic Analysis)	SE
8784	9	14.151549	I-126 SB (Basic Analysis)	SE
8784	10	13.113717	I-126 SB (Basic Analysis)	SE
8789	1	24.017436	I-26 EB (Basic Analysis)	S
8789	2	24.954782	I-26 EB (Basic Analysis)	S
8789	3	24.178497	I-26 EB (Basic Analysis)	S
8789	4	24.800976	I-26 EB (Basic Analysis)	S
8789	5	24.607993	I-26 EB (Basic Analysis)	S
8789	6	24.682961	I-26 EB (Basic Analysis)	S
8789	7	24.724073	I-26 EB (Basic Analysis)	S
8789	8	24.547535	I-26 EB (Basic Analysis)	S
8789	9	25.460214	I-26 EB (Basic Analysis)	S
8789	10	24.249596	I-26 EB (Basic Analysis)	S
8790	1	37.622076	D ROAD I-26 WB TO I-20 (Basic Analysi	NE
8790	2	37.001666	D ROAD I-26 WB TO I-20 (Basic Analysi	NE
8790	3	44.688939	D ROAD I-26 WB TO I-20 (Basic Analysi	NE
8790	4	41.460866	D ROAD I-26 WB TO I-20 (Basic Analysi	NE
8790	5	41.548111	D ROAD I-26 WB TO I-20 (Basic Analysi	NE
8790	6	36.584828	D ROAD I-26 WB TO I-20 (Basic Analysi	NE
8790	7	38.542998	D ROAD I-26 WB TO I-20 (Basic Analysi	NE
8790	8	41.102191	D ROAD I-26 WB TO I-20 (Basic Analysi	NE
8790	9	38.397589	D ROAD I-26 WB TO I-20 (Basic Analysi	NE
8790	10	39.609328	D ROAD I-26 WB TO I-20 (Basic Analysi	NE
8791	1	18.630352	D ROAD I-20 WB TO I-20 (Basic Analysi	NE
8791	2	18.079844	D ROAD I-20 WB TO I-20 (Basic Analysi	NE
8791	3	19.028746	D ROAD I-20 WB TO I-20 (Basic Analysi	NE
8791	4	18.731761	D ROAD I-20 WB TO I-20 (Basic Analysi	NE
8791	5	17.398952	D ROAD I-20 WB TO I-20 (Basic Analysi	NE
8791	6	17.427926	D ROAD I-20 WB TO I-20 (Basic Analysi	NE
8791	7	19.44887	D ROAD I-20 WB TO I-20 (Basic Analysi	NE
8791	8	18.347854	D ROAD I-20 WB TO I-20 (Basic Analysi	NE
8791	9	18.036383	D ROAD I-20 WB TO I-20 (Basic Analysi	NE
8791	10	16.073387	D ROAD I-20 WB TO I-20 (Basic Analysi	NE
8792	1	14.101103	I-26 EB (Basic Analysis)	S
8792	2	15.384589	I-26 EB (Basic Analysis)	S
8792	3	15.429418	I-26 EB (Basic Analysis)	S
8792	4	14.744058	I-26 EB (Basic Analysis)	S
8792	5	15.146497	I-26 EB (Basic Analysis)	S
8792	6	15.374947	I-26 EB (Basic Analysis)	S
8792	7	15.441644	I-26 EB (Basic Analysis)	S

ID	Run	Density	Name (Type)	Direction
8792	8	15.053203	I-26 EB (Basic Analysis)	S
8792	9	15.539747	I-26 EB (Basic Analysis)	S
8792	10	14.821482	I-26 EB (Basic Analysis)	S
8802	1	17.819975	CD ROAD I-20 EB (Basic Analysis)	NE
8802	2	17.377204	CD ROAD I-20 EB (Basic Analysis)	NE
8802	3	17.44892	CD ROAD I-20 EB (Basic Analysis)	NE
8802	4	15.496986	CD ROAD I-20 EB (Basic Analysis)	NE
8802	5	15.001207	CD ROAD I-20 EB (Basic Analysis)	NE
8802	6	17.352259	CD ROAD I-20 EB (Basic Analysis)	NE
8802	7	18.290809	CD ROAD I-20 EB (Basic Analysis)	NE
8802	8	17.757613	CD ROAD I-20 EB (Basic Analysis)	NE
8802	9	18.053833	CD ROAD I-20 EB (Basic Analysis)	NE
8802	10	17.991471	CD ROAD I-20 EB (Basic Analysis)	NE
8819	1	72.263949	CD ROAD I-20 WB (Weaving Analysis)	SW
8819	2	45.736505	CD ROAD I-20 WB (Weaving Analysis)	SW
8819	3	38.561148	CD ROAD I-20 WB (Weaving Analysis)	SW
8819	4	47.413666	CD ROAD I-20 WB (Weaving Analysis)	SW
8819	5	22.784696	CD ROAD I-20 WB (Weaving Analysis)	SW
8819	6	34.214682	CD ROAD I-20 WB (Weaving Analysis)	SW
8819	7	66.877162	CD ROAD I-20 WB (Weaving Analysis)	SW
8819	8	61.859229	CD ROAD I-20 WB (Weaving Analysis)	SW
8819	9	38.512971	CD ROAD I-20 WB (Weaving Analysis)	SW
8819	10	22.604032	CD ROAD I-20 WB (Weaving Analysis)	SW
8826	1	14.652532	CD ROAD I-20 EB (Basic Analysis)	E
8826	2	14.571618	CD ROAD I-20 EB (Basic Analysis)	E
8826	3	13.553057	CD ROAD I-20 EB (Basic Analysis)	E
8826	4	13.931448	CD ROAD I-20 EB (Basic Analysis)	E
8826	5	13.986183	CD ROAD I-20 EB (Basic Analysis)	E
8826	6	14.300319	CD ROAD I-20 EB (Basic Analysis)	E
8826	7	13.281758	CD ROAD I-20 EB (Basic Analysis)	E
8826	8	13.450725	CD ROAD I-20 EB (Basic Analysis)	E
8826	9	14.002842	CD ROAD I-20 EB (Basic Analysis)	E
8826	10	14.03378	CD ROAD I-20 EB (Basic Analysis)	E
8828	1	24.8333	(Weaving Analysis)	NW
8828	2	26.142692	(Weaving Analysis)	NW
8828	3	26.069112	(Weaving Analysis)	NW
8828	4	26.301558	(Weaving Analysis)	NW
8828	5	25.906901	(Weaving Analysis)	NW
8828	6	27.152747	(Weaving Analysis)	NW
8828	7	23.813212	(Weaving Analysis)	NW
8828	8	24.709552	(Weaving Analysis)	NW
8828	9	24.577442	(Weaving Analysis)	NW
8828	10	24.159373	(Weaving Analysis)	NW
8829	1	17.085456	CD ROAD I-20 EB (Basic Analysis)	E
8829	2	18.258013	CD ROAD I-20 EB (Basic Analysis)	E
8829	3	17.093524	CD ROAD I-20 EB (Basic Analysis)	E
8829	4	18.142371	CD ROAD I-20 EB (Basic Analysis)	E
8829	5	16.878375	CD ROAD I-20 EB (Basic Analysis)	E
8829	6	19.444018	CD ROAD I-20 EB (Basic Analysis)	E
8829	7	19.134742	CD ROAD I-20 EB (Basic Analysis)	E
8829	8	17.574918	CD ROAD I-20 EB (Basic Analysis)	E
8829	9	18.309111	CD ROAD I-20 EB (Basic Analysis)	E
8829	10	17.806202	CD ROAD I-20 EB (Basic Analysis)	E

ID	Run	Density	Name (Type)	Direction
8830	1	35.164182	CD ROAD I-26 EB (Weaving Analysis)	SE
8830	2	25.569169	CD ROAD I-26 EB (Weaving Analysis)	SE
8830	3	25.415138	CD ROAD I-26 EB (Weaving Analysis)	SE
8830	4	26.147725	CD ROAD I-26 EB (Weaving Analysis)	SE
8830	5	24.194159	CD ROAD I-26 EB (Weaving Analysis)	SE
8830	6	27.297323	CD ROAD I-26 EB (Weaving Analysis)	SE
8830	7	29.344811	CD ROAD I-26 EB (Weaving Analysis)	SE
8830	8	24.881664	CD ROAD I-26 EB (Weaving Analysis)	SE
8830	9	26.647387	CD ROAD I-26 EB (Weaving Analysis)	SE
8830	10	24.859123	CD ROAD I-26 EB (Weaving Analysis)	SE
8831	1	45.002098	I-20 WB (Diverge Analysis)	SW
8831	2	43.213417	I-20 WB (Diverge Analysis)	SW
8831	3	42.704555	I-20 WB (Diverge Analysis)	SW
8831	4	44.269459	I-20 WB (Diverge Analysis)	SW
8831	5	49.648529	I-20 WB (Diverge Analysis)	SW
8831	6	44.737704	I-20 WB (Diverge Analysis)	SW
8831	7	43.556746	I-20 WB (Diverge Analysis)	SW
8831	8	45.630511	I-20 WB (Diverge Analysis)	SW
8831	9	44.910135	I-20 WB (Diverge Analysis)	SW
8831	10	43.183529	I-20 WB (Diverge Analysis)	SW
8832	1	45.002098	I-20 WB (Diverge Analysis)	SW
8832	2	43.213417	I-20 WB (Diverge Analysis)	SW
8832	3	42.704555	I-20 WB (Diverge Analysis)	SW
8832	4	44.269459	I-20 WB (Diverge Analysis)	SW
8832	5	49.648529	I-20 WB (Diverge Analysis)	SW
8832	6	44.737704	I-20 WB (Diverge Analysis)	SW
8832	7	43.556746	I-20 WB (Diverge Analysis)	SW
8832	8	45.630511	I-20 WB (Diverge Analysis)	SW
8832	9	44.910135	I-20 WB (Diverge Analysis)	SW
8832	10	43.183529	I-20 WB (Diverge Analysis)	SW
8837	1	11.815463	I-20 WB (Basic Analysis)	W
8837	2	11.92464	I-20 WB (Basic Analysis)	W
8837	3	12.139344	I-20 WB (Basic Analysis)	W
8837	4	11.899137	I-20 WB (Basic Analysis)	W
8837	5	12.336188	I-20 WB (Basic Analysis)	W
8837	6	13.119491	I-20 WB (Basic Analysis)	W
8837	7	13.169798	I-20 WB (Basic Analysis)	W
8837	8	12.482566	I-20 WB (Basic Analysis)	W
8837	9	13.440172	I-20 WB (Basic Analysis)	W
8837	10	12.066291	I-20 WB (Basic Analysis)	W
8838	1	11.858925	I-20 WB (Basic Analysis)	SW
8838	2	12.36452	I-20 WB (Basic Analysis)	SW
8838	3	11.453671	I-20 WB (Basic Analysis)	SW
8838	4	11.336996	I-20 WB (Basic Analysis)	SW
8838	5	11.933598	I-20 WB (Basic Analysis)	SW
8838	6	11.724359	I-20 WB (Basic Analysis)	SW
8838	7	12.166172	I-20 WB (Basic Analysis)	SW
8838	8	12.152948	I-20 WB (Basic Analysis)	SW
8838	9	12.159171	I-20 WB (Basic Analysis)	SW
8838	10	12.101611	I-20 WB (Basic Analysis)	SW
8839	1	38.145301	I-20 EB (Basic Analysis)	NE
8839	2	38.21376	I-20 EB (Basic Analysis)	NE
8839	3	35.69342	I-20 EB (Basic Analysis)	NE

ID	Run	Density	Name (Type)	Direction
8839	4	36.059237	I-20 EB (Basic Analysis)	NE
8839	5	37.390883	I-20 EB (Basic Analysis)	NE
8839	6	37.275152	I-20 EB (Basic Analysis)	NE
8839	7	37.98798	I-20 EB (Basic Analysis)	NE
8839	8	36.345593	I-20 EB (Basic Analysis)	NE
8839	9	37.245972	I-20 EB (Basic Analysis)	NE
8839	10	36.431462	I-20 EB (Basic Analysis)	NE
8845	1	7.567537	I-20 WB (Merge Analysis)	W
8845	2	7.334503	I-20 WB (Merge Analysis)	W
8845	3	7.62828	I-20 WB (Merge Analysis)	W
8845	4	7.808302	I-20 WB (Merge Analysis)	W
8845	5	7.647056	I-20 WB (Merge Analysis)	W
8845	6	8.375978	I-20 WB (Merge Analysis)	W
8845	7	7.958504	I-20 WB (Merge Analysis)	W
8845	8	7.723261	I-20 WB (Merge Analysis)	W
8845	9	7.920954	I-20 WB (Merge Analysis)	W
8845	10	8.012621	I-20 WB (Merge Analysis)	W
8849	1	23.021645	CD ROAD I-20 WB (Weaving Analysis)	W
8849	2	23.553567	CD ROAD I-20 WB (Weaving Analysis)	W
8849	3	23.12098	CD ROAD I-20 WB (Weaving Analysis)	W
8849	4	23.516717	CD ROAD I-20 WB (Weaving Analysis)	W
8849	5	23.628869	CD ROAD I-20 WB (Weaving Analysis)	W
8849	6	24.282556	CD ROAD I-20 WB (Weaving Analysis)	W
8849	7	23.074516	CD ROAD I-20 WB (Weaving Analysis)	W
8849	8	23.431801	CD ROAD I-20 WB (Weaving Analysis)	W
8849	9	22.231773	CD ROAD I-20 WB (Weaving Analysis)	W
8849	10	23.332466	CD ROAD I-20 WB (Weaving Analysis)	W
8852	1	11.040244	(Basic Analysis)	E
8852	2	9.985956	(Basic Analysis)	E
8852	3	11.85285	(Basic Analysis)	E
8852	4	12.315196	(Basic Analysis)	E
8852	5	10.238145	(Basic Analysis)	E
8852	6	11.646196	(Basic Analysis)	E
8852	7	10.763537	(Basic Analysis)	E
8852	8	11.369489	(Basic Analysis)	E
8852	9	11.085778	(Basic Analysis)	E
8852	10	10.32571	(Basic Analysis)	E
8853	1	15.861539	CD ROAD I-20 EB (Basic Analysis)	E
8853	2	16.700016	CD ROAD I-20 EB (Basic Analysis)	E
8853	3	16.544118	CD ROAD I-20 EB (Basic Analysis)	E
8853	4	15.04413	CD ROAD I-20 EB (Basic Analysis)	E
8853	5	16.156481	CD ROAD I-20 EB (Basic Analysis)	E
8853	6	16.417715	CD ROAD I-20 EB (Basic Analysis)	E
8853	7	16.72319	CD ROAD I-20 EB (Basic Analysis)	E
8853	8	16.504091	CD ROAD I-20 EB (Basic Analysis)	E
8853	9	17.502679	CD ROAD I-20 EB (Basic Analysis)	E
8853	10	17.702818	CD ROAD I-20 EB (Basic Analysis)	E
8855	1	24.131767	D ROAD I-20 WB TO I-20 (Basic Analysi	NW
8855	2	24.51982	D ROAD I-20 WB TO I-20 (Basic Analysi	NW
8855	3	23.758205	D ROAD I-20 WB TO I-20 (Basic Analysi	NW
8855	4	23.943376	D ROAD I-20 WB TO I-20 (Basic Analysi	NW
8855	5	23.579475	D ROAD I-20 WB TO I-20 (Basic Analysi	NW
8855	6	23.386254	D ROAD I-20 WB TO I-20 (Basic Analysi	NW

ID	Run	Density	Name (Type)	Direction
8855	7	23.843545	D ROAD I-20 WB TO I-20 (Basic Analysi	NW
8855	8	22.584384	D ROAD I-20 WB TO I-20 (Basic Analysi	NW
8855	9	24.212276	D ROAD I-20 WB TO I-20 (Basic Analysi	NW
8855	10	22.983709	D ROAD I-20 WB TO I-20 (Basic Analysi	NW
8863	1	15.677599	(Basic Analysis)	SE
8863	2	16.665426	(Basic Analysis)	SE
8863	3	15.847342	(Basic Analysis)	SE
8863	4	16.313178	(Basic Analysis)	SE
8863	5	16.707543	(Basic Analysis)	SE
8863	6	16.712648	(Basic Analysis)	SE
8863	7	15.907327	(Basic Analysis)	SE
8863	8	16.970453	(Basic Analysis)	SE
8863	9	17.178483	(Basic Analysis)	SE
8863	10	17.12488	(Basic Analysis)	SE
8869	1	16.134232	(Weaving Analysis)	SE
8869	2	13.934983	(Weaving Analysis)	SE
8869	3	16.136633	(Weaving Analysis)	SE
8869	4	14.628851	(Weaving Analysis)	SE
8869	5	16.391132	(Weaving Analysis)	SE
8869	6	13.987803	(Weaving Analysis)	SE
8869	7	15.296309	(Weaving Analysis)	SE
8869	8	14.518408	(Weaving Analysis)	SE
8869	9	14.542417	(Weaving Analysis)	SE
8869	10	13.620461	(Weaving Analysis)	SE
8871	1	25.793496	(Basic Analysis)	W
8871	2	26.812347	(Basic Analysis)	W
8871	3	28.092048	(Basic Analysis)	W
8871	4	28.085911	(Basic Analysis)	W
8871	5	27.736064	(Basic Analysis)	W
8871	6	27.779028	(Basic Analysis)	W
8871	7	26.701869	(Basic Analysis)	W
8871	8	26.008314	(Basic Analysis)	W
8871	9	26.760177	(Basic Analysis)	W
8871	10	24.320459	(Basic Analysis)	W
8877	1	7.549939	I-20 WB (Diverge Analysis)	W
8877	2	7.406479	I-20 WB (Diverge Analysis)	W
8877	3	7.554757	I-20 WB (Diverge Analysis)	W
8877	4	7.534658	I-20 WB (Diverge Analysis)	W
8877	5	7.551866	I-20 WB (Diverge Analysis)	W
8877	6	8.262052	I-20 WB (Diverge Analysis)	W
8877	7	8.159816	I-20 WB (Diverge Analysis)	W
8877	8	8.340349	I-20 WB (Diverge Analysis)	W
8877	9	7.982603	I-20 WB (Diverge Analysis)	W
8877	10	8.020339	I-20 WB (Diverge Analysis)	W
8878	1	11.815463	I-20 WB (Basic Analysis)	W
8878	2	11.92464	I-20 WB (Basic Analysis)	W
8878	3	12.139344	I-20 WB (Basic Analysis)	W
8878	4	11.899137	I-20 WB (Basic Analysis)	W
8878	5	12.336188	I-20 WB (Basic Analysis)	W
8878	6	13.119491	I-20 WB (Basic Analysis)	W
8878	7	13.169798	I-20 WB (Basic Analysis)	W
8878	8	12.482566	I-20 WB (Basic Analysis)	W
8878	9	13.440172	I-20 WB (Basic Analysis)	W

ID	Run	Density	Name (Type)	Direction
8878	10	12.066291	I-20 WB (Basic Analysis)	W
8883	1	54.945739	I-26 WB (Basic Analysis)	NW
8883	2	56.785716	I-26 WB (Basic Analysis)	NW
8883	3	55.430251	I-26 WB (Basic Analysis)	NW
8883	4	52.484744	I-26 WB (Basic Analysis)	NW
8883	5	54.509985	I-26 WB (Basic Analysis)	NW
8883	6	56.457981	I-26 WB (Basic Analysis)	NW
8883	7	56.50674	I-26 WB (Basic Analysis)	NW
8883	8	56.577081	I-26 WB (Basic Analysis)	NW
8883	9	58.612672	I-26 WB (Basic Analysis)	NW
8883	10	50.353349	I-26 WB (Basic Analysis)	NW
8886	1	45.422006	I-26 WB (Basic Analysis)	NW
8886	2	46.236181	I-26 WB (Basic Analysis)	NW
8886	3	45.366349	I-26 WB (Basic Analysis)	NW
8886	4	53.399701	I-26 WB (Basic Analysis)	NW
8886	5	46.89025	I-26 WB (Basic Analysis)	NW
8886	6	49.427061	I-26 WB (Basic Analysis)	NW
8886	7	45.989272	I-26 WB (Basic Analysis)	NW
8886	8	44.138725	I-26 WB (Basic Analysis)	NW
8886	9	46.319976	I-26 WB (Basic Analysis)	NW
8886	10	44.510196	I-26 WB (Basic Analysis)	NW
8887	1	43.013162	I-26 WB (Merge Analysis)	NW
8887	2	41.67118	I-26 WB (Merge Analysis)	NW
8887	3	42.121451	I-26 WB (Merge Analysis)	NW
8887	4	44.934315	I-26 WB (Merge Analysis)	NW
8887	5	44.454027	I-26 WB (Merge Analysis)	NW
8887	6	44.461973	I-26 WB (Merge Analysis)	NW
8887	7	40.924262	I-26 WB (Merge Analysis)	NW
8887	8	40.318604	I-26 WB (Merge Analysis)	NW
8887	9	41.194424	I-26 WB (Merge Analysis)	NW
8887	10	41.238568	I-26 WB (Merge Analysis)	NW
8910	1	25.659435	I-26 EB (Basic Analysis)	SE
8910	2	26.191129	I-26 EB (Basic Analysis)	SE
8910	3	25.824887	I-26 EB (Basic Analysis)	SE
8910	4	27.310737	I-26 EB (Basic Analysis)	SE
8910	5	25.460251	I-26 EB (Basic Analysis)	SE
8910	6	27.787816	I-26 EB (Basic Analysis)	SE
8910	7	28.338785	I-26 EB (Basic Analysis)	SE
8910	8	26.57504	I-26 EB (Basic Analysis)	SE
8910	9	28.973283	I-26 EB (Basic Analysis)	SE
8910	10	26.941282	I-26 EB (Basic Analysis)	SE
8915	1	19.794462	I-26 EB (Basic Analysis)	SE
8915	2	20.73978	I-26 EB (Basic Analysis)	SE
8915	3	19.880775	I-26 EB (Basic Analysis)	SE
8915	4	20.397924	I-26 EB (Basic Analysis)	SE
8915	5	19.663054	I-26 EB (Basic Analysis)	SE
8915	6	20.76548	I-26 EB (Basic Analysis)	SE
8915	7	20.262878	I-26 EB (Basic Analysis)	SE
8915	8	19.787189	I-26 EB (Basic Analysis)	SE
8915	9	20.481085	I-26 EB (Basic Analysis)	SE
8915	10	19.922719	I-26 EB (Basic Analysis)	SE
8940	1	22.540124	I-26 EB (Basic Analysis)	SE
8940	2	26.078577	I-26 EB (Basic Analysis)	SE

ID	Run	Density	Name (Type)	Direction
8940	3	25.060857	I-26 EB (Basic Analysis)	SE
8940	4	27.198749	I-26 EB (Basic Analysis)	SE
8940	5	27.256707	I-26 EB (Basic Analysis)	SE
8940	6	27.17824	I-26 EB (Basic Analysis)	SE
8940	7	27.298403	I-26 EB (Basic Analysis)	SE
8940	8	25.608152	I-26 EB (Basic Analysis)	SE
8940	9	24.700691	I-26 EB (Basic Analysis)	SE
8940	10	26.515961	I-26 EB (Basic Analysis)	SE
8955	1	24.115745	I-20 EB (Basic Analysis)	NE
8955	2	25.370498	I-20 EB (Basic Analysis)	NE
8955	3	22.087551	I-20 EB (Basic Analysis)	NE
8955	4	21.291854	I-20 EB (Basic Analysis)	NE
8955	5	22.70519	I-20 EB (Basic Analysis)	NE
8955	6	22.755269	I-20 EB (Basic Analysis)	NE
8955	7	23.717896	I-20 EB (Basic Analysis)	NE
8955	8	23.100257	I-20 EB (Basic Analysis)	NE
8955	9	22.624508	I-20 EB (Basic Analysis)	NE
8955	10	23.467502	I-20 EB (Basic Analysis)	NE
8959	1	136.908782	I-20 WB (Basic Analysis)	SW
8959	2	124.67181	I-20 WB (Basic Analysis)	SW
8959	3	124.295178	I-20 WB (Basic Analysis)	SW
8959	4	136.466461	I-20 WB (Basic Analysis)	SW
8959	5	121.712499	I-20 WB (Basic Analysis)	SW
8959	6	115.498301	I-20 WB (Basic Analysis)	SW
8959	7	138.449867	I-20 WB (Basic Analysis)	SW
8959	8	130.719956	I-20 WB (Basic Analysis)	SW
8959	9	125.037842	I-20 WB (Basic Analysis)	SW
8959	10	120.481115	I-20 WB (Basic Analysis)	SW
8975	1	18.054896	I-26 EB (Weaving Analysis)	SE
8975	2	20.250684	I-26 EB (Weaving Analysis)	SE
8975	3	19.97621	I-26 EB (Weaving Analysis)	SE
8975	4	20.358461	I-26 EB (Weaving Analysis)	SE
8975	5	20.229128	I-26 EB (Weaving Analysis)	SE
8975	6	19.980521	I-26 EB (Weaving Analysis)	SE
8975	7	20.059558	I-26 EB (Weaving Analysis)	SE
8975	8	17.914066	I-26 EB (Weaving Analysis)	SE
8975	9	19.602581	I-26 EB (Weaving Analysis)	SE
8975	10	20.779512	I-26 EB (Weaving Analysis)	SE
8986	1	22.884079	I-26 EB (Basic Analysis)	SE
8986	2	24.747163	I-26 EB (Basic Analysis)	SE
8986	3	23.835441	I-26 EB (Basic Analysis)	SE
8986	4	24.500514	I-26 EB (Basic Analysis)	SE
8986	5	22.959689	I-26 EB (Basic Analysis)	SE
8986	6	24.143753	I-26 EB (Basic Analysis)	SE
8986	7	23.818557	I-26 EB (Basic Analysis)	SE
8986	8	23.599803	I-26 EB (Basic Analysis)	SE
8986	9	24.270748	I-26 EB (Basic Analysis)	SE
8986	10	24.070346	I-26 EB (Basic Analysis)	SE
8994	1	13.800149	I-126 SB (Basic Analysis)	SE
8994	2	14.267084	I-126 SB (Basic Analysis)	SE
8994	3	15.527167	I-126 SB (Basic Analysis)	SE
8994	4	14.877936	I-126 SB (Basic Analysis)	SE
8994	5	15.191358	I-126 SB (Basic Analysis)	SE

ID	Run	Density	Name (Type)	Direction
8994	6	14.593298	I-126 SB (Basic Analysis)	SE
8994	7	14.51974	I-126 SB (Basic Analysis)	SE
8994	8	15.952525	I-126 SB (Basic Analysis)	SE
8994	9	14.989873	I-126 SB (Basic Analysis)	SE
8994	10	15.191358	I-126 SB (Basic Analysis)	SE
8996	1	18.630352	D ROAD I-20 WB TO I-20 (Basic Analysi	NE
8996	2	18.079844	D ROAD I-20 WB TO I-20 (Basic Analysi	NE
8996	3	19.028746	D ROAD I-20 WB TO I-20 (Basic Analysi	NE
8996	4	18.731761	D ROAD I-20 WB TO I-20 (Basic Analysi	NE
8996	5	17.398952	D ROAD I-20 WB TO I-20 (Basic Analysi	NE
8996	6	17.427926	D ROAD I-20 WB TO I-20 (Basic Analysi	NE
8996	7	19.44887	D ROAD I-20 WB TO I-20 (Basic Analysi	NE
8996	8	18.347854	D ROAD I-20 WB TO I-20 (Basic Analysi	NE
8996	9	18.036383	D ROAD I-20 WB TO I-20 (Basic Analysi	NE
8996	10	16.073387	D ROAD I-20 WB TO I-20 (Basic Analysi	NE
9001	1	18.02202	I-126 NB (Merge Analysis)	NW
9001	2	16.156583	I-126 NB (Merge Analysis)	NW
9001	3	14.888718	I-126 NB (Merge Analysis)	NW
9001	4	16.450626	I-126 NB (Merge Analysis)	NW
9001	5	15.328202	I-126 NB (Merge Analysis)	NW
9001	6	16.333641	I-126 NB (Merge Analysis)	NW
9001	7	16.586582	I-126 NB (Merge Analysis)	NW
9001	8	15.928936	I-126 NB (Merge Analysis)	NW
9001	9	16.374744	I-126 NB (Merge Analysis)	NW
9001	10	15.909965	I-126 NB (Merge Analysis)	NW
9005	1	26.533383	I-126 NB (Basic Analysis)	NW
9005	2	24.890449	I-126 NB (Basic Analysis)	NW
9005	3	24.541325	I-126 NB (Basic Analysis)	NW
9005	4	23.514491	I-126 NB (Basic Analysis)	NW
9005	5	24.644008	I-126 NB (Basic Analysis)	NW
9005	6	24.602935	I-126 NB (Basic Analysis)	NW
9005	7	23.175636	I-126 NB (Basic Analysis)	NW
9005	8	25.691379	I-126 NB (Basic Analysis)	NW
9005	9	24.674814	I-126 NB (Basic Analysis)	NW
9005	10	24.835684	I-126 NB (Basic Analysis)	NW
9012	1	13.375158	I-126 SB (Merge Analysis)	E
9012	2	14.268762	I-126 SB (Merge Analysis)	E
9012	3	13.687475	I-126 SB (Merge Analysis)	E
9012	4	14.653322	I-126 SB (Merge Analysis)	E
9012	5	14.040915	I-126 SB (Merge Analysis)	E
9012	6	22.315641	I-126 SB (Merge Analysis)	E
9012	7	15.211269	I-126 SB (Merge Analysis)	E
9012	8	18.704548	I-126 SB (Merge Analysis)	E
9012	9	13.866418	I-126 SB (Merge Analysis)	E
9012	10	19.057988	I-126 SB (Merge Analysis)	E
9017	1	15.516153	I-126 SB (Basic Analysis)	E
9017	2	16.891372	I-126 SB (Basic Analysis)	E
9017	3	16.667771	I-126 SB (Basic Analysis)	E
9017	4	17.323959	I-126 SB (Basic Analysis)	E
9017	5	17.752162	I-126 SB (Basic Analysis)	E
9017	6	17.198275	I-126 SB (Basic Analysis)	E
9017	7	16.390096	I-126 SB (Basic Analysis)	E
9017	8	18.067834	I-126 SB (Basic Analysis)	E

ID	Run	Density	Name (Type)	Direction
9017	9	16.429555	I-126 SB (Basic Analysis)	E
9017	10	17.167585	I-126 SB (Basic Analysis)	E
9018	1	15.516153	I-126 SB (Basic Analysis)	E
9018	2	16.891372	I-126 SB (Basic Analysis)	E
9018	3	16.667771	I-126 SB (Basic Analysis)	E
9018	4	17.323959	I-126 SB (Basic Analysis)	E
9018	5	17.752162	I-126 SB (Basic Analysis)	E
9018	6	17.198275	I-126 SB (Basic Analysis)	E
9018	7	16.390096	I-126 SB (Basic Analysis)	E
9018	8	18.067834	I-126 SB (Basic Analysis)	E
9018	9	16.429555	I-126 SB (Basic Analysis)	E
9018	10	17.167585	I-126 SB (Basic Analysis)	E
9019	1	23.68797	I-126 NB (Diverge Analysis)	NW
9019	2	23.850087	I-126 NB (Diverge Analysis)	NW
9019	3	23.277022	I-126 NB (Diverge Analysis)	NW
9019	4	23.224239	I-126 NB (Diverge Analysis)	NW
9019	5	23.498205	I-126 NB (Diverge Analysis)	NW
9019	6	23.505745	I-126 NB (Diverge Analysis)	NW
9019	7	22.819575	I-126 NB (Diverge Analysis)	NW
9019	8	23.798562	I-126 NB (Diverge Analysis)	NW
9019	9	24.190659	I-126 NB (Diverge Analysis)	NW
9019	10	23.111134	I-126 NB (Diverge Analysis)	NW
9022	1	13.14855	107 (Basic Analysis)	NW
9022	2	13.434593	107 (Basic Analysis)	NW
9022	3	14.210996	107 (Basic Analysis)	NW
9022	4	13.623193	107 (Basic Analysis)	NW
9022	5	13.076254	107 (Basic Analysis)	NW
9022	6	13.18627	107 (Basic Analysis)	NW
9022	7	13.62005	107 (Basic Analysis)	NW
9022	8	13.774073	107 (Basic Analysis)	NW
9022	9	13.928096	107 (Basic Analysis)	NW
9022	10	12.994527	107 (Basic Analysis)	NW
9023	1	30.341265	I-126 NB (Basic Analysis)	NW
9023	2	31.679576	I-126 NB (Basic Analysis)	NW
9023	3	29.671263	I-126 NB (Basic Analysis)	NW
9023	4	29.415782	I-126 NB (Basic Analysis)	NW
9023	5	29.568055	I-126 NB (Basic Analysis)	NW
9023	6	31.253211	I-126 NB (Basic Analysis)	NW
9023	7	29.552828	I-126 NB (Basic Analysis)	NW
9023	8	29.170454	I-126 NB (Basic Analysis)	NW
9023	9	30.679649	I-126 NB (Basic Analysis)	NW
9023	10	29.539293	I-126 NB (Basic Analysis)	NW
9025	1	29.229468	ROAD I-26 WB TO I-20 (Diverge Analys	NE
9025	2	30.199528	ROAD I-26 WB TO I-20 (Diverge Analys	NE
9025	3	31.095559	ROAD I-26 WB TO I-20 (Diverge Analys	NE
9025	4	30.955155	ROAD I-26 WB TO I-20 (Diverge Analys	NE
9025	5	32.407694	ROAD I-26 WB TO I-20 (Diverge Analys	NE
9025	6	29.785976	ROAD I-26 WB TO I-20 (Diverge Analys	NE
9025	7	30.536497	ROAD I-26 WB TO I-20 (Diverge Analys	NE
9025	8	28.621903	ROAD I-26 WB TO I-20 (Diverge Analys	NE
9025	9	30.396093	ROAD I-26 WB TO I-20 (Diverge Analys	NE
9025	10	30.413963	ROAD I-26 WB TO I-20 (Diverge Analys	NE
9033	1	45.422006	I-26 WB (Basic Analysis)	NW

ID	Run	Density	Name (Type)	Direction
9033	2	46.236181	I-26 WB (Basic Analysis)	NW
9033	3	45.366349	I-26 WB (Basic Analysis)	NW
9033	4	53.399701	I-26 WB (Basic Analysis)	NW
9033	5	46.89025	I-26 WB (Basic Analysis)	NW
9033	6	49.427061	I-26 WB (Basic Analysis)	NW
9033	7	45.989272	I-26 WB (Basic Analysis)	NW
9033	8	44.138725	I-26 WB (Basic Analysis)	NW
9033	9	46.319976	I-26 WB (Basic Analysis)	NW
9033	10	44.510196	I-26 WB (Basic Analysis)	NW
9039	1	38.145301	I-20 EB (Basic Analysis)	NE
9039	2	38.21376	I-20 EB (Basic Analysis)	NE
9039	3	35.69342	I-20 EB (Basic Analysis)	NE
9039	4	36.059237	I-20 EB (Basic Analysis)	NE
9039	5	37.390883	I-20 EB (Basic Analysis)	NE
9039	6	37.275152	I-20 EB (Basic Analysis)	NE
9039	7	37.98798	I-20 EB (Basic Analysis)	NE
9039	8	36.345593	I-20 EB (Basic Analysis)	NE
9039	9	37.245972	I-20 EB (Basic Analysis)	NE
9039	10	36.431462	I-20 EB (Basic Analysis)	NE
9040	1	39.097776	I-20 WB (Basic Analysis)	SW
9040	2	39.726475	I-20 WB (Basic Analysis)	SW
9040	3	37.389193	I-20 WB (Basic Analysis)	SW
9040	4	38.513346	I-20 WB (Basic Analysis)	SW
9040	5	38.779105	I-20 WB (Basic Analysis)	SW
9040	6	40.170337	I-20 WB (Basic Analysis)	SW
9040	7	38.46213	I-20 WB (Basic Analysis)	SW
9040	8	38.991124	I-20 WB (Basic Analysis)	SW
9040	9	38.022282	I-20 WB (Basic Analysis)	SW
9040	10	37.818311	I-20 WB (Basic Analysis)	SW
9042	1	10.815693	I-20 WB (Basic Analysis)	W
9042	2	11.120971	I-20 WB (Basic Analysis)	W
9042	3	10.124107	I-20 WB (Basic Analysis)	W
9042	4	11.236863	I-20 WB (Basic Analysis)	W
9042	5	10.957968	I-20 WB (Basic Analysis)	W
9042	6	10.223982	I-20 WB (Basic Analysis)	W
9042	7	11.187868	I-20 WB (Basic Analysis)	W
9042	8	11.56287	I-20 WB (Basic Analysis)	W
9042	9	10.632903	I-20 WB (Basic Analysis)	W
9042	10	11.177504	I-20 WB (Basic Analysis)	W
9043	1	30.256834	CD ROAD I-20 WB (Basic Analysis)	W
9043	2	29.888423	CD ROAD I-20 WB (Basic Analysis)	W
9043	3	31.416852	CD ROAD I-20 WB (Basic Analysis)	W
9043	4	30.899189	CD ROAD I-20 WB (Basic Analysis)	W
9043	5	30.253055	CD ROAD I-20 WB (Basic Analysis)	W
9043	6	31.760701	CD ROAD I-20 WB (Basic Analysis)	W
9043	7	29.856306	CD ROAD I-20 WB (Basic Analysis)	W
9043	8	28.594266	CD ROAD I-20 WB (Basic Analysis)	W
9043	9	30.725375	CD ROAD I-20 WB (Basic Analysis)	W
9043	10	29.053361	CD ROAD I-20 WB (Basic Analysis)	W
9045	1	25.351162	CD ROAD I-20 EB (Weaving Analysis)	E
9045	2	25.183069	CD ROAD I-20 EB (Weaving Analysis)	E
9045	3	23.693715	CD ROAD I-20 EB (Weaving Analysis)	E
9045	4	23.325393	CD ROAD I-20 EB (Weaving Analysis)	E

ID	Run	Density	Name (Type)	Direction
9045	5	23.582476	CD ROAD I-20 EB (Weaving Analysis)	E
9045	6	24.059564	CD ROAD I-20 EB (Weaving Analysis)	E
9045	7	24.036081	CD ROAD I-20 EB (Weaving Analysis)	E
9045	8	23.411911	CD ROAD I-20 EB (Weaving Analysis)	E
9045	9	24.307996	CD ROAD I-20 EB (Weaving Analysis)	E
9045	10	23.872931	CD ROAD I-20 EB (Weaving Analysis)	E
9052	1	15.209379	CD ROAD I-20 EB (Basic Analysis)	NE
9052	2	14.545262	CD ROAD I-20 EB (Basic Analysis)	NE
9052	3	14.220666	CD ROAD I-20 EB (Basic Analysis)	NE
9052	4	14.437064	CD ROAD I-20 EB (Basic Analysis)	NE
9052	5	13.754293	CD ROAD I-20 EB (Basic Analysis)	NE
9052	6	14.642268	CD ROAD I-20 EB (Basic Analysis)	NE
9052	7	14.507953	CD ROAD I-20 EB (Basic Analysis)	NE
9052	8	13.55655	CD ROAD I-20 EB (Basic Analysis)	NE
9052	9	13.27113	CD ROAD I-20 EB (Basic Analysis)	NE
9052	10	13.509913	CD ROAD I-20 EB (Basic Analysis)	NE
9054	1	11.858925	I-20 WB (Basic Analysis)	SW
9054	2	12.36452	I-20 WB (Basic Analysis)	SW
9054	3	11.453671	I-20 WB (Basic Analysis)	SW
9054	4	11.336996	I-20 WB (Basic Analysis)	SW
9054	5	11.933598	I-20 WB (Basic Analysis)	SW
9054	6	11.724359	I-20 WB (Basic Analysis)	SW
9054	7	12.166172	I-20 WB (Basic Analysis)	SW
9054	8	12.152948	I-20 WB (Basic Analysis)	SW
9054	9	12.159171	I-20 WB (Basic Analysis)	SW
9054	10	12.101611	I-20 WB (Basic Analysis)	SW
9055	1	11.858925	I-20 WB (Basic Analysis)	SW
9055	2	12.36452	I-20 WB (Basic Analysis)	SW
9055	3	11.453671	I-20 WB (Basic Analysis)	SW
9055	4	11.336996	I-20 WB (Basic Analysis)	SW
9055	5	11.933598	I-20 WB (Basic Analysis)	SW
9055	6	11.724359	I-20 WB (Basic Analysis)	SW
9055	7	12.166172	I-20 WB (Basic Analysis)	SW
9055	8	12.152948	I-20 WB (Basic Analysis)	SW
9055	9	12.159171	I-20 WB (Basic Analysis)	SW
9055	10	12.101611	I-20 WB (Basic Analysis)	SW
9059	1	111.860026	I-20 WB (Merge Analysis)	SW
9059	2	97.411191	I-20 WB (Merge Analysis)	SW
9059	3	93.526113	I-20 WB (Merge Analysis)	SW
9059	4	91.490572	I-20 WB (Merge Analysis)	SW
9059	5	64.526666	I-20 WB (Merge Analysis)	SW
9059	6	81.474304	I-20 WB (Merge Analysis)	SW
9059	7	107.301115	I-20 WB (Merge Analysis)	SW
9059	8	105.114662	I-20 WB (Merge Analysis)	SW
9059	9	95.273872	I-20 WB (Merge Analysis)	SW
9059	10	72.233648	I-20 WB (Merge Analysis)	SW
9061	1	16.754672	I-20 EB (Basic Analysis)	NE
9061	2	16.145784	I-20 EB (Basic Analysis)	NE
9061	3	16.558727	I-20 EB (Basic Analysis)	NE
9061	4	16.101429	I-20 EB (Basic Analysis)	NE
9061	5	15.866464	I-20 EB (Basic Analysis)	NE
9061	6	16.499214	I-20 EB (Basic Analysis)	NE
9061	7	16.573606	I-20 EB (Basic Analysis)	NE

ID	Run	Density	Name (Type)	Direction
9061	8	16.484336	I-20 EB (Basic Analysis)	NE
9061	9	16.097499	I-20 EB (Basic Analysis)	NE
9061	10	16.002615	I-20 EB (Basic Analysis)	NE
9063	1	38.469174	I-26 WB (Basic Analysis)	NW
9063	2	38.827614	I-26 WB (Basic Analysis)	NW
9063	3	38.754598	I-26 WB (Basic Analysis)	NW
9063	4	39.916207	I-26 WB (Basic Analysis)	NW
9063	5	38.42271	I-26 WB (Basic Analysis)	NW
9063	6	38.70924	I-26 WB (Basic Analysis)	NW
9063	7	38.889566	I-26 WB (Basic Analysis)	NW
9063	8	37.583033	I-26 WB (Basic Analysis)	NW
9063	9	38.26451	I-26 WB (Basic Analysis)	NW
9063	10	39.02564	I-26 WB (Basic Analysis)	NW
9064	1	56.240783	I-26 WB (Diverge Analysis)	NW
9064	2	39.291988	I-26 WB (Diverge Analysis)	NW
9064	3	41.946654	I-26 WB (Diverge Analysis)	NW
9064	4	64.037581	I-26 WB (Diverge Analysis)	NW
9064	5	56.69545	I-26 WB (Diverge Analysis)	NW
9064	6	57.877583	I-26 WB (Diverge Analysis)	NW
9064	7	37.974922	I-26 WB (Diverge Analysis)	NW
9064	8	37.881055	I-26 WB (Diverge Analysis)	NW
9064	9	37.895722	I-26 WB (Diverge Analysis)	NW
9064	10	38.579188	I-26 WB (Diverge Analysis)	NW
9067	1	21.902689	I-26 EB (Merge Analysis)	SW
9067	2	22.156284	I-26 EB (Merge Analysis)	SW
9067	3	23.668861	I-26 EB (Merge Analysis)	SW
9067	4	21.41888	I-26 EB (Merge Analysis)	SW
9067	5	22.003407	I-26 EB (Merge Analysis)	SW
9067	6	23.712026	I-26 EB (Merge Analysis)	SW
9067	7	22.658078	I-26 EB (Merge Analysis)	SW
9067	8	22.713833	I-26 EB (Merge Analysis)	SW
9067	9	23.165268	I-26 EB (Merge Analysis)	SW
9067	10	22.938651	I-26 EB (Merge Analysis)	SW
9089	1	16.645685	I-26 EB (Diverge Analysis)	SE
9089	2	17.337952	I-26 EB (Diverge Analysis)	SE
9089	3	17.134574	I-26 EB (Diverge Analysis)	SE
9089	4	17.203018	I-26 EB (Diverge Analysis)	SE
9089	5	17.165863	I-26 EB (Diverge Analysis)	SE
9089	6	18.579729	I-26 EB (Diverge Analysis)	SE
9089	7	17.66844	I-26 EB (Diverge Analysis)	SE
9089	8	17.969596	I-26 EB (Diverge Analysis)	SE
9089	9	17.558929	I-26 EB (Diverge Analysis)	SE
9089	10	17.212796	I-26 EB (Diverge Analysis)	SE
9110	1	21.902689	I-26 EB (Merge Analysis)	SW
9110	2	22.156284	I-26 EB (Merge Analysis)	SW
9110	3	23.668861	I-26 EB (Merge Analysis)	SW
9110	4	21.41888	I-26 EB (Merge Analysis)	SW
9110	5	22.003407	I-26 EB (Merge Analysis)	SW
9110	6	23.712026	I-26 EB (Merge Analysis)	SW
9110	7	22.658078	I-26 EB (Merge Analysis)	SW
9110	8	22.713833	I-26 EB (Merge Analysis)	SW
9110	9	23.165268	I-26 EB (Merge Analysis)	SW
9110	10	22.938651	I-26 EB (Merge Analysis)	SW

ID	Run	Density	Name (Type)	Direction
9111	1	21.639867	(Merge Analysis)	SE
9111	2	20.761098	(Merge Analysis)	SE
9111	3	21.683063	(Merge Analysis)	SE
9111	4	21.476532	(Merge Analysis)	SE
9111	5	21.06752	(Merge Analysis)	SE
9111	6	22.024582	(Merge Analysis)	SE
9111	7	22.233813	(Merge Analysis)	SE
9111	8	21.863947	(Merge Analysis)	SE
9111	9	22.479491	(Merge Analysis)	SE
9111	10	21.195758	(Merge Analysis)	SE
9112	1	14.101103	I-26 EB (Basic Analysis)	S
9112	2	15.384589	I-26 EB (Basic Analysis)	S
9112	3	15.429418	I-26 EB (Basic Analysis)	S
9112	4	14.744058	I-26 EB (Basic Analysis)	S
9112	5	15.146497	I-26 EB (Basic Analysis)	S
9112	6	15.374947	I-26 EB (Basic Analysis)	S
9112	7	15.441644	I-26 EB (Basic Analysis)	S
9112	8	15.053203	I-26 EB (Basic Analysis)	S
9112	9	15.539747	I-26 EB (Basic Analysis)	S
9112	10	14.821482	I-26 EB (Basic Analysis)	S
9113	1	18.02202	I-126 NB (Merge+Diverge Analysis)	NW
9113	2	16.156583	I-126 NB (Merge+Diverge Analysis)	NW
9113	3	14.888718	I-126 NB (Merge+Diverge Analysis)	NW
9113	4	16.450626	I-126 NB (Merge+Diverge Analysis)	NW
9113	5	15.328202	I-126 NB (Merge+Diverge Analysis)	NW
9113	6	16.333641	I-126 NB (Merge+Diverge Analysis)	NW
9113	7	16.586582	I-126 NB (Merge+Diverge Analysis)	NW
9113	8	15.928936	I-126 NB (Merge+Diverge Analysis)	NW
9113	9	16.374744	I-126 NB (Merge+Diverge Analysis)	NW
9113	10	15.909965	I-126 NB (Merge+Diverge Analysis)	NW
9114	1	23.68797	I-126 NB (Diverge Analysis)	NW
9114	2	23.850087	I-126 NB (Diverge Analysis)	NW
9114	3	23.277022	I-126 NB (Diverge Analysis)	NW
9114	4	23.224239	I-126 NB (Diverge Analysis)	NW
9114	5	23.498205	I-126 NB (Diverge Analysis)	NW
9114	6	23.505745	I-126 NB (Diverge Analysis)	NW
9114	7	22.819575	I-126 NB (Diverge Analysis)	NW
9114	8	23.798562	I-126 NB (Diverge Analysis)	NW
9114	9	24.190659	I-126 NB (Diverge Analysis)	NW
9114	10	23.111134	I-126 NB (Diverge Analysis)	NW
9115	1	21.902689	I-26 EB (Merge Analysis)	SW
9115	2	22.156284	I-26 EB (Merge Analysis)	SW
9115	3	23.668861	I-26 EB (Merge Analysis)	SW
9115	4	21.41888	I-26 EB (Merge Analysis)	SW
9115	5	22.003407	I-26 EB (Merge Analysis)	SW
9115	6	23.712026	I-26 EB (Merge Analysis)	SW
9115	7	22.658078	I-26 EB (Merge Analysis)	SW
9115	8	22.713833	I-26 EB (Merge Analysis)	SW
9115	9	23.165268	I-26 EB (Merge Analysis)	SW
9115	10	22.938651	I-26 EB (Merge Analysis)	SW
9118	1	15.001137	I-26 EB (Diverge Analysis)	SE
9118	2	15.512903	I-26 EB (Diverge Analysis)	SE
9118	3	15.687369	I-26 EB (Diverge Analysis)	SE

ID	Run	Density	Name (Type)	Direction
9118	4	16.335799	I-26 EB (Diverge Analysis)	SE
9118	5	17.685	I-26 EB (Diverge Analysis)	SE
9118	6	15.091278	I-26 EB (Diverge Analysis)	SE
9118	7	16.01013	I-26 EB (Diverge Analysis)	SE
9118	8	14.532988	I-26 EB (Diverge Analysis)	SE
9118	9	16.891182	I-26 EB (Diverge Analysis)	SE
9118	10	15.521626	I-26 EB (Diverge Analysis)	SE
9119	1	12.65462	I-26 EB (Diverge Analysis)	SE
9119	2	14.266116	I-26 EB (Diverge Analysis)	SE
9119	3	12.648373	I-26 EB (Diverge Analysis)	SE
9119	4	12.4714	I-26 EB (Diverge Analysis)	SE
9119	5	13.000238	I-26 EB (Diverge Analysis)	SE
9119	6	13.853873	I-26 EB (Diverge Analysis)	SE
9119	7	13.325035	I-26 EB (Diverge Analysis)	SE
9119	8	13.699802	I-26 EB (Diverge Analysis)	SE
9119	9	13.868447	I-26 EB (Diverge Analysis)	SE
9119	10	11.413726	I-26 EB (Diverge Analysis)	SE
9120	1	16.542313	I-26 EB (Diverge Analysis)	SE
9120	2	18.738499	I-26 EB (Diverge Analysis)	SE
9120	3	16.674999	I-26 EB (Diverge Analysis)	SE
9120	4	16.681862	I-26 EB (Diverge Analysis)	SE
9120	5	18.260371	I-26 EB (Diverge Analysis)	SE
9120	6	17.013578	I-26 EB (Diverge Analysis)	SE
9120	7	18.045328	I-26 EB (Diverge Analysis)	SE
9120	8	17.754791	I-26 EB (Diverge Analysis)	SE
9120	9	17.789106	I-26 EB (Diverge Analysis)	SE
9120	10	15.757634	I-26 EB (Diverge Analysis)	SE
9121	1	22.540124	I-26 EB (Basic Analysis)	SE
9121	2	26.078577	I-26 EB (Basic Analysis)	SE
9121	3	25.060857	I-26 EB (Basic Analysis)	SE
9121	4	27.198749	I-26 EB (Basic Analysis)	SE
9121	5	27.256707	I-26 EB (Basic Analysis)	SE
9121	6	27.17824	I-26 EB (Basic Analysis)	SE
9121	7	27.298403	I-26 EB (Basic Analysis)	SE
9121	8	25.608152	I-26 EB (Basic Analysis)	SE
9121	9	24.700691	I-26 EB (Basic Analysis)	SE
9121	10	26.515961	I-26 EB (Basic Analysis)	SE
9122	1	21.86506	I-26 EB (Diverge Analysis)	SE
9122	2	23.164526	I-26 EB (Diverge Analysis)	SE
9122	3	22.686393	I-26 EB (Diverge Analysis)	SE
9122	4	22.431193	I-26 EB (Diverge Analysis)	SE
9122	5	24.895193	I-26 EB (Diverge Analysis)	SE
9122	6	24.150126	I-26 EB (Diverge Analysis)	SE
9122	7	23.29066	I-26 EB (Diverge Analysis)	SE
9122	8	22.967993	I-26 EB (Diverge Analysis)	SE
9122	9	22.17306	I-26 EB (Diverge Analysis)	SE
9122	10	22.61306	I-26 EB (Diverge Analysis)	SE
9123	1	21.581052	I-26 EB (Weaving Analysis)	SE
9123	2	24.075518	I-26 EB (Weaving Analysis)	SE
9123	3	23.178138	I-26 EB (Weaving Analysis)	SE
9123	4	23.483279	I-26 EB (Weaving Analysis)	SE
9123	5	23.702133	I-26 EB (Weaving Analysis)	SE
9123	6	24.743062	I-26 EB (Weaving Analysis)	SE

ID	Run	Density	Name (Type)	Direction
9123	7	24.172787	I-26 EB (Weaving Analysis)	SE
9123	8	22.486277	I-26 EB (Weaving Analysis)	SE
9123	9	23.644086	I-26 EB (Weaving Analysis)	SE
9123	10	23.276191	I-26 EB (Weaving Analysis)	SE
9125	1	19.794462	I-26 EB (Basic Analysis)	SE
9125	2	20.73978	I-26 EB (Basic Analysis)	SE
9125	3	19.880775	I-26 EB (Basic Analysis)	SE
9125	4	20.397924	I-26 EB (Basic Analysis)	SE
9125	5	19.663054	I-26 EB (Basic Analysis)	SE
9125	6	20.76548	I-26 EB (Basic Analysis)	SE
9125	7	20.262878	I-26 EB (Basic Analysis)	SE
9125	8	19.787189	I-26 EB (Basic Analysis)	SE
9125	9	20.481085	I-26 EB (Basic Analysis)	SE
9125	10	19.922719	I-26 EB (Basic Analysis)	SE
9126	1	19.794462	I-26 EB (Basic Analysis)	SE
9126	2	20.73978	I-26 EB (Basic Analysis)	SE
9126	3	19.880775	I-26 EB (Basic Analysis)	SE
9126	4	20.397924	I-26 EB (Basic Analysis)	SE
9126	5	19.663054	I-26 EB (Basic Analysis)	SE
9126	6	20.76548	I-26 EB (Basic Analysis)	SE
9126	7	20.262878	I-26 EB (Basic Analysis)	SE
9126	8	19.787189	I-26 EB (Basic Analysis)	SE
9126	9	20.481085	I-26 EB (Basic Analysis)	SE
9126	10	19.922719	I-26 EB (Basic Analysis)	SE
9127	1	25.659435	I-26 EB (Basic Analysis)	SE
9127	2	26.191129	I-26 EB (Basic Analysis)	SE
9127	3	25.824887	I-26 EB (Basic Analysis)	SE
9127	4	27.310737	I-26 EB (Basic Analysis)	SE
9127	5	25.460251	I-26 EB (Basic Analysis)	SE
9127	6	27.787816	I-26 EB (Basic Analysis)	SE
9127	7	28.338785	I-26 EB (Basic Analysis)	SE
9127	8	26.57504	I-26 EB (Basic Analysis)	SE
9127	9	28.973283	I-26 EB (Basic Analysis)	SE
9127	10	26.941282	I-26 EB (Basic Analysis)	SE
9128	1	23.049299	I-26 EB (Diverge Analysis)	SW
9128	2	23.051909	I-26 EB (Diverge Analysis)	SW
9128	3	24.670226	I-26 EB (Diverge Analysis)	SW
9128	4	21.97423	I-26 EB (Diverge Analysis)	SW
9128	5	23.579775	I-26 EB (Diverge Analysis)	SW
9128	6	24.576044	I-26 EB (Diverge Analysis)	SW
9128	7	24.516218	I-26 EB (Diverge Analysis)	SW
9128	8	23.866016	I-26 EB (Diverge Analysis)	SW
9128	9	24.589504	I-26 EB (Diverge Analysis)	SW
9128	10	23.856726	I-26 EB (Diverge Analysis)	SW
9130	1	21.639867	(Merge Analysis)	SE
9130	2	20.761098	(Merge Analysis)	SE
9130	3	21.683063	(Merge Analysis)	SE
9130	4	21.476532	(Merge Analysis)	SE
9130	5	21.06752	(Merge Analysis)	SE
9130	6	22.024582	(Merge Analysis)	SE
9130	7	22.233813	(Merge Analysis)	SE
9130	8	21.863947	(Merge Analysis)	SE
9130	9	22.479491	(Merge Analysis)	SE

ID	Run	Density	Name (Type)	Direction
9130	10	21.195758	(Merge Analysis)	SE
9131	1	10.033219	(Diverge Analysis)	SE
9131	2	11.131193	(Diverge Analysis)	SE
9131	3	9.698293	(Diverge Analysis)	SE
9131	4	10.770056	(Diverge Analysis)	SE
9131	5	10.810829	(Diverge Analysis)	SE
9131	6	11.16323	(Diverge Analysis)	SE
9131	7	10.630261	(Diverge Analysis)	SE
9131	8	11.014697	(Diverge Analysis)	SE
9131	9	11.448645	(Diverge Analysis)	SE
9131	10	11.731148	(Diverge Analysis)	SE
9132	1	13.602256	I-126 SB (Diverge Analysis)	E
9132	2	14.497577	I-126 SB (Diverge Analysis)	E
9132	3	13.597901	I-126 SB (Diverge Analysis)	E
9132	4	14.993949	I-126 SB (Diverge Analysis)	E
9132	5	13.983753	I-126 SB (Diverge Analysis)	E
9132	6	23.285896	I-126 SB (Diverge Analysis)	E
9132	7	15.335563	I-126 SB (Diverge Analysis)	E
9132	8	19.344132	I-126 SB (Diverge Analysis)	E
9132	9	14.119864	I-126 SB (Diverge Analysis)	E
9132	10	19.67362	I-126 SB (Diverge Analysis)	E
9133	1	30.862155	I-126 NB (Basic Analysis)	W
9133	2	31.702993	I-126 NB (Basic Analysis)	W
9133	3	31.28852	I-126 NB (Basic Analysis)	W
9133	4	30.291405	I-126 NB (Basic Analysis)	W
9133	5	30.569136	I-126 NB (Basic Analysis)	W
9133	6	31.015884	I-126 NB (Basic Analysis)	W
9133	7	31.032871	I-126 NB (Basic Analysis)	W
9133	8	31.043063	I-126 NB (Basic Analysis)	W
9133	9	31.013336	I-126 NB (Basic Analysis)	W
9133	10	30.757687	I-126 NB (Basic Analysis)	W
9134	1	31.600791	I-126 NB (Diverge Analysis)	W
9134	2	34.08239	I-126 NB (Diverge Analysis)	W
9134	3	32.54239	I-126 NB (Diverge Analysis)	W
9134	4	32.381057	I-126 NB (Diverge Analysis)	W
9134	5	33.041057	I-126 NB (Diverge Analysis)	W
9134	6	33.98559	I-126 NB (Diverge Analysis)	W
9134	7	32.562924	I-126 NB (Diverge Analysis)	W
9134	8	31.949857	I-126 NB (Diverge Analysis)	W
9134	9	32.25199	I-126 NB (Diverge Analysis)	W
9134	10	32.187457	I-126 NB (Diverge Analysis)	W
9135	1	31.756759	I-126 NB (Basic Analysis)	NW
9135	2	30.883199	I-126 NB (Basic Analysis)	NW
9135	3	31.020357	I-126 NB (Basic Analysis)	NW
9135	4	31.332225	I-126 NB (Basic Analysis)	NW
9135	5	31.307733	I-126 NB (Basic Analysis)	NW
9135	6	30.946879	I-126 NB (Basic Analysis)	NW
9135	7	30.680729	I-126 NB (Basic Analysis)	NW
9135	8	31.678384	I-126 NB (Basic Analysis)	NW
9135	9	31.701243	I-126 NB (Basic Analysis)	NW
9135	10	30.817886	I-126 NB (Basic Analysis)	NW
9136	1	31.756759	I-126 NB (Basic Analysis)	NW
9136	2	30.883199	I-126 NB (Basic Analysis)	NW

ID	Run	Density	Name (Type)	Direction
9136	3	31.020357	I-126 NB (Basic Analysis)	NW
9136	4	31.332225	I-126 NB (Basic Analysis)	NW
9136	5	31.307733	I-126 NB (Basic Analysis)	NW
9136	6	30.946879	I-126 NB (Basic Analysis)	NW
9136	7	30.680729	I-126 NB (Basic Analysis)	NW
9136	8	31.678384	I-126 NB (Basic Analysis)	NW
9136	9	31.701243	I-126 NB (Basic Analysis)	NW
9136	10	30.817886	I-126 NB (Basic Analysis)	NW
9137	1	33.025391	I-26 WB (Diverge Analysis)	N
9137	2	32.338997	I-26 WB (Diverge Analysis)	N
9137	3	32.943824	I-26 WB (Diverge Analysis)	N
9137	4	32.800697	I-26 WB (Diverge Analysis)	N
9137	5	32.249735	I-26 WB (Diverge Analysis)	N
9137	6	32.163551	I-26 WB (Diverge Analysis)	N
9137	7	32.648336	I-26 WB (Diverge Analysis)	N
9137	8	31.935779	I-26 WB (Diverge Analysis)	N
9137	9	33.223921	I-26 WB (Diverge Analysis)	N
9137	10	32.128154	I-26 WB (Diverge Analysis)	N
9138	1	19.956095	I-26 WB (Basic Analysis)	N
9138	2	20.214651	I-26 WB (Basic Analysis)	N
9138	3	20.250431	I-26 WB (Basic Analysis)	N
9138	4	20.511687	I-26 WB (Basic Analysis)	N
9138	5	20.74054	I-26 WB (Basic Analysis)	N
9138	6	20.453293	I-26 WB (Basic Analysis)	N
9138	7	20.064446	I-26 WB (Basic Analysis)	N
9138	8	19.681674	I-26 WB (Basic Analysis)	N
9138	9	20.352706	I-26 WB (Basic Analysis)	N
9138	10	20.388485	I-26 WB (Basic Analysis)	N
9139	1	19.956095	I-26 WB (Basic Analysis)	N
9139	2	20.214651	I-26 WB (Basic Analysis)	N
9139	3	20.250431	I-26 WB (Basic Analysis)	N
9139	4	20.511687	I-26 WB (Basic Analysis)	N
9139	5	20.74054	I-26 WB (Basic Analysis)	N
9139	6	20.453293	I-26 WB (Basic Analysis)	N
9139	7	20.064446	I-26 WB (Basic Analysis)	N
9139	8	19.681674	I-26 WB (Basic Analysis)	N
9139	9	20.352706	I-26 WB (Basic Analysis)	N
9139	10	20.388485	I-26 WB (Basic Analysis)	N
9140	1	23.435954	I-26 WB (Basic Analysis)	NW
9140	2	23.461335	I-26 WB (Basic Analysis)	NW
9140	3	22.727514	I-26 WB (Basic Analysis)	NW
9140	4	23.367381	I-26 WB (Basic Analysis)	NW
9140	5	23.411018	I-26 WB (Basic Analysis)	NW
9140	6	23.644345	I-26 WB (Basic Analysis)	NW
9140	7	23.419033	I-26 WB (Basic Analysis)	NW
9140	8	23.283668	I-26 WB (Basic Analysis)	NW
9140	9	23.3892	I-26 WB (Basic Analysis)	NW
9140	10	23.297027	I-26 WB (Basic Analysis)	NW
9141	1	23.435954	I-26 WB (Basic Analysis)	NW
9141	2	23.461335	I-26 WB (Basic Analysis)	NW
9141	3	22.727514	I-26 WB (Basic Analysis)	NW
9141	4	23.367381	I-26 WB (Basic Analysis)	NW
9141	5	23.411018	I-26 WB (Basic Analysis)	NW

ID	Run	Density	Name (Type)	Direction
9141	6	23.644345	I-26 WB (Basic Analysis)	NW
9141	7	23.419033	I-26 WB (Basic Analysis)	NW
9141	8	23.283668	I-26 WB (Basic Analysis)	NW
9141	9	23.3892	I-26 WB (Basic Analysis)	NW
9141	10	23.297027	I-26 WB (Basic Analysis)	NW
9142	1	54.945739	I-26 WB (Basic Analysis)	NW
9142	2	56.785716	I-26 WB (Basic Analysis)	NW
9142	3	55.430251	I-26 WB (Basic Analysis)	NW
9142	4	52.484744	I-26 WB (Basic Analysis)	NW
9142	5	54.509985	I-26 WB (Basic Analysis)	NW
9142	6	56.457981	I-26 WB (Basic Analysis)	NW
9142	7	56.50674	I-26 WB (Basic Analysis)	NW
9142	8	56.577081	I-26 WB (Basic Analysis)	NW
9142	9	58.612672	I-26 WB (Basic Analysis)	NW
9142	10	50.353349	I-26 WB (Basic Analysis)	NW
9143	1	45.422006	I-26 WB (Basic Analysis)	NW
9143	2	46.236181	I-26 WB (Basic Analysis)	NW
9143	3	45.366349	I-26 WB (Basic Analysis)	NW
9143	4	53.399701	I-26 WB (Basic Analysis)	NW
9143	5	46.89025	I-26 WB (Basic Analysis)	NW
9143	6	49.427061	I-26 WB (Basic Analysis)	NW
9143	7	45.989272	I-26 WB (Basic Analysis)	NW
9143	8	44.138725	I-26 WB (Basic Analysis)	NW
9143	9	46.319976	I-26 WB (Basic Analysis)	NW
9143	10	44.510196	I-26 WB (Basic Analysis)	NW
9147	1	40.911476	I-26 WB (Basic Analysis)	NW
9147	2	39.298155	I-26 WB (Basic Analysis)	NW
9147	3	43.881797	I-26 WB (Basic Analysis)	NW
9147	4	39.657076	I-26 WB (Basic Analysis)	NW
9147	5	42.070751	I-26 WB (Basic Analysis)	NW
9147	6	40.922482	I-26 WB (Basic Analysis)	NW
9147	7	47.336353	I-26 WB (Basic Analysis)	NW
9147	8	42.832021	I-26 WB (Basic Analysis)	NW
9147	9	40.94237	I-26 WB (Basic Analysis)	NW
9147	10	46.76004	I-26 WB (Basic Analysis)	NW
9148	1	41.189854	I-26 WB (Diverge Analysis)	NW
9148	2	39.233322	I-26 WB (Diverge Analysis)	NW
9148	3	44.234654	I-26 WB (Diverge Analysis)	NW
9148	4	39.758388	I-26 WB (Diverge Analysis)	NW
9148	5	42.119721	I-26 WB (Diverge Analysis)	NW
9148	6	40.884788	I-26 WB (Diverge Analysis)	NW
9148	7	47.329319	I-26 WB (Diverge Analysis)	NW
9148	8	42.864787	I-26 WB (Diverge Analysis)	NW
9148	9	41.406921	I-26 WB (Diverge Analysis)	NW
9148	10	43.093587	I-26 WB (Diverge Analysis)	NW
9149	1	23.175964	I-26 WB (Diverge Analysis)	NW
9149	2	23.647485	I-26 WB (Diverge Analysis)	NW
9149	3	24.685783	I-26 WB (Diverge Analysis)	NW
9149	4	23.183108	I-26 WB (Diverge Analysis)	NW
9149	5	25.640732	I-26 WB (Diverge Analysis)	NW
9149	6	24.400013	I-26 WB (Diverge Analysis)	NW
9149	7	24.504795	I-26 WB (Diverge Analysis)	NW
9149	8	23.711783	I-26 WB (Diverge Analysis)	NW

ID	Run	Density	Name (Type)	Direction
9149	9	25.82172	I-26 WB (Diverge Analysis)	NW
9149	10	24.750082	I-26 WB (Diverge Analysis)	NW
9151	1	20.271454	I-20 EB (Diverge Analysis)	NE
9151	2	19.339286	I-20 EB (Diverge Analysis)	NE
9151	3	19.73568	I-20 EB (Diverge Analysis)	NE
9151	4	18.391301	I-20 EB (Diverge Analysis)	NE
9151	5	18.975512	I-20 EB (Diverge Analysis)	NE
9151	6	18.516842	I-20 EB (Diverge Analysis)	NE
9151	7	19.139606	I-20 EB (Diverge Analysis)	NE
9151	8	19.689219	I-20 EB (Diverge Analysis)	NE
9151	9	18.761993	I-20 EB (Diverge Analysis)	NE
9151	10	19.657587	I-20 EB (Diverge Analysis)	NE
9152	1	16.754672	I-20 EB (Basic Analysis)	NE
9152	2	16.145784	I-20 EB (Basic Analysis)	NE
9152	3	16.558727	I-20 EB (Basic Analysis)	NE
9152	4	16.101429	I-20 EB (Basic Analysis)	NE
9152	5	15.866464	I-20 EB (Basic Analysis)	NE
9152	6	16.499214	I-20 EB (Basic Analysis)	NE
9152	7	16.573606	I-20 EB (Basic Analysis)	NE
9152	8	16.484336	I-20 EB (Basic Analysis)	NE
9152	9	16.097499	I-20 EB (Basic Analysis)	NE
9152	10	16.002615	I-20 EB (Basic Analysis)	NE
9153	1	16.754672	I-20 EB (Basic Analysis)	NE
9153	2	16.145784	I-20 EB (Basic Analysis)	NE
9153	3	16.558727	I-20 EB (Basic Analysis)	NE
9153	4	16.101429	I-20 EB (Basic Analysis)	NE
9153	5	15.866464	I-20 EB (Basic Analysis)	NE
9153	6	16.499214	I-20 EB (Basic Analysis)	NE
9153	7	16.573606	I-20 EB (Basic Analysis)	NE
9153	8	16.484336	I-20 EB (Basic Analysis)	NE
9153	9	16.097499	I-20 EB (Basic Analysis)	NE
9153	10	16.002615	I-20 EB (Basic Analysis)	NE
9155	1	38.145301	I-20 EB (Basic Analysis)	NE
9155	2	38.21376	I-20 EB (Basic Analysis)	NE
9155	3	35.69342	I-20 EB (Basic Analysis)	NE
9155	4	36.059237	I-20 EB (Basic Analysis)	NE
9155	5	37.390883	I-20 EB (Basic Analysis)	NE
9155	6	37.275152	I-20 EB (Basic Analysis)	NE
9155	7	37.98798	I-20 EB (Basic Analysis)	NE
9155	8	36.345593	I-20 EB (Basic Analysis)	NE
9155	9	37.245972	I-20 EB (Basic Analysis)	NE
9155	10	36.431462	I-20 EB (Basic Analysis)	NE
9156	1	35.829193	I-20 EB (Basic Analysis)	NE
9156	2	35.7091	I-20 EB (Basic Analysis)	NE
9156	3	34.097577	I-20 EB (Basic Analysis)	NE
9156	4	34.782338	I-20 EB (Basic Analysis)	NE
9156	5	35.510152	I-20 EB (Basic Analysis)	NE
9156	6	35.845961	I-20 EB (Basic Analysis)	NE
9156	7	35.815598	I-20 EB (Basic Analysis)	NE
9156	8	35.662875	I-20 EB (Basic Analysis)	NE
9156	9	34.946844	I-20 EB (Basic Analysis)	NE
9156	10	35.10138	I-20 EB (Basic Analysis)	NE
9157	1	73.890644	I-20 WB (Diverge Analysis)	SW

ID	Run	Density	Name (Type)	Direction
9157	2	67.891979	I-20 WB (Diverge Analysis)	SW
9157	3	70.672779	I-20 WB (Diverge Analysis)	SW
9157	4	75.694644	I-20 WB (Diverge Analysis)	SW
9157	5	73.259978	I-20 WB (Diverge Analysis)	SW
9157	6	70.731445	I-20 WB (Diverge Analysis)	SW
9157	7	72.060245	I-20 WB (Diverge Analysis)	SW
9157	8	71.564512	I-20 WB (Diverge Analysis)	SW
9157	9	73.875978	I-20 WB (Diverge Analysis)	SW
9157	10	72.318379	I-20 WB (Diverge Analysis)	SW
9158	1	39.097776	I-20 WB (Basic Analysis)	SW
9158	2	39.726475	I-20 WB (Basic Analysis)	SW
9158	3	37.389193	I-20 WB (Basic Analysis)	SW
9158	4	38.513346	I-20 WB (Basic Analysis)	SW
9158	5	38.779105	I-20 WB (Basic Analysis)	SW
9158	6	40.170337	I-20 WB (Basic Analysis)	SW
9158	7	38.46213	I-20 WB (Basic Analysis)	SW
9158	8	38.991124	I-20 WB (Basic Analysis)	SW
9158	9	38.022282	I-20 WB (Basic Analysis)	SW
9158	10	37.818311	I-20 WB (Basic Analysis)	SW
9159	1	11.815463	I-20 WB (Basic Analysis)	W
9159	2	11.92464	I-20 WB (Basic Analysis)	W
9159	3	12.139344	I-20 WB (Basic Analysis)	W
9159	4	11.899137	I-20 WB (Basic Analysis)	W
9159	5	12.336188	I-20 WB (Basic Analysis)	W
9159	6	13.119491	I-20 WB (Basic Analysis)	W
9159	7	13.169798	I-20 WB (Basic Analysis)	W
9159	8	12.482566	I-20 WB (Basic Analysis)	W
9159	9	13.440172	I-20 WB (Basic Analysis)	W
9159	10	12.066291	I-20 WB (Basic Analysis)	W
9160	1	133.556309	I-20 WB (Merge Analysis)	SW
9160	2	119.193278	I-20 WB (Merge Analysis)	SW
9160	3	120.174013	I-20 WB (Merge Analysis)	SW
9160	4	124.353063	I-20 WB (Merge Analysis)	SW
9160	5	104.333099	I-20 WB (Merge Analysis)	SW
9160	6	106.990576	I-20 WB (Merge Analysis)	SW
9160	7	132.10705	I-20 WB (Merge Analysis)	SW
9160	8	127.369087	I-20 WB (Merge Analysis)	SW
9160	9	121.923067	I-20 WB (Merge Analysis)	SW
9160	10	106.253895	I-20 WB (Merge Analysis)	SW
9162	1	14.918182	I-20 WB (Merge Analysis)	SW
9162	2	16.260867	I-20 WB (Merge Analysis)	SW
9162	3	16.584964	I-20 WB (Merge Analysis)	SW
9162	4	16.701931	I-20 WB (Merge Analysis)	SW
9162	5	16.03668	I-20 WB (Merge Analysis)	SW
9162	6	15.987944	I-20 WB (Merge Analysis)	SW
9162	7	16.333972	I-20 WB (Merge Analysis)	SW
9162	8	16.217004	I-20 WB (Merge Analysis)	SW
9162	9	15.641916	I-20 WB (Merge Analysis)	SW
9162	10	16.372961	I-20 WB (Merge Analysis)	SW
9163	1	19.32405	I-20 WB (Merge Analysis)	S
9163	2	19.52454	I-20 WB (Merge Analysis)	S
9163	3	18.7475	I-20 WB (Merge Analysis)	S
9163	4	19.233433	I-20 WB (Merge Analysis)	S

ID	Run	Density	Name (Type)	Direction
9163	5	20.024065	I-20 WB (Merge Analysis)	S
9163	6	19.267414	I-20 WB (Merge Analysis)	S
9163	7	18.746367	I-20 WB (Merge Analysis)	S
9163	8	20.227953	I-20 WB (Merge Analysis)	S
9163	9	18.713519	I-20 WB (Merge Analysis)	S
9163	10	19.868884	I-20 WB (Merge Analysis)	S
9182	1	13.019636	I-26 EB (Merge Analysis)	S
9182	2	12.892708	I-26 EB (Merge Analysis)	S
9182	3	13.017897	I-26 EB (Merge Analysis)	S
9182	4	12.276327	I-26 EB (Merge Analysis)	S
9182	5	12.950956	I-26 EB (Merge Analysis)	S
9182	6	13.287401	I-26 EB (Merge Analysis)	S
9182	7	13.388247	I-26 EB (Merge Analysis)	S
9182	8	13.083969	I-26 EB (Merge Analysis)	S
9182	9	13.609066	I-26 EB (Merge Analysis)	S
9182	10	13.0405	I-26 EB (Merge Analysis)	S
9183	1	11.753813	I-20 EB (Basic Analysis)	E
9183	2	10.622812	I-20 EB (Basic Analysis)	E
9183	3	10.823741	I-20 EB (Basic Analysis)	E
9183	4	10.534776	I-20 EB (Basic Analysis)	E
9183	5	10.940259	I-20 EB (Basic Analysis)	E
9183	6	11.144295	I-20 EB (Basic Analysis)	E
9183	7	11.025705	I-20 EB (Basic Analysis)	E
9183	8	10.947509	I-20 EB (Basic Analysis)	E
9183	9	10.882259	I-20 EB (Basic Analysis)	E
9183	10	10.642491	I-20 EB (Basic Analysis)	E
9185	1	125.722346	I-20 WB (Basic Analysis)	SW
9185	2	118.748204	I-20 WB (Basic Analysis)	SW
9185	3	120.892438	I-20 WB (Basic Analysis)	SW
9185	4	126.387631	I-20 WB (Basic Analysis)	SW
9185	5	110.638265	I-20 WB (Basic Analysis)	SW
9185	6	116.58289	I-20 WB (Basic Analysis)	SW
9185	7	128.040756	I-20 WB (Basic Analysis)	SW
9185	8	122.769327	I-20 WB (Basic Analysis)	SW
9185	9	119.397517	I-20 WB (Basic Analysis)	SW
9185	10	114.442693	I-20 WB (Basic Analysis)	SW
9186	1	125.722346	I-20 WB (Basic Analysis)	SW
9186	2	118.748204	I-20 WB (Basic Analysis)	SW
9186	3	120.892438	I-20 WB (Basic Analysis)	SW
9186	4	126.387631	I-20 WB (Basic Analysis)	SW
9186	5	110.638265	I-20 WB (Basic Analysis)	SW
9186	6	116.58289	I-20 WB (Basic Analysis)	SW
9186	7	128.040756	I-20 WB (Basic Analysis)	SW
9186	8	122.769327	I-20 WB (Basic Analysis)	SW
9186	9	119.397517	I-20 WB (Basic Analysis)	SW
9186	10	114.442693	I-20 WB (Basic Analysis)	SW
9204	1	29.492144	CD ROAD I-26 EB (Basic Analysis)	SE
9204	2	30.662125	CD ROAD I-26 EB (Basic Analysis)	SE
9204	3	29.246182	CD ROAD I-26 EB (Basic Analysis)	SE
9204	4	28.917126	CD ROAD I-26 EB (Basic Analysis)	SE
9204	5	29.222916	CD ROAD I-26 EB (Basic Analysis)	SE
9204	6	31.149062	CD ROAD I-26 EB (Basic Analysis)	SE
9204	7	28.905492	CD ROAD I-26 EB (Basic Analysis)	SE

ID	Run	Density	Name (Type)	Direction
9204	8	28.011388	CD ROAD I-26 EB (Basic Analysis)	SE
9204	9	28.844002	CD ROAD I-26 EB (Basic Analysis)	SE
9204	10	28.300559	CD ROAD I-26 EB (Basic Analysis)	SE
9206	1	14.101103	I-26 EB (Basic Analysis)	S
9206	2	15.384589	I-26 EB (Basic Analysis)	S
9206	3	15.429418	I-26 EB (Basic Analysis)	S
9206	4	14.744058	I-26 EB (Basic Analysis)	S
9206	5	15.146497	I-26 EB (Basic Analysis)	S
9206	6	15.374947	I-26 EB (Basic Analysis)	S
9206	7	15.441644	I-26 EB (Basic Analysis)	S
9206	8	15.053203	I-26 EB (Basic Analysis)	S
9206	9	15.539747	I-26 EB (Basic Analysis)	S
9206	10	14.821482	I-26 EB (Basic Analysis)	S
9207	1	14.101103	I-26 EB (Basic Analysis)	S
9207	2	15.384589	I-26 EB (Basic Analysis)	S
9207	3	15.429418	I-26 EB (Basic Analysis)	S
9207	4	14.744058	I-26 EB (Basic Analysis)	S
9207	5	15.146497	I-26 EB (Basic Analysis)	S
9207	6	15.374947	I-26 EB (Basic Analysis)	S
9207	7	15.441644	I-26 EB (Basic Analysis)	S
9207	8	15.053203	I-26 EB (Basic Analysis)	S
9207	9	15.539747	I-26 EB (Basic Analysis)	S
9207	10	14.821482	I-26 EB (Basic Analysis)	S
9208	1	17.699753	(Basic Analysis)	SE
9208	2	16.670983	(Basic Analysis)	SE
9208	3	17.704652	(Basic Analysis)	SE
9208	4	17.738945	(Basic Analysis)	SE
9208	5	16.433386	(Basic Analysis)	SE
9208	6	16.688129	(Basic Analysis)	SE
9208	7	18.532568	(Basic Analysis)	SE
9208	8	17.905507	(Basic Analysis)	SE
9208	9	17.748742	(Basic Analysis)	SE
9208	10	17.349481	(Basic Analysis)	SE
9211	1	11.911568	I-20 EB (Basic Analysis)	NE
9211	2	10.762776	I-20 EB (Basic Analysis)	NE
9211	3	10.786783	I-20 EB (Basic Analysis)	NE
9211	4	10.342658	I-20 EB (Basic Analysis)	NE
9211	5	10.860215	I-20 EB (Basic Analysis)	NE
9211	6	11.000019	I-20 EB (Basic Analysis)	NE
9211	7	11.164535	I-20 EB (Basic Analysis)	NE
9211	8	11.146883	I-20 EB (Basic Analysis)	NE
9211	9	10.968951	I-20 EB (Basic Analysis)	NE
9211	10	10.855272	I-20 EB (Basic Analysis)	NE
9225	1	16.754672	I-20 EB (Basic Analysis)	NE
9225	2	16.145784	I-20 EB (Basic Analysis)	NE
9225	3	16.558727	I-20 EB (Basic Analysis)	NE
9225	4	16.101429	I-20 EB (Basic Analysis)	NE
9225	5	15.866464	I-20 EB (Basic Analysis)	NE
9225	6	16.499214	I-20 EB (Basic Analysis)	NE
9225	7	16.573606	I-20 EB (Basic Analysis)	NE
9225	8	16.484336	I-20 EB (Basic Analysis)	NE
9225	9	16.097499	I-20 EB (Basic Analysis)	NE
9225	10	16.002615	I-20 EB (Basic Analysis)	NE

ID	Run	Density	Name (Type)	Direction
9243	1	39.097776	I-20 WB (Basic Analysis)	SW
9243	2	39.726475	I-20 WB (Basic Analysis)	SW
9243	3	37.389193	I-20 WB (Basic Analysis)	SW
9243	4	38.513346	I-20 WB (Basic Analysis)	SW
9243	5	38.779105	I-20 WB (Basic Analysis)	SW
9243	6	40.170337	I-20 WB (Basic Analysis)	SW
9243	7	38.46213	I-20 WB (Basic Analysis)	SW
9243	8	38.991124	I-20 WB (Basic Analysis)	SW
9243	9	38.022282	I-20 WB (Basic Analysis)	SW
9243	10	37.818311	I-20 WB (Basic Analysis)	SW
9245	1	24.131767	D ROAD I-20 WB TO I-20 (Basic Analysi	NW
9245	2	24.51982	D ROAD I-20 WB TO I-20 (Basic Analysi	NW
9245	3	23.758205	D ROAD I-20 WB TO I-20 (Basic Analysi	NW
9245	4	23.943376	D ROAD I-20 WB TO I-20 (Basic Analysi	NW
9245	5	23.579475	D ROAD I-20 WB TO I-20 (Basic Analysi	NW
9245	6	23.386254	D ROAD I-20 WB TO I-20 (Basic Analysi	NW
9245	7	23.843545	D ROAD I-20 WB TO I-20 (Basic Analysi	NW
9245	8	22.584384	D ROAD I-20 WB TO I-20 (Basic Analysi	NW
9245	9	24.212276	D ROAD I-20 WB TO I-20 (Basic Analysi	NW
9245	10	22.983709	D ROAD I-20 WB TO I-20 (Basic Analysi	NW
9246	1	18.188025	I-126 NB (Diverge Analysis)	NW
9246	2	16.305405	I-126 NB (Diverge Analysis)	NW
9246	3	15.025861	I-126 NB (Diverge Analysis)	NW
9246	4	16.622896	I-126 NB (Diverge Analysis)	NW
9246	5	15.469394	I-126 NB (Diverge Analysis)	NW
9246	6	16.497632	I-126 NB (Diverge Analysis)	NW
9246	7	16.767305	I-126 NB (Diverge Analysis)	NW
9246	8	16.075661	I-126 NB (Diverge Analysis)	NW
9246	9	16.525575	I-126 NB (Diverge Analysis)	NW
9246	10	16.056516	I-126 NB (Diverge Analysis)	NW
9248	1	28.109286	I-26 WB (Basic Analysis)	NW
9248	2	28.249428	I-26 WB (Basic Analysis)	NW
9248	3	28.347983	I-26 WB (Basic Analysis)	NW
9248	4	27.695762	I-26 WB (Basic Analysis)	NW
9248	5	27.970469	I-26 WB (Basic Analysis)	NW
9248	6	28.257832	I-26 WB (Basic Analysis)	NW
9248	7	27.867198	I-26 WB (Basic Analysis)	NW
9248	8	27.406342	I-26 WB (Basic Analysis)	NW
9248	9	28.213458	I-26 WB (Basic Analysis)	NW
9248	10	28.059986	I-26 WB (Basic Analysis)	NW
9249	1	16.366581	I-26 EB (Basic Analysis)	SE
9249	2	17.064354	I-26 EB (Basic Analysis)	SE
9249	3	16.480922	I-26 EB (Basic Analysis)	SE
9249	4	16.844498	I-26 EB (Basic Analysis)	SE
9249	5	16.793503	I-26 EB (Basic Analysis)	SE
9249	6	16.778019	I-26 EB (Basic Analysis)	SE
9249	7	17.034505	I-26 EB (Basic Analysis)	SE
9249	8	16.734856	I-26 EB (Basic Analysis)	SE
9249	9	17.060276	I-26 EB (Basic Analysis)	SE
9249	10	16.959894	I-26 EB (Basic Analysis)	SE

ID	Run	Density	Name (Type)	Direction
9329	1	30.484145	CD ROAD I-20 EB (Merge Analysis)	E
9329	2	31.340054	CD ROAD I-20 EB (Merge Analysis)	E
9329	3	28.69548	CD ROAD I-20 EB (Merge Analysis)	E
9329	4	30.433797	CD ROAD I-20 EB (Merge Analysis)	E
9329	5	28.748477	CD ROAD I-20 EB (Merge Analysis)	E
9329	6	29.561989	CD ROAD I-20 EB (Merge Analysis)	E
9329	7	30.076064	CD ROAD I-20 EB (Merge Analysis)	E
9329	8	30.200608	CD ROAD I-20 EB (Merge Analysis)	E
9329	9	30.674935	CD ROAD I-20 EB (Merge Analysis)	E
9329	10	29.52224	CD ROAD I-20 EB (Merge Analysis)	E
9262	1	58.611941	CD ROAD I-20 EB (Basic Analysis)	E
9262	2	49.235744	CD ROAD I-20 EB (Basic Analysis)	E
9262	3	58.783338	CD ROAD I-20 EB (Basic Analysis)	E
9262	4	54.048495	CD ROAD I-20 EB (Basic Analysis)	E
9262	5	52.936362	CD ROAD I-20 EB (Basic Analysis)	E
9262	6	52.702639	CD ROAD I-20 EB (Basic Analysis)	E
9262	7	58.191239	CD ROAD I-20 EB (Basic Analysis)	E
9262	8	52.64226	CD ROAD I-20 EB (Basic Analysis)	E
9262	9	61.032924	CD ROAD I-20 EB (Basic Analysis)	E
9262	10	55.48005	CD ROAD I-20 EB (Basic Analysis)	E
9206	1	17.027824	I-26 EB (Basic Analysis)	S
9206	2	16.789041	I-26 EB (Basic Analysis)	S
9206	3	18.521199	I-26 EB (Basic Analysis)	S
9206	4	17.52636	I-26 EB (Basic Analysis)	S
9206	5	17.327469	I-26 EB (Basic Analysis)	S
9206	6	16.664131	I-26 EB (Basic Analysis)	S
9206	7	17.365784	I-26 EB (Basic Analysis)	S
9206	8	16.539833	I-26 EB (Basic Analysis)	S
9206	9	16.645502	I-26 EB (Basic Analysis)	S
9206	10	17.911837	I-26 EB (Basic Analysis)	S
9300	1	97.552866	I-20 EB (Merge Analysis)	NE
9300	2	82.982025	I-20 EB (Merge Analysis)	NE
9300	3	100.43731	I-20 EB (Merge Analysis)	NE
9300	4	92.812601	I-20 EB (Merge Analysis)	NE
9300	5	89.60158	I-20 EB (Merge Analysis)	NE
9300	6	96.449933	I-20 EB (Merge Analysis)	NE
9300	7	96.176155	I-20 EB (Merge Analysis)	NE
9300	8	90.686912	I-20 EB (Merge Analysis)	NE
9300	9	102.402643	I-20 EB (Merge Analysis)	NE
9300	10	90.225402	I-20 EB (Merge Analysis)	NE
9248	1	16.500979	I-26 WB (Basic Analysis)	NW
9248	2	16.700287	I-26 WB (Basic Analysis)	NW
9248	3	16.163074	I-26 WB (Basic Analysis)	NW
9248	4	16.064119	I-26 WB (Basic Analysis)	NW
9248	5	17.006122	I-26 WB (Basic Analysis)	NW
9248	6	16.128826	I-26 WB (Basic Analysis)	NW
9248	7	16.727491	I-26 WB (Basic Analysis)	NW
9248	8	16.62704	I-26 WB (Basic Analysis)	NW
9248	9	16.682778	I-26 WB (Basic Analysis)	NW
9248	10	16.818729	I-26 WB (Basic Analysis)	NW
9303	1	55.912286	I-20 EB (Basic Analysis)	NE
9303	2	54.793019	I-20 EB (Basic Analysis)	NE
9303	3	58.109284	I-20 EB (Basic Analysis)	NE

ID	Run	Density	Name (Type)	Direction
9303	4	55.873465	I-20 EB (Basic Analysis)	NE
9303	5	56.767684	I-20 EB (Basic Analysis)	NE
9303	6	55.323741	I-20 EB (Basic Analysis)	NE
9303	7	57.299492	I-20 EB (Basic Analysis)	NE
9303	8	55.068017	I-20 EB (Basic Analysis)	NE
9303	9	56.932194	I-20 EB (Basic Analysis)	NE
9303	10	58.582183	I-20 EB (Basic Analysis)	NE
9245	1	13.471866	Ↄ ROAD I-20 WB TO I-20 (Basic Analysi	NW
9245	2	12.049791	Ↄ ROAD I-20 WB TO I-20 (Basic Analysi	NW
9245	3	13.109503	Ↄ ROAD I-20 WB TO I-20 (Basic Analysi	NW
9245	4	13.581381	Ↄ ROAD I-20 WB TO I-20 (Basic Analysi	NW
9245	5	12.776129	Ↄ ROAD I-20 WB TO I-20 (Basic Analysi	NW
9245	6	13.631306	Ↄ ROAD I-20 WB TO I-20 (Basic Analysi	NW
9245	7	12.247883	Ↄ ROAD I-20 WB TO I-20 (Basic Analysi	NW
9245	8	12.896917	Ↄ ROAD I-20 WB TO I-20 (Basic Analysi	NW
9245	9	13.25928	Ↄ ROAD I-20 WB TO I-20 (Basic Analysi	NW
9245	10	12.586089	Ↄ ROAD I-20 WB TO I-20 (Basic Analysi	NW
9005	1	12.023303	I-126 NB (Basic Analysis)	NW
9005	2	11.778585	I-126 NB (Basic Analysis)	NW
9005	3	12.270492	I-126 NB (Basic Analysis)	NW
9005	4	11.598137	I-126 NB (Basic Analysis)	NW
9005	5	12.243301	I-126 NB (Basic Analysis)	NW
9005	6	11.917011	I-126 NB (Basic Analysis)	NW
9005	7	11.266902	I-126 NB (Basic Analysis)	NW
9005	8	12.263077	I-126 NB (Basic Analysis)	NW
9005	9	13.461946	I-126 NB (Basic Analysis)	NW
9005	10	12.700602	I-126 NB (Basic Analysis)	NW
9023	1	11.991567	I-126 NB (Basic Analysis)	NW
9023	2	13.42536	I-126 NB (Basic Analysis)	NW
9023	3	13.486975	I-126 NB (Basic Analysis)	NW
9023	4	11.989902	I-126 NB (Basic Analysis)	NW
9023	5	13.27049	I-126 NB (Basic Analysis)	NW
9023	6	13.666823	I-126 NB (Basic Analysis)	NW
9023	7	12.895806	I-126 NB (Basic Analysis)	NW
9023	8	12.391231	I-126 NB (Basic Analysis)	NW
9023	9	12.444519	I-126 NB (Basic Analysis)	NW
9023	10	13.485309	I-126 NB (Basic Analysis)	NW
9033	1	27.793734	I-26 WB (Basic Analysis)	NW
9033	2	27.906472	I-26 WB (Basic Analysis)	NW
9033	3	27.74003	I-26 WB (Basic Analysis)	NW
9033	4	27.623707	I-26 WB (Basic Analysis)	NW
9033	5	28.525031	I-26 WB (Basic Analysis)	NW
9033	6	27.947408	I-26 WB (Basic Analysis)	NW
9033	7	28.262828	I-26 WB (Basic Analysis)	NW
9033	8	28.651583	I-26 WB (Basic Analysis)	NW
9033	9	28.793555	I-26 WB (Basic Analysis)	NW
9033	10	28.977145	I-26 WB (Basic Analysis)	NW
8994	1	29.201257	I-126 SB (Basic Analysis)	SE
8994	2	31.762718	I-126 SB (Basic Analysis)	SE
8994	3	30.025671	I-126 SB (Basic Analysis)	SE
8994	4	32.100393	I-126 SB (Basic Analysis)	SE
8994	5	30.439398	I-126 SB (Basic Analysis)	SE
8994	6	30.941347	I-126 SB (Basic Analysis)	SE

ID	Run	Density	Name (Type)	Direction
8994	7	31.342906	I-126 SB (Basic Analysis)	SE
8994	8	30.941347	I-126 SB (Basic Analysis)	SE
8994	9	32.526289	I-126 SB (Basic Analysis)	SE
8994	10	31.561938	I-126 SB (Basic Analysis)	SE
9040	1	34.074187	I-20 WB (Basic Analysis)	SW
9040	2	35.225167	I-20 WB (Basic Analysis)	SW
9040	3	34.436083	I-20 WB (Basic Analysis)	SW
9040	4	35.029088	I-20 WB (Basic Analysis)	SW
9040	5	35.559821	I-20 WB (Basic Analysis)	SW
9040	6	35.566075	I-20 WB (Basic Analysis)	SW
9040	7	35.097131	I-20 WB (Basic Analysis)	SW
9040	8	35.579062	I-20 WB (Basic Analysis)	SW
9040	9	36.426638	I-20 WB (Basic Analysis)	SW
9040	10	35.525231	I-20 WB (Basic Analysis)	SW
9045	1	68.143057	CD ROAD I-20 EB (Basic Analysis)	E
9045	2	55.598144	CD ROAD I-20 EB (Basic Analysis)	E
9045	3	65.835677	CD ROAD I-20 EB (Basic Analysis)	E
9045	4	63.056105	CD ROAD I-20 EB (Basic Analysis)	E
9045	5	60.243044	CD ROAD I-20 EB (Basic Analysis)	E
9045	6	59.419219	CD ROAD I-20 EB (Basic Analysis)	E
9045	7	68.799438	CD ROAD I-20 EB (Basic Analysis)	E
9045	8	56.12057	CD ROAD I-20 EB (Basic Analysis)	E
9045	9	73.025727	CD ROAD I-20 EB (Basic Analysis)	E
9045	10	67.272348	CD ROAD I-20 EB (Basic Analysis)	E
8853	1	30.484145	CD ROAD I-20 EB (Merge Analysis)	E
8853	2	31.340054	CD ROAD I-20 EB (Merge Analysis)	E
8853	3	28.69548	CD ROAD I-20 EB (Merge Analysis)	E
8853	4	30.433797	CD ROAD I-20 EB (Merge Analysis)	E
8853	5	28.748477	CD ROAD I-20 EB (Merge Analysis)	E
8853	6	29.561989	CD ROAD I-20 EB (Merge Analysis)	E
8853	7	30.076064	CD ROAD I-20 EB (Merge Analysis)	E
8853	8	30.200608	CD ROAD I-20 EB (Merge Analysis)	E
8853	9	30.674935	CD ROAD I-20 EB (Merge Analysis)	E
8853	10	29.52224	CD ROAD I-20 EB (Merge Analysis)	E
8826	1	16.832988	CD ROAD I-20 EB (Basic Analysis)	E
8826	2	16.378753	CD ROAD I-20 EB (Basic Analysis)	E
8826	3	17.201157	CD ROAD I-20 EB (Basic Analysis)	E
8826	4	16.316595	CD ROAD I-20 EB (Basic Analysis)	E
8826	5	17.571717	CD ROAD I-20 EB (Basic Analysis)	E
8826	6	16.593917	CD ROAD I-20 EB (Basic Analysis)	E
8826	7	17.179641	CD ROAD I-20 EB (Basic Analysis)	E
8826	8	17.947059	CD ROAD I-20 EB (Basic Analysis)	E
8826	9	17.456963	CD ROAD I-20 EB (Basic Analysis)	E
8826	10	17.920761	CD ROAD I-20 EB (Basic Analysis)	E
8839	1	80.369513	I-20 EB (Merge Analysis)	NE
8839	2	75.72682	I-20 EB (Merge Analysis)	NE
8839	3	84.501874	I-20 EB (Merge Analysis)	NE
8839	4	78.856192	I-20 EB (Merge Analysis)	NE
8839	5	80.555087	I-20 EB (Merge Analysis)	NE
8839	6	79.533319	I-20 EB (Merge Analysis)	NE
8839	7	81.850801	I-20 EB (Merge Analysis)	NE
8839	8	77.652162	I-20 EB (Merge Analysis)	NE
8839	9	82.798559	I-20 EB (Merge Analysis)	NE

ID	Run	Density	Name (Type)	Direction
8839	10	74.519477	I-20 EB (Merge Analysis)	NE
8883	1	34.602324	I-26 WB (Basic Analysis)	NW
8883	2	33.958616	I-26 WB (Basic Analysis)	NW
8883	3	32.540136	I-26 WB (Basic Analysis)	NW
8883	4	33.73701	I-26 WB (Basic Analysis)	NW
8883	5	37.2992	I-26 WB (Basic Analysis)	NW
8883	6	38.415382	I-26 WB (Basic Analysis)	NW
8883	7	36.609933	I-26 WB (Basic Analysis)	NW
8883	8	35.409129	I-26 WB (Basic Analysis)	NW
8883	9	38.112883	I-26 WB (Basic Analysis)	NW
8883	10	40.570501	I-26 WB (Basic Analysis)	NW
8869	1	28.327413	(Weaving Analysis)	SE
8869	2	29.722107	(Weaving Analysis)	SE
8869	3	29.907901	(Weaving Analysis)	SE
8869	4	30.997894	(Weaving Analysis)	SE
8869	5	29.172157	(Weaving Analysis)	SE
8869	6	28.78075	(Weaving Analysis)	SE
8869	7	28.45623	(Weaving Analysis)	SE
8869	8	29.409973	(Weaving Analysis)	SE
8869	9	29.860834	(Weaving Analysis)	SE
8869	10	30.45042	(Weaving Analysis)	SE
8871	1	15.526052	(Basic Analysis)	W
8871	2	17.76602	(Basic Analysis)	W
8871	3	17.593081	(Basic Analysis)	W
8871	4	16.560939	(Basic Analysis)	W
8871	5	17.667198	(Basic Analysis)	W
8871	6	17.455828	(Basic Analysis)	W
8871	7	18.018565	(Basic Analysis)	W
8871	8	17.32132	(Basic Analysis)	W
8871	9	18.847573	(Basic Analysis)	W
8871	10	16.182121	(Basic Analysis)	W
9054	1	9.27029	I-20 WB (Basic Analysis)	SW
9054	2	10.496706	I-20 WB (Basic Analysis)	SW
9054	3	9.080595	I-20 WB (Basic Analysis)	SW
9054	4	9.621637	I-20 WB (Basic Analysis)	SW
9054	5	9.728031	I-20 WB (Basic Analysis)	SW
9054	6	9.718134	I-20 WB (Basic Analysis)	SW
9054	7	9.728856	I-20 WB (Basic Analysis)	SW
9054	8	10.024119	I-20 WB (Basic Analysis)	SW
9054	9	9.788238	I-20 WB (Basic Analysis)	SW
9054	10	9.839373	I-20 WB (Basic Analysis)	SW
9115	1	18.217348	I-26 EB (Merge Analysis)	S
9115	2	18.435427	I-26 EB (Merge Analysis)	S
9115	3	19.38952	I-26 EB (Merge Analysis)	S
9115	4	17.461862	I-26 EB (Merge Analysis)	S
9115	5	18.038212	I-26 EB (Merge Analysis)	S
9115	6	19.4713	I-26 EB (Merge Analysis)	S
9115	7	17.621526	I-26 EB (Merge Analysis)	S
9115	8	18.641822	I-26 EB (Merge Analysis)	S
9115	9	17.726671	I-26 EB (Merge Analysis)	S
9115	10	17.878548	I-26 EB (Merge Analysis)	S
8887	1	27.605612	I-26 WB (Merge Analysis)	NW
8887	2	28.793106	I-26 WB (Merge Analysis)	NW

ID	Run	Density	Name (Type)	Direction
8887	3	28.550977	I-26 WB (Merge Analysis)	NW
8887	4	28.350329	I-26 WB (Merge Analysis)	NW
8887	5	29.538787	I-26 WB (Merge Analysis)	NW
8887	6	29.467402	I-26 WB (Merge Analysis)	NW
8887	7	28.52879	I-26 WB (Merge Analysis)	NW
8887	8	29.392159	I-26 WB (Merge Analysis)	NW
8887	9	29.745224	I-26 WB (Merge Analysis)	NW
8887	10	29.270612	I-26 WB (Merge Analysis)	NW
9089	1	24.961635	I-26 EB (Diverge Analysis)	SE
9089	2	24.64299	I-26 EB (Diverge Analysis)	SE
9089	3	25.191613	I-26 EB (Diverge Analysis)	SE
9089	4	25.29371	I-26 EB (Diverge Analysis)	SE
9089	5	25.390482	I-26 EB (Diverge Analysis)	SE
9089	6	24.971749	I-26 EB (Diverge Analysis)	SE
9089	7	24.283115	I-26 EB (Diverge Analysis)	SE
9089	8	23.780058	I-26 EB (Diverge Analysis)	SE
9089	9	25.921099	I-26 EB (Diverge Analysis)	SE
9089	10	24.363078	I-26 EB (Diverge Analysis)	SE
9299	1	27.269132	CD ROAD I-20 WB (Basic Analysis)	W
9299	2	28.912805	CD ROAD I-20 WB (Basic Analysis)	W
9299	3	29.932674	CD ROAD I-20 WB (Basic Analysis)	W
9299	4	24.773917	CD ROAD I-20 WB (Basic Analysis)	W
9299	5	28.685067	CD ROAD I-20 WB (Basic Analysis)	W
9299	6	30.734708	CD ROAD I-20 WB (Basic Analysis)	W
9299	7	28.952411	CD ROAD I-20 WB (Basic Analysis)	W
9299	8	26.447295	CD ROAD I-20 WB (Basic Analysis)	W
9299	9	29.526707	CD ROAD I-20 WB (Basic Analysis)	W
9299	10	27.972149	CD ROAD I-20 WB (Basic Analysis)	W
8886	1	27.793734	I-26 WB (Basic Analysis)	NW
8886	2	27.906472	I-26 WB (Basic Analysis)	NW
8886	3	27.74003	I-26 WB (Basic Analysis)	NW
8886	4	27.623707	I-26 WB (Basic Analysis)	NW
8886	5	28.525031	I-26 WB (Basic Analysis)	NW
8886	6	27.947408	I-26 WB (Basic Analysis)	NW
8886	7	28.262828	I-26 WB (Basic Analysis)	NW
8886	8	28.651583	I-26 WB (Basic Analysis)	NW
8886	9	28.793555	I-26 WB (Basic Analysis)	NW
8886	10	28.977145	I-26 WB (Basic Analysis)	NW
8819	1	13.188492	CD ROAD I-20 WB (Weaving Analysis)	SW
8819	2	13.586681	CD ROAD I-20 WB (Weaving Analysis)	SW
8819	3	13.988317	CD ROAD I-20 WB (Weaving Analysis)	SW
8819	4	13.765952	CD ROAD I-20 WB (Weaving Analysis)	SW
8819	5	13.786637	CD ROAD I-20 WB (Weaving Analysis)	SW
8819	6	12.673088	CD ROAD I-20 WB (Weaving Analysis)	SW
8819	7	14.321003	CD ROAD I-20 WB (Weaving Analysis)	SW
8819	8	13.765952	CD ROAD I-20 WB (Weaving Analysis)	SW
8819	9	13.888339	CD ROAD I-20 WB (Weaving Analysis)	SW
8819	10	13.033354	CD ROAD I-20 WB (Weaving Analysis)	SW
8832	1	34.074187	I-20 WB (Basic Analysis)	SW
8832	2	35.225167	I-20 WB (Basic Analysis)	SW
8832	3	34.436083	I-20 WB (Basic Analysis)	SW
8832	4	35.029088	I-20 WB (Basic Analysis)	SW
8832	5	35.559821	I-20 WB (Basic Analysis)	SW

ID	Run	Density	Name (Type)	Direction
8832	6	35.566075	I-20 WB (Basic Analysis)	SW
8832	7	35.097131	I-20 WB (Basic Analysis)	SW
8832	8	35.579062	I-20 WB (Basic Analysis)	SW
8832	9	36.426638	I-20 WB (Basic Analysis)	SW
8832	10	35.525231	I-20 WB (Basic Analysis)	SW
8829	1	71.872243	CD ROAD I-20 EB (Basic Analysis)	E
8829	2	55.653178	CD ROAD I-20 EB (Basic Analysis)	E
8829	3	72.641505	CD ROAD I-20 EB (Basic Analysis)	E
8829	4	66.129672	CD ROAD I-20 EB (Basic Analysis)	E
8829	5	64.045132	CD ROAD I-20 EB (Basic Analysis)	E
8829	6	59.752325	CD ROAD I-20 EB (Basic Analysis)	E
8829	7	69.744667	CD ROAD I-20 EB (Basic Analysis)	E
8829	8	56.075466	CD ROAD I-20 EB (Basic Analysis)	E
8829	9	79.688595	CD ROAD I-20 EB (Basic Analysis)	E
8829	10	69.922189	CD ROAD I-20 EB (Basic Analysis)	E
8791	1	10.19701	D ROAD I-20 WB TO I-20 (Basic Analysi	NE
8791	2	12.038823	D ROAD I-20 WB TO I-20 (Basic Analysi	NE
8791	3	12.215242	D ROAD I-20 WB TO I-20 (Basic Analysi	NE
8791	4	10.959139	D ROAD I-20 WB TO I-20 (Basic Analysi	NE
8791	5	11.290807	D ROAD I-20 WB TO I-20 (Basic Analysi	NE
8791	6	11.149672	D ROAD I-20 WB TO I-20 (Basic Analysi	NE
8791	7	12.462228	D ROAD I-20 WB TO I-20 (Basic Analysi	NE
8791	8	11.135558	D ROAD I-20 WB TO I-20 (Basic Analysi	NE
8791	9	10.613358	D ROAD I-20 WB TO I-20 (Basic Analysi	NE
8791	10	10.705096	D ROAD I-20 WB TO I-20 (Basic Analysi	NE
8838	1	9.27029	I-20 WB (Basic Analysis)	SW
8838	2	10.496706	I-20 WB (Basic Analysis)	SW
8838	3	9.080595	I-20 WB (Basic Analysis)	SW
8838	4	9.621637	I-20 WB (Basic Analysis)	SW
8838	5	9.728031	I-20 WB (Basic Analysis)	SW
8838	6	9.718134	I-20 WB (Basic Analysis)	SW
8838	7	9.728856	I-20 WB (Basic Analysis)	SW
8838	8	10.024119	I-20 WB (Basic Analysis)	SW
8838	9	9.788238	I-20 WB (Basic Analysis)	SW
8838	10	9.839373	I-20 WB (Basic Analysis)	SW
8658	1	26.697788	I-20 WB (Merge Analysis)	SW
8658	2	28.58906	I-20 WB (Merge Analysis)	SW
8658	3	27.834458	I-20 WB (Merge Analysis)	SW
8658	4	28.747744	I-20 WB (Merge Analysis)	SW
8658	5	28.713692	I-20 WB (Merge Analysis)	SW
8658	6	29.231289	I-20 WB (Merge Analysis)	SW
8658	7	28.961594	I-20 WB (Merge Analysis)	SW
8658	8	29.488726	I-20 WB (Merge Analysis)	SW
8658	9	30.054677	I-20 WB (Merge Analysis)	SW
8658	10	28.495075	I-20 WB (Merge Analysis)	SW
2806	1	36.608348	I-20 EB (Basic Analysis)	NE
2806	2	39.275046	I-20 EB (Basic Analysis)	NE
2806	3	37.22106	I-20 EB (Basic Analysis)	NE
2806	4	38.515194	I-20 EB (Basic Analysis)	NE
2806	5	38.886152	I-20 EB (Basic Analysis)	NE
2806	6	37.608816	I-20 EB (Basic Analysis)	NE
2806	7	39.427199	I-20 EB (Basic Analysis)	NE
2806	8	38.908296	I-20 EB (Basic Analysis)	NE

ID	Run	Density	Name (Type)	Direction
2806	9	39.711675	I-20 EB (Basic Analysis)	NE
2806	10	37.457871	I-20 EB (Basic Analysis)	NE
2807	1	36.608348	I-20 EB (Basic Analysis)	NE
2807	2	39.275046	I-20 EB (Basic Analysis)	NE
2807	3	37.22106	I-20 EB (Basic Analysis)	NE
2807	4	38.515194	I-20 EB (Basic Analysis)	NE
2807	5	38.886152	I-20 EB (Basic Analysis)	NE
2807	6	37.608816	I-20 EB (Basic Analysis)	NE
2807	7	39.427199	I-20 EB (Basic Analysis)	NE
2807	8	38.908296	I-20 EB (Basic Analysis)	NE
2807	9	39.711675	I-20 EB (Basic Analysis)	NE
2807	10	37.457871	I-20 EB (Basic Analysis)	NE
2808	1	37.809667	I-20 EB (Diverge Analysis)	NE
2808	2	41.126131	I-20 EB (Diverge Analysis)	NE
2808	3	39.582073	I-20 EB (Diverge Analysis)	NE
2808	4	40.700082	I-20 EB (Diverge Analysis)	NE
2808	5	41.162706	I-20 EB (Diverge Analysis)	NE
2808	6	39.156023	I-20 EB (Diverge Analysis)	NE
2808	7	41.71924	I-20 EB (Diverge Analysis)	NE
2808	8	41.249695	I-20 EB (Diverge Analysis)	NE
2808	9	44.542435	I-20 EB (Diverge Analysis)	NE
2808	10	38.496685	I-20 EB (Diverge Analysis)	NE
2813	1	12.099619	I-20 WB (Merge Analysis)	S
2813	2	12.904976	I-20 WB (Merge Analysis)	S
2813	3	11.620482	I-20 WB (Merge Analysis)	S
2813	4	12.57196	I-20 WB (Merge Analysis)	S
2813	5	13.171164	I-20 WB (Merge Analysis)	S
2813	6	12.353346	I-20 WB (Merge Analysis)	S
2813	7	12.271791	I-20 WB (Merge Analysis)	S
2813	8	11.658994	I-20 WB (Merge Analysis)	S
2813	9	11.832299	I-20 WB (Merge Analysis)	S
2813	10	12.044116	I-20 WB (Merge Analysis)	S
2814	1	15.267004	I-20 WB (Basic Analysis)	S
2814	2	15.781828	I-20 WB (Basic Analysis)	S
2814	3	15.033798	I-20 WB (Basic Analysis)	S
2814	4	15.275375	I-20 WB (Basic Analysis)	S
2814	5	15.578382	I-20 WB (Basic Analysis)	S
2814	6	15.222599	I-20 WB (Basic Analysis)	S
2814	7	14.999378	I-20 WB (Basic Analysis)	S
2814	8	15.003477	I-20 WB (Basic Analysis)	S
2814	9	15.466776	I-20 WB (Basic Analysis)	S
2814	10	14.942598	I-20 WB (Basic Analysis)	S
2822	1	9.891033	I-20 WB (Merge Analysis)	SW
2822	2	11.050956	I-20 WB (Merge Analysis)	SW
2822	3	10.329659	I-20 WB (Merge Analysis)	SW
2822	4	9.393922	I-20 WB (Merge Analysis)	SW
2822	5	10.115219	I-20 WB (Merge Analysis)	SW
2822	6	10.025057	I-20 WB (Merge Analysis)	SW
2822	7	9.774065	I-20 WB (Merge Analysis)	SW
2822	8	9.108815	I-20 WB (Merge Analysis)	SW
2822	9	11.596803	I-20 WB (Merge Analysis)	SW
2822	10	10.500236	I-20 WB (Merge Analysis)	SW
2823	1	199.111798	I-20 WB (Basic Analysis)	SW

ID	Run	Density	Name (Type)	Direction
2823	2	110.617667	I-20 WB (Basic Analysis)	SW
2823	3	103.243157	I-20 WB (Basic Analysis)	SW
2823	4	222.710241	I-20 WB (Basic Analysis)	SW
2823	5	73.745112	I-20 WB (Basic Analysis)	SW
2823	6	271.382015	I-20 WB (Basic Analysis)	SW
2823	7	234.509456	I-20 WB (Basic Analysis)	SW
2823	8	135.691007	I-20 WB (Basic Analysis)	SW
2823	9	88.494135	I-20 WB (Basic Analysis)	SW
2823	10	227.134948	I-20 WB (Basic Analysis)	SW
2826	1	39.268073	I-20 EB (Basic Analysis)	NE
2826	2	54.136381	I-20 EB (Basic Analysis)	NE
2826	3	30.29954	I-20 EB (Basic Analysis)	NE
2826	4	57.560382	I-20 EB (Basic Analysis)	NE
2826	5	43.667627	I-20 EB (Basic Analysis)	NE
2826	6	30.214829	I-20 EB (Basic Analysis)	NE
2826	7	38.705149	I-20 EB (Basic Analysis)	NE
2826	8	51.789041	I-20 EB (Basic Analysis)	NE
2826	9	68.236817	I-20 EB (Basic Analysis)	NE
2826	10	34.447692	I-20 EB (Basic Analysis)	NE
2829	1	64.870925	I-20 EB (Merge Analysis)	NE
2829	2	78.470414	I-20 EB (Merge Analysis)	NE
2829	3	55.250868	I-20 EB (Merge Analysis)	NE
2829	4	67.908186	I-20 EB (Merge Analysis)	NE
2829	5	57.293891	I-20 EB (Merge Analysis)	NE
2829	6	56.024439	I-20 EB (Merge Analysis)	NE
2829	7	71.332232	I-20 EB (Merge Analysis)	NE
2829	8	73.975268	I-20 EB (Merge Analysis)	NE
2829	9	78.89687	I-20 EB (Merge Analysis)	NE
2829	10	67.677602	I-20 EB (Merge Analysis)	NE
2830	1	47.205852	I-20 EB (Basic Analysis)	NE
2830	2	52.300293	I-20 EB (Basic Analysis)	NE
2830	3	49.930786	I-20 EB (Basic Analysis)	NE
2830	4	50.575819	I-20 EB (Basic Analysis)	NE
2830	5	50.707458	I-20 EB (Basic Analysis)	NE
2830	6	49.720163	I-20 EB (Basic Analysis)	NE
2830	7	49.404229	I-20 EB (Basic Analysis)	NE
2830	8	52.405605	I-20 EB (Basic Analysis)	NE
2830	9	51.036556	I-20 EB (Basic Analysis)	NE
2830	10	49.167278	I-20 EB (Basic Analysis)	NE
2831	1	14.923981	I-20 WB (Basic Analysis)	SW
2831	2	17.120002	I-20 WB (Basic Analysis)	SW
2831	3	14.883646	I-20 WB (Basic Analysis)	SW
2831	4	14.758159	I-20 WB (Basic Analysis)	SW
2831	5	13.740818	I-20 WB (Basic Analysis)	SW
2831	6	15.688107	I-20 WB (Basic Analysis)	SW
2831	7	14.753677	I-20 WB (Basic Analysis)	SW
2831	8	15.685866	I-20 WB (Basic Analysis)	SW
2831	9	15.437133	I-20 WB (Basic Analysis)	SW
2831	10	13.848379	I-20 WB (Basic Analysis)	SW
2837	1	13.114283	I-20 WB (Merge Analysis)	SW
2837	2	12.959289	I-20 WB (Merge Analysis)	SW
2837	3	13.004876	I-20 WB (Merge Analysis)	SW
2837	4	12.807942	I-20 WB (Merge Analysis)	SW

ID	Run	Density	Name (Type)	Direction
2837	5	12.731357	I-20 WB (Merge Analysis)	SW
2837	6	12.880881	I-20 WB (Merge Analysis)	SW
2837	7	13.145282	I-20 WB (Merge Analysis)	SW
2837	8	13.241925	I-20 WB (Merge Analysis)	SW
2837	9	13.555559	I-20 WB (Merge Analysis)	SW
2837	10	13.438858	I-20 WB (Merge Analysis)	SW
2838	1	31.279834	I-20 WB (Basic Analysis)	SW
2838	2	34.626379	I-20 WB (Basic Analysis)	SW
2838	3	29.684006	I-20 WB (Basic Analysis)	SW
2838	4	24.128831	I-20 WB (Basic Analysis)	SW
2838	5	24.529735	I-20 WB (Basic Analysis)	SW
2838	6	28.019524	I-20 WB (Basic Analysis)	SW
2838	7	28.463406	I-20 WB (Basic Analysis)	SW
2838	8	31.297797	I-20 WB (Basic Analysis)	SW
2838	9	27.928539	I-20 WB (Basic Analysis)	SW
2838	10	25.560044	I-20 WB (Basic Analysis)	SW
2839	1	51.333525	I-20 WB (Diverge Analysis)	SW
2839	2	55.106421	I-20 WB (Diverge Analysis)	SW
2839	3	52.148747	I-20 WB (Diverge Analysis)	SW
2839	4	26.628143	I-20 WB (Diverge Analysis)	SW
2839	5	32.249358	I-20 WB (Diverge Analysis)	SW
2839	6	44.252538	I-20 WB (Diverge Analysis)	SW
2839	7	42.413298	I-20 WB (Diverge Analysis)	SW
2839	8	52.586316	I-20 WB (Diverge Analysis)	SW
2839	9	43.194022	I-20 WB (Diverge Analysis)	SW
2839	10	34.419045	I-20 WB (Diverge Analysis)	SW
2840	1	51.333525	I-20 WB (Diverge Analysis)	SW
2840	2	55.106421	I-20 WB (Diverge Analysis)	SW
2840	3	52.148747	I-20 WB (Diverge Analysis)	SW
2840	4	26.628143	I-20 WB (Diverge Analysis)	SW
2840	5	32.249358	I-20 WB (Diverge Analysis)	SW
2840	6	44.252538	I-20 WB (Diverge Analysis)	SW
2840	7	42.413298	I-20 WB (Diverge Analysis)	SW
2840	8	52.586316	I-20 WB (Diverge Analysis)	SW
2840	9	43.194022	I-20 WB (Diverge Analysis)	SW
2840	10	34.419045	I-20 WB (Diverge Analysis)	SW
9153	1	30.778063	I-20 EB (Basic Analysis)	NE
9153	2	29.976652	I-20 EB (Basic Analysis)	NE
9153	3	30.33983	I-20 EB (Basic Analysis)	NE
9153	4	29.596977	I-20 EB (Basic Analysis)	NE
9153	5	31.133544	I-20 EB (Basic Analysis)	NE
9153	6	30.706582	I-20 EB (Basic Analysis)	NE
9153	7	30.01844	I-20 EB (Basic Analysis)	NE
9153	8	32.339648	I-20 EB (Basic Analysis)	NE
9153	9	30.93972	I-20 EB (Basic Analysis)	NE
9153	10	30.22876	I-20 EB (Basic Analysis)	NE
8830	1	46.013303	CD ROAD I-26 EB (Weaving Analysis)	SE
8830	2	32.852438	CD ROAD I-26 EB (Weaving Analysis)	SE
8830	3	44.433116	CD ROAD I-26 EB (Weaving Analysis)	SE
8830	4	42.351982	CD ROAD I-26 EB (Weaving Analysis)	SE
8830	5	34.60943	CD ROAD I-26 EB (Weaving Analysis)	SE
8830	6	31.323818	CD ROAD I-26 EB (Weaving Analysis)	SE
8830	7	46.134856	CD ROAD I-26 EB (Weaving Analysis)	SE

ID	Run	Density	Name (Type)	Direction
8830	8	31.725311	CD ROAD I-26 EB (Weaving Analysis)	SE
8830	9	48.311758	CD ROAD I-26 EB (Weaving Analysis)	SE
8830	10	42.506686	CD ROAD I-26 EB (Weaving Analysis)	SE
2852	1	12.054879	I-20 WB (Merge Analysis)	SW
2852	2	14.027791	I-20 WB (Merge Analysis)	SW
2852	3	12.544862	I-20 WB (Merge Analysis)	SW
2852	4	12.856374	I-20 WB (Merge Analysis)	SW
2852	5	13.550787	I-20 WB (Merge Analysis)	SW
2852	6	12.466984	I-20 WB (Merge Analysis)	SW
2852	7	12.181431	I-20 WB (Merge Analysis)	SW
2852	8	11.652509	I-20 WB (Merge Analysis)	SW
2852	9	12.84664	I-20 WB (Merge Analysis)	SW
2852	10	11.376691	I-20 WB (Merge Analysis)	SW
8802	1	28.902706	CD ROAD I-20 EB (Basic Analysis)	NE
8802	2	29.367266	CD ROAD I-20 EB (Basic Analysis)	NE
8802	3	27.460636	CD ROAD I-20 EB (Basic Analysis)	NE
8802	4	29.041429	CD ROAD I-20 EB (Basic Analysis)	NE
8802	5	28.657522	CD ROAD I-20 EB (Basic Analysis)	NE
8802	6	28.460729	CD ROAD I-20 EB (Basic Analysis)	NE
8802	7	30.402847	CD ROAD I-20 EB (Basic Analysis)	NE
8802	8	28.744627	CD ROAD I-20 EB (Basic Analysis)	NE
8802	9	28.554286	CD ROAD I-20 EB (Basic Analysis)	NE
8802	10	28.786566	CD ROAD I-20 EB (Basic Analysis)	NE
9257	1	17.147807	I-126 NB (Basic Analysis)	NW
9257	2	18.985691	I-126 NB (Basic Analysis)	NW
9257	3	14.130903	I-126 NB (Basic Analysis)	NW
9257	4	19.59254	I-126 NB (Basic Analysis)	NW
9257	5	15.535323	I-126 NB (Basic Analysis)	NW
9257	6	20.095357	I-126 NB (Basic Analysis)	NW
9257	7	16.540958	I-126 NB (Basic Analysis)	NW
9257	8	16.40225	I-126 NB (Basic Analysis)	NW
9257	9	16.315558	I-126 NB (Basic Analysis)	NW
9257	10	15.448631	I-126 NB (Basic Analysis)	NW
4563	1	40.85376	I-126 SB (Merge Analysis)	E
4563	2	44.944349	I-126 SB (Merge Analysis)	E
4563	3	40.219013	I-126 SB (Merge Analysis)	E
4563	4	42.380831	I-126 SB (Merge Analysis)	E
4563	5	39.136571	I-126 SB (Merge Analysis)	E
4563	6	44.508919	I-126 SB (Merge Analysis)	E
4563	7	41.375049	I-126 SB (Merge Analysis)	E
4563	8	43.932434	I-126 SB (Merge Analysis)	E
4563	9	44.263606	I-126 SB (Merge Analysis)	E
4563	10	38.587684	I-126 SB (Merge Analysis)	E
4566	1	15.1801	I-126 NB (Basic Analysis)	W
4566	2	15.44679	I-126 NB (Basic Analysis)	W
4566	3	15.818797	I-126 NB (Basic Analysis)	W
4566	4	14.232246	I-126 NB (Basic Analysis)	W
4566	5	15.729618	I-126 NB (Basic Analysis)	W
4566	6	15.381392	I-126 NB (Basic Analysis)	W
4566	7	14.86245	I-126 NB (Basic Analysis)	W
4566	8	15.321939	I-126 NB (Basic Analysis)	W
4566	9	15.265033	I-126 NB (Basic Analysis)	W
4566	10	15.197087	I-126 NB (Basic Analysis)	W

ID	Run	Density	Name (Type)	Direction
4570	1	13.234583	I-126 NB (Basic Analysis)	W
4570	2	13.90374	I-126 NB (Basic Analysis)	W
4570	3	13.159703	I-126 NB (Basic Analysis)	W
4570	4	12.810268	I-126 NB (Basic Analysis)	W
4570	5	13.953659	I-126 NB (Basic Analysis)	W
4570	6	13.308273	I-126 NB (Basic Analysis)	W
4570	7	12.817399	I-126 NB (Basic Analysis)	W
4570	8	12.836416	I-126 NB (Basic Analysis)	W
4570	9	13.119292	I-126 NB (Basic Analysis)	W
4570	10	13.106218	I-126 NB (Basic Analysis)	W
4573	1	51.14073	I-126 SB (Basic Analysis)	E
4573	2	53.275086	I-126 SB (Basic Analysis)	E
4573	3	46.835355	I-126 SB (Basic Analysis)	E
4573	4	48.438086	I-126 SB (Basic Analysis)	E
4573	5	45.743299	I-126 SB (Basic Analysis)	E
4573	6	52.492052	I-126 SB (Basic Analysis)	E
4573	7	48.228579	I-126 SB (Basic Analysis)	E
4573	8	51.470704	I-126 SB (Basic Analysis)	E
4573	9	53.408647	I-126 SB (Basic Analysis)	E
4573	10	45.070256	I-126 SB (Basic Analysis)	E
4579	1	30.297099	I-126 SB (Diverge Analysis)	E
4579	2	31.245996	I-126 SB (Diverge Analysis)	E
4579	3	26.442156	I-126 SB (Diverge Analysis)	E
4579	4	27.82681	I-126 SB (Diverge Analysis)	E
4579	5	26.965815	I-126 SB (Diverge Analysis)	E
4579	6	28.071735	I-126 SB (Diverge Analysis)	E
4579	7	25.841864	I-126 SB (Diverge Analysis)	E
4579	8	28.808014	I-126 SB (Diverge Analysis)	E
4579	9	33.194128	I-126 SB (Diverge Analysis)	E
4579	10	26.354254	I-126 SB (Diverge Analysis)	E
4589	1	12.830396	I-126 NB (Merge Analysis)	NW
4589	2	12.187996	I-126 NB (Merge Analysis)	NW
4589	3	11.551463	I-126 NB (Merge Analysis)	NW
4589	4	10.46613	I-126 NB (Merge Analysis)	NW
4589	5	12.53413	I-126 NB (Merge Analysis)	NW
4589	6	12.026663	I-126 NB (Merge Analysis)	NW
4589	7	12.48133	I-126 NB (Merge Analysis)	NW
4589	8	11.982663	I-126 NB (Merge Analysis)	NW
4589	9	12.695463	I-126 NB (Merge Analysis)	NW
4589	10	13.023996	I-126 NB (Merge Analysis)	NW
4599	1	10.564484	I-126 NB (Diverge Analysis)	NW
4599	2	10.988368	I-126 NB (Diverge Analysis)	NW
4599	3	9.673242	I-126 NB (Diverge Analysis)	NW
4599	4	9.785553	I-126 NB (Diverge Analysis)	NW
4599	5	10.089879	I-126 NB (Diverge Analysis)	NW
4599	6	10.126109	I-126 NB (Diverge Analysis)	NW
4599	7	10.444927	I-126 NB (Diverge Analysis)	NW
4599	8	10.064519	I-126 NB (Diverge Analysis)	NW
4599	9	10.05365	I-126 NB (Diverge Analysis)	NW
4599	10	9.915978	I-126 NB (Diverge Analysis)	NW
4601	1	12.523802	I-126 NB (Basic Analysis)	NW
4601	2	11.723127	I-126 NB (Basic Analysis)	NW
4601	3	12.227166	I-126 NB (Basic Analysis)	NW

ID	Run	Density	Name (Type)	Direction
4601	4	12.552742	I-126 NB (Basic Analysis)	NW
4601	5	11.25044	I-126 NB (Basic Analysis)	NW
4601	6	11.809947	I-126 NB (Basic Analysis)	NW
4601	7	10.874219	I-126 NB (Basic Analysis)	NW
4601	8	13.172541	I-126 NB (Basic Analysis)	NW
4601	9	13.112249	I-126 NB (Basic Analysis)	NW
4601	10	12.429746	I-126 NB (Basic Analysis)	NW
9254	1	11.897733	Ↄ ROAD I-20 WB TO I-20 (Basic Analysi	NW
9254	2	9.788307	Ↄ ROAD I-20 WB TO I-20 (Basic Analysi	NW
9254	3	11.587523	Ↄ ROAD I-20 WB TO I-20 (Basic Analysi	NW
9254	4	11.043463	Ↄ ROAD I-20 WB TO I-20 (Basic Analysi	NW
9254	5	11.372763	Ↄ ROAD I-20 WB TO I-20 (Basic Analysi	NW
9254	6	9.306289	Ↄ ROAD I-20 WB TO I-20 (Basic Analysi	NW
9254	7	11.439577	Ↄ ROAD I-20 WB TO I-20 (Basic Analysi	NW
9254	8	9.79308	Ↄ ROAD I-20 WB TO I-20 (Basic Analysi	NW
9254	9	12.155445	Ↄ ROAD I-20 WB TO I-20 (Basic Analysi	NW
9254	10	11.496846	Ↄ ROAD I-20 WB TO I-20 (Basic Analysi	NW
9067	1	18.217348	I-26 EB (Merge Analysis)	S
9067	2	18.435427	I-26 EB (Merge Analysis)	S
9067	3	19.38952	I-26 EB (Merge Analysis)	S
9067	4	17.461862	I-26 EB (Merge Analysis)	S
9067	5	18.038212	I-26 EB (Merge Analysis)	S
9067	6	19.4713	I-26 EB (Merge Analysis)	S
9067	7	17.621526	I-26 EB (Merge Analysis)	S
9067	8	18.641822	I-26 EB (Merge Analysis)	S
9067	9	17.726671	I-26 EB (Merge Analysis)	S
9067	10	17.878548	I-26 EB (Merge Analysis)	S
4604	1	14.999279	I-26 WB (Basic Analysis)	NW
4604	2	14.675218	I-26 WB (Basic Analysis)	NW
4604	3	14.252219	I-26 WB (Basic Analysis)	NW
4604	4	15.390733	I-26 WB (Basic Analysis)	NW
4604	5	14.987091	I-26 WB (Basic Analysis)	NW
4604	6	15.396468	I-26 WB (Basic Analysis)	NW
4604	7	15.354168	I-26 WB (Basic Analysis)	NW
4604	8	14.207051	I-26 WB (Basic Analysis)	NW
4604	9	15.081011	I-26 WB (Basic Analysis)	NW
4604	10	15.113991	I-26 WB (Basic Analysis)	NW
9063	1	23.980062	I-26 WB (Basic Analysis)	NW
9063	2	24.520407	I-26 WB (Basic Analysis)	NW
9063	3	23.507531	I-26 WB (Basic Analysis)	NW
9063	4	24.06014	I-26 WB (Basic Analysis)	NW
9063	5	25.010252	I-26 WB (Basic Analysis)	NW
9063	6	24.517521	I-26 WB (Basic Analysis)	NW
9063	7	23.894934	I-26 WB (Basic Analysis)	NW
9063	8	24.981396	I-26 WB (Basic Analysis)	NW
9063	9	24.953981	I-26 WB (Basic Analysis)	NW
9063	10	25.489998	I-26 WB (Basic Analysis)	NW
4610	1	14.159477	I-26 EB (Basic Analysis)	SE
4610	2	14.361345	I-26 EB (Basic Analysis)	SE
4610	3	15.48471	I-26 EB (Basic Analysis)	SE
4610	4	14.426382	I-26 EB (Basic Analysis)	SE
4610	5	14.104575	I-26 EB (Basic Analysis)	SE
4610	6	14.379927	I-26 EB (Basic Analysis)	SE

ID	Run	Density	Name (Type)	Direction
4610	7	13.828379	I-26 EB (Basic Analysis)	SE
4610	8	13.940716	I-26 EB (Basic Analysis)	SE
4610	9	13.731246	I-26 EB (Basic Analysis)	SE
4610	10	14.030247	I-26 EB (Basic Analysis)	SE
8828	1	19.103249	(Weaving Analysis)	NW
8828	2	19.427176	(Weaving Analysis)	NW
8828	3	18.551561	(Weaving Analysis)	NW
8828	4	19.180856	(Weaving Analysis)	NW
8828	5	19.643127	(Weaving Analysis)	NW
8828	6	19.835458	(Weaving Analysis)	NW
8828	7	18.863678	(Weaving Analysis)	NW
8828	8	19.491286	(Weaving Analysis)	NW
8828	9	20.167821	(Weaving Analysis)	NW
8828	10	20.267361	(Weaving Analysis)	NW
6223	1	35.771201	I-26 EB (Basic Analysis)	SE
6223	2	35.984957	I-26 EB (Basic Analysis)	SE
6223	3	37.976452	I-26 EB (Basic Analysis)	SE
6223	4	37.196242	I-26 EB (Basic Analysis)	SE
6223	5	36.715291	I-26 EB (Basic Analysis)	SE
6223	6	36.422267	I-26 EB (Basic Analysis)	SE
6223	7	37.621083	I-26 EB (Basic Analysis)	SE
6223	8	36.538052	I-26 EB (Basic Analysis)	SE
6223	9	37.389513	I-26 EB (Basic Analysis)	SE
6223	10	36.887187	I-26 EB (Basic Analysis)	SE
4646	1	21.584789	I-26 WB (Basic Analysis)	NW
4646	2	22.247775	I-26 WB (Basic Analysis)	NW
4646	3	20.864684	I-26 WB (Basic Analysis)	NW
4646	4	21.599068	I-26 WB (Basic Analysis)	NW
4646	5	23.071918	I-26 WB (Basic Analysis)	NW
4646	6	23.843022	I-26 WB (Basic Analysis)	NW
4646	7	20.672928	I-26 WB (Basic Analysis)	NW
4646	8	21.641907	I-26 WB (Basic Analysis)	NW
4646	9	21.52767	I-26 WB (Basic Analysis)	NW
4646	10	24.024578	I-26 WB (Basic Analysis)	NW
4651	1	22.003478	I-26 WB (Basic Analysis)	NW
4651	2	20.356421	I-26 WB (Basic Analysis)	NW
4651	3	22.074378	I-26 WB (Basic Analysis)	NW
4651	4	20.551396	I-26 WB (Basic Analysis)	NW
4651	5	21.768963	I-26 WB (Basic Analysis)	NW
4651	6	20.904531	I-26 WB (Basic Analysis)	NW
4651	7	22.097557	I-26 WB (Basic Analysis)	NW
4651	8	21.852134	I-26 WB (Basic Analysis)	NW
4651	9	21.651706	I-26 WB (Basic Analysis)	NW
4651	10	20.832268	I-26 WB (Basic Analysis)	NW
4654	1	26.731244	I-26 WB (Merge Analysis)	NW
4654	2	27.128114	I-26 WB (Merge Analysis)	NW
4654	3	25.861601	I-26 WB (Merge Analysis)	NW
4654	4	27.314621	I-26 WB (Merge Analysis)	NW
4654	5	26.371242	I-26 WB (Merge Analysis)	NW
4654	6	27.206187	I-26 WB (Merge Analysis)	NW
4654	7	26.653172	I-26 WB (Merge Analysis)	NW
4654	8	27.125946	I-26 WB (Merge Analysis)	NW
4654	9	27.637756	I-26 WB (Merge Analysis)	NW

ID	Run	Density	Name (Type)	Direction
4654	10	29.058247	I-26 WB (Merge Analysis)	NW
8986	1	67.935045	I-26 EB (Basic Analysis)	SE
8986	2	69.181505	I-26 EB (Basic Analysis)	SE
8986	3	72.727826	I-26 EB (Basic Analysis)	SE
8986	4	73.000901	I-26 EB (Basic Analysis)	SE
8986	5	68.077455	I-26 EB (Basic Analysis)	SE
8986	6	71.758845	I-26 EB (Basic Analysis)	SE
8986	7	69.695359	I-26 EB (Basic Analysis)	SE
8986	8	71.117997	I-26 EB (Basic Analysis)	SE
8986	9	70.475681	I-26 EB (Basic Analysis)	SE
8986	10	68.966421	I-26 EB (Basic Analysis)	SE
9258	1	40.99	I-126 SB (Basic Analysis)	E
9258	2	42.026154	I-126 SB (Basic Analysis)	E
9258	3	36.323723	I-126 SB (Basic Analysis)	E
9258	4	38.102472	I-126 SB (Basic Analysis)	E
9258	5	36.412711	I-126 SB (Basic Analysis)	E
9258	6	36.707295	I-126 SB (Basic Analysis)	E
9258	7	35.348939	I-126 SB (Basic Analysis)	E
9258	8	39.62653	I-126 SB (Basic Analysis)	E
9258	9	43.994133	I-126 SB (Basic Analysis)	E
9258	10	34.682036	I-126 SB (Basic Analysis)	E
4677	1	27.793734	I-26 WB (Basic Analysis)	NW
4677	2	27.906472	I-26 WB (Basic Analysis)	NW
4677	3	27.74003	I-26 WB (Basic Analysis)	NW
4677	4	27.623707	I-26 WB (Basic Analysis)	NW
4677	5	28.525031	I-26 WB (Basic Analysis)	NW
4677	6	27.947408	I-26 WB (Basic Analysis)	NW
4677	7	28.262828	I-26 WB (Basic Analysis)	NW
4677	8	28.651583	I-26 WB (Basic Analysis)	NW
4677	9	28.793555	I-26 WB (Basic Analysis)	NW
4677	10	28.977145	I-26 WB (Basic Analysis)	NW
9119	1	25.482048	I-26 EB (Diverge Analysis)	SE
9119	2	24.47226	I-26 EB (Diverge Analysis)	SE
9119	3	24.297369	I-26 EB (Diverge Analysis)	SE
9119	4	24.268221	I-26 EB (Diverge Analysis)	SE
9119	5	24.732515	I-26 EB (Diverge Analysis)	SE
9119	6	24.763745	I-26 EB (Diverge Analysis)	SE
9119	7	23.608215	I-26 EB (Diverge Analysis)	SE
9119	8	24.220334	I-26 EB (Diverge Analysis)	SE
9119	9	24.178693	I-26 EB (Diverge Analysis)	SE
9119	10	23.606133	I-26 EB (Diverge Analysis)	SE
4687	1	41.373732	I-26 EB (Basic Analysis)	SE
4687	2	40.809603	I-26 EB (Basic Analysis)	SE
4687	3	39.930144	I-26 EB (Basic Analysis)	SE
4687	4	41.14407	I-26 EB (Basic Analysis)	SE
4687	5	42.654187	I-26 EB (Basic Analysis)	SE
4687	6	38.886642	I-26 EB (Basic Analysis)	SE
4687	7	40.048621	I-26 EB (Basic Analysis)	SE
4687	8	38.941323	I-26 EB (Basic Analysis)	SE
4687	9	40.304711	I-26 EB (Basic Analysis)	SE
4687	10	41.338189	I-26 EB (Basic Analysis)	SE
4701	1	20.823172	I-26 WB (Weaving Analysis)	NW
4701	2	21.291767	I-26 WB (Weaving Analysis)	NW

ID	Run	Density	Name (Type)	Direction
4701	3	21.192922	I-26 WB (Weaving Analysis)	NW
4701	4	21.59196	I-26 WB (Weaving Analysis)	NW
4701	5	21.736565	I-26 WB (Weaving Analysis)	NW
4701	6	22.046521	I-26 WB (Weaving Analysis)	NW
4701	7	22.296072	I-26 WB (Weaving Analysis)	NW
4701	8	21.87751	I-26 WB (Weaving Analysis)	NW
4701	9	21.851273	I-26 WB (Weaving Analysis)	NW
4701	10	22.226515	I-26 WB (Weaving Analysis)	NW
9252	1	24.506364	I-26 EB (Basic Analysis)	SW
9252	2	25.791427	I-26 EB (Basic Analysis)	SW
9252	3	25.137623	I-26 EB (Basic Analysis)	SW
9252	4	25.498342	I-26 EB (Basic Analysis)	SW
9252	5	24.528909	I-26 EB (Basic Analysis)	SW
9252	6	24.371095	I-26 EB (Basic Analysis)	SW
9252	7	25.340527	I-26 EB (Basic Analysis)	SW
9252	8	24.461275	I-26 EB (Basic Analysis)	SW
9252	9	27.820473	I-26 EB (Basic Analysis)	SW
9252	10	25.295438	I-26 EB (Basic Analysis)	SW
9301	1	34.074187	I-20 WB (Basic Analysis)	SW
9301	2	35.225167	I-20 WB (Basic Analysis)	SW
9301	3	34.436083	I-20 WB (Basic Analysis)	SW
9301	4	35.029088	I-20 WB (Basic Analysis)	SW
9301	5	35.559821	I-20 WB (Basic Analysis)	SW
9301	6	35.566075	I-20 WB (Basic Analysis)	SW
9301	7	35.097131	I-20 WB (Basic Analysis)	SW
9301	8	35.579062	I-20 WB (Basic Analysis)	SW
9301	9	36.426638	I-20 WB (Basic Analysis)	SW
9301	10	35.525231	I-20 WB (Basic Analysis)	SW
9118	1	26.760121	I-26 EB (Diverge Analysis)	SE
9118	2	27.806915	I-26 EB (Diverge Analysis)	SE
9118	3	26.466437	I-26 EB (Diverge Analysis)	SE
9118	4	27.562663	I-26 EB (Diverge Analysis)	SE
9118	5	27.812731	I-26 EB (Diverge Analysis)	SE
9118	6	26.585655	I-26 EB (Diverge Analysis)	SE
9118	7	25.838361	I-26 EB (Diverge Analysis)	SE
9118	8	25.594109	I-26 EB (Diverge Analysis)	SE
9118	9	26.181477	I-26 EB (Diverge Analysis)	SE
9118	10	27.309688	I-26 EB (Diverge Analysis)	SE
9064	1	26.888754	I-26 WB (Diverge Analysis)	NW
9064	2	28.676804	I-26 WB (Diverge Analysis)	NW
9064	3	28.346439	I-26 WB (Diverge Analysis)	NW
9064	4	27.786406	I-26 WB (Diverge Analysis)	NW
9064	5	28.110105	I-26 WB (Diverge Analysis)	NW
9064	6	27.736537	I-26 WB (Diverge Analysis)	NW
9064	7	27.897026	I-26 WB (Diverge Analysis)	NW
9064	8	28.723954	I-26 WB (Diverge Analysis)	NW
9064	9	28.620588	I-26 WB (Diverge Analysis)	NW
9064	10	28.974208	I-26 WB (Diverge Analysis)	NW
4712	1	22.339859	I-26 WB (Basic Analysis)	NW
4712	2	23.099581	I-26 WB (Basic Analysis)	NW
4712	3	21.667198	I-26 WB (Basic Analysis)	NW
4712	4	21.629624	I-26 WB (Basic Analysis)	NW
4712	5	22.106169	I-26 WB (Basic Analysis)	NW

ID	Run	Density	Name (Type)	Direction
4712	6	21.370274	I-26 WB (Basic Analysis)	NW
4712	7	21.500407	I-26 WB (Basic Analysis)	NW
4712	8	22.264712	I-26 WB (Basic Analysis)	NW
4712	9	23.440494	I-26 WB (Basic Analysis)	NW
4712	10	22.852144	I-26 WB (Basic Analysis)	NW
4714	1	37.023292	I-26 EB (Basic Analysis)	SE
4714	2	36.158849	I-26 EB (Basic Analysis)	SE
4714	3	35.214952	I-26 EB (Basic Analysis)	SE
4714	4	35.515283	I-26 EB (Basic Analysis)	SE
4714	5	37.056662	I-26 EB (Basic Analysis)	SE
4714	6	35.288843	I-26 EB (Basic Analysis)	SE
4714	7	35.178404	I-26 EB (Basic Analysis)	SE
4714	8	34.642099	I-26 EB (Basic Analysis)	SE
4714	9	35.36909	I-26 EB (Basic Analysis)	SE
4714	10	36.179506	I-26 EB (Basic Analysis)	SE
4720	1	28.613028	I-26 EB (Merge Analysis)	SE
4720	2	29.783823	I-26 EB (Merge Analysis)	SE
4720	3	27.851664	I-26 EB (Merge Analysis)	SE
4720	4	29.43363	I-26 EB (Merge Analysis)	SE
4720	5	34.486165	I-26 EB (Merge Analysis)	SE
4720	6	27.654789	I-26 EB (Merge Analysis)	SE
4720	7	28.261093	I-26 EB (Merge Analysis)	SE
4720	8	26.229626	I-26 EB (Merge Analysis)	SE
4720	9	26.586788	I-26 EB (Merge Analysis)	SE
4720	10	30.268169	I-26 EB (Merge Analysis)	SE
4725	1	21.319331	I-26 WB (Merge Analysis)	NW
4725	2	22.451707	I-26 WB (Merge Analysis)	NW
4725	3	21.720523	I-26 WB (Merge Analysis)	NW
4725	4	22.328474	I-26 WB (Merge Analysis)	NW
4725	5	22.275072	I-26 WB (Merge Analysis)	NW
4725	6	24.144108	I-26 WB (Merge Analysis)	NW
4725	7	22.288765	I-26 WB (Merge Analysis)	NW
4725	8	22.822775	I-26 WB (Merge Analysis)	NW
4725	9	23.004886	I-26 WB (Merge Analysis)	NW
4725	10	23.063764	I-26 WB (Merge Analysis)	NW
4727	1	21.319331	I-26 WB (Merge Analysis)	NW
4727	2	22.451707	I-26 WB (Merge Analysis)	NW
4727	3	21.720523	I-26 WB (Merge Analysis)	NW
4727	4	22.328474	I-26 WB (Merge Analysis)	NW
4727	5	22.275072	I-26 WB (Merge Analysis)	NW
4727	6	24.144108	I-26 WB (Merge Analysis)	NW
4727	7	22.288765	I-26 WB (Merge Analysis)	NW
4727	8	22.822775	I-26 WB (Merge Analysis)	NW
4727	9	23.004886	I-26 WB (Merge Analysis)	NW
4727	10	23.063764	I-26 WB (Merge Analysis)	NW
4728	1	18.790008	I-26 WB (Diverge Analysis)	NW
4728	2	21.052171	I-26 WB (Diverge Analysis)	NW
4728	3	20.54606	I-26 WB (Diverge Analysis)	NW
4728	4	18.150979	I-26 WB (Diverge Analysis)	NW
4728	5	19.81501	I-26 WB (Diverge Analysis)	NW
4728	6	18.951044	I-26 WB (Diverge Analysis)	NW
4728	7	19.380471	I-26 WB (Diverge Analysis)	NW
4728	8	19.216879	I-26 WB (Diverge Analysis)	NW

ID	Run	Density	Name (Type)	Direction
4728	9	20.428478	I-26 WB (Diverge Analysis)	NW
4728	10	19.687205	I-26 WB (Diverge Analysis)	NW
4729	1	18.790008	I-26 WB (Diverge Analysis)	NW
4729	2	21.052171	I-26 WB (Diverge Analysis)	NW
4729	3	20.54606	I-26 WB (Diverge Analysis)	NW
4729	4	18.150979	I-26 WB (Diverge Analysis)	NW
4729	5	19.81501	I-26 WB (Diverge Analysis)	NW
4729	6	18.951044	I-26 WB (Diverge Analysis)	NW
4729	7	19.380471	I-26 WB (Diverge Analysis)	NW
4729	8	19.216879	I-26 WB (Diverge Analysis)	NW
4729	9	20.428478	I-26 WB (Diverge Analysis)	NW
4729	10	19.687205	I-26 WB (Diverge Analysis)	NW
4730	1	18.790008	I-26 WB (Diverge Analysis)	NW
4730	2	21.052171	I-26 WB (Diverge Analysis)	NW
4730	3	20.54606	I-26 WB (Diverge Analysis)	NW
4730	4	18.150979	I-26 WB (Diverge Analysis)	NW
4730	5	19.81501	I-26 WB (Diverge Analysis)	NW
4730	6	18.951044	I-26 WB (Diverge Analysis)	NW
4730	7	19.380471	I-26 WB (Diverge Analysis)	NW
4730	8	19.216879	I-26 WB (Diverge Analysis)	NW
4730	9	20.428478	I-26 WB (Diverge Analysis)	NW
4730	10	19.687205	I-26 WB (Diverge Analysis)	NW
4732	1	19.873353	I-26 WB (Basic Analysis)	NW
4732	2	18.951926	I-26 WB (Basic Analysis)	NW
4732	3	18.281197	I-26 WB (Basic Analysis)	NW
4732	4	19.739207	I-26 WB (Basic Analysis)	NW
4732	5	18.276799	I-26 WB (Basic Analysis)	NW
4732	6	19.171837	I-26 WB (Basic Analysis)	NW
4732	7	20.944319	I-26 WB (Basic Analysis)	NW
4732	8	19.349965	I-26 WB (Basic Analysis)	NW
4732	9	20.91793	I-26 WB (Basic Analysis)	NW
4732	10	18.457126	I-26 WB (Basic Analysis)	NW
4733	1	34.80651	I-26 EB (Basic Analysis)	SE
4733	2	32.863129	I-26 EB (Basic Analysis)	SE
4733	3	33.045985	I-26 EB (Basic Analysis)	SE
4733	4	33.532894	I-26 EB (Basic Analysis)	SE
4733	5	37.279324	I-26 EB (Basic Analysis)	SE
4733	6	32.525057	I-26 EB (Basic Analysis)	SE
4733	7	32.792963	I-26 EB (Basic Analysis)	SE
4733	8	32.050906	I-26 EB (Basic Analysis)	SE
4733	9	31.989245	I-26 EB (Basic Analysis)	SE
4733	10	32.967314	I-26 EB (Basic Analysis)	SE
4736	1	40.081231	I-26 EB (Basic Analysis)	SE
4736	2	43.231108	I-26 EB (Basic Analysis)	SE
4736	3	36.523272	I-26 EB (Basic Analysis)	SE
4736	4	36.842086	I-26 EB (Basic Analysis)	SE
4736	5	37.977062	I-26 EB (Basic Analysis)	SE
4736	6	35.745367	I-26 EB (Basic Analysis)	SE
4736	7	39.762417	I-26 EB (Basic Analysis)	SE
4736	8	37.747516	I-26 EB (Basic Analysis)	SE
4736	9	41.802823	I-26 EB (Basic Analysis)	SE
4736	10	42.083379	I-26 EB (Basic Analysis)	SE
4737	1	31.590767	I-26 EB (Diverge Analysis)	SE

ID	Run	Density	Name (Type)	Direction
4737	2	29.406019	I-26 EB (Diverge Analysis)	SE
4737	3	27.646783	I-26 EB (Diverge Analysis)	SE
4737	4	29.47465	I-26 EB (Diverge Analysis)	SE
4737	5	30.373714	I-26 EB (Diverge Analysis)	SE
4737	6	29.973367	I-26 EB (Diverge Analysis)	SE
4737	7	28.463489	I-26 EB (Diverge Analysis)	SE
4737	8	28.113472	I-26 EB (Diverge Analysis)	SE
4737	9	29.703419	I-26 EB (Diverge Analysis)	SE
4737	10	28.765465	I-26 EB (Diverge Analysis)	SE
4739	1	19.027556	I-26 WB (Weaving Analysis)	NW
4739	2	17.301328	I-26 WB (Weaving Analysis)	NW
4739	3	17.069728	I-26 WB (Weaving Analysis)	NW
4739	4	17.444059	I-26 WB (Weaving Analysis)	NW
4739	5	18.798649	I-26 WB (Weaving Analysis)	NW
4739	6	17.831854	I-26 WB (Weaving Analysis)	NW
4739	7	19.151435	I-26 WB (Weaving Analysis)	NW
4739	8	18.791917	I-26 WB (Weaving Analysis)	NW
4739	9	17.742984	I-26 WB (Weaving Analysis)	NW
4739	10	18.058068	I-26 WB (Weaving Analysis)	NW
4741	1	22.959976	I-26 WB (Basic Analysis)	NW
4741	2	23.13935	I-26 WB (Basic Analysis)	NW
4741	3	24.865833	I-26 WB (Basic Analysis)	NW
4741	4	26.502628	I-26 WB (Basic Analysis)	NW
4741	5	19.596698	I-26 WB (Basic Analysis)	NW
4741	6	25.336691	I-26 WB (Basic Analysis)	NW
4741	7	19.641542	I-26 WB (Basic Analysis)	NW
4741	8	17.713262	I-26 WB (Basic Analysis)	NW
4741	9	25.381535	I-26 WB (Basic Analysis)	NW
4741	10	24.843411	I-26 WB (Basic Analysis)	NW
4742	1	15.179161	I-26 WB (Diverge Analysis)	NW
4742	2	15.753083	I-26 WB (Diverge Analysis)	NW
4742	3	15.757846	I-26 WB (Diverge Analysis)	NW
4742	4	15.057709	I-26 WB (Diverge Analysis)	NW
4742	5	15.755464	I-26 WB (Diverge Analysis)	NW
4742	6	15.472075	I-26 WB (Diverge Analysis)	NW
4742	7	13.219254	I-26 WB (Diverge Analysis)	NW
4742	8	15.310139	I-26 WB (Diverge Analysis)	NW
4742	9	17.015235	I-26 WB (Diverge Analysis)	NW
4742	10	15.002936	I-26 WB (Diverge Analysis)	NW
4745	1	28.907687	I-26 EB (Basic Analysis)	SE
4745	2	28.565318	I-26 EB (Basic Analysis)	SE
4745	3	28.950483	I-26 EB (Basic Analysis)	SE
4745	4	30.09697	I-26 EB (Basic Analysis)	SE
4745	5	28.195919	I-26 EB (Basic Analysis)	SE
4745	6	26.968345	I-26 EB (Basic Analysis)	SE
4745	7	29.164464	I-26 EB (Basic Analysis)	SE
4745	8	29.910018	I-26 EB (Basic Analysis)	SE
4745	9	30.349242	I-26 EB (Basic Analysis)	SE
4745	10	31.583574	I-26 EB (Basic Analysis)	SE
9039	1	55.912286	I-20 EB (Basic Analysis)	NE
9039	2	54.793019	I-20 EB (Basic Analysis)	NE
9039	3	58.109284	I-20 EB (Basic Analysis)	NE
9039	4	55.873465	I-20 EB (Basic Analysis)	NE

ID	Run	Density	Name (Type)	Direction
9039	5	56.767684	I-20 EB (Basic Analysis)	NE
9039	6	55.323741	I-20 EB (Basic Analysis)	NE
9039	7	57.299492	I-20 EB (Basic Analysis)	NE
9039	8	55.068017	I-20 EB (Basic Analysis)	NE
9039	9	56.932194	I-20 EB (Basic Analysis)	NE
9039	10	58.582183	I-20 EB (Basic Analysis)	NE
4753	1	15.24379	I-26 WB (Basic Analysis)	NW
4753	2	16.898387	I-26 WB (Basic Analysis)	NW
4753	3	17.057401	I-26 WB (Basic Analysis)	NW
4753	4	14.91287	I-26 WB (Basic Analysis)	NW
4753	5	17.7923	I-26 WB (Basic Analysis)	NW
4753	6	15.974391	I-26 WB (Basic Analysis)	NW
4753	7	18.125369	I-26 WB (Basic Analysis)	NW
4753	8	17.8847	I-26 WB (Basic Analysis)	NW
4753	9	16.2344	I-26 WB (Basic Analysis)	NW
4753	10	18.015778	I-26 WB (Basic Analysis)	NW
4755	1	31.778882	I-26 EB (Basic Analysis)	SE
4755	2	30.722918	I-26 EB (Basic Analysis)	SE
4755	3	31.572688	I-26 EB (Basic Analysis)	SE
4755	4	31.378991	I-26 EB (Basic Analysis)	SE
4755	5	31.422729	I-26 EB (Basic Analysis)	SE
4755	6	31.941338	I-26 EB (Basic Analysis)	SE
4755	7	30.904119	I-26 EB (Basic Analysis)	SE
4755	8	31.141555	I-26 EB (Basic Analysis)	SE
4755	9	31.922593	I-26 EB (Basic Analysis)	SE
4755	10	30.597953	I-26 EB (Basic Analysis)	SE
4756	1	25.482048	I-26 EB (Diverge Analysis)	SE
4756	2	24.47226	I-26 EB (Diverge Analysis)	SE
4756	3	24.297369	I-26 EB (Diverge Analysis)	SE
4756	4	24.268221	I-26 EB (Diverge Analysis)	SE
4756	5	24.732515	I-26 EB (Diverge Analysis)	SE
4756	6	24.763745	I-26 EB (Diverge Analysis)	SE
4756	7	23.608215	I-26 EB (Diverge Analysis)	SE
4756	8	24.220334	I-26 EB (Diverge Analysis)	SE
4756	9	24.178693	I-26 EB (Diverge Analysis)	SE
4756	10	23.606133	I-26 EB (Diverge Analysis)	SE
4760	1	9.298076	I-26 WB (Merge Analysis)	NW
4760	2	9.86792	I-26 WB (Merge Analysis)	NW
4760	3	9.824997	I-26 WB (Merge Analysis)	NW
4760	4	9.782073	I-26 WB (Merge Analysis)	NW
4760	5	9.711028	I-26 WB (Merge Analysis)	NW
4760	6	9.570417	I-26 WB (Merge Analysis)	NW
4760	7	10.012971	I-26 WB (Merge Analysis)	NW
4760	8	10.536932	I-26 WB (Merge Analysis)	NW
4760	9	9.684386	I-26 WB (Merge Analysis)	NW
4760	10	9.410565	I-26 WB (Merge Analysis)	NW
4761	1	16.500979	I-26 WB (Basic Analysis)	NW
4761	2	16.700287	I-26 WB (Basic Analysis)	NW
4761	3	16.163074	I-26 WB (Basic Analysis)	NW
4761	4	16.064119	I-26 WB (Basic Analysis)	NW
4761	5	17.006122	I-26 WB (Basic Analysis)	NW
4761	6	16.128826	I-26 WB (Basic Analysis)	NW
4761	7	16.727491	I-26 WB (Basic Analysis)	NW

ID	Run	Density	Name (Type)	Direction
4761	8	16.62704	I-26 WB (Basic Analysis)	NW
4761	9	16.682778	I-26 WB (Basic Analysis)	NW
4761	10	16.818729	I-26 WB (Basic Analysis)	NW
4762	1	16.500979	I-26 WB (Basic Analysis)	NW
4762	2	16.700287	I-26 WB (Basic Analysis)	NW
4762	3	16.163074	I-26 WB (Basic Analysis)	NW
4762	4	16.064119	I-26 WB (Basic Analysis)	NW
4762	5	17.006122	I-26 WB (Basic Analysis)	NW
4762	6	16.128826	I-26 WB (Basic Analysis)	NW
4762	7	16.727491	I-26 WB (Basic Analysis)	NW
4762	8	16.62704	I-26 WB (Basic Analysis)	NW
4762	9	16.682778	I-26 WB (Basic Analysis)	NW
4762	10	16.818729	I-26 WB (Basic Analysis)	NW
4763	1	16.500979	I-26 WB (Basic Analysis)	NW
4763	2	16.700287	I-26 WB (Basic Analysis)	NW
4763	3	16.163074	I-26 WB (Basic Analysis)	NW
4763	4	16.064119	I-26 WB (Basic Analysis)	NW
4763	5	17.006122	I-26 WB (Basic Analysis)	NW
4763	6	16.128826	I-26 WB (Basic Analysis)	NW
4763	7	16.727491	I-26 WB (Basic Analysis)	NW
4763	8	16.62704	I-26 WB (Basic Analysis)	NW
4763	9	16.682778	I-26 WB (Basic Analysis)	NW
4763	10	16.818729	I-26 WB (Basic Analysis)	NW
4764	1	16.500979	I-26 WB (Basic Analysis)	NW
4764	2	16.700287	I-26 WB (Basic Analysis)	NW
4764	3	16.163074	I-26 WB (Basic Analysis)	NW
4764	4	16.064119	I-26 WB (Basic Analysis)	NW
4764	5	17.006122	I-26 WB (Basic Analysis)	NW
4764	6	16.128826	I-26 WB (Basic Analysis)	NW
4764	7	16.727491	I-26 WB (Basic Analysis)	NW
4764	8	16.62704	I-26 WB (Basic Analysis)	NW
4764	9	16.682778	I-26 WB (Basic Analysis)	NW
4764	10	16.818729	I-26 WB (Basic Analysis)	NW
4769	1	28.300026	I-26 EB (Basic Analysis)	SE
4769	2	28.255364	I-26 EB (Basic Analysis)	SE
4769	3	27.909564	I-26 EB (Basic Analysis)	SE
4769	4	28.360818	I-26 EB (Basic Analysis)	SE
4769	5	28.735158	I-26 EB (Basic Analysis)	SE
4769	6	27.92729	I-26 EB (Basic Analysis)	SE
4769	7	27.772365	I-26 EB (Basic Analysis)	SE
4769	8	27.856927	I-26 EB (Basic Analysis)	SE
4769	9	28.160429	I-26 EB (Basic Analysis)	SE
4769	10	28.128702	I-26 EB (Basic Analysis)	SE
8539	1	15.186207	I-20 WB (Basic Analysis)	SW
8539	2	16.127275	I-20 WB (Basic Analysis)	SW
8539	3	14.555958	I-20 WB (Basic Analysis)	SW
8539	4	15.441557	I-20 WB (Basic Analysis)	SW
8539	5	15.075268	I-20 WB (Basic Analysis)	SW
8539	6	14.687938	I-20 WB (Basic Analysis)	SW
8539	7	15.115435	I-20 WB (Basic Analysis)	SW
8539	8	15.704559	I-20 WB (Basic Analysis)	SW
8539	9	16.140664	I-20 WB (Basic Analysis)	SW
8539	10	15.134563	I-20 WB (Basic Analysis)	SW

ID	Run	Density	Name (Type)	Direction
6079	1	11.564276	Ↄ ROAD I-20 WB TO I-20 (Basic Analysi	N
6079	2	9.556521	Ↄ ROAD I-20 WB TO I-20 (Basic Analysi	N
6079	3	12.154793	Ↄ ROAD I-20 WB TO I-20 (Basic Analysi	N
6079	4	10.855657	Ↄ ROAD I-20 WB TO I-20 (Basic Analysi	N
6079	5	10.727712	Ↄ ROAD I-20 WB TO I-20 (Basic Analysi	N
6079	6	9.339998	Ↄ ROAD I-20 WB TO I-20 (Basic Analysi	N
6079	7	10.806447	Ↄ ROAD I-20 WB TO I-20 (Basic Analysi	N
6079	8	9.70415	Ↄ ROAD I-20 WB TO I-20 (Basic Analysi	N
6079	9	10.176563	Ↄ ROAD I-20 WB TO I-20 (Basic Analysi	N
6079	10	10.432454	Ↄ ROAD I-20 WB TO I-20 (Basic Analysi	N
6149	1	20.475843	I-26 EB (Merge Analysis)	S
6149	2	22.1049	I-26 EB (Merge Analysis)	S
6149	3	21.80606	I-26 EB (Merge Analysis)	S
6149	4	21.375426	I-26 EB (Merge Analysis)	S
6149	5	20.29654	I-26 EB (Merge Analysis)	S
6149	6	20.664342	I-26 EB (Merge Analysis)	S
6149	7	20.733305	I-26 EB (Merge Analysis)	S
6149	8	20.477376	I-26 EB (Merge Analysis)	S
6149	9	20.543274	I-26 EB (Merge Analysis)	S
6149	10	21.65894	I-26 EB (Merge Analysis)	S
6150	1	20.475843	I-26 EB (Merge Analysis)	S
6150	2	22.1049	I-26 EB (Merge Analysis)	S
6150	3	21.80606	I-26 EB (Merge Analysis)	S
6150	4	21.375426	I-26 EB (Merge Analysis)	S
6150	5	20.29654	I-26 EB (Merge Analysis)	S
6150	6	20.664342	I-26 EB (Merge Analysis)	S
6150	7	20.733305	I-26 EB (Merge Analysis)	S
6150	8	20.477376	I-26 EB (Merge Analysis)	S
6150	9	20.543274	I-26 EB (Merge Analysis)	S
6150	10	21.65894	I-26 EB (Merge Analysis)	S
6151	1	20.475843	I-26 EB (Merge Analysis)	S
6151	2	22.1049	I-26 EB (Merge Analysis)	S
6151	3	21.80606	I-26 EB (Merge Analysis)	S
6151	4	21.375426	I-26 EB (Merge Analysis)	S
6151	5	20.29654	I-26 EB (Merge Analysis)	S
6151	6	20.664342	I-26 EB (Merge Analysis)	S
6151	7	20.733305	I-26 EB (Merge Analysis)	S
6151	8	20.477376	I-26 EB (Merge Analysis)	S
6151	9	20.543274	I-26 EB (Merge Analysis)	S
6151	10	21.65894	I-26 EB (Merge Analysis)	S
6152	1	26.127954	I-26 EB (Basic Analysis)	S
6152	2	25.781993	I-26 EB (Basic Analysis)	S
6152	3	25.125194	I-26 EB (Basic Analysis)	S
6152	4	24.197949	I-26 EB (Basic Analysis)	S
6152	5	23.704472	I-26 EB (Basic Analysis)	S
6152	6	25.239344	I-26 EB (Basic Analysis)	S
6152	7	24.533373	I-26 EB (Basic Analysis)	S
6152	8	24.489469	I-26 EB (Basic Analysis)	S
6152	9	22.691175	I-26 EB (Basic Analysis)	S
6152	10	24.608887	I-26 EB (Basic Analysis)	S
6159	1	34.028818	I-26 WB (Diverge Analysis)	N
6159	2	53.016995	I-26 WB (Diverge Analysis)	N
6159	3	79.039937	I-26 WB (Diverge Analysis)	N

ID	Run	Density	Name (Type)	Direction
6159	4	35.473939	I-26 WB (Diverge Analysis)	N
6159	5	64.339414	I-26 WB (Diverge Analysis)	N
6159	6	36.788244	I-26 WB (Diverge Analysis)	N
6159	7	59.585444	I-26 WB (Diverge Analysis)	N
6159	8	51.690377	I-26 WB (Diverge Analysis)	N
6159	9	58.759002	I-26 WB (Diverge Analysis)	N
6159	10	45.959142	I-26 WB (Diverge Analysis)	N
6160	1	34.028818	I-26 WB (Diverge Analysis)	N
6160	2	53.016995	I-26 WB (Diverge Analysis)	N
6160	3	79.039937	I-26 WB (Diverge Analysis)	N
6160	4	35.473939	I-26 WB (Diverge Analysis)	N
6160	5	64.339414	I-26 WB (Diverge Analysis)	N
6160	6	36.788244	I-26 WB (Diverge Analysis)	N
6160	7	59.585444	I-26 WB (Diverge Analysis)	N
6160	8	51.690377	I-26 WB (Diverge Analysis)	N
6160	9	58.759002	I-26 WB (Diverge Analysis)	N
6160	10	45.959142	I-26 WB (Diverge Analysis)	N
6165	1	21.764589	I-26 WB (Basic Analysis)	N
6165	2	21.498443	I-26 WB (Basic Analysis)	N
6165	3	22.279747	I-26 WB (Basic Analysis)	N
6165	4	21.439045	I-26 WB (Basic Analysis)	N
6165	5	23.073617	I-26 WB (Basic Analysis)	N
6165	6	20.73313	I-26 WB (Basic Analysis)	N
6165	7	22.48878	I-26 WB (Basic Analysis)	N
6165	8	22.695529	I-26 WB (Basic Analysis)	N
6165	9	22.804044	I-26 WB (Basic Analysis)	N
6165	10	22.550462	I-26 WB (Basic Analysis)	N
8789	1	21.369115	I-26 EB (Basic Analysis)	S
8789	2	22.301255	I-26 EB (Basic Analysis)	S
8789	3	22.542025	I-26 EB (Basic Analysis)	S
8789	4	21.627291	I-26 EB (Basic Analysis)	S
8789	5	21.686758	I-26 EB (Basic Analysis)	S
8789	6	21.769432	I-26 EB (Basic Analysis)	S
8789	7	21.537364	I-26 EB (Basic Analysis)	S
8789	8	20.916582	I-26 EB (Basic Analysis)	S
8789	9	21.230358	I-26 EB (Basic Analysis)	S
8789	10	21.753961	I-26 EB (Basic Analysis)	S
6178	1	21.369115	I-26 EB (Basic Analysis)	S
6178	2	22.301255	I-26 EB (Basic Analysis)	S
6178	3	22.542025	I-26 EB (Basic Analysis)	S
6178	4	21.627291	I-26 EB (Basic Analysis)	S
6178	5	21.686758	I-26 EB (Basic Analysis)	S
6178	6	21.769432	I-26 EB (Basic Analysis)	S
6178	7	21.537364	I-26 EB (Basic Analysis)	S
6178	8	20.916582	I-26 EB (Basic Analysis)	S
6178	9	21.230358	I-26 EB (Basic Analysis)	S
6178	10	21.753961	I-26 EB (Basic Analysis)	S
9113	1	7.562917	I-126 NB (Merge Analysis)	NW
9113	2	7.645966	I-126 NB (Merge Analysis)	NW
9113	3	6.621705	I-126 NB (Merge Analysis)	NW
9113	4	8.349106	I-126 NB (Merge Analysis)	NW
9113	5	9.417659	I-126 NB (Merge Analysis)	NW
9113	6	7.806525	I-126 NB (Merge Analysis)	NW

ID	Run	Density	Name (Type)	Direction
9113	7	7.933866	I-126 NB (Merge Analysis)	NW
9113	8	7.153213	I-126 NB (Merge Analysis)	NW
9113	9	7.313773	I-126 NB (Merge Analysis)	NW
9113	10	7.136604	I-126 NB (Merge Analysis)	NW
6207	1	18.100911	I-20 EB (Basic Analysis)	E
6207	2	18.339404	I-20 EB (Basic Analysis)	E
6207	3	18.740866	I-20 EB (Basic Analysis)	E
6207	4	18.297667	I-20 EB (Basic Analysis)	E
6207	5	18.125092	I-20 EB (Basic Analysis)	E
6207	6	18.775977	I-20 EB (Basic Analysis)	E
6207	7	18.365903	I-20 EB (Basic Analysis)	E
6207	8	18.116148	I-20 EB (Basic Analysis)	E
6207	9	18.421882	I-20 EB (Basic Analysis)	E
6207	10	18.464943	I-20 EB (Basic Analysis)	E
6234	1	13.634939	I-20 WB (Basic Analysis)	SW
6234	2	14.796245	I-20 WB (Basic Analysis)	SW
6234	3	14.119414	I-20 WB (Basic Analysis)	SW
6234	4	14.188317	I-20 WB (Basic Analysis)	SW
6234	5	14.002422	I-20 WB (Basic Analysis)	SW
6234	6	14.357704	I-20 WB (Basic Analysis)	SW
6234	7	14.631164	I-20 WB (Basic Analysis)	SW
6234	8	14.674228	I-20 WB (Basic Analysis)	SW
6234	9	14.440245	I-20 WB (Basic Analysis)	SW
6234	10	14.641212	I-20 WB (Basic Analysis)	SW
8837	1	7.522129	I-20 WB (Merge Analysis)	W
8837	2	8.717233	I-20 WB (Merge Analysis)	W
8837	3	7.093936	I-20 WB (Merge Analysis)	W
8837	4	8.250695	I-20 WB (Merge Analysis)	W
8837	5	8.589414	I-20 WB (Merge Analysis)	W
8837	6	8.595805	I-20 WB (Merge Analysis)	W
8837	7	7.030027	I-20 WB (Merge Analysis)	W
8837	8	7.285664	I-20 WB (Merge Analysis)	W
8837	9	8.474378	I-20 WB (Merge Analysis)	W
8837	10	7.560474	I-20 WB (Merge Analysis)	W
8774	1	44.403585	I-20 EB (Diverge Analysis)	NE
8774	2	45.560957	I-20 EB (Diverge Analysis)	NE
8774	3	44.572956	I-20 EB (Diverge Analysis)	NE
8774	4	44.742328	I-20 EB (Diverge Analysis)	NE
8774	5	45.910992	I-20 EB (Diverge Analysis)	NE
8774	6	43.494624	I-20 EB (Diverge Analysis)	NE
8774	7	45.724683	I-20 EB (Diverge Analysis)	NE
8774	8	45.103654	I-20 EB (Diverge Analysis)	NE
8774	9	44.110007	I-20 EB (Diverge Analysis)	NE
8774	10	45.479094	I-20 EB (Diverge Analysis)	NE
6246	1	26.697788	I-20 WB (Merge Analysis)	SW
6246	2	28.58906	I-20 WB (Merge Analysis)	SW
6246	3	27.834458	I-20 WB (Merge Analysis)	SW
6246	4	28.747744	I-20 WB (Merge Analysis)	SW
6246	5	28.713692	I-20 WB (Merge Analysis)	SW
6246	6	29.231289	I-20 WB (Merge Analysis)	SW
6246	7	28.961594	I-20 WB (Merge Analysis)	SW
6246	8	29.488726	I-20 WB (Merge Analysis)	SW
6246	9	30.054677	I-20 WB (Merge Analysis)	SW

ID	Run	Density	Name (Type)	Direction
6246	10	28.495075	I-20 WB (Merge Analysis)	SW
6247	1	26.697788	I-20 WB (Merge Analysis)	SW
6247	2	28.58906	I-20 WB (Merge Analysis)	SW
6247	3	27.834458	I-20 WB (Merge Analysis)	SW
6247	4	28.747744	I-20 WB (Merge Analysis)	SW
6247	5	28.713692	I-20 WB (Merge Analysis)	SW
6247	6	29.231289	I-20 WB (Merge Analysis)	SW
6247	7	28.961594	I-20 WB (Merge Analysis)	SW
6247	8	29.488726	I-20 WB (Merge Analysis)	SW
6247	9	30.054677	I-20 WB (Merge Analysis)	SW
6247	10	28.495075	I-20 WB (Merge Analysis)	SW
9266	1	10.424477	I-20 WB (Basic Analysis)	W
9266	2	9.694251	I-20 WB (Basic Analysis)	W
9266	3	9.010289	I-20 WB (Basic Analysis)	W
9266	4	8.695192	I-20 WB (Basic Analysis)	W
9266	5	9.72426	I-20 WB (Basic Analysis)	W
9266	6	10.048111	I-20 WB (Basic Analysis)	W
9266	7	9.276622	I-20 WB (Basic Analysis)	W
9266	8	9.607974	I-20 WB (Basic Analysis)	W
9266	9	9.607974	I-20 WB (Basic Analysis)	W
9266	10	9.390407	I-20 WB (Basic Analysis)	W
6251	1	33.972647	I-20 WB (Basic Analysis)	SW
6251	2	36.880366	I-20 WB (Basic Analysis)	SW
6251	3	35.235307	I-20 WB (Basic Analysis)	SW
6251	4	35.976515	I-20 WB (Basic Analysis)	SW
6251	5	35.653711	I-20 WB (Basic Analysis)	SW
6251	6	35.411608	I-20 WB (Basic Analysis)	SW
6251	7	36.005071	I-20 WB (Basic Analysis)	SW
6251	8	35.247723	I-20 WB (Basic Analysis)	SW
6251	9	38.025079	I-20 WB (Basic Analysis)	SW
6251	10	36.656887	I-20 WB (Basic Analysis)	SW
6254	1	35.871117	I-20 EB (Basic Analysis)	NE
6254	2	35.782156	I-20 EB (Basic Analysis)	NE
6254	3	36.2019	I-20 EB (Basic Analysis)	NE
6254	4	35.564141	I-20 EB (Basic Analysis)	NE
6254	5	36.48507	I-20 EB (Basic Analysis)	NE
6254	6	34.703354	I-20 EB (Basic Analysis)	NE
6254	7	35.844805	I-20 EB (Basic Analysis)	NE
6254	8	35.017848	I-20 EB (Basic Analysis)	NE
6254	9	36.069086	I-20 EB (Basic Analysis)	NE
6254	10	34.648224	I-20 EB (Basic Analysis)	NE
6258	1	32.675605	I-20 EB (Merge Analysis)	NE
6258	2	34.57782	I-20 EB (Merge Analysis)	NE
6258	3	34.853013	I-20 EB (Merge Analysis)	NE
6258	4	33.871329	I-20 EB (Merge Analysis)	NE
6258	5	33.303239	I-20 EB (Merge Analysis)	NE
6258	6	34.085368	I-20 EB (Merge Analysis)	NE
6258	7	33.745802	I-20 EB (Merge Analysis)	NE
6258	8	32.424551	I-20 EB (Merge Analysis)	NE
6258	9	34.478042	I-20 EB (Merge Analysis)	NE
6258	10	32.554906	I-20 EB (Merge Analysis)	NE
6259	1	32.675605	I-20 EB (Merge Analysis)	NE
6259	2	34.57782	I-20 EB (Merge Analysis)	NE

ID	Run	Density	Name (Type)	Direction
6259	3	34.853013	I-20 EB (Merge Analysis)	NE
6259	4	33.871329	I-20 EB (Merge Analysis)	NE
6259	5	33.303239	I-20 EB (Merge Analysis)	NE
6259	6	34.085368	I-20 EB (Merge Analysis)	NE
6259	7	33.745802	I-20 EB (Merge Analysis)	NE
6259	8	32.424551	I-20 EB (Merge Analysis)	NE
6259	9	34.478042	I-20 EB (Merge Analysis)	NE
6259	10	32.554906	I-20 EB (Merge Analysis)	NE
9208	1	38.10291	(Basic Analysis)	SE
9208	2	38.466431	(Basic Analysis)	SE
9208	3	38.052124	(Basic Analysis)	SE
9208	4	38.589387	(Basic Analysis)	SE
9208	5	37.787502	(Basic Analysis)	SE
9208	6	38.175079	(Basic Analysis)	SE
9208	7	35.504802	(Basic Analysis)	SE
9208	8	37.931841	(Basic Analysis)	SE
9208	9	37.119264	(Basic Analysis)	SE
9208	10	37.9853	(Basic Analysis)	SE
9114	1	8.526494	I-126 NB (Diverge Analysis)	NW
9114	2	10.099623	I-126 NB (Diverge Analysis)	NW
9114	3	8.928388	I-126 NB (Diverge Analysis)	NW
9114	4	10.318475	I-126 NB (Diverge Analysis)	NW
9114	5	9.776946	I-126 NB (Diverge Analysis)	NW
9114	6	10.215091	I-126 NB (Diverge Analysis)	NW
9114	7	9.768666	I-126 NB (Diverge Analysis)	NW
9114	8	9.52778	I-126 NB (Diverge Analysis)	NW
9114	9	9.294518	I-126 NB (Diverge Analysis)	NW
9114	10	9.238214	I-126 NB (Diverge Analysis)	NW
8878	1	10.327867	I-20 WB (Basic Analysis)	W
8878	2	11.407703	I-20 WB (Basic Analysis)	W
8878	3	10.332378	I-20 WB (Basic Analysis)	W
8878	4	10.277333	I-20 WB (Basic Analysis)	W
8878	5	11.070212	I-20 WB (Basic Analysis)	W
8878	6	10.670523	I-20 WB (Basic Analysis)	W
8878	7	11.438835	I-20 WB (Basic Analysis)	W
8878	8	10.051257	I-20 WB (Basic Analysis)	W
8878	9	10.825487	I-20 WB (Basic Analysis)	W
8878	10	10.66718	I-20 WB (Basic Analysis)	W
9255	1	4.959309	I-126 NB (Diverge Analysis)	NW
9255	2	11.519655	I-126 NB (Diverge Analysis)	NW
9255	3	7.575638	I-126 NB (Diverge Analysis)	NW
9255	4	14.214083	I-126 NB (Diverge Analysis)	NW
9255	5	5.935551	I-126 NB (Diverge Analysis)	NW
9255	6	11.324407	I-126 NB (Diverge Analysis)	NW
9255	7	10.231016	I-126 NB (Diverge Analysis)	NW
9255	8	8.669029	I-126 NB (Diverge Analysis)	NW
9255	9	10.426264	I-126 NB (Diverge Analysis)	NW
9255	10	12.573997	I-126 NB (Diverge Analysis)	NW
8915	1	32.272927	I-26 EB (Basic Analysis)	SE
8915	2	30.456251	I-26 EB (Basic Analysis)	SE
8915	3	29.794577	I-26 EB (Basic Analysis)	SE
8915	4	29.02784	I-26 EB (Basic Analysis)	SE
8915	5	33.259228	I-26 EB (Basic Analysis)	SE

ID	Run	Density	Name (Type)	Direction
8915	6	28.635648	I-26 EB (Basic Analysis)	SE
8915	7	29.453287	I-26 EB (Basic Analysis)	SE
8915	8	28.036059	I-26 EB (Basic Analysis)	SE
8915	9	31.359826	I-26 EB (Basic Analysis)	SE
8915	10	29.218788	I-26 EB (Basic Analysis)	SE
8792	1	17.027824	I-26 EB (Basic Analysis)	S
8792	2	16.789041	I-26 EB (Basic Analysis)	S
8792	3	18.521199	I-26 EB (Basic Analysis)	S
8792	4	17.52636	I-26 EB (Basic Analysis)	S
8792	5	17.327469	I-26 EB (Basic Analysis)	S
8792	6	16.664131	I-26 EB (Basic Analysis)	S
8792	7	17.365784	I-26 EB (Basic Analysis)	S
8792	8	16.539833	I-26 EB (Basic Analysis)	S
8792	9	16.645502	I-26 EB (Basic Analysis)	S
8792	10	17.911837	I-26 EB (Basic Analysis)	S
8554	1	16.798718	I-26 WB (Basic Analysis)	N
8554	2	16.03807	I-26 WB (Basic Analysis)	N
8554	3	15.974969	I-26 WB (Basic Analysis)	N
8554	4	16.46572	I-26 WB (Basic Analysis)	N
8554	5	16.723613	I-26 WB (Basic Analysis)	N
8554	6	16.146097	I-26 WB (Basic Analysis)	N
8554	7	16.44823	I-26 WB (Basic Analysis)	N
8554	8	16.156386	I-26 WB (Basic Analysis)	N
8554	9	16.840214	I-26 WB (Basic Analysis)	N
8554	10	16.25241	I-26 WB (Basic Analysis)	N
8559	1	14.310686	I-126 NB (Basic Analysis)	W
8559	2	13.779401	I-126 NB (Basic Analysis)	W
8559	3	14.246932	I-126 NB (Basic Analysis)	W
8559	4	16.189309	I-126 NB (Basic Analysis)	W
8559	5	14.161926	I-126 NB (Basic Analysis)	W
8559	6	14.166177	I-126 NB (Basic Analysis)	W
8559	7	15.857787	I-126 NB (Basic Analysis)	W
8559	8	17.468643	I-126 NB (Basic Analysis)	W
8559	9	15.951293	I-126 NB (Basic Analysis)	W
8559	10	16.032049	I-126 NB (Basic Analysis)	W
8560	1	46.713494	I-126 SB (Basic Analysis)	E
8560	2	54.614987	I-126 SB (Basic Analysis)	E
8560	3	45.914901	I-126 SB (Basic Analysis)	E
8560	4	52.130906	I-126 SB (Basic Analysis)	E
8560	5	43.67188	I-126 SB (Basic Analysis)	E
8560	6	51.057736	I-126 SB (Basic Analysis)	E
8560	7	55.263401	I-126 SB (Basic Analysis)	E
8560	8	49.71837	I-126 SB (Basic Analysis)	E
8560	9	49.881439	I-126 SB (Basic Analysis)	E
8560	10	49.246561	I-126 SB (Basic Analysis)	E
8996	1	10.19701	Ↄ ROAD I-20 WB TO I-20 (Basic Analysi	NE
8996	2	12.038823	Ↄ ROAD I-20 WB TO I-20 (Basic Analysi	NE
8996	3	12.215242	Ↄ ROAD I-20 WB TO I-20 (Basic Analysi	NE
8996	4	10.959139	Ↄ ROAD I-20 WB TO I-20 (Basic Analysi	NE
8996	5	11.290807	Ↄ ROAD I-20 WB TO I-20 (Basic Analysi	NE
8996	6	11.149672	Ↄ ROAD I-20 WB TO I-20 (Basic Analysi	NE
8996	7	12.462228	Ↄ ROAD I-20 WB TO I-20 (Basic Analysi	NE
8996	8	11.135558	Ↄ ROAD I-20 WB TO I-20 (Basic Analysi	NE

ID	Run	Density	Name (Type)	Direction
8996	9	10.613358	D ROAD I-20 WB TO I-20 (Basic Analysi	NE
8996	10	10.705096	D ROAD I-20 WB TO I-20 (Basic Analysi	NE
8877	1	8.335155	I-20 WB (Diverge Analysis)	W
8877	2	8.326866	I-20 WB (Diverge Analysis)	W
8877	3	7.788098	I-20 WB (Diverge Analysis)	W
8877	4	8.984992	I-20 WB (Diverge Analysis)	W
8877	5	8.94189	I-20 WB (Diverge Analysis)	W
8877	6	8.638522	I-20 WB (Diverge Analysis)	W
8877	7	9.643117	I-20 WB (Diverge Analysis)	W
8877	8	9.500551	I-20 WB (Diverge Analysis)	W
8877	9	8.859003	I-20 WB (Diverge Analysis)	W
8877	10	9.336434	I-20 WB (Diverge Analysis)	W
9265	1	24.844747	CD ROAD I-20 WB (Basic Analysis)	W
9265	2	27.263857	CD ROAD I-20 WB (Basic Analysis)	W
9265	3	27.062265	CD ROAD I-20 WB (Basic Analysis)	W
9265	4	25.885291	CD ROAD I-20 WB (Basic Analysis)	W
9265	5	26.754785	CD ROAD I-20 WB (Basic Analysis)	W
9265	6	27.333091	CD ROAD I-20 WB (Basic Analysis)	W
9265	7	26.204988	CD ROAD I-20 WB (Basic Analysis)	W
9265	8	26.577628	CD ROAD I-20 WB (Basic Analysis)	W
9265	9	27.07041	CD ROAD I-20 WB (Basic Analysis)	W
9265	10	28.224985	CD ROAD I-20 WB (Basic Analysis)	W
8765	1	36.608348	I-20 EB (Basic Analysis)	NE
8765	2	39.275046	I-20 EB (Basic Analysis)	NE
8765	3	37.22106	I-20 EB (Basic Analysis)	NE
8765	4	38.515194	I-20 EB (Basic Analysis)	NE
8765	5	38.886152	I-20 EB (Basic Analysis)	NE
8765	6	37.608816	I-20 EB (Basic Analysis)	NE
8765	7	39.427199	I-20 EB (Basic Analysis)	NE
8765	8	38.908296	I-20 EB (Basic Analysis)	NE
8765	9	39.711675	I-20 EB (Basic Analysis)	NE
8765	10	37.457871	I-20 EB (Basic Analysis)	NE
8763	1	28.300026	I-26 EB (Basic Analysis)	SE
8763	2	28.255364	I-26 EB (Basic Analysis)	SE
8763	3	27.909564	I-26 EB (Basic Analysis)	SE
8763	4	28.360818	I-26 EB (Basic Analysis)	SE
8763	5	28.735158	I-26 EB (Basic Analysis)	SE
8763	6	27.92729	I-26 EB (Basic Analysis)	SE
8763	7	27.772365	I-26 EB (Basic Analysis)	SE
8763	8	27.856927	I-26 EB (Basic Analysis)	SE
8763	9	28.160429	I-26 EB (Basic Analysis)	SE
8763	10	28.128702	I-26 EB (Basic Analysis)	SE
8764	1	15.267004	I-20 WB (Basic Analysis)	S
8764	2	15.781828	I-20 WB (Basic Analysis)	S
8764	3	15.033798	I-20 WB (Basic Analysis)	S
8764	4	15.275375	I-20 WB (Basic Analysis)	S
8764	5	15.578382	I-20 WB (Basic Analysis)	S
8764	6	15.222599	I-20 WB (Basic Analysis)	S
8764	7	14.999378	I-20 WB (Basic Analysis)	S
8764	8	15.003477	I-20 WB (Basic Analysis)	S
8764	9	15.466776	I-20 WB (Basic Analysis)	S
8764	10	14.942598	I-20 WB (Basic Analysis)	S
8770	1	36.465576	I-20 WB (Basic Analysis)	SW

ID	Run	Density	Name (Type)	Direction
8770	2	38.13024	I-20 WB (Basic Analysis)	SW
8770	3	37.527622	I-20 WB (Basic Analysis)	SW
8770	4	38.8077	I-20 WB (Basic Analysis)	SW
8770	5	38.467672	I-20 WB (Basic Analysis)	SW
8770	6	38.773957	I-20 WB (Basic Analysis)	SW
8770	7	37.87111	I-20 WB (Basic Analysis)	SW
8770	8	38.805104	I-20 WB (Basic Analysis)	SW
8770	9	39.229057	I-20 WB (Basic Analysis)	SW
8770	10	37.955468	I-20 WB (Basic Analysis)	SW
8773	1	28.089666	I-26 WB (Basic Analysis)	N
8773	2	32.686939	I-26 WB (Basic Analysis)	N
8773	3	53.723396	I-26 WB (Basic Analysis)	N
8773	4	28.343421	I-26 WB (Basic Analysis)	N
8773	5	43.352078	I-26 WB (Basic Analysis)	N
8773	6	27.521313	I-26 WB (Basic Analysis)	N
8773	7	37.714557	I-26 WB (Basic Analysis)	N
8773	8	31.113953	I-26 WB (Basic Analysis)	N
8773	9	36.457652	I-26 WB (Basic Analysis)	N
8773	10	29.456382	I-26 WB (Basic Analysis)	N
8849	1	23.696395	CD ROAD I-20 WB (Basic Analysis)	W
8849	2	27.860559	CD ROAD I-20 WB (Basic Analysis)	W
8849	3	23.949591	CD ROAD I-20 WB (Basic Analysis)	W
8849	4	24.591623	CD ROAD I-20 WB (Basic Analysis)	W
8849	5	25.694832	CD ROAD I-20 WB (Basic Analysis)	W
8849	6	26.219309	CD ROAD I-20 WB (Basic Analysis)	W
8849	7	25.143227	CD ROAD I-20 WB (Basic Analysis)	W
8849	8	23.4432	CD ROAD I-20 WB (Basic Analysis)	W
8849	9	23.700917	CD ROAD I-20 WB (Basic Analysis)	W
8849	10	25.685789	CD ROAD I-20 WB (Basic Analysis)	W
8855	1	13.471866	Ↄ ROAD I-20 WB TO I-20 (Basic Analysi	NW
8855	2	12.049791	Ↄ ROAD I-20 WB TO I-20 (Basic Analysi	NW
8855	3	13.109503	Ↄ ROAD I-20 WB TO I-20 (Basic Analysi	NW
8855	4	13.581381	Ↄ ROAD I-20 WB TO I-20 (Basic Analysi	NW
8855	5	12.776129	Ↄ ROAD I-20 WB TO I-20 (Basic Analysi	NW
8855	6	13.631306	Ↄ ROAD I-20 WB TO I-20 (Basic Analysi	NW
8855	7	12.247883	Ↄ ROAD I-20 WB TO I-20 (Basic Analysi	NW
8855	8	12.896917	Ↄ ROAD I-20 WB TO I-20 (Basic Analysi	NW
8855	9	13.25928	Ↄ ROAD I-20 WB TO I-20 (Basic Analysi	NW
8855	10	12.586089	Ↄ ROAD I-20 WB TO I-20 (Basic Analysi	NW
9112	1	17.027824	I-26 EB (Basic Analysis)	S
9112	2	16.789041	I-26 EB (Basic Analysis)	S
9112	3	18.521199	I-26 EB (Basic Analysis)	S
9112	4	17.52636	I-26 EB (Basic Analysis)	S
9112	5	17.327469	I-26 EB (Basic Analysis)	S
9112	6	16.664131	I-26 EB (Basic Analysis)	S
9112	7	17.365784	I-26 EB (Basic Analysis)	S
9112	8	16.539833	I-26 EB (Basic Analysis)	S
9112	9	16.645502	I-26 EB (Basic Analysis)	S
9112	10	17.911837	I-26 EB (Basic Analysis)	S
8910	1	71.571798	I-26 EB (Basic Analysis)	SE
8910	2	69.407532	I-26 EB (Basic Analysis)	SE
8910	3	70.6521	I-26 EB (Basic Analysis)	SE
8910	4	73.790973	I-26 EB (Basic Analysis)	SE

ID	Run	Density	Name (Type)	Direction
8910	5	67.955536	I-26 EB (Basic Analysis)	SE
8910	6	77.10677	I-26 EB (Basic Analysis)	SE
8910	7	68.306333	I-26 EB (Basic Analysis)	SE
8910	8	69.650039	I-26 EB (Basic Analysis)	SE
8910	9	76.206898	I-26 EB (Basic Analysis)	SE
8910	10	67.475096	I-26 EB (Basic Analysis)	SE
9110	1	18.217348	I-26 EB (Merge Analysis)	S
9110	2	18.435427	I-26 EB (Merge Analysis)	S
9110	3	19.38952	I-26 EB (Merge Analysis)	S
9110	4	17.461862	I-26 EB (Merge Analysis)	S
9110	5	18.038212	I-26 EB (Merge Analysis)	S
9110	6	19.4713	I-26 EB (Merge Analysis)	S
9110	7	17.621526	I-26 EB (Merge Analysis)	S
9110	8	18.641822	I-26 EB (Merge Analysis)	S
9110	9	17.726671	I-26 EB (Merge Analysis)	S
9110	10	17.878548	I-26 EB (Merge Analysis)	S
8940	1	41.543118	I-26 EB (Basic Analysis)	SE
8940	2	45.604913	I-26 EB (Basic Analysis)	SE
8940	3	40.105963	I-26 EB (Basic Analysis)	SE
8940	4	42.854382	I-26 EB (Basic Analysis)	SE
8940	5	44.696582	I-26 EB (Basic Analysis)	SE
8940	6	42.620909	I-26 EB (Basic Analysis)	SE
8940	7	39.881606	I-26 EB (Basic Analysis)	SE
8940	8	41.980326	I-26 EB (Basic Analysis)	SE
8940	9	42.832261	I-26 EB (Basic Analysis)	SE
8940	10	41.554276	I-26 EB (Basic Analysis)	SE
8863	1	32.968164	(Basic Analysis)	SE
8863	2	34.171147	(Basic Analysis)	SE
8863	3	33.643914	(Basic Analysis)	SE
8863	4	33.762727	(Basic Analysis)	SE
8863	5	33.518912	(Basic Analysis)	SE
8863	6	34.204563	(Basic Analysis)	SE
8863	7	32.950837	(Basic Analysis)	SE
8863	8	33.825846	(Basic Analysis)	SE
8863	9	33.806044	(Basic Analysis)	SE
8863	10	33.354307	(Basic Analysis)	SE
8790	1	29.514607	ↄ ROAD I-26 WB TO I-20 (Basic Analysi	NE
8790	2	26.390552	ↄ ROAD I-26 WB TO I-20 (Basic Analysi	NE
8790	3	29.620671	ↄ ROAD I-26 WB TO I-20 (Basic Analysi	NE
8790	4	27.14264	ↄ ROAD I-26 WB TO I-20 (Basic Analysi	NE
8790	5	28.598604	ↄ ROAD I-26 WB TO I-20 (Basic Analysi	NE
8790	6	26.756954	ↄ ROAD I-26 WB TO I-20 (Basic Analysi	NE
8790	7	29.331407	ↄ ROAD I-26 WB TO I-20 (Basic Analysi	NE
8790	8	26.014509	ↄ ROAD I-26 WB TO I-20 (Basic Analysi	NE
8790	9	29.57246	ↄ ROAD I-26 WB TO I-20 (Basic Analysi	NE
8790	10	24.510334	ↄ ROAD I-26 WB TO I-20 (Basic Analysi	NE
9253	1	26.090988	I-26 WB (Basic Analysis)	N
9253	2	28.58978	I-26 WB (Basic Analysis)	N
9253	3	26.586244	I-26 WB (Basic Analysis)	N
9253	4	29.130059	I-26 WB (Basic Analysis)	N
9253	5	34.802992	I-26 WB (Basic Analysis)	N
9253	6	30.548292	I-26 WB (Basic Analysis)	N
9253	7	27.149035	I-26 WB (Basic Analysis)	N

ID	Run	Density	Name (Type)	Direction
9253	8	32.844479	I-26 WB (Basic Analysis)	N
9253	9	26.631267	I-26 WB (Basic Analysis)	N
9253	10	27.846896	I-26 WB (Basic Analysis)	N
8852	1	22.848414	(Basic Analysis)	E
8852	2	23.190858	(Basic Analysis)	E
8852	3	24.038142	(Basic Analysis)	E
8852	4	24.059324	(Basic Analysis)	E
8852	5	23.328542	(Basic Analysis)	E
8852	6	23.328542	(Basic Analysis)	E
8852	7	22.851945	(Basic Analysis)	E
8852	8	24.105218	(Basic Analysis)	E
8852	9	22.79899	(Basic Analysis)	E
8852	10	23.882806	(Basic Analysis)	E
9061	1	30.778063	I-20 EB (Basic Analysis)	NE
9061	2	29.976652	I-20 EB (Basic Analysis)	NE
9061	3	30.33983	I-20 EB (Basic Analysis)	NE
9061	4	29.596977	I-20 EB (Basic Analysis)	NE
9061	5	31.133544	I-20 EB (Basic Analysis)	NE
9061	6	30.706582	I-20 EB (Basic Analysis)	NE
9061	7	30.01844	I-20 EB (Basic Analysis)	NE
9061	8	32.339648	I-20 EB (Basic Analysis)	NE
9061	9	30.93972	I-20 EB (Basic Analysis)	NE
9061	10	30.22876	I-20 EB (Basic Analysis)	NE
8784	1	28.465392	I-126 SB (Basic Analysis)	SE
8784	2	30.058441	I-126 SB (Basic Analysis)	SE
8784	3	29.325238	I-126 SB (Basic Analysis)	SE
8784	4	29.079568	I-126 SB (Basic Analysis)	SE
8784	5	28.844372	I-126 SB (Basic Analysis)	SE
8784	6	29.09766	I-126 SB (Basic Analysis)	SE
8784	7	28.612984	I-126 SB (Basic Analysis)	SE
8784	8	29.570909	I-126 SB (Basic Analysis)	SE
8784	9	29.191929	I-126 SB (Basic Analysis)	SE
8784	10	28.803427	I-126 SB (Basic Analysis)	SE
9111	1	40.255183	(Merge Analysis)	SE
9111	2	42.41996	(Merge Analysis)	SE
9111	3	40.010773	(Merge Analysis)	SE
9111	4	41.489321	(Merge Analysis)	SE
9111	5	39.906025	(Merge Analysis)	SE
9111	6	41.133448	(Merge Analysis)	SE
9111	7	39.458835	(Merge Analysis)	SE
9111	8	41.191194	(Merge Analysis)	SE
9111	9	40.851437	(Merge Analysis)	SE
9111	10	41.508121	(Merge Analysis)	SE
9250	1	10.564484	I-126 NB (Diverge Analysis)	NW
9250	2	10.988368	I-126 NB (Diverge Analysis)	NW
9250	3	9.673242	I-126 NB (Diverge Analysis)	NW
9250	4	9.785553	I-126 NB (Diverge Analysis)	NW
9250	5	10.089879	I-126 NB (Diverge Analysis)	NW
9250	6	10.126109	I-126 NB (Diverge Analysis)	NW
9250	7	10.444927	I-126 NB (Diverge Analysis)	NW
9250	8	10.064519	I-126 NB (Diverge Analysis)	NW
9250	9	10.05365	I-126 NB (Diverge Analysis)	NW
9250	10	9.915978	I-126 NB (Diverge Analysis)	NW

ID	Run	Density	Name (Type)	Direction
8975	1	37.062545	I-26 EB (Weaving Analysis)	SE
8975	2	38.677771	I-26 EB (Weaving Analysis)	SE
8975	3	35.547911	I-26 EB (Weaving Analysis)	SE
8975	4	37.834232	I-26 EB (Weaving Analysis)	SE
8975	5	38.742438	I-26 EB (Weaving Analysis)	SE
8975	6	37.124337	I-26 EB (Weaving Analysis)	SE
8975	7	37.371507	I-26 EB (Weaving Analysis)	SE
8975	8	37.012249	I-26 EB (Weaving Analysis)	SE
8975	9	37.118589	I-26 EB (Weaving Analysis)	SE
8975	10	37.785373	I-26 EB (Weaving Analysis)	SE
9059	1	12.054879	I-20 WB (Merge Analysis)	SW
9059	2	14.027791	I-20 WB (Merge Analysis)	SW
9059	3	12.544862	I-20 WB (Merge Analysis)	SW
9059	4	12.856374	I-20 WB (Merge Analysis)	SW
9059	5	13.550787	I-20 WB (Merge Analysis)	SW
9059	6	12.466984	I-20 WB (Merge Analysis)	SW
9059	7	12.181431	I-20 WB (Merge Analysis)	SW
9059	8	11.652509	I-20 WB (Merge Analysis)	SW
9059	9	12.84664	I-20 WB (Merge Analysis)	SW
9059	10	11.376691	I-20 WB (Merge Analysis)	SW
9025	1	22.888394	ROAD I-26 WB TO I-20 (Diverge Analys	NE
9025	2	21.075578	ROAD I-26 WB TO I-20 (Diverge Analys	NE
9025	3	22.286672	ROAD I-26 WB TO I-20 (Diverge Analys	NE
9025	4	22.475347	ROAD I-26 WB TO I-20 (Diverge Analys	NE
9025	5	22.600281	ROAD I-26 WB TO I-20 (Diverge Analys	NE
9025	6	22.14389	ROAD I-26 WB TO I-20 (Diverge Analys	NE
9025	7	20.9022	ROAD I-26 WB TO I-20 (Diverge Analys	NE
9025	8	23.003129	ROAD I-26 WB TO I-20 (Diverge Analys	NE
9025	9	24.614521	ROAD I-26 WB TO I-20 (Diverge Analys	NE
9025	10	22.261175	ROAD I-26 WB TO I-20 (Diverge Analys	NE
9019	1	8.526494	I-126 NB (Diverge Analysis)	NW
9019	2	10.099623	I-126 NB (Diverge Analysis)	NW
9019	3	8.928388	I-126 NB (Diverge Analysis)	NW
9019	4	10.318475	I-126 NB (Diverge Analysis)	NW
9019	5	9.776946	I-126 NB (Diverge Analysis)	NW
9019	6	10.215091	I-126 NB (Diverge Analysis)	NW
9019	7	9.768666	I-126 NB (Diverge Analysis)	NW
9019	8	9.52778	I-126 NB (Diverge Analysis)	NW
9019	9	9.294518	I-126 NB (Diverge Analysis)	NW
9019	10	9.238214	I-126 NB (Diverge Analysis)	NW
9012	1	29.198335	I-126 SB (Merge Analysis)	E
9012	2	30.582044	I-126 SB (Merge Analysis)	E
9012	3	25.915417	I-126 SB (Merge Analysis)	E
9012	4	27.138731	I-126 SB (Merge Analysis)	E
9012	5	26.527473	I-126 SB (Merge Analysis)	E
9012	6	26.864224	I-126 SB (Merge Analysis)	E
9012	7	25.080723	I-126 SB (Merge Analysis)	E
9012	8	27.999759	I-126 SB (Merge Analysis)	E
9012	9	32.920145	I-126 SB (Merge Analysis)	E
9012	10	25.640112	I-126 SB (Merge Analysis)	E
9018	1	40.99	I-126 SB (Basic Analysis)	E
9018	2	42.026154	I-126 SB (Basic Analysis)	E
9018	3	36.323723	I-126 SB (Basic Analysis)	E

ID	Run	Density	Name (Type)	Direction
9018	4	38.102472	I-126 SB (Basic Analysis)	E
9018	5	36.412711	I-126 SB (Basic Analysis)	E
9018	6	36.707295	I-126 SB (Basic Analysis)	E
9018	7	35.348939	I-126 SB (Basic Analysis)	E
9018	8	39.62653	I-126 SB (Basic Analysis)	E
9018	9	43.994133	I-126 SB (Basic Analysis)	E
9018	10	34.682036	I-126 SB (Basic Analysis)	E
9022	1	6.535026	107 (Basic Analysis)	NW
9022	2	7.65611	107 (Basic Analysis)	NW
9022	3	7.415216	107 (Basic Analysis)	NW
9022	4	7.575812	107 (Basic Analysis)	NW
9022	5	7.097112	107 (Basic Analysis)	NW
9022	6	7.566547	107 (Basic Analysis)	NW
9022	7	7.538752	107 (Basic Analysis)	NW
9022	8	5.920437	107 (Basic Analysis)	NW
9022	9	7.785823	107 (Basic Analysis)	NW
9022	10	7.532575	107 (Basic Analysis)	NW
9052	1	29.301523	CD ROAD I-20 EB (Basic Analysis)	NE
9052	2	32.303704	CD ROAD I-20 EB (Basic Analysis)	NE
9052	3	30.978365	CD ROAD I-20 EB (Basic Analysis)	NE
9052	4	33.205511	CD ROAD I-20 EB (Basic Analysis)	NE
9052	5	31.534431	CD ROAD I-20 EB (Basic Analysis)	NE
9052	6	30.50009	CD ROAD I-20 EB (Basic Analysis)	NE
9052	7	29.88352	CD ROAD I-20 EB (Basic Analysis)	NE
9052	8	32.055924	CD ROAD I-20 EB (Basic Analysis)	NE
9052	9	32.099141	CD ROAD I-20 EB (Basic Analysis)	NE
9052	10	31.741876	CD ROAD I-20 EB (Basic Analysis)	NE
9121	1	41.543118	I-26 EB (Basic Analysis)	SE
9121	2	45.604913	I-26 EB (Basic Analysis)	SE
9121	3	40.105963	I-26 EB (Basic Analysis)	SE
9121	4	42.854382	I-26 EB (Basic Analysis)	SE
9121	5	44.696582	I-26 EB (Basic Analysis)	SE
9121	6	42.620909	I-26 EB (Basic Analysis)	SE
9121	7	39.881606	I-26 EB (Basic Analysis)	SE
9121	8	41.980326	I-26 EB (Basic Analysis)	SE
9121	9	42.832261	I-26 EB (Basic Analysis)	SE
9121	10	41.554276	I-26 EB (Basic Analysis)	SE
9123	1	37.896332	I-26 EB (Weaving Analysis)	SE
9123	2	36.661445	I-26 EB (Weaving Analysis)	SE
9123	3	34.482327	I-26 EB (Weaving Analysis)	SE
9123	4	37.528645	I-26 EB (Weaving Analysis)	SE
9123	5	37.503233	I-26 EB (Weaving Analysis)	SE
9123	6	35.36938	I-26 EB (Weaving Analysis)	SE
9123	7	36.683681	I-26 EB (Weaving Analysis)	SE
9123	8	35.113668	I-26 EB (Weaving Analysis)	SE
9123	9	36.180991	I-26 EB (Weaving Analysis)	SE
9123	10	35.259789	I-26 EB (Weaving Analysis)	SE
9120	1	31.590767	I-26 EB (Diverge Analysis)	SE
9120	2	29.406019	I-26 EB (Diverge Analysis)	SE
9120	3	27.646783	I-26 EB (Diverge Analysis)	SE
9120	4	29.47465	I-26 EB (Diverge Analysis)	SE
9120	5	30.373714	I-26 EB (Diverge Analysis)	SE
9120	6	29.973367	I-26 EB (Diverge Analysis)	SE

ID	Run	Density	Name (Type)	Direction
9120	7	28.463489	I-26 EB (Diverge Analysis)	SE
9120	8	28.113472	I-26 EB (Diverge Analysis)	SE
9120	9	29.703419	I-26 EB (Diverge Analysis)	SE
9120	10	28.765465	I-26 EB (Diverge Analysis)	SE
9122	1	36.021323	I-26 EB (Diverge Analysis)	SE
9122	2	34.789323	I-26 EB (Diverge Analysis)	SE
9122	3	32.448524	I-26 EB (Diverge Analysis)	SE
9122	4	34.994656	I-26 EB (Diverge Analysis)	SE
9122	5	35.751456	I-26 EB (Diverge Analysis)	SE
9122	6	35.381856	I-26 EB (Diverge Analysis)	SE
9122	7	33.357857	I-26 EB (Diverge Analysis)	SE
9122	8	33.337323	I-26 EB (Diverge Analysis)	SE
9122	9	31.858924	I-26 EB (Diverge Analysis)	SE
9122	10	34.01199	I-26 EB (Diverge Analysis)	SE
9125	1	32.272927	I-26 EB (Basic Analysis)	SE
9125	2	30.456251	I-26 EB (Basic Analysis)	SE
9125	3	29.794577	I-26 EB (Basic Analysis)	SE
9125	4	29.02784	I-26 EB (Basic Analysis)	SE
9125	5	33.259228	I-26 EB (Basic Analysis)	SE
9125	6	28.635648	I-26 EB (Basic Analysis)	SE
9125	7	29.453287	I-26 EB (Basic Analysis)	SE
9125	8	28.036059	I-26 EB (Basic Analysis)	SE
9125	9	31.359826	I-26 EB (Basic Analysis)	SE
9125	10	29.218788	I-26 EB (Basic Analysis)	SE
9126	1	32.272927	I-26 EB (Basic Analysis)	SE
9126	2	30.456251	I-26 EB (Basic Analysis)	SE
9126	3	29.794577	I-26 EB (Basic Analysis)	SE
9126	4	29.02784	I-26 EB (Basic Analysis)	SE
9126	5	33.259228	I-26 EB (Basic Analysis)	SE
9126	6	28.635648	I-26 EB (Basic Analysis)	SE
9126	7	29.453287	I-26 EB (Basic Analysis)	SE
9126	8	28.036059	I-26 EB (Basic Analysis)	SE
9126	9	31.359826	I-26 EB (Basic Analysis)	SE
9126	10	29.218788	I-26 EB (Basic Analysis)	SE
9127	1	71.571798	I-26 EB (Basic Analysis)	SE
9127	2	69.407532	I-26 EB (Basic Analysis)	SE
9127	3	70.6521	I-26 EB (Basic Analysis)	SE
9127	4	73.790973	I-26 EB (Basic Analysis)	SE
9127	5	67.955536	I-26 EB (Basic Analysis)	SE
9127	6	77.10677	I-26 EB (Basic Analysis)	SE
9127	7	68.306333	I-26 EB (Basic Analysis)	SE
9127	8	69.650039	I-26 EB (Basic Analysis)	SE
9127	9	76.206898	I-26 EB (Basic Analysis)	SE
9127	10	67.475096	I-26 EB (Basic Analysis)	SE
9128	1	22.698127	I-26 EB (Diverge Analysis)	SW
9128	2	21.691993	I-26 EB (Diverge Analysis)	SW
9128	3	21.489594	I-26 EB (Diverge Analysis)	SW
9128	4	23.09706	I-26 EB (Diverge Analysis)	SW
9128	5	21.598127	I-26 EB (Diverge Analysis)	SW
9128	6	20.022927	I-26 EB (Diverge Analysis)	SW
9128	7	21.694927	I-26 EB (Diverge Analysis)	SW
9128	8	22.22586	I-26 EB (Diverge Analysis)	SW
9128	9	20.580261	I-26 EB (Diverge Analysis)	SW

ID	Run	Density	Name (Type)	Direction
9128	10	23.06186	I-26 EB (Diverge Analysis)	SW
9130	1	40.255183	(Merge Analysis)	SE
9130	2	42.41996	(Merge Analysis)	SE
9130	3	40.010773	(Merge Analysis)	SE
9130	4	41.489321	(Merge Analysis)	SE
9130	5	39.906025	(Merge Analysis)	SE
9130	6	41.133448	(Merge Analysis)	SE
9130	7	39.458835	(Merge Analysis)	SE
9130	8	41.191194	(Merge Analysis)	SE
9130	9	40.851437	(Merge Analysis)	SE
9130	10	41.508121	(Merge Analysis)	SE
9132	1	30.297099	I-126 SB (Diverge Analysis)	E
9132	2	31.245996	I-126 SB (Diverge Analysis)	E
9132	3	26.442156	I-126 SB (Diverge Analysis)	E
9132	4	27.82681	I-126 SB (Diverge Analysis)	E
9132	5	26.965815	I-126 SB (Diverge Analysis)	E
9132	6	28.071735	I-126 SB (Diverge Analysis)	E
9132	7	25.841864	I-126 SB (Diverge Analysis)	E
9132	8	28.808014	I-126 SB (Diverge Analysis)	E
9132	9	33.194128	I-126 SB (Diverge Analysis)	E
9132	10	26.354254	I-126 SB (Diverge Analysis)	E
9133	1	15.1801	I-126 NB (Basic Analysis)	W
9133	2	15.44679	I-126 NB (Basic Analysis)	W
9133	3	15.818797	I-126 NB (Basic Analysis)	W
9133	4	14.232246	I-126 NB (Basic Analysis)	W
9133	5	15.729618	I-126 NB (Basic Analysis)	W
9133	6	15.381392	I-126 NB (Basic Analysis)	W
9133	7	14.86245	I-126 NB (Basic Analysis)	W
9133	8	15.321939	I-126 NB (Basic Analysis)	W
9133	9	15.265033	I-126 NB (Basic Analysis)	W
9133	10	15.197087	I-126 NB (Basic Analysis)	W
9134	1	16.253595	I-126 NB (Diverge Analysis)	W
9134	2	15.707995	I-126 NB (Diverge Analysis)	W
9134	3	15.306129	I-126 NB (Diverge Analysis)	W
9134	4	16.268262	I-126 NB (Diverge Analysis)	W
9134	5	13.355463	I-126 NB (Diverge Analysis)	W
9134	6	15.282662	I-126 NB (Diverge Analysis)	W
9134	7	16.265328	I-126 NB (Diverge Analysis)	W
9134	8	15.760795	I-126 NB (Diverge Analysis)	W
9134	9	14.566929	I-126 NB (Diverge Analysis)	W
9134	10	16.893062	I-126 NB (Diverge Analysis)	W
9135	1	13.511104	I-126 NB (Basic Analysis)	NW
9135	2	12.621076	I-126 NB (Basic Analysis)	NW
9135	3	13.79862	I-126 NB (Basic Analysis)	NW
9135	4	15.096667	I-126 NB (Basic Analysis)	NW
9135	5	13.361004	I-126 NB (Basic Analysis)	NW
9135	6	13.010067	I-126 NB (Basic Analysis)	NW
9135	7	13.722513	I-126 NB (Basic Analysis)	NW
9135	8	13.923351	I-126 NB (Basic Analysis)	NW
9135	9	13.494192	I-126 NB (Basic Analysis)	NW
9135	10	14.686535	I-126 NB (Basic Analysis)	NW
9137	1	34.028818	I-26 WB (Diverge Analysis)	N
9137	2	53.016995	I-26 WB (Diverge Analysis)	N

ID	Run	Density	Name (Type)	Direction
9137	3	79.039937	I-26 WB (Diverge Analysis)	N
9137	4	35.473939	I-26 WB (Diverge Analysis)	N
9137	5	64.339414	I-26 WB (Diverge Analysis)	N
9137	6	36.788244	I-26 WB (Diverge Analysis)	N
9137	7	59.585444	I-26 WB (Diverge Analysis)	N
9137	8	51.690377	I-26 WB (Diverge Analysis)	N
9137	9	58.759002	I-26 WB (Diverge Analysis)	N
9137	10	45.959142	I-26 WB (Diverge Analysis)	N
9138	1	16.798718	I-26 WB (Basic Analysis)	N
9138	2	16.03807	I-26 WB (Basic Analysis)	N
9138	3	15.974969	I-26 WB (Basic Analysis)	N
9138	4	16.46572	I-26 WB (Basic Analysis)	N
9138	5	16.723613	I-26 WB (Basic Analysis)	N
9138	6	16.146097	I-26 WB (Basic Analysis)	N
9138	7	16.44823	I-26 WB (Basic Analysis)	N
9138	8	16.156386	I-26 WB (Basic Analysis)	N
9138	9	16.840214	I-26 WB (Basic Analysis)	N
9138	10	16.25241	I-26 WB (Basic Analysis)	N
9139	1	16.798718	I-26 WB (Basic Analysis)	N
9139	2	16.03807	I-26 WB (Basic Analysis)	N
9139	3	15.974969	I-26 WB (Basic Analysis)	N
9139	4	16.46572	I-26 WB (Basic Analysis)	N
9139	5	16.723613	I-26 WB (Basic Analysis)	N
9139	6	16.146097	I-26 WB (Basic Analysis)	N
9139	7	16.44823	I-26 WB (Basic Analysis)	N
9139	8	16.156386	I-26 WB (Basic Analysis)	N
9139	9	16.840214	I-26 WB (Basic Analysis)	N
9139	10	16.25241	I-26 WB (Basic Analysis)	N
9140	1	14.534184	I-26 WB (Basic Analysis)	NW
9140	2	14.548475	I-26 WB (Basic Analysis)	NW
9140	3	14.616702	I-26 WB (Basic Analysis)	NW
9140	4	15.041737	I-26 WB (Basic Analysis)	NW
9140	5	14.851808	I-26 WB (Basic Analysis)	NW
9140	6	14.328581	I-26 WB (Basic Analysis)	NW
9140	7	14.580744	I-26 WB (Basic Analysis)	NW
9140	8	15.556666	I-26 WB (Basic Analysis)	NW
9140	9	14.998404	I-26 WB (Basic Analysis)	NW
9140	10	14.329964	I-26 WB (Basic Analysis)	NW
9141	1	14.534184	I-26 WB (Basic Analysis)	NW
9141	2	14.548475	I-26 WB (Basic Analysis)	NW
9141	3	14.616702	I-26 WB (Basic Analysis)	NW
9141	4	15.041737	I-26 WB (Basic Analysis)	NW
9141	5	14.851808	I-26 WB (Basic Analysis)	NW
9141	6	14.328581	I-26 WB (Basic Analysis)	NW
9141	7	14.580744	I-26 WB (Basic Analysis)	NW
9141	8	15.556666	I-26 WB (Basic Analysis)	NW
9141	9	14.998404	I-26 WB (Basic Analysis)	NW
9141	10	14.329964	I-26 WB (Basic Analysis)	NW
9142	1	34.602324	I-26 WB (Basic Analysis)	NW
9142	2	33.958616	I-26 WB (Basic Analysis)	NW
9142	3	32.540136	I-26 WB (Basic Analysis)	NW
9142	4	33.73701	I-26 WB (Basic Analysis)	NW
9142	5	37.2992	I-26 WB (Basic Analysis)	NW

ID	Run	Density	Name (Type)	Direction
9142	6	38.415382	I-26 WB (Basic Analysis)	NW
9142	7	36.609933	I-26 WB (Basic Analysis)	NW
9142	8	35.409129	I-26 WB (Basic Analysis)	NW
9142	9	38.112883	I-26 WB (Basic Analysis)	NW
9142	10	40.570501	I-26 WB (Basic Analysis)	NW
9143	1	27.793734	I-26 WB (Basic Analysis)	NW
9143	2	27.906472	I-26 WB (Basic Analysis)	NW
9143	3	27.74003	I-26 WB (Basic Analysis)	NW
9143	4	27.623707	I-26 WB (Basic Analysis)	NW
9143	5	28.525031	I-26 WB (Basic Analysis)	NW
9143	6	27.947408	I-26 WB (Basic Analysis)	NW
9143	7	28.262828	I-26 WB (Basic Analysis)	NW
9143	8	28.651583	I-26 WB (Basic Analysis)	NW
9143	9	28.793555	I-26 WB (Basic Analysis)	NW
9143	10	28.977145	I-26 WB (Basic Analysis)	NW
9323	1	29.198335	I-126 SB (Merge Analysis)	E
9323	2	30.582044	I-126 SB (Merge Analysis)	E
9323	3	25.915417	I-126 SB (Merge Analysis)	E
9323	4	27.138731	I-126 SB (Merge Analysis)	E
9323	5	26.527473	I-126 SB (Merge Analysis)	E
9323	6	26.864224	I-126 SB (Merge Analysis)	E
9323	7	25.080723	I-126 SB (Merge Analysis)	E
9323	8	27.999759	I-126 SB (Merge Analysis)	E
9323	9	32.920145	I-126 SB (Merge Analysis)	E
9323	10	25.640112	I-126 SB (Merge Analysis)	E
9147	1	24.715427	I-26 WB (Basic Analysis)	NW
9147	2	21.294728	I-26 WB (Basic Analysis)	NW
9147	3	24.522794	I-26 WB (Basic Analysis)	NW
9147	4	24.201739	I-26 WB (Basic Analysis)	NW
9147	5	21.715019	I-26 WB (Basic Analysis)	NW
9147	6	24.400209	I-26 WB (Basic Analysis)	NW
9147	7	25.328351	I-26 WB (Basic Analysis)	NW
9147	8	22.660673	I-26 WB (Basic Analysis)	NW
9147	9	23.594652	I-26 WB (Basic Analysis)	NW
9147	10	20.862763	I-26 WB (Basic Analysis)	NW
9148	1	23.038231	I-26 WB (Diverge Analysis)	NW
9148	2	22.947885	I-26 WB (Diverge Analysis)	NW
9148	3	22.694333	I-26 WB (Diverge Analysis)	NW
9148	4	23.600707	I-26 WB (Diverge Analysis)	NW
9148	5	24.002893	I-26 WB (Diverge Analysis)	NW
9148	6	24.029123	I-26 WB (Diverge Analysis)	NW
9148	7	21.371201	I-26 WB (Diverge Analysis)	NW
9148	8	23.903804	I-26 WB (Diverge Analysis)	NW
9148	9	24.288503	I-26 WB (Diverge Analysis)	NW
9148	10	24.679031	I-26 WB (Diverge Analysis)	NW
9149	1	15.179161	I-26 WB (Diverge Analysis)	NW
9149	2	15.753083	I-26 WB (Diverge Analysis)	NW
9149	3	15.757846	I-26 WB (Diverge Analysis)	NW
9149	4	15.057709	I-26 WB (Diverge Analysis)	NW
9149	5	15.755464	I-26 WB (Diverge Analysis)	NW
9149	6	15.472075	I-26 WB (Diverge Analysis)	NW
9149	7	13.219254	I-26 WB (Diverge Analysis)	NW
9149	8	15.310139	I-26 WB (Diverge Analysis)	NW

ID	Run	Density	Name (Type)	Direction
9149	9	17.015235	I-26 WB (Diverge Analysis)	NW
9149	10	15.002936	I-26 WB (Diverge Analysis)	NW
9151	1	37.809667	I-20 EB (Diverge Analysis)	NE
9151	2	41.126131	I-20 EB (Diverge Analysis)	NE
9151	3	39.582073	I-20 EB (Diverge Analysis)	NE
9151	4	40.700082	I-20 EB (Diverge Analysis)	NE
9151	5	41.162706	I-20 EB (Diverge Analysis)	NE
9151	6	39.156023	I-20 EB (Diverge Analysis)	NE
9151	7	41.71924	I-20 EB (Diverge Analysis)	NE
9151	8	41.249695	I-20 EB (Diverge Analysis)	NE
9151	9	44.542435	I-20 EB (Diverge Analysis)	NE
9151	10	38.496685	I-20 EB (Diverge Analysis)	NE
9152	1	30.778063	I-20 EB (Basic Analysis)	NE
9152	2	29.976652	I-20 EB (Basic Analysis)	NE
9152	3	30.33983	I-20 EB (Basic Analysis)	NE
9152	4	29.596977	I-20 EB (Basic Analysis)	NE
9152	5	31.133544	I-20 EB (Basic Analysis)	NE
9152	6	30.706582	I-20 EB (Basic Analysis)	NE
9152	7	30.01844	I-20 EB (Basic Analysis)	NE
9152	8	32.339648	I-20 EB (Basic Analysis)	NE
9152	9	30.93972	I-20 EB (Basic Analysis)	NE
9152	10	30.22876	I-20 EB (Basic Analysis)	NE
9256	1	30.854339	(Diverge Analysis)	SE
9256	2	31.992938	(Diverge Analysis)	SE
9256	3	32.531388	(Diverge Analysis)	SE
9256	4	30.697291	(Diverge Analysis)	SE
9256	5	30.273822	(Diverge Analysis)	SE
9256	6	30.357955	(Diverge Analysis)	SE
9256	7	30.080317	(Diverge Analysis)	SE
9256	8	30.716922	(Diverge Analysis)	SE
9256	9	32.853898	(Diverge Analysis)	SE
9256	10	30.688878	(Diverge Analysis)	SE
9302	1	27.483621	I-20 WB (Diverge Analysis)	SW
9302	2	29.732681	I-20 WB (Diverge Analysis)	SW
9302	3	29.140908	I-20 WB (Diverge Analysis)	SW
9302	4	29.3608	I-20 WB (Diverge Analysis)	SW
9302	5	29.689539	I-20 WB (Diverge Analysis)	SW
9302	6	30.716797	I-20 WB (Diverge Analysis)	SW
9302	7	29.849895	I-20 WB (Diverge Analysis)	SW
9302	8	30.580046	I-20 WB (Diverge Analysis)	SW
9302	9	30.868199	I-20 WB (Diverge Analysis)	SW
9302	10	29.901177	I-20 WB (Diverge Analysis)	SW
9156	1	36.445977	I-20 EB (Basic Analysis)	NE
9156	2	37.171978	I-20 EB (Basic Analysis)	NE
9156	3	38.003118	I-20 EB (Basic Analysis)	NE
9156	4	36.837528	I-20 EB (Basic Analysis)	NE
9156	5	37.912028	I-20 EB (Basic Analysis)	NE
9156	6	36.868798	I-20 EB (Basic Analysis)	NE
9156	7	37.198716	I-20 EB (Basic Analysis)	NE
9156	8	35.990074	I-20 EB (Basic Analysis)	NE
9156	9	37.846769	I-20 EB (Basic Analysis)	NE
9156	10	35.984182	I-20 EB (Basic Analysis)	NE
9157	1	36.886656	I-20 WB (Diverge Analysis)	SW

ID	Run	Density	Name (Type)	Direction
9157	2	40.391988	I-20 WB (Diverge Analysis)	SW
9157	3	40.397854	I-20 WB (Diverge Analysis)	SW
9157	4	43.128787	I-20 WB (Diverge Analysis)	SW
9157	5	42.263454	I-20 WB (Diverge Analysis)	SW
9157	6	42.873587	I-20 WB (Diverge Analysis)	SW
9157	7	40.116255	I-20 WB (Diverge Analysis)	SW
9157	8	43.178653	I-20 WB (Diverge Analysis)	SW
9157	9	42.495187	I-20 WB (Diverge Analysis)	SW
9157	10	40.007721	I-20 WB (Diverge Analysis)	SW
9158	1	34.074187	I-20 WB (Basic Analysis)	SW
9158	2	35.225167	I-20 WB (Basic Analysis)	SW
9158	3	34.436083	I-20 WB (Basic Analysis)	SW
9158	4	35.029088	I-20 WB (Basic Analysis)	SW
9158	5	35.559821	I-20 WB (Basic Analysis)	SW
9158	6	35.566075	I-20 WB (Basic Analysis)	SW
9158	7	35.097131	I-20 WB (Basic Analysis)	SW
9158	8	35.579062	I-20 WB (Basic Analysis)	SW
9158	9	36.426638	I-20 WB (Basic Analysis)	SW
9158	10	35.525231	I-20 WB (Basic Analysis)	SW
9159	1	10.327867	I-20 WB (Basic Analysis)	W
9159	2	11.407703	I-20 WB (Basic Analysis)	W
9159	3	10.332378	I-20 WB (Basic Analysis)	W
9159	4	10.277333	I-20 WB (Basic Analysis)	W
9159	5	11.070212	I-20 WB (Basic Analysis)	W
9159	6	10.670523	I-20 WB (Basic Analysis)	W
9159	7	11.438835	I-20 WB (Basic Analysis)	W
9159	8	10.051257	I-20 WB (Basic Analysis)	W
9159	9	10.825487	I-20 WB (Basic Analysis)	W
9159	10	10.66718	I-20 WB (Basic Analysis)	W
9160	1	13.114283	I-20 WB (Merge Analysis)	SW
9160	2	12.959289	I-20 WB (Merge Analysis)	SW
9160	3	13.004876	I-20 WB (Merge Analysis)	SW
9160	4	12.807942	I-20 WB (Merge Analysis)	SW
9160	5	12.731357	I-20 WB (Merge Analysis)	SW
9160	6	12.880881	I-20 WB (Merge Analysis)	SW
9160	7	13.145282	I-20 WB (Merge Analysis)	SW
9160	8	13.241925	I-20 WB (Merge Analysis)	SW
9160	9	13.555559	I-20 WB (Merge Analysis)	SW
9160	10	13.438858	I-20 WB (Merge Analysis)	SW
9162	1	9.891033	I-20 WB (Merge Analysis)	SW
9162	2	11.050956	I-20 WB (Merge Analysis)	SW
9162	3	10.329659	I-20 WB (Merge Analysis)	SW
9162	4	9.393922	I-20 WB (Merge Analysis)	SW
9162	5	10.115219	I-20 WB (Merge Analysis)	SW
9162	6	10.025057	I-20 WB (Merge Analysis)	SW
9162	7	9.774065	I-20 WB (Merge Analysis)	SW
9162	8	9.108815	I-20 WB (Merge Analysis)	SW
9162	9	11.596803	I-20 WB (Merge Analysis)	SW
9162	10	10.500236	I-20 WB (Merge Analysis)	SW
9163	1	12.099619	I-20 WB (Merge Analysis)	S
9163	2	12.904976	I-20 WB (Merge Analysis)	S
9163	3	11.620482	I-20 WB (Merge Analysis)	S
9163	4	12.57196	I-20 WB (Merge Analysis)	S

ID	Run	Density	Name (Type)	Direction
9163	5	13.171164	I-20 WB (Merge Analysis)	S
9163	6	12.353346	I-20 WB (Merge Analysis)	S
9163	7	12.271791	I-20 WB (Merge Analysis)	S
9163	8	11.658994	I-20 WB (Merge Analysis)	S
9163	9	11.832299	I-20 WB (Merge Analysis)	S
9163	10	12.044116	I-20 WB (Merge Analysis)	S
9182	1	13.99159	I-26 EB (Merge Analysis)	S
9182	2	13.904653	I-26 EB (Merge Analysis)	S
9182	3	14.355855	I-26 EB (Merge Analysis)	S
9182	4	14.426273	I-26 EB (Merge Analysis)	S
9182	5	14.190675	I-26 EB (Merge Analysis)	S
9182	6	13.778595	I-26 EB (Merge Analysis)	S
9182	7	14.322819	I-26 EB (Merge Analysis)	S
9182	8	13.814239	I-26 EB (Merge Analysis)	S
9182	9	13.644713	I-26 EB (Merge Analysis)	S
9182	10	14.235013	I-26 EB (Merge Analysis)	S
9183	1	19.983627	I-20 EB (Basic Analysis)	E
9183	2	18.344557	I-20 EB (Basic Analysis)	E
9183	3	20.566683	I-20 EB (Basic Analysis)	E
9183	4	18.386426	I-20 EB (Basic Analysis)	E
9183	5	19.83166	I-20 EB (Basic Analysis)	E
9183	6	21.073756	I-20 EB (Basic Analysis)	E
9183	7	21.590133	I-20 EB (Basic Analysis)	E
9183	8	20.655072	I-20 EB (Basic Analysis)	E
9183	9	21.003976	I-20 EB (Basic Analysis)	E
9183	10	19.951063	I-20 EB (Basic Analysis)	E
9186	1	31.279834	I-20 WB (Basic Analysis)	SW
9186	2	34.626379	I-20 WB (Basic Analysis)	SW
9186	3	29.684006	I-20 WB (Basic Analysis)	SW
9186	4	24.128831	I-20 WB (Basic Analysis)	SW
9186	5	24.529735	I-20 WB (Basic Analysis)	SW
9186	6	28.019524	I-20 WB (Basic Analysis)	SW
9186	7	28.463406	I-20 WB (Basic Analysis)	SW
9186	8	31.297797	I-20 WB (Basic Analysis)	SW
9186	9	27.928539	I-20 WB (Basic Analysis)	SW
9186	10	25.560044	I-20 WB (Basic Analysis)	SW
9249	1	28.300026	I-26 EB (Basic Analysis)	SE
9249	2	28.255364	I-26 EB (Basic Analysis)	SE
9249	3	27.909564	I-26 EB (Basic Analysis)	SE
9249	4	28.360818	I-26 EB (Basic Analysis)	SE
9249	5	28.735158	I-26 EB (Basic Analysis)	SE
9249	6	27.92729	I-26 EB (Basic Analysis)	SE
9249	7	27.772365	I-26 EB (Basic Analysis)	SE
9249	8	27.856927	I-26 EB (Basic Analysis)	SE
9249	9	28.160429	I-26 EB (Basic Analysis)	SE
9249	10	28.128702	I-26 EB (Basic Analysis)	SE
9304	1	102.809522	I-20 EB (Basic Analysis)	NE
9304	2	96.554579	I-20 EB (Basic Analysis)	NE
9304	3	114.042977	I-20 EB (Basic Analysis)	NE
9304	4	100.986445	I-20 EB (Basic Analysis)	NE
9304	5	104.569687	I-20 EB (Basic Analysis)	NE
9304	6	105.699323	I-20 EB (Basic Analysis)	NE
9304	7	105.295283	I-20 EB (Basic Analysis)	NE

ID	Run	Density	Name (Type)	Direction
9304	8	100.649512	I-20 EB (Basic Analysis)	NE
9304	9	112.822465	I-20 EB (Basic Analysis)	NE
9304	10	95.824789	I-20 EB (Basic Analysis)	NE
9246	1	7.562917	I-126 NB (Merge Analysis)	NW
9246	2	7.645966	I-126 NB (Merge Analysis)	NW
9246	3	6.621705	I-126 NB (Merge Analysis)	NW
9246	4	8.349106	I-126 NB (Merge Analysis)	NW
9246	5	9.417659	I-126 NB (Merge Analysis)	NW
9246	6	7.806525	I-126 NB (Merge Analysis)	NW
9246	7	7.933866	I-126 NB (Merge Analysis)	NW
9246	8	7.153213	I-126 NB (Merge Analysis)	NW
9246	9	7.313773	I-126 NB (Merge Analysis)	NW
9246	10	7.136604	I-126 NB (Merge Analysis)	NW
9207	1	17.027824	I-26 EB (Basic Analysis)	S
9207	2	16.789041	I-26 EB (Basic Analysis)	S
9207	3	18.521199	I-26 EB (Basic Analysis)	S
9207	4	17.52636	I-26 EB (Basic Analysis)	S
9207	5	17.327469	I-26 EB (Basic Analysis)	S
9207	6	16.664131	I-26 EB (Basic Analysis)	S
9207	7	17.365784	I-26 EB (Basic Analysis)	S
9207	8	16.539833	I-26 EB (Basic Analysis)	S
9207	9	16.645502	I-26 EB (Basic Analysis)	S
9207	10	17.911837	I-26 EB (Basic Analysis)	S
9204	1	62.274864	CD ROAD I-26 EB (Basic Analysis)	SE
9204	2	58.957703	CD ROAD I-26 EB (Basic Analysis)	SE
9204	3	55.9347	CD ROAD I-26 EB (Basic Analysis)	SE
9204	4	61.462193	CD ROAD I-26 EB (Basic Analysis)	SE
9204	5	61.688212	CD ROAD I-26 EB (Basic Analysis)	SE
9204	6	48.94307	CD ROAD I-26 EB (Basic Analysis)	SE
9204	7	61.229526	CD ROAD I-26 EB (Basic Analysis)	SE
9204	8	57.530128	CD ROAD I-26 EB (Basic Analysis)	SE
9204	9	57.742852	CD ROAD I-26 EB (Basic Analysis)	SE
9204	10	57.073104	CD ROAD I-26 EB (Basic Analysis)	SE
9328	1	30.484145	CD ROAD I-20 EB (Merge Analysis)	E
9328	2	31.340054	CD ROAD I-20 EB (Merge Analysis)	E
9328	3	28.69548	CD ROAD I-20 EB (Merge Analysis)	E
9328	4	30.433797	CD ROAD I-20 EB (Merge Analysis)	E
9328	5	28.748477	CD ROAD I-20 EB (Merge Analysis)	E
9328	6	29.561989	CD ROAD I-20 EB (Merge Analysis)	E
9328	7	30.076064	CD ROAD I-20 EB (Merge Analysis)	E
9328	8	30.200608	CD ROAD I-20 EB (Merge Analysis)	E
9328	9	30.674935	CD ROAD I-20 EB (Merge Analysis)	E
9328	10	29.52224	CD ROAD I-20 EB (Merge Analysis)	E
9330	1	29.330584	CD ROAD I-20 EB (Basic Analysis)	NE
9330	2	29.155766	CD ROAD I-20 EB (Basic Analysis)	NE
9330	3	30.383377	CD ROAD I-20 EB (Basic Analysis)	NE
9330	4	29.637487	CD ROAD I-20 EB (Basic Analysis)	NE
9330	5	27.768876	CD ROAD I-20 EB (Basic Analysis)	NE
9330	6	29.28785	CD ROAD I-20 EB (Basic Analysis)	NE
9330	7	27.994197	CD ROAD I-20 EB (Basic Analysis)	NE
9330	8	30.32122	CD ROAD I-20 EB (Basic Analysis)	NE
9330	9	30.165826	CD ROAD I-20 EB (Basic Analysis)	NE
9330	10	28.417645	CD ROAD I-20 EB (Basic Analysis)	NE

ID	Run	Density	Name (Type)	Direction
9329	1	19.26458	CD ROAD I-20 EB (Merge Analysis)	E
9329	2	19.537517	CD ROAD I-20 EB (Merge Analysis)	E
9329	3	18.604762	CD ROAD I-20 EB (Merge Analysis)	E
9329	4	18.63921	CD ROAD I-20 EB (Merge Analysis)	E
9329	5	19.995945	CD ROAD I-20 EB (Merge Analysis)	E
9329	6	20.425225	CD ROAD I-20 EB (Merge Analysis)	E
9329	7	19.185084	CD ROAD I-20 EB (Merge Analysis)	E
9329	8	20.557718	CD ROAD I-20 EB (Merge Analysis)	E
9329	9	18.398072	CD ROAD I-20 EB (Merge Analysis)	E
9329	10	20.165537	CD ROAD I-20 EB (Merge Analysis)	E
9262	1	25.771881	CD ROAD I-20 EB (Basic Analysis)	E
9262	2	25.456354	CD ROAD I-20 EB (Basic Analysis)	E
9262	3	26.884014	CD ROAD I-20 EB (Basic Analysis)	E
9262	4	25.775776	CD ROAD I-20 EB (Basic Analysis)	E
9262	5	27.168377	CD ROAD I-20 EB (Basic Analysis)	E
9262	6	26.854798	CD ROAD I-20 EB (Basic Analysis)	E
9262	7	24.525357	CD ROAD I-20 EB (Basic Analysis)	E
9262	8	27.063201	CD ROAD I-20 EB (Basic Analysis)	E
9262	9	25.337545	CD ROAD I-20 EB (Basic Analysis)	E
9262	10	26.358136	CD ROAD I-20 EB (Basic Analysis)	E
9206	1	16.51136	I-26 EB (Basic Analysis)	S
9206	2	16.054235	I-26 EB (Basic Analysis)	S
9206	3	15.729193	I-26 EB (Basic Analysis)	S
9206	4	15.911059	I-26 EB (Basic Analysis)	S
9206	5	15.644676	I-26 EB (Basic Analysis)	S
9206	6	15.520372	I-26 EB (Basic Analysis)	S
9206	7	15.95022	I-26 EB (Basic Analysis)	S
9206	8	16.572112	I-26 EB (Basic Analysis)	S
9206	9	15.096437	I-26 EB (Basic Analysis)	S
9206	10	15.727829	I-26 EB (Basic Analysis)	S
9300	1	22.314839	I-20 EB (Merge Analysis)	NE
9300	2	20.138306	I-20 EB (Merge Analysis)	NE
9300	3	21.548262	I-20 EB (Merge Analysis)	NE
9300	4	20.108973	I-20 EB (Merge Analysis)	NE
9300	5	21.552173	I-20 EB (Merge Analysis)	NE
9300	6	20.744529	I-20 EB (Merge Analysis)	NE
9300	7	21.235373	I-20 EB (Merge Analysis)	NE
9300	8	21.161062	I-20 EB (Merge Analysis)	NE
9300	9	20.140262	I-20 EB (Merge Analysis)	NE
9300	10	20.284973	I-20 EB (Merge Analysis)	NE
9248	1	27.618389	I-26 WB (Basic Analysis)	NW
9248	2	27.269977	I-26 WB (Basic Analysis)	NW
9248	3	27.709364	I-26 WB (Basic Analysis)	NW
9248	4	27.743086	I-26 WB (Basic Analysis)	NW
9248	5	28.033233	I-26 WB (Basic Analysis)	NW
9248	6	28.092796	I-26 WB (Basic Analysis)	NW
9248	7	27.929294	I-26 WB (Basic Analysis)	NW
9248	8	28.188739	I-26 WB (Basic Analysis)	NW
9248	9	28.46598	I-26 WB (Basic Analysis)	NW
9248	10	27.55473	I-26 WB (Basic Analysis)	NW
9303	1	38.244273	I-20 EB (Basic Analysis)	NE
9303	2	37.461085	I-20 EB (Basic Analysis)	NE
9303	3	39.157223	I-20 EB (Basic Analysis)	NE

ID	Run	Density	Name (Type)	Direction
9303	4	37.2735	I-20 EB (Basic Analysis)	NE
9303	5	39.162924	I-20 EB (Basic Analysis)	NE
9303	6	37.74097	I-20 EB (Basic Analysis)	NE
9303	7	37.059039	I-20 EB (Basic Analysis)	NE
9303	8	37.88159	I-20 EB (Basic Analysis)	NE
9303	9	36.7949	I-20 EB (Basic Analysis)	NE
9303	10	38.931361	I-20 EB (Basic Analysis)	NE
9245	1	27.185309	Ↄ ROAD I-20 WB TO I-20 (Basic Analysi	NW
9245	2	25.215662	Ↄ ROAD I-20 WB TO I-20 (Basic Analysi	NW
9245	3	26.080503	Ↄ ROAD I-20 WB TO I-20 (Basic Analysi	NW
9245	4	25.792223	Ↄ ROAD I-20 WB TO I-20 (Basic Analysi	NW
9245	5	24.312169	Ↄ ROAD I-20 WB TO I-20 (Basic Analysi	NW
9245	6	27.404337	Ↄ ROAD I-20 WB TO I-20 (Basic Analysi	NW
9245	7	25.473343	Ↄ ROAD I-20 WB TO I-20 (Basic Analysi	NW
9245	8	25.917842	Ↄ ROAD I-20 WB TO I-20 (Basic Analysi	NW
9245	9	24.308948	Ↄ ROAD I-20 WB TO I-20 (Basic Analysi	NW
9245	10	26.476687	Ↄ ROAD I-20 WB TO I-20 (Basic Analysi	NW
9005	1	24.343233	I-126 NB (Basic Analysis)	NW
9005	2	25.032892	I-126 NB (Basic Analysis)	NW
9005	3	24.380311	I-126 NB (Basic Analysis)	NW
9005	4	25.331992	I-126 NB (Basic Analysis)	NW
9005	5	25.27761	I-126 NB (Basic Analysis)	NW
9005	6	23.950202	I-126 NB (Basic Analysis)	NW
9005	7	25.208397	I-126 NB (Basic Analysis)	NW
9005	8	24.914241	I-126 NB (Basic Analysis)	NW
9005	9	24.518738	I-126 NB (Basic Analysis)	NW
9005	10	26.167492	I-126 NB (Basic Analysis)	NW
9023	1	30.347774	I-126 NB (Basic Analysis)	NW
9023	2	27.993091	I-126 NB (Basic Analysis)	NW
9023	3	29.566765	I-126 NB (Basic Analysis)	NW
9023	4	31.645015	I-126 NB (Basic Analysis)	NW
9023	5	31.949758	I-126 NB (Basic Analysis)	NW
9023	6	28.542628	I-126 NB (Basic Analysis)	NW
9023	7	31.115461	I-126 NB (Basic Analysis)	NW
9023	8	29.368599	I-126 NB (Basic Analysis)	NW
9023	9	31.846512	I-126 NB (Basic Analysis)	NW
9023	10	30.214553	I-126 NB (Basic Analysis)	NW
9033	1	45.338384	I-26 WB (Basic Analysis)	NW
9033	2	43.172748	I-26 WB (Basic Analysis)	NW
9033	3	47.588901	I-26 WB (Basic Analysis)	NW
9033	4	46.041315	I-26 WB (Basic Analysis)	NW
9033	5	47.904232	I-26 WB (Basic Analysis)	NW
9033	6	45.619605	I-26 WB (Basic Analysis)	NW
9033	7	45.704758	I-26 WB (Basic Analysis)	NW
9033	8	44.71553	I-26 WB (Basic Analysis)	NW
9033	9	46.691146	I-26 WB (Basic Analysis)	NW
9033	10	44.654228	I-26 WB (Basic Analysis)	NW
8994	1	12.913776	I-126 SB (Basic Analysis)	SE
8994	2	14.218843	I-126 SB (Basic Analysis)	SE
8994	3	16.208386	I-126 SB (Basic Analysis)	SE
8994	4	13.196693	I-126 SB (Basic Analysis)	SE
8994	5	14.593023	I-126 SB (Basic Analysis)	SE
8994	6	13.406599	I-126 SB (Basic Analysis)	SE

ID	Run	Density	Name (Type)	Direction
8994	7	13.960263	I-126 SB (Basic Analysis)	SE
8994	8	14.319233	I-126 SB (Basic Analysis)	SE
8994	9	13.954179	I-126 SB (Basic Analysis)	SE
8994	10	15.240994	I-126 SB (Basic Analysis)	SE
9040	1	37.44131	I-20 WB (Basic Analysis)	SW
9040	2	37.516562	I-20 WB (Basic Analysis)	SW
9040	3	39.08887	I-20 WB (Basic Analysis)	SW
9040	4	37.380729	I-20 WB (Basic Analysis)	SW
9040	5	37.951825	I-20 WB (Basic Analysis)	SW
9040	6	37.38672	I-20 WB (Basic Analysis)	SW
9040	7	38.831342	I-20 WB (Basic Analysis)	SW
9040	8	37.652717	I-20 WB (Basic Analysis)	SW
9040	9	37.560257	I-20 WB (Basic Analysis)	SW
9040	10	37.066889	I-20 WB (Basic Analysis)	SW
9045	1	25.983978	CD ROAD I-20 EB (Basic Analysis)	E
9045	2	26.151422	CD ROAD I-20 EB (Basic Analysis)	E
9045	3	26.777663	CD ROAD I-20 EB (Basic Analysis)	E
9045	4	26.124631	CD ROAD I-20 EB (Basic Analysis)	E
9045	5	23.867484	CD ROAD I-20 EB (Basic Analysis)	E
9045	6	28.117216	CD ROAD I-20 EB (Basic Analysis)	E
9045	7	26.791058	CD ROAD I-20 EB (Basic Analysis)	E
9045	8	25.806487	CD ROAD I-20 EB (Basic Analysis)	E
9045	9	24.470283	CD ROAD I-20 EB (Basic Analysis)	E
9045	10	26.657103	CD ROAD I-20 EB (Basic Analysis)	E
8853	1	19.26458	CD ROAD I-20 EB (Merge Analysis)	E
8853	2	19.537517	CD ROAD I-20 EB (Merge Analysis)	E
8853	3	18.604762	CD ROAD I-20 EB (Merge Analysis)	E
8853	4	18.63921	CD ROAD I-20 EB (Merge Analysis)	E
8853	5	19.995945	CD ROAD I-20 EB (Merge Analysis)	E
8853	6	20.425225	CD ROAD I-20 EB (Merge Analysis)	E
8853	7	19.185084	CD ROAD I-20 EB (Merge Analysis)	E
8853	8	20.557718	CD ROAD I-20 EB (Merge Analysis)	E
8853	9	18.398072	CD ROAD I-20 EB (Merge Analysis)	E
8853	10	20.165537	CD ROAD I-20 EB (Merge Analysis)	E
8826	1	16.213794	CD ROAD I-20 EB (Basic Analysis)	E
8826	2	16.593917	CD ROAD I-20 EB (Basic Analysis)	E
8826	3	16.409832	CD ROAD I-20 EB (Basic Analysis)	E
8826	4	16.275952	CD ROAD I-20 EB (Basic Analysis)	E
8826	5	15.924518	CD ROAD I-20 EB (Basic Analysis)	E
8826	6	16.082305	CD ROAD I-20 EB (Basic Analysis)	E
8826	7	16.13251	CD ROAD I-20 EB (Basic Analysis)	E
8826	8	16.768439	CD ROAD I-20 EB (Basic Analysis)	E
8826	9	17.583671	CD ROAD I-20 EB (Basic Analysis)	E
8826	10	16.182715	CD ROAD I-20 EB (Basic Analysis)	E
8839	1	36.685339	I-20 EB (Merge Analysis)	NE
8839	2	37.014514	I-20 EB (Merge Analysis)	NE
8839	3	38.115814	I-20 EB (Merge Analysis)	NE
8839	4	38.358829	I-20 EB (Merge Analysis)	NE
8839	5	39.087875	I-20 EB (Merge Analysis)	NE
8839	6	37.110615	I-20 EB (Merge Analysis)	NE
8839	7	37.143754	I-20 EB (Merge Analysis)	NE
8839	8	38.72998	I-20 EB (Merge Analysis)	NE
8839	9	36.739465	I-20 EB (Merge Analysis)	NE

ID	Run	Density	Name (Type)	Direction
8839	10	38.764223	I-20 EB (Merge Analysis)	NE
8883	1	51.915106	I-26 WB (Basic Analysis)	NW
8883	2	56.102213	I-26 WB (Basic Analysis)	NW
8883	3	53.87771	I-26 WB (Basic Analysis)	NW
8883	4	55.017793	I-26 WB (Basic Analysis)	NW
8883	5	58.324	I-26 WB (Basic Analysis)	NW
8883	6	56.51966	I-26 WB (Basic Analysis)	NW
8883	7	52.982605	I-26 WB (Basic Analysis)	NW
8883	8	57.75091	I-26 WB (Basic Analysis)	NW
8883	9	53.500965	I-26 WB (Basic Analysis)	NW
8883	10	50.448725	I-26 WB (Basic Analysis)	NW
8869	1	16.989016	(Weaving Analysis)	SE
8869	2	16.255748	(Weaving Analysis)	SE
8869	3	16.964243	(Weaving Analysis)	SE
8869	4	15.733047	(Weaving Analysis)	SE
8869	5	17.100492	(Weaving Analysis)	SE
8869	6	16.6422	(Weaving Analysis)	SE
8869	7	16.275566	(Weaving Analysis)	SE
8869	8	17.187196	(Weaving Analysis)	SE
8869	9	16.171521	(Weaving Analysis)	SE
8869	10	17.323445	(Weaving Analysis)	SE
8871	1	24.513374	(Basic Analysis)	W
8871	2	24.431022	(Basic Analysis)	W
8871	3	25.298461	(Basic Analysis)	W
8871	4	26.237271	(Basic Analysis)	W
8871	5	23.934167	(Basic Analysis)	W
8871	6	24.620431	(Basic Analysis)	W
8871	7	23.440056	(Basic Analysis)	W
8871	8	24.505139	(Basic Analysis)	W
8871	9	24.661607	(Basic Analysis)	W
8871	10	24.944348	(Basic Analysis)	W
9054	1	12.270763	I-20 WB (Basic Analysis)	SW
9054	2	11.636523	I-20 WB (Basic Analysis)	SW
9054	3	12.208906	I-20 WB (Basic Analysis)	SW
9054	4	12.288907	I-20 WB (Basic Analysis)	SW
9054	5	12.376332	I-20 WB (Basic Analysis)	SW
9054	6	11.577965	I-20 WB (Basic Analysis)	SW
9054	7	12.716957	I-20 WB (Basic Analysis)	SW
9054	8	12.82665	I-20 WB (Basic Analysis)	SW
9054	9	12.55283	I-20 WB (Basic Analysis)	SW
9054	10	12.919023	I-20 WB (Basic Analysis)	SW
9115	1	22.111608	I-26 EB (Merge Analysis)	S
9115	2	22.649016	I-26 EB (Merge Analysis)	S
9115	3	22.754161	I-26 EB (Merge Analysis)	S
9115	4	22.033723	I-26 EB (Merge Analysis)	S
9115	5	21.745548	I-26 EB (Merge Analysis)	S
9115	6	22.041511	I-26 EB (Merge Analysis)	S
9115	7	22.380312	I-26 EB (Merge Analysis)	S
9115	8	24.210614	I-26 EB (Merge Analysis)	S
9115	9	22.325792	I-26 EB (Merge Analysis)	S
9115	10	23.163058	I-26 EB (Merge Analysis)	S
8887	1	40.39987	I-26 WB (Merge Analysis)	NW
8887	2	39.513349	I-26 WB (Merge Analysis)	NW

ID	Run	Density	Name (Type)	Direction
8887	3	42.302175	I-26 WB (Merge Analysis)	NW
8887	4	40.832036	I-26 WB (Merge Analysis)	NW
8887	5	41.636561	I-26 WB (Merge Analysis)	NW
8887	6	40.449067	I-26 WB (Merge Analysis)	NW
8887	7	41.472569	I-26 WB (Merge Analysis)	NW
8887	8	39.982173	I-26 WB (Merge Analysis)	NW
8887	9	41.506332	I-26 WB (Merge Analysis)	NW
8887	10	39.910788	I-26 WB (Merge Analysis)	NW
9089	1	17.817531	I-26 EB (Diverge Analysis)	SE
9089	2	17.033178	I-26 EB (Diverge Analysis)	SE
9089	3	16.979697	I-26 EB (Diverge Analysis)	SE
9089	4	16.166217	I-26 EB (Diverge Analysis)	SE
9089	5	19.589525	I-26 EB (Diverge Analysis)	SE
9089	6	16.598833	I-26 EB (Diverge Analysis)	SE
9089	7	17.555395	I-26 EB (Diverge Analysis)	SE
9089	8	18.318896	I-26 EB (Diverge Analysis)	SE
9089	9	17.922743	I-26 EB (Diverge Analysis)	SE
9089	10	17.050602	I-26 EB (Diverge Analysis)	SE
9299	1	27.991952	CD ROAD I-20 WB (Basic Analysis)	W
9299	2	27.991952	CD ROAD I-20 WB (Basic Analysis)	W
9299	3	28.239493	CD ROAD I-20 WB (Basic Analysis)	W
9299	4	26.566115	CD ROAD I-20 WB (Basic Analysis)	W
9299	5	29.625723	CD ROAD I-20 WB (Basic Analysis)	W
9299	6	28.10087	CD ROAD I-20 WB (Basic Analysis)	W
9299	7	26.625525	CD ROAD I-20 WB (Basic Analysis)	W
9299	8	24.01149	CD ROAD I-20 WB (Basic Analysis)	W
9299	9	24.932343	CD ROAD I-20 WB (Basic Analysis)	W
9299	10	26.991886	CD ROAD I-20 WB (Basic Analysis)	W
8886	1	45.338384	I-26 WB (Basic Analysis)	NW
8886	2	43.172748	I-26 WB (Basic Analysis)	NW
8886	3	47.588901	I-26 WB (Basic Analysis)	NW
8886	4	46.041315	I-26 WB (Basic Analysis)	NW
8886	5	47.904232	I-26 WB (Basic Analysis)	NW
8886	6	45.619605	I-26 WB (Basic Analysis)	NW
8886	7	45.704758	I-26 WB (Basic Analysis)	NW
8886	8	44.71553	I-26 WB (Basic Analysis)	NW
8886	9	46.691146	I-26 WB (Basic Analysis)	NW
8886	10	44.654228	I-26 WB (Basic Analysis)	NW
8819	1	22.82259	CD ROAD I-20 WB (Weaving Analysis)	SW
8819	2	22.205484	CD ROAD I-20 WB (Weaving Analysis)	SW
8819	3	23.901664	CD ROAD I-20 WB (Weaving Analysis)	SW
8819	4	22.045174	CD ROAD I-20 WB (Weaving Analysis)	SW
8819	5	23.6431	CD ROAD I-20 WB (Weaving Analysis)	SW
8819	6	21.964158	CD ROAD I-20 WB (Weaving Analysis)	SW
8819	7	22.782944	CD ROAD I-20 WB (Weaving Analysis)	SW
8819	8	24.011985	CD ROAD I-20 WB (Weaving Analysis)	SW
8819	9	22.288224	CD ROAD I-20 WB (Weaving Analysis)	SW
8819	10	22.874303	CD ROAD I-20 WB (Weaving Analysis)	SW
8832	1	37.44131	I-20 WB (Basic Analysis)	SW
8832	2	37.516562	I-20 WB (Basic Analysis)	SW
8832	3	39.08887	I-20 WB (Basic Analysis)	SW
8832	4	37.380729	I-20 WB (Basic Analysis)	SW
8832	5	37.951825	I-20 WB (Basic Analysis)	SW

ID	Run	Density	Name (Type)	Direction
8832	6	37.38672	I-20 WB (Basic Analysis)	SW
8832	7	38.831342	I-20 WB (Basic Analysis)	SW
8832	8	37.652717	I-20 WB (Basic Analysis)	SW
8832	9	37.560257	I-20 WB (Basic Analysis)	SW
8832	10	37.066889	I-20 WB (Basic Analysis)	SW
8829	1	20.22676	CD ROAD I-20 EB (Basic Analysis)	E
8829	2	18.327812	CD ROAD I-20 EB (Basic Analysis)	E
8829	3	21.630799	CD ROAD I-20 EB (Basic Analysis)	E
8829	4	19.532811	CD ROAD I-20 EB (Basic Analysis)	E
8829	5	20.716291	CD ROAD I-20 EB (Basic Analysis)	E
8829	6	21.22465	CD ROAD I-20 EB (Basic Analysis)	E
8829	7	20.191794	CD ROAD I-20 EB (Basic Analysis)	E
8829	8	19.852888	CD ROAD I-20 EB (Basic Analysis)	E
8829	9	18.225602	CD ROAD I-20 EB (Basic Analysis)	E
8829	10	18.976037	CD ROAD I-20 EB (Basic Analysis)	E
8791	1	16.498691	D ROAD I-20 WB TO I-20 (Basic Analysi	NE
8791	2	17.550148	D ROAD I-20 WB TO I-20 (Basic Analysi	NE
8791	3	18.00178	D ROAD I-20 WB TO I-20 (Basic Analysi	NE
8791	4	17.19731	D ROAD I-20 WB TO I-20 (Basic Analysi	NE
8791	5	17.768907	D ROAD I-20 WB TO I-20 (Basic Analysi	NE
8791	6	17.606602	D ROAD I-20 WB TO I-20 (Basic Analysi	NE
8791	7	17.183196	D ROAD I-20 WB TO I-20 (Basic Analysi	NE
8791	8	16.279932	D ROAD I-20 WB TO I-20 (Basic Analysi	NE
8791	9	16.364613	D ROAD I-20 WB TO I-20 (Basic Analysi	NE
8791	10	18.044121	D ROAD I-20 WB TO I-20 (Basic Analysi	NE
8838	1	12.270763	I-20 WB (Basic Analysis)	SW
8838	2	11.636523	I-20 WB (Basic Analysis)	SW
8838	3	12.208906	I-20 WB (Basic Analysis)	SW
8838	4	12.288907	I-20 WB (Basic Analysis)	SW
8838	5	12.376332	I-20 WB (Basic Analysis)	SW
8838	6	11.577965	I-20 WB (Basic Analysis)	SW
8838	7	12.716957	I-20 WB (Basic Analysis)	SW
8838	8	12.82665	I-20 WB (Basic Analysis)	SW
8838	9	12.55283	I-20 WB (Basic Analysis)	SW
8838	10	12.919023	I-20 WB (Basic Analysis)	SW
8658	1	38.431575	I-20 WB (Merge Analysis)	SW
8658	2	38.779591	I-20 WB (Merge Analysis)	SW
8658	3	37.649731	I-20 WB (Merge Analysis)	SW
8658	4	38.524879	I-20 WB (Merge Analysis)	SW
8658	5	38.277658	I-20 WB (Merge Analysis)	SW
8658	6	37.813864	I-20 WB (Merge Analysis)	SW
8658	7	38.614096	I-20 WB (Merge Analysis)	SW
8658	8	37.266982	I-20 WB (Merge Analysis)	SW
8658	9	39.20729	I-20 WB (Merge Analysis)	SW
8658	10	38.619545	I-20 WB (Merge Analysis)	SW
2806	1	19.061924	I-20 EB (Basic Analysis)	NE
2806	2	19.519545	I-20 EB (Basic Analysis)	NE
2806	3	19.43159	I-20 EB (Basic Analysis)	NE
2806	4	19.298255	I-20 EB (Basic Analysis)	NE
2806	5	20.168651	I-20 EB (Basic Analysis)	NE
2806	6	18.521905	I-20 EB (Basic Analysis)	NE
2806	7	18.35561	I-20 EB (Basic Analysis)	NE
2806	8	19.362808	I-20 EB (Basic Analysis)	NE

ID	Run	Density	Name (Type)	Direction
2806	9	19.647648	I-20 EB (Basic Analysis)	NE
2806	10	20.015402	I-20 EB (Basic Analysis)	NE
2807	1	19.061924	I-20 EB (Basic Analysis)	NE
2807	2	19.519545	I-20 EB (Basic Analysis)	NE
2807	3	19.43159	I-20 EB (Basic Analysis)	NE
2807	4	19.298255	I-20 EB (Basic Analysis)	NE
2807	5	20.168651	I-20 EB (Basic Analysis)	NE
2807	6	18.521905	I-20 EB (Basic Analysis)	NE
2807	7	18.35561	I-20 EB (Basic Analysis)	NE
2807	8	19.362808	I-20 EB (Basic Analysis)	NE
2807	9	19.647648	I-20 EB (Basic Analysis)	NE
2807	10	20.015402	I-20 EB (Basic Analysis)	NE
2808	1	18.518819	I-20 EB (Diverge Analysis)	NE
2808	2	19.108962	I-20 EB (Diverge Analysis)	NE
2808	3	18.556382	I-20 EB (Diverge Analysis)	NE
2808	4	18.860845	I-20 EB (Diverge Analysis)	NE
2808	5	19.831565	I-20 EB (Diverge Analysis)	NE
2808	6	17.727019	I-20 EB (Diverge Analysis)	NE
2808	7	17.709226	I-20 EB (Diverge Analysis)	NE
2808	8	19.051628	I-20 EB (Diverge Analysis)	NE
2808	9	18.954754	I-20 EB (Diverge Analysis)	NE
2808	10	18.646337	I-20 EB (Diverge Analysis)	NE
2813	1	21.290436	I-20 WB (Merge Analysis)	S
2813	2	20.316305	I-20 WB (Merge Analysis)	S
2813	3	21.895304	I-20 WB (Merge Analysis)	S
2813	4	18.807533	I-20 WB (Merge Analysis)	S
2813	5	20.955154	I-20 WB (Merge Analysis)	S
2813	6	21.617789	I-20 WB (Merge Analysis)	S
2813	7	21.331214	I-20 WB (Merge Analysis)	S
2813	8	20.938163	I-20 WB (Merge Analysis)	S
2813	9	21.64724	I-20 WB (Merge Analysis)	S
2813	10	21.470537	I-20 WB (Merge Analysis)	S
2814	1	26.76063	I-20 WB (Basic Analysis)	S
2814	2	25.375425	I-20 WB (Basic Analysis)	S
2814	3	26.69976	I-20 WB (Basic Analysis)	S
2814	4	24.057474	I-20 WB (Basic Analysis)	S
2814	5	25.801947	I-20 WB (Basic Analysis)	S
2814	6	26.613425	I-20 WB (Basic Analysis)	S
2814	7	26.150255	I-20 WB (Basic Analysis)	S
2814	8	25.963139	I-20 WB (Basic Analysis)	S
2814	9	26.532888	I-20 WB (Basic Analysis)	S
2814	10	25.936047	I-20 WB (Basic Analysis)	S
2822	1	17.776566	I-20 WB (Merge Analysis)	SW
2822	2	16.628826	I-20 WB (Merge Analysis)	SW
2822	3	18.719614	I-20 WB (Merge Analysis)	SW
2822	4	16.543538	I-20 WB (Merge Analysis)	SW
2822	5	18.22494	I-20 WB (Merge Analysis)	SW
2822	6	17.430538	I-20 WB (Merge Analysis)	SW
2822	7	16.782346	I-20 WB (Merge Analysis)	SW
2822	8	16.933428	I-20 WB (Merge Analysis)	SW
2822	9	18.00319	I-20 WB (Merge Analysis)	SW
2822	10	16.682436	I-20 WB (Merge Analysis)	SW
2823	1	163.714153	I-20 WB (Basic Analysis)	SW

ID	Run	Density	Name (Type)	Direction
2823	2	305.304763	I-20 WB (Basic Analysis)	SW
2823	3	194.687097	I-20 WB (Basic Analysis)	SW
2823	4	246.308676	I-20 WB (Basic Analysis)	SW
2823	5	179.938075	I-20 WB (Basic Analysis)	SW
2823	6	199.111801	I-20 WB (Basic Analysis)	SW
2823	7	224.185139	I-20 WB (Basic Analysis)	SW
2823	8	346.602025	I-20 WB (Basic Analysis)	SW
2823	9	330.378105	I-20 WB (Basic Analysis)	SW
2823	10	268.432208	I-20 WB (Basic Analysis)	SW
2826	1	19.527463	I-20 EB (Basic Analysis)	NE
2826	2	17.950729	I-20 EB (Basic Analysis)	NE
2826	3	17.835958	I-20 EB (Basic Analysis)	NE
2826	4	17.614614	I-20 EB (Basic Analysis)	NE
2826	5	18.22126	I-20 EB (Basic Analysis)	NE
2826	6	16.652723	I-20 EB (Basic Analysis)	NE
2826	7	16.592605	I-20 EB (Basic Analysis)	NE
2826	8	18.357892	I-20 EB (Basic Analysis)	NE
2826	9	18.213062	I-20 EB (Basic Analysis)	NE
2826	10	19.759738	I-20 EB (Basic Analysis)	NE
2829	1	22.026957	I-20 EB (Merge Analysis)	NE
2829	2	21.920343	I-20 EB (Merge Analysis)	NE
2829	3	21.969931	I-20 EB (Merge Analysis)	NE
2829	4	21.288097	I-20 EB (Merge Analysis)	NE
2829	5	22.634409	I-20 EB (Merge Analysis)	NE
2829	6	21.064951	I-20 EB (Merge Analysis)	NE
2829	7	20.216998	I-20 EB (Merge Analysis)	NE
2829	8	22.262499	I-20 EB (Merge Analysis)	NE
2829	9	22.312088	I-20 EB (Merge Analysis)	NE
2829	10	20.916187	I-20 EB (Merge Analysis)	NE
2830	1	24.603385	I-20 EB (Basic Analysis)	NE
2830	2	29.381892	I-20 EB (Basic Analysis)	NE
2830	3	26.406843	I-20 EB (Basic Analysis)	NE
2830	4	25.09045	I-20 EB (Basic Analysis)	NE
2830	5	28.513072	I-20 EB (Basic Analysis)	NE
2830	6	26.472663	I-20 EB (Basic Analysis)	NE
2830	7	27.130859	I-20 EB (Basic Analysis)	NE
2830	8	27.578433	I-20 EB (Basic Analysis)	NE
2830	9	27.565269	I-20 EB (Basic Analysis)	NE
2830	10	27.36781	I-20 EB (Basic Analysis)	NE
2831	1	26.921428	I-20 WB (Basic Analysis)	SW
2831	2	26.123689	I-20 WB (Basic Analysis)	SW
2831	3	25.881679	I-20 WB (Basic Analysis)	SW
2831	4	23.829071	I-20 WB (Basic Analysis)	SW
2831	5	26.092317	I-20 WB (Basic Analysis)	SW
2831	6	27.324778	I-20 WB (Basic Analysis)	SW
2831	7	25.998202	I-20 WB (Basic Analysis)	SW
2831	8	26.746642	I-20 WB (Basic Analysis)	SW
2831	9	26.137134	I-20 WB (Basic Analysis)	SW
2831	10	26.999857	I-20 WB (Basic Analysis)	SW
2837	1	23.861722	I-20 WB (Merge Analysis)	SW
2837	2	23.790607	I-20 WB (Merge Analysis)	SW
2837	3	26.739133	I-20 WB (Merge Analysis)	SW
2837	4	34.279116	I-20 WB (Merge Analysis)	SW

ID	Run	Density	Name (Type)	Direction
2837	5	62.839879	I-20 WB (Merge Analysis)	SW
2837	6	23.176103	I-20 WB (Merge Analysis)	SW
2837	7	24.716922	I-20 WB (Merge Analysis)	SW
2837	8	48.936041	I-20 WB (Merge Analysis)	SW
2837	9	23.546264	I-20 WB (Merge Analysis)	SW
2837	10	29.682188	I-20 WB (Merge Analysis)	SW
2838	1	75.940226	I-20 WB (Basic Analysis)	SW
2838	2	83.340994	I-20 WB (Basic Analysis)	SW
2838	3	84.838732	I-20 WB (Basic Analysis)	SW
2838	4	92.561472	I-20 WB (Basic Analysis)	SW
2838	5	94.908708	I-20 WB (Basic Analysis)	SW
2838	6	74.120045	I-20 WB (Basic Analysis)	SW
2838	7	90.929908	I-20 WB (Basic Analysis)	SW
2838	8	94.043931	I-20 WB (Basic Analysis)	SW
2838	9	81.978877	I-20 WB (Basic Analysis)	SW
2838	10	101.819714	I-20 WB (Basic Analysis)	SW
2839	1	84.369054	I-20 WB (Diverge Analysis)	SW
2839	2	88.023934	I-20 WB (Diverge Analysis)	SW
2839	3	88.614015	I-20 WB (Diverge Analysis)	SW
2839	4	102.835905	I-20 WB (Diverge Analysis)	SW
2839	5	103.293447	I-20 WB (Diverge Analysis)	SW
2839	6	81.284286	I-20 WB (Diverge Analysis)	SW
2839	7	91.98747	I-20 WB (Diverge Analysis)	SW
2839	8	99.484239	I-20 WB (Diverge Analysis)	SW
2839	9	87.895023	I-20 WB (Diverge Analysis)	SW
2839	10	106.138551	I-20 WB (Diverge Analysis)	SW
2840	1	84.369054	I-20 WB (Diverge Analysis)	SW
2840	2	88.023934	I-20 WB (Diverge Analysis)	SW
2840	3	88.614015	I-20 WB (Diverge Analysis)	SW
2840	4	102.835905	I-20 WB (Diverge Analysis)	SW
2840	5	103.293447	I-20 WB (Diverge Analysis)	SW
2840	6	81.284286	I-20 WB (Diverge Analysis)	SW
2840	7	91.98747	I-20 WB (Diverge Analysis)	SW
2840	8	99.484239	I-20 WB (Diverge Analysis)	SW
2840	9	87.895023	I-20 WB (Diverge Analysis)	SW
2840	10	106.138551	I-20 WB (Diverge Analysis)	SW
9153	1	15.816268	I-20 EB (Basic Analysis)	NE
9153	2	16.081023	I-20 EB (Basic Analysis)	NE
9153	3	16.065352	I-20 EB (Basic Analysis)	NE
9153	4	15.94026	I-20 EB (Basic Analysis)	NE
9153	5	16.264949	I-20 EB (Basic Analysis)	NE
9153	6	15.77283	I-20 EB (Basic Analysis)	NE
9153	7	15.468486	I-20 EB (Basic Analysis)	NE
9153	8	16.030161	I-20 EB (Basic Analysis)	NE
9153	9	16.249828	I-20 EB (Basic Analysis)	NE
9153	10	16.883534	I-20 EB (Basic Analysis)	NE
8830	1	26.240696	CD ROAD I-26 EB (Weaving Analysis)	SE
8830	2	23.448662	CD ROAD I-26 EB (Weaving Analysis)	SE
8830	3	28.277628	CD ROAD I-26 EB (Weaving Analysis)	SE
8830	4	24.266382	CD ROAD I-26 EB (Weaving Analysis)	SE
8830	5	27.607245	CD ROAD I-26 EB (Weaving Analysis)	SE
8830	6	27.809834	CD ROAD I-26 EB (Weaving Analysis)	SE
8830	7	24.354784	CD ROAD I-26 EB (Weaving Analysis)	SE

ID	Run	Density	Name (Type)	Direction
8830	8	26.82636	CD ROAD I-26 EB (Weaving Analysis)	SE
8830	9	27.780366	CD ROAD I-26 EB (Weaving Analysis)	SE
8830	10	27.227853	CD ROAD I-26 EB (Weaving Analysis)	SE
2852	1	20.712326	I-20 WB (Merge Analysis)	SW
2852	2	19.258602	I-20 WB (Merge Analysis)	SW
2852	3	18.755639	I-20 WB (Merge Analysis)	SW
2852	4	19.492236	I-20 WB (Merge Analysis)	SW
2852	5	19.826463	I-20 WB (Merge Analysis)	SW
2852	6	20.397569	I-20 WB (Merge Analysis)	SW
2852	7	18.567434	I-20 WB (Merge Analysis)	SW
2852	8	20.55008	I-20 WB (Merge Analysis)	SW
2852	9	19.391644	I-20 WB (Merge Analysis)	SW
2852	10	18.460352	I-20 WB (Merge Analysis)	SW
8802	1	17.172575	CD ROAD I-20 EB (Basic Analysis)	NE
8802	2	17.046757	CD ROAD I-20 EB (Basic Analysis)	NE
8802	3	16.701564	CD ROAD I-20 EB (Basic Analysis)	NE
8802	4	15.401442	CD ROAD I-20 EB (Basic Analysis)	NE
8802	5	15.217554	CD ROAD I-20 EB (Basic Analysis)	NE
8802	6	18.011364	CD ROAD I-20 EB (Basic Analysis)	NE
8802	7	15.611139	CD ROAD I-20 EB (Basic Analysis)	NE
8802	8	17.862963	CD ROAD I-20 EB (Basic Analysis)	NE
8802	9	16.169256	CD ROAD I-20 EB (Basic Analysis)	NE
8802	10	18.330748	CD ROAD I-20 EB (Basic Analysis)	NE
9257	1	37.988722	I-126 NB (Basic Analysis)	NW
9257	2	34.156906	I-126 NB (Basic Analysis)	NW
9257	3	40.398778	I-126 NB (Basic Analysis)	NW
9257	4	36.11616	I-126 NB (Basic Analysis)	NW
9257	5	36.549624	I-126 NB (Basic Analysis)	NW
9257	6	35.873421	I-126 NB (Basic Analysis)	NW
9257	7	35.405281	I-126 NB (Basic Analysis)	NW
9257	8	38.83831	I-126 NB (Basic Analysis)	NW
9257	9	34.625047	I-126 NB (Basic Analysis)	NW
9257	10	36.410915	I-126 NB (Basic Analysis)	NW
4563	1	13.550459	I-126 SB (Merge Analysis)	E
4563	2	14.142276	I-126 SB (Merge Analysis)	E
4563	3	13.418603	I-126 SB (Merge Analysis)	E
4563	4	13.0629	I-126 SB (Merge Analysis)	E
4563	5	13.65165	I-126 SB (Merge Analysis)	E
4563	6	14.390655	I-126 SB (Merge Analysis)	E
4563	7	13.412471	I-126 SB (Merge Analysis)	E
4563	8	12.280966	I-126 SB (Merge Analysis)	E
4563	9	12.808388	I-126 SB (Merge Analysis)	E
4563	10	14.013487	I-126 SB (Merge Analysis)	E
4566	1	30.648124	I-126 NB (Basic Analysis)	W
4566	2	30.744948	I-126 NB (Basic Analysis)	W
4566	3	30.722865	I-126 NB (Basic Analysis)	W
4566	4	30.43664	I-126 NB (Basic Analysis)	W
4566	5	29.405552	I-126 NB (Basic Analysis)	W
4566	6	29.299386	I-126 NB (Basic Analysis)	W
4566	7	30.614151	I-126 NB (Basic Analysis)	W
4566	8	31.251998	I-126 NB (Basic Analysis)	W
4566	9	31.243505	I-126 NB (Basic Analysis)	W
4566	10	31.073639	I-126 NB (Basic Analysis)	W

ID	Run	Density	Name (Type)	Direction
4570	1	30.32009	I-126 NB (Basic Analysis)	W
4570	2	29.671138	I-126 NB (Basic Analysis)	W
4570	3	30.17152	I-126 NB (Basic Analysis)	W
4570	4	29.558224	I-126 NB (Basic Analysis)	W
4570	5	29.226617	I-126 NB (Basic Analysis)	W
4570	6	29.244445	I-126 NB (Basic Analysis)	W
4570	7	29.614087	I-126 NB (Basic Analysis)	W
4570	8	30.687354	I-126 NB (Basic Analysis)	W
4570	9	30.608909	I-126 NB (Basic Analysis)	W
4570	10	30.057418	I-126 NB (Basic Analysis)	W
4573	1	15.36736	I-126 SB (Basic Analysis)	E
4573	2	12.570438	I-126 SB (Basic Analysis)	E
4573	3	16.396564	I-126 SB (Basic Analysis)	E
4573	4	15.333315	I-126 SB (Basic Analysis)	E
4573	5	15.301889	I-126 SB (Basic Analysis)	E
4573	6	14.084128	I-126 SB (Basic Analysis)	E
4573	7	15.469495	I-126 SB (Basic Analysis)	E
4573	8	15.259987	I-126 SB (Basic Analysis)	E
4573	9	14.238639	I-126 SB (Basic Analysis)	E
4573	10	15.702572	I-126 SB (Basic Analysis)	E
4579	1	11.523558	I-126 SB (Diverge Analysis)	E
4579	2	11.465675	I-126 SB (Diverge Analysis)	E
4579	3	11.412625	I-126 SB (Diverge Analysis)	E
4579	4	11.159751	I-126 SB (Diverge Analysis)	E
4579	5	11.376618	I-126 SB (Diverge Analysis)	E
4579	6	11.098066	I-126 SB (Diverge Analysis)	E
4579	7	11.823026	I-126 SB (Diverge Analysis)	E
4579	8	15.799348	I-126 SB (Diverge Analysis)	E
4579	9	10.968728	I-126 SB (Diverge Analysis)	E
4579	10	10.708568	I-126 SB (Diverge Analysis)	E
4589	1	31.037591	I-126 NB (Merge Analysis)	NW
4589	2	33.64239	I-126 NB (Merge Analysis)	NW
4589	3	31.096257	I-126 NB (Merge Analysis)	NW
4589	4	31.870657	I-126 NB (Merge Analysis)	NW
4589	5	31.577324	I-126 NB (Merge Analysis)	NW
4589	6	31.037591	I-126 NB (Merge Analysis)	NW
4589	7	31.078657	I-126 NB (Merge Analysis)	NW
4589	8	32.27839	I-126 NB (Merge Analysis)	NW
4589	9	31.70639	I-126 NB (Merge Analysis)	NW
4589	10	32.562923	I-126 NB (Merge Analysis)	NW
4599	1	25.74459	I-126 NB (Diverge Analysis)	NW
4599	2	26.179343	I-126 NB (Diverge Analysis)	NW
4599	3	25.056232	I-126 NB (Diverge Analysis)	NW
4599	4	26.103261	I-126 NB (Diverge Analysis)	NW
4599	5	25.592427	I-126 NB (Diverge Analysis)	NW
4599	6	25.07797	I-126 NB (Diverge Analysis)	NW
4599	7	25.262739	I-126 NB (Diverge Analysis)	NW
4599	8	26.548882	I-126 NB (Diverge Analysis)	NW
4599	9	25.907622	I-126 NB (Diverge Analysis)	NW
4599	10	25.454755	I-126 NB (Diverge Analysis)	NW
4601	1	25.320122	I-126 NB (Basic Analysis)	NW
4601	2	24.379571	I-126 NB (Basic Analysis)	NW
4601	3	25.404531	I-126 NB (Basic Analysis)	NW

ID	Run	Density	Name (Type)	Direction
4601	4	24.625561	I-126 NB (Basic Analysis)	NW
4601	5	25.585406	I-126 NB (Basic Analysis)	NW
4601	6	25.92304	I-126 NB (Basic Analysis)	NW
4601	7	26.205205	I-126 NB (Basic Analysis)	NW
4601	8	26.484959	I-126 NB (Basic Analysis)	NW
4601	9	25.713224	I-126 NB (Basic Analysis)	NW
4601	10	25.886865	I-126 NB (Basic Analysis)	NW
9254	1	17.390829	Ↄ ROAD I-20 WB TO I-20 (Basic Analysi	NW
9254	2	15.653655	Ↄ ROAD I-20 WB TO I-20 (Basic Analysi	NW
9254	3	15.453212	Ↄ ROAD I-20 WB TO I-20 (Basic Analysi	NW
9254	4	17.600817	Ↄ ROAD I-20 WB TO I-20 (Basic Analysi	NW
9254	5	16.240667	Ↄ ROAD I-20 WB TO I-20 (Basic Analysi	NW
9254	6	15.873188	Ↄ ROAD I-20 WB TO I-20 (Basic Analysi	NW
9254	7	16.312254	Ↄ ROAD I-20 WB TO I-20 (Basic Analysi	NW
9254	8	17.271518	Ↄ ROAD I-20 WB TO I-20 (Basic Analysi	NW
9254	9	18.268961	Ↄ ROAD I-20 WB TO I-20 (Basic Analysi	NW
9254	10	17.60559	Ↄ ROAD I-20 WB TO I-20 (Basic Analysi	NW
9067	1	22.111608	I-26 EB (Merge Analysis)	S
9067	2	22.649016	I-26 EB (Merge Analysis)	S
9067	3	22.754161	I-26 EB (Merge Analysis)	S
9067	4	22.033723	I-26 EB (Merge Analysis)	S
9067	5	21.745548	I-26 EB (Merge Analysis)	S
9067	6	22.041511	I-26 EB (Merge Analysis)	S
9067	7	22.380312	I-26 EB (Merge Analysis)	S
9067	8	24.210614	I-26 EB (Merge Analysis)	S
9067	9	22.325792	I-26 EB (Merge Analysis)	S
9067	10	23.163058	I-26 EB (Merge Analysis)	S
4604	1	15.962141	I-26 WB (Basic Analysis)	NW
4604	2	15.314736	I-26 WB (Basic Analysis)	NW
4604	3	15.840976	I-26 WB (Basic Analysis)	NW
4604	4	16.203035	I-26 WB (Basic Analysis)	NW
4604	5	16.687692	I-26 WB (Basic Analysis)	NW
4604	6	17.044016	I-26 WB (Basic Analysis)	NW
4604	7	15.377111	I-26 WB (Basic Analysis)	NW
4604	8	16.201601	I-26 WB (Basic Analysis)	NW
4604	9	17.097787	I-26 WB (Basic Analysis)	NW
4604	10	15.338395	I-26 WB (Basic Analysis)	NW
9063	1	40.362109	I-26 WB (Basic Analysis)	NW
9063	2	37.254224	I-26 WB (Basic Analysis)	NW
9063	3	40.964496	I-26 WB (Basic Analysis)	NW
9063	4	39.207834	I-26 WB (Basic Analysis)	NW
9063	5	41.545963	I-26 WB (Basic Analysis)	NW
9063	6	39.076536	I-26 WB (Basic Analysis)	NW
9063	7	39.699844	I-26 WB (Basic Analysis)	NW
9063	8	38.431584	I-26 WB (Basic Analysis)	NW
9063	9	43.210283	I-26 WB (Basic Analysis)	NW
9063	10	38.824759	I-26 WB (Basic Analysis)	NW
4610	1	14.308977	I-26 EB (Basic Analysis)	SE
4610	2	13.27092	I-26 EB (Basic Analysis)	SE
4610	3	13.729557	I-26 EB (Basic Analysis)	SE
4610	4	14.457633	I-26 EB (Basic Analysis)	SE
4610	5	13.836826	I-26 EB (Basic Analysis)	SE
4610	6	12.552979	I-26 EB (Basic Analysis)	SE

ID	Run	Density	Name (Type)	Direction
4610	7	14.562368	I-26 EB (Basic Analysis)	SE
4610	8	14.194107	I-26 EB (Basic Analysis)	SE
4610	9	13.59526	I-26 EB (Basic Analysis)	SE
4610	10	14.223669	I-26 EB (Basic Analysis)	SE
8828	1	25.306786	(Weaving Analysis)	NW
8828	2	24.351876	(Weaving Analysis)	NW
8828	3	26.89099	(Weaving Analysis)	NW
8828	4	25.203871	(Weaving Analysis)	NW
8828	5	24.662306	(Weaving Analysis)	NW
8828	6	26.221204	(Weaving Analysis)	NW
8828	7	24.564453	(Weaving Analysis)	NW
8828	8	24.014452	(Weaving Analysis)	NW
8828	9	24.991294	(Weaving Analysis)	NW
8828	10	23.297427	(Weaving Analysis)	NW
6223	1	21.38185	I-26 EB (Basic Analysis)	SE
6223	2	21.111092	I-26 EB (Basic Analysis)	SE
6223	3	21.447758	I-26 EB (Basic Analysis)	SE
6223	4	21.050528	I-26 EB (Basic Analysis)	SE
6223	5	20.003123	I-26 EB (Basic Analysis)	SE
6223	6	21.397881	I-26 EB (Basic Analysis)	SE
6223	7	21.292785	I-26 EB (Basic Analysis)	SE
6223	8	20.042311	I-26 EB (Basic Analysis)	SE
6223	9	20.313069	I-26 EB (Basic Analysis)	SE
6223	10	20.873288	I-26 EB (Basic Analysis)	SE
4646	1	33.820453	I-26 WB (Basic Analysis)	NW
4646	2	32.841273	I-26 WB (Basic Analysis)	NW
4646	3	31.762136	I-26 WB (Basic Analysis)	NW
4646	4	34.208045	I-26 WB (Basic Analysis)	NW
4646	5	34.856751	I-26 WB (Basic Analysis)	NW
4646	6	34.008129	I-26 WB (Basic Analysis)	NW
4646	7	33.791894	I-26 WB (Basic Analysis)	NW
4646	8	33.97141	I-26 WB (Basic Analysis)	NW
4646	9	34.238644	I-26 WB (Basic Analysis)	NW
4646	10	33.120748	I-26 WB (Basic Analysis)	NW
4651	1	33.21928	I-26 WB (Basic Analysis)	NW
4651	2	33.106113	I-26 WB (Basic Analysis)	NW
4651	3	34.042808	I-26 WB (Basic Analysis)	NW
4651	4	34.676816	I-26 WB (Basic Analysis)	NW
4651	5	35.035405	I-26 WB (Basic Analysis)	NW
4651	6	33.926914	I-26 WB (Basic Analysis)	NW
4651	7	33.655586	I-26 WB (Basic Analysis)	NW
4651	8	33.461975	I-26 WB (Basic Analysis)	NW
4651	9	33.895555	I-26 WB (Basic Analysis)	NW
4651	10	32.842966	I-26 WB (Basic Analysis)	NW
4654	1	39.524333	I-26 WB (Merge Analysis)	NW
4654	2	39.127463	I-26 WB (Merge Analysis)	NW
4654	3	41.829648	I-26 WB (Merge Analysis)	NW
4654	4	38.669871	I-26 WB (Merge Analysis)	NW
4654	5	40.35494	I-26 WB (Merge Analysis)	NW
4654	6	40.524098	I-26 WB (Merge Analysis)	NW
4654	7	39.621924	I-26 WB (Merge Analysis)	NW
4654	8	39.372525	I-26 WB (Merge Analysis)	NW
4654	9	39.292284	I-26 WB (Merge Analysis)	NW

ID	Run	Density	Name (Type)	Direction
4654	10	40.318073	I-26 WB (Merge Analysis)	NW
8986	1	23.694498	I-26 EB (Basic Analysis)	SE
8986	2	22.304159	I-26 EB (Basic Analysis)	SE
8986	3	23.386187	I-26 EB (Basic Analysis)	SE
8986	4	23.352419	I-26 EB (Basic Analysis)	SE
8986	5	23.663667	I-26 EB (Basic Analysis)	SE
8986	6	21.771954	I-26 EB (Basic Analysis)	SE
8986	7	25.014367	I-26 EB (Basic Analysis)	SE
8986	8	23.083014	I-26 EB (Basic Analysis)	SE
8986	9	22.732125	I-26 EB (Basic Analysis)	SE
8986	10	23.608611	I-26 EB (Basic Analysis)	SE
9258	1	15.278426	I-126 SB (Basic Analysis)	E
9258	2	16.439369	I-126 SB (Basic Analysis)	E
9258	3	16.244003	I-126 SB (Basic Analysis)	E
9258	4	15.417534	I-126 SB (Basic Analysis)	E
9258	5	16.374929	I-126 SB (Basic Analysis)	E
9258	6	15.314226	I-126 SB (Basic Analysis)	E
9258	7	15.788831	I-126 SB (Basic Analysis)	E
9258	8	15.408328	I-126 SB (Basic Analysis)	E
9258	9	15.994426	I-126 SB (Basic Analysis)	E
9258	10	16.091597	I-126 SB (Basic Analysis)	E
4677	1	45.338384	I-26 WB (Basic Analysis)	NW
4677	2	43.172748	I-26 WB (Basic Analysis)	NW
4677	3	47.588901	I-26 WB (Basic Analysis)	NW
4677	4	46.041315	I-26 WB (Basic Analysis)	NW
4677	5	47.904232	I-26 WB (Basic Analysis)	NW
4677	6	45.619605	I-26 WB (Basic Analysis)	NW
4677	7	45.704758	I-26 WB (Basic Analysis)	NW
4677	8	44.71553	I-26 WB (Basic Analysis)	NW
4677	9	46.691146	I-26 WB (Basic Analysis)	NW
4677	10	44.654228	I-26 WB (Basic Analysis)	NW
9119	1	14.95527	I-26 EB (Diverge Analysis)	SE
9119	2	11.434546	I-26 EB (Diverge Analysis)	SE
9119	3	11.503253	I-26 EB (Diverge Analysis)	SE
9119	4	13.104339	I-26 EB (Diverge Analysis)	SE
9119	5	13.402071	I-26 EB (Diverge Analysis)	SE
9119	6	12.933612	I-26 EB (Diverge Analysis)	SE
9119	7	13.70813	I-26 EB (Diverge Analysis)	SE
9119	8	14.124537	I-26 EB (Diverge Analysis)	SE
9119	9	11.671898	I-26 EB (Diverge Analysis)	SE
9119	10	13.208441	I-26 EB (Diverge Analysis)	SE
4687	1	28.222867	I-26 EB (Basic Analysis)	SE
4687	2	25.992779	I-26 EB (Basic Analysis)	SE
4687	3	27.419051	I-26 EB (Basic Analysis)	SE
4687	4	26.418383	I-26 EB (Basic Analysis)	SE
4687	5	26.963373	I-26 EB (Basic Analysis)	SE
4687	6	25.412246	I-26 EB (Basic Analysis)	SE
4687	7	28.064291	I-26 EB (Basic Analysis)	SE
4687	8	26.288059	I-26 EB (Basic Analysis)	SE
4687	9	25.990045	I-26 EB (Basic Analysis)	SE
4687	10	26.692701	I-26 EB (Basic Analysis)	SE
4701	1	41.931893	I-26 WB (Weaving Analysis)	NW
4701	2	39.62858	I-26 WB (Weaving Analysis)	NW

ID	Run	Density	Name (Type)	Direction
4701	3	46.4171	I-26 WB (Weaving Analysis)	NW
4701	4	41.482823	I-26 WB (Weaving Analysis)	NW
4701	5	42.537772	I-26 WB (Weaving Analysis)	NW
4701	6	38.519939	I-26 WB (Weaving Analysis)	NW
4701	7	41.683563	I-26 WB (Weaving Analysis)	NW
4701	8	39.631631	I-26 WB (Weaving Analysis)	NW
4701	9	43.59516	I-26 WB (Weaving Analysis)	NW
4701	10	39.150223	I-26 WB (Weaving Analysis)	NW
9252	1	26.422685	I-26 EB (Basic Analysis)	SW
9252	2	24.619089	I-26 EB (Basic Analysis)	SW
9252	3	28.023377	I-26 EB (Basic Analysis)	SW
9252	4	26.62559	I-26 EB (Basic Analysis)	SW
9252	5	29.894608	I-26 EB (Basic Analysis)	SW
9252	6	25.633612	I-26 EB (Basic Analysis)	SW
9252	7	32.509823	I-26 EB (Basic Analysis)	SW
9252	8	28.293916	I-26 EB (Basic Analysis)	SW
9252	9	30.503322	I-26 EB (Basic Analysis)	SW
9252	10	30.864041	I-26 EB (Basic Analysis)	SW
9301	1	37.44131	I-20 WB (Basic Analysis)	SW
9301	2	37.516562	I-20 WB (Basic Analysis)	SW
9301	3	39.08887	I-20 WB (Basic Analysis)	SW
9301	4	37.380729	I-20 WB (Basic Analysis)	SW
9301	5	37.951825	I-20 WB (Basic Analysis)	SW
9301	6	37.38672	I-20 WB (Basic Analysis)	SW
9301	7	38.831342	I-20 WB (Basic Analysis)	SW
9301	8	37.652717	I-20 WB (Basic Analysis)	SW
9301	9	37.560257	I-20 WB (Basic Analysis)	SW
9301	10	37.066889	I-20 WB (Basic Analysis)	SW
9118	1	16.117717	I-26 EB (Diverge Analysis)	SE
9118	2	16.440479	I-26 EB (Diverge Analysis)	SE
9118	3	16.792318	I-26 EB (Diverge Analysis)	SE
9118	4	15.559427	I-26 EB (Diverge Analysis)	SE
9118	5	12.814501	I-26 EB (Diverge Analysis)	SE
9118	6	15.565243	I-26 EB (Diverge Analysis)	SE
9118	7	13.672291	I-26 EB (Diverge Analysis)	SE
9118	8	16.545158	I-26 EB (Diverge Analysis)	SE
9118	9	16.664376	I-26 EB (Diverge Analysis)	SE
9118	10	15.588505	I-26 EB (Diverge Analysis)	SE
9064	1	40.165842	I-26 WB (Diverge Analysis)	NW
9064	2	38.696957	I-26 WB (Diverge Analysis)	NW
9064	3	42.017362	I-26 WB (Diverge Analysis)	NW
9064	4	40.122319	I-26 WB (Diverge Analysis)	NW
9064	5	41.059867	I-26 WB (Diverge Analysis)	NW
9064	6	39.667146	I-26 WB (Diverge Analysis)	NW
9064	7	41.204942	I-26 WB (Diverge Analysis)	NW
9064	8	39.510284	I-26 WB (Diverge Analysis)	NW
9064	9	40.907538	I-26 WB (Diverge Analysis)	NW
9064	10	39.805874	I-26 WB (Diverge Analysis)	NW
4712	1	43.131865	I-26 WB (Basic Analysis)	NW
4712	2	35.951621	I-26 WB (Basic Analysis)	NW
4712	3	45.749194	I-26 WB (Basic Analysis)	NW
4712	4	38.957518	I-26 WB (Basic Analysis)	NW
4712	5	37.80373	I-26 WB (Basic Analysis)	NW

ID	Run	Density	Name (Type)	Direction
4712	6	36.512478	I-26 WB (Basic Analysis)	NW
4712	7	37.193386	I-26 WB (Basic Analysis)	NW
4712	8	36.440996	I-26 WB (Basic Analysis)	NW
4712	9	44.505596	I-26 WB (Basic Analysis)	NW
4712	10	36.062509	I-26 WB (Basic Analysis)	NW
4714	1	23.102413	I-26 EB (Basic Analysis)	SE
4714	2	22.07827	I-26 EB (Basic Analysis)	SE
4714	3	23.012632	I-26 EB (Basic Analysis)	SE
4714	4	22.056024	I-26 EB (Basic Analysis)	SE
4714	5	23.340771	I-26 EB (Basic Analysis)	SE
4714	6	21.468075	I-26 EB (Basic Analysis)	SE
4714	7	24.157543	I-26 EB (Basic Analysis)	SE
4714	8	22.201422	I-26 EB (Basic Analysis)	SE
4714	9	21.974982	I-26 EB (Basic Analysis)	SE
4714	10	22.979262	I-26 EB (Basic Analysis)	SE
4720	1	19.757154	I-26 EB (Merge Analysis)	SE
4720	2	19.896534	I-26 EB (Merge Analysis)	SE
4720	3	20.896588	I-26 EB (Merge Analysis)	SE
4720	4	18.920872	I-26 EB (Merge Analysis)	SE
4720	5	19.844267	I-26 EB (Merge Analysis)	SE
4720	6	20.45754	I-26 EB (Merge Analysis)	SE
4720	7	20.523746	I-26 EB (Merge Analysis)	SE
4720	8	19.97842	I-26 EB (Merge Analysis)	SE
4720	9	20.009781	I-26 EB (Merge Analysis)	SE
4720	10	20.731074	I-26 EB (Merge Analysis)	SE
4725	1	54.67717	I-26 WB (Merge Analysis)	NW
4725	2	43.724483	I-26 WB (Merge Analysis)	NW
4725	3	54.485474	I-26 WB (Merge Analysis)	NW
4725	4	49.88477	I-26 WB (Merge Analysis)	NW
4725	5	47.973287	I-26 WB (Merge Analysis)	NW
4725	6	47.943164	I-26 WB (Merge Analysis)	NW
4725	7	49.621873	I-26 WB (Merge Analysis)	NW
4725	8	51.54294	I-26 WB (Merge Analysis)	NW
4725	9	57.648457	I-26 WB (Merge Analysis)	NW
4725	10	44.978723	I-26 WB (Merge Analysis)	NW
4727	1	54.67717	I-26 WB (Merge Analysis)	NW
4727	2	43.724483	I-26 WB (Merge Analysis)	NW
4727	3	54.485474	I-26 WB (Merge Analysis)	NW
4727	4	49.88477	I-26 WB (Merge Analysis)	NW
4727	5	47.973287	I-26 WB (Merge Analysis)	NW
4727	6	47.943164	I-26 WB (Merge Analysis)	NW
4727	7	49.621873	I-26 WB (Merge Analysis)	NW
4727	8	51.54294	I-26 WB (Merge Analysis)	NW
4727	9	57.648457	I-26 WB (Merge Analysis)	NW
4727	10	44.978723	I-26 WB (Merge Analysis)	NW
4728	1	33.505567	I-26 WB (Diverge Analysis)	NW
4728	2	32.956002	I-26 WB (Diverge Analysis)	NW
4728	3	33.572027	I-26 WB (Diverge Analysis)	NW
4728	4	33.717725	I-26 WB (Diverge Analysis)	NW
4728	5	34.088362	I-26 WB (Diverge Analysis)	NW
4728	6	32.309305	I-26 WB (Diverge Analysis)	NW
4728	7	34.28007	I-26 WB (Diverge Analysis)	NW
4728	8	33.577139	I-26 WB (Diverge Analysis)	NW

ID	Run	Density	Name (Type)	Direction
4728	9	33.753511	I-26 WB (Diverge Analysis)	NW
4728	10	33.132374	I-26 WB (Diverge Analysis)	NW
4729	1	33.505567	I-26 WB (Diverge Analysis)	NW
4729	2	32.956002	I-26 WB (Diverge Analysis)	NW
4729	3	33.572027	I-26 WB (Diverge Analysis)	NW
4729	4	33.717725	I-26 WB (Diverge Analysis)	NW
4729	5	34.088362	I-26 WB (Diverge Analysis)	NW
4729	6	32.309305	I-26 WB (Diverge Analysis)	NW
4729	7	34.28007	I-26 WB (Diverge Analysis)	NW
4729	8	33.577139	I-26 WB (Diverge Analysis)	NW
4729	9	33.753511	I-26 WB (Diverge Analysis)	NW
4729	10	33.132374	I-26 WB (Diverge Analysis)	NW
4730	1	33.505567	I-26 WB (Diverge Analysis)	NW
4730	2	32.956002	I-26 WB (Diverge Analysis)	NW
4730	3	33.572027	I-26 WB (Diverge Analysis)	NW
4730	4	33.717725	I-26 WB (Diverge Analysis)	NW
4730	5	34.088362	I-26 WB (Diverge Analysis)	NW
4730	6	32.309305	I-26 WB (Diverge Analysis)	NW
4730	7	34.28007	I-26 WB (Diverge Analysis)	NW
4730	8	33.577139	I-26 WB (Diverge Analysis)	NW
4730	9	33.753511	I-26 WB (Diverge Analysis)	NW
4730	10	33.132374	I-26 WB (Diverge Analysis)	NW
4732	1	32.777727	I-26 WB (Basic Analysis)	NW
4732	2	31.500045	I-26 WB (Basic Analysis)	NW
4732	3	31.781531	I-26 WB (Basic Analysis)	NW
4732	4	31.796925	I-26 WB (Basic Analysis)	NW
4732	5	33.241739	I-26 WB (Basic Analysis)	NW
4732	6	32.727148	I-26 WB (Basic Analysis)	NW
4732	7	32.885484	I-26 WB (Basic Analysis)	NW
4732	8	33.861888	I-26 WB (Basic Analysis)	NW
4732	9	33.433062	I-26 WB (Basic Analysis)	NW
4732	10	32.586405	I-26 WB (Basic Analysis)	NW
4733	1	21.173074	I-26 EB (Basic Analysis)	SE
4733	2	18.587569	I-26 EB (Basic Analysis)	SE
4733	3	20.371483	I-26 EB (Basic Analysis)	SE
4733	4	20.705302	I-26 EB (Basic Analysis)	SE
4733	5	20.120587	I-26 EB (Basic Analysis)	SE
4733	6	19.048963	I-26 EB (Basic Analysis)	SE
4733	7	21.179453	I-26 EB (Basic Analysis)	SE
4733	8	18.791688	I-26 EB (Basic Analysis)	SE
4733	9	17.788104	I-26 EB (Basic Analysis)	SE
4733	10	20.907295	I-26 EB (Basic Analysis)	SE
4736	1	22.367954	I-26 EB (Basic Analysis)	SE
4736	2	25.364801	I-26 EB (Basic Analysis)	SE
4736	3	22.444469	I-26 EB (Basic Analysis)	SE
4736	4	24.242577	I-26 EB (Basic Analysis)	SE
4736	5	21.857852	I-26 EB (Basic Analysis)	SE
4736	6	23.732475	I-26 EB (Basic Analysis)	SE
4736	7	20.404063	I-26 EB (Basic Analysis)	SE
4736	8	24.331845	I-26 EB (Basic Analysis)	SE
4736	9	22.878055	I-26 EB (Basic Analysis)	SE
4736	10	26.831342	I-26 EB (Basic Analysis)	SE
4737	1	18.377046	I-26 EB (Diverge Analysis)	SE

ID	Run	Density	Name (Type)	Direction
4737	2	17.898918	I-26 EB (Diverge Analysis)	SE
4737	3	18.278675	I-26 EB (Diverge Analysis)	SE
4737	4	17.988138	I-26 EB (Diverge Analysis)	SE
4737	5	16.734482	I-26 EB (Diverge Analysis)	SE
4737	6	19.120547	I-26 EB (Diverge Analysis)	SE
4737	7	16.409629	I-26 EB (Diverge Analysis)	SE
4737	8	19.852609	I-26 EB (Diverge Analysis)	SE
4737	9	16.871743	I-26 EB (Diverge Analysis)	SE
4737	10	18.745365	I-26 EB (Diverge Analysis)	SE
4739	1	29.862936	I-26 WB (Weaving Analysis)	NW
4739	2	29.123701	I-26 WB (Weaving Analysis)	NW
4739	3	30.408273	I-26 WB (Weaving Analysis)	NW
4739	4	30.001626	I-26 WB (Weaving Analysis)	NW
4739	5	29.872361	I-26 WB (Weaving Analysis)	NW
4739	6	30.999392	I-26 WB (Weaving Analysis)	NW
4739	7	30.297859	I-26 WB (Weaving Analysis)	NW
4739	8	30.867433	I-26 WB (Weaving Analysis)	NW
4739	9	31.111152	I-26 WB (Weaving Analysis)	NW
4739	10	29.236808	I-26 WB (Weaving Analysis)	NW
4741	1	35.404103	I-26 WB (Basic Analysis)	NW
4741	2	32.758325	I-26 WB (Basic Analysis)	NW
4741	3	34.193323	I-26 WB (Basic Analysis)	NW
4741	4	33.206762	I-26 WB (Basic Analysis)	NW
4741	5	37.040898	I-26 WB (Basic Analysis)	NW
4741	6	41.480424	I-26 WB (Basic Analysis)	NW
4741	7	36.81668	I-26 WB (Basic Analysis)	NW
4741	8	37.153007	I-26 WB (Basic Analysis)	NW
4741	9	39.686677	I-26 WB (Basic Analysis)	NW
4741	10	37.66871	I-26 WB (Basic Analysis)	NW
4742	1	22.41391	I-26 WB (Diverge Analysis)	NW
4742	2	23.256932	I-26 WB (Diverge Analysis)	NW
4742	3	22.652052	I-26 WB (Diverge Analysis)	NW
4742	4	23.983265	I-26 WB (Diverge Analysis)	NW
4742	5	24.152345	I-26 WB (Diverge Analysis)	NW
4742	6	23.37124	I-26 WB (Diverge Analysis)	NW
4742	7	23.535558	I-26 WB (Diverge Analysis)	NW
4742	8	23.657011	I-26 WB (Diverge Analysis)	NW
4742	9	23.621289	I-26 WB (Diverge Analysis)	NW
4742	10	22.618712	I-26 WB (Diverge Analysis)	NW
4745	1	17.050895	I-26 EB (Basic Analysis)	SE
4745	2	16.676992	I-26 EB (Basic Analysis)	SE
4745	3	18.152333	I-26 EB (Basic Analysis)	SE
4745	4	16.958546	I-26 EB (Basic Analysis)	SE
4745	5	18.503713	I-26 EB (Basic Analysis)	SE
4745	6	17.623012	I-26 EB (Basic Analysis)	SE
4745	7	18.10278	I-26 EB (Basic Analysis)	SE
4745	8	16.271555	I-26 EB (Basic Analysis)	SE
4745	9	17.735634	I-26 EB (Basic Analysis)	SE
4745	10	18.33478	I-26 EB (Basic Analysis)	SE
9039	1	38.244273	I-20 EB (Basic Analysis)	NE
9039	2	37.461085	I-20 EB (Basic Analysis)	NE
9039	3	39.157223	I-20 EB (Basic Analysis)	NE
9039	4	37.2735	I-20 EB (Basic Analysis)	NE

ID	Run	Density	Name (Type)	Direction
9039	5	39.162924	I-20 EB (Basic Analysis)	NE
9039	6	37.74097	I-20 EB (Basic Analysis)	NE
9039	7	37.059039	I-20 EB (Basic Analysis)	NE
9039	8	37.88159	I-20 EB (Basic Analysis)	NE
9039	9	36.7949	I-20 EB (Basic Analysis)	NE
9039	10	38.931361	I-20 EB (Basic Analysis)	NE
4753	1	27.541535	I-26 WB (Basic Analysis)	NW
4753	2	27.522196	I-26 WB (Basic Analysis)	NW
4753	3	27.582363	I-26 WB (Basic Analysis)	NW
4753	4	28.201226	I-26 WB (Basic Analysis)	NW
4753	5	27.303015	I-26 WB (Basic Analysis)	NW
4753	6	27.457731	I-26 WB (Basic Analysis)	NW
4753	7	27.165491	I-26 WB (Basic Analysis)	NW
4753	8	27.270783	I-26 WB (Basic Analysis)	NW
4753	9	28.052956	I-26 WB (Basic Analysis)	NW
4753	10	26.759362	I-26 WB (Basic Analysis)	NW
4755	1	22.875047	I-26 EB (Basic Analysis)	SE
4755	2	18.207563	I-26 EB (Basic Analysis)	SE
4755	3	21.412943	I-26 EB (Basic Analysis)	SE
4755	4	17.3328	I-26 EB (Basic Analysis)	SE
4755	5	17.314055	I-26 EB (Basic Analysis)	SE
4755	6	17.688953	I-26 EB (Basic Analysis)	SE
4755	7	19.069829	I-26 EB (Basic Analysis)	SE
4755	8	19.307264	I-26 EB (Basic Analysis)	SE
4755	9	17.601477	I-26 EB (Basic Analysis)	SE
4755	10	18.432501	I-26 EB (Basic Analysis)	SE
4756	1	14.95527	I-26 EB (Diverge Analysis)	SE
4756	2	11.434546	I-26 EB (Diverge Analysis)	SE
4756	3	11.503253	I-26 EB (Diverge Analysis)	SE
4756	4	13.104339	I-26 EB (Diverge Analysis)	SE
4756	5	13.402071	I-26 EB (Diverge Analysis)	SE
4756	6	12.933612	I-26 EB (Diverge Analysis)	SE
4756	7	13.70813	I-26 EB (Diverge Analysis)	SE
4756	8	14.124537	I-26 EB (Diverge Analysis)	SE
4756	9	11.671898	I-26 EB (Diverge Analysis)	SE
4756	10	13.208441	I-26 EB (Diverge Analysis)	SE
4760	1	15.335461	I-26 WB (Merge Analysis)	NW
4760	2	13.853867	I-26 WB (Merge Analysis)	NW
4760	3	15.817978	I-26 WB (Merge Analysis)	NW
4760	4	15.329541	I-26 WB (Merge Analysis)	NW
4760	5	15.286617	I-26 WB (Merge Analysis)	NW
4760	6	15.846101	I-26 WB (Merge Analysis)	NW
4760	7	15.508635	I-26 WB (Merge Analysis)	NW
4760	8	16.439626	I-26 WB (Merge Analysis)	NW
4760	9	15.813538	I-26 WB (Merge Analysis)	NW
4760	10	15.746933	I-26 WB (Merge Analysis)	NW
4761	1	27.618389	I-26 WB (Basic Analysis)	NW
4761	2	27.269977	I-26 WB (Basic Analysis)	NW
4761	3	27.709364	I-26 WB (Basic Analysis)	NW
4761	4	27.743086	I-26 WB (Basic Analysis)	NW
4761	5	28.033233	I-26 WB (Basic Analysis)	NW
4761	6	28.092796	I-26 WB (Basic Analysis)	NW
4761	7	27.929294	I-26 WB (Basic Analysis)	NW

ID	Run	Density	Name (Type)	Direction
4761	8	28.188739	I-26 WB (Basic Analysis)	NW
4761	9	28.46598	I-26 WB (Basic Analysis)	NW
4761	10	27.55473	I-26 WB (Basic Analysis)	NW
4762	1	27.618389	I-26 WB (Basic Analysis)	NW
4762	2	27.269977	I-26 WB (Basic Analysis)	NW
4762	3	27.709364	I-26 WB (Basic Analysis)	NW
4762	4	27.743086	I-26 WB (Basic Analysis)	NW
4762	5	28.033233	I-26 WB (Basic Analysis)	NW
4762	6	28.092796	I-26 WB (Basic Analysis)	NW
4762	7	27.929294	I-26 WB (Basic Analysis)	NW
4762	8	28.188739	I-26 WB (Basic Analysis)	NW
4762	9	28.46598	I-26 WB (Basic Analysis)	NW
4762	10	27.55473	I-26 WB (Basic Analysis)	NW
4763	1	27.618389	I-26 WB (Basic Analysis)	NW
4763	2	27.269977	I-26 WB (Basic Analysis)	NW
4763	3	27.709364	I-26 WB (Basic Analysis)	NW
4763	4	27.743086	I-26 WB (Basic Analysis)	NW
4763	5	28.033233	I-26 WB (Basic Analysis)	NW
4763	6	28.092796	I-26 WB (Basic Analysis)	NW
4763	7	27.929294	I-26 WB (Basic Analysis)	NW
4763	8	28.188739	I-26 WB (Basic Analysis)	NW
4763	9	28.46598	I-26 WB (Basic Analysis)	NW
4763	10	27.55473	I-26 WB (Basic Analysis)	NW
4764	1	27.618389	I-26 WB (Basic Analysis)	NW
4764	2	27.269977	I-26 WB (Basic Analysis)	NW
4764	3	27.709364	I-26 WB (Basic Analysis)	NW
4764	4	27.743086	I-26 WB (Basic Analysis)	NW
4764	5	28.033233	I-26 WB (Basic Analysis)	NW
4764	6	28.092796	I-26 WB (Basic Analysis)	NW
4764	7	27.929294	I-26 WB (Basic Analysis)	NW
4764	8	28.188739	I-26 WB (Basic Analysis)	NW
4764	9	28.46598	I-26 WB (Basic Analysis)	NW
4764	10	27.55473	I-26 WB (Basic Analysis)	NW
4769	1	17.240061	I-26 EB (Basic Analysis)	SE
4769	2	16.255292	I-26 EB (Basic Analysis)	SE
4769	3	16.830866	I-26 EB (Basic Analysis)	SE
4769	4	16.563567	I-26 EB (Basic Analysis)	SE
4769	5	16.796128	I-26 EB (Basic Analysis)	SE
4769	6	16.400201	I-26 EB (Basic Analysis)	SE
4769	7	17.202621	I-26 EB (Basic Analysis)	SE
4769	8	17.032298	I-26 EB (Basic Analysis)	SE
4769	9	16.366888	I-26 EB (Basic Analysis)	SE
4769	10	16.810798	I-26 EB (Basic Analysis)	SE
8539	1	35.861023	I-20 WB (Basic Analysis)	SW
8539	2	67.7292	I-20 WB (Basic Analysis)	SW
8539	3	73.847102	I-20 WB (Basic Analysis)	SW
8539	4	80.677499	I-20 WB (Basic Analysis)	SW
8539	5	97.061082	I-20 WB (Basic Analysis)	SW
8539	6	30.227045	I-20 WB (Basic Analysis)	SW
8539	7	60.39862	I-20 WB (Basic Analysis)	SW
8539	8	103.927822	I-20 WB (Basic Analysis)	SW
8539	9	49.192827	I-20 WB (Basic Analysis)	SW
8539	10	90.487947	I-20 WB (Basic Analysis)	SW

ID	Run	Density	Name (Type)	Direction
6079	1	15.353422	Ↄ ROAD I-20 WB TO I-20 (Basic Analysi	N
6079	2	16.396667	Ↄ ROAD I-20 WB TO I-20 (Basic Analysi	N
6079	3	15.225477	Ↄ ROAD I-20 WB TO I-20 (Basic Analysi	N
6079	4	15.95378	Ↄ ROAD I-20 WB TO I-20 (Basic Analysi	N
6079	5	16.573822	Ↄ ROAD I-20 WB TO I-20 (Basic Analysi	N
6079	6	16.603348	Ↄ ROAD I-20 WB TO I-20 (Basic Analysi	N
6079	7	16.6624	Ↄ ROAD I-20 WB TO I-20 (Basic Analysi	N
6079	8	13.621241	Ↄ ROAD I-20 WB TO I-20 (Basic Analysi	N
6079	9	16.170303	Ↄ ROAD I-20 WB TO I-20 (Basic Analysi	N
6079	10	16.61319	Ↄ ROAD I-20 WB TO I-20 (Basic Analysi	N
6149	1	25.111681	I-26 EB (Merge Analysis)	S
6149	2	24.443507	I-26 EB (Merge Analysis)	S
6149	3	24.590628	I-26 EB (Merge Analysis)	S
6149	4	26.671774	I-26 EB (Merge Analysis)	S
6149	5	25.743074	I-26 EB (Merge Analysis)	S
6149	6	25.648059	I-26 EB (Merge Analysis)	S
6149	7	25.787517	I-26 EB (Merge Analysis)	S
6149	8	25.39826	I-26 EB (Merge Analysis)	S
6149	9	25.784452	I-26 EB (Merge Analysis)	S
6149	10	27.6771	I-26 EB (Merge Analysis)	S
6150	1	25.111681	I-26 EB (Merge Analysis)	S
6150	2	24.443507	I-26 EB (Merge Analysis)	S
6150	3	24.590628	I-26 EB (Merge Analysis)	S
6150	4	26.671774	I-26 EB (Merge Analysis)	S
6150	5	25.743074	I-26 EB (Merge Analysis)	S
6150	6	25.648059	I-26 EB (Merge Analysis)	S
6150	7	25.787517	I-26 EB (Merge Analysis)	S
6150	8	25.39826	I-26 EB (Merge Analysis)	S
6150	9	25.784452	I-26 EB (Merge Analysis)	S
6150	10	27.6771	I-26 EB (Merge Analysis)	S
6151	1	25.111681	I-26 EB (Merge Analysis)	S
6151	2	24.443507	I-26 EB (Merge Analysis)	S
6151	3	24.590628	I-26 EB (Merge Analysis)	S
6151	4	26.671774	I-26 EB (Merge Analysis)	S
6151	5	25.743074	I-26 EB (Merge Analysis)	S
6151	6	25.648059	I-26 EB (Merge Analysis)	S
6151	7	25.787517	I-26 EB (Merge Analysis)	S
6151	8	25.39826	I-26 EB (Merge Analysis)	S
6151	9	25.784452	I-26 EB (Merge Analysis)	S
6151	10	27.6771	I-26 EB (Merge Analysis)	S
6152	1	29.568246	I-26 EB (Basic Analysis)	S
6152	2	27.381843	I-26 EB (Basic Analysis)	S
6152	3	29.357509	I-26 EB (Basic Analysis)	S
6152	4	28.721783	I-26 EB (Basic Analysis)	S
6152	5	28.630464	I-26 EB (Basic Analysis)	S
6152	6	28.360017	I-26 EB (Basic Analysis)	S
6152	7	29.150283	I-26 EB (Basic Analysis)	S
6152	8	29.343459	I-26 EB (Basic Analysis)	S
6152	9	28.649781	I-26 EB (Basic Analysis)	S
6152	10	29.087062	I-26 EB (Basic Analysis)	S
6159	1	34.2412	I-26 WB (Diverge Analysis)	N
6159	2	31.909616	I-26 WB (Diverge Analysis)	N
6159	3	32.622173	I-26 WB (Diverge Analysis)	N

ID	Run	Density	Name (Type)	Direction
6159	4	33.664075	I-26 WB (Diverge Analysis)	N
6159	5	33.051554	I-26 WB (Diverge Analysis)	N
6159	6	34.622872	I-26 WB (Diverge Analysis)	N
6159	7	32.175863	I-26 WB (Diverge Analysis)	N
6159	8	33.845677	I-26 WB (Diverge Analysis)	N
6159	9	34.705978	I-26 WB (Diverge Analysis)	N
6159	10	33.114653	I-26 WB (Diverge Analysis)	N
6160	1	34.2412	I-26 WB (Diverge Analysis)	N
6160	2	31.909616	I-26 WB (Diverge Analysis)	N
6160	3	32.622173	I-26 WB (Diverge Analysis)	N
6160	4	33.664075	I-26 WB (Diverge Analysis)	N
6160	5	33.051554	I-26 WB (Diverge Analysis)	N
6160	6	34.622872	I-26 WB (Diverge Analysis)	N
6160	7	32.175863	I-26 WB (Diverge Analysis)	N
6160	8	33.845677	I-26 WB (Diverge Analysis)	N
6160	9	34.705978	I-26 WB (Diverge Analysis)	N
6160	10	33.114653	I-26 WB (Diverge Analysis)	N
6165	1	23.557934	I-26 WB (Basic Analysis)	N
6165	2	24.298117	I-26 WB (Basic Analysis)	N
6165	3	23.829792	I-26 WB (Basic Analysis)	N
6165	4	24.395209	I-26 WB (Basic Analysis)	N
6165	5	24.468314	I-26 WB (Basic Analysis)	N
6165	6	24.249	I-26 WB (Basic Analysis)	N
6165	7	23.731557	I-26 WB (Basic Analysis)	N
6165	8	25.121686	I-26 WB (Basic Analysis)	N
6165	9	24.330101	I-26 WB (Basic Analysis)	N
6165	10	23.832076	I-26 WB (Basic Analysis)	N
8789	1	25.470917	I-26 EB (Basic Analysis)	S
8789	2	23.903491	I-26 EB (Basic Analysis)	S
8789	3	24.47786	I-26 EB (Basic Analysis)	S
8789	4	24.720081	I-26 EB (Basic Analysis)	S
8789	5	24.154415	I-26 EB (Basic Analysis)	S
8789	6	23.873032	I-26 EB (Basic Analysis)	S
8789	7	24.999046	I-26 EB (Basic Analysis)	S
8789	8	25.022736	I-26 EB (Basic Analysis)	S
8789	9	24.454653	I-26 EB (Basic Analysis)	S
8789	10	24.83273	I-26 EB (Basic Analysis)	S
6178	1	25.470917	I-26 EB (Basic Analysis)	S
6178	2	23.903491	I-26 EB (Basic Analysis)	S
6178	3	24.47786	I-26 EB (Basic Analysis)	S
6178	4	24.720081	I-26 EB (Basic Analysis)	S
6178	5	24.154415	I-26 EB (Basic Analysis)	S
6178	6	23.873032	I-26 EB (Basic Analysis)	S
6178	7	24.999046	I-26 EB (Basic Analysis)	S
6178	8	25.022736	I-26 EB (Basic Analysis)	S
6178	9	24.454653	I-26 EB (Basic Analysis)	S
6178	10	24.83273	I-26 EB (Basic Analysis)	S
9113	1	18.098958	I-126 NB (Merge Analysis)	NW
9113	2	15.62966	I-126 NB (Merge Analysis)	NW
9113	3	17.334915	I-126 NB (Merge Analysis)	NW
9113	4	16.936284	I-126 NB (Merge Analysis)	NW
9113	5	16.908601	I-126 NB (Merge Analysis)	NW
9113	6	19.400046	I-126 NB (Merge Analysis)	NW

ID	Run	Density	Name (Type)	Direction
9113	7	17.40689	I-126 NB (Merge Analysis)	NW
9113	8	18.575101	I-126 NB (Merge Analysis)	NW
9113	9	17.329379	I-126 NB (Merge Analysis)	NW
9113	10	16.54319	I-126 NB (Merge Analysis)	NW
6207	1	10.853723	I-20 EB (Basic Analysis)	E
6207	2	11.122358	I-20 EB (Basic Analysis)	E
6207	3	10.88751	I-20 EB (Basic Analysis)	E
6207	4	10.776544	I-20 EB (Basic Analysis)	E
6207	5	11.213449	I-20 EB (Basic Analysis)	E
6207	6	10.027612	I-20 EB (Basic Analysis)	E
6207	7	10.252855	I-20 EB (Basic Analysis)	E
6207	8	10.760645	I-20 EB (Basic Analysis)	E
6207	9	10.565876	I-20 EB (Basic Analysis)	E
6207	10	11.236967	I-20 EB (Basic Analysis)	E
6234	1	16.095357	I-20 WB (Basic Analysis)	SW
6234	2	15.988413	I-20 WB (Basic Analysis)	SW
6234	3	16.129091	I-20 WB (Basic Analysis)	SW
6234	4	15.321631	I-20 WB (Basic Analysis)	SW
6234	5	15.904438	I-20 WB (Basic Analysis)	SW
6234	6	16.058752	I-20 WB (Basic Analysis)	SW
6234	7	15.755147	I-20 WB (Basic Analysis)	SW
6234	8	15.378333	I-20 WB (Basic Analysis)	SW
6234	9	15.658252	I-20 WB (Basic Analysis)	SW
6234	10	15.175212	I-20 WB (Basic Analysis)	SW
8837	1	9.31159	I-20 WB (Merge Analysis)	W
8837	2	6.91499	I-20 WB (Merge Analysis)	W
8837	3	7.53491	I-20 WB (Merge Analysis)	W
8837	4	8.845052	I-20 WB (Merge Analysis)	W
8837	5	8.672496	I-20 WB (Merge Analysis)	W
8837	6	8.186786	I-20 WB (Merge Analysis)	W
8837	7	8.142049	I-20 WB (Merge Analysis)	W
8837	8	7.400701	I-20 WB (Merge Analysis)	W
8837	9	8.883397	I-20 WB (Merge Analysis)	W
8837	10	8.372123	I-20 WB (Merge Analysis)	W
8774	1	38.619545	I-20 EB (Diverge Analysis)	NE
8774	2	39.398654	I-20 EB (Diverge Analysis)	NE
8774	3	40.078963	I-20 EB (Diverge Analysis)	NE
8774	4	46.111414	I-20 EB (Diverge Analysis)	NE
8774	5	45.826306	I-20 EB (Diverge Analysis)	NE
8774	6	38.13119	I-20 EB (Diverge Analysis)	NE
8774	7	39.2067	I-20 EB (Diverge Analysis)	NE
8774	8	39.934997	I-20 EB (Diverge Analysis)	NE
8774	9	38.393716	I-20 EB (Diverge Analysis)	NE
8774	10	40.931467	I-20 EB (Diverge Analysis)	NE
6246	1	38.431575	I-20 WB (Merge Analysis)	SW
6246	2	38.779591	I-20 WB (Merge Analysis)	SW
6246	3	37.649731	I-20 WB (Merge Analysis)	SW
6246	4	38.524879	I-20 WB (Merge Analysis)	SW
6246	5	38.277658	I-20 WB (Merge Analysis)	SW
6246	6	37.813864	I-20 WB (Merge Analysis)	SW
6246	7	38.614096	I-20 WB (Merge Analysis)	SW
6246	8	37.266982	I-20 WB (Merge Analysis)	SW
6246	9	39.20729	I-20 WB (Merge Analysis)	SW

ID	Run	Density	Name (Type)	Direction
6246	10	38.619545	I-20 WB (Merge Analysis)	SW
6247	1	38.431575	I-20 WB (Merge Analysis)	SW
6247	2	38.779591	I-20 WB (Merge Analysis)	SW
6247	3	37.649731	I-20 WB (Merge Analysis)	SW
6247	4	38.524879	I-20 WB (Merge Analysis)	SW
6247	5	38.277658	I-20 WB (Merge Analysis)	SW
6247	6	37.813864	I-20 WB (Merge Analysis)	SW
6247	7	38.614096	I-20 WB (Merge Analysis)	SW
6247	8	37.266982	I-20 WB (Merge Analysis)	SW
6247	9	39.20729	I-20 WB (Merge Analysis)	SW
6247	10	38.619545	I-20 WB (Merge Analysis)	SW
9266	1	9.617977	I-20 WB (Basic Analysis)	W
9266	2	9.585467	I-20 WB (Basic Analysis)	W
9266	3	9.870556	I-20 WB (Basic Analysis)	W
9266	4	9.888061	I-20 WB (Basic Analysis)	W
9266	5	11.298498	I-20 WB (Basic Analysis)	W
9266	6	10.191905	I-20 WB (Basic Analysis)	W
9266	7	10.534511	I-20 WB (Basic Analysis)	W
9266	8	10.939637	I-20 WB (Basic Analysis)	W
9266	9	10.507003	I-20 WB (Basic Analysis)	W
9266	10	11.225975	I-20 WB (Basic Analysis)	W
6251	1	84.724898	I-20 WB (Basic Analysis)	SW
6251	2	84.657854	I-20 WB (Basic Analysis)	SW
6251	3	74.279703	I-20 WB (Basic Analysis)	SW
6251	4	83.253656	I-20 WB (Basic Analysis)	SW
6251	5	84.711241	I-20 WB (Basic Analysis)	SW
6251	6	81.765033	I-20 WB (Basic Analysis)	SW
6251	7	83.971274	I-20 WB (Basic Analysis)	SW
6251	8	78.685978	I-20 WB (Basic Analysis)	SW
6251	9	89.390658	I-20 WB (Basic Analysis)	SW
6251	10	84.847811	I-20 WB (Basic Analysis)	SW
6254	1	33.863868	I-20 EB (Basic Analysis)	NE
6254	2	32.975516	I-20 EB (Basic Analysis)	NE
6254	3	34.77352	I-20 EB (Basic Analysis)	NE
6254	4	33.971623	I-20 EB (Basic Analysis)	NE
6254	5	35.570406	I-20 EB (Basic Analysis)	NE
6254	6	34.033018	I-20 EB (Basic Analysis)	NE
6254	7	33.041923	I-20 EB (Basic Analysis)	NE
6254	8	33.447884	I-20 EB (Basic Analysis)	NE
6254	9	32.464307	I-20 EB (Basic Analysis)	NE
6254	10	35.782157	I-20 EB (Basic Analysis)	NE
6258	1	33.13748	I-20 EB (Merge Analysis)	NE
6258	2	31.833931	I-20 EB (Merge Analysis)	NE
6258	3	33.534981	I-20 EB (Merge Analysis)	NE
6258	4	31.808182	I-20 EB (Merge Analysis)	NE
6258	5	35.216719	I-20 EB (Merge Analysis)	NE
6258	6	34.140085	I-20 EB (Merge Analysis)	NE
6258	7	33.398189	I-20 EB (Merge Analysis)	NE
6258	8	33.639587	I-20 EB (Merge Analysis)	NE
6258	9	32.999078	I-20 EB (Merge Analysis)	NE
6258	10	34.680816	I-20 EB (Merge Analysis)	NE
6259	1	33.13748	I-20 EB (Merge Analysis)	NE
6259	2	31.833931	I-20 EB (Merge Analysis)	NE

ID	Run	Density	Name (Type)	Direction
6259	3	33.534981	I-20 EB (Merge Analysis)	NE
6259	4	31.808182	I-20 EB (Merge Analysis)	NE
6259	5	35.216719	I-20 EB (Merge Analysis)	NE
6259	6	34.140085	I-20 EB (Merge Analysis)	NE
6259	7	33.398189	I-20 EB (Merge Analysis)	NE
6259	8	33.639587	I-20 EB (Merge Analysis)	NE
6259	9	32.999078	I-20 EB (Merge Analysis)	NE
6259	10	34.680816	I-20 EB (Merge Analysis)	NE
9208	1	18.766786	(Basic Analysis)	SE
9208	2	16.73267	(Basic Analysis)	SE
9208	3	18.098548	(Basic Analysis)	SE
9208	4	17.304682	(Basic Analysis)	SE
9208	5	18.205466	(Basic Analysis)	SE
9208	6	17.109556	(Basic Analysis)	SE
9208	7	18.614427	(Basic Analysis)	SE
9208	8	17.612071	(Basic Analysis)	SE
9208	9	16.925122	(Basic Analysis)	SE
9208	10	16.991946	(Basic Analysis)	SE
9114	1	25.214982	I-126 NB (Diverge Analysis)	NW
9114	2	25.782338	I-126 NB (Diverge Analysis)	NW
9114	3	25.67036	I-126 NB (Diverge Analysis)	NW
9114	4	25.023375	I-126 NB (Diverge Analysis)	NW
9114	5	25.797268	I-126 NB (Diverge Analysis)	NW
9114	6	25.088074	I-126 NB (Diverge Analysis)	NW
9114	7	25.797268	I-126 NB (Diverge Analysis)	NW
9114	8	26.907096	I-126 NB (Diverge Analysis)	NW
9114	9	25.222447	I-126 NB (Diverge Analysis)	NW
9114	10	25.881874	I-126 NB (Diverge Analysis)	NW
8878	1	12.943735	I-20 WB (Basic Analysis)	W
8878	2	12.296109	I-20 WB (Basic Analysis)	W
8878	3	11.831301	I-20 WB (Basic Analysis)	W
8878	4	12.35467	I-20 WB (Basic Analysis)	W
8878	5	11.989374	I-20 WB (Basic Analysis)	W
8878	6	11.514227	I-20 WB (Basic Analysis)	W
8878	7	12.670597	I-20 WB (Basic Analysis)	W
8878	8	11.714349	I-20 WB (Basic Analysis)	W
8878	9	11.944808	I-20 WB (Basic Analysis)	W
8878	10	11.539209	I-20 WB (Basic Analysis)	W
9255	1	21.633523	I-126 NB (Diverge Analysis)	NW
9255	2	17.220909	I-126 NB (Diverge Analysis)	NW
9255	3	20.618231	I-126 NB (Diverge Analysis)	NW
9255	4	19.446741	I-126 NB (Diverge Analysis)	NW
9255	5	20.071535	I-126 NB (Diverge Analysis)	NW
9255	6	20.071535	I-126 NB (Diverge Analysis)	NW
9255	7	19.954386	I-126 NB (Diverge Analysis)	NW
9255	8	19.641989	I-126 NB (Diverge Analysis)	NW
9255	9	21.321125	I-126 NB (Diverge Analysis)	NW
9255	10	21.125877	I-126 NB (Diverge Analysis)	NW
8915	1	20.32841	I-26 EB (Basic Analysis)	SE
8915	2	19.861191	I-26 EB (Basic Analysis)	SE
8915	3	20.5403	I-26 EB (Basic Analysis)	SE
8915	4	20.167038	I-26 EB (Basic Analysis)	SE
8915	5	20.50792	I-26 EB (Basic Analysis)	SE

ID	Run	Density	Name (Type)	Direction
8915	6	20.477686	I-26 EB (Basic Analysis)	SE
8915	7	20.709303	I-26 EB (Basic Analysis)	SE
8915	8	20.245843	I-26 EB (Basic Analysis)	SE
8915	9	19.696163	I-26 EB (Basic Analysis)	SE
8915	10	20.694973	I-26 EB (Basic Analysis)	SE
8792	1	16.51136	I-26 EB (Basic Analysis)	S
8792	2	16.054235	I-26 EB (Basic Analysis)	S
8792	3	15.729193	I-26 EB (Basic Analysis)	S
8792	4	15.911059	I-26 EB (Basic Analysis)	S
8792	5	15.644676	I-26 EB (Basic Analysis)	S
8792	6	15.520372	I-26 EB (Basic Analysis)	S
8792	7	15.95022	I-26 EB (Basic Analysis)	S
8792	8	16.572112	I-26 EB (Basic Analysis)	S
8792	9	15.096437	I-26 EB (Basic Analysis)	S
8792	10	15.727829	I-26 EB (Basic Analysis)	S
8554	1	18.936967	I-26 WB (Basic Analysis)	N
8554	2	18.564874	I-26 WB (Basic Analysis)	N
8554	3	18.731201	I-26 WB (Basic Analysis)	N
8554	4	19.76003	I-26 WB (Basic Analysis)	N
8554	5	19.305631	I-26 WB (Basic Analysis)	N
8554	6	19.714762	I-26 WB (Basic Analysis)	N
8554	7	18.774412	I-26 WB (Basic Analysis)	N
8554	8	19.216809	I-26 WB (Basic Analysis)	N
8554	9	19.849538	I-26 WB (Basic Analysis)	N
8554	10	19.025446	I-26 WB (Basic Analysis)	N
8559	1	28.829636	I-126 NB (Basic Analysis)	W
8559	2	31.226793	I-126 NB (Basic Analysis)	W
8559	3	29.777448	I-126 NB (Basic Analysis)	W
8559	4	29.951709	I-126 NB (Basic Analysis)	W
8559	5	31.974842	I-126 NB (Basic Analysis)	W
8559	6	31.286297	I-126 NB (Basic Analysis)	W
8559	7	31.94934	I-126 NB (Basic Analysis)	W
8559	8	30.342735	I-126 NB (Basic Analysis)	W
8559	9	29.994212	I-126 NB (Basic Analysis)	W
8559	10	31.579566	I-126 NB (Basic Analysis)	W
8560	1	17.230012	I-126 SB (Basic Analysis)	E
8560	2	16.61447	I-126 SB (Basic Analysis)	E
8560	3	17.431755	I-126 SB (Basic Analysis)	E
8560	4	17.173937	I-126 SB (Basic Analysis)	E
8560	5	16.502319	I-126 SB (Basic Analysis)	E
8560	6	16.759493	I-126 SB (Basic Analysis)	E
8560	7	17.119795	I-126 SB (Basic Analysis)	E
8560	8	17.043094	I-126 SB (Basic Analysis)	E
8560	9	16.680214	I-126 SB (Basic Analysis)	E
8560	10	16.883891	I-126 SB (Basic Analysis)	E
8996	1	16.498691	Ↄ ROAD I-20 WB TO I-20 (Basic Analysi	NE
8996	2	17.550148	Ↄ ROAD I-20 WB TO I-20 (Basic Analysi	NE
8996	3	18.00178	Ↄ ROAD I-20 WB TO I-20 (Basic Analysi	NE
8996	4	17.19731	Ↄ ROAD I-20 WB TO I-20 (Basic Analysi	NE
8996	5	17.768907	Ↄ ROAD I-20 WB TO I-20 (Basic Analysi	NE
8996	6	17.606602	Ↄ ROAD I-20 WB TO I-20 (Basic Analysi	NE
8996	7	17.183196	Ↄ ROAD I-20 WB TO I-20 (Basic Analysi	NE
8996	8	16.279932	Ↄ ROAD I-20 WB TO I-20 (Basic Analysi	NE

ID	Run	Density	Name (Type)	Direction
8996	9	16.364613	CD ROAD I-20 WB TO I-20 (Basic Analysi	NE
8996	10	18.044121	CD ROAD I-20 WB TO I-20 (Basic Analysi	NE
8877	1	8.396491	I-20 WB (Diverge Analysis)	W
8877	2	8.179326	I-20 WB (Diverge Analysis)	W
8877	3	7.862697	I-20 WB (Diverge Analysis)	W
8877	4	8.132909	I-20 WB (Diverge Analysis)	W
8877	5	8.27216	I-20 WB (Diverge Analysis)	W
8877	6	8.341786	I-20 WB (Diverge Analysis)	W
8877	7	8.23569	I-20 WB (Diverge Analysis)	W
8877	8	7.977081	I-20 WB (Diverge Analysis)	W
8877	9	8.156118	I-20 WB (Diverge Analysis)	W
8877	10	8.348417	I-20 WB (Diverge Analysis)	W
9265	1	29.416214	CD ROAD I-20 WB (Basic Analysis)	W
9265	2	28.047828	CD ROAD I-20 WB (Basic Analysis)	W
9265	3	30.963792	CD ROAD I-20 WB (Basic Analysis)	W
9265	4	29.469157	CD ROAD I-20 WB (Basic Analysis)	W
9265	5	28.98452	CD ROAD I-20 WB (Basic Analysis)	W
9265	6	29.691112	CD ROAD I-20 WB (Basic Analysis)	W
9265	7	29.053754	CD ROAD I-20 WB (Basic Analysis)	W
9265	8	29.059863	CD ROAD I-20 WB (Basic Analysis)	W
9265	9	29.88456	CD ROAD I-20 WB (Basic Analysis)	W
9265	10	28.82569	CD ROAD I-20 WB (Basic Analysis)	W
8765	1	19.061924	I-20 EB (Basic Analysis)	NE
8765	2	19.519545	I-20 EB (Basic Analysis)	NE
8765	3	19.43159	I-20 EB (Basic Analysis)	NE
8765	4	19.298255	I-20 EB (Basic Analysis)	NE
8765	5	20.168651	I-20 EB (Basic Analysis)	NE
8765	6	18.521905	I-20 EB (Basic Analysis)	NE
8765	7	18.35561	I-20 EB (Basic Analysis)	NE
8765	8	19.362808	I-20 EB (Basic Analysis)	NE
8765	9	19.647648	I-20 EB (Basic Analysis)	NE
8765	10	20.015402	I-20 EB (Basic Analysis)	NE
8763	1	17.240061	I-26 EB (Basic Analysis)	SE
8763	2	16.255292	I-26 EB (Basic Analysis)	SE
8763	3	16.830866	I-26 EB (Basic Analysis)	SE
8763	4	16.563567	I-26 EB (Basic Analysis)	SE
8763	5	16.796128	I-26 EB (Basic Analysis)	SE
8763	6	16.400201	I-26 EB (Basic Analysis)	SE
8763	7	17.202621	I-26 EB (Basic Analysis)	SE
8763	8	17.032298	I-26 EB (Basic Analysis)	SE
8763	9	16.366888	I-26 EB (Basic Analysis)	SE
8763	10	16.810798	I-26 EB (Basic Analysis)	SE
8764	1	26.76063	I-20 WB (Basic Analysis)	S
8764	2	25.375425	I-20 WB (Basic Analysis)	S
8764	3	26.69976	I-20 WB (Basic Analysis)	S
8764	4	24.057474	I-20 WB (Basic Analysis)	S
8764	5	25.801947	I-20 WB (Basic Analysis)	S
8764	6	26.613425	I-20 WB (Basic Analysis)	S
8764	7	26.150255	I-20 WB (Basic Analysis)	S
8764	8	25.963139	I-20 WB (Basic Analysis)	S
8764	9	26.532888	I-20 WB (Basic Analysis)	S
8764	10	25.936047	I-20 WB (Basic Analysis)	S
8770	1	74.504103	I-20 WB (Basic Analysis)	SW

ID	Run	Density	Name (Type)	Direction
8770	2	74.592356	I-20 WB (Basic Analysis)	SW
8770	3	67.142031	I-20 WB (Basic Analysis)	SW
8770	4	75.285389	I-20 WB (Basic Analysis)	SW
8770	5	76.958272	I-20 WB (Basic Analysis)	SW
8770	6	72.635251	I-20 WB (Basic Analysis)	SW
8770	7	75.865079	I-20 WB (Basic Analysis)	SW
8770	8	71.919289	I-20 WB (Basic Analysis)	SW
8770	9	77.660823	I-20 WB (Basic Analysis)	SW
8770	10	73.971568	I-20 WB (Basic Analysis)	SW
8773	1	31.110985	I-26 WB (Basic Analysis)	N
8773	2	29.601809	I-26 WB (Basic Analysis)	N
8773	3	29.591422	I-26 WB (Basic Analysis)	N
8773	4	30.415013	I-26 WB (Basic Analysis)	N
8773	5	30.437272	I-26 WB (Basic Analysis)	N
8773	6	31.346933	I-26 WB (Basic Analysis)	N
8773	7	30.373463	I-26 WB (Basic Analysis)	N
8773	8	31.912317	I-26 WB (Basic Analysis)	N
8773	9	30.892845	I-26 WB (Basic Analysis)	N
8773	10	30.691028	I-26 WB (Basic Analysis)	N
8849	1	23.07697	CD ROAD I-20 WB (Basic Analysis)	W
8849	2	24.709178	CD ROAD I-20 WB (Basic Analysis)	W
8849	3	26.549367	CD ROAD I-20 WB (Basic Analysis)	W
8849	4	25.287911	CD ROAD I-20 WB (Basic Analysis)	W
8849	5	25.061843	CD ROAD I-20 WB (Basic Analysis)	W
8849	6	25.857601	CD ROAD I-20 WB (Basic Analysis)	W
8849	7	25.563713	CD ROAD I-20 WB (Basic Analysis)	W
8849	8	23.104098	CD ROAD I-20 WB (Basic Analysis)	W
8849	9	25.233654	CD ROAD I-20 WB (Basic Analysis)	W
8849	10	24.275128	CD ROAD I-20 WB (Basic Analysis)	W
8855	1	27.185309	Ↄ ROAD I-20 WB TO I-20 (Basic Analysi	NW
8855	2	25.215662	Ↄ ROAD I-20 WB TO I-20 (Basic Analysi	NW
8855	3	26.080503	Ↄ ROAD I-20 WB TO I-20 (Basic Analysi	NW
8855	4	25.792223	Ↄ ROAD I-20 WB TO I-20 (Basic Analysi	NW
8855	5	24.312169	Ↄ ROAD I-20 WB TO I-20 (Basic Analysi	NW
8855	6	27.404337	Ↄ ROAD I-20 WB TO I-20 (Basic Analysi	NW
8855	7	25.473343	Ↄ ROAD I-20 WB TO I-20 (Basic Analysi	NW
8855	8	25.917842	Ↄ ROAD I-20 WB TO I-20 (Basic Analysi	NW
8855	9	24.308948	Ↄ ROAD I-20 WB TO I-20 (Basic Analysi	NW
8855	10	26.476687	Ↄ ROAD I-20 WB TO I-20 (Basic Analysi	NW
9112	1	16.51136	I-26 EB (Basic Analysis)	S
9112	2	16.054235	I-26 EB (Basic Analysis)	S
9112	3	15.729193	I-26 EB (Basic Analysis)	S
9112	4	15.911059	I-26 EB (Basic Analysis)	S
9112	5	15.644676	I-26 EB (Basic Analysis)	S
9112	6	15.520372	I-26 EB (Basic Analysis)	S
9112	7	15.95022	I-26 EB (Basic Analysis)	S
9112	8	16.572112	I-26 EB (Basic Analysis)	S
9112	9	15.096437	I-26 EB (Basic Analysis)	S
9112	10	15.727829	I-26 EB (Basic Analysis)	S
8910	1	26.477569	I-26 EB (Basic Analysis)	SE
8910	2	26.256415	I-26 EB (Basic Analysis)	SE
8910	3	26.96411	I-26 EB (Basic Analysis)	SE
8910	4	26.558405	I-26 EB (Basic Analysis)	SE

ID	Run	Density	Name (Type)	Direction
8910	5	25.379421	I-26 EB (Basic Analysis)	SE
8910	6	27.984472	I-26 EB (Basic Analysis)	SE
8910	7	25.734794	I-26 EB (Basic Analysis)	SE
8910	8	25.225375	I-26 EB (Basic Analysis)	SE
8910	9	24.747986	I-26 EB (Basic Analysis)	SE
8910	10	26.900051	I-26 EB (Basic Analysis)	SE
9110	1	22.111608	I-26 EB (Merge Analysis)	S
9110	2	22.649016	I-26 EB (Merge Analysis)	S
9110	3	22.754161	I-26 EB (Merge Analysis)	S
9110	4	22.033723	I-26 EB (Merge Analysis)	S
9110	5	21.745548	I-26 EB (Merge Analysis)	S
9110	6	22.041511	I-26 EB (Merge Analysis)	S
9110	7	22.380312	I-26 EB (Merge Analysis)	S
9110	8	24.210614	I-26 EB (Merge Analysis)	S
9110	9	22.325792	I-26 EB (Merge Analysis)	S
9110	10	23.163058	I-26 EB (Merge Analysis)	S
8940	1	26.201325	I-26 EB (Basic Analysis)	SE
8940	2	26.375443	I-26 EB (Basic Analysis)	SE
8940	3	26.802378	I-26 EB (Basic Analysis)	SE
8940	4	26.928424	I-26 EB (Basic Analysis)	SE
8940	5	27.943102	I-26 EB (Basic Analysis)	SE
8940	6	26.061876	I-26 EB (Basic Analysis)	SE
8940	7	26.27888	I-26 EB (Basic Analysis)	SE
8940	8	26.251905	I-26 EB (Basic Analysis)	SE
8940	9	26.849634	I-26 EB (Basic Analysis)	SE
8940	10	26.189204	I-26 EB (Basic Analysis)	SE
8863	1	16.318239	(Basic Analysis)	SE
8863	2	16.387546	(Basic Analysis)	SE
8863	3	16.701906	(Basic Analysis)	SE
8863	4	16.138782	(Basic Analysis)	SE
8863	5	16.533588	(Basic Analysis)	SE
8863	6	15.485309	(Basic Analysis)	SE
8863	7	16.122692	(Basic Analysis)	SE
8863	8	16.842997	(Basic Analysis)	SE
8863	9	15.937047	(Basic Analysis)	SE
8863	10	16.394972	(Basic Analysis)	SE
8790	1	35.14562	Ↄ ROAD I-26 WB TO I-20 (Basic Analysi	NE
8790	2	34.576734	Ↄ ROAD I-26 WB TO I-20 (Basic Analysi	NE
8790	3	33.275044	Ↄ ROAD I-26 WB TO I-20 (Basic Analysi	NE
8790	4	36.832996	Ↄ ROAD I-26 WB TO I-20 (Basic Analysi	NE
8790	5	37.016197	Ↄ ROAD I-26 WB TO I-20 (Basic Analysi	NE
8790	6	36.485879	Ↄ ROAD I-26 WB TO I-20 (Basic Analysi	NE
8790	7	32.629021	Ↄ ROAD I-26 WB TO I-20 (Basic Analysi	NE
8790	8	36.138761	Ↄ ROAD I-26 WB TO I-20 (Basic Analysi	NE
8790	9	38.06719	Ↄ ROAD I-26 WB TO I-20 (Basic Analysi	NE
8790	10	37.749	Ↄ ROAD I-26 WB TO I-20 (Basic Analysi	NE
9253	1	27.981966	I-26 WB (Basic Analysis)	N
9253	2	34.465317	I-26 WB (Basic Analysis)	N
9253	3	35.770992	I-26 WB (Basic Analysis)	N
9253	4	37.887086	I-26 WB (Basic Analysis)	N
9253	5	32.821968	I-26 WB (Basic Analysis)	N
9253	6	30.840943	I-26 WB (Basic Analysis)	N
9253	7	38.674993	I-26 WB (Basic Analysis)	N

ID	Run	Density	Name (Type)	Direction
9253	8	33.069596	I-26 WB (Basic Analysis)	N
9253	9	35.500852	I-26 WB (Basic Analysis)	N
9253	10	40.746064	I-26 WB (Basic Analysis)	N
8852	1	13.125835	(Basic Analysis)	E
8852	2	12.529206	(Basic Analysis)	E
8852	3	10.583984	(Basic Analysis)	E
8852	4	12.448008	(Basic Analysis)	E
8852	5	10.478074	(Basic Analysis)	E
8852	6	11.304175	(Basic Analysis)	E
8852	7	10.968792	(Basic Analysis)	E
8852	8	11.35713	(Basic Analysis)	E
8852	9	11.04646	(Basic Analysis)	E
8852	10	10.785214	(Basic Analysis)	E
9061	1	15.816268	I-20 EB (Basic Analysis)	NE
9061	2	16.081023	I-20 EB (Basic Analysis)	NE
9061	3	16.065352	I-20 EB (Basic Analysis)	NE
9061	4	15.94026	I-20 EB (Basic Analysis)	NE
9061	5	16.264949	I-20 EB (Basic Analysis)	NE
9061	6	15.77283	I-20 EB (Basic Analysis)	NE
9061	7	15.468486	I-20 EB (Basic Analysis)	NE
9061	8	16.030161	I-20 EB (Basic Analysis)	NE
9061	9	16.249828	I-20 EB (Basic Analysis)	NE
9061	10	16.883534	I-20 EB (Basic Analysis)	NE
8784	1	14.043206	I-126 SB (Basic Analysis)	SE
8784	2	13.280485	I-126 SB (Basic Analysis)	SE
8784	3	13.098613	I-126 SB (Basic Analysis)	SE
8784	4	13.587097	I-126 SB (Basic Analysis)	SE
8784	5	13.025293	I-126 SB (Basic Analysis)	SE
8784	6	13.874665	I-126 SB (Basic Analysis)	SE
8784	7	14.605963	I-126 SB (Basic Analysis)	SE
8784	8	13.170029	I-126 SB (Basic Analysis)	SE
8784	9	13.21383	I-126 SB (Basic Analysis)	SE
8784	10	13.307147	I-126 SB (Basic Analysis)	SE
9111	1	21.301298	(Merge Analysis)	SE
9111	2	20.143706	(Merge Analysis)	SE
9111	3	20.545238	(Merge Analysis)	SE
9111	4	21.387245	(Merge Analysis)	SE
9111	5	20.870223	(Merge Analysis)	SE
9111	6	21.273097	(Merge Analysis)	SE
9111	7	21.466476	(Merge Analysis)	SE
9111	8	21.524222	(Merge Analysis)	SE
9111	9	20.893052	(Merge Analysis)	SE
9111	10	21.073003	(Merge Analysis)	SE
9250	1	25.74459	I-126 NB (Diverge Analysis)	NW
9250	2	26.179343	I-126 NB (Diverge Analysis)	NW
9250	3	25.056232	I-126 NB (Diverge Analysis)	NW
9250	4	26.103261	I-126 NB (Diverge Analysis)	NW
9250	5	25.592427	I-126 NB (Diverge Analysis)	NW
9250	6	25.07797	I-126 NB (Diverge Analysis)	NW
9250	7	25.262739	I-126 NB (Diverge Analysis)	NW
9250	8	26.548882	I-126 NB (Diverge Analysis)	NW
9250	9	25.907622	I-126 NB (Diverge Analysis)	NW
9250	10	25.454755	I-126 NB (Diverge Analysis)	NW

ID	Run	Density	Name (Type)	Direction
8975	1	19.885677	I-26 EB (Weaving Analysis)	SE
8975	2	19.221767	I-26 EB (Weaving Analysis)	SE
8975	3	21.976562	I-26 EB (Weaving Analysis)	SE
8975	4	19.832507	I-26 EB (Weaving Analysis)	SE
8975	5	20.022195	I-26 EB (Weaving Analysis)	SE
8975	6	18.052021	I-26 EB (Weaving Analysis)	SE
8975	7	19.478996	I-26 EB (Weaving Analysis)	SE
8975	8	19.484744	I-26 EB (Weaving Analysis)	SE
8975	9	19.210271	I-26 EB (Weaving Analysis)	SE
8975	10	20.075366	I-26 EB (Weaving Analysis)	SE
9059	1	20.712326	I-20 WB (Merge Analysis)	SW
9059	2	19.258602	I-20 WB (Merge Analysis)	SW
9059	3	18.755639	I-20 WB (Merge Analysis)	SW
9059	4	19.492236	I-20 WB (Merge Analysis)	SW
9059	5	19.826463	I-20 WB (Merge Analysis)	SW
9059	6	20.397569	I-20 WB (Merge Analysis)	SW
9059	7	18.567434	I-20 WB (Merge Analysis)	SW
9059	8	20.55008	I-20 WB (Merge Analysis)	SW
9059	9	19.391644	I-20 WB (Merge Analysis)	SW
9059	10	18.460352	I-20 WB (Merge Analysis)	SW
9025	1	28.278397	ROAD I-26 WB TO I-20 (Diverge Analys	NE
9025	2	26.488529	ROAD I-26 WB TO I-20 (Diverge Analys	NE
9025	3	27.913795	ROAD I-26 WB TO I-20 (Diverge Analys	NE
9025	4	30.251843	ROAD I-26 WB TO I-20 (Diverge Analys	NE
9025	5	28.964259	ROAD I-26 WB TO I-20 (Diverge Analys	NE
9025	6	28.143265	ROAD I-26 WB TO I-20 (Diverge Analys	NE
9025	7	27.906146	ROAD I-26 WB TO I-20 (Diverge Analys	NE
9025	8	29.379856	ROAD I-26 WB TO I-20 (Diverge Analys	NE
9025	9	27.052006	ROAD I-26 WB TO I-20 (Diverge Analys	NE
9025	10	28.33449	ROAD I-26 WB TO I-20 (Diverge Analys	NE
9019	1	25.214982	I-126 NB (Diverge Analysis)	NW
9019	2	25.782338	I-126 NB (Diverge Analysis)	NW
9019	3	25.67036	I-126 NB (Diverge Analysis)	NW
9019	4	25.023375	I-126 NB (Diverge Analysis)	NW
9019	5	25.797268	I-126 NB (Diverge Analysis)	NW
9019	6	25.088074	I-126 NB (Diverge Analysis)	NW
9019	7	25.797268	I-126 NB (Diverge Analysis)	NW
9019	8	26.907096	I-126 NB (Diverge Analysis)	NW
9019	9	25.222447	I-126 NB (Diverge Analysis)	NW
9019	10	25.881874	I-126 NB (Diverge Analysis)	NW
9012	1	11.374503	I-126 SB (Merge Analysis)	E
9012	2	11.445524	I-126 SB (Merge Analysis)	E
9012	3	11.318644	I-126 SB (Merge Analysis)	E
9012	4	10.946782	I-126 SB (Merge Analysis)	E
9012	5	11.352957	I-126 SB (Merge Analysis)	E
9012	6	10.930024	I-126 SB (Merge Analysis)	E
9012	7	11.319442	I-126 SB (Merge Analysis)	E
9012	8	15.581489	I-126 SB (Merge Analysis)	E
9012	9	10.630779	I-126 SB (Merge Analysis)	E
9012	10	10.776811	I-126 SB (Merge Analysis)	E
9018	1	15.278426	I-126 SB (Basic Analysis)	E
9018	2	16.439369	I-126 SB (Basic Analysis)	E
9018	3	16.244003	I-126 SB (Basic Analysis)	E

ID	Run	Density	Name (Type)	Direction
9018	4	15.417534	I-126 SB (Basic Analysis)	E
9018	5	16.374929	I-126 SB (Basic Analysis)	E
9018	6	15.314226	I-126 SB (Basic Analysis)	E
9018	7	15.788831	I-126 SB (Basic Analysis)	E
9018	8	15.408328	I-126 SB (Basic Analysis)	E
9018	9	15.994426	I-126 SB (Basic Analysis)	E
9018	10	16.091597	I-126 SB (Basic Analysis)	E
9022	1	15.383254	107 (Basic Analysis)	NW
9022	2	16.034903	107 (Basic Analysis)	NW
9022	3	14.731604	107 (Basic Analysis)	NW
9022	4	15.201039	107 (Basic Analysis)	NW
9022	5	15.361635	107 (Basic Analysis)	NW
9022	6	14.20349	107 (Basic Analysis)	NW
9022	7	15.126918	107 (Basic Analysis)	NW
9022	8	16.949066	107 (Basic Analysis)	NW
9022	9	15.491347	107 (Basic Analysis)	NW
9022	10	15.10221	107 (Basic Analysis)	NW
9052	1	16.013556	CD ROAD I-20 EB (Basic Analysis)	NE
9052	2	14.72279	CD ROAD I-20 EB (Basic Analysis)	NE
9052	3	13.98521	CD ROAD I-20 EB (Basic Analysis)	NE
9052	4	14.397218	CD ROAD I-20 EB (Basic Analysis)	NE
9052	5	14.037072	CD ROAD I-20 EB (Basic Analysis)	NE
9052	6	14.270447	CD ROAD I-20 EB (Basic Analysis)	NE
9052	7	14.071646	CD ROAD I-20 EB (Basic Analysis)	NE
9052	8	15.561212	CD ROAD I-20 EB (Basic Analysis)	NE
9052	9	15.895428	CD ROAD I-20 EB (Basic Analysis)	NE
9052	10	15.111749	CD ROAD I-20 EB (Basic Analysis)	NE
9121	1	26.201325	I-26 EB (Basic Analysis)	SE
9121	2	26.375443	I-26 EB (Basic Analysis)	SE
9121	3	26.802378	I-26 EB (Basic Analysis)	SE
9121	4	26.928424	I-26 EB (Basic Analysis)	SE
9121	5	27.943102	I-26 EB (Basic Analysis)	SE
9121	6	26.061876	I-26 EB (Basic Analysis)	SE
9121	7	26.27888	I-26 EB (Basic Analysis)	SE
9121	8	26.251905	I-26 EB (Basic Analysis)	SE
9121	9	26.849634	I-26 EB (Basic Analysis)	SE
9121	10	26.189204	I-26 EB (Basic Analysis)	SE
9123	1	23.846418	I-26 EB (Weaving Analysis)	SE
9123	2	23.462849	I-26 EB (Weaving Analysis)	SE
9123	3	23.988569	I-26 EB (Weaving Analysis)	SE
9123	4	23.909949	I-26 EB (Weaving Analysis)	SE
9123	5	23.662178	I-26 EB (Weaving Analysis)	SE
9123	6	25.051921	I-26 EB (Weaving Analysis)	SE
9123	7	23.443789	I-26 EB (Weaving Analysis)	SE
9123	8	24.29193	I-26 EB (Weaving Analysis)	SE
9123	9	22.552765	I-26 EB (Weaving Analysis)	SE
9123	10	24.2824	I-26 EB (Weaving Analysis)	SE
9120	1	18.377046	I-26 EB (Diverge Analysis)	SE
9120	2	17.898918	I-26 EB (Diverge Analysis)	SE
9120	3	18.278675	I-26 EB (Diverge Analysis)	SE
9120	4	17.988138	I-26 EB (Diverge Analysis)	SE
9120	5	16.734482	I-26 EB (Diverge Analysis)	SE
9120	6	19.120547	I-26 EB (Diverge Analysis)	SE

ID	Run	Density	Name (Type)	Direction
9120	7	16.409629	I-26 EB (Diverge Analysis)	SE
9120	8	19.852609	I-26 EB (Diverge Analysis)	SE
9120	9	16.871743	I-26 EB (Diverge Analysis)	SE
9120	10	18.745365	I-26 EB (Diverge Analysis)	SE
9122	1	25.505326	I-26 EB (Diverge Analysis)	SE
9122	2	23.407993	I-26 EB (Diverge Analysis)	SE
9122	3	23.073593	I-26 EB (Diverge Analysis)	SE
9122	4	24.660526	I-26 EB (Diverge Analysis)	SE
9122	5	23.12346	I-26 EB (Diverge Analysis)	SE
9122	6	26.320792	I-26 EB (Diverge Analysis)	SE
9122	7	23.54586	I-26 EB (Diverge Analysis)	SE
9122	8	25.247192	I-26 EB (Diverge Analysis)	SE
9122	9	22.800793	I-26 EB (Diverge Analysis)	SE
9122	10	24.956793	I-26 EB (Diverge Analysis)	SE
9125	1	20.32841	I-26 EB (Basic Analysis)	SE
9125	2	19.861191	I-26 EB (Basic Analysis)	SE
9125	3	20.5403	I-26 EB (Basic Analysis)	SE
9125	4	20.167038	I-26 EB (Basic Analysis)	SE
9125	5	20.50792	I-26 EB (Basic Analysis)	SE
9125	6	20.477686	I-26 EB (Basic Analysis)	SE
9125	7	20.709303	I-26 EB (Basic Analysis)	SE
9125	8	20.245843	I-26 EB (Basic Analysis)	SE
9125	9	19.696163	I-26 EB (Basic Analysis)	SE
9125	10	20.694973	I-26 EB (Basic Analysis)	SE
9126	1	20.32841	I-26 EB (Basic Analysis)	SE
9126	2	19.861191	I-26 EB (Basic Analysis)	SE
9126	3	20.5403	I-26 EB (Basic Analysis)	SE
9126	4	20.167038	I-26 EB (Basic Analysis)	SE
9126	5	20.50792	I-26 EB (Basic Analysis)	SE
9126	6	20.477686	I-26 EB (Basic Analysis)	SE
9126	7	20.709303	I-26 EB (Basic Analysis)	SE
9126	8	20.245843	I-26 EB (Basic Analysis)	SE
9126	9	19.696163	I-26 EB (Basic Analysis)	SE
9126	10	20.694973	I-26 EB (Basic Analysis)	SE
9127	1	26.477569	I-26 EB (Basic Analysis)	SE
9127	2	26.256415	I-26 EB (Basic Analysis)	SE
9127	3	26.96411	I-26 EB (Basic Analysis)	SE
9127	4	26.558405	I-26 EB (Basic Analysis)	SE
9127	5	25.379421	I-26 EB (Basic Analysis)	SE
9127	6	27.984472	I-26 EB (Basic Analysis)	SE
9127	7	25.734794	I-26 EB (Basic Analysis)	SE
9127	8	25.225375	I-26 EB (Basic Analysis)	SE
9127	9	24.747986	I-26 EB (Basic Analysis)	SE
9127	10	26.900051	I-26 EB (Basic Analysis)	SE
9128	1	24.554926	I-26 EB (Diverge Analysis)	SW
9128	2	24.103193	I-26 EB (Diverge Analysis)	SW
9128	3	23.487193	I-26 EB (Diverge Analysis)	SW
9128	4	24.613593	I-26 EB (Diverge Analysis)	SW
9128	5	24.015193	I-26 EB (Diverge Analysis)	SW
9128	6	23.63386	I-26 EB (Diverge Analysis)	SW
9128	7	24.522659	I-26 EB (Diverge Analysis)	SW
9128	8	22.501593	I-26 EB (Diverge Analysis)	SW
9128	9	24.390659	I-26 EB (Diverge Analysis)	SW

ID	Run	Density	Name (Type)	Direction
9128	10	23.51946	I-26 EB (Diverge Analysis)	SW
9130	1	21.301298	(Merge Analysis)	SE
9130	2	20.143706	(Merge Analysis)	SE
9130	3	20.545238	(Merge Analysis)	SE
9130	4	21.387245	(Merge Analysis)	SE
9130	5	20.870223	(Merge Analysis)	SE
9130	6	21.273097	(Merge Analysis)	SE
9130	7	21.466476	(Merge Analysis)	SE
9130	8	21.524222	(Merge Analysis)	SE
9130	9	20.893052	(Merge Analysis)	SE
9130	10	21.073003	(Merge Analysis)	SE
9132	1	11.523558	I-126 SB (Diverge Analysis)	E
9132	2	11.465675	I-126 SB (Diverge Analysis)	E
9132	3	11.412625	I-126 SB (Diverge Analysis)	E
9132	4	11.159751	I-126 SB (Diverge Analysis)	E
9132	5	11.376618	I-126 SB (Diverge Analysis)	E
9132	6	11.098066	I-126 SB (Diverge Analysis)	E
9132	7	11.823026	I-126 SB (Diverge Analysis)	E
9132	8	15.799348	I-126 SB (Diverge Analysis)	E
9132	9	10.968728	I-126 SB (Diverge Analysis)	E
9132	10	10.708568	I-126 SB (Diverge Analysis)	E
9133	1	30.648124	I-126 NB (Basic Analysis)	W
9133	2	30.744948	I-126 NB (Basic Analysis)	W
9133	3	30.722865	I-126 NB (Basic Analysis)	W
9133	4	30.43664	I-126 NB (Basic Analysis)	W
9133	5	29.405552	I-126 NB (Basic Analysis)	W
9133	6	29.299386	I-126 NB (Basic Analysis)	W
9133	7	30.614151	I-126 NB (Basic Analysis)	W
9133	8	31.251998	I-126 NB (Basic Analysis)	W
9133	9	31.243505	I-126 NB (Basic Analysis)	W
9133	10	31.073639	I-126 NB (Basic Analysis)	W
9134	1	30.295458	I-126 NB (Diverge Analysis)	W
9134	2	30.993591	I-126 NB (Diverge Analysis)	W
9134	3	30.445057	I-126 NB (Diverge Analysis)	W
9134	4	30.433324	I-126 NB (Diverge Analysis)	W
9134	5	30.926124	I-126 NB (Diverge Analysis)	W
9134	6	30.820524	I-126 NB (Diverge Analysis)	W
9134	7	30.940791	I-126 NB (Diverge Analysis)	W
9134	8	30.682658	I-126 NB (Diverge Analysis)	W
9134	9	30.899724	I-126 NB (Diverge Analysis)	W
9134	10	30.301324	I-126 NB (Diverge Analysis)	W
9135	1	31.22712	I-126 NB (Basic Analysis)	NW
9135	2	30.565412	I-126 NB (Basic Analysis)	NW
9135	3	31.662621	I-126 NB (Basic Analysis)	NW
9135	4	31.588628	I-126 NB (Basic Analysis)	NW
9135	5	32.939527	I-126 NB (Basic Analysis)	NW
9135	6	31.664736	I-126 NB (Basic Analysis)	NW
9135	7	31.939566	I-126 NB (Basic Analysis)	NW
9135	8	31.64148	I-126 NB (Basic Analysis)	NW
9135	9	32.442718	I-126 NB (Basic Analysis)	NW
9135	10	31.637252	I-126 NB (Basic Analysis)	NW
9137	1	34.2412	I-26 WB (Diverge Analysis)	N
9137	2	31.909616	I-26 WB (Diverge Analysis)	N

ID	Run	Density	Name (Type)	Direction
9137	3	32.622173	I-26 WB (Diverge Analysis)	N
9137	4	33.664075	I-26 WB (Diverge Analysis)	N
9137	5	33.051554	I-26 WB (Diverge Analysis)	N
9137	6	34.622872	I-26 WB (Diverge Analysis)	N
9137	7	32.175863	I-26 WB (Diverge Analysis)	N
9137	8	33.845677	I-26 WB (Diverge Analysis)	N
9137	9	34.705978	I-26 WB (Diverge Analysis)	N
9137	10	33.114653	I-26 WB (Diverge Analysis)	N
9138	1	18.936967	I-26 WB (Basic Analysis)	N
9138	2	18.564874	I-26 WB (Basic Analysis)	N
9138	3	18.731201	I-26 WB (Basic Analysis)	N
9138	4	19.76003	I-26 WB (Basic Analysis)	N
9138	5	19.305631	I-26 WB (Basic Analysis)	N
9138	6	19.714762	I-26 WB (Basic Analysis)	N
9138	7	18.774412	I-26 WB (Basic Analysis)	N
9138	8	19.216809	I-26 WB (Basic Analysis)	N
9138	9	19.849538	I-26 WB (Basic Analysis)	N
9138	10	19.025446	I-26 WB (Basic Analysis)	N
9139	1	18.936967	I-26 WB (Basic Analysis)	N
9139	2	18.564874	I-26 WB (Basic Analysis)	N
9139	3	18.731201	I-26 WB (Basic Analysis)	N
9139	4	19.76003	I-26 WB (Basic Analysis)	N
9139	5	19.305631	I-26 WB (Basic Analysis)	N
9139	6	19.714762	I-26 WB (Basic Analysis)	N
9139	7	18.774412	I-26 WB (Basic Analysis)	N
9139	8	19.216809	I-26 WB (Basic Analysis)	N
9139	9	19.849538	I-26 WB (Basic Analysis)	N
9139	10	19.025446	I-26 WB (Basic Analysis)	N
9140	1	23.156595	I-26 WB (Basic Analysis)	NW
9140	2	22.547163	I-26 WB (Basic Analysis)	NW
9140	3	23.566879	I-26 WB (Basic Analysis)	NW
9140	4	23.935212	I-26 WB (Basic Analysis)	NW
9140	5	24.098865	I-26 WB (Basic Analysis)	NW
9140	6	23.615744	I-26 WB (Basic Analysis)	NW
9140	7	23.775248	I-26 WB (Basic Analysis)	NW
9140	8	23.388936	I-26 WB (Basic Analysis)	NW
9140	9	24.227482	I-26 WB (Basic Analysis)	NW
9140	10	23.346524	I-26 WB (Basic Analysis)	NW
9141	1	23.156595	I-26 WB (Basic Analysis)	NW
9141	2	22.547163	I-26 WB (Basic Analysis)	NW
9141	3	23.566879	I-26 WB (Basic Analysis)	NW
9141	4	23.935212	I-26 WB (Basic Analysis)	NW
9141	5	24.098865	I-26 WB (Basic Analysis)	NW
9141	6	23.615744	I-26 WB (Basic Analysis)	NW
9141	7	23.775248	I-26 WB (Basic Analysis)	NW
9141	8	23.388936	I-26 WB (Basic Analysis)	NW
9141	9	24.227482	I-26 WB (Basic Analysis)	NW
9141	10	23.346524	I-26 WB (Basic Analysis)	NW
9142	1	51.915106	I-26 WB (Basic Analysis)	NW
9142	2	56.102213	I-26 WB (Basic Analysis)	NW
9142	3	53.87771	I-26 WB (Basic Analysis)	NW
9142	4	55.017793	I-26 WB (Basic Analysis)	NW
9142	5	58.324	I-26 WB (Basic Analysis)	NW

ID	Run	Density	Name (Type)	Direction
9142	6	56.51966	I-26 WB (Basic Analysis)	NW
9142	7	52.982605	I-26 WB (Basic Analysis)	NW
9142	8	57.75091	I-26 WB (Basic Analysis)	NW
9142	9	53.500965	I-26 WB (Basic Analysis)	NW
9142	10	50.448725	I-26 WB (Basic Analysis)	NW
9143	1	45.338384	I-26 WB (Basic Analysis)	NW
9143	2	43.172748	I-26 WB (Basic Analysis)	NW
9143	3	47.588901	I-26 WB (Basic Analysis)	NW
9143	4	46.041315	I-26 WB (Basic Analysis)	NW
9143	5	47.904232	I-26 WB (Basic Analysis)	NW
9143	6	45.619605	I-26 WB (Basic Analysis)	NW
9143	7	45.704758	I-26 WB (Basic Analysis)	NW
9143	8	44.71553	I-26 WB (Basic Analysis)	NW
9143	9	46.691146	I-26 WB (Basic Analysis)	NW
9143	10	44.654228	I-26 WB (Basic Analysis)	NW
9323	1	11.374503	I-126 SB (Merge Analysis)	E
9323	2	11.445524	I-126 SB (Merge Analysis)	E
9323	3	11.318644	I-126 SB (Merge Analysis)	E
9323	4	10.946782	I-126 SB (Merge Analysis)	E
9323	5	11.352957	I-126 SB (Merge Analysis)	E
9323	6	10.930024	I-126 SB (Merge Analysis)	E
9323	7	11.319442	I-126 SB (Merge Analysis)	E
9323	8	15.581489	I-126 SB (Merge Analysis)	E
9323	9	10.630779	I-126 SB (Merge Analysis)	E
9323	10	10.776811	I-126 SB (Merge Analysis)	E
9147	1	54.065726	I-26 WB (Basic Analysis)	NW
9147	2	46.266999	I-26 WB (Basic Analysis)	NW
9147	3	54.287546	I-26 WB (Basic Analysis)	NW
9147	4	50.201387	I-26 WB (Basic Analysis)	NW
9147	5	53.668786	I-26 WB (Basic Analysis)	NW
9147	6	51.43891	I-26 WB (Basic Analysis)	NW
9147	7	51.935086	I-26 WB (Basic Analysis)	NW
9147	8	55.011381	I-26 WB (Basic Analysis)	NW
9147	9	56.511585	I-26 WB (Basic Analysis)	NW
9147	10	45.88757	I-26 WB (Basic Analysis)	NW
9148	1	53.277913	I-26 WB (Diverge Analysis)	NW
9148	2	49.416349	I-26 WB (Diverge Analysis)	NW
9148	3	51.060064	I-26 WB (Diverge Analysis)	NW
9148	4	50.488844	I-26 WB (Diverge Analysis)	NW
9148	5	49.669901	I-26 WB (Diverge Analysis)	NW
9148	6	48.110704	I-26 WB (Diverge Analysis)	NW
9148	7	51.992667	I-26 WB (Diverge Analysis)	NW
9148	8	51.549681	I-26 WB (Diverge Analysis)	NW
9148	9	54.315434	I-26 WB (Diverge Analysis)	NW
9148	10	47.600686	I-26 WB (Diverge Analysis)	NW
9149	1	22.41391	I-26 WB (Diverge Analysis)	NW
9149	2	23.256932	I-26 WB (Diverge Analysis)	NW
9149	3	22.652052	I-26 WB (Diverge Analysis)	NW
9149	4	23.983265	I-26 WB (Diverge Analysis)	NW
9149	5	24.152345	I-26 WB (Diverge Analysis)	NW
9149	6	23.37124	I-26 WB (Diverge Analysis)	NW
9149	7	23.535558	I-26 WB (Diverge Analysis)	NW
9149	8	23.657011	I-26 WB (Diverge Analysis)	NW

ID	Run	Density	Name (Type)	Direction
9149	9	23.621289	I-26 WB (Diverge Analysis)	NW
9149	10	22.618712	I-26 WB (Diverge Analysis)	NW
9151	1	18.518819	I-20 EB (Diverge Analysis)	NE
9151	2	19.108962	I-20 EB (Diverge Analysis)	NE
9151	3	18.556382	I-20 EB (Diverge Analysis)	NE
9151	4	18.860845	I-20 EB (Diverge Analysis)	NE
9151	5	19.831565	I-20 EB (Diverge Analysis)	NE
9151	6	17.727019	I-20 EB (Diverge Analysis)	NE
9151	7	17.709226	I-20 EB (Diverge Analysis)	NE
9151	8	19.051628	I-20 EB (Diverge Analysis)	NE
9151	9	18.954754	I-20 EB (Diverge Analysis)	NE
9151	10	18.646337	I-20 EB (Diverge Analysis)	NE
9152	1	15.816268	I-20 EB (Basic Analysis)	NE
9152	2	16.081023	I-20 EB (Basic Analysis)	NE
9152	3	16.065352	I-20 EB (Basic Analysis)	NE
9152	4	15.94026	I-20 EB (Basic Analysis)	NE
9152	5	16.264949	I-20 EB (Basic Analysis)	NE
9152	6	15.77283	I-20 EB (Basic Analysis)	NE
9152	7	15.468486	I-20 EB (Basic Analysis)	NE
9152	8	16.030161	I-20 EB (Basic Analysis)	NE
9152	9	16.249828	I-20 EB (Basic Analysis)	NE
9152	10	16.883534	I-20 EB (Basic Analysis)	NE
9256	1	11.916023	(Diverge Analysis)	SE
9256	2	11.601927	(Diverge Analysis)	SE
9256	3	10.847535	(Diverge Analysis)	SE
9256	4	11.158827	(Diverge Analysis)	SE
9256	5	11.725322	(Diverge Analysis)	SE
9256	6	11.02141	(Diverge Analysis)	SE
9256	7	11.304658	(Diverge Analysis)	SE
9256	8	12.373145	(Diverge Analysis)	SE
9256	9	10.482959	(Diverge Analysis)	SE
9256	10	12.726503	(Diverge Analysis)	SE
9302	1	40.360158	I-20 WB (Diverge Analysis)	SW
9302	2	41.116357	I-20 WB (Diverge Analysis)	SW
9302	3	39.590122	I-20 WB (Diverge Analysis)	SW
9302	4	40.430161	I-20 WB (Diverge Analysis)	SW
9302	5	40.396788	I-20 WB (Diverge Analysis)	SW
9302	6	39.787108	I-20 WB (Diverge Analysis)	SW
9302	7	40.579121	I-20 WB (Diverge Analysis)	SW
9302	8	39.287317	I-20 WB (Diverge Analysis)	SW
9302	9	41.77569	I-20 WB (Diverge Analysis)	SW
9302	10	40.880299	I-20 WB (Diverge Analysis)	SW
9156	1	36.394767	I-20 EB (Basic Analysis)	NE
9156	2	35.539609	I-20 EB (Basic Analysis)	NE
9156	3	36.379812	I-20 EB (Basic Analysis)	NE
9156	4	35.422687	I-20 EB (Basic Analysis)	NE
9156	5	36.782693	I-20 EB (Basic Analysis)	NE
9156	6	36.110168	I-20 EB (Basic Analysis)	NE
9156	7	35.462114	I-20 EB (Basic Analysis)	NE
9156	8	35.925721	I-20 EB (Basic Analysis)	NE
9156	9	35.305312	I-20 EB (Basic Analysis)	NE
9156	10	37.344641	I-20 EB (Basic Analysis)	NE
9157	1	72.993045	I-20 WB (Diverge Analysis)	SW

ID	Run	Density	Name (Type)	Direction
9157	2	73.928778	I-20 WB (Diverge Analysis)	SW
9157	3	65.747713	I-20 WB (Diverge Analysis)	SW
9157	4	71.136245	I-20 WB (Diverge Analysis)	SW
9157	5	73.553311	I-20 WB (Diverge Analysis)	SW
9157	6	70.540779	I-20 WB (Diverge Analysis)	SW
9157	7	70.913312	I-20 WB (Diverge Analysis)	SW
9157	8	70.379445	I-20 WB (Diverge Analysis)	SW
9157	9	77.81251	I-20 WB (Diverge Analysis)	SW
9157	10	71.494112	I-20 WB (Diverge Analysis)	SW
9158	1	37.44131	I-20 WB (Basic Analysis)	SW
9158	2	37.516562	I-20 WB (Basic Analysis)	SW
9158	3	39.08887	I-20 WB (Basic Analysis)	SW
9158	4	37.380729	I-20 WB (Basic Analysis)	SW
9158	5	37.951825	I-20 WB (Basic Analysis)	SW
9158	6	37.38672	I-20 WB (Basic Analysis)	SW
9158	7	38.831342	I-20 WB (Basic Analysis)	SW
9158	8	37.652717	I-20 WB (Basic Analysis)	SW
9158	9	37.560257	I-20 WB (Basic Analysis)	SW
9158	10	37.066889	I-20 WB (Basic Analysis)	SW
9159	1	12.943735	I-20 WB (Basic Analysis)	W
9159	2	12.296109	I-20 WB (Basic Analysis)	W
9159	3	11.831301	I-20 WB (Basic Analysis)	W
9159	4	12.35467	I-20 WB (Basic Analysis)	W
9159	5	11.989374	I-20 WB (Basic Analysis)	W
9159	6	11.514227	I-20 WB (Basic Analysis)	W
9159	7	12.670597	I-20 WB (Basic Analysis)	W
9159	8	11.714349	I-20 WB (Basic Analysis)	W
9159	9	11.944808	I-20 WB (Basic Analysis)	W
9159	10	11.539209	I-20 WB (Basic Analysis)	W
9160	1	23.861722	I-20 WB (Merge Analysis)	SW
9160	2	23.790607	I-20 WB (Merge Analysis)	SW
9160	3	26.739133	I-20 WB (Merge Analysis)	SW
9160	4	34.279116	I-20 WB (Merge Analysis)	SW
9160	5	62.839879	I-20 WB (Merge Analysis)	SW
9160	6	23.176103	I-20 WB (Merge Analysis)	SW
9160	7	24.716922	I-20 WB (Merge Analysis)	SW
9160	8	48.936041	I-20 WB (Merge Analysis)	SW
9160	9	23.546264	I-20 WB (Merge Analysis)	SW
9160	10	29.682188	I-20 WB (Merge Analysis)	SW
9162	1	17.776566	I-20 WB (Merge Analysis)	SW
9162	2	16.628826	I-20 WB (Merge Analysis)	SW
9162	3	18.719614	I-20 WB (Merge Analysis)	SW
9162	4	16.543538	I-20 WB (Merge Analysis)	SW
9162	5	18.22494	I-20 WB (Merge Analysis)	SW
9162	6	17.430538	I-20 WB (Merge Analysis)	SW
9162	7	16.782346	I-20 WB (Merge Analysis)	SW
9162	8	16.933428	I-20 WB (Merge Analysis)	SW
9162	9	18.00319	I-20 WB (Merge Analysis)	SW
9162	10	16.682436	I-20 WB (Merge Analysis)	SW
9163	1	21.290436	I-20 WB (Merge Analysis)	S
9163	2	20.316305	I-20 WB (Merge Analysis)	S
9163	3	21.895304	I-20 WB (Merge Analysis)	S
9163	4	18.807533	I-20 WB (Merge Analysis)	S

ID	Run	Density	Name (Type)	Direction
9163	5	20.955154	I-20 WB (Merge Analysis)	S
9163	6	21.617789	I-20 WB (Merge Analysis)	S
9163	7	21.331214	I-20 WB (Merge Analysis)	S
9163	8	20.938163	I-20 WB (Merge Analysis)	S
9163	9	21.64724	I-20 WB (Merge Analysis)	S
9163	10	21.470537	I-20 WB (Merge Analysis)	S
9182	1	14.761849	I-26 EB (Merge Analysis)	S
9182	2	13.707307	I-26 EB (Merge Analysis)	S
9182	3	13.626456	I-26 EB (Merge Analysis)	S
9182	4	13.592551	I-26 EB (Merge Analysis)	S
9182	5	13.53865	I-26 EB (Merge Analysis)	S
9182	6	14.140252	I-26 EB (Merge Analysis)	S
9182	7	14.715773	I-26 EB (Merge Analysis)	S
9182	8	14.068094	I-26 EB (Merge Analysis)	S
9182	9	14.191545	I-26 EB (Merge Analysis)	S
9182	10	13.797721	I-26 EB (Merge Analysis)	S
9183	1	10.828406	I-20 EB (Basic Analysis)	E
9183	2	10.758625	I-20 EB (Basic Analysis)	E
9183	3	12.175948	I-20 EB (Basic Analysis)	E
9183	4	12.763656	I-20 EB (Basic Analysis)	E
9183	5	11.560328	I-20 EB (Basic Analysis)	E
9183	6	10.924548	I-20 EB (Basic Analysis)	E
9183	7	11.006734	I-20 EB (Basic Analysis)	E
9183	8	11.346334	I-20 EB (Basic Analysis)	E
9183	9	10.653179	I-20 EB (Basic Analysis)	E
9183	10	13.859988	I-20 EB (Basic Analysis)	E
9186	1	75.940226	I-20 WB (Basic Analysis)	SW
9186	2	83.340994	I-20 WB (Basic Analysis)	SW
9186	3	84.838732	I-20 WB (Basic Analysis)	SW
9186	4	92.561472	I-20 WB (Basic Analysis)	SW
9186	5	94.908708	I-20 WB (Basic Analysis)	SW
9186	6	74.120045	I-20 WB (Basic Analysis)	SW
9186	7	90.929908	I-20 WB (Basic Analysis)	SW
9186	8	94.043931	I-20 WB (Basic Analysis)	SW
9186	9	81.978877	I-20 WB (Basic Analysis)	SW
9186	10	101.819714	I-20 WB (Basic Analysis)	SW
9249	1	17.240061	I-26 EB (Basic Analysis)	SE
9249	2	16.255292	I-26 EB (Basic Analysis)	SE
9249	3	16.830866	I-26 EB (Basic Analysis)	SE
9249	4	16.563567	I-26 EB (Basic Analysis)	SE
9249	5	16.796128	I-26 EB (Basic Analysis)	SE
9249	6	16.400201	I-26 EB (Basic Analysis)	SE
9249	7	17.202621	I-26 EB (Basic Analysis)	SE
9249	8	17.032298	I-26 EB (Basic Analysis)	SE
9249	9	16.366888	I-26 EB (Basic Analysis)	SE
9249	10	16.810798	I-26 EB (Basic Analysis)	SE
9304	1	24.168354	I-20 EB (Basic Analysis)	NE
9304	2	23.775497	I-20 EB (Basic Analysis)	NE
9304	3	23.817439	I-20 EB (Basic Analysis)	NE
9304	4	23.57837	I-20 EB (Basic Analysis)	NE
9304	5	24.489909	I-20 EB (Basic Analysis)	NE
9304	6	23.256815	I-20 EB (Basic Analysis)	NE
9304	7	22.613705	I-20 EB (Basic Analysis)	NE

ID	Run	Density	Name (Type)	Direction
9304	8	23.639885	I-20 EB (Basic Analysis)	NE
9304	9	23.117009	I-20 EB (Basic Analysis)	NE
9304	10	23.49169	I-20 EB (Basic Analysis)	NE
9246	1	18.098958	I-126 NB (Merge Analysis)	NW
9246	2	15.62966	I-126 NB (Merge Analysis)	NW
9246	3	17.334915	I-126 NB (Merge Analysis)	NW
9246	4	16.936284	I-126 NB (Merge Analysis)	NW
9246	5	16.908601	I-126 NB (Merge Analysis)	NW
9246	6	19.400046	I-126 NB (Merge Analysis)	NW
9246	7	17.40689	I-126 NB (Merge Analysis)	NW
9246	8	18.575101	I-126 NB (Merge Analysis)	NW
9246	9	17.329379	I-126 NB (Merge Analysis)	NW
9246	10	16.54319	I-126 NB (Merge Analysis)	NW
9207	1	16.51136	I-26 EB (Basic Analysis)	S
9207	2	16.054235	I-26 EB (Basic Analysis)	S
9207	3	15.729193	I-26 EB (Basic Analysis)	S
9207	4	15.911059	I-26 EB (Basic Analysis)	S
9207	5	15.644676	I-26 EB (Basic Analysis)	S
9207	6	15.520372	I-26 EB (Basic Analysis)	S
9207	7	15.95022	I-26 EB (Basic Analysis)	S
9207	8	16.572112	I-26 EB (Basic Analysis)	S
9207	9	15.096437	I-26 EB (Basic Analysis)	S
9207	10	15.727829	I-26 EB (Basic Analysis)	S
9204	1	29.026814	CD ROAD I-26 EB (Basic Analysis)	SE
9204	2	28.965323	CD ROAD I-26 EB (Basic Analysis)	SE
9204	3	31.034394	CD ROAD I-26 EB (Basic Analysis)	SE
9204	4	28.06291	CD ROAD I-26 EB (Basic Analysis)	SE
9204	5	31.837093	CD ROAD I-26 EB (Basic Analysis)	SE
9204	6	29.892666	CD ROAD I-26 EB (Basic Analysis)	SE
9204	7	28.676152	CD ROAD I-26 EB (Basic Analysis)	SE
9204	8	30.268256	CD ROAD I-26 EB (Basic Analysis)	SE
9204	9	27.361586	CD ROAD I-26 EB (Basic Analysis)	SE
9204	10	29.615128	CD ROAD I-26 EB (Basic Analysis)	SE
9328	1	19.26458	CD ROAD I-20 EB (Merge Analysis)	E
9328	2	19.537517	CD ROAD I-20 EB (Merge Analysis)	E
9328	3	18.604762	CD ROAD I-20 EB (Merge Analysis)	E
9328	4	18.63921	CD ROAD I-20 EB (Merge Analysis)	E
9328	5	19.995945	CD ROAD I-20 EB (Merge Analysis)	E
9328	6	20.425225	CD ROAD I-20 EB (Merge Analysis)	E
9328	7	19.185084	CD ROAD I-20 EB (Merge Analysis)	E
9328	8	20.557718	CD ROAD I-20 EB (Merge Analysis)	E
9328	9	18.398072	CD ROAD I-20 EB (Merge Analysis)	E
9328	10	20.165537	CD ROAD I-20 EB (Merge Analysis)	E
9330	1	13.297826	CD ROAD I-20 EB (Basic Analysis)	NE
9330	2	11.903167	CD ROAD I-20 EB (Basic Analysis)	NE
9330	3	15.236364	CD ROAD I-20 EB (Basic Analysis)	NE
9330	4	13.670771	CD ROAD I-20 EB (Basic Analysis)	NE
9330	5	15.698661	CD ROAD I-20 EB (Basic Analysis)	NE
9330	6	13.604729	CD ROAD I-20 EB (Basic Analysis)	NE
9330	7	13.810626	CD ROAD I-20 EB (Basic Analysis)	NE
9330	8	14.673062	CD ROAD I-20 EB (Basic Analysis)	NE
9330	9	15.566576	CD ROAD I-20 EB (Basic Analysis)	NE
9330	10	15.026582	CD ROAD I-20 EB (Basic Analysis)	NE

Appendix B—TransModeler Intersection Analysis Outputs

Node	Run	Delay	Intersection	Control Type
4	1	8.382742	WESTERN LN & BROAD RIVER RD	Actuated
4	2	8.801156	WESTERN LN & BROAD RIVER RD	Actuated
4	3	9.216431	WESTERN LN & BROAD RIVER RD	Actuated
4	4	8.867863	WESTERN LN & BROAD RIVER RD	Actuated
4	5	10.029426	WESTERN LN & BROAD RIVER RD	Actuated
4	6	9.57665	WESTERN LN & BROAD RIVER RD	Actuated
4	7	39.197862	WESTERN LN & BROAD RIVER RD	Actuated
4	8	9.312027	WESTERN LN & BROAD RIVER RD	Actuated
4	9	9.629371	WESTERN LN & BROAD RIVER RD	Actuated
4	10	9.038029	WESTERN LN & BROAD RIVER RD	Actuated
40	1	43.994768	I-26 EB EXIT 106 OFF RAMP, ST ANDREWS RD, I-26 WB TO BURNING TREE RD AND TO ST ANDREWS RD OFF RAMP,	Actuated
40	2	43.622207	I-26 EB EXIT 106 OFF RAMP, ST ANDREWS RD, I-26 WB TO BURNING TREE RD AND TO ST ANDREWS RD OFF RAMP,	Actuated
40	3	47.459163	I-26 EB EXIT 106 OFF RAMP, ST ANDREWS RD, I-26 WB TO BURNING TREE RD AND TO ST ANDREWS RD OFF RAMP,	Actuated
40	4	44.985238	I-26 EB EXIT 106 OFF RAMP, ST ANDREWS RD, I-26 WB TO BURNING TREE RD AND TO ST ANDREWS RD OFF RAMP,	Actuated
40	5	42.39342	I-26 EB EXIT 106 OFF RAMP, ST ANDREWS RD, I-26 WB TO BURNING TREE RD AND TO ST ANDREWS RD OFF RAMP,	Actuated
40	6	42.517957	I-26 EB EXIT 106 OFF RAMP, ST ANDREWS RD, I-26 WB TO BURNING TREE RD AND TO ST ANDREWS RD OFF RAMP,	Actuated
40	7	44.636841	I-26 EB EXIT 106 OFF RAMP, ST ANDREWS RD, I-26 WB TO BURNING TREE RD AND TO ST ANDREWS RD OFF RAMP,	Actuated
40	8	42.770666	I-26 EB EXIT 106 OFF RAMP, ST ANDREWS RD, I-26 WB TO BURNING TREE RD AND TO ST ANDREWS RD OFF RAMP,	Actuated
40	9	44.272061	I-26 EB EXIT 106 OFF RAMP, ST ANDREWS RD, I-26 WB TO BURNING TREE RD AND TO ST ANDREWS RD OFF RAMP,	Actuated
40	10	43.273557	I-26 EB EXIT 106 OFF RAMP, ST ANDREWS RD, I-26 WB TO BURNING TREE RD AND TO ST ANDREWS RD OFF RAMP,	Actuated
52	1	9.849669	BUSH RIVER RD, 6778 (SE) & 6777 (E)	Actuated
52	2	8.997329	BUSH RIVER RD, 6778 (SE) & 6777 (E)	Actuated
52	3	9.008128	BUSH RIVER RD, 6778 (SE) & 6777 (E)	Actuated
52	4	9.506921	BUSH RIVER RD, 6778 (SE) & 6777 (E)	Actuated
52	5	9.808218	BUSH RIVER RD, 6778 (SE) & 6777 (E)	Actuated
52	6	9.411346	BUSH RIVER RD, 6778 (SE) & 6777 (E)	Actuated
52	7	8.926054	BUSH RIVER RD, 6778 (SE) & 6777 (E)	Actuated
52	8	9.600569	BUSH RIVER RD, 6778 (SE) & 6777 (E)	Actuated
52	9	9.374869	BUSH RIVER RD, 6778 (SE) & 6777 (E)	Actuated
52	10	9.75021	BUSH RIVER RD, 6778 (SE) & 6777 (E)	Actuated
54	1	14.302691	EXIT 65 RAMP TO US 176, BROAD RIVER RD & RAMP	Actuated
54	2	11.033392	EXIT 65 RAMP TO US 176, BROAD RIVER RD & RAMP	Actuated
54	3	15.590212	EXIT 65 RAMP TO US 176, BROAD RIVER RD & RAMP	Actuated
54	4	14.623073	EXIT 65 RAMP TO US 176, BROAD RIVER RD & RAMP	Actuated
54	5	13.03406	EXIT 65 RAMP TO US 176, BROAD RIVER RD & RAMP	Actuated
54	6	6.755465	EXIT 65 RAMP TO US 176, BROAD RIVER RD & RAMP	Actuated
54	7	16.584189	EXIT 65 RAMP TO US 176, BROAD RIVER RD & RAMP	Actuated
54	8	7.051098	EXIT 65 RAMP TO US 176, BROAD RIVER RD & RAMP	Actuated
54	9	13.509354	EXIT 65 RAMP TO US 176, BROAD RIVER RD & RAMP	Actuated
54	10	13.874257	EXIT 65 RAMP TO US 176, BROAD RIVER RD & RAMP	Actuated
65	1	0	6564 (W) & RAMP	Yield
65	2	0	6564 (W) & RAMP	Yield
65	3	0	6564 (W) & RAMP	Yield
65	4	0	6564 (W) & RAMP	Yield
65	5	0	6564 (W) & RAMP	Yield
65	6	0	6564 (W) & RAMP	Yield
65	7	0	6564 (W) & RAMP	Yield
65	8	0	6564 (W) & RAMP	Yield
65	9	0	6564 (W) & RAMP	Yield
65	10	0	6564 (W) & RAMP	Yield
71	1	10.470637	PINEY GROVE RD, I-26 EB EXIT 104 OFF RAMP & I-26 EB EXIT 104 ON RAMP	Actuated
71	2	10.594386	PINEY GROVE RD, I-26 EB EXIT 104 OFF RAMP & I-26 EB EXIT 104 ON RAMP	Actuated
71	3	8.458271	PINEY GROVE RD, I-26 EB EXIT 104 OFF RAMP & I-26 EB EXIT 104 ON RAMP	Actuated
71	4	8.668112	PINEY GROVE RD, I-26 EB EXIT 104 OFF RAMP & I-26 EB EXIT 104 ON RAMP	Actuated
71	5	9.451593	PINEY GROVE RD, I-26 EB EXIT 104 OFF RAMP & I-26 EB EXIT 104 ON RAMP	Actuated
71	6	9.138175	PINEY GROVE RD, I-26 EB EXIT 104 OFF RAMP & I-26 EB EXIT 104 ON RAMP	Actuated
71	7	9.587444	PINEY GROVE RD, I-26 EB EXIT 104 OFF RAMP & I-26 EB EXIT 104 ON RAMP	Actuated
71	8	9.125142	PINEY GROVE RD, I-26 EB EXIT 104 OFF RAMP & I-26 EB EXIT 104 ON RAMP	Actuated
71	9	8.763504	PINEY GROVE RD, I-26 EB EXIT 104 OFF RAMP & I-26 EB EXIT 104 ON RAMP	Actuated
71	10	8.363699	PINEY GROVE RD, I-26 EB EXIT 104 OFF RAMP & I-26 EB EXIT 104 ON RAMP	Actuated
74	1	0	6579 (SW), 6581 (W) & RAMP	Yield
74	2	0	6579 (SW), 6581 (W) & RAMP	Yield
74	3	0	6579 (SW), 6581 (W) & RAMP	Yield
74	4	0	6579 (SW), 6581 (W) & RAMP	Yield
74	5	0	6579 (SW), 6581 (W) & RAMP	Yield
74	6	0	6579 (SW), 6581 (W) & RAMP	Yield
74	7	0	6579 (SW), 6581 (W) & RAMP	Yield
74	8	0	6579 (SW), 6581 (W) & RAMP	Yield
74	9	0	6579 (SW), 6581 (W) & RAMP	Yield
74	10	0	6579 (SW), 6581 (W) & RAMP	Yield
79	1	44.153186	6584 (NE), BROAD RIVER RD, 6583 (SW), 6587 (W) & 6581 (E)	Actuated
79	2	43.346044	6584 (NE), BROAD RIVER RD, 6583 (SW), 6587 (W) & 6581 (E)	Actuated
79	3	43.874175	6584 (NE), BROAD RIVER RD, 6583 (SW), 6587 (W) & 6581 (E)	Actuated
79	4	44.128888	6584 (NE), BROAD RIVER RD, 6583 (SW), 6587 (W) & 6581 (E)	Actuated
79	5	44.308427	6584 (NE), BROAD RIVER RD, 6583 (SW), 6587 (W) & 6581 (E)	Actuated
79	6	42.980173	6584 (NE), BROAD RIVER RD, 6583 (SW), 6587 (W) & 6581 (E)	Actuated
79	7	43.052174	6584 (NE), BROAD RIVER RD, 6583 (SW), 6587 (W) & 6581 (E)	Actuated
79	8	40.745421	6584 (NE), BROAD RIVER RD, 6583 (SW), 6587 (W) & 6581 (E)	Actuated

Node	Run	Delay	Intersection	Control Type
79	9	43.888855	6584 (NE), BROAD RIVER RD, 6583 (SW), 6587 (W) & 6581 (E)	Actuated
79	10	44.615196	6584 (NE), BROAD RIVER RD, 6583 (SW), 6587 (W) & 6581 (E)	Actuated
85	1	0	I-26 WB EXIT 106 ON RAMP	Yield
85	2	0	I-26 WB EXIT 106 ON RAMP	Yield
85	3	0	I-26 WB EXIT 106 ON RAMP	Yield
85	4	0	I-26 WB EXIT 106 ON RAMP	Yield
85	5	0	I-26 WB EXIT 106 ON RAMP	Yield
85	6	0	I-26 WB EXIT 106 ON RAMP	Yield
85	7	0	I-26 WB EXIT 106 ON RAMP	Yield
85	8	0	I-26 WB EXIT 106 ON RAMP	Yield
85	9	0	I-26 WB EXIT 106 ON RAMP	Yield
85	10	0	I-26 WB EXIT 106 ON RAMP	Yield
99	1	24.249739	I-26 WB EXIT 103 OFF RAMP, HARBISON BLVD, I-26 WB EXIT 103 ON RAMP & 6770 (SW)	Actuated
99	2	37.090732	I-26 WB EXIT 103 OFF RAMP, HARBISON BLVD, I-26 WB EXIT 103 ON RAMP & 6770 (SW)	Actuated
99	3	36.084275	I-26 WB EXIT 103 OFF RAMP, HARBISON BLVD, I-26 WB EXIT 103 ON RAMP & 6770 (SW)	Actuated
99	4	24.341131	I-26 WB EXIT 103 OFF RAMP, HARBISON BLVD, I-26 WB EXIT 103 ON RAMP & 6770 (SW)	Actuated
99	5	26.011022	I-26 WB EXIT 103 OFF RAMP, HARBISON BLVD, I-26 WB EXIT 103 ON RAMP & 6770 (SW)	Actuated
99	6	33.281098	I-26 WB EXIT 103 OFF RAMP, HARBISON BLVD, I-26 WB EXIT 103 ON RAMP & 6770 (SW)	Actuated
99	7	34.7957	I-26 WB EXIT 103 OFF RAMP, HARBISON BLVD, I-26 WB EXIT 103 ON RAMP & 6770 (SW)	Actuated
99	8	23.094016	I-26 WB EXIT 103 OFF RAMP, HARBISON BLVD, I-26 WB EXIT 103 ON RAMP & 6770 (SW)	Actuated
99	9	42.032842	I-26 WB EXIT 103 OFF RAMP, HARBISON BLVD, I-26 WB EXIT 103 ON RAMP & 6770 (SW)	Actuated
99	10	27.076902	I-26 WB EXIT 103 OFF RAMP, HARBISON BLVD, I-26 WB EXIT 103 ON RAMP & 6770 (SW)	Actuated
104	1	8.741403	HARBISON BLVD, I-26 EB EXIT 103 OFF RAMP, 6770 (NE) & I-26 EB EXIT 103 ON RAMP	Actuated
104	2	9.783024	HARBISON BLVD, I-26 EB EXIT 103 OFF RAMP, 6770 (NE) & I-26 EB EXIT 103 ON RAMP	Actuated
104	3	9.910938	HARBISON BLVD, I-26 EB EXIT 103 OFF RAMP, 6770 (NE) & I-26 EB EXIT 103 ON RAMP	Actuated
104	4	9.471003	HARBISON BLVD, I-26 EB EXIT 103 OFF RAMP, 6770 (NE) & I-26 EB EXIT 103 ON RAMP	Actuated
104	5	8.783587	HARBISON BLVD, I-26 EB EXIT 103 OFF RAMP, 6770 (NE) & I-26 EB EXIT 103 ON RAMP	Actuated
104	6	11.182982	HARBISON BLVD, I-26 EB EXIT 103 OFF RAMP, 6770 (NE) & I-26 EB EXIT 103 ON RAMP	Actuated
104	7	10.174953	HARBISON BLVD, I-26 EB EXIT 103 OFF RAMP, 6770 (NE) & I-26 EB EXIT 103 ON RAMP	Actuated
104	8	9.302268	HARBISON BLVD, I-26 EB EXIT 103 OFF RAMP, 6770 (NE) & I-26 EB EXIT 103 ON RAMP	Actuated
104	9	12.021585	HARBISON BLVD, I-26 EB EXIT 103 OFF RAMP, 6770 (NE) & I-26 EB EXIT 103 ON RAMP	Actuated
104	10	9.890744	HARBISON BLVD, I-26 EB EXIT 103 OFF RAMP, 6770 (NE) & I-26 EB EXIT 103 ON RAMP	Actuated
107	1	8.178063	RAMP, COLONIAL LIFE BLVD W & 6681 (NW)	Actuated
107	2	7.721713	RAMP, COLONIAL LIFE BLVD W & 6681 (NW)	Actuated
107	3	7.662183	RAMP, COLONIAL LIFE BLVD W & 6681 (NW)	Actuated
107	4	7.329276	RAMP, COLONIAL LIFE BLVD W & 6681 (NW)	Actuated
107	5	7.064249	RAMP, COLONIAL LIFE BLVD W & 6681 (NW)	Actuated
107	6	7.216474	RAMP, COLONIAL LIFE BLVD W & 6681 (NW)	Actuated
107	7	6.194485	RAMP, COLONIAL LIFE BLVD W & 6681 (NW)	Actuated
107	8	7.316467	RAMP, COLONIAL LIFE BLVD W & 6681 (NW)	Actuated
107	9	6.594744	RAMP, COLONIAL LIFE BLVD W & 6681 (NW)	Actuated
107	10	8.091364	RAMP, COLONIAL LIFE BLVD W & 6681 (NW)	Actuated
108	1	21.248648	COLONIAL LIFE BLVD W, 6676 (NW) & 6688 (SE)	Actuated
108	2	21.655926	COLONIAL LIFE BLVD W, 6676 (NW) & 6688 (SE)	Actuated
108	3	20.566564	COLONIAL LIFE BLVD W, 6676 (NW) & 6688 (SE)	Actuated
108	4	21.262911	COLONIAL LIFE BLVD W, 6676 (NW) & 6688 (SE)	Actuated
108	5	21.706609	COLONIAL LIFE BLVD W, 6676 (NW) & 6688 (SE)	Actuated
108	6	21.582691	COLONIAL LIFE BLVD W, 6676 (NW) & 6688 (SE)	Actuated
108	7	21.367773	COLONIAL LIFE BLVD W, 6676 (NW) & 6688 (SE)	Actuated
108	8	22.643795	COLONIAL LIFE BLVD W, 6676 (NW) & 6688 (SE)	Actuated
108	9	21.939407	COLONIAL LIFE BLVD W, 6676 (NW) & 6688 (SE)	Actuated
108	10	19.947016	COLONIAL LIFE BLVD W, 6676 (NW) & 6688 (SE)	Actuated
118	1	7.75521	BUSH RIVER RD & RAMP	Actuated
118	2	6.576824	BUSH RIVER RD & RAMP	Actuated
118	3	6.116604	BUSH RIVER RD & RAMP	Actuated
118	4	6.510253	BUSH RIVER RD & RAMP	Actuated
118	5	6.670494	BUSH RIVER RD & RAMP	Actuated
118	6	5.809911	BUSH RIVER RD & RAMP	Actuated
118	7	6.611003	BUSH RIVER RD & RAMP	Actuated
118	8	7.064527	BUSH RIVER RD & RAMP	Actuated
118	9	7.17096	BUSH RIVER RD & RAMP	Actuated
118	10	6.999959	BUSH RIVER RD & RAMP	Actuated
120	1	9.64555	BUSH RIVER RD & 6741 (NE)	Actuated
120	2	8.270978	BUSH RIVER RD & 6741 (NE)	Actuated
120	3	9.204235	BUSH RIVER RD & 6741 (NE)	Actuated
120	4	8.369788	BUSH RIVER RD & 6741 (NE)	Actuated
120	5	8.687548	BUSH RIVER RD & 6741 (NE)	Actuated
120	6	9.00873	BUSH RIVER RD & 6741 (NE)	Actuated
120	7	8.91901	BUSH RIVER RD & 6741 (NE)	Actuated
120	8	8.297155	BUSH RIVER RD & 6741 (NE)	Actuated
120	9	8.815176	BUSH RIVER RD & 6741 (NE)	Actuated
120	10	8.643467	BUSH RIVER RD & 6741 (NE)	Actuated
123	1	0	I-26 EB EXIT 103 ON RAMP & 6718 (W)	Yield
123	2	0	I-26 EB EXIT 103 ON RAMP & 6718 (W)	Yield
123	3	0	I-26 EB EXIT 103 ON RAMP & 6718 (W)	Yield
123	4	0	I-26 EB EXIT 103 ON RAMP & 6718 (W)	Yield
123	5	0	I-26 EB EXIT 103 ON RAMP & 6718 (W)	Yield
123	6	0	I-26 EB EXIT 103 ON RAMP & 6718 (W)	Yield

Node	Run	Delay	Intersection	Control Type
123	7	0	I-26 EB EXIT 103 ON RAMP & 6718 (W)	Yield
123	8	0	I-26 EB EXIT 103 ON RAMP & 6718 (W)	Yield
123	9	0	I-26 EB EXIT 103 ON RAMP & 6718 (W)	Yield
123	10	0	I-26 EB EXIT 103 ON RAMP & 6718 (W)	Yield
127	1	29.741457	WOODLAND HILLS RD, ST ANDREWS RD, I-26 EB EXIT 106 OFF RAMP & 6772 (NE)	Actuated
127	2	26.019372	WOODLAND HILLS RD, ST ANDREWS RD, I-26 EB EXIT 106 OFF RAMP & 6772 (NE)	Actuated
127	3	25.282931	WOODLAND HILLS RD, ST ANDREWS RD, I-26 EB EXIT 106 OFF RAMP & 6772 (NE)	Actuated
127	4	26.456716	WOODLAND HILLS RD, ST ANDREWS RD, I-26 EB EXIT 106 OFF RAMP & 6772 (NE)	Actuated
127	5	26.443003	WOODLAND HILLS RD, ST ANDREWS RD, I-26 EB EXIT 106 OFF RAMP & 6772 (NE)	Actuated
127	6	27.171725	WOODLAND HILLS RD, ST ANDREWS RD, I-26 EB EXIT 106 OFF RAMP & 6772 (NE)	Actuated
127	7	25.509354	WOODLAND HILLS RD, ST ANDREWS RD, I-26 EB EXIT 106 OFF RAMP & 6772 (NE)	Actuated
127	8	28.347971	WOODLAND HILLS RD, ST ANDREWS RD, I-26 EB EXIT 106 OFF RAMP & 6772 (NE)	Actuated
127	9	26.436355	WOODLAND HILLS RD, ST ANDREWS RD, I-26 EB EXIT 106 OFF RAMP & 6772 (NE)	Actuated
127	10	24.332432	WOODLAND HILLS RD, ST ANDREWS RD, I-26 EB EXIT 106 OFF RAMP & 6772 (NE)	Actuated
133	1	0	FRONTAGE RD & 6747 (SE)	
133	2	0	FRONTAGE RD & 6747 (SE)	
133	3	0	FRONTAGE RD & 6747 (SE)	
133	4	0	FRONTAGE RD & 6747 (SE)	
133	5	0	FRONTAGE RD & 6747 (SE)	
133	6	0	FRONTAGE RD & 6747 (SE)	
133	7	0	FRONTAGE RD & 6747 (SE)	
133	8	0	FRONTAGE RD & 6747 (SE)	
133	9	0	FRONTAGE RD & 6747 (SE)	
133	10	0	FRONTAGE RD & 6747 (SE)	
134	1	8.093408	6563 (N), 6777 (W) & BUSH RIVER RD	Actuated
134	2	6.707902	6563 (N), 6777 (W) & BUSH RIVER RD	Actuated
134	3	7.41675	6563 (N), 6777 (W) & BUSH RIVER RD	Actuated
134	4	7.556527	6563 (N), 6777 (W) & BUSH RIVER RD	Actuated
134	5	7.169774	6563 (N), 6777 (W) & BUSH RIVER RD	Actuated
134	6	7.669076	6563 (N), 6777 (W) & BUSH RIVER RD	Actuated
134	7	8.139866	6563 (N), 6777 (W) & BUSH RIVER RD	Actuated
134	8	7.389413	6563 (N), 6777 (W) & BUSH RIVER RD	Actuated
134	9	7.412359	6563 (N), 6777 (W) & BUSH RIVER RD	Actuated
134	10	7.625441	6563 (N), 6777 (W) & BUSH RIVER RD	Actuated
136	1	5.422211	EXIT 63 RAMP TO BUSH RIVER RD, BUSH RIVER RD & RAMP	Actuated
136	2	5.729496	EXIT 63 RAMP TO BUSH RIVER RD, BUSH RIVER RD & RAMP	Actuated
136	3	4.961499	EXIT 63 RAMP TO BUSH RIVER RD, BUSH RIVER RD & RAMP	Actuated
136	4	5.429114	EXIT 63 RAMP TO BUSH RIVER RD, BUSH RIVER RD & RAMP	Actuated
136	5	6.0544	EXIT 63 RAMP TO BUSH RIVER RD, BUSH RIVER RD & RAMP	Actuated
136	6	5.476519	EXIT 63 RAMP TO BUSH RIVER RD, BUSH RIVER RD & RAMP	Actuated
136	7	5.658317	EXIT 63 RAMP TO BUSH RIVER RD, BUSH RIVER RD & RAMP	Actuated
136	8	5.530795	EXIT 63 RAMP TO BUSH RIVER RD, BUSH RIVER RD & RAMP	Actuated
136	9	5.712982	EXIT 63 RAMP TO BUSH RIVER RD, BUSH RIVER RD & RAMP	Actuated
136	10	5.131095	EXIT 63 RAMP TO BUSH RIVER RD, BUSH RIVER RD & RAMP	Actuated
141	1	66.514528	BUSH RIVER RD, 6752 (NE) & 6751 (SW)	Actuated
141	2	60.644985	BUSH RIVER RD, 6752 (NE) & 6751 (SW)	Actuated
141	3	65.812571	BUSH RIVER RD, 6752 (NE) & 6751 (SW)	Actuated
141	4	66.054221	BUSH RIVER RD, 6752 (NE) & 6751 (SW)	Actuated
141	5	60.25213	BUSH RIVER RD, 6752 (NE) & 6751 (SW)	Actuated
141	6	48.345144	BUSH RIVER RD, 6752 (NE) & 6751 (SW)	Actuated
141	7	49.834371	BUSH RIVER RD, 6752 (NE) & 6751 (SW)	Actuated
141	8	68.960809	BUSH RIVER RD, 6752 (NE) & 6751 (SW)	Actuated
141	9	58.850681	BUSH RIVER RD, 6752 (NE) & 6751 (SW)	Actuated
141	10	49.772254	BUSH RIVER RD, 6752 (NE) & 6751 (SW)	Actuated
150	1	23.236375	BUSH RIVER RD & 6782 (W)	Actuated
150	2	22.644371	BUSH RIVER RD & 6782 (W)	Actuated
150	3	23.528203	BUSH RIVER RD & 6782 (W)	Actuated
150	4	23.711541	BUSH RIVER RD & 6782 (W)	Actuated
150	5	23.412312	BUSH RIVER RD & 6782 (W)	Actuated
150	6	24.387236	BUSH RIVER RD & 6782 (W)	Actuated
150	7	25.30287	BUSH RIVER RD & 6782 (W)	Actuated
150	8	22.988773	BUSH RIVER RD & 6782 (W)	Actuated
150	9	23.257516	BUSH RIVER RD & 6782 (W)	Actuated
150	10	22.937096	BUSH RIVER RD & 6782 (W)	Actuated
151	1	13.212289	6782 (E), 6554 (SE) & BUSH RIVER RD	Actuated
151	2	12.0679	6782 (E), 6554 (SE) & BUSH RIVER RD	Actuated
151	3	11.9323	6782 (E), 6554 (SE) & BUSH RIVER RD	Actuated
151	4	11.635084	6782 (E), 6554 (SE) & BUSH RIVER RD	Actuated
151	5	12.682969	6782 (E), 6554 (SE) & BUSH RIVER RD	Actuated
151	6	13.238837	6782 (E), 6554 (SE) & BUSH RIVER RD	Actuated
151	7	12.068197	6782 (E), 6554 (SE) & BUSH RIVER RD	Actuated
151	8	13.426465	6782 (E), 6554 (SE) & BUSH RIVER RD	Actuated
151	9	12.645987	6782 (E), 6554 (SE) & BUSH RIVER RD	Actuated
151	10	10.991776	6782 (E), 6554 (SE) & BUSH RIVER RD	Actuated
100000093	1	15.460021	SUNSET BLVD & RAMP	Actuated
100000093	2	15.678856	SUNSET BLVD & RAMP	Actuated
100000093	3	14.055517	SUNSET BLVD & RAMP	Actuated
100000093	4	14.480842	SUNSET BLVD & RAMP	Actuated

Node	Run	Delay	Intersection	Control Type
100000093	5	14.898898	SUNSET BLVD & RAMP	Actuated
100000093	6	14.590077	SUNSET BLVD & RAMP	Actuated
100000093	7	15.0792	SUNSET BLVD & RAMP	Actuated
100000093	8	14.569804	SUNSET BLVD & RAMP	Actuated
100000093	9	14.714699	SUNSET BLVD & RAMP	Actuated
100000093	10	14.556312	SUNSET BLVD & RAMP	Actuated
100000120	1	72.264157	CORLEY MILL RD, SUNSET BLVD & GINNY LN	Actuated
100000120	2	71.824555	CORLEY MILL RD, SUNSET BLVD & GINNY LN	Actuated
100000120	3	90.311913	CORLEY MILL RD, SUNSET BLVD & GINNY LN	Actuated
100000120	4	71.604632	CORLEY MILL RD, SUNSET BLVD & GINNY LN	Actuated
100000120	5	76.353312	CORLEY MILL RD, SUNSET BLVD & GINNY LN	Actuated
100000120	6	66.938225	CORLEY MILL RD, SUNSET BLVD & GINNY LN	Actuated
100000120	7	61.79505	CORLEY MILL RD, SUNSET BLVD & GINNY LN	Actuated
100000120	8	66.621226	CORLEY MILL RD, SUNSET BLVD & GINNY LN	Actuated
100000120	9	89.915824	CORLEY MILL RD, SUNSET BLVD & GINNY LN	Actuated
100000120	10	83.490158	CORLEY MILL RD, SUNSET BLVD & GINNY LN	Actuated
100000134	1	17.312694	SUNSET BLVD & RAMP	Actuated
100000134	2	17.635263	SUNSET BLVD & RAMP	Actuated
100000134	3	17.720688	SUNSET BLVD & RAMP	Actuated
100000134	4	16.934485	SUNSET BLVD & RAMP	Actuated
100000134	5	17.42199	SUNSET BLVD & RAMP	Actuated
100000134	6	18.379875	SUNSET BLVD & RAMP	Actuated
100000134	7	17.705349	SUNSET BLVD & RAMP	Actuated
100000134	8	17.097857	SUNSET BLVD & RAMP	Actuated
100000134	9	19.24995	SUNSET BLVD & RAMP	Actuated
100000134	10	19.317189	SUNSET BLVD & RAMP	Actuated
100000135	1	13.357824	SUNSET BLVD & RAMP	Actuated
100000135	2	16.98576	SUNSET BLVD & RAMP	Actuated
100000135	3	12.038391	SUNSET BLVD & RAMP	Actuated
100000135	4	13.166226	SUNSET BLVD & RAMP	Actuated
100000135	5	14.899811	SUNSET BLVD & RAMP	Actuated
100000135	6	22.217651	SUNSET BLVD & RAMP	Actuated
100000135	7	14.796424	SUNSET BLVD & RAMP	Actuated
100000135	8	15.630064	SUNSET BLVD & RAMP	Actuated
100000135	9	23.10839	SUNSET BLVD & RAMP	Actuated
100000135	10	19.673187	SUNSET BLVD & RAMP	Actuated
100000136	1	45.288372	SUNSET BLVD, CROMER RD & DAVEGA DR	Actuated
100000136	2	53.866345	SUNSET BLVD, CROMER RD & DAVEGA DR	Actuated
100000136	3	51.161876	SUNSET BLVD, CROMER RD & DAVEGA DR	Actuated
100000136	4	46.757993	SUNSET BLVD, CROMER RD & DAVEGA DR	Actuated
100000136	5	55.611936	SUNSET BLVD, CROMER RD & DAVEGA DR	Actuated
100000136	6	59.71103	SUNSET BLVD, CROMER RD & DAVEGA DR	Actuated
100000136	7	57.696107	SUNSET BLVD, CROMER RD & DAVEGA DR	Actuated
100000136	8	57.757407	SUNSET BLVD, CROMER RD & DAVEGA DR	Actuated
100000136	9	55.746239	SUNSET BLVD, CROMER RD & DAVEGA DR	Actuated
100000136	10	45.068315	SUNSET BLVD, CROMER RD & DAVEGA DR	Actuated
100000144	1	30.644247	W. HOSPITAL DR, SUNSET BLVD & SUNSET CT	Actuated
100000144	2	48.440642	W. HOSPITAL DR, SUNSET BLVD & SUNSET CT	Actuated
100000144	3	26.427827	W. HOSPITAL DR, SUNSET BLVD & SUNSET CT	Actuated
100000144	4	28.751745	W. HOSPITAL DR, SUNSET BLVD & SUNSET CT	Actuated
100000144	5	23.25755	W. HOSPITAL DR, SUNSET BLVD & SUNSET CT	Actuated
100000144	6	28.306716	W. HOSPITAL DR, SUNSET BLVD & SUNSET CT	Actuated
100000144	7	29.519069	W. HOSPITAL DR, SUNSET BLVD & SUNSET CT	Actuated
100000144	8	31.663875	W. HOSPITAL DR, SUNSET BLVD & SUNSET CT	Actuated
100000144	9	20.012998	W. HOSPITAL DR, SUNSET BLVD & SUNSET CT	Actuated
100000144	10	32.333664	W. HOSPITAL DR, SUNSET BLVD & SUNSET CT	Actuated
100000150	1	2.340153	I-26 EB EXIT 101 OFF RAMP & BROAD RIVER RD	Stop
100000150	2	4.881745	I-26 EB EXIT 101 OFF RAMP & BROAD RIVER RD	Stop
100000150	3	1.621155	I-26 EB EXIT 101 OFF RAMP & BROAD RIVER RD	Stop
100000150	4	2.305748	I-26 EB EXIT 101 OFF RAMP & BROAD RIVER RD	Stop
100000150	5	6.803174	I-26 EB EXIT 101 OFF RAMP & BROAD RIVER RD	Stop
100000150	6	2.246469	I-26 EB EXIT 101 OFF RAMP & BROAD RIVER RD	Stop
100000150	7	2.082851	I-26 EB EXIT 101 OFF RAMP & BROAD RIVER RD	Stop
100000150	8	2.119789	I-26 EB EXIT 101 OFF RAMP & BROAD RIVER RD	Stop
100000150	9	3.859281	I-26 EB EXIT 101 OFF RAMP & BROAD RIVER RD	Stop
100000150	10	1.918895	I-26 EB EXIT 101 OFF RAMP & BROAD RIVER RD	Stop
100000151	1	4.813745	BROAD RIVER RD & I-26 EB EXIT 101 ON RAMP	Actuated
100000151	2	5.115203	BROAD RIVER RD & I-26 EB EXIT 101 ON RAMP	Actuated
100000151	3	4.962118	BROAD RIVER RD & I-26 EB EXIT 101 ON RAMP	Actuated
100000151	4	5.396802	BROAD RIVER RD & I-26 EB EXIT 101 ON RAMP	Actuated
100000151	5	5.089297	BROAD RIVER RD & I-26 EB EXIT 101 ON RAMP	Actuated
100000151	6	5.700117	BROAD RIVER RD & I-26 EB EXIT 101 ON RAMP	Actuated
100000151	7	5.256547	BROAD RIVER RD & I-26 EB EXIT 101 ON RAMP	Actuated
100000151	8	4.649653	BROAD RIVER RD & I-26 EB EXIT 101 ON RAMP	Actuated
100000151	9	5.4531	BROAD RIVER RD & I-26 EB EXIT 101 ON RAMP	Actuated
100000151	10	4.629825	BROAD RIVER RD & I-26 EB EXIT 101 ON RAMP	Actuated
100000160	1	0	BROAD RIVER RD & I-26 WB EXIT 101 ON RAMP	
100000160	2	0	BROAD RIVER RD & I-26 WB EXIT 101 ON RAMP	

Node	Run	Delay	Intersection	Control Type
100000160	3	0	BROAD RIVER RD & I-26 WB EXIT 101 ON RAMP	
100000160	4	0	BROAD RIVER RD & I-26 WB EXIT 101 ON RAMP	
100000160	5	0	BROAD RIVER RD & I-26 WB EXIT 101 ON RAMP	
100000160	6	0	BROAD RIVER RD & I-26 WB EXIT 101 ON RAMP	
100000160	7	0	BROAD RIVER RD & I-26 WB EXIT 101 ON RAMP	
100000160	8	0	BROAD RIVER RD & I-26 WB EXIT 101 ON RAMP	
100000160	9	0	BROAD RIVER RD & I-26 WB EXIT 101 ON RAMP	
100000160	10	0	BROAD RIVER RD & I-26 WB EXIT 101 ON RAMP	
100000163	1	7.135693	MCSWAIN DR, SUNSET BLVD & CHRIS DR	Actuated
100000163	2	8.288568	MCSWAIN DR, SUNSET BLVD & CHRIS DR	Actuated
100000163	3	8.826164	MCSWAIN DR, SUNSET BLVD & CHRIS DR	Actuated
100000163	4	8.774049	MCSWAIN DR, SUNSET BLVD & CHRIS DR	Actuated
100000163	5	8.310535	MCSWAIN DR, SUNSET BLVD & CHRIS DR	Actuated
100000163	6	9.118861	MCSWAIN DR, SUNSET BLVD & CHRIS DR	Actuated
100000163	7	8.518968	MCSWAIN DR, SUNSET BLVD & CHRIS DR	Actuated
100000163	8	9.13208	MCSWAIN DR, SUNSET BLVD & CHRIS DR	Actuated
100000163	9	9.698617	MCSWAIN DR, SUNSET BLVD & CHRIS DR	Actuated
100000163	10	8.605342	MCSWAIN DR, SUNSET BLVD & CHRIS DR	Actuated
100000165	1	16.257109	HARBISON BLVD & WOODCROSS DR	Actuated
100000165	2	16.514244	HARBISON BLVD & WOODCROSS DR	Actuated
100000165	3	18.042272	HARBISON BLVD & WOODCROSS DR	Actuated
100000165	4	16.722023	HARBISON BLVD & WOODCROSS DR	Actuated
100000165	5	16.466096	HARBISON BLVD & WOODCROSS DR	Actuated
100000165	6	16.657793	HARBISON BLVD & WOODCROSS DR	Actuated
100000165	7	17.57124	HARBISON BLVD & WOODCROSS DR	Actuated
100000165	8	17.281394	HARBISON BLVD & WOODCROSS DR	Actuated
100000165	9	17.809308	HARBISON BLVD & WOODCROSS DR	Actuated
100000165	10	17.146241	HARBISON BLVD & WOODCROSS DR	Actuated
100000168	1	21.366033	SUNSET BLVD & LEAPHART RD	Actuated
100000168	2	20.994233	SUNSET BLVD & LEAPHART RD	Actuated
100000168	3	18.697447	SUNSET BLVD & LEAPHART RD	Actuated
100000168	4	20.097866	SUNSET BLVD & LEAPHART RD	Actuated
100000168	5	17.401172	SUNSET BLVD & LEAPHART RD	Actuated
100000168	6	20.560462	SUNSET BLVD & LEAPHART RD	Actuated
100000168	7	19.308562	SUNSET BLVD & LEAPHART RD	Actuated
100000168	8	21.88849	SUNSET BLVD & LEAPHART RD	Actuated
100000168	9	18.273022	SUNSET BLVD & LEAPHART RD	Actuated
100000168	10	16.760815	SUNSET BLVD & LEAPHART RD	Actuated
100000169	1	0	LAKE MURRAY BLVD & I-26 WB EXIT 102 ON RAMP	
100000169	2	0	LAKE MURRAY BLVD & I-26 WB EXIT 102 ON RAMP	
100000169	3	0	LAKE MURRAY BLVD & I-26 WB EXIT 102 ON RAMP	
100000169	4	0	LAKE MURRAY BLVD & I-26 WB EXIT 102 ON RAMP	
100000169	5	0	LAKE MURRAY BLVD & I-26 WB EXIT 102 ON RAMP	
100000169	6	0	LAKE MURRAY BLVD & I-26 WB EXIT 102 ON RAMP	
100000169	7	0	LAKE MURRAY BLVD & I-26 WB EXIT 102 ON RAMP	
100000169	8	0	LAKE MURRAY BLVD & I-26 WB EXIT 102 ON RAMP	
100000169	9	0	LAKE MURRAY BLVD & I-26 WB EXIT 102 ON RAMP	
100000169	10	0	LAKE MURRAY BLVD & I-26 WB EXIT 102 ON RAMP	
100000174	1	11.583703	PINEY GROVE RD, I-26 EB EXIT 104 OFF RAMP & I-26 EB EXIT 104 ON RAMP	Actuated
100000174	2	11.621112	PINEY GROVE RD, I-26 EB EXIT 104 OFF RAMP & I-26 EB EXIT 104 ON RAMP	Actuated
100000174	3	9.885276	PINEY GROVE RD, I-26 EB EXIT 104 OFF RAMP & I-26 EB EXIT 104 ON RAMP	Actuated
100000174	4	11.022383	PINEY GROVE RD, I-26 EB EXIT 104 OFF RAMP & I-26 EB EXIT 104 ON RAMP	Actuated
100000174	5	11.451447	PINEY GROVE RD, I-26 EB EXIT 104 OFF RAMP & I-26 EB EXIT 104 ON RAMP	Actuated
100000174	6	10.56677	PINEY GROVE RD, I-26 EB EXIT 104 OFF RAMP & I-26 EB EXIT 104 ON RAMP	Actuated
100000174	7	10.615376	PINEY GROVE RD, I-26 EB EXIT 104 OFF RAMP & I-26 EB EXIT 104 ON RAMP	Actuated
100000174	8	11.731995	PINEY GROVE RD, I-26 EB EXIT 104 OFF RAMP & I-26 EB EXIT 104 ON RAMP	Actuated
100000174	9	11.793668	PINEY GROVE RD, I-26 EB EXIT 104 OFF RAMP & I-26 EB EXIT 104 ON RAMP	Actuated
100000174	10	10.008454	PINEY GROVE RD, I-26 EB EXIT 104 OFF RAMP & I-26 EB EXIT 104 ON RAMP	Actuated
100000177	1	24.794541	PINEY GROVE RD, I-26 WB EXIT 104 OFF RAMP & I-26 WB EXIT 104 ON RAMP	Actuated
100000177	2	25.719227	PINEY GROVE RD, I-26 WB EXIT 104 OFF RAMP & I-26 WB EXIT 104 ON RAMP	Actuated
100000177	3	23.180372	PINEY GROVE RD, I-26 WB EXIT 104 OFF RAMP & I-26 WB EXIT 104 ON RAMP	Actuated
100000177	4	24.539065	PINEY GROVE RD, I-26 WB EXIT 104 OFF RAMP & I-26 WB EXIT 104 ON RAMP	Actuated
100000177	5	23.444821	PINEY GROVE RD, I-26 WB EXIT 104 OFF RAMP & I-26 WB EXIT 104 ON RAMP	Actuated
100000177	6	25.138878	PINEY GROVE RD, I-26 WB EXIT 104 OFF RAMP & I-26 WB EXIT 104 ON RAMP	Actuated
100000177	7	28.137733	PINEY GROVE RD, I-26 WB EXIT 104 OFF RAMP & I-26 WB EXIT 104 ON RAMP	Actuated
100000177	8	20.799689	PINEY GROVE RD, I-26 WB EXIT 104 OFF RAMP & I-26 WB EXIT 104 ON RAMP	Actuated
100000177	9	23.889863	PINEY GROVE RD, I-26 WB EXIT 104 OFF RAMP & I-26 WB EXIT 104 ON RAMP	Actuated
100000177	10	24.626142	PINEY GROVE RD, I-26 WB EXIT 104 OFF RAMP & I-26 WB EXIT 104 ON RAMP	Actuated
100000182	1	7.410418	ST ANDREWS RD & 6774 (S)	Stop
100000182	2	10.717406	ST ANDREWS RD & 6774 (S)	Stop
100000182	3	10.82617	ST ANDREWS RD & 6774 (S)	Stop
100000182	4	10.160496	ST ANDREWS RD & 6774 (S)	Stop
100000182	5	8.610207	ST ANDREWS RD & 6774 (S)	Stop
100000182	6	7.252834	ST ANDREWS RD & 6774 (S)	Stop
100000182	7	6.042177	ST ANDREWS RD & 6774 (S)	Stop
100000182	8	9.282104	ST ANDREWS RD & 6774 (S)	Stop
100000182	9	8.25102	ST ANDREWS RD & 6774 (S)	Stop
100000182	10	8.767651	ST ANDREWS RD & 6774 (S)	Stop

Node	Run	Delay	Intersection	Control Type
100000184	1	9.233955	ARROWWOOD RD, BUSH RIVER RD & N ARROWWOOD RD	Actuated
100000184	2	11.699196	ARROWWOOD RD, BUSH RIVER RD & N ARROWWOOD RD	Actuated
100000184	3	12.140713	ARROWWOOD RD, BUSH RIVER RD & N ARROWWOOD RD	Actuated
100000184	4	11.905396	ARROWWOOD RD, BUSH RIVER RD & N ARROWWOOD RD	Actuated
100000184	5	11.144587	ARROWWOOD RD, BUSH RIVER RD & N ARROWWOOD RD	Actuated
100000184	6	12.135597	ARROWWOOD RD, BUSH RIVER RD & N ARROWWOOD RD	Actuated
100000184	7	11.213289	ARROWWOOD RD, BUSH RIVER RD & N ARROWWOOD RD	Actuated
100000184	8	11.105411	ARROWWOOD RD, BUSH RIVER RD & N ARROWWOOD RD	Actuated
100000184	9	10.377424	ARROWWOOD RD, BUSH RIVER RD & N ARROWWOOD RD	Actuated
100000184	10	10.777635	ARROWWOOD RD, BUSH RIVER RD & N ARROWWOOD RD	Actuated
100000185	1	6.24058	GREYSTONE BLVD & RAMP	Stop
100000185	2	4.758548	GREYSTONE BLVD & RAMP	Stop
100000185	3	3.696992	GREYSTONE BLVD & RAMP	Stop
100000185	4	4.440583	GREYSTONE BLVD & RAMP	Stop
100000185	5	4.723419	GREYSTONE BLVD & RAMP	Stop
100000185	6	4.134255	GREYSTONE BLVD & RAMP	Stop
100000185	7	6.589499	GREYSTONE BLVD & RAMP	Stop
100000185	8	9.152155	GREYSTONE BLVD & RAMP	Stop
100000185	9	5.077546	GREYSTONE BLVD & RAMP	Stop
100000185	10	5.069638	GREYSTONE BLVD & RAMP	Stop
100000186	1	42.536673	HARBOR DR, SUNSET BLVD & E HOSPITAL DR	Actuated
100000186	2	52.05895	HARBOR DR, SUNSET BLVD & E HOSPITAL DR	Actuated
100000186	3	38.804727	HARBOR DR, SUNSET BLVD & E HOSPITAL DR	Actuated
100000186	4	48.640239	HARBOR DR, SUNSET BLVD & E HOSPITAL DR	Actuated
100000186	5	40.125605	HARBOR DR, SUNSET BLVD & E HOSPITAL DR	Actuated
100000186	6	43.968335	HARBOR DR, SUNSET BLVD & E HOSPITAL DR	Actuated
100000186	7	42.784791	HARBOR DR, SUNSET BLVD & E HOSPITAL DR	Actuated
100000186	8	39.304251	HARBOR DR, SUNSET BLVD & E HOSPITAL DR	Actuated
100000186	9	36.867569	HARBOR DR, SUNSET BLVD & E HOSPITAL DR	Actuated
100000186	10	36.341295	HARBOR DR, SUNSET BLVD & E HOSPITAL DR	Actuated
100000187	1	21.219389	BROAD RIVER RD, BRIARGATE CIR & MARLEY DR	Actuated
100000187	2	18.740595	BROAD RIVER RD, BRIARGATE CIR & MARLEY DR	Actuated
100000187	3	18.539862	BROAD RIVER RD, BRIARGATE CIR & MARLEY DR	Actuated
100000187	4	19.10009	BROAD RIVER RD, BRIARGATE CIR & MARLEY DR	Actuated
100000187	5	19.622373	BROAD RIVER RD, BRIARGATE CIR & MARLEY DR	Actuated
100000187	6	17.100467	BROAD RIVER RD, BRIARGATE CIR & MARLEY DR	Actuated
100000187	7	20.082835	BROAD RIVER RD, BRIARGATE CIR & MARLEY DR	Actuated
100000187	8	20.502101	BROAD RIVER RD, BRIARGATE CIR & MARLEY DR	Actuated
100000187	9	20.878354	BROAD RIVER RD, BRIARGATE CIR & MARLEY DR	Actuated
100000187	10	20.957644	BROAD RIVER RD, BRIARGATE CIR & MARLEY DR	Actuated
100000188	1	2.152627	GREYSTONE BLVD & RAMP	Stop
100000188	2	4.704699	GREYSTONE BLVD & RAMP	Stop
100000188	3	2.093401	GREYSTONE BLVD & RAMP	Stop
100000188	4	2.091397	GREYSTONE BLVD & RAMP	Stop
100000188	5	2.400805	GREYSTONE BLVD & RAMP	Stop
100000188	6	2.084411	GREYSTONE BLVD & RAMP	Stop
100000188	7	2.617548	GREYSTONE BLVD & RAMP	Stop
100000188	8	1.723244	GREYSTONE BLVD & RAMP	Stop
100000188	9	2.090964	GREYSTONE BLVD & RAMP	Stop
100000188	10	1.813112	GREYSTONE BLVD & RAMP	Stop
100000190	1	5.583666	BROAD RIVER RD, EXIT 65 RAMP TO US 176 & 6579 (NE)	Actuated
100000190	2	5.306872	BROAD RIVER RD, EXIT 65 RAMP TO US 176 & 6579 (NE)	Actuated
100000190	3	5.224842	BROAD RIVER RD, EXIT 65 RAMP TO US 176 & 6579 (NE)	Actuated
100000190	4	6.290277	BROAD RIVER RD, EXIT 65 RAMP TO US 176 & 6579 (NE)	Actuated
100000190	5	6.520107	BROAD RIVER RD, EXIT 65 RAMP TO US 176 & 6579 (NE)	Actuated
100000190	6	5.165063	BROAD RIVER RD, EXIT 65 RAMP TO US 176 & 6579 (NE)	Actuated
100000190	7	6.393837	BROAD RIVER RD, EXIT 65 RAMP TO US 176 & 6579 (NE)	Actuated
100000190	8	6.123224	BROAD RIVER RD, EXIT 65 RAMP TO US 176 & 6579 (NE)	Actuated
100000190	9	5.951033	BROAD RIVER RD, EXIT 65 RAMP TO US 176 & 6579 (NE)	Actuated
100000190	10	5.32392	BROAD RIVER RD, EXIT 65 RAMP TO US 176 & 6579 (NE)	Actuated
100000195	1	13.066375	LONGCREEK DR & BROAD RIVER RD	Actuated
100000195	2	14.463965	LONGCREEK DR & BROAD RIVER RD	Actuated
100000195	3	13.998777	LONGCREEK DR & BROAD RIVER RD	Actuated
100000195	4	12.539213	LONGCREEK DR & BROAD RIVER RD	Actuated
100000195	5	14.383832	LONGCREEK DR & BROAD RIVER RD	Actuated
100000195	6	13.026479	LONGCREEK DR & BROAD RIVER RD	Actuated
100000195	7	10.83874	LONGCREEK DR & BROAD RIVER RD	Actuated
100000195	8	13.364662	LONGCREEK DR & BROAD RIVER RD	Actuated
100000195	9	14.082135	LONGCREEK DR & BROAD RIVER RD	Actuated
100000195	10	13.565661	LONGCREEK DR & BROAD RIVER RD	Actuated
100000252	1	37.39929	MORNINGHILL DR, BUSH RIVER RD & RAMP	Actuated
100000252	2	32.148378	MORNINGHILL DR, BUSH RIVER RD & RAMP	Actuated
100000252	3	32.980233	MORNINGHILL DR, BUSH RIVER RD & RAMP	Actuated
100000252	4	37.170056	MORNINGHILL DR, BUSH RIVER RD & RAMP	Actuated
100000252	5	39.352491	MORNINGHILL DR, BUSH RIVER RD & RAMP	Actuated
100000252	6	45.150224	MORNINGHILL DR, BUSH RIVER RD & RAMP	Actuated
100000252	7	34.62059	MORNINGHILL DR, BUSH RIVER RD & RAMP	Actuated
100000252	8	33.194863	MORNINGHILL DR, BUSH RIVER RD & RAMP	Actuated

Node	Run	Delay	Intersection	Control Type
100000252	9	34.334893	MORNINGHILL DR, BUSH RIVER RD & RAMP	Actuated
100000252	10	36.918963	MORNINGHILL DR, BUSH RIVER RD & RAMP	Actuated
100000254	1	17.884783	WOODLAND HILLS RD & FRONTAGE RD	Stop
100000254	2	10.962496	WOODLAND HILLS RD & FRONTAGE RD	Stop
100000254	3	12.490248	WOODLAND HILLS RD & FRONTAGE RD	Stop
100000254	4	9.247	WOODLAND HILLS RD & FRONTAGE RD	Stop
100000254	5	11.215777	WOODLAND HILLS RD & FRONTAGE RD	Stop
100000254	6	9.371402	WOODLAND HILLS RD & FRONTAGE RD	Stop
100000254	7	8.922003	WOODLAND HILLS RD & FRONTAGE RD	Stop
100000254	8	7.863076	WOODLAND HILLS RD & FRONTAGE RD	Stop
100000254	9	21.565345	WOODLAND HILLS RD & FRONTAGE RD	Stop
100000254	10	9.159652	WOODLAND HILLS RD & FRONTAGE RD	Stop
100000255	1	13.326372	BUSH RIVER RD & INDEPENDENCE AVE	Actuated
100000255	2	16.87326	BUSH RIVER RD & INDEPENDENCE AVE	Actuated
100000255	3	12.002196	BUSH RIVER RD & INDEPENDENCE AVE	Actuated
100000255	4	14.364804	BUSH RIVER RD & INDEPENDENCE AVE	Actuated
100000255	5	11.777347	BUSH RIVER RD & INDEPENDENCE AVE	Actuated
100000255	6	16.393985	BUSH RIVER RD & INDEPENDENCE AVE	Actuated
100000255	7	19.122744	BUSH RIVER RD & INDEPENDENCE AVE	Actuated
100000255	8	13.71288	BUSH RIVER RD & INDEPENDENCE AVE	Actuated
100000255	9	13.663867	BUSH RIVER RD & INDEPENDENCE AVE	Actuated
100000255	10	12.495997	BUSH RIVER RD & INDEPENDENCE AVE	Actuated
100000256	1	7.518336	BUSH RIVER RD & ZIMALCREST DR	Actuated
100000256	2	8.122123	BUSH RIVER RD & ZIMALCREST DR	Actuated
100000256	3	7.079183	BUSH RIVER RD & ZIMALCREST DR	Actuated
100000256	4	7.110682	BUSH RIVER RD & ZIMALCREST DR	Actuated
100000256	5	6.978871	BUSH RIVER RD & ZIMALCREST DR	Actuated
100000256	6	8.438492	BUSH RIVER RD & ZIMALCREST DR	Actuated
100000256	7	7.795952	BUSH RIVER RD & ZIMALCREST DR	Actuated
100000256	8	7.778468	BUSH RIVER RD & ZIMALCREST DR	Actuated
100000256	9	7.606934	BUSH RIVER RD & ZIMALCREST DR	Actuated
100000256	10	6.70809	BUSH RIVER RD & ZIMALCREST DR	Actuated
100000348	1	25.542239	ST ANDREWS RD & JAMIL RD	Actuated
100000348	2	21.217567	ST ANDREWS RD & JAMIL RD	Actuated
100000348	3	25.309092	ST ANDREWS RD & JAMIL RD	Actuated
100000348	4	25.610133	ST ANDREWS RD & JAMIL RD	Actuated
100000348	5	19.745034	ST ANDREWS RD & JAMIL RD	Actuated
100000348	6	22.098795	ST ANDREWS RD & JAMIL RD	Actuated
100000348	7	21.27833	ST ANDREWS RD & JAMIL RD	Actuated
100000348	8	30.833637	ST ANDREWS RD & JAMIL RD	Actuated
100000348	9	25.418301	ST ANDREWS RD & JAMIL RD	Actuated
100000348	10	20.011603	ST ANDREWS RD & JAMIL RD	Actuated
100000353	1	47.609589	BOWER PKY, PINEY GROVE RD & JAMIL RD	Actuated
100000353	2	57.435498	BOWER PKY, PINEY GROVE RD & JAMIL RD	Actuated
100000353	3	81.157764	BOWER PKY, PINEY GROVE RD & JAMIL RD	Actuated
100000353	4	61.36231	BOWER PKY, PINEY GROVE RD & JAMIL RD	Actuated
100000353	5	44.561816	BOWER PKY, PINEY GROVE RD & JAMIL RD	Actuated
100000353	6	66.35567	BOWER PKY, PINEY GROVE RD & JAMIL RD	Actuated
100000353	7	43.672773	BOWER PKY, PINEY GROVE RD & JAMIL RD	Actuated
100000353	8	50.524755	BOWER PKY, PINEY GROVE RD & JAMIL RD	Actuated
100000353	9	38.854324	BOWER PKY, PINEY GROVE RD & JAMIL RD	Actuated
100000353	10	42.141334	BOWER PKY, PINEY GROVE RD & JAMIL RD	Actuated
100000354	1	48.917911	ST ANDREWS RD, KAY ST & CHARTWELL RD	Actuated
100000354	2	23.006792	ST ANDREWS RD, KAY ST & CHARTWELL RD	Actuated
100000354	3	42.52272	ST ANDREWS RD, KAY ST & CHARTWELL RD	Actuated
100000354	4	24.183049	ST ANDREWS RD, KAY ST & CHARTWELL RD	Actuated
100000354	5	20.561417	ST ANDREWS RD, KAY ST & CHARTWELL RD	Actuated
100000354	6	24.906605	ST ANDREWS RD, KAY ST & CHARTWELL RD	Actuated
100000354	7	21.824107	ST ANDREWS RD, KAY ST & CHARTWELL RD	Actuated
100000354	8	35.26816	ST ANDREWS RD, KAY ST & CHARTWELL RD	Actuated
100000354	9	30.057514	ST ANDREWS RD, KAY ST & CHARTWELL RD	Actuated
100000354	10	29.504811	ST ANDREWS RD, KAY ST & CHARTWELL RD	Actuated
100000358	1	38.293696	ST ANDREWS RD, FERNANDINA RD & BURNING TREE RD	Actuated
100000358	2	34.032612	ST ANDREWS RD, FERNANDINA RD & BURNING TREE RD	Actuated
100000358	3	37.739467	ST ANDREWS RD, FERNANDINA RD & BURNING TREE RD	Actuated
100000358	4	34.788667	ST ANDREWS RD, FERNANDINA RD & BURNING TREE RD	Actuated
100000358	5	30.558689	ST ANDREWS RD, FERNANDINA RD & BURNING TREE RD	Actuated
100000358	6	34.113884	ST ANDREWS RD, FERNANDINA RD & BURNING TREE RD	Actuated
100000358	7	33.541022	ST ANDREWS RD, FERNANDINA RD & BURNING TREE RD	Actuated
100000358	8	34.47707	ST ANDREWS RD, FERNANDINA RD & BURNING TREE RD	Actuated
100000358	9	36.386331	ST ANDREWS RD, FERNANDINA RD & BURNING TREE RD	Actuated
100000358	10	36.207614	ST ANDREWS RD, FERNANDINA RD & BURNING TREE RD	Actuated
100000360	1	11.124077	I-26 WB TO BURNING TREE RD EXIT 106 OFF RAMP & BURNING TREE RD	Yield
100000360	2	5.330934	I-26 WB TO BURNING TREE RD EXIT 106 OFF RAMP & BURNING TREE RD	Yield
100000360	3	5.250034	I-26 WB TO BURNING TREE RD EXIT 106 OFF RAMP & BURNING TREE RD	Yield
100000360	4	6.029159	I-26 WB TO BURNING TREE RD EXIT 106 OFF RAMP & BURNING TREE RD	Yield
100000360	5	4.964417	I-26 WB TO BURNING TREE RD EXIT 106 OFF RAMP & BURNING TREE RD	Yield
100000360	6	9.494151	I-26 WB TO BURNING TREE RD EXIT 106 OFF RAMP & BURNING TREE RD	Yield

Node	Run	Delay	Intersection	Control Type
100000360	7	10.418102	I-26 WB TO BURNING TREE RD EXIT 106 OFF RAMP & BURNING TREE RD	Yield
100000360	8	8.759461	I-26 WB TO BURNING TREE RD EXIT 106 OFF RAMP & BURNING TREE RD	Yield
100000360	9	5.071147	I-26 WB TO BURNING TREE RD EXIT 106 OFF RAMP & BURNING TREE RD	Yield
100000360	10	6.850734	I-26 WB TO BURNING TREE RD EXIT 106 OFF RAMP & BURNING TREE RD	Yield
100000362	1	0.585697	HARBISON BLVD & JAMIL RD	Actuated
100000362	2	0.509069	HARBISON BLVD & JAMIL RD	Actuated
100000362	3	0.690709	HARBISON BLVD & JAMIL RD	Actuated
100000362	4	0.750665	HARBISON BLVD & JAMIL RD	Actuated
100000362	5	1.092298	HARBISON BLVD & JAMIL RD	Actuated
100000362	6	0.788311	HARBISON BLVD & JAMIL RD	Actuated
100000362	7	0.698379	HARBISON BLVD & JAMIL RD	Actuated
100000362	8	0.728987	HARBISON BLVD & JAMIL RD	Actuated
100000362	9	0.779972	HARBISON BLVD & JAMIL RD	Actuated
100000362	10	0.782305	HARBISON BLVD & JAMIL RD	Actuated
100000364	1	14.429674	HARBISON BLVD & COLUMBIANA DR	Actuated
100000364	2	15.755967	HARBISON BLVD & COLUMBIANA DR	Actuated
100000364	3	15.766138	HARBISON BLVD & COLUMBIANA DR	Actuated
100000364	4	15.11389	HARBISON BLVD & COLUMBIANA DR	Actuated
100000364	5	15.146671	HARBISON BLVD & COLUMBIANA DR	Actuated
100000364	6	15.771343	HARBISON BLVD & COLUMBIANA DR	Actuated
100000364	7	18.786894	HARBISON BLVD & COLUMBIANA DR	Actuated
100000364	8	15.530154	HARBISON BLVD & COLUMBIANA DR	Actuated
100000364	9	15.343112	HARBISON BLVD & COLUMBIANA DR	Actuated
100000364	10	14.22881	HARBISON BLVD & COLUMBIANA DR	Actuated
100000365	1	7.886734	COLUMBIANA CIR, HARBISON BLVD & PARK TERRACE DR	Actuated
100000365	2	8.133717	COLUMBIANA CIR, HARBISON BLVD & PARK TERRACE DR	Actuated
100000365	3	8.785715	COLUMBIANA CIR, HARBISON BLVD & PARK TERRACE DR	Actuated
100000365	4	7.86584	COLUMBIANA CIR, HARBISON BLVD & PARK TERRACE DR	Actuated
100000365	5	8.298213	COLUMBIANA CIR, HARBISON BLVD & PARK TERRACE DR	Actuated
100000365	6	8.78342	COLUMBIANA CIR, HARBISON BLVD & PARK TERRACE DR	Actuated
100000365	7	8.22275	COLUMBIANA CIR, HARBISON BLVD & PARK TERRACE DR	Actuated
100000365	8	8.56054	COLUMBIANA CIR, HARBISON BLVD & PARK TERRACE DR	Actuated
100000365	9	8.563824	COLUMBIANA CIR, HARBISON BLVD & PARK TERRACE DR	Actuated
100000365	10	7.890958	COLUMBIANA CIR, HARBISON BLVD & PARK TERRACE DR	Actuated
100000391	1	24.846152	BROAD RIVER RD & COLUMBIANA DR	Actuated
100000391	2	26.839239	BROAD RIVER RD & COLUMBIANA DR	Actuated
100000391	3	27.570316	BROAD RIVER RD & COLUMBIANA DR	Actuated
100000391	4	26.52105	BROAD RIVER RD & COLUMBIANA DR	Actuated
100000391	5	27.487623	BROAD RIVER RD & COLUMBIANA DR	Actuated
100000391	6	25.147894	BROAD RIVER RD & COLUMBIANA DR	Actuated
100000391	7	27.311013	BROAD RIVER RD & COLUMBIANA DR	Actuated
100000391	8	26.290474	BROAD RIVER RD & COLUMBIANA DR	Actuated
100000391	9	28.576153	BROAD RIVER RD & COLUMBIANA DR	Actuated
100000391	10	21.410845	BROAD RIVER RD & COLUMBIANA DR	Actuated
100000395	1	37.188511	LAKE MURRAY BLVD & COLUMBIANA DR	Actuated
100000395	2	52.8941	LAKE MURRAY BLVD & COLUMBIANA DR	Actuated
100000395	3	39.708212	LAKE MURRAY BLVD & COLUMBIANA DR	Actuated
100000395	4	37.661391	LAKE MURRAY BLVD & COLUMBIANA DR	Actuated
100000395	5	45.132984	LAKE MURRAY BLVD & COLUMBIANA DR	Actuated
100000395	6	51.767164	LAKE MURRAY BLVD & COLUMBIANA DR	Actuated
100000395	7	32.90282	LAKE MURRAY BLVD & COLUMBIANA DR	Actuated
100000395	8	42.051486	LAKE MURRAY BLVD & COLUMBIANA DR	Actuated
100000395	9	31.005378	LAKE MURRAY BLVD & COLUMBIANA DR	Actuated
100000395	10	38.361251	LAKE MURRAY BLVD & COLUMBIANA DR	Actuated
100000398	1	10.279468	HARBISON BLVD & PARKRIDGE DR	Actuated
100000398	2	10.07989	HARBISON BLVD & PARKRIDGE DR	Actuated
100000398	3	10.555509	HARBISON BLVD & PARKRIDGE DR	Actuated
100000398	4	10.103169	HARBISON BLVD & PARKRIDGE DR	Actuated
100000398	5	11.735483	HARBISON BLVD & PARKRIDGE DR	Actuated
100000398	6	10.45342	HARBISON BLVD & PARKRIDGE DR	Actuated
100000398	7	11.489962	HARBISON BLVD & PARKRIDGE DR	Actuated
100000398	8	10.739487	HARBISON BLVD & PARKRIDGE DR	Actuated
100000398	9	12.419893	HARBISON BLVD & PARKRIDGE DR	Actuated
100000398	10	12.411756	HARBISON BLVD & PARKRIDGE DR	Actuated
100000399	1	27.092804	PINEY GROVE RD & FERNANDINA RD	Actuated
100000399	2	26.913766	PINEY GROVE RD & FERNANDINA RD	Actuated
100000399	3	30.690294	PINEY GROVE RD & FERNANDINA RD	Actuated
100000399	4	28.444721	PINEY GROVE RD & FERNANDINA RD	Actuated
100000399	5	28.458946	PINEY GROVE RD & FERNANDINA RD	Actuated
100000399	6	31.607221	PINEY GROVE RD & FERNANDINA RD	Actuated
100000399	7	29.75858	PINEY GROVE RD & FERNANDINA RD	Actuated
100000399	8	29.507545	PINEY GROVE RD & FERNANDINA RD	Actuated
100000399	9	32.35548	PINEY GROVE RD & FERNANDINA RD	Actuated
100000399	10	29.456478	PINEY GROVE RD & FERNANDINA RD	Actuated
100000401	1	16.313837	KINLEY RD, LAKE MURRAY BLVD & PARKRIDGE DR	Actuated
100000401	2	19.686198	KINLEY RD, LAKE MURRAY BLVD & PARKRIDGE DR	Actuated
100000401	3	14.251857	KINLEY RD, LAKE MURRAY BLVD & PARKRIDGE DR	Actuated
100000401	4	16.458445	KINLEY RD, LAKE MURRAY BLVD & PARKRIDGE DR	Actuated

Node	Run	Delay	Intersection	Control Type
100000401	5	15.079275	KINLEY RD, LAKE MURRAY BLVD & PARKRIDGE DR	Actuated
100000401	6	13.39438	KINLEY RD, LAKE MURRAY BLVD & PARKRIDGE DR	Actuated
100000401	7	42.438961	KINLEY RD, LAKE MURRAY BLVD & PARKRIDGE DR	Actuated
100000401	8	22.525479	KINLEY RD, LAKE MURRAY BLVD & PARKRIDGE DR	Actuated
100000401	9	18.683214	KINLEY RD, LAKE MURRAY BLVD & PARKRIDGE DR	Actuated
100000401	10	14.756622	KINLEY RD, LAKE MURRAY BLVD & PARKRIDGE DR	Actuated
100000446	1	0	RAMP	Yield
100000446	2	0	RAMP	Yield
100000446	3	0	RAMP	Yield
100000446	4	0	RAMP	Yield
100000446	5	0	RAMP	Yield
100000446	6	0	RAMP	Yield
100000446	7	0	RAMP	Yield
100000446	8	0	RAMP	Yield
100000446	9	0	RAMP	Yield
100000446	10	0	RAMP	Yield
100000508	1	0	I-26 EB EXIT 102 ON RAMP	
100000508	2	0	I-26 EB EXIT 102 ON RAMP	
100000508	3	0	I-26 EB EXIT 102 ON RAMP	
100000508	4	0	I-26 EB EXIT 102 ON RAMP	
100000508	5	0	I-26 EB EXIT 102 ON RAMP	
100000508	6	0	I-26 EB EXIT 102 ON RAMP	
100000508	7	0	I-26 EB EXIT 102 ON RAMP	
100000508	8	0	I-26 EB EXIT 102 ON RAMP	
100000508	9	0	I-26 EB EXIT 102 ON RAMP	
100000508	10	0	I-26 EB EXIT 102 ON RAMP	
100000510	1	0	LAKE MURRAY BLVD & I-26 EB EXIT 102 ON RAMP	
100000510	2	0	LAKE MURRAY BLVD & I-26 EB EXIT 102 ON RAMP	
100000510	3	0	LAKE MURRAY BLVD & I-26 EB EXIT 102 ON RAMP	
100000510	4	0	LAKE MURRAY BLVD & I-26 EB EXIT 102 ON RAMP	
100000510	5	0	LAKE MURRAY BLVD & I-26 EB EXIT 102 ON RAMP	
100000510	6	0	LAKE MURRAY BLVD & I-26 EB EXIT 102 ON RAMP	
100000510	7	0	LAKE MURRAY BLVD & I-26 EB EXIT 102 ON RAMP	
100000510	8	0	LAKE MURRAY BLVD & I-26 EB EXIT 102 ON RAMP	
100000510	9	0	LAKE MURRAY BLVD & I-26 EB EXIT 102 ON RAMP	
100000510	10	0	LAKE MURRAY BLVD & I-26 EB EXIT 102 ON RAMP	
100000520	1	0	I-26 WB EXIT 102 ON RAMP	Yield
100000520	2	0	I-26 WB EXIT 102 ON RAMP	Yield
100000520	3	0	I-26 WB EXIT 102 ON RAMP	Yield
100000520	4	0	I-26 WB EXIT 102 ON RAMP	Yield
100000520	5	0	I-26 WB EXIT 102 ON RAMP	Yield
100000520	6	0	I-26 WB EXIT 102 ON RAMP	Yield
100000520	7	0	I-26 WB EXIT 102 ON RAMP	Yield
100000520	8	0	I-26 WB EXIT 102 ON RAMP	Yield
100000520	9	0	I-26 WB EXIT 102 ON RAMP	Yield
100000520	10	0	I-26 WB EXIT 102 ON RAMP	Yield
100000522	1	0	I-26 WB EXIT 101 OFF RAMP, BROAD RIVER RD & I-26 WB EXIT 101 ON RAMP	
100000522	2	0	I-26 WB EXIT 101 OFF RAMP, BROAD RIVER RD & I-26 WB EXIT 101 ON RAMP	
100000522	3	0	I-26 WB EXIT 101 OFF RAMP, BROAD RIVER RD & I-26 WB EXIT 101 ON RAMP	
100000522	4	0	I-26 WB EXIT 101 OFF RAMP, BROAD RIVER RD & I-26 WB EXIT 101 ON RAMP	
100000522	5	0	I-26 WB EXIT 101 OFF RAMP, BROAD RIVER RD & I-26 WB EXIT 101 ON RAMP	
100000522	6	0	I-26 WB EXIT 101 OFF RAMP, BROAD RIVER RD & I-26 WB EXIT 101 ON RAMP	
100000522	7	0	I-26 WB EXIT 101 OFF RAMP, BROAD RIVER RD & I-26 WB EXIT 101 ON RAMP	
100000522	8	0	I-26 WB EXIT 101 OFF RAMP, BROAD RIVER RD & I-26 WB EXIT 101 ON RAMP	
100000522	9	0	I-26 WB EXIT 101 OFF RAMP, BROAD RIVER RD & I-26 WB EXIT 101 ON RAMP	
100000522	10	0	I-26 WB EXIT 101 OFF RAMP, BROAD RIVER RD & I-26 WB EXIT 101 ON RAMP	
100000682	1	0	RAMP	
100000682	2	0	RAMP	
100000682	3	0	RAMP	
100000682	4	0	RAMP	
100000682	5	0	RAMP	
100000682	6	0	RAMP	
100000682	7	0	RAMP	
100000682	8	0	RAMP	
100000682	9	0	RAMP	
100000682	10	0	RAMP	
100000686	1	0	RAMP	
100000686	2	0	RAMP	
100000686	3	0	RAMP	
100000686	4	0	RAMP	
100000686	5	0	RAMP	
100000686	6	0	RAMP	
100000686	7	0	RAMP	
100000686	8	0	RAMP	
100000686	9	0	RAMP	
100000686	10	0	RAMP	
100000702	1	0	RAMP & 6587 (E)	Yield
100000702	2	0	RAMP & 6587 (E)	Yield

Node	Run	Delay	Intersection	Control Type
100000702	3	0	RAMP & 6587 (E)	Yield
100000702	4	0	RAMP & 6587 (E)	Yield
100000702	5	0	RAMP & 6587 (E)	Yield
100000702	6	0	RAMP & 6587 (E)	Yield
100000702	7	0	RAMP & 6587 (E)	Yield
100000702	8	0	RAMP & 6587 (E)	Yield
100000702	9	0	RAMP & 6587 (E)	Yield
100000702	10	0	RAMP & 6587 (E)	Yield
100000897	1	2.092786	COLONIAL LIFE BLVD W & W COLONIAL LIFE BLVD	Stop
100000897	2	2.265427	COLONIAL LIFE BLVD W & W COLONIAL LIFE BLVD	Stop
100000897	3	2.179328	COLONIAL LIFE BLVD W & W COLONIAL LIFE BLVD	Stop
100000897	4	2.203581	COLONIAL LIFE BLVD W & W COLONIAL LIFE BLVD	Stop
100000897	5	2.381483	COLONIAL LIFE BLVD W & W COLONIAL LIFE BLVD	Stop
100000897	6	1.557602	COLONIAL LIFE BLVD W & W COLONIAL LIFE BLVD	Stop
100000897	7	2.213318	COLONIAL LIFE BLVD W & W COLONIAL LIFE BLVD	Stop
100000897	8	2.137762	COLONIAL LIFE BLVD W & W COLONIAL LIFE BLVD	Stop
100000897	9	2.228169	COLONIAL LIFE BLVD W & W COLONIAL LIFE BLVD	Stop
100000897	10	1.859134	COLONIAL LIFE BLVD W & W COLONIAL LIFE BLVD	Stop
100000898	1	3.627037	BUSH RIVER RD	Actuated
100000898	2	4.005852	BUSH RIVER RD	Actuated
100000898	3	3.71874	BUSH RIVER RD	Actuated
100000898	4	4.091719	BUSH RIVER RD	Actuated
100000898	5	3.985844	BUSH RIVER RD	Actuated
100000898	6	4.298511	BUSH RIVER RD	Actuated
100000898	7	3.947404	BUSH RIVER RD	Actuated
100000898	8	4.04547	BUSH RIVER RD	Actuated
100000898	9	4.708956	BUSH RIVER RD	Actuated
100000898	10	3.403915	BUSH RIVER RD	Actuated
100000899	1	0	I-26 WB TO BURNING TREE RD EXIT 106 OFF RAMP & BURNING TREE RD	Stop
100000899	2	0	I-26 WB TO BURNING TREE RD EXIT 106 OFF RAMP & BURNING TREE RD	Stop
100000899	3	0	I-26 WB TO BURNING TREE RD EXIT 106 OFF RAMP & BURNING TREE RD	Stop
100000899	4	0	I-26 WB TO BURNING TREE RD EXIT 106 OFF RAMP & BURNING TREE RD	Stop
100000899	5	0	I-26 WB TO BURNING TREE RD EXIT 106 OFF RAMP & BURNING TREE RD	Stop
100000899	6	0	I-26 WB TO BURNING TREE RD EXIT 106 OFF RAMP & BURNING TREE RD	Stop
100000899	7	0	I-26 WB TO BURNING TREE RD EXIT 106 OFF RAMP & BURNING TREE RD	Stop
100000899	8	0	I-26 WB TO BURNING TREE RD EXIT 106 OFF RAMP & BURNING TREE RD	Stop
100000899	9	0	I-26 WB TO BURNING TREE RD EXIT 106 OFF RAMP & BURNING TREE RD	Stop
100000899	10	0	I-26 WB TO BURNING TREE RD EXIT 106 OFF RAMP & BURNING TREE RD	Stop
100000902	1	7.009695	SUNSET BLVD & RAMP	Actuated
100000902	2	6.549452	SUNSET BLVD & RAMP	Actuated
100000902	3	7.442982	SUNSET BLVD & RAMP	Actuated
100000902	4	7.308367	SUNSET BLVD & RAMP	Actuated
100000902	5	6.548006	SUNSET BLVD & RAMP	Actuated
100000902	6	7.023072	SUNSET BLVD & RAMP	Actuated
100000902	7	6.043136	SUNSET BLVD & RAMP	Actuated
100000902	8	6.281858	SUNSET BLVD & RAMP	Actuated
100000902	9	9.110877	SUNSET BLVD & RAMP	Actuated
100000902	10	6.187938	SUNSET BLVD & RAMP	Actuated
100000903	1	27.198139	RAMP & SUNSET BLVD	Actuated
100000903	2	27.679385	RAMP & SUNSET BLVD	Actuated
100000903	3	26.909759	RAMP & SUNSET BLVD	Actuated
100000903	4	26.989059	RAMP & SUNSET BLVD	Actuated
100000903	5	26.419519	RAMP & SUNSET BLVD	Actuated
100000903	6	26.931181	RAMP & SUNSET BLVD	Actuated
100000903	7	26.177977	RAMP & SUNSET BLVD	Actuated
100000903	8	27.352731	RAMP & SUNSET BLVD	Actuated
100000903	9	27.317305	RAMP & SUNSET BLVD	Actuated
100000903	10	27.317347	RAMP & SUNSET BLVD	Actuated

Node	Run	Delay	Intersection	Control Type
4	1	9.755507	WESTERN LN & BROAD RIVER RD	Actuated
4	2	10.103803	WESTERN LN & BROAD RIVER RD	Actuated
4	3	9.844685	WESTERN LN & BROAD RIVER RD	Actuated
4	4	10.092454	WESTERN LN & BROAD RIVER RD	Actuated
4	5	10.761192	WESTERN LN & BROAD RIVER RD	Actuated
4	6	10.136449	WESTERN LN & BROAD RIVER RD	Actuated
4	7	9.311453	WESTERN LN & BROAD RIVER RD	Actuated
4	8	10.278188	WESTERN LN & BROAD RIVER RD	Actuated
4	9	10.711548	WESTERN LN & BROAD RIVER RD	Actuated
4	10	10.680996	WESTERN LN & BROAD RIVER RD	Actuated
40	1	38.482505	I-26 EB EXIT 106 OFF RAMP, ST ANDREWS RD, I-26 WB TO BURNING TREE RD AND TO ST ANDREWS RD OFF RAMP,	Actuated
40	2	38.92066	I-26 EB EXIT 106 OFF RAMP, ST ANDREWS RD, I-26 WB TO BURNING TREE RD AND TO ST ANDREWS RD OFF RAMP,	Actuated
40	3	36.727659	I-26 EB EXIT 106 OFF RAMP, ST ANDREWS RD, I-26 WB TO BURNING TREE RD AND TO ST ANDREWS RD OFF RAMP,	Actuated
40	4	37.033981	I-26 EB EXIT 106 OFF RAMP, ST ANDREWS RD, I-26 WB TO BURNING TREE RD AND TO ST ANDREWS RD OFF RAMP,	Actuated
40	5	37.121975	I-26 EB EXIT 106 OFF RAMP, ST ANDREWS RD, I-26 WB TO BURNING TREE RD AND TO ST ANDREWS RD OFF RAMP,	Actuated
40	6	40.015611	I-26 EB EXIT 106 OFF RAMP, ST ANDREWS RD, I-26 WB TO BURNING TREE RD AND TO ST ANDREWS RD OFF RAMP,	Actuated
40	7	37.019937	I-26 EB EXIT 106 OFF RAMP, ST ANDREWS RD, I-26 WB TO BURNING TREE RD AND TO ST ANDREWS RD OFF RAMP,	Actuated
40	8	35.921717	I-26 EB EXIT 106 OFF RAMP, ST ANDREWS RD, I-26 WB TO BURNING TREE RD AND TO ST ANDREWS RD OFF RAMP,	Actuated
40	9	37.971679	I-26 EB EXIT 106 OFF RAMP, ST ANDREWS RD, I-26 WB TO BURNING TREE RD AND TO ST ANDREWS RD OFF RAMP,	Actuated
40	10	36.745543	I-26 EB EXIT 106 OFF RAMP, ST ANDREWS RD, I-26 WB TO BURNING TREE RD AND TO ST ANDREWS RD OFF RAMP,	Actuated
52	1	21.353893	BUSH RIVER RD, 6778 (SE) & 6777 (E)	Actuated
52	2	21.536576	BUSH RIVER RD, 6778 (SE) & 6777 (E)	Actuated
52	3	20.402805	BUSH RIVER RD, 6778 (SE) & 6777 (E)	Actuated
52	4	22.371295	BUSH RIVER RD, 6778 (SE) & 6777 (E)	Actuated
52	5	21.383074	BUSH RIVER RD, 6778 (SE) & 6777 (E)	Actuated
52	6	21.100795	BUSH RIVER RD, 6778 (SE) & 6777 (E)	Actuated
52	7	22.432273	BUSH RIVER RD, 6778 (SE) & 6777 (E)	Actuated
52	8	20.960358	BUSH RIVER RD, 6778 (SE) & 6777 (E)	Actuated
52	9	22.487962	BUSH RIVER RD, 6778 (SE) & 6777 (E)	Actuated
52	10	21.717727	BUSH RIVER RD, 6778 (SE) & 6777 (E)	Actuated
54	1	20.579765	EXIT 65 RAMP TO US 176, BROAD RIVER RD & RAMP	Actuated
54	2	18.912941	EXIT 65 RAMP TO US 176, BROAD RIVER RD & RAMP	Actuated
54	3	29.200795	EXIT 65 RAMP TO US 176, BROAD RIVER RD & RAMP	Actuated
54	4	23.794518	EXIT 65 RAMP TO US 176, BROAD RIVER RD & RAMP	Actuated
54	5	23.699684	EXIT 65 RAMP TO US 176, BROAD RIVER RD & RAMP	Actuated
54	6	9.478805	EXIT 65 RAMP TO US 176, BROAD RIVER RD & RAMP	Actuated
54	7	13.904847	EXIT 65 RAMP TO US 176, BROAD RIVER RD & RAMP	Actuated
54	8	23.583425	EXIT 65 RAMP TO US 176, BROAD RIVER RD & RAMP	Actuated
54	9	16.821945	EXIT 65 RAMP TO US 176, BROAD RIVER RD & RAMP	Actuated
54	10	16.940841	EXIT 65 RAMP TO US 176, BROAD RIVER RD & RAMP	Actuated
65	1	0	6564 (W) & RAMP	Yield
65	2	0	6564 (W) & RAMP	Yield
65	3	0	6564 (W) & RAMP	Yield
65	4	0	6564 (W) & RAMP	Yield
65	5	0	6564 (W) & RAMP	Yield
65	6	0	6564 (W) & RAMP	Yield
65	7	0	6564 (W) & RAMP	Yield
65	8	0	6564 (W) & RAMP	Yield
65	9	0	6564 (W) & RAMP	Yield
65	10	0	6564 (W) & RAMP	Yield
71	1	1.701014	PINEY GROVE RD, I-26 EB EXIT 104 OFF RAMP & I-26 EB EXIT 104 ON RAMP	Actuated
71	2	1.544258	PINEY GROVE RD, I-26 EB EXIT 104 OFF RAMP & I-26 EB EXIT 104 ON RAMP	Actuated
71	3	1.999036	PINEY GROVE RD, I-26 EB EXIT 104 OFF RAMP & I-26 EB EXIT 104 ON RAMP	Actuated
71	4	1.497642	PINEY GROVE RD, I-26 EB EXIT 104 OFF RAMP & I-26 EB EXIT 104 ON RAMP	Actuated
71	5	1.701584	PINEY GROVE RD, I-26 EB EXIT 104 OFF RAMP & I-26 EB EXIT 104 ON RAMP	Actuated
71	6	1.526446	PINEY GROVE RD, I-26 EB EXIT 104 OFF RAMP & I-26 EB EXIT 104 ON RAMP	Actuated
71	7	1.646295	PINEY GROVE RD, I-26 EB EXIT 104 OFF RAMP & I-26 EB EXIT 104 ON RAMP	Actuated
71	8	1.298405	PINEY GROVE RD, I-26 EB EXIT 104 OFF RAMP & I-26 EB EXIT 104 ON RAMP	Actuated
71	9	1.996695	PINEY GROVE RD, I-26 EB EXIT 104 OFF RAMP & I-26 EB EXIT 104 ON RAMP	Actuated
71	10	1.201743	PINEY GROVE RD, I-26 EB EXIT 104 OFF RAMP & I-26 EB EXIT 104 ON RAMP	Actuated
74	1	0	6579 (SW), 6581 (W) & RAMP	Yield
74	2	0	6579 (SW), 6581 (W) & RAMP	Yield
74	3	0	6579 (SW), 6581 (W) & RAMP	Yield
74	4	0	6579 (SW), 6581 (W) & RAMP	Yield
74	5	0	6579 (SW), 6581 (W) & RAMP	Yield
74	6	0	6579 (SW), 6581 (W) & RAMP	Yield
74	7	0	6579 (SW), 6581 (W) & RAMP	Yield
74	8	0	6579 (SW), 6581 (W) & RAMP	Yield
74	9	0	6579 (SW), 6581 (W) & RAMP	Yield
74	10	0	6579 (SW), 6581 (W) & RAMP	Yield
79	1	36.590055	6584 (NE), BROAD RIVER RD, 6583 (SW), 6587 (W) & 6581 (E)	Actuated
79	2	37.939529	6584 (NE), BROAD RIVER RD, 6583 (SW), 6587 (W) & 6581 (E)	Actuated
79	3	37.623422	6584 (NE), BROAD RIVER RD, 6583 (SW), 6587 (W) & 6581 (E)	Actuated
79	4	35.617387	6584 (NE), BROAD RIVER RD, 6583 (SW), 6587 (W) & 6581 (E)	Actuated
79	5	36.151468	6584 (NE), BROAD RIVER RD, 6583 (SW), 6587 (W) & 6581 (E)	Actuated
79	6	35.852917	6584 (NE), BROAD RIVER RD, 6583 (SW), 6587 (W) & 6581 (E)	Actuated
79	7	34.971942	6584 (NE), BROAD RIVER RD, 6583 (SW), 6587 (W) & 6581 (E)	Actuated
79	8	37.14279	6584 (NE), BROAD RIVER RD, 6583 (SW), 6587 (W) & 6581 (E)	Actuated

Node	Run	Delay	Intersection	Control Type
79	9	35.525716	6584 (NE), BROAD RIVER RD, 6583 (SW), 6587 (W) & 6581 (E)	Actuated
79	10	34.534668	6584 (NE), BROAD RIVER RD, 6583 (SW), 6587 (W) & 6581 (E)	Actuated
85	1	0.180571	I-26 WB EXIT 106 ON RAMP	Yield
85	2	0.232988	I-26 WB EXIT 106 ON RAMP	Yield
85	3	0.05301	I-26 WB EXIT 106 ON RAMP	Yield
85	4	0	I-26 WB EXIT 106 ON RAMP	Yield
85	5	0	I-26 WB EXIT 106 ON RAMP	Yield
85	6	0.120918	I-26 WB EXIT 106 ON RAMP	Yield
85	7	0.278468	I-26 WB EXIT 106 ON RAMP	Yield
85	8	0.055606	I-26 WB EXIT 106 ON RAMP	Yield
85	9	0	I-26 WB EXIT 106 ON RAMP	Yield
85	10	0	I-26 WB EXIT 106 ON RAMP	Yield
99	1	40.005777	I-26 WB EXIT 103 OFF RAMP, HARBISON BLVD, I-26 WB EXIT 103 ON RAMP & 6770 (SW)	Actuated
99	2	44.228001	I-26 WB EXIT 103 OFF RAMP, HARBISON BLVD, I-26 WB EXIT 103 ON RAMP & 6770 (SW)	Actuated
99	3	42.186752	I-26 WB EXIT 103 OFF RAMP, HARBISON BLVD, I-26 WB EXIT 103 ON RAMP & 6770 (SW)	Actuated
99	4	43.762772	I-26 WB EXIT 103 OFF RAMP, HARBISON BLVD, I-26 WB EXIT 103 ON RAMP & 6770 (SW)	Actuated
99	5	47.032832	I-26 WB EXIT 103 OFF RAMP, HARBISON BLVD, I-26 WB EXIT 103 ON RAMP & 6770 (SW)	Actuated
99	6	43.306813	I-26 WB EXIT 103 OFF RAMP, HARBISON BLVD, I-26 WB EXIT 103 ON RAMP & 6770 (SW)	Actuated
99	7	41.65365	I-26 WB EXIT 103 OFF RAMP, HARBISON BLVD, I-26 WB EXIT 103 ON RAMP & 6770 (SW)	Actuated
99	8	50.368348	I-26 WB EXIT 103 OFF RAMP, HARBISON BLVD, I-26 WB EXIT 103 ON RAMP & 6770 (SW)	Actuated
99	9	40.469758	I-26 WB EXIT 103 OFF RAMP, HARBISON BLVD, I-26 WB EXIT 103 ON RAMP & 6770 (SW)	Actuated
99	10	46.190583	I-26 WB EXIT 103 OFF RAMP, HARBISON BLVD, I-26 WB EXIT 103 ON RAMP & 6770 (SW)	Actuated
104	1	10.810234	HARBISON BLVD, I-26 EB EXIT 103 OFF RAMP, 6770 (NE) & I-26 EB EXIT 103 ON RAMP	Actuated
104	2	15.609792	HARBISON BLVD, I-26 EB EXIT 103 OFF RAMP, 6770 (NE) & I-26 EB EXIT 103 ON RAMP	Actuated
104	3	10.749945	HARBISON BLVD, I-26 EB EXIT 103 OFF RAMP, 6770 (NE) & I-26 EB EXIT 103 ON RAMP	Actuated
104	4	16.760968	HARBISON BLVD, I-26 EB EXIT 103 OFF RAMP, 6770 (NE) & I-26 EB EXIT 103 ON RAMP	Actuated
104	5	20.409934	HARBISON BLVD, I-26 EB EXIT 103 OFF RAMP, 6770 (NE) & I-26 EB EXIT 103 ON RAMP	Actuated
104	6	13.379683	HARBISON BLVD, I-26 EB EXIT 103 OFF RAMP, 6770 (NE) & I-26 EB EXIT 103 ON RAMP	Actuated
104	7	19.769508	HARBISON BLVD, I-26 EB EXIT 103 OFF RAMP, 6770 (NE) & I-26 EB EXIT 103 ON RAMP	Actuated
104	8	21.371419	HARBISON BLVD, I-26 EB EXIT 103 OFF RAMP, 6770 (NE) & I-26 EB EXIT 103 ON RAMP	Actuated
104	9	13.249462	HARBISON BLVD, I-26 EB EXIT 103 OFF RAMP, 6770 (NE) & I-26 EB EXIT 103 ON RAMP	Actuated
104	10	21.595392	HARBISON BLVD, I-26 EB EXIT 103 OFF RAMP, 6770 (NE) & I-26 EB EXIT 103 ON RAMP	Actuated
107	1	15.595308	RAMP, COLONIAL LIFE BLVD W & 6681 (NW)	Actuated
107	2	14.711521	RAMP, COLONIAL LIFE BLVD W & 6681 (NW)	Actuated
107	3	12.805427	RAMP, COLONIAL LIFE BLVD W & 6681 (NW)	Actuated
107	4	15.771011	RAMP, COLONIAL LIFE BLVD W & 6681 (NW)	Actuated
107	5	14.473831	RAMP, COLONIAL LIFE BLVD W & 6681 (NW)	Actuated
107	6	15.626975	RAMP, COLONIAL LIFE BLVD W & 6681 (NW)	Actuated
107	7	16.381812	RAMP, COLONIAL LIFE BLVD W & 6681 (NW)	Actuated
107	8	15.205429	RAMP, COLONIAL LIFE BLVD W & 6681 (NW)	Actuated
107	9	19.117158	RAMP, COLONIAL LIFE BLVD W & 6681 (NW)	Actuated
107	10	15.376767	RAMP, COLONIAL LIFE BLVD W & 6681 (NW)	Actuated
108	1	21.778605	COLONIAL LIFE BLVD W, 6676 (NW) & 6688 (SE)	Actuated
108	2	21.251755	COLONIAL LIFE BLVD W, 6676 (NW) & 6688 (SE)	Actuated
108	3	20.112998	COLONIAL LIFE BLVD W, 6676 (NW) & 6688 (SE)	Actuated
108	4	20.988479	COLONIAL LIFE BLVD W, 6676 (NW) & 6688 (SE)	Actuated
108	5	20.92284	COLONIAL LIFE BLVD W, 6676 (NW) & 6688 (SE)	Actuated
108	6	21.284642	COLONIAL LIFE BLVD W, 6676 (NW) & 6688 (SE)	Actuated
108	7	20.704322	COLONIAL LIFE BLVD W, 6676 (NW) & 6688 (SE)	Actuated
108	8	20.33631	COLONIAL LIFE BLVD W, 6676 (NW) & 6688 (SE)	Actuated
108	9	20.578451	COLONIAL LIFE BLVD W, 6676 (NW) & 6688 (SE)	Actuated
108	10	20.162772	COLONIAL LIFE BLVD W, 6676 (NW) & 6688 (SE)	Actuated
118	1	7.342519	BUSH RIVER RD & RAMP	Actuated
118	2	5.123839	BUSH RIVER RD & RAMP	Actuated
118	3	5.500164	BUSH RIVER RD & RAMP	Actuated
118	4	8.154385	BUSH RIVER RD & RAMP	Actuated
118	5	10.246171	BUSH RIVER RD & RAMP	Actuated
118	6	6.509946	BUSH RIVER RD & RAMP	Actuated
118	7	4.846482	BUSH RIVER RD & RAMP	Actuated
118	8	5.599612	BUSH RIVER RD & RAMP	Actuated
118	9	4.985802	BUSH RIVER RD & RAMP	Actuated
118	10	9.909639	BUSH RIVER RD & RAMP	Actuated
120	1	15.881261	BUSH RIVER RD & 6741 (NE)	Actuated
120	2	16.427933	BUSH RIVER RD & 6741 (NE)	Actuated
120	3	16.290935	BUSH RIVER RD & 6741 (NE)	Actuated
120	4	16.6145	BUSH RIVER RD & 6741 (NE)	Actuated
120	5	16.981164	BUSH RIVER RD & 6741 (NE)	Actuated
120	6	14.818435	BUSH RIVER RD & 6741 (NE)	Actuated
120	7	16.585902	BUSH RIVER RD & 6741 (NE)	Actuated
120	8	16.84456	BUSH RIVER RD & 6741 (NE)	Actuated
120	9	15.109102	BUSH RIVER RD & 6741 (NE)	Actuated
120	10	16.533805	BUSH RIVER RD & 6741 (NE)	Actuated
123	1	0	I-26 EB EXIT 103 ON RAMP & 6718 (W)	Yield
123	2	0	I-26 EB EXIT 103 ON RAMP & 6718 (W)	Yield
123	3	0	I-26 EB EXIT 103 ON RAMP & 6718 (W)	Yield
123	4	0	I-26 EB EXIT 103 ON RAMP & 6718 (W)	Yield
123	5	0	I-26 EB EXIT 103 ON RAMP & 6718 (W)	Yield
123	6	0	I-26 EB EXIT 103 ON RAMP & 6718 (W)	Yield

Node	Run	Delay	Intersection	Control Type
123	7	0	I-26 EB EXIT 103 ON RAMP & 6718 (W)	Yield
123	8	0	I-26 EB EXIT 103 ON RAMP & 6718 (W)	Yield
123	9	0	I-26 EB EXIT 103 ON RAMP & 6718 (W)	Yield
123	10	0	I-26 EB EXIT 103 ON RAMP & 6718 (W)	Yield
127	1	13.574031	WOODLAND HILLS RD, ST ANDREWS RD, I-26 EB EXIT 106 OFF RAMP & 6772 (NE)	Actuated
127	2	12.209888	WOODLAND HILLS RD, ST ANDREWS RD, I-26 EB EXIT 106 OFF RAMP & 6772 (NE)	Actuated
127	3	15.249215	WOODLAND HILLS RD, ST ANDREWS RD, I-26 EB EXIT 106 OFF RAMP & 6772 (NE)	Actuated
127	4	13.424465	WOODLAND HILLS RD, ST ANDREWS RD, I-26 EB EXIT 106 OFF RAMP & 6772 (NE)	Actuated
127	5	14.471688	WOODLAND HILLS RD, ST ANDREWS RD, I-26 EB EXIT 106 OFF RAMP & 6772 (NE)	Actuated
127	6	13.916323	WOODLAND HILLS RD, ST ANDREWS RD, I-26 EB EXIT 106 OFF RAMP & 6772 (NE)	Actuated
127	7	10.841758	WOODLAND HILLS RD, ST ANDREWS RD, I-26 EB EXIT 106 OFF RAMP & 6772 (NE)	Actuated
127	8	12.262402	WOODLAND HILLS RD, ST ANDREWS RD, I-26 EB EXIT 106 OFF RAMP & 6772 (NE)	Actuated
127	9	12.122798	WOODLAND HILLS RD, ST ANDREWS RD, I-26 EB EXIT 106 OFF RAMP & 6772 (NE)	Actuated
127	10	12.989535	WOODLAND HILLS RD, ST ANDREWS RD, I-26 EB EXIT 106 OFF RAMP & 6772 (NE)	Actuated
133	1	0	FRONTAGE RD & 6747 (SE)	
133	2	0	FRONTAGE RD & 6747 (SE)	
133	3	0	FRONTAGE RD & 6747 (SE)	
133	4	0	FRONTAGE RD & 6747 (SE)	
133	5	0	FRONTAGE RD & 6747 (SE)	
133	6	0	FRONTAGE RD & 6747 (SE)	
133	7	0	FRONTAGE RD & 6747 (SE)	
133	8	0	FRONTAGE RD & 6747 (SE)	
133	9	0	FRONTAGE RD & 6747 (SE)	
133	10	0	FRONTAGE RD & 6747 (SE)	
134	1	12.436734	6563 (N), 6777 (W) & BUSH RIVER RD	Actuated
134	2	13.144901	6563 (N), 6777 (W) & BUSH RIVER RD	Actuated
134	3	11.226035	6563 (N), 6777 (W) & BUSH RIVER RD	Actuated
134	4	12.492607	6563 (N), 6777 (W) & BUSH RIVER RD	Actuated
134	5	10.932253	6563 (N), 6777 (W) & BUSH RIVER RD	Actuated
134	6	12.793611	6563 (N), 6777 (W) & BUSH RIVER RD	Actuated
134	7	11.086388	6563 (N), 6777 (W) & BUSH RIVER RD	Actuated
134	8	10.538148	6563 (N), 6777 (W) & BUSH RIVER RD	Actuated
134	9	10.521787	6563 (N), 6777 (W) & BUSH RIVER RD	Actuated
134	10	11.63892	6563 (N), 6777 (W) & BUSH RIVER RD	Actuated
136	1	4.333379	EXIT 63 RAMP TO BUSH RIVER RD, BUSH RIVER RD & RAMP	Actuated
136	2	6.279985	EXIT 63 RAMP TO BUSH RIVER RD, BUSH RIVER RD & RAMP	Actuated
136	3	4.919744	EXIT 63 RAMP TO BUSH RIVER RD, BUSH RIVER RD & RAMP	Actuated
136	4	5.461856	EXIT 63 RAMP TO BUSH RIVER RD, BUSH RIVER RD & RAMP	Actuated
136	5	5.404248	EXIT 63 RAMP TO BUSH RIVER RD, BUSH RIVER RD & RAMP	Actuated
136	6	4.757579	EXIT 63 RAMP TO BUSH RIVER RD, BUSH RIVER RD & RAMP	Actuated
136	7	4.200203	EXIT 63 RAMP TO BUSH RIVER RD, BUSH RIVER RD & RAMP	Actuated
136	8	4.969488	EXIT 63 RAMP TO BUSH RIVER RD, BUSH RIVER RD & RAMP	Actuated
136	9	4.518629	EXIT 63 RAMP TO BUSH RIVER RD, BUSH RIVER RD & RAMP	Actuated
136	10	4.578801	EXIT 63 RAMP TO BUSH RIVER RD, BUSH RIVER RD & RAMP	Actuated
141	1	13.571308	BUSH RIVER RD, 6752 (NE) & 6751 (SW)	Actuated
141	2	23.774871	BUSH RIVER RD, 6752 (NE) & 6751 (SW)	Actuated
141	3	11.064773	BUSH RIVER RD, 6752 (NE) & 6751 (SW)	Actuated
141	4	12.807565	BUSH RIVER RD, 6752 (NE) & 6751 (SW)	Actuated
141	5	24.631501	BUSH RIVER RD, 6752 (NE) & 6751 (SW)	Actuated
141	6	11.145443	BUSH RIVER RD, 6752 (NE) & 6751 (SW)	Actuated
141	7	12.622077	BUSH RIVER RD, 6752 (NE) & 6751 (SW)	Actuated
141	8	13.399411	BUSH RIVER RD, 6752 (NE) & 6751 (SW)	Actuated
141	9	12.167295	BUSH RIVER RD, 6752 (NE) & 6751 (SW)	Actuated
141	10	20.224541	BUSH RIVER RD, 6752 (NE) & 6751 (SW)	Actuated
150	1	23.242852	BUSH RIVER RD & 6782 (W)	Actuated
150	2	21.64244	BUSH RIVER RD & 6782 (W)	Actuated
150	3	22.76654	BUSH RIVER RD & 6782 (W)	Actuated
150	4	22.591681	BUSH RIVER RD & 6782 (W)	Actuated
150	5	21.703747	BUSH RIVER RD & 6782 (W)	Actuated
150	6	21.765517	BUSH RIVER RD & 6782 (W)	Actuated
150	7	22.757184	BUSH RIVER RD & 6782 (W)	Actuated
150	8	21.955293	BUSH RIVER RD & 6782 (W)	Actuated
150	9	22.900256	BUSH RIVER RD & 6782 (W)	Actuated
150	10	21.806196	BUSH RIVER RD & 6782 (W)	Actuated
151	1	8.637382	6782 (E), 6554 (SE) & BUSH RIVER RD	Actuated
151	2	8.840852	6782 (E), 6554 (SE) & BUSH RIVER RD	Actuated
151	3	8.131341	6782 (E), 6554 (SE) & BUSH RIVER RD	Actuated
151	4	7.615095	6782 (E), 6554 (SE) & BUSH RIVER RD	Actuated
151	5	8.523593	6782 (E), 6554 (SE) & BUSH RIVER RD	Actuated
151	6	8.688048	6782 (E), 6554 (SE) & BUSH RIVER RD	Actuated
151	7	8.792136	6782 (E), 6554 (SE) & BUSH RIVER RD	Actuated
151	8	8.191882	6782 (E), 6554 (SE) & BUSH RIVER RD	Actuated
151	9	8.524671	6782 (E), 6554 (SE) & BUSH RIVER RD	Actuated
151	10	8.990995	6782 (E), 6554 (SE) & BUSH RIVER RD	Actuated
100000093	1	12.512313	SUNSET BLVD & RAMP	Actuated
100000093	2	12.647356	SUNSET BLVD & RAMP	Actuated
100000093	3	13.411971	SUNSET BLVD & RAMP	Actuated
100000093	4	13.145123	SUNSET BLVD & RAMP	Actuated

Node	Run	Delay	Intersection	Control Type
100000093	5	12.743724	SUNSET BLVD & RAMP	Actuated
100000093	6	13.202868	SUNSET BLVD & RAMP	Actuated
100000093	7	12.869343	SUNSET BLVD & RAMP	Actuated
100000093	8	12.088661	SUNSET BLVD & RAMP	Actuated
100000093	9	13.822924	SUNSET BLVD & RAMP	Actuated
100000093	10	12.935505	SUNSET BLVD & RAMP	Actuated
100000120	1	113.083418	CORLEY MILL RD, SUNSET BLVD & GINNY LN	Actuated
100000120	2	110.384716	CORLEY MILL RD, SUNSET BLVD & GINNY LN	Actuated
100000120	3	101.817914	CORLEY MILL RD, SUNSET BLVD & GINNY LN	Actuated
100000120	4	113.454743	CORLEY MILL RD, SUNSET BLVD & GINNY LN	Actuated
100000120	5	111.871691	CORLEY MILL RD, SUNSET BLVD & GINNY LN	Actuated
100000120	6	120.788246	CORLEY MILL RD, SUNSET BLVD & GINNY LN	Actuated
100000120	7	113.127932	CORLEY MILL RD, SUNSET BLVD & GINNY LN	Actuated
100000120	8	106.905774	CORLEY MILL RD, SUNSET BLVD & GINNY LN	Actuated
100000120	9	107.655888	CORLEY MILL RD, SUNSET BLVD & GINNY LN	Actuated
100000120	10	107.885866	CORLEY MILL RD, SUNSET BLVD & GINNY LN	Actuated
100000134	1	20.409593	SUNSET BLVD & RAMP	Actuated
100000134	2	17.628786	SUNSET BLVD & RAMP	Actuated
100000134	3	16.037461	SUNSET BLVD & RAMP	Actuated
100000134	4	19.906034	SUNSET BLVD & RAMP	Actuated
100000134	5	20.059166	SUNSET BLVD & RAMP	Actuated
100000134	6	22.687078	SUNSET BLVD & RAMP	Actuated
100000134	7	18.351997	SUNSET BLVD & RAMP	Actuated
100000134	8	20.375595	SUNSET BLVD & RAMP	Actuated
100000134	9	17.80736	SUNSET BLVD & RAMP	Actuated
100000134	10	17.372411	SUNSET BLVD & RAMP	Actuated
100000135	1	6.13651	SUNSET BLVD & RAMP	Actuated
100000135	2	6.243679	SUNSET BLVD & RAMP	Actuated
100000135	3	6.014925	SUNSET BLVD & RAMP	Actuated
100000135	4	6.934995	SUNSET BLVD & RAMP	Actuated
100000135	5	6.230777	SUNSET BLVD & RAMP	Actuated
100000135	6	6.306606	SUNSET BLVD & RAMP	Actuated
100000135	7	6.308124	SUNSET BLVD & RAMP	Actuated
100000135	8	5.795072	SUNSET BLVD & RAMP	Actuated
100000135	9	6.440518	SUNSET BLVD & RAMP	Actuated
100000135	10	6.399005	SUNSET BLVD & RAMP	Actuated
100000136	1	26.897083	SUNSET BLVD, CROMER RD & DAVEGA DR	Actuated
100000136	2	24.979395	SUNSET BLVD, CROMER RD & DAVEGA DR	Actuated
100000136	3	22.525557	SUNSET BLVD, CROMER RD & DAVEGA DR	Actuated
100000136	4	27.369919	SUNSET BLVD, CROMER RD & DAVEGA DR	Actuated
100000136	5	20.95373	SUNSET BLVD, CROMER RD & DAVEGA DR	Actuated
100000136	6	21.009348	SUNSET BLVD, CROMER RD & DAVEGA DR	Actuated
100000136	7	21.347993	SUNSET BLVD, CROMER RD & DAVEGA DR	Actuated
100000136	8	21.929576	SUNSET BLVD, CROMER RD & DAVEGA DR	Actuated
100000136	9	21.191367	SUNSET BLVD, CROMER RD & DAVEGA DR	Actuated
100000136	10	26.876477	SUNSET BLVD, CROMER RD & DAVEGA DR	Actuated
100000144	1	22.423153	W. HOSPITAL DR, SUNSET BLVD & SUNSET CT	Actuated
100000144	2	26.657799	W. HOSPITAL DR, SUNSET BLVD & SUNSET CT	Actuated
100000144	3	38.008386	W. HOSPITAL DR, SUNSET BLVD & SUNSET CT	Actuated
100000144	4	17.695233	W. HOSPITAL DR, SUNSET BLVD & SUNSET CT	Actuated
100000144	5	18.219755	W. HOSPITAL DR, SUNSET BLVD & SUNSET CT	Actuated
100000144	6	30.88505	W. HOSPITAL DR, SUNSET BLVD & SUNSET CT	Actuated
100000144	7	17.910992	W. HOSPITAL DR, SUNSET BLVD & SUNSET CT	Actuated
100000144	8	34.48139	W. HOSPITAL DR, SUNSET BLVD & SUNSET CT	Actuated
100000144	9	30.073642	W. HOSPITAL DR, SUNSET BLVD & SUNSET CT	Actuated
100000144	10	39.806226	W. HOSPITAL DR, SUNSET BLVD & SUNSET CT	Actuated
100000150	1	2.299984	I-26 EB EXIT 101 OFF RAMP & BROAD RIVER RD	Stop
100000150	2	2.174637	I-26 EB EXIT 101 OFF RAMP & BROAD RIVER RD	Stop
100000150	3	2.786307	I-26 EB EXIT 101 OFF RAMP & BROAD RIVER RD	Stop
100000150	4	2.839145	I-26 EB EXIT 101 OFF RAMP & BROAD RIVER RD	Stop
100000150	5	2.214114	I-26 EB EXIT 101 OFF RAMP & BROAD RIVER RD	Stop
100000150	6	2.320141	I-26 EB EXIT 101 OFF RAMP & BROAD RIVER RD	Stop
100000150	7	7.822741	I-26 EB EXIT 101 OFF RAMP & BROAD RIVER RD	Stop
100000150	8	1.747533	I-26 EB EXIT 101 OFF RAMP & BROAD RIVER RD	Stop
100000150	9	2.074349	I-26 EB EXIT 101 OFF RAMP & BROAD RIVER RD	Stop
100000150	10	1.938042	I-26 EB EXIT 101 OFF RAMP & BROAD RIVER RD	Stop
100000151	1	5.38999	BROAD RIVER RD & I-26 EB EXIT 101 ON RAMP	Actuated
100000151	2	4.646251	BROAD RIVER RD & I-26 EB EXIT 101 ON RAMP	Actuated
100000151	3	5.153936	BROAD RIVER RD & I-26 EB EXIT 101 ON RAMP	Actuated
100000151	4	4.956987	BROAD RIVER RD & I-26 EB EXIT 101 ON RAMP	Actuated
100000151	5	4.244556	BROAD RIVER RD & I-26 EB EXIT 101 ON RAMP	Actuated
100000151	6	4.623465	BROAD RIVER RD & I-26 EB EXIT 101 ON RAMP	Actuated
100000151	7	4.683662	BROAD RIVER RD & I-26 EB EXIT 101 ON RAMP	Actuated
100000151	8	5.281575	BROAD RIVER RD & I-26 EB EXIT 101 ON RAMP	Actuated
100000151	9	5.094063	BROAD RIVER RD & I-26 EB EXIT 101 ON RAMP	Actuated
100000151	10	5.092087	BROAD RIVER RD & I-26 EB EXIT 101 ON RAMP	Actuated
100000160	1	0	BROAD RIVER RD & I-26 WB EXIT 101 ON RAMP	
100000160	2	0	BROAD RIVER RD & I-26 WB EXIT 101 ON RAMP	

Node	Run	Delay	Intersection	Control Type
100000160	3	0	BROAD RIVER RD & I-26 WB EXIT 101 ON RAMP	
100000160	4	0	BROAD RIVER RD & I-26 WB EXIT 101 ON RAMP	
100000160	5	0	BROAD RIVER RD & I-26 WB EXIT 101 ON RAMP	
100000160	6	0	BROAD RIVER RD & I-26 WB EXIT 101 ON RAMP	
100000160	7	0	BROAD RIVER RD & I-26 WB EXIT 101 ON RAMP	
100000160	8	0	BROAD RIVER RD & I-26 WB EXIT 101 ON RAMP	
100000160	9	0	BROAD RIVER RD & I-26 WB EXIT 101 ON RAMP	
100000160	10	0	BROAD RIVER RD & I-26 WB EXIT 101 ON RAMP	
100000163	1	73.322407	MCSWAIN DR, SUNSET BLVD & CHRIS DR	Actuated
100000163	2	20.844333	MCSWAIN DR, SUNSET BLVD & CHRIS DR	Actuated
100000163	3	70.302062	MCSWAIN DR, SUNSET BLVD & CHRIS DR	Actuated
100000163	4	78.885659	MCSWAIN DR, SUNSET BLVD & CHRIS DR	Actuated
100000163	5	36.710839	MCSWAIN DR, SUNSET BLVD & CHRIS DR	Actuated
100000163	6	59.850126	MCSWAIN DR, SUNSET BLVD & CHRIS DR	Actuated
100000163	7	40.071431	MCSWAIN DR, SUNSET BLVD & CHRIS DR	Actuated
100000163	8	86.735969	MCSWAIN DR, SUNSET BLVD & CHRIS DR	Actuated
100000163	9	79.634396	MCSWAIN DR, SUNSET BLVD & CHRIS DR	Actuated
100000163	10	47.738792	MCSWAIN DR, SUNSET BLVD & CHRIS DR	Actuated
100000165	1	24.034624	HARBISON BLVD & WOODCROSS DR	Actuated
100000165	2	31.997564	HARBISON BLVD & WOODCROSS DR	Actuated
100000165	3	27.885785	HARBISON BLVD & WOODCROSS DR	Actuated
100000165	4	26.678577	HARBISON BLVD & WOODCROSS DR	Actuated
100000165	5	23.260626	HARBISON BLVD & WOODCROSS DR	Actuated
100000165	6	35.670552	HARBISON BLVD & WOODCROSS DR	Actuated
100000165	7	33.109223	HARBISON BLVD & WOODCROSS DR	Actuated
100000165	8	25.528816	HARBISON BLVD & WOODCROSS DR	Actuated
100000165	9	52.309666	HARBISON BLVD & WOODCROSS DR	Actuated
100000165	10	32.097691	HARBISON BLVD & WOODCROSS DR	Actuated
100000168	1	11.371632	SUNSET BLVD & LEAPHART RD	Actuated
100000168	2	12.651039	SUNSET BLVD & LEAPHART RD	Actuated
100000168	3	10.823075	SUNSET BLVD & LEAPHART RD	Actuated
100000168	4	11.288816	SUNSET BLVD & LEAPHART RD	Actuated
100000168	5	11.084843	SUNSET BLVD & LEAPHART RD	Actuated
100000168	6	11.997965	SUNSET BLVD & LEAPHART RD	Actuated
100000168	7	10.366367	SUNSET BLVD & LEAPHART RD	Actuated
100000168	8	11.706355	SUNSET BLVD & LEAPHART RD	Actuated
100000168	9	10.381896	SUNSET BLVD & LEAPHART RD	Actuated
100000168	10	11.704214	SUNSET BLVD & LEAPHART RD	Actuated
100000169	1	0	LAKE MURRAY BLVD & I-26 WB EXIT 102 ON RAMP	
100000169	2	0	LAKE MURRAY BLVD & I-26 WB EXIT 102 ON RAMP	
100000169	3	0	LAKE MURRAY BLVD & I-26 WB EXIT 102 ON RAMP	
100000169	4	0	LAKE MURRAY BLVD & I-26 WB EXIT 102 ON RAMP	
100000169	5	0	LAKE MURRAY BLVD & I-26 WB EXIT 102 ON RAMP	
100000169	6	0	LAKE MURRAY BLVD & I-26 WB EXIT 102 ON RAMP	
100000169	7	0	LAKE MURRAY BLVD & I-26 WB EXIT 102 ON RAMP	
100000169	8	0	LAKE MURRAY BLVD & I-26 WB EXIT 102 ON RAMP	
100000169	9	0	LAKE MURRAY BLVD & I-26 WB EXIT 102 ON RAMP	
100000169	10	0	LAKE MURRAY BLVD & I-26 WB EXIT 102 ON RAMP	
100000174	1	9.015541	PINEY GROVE RD, I-26 EB EXIT 104 OFF RAMP & I-26 EB EXIT 104 ON RAMP	Actuated
100000174	2	8.526645	PINEY GROVE RD, I-26 EB EXIT 104 OFF RAMP & I-26 EB EXIT 104 ON RAMP	Actuated
100000174	3	9.879924	PINEY GROVE RD, I-26 EB EXIT 104 OFF RAMP & I-26 EB EXIT 104 ON RAMP	Actuated
100000174	4	8.918656	PINEY GROVE RD, I-26 EB EXIT 104 OFF RAMP & I-26 EB EXIT 104 ON RAMP	Actuated
100000174	5	9.333534	PINEY GROVE RD, I-26 EB EXIT 104 OFF RAMP & I-26 EB EXIT 104 ON RAMP	Actuated
100000174	6	10.044526	PINEY GROVE RD, I-26 EB EXIT 104 OFF RAMP & I-26 EB EXIT 104 ON RAMP	Actuated
100000174	7	9.88734	PINEY GROVE RD, I-26 EB EXIT 104 OFF RAMP & I-26 EB EXIT 104 ON RAMP	Actuated
100000174	8	8.796625	PINEY GROVE RD, I-26 EB EXIT 104 OFF RAMP & I-26 EB EXIT 104 ON RAMP	Actuated
100000174	9	10.588143	PINEY GROVE RD, I-26 EB EXIT 104 OFF RAMP & I-26 EB EXIT 104 ON RAMP	Actuated
100000174	10	8.408622	PINEY GROVE RD, I-26 EB EXIT 104 OFF RAMP & I-26 EB EXIT 104 ON RAMP	Actuated
100000177	1	31.745049	PINEY GROVE RD, I-26 WB EXIT 104 OFF RAMP & I-26 WB EXIT 104 ON RAMP	Actuated
100000177	2	33.632936	PINEY GROVE RD, I-26 WB EXIT 104 OFF RAMP & I-26 WB EXIT 104 ON RAMP	Actuated
100000177	3	31.488126	PINEY GROVE RD, I-26 WB EXIT 104 OFF RAMP & I-26 WB EXIT 104 ON RAMP	Actuated
100000177	4	28.855389	PINEY GROVE RD, I-26 WB EXIT 104 OFF RAMP & I-26 WB EXIT 104 ON RAMP	Actuated
100000177	5	35.177069	PINEY GROVE RD, I-26 WB EXIT 104 OFF RAMP & I-26 WB EXIT 104 ON RAMP	Actuated
100000177	6	32.11958	PINEY GROVE RD, I-26 WB EXIT 104 OFF RAMP & I-26 WB EXIT 104 ON RAMP	Actuated
100000177	7	32.950733	PINEY GROVE RD, I-26 WB EXIT 104 OFF RAMP & I-26 WB EXIT 104 ON RAMP	Actuated
100000177	8	38.950495	PINEY GROVE RD, I-26 WB EXIT 104 OFF RAMP & I-26 WB EXIT 104 ON RAMP	Actuated
100000177	9	33.380441	PINEY GROVE RD, I-26 WB EXIT 104 OFF RAMP & I-26 WB EXIT 104 ON RAMP	Actuated
100000177	10	29.558057	PINEY GROVE RD, I-26 WB EXIT 104 OFF RAMP & I-26 WB EXIT 104 ON RAMP	Actuated
100000182	1	12.558553	ST ANDREWS RD & 6774 (S)	Stop
100000182	2	13.858765	ST ANDREWS RD & 6774 (S)	Stop
100000182	3	13.030212	ST ANDREWS RD & 6774 (S)	Stop
100000182	4	12.348411	ST ANDREWS RD & 6774 (S)	Stop
100000182	5	9.65712	ST ANDREWS RD & 6774 (S)	Stop
100000182	6	13.069355	ST ANDREWS RD & 6774 (S)	Stop
100000182	7	13.899493	ST ANDREWS RD & 6774 (S)	Stop
100000182	8	11.97534	ST ANDREWS RD & 6774 (S)	Stop
100000182	9	12.078527	ST ANDREWS RD & 6774 (S)	Stop
100000182	10	12.054393	ST ANDREWS RD & 6774 (S)	Stop

Node	Run	Delay	Intersection	Control Type
100000184	1	12.504029	ARROWWOOD RD, BUSH RIVER RD & N ARROWWOOD RD	Actuated
100000184	2	12.240511	ARROWWOOD RD, BUSH RIVER RD & N ARROWWOOD RD	Actuated
100000184	3	12.603433	ARROWWOOD RD, BUSH RIVER RD & N ARROWWOOD RD	Actuated
100000184	4	12.887428	ARROWWOOD RD, BUSH RIVER RD & N ARROWWOOD RD	Actuated
100000184	5	13.164275	ARROWWOOD RD, BUSH RIVER RD & N ARROWWOOD RD	Actuated
100000184	6	12.148245	ARROWWOOD RD, BUSH RIVER RD & N ARROWWOOD RD	Actuated
100000184	7	12.473597	ARROWWOOD RD, BUSH RIVER RD & N ARROWWOOD RD	Actuated
100000184	8	12.475431	ARROWWOOD RD, BUSH RIVER RD & N ARROWWOOD RD	Actuated
100000184	9	13.08988	ARROWWOOD RD, BUSH RIVER RD & N ARROWWOOD RD	Actuated
100000184	10	12.117611	ARROWWOOD RD, BUSH RIVER RD & N ARROWWOOD RD	Actuated
100000185	1	31.522743	GREYSTONE BLVD & RAMP	Stop
100000185	2	16.186926	GREYSTONE BLVD & RAMP	Stop
100000185	3	39.463338	GREYSTONE BLVD & RAMP	Stop
100000185	4	11.654053	GREYSTONE BLVD & RAMP	Stop
100000185	5	11.981009	GREYSTONE BLVD & RAMP	Stop
100000185	6	23.650465	GREYSTONE BLVD & RAMP	Stop
100000185	7	21.281265	GREYSTONE BLVD & RAMP	Stop
100000185	8	18.640572	GREYSTONE BLVD & RAMP	Stop
100000185	9	16.084472	GREYSTONE BLVD & RAMP	Stop
100000185	10	48.9812	GREYSTONE BLVD & RAMP	Stop
100000186	1	42.379868	HARBOR DR, SUNSET BLVD & E HOSPITAL DR	Actuated
100000186	2	40.938896	HARBOR DR, SUNSET BLVD & E HOSPITAL DR	Actuated
100000186	3	39.066483	HARBOR DR, SUNSET BLVD & E HOSPITAL DR	Actuated
100000186	4	39.267581	HARBOR DR, SUNSET BLVD & E HOSPITAL DR	Actuated
100000186	5	42.959689	HARBOR DR, SUNSET BLVD & E HOSPITAL DR	Actuated
100000186	6	40.557385	HARBOR DR, SUNSET BLVD & E HOSPITAL DR	Actuated
100000186	7	38.05082	HARBOR DR, SUNSET BLVD & E HOSPITAL DR	Actuated
100000186	8	43.055757	HARBOR DR, SUNSET BLVD & E HOSPITAL DR	Actuated
100000186	9	39.476934	HARBOR DR, SUNSET BLVD & E HOSPITAL DR	Actuated
100000186	10	47.347528	HARBOR DR, SUNSET BLVD & E HOSPITAL DR	Actuated
100000187	1	32.929006	BROAD RIVER RD, BRIARGATE CIR & MARLEY DR	Actuated
100000187	2	41.462149	BROAD RIVER RD, BRIARGATE CIR & MARLEY DR	Actuated
100000187	3	38.79865	BROAD RIVER RD, BRIARGATE CIR & MARLEY DR	Actuated
100000187	4	39.703643	BROAD RIVER RD, BRIARGATE CIR & MARLEY DR	Actuated
100000187	5	37.810802	BROAD RIVER RD, BRIARGATE CIR & MARLEY DR	Actuated
100000187	6	30.282446	BROAD RIVER RD, BRIARGATE CIR & MARLEY DR	Actuated
100000187	7	31.474709	BROAD RIVER RD, BRIARGATE CIR & MARLEY DR	Actuated
100000187	8	39.646623	BROAD RIVER RD, BRIARGATE CIR & MARLEY DR	Actuated
100000187	9	32.458919	BROAD RIVER RD, BRIARGATE CIR & MARLEY DR	Actuated
100000187	10	34.658832	BROAD RIVER RD, BRIARGATE CIR & MARLEY DR	Actuated
100000188	1	1.747913	GREYSTONE BLVD & RAMP	Stop
100000188	2	1.697225	GREYSTONE BLVD & RAMP	Stop
100000188	3	1.615056	GREYSTONE BLVD & RAMP	Stop
100000188	4	1.433333	GREYSTONE BLVD & RAMP	Stop
100000188	5	1.487773	GREYSTONE BLVD & RAMP	Stop
100000188	6	1.435123	GREYSTONE BLVD & RAMP	Stop
100000188	7	1.417485	GREYSTONE BLVD & RAMP	Stop
100000188	8	1.565272	GREYSTONE BLVD & RAMP	Stop
100000188	9	1.508778	GREYSTONE BLVD & RAMP	Stop
100000188	10	1.486179	GREYSTONE BLVD & RAMP	Stop
100000190	1	9.630996	BROAD RIVER RD, EXIT 65 RAMP TO US 176 & 6579 (NE)	Actuated
100000190	2	10.775001	BROAD RIVER RD, EXIT 65 RAMP TO US 176 & 6579 (NE)	Actuated
100000190	3	10.394568	BROAD RIVER RD, EXIT 65 RAMP TO US 176 & 6579 (NE)	Actuated
100000190	4	10.38764	BROAD RIVER RD, EXIT 65 RAMP TO US 176 & 6579 (NE)	Actuated
100000190	5	9.961104	BROAD RIVER RD, EXIT 65 RAMP TO US 176 & 6579 (NE)	Actuated
100000190	6	9.616138	BROAD RIVER RD, EXIT 65 RAMP TO US 176 & 6579 (NE)	Actuated
100000190	7	10.018166	BROAD RIVER RD, EXIT 65 RAMP TO US 176 & 6579 (NE)	Actuated
100000190	8	10.730303	BROAD RIVER RD, EXIT 65 RAMP TO US 176 & 6579 (NE)	Actuated
100000190	9	10.92351	BROAD RIVER RD, EXIT 65 RAMP TO US 176 & 6579 (NE)	Actuated
100000190	10	10.410812	BROAD RIVER RD, EXIT 65 RAMP TO US 176 & 6579 (NE)	Actuated
100000195	1	13.382609	LONGCREEK DR & BROAD RIVER RD	Actuated
100000195	2	12.198274	LONGCREEK DR & BROAD RIVER RD	Actuated
100000195	3	13.186588	LONGCREEK DR & BROAD RIVER RD	Actuated
100000195	4	13.023678	LONGCREEK DR & BROAD RIVER RD	Actuated
100000195	5	11.892267	LONGCREEK DR & BROAD RIVER RD	Actuated
100000195	6	12.560116	LONGCREEK DR & BROAD RIVER RD	Actuated
100000195	7	13.716403	LONGCREEK DR & BROAD RIVER RD	Actuated
100000195	8	13.597445	LONGCREEK DR & BROAD RIVER RD	Actuated
100000195	9	12.64471	LONGCREEK DR & BROAD RIVER RD	Actuated
100000195	10	13.026448	LONGCREEK DR & BROAD RIVER RD	Actuated
100000252	1	22.637162	MORNINGHILL DR, BUSH RIVER RD & RAMP	Actuated
100000252	2	29.384923	MORNINGHILL DR, BUSH RIVER RD & RAMP	Actuated
100000252	3	25.594416	MORNINGHILL DR, BUSH RIVER RD & RAMP	Actuated
100000252	4	23.567231	MORNINGHILL DR, BUSH RIVER RD & RAMP	Actuated
100000252	5	20.476218	MORNINGHILL DR, BUSH RIVER RD & RAMP	Actuated
100000252	6	24.623944	MORNINGHILL DR, BUSH RIVER RD & RAMP	Actuated
100000252	7	22.932755	MORNINGHILL DR, BUSH RIVER RD & RAMP	Actuated
100000252	8	29.992153	MORNINGHILL DR, BUSH RIVER RD & RAMP	Actuated

Node	Run	Delay	Intersection	Control Type
100000252	9	24.012909	MORNINGHILL DR, BUSH RIVER RD & RAMP	Actuated
100000252	10	22.086643	MORNINGHILL DR, BUSH RIVER RD & RAMP	Actuated
100000254	1	5.880955	WOODLAND HILLS RD & FRONTAGE RD	Stop
100000254	2	5.680373	WOODLAND HILLS RD & FRONTAGE RD	Stop
100000254	3	6.411341	WOODLAND HILLS RD & FRONTAGE RD	Stop
100000254	4	4.877585	WOODLAND HILLS RD & FRONTAGE RD	Stop
100000254	5	6.329471	WOODLAND HILLS RD & FRONTAGE RD	Stop
100000254	6	7.440646	WOODLAND HILLS RD & FRONTAGE RD	Stop
100000254	7	5.818549	WOODLAND HILLS RD & FRONTAGE RD	Stop
100000254	8	5.679915	WOODLAND HILLS RD & FRONTAGE RD	Stop
100000254	9	4.897121	WOODLAND HILLS RD & FRONTAGE RD	Stop
100000254	10	6.174894	WOODLAND HILLS RD & FRONTAGE RD	Stop
100000255	1	21.282635	BUSH RIVER RD & INDEPENDENCE AVE	Actuated
100000255	2	21.656033	BUSH RIVER RD & INDEPENDENCE AVE	Actuated
100000255	3	18.552689	BUSH RIVER RD & INDEPENDENCE AVE	Actuated
100000255	4	19.40815	BUSH RIVER RD & INDEPENDENCE AVE	Actuated
100000255	5	33.268703	BUSH RIVER RD & INDEPENDENCE AVE	Actuated
100000255	6	19.592217	BUSH RIVER RD & INDEPENDENCE AVE	Actuated
100000255	7	31.7595	BUSH RIVER RD & INDEPENDENCE AVE	Actuated
100000255	8	31.704186	BUSH RIVER RD & INDEPENDENCE AVE	Actuated
100000255	9	28.23284	BUSH RIVER RD & INDEPENDENCE AVE	Actuated
100000255	10	19.45747	BUSH RIVER RD & INDEPENDENCE AVE	Actuated
100000256	1	8.406871	BUSH RIVER RD & ZIMALCREST DR	Actuated
100000256	2	9.739503	BUSH RIVER RD & ZIMALCREST DR	Actuated
100000256	3	9.554263	BUSH RIVER RD & ZIMALCREST DR	Actuated
100000256	4	9.868889	BUSH RIVER RD & ZIMALCREST DR	Actuated
100000256	5	8.181098	BUSH RIVER RD & ZIMALCREST DR	Actuated
100000256	6	8.699164	BUSH RIVER RD & ZIMALCREST DR	Actuated
100000256	7	8.426825	BUSH RIVER RD & ZIMALCREST DR	Actuated
100000256	8	8.860125	BUSH RIVER RD & ZIMALCREST DR	Actuated
100000256	9	8.974757	BUSH RIVER RD & ZIMALCREST DR	Actuated
100000256	10	8.071197	BUSH RIVER RD & ZIMALCREST DR	Actuated
100000348	1	26.253756	ST ANDREWS RD & JAMIL RD	Actuated
100000348	2	21.775411	ST ANDREWS RD & JAMIL RD	Actuated
100000348	3	22.989726	ST ANDREWS RD & JAMIL RD	Actuated
100000348	4	34.940679	ST ANDREWS RD & JAMIL RD	Actuated
100000348	5	16.024883	ST ANDREWS RD & JAMIL RD	Actuated
100000348	6	14.302896	ST ANDREWS RD & JAMIL RD	Actuated
100000348	7	22.443412	ST ANDREWS RD & JAMIL RD	Actuated
100000348	8	17.878073	ST ANDREWS RD & JAMIL RD	Actuated
100000348	9	14.019029	ST ANDREWS RD & JAMIL RD	Actuated
100000348	10	17.266755	ST ANDREWS RD & JAMIL RD	Actuated
100000353	1	79.260534	BOWER PKY, PINEY GROVE RD & JAMIL RD	Actuated
100000353	2	68.327875	BOWER PKY, PINEY GROVE RD & JAMIL RD	Actuated
100000353	3	65.63868	BOWER PKY, PINEY GROVE RD & JAMIL RD	Actuated
100000353	4	52.900907	BOWER PKY, PINEY GROVE RD & JAMIL RD	Actuated
100000353	5	55.168423	BOWER PKY, PINEY GROVE RD & JAMIL RD	Actuated
100000353	6	84.109412	BOWER PKY, PINEY GROVE RD & JAMIL RD	Actuated
100000353	7	87.591817	BOWER PKY, PINEY GROVE RD & JAMIL RD	Actuated
100000353	8	67.628723	BOWER PKY, PINEY GROVE RD & JAMIL RD	Actuated
100000353	9	74.33721	BOWER PKY, PINEY GROVE RD & JAMIL RD	Actuated
100000353	10	70.305936	BOWER PKY, PINEY GROVE RD & JAMIL RD	Actuated
100000354	1	23.488472	ST ANDREWS RD, KAY ST & CHARTWELL RD	Actuated
100000354	2	20.799705	ST ANDREWS RD, KAY ST & CHARTWELL RD	Actuated
100000354	3	19.920441	ST ANDREWS RD, KAY ST & CHARTWELL RD	Actuated
100000354	4	19.444808	ST ANDREWS RD, KAY ST & CHARTWELL RD	Actuated
100000354	5	20.404105	ST ANDREWS RD, KAY ST & CHARTWELL RD	Actuated
100000354	6	20.644423	ST ANDREWS RD, KAY ST & CHARTWELL RD	Actuated
100000354	7	22.075079	ST ANDREWS RD, KAY ST & CHARTWELL RD	Actuated
100000354	8	20.97245	ST ANDREWS RD, KAY ST & CHARTWELL RD	Actuated
100000354	9	20.263738	ST ANDREWS RD, KAY ST & CHARTWELL RD	Actuated
100000354	10	21.089196	ST ANDREWS RD, KAY ST & CHARTWELL RD	Actuated
100000358	1	32.309017	ST ANDREWS RD, FERNANDINA RD & BURNING TREE RD	Actuated
100000358	2	32.524959	ST ANDREWS RD, FERNANDINA RD & BURNING TREE RD	Actuated
100000358	3	33.525497	ST ANDREWS RD, FERNANDINA RD & BURNING TREE RD	Actuated
100000358	4	30.480769	ST ANDREWS RD, FERNANDINA RD & BURNING TREE RD	Actuated
100000358	5	33.413671	ST ANDREWS RD, FERNANDINA RD & BURNING TREE RD	Actuated
100000358	6	30.475037	ST ANDREWS RD, FERNANDINA RD & BURNING TREE RD	Actuated
100000358	7	30.250604	ST ANDREWS RD, FERNANDINA RD & BURNING TREE RD	Actuated
100000358	8	30.363871	ST ANDREWS RD, FERNANDINA RD & BURNING TREE RD	Actuated
100000358	9	28.720122	ST ANDREWS RD, FERNANDINA RD & BURNING TREE RD	Actuated
100000358	10	29.761068	ST ANDREWS RD, FERNANDINA RD & BURNING TREE RD	Actuated
100000360	1	5.604484	I-26 WB TO BURNING TREE RD EXIT 106 OFF RAMP & BURNING TREE RD	Yield
100000360	2	1.428854	I-26 WB TO BURNING TREE RD EXIT 106 OFF RAMP & BURNING TREE RD	Yield
100000360	3	8.913801	I-26 WB TO BURNING TREE RD EXIT 106 OFF RAMP & BURNING TREE RD	Yield
100000360	4	13.569656	I-26 WB TO BURNING TREE RD EXIT 106 OFF RAMP & BURNING TREE RD	Yield
100000360	5	20.742665	I-26 WB TO BURNING TREE RD EXIT 106 OFF RAMP & BURNING TREE RD	Yield
100000360	6	7.932785	I-26 WB TO BURNING TREE RD EXIT 106 OFF RAMP & BURNING TREE RD	Yield

Node	Run	Delay	Intersection	Control Type
100000360	7	15.572501	I-26 WB TO BURNING TREE RD EXIT 106 OFF RAMP & BURNING TREE RD	Yield
100000360	8	4.511398	I-26 WB TO BURNING TREE RD EXIT 106 OFF RAMP & BURNING TREE RD	Yield
100000360	9	7.00967	I-26 WB TO BURNING TREE RD EXIT 106 OFF RAMP & BURNING TREE RD	Yield
100000360	10	9.06877	I-26 WB TO BURNING TREE RD EXIT 106 OFF RAMP & BURNING TREE RD	Yield
100000362	1	1.566189	HARBISON BLVD & JAMIL RD	Actuated
100000362	2	6.900973	HARBISON BLVD & JAMIL RD	Actuated
100000362	3	1.727181	HARBISON BLVD & JAMIL RD	Actuated
100000362	4	8.043049	HARBISON BLVD & JAMIL RD	Actuated
100000362	5	8.931991	HARBISON BLVD & JAMIL RD	Actuated
100000362	6	2.275124	HARBISON BLVD & JAMIL RD	Actuated
100000362	7	10.569556	HARBISON BLVD & JAMIL RD	Actuated
100000362	8	8.89214	HARBISON BLVD & JAMIL RD	Actuated
100000362	9	4.003006	HARBISON BLVD & JAMIL RD	Actuated
100000362	10	13.891131	HARBISON BLVD & JAMIL RD	Actuated
100000364	1	33.610107	HARBISON BLVD & COLUMBIANA DR	Actuated
100000364	2	44.387237	HARBISON BLVD & COLUMBIANA DR	Actuated
100000364	3	21.975382	HARBISON BLVD & COLUMBIANA DR	Actuated
100000364	4	33.676667	HARBISON BLVD & COLUMBIANA DR	Actuated
100000364	5	42.034828	HARBISON BLVD & COLUMBIANA DR	Actuated
100000364	6	28.40586	HARBISON BLVD & COLUMBIANA DR	Actuated
100000364	7	39.396412	HARBISON BLVD & COLUMBIANA DR	Actuated
100000364	8	44.240355	HARBISON BLVD & COLUMBIANA DR	Actuated
100000364	9	30.404838	HARBISON BLVD & COLUMBIANA DR	Actuated
100000364	10	43.481099	HARBISON BLVD & COLUMBIANA DR	Actuated
100000365	1	24.572792	COLUMBIANA CIR, HARBISON BLVD & PARK TERRACE DR	Actuated
100000365	2	29.844771	COLUMBIANA CIR, HARBISON BLVD & PARK TERRACE DR	Actuated
100000365	3	28.999597	COLUMBIANA CIR, HARBISON BLVD & PARK TERRACE DR	Actuated
100000365	4	29.600776	COLUMBIANA CIR, HARBISON BLVD & PARK TERRACE DR	Actuated
100000365	5	33.972661	COLUMBIANA CIR, HARBISON BLVD & PARK TERRACE DR	Actuated
100000365	6	26.058182	COLUMBIANA CIR, HARBISON BLVD & PARK TERRACE DR	Actuated
100000365	7	33.179307	COLUMBIANA CIR, HARBISON BLVD & PARK TERRACE DR	Actuated
100000365	8	33.991772	COLUMBIANA CIR, HARBISON BLVD & PARK TERRACE DR	Actuated
100000365	9	25.433595	COLUMBIANA CIR, HARBISON BLVD & PARK TERRACE DR	Actuated
100000365	10	35.986646	COLUMBIANA CIR, HARBISON BLVD & PARK TERRACE DR	Actuated
100000391	1	14.562941	BROAD RIVER RD & COLUMBIANA DR	Actuated
100000391	2	13.148999	BROAD RIVER RD & COLUMBIANA DR	Actuated
100000391	3	11.961551	BROAD RIVER RD & COLUMBIANA DR	Actuated
100000391	4	13.979922	BROAD RIVER RD & COLUMBIANA DR	Actuated
100000391	5	14.30585	BROAD RIVER RD & COLUMBIANA DR	Actuated
100000391	6	13.19378	BROAD RIVER RD & COLUMBIANA DR	Actuated
100000391	7	12.496394	BROAD RIVER RD & COLUMBIANA DR	Actuated
100000391	8	12.378481	BROAD RIVER RD & COLUMBIANA DR	Actuated
100000391	9	13.3143	BROAD RIVER RD & COLUMBIANA DR	Actuated
100000391	10	11.114177	BROAD RIVER RD & COLUMBIANA DR	Actuated
100000395	1	85.092724	LAKE MURRAY BLVD & COLUMBIANA DR	Actuated
100000395	2	61.671511	LAKE MURRAY BLVD & COLUMBIANA DR	Actuated
100000395	3	96.906563	LAKE MURRAY BLVD & COLUMBIANA DR	Actuated
100000395	4	105.37988	LAKE MURRAY BLVD & COLUMBIANA DR	Actuated
100000395	5	120.495563	LAKE MURRAY BLVD & COLUMBIANA DR	Actuated
100000395	6	95.604539	LAKE MURRAY BLVD & COLUMBIANA DR	Actuated
100000395	7	75.025731	LAKE MURRAY BLVD & COLUMBIANA DR	Actuated
100000395	8	82.32588	LAKE MURRAY BLVD & COLUMBIANA DR	Actuated
100000395	9	97.129034	LAKE MURRAY BLVD & COLUMBIANA DR	Actuated
100000395	10	83.893985	LAKE MURRAY BLVD & COLUMBIANA DR	Actuated
100000398	1	6.046208	HARBISON BLVD & PARKRIDGE DR	Actuated
100000398	2	11.77363	HARBISON BLVD & PARKRIDGE DR	Actuated
100000398	3	7.554057	HARBISON BLVD & PARKRIDGE DR	Actuated
100000398	4	8.91797	HARBISON BLVD & PARKRIDGE DR	Actuated
100000398	5	7.827323	HARBISON BLVD & PARKRIDGE DR	Actuated
100000398	6	11.553066	HARBISON BLVD & PARKRIDGE DR	Actuated
100000398	7	9.540883	HARBISON BLVD & PARKRIDGE DR	Actuated
100000398	8	8.225601	HARBISON BLVD & PARKRIDGE DR	Actuated
100000398	9	45.494305	HARBISON BLVD & PARKRIDGE DR	Actuated
100000398	10	10.961639	HARBISON BLVD & PARKRIDGE DR	Actuated
100000399	1	45.062151	PINEY GROVE RD & FERNANDINA RD	Actuated
100000399	2	47.672232	PINEY GROVE RD & FERNANDINA RD	Actuated
100000399	3	39.837486	PINEY GROVE RD & FERNANDINA RD	Actuated
100000399	4	47.875136	PINEY GROVE RD & FERNANDINA RD	Actuated
100000399	5	68.863931	PINEY GROVE RD & FERNANDINA RD	Actuated
100000399	6	63.888279	PINEY GROVE RD & FERNANDINA RD	Actuated
100000399	7	42.903456	PINEY GROVE RD & FERNANDINA RD	Actuated
100000399	8	39.298362	PINEY GROVE RD & FERNANDINA RD	Actuated
100000399	9	44.492758	PINEY GROVE RD & FERNANDINA RD	Actuated
100000399	10	60.532806	PINEY GROVE RD & FERNANDINA RD	Actuated
100000401	1	19.131286	KINLEY RD, LAKE MURRAY BLVD & PARKRIDGE DR	Actuated
100000401	2	18.221041	KINLEY RD, LAKE MURRAY BLVD & PARKRIDGE DR	Actuated
100000401	3	20.423563	KINLEY RD, LAKE MURRAY BLVD & PARKRIDGE DR	Actuated
100000401	4	16.951802	KINLEY RD, LAKE MURRAY BLVD & PARKRIDGE DR	Actuated

Node	Run	Delay	Intersection	Control Type
100000401	5	18.012167	KINLEY RD, LAKE MURRAY BLVD & PARKRIDGE DR	Actuated
100000401	6	20.711144	KINLEY RD, LAKE MURRAY BLVD & PARKRIDGE DR	Actuated
100000401	7	18.673966	KINLEY RD, LAKE MURRAY BLVD & PARKRIDGE DR	Actuated
100000401	8	17.939798	KINLEY RD, LAKE MURRAY BLVD & PARKRIDGE DR	Actuated
100000401	9	19.565481	KINLEY RD, LAKE MURRAY BLVD & PARKRIDGE DR	Actuated
100000401	10	22.190625	KINLEY RD, LAKE MURRAY BLVD & PARKRIDGE DR	Actuated
100000446	1	0	RAMP	Yield
100000446	2	0	RAMP	Yield
100000446	3	0	RAMP	Yield
100000446	4	0	RAMP	Yield
100000446	5	0	RAMP	Yield
100000446	6	0	RAMP	Yield
100000446	7	0	RAMP	Yield
100000446	8	0	RAMP	Yield
100000446	9	0	RAMP	Yield
100000446	10	0	RAMP	Yield
100000508	1	0	I-26 EB EXIT 102 ON RAMP	
100000508	2	0	I-26 EB EXIT 102 ON RAMP	
100000508	3	0	I-26 EB EXIT 102 ON RAMP	
100000508	4	0	I-26 EB EXIT 102 ON RAMP	
100000508	5	0	I-26 EB EXIT 102 ON RAMP	
100000508	6	0	I-26 EB EXIT 102 ON RAMP	
100000508	7	0	I-26 EB EXIT 102 ON RAMP	
100000508	8	0	I-26 EB EXIT 102 ON RAMP	
100000508	9	0	I-26 EB EXIT 102 ON RAMP	
100000508	10	0	I-26 EB EXIT 102 ON RAMP	
100000510	1	0	LAKE MURRAY BLVD & I-26 EB EXIT 102 ON RAMP	
100000510	2	0	LAKE MURRAY BLVD & I-26 EB EXIT 102 ON RAMP	
100000510	3	0	LAKE MURRAY BLVD & I-26 EB EXIT 102 ON RAMP	
100000510	4	0	LAKE MURRAY BLVD & I-26 EB EXIT 102 ON RAMP	
100000510	5	0	LAKE MURRAY BLVD & I-26 EB EXIT 102 ON RAMP	
100000510	6	0	LAKE MURRAY BLVD & I-26 EB EXIT 102 ON RAMP	
100000510	7	0	LAKE MURRAY BLVD & I-26 EB EXIT 102 ON RAMP	
100000510	8	0	LAKE MURRAY BLVD & I-26 EB EXIT 102 ON RAMP	
100000510	9	0	LAKE MURRAY BLVD & I-26 EB EXIT 102 ON RAMP	
100000510	10	0	LAKE MURRAY BLVD & I-26 EB EXIT 102 ON RAMP	
100000520	1	0	I-26 WB EXIT 102 ON RAMP	Yield
100000520	2	0	I-26 WB EXIT 102 ON RAMP	Yield
100000520	3	0	I-26 WB EXIT 102 ON RAMP	Yield
100000520	4	0	I-26 WB EXIT 102 ON RAMP	Yield
100000520	5	0	I-26 WB EXIT 102 ON RAMP	Yield
100000520	6	0	I-26 WB EXIT 102 ON RAMP	Yield
100000520	7	0	I-26 WB EXIT 102 ON RAMP	Yield
100000520	8	0	I-26 WB EXIT 102 ON RAMP	Yield
100000520	9	0	I-26 WB EXIT 102 ON RAMP	Yield
100000520	10	0	I-26 WB EXIT 102 ON RAMP	Yield
100000522	1	0	I-26 WB EXIT 101 OFF RAMP, BROAD RIVER RD & I-26 WB EXIT 101 ON RAMP	
100000522	2	0	I-26 WB EXIT 101 OFF RAMP, BROAD RIVER RD & I-26 WB EXIT 101 ON RAMP	
100000522	3	0	I-26 WB EXIT 101 OFF RAMP, BROAD RIVER RD & I-26 WB EXIT 101 ON RAMP	
100000522	4	0	I-26 WB EXIT 101 OFF RAMP, BROAD RIVER RD & I-26 WB EXIT 101 ON RAMP	
100000522	5	0	I-26 WB EXIT 101 OFF RAMP, BROAD RIVER RD & I-26 WB EXIT 101 ON RAMP	
100000522	6	0	I-26 WB EXIT 101 OFF RAMP, BROAD RIVER RD & I-26 WB EXIT 101 ON RAMP	
100000522	7	0	I-26 WB EXIT 101 OFF RAMP, BROAD RIVER RD & I-26 WB EXIT 101 ON RAMP	
100000522	8	0	I-26 WB EXIT 101 OFF RAMP, BROAD RIVER RD & I-26 WB EXIT 101 ON RAMP	
100000522	9	0	I-26 WB EXIT 101 OFF RAMP, BROAD RIVER RD & I-26 WB EXIT 101 ON RAMP	
100000522	10	0	I-26 WB EXIT 101 OFF RAMP, BROAD RIVER RD & I-26 WB EXIT 101 ON RAMP	
100000682	1	0	RAMP	
100000682	2	0	RAMP	
100000682	3	0	RAMP	
100000682	4	0	RAMP	
100000682	5	0	RAMP	
100000682	6	0	RAMP	
100000682	7	0	RAMP	
100000682	8	0	RAMP	
100000682	9	0	RAMP	
100000682	10	0	RAMP	
100000686	1	0	RAMP	
100000686	2	0	RAMP	
100000686	3	0	RAMP	
100000686	4	0	RAMP	
100000686	5	0	RAMP	
100000686	6	0	RAMP	
100000686	7	0	RAMP	
100000686	8	0	RAMP	
100000686	9	0	RAMP	
100000686	10	0	RAMP	
100000702	1	0	RAMP & 6587 (E)	Yield
100000702	2	0	RAMP & 6587 (E)	Yield

Node	Run	Delay	Intersection	Control Type
100000702	3	0	RAMP & 6587 (E)	Yield
100000702	4	0	RAMP & 6587 (E)	Yield
100000702	5	0	RAMP & 6587 (E)	Yield
100000702	6	0	RAMP & 6587 (E)	Yield
100000702	7	0	RAMP & 6587 (E)	Yield
100000702	8	0	RAMP & 6587 (E)	Yield
100000702	9	0	RAMP & 6587 (E)	Yield
100000702	10	0	RAMP & 6587 (E)	Yield
100000897	1	5.490342	COLONIAL LIFE BLVD W & W COLONIAL LIFE BLVD	Stop
100000897	2	9.64858	COLONIAL LIFE BLVD W & W COLONIAL LIFE BLVD	Stop
100000897	3	8.978112	COLONIAL LIFE BLVD W & W COLONIAL LIFE BLVD	Stop
100000897	4	8.632289	COLONIAL LIFE BLVD W & W COLONIAL LIFE BLVD	Stop
100000897	5	9.280546	COLONIAL LIFE BLVD W & W COLONIAL LIFE BLVD	Stop
100000897	6	17.537429	COLONIAL LIFE BLVD W & W COLONIAL LIFE BLVD	Stop
100000897	7	5.898328	COLONIAL LIFE BLVD W & W COLONIAL LIFE BLVD	Stop
100000897	8	5.513976	COLONIAL LIFE BLVD W & W COLONIAL LIFE BLVD	Stop
100000897	9	7.242326	COLONIAL LIFE BLVD W & W COLONIAL LIFE BLVD	Stop
100000897	10	6.93027	COLONIAL LIFE BLVD W & W COLONIAL LIFE BLVD	Stop
100000898	1	1.95892	BUSH RIVER RD	Actuated
100000898	2	2.588032	BUSH RIVER RD	Actuated
100000898	3	2.644129	BUSH RIVER RD	Actuated
100000898	4	2.693823	BUSH RIVER RD	Actuated
100000898	5	2.589657	BUSH RIVER RD	Actuated
100000898	6	2.652298	BUSH RIVER RD	Actuated
100000898	7	3.216559	BUSH RIVER RD	Actuated
100000898	8	2.324224	BUSH RIVER RD	Actuated
100000898	9	2.150744	BUSH RIVER RD	Actuated
100000898	10	2.593856	BUSH RIVER RD	Actuated
100000899	1	0	I-26 WB TO BURNING TREE RD EXIT 106 OFF RAMP & BURNING TREE RD	Stop
100000899	2	0	I-26 WB TO BURNING TREE RD EXIT 106 OFF RAMP & BURNING TREE RD	Stop
100000899	3	0	I-26 WB TO BURNING TREE RD EXIT 106 OFF RAMP & BURNING TREE RD	Stop
100000899	4	0	I-26 WB TO BURNING TREE RD EXIT 106 OFF RAMP & BURNING TREE RD	Stop
100000899	5	0	I-26 WB TO BURNING TREE RD EXIT 106 OFF RAMP & BURNING TREE RD	Stop
100000899	6	0	I-26 WB TO BURNING TREE RD EXIT 106 OFF RAMP & BURNING TREE RD	Stop
100000899	7	0	I-26 WB TO BURNING TREE RD EXIT 106 OFF RAMP & BURNING TREE RD	Stop
100000899	8	0	I-26 WB TO BURNING TREE RD EXIT 106 OFF RAMP & BURNING TREE RD	Stop
100000899	9	0	I-26 WB TO BURNING TREE RD EXIT 106 OFF RAMP & BURNING TREE RD	Stop
100000899	10	0	I-26 WB TO BURNING TREE RD EXIT 106 OFF RAMP & BURNING TREE RD	Stop
100000902	1	19.79759	SUNSET BLVD & RAMP	Actuated
100000902	2	16.917929	SUNSET BLVD & RAMP	Actuated
100000902	3	19.374278	SUNSET BLVD & RAMP	Actuated
100000902	4	19.874473	SUNSET BLVD & RAMP	Actuated
100000902	5	17.917487	SUNSET BLVD & RAMP	Actuated
100000902	6	21.685466	SUNSET BLVD & RAMP	Actuated
100000902	7	15.987869	SUNSET BLVD & RAMP	Actuated
100000902	8	19.552748	SUNSET BLVD & RAMP	Actuated
100000902	9	20.341004	SUNSET BLVD & RAMP	Actuated
100000902	10	18.423348	SUNSET BLVD & RAMP	Actuated
100000903	1	23.96935	RAMP & SUNSET BLVD	Actuated
100000903	2	23.790298	RAMP & SUNSET BLVD	Actuated
100000903	3	24.596698	RAMP & SUNSET BLVD	Actuated
100000903	4	24.282063	RAMP & SUNSET BLVD	Actuated
100000903	5	24.092428	RAMP & SUNSET BLVD	Actuated
100000903	6	23.896682	RAMP & SUNSET BLVD	Actuated
100000903	7	23.22569	RAMP & SUNSET BLVD	Actuated
100000903	8	24.057831	RAMP & SUNSET BLVD	Actuated
100000903	9	26.128888	RAMP & SUNSET BLVD	Actuated
100000903	10	24.116499	RAMP & SUNSET BLVD	Actuated

Node	Run	Delay	Intersection	Control Type
4	1	6.245824	WESTERN LN & BROAD RIVER RD	Actuated
4	2	5.963606	WESTERN LN & BROAD RIVER RD	Actuated
4	3	6.151565	WESTERN LN & BROAD RIVER RD	Actuated
4	4	5.966262	WESTERN LN & BROAD RIVER RD	Actuated
4	5	5.762438	WESTERN LN & BROAD RIVER RD	Actuated
4	6	6.110528	WESTERN LN & BROAD RIVER RD	Actuated
4	7	6.023148	WESTERN LN & BROAD RIVER RD	Actuated
4	8	7.669636	WESTERN LN & BROAD RIVER RD	Actuated
4	9	5.683451	WESTERN LN & BROAD RIVER RD	Actuated
4	10	5.928491	WESTERN LN & BROAD RIVER RD	Actuated
6	1	0.950061	COLONIAL LIFE BLVD W & 6468 (E)	Stop
6	2	1.394684	COLONIAL LIFE BLVD W & 6468 (E)	Stop
6	3	0.856099	COLONIAL LIFE BLVD W & 6468 (E)	Stop
6	4	1.07327	COLONIAL LIFE BLVD W & 6468 (E)	Stop
6	5	1.204427	COLONIAL LIFE BLVD W & 6468 (E)	Stop
6	6	1.344782	COLONIAL LIFE BLVD W & 6468 (E)	Stop
6	7	1.432544	COLONIAL LIFE BLVD W & 6468 (E)	Stop
6	8	1.187328	COLONIAL LIFE BLVD W & 6468 (E)	Stop
6	9	1.634294	COLONIAL LIFE BLVD W & 6468 (E)	Stop
6	10	1.355309	COLONIAL LIFE BLVD W & 6468 (E)	Stop
9	1	1.279221	COLONIAL LIFE BLVD W & 6470 (NE)	Stop
9	2	1.217603	COLONIAL LIFE BLVD W & 6470 (NE)	Stop
9	3	1.643477	COLONIAL LIFE BLVD W & 6470 (NE)	Stop
9	4	1.561169	COLONIAL LIFE BLVD W & 6470 (NE)	Stop
9	5	1.415165	COLONIAL LIFE BLVD W & 6470 (NE)	Stop
9	6	1.09295	COLONIAL LIFE BLVD W & 6470 (NE)	Stop
9	7	1.575378	COLONIAL LIFE BLVD W & 6470 (NE)	Stop
9	8	1.400483	COLONIAL LIFE BLVD W & 6470 (NE)	Stop
9	9	1.36217	COLONIAL LIFE BLVD W & 6470 (NE)	Stop
9	10	1.07703	COLONIAL LIFE BLVD W & 6470 (NE)	Stop
40	1	37.974412	I-26 EB EXIT 106 OFF RAMP, ST ANDREWS RD, I-26 WB TO BURNING TREE RD AND TO ST ANDREWS RD OFF RAMP,	Actuated
40	2	37.671725	I-26 EB EXIT 106 OFF RAMP, ST ANDREWS RD, I-26 WB TO BURNING TREE RD AND TO ST ANDREWS RD OFF RAMP,	Actuated
40	3	38.185512	I-26 EB EXIT 106 OFF RAMP, ST ANDREWS RD, I-26 WB TO BURNING TREE RD AND TO ST ANDREWS RD OFF RAMP,	Actuated
40	4	38.088287	I-26 EB EXIT 106 OFF RAMP, ST ANDREWS RD, I-26 WB TO BURNING TREE RD AND TO ST ANDREWS RD OFF RAMP,	Actuated
40	5	38.086392	I-26 EB EXIT 106 OFF RAMP, ST ANDREWS RD, I-26 WB TO BURNING TREE RD AND TO ST ANDREWS RD OFF RAMP,	Actuated
40	6	38.847438	I-26 EB EXIT 106 OFF RAMP, ST ANDREWS RD, I-26 WB TO BURNING TREE RD AND TO ST ANDREWS RD OFF RAMP,	Actuated
40	7	38.519181	I-26 EB EXIT 106 OFF RAMP, ST ANDREWS RD, I-26 WB TO BURNING TREE RD AND TO ST ANDREWS RD OFF RAMP,	Actuated
40	8	39.46548	I-26 EB EXIT 106 OFF RAMP, ST ANDREWS RD, I-26 WB TO BURNING TREE RD AND TO ST ANDREWS RD OFF RAMP,	Actuated
40	9	39.434318	I-26 EB EXIT 106 OFF RAMP, ST ANDREWS RD, I-26 WB TO BURNING TREE RD AND TO ST ANDREWS RD OFF RAMP,	Actuated
40	10	39.495378	I-26 EB EXIT 106 OFF RAMP, ST ANDREWS RD, I-26 WB TO BURNING TREE RD AND TO ST ANDREWS RD OFF RAMP,	Actuated
41	1	9.639676	DUTCH SQUARE BLVD & BROAD RIVER RD	Actuated
41	2	8.148308	DUTCH SQUARE BLVD & BROAD RIVER RD	Actuated
41	3	8.844113	DUTCH SQUARE BLVD & BROAD RIVER RD	Actuated
41	4	8.540032	DUTCH SQUARE BLVD & BROAD RIVER RD	Actuated
41	5	7.61203	DUTCH SQUARE BLVD & BROAD RIVER RD	Actuated
41	6	9.078879	DUTCH SQUARE BLVD & BROAD RIVER RD	Actuated
41	7	8.851401	DUTCH SQUARE BLVD & BROAD RIVER RD	Actuated
41	8	9.260029	DUTCH SQUARE BLVD & BROAD RIVER RD	Actuated
41	9	8.554152	DUTCH SQUARE BLVD & BROAD RIVER RD	Actuated
41	10	9.117152	DUTCH SQUARE BLVD & BROAD RIVER RD	Actuated
45	1	0	I-26 WB , I-26 WB EXIT 106 OFF RAMP & I-26 WB TO BURNING TREE RD AND TO ST ANDREWS RD OFF RAMP	
45	2	0	I-26 WB , I-26 WB EXIT 106 OFF RAMP & I-26 WB TO BURNING TREE RD AND TO ST ANDREWS RD OFF RAMP	
45	3	0	I-26 WB , I-26 WB EXIT 106 OFF RAMP & I-26 WB TO BURNING TREE RD AND TO ST ANDREWS RD OFF RAMP	
45	4	0	I-26 WB , I-26 WB EXIT 106 OFF RAMP & I-26 WB TO BURNING TREE RD AND TO ST ANDREWS RD OFF RAMP	
45	5	0	I-26 WB , I-26 WB EXIT 106 OFF RAMP & I-26 WB TO BURNING TREE RD AND TO ST ANDREWS RD OFF RAMP	
45	6	0	I-26 WB , I-26 WB EXIT 106 OFF RAMP & I-26 WB TO BURNING TREE RD AND TO ST ANDREWS RD OFF RAMP	
45	7	0	I-26 WB , I-26 WB EXIT 106 OFF RAMP & I-26 WB TO BURNING TREE RD AND TO ST ANDREWS RD OFF RAMP	
45	8	0	I-26 WB , I-26 WB EXIT 106 OFF RAMP & I-26 WB TO BURNING TREE RD AND TO ST ANDREWS RD OFF RAMP	
45	9	0	I-26 WB , I-26 WB EXIT 106 OFF RAMP & I-26 WB TO BURNING TREE RD AND TO ST ANDREWS RD OFF RAMP	
45	10	0	I-26 WB , I-26 WB EXIT 106 OFF RAMP & I-26 WB TO BURNING TREE RD AND TO ST ANDREWS RD OFF RAMP	
51	1	0	6677 (NW), 6687 (SE) & 6691 (SE)	
51	2	0	6677 (NW), 6687 (SE) & 6691 (SE)	
51	3	0	6677 (NW), 6687 (SE) & 6691 (SE)	
51	4	0	6677 (NW), 6687 (SE) & 6691 (SE)	
51	5	0	6677 (NW), 6687 (SE) & 6691 (SE)	
51	6	0	6677 (NW), 6687 (SE) & 6691 (SE)	
51	7	0	6677 (NW), 6687 (SE) & 6691 (SE)	
51	8	0	6677 (NW), 6687 (SE) & 6691 (SE)	
51	9	0	6677 (NW), 6687 (SE) & 6691 (SE)	
51	10	0	6677 (NW), 6687 (SE) & 6691 (SE)	
57	1	1.089869	EXIT 65 RAMP TO US 176 & 6584 (SW)	
57	2	1.187869	EXIT 65 RAMP TO US 176 & 6584 (SW)	
57	3	0.914311	EXIT 65 RAMP TO US 176 & 6584 (SW)	
57	4	0.842256	EXIT 65 RAMP TO US 176 & 6584 (SW)	
57	5	0.997572	EXIT 65 RAMP TO US 176 & 6584 (SW)	
57	6	1.955713	EXIT 65 RAMP TO US 176 & 6584 (SW)	
57	7	0.982532	EXIT 65 RAMP TO US 176 & 6584 (SW)	
57	8	1.291561	EXIT 65 RAMP TO US 176 & 6584 (SW)	

Node	Run	Delay	Intersection	Control Type
57	9	0.892928	EXIT 65 RAMP TO US 176 & 6584 (SW)	
57	10	0.941876	EXIT 65 RAMP TO US 176 & 6584 (SW)	
68	1	0	6571 (SE), I-26 WB EXIT 106 OFF RAMP & I-26 WB EXIT 106 ON RAMP	
68	2	0	6571 (SE), I-26 WB EXIT 106 OFF RAMP & I-26 WB EXIT 106 ON RAMP	
68	3	0	6571 (SE), I-26 WB EXIT 106 OFF RAMP & I-26 WB EXIT 106 ON RAMP	
68	4	0	6571 (SE), I-26 WB EXIT 106 OFF RAMP & I-26 WB EXIT 106 ON RAMP	
68	5	0	6571 (SE), I-26 WB EXIT 106 OFF RAMP & I-26 WB EXIT 106 ON RAMP	
68	6	0	6571 (SE), I-26 WB EXIT 106 OFF RAMP & I-26 WB EXIT 106 ON RAMP	
68	7	0	6571 (SE), I-26 WB EXIT 106 OFF RAMP & I-26 WB EXIT 106 ON RAMP	
68	8	0	6571 (SE), I-26 WB EXIT 106 OFF RAMP & I-26 WB EXIT 106 ON RAMP	
68	9	0	6571 (SE), I-26 WB EXIT 106 OFF RAMP & I-26 WB EXIT 106 ON RAMP	
68	10	0	6571 (SE), I-26 WB EXIT 106 OFF RAMP & I-26 WB EXIT 106 ON RAMP	
100000455	1	7.477354	FRONTAGE RD, BUSH RIVER RD, 6859 (SE) & 6860 (SE)	Actuated
100000455	2	7.445592	FRONTAGE RD, BUSH RIVER RD, 6859 (SE) & 6860 (SE)	Actuated
100000455	3	7.662163	FRONTAGE RD, BUSH RIVER RD, 6859 (SE) & 6860 (SE)	Actuated
100000455	4	8.704617	FRONTAGE RD, BUSH RIVER RD, 6859 (SE) & 6860 (SE)	Actuated
100000455	5	8.418899	FRONTAGE RD, BUSH RIVER RD, 6859 (SE) & 6860 (SE)	Actuated
100000455	6	7.483692	FRONTAGE RD, BUSH RIVER RD, 6859 (SE) & 6860 (SE)	Actuated
100000455	7	9.391411	FRONTAGE RD, BUSH RIVER RD, 6859 (SE) & 6860 (SE)	Actuated
100000455	8	7.513669	FRONTAGE RD, BUSH RIVER RD, 6859 (SE) & 6860 (SE)	Actuated
100000455	9	7.324866	FRONTAGE RD, BUSH RIVER RD, 6859 (SE) & 6860 (SE)	Actuated
100000455	10	7.771656	FRONTAGE RD, BUSH RIVER RD, 6859 (SE) & 6860 (SE)	Actuated
71	1	15.138699	PINEY GROVE RD, I-26 EB EXIT 104 OFF RAMP & I-26 EB EXIT 104 ON RAMP	Actuated
71	2	19.143657	PINEY GROVE RD, I-26 EB EXIT 104 OFF RAMP & I-26 EB EXIT 104 ON RAMP	Actuated
71	3	12.558244	PINEY GROVE RD, I-26 EB EXIT 104 OFF RAMP & I-26 EB EXIT 104 ON RAMP	Actuated
71	4	16.759333	PINEY GROVE RD, I-26 EB EXIT 104 OFF RAMP & I-26 EB EXIT 104 ON RAMP	Actuated
71	5	13.741563	PINEY GROVE RD, I-26 EB EXIT 104 OFF RAMP & I-26 EB EXIT 104 ON RAMP	Actuated
71	6	8.948915	PINEY GROVE RD, I-26 EB EXIT 104 OFF RAMP & I-26 EB EXIT 104 ON RAMP	Actuated
71	7	17.842385	PINEY GROVE RD, I-26 EB EXIT 104 OFF RAMP & I-26 EB EXIT 104 ON RAMP	Actuated
71	8	16.303428	PINEY GROVE RD, I-26 EB EXIT 104 OFF RAMP & I-26 EB EXIT 104 ON RAMP	Actuated
71	9	31.903313	PINEY GROVE RD, I-26 EB EXIT 104 OFF RAMP & I-26 EB EXIT 104 ON RAMP	Actuated
71	10	15.562672	PINEY GROVE RD, I-26 EB EXIT 104 OFF RAMP & I-26 EB EXIT 104 ON RAMP	Actuated
74	1	0	6806 (SW), 6828 (W) & RAMP	Yield
74	2	0	6806 (SW), 6828 (W) & RAMP	Yield
74	3	0	6806 (SW), 6828 (W) & RAMP	Yield
74	4	0	6806 (SW), 6828 (W) & RAMP	Yield
74	5	0	6806 (SW), 6828 (W) & RAMP	Yield
74	6	0	6806 (SW), 6828 (W) & RAMP	Yield
74	7	0	6806 (SW), 6828 (W) & RAMP	Yield
74	8	0	6806 (SW), 6828 (W) & RAMP	Yield
74	9	0	6806 (SW), 6828 (W) & RAMP	Yield
74	10	0	6806 (SW), 6828 (W) & RAMP	Yield
76	1	0.037794	I-26 EB EXIT 106 OFF RAMP	
76	2	0.119207	I-26 EB EXIT 106 OFF RAMP	
76	3	0.057097	I-26 EB EXIT 106 OFF RAMP	
76	4	0.099712	I-26 EB EXIT 106 OFF RAMP	
76	5	0.063153	I-26 EB EXIT 106 OFF RAMP	
76	6	0.090131	I-26 EB EXIT 106 OFF RAMP	
76	7	0.043714	I-26 EB EXIT 106 OFF RAMP	
76	8	0.069273	I-26 EB EXIT 106 OFF RAMP	
76	9	0.074439	I-26 EB EXIT 106 OFF RAMP	
76	10	0.059739	I-26 EB EXIT 106 OFF RAMP	
77	1	0.099154	6706 (W), 6583 (NE) & EXIT 65 RAMP TO US 176	
77	2	0.127812	6706 (W), 6583 (NE) & EXIT 65 RAMP TO US 176	
77	3	0.137398	6706 (W), 6583 (NE) & EXIT 65 RAMP TO US 176	
77	4	0.151251	6706 (W), 6583 (NE) & EXIT 65 RAMP TO US 176	
77	5	0.153636	6706 (W), 6583 (NE) & EXIT 65 RAMP TO US 176	
77	6	0.114298	6706 (W), 6583 (NE) & EXIT 65 RAMP TO US 176	
77	7	0.090887	6706 (W), 6583 (NE) & EXIT 65 RAMP TO US 176	
77	8	0.144872	6706 (W), 6583 (NE) & EXIT 65 RAMP TO US 176	
77	9	0.13574	6706 (W), 6583 (NE) & EXIT 65 RAMP TO US 176	
77	10	0.08787	6706 (W), 6583 (NE) & EXIT 65 RAMP TO US 176	
79	1	7.946479	6584 (NE), BROAD RIVER RD & 6804 (SE)	Actuated
79	2	4.804339	6584 (NE), BROAD RIVER RD & 6804 (SE)	Actuated
79	3	5.786684	6584 (NE), BROAD RIVER RD & 6804 (SE)	Actuated
79	4	8.665598	6584 (NE), BROAD RIVER RD & 6804 (SE)	Actuated
79	5	6.50247	6584 (NE), BROAD RIVER RD & 6804 (SE)	Actuated
79	6	7.13238	6584 (NE), BROAD RIVER RD & 6804 (SE)	Actuated
79	7	5.330859	6584 (NE), BROAD RIVER RD & 6804 (SE)	Actuated
79	8	9.171525	6584 (NE), BROAD RIVER RD & 6804 (SE)	Actuated
79	9	10.022471	6584 (NE), BROAD RIVER RD & 6804 (SE)	Actuated
79	10	5.758119	6584 (NE), BROAD RIVER RD & 6804 (SE)	Actuated
85	1	0	I-26 WB EXIT 106 ON RAMP	Yield
85	2	0	I-26 WB EXIT 106 ON RAMP	Yield
85	3	0	I-26 WB EXIT 106 ON RAMP	Yield
85	4	0	I-26 WB EXIT 106 ON RAMP	Yield
85	5	0	I-26 WB EXIT 106 ON RAMP	Yield
85	6	0	I-26 WB EXIT 106 ON RAMP	Yield

Node	Run	Delay	Intersection	Control Type
85	7	0.063529	I-26 WB EXIT 106 ON RAMP	Yield
85	8	0	I-26 WB EXIT 106 ON RAMP	Yield
85	9	0	I-26 WB EXIT 106 ON RAMP	Yield
85	10	0	I-26 WB EXIT 106 ON RAMP	Yield
99	1	30.2915	I-26 WB EXIT 103 OFF RAMP, HARBISON BLVD, I-26 WB EXIT 103 ON RAMP & 6770 (SW)	Actuated
99	2	27.774356	I-26 WB EXIT 103 OFF RAMP, HARBISON BLVD, I-26 WB EXIT 103 ON RAMP & 6770 (SW)	Actuated
99	3	25.064562	I-26 WB EXIT 103 OFF RAMP, HARBISON BLVD, I-26 WB EXIT 103 ON RAMP & 6770 (SW)	Actuated
99	4	30.876471	I-26 WB EXIT 103 OFF RAMP, HARBISON BLVD, I-26 WB EXIT 103 ON RAMP & 6770 (SW)	Actuated
99	5	37.019281	I-26 WB EXIT 103 OFF RAMP, HARBISON BLVD, I-26 WB EXIT 103 ON RAMP & 6770 (SW)	Actuated
99	6	30.072871	I-26 WB EXIT 103 OFF RAMP, HARBISON BLVD, I-26 WB EXIT 103 ON RAMP & 6770 (SW)	Actuated
99	7	28.71961	I-26 WB EXIT 103 OFF RAMP, HARBISON BLVD, I-26 WB EXIT 103 ON RAMP & 6770 (SW)	Actuated
99	8	30.512898	I-26 WB EXIT 103 OFF RAMP, HARBISON BLVD, I-26 WB EXIT 103 ON RAMP & 6770 (SW)	Actuated
99	9	33.537048	I-26 WB EXIT 103 OFF RAMP, HARBISON BLVD, I-26 WB EXIT 103 ON RAMP & 6770 (SW)	Actuated
99	10	46.551677	I-26 WB EXIT 103 OFF RAMP, HARBISON BLVD, I-26 WB EXIT 103 ON RAMP & 6770 (SW)	Actuated
30	1	12.841649	6864 (NW), 6554 (SW), EXIT 63 RAMP TO BUSH RIVER RD, BUSH RIVER RD & 6863 (W)	Actuated
30	2	13.039129	6864 (NW), 6554 (SW), EXIT 63 RAMP TO BUSH RIVER RD, BUSH RIVER RD & 6863 (W)	Actuated
30	3	12.75076	6864 (NW), 6554 (SW), EXIT 63 RAMP TO BUSH RIVER RD, BUSH RIVER RD & 6863 (W)	Actuated
30	4	12.63242	6864 (NW), 6554 (SW), EXIT 63 RAMP TO BUSH RIVER RD, BUSH RIVER RD & 6863 (W)	Actuated
30	5	13.112292	6864 (NW), 6554 (SW), EXIT 63 RAMP TO BUSH RIVER RD, BUSH RIVER RD & 6863 (W)	Actuated
30	6	13.269473	6864 (NW), 6554 (SW), EXIT 63 RAMP TO BUSH RIVER RD, BUSH RIVER RD & 6863 (W)	Actuated
30	7	13.138922	6864 (NW), 6554 (SW), EXIT 63 RAMP TO BUSH RIVER RD, BUSH RIVER RD & 6863 (W)	Actuated
30	8	12.563019	6864 (NW), 6554 (SW), EXIT 63 RAMP TO BUSH RIVER RD, BUSH RIVER RD & 6863 (W)	Actuated
30	9	13.142319	6864 (NW), 6554 (SW), EXIT 63 RAMP TO BUSH RIVER RD, BUSH RIVER RD & 6863 (W)	Actuated
30	10	12.191779	6864 (NW), 6554 (SW), EXIT 63 RAMP TO BUSH RIVER RD, BUSH RIVER RD & 6863 (W)	Actuated
104	1	6.245666	HARBISON BLVD, I-26 EB EXIT 103 OFF RAMP, 6770 (NE) & I-26 EB EXIT 103 ON RAMP	Actuated
104	2	6.326255	HARBISON BLVD, I-26 EB EXIT 103 OFF RAMP, 6770 (NE) & I-26 EB EXIT 103 ON RAMP	Actuated
104	3	6.929096	HARBISON BLVD, I-26 EB EXIT 103 OFF RAMP, 6770 (NE) & I-26 EB EXIT 103 ON RAMP	Actuated
104	4	6.136529	HARBISON BLVD, I-26 EB EXIT 103 OFF RAMP, 6770 (NE) & I-26 EB EXIT 103 ON RAMP	Actuated
104	5	6.368541	HARBISON BLVD, I-26 EB EXIT 103 OFF RAMP, 6770 (NE) & I-26 EB EXIT 103 ON RAMP	Actuated
104	6	6.607029	HARBISON BLVD, I-26 EB EXIT 103 OFF RAMP, 6770 (NE) & I-26 EB EXIT 103 ON RAMP	Actuated
104	7	7.194017	HARBISON BLVD, I-26 EB EXIT 103 OFF RAMP, 6770 (NE) & I-26 EB EXIT 103 ON RAMP	Actuated
104	8	6.6907	HARBISON BLVD, I-26 EB EXIT 103 OFF RAMP, 6770 (NE) & I-26 EB EXIT 103 ON RAMP	Actuated
104	9	6.379482	HARBISON BLVD, I-26 EB EXIT 103 OFF RAMP, 6770 (NE) & I-26 EB EXIT 103 ON RAMP	Actuated
104	10	7.57594	HARBISON BLVD, I-26 EB EXIT 103 OFF RAMP, 6770 (NE) & I-26 EB EXIT 103 ON RAMP	Actuated
107	1	0	6838 (NW), 6691 (NW) & 6692 (SE)	
107	2	0	6838 (NW), 6691 (NW) & 6692 (SE)	
107	3	0	6838 (NW), 6691 (NW) & 6692 (SE)	
107	4	0	6838 (NW), 6691 (NW) & 6692 (SE)	
107	5	0	6838 (NW), 6691 (NW) & 6692 (SE)	
107	6	0	6838 (NW), 6691 (NW) & 6692 (SE)	
107	7	0	6838 (NW), 6691 (NW) & 6692 (SE)	
107	8	0	6838 (NW), 6691 (NW) & 6692 (SE)	
107	9	0	6838 (NW), 6691 (NW) & 6692 (SE)	
107	10	0	6838 (NW), 6691 (NW) & 6692 (SE)	
111	1	0	6836 (E), RAMP & 6842 (NW)	
111	2	0	6836 (E), RAMP & 6842 (NW)	
111	3	0	6836 (E), RAMP & 6842 (NW)	
111	4	0	6836 (E), RAMP & 6842 (NW)	
111	5	0	6836 (E), RAMP & 6842 (NW)	
111	6	0	6836 (E), RAMP & 6842 (NW)	
111	7	0	6836 (E), RAMP & 6842 (NW)	
111	8	0	6836 (E), RAMP & 6842 (NW)	
111	9	0	6836 (E), RAMP & 6842 (NW)	
111	10	0	6836 (E), RAMP & 6842 (NW)	
112	1	22.625187	BROAD RIVER RD	Actuated
112	2	16.288219	BROAD RIVER RD	Actuated
112	3	11.880868	BROAD RIVER RD	Actuated
112	4	18.260115	BROAD RIVER RD	Actuated
112	5	20.494962	BROAD RIVER RD	Actuated
112	6	19.564565	BROAD RIVER RD	Actuated
112	7	14.204074	BROAD RIVER RD	Actuated
112	8	22.794331	BROAD RIVER RD	Actuated
112	9	20.564077	BROAD RIVER RD	Actuated
112	10	14.5324	BROAD RIVER RD	Actuated
113	1	16.4852	6837 (N), 6841 (W), RAMP, 6835 (NE) & 6838 (SE)	Actuated
113	2	17.444496	6837 (N), 6841 (W), RAMP, 6835 (NE) & 6838 (SE)	Actuated
113	3	15.624625	6837 (N), 6841 (W), RAMP, 6835 (NE) & 6838 (SE)	Actuated
113	4	17.252481	6837 (N), 6841 (W), RAMP, 6835 (NE) & 6838 (SE)	Actuated
113	5	16.472447	6837 (N), 6841 (W), RAMP, 6835 (NE) & 6838 (SE)	Actuated
113	6	17.08451	6837 (N), 6841 (W), RAMP, 6835 (NE) & 6838 (SE)	Actuated
113	7	15.391324	6837 (N), 6841 (W), RAMP, 6835 (NE) & 6838 (SE)	Actuated
113	8	16.148547	6837 (N), 6841 (W), RAMP, 6835 (NE) & 6838 (SE)	Actuated
113	9	17.154566	6837 (N), 6841 (W), RAMP, 6835 (NE) & 6838 (SE)	Actuated
113	10	15.956268	6837 (N), 6841 (W), RAMP, 6835 (NE) & 6838 (SE)	Actuated
117	1	6.543038	6804 (NW), 6828 (E) & BROAD RIVER RD	
117	2	6.594509	6804 (NW), 6828 (E) & BROAD RIVER RD	
117	3	4.493596	6804 (NW), 6828 (E) & BROAD RIVER RD	
117	4	8.662248	6804 (NW), 6828 (E) & BROAD RIVER RD	

Node	Run	Delay	Intersection	Control Type
117	5	5.374608	6804 (NW), 6828 (E) & BROAD RIVER RD	
117	6	5.483824	6804 (NW), 6828 (E) & BROAD RIVER RD	
117	7	7.017945	6804 (NW), 6828 (E) & BROAD RIVER RD	
117	8	10.08873	6804 (NW), 6828 (E) & BROAD RIVER RD	
117	9	6.258756	6804 (NW), 6828 (E) & BROAD RIVER RD	
117	10	4.929731	6804 (NW), 6828 (E) & BROAD RIVER RD	
120	1	0.000436	BUSH RIVER RD & 6741 (NE)	Actuated
120	2	0.000002	BUSH RIVER RD & 6741 (NE)	Actuated
120	3	0.00003	BUSH RIVER RD & 6741 (NE)	Actuated
120	4	0.000107	BUSH RIVER RD & 6741 (NE)	Actuated
120	5	0.000108	BUSH RIVER RD & 6741 (NE)	Actuated
120	6	0.000001	BUSH RIVER RD & 6741 (NE)	Actuated
120	7	0.000317	BUSH RIVER RD & 6741 (NE)	Actuated
120	8	0.000024	BUSH RIVER RD & 6741 (NE)	Actuated
120	9	0.000082	BUSH RIVER RD & 6741 (NE)	Actuated
120	10	0.00012	BUSH RIVER RD & 6741 (NE)	Actuated
123	1	0	I-26 EB EXIT 103 ON RAMP & 6718 (W)	Yield
123	2	0	I-26 EB EXIT 103 ON RAMP & 6718 (W)	Yield
123	3	0	I-26 EB EXIT 103 ON RAMP & 6718 (W)	Yield
123	4	0	I-26 EB EXIT 103 ON RAMP & 6718 (W)	Yield
123	5	0	I-26 EB EXIT 103 ON RAMP & 6718 (W)	Yield
123	6	0	I-26 EB EXIT 103 ON RAMP & 6718 (W)	Yield
123	7	0	I-26 EB EXIT 103 ON RAMP & 6718 (W)	Yield
123	8	0	I-26 EB EXIT 103 ON RAMP & 6718 (W)	Yield
123	9	0	I-26 EB EXIT 103 ON RAMP & 6718 (W)	Yield
123	10	0	I-26 EB EXIT 103 ON RAMP & 6718 (W)	Yield
125	1	0.512689	6765 (SE), 6774 (N) & I-26 WB TO BURNING TREE RD AND TO ST ANDREWS RD OFF RAMP	
125	2	1.278223	6765 (SE), 6774 (N) & I-26 WB TO BURNING TREE RD AND TO ST ANDREWS RD OFF RAMP	
125	3	0.758367	6765 (SE), 6774 (N) & I-26 WB TO BURNING TREE RD AND TO ST ANDREWS RD OFF RAMP	
125	4	0.537146	6765 (SE), 6774 (N) & I-26 WB TO BURNING TREE RD AND TO ST ANDREWS RD OFF RAMP	
125	5	0.751467	6765 (SE), 6774 (N) & I-26 WB TO BURNING TREE RD AND TO ST ANDREWS RD OFF RAMP	
125	6	0.63543	6765 (SE), 6774 (N) & I-26 WB TO BURNING TREE RD AND TO ST ANDREWS RD OFF RAMP	
125	7	0.508179	6765 (SE), 6774 (N) & I-26 WB TO BURNING TREE RD AND TO ST ANDREWS RD OFF RAMP	
125	8	0.593597	6765 (SE), 6774 (N) & I-26 WB TO BURNING TREE RD AND TO ST ANDREWS RD OFF RAMP	
125	9	0.600327	6765 (SE), 6774 (N) & I-26 WB TO BURNING TREE RD AND TO ST ANDREWS RD OFF RAMP	
125	10	0.659439	6765 (SE), 6774 (N) & I-26 WB TO BURNING TREE RD AND TO ST ANDREWS RD OFF RAMP	
126	1	1.413942	6835 (SW), COLONIAL LIFE BLVD W, 6836 (W) & 6837 (S)	
126	2	1.362574	6835 (SW), COLONIAL LIFE BLVD W, 6836 (W) & 6837 (S)	
126	3	1.102465	6835 (SW), COLONIAL LIFE BLVD W, 6836 (W) & 6837 (S)	
126	4	1.579806	6835 (SW), COLONIAL LIFE BLVD W, 6836 (W) & 6837 (S)	
126	5	1.655464	6835 (SW), COLONIAL LIFE BLVD W, 6836 (W) & 6837 (S)	
126	6	0.972141	6835 (SW), COLONIAL LIFE BLVD W, 6836 (W) & 6837 (S)	
126	7	1.202659	6835 (SW), COLONIAL LIFE BLVD W, 6836 (W) & 6837 (S)	
126	8	1.464885	6835 (SW), COLONIAL LIFE BLVD W, 6836 (W) & 6837 (S)	
126	9	1.18662	6835 (SW), COLONIAL LIFE BLVD W, 6836 (W) & 6837 (S)	
126	10	1.324453	6835 (SW), COLONIAL LIFE BLVD W, 6836 (W) & 6837 (S)	
127	1	31.259291	WOODLAND HILLS RD, ST ANDREWS RD, I-26 EB EXIT 106 OFF RAMP & 6772 (NE)	Actuated
127	2	30.63152	WOODLAND HILLS RD, ST ANDREWS RD, I-26 EB EXIT 106 OFF RAMP & 6772 (NE)	Actuated
127	3	37.78584	WOODLAND HILLS RD, ST ANDREWS RD, I-26 EB EXIT 106 OFF RAMP & 6772 (NE)	Actuated
127	4	31.892521	WOODLAND HILLS RD, ST ANDREWS RD, I-26 EB EXIT 106 OFF RAMP & 6772 (NE)	Actuated
127	5	32.509373	WOODLAND HILLS RD, ST ANDREWS RD, I-26 EB EXIT 106 OFF RAMP & 6772 (NE)	Actuated
127	6	31.938854	WOODLAND HILLS RD, ST ANDREWS RD, I-26 EB EXIT 106 OFF RAMP & 6772 (NE)	Actuated
127	7	33.486659	WOODLAND HILLS RD, ST ANDREWS RD, I-26 EB EXIT 106 OFF RAMP & 6772 (NE)	Actuated
127	8	31.689351	WOODLAND HILLS RD, ST ANDREWS RD, I-26 EB EXIT 106 OFF RAMP & 6772 (NE)	Actuated
127	9	31.96928	WOODLAND HILLS RD, ST ANDREWS RD, I-26 EB EXIT 106 OFF RAMP & 6772 (NE)	Actuated
127	10	31.103779	WOODLAND HILLS RD, ST ANDREWS RD, I-26 EB EXIT 106 OFF RAMP & 6772 (NE)	Actuated
129	1	1.061935	COLONIAL LIFE BLVD W, W COLONIAL LIFE BLVD & 6840 (W)	Actuated
129	2	1.14415	COLONIAL LIFE BLVD W, W COLONIAL LIFE BLVD & 6840 (W)	Actuated
129	3	0.843752	COLONIAL LIFE BLVD W, W COLONIAL LIFE BLVD & 6840 (W)	Actuated
129	4	1.360579	COLONIAL LIFE BLVD W, W COLONIAL LIFE BLVD & 6840 (W)	Actuated
129	5	1.178186	COLONIAL LIFE BLVD W, W COLONIAL LIFE BLVD & 6840 (W)	Actuated
129	6	0.966186	COLONIAL LIFE BLVD W, W COLONIAL LIFE BLVD & 6840 (W)	Actuated
129	7	1.144128	COLONIAL LIFE BLVD W, W COLONIAL LIFE BLVD & 6840 (W)	Actuated
129	8	1.037515	COLONIAL LIFE BLVD W, W COLONIAL LIFE BLVD & 6840 (W)	Actuated
129	9	1.022042	COLONIAL LIFE BLVD W, W COLONIAL LIFE BLVD & 6840 (W)	Actuated
129	10	0.977684	COLONIAL LIFE BLVD W, W COLONIAL LIFE BLVD & 6840 (W)	Actuated
131	1	0.000429	6687 (NW), 6672 (NW) & 6841 (E)	
131	2	0.00054	6687 (NW), 6672 (NW) & 6841 (E)	
131	3	0.002171	6687 (NW), 6672 (NW) & 6841 (E)	
131	4	0.000782	6687 (NW), 6672 (NW) & 6841 (E)	
131	5	0.001945	6687 (NW), 6672 (NW) & 6841 (E)	
131	6	0	6687 (NW), 6672 (NW) & 6841 (E)	
131	7	0.000698	6687 (NW), 6672 (NW) & 6841 (E)	
131	8	0	6687 (NW), 6672 (NW) & 6841 (E)	
131	9	0.00038	6687 (NW), 6672 (NW) & 6841 (E)	
131	10	0.000424	6687 (NW), 6672 (NW) & 6841 (E)	
132	1	4.515824	EXIT 65 RAMP TO US 176 & BROAD RIVER RD	Actuated
132	2	4.756981	EXIT 65 RAMP TO US 176 & BROAD RIVER RD	Actuated

Node	Run	Delay	Intersection	Control Type
132	3	4.657184	EXIT 65 RAMP TO US 176 & BROAD RIVER RD	Actuated
132	4	4.549171	EXIT 65 RAMP TO US 176 & BROAD RIVER RD	Actuated
132	5	5.345237	EXIT 65 RAMP TO US 176 & BROAD RIVER RD	Actuated
132	6	4.642747	EXIT 65 RAMP TO US 176 & BROAD RIVER RD	Actuated
132	7	5.104157	EXIT 65 RAMP TO US 176 & BROAD RIVER RD	Actuated
132	8	5.696869	EXIT 65 RAMP TO US 176 & BROAD RIVER RD	Actuated
132	9	4.651992	EXIT 65 RAMP TO US 176 & BROAD RIVER RD	Actuated
132	10	3.901458	EXIT 65 RAMP TO US 176 & BROAD RIVER RD	Actuated
100000139	1	16.458348	6862 (SE), EXIT 63 RAMP TO BUSH RIVER RD, 6861 (NW), 6859 (NW), RAMP & 6866 (SE)	Actuated
100000139	2	16.718056	6862 (SE), EXIT 63 RAMP TO BUSH RIVER RD, 6861 (NW), 6859 (NW), RAMP & 6866 (SE)	Actuated
100000139	3	15.997971	6862 (SE), EXIT 63 RAMP TO BUSH RIVER RD, 6861 (NW), 6859 (NW), RAMP & 6866 (SE)	Actuated
100000139	4	18.345568	6862 (SE), EXIT 63 RAMP TO BUSH RIVER RD, 6861 (NW), 6859 (NW), RAMP & 6866 (SE)	Actuated
100000139	5	16.235156	6862 (SE), EXIT 63 RAMP TO BUSH RIVER RD, 6861 (NW), 6859 (NW), RAMP & 6866 (SE)	Actuated
100000139	6	15.655151	6862 (SE), EXIT 63 RAMP TO BUSH RIVER RD, 6861 (NW), 6859 (NW), RAMP & 6866 (SE)	Actuated
100000139	7	17.948491	6862 (SE), EXIT 63 RAMP TO BUSH RIVER RD, 6861 (NW), 6859 (NW), RAMP & 6866 (SE)	Actuated
100000139	8	15.648014	6862 (SE), EXIT 63 RAMP TO BUSH RIVER RD, 6861 (NW), 6859 (NW), RAMP & 6866 (SE)	Actuated
100000139	9	16.874712	6862 (SE), EXIT 63 RAMP TO BUSH RIVER RD, 6861 (NW), 6859 (NW), RAMP & 6866 (SE)	Actuated
100000139	10	16.322654	6862 (SE), EXIT 63 RAMP TO BUSH RIVER RD, 6861 (NW), 6859 (NW), RAMP & 6866 (SE)	Actuated
141	1	68.825665	BUSH RIVER RD, 6752 (NE) & 6751 (SW)	Actuated
141	2	72.40101	BUSH RIVER RD, 6752 (NE) & 6751 (SW)	Actuated
141	3	67.023057	BUSH RIVER RD, 6752 (NE) & 6751 (SW)	Actuated
141	4	78.310078	BUSH RIVER RD, 6752 (NE) & 6751 (SW)	Actuated
141	5	76.594825	BUSH RIVER RD, 6752 (NE) & 6751 (SW)	Actuated
141	6	81.740636	BUSH RIVER RD, 6752 (NE) & 6751 (SW)	Actuated
141	7	72.566308	BUSH RIVER RD, 6752 (NE) & 6751 (SW)	Actuated
141	8	72.145268	BUSH RIVER RD, 6752 (NE) & 6751 (SW)	Actuated
141	9	72.080127	BUSH RIVER RD, 6752 (NE) & 6751 (SW)	Actuated
141	10	63.681752	BUSH RIVER RD, 6752 (NE) & 6751 (SW)	Actuated
147	1	0	I-26 WB TO BURNING TREE RD AND TO ST ANDREWS RD OFF RAMP, I-26 WB TO BURNING TREE RD OFF RAMP & 6765	
147	2	0	I-26 WB TO BURNING TREE RD AND TO ST ANDREWS RD OFF RAMP, I-26 WB TO BURNING TREE RD OFF RAMP & 6765	
147	3	0	I-26 WB TO BURNING TREE RD AND TO ST ANDREWS RD OFF RAMP, I-26 WB TO BURNING TREE RD OFF RAMP & 6765	
147	4	0	I-26 WB TO BURNING TREE RD AND TO ST ANDREWS RD OFF RAMP, I-26 WB TO BURNING TREE RD OFF RAMP & 6765	
147	5	0	I-26 WB TO BURNING TREE RD AND TO ST ANDREWS RD OFF RAMP, I-26 WB TO BURNING TREE RD OFF RAMP & 6765	
147	6	0	I-26 WB TO BURNING TREE RD AND TO ST ANDREWS RD OFF RAMP, I-26 WB TO BURNING TREE RD OFF RAMP & 6765	
147	7	0	I-26 WB TO BURNING TREE RD AND TO ST ANDREWS RD OFF RAMP, I-26 WB TO BURNING TREE RD OFF RAMP & 6765	
147	8	0	I-26 WB TO BURNING TREE RD AND TO ST ANDREWS RD OFF RAMP, I-26 WB TO BURNING TREE RD OFF RAMP & 6765	
147	9	0	I-26 WB TO BURNING TREE RD AND TO ST ANDREWS RD OFF RAMP, I-26 WB TO BURNING TREE RD OFF RAMP & 6765	
147	10	0	I-26 WB TO BURNING TREE RD AND TO ST ANDREWS RD OFF RAMP, I-26 WB TO BURNING TREE RD OFF RAMP & 6765	
148	1	10.343264	BROAD RIVER RD	Actuated
148	2	11.0554	BROAD RIVER RD	Actuated
148	3	10.876185	BROAD RIVER RD	Actuated
148	4	10.176625	BROAD RIVER RD	Actuated
148	5	9.576109	BROAD RIVER RD	Actuated
148	6	10.249129	BROAD RIVER RD	Actuated
148	7	11.030099	BROAD RIVER RD	Actuated
148	8	10.262433	BROAD RIVER RD	Actuated
148	9	9.986864	BROAD RIVER RD	Actuated
148	10	10.303318	BROAD RIVER RD	Actuated
155	1	3.522673	BROAD RIVER RD & 6583 (SW)	Actuated
155	2	3.736128	BROAD RIVER RD & 6583 (SW)	Actuated
155	3	3.408621	BROAD RIVER RD & 6583 (SW)	Actuated
155	4	4.066003	BROAD RIVER RD & 6583 (SW)	Actuated
155	5	3.151392	BROAD RIVER RD & 6583 (SW)	Actuated
155	6	3.601418	BROAD RIVER RD & 6583 (SW)	Actuated
155	7	3.476396	BROAD RIVER RD & 6583 (SW)	Actuated
155	8	3.234743	BROAD RIVER RD & 6583 (SW)	Actuated
155	9	3.987707	BROAD RIVER RD & 6583 (SW)	Actuated
155	10	3.96275	BROAD RIVER RD & 6583 (SW)	Actuated
159	1	0	RAMP & 6812 (E)	Yield
159	2	0	RAMP & 6812 (E)	Yield
159	3	0	RAMP & 6812 (E)	Yield
159	4	0	RAMP & 6812 (E)	Yield
159	5	0	RAMP & 6812 (E)	Yield
159	6	0	RAMP & 6812 (E)	Yield
159	7	0	RAMP & 6812 (E)	Yield
159	8	0	RAMP & 6812 (E)	Yield
159	9	0	RAMP & 6812 (E)	Yield
159	10	0	RAMP & 6812 (E)	Yield
161	1	2.167568	BROAD RIVER RD & 6806 (NE)	
161	2	2.34823	BROAD RIVER RD & 6806 (NE)	
161	3	2.107436	BROAD RIVER RD & 6806 (NE)	
161	4	1.722193	BROAD RIVER RD & 6806 (NE)	
161	5	1.964006	BROAD RIVER RD & 6806 (NE)	
161	6	2.00837	BROAD RIVER RD & 6806 (NE)	
161	7	2.042073	BROAD RIVER RD & 6806 (NE)	
161	8	2.096822	BROAD RIVER RD & 6806 (NE)	
161	9	2.23313	BROAD RIVER RD & 6806 (NE)	
161	10	2.110274	BROAD RIVER RD & 6806 (NE)	

Node	Run	Delay	Intersection	Control Type
171	1	1.064765	BROAD RIVER RD & 6812 (W)	
171	2	1.042274	BROAD RIVER RD & 6812 (W)	
171	3	1.123505	BROAD RIVER RD & 6812 (W)	
171	4	1.139351	BROAD RIVER RD & 6812 (W)	
171	5	1.027039	BROAD RIVER RD & 6812 (W)	
171	6	1.229585	BROAD RIVER RD & 6812 (W)	
171	7	0.928607	BROAD RIVER RD & 6812 (W)	
171	8	0.998284	BROAD RIVER RD & 6812 (W)	
171	9	1.090769	BROAD RIVER RD & 6812 (W)	
171	10	1.065409	BROAD RIVER RD & 6812 (W)	
5112	1	0	RAMP	
5112	2	0	RAMP	
5112	3	0	RAMP	
5112	4	0	RAMP	
5112	5	0	RAMP	
5112	6	0	RAMP	
5112	7	0	RAMP	
5112	8	0	RAMP	
5112	9	0	RAMP	
5112	10	0	RAMP	
100000093	1	13.270074	SUNSET BLVD & RAMP	Actuated
100000093	2	12.466919	SUNSET BLVD & RAMP	Actuated
100000093	3	14.51274	SUNSET BLVD & RAMP	Actuated
100000093	4	14.976835	SUNSET BLVD & RAMP	Actuated
100000093	5	13.694871	SUNSET BLVD & RAMP	Actuated
100000093	6	16.231874	SUNSET BLVD & RAMP	Actuated
100000093	7	14.269366	SUNSET BLVD & RAMP	Actuated
100000093	8	14.608944	SUNSET BLVD & RAMP	Actuated
100000093	9	13.754709	SUNSET BLVD & RAMP	Actuated
100000093	10	15.943619	SUNSET BLVD & RAMP	Actuated
100000120	1	71.834885	CORLEY MILL RD, SUNSET BLVD & GINNY LN	Actuated
100000120	2	73.790364	CORLEY MILL RD, SUNSET BLVD & GINNY LN	Actuated
100000120	3	74.188914	CORLEY MILL RD, SUNSET BLVD & GINNY LN	Actuated
100000120	4	80.52563	CORLEY MILL RD, SUNSET BLVD & GINNY LN	Actuated
100000120	5	65.922402	CORLEY MILL RD, SUNSET BLVD & GINNY LN	Actuated
100000120	6	87.196867	CORLEY MILL RD, SUNSET BLVD & GINNY LN	Actuated
100000120	7	68.8351	CORLEY MILL RD, SUNSET BLVD & GINNY LN	Actuated
100000120	8	75.37606	CORLEY MILL RD, SUNSET BLVD & GINNY LN	Actuated
100000120	9	71.940443	CORLEY MILL RD, SUNSET BLVD & GINNY LN	Actuated
100000120	10	71.761713	CORLEY MILL RD, SUNSET BLVD & GINNY LN	Actuated
100000134	1	17.830585	SUNSET BLVD & RAMP	Actuated
100000134	2	17.44684	SUNSET BLVD & RAMP	Actuated
100000134	3	18.26464	SUNSET BLVD & RAMP	Actuated
100000134	4	18.507551	SUNSET BLVD & RAMP	Actuated
100000134	5	17.42564	SUNSET BLVD & RAMP	Actuated
100000134	6	18.150398	SUNSET BLVD & RAMP	Actuated
100000134	7	17.702317	SUNSET BLVD & RAMP	Actuated
100000134	8	22.50087	SUNSET BLVD & RAMP	Actuated
100000134	9	17.841615	SUNSET BLVD & RAMP	Actuated
100000134	10	17.767552	SUNSET BLVD & RAMP	Actuated
100000135	1	12.345213	SUNSET BLVD & RAMP	Actuated
100000135	2	10.18701	SUNSET BLVD & RAMP	Actuated
100000135	3	10.997789	SUNSET BLVD & RAMP	Actuated
100000135	4	11.902682	SUNSET BLVD & RAMP	Actuated
100000135	5	13.376901	SUNSET BLVD & RAMP	Actuated
100000135	6	9.555215	SUNSET BLVD & RAMP	Actuated
100000135	7	12.563643	SUNSET BLVD & RAMP	Actuated
100000135	8	11.487065	SUNSET BLVD & RAMP	Actuated
100000135	9	10.060016	SUNSET BLVD & RAMP	Actuated
100000135	10	9.394852	SUNSET BLVD & RAMP	Actuated
100000136	1	51.771482	SUNSET BLVD, CROMER RD & DAVEGA DR	Actuated
100000136	2	44.831499	SUNSET BLVD, CROMER RD & DAVEGA DR	Actuated
100000136	3	57.945044	SUNSET BLVD, CROMER RD & DAVEGA DR	Actuated
100000136	4	49.183803	SUNSET BLVD, CROMER RD & DAVEGA DR	Actuated
100000136	5	59.842213	SUNSET BLVD, CROMER RD & DAVEGA DR	Actuated
100000136	6	56.482398	SUNSET BLVD, CROMER RD & DAVEGA DR	Actuated
100000136	7	46.992755	SUNSET BLVD, CROMER RD & DAVEGA DR	Actuated
100000136	8	48.072768	SUNSET BLVD, CROMER RD & DAVEGA DR	Actuated
100000136	9	56.098357	SUNSET BLVD, CROMER RD & DAVEGA DR	Actuated
100000136	10	50.118288	SUNSET BLVD, CROMER RD & DAVEGA DR	Actuated
100000144	1	17.074696	W. HOSPITAL DR, SUNSET BLVD & SUNSET CT	Actuated
100000144	2	10.918283	W. HOSPITAL DR, SUNSET BLVD & SUNSET CT	Actuated
100000144	3	40.657305	W. HOSPITAL DR, SUNSET BLVD & SUNSET CT	Actuated
100000144	4	32.379377	W. HOSPITAL DR, SUNSET BLVD & SUNSET CT	Actuated
100000144	5	12.969738	W. HOSPITAL DR, SUNSET BLVD & SUNSET CT	Actuated
100000144	6	37.251467	W. HOSPITAL DR, SUNSET BLVD & SUNSET CT	Actuated
100000144	7	22.963327	W. HOSPITAL DR, SUNSET BLVD & SUNSET CT	Actuated
100000144	8	25.631799	W. HOSPITAL DR, SUNSET BLVD & SUNSET CT	Actuated

Node	Run	Delay	Intersection	Control Type
100000144	9	13.568667	W. HOSPITAL DR, SUNSET BLVD & SUNSET CT	Actuated
100000144	10	47.335833	W. HOSPITAL DR, SUNSET BLVD & SUNSET CT	Actuated
100000150	1	1.770378	I-26 EB EXIT 101 OFF RAMP & BROAD RIVER RD	Stop
100000150	2	1.86078	I-26 EB EXIT 101 OFF RAMP & BROAD RIVER RD	Stop
100000150	3	1.701891	I-26 EB EXIT 101 OFF RAMP & BROAD RIVER RD	Stop
100000150	4	2.045087	I-26 EB EXIT 101 OFF RAMP & BROAD RIVER RD	Stop
100000150	5	2.388707	I-26 EB EXIT 101 OFF RAMP & BROAD RIVER RD	Stop
100000150	6	1.667062	I-26 EB EXIT 101 OFF RAMP & BROAD RIVER RD	Stop
100000150	7	1.356895	I-26 EB EXIT 101 OFF RAMP & BROAD RIVER RD	Stop
100000150	8	1.397099	I-26 EB EXIT 101 OFF RAMP & BROAD RIVER RD	Stop
100000150	9	2.021732	I-26 EB EXIT 101 OFF RAMP & BROAD RIVER RD	Stop
100000150	10	1.534981	I-26 EB EXIT 101 OFF RAMP & BROAD RIVER RD	Stop
100000151	1	7.012555	BROAD RIVER RD & I-26 EB EXIT 101 ON RAMP	Actuated
100000151	2	6.396824	BROAD RIVER RD & I-26 EB EXIT 101 ON RAMP	Actuated
100000151	3	5.951315	BROAD RIVER RD & I-26 EB EXIT 101 ON RAMP	Actuated
100000151	4	6.190162	BROAD RIVER RD & I-26 EB EXIT 101 ON RAMP	Actuated
100000151	5	6.956431	BROAD RIVER RD & I-26 EB EXIT 101 ON RAMP	Actuated
100000151	6	7.617772	BROAD RIVER RD & I-26 EB EXIT 101 ON RAMP	Actuated
100000151	7	5.648417	BROAD RIVER RD & I-26 EB EXIT 101 ON RAMP	Actuated
100000151	8	5.68377	BROAD RIVER RD & I-26 EB EXIT 101 ON RAMP	Actuated
100000151	9	6.563095	BROAD RIVER RD & I-26 EB EXIT 101 ON RAMP	Actuated
100000151	10	6.278891	BROAD RIVER RD & I-26 EB EXIT 101 ON RAMP	Actuated
100000152	1	9.237813	BROAD RIVER RD & BEATTY RD	Actuated
100000152	2	8.325135	BROAD RIVER RD & BEATTY RD	Actuated
100000152	3	7.305175	BROAD RIVER RD & BEATTY RD	Actuated
100000152	4	7.0399	BROAD RIVER RD & BEATTY RD	Actuated
100000152	5	7.613866	BROAD RIVER RD & BEATTY RD	Actuated
100000152	6	8.945115	BROAD RIVER RD & BEATTY RD	Actuated
100000152	7	7.363326	BROAD RIVER RD & BEATTY RD	Actuated
100000152	8	7.175913	BROAD RIVER RD & BEATTY RD	Actuated
100000152	9	8.34113	BROAD RIVER RD & BEATTY RD	Actuated
100000152	10	6.570734	BROAD RIVER RD & BEATTY RD	Actuated
100000160	1	0	BROAD RIVER RD & I-26 WB EXIT 101 ON RAMP	
100000160	2	0	BROAD RIVER RD & I-26 WB EXIT 101 ON RAMP	
100000160	3	0	BROAD RIVER RD & I-26 WB EXIT 101 ON RAMP	
100000160	4	0	BROAD RIVER RD & I-26 WB EXIT 101 ON RAMP	
100000160	5	0	BROAD RIVER RD & I-26 WB EXIT 101 ON RAMP	
100000160	6	0	BROAD RIVER RD & I-26 WB EXIT 101 ON RAMP	
100000160	7	0	BROAD RIVER RD & I-26 WB EXIT 101 ON RAMP	
100000160	8	0	BROAD RIVER RD & I-26 WB EXIT 101 ON RAMP	
100000160	9	0	BROAD RIVER RD & I-26 WB EXIT 101 ON RAMP	
100000160	10	0	BROAD RIVER RD & I-26 WB EXIT 101 ON RAMP	
100000163	1	8.482076	MCSWAIN DR, SUNSET BLVD & CHRIS DR	Actuated
100000163	2	8.434958	MCSWAIN DR, SUNSET BLVD & CHRIS DR	Actuated
100000163	3	7.230922	MCSWAIN DR, SUNSET BLVD & CHRIS DR	Actuated
100000163	4	8.900851	MCSWAIN DR, SUNSET BLVD & CHRIS DR	Actuated
100000163	5	9.851197	MCSWAIN DR, SUNSET BLVD & CHRIS DR	Actuated
100000163	6	8.622008	MCSWAIN DR, SUNSET BLVD & CHRIS DR	Actuated
100000163	7	9.291792	MCSWAIN DR, SUNSET BLVD & CHRIS DR	Actuated
100000163	8	7.619011	MCSWAIN DR, SUNSET BLVD & CHRIS DR	Actuated
100000163	9	7.685315	MCSWAIN DR, SUNSET BLVD & CHRIS DR	Actuated
100000163	10	8.15111	MCSWAIN DR, SUNSET BLVD & CHRIS DR	Actuated
100000165	1	17.02558	HARBISON BLVD & WOODCROSS DR	Actuated
100000165	2	18.886101	HARBISON BLVD & WOODCROSS DR	Actuated
100000165	3	19.42696	HARBISON BLVD & WOODCROSS DR	Actuated
100000165	4	18.594926	HARBISON BLVD & WOODCROSS DR	Actuated
100000165	5	17.284594	HARBISON BLVD & WOODCROSS DR	Actuated
100000165	6	19.574012	HARBISON BLVD & WOODCROSS DR	Actuated
100000165	7	16.869023	HARBISON BLVD & WOODCROSS DR	Actuated
100000165	8	18.149272	HARBISON BLVD & WOODCROSS DR	Actuated
100000165	9	17.101146	HARBISON BLVD & WOODCROSS DR	Actuated
100000165	10	18.11081	HARBISON BLVD & WOODCROSS DR	Actuated
100000168	1	20.941423	SUNSET BLVD & LEAPHART RD	Actuated
100000168	2	22.586933	SUNSET BLVD & LEAPHART RD	Actuated
100000168	3	21.568885	SUNSET BLVD & LEAPHART RD	Actuated
100000168	4	19.657386	SUNSET BLVD & LEAPHART RD	Actuated
100000168	5	20.979832	SUNSET BLVD & LEAPHART RD	Actuated
100000168	6	16.683063	SUNSET BLVD & LEAPHART RD	Actuated
100000168	7	21.007697	SUNSET BLVD & LEAPHART RD	Actuated
100000168	8	17.432582	SUNSET BLVD & LEAPHART RD	Actuated
100000168	9	17.580599	SUNSET BLVD & LEAPHART RD	Actuated
100000168	10	21.05034	SUNSET BLVD & LEAPHART RD	Actuated
100000169	1	0	LAKE MURRAY BLVD & I-26 WB EXIT 102 ON RAMP	
100000169	2	0	LAKE MURRAY BLVD & I-26 WB EXIT 102 ON RAMP	
100000169	3	0	LAKE MURRAY BLVD & I-26 WB EXIT 102 ON RAMP	
100000169	4	0	LAKE MURRAY BLVD & I-26 WB EXIT 102 ON RAMP	
100000169	5	0	LAKE MURRAY BLVD & I-26 WB EXIT 102 ON RAMP	
100000169	6	0	LAKE MURRAY BLVD & I-26 WB EXIT 102 ON RAMP	

Node	Run	Delay	Intersection	Control Type
100000169	7	0	LAKE MURRAY BLVD & I-26 WB EXIT 102 ON RAMP	
100000169	8	0	LAKE MURRAY BLVD & I-26 WB EXIT 102 ON RAMP	
100000169	9	0	LAKE MURRAY BLVD & I-26 WB EXIT 102 ON RAMP	
100000169	10	0	LAKE MURRAY BLVD & I-26 WB EXIT 102 ON RAMP	
100000174	1	23.475474	PINEY GROVE RD, I-26 EB EXIT 104 OFF RAMP & I-26 EB EXIT 104 ON RAMP	Actuated
100000174	2	22.331683	PINEY GROVE RD, I-26 EB EXIT 104 OFF RAMP & I-26 EB EXIT 104 ON RAMP	Actuated
100000174	3	19.984393	PINEY GROVE RD, I-26 EB EXIT 104 OFF RAMP & I-26 EB EXIT 104 ON RAMP	Actuated
100000174	4	25.021238	PINEY GROVE RD, I-26 EB EXIT 104 OFF RAMP & I-26 EB EXIT 104 ON RAMP	Actuated
100000174	5	19.488011	PINEY GROVE RD, I-26 EB EXIT 104 OFF RAMP & I-26 EB EXIT 104 ON RAMP	Actuated
100000174	6	16.881098	PINEY GROVE RD, I-26 EB EXIT 104 OFF RAMP & I-26 EB EXIT 104 ON RAMP	Actuated
100000174	7	18.959825	PINEY GROVE RD, I-26 EB EXIT 104 OFF RAMP & I-26 EB EXIT 104 ON RAMP	Actuated
100000174	8	24.403908	PINEY GROVE RD, I-26 EB EXIT 104 OFF RAMP & I-26 EB EXIT 104 ON RAMP	Actuated
100000174	9	21.850709	PINEY GROVE RD, I-26 EB EXIT 104 OFF RAMP & I-26 EB EXIT 104 ON RAMP	Actuated
100000174	10	21.700563	PINEY GROVE RD, I-26 EB EXIT 104 OFF RAMP & I-26 EB EXIT 104 ON RAMP	Actuated
100000177	1	34.909958	PINEY GROVE RD, I-26 WB EXIT 104 OFF RAMP & I-26 WB EXIT 104 ON RAMP	Actuated
100000177	2	34.139459	PINEY GROVE RD, I-26 WB EXIT 104 OFF RAMP & I-26 WB EXIT 104 ON RAMP	Actuated
100000177	3	27.136006	PINEY GROVE RD, I-26 WB EXIT 104 OFF RAMP & I-26 WB EXIT 104 ON RAMP	Actuated
100000177	4	39.632157	PINEY GROVE RD, I-26 WB EXIT 104 OFF RAMP & I-26 WB EXIT 104 ON RAMP	Actuated
100000177	5	27.979615	PINEY GROVE RD, I-26 WB EXIT 104 OFF RAMP & I-26 WB EXIT 104 ON RAMP	Actuated
100000177	6	23.315061	PINEY GROVE RD, I-26 WB EXIT 104 OFF RAMP & I-26 WB EXIT 104 ON RAMP	Actuated
100000177	7	27.38079	PINEY GROVE RD, I-26 WB EXIT 104 OFF RAMP & I-26 WB EXIT 104 ON RAMP	Actuated
100000177	8	36.29259	PINEY GROVE RD, I-26 WB EXIT 104 OFF RAMP & I-26 WB EXIT 104 ON RAMP	Actuated
100000177	9	36.589411	PINEY GROVE RD, I-26 WB EXIT 104 OFF RAMP & I-26 WB EXIT 104 ON RAMP	Actuated
100000177	10	39.522289	PINEY GROVE RD, I-26 WB EXIT 104 OFF RAMP & I-26 WB EXIT 104 ON RAMP	Actuated
100000182	1	7.446914	ST ANDREWS RD & 6774 (S)	Stop
100000182	2	4.902483	ST ANDREWS RD & 6774 (S)	Stop
100000182	3	2.207669	ST ANDREWS RD & 6774 (S)	Stop
100000182	4	6.987989	ST ANDREWS RD & 6774 (S)	Stop
100000182	5	1.797623	ST ANDREWS RD & 6774 (S)	Stop
100000182	6	5.606829	ST ANDREWS RD & 6774 (S)	Stop
100000182	7	6.624436	ST ANDREWS RD & 6774 (S)	Stop
100000182	8	4.160972	ST ANDREWS RD & 6774 (S)	Stop
100000182	9	5.329438	ST ANDREWS RD & 6774 (S)	Stop
100000182	10	3.88912	ST ANDREWS RD & 6774 (S)	Stop
100000184	1	11.48689	ARROWWOOD RD, BUSH RIVER RD & N ARROWWOOD RD	Actuated
100000184	2	10.047756	ARROWWOOD RD, BUSH RIVER RD & N ARROWWOOD RD	Actuated
100000184	3	10.13406	ARROWWOOD RD, BUSH RIVER RD & N ARROWWOOD RD	Actuated
100000184	4	9.745454	ARROWWOOD RD, BUSH RIVER RD & N ARROWWOOD RD	Actuated
100000184	5	11.357621	ARROWWOOD RD, BUSH RIVER RD & N ARROWWOOD RD	Actuated
100000184	6	10.021546	ARROWWOOD RD, BUSH RIVER RD & N ARROWWOOD RD	Actuated
100000184	7	9.553284	ARROWWOOD RD, BUSH RIVER RD & N ARROWWOOD RD	Actuated
100000184	8	10.690946	ARROWWOOD RD, BUSH RIVER RD & N ARROWWOOD RD	Actuated
100000184	9	9.715916	ARROWWOOD RD, BUSH RIVER RD & N ARROWWOOD RD	Actuated
100000184	10	10.659765	ARROWWOOD RD, BUSH RIVER RD & N ARROWWOOD RD	Actuated
100000185	1	4.654792	GREYSTONE BLVD & RAMP	Stop
100000185	2	3.884507	GREYSTONE BLVD & RAMP	Stop
100000185	3	3.803015	GREYSTONE BLVD & RAMP	Stop
100000185	4	4.709311	GREYSTONE BLVD & RAMP	Stop
100000185	5	3.804518	GREYSTONE BLVD & RAMP	Stop
100000185	6	4.923641	GREYSTONE BLVD & RAMP	Stop
100000185	7	4.016233	GREYSTONE BLVD & RAMP	Stop
100000185	8	5.580812	GREYSTONE BLVD & RAMP	Stop
100000185	9	4.041604	GREYSTONE BLVD & RAMP	Stop
100000185	10	4.237053	GREYSTONE BLVD & RAMP	Stop
100000186	1	41.402292	HARBOR DR, SUNSET BLVD & E HOSPITAL DR	Actuated
100000186	2	45.446263	HARBOR DR, SUNSET BLVD & E HOSPITAL DR	Actuated
100000186	3	44.866072	HARBOR DR, SUNSET BLVD & E HOSPITAL DR	Actuated
100000186	4	48.155999	HARBOR DR, SUNSET BLVD & E HOSPITAL DR	Actuated
100000186	5	34.930643	HARBOR DR, SUNSET BLVD & E HOSPITAL DR	Actuated
100000186	6	53.824252	HARBOR DR, SUNSET BLVD & E HOSPITAL DR	Actuated
100000186	7	37.492654	HARBOR DR, SUNSET BLVD & E HOSPITAL DR	Actuated
100000186	8	44.757351	HARBOR DR, SUNSET BLVD & E HOSPITAL DR	Actuated
100000186	9	35.932722	HARBOR DR, SUNSET BLVD & E HOSPITAL DR	Actuated
100000186	10	53.018107	HARBOR DR, SUNSET BLVD & E HOSPITAL DR	Actuated
100000187	1	23.83679	BROAD RIVER RD, BRIARGATE CIR, 6829 (SE) & MARLEY DR	Actuated
100000187	2	17.855137	BROAD RIVER RD, BRIARGATE CIR, 6829 (SE) & MARLEY DR	Actuated
100000187	3	22.687725	BROAD RIVER RD, BRIARGATE CIR, 6829 (SE) & MARLEY DR	Actuated
100000187	4	21.562907	BROAD RIVER RD, BRIARGATE CIR, 6829 (SE) & MARLEY DR	Actuated
100000187	5	19.930815	BROAD RIVER RD, BRIARGATE CIR, 6829 (SE) & MARLEY DR	Actuated
100000187	6	18.668606	BROAD RIVER RD, BRIARGATE CIR, 6829 (SE) & MARLEY DR	Actuated
100000187	7	17.326449	BROAD RIVER RD, BRIARGATE CIR, 6829 (SE) & MARLEY DR	Actuated
100000187	8	23.657172	BROAD RIVER RD, BRIARGATE CIR, 6829 (SE) & MARLEY DR	Actuated
100000187	9	34.221935	BROAD RIVER RD, BRIARGATE CIR, 6829 (SE) & MARLEY DR	Actuated
100000187	10	19.992481	BROAD RIVER RD, BRIARGATE CIR, 6829 (SE) & MARLEY DR	Actuated
100000188	1	2.023956	GREYSTONE BLVD & RAMP	Stop
100000188	2	1.911665	GREYSTONE BLVD & RAMP	Stop
100000188	3	1.660453	GREYSTONE BLVD & RAMP	Stop
100000188	4	1.95084	GREYSTONE BLVD & RAMP	Stop

Node	Run	Delay	Intersection	Control Type
100000188	5	2.010218	GREYSTONE BLVD & RAMP	Stop
100000188	6	2.515326	GREYSTONE BLVD & RAMP	Stop
100000188	7	2.202652	GREYSTONE BLVD & RAMP	Stop
100000188	8	2.486278	GREYSTONE BLVD & RAMP	Stop
100000188	9	2.431059	GREYSTONE BLVD & RAMP	Stop
100000188	10	2.093987	GREYSTONE BLVD & RAMP	Stop
100000190	1	4.539351	EXIT 65 RAMP TO US 176 & BROAD RIVER RD	Actuated
100000190	2	5.732482	EXIT 65 RAMP TO US 176 & BROAD RIVER RD	Actuated
100000190	3	4.789915	EXIT 65 RAMP TO US 176 & BROAD RIVER RD	Actuated
100000190	4	5.316273	EXIT 65 RAMP TO US 176 & BROAD RIVER RD	Actuated
100000190	5	4.96781	EXIT 65 RAMP TO US 176 & BROAD RIVER RD	Actuated
100000190	6	5.025065	EXIT 65 RAMP TO US 176 & BROAD RIVER RD	Actuated
100000190	7	4.638543	EXIT 65 RAMP TO US 176 & BROAD RIVER RD	Actuated
100000190	8	5.394	EXIT 65 RAMP TO US 176 & BROAD RIVER RD	Actuated
100000190	9	4.968535	EXIT 65 RAMP TO US 176 & BROAD RIVER RD	Actuated
100000190	10	5.527033	EXIT 65 RAMP TO US 176 & BROAD RIVER RD	Actuated
100000195	1	7.496681	LONGCREEK DR & BROAD RIVER RD	Actuated
100000195	2	7.364432	LONGCREEK DR & BROAD RIVER RD	Actuated
100000195	3	8.112529	LONGCREEK DR & BROAD RIVER RD	Actuated
100000195	4	7.481538	LONGCREEK DR & BROAD RIVER RD	Actuated
100000195	5	7.529215	LONGCREEK DR & BROAD RIVER RD	Actuated
100000195	6	8.967708	LONGCREEK DR & BROAD RIVER RD	Actuated
100000195	7	8.686108	LONGCREEK DR & BROAD RIVER RD	Actuated
100000195	8	7.302596	LONGCREEK DR & BROAD RIVER RD	Actuated
100000195	9	8.629887	LONGCREEK DR & BROAD RIVER RD	Actuated
100000195	10	6.740109	LONGCREEK DR & BROAD RIVER RD	Actuated
100000252	1	43.669891	MORNINGHILL DR, BUSH RIVER RD & RAMP	Actuated
100000252	2	49.49656	MORNINGHILL DR, BUSH RIVER RD & RAMP	Actuated
100000252	3	33.839055	MORNINGHILL DR, BUSH RIVER RD & RAMP	Actuated
100000252	4	35.794858	MORNINGHILL DR, BUSH RIVER RD & RAMP	Actuated
100000252	5	44.512133	MORNINGHILL DR, BUSH RIVER RD & RAMP	Actuated
100000252	6	48.651341	MORNINGHILL DR, BUSH RIVER RD & RAMP	Actuated
100000252	7	48.143582	MORNINGHILL DR, BUSH RIVER RD & RAMP	Actuated
100000252	8	42.347334	MORNINGHILL DR, BUSH RIVER RD & RAMP	Actuated
100000252	9	44.388927	MORNINGHILL DR, BUSH RIVER RD & RAMP	Actuated
100000252	10	61.897654	MORNINGHILL DR, BUSH RIVER RD & RAMP	Actuated
100000254	1	24.327222	WOODLAND HILLS RD & FRONTAGE RD	Stop
100000254	2	20.136419	WOODLAND HILLS RD & FRONTAGE RD	Stop
100000254	3	40.760774	WOODLAND HILLS RD & FRONTAGE RD	Stop
100000254	4	29.37994	WOODLAND HILLS RD & FRONTAGE RD	Stop
100000254	5	14.536921	WOODLAND HILLS RD & FRONTAGE RD	Stop
100000254	6	27.711323	WOODLAND HILLS RD & FRONTAGE RD	Stop
100000254	7	14.003332	WOODLAND HILLS RD & FRONTAGE RD	Stop
100000254	8	32.836606	WOODLAND HILLS RD & FRONTAGE RD	Stop
100000254	9	17.193499	WOODLAND HILLS RD & FRONTAGE RD	Stop
100000254	10	12.4613	WOODLAND HILLS RD & FRONTAGE RD	Stop
100000904	1	13.744122	BUSH RIVER RD & INDEPENDENCE AVE	Actuated
100000904	2	16.793557	BUSH RIVER RD & INDEPENDENCE AVE	Actuated
100000904	3	9.926782	BUSH RIVER RD & INDEPENDENCE AVE	Actuated
100000904	4	13.037578	BUSH RIVER RD & INDEPENDENCE AVE	Actuated
100000904	5	15.074472	BUSH RIVER RD & INDEPENDENCE AVE	Actuated
100000904	6	15.334477	BUSH RIVER RD & INDEPENDENCE AVE	Actuated
100000904	7	14.48667	BUSH RIVER RD & INDEPENDENCE AVE	Actuated
100000904	8	16.461519	BUSH RIVER RD & INDEPENDENCE AVE	Actuated
100000904	9	9.41301	BUSH RIVER RD & INDEPENDENCE AVE	Actuated
100000904	10	10.825027	BUSH RIVER RD & INDEPENDENCE AVE	Actuated
100000256	1	4.231363	BUSH RIVER RD & ZIMALCREST DR	Actuated
100000256	2	5.210076	BUSH RIVER RD & ZIMALCREST DR	Actuated
100000256	3	4.942286	BUSH RIVER RD & ZIMALCREST DR	Actuated
100000256	4	4.319565	BUSH RIVER RD & ZIMALCREST DR	Actuated
100000256	5	4.886101	BUSH RIVER RD & ZIMALCREST DR	Actuated
100000256	6	4.405439	BUSH RIVER RD & ZIMALCREST DR	Actuated
100000256	7	4.522813	BUSH RIVER RD & ZIMALCREST DR	Actuated
100000256	8	5.104934	BUSH RIVER RD & ZIMALCREST DR	Actuated
100000256	9	4.685261	BUSH RIVER RD & ZIMALCREST DR	Actuated
100000256	10	4.960979	BUSH RIVER RD & ZIMALCREST DR	Actuated
100000259	1	0	NOTTINGWOOD DR & BUSH RIVER RD	Stop
100000259	2	0	NOTTINGWOOD DR & BUSH RIVER RD	Stop
100000259	3	0	NOTTINGWOOD DR & BUSH RIVER RD	Stop
100000259	4	0	NOTTINGWOOD DR & BUSH RIVER RD	Stop
100000259	5	0	NOTTINGWOOD DR & BUSH RIVER RD	Stop
100000259	6	0	NOTTINGWOOD DR & BUSH RIVER RD	Stop
100000259	7	0	NOTTINGWOOD DR & BUSH RIVER RD	Stop
100000259	8	0	NOTTINGWOOD DR & BUSH RIVER RD	Stop
100000259	9	0	NOTTINGWOOD DR & BUSH RIVER RD	Stop
100000259	10	0	NOTTINGWOOD DR & BUSH RIVER RD	Stop
100000262	1	15.694628	COLONIAL LIFE BLVD W & BUSH RIVER RD	Actuated
100000262	2	14.876059	COLONIAL LIFE BLVD W & BUSH RIVER RD	Actuated

Node	Run	Delay	Intersection	Control Type
100000262	3	14.105923	COLONIAL LIFE BLVD W & BUSH RIVER RD	Actuated
100000262	4	15.224041	COLONIAL LIFE BLVD W & BUSH RIVER RD	Actuated
100000262	5	13.468993	COLONIAL LIFE BLVD W & BUSH RIVER RD	Actuated
100000262	6	15.004394	COLONIAL LIFE BLVD W & BUSH RIVER RD	Actuated
100000262	7	13.687326	COLONIAL LIFE BLVD W & BUSH RIVER RD	Actuated
100000262	8	15.214515	COLONIAL LIFE BLVD W & BUSH RIVER RD	Actuated
100000262	9	14.105647	COLONIAL LIFE BLVD W & BUSH RIVER RD	Actuated
100000262	10	14.648801	COLONIAL LIFE BLVD W & BUSH RIVER RD	Actuated
100000263	1	1.252747	COLONIAL LIFE BLVD W	Stop
100000263	2	1.605038	COLONIAL LIFE BLVD W	Stop
100000263	3	1.24906	COLONIAL LIFE BLVD W	Stop
100000263	4	1.348189	COLONIAL LIFE BLVD W	Stop
100000263	5	1.252482	COLONIAL LIFE BLVD W	Stop
100000263	6	1.14806	COLONIAL LIFE BLVD W	Stop
100000263	7	1.404657	COLONIAL LIFE BLVD W	Stop
100000263	8	1.109569	COLONIAL LIFE BLVD W	Stop
100000263	9	1.342957	COLONIAL LIFE BLVD W	Stop
100000263	10	1.208658	COLONIAL LIFE BLVD W	Stop
100000339	1	27.721483	BROAD RIVER RD & ST ANDREWS RD	Actuated
100000339	2	26.741492	BROAD RIVER RD & ST ANDREWS RD	Actuated
100000339	3	30.371794	BROAD RIVER RD & ST ANDREWS RD	Actuated
100000339	4	30.657314	BROAD RIVER RD & ST ANDREWS RD	Actuated
100000339	5	28.188531	BROAD RIVER RD & ST ANDREWS RD	Actuated
100000339	6	30.795905	BROAD RIVER RD & ST ANDREWS RD	Actuated
100000339	7	25.714937	BROAD RIVER RD & ST ANDREWS RD	Actuated
100000339	8	27.10468	BROAD RIVER RD & ST ANDREWS RD	Actuated
100000339	9	29.454578	BROAD RIVER RD & ST ANDREWS RD	Actuated
100000339	10	28.55763	BROAD RIVER RD & ST ANDREWS RD	Actuated
100000344	1	16.336849	YOUNG DR, BROAD RIVER RD & SEMINOLE RD	Actuated
100000344	2	15.818324	YOUNG DR, BROAD RIVER RD & SEMINOLE RD	Actuated
100000344	3	16.721204	YOUNG DR, BROAD RIVER RD & SEMINOLE RD	Actuated
100000344	4	17.818912	YOUNG DR, BROAD RIVER RD & SEMINOLE RD	Actuated
100000344	5	19.798075	YOUNG DR, BROAD RIVER RD & SEMINOLE RD	Actuated
100000344	6	20.30469	YOUNG DR, BROAD RIVER RD & SEMINOLE RD	Actuated
100000344	7	19.578139	YOUNG DR, BROAD RIVER RD & SEMINOLE RD	Actuated
100000344	8	20.881505	YOUNG DR, BROAD RIVER RD & SEMINOLE RD	Actuated
100000344	9	15.409834	YOUNG DR, BROAD RIVER RD & SEMINOLE RD	Actuated
100000344	10	16.240851	YOUNG DR, BROAD RIVER RD & SEMINOLE RD	Actuated
100000348	1	25.215824	ST ANDREWS RD & JAMIL RD	Actuated
100000348	2	37.772235	ST ANDREWS RD & JAMIL RD	Actuated
100000348	3	23.183431	ST ANDREWS RD & JAMIL RD	Actuated
100000348	4	33.953026	ST ANDREWS RD & JAMIL RD	Actuated
100000348	5	37.823454	ST ANDREWS RD & JAMIL RD	Actuated
100000348	6	27.532221	ST ANDREWS RD & JAMIL RD	Actuated
100000348	7	27.626359	ST ANDREWS RD & JAMIL RD	Actuated
100000348	8	30.4881	ST ANDREWS RD & JAMIL RD	Actuated
100000348	9	35.084902	ST ANDREWS RD & JAMIL RD	Actuated
100000348	10	29.975352	ST ANDREWS RD & JAMIL RD	Actuated
100000349	1	5.175977	ST ANDREWS PKY & BROAD RIVER RD	Actuated
100000349	2	5.691132	ST ANDREWS PKY & BROAD RIVER RD	Actuated
100000349	3	5.61487	ST ANDREWS PKY & BROAD RIVER RD	Actuated
100000349	4	6.453167	ST ANDREWS PKY & BROAD RIVER RD	Actuated
100000349	5	5.34552	ST ANDREWS PKY & BROAD RIVER RD	Actuated
100000349	6	5.179916	ST ANDREWS PKY & BROAD RIVER RD	Actuated
100000349	7	5.647857	ST ANDREWS PKY & BROAD RIVER RD	Actuated
100000349	8	5.746837	ST ANDREWS PKY & BROAD RIVER RD	Actuated
100000349	9	5.5768	ST ANDREWS PKY & BROAD RIVER RD	Actuated
100000349	10	5.306411	ST ANDREWS PKY & BROAD RIVER RD	Actuated
100000353	1	48.398519	BOWER PKY, PINEY GROVE RD & JAMIL RD	Actuated
100000353	2	41.351119	BOWER PKY, PINEY GROVE RD & JAMIL RD	Actuated
100000353	3	48.880253	BOWER PKY, PINEY GROVE RD & JAMIL RD	Actuated
100000353	4	57.224588	BOWER PKY, PINEY GROVE RD & JAMIL RD	Actuated
100000353	5	48.944532	BOWER PKY, PINEY GROVE RD & JAMIL RD	Actuated
100000353	6	32.316805	BOWER PKY, PINEY GROVE RD & JAMIL RD	Actuated
100000353	7	46.293036	BOWER PKY, PINEY GROVE RD & JAMIL RD	Actuated
100000353	8	48.781241	BOWER PKY, PINEY GROVE RD & JAMIL RD	Actuated
100000353	9	64.665988	BOWER PKY, PINEY GROVE RD & JAMIL RD	Actuated
100000353	10	47.528128	BOWER PKY, PINEY GROVE RD & JAMIL RD	Actuated
100000354	1	21.822049	ST ANDREWS RD, KAY ST & CHARTWELL RD	Actuated
100000354	2	22.920643	ST ANDREWS RD, KAY ST & CHARTWELL RD	Actuated
100000354	3	25.088675	ST ANDREWS RD, KAY ST & CHARTWELL RD	Actuated
100000354	4	21.88602	ST ANDREWS RD, KAY ST & CHARTWELL RD	Actuated
100000354	5	22.823769	ST ANDREWS RD, KAY ST & CHARTWELL RD	Actuated
100000354	6	20.355189	ST ANDREWS RD, KAY ST & CHARTWELL RD	Actuated
100000354	7	22.573586	ST ANDREWS RD, KAY ST & CHARTWELL RD	Actuated
100000354	8	21.432586	ST ANDREWS RD, KAY ST & CHARTWELL RD	Actuated
100000354	9	21.81528	ST ANDREWS RD, KAY ST & CHARTWELL RD	Actuated
100000354	10	21.621753	ST ANDREWS RD, KAY ST & CHARTWELL RD	Actuated

Node	Run	Delay	Intersection	Control Type
100000358	1	30.394132	ST ANDREWS RD, FERNANDINA RD & BURNING TREE RD	Actuated
100000358	2	30.091083	ST ANDREWS RD, FERNANDINA RD & BURNING TREE RD	Actuated
100000358	3	31.257903	ST ANDREWS RD, FERNANDINA RD & BURNING TREE RD	Actuated
100000358	4	31.470076	ST ANDREWS RD, FERNANDINA RD & BURNING TREE RD	Actuated
100000358	5	29.441911	ST ANDREWS RD, FERNANDINA RD & BURNING TREE RD	Actuated
100000358	6	29.232037	ST ANDREWS RD, FERNANDINA RD & BURNING TREE RD	Actuated
100000358	7	32.980018	ST ANDREWS RD, FERNANDINA RD & BURNING TREE RD	Actuated
100000358	8	31.191934	ST ANDREWS RD, FERNANDINA RD & BURNING TREE RD	Actuated
100000358	9	31.849269	ST ANDREWS RD, FERNANDINA RD & BURNING TREE RD	Actuated
100000358	10	30.603763	ST ANDREWS RD, FERNANDINA RD & BURNING TREE RD	Actuated
100000360	1	5.626646	I-26 WB TO BURNING TREE RD EXIT 106 OFF RAMP & BURNING TREE RD	Yield
100000360	2	4.429172	I-26 WB TO BURNING TREE RD EXIT 106 OFF RAMP & BURNING TREE RD	Yield
100000360	3	10.195572	I-26 WB TO BURNING TREE RD EXIT 106 OFF RAMP & BURNING TREE RD	Yield
100000360	4	19.570483	I-26 WB TO BURNING TREE RD EXIT 106 OFF RAMP & BURNING TREE RD	Yield
100000360	5	15.780111	I-26 WB TO BURNING TREE RD EXIT 106 OFF RAMP & BURNING TREE RD	Yield
100000360	6	5.014685	I-26 WB TO BURNING TREE RD EXIT 106 OFF RAMP & BURNING TREE RD	Yield
100000360	7	20.229923	I-26 WB TO BURNING TREE RD EXIT 106 OFF RAMP & BURNING TREE RD	Yield
100000360	8	18.407854	I-26 WB TO BURNING TREE RD EXIT 106 OFF RAMP & BURNING TREE RD	Yield
100000360	9	19.060395	I-26 WB TO BURNING TREE RD EXIT 106 OFF RAMP & BURNING TREE RD	Yield
100000360	10	19.734127	I-26 WB TO BURNING TREE RD EXIT 106 OFF RAMP & BURNING TREE RD	Yield
100000362	1	0.62059	HARBISON BLVD & JAMIL RD	Actuated
100000362	2	0.570264	HARBISON BLVD & JAMIL RD	Actuated
100000362	3	0.51861	HARBISON BLVD & JAMIL RD	Actuated
100000362	4	0.749067	HARBISON BLVD & JAMIL RD	Actuated
100000362	5	0.612759	HARBISON BLVD & JAMIL RD	Actuated
100000362	6	0.591815	HARBISON BLVD & JAMIL RD	Actuated
100000362	7	0.683821	HARBISON BLVD & JAMIL RD	Actuated
100000362	8	0.627591	HARBISON BLVD & JAMIL RD	Actuated
100000362	9	0.439761	HARBISON BLVD & JAMIL RD	Actuated
100000362	10	0.518102	HARBISON BLVD & JAMIL RD	Actuated
100000364	1	14.758667	HARBISON BLVD & COLUMBIANA DR	Actuated
100000364	2	14.465455	HARBISON BLVD & COLUMBIANA DR	Actuated
100000364	3	15.190135	HARBISON BLVD & COLUMBIANA DR	Actuated
100000364	4	14.370434	HARBISON BLVD & COLUMBIANA DR	Actuated
100000364	5	15.053117	HARBISON BLVD & COLUMBIANA DR	Actuated
100000364	6	14.351708	HARBISON BLVD & COLUMBIANA DR	Actuated
100000364	7	15.366513	HARBISON BLVD & COLUMBIANA DR	Actuated
100000364	8	16.36026	HARBISON BLVD & COLUMBIANA DR	Actuated
100000364	9	15.467226	HARBISON BLVD & COLUMBIANA DR	Actuated
100000364	10	15.304797	HARBISON BLVD & COLUMBIANA DR	Actuated
100000365	1	7.506402	COLUMBIANA CIR, HARBISON BLVD & PARK TERRACE DR	Actuated
100000365	2	7.924913	COLUMBIANA CIR, HARBISON BLVD & PARK TERRACE DR	Actuated
100000365	3	7.477925	COLUMBIANA CIR, HARBISON BLVD & PARK TERRACE DR	Actuated
100000365	4	8.584533	COLUMBIANA CIR, HARBISON BLVD & PARK TERRACE DR	Actuated
100000365	5	7.232423	COLUMBIANA CIR, HARBISON BLVD & PARK TERRACE DR	Actuated
100000365	6	7.285654	COLUMBIANA CIR, HARBISON BLVD & PARK TERRACE DR	Actuated
100000365	7	7.44888	COLUMBIANA CIR, HARBISON BLVD & PARK TERRACE DR	Actuated
100000365	8	8.770345	COLUMBIANA CIR, HARBISON BLVD & PARK TERRACE DR	Actuated
100000365	9	7.538031	COLUMBIANA CIR, HARBISON BLVD & PARK TERRACE DR	Actuated
100000365	10	7.513937	COLUMBIANA CIR, HARBISON BLVD & PARK TERRACE DR	Actuated
100000391	1	13.733924	BROAD RIVER RD & COLUMBIANA DR	Actuated
100000391	2	11.383686	BROAD RIVER RD & COLUMBIANA DR	Actuated
100000391	3	10.06472	BROAD RIVER RD & COLUMBIANA DR	Actuated
100000391	4	11.056121	BROAD RIVER RD & COLUMBIANA DR	Actuated
100000391	5	10.283283	BROAD RIVER RD & COLUMBIANA DR	Actuated
100000391	6	11.430693	BROAD RIVER RD & COLUMBIANA DR	Actuated
100000391	7	9.171418	BROAD RIVER RD & COLUMBIANA DR	Actuated
100000391	8	8.54251	BROAD RIVER RD & COLUMBIANA DR	Actuated
100000391	9	14.011279	BROAD RIVER RD & COLUMBIANA DR	Actuated
100000391	10	11.66056	BROAD RIVER RD & COLUMBIANA DR	Actuated
100000395	1	28.486255	LAKE MURRAY BLVD & COLUMBIANA DR	Actuated
100000395	2	30.256533	LAKE MURRAY BLVD & COLUMBIANA DR	Actuated
100000395	3	48.836432	LAKE MURRAY BLVD & COLUMBIANA DR	Actuated
100000395	4	40.397983	LAKE MURRAY BLVD & COLUMBIANA DR	Actuated
100000395	5	28.219138	LAKE MURRAY BLVD & COLUMBIANA DR	Actuated
100000395	6	38.354643	LAKE MURRAY BLVD & COLUMBIANA DR	Actuated
100000395	7	38.733663	LAKE MURRAY BLVD & COLUMBIANA DR	Actuated
100000395	8	32.678684	LAKE MURRAY BLVD & COLUMBIANA DR	Actuated
100000395	9	29.530379	LAKE MURRAY BLVD & COLUMBIANA DR	Actuated
100000395	10	41.137086	LAKE MURRAY BLVD & COLUMBIANA DR	Actuated
100000398	1	4.573988	HARBISON BLVD & PARKRIDGE DR	Actuated
100000398	2	5.629273	HARBISON BLVD & PARKRIDGE DR	Actuated
100000398	3	4.18082	HARBISON BLVD & PARKRIDGE DR	Actuated
100000398	4	4.211858	HARBISON BLVD & PARKRIDGE DR	Actuated
100000398	5	3.983416	HARBISON BLVD & PARKRIDGE DR	Actuated
100000398	6	4.356975	HARBISON BLVD & PARKRIDGE DR	Actuated
100000398	7	4.629938	HARBISON BLVD & PARKRIDGE DR	Actuated
100000398	8	4.386658	HARBISON BLVD & PARKRIDGE DR	Actuated

Node	Run	Delay	Intersection	Control Type
100000398	9	5.131394	HARBISON BLVD & PARKRIDGE DR	Actuated
100000398	10	5.513773	HARBISON BLVD & PARKRIDGE DR	Actuated
100000399	1	26.668538	PINEY GROVE RD & FERNANDINA RD	Actuated
100000399	2	30.015431	PINEY GROVE RD & FERNANDINA RD	Actuated
100000399	3	28.168761	PINEY GROVE RD & FERNANDINA RD	Actuated
100000399	4	33.315037	PINEY GROVE RD & FERNANDINA RD	Actuated
100000399	5	28.285584	PINEY GROVE RD & FERNANDINA RD	Actuated
100000399	6	27.544487	PINEY GROVE RD & FERNANDINA RD	Actuated
100000399	7	32.653463	PINEY GROVE RD & FERNANDINA RD	Actuated
100000399	8	30.679288	PINEY GROVE RD & FERNANDINA RD	Actuated
100000399	9	35.299176	PINEY GROVE RD & FERNANDINA RD	Actuated
100000399	10	36.899853	PINEY GROVE RD & FERNANDINA RD	Actuated
100000401	1	14.683634	KINLEY RD, LAKE MURRAY BLVD & PARKRIDGE DR	Actuated
100000401	2	13.841026	KINLEY RD, LAKE MURRAY BLVD & PARKRIDGE DR	Actuated
100000401	3	13.793924	KINLEY RD, LAKE MURRAY BLVD & PARKRIDGE DR	Actuated
100000401	4	12.258227	KINLEY RD, LAKE MURRAY BLVD & PARKRIDGE DR	Actuated
100000401	5	14.189203	KINLEY RD, LAKE MURRAY BLVD & PARKRIDGE DR	Actuated
100000401	6	13.724925	KINLEY RD, LAKE MURRAY BLVD & PARKRIDGE DR	Actuated
100000401	7	13.767594	KINLEY RD, LAKE MURRAY BLVD & PARKRIDGE DR	Actuated
100000401	8	14.320322	KINLEY RD, LAKE MURRAY BLVD & PARKRIDGE DR	Actuated
100000401	9	13.340755	KINLEY RD, LAKE MURRAY BLVD & PARKRIDGE DR	Actuated
100000401	10	12.93038	KINLEY RD, LAKE MURRAY BLVD & PARKRIDGE DR	Actuated
100000446	1	0	RAMP	Yield
100000446	2	0	RAMP	Yield
100000446	3	0	RAMP	Yield
100000446	4	0	RAMP	Yield
100000446	5	0	RAMP	Yield
100000446	6	0	RAMP	Yield
100000446	7	0	RAMP	Yield
100000446	8	0	RAMP	Yield
100000446	9	0	RAMP	Yield
100000446	10	0	RAMP	Yield
100000508	1	0	I-26 EB EXIT 102 ON RAMP	
100000508	2	0	I-26 EB EXIT 102 ON RAMP	
100000508	3	0	I-26 EB EXIT 102 ON RAMP	
100000508	4	0	I-26 EB EXIT 102 ON RAMP	
100000508	5	0	I-26 EB EXIT 102 ON RAMP	
100000508	6	0	I-26 EB EXIT 102 ON RAMP	
100000508	7	0	I-26 EB EXIT 102 ON RAMP	
100000508	8	0	I-26 EB EXIT 102 ON RAMP	
100000508	9	0	I-26 EB EXIT 102 ON RAMP	
100000508	10	0	I-26 EB EXIT 102 ON RAMP	
100000510	1	0	LAKE MURRAY BLVD & I-26 EB EXIT 102 ON RAMP	
100000510	2	0	LAKE MURRAY BLVD & I-26 EB EXIT 102 ON RAMP	
100000510	3	0	LAKE MURRAY BLVD & I-26 EB EXIT 102 ON RAMP	
100000510	4	0	LAKE MURRAY BLVD & I-26 EB EXIT 102 ON RAMP	
100000510	5	0	LAKE MURRAY BLVD & I-26 EB EXIT 102 ON RAMP	
100000510	6	0	LAKE MURRAY BLVD & I-26 EB EXIT 102 ON RAMP	
100000510	7	0	LAKE MURRAY BLVD & I-26 EB EXIT 102 ON RAMP	
100000510	8	0	LAKE MURRAY BLVD & I-26 EB EXIT 102 ON RAMP	
100000510	9	0	LAKE MURRAY BLVD & I-26 EB EXIT 102 ON RAMP	
100000510	10	0	LAKE MURRAY BLVD & I-26 EB EXIT 102 ON RAMP	
100000520	1	0	I-26 WB EXIT 102 ON RAMP	Yield
100000520	2	0	I-26 WB EXIT 102 ON RAMP	Yield
100000520	3	0	I-26 WB EXIT 102 ON RAMP	Yield
100000520	4	0	I-26 WB EXIT 102 ON RAMP	Yield
100000520	5	0	I-26 WB EXIT 102 ON RAMP	Yield
100000520	6	0	I-26 WB EXIT 102 ON RAMP	Yield
100000520	7	0	I-26 WB EXIT 102 ON RAMP	Yield
100000520	8	0	I-26 WB EXIT 102 ON RAMP	Yield
100000520	9	0	I-26 WB EXIT 102 ON RAMP	Yield
100000520	10	0	I-26 WB EXIT 102 ON RAMP	Yield
100000522	1	0	I-26 WB EXIT 101 OFF RAMP, BROAD RIVER RD & I-26 WB EXIT 101 ON RAMP	
100000522	2	0	I-26 WB EXIT 101 OFF RAMP, BROAD RIVER RD & I-26 WB EXIT 101 ON RAMP	
100000522	3	0	I-26 WB EXIT 101 OFF RAMP, BROAD RIVER RD & I-26 WB EXIT 101 ON RAMP	
100000522	4	0	I-26 WB EXIT 101 OFF RAMP, BROAD RIVER RD & I-26 WB EXIT 101 ON RAMP	
100000522	5	0	I-26 WB EXIT 101 OFF RAMP, BROAD RIVER RD & I-26 WB EXIT 101 ON RAMP	
100000522	6	0	I-26 WB EXIT 101 OFF RAMP, BROAD RIVER RD & I-26 WB EXIT 101 ON RAMP	
100000522	7	0	I-26 WB EXIT 101 OFF RAMP, BROAD RIVER RD & I-26 WB EXIT 101 ON RAMP	
100000522	8	0	I-26 WB EXIT 101 OFF RAMP, BROAD RIVER RD & I-26 WB EXIT 101 ON RAMP	
100000522	9	0	I-26 WB EXIT 101 OFF RAMP, BROAD RIVER RD & I-26 WB EXIT 101 ON RAMP	
100000522	10	0	I-26 WB EXIT 101 OFF RAMP, BROAD RIVER RD & I-26 WB EXIT 101 ON RAMP	
100000682	1	0	RAMP	
100000682	2	0	RAMP	
100000682	3	0	RAMP	
100000682	4	0	RAMP	
100000682	5	0	RAMP	
100000682	6	0	RAMP	

Node	Run	Delay	Intersection	Control Type
100000682	7	0	RAMP	
100000682	8	0	RAMP	
100000682	9	0	RAMP	
100000682	10	0	RAMP	
100000683	1	79.051546	EXIT 110 RAMP TO US 378 & RAMP	
100000683	2	145.21826	EXIT 110 RAMP TO US 378 & RAMP	
100000683	3	129.120318	EXIT 110 RAMP TO US 378 & RAMP	
100000683	4	92.86865	EXIT 110 RAMP TO US 378 & RAMP	
100000683	5	163.744521	EXIT 110 RAMP TO US 378 & RAMP	
100000683	6	82.980386	EXIT 110 RAMP TO US 378 & RAMP	
100000683	7	134.434144	EXIT 110 RAMP TO US 378 & RAMP	
100000683	8	117.435113	EXIT 110 RAMP TO US 378 & RAMP	
100000683	9	122.312343	EXIT 110 RAMP TO US 378 & RAMP	
100000683	10	106.160531	EXIT 110 RAMP TO US 378 & RAMP	
100000686	1	0	RAMP	
100000686	2	0	RAMP	
100000686	3	0	RAMP	
100000686	4	0	RAMP	
100000686	5	0	RAMP	
100000686	6	0	RAMP	
100000686	7	0	RAMP	
100000686	8	0	RAMP	
100000686	9	0	RAMP	
100000686	10	0	RAMP	
100000687	1	58.172136	EXIT 110 RAMP TO US 378 & RAMP	
100000687	2	77.378386	EXIT 110 RAMP TO US 378 & RAMP	
100000687	3	57.424134	EXIT 110 RAMP TO US 378 & RAMP	
100000687	4	84.252157	EXIT 110 RAMP TO US 378 & RAMP	
100000687	5	63.312719	EXIT 110 RAMP TO US 378 & RAMP	
100000687	6	52.603766	EXIT 110 RAMP TO US 378 & RAMP	
100000687	7	56.763519	EXIT 110 RAMP TO US 378 & RAMP	
100000687	8	57.726791	EXIT 110 RAMP TO US 378 & RAMP	
100000687	9	76.501436	EXIT 110 RAMP TO US 378 & RAMP	
100000687	10	55.226108	EXIT 110 RAMP TO US 378 & RAMP	
100000898	1	3.489149	BUSH RIVER RD	Actuated
100000898	2	3.538643	BUSH RIVER RD	Actuated
100000898	3	4.001389	BUSH RIVER RD	Actuated
100000898	4	3.917225	BUSH RIVER RD	Actuated
100000898	5	3.930883	BUSH RIVER RD	Actuated
100000898	6	3.210264	BUSH RIVER RD	Actuated
100000898	7	3.630742	BUSH RIVER RD	Actuated
100000898	8	3.727369	BUSH RIVER RD	Actuated
100000898	9	3.623565	BUSH RIVER RD	Actuated
100000898	10	3.929286	BUSH RIVER RD	Actuated
100000899	1	0	I-26 WB TO BURNING TREE RD EXIT 106 OFF RAMP & BURNING TREE RD	Stop
100000899	2	0	I-26 WB TO BURNING TREE RD EXIT 106 OFF RAMP & BURNING TREE RD	Stop
100000899	3	0	I-26 WB TO BURNING TREE RD EXIT 106 OFF RAMP & BURNING TREE RD	Stop
100000899	4	0	I-26 WB TO BURNING TREE RD EXIT 106 OFF RAMP & BURNING TREE RD	Stop
100000899	5	0	I-26 WB TO BURNING TREE RD EXIT 106 OFF RAMP & BURNING TREE RD	Stop
100000899	6	0	I-26 WB TO BURNING TREE RD EXIT 106 OFF RAMP & BURNING TREE RD	Stop
100000899	7	0	I-26 WB TO BURNING TREE RD EXIT 106 OFF RAMP & BURNING TREE RD	Stop
100000899	8	0	I-26 WB TO BURNING TREE RD EXIT 106 OFF RAMP & BURNING TREE RD	Stop
100000899	9	0	I-26 WB TO BURNING TREE RD EXIT 106 OFF RAMP & BURNING TREE RD	Stop
100000899	10	0	I-26 WB TO BURNING TREE RD EXIT 106 OFF RAMP & BURNING TREE RD	Stop
100000902	1	6.394768	SUNSET BLVD & RAMP	Actuated
100000902	2	6.340666	SUNSET BLVD & RAMP	Actuated
100000902	3	6.67543	SUNSET BLVD & RAMP	Actuated
100000902	4	7.006626	SUNSET BLVD & RAMP	Actuated
100000902	5	6.603784	SUNSET BLVD & RAMP	Actuated
100000902	6	5.531049	SUNSET BLVD & RAMP	Actuated
100000902	7	6.860067	SUNSET BLVD & RAMP	Actuated
100000902	8	5.233425	SUNSET BLVD & RAMP	Actuated
100000902	9	6.159207	SUNSET BLVD & RAMP	Actuated
100000902	10	5.042448	SUNSET BLVD & RAMP	Actuated
100000903	1	26.25242	RAMP & SUNSET BLVD	Actuated
100000903	2	27.172227	RAMP & SUNSET BLVD	Actuated
100000903	3	26.856507	RAMP & SUNSET BLVD	Actuated
100000903	4	26.748286	RAMP & SUNSET BLVD	Actuated
100000903	5	27.793508	RAMP & SUNSET BLVD	Actuated
100000903	6	26.496418	RAMP & SUNSET BLVD	Actuated
100000903	7	27.428917	RAMP & SUNSET BLVD	Actuated
100000903	8	27.029767	RAMP & SUNSET BLVD	Actuated
100000903	9	26.794881	RAMP & SUNSET BLVD	Actuated
100000903	10	26.737655	RAMP & SUNSET BLVD	Actuated

Node	Run	Delay	Intersection	Control Type
4	1	6.36423	WESTERN LN & BROAD RIVER RD	Actuated
4	2	7.016727	WESTERN LN & BROAD RIVER RD	Actuated
4	3	6.33185	WESTERN LN & BROAD RIVER RD	Actuated
4	4	6.189257	WESTERN LN & BROAD RIVER RD	Actuated
4	5	6.310594	WESTERN LN & BROAD RIVER RD	Actuated
4	6	6.251066	WESTERN LN & BROAD RIVER RD	Actuated
4	7	6.287133	WESTERN LN & BROAD RIVER RD	Actuated
4	8	6.186815	WESTERN LN & BROAD RIVER RD	Actuated
4	9	6.824662	WESTERN LN & BROAD RIVER RD	Actuated
4	10	6.136111	WESTERN LN & BROAD RIVER RD	Actuated
6	1	14.900691	COLONIAL LIFE BLVD W & 6468 (E)	Stop
6	2	15.658453	COLONIAL LIFE BLVD W & 6468 (E)	Stop
6	3	17.784608	COLONIAL LIFE BLVD W & 6468 (E)	Stop
6	4	13.956911	COLONIAL LIFE BLVD W & 6468 (E)	Stop
6	5	16.73109	COLONIAL LIFE BLVD W & 6468 (E)	Stop
6	6	13.880861	COLONIAL LIFE BLVD W & 6468 (E)	Stop
6	7	14.071853	COLONIAL LIFE BLVD W & 6468 (E)	Stop
6	8	17.038776	COLONIAL LIFE BLVD W & 6468 (E)	Stop
6	9	16.016562	COLONIAL LIFE BLVD W & 6468 (E)	Stop
6	10	15.598482	COLONIAL LIFE BLVD W & 6468 (E)	Stop
9	1	11.894372	COLONIAL LIFE BLVD W & 6470 (NE)	Stop
9	2	14.089966	COLONIAL LIFE BLVD W & 6470 (NE)	Stop
9	3	12.766206	COLONIAL LIFE BLVD W & 6470 (NE)	Stop
9	4	13.28276	COLONIAL LIFE BLVD W & 6470 (NE)	Stop
9	5	11.732143	COLONIAL LIFE BLVD W & 6470 (NE)	Stop
9	6	10.05863	COLONIAL LIFE BLVD W & 6470 (NE)	Stop
9	7	12.170855	COLONIAL LIFE BLVD W & 6470 (NE)	Stop
9	8	12.899932	COLONIAL LIFE BLVD W & 6470 (NE)	Stop
9	9	12.962439	COLONIAL LIFE BLVD W & 6470 (NE)	Stop
9	10	12.337279	COLONIAL LIFE BLVD W & 6470 (NE)	Stop
40	1	39.075611	I-26 EB EXIT 106 OFF RAMP, ST ANDREWS RD, I-26 WB TO BURNING TREE RD AND TO ST ANDREWS RD OFF RAMP,	Actuated
40	2	38.91388	I-26 EB EXIT 106 OFF RAMP, ST ANDREWS RD, I-26 WB TO BURNING TREE RD AND TO ST ANDREWS RD OFF RAMP,	Actuated
40	3	39.097562	I-26 EB EXIT 106 OFF RAMP, ST ANDREWS RD, I-26 WB TO BURNING TREE RD AND TO ST ANDREWS RD OFF RAMP,	Actuated
40	4	37.944915	I-26 EB EXIT 106 OFF RAMP, ST ANDREWS RD, I-26 WB TO BURNING TREE RD AND TO ST ANDREWS RD OFF RAMP,	Actuated
40	5	38.670945	I-26 EB EXIT 106 OFF RAMP, ST ANDREWS RD, I-26 WB TO BURNING TREE RD AND TO ST ANDREWS RD OFF RAMP,	Actuated
40	6	39.729002	I-26 EB EXIT 106 OFF RAMP, ST ANDREWS RD, I-26 WB TO BURNING TREE RD AND TO ST ANDREWS RD OFF RAMP,	Actuated
40	7	37.844338	I-26 EB EXIT 106 OFF RAMP, ST ANDREWS RD, I-26 WB TO BURNING TREE RD AND TO ST ANDREWS RD OFF RAMP,	Actuated
40	8	38.232186	I-26 EB EXIT 106 OFF RAMP, ST ANDREWS RD, I-26 WB TO BURNING TREE RD AND TO ST ANDREWS RD OFF RAMP,	Actuated
40	9	38.822363	I-26 EB EXIT 106 OFF RAMP, ST ANDREWS RD, I-26 WB TO BURNING TREE RD AND TO ST ANDREWS RD OFF RAMP,	Actuated
40	10	40.13793	I-26 EB EXIT 106 OFF RAMP, ST ANDREWS RD, I-26 WB TO BURNING TREE RD AND TO ST ANDREWS RD OFF RAMP,	Actuated
41	1	11.6294	DUTCH SQUARE BLVD & BROAD RIVER RD	Actuated
41	2	11.163939	DUTCH SQUARE BLVD & BROAD RIVER RD	Actuated
41	3	11.775428	DUTCH SQUARE BLVD & BROAD RIVER RD	Actuated
41	4	9.8558	DUTCH SQUARE BLVD & BROAD RIVER RD	Actuated
41	5	12.305924	DUTCH SQUARE BLVD & BROAD RIVER RD	Actuated
41	6	12.295098	DUTCH SQUARE BLVD & BROAD RIVER RD	Actuated
41	7	12.749094	DUTCH SQUARE BLVD & BROAD RIVER RD	Actuated
41	8	10.963146	DUTCH SQUARE BLVD & BROAD RIVER RD	Actuated
41	9	11.737056	DUTCH SQUARE BLVD & BROAD RIVER RD	Actuated
41	10	10.378782	DUTCH SQUARE BLVD & BROAD RIVER RD	Actuated
45	1	0	I-26 WB , I-26 WB EXIT 106 OFF RAMP & I-26 WB TO BURNING TREE RD AND TO ST ANDREWS RD OFF RAMP	
45	2	0	I-26 WB , I-26 WB EXIT 106 OFF RAMP & I-26 WB TO BURNING TREE RD AND TO ST ANDREWS RD OFF RAMP	
45	3	0	I-26 WB , I-26 WB EXIT 106 OFF RAMP & I-26 WB TO BURNING TREE RD AND TO ST ANDREWS RD OFF RAMP	
45	4	0	I-26 WB , I-26 WB EXIT 106 OFF RAMP & I-26 WB TO BURNING TREE RD AND TO ST ANDREWS RD OFF RAMP	
45	5	0	I-26 WB , I-26 WB EXIT 106 OFF RAMP & I-26 WB TO BURNING TREE RD AND TO ST ANDREWS RD OFF RAMP	
45	6	0	I-26 WB , I-26 WB EXIT 106 OFF RAMP & I-26 WB TO BURNING TREE RD AND TO ST ANDREWS RD OFF RAMP	
45	7	0	I-26 WB , I-26 WB EXIT 106 OFF RAMP & I-26 WB TO BURNING TREE RD AND TO ST ANDREWS RD OFF RAMP	
45	8	0	I-26 WB , I-26 WB EXIT 106 OFF RAMP & I-26 WB TO BURNING TREE RD AND TO ST ANDREWS RD OFF RAMP	
45	9	0	I-26 WB , I-26 WB EXIT 106 OFF RAMP & I-26 WB TO BURNING TREE RD AND TO ST ANDREWS RD OFF RAMP	
45	10	0	I-26 WB , I-26 WB EXIT 106 OFF RAMP & I-26 WB TO BURNING TREE RD AND TO ST ANDREWS RD OFF RAMP	
51	1	0	6677 (NW), 6687 (SE) & 6691 (SE)	
51	2	0	6677 (NW), 6687 (SE) & 6691 (SE)	
51	3	0	6677 (NW), 6687 (SE) & 6691 (SE)	
51	4	0	6677 (NW), 6687 (SE) & 6691 (SE)	
51	5	0	6677 (NW), 6687 (SE) & 6691 (SE)	
51	6	0	6677 (NW), 6687 (SE) & 6691 (SE)	
51	7	0	6677 (NW), 6687 (SE) & 6691 (SE)	
51	8	0	6677 (NW), 6687 (SE) & 6691 (SE)	
51	9	0	6677 (NW), 6687 (SE) & 6691 (SE)	
51	10	0	6677 (NW), 6687 (SE) & 6691 (SE)	
57	1	0.650252	EXIT 65 RAMP TO US 176 & 6584 (SW)	
57	2	0.72572	EXIT 65 RAMP TO US 176 & 6584 (SW)	
57	3	0.788304	EXIT 65 RAMP TO US 176 & 6584 (SW)	
57	4	0.707171	EXIT 65 RAMP TO US 176 & 6584 (SW)	
57	5	0.562183	EXIT 65 RAMP TO US 176 & 6584 (SW)	
57	6	0.647854	EXIT 65 RAMP TO US 176 & 6584 (SW)	
57	7	1.007462	EXIT 65 RAMP TO US 176 & 6584 (SW)	
57	8	0.857737	EXIT 65 RAMP TO US 176 & 6584 (SW)	

57	9	0.954626	EXIT 65 RAMP TO US 176 & 6584 (SW)	
57	10	1.003971	EXIT 65 RAMP TO US 176 & 6584 (SW)	
68	1	0	6571 (SE), I-26 WB EXIT 106 OFF RAMP & I-26 WB EXIT 106 ON RAMP	
68	2	0	6571 (SE), I-26 WB EXIT 106 OFF RAMP & I-26 WB EXIT 106 ON RAMP	
68	3	0	6571 (SE), I-26 WB EXIT 106 OFF RAMP & I-26 WB EXIT 106 ON RAMP	
68	4	0	6571 (SE), I-26 WB EXIT 106 OFF RAMP & I-26 WB EXIT 106 ON RAMP	
68	5	0	6571 (SE), I-26 WB EXIT 106 OFF RAMP & I-26 WB EXIT 106 ON RAMP	
68	6	0	6571 (SE), I-26 WB EXIT 106 OFF RAMP & I-26 WB EXIT 106 ON RAMP	
68	7	0	6571 (SE), I-26 WB EXIT 106 OFF RAMP & I-26 WB EXIT 106 ON RAMP	
68	8	0	6571 (SE), I-26 WB EXIT 106 OFF RAMP & I-26 WB EXIT 106 ON RAMP	
68	9	0	6571 (SE), I-26 WB EXIT 106 OFF RAMP & I-26 WB EXIT 106 ON RAMP	
68	10	0	6571 (SE), I-26 WB EXIT 106 OFF RAMP & I-26 WB EXIT 106 ON RAMP	
100000455	1	16.586044	FRONTAGE RD, BUSH RIVER RD, 6859 (SE) & 6860 (SE)	Actuated
100000455	2	17.802388	FRONTAGE RD, BUSH RIVER RD, 6859 (SE) & 6860 (SE)	Actuated
100000455	3	18.26538	FRONTAGE RD, BUSH RIVER RD, 6859 (SE) & 6860 (SE)	Actuated
100000455	4	16.481316	FRONTAGE RD, BUSH RIVER RD, 6859 (SE) & 6860 (SE)	Actuated
100000455	5	17.239765	FRONTAGE RD, BUSH RIVER RD, 6859 (SE) & 6860 (SE)	Actuated
100000455	6	19.101362	FRONTAGE RD, BUSH RIVER RD, 6859 (SE) & 6860 (SE)	Actuated
100000455	7	16.899648	FRONTAGE RD, BUSH RIVER RD, 6859 (SE) & 6860 (SE)	Actuated
100000455	8	18.63041	FRONTAGE RD, BUSH RIVER RD, 6859 (SE) & 6860 (SE)	Actuated
100000455	9	18.140374	FRONTAGE RD, BUSH RIVER RD, 6859 (SE) & 6860 (SE)	Actuated
100000455	10	17.296203	FRONTAGE RD, BUSH RIVER RD, 6859 (SE) & 6860 (SE)	Actuated
71	1	2.515412	PINEY GROVE RD, I-26 EB EXIT 104 OFF RAMP & I-26 EB EXIT 104 ON RAMP	Actuated
71	2	2.383323	PINEY GROVE RD, I-26 EB EXIT 104 OFF RAMP & I-26 EB EXIT 104 ON RAMP	Actuated
71	3	3.057074	PINEY GROVE RD, I-26 EB EXIT 104 OFF RAMP & I-26 EB EXIT 104 ON RAMP	Actuated
71	4	2.524831	PINEY GROVE RD, I-26 EB EXIT 104 OFF RAMP & I-26 EB EXIT 104 ON RAMP	Actuated
71	5	3.01336	PINEY GROVE RD, I-26 EB EXIT 104 OFF RAMP & I-26 EB EXIT 104 ON RAMP	Actuated
71	6	2.463798	PINEY GROVE RD, I-26 EB EXIT 104 OFF RAMP & I-26 EB EXIT 104 ON RAMP	Actuated
71	7	2.563587	PINEY GROVE RD, I-26 EB EXIT 104 OFF RAMP & I-26 EB EXIT 104 ON RAMP	Actuated
71	8	2.489966	PINEY GROVE RD, I-26 EB EXIT 104 OFF RAMP & I-26 EB EXIT 104 ON RAMP	Actuated
71	9	2.401861	PINEY GROVE RD, I-26 EB EXIT 104 OFF RAMP & I-26 EB EXIT 104 ON RAMP	Actuated
71	10	2.478398	PINEY GROVE RD, I-26 EB EXIT 104 OFF RAMP & I-26 EB EXIT 104 ON RAMP	Actuated
74	1	0	6806 (SW), 6828 (W) & RAMP	Yield
74	2	0	6806 (SW), 6828 (W) & RAMP	Yield
74	3	0	6806 (SW), 6828 (W) & RAMP	Yield
74	4	0	6806 (SW), 6828 (W) & RAMP	Yield
74	5	0	6806 (SW), 6828 (W) & RAMP	Yield
74	6	0	6806 (SW), 6828 (W) & RAMP	Yield
74	7	0	6806 (SW), 6828 (W) & RAMP	Yield
74	8	0	6806 (SW), 6828 (W) & RAMP	Yield
74	9	0	6806 (SW), 6828 (W) & RAMP	Yield
74	10	0	6806 (SW), 6828 (W) & RAMP	Yield
76	1	0.049517	I-26 EB EXIT 106 OFF RAMP	
76	2	0.041808	I-26 EB EXIT 106 OFF RAMP	
76	3	0.031932	I-26 EB EXIT 106 OFF RAMP	
76	4	0.037057	I-26 EB EXIT 106 OFF RAMP	
76	5	0.02413	I-26 EB EXIT 106 OFF RAMP	
76	6	0.065687	I-26 EB EXIT 106 OFF RAMP	
76	7	0.030962	I-26 EB EXIT 106 OFF RAMP	
76	8	0.01996	I-26 EB EXIT 106 OFF RAMP	
76	9	0.031999	I-26 EB EXIT 106 OFF RAMP	
76	10	0.0352	I-26 EB EXIT 106 OFF RAMP	
77	1	0.075657	6706 (W), 6583 (NE) & EXIT 65 RAMP TO US 176	
77	2	0.082127	6706 (W), 6583 (NE) & EXIT 65 RAMP TO US 176	
77	3	0.097626	6706 (W), 6583 (NE) & EXIT 65 RAMP TO US 176	
77	4	0.069529	6706 (W), 6583 (NE) & EXIT 65 RAMP TO US 176	
77	5	0.08369	6706 (W), 6583 (NE) & EXIT 65 RAMP TO US 176	
77	6	0.059122	6706 (W), 6583 (NE) & EXIT 65 RAMP TO US 176	
77	7	0.0707	6706 (W), 6583 (NE) & EXIT 65 RAMP TO US 176	
77	8	0.098277	6706 (W), 6583 (NE) & EXIT 65 RAMP TO US 176	
77	9	0.174942	6706 (W), 6583 (NE) & EXIT 65 RAMP TO US 176	
77	10	0.065261	6706 (W), 6583 (NE) & EXIT 65 RAMP TO US 176	
79	1	4.526775	6584 (NE), BROAD RIVER RD & 6804 (SE)	Actuated
79	2	4.057371	6584 (NE), BROAD RIVER RD & 6804 (SE)	Actuated
79	3	4.458232	6584 (NE), BROAD RIVER RD & 6804 (SE)	Actuated
79	4	4.534691	6584 (NE), BROAD RIVER RD & 6804 (SE)	Actuated
79	5	3.876984	6584 (NE), BROAD RIVER RD & 6804 (SE)	Actuated
79	6	3.924229	6584 (NE), BROAD RIVER RD & 6804 (SE)	Actuated
79	7	4.790772	6584 (NE), BROAD RIVER RD & 6804 (SE)	Actuated
79	8	4.603456	6584 (NE), BROAD RIVER RD & 6804 (SE)	Actuated
79	9	4.348171	6584 (NE), BROAD RIVER RD & 6804 (SE)	Actuated
79	10	4.770112	6584 (NE), BROAD RIVER RD & 6804 (SE)	Actuated
85	1	0.080298	I-26 WB EXIT 106 ON RAMP	Yield
85	2	0.068567	I-26 WB EXIT 106 ON RAMP	Yield
85	3	0	I-26 WB EXIT 106 ON RAMP	Yield
85	4	0.091642	I-26 WB EXIT 106 ON RAMP	Yield
85	5	0.069511	I-26 WB EXIT 106 ON RAMP	Yield
85	6	0	I-26 WB EXIT 106 ON RAMP	Yield
85	7	0.089608	I-26 WB EXIT 106 ON RAMP	Yield

85	8	0.111553	I-26 WB EXIT 106 ON RAMP	Yield
85	9	0	I-26 WB EXIT 106 ON RAMP	Yield
85	10	0	I-26 WB EXIT 106 ON RAMP	Yield
99	1	35.93287	I-26 WB EXIT 103 OFF RAMP, HARBISON BLVD, I-26 WB EXIT 103 ON RAMP & 6770 (SW)	Actuated
99	2	33.913323	I-26 WB EXIT 103 OFF RAMP, HARBISON BLVD, I-26 WB EXIT 103 ON RAMP & 6770 (SW)	Actuated
99	3	37.640828	I-26 WB EXIT 103 OFF RAMP, HARBISON BLVD, I-26 WB EXIT 103 ON RAMP & 6770 (SW)	Actuated
99	4	34.475138	I-26 WB EXIT 103 OFF RAMP, HARBISON BLVD, I-26 WB EXIT 103 ON RAMP & 6770 (SW)	Actuated
99	5	38.602517	I-26 WB EXIT 103 OFF RAMP, HARBISON BLVD, I-26 WB EXIT 103 ON RAMP & 6770 (SW)	Actuated
99	6	32.697552	I-26 WB EXIT 103 OFF RAMP, HARBISON BLVD, I-26 WB EXIT 103 ON RAMP & 6770 (SW)	Actuated
99	7	34.84681	I-26 WB EXIT 103 OFF RAMP, HARBISON BLVD, I-26 WB EXIT 103 ON RAMP & 6770 (SW)	Actuated
99	8	35.085284	I-26 WB EXIT 103 OFF RAMP, HARBISON BLVD, I-26 WB EXIT 103 ON RAMP & 6770 (SW)	Actuated
99	9	36.207875	I-26 WB EXIT 103 OFF RAMP, HARBISON BLVD, I-26 WB EXIT 103 ON RAMP & 6770 (SW)	Actuated
99	10	34.143344	I-26 WB EXIT 103 OFF RAMP, HARBISON BLVD, I-26 WB EXIT 103 ON RAMP & 6770 (SW)	Actuated
30	1	12.461616	6864 (NW), 6554 (SW), EXIT 63 RAMP TO BUSH RIVER RD, BUSH RIVER RD & 6863 (W)	Actuated
30	2	12.692908	6864 (NW), 6554 (SW), EXIT 63 RAMP TO BUSH RIVER RD, BUSH RIVER RD & 6863 (W)	Actuated
30	3	12.867166	6864 (NW), 6554 (SW), EXIT 63 RAMP TO BUSH RIVER RD, BUSH RIVER RD & 6863 (W)	Actuated
30	4	12.790634	6864 (NW), 6554 (SW), EXIT 63 RAMP TO BUSH RIVER RD, BUSH RIVER RD & 6863 (W)	Actuated
30	5	13.077551	6864 (NW), 6554 (SW), EXIT 63 RAMP TO BUSH RIVER RD, BUSH RIVER RD & 6863 (W)	Actuated
30	6	12.292918	6864 (NW), 6554 (SW), EXIT 63 RAMP TO BUSH RIVER RD, BUSH RIVER RD & 6863 (W)	Actuated
30	7	12.667553	6864 (NW), 6554 (SW), EXIT 63 RAMP TO BUSH RIVER RD, BUSH RIVER RD & 6863 (W)	Actuated
30	8	11.834001	6864 (NW), 6554 (SW), EXIT 63 RAMP TO BUSH RIVER RD, BUSH RIVER RD & 6863 (W)	Actuated
30	9	12.778206	6864 (NW), 6554 (SW), EXIT 63 RAMP TO BUSH RIVER RD, BUSH RIVER RD & 6863 (W)	Actuated
30	10	12.752951	6864 (NW), 6554 (SW), EXIT 63 RAMP TO BUSH RIVER RD, BUSH RIVER RD & 6863 (W)	Actuated
104	1	10.78705	HARBISON BLVD, I-26 EB EXIT 103 OFF RAMP, 6770 (NE) & I-26 EB EXIT 103 ON RAMP	Actuated
104	2	8.951161	HARBISON BLVD, I-26 EB EXIT 103 OFF RAMP, 6770 (NE) & I-26 EB EXIT 103 ON RAMP	Actuated
104	3	9.742039	HARBISON BLVD, I-26 EB EXIT 103 OFF RAMP, 6770 (NE) & I-26 EB EXIT 103 ON RAMP	Actuated
104	4	9.153563	HARBISON BLVD, I-26 EB EXIT 103 OFF RAMP, 6770 (NE) & I-26 EB EXIT 103 ON RAMP	Actuated
104	5	9.954264	HARBISON BLVD, I-26 EB EXIT 103 OFF RAMP, 6770 (NE) & I-26 EB EXIT 103 ON RAMP	Actuated
104	6	10.14565	HARBISON BLVD, I-26 EB EXIT 103 OFF RAMP, 6770 (NE) & I-26 EB EXIT 103 ON RAMP	Actuated
104	7	9.563853	HARBISON BLVD, I-26 EB EXIT 103 OFF RAMP, 6770 (NE) & I-26 EB EXIT 103 ON RAMP	Actuated
104	8	10.611427	HARBISON BLVD, I-26 EB EXIT 103 OFF RAMP, 6770 (NE) & I-26 EB EXIT 103 ON RAMP	Actuated
104	9	10.454822	HARBISON BLVD, I-26 EB EXIT 103 OFF RAMP, 6770 (NE) & I-26 EB EXIT 103 ON RAMP	Actuated
104	10	11.127141	HARBISON BLVD, I-26 EB EXIT 103 OFF RAMP, 6770 (NE) & I-26 EB EXIT 103 ON RAMP	Actuated
107	1	0	6838 (NW), 6691 (NW) & 6692 (SE)	
107	2	0	6838 (NW), 6691 (NW) & 6692 (SE)	
107	3	0	6838 (NW), 6691 (NW) & 6692 (SE)	
107	4	0	6838 (NW), 6691 (NW) & 6692 (SE)	
107	5	0	6838 (NW), 6691 (NW) & 6692 (SE)	
107	6	0	6838 (NW), 6691 (NW) & 6692 (SE)	
107	7	0	6838 (NW), 6691 (NW) & 6692 (SE)	
107	8	0	6838 (NW), 6691 (NW) & 6692 (SE)	
107	9	0	6838 (NW), 6691 (NW) & 6692 (SE)	
107	10	0	6838 (NW), 6691 (NW) & 6692 (SE)	
111	1	0	6836 (E), RAMP & 6842 (NW)	
111	2	0	6836 (E), RAMP & 6842 (NW)	
111	3	0	6836 (E), RAMP & 6842 (NW)	
111	4	0	6836 (E), RAMP & 6842 (NW)	
111	5	0	6836 (E), RAMP & 6842 (NW)	
111	6	0	6836 (E), RAMP & 6842 (NW)	
111	7	0	6836 (E), RAMP & 6842 (NW)	
111	8	0	6836 (E), RAMP & 6842 (NW)	
111	9	0	6836 (E), RAMP & 6842 (NW)	
111	10	0	6836 (E), RAMP & 6842 (NW)	
112	1	15.461599	BROAD RIVER RD	Actuated
112	2	15.386023	BROAD RIVER RD	Actuated
112	3	8.372237	BROAD RIVER RD	Actuated
112	4	8.238725	BROAD RIVER RD	Actuated
112	5	18.825661	BROAD RIVER RD	Actuated
112	6	18.474864	BROAD RIVER RD	Actuated
112	7	7.768383	BROAD RIVER RD	Actuated
112	8	8.205862	BROAD RIVER RD	Actuated
112	9	16.118246	BROAD RIVER RD	Actuated
112	10	10.17952	BROAD RIVER RD	Actuated
113	1	27.60635	6837 (N), 6841 (W), RAMP, 6835 (NE) & 6838 (SE)	Actuated
113	2	27.190406	6837 (N), 6841 (W), RAMP, 6835 (NE) & 6838 (SE)	Actuated
113	3	26.615615	6837 (N), 6841 (W), RAMP, 6835 (NE) & 6838 (SE)	Actuated
113	4	26.530488	6837 (N), 6841 (W), RAMP, 6835 (NE) & 6838 (SE)	Actuated
113	5	27.137395	6837 (N), 6841 (W), RAMP, 6835 (NE) & 6838 (SE)	Actuated
113	6	25.771169	6837 (N), 6841 (W), RAMP, 6835 (NE) & 6838 (SE)	Actuated
113	7	27.629408	6837 (N), 6841 (W), RAMP, 6835 (NE) & 6838 (SE)	Actuated
113	8	26.865796	6837 (N), 6841 (W), RAMP, 6835 (NE) & 6838 (SE)	Actuated
113	9	26.766863	6837 (N), 6841 (W), RAMP, 6835 (NE) & 6838 (SE)	Actuated
113	10	27.735957	6837 (N), 6841 (W), RAMP, 6835 (NE) & 6838 (SE)	Actuated
117	1	3.848191	6804 (NW), 6828 (E) & BROAD RIVER RD	
117	2	3.253274	6804 (NW), 6828 (E) & BROAD RIVER RD	
117	3	3.727139	6804 (NW), 6828 (E) & BROAD RIVER RD	
117	4	3.077825	6804 (NW), 6828 (E) & BROAD RIVER RD	
117	5	2.946703	6804 (NW), 6828 (E) & BROAD RIVER RD	
117	6	3.033554	6804 (NW), 6828 (E) & BROAD RIVER RD	

117	7	4.170489	6804 (NW), 6828 (E) & BROAD RIVER RD	
117	8	3.229419	6804 (NW), 6828 (E) & BROAD RIVER RD	
117	9	3.751145	6804 (NW), 6828 (E) & BROAD RIVER RD	
117	10	3.557755	6804 (NW), 6828 (E) & BROAD RIVER RD	
120	1	0.000236	BUSH RIVER RD & 6741 (NE)	Actuated
120	2	0.000309	BUSH RIVER RD & 6741 (NE)	Actuated
120	3	0.00022	BUSH RIVER RD & 6741 (NE)	Actuated
120	4	0.000078	BUSH RIVER RD & 6741 (NE)	Actuated
120	5	0.000083	BUSH RIVER RD & 6741 (NE)	Actuated
120	6	0.000093	BUSH RIVER RD & 6741 (NE)	Actuated
120	7	0.000056	BUSH RIVER RD & 6741 (NE)	Actuated
120	8	0.00023	BUSH RIVER RD & 6741 (NE)	Actuated
120	9	0.000145	BUSH RIVER RD & 6741 (NE)	Actuated
120	10	0.000219	BUSH RIVER RD & 6741 (NE)	Actuated
123	1	0	I-26 EB EXIT 103 ON RAMP & 6718 (W)	Yield
123	2	0	I-26 EB EXIT 103 ON RAMP & 6718 (W)	Yield
123	3	0	I-26 EB EXIT 103 ON RAMP & 6718 (W)	Yield
123	4	0	I-26 EB EXIT 103 ON RAMP & 6718 (W)	Yield
123	5	0	I-26 EB EXIT 103 ON RAMP & 6718 (W)	Yield
123	6	0	I-26 EB EXIT 103 ON RAMP & 6718 (W)	Yield
123	7	0	I-26 EB EXIT 103 ON RAMP & 6718 (W)	Yield
123	8	0	I-26 EB EXIT 103 ON RAMP & 6718 (W)	Yield
123	9	0	I-26 EB EXIT 103 ON RAMP & 6718 (W)	Yield
123	10	0	I-26 EB EXIT 103 ON RAMP & 6718 (W)	Yield
125	1	0.621724	6765 (SE), 6774 (N) & I-26 WB TO BURNING TREE RD AND TO ST ANDREWS RD OFF RAMP	
125	2	0.306618	6765 (SE), 6774 (N) & I-26 WB TO BURNING TREE RD AND TO ST ANDREWS RD OFF RAMP	
125	3	0.686435	6765 (SE), 6774 (N) & I-26 WB TO BURNING TREE RD AND TO ST ANDREWS RD OFF RAMP	
125	4	0.427821	6765 (SE), 6774 (N) & I-26 WB TO BURNING TREE RD AND TO ST ANDREWS RD OFF RAMP	
125	5	0.449782	6765 (SE), 6774 (N) & I-26 WB TO BURNING TREE RD AND TO ST ANDREWS RD OFF RAMP	
125	6	0.19505	6765 (SE), 6774 (N) & I-26 WB TO BURNING TREE RD AND TO ST ANDREWS RD OFF RAMP	
125	7	0.402041	6765 (SE), 6774 (N) & I-26 WB TO BURNING TREE RD AND TO ST ANDREWS RD OFF RAMP	
125	8	0.331279	6765 (SE), 6774 (N) & I-26 WB TO BURNING TREE RD AND TO ST ANDREWS RD OFF RAMP	
125	9	0.15452	6765 (SE), 6774 (N) & I-26 WB TO BURNING TREE RD AND TO ST ANDREWS RD OFF RAMP	
125	10	2.568929	6765 (SE), 6774 (N) & I-26 WB TO BURNING TREE RD AND TO ST ANDREWS RD OFF RAMP	
126	1	0.631823	6835 (SW), COLONIAL LIFE BLVD W, 6836 (W) & 6837 (S)	
126	2	0.68918	6835 (SW), COLONIAL LIFE BLVD W, 6836 (W) & 6837 (S)	
126	3	0.682773	6835 (SW), COLONIAL LIFE BLVD W, 6836 (W) & 6837 (S)	
126	4	0.543777	6835 (SW), COLONIAL LIFE BLVD W, 6836 (W) & 6837 (S)	
126	5	0.759468	6835 (SW), COLONIAL LIFE BLVD W, 6836 (W) & 6837 (S)	
126	6	0.778458	6835 (SW), COLONIAL LIFE BLVD W, 6836 (W) & 6837 (S)	
126	7	0.760443	6835 (SW), COLONIAL LIFE BLVD W, 6836 (W) & 6837 (S)	
126	8	0.424402	6835 (SW), COLONIAL LIFE BLVD W, 6836 (W) & 6837 (S)	
126	9	0.655917	6835 (SW), COLONIAL LIFE BLVD W, 6836 (W) & 6837 (S)	
126	10	0.632157	6835 (SW), COLONIAL LIFE BLVD W, 6836 (W) & 6837 (S)	
127	1	15.101206	WOODLAND HILLS RD, ST ANDREWS RD, I-26 EB EXIT 106 OFF RAMP & 6772 (NE)	Actuated
127	2	13.418841	WOODLAND HILLS RD, ST ANDREWS RD, I-26 EB EXIT 106 OFF RAMP & 6772 (NE)	Actuated
127	3	15.171864	WOODLAND HILLS RD, ST ANDREWS RD, I-26 EB EXIT 106 OFF RAMP & 6772 (NE)	Actuated
127	4	14.449842	WOODLAND HILLS RD, ST ANDREWS RD, I-26 EB EXIT 106 OFF RAMP & 6772 (NE)	Actuated
127	5	15.223405	WOODLAND HILLS RD, ST ANDREWS RD, I-26 EB EXIT 106 OFF RAMP & 6772 (NE)	Actuated
127	6	14.617228	WOODLAND HILLS RD, ST ANDREWS RD, I-26 EB EXIT 106 OFF RAMP & 6772 (NE)	Actuated
127	7	16.44423	WOODLAND HILLS RD, ST ANDREWS RD, I-26 EB EXIT 106 OFF RAMP & 6772 (NE)	Actuated
127	8	16.471136	WOODLAND HILLS RD, ST ANDREWS RD, I-26 EB EXIT 106 OFF RAMP & 6772 (NE)	Actuated
127	9	13.986649	WOODLAND HILLS RD, ST ANDREWS RD, I-26 EB EXIT 106 OFF RAMP & 6772 (NE)	Actuated
127	10	13.501668	WOODLAND HILLS RD, ST ANDREWS RD, I-26 EB EXIT 106 OFF RAMP & 6772 (NE)	Actuated
129	1	10.779808	COLONIAL LIFE BLVD W, W COLONIAL LIFE BLVD & 6840 (W)	Actuated
129	2	20.429362	COLONIAL LIFE BLVD W, W COLONIAL LIFE BLVD & 6840 (W)	Actuated
129	3	10.420605	COLONIAL LIFE BLVD W, W COLONIAL LIFE BLVD & 6840 (W)	Actuated
129	4	17.767012	COLONIAL LIFE BLVD W, W COLONIAL LIFE BLVD & 6840 (W)	Actuated
129	5	7.024714	COLONIAL LIFE BLVD W, W COLONIAL LIFE BLVD & 6840 (W)	Actuated
129	6	15.600319	COLONIAL LIFE BLVD W, W COLONIAL LIFE BLVD & 6840 (W)	Actuated
129	7	12.527382	COLONIAL LIFE BLVD W, W COLONIAL LIFE BLVD & 6840 (W)	Actuated
129	8	8.241438	COLONIAL LIFE BLVD W, W COLONIAL LIFE BLVD & 6840 (W)	Actuated
129	9	14.73173	COLONIAL LIFE BLVD W, W COLONIAL LIFE BLVD & 6840 (W)	Actuated
129	10	13.140126	COLONIAL LIFE BLVD W, W COLONIAL LIFE BLVD & 6840 (W)	Actuated
131	1	0.000398	6687 (NW), 6672 (NW) & 6841 (E)	
131	2	0	6687 (NW), 6672 (NW) & 6841 (E)	
131	3	0.001032	6687 (NW), 6672 (NW) & 6841 (E)	
131	4	0.000242	6687 (NW), 6672 (NW) & 6841 (E)	
131	5	0.000252	6687 (NW), 6672 (NW) & 6841 (E)	
131	6	0.000261	6687 (NW), 6672 (NW) & 6841 (E)	
131	7	0	6687 (NW), 6672 (NW) & 6841 (E)	
131	8	0	6687 (NW), 6672 (NW) & 6841 (E)	
131	9	0	6687 (NW), 6672 (NW) & 6841 (E)	
131	10	0.000632	6687 (NW), 6672 (NW) & 6841 (E)	
132	1	29.321092	EXIT 65 RAMP TO US 176 & BROAD RIVER RD	Actuated
132	2	23.775164	EXIT 65 RAMP TO US 176 & BROAD RIVER RD	Actuated
132	3	7.453855	EXIT 65 RAMP TO US 176 & BROAD RIVER RD	Actuated
132	4	7.049317	EXIT 65 RAMP TO US 176 & BROAD RIVER RD	Actuated
132	5	34.867277	EXIT 65 RAMP TO US 176 & BROAD RIVER RD	Actuated

132	6	28.730283	EXIT 65 RAMP TO US 176 & BROAD RIVER RD	Actuated
132	7	7.52763	EXIT 65 RAMP TO US 176 & BROAD RIVER RD	Actuated
132	8	6.210323	EXIT 65 RAMP TO US 176 & BROAD RIVER RD	Actuated
132	9	22.581246	EXIT 65 RAMP TO US 176 & BROAD RIVER RD	Actuated
132	10	11.850579	EXIT 65 RAMP TO US 176 & BROAD RIVER RD	Actuated
100000139	1	31.010027	6862 (SE), EXIT 63 RAMP TO BUSH RIVER RD, 6861 (NW), 6859 (NW), RAMP & 6866 (SE)	Actuated
100000139	2	34.630344	6862 (SE), EXIT 63 RAMP TO BUSH RIVER RD, 6861 (NW), 6859 (NW), RAMP & 6866 (SE)	Actuated
100000139	3	33.839763	6862 (SE), EXIT 63 RAMP TO BUSH RIVER RD, 6861 (NW), 6859 (NW), RAMP & 6866 (SE)	Actuated
100000139	4	31.510635	6862 (SE), EXIT 63 RAMP TO BUSH RIVER RD, 6861 (NW), 6859 (NW), RAMP & 6866 (SE)	Actuated
100000139	5	31.254955	6862 (SE), EXIT 63 RAMP TO BUSH RIVER RD, 6861 (NW), 6859 (NW), RAMP & 6866 (SE)	Actuated
100000139	6	43.680647	6862 (SE), EXIT 63 RAMP TO BUSH RIVER RD, 6861 (NW), 6859 (NW), RAMP & 6866 (SE)	Actuated
100000139	7	32.297852	6862 (SE), EXIT 63 RAMP TO BUSH RIVER RD, 6861 (NW), 6859 (NW), RAMP & 6866 (SE)	Actuated
100000139	8	38.823491	6862 (SE), EXIT 63 RAMP TO BUSH RIVER RD, 6861 (NW), 6859 (NW), RAMP & 6866 (SE)	Actuated
100000139	9	31.67197	6862 (SE), EXIT 63 RAMP TO BUSH RIVER RD, 6861 (NW), 6859 (NW), RAMP & 6866 (SE)	Actuated
100000139	10	36.839665	6862 (SE), EXIT 63 RAMP TO BUSH RIVER RD, 6861 (NW), 6859 (NW), RAMP & 6866 (SE)	Actuated
141	1	10.451253	BUSH RIVER RD, 6752 (NE) & 6751 (SW)	Actuated
141	2	10.914661	BUSH RIVER RD, 6752 (NE) & 6751 (SW)	Actuated
141	3	9.966303	BUSH RIVER RD, 6752 (NE) & 6751 (SW)	Actuated
141	4	10.60471	BUSH RIVER RD, 6752 (NE) & 6751 (SW)	Actuated
141	5	9.159988	BUSH RIVER RD, 6752 (NE) & 6751 (SW)	Actuated
141	6	11.216929	BUSH RIVER RD, 6752 (NE) & 6751 (SW)	Actuated
141	7	11.322789	BUSH RIVER RD, 6752 (NE) & 6751 (SW)	Actuated
141	8	13.494672	BUSH RIVER RD, 6752 (NE) & 6751 (SW)	Actuated
141	9	12.092258	BUSH RIVER RD, 6752 (NE) & 6751 (SW)	Actuated
141	10	10.707208	BUSH RIVER RD, 6752 (NE) & 6751 (SW)	Actuated
147	1	0	I-26 WB TO BURNING TREE RD AND TO ST ANDREWS RD OFF RAMP, I-26 WB TO BURNING TREE RD OFF RAMP & 6765	
147	2	0	I-26 WB TO BURNING TREE RD AND TO ST ANDREWS RD OFF RAMP, I-26 WB TO BURNING TREE RD OFF RAMP & 6765	
147	3	0	I-26 WB TO BURNING TREE RD AND TO ST ANDREWS RD OFF RAMP, I-26 WB TO BURNING TREE RD OFF RAMP & 6765	
147	4	0	I-26 WB TO BURNING TREE RD AND TO ST ANDREWS RD OFF RAMP, I-26 WB TO BURNING TREE RD OFF RAMP & 6765	
147	5	0	I-26 WB TO BURNING TREE RD AND TO ST ANDREWS RD OFF RAMP, I-26 WB TO BURNING TREE RD OFF RAMP & 6765	
147	6	0	I-26 WB TO BURNING TREE RD AND TO ST ANDREWS RD OFF RAMP, I-26 WB TO BURNING TREE RD OFF RAMP & 6765	
147	7	0	I-26 WB TO BURNING TREE RD AND TO ST ANDREWS RD OFF RAMP, I-26 WB TO BURNING TREE RD OFF RAMP & 6765	
147	8	0	I-26 WB TO BURNING TREE RD AND TO ST ANDREWS RD OFF RAMP, I-26 WB TO BURNING TREE RD OFF RAMP & 6765	
147	9	0	I-26 WB TO BURNING TREE RD AND TO ST ANDREWS RD OFF RAMP, I-26 WB TO BURNING TREE RD OFF RAMP & 6765	
147	10	0	I-26 WB TO BURNING TREE RD AND TO ST ANDREWS RD OFF RAMP, I-26 WB TO BURNING TREE RD OFF RAMP & 6765	
148	1	11.992253	BROAD RIVER RD	Actuated
148	2	11.876556	BROAD RIVER RD	Actuated
148	3	10.362045	BROAD RIVER RD	Actuated
148	4	10.623352	BROAD RIVER RD	Actuated
148	5	11.578459	BROAD RIVER RD	Actuated
148	6	13.215058	BROAD RIVER RD	Actuated
148	7	10.628198	BROAD RIVER RD	Actuated
148	8	11.116382	BROAD RIVER RD	Actuated
148	9	11.524542	BROAD RIVER RD	Actuated
148	10	10.602809	BROAD RIVER RD	Actuated
155	1	2.799269	BROAD RIVER RD & 6583 (SW)	Actuated
155	2	2.574046	BROAD RIVER RD & 6583 (SW)	Actuated
155	3	2.464304	BROAD RIVER RD & 6583 (SW)	Actuated
155	4	2.326192	BROAD RIVER RD & 6583 (SW)	Actuated
155	5	2.457155	BROAD RIVER RD & 6583 (SW)	Actuated
155	6	3.219608	BROAD RIVER RD & 6583 (SW)	Actuated
155	7	2.069314	BROAD RIVER RD & 6583 (SW)	Actuated
155	8	2.556705	BROAD RIVER RD & 6583 (SW)	Actuated
155	9	2.229772	BROAD RIVER RD & 6583 (SW)	Actuated
155	10	2.802286	BROAD RIVER RD & 6583 (SW)	Actuated
159	1	0	RAMP & 6812 (E)	Yield
159	2	0	RAMP & 6812 (E)	Yield
159	3	0	RAMP & 6812 (E)	Yield
159	4	0	RAMP & 6812 (E)	Yield
159	5	0	RAMP & 6812 (E)	Yield
159	6	0	RAMP & 6812 (E)	Yield
159	7	0	RAMP & 6812 (E)	Yield
159	8	0	RAMP & 6812 (E)	Yield
159	9	0	RAMP & 6812 (E)	Yield
159	10	0	RAMP & 6812 (E)	Yield
161	1	6.49104	BROAD RIVER RD & 6806 (NE)	
161	2	5.557634	BROAD RIVER RD & 6806 (NE)	
161	3	4.30665	BROAD RIVER RD & 6806 (NE)	
161	4	4.041475	BROAD RIVER RD & 6806 (NE)	
161	5	5.544276	BROAD RIVER RD & 6806 (NE)	
161	6	7.49457	BROAD RIVER RD & 6806 (NE)	
161	7	4.800485	BROAD RIVER RD & 6806 (NE)	
161	8	5.201556	BROAD RIVER RD & 6806 (NE)	
161	9	6.2461	BROAD RIVER RD & 6806 (NE)	
161	10	5.347812	BROAD RIVER RD & 6806 (NE)	
171	1	0.126599	BROAD RIVER RD & 6812 (W)	
171	2	0.157672	BROAD RIVER RD & 6812 (W)	
171	3	0.353741	BROAD RIVER RD & 6812 (W)	
171	4	0.238195	BROAD RIVER RD & 6812 (W)	

171	5	0.126567	BROAD RIVER RD & 6812 (W)	
171	6	0.126592	BROAD RIVER RD & 6812 (W)	
171	7	0.264147	BROAD RIVER RD & 6812 (W)	
171	8	0.271705	BROAD RIVER RD & 6812 (W)	
171	9	0.129874	BROAD RIVER RD & 6812 (W)	
171	10	0.257013	BROAD RIVER RD & 6812 (W)	
5112	1	0	RAMP	
5112	2	0	RAMP	
5112	3	0	RAMP	
5112	4	0	RAMP	
5112	5	0	RAMP	
5112	6	0	RAMP	
5112	7	0	RAMP	
5112	8	0	RAMP	
5112	9	0	RAMP	
5112	10	0	RAMP	
100000093	1	12.953642	SUNSET BLVD & RAMP	Actuated
100000093	2	12.370757	SUNSET BLVD & RAMP	Actuated
100000093	3	12.755911	SUNSET BLVD & RAMP	Actuated
100000093	4	12.520316	SUNSET BLVD & RAMP	Actuated
100000093	5	12.565464	SUNSET BLVD & RAMP	Actuated
100000093	6	12.756249	SUNSET BLVD & RAMP	Actuated
100000093	7	12.871916	SUNSET BLVD & RAMP	Actuated
100000093	8	12.406432	SUNSET BLVD & RAMP	Actuated
100000093	9	13.112796	SUNSET BLVD & RAMP	Actuated
100000093	10	11.752999	SUNSET BLVD & RAMP	Actuated
100000120	1	110.635243	CORLEY MILL RD, SUNSET BLVD & GINNY LN	Actuated
100000120	2	117.876046	CORLEY MILL RD, SUNSET BLVD & GINNY LN	Actuated
100000120	3	105.600999	CORLEY MILL RD, SUNSET BLVD & GINNY LN	Actuated
100000120	4	116.772427	CORLEY MILL RD, SUNSET BLVD & GINNY LN	Actuated
100000120	5	107.08797	CORLEY MILL RD, SUNSET BLVD & GINNY LN	Actuated
100000120	6	109.885696	CORLEY MILL RD, SUNSET BLVD & GINNY LN	Actuated
100000120	7	114.742371	CORLEY MILL RD, SUNSET BLVD & GINNY LN	Actuated
100000120	8	108.351645	CORLEY MILL RD, SUNSET BLVD & GINNY LN	Actuated
100000120	9	108.498714	CORLEY MILL RD, SUNSET BLVD & GINNY LN	Actuated
100000120	10	102.933735	CORLEY MILL RD, SUNSET BLVD & GINNY LN	Actuated
100000134	1	21.33546	SUNSET BLVD & RAMP	Actuated
100000134	2	30.291981	SUNSET BLVD & RAMP	Actuated
100000134	3	20.803239	SUNSET BLVD & RAMP	Actuated
100000134	4	34.617088	SUNSET BLVD & RAMP	Actuated
100000134	5	35.295833	SUNSET BLVD & RAMP	Actuated
100000134	6	20.658096	SUNSET BLVD & RAMP	Actuated
100000134	7	20.885362	SUNSET BLVD & RAMP	Actuated
100000134	8	27.130775	SUNSET BLVD & RAMP	Actuated
100000134	9	20.830282	SUNSET BLVD & RAMP	Actuated
100000134	10	23.424598	SUNSET BLVD & RAMP	Actuated
100000135	1	5.544344	SUNSET BLVD & RAMP	Actuated
100000135	2	7.460048	SUNSET BLVD & RAMP	Actuated
100000135	3	6.4619	SUNSET BLVD & RAMP	Actuated
100000135	4	12.206987	SUNSET BLVD & RAMP	Actuated
100000135	5	10.112	SUNSET BLVD & RAMP	Actuated
100000135	6	6.152668	SUNSET BLVD & RAMP	Actuated
100000135	7	6.353063	SUNSET BLVD & RAMP	Actuated
100000135	8	7.429999	SUNSET BLVD & RAMP	Actuated
100000135	9	6.515976	SUNSET BLVD & RAMP	Actuated
100000135	10	6.734225	SUNSET BLVD & RAMP	Actuated
100000136	1	29.634943	SUNSET BLVD, CROMER RD & DAVEGA DR	Actuated
100000136	2	28.045446	SUNSET BLVD, CROMER RD & DAVEGA DR	Actuated
100000136	3	31.253631	SUNSET BLVD, CROMER RD & DAVEGA DR	Actuated
100000136	4	37.374966	SUNSET BLVD, CROMER RD & DAVEGA DR	Actuated
100000136	5	30.728493	SUNSET BLVD, CROMER RD & DAVEGA DR	Actuated
100000136	6	37.291765	SUNSET BLVD, CROMER RD & DAVEGA DR	Actuated
100000136	7	27.111621	SUNSET BLVD, CROMER RD & DAVEGA DR	Actuated
100000136	8	26.530927	SUNSET BLVD, CROMER RD & DAVEGA DR	Actuated
100000136	9	26.386087	SUNSET BLVD, CROMER RD & DAVEGA DR	Actuated
100000136	10	25.200773	SUNSET BLVD, CROMER RD & DAVEGA DR	Actuated
100000144	1	24.705269	W. HOSPITAL DR, SUNSET BLVD & SUNSET CT	Actuated
100000144	2	19.270768	W. HOSPITAL DR, SUNSET BLVD & SUNSET CT	Actuated
100000144	3	19.417049	W. HOSPITAL DR, SUNSET BLVD & SUNSET CT	Actuated
100000144	4	19.212139	W. HOSPITAL DR, SUNSET BLVD & SUNSET CT	Actuated
100000144	5	24.418781	W. HOSPITAL DR, SUNSET BLVD & SUNSET CT	Actuated
100000144	6	20.02798	W. HOSPITAL DR, SUNSET BLVD & SUNSET CT	Actuated
100000144	7	20.427614	W. HOSPITAL DR, SUNSET BLVD & SUNSET CT	Actuated
100000144	8	16.806505	W. HOSPITAL DR, SUNSET BLVD & SUNSET CT	Actuated
100000144	9	20.507023	W. HOSPITAL DR, SUNSET BLVD & SUNSET CT	Actuated
100000144	10	20.381603	W. HOSPITAL DR, SUNSET BLVD & SUNSET CT	Actuated
100000150	1	1.325129	I-26 EB EXIT 101 OFF RAMP & BROAD RIVER RD	Stop
100000150	2	1.498887	I-26 EB EXIT 101 OFF RAMP & BROAD RIVER RD	Stop
100000150	3	1.040754	I-26 EB EXIT 101 OFF RAMP & BROAD RIVER RD	Stop

100000150	4	1.704413	I-26 EB EXIT 101 OFF RAMP & BROAD RIVER RD	Stop
100000150	5	1.758512	I-26 EB EXIT 101 OFF RAMP & BROAD RIVER RD	Stop
100000150	6	1.292057	I-26 EB EXIT 101 OFF RAMP & BROAD RIVER RD	Stop
100000150	7	2.271418	I-26 EB EXIT 101 OFF RAMP & BROAD RIVER RD	Stop
100000150	8	1.893346	I-26 EB EXIT 101 OFF RAMP & BROAD RIVER RD	Stop
100000150	9	1.610799	I-26 EB EXIT 101 OFF RAMP & BROAD RIVER RD	Stop
100000150	10	1.353282	I-26 EB EXIT 101 OFF RAMP & BROAD RIVER RD	Stop
100000151	1	5.39774	BROAD RIVER RD & I-26 EB EXIT 101 ON RAMP	Actuated
100000151	2	6.291387	BROAD RIVER RD & I-26 EB EXIT 101 ON RAMP	Actuated
100000151	3	6.873328	BROAD RIVER RD & I-26 EB EXIT 101 ON RAMP	Actuated
100000151	4	5.645464	BROAD RIVER RD & I-26 EB EXIT 101 ON RAMP	Actuated
100000151	5	6.210581	BROAD RIVER RD & I-26 EB EXIT 101 ON RAMP	Actuated
100000151	6	5.75751	BROAD RIVER RD & I-26 EB EXIT 101 ON RAMP	Actuated
100000151	7	5.425487	BROAD RIVER RD & I-26 EB EXIT 101 ON RAMP	Actuated
100000151	8	5.490427	BROAD RIVER RD & I-26 EB EXIT 101 ON RAMP	Actuated
100000151	9	5.021091	BROAD RIVER RD & I-26 EB EXIT 101 ON RAMP	Actuated
100000151	10	5.583239	BROAD RIVER RD & I-26 EB EXIT 101 ON RAMP	Actuated
100000152	1	7.928825	BROAD RIVER RD & BEATTY RD	Actuated
100000152	2	7.426204	BROAD RIVER RD & BEATTY RD	Actuated
100000152	3	6.850519	BROAD RIVER RD & BEATTY RD	Actuated
100000152	4	6.988043	BROAD RIVER RD & BEATTY RD	Actuated
100000152	5	6.391678	BROAD RIVER RD & BEATTY RD	Actuated
100000152	6	6.696686	BROAD RIVER RD & BEATTY RD	Actuated
100000152	7	6.93118	BROAD RIVER RD & BEATTY RD	Actuated
100000152	8	5.507307	BROAD RIVER RD & BEATTY RD	Actuated
100000152	9	6.763836	BROAD RIVER RD & BEATTY RD	Actuated
100000152	10	5.914405	BROAD RIVER RD & BEATTY RD	Actuated
100000160	1	0	BROAD RIVER RD & I-26 WB EXIT 101 ON RAMP	
100000160	2	0	BROAD RIVER RD & I-26 WB EXIT 101 ON RAMP	
100000160	3	0	BROAD RIVER RD & I-26 WB EXIT 101 ON RAMP	
100000160	4	0	BROAD RIVER RD & I-26 WB EXIT 101 ON RAMP	
100000160	5	0	BROAD RIVER RD & I-26 WB EXIT 101 ON RAMP	
100000160	6	0	BROAD RIVER RD & I-26 WB EXIT 101 ON RAMP	
100000160	7	0	BROAD RIVER RD & I-26 WB EXIT 101 ON RAMP	
100000160	8	0	BROAD RIVER RD & I-26 WB EXIT 101 ON RAMP	
100000160	9	0	BROAD RIVER RD & I-26 WB EXIT 101 ON RAMP	
100000160	10	0	BROAD RIVER RD & I-26 WB EXIT 101 ON RAMP	
100000163	1	89.031451	MCSWAIN DR, SUNSET BLVD & CHRIS DR	Actuated
100000163	2	17.924646	MCSWAIN DR, SUNSET BLVD & CHRIS DR	Actuated
100000163	3	81.461277	MCSWAIN DR, SUNSET BLVD & CHRIS DR	Actuated
100000163	4	50.718023	MCSWAIN DR, SUNSET BLVD & CHRIS DR	Actuated
100000163	5	67.951372	MCSWAIN DR, SUNSET BLVD & CHRIS DR	Actuated
100000163	6	58.487681	MCSWAIN DR, SUNSET BLVD & CHRIS DR	Actuated
100000163	7	74.621789	MCSWAIN DR, SUNSET BLVD & CHRIS DR	Actuated
100000163	8	80.105955	MCSWAIN DR, SUNSET BLVD & CHRIS DR	Actuated
100000163	9	83.111088	MCSWAIN DR, SUNSET BLVD & CHRIS DR	Actuated
100000163	10	91.758966	MCSWAIN DR, SUNSET BLVD & CHRIS DR	Actuated
100000165	1	26.986788	HARBISON BLVD & WOODCROSS DR	Actuated
100000165	2	22.649294	HARBISON BLVD & WOODCROSS DR	Actuated
100000165	3	26.890028	HARBISON BLVD & WOODCROSS DR	Actuated
100000165	4	26.661702	HARBISON BLVD & WOODCROSS DR	Actuated
100000165	5	26.134954	HARBISON BLVD & WOODCROSS DR	Actuated
100000165	6	25.557484	HARBISON BLVD & WOODCROSS DR	Actuated
100000165	7	25.616051	HARBISON BLVD & WOODCROSS DR	Actuated
100000165	8	25.601307	HARBISON BLVD & WOODCROSS DR	Actuated
100000165	9	26.637193	HARBISON BLVD & WOODCROSS DR	Actuated
100000165	10	27.786588	HARBISON BLVD & WOODCROSS DR	Actuated
100000168	1	12.705651	SUNSET BLVD & LEAPHART RD	Actuated
100000168	2	13.602796	SUNSET BLVD & LEAPHART RD	Actuated
100000168	3	12.282271	SUNSET BLVD & LEAPHART RD	Actuated
100000168	4	15.715632	SUNSET BLVD & LEAPHART RD	Actuated
100000168	5	13.674502	SUNSET BLVD & LEAPHART RD	Actuated
100000168	6	17.318174	SUNSET BLVD & LEAPHART RD	Actuated
100000168	7	13.437548	SUNSET BLVD & LEAPHART RD	Actuated
100000168	8	12.404896	SUNSET BLVD & LEAPHART RD	Actuated
100000168	9	14.124523	SUNSET BLVD & LEAPHART RD	Actuated
100000168	10	11.051253	SUNSET BLVD & LEAPHART RD	Actuated
100000169	1	0	LAKE MURRAY BLVD & I-26 WB EXIT 102 ON RAMP	
100000169	2	0	LAKE MURRAY BLVD & I-26 WB EXIT 102 ON RAMP	
100000169	3	0	LAKE MURRAY BLVD & I-26 WB EXIT 102 ON RAMP	
100000169	4	0	LAKE MURRAY BLVD & I-26 WB EXIT 102 ON RAMP	
100000169	5	0	LAKE MURRAY BLVD & I-26 WB EXIT 102 ON RAMP	
100000169	6	0	LAKE MURRAY BLVD & I-26 WB EXIT 102 ON RAMP	
100000169	7	0	LAKE MURRAY BLVD & I-26 WB EXIT 102 ON RAMP	
100000169	8	0	LAKE MURRAY BLVD & I-26 WB EXIT 102 ON RAMP	
100000169	9	0	LAKE MURRAY BLVD & I-26 WB EXIT 102 ON RAMP	
100000169	10	0	LAKE MURRAY BLVD & I-26 WB EXIT 102 ON RAMP	
100000174	1	7.418967	PINEY GROVE RD, I-26 EB EXIT 104 OFF RAMP & I-26 EB EXIT 104 ON RAMP	Actuated
100000174	2	8.454718	PINEY GROVE RD, I-26 EB EXIT 104 OFF RAMP & I-26 EB EXIT 104 ON RAMP	Actuated

100000174	3	8.896365	PINEY GROVE RD, I-26 EB EXIT 104 OFF RAMP & I-26 EB EXIT 104 ON RAMP	Actuated
100000174	4	8.364791	PINEY GROVE RD, I-26 EB EXIT 104 OFF RAMP & I-26 EB EXIT 104 ON RAMP	Actuated
100000174	5	9.507342	PINEY GROVE RD, I-26 EB EXIT 104 OFF RAMP & I-26 EB EXIT 104 ON RAMP	Actuated
100000174	6	8.017291	PINEY GROVE RD, I-26 EB EXIT 104 OFF RAMP & I-26 EB EXIT 104 ON RAMP	Actuated
100000174	7	8.640541	PINEY GROVE RD, I-26 EB EXIT 104 OFF RAMP & I-26 EB EXIT 104 ON RAMP	Actuated
100000174	8	8.70713	PINEY GROVE RD, I-26 EB EXIT 104 OFF RAMP & I-26 EB EXIT 104 ON RAMP	Actuated
100000174	9	9.522993	PINEY GROVE RD, I-26 EB EXIT 104 OFF RAMP & I-26 EB EXIT 104 ON RAMP	Actuated
100000174	10	7.64345	PINEY GROVE RD, I-26 EB EXIT 104 OFF RAMP & I-26 EB EXIT 104 ON RAMP	Actuated
100000177	1	26.572184	PINEY GROVE RD, I-26 WB EXIT 104 OFF RAMP & I-26 WB EXIT 104 ON RAMP	Actuated
100000177	2	26.984251	PINEY GROVE RD, I-26 WB EXIT 104 OFF RAMP & I-26 WB EXIT 104 ON RAMP	Actuated
100000177	3	26.648111	PINEY GROVE RD, I-26 WB EXIT 104 OFF RAMP & I-26 WB EXIT 104 ON RAMP	Actuated
100000177	4	25.673499	PINEY GROVE RD, I-26 WB EXIT 104 OFF RAMP & I-26 WB EXIT 104 ON RAMP	Actuated
100000177	5	26.892193	PINEY GROVE RD, I-26 WB EXIT 104 OFF RAMP & I-26 WB EXIT 104 ON RAMP	Actuated
100000177	6	27.883178	PINEY GROVE RD, I-26 WB EXIT 104 OFF RAMP & I-26 WB EXIT 104 ON RAMP	Actuated
100000177	7	27.947905	PINEY GROVE RD, I-26 WB EXIT 104 OFF RAMP & I-26 WB EXIT 104 ON RAMP	Actuated
100000177	8	27.18086	PINEY GROVE RD, I-26 WB EXIT 104 OFF RAMP & I-26 WB EXIT 104 ON RAMP	Actuated
100000177	9	25.647913	PINEY GROVE RD, I-26 WB EXIT 104 OFF RAMP & I-26 WB EXIT 104 ON RAMP	Actuated
100000177	10	28.354756	PINEY GROVE RD, I-26 WB EXIT 104 OFF RAMP & I-26 WB EXIT 104 ON RAMP	Actuated
100000182	1	9.13433	ST ANDREWS RD & 6774 (S)	Stop
100000182	2	10.506368	ST ANDREWS RD & 6774 (S)	Stop
100000182	3	7.067099	ST ANDREWS RD & 6774 (S)	Stop
100000182	4	9.153948	ST ANDREWS RD & 6774 (S)	Stop
100000182	5	9.17536	ST ANDREWS RD & 6774 (S)	Stop
100000182	6	12.040802	ST ANDREWS RD & 6774 (S)	Stop
100000182	7	9.84172	ST ANDREWS RD & 6774 (S)	Stop
100000182	8	10.472218	ST ANDREWS RD & 6774 (S)	Stop
100000182	9	11.882482	ST ANDREWS RD & 6774 (S)	Stop
100000182	10	11.869297	ST ANDREWS RD & 6774 (S)	Stop
100000184	1	14.412114	ARROWWOOD RD, BUSH RIVER RD & N ARROWWOOD RD	Actuated
100000184	2	13.698788	ARROWWOOD RD, BUSH RIVER RD & N ARROWWOOD RD	Actuated
100000184	3	14.048932	ARROWWOOD RD, BUSH RIVER RD & N ARROWWOOD RD	Actuated
100000184	4	13.419205	ARROWWOOD RD, BUSH RIVER RD & N ARROWWOOD RD	Actuated
100000184	5	13.656004	ARROWWOOD RD, BUSH RIVER RD & N ARROWWOOD RD	Actuated
100000184	6	12.999953	ARROWWOOD RD, BUSH RIVER RD & N ARROWWOOD RD	Actuated
100000184	7	13.998464	ARROWWOOD RD, BUSH RIVER RD & N ARROWWOOD RD	Actuated
100000184	8	14.026243	ARROWWOOD RD, BUSH RIVER RD & N ARROWWOOD RD	Actuated
100000184	9	13.06255	ARROWWOOD RD, BUSH RIVER RD & N ARROWWOOD RD	Actuated
100000184	10	14.594897	ARROWWOOD RD, BUSH RIVER RD & N ARROWWOOD RD	Actuated
100000185	1	46.196565	GREYSTONE BLVD & RAMP	Stop
100000185	2	20.083366	GREYSTONE BLVD & RAMP	Stop
100000185	3	11.085875	GREYSTONE BLVD & RAMP	Stop
100000185	4	22.379257	GREYSTONE BLVD & RAMP	Stop
100000185	5	23.497784	GREYSTONE BLVD & RAMP	Stop
100000185	6	14.08109	GREYSTONE BLVD & RAMP	Stop
100000185	7	18.034214	GREYSTONE BLVD & RAMP	Stop
100000185	8	60.861939	GREYSTONE BLVD & RAMP	Stop
100000185	9	12.658743	GREYSTONE BLVD & RAMP	Stop
100000185	10	12.097287	GREYSTONE BLVD & RAMP	Stop
100000186	1	46.047835	HARBOR DR, SUNSET BLVD & E HOSPITAL DR	Actuated
100000186	2	35.54977	HARBOR DR, SUNSET BLVD & E HOSPITAL DR	Actuated
100000186	3	33.325198	HARBOR DR, SUNSET BLVD & E HOSPITAL DR	Actuated
100000186	4	45.300543	HARBOR DR, SUNSET BLVD & E HOSPITAL DR	Actuated
100000186	5	37.340436	HARBOR DR, SUNSET BLVD & E HOSPITAL DR	Actuated
100000186	6	33.918187	HARBOR DR, SUNSET BLVD & E HOSPITAL DR	Actuated
100000186	7	47.443508	HARBOR DR, SUNSET BLVD & E HOSPITAL DR	Actuated
100000186	8	34.156912	HARBOR DR, SUNSET BLVD & E HOSPITAL DR	Actuated
100000186	9	38.884589	HARBOR DR, SUNSET BLVD & E HOSPITAL DR	Actuated
100000186	10	31.291366	HARBOR DR, SUNSET BLVD & E HOSPITAL DR	Actuated
100000187	1	19.372763	BROAD RIVER RD, BRIARGATE CIR, 6829 (SE) & MARLEY DR	Actuated
100000187	2	21.067319	BROAD RIVER RD, BRIARGATE CIR, 6829 (SE) & MARLEY DR	Actuated
100000187	3	25.206183	BROAD RIVER RD, BRIARGATE CIR, 6829 (SE) & MARLEY DR	Actuated
100000187	4	15.405283	BROAD RIVER RD, BRIARGATE CIR, 6829 (SE) & MARLEY DR	Actuated
100000187	5	33.131982	BROAD RIVER RD, BRIARGATE CIR, 6829 (SE) & MARLEY DR	Actuated
100000187	6	21.612794	BROAD RIVER RD, BRIARGATE CIR, 6829 (SE) & MARLEY DR	Actuated
100000187	7	25.9421	BROAD RIVER RD, BRIARGATE CIR, 6829 (SE) & MARLEY DR	Actuated
100000187	8	15.308757	BROAD RIVER RD, BRIARGATE CIR, 6829 (SE) & MARLEY DR	Actuated
100000187	9	17.912408	BROAD RIVER RD, BRIARGATE CIR, 6829 (SE) & MARLEY DR	Actuated
100000187	10	21.160805	BROAD RIVER RD, BRIARGATE CIR, 6829 (SE) & MARLEY DR	Actuated
100000188	1	1.870528	GREYSTONE BLVD & RAMP	Stop
100000188	2	1.42612	GREYSTONE BLVD & RAMP	Stop
100000188	3	1.506728	GREYSTONE BLVD & RAMP	Stop
100000188	4	1.797788	GREYSTONE BLVD & RAMP	Stop
100000188	5	1.933307	GREYSTONE BLVD & RAMP	Stop
100000188	6	1.587541	GREYSTONE BLVD & RAMP	Stop
100000188	7	1.244718	GREYSTONE BLVD & RAMP	Stop
100000188	8	1.615038	GREYSTONE BLVD & RAMP	Stop
100000188	9	1.731826	GREYSTONE BLVD & RAMP	Stop
100000188	10	1.530038	GREYSTONE BLVD & RAMP	Stop
100000190	1	5.416173	EXIT 65 RAMP TO US 176 & BROAD RIVER RD	Actuated

100000190	2	6.30113	EXIT 65 RAMP TO US 176 & BROAD RIVER RD	Actuated
100000190	3	5.496999	EXIT 65 RAMP TO US 176 & BROAD RIVER RD	Actuated
100000190	4	6.382676	EXIT 65 RAMP TO US 176 & BROAD RIVER RD	Actuated
100000190	5	5.926156	EXIT 65 RAMP TO US 176 & BROAD RIVER RD	Actuated
100000190	6	6.329653	EXIT 65 RAMP TO US 176 & BROAD RIVER RD	Actuated
100000190	7	5.628761	EXIT 65 RAMP TO US 176 & BROAD RIVER RD	Actuated
100000190	8	6.771132	EXIT 65 RAMP TO US 176 & BROAD RIVER RD	Actuated
100000190	9	5.648133	EXIT 65 RAMP TO US 176 & BROAD RIVER RD	Actuated
100000190	10	4.931319	EXIT 65 RAMP TO US 176 & BROAD RIVER RD	Actuated
100000195	1	11.629166	LONGCREEK DR & BROAD RIVER RD	Actuated
100000195	2	10.960724	LONGCREEK DR & BROAD RIVER RD	Actuated
100000195	3	11.629014	LONGCREEK DR & BROAD RIVER RD	Actuated
100000195	4	12.333842	LONGCREEK DR & BROAD RIVER RD	Actuated
100000195	5	12.474123	LONGCREEK DR & BROAD RIVER RD	Actuated
100000195	6	13.547201	LONGCREEK DR & BROAD RIVER RD	Actuated
100000195	7	12.476444	LONGCREEK DR & BROAD RIVER RD	Actuated
100000195	8	10.463587	LONGCREEK DR & BROAD RIVER RD	Actuated
100000195	9	11.923882	LONGCREEK DR & BROAD RIVER RD	Actuated
100000195	10	10.499595	LONGCREEK DR & BROAD RIVER RD	Actuated
100000252	1	22.319476	MORNINGHILL DR, BUSH RIVER RD & RAMP	Actuated
100000252	2	21.502353	MORNINGHILL DR, BUSH RIVER RD & RAMP	Actuated
100000252	3	25.668388	MORNINGHILL DR, BUSH RIVER RD & RAMP	Actuated
100000252	4	25.852932	MORNINGHILL DR, BUSH RIVER RD & RAMP	Actuated
100000252	5	23.836194	MORNINGHILL DR, BUSH RIVER RD & RAMP	Actuated
100000252	6	28.119308	MORNINGHILL DR, BUSH RIVER RD & RAMP	Actuated
100000252	7	24.32796	MORNINGHILL DR, BUSH RIVER RD & RAMP	Actuated
100000252	8	19.941934	MORNINGHILL DR, BUSH RIVER RD & RAMP	Actuated
100000252	9	24.119647	MORNINGHILL DR, BUSH RIVER RD & RAMP	Actuated
100000252	10	22.067997	MORNINGHILL DR, BUSH RIVER RD & RAMP	Actuated
100000254	1	5.744937	WOODLAND HILLS RD & FRONTAGE RD	Stop
100000254	2	6.733255	WOODLAND HILLS RD & FRONTAGE RD	Stop
100000254	3	6.009706	WOODLAND HILLS RD & FRONTAGE RD	Stop
100000254	4	4.759822	WOODLAND HILLS RD & FRONTAGE RD	Stop
100000254	5	6.15261	WOODLAND HILLS RD & FRONTAGE RD	Stop
100000254	6	6.511586	WOODLAND HILLS RD & FRONTAGE RD	Stop
100000254	7	7.447496	WOODLAND HILLS RD & FRONTAGE RD	Stop
100000254	8	5.425509	WOODLAND HILLS RD & FRONTAGE RD	Stop
100000254	9	5.94282	WOODLAND HILLS RD & FRONTAGE RD	Stop
100000254	10	5.645523	WOODLAND HILLS RD & FRONTAGE RD	Stop
100000904	1	36.544447	BUSH RIVER RD & INDEPENDENCE AVE	Actuated
100000904	2	40.360941	BUSH RIVER RD & INDEPENDENCE AVE	Actuated
100000904	3	31.838961	BUSH RIVER RD & INDEPENDENCE AVE	Actuated
100000904	4	38.705674	BUSH RIVER RD & INDEPENDENCE AVE	Actuated
100000904	5	29.661617	BUSH RIVER RD & INDEPENDENCE AVE	Actuated
100000904	6	38.49587	BUSH RIVER RD & INDEPENDENCE AVE	Actuated
100000904	7	34.301356	BUSH RIVER RD & INDEPENDENCE AVE	Actuated
100000904	8	37.88458	BUSH RIVER RD & INDEPENDENCE AVE	Actuated
100000904	9	39.527813	BUSH RIVER RD & INDEPENDENCE AVE	Actuated
100000904	10	40.589902	BUSH RIVER RD & INDEPENDENCE AVE	Actuated
100000256	1	5.534094	BUSH RIVER RD & ZIMALCREST DR	Actuated
100000256	2	6.384336	BUSH RIVER RD & ZIMALCREST DR	Actuated
100000256	3	6.0786	BUSH RIVER RD & ZIMALCREST DR	Actuated
100000256	4	6.784971	BUSH RIVER RD & ZIMALCREST DR	Actuated
100000256	5	5.57505	BUSH RIVER RD & ZIMALCREST DR	Actuated
100000256	6	5.318031	BUSH RIVER RD & ZIMALCREST DR	Actuated
100000256	7	5.222705	BUSH RIVER RD & ZIMALCREST DR	Actuated
100000256	8	5.271992	BUSH RIVER RD & ZIMALCREST DR	Actuated
100000256	9	4.68011	BUSH RIVER RD & ZIMALCREST DR	Actuated
100000256	10	5.019466	BUSH RIVER RD & ZIMALCREST DR	Actuated
100000259	1	0	NOTTINGWOOD DR & BUSH RIVER RD	Stop
100000259	2	0	NOTTINGWOOD DR & BUSH RIVER RD	Stop
100000259	3	0	NOTTINGWOOD DR & BUSH RIVER RD	Stop
100000259	4	0	NOTTINGWOOD DR & BUSH RIVER RD	Stop
100000259	5	0	NOTTINGWOOD DR & BUSH RIVER RD	Stop
100000259	6	0	NOTTINGWOOD DR & BUSH RIVER RD	Stop
100000259	7	0	NOTTINGWOOD DR & BUSH RIVER RD	Stop
100000259	8	0	NOTTINGWOOD DR & BUSH RIVER RD	Stop
100000259	9	0	NOTTINGWOOD DR & BUSH RIVER RD	Stop
100000259	10	0	NOTTINGWOOD DR & BUSH RIVER RD	Stop
100000262	1	19.753032	COLONIAL LIFE BLVD W & BUSH RIVER RD	Actuated
100000262	2	21.848168	COLONIAL LIFE BLVD W & BUSH RIVER RD	Actuated
100000262	3	22.411314	COLONIAL LIFE BLVD W & BUSH RIVER RD	Actuated
100000262	4	20.723375	COLONIAL LIFE BLVD W & BUSH RIVER RD	Actuated
100000262	5	22.149419	COLONIAL LIFE BLVD W & BUSH RIVER RD	Actuated
100000262	6	20.54539	COLONIAL LIFE BLVD W & BUSH RIVER RD	Actuated
100000262	7	21.251404	COLONIAL LIFE BLVD W & BUSH RIVER RD	Actuated
100000262	8	22.068277	COLONIAL LIFE BLVD W & BUSH RIVER RD	Actuated
100000262	9	20.794909	COLONIAL LIFE BLVD W & BUSH RIVER RD	Actuated
100000262	10	21.395701	COLONIAL LIFE BLVD W & BUSH RIVER RD	Actuated

100000263	1	37.035565	COLONIAL LIFE BLVD W	Stop
100000263	2	45.034462	COLONIAL LIFE BLVD W	Stop
100000263	3	33.104532	COLONIAL LIFE BLVD W	Stop
100000263	4	34.792423	COLONIAL LIFE BLVD W	Stop
100000263	5	37.256657	COLONIAL LIFE BLVD W	Stop
100000263	6	35.669076	COLONIAL LIFE BLVD W	Stop
100000263	7	36.094346	COLONIAL LIFE BLVD W	Stop
100000263	8	40.865109	COLONIAL LIFE BLVD W	Stop
100000263	9	33.453015	COLONIAL LIFE BLVD W	Stop
100000263	10	54.093362	COLONIAL LIFE BLVD W	Stop
100000339	1	29.317087	BROAD RIVER RD & ST ANDREWS RD	Actuated
100000339	2	25.810135	BROAD RIVER RD & ST ANDREWS RD	Actuated
100000339	3	29.014012	BROAD RIVER RD & ST ANDREWS RD	Actuated
100000339	4	31.368514	BROAD RIVER RD & ST ANDREWS RD	Actuated
100000339	5	31.668206	BROAD RIVER RD & ST ANDREWS RD	Actuated
100000339	6	28.7068	BROAD RIVER RD & ST ANDREWS RD	Actuated
100000339	7	29.587602	BROAD RIVER RD & ST ANDREWS RD	Actuated
100000339	8	26.899124	BROAD RIVER RD & ST ANDREWS RD	Actuated
100000339	9	31.192589	BROAD RIVER RD & ST ANDREWS RD	Actuated
100000339	10	27.571112	BROAD RIVER RD & ST ANDREWS RD	Actuated
100000344	1	83.274697	YOUNG DR, BROAD RIVER RD & SEMINOLE RD	Actuated
100000344	2	86.122761	YOUNG DR, BROAD RIVER RD & SEMINOLE RD	Actuated
100000344	3	78.610165	YOUNG DR, BROAD RIVER RD & SEMINOLE RD	Actuated
100000344	4	76.944495	YOUNG DR, BROAD RIVER RD & SEMINOLE RD	Actuated
100000344	5	88.695401	YOUNG DR, BROAD RIVER RD & SEMINOLE RD	Actuated
100000344	6	86.196345	YOUNG DR, BROAD RIVER RD & SEMINOLE RD	Actuated
100000344	7	85.424926	YOUNG DR, BROAD RIVER RD & SEMINOLE RD	Actuated
100000344	8	77.921636	YOUNG DR, BROAD RIVER RD & SEMINOLE RD	Actuated
100000344	9	90.353437	YOUNG DR, BROAD RIVER RD & SEMINOLE RD	Actuated
100000344	10	82.380063	YOUNG DR, BROAD RIVER RD & SEMINOLE RD	Actuated
100000348	1	14.299491	ST ANDREWS RD & JAMIL RD	Actuated
100000348	2	37.295804	ST ANDREWS RD & JAMIL RD	Actuated
100000348	3	16.443736	ST ANDREWS RD & JAMIL RD	Actuated
100000348	4	13.617311	ST ANDREWS RD & JAMIL RD	Actuated
100000348	5	41.778703	ST ANDREWS RD & JAMIL RD	Actuated
100000348	6	34.425431	ST ANDREWS RD & JAMIL RD	Actuated
100000348	7	19.274753	ST ANDREWS RD & JAMIL RD	Actuated
100000348	8	31.942751	ST ANDREWS RD & JAMIL RD	Actuated
100000348	9	15.404339	ST ANDREWS RD & JAMIL RD	Actuated
100000348	10	16.977255	ST ANDREWS RD & JAMIL RD	Actuated
100000349	1	11.558684	ST ANDREWS PKY & BROAD RIVER RD	Actuated
100000349	2	9.62512	ST ANDREWS PKY & BROAD RIVER RD	Actuated
100000349	3	13.834909	ST ANDREWS PKY & BROAD RIVER RD	Actuated
100000349	4	13.55209	ST ANDREWS PKY & BROAD RIVER RD	Actuated
100000349	5	10.929356	ST ANDREWS PKY & BROAD RIVER RD	Actuated
100000349	6	12.67865	ST ANDREWS PKY & BROAD RIVER RD	Actuated
100000349	7	10.41937	ST ANDREWS PKY & BROAD RIVER RD	Actuated
100000349	8	10.053604	ST ANDREWS PKY & BROAD RIVER RD	Actuated
100000349	9	10.129229	ST ANDREWS PKY & BROAD RIVER RD	Actuated
100000349	10	11.14704	ST ANDREWS PKY & BROAD RIVER RD	Actuated
100000353	1	57.208232	BOWER PKY, PINEY GROVE RD & JAMIL RD	Actuated
100000353	2	51.102981	BOWER PKY, PINEY GROVE RD & JAMIL RD	Actuated
100000353	3	78.022288	BOWER PKY, PINEY GROVE RD & JAMIL RD	Actuated
100000353	4	52.78618	BOWER PKY, PINEY GROVE RD & JAMIL RD	Actuated
100000353	5	51.633159	BOWER PKY, PINEY GROVE RD & JAMIL RD	Actuated
100000353	6	72.269449	BOWER PKY, PINEY GROVE RD & JAMIL RD	Actuated
100000353	7	56.549199	BOWER PKY, PINEY GROVE RD & JAMIL RD	Actuated
100000353	8	67.90243	BOWER PKY, PINEY GROVE RD & JAMIL RD	Actuated
100000353	9	51.846969	BOWER PKY, PINEY GROVE RD & JAMIL RD	Actuated
100000353	10	54.220174	BOWER PKY, PINEY GROVE RD & JAMIL RD	Actuated
100000354	1	16.942399	ST ANDREWS RD, KAY ST & CHARTWELL RD	Actuated
100000354	2	18.58961	ST ANDREWS RD, KAY ST & CHARTWELL RD	Actuated
100000354	3	18.667875	ST ANDREWS RD, KAY ST & CHARTWELL RD	Actuated
100000354	4	21.34695	ST ANDREWS RD, KAY ST & CHARTWELL RD	Actuated
100000354	5	17.872855	ST ANDREWS RD, KAY ST & CHARTWELL RD	Actuated
100000354	6	18.762689	ST ANDREWS RD, KAY ST & CHARTWELL RD	Actuated
100000354	7	20.714596	ST ANDREWS RD, KAY ST & CHARTWELL RD	Actuated
100000354	8	19.414573	ST ANDREWS RD, KAY ST & CHARTWELL RD	Actuated
100000354	9	19.095261	ST ANDREWS RD, KAY ST & CHARTWELL RD	Actuated
100000354	10	18.953026	ST ANDREWS RD, KAY ST & CHARTWELL RD	Actuated
100000358	1	30.541865	ST ANDREWS RD, FERNANDINA RD & BURNING TREE RD	Actuated
100000358	2	34.134909	ST ANDREWS RD, FERNANDINA RD & BURNING TREE RD	Actuated
100000358	3	33.708901	ST ANDREWS RD, FERNANDINA RD & BURNING TREE RD	Actuated
100000358	4	32.585464	ST ANDREWS RD, FERNANDINA RD & BURNING TREE RD	Actuated
100000358	5	31.729177	ST ANDREWS RD, FERNANDINA RD & BURNING TREE RD	Actuated
100000358	6	34.515054	ST ANDREWS RD, FERNANDINA RD & BURNING TREE RD	Actuated
100000358	7	32.601399	ST ANDREWS RD, FERNANDINA RD & BURNING TREE RD	Actuated
100000358	8	31.132485	ST ANDREWS RD, FERNANDINA RD & BURNING TREE RD	Actuated
100000358	9	31.390354	ST ANDREWS RD, FERNANDINA RD & BURNING TREE RD	Actuated

100000358	10	32.389804	ST ANDREWS RD, FERNANDINA RD & BURNING TREE RD	Actuated
100000360	1	8.370535	I-26 WB TO BURNING TREE RD EXIT 106 OFF RAMP & BURNING TREE RD	Yield
100000360	2	17.607279	I-26 WB TO BURNING TREE RD EXIT 106 OFF RAMP & BURNING TREE RD	Yield
100000360	3	9.39697	I-26 WB TO BURNING TREE RD EXIT 106 OFF RAMP & BURNING TREE RD	Yield
100000360	4	8.549671	I-26 WB TO BURNING TREE RD EXIT 106 OFF RAMP & BURNING TREE RD	Yield
100000360	5	6.444706	I-26 WB TO BURNING TREE RD EXIT 106 OFF RAMP & BURNING TREE RD	Yield
100000360	6	18.561758	I-26 WB TO BURNING TREE RD EXIT 106 OFF RAMP & BURNING TREE RD	Yield
100000360	7	2.775426	I-26 WB TO BURNING TREE RD EXIT 106 OFF RAMP & BURNING TREE RD	Yield
100000360	8	15.128132	I-26 WB TO BURNING TREE RD EXIT 106 OFF RAMP & BURNING TREE RD	Yield
100000360	9	5.82753	I-26 WB TO BURNING TREE RD EXIT 106 OFF RAMP & BURNING TREE RD	Yield
100000360	10	4.155585	I-26 WB TO BURNING TREE RD EXIT 106 OFF RAMP & BURNING TREE RD	Yield
100000362	1	2.651005	HARBISON BLVD & JAMIL RD	Actuated
100000362	2	2.534695	HARBISON BLVD & JAMIL RD	Actuated
100000362	3	2.040177	HARBISON BLVD & JAMIL RD	Actuated
100000362	4	1.890547	HARBISON BLVD & JAMIL RD	Actuated
100000362	5	2.180054	HARBISON BLVD & JAMIL RD	Actuated
100000362	6	2.222669	HARBISON BLVD & JAMIL RD	Actuated
100000362	7	1.865304	HARBISON BLVD & JAMIL RD	Actuated
100000362	8	2.26396	HARBISON BLVD & JAMIL RD	Actuated
100000362	9	2.33901	HARBISON BLVD & JAMIL RD	Actuated
100000362	10	1.897078	HARBISON BLVD & JAMIL RD	Actuated
100000364	1	43.651417	HARBISON BLVD & COLUMBIANA DR	Actuated
100000364	2	40.06316	HARBISON BLVD & COLUMBIANA DR	Actuated
100000364	3	36.26271	HARBISON BLVD & COLUMBIANA DR	Actuated
100000364	4	38.713973	HARBISON BLVD & COLUMBIANA DR	Actuated
100000364	5	42.764103	HARBISON BLVD & COLUMBIANA DR	Actuated
100000364	6	37.960751	HARBISON BLVD & COLUMBIANA DR	Actuated
100000364	7	39.217544	HARBISON BLVD & COLUMBIANA DR	Actuated
100000364	8	39.811423	HARBISON BLVD & COLUMBIANA DR	Actuated
100000364	9	28.331778	HARBISON BLVD & COLUMBIANA DR	Actuated
100000364	10	42.158824	HARBISON BLVD & COLUMBIANA DR	Actuated
100000365	1	24.671586	COLUMBIANA CIR, HARBISON BLVD & PARK TERRACE DR	Actuated
100000365	2	24.388225	COLUMBIANA CIR, HARBISON BLVD & PARK TERRACE DR	Actuated
100000365	3	24.576465	COLUMBIANA CIR, HARBISON BLVD & PARK TERRACE DR	Actuated
100000365	4	24.126978	COLUMBIANA CIR, HARBISON BLVD & PARK TERRACE DR	Actuated
100000365	5	23.171636	COLUMBIANA CIR, HARBISON BLVD & PARK TERRACE DR	Actuated
100000365	6	25.224605	COLUMBIANA CIR, HARBISON BLVD & PARK TERRACE DR	Actuated
100000365	7	26.507706	COLUMBIANA CIR, HARBISON BLVD & PARK TERRACE DR	Actuated
100000365	8	24.38417	COLUMBIANA CIR, HARBISON BLVD & PARK TERRACE DR	Actuated
100000365	9	25.024826	COLUMBIANA CIR, HARBISON BLVD & PARK TERRACE DR	Actuated
100000365	10	23.641013	COLUMBIANA CIR, HARBISON BLVD & PARK TERRACE DR	Actuated
100000391	1	15.516919	BROAD RIVER RD & COLUMBIANA DR	Actuated
100000391	2	13.854562	BROAD RIVER RD & COLUMBIANA DR	Actuated
100000391	3	12.019829	BROAD RIVER RD & COLUMBIANA DR	Actuated
100000391	4	12.520584	BROAD RIVER RD & COLUMBIANA DR	Actuated
100000391	5	16.158507	BROAD RIVER RD & COLUMBIANA DR	Actuated
100000391	6	15.083466	BROAD RIVER RD & COLUMBIANA DR	Actuated
100000391	7	15.545853	BROAD RIVER RD & COLUMBIANA DR	Actuated
100000391	8	14.396969	BROAD RIVER RD & COLUMBIANA DR	Actuated
100000391	9	12.885955	BROAD RIVER RD & COLUMBIANA DR	Actuated
100000391	10	14.800369	BROAD RIVER RD & COLUMBIANA DR	Actuated
100000395	1	119.729343	LAKE MURRAY BLVD & COLUMBIANA DR	Actuated
100000395	2	87.428067	LAKE MURRAY BLVD & COLUMBIANA DR	Actuated
100000395	3	87.161907	LAKE MURRAY BLVD & COLUMBIANA DR	Actuated
100000395	4	103.335312	LAKE MURRAY BLVD & COLUMBIANA DR	Actuated
100000395	5	88.13732	LAKE MURRAY BLVD & COLUMBIANA DR	Actuated
100000395	6	78.110865	LAKE MURRAY BLVD & COLUMBIANA DR	Actuated
100000395	7	79.971846	LAKE MURRAY BLVD & COLUMBIANA DR	Actuated
100000395	8	86.940673	LAKE MURRAY BLVD & COLUMBIANA DR	Actuated
100000395	9	127.853056	LAKE MURRAY BLVD & COLUMBIANA DR	Actuated
100000395	10	83.746239	LAKE MURRAY BLVD & COLUMBIANA DR	Actuated
100000398	1	1.215132	HARBISON BLVD & PARKRIDGE DR	Actuated
100000398	2	1.523632	HARBISON BLVD & PARKRIDGE DR	Actuated
100000398	3	1.072943	HARBISON BLVD & PARKRIDGE DR	Actuated
100000398	4	1.20834	HARBISON BLVD & PARKRIDGE DR	Actuated
100000398	5	0.859834	HARBISON BLVD & PARKRIDGE DR	Actuated
100000398	6	1.248563	HARBISON BLVD & PARKRIDGE DR	Actuated
100000398	7	1.118768	HARBISON BLVD & PARKRIDGE DR	Actuated
100000398	8	1.395981	HARBISON BLVD & PARKRIDGE DR	Actuated
100000398	9	1.110185	HARBISON BLVD & PARKRIDGE DR	Actuated
100000398	10	1.277611	HARBISON BLVD & PARKRIDGE DR	Actuated
100000399	1	92.945349	PINEY GROVE RD & FERNANDINA RD	Actuated
100000399	2	86.391297	PINEY GROVE RD & FERNANDINA RD	Actuated
100000399	3	88.916222	PINEY GROVE RD & FERNANDINA RD	Actuated
100000399	4	82.477201	PINEY GROVE RD & FERNANDINA RD	Actuated
100000399	5	95.295575	PINEY GROVE RD & FERNANDINA RD	Actuated
100000399	6	85.449107	PINEY GROVE RD & FERNANDINA RD	Actuated
100000399	7	81.425449	PINEY GROVE RD & FERNANDINA RD	Actuated
100000399	8	102.808632	PINEY GROVE RD & FERNANDINA RD	Actuated

100000399	9	90.639361	PINEY GROVE RD & FERNANDINA RD	Actuated
100000399	10	53.54694	PINEY GROVE RD & FERNANDINA RD	Actuated
100000401	1	19.849724	KINLEY RD, LAKE MURRAY BLVD & PARKRIDGE DR	Actuated
100000401	2	20.087656	KINLEY RD, LAKE MURRAY BLVD & PARKRIDGE DR	Actuated
100000401	3	19.147308	KINLEY RD, LAKE MURRAY BLVD & PARKRIDGE DR	Actuated
100000401	4	20.053756	KINLEY RD, LAKE MURRAY BLVD & PARKRIDGE DR	Actuated
100000401	5	19.420793	KINLEY RD, LAKE MURRAY BLVD & PARKRIDGE DR	Actuated
100000401	6	20.090065	KINLEY RD, LAKE MURRAY BLVD & PARKRIDGE DR	Actuated
100000401	7	20.696621	KINLEY RD, LAKE MURRAY BLVD & PARKRIDGE DR	Actuated
100000401	8	24.07651	KINLEY RD, LAKE MURRAY BLVD & PARKRIDGE DR	Actuated
100000401	9	21.640218	KINLEY RD, LAKE MURRAY BLVD & PARKRIDGE DR	Actuated
100000401	10	23.03671	KINLEY RD, LAKE MURRAY BLVD & PARKRIDGE DR	Actuated
100000446	1	0	RAMP	Yield
100000446	2	0	RAMP	Yield
100000446	3	0	RAMP	Yield
100000446	4	0	RAMP	Yield
100000446	5	0	RAMP	Yield
100000446	6	0	RAMP	Yield
100000446	7	0	RAMP	Yield
100000446	8	0	RAMP	Yield
100000446	9	0	RAMP	Yield
100000446	10	0	RAMP	Yield
100000508	1	0	I-26 EB EXIT 102 ON RAMP	
100000508	2	0	I-26 EB EXIT 102 ON RAMP	
100000508	3	0	I-26 EB EXIT 102 ON RAMP	
100000508	4	0	I-26 EB EXIT 102 ON RAMP	
100000508	5	0	I-26 EB EXIT 102 ON RAMP	
100000508	6	0	I-26 EB EXIT 102 ON RAMP	
100000508	7	0	I-26 EB EXIT 102 ON RAMP	
100000508	8	0	I-26 EB EXIT 102 ON RAMP	
100000508	9	0	I-26 EB EXIT 102 ON RAMP	
100000508	10	0	I-26 EB EXIT 102 ON RAMP	
100000510	1	0	LAKE MURRAY BLVD & I-26 EB EXIT 102 ON RAMP	
100000510	2	0	LAKE MURRAY BLVD & I-26 EB EXIT 102 ON RAMP	
100000510	3	0	LAKE MURRAY BLVD & I-26 EB EXIT 102 ON RAMP	
100000510	4	0	LAKE MURRAY BLVD & I-26 EB EXIT 102 ON RAMP	
100000510	5	0	LAKE MURRAY BLVD & I-26 EB EXIT 102 ON RAMP	
100000510	6	0	LAKE MURRAY BLVD & I-26 EB EXIT 102 ON RAMP	
100000510	7	0	LAKE MURRAY BLVD & I-26 EB EXIT 102 ON RAMP	
100000510	8	0	LAKE MURRAY BLVD & I-26 EB EXIT 102 ON RAMP	
100000510	9	0	LAKE MURRAY BLVD & I-26 EB EXIT 102 ON RAMP	
100000510	10	0	LAKE MURRAY BLVD & I-26 EB EXIT 102 ON RAMP	
100000520	1	0	I-26 WB EXIT 102 ON RAMP	Yield
100000520	2	0	I-26 WB EXIT 102 ON RAMP	Yield
100000520	3	0	I-26 WB EXIT 102 ON RAMP	Yield
100000520	4	0	I-26 WB EXIT 102 ON RAMP	Yield
100000520	5	0	I-26 WB EXIT 102 ON RAMP	Yield
100000520	6	0	I-26 WB EXIT 102 ON RAMP	Yield
100000520	7	0	I-26 WB EXIT 102 ON RAMP	Yield
100000520	8	0	I-26 WB EXIT 102 ON RAMP	Yield
100000520	9	0	I-26 WB EXIT 102 ON RAMP	Yield
100000520	10	0	I-26 WB EXIT 102 ON RAMP	Yield
100000522	1	0	I-26 WB EXIT 101 OFF RAMP, BROAD RIVER RD & I-26 WB EXIT 101 ON RAMP	
100000522	2	0	I-26 WB EXIT 101 OFF RAMP, BROAD RIVER RD & I-26 WB EXIT 101 ON RAMP	
100000522	3	0	I-26 WB EXIT 101 OFF RAMP, BROAD RIVER RD & I-26 WB EXIT 101 ON RAMP	
100000522	4	0	I-26 WB EXIT 101 OFF RAMP, BROAD RIVER RD & I-26 WB EXIT 101 ON RAMP	
100000522	5	0	I-26 WB EXIT 101 OFF RAMP, BROAD RIVER RD & I-26 WB EXIT 101 ON RAMP	
100000522	6	0	I-26 WB EXIT 101 OFF RAMP, BROAD RIVER RD & I-26 WB EXIT 101 ON RAMP	
100000522	7	0	I-26 WB EXIT 101 OFF RAMP, BROAD RIVER RD & I-26 WB EXIT 101 ON RAMP	
100000522	8	0	I-26 WB EXIT 101 OFF RAMP, BROAD RIVER RD & I-26 WB EXIT 101 ON RAMP	
100000522	9	0	I-26 WB EXIT 101 OFF RAMP, BROAD RIVER RD & I-26 WB EXIT 101 ON RAMP	
100000522	10	0	I-26 WB EXIT 101 OFF RAMP, BROAD RIVER RD & I-26 WB EXIT 101 ON RAMP	
100000682	1	0	RAMP	
100000682	2	0	RAMP	
100000682	3	0	RAMP	
100000682	4	0	RAMP	
100000682	5	0	RAMP	
100000682	6	0	RAMP	
100000682	7	0	RAMP	
100000682	8	0	RAMP	
100000682	9	0	RAMP	
100000682	10	0	RAMP	
100000683	1	56.726748	EXIT 110 RAMP TO US 378 & RAMP	
100000683	2	12.372272	EXIT 110 RAMP TO US 378 & RAMP	
100000683	3	26.953842	EXIT 110 RAMP TO US 378 & RAMP	
100000683	4	20.809903	EXIT 110 RAMP TO US 378 & RAMP	
100000683	5	21.72266	EXIT 110 RAMP TO US 378 & RAMP	
100000683	6	31.584566	EXIT 110 RAMP TO US 378 & RAMP	
100000683	7	33.729024	EXIT 110 RAMP TO US 378 & RAMP	

100000683	8	36.459072	EXIT 110 RAMP TO US 378 & RAMP	
100000683	9	16.148446	EXIT 110 RAMP TO US 378 & RAMP	
100000683	10	16.527527	EXIT 110 RAMP TO US 378 & RAMP	
100000686	1	0	RAMP	
100000686	2	0	RAMP	
100000686	3	0	RAMP	
100000686	4	0	RAMP	
100000686	5	0	RAMP	
100000686	6	0	RAMP	
100000686	7	0	RAMP	
100000686	8	0	RAMP	
100000686	9	0	RAMP	
100000686	10	0	RAMP	
100000687	1	108.864174	EXIT 110 RAMP TO US 378 & RAMP	
100000687	2	86.414473	EXIT 110 RAMP TO US 378 & RAMP	
100000687	3	110.601264	EXIT 110 RAMP TO US 378 & RAMP	
100000687	4	75.455724	EXIT 110 RAMP TO US 378 & RAMP	
100000687	5	84.24105	EXIT 110 RAMP TO US 378 & RAMP	
100000687	6	104.718611	EXIT 110 RAMP TO US 378 & RAMP	
100000687	7	116.765855	EXIT 110 RAMP TO US 378 & RAMP	
100000687	8	87.489568	EXIT 110 RAMP TO US 378 & RAMP	
100000687	9	76.302269	EXIT 110 RAMP TO US 378 & RAMP	
100000687	10	95.200675	EXIT 110 RAMP TO US 378 & RAMP	
100000898	1	2.583349	BUSH RIVER RD	Actuated
100000898	2	2.78559	BUSH RIVER RD	Actuated
100000898	3	2.518184	BUSH RIVER RD	Actuated
100000898	4	2.445968	BUSH RIVER RD	Actuated
100000898	5	2.195429	BUSH RIVER RD	Actuated
100000898	6	2.812591	BUSH RIVER RD	Actuated
100000898	7	2.175774	BUSH RIVER RD	Actuated
100000898	8	2.604706	BUSH RIVER RD	Actuated
100000898	9	2.76836	BUSH RIVER RD	Actuated
100000898	10	3.208332	BUSH RIVER RD	Actuated
100000899	1	0	I-26 WB TO BURNING TREE RD EXIT 106 OFF RAMP & BURNING TREE RD	Stop
100000899	2	0	I-26 WB TO BURNING TREE RD EXIT 106 OFF RAMP & BURNING TREE RD	Stop
100000899	3	0	I-26 WB TO BURNING TREE RD EXIT 106 OFF RAMP & BURNING TREE RD	Stop
100000899	4	0	I-26 WB TO BURNING TREE RD EXIT 106 OFF RAMP & BURNING TREE RD	Stop
100000899	5	0	I-26 WB TO BURNING TREE RD EXIT 106 OFF RAMP & BURNING TREE RD	Stop
100000899	6	0	I-26 WB TO BURNING TREE RD EXIT 106 OFF RAMP & BURNING TREE RD	Stop
100000899	7	0	I-26 WB TO BURNING TREE RD EXIT 106 OFF RAMP & BURNING TREE RD	Stop
100000899	8	0	I-26 WB TO BURNING TREE RD EXIT 106 OFF RAMP & BURNING TREE RD	Stop
100000899	9	0	I-26 WB TO BURNING TREE RD EXIT 106 OFF RAMP & BURNING TREE RD	Stop
100000899	10	0	I-26 WB TO BURNING TREE RD EXIT 106 OFF RAMP & BURNING TREE RD	Stop
100000902	1	21.523058	SUNSET BLVD & RAMP	Actuated
100000902	2	15.86374	SUNSET BLVD & RAMP	Actuated
100000902	3	20.174571	SUNSET BLVD & RAMP	Actuated
100000902	4	19.967192	SUNSET BLVD & RAMP	Actuated
100000902	5	21.207155	SUNSET BLVD & RAMP	Actuated
100000902	6	19.778	SUNSET BLVD & RAMP	Actuated
100000902	7	19.570011	SUNSET BLVD & RAMP	Actuated
100000902	8	20.283454	SUNSET BLVD & RAMP	Actuated
100000902	9	21.208471	SUNSET BLVD & RAMP	Actuated
100000902	10	21.393977	SUNSET BLVD & RAMP	Actuated
100000903	1	26.825732	RAMP & SUNSET BLVD	Actuated
100000903	2	24.619668	RAMP & SUNSET BLVD	Actuated
100000903	3	25.614721	RAMP & SUNSET BLVD	Actuated
100000903	4	25.501203	RAMP & SUNSET BLVD	Actuated
100000903	5	25.842415	RAMP & SUNSET BLVD	Actuated
100000903	6	26.664658	RAMP & SUNSET BLVD	Actuated
100000903	7	26.333534	RAMP & SUNSET BLVD	Actuated
100000903	8	27.08767	RAMP & SUNSET BLVD	Actuated
100000903	9	25.388025	RAMP & SUNSET BLVD	Actuated
100000903	10	25.570599	RAMP & SUNSET BLVD	Actuated

ENVIRONMENTAL RE-EVALUATION FORM

FHWA South Carolina

State File #	Fed Project #	Project ID	Route	County
	P027662	P027662	I-20/I-26/I-126	Lexington and Richla

Project Name/Description

The FHWA and SCDOT propose to upgrade the I-20/26/126 corridor and reconstruct associated interchanges in Richland and Lexington Counties, South Carolina. The primary purpose of the proposed Carolina Crossroads project is to implement a transportation solution(s) that would improve mobility and enhance traffic operations by reducing existing traffic congestion within the I-20/26/126 corridor while accommodating future traffic needs.

1. DOCUMENT TYPE: ☒ EIS ☐ EA ☐ CE (non Programmatic) ☐ PCE (No FHWA Approval Required)

A. Other Actions Associated with the Project:

- ☐ Section 4(f) Evaluation
- ☒ Section 106 Compliance
- ☒ Wetland Finding/Section 404 Compliance
- ☒ T & E Species Biological Assessment
- ☐ None

2. DOCUMENT APPROVAL DATE: May 2, 2019

3. DATE(S) OF PRIOR RE-EVALUATIONS:

4. PROJECT DEVELOPMENT STAGE:

- ☐ Final Design
- ☒ ROW
- ☐ Construction
- ☐ Other, Specify

5. HAS DESIGN OR ROW CHANGED SINCE THE LAST APPROVAL?:
(if "NO" then Go To Item 7)

☒ YES ☐ NO

6. DESCRIPTION OF CURRENT PROJECT/DESIGN CHANGES:

See attached Supporting documentation.

7. HAVE THERE BEEN SIGNIFICANT CHANGES IN THE AFFECTED ENVIRONMENT OR HAVE THE ENVIRONMENTAL STUDIES BEEN UPDATED SINCE THE LAST PROJECT APPROVAL?: (If "NO" to both Items 5 and 7, Go To Item 10) ☒ YES ☐ NO

8. APPROVED DOCUMENT(S) RE-EVALUATION:

A. REVIEW OF EFFECTS: (Complete this section if "YES" to either Item 5 or Item 7)

SOCIAL ENVIRONMENT	CHANGE		REMARKS
1. Land Use	☐ YES	☒ NO	
2. Community	☐ YES	☒ NO	
3. Relocations	☐ YES	☒ NO	
4. Churches/Institutions	☐ YES	☒ NO	
5. Title VI/E.O. 12898	☐ YES	☒ NO	
6. Economic	☐ YES	☒ NO	
7. Controversy	☐ YES	☒ NO	
8. Other; Specify	☐ YES	☒ NO	

NATURAL ENVIRONMENT	CHANGE		REMARKS
1. Wetlands	☒ YES	☐ NO	See Support documentation attached
2. Water Quality	☐ YES	☒ NO	
3. Wild/Scenic Rivers	☐ YES	☒ NO	
4. Farmland	☐ YES	☒ NO	
5. T & E Species	☐ YES	☒ NO	
6. Floodplains	☐ YES	☒ NO	
7. Other; Specify	☐ YES	☒ NO	

PHYSICAL ENVIRONMENT	CHANGE		REMARKS
1. Noise	☒ YES	☐ NO	See Appendix A
2. Air Quality	☐ YES	☒ NO	
3. Energy/Mineral Resources	☐ YES	☒ NO	
4. Construction/Utilities	☐ YES	☒ NO	
5. UST's	☐ YES	☒ NO	
6. Hazardous Waste Sites	☐ YES	☒ NO	
7. Other; Specify	☐ YES	☒ NO	

CULTURAL ENVIRONMENT	CHANGE		REMARKS
1. Historic Sites	☐ YES	☒ NO	
2. Archaeological Resources	☒ YES	☐ NO	Saluda Canal - see Appendix B
7. Other; Specify	☐ YES	☒ NO	

PERMITS	CHANGE		REMARKS
1. U.S. Coast Guard	☐ YES	☒ NO	
2. Forest Service/USACE/USFWS Land	☐ YES	☒ NO	
3. Section 404	☐ YES	☒ NO	
4. Other; Specify	☐ YES	☒ NO	

Have the required permits been obtained? ☐ YES ☒ NO

If "YES" what is the expiration date?

***If permits have expired, permits will need updated and attached to re-evaluation.**

9. NEED FOR PUBLIC INVOLVMENT:

☒ A public hearing/public information meeting was held for the project on: August 23, 2018

☒ There have been no changes in project design or environmental effects which would require a public hearing [or additional public hearing if one has already been held] or public information meeting.

☐ The change(s) in project design and/or effects require(s) an additional public hearing/public information meeting. The meeting is scheduled for:

10. FINDINGS/CONCLUSIONS:

☒ Based on the analysis contained in this re-evaluation, it has been determined that the change in project design and/or environmental effects would not significantly alter the conclusions reached in the approved environmental document and/or previous re-evaluation(s).

☐ There have been no changes in the design/ROW of this project nor have there been changes in project effects or the affected environment. Therefore, the conclusions reached in the approved environmental document and/or previous re-evaluation(s) remain valid.

Prepared By: Will McGoldrick Digitally signed by Will McGoldrick Date: 2020.08.03 09:43:51 -04'00' Date 8-3-20

For Non Programmatic CEs:

Concurred (FHWA): EMILY OLDHAM LAWTON Digitally signed by EMILY OLDHAM LAWTON Date: 2020.08.03 17:14:23 -04'00' Date

Date: 07/21/2020

NEPA ENVIRONMENTAL COMMITMENTS FORM

Project ID : P027662 County : Richland/Lexingt District : District 1 Doc Type: RE-Eval Total # of Commitments: 30

Project Name: I-20, I-26, I-126 Carolina Crossroads Corridor Improvements

The Environmental Commitment **Contractor Responsible** measures listed below **are to be included in the contract and must be implemented**. It is the responsibility of the Program Manager to make sure the Environmental Commitment **SCDOT Responsible** measures are adhered to. If there are questions regarding the commitments listed please contact:

CONTACT NAME: Brian Klauk, PE **PHONE #:** (803)-737-5051

ENVIRONMENTAL COMMITMENTS FOR THE PROJECT

Non-Standard Commitment NEPA Doc Ref: Chapter 2, Section 2.2.2.2 Responsibility: SCDOT

Mass Transit

SCDOT will work with CMRTA and CMCOG to develop two park-and-ride lots to improve mobility during construction and mitigate congestion resulting from the project. SCDOT would construct the two sites and maintain them during construction of the project. Engineering feasibility, timing and continued maintenance of the sites would be determined in coordination with CMRTA and the CMCOG prior to the start of construction. In the event a permanent site cannot be developed, SCDOT would work with CMRTA and CMCOG to identify and provide funding for existing parking lots that could be leased for park-and-ride use during construction.

☐ Special Provision

Non-Standard Commitment NEPA Doc Ref: Chapter 2, Section 2.2.9 Responsibility: SCDOT

Mass Transit

SCDOT will implement a congestion management tool/commuter services application to improve mobility during construction and mitigate congestion by informing commuters of available options such as carpooling, ridesharing, vanpools and other transit oriented options.

☐ Special Provision

Non-Standard Commitment NEPA Doc Ref: Chapter 2 Responsibility: SCDOT

Mass Transit

SCDOT will assist COMET/CMRTA ongoing efforts through such measures as accommodating transit (bus) stops at interchange locations, which may include bus turnouts. In addition, SCDOT will work with CMRTA to monitor bus operations and capacity during construction and in the event that capacity is reached, SCDOT will provide support in determining funding for enhanced bus service during construction based upon a framework to be agreed upon with CMRTA.

☐ Special Provision

Project ID : P027662	SCDOT NEPA ENVIRONMENTAL COMMITMENTS FORM	SCDOT ENVIRONMENTAL SERVICES

ENVIRONMENTAL COMMITMENTS FOR THE PROJECT

Non-Standard Commitment | NEPA Doc Ref: Chapter 2, Section 2.2.2.2 | Responsibility: Contractor/SCDOT

Bicycle/Pedestrian

Prior to final design, SCDOT will coordinate with the City of Columbia and CMCOG to ensure that existing and planned bicycle and pedestrian facilities identified in the local and regional plans and existing and proposed connections to such facilities are accommodated where located within the limits of the Carolina Crossroads project at crossing routes and interchanges where feasible.

During construction, SCDOT will accommodate bicycle/pedestrian access. SCDOT will coordinate with the local municipalities and/or trail groups to post information on temporary sidewalk or bicycle facility closures or detours. Sidewalk and/or bicycle lane/path closures will be communicated to the agency with jurisdiction at least 48 hours in advance and appropriate signage will be placed.

☐ Special Provision

Non-Standard Commitment | NEPA Doc Ref: Chapter 3, Section 3.3 | Responsibility: SCDOT

Displacements

SCDOT will acquire all new right-of-way and process any relocations in compliance with the Uniform Relocation Assistance and Real Property Acquisition Policies Act of 1970, as amended (42 U.S. C. 4601 et seq.) and the SCDOT ROW Manual. The purpose of these regulations is to ensure that owners of real property to be acquired for federal and federally-assisted projects are treated fairly and consistently, to encourage and expedite acquisition by agreements with such owner, to minimize litigation and relieve congestion in the courts, and to promote public confidence in federal and federally-assisted land acquisition programs.
Temporary construction easements may be needed for some properties. SCDOT will temporarily use these properties during construction and would provide compensation to the landowner for the temporary use. The property will be fully returned to the owner when the use of the property is no longer required, typically when construction is complete.

☐ Special Provision

Non-Standard Commitment | NEPA Doc Ref: Chapter 3, Section 3.3 | Responsibility: Contractor/SCDOT

Public Involvement

Changes in access for school bus routes will be discussed with the school system in advance of when they will actually take place, so that the school systems can adjust routes in a timely manner. Coordination with local school districts will also occur during construction. SCDOT and the contractor will coordinate with the school system during development of the community outreach program.

☐ Special Provision

Project ID : P027662	SCDOT NEPA ENVIRONMENTAL COMMITMENTS FORM	SCDOT ENVIRONMENTAL SERVICES

ENVIRONMENTAL COMMITMENTS FOR THE PROJECT

Non-Standard Commitment | NEPA Doc Ref: Chapter 3, Section 3.3 | Responsibility: Contractor/SCDOT

Public Involvement During Construction

Written translations of public involvement documents will be provided for Spanish language speaking populations, as well as other measures determined by SCDOT to ensure meaningful access to project information during construction. Efforts will be made to ensure meaningful opportunities for public participation during construction. Additional meetings will be held when warranted to address community concerns.

☐ Special Provision

Non-Standard Commitment | NEPA Doc Ref: Chapter 3, Section 3.13 | Responsibility: Contractor/SCDOT

Public Involvement During Construction

The contractor(s), through a community outreach program, will let the community know what types of closures to expect (i.e. temporary, long-term), when to expect them and who to contact, if needed.

SCDOT and the contractor(s) will coordinate with emergency service providers such as police, fire protection and ambulance services before construction to ensure that access for emergency vehicles will be maintained.

☐ Special Provision

Non-Standard Commitment | NEPA Doc Ref: Chapter 3, Section 3.5 | Responsibility: Contractor/SCDOT

Noise

Based on the studies thus far accomplished, SCDOT intends to install highway traffic noise abatement measures in the form of a barrier at Noise Sensitive Area (NSA) O and S. These barriers are located on the south side of I-20 from the Saluda River extending approximately 2,300 feet west (Barrier O), and on the south side of I-20 from the Broad River Road exit extending approximately 4,380 feet east towards the Broad River (Barrier S). These preliminary indications of likely abatement measures are based upon preliminary design for a barrier cost of $35.00 per square foot that will reduce the noise level by at least 5dB(A) for residences. If it subsequently develops during final design that these conditions have substantially changed, the abatement measures might not be provided. A final decision of the installation of the abatement measure(s) will be made upon completion of the project's design. Since there are residences located on the opposite side of the interstate adjacent to Barriers O and S, sound absorption materials will be added to the barriers to minimize noise reflectivity of the barriers towards receptors on the other side of the interstate.

☐ Special Provision

Project ID : P027662	SCDOT NEPA ENVIRONMENTAL COMMITMENTS FORM	SCDOT ENVIRONMENTAL SERVICES

ENVIRONMENTAL COMMITMENTS FOR THE PROJECT

Non-Standard Commitment | NEPA Doc Ref: Chapter 3, Section 3.5 | Responsibility: SCDOT

Noise

In order to help local officials and developers consider highway traffic noise in the vicinity of a proposed Type I project, SCDOT will inform them of the predicted future noise levels and the required distance from the roadways needed to ensure that noise levels remain below the NAC for each type of land use per 23 CFR 772.17. The information will be provided within three months of the Record of Decision (ROD) publication. This commitment has been completed.

☐ Special Provision

Non-Standard Commitment | NEPA Doc Ref: Chapter 3, Section 3.5 | Responsibility: CONTRACTOR

Noise

During construction, powered construction equipment will not be operated during the traditional evening and/or sleeping hours within 150 feet of a noise sensitive site, to be decided either by local ordinances and/or agreement with SCDOT.

☐ Special Provision

Non-Standard Commitment | NEPA Doc Ref: Chapter 3, Section 3.6 | Responsibility: CONTRACTOR

Water Quality

The contractor(s) will be required to minimize possible water quality impacts through implementation of BMPs, reflecting policies contained in 23 CFR 650B and the Department's Supplemental Specification on Erosion Control Measures (latest edition) and Supplemental Technical Specifications on Seeding (latest edition). Other measures including seeding, silt fences, sediment basins, etc. as appropriate will be implemented during construction to minimize impacts to water quality.

☐ Special Provision

Project ID : P027662	SCDOT NEPA ENVIRONMENTAL COMMITMENTS FORM	SCDOT ENVIRONMENTAL SERVICES

ENVIRONMENTAL COMMITMENTS FOR THE PROJECT

Non-Standard Commitment | NEPA Doc Ref: Chapter 3, Section 3.6 | Responsibility: CONTRACTOR

Water Quality

Stormwater modeling will be completed for the final design of the project. Stormwater runoff would be mitigated by discharging stormwater into appropriately designed BMP's before being released into receiving waters. During construction, the contractor(s) will identify and avoid all point sources of fecal coliform as identified in Chapter 3, Section 3.6.

☐ Special Provision

Non-Standard Commitment | NEPA Doc Ref: Chapter 3, Section 3.6 | Responsibility: CONTRACTOR

Permits

A Section 401 State Water Quality Certification will be required for the overall project. The contractor(s) is responsible for obtaining the certification as part of the Joint 404/401 permit application process.

☐ Special Provision

Non-Standard Commitment | NEPA Doc Ref: Chapter 3, Section 3.6 | Responsibility: CONTRACTOR

Permits

The contractor(s) is responsible for development of a project specific SWPPP and for obtaining a Section 402 NPDES permit for the project prior to initiating land disturbing activities.

☐ Special Provision

Project ID : P027662	SCDOT NEPA ENVIRONMENTAL COMMITMENTS FORM	SCDOT ENVIRONMENTAL SERVICES

ENVIRONMENTAL COMMITMENTS FOR THE PROJECT

Non-Standard Commitment | NEPA Doc Ref: Chapter 3, Section 3.7 | Responsibility: CONTRACTOR

Permits

A State Navigable Waters permit will be required for construction over any navigable waterways (i.e., the Saluda River). The contractor will be responsible for obtaining this permit.

☐ Special Provision

Non-Standard Commitment | NEPA Doc Ref: Chapter 3, Sec 3.7/3.18 | Responsibility: SCDOT

Individual Permit-Permits

Impacts to jurisdictional waters will be permitted under a Department of the Army Section 404 permit from the U.S. Army Corps of Engineers (USACE). Based on preliminary design, it is anticipated that the proposed project will be permitted under an Individual Army Corps of Engineers Permit (IP). SCDOT will provide the USACE with information regarding any proposed activities during the Section 404 permitting process. One permit would be obtained for the overall project. The required mitigation for the this project will be determined through consultation with the USACE and other resource agencies.

☐ Special Provision

Non-Standard Commitment | NEPA Doc Ref: Chapter 3, Section 3.8 | Responsibility: CONTRACTOR

Floodplains

Detailed hydraulic and hydrologic studies for each bridge crossing will be performed to determine the correct sizing of bridges and culverts. The project will be designed to be consistent with local floodplain development plans. Prior to construction activity in the area, coordination with Dominion Energy and Federal Energy Regulatory Commission (FERC) will be required for the two Saluda River floodway crossings due to its function as part of a hydroelectric facility.

☐ Special Provision

Project ID : P027662	SCDOT NEPA ENVIRONMENTAL COMMITMENTS FORM	SCDOT ENVIRONMENTAL SERVICES

ENVIRONMENTAL COMMITMENTS FOR THE PROJECT

Non-Standard Commitment | NEPA Doc Ref: Chapter 3, Section 3.8 | Responsibility: CONTRACTOR

Floodplains

The project will be designed in an effort to meet "No-Rise" requirements. In the event a "No-Rise" condition cannot be achieved, coordination with FEMA will require the preparation of a CLOMR (Conditional Letter of Map Revision) / LOMR (Letter of Map Revision) package for the encroachment. Where regulatory floodplains are defined, hydraulic structures will be designed to accommodate a 100-year (1% annual chance) flood. Where no regulatory floodplains are defined, culverts and bridges will be designed to accommodate a 50-year or greater magnitude flood event. Ongoing design efforts to minimize floodplain impacts will be coordinated with resource and regulatory agencies during the final design process.

☐ Special Provision

Non-Standard Commitment | NEPA Doc Ref: Chapter 3, Section 3.8 | Responsibility: CONTRACTOR

Floodplains

Prior to construction, the selected contractor(s) will send a set of final plans and request for floodplain management compliance to the local County Floodplain Administrator.

☐ Special Provision

Non-Standard Commitment | NEPA Doc Ref: Chapter 3, Section 3.8 | Responsibility: CONTRACTOR

Floodplains

No substantial impacts to floodplain values are anticipated from the proposed project. If conditions change based on final design, additional measures will be evaluated to restore lost floodplain values.

☐ Special Provision

Project ID : P027662	SCDOT NEPA ENVIRONMENTAL COMMITMENTS FORM	SCDOT ENVIRONMENTAL SERVICES

ENVIRONMENTAL COMMITMENTS FOR THE PROJECT

Non-Standard Commitment | NEPA Doc Ref: Chapter 3, Section 3.9 | Responsibility: Contractor/SCDOT

Natural Resources

To mitigate for natural upland forested habitats, lost as a result of the project, SCDOT will plant trees (native species), as defined by the final design plans, within the rights-of-way adjacent to new or improved interchanges and roadways outside of required clear safety zones.

Impacts to areas providing significant wildlife habitat, such as river floodplains and other large riparian buffers, will be minimized to the extent practicable through avoidance and minimization design measures such as the use of appropriate BMP's.

Construction activities will be conducted within the disturbed footprint of the existing roadway and utility right-of-way to the maximum extent practicable.

☐ Special Provision

Non-Standard Commitment | NEPA Doc Ref: Chapter 3, Section 3.11 | Responsibility: CONTRACTOR

Section 4(f)

To mitigate the temporary impacts to the Saluda Riverwalk Extension, SCDOT will notify the City of Columbia Parks and Recreation Department at least 48 hours in advance as to when the trail with be temporarily closed. SCDOT will also work closely with the Parks and Recreation Department to communicate the closing to trail users during construction. When construction is complete, the condition of the trail will be equal to existing conditions.

☐ Special Provision

Non-Standard Commitment | NEPA Doc Ref: Chapter 3, Section 3.12 | Responsibility: CONTRACTOR

Hazardous Materials

Prior to construction, the project contractor will perform Phase II ESAs on the properties identified within the footprint, including the subject properties, and/or on the adjoining properties or the ROW. Ultimately, the Phase II ESAs will include environmental sample collection (e.g. soil, soil gas, and groundwater), specifically, in areas where a potential for disturbance of soil and/or groundwater exists. Asbestos Containing Material and/or Lead Based Paint testing will be assessed separately. Materials containing asbestos and lead-based paints will be managed and disposed of properly at an appropriate permitted facility to minimize impacts during the construction and cleanup. Activities will be monitored by a professional that is certified in the removal, handling and disposal of lead-based paint and/or asbestos-containing materials.

☐ Special Provision

Project ID : P027662	SCDOT NEPA ENVIRONMENTAL COMMITMENTS FORM	SCDOT ENVIRONMENTAL SERVICES

ENVIRONMENTAL COMMITMENTS FOR THE PROJECT

Non-Standard Commitment | NEPA Doc Ref: Chapter 3, Section 3.12 | Responsibility: CONTRACTOR

Hazardous Materials

A spill prevention, control, and countermeasures (SPCC) plan will be prepared in accordance with 40 CFR 112, for the handling of oils or oil-based products during construction to prevent a discharge of oil into navigable waters.

☐ Special Provision

Non-Standard Commitment | NEPA Doc Ref: Chapter 3, Section 3.12 | Responsibility: CONTRACTOR

Hazardous Materials

A hazardous waste management plan will be prepared for the handling of hazardous materials during construction, and an on-site health and safety plan will be developed for construction activities to protect human health (i.e. workers, residents, recreation and trespassers) and the environment within proximate to the site.

The hazardous waste management plan will also state that disposal of waste materials will be disposed of in approved landfills.

☐ Special Provision

Non-Standard Commitment | NEPA Doc Ref: Chapter 3, Section 3.12 | Responsibility: CONTRACTOR

Hazardous Materials

If avoidance of hazardous materials is not a viable alternative and soils that appear to be contaminated are encountered during construction, the South Carolina Department of Health and Environmental Control (SCDHEC) will be informed immediately. Hazardous materials will be tested and removed and/or treated in accordance with the United States Environmental Protection Agency and the SCDHEC requirements, if necessary. SCDHEC Hazardous Waste Treatment, Storage, and Disposal compliance staff can be contacted at 803-898-0290.

☐ Special Provision

Project ID : P027662	SCDOT NEPA ENVIRONMENTAL COMMITMENTS FORM	SCDOT ENVIRONMENTAL SERVICES

ENVIRONMENTAL COMMITMENTS FOR THE PROJECT

Non-Standard Commitment | NEPA Doc Ref: Chapter 3, Section 3.13 | Responsibility: CONTRACTOR

Cultural Resources

During the construction phase of the project, the contractor and subcontractors must notify their workers to watch for the presence of any prehistoric or historic remains, including but not limited to arrowheads, pottery, ceramics, flakes, bones, graves, gravestones, or brick concentrations. If any such remains are encountered, the Resident Construction Engineer (RCE) and SCDOT's Construction Manager would be immediately notified and all work in the vicinity of the discovered materials and site work shall cease until the SCDOT Chief Archaeologist directs otherwise. SCDOT Chief Archaeologist, Tracy Martin, can be contacted at 803-737-6371.

☐ Special Provision

Non-Standard Commitment | NEPA Doc Ref: Chapter 3, Section 3.13 | Responsibility: SCDOT

Cultural Resources

An archaeological professional will be present during any ground disturbing activities related to Site 38LX212 and 38RD59. Additionally, sites 38RD140, 38RD1175, and 38RD1176 will be protected from indirect effects, including borrow sites and equipment staging. Sites will be clearly marked in the field using orange construction fencing prior to beginning construction activities in the vicinity of the resources.

☐ Special Provision

Non-Standard Commitment | NEPA Doc Ref: Chapter 3, Section 3.13 | Responsibility: CONTRACTOR

Cultural Resources - Part 1

The Saluda Canal (Site 38RD59) would be clearly plotted on all construction plans. SCDOT has reduced ROW widths in the vicinity of the canal to avoid impacts to the canal during construction & any future maintenance activities along the ROW. A 25-foot buffer will be maintained around the canal for the majority of the resource. This zone would be clearly marked in the field using orange fencing during construction, and all ground disturbance and construction staging activities would be conducted outside of this buffer in order to avoid all possible impacts to the resource. SCDOT proposes to revise the commitment of a 25-foot buffer for a distance of approximately 700 feet along the proposed ramp to allow room for temporary construction access & equipment near I-26 Ramp C. To protect the boundary of the canal at this location, the following will be added to the contract as commitments: CONTINUED IN PART 2 & 3

☐ Special Provision

Date: 07/21/2020

NEPA ENVIRONMENTAL COMMITMENTS FORM

Project ID : P027662 County : Richland/Lexingt District : District 1 Doc Type: RE-Eval Total # of Commitments: 8

Project Name: I-20, I-26, I-126 Carolina Crossroads Corridor Improvements

The Environmental Commitment **Contractor Responsible** measures listed below **are to be included in the contract and must be implemented**. It is the responsibility of the Program Manager to make sure the Environmental Commitment **SCDOT Responsible** measures are adhered to. If there are questions regarding the commitments listed please contact:

CONTACT NAME: Brian Klauk, PE **PHONE #:** (803)-737-5051

ENVIRONMENTAL COMMITMENTS FOR THE PROJECT

Non-Standard Commitment NEPA Doc Ref: Chapter 3, Section 3.13 Responsibility: CONTRACTOR

Cultural Resources - Part 2

a. Prior to construction activities orange protective fencing will be installed along the edge of boundary of the Saluda Canal Historic District in areas that will maintain the original buffer as well as those areas where the buffer has been requested to be reduced between the two drainages and for a length to the south of the southernmost drainage.
b. Prior to construction activities silt fencing will be installed along the edge of SCDOT right of way to prevent runoff.
c. For areas along the identified Saluda Canal located along the I-26 Ramp C beginning Station 5412+50 and ending Station 5419+50 clearing will be allowable to the right of way but grubbing will be limited to within a distance of 5-feet inside of the right of way. Grubbing activities within the 5-foot buffer will require approval from SCDOT prior to occurring.
d. During land clearing activities prior to construction, an archaeologist will be present at all times to ensure that these activities undertaken close to the fencing do not damage the canal.

☐ Special Provision

Non-Standard Commitment NEPA Doc Ref: Chapter 3, Section 3.13 Responsibility: CONTRACTOR

Cultural Resources - Part 3

e. During construction, an archaeologist will visit the construction site twice a week to ensure that no activities have crossed over the protective fencing. Any observations during these visits will be recorded in an inspection log that will be made available to the SHPO.

f. As soon as an inadvertent impact is discovered, such as a previously unidentified cultural resource, archaeological feature, or artifact, construction in that area will stop immediately until an onsite consultation with SCDOT archaeologists and SHPO can determine the best strategies for avoiding, minimizing, or mitigating adverse effects upon the resource.

☐ Special Provision

Non-Standard Commitment NEPA Doc Ref: Chapter 3, Section 3.13 Responsibility: CONTRACTOR

Air Quality

The contractor(s) will ensure that all construction equipment is properly tuned and maintained.

Idling time will be minimized to save fuel and reduce emissions.

Water will be applied to control dust as needed to prevent dust impacts off site. There will be no open burning of removed vegetation. Vegetation will be chipped or delivered to waste energy facilities.

☐ Special Provision

Project ID : P027662	SCDOT NEPA ENVIRONMENTAL COMMITMENTS FORM	SCDOT ENVIRONMENTAL SERVICES

ENVIRONMENTAL COMMITMENTS FOR THE PROJECT

Non-Standard Commitment | NEPA Doc Ref: Chapter 3, Section 3.13 | Responsibility: CONTRACTOR

Migratory Bird Treaty Act

The federal Migratory Bird Treaty Act, 16 USC § 703-711, states that it is unlawful to pursue, hunt, take, capture or kill; attempt to take, capture or kill; possess,offer to or sell, barter, purchase, deliver or cause to be shipped, exported, imported, transported, carried or received any migratory bird, part, nest, egg or product, manufactured or not. SCDOT will comply with the Migratory Bird Treaty Act of 1918 in regard to the avoidance of taking of individual migratory birds and the destruction of their active nests. The Contractor will notify the Resident Construction Engineer (RCE) at least four (4) weeks prior to construction/demolition/ maintenance of bridges and box culverts. The RCE will coordinate with Environmental Services Office ComplianceDivision, to determine if there are any active birds using the structure. SCDOT will be responsible for the removal/management of any active bird nests.

☐ Special Provision

Non-Standard Commitment | NEPA Doc Ref: Chapter 3, Section 3.13 | Responsibility: CONTRACTOR

Borrow Pits

Potential borrow areas to be used for fill dirt for the project will be field reviewed and assessed for the presence of any jurisdictional features, and BMPs will be applied prior to disturbance to avoid and/or minimize erosion and runoff of sediments.

☐ Special Provision

Non-Standard Commitment | NEPA Doc Ref: Chapter 3, Section 3.13 | Responsibility: CONTRACTOR

Construction

Construction operations will be scheduled for off-peak traffic hours when reasonable/feasible.

☐ Special Provision

Project ID : P027662	SCDOT NEPA ENVIRONMENTAL COMMITMENTS FORM	SCDOT ENVIRONMENTAL SERVICES

ENVIRONMENTAL COMMITMENTS FOR THE PROJECT

Non-Standard Commitment | NEPA Doc Ref: Chapter 3, Section 3.13 | Responsibility: CONTRACTOR

Construction

A traffic maintenance plan will be developed prior to construction initiation to minimize interference to traffic flow from construction equipment and activities.

☐ Special Provision

Non-Standard Commitment | NEPA Doc Ref: Re-evaluation Page 3-4 | Responsibility: CONTRACTOR

Cultural Resources and Wetland Survey on Additional ROW tracts

After SCDOT acquisition, wetland delineations will be performed on Parcels 270, 187 and 316; archaeological investigations will be conducted on Parcels 187 and 316.

☐ Special Provision

	NEPA Doc Ref: Page: XX Paragraph: XX	Responsibility:

☐ Special Provision

2020



NEPA Re-evaluation

SUPPORTING DOCUMENTATION
JULY 22, 2020

Contents

Introduction 2

Proposed Design Changes 2

Right of way changes based on Design Refinements 8

Revision to FEIS Environmental Commitments 19

APPENDIX A: Noise Analysis Update Memo 20

APPENDIX B: SHPO Coordination 25

Introduction

FHWA approved a Final Environmental Impact Statement (FEIS) and Record of Decisions (ROD) for the Carolina Crossroads Project on May 2, 2019. Since that time the project has progressed towards construction that will occur in five (5) phases. The phases of construction are proposed to overlap or be performed consecutively with little or no time between phases and the overall construction time of all phases of work is anticipated to be less than 10 years. The 5 proposed phases are shown in Figure 1.

Proposed Design Changes

During detailed design and constructability reviews, the development of right of way plans, and right of way acquisition for construction of Phases 1 and 2 of the Carolina Crossroads Project, several design changes have been proposed to the Refined Recommended Preferred Alternative (RPA) described in the FEIS/ROD. These changes are described below.

As a result of these changes, SCDOT has re-evaluated the social, environmental and economic impacts documented in the FEIS/ROD.

I-26 Westbound Ramp onto I-126 Eastbound and Colonial Life Blvd.

The proposed ramp alignment at the above location proposed in the RPA created a physical overlap between the ramp bridge and the existing I-26 Mainline Bridge over the Saluda River. Since the project is now being constructed in phases through multiple construction contracts and this ramp is constructed as part of the first phase, this physical conflict between the bridges must be resolved to allow the existing bridge to remain in service during construction and in the interim period between construction phases. To resolve this conflict, the ramp has been shifted away from the mainline approximately 20 feet. This change is just to the ramp geometry and does not change the operational function of the proposed exit from I-26 Westbound. The change occurs within the right of way proposed for the Refined RPA. See Figure 2.

As a result of this design change, the traffic noise analysis was updated to account for the ramp shifting closer to the Rivers Edge neighborhood by approximately 22 feet. The noise analysis concluded that the overall number of impacted receivers in the area did not change. The noise barrier analysis still found that a noise barrier at this location was not reasonable. See the Noise Analysis Update memo in Appendix A.

No other studies documented in the FEIS/ROD required updating as a result of this design change. No change of impacts presented in the FEIS/ROD are anticipated at this location.

Phased Construction Map

July 23, 2020

CAROLINA CROSSROADS

- INTERCHANGE IMPROVEMENTS
- INTERCHANGE TO BE RELOCATED
- OTHER INTERCHANGES

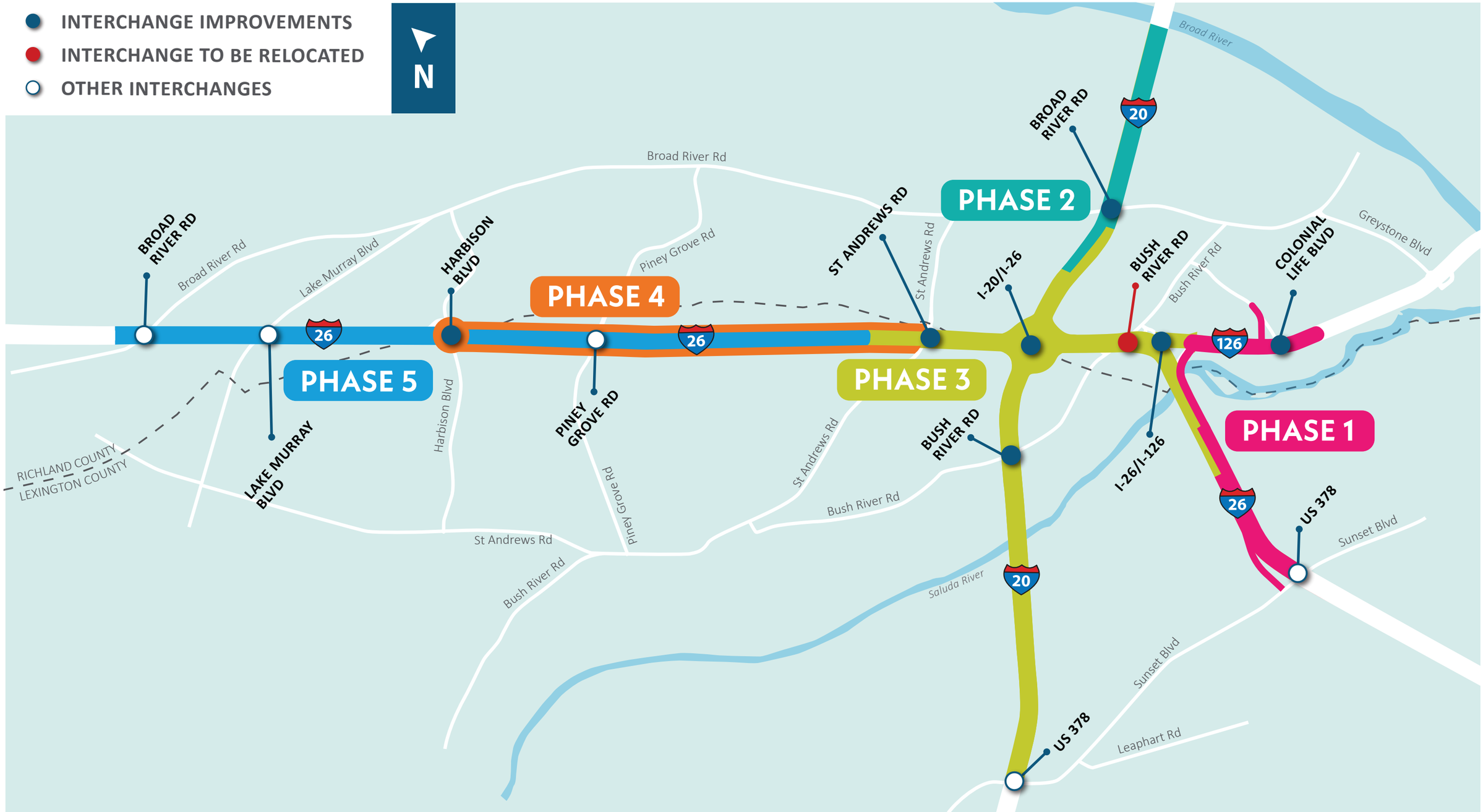

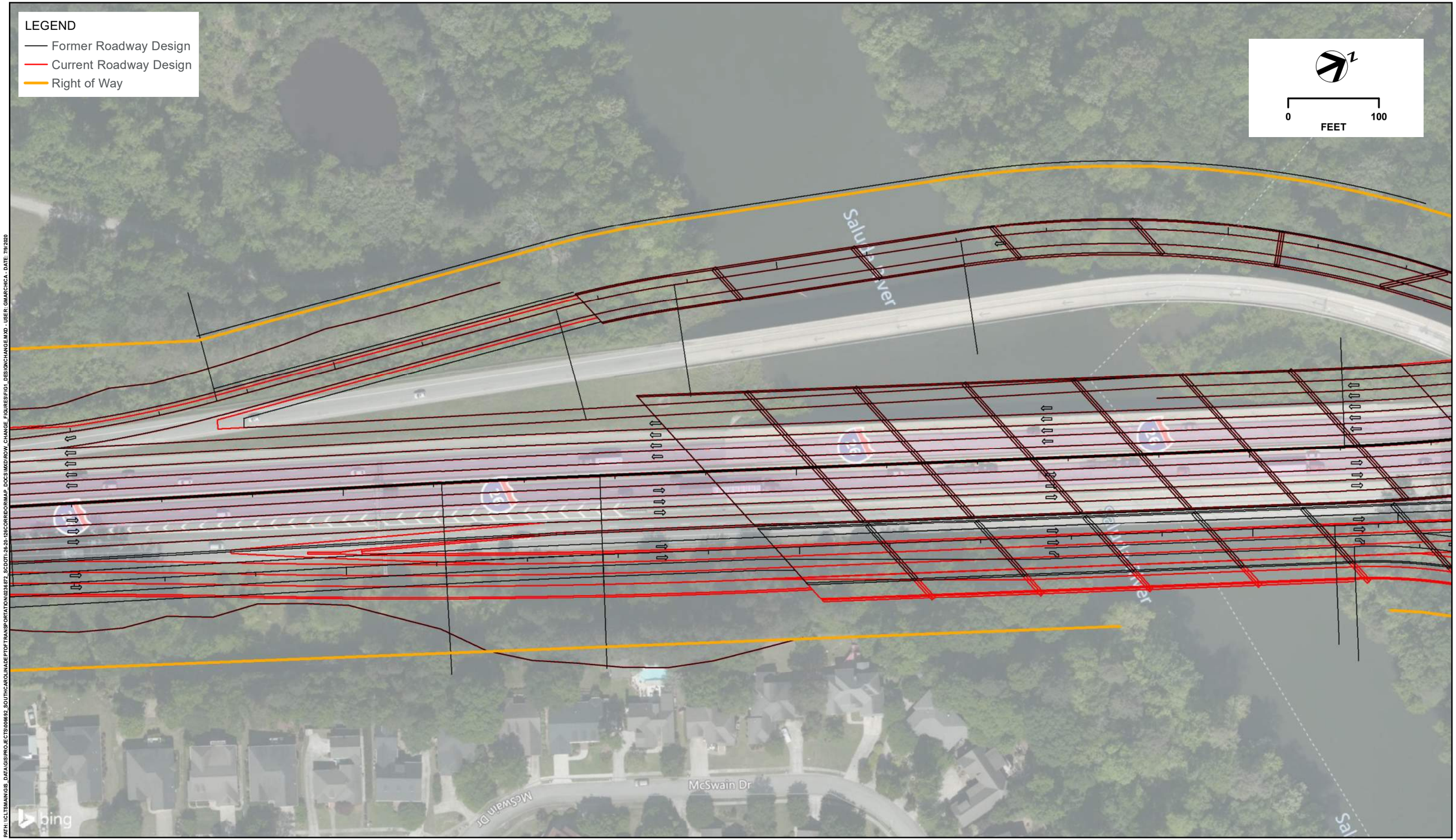

CAROLINA CROSSROADS
I-26 WESTBOUND RAMP ONTO I-126
EASTBOUND AND COLONIAL LIFE BLVD

CAROLINA CROSSROADS RE-EVALUATION

DATE
JULY 2020

FIGURE
FIGURE 2

I-126 WB Exits to Colonial Life Blvd. and I-26 EB

The Refined RPA included a five-lane approach along I-126 Westbound to the Colonial Life Blvd. exit with the exit to Colonial Life Blvd. being a tapered exit and all five through lanes extending through the exit. Beyond the Colonial Life Blvd. exit, the outside lane would become an "Exit Only" lane for the exit to I-26 Eastbound. During the design development, it was discovered that undesirable roadway design exceptions for lane and/or shoulder width would be required to allow for the five through lanes beyond the tapered exit to Colonial Life Blvd. The design was subsequently modified to retain the existing approach to the Colonial Life Blvd. parallel exit with four through lanes and immediately following the exit to Colonial Life Blvd., a deceleration lane for the exit to I-26 Eastbound is developed. This change was incorporated into the project traffic models and it was determined that this change will not adversely impact the I-126 westbound mainline operations during both the morning and afternoon peak hours. The change occurs within the originally proposed footprint of the roadway and within the right of way proposed for the Refined RPA. See Figure 3.

No environmental studies were updated based on this design change. No change of impacts documented in the FEIS/ROD are anticipated at this location.

Saluda River Access Road relocation

SCDOT is currently in the process of purchasing right of way for the project. During the negotiation process with Dominion Energy for the purchase of right-of-way along I-126 near the I-126/I-26 interchange, adjacent to the Saluda River, Dominion Energy identified an existing access/service road along the Saluda River that they currently used for maintenance of transmission lines and access for both the Saluda Riverwalk and Saluda River boat ramp. Emergency services also use the access road for emergency response to the trail and the boat ramp, which provides access for river rescues. The current design would require the elimination of the existing access road. SCDOT will be required to re-establish this access road within the proposed right of way acquired for the Carolina Crossroads project. The relocated roadway is expected to be reconstructed along the right of way line, adjacent to I-126 and the interchange ramps. The road was designed to avoid impacts to the Saluda Canal, which is an historic resource. See Figure 4. The proposed relocation of the access would increase impacts for Wetlands 25 and 26 by a total of 0.24 acres of fill and 0.19 acres of clearing and Tributaries 45 and 46 by a total of 53 linear feet. However, the overall wetland and stream impacts included in the USACE Individual Permit (IP) are lower than the impacts documented in the FEIS/ROD, as noted in Table 1.

Table 1: Wetland and Stream Impact Comparison

		FEIS	Permit	Reduction
Wetlands	Fill (acres)	6.88	Fill: 2.76	2.35
			Clearing: 1.77	
	Ponds (acres)	0.01	0.0	0.1
Streams	Linear feet	16,251	8,136	3,282
			Morphologic change: 2,538	
			Stream relocation: 2,295	



PATH: \\CLT3MAN\GIS_DATA\GIS\PROJECTS\00692\92_SOUTHCAROLINA\DEPT\OFTRANSPORTATION\2345\P2_SCDOT\1-26-20-126CORRIDOR\MAP_DOCS\MXD\ROW_CHANGE_FIGURES\FIG2_DESIGNCHANGE.MXD - USER: GMARCHICA - DATE: 7/10/2020

CAROLINA CROSSROADS
I-126 WB EXITS TO COLONIAL LIFE BLVD. AND I-26 EB

CAROLINA CROSSROADS RE-EVALUATION

DATE
JULY 2020

FIGURE
FIGURE 3

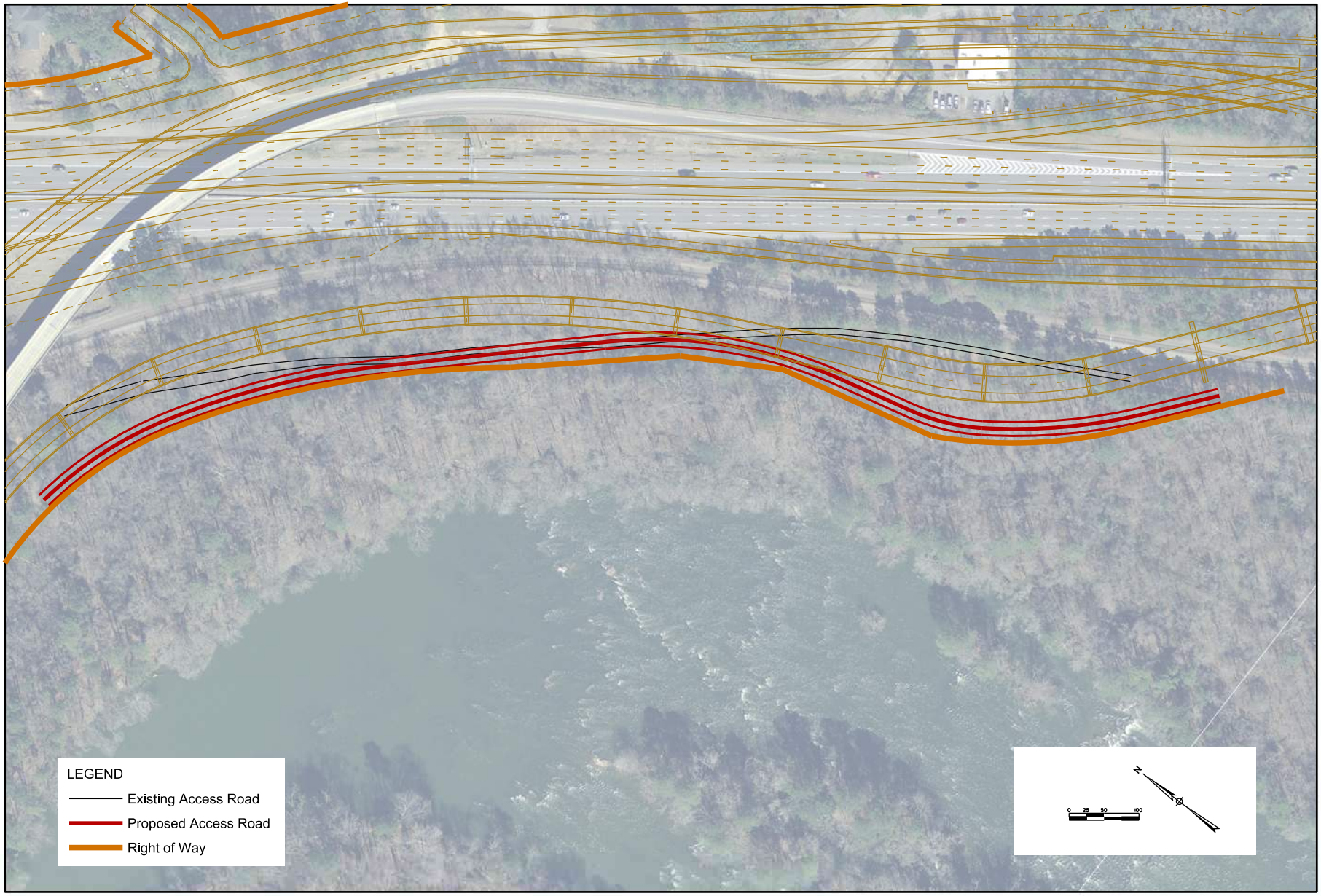

CAROLINA CROSSROADS
SALUDA RIVER ACCESS ROAD

CAROLINA CROSSROADS RE-EVALUATION

DATE
JULY 2020

FIGURE
FIGURE 4

Right of way changes based on Design Refinements

The changes to right-of-way are based on design refinements during development of right of way plans including, but not limited to:

- minor changes to roadway design/alignments
- allowance for adequate drainage ditches along the roadway
- allowance for detention basins
- allowance for outfall and inlet improvements/protection at pipe crossings

These design refinements caused additional right of way requirements in construction Phases 1 and 2 for the Refined RPA. See Figures 5.1 – 5.7.

These areas of additional right of way were reviewed to determine if they were within the previously surveyed project study area (PSA) for the FEIS/ROD. In three (3) locations encompassing five (5) parcels, the additional right of way extended beyond the PSA, on Parcels 404, 187/316 and 269/270, as shown in the above-referenced figures. These locations were field reviewed for jurisdiction features (streams, wetlands) and cultural resources.

Initial Archaeological and Wetlands Survey: Parcels 269, 404, 187, 270, and 316

On July 7, 2020, investigators conducted archaeological and wetland surveys of Parcels 269 and 404. Due to ongoing right of way negotiations, shovel testing and delineation was not conducted at this time on Parcels 187, 270, and 316; these parcels were visually inspected during the current investigations. Once SCDOT acquires the properties and/or provides property owner notification, additional surveys will be completed based on recommendations below. The locations of Parcels 269, 270, 404, 187, and 316 are presented in Figures 5.1-5.7. The investigations are summarized below.

Parcel 269 is located in a paved and partially wooded area between two abandoned nightclubs adjacent to Longcreek Drive, approximately 630 feet northeast of the intersection of Longcreek Drive and US 176. The portion of the parcel that is outside of the original archaeological study area is approximately 0.2 acres. The area is largely paved and the only wooded area is a heavily disturbed strip between the two parking lots of the nightclubs. No shovel tests were excavated at Parcel 269 and no further survey is recommended at this location. No wetlands were observed within this parcel.



View of Parcel 269, facing northwest.

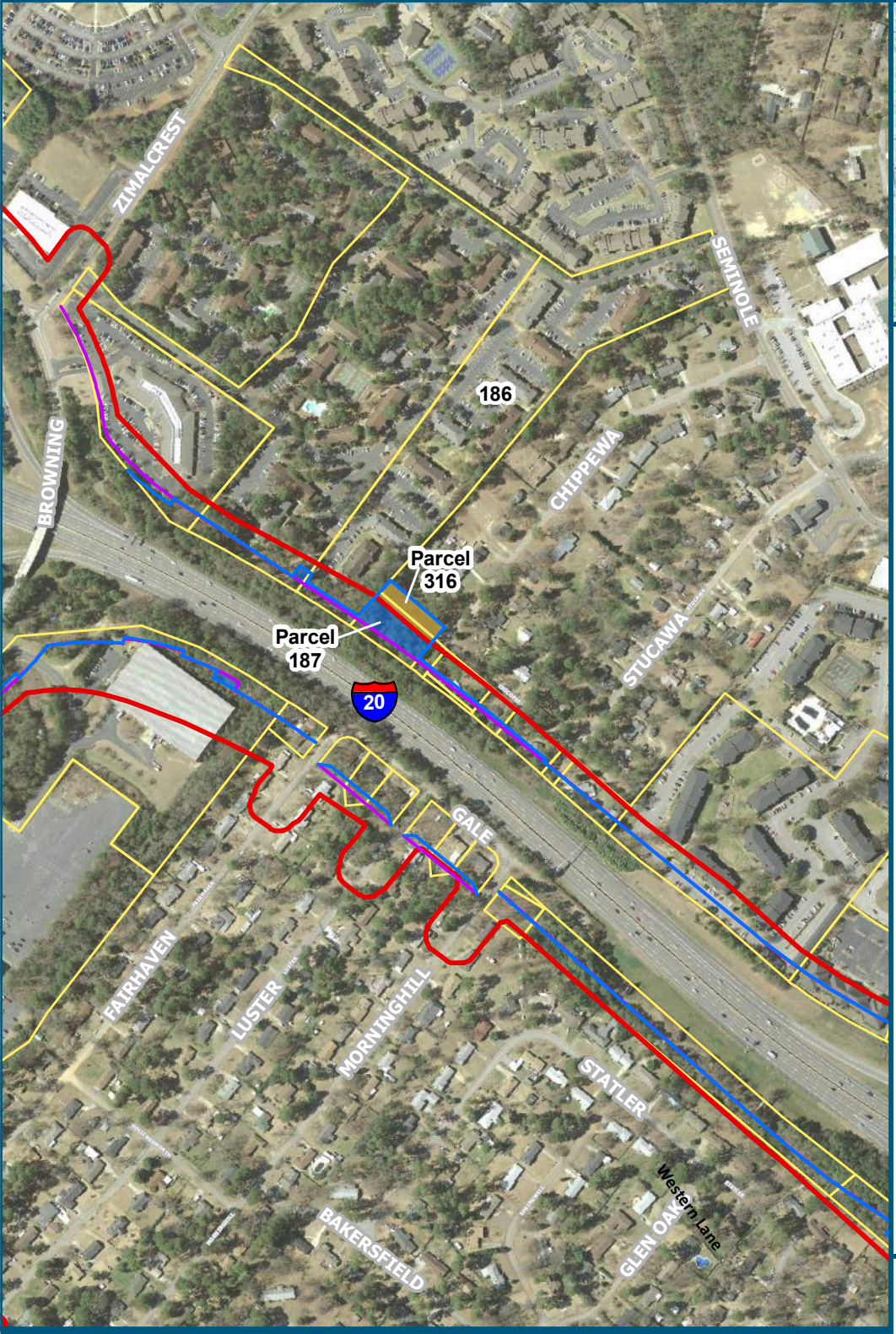

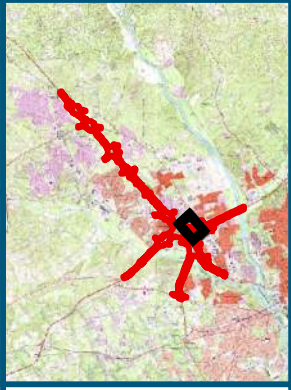

0 500

Feet

1 inch = 500 feet
@ 8.5 x 11 inches

Projection: Lambert Conformal Conic
State Plane South Carolina FIPS 3900 Intl Feet
North American Datum of 1983
Source: USGS High Resolution Orthoimagery

Legend

- Updated Right of Way
- FEIS Right of Way
- Environmental Study Area
- Parcels
- Unsurveyed Area
- New Right of Way

FIGURE 5.1
ROW CHANGE
PHASE 2
PARCEL 187

07/2020

SCDOT South Carolina Department of Transportation

U.S. Department of Transportation Federal Highway Administration

CAROLINA CROSSROADS

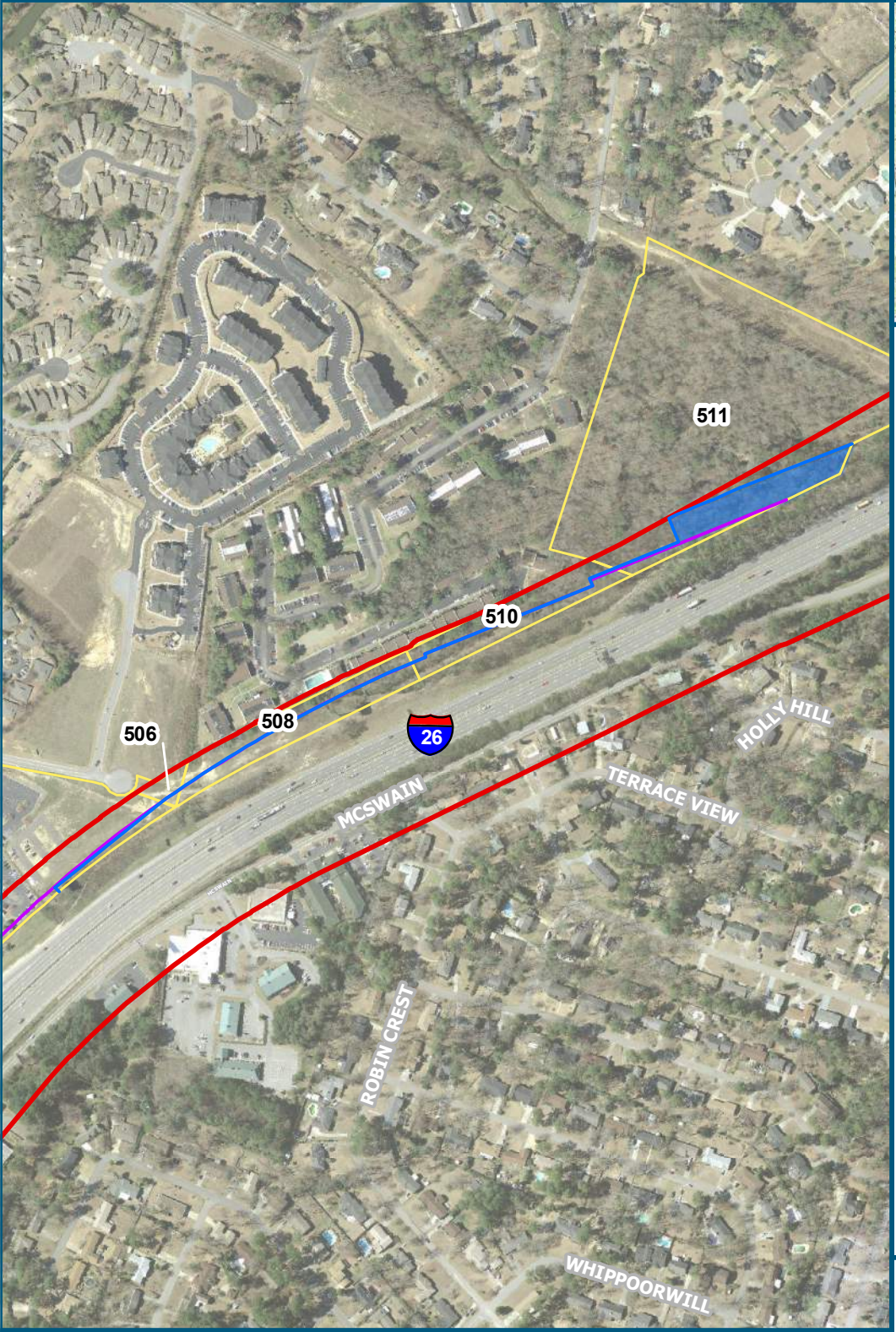

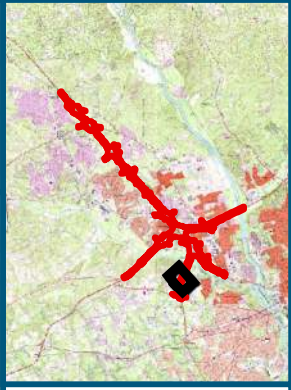

0 500

Feet

1 inch = 500 feet
@ 8.5 x 11 inches

Projection: Lambert Conformal Conic
State Plane South Carolina FIPS 3900 Intl Feet
North American Datum of 1983
Source: USGS High Resolution Orthoimagery

Legend

- Updated Right of Way
- FEIS Right of Way
- Environmental Study Area
- Parcels
- Unsurveyed Area
- New Right of Way

FIGURE 5.2
ROW CHANGE
PHASE 1
PARCELS 505 - 511

07/2020

SCDOT South Carolina Department of Transportation

U.S. Department of Transportation Federal Highway Administration

CAROLINA CROSSROADS

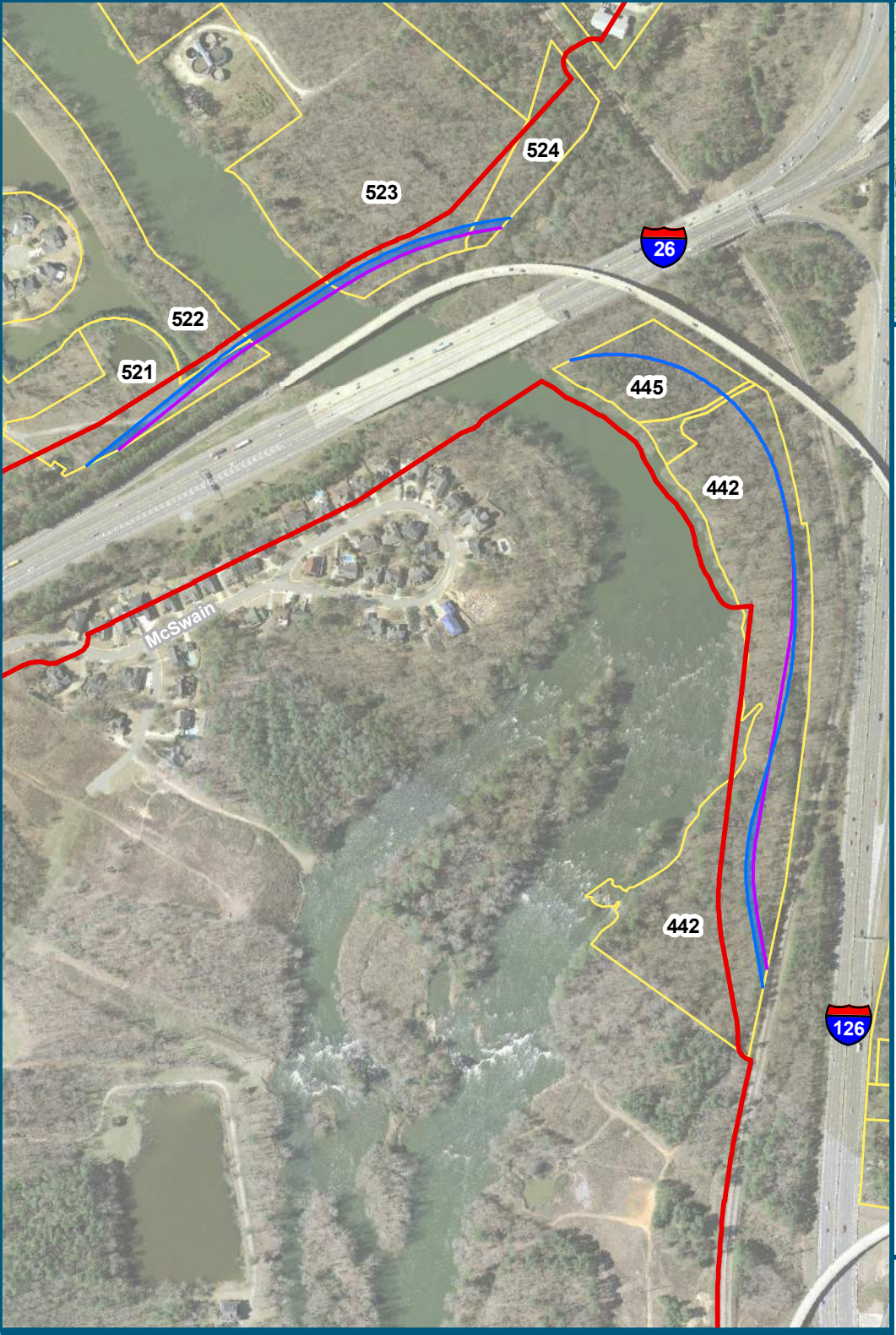

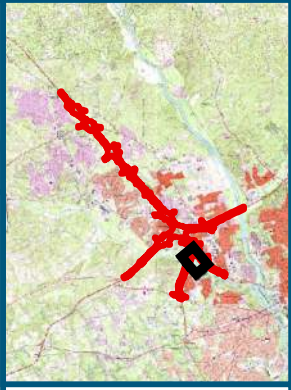

0 500

Feet

1 inch = 500 feet
@ 8.5 x 11 inches

Projection: Lambert Conformal Conic
State Plane South Carolina FIPS 3900 Intl Feet
North American Datum of 1983
Source: USGS High Resolution Orthoimagery

Legend

- Updated Right of Way
- FEIS Right of Way
- Environmental Study Area
- Parcels
- Unsurveyed Area
- New Right of Way

FIGURE 5.3
ROW Change
Phase 1
Parcels 442, 445, 524, 523, 522, &

07/2020

SCDOT South Carolina Department of Transportation

U.S. Department of Transportation Federal Highway Administration

CAROLINA CROSSROADS

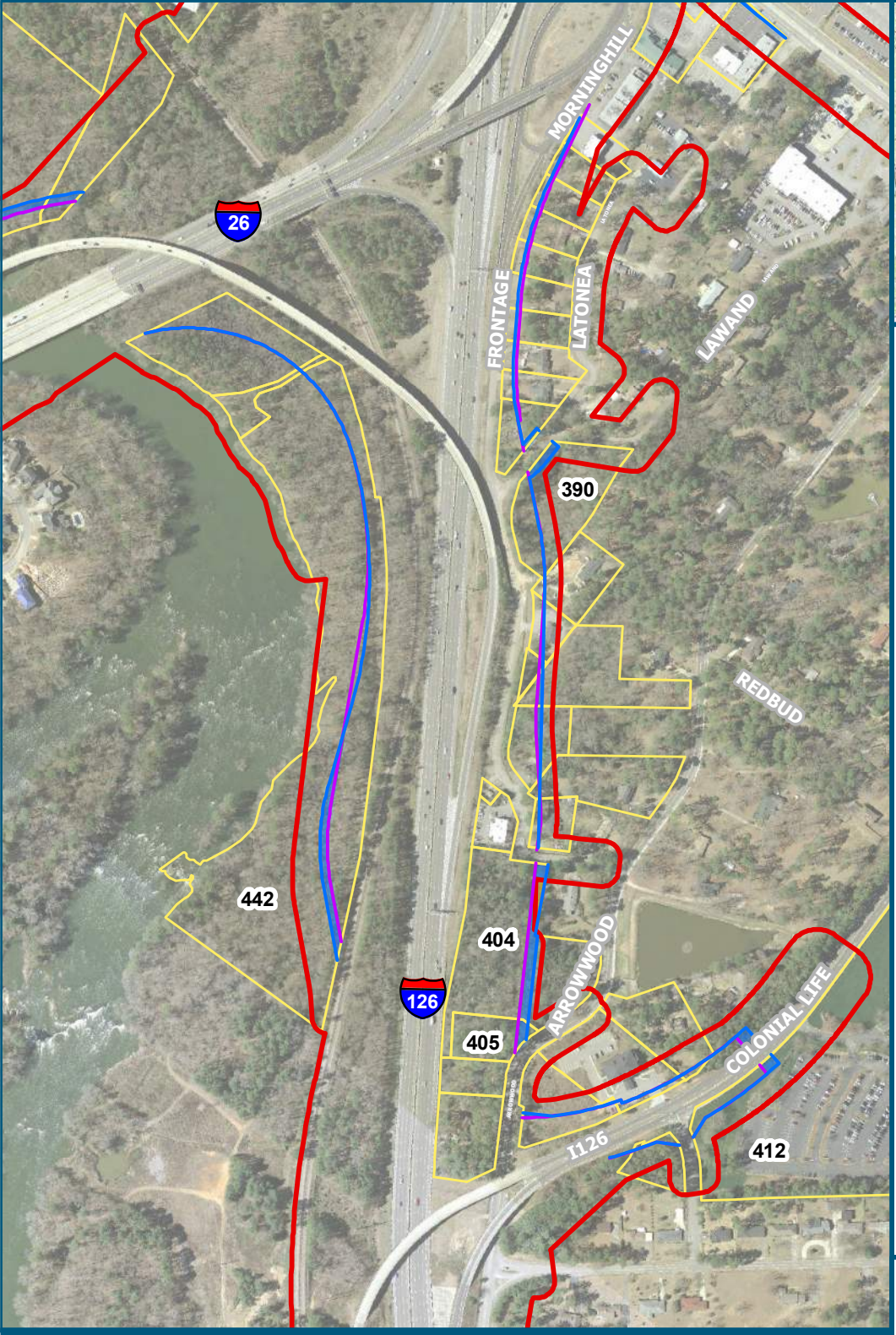

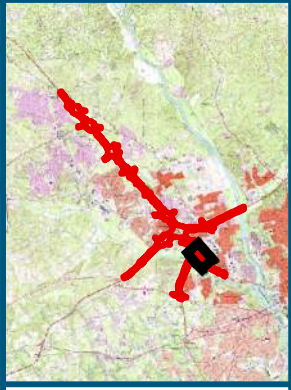

0 500

Feet

1 inch = 500 feet
@ 8.5 x 11 inches

Projection: Lambert Conformal Conic
State Plane South Carolina FIPS 3900 Intl Feet
North American Datum of 1983
Source: USGS High Resolution Orthoimagery

Legend

- Updated Right of Way
- FEIS Right of Way
- Environmental Study Area
- Parcels
- Unsurveyed Area
- New Right of Way

FIGURE 5.4
ROW Change
Phase 1
Parcels 390, 404, 405, 412, & 442

07/2020

SCDOT South Carolina Department of Transportation

U.S. Department of Transportation Federal Highway Administration

CAROLINA CROSSROADS

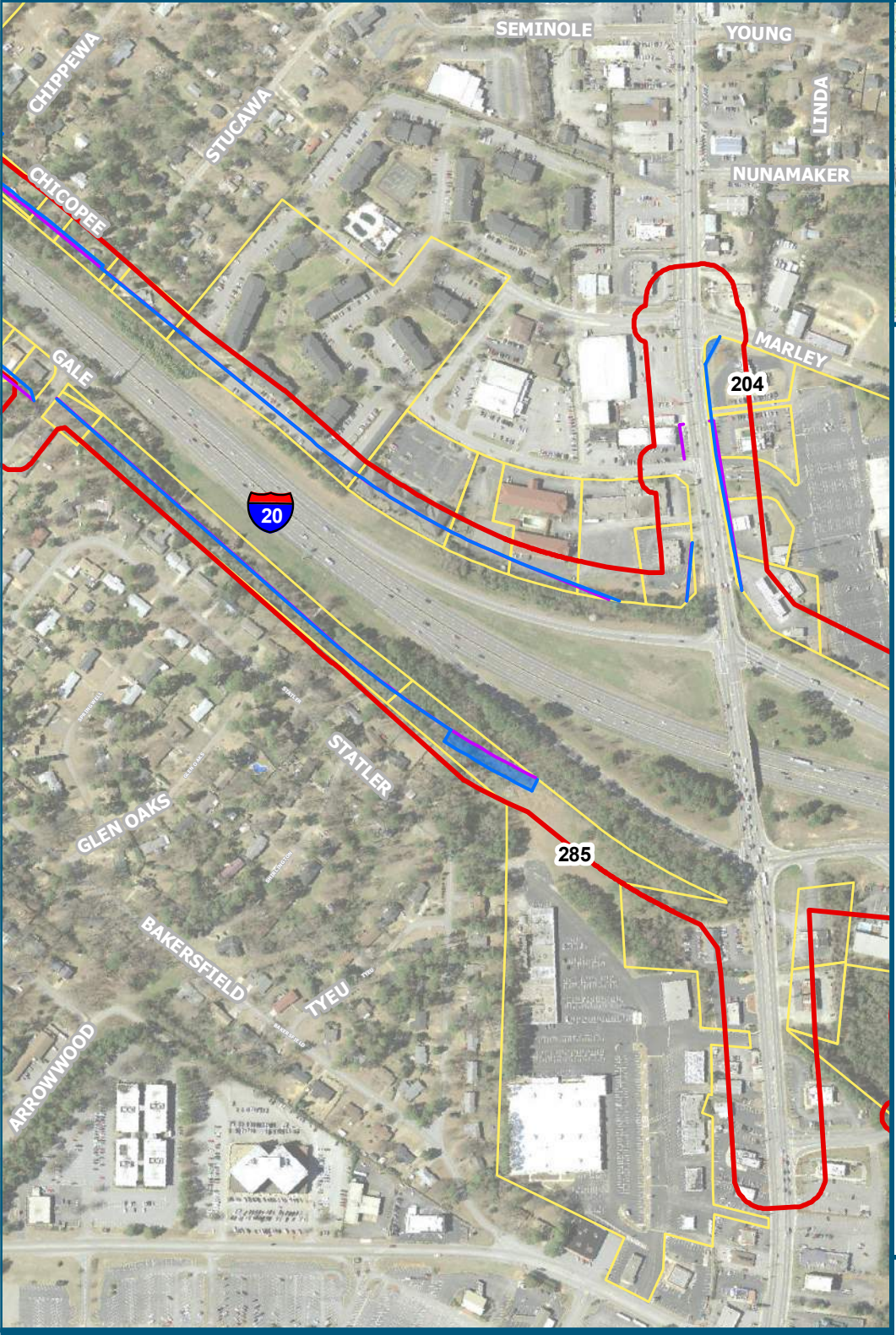

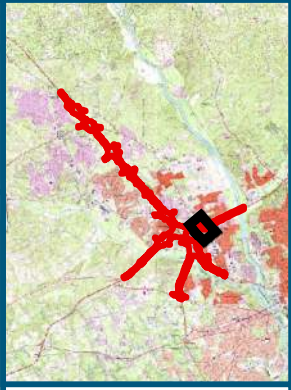

0 500

Feet

1 inch = 500 feet
@ 8.5 x 11 inches

Projection: Lambert Conformal Conic
State Plane South Carolina FIPS 3900 Intl Feet
North American Datum of 1983
Source: USGS High Resolution Orthoimagery

Legend

- Updated Right of Way
- FEIS Right of Way
- Environmental Study Area
- Parcels
- Unsurveyed Area
- New Right of Way

FIGURE 5.5
ROW Change
Phase 2
Parcels 204 & 285

07/2020

SCDOT South Carolina Department of Transportation

U.S. Department of Transportation Federal Highway Administration

CAROLINA CROSSROADS

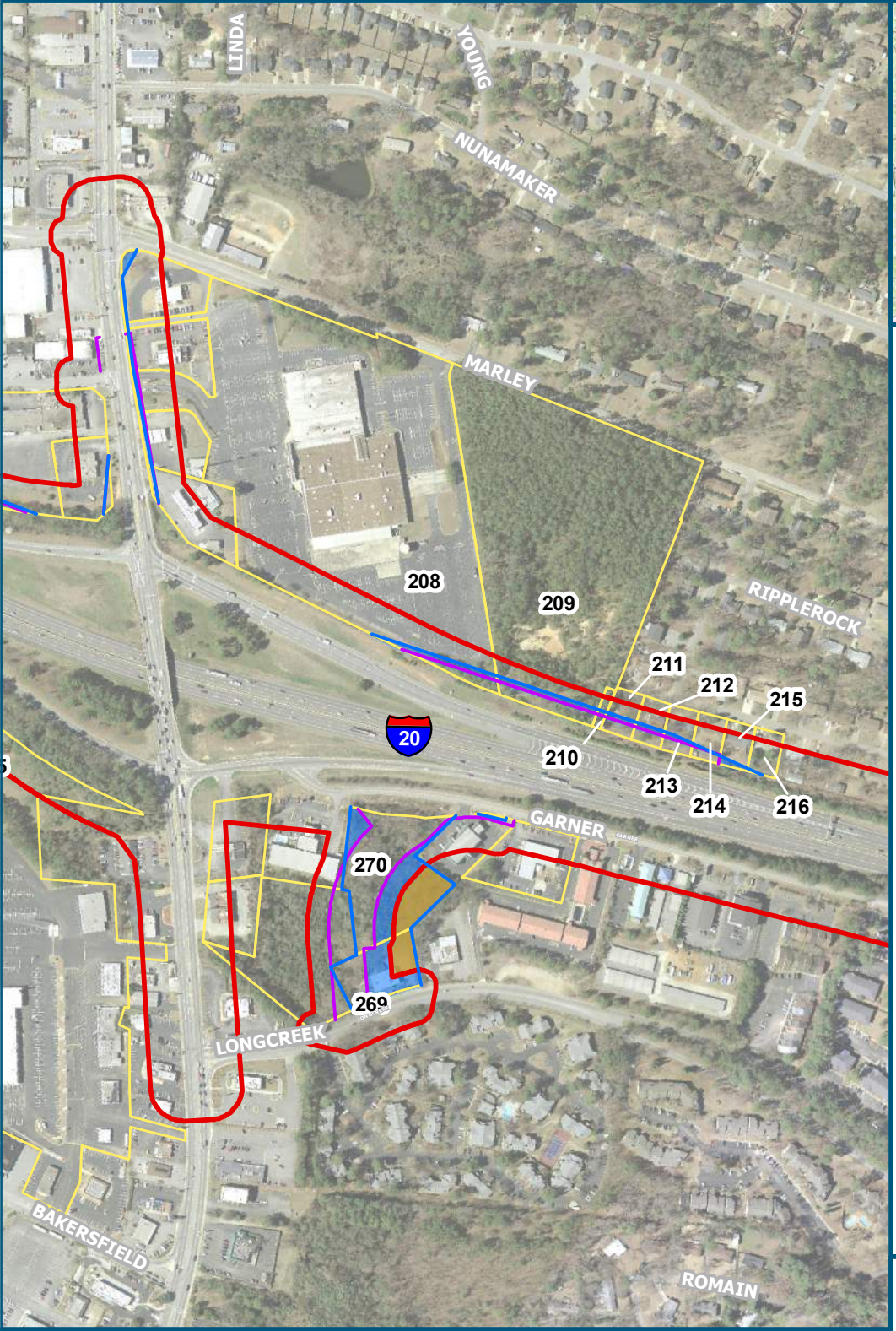

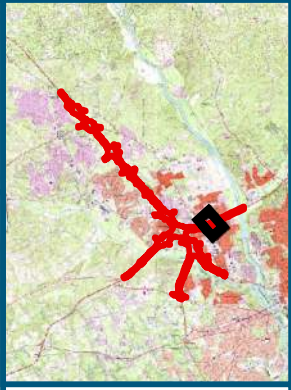

0 500

Feet

1 inch = 500 feet
@ 8.5 x 11 inches

Projection: Lambert Conformal Conic
State Plane South Carolina FIPS 3900 Intl Feet
North American Datum of 1983
Source: USGS High Resolution Orthoimagery

Legend

- Updated Right of Way
- FEIS Right of Way
- Environmental Study Area
- Parcels
- Unsurveyed Area
- New Right of Way

FIGURE 5.6
ROW Change
Phase 2
Parcels 269, 270, and 208-216

07/2020

SCDOT South Carolina Department of Transportation

U.S. Department of Transportation Federal Highway Administration

CAROLINA CROSSROADS

Parcel 270 is located in a wooded area behind an abandoned nightclub adjacent to Longcreek Drive, approximately 630 feet northeast of the intersection of Longcreek Drive and US 176. The portion of the parcel that is outside of the original archaeological study area is approximately 0.43 acres. The area is wooded and is generally very low and wet. It appears to be an area where people dispose of used tires and other debris. Due to ongoing right of way negotiations, no shovel tests were excavated at Parcel 270. Due to heavy ground disturbance and the preponderance of wetlands, it is recommended that no archaeological investigations are necessary on this portion of Parcel 270.

The area has numerous depressional areas and braided channels that appear to accept runoff from the hotel parking lot on Garner Drive as well as from a channel that emanates from underneath a concrete block wall. The area is highly disturbed with numerous manmade features such as a concrete block wall, and buried pipes. It is recommended that a delineation be performed after acquisition. As currently proposed, the design would not impact wetlands on this parcel; however, if the design-build contractor proposed an alternate design that did impact wetlands at this location, those impacts would be documented in a re-evaluation and USACE Individual Permit (IP) modification.



View of Parcel 270, facing south.



View of Parcel 270, facing west



View of Parcel 270, facing north

Parcel 404 is located in a wooded area behind a residence on Arrowwood Road, approximately 860 feet northwest of the intersection of Arrowwood Road and Colonial Life Boulevard. The portion of the parcel that is outside of the original archaeological study area is approximately 0.06 acres. The area is covered in dense undergrowth. Investigators excavated two shovel tests spaced 30 meters (100 feet) apart to cover the area. The two shovel tests generally exposed a 10YR4/2 dark grayish brown sandy loam from 0-20 cm below surface (bs), over a 10YR5/6 yellowish brown loamy sand from 20-50 cm bs, underlain by a compact 10YR7/6 yellow sand subsoil at 50-70+ cm bs. The fill from these tests was sifted through ¼-inch mesh hardware cloth. We recovered no cultural materials from the investigations at Parcel 404. No further archaeological survey is recommended at this location. No wetlands were observed within this parcel.



View of Parcel 404, facing northwest.

Parcels 187 and 316 are adjacent to each other and are located in a wooded area in a residential neighborhood, to the west of the intersection of Chippewa Drive and Chicopee Drive. The portion of the parcels that is outside of the original archaeological study area is approximately 0.3 acres. Due to ongoing ROW negotiations, no shovel tests were excavated at Parcels 187 and 316. It is recommended that archaeological investigations be conducted in the uplands portions of Parcels 187 and 316. The area is heavily wooded and includes a stream and associated wetlands in the central portion, with uplands to the east and west. This system appears to be part of Wetland 15. It is recommended that a delineation be performed after acquisition.

As currently proposed, the design would not impact wetlands on this parcel; however, if the design-build contractor proposed an alternate design that did impact wetlands at this location, those impacts would be documented in a re-evaluation and USACE Individual Permit (IP) modification.



View of Parcels 187 and 316, facing west.



View of Parcels 187 and 316, facing north.

Revision to FEIS Environmental Commitments

The proposed I-26 Westbound Ramp onto I-126 Eastbound and Colonial Life Blvd. is located between and immediately adjacent to both CSX railroad right of way and the Saluda Canal Historic District. The Environmental Commitment in the FEIS/ROD proposed a 25-foot buffer along the canal during construction activities.

During detailed design and constructability reviews and right of way acquisition for construction Phase 1 of the Carolina Crossroads Project, issues were identified in the vicinity of the Saluda Canal Historic District. The proposed ramp is at the northern end of the Saluda Canal and will not overlap the mapped limits of the canal. However, the currently proposed 25-foot buffer extends underneath the proposed I-26 Ramp C and presents constructability issues for equipment access during the construction of the project. Generally, the condition of the canal is very poor in this area adjacent to the proposed ramp due to erosion and siltation from two drainages in this area.

SCDOT has reduced right of way widths in the vicinity of the canal at this location to avoid impacts to the canal during construction and any future maintenance activities along the right of way.

SCDOT proposes to revise the commitment of a 25-foot buffer for a distance of approximately 700 feet along the proposed ramp to allow room for temporary construction access and equipment. The following mitigation will be implemented instead:

- Prior to construction activities orange protective fencing will be installed along the edge of boundary of the Saluda Canal Historic District in areas that will maintain the original buffer as well as those areas where the buffer has been requested to be reduced between the two drainages and for a length to the south of the southernmost drainage.
- Prior to construction activities silt fencing will be installed along the edge of SCDOT right of way to prevent runoff.
- For areas along the identified Saluda Canal located along the I-26 Ramp C beginning Station 5412+50 and ending Station 5419+50 clearing will be allowable to the right of way but grubbing will be limited to within a distance of 5-feet inside of the right of way. Grubbing activities within the 5-foot buffer will require approval from SCDOT prior to occurring.
- During land clearing activities prior to construction, an archaeologist will be present at all times to ensure that these activities undertaken close to the fencing do not damage the canal.
- During construction, an archaeologist will visit the construction site twice a week to ensure that no activities have crossed over the protective fencing. Any observations during these visits will be recorded in an inspection log that will be made available to the SHPO.
- As soon as an inadvertent impact is discovered, such as a previously unidentified cultural resource, archaeological feature, or artifact, construction in that area will stop immediately until an onsite consultation with SCDOT archaeologists and SHPO can determine the best strategies for avoiding, minimizing, or mitigating adverse effects upon the resource.

See SHPO coordination memo, figure, SHPO concurrence letter and tribal notification in Appendix B.

APPENDIX A
Noise Analysis Update Memo

Memo

Date: Monday, June 08, 2020

Project: Carolina Crossroads

To: Chad Long, SCDOT
David Kelly, SCDOT
Shane Belcher, FHWA

From: Ben Copenhaver

Subject: Noise Analysis Updates due to bridge shift

Introduction

Updates to the design of the Recommended Preferred Alternative (RPA) involved shifting a bridge approximately 22' closer to residences in NSA X. The design updates also involved shifts to connecting collector/distributor ramps, as well as refinements of grading in the area. The grading refinements include adding a vertical wall where the proposed roadway grade is either above or below the existing ground elevation.

Build-case and barrier noise models for the area were updated, rerun, and reanalyzed.

Updated Impact Results

A comparison between build case results in the original and updated model is shown in the table below. Impacts are highlighted in red (levels in excess of the impact threshold of 66 dBA). Only receptors in the northern portion of NSA X (the area nearest the design updates) are included.

Receptor	Original Build Level (dBA)	Updated Build Level (dBA)	Change
X40	71.1	69.7	-1.4
X41	65.6	65.4	-0.2
X42	67.6	65.9	-1.7
X43	67.3	66.4	-0.9
X44	67.4	67.4	0
X45	65.8	66.6	0.8
X46	61.1	59.7	-1.4
X47	66.8	68.6	1.8
X48	67.5	69.3	1.8
X49	60.7	59.8	-0.9
X50	69.3	70.3	1.0
X51	69.6	70.1	0.5
X52	59.7	58.8	-0.9

Receptor	Original Build Level (dBA)	Updated Build Level (dBA)	Change
X53	69.2	69.7	0.5
X54	69.3	69.7	0.4
X55	73.6	74.1	0.5
X56	68.2	68.5	0.3
X57	60.0	59.4	-0.6
X58	60.6	59.5	-1.1
X59	69.2	69.6	0.4
X60	71.9	72.5	0.6
X61	60.0	60.1	0.1
X62	70.9	71.4	0.5
X63	60.9	60.7	-0.2
X64	59.9	59.9	0
X65	70.7	71.6	0.9
X66	59.4	59.3	-0.1
X67	62.2	62.3	0.1
X68	61.0	60.9	-0.1
X69	68.6	69.6	1.0
X70	62.8	62.8	0
X71	63.6	63.6	0
X72	58.6	58.5	-0.1
X73	66.5	66.9	0.4
X74	61.5	61.6	0.1
X75	60.5	60.5	0
X76	61.6	61.6	0
X77	65.0	65.3	0.3
X78	62.7	62.8	0.1
X79	63.7	63.7	0
X80	56.0	56.0	0

The largest increase in build noise levels was 1.8 dB, and the largest decrease was 1.7 dB. Two receptors changed impact status: X42 changed from impacted to non-impacted, and X45 changed from non-impacted to impacted. Therefore, the overall number of noise impacts in the project remains the same. The updated impact information is shown in Figure 1 below.

Figure 1. Updated Impacts in northern half of NSA X

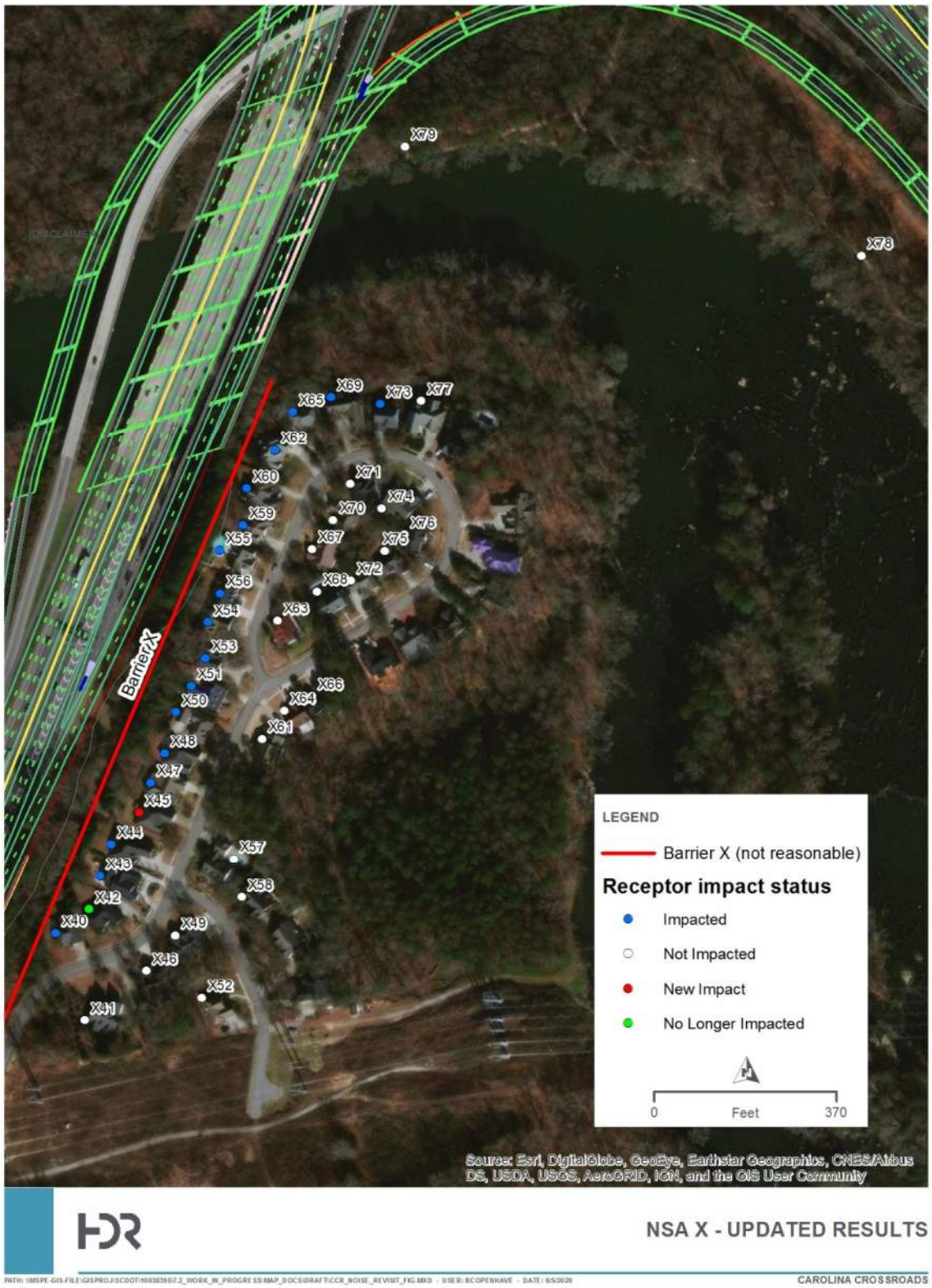

Updated Barrier Analysis

Previously, the barrier investigated to shield impacted receptors in NSA X was found to be not reasonable, as it could not meet the SCDOT reasonableness criteria of providing at least 8 dB of noise reduction to at least 80% of benefited receptors. The barrier model was updated to account for the design changes in this area. Updated results of the barrier analysis are below.

Barrier X – Impacted Receivers X1, X8, X11-X12, X14, X17, X21, X23, X27-X28, X31-X32, X35, X39-X40, X43-X45, X47-X48, X50-X51, X53-X56, X59-X60, X62, X65, X69, X73[1]

Barrier X is a 5,697 foot long noise wall whose height is 25 feet.

Feasibility:

Acoustic Feasibility: SCDOT noise policy states that a noise reduction of at least 5 dBA must be achieved for 75 percent of the impacted receivers. This was achieved for 28 of the 33 impacted receivers (85%). This meets the SCDOT allowable percentage (75%) per impacted receiver. A total of 32 receivers (including impacted and non-impacted) achieved 5 dBA of noise reduction.

Engineering Feasibility: No known issues at this time.

Reasonableness:

Noise Reduction Design Goal: SCDOT noise policy states that a noise reduction of at least 8 dBA must be achieved for 80 percent of the benefited receivers in the first two building rows. Of the 32 benefited receivers in the first two rows, there were 16 that achieved the 8 dBA reduction (50%). This does not meet the SCDOT allowable percentage (80%) of the benefited receivers.

Cost Effectiveness: The cost effectiveness analysis is not applicable since the noise reduction design goal was not met.

Conclusion: Based on the above results of the detailed analysis, this abatement feature is feasible but not reasonable, and is not proposed as part of this project.

Conclusions

Due to design changes in the vicinity of NSA X, the noise analysis in that area was updated, including the build model and the barrier analysis. No change greater than 2 dB was observed. One receptor changed impact status from non-impacted to impacted, and one receptor changed impact status from impacted to non-impacted. The barrier status remains not reasonable.

[1] Receiver X1 represents a retirement home patio with 2 equivalent dwelling units.

APPENDIX B
SHPO Coordination

MEMORANDUM

July 8, 2020

To: Elizabeth Johnson, SCDAH
Keely Lewis, SCDAH

From: Tracy Martin, SCDOT
Will McGoldrick, SCDOT
Josh Fletcher, HDR

Re: Carolina Crossroads Project: SAC 2015-01080
Justification for reduction of construction buffer at the northern end of the Saluda Canal
SCDOT PIN P027662

The South Carolina Department of Transportation (SCDOT) is currently in the process of purchasing right of way (ROW) parcels for the proposed Carolina Crossroads project. During a review of ROW and project design, it was identified that the proximity of the proposed ramp near the northern end of the Saluda Canal would create constructability issues for SCDOT's design/build contractor.

The proposed ramp is at the northern end of the Saluda Canal Historic District and will not overlap the mapped limits of the canal. While the ROW for the proposed ramp is approximately 60 feet wide (to the west of the proposed ramp), in areas where the proposed ramp is closer to the canal, the ROW has been reduced in order to not overlap the canal; at one location along eastern edge of the canal, the ROW is approximately 14 feet from the edge of the ramp.

In this northern end of the Saluda Canal, two drainages enter the canal from the east. These drainages are approximately 350 feet apart. Generally, the condition of the canal is very poor in the area between these two drainages. The banks of the canal are difficult to discern and were largely mapped using the georeferenced route from an historic map of the Saluda Canal, LiDAR imagery, and mid-20th century aerial photographs. In this area, the width of the canal ranges from approximately 40-50 feet with either no depth or only mild, uneven depressions of a couple of feet, whereas in more intact and deeply incised portions of the canal to the south of the southern drainage, the canal is a fairly uniform 30 feet wide with well-defined banks, with a depth of up to approximately six feet and three noted occurrences of intact stonework sections.

As noted in the cultural resources survey report, "No sign of the canal head or entrance from the Saluda River was discovered, nor was any trace of the dam described as being near the head of the canal found, and it is probable that these entities were the victim of floods and erosion, or, in the case of the dam, possible dismantlement." (Sipe et al. 2018: 54). In addition to periodic flooding of the Saluda River in this section of the canal that is closest to the river, it is believed that the two drainages that empty into the canal have caused a great deal of erosion and silting in of the canal. There is an approximately 45-foot long section of aligned stones on the western bank of the canal in the area between the two drainages. There are no intact features on the eastern bank of the canal in this area. An intact alignment of stones is present on the eastern bank of the canal just south of the southern drainage that cuts into the canal but this alignment will not be impacted by the proposed construction.

Prior to any construction activities, protective fencing will be installed along the edge of the previously proposed 25-foot buffer along the majority of the canal. It is requested that the buffer for the Saluda

Canal Historic District be reduced in the area between the two drainages, and for a length to the south of the southern drainage, to allow room for temporary construction access and equipment. In those areas, the protective fencing will be installed along the proposed ROW along the edge of the canal. During timbering/landclearing activities prior to construction, an archaeologist will be present to ensure that these activities undertaken close to the fencing do not damage the canal. During construction, an archaeologist will visit the construction site twice a week to ensure that no activities have crossed over the protective fencing. Any observations during these visits will be recorded in an inspection log that will be made available to the SHPO.

ec: Brian Klauk, Program Manager, Carolina Crossroads Project

Reference Cited

Sipe, Ryan, David Adair, Michael Miller, Bill Jurgelski, and Tracy Martin. 2018. *A Cultural Resource Survey of the Proposed Improvements to the Carolina Crossroads Corridor. Carolina Crossroads. I-20/26/126 Corridor Improvements. Lexington and Richland Counties, South Carolina*. Prepared for SCDOT and FHWA. Prepared by Edwards-Pitman Environmental, Inc.



Figure 1. Example of the canal, south of southern drainage.



Figure 2. Northern drainage.



Figure 3. Southern drainage.



Figure 4. Portion of the canal between the two drainages.



Figure 5. Portion of the canal between the two drainages.



Figure 6. Alignment of stones on the western edge of canal, in the portion between the two drainages.



Figure 7. Stacked stone feature near right of way, to the south of the southern drainage.

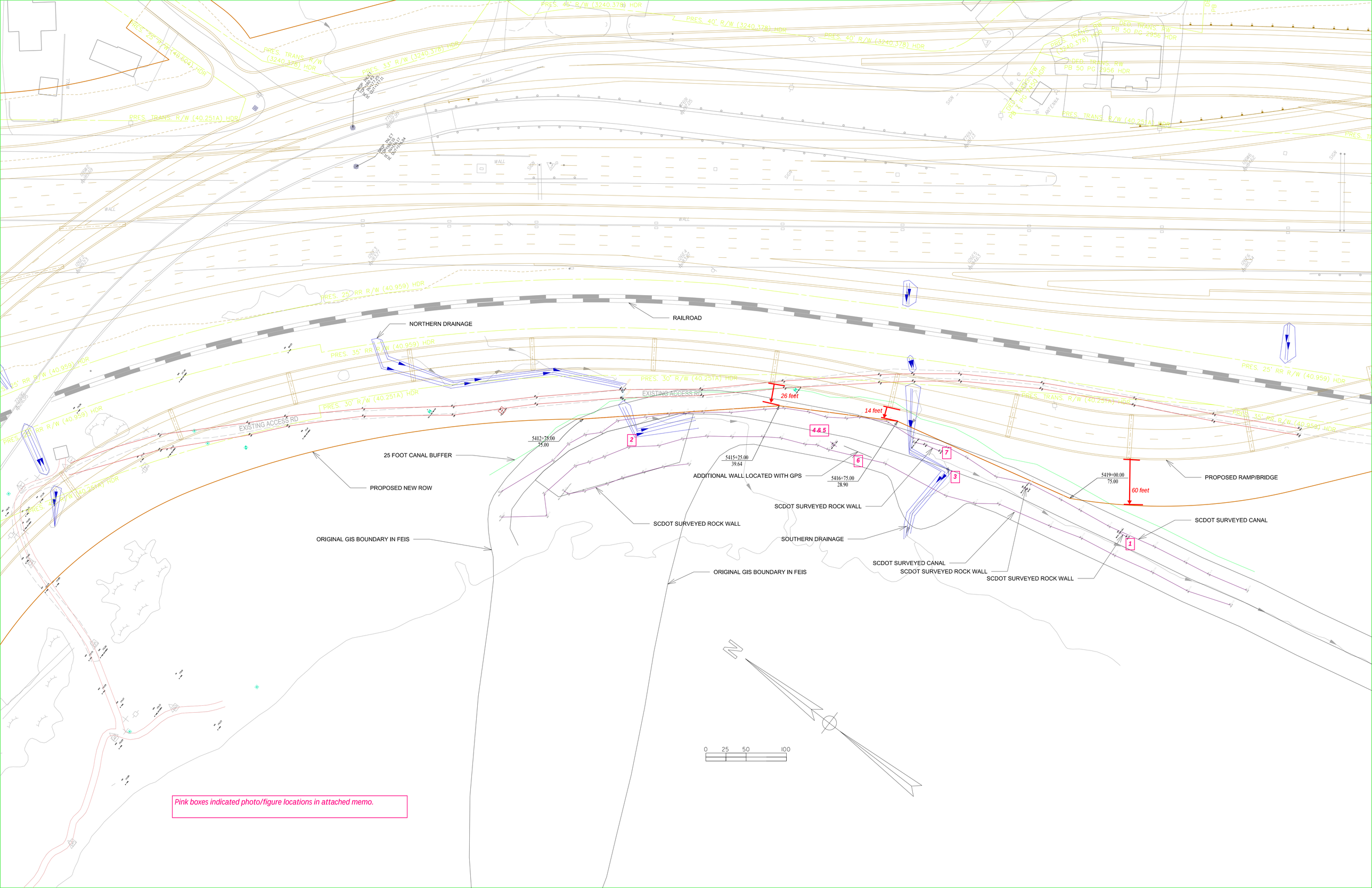
RAILROAD
NORTHERN DRAINAGE
PRES. 35' RR R/W (40.959) HDR
PRES. 30' R/W (40.251A) HDR
EXISTING ACCESS RD
26 feet
14 feet
4 & 5
2
7
6
3
1
5412+75.00
75.00
5415+25.00
39.64
5416+75.00
28.90
5419+00.00
75.00
60 feet
25 FOOT CANAL BUFFER
PROPOSED NEW ROW
ADDITIONAL WALL LOCATED WITH GPS
SCDOT SURVEYED ROCK WALL
ORIGINAL GIS BOUNDARY IN FEIS
SOUTHERN DRAINAGE
SCDOT SURVEYED CANAL
PROPOSED RAMP/BRIDGE
0 25 50 100
Pink boxes indicated photo/figure locations in attached memo.

South Carolina
Department of Transportation

July 8, 2020

Ms. Elizabeth Johnson
Director, Historical Services, D-SHPO
State Historic Preservation Office
SC Department of Archives & History
8301 Parklane Road
Columbia, SC 29223

RE: Carolina Crossroads Project: SAC 2015-01080 Justification for reduction of construction buffer at the northern end of the Saluda Canal, Lexington and Richland Counties, South Carolina.

Dear Ms. Johnson:

The South Carolina Department of Transportation (SCDOT) is currently in the process of purchasing right-of-way (ROW) parcels for the proposed Carolina Crossroads project. During a review of ROW and project design, it was identified that the proximity of the proposed I-26 Ramp C near the northern end of the Saluda Canal Historic District would create constructability issues for SCDOT's design/build contractor.

Proposed Ramp C is at the northern end of the Saluda Canal Historic District and will not overlap the mapped limits of the actual canal. However, the ROW will overlap the buffer created as the boundary for the Saluda Canal Historic District. The ROW for the proposed ramp is approximately 60 feet wide (to the west of the proposed ramp). In areas where the proposed ramp is closer to the canal, the ROW has been reduced in order to not overlap the canal. At one location along eastern edge of the canal, the ROW is approximately 14 feet from the edge of the ramp.

The northern end of the Saluda Canal has been impacted by two drainages that enter the canal from the east and are approximately 350 feet apart. In addition to periodic flooding of the Saluda River in this section of the canal that is closest to the river, it is also believed that the two drainages that empty into the canal have caused a great deal of erosion and silting in of the canal itself. This has left the banks of the canal in this area somewhat difficult to discern. This portion was largely mapped using the georeferenced route from an historic map of the Saluda Canal, LiDAR imagery, and mid-twentieth century aerial photographs. In this area, the width of the canal ranges from approximately 40- to 50-feet and features very little to no depth, whereas in more intact and deeply incised portions of the canal to the south of the southern drainage, the canal is a fairly uniform 30-feet wide with well-defined banks, with a depth of up to approximately 6-feet and three noted occurrences of intact stonework sections.

There is an approximately 45-foot long section of aligned stones on the western bank of the canal in the area between the two drainages. There are no intact features on the eastern bank of the canal in this area. An intact alignment of stones is present on the eastern bank of the canal just south of the southern drainage that cuts into the canal but this alignment will not be impacted by the proposed construction.

It is requested that the proposed ROW be allowed to cross over the buffer for the Saluda Canal Historic District for a distance of approximately 60-feet north of the northern drainage, the 350-feet between the northern and southern drainages, and approximately 260-feet south of the southern drainage.

In order to protect the boundary of the canal and the features associated with it, the following will be added to the contract as commitments:

a. Prior to construction activities orange protective fencing will be installed along the edge of boundary of the Saluda Canal Historic District in areas that will maintain the original buffer as well as those areas where the buffer has been requested to be reduced between the two drainages and for a length to the south of the southernmost drainage.

b. Prior to construction activities silt fencing will be installed along the edge of SCDOT ROW to prevent runoff.

c. For areas along the identified Saluda Canal located along the I-26 Ramp C beginning Station 5412+50 and ending Station 5419+50 clearing will be allowable to the ROW but grubbing will be limited to within a distance of 5-feet inside of the ROW. Grubbing activities within the 5-foot buffer will require approval from SCDOT prior to occurring.

d. During land clearing activities prior to construction, an archaeologist will be present to ensure that these activities undertaken close to the fencing do not damage the canal.

e. During construction, an archaeologist will visit the construction site twice a week to ensure that no activities have crossed over the protective fencing. Any observations during these visits will be recorded in an inspection log that will be made available to the SHPO.

f. As soon as an inadvertent impact is discovered, such as a previously unidentified cultural resource, archaeological feature, or artifact, construction in that area will stop immediately until an onsite consultation with SCDOT archaeologists and SHPO can determine the best strategies for avoiding, minimizing, or mitigating adverse effects upon the resource.

Based on the results of the background research and field investigations, SCDOT therefore recommends that the proposed project would have **no adverse effect** upon the Saluda Canal or the Saluda Canal Historic District.

Per the terms of the Section 106 Programmatic Agreement executed on October 6, 2017, the Department is providing this information on behalf of the Federal Highway Administration. It is requested that you review the enclosed material, and, if appropriate, indicate your concurrence in the Department's findings. Please respond within 30 days if you have any objections or if you have need of additional information.

Sincerely,

Tracy Martin
Chief Archaeologist

TAM:tam
I (~~do not~~) concur in the above determination.

Signed: _____ Date: 7/9/2020

Pearson, Jennifer

From: Martin, Tracy <MartinT@scdot.org>
Sent: Wednesday, July 22, 2020 10:25 AM
To: Pearson, Jennifer
Subject: Fwd: P027662 Carolina Crossroads Change Notification/update
Attachments: 27662-Concurrence letter and attachments - SHPO signed July-9-2020.pdf; ATT00001.htm

CAUTION: [EXTERNAL] This email originated from outside of the organization. Do not click links or open attachments unless you recognize the sender and know the content is safe.

Sent from my iPhone

Begin forwarded message:

From: "Martin, Tracy" <MartinT@scdot.org>
Date: July 10, 2020 at 3:39:00 PM EDT
To: "Section106@mcn-nsn.gov" <Section106@mcn-nsn.gov>, "elizabeth-toombs@cherokee.org" <elizabeth-toombs@cherokee.org>
Cc: "Belcher, Jeffery - FHWA" <Jeffrey.Belcher@dot.gov>, "McGoldrick, Will" <McGoldriWR@scdot.org>
Subject: P027662 Carolina Crossroads Change Notification/update

All,

Per the original concurrence letters for the Carolina Crossroads I-20, I-26, and I-126 Corridor Improvements Project a stipulation was made for notification upon changes or updates to the project. Please see the attached letter for the proposed effects inside the Saluda Canal Historic District boundary. We've coordinated with SHPO on these revisions and received their concurrence. Please let me know if you have any questions.

Thanks,

Tracy Martin
Chief Archaeologist
SC Department of Transportation
955 Park Street, Columbia SC, 29201
Office 803-737-6371 / Cell 803-206-1223



NEPA Re-Evaluation

August 2022



Carolina Crossroads
Phase 2 – Broad River Road at I-20 Interchange
Project ID: P039719

CAROLINA CROSSROADS



Submitted by:

ARCHER UNITED JOINT VENTURE

UNITED INFRASTRUCTURE CONSULTING & ENGINEERING

ENVIRONMENTAL RE-EVALUATION FORM

FHWA South Carolina

State File #	Fed Project #	Project ID	Route	County
	P039719	P039719	I-20/I-20/I-126	Richland

Project Name/Description

FHWA and SCDOT propose to upgrade the I-20/26/126 corridor and reconstruct associated interchanges in Richland and Lexington Counties. The primary purpose of the proposed Carolina Crossroads project is to implement a transportation solution that would improve mobility and enhance traffic operations by reducing existing traffic congestion within the I-20/26/126 corridor while accommodating future traffic needs.

1. DOCUMENT TYPE: ☒ EIS ☐ EA ☐ CE (non Programmatic) ☐ PCE (No FHWA Approval Required)

A. Other Actions Associated with the Project:

- ☐ Section 4(f) Evaluation
- ☒ Section 106 Compliance
- ☒ Wetland Finding/Section 404 Compliance
- ☒ T & E Species Biological Assessment
- ☐ None

2. DOCUMENT APPROVAL DATE: May 2, 2019

3. DATE(S) OF PRIOR RE-EVALUATIONS: 8/3/20; 10/30/20; 12/8/20; 5/23/22

4. PROJECT DEVELOPMENT STAGE:

- ☒ Final Design
- ☐ ROW
- ☐ Construction
- ☐ Other, Specify

5. HAS DESIGN OR ROW CHANGED SINCE THE LAST APPROVAL?:
(if "NO" then Go To Item 7)

☒ YES ☐ NO

6. DESCRIPTION OF CURRENT PROJECT/DESIGN CHANGES:

See attached supporting documentation.

7. HAVE THERE BEEN SIGNIFICANT CHANGES IN THE AFFECTED ENVIRONMENT OR HAVE THE ENVIRONMENTAL STUDIES BEEN UPDATED SINCE THE LAST PROJECT APPROVAL?: (If "NO" to both Items 5 and 7, Go To Item 10) ☒ YES ☐ NO

8. APPROVED DOCUMENT(S) RE-EVALUATION:

A. REVIEW OF EFFECTS: (Complete this section if "YES" to either Item 5 or Item 7)

SOCIAL ENVIRONMENT	CHANGE		REMARKS
1. Land Use	☐ YES	☒ NO	
2. Community	☐ YES	☒ NO	
3. Relocations	☐ YES	☒ NO	
4. Churches/Institutions	☐ YES	☒ NO	
5. Title VI/E.O. 12898	☐ YES	☒ NO	
6. Economic	☐ YES	☒ NO	
7. Controversy	☐ YES	☒ NO	
8. Other; Specify	☐ YES	☒ NO	

NATURAL ENVIRONMENT	CHANGE		REMARKS
1. Wetlands	☒ YES	☐ NO	See attached supporting documentation.
2. Water Quality	☐ YES	☒ NO	
3. Wild/Scenic Rivers	☐ YES	☒ NO	
4. Farmland	☐ YES	☒ NO	
5. T & E Species	☐ YES	☒ NO	
6. Floodplains	☐ YES	☒ NO	
7. Other; Specify	☐ YES	☒ NO	

PHYSICAL ENVIRONMENT	CHANGE		REMARKS
1. Noise	☒ YES	☐ NO	See attached
2. Air Quality	☐ YES	☒ NO	
3. Energy/Mineral Resources	☐ YES	☒ NO	
4. Construction/Utilities	☐ YES	☒ NO	
5. UST's	☐ YES	☒ NO	
6. Hazardous Waste Sites	☒ YES	☐ NO	See attached
7. Other; Specify	☐ YES	☒ NO	

CULTURAL ENVIRONMENT	CHANGE		REMARKS
1. Historic Sites	☐ YES	☒ NO	
2. Archaeological Resources	☐ YES	☒ NO	
7. Other; Specify	☐ YES	☒ NO	

PERMITS	CHANGE		REMARKS
1. U.S. Coast Guard	☐ YES	☒ NO	
2. Forest Service/USACE/USFWS Land	☐ YES	☒ NO	
3. Section 404	☒ YES	☐ NO	See attached
4. Other; Specify	☐ YES	☒ NO	

Have the required permits been obtained? ☐ YES ☒ NO

If "YES" what is the expiration date?

***If permits have expired, permits will need updated and attached to re-evaluation.**

9. NEED FOR PUBLIC INVOLVMENT:

☒ A public hearing/public information meeting was held for the project on: August 23, 2018

☒ There have been no changes in project design or environmental effects which would require a public hearing [or additional public hearing if one has already been held] or public information meeting.

☐ The change(s) in project design and/or effects require(s) an additional public hearing/public information meeting. The meeting is scheduled for:

10. FINDINGS/CONCLUSIONS:

☒ Based on the analysis contained in this re-evaluation, it has been determined that the change in project design and/or environmental effects would not significantly alter the conclusions reached in the approved environmental document and/or previous re-evaluation(s).

☐ There have been no changes in the design/ROW of this project nor have there been changes in project effects or the affected environment. Therefore, the conclusions reached in the approved environmental document and/or previous re-evaluation(s) remain valid.

Prepared By: Will McGoldrick Digitally signed by Will McGoldrick Date: 2022.09.14 14:25:11 -04'00' Date 9-14-22

For Non Programmatic CEs:

Concurred (FHWA): EMILY OLDHAM LAWTON Digitally signed by EMILY OLDHAM LAWTON Date: 2022.09.14 17:27:14 -04'00' Date

EC ID	Description	Category	Status	Phase 1 Updates	Phase 2 Updates
EC-01	SCDOT will work with the Central Midlands Rural Transit Authority / COMET (CMRTA/COMET) and the Central Midlands Council of Governments (CMCOG) to develop two park-and-ride lots to improve mobility during construction and mitigate congestion resulting from the project. SCDOT would construct the two sites and maintain them during construction of the project. Engineering feasibility, timing and continued maintenance of the sites would be determined in coordination with CMRTA and the CMCOG prior to the start of construction. In the event a permanent site cannot be developed, SCDOT would work with CMRTA and CMCOG to identify and provide funding for existing parking lots that could be leased for park-and-ride use during construction.	Programmatic	SCDOT has completed an evaluation to identify park and ride facilities. In coordination with FHWA a leasing option will move forward. SCDOT is in the process of obtaining leasing agreement information for the park and ride sites. One appraisal has been completed and discussions relative to process for negotiation is forthcoming.	N/A	N/A
EC-02	SCDOT will implement a congestion management tool/commuter services application to improve mobility during construction and mitigate congestion by informing commuters of available options such as carpooling, ridesharing, vanpools and other transit oriented options.	Programmatic	SCDOT has met with the CMCOG who is in the process of developing a mobile application. SCDOT to follow up and determine when the application will be available.	N/A	N/A
EC-03	SCDOT will assist COMET/CMRTA ongoing efforts through such measures as accommodating transit (bus) stops at interchange locations, which may include bus turnout. In addition, SCDOT will work with CMRTA to monitor bus operations and capacity during construction and in the event that capacity is reached, SCDOT will provide support in determining funding for enhanced bus service during construction based upon a framework to be agreed upon with CMRTA.	Programmatic	SCDOT has met with the CMCOG and discussions are ongoing.	N/A	N/A
EC-04	Prior to final design, SCDOT will coordinate with the City of Columbia and CMCOG to ensure that existing and planned bicycle and pedestrian facilities identified in the local and regional plans and existing and proposed connections to such facilities are accommodated where located within the limits of the Carolina Crossroads project at crossing routes and interchanges where feasible.	Design	Status update to be phase specific.	Phase 1 Final design plans are under review.	Phase 2 Final design plans are under review.
EC-05	During final construction, SCDOT will accommodate bicycle/pedestrian access. SCDOT will coordinate with the local municipalities and/ or trail groups to post information on temporary sidewalk or bicycle facility closures or detours. Sidewalk and/or bicycle lane/path closures will be communicated to the agency with jurisdiction at least 48 hours in advance and appropriate signage will be placed.	Construction	Status update to be phase specific.	Coordination occurred prior to the closing of the Saluda River greenway with the City of Columbia. The end portion of the trail has been temporarily closed.	SCDOT will comply.
EC-06	SCDOT will acquire all new right-of-way and process any relocations in compliance with the Uniform Relocation Assistance and Real Property Acquisition Policies Act of 1970, as amended (42 U.S.C. 4601 et seq.) and the SCDOT ROW Manual. The purpose of these regulations is to ensure that owners of real property to be acquired for federal and federally-assisted projects are treated fairly and consistently, to encourage and expedite acquisition by agreements with such owner, to minimize litigation and relieve congestion in the courts, and to promote public confidence in federal and federally-assisted land acquisition programs. Temporary construction easements may be needed for some properties. SCDOT will temporarily use these properties during construction and would provide compensation to the landowner for the temporary use. The property will be fully returned to the owner when the use of the property is no longer required, typically when construction is complete.	Programmatic	Phase 1 right-of-way acquisition is near completion and relocations are ongoing.	N/A	N/A

EC ID	Description	Category	Status	Phase 1 Updates	Phase 2 Updates
EC-07	Changes in access for school bus routes will be discussed with the school system in advance of when they will actually take place, so that the school systems can adjust routes in a timely manner. Coordination with local school districts will also occur during construction. SCDOT and the CONTRACTOR will coordinate with the school system during development of the community outreach program.	Construction	Status update to be phase specific.	Contractor will coordinate with local school districts as necessary.	Contractor will coordinate with local school districts as necessary.
EC-08	Written translations of public involvement documents will be provided for Spanish language speaking populations, as well as other measures determined by SCDOT to ensure meaningful access to project information during construction. Efforts will be made to ensure meaningful opportunities for public participation during construction. Additional meetings will be held when warranted to address community concerns.	Construction	Status update to be phase specific.	SCDOT has implemented a translation tool on the project website for Spanish language speaking populations.	SCDOT has implemented a translation tool on the project website for Spanish language speaking populations.
EC-09	The CONTRACTOR(s), through a community outreach program, will let the community know what types of closures to expect (i.e. temporary, long-term), when to expect them and who to contact, if needed. SCDOT and the CONTRACTOR(s) will coordinate with emergency service providers such as police, fire protection and ambulance services before construction to ensure that access for emergency vehicles will be maintained.	Programmatic	Community and public relations support plan has been approved and is being implemented.	N/A	N/A
EC-10	Based on the studies thus far accomplished, SCDOT intends to install highway traffic noise abatement measures in the form of a barrier at Noise Sensitive Area (NSA) O, R and S. These barriers are located on the south side of I-20 from the Saluda River extending approximately 2,300 feet west (Barrier O); on the north side of I-20 from approximate station 224+90 to approximate 270+34.81 the Broad River Road to approximately 4,550 feet east towards the Broad River (Barrier R); and on the south side of I-20 from approximate station 223+85.23 to approximate station 267+64.89 the Broad River Road exit extending approximately 4,380 feet east towards the Broad River (Barrier S). These preliminary indications of likely abatement measures are based upon preliminary design for a barrier cost of $35.00 per square foot that will reduce the noise level by at least 5 dB(A) for residences. If it subsequently develops during final design that these conditions have substantially changed, the abatement measures might not be provided. A final decision of the installation of the abatement measure(s) will be made upon completion of the project's design. Since there are residences located on the opposite side of the interstate adjacent to Barriers O, R and S, sound absorption materials will be added to the barriers to minimize noise reflectivity of the barriers towards receptors on the other side of the interstate.	Design	Status update to be phase specific.	Barriers are not located within this phase.	Barriers R and S will be designed in this phase.
EC-11	In order to help local officials and developers consider highway traffic noise in the vicinity of a proposed Type I project, SCDOT will inform them of the predicted future noise levels and the required distance from the roadways needed to ensure that noise levels remain below the NAC for each type of land use per 23 CFR 772.J 7. The information will be provided within three months of the Record of Decision (ROD) publication.	Programmatic	SCDOT has complied.	N/A	N/A

EC ID	Description	Category	Status	Phase 1 Updates	Phase 2 Updates
EC-12	During construction, powered construction equipment will not be operated during the traditional evening and/or sleeping hours within 150 feet of a noise-sensitive site, to be decided either by local ordinances and/or agreement with SCDOT.	Construction	Status update to be phase specific.	Discussion will occur in pre-activity meeting with the Contractor and documented accordingly.	Discussion will occur in pre-activity meeting with the Contractor and documented accordingly.
EC-13	The CONTRACTOR(s) will be required to minimize possible water quality impacts through implementation of BMPs, reflecting policies contained in 23 CFR 650B and SCDOT's Supplemental Specification on Erosion Control Measures (latest edition) and Supplemental Technical Specifications on Seeding (latest edition). Other measures including seeding, silt fences, sediment basins, etc. as appropriate will be implemented during construction to minimize impacts to water quality.	Construction	Status update to be phase specific.	Environmental compliance inspections are on-going. Phase 1 Final design plans are under review.	Contractor shall comply. Phase 2 Final design plans are under review.
EC-14	Stormwater modeling will be completed for the final design of the Project. Stormwater runoff would be mitigated by discharging stormwater into appropriately designed BMP's before being released into receiving waters. During construction, the CONTRACTOR(s) will identify and avoid all point sources of fecal coliform as identified in Chapter 3, Section 3.6 of the FEIS.	Construction	Status update to be phase specific.	Final design has been initiated and modeling efforts are ongoing.	Final design has been initiated and modeling efforts are ongoing.
EC-15	A Section 401 State Water Quality Certification will be required for the overall project. SCDOT is responsible for obtaining the certification as part of the Joint 404/401 permit application process.	Programmatic	Initial 401 water quality certification has been obtained.	N/A	N/A
EC-16	The CONTRACTOR(s) is responsible for development of a project specific SWPPP and for obtaining a Section 402 NPDES permit for the project prior to initiating land disturbing activities.	Construction	Status update to be phase specific.	Compliance inspection have been initiated and are ongoing.	Contractor shall comply.
EC-17	A State Navigable Waters permit will be required for construction over any navigable waterways (i.e., the Saluda River). The CONTRACTOR will be responsible for obtaining this permit.	Construction	Status update to be phase specific.	Permit has been obtained.	Permit has been obtained.
EC-18	Impacts to jurisdictional waters will be permitted under a Department of the Army Section 404 permit from the U.S. Army Corps of Engineers (USACE). Based on preliminary design, it is anticipated that the proposed project will be permitted under an Individual USACE Permit (IP). SCDOT will provide the USACE with information regarding any proposed activities during the Section 404 permitting process. One permit would be obtained for the overall project. The required mitigation for this project will be provided through a Permittee Responsible Mitigation (PRM) site, developed in consultation with the USACE and other resource agencies.	Construction	Status update to be phase specific.	Permit mod for Ph 1 under development. Construction activities for the PRM site has reach substantial completion. Some minor work remains in the contract.	Permit mod for Ph 2 under development. Construction activities for the PRM site has reach substantial completion. Some minor work remains in the contract.
EC-19	Detailed hydraulic and hydrologic studies for each bridge crossing will be performed to determine the correct sizing of bridges and culverts. The project will be designed to be consistent with local floodplain development plans. Prior to construction activity in the area, coordination with Dominion Energy and Federal Energy Regulatory Commission (FERC) will be required for the Lower Saluda River floodway crossings due to its function as part of a hydroelectric facility.	Design	Status update to be phase specific.	Phase 1 Final design plans are under review.	Phase 2 Final design plans are under review.
EC-20	The project will be designed in an effort to meet "No-Rise" requirements. In the event a "No-Rise" condition cannot be achieved, coordination with FEMA will require the preparation of a CLOMR (Conditional Letter of Map Revision) / LOMR (Letter of Map Revision) package for the encroachment. Where regulatory floodplains are defined, hydraulic structures will be designed to accommodate a 100-year (1% annual chance) flood. Where no regulatory floodplains are defined, culverts and bridges will be designed to accommodate a 50-year or greater magnitude flood event. Ongoing design efforts to minimize floodplain impacts will be coordinated with resource and regulatory agencies during the final design process.	Design	Status update to be phase specific.	Phase 1 Final design plans are under review.	Phase 2 Final design plans are under review.
EC-21	Prior to construction, the selected CONTRACTOR(s) will send a set of final plans and request for floodplain management compliance to the local County Floodplain Administrator.	Design	Status update to be phase specific.	Phase 1 Final design plans are under review.	Phase 2 Final design plans are under review.

EC ID	Description	Category	Status	Phase 1 Updates	Phase 2 Updates
EC-22	No substantial impacts to floodplain values are anticipated from the proposed project. If conditions change based on final design, additional measures will be evaluated to restore lost floodplain values.	Design	Status update to be phase specific.	Phase 1 Final design plans are under review.	Phase 2 Final design plans are under review.
EC-23	To mitigate for natural upland forested habitats, lost as a result of the project, SCDOT will plant trees (native species), as defined by the final design plans, within the rights-of-way adjacent to new or improved interchanges and roadways outside of required clear safety zones. Impacts to areas providing significant wildlife habitat, such as river floodplains and other large riparian buffers, will be minimized to the extent practicable through avoidance and minimization design measures such as the use of appropriate BMP's. Construction activities will be conducted within the disturbed footprint of the existing roadway and utility right-of-way to the maximum extent practicable.	Programmatic	(blank)	N/A	N/A
EC-24	To mitigate the temporary impacts to the Saluda Riverwalk Extension, SCDOT will notify the City of Columbia Parks and Recreation Department at least 48 hours in advance as to when the trail will be temporarily closed. SCDOT will also work closely with the Parks and Recreation Department to communicate the closing to trail users during construction. When construction is complete, the condition of the trail will be equal to existing conditions.	Construction	Status update to be phase specific.	In May, cooridination occurred with the City of Columbia in which they accepted the electrical update to provide a permanent power source for lights on the upriver end of the Saluda Riverwalk.	N/A for Phase 2.
EC-25	Prior to construction, the project CONTRACTOR will perform Phase II ESAs on the properties identified within the footprint, including the subject properties, and/or on the adjoining properties or the ROW. Ultimately, the Phase II ESAs will include environmental sample collection (e.g. soil, soil gas, and groundwater), specifically, in areas where a potential for disturbance of soil and/or groundwater exists. Asbestos Containing Material (ACM) and/or Lead Based Paint (LBP) testing will be assessed separately. Materials containing asbestos and lead-based paints will be managed and disposed of properly at an appropriate permitted facility to minimize impacts during the construction and cleanup. Activities will be monitored by a professional that is certified in the removal, handling and disposal of lead-based paint and/or asbestos-containing materials.	Programmatic	SCDOT has completed some of the identified Phase II ESAs.	N/A	N/A
EC-26	A spill prevention, control, and countermeasures (SPCC) plan will be prepared in accordance with 40 CFR 112, for the handling of oils or oil-based products during construction to prevent a discharge of oil into navigable waters.	Design	Status update to be phase specific.	Contractor has submitted the SPCC and it will be monitored during construction.	Contractor has submitted the SPCC and it will be monitored during construction.
EC-27	A hazardous waste management plan will be prepared for the handling of hazardous materials during construction, and an on-site health and safety plan will be developed for construction activities to protect human health (i.e. workers, residents, recreation and trespassers) and the environment within/proximate to the site. The hazardous waste management plan will also state that disposal of waste materials will be disposed of in approved landfills.	Construction	Status update to be phase specific.	Contractor has submitted a project specific hazardous waste management plan which is currently in place.	Contractor has submitted a project specific hazardous waste management plan which is currently in place.

EC ID	Description	Category	Status	Phase 1 Updates	Phase 2 Updates
EC-28	If avoidance of hazardous materials is not a viable alternative and soils that appear to be contaminated are encountered during construction, the South Carolina Department of Health and Environmental Control (SCDHEC) will be informed immediately. Hazardous materials will be tested and removed and/or treated in accordance with the United States Environmental Protection Agency and the SCDHEC requirements, if necessary. SCDHEC Hazardous Waste Treatment, Storage, and Disposal compliance staff can be contacted at 803-898-0290.	Construction	Status update to be phase specific.	Four buildings were previously demolished with asbestoes and the construction materials were properly disposed.	Should hazardous materials be encountered the will be properly disposed of according to the site specific hazardous waste management plan and this commitment.
EC-29	During the construction phase of the project, the CONTRACTOR and subCONTRACTORs must notify their workers to watch for the presence of any prehistoric or historic remains, including but not limited to arrowheads, pottery, ceramics, flakes, bones, graves, gravestones, or brick concentrations. If any such remains are encountered, the Construction Manager for Mega Projects would be immediately notified and all work in the vicinity of the discovered materials and site work shall cease until the SCDOT Chief Archaeologist directs otherwise. SCDOT Chief Archaeologist, Tracy Martin, can be contacted at 803-737-6371.	Construction	Status update to be phase specific.	Discussion will occur in pre-activity meeting with the Contractor and documented accordingly. Minor clearing has been conducted.	Contractor and subContractors shall comply.
EC-30	An archaeological professional will be present during any ground disturbing activities related to Site 38LX212 and 38RD59. Additionally, sites 38RD140, 38RD1175, and 38RD1176 will be protected from indirect effects, including borrow sites and equipment staging. Sites will be clearly marked in the field using orange construction fencing prior to beginning construction activities in the vicinity of the resources.	Construction	Status update to be phase specific.	Requested an archaeogolical professional for silt fence installation per plan near site 38RD59 (Saluda Canal)	N/A for Phase 2
EC-31	The Saluda Canal (Site 38RD59) would be clearly plotted on all construction plans. SCDOT has reduced ROW widths in the vicinity of the canal to avoid impacts to the canal during construction & any future maintenance activities along the ROW. A 25-foot buffer will be maintained around the canal for the majority of the resource. This zone would be clearly marked in the field using orange fencing during construction, and all ground disturbance and construction staging activities would be conducted outside of this buffer in order to avoid all possible impacts to the resource. SCDOT proposes to revise the commitment of a 25-foot buffer for a distance of approximately 700 feet along the proposed ramp to allow room for temporary construction access & equipment near I-26 Ramp C. To protect the boundary of the canal at this location, the following will be added to the contract as commitments: •Prior to construction activities orange protective fencing will be installed along the edge of boundary of the Saluda Canal Historic District in areas that will maintain the original buffer as well as those areas where the buffer has been requested to be reduced between the two drainages and for a length to the south of the southernmost drainage. •Prior to construction activities silt fencing will be installed along the edge of SCDOT right of way to prevent runoff. •For areas along the identified Saluda Canal located along the I-26 Ramp C beginning Station 5412+50 and ending Station 5419+50 clearing will be allowable to the right of way but grubbing will be limited to within a distance of 5-feet inside of the right of way. Grubbing activities within the 5-foot buffer will require approval from SCDOT prior to occurring. •During land clearing activities prior to construction, an archaeologist will be present at all times to ensure that these activities undertaken close to the fencing do not damage the canal. •During construction, an archaeologist will visit the construction site twice a week to ensure that no activities have crossed over the protective fencing. Any observations during these visits will be recorded in an inspection log that will be made available to the SHPO. •As soon as an inadvertent impact is discovered, such as a previously unidentified cultural resource, archaeological feature, or artifact, construction in that area will stop immediately until an onsite consultation with SCDOT archaeologists and SHPO can determine the best strategies for avoiding, minimizing, or mitigating adverse effects upon the resource.	Construction	Status update to be phase specific.	Canal plotted on plans and orange fencing has been installed.	N/A for Phase 2

EC ID	Description	Category	Status	Phase 1 Updates	Phase 2 Updates
EC-32	The CONTRACTOR(s) will ensure that all construction equipment is properly tuned and maintained. Idling time will be minimized to save fuel and emissions.	Construction	Status update to be phase specific.	Discussion will occur in pre-activity meeting with the Contractor and documented accordingly.	Discussion will occur in pre-activity meeting with the Contractor and documented accordingly.
EC-33	Water will be applied to control dust as needed to prevent dust impacts off site. There will be no open burning of removed vegetation. Vegetation will be chipped or delivered to waste energy facilities.	Construction	Status update to be phase specific.	Dust producing activities are not ongoing.	Dust producing activities are not ongoing.
EC-34	The federal Migratory Bird Treaty Act, 16 USC § 703-711, states that it is unlawful to pursue, hunt, take, capture or kill; attempt to take, capture or kill; possess, offer to or sell, barter, purchase, deliver or cause to be shipped, exported, imported, transported, carried or received any migratory bird, part, nest, egg or product, manufactured or not. The South Carolina Department of Transportation (SCDOT) will comply with the Migratory Bird Treaty Act of 1918 in regard to the avoidance of taking of individual migratory birds and the destruction of their active nests. The CONTRACTOR will notify the Construction Manager for Mega Projects at least four (4)weeks prior to construction/demolition/maintenance of bridges and box culverts. The Construction Manager for Mega Projects will coordinate with SCDOT Environmental Services Office (ESO), Compliance Division, to determine if there are any active birds using the structure. SCDOT will be responsible for the removal/management of any active bird nests.	Construction	Status update to be phase specific.	Surveys conducted on Ramps C and D prior to maintenance/rehab activities. Meeting minutes will be provided for documentation.	No current or anticipated notification of construction/demolition/maintenanc e of bridges and box culverts.
EC-35	Potential borrow areas to be used for fill dirt for the project will be field reviewed and assessed for the presence of any jurisdictional features, and BMPs will be applied prior to disturbance to avoid and/or minimize erosion and runoff of sediments.	Construction	Status update to be phase specific.	Contractor shall comply.	Contractor shall comply.
EC-36	Construction operations will be scheduled for off-peak traffic hours when reasonable/feasible.	Construction	Status update to be phase specific.	Project specific traffic management plan has been submitted and is being monitored.	Project specific traffic management plan has been submitted.
EC-37	A traffic maintenance plan will be developed prior to construction initiation to minimize interference to traffic flow from construction equipment and activities.	Design	Status update to be phase specific.	Contractor has submitted a conceptual traffic maintenance plan for review.	Contractor has submitted a conceptual traffic maintenance plan for review.
EC-38	After SCDOT acquisition, wetland delineations will be performed on Parcels 270, 187 and 316; archaeological investigations will be conducted on Parcels 187 and 316.	Programmatic	SCDOT has complied.	N/A	N/A

Re-Evaluation

Supporting Documentation

Carolina Crossroads Phase 2 – Broad River Road at I-20 Interchange

Richland County

Project ID: P039719

August 29, 2022

Contents

Introduction 1
Proposed Design Changes 3
Traffic 4
Environmental Effects Associated with the Final Project 5
Right-of-Way 5
Hazardous Materials 5
Noise 8
Waters of the U.S./Section 404 Permit Modification 9
Public Involvement 11
Environmental Commitments 11
Summary 11

APPENDIX A: Phase I and Phase II ESAs

APPENDIX B: Noise Analysis Addendum

Introduction

The Federal Highway Administration (FHWA) and South Carolina Department of Transportation (SCDOT) propose to implement various strategies that will improve the mobility and enhance traffic operations by reducing existing traffic congestion within the I 20/26/126 corridor in Richland and Lexington Counties, South Carolina. The proposed project, Carolina Crossroads (CCR), will ultimately increase capacity and improve operation along the corridor, including reconstructing/improving the following interchanges: the I-20 and I-26 system-to-system interchange, I-26 Exit 101 at Broad River Road, I-26 Exit 102 at Lake Murray Boulevard, I-26 Exit 103 at Harbison Boulevard, I-26 Exit 104 at Piney Grove Road, I-26 Exit 106 at St Andrews Road, I-26 Exit 108 at Bush River Road, the I-26/I-126 interchange, I-26 Exit 110 at US 378, I-126 at Colonial Life Boulevard, I-20 Exit 65 at Broad River Road, and I-20 Exit 63 at Bush River Road.

FHWA approved a final environmental impact statement (FEIS) and record of decision (ROD) for the project on May 2, 2019. The project has since progressed towards construction that will occur in five phases through the design-build process. Four reevaluations have been completed for the project since the FEIS/ROD: one for CCR Phase 1 design updates due to right-of-way changes (approved August 3, 2020), one for noise barrier wall updates (approved October 30, 2020), one for demolition updates (approved December 8, 2020), and one for changes to right-of-way and parcel acquisitions based on right-of-way negotiations for CCR Phases 2 and 3 and design revisions for CCR Phase 1 based on the design-build process (approved May 23, 2022). Project construction is anticipated to begin in fall 2022 with traffic control/maintenance activities and substantial project completion scheduled for March 2025.

Under CCR Phase 2, SCDOT proposes improvements to Interstate 20 (I-20) in Richland County, SC, including widening I-20, constructing new ramps and bridges, and replacing the I-20 at US 176 (Broad River Road) interchange with a new interchange design. The CCR Phase 2 project will extend from approximately 0.2 mile east of the Browning Road overpass to just west of the existing bridge over the Broad River.

SCDOT is administering the final design and construction of the project through a design-build contract. The design-build team has slightly modified various design elements of the previous Refined Recommended Preferred Alternative (RRPA), including an alternative design for the I-20 at US 176 (Broad River Road) interchange to provide the most efficient and economical solution to SCDOT (see **Figure 1** for design changes).

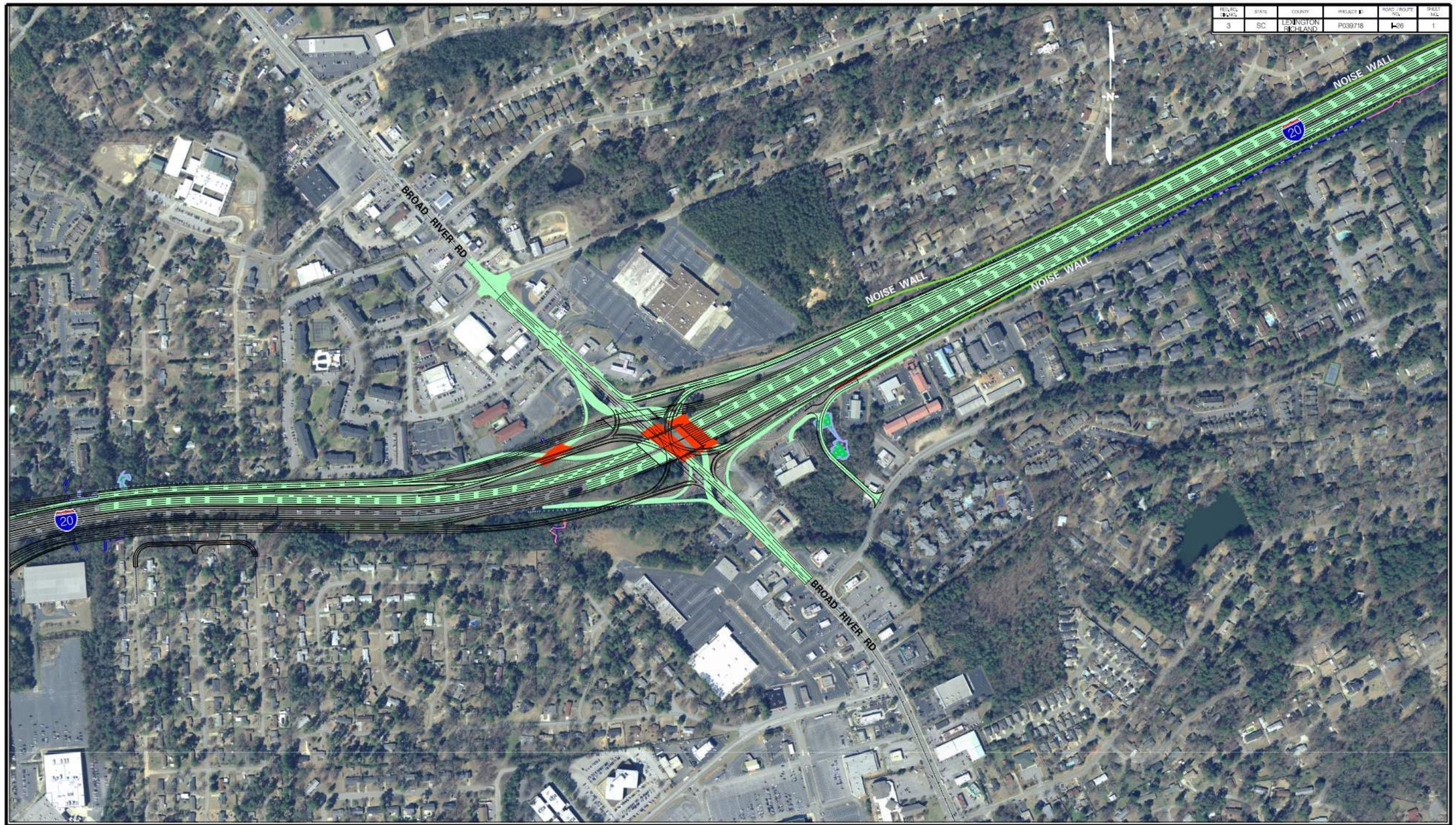

REV. NO.	STATE	COUNTY	PROJECT ID	ROAD / ROUTE NO.	SHEET NO.
3	SC	LEXINGTON RICHLAND	P039718	I-26	1

LEGEND

MODIFIED ROADWAY

MODIFIED BRIDGES

WETLANDS

PREVIOUS REFINED RPA

Figure 1: Design Modifications
Carolina Crossroads Phase 2

REV. NO.	BY	DATE	DESCRIPTION OF REVISION
6			
5			
4			
3			
2			
1			
0			

SOUTH CAROLINA DEPARTMENT OF TRANSPORTATION

CAROLINA CROSSROADS PHASE 2

DISPLAY SHEET

SCALE: 1" = 500'

Proposed Design Changes

The CCR Phase 2 design-build team evaluated the previous RRPA for CCR Phase 2 to develop more efficient and economical solutions based on design and construction. This included a detailed evaluation of the I-20 at US 176 (Broad River Road) interchange (Exit 65). A single point urban interchange (SPUI) was proposed as the RRPA design to replace the existing tight diamond interchange. The CCR Phase 2 design-build team proposes an alternative design for the I-20 at US 176 (Broad River Road) interchange—an offset diverging diamond interchange (DDI) for I-20 at US 176. Following extensive analysis, the offset DDI was chosen as the preferred concept based on several factors, such as constructability, cost effectiveness, and traffic operations. The proposed design does not include addition or removal of ramp connections to I-20 and I-26, which are proposed as part of the RRPA (**Figure 1**).

The purpose of the project is to provide traffic access to and from I-20 and Broad River Road efficiently and safely by replacing the old over capacity interchange and adding additional capacity along I-20 within the study limits, while keeping in view the ultimate design of the I-20/I-26/I-126 interchange. CCR Phase 2 includes adding lanes to I-20 and replacing the existing I-20/US 176 (Broad River Road) tight diamond interchange (Exit 65) with an offset DDI. These improvements include constructing new parallel bridges along Broad River Road over I-20, all new entrance and exit ramps, and other improvements to surface streets and frontage roads. This design creates two new "crossover" intersections instead of a single point intersection. The crossover is where two of the four interchange ramps intersect at a single location.

In addition, CCR Phase 2 will include construction of an exit ramp from I-20 westbound (WB) to I-26 eastbound (EB) and WB. This ramp will connect to a collector-distributor (CD) road which will include traffic from Broad River Road. The CD Road, at its maximum, will have three WB lanes. Two will split off and connect to WB I-26 and one will connect to EB I-26 once the I-20/I-26/I-126 interchange is complete. In the interim, the new connection will tie into the existing I-26 WB ramps and not reach its full capacity until the ultimate interchange is complete. Traffic that is bound for I-26 EB will continue to use the existing loop ramp until the ultimate system-to-system interchange is complete. The project will also include the relocation of Garner Lane from the I-20 EB entrance ramp to connect with Longcreek Drive north of the Broad River Road/Longcreek Drive intersection.

The following design changes were also made as part of the new offset DDI:

1. The entrance ramp from northbound (NB) Broad River Road to I-20 WB has been modified. The change reduced the ramp from two lanes to one lane. The amount of traffic using the ramp in the peak hour only required one lane. It also allows the merging with the ramp from southbound (SB) Broad River to I-20 WB to occur more efficiently.
2. The two-lane portion of the EB I-20 on-ramp from Broad River Road has been extended to provide a total of 800 feet from the south crossover intersection to improve safety and operations.

3. The south leg of Broad River Road at Briargate Circle/Marley Drive has been widened to accommodate the bicycle lane in the SB direction. The NB left turn is channelized at this approach allowing the NB and SB left-turn lanes to align with each other. The channelization is provided using pavement markings to provide guidance to drivers without presenting an obstruction in the roadway.

Traffic

The offset DDI proposed at I-20 at US 176 (Broad River Road) would provide additional capacity and therefore, reduce the traffic delays when compared to the FEIS/ROD RRPA design (SPUI). Most notably, the delays (measured in seconds per vehicle) would improve in the year 2040 with the offset DDI design. The RRPA SPUI concept is made up of three intersections and the offset DDI concept is comprised of two intersections; therefore, delays at each interchange are compared/analyzed by combining the intersections for each concept. As noted in **Table 1**, the combined delay (seconds/vehicle) at the intersections improves from 61.9 in the a.m. and 66.3 in the p.m. under the RRPA concept to 28.5 in the a.m. and 24.1 in the p.m. under the final design concept. In addition, the level of service (LOS) for the combined signalized intersections is better or equal to the RRPA interchange concept. LOS is a measurement of traffic operations (defined in terms of a weighted average control delay for the signalized intersection), based on a range from LOS A (best/free-flowing conditions) to LOS F (worst/most congested conditions). The traffic operation/LOS at the signalized intersections as well as the freeway capacity, and ramp merge/diverge movements, and delays (in seconds) have been improved with the proposed alternative design while meeting the purpose and need of the project. The proposed offset DDI improves overall traffic operations and enhances the buildability of the interchange by providing an additional travelway for diversion of traffic when constructing the main overpass structure over I-20.

Table 1. RRPA design (SPUI) vs. final design (offset DDI) intersection capacity analysis (year 2040)

	RRPA design concept				Final design concept			
	a.m. peak		p.m. peak		a.m. peak		p.m. peak	
Intersection	**LOS[a]**	**Delay**	**LOS**	**Delay**	**LOS**	**Delay**	**LOS**	**Delay**
I-20 WB off-ramp/crossover at US 176	B	12.6	B	19.7	B	18.1	B	12.7
I-20 at US 176 SPUI	D	43.5	D	36.2	-			
I-20 EB off-ramp/crossover at US 176	A	5.8	B	10.3	B	10.4	B	11.4
Combined concept	E	61.9	E	66.3	C	28.5	C	24.1

-: concept has EB and WB ramp termini only

a: LOS criteria based on the Transportation Research Board *Highway Capacity Manual* 2010.

Source: Adapted from STV. *Modified Selected Alternative Phase 1/Phase 2 Traffic Technical Report: Carolina Crossroads I-20/26/126 Corridor Project, Lexington and Richland Counties*. August 2022.

As a result of these design changes, the impacts to the human and natural environmental have been reevaluated for CCR Phase 2, as discussed below.

Environmental Effects Associated with the Final Project

Right-of-Way

The design revisions result in changes to the amount of right-of-way to be acquired beyond SCDOT right-of-way. Approximately 0.76 acre of additional right-of-way is needed for CCR Phase 2, compared to the previous RRPA design. Additional right-of-way will be acquired from 12 parcels, as shown in **Figure 2** (2.1-2.2). The additional right-of-way needed for CCR Phase 2 falls within the previously surveyed project study area (PSA) for the FEIS/ROD. Additionally, several areas of the PSA were expanded and evaluated to fully encompass the proposed footprint and incorporate additional right-of-way areas and parcels that have been incorporated into the project. The additional areas outside the existing PSA encompasses 24.6 acres and were evaluated for environmental resources.

Hazardous Materials

As a result of final design, and the additional right-of-way required, an additional limited Phase I environmental site assessment (ESA) was conducted in April 2022 along the new right-of-way areas to determine whether recognized environmental concerns (RECs) are present within or near the proposed corridor. All areas of additional new right-of-way are within the original FEIS/ROD PSA, which was previously screened for hazardous material sites. Based on the limited 2022 Phase I ESA, five tracts associated with new right-of-way were determined to have potential risks associated with hazardous substances. Three of the five areas were determined to contain the potential for moderate to high risk of environmental impact, one was determined to have a low to moderate risk of impact, and one was determined to have a low potential for environmental impact. The three areas of moderate to high risk were current or former gas stations. The low to moderate risk sites were abandoned monitoring wells likely associated with former gas stations, and the low-risk site was a former gas station. Two moderate to high risk sites (Tract 205—the Pon Di River Restaurant, and Tract 288—Affordable Dentures), both former service stations. The proposed project will result in minimal work on these sites; however, construction activities will be monitored and additional measures will be implemented as required. The location of these tracts can be found on **Figure 2** (2.1-2.2). A copy of the April 2022 Phase I ESA can be found in Appendix A.

Prior to the April 2022 limited Phase I ESA, a Phase I ESA was conducted in 2017, which identified several sites for Phase II ESA sampling. A Phase II ESA was conducted in April 2022 for four sites (Tracts 206, 207, 272, and 273) based on the 2017 Phase I ESA (enclosed in Appendix A). The results of the Phase II ESA identified two tracts (Tracts 272 and 273) along Broad River Road that had indications of contaminated soils that may warrant consideration during project construction activities depending on the depths of disturbance. For Tract 272 (vacant former Shephard's Texaco gas station), in areas where contamination may occur, it was recommended that a qualified environmental professional screen the soils for contamination and disposal. For Tract 273 (vacant former Racetrac gas station), no recommendations were made beyond standard practices. If soils are encountered which exhibit odor or other indications of contamination, work shall cease until the site is evaluated by an environmental professional (see environmental commitment number 25 from Chapter 3, Section 3.12).

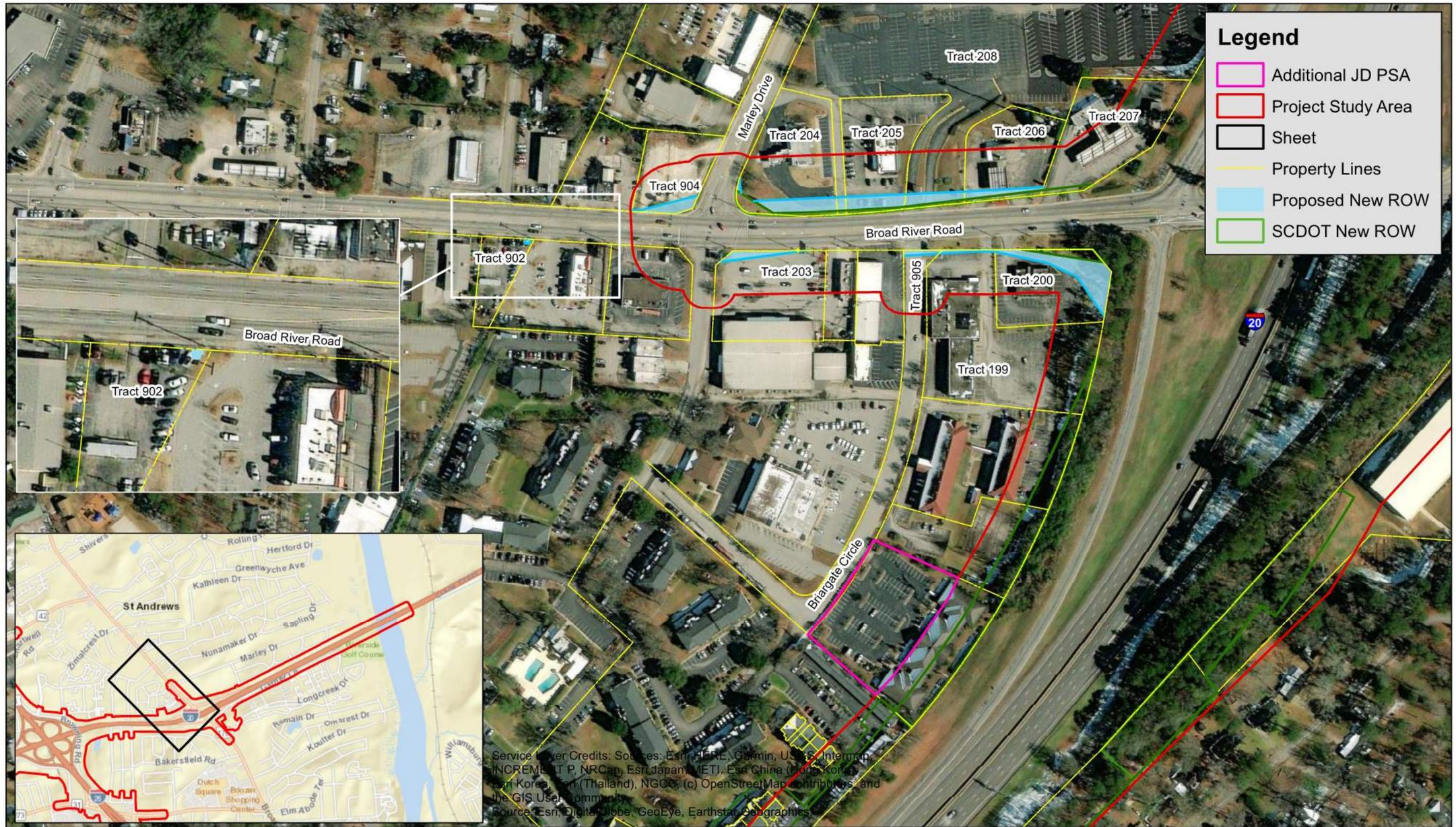

Date: 08.11.2022

Figure 2.1: Right-of-Way Impact Change

Carolina Crossroads Phase 2

0 100 200 Feet

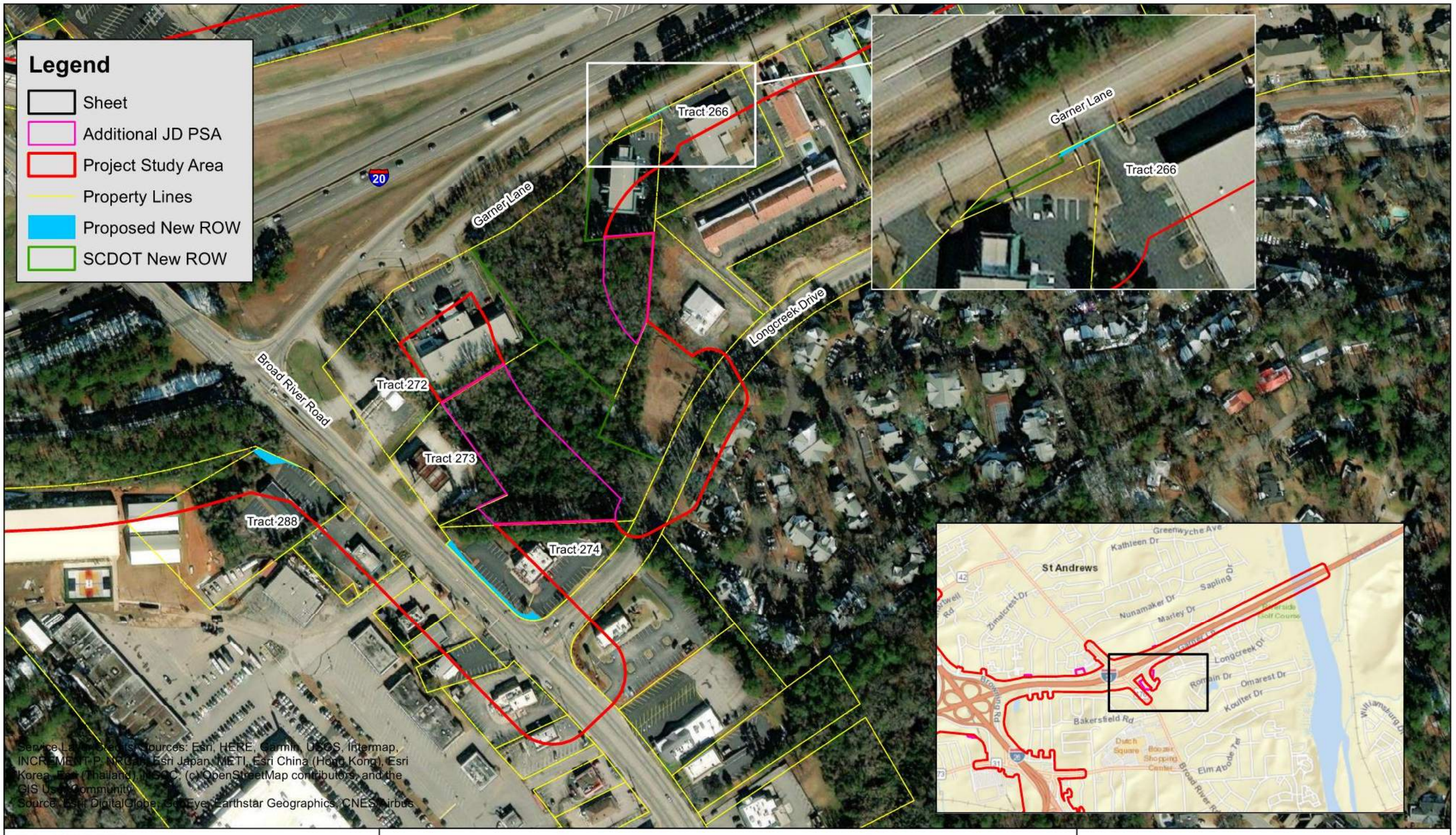

Date: 08.11.2022

Figure 2.2: Right-of-Way Impact Change

Carolina Crossroads Phase 2

0 100 200 Feet

N W E S

Noise

An addendum to the noise analysis was conducted to evaluate and document the geometric alignment changes proposed by the design-build team (enclosed in Appendix B). Sound levels were evaluated for the noise receivers within four noise sensitive areas (NSAs)—Q, R, S, and T—as a result of the design revisions. An NSA is a group of receptors that are situated in a single geographic area and might be protected by a single noise barrier. The CCR project area was divided into NSAs to make the noise analysis process more organized. Four noise barriers were re-evaluated based on the revised design. Overall, there is an increase in the total number of impacts (impacted receivers) when compared to the May 2019 FEIS. The increase is likely due to changes to the traffic volumes, truck percentages, and roadway geometry in the alternative design. Overall, with the design revisions there is a reduction in the number of impacted receivers in NSA Q and an increase in impacted receivers in NSA S and NSA T with the alternative design when compared to the May 2019 FEIS and an increase in impacted receivers in NSA R when compared to the October 2020 noise addendum. A total of 41 more receivers would be impacted by noise from the alternative design. The feasibleness, reasonableness, and design of Noise Barriers Q, R, S, and T were re-evaluated as part of this addendum. This re-evaluation determined whether these four noise barriers would pass the feasible and reasonable criteria to construct each noise barrier. Based on the SCDOT Traffic Noise Abatement Policy (2019), Noise Barriers R and S meet SCDOT's noise policy and are feasible and reasonable to construct. Therefore, Noise Barriers R and S were recommended for construction; however, Noise Barriers Q and T were feasible but not reasonable to construct based on the design revisions and were not recommended for construction. A summary of the four noise walls evaluated is included in **Table 2,** including a comparison of the noise impacts (number of impacted receivers) for the FEIS, the October 2020 noise addendum, and the final design.

Table 2. Noise Barriers Q, R, S, and T

Barrier ID	Station range (along I-20)	Barrier length (feet)	Impacts in FEIS	Impacts in October 2020	Impacts for 2022 final design	Total difference	Feasible/ Reasonable?
Q	122+60–194+55	3,362	48	-	43	-5	Yes/No
R	216+73–258+67	4,200	78	77	84	+7	Yes/Yes
S	215+73–257+62	4,189	159	-	174	+15	Yes/Yes
T	161+95–198+06	3,660	20	-	24	+4	Yes/No

A parallel barrier analysis was also conducted. A parallel barrier analysis is recommended when noise barriers are proposed on opposing sides of the roadway where the ratio of the distance between the noise barriers and the height of the noise barrier panels is less than 10:1. Portions of Noise Barriers R and S meet this criterion; therefore, the analysis was conducted at ten receivers across the length of the proposed barriers. Sound levels for Noise Barrier R may increase due to the sound reflecting between the parallel

barriers; however, the increase is less than 3.0 dBA so no action is required for absorptive treatment for the noise barriers.

Waters of the U.S./Section 404 Permit Modification

The design modifications would result in a change in impacts to waters of the U.S. (WOUS), which have been permitted through a Department of Army, Corps of Engineers Permit pursuant to Section 404 of the Clean Water Act (SAC-2015-01080). This permit authorized a total of 12,969 linear feet of stream impacts and 4.42 acres of wetland impacts, which were mitigated through a permittee-responsible mitigation (PRM) plan.

The final design results in an expansion of the existing (approved permit) PSA to fully encompass the proposed footprint. The additional areas outside the existing PSA for the entire CCR project encompasses 24.6 acres. The additional PSA was evaluated for presence of wetlands or other WOUS. One wetland feature was identified within the additional PSA footprint in CCR Phase 2—new Wetland 50-1 totaling 0.15 acre. There are no proposed impacts to the newly identified Wetland 50-1. The additional PSA including new Wetland 50-1 is depicted in **Figure 3** and is documented in a permit modification for CCR Phases 1 and 2.

The total stream/tributary and wetland impacts associated with CCR Phase 2 are consistent with the approved permit, with an overall net reduction in impacts to WOUS as a result of final roadway and drainage design. Specifically, the proposed modifications will result in a net reduction of 0.40 acre of wetland impacts and 111 linear feet of stream impacts. The reduction in wetland impacts is primarily due to reduced impacts to Wetlands 50 and 18. For stream impacts, final drainage design will result in an increase in impacts to Tributary 36; however, impacts to Tributary 35 will decrease, resulting in a net reduction. Additionally, the approved permit contained a special condition (g) regarding Tributary 39, specifically that impacts to Tributary 39 cannot commence until USACE has provided written notice to proceed and written approval of a final compensatory mitigation plan for the stream relocation impacts to Tributary 39. The approved permit documented 170 linear feet of (pipe) impacts, and 2,295 linear feet of relocation impacts to Tributary 39. Due to final roadway and drainage design, the proposed pipe impacts to Tributary 39 have been eliminated and replaced with an open channel (relocation impacts). Therefore, the total impacts to Tributary 39 have been revised to 2,465 linear feet of relocation and no pipe impacts. The proposed activity will not result in a loss of function to Tributary 39 and no additional compensatory mitigation is proposed. These impacts are documented in the permit modification and accompanying Tributary 39 Mitigation Plan for SAC 2015-01080.

The proposed impacts have been mitigated through the previously approved PRM plan and no additional mitigation is required due to the reduction in impacts. The revised total WOUS impacts are 12,828 linear feet of streams and 4.02 acres of wetlands. A permit modification reflecting the final impact totals, including mitigation credits and the Tributary 39 mitigation plan, for individual permit SAC-2015-01080 was submitted to the U.S. Army Corps of Engineers in April 2022.

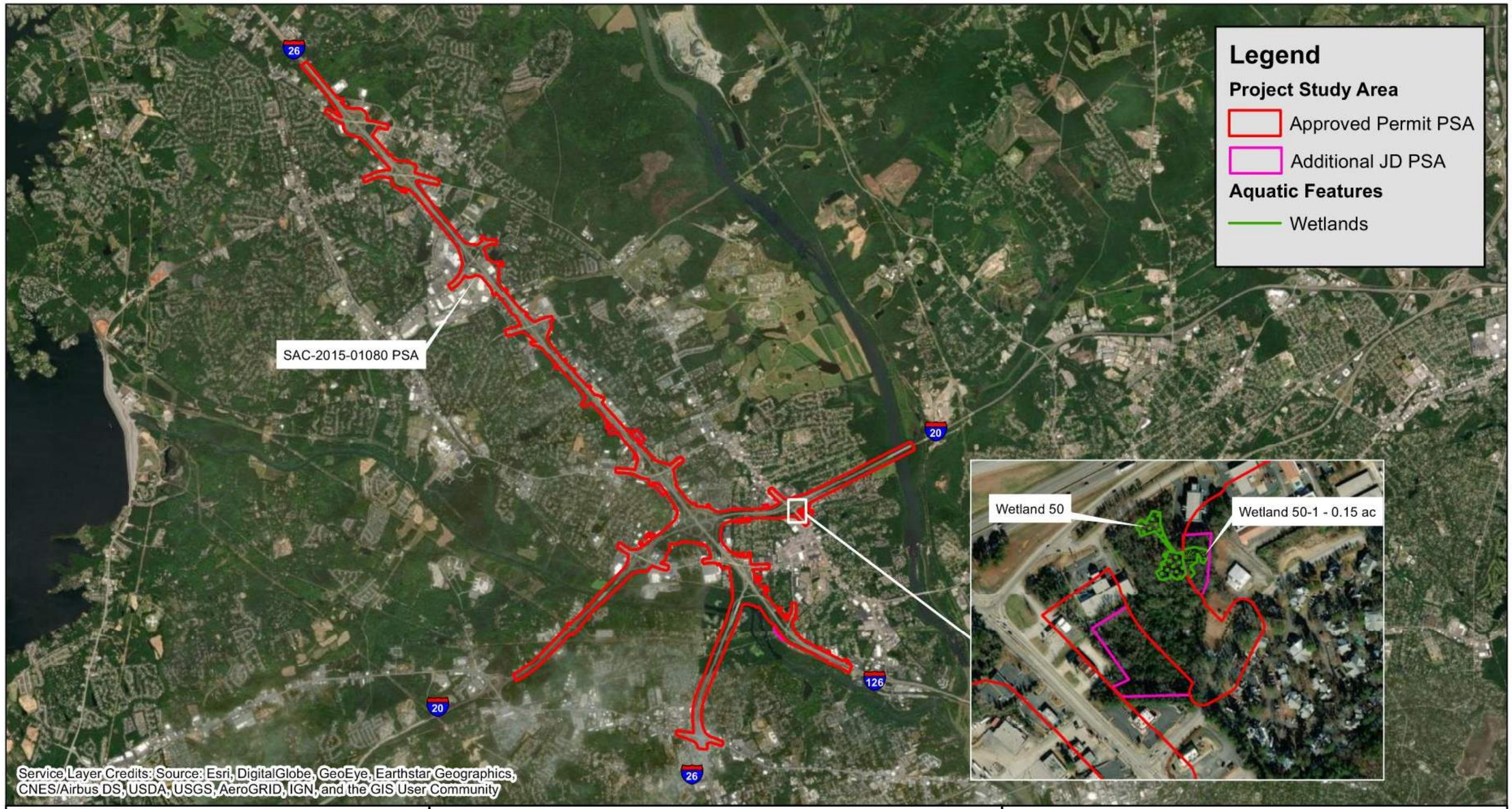

Date: 08.11.2022

Figure 3: Additional Project Study Area

Carolina Crossroads Phase 2

0 1 Miles

N W E S

Public Involvement

Updates are provided regularly on the project website and social media pages (Facebook and Twitter), and with quarterly newsletters. A press release was issued on August 9, 2021, announcing the commencement of CCR Phase 2.

Environmental Commitments

SCDOT and FHWA previously identified various environmental commitments to avoid and minimize impacts to the surrounding human and natural environment (attached). These commitments are documented in the FEIS/ROD and the contract documents associated with the design-build procurement. No new commitments are proposed for these modifications. However, the following existing commitment (number 25 from Chapter 3, Section 3.12) must be followed for the newly identified tracts along Broad River Road that had indications of contaminated soils:

If avoidance of hazardous materials is not a viable alternative and soils that appear to be contaminated re encountered during construction, the South Carolina Department of Health and Environmental Control (SCDHEC) will be informed immediately. Hazardous materials will be tested and removed and/or treated in accordance with the United State Environmental Protection Agency and SCDHEC requirements, if necessary. SCDHEC Hazardous Waste Treatment, Storage, and Disposal compliance staff can be contacted at 803-898-0290.

Summary

The potential impacts associated with the continued negotiation and acquisition of right-of-way, as well as with the design changes to CCR Phase 2 have been evaluated to ensure consistency with the original decisions made in the FEIS/ROD. The RRPA for CCR Phase 2 has been modified to provide an alternate design for the I-20 at US 176 (Broad River Road) interchange (Exit 65). The proposed modified design was chosen as the preferred concept based on constructability, cost effectiveness, and traffic operations and includes all new entrance and exit ramps, and two new “crossover” intersections instead of a single point intersection. The proposed modified design will require a minor amount of additional right-of-way but will not result in any displacements. A limited Phase I was conducted of the new right-of-way areas, and two additional tracts were recommended for Phase II investigations. A Phase II was also conducted on previously identified sites, which recommended one of those tracts for further screening. Potential noise impacts associated with the proposed design was reevaluated for four noise barriers, with the no change from the determination in the FEIS/ROD. Two noise barriers (R and S) are still warranted, and two barriers (Q and T) are not proposed for construction. Finally, the proposed design will result in a net loss of impacts to wetlands and other WOUS, but will require modification of the Section 404, Department of Army Permit SAC-2015-01080. As such, the impacts associated with the proposed design of CCR Phase 2 are similar to the impacts of the RRPA, and consistent with the overall findings and decision documented in the FEIS/ROD.

Table 3. Summary of impact changes since FEIS/ROD

Environmental criteria	Impact change
Right-of-way	0.76 acre increase over 12 tracts
Hazardous materials	ROW from 5 potential RECs
Noise	21 additional noise impacts (net)
WOUS (wetlands)	Net reduction of 0.40 acre
WOUS (streams)	Net reduction of 111 linear feet

Appendix A:
Phase I and Phase II ESAs

Carolina Cross Roads
Additional ROW Study Areas Near I-20 and Broad River Road
Richland County, South Carolina

Corridor / Phase I Environmental Site Assessment

April 18, 2022

ARM Project #08-300-22

Prepared For:

Infrastructure Consulting & Engineering
Columbia, South Carolina

ARM ENVIRONMENTAL SERVICES

1210 1st STREET SOUTH EXT, COLUMBIA, SC 29209 / phone: 803 783-3314 / www.armenv.com

TABLE OF CONTENTS

1.0 - Summary	Page 1
2.0 - Introduction	Page 3
3.0 - Site Description	Page 5
4.0 – User Provided Information	Page 5
5.0 – Records Review	Page 7
6.0 – Site Reconnaissance	Page 14
7.0 – Interviews	Page 15
8.0 – Findings	Page 16
9.0 – Opinion	Page 16
10.0 – Conclusions	Page 16
11.0 – Deviations	Page 18
12.0 – Additional Services	Page 18
13.0 – References	Page 18
14.0 – Signature(s) of Environmental Professional(s)	Page 20
15.0 – Qualifications of Environmental Professional(s)	Page 20
16.0 – Warranty	Page 20

17.0 – Appendices

- 17.1 Site (Vicinity) Map – Figure 1
- 17.2 Site Plans – Figures 2 though 3
- 17.3 Site Photographs
- 17.4 Historical Research Documentation
- 17.5 Regulatory Records Documentation
- 17.6 Interview Documentation
- 17.7 Special Contractual Conditions Between User and Environmental Professional
- 17.8 Qualifications of the Environmental Professional

1.0 Summary

ARM Environmental Services, Inc. (ARM) has completed a Corridor / Phase I Environmental Site Assessment (ESA) of six potential new right of way areas along Broad River Road, near I-20, in Richland County, South Carolina. The study areas include six small areas of potential new right of way on the northeast and southwest sides of Broad River Road. Four of the areas are northwest of the I-20 / Broad River Road interchange and two are southeast of the I-20 / Broad River Road interchange. The study area locations have been designated by ARM as 1 through 6, going from northwest to southeast, as indicated on Figure 2 and Figure 3, included in Appendix 17.1. Due to the multi-property nature of this project, the scope of the assessment has been modified to be more general relative to the ASTM 1527-13 standard. The purpose of this assessment was to identify any Recognized Environmental Conditions (RECs) present on, or located in close proximity to, the study areas, so that these conditions can be considered during the roadway construction planning process.

Sites considered to represent current, historic, and/or controlled RECs were identified within the scope of this assessment. Based on the findings of this assessment and the available information, the following sites are considered to represent a **moderate to high potential** for adverse impact to one or more of the study areas:

- Proposed new ROW area #3 is located adjacent to the southwest of the Pon Di River restaurant, at 2344 Broad River Road. The Pon Di River restaurant property is the former location of a gas station and is further discussed in Section 5.1. Based on the available information, the property at 2344 Broad River Road is considered to represent a moderate to high potential for adverse impact to Proposed new ROW area #3.
- A Gulf Service station was formerly located at 2123 Broad River Road. This is the current location of an Affordable Dentures and Implants business, which is located adjacent to the south of Area #5. Abandoned monitoring wells were observed here in close proximity to the proposed new ROW area #5. This site is further discussed in Section 5.1 and is considered to represent a moderate to high potential for adverse impact to the proposed new ROW area #5.

Based on the findings of this assessment and the available information, the following sites are considered to represent a **low to moderate** potential for adverse impact to one or more of the study areas:

- Abandoned monitoring wells were observed at the motel property, at 1029 Briargate Circle, located adjacent to the southwest of potential new ROW area #4. These monitoring wells are further discussed in Section 5.1. No data was available for these wells. While these monitoring wells may be related to past assessment of the 2224 Broad River Road site, the presence of these wells in close proximity to the proposed new ROW Area #4 is considered to represent a low to moderate potential for adverse impact to the proposed new ROW Area #4.

Upon completion of preliminary engineering plans, it may be warranted to conduct FOIA file reviews and/or detailed investigations of those suspect sites potentially impacted by the roadway improvements, or any portion of the study area that has the potential to have been adversely impacted by any of the referenced environmental sites. The determination of areas that may warrant Phase II Assessment services should be site specific, based on hydrogeologic conditions, distance from specific environmental concerns, and other relative factors. Specific Phase II Assessment recommendations can be formulated upon review of preliminary engineering and right of way plans and may include soil / groundwater sampling and/or additional regulatory file review under the FOIA process.

2.0 Introduction

Pursuant to authorization from Infrastructure Consulting and Engineering (ICE), ARM has completed a Corridor / Phase I Environmental Site Assessment (ESA) of six potential new right of way areas along Broad River Road, near I-20, in Richland County, South Carolina. The study areas include six small areas of potential new right of way on the northeast and southwest sides of Broad River Road. Four of the areas are northwest of the I-20 / Broad River Road interchange and two are southeast of the I-20 / Broad River Road interchange.

Due to the multi-property nature of this project, the scope of the assessment has been modified to be more general relative to the ASTM 1527-13 standard. Specific processes that are typically not conducted as part of a Corridor / Phase I ESA include detailed reviews of chain of title data and interviews with all property owners.

2.1 Purpose

The purpose of this assessment was to identify any RECs or liabilities present within, or located in close proximity to, the study area. The term *recognized environmental conditions* means the presence, or likely presence, of any hazardous substances or petroleum products in, on, or at a property: (1) due to any release to the environment; (2) under conditions indicative of a release to the environment; or (3) under conditions that pose a material threat of a future release to the environment (ASTM E 1527-13).

2.2 Detailed Scope of Services

This assessment was conducted in general accordance with ASTM Standard E 1527-13 for Phase I ESAs. Per this standard, the ESA is composed of four parts. They are (1) Records Review, (2) Site Reconnaissance, (3) Interviews, and (4) Report.

2.3 Significant Assumptions

The purpose of this study is to define and report RECs. This study does not address or relate to “de minimis” conditions that do not present a material threat to health or the environment and generally would not be the subject of an enforcement action by a governmental agency. It is assumed that the user of this ESA expects this study to constitute all appropriate inquiry in order to satisfy one of the requirements to qualify for one or more of the landowner liability protections (LLPs) to CERCLA liability.

This environmental assessment was accomplished based on customary practices and the type of property involved. The following are some issues or conditions which are outside the scope of work for a Phase I ESA as defined by ASTM E 1527: Asbestos Containing Materials, Radon, Lead-Based Paint, Lead in Drinking Water, Wetlands, Regulatory Compliance, Cultural and Historic Resources, Industrial Hygiene, Health and

Safety, Ecological Resources, Endangered Species, Flood Plains/Flood Ways, Indoor Air Quality, and High Voltage Power Lines.

The accuracy of this environmental assessment partially depends on information provided by others. ARM cannot be responsible for the accuracy of information provided by other entities or persons. However, we have no reason to suspect that any of the information provided is inaccurate. With regard to the interviews, it is assumed that those interviewed responded in good faith and honestly.

ARM assumes no liability for changes in the fair market value of the property as a result of the performance of the environmental assessment activities, or disclosures of environmental conditions relating to the property.

2.4 Limitations and Exceptions of Assessment

This study was accomplished using the ASTM E 1527-13 guidelines for all appropriate inquiry and the environmental professional's best judgment. The environmental site assessment cannot wholly eliminate uncertainty regarding the potential for environmental conditions to exist on the subject site or adjoining properties. Performance of the study under the referenced ASTM guidelines is intended to reduce, but not eliminate, uncertainty regarding the potential for RECs in connection with the Study area. ASTM recognizes reasonable limits with regard to time and cost.

Due to the multi-property nature of this project, the scope of the assessment has been modified to be more general relative to the ASTM 1527-13 standard. Specific processes that are typically not conducted as part of a Corridor / Phase I ESA include detailed reviews of chain of title data and interviews with all property owners. Vapor intrusion was not considered as part of this assessment as it is understood that the project involves roadway construction and not evaluation, renovation, or the construction of buildings or other structures that would potentially collect vapors. However, any sites that have been identified as potential sources of soil and/or groundwater contamination to the study area, would also represent the potential to impact the study area through vapor encroachment. It is recommended that vapor issues be evaluated on a site specific basis, for any part of the roadway improvement project with potential or documented soil or groundwater contamination.

2.5 Special Terms and Conditions

This scope of work has been conducted for Infrastructure Consulting and Engineering (ICE), of Columbia, SC.

2.6 User Reliance

This scope of work has been conducted solely for the user(s) identified on the cover sheet of this report. ARM has no present or contemplated future interest in the inspected property. User reliance may be amended by letter to include other parties,

such as involved lenders, as deemed appropriate by ARM ***and*** pursuant to permission granted to ARM from the originally identified user.

3.0 Site Description

A general site description, site location, uses of adjacent properties, and general background information for the study area is summarized in the following sections. Photographic documentation of the study area is included in Appendix 17.3.

3.1 Location and Description

The study areas include six small areas of potential new right of way on the northeast and southwest sides of Broad River Road. Four of the areas are northwest of the I-20 / Broad River Road interchange and two are southeast of the I-20 / Broad River Road interchange. The study area locations have been designated by ARM as 1 through 6, going from northwest to southeast, as indicated on Figure 2 and Figure 3, included in Appendix 17.1.

3.2 Site and Vicinity General Characteristics

The study areas are described in Section 3.1 and 3.4. The general vicinity of the study areas consists primarily of commercial properties.

3.3 Current Use of the Property

The study areas are primarily grassed road frontage or paved parking areas of commercial properties.

3.4 Descriptions of Structures, Roads, and Improvements on Site

The study areas are primarily grassed road frontage or paved parking areas of commercial properties. Portions of the various commercial properties fall within the study area boundaries.

3.5 Current Uses of Adjoining Properties

Adjoining properties consist of primarily commercial development.

4.0 User Provided Information

4.1 Title Records

As this Phase I ESA has been modified to fit a corridor type project, the review of chain of title information for multiple properties was not conducted as part of this assessment.

4.2 Environmental Liens or Activity and Use Limitations (AULs)

No information regarding environmental liens or AULs was provided. As this Phase I ESA has been modified to fit a corridor type project, the review of this type of information for multiple properties was not included in the scope of this assessment.

4.3 Specialized Knowledge

No specialized knowledge or other information relevant to environmental conditions in the study area was provided.

4.4 Commonly Known or Reasonably Ascertainable Information

No commonly known or reasonably ascertainable information relevant to environmental conditions in the study area was provided.

4.5 Valuation Reduction for Environmental Issues

Property valuation information was not provided. The intent of this Phase I ESA is to act as a corridor study of potential new ROW areas.

4.6 Owner, Property Manager, and Occupant Information

As this Phase I ESA has been modified to fit a corridor type project, the collection and review of this type of information for these multiple properties of ownership data was not included in the scope of this assessment.

4.7 Reason for Performing Phase I

The Phase I ESA has been requested to document the environmental conditions in the study areas so that alternatives for roadway construction within the study areas can be considered.

4.8 Other

The User provided previous Phase I ESA reports, dated June 2017, for four nearby properties, prepared by F&ME Consultants. These reports are referenced in Section 13.0.

5.0 Records Review

5.1 Standard Environmental Record Sources

Federal and State regulatory databases were reviewed to further identify any known sources of contamination located within a one mile or one-half mile radius of the Study area. The Federal records searched during this assessment included sites which handle or dispose of hazardous wastes or hazardous materials, and sites which otherwise have been identified to have air, soil, or groundwater contamination. The State records reviewed included hazardous waste sites, landfills, and sites with registered or leaking underground storage tanks. The environmental record search information is provided by Environmental Data Resources, Inc. (EDR). The EDR database report is provided in Appendix 17.5.

The regulatory databases and target radius for each database are as follows:

Federal Databases

NPL	National Priorities List (1.0 mile radius, 0.5 if delisted)
CERCLIS	EPA Comprehensive Environmental Response, Cleanup and Liability Information System (0.5 mile radius)
CERCLIS NFRAP	CERCLIS No Further Remedial Action Planned (property and adjoining property)
RCRA CORRACTS	Resource Conservation and Recovery Act Facilities that have been notified by the EPA to undertake corrective action under RCRA (1.0 mile radius)
RCRA TSD	RCRA Non-CORRACTS Treatment/Storage/Disposal Facilities (0.5 mile radius)
RCRA Generators	RCRA generators of hazardous waste (property and adjoining property)
AULs	Activity and use limitations – legal or physical restrictions or limitations on use (property)
ERNS	Emergency Response Notification System (property)

State Databases

SHWS	
Equivalent NPL	(1.0 mile radius)
Equivalent CERCLIS	(0.5 mile radius)
SWF/LF	Landfill/Solid Waste (0.5 mile radius)
LUST	Leaking Underground Storage Tank sites (0.5 mile radius)

RUST	Registered Underground Storage Tank sites (property and adjoining property)
AULs	(property)
Voluntary Cleanup Sites	(0.5 mile radius)
Brownfield Sites	(0.5 mile radius)

Regulated Facilities

The following regulated sites were identified within the research distances from the study area as defined above. Details gathered during the investigative process, including site visits, for sites deemed to represent greater than a low potential for adverse impact to the study area are also provided following the list. Additional regulatory database descriptions are included in Section 17.5.

- Metts Oil Company
  2340 Broad River Road, located adjacent to the northeast of Area #3
  EDR Historical Auto Stations (Metts Oil Co., 1977-1979)

- Gulf Service Station
  2123 Broad River Road, located adjacent to Area #5
  LUST site, DHEC ID #07342; EDR Historical Auto Stations (Robertsons Gulf Service, 1970-1989)

- Racetrac 978
  2114 Broad River Road, located adjacent to Area #6 and approximately 170 feet east of Area #5
  LUST site, DHEC ID #07910

- Carolina Industrial, Inc.
  2428 Broad River Road, located approximately 80 feet northeast of Area #1 and 160 feet northwest of Area #2
  RCRA VSQG site, EPA ID #SCR000003491

- McQuiks Oil Lube
  2121 Broad River Road, located approximately 80 feet west of Area #6 and approximately 150 feet southeast of Area #5
  LUST site, DHEC ID #10130; EDR Historical Auto Stations (Mobil Oil Corp, 1973-1982)

- Shepperds Texaco
  2116 Broad River Road, located approximately 100 feet northeast of Area #5
  LUST site, DHEC ID #07605

- Texaco Service
  Broad River Road at I-20, located approximately 100 feet northeast of Area #5
  LUST site, DHEC ID #07628

- Exxon Location 4 5015
  2220 Broad River Road, located approximately 100 feet northeast of Area #4
  RCRA VSQG, EPA ID #SCD987578234

- R A S 45015
  2220 Broad River Road, located approximately 100 feet northeast of Area #4
  UST site, DHEC ID #11892

- Circle K 2703105
  2220 Broad River Road, located approximately 100 feet northeast of Area #4
  LUST site, DHEC ID #07648; EDR Historical Auto Stations (Shealy Miller Esso, Broad River Exxon, Garvin Oil Company, 1969-2014)

- Port Unit 288
  2224 Broad River Road, located approximately 100 feet northeast of Area #4
  LUST site, DHEC ID #07758; EDR Historical Auto Stations (Fox Shell Service Station, 1974-1976)

- Yokahama Tire
  2341 Broad River Road, located approximately 130 feet west of Area #4
  LUST site, DHEC ID #18544

- Columbia Fire Department St. Andrews
  1225 Briargate Circle, located approximately 275 feet southwest of Area #2
  LUST site, DHEC ID #07326

- Constan, Inc.
  2505 Broad River Road, located approximately 350 feet northwest of Area #1
  LUST site, DHEC ID #07925

- Circle K 2705138
  2624 Broad River Road, located approximately 550 feet northwest of Area #1
  LUST site, DHEC ID #11013

- Former USA Service Station
  Dutch Square Mall, located approximately 900 feet south of Area #6
  LUST site, DHEC ID #16612

- Pep Boys 134
  1804 Broad River Road, located approximately 1,015 feet southeast of Area #6
  LUST site, DHEC ID #18230

- Frasier Tire Service
  828 Dutch Square Blvd, located approximately 1,300 feet southwest of Area #6
  LUST site, DHEC ID #14101

- Palmetto Fine Cleaners
  1718 Broad River Road, located approximately 1,530 feet southeast of Area #4
  SHWS site, DHEC ID #SCDRY0053089, SC Drycleaners site, DHEC ID #53089

- Speedway 2842
  1714 Broad River Road, located approximately 1,600 feet southeast of Area #6
  LUST site, DHEC ID #18230

- Suburban Lodge
  1633 Broad River Road, located approximately 1,900 feet south-southeast of Area #6
  SHWS site, DHEC ID #SCS123457099

- Former Ed Robinson Laundry and Drycleaning
  Dutch Square Mall, located approximately 1,900 feet south-southeast of Area #6
  SHWS site, DHEC ID #SCDRY0056170

- Former Brite Cleaners
  422 Bush River Road, located approximately 2,900 feet south of Area #6
  SHWS site, DHEC ID #SCS123457021; Voluntary Cleanup Program site, DHEC File #57278

- Deluxe Cleaners
  3007 Broad River Road, located approximately 3,080 feet northwest of Area #1
  SHWS site, DHEC ID #SCDRY0056072; SC Drycleaners site, DHEC ID #56072

- Tripps Fine Cleaners
  1339 Broad River Road, located approximately 3,500 feet south-southeast of Area #6
  SHWS site, DHEC ID #SCDRY0051271; SC Drycleaners site, DHEC ID #51271

- Arnolds Professional Garment Care
  3104 Broad River Road, located approximately 3,750 feet northwest of Area #1
  SHWS site, DHEC ID #SCDRY0051118; SC Drycleaners site, DHEC ID #51118

The Metts Oil Company site, listed at 2340 Broad River Road in the EDR Historical Auto Stations database, appears to be a former service station. The current 2340 Broad River Road address is that of a large office building that is the former location of a Home Quarters (HQ) Warehouse home improvement store. However, historical aerial photographs do not clearly show a service station at the location of the former HQ store. Based on the 1971 aerial photograph, the current location of the Pon Di River restaurant, at 2344 Broad River Road, is the likely location for the former service station. ARM

obtained the most recent assessment report for the Speedway Super America site at 2224 Broad River Road, dated February 26, 2021 from DHEC. The report shows two separate plumes of contamination, one of which appears to originate from a presumed source area on the Pon Di River property (former Applebees). According to the report for 2224 Broad River Road, the former Applebees site is DHEC ID #18726. However, the online UST database does not pull this site up for this ID number. The report includes a plume map that shows the groundwater contamination at the former Applebees site, including free product, to be encroaching close to the proposed new ROW Area #3. Additionally, it is unknown if USTs at the former Applebees property were ever removed. A source area for the groundwater contamination, either remaining tanks or contaminated soil, is likely present here in close proximity to the proposed new ROW Area #3. Therefore, based on the available information, the former Metts Oil site (on the Pon Di River / former Applebees property) is considered to represent a moderate to high potential for adverse impact to the proposed new ROW Area #3.

The above referenced report for Speedway Super America also indicates the presence of three abandoned monitoring wells on the hotel property located adjacent to the southwest of proposed new ROW Area #4. No data was available for these wells. While these monitoring wells may be related to past assessment of the 2224 Broad River Road site, the presence of these wells in close proximity to the proposed new ROW Area #4 is considered to represent a low to moderate potential for adverse impact to the proposed new ROW Area #4.

The above referenced report for Speedway Super America also indicates that Performance Auto at 2341 Broad River Road, located approximately 50 feet northwest of proposed new ROW Area #4, also historically utilized USTs. However, monitoring wells located on or near 2341 Broad River Road, do not show current impact. Therefore, the property at 2341 Broad River Road is considered to represent a low potential for adverse impact to the proposed new ROW Area #4.

A Gulf Service station was formerly located at 2123 Broad River Road. This is the current location of an Affordable Dentures and Implants business, which is located adjacent to the south of Area #5. Stephanie Briney, Manager of the Corrective Action and Field Support Section of the DHEC UST Management Division, provided the latest Groundwater Monitoring Report, dated July 13, 2017, for the former Gulf Service Station #24132. The referenced report indicated the presence of petroleum based groundwater contamination in the vicinity of the proposed new right of way #5 near Broad River Road. Therefore, this former Gulf Service station is considered to represent a moderate to high potential for adverse impact to the study area.

The former McQuicks Oil Lube facility, at 2121 Broad River Road, is located adjacent to the southeast of the above referenced former Gulf Service station and approximately 80 feet west of Area #6 / 150 feet southeast of Area #5. Based on the 1978 city directory, the site is also the former location of a Mobil Oil gas station. Previous (June 2017) Phase I ESA assessment information prepared for the Carolina Cross Roads project by F&ME Consultants, included a Groundwater Monitoring Report, dated October 9, 2013,

for the former McQuicks Oil Lube facility. The report indicates groundwater to be flowing to the northwest and does not show petroleum based contamination to be encroaching toward either Area #5 or Area #6. Based on the available information, the former McQuicks Oil Lube facility is considered to represent a low potential for adverse impact to the study area.

Several other regulated sites were identified within the research distances of the study areas. Based on the available information and the locations of the other listed sites relative to the study areas, the other listed sites are considered to represent a low potential for adverse impact to the study areas.

5.2 Additional Environmental Record Sources

Additional environmental record sources (ASTM non-standard), as listed in the search of environmental databases provided by EDR, were reviewed as they were encountered in the EDR report and as considered appropriate.

5.3 Physical Setting Sources

ARM reviewed the following sources regarding the physical setting of the study area and surrounding area:

- USGS Topographic Map, 7.5 minute series – Columbia North, (SC) Quadrangle, dated 2020

According to the contour lines on the USGS topographic maps reviewed for this assessment, the study areas are located approximately 330 feet above mean sea level. Topography in the area is of moderate relief. The section of Broad River Road that is adjacent to the study areas is generally located along a topographic ridge, with topography on the northeast side of the road generally sloping away to the northeast and topography on the southwest side of the road generally sloping away to the southwest. Shallow groundwater flow direction is expected to generally mirror surface topography.

The study areas are located within the Piedmont Physiographic Province of South Carolina (Maybin and Nystrom, 1997). The site is located in the Mylonotic Rocks of the Modoc Fault Zone, with major lithological constituents being tectonite and mylonite (Horton and Dicken, 2001).

5.4 Historical Use Information on the Property

Aerial Photographs

Aerial photographs, dated 1938, 1943, 1951, 1955, 1964, 1966, 1971, 1983, 1989, 1994, 2006, 2009, 2013, and 2017 were obtained from EDR. General conditions in the aerial photographs appeared as follows and further details discerned from the aerial

photographs or other historical sources regarding localized areas or individual properties may be located throughout this report.:

The general vicinity of the study areas appears rural, agricultural, and lightly residential through the 1955 photograph. By 1964, the area is becoming slightly more developed, with a mix of residential properties and commercial properties. The 1964 photograph also shows the Broad River Road / I-20 interchange under construction. The 1971 photograph shows greater commercial development in the area, including several of the gasoline stations discussed in previous sections. By the 1983 photograph, the area along Broad River Road appears predominantly commercial.

Historical Topographic Maps

Historical topographic maps from the years 1904, 1947, 1948, 1972, 1983, 1990, 1997, 2014, 2017, and 2020 were provided by EDR.

The general vicinity of the study areas is shown to be predominantly rural and only lightly developed through the 1948 map. The 1972 map shows the area becoming more developed with a mix of residential and commercial properties. The Broad River Road / I-20 interchange is also depicted on the 1972 map. Successive maps appear to show more and more commercial development; however, significant industrial development is not apparent in the general area of this portion of Broad River Road.

Historical City Directories

City directories contained in the previous 2017 F&ME Phase I Assessments were reviewed. The directories included the address range of the currently proposed new ROW areas and included the years 1970, 1973, 1978, 1983, 1988, 1992, 1995, 1999, 2003, 2008, and 2013. The reviewed city directories were in substantial agreement with other historical sources reviewed. However, a listing for the Metts Oil Company site, listed at 2340 Broad River Road in the EDR Historical Auto Stations database, was not evident in the city directories.

Summary

The available historical information indicates that the vicinity of the study areas has transitioned from rural / agricultural / light residential to predominantly commercial beginning in the 1970s. Although commercial development and the development of several gas stations has occurred near the study areas, no significant industrial development was apparent in the review of available historical sources.

6.0 Site Reconnaissance

6.1 Methodology and Limiting Conditions

ARM conducted the site walkover/ reconnaissance on April 13, 2022, in order to obtain any information regarding current conditions. Representative photographs of the study area were taken and are included in Appendix 17.3.

6.2 General Site Setting

The study area location is indicated on Figure 1 included in Appendix 17.1. Site plans showing the general study area layout are included as Figures 2 and 3 in Appendix 17.2. Sections 3.1, 3.2 and 3.4 of this report detail the general setting of the study areas. The adjoining properties have been described in Section 3.5 of this report. The pertinent information collected during the site inspection is summarized in the following sections. The study areas are primarily grassed road frontage or paved parking areas of commercial properties.

6.3 Observations

The study areas include six small areas of potential new right of way on the northeast and southwest sides of Broad River Road. Four of the areas are northwest of the I-20 / Broad River Road interchange and two are southeast of the I-20 / Broad River Road interchange. The study area locations have been designated by ARM as 1 through 6, going from northwest to southeast, as indicated on Figure 2 and Figure 3, included in Appendix 17.1. The general vicinity of the study areas consists primarily of commercial properties. Details regarding sites identified in the regulatory review process are provided in Section 5.0.

Based on the site reconnaissance and available information, there is a low potential for adverse impact to proposed new ROW area #1

Proposed new ROW #2 is adjacent to the southeast of a former car wash (2416 Broad River Road) and a tire shop (2420 Broad River Road). There was no evidence in the historical review or site observations that would indicate these properties were gas station related. Therefore, these properties are considered to represent a low potential for adverse impact to proposed new ROW #2.

Proposed new ROW area #3 is located adjacent to the southwest of the Pon Di River restaurant, at 2344 Broad River Road. The Pon Di River restaurant property is the former location of a gas station and is further discussed in Section 5.1. Based on the available information, the property at 2344 Broad River Road is considered to represent a moderate to high potential for adverse impact to Proposed new ROW area #3.

Abandoned monitoring wells were observed at the motel property, at 1029 Briargate Circle, located adjacent to the southwest of potential new ROW area #4. These monitoring wells are further discussed in Section 5.1. No data was available for these wells. While these monitoring wells may be related to past assessment of the 2224 Broad River Road site, the presence of these wells in close proximity to the proposed new ROW Area #4 is considered to represent a low to moderate potential for adverse impact to the proposed new ROW Area #4.

A Gulf Service station was formerly located at 2123 Broad River Road. This is the current location of an Affordable Dentures and Implants business, which is located adjacent to the south of Area #5. Abandoned monitoring wells were observed here in close proximity to the proposed new ROW area #5. This site is further discussed in Section 5.1 and is considered to represent a moderate to high potential for adverse impact to the proposed new ROW area #5.

Proposed new ROW area #6 is located adjacent to the Kentucky Fried Chicken, at 2104 Broad River Road, along the road. Although the former Racetrac gas station is located adjacent to the northwest, based on the available assessment information for the Racetrac site, the nearby Racetrac site is considered to represent a low potential for adverse impact to proposed new ROW area #6. No other sites with a greater than low potential to adversely impact proposed new ROW area #6 were identified.

7.0 Interviews

Interviews were conducted as part of the Phase I ESA investigative process and are summarized below. Additional information related to the interviews may be contained in other sections of this report, as appropriate, and interview documentation is provided in Section 17.6. Due to the multi-property nature of this assessment the Phase I ESA has been modified to be more general in scope and to provide an overall assessment of a large area. Therefore, interviews with individual property owners / managers were not generally conducted, as it would have been prohibitively time consuming to locate ownership / manager information for these multiple parcels.

7.1 Interviews with Local Government Officials

Debra Thoma and Stephanie Briney of the DHEC UST Management Division provided recent assessment reports for several of the UST sites in the area. ARM also conducted file reviews for several sites through the DHEC freedom of information process. Pertinent information obtained is summarized in Section 5.1.

7.2 Interviews with Others

No other interviews were conducted.

8.0 Findings

The following summary of findings is provided:

- The study areas consist of six potential new right of way areas along Broad River Road, near I-20, in Richland County, South Carolina. The study areas include six small areas of potential new right of way on the northeast and southwest sides of Broad River Road. Four of the areas are northwest of the I-20 / Broad River Road interchange and two are southeast of the I-20 / Broad River Road interchange. The study areas are primarily grassed road frontage or paved parking areas of commercial properties. Portions of the various commercial properties fall within the study area boundaries. The study area locations have been designated by ARM as 1 through 6, going from northwest to southeast, as indicated on Figure 2 and Figure 3, included in Appendix 17.1.

- Several environmentally regulated facilities have been identified within or near the study area. These sites have been further described in Section 5.1. Based on the available information and locations of the sites, each site has been categorized as a Low (de minimis), Low to Moderate, or Moderate to High potential for adverse impact to the study area. Those sites with greater than a Low potential for adverse impact are considered to be RECs with respect to the study area. A summarized list of these sites considered to be RECs is included in the conclusions below.

- Sites of potential concern that were not identified on available database information were also noted during the investigative process. These sites have also been categorized by potential for adverse impact to the study area. A summarized list of these sites considered to be RECs is included in the conclusions below.

9.0 Opinion

Based on the site inspection, historical research, regulatory data review and interviews, it is the opinion of the environmental professional that RECs exist with respect to one or more of the study areas.

10.0 Conclusions

We have performed a Corridor / Phase I ESA in general conformance with the scope and limitations of ASTM Practice E 1527-13 of six potential new right of way areas along Broad River Road, near I-20, in Richland County, South Carolina. The study areas include six small areas of potential new right of way on the northeast and southwest sides of Broad River Road. Four of the areas are northwest of the I-20 / Broad River Road interchange and two are southeast of the I-20 / Broad River Road interchange. The study areas are primarily grassed road frontage or paved parking areas of commercial properties. Portions of the various commercial properties fall within the

study area boundaries. Any exceptions to, or deletions from, this practice are described in Sections 2.4 and 11.0. This assessment has revealed no evidence of RECs in connection with the study areas, except for the following:

Based on the findings of this assessment and the available information, the following sites are considered to represent a **moderate to high** potential for adverse impact to one or more of the study areas:

- Proposed new ROW area #3 is located adjacent to the southwest of the Pon Di River restaurant, at 2344 Broad River Road. The Pon Di River restaurant property is the former location of a gas station and is further discussed in Section 5.1. Based on the available information, the property at 2344 Broad River Road is considered to represent a moderate to high potential for adverse impact to Proposed new ROW area #3.
- A Gulf Service station was formerly located at 2123 Broad River Road. This is the current location of an Affordable Dentures and Implants business, which is located adjacent to the south of Area #5. Abandoned monitoring wells were observed here in close proximity to the proposed new ROW area #5. This site is further discussed in Section 5.1 and is considered to represent a moderate to high potential for adverse impact to the proposed new ROW area #5.

Based on the findings of this assessment and the available information, the following sites are considered to represent a **low to moderate** potential for adverse impact to one or more of the study areas:

- Abandoned monitoring wells were observed at the motel property, at 1029 Briargate Circle, located adjacent to the southwest of potential new ROW area #4. These monitoring wells are further discussed in Section 5.1. No data was available for these wells. While these monitoring wells may be related to past assessment of the 2224 Broad River Road site, the presence of these wells in close proximity to the proposed new ROW Area #4 is considered to represent a low to moderate potential for adverse impact to the proposed new ROW Area #4.

Upon completion of preliminary engineering plans, it may be warranted to conduct FOIA file reviews and/or detailed investigations of those suspect sites potentially impacted by the roadway improvements, or any portion of the study area that has the potential to have been adversely impacted by any of the referenced environmental sites. The determination of areas that may warrant Phase II Assessment services should be site specific, based on hydrogeologic conditions, distance from specific environmental concerns, and other relative factors. Specific Phase II Assessment recommendations can be formulated upon review of preliminary engineering and right of way plans and may include soil / groundwater sampling and/or additional regulatory file review under the FOIA process.

11.0 Deviations

This Phase I ESA was conducted in general accordance with ASTM Standard E 1527-13 for Phase I Environmental Site Assessments. However, due to the multi-property nature of this assessment the Phase I ESA has been modified to be more general in scope and to provide an overall assessment of a large area.

12.0 Additional Services

An Asbestos and Lead Based Paint Survey of the US 1 Bridge over the SCL RR No. 3 was also conducted. The results of the survey are provided under separate cover.

13.0 References

ASTM E 1527-13 Standard Practice for Environmental Site Assessments: Phase I Environmental Site Assessment Process.

Environmental regulatory data, aerial photographs, historical topographic maps, and Sanborn Fire Insurance Map searches, provided by EDR, Inc.

Maybin and Nystrom, 1997, revised by Willoughby, Howard and Nystrom, 2005. Generalized Geologic Map of South Carolina; South Carolina Department of Natural Resources Geological Survey.

Horton, J.Wright, and Dicken, Connie L., 2001, Preliminary Geologic Map of the Appalachian Piedmont and Blue Ridge, South Carolina Segment: U.S. Geological Survey, Open-File Report 01-298, CD, scale 1:500,000. https://pubs.er.usgs.gov/publication/ofr01298

Phase I Environmental Site Assessment: 2224 Broad River Road, Columbia, SC. Prepared by F&ME, June 14, 2017.

Phase I Environmental Site Assessment: 2220 Broad River Road, Columbia, SC. Prepared by F&ME, June 14, 2017.

Phase I Environmental Site Assessment: 2116 Broad River Road, Columbia, SC. Prepared by F&ME, June 14, 2017.

Phase I Environmental Site Assessment: 2108 Broad River Road, Columbia, SC. Prepared by F&ME, June 14, 2017.

Groundwater Sampling Report: Former Speedway Super America LLC Unit #0288. UST Permit #07758. 2224 Broad River Road, Columbia, SC. Prepared for Marathon Petroleum Company, LP by Antea Group. February 26, 2021.

Groundwater Monitoring Report: Former Gulf Service Station No. 24132. 2123 Broad River Road, Columbia, SC. UST ID #07342. Prepared for BP Products North America, Inc. by Arcadis. July 13, 2017.

Groundwater Monitoring Results: McQuick's Oil Lube, 2121 Broad River Road, Columbia, SC. UST ID #10130. Prepared by Force & Associates, Inc. October 9, 2013.

14.0 Signature(s) of Environmental Professional(s)

Report Compiled By:



Richard Ciccolella
Project Manager

Reviewed By:



Andrew M. Wilson, P.G.
Sr. Project Manager / Principal

15.0 Qualifications of Environmental Professional(s)

We declare that, to the best of our professional knowledge and belief, we meet the definition of Environmental Professional as defined in §312.10 of 40 CFR 312, and we have the specific qualifications based on the education, training, and experience to assess a property of the nature, history, and setting of the Study area. We have developed and performed the all appropriate inquiries in conformance with the standards and practices set forth in 40 CFR Part 312.

Resumes summarizing the qualifications of the Environmental Professionals that conducted this assessment are included in Appendix 17.8.

16.0 Warranty

Services provided by ARM in this environmental assessment have been conducted in accordance with generally accepted environmental practices. This report has been generated solely for the use of the client. The information presented in this report is based only upon our site observations at the time of the site reconnaissance and data generated during our site reconnaissance. We cannot be responsible for the accuracy of information provided by others; however, we have no reason to suspect that any of the information provided is inaccurate. We accept no responsibility of damages or claims resulting from past or future environmental impact to the site caused by on or off-site activities or contamination, nor do we accept responsibility for subsequent remediation. This study is intended to be a non-biased assessment of on-site environmental conditions. No other warranties, either expressed or implied, are made.

17.0 APPENDICES

17.1 Site Location Map – Figure 1 & Physical Setting Sources
17.2 Site Plan – Figures 2, 3
17.3 Site Photographs
17.4 Historical Research Documentation
17.5 Regulatory Records Documentation
17.6 Interview Documentation
17.7 Special Contractual Conditions Between User and Environmental Professional
17.8 Qualifications of the Environmental Professional(s)

17.1 Site (Vicinity) Map

Figure 1 – Topographic Site Location Map

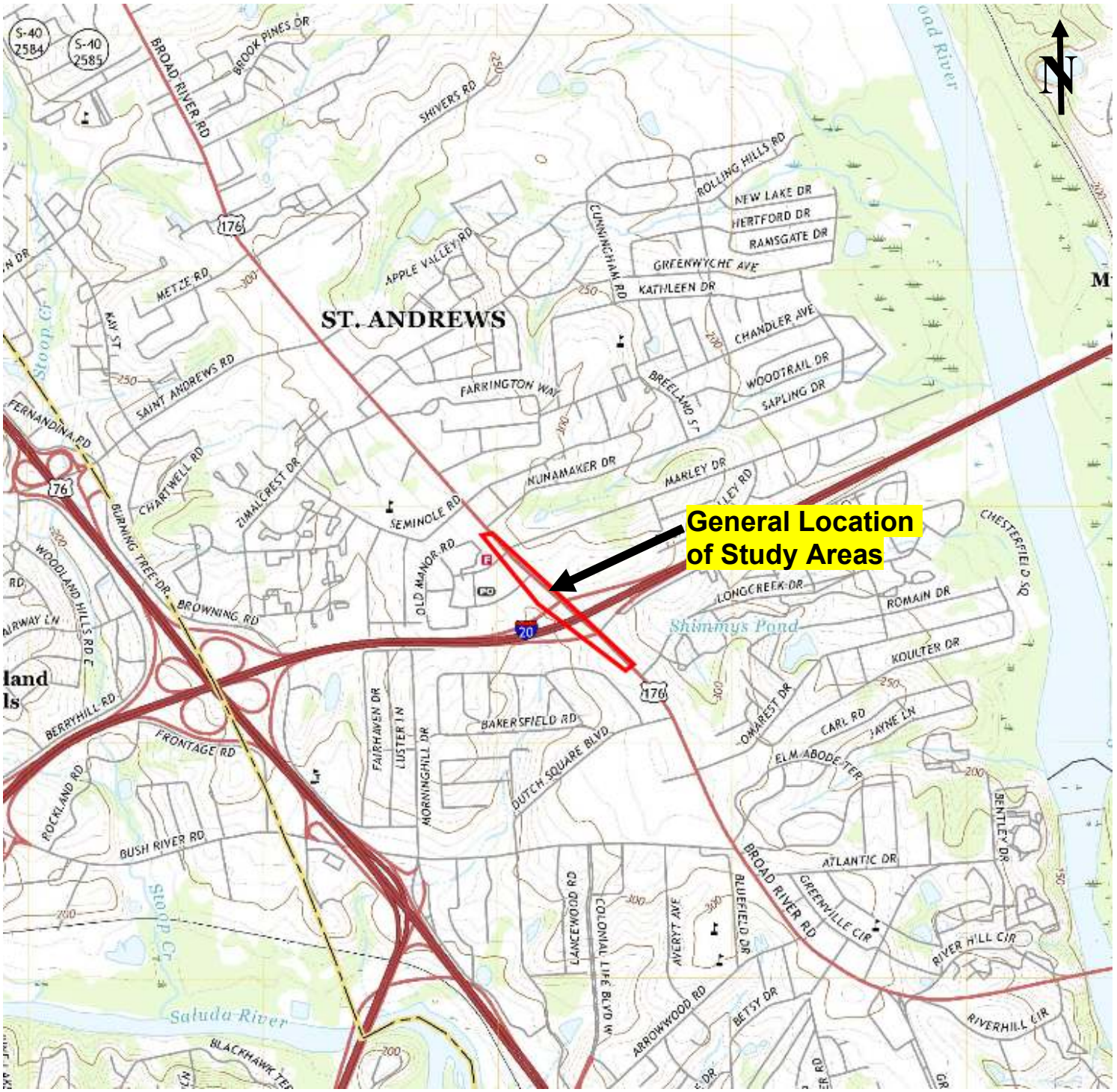

Project Corridor / Phase I ESA Carolina Cross Roads Project New ROW Areas Columbia, South Carolina	***Figure 1*** Study Areas Site Location Map 7.5 Minute Columbia North, SC Quad (2020)
Scale No Scale	***Date*** April 2022

ARM ENVIRONMENTAL SERVICES, INC.

17.2 Site Plan

Figure 2 – General Site Plan (areas 1-4)

Figure 3 – General Site Plan (areas 5-6)



Project	***Figure 2***
Corridor / Phase I Environmental Site Assessment Carolina Cross Roads Project New ROW Areas Columbia, South Carolina	Site Plan Showing New ROW Areas 1 through 4 (Figure adapted from ICE Figure provided on December 12, 2021)
Scale No Scale	***Date*** April 2022

ARM ENVIRONMENTAL SERVICES, INC.

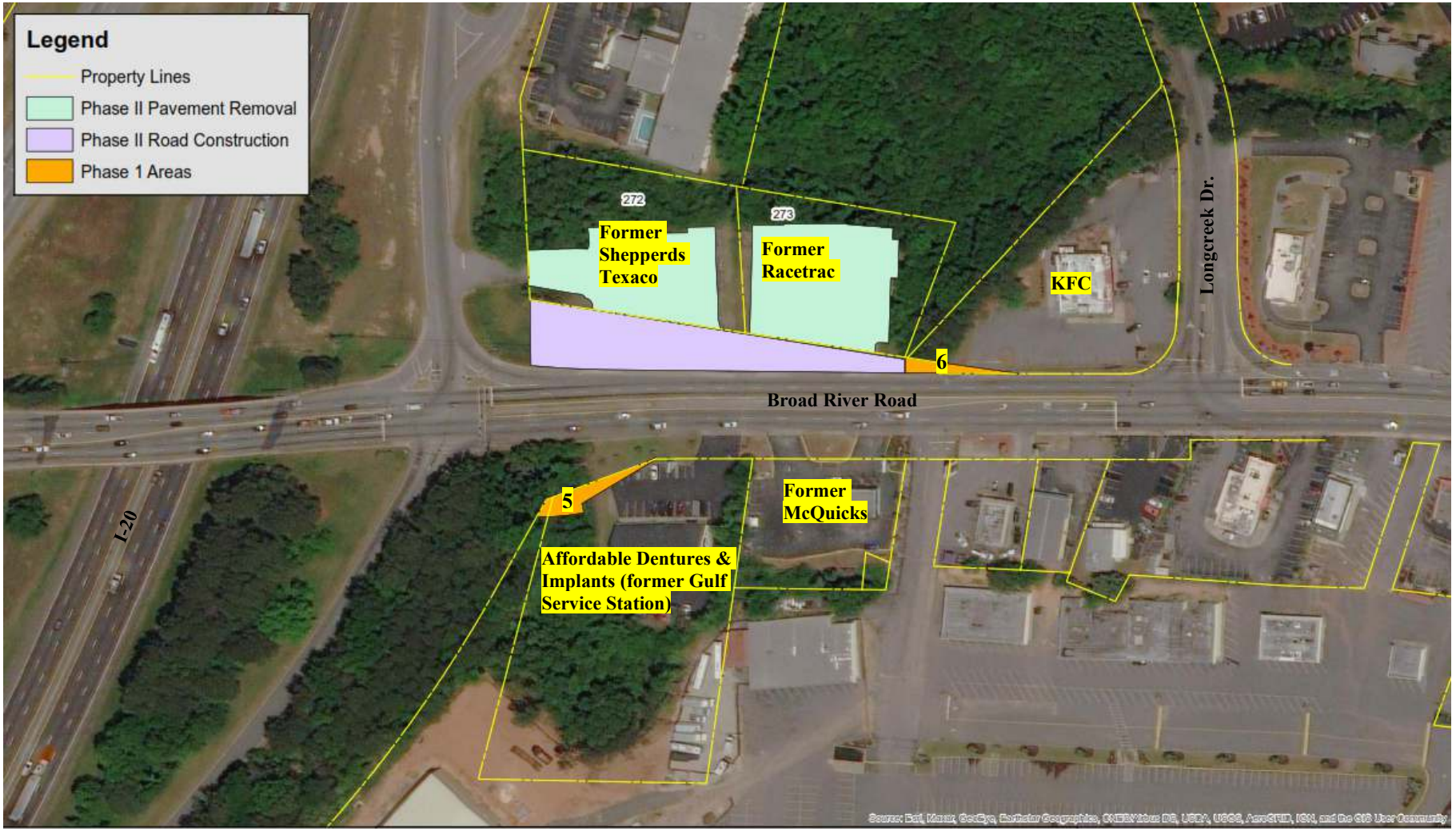

Project Corridor / Phase I Environmental Site Assessment Carolina Cross Roads Project New ROW Areas Columbia, South Carolina	***Figure 3*** Site Plan Showing New ROW Areas 5 through 6 (Figure adapted from ICE Figure provided on December 12, 2021)
Scale No Scale	***Date*** April 2022

ARM ENVIRONMENTAL SERVICES, INC.

17.3 Site Photographs



Photograph 1 – View of proposed new ROW area #1 looking northwest from Bojangles parking lot.



Photograph 2 – View of proposed new ROW area #1 looking southeast toward Bojangles parking lot.



Photograph 3 – View looking northwest along proposed new ROW area #2 adjacent to the former National Pride Car Wash.



Photograph 4 – View looking northwest along proposed new ROW area #2 adjacent to the former National Pride Car Wash.



Photograph 5 – View looking northwest along proposed new ROW area #3, adjacent to the Pon Di River restaurant site, which is a former service station.



Photograph 6 – View looking southeast along proposed new ROW area #3, adjacent to the bank and the Pon Di River restaurant site, which is a former service station.



Photograph 7 – View looking southeast along proposed new ROW area #4, along the motel property.


Photograph 8 – View looking south along additional portion of proposed new ROW area #4, along the southeastern side of the Rose Gold Club property.



Photograph 9 – View of the Affordable Dentures and Implants business, located adjacent to the south of proposed new ROW area #5. This is the former site of a Gulf service station.



Photograph 10 – View of proposed new ROW area #5 adjacent to the Affordable Dentures and Implants business.



Photograph 11 – View of monitoring wells located in the parking lot of the Affordable Dentures and Implants business near the proposed new ROW area #5.



Photograph 12 – View looking northwest along the KFC parking lot, at the location of the proposed new ROW area #6.

17.4 Historical Research Documentation

Carolina Cross Roads

Broad River Rd

Columbia, SC 29210

Inquiry Number: 6860313.5

February 15, 2022

The EDR Aerial Photo Decade Package

6 Armstrong Road, 4th floor
Shelton, CT 06484
Toll Free: 800.352.0050
www.edrnet.com

EDR Aerial Photo Decade Package

02/15/22

Site Name:

Carolina Cross Roads
Broad River Rd
Columbia, SC 29210
EDR Inquiry # 6860313.5

Client Name:

ARM Environmental Services
1210 First Street South Ext
Columbia, SC 29209
Contact: Richard Ciccolella

Environmental Data Resources, Inc. (EDR) Aerial Photo Decade Package is a screening tool designed to assist environmental professionals in evaluating potential liability on a target property resulting from past activities. EDR's professional researchers provide digitally reproduced historical aerial photographs, and when available, provide one photo per decade.

Search Results:

Year	Scale	Details	Source
2017	1"=500'	Flight Year: 2017	USDA/NAIP
2013	1"=500'	Flight Year: 2013	USDA/NAIP
2009	1"=500'	Flight Year: 2009	USDA/NAIP
2006	1"=500'	Flight Year: 2006	USDA/NAIP
1994	1"=500'	Acquisition Date: January 21, 1994	USGS/DOQQ
1989	1"=500'	Flight Date: March 11, 1989	USGS
1983	1"=500'	Flight Date: March 03, 1983	USDA
1971	1"=500'	Flight Date: March 21, 1971	USGS
1966	1"=500'	Flight Date: February 19, 1966	USDA
1964	1"=500'	Flight Date: October 10, 1964	USGS
1955	1"=500'	Flight Date: April 01, 1955	USDA
1951	1"=500'	Flight Date: May 24, 1951	USDA
1943	1"=500'	Flight Date: May 01, 1943	USDA
1938	1"=500'	Flight Date: April 11, 1938	USDA

When delivered electronically by EDR, the aerial photo images included with this report are for ONE TIME USE ONLY. Further reproduction of these aerial photo images is prohibited without permission from EDR. For more information contact your EDR Account Executive.

Disclaimer - Copyright and Trademark Notice

This Report contains certain information obtained from a variety of public and other sources reasonably available to Environmental Data Resources, Inc. It cannot be concluded from this Report that coverage information for the target and surrounding properties does not exist from other sources. NO WARRANTY EXPRESSED OR IMPLIED, IS MADE WHATSOEVER IN CONNECTION WITH THIS REPORT. ENVIRONMENTAL DATA RESOURCES, INC. SPECIFICALLY DISCLAIMS THE MAKING OF ANY SUCH WARRANTIES, INCLUDING WITHOUT LIMITATION, MERCHANTABILITY OR FITNESS FOR A PARTICULAR USE OR PURPOSE. ALL RISK IS ASSUMED BY THE USER. IN NO EVENT SHALL ENVIRONMENTAL DATA RESOURCES, INC. BE LIABLE TO ANYONE, WHETHER ARISING OUT OF ERRORS OR OMISSIONS, NEGLIGENCE, ACCIDENT OR ANY OTHER CAUSE, FOR ANY LOSS OF DAMAGE, INCLUDING, WITHOUT LIMITATION, SPECIAL, INCIDENTAL, CONSEQUENTIAL, OR EXEMPLARY DAMAGES. ANY LIABILITY ON THE PART OF ENVIRONMENTAL DATA RESOURCES, INC. IS STRICTLY LIMITED TO A REFUND OF THE AMOUNT PAID FOR THIS REPORT. Purchaser accepts this Report "AS IS". Any analyses, estimates, ratings, environmental risk levels or risk codes provided in this Report are provided for illustrative purposes only, and are not intended to provide, nor should they be interpreted as providing any facts regarding, or prediction or forecast of, any environmental risk for any property. Only a Phase I Environmental Site Assessment performed by an environmental professional can provide information regarding the environmental risk for any property. Additionally, the information provided in this Report is not to be construed as legal advice.

Copyright 2022 by Environmental Data Resources, Inc. All rights reserved. Reproduction in any media or format, in whole or in part, of any report or map of Environmental Data Resources, Inc., or its affiliates, is prohibited without prior written permission.

EDR and its logos (including Sanborn and Sanborn Map) are trademarks of Environmental Data Resources, Inc. or its affiliates. All other trademarks used herein are the property of their respective owners.


INQUIRY #: 6860313.5
YEAR: 2017
= 500'
N
EDR


INQUIRY #: 6860313.5
YEAR: 2013
= 500'
N
EDR

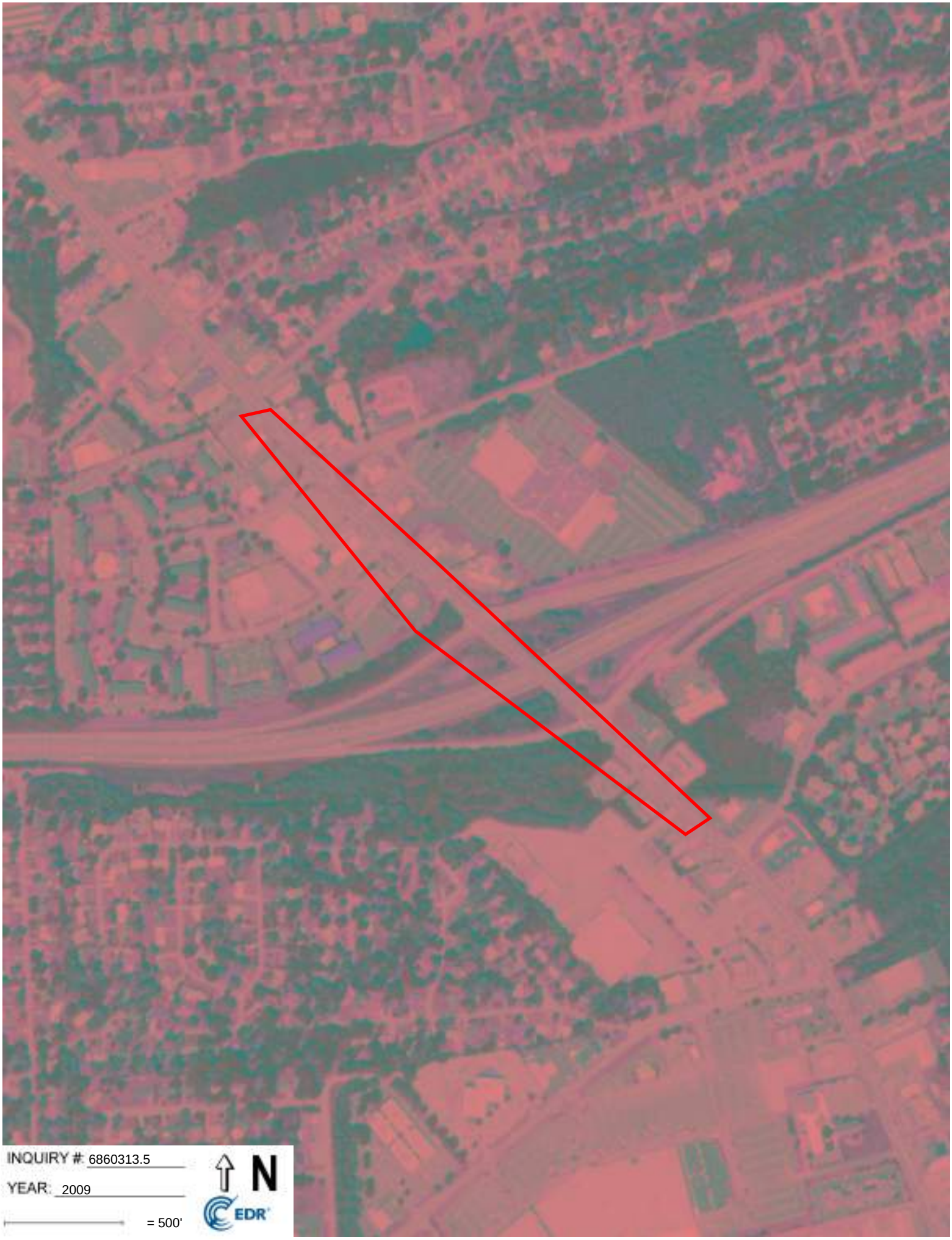
INQUIRY #: 6860313.5
YEAR: 2009
= 500'
N
EDR

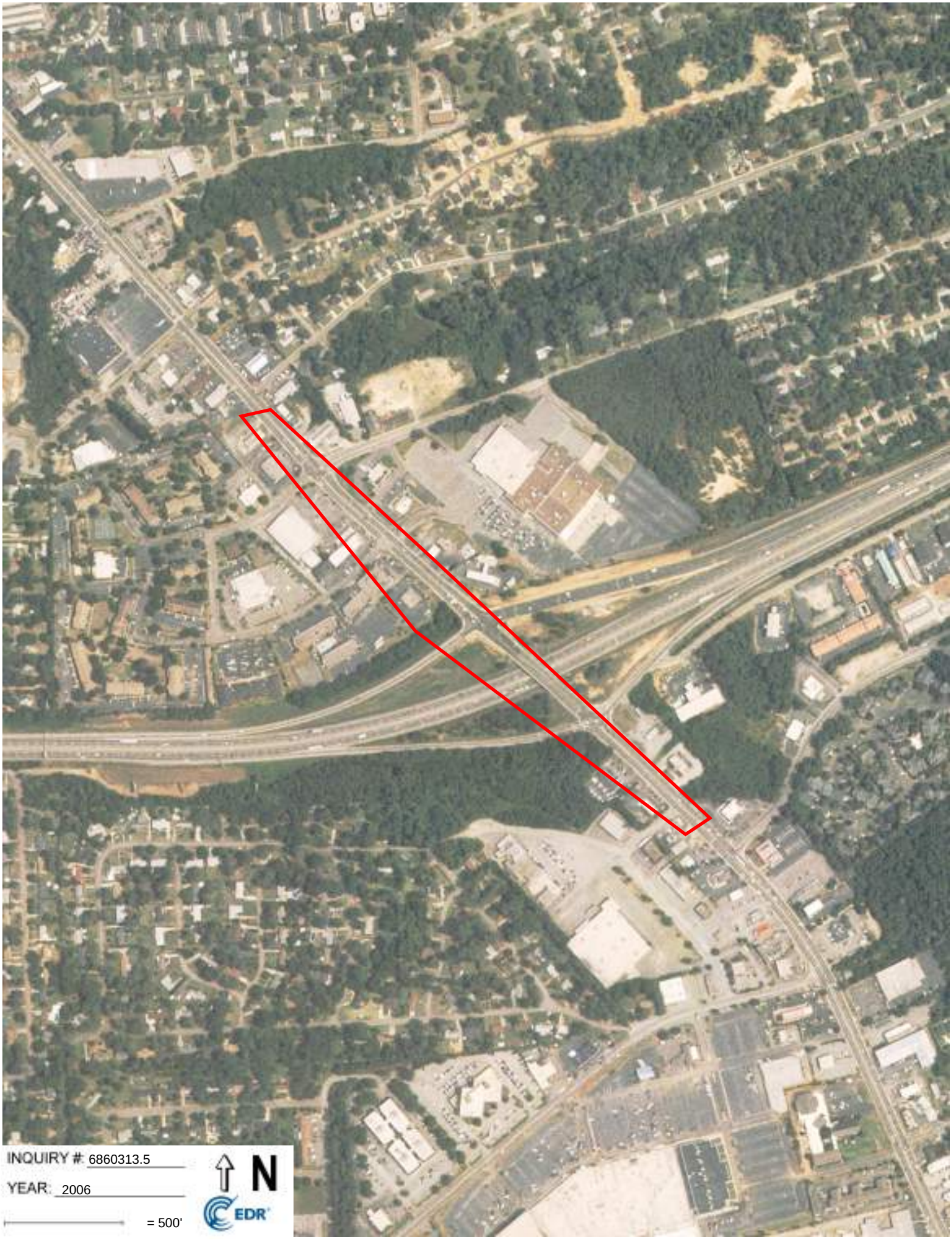
INQUIRY #: 6860313.5
YEAR: 2006
= 500'
N
EDR

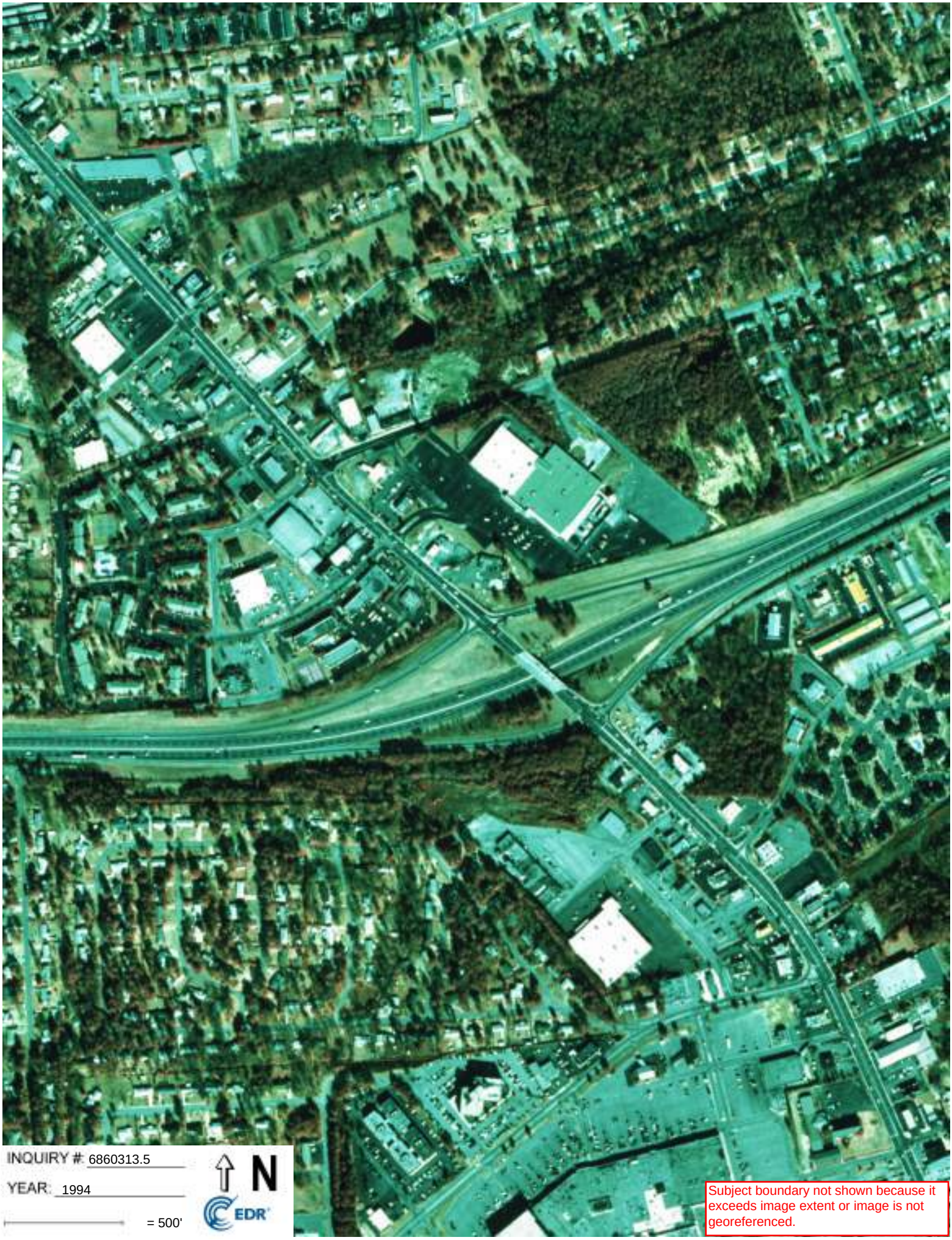
INQUIRY #: 6860313.5
YEAR: 1994
= 500'
N
EDR
Subject boundary not shown because it exceeds image extent or image is not georeferenced.

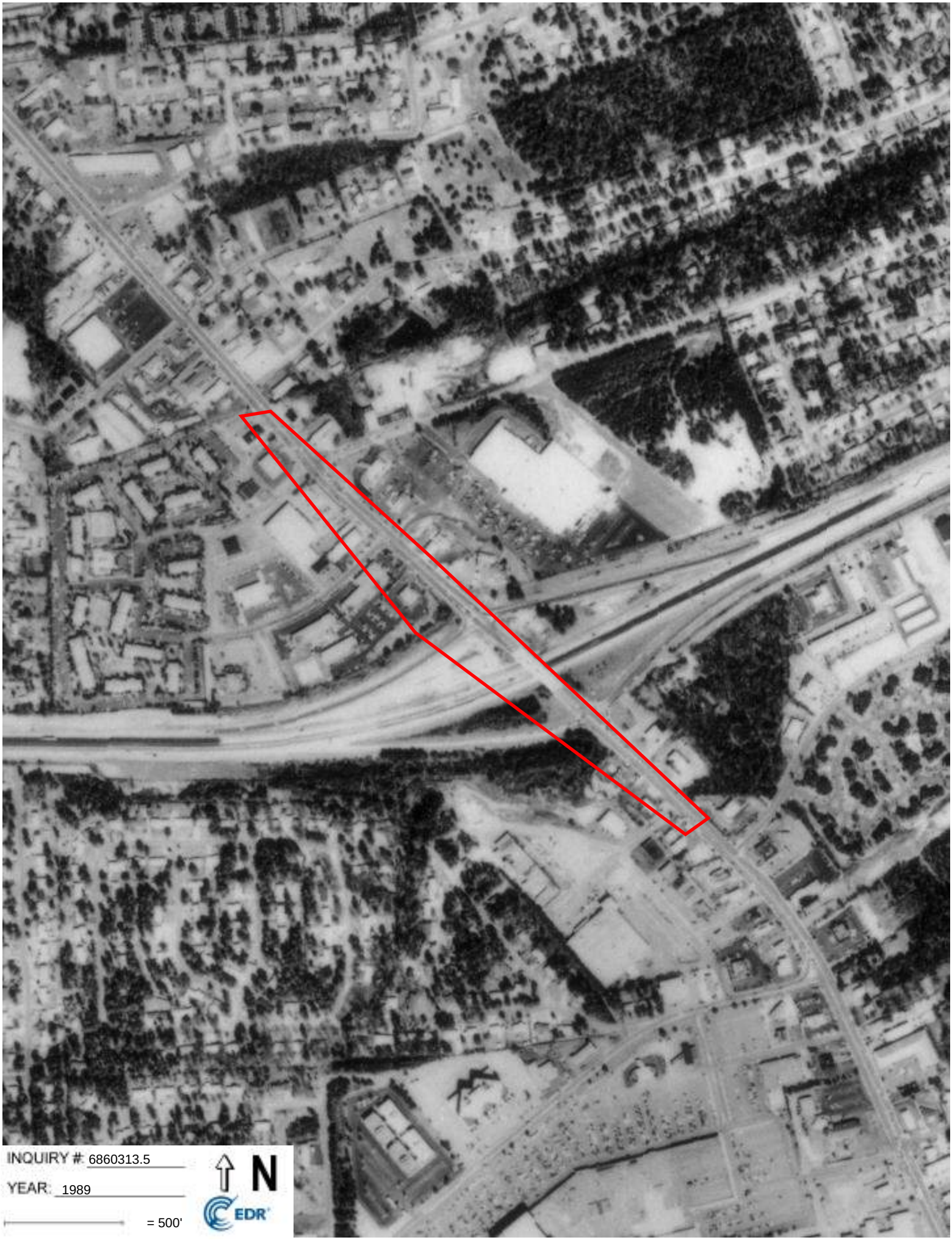
INQUIRY #: 6860313.5
YEAR: 1989
= 500'
N
EDR


INQUIRY #: 6860313.5
YEAR: 1983
= 500'
N
EDR

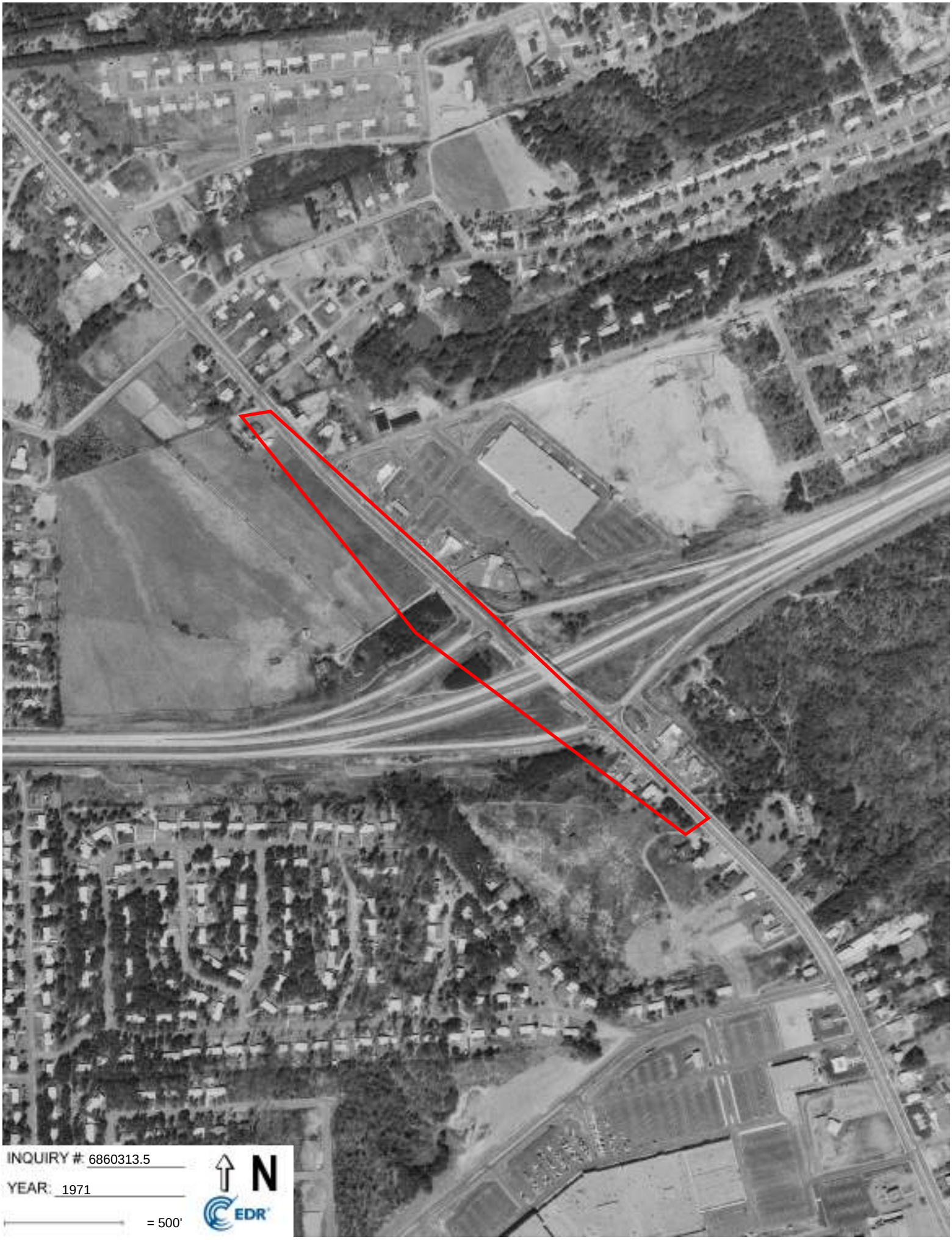
INQUIRY #: 6860313.5
YEAR: 1971
= 500'
N
EDR


INQUIRY #: 6860313.5
YEAR: 1966
= 500'
N
EDR


INQUIRY #: 6860313.5
YEAR: 1964
= 500'
N
EDR

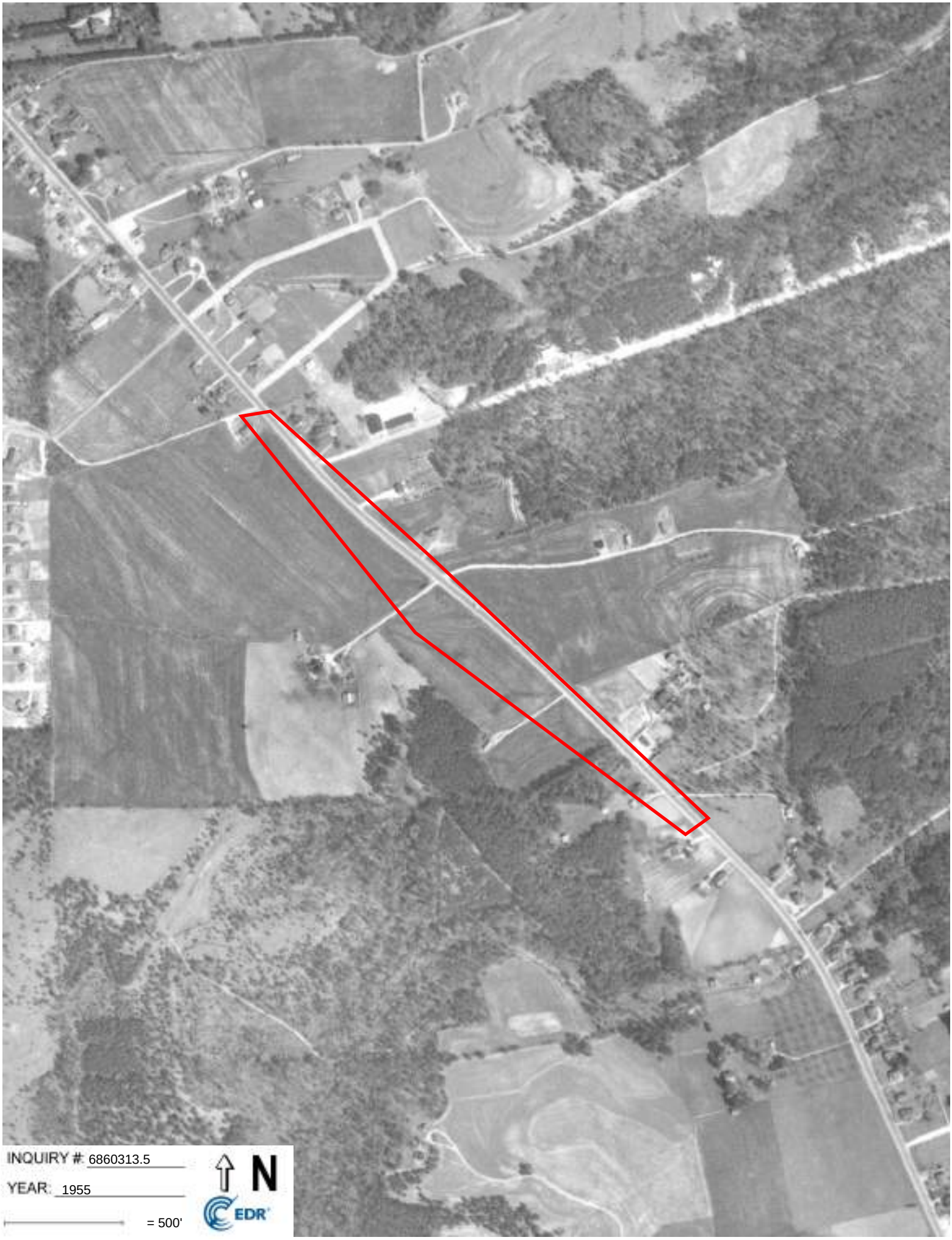
INQUIRY #: 6860313.5
YEAR: 1955
= 500'
N
EDR


INQUIRY #: 6860313.5
YEAR: 1951
= 500'
N
EDR


INQUIRY #: 6860313.5
YEAR: 1943
= 500'
N
EDR


INQUIRY #: 6860313.5
YEAR: 1938
= 500'
N
EDR

Carolina Cross Roads

Broad River Rd

Columbia, SC 29210

Inquiry Number: 6860313.8

February 15, 2022

EDR Historical Topo Map Report

with QuadMatch™

6 Armstrong Road, 4th floor
Shelton, CT 06484
Toll Free: 800.352.0050
www.edrnet.com

EDR Historical Topo Map Report

02/15/22

Site Name:	Client Name:
Carolina Cross Roads	ARM Environmental Services
Broad River Rd	1210 First Street South Ext
Columbia, SC 29210	Columbia, SC 29209
EDR Inquiry # 6860313.8	Contact: Richard Ciccolella

EDR Topographic Map Library has been searched by EDR and maps covering the target property location as provided by ARM Environmental Services were identified for the years listed below. EDR's Historical Topo Map Report is designed to assist professionals in evaluating potential liability on a target property resulting from past activities. EDRs Historical Topo Map Report includes a search of a collection of public and private color historical topographic maps, dating back to the late 1800s.

Search Results:		*Coordinates:*	
P.O.#	08-300-22	**Latitude:**	34.040273 34° 2' 25" North
Project:	Carolina Cross Roads	**Longitude:**	-81.094887 -81° 5' 42" West
		UTM Zone:	Zone 17 North
		UTM X Meters:	491241.53
		UTM Y Meters:	3766625.44
		Elevation:	318.21' above sea level

Maps Provided:

2020	1947
2017	1904
2014	
1997	
1990	
1983	
1972	
1948	

Disclaimer - Copyright and Trademark Notice

This Report contains certain information obtained from a variety of public and other sources reasonably available to Environmental Data Resources, Inc. It cannot be concluded from this Report that coverage information for the target and surrounding properties does not exist from other sources. NO WARRANTY EXPRESSED OR IMPLIED, IS MADE WHATSOEVER IN CONNECTION WITH THIS REPORT. ENVIRONMENTAL DATA RESOURCES, INC. SPECIFICALLY DISCLAIMS THE MAKING OF ANY SUCH WARRANTIES, INCLUDING WITHOUT LIMITATION, MERCHANTABILITY OR FITNESS FOR A PARTICULAR USE OR PURPOSE. ALL RISK IS ASSUMED BY THE USER. IN NO EVENT SHALL ENVIRONMENTAL DATA RESOURCES, INC. BE LIABLE TO ANYONE, WHETHER ARISING OUT OF ERRORS OR OMISSIONS, NEGLIGENCE, ACCIDENT OR ANY OTHER CAUSE, FOR ANY LOSS OF DAMAGE, INCLUDING, WITHOUT LIMITATION, SPECIAL, INCIDENTAL, CONSEQUENTIAL, OR EXEMPLARY DAMAGES. ANY LIABILITY ON THE PART OF ENVIRONMENTAL DATA RESOURCES, INC. IS STRICTLY LIMITED TO A REFUND OF THE AMOUNT PAID FOR THIS REPORT. Purchaser accepts this Report "AS IS". Any analyses, estimates, ratings, environmental risk levels or risk codes provided in this Report are provided for illustrative purposes only, and are not intended to provide, nor should they be interpreted as providing any facts regarding, or prediction or forecast of, any environmental risk for any property. Only a Phase I Environmental Site Assessment performed by an environmental professional can provide information regarding the environmental risk for any property. Additionally, the information provided in this Report is not to be construed as legal advice.

Copyright 2022 by Environmental Data Resources, Inc. All rights reserved. Reproduction in any media or format, in whole or in part, of any report or map of Environmental Data Resources, Inc., or its affiliates, is prohibited without prior written permission.

EDR and its logos (including Sanborn and Sanborn Map) are trademarks of Environmental Data Resources, Inc. or its affiliates. All other trademarks used herein are the property of their respective owners.

Topo Sheet Key

This EDR Topo Map Report is based upon the following USGS topographic map sheets.

2020 Source Sheets



Columbia North
2020
7.5-minute, 24000

2017 Source Sheets



Columbia North
2017
7.5-minute, 24000

2014 Source Sheets



Columbia North
2014
7.5-minute, 24000

1997 Source Sheets



Columbia North
1997
7.5-minute, 24000
Aerial Photo Revised 1988

Topo Sheet Key

This EDR Topo Map Report is based upon the following USGS topographic map sheets.

1990 Source Sheets



Columbia North
1990
7.5-minute, 24000
Aerial Photo Revised 1988

1983 Source Sheets

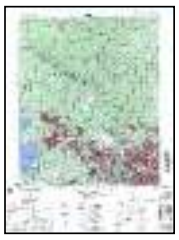

IRMO
1983
15-minute, 50000

1972 Source Sheets



Columbia North
1972
7.5-minute, 24000
Aerial Photo Revised 1971

1948 Source Sheets



Columbia North
1948
7.5-minute, 24000

Topo Sheet Key

This EDR Topo Map Report is based upon the following USGS topographic map sheets.

1947 Source Sheets



Columbia North
1947
7.5-minute, 24000

1904 Source Sheets



Columbia
1904
30-minute, 125000

Historical Topo Map

2020

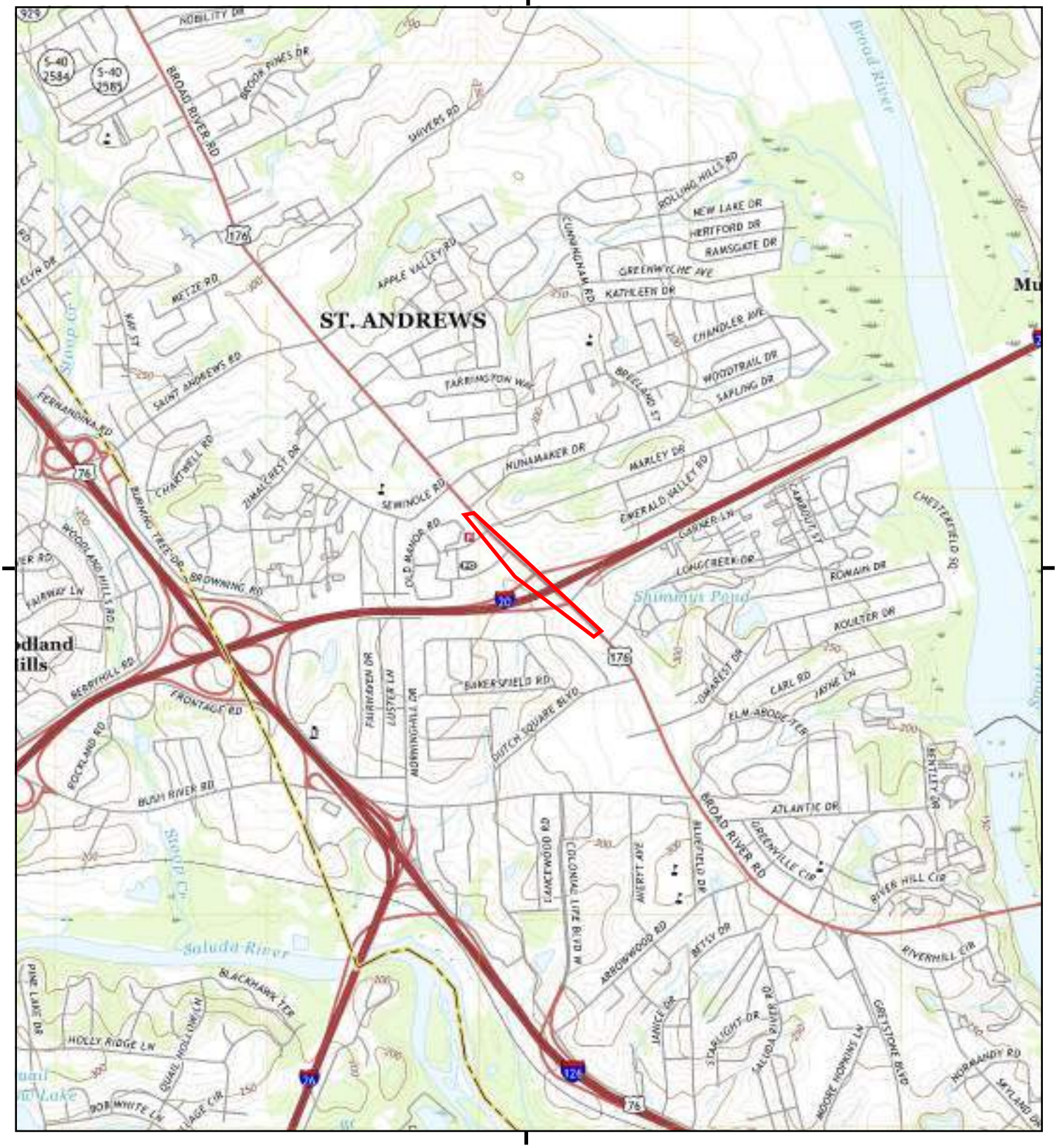

This report includes information from the following map sheet(s).

0 Miles 0.25 0.5 1 1.5

NW N NE
W E
SW S SE

TP, Columbia North, 2020, 7.5-minute

SITE NAME: Carolina Cross Roads
ADDRESS: Broad River Rd
Columbia, SC 29210
CLIENT: ARM Environmental Services

N

Historical Topo Map

2017

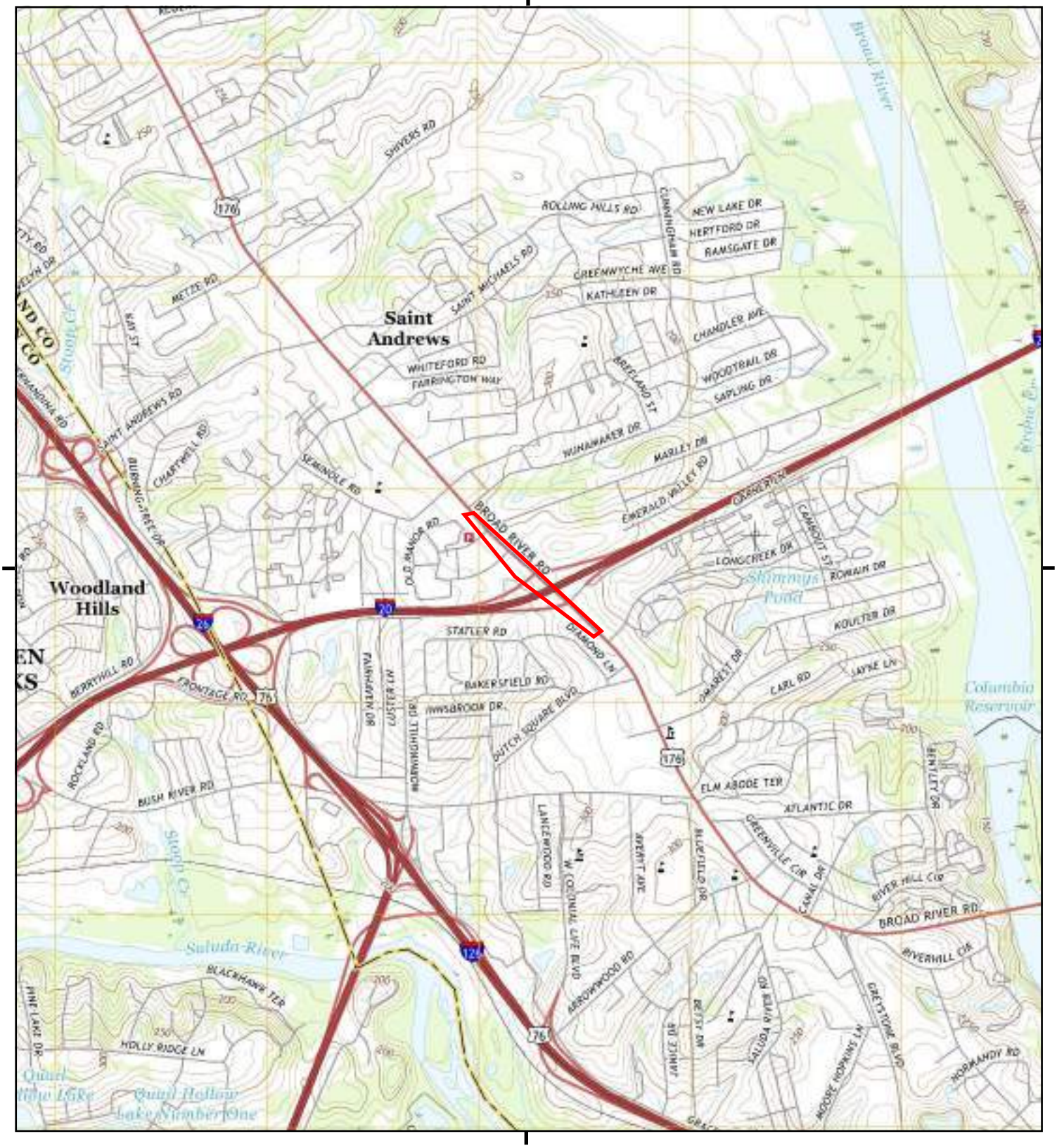

This report includes information from the following map sheet(s).

0 Miles 0.25 0.5 1 1.5

NW N NE
W E
SW S SE

TP, Columbia North, 2017, 7.5-minute

SITE NAME: Carolina Cross Roads
ADDRESS: Broad River Rd
Columbia, SC 29210
CLIENT: ARM Environmental Services

N

Historical Topo Map

2014

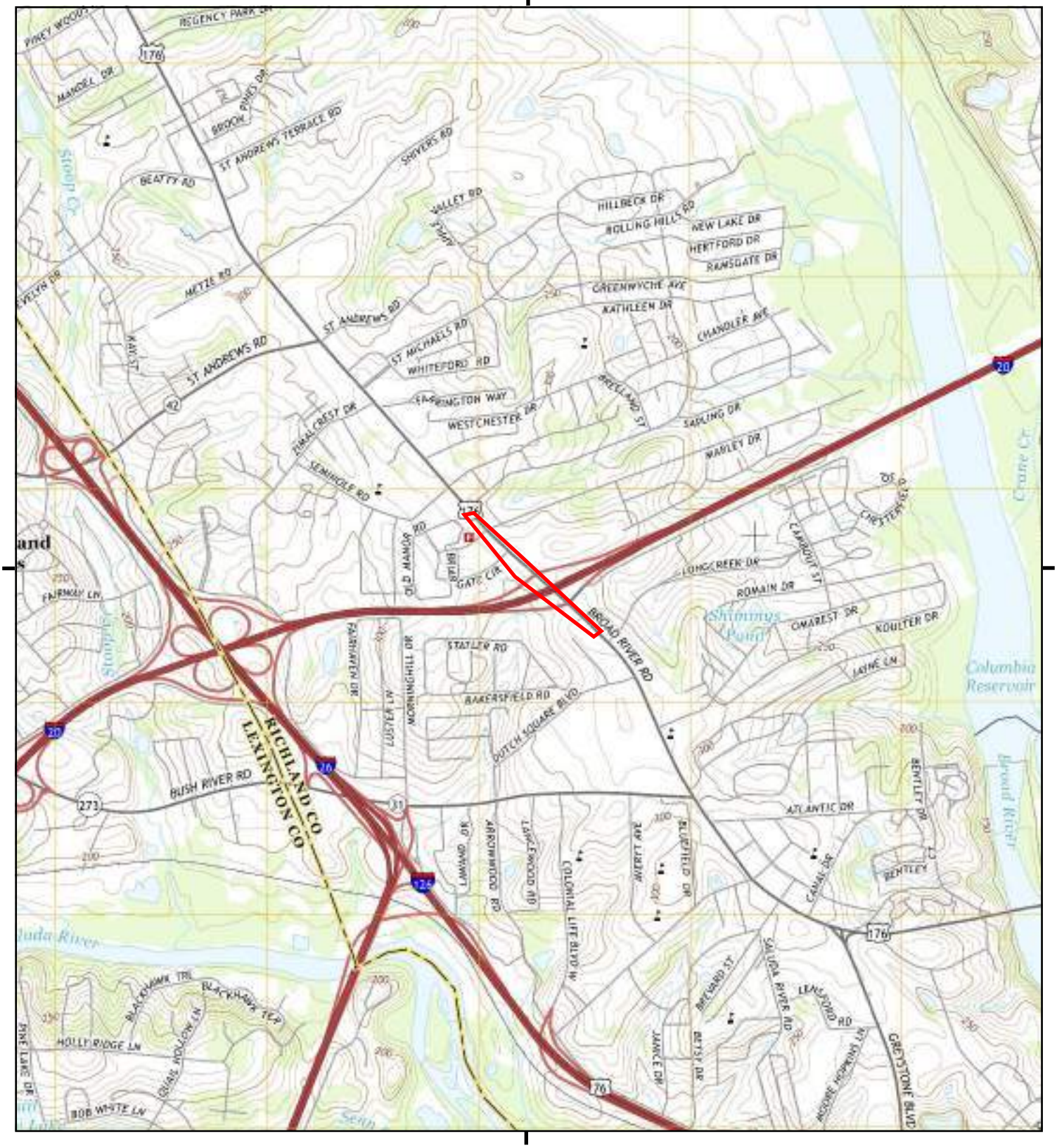

This report includes information from the following map sheet(s).

0 Miles 0.25 0.5 1 1.5

NW N NE
W E
SW S SE

TP, Columbia North, 2014, 7.5-minute

SITE NAME: Carolina Cross Roads
ADDRESS: Broad River Rd
Columbia, SC 29210
CLIENT: ARM Environmental Services

N

Historical Topo Map

1997

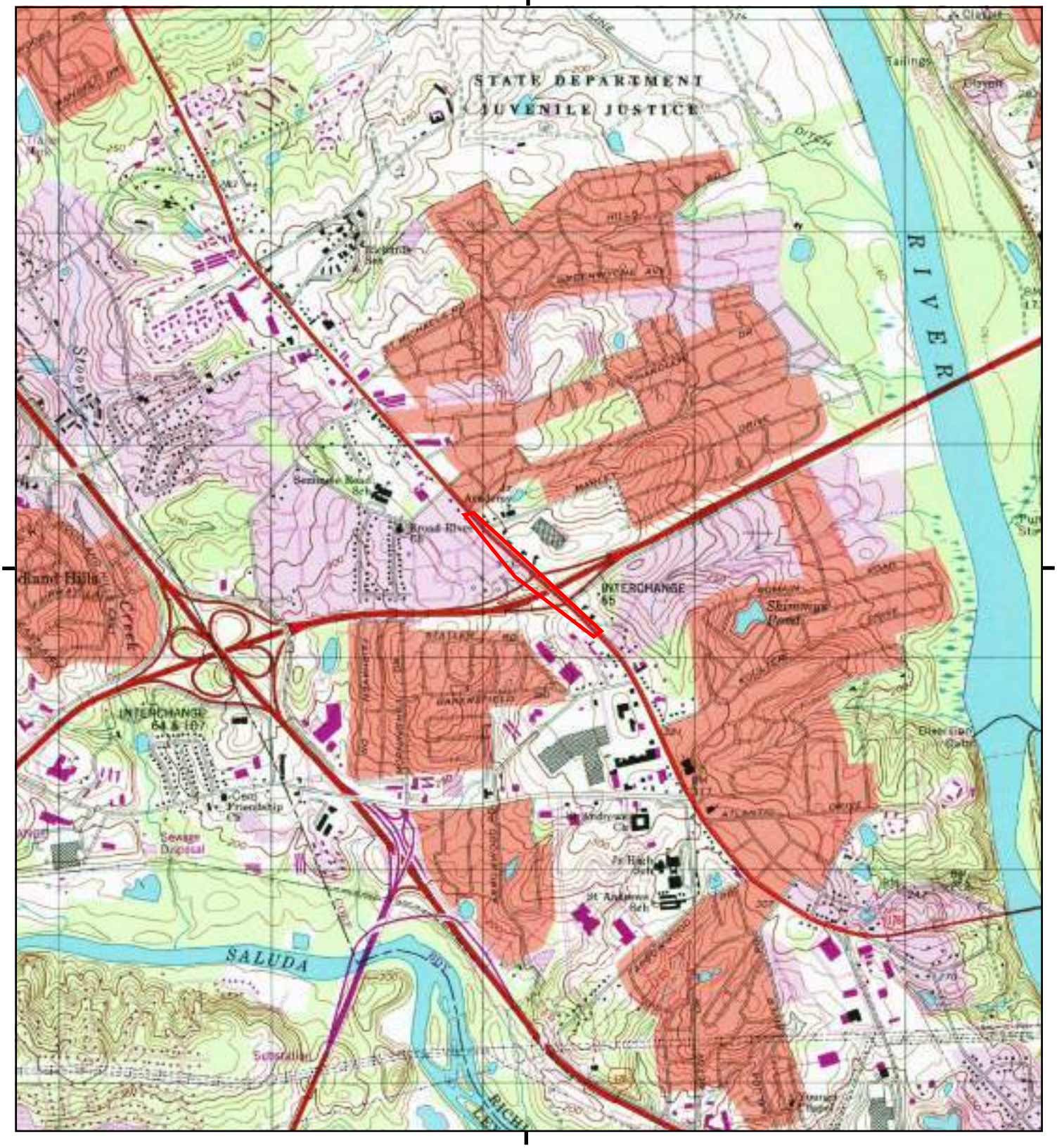

This report includes information from the following map sheet(s).

0 Miles 0.25 0.5 1 1.5

NW N NE
W E
SW S SE

TP, Columbia North, 1997, 7.5-minute

SITE NAME: Carolina Cross Roads
ADDRESS: Broad River Rd
Columbia, SC 29210
CLIENT: ARM Environmental Services

N

Historical Topo Map

1990

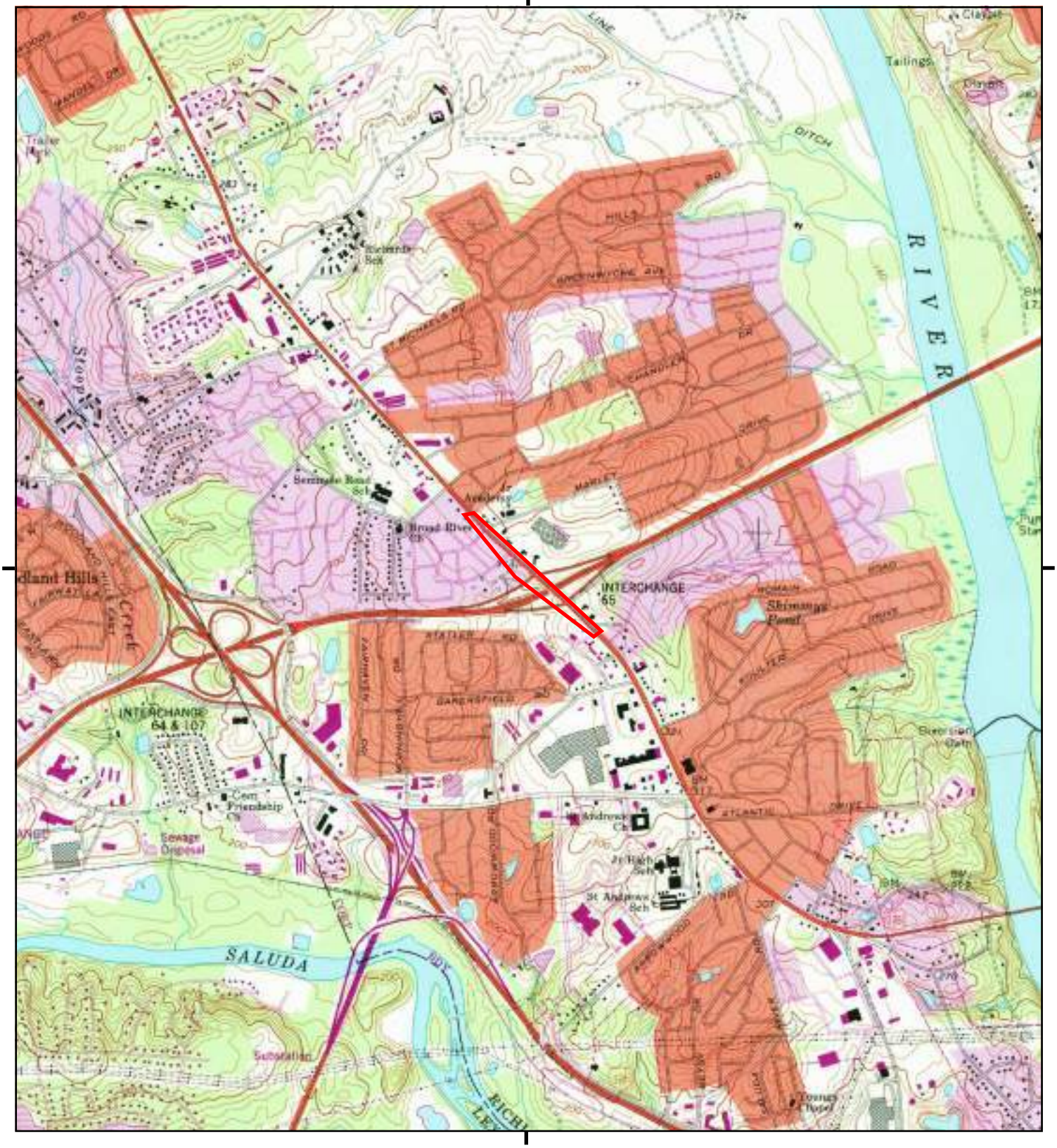

This report includes information from the following map sheet(s).

0 Miles 0.25 0.5 1 1.5

NW N NE
W E
SW S SE

TP, Columbia North, 1990, 7.5-minute

SITE NAME: Carolina Cross Roads
ADDRESS: Broad River Rd
Columbia, SC 29210
CLIENT: ARM Environmental Services

N

Historical Topo Map

1983

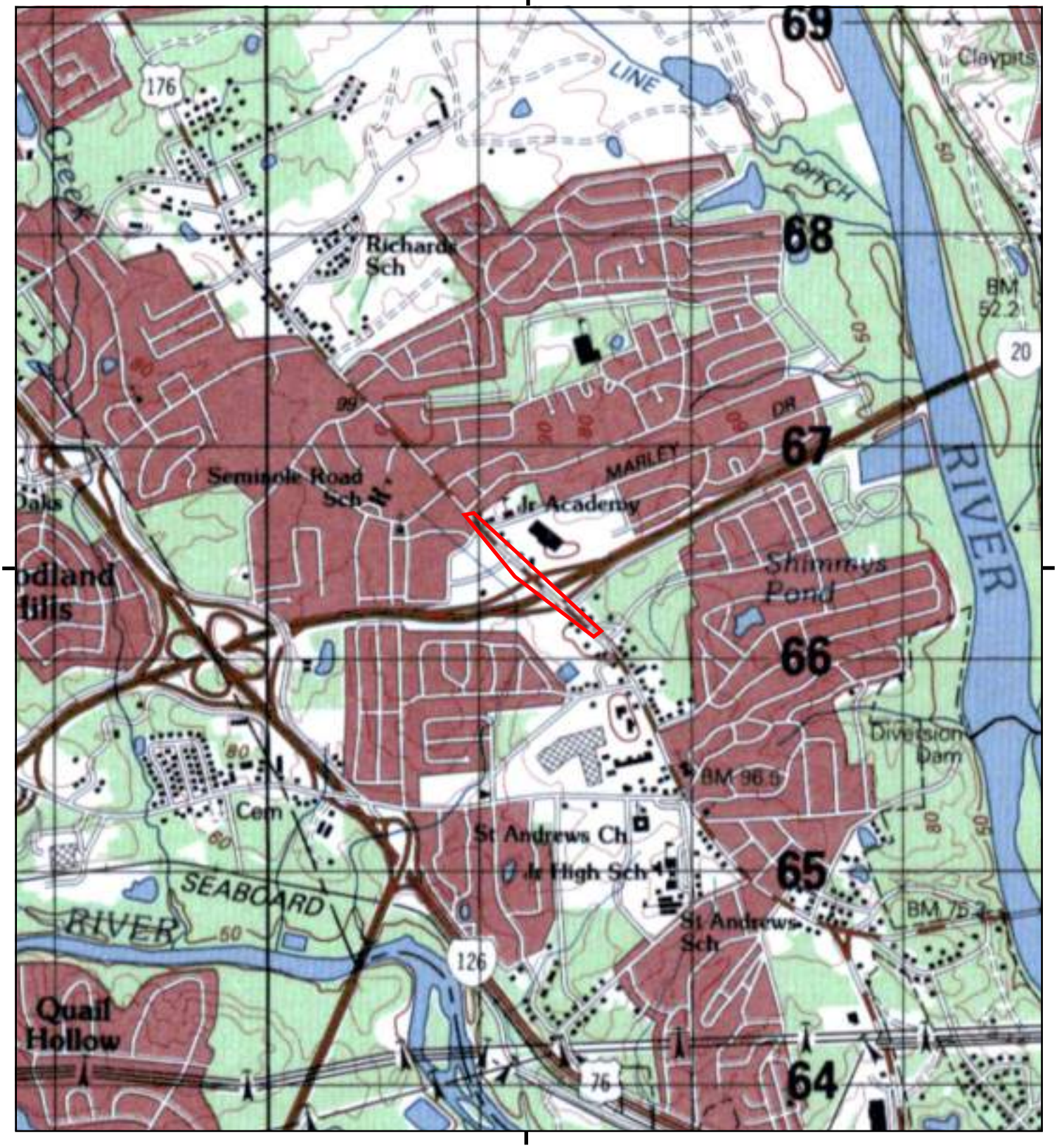

This report includes information from the following map sheet(s).

0 Miles 0.25 0.5 1 1.5

NW N NE
W E
SW S SE

TP, IRMO, 1983, 15-minute

SITE NAME: Carolina Cross Roads
ADDRESS: Broad River Rd
Columbia, SC 29210
CLIENT: ARM Environmental Services

N

Historical Topo Map

1972

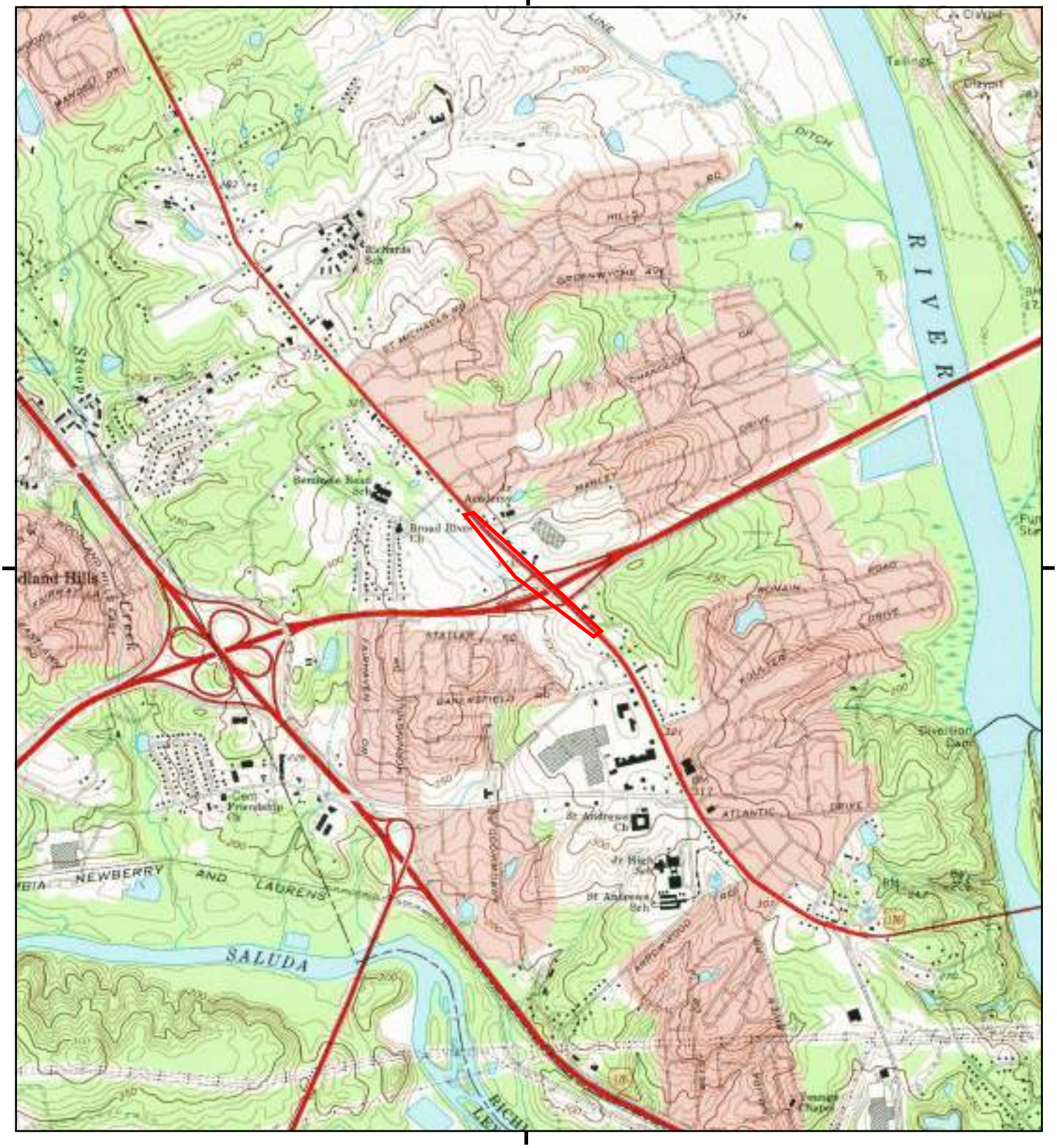

This report includes information from the following map sheet(s).

0 Miles 0.25 0.5 1 1.5

NW N NE
W E
SW S SE

TP, Columbia North, 1972, 7.5-minute

SITE NAME: Carolina Cross Roads
ADDRESS: Broad River Rd
Columbia, SC 29210
CLIENT: ARM Environmental Services

N

Historical Topo Map

1948

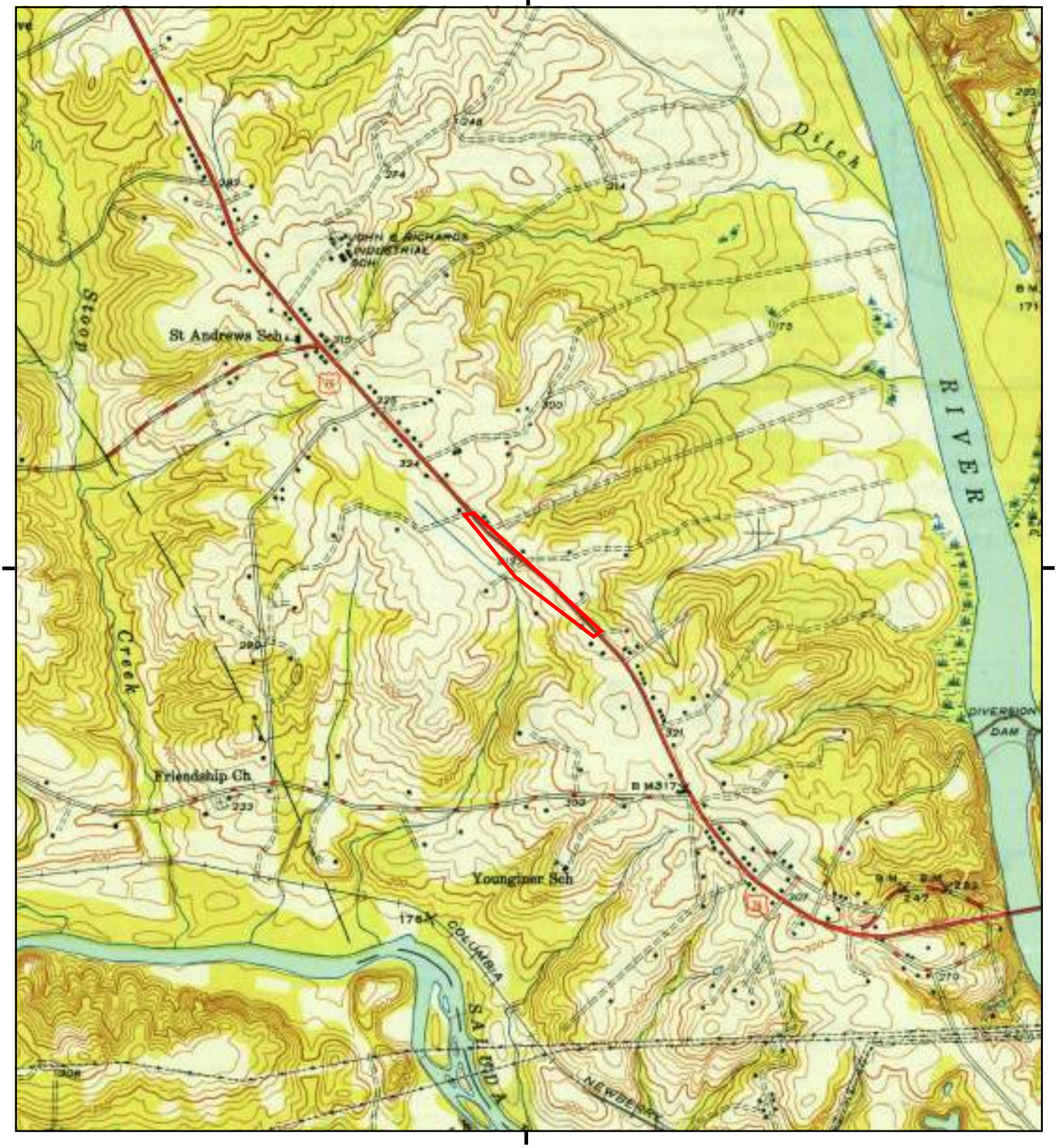

This report includes information from the following map sheet(s).

0 Miles 0.25 0.5 1 1.5

NW N NE
W E
SW S SE

TP, Columbia North, 1948, 7.5-minute

SITE NAME: Carolina Cross Roads
ADDRESS: Broad River Rd
Columbia, SC 29210
CLIENT: ARM Environmental Services

N

Historical Topo Map

1947

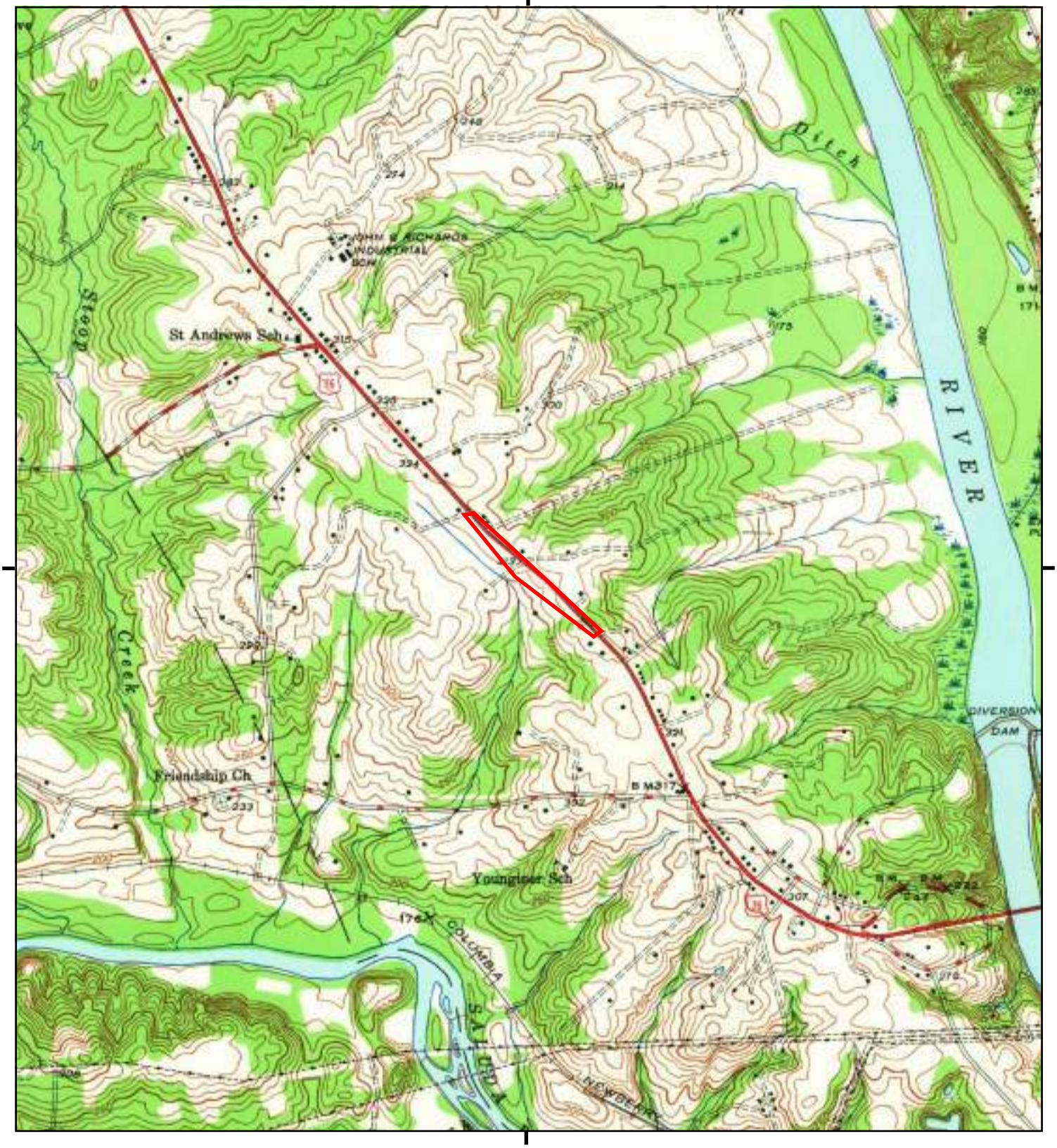

This report includes information from the following map sheet(s).

0 Miles 0.25 0.5 1 1.5

NW N NE
W E
SW S SE

TP, Columbia North, 1947, 7.5-minute

SITE NAME: Carolina Cross Roads
ADDRESS: Broad River Rd
Columbia, SC 29210
CLIENT: ARM Environmental Services

N

Historical Topo Map

1904

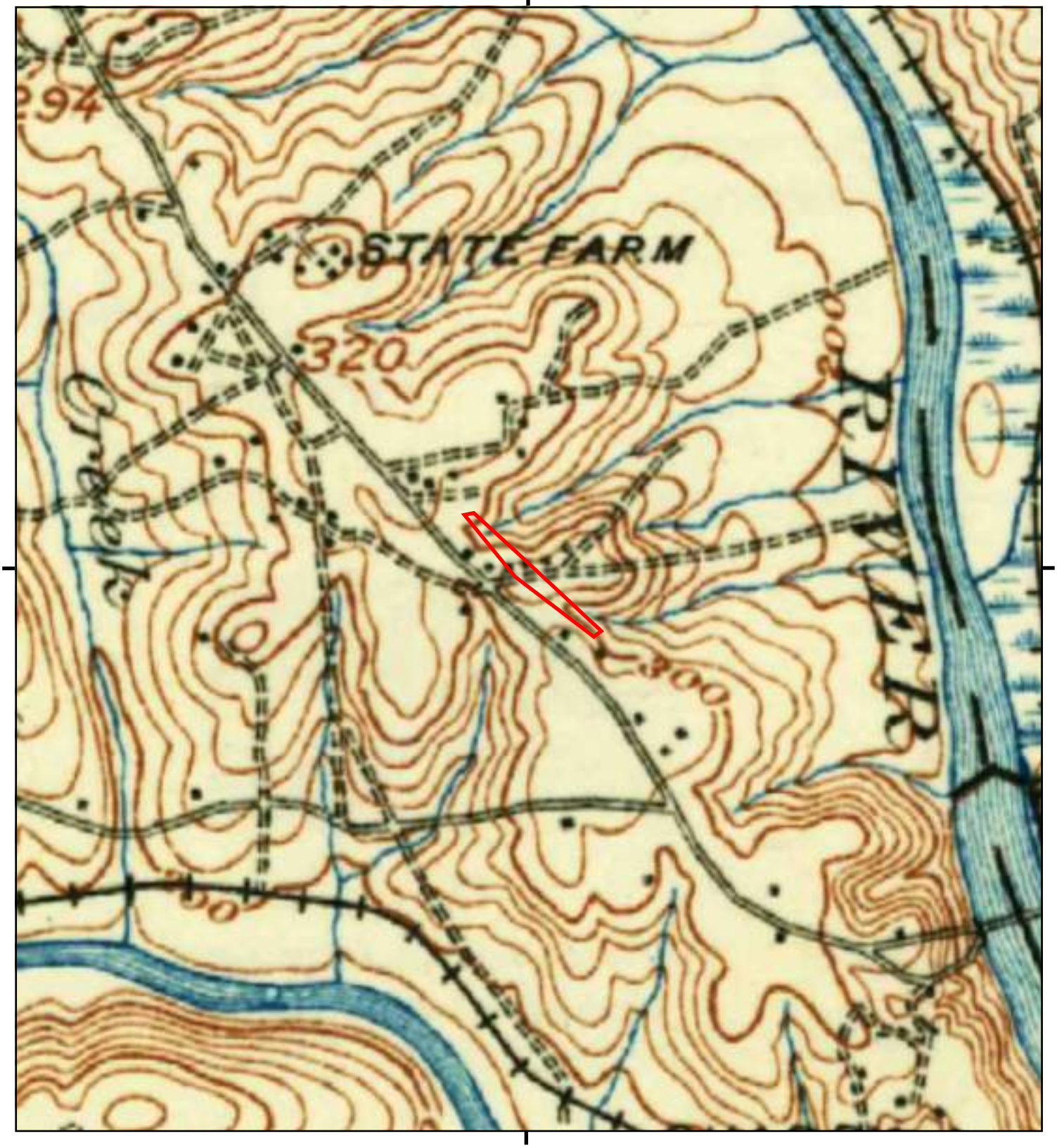

This report includes information from the following map sheet(s).

0 Miles 0.25 0.5 1 1.5

NW N NE
W E
SW S SE

TP, Columbia, 1904, 30-minute

SITE NAME: Carolina Cross Roads
ADDRESS: Broad River Rd
Columbia, SC 29210
CLIENT: ARM Environmental Services

N

Carolina Cross Roads

Broad River Rd

Columbia, SC 29210

Inquiry Number: 6860313.3

February 15, 2022

Certified Sanborn® Map Report

6 Armstrong Road, 4th floor
Shelton, CT 06484
Toll Free: 800.352.0050
www.edrnet.com

Certified Sanborn® Map Report

02/15/22

Site Name:

Carolina Cross Roads
Broad River Rd
Columbia, SC 29210
EDR Inquiry # 6860313.3

Client Name:

ARM Environmental Services
1210 First Street South Ext
Columbia, SC 29209
Contact: Richard Ciccolella

The Sanborn Library has been searched by EDR and maps covering the target property location as provided by ARM Environmental Services were identified for the years listed below. The Sanborn Library is the largest, most complete collection of fire insurance maps. The collection includes maps from Sanborn, Bromley, Perris & Browne, Hopkins, Barlow, and others. Only Environmental Data Resources Inc. (EDR) is authorized to grant rights for commercial reproduction of maps by the Sanborn Library LLC, the copyright holder for the collection. Results can be authenticated by visiting www.edrnet.com/sanborn.

The Sanborn Library is continually enhanced with newly identified map archives. This report accesses all maps in the collection as of the day this report was generated.

Certified Sanborn Results:

Certification # 0FD8-4E94-B195

PO # 08-300-22

Project Carolina Cross Roads

UNMAPPED PROPERTY

This report certifies that the complete holdings of the Sanborn Library, LLC collection have been searched based on client supplied target property information, and fire insurance maps covering the target property were not found.

Sanborn® Library search results

Certification #: 0FD8-4E94-B195

The Sanborn Library includes more than 1.2 million fire insurance maps from Sanborn, Bromley, Perris & Browne, Hopkins, Barlow and others which track historical property usage in approximately 12,000 American cities and towns. Collections searched:

- ☑ Library of Congress
- ☑ University Publications of America
- ☑ EDR Private Collection

The Sanborn Library LLC Since 1866™

Limited Permission To Make Copies

ARM Environmental Services (the client) is permitted to make up to FIVE photocopies of this Sanborn Map transmittal and each fire insurance map accompanying this report solely for the limited use of its customer. No one other than the client is authorized to make copies. Upon request made directly to an EDR Account Executive, the client may be permitted to make a limited number of additional photocopies. This permission is conditioned upon compliance by the client, its customer and their agents with EDR's copyright policy; a copy of which is available upon request.

Disclaimer - Copyright and Trademark Notice

This Report contains certain information obtained from a variety of public and other sources reasonably available to Environmental Data Resources, Inc. It cannot be concluded from this Report that coverage information for the target and surrounding properties does not exist from other sources. NO WARRANTY EXPRESSED OR IMPLIED, IS MADE WHATSOEVER IN CONNECTION WITH THIS REPORT. ENVIRONMENTAL DATA RESOURCES, INC. SPECIFICALLY DISCLAIMS THE MAKING OF ANY SUCH WARRANTIES, INCLUDING WITHOUT LIMITATION, MERCHANTABILITY OR FITNESS FOR A PARTICULAR USE OR PURPOSE. ALL RISK IS ASSUMED BY THE USER. IN NO EVENT SHALL ENVIRONMENTAL DATA RESOURCES, INC. BE LIABLE TO ANYONE, WHETHER ARISING OUT OF ERRORS OR OMISSIONS, NEGLIGENCE, ACCIDENT OR ANY OTHER CAUSE, FOR ANY LOSS OF DAMAGE, INCLUDING, WITHOUT LIMITATION, SPECIAL, INCIDENTAL, CONSEQUENTIAL, OR EXEMPLARY DAMAGES. ANY LIABILITY ON THE PART OF ENVIRONMENTAL DATA RESOURCES, INC. IS STRICTLY LIMITED TO A REFUND OF THE AMOUNT PAID FOR THIS REPORT. Purchaser accepts this Report "AS IS". Any analyses, estimates, ratings, environmental risk levels or risk codes provided in this Report are provided for illustrative purposes only, and are not intended to provide, nor should they be interpreted as providing any facts regarding, or prediction or forecast of, any environmental risk for any property. Only a Phase I Environmental Site Assessment performed by an environmental professional can provide information regarding the environmental risk for any property. Additionally, the information provided in this Report is not to be construed as legal advice.

Copyright 2022 by Environmental Data Resources, Inc. All rights reserved. Reproduction in any media or format, in whole or in part, of any report or map of Environmental Data Resources, Inc., or its affiliates, is prohibited without prior written permission.

EDR and its logos (including Sanborn and Sanborn Map) are trademarks of Environmental Data Resources, Inc. or its affiliates. All other trademarks used herein are the property of their respective owners.

17.5 Regulatory Records Documentation

Carolina Cross Roads
Broad River Rd
Columbia, SC 29210

Inquiry Number: 6860313.2s
February 16, 2022

The EDR Radius Map™ Report with GeoCheck®

6 Armstrong Road, 4th floor
Shelton, CT 06484
Toll Free: 800.352.0050
www.edrnet.com

TABLE OF CONTENTS

SECTION	PAGE
Executive Summary	ES1
Overview Map	2
Detail Map	3
Map Findings Summary	4
Map Findings	8
Orphan Summary	90
Zip Scan Report	ZIP-1
Government Records Searched/Data Currency Tracking	GR-1

GEOCHECK ADDENDUM

Physical Setting Source Addendum	A-1
Physical Setting Source Summary	A-2
Physical Setting SSURGO Soil Map	A-6
Physical Setting Source Map	A-10
Physical Setting Source Map Findings	A-12
Physical Setting Source Records Searched	PSGR-1

Thank you for your business.
Please contact EDR at 1-800-352-0050
with any questions or comments.

Disclaimer - Copyright and Trademark Notice

This Report contains certain information obtained from a variety of public and other sources reasonably available to Environmental Data Resources, Inc. It cannot be concluded from this Report that coverage information for the target and surrounding properties does not exist from other sources. **NO WARRANTY EXPRESSED OR IMPLIED, IS MADE WHATSOEVER IN CONNECTION WITH THIS REPORT. ENVIRONMENTAL DATA RESOURCES, INC. SPECIFICALLY DISCLAIMS THE MAKING OF ANY SUCH WARRANTIES, INCLUDING WITHOUT LIMITATION, MERCHANTABILITY OR FITNESS FOR A PARTICULAR USE OR PURPOSE. ALL RISK IS ASSUMED BY THE USER. IN NO EVENT SHALL ENVIRONMENTAL DATA RESOURCES, INC. BE LIABLE TO ANYONE, WHETHER ARISING OUT OF ERRORS OR OMISSIONS, NEGLIGENCE, ACCIDENT OR ANY OTHER CAUSE, FOR ANY LOSS OF DAMAGE, INCLUDING, WITHOUT LIMITATION, SPECIAL, INCIDENTAL, CONSEQUENTIAL, OR EXEMPLARY DAMAGES. ANY LIABILITY ON THE PART OF ENVIRONMENTAL DATA RESOURCES, INC. IS STRICTLY LIMITED TO A REFUND OF THE AMOUNT PAID FOR THIS REPORT.** Purchaser accepts this Report "AS IS". Any analyses, estimates, ratings, environmental risk levels or risk codes provided in this Report are provided for illustrative purposes only, and are not intended to provide, nor should they be interpreted as providing any facts regarding, or prediction or forecast of, any environmental risk for any property. Only a Phase I Environmental Site Assessment performed by an environmental professional can provide information regarding the environmental risk for any property. Additionally, the information provided in this Report is not to be construed as legal advice.

Copyright 2020 by Environmental Data Resources, Inc. All rights reserved. Reproduction in any media or format, in whole or in part, of any report or map of Environmental Data Resources, Inc., or its affiliates, is prohibited without prior written permission.

EDR and its logos (including Sanborn and Sanborn Map) are trademarks of Environmental Data Resources, Inc. or its affiliates. All other trademarks used herein are the property of their respective owners.

EXECUTIVE SUMMARY

A search of available environmental records was conducted by Environmental Data Resources, Inc (EDR). The report was designed to assist parties seeking to meet the search requirements of EPA's Standards and Practices for All Appropriate Inquiries (40 CFR Part 312), the ASTM Standard Practice for Environmental Site Assessments (E1527-21), the ASTM Standard Practice for Environmental Site Assessments for Forestland or Rural Property (E 2247-16), the ASTM Standard Practice for Limited Environmental Due Diligence: Transaction Screen Process (E 1528-14) or custom requirements developed for the evaluation of environmental risk associated with a parcel of real estate.

TARGET PROPERTY INFORMATION

ADDRESS

BROAD RIVER RD
COLUMBIA, SC 29210

COORDINATES

Latitude (North):	34.0402730 - 34ˆ 2' 24.98''
Longitude (West):	81.0948870 - 81ˆ 5' 41.59''
Universal Tranverse Mercator:	Zone 17
UTM X (Meters):	491241.3
UTM Y (Meters):	3766430.8
Elevation:	318 ft. above sea level

USGS TOPOGRAPHIC MAP ASSOCIATED WITH TARGET PROPERTY

Target Property Map:	15786838 COLUMBIA NORTH, SC
Version Date:	2020

AERIAL PHOTOGRAPHY IN THIS REPORT

Portions of Photo from:	20150430
Source:	USDA

MAPPED SITES SUMMARY

Target Property Address:
BROAD RIVER RD
COLUMBIA, SC 29210

Click on Map ID to see full detail.

MAP ID	SITE NAME	ADDRESS	DATABASE ACRONYMS	RELATIVE ELEVATION	DIST (ft. & mi.) DIRECTION
A1	FOX SHELL SERVICE ST	2224 BROAD RIVER RD	EDR Hist Auto	Lower	1 ft.
B2	USS AGRI-CHEMICALS	BROADRIVER RD,PO BOX	RCRA NonGen / NLR	Higher	1 ft.
A3	PORT UNIT 288	2224 BROAD RIVER RD	LUST, UST, RCR, Financial Assurance, GWCI, UIC	Lower	1 ft.
C4	AUTRYS AMOCO	2369 BROAD RIVER RD	EDR Hist Auto	Lower	1 ft.
5	TEXACO SERVICE	BROAD RIVER & I 20	UST	Lower	1 ft.
C6	YOKAHAMA TIRE	2341 BROAD RIVER RD	LUST, UST	Lower	1 ft.
D7	BANNISTERS 66 SERVIC	2114 BROAD RIVER RD	EDR Hist Auto	Higher	11, 0.002, SE
D8	RACETRAC 978	2114 BROAD RIVER RD	LUST, UST, RCR, Financial Assurance, GWCI	Higher	11, 0.002, SE
B9	MOBIL OIL CORP	2121 BROAD RIVER ROA	EDR Hist Auto	Higher	12, 0.002, SE
B10	MCQUIKS OILUBE	2121 BROAD RIVER RD	LUST, UST, RCR, Financial Assurance, GWCI	Higher	12, 0.002, SE
B11	MCQUIK'S #9660	2121 BROAD RIVERS RO	RCRA NonGen / NLR	Higher	12, 0.002, SE
D12	SHEPPARD TEXACO	2116 BROAD RIVER RD	EDR Hist Auto	Higher	29, 0.005, SE
D13	SHEPPERDS TEXACO STA	2116 BROAD RIVER RD	LUST, UST	Higher	29, 0.005, SE
E14	CAROLINA INDUSTRIAL	2428 BROAD RIVER RD	RCRA-VSQG, FINDS, ECHO	Lower	47, 0.009, NW
E15	AAMCO TRANSMISSIONS	2428 BROAD RIVER RD	EDR Hist Auto	Lower	47, 0.009, NW
F16	GULF SERVICE STATION	2123 BROAD RIVER RD	LUST, UST, RCR, GWCI	Higher	110, 0.021, SE
F17	GULF SERVICE STATION	2123 BROAD RIVER RD	UST	Higher	110, 0.021, SE
F18	ROBERTSONS GULF SERV	2123 BROAD RIVER RD	EDR Hist Auto	Higher	110, 0.021, SE
A19	R A S 45015	2220 BROAD RIVER RD	UST	Lower	116, 0.022, NE
A20	GARVIN OIL COMPANY I	2220 BROAD RIVER RD	EDR Hist Auto	Lower	116, 0.022, NE
A21	CIRCLE K 3105	2220 BROAD RIVER RD	LUST, UST, RCR, Financial Assurance, GWCI	Lower	116, 0.022, NE
A22	EXXON LOCATION 4 501	2220 BROAD RIVER ROA	RCRA-VSQG, FINDS, ECHO	Lower	116, 0.022, NE
23	COLUMBIA FIRE DEPT S	1225 BRIARGATE CIR	LUST, UST, RCR, GWCI	Higher	335, 0.063, WNW
G24	CONSTAN INC	2505 BROAD RIVER RD	LUST, UST	Lower	375, 0.071, NW
G25	GULF SERVICE STATION	BROAD RIVER & YOUNG	UST	Higher	480, 0.091, NW
G26	BP OIL-SITE #24144	2624 BROAD RIVER RD	RCRA NonGen / NLR, FINDS, ECHO	Higher	488, 0.092, NW
27	METTS OIL CO	2340 BROAD RIVER ROA	EDR Hist Auto	Higher	567, 0.107, NE
G28	EL CHEAPO 08	2624 BROAD RIVER RD	UST, Financial Assurance	Higher	592, 0.112, NW
G29	CIRCLE K STORES INC	2624 BROAD RIVER RD	EDR Hist Auto	Higher	592, 0.112, NW
G30	CIRCLE K 2705138	2624 BROAD RIVER RD	LUST, UST, Financial Assurance	Higher	592, 0.112, NW
G31	CIRCLE K 2705138	2624 BROAD RIVER RD	RCR, GWCI	Higher	592, 0.112, NW
H32	SHERWIN WILLIAMS CO	1221 BAKERSFIELD RD	RCRA NonGen / NLR, FINDS, ECHO	Higher	751, 0.142, SSE
33	CRAFT MASTER	2639 BROAD RIVER RD	RCRA-VSQG, FINDS, ECHO	Higher	872, 0.165, NW
H34	SHARPES FORMAL WEAR	RT 1 BOX 499G	RCRA-VSQG	Lower	879, 0.166, SSE
I35	PEP BOY 134	1804 BROAD RIVER RD	LUST, UST, Financial Assurance	Higher	1085, 0.205, SE
I36	PEP BOYS 134	1804 BROAD RIVER ROA	RCRA-VSQG, FINDS, ECHO	Higher	1085, 0.205, SE
37	FRASIER TIRE SERVICE	828 DUTCH SQUARE BLV	LUST, UST	Lower	1235, 0.234, South
J38	PALMETTO FINE CLEANE	1718 BROAD RIVER RD	SHWS, DRYCLEANERS	Higher	1537, 0.291, SE
J39	SPEEDWAY 2842	1714 BROAD RIVER RD	LUST, UST, GWCI, NPDES, UIC	Higher	1624, 0.308, SE

MAPPED SITES SUMMARY

Target Property Address:
BROAD RIVER RD
COLUMBIA, SC 29210

Click on Map ID to see full detail.

MAP ID	SITE NAME	ADDRESS	DATABASE ACRONYMS	RELATIVE ELEVATION	DIST (ft. & mi.) DIRECTION
40	FMR ED ROBINSON LAUN	DUTCH SQUARE MALL -	SHWS	Lower	1709, 0.324, SSE
41	SUBURBAN LODGE (FORM	1633 BROAD RIVER RD	SHWS	Higher	1802, 0.341, SE
42	PENSKE AUTO CENTER K	99 N ARROWOOD RD	LUST, UST, Financial Assurance	Lower	1950, 0.369, SSW
43	FORMER USA SERVICE S	DUTCH SQUARE MALL	RCR, FINDS	Lower	2116, 0.401, South
K44	BRITE CLEANERS	422 BUSH RIVER RD/14	SHWS	Lower	2770, 0.525, South
K45	BRITE CLEANERS	422 BUSH RIVER RD UN	SHWS, VCP, BROWNFIELDS	Lower	2770, 0.525, South
46	DELUXE CLEANERS	3007 BROAD RIVER RD	SHWS, DRYCLEANERS	Lower	3185, 0.603, NW
47	TRIPP'S FINE CLEANER	1339 BROAD RIVER RD	SHWS, DRYCLEANERS	Lower	3463, 0.656, SE
48	ARNOLDS PROFESSIONAL	3104 BROAD RIVER ROA	SHWS, RCRA NonGen / NLR, FINDS, ECHO, DRYCLEANERS	Lower	3795, 0.719, NW
49	CAROLINA CUSTOM AUTO	1109 ST ANDREWS RD	SHWS	Lower	4426, 0.838, WNW
50	CEDAR CHEST CLEANERS	3315 BROAD RIVER RD	SHWS, ASBESTOS	Lower	4775, 0.904, NW

EXECUTIVE SUMMARY

TARGET PROPERTY SEARCH RESULTS

The target property was not listed in any of the databases searched by EDR.

DATABASES WITH NO MAPPED SITES

No mapped sites were found in EDR's search of available ("reasonably ascertainable ") government records either on the target property or within the search radius around the target property for the following databases:

STANDARD ENVIRONMENTAL RECORDS

Lists of Federal NPL (Superfund) sites

NPL ---------- National Priority List
Proposed NPL ---------- Proposed National Priority List Sites
NPL LIENS ---------- Federal Superfund Liens

Lists of Federal Delisted NPL sites

Delisted NPL ---------- National Priority List Deletions

Lists of Federal sites subject to CERCLA removals and CERCLA orders

FEDERAL FACILITY ---------- Federal Facility Site Information listing
SEMS ---------- Superfund Enterprise Management System

Lists of Federal CERCLA sites with NFRAP

SEMS-ARCHIVE ---------- Superfund Enterprise Management System Archive

Lists of Federal RCRA facilities undergoing Corrective Action

CORRACTS ---------- Corrective Action Report

Lists of Federal RCRA TSD facilities

RCRA-TSDF ---------- RCRA - Treatment, Storage and Disposal

Lists of Federal RCRA generators

RCRA-LQG ---------- RCRA - Large Quantity Generators
RCRA-SQG ---------- RCRA - Small Quantity Generators

Federal institutional controls / engineering controls registries

LUCIS ---------- Land Use Control Information System
US ENG CONTROLS ---------- Engineering Controls Sites List
US INST CONTROLS ---------- Institutional Controls Sites List

EXECUTIVE SUMMARY

Federal ERNS list

ERNS ---------- Emergency Response Notification System

Lists of state and tribal landfills and solid waste disposal facilities

SWF/LF ---------- Permitted Landfills List

Lists of state and tribal leaking storage tanks

INDIAN LUST ---------- Leaking Underground Storage Tanks on Indian Land

Lists of state and tribal registered storage tanks

FEMA UST ---------- Underground Storage Tank Listing
AST ---------- Aboveground Storage Tank List
INDIAN UST ---------- Underground Storage Tanks on Indian Land

State and tribal institutional control / engineering control registries

AUL ---------- Land Use Controls

Lists of state and tribal voluntary cleanup sites

INDIAN VCP ---------- Voluntary Cleanup Priority Listing
VCP ---------- Voluntary Cleanup Sites

Lists of state and tribal brownfield sites

BROWNFIELDS ---------- Brownfields Sites Listing

ADDITIONAL ENVIRONMENTAL RECORDS

Local Brownfield lists

US BROWNFIELDS ---------- A Listing of Brownfields Sites

Local Lists of Landfill / Solid Waste Disposal Sites

SWRCY ---------- Solid Waste Recycling Facilities
INDIAN ODI ---------- Report on the Status of Open Dumps on Indian Lands
DEBRIS REGION 9 ---------- Torres Martinez Reservation Illegal Dump Site Locations
ODI ---------- Open Dump Inventory
IHS OPEN DUMPS ---------- Open Dumps on Indian Land

Local Lists of Hazardous waste / Contaminated Sites

US HIST CDL ---------- Delisted National Clandestine Laboratory Register
ALLSITES ---------- Site Assessment & Remediation Public Record Database
CDL ---------- Clandestine Drug Lab Sites
US CDL ---------- National Clandestine Laboratory Register

Local Land Records

LIENS 2 ---------- CERCLA Lien Information

EXECUTIVE SUMMARY

Records of Emergency Release Reports

HMIRS	Hazardous Materials Information Reporting System
SPILLS	Spills Database List
SPILLS 90	SPILLS 90 data from FirstSearch
SPILLS 80	SPILLS 80 data from FirstSearch

Other Ascertainable Records

FUDS	Formerly Used Defense Sites
DOD	Department of Defense Sites
SCRD DRYCLEANERS	State Coalition for Remediation of Drycleaners Listing
US FIN ASSUR	Financial Assurance Information
EPA WATCH LIST	EPA WATCH LIST
2020 COR ACTION	2020 Corrective Action Program List
TSCA	Toxic Substances Control Act
TRIS	Toxic Chemical Release Inventory System
SSTS	Section 7 Tracking Systems
ROD	Records Of Decision
RMP	Risk Management Plans
RAATS	RCRA Administrative Action Tracking System
PRP	Potentially Responsible Parties
PADS	PCB Activity Database System
ICIS	Integrated Compliance Information System
FTTS	FIFRA/ TSCA Tracking System - FIFRA (Federal Insecticide, Fungicide, & Rodenticide Act)/TSCA (Toxic Substances Control Act)
MLTS	Material Licensing Tracking System
COAL ASH DOE	Steam-Electric Plant Operation Data
COAL ASH EPA	Coal Combustion Residues Surface Impoundments List
PCB TRANSFORMER	PCB Transformer Registration Database
RADINFO	Radiation Information Database
HIST FTTS	FIFRA/TSCA Tracking System Administrative Case Listing
DOT OPS	Incident and Accident Data
CONSENT	Superfund (CERCLA) Consent Decrees
INDIAN RESERV	Indian Reservations
FUSRAP	Formerly Utilized Sites Remedial Action Program
UMTRA	Uranium Mill Tailings Sites
LEAD SMELTERS	Lead Smelter Sites
US AIRS	Aerometric Information Retrieval System Facility Subsystem
US MINES	Mines Master Index File
ABANDONED MINES	Abandoned Mines
FINDS	Facility Index System/Facility Registry System
DOCKET HWC	Hazardous Waste Compliance Docket Listing
ECHO	Enforcement & Compliance History Information
UXO	Unexploded Ordnance Sites
FUELS PROGRAM	EPA Fuels Program Registered Listing
AIRS	Permitted Airs Facility Listing
ASBESTOS	ASBESTOS
COAL ASH	Coal Ash Disposal Sites
DRYCLEANERS	Drycleaner Database
Financial Assurance	Financial Assurance Information Listing
NPDES	Waste Water Treatment Facilities Listing
UIC	Underground Injection Wells Listing
MANIFEST	Hazardous Waste Manifest Data

MINES MRDS..... Mineral Resources Data System

EDR HIGH RISK HISTORICAL RECORDS

EDR Exclusive Records

EDR MGP..... EDR Proprietary Manufactured Gas Plants
EDR Hist Cleaner..... EDR Exclusive Historical Cleaners

EDR RECOVERED GOVERNMENT ARCHIVES

Exclusive Recovered Govt. Archives

RGA HWS..... Recovered Government Archive State Hazardous Waste Facilities List
RGA LF..... Recovered Government Archive Solid Waste Facilities List
RGA LUST..... Recovered Government Archive Leaking Underground Storage Tank

SURROUNDING SITES: SEARCH RESULTS

Surrounding sites were identified in the following databases.

Elevations have been determined from the USGS Digital Elevation Model and should be evaluated on a relative (not an absolute) basis. Relative elevation information between sites of close proximity should be field verified. Sites with an elevation equal to or higher than the target property have been differentiated below from sites with an elevation lower than the target property.
Page numbers and map identification numbers refer to the EDR Radius Map report where detailed data on individual sites can be reviewed.

Sites listed in ***bold italics*** are in multiple databases.

Unmappable (orphan) sites are not considered in the foregoing analysis.

STANDARD ENVIRONMENTAL RECORDS

Lists of Federal RCRA generators

RCRA-VSQG: RCRAInfo is EPA's comprehensive information system, providing access to data supporting the Resource Conservation and Recovery Act (RCRA) of 1976 and the Hazardous and Solid Waste Amendments (HSWA) of 1984. The database includes selective information on sites which generate, transport, store, treat and/or dispose of hazardous waste as defined by the Resource Conservation and Recovery Act (RCRA). Very small quantity generators (VSQGs) generate less than 100 kg of hazardous waste, or less than 1 kg of acutely hazardous waste per month.

A review of the RCRA-VSQG list, as provided by EDR, and dated 09/13/2021 has revealed that there are 5 RCRA-VSQG sites within approximately 0.25 miles of the target property.

Equal/Higher Elevation	Address	Direction / Distance	Map ID	Page
CRAFT MASTER EPA ID:: SCD987598125	***2639 BROAD RIVER RD***	***NW 1/8 - 1/4 (0.165 mi.)***	***33***	***65***
PEP BOYS 134 EPA ID:: SCD987580891	***1804 BROAD RIVER ROA***	***SE 1/8 - 1/4 (0.205 mi.)***	***I36***	***72***

Lower Elevation	Address	Direction / Distance	Map ID	Page
CAROLINA INDUSTRIAL	***2428 BROAD RIVER RD***	***NW 0 - 1/8 (0.009 mi.)***	***E14***	***31***

EPA ID:: SCR000003491				
EXXON LOCATION 4 501 EPA ID:: SCD987578234	***2220 BROAD RIVER ROA***	***NE 0 - 1/8 (0.022 mi.)***	***A22***	***45***
SHARPES FORMAL WEAR EPA ID:: SCD982094575	RT 1 BOX 499G	SSE 1/8 - 1/4 (0.166 mi.)	H34	69

Lists of state- and tribal hazardous waste facilities

SHWS: State hazardous waste site records are the states' equivalent to CERCLIS. These sites may or may not already be listed on the federal CERCLIS list. Priority sites planned for cleanup using state funds (state equivalent of Superfund) are identified along with sites where cleanup will be paid for by potentially responsible parties. Available information varies by state.

A review of the SHWS list, as provided by EDR, and dated 09/10/2021 has revealed that there are 10 SHWS sites within approximately 1 mile of the target property.

Equal/Higher Elevation	Address	Direction / Distance	Map ID	Page
PALMETTO FINE CLEANE EPA ID: SCDRY0053089	***1718 BROAD RIVER RD***	***SE 1/4 - 1/2 (0.291 mi.)***	***J38***	***76***
SUBURBAN LODGE (FORM EPA ID: SCS123457099	1633 BROAD RIVER RD	SE 1/4 - 1/2 (0.341 mi.)	41	81

Lower Elevation	Address	Direction / Distance	Map ID	Page
FMR ED ROBINSON LAUN EPA ID: SCDRY0056170	DUTCH SQUARE MALL -	SSE 1/4 - 1/2 (0.324 mi.)	40	80
BRITE CLEANERS EPA ID: SCDRY0057314	422 BUSH RIVER RD/14	S 1/2 - 1 (0.525 mi.)	K44	83
BRITE CLEANERS EPA ID: SCS123457021	***422 BUSH RIVER RD UN***	***S 1/2 - 1 (0.525 mi.)***	***K45***	***83***
DELUXE CLEANERS EPA ID: SCDRY0056072	***3007 BROAD RIVER RD***	***NW 1/2 - 1 (0.603 mi.)***	***46***	***84***
TRIPP'S FINE CLEANER EPA ID: SCDRY0051271	***1339 BROAD RIVER RD***	***SE 1/2 - 1 (0.656 mi.)***	***47***	***85***
ARNOLDS PROFESSIONAL EPA ID: SCDRY0051118	***3104 BROAD RIVER ROA***	***NW 1/2 - 1 (0.719 mi.)***	***48***	***85***
CAROLINA CUSTOM AUTO EPA ID: SCD982119281	1109 ST ANDREWS RD	WNW 1/2 - 1 (0.838 mi.)	49	88
CEDAR CHEST CLEANERS EPA ID: SCD987598091	***3315 BROAD RIVER RD***	***NW 1/2 - 1 (0.904 mi.)***	***50***	***89***

Lists of state and tribal leaking storage tanks

LUST: The Leaking Underground Storage Tank Incident Reports contain an inventory of reported leaking underground storage tank incidents. The data come from the Department of Health & Environmental Control's Leaking UST list.

A review of the LUST list, as provided by EDR, and dated 06/11/2021 has revealed that there are 14

EXECUTIVE SUMMARY

LUST sites within approximately 0.5 miles of the target property.

Equal/Higher Elevation	Address	Direction / Distance	Map ID	Page
RACETRAC 978	***2114 BROAD RIVER RD***	***SE 0 - 1/8 (0.002 mi.)***	***D8***	***17***
No Action Required: 10/05/2010 No Action Required: 05/06/2021 No Action Required: 02/09/2018 Substance: PETROL Facility Id: 07910				
MCQUIKS OILUBE	***2121 BROAD RIVER RD***	***SE 0 - 1/8 (0.002 mi.)***	***B10***	***22***
No Action Required: 11/05/2013 Substance: PETRO Facility Id: 10130				
SHEPPERDS TEXACO STA	***2116 BROAD RIVER RD***	***SE 0 - 1/8 (0.005 mi.)***	***D13***	***29***
No Action Required: 01/13/2014 Substance: PETROL Facility Id: 07605				
GULF SERVICE STATION	***2123 BROAD RIVER RD***	***SE 0 - 1/8 (0.021 mi.)***	***F16***	***36***
No Action Required: 07/27/2017 Substance: PETROL Facility Id: 07342				
COLUMBIA FIRE DEPT S	***1225 BRIARGATE CIR***	***WNW 0 - 1/8 (0.063 mi.)***	***23***	***48***
No Action Required: 09/28/2006 Substance: PETRO Facility Id: 07326				
CIRCLE K 2705138	***2624 BROAD RIVER RD***	***NW 0 - 1/8 (0.112 mi.)***	***G30***	***57***
No Action Required: 07/17/2012 Substance: PETRO Facility Id: 11013				
PEP BOY 134	***1804 BROAD RIVER RD***	***SE 1/8 - 1/4 (0.205 mi.)***	***I35***	***71***
No Action Required: 01/22/1999 Substance: PETRO Facility Id: 18230				
SPEEDWAY 2842	***1714 BROAD RIVER RD***	***SE 1/4 - 1/2 (0.308 mi.)***	***J39***	***77***
Substance: PETRO Facility Id: 07633				

Lower Elevation	Address	Direction / Distance	Map ID	Page
PORT UNIT 288	***2224 BROAD RIVER RD***	***0 - 1/8 (0.000 mi.)***	***A3***	***11***
Substance: PETROL Facility Id: 07758				
YOKAHAMA TIRE	***2341 BROAD RIVER RD***	***0 - 1/8 (0.000 mi.)***	***C6***	***15***
No Action Required: 03/31/2000 Substance: PETRO Facility Id: 18544				
CIRCLE K 3105	***2220 BROAD RIVER RD***	***NE 0 - 1/8 (0.022 mi.)***	***A21***	***41***
No Action Required: 10/28/1998 Substance: PETRO Facility Id: 07648				
CONSTAN INC	***2505 BROAD RIVER RD***	***NW 0 - 1/8 (0.071 mi.)***	***G24***	***51***

No Action Required: 04/28/1995
Substance: PETRO
Facility Id: 07925

FRASIER TIRE SERVICE	***828 DUTCH SQUARE BLV***	***S 1/8 - 1/4 (0.234 mi.)***	***37***	***75***
No Action Required: 04/06/1995 Substance: PETRO Facility Id: 14101				
PENSKE AUTO CENTER K	***99 N ARROWOOD RD***	***SSW 1/4 - 1/2 (0.369 mi.)***	***42***	***81***
No Action Required: 05/10/1999 Substance: PETRO Facility Id: 07780				

Lists of state and tribal registered storage tanks

UST: The Underground Storage Tank database contains registered USTs. USTs are regulated under Subtitle I of the Resource Conservation and Recovery Act (RCRA). The data come from the Department of Health & Environmental Control's list: Comprehensive Underground Storage Tanks.

A review of the UST list, as provided by EDR, and dated 02/28/2021 has revealed that there are 17 UST sites within approximately 0.25 miles of the target property.

Equal/Higher Elevation	Address	Direction / Distance	Map ID	Page
RACETRAC 978	***2114 BROAD RIVER RD***	***SE 0 - 1/8 (0.002 mi.)***	***D8***	***17***
Facility Id: 07910 Status: Abandoned				
MCQUIKS OILUBE	***2121 BROAD RIVER RD***	***SE 0 - 1/8 (0.002 mi.)***	***B10***	***22***
Facility Id: 10130 Status: Abandoned				
SHEPPERDS TEXACO STA	***2116 BROAD RIVER RD***	***SE 0 - 1/8 (0.005 mi.)***	***D13***	***29***
Facility Id: 07605 Status: Abandoned				
GULF SERVICE STATION	***2123 BROAD RIVER RD***	***SE 0 - 1/8 (0.021 mi.)***	***F16***	***36***
Facility Id: 07342 Status: Abandoned				
GULF SERVICE STATION	2123 BROAD RIVER RD	SE 0 - 1/8 (0.021 mi.)	F17	40
Facility Id: 11060				
COLUMBIA FIRE DEPT S	***1225 BRIARGATE CIR***	***WNW 0 - 1/8 (0.063 mi.)***	***23***	***48***
Facility Id: 07326 Status: Abandoned				
GULF SERVICE STATION	BROAD RIVER & YOUNG	NW 0 - 1/8 (0.091 mi.)	G25	52
Facility Id: 07651 Status: Abandoned				
EL CHEAPO 08	***2624 BROAD RIVER RD***	***NW 0 - 1/8 (0.112 mi.)***	***G28***	***56***
Facility Id: 19587 Status: Currently in Use				
CIRCLE K 2705138	***2624 BROAD RIVER RD***	***NW 0 - 1/8 (0.112 mi.)***	***G30***	***57***
Facility Id: 11013 Status: Abandoned				
PEP BOY 134	***1804 BROAD RIVER RD***	***SE 1/8 - 1/4 (0.205 mi.)***	***I35***	***71***

Facility Id: 18230
Status: Abandoned

Lower Elevation	Address	Direction / Distance	Map ID	Page
PORT UNIT 288	***2224 BROAD RIVER RD***	***0 - 1/8 (0.000 mi.)***	***A3***	***11***
Facility Id: 07758				
Status: Abandoned				
TEXACO SERVICE	BROAD RIVER & I 20	0 - 1/8 (0.000 mi.)	5	14
Facility Id: 07628				
Status: Abandoned				
YOKAHAMA TIRE	***2341 BROAD RIVER RD***	***0 - 1/8 (0.000 mi.)***	***C6***	***15***
Facility Id: 18544				
Status: Abandoned				
R A S 45015	2220 BROAD RIVER RD	NE 0 - 1/8 (0.022 mi.)	A19	40
Facility Id: 11892				
CIRCLE K 3105	***2220 BROAD RIVER RD***	***NE 0 - 1/8 (0.022 mi.)***	***A21***	***41***
Facility Id: 07648				
Status: Abandoned				
Status: Currently in Use				
CONSTAN INC	***2505 BROAD RIVER RD***	***NW 0 - 1/8 (0.071 mi.)***	***G24***	***51***
Facility Id: 07925				
Status: Abandoned				
FRASIER TIRE SERVICE	***828 DUTCH SQUARE BLV***	***S 1/8 - 1/4 (0.234 mi.)***	***37***	***75***
Facility Id: 14101				
Status: Abandoned				

State and tribal institutional control / engineering control registries

RCR: The Bureau of Land and Waste Management established this Registry to help monitor and maintain sites that have conditional remedies. A Conditional Remedy is an environmental remedy that includes certain qualifications. These qualifications are divided into two major categories: Remedies requiring Land Use Controls and Conditional No Further Actions.

A review of the RCR list, as provided by EDR, and dated 09/09/2021 has revealed that there are 8 RCR sites within approximately 0.5 miles of the target property.

Equal/Higher Elevation	Address	Direction / Distance	Map ID	Page
RACETRAC 978	***2114 BROAD RIVER RD***	***SE 0 - 1/8 (0.002 mi.)***	***D8***	***17***
MCQUIKS OILUBE	***2121 BROAD RIVER RD***	***SE 0 - 1/8 (0.002 mi.)***	***B10***	***22***
GULF SERVICE STATION	***2123 BROAD RIVER RD***	***SE 0 - 1/8 (0.021 mi.)***	***F16***	***36***
COLUMBIA FIRE DEPT S	***1225 BRIARGATE CIR***	***WNW 0 - 1/8 (0.063 mi.)***	***23***	***48***
CIRCLE K 2705138	***2624 BROAD RIVER RD***	***NW 0 - 1/8 (0.112 mi.)***	***G31***	***59***

Lower Elevation	Address	Direction / Distance	Map ID	Page
PORT UNIT 288	***2224 BROAD RIVER RD***	***0 - 1/8 (0.000 mi.)***	***A3***	***11***
CIRCLE K 3105	***2220 BROAD RIVER RD***	***NE 0 - 1/8 (0.022 mi.)***	***A21***	***41***
FORMER USA SERVICE S	***DUTCH SQUARE MALL***	***S 1/4 - 1/2 (0.401 mi.)***	***43***	***82***

ADDITIONAL ENVIRONMENTAL RECORDS

Other Ascertainable Records

RCRA NonGen / NLR: RCRAInfo is EPA's comprehensive information system, providing access to data supporting the Resource Conservation and Recovery Act (RCRA) of 1976 and the Hazardous and Solid Waste Amendments (HSWA) of 1984. The database includes selective information on sites which generate, transport, store, treat and/or dispose of hazardous waste as defined by the Resource Conservation and Recovery Act (RCRA). Non-Generators do not presently generate hazardous waste.

A review of the RCRA NonGen / NLR list, as provided by EDR, and dated 09/13/2021 has revealed that there are 4 RCRA NonGen / NLR sites within approximately 0.25 miles of the target property.

Equal/Higher Elevation	Address	Direction / Distance	Map ID	Page
USS AGRI-CHEMICALS EPA ID:: SCD044942878	BROADRIVER RD,PO BOX	0 - 1/8 (0.000 mi.)	B2	8
MCQUIK'S #9660 EPA ID:: SCD987577814	2121 BROAD RIVERS RO	SE 0 - 1/8 (0.002 mi.)	B11	25
BP OIL-SITE #24144 EPA ID:: SCD987582186	***2624 BROAD RIVER RD***	***NW 0 - 1/8 (0.092 mi.)***	***G26***	***53***
SHERWIN WILLIAMS CO EPA ID:: SCD000826651	***1221 BAKERSFIELD RD***	***SSE 1/8 - 1/4 (0.142 mi.)***	***H32***	***61***

GWCI: Groundwater Contamination Inventory Cases. Any site that has groundwater contamination over a federal MCL.

A review of the GWCI list, as provided by EDR, and dated 07/01/2008 has revealed that there are 8 GWCI sites within approximately 0.5 miles of the target property.

Equal/Higher Elevation	Address	Direction / Distance	Map ID	Page
RACETRAC 978 Solid Waste Permit #: 07910	***2114 BROAD RIVER RD***	***SE 0 - 1/8 (0.002 mi.)***	***D8***	***17***
MCQUIKS OILUBE Solid Waste Permit #: 10130	***2121 BROAD RIVER RD***	***SE 0 - 1/8 (0.002 mi.)***	***B10***	***22***
GULF SERVICE STATION Solid Waste Permit #: 07342	***2123 BROAD RIVER RD***	***SE 0 - 1/8 (0.021 mi.)***	***F16***	***36***
COLUMBIA FIRE DEPT S Solid Waste Permit #: 07326	***1225 BRIARGATE CIR***	***WNW 0 - 1/8 (0.063 mi.)***	***23***	***48***
CIRCLE K 2705138 Solid Waste Permit #: 11013	***2624 BROAD RIVER RD***	***NW 0 - 1/8 (0.112 mi.)***	***G31***	***59***
SPEEDWAY 2842 Solid Waste Permit #: 07633	***1714 BROAD RIVER RD***	***SE 1/4 - 1/2 (0.308 mi.)***	***J39***	***77***

Lower Elevation	Address	Direction / Distance	Map ID	Page
PORT UNIT 288 Solid Waste Permit #: 07758	***2224 BROAD RIVER RD***	***0 - 1/8 (0.000 mi.)***	***A3***	***11***
CIRCLE K 3105	***2220 BROAD RIVER RD***	***NE 0 - 1/8 (0.022 mi.)***	***A21***	***41***

EXECUTIVE SUMMARY

Solid Waste Permit #: 07648

EDR HIGH RISK HISTORICAL RECORDS

EDR Exclusive Records

EDR Hist Auto: EDR has searched selected national collections of business directories and has collected listings of potential gas station/filling station/service station sites that were available to EDR researchers. EDR's review was limited to those categories of sources that might, in EDR's opinion, include gas station/filling station/service station establishments. The categories reviewed included, but were not limited to gas, gas station, gasoline station, filling station, auto, automobile repair, auto service station, service station, etc. This database falls within a category of information EDR classifies as "High Risk Historical Records", or HRHR. EDR's HRHR effort presents unique and sometimes proprietary data about past sites and operations that typically create environmental concerns, but may not show up in current government records searches.

A review of the EDR Hist Auto list, as provided by EDR, has revealed that there are 10 EDR Hist Auto sites within approximately 0.125 miles of the target property.

Equal/Higher Elevation	Address	Direction / Distance	Map ID	Page
BANNISTERS 66 SERVIC	2114 BROAD RIVER RD	SE 0 - 1/8 (0.002 mi.)	D7	16
MOBIL OIL CORP	2121 BROAD RIVER ROA	SE 0 - 1/8 (0.002 mi.)	B9	22
SHEPPARD TEXACO	2116 BROAD RIVER RD	SE 0 - 1/8 (0.005 mi.)	D12	29
ROBERTSONS GULF SERV	2123 BROAD RIVER RD	SE 0 - 1/8 (0.021 mi.)	F18	40
METTS OIL CO	2340 BROAD RIVER ROA	NE 0 - 1/8 (0.107 mi.)	27	56
CIRCLE K STORES INC	2624 BROAD RIVER RD	NW 0 - 1/8 (0.112 mi.)	G29	57

Lower Elevation	Address	Direction / Distance	Map ID	Page
FOX SHELL SERVICE ST	2224 BROAD RIVER RD	0 - 1/8 (0.000 mi.)	A1	8
AUTRYS AMOCO	2369 BROAD RIVER RD	0 - 1/8 (0.000 mi.)	C4	14
AAMCO TRANSMISSIONS	2428 BROAD RIVER RD	NW 0 - 1/8 (0.009 mi.)	E15	35
GARVIN OIL COMPANY I	2220 BROAD RIVER RD	NE 0 - 1/8 (0.022 mi.)	A20	41

EXECUTIVE SUMMARY

Due to poor or inadequate address information, the following sites were not mapped. Count: 6 records.

Site Name	Database(s)
RUSHMORE SITE	CDL
FMR ED ROBINSON LAUNDRY & DRY CLE	SEMS-ARCHIVE
LEXINGTON HEALTH INC DBA LEXINGTON	DRYCLEANERS
DORIS DERRICK PROPERTY	LUST
FORMER USA SERVICE STATION	LUST, UST
	LUST, UST, GWCI

OVERVIEW MAP - 6860313.2S

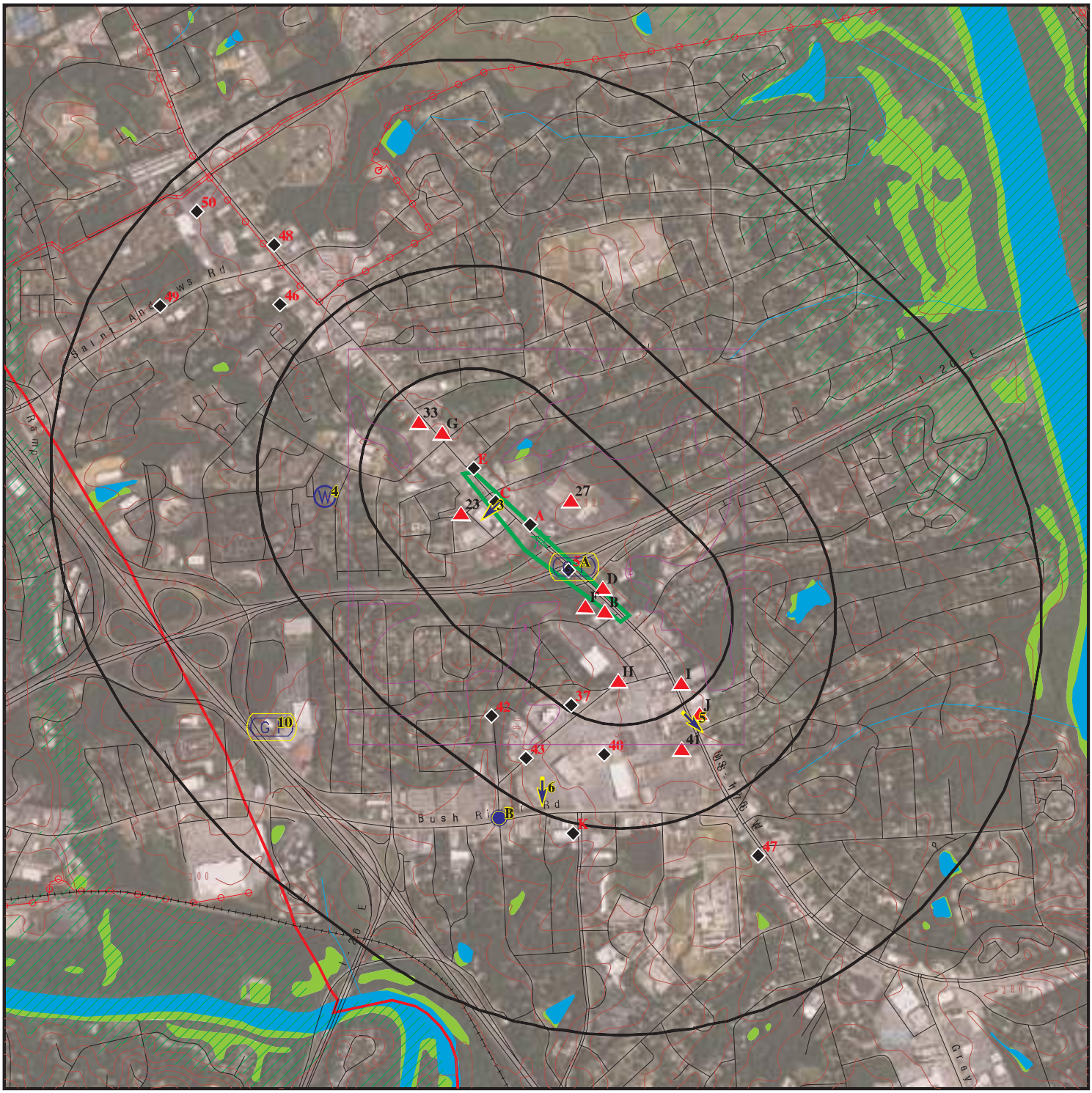

0 1/4 1/2 1 Miles

- Target Property
- Sites at elevations higher than or equal to the target property
- Sites at elevations lower than the target property
- Manufactured Gas Plants
- National Priority List Sites
- Dept. Defense Sites
- Indian Reservations BIA
- County Boundary
- Power transmission lines
- Pipelines
- Special Flood Hazard Area (1%)
- 0.2% Annual Chance Flood Hazard
- National Wetland Inventory
- State Wetlands

This report includes Interactive Map Layers to display and/or hide map information. The legend includes only those icons for the default map view.

SITE NAME:	Carolina Cross Roads	CLIENT:	ARM Environmental Services
ADDRESS:	Broad River Rd Columbia SC 29210	CONTACT:	Richard Ciccolella
LAT/LONG:	34.040273 / 81.094887	INQUIRY #:	6860313.2s
		DATE:	February 16, 2022 12:07 pm

Copyright © 2022 EDR, Inc. © 2015 TomTom Rel. 2015.

DETAIL MAP - 6860313.2S

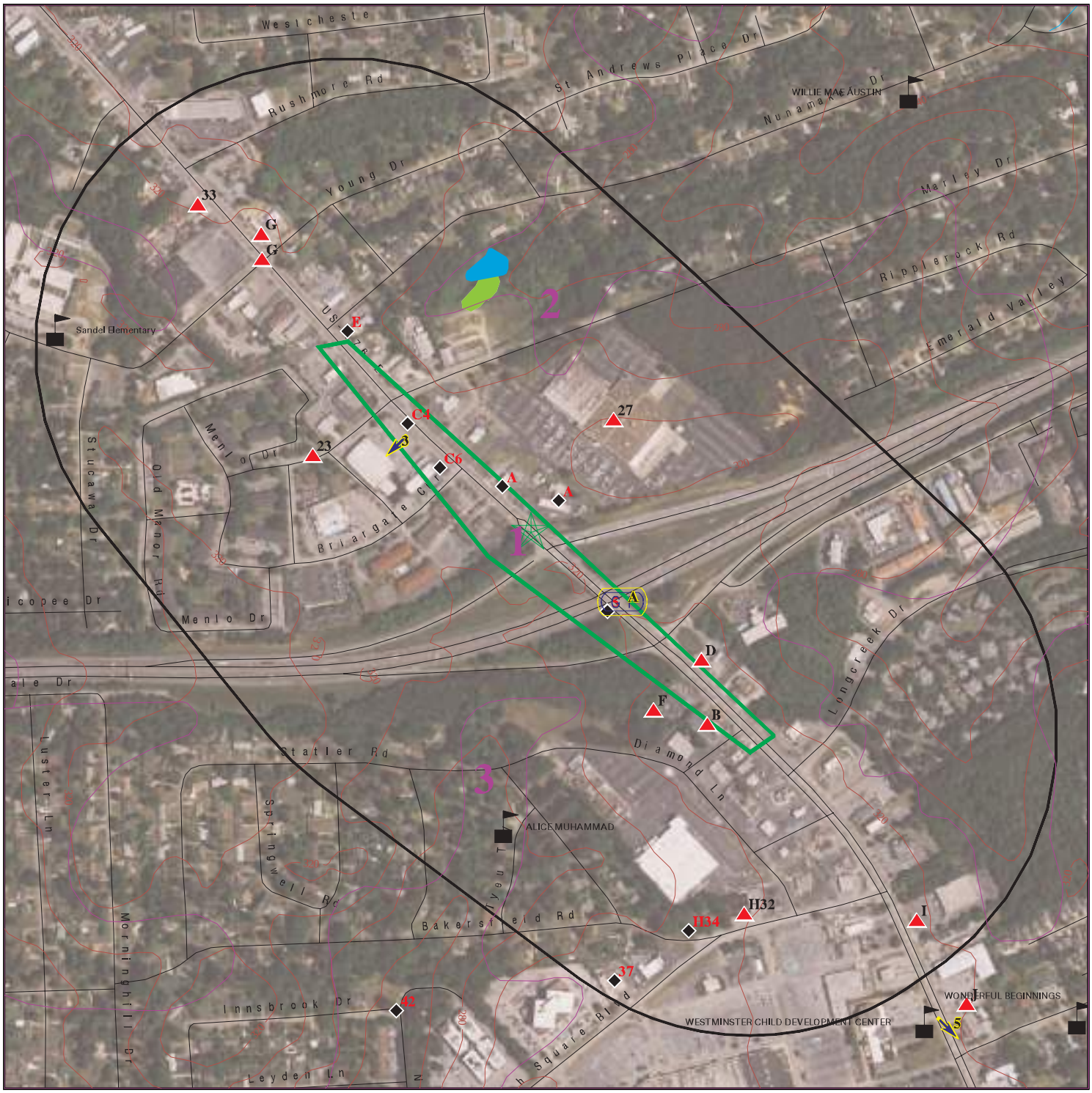

Target Property

Sites at elevations higher than or equal to the target property

Sites at elevations lower than the target property

Manufactured Gas Plants

Sensitive Receptors

National Priority List Sites

Dept. Defense Sites

0 1/16 1/8 1/4 Miles

Indian Reservations BIA

National Wetland Inventory

State Wetlands

N

This report includes Interactive Map Layers to display and/or hide map information. The legend includes only those icons for the default map view.

SITE NAME:	Carolina Cross Roads	CLIENT:	ARM Environmental Services
ADDRESS:	Broad River Rd Columbia SC 29210	CONTACT:	Richard Ciccolella
LAT/LONG:	34.040273 / 81.094887	INQUIRY #:	6860313.2s
		DATE:	February 16, 2022 12:10 pm

Copyright © 2022 EDR, Inc. © 2015 TomTom Rel. 2015.

MAP FINDINGS SUMMARY

Database	Search Distance (Miles)	Target Property	< 1/8	1/8 - 1/4	1/4 - 1/2	1/2 - 1	> 1	Total Plotted
STANDARD ENVIRONMENTAL RECORDS								
Lists of Federal NPL (Superfund) sites								
NPL	1.000		0	0	0	0	NR	0
Proposed NPL	1.000		0	0	0	0	NR	0
NPL LIENS	1.000		0	0	0	0	NR	0
Lists of Federal Delisted NPL sites								
Delisted NPL	1.000		0	0	0	0	NR	0
Lists of Federal sites subject to CERCLA removals and CERCLA orders								
FEDERAL FACILITY	0.500		0	0	0	NR	NR	0
SEMS	0.500		0	0	0	NR	NR	0
Lists of Federal CERCLA sites with NFRAP								
SEMS-ARCHIVE	0.500		0	0	0	NR	NR	0
Lists of Federal RCRA facilities undergoing Corrective Action								
CORRACTS	1.000		0	0	0	0	NR	0
Lists of Federal RCRA TSD facilities								
RCRA-TSDF	0.500		0	0	0	NR	NR	0
Lists of Federal RCRA generators								
RCRA-LQG	0.250		0	0	NR	NR	NR	0
RCRA-SQG	0.250		0	0	NR	NR	NR	0
RCRA-VSQG	0.250		2	3	NR	NR	NR	5
Federal institutional controls / engineering controls registries								
LUCIS	0.500		0	0	0	NR	NR	0
US ENG CONTROLS	0.500		0	0	0	NR	NR	0
US INST CONTROLS	0.500		0	0	0	NR	NR	0
Federal ERNS list								
ERNS	TP		NR	NR	NR	NR	NR	0
Lists of state- and tribal hazardous waste facilities								
SHWS	1.000		0	0	3	7	NR	10
Lists of state and tribal landfills and solid waste disposal facilities								
SWF/LF	0.500		0	0	0	NR	NR	0
Lists of state and tribal leaking storage tanks								
LUST	0.500		10	2	2	NR	NR	14

MAP FINDINGS SUMMARY

Database	Search Distance (Miles)	Target Property	< 1/8	1/8 - 1/4	1/4 - 1/2	1/2 - 1	> 1	Total Plotted
INDIAN LUST	0.500		0	0	0	NR	NR	0
Lists of state and tribal registered storage tanks								
FEMA UST	0.250		0	0	NR	NR	NR	0
UST	0.250		15	2	NR	NR	NR	17
AST	0.250		0	0	NR	NR	NR	0
INDIAN UST	0.250		0	0	NR	NR	NR	0
State and tribal institutional control / engineering control registries								
RCR	0.500		7	0	1	NR	NR	8
AUL	0.500		0	0	0	NR	NR	0
Lists of state and tribal voluntary cleanup sites								
INDIAN VCP	0.500		0	0	0	NR	NR	0
VCP	0.500		0	0	0	NR	NR	0
Lists of state and tribal brownfield sites								
BROWNFIELDS	0.500		0	0	0	NR	NR	0
ADDITIONAL ENVIRONMENTAL RECORDS								
Local Brownfield lists								
US BROWNFIELDS	0.500		0	0	0	NR	NR	0
Local Lists of Landfill / Solid Waste Disposal Sites								
SWRCY	0.500		0	0	0	NR	NR	0
INDIAN ODI	0.500		0	0	0	NR	NR	0
DEBRIS REGION 9	0.500		0	0	0	NR	NR	0
ODI	0.500		0	0	0	NR	NR	0
IHS OPEN DUMPS	0.500		0	0	0	NR	NR	0
Local Lists of Hazardous waste / Contaminated Sites								
US HIST CDL	TP		NR	NR	NR	NR	NR	0
ALLSITES	0.500		0	0	0	NR	NR	0
CDL	TP		NR	NR	NR	NR	NR	0
US CDL	TP		NR	NR	NR	NR	NR	0
Local Land Records								
LIENS 2	TP		NR	NR	NR	NR	NR	0
Records of Emergency Release Reports								
HMIRS	TP		NR	NR	NR	NR	NR	0
SPILLS	TP		NR	NR	NR	NR	NR	0
SPILLS 90	TP		NR	NR	NR	NR	NR	0
SPILLS 80	TP		NR	NR	NR	NR	NR	0
Other Ascertainable Records								
RCRA NonGen / NLR	0.250		3	1	NR	NR	NR	4

MAP FINDINGS SUMMARY

Database	Search Distance (Miles)	Target Property	< 1/8	1/8 - 1/4	1/4 - 1/2	1/2 - 1	> 1	Total Plotted
FUDS	1.000		0	0	0	0	NR	0
DOD	1.000		0	0	0	0	NR	0
SCRD DRYCLEANERS	0.500		0	0	0	NR	NR	0
US FIN ASSUR	TP		NR	NR	NR	NR	NR	0
EPA WATCH LIST	TP		NR	NR	NR	NR	NR	0
2020 COR ACTION	0.250		0	0	NR	NR	NR	0
TSCA	TP		NR	NR	NR	NR	NR	0
TRIS	TP		NR	NR	NR	NR	NR	0
SSTS	TP		NR	NR	NR	NR	NR	0
ROD	1.000		0	0	0	0	NR	0
RMP	TP		NR	NR	NR	NR	NR	0
RAATS	TP		NR	NR	NR	NR	NR	0
PRP	TP		NR	NR	NR	NR	NR	0
PADS	TP		NR	NR	NR	NR	NR	0
ICIS	TP		NR	NR	NR	NR	NR	0
FTTS	TP		NR	NR	NR	NR	NR	0
MLTS	TP		NR	NR	NR	NR	NR	0
COAL ASH DOE	TP		NR	NR	NR	NR	NR	0
COAL ASH EPA	0.500		0	0	0	NR	NR	0
PCB TRANSFORMER	TP		NR	NR	NR	NR	NR	0
RADINFO	TP		NR	NR	NR	NR	NR	0
HIST FTTS	TP		NR	NR	NR	NR	NR	0
DOT OPS	TP		NR	NR	NR	NR	NR	0
CONSENT	1.000		0	0	0	0	NR	0
INDIAN RESERV	1.000		0	0	0	0	NR	0
FUSRAP	1.000		0	0	0	0	NR	0
UMTRA	0.500		0	0	0	NR	NR	0
LEAD SMELTERS	TP		NR	NR	NR	NR	NR	0
US AIRS	TP		NR	NR	NR	NR	NR	0
US MINES	0.250		0	0	NR	NR	NR	0
ABANDONED MINES	0.250		0	0	NR	NR	NR	0
FINDS	TP		NR	NR	NR	NR	NR	0
DOCKET HWC	TP		NR	NR	NR	NR	NR	0
ECHO	TP		NR	NR	NR	NR	NR	0
UXO	1.000		0	0	0	0	NR	0
FUELS PROGRAM	0.250		0	0	NR	NR	NR	0
AIRS	TP		NR	NR	NR	NR	NR	0
ASBESTOS	TP		NR	NR	NR	NR	NR	0
COAL ASH	0.500		0	0	0	NR	NR	0
DRYCLEANERS	0.250		0	0	NR	NR	NR	0
Financial Assurance	TP		NR	NR	NR	NR	NR	0
GWCI	0.500		7	0	1	NR	NR	8
NPDES	TP		NR	NR	NR	NR	NR	0
UIC	TP		NR	NR	NR	NR	NR	0
MANIFEST	0.250		0	0	NR	NR	NR	0
MINES MRDS	TP		NR	NR	NR	NR	NR	0

EDR HIGH RISK HISTORICAL RECORDS

EDR Exclusive Records

EDR MGP	1.000		0	0	0	0	NR	0

MAP FINDINGS SUMMARY

Database	Search Distance (Miles)	Target Property	< 1/8	1/8 - 1/4	1/4 - 1/2	1/2 - 1	> 1	Total Plotted
EDR Hist Auto	0.125		10	NR	NR	NR	NR	10
EDR Hist Cleaner	0.125		0	NR	NR	NR	NR	0
EDR RECOVERED GOVERNMENT ARCHIVES								
Exclusive Recovered Govt. Archives								
RGA HWS	TP		NR	NR	NR	NR	NR	0
RGA LF	TP		NR	NR	NR	NR	NR	0
RGA LUST	TP		NR	NR	NR	NR	NR	0
- Totals --		0	54	8	7	7	0	76

NOTES:

TP = Target Property

NR = Not Requested at this Search Distance

Sites may be listed in more than one database

A1 **FOX SHELL SERVICE STATION** **EDR Hist Auto** **1022058315**
2224 BROAD RIVER RD **N/A**
< 1/8 **COLUMBIA, SC 29210**
1 ft.

Site 1 of 6 in cluster A

Relative: EDR Hist Auto
Lower

Actual: Year: Name: Type:
316 ft. 1974 FOX SHELL SERVICE STATION Gasoline Service Stations
1975 FOX SHELL SERVICE STATION Gasoline Service Stations
1976 FOX SHELL SERVICE STATION Gasoline Service Stations

B2 **USS AGRI-CHEMICALS** **RCRA NonGen / NLR** **1000101385**
BROADRIVER RD,PO BOX 21099 **SCD044942878**
< 1/8 **COLUMBIA, SC 29221**
1 ft.

Site 1 of 4 in cluster B

Relative: RCRA NonGen / NLR:
Higher

Actual: Date Form Received by Agency:		19800815
333 ft. Handler Name:	USS AGRI-CHEMICALS	
Handler Address:		BROADRIVER RD,PO BOX 21099
Handler City,State,Zip:		COLUMBIA, SC 29221
EPA ID:		SCD044942878
Contact Name:		JOHN NICKERSON
Contact Address:		PO BOX 1685
Contact City,State,Zip:		ATLANTA, GA 30301
Contact Telephone:		404-572-4105
Contact Fax:		Not reported
Contact Email:		Not reported
Contact Title:		Not reported
EPA Region:		04
Land Type:		Not reported
Federal Waste Generator Description:		Not a generator, verified
Non-Notifier:		Not reported
Biennial Report Cycle:		Not reported
Accessibility:		Not reported
Active Site Indicator:		Not reported
State District Owner:		SC
State District:		CM
Mailing Address:		PO BOX 1685
Mailing City,State,Zip:		ATLANTA, GA 30301
Owner Name:		OWNERNAME
Owner Type:		Private
Operator Name:		OPERNAME
Operator Type:		Private
Short-Term Generator Activity:		No
Importer Activity:		No
Mixed Waste Generator:		No
Transporter Activity:		No
Transfer Facility Activity:		No
Recycler Activity with Storage:		No
Small Quantity On-Site Burner Exemption:		No
Smelting Melting and Refining Furnace Exemption:		No
Underground Injection Control:		No
Off-Site Waste Receipt:		No
Universal Waste Indicator:		No
Universal Waste Destination Facility:		No
Federal Universal Waste:		No

USS AGRI-CHEMICALS (Continued) **1000101385**

Active Site Fed-Reg Treatment Storage and Disposal Facility:	Not reported
Active Site Converter Treatment storage and Disposal Facility:	Not reported
Active Site State-Reg Treatment Storage and Disposal Facility:	Not reported
Active Site State-Reg Handler:	---
Federal Facility Indicator:	Not reported
Hazardous Secondary Material Indicator:	NN
Sub-Part K Indicator:	Not reported
Commercial TSD Indicator:	No
Treatment Storage and Disposal Type:	Not reported
2018 GPRA Permit Baseline:	Not on the Baseline
2018 GPRA Renewals Baseline:	Not on the Baseline
Permit Renewals Workload Universe:	Not reported
Permit Workload Universe:	Not reported
Permit Progress Universe:	Not reported
Post-Closure Workload Universe:	Not reported
Closure Workload Universe:	Not reported
202 GPRA Corrective Action Baseline:	No
Corrective Action Workload Universe:	No
Subject to Corrective Action Universe:	No
Non-TSDFs Where RCRA CA has Been Imposed Universe:	No
TSDFs Potentially Subject to CA Under 3004 (u)/(v) Universe:	No
TSDFs Only Subject to CA under Discretionary Auth Universe:	No
Corrective Action Priority Ranking:	No NCAPS ranking
Environmental Control Indicator:	No
Institutional Control Indicator:	No
Human Exposure Controls Indicator:	N/A
Groundwater Controls Indicator:	N/A
Operating TSDF Universe:	Not reported
Full Enforcement Universe:	Not reported
Significant Non-Complier Universe:	No
Unaddressed Significant Non-Complier Universe:	No
Addressed Significant Non-Complier Universe:	No
Significant Non-Complier With a Compliance Schedule Universe:	No
Financial Assurance Required:	Not reported
Handler Date of Last Change:	20150414
Recognized Trader-Importer:	No
Recognized Trader-Exporter:	No
Importer of Spent Lead Acid Batteries:	No
Exporter of Spent Lead Acid Batteries:	No
Recycler Activity Without Storage:	Not reported
Manifest Broker:	Not reported
Sub-Part P Indicator:	No

Hazardous Waste Summary:

Waste Code:	P071
Waste Description:	METHYL PARATHION (OR) PHOSPHOROTHIOIC ACID, O,O,-DIMETHYL O-(4-NITROPHENYL) ESTER
Waste Code:	U084
Waste Description:	1,3-DICHLOROPROPENE (OR) 1-PROPENE, 1,3-DICHLORO-
Waste Code:	U224
Waste Description:	Not Defined
Waste Code:	U233
Waste Description:	Not Defined

USS AGRI-CHEMICALS (Continued) **1000101385**

Handler - Owner Operator:

Owner/Operator Indicator:	Operator
Owner/Operator Name:	OPERNAME
Legal Status:	Private
Date Became Current:	Not reported
Date Ended Current:	Not reported
Owner/Operator Address:	OPERSTREET
Owner/Operator City,State,Zip:	OPERCITY, WY 99999
Owner/Operator Telephone:	404-555-1212
Owner/Operator Telephone Ext:	Not reported
Owner/Operator Fax:	Not reported
Owner/Operator Email:	Not reported

Owner/Operator Indicator:	Owner
Owner/Operator Name:	OWNERNAME
Legal Status:	Private
Date Became Current:	Not reported
Date Ended Current:	Not reported
Owner/Operator Address:	OWNERSTREET
Owner/Operator City,State,Zip:	OWNERCITY, WY 99999
Owner/Operator Telephone:	404-555-1212
Owner/Operator Telephone Ext:	Not reported
Owner/Operator Fax:	Not reported
Owner/Operator Email:	Not reported

Historic Generators:

Receive Date:	19800815
Handler Name: USS AGRI-CHEMICALS	
Federal Waste Generator Description:	Not a generator, verified
State District Owner:	SC
Large Quantity Handler of Universal Waste:	No
Recognized Trader Importer:	No
Recognized Trader Exporter:	No
Spent Lead Acid Battery Importer:	No
Spent Lead Acid Battery Exporter:	No
Current Record:	Yes
Non Storage Recycler Activity:	Not reported
Electronic Manifest Broker:	Not reported

List of NAICS Codes and Descriptions:

NAICS Code:	325312
NAICS Description:	PHOSPHATIC FERTILIZER MANUFACTURING

Facility Has Received Notices of Violations:

Violations:	No Violations Found

Evaluation Action Summary:

Evaluations:	No Evaluations Found

A3
< 1/8
1 ft.

Relative: Lower

Actual: 316 ft.

PORT UNIT 288
2224 BROAD RIVER RD
COLUMBIA, SC

Site 2 of 6 in cluster A

Database(s): LUST, UST, RCR, Financial Assurance, GWCI, UIC

EDR ID Number: U003524384
EPA ID Number: N/A

LUST:

Name:	PORT UNIT 288
Address:	2224 BROAD RIVER RD
City,State,Zip:	COLUMBIA, SC 29210-6730
Release Number:	1
Facility ID:	07758
Release Status Number:	Not reported
Substance:	PETROL
Tank Owner Company Name:	SPEEDWAY LLC
Tank Owner Last Name:	Not reported
Tank Owner First name:	Not reported
NFA Date:	Not reported
Tank Owner City:	Not reported
Confirmed Date:	Not reported
Release Date:	12/19/1989
EID:	Not reported
Local Facility District:	Not reported
SCRBCA Class Number:	Not reported
Release Fin Type Code:	Not reported
Qualified:	Not reported
Release Source:	Not reported
Local Fac Last Name:	Not reported
Local Fac First Name:	Not reported
User Name:	BALDWIBA
Cleanup Initiated Date:	06/04/1990
Prefix:	Not reported
Total Score:	84

LUST:

Release Date:	12/19/1989
Cleanup Complete Date:	Not reported
Depth to Ground Water:	25.43
Ground Water Flow Direction:	N
Release Number:	1
Confirmed date:	06/04/1990
RP Name:	MARATHON ASHLAND PETROLEUM LLC
RP Address:	539 S MAIN ST
RP City:	FINDLAY
RP State:	OH
RP Zip:	45840
SCRBCA Class Code:	CLASS4BA
Project Manager:	FULMER, SUSAN B
Release Fin Type Code:	WS

UST:

Name:	PORT UNIT 288
Address:	2224 BROAD RIVER RD
City:	COLUMBIA
Facility ID:	07758
Permit:	N 07758
Owner:	SPEEDWAY LLC

PORT UNIT 288 (Continued) **U003524384**

Owner Address: 500 SPEEDWAY DR
Owner City, st, zip: ENON OH 45323-1056
Owner Phone: 336-767-6280

Tank ID: 1
Status: **Abandoned**
Capacity: 5000
Product: Gasoline
Calcage: 25

Name: PORT UNIT 288
Address: 2224 BROAD RIVER RD
City: COLUMBIA

Tank ID: 2
Status: **Abandoned**
Capacity: 5000
Product: Gasoline
Calcage: 25

Name: PORT UNIT 288
Address: 2224 BROAD RIVER RD
City: COLUMBIA

Tank ID: 3
Status: **Abandoned**
Capacity: 8000
Product: Gasoline
Calcage: 25

Name: PORT UNIT 288
Address: 2224 BROAD RIVER RD
City: COLUMBIA

Tank ID: 4
Status: **Abandoned**
Capacity: 8000
Product: Gasoline
Calcage: 25

Name: PORT UNIT 288
Address: 2224 BROAD RIVER RD
City: COLUMBIA

Tank ID: 5
Status: **Abandoned**
Capacity: 550
Product: Waste oil, burnt oil, used oil
Calcage: 25

RCR:
Name: PORT UNIT 288
Address: 2224 BROAD RIVER RD
City,State,Zip: COLUMBIA, SC 29210-6730
Entity Responsibility: Not reported
Region: Not reported
Tax Id: R07402-02-01

PORT UNIT 288 (Continued) **U003524384**

Latitude:	34.04074
Longitude:	-81.0957
Tracking Number:	07758
Regulatory Program:	Not reported
Reported:	12/19/89
CU-MCL:	07/06/21
Unit Type:	Not reported
Unit Number/Letter:	Not reported
Area/Acres:	Not reported
Affected Media:	Not reported
Site/Unit:	Not reported
Condtions:	Not reported
Associated Response/Corrective Action:	Not reported
Associated Chemicals Requiring:	Not reported

SC Financial Assurance 3:

Name:	PORT UNIT 288
Address:	2224 BROAD RIVER RD
City,State,Zip:	COLUMBIA, SC 29210-6730
Owner Name:	SPEEDWAY LLC
Owner Address:	500 SPEEDWAY DR
Owner City St Zip:	ENON OH 45323-1056
Mechanism:	Self Insurance 280.95
Date Expired:	Not reported
Bill:	0

SC GWIC:

Bureau:	BLWM
EAP ID:	Not reported
Solid Waste Permit #:	Not reported
Bureau of Land & Waste Management File #:	Not reported
Permit Number:	07758
WPC Permit:	Not reported
Program:	DUST
Contamination:	PETRO
Petroleum Products:	True
Volatile Organic Compounds:	False
Metals:	False
Nitrates or Potential to Nitrate:	False
Pesticides & Herbicides:	False
Polychlorinated Biphenyls:	False
Base, Neutral, & Acid Extractables:	False
Phenols:	False
Radionuclides Over Max Contaminant Levels:	False
Sources Not In Other Categories:	False
Source:	UST
Underground Storage Tanks:	True
Pits, Ponds, & Lagoons:	False
Spills & Leaks:	False
Landfills:	False
Aboveground Storage Tank:	False
Spray Irrigation:	False
Single-Event Spill:	False
Unpermitted Disposal:	False
Septic Tank/Tile Field:	False
Substances Not In Other Categories:	False

PORT UNIT 288 (Continued) **U003524384**

Sources of Contamination Undetermined: False
Assessment: No
Monitoring: No
Remediation: Yes
Surface Impact: No
Drinking Water Well Impact: No
Remarks: Site ID # 07758. RBCA Classification 2BA3. Monitored Natural Attenuation.

UIC:
Name: PORT OIL STATION 288
Address: 2224 BROAD RIVER RD
City,State,Zip: COLUMBIA, SC 29203
Permit Number: SCHE03000042
Permit Holder: EMRO MARKETING CORP
Former Permit Number: 146
Activity: Inactive
Disposition: Closed
District: Columbia EQC Office
Sub Type: Area Permit

C4 **AUTRYS AMOCO** **EDR Hist Auto** **1021614660**
2369 BROAD RIVER RD **N/A**
< 1/8 **COLUMBIA, SC 29210**
1 ft.

Site 1 of 2 in cluster C

Relative: EDR Hist Auto
Lower

Actual: **312 ft.**

Year:	Name:	Type:
1976	AUTRYS AMOCO	Gasoline Service Stations
1977	AUTRYS AMOCO	Gasoline Service Stations
1978	AUTRYS AMOCO	Gasoline Service Stations
1979	AUTRYS AMOCO	Gasoline Service Stations

---

5 **TEXACO SERVICE** **UST** **U003525830**
BROAD RIVER & I 20 **N/A**
< 1/8 **COLUMBIA, SC**
1 ft.

UST:
Relative: Name: TEXACO SERVICE
Lower Address: BROAD RIVER & I 20
City: COLUMBIA
Actual: **317 ft.** Facility ID: 07628
Permit: N 07628
Owner: TEXACO USA
Owner Address: PO BOX 4582
Owner City, st, zip: ATLANTA GA 30302-4582
Owner Phone: 404-321-4411

Tank ID: 1
Status: **Abandoned**
Capacity: 10000
Product: Gasoline
Calcage: Not reported

TEXACO SERVICE (Continued) **U003525830**

Name: TEXACO SERVICE
Address: BROAD RIVER & I 20
City: COLUMBIA

Tank ID: 2
Status: **Abandoned**
Capacity: 10000
Product: Gasoline
Calcage: Not reported

Name: TEXACO SERVICE
Address: BROAD RIVER & I 20
City: COLUMBIA

Tank ID: 3
Status: **Abandoned**
Capacity: 6000
Product: Gasoline
Calcage: Not reported

Name: TEXACO SERVICE
Address: BROAD RIVER & I 20
City: COLUMBIA

Tank ID: 4
Status: **Abandoned**
Capacity: 1000
Product: Fuel oil
Calcage: Not reported

Name: TEXACO SERVICE
Address: BROAD RIVER & I 20
City: COLUMBIA

Tank ID: 5
Status: **Abandoned**
Capacity: 550
Product: Waste oil, burnt oil, used oil
Calcage: Not reported

C6 **YOKAHAMA TIRE** **LUST U003714870**
2341 BROAD RIVER RD **UST N/A**
< 1/8 **COLUMBIA, SC**
1 ft.

Site 2 of 2 in cluster C

Relative: LUST:
Lower
Actual: Name: YOKAHAMA TIRE
315 ft. Address: 2341 BROAD RIVER RD
City,State,Zip: COLUMBIA, SC 29210-6731
Release Number: 1
Facility ID: 18544
Release Status Number: Not reported
Substance: PETRO
Tank Owner Company Name: STURKIE, ALBERT
Tank Owner Last Name: STURKIE
Tank Owner First name: ALBERT
NFA Date: 03/31/2000

YOKAHAMA TIRE (Continued) **U003714870**

Tank Owner City:	W COLUMBIA
Confirmed Date:	03/06/2000
Release Date:	03/02/2000
EID:	1797804
Local Facility District:	Columbia EQC Office
SCRBCA Class Number:	Not reported
Release Fin Type Code:	UNK
Qualified:	Not reported
Release Source:	UST
Local Fac Last Name:	YOKAHAMA TIRE
Local Fac First Name:	Not reported
User Name:	FANTRM
Cleanup Initiated Date:	03/06/2000
Prefix:	N
Total Score:	Not reported

UST:

Name:	YOKAHAMA TIRE
Address:	2341 BROAD RIVER RD
City:	COLUMBIA
Facility ID:	18544
Permit:	N 18544
Owner:	STURKIE, ALBERT
Owner Address:	757 RAMBLIN RD
Owner City, st, zip:	W COLUMBIA SC 29170
Owner Phone:	803-755-1735
Tank ID:	1
Status:	**Abandoned**
Capacity:	128
Product:	Waste oil, burnt oil, used oil
Calcage:	25

D7 **BANNISTERS 66 SERVICE STATION** **EDR Hist Auto** **1020279738**
SE **2114 BROAD RIVER RD** **N/A**
< 1/8 **COLUMBIA, SC 29210**
0.002 mi.
11 ft. **Site 1 of 4 in cluster D**

Relative: EDR Hist Auto
Higher

Actual: **326 ft.**

Year:	Name:	Type:
1971	BANNISTERS 66 SERVICE STATION	Gasoline Service Stations
1972	BANNISTERS 66 SERVICE STATION	Gasoline Service Stations
1973	BANNISTERS 66 SERVICE STATION	Gasoline Service Stations
1980	DARLINGTONS TUNE-UP CENTER	Gasoline Service Stations
1982	DARLINGTONS TUNE-UP CENTER	Gasoline Service Stations
1983	DARLINGTONS TUNE-UP CENTER	Gasoline Service Stations
2001	RACETRAC PETROLEUM INC	Gasoline Service Stations
2002	RACETRAC PETROLEUM INC	Gasoline Service Stations
2002	PART LLC OF FLORENCE	Gasoline Service Stations
2003	RACETRAC PETROLEUM INC	Gasoline Service Stations
2003	PART LLC OF FLORENCE	Gasoline Service Stations
2004	RACETRAC PETROLEUM INC	Gasoline Service Stations
2004	PART LLC OF FLORENCE	Gasoline Service Stations
2005	RACETRAC PETROLEUM INC	Gasoline Service Stations, NEC
2005	PART LLC OF FLORENCE	Gasoline Service Stations

BANNISTERS 66 SERVICE STATION (Continued) **1020279738**

2006	RACETRAC PETROLEUM INC	Gasoline Service Stations, NEC
2007	RACETRAC PETROLEUM INC	Gasoline Service Stations, NEC
2008	RACETRAC PETROLEUM INC	Gasoline Service Stations, NEC
2009	RACETRAC PETROLEUM INC	Gasoline Service Stations, NEC
2010	RACETRAC PETROLEUM INC	Gasoline Service Stations, NEC
2011	RACETRAC PETROLEUM INC	Gasoline Service Stations, NEC
2012	RACETRAC PETROLEUM INC	Gasoline Service Stations, NEC
2013	RACETRAC PETROLEUM INC	Gasoline Service Stations, NEC
2014	RACETRAC PETROLEUM INC	Gasoline Service Stations, NEC

D8 **RACETRAC 978** **LUST U004019472**
SE **2114 BROAD RIVER RD** **UST N/A**
< 1/8 **COLUMBIA, SC** **RCR**
0.002 mi. **Financial Assurance**
11 ft. **Site 2 of 4 in cluster D** **GWCI**

Relative: Higher

Actual: 326 ft.

LUST:

Name:	RACETRAC 978
Address:	2114 BROAD RIVER RD
City,State,Zip:	COLUMBIA, SC 29210-7008
Release Number:	2
Facility ID:	07910
Release Status Number:	Not reported
Substance:	PETROL
Tank Owner Company Name:	RACETRAC PETROLEUM INC
Tank Owner Last Name:	Not reported
Tank Owner First name:	Not reported
NFA Date:	10/05/2010
Tank Owner City:	Not reported
Confirmed Date:	Not reported
Release Date:	04/01/2010
EID:	Not reported
Local Facility District:	Not reported
SCRBCA Class Number:	Not reported
Release Fin Type Code:	Not reported
Qualified:	Not reported
Release Source:	Not reported
Local Fac Last Name:	Not reported
Local Fac First Name:	Not reported
User Name:	SHRADEAA
Cleanup Initiated Date:	04/28/2010
Prefix:	Not reported
Total Score:	41

LUST:

Release Date:	04/01/2010
Cleanup Complete Date:	10/05/2010
Depth to Ground Water:	39.60
Ground Water Flow Direction:	Not reported
Release Number:	2
Confirmed date:	04/28/2010
RP Name:	RACETRAC PETROLEUM INC
RP Address:	3225 CUMBERLAND BLVD STE 100
RP City:	ATLANTA
RP State:	GA
RP Zip:	30339
SCRBCA Class Code:	CLASS4AA
Project Manager:	SHRADER, ART A

RACETRAC 978 (Continued) **U004019472**

Release Fin Type Code: ENQ

Release Date: 12/12/1991
Cleanup Complete Date: Not reported
Depth to Ground Water: 35.64
Ground Water Flow Direction: W
Release Number: 1
Confirmed date: 03/23/1992
RP Name: RACETRAC PETROLEUM INC
RP Address: 300 TECHNOLOGY CT
RP City: SMYRNA
RP State: GA
RP Zip: 30082
SCRBCA Class Code: CLASS3BA
Project Manager: FULMER, SUSAN B
Release Fin Type Code: WS

Name: RACETRAC 978
Address: 2114 BROAD RIVER RD
City,State,Zip: COLUMBIA, SC 29210-7008
Release Number: 1
Facility ID: 07910
Release Status Number: Not reported
Substance: PETROL
Tank Owner Company Name: RACETRAC PETROLEUM INC
Tank Owner Last Name: Not reported
Tank Owner First name: Not reported
NFA Date: 05/06/2021
Tank Owner City: Not reported
Confirmed Date: Not reported
Release Date: 12/12/1991
EID: Not reported
Local Facility District: Not reported
SCRBCA Class Number: Not reported
Release Fin Type Code: Not reported
Qualified: Not reported
Release Source: Not reported
Local Fac Last Name: Not reported
Local Fac First Name: Not reported
User Name: BALDWIBA
Cleanup Initiated Date: 03/23/1992
Prefix: Not reported
Total Score: 2341

LUST:
Release Date: 04/01/2010
Cleanup Complete Date: 10/05/2010
Depth to Ground Water: 39.60
Ground Water Flow Direction: Not reported
Release Number: 2
Confirmed date: 04/28/2010
RP Name: RACETRAC PETROLEUM INC
RP Address: 3225 CUMBERLAND BLVD STE 100
RP City: ATLANTA
RP State: GA
RP Zip: 30339
SCRBCA Class Code: CLASS4AA

RACETRAC 978 (Continued) **U004019472**

Project Manager: SHRADER, ART A
Release Fin Type Code: ENQ

Release Date: 12/12/1991
Cleanup Complete Date: Not reported
Depth to Ground Water: 35.64
Ground Water Flow Direction: W
Release Number: 1
Confirmed date: 03/23/1992
RP Name: RACETRAC PETROLEUM INC
RP Address: 300 TECHNOLOGY CT
RP City: SMYRNA
RP State: GA
RP Zip: 30082
SCRBCA Class Code: CLASS3BA
Project Manager: FULMER, SUSAN B
Release Fin Type Code: WS

Name: RACETRAC 978
Address: 2114 BROAD RIVER RD
City,State,Zip: COLUMBIA, SC 29210-7008
Release Number: 3
Facility ID: 07910
Release Status Number: Not reported
Substance: PETROL
Tank Owner Company Name: RACETRAC PETROLEUM INC
Tank Owner Last Name: Not reported
Tank Owner First name: Not reported
NFA Date: 02/09/2018
Tank Owner City: Not reported
Confirmed Date: Not reported
Release Date: 03/02/2017
EID: Not reported
Local Facility District: Not reported
SCRBCA Class Number: Not reported
Release Fin Type Code: Not reported
Qualified: Not reported
Release Source: Not reported
Local Fac Last Name: Not reported
Local Fac First Name: Not reported
User Name: MENDENJE
Cleanup Initiated Date: 06/01/2017
Prefix: Not reported
Total Score: 2148

LUST:
Release Date: 04/01/2010
Cleanup Complete Date: 10/05/2010
Depth to Ground Water: 39.60
Ground Water Flow Direction: Not reported
Release Number: 2
Confirmed date: 04/28/2010
RP Name: RACETRAC PETROLEUM INC
RP Address: 3225 CUMBERLAND BLVD STE 100
RP City: ATLANTA
RP State: GA
RP Zip: 30339

RACETRAC 978 (Continued) **U004019472**

SCRBCA Class Code:	CLASS4AA
Project Manager:	SHRADER, ART A
Release Fin Type Code:	ENQ
Release Date:	12/12/1991
Cleanup Complete Date:	Not reported
Depth to Ground Water:	35.64
Ground Water Flow Direction:	W
Release Number:	1
Confirmed date:	03/23/1992
RP Name:	RACETRAC PETROLEUM INC
RP Address:	300 TECHNOLOGY CT
RP City:	SMYRNA
RP State:	GA
RP Zip:	30082
SCRBCA Class Code:	CLASS3BA
Project Manager:	FULMER, SUSAN B
Release Fin Type Code:	WS

UST:

Name:	RACETRAC 978
Address:	2114 BROAD RIVER RD
City:	COLUMBIA
Facility ID:	07910
Permit:	R 07910
Owner:	RACETRAC PETROLEUM INC
Owner Address:	200 GALLERIA PKWY SE
Owner City, st, zip:	ATLANTA GA 30339
Owner Phone:	770-431-7600
Tank ID:	1
Status:	**Abandoned**
Capacity:	11300
Product:	Gasoline RUL
Calcage:	5
Name:	RACETRAC 978
Address:	2114 BROAD RIVER RD
City:	COLUMBIA
Tank ID:	2
Status:	**Abandoned**
Capacity:	11300
Product:	Gasoline Super/Prem
Calcage:	5
Name:	RACETRAC 978
Address:	2114 BROAD RIVER RD
City:	COLUMBIA
Tank ID:	3
Status:	**Abandoned**
Capacity:	11300
Product:	Gasoline
Calcage:	5

RACETRAC 978 (Continued) **U004019472**

Name: RACETRAC 978
Address: 2114 BROAD RIVER RD
City: COLUMBIA

Tank ID: 4
Status: Abandoned
Capacity: 11300
Product: Diesel fuel
Calcage: 5

RCR:
Name: RACETRAC 978
Address: 2114 BROAD RIVER RD
City,State,Zip: COLUMBIA, SC 29210-7008
Entity Responsibility: Not reported
Region: Not reported
Tax Id: R07402-03-02A
Latitude: 34.03806
Longitude: -81.09152
Tracking Number: 07910
Regulatory Program: Not reported
Reported: 12/12/91
CU-MCL: 05/06/21
Unit Type: Not reported
Unit Number/Letter: Not reported
Area/Acres: Not reported
Affected Media: Not reported
Site/Unit: Not reported
Condtions: Not reported
Associated Response/Corrective Action: Not reported
Associated Chemicals Requiring: Not reported

SC Financial Assurance 3:
Name: RACETRAC 978
Address: 2114 BROAD RIVER RD
City,State,Zip: COLUMBIA, SC 29210-7008
Owner Name: RACETRAC PETROLEUM INC
Owner Address: 200 GALLERIA PKWY SE
Owner City St Zip: ATLANTA GA 30339
Mechanism: Self Insurance 280.95
Date Expired: 12/23/2018
Bill: 0

SC GWIC:
Bureau: BLWM
EAP ID: Not reported
Solid Waste Permit #: Not reported
Bureau of Land & Waste Management File #: Not reported
Permit Number: 07910
WPC Permit: Not reported
Program: DUST
Contamination: PETRO
Petroleum Products: True
Volatile Organic Compounds: False
Metals: False
Nitrates or Potential to Nitrate: False

RACETRAC 978 (Continued) **U004019472**

Pesticides & Herbicides:	False
Polychlorinated Biphenyls:	False
Base, Neutral, & Acid Extractables:	False
Phenols:	False
Radionuclides Over Max Contaminant Levels:	False
Sources Not In Other Categories:	False
Source:	UST
Underground Storage Tanks:	True
Pits, Ponds, & Lagoons:	False
Spills & Leaks:	False
Landfills:	False
Aboveground Storage Tank:	False
Spray Irrigation:	False
Single-Event Spill:	False
Unpermitted Disposal:	False
Septic Tank/Tile Field:	False
Substances Not In Other Categories:	False
Sources of Contamination Undetermined:	False
Assessment:	Yes
Monitoring:	No
Remediation:	No
Surface Impact:	No
Drinking Water Well Impact:	No
Remarks:	Site ID # 07910. RBCA Classification 3BA1. Conducting investigation/Risk Assessment.

B9 **MOBIL OIL CORP** **EDR Hist Auto** **1020967137**
SE **2121 BROAD RIVER ROAD** **N/A**
< 1/8 **COLUMBIA, SC 29210**
0.002 mi.
12 ft. **Site 2 of 4 in cluster B**

Relative: EDR Hist Auto
Higher

Actual:
332 ft.

Year:	Name:	Type:
1973	MOBILE OIL CORPORATION	Gasoline Service Stations
1974	MOBIL OIL CORP	Gasoline Service Stations
1975	MOBIL OIL CORP	Gasoline Service Stations
1976	MOBIL OIL CORP	Gasoline Service Stations
1977	MOBIL OIL CORP	Gasoline Service Stations
1978	MOBIL OIL CORP	Gasoline Service Stations
1980	MOBILE OIL CORPORTION	Gasoline Service Stations
1982	MOBILE OIL CORPORTION	Gasoline Service Stations

B10 **MCQUIKS OILUBE** **LUST** **U004016932**
SE **2121 BROAD RIVER RD** **UST** **N/A**
< 1/8 **COLUMBIA, SC** **RCR**
0.002 mi. **Financial Assurance**
12 ft. **Site 3 of 4 in cluster B** **GWCI**

Relative: LUST:
Higher

Actual:
332 ft.

Name:	MCQUIKS OILUBE
Address:	2121 BROAD RIVER RD
City,State,Zip:	COLUMBIA, SC 29210
Release Number:	1
Facility ID:	10130

MCQUIKS OILUBE (Continued) **U004016932**

Release Status Number:	3
Substance:	PETRO
Tank Owner Company Name:	SOUTHEAST LUBE INC
Tank Owner Last Name:	SOUTHEAST LUBE INC
Tank Owner First name:	Not reported
NFA Date:	11/05/2013
Tank Owner City:	COLUMBIA
Confirmed Date:	11/14/1995
Release Date:	10/03/1995
EID:	1757567
Local Facility District:	Columbia EQC Office
SCRBCA Class Number:	4AA
Release Fin Type Code:	WS
Qualified:	Y
Release Source:	UST
Local Fac Last Name:	MCQUIKS OILUBE
Local Fac First Name:	Not reported
User Name:	FULMERSB
Cleanup Initiated Date:	11/14/1995
Prefix:	P
Total Score:	1066

LUST:

Release Date:	10/03/1995
Cleanup Complete Date:	Not reported
Depth to Ground Water:	38.35
Ground Water Flow Direction:	NW
Release Number:	1
Confirmed date:	11/14/1995
RP Name:	SOUTHEAST LUBE INC
RP Address:	PO BOX 210829
RP City:	COLUMBIA
RP State:	SC
RP Zip:	29221-0829
SCRBCA Class Code:	CLASS4AA
Project Manager:	FULMER, SUSAN B
Release Fin Type Code:	WS

UST:

Name:	MCQUIKS OILUBE
Address:	2121 BROAD RIVER RD
City:	COLUMBIA
Facility ID:	10130
Permit:	P 10130
Owner:	SOUTHEAST LUBE INC
Owner Address:	PO BOX 210829
Owner City, st, zip:	COLUMBIA SC 29221-0829
Owner Phone:	- -
Tank ID:	1
Status:	**Abandoned**
Capacity:	4000
Product:	Motor oil, lube oil, hydraulic oil (new)
Calcage:	Not reported
Name:	MCQUIKS OILUBE

MCQUIKS OILUBE (Continued) **U004016932**

Address: 2121 BROAD RIVER RD
City: COLUMBIA

Tank ID: 2
Status: **Abandoned**
Capacity: 4000
Product: Motor oil, lube oil, hydraulic oil (new)
Calcage: Not reported

Name: MCQUIKS OILUBE
Address: 2121 BROAD RIVER RD
City: COLUMBIA

Tank ID: 3
Status: **Abandoned**
Capacity: 4000
Product: Waste oil, burnt oil, used oil
Calcage: Not reported

RCR:
Name: MCQUIKS OILUBE
Address: 2121 BROAD RIVER RD
City,State,Zip: COLUMBIA, SC 29210
Entity Responsibility: Not reported
Region: Not reported
Tax Id: R07402-04-14
Latitude: 34.0376
Longitude: -81.09252
Tracking Number: 10130
Regulatory Program: Not reported
Reported: 10/03/95
CU-MCL: 11/05/13
Unit Type: Not reported
Unit Number/Letter: Not reported
Area/Acres: Not reported
Affected Media: Not reported
Site/Unit: Not reported
Condtions: Not reported
Associated Response/Corrective Action: Not reported
Associated Chemicals Requiring: Not reported

SC Financial Assurance 3:
Name: MCQUIKS OILUBE
Address: 2121 BROAD RIVER RD
City,State,Zip: COLUMBIA, SC 29210
Owner Name: SOUTHEAST LUBE INC
Owner Address: PO BOX 210829
Owner City St Zip: COLUMBIA SC 29221-0829
Mechanism: None
Date Expired: Not reported
Bill: 0

SC GWIC:
Bureau: BLWM
EAP ID: Not reported
Solid Waste Permit #: Not reported

MCQUIKS OILUBE (Continued) **U004016932**

Bureau of Land & Waste Management File #:	Not reported
Permit Number:	10130
WPC Permit:	Not reported
Program:	DUST
Contamination:	PETRO
Petroleum Products:	True
Volatile Organic Compounds:	False
Metals:	False
Nitrates or Potential to Nitrate:	False
Pesticides & Herbicides:	False
Polychlorinated Biphenyls:	False
Base, Neutral, & Acid Extractables:	False
Phenols:	False
Radionuclides Over Max Contaminant Levels:	False
Sources Not In Other Categories:	False
Source:	UST
Underground Storage Tanks:	True
Pits, Ponds, & Lagoons:	False
Spills & Leaks:	False
Landfills:	False
Aboveground Storage Tank:	False
Spray Irrigation:	False
Single-Event Spill:	False
Unpermitted Disposal:	False
Septic Tank/Tile Field:	False
Substances Not In Other Categories:	False
Sources of Contamination Undetermined:	False
Assessment:	Yes
Monitoring:	No
Remediation:	No
Surface Impact:	No
Drinking Water Well Impact:	No
Remarks:	Site ID # 10130. RBCA Classification 4AA1. Conducting investigation/Risk Assessment.

B11 **MCQUIK'S #9660** **RCRA NonGen / NLR** **1000461882**
SE **2121 BROAD RIVERS ROAD** **SCD987577814**
< 1/8 **COLUMBIA, SC 29210**
0.002 mi.
12 ft. **Site 4 of 4 in cluster B**

Relative: RCRA NonGen / NLR:
Higher

Date Form Received by Agency:		20020221
Handler Name:	MCQUIK'S #9660	
Handler Address:		2121 BROAD RIVERS ROAD
Handler City,State,Zip:		COLUMBIA, SC 29210
EPA ID:		SCD987577814
Contact Name:		DENNIS-MGR. DOUGLAS
Contact Address:		2121 BROAD RIVERS ROAD
Contact City,State,Zip:		COLUMBIA, SC 29210
Contact Telephone:		803-772-3721
Contact Fax:		Not reported
Contact Email:		Not reported
Contact Title:		Not reported
EPA Region:		04
Land Type:		Private
Federal Waste Generator Description:		Not a generator, verified
Non-Notifier:		Not reported

Actual:
332 ft.

MCQUIK'S #9660 (Continued) **1000461882**

Biennial Report Cycle:	Not reported
Accessibility:	Not reported
Active Site Indicator:	Not reported
State District Owner:	SC
State District:	CM
Mailing Address:	BROAD RIVERS ROAD
Mailing City,State,Zip:	COLUMBIA, SC 29210
Owner Name:	SOUTHEAST LUBE, INC.
Owner Type:	Private
Operator Name:	Not reported
Operator Type:	Not reported
Short-Term Generator Activity:	No
Importer Activity:	No
Mixed Waste Generator:	No
Transporter Activity:	No
Transfer Facility Activity:	No
Recycler Activity with Storage:	No
Small Quantity On-Site Burner Exemption:	No
Smelting Melting and Refining Furnace Exemption:	No
Underground Injection Control:	No
Off-Site Waste Receipt:	No
Universal Waste Indicator:	No
Universal Waste Destination Facility:	No
Federal Universal Waste:	No
Active Site Fed-Reg Treatment Storage and Disposal Facility:	Not reported
Active Site Converter Treatment storage and Disposal Facility:	Not reported
Active Site State-Reg Treatment Storage and Disposal Facility:	Not reported
Active Site State-Reg Handler:	---
Federal Facility Indicator:	Not reported
Hazardous Secondary Material Indicator:	NN
Sub-Part K Indicator:	Not reported
Commercial TSD Indicator:	No
Treatment Storage and Disposal Type:	Not reported
2018 GPRA Permit Baseline:	Not on the Baseline
2018 GPRA Renewals Baseline:	Not on the Baseline
Permit Renewals Workload Universe:	Not reported
Permit Workload Universe:	Not reported
Permit Progress Universe:	Not reported
Post-Closure Workload Universe:	Not reported
Closure Workload Universe:	Not reported
202 GPRA Corrective Action Baseline:	No
Corrective Action Workload Universe:	No
Subject to Corrective Action Universe:	No
Non-TSDFs Where RCRA CA has Been Imposed Universe:	No
TSDFs Potentially Subject to CA Under 3004 (u)/(v) Universe:	No
TSDFs Only Subject to CA under Discretionary Auth Universe:	No
Corrective Action Priority Ranking:	No NCAPS ranking
Environmental Control Indicator:	No
Institutional Control Indicator:	No
Human Exposure Controls Indicator:	N/A
Groundwater Controls Indicator:	N/A
Operating TSDF Universe:	Not reported
Full Enforcement Universe:	Not reported
Significant Non-Complier Universe:	No
Unaddressed Significant Non-Complier Universe:	No
Addressed Significant Non-Complier Universe:	No
Significant Non-Complier With a Compliance Schedule Universe:	No

MCQUIK'S #9660 (Continued) **1000461882**

Financial Assurance Required:	Not reported
Handler Date of Last Change:	20150414
Recognized Trader-Importer:	No
Recognized Trader-Exporter:	No
Importer of Spent Lead Acid Batteries:	No
Exporter of Spent Lead Acid Batteries:	No
Recycler Activity Without Storage:	Not reported
Manifest Broker:	Not reported
Sub-Part P Indicator:	No

Hazardous Waste Summary:

Waste Code:	D000
Waste Description:	Not Defined
Waste Code:	D008
Waste Description:	LEAD
Waste Code:	D018
Waste Description:	BENZENE

Handler - Owner Operator:

Owner/Operator Indicator:	Owner
Owner/Operator Name:	SOUTHEAST LUBE, INC.
Legal Status:	Private
Date Became Current:	Not reported
Date Ended Current:	Not reported
Owner/Operator Address:	2121 BROAD RIVERS ROAD
Owner/Operator City,State,Zip:	COLUMBIA, SC 29210
Owner/Operator Telephone:	999-999-9999
Owner/Operator Telephone Ext:	Not reported
Owner/Operator Fax:	Not reported
Owner/Operator Email:	Not reported

Historic Generators:

Receive Date:	19901030
Handler Name: MCQUIK'S #9660	
Federal Waste Generator Description:	Small Quantity Generator
State District Owner:	SC
Large Quantity Handler of Universal Waste:	No
Recognized Trader Importer:	No
Recognized Trader Exporter:	No
Spent Lead Acid Battery Importer:	No
Spent Lead Acid Battery Exporter:	No
Current Record:	No
Non Storage Recycler Activity:	Not reported
Electronic Manifest Broker:	Not reported
Receive Date:	20020221
Handler Name: MCQUIK'S #9660	
Federal Waste Generator Description:	Not a generator, verified
State District Owner:	SC
Large Quantity Handler of Universal Waste:	No
Recognized Trader Importer:	No
Recognized Trader Exporter:	No
Spent Lead Acid Battery Importer:	No

MCQUIK'S #9660 (Continued) **1000461882**

Spent Lead Acid Battery Exporter: No
Current Record: Yes
Non Storage Recycler Activity: Not reported
Electronic Manifest Broker: Not reported

List of NAICS Codes and Descriptions:
NAICS Codes: No NAICS Codes Found

Facility Has Received Notices of Violation:
Found Violation: No
Agency Which Determined Violation: Not reported
Violation Short Description: Not reported
Date Violation was Determined: Not reported
Actual Return to Compliance Date: Not reported
Return to Compliance Qualifier: Not reported
Violation Responsible Agency: Not reported
Scheduled Compliance Date: Not reported
Enforcement Identifier: Not reported
Date of Enforcement Action: Not reported
Enforcement Responsible Agency: Not reported
Enforcement Docket Number: Not reported
Enforcement Attorney: Not reported
Corrective Action Component: Not reported
Appeal Initiated Date: Not reported
Appeal Resolution Date: Not reported
Disposition Status Date: Not reported
Disposition Status: Not reported
Disposition Status Description: Not reported
Consent/Final Order Sequence Number: Not reported
Consent/Final Order Respondent Name: Not reported
Consent/Final Order Lead Agency: Not reported
Enforcement Type: Not reported
Enforcement Responsible Person: Not reported
Enforcement Responsible Sub-Organization: Not reported
SEP Sequence Number: Not reported
SEP Expenditure Amount: Not reported
SEP Scheduled Completion Date: Not reported
SEP Actual Date: Not reported
SEP Defaulted Date: Not reported
SEP Type: Not reported
SEP Type Description: Not reported
Proposed Amount: Not reported
Final Monetary Amount: Not reported
Paid Amount: Not reported
Final Count: Not reported
Final Amount: Not reported

Evaluation Action Summary:
Evaluation Date: 20020220
Evaluation Responsible Agency: State
Found Violation: No
Evaluation Type Description: COMPLIANCE EVALUATION INSPECTION ON-SITE
Evaluation Responsible Person Identifier: SCGDS
Evaluation Responsible Sub-Organization: CM
Actual Return to Compliance Date: Not reported
Scheduled Compliance Date: Not reported

MCQUIK'S #9660 (Continued) **1000461882**

Date of Request:	Not reported
Date Response Received:	Not reported
Request Agency:	Not reported
Former Citation:	Not reported

D12 **SHEPPARD TEXACO** **EDR Hist Auto** **1021634214**
SE **2116 BROAD RIVER RD** **N/A**
< 1/8 **COLUMBIA, SC 29210**
0.005 mi.
29 ft. **Site 3 of 4 in cluster D**

Relative: EDR Hist Auto
Higher

Actual:
325 ft.

Year:	Name:	Type:
1974	SHEPPARD TEXACO	Gasoline Service Stations
1975	SHEPPARD TEXACO	Gasoline Service Stations
1976	SHEPPARD TEXACO	Gasoline Service Stations
1977	SHEPPARD TEXACO	Gasoline Service Stations
1978	SHEPPARD TEXACO	Gasoline Service Stations
1979	SHEPPARD TEXACO	Gasoline Service Stations
1980	SHEPPARD TEXACO	Gasoline Service Stations
1982	SHEPPARD TEXACO	Gasoline Service Stations
1983	SHEPPARD TEXACO	Gasoline Service Stations
1985	SHEPPARD TEXACO	Gasoline Service Stations

D13 **SHEPPERDS TEXACO STATION** **LUST** **U003525153**
SE **2116 BROAD RIVER RD** **UST** **N/A**
< 1/8 **COLUMBIA, SC**
0.005 mi.
29 ft. **Site 4 of 4 in cluster D**

Relative: LUST:
Higher

Actual:
325 ft.

Name:	SHEPPERDS TEXACO STATION
Address:	2116 BROAD RIVER RD
City,State,Zip:	COLUMBIA, SC 29210-7008
Release Number:	1
Facility ID:	07605
Release Status Number:	Not reported
Substance:	PETROL
Tank Owner Company Name:	TEXACO USA
Tank Owner Last Name:	Not reported
Tank Owner First name:	Not reported
NFA Date:	01/13/2014
Tank Owner City:	Not reported
Confirmed Date:	Not reported
Release Date:	09/23/2008
EID:	Not reported
Local Facility District:	Not reported
SCRBCA Class Number:	Not reported
Release Fin Type Code:	Not reported
Qualified:	Not reported
Release Source:	Not reported
Local Fac Last Name:	Not reported
Local Fac First Name:	Not reported
User Name:	FULMERSB

SHEPPERDS TEXACO STATION (Continued) **U003525153**

Cleanup Initiated Date: 11/20/2008
Prefix: Not reported
Total Score: 0

LUST:
Release Date: 09/23/2008
Cleanup Complete Date: Not reported
Depth to Ground Water: 47.67
Ground Water Flow Direction: NW
Release Number: 1
Confirmed date: 11/20/2008
RP Name: CHEVRON TEXACO PRODUCTS
RP Address: 2300 WINDY RIDGE PKWY SE STE 575S
RP City: ATLANTA
RP State: GA
RP Zip: 30339-5673
SCRBCA Class Code: CLASS3BF
Project Manager: FULMER, SUSAN B
Release Fin Type Code: WS

UST:
Name: SHEPPERDS TEXACO STATION
Address: 2116 BROAD RIVER RD
City: COLUMBIA
Facility ID: 07605
Permit: N 07605
Owner: TEXACO USA
Owner Address: PO BOX 4582
Owner City, st, zip: ATLANTA GA 30302-4582
Owner Phone: 404-321-4411

Tank ID: 1
Status: **Abandoned**
Capacity: 10000
Product: Gasoline
Calcage: Not reported

Name: SHEPPERDS TEXACO STATION
Address: 2116 BROAD RIVER RD
City: COLUMBIA

Tank ID: 2
Status: **Abandoned**
Capacity: 10000
Product: Gasoline
Calcage: Not reported

Name: SHEPPERDS TEXACO STATION
Address: 2116 BROAD RIVER RD
City: COLUMBIA

Tank ID: 3
Status: **Abandoned**
Capacity: 6000
Product: Gasoline
Calcage: Not reported

SHEPPERDS TEXACO STATION (Continued) **U003525153**

Name: SHEPPERDS TEXACO STATION
Address: 2116 BROAD RIVER RD
City: COLUMBIA

Tank ID: 4
Status: Abandoned
Capacity: 550
Product: Waste oil, burnt oil, used oil
Calcage: Not reported

E14 **CAROLINA INDUSTRIAL INC** **RCRA-VSQG 1001120764**
NW **2428 BROAD RIVER RD** **FINDS SCR000003491**
< 1/8 **COLUMBIA, SC 29210** **ECHO**
0.009 mi.
47 ft. **Site 1 of 2 in cluster E**

Relative: **Lower**
Actual: **308 ft.**

RCRA-VSQG:

Date Form Received by Agency:	20080418
Handler Name:	CAROLINA INDUSTRIAL INC
Handler Address:	2428 BROAD RIVER RD
Handler City,State,Zip:	COLUMBIA, SC 29210
EPA ID:	SCR000003491
Contact Name:	JAMES CHU
Contact Address:	BROAD RIVER RD
Contact City,State,Zip:	COLUMBIA, SC 29210
Contact Telephone:	803-798-6130
Contact Fax:	Not reported
Contact Email:	Not reported
Contact Title:	Not reported
EPA Region:	04
Land Type:	Private
Federal Waste Generator Description:	Conditionally Exempt Small Quantity Generator
Non-Notifier:	Not reported
Biennial Report Cycle:	Not reported
Accessibility:	Not reported
Active Site Indicator:	Handler Activities
State District Owner:	SC
State District:	CM
Mailing Address:	BROAD RIVER RD
Mailing City,State,Zip:	COLUMBIA, SC 29210
Owner Name:	ROMAN JASKIN
Owner Type:	Private
Operator Name:	ROMAN JASKIN
Operator Type:	Private
Short-Term Generator Activity:	No
Importer Activity:	No
Mixed Waste Generator:	No
Transporter Activity:	No
Transfer Facility Activity:	No
Recycler Activity with Storage:	No
Small Quantity On-Site Burner Exemption:	No
Smelting Melting and Refining Furnace Exemption:	No
Underground Injection Control:	No
Off-Site Waste Receipt:	No
Universal Waste Indicator:	No
Universal Waste Destination Facility:	No
Federal Universal Waste:	No
Active Site Fed-Reg Treatment Storage and Disposal Facility:	Not reported

CAROLINA INDUSTRIAL INC (Continued) **1001120764**

Active Site Converter Treatment storage and Disposal Facility:	Not reported
Active Site State-Reg Treatment Storage and Disposal Facility:	Not reported
Active Site State-Reg Handler:	---
Federal Facility Indicator:	Not reported
Hazardous Secondary Material Indicator:	NN
Sub-Part K Indicator:	Not reported
Commercial TSD Indicator:	No
Treatment Storage and Disposal Type:	Not reported
2018 GPRA Permit Baseline:	Not on the Baseline
2018 GPRA Renewals Baseline:	Not on the Baseline
Permit Renewals Workload Universe:	Not reported
Permit Workload Universe:	Not reported
Permit Progress Universe:	Not reported
Post-Closure Workload Universe:	Not reported
Closure Workload Universe:	Not reported
202 GPRA Corrective Action Baseline:	No
Corrective Action Workload Universe:	No
Subject to Corrective Action Universe:	No
Non-TSDFs Where RCRA CA has Been Imposed Universe:	No
TSDFs Potentially Subject to CA Under 3004 (u)/(v) Universe:	No
TSDFs Only Subject to CA under Discretionary Auth Universe:	No
Corrective Action Priority Ranking:	No NCAPS ranking
Environmental Control Indicator:	No
Institutional Control Indicator:	No
Human Exposure Controls Indicator:	N/A
Groundwater Controls Indicator:	N/A
Operating TSDF Universe:	Not reported
Full Enforcement Universe:	Not reported
Significant Non-Complier Universe:	No
Unaddressed Significant Non-Complier Universe:	No
Addressed Significant Non-Complier Universe:	No
Significant Non-Complier With a Compliance Schedule Universe:	No
Financial Assurance Required:	Not reported
Handler Date of Last Change:	20161017
Recognized Trader-Importer:	No
Recognized Trader-Exporter:	No
Importer of Spent Lead Acid Batteries:	No
Exporter of Spent Lead Acid Batteries:	No
Recycler Activity Without Storage:	Not reported
Manifest Broker:	Not reported
Sub-Part P Indicator:	No

Hazardous Waste Summary:

Waste Code:	D006
Waste Description:	CADMIUM
Waste Code:	D008
Waste Description:	LEAD
Waste Code:	D018
Waste Description:	BENZENE
Waste Code:	D035
Waste Description:	METHYL ETHYL KETONE
Waste Code:	D039

CAROLINA INDUSTRIAL INC (Continued) **1001120764**

Waste Description: TETRACHLOROETHYLENE

Waste Code: D040
Waste Description: TRICHLORETHYLENE

Handler - Owner Operator:

Owner/Operator Indicator:	Operator
Owner/Operator Name:	ROMAN JASKIN
Legal Status:	Private
Date Became Current:	19990301
Date Ended Current:	Not reported
Owner/Operator Address:	646 HARRISON BR RD
Owner/Operator City,State,Zip:	SIMPSONVILLE, SC 29684
Owner/Operator Telephone:	999-999-9999
Owner/Operator Telephone Ext:	Not reported
Owner/Operator Fax:	Not reported
Owner/Operator Email:	Not reported

Owner/Operator Indicator:	Owner
Owner/Operator Name:	ROMAN JASKIN
Legal Status:	Private
Date Became Current:	19990301
Date Ended Current:	Not reported
Owner/Operator Address:	646 HARRISON BR RD
Owner/Operator City,State,Zip:	SIMPSONVILLE, SC 29684
Owner/Operator Telephone:	999-999-9999
Owner/Operator Telephone Ext:	Not reported
Owner/Operator Fax:	Not reported
Owner/Operator Email:	Not reported

Owner/Operator Indicator:	Owner
Owner/Operator Name:	ROMAN JASKIN
Legal Status:	Private
Date Became Current:	19990301
Date Ended Current:	Not reported
Owner/Operator Address:	646 HARRISON BR RD
Owner/Operator City,State,Zip:	SIMPSONVILLE, SC 29684
Owner/Operator Telephone:	999-999-9999
Owner/Operator Telephone Ext:	Not reported
Owner/Operator Fax:	Not reported
Owner/Operator Email:	Not reported

Historic Generators:

Receive Date:	19960723
Handler Name: AAMCO TRANSMISSIONS	
Federal Waste Generator Description:	Small Quantity Generator
State District Owner:	SC
Large Quantity Handler of Universal Waste:	No
Recognized Trader Importer:	No
Recognized Trader Exporter:	No
Spent Lead Acid Battery Importer:	No
Spent Lead Acid Battery Exporter:	No
Current Record:	No
Non Storage Recycler Activity:	Not reported
Electronic Manifest Broker:	Not reported

CAROLINA INDUSTRIAL INC (Continued) **1001120764**

Receive Date: 20020311
Handler Name: AAMCO TRANSMISSIONS
Federal Waste Generator Description: Small Quantity Generator
State District Owner: SC
Large Quantity Handler of Universal Waste: No
Recognized Trader Importer: No
Recognized Trader Exporter: No
Spent Lead Acid Battery Importer: No
Spent Lead Acid Battery Exporter: No
Current Record: No
Non Storage Recycler Activity: Not reported
Electronic Manifest Broker: Not reported

Receive Date: 20080418
Handler Name: CAROLINA INDUSTRIAL INC
Federal Waste Generator Description: Conditionally Exempt Small Quantity Generator
State District Owner: SC
Large Quantity Handler of Universal Waste: No
Recognized Trader Importer: No
Recognized Trader Exporter: No
Spent Lead Acid Battery Importer: No
Spent Lead Acid Battery Exporter: No
Current Record: Yes
Non Storage Recycler Activity: Not reported
Electronic Manifest Broker: Not reported

List of NAICS Codes and Descriptions:
NAICS Code: 541330
NAICS Description: ENGINEERING SERVICES

Facility Has Received Notices of Violations:
Violations: No Violations Found

Evaluation Action Summary:
Evaluations: No Evaluations Found

FINDS:
Registry ID: 110004942750

Click Here:

Environmental Interest/Information System:
SC-EFIS (South Carolina - Environmental Facility Information System) integrates information on environmental facilities, permits, violations, enforcement actions, and compliance activities needed to support regulatory requirements and target environmental quality improvements for the water, air, solid waste, and hazardous waste program areas. The EFIS was developed by the state of South Carolina and Maine joined their system in 2004.
RCRAInfo is a national information system that supports the Resource Conservation and Recovery Act (RCRA) program through the tracking of events and activities related to facilities that generate, transport, and treat, store, or dispose of hazardous waste. RCRAInfo allows RCRA program staff to track the notification, permit, compliance, and corrective action activities required under RCRA.

CAROLINA INDUSTRIAL INC (Continued) **1001120764**

Click this hyperlink while viewing on your computer to access additional FINDS: detail in the EDR Site Report.

ECHO:

Envid:	1001120764
Registry ID:	110004942750
DFR URL:	http://echo.epa.gov/detailed-facility-report?fid=110004942750
Name:	AAMCO TRANSMISSIONS
Address:	2428 BROAD RIVER RD
City,State,Zip:	COLUMBIA, SC 29210

E15 **AAMCO TRANSMISSIONS** **EDR Hist Auto** **1020859807**
NW **2428 BROAD RIVER RD** **N/A**
< 1/8 **COLUMBIA, SC 29210**
0.009 mi.
47 ft. **Site 2 of 2 in cluster E**

Relative: EDR Hist Auto
Lower

Actual: **308 ft.**

Year:	Name:	Type:
1985	CARRAWAY ENTERPRISES INC	Automotive Repair Shops, NEC
1986	CARRAWAY ENTERPRISES INC	Automotive Repair Shops, NEC
1987	CARRAWAY ENTERPRISES INC	Automotive Repair Shops, NEC
1988	CARRAWAY ENTERPRISES INC	Automotive Repair Shops, NEC
1989	CARRAWAY ENTERPRISES INC	Automotive Transmission Repair Shops
1990	CARRAWAY ENTERPRISES INC	Automotive Transmission Repair Shops
1991	CARRAWAY ENTERPRISES INC	Automotive Transmission Repair Shops
1992	CARRAWAY ENTERPRISES INC	Automotive Transmission Repair Shops
1993	CARRAWAY ENTERPRISES INC	Automotive Transmission Repair Shops
1994	CARRAWAY ENTERPRISES INC	Automotive Transmission Repair Shops
1995	CARRAWAY ENTERPRISES INC	Automotive Transmission Repair Shops
1996	CARRAWAY ENTERPRISES INC	Automotive Transmission Repair Shops
1997	SHOEMAKER ENTERPRISES INC	Automotive Transmission Repair Shops
1998	SHOEMAKER ENTERPRISES INC	Automotive Transmission Repair Shops
1999	SHOEMAKER ENTERPRISES INC	Automotive Transmission Repair Shops
2002	AAMCO TRANSMISSIONS	Automotive Transmission Repair Shops
2003	AAMCO TRANSMISSIONS	Automotive Transmission Repair Shops
2004	AAMCO TRANSMISSIONS	Automotive Transmission Repair Shops
2004	SECOND VENTURE INC	Automotive Transmission Repair Shops
2005	SECOND VENTURE INC	Automotive Transmission Repair Shops
2005	AAMCO TRANSMISSIONS	Automotive Transmission Repair Shops
2006	SECOND VENTURE INC	Automotive Transmission Repair Shops
2006	AAMCO TRANSMISSIONS	Automotive Transmission Repair Shops
2007	SECOND VENTURE INC	Automotive Transmission Repair Shops
2007	AAMCO TRANSMISSIONS	Automotive Transmission Repair Shops
2008	AAMCO TRANSMISSIONS	Automotive Transmission Repair Shops
2008	SECOND VENTURE INC	Automotive Transmission Repair Shops
2009	AAMCO TRANSMISSIONS	Automotive Transmission Repair Shops
2009	SECOND VENTURE INC	Automotive Transmission Repair Shops
2010	SECOND VENTURE INC	Automotive Transmission Repair Shops
2010	AAMCO TRANSMISSIONS	Automotive Transmission Repair Shops
2011	AAMCO TRANSMISSIONS	Automotive Transmission Repair Shops
2011	SECOND VENTURE INC	Automotive Transmission Repair Shops
2012	SECOND VENTURE INC	Automotive Transmission Repair Shops
2012	AAMCO TRANSMISSIONS	Automotive Transmission Repair Shops
2013	AAMCO TRANSMISSIONS	Automotive Transmission Repair Shops
2013	CAROLINA INDUSTRAIL	Automotive Transmission Repair Shops

AAMCO TRANSMISSIONS (Continued) **1020859807**

2013	SECOND VENTURE INC	Automotive Transmission Repair Shops
2014	CAROLINA INDUSTRAIL	Automotive Transmission Repair Shops
2014	AAMCO TRANSMISSIONS	Automotive Transmission Repair Shops
2014	SECOND VENTURE INC	Automotive Transmission Repair Shops

F16 **GULF SERVICE STATION** **LUST U003521988**
SE **2123 BROAD RIVER RD** **UST N/A**
< 1/8 **COLUMBIA, SC** **RCR**
0.021 mi. **GWCI**
110 ft. **Site 1 of 3 in cluster F**

Relative: **Higher**
Actual: **327 ft.**

LUST:

Name:	GULF SERVICE STATION
Address:	2123 BROAD RIVER RD
City,State,Zip:	COLUMBIA, SC 29201
Release Number:	1
Facility ID:	07342
Release Status Number:	Not reported
Substance:	PETROL
Tank Owner Company Name:	BP OIL INC
Tank Owner Last Name:	Not reported
Tank Owner First name:	Not reported
NFA Date:	07/27/2017
Tank Owner City:	Not reported
Confirmed Date:	Not reported
Release Date:	06/30/1993
EID:	Not reported
Local Facility District:	Not reported
SCRBCA Class Number:	Not reported
Release Fin Type Code:	Not reported
Qualified:	Not reported
Release Source:	Not reported
Local Fac Last Name:	Not reported
Local Fac First Name:	Not reported
User Name:	MENDENJE
Cleanup Initiated Date:	11/10/1994
Prefix:	Not reported
Total Score:	241

LUST:

Release Date:	06/30/1993
Cleanup Complete Date:	Not reported
Depth to Ground Water:	32.78
Ground Water Flow Direction:	S
Release Number:	1
Confirmed date:	11/10/1994
RP Name:	BP PRODUCTS OF NORTH AMERICA
RP Address:	501 WESTLAKE PKWY BLVD STE 20.107C
RP City:	HOUSTON
RP State:	TX
RP Zip:	77079
SCRBCA Class Code:	CLASS4AA
Project Manager:	FULMER, SUSAN B
Release Fin Type Code:	WS

UST:

Name:	GULF SERVICE STATION

GULF SERVICE STATION (Continued) **U003521988**

Address: 2123 BROAD RIVER RD
City: COLUMBIA
Facility ID: 07342
Permit: N 07342
Owner: BP OIL INC
Owner Address: Not reported
Owner City, st, zip: ALPHARETTA GA 30004-4811
Owner Phone: 770-576-3082

Tank ID: 1
Status: **Abandoned**
Capacity: 6000
Product: Gasoline
Calcage: Not reported

Name: GULF SERVICE STATION
Address: 2123 BROAD RIVER RD
City: COLUMBIA

Tank ID: 10
Status: **Abandoned**
Capacity: 550
Product: Waste oil, burnt oil, used oil
Calcage: Not reported

Name: GULF SERVICE STATION
Address: 2123 BROAD RIVER RD
City: COLUMBIA

Tank ID: 2
Status: **Abandoned**
Capacity: 6000
Product: Gasoline
Calcage: Not reported

Name: GULF SERVICE STATION
Address: 2123 BROAD RIVER RD
City: COLUMBIA

Tank ID: 3
Status: **Abandoned**
Capacity: 6000
Product: Gasoline
Calcage: Not reported

Name: GULF SERVICE STATION
Address: 2123 BROAD RIVER RD
City: COLUMBIA

Tank ID: 4
Status: **Abandoned**
Capacity: 8000
Product: Gasoline
Calcage: Not reported

Name: GULF SERVICE STATION
Address: 2123 BROAD RIVER RD

GULF SERVICE STATION (Continued) **U003521988**

City: COLUMBIA

Tank ID: 5
Status: **Abandoned**
Capacity: 10000
Product: Diesel fuel
Calcage: Not reported

Name: GULF SERVICE STATION
Address: 2123 BROAD RIVER RD
City: COLUMBIA

Tank ID: 6
Status: **Abandoned**
Capacity: 10000
Product: Gasoline
Calcage: Not reported

Name: GULF SERVICE STATION
Address: 2123 BROAD RIVER RD
City: COLUMBIA

Tank ID: 7
Status: **Abandoned**
Capacity: 10000
Product: Gasoline
Calcage: Not reported

Name: GULF SERVICE STATION
Address: 2123 BROAD RIVER RD
City: COLUMBIA

Tank ID: 8
Status: **Abandoned**
Capacity: 10000
Product: Gasoline
Calcage: Not reported

Name: GULF SERVICE STATION
Address: 2123 BROAD RIVER RD
City: COLUMBIA

Tank ID: 9
Status: **Abandoned**
Capacity: 1000
Product: Diesel fuel
Calcage: Not reported

RCR:
Name: GULF SERVICE STATION
Address: 2123 BROAD RIVER RD
City,State,Zip: COLUMBIA, SC 29201
Entity Responsibility: Not reported
Region: Not reported
Tax Id: 07402-04-13
Latitude: 34.03792
Longitude: -81.09281

GULF SERVICE STATION (Continued) **U003521988**

Tracking Number: 07342
Regulatory Program: Not reported
Reported: 06/30/93
CU-MCL: 07/27/17
Unit Type: Not reported
Unit Number/Letter: Not reported
Area/Acres: Not reported
Affected Media: Not reported
Site/Unit: Not reported
Condtions: Not reported
Associated Response/Corrective Action: Not reported
Associated Chemicals Requiring: Not reported

SC GWIC:
Bureau: BLWM
EAP ID: Not reported
Solid Waste Permit #: Not reported
Bureau of Land & Waste Management File #: Not reported
Permit Number: 07342
WPC Permit: Not reported
Program: DUST
Contamination: PETRO
Petroleum Products: True
Volatile Organic Compounds: False
Metals: False
Nitrates or Potential to Nitrate: False
Pesticides & Herbicides: False
Polychlorinated Biphenyls: False
Base, Neutral, & Acid Extractables: False
Phenols: False
Radionuclides Over Max Contaminant Levels: False
Sources Not In Other Categories: False
Source: UST
Underground Storage Tanks: True
Pits, Ponds, & Lagoons: False
Spills & Leaks: False
Landfills: False
Aboveground Storage Tank: False
Spray Irrigation: False
Single-Event Spill: False
Unpermitted Disposal: False
Septic Tank/Tile Field: False
Substances Not In Other Categories: False
Sources of Contamination Undetermined: False
Assessment: No
Monitoring: No
Remediation: Yes
Surface Impact: No
Drinking Water Well Impact: No
Remarks: Site ID # 07342. RBCA Classification 4AA7. Approved Monitored Natural Attenuation (MNA Awaiti.

F17 **GULF SERVICE STATION** **UST** **U004253559**
SE **2123 BROAD RIVER RD** **N/A**
< 1/8 **COLUMBIA, SC**
0.021 mi.
110 ft. **Site 2 of 3 in cluster F**

Relative: UST:
Higher

Actual: Name: GULF SERVICE STATION
327 ft. Address: 2123 BROAD RIVER RD
City: COLUMBIA
Facility ID: 11060
Permit: P 11060
Owner: BP OIL INC
Owner Address: Not reported
Owner City, st, zip: ALPHARETTA GA 30004-4811
Owner Phone: 770-576-3082

Tank ID: Not reported
Status: **Not reported**
Capacity: Not reported
Product: Not reported
Calcage: Not reported

F18 **ROBERTSONS GULF SERVICE** **EDR Hist Auto** **1020626878**
SE **2123 BROAD RIVER RD** **N/A**
< 1/8 **COLUMBIA, SC 29210**
0.021 mi.
110 ft. **Site 3 of 3 in cluster F**

Relative: EDR Hist Auto
Higher

Actual:
327 ft.

Year:	Name:	Type:
1970	ROBERTSONS GULF SERVICE	Gasoline Service Stations
1971	ROBERTSONS GULF SERVICE	Gasoline Service Stations
1972	ROBERTSONS GULF SERVICE	Gasoline Service Stations
1973	ROBERTSONS GULF SERVICE	Gasoline Service Stations
1974	ROBERTSONS GULF SERVICE	Gasoline Service Stations
1975	ROBERTSONS GULF SERVICE	Gasoline Service Stations
1987	ROBERTSONS GULF SERVICE	Gasoline Service Stations
1988	ROBERTSONS GULF SERVICE	Gasoline Service Stations
1989	ROBERTSONS GULF SERVICE	Gasoline Service Stations, NEC

A19 **R A S 45015** **UST** **U004253750**
NE **2220 BROAD RIVER RD** **N/A**
< 1/8 **COLUMBIA, SC**
0.022 mi.
116 ft. **Site 3 of 6 in cluster A**

Relative: UST:
Lower

Actual: Name: R A S 45015
317 ft. Address: 2220 BROAD RIVER RD
City: COLUMBIA
Facility ID: 11892
Permit: P 11892
Owner: EXXON MOBIL
Owner Address: 4045 SCENIC HWY
Owner City, st, zip: BATON ROUGE LA 70805
Owner Phone: 303-986-8011

R A S 45015 (Continued) **U004253750**

Tank ID:	Not reported
Status:	**Not reported**
Capacity:	Not reported
Product:	Not reported
Calcage:	Not reported

A20 **GARVIN OIL COMPANY INC** **EDR Hist Auto** **1020174567**
NE **2220 BROAD RIVER RD** **N/A**
< 1/8 **COLUMBIA, SC 29210**
0.022 mi.
116 ft. **Site 4 of 6 in cluster A**

Relative: EDR Hist Auto
Lower

Actual:
317 ft.

Year:	Name:	Type:
1969	SHEALY MILLER W ESSO STATION	Gasoline Service Stations
1970	SHEALY MILLER W ESSO STATION	Gasoline Service Stations
1971	SHEALY MILLER W ESSO STATION	Gasoline Service Stations
1972	SHEALY MILLER W ESSO STATION	Gasoline Service Stations
1973	SHEALY MILLER W ESSO STATION	Gasoline Service Stations
1974	SHEALY MILLER W ESSO STATION	Gasoline Service Stations
1975	SHEALY MILLER W ESSO STATION	Gasoline Service Stations
1991	BROAD RIVER EXXON	Gasoline Service Stations
1992	BROAD RIVER EXXON	Gasoline Service Stations
1993	BROAD RIVER EXXON	Gasoline Service Stations
1994	BROAD RIVER EXXON	Gasoline Service Stations
2000	GARVIN OIL COMPANY INC	Gasoline Service Stations
2001	GARVIN OIL COMPANY INC	Gasoline Service Stations
2002	GARVIN OIL COMPANY INC	Gasoline Service Stations
2003	GARVIN OIL COMPANY INC	Gasoline Service Stations
2004	GARVIN OIL COMPANY INC	Gasoline Service Stations
2005	GARVIN OIL COMPANY INC	Gasoline Service Stations
2006	GARVIN OIL COMPANY INC	Gasoline Service Stations
2007	GARVIN OIL COMPANY INC	Gasoline Service Stations
2008	BROAD RIVER EXXON	Gasoline Service Stations
2008	GARVIN OIL COMPANY INC	Gasoline Service Stations
2009	GARVIN OIL COMPANY INC	Gasoline Service Stations
2010	GARVIN OIL COMPANY INC	Gasoline Service Stations
2011	GARVIN OIL COMPANY INC	Gasoline Service Stations, NEC
2012	GARVIN OIL COMPANY INC	Gasoline Service Stations, NEC
2013	GARVIN OIL COMPANY INC	Gasoline Service Stations, NEC
2014	GARVIN OIL COMPANY INC	Gasoline Service Stations, NEC

A21 **CIRCLE K 3105** **LUST** **U001539487**
NE **2220 BROAD RIVER RD** **UST** **N/A**
< 1/8 **COLUMBIA, SC** **RCR**
0.022 mi. **Financial Assurance**
116 ft. **Site 5 of 6 in cluster A** **GWCI**

Relative: LUST:
Lower

Actual:
317 ft.

Name:	CIRCLE K 3105
Address:	2220 BROAD RIVER RD
City,State,Zip:	COLUMBIA, SC 29210-6730
Release Number:	1
Facility ID:	07648
Release Status Number:	Not reported

CIRCLE K 3105 (Continued) **U001539487**

Substance:	PETRO
Tank Owner Company Name:	CIRCLE K STORES INC
Tank Owner Last Name:	Not reported
Tank Owner First name:	Not reported
NFA Date:	10/28/1998
Tank Owner City:	Not reported
Confirmed Date:	Not reported
Release Date:	11/03/1989
EID:	Not reported
Local Facility District:	Not reported
SCRBCA Class Number:	Not reported
Release Fin Type Code:	Not reported
Qualified:	Not reported
Release Source:	Not reported
Local Fac Last Name:	Not reported
Local Fac First Name:	Not reported
User Name:	MAYJM
Cleanup Initiated Date:	11/03/1989
Prefix:	Not reported
Total Score:	538

LUST:

Release Date:	11/03/1989
Cleanup Complete Date:	Not reported
Depth to Ground Water:	Not reported
Ground Water Flow Direction:	Not reported
Release Number:	1
Confirmed date:	11/03/1989
RP Name:	EXXON MOBIL
RP Address:	217 COUNTRY CLUB PARK PMB# 101
RP City:	BIRMINGHAM
RP State:	AL
RP Zip:	35213-4237
SCRBCA Class Code:	CLASS4AA
Project Manager:	MAY, JULIE M
Release Fin Type Code:	WS

UST:

Name:	CIRCLE K 3105
Address:	2220 BROAD RIVER RD
City:	COLUMBIA
Facility ID:	07648
Permit:	P 07648
Owner:	CIRCLE K STORES INC
Owner Address:	1100 SITUS CT STE 100
Owner City, st, zip:	RALEIGH NC 27606
Owner Phone:	800-476-7574
Tank ID:	1
Status:	**Abandoned**
Capacity:	6000
Product:	Gasoline
Calcage:	0
Name:	CIRCLE K 3105
Address:	2220 BROAD RIVER RD

CIRCLE K 3105 (Continued) **U001539487**

City: COLUMBIA

Tank ID: 10
Status: **Currently in Use**
Capacity: 20000
Product: Multiple petroleum
Calcage: 0

Name: CIRCLE K 3105
Address: 2220 BROAD RIVER RD
City: COLUMBIA

Tank ID: 2
Status: **Abandoned**
Capacity: 6000
Product: Gasoline
Calcage: Not reported

Name: CIRCLE K 3105
Address: 2220 BROAD RIVER RD
City: COLUMBIA

Tank ID: 3
Status: **Abandoned**
Capacity: 4000
Product: Gasoline
Calcage: Not reported

Name: CIRCLE K 3105
Address: 2220 BROAD RIVER RD
City: COLUMBIA

Tank ID: 4
Status: **Abandoned**
Capacity: 550
Product: Waste oil, burnt oil, used oil
Calcage: Not reported

Name: CIRCLE K 3105
Address: 2220 BROAD RIVER RD
City: COLUMBIA

Tank ID: 5
Status: **Abandoned**
Capacity: 12000
Product: Gasoline
Calcage: Not reported

Name: CIRCLE K 3105
Address: 2220 BROAD RIVER RD
City: COLUMBIA

Tank ID: 6
Status: **Abandoned**
Capacity: 12000
Product: Gasoline
Calcage: Not reported

CIRCLE K 3105 (Continued) **U001539487**

Name: CIRCLE K 3105
Address: 2220 BROAD RIVER RD
City: COLUMBIA

Tank ID: 7
Status: **Abandoned**
Capacity: 12000
Product: Gasoline
Calcage: Not reported

Name: CIRCLE K 3105
Address: 2220 BROAD RIVER RD
City: COLUMBIA

Tank ID: 8
Status: **Abandoned**
Capacity: 1000
Product: Waste oil, burnt oil, used oil
Calcage: Not reported

Name: CIRCLE K 3105
Address: 2220 BROAD RIVER RD
City: COLUMBIA

Tank ID: 9
Status: **Abandoned**
Capacity: 1000
Product: Not reported
Calcage: Not reported

RCR:
Name: CIRCLE K 3105
Address: 2220 BROAD RIVER RD
City,State,Zip: COLUMBIA, SC 29210-6730
Entity Responsibility: Not reported
Region: Not reported
Tax Id: R07402-02-02
Latitude: 34.04058
Longitude: -81.0946
Tracking Number: 07648
Regulatory Program: Not reported
Reported: 11/03/89
CU-MCL: 10/28/98
Unit Type: Not reported
Unit Number/Letter: Not reported
Area/Acres: Not reported
Affected Media: Not reported
Site/Unit: Not reported
Condtions: Not reported
Associated Response/Corrective Action: Not reported
Associated Chemicals Requiring: Not reported

SC Financial Assurance 3:
Name: CIRCLE K 3105
Address: 2220 BROAD RIVER RD
City,State,Zip: COLUMBIA, SC 29210-6730

CIRCLE K 3105 (Continued) **U001539487**

Owner Name: CIRCLE K STORES INC
Owner Address: 1100 SITUS CT STE 100
Owner City St Zip: RALEIGH NC 27606
Mechanism: Guarantee
Date Expired: 8/24/2021
Bill: 1

SC GWIC:

Bureau:	BLWM
EAP ID:	Not reported
Solid Waste Permit #:	Not reported
Bureau of Land & Waste Management File #:	Not reported
Permit Number:	07648
WPC Permit:	Not reported
Program:	DUST
Contamination:	PETRO
Petroleum Products:	True
Volatile Organic Compounds:	False
Metals:	False
Nitrates or Potential to Nitrate:	False
Pesticides & Herbicides:	False
Polychlorinated Biphenyls:	False
Base, Neutral, & Acid Extractables:	False
Phenols:	False
Radionuclides Over Max Contaminant Levels:	False
Sources Not In Other Categories:	False
Source:	UST
Underground Storage Tanks:	True
Pits, Ponds, & Lagoons:	False
Spills & Leaks:	False
Landfills:	False
Aboveground Storage Tank:	False
Spray Irrigation:	False
Single-Event Spill:	False
Unpermitted Disposal:	False
Septic Tank/Tile Field:	False
Substances Not In Other Categories:	False
Sources of Contamination Undetermined:	False
Assessment:	No
Monitoring:	Yes
Remediation:	No
Surface Impact:	No
Drinking Water Well Impact:	No

Remarks: Site ID # 07648. RBCA Classification 4AA5. Inactive.

A22 **EXXON LOCATION 4 5015** **RCRA-VSQG** **1004780444**
NE **2220 BROAD RIVER ROAD** **FINDS** **SCD987578234**
< 1/8 **COLUMBIA, SC 29210** **ECHO**
0.022 mi.
116 ft. **Site 6 of 6 in cluster A**

Relative: **Lower**
Actual: **317 ft.**

RCRA-VSQG:

Date Form Received by Agency:		19970211
Handler Name:	EXXON LOCATION 4 5015	
Handler Address:		2220 BROAD RIVER ROAD
Handler City,State,Zip:		COLUMBIA, SC 29210
EPA ID:		SCD987578234

EXXON LOCATION 4 5015 (Continued) **1004780444**

Contact Name:	ALDA S POOL
Contact Address:	800 BELL ROOM 2753X
Contact City,State,Zip:	HOUSTON, TX 77002
Contact Telephone:	713-656-7709
Contact Fax:	Not reported
Contact Email:	Not reported
Contact Title:	Not reported
EPA Region:	04
Land Type:	Private
Federal Waste Generator Description:	Conditionally Exempt Small Quantity Generator
Non-Notifier:	Not reported
Biennial Report Cycle:	Not reported
Accessibility:	Not reported
Active Site Indicator:	Handler Activities
State District Owner:	SC
State District:	CM
Mailing Address:	BELL ROOM 2753X
Mailing City,State,Zip:	HOUSTON, TX 77002
Owner Name:	EXXON COMPANY USA
Owner Type:	Private
Operator Name:	Not reported
Operator Type:	Not reported
Short-Term Generator Activity:	No
Importer Activity:	No
Mixed Waste Generator:	No
Transporter Activity:	No
Transfer Facility Activity:	No
Recycler Activity with Storage:	No
Small Quantity On-Site Burner Exemption:	No
Smelting Melting and Refining Furnace Exemption:	No
Underground Injection Control:	No
Off-Site Waste Receipt:	No
Universal Waste Indicator:	No
Universal Waste Destination Facility:	No
Federal Universal Waste:	No
Active Site Fed-Reg Treatment Storage and Disposal Facility:	Not reported
Active Site Converter Treatment storage and Disposal Facility:	Not reported
Active Site State-Reg Treatment Storage and Disposal Facility:	Not reported
Active Site State-Reg Handler:	---
Federal Facility Indicator:	Not reported
Hazardous Secondary Material Indicator:	NN
Sub-Part K Indicator:	Not reported
Commercial TSD Indicator:	No
Treatment Storage and Disposal Type:	Not reported
2018 GPRA Permit Baseline:	Not on the Baseline
2018 GPRA Renewals Baseline:	Not on the Baseline
Permit Renewals Workload Universe:	Not reported
Permit Workload Universe:	Not reported
Permit Progress Universe:	Not reported
Post-Closure Workload Universe:	Not reported
Closure Workload Universe:	Not reported
202 GPRA Corrective Action Baseline:	No
Corrective Action Workload Universe:	No
Subject to Corrective Action Universe:	No
Non-TSDFs Where RCRA CA has Been Imposed Universe:	No
TSDFs Potentially Subject to CA Under 3004 (u)/(v) Universe:	No
TSDFs Only Subject to CA under Discretionary Auth Universe:	No

EXXON LOCATION 4 5015 (Continued) **1004780444**

Corrective Action Priority Ranking:	No NCAPS ranking
Environmental Control Indicator:	No
Institutional Control Indicator:	No
Human Exposure Controls Indicator:	N/A
Groundwater Controls Indicator:	N/A
Operating TSDF Universe:	Not reported
Full Enforcement Universe:	Not reported
Significant Non-Complier Universe:	No
Unaddressed Significant Non-Complier Universe:	No
Addressed Significant Non-Complier Universe:	No
Significant Non-Complier With a Compliance Schedule Universe:	No
Financial Assurance Required:	Not reported
Handler Date of Last Change:	20150414
Recognized Trader-Importer:	No
Recognized Trader-Exporter:	No
Importer of Spent Lead Acid Batteries:	No
Exporter of Spent Lead Acid Batteries:	No
Recycler Activity Without Storage:	Not reported
Manifest Broker:	Not reported
Sub-Part P Indicator:	No

Hazardous Waste Summary:

Waste Code:	D000
Waste Description:	Not Defined
Waste Code:	D001
Waste Description:	IGNITABLE WASTE
Waste Code:	D008
Waste Description:	LEAD

Handler - Owner Operator:

Owner/Operator Indicator:	Owner
Owner/Operator Name:	EXXON COMPANY USA
Legal Status:	Private
Date Became Current:	Not reported
Date Ended Current:	Not reported
Owner/Operator Address:	PO BOX 2180
Owner/Operator City,State,Zip:	HOUSTON, TX 77252-2180
Owner/Operator Telephone:	999-999-9999
Owner/Operator Telephone Ext:	Not reported
Owner/Operator Fax:	Not reported
Owner/Operator Email:	Not reported

Historic Generators:

Receive Date:	19970211
Handler Name: EXXON LOCATION 4 5015	
Federal Waste Generator Description:	Conditionally Exempt Small Quantity Generator
State District Owner:	SC
Large Quantity Handler of Universal Waste:	No
Recognized Trader Importer:	No
Recognized Trader Exporter:	No
Spent Lead Acid Battery Importer:	No
Spent Lead Acid Battery Exporter:	No
Current Record:	Yes

EXXON LOCATION 4 5015 (Continued) **1004780444**

Non Storage Recycler Activity: Not reported
Electronic Manifest Broker: Not reported

List of NAICS Codes and Descriptions:
NAICS Codes: No NAICS Codes Found

Facility Has Received Notices of Violations:
Violations: No Violations Found

Evaluation Action Summary:
Evaluations: No Evaluations Found

FINDS:
Registry ID: 110004941038

Click Here:

Environmental Interest/Information System:
SC-EFIS (South Carolina - Environmental Facility Information System) integrates information on environmental facilities, permits, violations, enforcement actions, and compliance activities needed to support regulatory requirements and target environmental quality improvements for the water, air, solid waste, and hazardous waste program areas. The EFIS was developed by the state of South Carolina and Maine joined their system in 2004.
RCRAInfo is a national information system that supports the Resource Conservation and Recovery Act (RCRA) program through the tracking of events and activities related to facilities that generate, transport, and treat, store, or dispose of hazardous waste. RCRAInfo allows RCRA program staff to track the notification, permit, compliance, and corrective action activities required under RCRA.

Click this hyperlink while viewing on your computer to access additional FINDS: detail in the EDR Site Report.

ECHO:
Envid: 1004780444
Registry ID: 110004941038
DFR URL: http://echo.epa.gov/detailed-facility-report?fid=110004941038
Name: EXXON LOCATION 4-5015
Address: 2220 BROAD RIVER ROAD
City,State,Zip: COLUMBIA, SC 29210

---

23 **COLUMBIA FIRE DEPT ST ANDREWS** **LUST** **U003930955**
WNW **1225 BRIARGATE CIR** **UST** **N/A**
< 1/8 **COLUMBIA, SC** **RCR**
0.063 mi. **GWCI**
335 ft.

Relative:
Higher

Actual:
318 ft.

LUST:
Name: COLUMBIA FIRE DEPT ST ANDREWS
Address: 1225 BRIARGATE CIR
City,State,Zip: COLUMBIA, SC 29210-6588
Release Number: 1
Facility ID: 07326
Release Status Number: Not reported

COLUMBIA FIRE DEPT ST ANDREWS (Continued) **U003930955**

Substance:	PETRO
Tank Owner Company Name:	COLUMBIA FIRE DEPT
Tank Owner Last Name:	Not reported
Tank Owner First name:	Not reported
NFA Date:	09/28/2006
Tank Owner City:	Not reported
Confirmed Date:	Not reported
Release Date:	06/28/1993
EID:	Not reported
Local Facility District:	Not reported
SCRBCA Class Number:	Not reported
Release Fin Type Code:	Not reported
Qualified:	Not reported
Release Source:	Not reported
Local Fac Last Name:	Not reported
Local Fac First Name:	Not reported
User Name:	FULMERSB
Cleanup Initiated Date:	01/30/1995
Prefix:	Not reported
Total Score:	45

LUST:

Release Date:	06/28/1993
Cleanup Complete Date:	Not reported
Depth to Ground Water:	15.71
Ground Water Flow Direction:	NE
Release Number:	1
Confirmed date:	01/30/1995
RP Name:	COLUMBIA FIRE DEPT CENTRAL
RP Address:	1001 SENATE ST
RP City:	COLUMBIA
RP State:	SC
RP Zip:	29201
SCRBCA Class Code:	CLASS3AA
Project Manager:	FULMER, SUSAN B
Release Fin Type Code:	DS

UST:

Name:	COLUMBIA FIRE DEPT ST ANDREWS
Address:	1225 BRIARGATE CIR
City:	COLUMBIA
Facility ID:	07326
Permit:	N 07326
Owner:	COLUMBIA FIRE DEPT
Owner Address:	1800 LAUREL ST
Owner City, st, zip:	COLUMBIA SC 29201-2627
Owner Phone:	803-733-8355
Tank ID:	1
Status:	**Abandoned**
Capacity:	560
Product:	Gasoline
Calcage:	20

RCR:

Name:	COLUMBIA FIRE DEPT ST ANDREW

COLUMBIA FIRE DEPT ST ANDREWS (Continued) **U003930955**

Address:	1225 BRIARGATE CIR
City,State,Zip:	COLUMBIA, SC 29210-6588
Entity Responsibility:	Not reported
Region:	Not reported
Tax Id:	R07403-05-06
Latitude:	34.04168
Longitude:	-81.09815
Tracking Number:	07326
Regulatory Program:	Not reported
Reported:	06/28/93
CU-MCL:	09/28/06
Unit Type:	Not reported
Unit Number/Letter:	Not reported
Area/Acres:	Not reported
Affected Media:	Not reported
Site/Unit:	Not reported
Condtions:	Not reported
Associated Response/Corrective Action:	Not reported
Associated Chemicals Requiring:	Not reported

SC GWIC:

Bureau:	BLWM
EAP ID:	Not reported
Solid Waste Permit #:	Not reported
Bureau of Land & Waste Management File #:	Not reported
Permit Number:	07326
WPC Permit:	Not reported
Program:	DUST
Contamination:	PETRO
Petroleum Products:	True
Volatile Organic Compounds:	False
Metals:	False
Nitrates or Potential to Nitrate:	False
Pesticides & Herbicides:	False
Polychlorinated Biphenyls:	False
Base, Neutral, & Acid Extractables:	False
Phenols:	False
Radionuclides Over Max Contaminant Levels:	False
Sources Not In Other Categories:	False
Source:	UST
Underground Storage Tanks:	True
Pits, Ponds, & Lagoons:	False
Spills & Leaks:	False
Landfills:	False
Aboveground Storage Tank:	False
Spray Irrigation:	False
Single-Event Spill:	False
Unpermitted Disposal:	False
Septic Tank/Tile Field:	False
Substances Not In Other Categories:	False
Sources of Contamination Undetermined:	False
Assessment:	No
Monitoring:	No
Remediation:	Yes
Surface Impact:	No
Drinking Water Well Impact:	No
Remarks:	Site ID # 07326. RBCA Classification 3AA3. Monitored Natural

COLUMBIA FIRE DEPT ST ANDREWS (Continued) **U003930955**

Attenuation.

G24 **CONSTAN INC** **LUST U003520462**
NW **2505 BROAD RIVER RD** **UST N/A**
< 1/8 **COLUMBIA, SC**
0.071 mi.
375 ft. **Site 1 of 7 in cluster G**

Relative:
Lower

Actual:
315 ft.

LUST:

Name:	CONSTAN INC
Address:	2505 BROAD RIVER RD
City,State,Zip:	COLUMBIA, SC 29210-6646
Release Number:	1
Facility ID:	07925
Release Status Number:	Not reported
Substance:	PETRO
Tank Owner Company Name:	HARMON OIL CO
Tank Owner Last Name:	Not reported
Tank Owner First name:	Not reported
NFA Date:	04/28/1995
Tank Owner City:	Not reported
Confirmed Date:	Not reported
Release Date:	06/27/1991
EID:	Not reported
Local Facility District:	Not reported
SCRBCA Class Number:	Not reported
Release Fin Type Code:	Not reported
Qualified:	Not reported
Release Source:	Not reported
Local Fac Last Name:	Not reported
Local Fac First Name:	Not reported
User Name:	STOUDEDW
Cleanup Initiated Date:	04/28/1995
Prefix:	Not reported
Total Score:	Not reported

UST:

Name:	CONSTAN INC
Address:	2505 BROAD RIVER RD
City:	COLUMBIA
Facility ID:	07925
Permit:	N 07925
Owner:	HARMON OIL CO
Owner Address:	111 HAMILTON ST
Owner City, st, zip:	LEXINGTON SC 29071-1417
Owner Phone:	803-359-4305
Tank ID:	1
Status:	**Abandoned**
Capacity:	10000
Product:	Gasoline
Calcage:	15
Name:	CONSTAN INC
Address:	2505 BROAD RIVER RD
City:	COLUMBIA

CONSTAN INC (Continued) **U003520462**

Tank ID: 2
Status: **Abandoned**
Capacity: 10000
Product: Gasoline
Calcage: 15

Name: CONSTAN INC
Address: 2505 BROAD RIVER RD
City: COLUMBIA

Tank ID: 3
Status: **Abandoned**
Capacity: 10000
Product: Gasoline
Calcage: 15

G25 **GULF SERVICE STATION** **UST** **U003521991**
NW **BROAD RIVER & YOUNG** **N/A**
< 1/8 **COLUMBIA, SC**
0.091 mi.
480 ft. **Site 2 of 7 in cluster G**

Relative: **Higher**
Actual: **319 ft.**

UST:
Name: GULF SERVICE STATION
Address: BROAD RIVER & YOUNG
City: COLUMBIA
Facility ID: 07651
Permit: N 07651
Owner: BP OIL INC
Owner Address: Not reported
Owner City, st, zip: ALPHARETTA GA 30004-4811
Owner Phone: 770-576-3082

Tank ID: 1
Status: **Abandoned**
Capacity: 10000
Product: Gasoline
Calcage: Not reported

Name: GULF SERVICE STATION
Address: BROAD RIVER & YOUNG
City: COLUMBIA

Tank ID: 2
Status: **Abandoned**
Capacity: 10000
Product: Gasoline
Calcage: Not reported

Name: GULF SERVICE STATION
Address: BROAD RIVER & YOUNG
City: COLUMBIA

Tank ID: 3
Status: **Abandoned**
Capacity: 10000
Product: Gasoline
Calcage: Not reported

GULF SERVICE STATION (Continued) **U003521991**

Name: GULF SERVICE STATION
Address: BROAD RIVER & YOUNG
City: COLUMBIA

Tank ID: 4
Status: Abandoned
Capacity: 10000
Product: Diesel fuel
Calcage: Not reported

G26 **BP OIL-SITE #24144** **RCRA NonGen / NLR** **1004780518**
NW **2624 BROAD RIVER RD & YOUNG** **FINDS** **SCD987582186**
< 1/8 **COLUMBIA, SC 29201** **ECHO**
0.092 mi.
488 ft. **Site 3 of 7 in cluster G**

Relative: **Higher**
Actual: **319 ft.**

RCRA NonGen / NLR:

Date Form Received by Agency:		20010810
Handler Name:	BP OIL-SITE #24144	
Handler Address:		2624 BROAD RIVER RD & YOUNG
Handler City,State,Zip:		COLUMBIA, SC 29201
EPA ID:		SCD987582186
Contact Name:		FRANK BARCO
Contact Address:		PO BOX 2179
Contact City,State,Zip:		MT PLEASANT, SC 29465
Contact Telephone:		803-849-2190
Contact Fax:		Not reported
Contact Email:		Not reported
Contact Title:		Not reported
EPA Region:		04
Land Type:		Private
Federal Waste Generator Description:		Not a generator, verified
Non-Notifier:		Not reported
Biennial Report Cycle:		Not reported
Accessibility:		Not reported
Active Site Indicator:		Not reported
State District Owner:		SC
State District:		CM
Mailing Address:		PO BOX 2179
Mailing City,State,Zip:		MT PLEASANT, SC 29465
Owner Name:		BP OIL-COMPANY OP
Owner Type:		Private
Operator Name:		Not reported
Operator Type:		Not reported
Short-Term Generator Activity:		No
Importer Activity:		No
Mixed Waste Generator:		No
Transporter Activity:		No
Transfer Facility Activity:		No
Recycler Activity with Storage:		No
Small Quantity On-Site Burner Exemption:		No
Smelting Melting and Refining Furnace Exemption:		No
Underground Injection Control:		No
Off-Site Waste Receipt:		No
Universal Waste Indicator:		No
Universal Waste Destination Facility:		No
Federal Universal Waste:		No
Active Site Fed-Reg Treatment Storage and Disposal Facility:		Not reported

BP OIL-SITE #24144 (Continued) **1004780518**

Active Site Converter Treatment storage and Disposal Facility:	Not reported
Active Site State-Reg Treatment Storage and Disposal Facility:	Not reported
Active Site State-Reg Handler:	---
Federal Facility Indicator:	Not reported
Hazardous Secondary Material Indicator:	NN
Sub-Part K Indicator:	Not reported
Commercial TSD Indicator:	No
Treatment Storage and Disposal Type:	Not reported
2018 GPRA Permit Baseline:	Not on the Baseline
2018 GPRA Renewals Baseline:	Not on the Baseline
Permit Renewals Workload Universe:	Not reported
Permit Workload Universe:	Not reported
Permit Progress Universe:	Not reported
Post-Closure Workload Universe:	Not reported
Closure Workload Universe:	Not reported
202 GPRA Corrective Action Baseline:	No
Corrective Action Workload Universe:	No
Subject to Corrective Action Universe:	No
Non-TSDFs Where RCRA CA has Been Imposed Universe:	No
TSDFs Potentially Subject to CA Under 3004 (u)/(v) Universe:	No
TSDFs Only Subject to CA under Discretionary Auth Universe:	No
Corrective Action Priority Ranking:	No NCAPS ranking
Environmental Control Indicator:	No
Institutional Control Indicator:	No
Human Exposure Controls Indicator:	N/A
Groundwater Controls Indicator:	N/A
Operating TSDF Universe:	Not reported
Full Enforcement Universe:	Not reported
Significant Non-Complier Universe:	No
Unaddressed Significant Non-Complier Universe:	No
Addressed Significant Non-Complier Universe:	No
Significant Non-Complier With a Compliance Schedule Universe:	No
Financial Assurance Required:	Not reported
Handler Date of Last Change:	20150414
Recognized Trader-Importer:	No
Recognized Trader-Exporter:	No
Importer of Spent Lead Acid Batteries:	No
Exporter of Spent Lead Acid Batteries:	No
Recycler Activity Without Storage:	Not reported
Manifest Broker:	Not reported
Sub-Part P Indicator:	No

Hazardous Waste Summary:

Waste Code:	D001
Waste Description:	IGNITABLE WASTE
Waste Code:	D018
Waste Description:	BENZENE

Handler - Owner Operator:

Owner/Operator Indicator:	Owner
Owner/Operator Name:	BP OIL-COMPANY OP
Legal Status:	Private
Date Became Current:	Not reported
Date Ended Current:	Not reported

BP OIL-SITE #24144 (Continued) **1004780518**

Owner/Operator Address: 200 PUBLIC SQUARE #5L
Owner/Operator City,State,Zip: CLEVELAND, OH 44114
Owner/Operator Telephone: 216-586-5398
Owner/Operator Telephone Ext: Not reported
Owner/Operator Fax: Not reported
Owner/Operator Email: Not reported

Historic Generators:
Receive Date: 19910725
Handler Name: BP OIL-SITE #24144
Federal Waste Generator Description: Conditionally Exempt Small Quantity Generator
State District Owner: SC
Large Quantity Handler of Universal Waste: No
Recognized Trader Importer: No
Recognized Trader Exporter: No
Spent Lead Acid Battery Importer: No
Spent Lead Acid Battery Exporter: No
Current Record: No
Non Storage Recycler Activity: Not reported
Electronic Manifest Broker: Not reported

Receive Date: 20010810
Handler Name: BP OIL-SITE #24144
Federal Waste Generator Description: Not a generator, verified
State District Owner: SC
Large Quantity Handler of Universal Waste: No
Recognized Trader Importer: No
Recognized Trader Exporter: No
Spent Lead Acid Battery Importer: No
Spent Lead Acid Battery Exporter: No
Current Record: Yes
Non Storage Recycler Activity: Not reported
Electronic Manifest Broker: Not reported

List of NAICS Codes and Descriptions:
NAICS Codes: No NAICS Codes Found

Facility Has Received Notices of Violations:
Violations: No Violations Found

Evaluation Action Summary:
Evaluations: No Evaluations Found

FINDS:
Registry ID: 110007836333

Click Here:

Environmental Interest/Information System:
RCRAInfo is a national information system that supports the Resource Conservation and Recovery Act (RCRA) program through the tracking of events and activities related to facilities that generate, transport, and treat, store, or dispose of hazardous waste. RCRAInfo allows RCRA program staff to track the notification, permit, compliance, and

BP OIL-SITE #24144 (Continued) **1004780518**

corrective action activities required under RCRA.

~~Click this hyperlink~~ while viewing on your computer to access additional FINDS: detail in the EDR Site Report.

ECHO:

Envid:	1004780518
Registry ID:	110007836333
DFR URL:	http://echo.epa.gov/detailed-facility-report?fid=110007836333
Name:	BP OIL-SITE #24144
Address:	2624 BROAD RIVER RD & YOUNG
City,State,Zip:	COLUMBIA, SC 29201

---

27 **METTS OIL CO** **EDR Hist Auto** **1020627580**
NE **2340 BROAD RIVER ROAD** **N/A**
< 1/8 **COLUMBIA, SC 29210**
0.107 mi.
567 ft.

Relative: EDR Hist Auto
Higher

Actual: **321 ft.**

Year:	Name:	Type:
1977	METTS OIL CO	Gasoline Service Stations
1978	METTS OIL CO	Gasoline Service Stations
1979	METTS OIL CO	Gasoline Service Stations

G28 **EL CHEAPO 08** **UST** **U004255301**
NW **2624 BROAD RIVER RD** **Financial Assurance** **N/A**
< 1/8 **COLUMBIA, SC**
0.112 mi.
592 ft. **Site 4 of 7 in cluster G**

Relative: UST:
Higher

Actual: **319 ft.**

Name:	EL CHEAPO 08
Address:	2624 BROAD RIVER RD
City:	COLUMBIA
Facility ID:	19587
Permit:	P 19587
Owner:	C K ACQUISITION LLC
Owner Address:	4701 N MAIN ST
Owner City, st, zip:	COLUMBIA SC 29223
Owner Phone:	803-309-6968
Tank ID:	1
Status:	**Currently in Use**
Capacity:	22000
Product:	Multiple petroleum
Calcage:	0
Name:	EL CHEAPO 08
Address:	2624 BROAD RIVER RD
City:	COLUMBIA
Tank ID:	2
Status:	**Currently in Use**
Capacity:	20000
Product:	Gasoline RUL

EL CHEAPO 08 (Continued) **U004255301**

Calcage: 0

SC Financial Assurance 3:
Name: EL CHEAPO 08
Address: 2624 BROAD RIVER RD
City,State,Zip: COLUMBIA, SC 29210-6649
Owner Name: C K ACQUISITION LLC
Owner Address: 4701 N MAIN ST
Owner City St Zip: COLUMBIA SC 29223
Mechanism: Self Insurance 280.101
Date Expired: 5/1/2021
Bill: 2

G29 **CIRCLE K STORES INC** **EDR Hist Auto** **1020432803**
NW **2624 BROAD RIVER RD** **N/A**
< 1/8 **COLUMBIA, SC 29210**
0.112 mi.
592 ft. **Site 5 of 7 in cluster G**

Relative: EDR Hist Auto
Higher

Actual:
319 ft.

Year:	Name:	Type:
1995	BP EXPLORATION & OIL INC	Gasoline Service Stations
1996	BP EXPLORATION & OIL INC	Gasoline Service Stations
1997	BP EXPLORATION & OIL INC	Gasoline Service Stations
1998	BP EXPLORATION & OIL INC	Gasoline Service Stations
1999	BP EXPLORATION & OIL INC	Gasoline Service Stations
2000	TOSCO CORPORATION	Gasoline Service Stations
2001	TOSCO CORPORATION	Gasoline Service Stations
2002	TOSCO CORPORATION	Gasoline Service Stations
2003	TOSCO CORPORATION	Gasoline Service Stations
2004	CIRCLE K STORES INC	Gasoline Service Stations
2005	CIRCLE K STORES INC	Convenience Stores
2006	CIRCLE K STORES INC	Convenience Stores
2007	CIRCLE K STORES INC	Convenience Stores
2008	CIRCLE K STORES INC	Convenience Stores
2009	CIRCLE K STORES INC	Convenience Stores
2010	CIRCLE K STORES INC	Convenience Stores
2011	CIRCLE K STORES INC	Convenience Stores
2012	CIRCLE K STORES INC	Convenience Stores
2013	CIRCLE K STORES INC	Convenience Stores
2014	CIRCLE K STORES INC	Convenience Stores

G30 **CIRCLE K 2705138** **LUST** **U004253539**
NW **2624 BROAD RIVER RD** **UST** **N/A**
< 1/8 **COLUMBIA, SC** **Financial Assurance**
0.112 mi.
592 ft. **Site 6 of 7 in cluster G**

Relative: LUST:
Higher
Name: CIRCLE K 2705138
Actual: Address: 2624 BROAD RIVER RD
319 ft. City,State,Zip: COLUMBIA, SC 29210-6649
Release Number: 1
Facility ID: 11013
Release Status Number: 3

CIRCLE K 2705138 (Continued) **U004253539**

Substance:	PETRO
Tank Owner Company Name:	CIRCLE K STORES INC
Tank Owner Last Name:	CIRCLE K STORES INC
Tank Owner First name:	Not reported
NFA Date:	07/17/2012
Tank Owner City:	CHARLOTTE
Confirmed Date:	04/15/1999
Release Date:	03/17/1999
EID:	1762593
Local Facility District:	Columbia EQC Office
SCRBCA Class Number:	4AA
Release Fin Type Code:	WS
Qualified:	Y
Release Source:	UST
Local Fac Last Name:	CIRCLE K 2705138
Local Fac First Name:	Not reported
User Name:	FULMERSB
Cleanup Initiated Date:	04/15/1999
Prefix:	P
Total Score:	150

LUST:

Release Date:	03/17/1999
Cleanup Complete Date:	Not reported
Depth to Ground Water:	29.44
Ground Water Flow Direction:	NE
Release Number:	1
Confirmed date:	04/15/1999
RP Name:	TOSCO MARKETING COMPANY
RP Address:	5650 BRECKENRIDGE PKWY STE 300
RP City:	TAMPA
RP State:	FL
RP Zip:	33610
SCRBCA Class Code:	CLASS4AA
Project Manager:	FULMER, SUSAN B
Release Fin Type Code:	WS

UST:

Name:	CIRCLE K 2705138
Address:	2624 BROAD RIVER RD
City:	COLUMBIA
Facility ID:	11013
Permit:	P 11013
Owner:	CIRCLE K STORES INC
Owner Address:	1100 SITUS CT STE 100
Owner City, st, zip:	RALEIGH NC 27606
Owner Phone:	800-476-7574
Tank ID:	1
Status:	**Abandoned**
Capacity:	10000
Product:	Gasoline
Calcage:	0
Name:	CIRCLE K 2705138
Address:	2624 BROAD RIVER RD

CIRCLE K 2705138 (Continued) **U004253539**

City: COLUMBIA

Tank ID: 2
Status: **Abandoned**
Capacity: 10000
Product: Gasoline
Calcage: 0

Name: CIRCLE K 2705138
Address: 2624 BROAD RIVER RD
City: COLUMBIA

Tank ID: 3
Status: **Abandoned**
Capacity: 10000
Product: Gasoline
Calcage: 0

Name: CIRCLE K 2705138
Address: 2624 BROAD RIVER RD
City: COLUMBIA

Tank ID: 4
Status: **Abandoned**
Capacity: 1000
Product: Waste oil, burnt oil, used oil
Calcage: 60

SC Financial Assurance 3:
Name: CIRCLE K 2705138
Address: 2624 BROAD RIVER RD
City,State,Zip: COLUMBIA, SC 29210-6649
Owner Name: CIRCLE K STORES INC
Owner Address: 1100 SITUS CT STE 100
Owner City St Zip: RALEIGH NC 27606
Mechanism: Guarantee
Date Expired: 9/1/2009
Bill: 0

G31 **CIRCLE K 2705138** **RCR** **U003666055**
NW **2624 BROAD RIVER RD** **GWCI** **N/A**
< 1/8 **COLUMBIA, SC 29210**
0.112 mi.
592 ft. **Site 7 of 7 in cluster G**

Relative: **Higher**
Actual: **319 ft.**

RCR:
Name: CIRCLE K 2705138
Address: 2624 BROAD RIVER RD
City,State,Zip: COLUMBIA, SC 29210-6649
Entity Responsibility: Not reported
Region: Not reported
Tax Id: R06015-03-04
Latitude: 34.04378
Longitude: -81.0991
Tracking Number: 11013
Regulatory Program: Not reported
Reported: 03/17/99

CIRCLE K 2705138 (Continued) **U003666055**

CU-MCL: 07/17/12
Unit Type: Not reported
Unit Number/Letter: Not reported
Area/Acres: Not reported
Affected Media: Not reported
Site/Unit: Not reported
Condtions: Not reported
Associated Response/Corrective Action: Not reported
Associated Chemicals Requiring: Not reported

SC GWIC:
Bureau: BLWM
EAP ID: Not reported
Solid Waste Permit #: Not reported
Bureau of Land & Waste Management File #: Not reported
Permit Number: 11013
WPC Permit: Not reported
Program: DUST
Contamination: PETRO
Petroleum Products: True
Volatile Organic Compounds: False
Metals: False
Nitrates or Potential to Nitrate: False
Pesticides & Herbicides: False
Polychlorinated Biphenyls: False
Base, Neutral, & Acid Extractables: False
Phenols: False
Radionuclides Over Max Contaminant Levels: False
Sources Not In Other Categories: False
Source: UST
Underground Storage Tanks: True
Pits, Ponds, & Lagoons: False
Spills & Leaks: False
Landfills: False
Aboveground Storage Tank: False
Spray Irrigation: False
Single-Event Spill: False
Unpermitted Disposal: False
Septic Tank/Tile Field: False
Substances Not In Other Categories: False
Sources of Contamination Undetermined: False
Assessment: Yes
Monitoring: No
Remediation: No
Surface Impact: No
Drinking Water Well Impact: No
Remarks: Site ID # 11013. RBCA Classification 2BB1. Conducting investigation/Risk Assessment.

H32 **SHERWIN WILLIAMS CO** **RCRA NonGen / NLR** **1000370858**
SSE **1221 BAKERSFIELD RD** **FINDS** **SCD000826651**
1/8-1/4 **COLUMBIA, SC 29221** **ECHO**
0.142 mi.
751 ft. **Site 1 of 2 in cluster H**

Relative:
Higher

Actual:
319 ft.

RCRA NonGen / NLR:

Date Form Received by Agency:		19981102
Handler Name:	SHERWIN WILLIAMS CO	
Handler Address:		1221 BAKERSFIELD RD
Handler City,State,Zip:		COLUMBIA, SC 29221
EPA ID:		SCD000826651
Contact Name:		A ARTERS
Contact Address:		PO DRAWER 21628
Contact City,State,Zip:		COLUMBIA, SC 29221
Contact Telephone:		216-566-3096
Contact Fax:		Not reported
Contact Email:		Not reported
Contact Title:		Not reported
EPA Region:		04
Land Type:		Not reported
Federal Waste Generator Description:		Not a generator, verified
Non-Notifier:		Not reported
Biennial Report Cycle:		Not reported
Accessibility:		Not reported
Active Site Indicator:		Not reported
State District Owner:		SC
State District:		CM
Mailing Address:		PO DRAWER 21628
Mailing City,State,Zip:		COLUMBIA, SC 29221
Owner Name:		OWNERNAME
Owner Type:		Private
Operator Name:		OPERNAME
Operator Type:		Private
Short-Term Generator Activity:		No
Importer Activity:		No
Mixed Waste Generator:		No
Transporter Activity:		No
Transfer Facility Activity:		No
Recycler Activity with Storage:		No
Small Quantity On-Site Burner Exemption:		No
Smelting Melting and Refining Furnace Exemption:		No
Underground Injection Control:		No
Off-Site Waste Receipt:		No
Universal Waste Indicator:		No
Universal Waste Destination Facility:		No
Federal Universal Waste:		No
Active Site Fed-Reg Treatment Storage and Disposal Facility:		Not reported
Active Site Converter Treatment storage and Disposal Facility:		Not reported
Active Site State-Reg Treatment Storage and Disposal Facility:		Not reported
Active Site State-Reg Handler:		---
Federal Facility Indicator:		Not reported
Hazardous Secondary Material Indicator:		NN
Sub-Part K Indicator:		Not reported
Commercial TSD Indicator:		No
Treatment Storage and Disposal Type:		Not reported
2018 GPRA Permit Baseline:		Not on the Baseline
2018 GPRA Renewals Baseline:		Not on the Baseline
Permit Renewals Workload Universe:		Not reported

SHERWIN WILLIAMS CO (Continued) **1000370858**

Permit Workload Universe:	Not reported
Permit Progress Universe:	Not reported
Post-Closure Workload Universe:	Not reported
Closure Workload Universe:	Not reported
202 GPRA Corrective Action Baseline:	No
Corrective Action Workload Universe:	No
Subject to Corrective Action Universe:	No
Non-TSDFs Where RCRA CA has Been Imposed Universe:	No
TSDFs Potentially Subject to CA Under 3004 (u)/(v) Universe:	No
TSDFs Only Subject to CA under Discretionary Auth Universe:	No
Corrective Action Priority Ranking:	No NCAPS ranking
Environmental Control Indicator:	No
Institutional Control Indicator:	No
Human Exposure Controls Indicator:	N/A
Groundwater Controls Indicator:	N/A
Operating TSDF Universe:	Not reported
Full Enforcement Universe:	Not reported
Significant Non-Complier Universe:	No
Unaddressed Significant Non-Complier Universe:	No
Addressed Significant Non-Complier Universe:	No
Significant Non-Complier With a Compliance Schedule Universe:	No
Financial Assurance Required:	Not reported
Handler Date of Last Change:	20150414
Recognized Trader-Importer:	No
Recognized Trader-Exporter:	No
Importer of Spent Lead Acid Batteries:	No
Exporter of Spent Lead Acid Batteries:	No
Recycler Activity Without Storage:	Not reported
Manifest Broker:	Not reported
Sub-Part P Indicator:	No

Hazardous Waste Summary:

Waste Code:	D000
Waste Description:	Not Defined
Waste Code:	D001
Waste Description:	IGNITABLE WASTE
Waste Code:	D002
Waste Description:	CORROSIVE WASTE
Waste Code:	D003
Waste Description:	REACTIVE WASTE
Waste Code:	F002
Waste Description:	THE FOLLOWING SPENT HALOGENATED SOLVENTS: TETRACHLOROETHYLENE, METHYLENE CHLORIDE, TRICHLOROETHYLENE, 1,1,1-TRICHLOROETHANE, CHLOROBENZENE, 1,1,2-TRICHLORO-1,2,2-TRIFLUOROETHANE, ORTHO-DICHLOROBENZENE, TRICHLOROFLUOROMETHANE, AND 1,1,2, TRICHLOROETHANE; ALL SPENT SOLVENT MIXTURES/BLENDS CONTAINING, BEFORE USE, A TOTAL OF TEN PERCENT OR MORE (BY VOLUME) OF ONE OR MORE OF THE ABOVE HALOGENATED SOLVENTS OR THOSE SOLVENTS LISTED IN F001, F004, AND F005; AND STILL BOTTOMS FROM THE RECOVERY OF THESE SPENT SOLVENTS AND SPENT SOLVENT MIXTURES.
Waste Code:	F003

SHERWIN WILLIAMS CO (Continued) **1000370858**

Waste Description: THE FOLLOWING SPENT NONHALOGENATED SOLVENTS: XYLENE, ACETONE, ETHYL ACETATE, ETHYL BENZENE, ETHYL ETHER, METHYL ISOBUTYL KETONE, N-BUTYL ALCOHOL, CYCLOHEXANONE, AND METHANOL; ALL SPENT SOLVENT MIXTURES/BLENDS CONTAINING, BEFORE USE, ONLY THE ABOVE SPENT NONHALOGENATED SOLVENTS; AND ALL SPENT SOLVENT MIXTURES/BLENDS CONTAINING, BEFORE USE, ONE OR MORE OF THE ABOVE NONHALOGENATED SOLVENTS, AND A TOTAL OF TEN PERCENT OR MORE (BY VOLUME) OF ONE OR MORE OF THOSE SOLVENTS LISTED IN F001, F002, F004, AND F005; AND STILL BOTTOMS FROM THE RECOVERY OF THESE SPENT SOLVENTS AND SPENT SOLVENT MIXTURES.

Waste Code: F005
Waste Description: THE FOLLOWING SPENT NONHALOGENATED SOLVENTS: TOLUENE, METHYL ETHYL KETONE, CARBON DISULFIDE, ISOBUTANOL, PYRIDINE, BENZENE, 2-ETHOXYETHANOL, AND 2-NITROPROPANE; ALL SPENT SOLVENT MIXTURES/BLENDS CONTAINING, BEFORE USE, A TOTAL OF TEN PERCENT OR MORE (BY VOLUME) OF ONE OR MORE OF THE ABOVE NONHALOGENATED SOLVENTS OR THOSE SOLVENTS LISTED IN F001, F002, OR F004; AND STILL BOTTOMS FROM THE RECOVERY OF THESE SPENT SOLVENTS AND SPENT SOLVENT MIXTURES.

Waste Code: F017
Waste Description: Not Defined

Waste Code: F018
Waste Description: Not Defined

Waste Code: P090
Waste Description: Not Defined

Waste Code: U002
Waste Description: 2-PROPANONE (I) (OR) ACETONE (I)

Waste Code: U031
Waste Description: 1-BUTANOL (I) (OR) N-BUTYL ALCOHOL (I)

Waste Code: U112
Waste Description: ACETIC ACID, ETHYL ESTER (I) (OR) ETHYL ACETATE (I)

Waste Code: U150
Waste Description: L-PHENYLALANINE, 4-[BIS(2-CHLOROETHYL)AMINO]- (OR) MELPHALAN

Waste Code: U154
Waste Description: METHANOL (I) (OR) METHYL ALCOHOL (I)

Waste Code: U159
Waste Description: 2-BUTANONE (I,T) (OR) METHYL ETHYL KETONE (MEK) (I,T)

Waste Code: U161
Waste Description: 4-METHYL-2-PENTANONE (I) (OR) METHYL ISOBUTYL KETONE (I) (OR) PENTANOL, 4-METHYL-

Waste Code: U220
Waste Description: BENZENE, METHYL- (OR) TOLUENE

Waste Code: U239
Waste Description: BENZENE, DIMETHYL- (I,T) (OR) XYLENE (I)

SHERWIN WILLIAMS CO (Continued) **1000370858**

Handler - Owner Operator:

Owner/Operator Indicator:	Owner
Owner/Operator Name:	OWNERNAME
Legal Status:	Private
Date Became Current:	Not reported
Date Ended Current:	Not reported
Owner/Operator Address:	OWNERSTREET
Owner/Operator City,State,Zip:	OWNERCITY, WY 99999
Owner/Operator Telephone:	404-555-1212
Owner/Operator Telephone Ext:	Not reported
Owner/Operator Fax:	Not reported
Owner/Operator Email:	Not reported

Owner/Operator Indicator:	Operator
Owner/Operator Name:	OPERNAME
Legal Status:	Private
Date Became Current:	Not reported
Date Ended Current:	Not reported
Owner/Operator Address:	OPERSTREET
Owner/Operator City,State,Zip:	OPERCITY, WY 99999
Owner/Operator Telephone:	404-555-1212
Owner/Operator Telephone Ext:	Not reported
Owner/Operator Fax:	Not reported
Owner/Operator Email:	Not reported

Historic Generators:

Receive Date:	19981102
Handler Name: SHERWIN WILLIAMS CO	
Federal Waste Generator Description:	Not a generator, verified
State District Owner:	SC
Large Quantity Handler of Universal Waste:	No
Recognized Trader Importer:	No
Recognized Trader Exporter:	No
Spent Lead Acid Battery Importer:	No
Spent Lead Acid Battery Exporter:	No
Current Record:	Yes
Non Storage Recycler Activity:	Not reported
Electronic Manifest Broker:	Not reported

List of NAICS Codes and Descriptions:

NAICS Codes:	No NAICS Codes Found

Facility Has Received Notices of Violations:

Violations:	No Violations Found

Evaluation Action Summary:

Evaluations:	No Evaluations Found

FINDS:

Registry ID:	110002191066

Click Here:

SHERWIN WILLIAMS CO (Continued) **1000370858**

Environmental Interest/Information System:
SC-EFIS (South Carolina - Environmental Facility Information System) integrates information on environmental facilities, permits, violations, enforcement actions, and compliance activities needed to support regulatory requirements and target environmental quality improvements for the water, air, solid waste, and hazardous waste program areas. The EFIS was developed by the state of South Carolina and Maine joined their system in 2004.
RCRAInfo is a national information system that supports the Resource Conservation and Recovery Act (RCRA) program through the tracking of events and activities related to facilities that generate, transport, and treat, store, or dispose of hazardous waste. RCRAInfo allows RCRA program staff to track the notification, permit, compliance, and corrective action activities required under RCRA.

Click this hyperlink while viewing on your computer to access additional FINDS: detail in the EDR Site Report.

ECHO:

Envid:	1000370858
Registry ID:	110002191066
DFR URL:	http://echo.epa.gov/detailed-facility-report?fid=110002191066
Name:	SHERWIN WILLIAMS COMPANY
Address:	1221 BAKERSFIELD RD
City,State,Zip:	COLUMBIA, SC 29210

---

33 **CRAFT MASTER** **RCRA-VSQG** **1004780789**
NW **2639 BROAD RIVER RD** **FINDS** **SCD987598125**
1/8-1/4 **COLUMBIA, SC 29210** **ECHO**
0.165 mi.
872 ft.

Relative:
Higher

Actual:
321 ft.

RCRA-VSQG:

Date Form Received by Agency:		19930802
Handler Name:	CRAFT MASTER	
Handler Address:		2639 BROAD RIVER RD
Handler City,State,Zip:		COLUMBIA, SC 29210
EPA ID:		SCD987598125
Contact Name:		RUSTY DANIELS
Contact Address:		2639 BROAD RIVER RD
Contact City,State,Zip:		COLUMBIA, SC 29210
Contact Telephone:		803-798-4261
Contact Fax:		Not reported
Contact Email:		Not reported
Contact Title:		Not reported
EPA Region:		04
Land Type:		Private
Federal Waste Generator Description:		Conditionally Exempt Small Quantity Generator
Non-Notifier:		Not reported
Biennial Report Cycle:		Not reported
Accessibility:		Not reported
Active Site Indicator:		Handler Activities
State District Owner:		SC
State District:		CM
Mailing Address:		BROAD RIVER RD
Mailing City,State,Zip:		COLUMBIA, SC 29210
Owner Name:		G A STROBELL
Owner Type:		Private

CRAFT MASTER (Continued) **1004780789**

Operator Name:	Not reported
Operator Type:	Not reported
Short-Term Generator Activity:	No
Importer Activity:	No
Mixed Waste Generator:	No
Transporter Activity:	No
Transfer Facility Activity:	No
Recycler Activity with Storage:	No
Small Quantity On-Site Burner Exemption:	No
Smelting Melting and Refining Furnace Exemption:	No
Underground Injection Control:	No
Off-Site Waste Receipt:	No
Universal Waste Indicator:	No
Universal Waste Destination Facility:	No
Federal Universal Waste:	No
Active Site Fed-Reg Treatment Storage and Disposal Facility:	Not reported
Active Site Converter Treatment storage and Disposal Facility:	Not reported
Active Site State-Reg Treatment Storage and Disposal Facility:	Not reported
Active Site State-Reg Handler:	---
Federal Facility Indicator:	Not reported
Hazardous Secondary Material Indicator:	NN
Sub-Part K Indicator:	Not reported
Commercial TSD Indicator:	No
Treatment Storage and Disposal Type:	Not reported
2018 GPRA Permit Baseline:	Not on the Baseline
2018 GPRA Renewals Baseline:	Not on the Baseline
Permit Renewals Workload Universe:	Not reported
Permit Workload Universe:	Not reported
Permit Progress Universe:	Not reported
Post-Closure Workload Universe:	Not reported
Closure Workload Universe:	Not reported
202 GPRA Corrective Action Baseline:	No
Corrective Action Workload Universe:	No
Subject to Corrective Action Universe:	No
Non-TSDFs Where RCRA CA has Been Imposed Universe:	No
TSDFs Potentially Subject to CA Under 3004 (u)/(v) Universe:	No
TSDFs Only Subject to CA under Discretionary Auth Universe:	No
Corrective Action Priority Ranking:	No NCAPS ranking
Environmental Control Indicator:	No
Institutional Control Indicator:	No
Human Exposure Controls Indicator:	N/A
Groundwater Controls Indicator:	N/A
Operating TSDF Universe:	Not reported
Full Enforcement Universe:	Not reported
Significant Non-Complier Universe:	No
Unaddressed Significant Non-Complier Universe:	No
Addressed Significant Non-Complier Universe:	No
Significant Non-Complier With a Compliance Schedule Universe:	No
Financial Assurance Required:	Not reported
Handler Date of Last Change:	20140729
Recognized Trader-Importer:	No
Recognized Trader-Exporter:	No
Importer of Spent Lead Acid Batteries:	No
Exporter of Spent Lead Acid Batteries:	No
Recycler Activity Without Storage:	Not reported
Manifest Broker:	Not reported
Sub-Part P Indicator:	No

CRAFT MASTER (Continued) **1004780789**

Hazardous Waste Summary:
Waste Code: D001
Waste Description: IGNITABLE WASTE

Waste Code: F001
Waste Description: THE FOLLOWING SPENT HALOGENATED SOLVENTS USED IN DEGREASING: TETRACHLOROETHYLENE, TRICHLORETHYLENE, METHYLENE CHLORIDE, 1,1,1-TRICHLOROETHANE, CARBON TETRACHLORIDE AND CHLORINATED FLUOROCARBONS; ALL SPENT SOLVENT MIXTURES/BLENDS USED IN DEGREASING CONTAINING, BEFORE USE, A TOTAL OF TEN PERCENT OR MORE (BY VOLUME) OF ONE OR MORE OF THE ABOVE HALOGENATED SOLVENTS OR THOSE SOLVENTS LISTED IN F002, F004, AND F005; AND STILL BOTTOMS FROM THE RECOVERY OF THESE SPENT SOLVENTS AND SPENT SOLVENT MIXTURES.

Waste Code: F002
Waste Description: THE FOLLOWING SPENT HALOGENATED SOLVENTS: TETRACHLOROETHYLENE, METHYLENE CHLORIDE, TRICHLOROETHYLENE, 1,1,1-TRICHLOROETHANE, CHLOROBENZENE, 1,1,2-TRICHLORO-1,2,2-TRIFLUOROETHANE, ORTHO-DICHLOROBENZENE, TRICHLOROFLUOROMETHANE, AND 1,1,2, TRICHLOROETHANE; ALL SPENT SOLVENT MIXTURES/BLENDS CONTAINING, BEFORE USE, A TOTAL OF TEN PERCENT OR MORE (BY VOLUME) OF ONE OR MORE OF THE ABOVE HALOGENATED SOLVENTS OR THOSE SOLVENTS LISTED IN F001, F004, AND F005; AND STILL BOTTOMS FROM THE RECOVERY OF THESE SPENT SOLVENTS AND SPENT SOLVENT MIXTURES.

Waste Code: F003
Waste Description: THE FOLLOWING SPENT NONHALOGENATED SOLVENTS: XYLENE, ACETONE, ETHYL ACETATE, ETHYL BENZENE, ETHYL ETHER, METHYL ISOBUTYL KETONE, N-BUTYL ALCOHOL, CYCLOHEXANONE, AND METHANOL; ALL SPENT SOLVENT MIXTURES/BLENDS CONTAINING, BEFORE USE, ONLY THE ABOVE SPENT NONHALOGENATED SOLVENTS; AND ALL SPENT SOLVENT MIXTURES/BLENDS CONTAINING, BEFORE USE, ONE OR MORE OF THE ABOVE NONHALOGENATED SOLVENTS, AND A TOTAL OF TEN PERCENT OR MORE (BY VOLUME) OF ONE OR MORE OF THOSE SOLVENTS LISTED IN F001, F002, F004, AND F005; AND STILL BOTTOMS FROM THE RECOVERY OF THESE SPENT SOLVENTS AND SPENT SOLVENT MIXTURES.

Waste Code: F005
Waste Description: THE FOLLOWING SPENT NONHALOGENATED SOLVENTS: TOLUENE, METHYL ETHYL KETONE, CARBON DISULFIDE, ISOBUTANOL, PYRIDINE, BENZENE, 2-ETHOXYETHANOL, AND 2-NITROPROPANE; ALL SPENT SOLVENT MIXTURES/BLENDS CONTAINING, BEFORE USE, A TOTAL OF TEN PERCENT OR MORE (BY VOLUME) OF ONE OR MORE OF THE ABOVE NONHALOGENATED SOLVENTS OR THOSE SOLVENTS LISTED IN F001, F002, OR F004; AND STILL BOTTOMS FROM THE RECOVERY OF THESE SPENT SOLVENTS AND SPENT SOLVENT MIXTURES.

Handler - Owner Operator:
Owner/Operator Indicator: Owner
Owner/Operator Name: G A STROBELL
Legal Status: Private
Date Became Current: Not reported
Date Ended Current: Not reported
Owner/Operator Address: 2639 BROAD RIVER RD
Owner/Operator City,State,Zip: COLUMBIA, SC 29210
Owner/Operator Telephone: 803-798-4261
Owner/Operator Telephone Ext: Not reported

CRAFT MASTER (Continued) **1004780789**

Owner/Operator Fax: Not reported
Owner/Operator Email: Not reported

Historic Generators:
Receive Date: 19930802
Handler Name: CRAFT MASTER
Federal Waste Generator Description: Conditionally Exempt Small Quantity Generator
State District Owner: SC
Large Quantity Handler of Universal Waste: No
Recognized Trader Importer: No
Recognized Trader Exporter: No
Spent Lead Acid Battery Importer: No
Spent Lead Acid Battery Exporter: No
Current Record: Yes
Non Storage Recycler Activity: Not reported
Electronic Manifest Broker: Not reported

List of NAICS Codes and Descriptions:
NAICS Codes: No NAICS Codes Found

Facility Has Received Notices of Violations:
Violations: No Violations Found

Evaluation Action Summary:
Evaluations: No Evaluations Found

FINDS:
Registry ID: 110004942251

Click Here:

Environmental Interest/Information System:
SC-EFIS (South Carolina - Environmental Facility Information System) integrates information on environmental facilities, permits, violations, enforcement actions, and compliance activities needed to support regulatory requirements and target environmental quality improvements for the water, air, solid waste, and hazardous waste program areas. The EFIS was developed by the state of South Carolina and Maine joined their system in 2004.
RCRAInfo is a national information system that supports the Resource Conservation and Recovery Act (RCRA) program through the tracking of events and activities related to facilities that generate, transport, and treat, store, or dispose of hazardous waste. RCRAInfo allows RCRA program staff to track the notification, permit, compliance, and corrective action activities required under RCRA.

Click this hyperlink while viewing on your computer to access additional FINDS: detail in the EDR Site Report.

ECHO:
Envid: 1004780789
Registry ID: 110004942251
DFR URL: http://echo.epa.gov/detailed-facility-report?fid=110004942251
Name: CRAFT MASTER
Address: 2639 BROAD RIVER RD

CRAFT MASTER (Continued) **1004780789**

City,State,Zip: COLUMBIA, SC 29210

H34 **SHARPES FORMAL WEAR OPERA CTR** **RCRA-VSQG** **1000368510**
SSE **RT 1 BOX 499G** **SCD982094575**
1/8-1/4 **COLUMBIA, SC 29203**
0.166 mi.
879 ft. **Site 2 of 2 in cluster H**

Relative: **Lower**
Actual: **306 ft.**

RCRA-VSQG:

Date Form Received by Agency:	19870706
Handler Name:	SHARPES FORMAL WEAR OPERA CTR
Handler Address:	RT 1 BOX 499G
Handler City,State,Zip:	COLUMBIA, SC 29203
EPA ID:	SCD982094575
Contact Name:	LENNON WIDER
Contact Address:	PO BOX 1082
Contact City,State,Zip:	COLUMBIA, SC 29202
Contact Telephone:	803-786-8550
Contact Fax:	Not reported
Contact Email:	Not reported
Contact Title:	Not reported
EPA Region:	04
Land Type:	Private
Federal Waste Generator Description:	Conditionally Exempt Small Quantity Generator
Non-Notifier:	Not reported
Biennial Report Cycle:	Not reported
Accessibility:	Not reported
Active Site Indicator:	Handler Activities
State District Owner:	SC
State District:	CM
Mailing Address:	PO BOX 1082
Mailing City,State,Zip:	COLUMBIA, SC 29202
Owner Name:	SHARPES JAMES
Owner Type:	Municipal
Operator Name:	OPERNAME
Operator Type:	Municipal
Short-Term Generator Activity:	No
Importer Activity:	No
Mixed Waste Generator:	No
Transporter Activity:	No
Transfer Facility Activity:	No
Recycler Activity with Storage:	No
Small Quantity On-Site Burner Exemption:	No
Smelting Melting and Refining Furnace Exemption:	No
Underground Injection Control:	No
Off-Site Waste Receipt:	No
Universal Waste Indicator:	No
Universal Waste Destination Facility:	No
Federal Universal Waste:	No
Active Site Fed-Reg Treatment Storage and Disposal Facility:	Not reported
Active Site Converter Treatment storage and Disposal Facility:	Not reported
Active Site State-Reg Treatment Storage and Disposal Facility:	Not reported
Active Site State-Reg Handler:	---
Federal Facility Indicator:	Not reported
Hazardous Secondary Material Indicator:	NN
Sub-Part K Indicator:	Not reported
Commercial TSD Indicator:	No
Treatment Storage and Disposal Type:	Not reported

SHARPES FORMAL WEAR OPERA CTR (Continued) **1000368510**

2018 GPRA Permit Baseline:	Not on the Baseline
2018 GPRA Renewals Baseline:	Not on the Baseline
Permit Renewals Workload Universe:	Not reported
Permit Workload Universe:	Not reported
Permit Progress Universe:	Not reported
Post-Closure Workload Universe:	Not reported
Closure Workload Universe:	Not reported
202 GPRA Corrective Action Baseline:	No
Corrective Action Workload Universe:	No
Subject to Corrective Action Universe:	No
Non-TSDFs Where RCRA CA has Been Imposed Universe:	No
TSDFs Potentially Subject to CA Under 3004 (u)/(v) Universe:	No
TSDFs Only Subject to CA under Discretionary Auth Universe:	No
Corrective Action Priority Ranking:	No NCAPS ranking
Environmental Control Indicator:	No
Institutional Control Indicator:	No
Human Exposure Controls Indicator:	N/A
Groundwater Controls Indicator:	N/A
Operating TSDF Universe:	Not reported
Full Enforcement Universe:	Not reported
Significant Non-Complier Universe:	No
Unaddressed Significant Non-Complier Universe:	No
Addressed Significant Non-Complier Universe:	No
Significant Non-Complier With a Compliance Schedule Universe:	No
Financial Assurance Required:	Not reported
Handler Date of Last Change:	20150414
Recognized Trader-Importer:	No
Recognized Trader-Exporter:	No
Importer of Spent Lead Acid Batteries:	No
Exporter of Spent Lead Acid Batteries:	No
Recycler Activity Without Storage:	Not reported
Manifest Broker:	Not reported
Sub-Part P Indicator:	No

Hazardous Waste Summary:

Waste Code:	F002
Waste Description:	THE FOLLOWING SPENT HALOGENATED SOLVENTS: TETRACHLOROETHYLENE, METHYLENE CHLORIDE, TRICHLOROETHYLENE, 1,1,1-TRICHLOROETHANE, CHLOROBENZENE, 1,1,2-TRICHLORO-1,2,2-TRIFLUOROETHANE, ORTHO-DICHLOROBENZENE, TRICHLOROFLUOROMETHANE, AND 1,1,2, TRICHLOROETHANE; ALL SPENT SOLVENT MIXTURES/BLENDS CONTAINING, BEFORE USE, A TOTAL OF TEN PERCENT OR MORE (BY VOLUME) OF ONE OR MORE OF THE ABOVE HALOGENATED SOLVENTS OR THOSE SOLVENTS LISTED IN F001, F004, AND F005; AND STILL BOTTOMS FROM THE RECOVERY OF THESE SPENT SOLVENTS AND SPENT SOLVENT MIXTURES.

Handler - Owner Operator:

Owner/Operator Indicator:	Operator
Owner/Operator Name:	OPERNAME
Legal Status:	Municipal
Date Became Current:	Not reported
Date Ended Current:	Not reported
Owner/Operator Address:	OPERSTREET
Owner/Operator City,State,Zip:	OPERCITY, WY 99999
Owner/Operator Telephone:	404-555-1212

SHARPES FORMAL WEAR OPERA CTR (Continued) **1000368510**

Owner/Operator Telephone Ext: Not reported
Owner/Operator Fax: Not reported
Owner/Operator Email: Not reported

Owner/Operator Indicator: Owner
Owner/Operator Name: SHARPES JAMES
Legal Status: Municipal
Date Became Current: Not reported
Date Ended Current: Not reported
Owner/Operator Address: OWNERSTREET
Owner/Operator City,State,Zip: OWNERCITY, WY 99999
Owner/Operator Telephone: 404-555-1212
Owner/Operator Telephone Ext: Not reported
Owner/Operator Fax: Not reported
Owner/Operator Email: Not reported

Historic Generators:
Receive Date: 19870706
Handler Name: SHARPES FORMAL WEAR OPERA CTR
Federal Waste Generator Description: Conditionally Exempt Small Quantity Generator
State District Owner: SC
Large Quantity Handler of Universal Waste: No
Recognized Trader Importer: No
Recognized Trader Exporter: No
Spent Lead Acid Battery Importer: No
Spent Lead Acid Battery Exporter: No
Current Record: Yes
Non Storage Recycler Activity: Not reported
Electronic Manifest Broker: Not reported

List of NAICS Codes and Descriptions:
NAICS Codes: No NAICS Codes Found

Facility Has Received Notices of Violations:
Violations: No Violations Found

Evaluation Action Summary:
Evaluations: No Evaluations Found

I35 **PEP BOY 134** **LUST U004018251**
SE **1804 BROAD RIVER RD** **UST N/A**
1/8-1/4 **COLUMBIA, SC** **Financial Assurance**
0.205 mi.
1085 ft. **Site 1 of 2 in cluster I**

Relative: Higher
Actual: 322 ft.

LUST:
Name: PEP BOY 134
Address: 1804 BROAD RIVER RD
City,State,Zip: COLUMBIA, SC 29210
Release Number: 1
Facility ID: 18230
Release Status Number: Not reported
Substance: PETRO
Tank Owner Company Name: PEP BOYS
Tank Owner Last Name: PEP BOYS

PEP BOY 134 (Continued) **U004018251**

Tank Owner First name:	Not reported
NFA Date:	01/22/1999
Tank Owner City:	PHILADELPHIA
Confirmed Date:	01/19/1999
Release Date:	12/16/1998
EID:	1796782
Local Facility District:	Columbia EQC Office
SCRBCA Class Number:	Not reported
Release Fin Type Code:	UNK
Qualified:	Not reported
Release Source:	UST
Local Fac Last Name:	PEP BOY 134
Local Fac First Name:	Not reported
User Name:	FANTRM
Cleanup Initiated Date:	01/19/1999
Prefix:	N
Total Score:	Not reported

UST:

Name:	PEP BOY 134
Address:	1804 BROAD RIVER RD
City:	COLUMBIA
Facility ID:	18230
Permit:	N 18230
Owner:	PEP BOYS
Owner Address:	3111 W ALLEGHENY AVE
Owner City, st, zip:	PHILADELPHIA PA 19132
Owner Phone:	215-430-9277
Tank ID:	1
Status:	**Abandoned**
Capacity:	550
Product:	Waste oil, burnt oil, used oil
Calcage:	Not reported

SC Financial Assurance 3:

Name:	PEP BOY 134
Address:	1804 BROAD RIVER RD
City,State,Zip:	COLUMBIA, SC 29210
Owner Name:	PEP BOYS
Owner Address:	3111 W ALLEGHENY AVE
Owner City St Zip:	PHILADELPHIA PA 19132
Mechanism:	Pending
Date Expired:	Not reported
Bill:	0

I36 **PEP BOYS 134** **RCRA-VSQG** **1004780488**
SE **1804 BROAD RIVER ROAD** **FINDS** **SCD987580891**
1/8-1/4 **COLUMBIA, SC 29210** **ECHO**
0.205 mi.
1085 ft. **Site 2 of 2 in cluster I**

Relative: **Higher**
Actual: **322 ft.**

RCRA-VSQG:

Date Form Received by Agency:		19980720
Handler Name:	PEP BOYS 134	
Handler Address:		1804 BROAD RIVER ROAD
Handler City,State,Zip:		COLUMBIA, SC 29210

PEP BOYS 134 (Continued) **1004780488**

EPA ID:	SCD987580891
Contact Name:	JOHN KERELO
Contact Address:	3111 W ALLGHNEY AVENUE
Contact City,State,Zip:	PHILADELPHIA, PA 19132
Contact Telephone:	215-430-9277
Contact Fax:	Not reported
Contact Email:	Not reported
Contact Title:	Not reported
EPA Region:	04
Land Type:	Private
Federal Waste Generator Description:	Conditionally Exempt Small Quantity Generator
Non-Notifier:	Not reported
Biennial Report Cycle:	Not reported
Accessibility:	Not reported
Active Site Indicator:	Handler Activities
State District Owner:	SC
State District:	CM
Mailing Address:	W ALLGHNEY AVENUE
Mailing City,State,Zip:	PHILADELPHIA, PA 19132
Owner Name:	THE PEP BOYS
Owner Type:	Private
Operator Name:	Not reported
Operator Type:	Not reported
Short-Term Generator Activity:	No
Importer Activity:	No
Mixed Waste Generator:	No
Transporter Activity:	No
Transfer Facility Activity:	No
Recycler Activity with Storage:	No
Small Quantity On-Site Burner Exemption:	No
Smelting Melting and Refining Furnace Exemption:	No
Underground Injection Control:	No
Off-Site Waste Receipt:	No
Universal Waste Indicator:	No
Universal Waste Destination Facility:	No
Federal Universal Waste:	No
Active Site Fed-Reg Treatment Storage and Disposal Facility:	Not reported
Active Site Converter Treatment storage and Disposal Facility:	Not reported
Active Site State-Reg Treatment Storage and Disposal Facility:	Not reported
Active Site State-Reg Handler:	---
Federal Facility Indicator:	Not reported
Hazardous Secondary Material Indicator:	NN
Sub-Part K Indicator:	Not reported
Commercial TSD Indicator:	No
Treatment Storage and Disposal Type:	Not reported
2018 GPRA Permit Baseline:	Not on the Baseline
2018 GPRA Renewals Baseline:	Not on the Baseline
Permit Renewals Workload Universe:	Not reported
Permit Workload Universe:	Not reported
Permit Progress Universe:	Not reported
Post-Closure Workload Universe:	Not reported
Closure Workload Universe:	Not reported
202 GPRA Corrective Action Baseline:	No
Corrective Action Workload Universe:	No
Subject to Corrective Action Universe:	No
Non-TSDFs Where RCRA CA has Been Imposed Universe:	No
TSDFs Potentially Subject to CA Under 3004 (u)/(v) Universe:	No

PEP BOYS 134 (Continued) **1004780488**

TSDFs Only Subject to CA under Discretionary Auth Universe:	No
Corrective Action Priority Ranking:	No NCAPS ranking
Environmental Control Indicator:	No
Institutional Control Indicator:	No
Human Exposure Controls Indicator:	N/A
Groundwater Controls Indicator:	N/A
Operating TSDF Universe:	Not reported
Full Enforcement Universe:	Not reported
Significant Non-Complier Universe:	No
Unaddressed Significant Non-Complier Universe:	No
Addressed Significant Non-Complier Universe:	No
Significant Non-Complier With a Compliance Schedule Universe:	No
Financial Assurance Required:	Not reported
Handler Date of Last Change:	20140729
Recognized Trader-Importer:	No
Recognized Trader-Exporter:	No
Importer of Spent Lead Acid Batteries:	No
Exporter of Spent Lead Acid Batteries:	No
Recycler Activity Without Storage:	Not reported
Manifest Broker:	Not reported
Sub-Part P Indicator:	No

Hazardous Waste Summary:

Waste Code:	D001
Waste Description:	IGNITABLE WASTE

Handler - Owner Operator:

Owner/Operator Indicator:	Owner
Owner/Operator Name:	THE PEP BOYS
Legal Status:	Private
Date Became Current:	Not reported
Date Ended Current:	Not reported
Owner/Operator Address:	3111 W ALLEGHNEY AVENU
Owner/Operator City,State,Zip:	PHILADELPHIA, PA 19132
Owner/Operator Telephone:	215-227-9277
Owner/Operator Telephone Ext:	Not reported
Owner/Operator Fax:	Not reported
Owner/Operator Email:	Not reported

Historic Generators:

Receive Date:	19980720
Handler Name: PEP BOYS 134	
Federal Waste Generator Description:	Conditionally Exempt Small Quantity Generator
State District Owner:	SC
Large Quantity Handler of Universal Waste:	No
Recognized Trader Importer:	No
Recognized Trader Exporter:	No
Spent Lead Acid Battery Importer:	No
Spent Lead Acid Battery Exporter:	No
Current Record:	Yes
Non Storage Recycler Activity:	Not reported
Electronic Manifest Broker:	Not reported

List of NAICS Codes and Descriptions:

PEP BOYS 134 (Continued) **1004780488**

NAICS Codes: No NAICS Codes Found

Facility Has Received Notices of Violations:
Violations: No Violations Found

Evaluation Action Summary:
Evaluations: No Evaluations Found

FINDS:
Registry ID: 110004941190

Click Here:

Environmental Interest/Information System:
SC-EFIS (South Carolina - Environmental Facility Information System) integrates information on environmental facilities, permits, violations, enforcement actions, and compliance activities needed to support regulatory requirements and target environmental quality improvements for the water, air, solid waste, and hazardous waste program areas. The EFIS was developed by the state of South Carolina and Maine joined their system in 2004.
RCRAInfo is a national information system that supports the Resource Conservation and Recovery Act (RCRA) program through the tracking of events and activities related to facilities that generate, transport, and treat, store, or dispose of hazardous waste. RCRAInfo allows RCRA program staff to track the notification, permit, compliance, and corrective action activities required under RCRA.

Click this hyperlink while viewing on your computer to access additional FINDS: detail in the EDR Site Report.

ECHO:

Envid:	1004780488
Registry ID:	110004941190
DFR URL:	http://echo.epa.gov/detailed-facility-report?fid=110004941190
Name:	PEP BOYS 134
Address:	1804 BROAD RIVER ROAD
City,State,Zip:	COLUMBIA, SC 29210

37
South
1/8-1/4
0.234 mi.
1235 ft.

FRASIER TIRE SERVICE
828 DUTCH SQUARE BLVD
COLUMBIA, SC

LUST **U004017560**
UST **N/A**

Relative:
Lower

Actual:
310 ft.

LUST:

Name:	FRASIER TIRE SERVICE
Address:	828 DUTCH SQUARE BLVD
City,State,Zip:	COLUMBIA, SC 29210-7316
Release Number:	1
Facility ID:	14101
Release Status Number:	Not reported
Substance:	PETRO
Tank Owner Company Name:	GOODYEAR TIRE & RUBBER
Tank Owner Last Name:	GOODYEAR TIRE & RUBBER CO
Tank Owner First name:	Not reported

FRASIER TIRE SERVICE (Continued) **U004017560**

NFA Date:	04/06/1995
Tank Owner City:	AKRON
Confirmed Date:	12/06/1994
Release Date:	09/16/1994
EID:	1777024
Local Facility District:	Columbia EQC Office
SCRBCA Class Number:	Not reported
Release Fin Type Code:	Not reported
Qualified:	Not reported
Release Source:	UST
Local Fac Last Name:	FRASIER TIRE SERVICE
Local Fac First Name:	Not reported
User Name:	STOUDEDW
Cleanup Initiated Date:	12/06/1994
Prefix:	N
Total Score:	Not reported

UST:

Name:	FRASIER TIRE SERVICE
Address:	828 DUTCH SQUARE BLVD
City:	COLUMBIA
Facility ID:	14101
Permit:	N 14101
Owner:	GOODYEAR TIRE & RUBBER CO
Owner Address:	1144 E MARKET ST
Owner City, st, zip:	AKRON OH 44316
Owner Phone:	216-796-2121
Tank ID:	1
Status:	**Abandoned**
Capacity:	300
Product:	Waste oil, burnt oil, used oil
Calcage:	20

J38 **PALMETTO FINE CLEANERS/FMR BURNETTES CLN** **SHWS** **S105621371**
SE **1718 BROAD RIVER RD** **DRYCLEANERS** **N/A**
1/4-1/2 **COLUMBIA, SC 29210**
0.291 mi.
1537 ft. **Site 1 of 2 in cluster J**

Relative:
Higher

Actual:
320 ft.

SHWS:

Name:	PALMETTO FINE CLEANERS/FMR BURNETTES CLN
Address:	1718 BROAD RIVER RD
City,State,Zip:	COLUMBIA, SC 29210
EPA ID:	SCDRY0053089

Drycleaners:

BLWM Number:	53089
Rank:	III
Priority Group Explanation:	III

J39 **SPEEDWAY 2842** **LUST** **U003619431**
SE **1714 BROAD RIVER RD** **UST** **N/A**
1/4-1/2 **COLUMBIA, SC** **GWCI**
0.308 mi. **NPDES**
1624 ft. **Site 2 of 2 in cluster J** **UIC**

Relative:
Higher

Actual:
320 ft.

LUST:

Name:	SPEEDWAY 2842
Address:	1714 BROAD RIVER RD
City,State,Zip:	COLUMBIA, SC 29210
Release Number:	1
Facility ID:	07633
Release Status Number:	Not reported
Substance:	PETRO
Tank Owner Company Name:	SPEEDWAY LLC
Tank Owner Last Name:	Not reported
Tank Owner First name:	Not reported
NFA Date:	Not reported
Tank Owner City:	Not reported
Confirmed Date:	Not reported
Release Date:	12/28/1989
EID:	Not reported
Local Facility District:	Not reported
SCRBCA Class Number:	Not reported
Release Fin Type Code:	Not reported
Qualified:	Not reported
Release Source:	Not reported
Local Fac Last Name:	Not reported
Local Fac First Name:	Not reported
User Name:	BALDWIBA
Cleanup Initiated Date:	12/29/1989
Prefix:	Not reported
Total Score:	810

LUST:

Release Date:	12/28/1989
Cleanup Complete Date:	Not reported
Depth to Ground Water:	18.57
Ground Water Flow Direction:	E
Release Number:	1
Confirmed date:	12/29/1989
RP Name:	HESS CORPORATION
RP Address:	1 HESS PLAZA
RP City:	WOODBRIDGE
RP State:	NJ
RP Zip:	07095-1299
SCRBCA Class Code:	CLASS2BB
Project Manager:	FULMER, SUSAN B
Release Fin Type Code:	DS

UST:

Name:	SPEEDWAY 2842
Address:	1714 BROAD RIVER RD
City:	COLUMBIA
Facility ID:	07633
Permit:	R 07633
Owner:	SPEEDWAY LLC
Owner Address:	500 SPEEDWAY DR

SPEEDWAY 2842 (Continued) **U003619431**

Owner City, st, zip: ENON OH 45323-1056
Owner Phone: 336-767-6280

Tank ID: 1
Status: **Abandoned**
Capacity: 6000
Product: Gasoline
Calcage: Not reported

Name: SPEEDWAY 2842
Address: 1714 BROAD RIVER RD
City: COLUMBIA

Tank ID: 2
Status: **Abandoned**
Capacity: 6000
Product: Gasoline
Calcage: Not reported

Name: SPEEDWAY 2842
Address: 1714 BROAD RIVER RD
City: COLUMBIA

Tank ID: 3
Status: **Abandoned**
Capacity: 6000
Product: Gasoline
Calcage: Not reported

Name: SPEEDWAY 2842
Address: 1714 BROAD RIVER RD
City: COLUMBIA

Tank ID: 4
Status: **Abandoned**
Capacity: 6000
Product: Gasoline
Calcage: Not reported

Name: SPEEDWAY 2842
Address: 1714 BROAD RIVER RD
City: COLUMBIA

Tank ID: 5
Status: **Currently in Use**
Capacity: 10000
Product: Gasoline RUL
Calcage: 5

Name: SPEEDWAY 2842
Address: 1714 BROAD RIVER RD
City: COLUMBIA

Tank ID: 6
Status: **Currently in Use**
Capacity: 10000
Product: Gasoline RUL

SPEEDWAY 2842 (Continued) **U003619431**

Calcage: 5

Name: SPEEDWAY 2842
Address: 1714 BROAD RIVER RD
City: COLUMBIA

Tank ID: 7
Status: Currently in Use
Capacity: 10000
Product: Gasoline Super/Prem
Calcage: 0

SC GWIC:

Bureau:	BLWM
EAP ID:	Not reported
Solid Waste Permit #:	Not reported
Bureau of Land & Waste Management File #:	Not reported
Permit Number:	07633
WPC Permit:	Not reported
Program:	DUST
Contamination:	PETRO
Petroleum Products:	True
Volatile Organic Compounds:	False
Metals:	False
Nitrates or Potential to Nitrate:	False
Pesticides & Herbicides:	False
Polychlorinated Biphenyls:	False
Base, Neutral, & Acid Extractables:	False
Phenols:	False
Radionuclides Over Max Contaminant Levels:	False
Sources Not In Other Categories:	False
Source:	UST
Underground Storage Tanks:	True
Pits, Ponds, & Lagoons:	False
Spills & Leaks:	False
Landfills:	False
Aboveground Storage Tank:	False
Spray Irrigation:	False
Single-Event Spill:	False
Unpermitted Disposal:	False
Septic Tank/Tile Field:	False
Substances Not In Other Categories:	False
Sources of Contamination Undetermined:	False
Assessment:	No
Monitoring:	No
Remediation:	Yes
Surface Impact:	No
Drinking Water Well Impact:	No

Remarks: Site ID # 07633. RBCA Classification 2BB4. Active corrective action.

NPDES:

Name:	AMERADA HESS #40231
Address:	1714 BROAD RIVER RD
City,State,Zip:	COLUMBIA, SC 29210
Permit:	SC0045187
Permit Status Date:	1999-11-10

SPEEDWAY 2842 (Continued) **U003619431**

Act/Inactive:	INACT
App Type:	NPDES REISSUE
App Status Date:	07/20/1995
Permit Contact:	GOLDMAN HOWARD S
Permit Issued Date:	07/20/1995
Permit Expire Date:	08/31/2000
Permit Type:	WTRNPDESWWTP
Permit Sub Type:	INDUSTRIAL
Permit Status:	CAN
Receiving Stream:	STORM DRAIN TO BROAD RIVER
Address Type:	SITE
Owner Address Type:	BUSINESS
Owner Telephone:	937-864-3001
Owner Title:	Not reported
SIC Code:	Not reported
River Basin:	Not reported
Receive Date:	Not reported
Term Date:	Not reported
Creation Date:	Not reported
Status:	Not reported
Major:	Not reported
Permittee Name:	Not reported
Permittee Address:	Not reported
Permittee City,State,Zip:	Not reported
Permittee Phone:	Not reported

UIC:

Name:	SPEEDWAY 2842
Address:	1714 BROAD RIVER RD
City,State,Zip:	COLUMBIA, SC 29210
Permit Number:	SCHE03020108
Permit Holder:	BUNNELL-LAMMONS ENGINEERING INC
Former Permit Number:	925
Activity:	Active/Operating
Disposition:	Approved
District:	Columbia EQC Office
Sub Type:	Area Permit

40
SSE
1/4-1/2
0.324 mi.
1709 ft.

FMR ED ROBINSON LAUNDRY & DRY CLEANING **SHWS** **S107454503**
DUTCH SQUARE MALL - NEXT TO A & P STORE **N/A**
COLUMBIA, SC 29210

Relative:
Lower

Actual:
314 ft.

SHWS:

Name:	FMR ED ROBINSON LAUNDRY & DRY CLEANING
Address:	DUTCH SQUARE MALL - NEXT TO A & P STORE
City,State,Zip:	COLUMBIA, SC 29210
EPA ID:	SCDRY0056170

41
SE
1/4-1/2
0.341 mi.
1802 ft.

SUBURBAN LODGE (FORMER BANK LOCATION)
1633 BROAD RIVER RD
COLUMBIA, SC 29210

SHWS **S108953994**
N/A

Relative:
Higher

Actual:
327 ft.

SHWS:
Name: SUBURBAN LODGE (FORMER BANK LOCATION)
Address: 1633 BROAD RIVER RD
City,State,Zip: COLUMBIA, SC 29210
EPA ID: SCS123457099

42
SSW
1/4-1/2
0.369 mi.
1950 ft.

PENSKE AUTO CENTER KMART
99 N ARROWOOD RD
COLUMBIA, SC

LUST **U004019444**
UST **N/A**
Financial Assurance

Relative:
Lower

Actual:
254 ft.

LUST:
Name: PENSKE AUTO CENTER KMART
Address: 99 N ARROWOOD RD
City,State,Zip: COLUMBIA, SC 29210
Release Number: 1
Facility ID: 07780
Release Status Number: Not reported
Substance: PETRO
Tank Owner Company Name: KMART 3168
Tank Owner Last Name: Not reported
Tank Owner First name: Not reported
NFA Date: 05/10/1999
Tank Owner City: Not reported
Confirmed Date: Not reported
Release Date: 12/30/1998
EID: Not reported
Local Facility District: Not reported
SCRBCA Class Number: Not reported
Release Fin Type Code: Not reported
Qualified: Not reported
Release Source: Not reported
Local Fac Last Name: Not reported
Local Fac First Name: Not reported
User Name: PASLEYDC
Cleanup Initiated Date: 01/05/1999
Prefix: Not reported
Total Score: Not reported

UST:
Name: PENSKE AUTO CENTER KMART
Address: 99 N ARROWOOD RD
City: COLUMBIA
Facility ID: 07780
Permit: N 07780
Owner: KMART 3168
Owner Address: 99 N ARROWOOD RD
Owner City, st, zip: COLUMBIA SC 29210
Owner Phone: 313-643-1790

Tank ID: 1
Status: **Abandoned**

PENSKE AUTO CENTER KMART (Continued) **U004019444**

Capacity: 1000
Product: Waste oil, burnt oil, used oil
Calcage: 15

SC Financial Assurance 3:
Name: PENSKE AUTO CENTER KMART
Address: 99 N ARROWOOD RD
City,State,Zip: COLUMBIA, SC 29210
Owner Name: KMART 3168
Owner Address: 99 N ARROWOOD RD
Owner City St Zip: COLUMBIA SC 29210
Mechanism: None
Date Expired: Not reported
Bill: 0

---

43 **FORMER USA SERVICE STATION** **RCR** **1007226839**
South **DUTCH SQUARE MALL** **FINDS** **N/A**
1/4-1/2 **COLUMBIA, SC 29210**
0.401 mi.
2116 ft.

Relative:
Lower

Actual:
289 ft.

RCR:
Name: FORMER USA SERVICE STATION
Address: DUTCH SQUARE MALL
City,State,Zip: COLUMBIA, SC 29210
Entity Responsibility: Mar A Lowe Corp
Region: 3
Tax Id: 07405-09-01
Latitude: 34.03498
Longitude: -81.09052
Tracking Number: 16612
Regulatory Program: UST
Reported: 05/31/94
CU-MCL: 09/15/98
Unit Type: UST
Unit Number/Letter: 1
Area/Acres: Not reported
Affected Media: Groundwater
Site/Unit: Regulated Petroleum Underground Storage Tank Location
Condtions: Public Noticed Corrective Action Plan
Associated Response/Corrective Action: Not reported
Associated Chemicals Requiring: Benzene MTBE

FINDS:
Registry ID: 110016979796

Click Here:

Environmental Interest/Information System:
SC-EFIS (South Carolina - Environmental Facility Information System) integrates information on environmental facilities, permits, violations, enforcement actions, and compliance activities needed to support regulatory requirements and target environmental quality improvements for the water, air, solid waste, and hazardous waste program areas. The EFIS was developed by the state of South Carolina and Maine joined their system in 2004.

FORMER USA SERVICE STATION (Continued) **1007226839**

Click this hyperlink while viewing on your computer to access additional FINDS: detail in the EDR Site Report.

K44 **BRITE CLEANERS** **SHWS** **S107599677**
South **422 BUSH RIVER RD/1441-A COLONIAL LIFE** **N/A**
1/2-1 **COLUMBIA, SC 29210**
0.525 mi.
2770 ft. **Site 1 of 2 in cluster K**

Relative:
Lower

Actual:
287 ft.

SHWS:
Name: BRITE CLEANERS
Address: 422 BUSH RIVER RD/1441-A COLONIAL LIFE
City,State,Zip: COLUMBIA, SC 29210
EPA ID: SCDRY0057314

K45 **BRITE CLEANERS** **SHWS** **S107520947**
South **422 BUSH RIVER RD UNIT 1** **VCP** **N/A**
1/2-1 **COLUMBIA, SC 29210** **BROWNFIELDS**
0.525 mi.
2770 ft. **Site 2 of 2 in cluster K**

Relative:
Lower

Actual:
287 ft.

SHWS:
Name: BRITE CLEANERS
Address: 422 BUSH RIVER RD UNIT 1
City,State,Zip: COLUMBIA, SC 29210
EPA ID: SCS123457021

VCP:

Name:	BRITE CLEANERS
Address:	422 BUSH RIVER RD UNIT 1
City,State,Zip:	COLUMBIA, SC 29210
Person Company:	GRAHAM & CONNER LLC
Prim Address 1:	Not reported
Prim Address 2:	Not reported
Prim City:	Not reported
Prim State:	Not reported
Prim Zip:	Not reported
Type Brownfield:	Not reported
Contact:	Not reported
Status code:	ACTIVE
File Number:	57278
Exec Date:	13-Feb-06
Contract Mailed Date:	Not reported
Date Terminated:	11-May-06
Contract #:	05-5628-NRP
Contract Type:	NRP
Contract Manager:	GORMAN ANGELA K
Acreage:	0.94
COC Issued Date:	Not reported
RC Executed Date:	Not reported
I C Received:	26-Oct-05
Workplan Due:	Not reported
Workplan Receive:	Not reported
Workplan Reviewed:	Not reported
Workplan Approved:	Not reported
Report Receive:	Not reported

BRITE CLEANERS (Continued) **S107520947**

Report Reviewed: Not reported
Report Approved: Not reported
Cap Approved: Not reported

SC BROWNFIELD:

Name:	BRITE CLEANERS
Address:	422 BUSH RIVER RD UNIT 1
City,State,Zip:	COLUMBIA, SC 29210
Contract Number:	05-5628-NRP
Contract Type:	NRP
File Number:	57278
Contract Manager:	GORMAN ANGELA K
Person Company:	GRAHAM & CONNER LLC
Primary Address1:	Not reported
Primary Address2:	Not reported
Primary City:	Not reported
Primary State Code:	Not reported
Primary Zip Code:	Not reported
Type Brownfield:	Not reported
Acreage:	0.94
Contract Executed:	13-Feb-06
COC Date Issued:	Not reported
RC Executed:	Not reported
Contact:	Not reported
Status Code:	ACTIVE
IC Received:	26-Oct-05
Workplan Due:	Not reported
Workplan Received:	Not reported
Workplan Reviewed:	Not reported
Workplan Approved:	Not reported
Report Received:	Not reported
Report Reviewed:	Not reported
Report Approved:	Not reported
Cap Approved:	Not reported
Contract Mailed:	Not reported
Date Terminated:	11-May-06

46
NW
1/2-1
0.603 mi.
3185 ft.

DELUXE CLEANERS **SHWS** **S105621450**
3007 BROAD RIVER RD **DRYCLEANERS** **N/A**
COLUMBIA, SC 29210

Relative:
Lower

Actual:
310 ft.

SHWS:

Name:	DELUXE CLEANERS
Address:	3007 BROAD RIVER RD
City,State,Zip:	COLUMBIA, SC 29210
EPA ID:	SCDRY0056072

Drycleaners:

BLWM Number:	56072
Rank:	N
Priority Group Explanation:	N

47
SE
1/2-1
0.656 mi.
3463 ft.

TRIPP'S FINE CLEANERS
1339 BROAD RIVER RD
COLUMBIA, SC 29210

SHWS **S105621468**
DRYCLEANERS **N/A**

Relative:
Lower

Actual:
305 ft.

SHWS:
Name: TRIPP'S FINE CLEANERS
Address: 1339 BROAD RIVER RD
City,State,Zip: COLUMBIA, SC 29210
EPA ID: SCDRY0051271

Drycleaners:
BLWM Number: 51271
Rank: III
Priority Group Explanation: III

48
NW
1/2-1
0.719 mi.
3795 ft.

ARNOLDS PROFESSIONAL GARMENT CARE
3104 BROAD RIVER ROAD
COLUMBIA, SC 29210

SHWS **1000333641**
RCRA NonGen / NLR **SCD036105484**
FINDS
ECHO
DRYCLEANERS

Relative:
Lower

Actual:
315 ft.

SHWS:
Name: ARNOLDS PROFESSIONAL GARMENT CARE INC
Address: 3104 BROAD RIVER RD
City,State,Zip: COLUMBIA, SC 29210
EPA ID: SCDRY0051118

RCRA NonGen / NLR:

Date Form Received by Agency:	19980701
Handler Name:	ARNOLDS PROFESSIONAL GARMENT CARE
Handler Address:	3104 BROAD RIVER ROAD
Handler City,State,Zip:	COLUMBIA, SC 29210
EPA ID:	SCD036105484
Contact Name:	DAVID SHAW
Contact Address:	101 SUNBELT BLVD
Contact City,State,Zip:	COLUMBIA, SC 29203
Contact Telephone:	803-786-8985
Contact Fax:	Not reported
Contact Email:	Not reported
Contact Title:	Not reported
EPA Region:	04
Land Type:	Private
Federal Waste Generator Description:	Not a generator, verified
Non-Notifier:	Not reported
Biennial Report Cycle:	Not reported
Accessibility:	Not reported
Active Site Indicator:	Not reported
State District Owner:	SC
State District:	CM
Mailing Address:	SUNBELT BLVD
Mailing City,State,Zip:	COLUMBIA, SC 29203
Owner Name:	DAVID SHAW & NEIL FREEMAN
Owner Type:	Private
Operator Name:	OPERNAME
Operator Type:	Private
Short-Term Generator Activity:	No
Importer Activity:	No

ARNOLDS PROFESSIONAL GARMENT CARE (Continued) **1000333641**

Mixed Waste Generator:	No
Transporter Activity:	No
Transfer Facility Activity:	No
Recycler Activity with Storage:	No
Small Quantity On-Site Burner Exemption:	No
Smelting Melting and Refining Furnace Exemption:	No
Underground Injection Control:	No
Off-Site Waste Receipt:	No
Universal Waste Indicator:	No
Universal Waste Destination Facility:	No
Federal Universal Waste:	No
Active Site Fed-Reg Treatment Storage and Disposal Facility:	Not reported
Active Site Converter Treatment storage and Disposal Facility:	Not reported
Active Site State-Reg Treatment Storage and Disposal Facility:	Not reported
Active Site State-Reg Handler:	---
Federal Facility Indicator:	Not reported
Hazardous Secondary Material Indicator:	NN
Sub-Part K Indicator:	Not reported
Commercial TSD Indicator:	No
Treatment Storage and Disposal Type:	Not reported
2018 GPRA Permit Baseline:	Not on the Baseline
2018 GPRA Renewals Baseline:	Not on the Baseline
Permit Renewals Workload Universe:	Not reported
Permit Workload Universe:	Not reported
Permit Progress Universe:	Not reported
Post-Closure Workload Universe:	Not reported
Closure Workload Universe:	Not reported
202 GPRA Corrective Action Baseline:	No
Corrective Action Workload Universe:	No
Subject to Corrective Action Universe:	No
Non-TSDFs Where RCRA CA has Been Imposed Universe:	No
TSDFs Potentially Subject to CA Under 3004 (u)/(v) Universe:	No
TSDFs Only Subject to CA under Discretionary Auth Universe:	No
Corrective Action Priority Ranking:	No NCAPS ranking
Environmental Control Indicator:	No
Institutional Control Indicator:	No
Human Exposure Controls Indicator:	N/A
Groundwater Controls Indicator:	N/A
Operating TSDF Universe:	Not reported
Full Enforcement Universe:	Not reported
Significant Non-Complier Universe:	No
Unaddressed Significant Non-Complier Universe:	No
Addressed Significant Non-Complier Universe:	No
Significant Non-Complier With a Compliance Schedule Universe:	No
Financial Assurance Required:	Not reported
Handler Date of Last Change:	20150414
Recognized Trader-Importer:	No
Recognized Trader-Exporter:	No
Importer of Spent Lead Acid Batteries:	No
Exporter of Spent Lead Acid Batteries:	No
Recycler Activity Without Storage:	Not reported
Manifest Broker:	Not reported
Sub-Part P Indicator:	No

Hazardous Waste Summary:
Waste Code: D039

ARNOLDS PROFESSIONAL GARMENT CARE (Continued) **1000333641**

Waste Description: TETRACHLOROETHYLENE

Waste Code: F002
Waste Description: THE FOLLOWING SPENT HALOGENATED SOLVENTS: TETRACHLOROETHYLENE, METHYLENE CHLORIDE, TRICHLOROETHYLENE, 1,1,1-TRICHLOROETHANE, CHLOROBENZENE, 1,1,2-TRICHLORO-1,2,2-TRIFLUOROETHANE, ORTHO-DICHLOROBENZENE, TRICHLOROFLUOROMETHANE, AND 1,1,2, TRICHLOROETHANE; ALL SPENT SOLVENT MIXTURES/BLENDS CONTAINING, BEFORE USE, A TOTAL OF TEN PERCENT OR MORE (BY VOLUME) OF ONE OR MORE OF THE ABOVE HALOGENATED SOLVENTS OR THOSE SOLVENTS LISTED IN F001, F004, AND F005; AND STILL BOTTOMS FROM THE RECOVERY OF THESE SPENT SOLVENTS AND SPENT SOLVENT MIXTURES.

Handler - Owner Operator:
Owner/Operator Indicator: Owner
Owner/Operator Name: DAVID SHAW & NEIL FREEMAN
Legal Status: Private
Date Became Current: Not reported
Date Ended Current: Not reported
Owner/Operator Address: 101 SUNBELT
Owner/Operator City,State,Zip: COLUMBIA, SC 29203
Owner/Operator Telephone: 803-786-8985
Owner/Operator Telephone Ext: Not reported
Owner/Operator Fax: Not reported
Owner/Operator Email: Not reported

Owner/Operator Indicator: Operator
Owner/Operator Name: OPERNAME
Legal Status: Private
Date Became Current: Not reported
Date Ended Current: Not reported
Owner/Operator Address: OPERSTREET
Owner/Operator City,State,Zip: OPERCITY, WY 99999
Owner/Operator Telephone: 404-555-1212
Owner/Operator Telephone Ext: Not reported
Owner/Operator Fax: Not reported
Owner/Operator Email: Not reported

Historic Generators:
Receive Date: 19980701
Handler Name: ARNOLDS PROFESSIONAL GARMENT CARE
Federal Waste Generator Description: Not a generator, verified
State District Owner: SC
Large Quantity Handler of Universal Waste: No
Recognized Trader Importer: No
Recognized Trader Exporter: No
Spent Lead Acid Battery Importer: No
Spent Lead Acid Battery Exporter: No
Current Record: Yes
Non Storage Recycler Activity: Not reported
Electronic Manifest Broker: Not reported

List of NAICS Codes and Descriptions:
NAICS Codes: No NAICS Codes Found

ARNOLDS PROFESSIONAL GARMENT CARE (Continued) **1000333641**

Facility Has Received Notices of Violations:
Violations: No Violations Found

Evaluation Action Summary:
Evaluations: No Evaluations Found

FINDS:
Registry ID: 110004937793

Click Here:

Environmental Interest/Information System:
SC-EFIS (South Carolina - Environmental Facility Information System) integrates information on environmental facilities, permits, violations, enforcement actions, and compliance activities needed to support regulatory requirements and target environmental quality improvements for the water, air, solid waste, and hazardous waste program areas. The EFIS was developed by the state of South Carolina and Maine joined their system in 2004.
RCRAInfo is a national information system that supports the Resource Conservation and Recovery Act (RCRA) program through the tracking of events and activities related to facilities that generate, transport, and treat, store, or dispose of hazardous waste. RCRAInfo allows RCRA program staff to track the notification, permit, compliance, and corrective action activities required under RCRA.

Click this hyperlink while viewing on your computer to access additional FINDS: detail in the EDR Site Report.

ECHO:
Envid: 1000333641
Registry ID: 110004937793
DFR URL: http://echo.epa.gov/detailed-facility-report?fid=110004937793
Name: ARNOLDS PROFESSIONAL GARMENT CARE
Address: 3104 BROAD RIVER ROAD
City,State,Zip: COLUMBIA, SC 29210

Drycleaners:
BLWM Number: 51118
Rank: II
Priority Group Explanation: II

---

49 WNW 1/2-1 0.838 mi. 4426 ft. **CAROLINA CUSTOM AUTO TRIM** **SHWS S108953988**
1109 ST ANDREWS RD **N/A**
COLUMBIA, SC 29201

Relative: Lower
Actual: 290 ft.

SHWS:
Name: CAROLINA CUSTOM AUTO TRIM
Address: 1109 ST ANDREWS RD
City,State,Zip: COLUMBIA, SC 29201
EPA ID: SCD982119281

50
NW
1/2-1
0.904 mi.
4775 ft.

CEDAR CHEST CLEANERS
3315 BROAD RIVER RD
COLUMBIA, SC 29201

SHWS **S119121998**
ASBESTOS **N/A**

Relative:
Lower

Actual:
299 ft.

SHWS:

Name:	CEDAR CHEST CLEANERS
Address:	3315 BROAD RIVER RD
City,State,Zip:	COLUMBIA, SC 29201
EPA ID:	SCD987598091

ASBESTOS:

Name:	BI-LO #64
Address:	3315 BROAD RIVER RD
Address 2:	Not reported
City,State,Zip:	COLUMBIA, SC 29201
Permit No:	R1609206
Activity:	Expired
Bus Phone:	Not reported
Co Name:	PALMETTO ENVIRONMENTAL ASSOCIATES INC
District:	Not reported
Permit Type:	NESHAP Project
Sub Type:	Not reported
Local Facility:	Not reported
Disposition:	Not reported
Description:	Not reported
Glove:	Not reported
Fri:	Not reported
Other:	Not reported
Program:	Air - Asbestos
Category:	AIR-Asbestos Removal
General Category:	NESHAP
Issue Date:	9/14/2016
Permitee:	MELANIE DUNNAGAN, PALMETTO ENVIRONMENTAL ASSOCIATES INC
Permitee Address:	SC, US, 2047 INDUSTRIAL BLVD, LEXINGTON, 29072
Permitee Phone:	8039960644
Permitee Email:	Not reported
Comments:	Not reported
Compliance Name:	James E Hinkle (INACTIVE)
Agency:	Not reported

Count: 6 records. ORPHAN SUMMARY

City	EDR ID	Site Name	Site Address	Zip	Database(s)
COLUMBIA	S127460297	LEXINGTON HEALTH INC DBA LEXINGTON	7033 & 7035 ST ANDREWS RD	29210	LUST
COLUMBIA	U004254829	DORIS DERRICK PROPERTY	8025 BROAD RIVER RD		LUST, UST
COLUMBIA	U003930440	FORMER USA SERVICE STATION	DUTCH SQUARE MALL		LUST, UST, GWCI
COLUMBIA	S117725562	FMR ED ROBINSON LAUNDRY & DRY CLE	DUTCH SQUARE MALL - NEXT		DRYCLEANERS
COLUMBIA	1003869057	RUSHMORE SITE	RUSHMORE DRIVE	29210	SEMS-ARCHIVE
COLUMBIA	S118491499		I-20 W MM 67	0	CDL

EDR ZIP Code Scan Report

ZIP	EDR-ID	Facility ID	Name	Address	Map/Dir/Dist	City	State	Databases
**** - Indicates location may or may not be in requested radius. Site has not been assigned a latitude/longitude coordinate. Further review recommended.**								
29210	S112637986					COLUMBIA	SC	
29210	1025580560		GREEN HOLE			COLUMBIA	SC	
29210	2011007219				**	COLUMBIA	SC	HMIRS
29210	1018232705		TOMS CREEK		**		SC	
29210	1021247146		MARKS PLACE	HWY #6	**	COLUMBIA	SC	EDR Historical Auto Stations
29210	1020954211		CAROLINA INTERSTATE SERVICE	I-26 & PINEY GROVE RD	**	COLUMBIA	SC	EDR Historical Auto Stations
29210	1021069299		CAROLINA INTERSTATE SERVICE	I-26 & PINEY GROVE ROAD	**	COLUMBIA	SC	EDR Historical Auto Stations
29210	1004780441	SCD987578150	EXXON LOCATION 4 5637	I26 & PINEY GROVE ROAD		COLUMBIA	SC	RCRA-CESQG
29210	1020317908		BACHMAN HORACE M	HWY 1 I 26	**	COLUMBIA	SC	EDR Historical Auto Stations
29210	S127618387		RESIDENTIAL HOUSE	3490 HWY 101		GREER	SC	
29210	1005792335	110002312667	MCCALL ROYAL AMBASSADOR CAMP	C/O 190 STONERIDGE DR	**	COLUMBIA	SC	FINDS
29210	1006818331	110002314754	PINE ISLAND CLUB	RT 2 BOX 331A RIVER RD	**	COLUMBIA	SC	FINDS
29210	1026589527		DUCANE HEATING CORPORATION	S 200 DUTCH PLAZA 800 DUTCH SQUARE	**	COLUMBIA	SC	PRP
29210	1005853766	110008564865	EXXON LOCATION 4 5637	I 26 & PINEY GROVE RD		COLUMBIA	SC	FINDS
29210	U003622327	10363	GILES EXXON	I 26 & PINEY GROVE RD		COLUMBIA	SC	GWCI, LUST, UST
29210	1020568296		TRUCKSTOP INC	I 26 PINEY GROVE RD	**	COLUMBIA	SC	EDR Historical Auto Stations
29210	1012097789	110038788489	SC DC:REMBERT	HWY 261	**	SUMTER	SC	FINDS
29210	1020798310		HAGOODS BARGAIN STORE	HWY 321	**	COLUMBIA	SC	EDR Historical Auto Stations
29210	S127630453		WELLMAN INC	HWY 41-51	**	JOHNSVILLE	SC	
29210	2000531600			HWY 45 SOUTH	**	JAMESTOWN	SC	ERNS
29210	1021597954		MARKS PLACE	HWY 6	**	COLUMBIA	SC	EDR Historical Auto Stations
29210	S127618883		MASSRY PROPERTY GRAVITY SEWER ---	64TH AVE	**	MYRTLE BEACH	SC	
29210	U004016921	10080	LEXINGTON HEALTH INC DBA LEXINGTON	7033 & 7035 ST ANDREWS RD		COLUMBIA	SC	UST
29210	S127460297		LEXINGTON HEALTH INC DBA LEXINGTON	7033 & 7035 ST ANDREWS RD	**	COLUMBIA	SC	LUST
29210	1021948261		SOC SERVICE STATION NO 73	<	**	COLUMBIA	SC	EDR Historical Auto Stations
29210	1020864943		RIVERVIEW SERVICE STATION	1420 ADELLA ST		COLUMBIA	SC	EDR Historical Auto Stations
29210	1021787541		CIRCLE K CONVENIENCE STORES	786 ST ANDRES		COLUMBIA	SC	EDR Historical Auto Stations
29210	S126293924		SHAW INDUSTRIES	4401 ST. ANDREW RD		COLUMBIA	SC	
29210	1005790096	110002239382	BRIDLERIDGE SD	1030 ST ANDREWS RD		COLUMBIA	SC	FINDS
29210	1005790235	110002237856	RIVERCHASE UTILITIES INC	1030 ST ANDREWS RD		COLUMBIA	SC	FINDS
29210	1007241053	110017127170	DRS HOLMAN & FORBES	1061 ST ANDREWS RD		COLUMBIA	SC	FINDS
29210	1003869058	SCD982119281	CAROLINA CUSTOM AUTO TRIM	1109 ST. ANDREWS RD		COLUMBIA	SC	CERCLIS-NFRAP
29210	1012094019	110038798593	VERIZON WIRELESS COLUMBIA	1118 ST ANDREWS RD		COLUMBIA	SC	FINDS
29210	S117406043			1168 ST ANDREWS RD		COLUMBIA	SC	CDL
29210	1004780027	110002245286	ASTRO AUTO ELECTRIC	1168 ST ANDREWS ROAD		COLUMBIA	SC	RCRA-CESQG, FINDS
29210	S119117344		LEEZA'S CARE CONNECTION	1201 ST ANDREWS RD		COLUMBIA	SC	
29210	S127640047		FORMER MAGISTRATE'S OFFICE	1223 ST ANDREWS RD		COLUMBIA	SC	
29210	S127640049		FORMER MAGISTRATE'S OFFICE	1223 ST ANDREWS RD		COLUMBIA	SC	
29210	S127639986		KITCHEN AREA- FORMER MAGISTRATES	1223 ST ANDREWS RD		COLUMBIA	SC	
29210	1023542300	110069994110	TAYLORS WINDOWS & SCREEN, INC	1404 ST ANDREWS ROAD		COLUMBIA	SC	FINDS
29210	1007152465	110016672894	ALLTEL	1440 ST. ANDREWS RD.		COLUMBIA	SC	ICIS, FINDS
29210	2018017014		1770 ANDREWS ROAD	1770 ANDREWS ROAD		Columbia	SC	HMIRS
29210	1007257531	110017305058	KIMBERLY J HOLLIDAY DMD	384 ST ANDREWS RD		COLUMBIA	SC	FINDS
29210	1007240460	110017120934	JAMES J NYLAND DDS	392 ST ANDREWS RD		COLUMBIA	SC	FINDS
29210	1001233703	SCR000007211	HUDSONS CLEANERS D/B/A STERLING CI	4350 ST ANDREWS RD		COLUMBIA	SC	RCRA-CESQG
29210	1007225806	110016969020	WEXFORD HOMEOWNERS ASSOCIATION	4400 ST ANDREWS RD		COLUMBIA	SC	FINDS
29210	S118177111		HIDDEN VALLEY SD	4400 ST ANDREWS RD		COLUMBIA	SC	NPDES
29210	S119118324		SHAW INDUSTRIES	4401 ST ANDREWS AVE		COLUMBIA	SC	
29210	S127665400		SHAW FIBER PLANT	4401 ST ANDREWS RD		COLUMBIA	SC	
29210	S127664157		SHAW FIBER PLANT - BCF HEADERS	4401 ST ANDREWS RD		COLUMBIA	SC	
29210	S127632261		SHAW FIBER PLANT - AIR WASHER 1&2, F	4401 ST ANDREWS RD		COLUMBIA	SC	
29210	S127667175		SHAW FIBER	4401 ST ANDREWS RD		COLUMBIA	SC	
29210	S127624921		SHAW GROUP	4401 ST ANDREWS RD		COLUMBIA	SC	
29210	S127666119		SHAW FIBER PLANT	4401 ST ANDREWS RD		COLUMBIA	SC	
29210	S127632382		SHAW FIBER PLANT- XT-801,4TH FLOOR,S	4401 ST ANDREWS RD		COLUMBIA	SC	
29210	S127633323		SHAW FIBER PLANT AREA 2	4401 ST ANDREWS RD		COLUMBIA	SC	
29210	S119113996		SHAW INDUSTRIES - PLANT 8S - BLDG 80	4401 ST ANDREWS RD		COLUMBIA	SC	
29210	S127671660		SHAW FIBER PLANT	4401 ST ANDREWS RD		COLUMBIA	SC	
29210	S127672479		SHAW FIBER PLANT AREA 1	4401 ST ANDREWS RD		COLUMBIA	SC	

EDR ZIP Code Scan Report

ZIP	EDR-ID	Facility ID	Name	Address	Map/Dir/Dist	City	State	Databases
29210	S127672412		SHAW FIBER PLANT 7748	4401 ST ANDREWS RD		COLUMBIA	SC	
29210	S127633292		SHAW FIBER PLANT -	4401 ST ANDREWS RD		COLUMBIA	SC	
29210	S127662635		SHAW FIBER PLANT HEATERS	4401 ST ANDREWS RD		COLUMBIA	SC	
29210	S127671930		SHAW FIBER PLANT	4401 ST ANDREWS RD		COLUMBIA	SC	
29210	S127632706		SHAW FIBER PLANT # 7298 -A	4401 ST ANDREWS RD		COLUMBIA	SC	
29210	S127662487		SHAW	4401 ST ANDREWS RD		COLUMBIA	SC	
29210	S119115506		SHAW INDUSTRIES - COLUMBIA	4401 ST ANDREWS RD		COLUMBIA	SC	
29210	S127665296		SHAW FIBER PLANT	4401 ST ANDREWS RD		COLUMBIA	SC	
29210	S127631493		HONEYWELL---PROJECT CANCELLED---	4401 ST ANDREWS RD		COLUMBIA	SC	
29210	S127632570		SHAW INDUSTRIES GROUP, INC	4401 ST ANDREWS RD		COLUMBIA	SC	
29210	S127666087		SHAW FIBER PLANT - EMERGENCY	4401 ST ANDREWS RD		COLUMBIA	SC	
29210	S127671148		SHAW FIBER PLANT	4401 ST ANDREWS RD		COLUMBIA	SC	
29210	S127632262		SHAW FIBER PLANT - UTILITIES AREA	4401 ST ANDREWS RD		COLUMBIA	SC	
29210	1000248735	29210LLDFB44	SHAW INDUSTRIES GROUP INC/COLUMBI	4401 ST ANDREWS RD		COLUMBIA	SC	CORRACTS, AIRS, CERCLIS-NFRAP, NPDES, ICIS, RCRAInfo-SQG, TRIS, RCRAInfo-TSDF
29210	S127633224		SHAW FIBER PLANT	4401 ST ANDREWS RD		COLUMBIA	SC	
29210	S127632396		SHAW FIBER PLANT TANK FARM AREA	4401 ST ANDREWS RD		COLUMBIA	SC	
29210	S127627163		SHAW FIBER PLANT -EMERGENCY PROJE	4401 ST ANDREWS RD		COLUMBIA	SC	
29210	S127636976		HONEYWELL INTERNATIONAL AUTOCLAV	4401 ST ANDREWS RD		COLUMBIA	SC	
29210	S127650694		SHAW INDUSTRIES T&N SPINNING BLDG	4401 ST ANDREWS RD		COLUMBIA	SC	
29210	S127672453		SHAW FIBER PLANT	4401 ST ANDREWS RD		COLUMBIA	SC	
29210	S127663096		SHAW FIBER PLANT	4401 ST ANDREWS RD		COLUMBIA	SC	
29210	S127625573		SHAW FIBER PLANT	4401 ST ANDREWS RD		COLUMBIA	SC	
29210	S127655467		SHAW FIBER PLANT	4401 ST ANDREWS RD		COLUMBIA	SC	
29210	S127671390		SHAW FIBER PLANT - 3RD FLOOR, S-TRAI	4401 ST ANDREWS RD		COLUMBIA	SC	
29210	S127672130		SHAW FIBER PLANT	4401 ST ANDREWS RD		COLUMBIA	SC	
29210	S127632580		SHAW INDUSTRIES GROUP INC - UTILITIE	4401 ST ANDREWS RD		COLUMBIA	SC	
29210	S119116682		SHAW INDUSTRIES	4401 ST ANDREWS RD		COLUMBIA	SC	
29210	S127664264		SHAW FIBER PLANT	4401 ST ANDREWS RD		COLUMBIA	SC	
29210	S127663416		SHAW FIBER PLANT EMERGENCY	4401 ST ANDREWS RD		COLUMBIA	SC	
29210	S127648386		SHAW FIBER PLANT HT-1 TANK	4401 ST ANDREWS RD		COLUMBIA	SC	
29210	S127632871		SHAW FIBER PLANT	4401 ST ANDREWS RD		COLUMBIA	SC	
29210	S127662488		SHAW	4401 ST ANDREWS RD		COLUMBIA	SC	
29210	S127662634		SHAW FIBER PLANT	4401 ST ANDREWS RD		COLUMBIA	SC	
29210	S127654331		SHAW FIBER PLANT	4401 ST ANDREWS RD		COLUMBIA	SC	
29210	S127667169		SHAW INDUSTRIES GROUP - PLANT 8S	4401 ST ANDREWS RD		COLUMBIA	SC	
29210	S119117419		SHAW INDUSTRIES	4401 ST ANDREWS RD		COLUMBIA	SC	
29210	S127663477		SHAW FIBER PLANT	4401 ST ANDREWS RD		COLUMBIA	SC	
29210	S119114277		SHAW INDUSTRIES - PLANT 8S - S-TRAIN	4401 ST ANDREWS RD		COLUMBIA	SC	
29210	S127667486		SHAW FIBER PLANT - STAPLE SPINING P(	4401 ST ANDREWS RD		COLUMBIA	SC	
29210	S119109939		SHAW PLANT 8S - ELEVATED STRUCTURI	4401 ST ANDREWS RD		COLUMBIA	SC	
29210	S127672473		SHAW FIBER PLANT	4401 ST ANDREWS RD		COLUMBIA	SC	
29210	S119109940		SHAW PLANT 8S - ROOFTOP TANK FARM	4401 ST ANDREWS RD		COLUMBIA	SC	
29210	S127623301		SHAW FIBER PLANT	4401 ST ANDREWS RD		COLUMBIA	SC	
29210	S127665829		SHAW FIBER PLANT	4401 ST ANDREWS RD		COLUMBIA	SC	
29210	S127633187		SHAW FIBER PLANT	4401 ST ANDREWS RD		COLUMBIA	SC	
29210	S127640835		HONEYWELL NYLON - 4401 ST ANDREWS	4401 ST ANDREWS RD		COLUMBIA	SC	
29210	S127632381		SHAW FIBER PLANT - MEZZANINE SHOP A	4401 ST ANDREWS RD		COLUMBIA	SC	
29210	S127662657		SHAW FIBER PLANT	4401 ST ANDREWS RD		COLUMBIA	SC	
29210	S119109941		SHAW PLANT 8S - AIR SCRUBBER #4	4401 ST ANDREWS RD		COLUMBIA	SC	
29210	S127632065		SHAW INDUSTRIY- OUTDOOR PIPE	4401 ST ANDREWS RD		COLUMBIA	SC	
29210	S127663102		SHAW FIBER PLANT	4401 ST ANDREWS RD		COLUMBIA	SC	
29210	S127672180		SHAW INDUSTRIES INC ADMINISTRATIVE	4401 ST ANDREWS RD		COLUMBIA	SC	
29210	S127671452		SHAW FIBER PLANT	4401 ST ANDREWS RD		COLUMBIA	SC	
29210	S119109942		SHAW PLANT 8S - AIR SCRUBBER #3	4401 ST ANDREWS RD		COLUMBIA	SC	
29210	S119114688		SHAW - 8S - S-TRAIN POLYMERIZATION A	4401 ST ANDREWS RD		COLUMBIA	SC	
29210	S127672451		SHAW FIBER PLANT	4401 ST ANDREWS RD		COLUMBIA	SC	
29210	S127650229		SHAW FIBER PLANT (8S) - AW-3 & 4 AND A	4401 ST ANDREWS RD		COLUMBIA	SC	
29210	S127667636		SHAW FIBER PLANT	4401 ST ANDREWS RD		COLUMBIA	SC	
29210	S127652656		SHAW FIBER PLANT	4401 ST ANDREWS RD		COLUMBIA	SC	
29210	S127653049		SHAW FIBER PLANT	4401 ST ANDREWS RD		COLUMBIA	SC	
29210	S127632861		SHAW FIBER PLANT	4401 ST ANDREWS RD		COLUMBIA	SC	
29210	S119109943		SHAW PLANT 8S - AIR SCRUBBER #2	4401 ST ANDREWS RD		COLUMBIA	SC	
29210	S127632813		SHAW FIBER PLANT	4401 ST ANDREWS RD		COLUMBIA	SC	
29210	S127633254		SHAW FIBER PLANT	4401 ST ANDREWS RD		COLUMBIA	SC	
29210	S127632145		SHAW FIBER PLANT	4401 ST ANDREWS RD		COLUMBIA	SC	
29210	S127632624		SHAW FIBER PLANT --EMERGENCY REMO	4401 ST ANDREWS RD		COLUMBIA	SC	
29210	S127632163		SHAW FIBER PLANT EMERGENY REMOVA	4401 ST ANDREWS RD		COLUMBIA	SC	
29210	S127657811		SHAW INDUSTRIES INC EXTRUSION PLAN	4401 ST ANDREWS RD		COLUMBIA	SC	
29210	S127665863		SHAW FIBER PLANT	4401 ST ANDREWS RD		COLUMBIA	SC	

EDR ZIP Code Scan Report

ZIP	EDR-ID	Facility ID	Name	Address	Map/Dir/Dist	City	State	Databases
29210	S127632221		SHAW FIBER PLANT	4401 ST ANDREWS RD		COLUMBIA	SC	
29210	S127671698		SHAW INDUSTRIES REFRIGERATION ROO	4401 ST ANDREWS RD		COLUMBIA	SC	
29210	S127650456		SHAW FIBER PLANT AIRWASH #1 AND #2	4401 ST ANDREWS RD		COLUMBIA	SC	
29210	S123163385		SAHW CARPET PLANT 8S	4401 ST ANDREWS RD		COLUMBIA	SC	
29210	95293714			4401 ST ANDREWS RD		COLUMBIA	SC	ERNS
29210	S127648384		SHAW FIBER PLANT ROOF TN SPINNING I	4401 ST ANDREWS RD		COLUMBIA	SC	
29210	S127672397		SHAW FIBER PLANT #7748-A	4401 ST ANDREWS RD		COLUMBIA	SC	
29210	S127632926		SHAW FIBER PLANT	4401 ST ANDREWS RD		COLUMBIA	SC	
29210	S127671662		SHAW FIBER PLANT	4401 ST ANDREWS RD		COLUMBIA	SC	
29210	S127651723		SHAW INDUSTRIES - REFRIDGERATION R	4401 ST ANDREWS RD		COLUMBIA	SC	
29210	S127632705		SHAW FIBER PLANT - EMERGENCY - 4TH	4401 ST ANDREWS RD		COLUMBIA	SC	
29210	S119109944		SHAW PLANT 8S - AIR SCRUBBER #1	4401 ST ANDREWS RD		COLUMBIA	SC	
29210	S127624290		SHAW FIBER PLANT - DRAW TWIST OFFIC	4401 ST ANDREWS RD		COLUMBIA	SC	
29210	S127671854		SHAW FIBER PLANT	4401 ST ANDREWS RD		COLUMBIA	SC	
29210	S119109938		SHAW PLANT 8S - ELEVATED STRUCTURI	4401 ST ANDREWS RD		COLUMBIA	SC	
29210	S127624968		SHAW FIBER PLANT - DT ANEX BUILDING	4401 ST ANDREWS RD		COLUMBIA	SC	
29210	S127022598		SHAW INDUSTRIES 44012 ST ANDREWS F	4401 ST ANDREWS ROAD		COLUMBIA	SC	
29210	1009401800		SHAW INDUSTRIES, INC	4401 ST ANDREWS ROAD		COLUMBIA	SC	FTTS
29210	S127022333		SHAW INDUSTRIES PLANT	4401 ST ANDREWS ROAD		COLUMBIA	SC	
29210	A100200333	1668	HONEYWELL	4401 ST. ANDREWS RD		COLUMBIA	SC	AST
29210	92109644			4401 ST. ANDREWS RD		COLUMBIA	SC	ERNS
29210	92107042			4401 ST. ANDREWS RD		COLUMBIA	SC	ERNS
29210	92110077			4401 ST. ANDREWS RD		COLUMBIA	SC	ERNS
29210	92103862			4401 ST. ANDREWS RD		COLUMBIA	SC	ERNS
29210	92103428			4401 ST. ANDREWS RD		COLUMBIA	SC	ERNS
29210	1014628126			4401 ST. ANDREWS RD.		COLUMBIA	SC	PCB TRANSFORMER
29210	1011815165		ALLIEDSIGNAL INC. - COLUMBIA SITE	4401 ST. ANDREWS ROAD		COLUMBIA	SC	RMP
29210	1012041774		HONEYWELL NYLON INC. - COLUMBIA PL	4401 ST. ANDREWS ROAD		COLUMBIA	SC	RMP
29210	1011837075		SHAW INDUSTRIES GROUP, INC., PLANT	4401 ST. ANDREWS ROAD		COLUMBIA	SC	RMP
29210	1007089051		HONEYWELL COLUMBIA PLANT	4401 ST. ANDREWS ROAD		COLUMBIA	SC	TSCA
29210	1001957502		ALLIEDSIGNAL FIBERS COLUMBIA PLANT	4401 ST. ANDREWS ROAD		COLUMBIA	SC	TSCA
29210	92134434			4401 ST. ANDREWS ROAD		COLUMBIA	SC	ERNS
29210	1011837074		SHAW INDUSTRIES GROUP, INC., PLANT (	4401 ST. ANDREWS ROAD		COLUMBIA	SC	RMP
29210	S127470191		SHAW COLA PIPE	4401 ST. ANDREWS ROAD		COLUMBIA	SC	
29210	1011827692		HONEYWELL INTERNATIONAL, INC. - COL	4401 ST. ANDREWS ROAD		COLUMBIA	SC	RMP
29210	92141205			4402 ST ANDREWS ROAD		COLUMBIA	SC	ERNS
29210	95291554			4402 ST. ANDREWS ROAD		COLUMBIA	SC	ERNS
29210	9194232			4402 ST. ANDREWS ROAD		COLUMBIA	SC	ERNS
29210	95292046			4402 ST. ANDREWS ROAD		COLUMBIA	SC	ERNS
29210	92131993			4402 ST. ANDREWS ROAD		COLUMBIA	SC	ERNS
29210	92111762			4402 ST. ANDREWS ROAD		COLUMBIA	SC	ERNS
29210	95285023			4402 ST. ANDREWS ROAD		COLUMBIA	SC	ERNS
29210	94265573			4402 ST. ANDREWS ROAD		COLUMBIA	SC	ERNS
29210	95284833			4402 ST. ANDREWS ROAD		COLUMBIA	SC	ERNS
29210	9196819			4402 ST. ANDREWS ROAD		COLUMBIA	SC	ERNS
29210	95291519			4402 ST. ANDREWS ROAD		COLUMBIA	SC	ERNS
29210	94266392			4402 ST. ANDREWS ROAD		COLUMBIA	SC	ERNS
29210	94231182			4402 ST. ANDREWS ROAD		COLUMBIA	SC	ERNS
29210	95279025			4402 ST. ANDREWS ROAD		COLUMBIA	SC	ERNS
29210	94259854			4402 ST. ANDREWS ROAD		COLUMBIA	SC	ERNS
29210	95282134			4402 ST. ANDREWS ROAD		COLUMBIA	SC	ERNS
29210	95281949			4402 ST. ANDREWS ROAD		COLUMBIA	SC	ERNS
29210	9192718			4402 ST. ANDREWS ROAD		COLUMBIA	SC	ERNS
29210	94248978			4402 ST. ANDREWS ROAD		COLUMBIA	SC	ERNS
29210	95289478			4402 ST. ANDREWS ROAD		COLUMBIA	SC	ERNS
29210	95290855			4402 ST. ANDREWS ROAD		COLUMBIA	SC	ERNS
29210	97394557			4402 ST. ANDREWS ROAD		COLUMBIA	SC	ERNS
29210	92145163			4402 ST. ANDREWS ROAD		COLUMBIA	SC	ERNS
29210	92141097			4402 ST. ANDREWS ROAD		COLUMBIA	SC	ERNS
29210	94219811			4402 ST. ANDREWS ROAD		COLUMBIA	SC	ERNS
29210	95291063			4402 ST. ANDREWS ROAD		COLUMBIA	SC	ERNS
29210	93206140			4402 ST. ANDREWS ROAD		COLUMBIA	SC	ERNS
29210	94262202			4402 ST. ANDREWS ROAD		COLUMBIA	SC	ERNS
29210	93155931			4402 ST. ANDREWS ROAD		COLUMBIA	SC	ERNS
29210	92117475			4402 ST. ANDREWS ROAD		COLUMBIA	SC	ERNS
29210	94251786			4402 ST. ANDREWS ROAD		COLUMBIA	SC	ERNS
29210	94249361			4402 ST. ANDREWS ROAD		COLUMBIA	SC	ERNS
29210	94273181			4402 ST. ANDREWS ROAD		COLUMBIA	SC	ERNS
29210	93184540			4402 ST. ANDREWS ROAD		COLUMBIA	SC	ERNS
29210	95291521			4402 ST. ANDREWS ROAD		COLUMBIA	SC	ERNS
29210	9192615			4402 ST. ANDREWS ROAD		COLUMBIA	SC	ERNS

EDR ZIP Code Scan Report

ZIP	EDR-ID	Facility ID	Name	Address	Map/Dir/Dist	City	State	Databases
29210	94249025			4402 ST. ANDREWS ROAD		COLUMBIA	SC	ERNS
29210	94269146			4402 ST. ANDREWS ROAD		COLUMBIA	SC	ERNS
29210	94251156			4402 ST. ANDREWS ROAD		COLUMBIA	SC	ERNS
29210	95277157			4402 ST. ANDREWS ROAD		COLUMBIA	SC	ERNS
29210	95291061			4402 ST. ANDREWS ROAD		COLUMBIA	SC	ERNS
29210	9187234			4402 ST. ANDREWS ROAD		COLUMBIA	SC	ERNS
29210	93151429			4402 ST. ANDREWS ROAD		COLUMBIA	SC	ERNS
29210	93181718			4402 ST. ANDREWS ROAD		COLUMBIA	SC	ERNS
29210	93179228			4402 ST. ANDREWS ROAD		COLUMBIA	SC	ERNS
29210	94251155			4402 ST. ANDREWS ROAD		COLUMBIA	SC	ERNS
29210	92148082			4402 ST. ANDREWS ROAD		COLUMBIA	SC	ERNS
29210	9192613			4402 ST. ANDREWS ROAD		COLUMBIA	SC	ERNS
29210	94259982			4402 ST. ANDREWS ROAD		COLUMBIA	SC	ERNS
29210	92134372			4402 ST. ANDREWS ROAD		COLUMBIA	SC	ERNS
29210	9193301			4402 ST. ANDREWS ROAD		COLUMBIA	SC	ERNS
29210	92142134			4402 ST. ANDREWS ROAD		COLUMBIA	SC	ERNS
29210	94263783			4402 ST. ANDREWS ROAD		COLUMBIA	SC	ERNS
29210	9187509			4402 ST. ANDREWS ROAD		COLUMBIA	SC	ERNS
29210	93183777			4402 ST. ANDREWS ROAD		COLUMBIA	SC	ERNS
29210	92146710			4402 ST. ANDREWS ROAD		COLUMBIA	SC	ERNS
29210	94254397			4402 ST. ANDREWS ROAD		COLUMBIA	SC	ERNS
29210	92137386			4402 ST. ANDREWS ROAD		COLUMBIA	SC	ERNS
29210	93209363			4402 ST. ANDREWS ROAD		COLUMBIA	SC	ERNS
29210	94254736			4402 ST. ANDREWS ROAD		COLUMBIA	SC	ERNS
29210	94229785			4402 ST. ANDREWS ROAD		COLUMBIA	SC	ERNS
29210	95283763			4402 ST. ANDREWS ROAD		COLUMBIA	SC	ERNS
29210	9196761			4402 ST. ANDREWS ROAD		COLUMBIA	SC	ERNS
29210	95285924			4402 ST. ANDREWS ROAD		COLUMBIA	SC	ERNS
29210	94254940			4402 ST. ANDREWS ROAD		COLUMBIA	SC	ERNS
29210	95275733			4402 ST. ANDREWS ROAD		COLUMBIA	SC	ERNS
29210	93210828			4402 ST. ANDREWS ROAD		COLUMBIA	SC	ERNS
29210	92101703			4402 ST. ANDREWS ROAD		COLUMBIA	SC	ERNS
29210	93192419			4402 ST. ANDREWS ROAD		COLUMBIA	SC	ERNS
29210	9194457			4402 ST. ANDREWS ROAD		COLUMBIA	SC	ERNS
29210	94216108			4402 ST. ANDREWS ROAD		COLUMBIA	SC	ERNS
29210	93207915			4402 ST. ANDREWS ROAD		COLUMBIA	SC	ERNS
29210	94223062			4402 ST. ANDREWS ROAD		COLUMBIA	SC	ERNS
29210	94266175			4402 ST. ANDREWS ROAD		COLUMBIA	SC	ERNS
29210	94265389			4402 ST. ANDREWS ROAD		COLUMBIA	SC	ERNS
29210	94244904			4402 ST. ANDREWS ROAD		COLUMBIA	SC	ERNS
29210	92147912			4402 ST. ANDREWS ROAD		COLUMBIA	SC	ERNS
29210	93171296			4402 ST. ANDREWS ROAD		COLUMBIA	SC	ERNS
29210	92142970			4402 ST. ANDREWS ROAD		COLUMBIA	SC	ERNS
29210	94243087			4402 ST. ANDREWS ROAD		COLUMBIA	SC	ERNS
29210	92115491			4402 ST. ANDREWS ROAD		COLUMBIA	SC	ERNS
29210	9190871			4402 ST. ANDREWS ROAD		COLUMBIA	SC	ERNS
29210	92142723			4402 ST. ANDREWS ROAD		COLUMBIA	SC	ERNS
29210	94221771			4402 ST. ANDREWS ROAD		COLUMBIA	SC	ERNS
29210	94243182			4402 ST. ANDREWS ROAD		COLUMBIA	SC	ERNS
29210	1004592891	110011928325	ROCKING HORSE CHILD CARE CENTER	449 ST. ANDREWS ROAD		COLUMBIA	SC	FINDS
29210	1005790439	110002233020	GREAT SOUTHERN SERVICES	4508 ST ANDREWS RD		COLUMBIA	SC	FINDS
29210	1004781256	SCR000761635	TOTAL ENVIRONMENTAL SERV WORLDW	4508 ST ANDREWS RD STE 5		COLUMBIA	SC	RCRA-NonGen
29210	1007225624	110016967175	RENICK CHIROPRACTIC	4514 ST ANDREWS RD		COLUMBIA	SC	FINDS
29210	1004780154	SCD981746118	GOODYEAR AUTO SERVICE CTR 2369	4520 ST ANDREWS RD		COLUMBIA	SC	RCRA-CESQG
29210	1007236650	110017081129	SHADOWWOOD COVE	455 ST ANDREWS RD B-2		COLUMBIA	SC	FINDS
29210	S127560257			527 ST ANDREWS RD		COLUMBIA	SC	CDL
29210	S119111891		SC STATE CREDIT UNION - PARTIAL DEM	529 ST ANDREWS RD		COLUMBIA	SC	
29210	S127626837		SEVEN OAKS PRESBYTERIAN CHURCH	530 ST ANDREWS RD		COLUMBIA	SC	
29210	S127626186		SEVEN OAKS PRESBYTERIAN CHURCH	530 ST ANDREWS RD		COLUMBIA	SC	
29210	S127626185		SEVEN OAKS PRESBYTERIAN CHURCH	530 ST ANDREWS RD		COLUMBIA	SC	
29210	1000575808	SCD987582616	DUTCH CLEANERS & LAUNDRY	533 ST. ANDREWS ROAD		COLUMBIA	SC	DRYCLEANERS, RCRA-CESQG, SHWS
29210	S127595098		DOLLAR GENERAL ST ANDREWS ROAD	536 ST ANDREWS RD		COLUMBIA	SC	BROWNFIELDS, VCP, SHWS
29210	1000449067	SCD987573300	CROWN SC-011	538 ST ANDREWS RD		COLUMBIA	SC	RCRA-NonGen
29210	U003623069	7685	PANTRY EXPRESS 610	538 ST ANDREWS RD		COLUMBIA	SC	GWCI, LUST, UST
29210	1014629641			542 ST ANDREWS RD		COLUMBIA	SC	PCB TRANSFORMER
29210	1016827074	110058917702	WINDOW WORLD OF THE MIDLANDS, INC	549 ST. ANDREWS ROAD		COLUMBIA	SC	FINDS
29210	1007256834	110017297708	SEVEN OAKS ANIMAL HOSPITAL	591 ST ANDREWS RD		COLUMBIA	SC	FINDS
29210	S127656745		SAINT ANDREWS APARTMENTS UNIT # 47	601 ST ANDREWS RD		COLUMBIA	SC	
29210	S127656969		ST ANDREWS APARTMENTS - PAISLEY UI	601 ST ANDREWS RD		COLUMBIA	SC	
29210	S127633197		SAINT ANDREWS APT UNIT 14E	601 ST ANDREWS RD		COLUMBIA	SC	

EDR ZIP Code Scan Report

ZIP	EDR-ID	Facility ID	Name	Address	Map/Dir/Dist	City	State	Databases
29210	S127663501		ST ANDREWS APT 79H	601 ST ANDREWS RD		COLUMBIA	SC	
29210	S127663499		ST ANDREWS APT 79C	601 ST ANDREWS RD		COLUMBIA	SC	
29210	S127654257		TOWN HOUSE #7	601 ST ANDREWS RD		COLUMBIA	SC	
29210	S127664965		ST ANDREWS APTS 9F	601 ST ANDREWS RD		COLUMBIA	SC	
29210	S127663387		ST ANDREWS APT 79A KITCHEN	601 ST ANDREWS RD		COLUMBIA	SC	
29210	S127657358		SAINT ANDREWS UNIT 14A	601 ST ANDREWS RD		COLUMBIA	SC	
29210	S127663497		ST ANDREWS APT 34D	601 ST ANDREWS RD		COLUMBIA	SC	
29210	S127666464		ST ANDREWS APTS - UNIT 002	601 ST ANDREWS RD		COLUMBIA	SC	
29210	S127657327		SAINT ANDREWS UNIT43F	601 ST ANDREWS RD		COLUMBIA	SC	
29210	S127664101		ST ANDREWS APARTMENT HOMES - UNIT	601 ST ANDREWS RD		COLUMBIA	SC	
29210	S127666468		ST ANDREWS APTS - UNIT 055	601 ST ANDREWS RD		COLUMBIA	SC	
29210	S127664107		ST ANDREWS APARTMENT HOMES - UNIT	601 ST ANDREWS RD		COLUMBIA	SC	
29210	S127666461		ST ANDREWS APTS - UNIT 092	601 ST ANDREWS RD		COLUMBIA	SC	
29210	S127663498		ST ANDREWS APT 34G	601 ST ANDREWS RD		COLUMBIA	SC	
29210	S127663500		ST ANDREWS APT 79G	601 ST ANDREWS RD		COLUMBIA	SC	
29210	S127633233		ST ANDREWS APT PAISLEY 51	601 ST ANDREWS RD		COLUMBIA	SC	
29210	S127664963		ST ANDREWS APTS - 9E	601 ST ANDREWS RD		COLUMBIA	SC	
29210	S127664105		ST ANDREWS APARTMENT HOMES - UNIT	601 ST ANDREWS RD		COLUMBIA	SC	
29210	S127666467		ST ANDREWS APTS - UNIT 010	601 ST ANDREWS RD		COLUMBIA	SC	
29210	S127666466		ST ANDREWS APTS - UNIT KB(VARIOUS L	601 ST ANDREWS RD		COLUMBIA	SC	
29210	S127658122		ST ANDREWS APT UNIT 21	601 ST ANDREWS RD		COLUMBIA	SC	
29210	S127656970		ST ANDREWS APARTMENTS - ISLEY UNIT	601 ST ANDREWS RD		COLUMBIA	SC	
29210	S127666465		ST ANDREWS APTS - UNIT PA(VARIOUS)	601 ST ANDREWS RD		COLUMBIA	SC	
29210	S127629241		SAINT ANDREWS APT 22G	601 ST ANDREWS RD		COLUMBIA	SC	
29210	S127664966		ST ANDREWS APTS - IS 5	601 ST ANDREWS RD		COLUMBIA	SC	
29210	S119115267		ST ANDREWS APTS - UNIT 7	601 ST ANDREWS RD		COLUMBIA	SC	
29210	S127666462		ST ANDREWS APTS - UNIT 101	601 ST ANDREWS RD		COLUMBIA	SC	
29210	S127664725		ST ANDREWS APTS - UNIT 55E	601 ST ANDREWS RD		COLUMBIA	SC	
29210	S127657210		UNIT 22B	601 ST ANDREWS RD		COLUMBIA	SC	
29210	S127666463		ST ANDREWS APTS - UNIT IS17, IS21	601 ST ANDREWS RD		COLUMBIA	SC	
29210	S127664109		ST ANDREWS APARTMEMT HOMES - UNIT	601 ST ANDREWS RD		COLUMBIA	SC	
29210	S123163042		UNIT 43-D	601 ST ANDREWS RD		COLUMBIA	SC	
29210	S127666469		ST ANDREWS APTS - UNITS 022, 026, 027	601 ST ANDREWS RD		COLUMBIA	SC	
29210	S127664108		ST ANDREWS APARTMENT HOMES - UNIT	601 ST ANDREWS RD		COLUMBIA	SC	
29210	S127657055		UNIT 92 J	601 ST ANDREWS RD		COLUMBIA	SC	
29210	S127639369		ST ANDREWS APTS,	601 ST ANDREWS RD		COLUMBIA	SC	
29210	S127662437		ST ANDREWS APTS - UNIT 92F - EMERGE	601 ST ANDREWS RD		COLUMBIA	SC	
29210	S127633265		ST ANDREWS APTS - KILBRANNON 45B	601 ST ANDREWS RD		COLUMBIA	SC	
29210	S127664875		ST ANDREWS APTS - KB25	601 ST ANDREWS RD		COLUMBIA	SC	
29210	S127664106		ST ANDREWS APARTMENT HOMES - UNIT	601 ST ANDREWS RD		COLUMBIA	SC	
29210	S127657120		UNIT 22C --EMERGENCY REMOVAL--	601 ST ANDREWS RD		COLUMBIA	SC	
29210	S127656849		UNIT 34A	601 ST ANDREWS RD		COLUMBIA	SC	
29210	S127672332		SAINT ANDREWS UNIT10H	601 ST ANDREWS RD		COLUMBIA	SC	
29210	S127672344		SAINT ANDREWS APARTMENTS UNIT KB7	601 ST ANDREWS RD		COLUMBIA	SC	
29210	S119115266		ST ANDREWS APTS - UNIT 11	601 ST ANDREWS RD		COLUMBIA	SC	
29210	S127656848		UNIT 27B	601 ST ANDREWS RD		COLUMBIA	SC	
29210	S127657329		SAINT ANDREWS UNIT 45F & E	601 ST ANDREWS RD		COLUMBIA	SC	
29210	S127663769		ST ANDREWS APT 34F	601 ST ANDREWS RD		COLUMBIA	SC	
29210	S127663496		ST ANDREWS APT 34C	601 ST ANDREWS RD		COLUMBIA	SC	
29210	S127657361		SAINT ANDREWS UNIT 14C	601 ST ANDREWS RD		COLUMBIA	SC	
29210	S127664962		ST ANDREWS APTS - 9D	601 ST ANDREWS RD		COLUMBIA	SC	
29210	S127656727		ST ANDREWS APARTMENT HOMES UNIT	601 ST ANDREWS RD		COLUMBIA	SC	
29210	S127657328		SAINT ANDREWS UNIT 43H	601 ST ANDREWS RD		COLUMBIA	SC	
29210	S127664960		ST ANDREWS APTS - 9B	601 ST ANDREWS RD		COLUMBIA	SC	
29210	S127635519		ST ANDREWS APARTMENT; BLDG 45	601 ST ANDREWS RD		COLUMBIA	SC	
29210	S127657365		SAINT ANDREWS UNIT 22F	601 ST ANDREWS RD		COLUMBIA	SC	
29210	S127664961		ST ANDREWS APTS - 9C	601 ST ANDREWS RD		COLUMBIA	SC	
29210	1000349538	110002243082	TRIPPS CLEANERS	6020 ST ANDREWS ROAD		COLUMBIA	SC	RCRA-CESQG, FINDS
29210	1018289932		BC COMPONENTS INC	6071 ST ANDREWS RD		COLUMBIA	SC	ICIS
29210	1000289223	110038748380	PHILIPS COMPONENTS FACILITY	6071 ST ANDREWS RD		COLUMBIA	SC	GWCI, BROWNFIELDS, VCP, ALLSITES, UIC, NPDES, RCRA-CESQG, AUL, SHWS, FINDS
29210	1007224785	110016958498	WHITES COMMUNITY CARE	6172 ST ANDREWS RD		IRMO	SC	FINDS
29210	1020084339		SEVEN OAKS MARTINIZING	6179 ST ANDREWS RD		COLUMBIA	SC	EDR Historical Cleaners
29210	1000117466	110002243876	ONE HOUR KLEAN KARE	6179 ST ANDREWS RD		COLUMBIA	SC	RCRA-CESQG, FINDS
29210	1007449391	SCR000766071	GREENVIEW ENVIRONMENTAL WORLDW	6326 ST ANDREWS RD STE 201		COLUMBIA	SC	RCRA-NonGen
29210	1007837797	110020017881	PALMETTO BAY ASSOCIATES LLC	6334 ST ANDREWS RD		COLUMBIA	SC	FINDS
29210	U003730130	6045	SAMS FOODMART 2	6340 ST ANDREWS RD		COLUMBIA	SC	GWCI, LUST, UST
29210	1000449068	SCD987573318	QUICK FARE	6340 ST ANDREWS RDR		COLUMBIA	SC	RCRA-NonGen
29210	1006818332	110002314790	OLE TIMEY MEATS	6352 ST ANDREWS RD		COLUMBIA	SC	FINDS

EDR ZIP Code Scan Report

ZIP	EDR-ID	Facility ID	Name	Address	Map/Dir/Dist	City	State	Databases
29210	1020995188		SEVEN OAKS EXXON SERVICENTER	637 ST ANDREWS RD		COLUMBIA	SC	EDR Historical Auto Stations
29210	1004780709	SCD987595717	SPEEDWAY 2857	637 ST ANDREWS RD		COLUMBIA	SC	RCRA-CESQG
29210	U003622484	12138	HESS STATION 40374	637 ST ANDREWS RD		COLUMBIA	SC	GWCI
29210	1007881232	SCR000766543	NATIONAL TIRE & BATTERY #8605	640 ST ANDREWS RD		COLUMBIA	SC	RCRA-CESQG
29210	S128050522		CHEF STORE - ST. ANDREWS RD	655 ST. ANDREWS RD		COLUMBIA	SC	
29210	1007245945	110017178150	UNOCAL 55 9655 222	710 ST ANDREWS & WOODLAND HILL	**	COLUMBIA	SC	FINDS
29210	1000257570	SCD987569217	LEXINGTON DRY CLEANING	733 ST. ANDREWS RD.		IRMO	SC	RCRA-NonGen
29210	S123163534		SUITE C	736 ST ANDREWS RD		COLUMBIA	SC	
29210	S105621419		ONE HOUR MARTINIZING/CROWN CLEAN	742 ST ANDREWS RD		COLUMBIA	SC	DRYCLEANERS, SHWS
29210	1004780183	110002243885	ONE HOUR MARTINIZING	742 ST ANDREWS ROAD		COLUMBIA	SC	RCRA-CESQG, FINDS
29210	S127021915		QT- 773 ST ANDREWS - POOL HOUSE	773 ST ANDREWS RD		COLUMBIA	SC	
29210	S127021946		QT -773 ST. ANDREWS - MAIN BLDG	773 ST ANDREWS ROAD		COLUMBIA	SC	
29210	1004780540	SCD987582400	BP OIL-SITE #24224	775 ST ANDREWS & 1-26		COLUMBIA	SC	RCRA-NonGen
29210	1020746345		ST ANDREWS GULF	775 ST ANDREWS RD		COLUMBIA	SC	EDR Historical Auto Stations
29210	1007245714	110017175830	CIRCLE K 2705141	775 ST ANDREWS RD		COLUMBIA	SC	FINDS
29210	S120857741		ST ANDREWS C MART	775 ST ANDREWS RD		COLUMBIA	SC	RCR
29210	U004273476		ST ANDREWS C MART	775 ST ANDREWS RD		COLUMBIA	SC	LUST, UST
29210	U003666078	7623	ST ANDREWS PB	775 ST ANDREWS RD		COLUMBIA	SC	GWCI
29210	1020519919		ST ANDREWS PURE OIL STATION	780 ST ANDREWS RD		COLUMBIA	SC	EDR Historical Auto Stations
29210	1021145096		BUNDRICKS TEXACO	801 ST ANDREWS RD		COLUMBIA	SC	EDR Historical Auto Stations
29210	S127622632		FIRST CHURCH OF NAZARENE ANDREWS	901 ST ANDREWS HOUSE		COLUMBIA	SC	
29210	S127643717		COLUMBIA FIRST CHURCH OF THE NAZA	901 ST ANDREWS RD		COLUMBIA	SC	
29210	S127643464		FLOOR 1 & EXTERIOR @ CHRISTIAN ACT	901 ST ANDREWS RD, COLUMBIA FIRST C		COLUMBIA	SC	
29210	S127648049		FIRST CHURCH OF NAZARENE	901 ST ANDREWS RD, COLUMBIA FIRST C		COLUMBIA	SC	
29210	92101649			ST ANDREWS RD	**	COLUMBIA	SC	ERNS
29210	1020746358		SOC SERVICE STATION NO 73	ST ANDREWS RD	**	COLUMBIA	SC	EDR Historical Auto Stations
29210	9175509			ST ANDREWS RD	**	COLUMBIA	SC	ERNS
29210	1007258161	110017311700	CSX REAL PROPERTY INC	ARM ENVIRONMENTAL SERVICES	**	COLUMBIA	SC	FINDS
29210	1000156171	110004940315	K-MART #3168	99 NORTH ARROWHEAD RD.		COLUMBIA	SC	RCRA-CESQG, FINDS
29210	1016184858	110002191253	PENSKE AUTO CENTER COLUMBIA	99B N ARROWHEAD RD		COLUMBIA	SC	FINDS
29210	1004780888	SCR000002089	PENSKE AUTO CENTER 3168	99B N ARROWHEAD RD	**	COLUMBIA	SC	RCRA-NonGen
29210	S119014889		CITGO 209	102 ARROWOOD & BUSH R		COLUMBIA	SC	RCR
29210	U001119726	7763	CITGO 209	102 ARROWOOD & BUSH RIVER RD		COLUMBIA	SC	GWCI, LUST, UST
29210	1007231986	110017032799	CITGO 209	102 ARROWOOD & BUSH RIVER ROAD		COLUMBIA	SC	FINDS
29210	1005791105	110002190986	SOMMERS 319	102 ARROWOOD RD		COLUMBIA	SC	FINDS
29210	1004780607	SCD987586856	SUNSTAR INC CITGO 209	102 ARROWOOD RD		COLUMBIA	SC	RCRA-NonGen
29210	U004019444	7780	PENSKE AUTO CENTER KMART	99 N ARROWOOD RD	42, SSW, 1/4 - 1/2	COLUMBIA	SC	LUST, UST
29210	1020826324		AUTOTRONIC SYSTEMS INC	102 ARROWWOOD DR		COLUMBIA	SC	EDR Historical Auto Stations
29210	1009312462	SCR000767632	AKZO NOBEL PAINTS 491	110 ARROWWOOD DR		COLUMBIA	SC	RCRA-CESQG
29210	1009329983	110024557754	AKZO NOBEL PAINTS 491	110 ARROWWOOD DR		COLUMBIA	SC	FINDS
29210	S127559867			1115 ARROWWOOD RD		COLUMBIA	SC	CDL
29210	S127635274		H B RHAME ELEM SCHOOL	1300 ARROWWOOD RD		COLUMBIA	SC	
29210	S128050157		433 ARROWWOOD	433 ARROWWOOD COLUMBIA SC		COLUMBIA	SC	
29210	S127469706		433 ARROWWOOD ROAD	433 ARROWWOOD ROAD		COLUMBIA	SC	
29210	S127469745		435 ARROWWOOD DRIVE	435 ARROWWOOD DRIVE		COLUMBIA	SC	
29210	S127616947		443 ARROWWOOD ROAD JOB#3539-21	443 ARROWWOOD RD		COLUMBIA	SC	
29210	S127616611		443 ARROWWOOD RD - SCDOT	443 ARROWWOOD RD		COLUMBIA	SC	
29210	S125479637		PITTHARD RESIDENCE	1808 ASHFORD LN		COLUMBIA	SC	
29210	1005790393	110002234564	HYDROLOGIC INC COLUMBIA	100 ASHLAND PK LN STE E		COLUMBIA	SC	FINDS
29210	S127627590		SEVEN OAKS ELEMENTARY	2800 ASHLAND RD		COLUMBIA	SC	
29210	S127629122		SEVEN OAKS ELEMENTARY	2800 ASHLAND RD		COLUMBIA	SC	
29210	1007256092	110017290073	ASSURANCE WATERPROOFING	1977 ASSURANCE RD		COLUMBIA	SC	FINDS
29210	1021402831		PINEY GROVE SHELL	I-20 AT PINEY GROVE RD	**	COLUMBIA	SC	EDR Historical Auto Stations
29210	1021616356		GILES EXXON SERVICE	I-26 AT PINEY GROVE RD	**	COLUMBIA	SC	EDR Historical Auto Stations
29210	S127634217		HOUSE	3116 AVALEE RD		COLUMBIA	SC	
29210	S127634316		SFD 3116 AVALEE RD, FIRST CHURCH OF	3116 AVALEE RD		COLUMBIA	SC	
29210	S125479507		HOUSE	1216 BAFFIN BAY RD		COLUMBIA	SC	
29210	S126294279		1224 BAFFIN BAY	1224 BAFFIN BAY ROAD		COLUMBIA	SC	
29210	S127628145		RESIDENCE	802 BAFFIN BAY RD		COLUMBIA	SC	
29210	S127643958		MONTESSORI EARLY LEARNING CENTER	1101 BALSAM RD		COLUMBIA	SC	
29210	S127643883		MONTESSORI EARLY LEARNING CENTER	1101 BALSAM RD		COLUMBIA	SC	
29210	1004592861	110011928192	MONTESSORI EARLY LEARNING CENTER	1101 BALSAM ROAD		COLUMBIA	SC	FINDS
29210	S126293197		134 BARMOUNT DRIVE	134 BARMOUNT DR		COLUMBIA	SC	

EDR ZIP Code Scan Report

ZIP	EDR-ID	Facility ID	Name	Address	Map/Dir/Dist	City	State	Databases
29210	S127635148		CITY OF AIKEN PUBLIC WORKS; FORMER	208-210 BARNWELL ST NE		AIKEN	SC	
29210	S119113851		RESIDENCE	1015 BEATTY RD		WEST COLUMBIA	SC	
29210	S109516052		BELLSOUTH HOWARD CIRCLE	1900 BEATTY RD	**	COLUMBIA	SC	UIC
29210	1021565814		DECKER BLVD UNION 76 SVC CTR	2215 BECKER BLVD	**	COLUMBIA	SC	EDR Historical Auto Stations
29210	S127655643		BROAD RIVER PUMP STATION	1875 BENTLEY DR		COLUMBIA	SC	
29210	1007257400	110017303728	WYBOO PLANTATION	1875 BENTLEY DR		COLUMBIA	SC	FINDS
29210	1007834997	110019989850	RIVERGATE APARTMENTS	3900 BENTLEY DR		COLUMBIA	SC	FINDS
29210	1007835005	110019989958	RIVERVIEW APARTMENTS	4501 BENTLEY DR		COLUMBIA	SC	FINDS
29210	S121477237		STONEY CREEK APARTMENTS BUILDING	18 BERRY HILL RD		COLUMBIA	SC	
29210	S121476772		STONEY CREEK APARTMENTS BLDG 20 U	18 BERRY HILL RD		COLUMBIA	SC	
29210	S121477238		STONEY CREEK APARTMENTS BUILDING	18 BERRY HILL RD		COLUMBIA	SC	
29210	S121477239		STONEY CREEK APARTMENTS BUILDING	18 BERRY HILL RD		COLUMBIA	SC	
29210	S121477236		STONEY CREEK APARTMENTS BUILDING	18 BERRY HILL RD		COLUMBIA	SC	
29210	S118422670			10 BERRYHILL RD		LEXINGTON	SC	CDL
29210	S119119061		16 BERRYHILL ROAD - SCDOT	16 BERRYHILL RD		COLUMBIA	SC	
29210	S127617327		16 BERRYHILL ROAD JOB#3690-21	16 BERRYHILL RD		COLUMBIA	SC	
29210	S120982369		STONEYCREEK APARTMENTS BLDG 16-D	18 BERRYHILL RD		COLUMBIA	SC	
29210	S127656945		STONEY CREEK APARTMENTS - BUILDIN(	18 BERRYHILL RD		COLUMBIA	SC	
29210	S120982364		STONEYCREEK APARTMENTS BLDG 28- U	18 BERRYHILL RD		COLUMBIA	SC	
29210	S127659985		STONY CREEK APARTMENTS	18 BERRYHILL RD		COLUMBIA	SC	
29210	S120982375		STONEYCREEK APARTMENTS BLDG 20-G	18 BERRYHILL RD		COLUMBIA	SC	
29210	S120982370		STONEYCREEK APARTMENTS BLDG 15-H	18 BERRYHILL RD		COLUMBIA	SC	
29210	S127665289		APARTMENT	18 BERRYHILL RD		COLUMBIA	SC	
29210	S120982377		STONEYCREEK APARTMENTS BLDG 7-G I	18 BERRYHILL RD		COLUMBIA	SC	
29210	S120982365		STONEYCREEK APARTMENTS BLDG 9-C	18 BERRYHILL RD		COLUMBIA	SC	
29210	S120982376		STONEYCREEK APARTMENTS BLDG 8-F,H	18 BERRYHILL RD		COLUMBIA	SC	
29210	S120982373		STONEYCREEK APARTMENTS BLDG 4-G	18 BERRYHILL RD		COLUMBIA	SC	
29210	S120982366		STONEYCREEK APARTMENTS BLDG 10-C	18 BERRYHILL RD		COLUMBIA	SC	
29210	S120982368		STONEYCREEK APARTMENTS BLDG 14-D	18 BERRYHILL RD		COLUMBIA	SC	
29210	S127663618		STONEY CREEK APARTMENTS (BUILDING	18 BERRYHILL RD		COLUMBIA	SC	
29210	S120982378		STONEYCREEK APARTMENTS BLDG 24-3	18 BERRYHILL RD		COLUMBIA	SC	
29210	S120982374		STONEYCREEK APARTMENTS BLDG 23-B	18 BERRYHILL RD		COLUMBIA	SC	
29210	S120982362		STONEYCREEK APARTMENTS BLDG 29-G	18 BERRYHILL RD		COLUMBIA	SC	
29210	S120982367		STONEYCREEK APARTMENTS BLDG 12-C	18 BERRYHILL RD		COLUMBIA	SC	
29210	S120982379		STONEYCREEK APARTMENTS BLDG 30-A	18 BERRYHILL RD		COLUMBIA	SC	
29210	S120982372		STONEYCREEK APARTMENTS BLDG 2-A	18 BERRYHILL RD		COLUMBIA	SC	
29210	S120982371		STONEYCREEK APARTMENTS BLDG 6-D I	18 BERRYHILL RD		COLUMBIA	SC	
29210	S127663178		PEACHTREE APT 300-309	200 BERRYHILL RD		COLUMBIA	SC	
29210	S127666457		PEACHTREE PLACE APTS - BLDG 1 - VAR	200 BERRYHILL RD		COLUMBIA	SC	
29210	S127666454		PEACHTREE PLACE APTS - BLDG 5 - VAR	200 BERRYHILL RD		COLUMBIA	SC	
29210	S127667001		PEACHTREE PLACE APTS - BLDG 5 (511, !	200 BERRYHILL RD		COLUMBIA	SC	
29210	S127663491		PEACHTREE APT 555	200 BERRYHILL RD		COLUMBIA	SC	
29210	S127662909		PEACHTREE PLACE APARTMENTS (BREE	200 BERRYHILL RD		COLUMBIA	SC	
29210	S127662955		PEACHTREE PLACE APT UNIT 510-519 BR	200 BERRYHILL RD		COLUMBIA	SC	
29210	S127666456		PEACHTREE PLACE APTS - BLDG 7 - VAR	200 BERRYHILL RD		COLUMBIA	SC	
29210	S127667196		PEACHTREE APTS - UNIT 500	200 BERRYHILL RD		COLUMBIA	SC	
29210	S127662945		PEACHTREE PLACE APARTMENTS - BREE	200 BERRYHILL RD		COLUMBIA	SC	
29210	S127663955		PEACHTREE PLACE APT 525	200 BERRYHILL RD		COLUMBIA	SC	
29210	S127666455		PEACHTREE PLACE APTS - BLDG 6 - VAR	200 BERRYHILL RD		COLUMBIA	SC	
29210	S127663492		PEACHTREE APT 559	200 BERRYHILL RD		COLUMBIA	SC	
29210	S127663232		PEACHTREE PLACE APTS 330-339	200 BERRYHILL RD		COLUMBIA	SC	
29210	S127663948		PEACHTREE PLACE APT UNIT 115	200 BERRYHILL RD		COLUMBIA	SC	
29210	S127666952		PEACHTREE PLACE APTS - BLDG 2 (201, 2	200 BERRYHILL RD		COLUMBIA	SC	
29210	S127663490		PEACHTREE APT 551	200 BERRYHILL RD		COLUMBIA	SC	
29210	S127662953		PEACHTREE PLACE APT UNITS 530-539 B	200 BERRYHILL RD		COLUMBIA	SC	
29210	S127664722		PEACHTREE PLACE APTS - 602	200 BERRYHILL RD		COLUMBIA	SC	
29210	S127662910		PEACHTREE PLACE APARTMENTS - BREE	200 BERRYHILL RD		COLUMBIA	SC	
29210	S127662952		PEACHTREE APT BREEZEWAY UNITS 500	200 BERRYHILL RD		COLUMBIA	SC	
29210	S127663493		PEACHTREE APT 630	200 BERRYHILL RD		COLUMBIA	SC	
29210	S127664721		PEACHTREE PLACE APTS - 613	200 BERRYHILL RD		COLUMBIA	SC	
29210	S127667002		PEACHTREE PLACE APTS - BLDG 2 (220,2	200 BERRYHILL RD		COLUMBIA	SC	
29210	S127663951		PEACHTREE APT UNIT 529	200 BERRYHILL RD		COLUMBIA	SC	
29210	S127663179		PEACHTREE APT 200-209	200 BERRYHILL RD		COLUMBIA	SC	
29210	S127666458		PEACHTREE PLACE APTS - BLDG 2 - VAR	200 BERRYHILL RD		COLUMBIA	SC	
29210	S127664723		PEACHTREE PLACE APTS - 621	200 BERRYHILL RD		COLUMBIA	SC	
29210	S127664724		PEACHTREE PLACE APTS - 614	200 BERRYHILL RD		COLUMBIA	SC	
29210	S127663177		PEACHTREE APT BREEZEWAY 310-319	200 BERRYHILL RD		COLUMBIA	SC	
29210	S127667194		PEACHTREE PLACE APTS - BLDG 3 - 330,	200 BERRYHILL RD		COLUMBIA	SC	
29210	S127663791		PEACHTREE APT LAUNDRY ROOM	200 BERRYHILL RD		COLUMBIA	SC	
29210	S127664719		PEACHTREE PLACE APTS - 600	200 BERRYHILL RD		COLUMBIA	SC	

EDR ZIP Code Scan Report

ZIP	EDR-ID	Facility ID	Name	Address	Map/Dir/Dist	City	State	Databases
29210	S127664720		PEACHTREE PLACE APTS - 620	200 BERRYHILL RD		COLUMBIA	SC	
29210	S127663180		PEACHTREE APT BREEZEWAY210-219	200 BERRYHILL RD		COLUMBIA	SC	
29210	S127667195		PEACHTREE PLACE APTS - UNIT 528	200 BERRYHILL RD		COLUMBIA	SC	
29210	S127663233		PEACHTREE PLACE APT 320-329 BREEZE	200 BERRYHILL RD		COLUMBIA	SC	
29210	S127663494		PEACHTREE APT 632	200 BERRYHILL RD		COLUMBIA	SC	
29210	S127666427		PEACHTREE APTS - BUILDING 3 - MULTIP	200 BERRYHILL RD		COLUMBIA	SC	
29210	S127663495		PEACHTREE APT 635	200 BERRYHILL RD		COLUMBIA	SC	
29210	S127662485		PEACHTREE PLACE APARTMENNTS	200 BERRYHILL RD, APT 330		COLUMBIA	SC	
29210	S127617284		214 BERRYHILL ROAD - SCDOT	214 BERRYHILL RD		COLUMBIA	SC	
29210	1004779808	SC0000671024	HEWLETT PACKARD CO	250 BERRYHILL RD S 111		COLUMBIA	SC	RCRA-NonGen
29210	1016184861	110002191422	HEWLETT PACKARD CO	250 BERRYHILL RD STE 111		COLUMBIA	SC	FINDS
29210	S119117775		VACANT BUILDING	714 BETSY DR		COLUMBIA	SC	
29210	1007228059	110016992263	LEARN & PLAY DAYCARE	1224 BLUEFIELD RD		COLUMBIA	SC	FINDS
29210	S125237947		ST ANDREWS MIDDLE SCHOOL ROOM A1	1231 BLUEFIELD DR		COLUMBIA	SC	
29210	S127617363		ST. ANDREWS MIDDLE SCHOOL	1231 BLUEFIELD DRIVE		COLUMBIA	SC	
29210	S119115249		ST ANDREWS MIDDLE SCHOOL	1231 BLUEFIELD RD		COLUMBIA	SC	
29210	S127640724		ST ANDREWS MIDDLE SCHOOL - ADMINIS	1231 BLUEFIELD RD		COLUMBIA	SC	
29210	S127631526		ST ANDREWS MIDDLE SCHOOL ADMIN BL	1231 BLUEFIELD RD		COLUMBIA	SC	
29210	S127670623		ST ANDREWS MIDDLE SCHOOL - MEDIA C	1231 BLUEFIELD RD		COLUMBIA	SC	
29210	S127641744		ST ANDREWS MIDDLE SCHOOL - MECHAI	1231 BLUEFIELD RD		COLUMBIA	SC	
29210	S127627968		SAINT ANDREWS MIDDLE SCHOOL	1231 BLUEFIELD RD		COLUMBIA	SC	
29210	S127641900		ST ANDREWS MIDDLE SCHOOL - MEDIA C	1231 BLUEFIELD RD		COLUMBIA	SC	
29210	S127645158		CAFETERIA- ST ANDREWS MIDDLE SCHO	1241 BLUEFIELD RD		COLUMBIA	SC	
29210	S128050819		MIGUEL RESIDENCE	1320 BLUEFIELD DRIVE		COLUMBIA	SC	
29210	1009634469			4504 BONNIE FOREST BLVD.		COLUMBIA	SC	DOT OPS
29210	1020071523		RAINBOW LAUNDRY CLEANERS NO 5*	BOOZER SHOPPING CTR	**	COLUMBIA	SC	EDR Historical Cleaners
29210	1007834888	110019988780	CONGAREE RIVER ASSOCIATES	PO BOX 1785	**	COLUMBIA	SC	FINDS
29210	1007239432	110017110053	PALMETTO OIL EQUIPMENT CO INC	PO BOX 21216	**	COLUMBIA	SC	FINDS
29210	S127644493		VACANT RESIDENCE	3401 BRIAD RIVER RD		COLUMBIA	SC	
29210	S113669054		ECONOMY INN	1029 BRIARGATE CIR		COLUMBIA	SC	CDL
29210	S123163061		US POST OFFICE REAR VESTIBULE	1120 BRIARGATE CIR		COLUMBIA	SC	
29210	1007837697	110020016882	THE CHRISTIE COMPANY	1140 BRIARGATE CIR		COLUMBIA	SC	FINDS
29210	1014961328	SCR000775320	CVS PHARMACY 3199	1013 BROAD RIVER RD		COLUMBIA	SC	RCRA-NonGen
29210	1016037071	110070738141	CVS PHARMACY 3199	1013 BROAD RIVER RD		COLUMBIA	SC	FINDS
29210	S127022473		10737 BROAD RIVER ROAD	10737 BROAD RIVER ROAD	**	COLUMBIA	SC	
29210	U001016621	10458	GREASE MONKEY	1101 BROAD RIVER RD		COLUMBIA	SC	LUST, UST
29210	1007227745	110016989053	PURDY CHIROPRACTIC CENTER	1120 BROAD RIVER RD		COLUMBIA	SC	FINDS
29210	S127621491		RESIDENCE	1209 BROAD RIVER RUN		COLUMBIA	SC	
29210	S127637396		AUTO ONE CORP PROPERTY----CANCELL	1231 BROAD RIVER RD		COLUMBIA	SC	
29210	S127619354		RESIDENCE	1237 BROAD RIVER RD		COLUMBIA	SC	
29210	1020968554		BINGHAM INVESTMENTS	1307 BROAD RIVER RD		COLUMBIA	SC	EDR Historical Auto Stations
29210	1000134293	SCD981752850	MR TRANSMISSION	1307 BROAD RIVER ROAD		COLUMBIA	SC	RCRA-CESQG
29210	1007241455	110017131334	EXPRESS FOOD MART & GRILL	1330 BROAD RIVER RD		COLUMBIA	SC	FINDS
29210	U003620354	7895	QUICK STOP DBA JAI AMBE MANAGEME	1330 BROAD RIVER RD		COLUMBIA	SC	LUST, UST
29210	S105621468		TRIPP'S FINE CLEANERS	1339 BROAD RIVER RD	47, SSE, 1/2 - 1	COLUMBIA	SC	DRYCLEANERS, SHWS
29210	1018887197		PENTERPRISES INC	1339 BROAD RIVER ROAD		COLUMBIA	SC	EDR Historical Cleaners
29210	1000349537	110004937980	TRIPPS FINE CLEANERS	1339 BROAD RIVER ROAD		COLUMBIA	SC	RCRA-CESQG, FINDS
29210	1007225530	110016966210	JAMES E BOSLEY DMD	1401 BROAD RIVER		COLUMBIA	SC	FINDS
29210	S128050929		1415 BROADRIVER ROAD - PLAYER	1415 BROAD RIVER RD		COLUMBIA	SC	
29210	S127022911		ST. ANDREWS LUTHERAN CHURCH	1416 BROAD RIVER RD		COLUMBIA	SC	
29210	S119118970		RICHLAND COUNTY FIRST STEPS EARLY	1500 BROAD RIVER RD		COLUMBIA	SC	
29210	S127671486		VIRGINIA WINGARD MEMORIAL UNITED M	1500 BROAD RIVER RD		COLUMBIA	SC	
29210	S127664783		VIRGINIA WINGARD MEMORIAL UNITED M	1500 BROAD RIVER RD		COLUMBIA	SC	
29210	1020315387		BOUKNIGHT O Y ATLANTIC SERVICE	1501 BROAD RIVER RD		COLUMBIA	SC	EDR Historical Auto Stations
29210	S127620111		DUNKIN' DONUTS BASKIN ROBBINS	1525 BROAD RIVER RD		COLUMBIA	SC	
29210	1007248332	110017202686	CLOVERLEAF ASSOC	1527 BROAD RIVER RD		COLUMBIA	SC	FINDS
29210	1022106729		HUTTO SOC #23	1540 BROAD RIVER RD		COLUMBIA	SC	EDR Historical Auto Stations
29210	S127622466		DOLLAR GENERAL- BOOZER SHOPPING (	1563-B BROAD RIVER RD		COLUMBIA	SC	
29210	1007235745	110017071764	WYMAN BOOZER REALTY INC	1572 BROAD RIVER RD		COLUMBIA	SC	FINDS
29210	1007650817	110019917704	SWB INC	1572 BROAD RIVER RD		COLUMBIA	SC	FINDS
29210	S108953994		SUBURBAN LODGE (FORMER BANK LOCA	1633 BROAD RIVER RD	41, SSE, 1/2 - 1	COLUMBIA	SC	SHWS
29210	1007240459	110017120925	ST ANDREWS CHRIROPRACTIC CLINIC	1655 BROAD RIVER		COLUMBIA	SC	FINDS
29210	1004780877	SCR000001800	SPEEDWAY 2842	1714 BROAD RIVER RD		COLUMBIA	SC	RCRA-CESQG
29210	S127641548		HESS STATION #40231	1714 BROAD RIVER RD		COLUMBIA	SC	
29210	S127620413		HESS GAS STATION - ROOF	1714 BROAD RIVER RD		COLUMBIA	SC	
29210	U003619431	7633	HESS STATION 40231	1714 BROAD RIVER RD	J, SSE, 1/2 - 1	COLUMBIA	SC	GWCI, UIC, NPDES, LUST, UST
29210	U004253956		SPEEDWAY 2842	1714 BROAD RIVER RD		COLUMBIA	SC	UST

EDR ZIP Code Scan Report

ZIP	EDR-ID	Facility ID	Name	Address	Map/Dir/Dist	City	State	Databases
29210	1020567798		LUX HESS SERVICE STATION	1714 BROAD RIVER ROAD		COLUMBIA	SC	EDR Historical Auto Stations
29210	1016119408	110002258280	AMERADA HESS STATION 40231	1714 BROAD RIVER ROAD		COLUMBIA	SC	FINDS
29210	S127640607		WESTMINSTER PRESBYTERIAN CHURCH	1715 BROAD RIVER RD		COLUMBIA	SC	
29210	S127670468		WESTMINSTER PRESBYTERIAN CHURCH	1715 BROAD RIVER RD		COLUMBIA	SC	
29210	S127640427		WESTMINSTER PRESBYTERIAN CHURCH	1715 BROAD RIVER RD		COLUMBIA	SC	
29210	1019945525		BURNETTES CLEANERS INC	1718 BROAD RIVER RD		COLUMBIA	SC	EDR Historical Cleaners
29210	S105621371		PALMETTO FINE CLEANERS/FMR BURNE	1718 BROAD RIVER RD	J, SSE, 1/2 - 1	COLUMBIA	SC	DRYCLEANERS, SHWS
29210	U004018251	18230	PEP BOY 134	1804 BROAD RIVER RD	I, SSE, 1/4 - 1/2	COLUMBIA	SC	LUST, UST
29210	1004780488	110004941190	PEP BOYS 134	1804 BROAD RIVER ROAD	I, SSE, 1/4 - 1/2	COLUMBIA	SC	RCRA-CESQG, FINDS
29210	1007229367	110017005747	JOSEPH S MACK JR DDS	2007 BROAD RIVER RD		COLUMBIA	SC	FINDS
29210	1020279738		BANNISTERS 66 SERVICE STATION	2114 BROAD RIVER RD	D, SE, 1/8 - 1/4	COLUMBIA	SC	EDR Historical Auto Stations
29210	1021634214		SHEPPARD TEXACO	2116 BROAD RIVER RD	D, SE, 1/8 - 1/4	COLUMBIA	SC	EDR Historical Auto Stations
29210	1021744094		MOBILE OIL CORPORTION	212 BROAD RIVER TOAD	**	COLUMBIA	SC	EDR Historical Auto Stations
29210	U004016932	10130	MCQUIKS OILUBE	2121 BROAD RIVER RD	B, SSE, 1/8 - 1/4	COLUMBIA	SC	GWCI, RCR, LUST, UST
29210	1020967137		MOBIL OIL CORP	2121 BROAD RIVER ROAD	B, SSE, 1/8 - 1/4	COLUMBIA	SC	EDR Historical Auto Stations
29210	1000461882	SCD987577814	MCQUIK'S #9660	2121 BROAD RIVERS ROAD	B, SSE, 1/8 - 1/4	COLUMBIA	SC	RCRA-NonGen
29210	1020626878		ROBERTSONS GULF SERVICE	2123 BROAD RIVER RD	F, SSE, 1/8 - 1/4	COLUMBIA	SC	EDR Historical Auto Stations
29210	1007259022	110017320709	COLUMBIA DENTURE CENTER	2123 BROAD RIVER RD		COLUMBIA	SC	FINDS
29210	S119120317		MONTERREY RESTAURANT - FLOORING /	2219 BROAD RIVER RD		COLUMBIA	SC	
29210	1020174567		GARVIN OIL COMPANY INC	2220 BROAD RIVER RD	A, NE, 0 - 1/8	COLUMBIA	SC	EDR Historical Auto Stations
29210	1004780444	110004941038	EXXON LOCATION 4 5015	2220 BROAD RIVER ROAD	A, NE, 0 - 1/8	COLUMBIA	SC	RCRA-CESQG, FINDS
29210	1022058315		FOX SHELL SERVICE STATION	2224 BROAD RIVER RD	A, NNW, 0 - 1/8	COLUMBIA	SC	EDR Historical Auto Stations
29210	S126293565		BROAD RIVER COMMONS	2340 BROAD RIVER RD		COLUMBIA	SC	
29210	S126293552		TELEPERFORMANCE	2340 BROAD RIVER RD		COLUMBIA	SC	
29210	1020627580		METTS OIL CO	2340 BROAD RIVER ROAD	27, NE, 0 - 1/8	COLUMBIA	SC	EDR Historical Auto Stations
29210	S127560076			2344 BROAD RIVER RD		COLUMBIA	SC	CDL
29210	1021614660		AUTRYS AMOCO	2369 BROAD RIVER RD	C, NW, 1/8 - 1/4	COLUMBIA	SC	EDR Historical Auto Stations
29210	S117884616			2419 BROAD RIVER RD		COLUMBIA	SC	CDL
29210	1020859807		AAMCO TRANSMISSIONS	2428 BROAD RIVER RD	E, NNW, 1/8 - 1/4	COLUMBIA	SC	EDR Historical Auto Stations
29210	1001120764	110004942750	CAROLINA INDUSTRIAL INC	2428 BROAD RIVER RD	E, NNW, 1/8 - 1/4	COLUMBIA	SC	RCRA-CESQG, FINDS
29210	1020432803		CIRCLE K STORES INC	2624 BROAD RIVER RD	G, NNW, 1/4 - 1/2	COLUMBIA	SC	EDR Historical Auto Stations
29210	1004780789	110004942251	CRAFT MASTER	2639 BROAD RIVER RD	33, NW, 1/4 - 1/2	COLUMBIA	SC	RCRA-CESQG, FINDS
29210	1021069296		ST ANDREWS RADIATOR	2639 BROAD RIVER ROAD		COLUMBIA	SC	EDR Historical Auto Stations
29210	1007836414	110020004056	R A PROPERTIES	2701 BROAD RIVER RD		COLUMBIA	SC	FINDS
29210	1020082187		SCHOONYS CLEANERS	2837 BROAD RIVER RD		COLUMBIA	SC	EDR Historical Cleaners
29210	1020065520		POWERS 60 MINUTE CLEANERS	2839 BROAD RIVER		COLUMBIA	SC	EDR Historical Cleaners
29210	1005790370	110002234948	DATA RESOURCES INC	3005 BROAD RIVER RD		COLUMBIA	SC	FINDS
29210	S105621450		DELUXE CLEANERS	3007 BROAD RIVER RD	46, NW, 1/2 - 1	COLUMBIA	SC	DRYCLEANERS, SHWS
29210	1019931558		ARROWWOOD DISTRIBUTORS INC	3007 BROAD RIVER RD		COLUMBIA	SC	EDR Historical Cleaners
29210	1004592857	110011928129	KINDER/WORLD DAY CARE CENTER	3011 BROAD RIVER ROAD		COLUMBIA	SC	FINDS
29210	1014961189	110045989800	CVS PHARMACY 3849	3055 BROAD RIVER RD		COLUMBIA	SC	RCRA-CESQG, FINDS
29210	1000333641	110004937793	ARNOLDS PROFESSIONAL GARMENT CAI	3104 BROAD RIVER RD	48, NNW, 1/2 - 1	COLUMBIA	SC	DRYCLEANERS, RCRA-NonGen, SHWS, FINDS
29210	1018427906		SHAW ENTERPRISES INC	3104 BROAD RIVER RD		COLUMBIA	SC	EDR Historical Cleaners
29210	1020864966		HIPPS ENTERPRISES INC	3137 BROAD RIVER RD		COLUMBIA	SC	EDR Historical Auto Stations
29210	S127636458		MODULAR BLDG 1 DEPT OF YOUTH SERV	3200 BROAD RIVER		COLUMBIA	SC	
29210	S127636457		MODULAR 2 DEPT OF YOUTH SERVICES	3200M BROAD RIVER RD		COLUMBIA	SC	
29210	S119116058		BI LO 5064	3315 BROAD RIVER RD		COLUMBIA	SC	
29210	S119118958		BILO #64	3315 BROAD RIVER RD		COLUMBIA	SC	
29210	1018745950		CEDAR CHEST CLEANERS	3315 BROAD RIVER RD		COLUMBIA	SC	EDR Historical Cleaners
29210	S119114060		BILO	3315 BROAD RIVER RD		COLUMBIA	SC	
29210	1004780788	110004942242	CEDAR CHEST CLEANERS	3315 BROAD RIVER RD SUITE 110		COLUMBIA	SC	RCRA-NonGen, FINDS
29210	S117884648			3415 BROAD RIVER RD		COLUMBIA	SC	CDL
29210	S127469663		JOHNATHAN SIMS	3415 BROAD RIVER RD BLDG F		COLUMBIA	SC	
29210	S127654410		CYORESS RUN APARTMENTS BUILDING (	3430 BROAD RIVER RD		COLUMBIA	SC	
29210	S119117651		VACANT RESIDENCE	3533 BROAD RIVER RD		COLUMBIA	SC	
29210	S119117683		MOBILE HOME #2	3533 BROAD RIVER RD		COLUMBIA	SC	

EDR ZIP Code Scan Report

ZIP	EDR-ID	Facility ID	Name	Address	Map/Dir/Dist	City	State	Databases
29210	S119117652		MOBILE HOME #1	3533 BROAD RIVER RD		COLUMBIA	SC	
29210	S119117715		RESIDENCE	3533 BROAD RIVER RD		COLUMBIA	SC	
29210	1018160418	110067049223	WALMART NEIGHBORHOOD MARKET 531	3603 BROAD RIVER ROAD		COLUMBIA	SC	RCRA-NonGen, FINDS
29210	S127651413		GREEN OAKS APTS	3930 BROAD RIVER RD		COLUMBIA	SC	
29210	S127651451		GREEN OAKS APT R BUILDING - BURNED	3930 BROAD RIVER RD		COLUMBIA	SC	
29210	1010493678	110032601833	GREEN OAKS APARTMENTS	3930 BROAD ROAD		COLUMBIA	SC	FINDS
29210	1000835424	110004941859	ENGINE REPAIR SHOP	3931 BROAD RIVER RD		COLUMBIA	SC	RCRA-NonGen, FINDS
29210	1020632769		KESTNER AUTO REPAIR	4059 BROAD RIVER RD		COLUMBIA	SC	EDR Historical Auto Stations
29210	1024598591	110070385984	MERITAGE ASSET MANAGEMENT, INC D/I	4059 BROAD RIVER ROAD		COLUMBIA	SC	FINDS
29210	S127639759		ST ANDREWS LUTHERAN CHURCH	416 BROAD RIVER RD	**	COLUMBIA	SC	
29210	S127671003		SC DEPT OF CORRECTIONS	4322 BROAD RIVER RD		COLUMBIA	SC	
29210	1012093908	110011734926	SC DC:COLUMBIA #6 (PRECAST)-CLOSED	4322 BROAD RIVER RD		COLUMBIA	SC	FINDS
29210	S119122260		WALDEN CORRECTIONAL INSTITUTION	4322 BROAD RIVER RD		COLUMBIA	SC	
29210	1023969035	SCR000784348	SC DEPARTMENT OF CORRECTION	4322 BROAD RIVER RD		COLUMBIA	SC	RCRA-NonGen
29210	1024036987	110070158126	SC DEPARTMENT OF CORRECTION	4322 BROAD RIVER RD		COLUMBIA	SC	FINDS
29210	S126294808		SC DEPT OF CORRECTIONS	4322 BROAD RIVER ROAD		COLA	SC	
29210	1004595237		S C DEPT OF CORRECTION/CCI	4322 BROAD RIVER ROAD		COLUMBIA	SC	FTTS
29210	1020893092		DERRICK B O GULF & FUEL OIL SV	4335 BROAD RIVER RD		COLUMBIA	SC	EDR Historical Auto Stations
29210	1000271066	110004938024	SCDC DIV OF IND FURNITURE FACTORY	4344 BROAD RIVER RD		COLUMBIA	SC	RCRA-NonGen, FINDS
29210	S127664454		SLED HEADQUARTERS	4400 BROAD RIVER RD		COLUMBIA	SC	
29210	S127624745		SLED HEADQUARTERS	4400 BROAD RIVER RD		COLUMBIA	SC	
29210	U004291863		SLED	4400 BROAD RIVER RD		COLUMBIA	SC	LUST, UST
29210	1000122045	SCD982097552	SC LAW ENFORCEMENT DIVISION	4400 BROAD RIVER RD		COLUMBIA	SC	RCRAInfo-SQG
29210	S127623024		SLED HEADQUARTERS	4400 BROAD RIVER RD		COLUMBIA	SC	
29210	S127624761		SLED HEADQUARTERS	4400 BROAD RIVER RD		COLUMBIA	SC	
29210	S127665937		SLD HEADQUARTERS	4400 BROAD RIVER RD		COLUMBIA	SC	
29210	S127624792		SLED HEADQUARTERS	4400 BROAD RIVER RD		COLUMBIA	SC	
29210	S127643288		SLED - CUMPUTER ROOM	4400 BROAD RIVER RD		COLUMBIA	SC	
29210	S127624675		SLED HEADQUARTERS	4400 BROAD RIVER RD		COLUMBIA	SC	
29210	S127620515		SLED HEADQUARTERS	4400 BROAD RIVER RD		COLUMBIA	SC	
29210	S127624726		SLED HEADQUARTERS	4400 BROAD RIVER RD		COLUMBIA	SC	
29210	S127624757		SLED HEADQUARTERS	4400 BROAD RIVER RD		COLUMBIA	SC	
29210	1000835470	110004941920	SOUTH CAROLINA LAW ENFORCEMENT	4416 BROAD RIVER RD		COLUMBIA	SC	RCRA-NonGen, FINDS
29210	1026638640		SOUTH CAROLINA DEPARTMETN OF COR	4424 BROAD RIVER BLVD		COLUMBIA	SC	PRP
29210	1007228935	110017001279	BROAD RIVER FUELING FACILITY	4424 BROAD RIVER RD		COLUMBIA	SC	FINDS
29210	U003619308	18391	BROAD RIVER FUELING FACILITY	4424 BROAD RIVER RD		COLUMBIA	SC	UST
29210	U003604122	18422	SC COMPUTER DATA CENTER	4430 BROAD RIVER RD		COLUMBIA	SC	UST
29210	U003522958	7375	KIRKLAND CORRECTIONAL INST	4444 BROAD RIVER RD		COLUMBIA	SC	GWCI, LUST, UST
29210	1026638620		SOUTH CAROLINA DEPARTMENT OF COR	4444 BROAD RIVER RD		COLUMBIA	SC	PRP
29210	1007241910	110017136071	SC DEPT OF CORRECTIONS - WOMEN S (	4450 BROAD RIVER RD		COLUMBIA	SC	FINDS
29210	1012093395	110038800508	RM DESIGN INC COLUMBIA	4460 BROAD RIVER RD		COLUMBIA	SC	FINDS
29210	1000244826	110002178740	SC DEPT CORRECTIONS BRCI DIV OF IND	4460 BROAD RIVER RD		COLUMBIA	SC	RCRA-CESQG, FINDS
29210	S127645938		CAMBELL PRE-RELEASE CENTER- TRAILE	4530 BROAD RIVER RD		COLUMBIA	SC	
29210	S126294914		CAMPBELL PRE-RELEASE PRISON CAFET	4530 BROAD RIVER RD		COLUMBIA	SC	
29210	S126294916		CAMPBELL PRE-RELEASE PRISON WEST	4530 BROAD RIVER RD		COLUMBIA	SC	
29210	S126294915		CAMPBELL PRE-RELEASE PRISON ADMIN	4530 BROAD RIVER RD		COLUMBIA	SC	
29210	S126294913		CAMPBELL PRE-RELEASE PRISON EAST	4530 BROAD RIVER RD		COLUMBIA	SC	
29210	S126293266		4530 BROAD RIVER CAMPBELL PRC	4530 BROAD RIVER RD		COLUMBIA	SC	
29210	1007234217	110017055899	SC DEPT OF CORRECTIONS HEADQUART	4542 BROAD RIVER RD		COLUMBIA	SC	FINDS
29210	S120982231		STEVENSON CORRECTION INSTITUTE - T	4546 BROAD RIVER RD		COLUMBIA	SC	
29210	S127667165		SC DOC - STEVENSON CORRECTIONS - A	4546 BROAD RIVER RD		COLUMBIA	SC	
29210	S127629284		SCE&G - BURTON STATION	4546 BROAD RIVER RD		COLUMBIA	SC	
29210	S120982298		STEVENSON CORRECTION INSTITUTE - M	4546 BROAD RIVER RD		COLUMBIA	SC	
29210	S127663998		STEVENSON CORRECTIONS ADMIN BLDG	4546 BROAD RIVER RD		COLUMBIA	SC	
29210	1019952440		CHAPIN DRY CLEANERS	4611 BROAD RIVER RD		COLUMBIA	SC	EDR Historical Cleaners
29210	S127628334		MINOES LAUNDROMAT	4645 BROAD RIVER RD		COLUMBIA	SC	
29210	S127632989		MINOES LAUNDROMAT	4645 BROAD RIVER RD		COLUMBIA	SC	
29210	1007241050	110017127143	SC DEPT OF JUVENILE JUSTICE	4650 BROAD RIVER RD		COLUMBIA	SC	FINDS
29210	1004780576	SCD987584208	COLONY STATION AUTO REPAIR	4709 BROAD RIVER ROAD BLDG A		COLUMBIA	SC	RCRA-CESQG
29210	S119116231		SCDJJ - ROSEWOOD BLDG	4900 BROAD RIVER RD		COLUMBIA	SC	
29210	S127671704		SC DEPT OF JUVENILE JUSTICE JOHN J F	4900 BROAD RIVER RD		COLUMBIA	SC	
29210	S127632825		SC DEPT OF JUVENILE JUSTICE MAINTEN	4900 BROAD RIVER RD		COLUMBIA	SC	
29210	S127659569		DJJ - OAK DORMITORY	4900 BROAD RIVER RD		COLUMBIA	SC	
29210	S119109900		DJJ - GAMMA DORM	4900 BROAD RIVER RD		COLUMBIA	SC	
29210	S127655238		HICKORY DORM # 3006 DEPARTMENT OF	4900 BROAD RIVER RD		COLUMBIA	SC	
29210	S127623618		GOLDSMITH BUILDING 3001	4900 BROAD RIVER RD		COLUMBIA	SC	
29210	1011924277	110037443255	SOUTH CAROLINA DEPARTMENT OF JUV	4900 BROAD RIVER RD		COLUMBIA	SC	FINDS
29210	S127632947		DJJ WILLOW LANES OPERATION OFFICE	4900 BROAD RIVER RD		COLUMBIA	SC	
29210	S127657465		SIGMA 2005 & DELTA 2004 DORMS ONE S	4900 BROAD RIVER RD		COLUMBIA	SC	

EDR ZIP Code Scan Report

ZIP	EDR-ID	Facility ID	Name	Address	Map/Dir/Dist	City	State	Databases
29210	S119114752		SMU BUILDING	4900 BROAD RIVER RD		COLUMBIA	SC	
29210	S119109899		DJJ - ALPHA DORM	4900 BROAD RIVER RD		COLUMBIA	SC	
29210	1011491100	SCR000769984	SOUTH CAROLINA DEPARTMENT OF JUVI	4900 BROAD RIVER RD		COLUMBIA	SC	RCRA-NonGen
29210	S119114223		SC DJJ - SANTEE BLDG - ROOM 7B	4900 BROAD RIVER RD		COLUMBIA	SC	
29210	S127626987		SCDJJ HICKORY DORM	4900 BROAD RIVER RD		COLUMBIA	SC	
29210	S127664135		BUILDING 4002 - SANTEE BUILDING	4900 BROAD RIVER RD		COLUMBIA	SC	
29210	S127668124		SC DJJ - ALPHA GAMMA DORM	4900 BROAD RIVER RD		COLUMBIA	SC	
29210	S119120424		SANTEE BLDG 4002 (BIRCHWOOD CAMPU	4900 BROAD RIVER RD		COLUMBIA	SC	
29210	S127658095		PINE #3005 &ELM #3004 DORMS - JOHN G	4900 BROAD RIVER RD		COLUMBIA	SC	
29210	S119116545		DJJ - BLDG 2015	4900 BROAD RIVER RD		COLUMBIA	SC	
29210	S127662640		BIRCHWOOD VOCATIONAL BLDG 4010	4900 BROAD RIVER RD		COLUMBIA	SC	
29210	S127659570		DJJ - CEDAR DORMITORY	4900 BROAD RIVER RD		COLUMBIA	SC	
29210	S119120617		WILLOW LANE OMEGA	4900 BROAD RIVER RD		COLUMBIA	SC	
29210	S127636373		BIRCHWOOD HIGH SCHOOL	5000 BROAD RIVER RD		COLUMBIA	SC	
29210	S127624221		OMEGA DORM	5000 BROAD RIVER RD		COLUMBIA	SC	
29210	S127659040		SC DJJ BUILDING 2006	5000 BROAD RIVER RD		COLUMBIA	SC	
29210	U002323631	17196	SC DEPT OF JUVENILE JUSTICE	5000 BROAD RIVER RD		COLUMBIA	SC	LUST, UST
29210	1007239060	110017106219	SC DEPT OF JUVENILE JUSTICE	5000 BROAD RIVER RD		COLUMBIA	SC	FINDS
29210	1004592813	110004936892	SC CRIMINAL JUSTICE ACADEMY	5400 BROAD RIVER RD		COLUMBIA	SC	RCRA-CESQG, FINDS
29210	S127625985		CRIMINAL JUSTICE ACADEMY CAFE HALL	5410 BROAD RIVER RD		COLUMBIA	SC	
29210	S127625464		CRIMINAL JUSTICE ACADEMY- HALL OF F	5410 BROAD RIVER RD		COLUMBIA	SC	
29210	U004019367	7360	COLUMBIA PAINT SHOP- 3609-21	5500 BROAD RIVER ROAD		COLUMBIA	SC	LUST, UST
29210	S127641454		CENTRAL WAREHOUSE	5900 BROAD RIVER RD	**	COLUMBIA	SC	
29210	S127637443		SC DEPT OF JUVENILE JUSTICE CONGAR	5900 BROAD RIVER RD	**	COLUMBIA	SC	
29210	S127643396		SC DEPT OF JUVENILE JUSTICE - BIRCHV	5900 BROAD RIVER RD	**	COLUMBIA	SC	
29210	S127639232		SC DEPT OF JUVENILE JUSTICE	5900 BROAD RIVER RD	**	COLUMBIA	SC	
29210	S127631395		SC DEPT OF JUVENILE JUSTICE MOULTR	5900 BROAD RIVER RD	**	COLUMBIA	SC	
29210	S127637444		SC DEPT OF JUVENILE JUSTICE KEOWEE	5900 BROAD RIVER RD	**	COLUMBIA	SC	
29210	1000163237	110004940707	MIDLANDS MAZDA COLUMBIA GROUP	655 BROAD RIVER RD		COLUMBIA	SC	RCRAInfo-SQG, FINDS
29210	1026629888		PULLIAM-WRAY MAZDA/VOLKSWAGON	655 BROAD RIVER ROAD		COLUMBIA	SC	PRP
29210	1021405701		ST ANDREWS AMERICAN	725 BROAD RIVER RD		COLUMBIA	SC	EDR Historical Auto Stations
29210	U004226547		WRAY AUTOMOTIVE PROPERTY	725 BROAD RIVER RD		COLUMBIA	SC	LUST, UST
29210	1007226303	110016974363	DORIS DERRICK PROPERTY	8025 BROAD RIVER ROAD		COLUMBIA	SC	FINDS
29210	1020967069		PANTRY INC	806 BROAD RIVER RD		COLUMBIA	SC	EDR Historical Auto Stations
29210	S127669720		US POST OFFICE	91 BROAD ST		CHARLESTON	SC	
29210	1007245709	110017175778	TEXACO SERVICE	BROAD RIVER & I 20		COLUMBIA	SC	FINDS
29210	1007227100	110016982470	GULF SERVICE STATION	BROAD RIVER & YOUNG		COLUMBIA	SC	FINDS
29210	1007224276	110016953126	SC DEPT OF CORRECTIONS BROAD RIVE	BROAD RIVER ABATT	**	COLUMBIA	SC	FINDS
29210	S127642853		DEPT OF JUVENILE JUSTICE MAIN CAMPU	BROAD RIVER RD	**	COLUMBIA	SC	
29210	S127670751		SC DEPT OF JUVENILE JUSTICE - JGR & V	BROAD RIVER RD	**	COLUMBIA	SC	
29210	1021608918		SOUTH CAROLINA ARMOUR OIL INC	BROAD RIVER RD	**	COLUMBIA	SC	EDR Historical Auto Stations
29210	S127627174		SANTEE BUILDING	BROAD RIVER RD	**	COLUMBIA	SC	
29210	S127623591		WILLOW LANE CANOPY	BROAD RIVER RD CAMPUS	**	COLUMBIA	SC	
29210	1000449069	110004940841	FAST FARE SC-609	4240 BROADRIVER RD		COLUMBIA	SC	RCRA-NonGen, FINDS
29210	S127633576		SC FORESTRY COMMISSION	5500 BROADRIVER RD		COLUMBIA	SC	
29210	S123163304		HOUSE	3414 BRONTE RD		COLUMBIA	SC	
29210	S126293932		3543 BRONTE RD - REAPPLICATION	3543 BRONTE RD		COLUMBIA	SC	
29210	S126293840		HOUSE	3544 BRONTE RD		COLUMBIA	SC	
29210	S126295069		HOUSE	3544 BRONTE RD		COLUMBIA	SC	
29210	S127559938			138 BROOK PINES DR (APT 4301)		COLUMBIA	SC	CDL
29210	S127642150		BROOK PINES APARTMENTS 25 UNITS	169 BROOK PINES DR		COLUMBIA	SC	
29210	1007255854	110017287648	UNIVERSITY OF SOUTH CAROLINA WATE	202 BROWNING LN		COLUMBIA	SC	FINDS
29210	1007228326	110016995108	COLUMBIA WATER SKI CLUB	202 BROWNING LN		COLUMBIA	SC	FINDS
29210	S116710365			100 BRYTON TRACE		COLUMBIA	SC	CDL
29210	S127617138		SCDHEC	2600 BULL STREET		COLUMBIA	SC	
29210	S127559983			1776 BURNING TREE RD		COLUMBIA	SC	CDL
29210	S127649948		FORMER A PAWS PARADISE	1787 BURNING TREE DR		COLUMBIA	SC	
29210	S127623940		PAWS PARADEISE DOG DAYCARE & BOA	1787 BURNING TREE DR		COLUMBIA	SC	
29210	1012135163	110039161108	AMERICA'S HOME PLACE OFFICE/DISPLA	BURNING TREE ROAD NEAR INTERSECTI		COLUMBIA	SC	FINDS
29210	1020399767		BARNHILL AUTOMOTIVE	1 BUSH RIVER CT		COLUMBIA	SC	EDR Historical Auto Stations
29210	1020653371		BAUGHMANS 66 SERVICE	1-26 AT BUSH RIVER	**	COLUMBIA	SC	EDR Historical Auto Stations
29210	1021420821		BAUGHMANS 66 SERVICE	1-26 AT BUSH RIVER	**	COLUMBIA	SC	EDR Historical Auto Stations
29210	1007232711	110017040236	EXXON 4 3466	1033 BUSH RIVER RD		COLUMBIA	SC	FINDS
29210	1020175275		EXXON CORPORATION	1033 BUSH RIVER RD		COLUMBIA	SC	EDR Historical Auto Stations

EDR ZIP Code Scan Report

ZIP	EDR-ID	Facility ID	Name	Address	Map/Dir/Dist	City	State	Databases
29210	S113669115		DAYS INN - DEMO IN PLACE	1144 BUSH RIVER RD		COLUMBIA	SC	CDL
29210	S127632543		SUPER 8	1144 BUSH RIVER RD		COLUMBIA	SC	
29210	S127559882			1144 BUSH RIVER RD (DAYS INN)		COLUMBIA	SC	CDL
29210	1020372806		SMITHS GULF STATION	1200 BUSH RIVER RD		COLUMBIA	SC	EDR Historical Auto Stations
29210	U004256683		PORT UNIT 87	1203 BUSH RIVER RD		COLUMBIA	SC	UST
29210	1007239366	110017109369	SUNOCO 0689-2798/COOP2636	1203 BUSH RIVER RD		COLUMBIA	SC	FINDS
29210	U003619489	10618	SUNOCO 0689 2798 COOP2636	1203 BUSH RIVER RD		COLUMBIA	SC	GWCI, UIC, RCR, LUST, UST
29210	1020145690		SPEEDWAY SUPERAMERICA LLC	1203 BUSH RIVER RD		COLUMBIA	SC	EDR Historical Auto Stations
29210	1021191619		RACETRAC PETROLEUM INC	1204 BUSH RIVER RD		COLUMBIA	SC	EDR Historical Auto Stations
29210	1022020439		BAUGHMANS 66 SERVICE	1208 BUSH RIVER RD		COLUMBIA	SC	EDR Historical Auto Stations
29210	U003521078	7755	SPEEDWAY 221	1301 BUSH RIVER RD		COLUMBIA	SC	GWCI, RCR
29210	U004256682		SPEEDWAY 221	1301 BUSH RIVER RD		COLUMBIA	SC	LUST, UST
29210	1021643349		PORT OIL #221	1301 BUSH RIVER RD		COLUMBIA	SC	EDR Historical Auto Stations
29210	1007834763	110019987530	CITY GAS & FOOD INC	1301 BUSH RIVER RD		COLUMBIA	SC	FINDS
29210	1010437080	110031354139	WALMART SUPERCENTER 4379	1326 BUSH RIVER RD		COLUMBIA	SC	FINDS
29210	1010332015	SCR000768812	WALMART SUPERCENTER 4379	1326 BUSH RIVER RD		COLUMBIA	SC	RCRA-NonGen
29210	1020452202		MURPHY OIL USA INC	1330 BUSH RIVER RD		COLUMBIA	SC	EDR Historical Auto Stations
29210	U004117041		MURPHY USA 7460	1330 BUSH RIVER RD		COLUMBIA	SC	UST
29210	1007257919	110017308992	STEPHEN F LINDER DMD-BUSH RIVER	1510 BUSH RIVER RD		COLUMBIA	SC	FINDS
29210	S119116835		VACANT BLDG	1540 BUSH RIVER RD		COLUMBIA	SC	
29210	S119111033		VACANT STRUCTURE	1540 BUSH RIVER RD		COLUMBIA	SC	
29210	1007248576	110017205246	E A SERVICES INC	1610 BUSH RIVER RD		COLUMBIA	SC	FINDS
29210	S116550010		WOODLAND HILLS WEST SD	1610 BUSH RIVER RD		COLUMBIA	SC	NPDES
29210	1017790735	110002188908	BELLSOUTH TELECOMMUNICATIONS INC	1731 BUSH RIVER RD. , ROOM B 103		COLUMBIA	SC	FINDS
29210	1007835366	110019993569	KNIGHTS INN	1803 BUSH RIVER RD		COLUMBIA	SC	FINDS
29210	S111100304			1803 BUSH RIVER RD		COLUMBIA	SC	CDL
29210	U003666046	10816	PANTRY 3260 DBA DEPOT	1900 BUSH RIVER RD		COLUMBIA	SC	GWCI, RCR, LUST, UST
29210	1021722902		PANTRY INC	1900 BUSH RIVER RD		COLUMBIA	SC	EDR Historical Auto Stations
29210	1000461884	110002244544	EXXON CO. USA #40421	1900 BUSH RIVER ROAD		COLUMBIA	SC	RCRA-NonGen, FINDS
29210	U004334287		MURPHY EXPRESS 8924	201 BUSH RIVER RD		COLUMBIA	SC	UST
29210	U003666043	11165	CIRCLE K 2705140	2201 BUSH RIVER RD		COLUMBIA	SC	GWCI, RCR, LUST, UST
29210	1021642261		CIRCLE K STORES INC	2201 BUSH RIVER RD		COLUMBIA	SC	EDR Historical Auto Stations
29210	1004780541	110007836477	BP OIL-SITE #24223	2201 BUSH RIVER RD & 1-20		COLUMBIA	SC	RCRA-NonGen, FINDS
29210	S127633129		WOODLAND VILLAGE APTS 808	2221 BUSH RIVER RD		COLUMBIA	SC	
29210	S127656901		WOODLAND VILLAGE APT 100	2221 BUSH RIVER RD		COLUMBIA	SC	
29210	S127672425		WOODLAND VILLAGE LAUNDRY BUILDINC	2221 BUSH RIVER RD		COLUMBIA	SC	
29210	S127672289		WOODLAND VILLAGE APT 122	2221 BUSH RIVER RD		COLUMBIA	SC	
29210	S127633128		WOODLAND VILLAGE APT 805	2221 BUSH RIVER RD		COLUMBIA	SC	
29210	S127633125		WOODLAND VILLAGE APT 138	2221 BUSH RIVER RD		COLUMBIA	SC	
29210	S127633127		WOODLAND VILLAGE APT 318	2221 BUSH RIVER RD		COLUMBIA	SC	
29210	S127633124		WOODLAND VILLAGE APT 126	2221 BUSH RIVER RD		COLUMBIA	SC	
29210	S127633130		WOODLAND VILLAGE APT 813	2221 BUSH RIVER RD		COLUMBIA	SC	
29210	S127656910		WOODLAND VILLAGE APT 115	2221 BUSH RIVER RD		COLUMBIA	SC	
29210	S127633264		WOODLAND VILLAGE	2221 BUSH RIVER RD		COLUMBIA	SC	
29210	S127633133		WOODLAND VILLAGE APT 910	2221 BUSH RIVER RD		COLUMBIA	SC	
29210	S127672182		APARTMENT 102	2221 BUSH RIVER RD		COLUMBIA	SC	
29210	S127672294		WOODLAND VILLAGE APTS 104	2221 BUSH RIVER RD		COLUMBIA	SC	
29210	S127656903		WOODLAND VILLAGE APT 836	2221 BUSH RIVER RD		COLUMBIA	SC	
29210	S127633132		WOODLAND VILLAGE APT 852	2221 BUSH RIVER RD		COLUMBIA	SC	
29210	S127633135		WOODLAND VILLAGE APT LAUNDRY RM	2221 BUSH RIVER RD		COLUMBIA	SC	
29210	S127633136		WOODLAND VILLAGE APT LEASING OFFI(	2221 BUSH RIVER RD		COLUMBIA	SC	
29210	S127656907		WOODLAND VILLAGE APT 100 -CANCELEI	2221 BUSH RIVER RD		COLUMBIA	SC	
29210	S127664749		WOODLAND VILLAGE-MULTIPLE APARTM	2221 BUSH RIVER RD		COLUMBIA	SC	
29210	S127633131		WOODLAND VILLAGE APT 828	2221 BUSH RIVER RD		COLUMBIA	SC	
29210	S127672291		WOODLAND VILLAGE APT 104	2221 BUSH RIVER RD		COLUMBIA	SC	
29210	S127672292		WOODLAND VILLAGE APT 105	2221 BUSH RIVER RD		COLUMBIA	SC	
29210	S127656902		WOODLAND VILLAGE APT 107	2221 BUSH RIVER RD		COLUMBIA	SC	
29210	S127633126		WOODLAND VILLAGE APT 225	2221 BUSH RIVER RD		COLUMBIA	SC	
29210	S127656909		WOODLAND VILLAGE APT 111	2221 BUSH RIVER RD		COLUMBIA	SC	
29210	S127633134		WOODLAND VILLAGE APT 929	2221 BUSH RIVER RD		COLUMBIA	SC	
29210	1010169378	110030478061	WOODLAND VILLAGE	2221 BUSH RIVER ROAD		COLUMBIA	SC	FINDS
29210	S127630042		ST ANDREWS BAPTIST CHURCH	230 BUSH RIVER RD		COLUMBIA	SC	

EDR ZIP Code Scan Report

ZIP	EDR-ID	Facility ID	Name	Address	Map/Dir/Dist	City	State	Databases
29210	S119118811		ST ANDREWS BAPTIST CHURCH	230 BUSH RIVER ROAD		COLUMBIA	SC	
29210	1004780499	110002190897	WESTERN AUTO	249 BUSH RIVER ROAD		COLUMBIA	SC	RCRA-NonGen, FINDS
29210	S127469795		ADVANCED AUTO PARTS 105353	249 BUSH RIVER ROAD		COLUMBIA	SC	
29210	1007258746	110017317919	CHRISTIAN LIFE ASSEMBLY	2700 BUSH RIVER RD		COLUMBIA	SC	FINDS
29210	1007228560	110016997473	STURKIE PROPERTY	3512 BUSH RIVER RD		COLUMBIA	SC	FINDS
29210	U003525677	18204	STURKIE PROPERTY	3512 BUSH RIVER RD		COLUMBIA	SC	LUST, UST
29210	1021626143		PANTRY INC	3516 BUSH RIVER RD		COLUMBIA	SC	EDR Historical Auto Stations
29210	1007258035	110017310275	MATIN CHIROPRACTIC GROUP	3525 BUSH RIVER RD		COLUMBIA	SC	FINDS
29210	1007241893	110017135900	WILLIAM B FARRAR DDS	3527 BUSH RIVER RD		COLUMBIA	SC	FINDS
29210	1020394672		CARPENTERS KWIK STOP INC	3636 BUSH RIVER ROAD		COLUMBIA	SC	EDR Historical Auto Stations
29210	S127665586		CLOISTERS OF WHITEHALL - C-6	3700 BUSH RIVER RD		COLUMBIA	SC	
29210	S127665142		APARTMENT COMPLEX - BLDG I-3	3700 BUSH RIVER RD		COLUMBIA	SC	
29210	S127469860		3700 BUSH RIVER RD - MCCONVILLE	3700 BUSH RIVER RD UNIT G 2		COLUMBIA	SC	
29210	S127639540		BB&T BANK BLDG	420 BUSH RIVER RD		COLUMBIA	SC	
29210	S127618312		DUTCH SQUARE CENTER; SPACE 124	421 BUSH RIVER RD		COLUMBIA	SC	
29210	S127655742		DUTCH SQUARE VACANT INTERIOR MALL	421 BUSH RIVER RD		COLUMBIA	SC	
29210	S107520947		BRITE CLEANERS	422 BUSH RIVER RD UNIT 1	K, South, 1/2 - 1	COLUMBIA	SC	BROWNFIELDS, VCP, SHWS
29210	S107599677		BRITE CLEANERS	422 BUSH RIVER RD/1441-A COLONIAL LIF	K, South, 1/2 - 1	COLUMBIA	SC	SHWS
29210	1004780455	SCD987578903	MCCLEAN'S CLEANERS	422 BUSH RIVER ROAD UNIT 11		COLUMBIA	SC	RCRA-NonGen
29210	1007231970	110017032628	BEST STOP	5318 BUSH RIVER RD		COLUMBIA	SC	FINDS
29210	1007837862	110020018531	HARBOUR LLC	5530 BUSH RIVER RD		COLUMBIA	SC	FINDS
29210	1020627614		BOB FRNKS QCK-AS-A-WNK CAR WSH	601 BUSH RIVER RD		COLUMBIA	SC	EDR Historical Auto Stations
29210	S127623860		REMINGTON COLLEGE	607 BUSH RIVER RD		COLUMBIA	SC	
29210	S127663639		FORMER K-MART	607 BUSH RIVER RD		COLUMBIA	SC	
29210	S127659193		K-MART	607 BUSH RIVER RD		COLUMBIA	SC	
29210	S119114119		BUSH RIVER PLAZA	652 BUSH RIVER RD		COLUMBIA	SC	
29210	S127634804		KAILEYS SUITE D, KAILEYS INC	800 BUSH RIVER RD		COLUMBIA	SC	
29210	S127634760		KAILEYS, INC,; SUITE D	800 BUSH RIVER RD		COLUMBIA	SC	
29210	S127659283		FORMER WESTERN INN & SUITES - OFFIC	827 BUSH RIVER RD		COLUMBIA	SC	
29210	S127663746		FORMER WESTERN INN & SUITES NORTH	827 BUSH RIVER RD		COLUMBIA	SC	
29210	S127659285		FORMER WESTERN INN - NORTH WING	827 BUSH RIVER RD		COLUMBIA	SC	
29210	S127663749		FORMER WESTERN INN SUITES OFFICE E	827 BUSH RIVER RD		COLUMBIA	SC	
29210	S127663750		FORMER WESTERN INN & SUITES SOUTH	827 BUSH RIVER RD		COLUMBIA	SC	
29210	S127659284		FORMER WESTERN INN - SOUTH WING	827 BUSH RIVER RD		COLUMBIA	SC	
29210	1020825957		STANS TEXACO SERVICE	830 BUSH RIVER RD		COLUMBIA	SC	EDR Historical Auto Stations
29210	S127637279		PALMETTO CITIZENS FCU CUSTOMER SE	832 BUSH RIVER RD		COLUMBIA	SC	
29210	1020944486		MUNFORD INC	835 BUSH RIVER RD		COLUMBIA	SC	EDR Historical Auto Stations
29210	U004256667		MAJIK MARKET 34004	835 BUSH RIVER RD		COLUMBIA	SC	LUST, UST
29210	1012218862	110040510104	BELLSOUTH:COLUMBIA-BUSH RIVER RD	BUSH RIVER RD	**	COLUMBIA	SC	FINDS
29210	1005648549	110007186035	BUSH RIVER UTILITY INC	BUSH RIVER RD	**	COLUMBIA	SC	FINDS
29210	S127620484		OLD BELL SOUTH BUILDING	BUSH RIVER RD	**	COLUMBIA	SC	
29210	1007245729	110017175983	BOBS TEXACO STATION	BUSH RIVER RD & I 26		COLUMBIA	SC	FINDS
29210	1000418306	110002191618	CONTRACT SERVICES INC	3700 BUSHRIVER RD L6		COLUMBIA	SC	RCRA-NonGen, FINDS
29210	S127022607		1327 CACTUS AVE	1327 CACTUS AVENUE		COLUMBIA	SC	
29210	S127645353		ST ANDREWS MIDDLE SCHOOL	CAFETERIA & GYM CLASSROOM	**	COLUMBIA	SC	
29210	S126293118		3513 CAIRNBROOK DR LEX CO	3513 CAIRNBROOK DR		COLUMBIA	SC	
29210	S127021672		3609 CAIRNBROOK DR	3609 CAIRNBROOK DR		COLUMBIA	SC	
29210	S126293199		3632 CAIRNBROOK DRIVE	3632 CAIRNBROOK DR		COLUMBIA	SC	
29210	S126293697		3632 CARINBROOK DRIVE	3632 CAIRNBROOK DR		COLUMBIA	SC	
29210	S126293258		3701 CAIRNBROOK COURT	3701 CAIRNBROOK CT		COLUMBIA	SC	
29210	S126293851		ASBESTOS & DEMOLITION	3701 CAIRNBROOK CT		COLUMBIA	SC	
29210	S127618403		MUSC BLDG F PENTHOUSE	280 CALHOUN ST		CHARLESTON	SC	
29210	S127671597		QUAD F - COLLEGE OF PHARMACY 103 -1	280 CALHOUN ST		CHARLESTON	SC	
29210	S127635124		BRIDGE OVER SALUDA RIVER	3405 CALHOUN MEMORIAL HWY		GREENVILLE	SC	
29210	1007243343	110017151099	SPECIALTY IMAGING SERVICES INC	208 CANDI LN STE B		COLUMBIA	SC	FINDS
29210	1010496157	110032624408	BOB CAPES REALTORS	300 CANDI LANE		COLUMBIA	SC	FINDS
29210	S126295068		HOUSE	3513 CARINBROOK DR		COLUMBIA	SC	
29210	S126294552		3609 CARINBROOK DRIVE	3609 CARINBROOK DRIVE		COLUMBIA	SC	
29210	S125920342		HOUSE	3705 CARINBROOK	**	COLUMBIA	SC	
29210	S123163307		HOUSE	3718 CARINBROOK CT		COLUMBIA	SC	
29210	S127635162		COLUMBIA COLLEGE; VACANT HOUSE	910 CAROLA ST		COLUMBIA	SC	
29210	1026884671		MCCALL RA CAMP (SC3970675)-PLANT (B	SOUTH CAROLINA BAPTIST CONVENTION	**	COLUMBIA	SC	
29210	S125920592		RESIDENCE	130 CASTLE RD		COLUMBIA	SC	
29210	S127642000		CAUGHMAN ELEMENTARY SCHOOL	7725 CAUGHMAN RD		COLUMBIA	SC	
29210	S127669901		CAUGHMAN ELEMENTARY	7725 CAUGHMAN RD		COLUMBIA	SC	
29210	S127634101		CAUGHMAN ELEM SCHOOL	7725 CAUGHMAN RD		COLUMBIA	SC	

EDR ZIP Code Scan Report

ZIP	EDR-ID	Facility ID	Name	Address	Map/Dir/Dist	City	State	Databases
29210	1004781115	110004943198	INTEL CORP COLUMBIA DESIGN CTR	100 CENTER POINT CR SUITE 200		COLUMBIA	SC	RCRA-CESQG, FINDS
29210	1021085541		ALLTEL MOBIL COMMUNICATNS CO	2000 CENTER POINT BLVD		COLUMBIA	SC	EDR Historical Auto Stations
29210	1022132580		ALLTEL MOBIL COMMUNICATNS CO	2000 CENTER POINT RD		COLUMBIA	SC	EDR Historical Auto Stations
29210	1008202620	110020999017	SOUTHBROOK DEVELOPMENT INC	2000 CENTER PT LN STE 2100		COLUMBIA	SC	FINDS
29210	2013048120			206 CHARBONNEAU DRIVE		COLUMBIA	SC	ERNS
29210	S127469844		236 CHICOPEE DRIVE- SCDOT HOUSES	236 CHICOPEE DR		COLUMBIA	SC	
29210	S127616515		236 CHICOPEE DR - SCDOT	236 CHICOPEE DR		COLUMBIA	SC	
29210	1021972192		TRUCK STOP	112 CHIPPENHAM CIR		COLUMBIA	SC	EDR Historical Auto Stations
29210	1007837870	110020018611	BOULEVARD PARTNERS	C/O CIVIL ENGINEERING	**	COLUMBIA	SC	FINDS
29210	1007835060	110019990508	LAMPLIGHTER VILLAGE	1117 CLOISTER DR		COLUMBIA	SC	FINDS
29210	1000361671	SCD982117558	CARRIER SERVICE CENTER	BA CLUSTER COURT		COLUMBIA	SC	RCRA-NonGen
29210	1007228437	110016996232	DAIL CHIROPRACTIC	13 CLUSTERS CT		COLUMBIA	SC	FINDS
29210	S127667628		COLONIAL LIFE - 3RD FLOOR	1200 COLONIAL LIFE BLVD		COLUMBIA	SC	
29210	S119116329		COLONIAL LIFE - 4TH FL WEST	1200 COLONIAL LIFE BLVD		COLUMBIA	SC	
29210	1007836176	110020001665	COLONIAL LIFE & ACCIDENT INS CO	1200 COLONIAL LIFE BLVD		COLUMBIA	SC	FINDS
29210	S127662763		COLONIAL LIFE BLDG 2ND FLOOR EAST	1200 COLONIAL LIFE BLVD		COLUMBIA	SC	
29210	S127623690		COLONIAL LIFE BUILDING	1200 COLONIAL LIFE BLVD		COLUMBIA	SC	
29210	S127623816		COLONIAL LIFE BUILDING	1200 COLONIAL LIFE BLVD		COLUMBIA	SC	
29210	S127667697		COLONIAL LIFE BLDG - 3RD FL	1200 COLONIAL LIFE BLVD		COLUMBIA	SC	
29210	S119113506		COLONIAL LIFE BLDG 3RD FL	1200 COLONIAL LIFE BLVD		COLUMBIA	SC	
29210	S127662459		COLONIAL LIFE BUILDING	1200 COLONIAL LIFE BLVD		COLUMBIA	SC	
29210	S127667514		COLONIAL LIFE BLDG - 3RD FL WEST	1200 COLONIAL LIFE BLVD		COLUMBIA	SC	
29210	S127626537		COLONIAL LIFE BLDG STUDIO AREA	1200 COLONIAL LIFE BLVD		COLUMBIA	SC	
29210	S119115417		COLONIAL LIFE BLDG	1200 COLONIAL LIFE BLVD		COLUMBIA	SC	
29210	S127662329		COLONIAL LIFE BUILDING	1200 COLONIAL LIFE BLVD		COLUMBIA	SC	
29210	S127667542		COLONIAL LIFE BLDG - 3RD FL WEST	1200 COLONIAL LIFE BLVD		COLUMBIA	SC	
29210	S127666135		COLONIAL LIFE BLDG - 1ST FLOOR EAST	1200 COLONIAL LIFE BLVD		COLUMBIA	SC	
29210	S127652403		COLONIAL LIFE BUILDING	1200 COLONIAL LIFE BLVD		COLUMBIA	SC	
29210	S127630182		COLONIAL LIFE BUILDING 3RD FLOOR WE	1200 COLONIAL LIFE BLVD		COLUMBIA	SC	
29210	S119119041		COLONIAL LIFE BLDG - E GREENVILLE PF	1200 COLONIAL LIFE BLVD		COLUMBIA	SC	
29210	S127626334		COLONIAL LIFE BUILDING	1200 COLONIAL LIFE BLVD		COLUMBIA	SC	
29210	S119113747		COLONIAL LIFE BLDG - 3RD FLOOR	1200 COLONIAL LIFE BLVD		COLUMBIA	SC	
29210	S119113569		COLONIAL LIFE BLDG - 3RD FL EAST	1200 COLONIAL LIFE BLVD		COLUMBIA	SC	
29210	S119115702		COLONIAL LIFE - 3RD FL EAST	1200 COLONIAL LIFE BLVD		COLUMBIA	SC	
29210	S127662856		COLONIAL LIFE BUILDING - 2ND FLOOR 2	1200 COLONIAL LIFE BLVD		COLUMBIA	SC	
29210	S127623802		COLONIAL LIFE BUILDING	1200 COLONIAL LIFE BLVD		COLUMBIA	SC	
29210	S127629660		COLONIAL LIFE BLDG 4TH FLOOR EAST	1200 COLONIAL LIFE BLVD		COLUMBIA	SC	
29210	S127664688		COLONIAL LIFE BUILDING	1200 COLONIAL LIFE BLVD		COLUMBIA	SC	
29210	S119119957		UNUM COLONIAL LIFE	1200 COLONIAL LIFE BLVD W		COLUMBIA	SC	
29210	S127623954		COLONIAL LIFE BUILDING - 3RD 4TH FLO(	122 COLONIAL LIFE BLVD	**	COLUMBIA	SC	
29210	1020027549		LEXINGTON CLEANERS INC	1441A COLONIAL LF BLVD W	**	COLUMBIA	SC	EDR Historical Cleaners
29210	1020027550		LEXINGTON CLEANERS INC	1441A COLONIAL LIFE BLVD		COLUMBIA	SC	EDR Historical Cleaners
29210	1016203546	110004943321	BRITE CLEANERS	1441A COLONIAL LIFE BLVD		COLUMBIA	SC	FINDS
29210	1004781227	SCR000761304	BRITE CLEANERS	1441A COLONIAL LIFE BLVD		COLUMBIA	SC	RCRA-CESQG
29210	1007837605	110020015963	TEC RENTAL PROPERTIES INC	T.E CONNELLY JR.	**	COLUMBIA	SC	FINDS
29210	1021534572		WOLFE JOHN GULF	COR ST ANDREWS RD	**	COLUMBIA	SC	EDR Historical Auto Stations
29210	1009647840			5802 CORLEY ST.		COLUMBIA	SC	DOT OPS
29210	S106133915	1143	SMURFIT-STONE CONTAINER	123 CREWS DRIVE		COLUMBIA	SC	AST
29210	1000311327	SCD981752199	STONE CONTAINER CORP	128 CREWS DR		COLUMBIA	SC	RCRA-NonGen, LUST, UST
29210	S127629895		VEHICLE MAINTENANCE SHOP	128 CREWS DR		COLUMBIA	SC	AIRS
29210	S127658427		MAINTENANCE BUILDING	128 CREWS DR		COLUMBIA	SC	
29210	S127656485		WAREHOUSE	128 CREWS DR		COLUMBIA	SC	
29210	S127644208		SMURFIT STONE	128 CREWS DR		COLUMBIA	SC	
29210	1026032686		DS SMITH PACKAGING - COLUMBIA	128 CREWS DRIVE		COLUMBIA	SC	
29210	1012881875	110044951344	STONE CONTAINER CORPORATION	128 CREWS DRIVE		COLUMBIA	SC	FINDS
29210	1007829018	110019930048	COLUMBIANA LAKES APTS	250 CROSSBOW DR		COLUMBIA	SC	FINDS
29210	1020394676		BRAKE KING INCORPORATED	2220 DECKER BLVD		COLUMBIA	SC	EDR Historical Auto Stations
29210	S127621357		JOHN J RICHARDS SMU	DJJ MAIN CAMPUS/ BROAD RIVER RD	**	COLUMBIA	SC	
29210	S127644906		PICKENS DORM	DOJJ SHIVERS RD	**	COLUMBIA	SC	
29210	S127652302		RESIDENCE	4232 DONOVAN DR		COLUMBIA	SC	
29210	1018960811		BRINSONS DRY CLEANERS	DUTCH SQ	**	COLUMBIA	SC	EDR Historical Cleaners
29210	1007236728	110017081922	THE DENTAL TEAM LLC	DUTCH SQUARE CENTER #5		COLUMBIA	SC	FINDS
29210	1007226839	110016979796	FORMER USA SERVICE STATION	DUTCH SQUARE MALL	43, SSW, 1/2 - 1	COLUMBIA	SC	RCR, FINDS
29210	U003930440	16612	FORMER USA SERVICE STATION	DUTCH SQUARE MALL	**	COLUMBIA	SC	GWCI, LUST, UST
29210	S107454503		FMR ED ROBINSON LAUNDRY & DRY CLE	DUTCH SQUARE MALL - NEXT TO A & P S	40, South, 1/2 - 1	COLUMBIA	SC	SHWS
29210	S127560427			I-126 E	**	COLUMBIA	SC	CDL

EDR ZIP Code Scan Report

ZIP	EDR-ID	Facility ID	Name	Address	Map/Dir/Dist	City	State	Databases
29210	S127662615		HOUSE	1915 ELM ABODE TERRACE		COLUMBIA	SC	
29210	U003878953	18889	PITT STOP 57	1000 ELMWOOD AVE		COLUMBIA	SC	LUST, UST
29210	1007258698	110017317410	S MART 117	1000 ELMWOOD AVE		COLUMBIA	SC	FINDS
29210	S127619835		409 EVELYN DRIVE	409 EVELYN DR		COLUMBIA	SC	
29210	1007836129	110020001193	COLUMBIA POINT LLC	508 EVELYN DR		COLUMBIA	SC	FINDS
29210	S119115275		SALUDA BUILDINGS - SUITES 200 & 215	101 EXECUTIVE CENTER DR		COLUMBIA	SC	
29210	1024598585	110070385978	CONSTRUCTION SPECIALITIES OF COLUI	111 EXECUTIVE POINTE BOULEVARD, SU		COLUMBIA	SC	FINDS
29210	1004781144	SCR000075721	SCDOT COLUMBIA EXIT 72	EXIT 72 I-20 OVER SC 555	**	COLUMBIA	SC	RCRA-NonGen
29210	1016203544	110004943278	SCDOT COLUMBIA EXIT 72	EXIT 72 I-20 OVER SC 555	**	COLUMBIA	SC	FINDS
29210	S127616546		1836 FAIRHAVEN DR - SCDOT	1836 FAIRHAVEN DR		COLUMBIA	SC	
29210	S127469887		1836 FAIRHAVEN DRIVE-SCDOT HOUSES	1836 FAIRHAVEN DRIVE		COLUMBIA	SC	
29210	S127022587		744 FAIRWAY LANE, COLUMBIA, MURDOC	744 FAIRWAY LN		COLUMBIA	SC	
29210	S127669538		THE FARRINGTON APTS; APTS J & K	1512 FARRINGTON WAY		COLUMBIA	SC	
29210	S127649935		FARRINGTON APARTMENTS - BLDG 1504,	1513 FARRINGTON WAY		COLUMBIA	SC	
29210	S127647633		THE FARRINGTON	1513 FARRINGTON WAY		COLUMBIA	SC	
29210	1022008874		TRANSMISSIONS PLUS	4724 FAULKLAND RD		COLUMBIA	SC	EDR Historical Auto Stations
29210	S127642401		RESIDENCE	107 FERGUSON ST		GREENVILLE	SC	
29210	S127670678		RESIDENCE	107 FERGUSON ST		GREENVILLE	SC	
29210	1000407511	110002243162	SOUTHEASTERN WASTE MANAGEMENT (	3500 FERNANDINA RD. #B2		COLUMBIA	SC	RCRA-NonGen, FINDS
29210	1007226654	110016977921	BROAD RIVER REGIONALWWTP	3506 FERNANDINA RD		COLUMBIA	SC	FINDS
29210	1007831403	110019953932	RICHLAND CO EASTOVER REG WWTP	3506 FERNANDINA RD		COLUMBIA	SC	FINDS
29210	S118177901		RICHLAND CO/HOLLINGSHED CREEK	3506 FERNANDINA RD		COLUMBIA	SC	NPDES
29210	1007836187	110020001772	BB&B BUILDERS	3506 FERNANDINA RD		COLUMBIA	SC	FINDS
29210	1007837649	110020016409	COLUMBIA LAND COMPANY LLC	3608 FERNANDINA RD		COLUMBIA	SC	FINDS
29210	1020519894		VALK OIL CORP	3624 FERNANDINA RD		COLUMBIA	SC	EDR Historical Auto Stations
29210	S127638777		HOLIDAY KAMPER & BOATS	3630 FERNANDINA RD		COLUMBIA	SC	
29210	1000267204	110002244651	DICK SMITH NISSAN	3650 FERNANDINA RD.		COLUMBIA	SC	ICIS, RCRAInfo-SQG, FINDS
29210	1016170183	110055947757	DICK SMITH PAINT AND BODY SHOP AND	3650 FERNANDINA ROAD		COLUMBIA	SC	RCRAInfo-SQG, FINDS
29210	S127637447		DICK SMITH MOTORS USED CAR OFFICE	3670 FERNANDINA RD		COLUMBIA	SC	
29210	S127022062		FLOOR AND DECOR - COLUMBIA, SC	3700 FERNANDINA RD		COLUMBIA	SC	
29210	S127022818		FLOOR AND DECOR - COLUMBIA, SC	3700 FERNANDINA RD		COLUMBIA	SC	
29210	1004780621	SCD987588282	HAMPTON AUTOMOTIVE	3700 FERNANDINA RD		COLUMBIA	SC	RCRA-CESQG
29210	1016120051	110002313559	HAMPTON AUTOMOTIVE INCORPORATED	3700 FERNANDINA ROAD		COLUMBIA	SC	ICIS, FINDS
29210	1026601149		HANSON AGGREGATES SOUTHEAST, LLC	3700 FERNANDINA ROAD		COLUMBIA	SC	PRP
29210	1007243735	110017155148	CENTEX HOMES	3740 FERNANDINA RD STE A		COLUMBIA	SC	FINDS
29210	1016976282	SCR000778076	PALMETTO STATE ARMORY	3760 FERNANDINA RD		COLUMBIA	SC	RCRAInfo-SQG
29210	1016899347	110060240662	PALMETTO STATE ARMORY	3760 FERNANDINA RD		COLUMBIA	SC	FINDS
29210	1009326248	110024532692	NORTHERN TOOL AND EQUIPMENT	4040 FERNANDINA RD		COLUMBIA	SC	FINDS
29210	1000428148	SCD039286315	INDUSTRIAL SYSTEMS CORP	4046-C FERNANDINA RD		COLUMBIA	SC	RCRA-NonGen
29210	S127623079		US ARMY BUILDING 2340	FORT JACKSON	**	COLUMBIA	SC	
29210	S127642270		FORT JACKSON BLDG 2230 - CAFETERIA	FORT JACKSON	**	COLUMBIA	SC	
29210	S127469886		418 GALE DRIVE- SCDOT HOUSES	418 GALE DR		COLUMBIA	SC	
29210	S127616579		418 GALE DR - SCDOT	418 GALE DR		COLUMBIA	SC	
29210	S127616566		420 GALE DR - SCDOT	420 GALE DR		COLUMBIA	SC	
29210	S127617014		420 GALE DRIVE-SCDOT HOUSES	420 GALE DR		COLUMBIA	SC	
29210	S127616547		436 GALE DR - SCDOT	436 GALE DR		COLUMBIA	SC	
29210	S127469802		436 GALE DRIVE-SCDOT HOUSES	436 GALE DR		COLUMBIA	SC	
29210	S117406072			1335 GARNER LN		COLUMBIA	SC	CDL
29210	S123162378		POOL HOUSE	1337 GARNER LN		COLUMBIA	SC	
29210	1007244730	110017165510	BUILDERS ONE CORP	1341 GARNER LN STE 201		COLUMBIA	SC	FINDS
29210	1007243393	110017151641	PHA ENVIRONMENTAL RESTORATION INC	1345 GARNER LN		COLUMBIA	SC	FINDS
29210	1020317890		CROWN CENTRAL PETROLEUM CORP	1345 GARNER LN		COLUMBIA	SC	EDR Historical Auto Stations
29210	1007832184	110019961718	D R HORTON INC	1345 GARNER LN STE 201A		COLUMBIA	SC	FINDS
29210	1021510310		CROWN CENTRAL PETROLEUM CORP	135 GARNER LN	**	COLUMBIA	SC	EDR Historical Auto Stations
29210	1004781209	110002234074	LOWES OF S E COLUMBIA 1064	7420 GARNERS FERRY RD		COLUMBIA	SC	RCRAInfo-SQG, FINDS
29210	S127640271		FORT JACKSON RESIDENCE	5853C GASKINS		COLUMBIA	SC	
29210	S127652384		SOUTH CAROLINA SUPREME COURT BAS	1231 GERVAIS ST		COLUMBIA	SC	
29210	2007825007			500 GRACERN ROAD		COLUMBIA	SC	ERNS
29210	1005791593	110002181905	US GEOLOGICAL SURVEY	720 GRACERN RD		COLUMBIA	SC	FINDS
29210	1012188341	SCR000771014	HONEYWELL INTERNATIONAL AEROSPAC	720 GRACERN RD STE 116		COLUMBIA	SC	RCRA-NonGen
29210	1012109668	110038911256	HONEYWELL INTERNATIONAL AEROSPAC	720 GRACERN RD STE 116		COLUMBIA	SC	FINDS
29210	1007241438	110017131156	LAW ENGINEERING INC	720 GRACERN RD STE 132		COLUMBIA	SC	FINDS
29210	1007259679	110017327490	MACTEC ENGINEERING AND CONSULTIN	720 GRACERN RD STE 132		COLUMBIA	SC	FINDS
29210	1000361672	110002245124	CARRIER CORPORATION	720 GRACERN RD. SUITE 101		COLUMBIA	SC	RCRA-NonGen, FINDS
29210	S119116785		THREE RIVERS APTS - APT 116	900 GRACERN RD		COLUMBIA	SC	
29210	1000246583	110002243983	KONICA BUSINESS MACHINES USA INC	955 GRACERN ROAD		COLUMBIA	SC	RCRA-CESQG, FINDS

EDR ZIP Code Scan Report

ZIP	EDR-ID	Facility ID	Name	Address	Map/Dir/Dist	City	State	Databases
29210	1026588645		DODGELAND OF COLUMBIA	190 GRAYSTONE BLVD		COLUMBIA	SC	PRP
29210	1000141658	110002243812	NAPA AUTO PARTS	110 GREYSTONE BLVD.		COLUMBIA	SC	RCRA-NonGen, FINDS
29210	U002234760	17128	CENTRAL ELECTRIC POWER COOP	121 GREYSTONE BLVD		COLUMBIA	SC	UST
29210	1004387565	7482	BOB BENNETT FORD INC	177 GREYSTONE BLVD		COLUMBIA	SC	LUST, UST
29210	1000104654	110002245348	BOB BENNETT FORD INCORPORATED	177 GREYSTONE BLVD		COLUMBIA	SC	RCRA-CESQG, FINDS
29210	1014834918	110043555667	CLASSIC FORD OF COLUMBIA	177 GREYSTONE BLVD		COLUMBIA	SC	FINDS
29210	1000138260	110002242984	HONDA CARS OF COLA	178 GREYSTONE BLVD		COLUMBIA	SC	RCRA-CESQG, FINDS
29210	U004019390	7480	HONDA CARS OF COLUMBIA	178 GREYSTONE BLVD		COLUMBIA	SC	LUST, UST
29210	U000483206	7416	GALEANA CHRYSLER JEEP INC	180 GREYSTONE BLVD		COLUMBIA	SC	LUST, UST
29210	1000421408	110002244410	GALEANA CHRYSLER JEEP KIA	180 GREYSTONE BLVD		COLUMBIA	SC	RCRAInfo-SQG, FINDS
29210	1001493874	110002313568	DODGELAND OF COLUMBIA	190 GREYSTONE BLVD		COLUMBIA	SC	RCRA-CESQG, FINDS
29210	1000835532	110002244223	JIM HUDSON AUTO MALL	250 GREYSTONE BLVD		COLUMBIA	SC	RCRA-CESQG, FINDS
29210	S127644643		FORMER NATIONS BANK	293 GREYSTONE BLVD		COLUMBIA	SC	
29210	S127670753		RL BRYAN COMPANY	301 GREYSTONE BLVD		COLUMBIA	SC	
29210	S127631726		THE RL BRYAN COMPANY - PENTHOUSE	301 GREYSTONE BLVD		COLUMBIA	SC	
29210	1000105451	110001670433	PROFESSIONAL PRINTERS INC SITE 2	301 GREYSTONE BLVD		COLUMBIA	SC	AIRS, FINDS, RCRAInfo-LQG
29210	S127624325		RL BRYAN CO BUILDING - 2ND FLOOR HA	301 GREYSTONE BLVD		COLUMBIA	SC	
29210	S127633053		JIM HUDSON HYUNDAI	310 GREYSTONE BLVD		COLUMBIA	SC	
29210	1007228728	110016999177	JIM HUDSON AUTOWORLD	310 GREYSTONE BLVD		COLUMBIA	SC	ICIS, FINDS
29210	S127655928		JIM HUDSON HYUNDAI	310 GREYSTONE BLVD		COLUMBIA	SC	
29210	U003522773	10557	JIM HUDSON AUTOWORLD	310 GREYSTONE BLVD		COLUMBIA	SC	LUST, UST
29210	1007835296	110019992873	BRANDON PROPERTIES LLC	310 GREYSTONE BLVD		COLUMBIA	SC	FINDS
29210	1000431134	110002244955	STIVERS AUTOMOTIVE OF COLUMBIA	320 GREYSTONE BLVD		COLUMBIA	SC	RCRA-NonGen, FINDS
29210	S127658695		STEEL FRAME BUILDING	320 GREYSTONE BLVD		COLUMBIA	SC	
29210	1007229374	110017005818	MICHAEL P PORTERFIELD DDS	1400 GROVE PARK LN		COLUMBIA	SC	FINDS
29210	S127643340		SC STATE FEDERAL CREDIT UNION - FOF	HARBISON BLVD	**	COLUMBIA	SC	
29210	S127619098		HARBISON WEST ELEMENTARY SCHOOL	HARBISON W ELEMENTARY SCHOOL, 257	**	COLUMBIA	SC	
29210	S123163309		HOUSE	3506 HARROGATE RD		COLUMBIA	SC	
29210	S126294278		3515 HARROGATE ROAD	3515 HARROGATE RD		COLUMBIA	SC	
29210	S126293374		3515 HARROGATE RD - LEX CO FLOOD	3515 HARROGATE RD		COLUMBIA	SC	
29210	S125920841		ASBESTOS AND DEMOLITION INC	3518 HARROGATE RD		COLUMBIA	SC	
29210	S125479499		HOUSE	3601 HARROGATE		COLUMBIA	SC	
29210	S123163308		HOUSE	3632 HARROGATE RD		COLUMBIA	SC	
29210	S125920452		STRUCTURE	3635 HARROGATE RD		COLUMBIA	SC	
29210	S126293176		3700 HARROGATE RD - RE-APPLY	3700 HARROGATE RD		COLUMBIA	SC	
29210	S126295054		ASBESTOS AND DEMOLITION INC	3700 HARROGATE RD		COLUMBIA	SC	
29210	S119119819		TISDALE RESIDENCE	412 HARROW DR		COLUMBIA	SC	
29210	1007228475	110016996624	RADS MOBILE X-RAY AND DIGITAL IMAGII	1310 HAVILAND CIR		COLUMBIA	SC	FINDS
29210	S128050884		DIANE HILTON	2401 HERTFORD DR		COLUMBIA	SC	
29210	S127629079		RESIDENTIAL	2125 HILLBECK DR		COLUMBIA	SC	
29210	1020372784		CASEYS UNION 76 & TRUCK STOP*	HWY I-26	**	COLUMBIA	SC	EDR Historical Auto Stations
29210	1021572566		CAROLINA INTERSTATE SERVICE*	HWY I-26 & PINEY GROVE RD	**	COLUMBIA	SC	EDR Historical Auto Stations
29210	1021133933		CAROLINA INTERSTATE SERVICE*	HWY I-26/476	**	COLUMBIA	SC	EDR Historical Auto Stations
29210	1020461679		CAROLINA INTERSTATE SERVICE*	HWY I-26/476 PINY GRVE RD	**	COLUMBIA	SC	EDR Historical Auto Stations
29210	1021440350		CAROLINA INTERSTATE SERVICE	HWY I-26/PINEY GROVE ROAD	**	COLUMBIA	SC	EDR Historical Auto Stations
29210	1004593561	110001992069	JACKSON CR:ASPHALT	100 INDEPENDENCE BLVD		COLUMBIA	SC	FINDS
29210	1016939769		C R JACKSON INC COLUMBIA PLANT	100 INDEPENDENCE BLVD		COLUMBIA	SC	ICIS
29210	S127021529		JACKSON, CR ASPHALT	100 INDEPENDENCE BLVD		COLUMBIA	SC	AIRS
29210	A100163792	902	JACKSON, C.R., CONSTRUCTION	100 INDEPENDENCE BLVD.		COLUMBIA	SC	AST
29210	1026576715		C.R. JACKSON, INC.	100 INDEPENDENCE BLVD.		COLUMBIA	SC	PRP
29210	1026603045		HOBBS, JAMES WILLIAM, II	509 INNSBROOK DRIVE		COLUMBIA	SC	PRP
29210	S127635170		BANK OF AMERICA	1500 S IRBY ST		FLORENCE	SC	
29210	1006811464	110013362182	GREENVIEW ENVIRONMENTAL OF SC	315 JACOB RD		COLUMBIA	SC	RCRA-NonGen, FINDS
29210	S119120618		HOUSE	220 JAMIL RD		COLUMBIA	SC	
29210	S119119886		LAKEWOOD VILAGE CONDO - UNITS 16, 1	240 JAMIL RD		COLUMBIA	SC	
29210	U004292037		CARMAX 7265	555 JAMIL RD		COLUMBIA	SC	LUST, UST
29210	1007254937	110017277980	CARMAX	555 JAMIL RD		COLUMBIA	SC	FINDS
29210	1007209150	SCR000765313	CARMAX #7265	555 JAMIL RD		COLUMBIA	SC	RCRAInfo-SQG
29210	S127621610		SIGMA DORMITORY	JOHN J RICHARDS MAIN CAMPUS	**	COLUMBIA	SC	
29210	1026632416		RICHARD SCOTT	3643 JUNEAU ROAD		29210	SC	PRP
29210	1010342850	110030892899	COLONY EAST	3430 KAY ST		COLUMBIA	SC	FINDS
29210	S127635756		HOUSE	3752- B KNIGHT RD, FORT JACKSON	**	COLUMBIA	SC	
29210	S127635757		HOUSE	3771 H KNIGHT RD, FORT JACKSON		COLUMBIA	SC	
29210	1007831208	110019951952	BROAD RIVER REGIONAL WWTP	KOON BOTTOM RD		COLUMBIA	SC	FINDS
29210	1007234168	110017055407	MARSHALL C FIELDS DMD	1612 LAKE MURRAY BLVD		COLUMBIA	SC	FINDS
29210	S128050855		312 LAMBETH CT - WILLIAMSON	312 LAMBETH CT		COLUMBIA	SC	

EDR ZIP Code Scan Report

ZIP	EDR-ID	Facility ID	Name	Address	Map/Dir/Dist	City	State	Databases
29210	S126293696		JOYNER RESIDENCE	315 LAMBETH CT		COLUMBIA	SC	
29210	S126293556		RICHLAND CO PUBLIC LIBRARY; OPERAT	130 LANCEWOOD RD		COLUMBIA	SC	
29210	1022044318		TELFORD AUTOMATIC TRANSMISSION	19 LANDMARK DR APT 39G		COLUMBIA	SC	EDR Historical Auto Stations
29210	S127469743		320 LAWAND DRIVE	320 LAWAND DRIVE		COLUMBIA	SC	
29210	1007259630	110017326954	VIROGROUP INC	500 LAWAND DR		COLUMBIA	SC	FINDS
29210	S128050524		500 LAWAND DRIVE- JOB#3700-21	500 LAWAND DR		COLUMBIA	SC	
29210	S128050187		500 LAWAND DRIVE - SCDOT #402	500 LAWAND DR		COLUMBIA	SC	
29210	S118178376		YORKSHIRE SD/LEESBURG UTIL CO	LEESBURG UT-6236 ST ANDREWS RD	**	COLUMBIA	SC	NPDES
29210	S127669814		HOUSE	3728 D LEGGE CT, FORT JACKSON	**	COLUMBIA	SC	
29210	1007240513	110017121489	INTEGRATED HEALTH CENTER PC	128 LEISURE LN		COLUMBIA	SC	FINDS
29210	1007229346	110017005532	THOMAS H PITTS DMD	138 LEISURE LN		COLUMBIA	SC	FINDS
29210	1007233938	110017053061	THOMAS F TRINKNER DDS	140 LEISURE LN		COLUMBIA	SC	FINDS
29210	1007227776	110016989366	IRMO CHAPIN RECREATION COMMISSION	200 LEISURE LN		COLUMBIA	SC	FINDS
29210	S127660824		CONCESSION BLDG	200 LEISURE LN SEVEN OAKS PARK		COLUMBIA	SC	
29210	S127022759		631 LEWISHAM RD, COLUMBIA, JOYE	631 LEWISHAM ROAD		COLUMBIA	SC	
29210	S125479506		HOUSE	642 LOCKNEAR RD		COLUMBIA	SC	
29210	S125920879		ASBESTOS AND DEMOLITION INC	706 LOCKNEAR RD		COLUMBIA	SC	
29210	S123163305		HOUSE	648 LOCKNER RD		COLUMBIA	SC	
29210	S125479504		HOUSE	688 LOCKNER RD		COLUMBIA	SC	
29210	S127658333		LEXINGTON STATION APTS BUILDING 5	1800 LONG CREEK DR		COLUMBIA	SC	
29210	S127657856		THE ENCLAVE APARTMENTS	1800 LONG CREEK DR		COLUMBIA	SC	
29210	1007835547	110019995371	THE HOLLOWS APARTMENTS	1300 LONGCREEK DR		COLUMBIA	SC	FINDS
29210	S127616452		1315 LONGCREEK DRIVE #269	1315 LONGCREEK DR		COLUMBIA	SC	
29210	S127469803		1315 LONGCREEK DRIVE-SCDOT HOUSES	1315 LONGCREEK DRIVE		COLUMBIA	SC	
29210	1021504279		TURKI S RESTAURANT & EXXON	1325 LONGCREEK DR		COLUMBIA	SC	EDR Historical Auto Stations
29210	S127632950		THE ASHTON @ LONGCREEK UNIT 801 B	1401 LONGCREEK DR		COLUMBIA	SC	
29210	S127671955		THE ASHTON @ LONGCREEK UNIT MAINT	1401 LONGCREEK DR		COLUMBIA	SC	
29210	S127653925		THE ASHTON AT LONGCREEK BLDG 602 U	1401 LONGCREEK DR		COLUMBIA	SC	
29210	S127663872		ASHTON APT 103A	1401 LONGCREEK DR		COLUMBIA	SC	
29210	S127632951		THE ASHTON @ LONGCREEK UNIT 801 D	1401 LONGCREEK DR		COLUMBIA	SC	
29210	S127671957		THE ASHTON @ LONGCREEK UNIT UNIT 1	1401 LONGCREEK DR		COLUMBIA	SC	
29210	S127663617		ASHTON APARTMENTS (401-B)	1401 LONGCREEK DR		COLUMBIA	SC	
29210	S127663536		ASHTON APARTMENTS 905A ,904A ,902B	1401 LONGCREEK DR		COLUMBIA	SC	
29210	S127632885		THE ASHTON AT LOONGCREEK BUILDING	1401 LONGCREEK DR		COLUMBIA	SC	
29210	S127663759		ASHTON APT 103-B	1401 LONGCREEK DR		COLUMBIA	SC	
29210	S127663564		ASHTON APARTMENT 902-A	1401 LONGCREEK DR		COLUMBIA	SC	
29210	S127632934		THE ASHTON AT LONGCREEK UNIT 103 F	1401 LONGCREEK DR		COLUMBIA	SC	
29210	S127632933		THE ASHTON AT LONGCREEK UNIT 107 D	1401 LONGCREEK DR		COLUMBIA	SC	
29210	S127663819		ASHTON APT 101A	1401 LONGCREEK DR		COLUMBIA	SC	
29210	S127654074		THE ASHTON AT LONGCREEK BUILDING 1	1401 LONGCREEK DR		COLUMBIA	SC	
29210	S127671888		THE ASHTON BUILDING 806 UNIT A	1401 LONGCREEK DR		COLUMBIA	SC	
29210	S127654068		THE ASHTON AT LONGCREEK BUILDING 1	1401 LONGCREEK DR		COLUMBIA	SC	
29210	S127663565		ASHTON APT 905-A	1401 LONGCREEK DR		COLUMBIA	SC	
29210	S127632884		THE ASHTON LEASING OFFICE MECH RO	1401 LONGCREEK DR		COLUMBIA	SC	
29210	S127663614		ASHTON APARTMENTS (703 B)	1401 LONGCREEK DR		COLUMBIA	SC	
29210	S127671956		THE ASHTON @ LONGCREEK UNIT UNIT 6	1401 LONGCREEK DR		COLUMBIA	SC	
29210	S127632887		THE ASHTON AT LONGCREEK BUILDING 1	1401 LONGCREEK DR		COLUMBIA	SC	
29210	S127653926		THE ASHTON AT LONGCREEK BLDG 102 U	1401 LONGCREEK DR		COLUMBIA	SC	
29210	S127663855		ASHTON APARTMENTS - 104 - B	1401 LONGCREEK DR		COLUMBIA	SC	
29210	S127654059		ASHTON LEASING OFFICE MECHANICAL I	1401 LONGCREEK DR		COLUMBIA	SC	
29210	S127663818		ASHTON APT 101B	1401 LONGCREEK DR		COLUMBIA	SC	
29210	S127663615		ASHTON APARTMENTS (501 A)	1401 LONGCREEK DR		COLUMBIA	SC	
29210	S127663854		ASHTON APARTMENTS - APT 106-A	1401 LONGCREEK DR		COLUMBIA	SC	
29210	S127663760		ASHTON APT 102-B	1401 LONGCREEK DR		COLUMBIA	SC	
29210	S127671954		THE ASHTON @ LONGCREEK UNIT 702 A	1401 LONGCREEK DR		COLUMBIA	SC	
29210	S127671897		THE ASHTON AT LONGCREEK BUILDING 1	1401 LONGCREEK DR		COLUMBIA	SC	
29210	S127653928		THE ASHTON AT LONGCREEK BLDG 903 U	1401 LONGCREEK DR		COLUMBIA	SC	
29210	S127671996		THE ASHTON @ LONGCREEK UNIT 605 B	1401 LONGCREEK DR		COLUMBIA	SC	
29210	S127632810		ASHTON AT LONGCREEK	1401 LONGCREEK DR		COLUMBIA	SC	
29210	S127663616		ASHTON APARTMENTS (401-A)	1401 LONGCREEK DR		COLUMBIA	SC	
29210	S127653927		THE ASHTON AT LONGCREEK BLDG 901 U	1401 LONGCREEK DR		COLUMBIA	SC	
29210	S127663758		ASHTON APT 301-A	1401 LONGCREEK DR		COLUMBIA	SC	
29210	S127671953		THE ASHTON @ LONGCREEK UNIT 608A	1401 LONGCREEK DR		COLUMBIA	SC	
29210	S127632935		THE ASHTON AT LONGCREEK UNIT 107 B	1401 LONGCREEK DR		COLUMBIA	SC	
29210	S127662869		THE ASHTON APT 601A	1401 LONGCREEK DR		COLUMBIA	SC	
29210	S127663613		ASHTON APARTMENTS (903-B)	1401 LONGCREEK DR 903 A AND B		COLUMBIA	SC	
29210	1010342849	110030892880	THE ASHTON AT LONGCREEK	1401 LONGCREEK DRIVE		COLUMBIA	SC	FINDS
29210	S119115573		PARK APT UNIT 130	1601 LONGCREEK DR		COLUMBIA	SC	
29210	S127665463		THE PARK APTS - 176, 276, 179, 279	1601 LONGCREEK DR		COLUMBIA	SC	

EDR ZIP Code Scan Report

ZIP	EDR-ID	Facility ID	Name	Address	Map/Dir/Dist	City	State	Databases
29210	S127665074		THE PARK	1601 LONGCREEK DR		COLUMBIA	SC	
29210	2021316272			1601 LONGCREEK DRIVE		COLUMBIA	SC	ERNS
29210	S119119795		VIEW AT LONGCREEK - BLDG 10 - FLOOD	1800 LONGCREEK DR		COLUMBIA	SC	
29210	S119119280		VIEW AT LONGCREEK - BLDG 9 - FLOOD I	1800 LONGCREEK DR		COLUMBIA	SC	
29210	S119119195		VIEW AT LONGCREEK APTS - BLDG 4 - FL	1800 LONGCREEK DR		COLUMBIA	SC	
29210	S119119326		VIEWS AT LONGCREEK - BLDG 5 - APTS M	1800 LONGCREEK DR		COLUMBIA	SC	
29210	S119119598		VIEW AT LONGCREEK - B10 - FLOOD DAM	1800 LONGCREEK DR		COLUMBIA	SC	
29210	S119119757		VIEW AT LONCREEK - 11N - FLOOD DAMA	1800 LONGCREEK DR		COLUMBIA	SC	
29210	S119119668		VIEWS AT LONGCREEK - APT 5Q - FLOOD	1800 LONGCREEK DR		COLUMBIA	SC	
29210	S119119975		VIEWS AT LONGCREEK - B8 - FLOOD DAM	1800 LONGCREEK DR		COLUMBIA	SC	
29210	S119119277		VIEW AT LONGCREEK - BLDG 5 - FLOOD I	1800 LONGCREEK DR		COLUMBIA	SC	
29210	S119119263		THE VIEWS AT LONGCREEK BUILDING 2 -	1800 LONGCREEK DR		COLUMBIA	SC	
29210	S119119597		VIEWS AT LONGCREEK - B14 - FLOOD DA	1800 LONGCREEK DR		COLUMBIA	SC	
29210	S119119279		VIEW AT LONGCREEK - BLDG 12 - FLOOD	1800 LONGCREEK DR		COLUMBIA	SC	
29210	S119119813		VIEWS AT LONGCREEK - 6P - FLOOD DAM	1800 LONGCREEK DR		COLUMBIA	SC	
29210	S119119812		VIEWS AT LONGCREEK - 13C - FLOOD DA	1800 LONGCREEK DR		COLUMBIA	SC	
29210	S119119278		VIEW AT LONGCREEK - BLDG 1 - FLOOD I	1800 LONGCREEK DR		COLUMBIA	SC	
29210	S119119880		VIEWS AT LONGCREEK - 4E - FLOOD DAM	1800 LONGCREEK DR		COLUMBIA	SC	
29210	S119119976		VIEWS AT LONGCREEK -B7 - FLOOD DAM	1800 LONGCREEK DR		COLUMBIA	SC	
29210	S119119520		VIEWS AT LONGCREEK - BLDG 3	1800 LONGCREEK DR		COLUMBIA	SC	
29210	S119119723		VIEW AT LONGCREEK - CLUB HOUSE - FL	1800 LONGCREEK DR		COLUMBIA	SC	
29210	S119119288		VIEWS ON LONGCREEK BUILDING 1 UNIT	1800 LONGCREEK DR		COLUMBIA	SC	
29210	S119119767		VIEW AT LONGCREEK - 4E - FLOOD DAMA	1800 LONGCREEK DR		COLUMBIA	SC	
29210	1018656027		ARNOLDS PROFESSIONAL CLG CTR	2601 MAIN ST		COLUMBIA	SC	EDR Historical Cleaners
29210	S127635130		FORMER QUINCY'S RESTAURANT	3320 N MAIN ST		ANDERSON	SC	
29210	S125479310		LIVINGSTON RESIDENCE	4225 MANDEL DR		COLUMBIA	SC	
29210	S111333713			133 MANORWOOD CT		COLUMBIA	SC	CDL
29210	S128050844		TUBOLINO RESIDENCE	1705 MARLEY DR		COLUMBIA	SC	
29210	S127022633		1716 MARLEY DRIVE, NESBITT	1716 MARLEY DR		COLUMBIA	SC	
29210	1000891159	110002243867	OHM REMEDIATION SERVICES CORP	725 MAUNEY DR		COLUMBIA	SC	RCRA-NonGen, FINDS
29210	S127665293		BRIARGATE - 113	113 MENLO DR		COLUMBIA	SC	
29210	S127022849		314 MENLO DR - MCCOY	314 MENLO DR		COLUMBIA	SC	
29210	S119116487		BRIARGATE CONDOS	825 MENLO DR		COLUMBIA	SC	
29210	S119116496		BRIARGATE CONDOS	825 MENLO DR		COLUMBIA	SC	
29210	S119114418		BRIARGATE CONDOS	825 MENLO DR		COLUMBIA	SC	
29210	S127655722		BRIARGATE CONDOMINIUMS UNIT 602	825 MENLO DR		COLUMBIA	SC	
29210	S127655740		BRIARGATE CONDOS UNIT 302	825 MENLO DR		COLUMBIA	SC	
29210	S127650885		BRIARGATE CONDIMINIUM CLUB	825 MENLO DR		COLUMBIA	SC	
29210	S119117193		BRIARGATE APT BLDG 5	825 MENLO DR		COLUMBIA	SC	
29210	S119121221		BRIARGATE CONDOMINIUMS	825 MENLO DRIVE		COLUMBIA	SC	
29210	S123343942		SINGLE FAMILY HOME	2433 MERRYWOOD RD		COLUMBIA	SC	
29210	S125920488		A&A ASBESTOS ENVIRONMENTAL	2435 MERRYWOOD RD		COLUMBIA	SC	
29210	1007837821	110020018121	MALLACH SISTERS LLC	261 MIDDLESEX RD		COLUMBIA	SC	FINDS
29210	S127022530		295 MIDDLESEX RD	295 MIDDLESEX RD		COLUMBIA	SC	
29210	S118693050			100 MONDAMIN RD		COLUMBIA	SC	CDL
29210	S119120678		3310 MONTCREST ROAD	3310 MONTCREST RD		COLUMBIA	SC	
29210	S127022187		HALL - 34-- MONTCREST ROAD, COLA. SC	3400 MONTCREST RD		COLUMBIA	SC	
29210	1025485432		CGT- GREYSTONE FACILITY	121 MOORE HOPKINS LN		COLUMBIA	SC	
29210	1007245740	110070595552	DOMINION ENERGY CGT LLC GREYSTON	121 MOORE HOPKINS LN		COLUMBIA	SC	FINDS
29210	1025888258	SCR000786350	CGT- GREYSTONE FACILITY	121 MOORE HOPKINS LN		COLUMBIA	SC	RCRA-CESQG
29210	S119118848		CAROLINA GAS TRANSMISSION LLC	121 MOORE-HOPKINS LANE		COLUMBIA	SC	
29210	S127629743		RICHARDSON RESIDENCE	269 MORINGSIDE DR		COLUMBIA	SC	
29210	S118491440			127 MORNINGHILL DR		COLUMBIA	SC	CDL
29210	1007229366	110017005738	AUSTIN B MEARES DMD	1513 MORNINGHILL DR		COLUMBIA	SC	FINDS
29210	S125479318		PHILLIPS RESIDENCE	120 MORNINGSIDE DR		COLUMBIA	SC	
29210	S117884580			189 MORNINGSIDE DR		COLUMBIA	SC	CDL
29210	S127470273		245 MORNINGSIDE DR - ELLIS	245 MORNINGSIDE DR		COLUMBIA	SC	
29210	1007234440	110017058173	YACHT COVE OWNERS ASSOCIATION	C/O MR HENRY MOMAND	**	COLUMBIA	SC	FINDS
29210	2011997477			NEAR 500 WILDLIFE PKWY		COLUMBIA	SC	ERNS
29210	S127470265		27 NOB HILL RD - MOSS	27 NOB HILL RD		COLUMBIA	SC	
29210	S127616867		27 NOB HILL RD - MOSS 2	27 NOB HILL RD		COLUMBIA	SC	
29210	S126293601		STRUCTURE	105 NOTTINGHAM CT		COLUMBIA	SC	
29210	S126293119		105 NOTTINGHAM CT - LEX CO	105 NOTTINGHAM CT		COLUMBIA	SC	
29210	S126294651		225 E NOTTINGHAM RD	225 E NOTTINGHAM RD		COLUMBIA	SC	
29210	S126294883		ASBESTOS AND DEMOLITION INC	409 NOTTINGHAM		COLUMBIA	SC	
29210	S125479471		MCDOWELL RESIDENCE	1545 NUNAMAKER DR		COLUMBIA	SC	
29210	1005854153	110008564026	MUSTARD-COLEMAN CONST CO INC DEA	OFF BUSH RIVER RD	**	COLUMBIA	SC	RCRA-NonGen, FINDS
29210	S127665206		BRIARGATE CONDOS	1202 OLD MANOR RD		COLUMBIA	SC	
29210	S127665207		BRIARGATE CONDOS	1220 OLD MANOR RD		COLUMBIA	SC	
29210	S127665208		BRIARGATE CONDOS	1314 OLD MANOR RD		COLUMBIA	SC	
29210	1004780037	SCD062700273	BROWNING METAL PRODUCTS INC	5311 OLD BUSH RD	**	COLUMBIA	SC	RCRA-NonGen

EDR ZIP Code Scan Report

ZIP	EDR-ID	Facility ID	Name	Address	Map/Dir/Dist	City	State	Databases
29210	1016120052	110002313639	BROWNING METAL PRODUCTSINC	5311 OLD BUSH ROAD	**	COLUMBIA	SC	FINDS
29210	1007245561	110017174234	APPLETREE LANDSCAPING	5466 OLD BUSH RIVER RD		COLUMBIA	SC	FINDS
29210	U003519030	10834	APPLETREE LANDSCAPING INC	5466 OLD BUSH RIVER RD		COLUMBIA	SC	LUST, UST
29210	S127665292		BRIARGATE - 905	905 OLD MANOR RD		COLUMBIA	SC	
29210	S127665291		BRIARGATE - 906	906 OLD MANOR RD		COLUMBIA	SC	
29210	S127665290		BRIARGATE - 921	921 OLD MANOR RD		COLUMBIA	SC	
29210	1007229375	110017005827	ST ANDREWS ANIMAL CLINIC	1330 OMAREST DR		COLUMBIA	SC	FINDS
29210	1007241268	110017129392	SHIMMYS POND INC	1549 OMAREST DR		COLUMBIA	SC	FINDS
29210	S125479573		RESIDENCE	1733 OMAREST DR		COLUMBIA	SC	
29210	S125479369		HEATH RESIDENCE - 2 BEDROOMS AND I	1757 OMAREST DR		COLUMBIA	SC	
29210	1014961310	SCR000775130	CVS PHARMACY 4156	100 OUTLET POINT BLVD	**	COLUMBIA	SC	RCRA-CESQG
29210	1026425647	110070754687	CVS PHARMACY 4156	100 OUTLET POINT BLVD	**	COLUMBIA	SC	FINDS
29210	1016037054	110045991067	CVS PHARMACY 4156	100 OUTLET POINT BVLD		COLUMBIA	SC	FINDS
29210	1007256892	110017298280	T C STEWART JR DDS	212 OUTLET POINT BLVD		COLUMBIA	SC	FINDS
29210	1026565555		ALCHEM-TRON, INC.	220 OUTLET POINTE BOULEVARD		COLUMBIA	SC	PRP
29210	1026611355		LAIDLAW ENVIRONMENTAL SERVICES (TS	220 OUTLET POINTE BOULEVARD		COLUMBIA	SC	PRP
29210	1026599962		GSX CHEMICAL SERVICES OF OHIO, INC.	220 OUTLET POINTE BOULEVARD		COLUMBIA	SC	PRP
29210	S127630834		HOUSE -PROJECT CANCELLED-	6906 B OWEN RD, FORT JACKSON	**	COLUMBIA	SC	
29210	S127469845		301 PARIS ROAD-SCDOT HOUSES	301 PARIS DRIVE		COLUMBIA	SC	
29210	S128050167		301 PARIS RD - SCDOT	301 PARIS RD		COLUMBIA	SC	
29210	1007232211	110017035091	BNP INC	101 W PASSAGE		COLUMBIA	SC	FINDS
29210	S127635131		VACANT HOUSE	1604 PEARMAN DAIRY RD		ANDERSON	SC	
29210	S127632820		WEST SIDE HIGH	806 PEARMAN DAIRY RD		ANDERSON	SC	
29210	S119117888		WESTSIDE HIGH SCHOOL BUILDING 600	806 PEARMAN DAIRY RD		ANDERSON	SC	
29210	S119117887		WESTSIDE HIGH SCHOOL BUILDING 400	806 PEARMAN DAIRY RD		ANDERSON	SC	
29210	S127671542		WESTSIDE HIGH SCHOOL - MECHANICAL	806 PEARMAN DAIRY RD		ANDERSON	SC	
29210	S127630724		WESTSIDE HIGH SCHOOL; 2ND FLOOR MI	806 PEARMAN DAIRY RD		ANDERSON	SC	
29210	S119117917		WESTSIDE HIGH SCHOOL	806 PEARMAN DAIRY RD		ANDERSON	SC	
29210	S119117886		WESTSIDE HIGH SCHOOL - BUILDING 200	806 PEARMAN DAIRY RD		ANDERSON	SC	
29210	1020315720		GILES ESSO STATION	1-26 & PINEY GROVE	**	COLUMBIA	SC	EDR Historical Auto Stations
29210	1021840265		GILES EXXON SERVICE	1-26 & PINEY GROVE	**	COLUMBIA	SC	EDR Historical Auto Stations
29210	1021472802		CASEYS UNION 76 AT & TRCK STP*	1-26 & PINEY GROVE RD	**	COLUMBIA	SC	EDR Historical Auto Stations
29210	1021586006		CASEYS UNION 76 AT & TRCK STP*	1-26 & PINEY GROVE RD	**	COLUMBIA	SC	EDR Historical Auto Stations
29210	1016185469	110002313504	SEVEN OAKS AUTO REPAIR AND TIRES IN	103 1/2 PINEY GROVE ROAD		COLUMBIA	SC	FINDS
29210	1000575733	SCD987581642	SEVEN OAKS AUTO REPAIR & TIRES INC	103 PINEY GROVE ROAD		COLUMBIA	SC	RCRA-CESQG
29210	1024598593	110070385986	SOUTHERN SIDING	104 PINEY GROVE ROAD		COLUMBIA	SC	FINDS
29210	S127628525		LEAPHART ELEMENTARY	120 PINEY GROVE RD		COLUMBIA	SC	
29210	S127627756		LEAPART ELEMENTARY ROOF	120 PINEY GROVE RD		COLUMBIA	SC	
29210	S127628025		LEAHART ELEMENTARY SCHOOL MUSIC	120 PINEY GROVE RD		COLUMBIA	SC	
29210	U003508431	18387	LEAPHART ELEMENTARY SCHOOL	120 PINEY GROVE RD		COLUMBIA	SC	UST
29210	S127628526		LEAPART ELEMENTARY SCHOOL	120 PINEY GROVE RD		COLUMBIA	SC	
29210	S127628529		LEAPART ELEMENTARY SCHOOL	120 PINEY GROVE RD		COLUMBIA	SC	
29210	1001405330	110002311579	LEAPHEART ELEMENTARY SCHOOL	120 PINEY GROVE ROAD		COLUMBIA	SC	RCRA-NonGen, FINDS
29210	1007837716	110020017079	LEXINGTON BUILDERS INC	1204 PINEY GROVE RD		COLUMBIA	SC	FINDS
29210	1021663489		CHUCKS GULF VALVE CENTER	1903 PINEY GROVE RD	**	COLUMBIA	SC	EDR Historical Auto Stations
29210	1022012430		CHUCKS GULF VALUE CENTER	1903 PINEY GROVE ROAD	**	COLUMBIA	SC	EDR Historical Auto Stations
29210	S123163168		FISCHER RESIDENCE	241 PINEY GROVE RD		COLUMBIA	SC	
29210	S126294268		255 PINEY GROVE RD	255 PINEY GROVE RD		COLUMBIA	SC	
29210	1021916548		TIGER EXPRESS INC	418 PINEY GROVE RD		COLUMBIA	SC	EDR Historical Auto Stations
29210	1007226307	110016974407	TIGER EXPRESS 8	418 PINEY GROVE RD		COLUMBIA	SC	FINDS
29210	U003624338	17531	RAINBOW GAS GARDEN 318	418 PINEY GROVE RD		COLUMBIA	SC	CDL, UST
29210	1021272114		WINNSBORO PETROLEUM CO INC	441 PINEY GROVE RD		COLUMBIA	SC	EDR Historical Auto Stations
29210	1004780520	110007836342	BP OIL-SITE #24225	477 PINEY GROVE RD & I-26	**	COLUMBIA	SC	RCRA-NonGen, FINDS
29210	1021329222		SUNOCO INC	495 PINEY GROVE RD		COLUMBIA	SC	EDR Historical Auto Stations
29210	2009052827		495 PINEY GROVE RD	495 PINEY GROVE RD		COLUMBIA	SC	HMIRS
29210	1007228566	110016997534	SUNOCO 0691-0574/COOP2687	495 PINEY GROVE RD		COLUMBIA	SC	FINDS
29210	S105703563		EMRO MKTG/STARVIN MARVIN 62	495 PINEY GROVE RD		COLUMBIA	SC	NPDES, SPILLS
29210	U003930890	6094	SUNOCO 0691 0574 COOP2687	495 PINEY GROVE RD		COLUMBIA	SC	GWCI, RCR, LUST, UST
29210	2013003615		495 PINEY GROVE RD.	495 PINEY GROVE RD.		COLUMBIA	SC	HMIRS
29210	2001584668			495 PINEY GROVE ROAD		COLUMBIA	SC	ERNS
29210	S113669518			499 PINEY GROVE RD		COLUMBIA	SC	CDL
29210	1018281973	110070739753	COSTCO WHOLESALE 1232	507 PINEY GROVE RD		COLUMBIA	SC	RCRAInfo-SQG, FINDS

EDR ZIP Code Scan Report

ZIP	EDR-ID	Facility ID	Name	Address	Map/Dir/Dist	City	State	Databases
29210	U004255340		COSTCO COLUMBIA	509 PINEY GROVE RD		COLUMBIA	SC	UST
29210	1020433147		VEAL WILLIAM JR	600 PINEY WOODS RD		COLUMBIA	SC	EDR Historical Auto Stations
29210	S126294963		RESIDENTIAL PROPERTY	920 PINEY WOODS RD		COLUMBIA	SC	
29210	1020954173		CAROLINA INTERSTATE SERVICE	I-26 PINEY GROVE RD	**	COLUMBIA	SC	EDR Historical Auto Stations
29210	1000449071	110002313602	FAST FARE SC-615	441 PINEYGROVE RD		COLUMBIA	SC	RCRA-NonGen, FINDS
29210	S125479503		HOUSE	317 PITTSDOWNE RD		COLUMBIA	SC	
29210	1005791148	110002188748	BROOKGREEN MANOR MHP	129 REMBERT MARTIN PK		COLUMBIA	SC	FINDS
29210	U003526324	7888	PANTRY EXPRESS 612	1004 RIVER RD		COLUMBIA	SC	LUST, UST
29210	1000449070	110002244465	FAST FARE SC-612	1004 RIVER RD		COLUMBIA	SC	RCRA-NonGen, FINDS
29210	1007230972	110017022434	RIVERMONT FACILITY	400 RIVERMONT DR		COLUMBIA	SC	FINDS
29210	1007837836	110020018274	CENTEX REAL ESTATE	500 RIVERMONT DR		COLUMBIA	SC	FINDS
29210	S127624254		OLD BABCOCK CENTER	500 RIVERMONT DR		COLUMBIA	SC	
29210	U003525635	13855	STONE CONTAINER	550 RIVERMONT DR		COLUMBIA	SC	LUST, SPILLS, UST
29210	1020344604		SHEPPARD TEXACO	1517 ROMAIN DR		COLUMBIA	SC	EDR Historical Auto Stations
29210	1003869057	SCD982119331	RUSHMORE SITE	RUSHMORE DRIVE	**	COLUMBIA	SC	CERCLIS-NFRAP
29210	1007259703	110017327739	GS2 ENGINEERING & ENVIRONMENTAL C	1401 SAINT ANDREWS RD STE 130		COLUMBIA	SC	FINDS
29210	1024403489	110070318405	WATER AND POWER TECHNOLOGIES INC	1501 SAINT ANDREWS ROAD		COLUMBIA	SC	FINDS
29210	S127617383		380 ST ANDREWS ROAD JOB# 3693-21	380 SAINT ANDREWS RD		COLUMBIA	SC	
29210	1018877798		STERLING CLEANERS INC	4350 SAINT ANDREWS RD		COLUMBIA	SC	EDR Historical Cleaners
29210	1007258169	110017311782	THE NORMANDY COMPANY	4400 SAINT ANDREWS RD		COLUMBIA	SC	FINDS
29210	S111221066		SHAW INDUSTRIES GROUP INC	4401 SAINT ANDREWS RD		COLUMBIA	SC	SPILLS
29210	S127632697		SHAW FIBER PLANT	4401 SAINT ANDREWS RD		COLUMBIA	SC	
29210	S127655950		SHAW INDUSTRIES INC - ADMIN OFFICES	4401 SAINT ANDREWS RD		COLUMBIA	SC	
29210	S127633208		SHAW INDUSTRIES - GROUND FLOOR	4401 SAINT ANDREWS RD		COLUMBIA	SC	
29210	S127664143		SHAW INDUSTRIES GROUP INC PLANT 8S	4401 SAINT ANDREWS RD		COLUMBIA	SC	
29210	S127672359		SHAW FIBER PLANT	4401 SAINT ANDREWS RD		COLUMBIA	SC	
29210	S127672061		SHAW FIBER PLANT	4401 SAINT ANDREWS RD		COLUMBIA	SC	
29210	2009900773			4401 SAINT ANDREWS RD		COLUMBIA	SC	ERNS
29210	1016121674	110000854246	SHAW INDUSTRIES GROUP INC PLANT 8S	4401 SAINT ANDREWS RD		COLUMBIA	SC	FINDS
29210	1019978169		DUTCH CLEANERS & LAUNDRY INC	533 SAINT ANDREWS RD		COLUMBIA	SC	EDR Historical Cleaners
29210	S127625837		FOOD LION STORE # 112	534 SAINT ANDREW RD		COLUMBIA	SC	
29210	1019971850		DERBYS CLEANERS & TAILORS	736 SAINT ANDREWS RD		COLUMBIA	SC	EDR Historical Cleaners
29210	1018880357		ONE HOUR MARTINIZING	742 SAINT ANDREWS RD		COLUMBIA	SC	EDR Historical Cleaners
29210	1020027560		LEXINGTON CLEANERS INC	744 SAINT ANDREWS RD		COLUMBIA	SC	EDR Historical Cleaners
29210	1022103109		BP EXPLORATION & OIL INC	755 SAINT ANDREWS RD		COLUMBIA	SC	EDR Historical Auto Stations
29210	S127022234		QUIKTRIP - STORE 1191	773 SAINT ANDREWS RD		COLUMBIA	SC	
29210	S127022284		QUIKTRIP - STORE 1191	773 SAINT ANDREWS RD		COLUMBIA	SC	
29210	1022040541		PETROLEUM DEVELOPERS INC	800 SAINT ANDREWS RD		COLUMBIA	SC	EDR Historical Auto Stations
29210	1019945530		BURNETTES CLEANERS INC	817 SAINT ANDREWS RD		COLUMBIA	SC	EDR Historical Cleaners
29210	S111676874		COPPERFIELD APARTMENTS UNIT 10F	200 SALUDA RIVER RD APT 10F		COLUMBIA	SC	SPILLS
29210	S127617064		RANJI RICHARDSON 2	200 SALUDA RIVER RD UNIT I		COLUMBIA	SC	
29210	S127617065		RANJI RICHARDSON	200 SALUDA RIVER RD UNIT J		COLUMBIA	SC	
29210	S123163306		HOUSE	118 SANDHURST RD		COLUMBIA	SC	
29210	S127617379		1805 SAPLING DR. COLUMBIA - MYERS	1805 SAPLING DR		COLUMBIA	SC	
29210	S127470050		1828 SAPLING ROAD	1828 SAPLING ROAD		COLUMBIA	SC	
29210	S127635169		ABC STORE	106 W SECOND LOOP RD		FLORENCE	SC	
29210	S127622742		SANDAL ELEMENTARY SCHOOL	2700 SEMINOLE RD CUSTODIAL CLOSET		COLUMBIA	SC	
29210	S127617279		MECCIA RESIDENCE	511 SHADOWBROOK DR		COLUMBIA	SC	
29210	S123163370		SHADOWBROOK	784 SHADOWBROOK DR		COLUMBIA	SC	
29210	S126293985		785 SHADOWBROOK DRIVE COLUMBIA	785 SHADOWBROOK DRIVE		COLUMBIA	SC	
29210	1007258236	110017312521	LORD PROPERTIES	1110 SHIRLINGTON RD		COLUMBIA	SC	FINDS
29210	S127622691		SCDJI SMU BUILDING # 3003	SHIVELS RD	**	COLUMBIA	SC	
29210	S127622693		SCDJI HVAC SHOP FLOOR	SHIVELS RD	**	COLUMBIA	SC	
29210	1007830006	110019939931	SC DEPT OF YOUTH SERVICES	1720 SHIVERS RD		COLUMBIA	SC	FINDS
29210	1008153396	110002309038	GEORGETOWN MAR BELLE ISL	1720 SHIVERS RD		COLUMBIA	SC	FINDS
29210	S127619346		R&E SCHOOL	1745 SHIVERS RD		COLUMBIA	SC	
29210	S127619333		WL SCHOOL #2 LIBRARY, 1745 SHIVERS F	1745 SHIVERS RD		COLUMBIA	SC	
29210	S127671395		SOUTH CAROLINA DEPT JUVENILE JUSTI	SHIVERS RD	**	COLUMBIA	SC	
29210	S127640839		R&E PROCESSING BLDG 1016	1745, SHIVES RD		COLUMBIA	SC	
29210	1007235258	110017066690	COLUMBIA NORTH AMERICAN VAN LINES	2708 SHOP RD		COLUMBIA	SC	FINDS
29210	S118177902		RICHLAND CO/NICHOLAS CREEK	W SIDE OF BROAD RIVER	**	COLUMBIA	SC	NPDES
29210	1007236546	110017080077	SHARPE RD MHP	3719 SIDNEY DR		COLUMBIA	SC	FINDS
29210	1019944695		BRYANS CLEANERS & LAUNDRY	326 SINT ANDREWS RD STE J		COLUMBIA	SC	EDR Historical Cleaners
29210	S126293698		STACEY COATES	1131 SKYLAND DR		COLUMBIA	SC	
29210	1009648593			225 SKYLAND DRIVE		COLUMBIA	SC	DOT OPS
29210	S127469697		1079 SPRINGHOUSE DRIVE - UNIT 1013	1079 SPRINGHOUSE DRIVE		COLUMBIA	SC	

EDR ZIP Code Scan Report

ZIP	EDR-ID	Facility ID	Name	Address	Map/Dir/Dist	City	State	Databases
29210	1018409309		DERBYS CLEANERS & TAILORS	736 G ST	**	COLUMBIA	SC	EDR Historical Cleaners
29210	S127629763		ST ANDREW'S LUTHERN CHURCH	STANDREW'S LUTHERN CHURCH	**	COLUMBIA	SC	
29210	1007236649	110017081110	LOST CREEK S/D	455 STANDREWS RD /B-2		COLUMBIA	SC	FINDS
29210	S128050845		171 STARLIGHT JOB#3749-21	171 STARLIGHT DR		COLUMBIA	SC	
29210	1007835367	110019993578	RESIDENCE INN	150 STONE RIDGE DR		COLUMBIA	SC	FINDS
29210	S127659349		USED CAR SALES	183 STONE RIDGE DR		COLUMBIA	SC	
29210	S125920491		RESIDENCE	312 S STONE HEDGE DR		COLUMBIA	SC	
29210	S127656466		STONE RIDGE APARTMENTS BLDG 5	STONE RIDGE APARTMENTS, 1000 WATE	**	COLUMBIA	SC	
29210	S127672243		STONE RIDGE APARTMENTS BLDG 6	STONE RIDGE APARTMENTS, 1000 WATE	**	COLUMBIA	SC	
29210	S127656465		STONE RIDGE APARTMENTS BLDG 9	STONE RIDGE APARTMENTS, 1000 WATE	**	COLUMBIA	SC	
29210	S127635120		HOUSE	101 STONEHEDGE DR		GREENVILLE	SC	
29210	1007257963	110017309465	SOUTH CAROLINA SURGICAL REFERRAL	124 STONEMARK LN		COLUMBIA	SC	FINDS
29210	1007235265	110017066789	SOUTH CAROLINA VETERINARY INTERNA	132 STONEMARK LN		COLUMBIA	SC	FINDS
29210	1007259258	110017323127	STONEMARK VETERINARY GROUP	132 STONEMARK LN		COLUMBIA	SC	FINDS
29210	1012301186	110040076495	CINGULAR WIRELESS LLC - COLUMBIA S\	140 STONEMARK LN		COLUMBIA	SC	ICIS, FINDS
29210	1026579324		CHEM NUCLEAR SYSTEMS INC	140 STONERIDGE DR		COLUMBIA	SC	PRP
29210	1005791598	110002181969	RUST ENV & INFRASTRUTURE INC	140 STONERIDGE DR		COLUMBIA	SC	FINDS
29210	1001211697		CHEM-NUCLEAR SYSTEMS, INC.	140 STONERIDGE DRIVE		COLUMBIA	SC	MLTS
29210	S127635420		TAMARIND AT STONERIDGE APARTMENT	143 STONERIDGE DR		COLUMBIA	SC	
29210	S127660450		AFFORDABLE SUITES - BLDG 9	150 STONERIDGE DR		COLUMBIA	SC	
29210	S113910511			150 STONERIDGE DR		COLUMBIA	SC	CDL
29210	1007228417	110016996027	SC ONCOLOGY ASSOCIATES	166 STONERIDGE DR		COLUMBIA	SC	FINDS
29210	S127559987			180 STONERIDGE DR		COLUMBIA	SC	CDL
29210	1007835397	110019993872	SC BAPTIST CONVENTION	190 STONERIDGE DR		COLUMBIA	SC	FINDS
29210	1001030680	110002244401	FUJI PHOTO FILM USA	200 STONERIDGE DR		COLUMBIA	SC	RCRA-NonGen, FINDS
29210	1007260101	110017331831	CAROLINA CONVENIENCE CORP	209 STONERIDGE DR STE 102		COLUMBIA	SC	FINDS
29210	1021108637		CAROLINA CONVENIENCE CORP	209 STONERIDGE DR STE 102		COLUMBIA	SC	EDR Historical Auto Stations
29210	S118176193		CHEM-NUCLEAR SYSTEMS/TRANSPORT	220 STONERIDGE DR		COLUMBIA	SC	NPDES
29210	1022106562		CHEVRONTEXACO CORPORATION	220 STONERIDGE DR STE 200		COLUMBIA	SC	EDR Historical Auto Stations
29210	1007235643	110017070710	LJ INC	220 STONERIDGE DR STE 405		COLUMBIA	SC	FINDS
29210	1006331317		CHEM-NUCLEAR SYS., INC.	220 STONERIDGE DRIVE		COLUMBIA	SC	MLTS
29210	1007259071	110017321192	PALMETTO HEALTH ALLIANCE-PAIN MAN	223 STONERIDGE DR		COLUMBIA	SC	FINDS
29210	1007834244	110019982349	SWANSEA APARTMENTS LLP	236 STONERIDGE DR		COLUMBIA	SC	FINDS
29210	S126294958		ASBESTOS AND DEMOLITION INC	240 STONERIDGE		COLUMBIA	SC	
29210	1007835183	110019991730	VOA HICKORY KNOLL INC	246 STONERIDGE DR		COLUMBIA	SC	FINDS
29210	1005505584	110006795799	MARTIN MARIETTA MATERIALS INC	246 STONERIDGE DR STE 102		COLUMBIA	SC	FINDS
29210	1026628068		PIRELLI CABLE	246 STONERIDGE DRIVE 4TH FLOOR		COLUMBIA	SC	PRP
29210	1007835050	110019990401	OUR LADY OF THE HILLS CATH CU	C/O STRUCTIONEERS	**	COLUMBIA	SC	FINDS
29210	S127616517		302 STUCAWA DR - SCDOT	302 STUCAWA DR		COLUMBIA	SC	
29210	S127469846		302 STUCAWA DRIVE- SCDOT HOUSES	302 STUCAWA DRIVE		COLUMBIA	SC	
29210	S127639911		JAYCEE COTTAGE	134 SUBER RD		COLUMBIA	SC	
29210	1005791613	110002181727	S&ME INC COLUMBIA	134 SUBER RD		COLUMBIA	SC	FINDS
29210	S128051054		449 SULGRAVE DR, COLUMBIA - CALLICU	449 SULGRAVE DR		COLUMBIA	SC	
29210	S127469877		525 SULGRAVE DR - STEVENS	525 SULGRAVE DR		COLUMBIA	SC	
29210	S116706135		USA STATION	SUNSET	**	COLUMBIA	SC	UIC
29210	S126294579		1137 SUSAN ROAD, COLUMBIA, SC 29210	1137 SUSAN RD		COLUMBIA	SC	
29210	1007241954	110017136516	ROBERT C CHRISTIAN DPM	1144 SUSAN RD		COLUMBIA	SC	FINDS
29210	S127617060		837 TARA TRAIL, COLUMBIA SC - WOODH	837 TARA TRL		COLUMBIA	SC	
29210	S127616864		920 TARA TRAIL - HOOVER	920 TARA TRL		COLUMBIA	SC	
29210	S126293134		JENNIFER BORYK TEST SITE	123 TEST AVE	**	COLUMBIA	SC	
29210	S127470188		755 TRAFALGAR DR - VALK	755 TRAFALGAR DR		COLUMBIA	SC	
29210	1007258742	110017317875	DIVERSIFIED CHEMICAL & CLEAN	101 TRAM CT		COLUMBIA	SC	FINDS
29210	S127638531		SCDOT BRIDGE OVER N TYGER RIVER TF	TUCAPAU RD	**	SPARTANBURG	SC	
29210	1007835895	110019998859	C H ASSOCIATES LLC	261 TUDOR RD		COLUMBIA	SC	FINDS
29210	S127656976		STRUCTURE	2525 TWO NOTCH RD		COLUMBIA	SC	
29210	S127629147		ECL EQUIPMENT CO,	2525 TWO NOTCH RD		COLUMBIA	SC	
29210	1007227477	110016986314	FORMER DLITES	7461 TWO NOTCH RD		COLUMBIA	SC	FINDS
29210	U003521387	15077	FORMER DLITES	7461 TWO NOTCH RD		COLUMBIA	SC	GWCI, RCR, LUST, UST
29210	1018563647		PENTERPRISES INC	TWO NOTCH RD	**	COLUMBIA	SC	EDR Historical Cleaners
29210	S119121471		RESIDENCE	143 TYBORNE CIR		COLUMBIA	SC	
29210	S127617247		249 TYBORNE CIRCLE, COLUMBIA - FLOY	249 TYBORNE CIR		COLUMBIA	SC	
29210	1023648386	110070058378	VIRGINIA CAROLINA CHEMICAL GLOBE	UNKNOWN	**	COLUMBIA	SC	FINDS
29210	1019328424	SCN000404833	VIRGINIA CAROLINA CHEMICAL GLOBE	UNKNOWN	**	COLUMBIA	SC	CERCLIS
29210	1007225101	110016961741	VILLAGE LAK MUR	805 VILLAGE LN		COLUMBIA	SC	FINDS
29210	S123792136		SINGLE FAMILY HOME	203 WACTOR ST	**	COLUMBIA	SC	
29210	S127666152		STONE RIDGE APTS - BLDG 100 - MULTIP	1000 WATERMARK PL		COLUMBIA	SC	
29210	S127622504		I-20 WESTBOUND REST AREA REST ROO	I-20 WESTBOUND	**	COLUMBIA	SC	
29210	S119115307		COLUMBIA HIGH SCHOOL	1701 WESTCHESTER DR		COLUMBIA	SC	
29210	S127022694		ED HOFFMAN	518 WESTLAWN RD		COLUMBIA	SC	

EDR ZIP Code Scan Report

ZIP	EDR-ID	Facility ID	Name	Address	Map/Dir/Dist	City	State	Databases
29210	S125920424		CARTER RESIDENCE	659 WESTOVER RD		COLUMBIA	SC	
29210	1020568601		BEST PRICE GAS	667 WESTOVER RD		COLUMBIA	SC	EDR Historical Auto Stations
29210	1007836045	110020000354	ATLANTIS DEVELOPMENT GROUP LLC	138 WESTPARK BLVD		COLUMBIA	SC	FINDS
29210	1020546381		RATLIFF TEXACO SERVICE	1701 WHITEFORD RD		COLUMBIA	SC	EDR Historical Auto Stations
29210	S125920628		PALMETTO ENVIRONMENTAL ASSOCIATE	516 WIBLEDON CT		COLUMBIA	SC	
29210	1012075993	110038797790	RIVERBANKS PARK-CLOSED	500 WILDLIE PKWY		COLUMBIA	SC	FINDS
29210	S127657585		BOOMERANG GIFT SHOP	500 WILDLIFE PKWY		COLUMBIA	SC	
29210	U004291788		RIVERBANKS ZOO AND GARDEN	500 WILDLIFE PKWY		COLUMBIA	SC	LUST, UST
29210	U003524652	11792	RIVERBANKS ZOO - MAIN ENTRANCE GA	500 WILDLIFE PKWY		COLUMBIA	SC	NPDES
29210	S127652323		SEA LIONFACILITY RIVERBANKS ZOO ANI	500 WILDLIFE PKWY		COLUMBIA	SC	
29210	S127653219		RIVERBANKS ZOO ZEBRA BARN	500 WILDLIFE PKWY		COLUMBIA	SC	
29210	S127658551		RIVERBANKS ZOO GREENHOUSE	500 WILDLIFE PKWY		COLUMBIA	SC	
29210	S127626105		SEA LION FACILITY RIVERBANKS ZOO AN	500 WILDLIFE PKWY		COLUMBIA	SC	
29210	S127626935		ZEBRA BUILDING	500 WILDLIFE PKWY		COLUMBIA	SC	
29210	S127657410		ADMIN BLDG	500 WILDLIFE PKWY		COLUMBIA	SC	
29210	S127620371		RIVERBANKS ZOO & GARDEN - ADMINIST	500 WILDLIFE PWY		COLUMBIA	SC	
29210	S127618838		RESIDENCE	204 WILLOW WIND RD	**	COLUMBIA	SC	
29210	S127622550		WILLOW LANE OMEGA DORM 2013	WILLOW LN	**	COLUMBIA	SC	
29210	S127636852		WOMEN'S CORRECTIONAL CENTER - CO	WOMEN'S CORRECTIONAL CENTER	**	COLUMBIA	SC	
29210	S127636853		WOMEN'S CORRECTIONAL CENTER - CO	WOMEN'S CORRECTIONAL CENTER	**	COLUMBIA	SC	
29210	S127670022		COTTAGE 2	WOMEN'S CORRECTIONAL INST, 4344 BR	**	COLUMBIA	SC	
29210	S127670021		COTTAGE 6	SC WOMENS CORRECTIONAL INST, 4344	**	COLUMBIA	SC	
29210	S126295063		GROSS RESIDENCE	105 WOOD CT		COLUMBIA	SC	
29210	S126293921		109 WOOD COURT	109 WOOD CT		COLUMBIA	SC	
29210	S127616944		105 WOODLAND VILLAGE DRIVE, COLUM	105 WOODLAND VILLAGE DR		COLUMBIA	SC	
29210	S127624985		RESIDENCE	545 WOODLAND HILLS W		COLUMBIA	SC	
29210	S126294195		1847 WOODSBORO DR	1847 WOODSBORO DR		COLUMBIA	SC	
29210	S126295041		STRUCTURE	318 YARMOUTH DR		COLUMBIA	SC	
29210	S126293200		318 YARMOUTH DR - REAPPLY	318 YARMOUTH DR		COLUMBIA	SC	
29210	S125479498		HOUSE	324 YARMOUTH DR		COLUMBIA	SC	
29210	1007228802	110016999925	MIDLANDS VETERINARY PRACTICE	1002 ZIMALCREST DR		COLUMBIA	SC	FINDS
29210	S113669264			200 ZIMALCREST DR		COLUMBIA	SC	CDL
29210	S123162990		OFFICE BUILDING	317 ZIMALCREST DR		COLUMBIA	SC	
29210	S127560309			716 ZIMALCREST DR		COLUMBIA	SC	CDL
29210	S127663812		CROSSROADS APT 700 LAUNDRY ROOM	716 ZIMCREST DR	**	COLUMBIA	SC	

GOVERNMENT RECORDS SEARCHED / DATA CURRENCY TRACKING

To maintain currency of the following federal and state databases, EDR contacts the appropriate governmental agency on a monthly or quarterly basis, as required.

Number of Days to Update: Provides confirmation that EDR is reporting records that have been updated within 90 days from the date the government agency made the information available to the public.

STANDARD ENVIRONMENTAL RECORDS

Lists of Federal NPL (Superfund) sites

NPL: National Priority List

National Priorities List (Superfund). The NPL is a subset of CERCLIS and identifies over 1,200 sites for priority cleanup under the Superfund Program. NPL sites may encompass relatively large areas. As such, EDR provides polygon coverage for over 1,000 NPL site boundaries produced by EPA's Environmental Photographic Interpretation Center (EPIC) and regional EPA offices.

Date of Government Version: 10/20/2021
Date Data Arrived at EDR: 11/05/2021
Date Made Active in Reports: 11/29/2021
Number of Days to Update: 24

Source: EPA
Telephone: N/A
Last EDR Contact: 02/03/2022
Next Scheduled EDR Contact: 04/11/2022
Data Release Frequency: Quarterly

NPL Site Boundaries

Sources:

EPA's Environmental Photographic Interpretation Center (EPIC)
Telephone: 202-564-7333

EPA Region 1
Telephone 617-918-1143

EPA Region 6
Telephone: 214-655-6659

EPA Region 3
Telephone 215-814-5418

EPA Region 7
Telephone: 913-551-7247

EPA Region 4
Telephone 404-562-8033

EPA Region 8
Telephone: 303-312-6774

EPA Region 5
Telephone 312-886-6686

EPA Region 9
Telephone: 415-947-4246

EPA Region 10
Telephone 206-553-8665

Proposed NPL: Proposed National Priority List Sites

A site that has been proposed for listing on the National Priorities List through the issuance of a proposed rule in the Federal Register. EPA then accepts public comments on the site, responds to the comments, and places on the NPL those sites that continue to meet the requirements for listing.

Date of Government Version: 10/20/2021
Date Data Arrived at EDR: 11/05/2021
Date Made Active in Reports: 11/29/2021
Number of Days to Update: 24

Source: EPA
Telephone: N/A
Last EDR Contact: 02/03/2022
Next Scheduled EDR Contact: 04/11/2022
Data Release Frequency: Quarterly

NPL LIENS: Federal Superfund Liens

Federal Superfund Liens. Under the authority granted the USEPA by CERCLA of 1980, the USEPA has the authority to file liens against real property in order to recover remedial action expenditures or when the property owner received notification of potential liability. USEPA compiles a listing of filed notices of Superfund Liens.

Date of Government Version: 10/15/1991
Date Data Arrived at EDR: 02/02/1994
Date Made Active in Reports: 03/30/1994
Number of Days to Update: 56

Source: EPA
Telephone: 202-564-4267
Last EDR Contact: 08/15/2011
Next Scheduled EDR Contact: 11/28/2011
Data Release Frequency: No Update Planned

Lists of Federal Delisted NPL sites

Delisted NPL: National Priority List Deletions

The National Oil and Hazardous Substances Pollution Contingency Plan (NCP) establishes the criteria that the EPA uses to delete sites from the NPL. In accordance with 40 CFR 300.425.(e), sites may be deleted from the NPL where no further response is appropriate.

Date of Government Version: 10/20/2021
Date Data Arrived at EDR: 11/05/2021
Date Made Active in Reports: 11/29/2021
Number of Days to Update: 24

Source: EPA
Telephone: N/A
Last EDR Contact: 02/03/2022
Next Scheduled EDR Contact: 04/11/2022
Data Release Frequency: Quarterly

Lists of Federal sites subject to CERCLA removals and CERCLA orders

FEDERAL FACILITY: Federal Facility Site Information listing

A listing of National Priority List (NPL) and Base Realignment and Closure (BRAC) sites found in the Comprehensive Environmental Response, Compensation and Liability Information System (CERCLIS) Database where EPA Federal Facilities Restoration and Reuse Office is involved in cleanup activities.

Date of Government Version: 05/25/2021
Date Data Arrived at EDR: 06/24/2021
Date Made Active in Reports: 09/20/2021
Number of Days to Update: 88

Source: Environmental Protection Agency
Telephone: 703-603-8704
Last EDR Contact: 12/29/2021
Next Scheduled EDR Contact: 04/11/2022
Data Release Frequency: Varies

SEMS: Superfund Enterprise Management System

SEMS (Superfund Enterprise Management System) tracks hazardous waste sites, potentially hazardous waste sites, and remedial activities performed in support of EPA's Superfund Program across the United States. The list was formerly know as CERCLIS, renamed to SEMS by the EPA in 2015. The list contains data on potentially hazardous waste sites that have been reported to the USEPA by states, municipalities, private companies and private persons, pursuant to Section 103 of the Comprehensive Environmental Response, Compensation, and Liability Act (CERCLA). This dataset also contains sites which are either proposed to or on the National Priorities List (NPL) and the sites which are in the screening and assessment phase for possible inclusion on the NPL.

Date of Government Version: 10/20/2021
Date Data Arrived at EDR: 11/05/2021
Date Made Active in Reports: 11/29/2021
Number of Days to Update: 24

Source: EPA
Telephone: 800-424-9346
Last EDR Contact: 02/03/2022
Next Scheduled EDR Contact: 04/25/2022
Data Release Frequency: Quarterly

Lists of Federal CERCLA sites with NFRAP

SEMS-ARCHIVE: Superfund Enterprise Management System Archive

SEMS-ARCHIVE (Superfund Enterprise Management System Archive) tracks sites that have no further interest under the Federal Superfund Program based on available information. The list was formerly known as the CERCLIS-NFRAP, renamed to SEMS ARCHIVE by the EPA in 2015. EPA may perform a minimal level of assessment work at a site while it is archived if site conditions change and/or new information becomes available. Archived sites have been removed and archived from the inventory of SEMS sites. Archived status indicates that, to the best of EPA's knowledge, assessment at a site has been completed and that EPA has determined no further steps will be taken to list the site on the National Priorities List (NPL), unless information indicates this decision was not appropriate or other considerations require a recommendation for listing at a later time. The decision does not necessarily mean that there is no hazard associated with a given site; it only means that. based upon available information, the location is not judged to be potential NPL site.

Date of Government Version: 10/20/2021
Date Data Arrived at EDR: 11/05/2021
Date Made Active in Reports: 11/29/2021
Number of Days to Update: 24

Source: EPA
Telephone: 800-424-9346
Last EDR Contact: 02/03/2022
Next Scheduled EDR Contact: 04/25/2022
Data Release Frequency: Quarterly

Lists of Federal RCRA facilities undergoing Corrective Action

CORRACTS: Corrective Action Report

CORRACTS identifies hazardous waste handlers with RCRA corrective action activity.

Date of Government Version: 09/13/2021
Date Data Arrived at EDR: 09/15/2021
Date Made Active in Reports: 10/12/2021
Number of Days to Update: 27

Source: EPA
Telephone: 800-424-9346
Last EDR Contact: 12/17/2021
Next Scheduled EDR Contact: 04/04/2022
Data Release Frequency: Quarterly

Lists of Federal RCRA TSD facilities

RCRA-TSDF: RCRA - Treatment, Storage and Disposal

RCRAInfo is EPA's comprehensive information system, providing access to data supporting the Resource Conservation and Recovery Act (RCRA) of 1976 and the Hazardous and Solid Waste Amendments (HSWA) of 1984. The database includes selective information on sites which generate, transport, store, treat and/or dispose of hazardous waste as defined by the Resource Conservation and Recovery Act (RCRA). Transporters are individuals or entities that move hazardous waste from the generator offsite to a facility that can recycle, treat, store, or dispose of the waste. TSDFs treat, store, or dispose of the waste.

Date of Government Version: 09/13/2021
Date Data Arrived at EDR: 09/15/2021
Date Made Active in Reports: 10/12/2021
Number of Days to Update: 27

Source: Environmental Protection Agency
Telephone: (404) 562-8651
Last EDR Contact: 12/17/2021
Next Scheduled EDR Contact: 04/04/2022
Data Release Frequency: Quarterly

Lists of Federal RCRA generators

RCRA-LQG: RCRA - Large Quantity Generators

RCRAInfo is EPA's comprehensive information system, providing access to data supporting the Resource Conservation and Recovery Act (RCRA) of 1976 and the Hazardous and Solid Waste Amendments (HSWA) of 1984. The database includes selective information on sites which generate, transport, store, treat and/or dispose of hazardous waste as defined by the Resource Conservation and Recovery Act (RCRA). Large quantity generators (LQGs) generate over 1,000 kilograms (kg) of hazardous waste, or over 1 kg of acutely hazardous waste per month.

Date of Government Version: 09/13/2021
Date Data Arrived at EDR: 09/15/2021
Date Made Active in Reports: 10/12/2021
Number of Days to Update: 27

Source: Environmental Protection Agency
Telephone: (404) 562-8651
Last EDR Contact: 12/17/2021
Next Scheduled EDR Contact: 04/04/2022
Data Release Frequency: Quarterly

RCRA-SQG: RCRA - Small Quantity Generators

RCRAInfo is EPA's comprehensive information system, providing access to data supporting the Resource Conservation and Recovery Act (RCRA) of 1976 and the Hazardous and Solid Waste Amendments (HSWA) of 1984. The database includes selective information on sites which generate, transport, store, treat and/or dispose of hazardous waste as defined by the Resource Conservation and Recovery Act (RCRA). Small quantity generators (SQGs) generate between 100 kg and 1,000 kg of hazardous waste per month.

Date of Government Version: 09/13/2021
Date Data Arrived at EDR: 09/15/2021
Date Made Active in Reports: 10/12/2021
Number of Days to Update: 27

Source: Environmental Protection Agency
Telephone: (404) 562-8651
Last EDR Contact: 12/17/2021
Next Scheduled EDR Contact: 04/04/2022
Data Release Frequency: Quarterly

RCRA-VSQG: RCRA - Very Small Quantity Generators (Formerly Conditionally Exempt Small Quantity Generators)

RCRAInfo is EPA's comprehensive information system, providing access to data supporting the Resource Conservation and Recovery Act (RCRA) of 1976 and the Hazardous and Solid Waste Amendments (HSWA) of 1984. The database includes selective information on sites which generate, transport, store, treat and/or dispose of hazardous waste as defined by the Resource Conservation and Recovery Act (RCRA). Very small quantity generators (VSQGs) generate less than 100 kg of hazardous waste, or less than 1 kg of acutely hazardous waste per month.

Date of Government Version: 09/13/2021
Date Data Arrived at EDR: 09/15/2021
Date Made Active in Reports: 10/12/2021
Number of Days to Update: 27

Source: Environmental Protection Agency
Telephone: (404) 562-8651
Last EDR Contact: 12/17/2021
Next Scheduled EDR Contact: 04/04/2022
Data Release Frequency: Quarterly

Federal institutional controls / engineering controls registries

LUCIS: Land Use Control Information System

LUCIS contains records of land use control information pertaining to the former Navy Base Realignment and Closure properties.

Date of Government Version: 11/15/2021
Date Data Arrived at EDR: 11/16/2021
Date Made Active in Reports: 02/08/2022
Number of Days to Update: 84

Source: Department of the Navy
Telephone: 843-820-7326
Last EDR Contact: 02/07/2022
Next Scheduled EDR Contact: 05/23/2022
Data Release Frequency: Varies

US ENG CONTROLS: Engineering Controls Sites List

A listing of sites with engineering controls in place. Engineering controls include various forms of caps, building foundations, liners, and treatment methods to create pathway elimination for regulated substances to enter environmental media or effect human health.

Date of Government Version: 11/19/2021
Date Data Arrived at EDR: 11/19/2021
Date Made Active in Reports: 02/14/2022
Number of Days to Update: 87

Source: Environmental Protection Agency
Telephone: 703-603-0695
Last EDR Contact: 11/18/2021
Next Scheduled EDR Contact: 03/07/2022
Data Release Frequency: Varies

US INST CONTROLS: Institutional Controls Sites List

A listing of sites with institutional controls in place. Institutional controls include administrative measures, such as groundwater use restrictions, construction restrictions, property use restrictions, and post remediation care requirements intended to prevent exposure to contaminants remaining on site. Deed restrictions are generally required as part of the institutional controls.

Date of Government Version: 11/19/2021
Date Data Arrived at EDR: 11/19/2021
Date Made Active in Reports: 02/14/2022
Number of Days to Update: 87

Source: Environmental Protection Agency
Telephone: 703-603-0695
Last EDR Contact: 11/19/2021
Next Scheduled EDR Contact: 03/07/2022
Data Release Frequency: Varies

Federal ERNS list

ERNS: Emergency Response Notification System

Emergency Response Notification System. ERNS records and stores information on reported releases of oil and hazardous substances.

Date of Government Version: 09/13/2021
Date Data Arrived at EDR: 09/21/2021
Date Made Active in Reports: 12/15/2021
Number of Days to Update: 85

Source: National Response Center, United States Coast Guard
Telephone: 202-267-2180
Last EDR Contact: 12/16/2021
Next Scheduled EDR Contact: 04/04/2022
Data Release Frequency: Quarterly

Lists of state- and tribal hazardous waste facilities

SHWS: Site Assessment Section Project List

State Hazardous Waste Sites. State hazardous waste site records are the states' equivalent to CERCLIS. These sites may or may not already be listed on the federal CERCLIS list. Priority sites planned for cleanup using state funds (state equivalent of Superfund) are identified along with sites where cleanup will be paid for by potentially responsible parties. Available information varies by state.

Date of Government Version: 09/10/2021
Date Data Arrived at EDR: 09/23/2021
Date Made Active in Reports: 12/15/2021
Number of Days to Update: 83

Source: Department of Health and Environmental Control
Telephone: 803-898-0835
Last EDR Contact: 12/02/2021
Next Scheduled EDR Contact: 03/21/2022
Data Release Frequency: Semi-Annually

Lists of state and tribal landfills and solid waste disposal facilities

SWF/LF: Permitted Landfills List

Solid Waste Facilities/Landfill Sites. SWF/LF type records typically contain an inventory of solid waste disposal facilities or landfills in a particular state. Depending on the state, these may be active or inactive facilities or open dumps that failed to meet RCRA Subtitle D Section 4004 criteria for solid waste landfills or disposal sites.

Date of Government Version: 09/01/2021
Date Data Arrived at EDR: 09/07/2021
Date Made Active in Reports: 12/01/2021
Number of Days to Update: 85

Source: Department of Health and Environmental Control
Telephone: 803-734-5165
Source: Department of Health and Environmental Control, GIS Section
Telephone: 803-896-4084
Last EDR Contact: 12/02/2021
Next Scheduled EDR Contact: 03/21/2022
Data Release Frequency: Semi-Annually

Lists of state and tribal leaking storage tanks

LUST: Leaking Underground Storage Tank List

Leaking Underground Storage Tank Incident Reports. LUST records contain an inventory of reported leaking underground storage tank incidents. Not all states maintain these records, and the information stored varies by state.

Date of Government Version: 06/11/2021
Date Data Arrived at EDR: 08/06/2021
Date Made Active in Reports: 11/02/2021
Number of Days to Update: 88

Source: Department of Health and Environmental Control
Telephone: 803-898-4350
Last EDR Contact: 01/18/2022
Next Scheduled EDR Contact: 05/02/2022
Data Release Frequency: Quarterly

INDIAN LUST R5: Leaking Underground Storage Tanks on Indian Land

Leaking underground storage tanks located on Indian Land in Michigan, Minnesota and Wisconsin.

Date of Government Version: 10/12/2021
Date Data Arrived at EDR: 11/15/2021
Date Made Active in Reports: 02/08/2022
Number of Days to Update: 85

Source: EPA, Region 5
Telephone: 312-886-7439
Last EDR Contact: 01/18/2022
Next Scheduled EDR Contact: 05/02/2022
Data Release Frequency: Varies

INDIAN LUST R10: Leaking Underground Storage Tanks on Indian Land
LUSTs on Indian land in Alaska, Idaho, Oregon and Washington.

Date of Government Version: 10/12/2021
Date Data Arrived at EDR: 11/15/2021
Date Made Active in Reports: 02/08/2022
Number of Days to Update: 85
Source: EPA Region 10
Telephone: 206-553-2857
Last EDR Contact: 01/18/2022
Next Scheduled EDR Contact: 05/02/2022
Data Release Frequency: Varies

INDIAN LUST R9: Leaking Underground Storage Tanks on Indian Land
LUSTs on Indian land in Arizona, California, New Mexico and Nevada

Date of Government Version: 10/12/2021
Date Data Arrived at EDR: 11/15/2021
Date Made Active in Reports: 02/08/2022
Number of Days to Update: 85
Source: Environmental Protection Agency
Telephone: 415-972-3372
Last EDR Contact: 01/18/2022
Next Scheduled EDR Contact: 05/02/2022
Data Release Frequency: Varies

INDIAN LUST R1: Leaking Underground Storage Tanks on Indian Land
A listing of leaking underground storage tank locations on Indian Land.

Date of Government Version: 04/28/2021
Date Data Arrived at EDR: 06/11/2021
Date Made Active in Reports: 09/07/2021
Number of Days to Update: 88
Source: EPA Region 1
Telephone: 617-918-1313
Last EDR Contact: 01/18/2022
Next Scheduled EDR Contact: 05/02/2022
Data Release Frequency: Varies

INDIAN LUST R6: Leaking Underground Storage Tanks on Indian Land
LUSTs on Indian land in New Mexico and Oklahoma.

Date of Government Version: 10/12/2021
Date Data Arrived at EDR: 11/15/2021
Date Made Active in Reports: 02/08/2022
Number of Days to Update: 85
Source: EPA Region 6
Telephone: 214-665-6597
Last EDR Contact: 01/18/2022
Next Scheduled EDR Contact: 05/02/2022
Data Release Frequency: Varies

INDIAN LUST R8: Leaking Underground Storage Tanks on Indian Land
LUSTs on Indian land in Colorado, Montana, North Dakota, South Dakota, Utah and Wyoming.

Date of Government Version: 10/12/2021
Date Data Arrived at EDR: 11/15/2021
Date Made Active in Reports: 02/08/2022
Number of Days to Update: 85
Source: EPA Region 8
Telephone: 303-312-6271
Last EDR Contact: 01/18/2022
Next Scheduled EDR Contact: 05/02/2022
Data Release Frequency: Varies

INDIAN LUST R7: Leaking Underground Storage Tanks on Indian Land
LUSTs on Indian land in Iowa, Kansas, and Nebraska

Date of Government Version: 10/12/2021
Date Data Arrived at EDR: 11/15/2021
Date Made Active in Reports: 02/08/2022
Number of Days to Update: 85
Source: EPA Region 7
Telephone: 913-551-7003
Last EDR Contact: 01/18/2022
Next Scheduled EDR Contact: 05/02/2022
Data Release Frequency: Varies

INDIAN LUST R4: Leaking Underground Storage Tanks on Indian Land
LUSTs on Indian land in Florida, Mississippi and North Carolina.

Date of Government Version: 05/28/2021
Date Data Arrived at EDR: 06/22/2021
Date Made Active in Reports: 09/20/2021
Number of Days to Update: 90
Source: EPA Region 4
Telephone: 404-562-8677
Last EDR Contact: 01/18/2022
Next Scheduled EDR Contact: 05/02/2022
Data Release Frequency: Varies

Lists of state and tribal registered storage tanks

FEMA UST: Underground Storage Tank Listing
A listing of all FEMA owned underground storage tanks.

Date of Government Version: 10/14/2021
Date Data Arrived at EDR: 11/05/2021
Date Made Active in Reports: 02/01/2022
Number of Days to Update: 88

Source: FEMA
Telephone: 202-646-5797
Last EDR Contact: 02/07/2022
Next Scheduled EDR Contact: 04/18/2022
Data Release Frequency: Varies

UST: Comprehensive Underground Storage Tanks
Registered Underground Storage Tanks. UST's are regulated under Subtitle I of the Resource Conservation and Recovery Act (RCRA) and must be registered with the state department responsible for administering the UST program. Available information varies by state program.

Date of Government Version: 02/28/2021
Date Data Arrived at EDR: 03/02/2021
Date Made Active in Reports: 05/21/2021
Number of Days to Update: 80

Source: Department of Health and Environmental Control
Telephone: 803-896-7957
Last EDR Contact: 01/03/2022
Next Scheduled EDR Contact: 04/18/2022
Data Release Frequency: Quarterly

AST: Aboveground Storage Tank List
Registered Aboveground Storage Tanks.

Date of Government Version: 03/25/2004
Date Data Arrived at EDR: 08/04/2004
Date Made Active in Reports: 09/23/2004
Number of Days to Update: 50

Source: Department of Health and Environmental Control
Telephone: 803-898-4350
Last EDR Contact: 11/18/2021
Next Scheduled EDR Contact: 03/07/2022
Data Release Frequency: Varies

INDIAN UST R10: Underground Storage Tanks on Indian Land
The Indian Underground Storage Tank (UST) database provides information about underground storage tanks on Indian land in EPA Region 10 (Alaska, Idaho, Oregon, Washington, and Tribal Nations).

Date of Government Version: 10/12/2021
Date Data Arrived at EDR: 11/15/2021
Date Made Active in Reports: 02/08/2022
Number of Days to Update: 85

Source: EPA Region 10
Telephone: 206-553-2857
Last EDR Contact: 01/18/2022
Next Scheduled EDR Contact: 05/02/2022
Data Release Frequency: Varies

INDIAN UST R5: Underground Storage Tanks on Indian Land
The Indian Underground Storage Tank (UST) database provides information about underground storage tanks on Indian land in EPA Region 5 (Michigan, Minnesota and Wisconsin and Tribal Nations).

Date of Government Version: 04/06/2021
Date Data Arrived at EDR: 06/11/2021
Date Made Active in Reports: 09/07/2021
Number of Days to Update: 88

Source: EPA Region 5
Telephone: 312-886-6136
Last EDR Contact: 02/09/2022
Next Scheduled EDR Contact: 05/02/2022
Data Release Frequency: Varies

INDIAN UST R1: Underground Storage Tanks on Indian Land
The Indian Underground Storage Tank (UST) database provides information about underground storage tanks on Indian land in EPA Region 1 (Connecticut, Maine, Massachusetts, New Hampshire, Rhode Island, Vermont and ten Tribal Nations).

Date of Government Version: 10/14/2021
Date Data Arrived at EDR: 11/15/2021
Date Made Active in Reports: 02/08/2022
Number of Days to Update: 85

Source: EPA, Region 1
Telephone: 617-918-1313
Last EDR Contact: 01/18/2022
Next Scheduled EDR Contact: 05/02/2022
Data Release Frequency: Varies

INDIAN UST R6: Underground Storage Tanks on Indian Land

The Indian Underground Storage Tank (UST) database provides information about underground storage tanks on Indian land in EPA Region 6 (Louisiana, Arkansas, Oklahoma, New Mexico, Texas and 65 Tribes).

Date of Government Version: 10/12/2021
Date Data Arrived at EDR: 11/15/2021
Date Made Active in Reports: 02/08/2022
Number of Days to Update: 85

Source: EPA Region 6
Telephone: 214-665-7591
Last EDR Contact: 01/18/2022
Next Scheduled EDR Contact: 05/02/2022
Data Release Frequency: Varies

INDIAN UST R4: Underground Storage Tanks on Indian Land

The Indian Underground Storage Tank (UST) database provides information about underground storage tanks on Indian land in EPA Region 4 (Alabama, Florida, Georgia, Kentucky, Mississippi, North Carolina, South Carolina, Tennessee and Tribal Nations)

Date of Government Version: 05/28/2021
Date Data Arrived at EDR: 06/22/2021
Date Made Active in Reports: 09/20/2021
Number of Days to Update: 90

Source: EPA Region 4
Telephone: 404-562-9424
Last EDR Contact: 01/18/2022
Next Scheduled EDR Contact: 05/02/2022
Data Release Frequency: Varies

INDIAN UST R8: Underground Storage Tanks on Indian Land

The Indian Underground Storage Tank (UST) database provides information about underground storage tanks on Indian land in EPA Region 8 (Colorado, Montana, North Dakota, South Dakota, Utah, Wyoming and 27 Tribal Nations).

Date of Government Version: 10/12/2021
Date Data Arrived at EDR: 11/15/2021
Date Made Active in Reports: 02/08/2022
Number of Days to Update: 85

Source: EPA Region 8
Telephone: 303-312-6137
Last EDR Contact: 01/18/2022
Next Scheduled EDR Contact: 05/02/2022
Data Release Frequency: Varies

INDIAN UST R9: Underground Storage Tanks on Indian Land

The Indian Underground Storage Tank (UST) database provides information about underground storage tanks on Indian land in EPA Region 9 (Arizona, California, Hawaii, Nevada, the Pacific Islands, and Tribal Nations).

Date of Government Version: 10/12/2021
Date Data Arrived at EDR: 11/15/2021
Date Made Active in Reports: 02/08/2022
Number of Days to Update: 85

Source: EPA Region 9
Telephone: 415-972-3368
Last EDR Contact: 01/18/2022
Next Scheduled EDR Contact: 05/02/2022
Data Release Frequency: Varies

INDIAN UST R7: Underground Storage Tanks on Indian Land

The Indian Underground Storage Tank (UST) database provides information about underground storage tanks on Indian land in EPA Region 7 (Iowa, Kansas, Missouri, Nebraska, and 9 Tribal Nations).

Date of Government Version: 10/12/2021
Date Data Arrived at EDR: 11/15/2021
Date Made Active in Reports: 02/08/2022
Number of Days to Update: 85

Source: EPA Region 7
Telephone: 913-551-7003
Last EDR Contact: 01/18/2022
Next Scheduled EDR Contact: 05/02/2022
Data Release Frequency: Varies

State and tribal institutional control / engineering control registries

RCR: Registry of Conditional Remedies

The Bureau of Land and Waste Management established this Registry to help monitor and maintain sites that have conditional remedies. A Conditional Remedy is an environmental remedy that includes certain qualifications. These qualifications are divided into two major categories: Remedies requiring Land Use Controls and Conditional No Further Actions.

Date of Government Version: 09/09/2021
Date Data Arrived at EDR: 09/13/2021
Date Made Active in Reports: 12/02/2021
Number of Days to Update: 80

Source: Department of Health & Environmental Control
Telephone: 803-896-4000
Last EDR Contact: 12/02/2021
Next Scheduled EDR Contact: 03/21/2022
Data Release Frequency: Varies

AUL: Land Use Controls

The term Land Use Controls or "LUCs" encompass institutional controls, such as those involved in real estate interests, governmental permitting, zoning, public advisories, deed notices, and other legal restrictions. The term also includes restrictions on access, whether achieved by means of engineered barriers (e.g., fence or concrete pad) or by human means (e.g., the presence of security guards). Additionally, the term includes both affirmative measures to achieve the desired restrictions (e.g., night lighting of an area) and prohibitive directives (e.g., restrictions on certain types of wells for the duration of the corrective action). Considered altogether, the LUCs for a facility will provide a tool for how the property should be used in order to maintain the level of protectiveness that one or more corrective actions were designed to achieve.

Date of Government Version: 09/07/2021
Date Data Arrived at EDR: 09/08/2021
Date Made Active in Reports: 12/01/2021
Number of Days to Update: 84

Source: Department of Health & Environmental Control
Telephone: 803-896-4049
Last EDR Contact: 12/08/2021
Next Scheduled EDR Contact: 03/21/2022
Data Release Frequency: Varies

Lists of state and tribal voluntary cleanup sites

INDIAN VCP R7: Voluntary Cleanup Priority Lisitng

A listing of voluntary cleanup priority sites located on Indian Land located in Region 7.

Date of Government Version: 03/20/2008
Date Data Arrived at EDR: 04/22/2008
Date Made Active in Reports: 05/19/2008
Number of Days to Update: 27

Source: EPA, Region 7
Telephone: 913-551-7365
Last EDR Contact: 07/08/2021
Next Scheduled EDR Contact: 07/20/2009
Data Release Frequency: Varies

INDIAN VCP R1: Voluntary Cleanup Priority Listing

A listing of voluntary cleanup priority sites located on Indian Land located in Region 1.

Date of Government Version: 07/27/2015
Date Data Arrived at EDR: 09/29/2015
Date Made Active in Reports: 02/18/2016
Number of Days to Update: 142

Source: EPA, Region 1
Telephone: 617-918-1102
Last EDR Contact: 12/14/2021
Next Scheduled EDR Contact: 04/04/2022
Data Release Frequency: Varies

VCP: Voluntary Cleanup Sites

Sites participating in the Voluntary Cleanup Program. Once staff and a non-responsible party have agreed upon an approved scope of work for a site investigation and/or remediation, the party enters into a voluntary cleanup contract. Staff oversees the cleanup efforts to ensure that activities are performed to our satisfaction. Upon completion of the negotiated work in the voluntary cleanup contract, the non-responsible party receives State Superfund liability protection.

Date of Government Version: 10/07/2021
Date Data Arrived at EDR: 10/20/2021
Date Made Active in Reports: 01/12/2022
Number of Days to Update: 84

Source: Department of Health and Environmental Control
Telephone: 803-896-4049
Last EDR Contact: 01/10/2022
Next Scheduled EDR Contact: 04/25/2022
Data Release Frequency: Varies

Lists of state and tribal brownfield sites

BROWNFIELDS: Brownfields Sites Listing

The Brownfields component of the Voluntary Cleanup Program allows a non-responsible party to acquire a contaminated property with State Superfund liability protection for existing contamination by agreeing to perform an environmental assessment and/or remediation.

Date of Government Version: 10/07/2021
Date Data Arrived at EDR: 10/20/2021
Date Made Active in Reports: 01/12/2022
Number of Days to Update: 84

Source: Department of Health & Environmental Control
Telephone: 803-896-4069
Last EDR Contact: 01/10/2022
Next Scheduled EDR Contact: 04/25/2022
Data Release Frequency: Varies

ADDITIONAL ENVIRONMENTAL RECORDS

Local Brownfield lists

US BROWNFIELDS: A Listing of Brownfields Sites

Brownfields are real property, the expansion, redevelopment, or reuse of which may be complicated by the presence or potential presence of a hazardous substance, pollutant, or contaminant. Cleaning up and reinvesting in these properties takes development pressures off of undeveloped, open land, and both improves and protects the environment. Assessment, Cleanup and Redevelopment Exchange System (ACRES) stores information reported by EPA Brownfields grant recipients on brownfields properties assessed or cleaned up with grant funding as well as information on Targeted Brownfields Assessments performed by EPA Regions. A listing of ACRES Brownfield sites is obtained from Cleanups in My Community. Cleanups in My Community provides information on Brownfields properties for which information is reported back to EPA, as well as areas served by Brownfields grant programs.

Date of Government Version: 06/10/2021
Date Data Arrived at EDR: 06/10/2021
Date Made Active in Reports: 08/17/2021
Number of Days to Update: 68

Source: Environmental Protection Agency
Telephone: 202-566-2777
Last EDR Contact: 03/15/2022
Next Scheduled EDR Contact: 03/28/2022
Data Release Frequency: Semi-Annually

Local Lists of Landfill / Solid Waste Disposal Sites

SWRCY: Solid Waste Recycling Facilities

A listing of recycling center locations.

Date of Government Version: 06/30/2019
Date Data Arrived at EDR: 03/13/2020
Date Made Active in Reports: 05/22/2020
Number of Days to Update: 70

Source: Department of Health & Enviornmental Control
Telephone: 803-896-8985
Last EDR Contact: 12/06/2021
Next Scheduled EDR Contact: 03/21/2022
Data Release Frequency: Varies

INDIAN ODI: Report on the Status of Open Dumps on Indian Lands

Location of open dumps on Indian land.

Date of Government Version: 12/31/1998
Date Data Arrived at EDR: 12/03/2007
Date Made Active in Reports: 01/24/2008
Number of Days to Update: 52

Source: Environmental Protection Agency
Telephone: 703-308-8245
Last EDR Contact: 01/24/2022
Next Scheduled EDR Contact: 05/09/2022
Data Release Frequency: Varies

DEBRIS REGION 9: Torres Martinez Reservation Illegal Dump Site Locations

A listing of illegal dump sites location on the Torres Martinez Indian Reservation located in eastern Riverside County and northern Imperial County, California.

Date of Government Version: 01/12/2009
Date Data Arrived at EDR: 05/07/2009
Date Made Active in Reports: 09/21/2009
Number of Days to Update: 137

Source: EPA, Region 9
Telephone: 415-947-4219
Last EDR Contact: 01/13/2022
Next Scheduled EDR Contact: 05/02/2022
Data Release Frequency: No Update Planned

ODI: Open Dump Inventory

An open dump is defined as a disposal facility that does not comply with one or more of the Part 257 or Part 258 Subtitle D Criteria.

Date of Government Version: 06/30/1985
Date Data Arrived at EDR: 08/09/2004
Date Made Active in Reports: 09/17/2004
Number of Days to Update: 39

Source: Environmental Protection Agency
Telephone: 800-424-9346
Last EDR Contact: 06/09/2004
Next Scheduled EDR Contact: N/A
Data Release Frequency: No Update Planned

IHS OPEN DUMPS: Open Dumps on Indian Land

A listing of all open dumps located on Indian Land in the United States.

Date of Government Version: 04/01/2014
Date Data Arrived at EDR: 08/06/2014
Date Made Active in Reports: 01/29/2015
Number of Days to Update: 176

Source: Department of Health & Human Serivces, Indian Health Service
Telephone: 301-443-1452
Last EDR Contact: 01/28/2022
Next Scheduled EDR Contact: 05/09/2022
Data Release Frequency: Varies

Local Lists of Hazardous waste / Contaminated Sites

US HIST CDL: National Clandestine Laboratory Register

A listing of clandestine drug lab locations that have been removed from the DEAs National Clandestine Laboratory Register.

Date of Government Version: 11/16/2021
Date Data Arrived at EDR: 11/18/2021
Date Made Active in Reports: 02/08/2022
Number of Days to Update: 82

Source: Drug Enforcement Administration
Telephone: 202-307-1000
Last EDR Contact: 11/16/2021
Next Scheduled EDR Contact: 03/07/2022
Data Release Frequency: No Update Planned

ALLSITES: Site Assessment & Remediation Public Record Database

The South Carolina Department of Health and Environmental Control is pleased to have the Public Record for your review. The purpose of this database is two-fold. First, it will provide to communities another form of notice of cleanup activity, allowing them to have more information about assessment and cleanup activities in their area and in the State. Second, it can assist those seeking to redevelop brownfield properties within South Carolina.

Date of Government Version: 09/07/2021
Date Data Arrived at EDR: 09/08/2021
Date Made Active in Reports: 12/01/2021
Number of Days to Update: 84

Source: Department of Health & Environmental Control
Telephone: 803-896-4000
Last EDR Contact: 12/08/2021
Next Scheduled EDR Contact: 03/21/2022
Data Release Frequency: Quarterly

CDL: Clandestine Drug Lab Sites

A listing of clandestine drug lab site locations.

Date of Government Version: 01/24/2012
Date Data Arrived at EDR: 01/26/2012
Date Made Active in Reports: 02/24/2012
Number of Days to Update: 29

Source: Department of Health & Environmental Control
Telephone: 803-896-4288
Last EDR Contact: 11/29/2021
Next Scheduled EDR Contact: 03/14/2022
Data Release Frequency: Varies

CDL 2: Clandestine Drug Lab Listing

A listing of clandestine drug lab site locations.

Date of Government Version: 08/26/2021
Date Data Arrived at EDR: 08/26/2021
Date Made Active in Reports: 09/02/2021
Number of Days to Update: 7

Source: South Carolina Law Enforcement Division
Telephone: 803-896-7136
Last EDR Contact: 11/18/2021
Next Scheduled EDR Contact: 03/07/2022
Data Release Frequency: Varies

US CDL: Clandestine Drug Labs

A listing of clandestine drug lab locations. The U.S. Department of Justice ("the Department") provides this web site as a public service. It contains addresses of some locations where law enforcement agencies reported they found chemicals or other items that indicated the presence of either clandestine drug laboratories or dumpsites. In most cases, the source of the entries is not the Department, and the Department has not verified the entry and does not guarantee its accuracy. Members of the public must verify the accuracy of all entries by, for example, contacting local law enforcement and local health departments.

Date of Government Version: 11/16/2021
Date Data Arrived at EDR: 11/18/2021
Date Made Active in Reports: 02/08/2022
Number of Days to Update: 82

Source: Drug Enforcement Administration
Telephone: 202-307-1000
Last EDR Contact: 11/16/2021
Next Scheduled EDR Contact: 03/07/2022
Data Release Frequency: Quarterly

Local Land Records

LIENS 2: CERCLA Lien Information

A Federal CERCLA ('Superfund') lien can exist by operation of law at any site or property at which EPA has spent Superfund monies. These monies are spent to investigate and address releases and threatened releases of contamination. CERCLIS provides information as to the identity of these sites and properties.

Date of Government Version: 10/20/2021
Date Data Arrived at EDR: 11/05/2021
Date Made Active in Reports: 11/29/2021
Number of Days to Update: 24

Source: Environmental Protection Agency
Telephone: 202-564-6023
Last EDR Contact: 02/03/2022
Next Scheduled EDR Contact: 04/11/2022
Data Release Frequency: Semi-Annually

Records of Emergency Release Reports

HMIRS: Hazardous Materials Information Reporting System

Hazardous Materials Incident Report System. HMIRS contains hazardous material spill incidents reported to DOT.

Date of Government Version: 09/12/2021
Date Data Arrived at EDR: 09/13/2021
Date Made Active in Reports: 09/28/2021
Number of Days to Update: 15

Source: U.S. Department of Transportation
Telephone: 202-366-4555
Last EDR Contact: 12/16/2021
Next Scheduled EDR Contact: 04/04/2022
Data Release Frequency: Quarterly

SPILLS: Spill List

Spills and releases of petroleum and hazardous chemicals reported to the Oil & Chemical Emergency Response division.

Date of Government Version: 09/10/2021
Date Data Arrived at EDR: 09/13/2021
Date Made Active in Reports: 12/02/2021
Number of Days to Update: 80

Source: Department of Health and Environmental Control
Telephone: 803-898-4111
Last EDR Contact: 11/18/2021
Next Scheduled EDR Contact: 03/07/2022
Data Release Frequency: Semi-Annually

SPILLS 90: SPILLS90 data from FirstSearch

Spills 90 includes those spill and release records available exclusively from FirstSearch databases. Typically, they may include chemical, oil and/or hazardous substance spills recorded after 1990. Duplicate records that are already included in EDR incident and release records are not included in Spills 90.

Date of Government Version: 10/25/2012
Date Data Arrived at EDR: 01/03/2013
Date Made Active in Reports: 03/07/2013
Number of Days to Update: 63

Source: FirstSearch
Telephone: N/A
Last EDR Contact: 01/03/2013
Next Scheduled EDR Contact: N/A
Data Release Frequency: No Update Planned

SPILLS 80: SPILLS80 data from FirstSearch

Spills 80 includes those spill and release records available from FirstSearch databases prior to 1990. Typically, they may include chemical, oil and/or hazardous substance spills recorded before 1990. Duplicate records that are already included in EDR incident and release records are not included in Spills 80.

Date of Government Version: 03/26/2001
Date Data Arrived at EDR: 01/03/2013
Date Made Active in Reports: 03/07/2013
Number of Days to Update: 63

Source: FirstSearch
Telephone: N/A
Last EDR Contact: 01/03/2013
Next Scheduled EDR Contact: N/A
Data Release Frequency: No Update Planned

Other Ascertainable Records

RCRA NonGen / NLR: RCRA - Non Generators / No Longer Regulated

RCRAInfo is EPA's comprehensive information system, providing access to data supporting the Resource Conservation and Recovery Act (RCRA) of 1976 and the Hazardous and Solid Waste Amendments (HSWA) of 1984. The database includes selective information on sites which generate, transport, store, treat and/or dispose of hazardous waste as defined by the Resource Conservation and Recovery Act (RCRA). Non-Generators do not presently generate hazardous waste.

Date of Government Version: 09/13/2021
Date Data Arrived at EDR: 09/15/2021
Date Made Active in Reports: 10/12/2021
Number of Days to Update: 27

Source: Environmental Protection Agency
Telephone: (404) 562-8651
Last EDR Contact: 12/17/2021
Next Scheduled EDR Contact: 04/04/2022
Data Release Frequency: Quarterly

FUDS: Formerly Used Defense Sites

The listing includes locations of Formerly Used Defense Sites properties where the US Army Corps of Engineers is actively working or will take necessary cleanup actions.

Date of Government Version: 10/26/2021
Date Data Arrived at EDR: 11/16/2021
Date Made Active in Reports: 02/08/2022
Number of Days to Update: 84

Source: U.S. Army Corps of Engineers
Telephone: 202-528-4285
Last EDR Contact: 02/15/2022
Next Scheduled EDR Contact: 05/30/2022
Data Release Frequency: Varies

DOD: Department of Defense Sites

This data set consists of federally owned or administered lands, administered by the Department of Defense, that have any area equal to or greater than 640 acres of the United States, Puerto Rico, and the U.S. Virgin Islands.

Date of Government Version: 12/31/2005
Date Data Arrived at EDR: 11/10/2006
Date Made Active in Reports: 01/11/2007
Number of Days to Update: 62

Source: USGS
Telephone: 888-275-8747
Last EDR Contact: 01/14/2022
Next Scheduled EDR Contact: 04/25/2022
Data Release Frequency: Semi-Annually

FEDLAND: Federal and Indian Lands

Federally and Indian administrated lands of the United States. Lands included are administrated by: Army Corps of Engineers, Bureau of Reclamation, National Wild and Scenic River, National Wildlife Refuge, Public Domain Land, Wilderness, Wilderness Study Area, Wildlife Management Area, Bureau of Indian Affairs, Bureau of Land Management, Department of Justice, Forest Service, Fish and Wildlife Service, National Park Service.

Date of Government Version: 04/02/2018
Date Data Arrived at EDR: 04/11/2018
Date Made Active in Reports: 11/06/2019
Number of Days to Update: 574

Source: U.S. Geological Survey
Telephone: 888-275-8747
Last EDR Contact: 01/07/2022
Next Scheduled EDR Contact: 04/18/2022
Data Release Frequency: N/A

SCRD DRYCLEANERS: State Coalition for Remediation of Drycleaners Listing

The State Coalition for Remediation of Drycleaners was established in 1998, with support from the U.S. EPA Office of Superfund Remediation and Technology Innovation. It is comprised of representatives of states with established drycleaner remediation programs. Currently the member states are Alabama, Connecticut, Florida, Illinois, Kansas, Minnesota, Missouri, North Carolina, Oregon, South Carolina, Tennessee, Texas, and Wisconsin.

Date of Government Version: 01/01/2017
Date Data Arrived at EDR: 02/03/2017
Date Made Active in Reports: 04/07/2017
Number of Days to Update: 63

Source: Environmental Protection Agency
Telephone: 615-532-8599
Last EDR Contact: 02/08/2022
Next Scheduled EDR Contact: 05/23/2022
Data Release Frequency: Varies

US FIN ASSUR: Financial Assurance Information

All owners and operators of facilities that treat, store, or dispose of hazardous waste are required to provide proof that they will have sufficient funds to pay for the clean up, closure, and post-closure care of their facilities.

Date of Government Version: 09/13/2021
Date Data Arrived at EDR: 09/15/2021
Date Made Active in Reports: 09/28/2021
Number of Days to Update: 13

Source: Environmental Protection Agency
Telephone: 202-566-1917
Last EDR Contact: 12/17/2021
Next Scheduled EDR Contact: 04/04/2022
Data Release Frequency: Quarterly

EPA WATCH LIST: EPA WATCH LIST

EPA maintains a "Watch List" to facilitate dialogue between EPA, state and local environmental agencies on enforcement matters relating to facilities with alleged violations identified as either significant or high priority. Being on the Watch List does not mean that the facility has actually violated the law only that an investigation by EPA or a state or local environmental agency has led those organizations to allege that an unproven violation has in fact occurred. Being on the Watch List does not represent a higher level of concern regarding the alleged violations that were detected, but instead indicates cases requiring additional dialogue between EPA, state and local agencies - primarily because of the length of time the alleged violation has gone unaddressed or unresolved.

Date of Government Version: 08/30/2013
Date Data Arrived at EDR: 03/21/2014
Date Made Active in Reports: 06/17/2014
Number of Days to Update: 88

Source: Environmental Protection Agency
Telephone: 617-520-3000
Last EDR Contact: 02/01/2022
Next Scheduled EDR Contact: 05/16/2022
Data Release Frequency: Quarterly

2020 COR ACTION: 2020 Corrective Action Program List

The EPA has set ambitious goals for the RCRA Corrective Action program by creating the 2020 Corrective Action Universe. This RCRA cleanup baseline includes facilities expected to need corrective action. The 2020 universe contains a wide variety of sites. Some properties are heavily contaminated while others were contaminated but have since been cleaned up. Still others have not been fully investigated yet, and may require little or no remediation. Inclusion in the 2020 Universe does not necessarily imply failure on the part of a facility to meet its RCRA obligations.

Date of Government Version: 09/30/2017
Date Data Arrived at EDR: 05/08/2018
Date Made Active in Reports: 07/20/2018
Number of Days to Update: 73

Source: Environmental Protection Agency
Telephone: 703-308-4044
Last EDR Contact: 02/03/2022
Next Scheduled EDR Contact: 05/16/2022
Data Release Frequency: Varies

TSCA: Toxic Substances Control Act

Toxic Substances Control Act. TSCA identifies manufacturers and importers of chemical substances included on the TSCA Chemical Substance Inventory list. It includes data on the production volume of these substances by plant site.

Date of Government Version: 12/31/2016
Date Data Arrived at EDR: 06/17/2020
Date Made Active in Reports: 09/10/2020
Number of Days to Update: 85

Source: EPA
Telephone: 202-260-5521
Last EDR Contact: 12/17/2021
Next Scheduled EDR Contact: 03/28/2022
Data Release Frequency: Every 4 Years

TRIS: Toxic Chemical Release Inventory System

Toxic Release Inventory System. TRIS identifies facilities which release toxic chemicals to the air, water and land in reportable quantities under SARA Title III Section 313.

Date of Government Version: 12/31/2018
Date Data Arrived at EDR: 08/14/2020
Date Made Active in Reports: 11/04/2020
Number of Days to Update: 82

Source: EPA
Telephone: 202-566-0250
Last EDR Contact: 11/16/2021
Next Scheduled EDR Contact: 02/28/2022
Data Release Frequency: Annually

GOVERNMENT RECORDS SEARCHED / DATA CURRENCY TRACKING

SSTS: Section 7 Tracking Systems

Section 7 of the Federal Insecticide, Fungicide and Rodenticide Act, as amended (92 Stat. 829) requires all registered pesticide-producing establishments to submit a report to the Environmental Protection Agency by March 1st each year. Each establishment must report the types and amounts of pesticides, active ingredients and devices being produced, and those having been produced and sold or distributed in the past year.

Date of Government Version: 10/18/2021
Date Data Arrived at EDR: 10/20/2021
Date Made Active in Reports: 01/10/2022
Number of Days to Update: 82

Source: EPA
Telephone: 202-564-4203
Last EDR Contact: 01/19/2022
Next Scheduled EDR Contact: 05/02/2022
Data Release Frequency: Annually

ROD: Records Of Decision

Record of Decision. ROD documents mandate a permanent remedy at an NPL (Superfund) site containing technical and health information to aid in the cleanup.

Date of Government Version: 10/20/2021
Date Data Arrived at EDR: 11/05/2021
Date Made Active in Reports: 11/29/2021
Number of Days to Update: 24

Source: EPA
Telephone: 703-416-0223
Last EDR Contact: 02/03/2022
Next Scheduled EDR Contact: 03/14/2022
Data Release Frequency: Annually

RMP: Risk Management Plans

When Congress passed the Clean Air Act Amendments of 1990, it required EPA to publish regulations and guidance for chemical accident prevention at facilities using extremely hazardous substances. The Risk Management Program Rule (RMP Rule) was written to implement Section 112(r) of these amendments. The rule, which built upon existing industry codes and standards, requires companies of all sizes that use certain flammable and toxic substances to develop a Risk Management Program, which includes a(n): Hazard assessment that details the potential effects of an accidental release, an accident history of the last five years, and an evaluation of worst-case and alternative accidental releases; Prevention program that includes safety precautions and maintenance, monitoring, and employee training measures; and Emergency response program that spells out emergency health care, employee training measures and procedures for informing the public and response agencies (e.g the fire department) should an accident occur.

Date of Government Version: 10/20/2021
Date Data Arrived at EDR: 11/05/2021
Date Made Active in Reports: 11/12/2021
Number of Days to Update: 7

Source: Environmental Protection Agency
Telephone: 202-564-8600
Last EDR Contact: 01/18/2022
Next Scheduled EDR Contact: 05/02/2022
Data Release Frequency: Varies

RAATS: RCRA Administrative Action Tracking System

RCRA Administration Action Tracking System. RAATS contains records based on enforcement actions issued under RCRA pertaining to major violators and includes administrative and civil actions brought by the EPA. For administration actions after September 30, 1995, data entry in the RAATS database was discontinued. EPA will retain a copy of the database for historical records. It was necessary to terminate RAATS because a decrease in agency resources made it impossible to continue to update the information contained in the database.

Date of Government Version: 04/17/1995
Date Data Arrived at EDR: 07/03/1995
Date Made Active in Reports: 08/07/1995
Number of Days to Update: 35

Source: EPA
Telephone: 202-564-4104
Last EDR Contact: 06/02/2008
Next Scheduled EDR Contact: 09/01/2008
Data Release Frequency: No Update Planned

PRP: Potentially Responsible Parties

A listing of verified Potentially Responsible Parties

Date of Government Version: 10/20/2021
Date Data Arrived at EDR: 11/05/2021
Date Made Active in Reports: 12/15/2021
Number of Days to Update: 40

Source: EPA
Telephone: 202-564-6023
Last EDR Contact: 02/03/2022
Next Scheduled EDR Contact: 05/16/2022
Data Release Frequency: Quarterly

PADS: PCB Activity Database System

PCB Activity Database. PADS Identifies generators, transporters, commercial storers and/or brokers and disposers of PCB's who are required to notify the EPA of such activities.

Date of Government Version: 11/19/2020
Date Data Arrived at EDR: 01/08/2021
Date Made Active in Reports: 03/22/2021
Number of Days to Update: 73

Source: EPA
Telephone: 202-566-0500
Last EDR Contact: 01/07/2022
Next Scheduled EDR Contact: 04/18/2022
Data Release Frequency: Annually

ICIS: Integrated Compliance Information System

The Integrated Compliance Information System (ICIS) supports the information needs of the national enforcement and compliance program as well as the unique needs of the National Pollutant Discharge Elimination System (NPDES) program.

Date of Government Version: 11/18/2016
Date Data Arrived at EDR: 11/23/2016
Date Made Active in Reports: 02/10/2017
Number of Days to Update: 79

Source: Environmental Protection Agency
Telephone: 202-564-2501
Last EDR Contact: 12/29/2021
Next Scheduled EDR Contact: 04/18/2022
Data Release Frequency: Quarterly

FTTS: FIFRA/ TSCA Tracking System - FIFRA (Federal Insecticide, Fungicide, & Rodenticide Act)/TSCA (Toxic Substances Control Act)

FTTS tracks administrative cases and pesticide enforcement actions and compliance activities related to FIFRA, TSCA and EPCRA (Emergency Planning and Community Right-to-Know Act). To maintain currency, EDR contacts the Agency on a quarterly basis.

Date of Government Version: 04/09/2009
Date Data Arrived at EDR: 04/16/2009
Date Made Active in Reports: 05/11/2009
Number of Days to Update: 25

Source: EPA/Office of Prevention, Pesticides and Toxic Substances
Telephone: 202-566-1667
Last EDR Contact: 08/18/2017
Next Scheduled EDR Contact: 12/04/2017
Data Release Frequency: No Update Planned

FTTS INSP: FIFRA/ TSCA Tracking System - FIFRA (Federal Insecticide, Fungicide, & Rodenticide Act)/TSCA (Toxic Substances Control Act)

A listing of FIFRA/TSCA Tracking System (FTTS) inspections and enforcements.

Date of Government Version: 04/09/2009
Date Data Arrived at EDR: 04/16/2009
Date Made Active in Reports: 05/11/2009
Number of Days to Update: 25

Source: EPA
Telephone: 202-566-1667
Last EDR Contact: 08/18/2017
Next Scheduled EDR Contact: 12/04/2017
Data Release Frequency: No Update Planned

MLTS: Material Licensing Tracking System

MLTS is maintained by the Nuclear Regulatory Commission and contains a list of approximately 8,100 sites which possess or use radioactive materials and which are subject to NRC licensing requirements. To maintain currency, EDR contacts the Agency on a quarterly basis.

Date of Government Version: 07/29/2021
Date Data Arrived at EDR: 08/24/2021
Date Made Active in Reports: 11/19/2021
Number of Days to Update: 87

Source: Nuclear Regulatory Commission
Telephone: 301-415-7169
Last EDR Contact: 01/18/2022
Next Scheduled EDR Contact: 05/02/2022
Data Release Frequency: Quarterly

COAL ASH DOE: Steam-Electric Plant Operation Data

A listing of power plants that store ash in surface ponds.

Date of Government Version: 12/31/2019
Date Data Arrived at EDR: 12/01/2020
Date Made Active in Reports: 02/09/2021
Number of Days to Update: 70

Source: Department of Energy
Telephone: 202-586-8719
Last EDR Contact: 11/30/2021
Next Scheduled EDR Contact: 03/14/2022
Data Release Frequency: Varies

COAL ASH EPA: Coal Combustion Residues Surface Impoundments List
A listing of coal combustion residues surface impoundments with high hazard potential ratings.

Date of Government Version: 01/12/2017
Date Data Arrived at EDR: 03/05/2019
Date Made Active in Reports: 11/11/2019
Number of Days to Update: 251
Source: Environmental Protection Agency
Telephone: N/A
Last EDR Contact: 12/02/2021
Next Scheduled EDR Contact: 03/14/2022
Data Release Frequency: Varies

PCB TRANSFORMER: PCB Transformer Registration Database
The database of PCB transformer registrations that includes all PCB registration submittals.

Date of Government Version: 09/13/2019
Date Data Arrived at EDR: 11/06/2019
Date Made Active in Reports: 02/10/2020
Number of Days to Update: 96
Source: Environmental Protection Agency
Telephone: 202-566-0517
Last EDR Contact: 02/04/2022
Next Scheduled EDR Contact: 05/16/2022
Data Release Frequency: Varies

RADINFO: Radiation Information Database
The Radiation Information Database (RADINFO) contains information about facilities that are regulated by U.S. Environmental Protection Agency (EPA) regulations for radiation and radioactivity.

Date of Government Version: 07/01/2019
Date Data Arrived at EDR: 07/01/2019
Date Made Active in Reports: 09/23/2019
Number of Days to Update: 84
Source: Environmental Protection Agency
Telephone: 202-343-9775
Last EDR Contact: 12/27/2021
Next Scheduled EDR Contact: 04/11/2022
Data Release Frequency: Quarterly

HIST FTTS: FIFRA/TSCA Tracking System Administrative Case Listing
A complete administrative case listing from the FIFRA/TSCA Tracking System (FTTS) for all ten EPA regions. The information was obtained from the National Compliance Database (NCDB). NCDB supports the implementation of FIFRA (Federal Insecticide, Fungicide, and Rodenticide Act) and TSCA (Toxic Substances Control Act). Some EPA regions are now closing out records. Because of that, and the fact that some EPA regions are not providing EPA Headquarters with updated records, it was decided to create a HIST FTTS database. It included records that may not be included in the newer FTTS database updates. This database is no longer updated.

Date of Government Version: 10/19/2006
Date Data Arrived at EDR: 03/01/2007
Date Made Active in Reports: 04/10/2007
Number of Days to Update: 40
Source: Environmental Protection Agency
Telephone: 202-564-2501
Last EDR Contact: 12/17/2007
Next Scheduled EDR Contact: 03/17/2008
Data Release Frequency: No Update Planned

HIST FTTS INSP: FIFRA/TSCA Tracking System Inspection & Enforcement Case Listing
A complete inspection and enforcement case listing from the FIFRA/TSCA Tracking System (FTTS) for all ten EPA regions. The information was obtained from the National Compliance Database (NCDB). NCDB supports the implementation of FIFRA (Federal Insecticide, Fungicide, and Rodenticide Act) and TSCA (Toxic Substances Control Act). Some EPA regions are now closing out records. Because of that, and the fact that some EPA regions are not providing EPA Headquarters with updated records, it was decided to create a HIST FTTS database. It included records that may not be included in the newer FTTS database updates. This database is no longer updated.

Date of Government Version: 10/19/2006
Date Data Arrived at EDR: 03/01/2007
Date Made Active in Reports: 04/10/2007
Number of Days to Update: 40
Source: Environmental Protection Agency
Telephone: 202-564-2501
Last EDR Contact: 12/17/2008
Next Scheduled EDR Contact: 03/17/2008
Data Release Frequency: No Update Planned

DOT OPS: Incident and Accident Data
Department of Transporation, Office of Pipeline Safety Incident and Accident data.

Date of Government Version: 01/02/2020
Date Data Arrived at EDR: 01/28/2020
Date Made Active in Reports: 04/17/2020
Number of Days to Update: 80

Source: Department of Transporation, Office of Pipeline Safety
Telephone: 202-366-4595
Last EDR Contact: 01/24/2022
Next Scheduled EDR Contact: 05/08/2022
Data Release Frequency: Quarterly

CONSENT: Superfund (CERCLA) Consent Decrees

Major legal settlements that establish responsibility and standards for cleanup at NPL (Superfund) sites. Released periodically by United States District Courts after settlement by parties to litigation matters.

Date of Government Version: 09/30/2021
Date Data Arrived at EDR: 10/13/2021
Date Made Active in Reports: 01/10/2022
Number of Days to Update: 89

Source: Department of Justice, Consent Decree Library
Telephone: Varies
Last EDR Contact: 01/03/2022
Next Scheduled EDR Contact: 04/18/2022
Data Release Frequency: Varies

BRS: Biennial Reporting System

The Biennial Reporting System is a national system administered by the EPA that collects data on the generation and management of hazardous waste. BRS captures detailed data from two groups: Large Quantity Generators (LQG) and Treatment, Storage, and Disposal Facilities.

Date of Government Version: 12/31/2019
Date Data Arrived at EDR: 09/15/2021
Date Made Active in Reports: 12/14/2021
Number of Days to Update: 90

Source: EPA/NTIS
Telephone: 800-424-9346
Last EDR Contact: 12/17/2021
Next Scheduled EDR Contact: 04/04/2022
Data Release Frequency: Biennially

INDIAN RESERV: Indian Reservations

This map layer portrays Indian administered lands of the United States that have any area equal to or greater than 640 acres.

Date of Government Version: 12/31/2014
Date Data Arrived at EDR: 07/14/2015
Date Made Active in Reports: 01/10/2017
Number of Days to Update: 546

Source: USGS
Telephone: 202-208-3710
Last EDR Contact: 01/04/2022
Next Scheduled EDR Contact: 04/18/2022
Data Release Frequency: Semi-Annually

FUSRAP: Formerly Utilized Sites Remedial Action Program

DOE established the Formerly Utilized Sites Remedial Action Program (FUSRAP) in 1974 to remediate sites where radioactive contamination remained from Manhattan Project and early U.S. Atomic Energy Commission (AEC) operations.

Date of Government Version: 07/26/2021
Date Data Arrived at EDR: 07/27/2021
Date Made Active in Reports: 10/22/2021
Number of Days to Update: 87

Source: Department of Energy
Telephone: 202-586-3559
Last EDR Contact: 01/31/2022
Next Scheduled EDR Contact: 05/16/2022
Data Release Frequency: Varies

UMTRA: Uranium Mill Tailings Sites

Uranium ore was mined by private companies for federal government use in national defense programs. When the mills shut down, large piles of the sand-like material (mill tailings) remain after uranium has been extracted from the ore. Levels of human exposure to radioactive materials from the piles are low; however, in some cases tailings were used as construction materials before the potential health hazards of the tailings were recognized.

Date of Government Version: 08/30/2019
Date Data Arrived at EDR: 11/15/2019
Date Made Active in Reports: 01/28/2020
Number of Days to Update: 74

Source: Department of Energy
Telephone: 505-845-0011
Last EDR Contact: 12/09/2021
Next Scheduled EDR Contact: 02/28/2022
Data Release Frequency: Varies

LEAD SMELTER 1: Lead Smelter Sites
A listing of former lead smelter site locations.

Date of Government Version: 10/20/2021
Date Data Arrived at EDR: 11/05/2021
Date Made Active in Reports: 11/29/2021
Number of Days to Update: 24

Source: Environmental Protection Agency
Telephone: 703-603-8787
Last EDR Contact: 05/03/2022
Next Scheduled EDR Contact: 04/11/2022
Data Release Frequency: Varies

LEAD SMELTER 2: Lead Smelter Sites
A list of several hundred sites in the U.S. where secondary lead smelting was done from 1931and 1964. These sites may pose a threat to public health through ingestion or inhalation of contaminated soil or dust

Date of Government Version: 04/05/2001
Date Data Arrived at EDR: 10/27/2010
Date Made Active in Reports: 12/02/2010
Number of Days to Update: 36

Source: American Journal of Public Health
Telephone: 703-305-6451
Last EDR Contact: 12/02/2009
Next Scheduled EDR Contact: N/A
Data Release Frequency: No Update Planned

US AIRS (AFS): Aerometric Information Retrieval System Facility Subsystem (AFS)
The database is a sub-system of Aerometric Information Retrieval System (AIRS). AFS contains compliance data on air pollution point sources regulated by the U.S. EPA and/or state and local air regulatory agencies. This information comes from source reports by various stationary sources of air pollution, such as electric power plants, steel mills, factories, and universities, and provides information about the air pollutants they produce. Action, air program, air program pollutant, and general level plant data. It is used to track emissions and compliance data from industrial plants.

Date of Government Version: 10/12/2016
Date Data Arrived at EDR: 10/26/2016
Date Made Active in Reports: 02/03/2017
Number of Days to Update: 100

Source: EPA
Telephone: 202-564-2496
Last EDR Contact: 09/26/2017
Next Scheduled EDR Contact: 01/08/2018
Data Release Frequency: Annually

US AIRS MINOR: Air Facility System Data
A listing of minor source facilities.

Date of Government Version: 10/12/2016
Date Data Arrived at EDR: 10/26/2016
Date Made Active in Reports: 02/03/2017
Number of Days to Update: 100

Source: EPA
Telephone: 202-564-2496
Last EDR Contact: 09/26/2017
Next Scheduled EDR Contact: 01/08/2018
Data Release Frequency: Annually

US MINES: Mines Master Index File
Contains all mine identification numbers issued for mines active or opened since 1971. The data also includes violation information.

Date of Government Version: 11/02/2021
Date Data Arrived at EDR: 11/22/2021
Date Made Active in Reports: 02/14/2022
Number of Days to Update: 84

Source: Department of Labor, Mine Safety and Health Administration
Telephone: 303-231-5959
Last EDR Contact: 11/22/2021
Next Scheduled EDR Contact: 03/07/2022
Data Release Frequency: Semi-Annually

MINES VIOLATIONS: MSHA Violation Assessment Data
Mines violation and assessment information. Department of Labor, Mine Safety & Health Administration.

Date of Government Version: 06/30/2021
Date Data Arrived at EDR: 07/01/2021
Date Made Active in Reports: 09/28/2021
Number of Days to Update: 89

Source: DOL, Mine Safety & Health Admi
Telephone: 202-693-9424
Last EDR Contact: 12/20/2021
Next Scheduled EDR Contact: 03/14/2022
Data Release Frequency: Quarterly

US MINES 2: Ferrous and Nonferrous Metal Mines Database Listing

This map layer includes ferrous (ferrous metal mines are facilities that extract ferrous metals, such as iron ore or molybdenum) and nonferrous (Nonferrous metal mines are facilities that extract nonferrous metals, such as gold, silver, copper, zinc, and lead) metal mines in the United States.

Date of Government Version: 05/06/2020
Date Data Arrived at EDR: 05/27/2020
Date Made Active in Reports: 08/13/2020
Number of Days to Update: 78

Source: USGS
Telephone: 703-648-7709
Last EDR Contact: 11/22/2021
Next Scheduled EDR Contact: 03/07/2022
Data Release Frequency: Varies

US MINES 3: Active Mines & Mineral Plants Database Listing

Active Mines and Mineral Processing Plant operations for commodities monitored by the Minerals Information Team of the USGS.

Date of Government Version: 04/14/2011
Date Data Arrived at EDR: 06/08/2011
Date Made Active in Reports: 09/13/2011
Number of Days to Update: 97

Source: USGS
Telephone: 703-648-7709
Last EDR Contact: 11/22/2021
Next Scheduled EDR Contact: 03/07/2022
Data Release Frequency: Varies

ABANDONED MINES: Abandoned Mines

An inventory of land and water impacted by past mining (primarily coal mining) is maintained by OSMRE to provide information needed to implement the Surface Mining Control and Reclamation Act of 1977 (SMCRA). The inventory contains information on the location, type, and extent of AML impacts, as well as, information on the cost associated with the reclamation of those problems. The inventory is based upon field surveys by State, Tribal, and OSMRE program officials. It is dynamic to the extent that it is modified as new problems are identified and existing problems are reclaimed.

Date of Government Version: 09/14/2021
Date Data Arrived at EDR: 09/15/2021
Date Made Active in Reports: 12/15/2021
Number of Days to Update: 91

Source: Department of Interior
Telephone: 202-208-2609
Last EDR Contact: 12/14/2021
Next Scheduled EDR Contact: 03/21/2022
Data Release Frequency: Quarterly

FINDS: Facility Index System/Facility Registry System

Facility Index System. FINDS contains both facility information and 'pointers' to other sources that contain more detail. EDR includes the following FINDS databases in this report: PCS (Permit Compliance System), AIRS (Aerometric Information Retrieval System), DOCKET (Enforcement Docket used to manage and track information on civil judicial enforcement cases for all environmental statutes), FURS (Federal Underground Injection Control), C-DOCKET (Criminal Docket System used to track criminal enforcement actions for all environmental statutes), FFIS (Federal Facilities Information System), STATE (State Environmental Laws and Statutes), and PADS (PCB Activity Data System).

Date of Government Version: 05/05/2021
Date Data Arrived at EDR: 05/18/2021
Date Made Active in Reports: 08/17/2021
Number of Days to Update: 91

Source: EPA
Telephone: (404) 562-9900
Last EDR Contact: 11/22/2021
Next Scheduled EDR Contact: 03/14/2022
Data Release Frequency: Quarterly

DOCKET HWC: Hazardous Waste Compliance Docket Listing

A complete list of the Federal Agency Hazardous Waste Compliance Docket Facilities.

Date of Government Version: 05/06/2021
Date Data Arrived at EDR: 05/21/2021
Date Made Active in Reports: 08/11/2021
Number of Days to Update: 82

Source: Environmental Protection Agency
Telephone: 202-564-0527
Last EDR Contact: 11/23/2021
Next Scheduled EDR Contact: 03/07/2022
Data Release Frequency: Varies

ECHO: Enforcement & Compliance History Information

ECHO provides integrated compliance and enforcement information for about 800,000 regulated facilities nationwide.

Date of Government Version: 01/01/2022
Date Data Arrived at EDR: 01/04/2022
Date Made Active in Reports: 01/10/2022
Number of Days to Update: 6

Source: Environmental Protection Agency
Telephone: 202-564-2280
Last EDR Contact: 01/04/2022
Next Scheduled EDR Contact: 04/18/2022
Data Release Frequency: Quarterly

UXO: Unexploded Ordnance Sites

A listing of unexploded ordnance site locations

Date of Government Version: 12/31/2020
Date Data Arrived at EDR: 01/11/2022
Date Made Active in Reports: 02/14/2022
Number of Days to Update: 34

Source: Department of Defense
Telephone: 703-704-1564
Last EDR Contact: 01/11/2022
Next Scheduled EDR Contact: 04/25/2022
Data Release Frequency: Varies

FUELS PROGRAM: EPA Fuels Program Registered Listing

This listing includes facilities that are registered under the Part 80 (Code of Federal Regulations) EPA Fuels Programs. All companies now are required to submit new and updated registrations.

Date of Government Version: 11/15/2021
Date Data Arrived at EDR: 11/15/2021
Date Made Active in Reports: 02/01/2022
Number of Days to Update: 78

Source: EPA
Telephone: 800-385-6164
Last EDR Contact: 11/15/2021
Next Scheduled EDR Contact: 02/28/2022
Data Release Frequency: Quarterly

AIRS: Permiited Airs Facility Listing

A listing of permitted airs facilities.

Date of Government Version: 11/22/2021
Date Data Arrived at EDR: 11/22/2021
Date Made Active in Reports: 02/10/2022
Number of Days to Update: 80

Source: Department of Health & Environmental Control
Telephone: 803-898-4279
Last EDR Contact: 11/22/2021
Next Scheduled EDR Contact: 03/07/2022
Data Release Frequency: Varies

ASBESTOS: Asbestos Notification Listing

Asbestos abatement & demolition project list

Date of Government Version: 11/02/2021
Date Data Arrived at EDR: 11/18/2021
Date Made Active in Reports: 02/08/2022
Number of Days to Update: 82

Source: Department of Health & Environmental Control
Telephone: 803-898-3882
Last EDR Contact: 01/18/2022
Next Scheduled EDR Contact: 05/02/2022
Data Release Frequency: Varies

COAL ASH: Coal Ash Disposal Sites

A listing of sites with coal ash ponds.

Date of Government Version: 03/20/2018
Date Data Arrived at EDR: 03/22/2018
Date Made Active in Reports: 04/25/2018
Number of Days to Update: 34

Source: Department of Health & Environmental Control
Telephone: 803-898-3964
Last EDR Contact: 12/20/2021
Next Scheduled EDR Contact: 03/28/2022
Data Release Frequency: Varies

DRYCLEANERS: Drycleaner Database

The Drycleaning Facility Restoration Trust Fund database is used to access, prioritze and cleanup contaminated registered drycleaning sites.

Date of Government Version: 01/08/2018
Date Data Arrived at EDR: 02/01/2018
Date Made Active in Reports: 03/21/2018
Number of Days to Update: 48

Source: Department of Health & Environmental Control
Telephone: 803-898-3882
Last EDR Contact: 01/28/2022
Next Scheduled EDR Contact: 05/09/2022
Data Release Frequency: Annually

GOVERNMENT RECORDS SEARCHED / DATA CURRENCY TRACKING

Financial Assurance 1: Financial Assurance Information Listing

Financial assurance information for aolid waste facilities. Financial assurance is intended to ensure that resources are available to pay for the cost of closure, post-closure care, and corrective measures if the owner or operator of a regulated facility is unable or unwilling to pay.

Date of Government Version: 09/15/2021
Date Data Arrived at EDR: 09/15/2021
Date Made Active in Reports: 10/08/2021
Number of Days to Update: 23

Source: Department of Health & Environmental Control
Telephone: 803-896-4067
Last EDR Contact: 12/02/2021
Next Scheduled EDR Contact: 03/21/2022
Data Release Frequency: Semi-Annually

Financial Assurance 2: Financial Assurance Information Listing

Hazardous waste financial assurance information.

Date of Government Version: 09/15/2021
Date Data Arrived at EDR: 09/15/2021
Date Made Active in Reports: 10/14/2021
Number of Days to Update: 29

Source: Department of Health & Environmental Control
Telephone: 803-898-3880
Last EDR Contact: 12/02/2021
Next Scheduled EDR Contact: 03/21/2022
Data Release Frequency: Varies

Financial Assurance 3: Financial Assurance Information Listing

UST financial assurance information.

Date of Government Version: 02/28/2021
Date Data Arrived at EDR: 03/02/2021
Date Made Active in Reports: 05/21/2021
Number of Days to Update: 80

Source: Department of Health & Environmental Control
Telephone: 803-898-3880
Last EDR Contact: 01/03/2022
Next Scheduled EDR Contact: 04/18/2022
Data Release Frequency: Varies

GWCI: Groundwater Contamination Inventory

An inventory of all groundwater contamination cases in the state.

Date of Government Version: 07/01/2008
Date Data Arrived at EDR: 11/06/2008
Date Made Active in Reports: 11/19/2008
Number of Days to Update: 13

Source: Department of Health and Environmental Control
Telephone: 803-898-3798
Last EDR Contact: 12/15/2021
Next Scheduled EDR Contact: 04/04/2022
Data Release Frequency: Annually

NPDES: Waste Water Treatment Facilities Listing

A listing of waste water treatment facility locations.

Date of Government Version: 10/27/2021
Date Data Arrived at EDR: 10/28/2021
Date Made Active in Reports: 01/19/2022
Number of Days to Update: 83

Source: Department of Health & Environmental Control
Telephone: 803-898-4300
Last EDR Contact: 01/18/2022
Next Scheduled EDR Contact: 05/02/2022
Data Release Frequency: Varies

UIC: Underground Injection Wells Listing

A listing of underground injection wells locations.

Date of Government Version: 06/15/2021
Date Data Arrived at EDR: 07/22/2021
Date Made Active in Reports: 10/12/2021
Number of Days to Update: 82

Source: Department of Health & Environmental Control
Telephone: 803-898-3799
Last EDR Contact: 02/07/2022
Next Scheduled EDR Contact: 05/09/2022
Data Release Frequency: Semi-Annually

MINES MRDS: Mineral Resources Data System

Mineral Resources Data System

Date of Government Version: 04/06/2018
Date Data Arrived at EDR: 10/21/2019
Date Made Active in Reports: 10/24/2019
Number of Days to Update: 3

Source: USGS
Telephone: 703-648-6533
Last EDR Contact: 11/23/2021
Next Scheduled EDR Contact: 03/07/2022
Data Release Frequency: Varies

PCS ENF: Enforcement data
No description is available for this data

Date of Government Version: 12/31/2014
Date Data Arrived at EDR: 02/05/2015
Date Made Active in Reports: 03/06/2015
Number of Days to Update: 29

Source: EPA
Telephone: 202-564-2497
Last EDR Contact: 12/29/2021
Next Scheduled EDR Contact: 04/18/2022
Data Release Frequency: Varies

PCS INACTIVE: Listing of Inactive PCS Permits
An inactive permit is a facility that has shut down or is no longer discharging.

Date of Government Version: 11/05/2014
Date Data Arrived at EDR: 01/06/2015
Date Made Active in Reports: 05/06/2015
Number of Days to Update: 120

Source: EPA
Telephone: 202-564-2496
Last EDR Contact: 12/29/2021
Next Scheduled EDR Contact: 04/18/2022
Data Release Frequency: Semi-Annually

MANIFEST: Hazardous Waste Manifest Data
A generator who transports, or offers for transportation, hazardous waste for off-site treatment, storage or disposal must prepare a hazardous waste manifest to accompany such shipment.

Date of Government Version: 12/31/2019
Date Data Arrived at EDR: 10/22/2020
Date Made Active in Reports: 01/20/2021
Number of Days to Update: 90

Source: Department of Health & Environmental Control
Telephone: 803-898-3796
Last EDR Contact: 01/31/2022
Next Scheduled EDR Contact: 05/16/2022
Data Release Frequency: Annually

PCS: Permit Compliance System
PCS is a computerized management information system that contains data on National Pollutant Discharge Elimination System (NPDES) permit holding facilities. PCS tracks the permit, compliance, and enforcement status of NPDES facilities.

Date of Government Version: 07/14/2011
Date Data Arrived at EDR: 08/05/2011
Date Made Active in Reports: 09/29/2011
Number of Days to Update: 55

Source: EPA, Office of Water
Telephone: 202-564-2496
Last EDR Contact: 12/29/2021
Next Scheduled EDR Contact: 04/18/2022
Data Release Frequency: Semi-Annually

EDR HIGH RISK HISTORICAL RECORDS

EDR Exclusive Records

EDR MGP: EDR Proprietary Manufactured Gas Plants
The EDR Proprietary Manufactured Gas Plant Database includes records of coal gas plants (manufactured gas plants) compiled by EDR's researchers. Manufactured gas sites were used in the United States from the 1800's to 1950's to produce a gas that could be distributed and used as fuel. These plants used whale oil, rosin, coal, or a mixture of coal, oil, and water that also produced a significant amount of waste. Many of the byproducts of the gas production, such as coal tar (oily waste containing volatile and non-volatile chemicals), sludges, oils and other compounds are potentially hazardous to human health and the environment. The byproduct from this process was frequently disposed of directly at the plant site and can remain or spread slowly, serving as a continuous source of soil and groundwater contamination.

Date of Government Version: N/A
Date Data Arrived at EDR: N/A
Date Made Active in Reports: N/A
Number of Days to Update: N/A

Source: EDR, Inc.
Telephone: N/A
Last EDR Contact: N/A
Next Scheduled EDR Contact: N/A
Data Release Frequency: No Update Planned

EDR Hist Auto: EDR Exclusive Historical Auto Stations
EDR has searched selected national collections of business directories and has collected listings of potential gas station/filling station/service station sites that were available to EDR researchers. EDR's review was limited to those categories of sources that might, in EDR's opinion, include gas station/filling station/service station establishments. The categories reviewed included, but were not limited to gas, gas station, gasoline station, filling station, auto, automobile repair, auto service station, service station, etc. This database falls within a category of information EDR classifies as "High Risk Historical Records", or HRHR. EDR's HRHR effort presents unique and sometimes proprietary data about past sites and operations that typically create environmental concerns, but may not show up in current government records searches.

Date of Government Version: N/A
Date Data Arrived at EDR: N/A
Date Made Active in Reports: N/A
Number of Days to Update: N/A

Source: EDR, Inc.
Telephone: N/A
Last EDR Contact: N/A
Next Scheduled EDR Contact: N/A
Data Release Frequency: Varies

EDR Hist Cleaner: EDR Exclusive Historical Cleaners

EDR has searched selected national collections of business directories and has collected listings of potential dry cleaner sites that were available to EDR researchers. EDR's review was limited to those categories of sources that might, in EDR's opinion, include dry cleaning establishments. The categories reviewed included, but were not limited to dry cleaners, cleaners, laundry, laundromat, cleaning/laundry, wash & dry etc. This database falls within a category of information EDR classifies as "High Risk Historical Records", or HRHR. EDR's HRHR effort presents unique and sometimes proprietary data about past sites and operations that typically create environmental concerns, but may not show up in current government records searches.

Date of Government Version: N/A
Date Data Arrived at EDR: N/A
Date Made Active in Reports: N/A
Number of Days to Update: N/A

Source: EDR, Inc.
Telephone: N/A
Last EDR Contact: N/A
Next Scheduled EDR Contact: N/A
Data Release Frequency: Varies

EDR RECOVERED GOVERNMENT ARCHIVES

Exclusive Recovered Govt. Archives

RGA HWS: Recovered Government Archive State Hazardous Waste Facilities List

The EDR Recovered Government Archive State Hazardous Waste database provides a list of SHWS incidents derived from historical databases and includes many records that no longer appear in current government lists. Compiled from Records formerly available from the Department of Health and Environmental Control in South Carolina.

Date of Government Version: N/A
Date Data Arrived at EDR: 07/01/2013
Date Made Active in Reports: 01/03/2014
Number of Days to Update: 186

Source: Department of Health and Environmental Control
Telephone: N/A
Last EDR Contact: 06/01/2012
Next Scheduled EDR Contact: N/A
Data Release Frequency: Varies

RGA LF: Recovered Government Archive Solid Waste Facilities List

The EDR Recovered Government Archive Landfill database provides a list of landfills derived from historical databases and includes many records that no longer appear in current government lists. Compiled from Records formerly available from the Department of Health and Environmental Control in South Carolina.

Date of Government Version: N/A
Date Data Arrived at EDR: 07/01/2013
Date Made Active in Reports: 01/15/2014
Number of Days to Update: 198

Source: Department of Health and Environmental Control
Telephone: N/A
Last EDR Contact: 06/01/2012
Next Scheduled EDR Contact: N/A
Data Release Frequency: Varies

RGA LUST: Recovered Government Archive Leaking Underground Storage Tank

The EDR Recovered Government Archive Leaking Underground Storage Tank database provides a list of LUST incidents derived from historical databases and includes many records that no longer appear in current government lists. Compiled from Records formerly available from the Department of Health and Environmental Control in South Carolina.

Date of Government Version: N/A
Date Data Arrived at EDR: 07/01/2013
Date Made Active in Reports: 01/03/2014
Number of Days to Update: 186

Source: Department of Health and Environmental Control
Telephone: N/A
Last EDR Contact: 06/01/2012
Next Scheduled EDR Contact: N/A
Data Release Frequency: Varies

OTHER DATABASE(S)

Depending on the geographic area covered by this report, the data provided in these specialty databases may or may not be complete. For example, the existence of wetlands information data in a specific report does not mean that all wetlands in the area covered by the report are included. Moreover, the absence of any reported wetlands information does not necessarily mean that wetlands do not exist in the area covered by the report.

CT MANIFEST: Hazardous Waste Manifest Data

Facility and manifest data. Manifest is a document that lists and tracks hazardous waste from the generator through transporters to a tsd facility.

Date of Government Version: 11/11/2021
Date Data Arrived at EDR: 11/12/2021
Date Made Active in Reports: 02/01/2022
Number of Days to Update: 81

Source: Department of Energy & Environmental Protection
Telephone: 860-424-3375
Last EDR Contact: 02/11/2022
Next Scheduled EDR Contact: 05/23/2022
Data Release Frequency: No Update Planned

NJ MANIFEST: Manifest Information

Hazardous waste manifest information.

Date of Government Version: 12/31/2018
Date Data Arrived at EDR: 04/10/2019
Date Made Active in Reports: 05/16/2019
Number of Days to Update: 36

Source: Department of Environmental Protection
Telephone: N/A
Last EDR Contact: 01/07/2022
Next Scheduled EDR Contact: 04/18/2022
Data Release Frequency: Annually

NY MANIFEST: Facility and Manifest Data

Manifest is a document that lists and tracks hazardous waste from the generator through transporters to a TSD facility.

Date of Government Version: 01/01/2019
Date Data Arrived at EDR: 10/29/2021
Date Made Active in Reports: 01/19/2022
Number of Days to Update: 82

Source: Department of Environmental Conservation
Telephone: 518-402-8651
Last EDR Contact: 01/28/2022
Next Scheduled EDR Contact: 05/09/2022
Data Release Frequency: Quarterly

PA MANIFEST: Manifest Information

Hazardous waste manifest information.

Date of Government Version: 06/30/2018
Date Data Arrived at EDR: 07/19/2019
Date Made Active in Reports: 09/10/2019
Number of Days to Update: 53

Source: Department of Environmental Protection
Telephone: 717-783-8990
Last EDR Contact: 01/10/2022
Next Scheduled EDR Contact: 04/25/2022
Data Release Frequency: Annually

RI MANIFEST: Manifest information

Hazardous waste manifest information

Date of Government Version: 12/31/2019
Date Data Arrived at EDR: 02/11/2021
Date Made Active in Reports: 02/24/2021
Number of Days to Update: 13

Source: Department of Environmental Management
Telephone: 401-222-2797
Last EDR Contact: 02/14/2022
Next Scheduled EDR Contact: 05/30/2022
Data Release Frequency: Annually

WI MANIFEST: Manifest Information

Hazardous waste manifest information.

Date of Government Version: 05/31/2018
Date Data Arrived at EDR: 06/19/2019
Date Made Active in Reports: 09/03/2019
Number of Days to Update: 76

Source: Department of Natural Resources
Telephone: N/A
Last EDR Contact: 12/06/2021
Next Scheduled EDR Contact: 03/21/2022
Data Release Frequency: Annually

Oil/Gas Pipelines
Source: Endeavor Business Media
Petroleum Bundle (Crude Oil, Refined Products, Petrochemicals, Gas Liquids (LPG/NGL), and Specialty Gases (Miscellaneous)) N = Natural Gas Bundle (Natural Gas, Gas Liquids (LPG/NGL), and Specialty Gases (Miscellaneous)). This map includes information copyrighted by Endeavor Business Media. This information is provided on a best effort basis and Endeavor Business Media does not guarantee its accuracy nor warrant its fitness for any particular purpose. Such information has been reprinted with the permission of Endeavor Business Media.

Electric Power Transmission Line Data
Source: Endeavor Business Media
This map includes information copyrighted by Endeavor Business Media. This information is provided on a best effort basis and Endeavor Business Media does not guarantee its accuracy nor warrant its fitness for any particular purpose. Such information has been reprinted with the permission of Endeavor Business Media.

Sensitive Receptors: There are individuals deemed sensitive receptors due to their fragile immune systems and special sensitivity to environmental discharges. These sensitive receptors typically include the elderly, the sick, and children. While the location of all sensitive receptors cannot be determined, EDR indicates those buildings and facilities - schools, daycares, hospitals, medical centers, and nursing homes - where individuals who are sensitive receptors are likely to be located.

AHA Hospitals:
Source: American Hospital Association, Inc.
Telephone: 312-280-5991
The database includes a listing of hospitals based on the American Hospital Association's annual survey of hospitals.

Medical Centers: Provider of Services Listing
Source: Centers for Medicare & Medicaid Services
Telephone: 410-786-3000
A listing of hospitals with Medicare provider number, produced by Centers of Medicare & Medicaid Services, a federal agency within the U.S. Department of Health and Human Services.

Nursing Homes
Source: National Institutes of Health
Telephone: 301-594-6248
Information on Medicare and Medicaid certified nursing homes in the United States.

Public Schools
Source: National Center for Education Statistics
Telephone: 202-502-7300
The National Center for Education Statistics' primary database on elementary and secondary public education in the United States. It is a comprehensive, annual, national statistical database of all public elementary and secondary schools and school districts, which contains data that are comparable across all states.

Private Schools
Source: National Center for Education Statistics
Telephone: 202-502-7300
The National Center for Education Statistics' primary database on private school locations in the United States.

Daycare Centers: Child Day Care List
Source: Department of Social Services
Telephone: 803-898-7345

Flood Zone Data: This data was obtained from the Federal Emergency Management Agency (FEMA). It depicts 100-year and 500-year flood zones as defined by FEMA. It includes the National Flood Hazard Layer (NFHL) which incorporates Flood Insurance Rate Map (FIRM) data and Q3 data from FEMA in areas not covered by NFHL.
Source: FEMA
Telephone: 877-336-2627
Date of Government Version: 2003, 2015

NWI: National Wetlands Inventory. This data, available in select counties across the country, was obtained by EDR in 2002, 2005 and 2010 from the U.S. Fish and Wildlife Service.

State Wetlands Data: Wetlands Inventory
Source: Department of Natural Resources
Telephone: 803-734-9494

GOVERNMENT RECORDS SEARCHED / DATA CURRENCY TRACKING

Current USGS 7.5 Minute Topographic Map
Source: U.S. Geological Survey

STREET AND ADDRESS INFORMATION

Â© 2015 TomTom North America, Inc. All rights reserved. This material is proprietary and the subject of copyright protection and other intellectual property rights owned by or licensed to Tele Atlas North America, Inc. The use of this material is subject to the terms of a license agreement. You will be held liable for any unauthorized copying or disclosure of this material.

GEOCHECK ®- PHYSICAL SETTING SOURCE ADDENDUM

TARGET PROPERTY ADDRESS

CAROLINA CROSS ROADS
BROAD RIVER RD
COLUMBIA, SC 29210

TARGET PROPERTY COORDINATES

Latitude (North):	34.040273 - 34ˆ 2’ 24.98’’
Longitude (West):	81.094887 - 81ˆ 5’ 41.59’’
Universal Tranverse Mercator:	Zone 17
UTM X (Meters):	491241.3
UTM Y (Meters):	3766430.8
Elevation:	318 ft. above sea level

USGS TOPOGRAPHIC MAP

Target Property Map:	15786838 COLUMBIA NORTH, SC
Version Date:	2020

EDR’s GeoCheck Physical Setting Source Addendum is provided to assist the environmental professional in forming an opinion about the impact of potential contaminant migration.

Assessment of the impact of contaminant migration generally has two principle investigative components:

1. Groundwater flow direction, and
2. Groundwater flow velocity.

Groundwater flow direction may be impacted by surface topography, hydrology, hydrogeology, characteristics of the soil, and nearby wells. Groundwater flow velocity is generally impacted by the nature of the geologic strata.

GEOCHECK® - PHYSICAL SETTING SOURCE SUMMARY

GROUNDWATER FLOW DIRECTION INFORMATION

Groundwater flow direction for a particular site is best determined by a qualified environmental professional using site-specific well data. If such data is not reasonably ascertainable, it may be necessary to rely on other sources of information, such as surface topographic information, hydrologic information, hydrogeologic data collected on nearby properties, and regional groundwater flow information (from deep aquifers).

TOPOGRAPHIC INFORMATION

Surface topography may be indicative of the direction of surficial groundwater flow. This information can be used to assist the environmental professional in forming an opinion about the impact of nearby contaminated properties or, should contamination exist on the target property, what downgradient sites might be impacted.

TARGET PROPERTY TOPOGRAPHY

General Topographic Gradient: General ENE

SURROUNDING TOPOGRAPHY: ELEVATION PROFILES

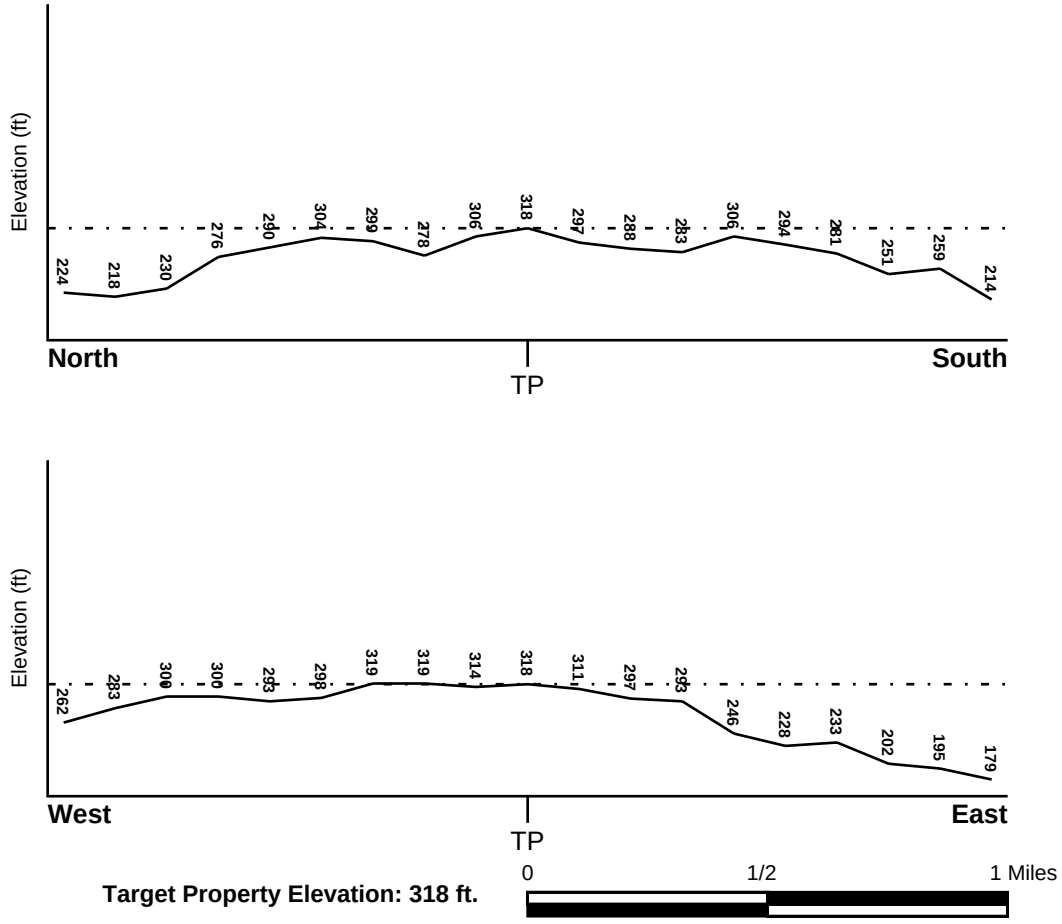

Target Property Elevation: 318 ft.

Source: Topography has been determined from the USGS 7.5' Digital Elevation Model and should be evaluated on a relative (not an absolute) basis. Relative elevation information between sites of close proximity should be field verified.

GEOCHECK® - PHYSICAL SETTING SOURCE SUMMARY

HYDROLOGIC INFORMATION

Surface water can act as a hydrologic barrier to groundwater flow. Such hydrologic information can be used to assist the environmental professional in forming an opinion about the impact of nearby contaminated properties or, should contamination exist on the target property, what downgradient sites might be impacted.

Refer to the Physical Setting Source Map following this summary for hydrologic information (major waterways and bodies of water).

FEMA FLOOD ZONE

Flood Plain Panel at Target Property	FEMA Source Type
45063C0161G	FEMA FIRM Flood data

Additional Panels in search area:	FEMA Source Type
45079C0237K	FEMA FIRM Flood data
45063C0164G	FEMA FIRM Flood data
45063C0163G	FEMA FIRM Flood data

NATIONAL WETLAND INVENTORY

NWI Quad at Target Property	NWI Electronic Data Coverage
COLUMBIA NORTH	YES - refer to the Overview Map and Detail Map

HYDROGEOLOGIC INFORMATION

Hydrogeologic information obtained by installation of wells on a specific site can often be an indicator of groundwater flow direction in the immediate area. Such hydrogeologic information can be used to assist the environmental professional in forming an opinion about the impact of nearby contaminated properties or, should contamination exist on the target property, what downgradient sites might be impacted.

AQUIFLOW®

Search Radius: 1.000 Mile.

EDR has developed the AQUIFLOW Information System to provide data on the general direction of groundwater flow at specific points. EDR has reviewed reports submitted by environmental professionals to regulatory authorities at select sites and has extracted the date of the report, groundwater flow direction as determined hydrogeologically, and the depth to water table.

MAP ID	LOCATION FROM TP	GENERAL DIRECTION GROUNDWATER FLOW
A1	0 - 1/8 Mile SE	Not Reported
A2	1/8 - 1/4 Mile SE	Not Reported
3	1/8 - 1/4 Mile WNW	SW
5	1/2 - 1 Mile SE	SE
6	1/2 - 1 Mile South	S
B7	1/2 - 1 Mile South	SW
B8	1/2 - 1 Mile South	W
B9	1/2 - 1 Mile South	ESE
10	1/2 - 1 Mile SW	Not Reported
1G	1/8 - 1/4 Mile WNW	SW
2G	0 - 1/8 Mile SE	Not Reported

GEOCHECK® - PHYSICAL SETTING SOURCE SUMMARY

MAP ID	LOCATION FROM TP	GENERAL DIRECTION GROUNDWATER FLOW
3G	1/8 - 1/4 Mile SE	Not Reported
4G	1/2 - 1 Mile SE	SE
5G	1/2 - 1 Mile SW	Not Reported
6G	1/2 - 1 Mile South	S
7G	1/2 - 1 Mile South	SW
8G	1/2 - 1 Mile South	W
9G	1/2 - 1 Mile South	ESE

For additional site information, refer to Physical Setting Source Map Findings.

GEOCHECK® - PHYSICAL SETTING SOURCE SUMMARY

GROUNDWATER FLOW VELOCITY INFORMATION

Groundwater flow velocity information for a particular site is best determined by a qualified environmental professional using site specific geologic and soil strata data. If such data are not reasonably ascertainable, it may be necessary to rely on other sources of information, including geologic age identification, rock stratigraphic unit and soil characteristics data collected on nearby properties and regional soil information. In general, contaminant plumes move more quickly through sandy-gravelly types of soils than silty-clayey types of soils.

GEOLOGIC INFORMATION IN GENERAL AREA OF TARGET PROPERTY

Geologic information can be used by the environmental professional in forming an opinion about the relative speed at which contaminant migration may be occurring.

ROCK STRATIGRAPHIC UNIT

Era:	Paleozoic
System:	Pennsylvanian
Series:	Upper Paleozoic granitic rocks
Code:	Pzg3 *(decoded above as Era, System & Series)*

GEOLOGIC AGE IDENTIFICATION

Category: Plutonic and Intrusive Rocks

Geologic Age and Rock Stratigraphic Unit Source: P.G. Schruben, R.E. Arndt and W.J. Bawiec, Geology of the Conterminous U.S. at 1:2,500,000 Scale - a digital representation of the 1974 P.B. King and H.M. Beikman Map, USGS Digital Data Series DDS - 11 (1994).

SSURGO SOIL MAP - 6860313.2s

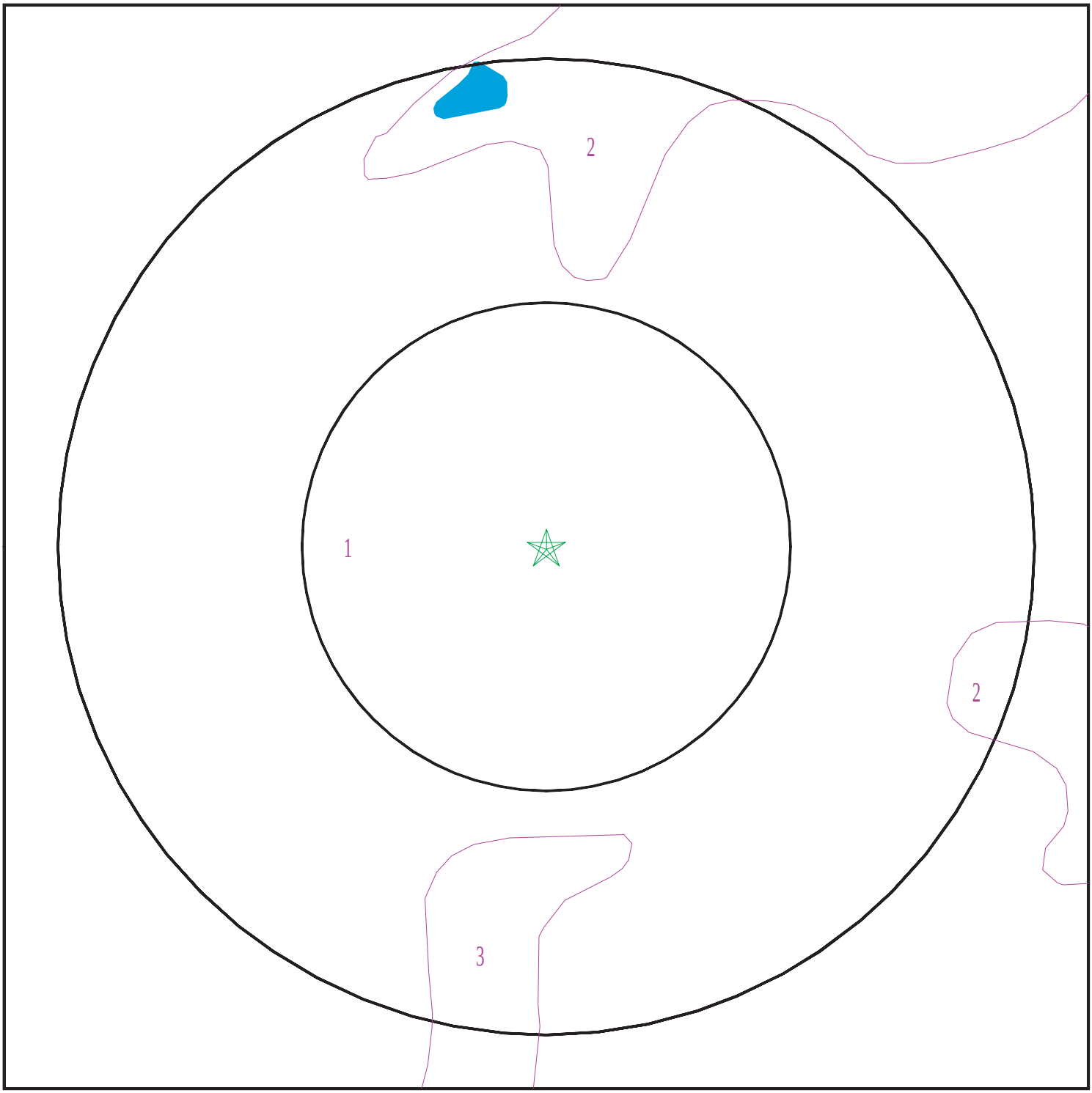

Target Property
SSURGO Soil
Water

0 1/16 1/8 1/4 Miles

N

SITE NAME:	Carolina Cross Roads	CLIENT:	ARM Environmental Services
ADDRESS:	Broad River Rd Columbia SC 29210	CONTACT:	Richard Ciccolella
LAT/LONG:	34.040273 / 81.094887	INQUIRY #:	6860313.2s
		DATE:	February 16, 2022 12:11 pm

Copyright © 2022 EDR, Inc. © 2015 TomTom Rel. 2015.

GEOCHECK® - PHYSICAL SETTING SOURCE SUMMARY

DOMINANT SOIL COMPOSITION IN GENERAL AREA OF TARGET PROPERTY

The U.S. Department of Agriculture's (USDA) Soil Conservation Service (SCS) leads the National Cooperative Soil Survey (NCSS) and is responsible for collecting, storing, maintaining and distributing soil survey information for privately owned lands in the United States. A soil map in a soil survey is a representation of soil patterns in a landscape. The following information is based on Soil Conservation Service SSURGO data.

Soil Map ID: 1

Soil Component Name: Orangeburg

Soil Surface Texture: loamy sand

Hydrologic Group: Class B - Moderate infiltration rates. Deep and moderately deep, moderately well and well drained soils with moderately coarse textures.

Soil Drainage Class: Well drained

Hydric Status: Unknown

Corrosion Potential - Uncoated Steel: Moderate

Depth to Bedrock Min: > 0 inches

Depth to Watertable Min: > 0 inches

Soil Layer Information							
	Boundary			Classification		Saturated hydraulic conductivity micro m/sec	Soil Reaction (pH)
Layer	Upper	Lower	Soil Texture Class	AASHTO Group	Unified Soil		
1	0 inches	5 inches	loamy sand	Not reported	Not reported	Max: 14 Min: 4	Max: 5.5 Min: 4.5
2	5 inches	11 inches	loamy sand	Not reported	Not reported	Max: 14 Min: 4	Max: 5.5 Min: 4.5
3	11 inches	18 inches	sandy loam	Not reported	Not reported	Max: 14 Min: 4	Max: 5.5 Min: 4.5
4	18 inches	89 inches	sandy clay loam	Not reported	Not reported	Max: 14 Min: 4	Max: 5.5 Min: 4.5

Soil Map ID: 2

Soil Component Name: Herndon

Soil Surface Texture: silt loam

Hydrologic Group: Class B - Moderate infiltration rates. Deep and moderately deep, moderately well and well drained soils with moderately coarse textures.

Soil Drainage Class: Well drained

GEOCHECK® - PHYSICAL SETTING SOURCE SUMMARY

Hydric Status: Unknown

Corrosion Potential - Uncoated Steel: High

Depth to Bedrock Min: > 0 inches

Depth to Watertable Min: > 0 inches

Soil Layer Information							
	Boundary			Classification		Saturated hydraulic conductivity micro m/sec	Soil Reaction (pH)
Layer	Upper	Lower	Soil Texture Class	AASHTO Group	Unified Soil		
1	0 inches	1 inches	silt loam	Silt-Clay Materials (more than 35 pct. passing No. 200), Silty Soils.	Not reported	Max: 14 Min: 0	Max: Min:
2	1 inches	9 inches	loam	Silt-Clay Materials (more than 35 pct. passing No. 200), Silty Soils.	Not reported	Max: 14 Min: 0	Max: Min:
3	9 inches	37 inches	silty clay	Silt-Clay Materials (more than 35 pct. passing No. 200), Silty Soils.	Not reported	Max: 14 Min: 0	Max: Min:
4	37 inches	51 inches	silty clay loam	Silt-Clay Materials (more than 35 pct. passing No. 200), Silty Soils.	Not reported	Max: 14 Min: 0	Max: Min:
5	51 inches	61 inches	silt loam	Silt-Clay Materials (more than 35 pct. passing No. 200), Silty Soils.	Not reported	Max: 14 Min: 0	Max: Min:
6	61 inches	74 inches	bedrock	Silt-Clay Materials (more than 35 pct. passing No. 200), Silty Soils.	Not reported	Max: 14 Min: 0	Max: Min:

GEOCHECK® - PHYSICAL SETTING SOURCE SUMMARY

Soil Map ID: 3

Soil Component Name: Orangeburg

Soil Surface Texture: loamy sand

Hydrologic Group: Class B - Moderate infiltration rates. Deep and moderately deep, moderately well and well drained soils with moderately coarse textures.

Soil Drainage Class: Well drained

Hydric Status: Unknown

Corrosion Potential - Uncoated Steel: Moderate

Depth to Bedrock Min: > 0 inches

Depth to Watertable Min: > 0 inches

Soil Layer Information							
	Boundary			Classification		Saturated hydraulic conductivity micro m/sec	Soil Reaction (pH)
Layer	Upper	Lower	Soil Texture Class	AASHTO Group	Unified Soil		
1	0 inches	5 inches	loamy sand	Not reported	Not reported	Max: 14 Min: 4	Max: 5.5 Min: 4.5
2	5 inches	11 inches	loamy sand	Not reported	Not reported	Max: 14 Min: 4	Max: 5.5 Min: 4.5
3	11 inches	18 inches	sandy loam	Not reported	Not reported	Max: 14 Min: 4	Max: 5.5 Min: 4.5
4	18 inches	89 inches	sandy clay loam	Not reported	Not reported	Max: 14 Min: 4	Max: 5.5 Min: 4.5

LOCAL / REGIONAL WATER AGENCY RECORDS

EDR Local/Regional Water Agency records provide water well information to assist the environmental professional in assessing sources that may impact ground water flow direction, and in forming an opinion about the impact of contaminant migration on nearby drinking water wells.

WELL SEARCH DISTANCE INFORMATION

DATABASE	SEARCH DISTANCE (miles)
Federal USGS	1.000
Federal FRDS PWS	Nearest PWS within 1 mile
State Database	1.000

GEOCHECK® - PHYSICAL SETTING SOURCE SUMMARY

FEDERAL USGS WELL INFORMATION

MAP ID	WELL ID	LOCATION FROM TP
No Wells Found		

FEDERAL FRDS PUBLIC WATER SUPPLY SYSTEM INFORMATION

MAP ID	WELL ID	LOCATION FROM TP
No PWS System Found		

Note: PWS System location is not always the same as well location.

STATE DATABASE WELL INFORMATION

MAP ID	WELL ID	LOCATION FROM TP
4	SCWC60000013271	1/2 - 1 Mile WNW

PHYSICAL SETTING SOURCE MAP - 6860313.2s

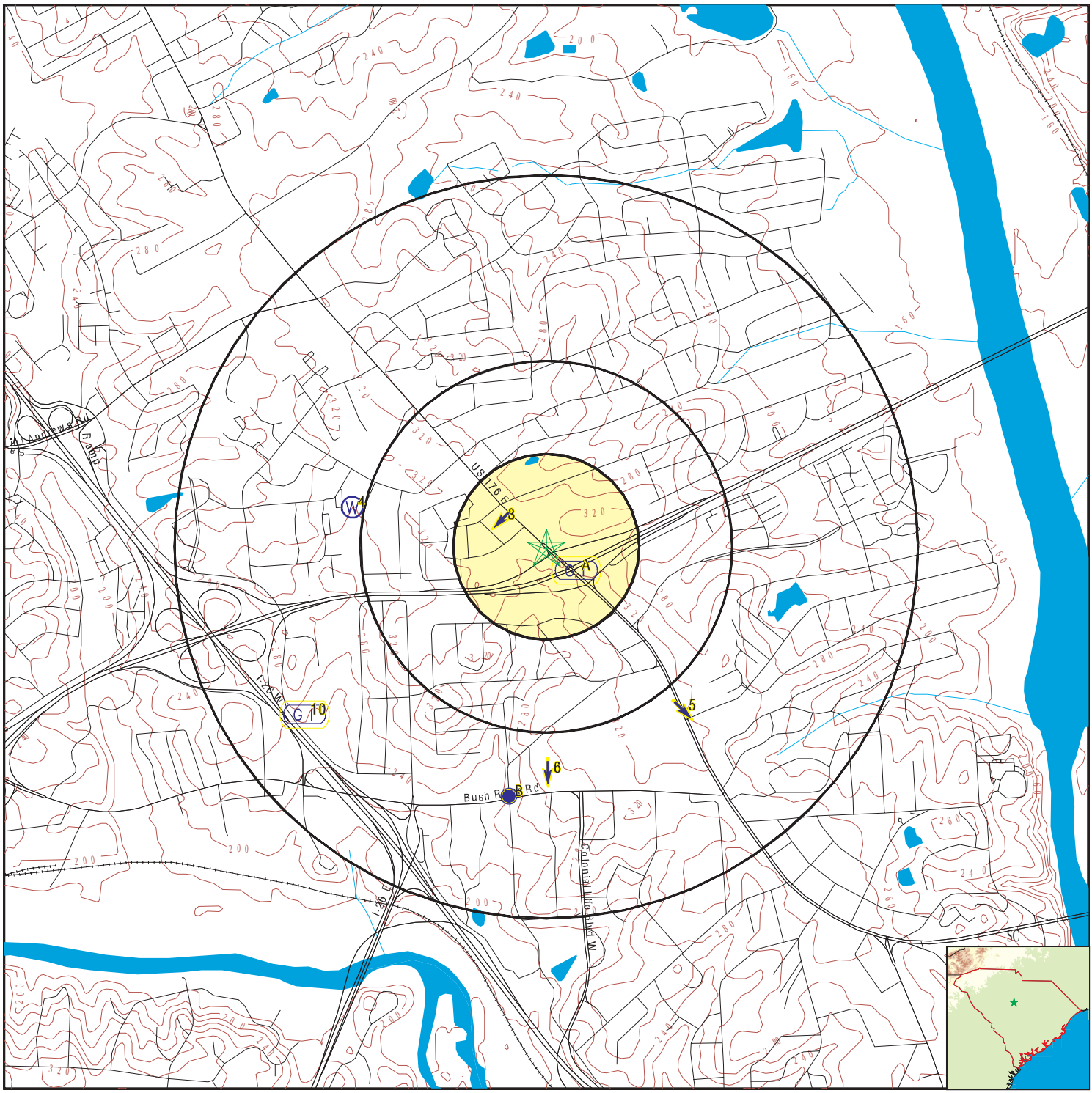

- County Boundary
- Major Roads
- Contour Lines
- Earthquake epicenter, Richter 5 or greater
- Water Wells
- Public Water Supply Wells
- Cluster of Multiple Icons
- Groundwater Flow Direction
- Indeterminate Groundwater Flow at Location
- Groundwater Flow Varies at Location

SITE NAME:	Carolina Cross Roads	CLIENT:	ARM Environmental Services
ADDRESS:	Broad River Rd Columbia SC 29210	CONTACT:	Richard Ciccolella
LAT/LONG:	34.040273 / 81.094887	INQUIRY #:	6860313.2s
		DATE:	February 16, 2022 12:11 pm

Copyright © 2022 EDR, Inc. © 2015 TomTom Rel. 2015.

GEOCHECK® - PHYSICAL SETTING SOURCE MAP FINDINGS

Map ID
Direction
Distance
Elevation

			Database	EDR ID Number
A1 **SE** **0 - 1/8 Mile** **Lower**	Site ID: Groundwater Flow: Shallowest Water Table Depth: Deepest Water Table Depth: Average Water Table Depth: Date:	N-40-NO-07758 Not Reported Not Reported Not Reported 24 12/12/1989	**AQUIFLOW**	**37261**
A2 **SE** **1/8 - 1/4 Mile** **Higher**	Site ID: Groundwater Flow: Shallowest Water Table Depth: Deepest Water Table Depth: Average Water Table Depth: Date:	R-40-NO-07910 Not Reported 15.80 21.36 Not Reported 03/29/1998	**AQUIFLOW**	**37000**
3 **WNW** **1/8 - 1/4 Mile** **Lower**	Site ID: Groundwater Flow: Shallowest Water Table Depth: Deepest Water Table Depth: Average Water Table Depth: Date:	N-40-GM-07326 SW Not Reported Not Reported Not Reported 10/09/1998	**AQUIFLOW**	**31938**

4
WNW
1/2 - 1 Mile
Lower

SC WELLS **SCWC60000013271**

Well #:	RIC-766	Elevation (ft):	0
Well Use:	Irrigation	Well Depth (ft):	360
Completion Depth (ft):	360	Top Casing Diameter (in):	6
Bottom Casing Diameter (in):	0	Open Hole Casing Depth (ft):	93
Top Screen Depth (ft):	0	Bottom Screen Depth (ft):	0
Year Completed:	2008	Yield (g/m):	100
Year Yield Measure:	2008	Geographical Logs:	Not Reported
Driller Logs:	1	Pump Test Data:	0
Chemical Analysis:	Not Reported	Static Water Level (ft):	40
Year SWL Measured:	2008	Driller Name:	AAA Well Drilling
Comments:	Not Reported		

			Database	EDR ID Number
5 **SE** **1/2 - 1 Mile** **Higher**	Site ID: Groundwater Flow: Shallowest Water Table Depth: Deepest Water Table Depth: Average Water Table Depth: Date:	B-40-NM-07633 SE 18.99 21.91 Not Reported 01/03/1991	**AQUIFLOW**	**32355**
6 **South** **1/2 - 1 Mile** **Lower**	Site ID: Groundwater Flow: Shallowest Water Table Depth: Deepest Water Table Depth: Average Water Table Depth: Date:	N-40-NO-16612 S Not Reported Not Reported 25 12/20/1994	**AQUIFLOW**	**41361**

GEOCHECK® - PHYSICAL SETTING SOURCE MAP FINDINGS

Map ID Direction Distance Elevation			Database	EDR ID Number
B7 **South** **1/2 - 1 Mile** **Lower**	Site ID: Groundwater Flow: Shallowest Water Table Depth: Deepest Water Table Depth: Average Water Table Depth: Date:	N-40-NO-07763 SW 85.70 102.05 Not Reported 05/29/1998	**AQUIFLOW**	**37045**
B8 **South** **1/2 - 1 Mile** **Lower**	Site ID: Groundwater Flow: Shallowest Water Table Depth: Deepest Water Table Depth: Average Water Table Depth: Date:	N-40-NO-11758 W 1.82 13.31 Not Reported 02/09/1999	**AQUIFLOW**	**41375**
B9 **South** **1/2 - 1 Mile** **Lower**	Site ID: Groundwater Flow: Shallowest Water Table Depth: Deepest Water Table Depth: Average Water Table Depth: Date:	P-32-NM-10816 ESE 15.61 19.30 Not Reported 04/1997	**AQUIFLOW**	**37272**
10 **SW** **1/2 - 1 Mile** **Lower**	Site ID: Groundwater Flow: Shallowest Water Table Depth: Deepest Water Table Depth: Average Water Table Depth: Date:	N-40-NO-11836 Not Reported Not Reported Not Reported 5 10/06/1998	**AQUIFLOW**	**41371**
1G **WNW** **1/8 - 1/4 Mile** **Lower**	Site ID: Groundwater Flow: Shallowest Water Table Depth: Deepest Water Table Depth: Average Water Table Depth: Date:	N-40-GM-07326 SW Not Reported Not Reported Not Reported 10/09/1998	**AQUIFLOW**	**31938**
2G **SE** **0 - 1/8 Mile** **Lower**	Site ID: Groundwater Flow: Shallowest Water Table Depth: Deepest Water Table Depth: Average Water Table Depth: Date:	N-40-NO-07758 Not Reported Not Reported Not Reported 24 12/12/1989	**AQUIFLOW**	**37261**
3G **SE** **1/8 - 1/4 Mile** **Lower**	Site ID: Groundwater Flow: Shallowest Water Table Depth: Deepest Water Table Depth: Average Water Table Depth: Date:	R-40-NO-07910 Not Reported 15.80 21.36 Not Reported 03/29/1998	**AQUIFLOW**	**37000**

GEOCHECK® - PHYSICAL SETTING SOURCE MAP FINDINGS

Map ID Direction Distance Elevation			Database	EDR ID Number
4G **SE** **1/2 - 1 Mile** **Lower**	Site ID: Groundwater Flow: Shallowest Water Table Depth: Deepest Water Table Depth: Average Water Table Depth: Date:	B-40-NM-07633 SE 18.99 21.91 Not Reported 01/03/1991	**AQUIFLOW**	**32355**
5G **SW** **1/2 - 1 Mile** **Lower**	Site ID: Groundwater Flow: Shallowest Water Table Depth: Deepest Water Table Depth: Average Water Table Depth: Date:	N-40-NO-11836 Not Reported Not Reported Not Reported 5 10/06/1998	**AQUIFLOW**	**41371**
6G **South** **1/2 - 1 Mile** **Lower**	Site ID: Groundwater Flow: Shallowest Water Table Depth: Deepest Water Table Depth: Average Water Table Depth: Date:	N-40-NO-16612 S Not Reported Not Reported 25 12/20/1994	**AQUIFLOW**	**41361**
7G **South** **1/2 - 1 Mile** **Lower**	Site ID: Groundwater Flow: Shallowest Water Table Depth: Deepest Water Table Depth: Average Water Table Depth: Date:	N-40-NO-07763 SW 85.70 102.05 Not Reported 05/29/1998	**AQUIFLOW**	**37045**
8G **South** **1/2 - 1 Mile** **Lower**	Site ID: Groundwater Flow: Shallowest Water Table Depth: Deepest Water Table Depth: Average Water Table Depth: Date:	N-40-NO-11758 W 1.82 13.31 Not Reported 02/09/1999	**AQUIFLOW**	**41375**
9G **South** **1/2 - 1 Mile** **Lower**	Site ID: Groundwater Flow: Shallowest Water Table Depth: Deepest Water Table Depth: Average Water Table Depth: Date:	P-32-NM-10816 ESE 15.61 19.30 Not Reported 04/1997	**AQUIFLOW**	**37272**

GEOCHECK® - PHYSICAL SETTING SOURCE MAP FINDINGS
RADON

AREA RADON INFORMATION

State Database: SC Radon

Radon Test Results

Zipcode	Average	Num Tests	Minimum	Maximum	% > 4 pCi/L
29210	2.1	101	0.3	46.4	5.0

Federal EPA Radon Zone for RICHLAND County: 3

Note: Zone 1 indoor average level > 4 pCi/L.
: Zone 2 indoor average level >= 2 pCi/L and <= 4 pCi/L.
: Zone 3 indoor average level < 2 pCi/L.

Federal Area Radon Information for Zip Code: 29210

Number of sites tested: 14

Area	Average Activity	% <4 pCi/L	% 4-20 pCi/L	% >20 pCi/L
Living Area - 1st Floor	0.786 pCi/L	100%	0%	0%
Living Area - 2nd Floor	Not Reported	Not Reported	Not Reported	Not Reported
Basement	Not Reported	Not Reported	Not Reported	Not Reported

PHYSICAL SETTING SOURCE RECORDS SEARCHED

TOPOGRAPHIC INFORMATION

USGS 7.5' Digital Elevation Model (DEM)
Source: United States Geologic Survey
EDR acquired the USGS 7.5' Digital Elevation Model in 2002 and updated it in 2006. The 7.5 minute DEM corresponds to the USGS 1:24,000- and 1:25,000-scale topographic quadrangle maps. The DEM provides elevation data with consistent elevation units and projection.

Current USGS 7.5 Minute Topographic Map
Source: U.S. Geological Survey

HYDROLOGIC INFORMATION

Flood Zone Data: This data was obtained from the Federal Emergency Management Agency (FEMA). It depicts 100-year and 500-year flood zones as defined by FEMA. It includes the National Flood Hazard Layer (NFHL) which incorporates Flood Insurance Rate Map (FIRM) data and Q3 data from FEMA in areas not covered by NFHL.
Source: FEMA
Telephone: 877-336-2627
Date of Government Version: 2003, 2015

NWI: National Wetlands Inventory. This data, available in select counties across the country, was obtained by EDR in 2002, 2005 and 2010 from the U.S. Fish and Wildlife Service.

State Wetlands Data: Wetlands Inventory
Source: Department of Natural Resources
Telephone: 803-734-9494

HYDROGEOLOGIC INFORMATION

AQUIFLOW^{R} Information System
Source: EDR proprietary database of groundwater flow information
EDR has developed the AQUIFLOW Information System (AIS) to provide data on the general direction of groundwater flow at specific points. EDR has reviewed reports submitted to regulatory authorities at select sites and has extracted the date of the report, hydrogeologically determined groundwater flow direction and depth to water table information.

GEOLOGIC INFORMATION

Geologic Age and Rock Stratigraphic Unit
Source: P.G. Schruben, R.E. Arndt and W.J. Bawiec, Geology of the Conterminous U.S. at 1:2,500,000 Scale - A digital representation of the 1974 P.B. King and H.M. Beikman Map, USGS Digital Data Series DDS - 11 (1994).

STATSGO: State Soil Geographic Database
Source: Department of Agriculture, Natural Resources Conservation Service (NRCS)
The U.S. Department of Agriculture's (USDA) Natural Resources Conservation Service (NRCS) leads the national Conservation Soil Survey (NCSS) and is responsible for collecting, storing, maintaining and distributing soil survey information for privately owned lands in the United States. A soil map in a soil survey is a representation of soil patterns in a landscape. Soil maps for STATSGO are compiled by generalizing more detailed (SSURGO) soil survey maps.

SSURGO: Soil Survey Geographic Database
Source: Department of Agriculture, Natural Resources Conservation Service (NRCS)
Telephone: 800-672-5559
SSURGO is the most detailed level of mapping done by the Natural Resources Conservation Service, mapping scales generally range from 1:12,000 to 1:63,360. Field mapping methods using national standards are used to construct the soil maps in the Soil Survey Geographic (SSURGO) database. SSURGO digitizing duplicates the original soil survey maps. This level of mapping is designed for use by landowners, townships and county natural resource planning and management.

PHYSICAL SETTING SOURCE RECORDS SEARCHED

LOCAL / REGIONAL WATER AGENCY RECORDS

FEDERAL WATER WELLS

PWS: Public Water Systems
Source: EPA/Office of Drinking Water
Telephone: 202-564-3750
Public Water System data from the Federal Reporting Data System. A PWS is any water system which provides water to at least 25 people for at least 60 days annually. PWSs provide water from wells, rivers and other sources.

PWS ENF: Public Water Systems Violation and Enforcement Data
Source: EPA/Office of Drinking Water
Telephone: 202-564-3750
Violation and Enforcement data for Public Water Systems from the Safe Drinking Water Information System (SDWIS) after August 1995. Prior to August 1995, the data came from the Federal Reporting Data System (FRDS).

USGS Water Wells: USGS National Water Inventory System (NWIS)
This database contains descriptive information on sites where the USGS collects or has collected data on surface water and/or groundwater. The groundwater data includes information on wells, springs, and other sources of groundwater.

STATE RECORDS

South Carolina Water Well Database
Source: Department of Natural Resources
Telephone: 803-734-6440
Water wells in the Coastal Plain counties of South Carolina.

Water Well Database
Source: Department of Natural Resources
Telephone: 864-654-1671
A listing of water wells in the Piedmont (upstate) counties.

OTHER STATE DATABASE INFORMATION

RADON

State Database: SC Radon
Source: Department of Health & Environmental Control
Telephone: 864-241-1090
Radon Test Results by Zip Code

Area Radon Information
Source: USGS
Telephone: 703-356-4020
The National Radon Database has been developed by the U.S. Environmental Protection Agency (USEPA) and is a compilation of the EPA/State Residential Radon Survey and the National Residential Radon Survey. The study covers the years 1986 - 1992. Where necessary data has been supplemented by information collected at private sources such as universities and research institutions.

EPA Radon Zones
Source: EPA
Telephone: 703-356-4020
Sections 307 & 309 of IRAA directed EPA to list and identify areas of U.S. with the potential for elevated indoor radon levels.

OTHER

Airport Landing Facilities: Private and public use landing facilities
Source: Federal Aviation Administration, 800-457-6656

Epicenters: World earthquake epicenters, Richter 5 or greater
Source: Department of Commerce, National Oceanic and Atmospheric Administration

Earthquake Fault Lines: The fault lines displayed on EDR's Topographic map are digitized quaternary faultlines, prepared in 1975 by the United State Geological Survey

PHYSICAL SETTING SOURCE RECORDS SEARCHED

STREET AND ADDRESS INFORMATION

Â© 2015 TomTom North America, Inc. All rights reserved. This material is proprietary and the subject of copyright protection and other intellectual property rights owned by or licensed to Tele Atlas North America, Inc. The use of this material is subject to the terms of a license agreement. You will be held liable for any unauthorized copying or disclosure of this material.

17.6 Interview Documentation

17.7 Special Contractual Conditions Between User and Environmental Professional

17.8 Qualifications of the Environmental Professional(s)

RICHARD CICCOLELLA
PROJECT MANAGER

Mr. Ciccolella is a Biologist with experience in the environmental field since 1993. He has extensive experience in a variety of environmental areas including wetland delineation, biological assessments, Phase I and Phase II Environmental Site Assessments, NEPA Environmental Assessments, and soil and ground water assessments with respect to leaking underground storage tanks and/or other sources of potential subsurface contamination.

EDUCATION
B.S., Biology - Auburn University (1993)

CERTIFICATIONS
Niton XRF Lead Analyzer Manufacturer's Training Course
Lead Awareness Training Certificate
Wetland Delineation – Richard Chinn Environmental Training, Inc.

SPECIALIZED TRAINING
Environmental Site Assessments, Phase I and Phase II
Wetland Delination
Biology / Ecology
Ecological Modeling
Environmental Assessment

PROFESSIONAL EXPERIENCE
1993 to Present: ARM Environmental Services, Inc. - Columbia, South Carolina

Mr. Ciccolella joined ARM in 1993 as a staff scientist. His responsibilities include Phase I and Phase II Environmental Site Assessments, highway corridor assessments for hazardous materials or waste sites, soil and ground water assessments, preparation of environmental assessment documentation pursuant to the National Environmental Policy Act (NEPA), wetland delineation, and biological assessments.

PROJECT EXPERIENCE

Environmental Site Assessments

Mr. Ciccolella has been the principal investigator for numerous Phase I Environmental Site Assessments (ESAs). Assessments have been conducted on a wide range of sites including vacant property, industrial facilities, potential SCDOT rights-of-way, and retail service station properties. Typical clientele has included highway design firms, lending institutions, law firms, real estate brokers, and individual clients.

Subsurface Assessments

Mr. Ciccolella has been involved with the assessment of numerous sites where the subsurface soils and/or ground water have been impacted from leaking underground storage tanks or other sources. His responsibilities on these projects have included the completion of numerous ground water quality assessments designed to characterize the subsurface contamination, determine the primary direction of ground water flow and aquifer characteristics, identify and evaluate potential exposure pathways, and model the fate and transport of the contaminated ground water plumes. His project experience includes numerous assessments conducted pursuant to South Carolina Department of Health and Environmental Control (DHEC) guidelines for assessment of petroleum underground storage tank (UST) releases. Other subsurface assessment work has included the completion of numerous Phase II Soil and/or Ground Water Quality Assessments for commercial real estate transactions and SCDOT right of way acquisitions.

Highway Corridor Assessments

Mr. Ciccolella has also been involved in numerous Highway Corridor Assessments. These Corridor Assessments have been conducted to evaluate the presence, or likely, presence, of hazardous waste or materials that may pose a threat of contamination to the potential highway corridor. Corridor Assessments typically include a site reconnaissance of the corridor area, a review of available regulatory information for sites that potentially are a source of contamination to the corridor, discussions with regulatory personnel regarding specific sites of concern, and the generation of a report summarizing the findings and providing specific recommendations. Typical clientele has included highway design firms involved in the preparation of environmental impact studies conducted pursuant to NEPA.

Environmental Assessment

Mr. Ciccolella was the principal author of the NEPA Environmental Assessment (EA) conducted for the proposed construction of a Ready Building for the 43rd Weapons of Mass Destruction – Civil Support Team of the South Carolina Army National Guard. The EA included an alternatives analysis of a variety of potential environmental impacts including natural resource impacts, cultural resource impacts and community impacts.

Biological Assessments

Mr. Ciccolella has performed numerous wetland delineations throughout South Carolina and has been the principal field technician on a number of wetland assessments, delineation, and wetland mitigation projects. His duties have included wetland delineation and monitoring of environmental conditions at wetland mitigation sites.

ANDREW M. WILSON, P.G.
SENIOR GEOLOGIST / PRINCIPAL

Mr. Wilson is a Professional Geologist with approximately twenty years of professional experience in the environmental field. He has experience in all aspects of environmental assessment and remediation. Mr. Wilson has been the principal investigator on hundreds of environmental investigations, involving RCRA, CERCLA, DNAPL assessment, LNAPL assessment and remediation and dry cleaning contaminant evaluation. Mr. Wilson has also been involved as the principal investigator in numerous projects involving contaminant source apportionment, and contaminant fate and transport analysis.

EDUCATION
B.S., Geology - University of South Carolina, 1980
M.S., Geology - University of Mississippi, 1983

CERTIFICATIONS
Registered Professional Geologist, South Carolina, North Carolina, Tennessee, and Florida
South Carolina Certified Well Driller
OSHA Hazardous Waste Operations and Emergency Response with Updates

SPECIALIZED TRAINING
Geology, Hydrogeology, Remedial Technologies, Coastal Geological Processes, South Carolina Stratigraphy, Geoprobe (multilevel groundwater sampling, conductivity probe, membrane interface probe, injection techniques)

PROFESSIONAL EXPERIENCE
1993 to Present: ARM Environmental Services, Inc. - Columbia, South Carolina

Mr. Wilson joined ARM in 1993 as Principal and Senior Geologist / Hydrogeologist. His responsibilities include business development, technical oversight, and project leader in ground water quality assessments and remediation. Project experience includes assessment and remediation of metals contamination site in the Congaree Vista, assessment of lead contamination in soils, surface water, and groundwater at firing ranges #2 and #4 at Fort Jackson, South Carolina, and assessment of soil and ground water at four South Carolina turbine powered gas compression stations across South Carolina.

1985 to 1993: ViroGroup - ETE Division - Lexington, South Carolina

Mr. Wilson was employed as a Staff/Senior level Hydrogeologist and later as Manager of Hydrogeological Services. His responsibilities included assimilation, evaluation and reporting of geologic and environmental data, large scale project management, business development, and management of a staff of technicians, geologists and hydrogeologists. Mr. Wilson was also team leader for all Corporate ground water remedial activities.

1983-1985 S.C. Dept. of Health and Environmental Control, Ground Water Protection Division, Staff Geologist - Columbia, South Carolina

While at DHEC, Mr. Wilson worked on a variety of projects including ground water contamination and remediation from manufacturing facilities, landfills, and waste disposal sites.

PROJECT EXPERIENCE

Environmental Assessments

Mr. Wilson has been the principal investigator on hundreds of Phase I, II, and III environmental site assessments (ESA's). These ESA's have been completed on a wide variety of industrial, agricultural, commercial, and waste disposal facilities and have been completed for lending institutions, law firms, real estate brokers, and industrial clients. Mr. Wilson has also conducted seminars regarding "due diligence" and environmental site assessments.

Ground Water Quality / Subsurface Geological Assessments and Remediation

Mr. Wilson has been involved with the field investigation and suitability evaluation of numerous potential solid/chemical waste and waste water disposal sites. Characterization of the site geology and hydrogeology is of primary importance when property is being evaluated for mining or as utilization for treatment, storage and/or disposal facility for waste. In the area of contaminant hydrogeology, Mr. Wilson has been project manager on numerous projects involving ground water assessment and remediation from creosote, semi-volatile and volatile organic chemicals, and heavy metals.

A partial list of remedial projects and responsibilities include: field hydrogeologist for the hydrogeological evaluation and remedial activities of the shallow aquifer at the Laidlaw Environmental Services, Inc., Pinewood, S.C., hazardous waste landfill; Project Manager for the hydrogeological assessment Balchem Inc.'s, Green Pond, S.C. facility, Assessment and Remedial Manager for Carolina Plating and Stamping's Greenville, S.C., facilities; Project Manager for preparing the ground water monitoring plan portion of closure and post closure plans for a confidential New Jersey client; Project Manager responsible for development of a Ground Water Quality Assessment Program for Carolina Plating and Stamping Division's Greenville, S.C., facility; Project Manager for evaluation of three sites polluted with wood preserving chemicals for a South Carolina client, and principal investigator for State (DHEC) funded assessment and corrective action at numerous leaking UST sites. Corrective action activities have included soil removal, forced air injection and injection of bacteria and oxygen enriched compounds.

Mr. Wilson also served as the manager of technical field activities for the plantiff in the Martin v. Diamant Boart case and also as the principal inspector in the Phase II environmental assessment activities at the Sunny Slope Farms site in Gaffney, South Carolina.

Carolina Cross Roads Project
Broad River Road
Columbia, South Carolina

Phase 2 Environmental Assessments
(4 Sites)

April 27, 2022

ARM Project #08-300-22

Prepared For:

Infrastructure Consulting & Engineering
Columbia, SC

Richard Ciccolella
Project Manager

Andrew M. Wilson, P.G.
Sr. Project Manager / Principal

TABLE OF CONTENTS

1.0 - Introduction Page 1

1.1 Purpose

1.2 Scope of Services

2.0 – Results Page 2

2.1 Former Port Unit 288 (North American Title Loans), 2224 Broad River Road (Tract 206) Page 2

2.2 Circle K 2703105, 2220 Broad River Road (Tract 207) Page 4

2.3 Former Shepperds Texaco, 2116 Broad River Road (Tract 272) Page 4

2.4 Former Racetrac 978, 2114 Broad River Road (Tract 273) Page 8

3.0 – Conclusions Page 12

Attachment A – Figures

Attachment B – Laboratory Analytical Data

Attachment C – EM / GPR Information

1.0 Introduction

Pursuant to authorization from Integrated Consulting & Engineering (ICE), ARM has completed Phase 2 Limited Subsurface Assessments (LSA) of 4 sites along Broad River Road, near the I-20 interchange, in Columbia, SC. The sites were selected based on previous Phase I Environmental Site Assessments (ESA), prepared by F&ME Consultants, dated June 14, 2017. Phase 2 efforts were concentrated in potential new right of way (ROW) areas for two sites, and across the sites for two sites.

Phase 2 LSAs were conducted at the following 4 sites:

- Former Port Unit 288 (North American Title Loans), 2224 Broad River Road (Tract 206)
- Circle K 2703105, 2220 Broad River Road (Tract 207)
- Former Shepperds Texaco, 2116 Broad River Road (Tract 272)
- Former Racetrac 978, 2114 Broad River Road (Tract 273)

1.1 Purpose

The referenced sites are included on the SCDHEC Leaking Underground Storage Tank (LUST) database and are known to have subsurface petroleum-based soil and / or groundwater contamination. The purpose of the LSAs was to identify significant concentrations of chemicals of concern (COC) in the subsurface soil in areas of potential new right of way / approximate construction limits that would potentially be encountered during road related work at the referenced sites. Borings outside new road construction areas were installed to shallower depths as it is understood that work will primarily include building demolition, pavement removal and site grading (shallow disturbances). Borings in proposed new ROW areas were typically installed to deeper depths as deeper soil disturbance may be necessary here.

1.2 Scope of Services

- ARM obtained current SCDHEC information for each site as it pertains to known soil / groundwater contamination.
- ARM notified SC 811 in order to have subsurface utilities identified.
- ARM contracted with Reed Tech, a private utility locator, to conduct an electromagnetic / ground penetrating radar (EM/GPR) survey at Tracts 272 and 273 in an attempt to determine if USTs remain onsite.
- On March 21 and 22, a Geoprobe was used to install 32 soil borings in representative areas of the potential area of new ROW / area of new road construction activity and / or the overall site, depending on the location. The soil borings were installed to depths of approximately 5 to 15 feet below ground surface (bgs). Areas of planned new road construction areas included deeper borings.

Borings outside new road construction areas were shallower as it is understood that work will primarily include building demolition, pavement removal and site grading (shallow disturbances). The soil borings were field screened at 2 to 5 foot depth intervals with an Organic Vapor Analyzer (OVA) for evidence of organic vapors.

- Based on the field screening, one soil sample from each boring was collected and submitted to a South Carolina certified laboratory for analysis. As the concern appears to be from gas station sites, the laboratory analyses consisted of benzene, toluene, ethylbenzene, xylenes (BTEX), naphthalene and methyl tert butyl ether (MTBE) by EPA Method 8260, and Polynuclear Aromatic Hydrocarbons (PAHs) by EPA Method 8270. These compounds are typically associated with petroleum fuel-based contamination.
- A Summary Report has been compiled (this document), to include field data, lab data and interpretation.

2.0 Results

A general site description, site location, general background information, and soil sampling results for the referenced sites are summarized in the following sections.

2.1 Former Port Unit 288, 2224 Broad River Road (Tract 206)

The site is a former gas station and is the current location of a North American Title Loans business. A potential area of new ROW / area of new road construction activity has been identified encroaching onto the site from Broad River Road.

Subsurface soils at the site were primarily sandy clays, silty sandy clays, and silty clays. Several of the borings included small quartz cobbles at deeper depths. Four borings were completed to depths of 12 feet. The soil borings were field screened with an OVA at 2 to 5 foot intervals. The OVA data is summarized in Table 1 below. The soil boring / soil sample locations are indicated on Figure 1 in Attachment A.

Table 1 – Soil Screening (OVA) Results –
Former Port Unit 288 (North American Title Loans), 2224 Broad River Rd

Soil Boring ID	Soil OVA Results (PPM)			
Depth Interval	2 ft	5 ft	10 ft	12 ft
SB-1	1.0	0.9	1.3	1.7*
SB-2	0.9	1.4	0.8	0.9*
SB-3	0.9	0.9	1.0	1.0*
SB-4	0.4	0.3	0.8	0.8*

* Sample collected for laboratory analysis

The OVA field screening results did not indicate the significant presence of volatile organic compounds (VOCs) in any of the soil borings. One sample from each boring was submitted to a South Carolina certified laboratory for analysis of BTEX, naphthalene, MTBE and PAHs. The positive laboratory analytical results for the soil samples are summarized in Table 2 below. DHEC Risk Based Screening Levels (RBSLs) for clayey soils are provided as a primary regulatory comparison standard, if available and applicable. EPA Regional Screening Levels (industrial) and the EPA Maximum Contaminant Level (MCL) based Site Screening Level (SSL) are also provided. The MCL based SSL is an indicator of a contaminants potential to leach to groundwater at concentrations greater than the groundwater MCL. The complete laboratory analytical data is included in Attachment B.

Table 2 – Laboratory Analytical Data Positive Results
Former Port Unit 288 (North American Title Loans), 2224 Broad River Rd

Sample ID	Analyte	Sample Result (ug/kg)	DHEC RBSL*	Industrial Soil RSL** (ug/kg)	MCL Based SSL*** (ug/kg)
SB-4	Benzo(b)fluoranthene	21	N/A	21,000	N/A
	Fluoranthene	18	N/A	3,000,000	N/A
	Pyrene	16	N/A	2,300,000	N/A

*DHEC Risk Based Screening Level (Protection of Groundwater)
**RSL = EPA Regional Screening Level
***SSL = Protection of Groundwater Soil Screening Level

Very low concentrations of 3 PAHs were detected in sample SB-4. DHEC RBSLs are not available for these 3 PAHs. The concentrations of these PAHs were found to be significantly less than the EPA Industrial Soil RSL. There were no detections of the target COCs in any of the other soil samples collected. Therefore, based on the laboratory analytical results and the OVA soil screening results, it is not expected that petroleum fuel-based soil contamination would be encountered in the area of potential new ROW / areas of new road construction adjacent to the 2224 Broad River Road site.

2.2 Circle K 2703105, 2220 Broad River Road (Tract 207)

The site is an active Circle K gas station. A potential area of new ROW / area of new road construction activity has been identified encroaching onto the site from Broad River Road.

Subsurface soils at the site were primarily sandy clays, silty sandy clays, and silty clays. Several of the borings included small quartz cobbles at deeper depths. Three borings were completed to depths of 12 to 15 feet. The soil borings were field screened with an OVA at 2 to 5 foot intervals. The OVA data is summarized in Table 3 below. The soil boring / soil sample locations are indicated on Figure 2 in Attachment A.

Table 3 – Soil Screening (OVA) Results
Circle K 2703105, 2220 Broad River Road (Tract 207)

Soil Boring ID	Soil OVA Results (PPM)				
Depth Interval	2 ft	5 ft	10 ft	12 ft	15
SB-1	1.2	0.4	1.2	Not Screened	1.4*
SB-2	0.1	0.8	1.1	1.3*	Not Screened
SB-3	1.1	0.8	0.9	1.2*	Not Screened

* Sample collected for laboratory analysis

The OVA field screening results did not indicate the significant presence of volatile organic compounds (VOCs) in any of the soil borings. The deepest sample from each boring was submitted to a South Carolina certified laboratory for analysis of BTEX, naphthalene, MTBE and PAHs.

None of the target COCs were detected in the samples collected for analysis. Therefore, based on the laboratory analytical results and the OVA soil screening results, it is not expected that petroleum fuel-based soil contamination would be encountered in the area of potential new ROW / areas of new road construction adjacent to the 2220 Broad River Road site. The complete laboratory analytical data is included in Attachment B.

2.3 Former Shepperds Texaco, 2116 Broad River Road (Tract 272)

The former Shepperds Texaco site, at 2116 Broad River Road, is a former gasoline service station. The online DHEC UST registry database indicates that four USTs have been removed from the site; however, a date of removal is unknown. DHEC file information, obtained through the FOI process, indicates the approximate location of the former UST basin to have been adjacent to the southeastern property line. ARM contracted with Reed Tech, a private utility locator, to conduct an EM/GPR survey at the site in an attempt to determine if USTs remain onsite. No indications of remaining USTs were discovered onsite through this process. Documentation from Reed Tech is included in Attachment C.

The Tier 1 report for the site, dated September 21, 2009, shows naphthalene in soil concentrations in excess of DHEC Risk Based Screening Levels (RBSLs) in the vicinity of the dispenser islands at depths ranging from 4 to 8 feet below ground surface. The three monitoring wells installed for the Tier 1 only exhibited concentrations of MTBE that were greater than groundwater RBSLs.

The Tier 2 report for the site, dated June 29, 2012, indicates shallow groundwater depths of approximately 20 to 40 feet. The Tier 2 report also indicates that MTBE appeared to be the constituent of concern in groundwater and that it was likely a result of migration from the adjacent RaceTrac site. The most recent groundwater monitoring report for the site, dated December 20, 2019, indicated that in onsite monitoring wells, only MTBE was detected on the northeastern portion of the subject property at a concentration exceeding the groundwater RBSL, and also concluded that the MTBE was from the adjacent RaceTrac site.

In summary, the available DHEC file information does not indicate widespread shallow soil contamination, with naphthalene found near the dispenser islands at depths of 4 to 8 feet. Groundwater at the site does not appear to be significantly impacted, except with MTBE on the northeastern portion. A letter of No Further Action (NFA) was issued for the site, dated January 13, 2014, indicating that based on the available information, DHEC will not require further assessment or remediation of the site, as far as conditions pertain to the documented UST release.

For this current assessment, subsurface soils at the site were found to be primarily silty sandy clay to tight silty clay. Three borings were completed in the potential new ROW / area of new roadway construction to depths of 10 feet and nine borings were completed across the site to depths of 8 feet. The soil borings were field screened with an OVA at 2 to 5 foot intervals. The OVA data is summarized in Table 4 below. The soil boring / soil sample locations are indicated on Figure 3 in Attachment A.

Table 4 – Soil Screening (OVA) Results
Former Shepperds Texaco, 2116 Broad River Road (Tract 272)

Soil Boring ID	Soil OVA Results (PPM)					
Depth Interval	2 ft	4 ft	5 ft	6 ft	8 ft	10 ft
SB-1	0.2	Not Screened	0.5	Not Screened	Not Screened	0.4*
SB-2	0.2	Not Screened	0.5	Not Screened	Not Screened	0.3*
SB-3	0.5	Not Screened	0.3	Not Screened	Not Screened	0.2*
SB-4	1.9	21.8	Not Screened	25.2	33.2*	Not Screened
SB-5	34.5	316	Not Screened	900	1053*	Not Screened
SB-6	253.1	290.4*	Not Screened	85.7	103.3	Not Screened
SB-7	6.8	22.7	Not Screened	43.2*	9.3	Not Screened
SB-8	293.5	50.1	Not Screened	194	952*	Not Screened
SB-9	1.7	1.0	Not Screened	0.8	1.0*	Not Screened
SB-10	0.7	0.7	Not Screened	0.4	0.8*	Not Screened
SB-11	0.3	0.3	Not Screened	0.3	0.6*	Not Screened
SB-12	0.1	0.3	Not Screened	0.2	0.1*	Not Screened

* Sample collected for laboratory analysis

The OVA field screening results indicated significant VOC based vapors in several of the site borings, but not in the borings located in the potential new ROW / area of new roadway construction. The OVA based evidence of contamination was primarily in the vicinity of the former dispensers, which is in substantial agreement with past DHEC directed assessments. Based on the field screening one soil sample from each boring was submitted to a South Carolina certified laboratory for analysis of BTEX, naphthalene, MTBE, and PAHs. The positive laboratory analytical results for the soil samples are summarized in Table 5 below. DHEC RBSLs for clayey soils, at 10 to 15 feet above the water table, are provided as the primary regulatory comparison standard, if available and applicable. EPA Regional Screening Levels (industrial) and the EPA MCL based SSL are also provided. The MCL based SSL is an indicator of a contaminants potential to leach to groundwater at concentrations greater than the groundwater MCL. The complete laboratory analytical data is included in Attachment B.

Table 5 – Laboratory Analytical Data Positive Results

Former Shepperds Texaco, 2116 Broad River Road (Tract 272)

Sample ID	Analyte	Sample Result (ug/kg)	DHEC RBSL*	Industrial Soil RSL** (ug/kg)	MCL Based SSL*** (ug/kg)
SB-5 (8 ft)	Ethylbenzene	**9,500**	6,168	25,000	780
	Naphthalene	**5,900**	69	8,600	NA
	Xylenes	**40,000**	22,495	2,500,000	9,900
	Phenanthrene	23	NA	NA	NA
SB-6 (4 ft)	Ethylbenzene	3,100	6,168	25,000	780
	Xylenes	6,900	22,495	2,500,000	9,900
	Naphthalene	**2,600**	69	8,600	N/A
SB-7 (6 ft)	Ethylbenzene	800	6,168	25,000	780
	Xylenes	6,900	22,495	2,500,000	9,900
	Naphthalene	**930**	69	8,600	NA
	Benzo(b)fluoranthene	120	7,439,000	21,000	NA
	Fluoranthene	140	NA	30,000,000	NA
	Pyrene	110	NA	23,000,000	NA
SB-8 (8 ft)	Ethylbenzene	1,200	1,551	25,000	780
	Naphthalene	**3,400**	47	8,600	NA
	Xylenes	4,400	22,495	2,500,000	9,900
	Acenaphthene	24	NA	45,000,000	NA
	Fluorene	31	NA	30,000,000	NA
	Phenanthrene	53	NA	NA	NA
SB-10 (8 ft)	MTBE	63	NA	210,000	NA
	Naphthalene	**240**	47	8,600	NA
SB-11 (8 ft)	Benzo(b)fluoranthene	90	7,439,000	21,000	NA
	Fluoranthene	180	NA	30,000,000	NA
	Phenanthrene	86	NA	NA	NA
	Pyrene	170	NA	23,000,000	NA

*DHEC Risk Based Screening Level (for clay rich soil with separation distance of 10-15 feet)
**RSL = EPA Regional Screening Level
***SSL = Protection of Groundwater Soil Screening Level

Significant petroleum based soil contamination was detected in samples SB-5, SB-6, SB-7, SB-8, and SB 10. Based on the OVA field screening results and the laboratory analytical results, soil contamination in the dispenser area appears to be within the 2 to 6 foot depth range. Therefore, shallow excavation in the former dispenser area may encounter petroleum contaminated soil. Based on the OVA screening and the laboratory analytical results, soil contamination is present in the vicinity of the former UST basin.

However, contamination here appears to be deeper, in the 8 foot range, and therefore, shallow excavation in this area would be much less likely to encounter petroleum based soil contamination. Based on the OVA field screening and laboratory results, there is a low potential for encountering petroleum based soil contamination in the area of potential new ROW / areas of new road construction adjacent to the 2116 Broad River Road site. Additionally, there is no known current or historic source of petroleum based soil contamination within the area of potential new ROW / areas of new road construction adjacent to the 2116 Broad River Road site. Groundwater at the site has been documented to be approximately 20 to 40 feet below ground surface and only appears to be impacted by MTBE on the northeastern portion of the site. Based on the available information, and the depth to groundwater, it is not expected that contaminated groundwater would be encountered during work at the site.

2.4 Former Racetrac 978, 2114 Broad River Road (Tract 273)

The former RaceTrac 978 site, at 2114 Broad River Road, is a former gasoline service station. The online DHEC UST registry database indicates that three USTs were removed from the site and that one was abandoned in place by filling with an inert material. However, DHEC file information, obtained through the FOI process, does indicate that the fourth tank has since been removed. The file information also indicates the approximate location of the former UST basin to have been adjacent to the southeastern property line. ARM contracted with Reed Tech, a private utility locator, to conduct an EM/GPR survey at the site in an attempt to determine if USTs remain onsite. No indications of remaining USTs were discovered onsite through this process. Documentation from Reed Tech is included in Attachment C.

An Investigation of Potential Soil Contamination report, dated, December 9, 1991, shows significant petroleum-based soil contamination adjacent to the UST basin at a depth of 13 feet. OVA results also show that organic vapor measurements increase with depth, becoming most significant at the depth of the soil sample collected.

A Product Line Closure report, dated March 31, 2010, documented the closure of a fuel product line that ran from the southeastern-most dispenser island toward the UST basin. A sample collected adjacent to the dispenser island, at a depth of 3 feet below ground surface, exhibited significant petroleum-based soil contamination. Subsequent to this report DHEC considered a second release to have occurred.

The site has undergone many rounds of Advanced Fluid Vapor Recovery (AFVR) events in an effort to remediate groundwater contamination. The most recent Groundwater Monitoring report for the site, dated June 11, 2020, indicates that significant groundwater contamination remains on site, in the area adjacent to the northeast of the former UST basin. Although contamination above RBSLs remains, DHEC has issued a risk-based Conditional NFA for the site, dated May 7, 2021. The most recent groundwater data indicates that groundwater is located approximately 35 feet below ground surface at the site.

For this current assessment, subsurface soils at the site were found to be primarily silty sandy clay to tight silty clay. Three borings were completed in the potential new ROW / area of new roadway construction to depths of 12 feet and ten borings were completed across the site to depths of 8 feet. The soil borings were field screened with an OVA at 2 to 5 foot intervals. The OVA data is summarized in Table 6 below. The soil boring / soil sample locations are indicated on Figure 4 in Attachment A.

Table 6 – Soil Screening (OVA) Results
Former Racetrac 978, 2114 Broad River Road (Tract 273)

Soil Boring ID	Soil OVA Results (PPM)						
Depth Interval	2 ft	4 ft	5 ft	6 ft	8 ft	10 ft	12 ft
SB-1	1.7	Not Screened	0.6	Not Screened	Not Screened	0.7	1.2*
SB-2	1.9	Not Screened	0.3	Not Screened	Not Screened	0.3	0.8*
SB-3	0.7	Not Screened	0.4	Not Screened	Not Screened	0.5	0.9*
SB-4	1.5	1.9	Not Screened	5.7	7.3*	Not Screened	Not Screened
SB-5	5.5	178.2	Not Screened	17.2	769*	Not Screened	Not Screened
SB-6	1.3	2.5	Not Screened	16.9*	5.4	Not Screened	Not Screened
SB-7	1.2	1.4	Not Screened	0.6	2.2*	Not Screened	Not Screened
SB-8	27.0	6.5	Not Screened	63.4*	1.1	Not Screened	Not Screened
SB-9	26.0*	2.8	Not Screened	2.7	2.5	Not Screened	Not Screened
SB-10	4.4	2.4	Not Screened	1.9	1.9*	Not Screened	Not Screened
SB-11	0.6	3.0	Not Screened	0.6	1,59*6	Not Screened	Not Screened
SB-12	1.2	1.0	Not Screened	0.4	0.6*	Not Screened	Not Screened
SB-13	0.4	0.6	Not Screened	0.2	1,702*	Not Screened	Not Screened

* Sample collected for laboratory analysis

The OVA field screening results indicated the significant presence of volatile organic compounds (VOCs) primarily at the deeper depth near the UST basin; however, SB-5 also exhibited significant organic vapors at a depth of 8 feet. Based on the field screening one soil sample from each boring was submitted to a South Carolina certified laboratory for analysis of BTEX, naphthalene, MTBE, and PAHs. The positive laboratory analytical results for the soil samples are summarized in Table 7 below. DHEC RBSLs for clayey

soils, at 10 to 15 feet above the water table, are provided as the primary regulatory comparison standard, if available and applicable. EPA Regional Screening Levels (industrial) and the EPA MCL based SSL are also provided. The MCL based SSL is an indicator of a contaminants potential to leach to groundwater at concentrations greater than the groundwater MCL. The complete laboratory analytical data is included in Attachment B.

Table 7 – Laboratory Analytical Data Positive Results
Former Racetrac 978, 2114 Broad River Road (Tract 273)

Sample ID	Analyte	Sample Result (ug/kg)	DHEC RBSL*	Industrial Soil RSL** (ug/kg)	MCL Based SSL*** (ug/kg)
SB-4 (8 ft)	Ethylbenzene	20	6,168	25,000	780
	Xylenes	330	22,495	2,500,000	9,900
SB-5 (8 ft)	Phenanthrene	19	NA	NA	NA
SB-6 (6 ft)	Xylenes	18	22,495	2,500,000	9,900
	Naphthalene	**210**	69	8,600	NA
SB-8 (6 ft)	Naphthalene	**110**	69	8,600	NA
	Acenaphthene	47	NA	45,000,000	NA
	Fluorene	78	NA	30,000,000	NA
	Phenanthrene	180	NA	NA	NA
	Pyrene	24	NA	230,00,000	NA
SB-11 (8 ft)	Ethylbenzene	**52,000**	6,168	25,000	780
	Naphthalene	**23,000**	69	8,600	NA
	Xylenes	**280,000**	22,495	2,500,000	9,900
	Phenanthrene	19	NA	NA	NA
SB-13 (8 ft)	Ethylbenzene	**62,000**	6,168	25,000	780
	Naphthalene	**23,000**	69	8,600	NA
	Toluene	**110,000**	1,167	47,000,000	690
	Xylenes	**380,000**	22,495	2,500,000	9,900
	Acenaphthene	26	NA	45,000,000	NA
	Anthracene	32	NA	230,000,000	NA
	Fluorene	24	NA	30,000,000	NA
	Phenanthrene	45	NA	NA	NA

*DHEC Risk Based Screening Level (for clay rich soil with separation distance of 10-15 feet)
**RSL = EPA Regional Screening Level
***SSL = Protection of Groundwater Soil Screening Level

Significant petroleum-based soil contamination was detected in samples SB-6, SB-8, SB-11, and SB 13. Although lab results do not show significant contamination for SB-5, the OVA screening results did indicate significant organic vapors in this boring at the 2 foot and 8 foot depths. Based on the OVA field screening results and the laboratory analytical results, soil contamination in the dispenser areas appears to be within the 2 to 8 foot depth range. Additionally, the previously referenced Product Line Closure report, dated March

31, 2010, documented the closure of a fuel product line that ran from the southeastern-most dispenser island toward the UST basin. A sample collected adjacent to the dispenser island, at a depth of 3 feet below ground surface, exhibited significant petroleum-based soil contamination. Therefore, shallow excavation in the former dispenser areas may encounter petroleum contaminated soil. Based on the OVA screening and the laboratory analytical results, soil contamination is present in the vicinity of the former UST basin. However, contamination here appears to be deeper, in the 8 foot range, and therefore, shallow excavation in this area would be much less likely to encounter petroleum based soil contamination. Based on the OVA field screening and laboratory results, there is a low potential for encountering petroleum-based soil contamination in the area of potential new ROW / areas of new road construction adjacent to the 2116 Broad River Road site. Additionally, there is no known current or historic source of petroleum-based soil contamination within the area of potential new ROW / areas of new road construction adjacent to the 2114 Broad River Road site. Groundwater at the site has been documented to be approximately 35 feet below ground surface. Based on the available information, and the depth to groundwater, it is not expected that contaminated groundwater would be encountered during work at the site.

3.0 Conclusions

Detailed results for the LSA conducted at each site are provided above. The following sites exhibited evidence of subsurface contamination that may warrant consideration during project construction activities, depending on depths of disturbance:

- Former Shepperds Texaco, 2116 Broad River Road (Tract 272)
- Former Racetrac 978, 2114 Broad River Road (Tract 273)

At each of the above listed sites, shallow petroleum-based soil contamination appears to be confined to the dispenser island areas and would range from approximately 2 feet to 8 feet in depth. It is understood that only shallow disturbances will occur in these areas, and therefore, the potential for encountering contaminated soil would be reduced the shallower the disturbance. Contamination is likely to be located beneath the former dispenser islands and dispenser piping. Soil contamination originating from the UST basins is deeper in depth, closer to 8 feet, and would likely not be encountered during shallow disturbances. Contamination at each of these sites appears to be petroleum fuel based, originating from registered UST systems.

It should also be noted that, based on the results of these assessments, in areas of potential new ROW / areas of new road construction that have been defined adjacent to all four of the sites considered in this report, there is a low potential for encountering contaminated soil during road construction activities. These areas do not have known sources of shallow soil contamination (UST components) and none of the deeper soil borings in these areas exhibited evidence of contamination.

These sites have been assessed by DHEC under the State Underground Petroleum Environmental Response Bank (SUPERB) regulations. The DHEC directed assessments are covered by SUPERB funding and the responsibility for the UST related contamination typically remains with the responsible party of record. However, the LSAs in this document are an effort to identify contamination that would potentially be encountered during road or utility construction activities. Subsurface contamination that is encountered and/or excavated should be handled / disposed of properly and all appropriate worker protection measures should be undertaken. SUPERB funding will not cover disposal costs for the contaminated soil and or groundwater encountered during construction activities. No activities that will exacerbate existing contamination, or cause increased contaminant migration, should be conducted.

Attachment A

Figure 1 – Former Port Unit 288 (North American Title Loans),
2224 Broad River Road (Tract 206)

Figure 2 - Circle K 2703105, 2220 Broad River Road (Tract 207)

Figure 3 - Former Shepperds Texaco, 2116 Broad River Road (Tract 272)

Figure 4 - Former Racetrac 978, 2114 Broad River Road (Tract 273)

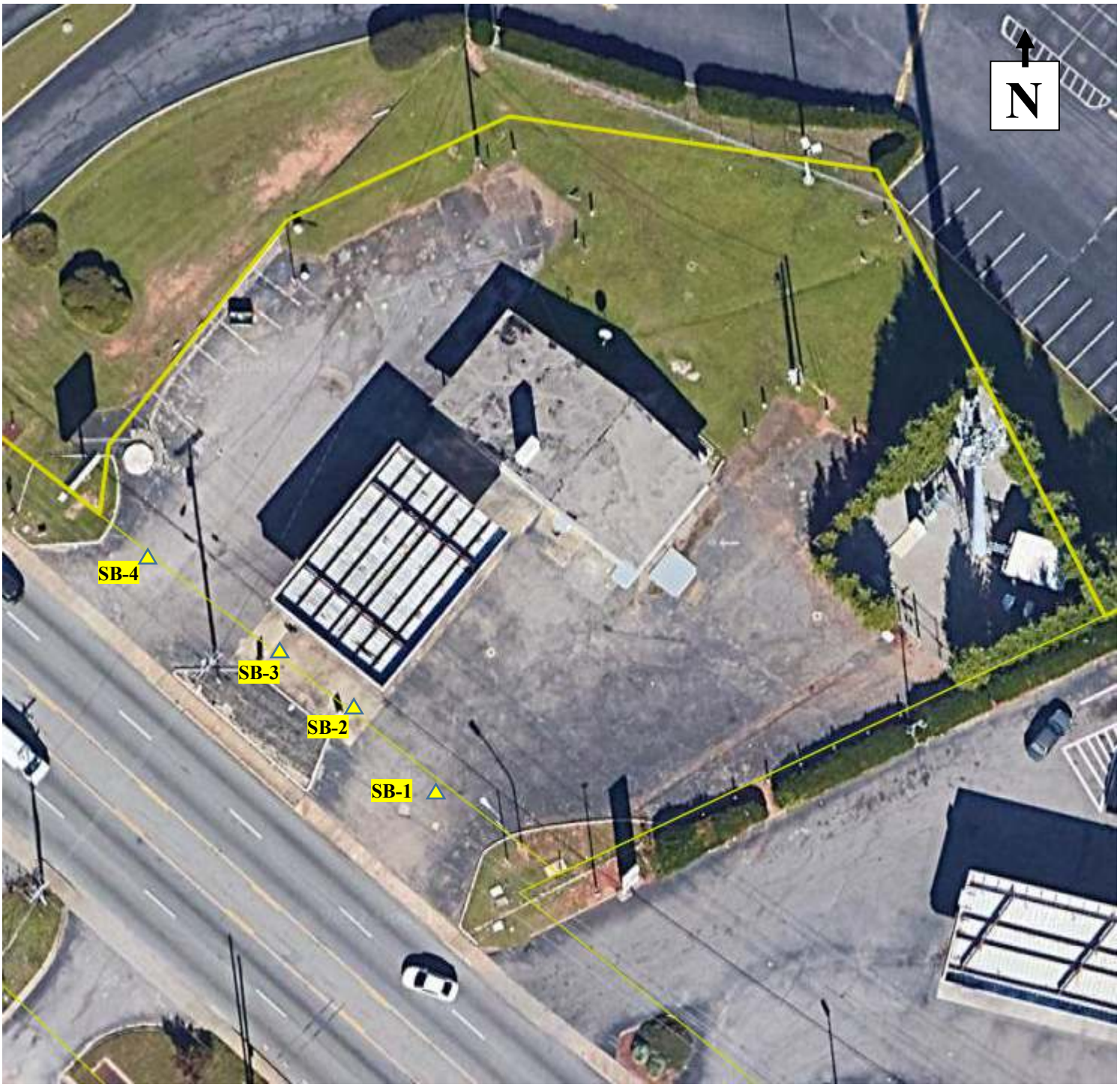

Project Phase II Limited Subsurface Assessments CCR Project – Broad River Road Columbia, South Carolina	***Figure 1*** Site Plan Showing Soil Boring Locations 2224 Broad River Rd. (Tract 206) SB● = Soil Boring with Contamination SB△ = Clean Soil Boring
Scale 1 in. = 40 ft (Approx.)	***Date*** April 2022

ARM ENVIRONMENTAL SERVICES, INC.



Project	***Figure 2***
Phase II Limited Subsurface Assessments CCR Project – Broad River Road Columbia, South Carolina	Site Plan Showing Soil Boring Locations 2220 Broad River Rd. (Tract 207) SB● = Soil Boring with Contamination SB△ = Clean Soil Boring

Scale	***Date***	
1 in. = 40 ft (Approx.)	April 2022	ARM ENVIRONMENTAL SERVICES, INC.



Project

Phase II Limited Subsurface Assessments
CCR Project – Broad River Road
Columbia, South Carolina

Figure 3

Site Plan Showing Soil Boring Locations
2116 Broad River Rd. (Tract 272)
SB● = Soil Boring with Contamination
SB△ = Clean Soil Boring

Scale	***Date***	
1 in. = 40 ft (Approx.)	April 2022	ARM ENVIRONMENTAL SERVICES, INC.



Project Phase II Limited Subsurface Assessments CCR Project – Broad River Road Columbia, South Carolina	***Figure 4*** Site Plan Showing Soil Boring Locations 2114 Broad River Rd. (Tract 273) SB● = Soil Boring with Contamination SB△ = Clean Soil Boring

Scale 1 in. = 40 ft (Approx.)	***Date*** April 2022	ARM ENVIRONMENTAL SERVICES, INC.

Attachment B

Laboratory Analytical Data

Report of Analysis

ARM Environmental Services, Inc.
1210 1st Street S. Ext.
Columbia, SC 29209
Attention: Richard Ciccolella

Project Name: 2224 Broad River Road

Project Number: 08-300-22

Lot Number:**XC24073**

Date Completed:04/06/2022

04/11/2022 11:34 AM
Approved and released by:
Project Manager II: **Lucas Odom**

The electronic signature above is the equivalent of a handwritten signature.
This report shall not be reproduced, except in its entirety, without the written approval of Pace Analytical Services, LLC.

Pace Analytical Services, LLC (*formerly Shealy Environmental Services, Inc.*)
106 Vantage Point Drive West Columbia, SC 29172
Tel: 803-791-9700 Fax: 803-791-9111 www.pacelabs.com

Case Narrative
ARM Environmental Services, Inc.
Lot Number: XC24073

This Report of Analysis contains the analytical result(s) for the sample(s) listed on the Sample Summary following this Case Narrative. The sample receiving date is documented in the header information associated with each sample.

All results listed in this report relate only to the samples that are contained within this report. Where sampling is conducted by the client, results relate to the accuracy of the information provided, and as the samples are received.

Sample receipt, sample analysis, and data review have been performed in accordance with the most current approved The NELAC Institute (TNI) standards, the Pace Analytical Services, LLC ("Pace") Laboratory Quality Manual, standard operating procedures (SOPs), and Pace policies. Any exceptions to the TNI standards, the Laboratory Quality Manual, SOPs or policies are qualified on the results page or discussed below.

Pace is a TNI accredited laboratory; however, the following analyses are currently not listed on our TNI scope of accreditation: Drinking Water: VOC (excluding BTEX, MTBE, Naphthalene, & 1,2-dichloroethane) EPA 524.2, E. coli and Total coliforms SM 9223 B-2004, Solid Chemical Material: TOC Walkley-Black, Biological Tissue: All, Non-Potable Water: SGT-HEM EPA 1664B, Silica EPA 200.7, Boron, Calcium, Silicon, Strontium EPA 200.8, Bicarbonate, Carbonate, and Hydroxide Alkalinity SM 2320 B-2011, SM 9221 C E-2006 & SM 9222D-2006, Strontium SW-846 6010D, VOC SM 6200 B-2011, Fecal Coliform Colilert-18.

Where applicable, all soil sample results (including LOQ and DL if requested) are corrected for dry weight unless flagged with a "W" qualifier.

If you have any questions regarding this report, please contact the Pace Project Manager listed on the cover page.

VOCs by GC/MS
Insufficient sample volume was provided to perform matrix spike/matrix spike duplicate (MS/MSD) for analytical batch 36429. An LCS/LCSD was run in lieu of an MS/MSD.

Insufficient sample volume was provided to perform matrix spike/matrix spike duplicate (MS/MSD) for analytical batch 37057. An LCS/LCSD was run in lieu of an MS/MSD.

Sample Summary

ARM Environmental Services, Inc.

Lot Number: XC24073

Sample Number	Sample ID	Matrix	Date Sampled	Date Received
001	SB-1	Solid	03/21/2022 1453	03/24/2022
002	SB-2	Solid	03/21/2022 1521	03/24/2022
003	SB-3	Solid	03/21/2022 1543	03/24/2022
004	SB-4	Solid	03/21/2022 1620	03/24/2022

(4 samples)

Detection Summary

ARM Environmental Services, Inc.

Lot Number: XC24073

Sample	Sample ID	Matrix	Parameter	Method	Result	Q	Units	Page
004	SB-4	Solid	Benzo(b)fluoranthene	8270E	21		ug/kg	8
004	SB-4	Solid	Fluoranthene	8270E	18		ug/kg	8
004	SB-4	Solid	Pyrene	8270E	16		ug/kg	8

(3 detections)

Client: **ARM Environmental Services, Inc.** Laboratory ID: **XC24073-001**

Description: **SB-1** Matrix: **Solid**

Date Sampled: **03/21/2022 1453** % Solids: **86.9** **03/24/2022 2321**

Date Received: **03/24/2022**

Volatile Organic Compounds by GC/MS

Run	Prep Method	Analytical Method	Dilution	Analysis Date	Analyst	Prep Date	Batch	Sample Wt.(g)
1	5035	8260D	1	03/29/2022 1843	JM1		36429	5.53

Parameter	CAS Number	Analytical Method	Result	Q	LOQ	Units	Run
Benzene	71-43-2	8260D	ND		5.2	ug/kg	1
Ethylbenzene	100-41-4	8260D	ND		5.2	ug/kg	1
Methyl tertiary butyl ether (MTBE)	1634-04-4	8260D	ND		5.2	ug/kg	1
Naphthalene	91-20-3	8260D	ND		5.2	ug/kg	1
Toluene	108-88-3	8260D	ND		5.2	ug/kg	1
Xylenes (total)	1330-20-7	8260D	ND		10	ug/kg	1

Surrogate	Q	Run 1 % Recovery	Acceptance Limits
Bromofluorobenzene		93	47-138
1,2-Dichloroethane-d4		98	53-142
Toluene-d8		104	68-124

Semivolatile Organic Compounds by GC/MS

Run	Prep Method	Analytical Method	Dilution	Analysis Date	Analyst	Prep Date	Batch
1	3546	8270E	1	03/30/2022 0343	SCD	03/28/2022 1228	36263

Parameter	CAS Number	Analytical Method	Result	Q	LOQ	Units	Run
Acenaphthene	83-32-9	8270E	ND		15	ug/kg	1
Acenaphthylene	208-96-8	8270E	ND		15	ug/kg	1
Anthracene	120-12-7	8270E	ND		15	ug/kg	1
Benzo(a)anthracene	56-55-3	8270E	ND		15	ug/kg	1
Benzo(a)pyrene	50-32-8	8270E	ND		15	ug/kg	1
Benzo(b)fluoranthene	205-99-2	8270E	ND		15	ug/kg	1
Benzo(g,h,i)perylene	191-24-2	8270E	ND		15	ug/kg	1
Benzo(k)fluoranthene	207-08-9	8270E	ND		15	ug/kg	1
Chrysene	218-01-9	8270E	ND		15	ug/kg	1
Dibenzo(a,h)anthracene	53-70-3	8270E	ND		15	ug/kg	1
Fluoranthene	206-44-0	8270E	ND		15	ug/kg	1
Fluorene	86-73-7	8270E	ND		15	ug/kg	1
Indeno(1,2,3-c,d)pyrene	193-39-5	8270E	ND		15	ug/kg	1
Naphthalene	91-20-3	8270E	ND		15	ug/kg	1
Phenanthrene	85-01-8	8270E	ND		15	ug/kg	1
Pyrene	129-00-0	8270E	ND		15	ug/kg	1

Surrogate	Q	Run 1 % Recovery	Acceptance Limits
2-Fluorobiphenyl		81	24-137
Nitrobenzene-d5		76	12-144
Terphenyl-d14		89	20-127

LOQ = Limit of Quantitation
B = Detected in the method blank
E = Quantitation of compound exceeded the calibration range
Q = Surrogate failure
ND = Not detected at or above the LOQ
N = Recovery is out of criteria
P = The RPD between two GC columns exceeds 40%
L = LCS/LCSD failure
H = Out of holding time
W = Reported on wet weight basis
S = MS/MSD failure

Pace Analytical Services, LLC *(formerly Shealy Environmental Services, Inc.)*
106 Vantage Point Drive West Columbia, SC 29172 (803) 791-9700 Fax (803) 791-9111 www.pacelabs.com

Client: **ARM Environmental Services, Inc.** Laboratory ID: **XC24073-002**

Description: **SB-2** Matrix: **Solid**

Date Sampled: **03/21/2022 1521** % Solids: **84.5** **03/24/2022 2321**

Date Received: **03/24/2022**

Volatile Organic Compounds by GC/MS

Run	Prep Method	Analytical Method	Dilution	Analysis Date	Analyst	Prep Date	Batch	Sample Wt.(g)
2	5035	8260D	1	04/04/2022 2110	JM1		37057	4.92

Parameter	CAS Number	Analytical Method	Result	Q	LOQ	Units	Run
Benzene	71-43-2	8260D	ND		6.0	ug/kg	2
Ethylbenzene	100-41-4	8260D	ND		6.0	ug/kg	2
Methyl tertiary butyl ether (MTBE)	1634-04-4	8260D	ND		6.0	ug/kg	2
Naphthalene	91-20-3	8260D	ND		6.0	ug/kg	2
Toluene	108-88-3	8260D	ND		6.0	ug/kg	2
Xylenes (total)	1330-20-7	8260D	ND		12	ug/kg	2

Surrogate	Q	Run 2 % Recovery	Acceptance Limits
Bromofluorobenzene		104	47-138
1,2-Dichloroethane-d4		97	53-142
Toluene-d8		98	68-124

Semivolatile Organic Compounds by GC/MS

Run	Prep Method	Analytical Method	Dilution	Analysis Date	Analyst	Prep Date	Batch
1	3546	8270E	1	03/30/2022 0408	SCD	03/28/2022 1228	36263

Parameter	CAS Number	Analytical Method	Result	Q	LOQ	Units	Run
Acenaphthene	83-32-9	8270E	ND		15	ug/kg	1
Acenaphthylene	208-96-8	8270E	ND		15	ug/kg	1
Anthracene	120-12-7	8270E	ND		15	ug/kg	1
Benzo(a)anthracene	56-55-3	8270E	ND		15	ug/kg	1
Benzo(a)pyrene	50-32-8	8270E	ND		15	ug/kg	1
Benzo(b)fluoranthene	205-99-2	8270E	ND		15	ug/kg	1
Benzo(g,h,i)perylene	191-24-2	8270E	ND		15	ug/kg	1
Benzo(k)fluoranthene	207-08-9	8270E	ND		15	ug/kg	1
Chrysene	218-01-9	8270E	ND		15	ug/kg	1
Dibenzo(a,h)anthracene	53-70-3	8270E	ND		15	ug/kg	1
Fluoranthene	206-44-0	8270E	ND		15	ug/kg	1
Fluorene	86-73-7	8270E	ND		15	ug/kg	1
Indeno(1,2,3-c,d)pyrene	193-39-5	8270E	ND		15	ug/kg	1
Naphthalene	91-20-3	8270E	ND		15	ug/kg	1
Phenanthrene	85-01-8	8270E	ND		15	ug/kg	1
Pyrene	129-00-0	8270E	ND		15	ug/kg	1

Surrogate	Q	Run 1 % Recovery	Acceptance Limits
2-Fluorobiphenyl		84	24-137
Nitrobenzene-d5		76	12-144
Terphenyl-d14		92	20-127

LOQ = Limit of Quantitation
B = Detected in the method blank
E = Quantitation of compound exceeded the calibration range
Q = Surrogate failure
ND = Not detected at or above the LOQ
N = Recovery is out of criteria
P = The RPD between two GC columns exceeds 40%
L = LCS/LCSD failure
H = Out of holding time
W = Reported on wet weight basis
S = MS/MSD failure

Pace Analytical Services, LLC *(formerly Shealy Environmental Services, Inc.)*
106 Vantage Point Drive West Columbia, SC 29172 (803) 791-9700 Fax (803) 791-9111 www.pacelabs.com

Client: **ARM Environmental Services, Inc.** Laboratory ID: **XC24073-003**

Description: **SB-3** Matrix: **Solid**

Date Sampled: **03/21/2022 1543** % Solids: **86.1** **03/24/2022 2321**

Date Received: **03/24/2022**

Volatile Organic Compounds by GC/MS

Run	Prep Method	Analytical Method	Dilution	Analysis Date	Analyst	Prep Date	Batch	Sample Wt.(g)
1	5035	8260D	1	03/29/2022 1929	JM1		36429	5.09

Parameter	CAS Number	Analytical Method	Result	Q	LOQ	Units	Run
Benzene	71-43-2	8260D	ND		5.7	ug/kg	1
Ethylbenzene	100-41-4	8260D	ND		5.7	ug/kg	1
Methyl tertiary butyl ether (MTBE)	1634-04-4	8260D	ND		5.7	ug/kg	1
Naphthalene	91-20-3	8260D	ND		5.7	ug/kg	1
Toluene	108-88-3	8260D	ND		5.7	ug/kg	1
Xylenes (total)	1330-20-7	8260D	ND		11	ug/kg	1

Surrogate	Q	Run 1 % Recovery	Acceptance Limits
Bromofluorobenzene		93	47-138
1,2-Dichloroethane-d4		95	53-142
Toluene-d8		101	68-124

Semivolatile Organic Compounds by GC/MS

Run	Prep Method	Analytical Method	Dilution	Analysis Date	Analyst	Prep Date	Batch
1	3546	8270E	1	03/30/2022 0432	SCD	03/28/2022 1228	36263

Parameter	CAS Number	Analytical Method	Result	Q	LOQ	Units	Run
Acenaphthene	83-32-9	8270E	ND		15	ug/kg	1
Acenaphthylene	208-96-8	8270E	ND		15	ug/kg	1
Anthracene	120-12-7	8270E	ND		15	ug/kg	1
Benzo(a)anthracene	56-55-3	8270E	ND		15	ug/kg	1
Benzo(a)pyrene	50-32-8	8270E	ND		15	ug/kg	1
Benzo(b)fluoranthene	205-99-2	8270E	ND		15	ug/kg	1
Benzo(g,h,i)perylene	191-24-2	8270E	ND		15	ug/kg	1
Benzo(k)fluoranthene	207-08-9	8270E	ND		15	ug/kg	1
Chrysene	218-01-9	8270E	ND		15	ug/kg	1
Dibenzo(a,h)anthracene	53-70-3	8270E	ND		15	ug/kg	1
Fluoranthene	206-44-0	8270E	ND		15	ug/kg	1
Fluorene	86-73-7	8270E	ND		15	ug/kg	1
Indeno(1,2,3-c,d)pyrene	193-39-5	8270E	ND		15	ug/kg	1
Naphthalene	91-20-3	8270E	ND		15	ug/kg	1
Phenanthrene	85-01-8	8270E	ND		15	ug/kg	1
Pyrene	129-00-0	8270E	ND		15	ug/kg	1

Surrogate	Q	Run 1 % Recovery	Acceptance Limits
2-Fluorobiphenyl		85	24-137
Nitrobenzene-d5		77	12-144
Terphenyl-d14		92	20-127

LOQ = Limit of Quantitation
B = Detected in the method blank
E = Quantitation of compound exceeded the calibration range
Q = Surrogate failure
ND = Not detected at or above the LOQ
N = Recovery is out of criteria
P = The RPD between two GC columns exceeds 40%
L = LCS/LCSD failure
H = Out of holding time
W = Reported on wet weight basis
S = MS/MSD failure

Pace Analytical Services, LLC *(formerly Shealy Environmental Services, Inc.)*
106 Vantage Point Drive West Columbia, SC 29172 (803) 791-9700 Fax (803) 791-9111 www.pacelabs.com

Client: **ARM Environmental Services, Inc.** Laboratory ID: **XC24073-004**

Description: **SB-4** Matrix: **Solid**

Date Sampled: **03/21/2022 1620** % Solids: **87.3** **03/24/2022 2321**

Date Received: **03/24/2022**

Volatile Organic Compounds by GC/MS

Run	Prep Method	Analytical Method	Dilution	Analysis Date	Analyst	Prep Date	Batch	Sample Wt.(g)
1	5035	8260D	1	03/29/2022 1953	JM1		36429	5.01

Parameter	CAS Number	Analytical Method	Result	Q	LOQ	Units	Run
Benzene	71-43-2	8260D	ND		5.7	ug/kg	1
Ethylbenzene	100-41-4	8260D	ND		5.7	ug/kg	1
Methyl tertiary butyl ether (MTBE)	1634-04-4	8260D	ND		5.7	ug/kg	1
Naphthalene	91-20-3	8260D	ND		5.7	ug/kg	1
Toluene	108-88-3	8260D	ND		5.7	ug/kg	1
Xylenes (total)	1330-20-7	8260D	ND		11	ug/kg	1

Surrogate	Q	Run 1 % Recovery	Acceptance Limits
Bromofluorobenzene		95	47-138
1,2-Dichloroethane-d4		97	53-142
Toluene-d8		106	68-124

Semivolatile Organic Compounds by GC/MS

Run	Prep Method	Analytical Method	Dilution	Analysis Date	Analyst	Prep Date	Batch
1	3546	8270E	1	03/30/2022 0457	SCD	03/28/2022 1228	36263

Parameter	CAS Number	Analytical Method	Result	Q	LOQ	Units	Run
Acenaphthene	83-32-9	8270E	ND		15	ug/kg	1
Acenaphthylene	208-96-8	8270E	ND		15	ug/kg	1
Anthracene	120-12-7	8270E	ND		15	ug/kg	1
Benzo(a)anthracene	56-55-3	8270E	ND		15	ug/kg	1
Benzo(a)pyrene	50-32-8	8270E	ND		15	ug/kg	1
Benzo(b)fluoranthene	**205-99-2**	**8270E**	**21**		**15**	**ug/kg**	**1**
Benzo(g,h,i)perylene	191-24-2	8270E	ND		15	ug/kg	1
Benzo(k)fluoranthene	207-08-9	8270E	ND		15	ug/kg	1
Chrysene	218-01-9	8270E	ND		15	ug/kg	1
Dibenzo(a,h)anthracene	53-70-3	8270E	ND		15	ug/kg	1
Fluoranthene	**206-44-0**	**8270E**	**18**		**15**	**ug/kg**	**1**
Fluorene	86-73-7	8270E	ND		15	ug/kg	1
Indeno(1,2,3-c,d)pyrene	193-39-5	8270E	ND		15	ug/kg	1
Naphthalene	91-20-3	8270E	ND		15	ug/kg	1
Phenanthrene	85-01-8	8270E	ND		15	ug/kg	1
Pyrene	**129-00-0**	**8270E**	**16**		**15**	**ug/kg**	**1**

Surrogate	Q	Run 1 % Recovery	Acceptance Limits
2-Fluorobiphenyl		82	24-137
Nitrobenzene-d5		74	12-144
Terphenyl-d14		88	20-127

LOQ = Limit of Quantitation
B = Detected in the method blank
E = Quantitation of compound exceeded the calibration range
Q = Surrogate failure
ND = Not detected at or above the LOQ
N = Recovery is out of criteria
P = The RPD between two GC columns exceeds 40%
L = LCS/LCSD failure
H = Out of holding time
W = Reported on wet weight basis
S = MS/MSD failure

QC Summary

Volatile Organic Compounds by GC/MS - MB

Sample ID: XQ36429-001
Batch: 36429
Analytical Method: 8260D
Matrix: Solid
Prep Method: 5035

Parameter	Result	Q	Dil	LOQ	Units	Analysis Date
Benzene	ND		1	5.0	ug/kg	03/29/2022 1115
Ethylbenzene	ND		1	5.0	ug/kg	03/29/2022 1115
Methyl tertiary butyl ether (MTBE)	ND		1	5.0	ug/kg	03/29/2022 1115
Naphthalene	ND		1	5.0	ug/kg	03/29/2022 1115
Toluene	ND		1	5.0	ug/kg	03/29/2022 1115
Xylenes (total)	ND		1	10	ug/kg	03/29/2022 1115

Surrogate	Q	% Rec	Acceptance Limit
Bromofluorobenzene		94	47-138
1,2-Dichloroethane-d4		95	53-142
Toluene-d8		102	68-124

LOQ = Limit of Quantitation
ND = Not detected at or above the LOQ
N = Recovery is out of criteria
P = The RPD between two GC columns exceeds 40%
* = RSD is out of criteria
+ = RPD is out of criteria

Note: Calculations are performed before rounding to avoid round-off errors in calculated results

Pace Analytical Services, LLC *(formerly Shealy Environmental Services, Inc.)*
106 Vantage Point Drive West Columbia, SC 29172 (803) 791-9700 Fax (803) 791-9111 www.pacelabs.com

Volatile Organic Compounds by GC/MS - LCS

Sample ID: XQ36429-002
Batch: 36429
Analytical Method: 8260D
Matrix: Solid
Prep Method: 5035

Parameter	Spike Amount (ug/kg)	Result (ug/kg)	Q	Dil	% Rec	%Rec Limit	Analysis Date
Benzene	50	48		1	95	70-130	03/29/2022 1028
Ethylbenzene	50	48		1	96	70-130	03/29/2022 1028
Methyl tertiary butyl ether (MTBE)	50	45		1	89	70-130	03/29/2022 1028
Naphthalene	50	48		1	96	70-130	03/29/2022 1028
Toluene	50	52		1	105	70-130	03/29/2022 1028
Xylenes (total)	100	96		1	96	70-130	03/29/2022 1028

Surrogate	Q	% Rec	Acceptance Limit
Bromofluorobenzene		88	47-138
1,2-Dichloroethane-d4		94	53-142
Toluene-d8		107	68-124

LOQ = Limit of Quantitation

ND = Not detected at or above the LOQ

N = Recovery is out of criteria

P = The RPD between two GC columns exceeds 40%

* = RSD is out of criteria

+ = RPD is out of criteria

Note: Calculations are performed before rounding to avoid round-off errors in calculated results

Volatile Organic Compounds by GC/MS - LCSD

Sample ID: XQ36429-003
Batch: 36429
Analytical Method: 8260D
Matrix: Solid
Prep Method: 5035

Parameter	Spike Amount (ug/kg)	Result (ug/kg)	Q	Dil	% Rec	% RPD	%Rec Limit	% RPD Limit	Analysis Date
Benzene	50	47		1	93	2.4	70-130	20	03/29/2022 1052
Ethylbenzene	50	46		1	91	4.9	70-130	20	03/29/2022 1052
Methyl tertiary butyl ether (MTBE)	50	46		1	91	2.0	70-130	20	03/29/2022 1052
Naphthalene	50	41		1	83	15	70-130	20	03/29/2022 1052
Toluene	50	46		1	91	14	70-130	20	03/29/2022 1052
Xylenes (total)	100	91		1	91	5.3	70-130	20	03/29/2022 1052

Surrogate	Q	% Rec	Acceptance Limit
Bromofluorobenzene		92	47-138
1,2-Dichloroethane-d4		97	53-142
Toluene-d8		93	68-124

LOQ = Limit of Quantitation

ND = Not detected at or above the LOQ

N = Recovery is out of criteria

P = The RPD between two GC columns exceeds 40%

* = RSD is out of criteria

+ = RPD is out of criteria

Note: Calculations are performed before rounding to avoid round-off errors in calculated results

Volatile Organic Compounds by GC/MS - MB

Sample ID: XQ37057-001
Batch: 37057
Analytical Method: 8260D
Matrix: Solid
Prep Method: 5035

Parameter	Result	Q	Dil	LOQ	Units	Analysis Date
Benzene	ND		1	5.0	ug/kg	04/04/2022 1544
Ethylbenzene	ND		1	5.0	ug/kg	04/04/2022 1544
Methyl tertiary butyl ether (MTBE)	ND		1	5.0	ug/kg	04/04/2022 1544
Naphthalene	ND		1	5.0	ug/kg	04/04/2022 1544
Toluene	ND		1	5.0	ug/kg	04/04/2022 1544
Xylenes (total)	ND		1	10	ug/kg	04/04/2022 1544

Surrogate	Q	% Rec	Acceptance Limit
Bromofluorobenzene		103	47-138
1,2-Dichloroethane-d4		96	53-142
Toluene-d8		93	68-124

LOQ = Limit of Quantitation
ND = Not detected at or above the LOQ
N = Recovery is out of criteria
P = The RPD between two GC columns exceeds 40%
* = RSD is out of criteria
+ = RPD is out of criteria

Note: Calculations are performed before rounding to avoid round-off errors in calculated results

Volatile Organic Compounds by GC/MS - LCS

Sample ID: XQ37057-002
Batch: 37057
Analytical Method: 8260D
Matrix: Solid
Prep Method: 5035

Parameter	Spike Amount (ug/kg)	Result (ug/kg)	Q	Dil	% Rec	%Rec Limit	Analysis Date
Benzene	50	47		1	94	70-130	04/04/2022 1456
Ethylbenzene	50	48		1	96	70-130	04/04/2022 1456
Methyl tertiary butyl ether (MTBE)	50	48		1	95	70-130	04/04/2022 1456
Naphthalene	50	49		1	98	70-130	04/04/2022 1456
Toluene	50	48		1	97	70-130	04/04/2022 1456
Xylenes (total)	100	96		1	96	70-130	04/04/2022 1456

Surrogate	Q	% Rec	Acceptance Limit
Bromofluorobenzene		92	47-138
1,2-Dichloroethane-d4		90	53-142
Toluene-d8		93	68-124

LOQ = Limit of Quantitation

ND = Not detected at or above the LOQ

N = Recovery is out of criteria

P = The RPD between two GC columns exceeds 40%

* = RSD is out of criteria

+ = RPD is out of criteria

Note: Calculations are performed before rounding to avoid round-off errors in calculated results

Volatile Organic Compounds by GC/MS - LCSD

Sample ID: XQ37057-003
Batch: 37057
Analytical Method: 8260D
Matrix: Solid
Prep Method: 5035

Parameter	Spike Amount (ug/kg)	Result (ug/kg)	Q	Dil	% Rec	% RPD	%Rec Limit	% RPD Limit	Analysis Date
Benzene	50	47		1	95	0.16	70-130	20	04/04/2022 1620
Ethylbenzene	50	48		1	96	0.067	70-130	20	04/04/2022 1620
Methyl tertiary butyl ether (MTBE)	50	50		1	99	3.7	70-130	20	04/04/2022 1620
Naphthalene	50	51		1	102	3.0	70-130	20	04/04/2022 1620
Toluene	50	48		1	95	1.4	70-130	20	04/04/2022 1620
Xylenes (total)	100	98		1	98	1.7	70-130	20	04/04/2022 1620

Surrogate	Q	% Rec	Acceptance Limit
Bromofluorobenzene		94	47-138
1,2-Dichloroethane-d4		92	53-142
Toluene-d8		94	68-124

LOQ = Limit of Quantitation

ND = Not detected at or above the LOQ

N = Recovery is out of criteria

P = The RPD between two GC columns exceeds 40%

* = RSD is out of criteria

+ = RPD is out of criteria

Note: Calculations are performed before rounding to avoid round-off errors in calculated results

Semivolatile Organic Compounds by GC/MS - MB

Sample ID: XQ36263-001
Batch: 36263
Analytical Method: 8270E
Matrix: Solid
Prep Method: 3546
Prep Date: 03/28/2022 1228

Parameter	Result	Q	Dil	LOQ	Units	Analysis Date
Acenaphthene	ND		1	13	ug/kg	03/29/2022 2045
Acenaphthylene	ND		1	13	ug/kg	03/29/2022 2045
Anthracene	ND		1	13	ug/kg	03/29/2022 2045
Benzo(a)anthracene	ND		1	13	ug/kg	03/29/2022 2045
Benzo(a)pyrene	ND		1	13	ug/kg	03/29/2022 2045
Benzo(b)fluoranthene	ND		1	13	ug/kg	03/29/2022 2045
Benzo(g,h,i)perylene	ND		1	13	ug/kg	03/29/2022 2045
Benzo(k)fluoranthene	ND		1	13	ug/kg	03/29/2022 2045
Chrysene	ND		1	13	ug/kg	03/29/2022 2045
Dibenzo(a,h)anthracene	ND		1	13	ug/kg	03/29/2022 2045
Fluoranthene	ND		1	13	ug/kg	03/29/2022 2045
Fluorene	ND		1	13	ug/kg	03/29/2022 2045
Indeno(1,2,3-c,d)pyrene	ND		1	13	ug/kg	03/29/2022 2045
Naphthalene	ND		1	13	ug/kg	03/29/2022 2045
Phenanthrene	ND		1	13	ug/kg	03/29/2022 2045
Pyrene	ND		1	13	ug/kg	03/29/2022 2045

Surrogate	Q	% Rec	Acceptance Limit
2-Fluorobiphenyl		87	24-137
Nitrobenzene-d5		79	12-144
Terphenyl-d14		102	20-127

LOQ = Limit of Quantitation
ND = Not detected at or above the LOQ
N = Recovery is out of criteria
P = The RPD between two GC columns exceeds 40%
* = RSD is out of criteria
+ = RPD is out of criteria

Note: Calculations are performed before rounding to avoid round-off errors in calculated results

Pace Analytical Services, LLC *(formerly Shealy Environmental Services, Inc.)*
106 Vantage Point Drive West Columbia, SC 29172 (803) 791-9700 Fax (803) 791-9111 www.pacelabs.com

Semivolatile Organic Compounds by GC/MS - LCS

Sample ID: XQ36263-002
Batch: 36263
Analytical Method: 8270E
Matrix: Solid
Prep Method: 3546
Prep Date: 03/28/2022 1228

Parameter	Spike Amount (ug/kg)	Result (ug/kg)	Q	Dil	% Rec	%Rec Limit	Analysis Date
Acenaphthene	670	560		1	83	12-111	03/29/2022 2109
Acenaphthylene	670	630		1	95	44-122	03/29/2022 2109
Anthracene	670	630		1	94	16-122	03/29/2022 2109
Benzo(a)anthracene	670	560		1	83	40-121	03/29/2022 2109
Benzo(a)pyrene	670	640		1	96	36-114	03/29/2022 2109
Benzo(b)fluoranthene	670	530		1	80	38-123	03/29/2022 2109
Benzo(g,h,i)perylene	670	570		1	85	43-120	03/29/2022 2109
Benzo(k)fluoranthene	670	610		1	92	40-126	03/29/2022 2109
Chrysene	670	570		1	85	41-124	03/29/2022 2109
Dibenzo(a,h)anthracene	670	560		1	84	38-125	03/29/2022 2109
Fluoranthene	670	580		1	88	26-133	03/29/2022 2109
Fluorene	670	600		1	90	19-108	03/29/2022 2109
Indeno(1,2,3-c,d)pyrene	670	590		1	88	42-123	03/29/2022 2109
Naphthalene	670	570		1	85	10-112	03/29/2022 2109
Phenanthrene	670	600		1	89	16-123	03/29/2022 2109
Pyrene	670	640		1	96	34-121	03/29/2022 2109

Surrogate	Q	% Rec	Acceptance Limit
2-Fluorobiphenyl		85	24-137
Nitrobenzene-d5		82	12-144
Terphenyl-d14		99	20-127

LOQ = Limit of Quantitation

ND = Not detected at or above the LOQ

N = Recovery is out of criteria

P = The RPD between two GC columns exceeds 40%

* = RSD is out of criteria

+ = RPD is out of criteria

Note: Calculations are performed before rounding to avoid round-off errors in calculated results

Chain of Custody
and
Miscellaneous Documents

ARM ENVIRONMENTAL SERVICES, INC.
ASSESSMENT & REMEDIAL SERVICES

CHAIN OF CUSTODY RECORD

PAGE 1 OF 1

1210 1st STREET SOUTH EXTENSION COLUMBIA, SOUTH CAROLINA 29209 PHONE: 803-783-3314 FAX: 803-783-2587

Project #: 08-300-22
Project Name: 2224 BROAD RIV RD
Sampler Name (print): RICHARD CICCOLELLA
Preservative: 1. Unpreserved 2. NaOH 3. H_2SO_4 4. HNO_3 5. HCl 6. $Na_2S_2O_3$ 7. 5035 Kit
Laboratory Utilized: PACE / EQI
Sampler Signature: [signature]

Sample ID / Description	Date	Time	G = Grab C = Composite	Matrix S, GW, DW, DI, Other	BTEX, NAPH, MTBE	PAH	# of Containers / Preservative / Remarks
SB-1	3/21/22	1453	G	S	x	x	
SB-2	3/21/22	1521	G	S	x	x	
SB-3	3/21/22	1543	G	S	x	x	
SB-4	3/21/22	1620	G	S	x	x	

XC24073
LID

Relinquished by / Sampler	Date	Time	Received by	Date	Time	Project Manager
[signature]	3/24/22	0945	[signature]	3-24-22	0945	RICHARD CICCOLELLA
Relinquished by	Date	Time	Received by	Date	Time	
Relinquished by [signature]	Date 3-24-22	Time 1555	Received by [signature] T=2.0°C	Date 3/24/22	Time 1555	P.O. Number 08-300-22

PaceAnalytical

Samples Receipt Checklist (SRC) (ME0018C-15)
Issuing Authority: Pace ENV - WCOL

Revised:9/29/2020
Page 1 of 1

Sample Receipt Checklist (SRC)

Client: ARM Cooler Inspected by/date: KDRW / 03/24/2022 Lot #: XC24073

Means of receipt: ☑ Pace ☐ Client: ☐ UPS ☐ FedEx ☐ Other:

☐ Yes	☑ No		1. Were custody seals present on the cooler?
☐ Yes	☐ No	☑ NA	2. If custody seals were present, were they intact and unbroken?

pH Strip ID: NA Chlorine Strip ID: NA Tested by: NA

Original temperature upon receipt / Derived (Corrected) temperature upon receipt %Solid Snap-Cup ID: 22-3

2.0 / 2.0 °C NA / NA °C NA / NA °C NA / NA °C

Method: ☑ Temperature Blank ☐ Against Bottles IR Gun ID: 5 IR Gun Correction Factor: 0 °C

Method of coolant: ☑ Wet Ice ☐ Ice Packs ☐ Dry Ice ☐ None

☐ Yes	☐ No	☑ NA	3. If temperature of any cooler exceeded 6.0°C, was Project Manager Notified? PM was Notified by: phone / email / face-to-face (circle one).
☐ Yes	☐ No	☑ NA	4. Is the commercial courier's packing slip attached to this form?
☑ Yes	☐ No		5. Were proper custody procedures (relinquished/received) followed?
☑ Yes	☐ No		6. Were sample IDs listed on the COC?
☑ Yes	☐ No		7. Were sample IDs listed on all sample containers?
☑ Yes	☐ No		8. Was collection date & time listed on the COC?
☑ Yes	☐ No		9. Was collection date & time listed on all sample containers?
☑ Yes	☐ No		10. Did all container label information (ID, date, time) agree with the COC?
☑ Yes	☐ No		11. Were tests to be performed listed on the COC?
☑ Yes	☐ No		12. Did all samples arrive in the proper containers for each test and/or in good condition (unbroken, lids on, etc.)?
☑ Yes	☐ No		13. Was adequate sample volume available?
☐ Yes	☑ No		14. Were all samples received within ½ the holding time or 48 hours, whichever comes first?
☐ Yes	☑ No		15. Were any samples containers missing/excess (circle one) samples Not listed on COC?
☐ Yes	☐ No	☑ NA	16. For VOA and RSK-175 samples, were bubbles present >"pea-size" (¼"or 6mm in diameter) in any of the VOA vials?
☐ Yes	☐ No	☑ NA	17. Were all DRO/metals/nutrient samples received at a pH of < 2?
☐ Yes	☐ No	☑ NA	18. Were all cyanide samples received at a pH > 12 and sulfide samples received at a pH > 9?
☐ Yes	☐ No	☑ NA	19. Were all applicable NH_3/TKN/cyanide/phenol/625.1/608.3 (< 0.5mg/L) samples free of residual chlorine?
☐ Yes	☐ No	☑ NA	20. Were client remarks/requests (i.e. requested dilutions, MS/MSD designations, etc…) correctly transcribed from the COC into the comment section in LIMS?
☐ Yes	☑ No		21. Was the quote number listed on the container label? If yes, Quote #

Sample Preservation (Must be completed for any sample(s) incorrectly preserved or with headspace.)

Sample(s) NA were received incorrectly preserved and were adjusted accordingly in sample receiving with NA mL of circle one: H2SO4, HNO3, HCl, NaOH using SR # NA.
Time of preservation NA. If more than one preservative is needed, please note in the comments below.

Sample(s) NA were received with bubbles >6 mm in diameter.

Samples(s) NA were received with TRC > 0.5 mg/L. (If #19 is *no*) and were adjusted accordingly in sample receiving with sodium thiosulfate ($Na_2S_2O_3$) with Shealy ID: NA.

SR barcode labels applied by: KDRW Date: 03/24/2022

Comments:

Report of Analysis

ARM Environmental Services, Inc.
1210 1st Street S. Ext.
Columbia, SC 29209
Attention: Richard Ciccolella

Project Name: 2220 Broad River Rd.

Project Number: 08-300-22

Lot Number:**XC24068**

Date Completed:04/01/2022



04/01/2022 3:57 PM
Approved and released by:
Project Manager II: **Lucas Odom**

The electronic signature above is the equivalent of a handwritten signature.
This report shall not be reproduced, except in its entirety, without the written approval of Pace Analytical Services, LLC.

Pace Analytical Services, LLC (*formerly Shealy Environmental Services, Inc.*)
106 Vantage Point Drive West Columbia, SC 29172
Tel: 803-791-9700 Fax: 803-791-9111 www.pacelabs.com

Case Narrative
ARM Environmental Services, Inc.
Lot Number: XC24068

This Report of Analysis contains the analytical result(s) for the sample(s) listed on the Sample Summary following this Case Narrative. The sample receiving date is documented in the header information associated with each sample.

All results listed in this report relate only to the samples that are contained within this report. Where sampling is conducted by the client, results relate to the accuracy of the information provided, and as the samples are received.

Sample receipt, sample analysis, and data review have been performed in accordance with the most current approved The NELAC Institute (TNI) standards, the Pace Analytical Services, LLC ("Pace") Laboratory Quality Manual, standard operating procedures (SOPs), and Pace policies. Any exceptions to the TNI standards, the Laboratory Quality Manual, SOPs or policies are qualified on the results page or discussed below.

Pace is a TNI accredited laboratory; however, the following analyses are currently not listed on our TNI scope of accreditation: Drinking Water: VOC (excluding BTEX, MTBE, Naphthalene, & 1,2-dichloroethane) EPA 524.2, E. coli and Total coliforms SM 9223 B-2004, Solid Chemical Material: TOC Walkley-Black, Biological Tissue: All, Non-Potable Water: SGT-HEM EPA 1664B, Silica EPA 200.7, Boron, Calcium, Silicon, Strontium EPA 200.8, Bicarbonate, Carbonate, and Hydroxide Alkalinity SM 2320 B-2011, SM 9221 C E-2006 & SM 9222D-2006, Strontium SW-846 6010D, VOC SM 6200 B-2011, Fecal Coliform Colilert-18.

Where applicable, all soil sample results (including LOQ and DL if requested) are corrected for dry weight unless flagged with a "W" qualifier.

If you have any questions regarding this report, please contact the Pace Project Manager listed on the cover page.

Sample Summary

ARM Environmental Services, Inc.

Lot Number: XC24068

Sample Number	Sample ID	Matrix	Date Sampled	Date Received
001	SB-1	Solid	03/21/2022 1304	03/24/2022
002	SB-2	Solid	03/21/2022 1340	03/24/2022
003	SB-3	Solid	03/21/2022 1410	03/24/2022

(3 samples)

Detection Summary

ARM Environmental Services, Inc.

Lot Number: XC24068

Sample	Sample ID	Matrix	Parameter	Method	Result	Q	Units	Page

(0 detections)

Client: ARM Environmental Services, Inc. | Laboratory ID: XC24068-001
Description: SB-1 | Matrix: Solid
Date Sampled: 03/21/2022 1304 | % Solids: 82.0 03/24/2022 2321
Date Received: 03/24/2022

Volatile Organic Compounds by GC/MS

Run	Prep Method	Analytical Method	Dilution	Analysis Date	Analyst	Prep Date	Batch	Sample Wt.(g)
1	5035	8260D	1	03/28/2022 1806	JM1		36259	5.26

Parameter	CAS Number	Analytical Method	Result	Q	LOQ	Units	Run
Benzene	71-43-2	8260D	ND		5.8	ug/kg	1
Ethylbenzene	100-41-4	8260D	ND		5.8	ug/kg	1
Methyl tertiary butyl ether (MTBE)	1634-04-4	8260D	ND		5.8	ug/kg	1
Naphthalene	91-20-3	8260D	ND		5.8	ug/kg	1
Toluene	108-88-3	8260D	ND		5.8	ug/kg	1
Xylenes (total)	1330-20-7	8260D	ND		12	ug/kg	1

Surrogate	Q	Run 1 % Recovery	Acceptance Limits
Bromofluorobenzene		94	47-138
1,2-Dichloroethane-d4		99	53-142
Toluene-d8		101	68-124

Semivolatile Organic Compounds by GC/MS

Run	Prep Method	Analytical Method	Dilution	Analysis Date	Analyst	Prep Date	Batch
1	3546	8270E	1	03/29/2022 2242	SCD	03/28/2022 1100	36249

Parameter	CAS Number	Analytical Method	Result	Q	LOQ	Units	Run
Acenaphthene	83-32-9	8270E	ND		16	ug/kg	1
Acenaphthylene	208-96-8	8270E	ND		16	ug/kg	1
Anthracene	120-12-7	8270E	ND		16	ug/kg	1
Benzo(a)anthracene	56-55-3	8270E	ND		16	ug/kg	1
Benzo(a)pyrene	50-32-8	8270E	ND		16	ug/kg	1
Benzo(b)fluoranthene	205-99-2	8270E	ND		16	ug/kg	1
Benzo(g,h,i)perylene	191-24-2	8270E	ND		16	ug/kg	1
Benzo(k)fluoranthene	207-08-9	8270E	ND		16	ug/kg	1
Chrysene	218-01-9	8270E	ND		16	ug/kg	1
Dibenzo(a,h)anthracene	53-70-3	8270E	ND		16	ug/kg	1
Fluoranthene	206-44-0	8270E	ND		16	ug/kg	1
Fluorene	86-73-7	8270E	ND		16	ug/kg	1
Indeno(1,2,3-c,d)pyrene	193-39-5	8270E	ND		16	ug/kg	1
Naphthalene	91-20-3	8270E	ND		16	ug/kg	1
Phenanthrene	85-01-8	8270E	ND		16	ug/kg	1
Pyrene	129-00-0	8270E	ND		16	ug/kg	1

Surrogate	Q	Run 1 % Recovery	Acceptance Limits
2-Fluorobiphenyl		78	24-137
Nitrobenzene-d5		77	12-144
Terphenyl-d14		95	20-127

LOQ = Limit of Quantitation
ND = Not detected at or above the LOQ
H = Out of holding time
B = Detected in the method blank
N = Recovery is out of criteria
W = Reported on wet weight basis
E = Quantitation of compound exceeded the calibration range
P = The RPD between two GC columns exceeds 40%
Q = Surrogate failure
L = LCS/LCSD failure
S = MS/MSD failure

Client: ARM Environmental Services, Inc. | Laboratory ID: XC24068-002
Description: SB-2 | Matrix: Solid
Date Sampled: 03/21/2022 1340 | % Solids: 85.4 03/24/2022 2321
Date Received: 03/24/2022

Volatile Organic Compounds by GC/MS

Run	Prep Method	Analytical Method	Dilution	Analysis Date	Analyst	Prep Date	Batch	Sample Wt.(g)
1	5035	8260D	1	03/28/2022 1829	JM1		36259	5.96

Parameter	CAS Number	Analytical Method	Result	Q	LOQ	Units	Run
Benzene	71-43-2	8260D	ND		4.9	ug/kg	1
Ethylbenzene	100-41-4	8260D	ND		4.9	ug/kg	1
Methyl tertiary butyl ether (MTBE)	1634-04-4	8260D	ND		4.9	ug/kg	1
Naphthalene	91-20-3	8260D	ND		4.9	ug/kg	1
Toluene	108-88-3	8260D	ND		4.9	ug/kg	1
Xylenes (total)	1330-20-7	8260D	ND		9.8	ug/kg	1

Surrogate	Q	Run 1 % Recovery	Acceptance Limits
Bromofluorobenzene		94	47-138
1,2-Dichloroethane-d4		101	53-142
Toluene-d8		98	68-124

Semivolatile Organic Compounds by GC/MS

Run	Prep Method	Analytical Method	Dilution	Analysis Date	Analyst	Prep Date	Batch
1	3546	8270E	1	03/30/2022 1413	SCD	03/28/2022 1100	36249

Parameter	CAS Number	Analytical Method	Result	Q	LOQ	Units	Run
Acenaphthene	83-32-9	8270E	ND		15	ug/kg	1
Acenaphthylene	208-96-8	8270E	ND		15	ug/kg	1
Anthracene	120-12-7	8270E	ND		15	ug/kg	1
Benzo(a)anthracene	56-55-3	8270E	ND		15	ug/kg	1
Benzo(a)pyrene	50-32-8	8270E	ND		15	ug/kg	1
Benzo(b)fluoranthene	205-99-2	8270E	ND		15	ug/kg	1
Benzo(g,h,i)perylene	191-24-2	8270E	ND		15	ug/kg	1
Benzo(k)fluoranthene	207-08-9	8270E	ND		15	ug/kg	1
Chrysene	218-01-9	8270E	ND		15	ug/kg	1
Dibenzo(a,h)anthracene	53-70-3	8270E	ND		15	ug/kg	1
Fluoranthene	206-44-0	8270E	ND		15	ug/kg	1
Fluorene	86-73-7	8270E	ND		15	ug/kg	1
Indeno(1,2,3-c,d)pyrene	193-39-5	8270E	ND		15	ug/kg	1
Naphthalene	91-20-3	8270E	ND		15	ug/kg	1
Phenanthrene	85-01-8	8270E	ND		15	ug/kg	1
Pyrene	129-00-0	8270E	ND		15	ug/kg	1

Surrogate	Q	Run 1 % Recovery	Acceptance Limits
2-Fluorobiphenyl		86	24-137
Nitrobenzene-d5		87	12-144
Terphenyl-d14		93	20-127

LOQ = Limit of Quantitation
ND = Not detected at or above the LOQ
H = Out of holding time
B = Detected in the method blank
N = Recovery is out of criteria
W = Reported on wet weight basis
E = Quantitation of compound exceeded the calibration range
P = The RPD between two GC columns exceeds 40%
Q = Surrogate failure
L = LCS/LCSD failure
S = MS/MSD failure

Client: ARM Environmental Services, Inc. | Laboratory ID: XC24068-003
Description: SB-3 | Matrix: Solid
Date Sampled: 03/21/2022 1410 | % Solids: 87.5 03/24/2022 2321
Date Received: 03/24/2022

Volatile Organic Compounds by GC/MS

Run	Prep Method	Analytical Method	Dilution	Analysis Date	Analyst	Prep Date	Batch	Sample Wt.(g)
1	5035	8260D	1	03/28/2022 1852	JM1		36259	4.65

Parameter	CAS Number	Analytical Method	Result	Q	LOQ	Units	Run
Benzene	71-43-2	8260D	ND		6.1	ug/kg	1
Ethylbenzene	100-41-4	8260D	ND		6.1	ug/kg	1
Methyl tertiary butyl ether (MTBE)	1634-04-4	8260D	ND		6.1	ug/kg	1
Naphthalene	91-20-3	8260D	ND		6.1	ug/kg	1
Toluene	108-88-3	8260D	ND		6.1	ug/kg	1
Xylenes (total)	1330-20-7	8260D	ND		12	ug/kg	1

Surrogate	Q	Run 1 % Recovery	Acceptance Limits
Bromofluorobenzene		91	47-138
1,2-Dichloroethane-d4		94	53-142
Toluene-d8		102	68-124

Semivolatile Organic Compounds by GC/MS

Run	Prep Method	Analytical Method	Dilution	Analysis Date	Analyst	Prep Date	Batch
1	3546	8270E	1	03/30/2022 0338	SCD	03/28/2022 1100	36249

Parameter	CAS Number	Analytical Method	Result	Q	LOQ	Units	Run
Acenaphthene	83-32-9	8270E	ND		15	ug/kg	1
Acenaphthylene	208-96-8	8270E	ND		15	ug/kg	1
Anthracene	120-12-7	8270E	ND		15	ug/kg	1
Benzo(a)anthracene	56-55-3	8270E	ND		15	ug/kg	1
Benzo(a)pyrene	50-32-8	8270E	ND		15	ug/kg	1
Benzo(b)fluoranthene	205-99-2	8270E	ND		15	ug/kg	1
Benzo(g,h,i)perylene	191-24-2	8270E	ND		15	ug/kg	1
Benzo(k)fluoranthene	207-08-9	8270E	ND		15	ug/kg	1
Chrysene	218-01-9	8270E	ND		15	ug/kg	1
Dibenzo(a,h)anthracene	53-70-3	8270E	ND		15	ug/kg	1
Fluoranthene	206-44-0	8270E	ND		15	ug/kg	1
Fluorene	86-73-7	8270E	ND		15	ug/kg	1
Indeno(1,2,3-c,d)pyrene	193-39-5	8270E	ND		15	ug/kg	1
Naphthalene	91-20-3	8270E	ND		15	ug/kg	1
Phenanthrene	85-01-8	8270E	ND		15	ug/kg	1
Pyrene	129-00-0	8270E	ND		15	ug/kg	1

Surrogate	Q	Run 1 % Recovery	Acceptance Limits
2-Fluorobiphenyl		85	24-137
Nitrobenzene-d5		85	12-144
Terphenyl-d14		92	20-127

LOQ = Limit of Quantitation
ND = Not detected at or above the LOQ
H = Out of holding time
B = Detected in the method blank
N = Recovery is out of criteria
W = Reported on wet weight basis
E = Quantitation of compound exceeded the calibration range
P = The RPD between two GC columns exceeds 40%
Q = Surrogate failure
L = LCS/LCSD failure
S = MS/MSD failure

QC Summary

Volatile Organic Compounds by GC/MS - MB

Sample ID: XQ36259-001
Batch: 36259
Analytical Method: 8260D

Matrix: Solid
Prep Method: 5035

Parameter	Result	Q	Dil	LOQ	Units	Analysis Date
Benzene	ND		1	5.0	ug/kg	03/28/2022 1002
Ethylbenzene	ND		1	5.0	ug/kg	03/28/2022 1002
Methyl tertiary butyl ether (MTBE)	ND		1	5.0	ug/kg	03/28/2022 1002
Naphthalene	ND		1	5.0	ug/kg	03/28/2022 1002
Toluene	ND		1	5.0	ug/kg	03/28/2022 1002
Xylenes (total)	ND		1	10	ug/kg	03/28/2022 1002

Surrogate	Q	% Rec	Acceptance Limit
Bromofluorobenzene		103	47-138
1,2-Dichloroethane-d4		104	53-142
Toluene-d8		98	68-124

LOQ = Limit of Quantitation

ND = Not detected at or above the LOQ

N = Recovery is out of criteria

P = The RPD between two GC columns exceeds 40%

* = RSD is out of criteria

+ = RPD is out of criteria

Note: Calculations are performed before rounding to avoid round-off errors in calculated results

Volatile Organic Compounds by GC/MS - LCS

Sample ID: XQ36259-002
Batch: 36259
Analytical Method: 8260D

Matrix: Solid
Prep Method: 5035

Parameter	Spike Amount (ug/kg)	Result (ug/kg)	Q	Dil	% Rec	%Rec Limit	Analysis Date
Benzene	50	53		1	107	70-130	03/28/2022 0915
Ethylbenzene	50	52		1	103	70-130	03/28/2022 0915
Methyl tertiary butyl ether (MTBE)	50	54		1	107	70-130	03/28/2022 0915
Naphthalene	50	46		1	92	70-130	03/28/2022 0915
Toluene	50	51		1	101	70-130	03/28/2022 0915
Xylenes (total)	100	100		1	102	70-130	03/28/2022 0915

Surrogate	Q	% Rec	Acceptance Limit
Bromofluorobenzene		105	47-138
1,2-Dichloroethane-d4		104	53-142
Toluene-d8		103	68-124

LOQ = Limit of Quantitation

ND = Not detected at or above the LOQ

N = Recovery is out of criteria

P = The RPD between two GC columns exceeds 40%

* = RSD is out of criteria

+ = RPD is out of criteria

Note: Calculations are performed before rounding to avoid round-off errors in calculated results

Semivolatile Organic Compounds by GC/MS - MB

Sample ID: XQ36249-001
Batch: 36249
Analytical Method: 8270E

Matrix: Solid
Prep Method: 3546
Prep Date: 03/28/2022 1100

Parameter	Result	Q	Dil	LOQ	Units	Analysis Date
Acenaphthene	ND		1	13	ug/kg	03/29/2022 1834
Acenaphthylene	ND		1	13	ug/kg	03/29/2022 1834
Anthracene	ND		1	13	ug/kg	03/29/2022 1834
Benzo(a)anthracene	ND		1	13	ug/kg	03/29/2022 1834
Benzo(a)pyrene	ND		1	13	ug/kg	03/29/2022 1834
Benzo(b)fluoranthene	ND		1	13	ug/kg	03/29/2022 1834
Benzo(g,h,i)perylene	ND		1	13	ug/kg	03/29/2022 1834
Benzo(k)fluoranthene	ND		1	13	ug/kg	03/29/2022 1834
Chrysene	ND		1	13	ug/kg	03/29/2022 1834
Dibenzo(a,h)anthracene	ND		1	13	ug/kg	03/29/2022 1834
Fluoranthene	ND		1	13	ug/kg	03/29/2022 1834
Fluorene	ND		1	13	ug/kg	03/29/2022 1834
Indeno(1,2,3-c,d)pyrene	ND		1	13	ug/kg	03/29/2022 1834
Naphthalene	ND		1	13	ug/kg	03/29/2022 1834
Phenanthrene	ND		1	13	ug/kg	03/29/2022 1834
Pyrene	ND		1	13	ug/kg	03/29/2022 1834

Surrogate	Q	% Rec	Acceptance Limit
2-Fluorobiphenyl		99	24-137
Nitrobenzene-d5		101	12-144
Terphenyl-d14		110	20-127

LOQ = Limit of Quantitation

ND = Not detected at or above the LOQ

N = Recovery is out of criteria

P = The RPD between two GC columns exceeds 40%

* = RSD is out of criteria

+ = RPD is out of criteria

Note: Calculations are performed before rounding to avoid round-off errors in calculated results

Semivolatile Organic Compounds by GC/MS - LCS

Sample ID: XQ36249-002
Batch: 36249
Analytical Method: 8270E

Matrix: Solid
Prep Method: 3546
Prep Date: 03/28/2022 1100

Parameter	Spike Amount (ug/kg)	Result (ug/kg)	Q	Dil	% Rec	%Rec Limit	Analysis Date
Acenaphthene	670	610		1	91	12-111	03/29/2022 1857
Acenaphthylene	670	660		1	99	44-122	03/29/2022 1857
Anthracene	670	680		1	101	16-122	03/29/2022 1857
Benzo(a)anthracene	670	610		1	91	40-121	03/29/2022 1857
Benzo(a)pyrene	670	700		1	105	36-114	03/29/2022 1857
Benzo(b)fluoranthene	670	630		1	94	38-123	03/29/2022 1857
Benzo(g,h,i)perylene	670	680		1	102	43-120	03/29/2022 1857
Benzo(k)fluoranthene	670	660		1	99	40-126	03/29/2022 1857
Chrysene	670	650		1	97	41-124	03/29/2022 1857
Dibenzo(a,h)anthracene	670	680		1	102	38-125	03/29/2022 1857
Fluoranthene	670	650		1	97	26-133	03/29/2022 1857
Fluorene	670	610		1	92	19-108	03/29/2022 1857
Indeno(1,2,3-c,d)pyrene	670	680		1	102	42-123	03/29/2022 1857
Naphthalene	670	600		1	90	10-112	03/29/2022 1857
Phenanthrene	670	630		1	94	16-123	03/29/2022 1857
Pyrene	670	640		1	96	34-121	03/29/2022 1857

Surrogate	Q	% Rec	Acceptance Limit
2-Fluorobiphenyl		92	24-137
Nitrobenzene-d5		93	12-144
Terphenyl-d14		102	20-127

LOQ = Limit of Quantitation

ND = Not detected at or above the LOQ

N = Recovery is out of criteria

P = The RPD between two GC columns exceeds 40%

* = RSD is out of criteria

+ = RPD is out of criteria

Note: Calculations are performed before rounding to avoid round-off errors in calculated results

Semivolatile Organic Compounds by GC/MS - MS

Sample ID: XC24068-001MS
Batch: 36249
Analytical Method: 8270E

Matrix: Solid
Prep Method: 3546
Prep Date: 03/28/2022 1100

Parameter	Sample Amount (ug/kg)	Spike Amount (ug/kg)	Result (ug/kg)	Q	Dil	% Rec	%Rec Limit	Analysis Date
Acenaphthene	ND	800	660		1	83	12-111	03/29/2022 2332
Acenaphthylene	ND	800	710		1	89	44-122	03/29/2022 2332
Anthracene	ND	800	750		1	94	16-122	03/29/2022 2332
Benzo(a)anthracene	ND	800	650		1	82	40-121	03/29/2022 2332
Benzo(a)pyrene	ND	800	680		1	85	36-114	03/29/2022 2332
Benzo(b)fluoranthene	ND	800	590		1	74	38-123	03/29/2022 2332
Benzo(g,h,i)perylene	ND	800	630		1	79	43-120	03/29/2022 2332
Benzo(k)fluoranthene	ND	800	670		1	84	40-126	03/29/2022 2332
Chrysene	ND	800	730		1	92	41-124	03/29/2022 2332
Dibenzo(a,h)anthracene	ND	800	620		1	78	38-125	03/29/2022 2332
Fluoranthene	ND	800	600		1	75	26-133	03/29/2022 2332
Fluorene	ND	800	660		1	82	19-108	03/29/2022 2332
Indeno(1,2,3-c,d)pyrene	ND	800	610		1	76	42-123	03/29/2022 2332
Naphthalene	ND	800	610		1	76	10-112	03/29/2022 2332
Phenanthrene	ND	800	690		1	86	16-123	03/29/2022 2332
Pyrene	ND	800	690		1	87	34-121	03/29/2022 2332

Surrogate	Q	% Rec	Acceptance Limit
2-Fluorobiphenyl		80	24-137
Nitrobenzene-d5		77	12-144
Terphenyl-d14		97	20-127

LOQ = Limit of Quantitation

ND = Not detected at or above the LOQ

N = Recovery is out of criteria

P = The RPD between two GC columns exceeds 40%

* = RSD is out of criteria

+ = RPD is out of criteria

Note: Calculations are performed before rounding to avoid round-off errors in calculated results

Semivolatile Organic Compounds by GC/MS - MSD

Sample ID: XC24068-001MD
Batch: 36249
Analytical Method: 8270E

Matrix: Solid
Prep Method: 3546
Prep Date: 03/28/2022 1100

Parameter	Sample Amount (ug/kg)	Spike Amount (ug/kg)	Result (ug/kg)	Q	Dil	% Rec	% RPD	%Rec Limit	% RPD Limit	Analysis Date
Acenaphthene	ND	790	660		1	84	0.15	12-111	30	03/29/2022 2358
Acenaphthylene	ND	790	700		1	89	0.94	44-122	30	03/29/2022 2358
Anthracene	ND	790	750		1	95	0.33	16-122	30	03/29/2022 2358
Benzo(a)anthracene	ND	790	650		1	83	0.12	40-121	30	03/29/2022 2358
Benzo(a)pyrene	ND	790	680		1	86	0.94	36-114	30	03/29/2022 2358
Benzo(b)fluoranthene	ND	790	600		1	75	0.82	38-123	30	03/29/2022 2358
Benzo(g,h,i)perylene	ND	790	610		1	77	3.6	43-120	30	03/29/2022 2358
Benzo(k)fluoranthene	ND	790	670		1	85	0.012	40-126	30	03/29/2022 2358
Chrysene	ND	790	730		1	92	0.33	41-124	30	03/29/2022 2358
Dibenzo(a,h)anthracene	ND	790	600		1	76	3.0	38-125	30	03/29/2022 2358
Fluoranthene	ND	790	610		1	77	0.95	26-133	30	03/29/2022 2358
Fluorene	ND	790	640		1	81	2.1	19-108	30	03/29/2022 2358
Indeno(1,2,3-c,d)pyrene	ND	790	590		1	74	3.2	42-123	30	03/29/2022 2358
Naphthalene	ND	790	610		1	77	0.41	10-112	30	03/29/2022 2358
Phenanthrene	ND	790	690		1	87	0.61	16-123	30	03/29/2022 2358
Pyrene	ND	790	690		1	87	0.19	34-121	30	03/29/2022 2358

Surrogate	Q	% Rec	Acceptance Limit
2-Fluorobiphenyl		78	24-137
Nitrobenzene-d5		79	12-144
Terphenyl-d14		96	20-127

LOQ = Limit of Quantitation

ND = Not detected at or above the LOQ

N = Recovery is out of criteria

P = The RPD between two GC columns exceeds 40%

* = RSD is out of criteria

+ = RPD is out of criteria

Note: Calculations are performed before rounding to avoid round-off errors in calculated results

Chain of Custody

and

Miscellaneous Documents

ARM ENVIRONMENTAL SERVICES, INC.
ASSESSMENT & REMEDIAL SERVICES

CHAIN OF CUSTODY RECORD

PAGE 1 OF 1

1210 1st STREET SOUTH EXTENSION COLUMBIA, SOUTH CAROLINA 29209 PHONE: 803-783-3314 FAX: 803-783-2587

Project #: 08-300-22

Preservative: 1. Unpreserved 2. NaOH 3. H_2SO_4 4. HNO_3 5. HCl 6. $Na_2S_2O_3$ 7. 5035 Kit

Project Name: 2220 BROAD RIV RD

Laboratory Utilized: PACE / EQI

Sampler Name (print): RICHARD CICCOLELLA

Sampler Signature: [signature]

Sample ID / Description	Date	Time	G = Grab C = Composite	Matrix S, GW, DW, DI, Other	BTEX, NAPH, MTBE	PAH									# of Containers / Preservative / Remarks
SB-1	3/21/22	1304	G	S	X	X									
SB-2	3/21/22	1340	G	S	X	X									
SB-3	3/21/22	1410	G	S	X	X									

XC24068
LJC

Relinquished by / Sampler	Date	Time	Received by	Date	Time	Project Manager
[signature]	3/24/21	0945	[signature]	3.24.22	0945	RICHARD CICCOLELLA
Relinquished by	Date	Time	Received by	Date	Time	
Relinquished by	Date	Time	Received by	Date	Time	P.O. Number
[signature]	3.24.22	1555	[signature] T=2.0°C	3/24/22	1555	08-300-22

PaceAnalytical

Samples Receipt Checklist (SRC) (MF0018C-15)
Issuing Authority: Pace ENV - WCOL

Revised:9/29/2020
Page 1 of 1

Sample Receipt Checklist (SRC)

Client: ARM
Cooler Inspected by/date: KDRW / 03/24/2022
Lot #: XC24068

Means of receipt: ☑ Pace ☐ Client: ☐ UPS ☐ FedEx ☐ Other:

☐ Yes	☑ No		1. Were custody seals present on the cooler?
☐ Yes	☐ No	☑ NA	2. If custody seals were present, were they intact and unbroken?

pH Strip ID: NA Chlorine Strip ID: NA Tested by: NA

Original temperature upon receipt / Derived (Corrected) temperature upon receipt %Solid Snap-Cup ID: 22-3

2.0 / 2.0 °C NA / NA °C NA / NA °C NA / NA °C

Method: ☑ Temperature Blank ☐ Against Bottles IR Gun ID: 5 IR Gun Correction Factor: 0 °C

Method of coolant: ☑ Wet Ice ☐ Ice Packs ☐ Dry Ice ☐ None

☐ Yes	☐ No	☑ NA	3. If temperature of any cooler exceeded 6.0°C, was Project Manager Notified? PM was Notified by: phone / email / face-to-face (circle one).
☐ Yes	☐ No	☑ NA	4. Is the commercial courier's packing slip attached to this form?
☑ Yes	☐ No		5. Were proper custody procedures (relinquished/received) followed?
☑ Yes	☐ No		6. Were sample IDs listed on the COC?
☑ Yes	☐ No		7. Were sample IDs listed on all sample containers?
☑ Yes	☐ No		8. Was collection date & time listed on the COC?
☑ Yes	☐ No		9. Was collection date & time listed on all sample containers?
☑ Yes	☐ No		10. Did all container label information (ID, date, time) agree with the COC?
☑ Yes	☐ No		11. Were tests to be performed listed on the COC?
☑ Yes	☐ No		12. Did all samples arrive in the proper containers for each test and/or in good condition (unbroken, lids on, etc.)?
☑ Yes	☐ No		13. Was adequate sample volume available?
☐ Yes	☑ No		14. Were all samples received within ½ the holding time or 48 hours, whichever comes first?
☐ Yes	☑ No		15. Were any samples containers missing/excess (circle one) samples Not listed on COC?
☐ Yes	☐ No	☑ NA	16. For VOA and RSK-175 samples, were bubbles present >"pea-size" (¼"or 6mm in diameter) in any of the VOA vials?
☐ Yes	☐ No	☑ NA	17. Were all DRO/metals/nutrient samples received at a pH of < 2?
☐ Yes	☐ No	☑ NA	18. Were all cyanide samples received at a pH > 12 and sulfide samples received at a pH > 9?
☐ Yes	☐ No	☑ NA	19. Were all applicable NH_3/TKN/cyanide/phenol/625.1/608.3 (< 0.5mg/L) samples free of residual chlorine?
☐ Yes	☐ No	☑ NA	20. Were client remarks/requests (i.e. requested dilutions, MS/MSD designations, etc…) correctly transcribed from the COC into the comment section in LIMS?
☐ Yes	☑ No		21. Was the quote number listed on the container label? If yes, Quote #

Sample Preservation (Must be completed for any sample(s) incorrectly preserved or with headspace.)

Sample(s) NA were received incorrectly preserved and were adjusted accordingly in sample receiving with NA mL of circle one: H2SO4, HNO3, HCl, NaOH using SR # NA. Time of preservation NA. If more than one preservative is needed, please note in the comments below.

Sample(s) NA were received with bubbles >6 mm in diameter.

Samples(s) NA were received with TRC > 0.5 mg/L (If #19 is ***no***) and were adjusted accordingly in sample receiving with sodium thiosulfate ($Na_2S_2O_3$) with Shealy ID: NA.

SR barcode labels applied by: KDRW Date: 03/24/2022

Comments:

Report of Analysis

ARM Environmental Services, Inc.
1210 1st Street S. Ext.
Columbia, SC 29209
Attention: Richard Ciccolella

Project Name: 2116 BRR

Project Number: 08-300-22

Lot Number:**XC24072**

Date Completed:04/06/2022

04/11/2022 11:32 AM
Approved and released by:
Project Manager II: **Lucas Odom**

The electronic signature above is the equivalent of a handwritten signature.
This report shall not be reproduced, except in its entirety, without the written approval of Pace Analytical Services, LLC.

Pace Analytical Services, LLC (*formerly Shealy Environmental Services, Inc.*)
106 Vantage Point Drive West Columbia, SC 29172
Tel: 803-791-9700 Fax: 803-791-9111 www.pacelabs.com

Case Narrative
ARM Environmental Services, Inc.
Lot Number: XC24072

This Report of Analysis contains the analytical result(s) for the sample(s) listed on the Sample Summary following this Case Narrative. The sample receiving date is documented in the header information associated with each sample.

All results listed in this report relate only to the samples that are contained within this report. Where sampling is conducted by the client, results relate to the accuracy of the information provided, and as the samples are received.

Sample receipt, sample analysis, and data review have been performed in accordance with the most current approved The NELAC Institute (TNI) standards, the Pace Analytical Services, LLC ("Pace") Laboratory Quality Manual, standard operating procedures (SOPs), and Pace policies. Any exceptions to the TNI standards, the Laboratory Quality Manual, SOPs or policies are qualified on the results page or discussed below.

Pace is a TNI accredited laboratory; however, the following analyses are currently not listed on our TNI scope of accreditation: Drinking Water: VOC (excluding BTEX, MTBE, Naphthalene, & 1,2-dichloroethane) EPA 524.2, E. coli and Total coliforms SM 9223 B-2004, Solid Chemical Material: TOC Walkley-Black, Biological Tissue: All, Non-Potable Water: SGT-HEM EPA 1664B, Silica EPA 200.7, Boron, Calcium, Silicon, Strontium EPA 200.8, Bicarbonate, Carbonate, and Hydroxide Alkalinity SM 2320 B-2011, SM 9221 C E-2006 & SM 9222D-2006, Strontium SW-846 6010D, VOC SM 6200 B-2011, Fecal Coliform Colilert-18.

Where applicable, all soil sample results (including LOQ and DL if requested) are corrected for dry weight unless flagged with a "W" qualifier.

If you have any questions regarding this report, please contact the Pace Project Manager listed on the cover page.

SVOCs by GC/MS
The following sample was diluted due to appearance or color: XC24072-003. The LOQ has been elevated to reflect the dilution.

VOCs by GC/MS
Insufficient sample volume was provided to perform matrix spike/matrix spike duplicate (MS/MSD) for analytical batch 36292. An LCS/LCSD was run in lieu of an MS/MSD.

Insufficient sample volume was provided to perform matrix spike/matrix spike duplicate (MS/MSD) for analytical batch 36429. An LCS/LCSD was run in lieu of an MS/MSD.

Sample Summary

ARM Environmental Services, Inc.

Lot Number: XC24072

Sample Number	Sample ID	Matrix	Date Sampled	Date Received
001	SB-1	Solid	03/22/2022 1531	03/24/2022
002	SB-2	Solid	03/22/2022 1543	03/24/2022
003	SB-3	Solid	03/22/2022 1556	03/24/2022
004	SB-4	Solid	03/22/2022 1613	03/24/2022
005	SB-5	Solid	03/22/2022 1625	03/24/2022
006	SB-6	Solid	03/22/2022 1634	03/24/2022
007	SB-7	Solid	03/22/2022 1648	03/24/2022
008	SB-8	Solid	03/22/2022 1701	03/24/2022
009	SB-9	Solid	03/22/2022 1714	03/24/2022
010	SB-10	Solid	03/22/2022 1728	03/24/2022
011	SB-11	Solid	03/22/2022 1756	03/24/2022
012	SB-12	Solid	03/22/2022 1813	03/24/2022

(12 samples)

Detection Summary

ARM Environmental Services, Inc.

Lot Number: XC24072

Sample	Sample ID	Matrix	Parameter	Method	Result	Q	Units	Page
005	SB-5	Solid	Ethylbenzene	8260D	9500		ug/kg	10
005	SB-5	Solid	Naphthalene	8260D	5900		ug/kg	10
005	SB-5	Solid	Xylenes (total)	8260D	40000		ug/kg	10
005	SB-5	Solid	Naphthalene	8270E	3600		ug/kg	10
005	SB-5	Solid	Phenanthrene	8270E	23		ug/kg	10
006	SB-6	Solid	Ethylbenzene	8260D	3100		ug/kg	12
006	SB-6	Solid	Naphthalene	8260D	2600		ug/kg	12
006	SB-6	Solid	Xylenes (total)	8260D	6900		ug/kg	12
006	SB-6	Solid	Naphthalene	8270E	1900		ug/kg	12
007	SB-7	Solid	Ethylbenzene	8260D	800		ug/kg	13
007	SB-7	Solid	Naphthalene	8260D	640		ug/kg	13
007	SB-7	Solid	Xylenes (total)	8260D	6900		ug/kg	13
007	SB-7	Solid	Benzo(b)fluoranthene	8270E	120		ug/kg	13
007	SB-7	Solid	Fluoranthene	8270E	140		ug/kg	13
007	SB-7	Solid	Naphthalene	8270E	930		ug/kg	13
007	SB-7	Solid	Pyrene	8270E	110		ug/kg	13
008	SB-8	Solid	Ethylbenzene	8260D	1200		ug/kg	14
008	SB-8	Solid	Naphthalene	8260D	2000		ug/kg	14
008	SB-8	Solid	Xylenes (total)	8260D	4400		ug/kg	14
008	SB-8	Solid	Acenaphthene	8270E	24		ug/kg	14
008	SB-8	Solid	Fluorene	8270E	31		ug/kg	14
008	SB-8	Solid	Naphthalene	8270E	3400		ug/kg	14
008	SB-8	Solid	Phenanthrene	8270E	53		ug/kg	14
010	SB-10	Solid	Methyl tertiary butyl ether	8260D	63		ug/kg	17
010	SB-10	Solid	Naphthalene	8260D	19		ug/kg	17
010	SB-10	Solid	Naphthalene	8270E	240		ug/kg	17
011	SB-11	Solid	Benzo(b)fluoranthene	8270E	90		ug/kg	18
011	SB-11	Solid	Fluoranthene	8270E	180		ug/kg	18
011	SB-11	Solid	Phenanthrene	8270E	86		ug/kg	18
011	SB-11	Solid	Pyrene	8270E	170		ug/kg	18

(30 detections)

Client: ARM Environmental Services, Inc. | Laboratory ID: XC24072-001
Description: SB-1 | Matrix: Solid
Date Sampled: 03/22/2022 1531 | % Solids: 74.3 03/25/2022 2319
Date Received: 03/24/2022

Volatile Organic Compounds by GC/MS

Run	Prep Method	Analytical Method	Dilution	Analysis Date	Analyst	Prep Date	Batch	Sample Wt.(g)
1	5035	8260D	1	03/28/2022 2316	JM1		36292	5.45

Parameter	CAS Number	Analytical Method	Result	Q	LOQ	Units	Run
Benzene	71-43-2	8260D	ND		6.2	ug/kg	1
Ethylbenzene	100-41-4	8260D	ND		6.2	ug/kg	1
Methyl tertiary butyl ether (MTBE)	1634-04-4	8260D	ND		6.2	ug/kg	1
Naphthalene	91-20-3	8260D	ND		6.2	ug/kg	1
Toluene	108-88-3	8260D	ND		6.2	ug/kg	1
Xylenes (total)	1330-20-7	8260D	ND		12	ug/kg	1

Surrogate	Q	Run 1 % Recovery	Acceptance Limits
Bromofluorobenzene		104	47-138
1,2-Dichloroethane-d4		108	53-142
Toluene-d8		96	68-124

Semivolatile Organic Compounds by GC/MS

Run	Prep Method	Analytical Method	Dilution	Analysis Date	Analyst	Prep Date	Batch
1	3546	8270E	1	03/29/2022 2247	SCD	03/28/2022 1228	36263

Parameter	CAS Number	Analytical Method	Result	Q	LOQ	Units	Run
Acenaphthene	83-32-9	8270E	ND		18	ug/kg	1
Acenaphthylene	208-96-8	8270E	ND		18	ug/kg	1
Anthracene	120-12-7	8270E	ND		18	ug/kg	1
Benzo(a)anthracene	56-55-3	8270E	ND		18	ug/kg	1
Benzo(a)pyrene	50-32-8	8270E	ND		18	ug/kg	1
Benzo(b)fluoranthene	205-99-2	8270E	ND		18	ug/kg	1
Benzo(g,h,i)perylene	191-24-2	8270E	ND		18	ug/kg	1
Benzo(k)fluoranthene	207-08-9	8270E	ND		18	ug/kg	1
Chrysene	218-01-9	8270E	ND		18	ug/kg	1
Dibenzo(a,h)anthracene	53-70-3	8270E	ND		18	ug/kg	1
Fluoranthene	206-44-0	8270E	ND		18	ug/kg	1
Fluorene	86-73-7	8270E	ND		18	ug/kg	1
Indeno(1,2,3-c,d)pyrene	193-39-5	8270E	ND		18	ug/kg	1
Naphthalene	91-20-3	8270E	ND		18	ug/kg	1
Phenanthrene	85-01-8	8270E	ND		18	ug/kg	1
Pyrene	129-00-0	8270E	ND		18	ug/kg	1

Surrogate	Q	Run 1 % Recovery	Acceptance Limits
2-Fluorobiphenyl		82	24-137
Nitrobenzene-d5		74	12-144
Terphenyl-d14		88	20-127

LOQ = Limit of Quantitation
ND = Not detected at or above the LOQ
H = Out of holding time
B = Detected in the method blank
N = Recovery is out of criteria
W = Reported on wet weight basis
E = Quantitation of compound exceeded the calibration range
P = The RPD between two GC columns exceeds 40%
Q = Surrogate failure
L = LCS/LCSD failure
S = MS/MSD failure

Client: ARM Environmental Services, Inc. | Laboratory ID: XC24072-002
Description: SB-2 | Matrix: Solid
Date Sampled: 03/22/2022 1543 | % Solids: 77.7 03/25/2022 2319
Date Received: 03/24/2022

Volatile Organic Compounds by GC/MS

Run	Prep Method	Analytical Method	Dilution	Analysis Date	Analyst	Prep Date	Batch	Sample Wt.(g)
1	5035	8260D	1	03/28/2022 2340	JM1		36292	5.40

Parameter	CAS Number	Analytical Method	Result	Q	LOQ	Units	Run
Benzene	71-43-2	8260D	ND		6.0	ug/kg	1
Ethylbenzene	100-41-4	8260D	ND		6.0	ug/kg	1
Methyl tertiary butyl ether (MTBE)	1634-04-4	8260D	ND		6.0	ug/kg	1
Naphthalene	91-20-3	8260D	ND		6.0	ug/kg	1
Toluene	108-88-3	8260D	ND		6.0	ug/kg	1
Xylenes (total)	1330-20-7	8260D	ND		12	ug/kg	1

Surrogate	Q	Run 1 % Recovery	Acceptance Limits
Bromofluorobenzene		105	47-138
1,2-Dichloroethane-d4		95	53-142
Toluene-d8		99	68-124

Semivolatile Organic Compounds by GC/MS

Run	Prep Method	Analytical Method	Dilution	Analysis Date	Analyst	Prep Date	Batch
1	3546	8270E	1	03/29/2022 2312	SCD	03/28/2022 1228	36263

Parameter	CAS Number	Analytical Method	Result	Q	LOQ	Units	Run
Acenaphthene	83-32-9	8270E	ND		17	ug/kg	1
Acenaphthylene	208-96-8	8270E	ND		17	ug/kg	1
Anthracene	120-12-7	8270E	ND		17	ug/kg	1
Benzo(a)anthracene	56-55-3	8270E	ND		17	ug/kg	1
Benzo(a)pyrene	50-32-8	8270E	ND		17	ug/kg	1
Benzo(b)fluoranthene	205-99-2	8270E	ND		17	ug/kg	1
Benzo(g,h,i)perylene	191-24-2	8270E	ND		17	ug/kg	1
Benzo(k)fluoranthene	207-08-9	8270E	ND		17	ug/kg	1
Chrysene	218-01-9	8270E	ND		17	ug/kg	1
Dibenzo(a,h)anthracene	53-70-3	8270E	ND		17	ug/kg	1
Fluoranthene	206-44-0	8270E	ND		17	ug/kg	1
Fluorene	86-73-7	8270E	ND		17	ug/kg	1
Indeno(1,2,3-c,d)pyrene	193-39-5	8270E	ND		17	ug/kg	1
Naphthalene	91-20-3	8270E	ND		17	ug/kg	1
Phenanthrene	85-01-8	8270E	ND		17	ug/kg	1
Pyrene	129-00-0	8270E	ND		17	ug/kg	1

Surrogate	Q	Run 1 % Recovery	Acceptance Limits
2-Fluorobiphenyl		82	24-137
Nitrobenzene-d5		76	12-144
Terphenyl-d14		93	20-127

LOQ = Limit of Quantitation
ND = Not detected at or above the LOQ
H = Out of holding time
B = Detected in the method blank
N = Recovery is out of criteria
W = Reported on wet weight basis
E = Quantitation of compound exceeded the calibration range
P = The RPD between two GC columns exceeds 40%
Q = Surrogate failure
L = LCS/LCSD failure
S = MS/MSD failure

Client: ARM Environmental Services, Inc. | Laboratory ID: XC24072-003
Description: SB-3 | Matrix: Solid
Date Sampled: 03/22/2022 1556 | % Solids: 88.5 03/29/2022 0030
Date Received: 03/24/2022

Volatile Organic Compounds by GC/MS

Run	Prep Method	Analytical Method	Dilution	Analysis Date	Analyst	Prep Date	Batch	Sample Wt.(g)
1	5035	8260D	1	03/29/2022 1624	JM1		36429	4.47

Parameter	CAS Number	Analytical Method	Result	Q	LOQ	Units	Run
Benzene	71-43-2	8260D	ND		6.3	ug/kg	1
Ethylbenzene	100-41-4	8260D	ND		6.3	ug/kg	1
Methyl tertiary butyl ether (MTBE)	1634-04-4	8260D	ND		6.3	ug/kg	1
Naphthalene	91-20-3	8260D	ND		6.3	ug/kg	1
Toluene	108-88-3	8260D	ND		6.3	ug/kg	1
Xylenes (total)	1330-20-7	8260D	ND		13	ug/kg	1

Surrogate	Q	Run 1 % Recovery	Acceptance Limits
Bromofluorobenzene		84	47-138
1,2-Dichloroethane-d4		99	53-142
Toluene-d8		108	68-124

Semivolatile Organic Compounds by GC/MS

Run	Prep Method	Analytical Method	Dilution	Analysis Date	Analyst	Prep Date	Batch
1	3546	8270E	5	03/29/2022 2337	SCD	03/28/2022 1228	36263

Parameter	CAS Number	Analytical Method	Result	Q	LOQ	Units	Run
Acenaphthene	83-32-9	8270E	ND		71	ug/kg	1
Acenaphthylene	208-96-8	8270E	ND		71	ug/kg	1
Anthracene	120-12-7	8270E	ND		71	ug/kg	1
Benzo(a)anthracene	56-55-3	8270E	ND		71	ug/kg	1
Benzo(a)pyrene	50-32-8	8270E	ND		71	ug/kg	1
Benzo(b)fluoranthene	205-99-2	8270E	ND		71	ug/kg	1
Benzo(g,h,i)perylene	191-24-2	8270E	ND		71	ug/kg	1
Benzo(k)fluoranthene	207-08-9	8270E	ND		71	ug/kg	1
Chrysene	218-01-9	8270E	ND		71	ug/kg	1
Dibenzo(a,h)anthracene	53-70-3	8270E	ND		71	ug/kg	1
Fluoranthene	206-44-0	8270E	ND		71	ug/kg	1
Fluorene	86-73-7	8270E	ND		71	ug/kg	1
Indeno(1,2,3-c,d)pyrene	193-39-5	8270E	ND		71	ug/kg	1
Naphthalene	91-20-3	8270E	ND		71	ug/kg	1
Phenanthrene	85-01-8	8270E	ND		71	ug/kg	1
Pyrene	129-00-0	8270E	ND		71	ug/kg	1

Surrogate	Q	Run 1 % Recovery	Acceptance Limits
2-Fluorobiphenyl		76	24-137
Nitrobenzene-d5		70	12-144
Terphenyl-d14		79	20-127

LOQ = Limit of Quantitation
ND = Not detected at or above the LOQ
H = Out of holding time
B = Detected in the method blank
N = Recovery is out of criteria
W = Reported on wet weight basis
E = Quantitation of compound exceeded the calibration range
P = The RPD between two GC columns exceeds 40%
Q = Surrogate failure
L = LCS/LCSD failure
S = MS/MSD failure

Client: ARM Environmental Services, Inc. | Laboratory ID: XC24072-004
Description: SB-4 | Matrix: Solid
Date Sampled: 03/22/2022 1613 | % Solids: 92.8 03/25/2022 2319
Date Received: 03/24/2022

Volatile Organic Compounds by GC/MS

Run	Prep Method	Analytical Method	Dilution	Analysis Date	Analyst	Prep Date	Batch	Sample Wt.(g)
1	5035	8260D	1	03/29/2022 1647	JM1		36429	4.90

Parameter	CAS Number	Analytical Method	Result	Q	LOQ	Units	Run
Benzene	71-43-2	8260D	ND		5.5	ug/kg	1
Ethylbenzene	100-41-4	8260D	ND		5.5	ug/kg	1
Methyl tertiary butyl ether (MTBE)	1634-04-4	8260D	ND		5.5	ug/kg	1
Naphthalene	91-20-3	8260D	ND		5.5	ug/kg	1
Toluene	108-88-3	8260D	ND		5.5	ug/kg	1
Xylenes (total)	1330-20-7	8260D	ND		11	ug/kg	1

Surrogate	Q	Run 1 % Recovery	Acceptance Limits
Bromofluorobenzene		91	47-138
1,2-Dichloroethane-d4		94	53-142
Toluene-d8		102	68-124

Semivolatile Organic Compounds by GC/MS

Run	Prep Method	Analytical Method	Dilution	Analysis Date	Analyst	Prep Date	Batch
1	3546	8270E	1	03/30/2022 0002	SCD	03/28/2022 1228	36263

Parameter	CAS Number	Analytical Method	Result	Q	LOQ	Units	Run
Acenaphthene	83-32-9	8270E	ND		14	ug/kg	1
Acenaphthylene	208-96-8	8270E	ND		14	ug/kg	1
Anthracene	120-12-7	8270E	ND		14	ug/kg	1
Benzo(a)anthracene	56-55-3	8270E	ND		14	ug/kg	1
Benzo(a)pyrene	50-32-8	8270E	ND		14	ug/kg	1
Benzo(b)fluoranthene	205-99-2	8270E	ND		14	ug/kg	1
Benzo(g,h,i)perylene	191-24-2	8270E	ND		14	ug/kg	1
Benzo(k)fluoranthene	207-08-9	8270E	ND		14	ug/kg	1
Chrysene	218-01-9	8270E	ND		14	ug/kg	1
Dibenzo(a,h)anthracene	53-70-3	8270E	ND		14	ug/kg	1
Fluoranthene	206-44-0	8270E	ND		14	ug/kg	1
Fluorene	86-73-7	8270E	ND		14	ug/kg	1
Indeno(1,2,3-c,d)pyrene	193-39-5	8270E	ND		14	ug/kg	1
Naphthalene	91-20-3	8270E	ND		14	ug/kg	1
Phenanthrene	85-01-8	8270E	ND		14	ug/kg	1
Pyrene	129-00-0	8270E	ND		14	ug/kg	1

Surrogate	Q	Run 1 % Recovery	Acceptance Limits
2-Fluorobiphenyl		83	24-137
Nitrobenzene-d5		76	12-144
Terphenyl-d14		97	20-127

LOQ = Limit of Quantitation
ND = Not detected at or above the LOQ
H = Out of holding time
B = Detected in the method blank
N = Recovery is out of criteria
W = Reported on wet weight basis
E = Quantitation of compound exceeded the calibration range
P = The RPD between two GC columns exceeds 40%
Q = Surrogate failure
L = LCS/LCSD failure
S = MS/MSD failure

Client: ARM Environmental Services, Inc.
Description: SB-5
Date Sampled: 03/22/2022 1625
Date Received: 03/24/2022

Laboratory ID: XC24072-005
Matrix: Solid
% Solids: 90.9 03/29/2022 0030

Volatile Organic Compounds by GC/MS

Run	Prep Method	Analytical Method	Dilution	Analysis Date	Analyst	Prep Date	Batch	Sample Wt.(g)
1	5035 High	8260D	4	03/31/2022 1936	JM1		36757	6.62
2	5035 High	8260D	10	04/05/2022 2041	JM1		37264	6.62

Parameter	CAS Number	Analytical Method	Result	Q	LOQ	Units	Run
Benzene	71-43-2	8260D	ND		930	ug/kg	1
Ethylbenzene	100-41-4	8260D	9500		930	ug/kg	1
Methyl tertiary butyl ether (MTBE)	1634-04-4	8260D	ND		930	ug/kg	1
Naphthalene	91-20-3	8260D	5900		930	ug/kg	1
Toluene	108-88-3	8260D	ND		930	ug/kg	1
Xylenes (total)	1330-20-7	8260D	40000		4700	ug/kg	2

Surrogate	Q	Run 1 % Recovery	Run 1 Acceptance Limits	Q	Run 2 % Recovery	Run 2 Acceptance Limits
Bromofluorobenzene		89	47-138		106	47-138
1,2-Dichloroethane-d4		92	53-142		93	53-142
Toluene-d8		96	68-124		97	68-124

Semivolatile Organic Compounds by GC/MS

Run	Prep Method	Analytical Method	Dilution	Analysis Date	Analyst	Prep Date	Batch
1	3546	8270E	1	03/30/2022 0026	SCD	03/28/2022 1228	36263
2	3546	8270E	5	03/30/2022 1437	JCG	03/28/2022 1228	36263

Parameter	CAS Number	Analytical Method	Result	Q	LOQ	Units	Run
Acenaphthene	83-32-9	8270E	ND		14	ug/kg	1
Acenaphthylene	208-96-8	8270E	ND		14	ug/kg	1
Anthracene	120-12-7	8270E	ND		14	ug/kg	1
Benzo(a)anthracene	56-55-3	8270E	ND		14	ug/kg	1
Benzo(a)pyrene	50-32-8	8270E	ND		14	ug/kg	1
Benzo(b)fluoranthene	205-99-2	8270E	ND		14	ug/kg	1
Benzo(g,h,i)perylene	191-24-2	8270E	ND		14	ug/kg	1
Benzo(k)fluoranthene	207-08-9	8270E	ND		14	ug/kg	1
Chrysene	218-01-9	8270E	ND		14	ug/kg	1
Dibenzo(a,h)anthracene	53-70-3	8270E	ND		14	ug/kg	1
Fluoranthene	206-44-0	8270E	ND		14	ug/kg	1
Fluorene	86-73-7	8270E	ND		14	ug/kg	1
Indeno(1,2,3-c,d)pyrene	193-39-5	8270E	ND		14	ug/kg	1
Naphthalene	91-20-3	8270E	3600		70	ug/kg	2
Phenanthrene	85-01-8	8270E	23		14	ug/kg	1
Pyrene	129-00-0	8270E	ND		14	ug/kg	1

LOQ = Limit of Quantitation
ND = Not detected at or above the LOQ
H = Out of holding time
B = Detected in the method blank
N = Recovery is out of criteria
W = Reported on wet weight basis
E = Quantitation of compound exceeded the calibration range
P = The RPD between two GC columns exceeds 40%
Q = Surrogate failure
L = LCS/LCSD failure
S = MS/MSD failure

Client: ARM Environmental Services, Inc.
Laboratory ID: XC24072-005
Description: SB-5
Matrix: Solid
Date Sampled: 03/22/2022 1625
% Solids: 90.9 03/29/2022 0030
Date Received: 03/24/2022

Surrogate	Q	Run 1 % Recovery	Acceptance Limits	Q	Run 2 % Recovery	Acceptance Limits
2-Fluorobiphenyl		86	24-137		87	24-137
Nitrobenzene-d5		96	12-144		88	12-144
Terphenyl-d14		99	20-127		93	20-127

LOQ = Limit of Quantitation
ND = Not detected at or above the LOQ
H = Out of holding time
B = Detected in the method blank
N = Recovery is out of criteria
W = Reported on wet weight basis
E = Quantitation of compound exceeded the calibration range
P = The RPD between two GC columns exceeds 40%
Q = Surrogate failure
L = LCS/LCSD failure
S = MS/MSD failure

Client: ARM Environmental Services, Inc. | Laboratory ID: XC24072-006
Description: SB-6 | Matrix: Solid
Date Sampled: 03/22/2022 1634 | % Solids: 84.7 03/29/2022 0030
Date Received: 03/24/2022

Volatile Organic Compounds by GC/MS

Run	Prep Method	Analytical Method	Dilution	Analysis Date	Analyst	Prep Date	Batch	Sample Wt.(g)
1	5035 High	8260D	1	03/31/2022 2018	JM1		36757	5.75

Parameter	CAS Number	Analytical Method	Result	Q	LOQ	Units	Run
Benzene	71-43-2	8260D	ND		300	ug/kg	1
Ethylbenzene	100-41-4	8260D	3100		300	ug/kg	1
Methyl tertiary butyl ether (MTBE)	1634-04-4	8260D	ND		300	ug/kg	1
Naphthalene	91-20-3	8260D	2600		300	ug/kg	1
Toluene	108-88-3	8260D	ND		300	ug/kg	1
Xylenes (total)	1330-20-7	8260D	6900		600	ug/kg	1

Surrogate	Q	Run 1 % Recovery	Acceptance Limits
Bromofluorobenzene		84	47-138
1,2-Dichloroethane-d4		88	53-142
Toluene-d8		88	68-124

Semivolatile Organic Compounds by GC/MS

Run	Prep Method	Analytical Method	Dilution	Analysis Date	Analyst	Prep Date	Batch
1	3546	8270E	1	03/30/2022 0051	SCD	03/28/2022 1228	36263

Parameter	CAS Number	Analytical Method	Result	Q	LOQ	Units	Run
Acenaphthene	83-32-9	8270E	ND		15	ug/kg	1
Acenaphthylene	208-96-8	8270E	ND		15	ug/kg	1
Anthracene	120-12-7	8270E	ND		15	ug/kg	1
Benzo(a)anthracene	56-55-3	8270E	ND		15	ug/kg	1
Benzo(a)pyrene	50-32-8	8270E	ND		15	ug/kg	1
Benzo(b)fluoranthene	205-99-2	8270E	ND		15	ug/kg	1
Benzo(g,h,i)perylene	191-24-2	8270E	ND		15	ug/kg	1
Benzo(k)fluoranthene	207-08-9	8270E	ND		15	ug/kg	1
Chrysene	218-01-9	8270E	ND		15	ug/kg	1
Dibenzo(a,h)anthracene	53-70-3	8270E	ND		15	ug/kg	1
Fluoranthene	206-44-0	8270E	ND		15	ug/kg	1
Fluorene	86-73-7	8270E	ND		15	ug/kg	1
Indeno(1,2,3-c,d)pyrene	193-39-5	8270E	ND		15	ug/kg	1
Naphthalene	91-20-3	8270E	1900		15	ug/kg	1
Phenanthrene	85-01-8	8270E	ND		15	ug/kg	1
Pyrene	129-00-0	8270E	ND		15	ug/kg	1

Surrogate	Q	Run 1 % Recovery	Acceptance Limits
2-Fluorobiphenyl		88	24-137
Nitrobenzene-d5		80	12-144
Terphenyl-d14		92	20-127

LOQ = Limit of Quantitation
ND = Not detected at or above the LOQ
H = Out of holding time
B = Detected in the method blank
N = Recovery is out of criteria
W = Reported on wet weight basis
E = Quantitation of compound exceeded the calibration range
P = The RPD between two GC columns exceeds 40%
Q = Surrogate failure
L = LCS/LCSD failure
S = MS/MSD failure

Client: ARM Environmental Services, Inc. | Laboratory ID: XC24072-007
Description: SB-7 | Matrix: Solid
Date Sampled: 03/22/2022 1648 | % Solids: 81.9 03/29/2022 0030
Date Received: 03/24/2022

Volatile Organic Compounds by GC/MS

Run	Prep Method	Analytical Method	Dilution	Analysis Date	Analyst	Prep Date	Batch	Sample Wt.(g)
1	5035 High	8260D	1	03/31/2022 2041	JM1		36757	5.73

Parameter	CAS Number	Analytical Method	Result	Q	LOQ	Units	Run
Benzene	71-43-2	8260D	ND		320	ug/kg	1
Ethylbenzene	100-41-4	8260D	800		320	ug/kg	1
Methyl tertiary butyl ether (MTBE)	1634-04-4	8260D	ND		320	ug/kg	1
Naphthalene	91-20-3	8260D	640		320	ug/kg	1
Toluene	108-88-3	8260D	ND		320	ug/kg	1
Xylenes (total)	1330-20-7	8260D	6900		640	ug/kg	1

Surrogate	Q	Run 1 % Recovery	Acceptance Limits
Bromofluorobenzene		72	47-138
1,2-Dichloroethane-d4		85	53-142
Toluene-d8		79	68-124

Semivolatile Organic Compounds by GC/MS

Run	Prep Method	Analytical Method	Dilution	Analysis Date	Analyst	Prep Date	Batch
1	3546	8270E	5	03/30/2022 0116	SCD	03/28/2022 1228	36263

Parameter	CAS Number	Analytical Method	Result	Q	LOQ	Units	Run
Acenaphthene	83-32-9	8270E	ND		81	ug/kg	1
Acenaphthylene	208-96-8	8270E	ND		81	ug/kg	1
Anthracene	120-12-7	8270E	ND		81	ug/kg	1
Benzo(a)anthracene	56-55-3	8270E	ND		81	ug/kg	1
Benzo(a)pyrene	50-32-8	8270E	ND		81	ug/kg	1
Benzo(b)fluoranthene	205-99-2	8270E	120		81	ug/kg	1
Benzo(g,h,i)perylene	191-24-2	8270E	ND		81	ug/kg	1
Benzo(k)fluoranthene	207-08-9	8270E	ND		81	ug/kg	1
Chrysene	218-01-9	8270E	ND		81	ug/kg	1
Dibenzo(a,h)anthracene	53-70-3	8270E	ND		81	ug/kg	1
Fluoranthene	206-44-0	8270E	140		81	ug/kg	1
Fluorene	86-73-7	8270E	ND		81	ug/kg	1
Indeno(1,2,3-c,d)pyrene	193-39-5	8270E	ND		81	ug/kg	1
Naphthalene	91-20-3	8270E	930		81	ug/kg	1
Phenanthrene	85-01-8	8270E	ND		81	ug/kg	1
Pyrene	129-00-0	8270E	110		81	ug/kg	1

Surrogate	Q	Run 1 % Recovery	Acceptance Limits
2-Fluorobiphenyl		71	24-137
Nitrobenzene-d5		71	12-144
Terphenyl-d14		78	20-127

LOQ = Limit of Quantitation
ND = Not detected at or above the LOQ
H = Out of holding time
B = Detected in the method blank
N = Recovery is out of criteria
W = Reported on wet weight basis
E = Quantitation of compound exceeded the calibration range
P = The RPD between two GC columns exceeds 40%
Q = Surrogate failure
L = LCS/LCSD failure
S = MS/MSD failure

Client: ARM Environmental Services, Inc. | Laboratory ID: XC24072-008
Description: SB-8 | Matrix: Solid
Date Sampled: 03/22/2022 1701 | % Solids: 80.8 03/25/2022 2319
Date Received: 03/24/2022

Volatile Organic Compounds by GC/MS

Run	Prep Method	Analytical Method	Dilution	Analysis Date	Analyst	Prep Date	Batch	Sample Wt.(g)
1	5035 High	8260D	2	03/31/2022 2104	JM1		36757	4.65

Parameter	CAS Number	Analytical Method	Result	Q	LOQ	Units	Run
Benzene	71-43-2	8260D	ND		780	ug/kg	1
Ethylbenzene	100-41-4	8260D	1200		780	ug/kg	1
Methyl tertiary butyl ether (MTBE)	1634-04-4	8260D	ND		780	ug/kg	1
Naphthalene	91-20-3	8260D	2000		780	ug/kg	1
Toluene	108-88-3	8260D	ND		780	ug/kg	1
Xylenes (total)	1330-20-7	8260D	4400		1600	ug/kg	1

Surrogate	Q	Run 1 % Recovery	Acceptance Limits
Bromofluorobenzene		80	47-138
1,2-Dichloroethane-d4		87	53-142
Toluene-d8		79	68-124

Semivolatile Organic Compounds by GC/MS

Run	Prep Method	Analytical Method	Dilution	Analysis Date	Analyst	Prep Date	Batch
1	3546	8270E	1	03/30/2022 0140	SCD	03/28/2022 1228	36263
2	3546	8270E	10	03/30/2022 1502	JCG	03/28/2022 1228	36263

Parameter	CAS Number	Analytical Method	Result	Q	LOQ	Units	Run
Acenaphthene	83-32-9	8270E	24		16	ug/kg	1
Acenaphthylene	208-96-8	8270E	ND		16	ug/kg	1
Anthracene	120-12-7	8270E	ND		16	ug/kg	1
Benzo(a)anthracene	56-55-3	8270E	ND		16	ug/kg	1
Benzo(a)pyrene	50-32-8	8270E	ND		16	ug/kg	1
Benzo(b)fluoranthene	205-99-2	8270E	ND		16	ug/kg	1
Benzo(g,h,i)perylene	191-24-2	8270E	ND		16	ug/kg	1
Benzo(k)fluoranthene	207-08-9	8270E	ND		16	ug/kg	1
Chrysene	218-01-9	8270E	ND		16	ug/kg	1
Dibenzo(a,h)anthracene	53-70-3	8270E	ND		16	ug/kg	1
Fluoranthene	206-44-0	8270E	ND		16	ug/kg	1
Fluorene	86-73-7	8270E	31		16	ug/kg	1
Indeno(1,2,3-c,d)pyrene	193-39-5	8270E	ND		16	ug/kg	1
Naphthalene	91-20-3	8270E	3400		160	ug/kg	2
Phenanthrene	85-01-8	8270E	53		16	ug/kg	1
Pyrene	129-00-0	8270E	ND		16	ug/kg	1

LOQ = Limit of Quantitation
ND = Not detected at or above the LOQ
H = Out of holding time
B = Detected in the method blank
N = Recovery is out of criteria
W = Reported on wet weight basis
E = Quantitation of compound exceeded the calibration range
P = The RPD between two GC columns exceeds 40%
Q = Surrogate failure
L = LCS/LCSD failure
S = MS/MSD failure

Client: ARM Environmental Services, Inc.
Laboratory ID: XC24072-008
Description: SB-8
Matrix: Solid
Date Sampled: 03/22/2022 1701
% Solids: 80.8 03/25/2022 2319
Date Received: 03/24/2022

Surrogate	Q	Run 1 % Recovery	Acceptance Limits	Q	Run 2 % Recovery	Acceptance Limits
2-Fluorobiphenyl		85	24-137		87	24-137
Nitrobenzene-d5		93	12-144		81	12-144
Terphenyl-d14		88	20-127		87	20-127

LOQ = Limit of Quantitation
ND = Not detected at or above the LOQ
H = Out of holding time
B = Detected in the method blank
N = Recovery is out of criteria
W = Reported on wet weight basis
E = Quantitation of compound exceeded the calibration range
P = The RPD between two GC columns exceeds 40%
Q = Surrogate failure
L = LCS/LCSD failure
S = MS/MSD failure

Client: ARM Environmental Services, Inc. | Laboratory ID: XC24072-009
Description: SB-9 | Matrix: Solid
Date Sampled: 03/22/2022 1714 | % Solids: 73.1 03/29/2022 0030
Date Received: 03/24/2022

Volatile Organic Compounds by GC/MS

Run	Prep Method	Analytical Method	Dilution	Analysis Date	Analyst	Prep Date	Batch	Sample Wt.(g)
1	5035	8260D	1	03/29/2022 1711	JM1		36429	5.34

Parameter	CAS Number	Analytical Method	Result	Q	LOQ	Units	Run
Benzene	71-43-2	8260D	ND		6.4	ug/kg	1
Ethylbenzene	100-41-4	8260D	ND		6.4	ug/kg	1
Methyl tertiary butyl ether (MTBE)	1634-04-4	8260D	ND		6.4	ug/kg	1
Naphthalene	91-20-3	8260D	ND		6.4	ug/kg	1
Toluene	108-88-3	8260D	ND		6.4	ug/kg	1
Xylenes (total)	1330-20-7	8260D	ND		13	ug/kg	1

Surrogate	Q	Run 1 % Recovery	Acceptance Limits
Bromofluorobenzene		91	47-138
1,2-Dichloroethane-d4		96	53-142
Toluene-d8		105	68-124

Semivolatile Organic Compounds by GC/MS

Run	Prep Method	Analytical Method	Dilution	Analysis Date	Analyst	Prep Date	Batch
1	3546	8270E	1	03/30/2022 0205	SCD	03/28/2022 1228	36263

Parameter	CAS Number	Analytical Method	Result	Q	LOQ	Units	Run
Acenaphthene	83-32-9	8270E	ND		18	ug/kg	1
Acenaphthylene	208-96-8	8270E	ND		18	ug/kg	1
Anthracene	120-12-7	8270E	ND		18	ug/kg	1
Benzo(a)anthracene	56-55-3	8270E	ND		18	ug/kg	1
Benzo(a)pyrene	50-32-8	8270E	ND		18	ug/kg	1
Benzo(b)fluoranthene	205-99-2	8270E	ND		18	ug/kg	1
Benzo(g,h,i)perylene	191-24-2	8270E	ND		18	ug/kg	1
Benzo(k)fluoranthene	207-08-9	8270E	ND		18	ug/kg	1
Chrysene	218-01-9	8270E	ND		18	ug/kg	1
Dibenzo(a,h)anthracene	53-70-3	8270E	ND		18	ug/kg	1
Fluoranthene	206-44-0	8270E	ND		18	ug/kg	1
Fluorene	86-73-7	8270E	ND		18	ug/kg	1
Indeno(1,2,3-c,d)pyrene	193-39-5	8270E	ND		18	ug/kg	1
Naphthalene	91-20-3	8270E	ND		18	ug/kg	1
Phenanthrene	85-01-8	8270E	ND		18	ug/kg	1
Pyrene	129-00-0	8270E	ND		18	ug/kg	1

Surrogate	Q	Run 1 % Recovery	Acceptance Limits
2-Fluorobiphenyl		84	24-137
Nitrobenzene-d5		79	12-144
Terphenyl-d14		97	20-127

LOQ = Limit of Quantitation
ND = Not detected at or above the LOQ
H = Out of holding time
B = Detected in the method blank
N = Recovery is out of criteria
W = Reported on wet weight basis
E = Quantitation of compound exceeded the calibration range
P = The RPD between two GC columns exceeds 40%
Q = Surrogate failure
L = LCS/LCSD failure
S = MS/MSD failure

Client: ARM Environmental Services, Inc. | Laboratory ID: XC24072-010
Description: SB-10 | Matrix: Solid
Date Sampled: 03/22/2022 1728 | % Solids: 74.3 03/29/2022 0030
Date Received: 03/24/2022

Volatile Organic Compounds by GC/MS

Run	Prep Method	Analytical Method	Dilution	Analysis Date	Analyst	Prep Date	Batch	Sample Wt.(g)
1	5035	8260D	1	03/29/2022 1734	JM1		36429	4.73

Parameter	CAS Number	Analytical Method	Result	Q	LOQ	Units	Run
Benzene	71-43-2	8260D	ND		7.1	ug/kg	1
Ethylbenzene	100-41-4	8260D	ND		7.1	ug/kg	1
Methyl tertiary butyl ether (MTBE)	1634-04-4	8260D	63		7.1	ug/kg	1
Naphthalene	91-20-3	8260D	19		7.1	ug/kg	1
Toluene	108-88-3	8260D	ND		7.1	ug/kg	1
Xylenes (total)	1330-20-7	8260D	ND		14	ug/kg	1

Surrogate	Q	Run 1 % Recovery	Acceptance Limits
Bromofluorobenzene		93	47-138
1,2-Dichloroethane-d4		94	53-142
Toluene-d8		110	68-124

Semivolatile Organic Compounds by GC/MS

Run	Prep Method	Analytical Method	Dilution	Analysis Date	Analyst	Prep Date	Batch
1	3546	8270E	1	03/30/2022 0230	SCD	03/28/2022 1228	36263

Parameter	CAS Number	Analytical Method	Result	Q	LOQ	Units	Run
Acenaphthene	83-32-9	8270E	ND		17	ug/kg	1
Acenaphthylene	208-96-8	8270E	ND		17	ug/kg	1
Anthracene	120-12-7	8270E	ND		17	ug/kg	1
Benzo(a)anthracene	56-55-3	8270E	ND		17	ug/kg	1
Benzo(a)pyrene	50-32-8	8270E	ND		17	ug/kg	1
Benzo(b)fluoranthene	205-99-2	8270E	ND		17	ug/kg	1
Benzo(g,h,i)perylene	191-24-2	8270E	ND		17	ug/kg	1
Benzo(k)fluoranthene	207-08-9	8270E	ND		17	ug/kg	1
Chrysene	218-01-9	8270E	ND		17	ug/kg	1
Dibenzo(a,h)anthracene	53-70-3	8270E	ND		17	ug/kg	1
Fluoranthene	206-44-0	8270E	ND		17	ug/kg	1
Fluorene	86-73-7	8270E	ND		17	ug/kg	1
Indeno(1,2,3-c,d)pyrene	193-39-5	8270E	ND		17	ug/kg	1
Naphthalene	91-20-3	8270E	240		17	ug/kg	1
Phenanthrene	85-01-8	8270E	ND		17	ug/kg	1
Pyrene	129-00-0	8270E	ND		17	ug/kg	1

Surrogate	Q	Run 1 % Recovery	Acceptance Limits
2-Fluorobiphenyl		83	24-137
Nitrobenzene-d5		79	12-144
Terphenyl-d14		88	20-127

LOQ = Limit of Quantitation
ND = Not detected at or above the LOQ
H = Out of holding time
B = Detected in the method blank
N = Recovery is out of criteria
W = Reported on wet weight basis
E = Quantitation of compound exceeded the calibration range
P = The RPD between two GC columns exceeds 40%
Q = Surrogate failure
L = LCS/LCSD failure
S = MS/MSD failure

Client: ARM Environmental Services, Inc. | Laboratory ID: XC24072-011
Description: SB-11 | Matrix: Solid
Date Sampled: 03/22/2022 1756 | % Solids: 92.2 03/29/2022 0030
Date Received: 03/24/2022

Volatile Organic Compounds by GC/MS

Run	Prep Method	Analytical Method	Dilution	Analysis Date	Analyst	Prep Date	Batch	Sample Wt.(g)
1	5035	8260D	1	03/29/2022 1757	JM1		36429	5.60

Parameter	CAS Number	Analytical Method	Result	Q	LOQ	Units	Run
Benzene	71-43-2	8260D	ND		4.8	ug/kg	1
Ethylbenzene	100-41-4	8260D	ND		4.8	ug/kg	1
Methyl tertiary butyl ether (MTBE)	1634-04-4	8260D	ND		4.8	ug/kg	1
Naphthalene	91-20-3	8260D	ND		4.8	ug/kg	1
Toluene	108-88-3	8260D	ND		4.8	ug/kg	1
Xylenes (total)	1330-20-7	8260D	ND		9.7	ug/kg	1

Surrogate	Q	Run 1 % Recovery	Acceptance Limits
Bromofluorobenzene		95	47-138
1,2-Dichloroethane-d4		100	53-142
Toluene-d8		105	68-124

Semivolatile Organic Compounds by GC/MS

Run	Prep Method	Analytical Method	Dilution	Analysis Date	Analyst	Prep Date	Batch
1	3546	8270E	5	03/30/2022 0254	SCD	03/28/2022 1228	36263

Parameter	CAS Number	Analytical Method	Result	Q	LOQ	Units	Run
Acenaphthene	83-32-9	8270E	ND		71	ug/kg	1
Acenaphthylene	208-96-8	8270E	ND		71	ug/kg	1
Anthracene	120-12-7	8270E	ND		71	ug/kg	1
Benzo(a)anthracene	56-55-3	8270E	ND		71	ug/kg	1
Benzo(a)pyrene	50-32-8	8270E	ND		71	ug/kg	1
Benzo(b)fluoranthene	205-99-2	8270E	90		71	ug/kg	1
Benzo(g,h,i)perylene	191-24-2	8270E	ND		71	ug/kg	1
Benzo(k)fluoranthene	207-08-9	8270E	ND		71	ug/kg	1
Chrysene	218-01-9	8270E	ND		71	ug/kg	1
Dibenzo(a,h)anthracene	53-70-3	8270E	ND		71	ug/kg	1
Fluoranthene	206-44-0	8270E	180		71	ug/kg	1
Fluorene	86-73-7	8270E	ND		71	ug/kg	1
Indeno(1,2,3-c,d)pyrene	193-39-5	8270E	ND		71	ug/kg	1
Naphthalene	91-20-3	8270E	ND		71	ug/kg	1
Phenanthrene	85-01-8	8270E	86		71	ug/kg	1
Pyrene	129-00-0	8270E	170		71	ug/kg	1

Surrogate	Q	Run 1 % Recovery	Acceptance Limits
2-Fluorobiphenyl		76	24-137
Nitrobenzene-d5		70	12-144
Terphenyl-d14		80	20-127

LOQ = Limit of Quantitation
ND = Not detected at or above the LOQ
H = Out of holding time
B = Detected in the method blank
N = Recovery is out of criteria
W = Reported on wet weight basis
E = Quantitation of compound exceeded the calibration range
P = The RPD between two GC columns exceeds 40%
Q = Surrogate failure
L = LCS/LCSD failure
S = MS/MSD failure

Client: ARM Environmental Services, Inc. | Laboratory ID: XC24072-012
Description: SB-12 | Matrix: Solid
Date Sampled: 03/22/2022 1813 | % Solids: 91.9 03/25/2022 2319
Date Received: 03/24/2022

Volatile Organic Compounds by GC/MS

Run	Prep Method	Analytical Method	Dilution	Analysis Date	Analyst	Prep Date	Batch	Sample Wt.(g)
1	5035	8260D	1	03/29/2022 1820	JM1		36429	5.93

Parameter	CAS Number	Analytical Method	Result	Q	LOQ	Units	Run
Benzene	71-43-2	8260D	ND		4.6	ug/kg	1
Ethylbenzene	100-41-4	8260D	ND		4.6	ug/kg	1
Methyl tertiary butyl ether (MTBE)	1634-04-4	8260D	ND		4.6	ug/kg	1
Naphthalene	91-20-3	8260D	ND		4.6	ug/kg	1
Toluene	108-88-3	8260D	ND		4.6	ug/kg	1
Xylenes (total)	1330-20-7	8260D	ND		9.2	ug/kg	1

Surrogate	Q	Run 1 % Recovery	Acceptance Limits
Bromofluorobenzene		93	47-138
1,2-Dichloroethane-d4		95	53-142
Toluene-d8		109	68-124

Semivolatile Organic Compounds by GC/MS

Run	Prep Method	Analytical Method	Dilution	Analysis Date	Analyst	Prep Date	Batch
1	3546	8270E	1	03/30/2022 0319	SCD	03/28/2022 1228	36263

Parameter	CAS Number	Analytical Method	Result	Q	LOQ	Units	Run
Acenaphthene	83-32-9	8270E	ND		14	ug/kg	1
Acenaphthylene	208-96-8	8270E	ND		14	ug/kg	1
Anthracene	120-12-7	8270E	ND		14	ug/kg	1
Benzo(a)anthracene	56-55-3	8270E	ND		14	ug/kg	1
Benzo(a)pyrene	50-32-8	8270E	ND		14	ug/kg	1
Benzo(b)fluoranthene	205-99-2	8270E	ND		14	ug/kg	1
Benzo(g,h,i)perylene	191-24-2	8270E	ND		14	ug/kg	1
Benzo(k)fluoranthene	207-08-9	8270E	ND		14	ug/kg	1
Chrysene	218-01-9	8270E	ND		14	ug/kg	1
Dibenzo(a,h)anthracene	53-70-3	8270E	ND		14	ug/kg	1
Fluoranthene	206-44-0	8270E	ND		14	ug/kg	1
Fluorene	86-73-7	8270E	ND		14	ug/kg	1
Indeno(1,2,3-c,d)pyrene	193-39-5	8270E	ND		14	ug/kg	1
Naphthalene	91-20-3	8270E	ND		14	ug/kg	1
Phenanthrene	85-01-8	8270E	ND		14	ug/kg	1
Pyrene	129-00-0	8270E	ND		14	ug/kg	1

Surrogate	Q	Run 1 % Recovery	Acceptance Limits
2-Fluorobiphenyl		84	24-137
Nitrobenzene-d5		77	12-144
Terphenyl-d14		92	20-127

LOQ = Limit of Quantitation
ND = Not detected at or above the LOQ
H = Out of holding time
B = Detected in the method blank
N = Recovery is out of criteria
W = Reported on wet weight basis
E = Quantitation of compound exceeded the calibration range
P = The RPD between two GC columns exceeds 40%
Q = Surrogate failure
L = LCS/LCSD failure
S = MS/MSD failure

QC Summary

Volatile Organic Compounds by GC/MS - MB

Sample ID: XQ36292-001
Batch: 36292
Analytical Method: 8260D

Matrix: Solid
Prep Method: 5035

Parameter	Result	Q	Dil	LOQ	Units	Analysis Date
Benzene	ND		1	5.0	ug/kg	03/28/2022 1515
Ethylbenzene	ND		1	5.0	ug/kg	03/28/2022 1515
Methyl tertiary butyl ether (MTBE)	ND		1	5.0	ug/kg	03/28/2022 1515
Naphthalene	ND		1	5.0	ug/kg	03/28/2022 1515
Toluene	ND		1	5.0	ug/kg	03/28/2022 1515
Xylenes (total)	ND		1	10	ug/kg	03/28/2022 1515

Surrogate	Q	% Rec	Acceptance Limit
Bromofluorobenzene		100	47-138
1,2-Dichloroethane-d4		91	53-142
Toluene-d8		96	68-124

LOQ = Limit of Quantitation

ND = Not detected at or above the LOQ

N = Recovery is out of criteria

P = The RPD between two GC columns exceeds 40%

* = RSD is out of criteria

+ = RPD is out of criteria

Note: Calculations are performed before rounding to avoid round-off errors in calculated results

Volatile Organic Compounds by GC/MS - LCS

Sample ID: XQ36292-002
Batch: 36292
Analytical Method: 8260D

Matrix: Solid
Prep Method: 5035

Parameter	Spike Amount (ug/kg)	Result (ug/kg)	Q	Dil	% Rec	%Rec Limit	Analysis Date
Benzene	50	49		1	98	70-130	03/28/2022 1451
Ethylbenzene	50	49		1	99	70-130	03/28/2022 1451
Methyl tertiary butyl ether (MTBE)	50	52		1	103	70-130	03/28/2022 1451
Naphthalene	50	55		1	111	70-130	03/28/2022 1451
Toluene	50	50		1	101	70-130	03/28/2022 1451
Xylenes (total)	100	99		1	99	70-130	03/28/2022 1451

Surrogate	Q	% Rec	Acceptance Limit
Bromofluorobenzene		104	47-138
1,2-Dichloroethane-d4		104	53-142
Toluene-d8		104	68-124

LOQ = Limit of Quantitation

ND = Not detected at or above the LOQ

N = Recovery is out of criteria

P = The RPD between two GC columns exceeds 40%

* = RSD is out of criteria

+ = RPD is out of criteria

Note: Calculations are performed before rounding to avoid round-off errors in calculated results

Volatile Organic Compounds by GC/MS - LCSD

Sample ID: XQ36292-003
Batch: 36292
Analytical Method: 8260D

Matrix: Solid
Prep Method: 5035

Parameter	Spike Amount (ug/kg)	Result (ug/kg)	Q	Dil	% Rec	% RPD	%Rec Limit	% RPD Limit	Analysis Date
Benzene	50	45		1	89	9.1	70-130	20	03/28/2022 1627
Ethylbenzene	50	47		1	94	5.0	70-130	20	03/28/2022 1627
Methyl tertiary butyl ether (MTBE)	50	44		1	87	17	70-130	20	03/28/2022 1627
Naphthalene	50	49		1	98	13	70-130	20	03/28/2022 1627
Toluene	50	47		1	93	7.9	70-130	20	03/28/2022 1627
Xylenes (total)	100	94		1	94	5.3	70-130	20	03/28/2022 1627

Surrogate	Q	% Rec	Acceptance Limit
Bromofluorobenzene		98	47-138
1,2-Dichloroethane-d4		92	53-142
Toluene-d8		98	68-124

LOQ = Limit of Quantitation

ND = Not detected at or above the LOQ

N = Recovery is out of criteria

P = The RPD between two GC columns exceeds 40%

* = RSD is out of criteria

+ = RPD is out of criteria

Note: Calculations are performed before rounding to avoid round-off errors in calculated results

Volatile Organic Compounds by GC/MS - MB

Sample ID: XQ36429-001
Batch: 36429
Analytical Method: 8260D

Matrix: Solid
Prep Method: 5035

Parameter	Result	Q	Dil	LOQ	Units	Analysis Date
Benzene	ND		1	5.0	ug/kg	03/29/2022 1115
Ethylbenzene	ND		1	5.0	ug/kg	03/29/2022 1115
Methyl tertiary butyl ether (MTBE)	ND		1	5.0	ug/kg	03/29/2022 1115
Naphthalene	ND		1	5.0	ug/kg	03/29/2022 1115
Toluene	ND		1	5.0	ug/kg	03/29/2022 1115
Xylenes (total)	ND		1	10	ug/kg	03/29/2022 1115

Surrogate	Q	% Rec	Acceptance Limit
Bromofluorobenzene		94	47-138
1,2-Dichloroethane-d4		95	53-142
Toluene-d8		102	68-124

LOQ = Limit of Quantitation

ND = Not detected at or above the LOQ

N = Recovery is out of criteria

P = The RPD between two GC columns exceeds 40%

* = RSD is out of criteria

+ = RPD is out of criteria

Note: Calculations are performed before rounding to avoid round-off errors in calculated results

Volatile Organic Compounds by GC/MS - LCS

Sample ID: XQ36429-002
Batch: 36429
Analytical Method: 8260D

Matrix: Solid
Prep Method: 5035

Parameter	Spike Amount (ug/kg)	Result (ug/kg)	Q	Dil	% Rec	%Rec Limit	Analysis Date
Benzene	50	48		1	95	70-130	03/29/2022 1028
Ethylbenzene	50	48		1	96	70-130	03/29/2022 1028
Methyl tertiary butyl ether (MTBE)	50	45		1	89	70-130	03/29/2022 1028
Naphthalene	50	48		1	96	70-130	03/29/2022 1028
Toluene	50	52		1	105	70-130	03/29/2022 1028
Xylenes (total)	100	96		1	96	70-130	03/29/2022 1028

Surrogate	Q	% Rec	Acceptance Limit
Bromofluorobenzene		88	47-138
1,2-Dichloroethane-d4		94	53-142
Toluene-d8		107	68-124

LOQ = Limit of Quantitation

ND = Not detected at or above the LOQ

N = Recovery is out of criteria

P = The RPD between two GC columns exceeds 40%

* = RSD is out of criteria

+ = RPD is out of criteria

Note: Calculations are performed before rounding to avoid round-off errors in calculated results

Volatile Organic Compounds by GC/MS - LCSD

Sample ID: XQ36429-003
Batch: 36429
Analytical Method: 8260D

Matrix: Solid
Prep Method: 5035

Parameter	Spike Amount (ug/kg)	Result (ug/kg)	Q	Dil	% Rec	% RPD	%Rec Limit	% RPD Limit	Analysis Date
Benzene	50	47		1	93	2.4	70-130	20	03/29/2022 1052
Ethylbenzene	50	46		1	91	4.9	70-130	20	03/29/2022 1052
Methyl tertiary butyl ether (MTBE)	50	46		1	91	2.0	70-130	20	03/29/2022 1052
Naphthalene	50	41		1	83	15	70-130	20	03/29/2022 1052
Toluene	50	46		1	91	14	70-130	20	03/29/2022 1052
Xylenes (total)	100	91		1	91	5.3	70-130	20	03/29/2022 1052

Surrogate	Q	% Rec	Acceptance Limit
Bromofluorobenzene		92	47-138
1,2-Dichloroethane-d4		97	53-142
Toluene-d8		93	68-124

LOQ = Limit of Quantitation

ND = Not detected at or above the LOQ

N = Recovery is out of criteria

P = The RPD between two GC columns exceeds 40%

* = RSD is out of criteria

+ = RPD is out of criteria

Note: Calculations are performed before rounding to avoid round-off errors in calculated results

Volatile Organic Compounds by GC/MS - MB

Sample ID: XQ36757-001
Batch: 36757
Analytical Method: 8260D

Matrix: Solid
Prep Method: 5035 High

Parameter	Result	Q	Dil	LOQ	Units	Analysis Date
Benzene	ND		1	250	ug/kg	03/31/2022 1148
Ethylbenzene	ND		1	250	ug/kg	03/31/2022 1148
Methyl tertiary butyl ether (MTBE)	ND		1	250	ug/kg	03/31/2022 1148
Naphthalene	ND		1	250	ug/kg	03/31/2022 1148
Toluene	ND		1	250	ug/kg	03/31/2022 1148
Xylenes (total)	ND		1	500	ug/kg	03/31/2022 1148

Surrogate	Q	% Rec	Acceptance Limit
Bromofluorobenzene		90	47-138
1,2-Dichloroethane-d4		96	53-142
Toluene-d8		101	68-124

LOQ = Limit of Quantitation

ND = Not detected at or above the LOQ

N = Recovery is out of criteria

P = The RPD between two GC columns exceeds 40%

* = RSD is out of criteria

+ = RPD is out of criteria

Note: Calculations are performed before rounding to avoid round-off errors in calculated results

Volatile Organic Compounds by GC/MS - LCS

Sample ID: XQ36757-002
Batch: 36757
Analytical Method: 8260D

Matrix: Solid
Prep Method: 5035 High

Parameter	Spike Amount (ug/kg)	Result (ug/kg)	Q	Dil	% Rec	%Rec Limit	Analysis Date
Benzene	2500	2800		1	114	70-130	03/31/2022 1125
Ethylbenzene	2500	2700		1	109	70-130	03/31/2022 1125
Methyl tertiary butyl ether (MTBE)	2500	2600		1	104	70-130	03/31/2022 1125
Naphthalene	2500	2300		1	91	70-130	03/31/2022 1125
Toluene	2500	2600		1	104	70-130	03/31/2022 1125
Xylenes (total)	5000	5300		1	107	70-130	03/31/2022 1125

Surrogate	Q	% Rec	Acceptance Limit
Bromofluorobenzene		110	47-138
1,2-Dichloroethane-d4		113	53-142
Toluene-d8		107	68-124

LOQ = Limit of Quantitation

ND = Not detected at or above the LOQ

N = Recovery is out of criteria

P = The RPD between two GC columns exceeds 40%

* = RSD is out of criteria

+ = RPD is out of criteria

Note: Calculations are performed before rounding to avoid round-off errors in calculated results

Volatile Organic Compounds by GC/MS - MB

Sample ID: XQ37264-001
Batch: 37264
Analytical Method: 8260D

Matrix: Solid
Prep Method: 5035 High

Parameter	Result	Q	Dil	LOQ	Units	Analysis Date
Xylenes (total)	ND		1	500	ug/kg	03/31/2022 1148

Surrogate	Q	% Rec	Acceptance Limit
Bromofluorobenzene		90	47-138
1,2-Dichloroethane-d4		96	53-142
Toluene-d8		101	68-124

LOQ = Limit of Quantitation

ND = Not detected at or above the LOQ

N = Recovery is out of criteria

P = The RPD between two GC columns exceeds 40%

* = RSD is out of criteria

+ = RPD is out of criteria

Note: Calculations are performed before rounding to avoid round-off errors in calculated results

Volatile Organic Compounds by GC/MS - LCS

Sample ID: XQ37264-002
Batch: 37264
Analytical Method: 8260D

Matrix: Solid
Prep Method: 5035 High

Parameter	Spike Amount (ug/kg)	Result (ug/kg)	Q	Dil	% Rec	%Rec Limit	Analysis Date
Xylenes (total)	5000	5300		1	107	70-130	03/31/2022 1125

Surrogate	Q	% Rec	Acceptance Limit
Bromofluorobenzene		110	47-138
1,2-Dichloroethane-d4		113	53-142
Toluene-d8		107	68-124

LOQ = Limit of Quantitation

ND = Not detected at or above the LOQ

N = Recovery is out of criteria

P = The RPD between two GC columns exceeds 40%

* = RSD is out of criteria

+ = RPD is out of criteria

Note: Calculations are performed before rounding to avoid round-off errors in calculated results

Semivolatile Organic Compounds by GC/MS - MB

Sample ID: XQ36263-001
Batch: 36263
Analytical Method: 8270E

Matrix: Solid
Prep Method: 3546
Prep Date: 03/28/2022 1228

Parameter	Result	Q	Dil	LOQ	Units	Analysis Date
Acenaphthene	ND		1	13	ug/kg	03/29/2022 2045
Acenaphthylene	ND		1	13	ug/kg	03/29/2022 2045
Anthracene	ND		1	13	ug/kg	03/29/2022 2045
Benzo(a)anthracene	ND		1	13	ug/kg	03/29/2022 2045
Benzo(a)pyrene	ND		1	13	ug/kg	03/29/2022 2045
Benzo(b)fluoranthene	ND		1	13	ug/kg	03/29/2022 2045
Benzo(g,h,i)perylene	ND		1	13	ug/kg	03/29/2022 2045
Benzo(k)fluoranthene	ND		1	13	ug/kg	03/29/2022 2045
Chrysene	ND		1	13	ug/kg	03/29/2022 2045
Dibenzo(a,h)anthracene	ND		1	13	ug/kg	03/29/2022 2045
Fluoranthene	ND		1	13	ug/kg	03/29/2022 2045
Fluorene	ND		1	13	ug/kg	03/29/2022 2045
Indeno(1,2,3-c,d)pyrene	ND		1	13	ug/kg	03/29/2022 2045
Naphthalene	ND		1	13	ug/kg	03/29/2022 2045
Phenanthrene	ND		1	13	ug/kg	03/29/2022 2045
Pyrene	ND		1	13	ug/kg	03/29/2022 2045

Surrogate	Q	% Rec	Acceptance Limit
2-Fluorobiphenyl		87	24-137
Nitrobenzene-d5		79	12-144
Terphenyl-d14		102	20-127

LOQ = Limit of Quantitation

ND = Not detected at or above the LOQ

N = Recovery is out of criteria

P = The RPD between two GC columns exceeds 40%

* = RSD is out of criteria

+ = RPD is out of criteria

Note: Calculations are performed before rounding to avoid round-off errors in calculated results

Semivolatile Organic Compounds by GC/MS - LCS

Sample ID: XQ36263-002
Batch: 36263
Analytical Method: 8270E

Matrix: Solid
Prep Method: 3546
Prep Date: 03/28/2022 1228

Parameter	Spike Amount (ug/kg)	Result (ug/kg)	Q	Dil	% Rec	%Rec Limit	Analysis Date
Acenaphthene	670	560		1	83	12-111	03/29/2022 2109
Acenaphthylene	670	630		1	95	44-122	03/29/2022 2109
Anthracene	670	630		1	94	16-122	03/29/2022 2109
Benzo(a)anthracene	670	560		1	83	40-121	03/29/2022 2109
Benzo(a)pyrene	670	640		1	96	36-114	03/29/2022 2109
Benzo(b)fluoranthene	670	530		1	80	38-123	03/29/2022 2109
Benzo(g,h,i)perylene	670	570		1	85	43-120	03/29/2022 2109
Benzo(k)fluoranthene	670	610		1	92	40-126	03/29/2022 2109
Chrysene	670	570		1	85	41-124	03/29/2022 2109
Dibenzo(a,h)anthracene	670	560		1	84	38-125	03/29/2022 2109
Fluoranthene	670	580		1	88	26-133	03/29/2022 2109
Fluorene	670	600		1	90	19-108	03/29/2022 2109
Indeno(1,2,3-c,d)pyrene	670	590		1	88	42-123	03/29/2022 2109
Naphthalene	670	570		1	85	10-112	03/29/2022 2109
Phenanthrene	670	600		1	89	16-123	03/29/2022 2109
Pyrene	670	640		1	96	34-121	03/29/2022 2109

Surrogate	Q	% Rec	Acceptance Limit
2-Fluorobiphenyl		85	24-137
Nitrobenzene-d5		82	12-144
Terphenyl-d14		99	20-127

LOQ = Limit of Quantitation

ND = Not detected at or above the LOQ

N = Recovery is out of criteria

P = The RPD between two GC columns exceeds 40%

* = RSD is out of criteria

+ = RPD is out of criteria

Note: Calculations are performed before rounding to avoid round-off errors in calculated results

Chain of Custody

and

Miscellaneous Documents

ARM ENVIRONMENTAL SERVICES, INC.
ASSESSMENT & REMEDIAL SERVICES
1210 1st STREET SOUTH EXTENSION COLUMBIA, SOUTH CAROLINA 29209 PHONE: 803-783-3314 FAX: 803-783-2587

CHAIN OF CUSTODY RECORD

Project #: 08-300-22
Project Name: 2116 BRR
Sampler Name (print): RICHARD CICCOLELLA
Sampler Signature:
Preservative: 1. Unpreserved 2. NaOH 3. H_2SO_4 4. HNO_3 5. HCl 6. $Na_2S_2O_3$ 7. 5035 Kit
Laboratory Utilized: PACE / EQI

Sample ID / Description	Date	Time	G = Grab C = Composite	Matrix S, GW, DW, O, Other	BTEX, NAPH, MTBE	PAH	# of Containers	Preservative	Remarks
SB-1	3/22/22	1531	G	S	X	X			
SB-2	3/22/22	1543	G	S	X	X			
SB-3	3/22/22	1556	G	S	X	X			
SB-4	3/22/22	1613	G	S	X	X			
SB-5	3/22/22	1625	G	S	X	X			
SB-6	3/22/22	1634	G	S	X	X			
SB-7	3/22/22	1648	G	S	X	X			
SB-8	3/22/22	1701	G	S	X	X			
SB-9	3/22/22	1714	G	S	X	X			
SB-10	3/22/22	1728	G	S	X	X			

XC24072
LJO

Relinquished by / Sampler	Date	Time	Received by	Date	Time	Project Manager
	3/24/22	0945		3.24.22	094	RICHARD CICCOLELLA
Relinquished by	Date	Time	Received by	Date	Time	
						P.O. Number
Relinquished by	Date	Time	Received by	Date	Time	08-300-22
	3.24.22	1555	T=2.6°C	3/24/22	1555	

Pace Analytical Services, LLC (formerly Shealy Environmental Services, Inc.)
106 Vantage Point Drive West Columbia, SC 29172 (803) 791-9700 Fax (803) 791-9111 www.pacelabs.com

ARM ENVIRONMENTAL SERVICES, INC.
ASSESSMENT & REMEDIAL SERVICES

CHAIN OF CUSTODY RECORD

PAGE 2 OF 2

1210 1st STREET SOUTH EXTENSION COLUMBIA, SOUTH CAROLINA 29209 PHONE: 803-783-3314 FAX: 803-783-2587

Project #: 08-300-22
Project Name: 2116 BRR
Sampler Name (print): RICHARD CICCOLELLA
Preservative: 1. Unpreserved 2. NaOH 3. H_2SO_4 4. HNO_3 5. HCl 6. $Na_2S_2O_3$ 7. 5035 Kit
Laboratory Utilized: PACE / EQI
Sampler Signature: [signature]

Sample ID / Description	Date	Time	C = Grab C = Composite	Matrix S, GW, DW, DI, Other	BTEX, NAPH, MTBE	PAH	# of Containers / Preservative	Remarks
SB-11	3/22/22	1756	G	S	X	X		
SB-12	3/22/22	1813	G	S	X	X		

XC24072
LJO

Relinquished by / Sampler	Date	Time	Received by	Date	Time	Project Manager
[signature]	3/24/22	0945	[signature]	3.24.22	0945	RICHARD CICCOLELLA
Relinquished by	Date	Time	Received by	Date	Time	
Relinquished by [signature]	3.24.22	1555	Received by [signature] T=2.6°C	3/24/22	1555	P.O. Number 08-300-22

Pace Analytical

Samples Receipt Checklist (SRC) (ME0018C-15)
Issuing Authority: Pace ENV - WCOL

Revised:9/29/2020
Page 1 of 1

Sample Receipt Checklist (SRC)

Client: ARM Cooler Inspected by/date: KDRW / 03/24/2022 Lot #: XC24072

Means of receipt: ☑ Pace ☐ Client ☐ UPS ☐ FedEx ☐ Other: ____

☐ Yes	☑ No		1. Were custody seals present on the cooler?
☐ Yes	☐ No	☑ NA	2. If custody seals were present, were they intact and unbroken?

pH Strip ID: NA Chlorine Strip ID: NA Tested by: NA

Original temperature upon receipt / Derived (Corrected) temperature upon receipt: %Solid Snap-Cup ID: 22-3

2.6 / 2.6 °C NA / NA °C NA / NA °C NA / NA °C

Method: ☑ Temperature Blank ☐ Against Bottles IR Gun ID: 5 IR Gun Correction Factor: 0 °C

Method of coolant: ☑ Wet Ice ☐ Ice Packs ☐ Dry Ice ☐ None

☐ Yes	☐ No	☑ NA	3. If temperature of any cooler exceeded 6.0°C, was Project Manager Notified? PM was Notified by: phone / email / face-to-face (circle one).
☐ Yes	☐ No	☑ NA	4. Is the commercial courier's packing slip attached to this form?
☑ Yes	☐ No		5. Were proper custody procedures (relinquished/received) followed?
☑ Yes	☐ No		6. Were sample IDs listed on the COC?
☑ Yes	☐ No		7. Were sample IDs listed on all sample containers?
☑ Yes	☐ No		8. Was collection date & time listed on the COC?
☑ Yes	☐ No		9. Was collection date & time listed on all sample containers?
☑ Yes	☐ No		10. Did all container label information (ID, date, time) agree with the COC?
☑ Yes	☐ No		11. Were tests to be performed listed on the COC?
☑ Yes	☐ No		12. Did all samples arrive in the proper containers for each test and/or in good condition (unbroken, lids on, etc.)?
☑ Yes	☐ No		13. Was adequate sample volume available?
☐ Yes	☑ No		14. Were all samples received within ½ the holding time or 48 hours, whichever comes first?
☐ Yes	☑ No		15. Were any samples containers missing/excess (circle one) samples Not listed on COC?
☐ Yes	☐ No	☑ NA	16. For VOA and RSK-175 samples, were bubbles present >"pea-size" (¼"or 6mm in diameter) in any of the VOA vials?
☐ Yes	☐ No	☑ NA	17. Were all DRO/metals/nutrient samples received at a pH of < 2?
☐ Yes	☐ No	☑ NA	18. Were all cyanide samples received at a pH > 12 and sulfide samples received at a pH > 9?
☐ Yes	☐ No	☑ NA	19. Were all applicable NH_3/TKN/cyanide/phenol/625.1/608.3 (< 0.5mg/L) samples free of residual chlorine?
☐ Yes	☐ No	☑ NA	20. Were client remarks/requests (i.e. requested dilutions, MS/MSD designations, etc…) correctly transcribed from the COC into the comment section in LIMS?
☐ Yes	☑ No		21. Was the quote number listed on the container label? If yes, Quote #

Sample Preservation (Must be completed for any sample(s) incorrectly preserved or with headspace.)

Sample(s) NA were received incorrectly preserved and were adjusted accordingly in sample receiving with NA mL of circle one: H2SO4, HNO3, HCl, NaOH using SR # NA. Time of preservation NA. If more than one preservative is needed, please note in the comments below.

Sample(s) NA were received with bubbles >6 mm in diameter.

Samples(s) NA were received with TRC > 0.5 mg/L (If #19 is *no*) and were adjusted accordingly in sample receiving with sodium thiosulfate ($Na_2S_2O_3$) with Shealy ID: NA.

SR barcode labels applied by: KDRW Date: 03/24/2022

Comments:

Report of Analysis

ARM Environmental Services, Inc.
1210 1st Street S. Ext.
Columbia, SC 29209
Attention: Richard Ciccolella

Project Name: 2114 BRR

Project Number: 08-300-22

Lot Number:**XC24070**

Date Completed:04/06/2022

04/11/2022 11:29 AM
Approved and released by:
Project Manager II: **Lucas Odom**

The electronic signature above is the equivalent of a handwritten signature.
This report shall not be reproduced, except in its entirety, without the written approval of Pace Analytical Services, LLC.

Pace Analytical Services, LLC (*formerly Shealy Environmental Services, Inc.*)
106 Vantage Point Drive West Columbia, SC 29172
Tel: 803-791-9700 Fax: 803-791-9111 www.pacelabs.com

Case Narrative
ARM Environmental Services, Inc.
Lot Number: XC24070

This Report of Analysis contains the analytical result(s) for the sample(s) listed on the Sample Summary following this Case Narrative. The sample receiving date is documented in the header information associated with each sample.

All results listed in this report relate only to the samples that are contained within this report. Where sampling is conducted by the client, results relate to the accuracy of the information provided, and as the samples are received.

Sample receipt, sample analysis, and data review have been performed in accordance with the most current approved The NELAC Institute (TNI) standards, the Pace Analytical Services, LLC ("Pace") Laboratory Quality Manual, standard operating procedures (SOPs), and Pace policies. Any exceptions to the TNI standards, the Laboratory Quality Manual, SOPs or policies are qualified on the results page or discussed below.

Pace is a TNI accredited laboratory; however, the following analyses are currently not listed on our TNI scope of accreditation: Drinking Water: VOC (excluding BTEX, MTBE, Naphthalene, & 1,2-dichloroethane) EPA 524.2, E. coli and Total coliforms SM 9223 B-2004, Solid Chemical Material: TOC Walkley-Black, Biological Tissue: All, Non-Potable Water: SGT-HEM EPA 1664B, Silica EPA 200.7, Boron, Calcium, Silicon, Strontium EPA 200.8, Bicarbonate, Carbonate, and Hydroxide Alkalinity SM 2320 B-2011, SM 9221 C E-2006 & SM 9222D-2006, Strontium SW-846 6010D, VOC SM 6200 B-2011, Fecal Coliform Colilert-18.

Where applicable, all soil sample results (including LOQ and DL if requested) are corrected for dry weight unless flagged with a "W" qualifier.

If you have any questions regarding this report, please contact the Pace Project Manager listed on the cover page.

SVOCs by GC/MS
The following sample was diluted due to the nature of the sample matrix: XC24070-009. The LOQ has been elevated to reflect the dilution.

VOCs by GC/MS
Insufficient sample volume was provided to perform matrix spike/matrix spike duplicate (MS/MSD) for analytical batch 36292. An LCS/LCSD was run in lieu of an MS/MSD.

Surrogate recovery for the following sample was outside of acceptance limits: XC24070-013. This sample was analyzed at a high dilution; therefore, re-extraction and/or re-analysis was not performed.

Insufficient sample volume was provided to perform matrix spike/matrix spike duplicate (MS/MSD) for analytical batch 37057. An LCS/LCSD was run in lieu of an MS/MSD.

Xylenes (total) was reported as an estimated value in sample: XC24070-004 as the result was above the upper calibration level. The sample was re-analyzed from the medium level (methanol) vial, but was not reported due to the result being below the LOQ therefore only the low level was reported.

Sample Summary

ARM Environmental Services, Inc.

Lot Number: XC24070

Sample Number	Sample ID	Matrix	Date Sampled	Date Received
001	SB-1	Solid	03/22/2022 0951	03/24/2022
002	SB-2	Solid	03/22/2022 1017	03/24/2022
003	SB-3	Solid	03/22/2022 1041	03/24/2022
004	SB-4	Solid	03/22/2022 1102	03/24/2022
005	SB-5	Solid	03/22/2022 1121	03/24/2022
006	SB-6	Solid	03/22/2022 1137	03/24/2022
007	SB-7	Solid	03/22/2022 1158	03/24/2022
008	SB-8	Solid	03/22/2022 1228	03/24/2022
009	SB-9	Solid	03/22/2022 1242	03/24/2022
010	SB-10	Solid	03/22/2022 1257	03/24/2022
011	SB-11	Solid	03/22/2022 1426	03/24/2022
012	SB-12	Solid	03/22/2022 1441	03/24/2022
013	SB-13	Solid	03/22/2022 1500	03/24/2022

(13 samples)

Detection Summary

ARM Environmental Services, Inc.

Lot Number: XC24070

Sample	Sample ID	Matrix	Parameter	Method	Result	Q	Units	Page
004	SB-4	Solid	Ethylbenzene	8260D	20		ug/kg	9
004	SB-4	Solid	Xylenes (total)	8260D	330		ug/kg	9
005	SB-5	Solid	Phenanthrene	8270E	19		ug/kg	10
006	SB-6	Solid	Naphthalene	8260D	130		ug/kg	11
006	SB-6	Solid	Xylenes (total)	8260D	18		ug/kg	11
006	SB-6	Solid	Naphthalene	8270E	210		ug/kg	11
008	SB-8	Solid	Naphthalene	8260D	11		ug/kg	13
008	SB-8	Solid	Acenaphthene	8270E	47		ug/kg	13
008	SB-8	Solid	Fluorene	8270E	78		ug/kg	13
008	SB-8	Solid	Naphthalene	8270E	110		ug/kg	13
008	SB-8	Solid	Phenanthrene	8270E	180		ug/kg	13
008	SB-8	Solid	Pyrene	8270E	24		ug/kg	13
011	SB-11	Solid	Ethylbenzene	8260D	52000		ug/kg	16
011	SB-11	Solid	Naphthalene	8260D	23000		ug/kg	16
011	SB-11	Solid	Xylenes (total)	8260D	280000		ug/kg	16
011	SB-11	Solid	Naphthalene	8270E	5100		ug/kg	16
011	SB-11	Solid	Phenanthrene	8270E	19		ug/kg	16
013	SB-13	Solid	Ethylbenzene	8260D	62000	Q	ug/kg	19
013	SB-13	Solid	Naphthalene	8260D	23000	Q	ug/kg	19
013	SB-13	Solid	Toluene	8260D	110000	Q	ug/kg	19
013	SB-13	Solid	Xylenes (total)	8260D	380000	Q	ug/kg	19
013	SB-13	Solid	Acenaphthene	8270E	26		ug/kg	19
013	SB-13	Solid	Anthracene	8270E	32		ug/kg	19
013	SB-13	Solid	Fluorene	8270E	24		ug/kg	19
013	SB-13	Solid	Naphthalene	8270E	15000		ug/kg	19
013	SB-13	Solid	Phenanthrene	8270E	45		ug/kg	19

(26 detections)

Client: ARM Environmental Services, Inc. | Laboratory ID: XC24070-001
Description: SB-1 | Matrix: Solid
Date Sampled: 03/22/2022 0951 | % Solids: 80.4 03/24/2022 2321
Date Received: 03/24/2022

Volatile Organic Compounds by GC/MS

Run	Prep Method	Analytical Method	Dilution	Analysis Date	Analyst	Prep Date	Batch	Sample Wt.(g)
1	5035	8260D	1	03/28/2022 1851	JM1		36292	5.91

Parameter	CAS Number	Analytical Method	Result	Q	LOQ	Units	Run
Benzene	71-43-2	8260D	ND		5.3	ug/kg	1
Ethylbenzene	100-41-4	8260D	ND		5.3	ug/kg	1
Methyl tertiary butyl ether (MTBE)	1634-04-4	8260D	ND		5.3	ug/kg	1
Naphthalene	91-20-3	8260D	ND		5.3	ug/kg	1
Toluene	108-88-3	8260D	ND		5.3	ug/kg	1
Xylenes (total)	1330-20-7	8260D	ND		11	ug/kg	1

Surrogate	Q	Run 1 % Recovery	Acceptance Limits
Bromofluorobenzene		101	47-138
1,2-Dichloroethane-d4		97	53-142
Toluene-d8		96	68-124

Semivolatile Organic Compounds by GC/MS

Run	Prep Method	Analytical Method	Dilution	Analysis Date	Analyst	Prep Date	Batch
1	3546	8270E	1	03/29/2022 2341	SCD	03/28/2022 1100	36249

Parameter	CAS Number	Analytical Method	Result	Q	LOQ	Units	Run
Acenaphthene	83-32-9	8270E	ND		16	ug/kg	1
Acenaphthylene	208-96-8	8270E	ND		16	ug/kg	1
Anthracene	120-12-7	8270E	ND		16	ug/kg	1
Benzo(a)anthracene	56-55-3	8270E	ND		16	ug/kg	1
Benzo(a)pyrene	50-32-8	8270E	ND		16	ug/kg	1
Benzo(b)fluoranthene	205-99-2	8270E	ND		16	ug/kg	1
Benzo(g,h,i)perylene	191-24-2	8270E	ND		16	ug/kg	1
Benzo(k)fluoranthene	207-08-9	8270E	ND		16	ug/kg	1
Chrysene	218-01-9	8270E	ND		16	ug/kg	1
Dibenzo(a,h)anthracene	53-70-3	8270E	ND		16	ug/kg	1
Fluoranthene	206-44-0	8270E	ND		16	ug/kg	1
Fluorene	86-73-7	8270E	ND		16	ug/kg	1
Indeno(1,2,3-c,d)pyrene	193-39-5	8270E	ND		16	ug/kg	1
Naphthalene	91-20-3	8270E	ND		16	ug/kg	1
Phenanthrene	85-01-8	8270E	ND		16	ug/kg	1
Pyrene	129-00-0	8270E	ND		16	ug/kg	1

Surrogate	Q	Run 1 % Recovery	Acceptance Limits
2-Fluorobiphenyl		84	24-137
Nitrobenzene-d5		86	12-144
Terphenyl-d14		92	20-127

LOQ = Limit of Quantitation
ND = Not detected at or above the LOQ
H = Out of holding time
B = Detected in the method blank
N = Recovery is out of criteria
W = Reported on wet weight basis
E = Quantitation of compound exceeded the calibration range
P = The RPD between two GC columns exceeds 40%
Q = Surrogate failure
L = LCS/LCSD failure
S = MS/MSD failure

Client: ARM Environmental Services, Inc. | Laboratory ID: XC24070-002
Description: SB-2 | Matrix: Solid
Date Sampled: 03/22/2022 1017 | % Solids: 80.0 03/24/2022 2321
Date Received: 03/24/2022

Volatile Organic Compounds by GC/MS

Run	Prep Method	Analytical Method	Dilution	Analysis Date	Analyst	Prep Date	Batch	Sample Wt.(g)
1	5035	8260D	1	03/28/2022 1915	JM1		36292	5.59

Parameter	CAS Number	Analytical Method	Result	Q	LOQ	Units	Run
Benzene	71-43-2	8260D	ND		5.6	ug/kg	1
Ethylbenzene	100-41-4	8260D	ND		5.6	ug/kg	1
Methyl tertiary butyl ether (MTBE)	1634-04-4	8260D	ND		5.6	ug/kg	1
Naphthalene	91-20-3	8260D	ND		5.6	ug/kg	1
Toluene	108-88-3	8260D	ND		5.6	ug/kg	1
Xylenes (total)	1330-20-7	8260D	ND		11	ug/kg	1

Surrogate	Q	Run 1 % Recovery	Acceptance Limits
Bromofluorobenzene		102	47-138
1,2-Dichloroethane-d4		99	53-142
Toluene-d8		97	68-124

Semivolatile Organic Compounds by GC/MS

Run	Prep Method	Analytical Method	Dilution	Analysis Date	Analyst	Prep Date	Batch
1	3546	8270E	1	03/30/2022 0005	SCD	03/28/2022 1100	36249

Parameter	CAS Number	Analytical Method	Result	Q	LOQ	Units	Run
Acenaphthene	83-32-9	8270E	ND		16	ug/kg	1
Acenaphthylene	208-96-8	8270E	ND		16	ug/kg	1
Anthracene	120-12-7	8270E	ND		16	ug/kg	1
Benzo(a)anthracene	56-55-3	8270E	ND		16	ug/kg	1
Benzo(a)pyrene	50-32-8	8270E	ND		16	ug/kg	1
Benzo(b)fluoranthene	205-99-2	8270E	ND		16	ug/kg	1
Benzo(g,h,i)perylene	191-24-2	8270E	ND		16	ug/kg	1
Benzo(k)fluoranthene	207-08-9	8270E	ND		16	ug/kg	1
Chrysene	218-01-9	8270E	ND		16	ug/kg	1
Dibenzo(a,h)anthracene	53-70-3	8270E	ND		16	ug/kg	1
Fluoranthene	206-44-0	8270E	ND		16	ug/kg	1
Fluorene	86-73-7	8270E	ND		16	ug/kg	1
Indeno(1,2,3-c,d)pyrene	193-39-5	8270E	ND		16	ug/kg	1
Naphthalene	91-20-3	8270E	ND		16	ug/kg	1
Phenanthrene	85-01-8	8270E	ND		16	ug/kg	1
Pyrene	129-00-0	8270E	ND		16	ug/kg	1

Surrogate	Q	Run 1 % Recovery	Acceptance Limits
2-Fluorobiphenyl		84	24-137
Nitrobenzene-d5		85	12-144
Terphenyl-d14		90	20-127

LOQ = Limit of Quantitation
ND = Not detected at or above the LOQ
H = Out of holding time
B = Detected in the method blank
N = Recovery is out of criteria
W = Reported on wet weight basis
E = Quantitation of compound exceeded the calibration range
P = The RPD between two GC columns exceeds 40%
Q = Surrogate failure
L = LCS/LCSD failure
S = MS/MSD failure

Client: ARM Environmental Services, Inc. | Laboratory ID: XC24070-003
Description: SB-3 | Matrix: Solid
Date Sampled: 03/22/2022 1041 | % Solids: 74.1 03/24/2022 2321
Date Received: 03/24/2022

Volatile Organic Compounds by GC/MS

Run	Prep Method	Analytical Method	Dilution	Analysis Date	Analyst	Prep Date	Batch	Sample Wt.(g)
1	5035	8260D	1	03/28/2022 1940	JM1		36292	4.10

Parameter	CAS Number	Analytical Method	Result	Q	LOQ	Units	Run
Benzene	71-43-2	8260D	ND		8.2	ug/kg	1
Ethylbenzene	100-41-4	8260D	ND		8.2	ug/kg	1
Methyl tertiary butyl ether (MTBE)	1634-04-4	8260D	ND		8.2	ug/kg	1
Naphthalene	91-20-3	8260D	ND		8.2	ug/kg	1
Toluene	108-88-3	8260D	ND		8.2	ug/kg	1
Xylenes (total)	1330-20-7	8260D	ND		16	ug/kg	1

Surrogate	Q	Run 1 % Recovery	Acceptance Limits
Bromofluorobenzene		101	47-138
1,2-Dichloroethane-d4		99	53-142
Toluene-d8		94	68-124

Semivolatile Organic Compounds by GC/MS

Run	Prep Method	Analytical Method	Dilution	Analysis Date	Analyst	Prep Date	Batch
1	3546	8270E	1	03/30/2022 0029	SCD	03/28/2022 1100	36249

Parameter	CAS Number	Analytical Method	Result	Q	LOQ	Units	Run
Acenaphthene	83-32-9	8270E	ND		17	ug/kg	1
Acenaphthylene	208-96-8	8270E	ND		17	ug/kg	1
Anthracene	120-12-7	8270E	ND		17	ug/kg	1
Benzo(a)anthracene	56-55-3	8270E	ND		17	ug/kg	1
Benzo(a)pyrene	50-32-8	8270E	ND		17	ug/kg	1
Benzo(b)fluoranthene	205-99-2	8270E	ND		17	ug/kg	1
Benzo(g,h,i)perylene	191-24-2	8270E	ND		17	ug/kg	1
Benzo(k)fluoranthene	207-08-9	8270E	ND		17	ug/kg	1
Chrysene	218-01-9	8270E	ND		17	ug/kg	1
Dibenzo(a,h)anthracene	53-70-3	8270E	ND		17	ug/kg	1
Fluoranthene	206-44-0	8270E	ND		17	ug/kg	1
Fluorene	86-73-7	8270E	ND		17	ug/kg	1
Indeno(1,2,3-c,d)pyrene	193-39-5	8270E	ND		17	ug/kg	1
Naphthalene	91-20-3	8270E	ND		17	ug/kg	1
Phenanthrene	85-01-8	8270E	ND		17	ug/kg	1
Pyrene	129-00-0	8270E	ND		17	ug/kg	1

Surrogate	Q	Run 1 % Recovery	Acceptance Limits
2-Fluorobiphenyl		85	24-137
Nitrobenzene-d5		82	12-144
Terphenyl-d14		91	20-127

LOQ = Limit of Quantitation
ND = Not detected at or above the LOQ
H = Out of holding time
B = Detected in the method blank
N = Recovery is out of criteria
W = Reported on wet weight basis
E = Quantitation of compound exceeded the calibration range
P = The RPD between two GC columns exceeds 40%
Q = Surrogate failure
L = LCS/LCSD failure
S = MS/MSD failure

Client: ARM Environmental Services, Inc. | Laboratory ID: XC24070-004
Description: SB-4 | Matrix: Solid
Date Sampled: 03/22/2022 1102 | % Solids: 80.4 03/24/2022 2321
Date Received: 03/24/2022

Volatile Organic Compounds by GC/MS

Run	Prep Method	Analytical Method	Dilution	Analysis Date	Analyst	Prep Date	Batch	Sample Wt.(g)
1	5035	8260D	1	03/28/2022 2004	JM1		36292	4.94

Parameter	CAS Number	Analytical Method	Result	Q	LOQ	Units	Run
Benzene	71-43-2	8260D	ND		6.3	ug/kg	1
Ethylbenzene	100-41-4	8260D	20		6.3	ug/kg	1
Methyl tertiary butyl ether (MTBE)	1634-04-4	8260D	ND		6.3	ug/kg	1
Naphthalene	91-20-3	8260D	ND		6.3	ug/kg	1
Toluene	108-88-3	8260D	ND		6.3	ug/kg	1
Xylenes (total)	1330-20-7	8260D	330		13	ug/kg	1

Surrogate	Q	Run 1 % Recovery	Acceptance Limits
Bromofluorobenzene		91	47-138
1,2-Dichloroethane-d4		97	53-142
Toluene-d8		99	68-124

Semivolatile Organic Compounds by GC/MS

Run	Prep Method	Analytical Method	Dilution	Analysis Date	Analyst	Prep Date	Batch
1	3546	8270E	1	03/30/2022 0052	SCD	03/28/2022 1100	36249

Parameter	CAS Number	Analytical Method	Result	Q	LOQ	Units	Run
Acenaphthene	83-32-9	8270E	ND		16	ug/kg	1
Acenaphthylene	208-96-8	8270E	ND		16	ug/kg	1
Anthracene	120-12-7	8270E	ND		16	ug/kg	1
Benzo(a)anthracene	56-55-3	8270E	ND		16	ug/kg	1
Benzo(a)pyrene	50-32-8	8270E	ND		16	ug/kg	1
Benzo(b)fluoranthene	205-99-2	8270E	ND		16	ug/kg	1
Benzo(g,h,i)perylene	191-24-2	8270E	ND		16	ug/kg	1
Benzo(k)fluoranthene	207-08-9	8270E	ND		16	ug/kg	1
Chrysene	218-01-9	8270E	ND		16	ug/kg	1
Dibenzo(a,h)anthracene	53-70-3	8270E	ND		16	ug/kg	1
Fluoranthene	206-44-0	8270E	ND		16	ug/kg	1
Fluorene	86-73-7	8270E	ND		16	ug/kg	1
Indeno(1,2,3-c,d)pyrene	193-39-5	8270E	ND		16	ug/kg	1
Naphthalene	91-20-3	8270E	ND		16	ug/kg	1
Phenanthrene	85-01-8	8270E	ND		16	ug/kg	1
Pyrene	129-00-0	8270E	ND		16	ug/kg	1

Surrogate	Q	Run 1 % Recovery	Acceptance Limits
2-Fluorobiphenyl		84	24-137
Nitrobenzene-d5		84	12-144
Terphenyl-d14		88	20-127

LOQ = Limit of Quantitation
ND = Not detected at or above the LOQ
H = Out of holding time
B = Detected in the method blank
N = Recovery is out of criteria
W = Reported on wet weight basis
E = Quantitation of compound exceeded the calibration range
P = The RPD between two GC columns exceeds 40%
Q = Surrogate failure
L = LCS/LCSD failure
S = MS/MSD failure

Client: ARM Environmental Services, Inc. | Laboratory ID: XC24070-005
Description: SB-5 | Matrix: Solid
Date Sampled: 03/22/2022 1121 | % Solids: 76.3 03/24/2022 2321
Date Received: 03/24/2022

Volatile Organic Compounds by GC/MS

Run	Prep Method	Analytical Method	Dilution	Analysis Date	Analyst	Prep Date	Batch	Sample Wt.(g)
1	5035	8260D	1	03/28/2022 2028	JM1		36292	3.69

Parameter	CAS Number	Analytical Method	Result	Q	LOQ	Units	Run
Benzene	71-43-2	8260D	ND		8.9	ug/kg	1
Ethylbenzene	100-41-4	8260D	ND		8.9	ug/kg	1
Methyl tertiary butyl ether (MTBE)	1634-04-4	8260D	ND		8.9	ug/kg	1
Naphthalene	91-20-3	8260D	ND		8.9	ug/kg	1
Toluene	108-88-3	8260D	ND		8.9	ug/kg	1
Xylenes (total)	1330-20-7	8260D	ND		18	ug/kg	1

Surrogate	Q	Run 1 % Recovery	Acceptance Limits
Bromofluorobenzene		102	47-138
1,2-Dichloroethane-d4		94	53-142
Toluene-d8		105	68-124

Semivolatile Organic Compounds by GC/MS

Run	Prep Method	Analytical Method	Dilution	Analysis Date	Analyst	Prep Date	Batch
1	3546	8270E	1	03/30/2022 0116	SCD	03/28/2022 1100	36249

Parameter	CAS Number	Analytical Method	Result	Q	LOQ	Units	Run
Acenaphthene	83-32-9	8270E	ND		17	ug/kg	1
Acenaphthylene	208-96-8	8270E	ND		17	ug/kg	1
Anthracene	120-12-7	8270E	ND		17	ug/kg	1
Benzo(a)anthracene	56-55-3	8270E	ND		17	ug/kg	1
Benzo(a)pyrene	50-32-8	8270E	ND		17	ug/kg	1
Benzo(b)fluoranthene	205-99-2	8270E	ND		17	ug/kg	1
Benzo(g,h,i)perylene	191-24-2	8270E	ND		17	ug/kg	1
Benzo(k)fluoranthene	207-08-9	8270E	ND		17	ug/kg	1
Chrysene	218-01-9	8270E	ND		17	ug/kg	1
Dibenzo(a,h)anthracene	53-70-3	8270E	ND		17	ug/kg	1
Fluoranthene	206-44-0	8270E	ND		17	ug/kg	1
Fluorene	86-73-7	8270E	ND		17	ug/kg	1
Indeno(1,2,3-c,d)pyrene	193-39-5	8270E	ND		17	ug/kg	1
Naphthalene	91-20-3	8270E	ND		17	ug/kg	1
Phenanthrene	85-01-8	8270E	19		17	ug/kg	1
Pyrene	129-00-0	8270E	ND		17	ug/kg	1

Surrogate	Q	Run 1 % Recovery	Acceptance Limits
2-Fluorobiphenyl		89	24-137
Nitrobenzene-d5		87	12-144
Terphenyl-d14		91	20-127

LOQ = Limit of Quantitation
ND = Not detected at or above the LOQ
H = Out of holding time
B = Detected in the method blank
N = Recovery is out of criteria
W = Reported on wet weight basis
E = Quantitation of compound exceeded the calibration range
P = The RPD between two GC columns exceeds 40%
Q = Surrogate failure
L = LCS/LCSD failure
S = MS/MSD failure

Client: ARM Environmental Services, Inc. | Laboratory ID: XC24070-006
Description: SB-6 | Matrix: Solid
Date Sampled: 03/22/2022 1137 | % Solids: 78.8 03/24/2022 2321
Date Received: 03/24/2022

Volatile Organic Compounds by GC/MS

Run	Prep Method	Analytical Method	Dilution	Analysis Date	Analyst	Prep Date	Batch	Sample Wt.(g)
1	5035	8260D	1	03/28/2022 2051	JM1		36292	5.12

Parameter	CAS Number	Analytical Method	Result	Q	LOQ	Units	Run
Benzene	71-43-2	8260D	ND		6.2	ug/kg	1
Ethylbenzene	100-41-4	8260D	ND		6.2	ug/kg	1
Methyl tertiary butyl ether (MTBE)	1634-04-4	8260D	ND		6.2	ug/kg	1
Naphthalene	91-20-3	8260D	130		6.2	ug/kg	1
Toluene	108-88-3	8260D	ND		6.2	ug/kg	1
Xylenes (total)	1330-20-7	8260D	18		12	ug/kg	1

Surrogate	Q	Run 1 % Recovery	Acceptance Limits
Bromofluorobenzene		102	47-138
1,2-Dichloroethane-d4		97	53-142
Toluene-d8		101	68-124

Semivolatile Organic Compounds by GC/MS

Run	Prep Method	Analytical Method	Dilution	Analysis Date	Analyst	Prep Date	Batch
1	3546	8270E	1	03/30/2022 0139	SCD	03/28/2022 1100	36249

Parameter	CAS Number	Analytical Method	Result	Q	LOQ	Units	Run
Acenaphthene	83-32-9	8270E	ND		17	ug/kg	1
Acenaphthylene	208-96-8	8270E	ND		17	ug/kg	1
Anthracene	120-12-7	8270E	ND		17	ug/kg	1
Benzo(a)anthracene	56-55-3	8270E	ND		17	ug/kg	1
Benzo(a)pyrene	50-32-8	8270E	ND		17	ug/kg	1
Benzo(b)fluoranthene	205-99-2	8270E	ND		17	ug/kg	1
Benzo(g,h,i)perylene	191-24-2	8270E	ND		17	ug/kg	1
Benzo(k)fluoranthene	207-08-9	8270E	ND		17	ug/kg	1
Chrysene	218-01-9	8270E	ND		17	ug/kg	1
Dibenzo(a,h)anthracene	53-70-3	8270E	ND		17	ug/kg	1
Fluoranthene	206-44-0	8270E	ND		17	ug/kg	1
Fluorene	86-73-7	8270E	ND		17	ug/kg	1
Indeno(1,2,3-c,d)pyrene	193-39-5	8270E	ND		17	ug/kg	1
Naphthalene	91-20-3	8270E	210		17	ug/kg	1
Phenanthrene	85-01-8	8270E	ND		17	ug/kg	1
Pyrene	129-00-0	8270E	ND		17	ug/kg	1

Surrogate	Q	Run 1 % Recovery	Acceptance Limits
2-Fluorobiphenyl		89	24-137
Nitrobenzene-d5		88	12-144
Terphenyl-d14		93	20-127

LOQ = Limit of Quantitation
ND = Not detected at or above the LOQ
H = Out of holding time
B = Detected in the method blank
N = Recovery is out of criteria
W = Reported on wet weight basis
E = Quantitation of compound exceeded the calibration range
P = The RPD between two GC columns exceeds 40%
Q = Surrogate failure
L = LCS/LCSD failure
S = MS/MSD failure

Client: ARM Environmental Services, Inc. | Laboratory ID: XC24070-007
Description: SB-7 | Matrix: Solid
Date Sampled: 03/22/2022 1158 | % Solids: 78.4 03/24/2022 2321
Date Received: 03/24/2022

Volatile Organic Compounds by GC/MS

Run	Prep Method	Analytical Method	Dilution	Analysis Date	Analyst	Prep Date	Batch	Sample Wt.(g)
1	5035	8260D	1	03/28/2022 2115	JM1		36292	5.36

Parameter	CAS Number	Analytical Method	Result	Q	LOQ	Units	Run
Benzene	71-43-2	8260D	ND		5.9	ug/kg	1
Ethylbenzene	100-41-4	8260D	ND		5.9	ug/kg	1
Methyl tertiary butyl ether (MTBE)	1634-04-4	8260D	ND		5.9	ug/kg	1
Naphthalene	91-20-3	8260D	ND		5.9	ug/kg	1
Toluene	108-88-3	8260D	ND		5.9	ug/kg	1
Xylenes (total)	1330-20-7	8260D	ND		12	ug/kg	1

Surrogate	Q	Run 1 % Recovery	Acceptance Limits
Bromofluorobenzene		102	47-138
1,2-Dichloroethane-d4		95	53-142
Toluene-d8		94	68-124

Semivolatile Organic Compounds by GC/MS

Run	Prep Method	Analytical Method	Dilution	Analysis Date	Analyst	Prep Date	Batch
1	3546	8270E	1	03/30/2022 0203	SCD	03/28/2022 1100	36249

Parameter	CAS Number	Analytical Method	Result	Q	LOQ	Units	Run
Acenaphthene	83-32-9	8270E	ND		17	ug/kg	1
Acenaphthylene	208-96-8	8270E	ND		17	ug/kg	1
Anthracene	120-12-7	8270E	ND		17	ug/kg	1
Benzo(a)anthracene	56-55-3	8270E	ND		17	ug/kg	1
Benzo(a)pyrene	50-32-8	8270E	ND		17	ug/kg	1
Benzo(b)fluoranthene	205-99-2	8270E	ND		17	ug/kg	1
Benzo(g,h,i)perylene	191-24-2	8270E	ND		17	ug/kg	1
Benzo(k)fluoranthene	207-08-9	8270E	ND		17	ug/kg	1
Chrysene	218-01-9	8270E	ND		17	ug/kg	1
Dibenzo(a,h)anthracene	53-70-3	8270E	ND		17	ug/kg	1
Fluoranthene	206-44-0	8270E	ND		17	ug/kg	1
Fluorene	86-73-7	8270E	ND		17	ug/kg	1
Indeno(1,2,3-c,d)pyrene	193-39-5	8270E	ND		17	ug/kg	1
Naphthalene	91-20-3	8270E	ND		17	ug/kg	1
Phenanthrene	85-01-8	8270E	ND		17	ug/kg	1
Pyrene	129-00-0	8270E	ND		17	ug/kg	1

Surrogate	Q	Run 1 % Recovery	Acceptance Limits
2-Fluorobiphenyl		86	24-137
Nitrobenzene-d5		84	12-144
Terphenyl-d14		89	20-127

LOQ = Limit of Quantitation
ND = Not detected at or above the LOQ
H = Out of holding time
B = Detected in the method blank
N = Recovery is out of criteria
W = Reported on wet weight basis
E = Quantitation of compound exceeded the calibration range
P = The RPD between two GC columns exceeds 40%
Q = Surrogate failure
L = LCS/LCSD failure
S = MS/MSD failure

Pace Analytical Services, LLC *(formerly Shealy Environmental Services, Inc.)*
106 Vantage Point Drive West Columbia, SC 29172 (803) 791-9700 Fax (803) 791-9111 www.pacelabs.com

Client: ARM Environmental Services, Inc. | Laboratory ID: XC24070-008
Description: SB-8 | Matrix: Solid
Date Sampled: 03/22/2022 1228 | % Solids: 79.0 03/24/2022 2321
Date Received: 03/24/2022

Volatile Organic Compounds by GC/MS

Run	Prep Method	Analytical Method	Dilution	Analysis Date	Analyst	Prep Date	Batch	Sample Wt.(g)
1	5035	8260D	1	03/28/2022 2139	JM1		36292	4.37

Parameter	CAS Number	Analytical Method	Result	Q	LOQ	Units	Run
Benzene	71-43-2	8260D	ND		7.2	ug/kg	1
Ethylbenzene	100-41-4	8260D	ND		7.2	ug/kg	1
Methyl tertiary butyl ether (MTBE)	1634-04-4	8260D	ND		7.2	ug/kg	1
Naphthalene	91-20-3	8260D	11		7.2	ug/kg	1
Toluene	108-88-3	8260D	ND		7.2	ug/kg	1
Xylenes (total)	1330-20-7	8260D	ND		14	ug/kg	1

Surrogate	Q	Run 1 % Recovery	Acceptance Limits
Bromofluorobenzene		101	47-138
1,2-Dichloroethane-d4		95	53-142
Toluene-d8		99	68-124

Semivolatile Organic Compounds by GC/MS

Run	Prep Method	Analytical Method	Dilution	Analysis Date	Analyst	Prep Date	Batch
1	3546	8270E	1	03/30/2022 0227	SCD	03/28/2022 1100	36249

Parameter	CAS Number	Analytical Method	Result	Q	LOQ	Units	Run
Acenaphthene	83-32-9	8270E	47		17	ug/kg	1
Acenaphthylene	208-96-8	8270E	ND		17	ug/kg	1
Anthracene	120-12-7	8270E	ND		17	ug/kg	1
Benzo(a)anthracene	56-55-3	8270E	ND		17	ug/kg	1
Benzo(a)pyrene	50-32-8	8270E	ND		17	ug/kg	1
Benzo(b)fluoranthene	205-99-2	8270E	ND		17	ug/kg	1
Benzo(g,h,i)perylene	191-24-2	8270E	ND		17	ug/kg	1
Benzo(k)fluoranthene	207-08-9	8270E	ND		17	ug/kg	1
Chrysene	218-01-9	8270E	ND		17	ug/kg	1
Dibenzo(a,h)anthracene	53-70-3	8270E	ND		17	ug/kg	1
Fluoranthene	206-44-0	8270E	ND		17	ug/kg	1
Fluorene	86-73-7	8270E	78		17	ug/kg	1
Indeno(1,2,3-c,d)pyrene	193-39-5	8270E	ND		17	ug/kg	1
Naphthalene	91-20-3	8270E	110		17	ug/kg	1
Phenanthrene	85-01-8	8270E	180		17	ug/kg	1
Pyrene	129-00-0	8270E	24		17	ug/kg	1

Surrogate	Q	Run 1 % Recovery	Acceptance Limits
2-Fluorobiphenyl		85	24-137
Nitrobenzene-d5		82	12-144
Terphenyl-d14		92	20-127

LOQ = Limit of Quantitation
ND = Not detected at or above the LOQ
H = Out of holding time
B = Detected in the method blank
N = Recovery is out of criteria
W = Reported on wet weight basis
E = Quantitation of compound exceeded the calibration range
P = The RPD between two GC columns exceeds 40%
Q = Surrogate failure
L = LCS/LCSD failure
S = MS/MSD failure

Client: ARM Environmental Services, Inc. | Laboratory ID: XC24070-009
Description: SB-9 | Matrix: Solid
Date Sampled: 03/22/2022 1242 | % Solids: 75.2 03/24/2022 2321
Date Received: 03/24/2022

Volatile Organic Compounds by GC/MS

Run	Prep Method	Analytical Method	Dilution	Analysis Date	Analyst	Prep Date	Batch	Sample Wt.(g)
2	5035	8260D	1	04/04/2022 2045	JM1		37057	5.55

Parameter	CAS Number	Analytical Method	Result	Q	LOQ	Units	Run
Benzene	71-43-2	8260D	ND		6.0	ug/kg	2
Ethylbenzene	100-41-4	8260D	ND		6.0	ug/kg	2
Methyl tertiary butyl ether (MTBE)	1634-04-4	8260D	ND		6.0	ug/kg	2
Naphthalene	91-20-3	8260D	ND		6.0	ug/kg	2
Toluene	108-88-3	8260D	ND		6.0	ug/kg	2
Xylenes (total)	1330-20-7	8260D	ND		12	ug/kg	2

Surrogate	Q	Run 2 % Recovery	Acceptance Limits
Bromofluorobenzene		91	47-138
1,2-Dichloroethane-d4		91	53-142
Toluene-d8		91	68-124

Semivolatile Organic Compounds by GC/MS

Run	Prep Method	Analytical Method	Dilution	Analysis Date	Analyst	Prep Date	Batch
1	3546	8270E	5	03/30/2022 0250	SCD	03/28/2022 1100	36249

Parameter	CAS Number	Analytical Method	Result	Q	LOQ	Units	Run
Acenaphthene	83-32-9	8270E	ND		86	ug/kg	1
Acenaphthylene	208-96-8	8270E	ND		86	ug/kg	1
Anthracene	120-12-7	8270E	ND		86	ug/kg	1
Benzo(a)anthracene	56-55-3	8270E	ND		86	ug/kg	1
Benzo(a)pyrene	50-32-8	8270E	ND		86	ug/kg	1
Benzo(b)fluoranthene	205-99-2	8270E	ND		86	ug/kg	1
Benzo(g,h,i)perylene	191-24-2	8270E	ND		86	ug/kg	1
Benzo(k)fluoranthene	207-08-9	8270E	ND		86	ug/kg	1
Chrysene	218-01-9	8270E	ND		86	ug/kg	1
Dibenzo(a,h)anthracene	53-70-3	8270E	ND		86	ug/kg	1
Fluoranthene	206-44-0	8270E	ND		86	ug/kg	1
Fluorene	86-73-7	8270E	ND		86	ug/kg	1
Indeno(1,2,3-c,d)pyrene	193-39-5	8270E	ND		86	ug/kg	1
Naphthalene	91-20-3	8270E	ND		86	ug/kg	1
Phenanthrene	85-01-8	8270E	ND		86	ug/kg	1
Pyrene	129-00-0	8270E	ND		86	ug/kg	1

Surrogate	Q	Run 1 % Recovery	Acceptance Limits
2-Fluorobiphenyl		87	24-137
Nitrobenzene-d5		79	12-144
Terphenyl-d14		87	20-127

LOQ = Limit of Quantitation
ND = Not detected at or above the LOQ
H = Out of holding time
B = Detected in the method blank
N = Recovery is out of criteria
W = Reported on wet weight basis
E = Quantitation of compound exceeded the calibration range
P = The RPD between two GC columns exceeds 40%
Q = Surrogate failure
L = LCS/LCSD failure
S = MS/MSD failure

Client: ARM Environmental Services, Inc. | Laboratory ID: XC24070-010
Description: SB-10 | Matrix: Solid
Date Sampled: 03/22/2022 1257 | % Solids: 79.9 03/24/2022 2321
Date Received: 03/24/2022

Volatile Organic Compounds by GC/MS

Run	Prep Method	Analytical Method	Dilution	Analysis Date	Analyst	Prep Date	Batch	Sample Wt.(g)
1	5035	8260D	1	03/28/2022 2228	JM1		36292	6.10

Parameter	CAS Number	Analytical Method	Result	Q	LOQ	Units	Run
Benzene	71-43-2	8260D	ND		5.1	ug/kg	1
Ethylbenzene	100-41-4	8260D	ND		5.1	ug/kg	1
Methyl tertiary butyl ether (MTBE)	1634-04-4	8260D	ND		5.1	ug/kg	1
Naphthalene	91-20-3	8260D	ND		5.1	ug/kg	1
Toluene	108-88-3	8260D	ND		5.1	ug/kg	1
Xylenes (total)	1330-20-7	8260D	ND		10	ug/kg	1

Surrogate	Q	Run 1 % Recovery	Acceptance Limits
Bromofluorobenzene		104	47-138
1,2-Dichloroethane-d4		103	53-142
Toluene-d8		98	68-124

Semivolatile Organic Compounds by GC/MS

Run	Prep Method	Analytical Method	Dilution	Analysis Date	Analyst	Prep Date	Batch
1	3546	8270E	1	03/30/2022 0314	SCD	03/28/2022 1100	36249

Parameter	CAS Number	Analytical Method	Result	Q	LOQ	Units	Run
Acenaphthene	83-32-9	8270E	ND		17	ug/kg	1
Acenaphthylene	208-96-8	8270E	ND		17	ug/kg	1
Anthracene	120-12-7	8270E	ND		17	ug/kg	1
Benzo(a)anthracene	56-55-3	8270E	ND		17	ug/kg	1
Benzo(a)pyrene	50-32-8	8270E	ND		17	ug/kg	1
Benzo(b)fluoranthene	205-99-2	8270E	ND		17	ug/kg	1
Benzo(g,h,i)perylene	191-24-2	8270E	ND		17	ug/kg	1
Benzo(k)fluoranthene	207-08-9	8270E	ND		17	ug/kg	1
Chrysene	218-01-9	8270E	ND		17	ug/kg	1
Dibenzo(a,h)anthracene	53-70-3	8270E	ND		17	ug/kg	1
Fluoranthene	206-44-0	8270E	ND		17	ug/kg	1
Fluorene	86-73-7	8270E	ND		17	ug/kg	1
Indeno(1,2,3-c,d)pyrene	193-39-5	8270E	ND		17	ug/kg	1
Naphthalene	91-20-3	8270E	ND		17	ug/kg	1
Phenanthrene	85-01-8	8270E	ND		17	ug/kg	1
Pyrene	129-00-0	8270E	ND		17	ug/kg	1

Surrogate	Q	Run 1 % Recovery	Acceptance Limits
2-Fluorobiphenyl		89	24-137
Nitrobenzene-d5		88	12-144
Terphenyl-d14		93	20-127

LOQ = Limit of Quantitation
ND = Not detected at or above the LOQ
H = Out of holding time
B = Detected in the method blank
N = Recovery is out of criteria
W = Reported on wet weight basis
E = Quantitation of compound exceeded the calibration range
P = The RPD between two GC columns exceeds 40%
Q = Surrogate failure
L = LCS/LCSD failure
S = MS/MSD failure

Client: ARM Environmental Services, Inc.
Description: SB-11
Date Sampled: 03/22/2022 1426
Date Received: 03/24/2022

Laboratory ID: XC24070-011
Matrix: Solid
% Solids: 75.7 03/24/2022 2321

Volatile Organic Compounds by GC/MS

Run	Prep Method	Analytical Method	Dilution	Analysis Date	Analyst	Prep Date	Batch	Sample Wt.(g)
1	5035 High	8260D	20	04/04/2022 1933	JM1		36758	5.99

Parameter	CAS Number	Analytical Method	Result	Q	LOQ	Units	Run
Benzene	71-43-2	8260D	ND		7100	ug/kg	1
Ethylbenzene	100-41-4	8260D	52000		7100	ug/kg	1
Methyl tertiary butyl ether (MTBE)	1634-04-4	8260D	ND		7100	ug/kg	1
Naphthalene	91-20-3	8260D	23000		7100	ug/kg	1
Toluene	108-88-3	8260D	ND		7100	ug/kg	1
Xylenes (total)	1330-20-7	8260D	280000		14000	ug/kg	1

Surrogate	Q	Run 1 % Recovery	Acceptance Limits
Bromofluorobenzene		130	47-138
1,2-Dichloroethane-d4		102	53-142
Toluene-d8		111	68-124

Semivolatile Organic Compounds by GC/MS

Run	Prep Method	Analytical Method	Dilution	Analysis Date	Analyst	Prep Date	Batch
1	3546	8270E	1	03/29/2022 2134	SCD	03/28/2022 1228	36263
2	3546	8270E	5	03/30/2022 0546	JCG	03/28/2022 1228	36263

Parameter	CAS Number	Analytical Method	Result	Q	LOQ	Units	Run
Acenaphthene	83-32-9	8270E	ND		18	ug/kg	1
Acenaphthylene	208-96-8	8270E	ND		18	ug/kg	1
Anthracene	120-12-7	8270E	ND		18	ug/kg	1
Benzo(a)anthracene	56-55-3	8270E	ND		18	ug/kg	1
Benzo(a)pyrene	50-32-8	8270E	ND		18	ug/kg	1
Benzo(b)fluoranthene	205-99-2	8270E	ND		18	ug/kg	1
Benzo(g,h,i)perylene	191-24-2	8270E	ND		18	ug/kg	1
Benzo(k)fluoranthene	207-08-9	8270E	ND		18	ug/kg	1
Chrysene	218-01-9	8270E	ND		18	ug/kg	1
Dibenzo(a,h)anthracene	53-70-3	8270E	ND		18	ug/kg	1
Fluoranthene	206-44-0	8270E	ND		18	ug/kg	1
Fluorene	86-73-7	8270E	ND		18	ug/kg	1
Indeno(1,2,3-c,d)pyrene	193-39-5	8270E	ND		18	ug/kg	1
Naphthalene	91-20-3	8270E	5100		88	ug/kg	2
Phenanthrene	85-01-8	8270E	19		18	ug/kg	1
Pyrene	129-00-0	8270E	ND		18	ug/kg	1

LOQ = Limit of Quantitation
ND = Not detected at or above the LOQ
H = Out of holding time
B = Detected in the method blank
N = Recovery is out of criteria
W = Reported on wet weight basis
E = Quantitation of compound exceeded the calibration range
P = The RPD between two GC columns exceeds 40%
Q = Surrogate failure
L = LCS/LCSD failure
S = MS/MSD failure

Client: ARM Environmental Services, Inc.
Laboratory ID: XC24070-011
Description: SB-11
Matrix: Solid
Date Sampled: 03/22/2022 1426
% Solids: 75.7 03/24/2022 2321
Date Received: 03/24/2022

Surrogate	Q	Run 1 % Recovery	Acceptance Limits	Q	Run 2 % Recovery	Acceptance Limits
2-Fluorobiphenyl		77	24-137		69	24-137
Nitrobenzene-d5		83	12-144		70	12-144
Terphenyl-d14		92	20-127		74	20-127

LOQ = Limit of Quantitation
ND = Not detected at or above the LOQ
H = Out of holding time
B = Detected in the method blank
N = Recovery is out of criteria
W = Reported on wet weight basis
E = Quantitation of compound exceeded the calibration range
P = The RPD between two GC columns exceeds 40%
Q = Surrogate failure
L = LCS/LCSD failure
S = MS/MSD failure

Pace Analytical Services, LLC *(formerly Shealy Environmental Services, Inc.)*
106 Vantage Point Drive West Columbia, SC 29172 (803) 791-9700 Fax (803) 791-9111 www.pacelabs.com

Client: ARM Environmental Services, Inc. | Laboratory ID: XC24070-012
Description: SB-12 | Matrix: Solid
Date Sampled: 03/22/2022 1441 | % Solids: 78.1 03/24/2022 2321
Date Received: 03/24/2022

Volatile Organic Compounds by GC/MS

Run	Prep Method	Analytical Method	Dilution	Analysis Date	Analyst	Prep Date	Batch	Sample Wt.(g)
1	5035	8260D	1	03/28/2022 2252	JM1		36292	5.07

Parameter	CAS Number	Analytical Method	Result	Q	LOQ	Units	Run
Benzene	71-43-2	8260D	ND		6.3	ug/kg	1
Ethylbenzene	100-41-4	8260D	ND		6.3	ug/kg	1
Methyl tertiary butyl ether (MTBE)	1634-04-4	8260D	ND		6.3	ug/kg	1
Naphthalene	91-20-3	8260D	ND		6.3	ug/kg	1
Toluene	108-88-3	8260D	ND		6.3	ug/kg	1
Xylenes (total)	1330-20-7	8260D	ND		13	ug/kg	1

Surrogate	Q	Run 1 % Recovery	Acceptance Limits
Bromofluorobenzene		103	47-138
1,2-Dichloroethane-d4		96	53-142
Toluene-d8		97	68-124

Semivolatile Organic Compounds by GC/MS

Run	Prep Method	Analytical Method	Dilution	Analysis Date	Analyst	Prep Date	Batch
1	3546	8270E	1	03/29/2022 2158	SCD	03/28/2022 1228	36263

Parameter	CAS Number	Analytical Method	Result	Q	LOQ	Units	Run
Acenaphthene	83-32-9	8270E	ND		17	ug/kg	1
Acenaphthylene	208-96-8	8270E	ND		17	ug/kg	1
Anthracene	120-12-7	8270E	ND		17	ug/kg	1
Benzo(a)anthracene	56-55-3	8270E	ND		17	ug/kg	1
Benzo(a)pyrene	50-32-8	8270E	ND		17	ug/kg	1
Benzo(b)fluoranthene	205-99-2	8270E	ND		17	ug/kg	1
Benzo(g,h,i)perylene	191-24-2	8270E	ND		17	ug/kg	1
Benzo(k)fluoranthene	207-08-9	8270E	ND		17	ug/kg	1
Chrysene	218-01-9	8270E	ND		17	ug/kg	1
Dibenzo(a,h)anthracene	53-70-3	8270E	ND		17	ug/kg	1
Fluoranthene	206-44-0	8270E	ND		17	ug/kg	1
Fluorene	86-73-7	8270E	ND		17	ug/kg	1
Indeno(1,2,3-c,d)pyrene	193-39-5	8270E	ND		17	ug/kg	1
Naphthalene	91-20-3	8270E	ND		17	ug/kg	1
Phenanthrene	85-01-8	8270E	ND		17	ug/kg	1
Pyrene	129-00-0	8270E	ND		17	ug/kg	1

Surrogate	Q	Run 1 % Recovery	Acceptance Limits
2-Fluorobiphenyl		80	24-137
Nitrobenzene-d5		74	12-144
Terphenyl-d14		91	20-127

LOQ = Limit of Quantitation
ND = Not detected at or above the LOQ
H = Out of holding time
B = Detected in the method blank
N = Recovery is out of criteria
W = Reported on wet weight basis
E = Quantitation of compound exceeded the calibration range
P = The RPD between two GC columns exceeds 40%
Q = Surrogate failure
L = LCS/LCSD failure
S = MS/MSD failure

Client: ARM Environmental Services, Inc. | Laboratory ID: XC24070-013
Description: SB-13 | Matrix: Solid
Date Sampled: 03/22/2022 1500 | % Solids: 78.4 03/24/2022 2321
Date Received: 03/24/2022

Volatile Organic Compounds by GC/MS

Run	Prep Method	Analytical Method	Dilution	Analysis Date	Analyst	Prep Date	Batch	Sample Wt.(g)
1	5035 High	8260D	40	03/31/2022 1913	JM1		36757	5.48

Parameter	CAS Number	Analytical Method	Result	Q	LOQ	Units	Run
Benzene	71-43-2	8260D	ND	Q	14000	ug/kg	1
Ethylbenzene	100-41-4	8260D	62000	Q	14000	ug/kg	1
Methyl tertiary butyl ether (MTBE)	1634-04-4	8260D	ND	Q	14000	ug/kg	1
Naphthalene	91-20-3	8260D	23000	Q	14000	ug/kg	1
Toluene	108-88-3	8260D	110000	Q	14000	ug/kg	1
Xylenes (total)	1330-20-7	8260D	380000	Q	29000	ug/kg	1

Surrogate	Q	Run 1 % Recovery	Acceptance Limits
Bromofluorobenzene	N	182	47-138
1,2-Dichloroethane-d4		140	53-142
Toluene-d8	N	176	68-124

Semivolatile Organic Compounds by GC/MS

Run	Prep Method	Analytical Method	Dilution	Analysis Date	Analyst	Prep Date	Batch
1	3546	8270E	1	03/29/2022 2223	SCD	03/28/2022 1228	36263
2	3546	8270E	10	03/30/2022 0610	JCG	03/28/2022 1228	36263

Parameter	CAS Number	Analytical Method	Result	Q	LOQ	Units	Run
Acenaphthene	83-32-9	8270E	26		17	ug/kg	1
Acenaphthylene	208-96-8	8270E	ND		17	ug/kg	1
Anthracene	120-12-7	8270E	32		17	ug/kg	1
Benzo(a)anthracene	56-55-3	8270E	ND		17	ug/kg	1
Benzo(a)pyrene	50-32-8	8270E	ND		17	ug/kg	1
Benzo(b)fluoranthene	205-99-2	8270E	ND		17	ug/kg	1
Benzo(g,h,i)perylene	191-24-2	8270E	ND		17	ug/kg	1
Benzo(k)fluoranthene	207-08-9	8270E	ND		17	ug/kg	1
Chrysene	218-01-9	8270E	ND		17	ug/kg	1
Dibenzo(a,h)anthracene	53-70-3	8270E	ND		17	ug/kg	1
Fluoranthene	206-44-0	8270E	ND		17	ug/kg	1
Fluorene	86-73-7	8270E	24		17	ug/kg	1
Indeno(1,2,3-c,d)pyrene	193-39-5	8270E	ND		17	ug/kg	1
Naphthalene	91-20-3	8270E	15000		170	ug/kg	2
Phenanthrene	85-01-8	8270E	45		17	ug/kg	1
Pyrene	129-00-0	8270E	ND		17	ug/kg	1

LOQ = Limit of Quantitation
ND = Not detected at or above the LOQ
H = Out of holding time
B = Detected in the method blank
N = Recovery is out of criteria
W = Reported on wet weight basis
E = Quantitation of compound exceeded the calibration range
P = The RPD between two GC columns exceeds 40%
Q = Surrogate failure
L = LCS/LCSD failure
S = MS/MSD failure

Client: ARM Environmental Services, Inc.
Description: SB-13
Date Sampled: 03/22/2022 1500
Date Received: 03/24/2022

Laboratory ID: XC24070-013
Matrix: Solid
% Solids: 78.4 03/24/2022 2321

Surrogate	Q	Run 1 % Recovery	Acceptance Limits	Q	Run 2 % Recovery	Acceptance Limits
2-Fluorobiphenyl		86	24-137		78	24-137
Nitrobenzene-d5		93	12-144		81	12-144
Terphenyl-d14		89	20-127		78	20-127

LOQ = Limit of Quantitation
ND = Not detected at or above the LOQ
H = Out of holding time
B = Detected in the method blank
N = Recovery is out of criteria
W = Reported on wet weight basis
E = Quantitation of compound exceeded the calibration range
P = The RPD between two GC columns exceeds 40%
Q = Surrogate failure
L = LCS/LCSD failure
S = MS/MSD failure

QC Summary

Volatile Organic Compounds by GC/MS - MB

Sample ID: XQ36292-001
Batch: 36292
Analytical Method: 8260D

Matrix: Solid
Prep Method: 5035

Parameter	Result	Q	Dil	LOQ	Units	Analysis Date
Benzene	ND		1	5.0	ug/kg	03/28/2022 1515
Ethylbenzene	ND		1	5.0	ug/kg	03/28/2022 1515
Methyl tertiary butyl ether (MTBE)	ND		1	5.0	ug/kg	03/28/2022 1515
Naphthalene	ND		1	5.0	ug/kg	03/28/2022 1515
Toluene	ND		1	5.0	ug/kg	03/28/2022 1515
Xylenes (total)	ND		1	10	ug/kg	03/28/2022 1515

Surrogate	Q	% Rec	Acceptance Limit
Bromofluorobenzene		100	47-138
1,2-Dichloroethane-d4		91	53-142
Toluene-d8		96	68-124

LOQ = Limit of Quantitation

ND = Not detected at or above the LOQ

N = Recovery is out of criteria

P = The RPD between two GC columns exceeds 40%

* = RSD is out of criteria

+ = RPD is out of criteria

Note: Calculations are performed before rounding to avoid round-off errors in calculated results

Volatile Organic Compounds by GC/MS - LCS

Sample ID: XQ36292-002
Batch: 36292
Analytical Method: 8260D

Matrix: Solid
Prep Method: 5035

Parameter	Spike Amount (ug/kg)	Result (ug/kg)	Q	Dil	% Rec	%Rec Limit	Analysis Date
Benzene	50	49		1	98	70-130	03/28/2022 1451
Ethylbenzene	50	49		1	99	70-130	03/28/2022 1451
Methyl tertiary butyl ether (MTBE)	50	52		1	103	70-130	03/28/2022 1451
Naphthalene	50	55		1	111	70-130	03/28/2022 1451
Toluene	50	50		1	101	70-130	03/28/2022 1451
Xylenes (total)	100	99		1	99	70-130	03/28/2022 1451

Surrogate	Q	% Rec	Acceptance Limit
Bromofluorobenzene		104	47-138
1,2-Dichloroethane-d4		104	53-142
Toluene-d8		104	68-124

LOQ = Limit of Quantitation

ND = Not detected at or above the LOQ

N = Recovery is out of criteria

P = The RPD between two GC columns exceeds 40%

* = RSD is out of criteria

+ = RPD is out of criteria

Note: Calculations are performed before rounding to avoid round-off errors in calculated results

Volatile Organic Compounds by GC/MS - LCSD

Sample ID: XQ36292-003
Batch: 36292
Analytical Method: 8260D

Matrix: Solid
Prep Method: 5035

Parameter	Spike Amount (ug/kg)	Result (ug/kg)	Q	Dil	% Rec	% RPD	%Rec Limit	% RPD Limit	Analysis Date
Benzene	50	45		1	89	9.1	70-130	20	03/28/2022 1627
Ethylbenzene	50	47		1	94	5.0	70-130	20	03/28/2022 1627
Methyl tertiary butyl ether (MTBE)	50	44		1	87	17	70-130	20	03/28/2022 1627
Naphthalene	50	49		1	98	13	70-130	20	03/28/2022 1627
Toluene	50	47		1	93	7.9	70-130	20	03/28/2022 1627
Xylenes (total)	100	94		1	94	5.3	70-130	20	03/28/2022 1627

Surrogate	Q	% Rec	Acceptance Limit
Bromofluorobenzene		98	47-138
1,2-Dichloroethane-d4		92	53-142
Toluene-d8		98	68-124

LOQ = Limit of Quantitation

ND = Not detected at or above the LOQ

N = Recovery is out of criteria

P = The RPD between two GC columns exceeds 40%

* = RSD is out of criteria

+ = RPD is out of criteria

Note: Calculations are performed before rounding to avoid round-off errors in calculated results

Volatile Organic Compounds by GC/MS - MB

Sample ID: XQ36757-001
Batch: 36757
Analytical Method: 8260D

Matrix: Solid
Prep Method: 5035 High

Parameter	Result	Q	Dil	LOQ	Units	Analysis Date
Benzene	ND		1	250	ug/kg	03/31/2022 1148
Ethylbenzene	ND		1	250	ug/kg	03/31/2022 1148
Methyl tertiary butyl ether (MTBE)	ND		1	250	ug/kg	03/31/2022 1148
Naphthalene	ND		1	250	ug/kg	03/31/2022 1148
Toluene	ND		1	250	ug/kg	03/31/2022 1148
Xylenes (total)	ND		1	500	ug/kg	03/31/2022 1148

Surrogate	Q	% Rec	Acceptance Limit
Bromofluorobenzene		90	47-138
1,2-Dichloroethane-d4		96	53-142
Toluene-d8		101	68-124

LOQ = Limit of Quantitation

ND = Not detected at or above the LOQ

N = Recovery is out of criteria

P = The RPD between two GC columns exceeds 40%

* = RSD is out of criteria

+ = RPD is out of criteria

Note: Calculations are performed before rounding to avoid round-off errors in calculated results

Volatile Organic Compounds by GC/MS - LCS

Sample ID: XQ36757-002
Batch: 36757
Analytical Method: 8260D

Matrix: Solid
Prep Method: 5035 High

Parameter	Spike Amount (ug/kg)	Result (ug/kg)	Q	Dil	% Rec	%Rec Limit	Analysis Date
Benzene	2500	2800		1	114	70-130	03/31/2022 1125
Ethylbenzene	2500	2700		1	109	70-130	03/31/2022 1125
Methyl tertiary butyl ether (MTBE)	2500	2600		1	104	70-130	03/31/2022 1125
Naphthalene	2500	2300		1	91	70-130	03/31/2022 1125
Toluene	2500	2600		1	104	70-130	03/31/2022 1125
Xylenes (total)	5000	5300		1	107	70-130	03/31/2022 1125

Surrogate	Q	% Rec	Acceptance Limit
Bromofluorobenzene		110	47-138
1,2-Dichloroethane-d4		113	53-142
Toluene-d8		107	68-124

LOQ = Limit of Quantitation

ND = Not detected at or above the LOQ

N = Recovery is out of criteria

P = The RPD between two GC columns exceeds 40%

* = RSD is out of criteria

+ = RPD is out of criteria

Note: Calculations are performed before rounding to avoid round-off errors in calculated results

Volatile Organic Compounds by GC/MS - MB

Sample ID: XQ36758-001
Batch: 36758
Analytical Method: 8260D

Matrix: Solid
Prep Method: 5035 High

Parameter	Result	Q	Dil	LOQ	Units	Analysis Date
Benzene	ND		1	250	ug/kg	03/31/2022 1148
Ethylbenzene	ND		1	250	ug/kg	03/31/2022 1148
Methyl tertiary butyl ether (MTBE)	ND		1	250	ug/kg	03/31/2022 1148
Naphthalene	ND		1	250	ug/kg	03/31/2022 1148
Toluene	ND		1	250	ug/kg	03/31/2022 1148
Xylenes (total)	ND		1	500	ug/kg	03/31/2022 1148

Surrogate	Q	% Rec	Acceptance Limit
Bromofluorobenzene		90	47-138
1,2-Dichloroethane-d4		96	53-142
Toluene-d8		101	68-124

LOQ = Limit of Quantitation

ND = Not detected at or above the LOQ

N = Recovery is out of criteria

P = The RPD between two GC columns exceeds 40%

* = RSD is out of criteria

+ = RPD is out of criteria

Note: Calculations are performed before rounding to avoid round-off errors in calculated results

Volatile Organic Compounds by GC/MS - LCS

Sample ID: XQ36758-002
Batch: 36758
Analytical Method: 8260D

Matrix: Solid
Prep Method: 5035 High

Parameter	Spike Amount (ug/kg)	Result (ug/kg)	Q	Dil	% Rec	%Rec Limit	Analysis Date
Benzene	2500	2800		1	114	70-130	03/31/2022 1125
Ethylbenzene	2500	2700		1	109	70-130	03/31/2022 1125
Methyl tertiary butyl ether (MTBE)	2500	2600		1	104	70-130	03/31/2022 1125
Naphthalene	2500	2300		1	91	70-130	03/31/2022 1125
Toluene	2500	2600		1	104	70-130	03/31/2022 1125
Xylenes (total)	5000	5300		1	107	70-130	03/31/2022 1125

Surrogate	Q	% Rec	Acceptance Limit
Bromofluorobenzene		110	47-138
1,2-Dichloroethane-d4		113	53-142
Toluene-d8		107	68-124

LOQ = Limit of Quantitation

ND = Not detected at or above the LOQ

N = Recovery is out of criteria

P = The RPD between two GC columns exceeds 40%

* = RSD is out of criteria

+ = RPD is out of criteria

Note: Calculations are performed before rounding to avoid round-off errors in calculated results

Volatile Organic Compounds by GC/MS - MB

Sample ID: XQ37057-001
Batch: 37057
Analytical Method: 8260D

Matrix: Solid
Prep Method: 5035

Parameter	Result	Q	Dil	LOQ	Units	Analysis Date
Benzene	ND		1	5.0	ug/kg	04/04/2022 1544
Ethylbenzene	ND		1	5.0	ug/kg	04/04/2022 1544
Methyl tertiary butyl ether (MTBE)	ND		1	5.0	ug/kg	04/04/2022 1544
Naphthalene	ND		1	5.0	ug/kg	04/04/2022 1544
Toluene	ND		1	5.0	ug/kg	04/04/2022 1544
Xylenes (total)	ND		1	10	ug/kg	04/04/2022 1544

Surrogate	Q	% Rec	Acceptance Limit
Bromofluorobenzene		103	47-138
1,2-Dichloroethane-d4		96	53-142
Toluene-d8		93	68-124

LOQ = Limit of Quantitation

ND = Not detected at or above the LOQ

N = Recovery is out of criteria

P = The RPD between two GC columns exceeds 40%

* = RSD is out of criteria

+ = RPD is out of criteria

Note: Calculations are performed before rounding to avoid round-off errors in calculated results

Volatile Organic Compounds by GC/MS - LCS

Sample ID: XQ37057-002
Batch: 37057
Analytical Method: 8260D

Matrix: Solid
Prep Method: 5035

Parameter	Spike Amount (ug/kg)	Result (ug/kg)	Q	Dil	% Rec	%Rec Limit	Analysis Date
Benzene	50	47		1	94	70-130	04/04/2022 1456
Ethylbenzene	50	48		1	96	70-130	04/04/2022 1456
Methyl tertiary butyl ether (MTBE)	50	48		1	95	70-130	04/04/2022 1456
Naphthalene	50	49		1	98	70-130	04/04/2022 1456
Toluene	50	48		1	97	70-130	04/04/2022 1456
Xylenes (total)	100	96		1	96	70-130	04/04/2022 1456

Surrogate	Q	% Rec	Acceptance Limit
Bromofluorobenzene		92	47-138
1,2-Dichloroethane-d4		90	53-142
Toluene-d8		93	68-124

LOQ = Limit of Quantitation

ND = Not detected at or above the LOQ

N = Recovery is out of criteria

P = The RPD between two GC columns exceeds 40%

* = RSD is out of criteria

+ = RPD is out of criteria

Note: Calculations are performed before rounding to avoid round-off errors in calculated results

Volatile Organic Compounds by GC/MS - LCSD

Sample ID: XQ37057-003
Batch: 37057
Analytical Method: 8260D

Matrix: Solid
Prep Method: 5035

Parameter	Spike Amount (ug/kg)	Result (ug/kg)	Q	Dil	% Rec	% RPD	%Rec Limit	% RPD Limit	Analysis Date
Benzene	50	47		1	95	0.16	70-130	20	04/04/2022 1620
Ethylbenzene	50	48		1	96	0.067	70-130	20	04/04/2022 1620
Methyl tertiary butyl ether (MTBE)	50	50		1	99	3.7	70-130	20	04/04/2022 1620
Naphthalene	50	51		1	102	3.0	70-130	20	04/04/2022 1620
Toluene	50	48		1	95	1.4	70-130	20	04/04/2022 1620
Xylenes (total)	100	98		1	98	1.7	70-130	20	04/04/2022 1620

Surrogate	Q	% Rec	Acceptance Limit
Bromofluorobenzene		94	47-138
1,2-Dichloroethane-d4		92	53-142
Toluene-d8		94	68-124

LOQ = Limit of Quantitation

ND = Not detected at or above the LOQ

N = Recovery is out of criteria

P = The RPD between two GC columns exceeds 40%

* = RSD is out of criteria

+ = RPD is out of criteria

Note: Calculations are performed before rounding to avoid round-off errors in calculated results

Semivolatile Organic Compounds by GC/MS - MB

Sample ID: XQ36249-001
Batch: 36249
Analytical Method: 8270E

Matrix: Solid
Prep Method: 3546
Prep Date: 03/28/2022 1100

Parameter	Result	Q	Dil	LOQ	Units	Analysis Date
Acenaphthene	ND		1	13	ug/kg	03/29/2022 1834
Acenaphthylene	ND		1	13	ug/kg	03/29/2022 1834
Anthracene	ND		1	13	ug/kg	03/29/2022 1834
Benzo(a)anthracene	ND		1	13	ug/kg	03/29/2022 1834
Benzo(a)pyrene	ND		1	13	ug/kg	03/29/2022 1834
Benzo(b)fluoranthene	ND		1	13	ug/kg	03/29/2022 1834
Benzo(g,h,i)perylene	ND		1	13	ug/kg	03/29/2022 1834
Benzo(k)fluoranthene	ND		1	13	ug/kg	03/29/2022 1834
Chrysene	ND		1	13	ug/kg	03/29/2022 1834
Dibenzo(a,h)anthracene	ND		1	13	ug/kg	03/29/2022 1834
Fluoranthene	ND		1	13	ug/kg	03/29/2022 1834
Fluorene	ND		1	13	ug/kg	03/29/2022 1834
Indeno(1,2,3-c,d)pyrene	ND		1	13	ug/kg	03/29/2022 1834
Naphthalene	ND		1	13	ug/kg	03/29/2022 1834
Phenanthrene	ND		1	13	ug/kg	03/29/2022 1834
Pyrene	ND		1	13	ug/kg	03/29/2022 1834

Surrogate	Q	% Rec	Acceptance Limit
2-Fluorobiphenyl		99	24-137
Nitrobenzene-d5		101	12-144
Terphenyl-d14		110	20-127

LOQ = Limit of Quantitation

ND = Not detected at or above the LOQ

N = Recovery is out of criteria

P = The RPD between two GC columns exceeds 40%

* = RSD is out of criteria

+ = RPD is out of criteria

Note: Calculations are performed before rounding to avoid round-off errors in calculated results

Semivolatile Organic Compounds by GC/MS - LCS

Sample ID: XQ36249-002
Batch: 36249
Analytical Method: 8270E

Matrix: Solid
Prep Method: 3546
Prep Date: 03/28/2022 1100

Parameter	Spike Amount (ug/kg)	Result (ug/kg)	Q	Dil	% Rec	%Rec Limit	Analysis Date
Acenaphthene	670	610		1	91	12-111	03/29/2022 1857
Acenaphthylene	670	660		1	99	44-122	03/29/2022 1857
Anthracene	670	680		1	101	16-122	03/29/2022 1857
Benzo(a)anthracene	670	610		1	91	40-121	03/29/2022 1857
Benzo(a)pyrene	670	700		1	105	36-114	03/29/2022 1857
Benzo(b)fluoranthene	670	630		1	94	38-123	03/29/2022 1857
Benzo(g,h,i)perylene	670	680		1	102	43-120	03/29/2022 1857
Benzo(k)fluoranthene	670	660		1	99	40-126	03/29/2022 1857
Chrysene	670	650		1	97	41-124	03/29/2022 1857
Dibenzo(a,h)anthracene	670	680		1	102	38-125	03/29/2022 1857
Fluoranthene	670	650		1	97	26-133	03/29/2022 1857
Fluorene	670	610		1	92	19-108	03/29/2022 1857
Indeno(1,2,3-c,d)pyrene	670	680		1	102	42-123	03/29/2022 1857
Naphthalene	670	600		1	90	10-112	03/29/2022 1857
Phenanthrene	670	630		1	94	16-123	03/29/2022 1857
Pyrene	670	640		1	96	34-121	03/29/2022 1857

Surrogate	Q	% Rec	Acceptance Limit
2-Fluorobiphenyl		92	24-137
Nitrobenzene-d5		93	12-144
Terphenyl-d14		102	20-127

LOQ = Limit of Quantitation

ND = Not detected at or above the LOQ

N = Recovery is out of criteria

P = The RPD between two GC columns exceeds 40%

* = RSD is out of criteria

+ = RPD is out of criteria

Note: Calculations are performed before rounding to avoid round-off errors in calculated results

Semivolatile Organic Compounds by GC/MS - MB

Sample ID: XQ36263-001
Batch: 36263
Analytical Method: 8270E

Matrix: Solid
Prep Method: 3546
Prep Date: 03/28/2022 1228

Parameter	Result	Q	Dil	LOQ	Units	Analysis Date
Acenaphthene	ND		1	13	ug/kg	03/29/2022 2045
Acenaphthylene	ND		1	13	ug/kg	03/29/2022 2045
Anthracene	ND		1	13	ug/kg	03/29/2022 2045
Benzo(a)anthracene	ND		1	13	ug/kg	03/29/2022 2045
Benzo(a)pyrene	ND		1	13	ug/kg	03/29/2022 2045
Benzo(b)fluoranthene	ND		1	13	ug/kg	03/29/2022 2045
Benzo(g,h,i)perylene	ND		1	13	ug/kg	03/29/2022 2045
Benzo(k)fluoranthene	ND		1	13	ug/kg	03/29/2022 2045
Chrysene	ND		1	13	ug/kg	03/29/2022 2045
Dibenzo(a,h)anthracene	ND		1	13	ug/kg	03/29/2022 2045
Fluoranthene	ND		1	13	ug/kg	03/29/2022 2045
Fluorene	ND		1	13	ug/kg	03/29/2022 2045
Indeno(1,2,3-c,d)pyrene	ND		1	13	ug/kg	03/29/2022 2045
Naphthalene	ND		1	13	ug/kg	03/29/2022 2045
Phenanthrene	ND		1	13	ug/kg	03/29/2022 2045
Pyrene	ND		1	13	ug/kg	03/29/2022 2045

Surrogate	Q	% Rec	Acceptance Limit
2-Fluorobiphenyl		87	24-137
Nitrobenzene-d5		79	12-144
Terphenyl-d14		102	20-127

LOQ = Limit of Quantitation

ND = Not detected at or above the LOQ

N = Recovery is out of criteria

P = The RPD between two GC columns exceeds 40%

* = RSD is out of criteria

+ = RPD is out of criteria

Note: Calculations are performed before rounding to avoid round-off errors in calculated results

Semivolatile Organic Compounds by GC/MS - LCS

Sample ID: XQ36263-002
Batch: 36263
Analytical Method: 8270E

Matrix: Solid
Prep Method: 3546
Prep Date: 03/28/2022 1228

Parameter	Spike Amount (ug/kg)	Result (ug/kg)	Q	Dil	% Rec	%Rec Limit	Analysis Date
Acenaphthene	670	560		1	83	12-111	03/29/2022 2109
Acenaphthylene	670	630		1	95	44-122	03/29/2022 2109
Anthracene	670	630		1	94	16-122	03/29/2022 2109
Benzo(a)anthracene	670	560		1	83	40-121	03/29/2022 2109
Benzo(a)pyrene	670	640		1	96	36-114	03/29/2022 2109
Benzo(b)fluoranthene	670	530		1	80	38-123	03/29/2022 2109
Benzo(g,h,i)perylene	670	570		1	85	43-120	03/29/2022 2109
Benzo(k)fluoranthene	670	610		1	92	40-126	03/29/2022 2109
Chrysene	670	570		1	85	41-124	03/29/2022 2109
Dibenzo(a,h)anthracene	670	560		1	84	38-125	03/29/2022 2109
Fluoranthene	670	580		1	88	26-133	03/29/2022 2109
Fluorene	670	600		1	90	19-108	03/29/2022 2109
Indeno(1,2,3-c,d)pyrene	670	590		1	88	42-123	03/29/2022 2109
Naphthalene	670	570		1	85	10-112	03/29/2022 2109
Phenanthrene	670	600		1	89	16-123	03/29/2022 2109
Pyrene	670	640		1	96	34-121	03/29/2022 2109

Surrogate	Q	% Rec	Acceptance Limit
2-Fluorobiphenyl		85	24-137
Nitrobenzene-d5		82	12-144
Terphenyl-d14		99	20-127

LOQ = Limit of Quantitation

ND = Not detected at or above the LOQ

N = Recovery is out of criteria

P = The RPD between two GC columns exceeds 40%

* = RSD is out of criteria

+ = RPD is out of criteria

Note: Calculations are performed before rounding to avoid round-off errors in calculated results

Semivolatile Organic Compounds by GC/MS - MS

Sample ID: XC24070-011MS
Batch: 36263
Analytical Method: 8270E

Matrix: Solid
Prep Method: 3546
Prep Date: 03/28/2022 1228

Parameter	Sample Amount (ug/kg)	Spike Amount (ug/kg)	Result (ug/kg)	Q	Dil	% Rec	%Rec Limit	Analysis Date
Acenaphthene	ND	850	660		1	77	12-111	03/30/2022 0748
Acenaphthylene	ND	850	750		1	89	44-122	03/30/2022 0748
Anthracene	ND	850	710		1	84	16-122	03/30/2022 0748
Benzo(a)anthracene	ND	850	650		1	76	40-121	03/30/2022 0748
Benzo(a)pyrene	ND	850	700		1	83	36-114	03/30/2022 0748
Benzo(b)fluoranthene	ND	850	590		1	70	38-123	03/30/2022 0748
Benzo(g,h,i)perylene	ND	850	530		1	63	43-120	03/30/2022 0748
Benzo(k)fluoranthene	ND	850	660		1	77	40-126	03/30/2022 0748
Chrysene	ND	850	630		1	75	41-124	03/30/2022 0748
Dibenzo(a,h)anthracene	ND	850	560		1	66	38-125	03/30/2022 0748
Fluoranthene	ND	850	650		1	76	26-133	03/30/2022 0748
Fluorene	ND	850	660		1	78	19-108	03/30/2022 0748
Indeno(1,2,3-c,d)pyrene	ND	850	560		1	66	42-123	03/30/2022 0748
Naphthalene	3600	850	3700	E	1	10	10-112	03/30/2022 0748
Phenanthrene	19	850	680		1	77	16-123	03/30/2022 0748
Pyrene	ND	850	740		1	88	34-121	03/30/2022 0748

Surrogate	Q	% Rec	Acceptance Limit
2-Fluorobiphenyl		79	24-137
Nitrobenzene-d5		81	12-144
Terphenyl-d14		83	20-127

LOQ = Limit of Quantitation

ND = Not detected at or above the LOQ

N = Recovery is out of criteria

P = The RPD between two GC columns exceeds 40%

* = RSD is out of criteria

+ = RPD is out of criteria

Note: Calculations are performed before rounding to avoid round-off errors in calculated results

Semivolatile Organic Compounds by GC/MS - MSD

Sample ID: XC24070-011MD
Batch: 36263
Analytical Method: 8270E

Matrix: Solid
Prep Method: 3546
Prep Date: 03/28/2022 1228

Parameter	Sample Amount (ug/kg)	Spike Amount (ug/kg)	Result (ug/kg)	Q	Dil	% Rec	% RPD	%Rec Limit	% RPD Limit	Analysis Date
Acenaphthene	ND	850	670		1	79	2.6	12-111	30	03/30/2022 0813
Acenaphthylene	ND	850	760		1	89	0.76	44-122	30	03/30/2022 0813
Anthracene	ND	850	740		1	86	3.3	16-122	30	03/30/2022 0813
Benzo(a)anthracene	ND	850	660		1	77	1.9	40-121	30	03/30/2022 0813
Benzo(a)pyrene	ND	850	710		1	84	1.6	36-114	30	03/30/2022 0813
Benzo(b)fluoranthene	ND	850	590		1	69	0.24	38-123	30	03/30/2022 0813
Benzo(g,h,i)perylene	ND	850	510		1	59	5.5	43-120	30	03/30/2022 0813
Benzo(k)fluoranthene	ND	850	670		1	78	1.9	40-126	30	03/30/2022 0813
Chrysene	ND	850	660		1	78	4.8	41-124	30	03/30/2022 0813
Dibenzo(a,h)anthracene	ND	850	550		1	65	0.77	38-125	30	03/30/2022 0813
Fluoranthene	ND	850	650		1	77	1.2	26-133	30	03/30/2022 0813
Fluorene	ND	850	680		1	80	2.9	19-108	30	03/30/2022 0813
Indeno(1,2,3-c,d)pyrene	ND	850	560		1	66	0.31	42-123	30	03/30/2022 0813
Naphthalene	3600	850	3800	E	1	23	3.0	10-112	30	03/30/2022 0813
Phenanthrene	19	850	680		1	78	1.3	16-123	30	03/30/2022 0813
Pyrene	ND	850	760		1	89	2.4	34-121	30	03/30/2022 0813

Surrogate	Q	% Rec	Acceptance Limit
2-Fluorobiphenyl		77	24-137
Nitrobenzene-d5		81	12-144
Terphenyl-d14		85	20-127

LOQ = Limit of Quantitation

ND = Not detected at or above the LOQ

N = Recovery is out of criteria

P = The RPD between two GC columns exceeds 40%

* = RSD is out of criteria

+ = RPD is out of criteria

Note: Calculations are performed before rounding to avoid round-off errors in calculated results

Chain of Custody

and

Miscellaneous Documents

ARM ENVIRONMENTAL SERVICES, INC.
ASSESSMENT & REMEDIAL SERVICES

CHAIN OF CUSTODY RECORD

PAGE 1 OF 2

1210 1st STREET SOUTH EXTENSION COLUMBIA, SOUTH CAROLINA 29209 PHONE: 803-783-3314 FAX: 803-783-2587

Project #	Preservative 2. NaOH 5. HCl 3. H_2SO_4 6. $Na_2S_2O_3$ 1. Unpreserved 4. HNO_3 7. 5035 Kit				BTEX, NAPH, MTBE									# of Containers
08-300-22														Preservative
Project Name: 2114 BRR	Laboratory Utilized: PACE / EQI													
Sampler Name (print): RICHARD CICCOLELLA	Sampler Signature:													
Sample ID / Description	Date	Time	G = Grab C = Composite	Matrix S, GW, DW, DI, Other		PAH								Remarks
SB-1	3/22/22 ~~0957~~	0957	G	S	X	X								
SB-2	3/22/22	1017	G	S	X	X								
SB-3	3/22/22	1041	G	S	X	X								XC24070 LJC
SB-4	3/22/22	1102	G	S	X	X								
SB-5	3/22/22	1121	G	S	X	X								
SB-6	3/22/22	1137	G	S	X	X								
SB-7	3/22/22	1158	G	S	X	X								
SB-8	3/22/22	1228	G	S	X	X								
SB-9	3/22/22	1242	G	S	X	X								
SB-10	3/22/22	1257	G	S	X	X								

Relinquished by / Sampler	Date	Time	Received by	Date	Time	Project Manager
	3/24/22	0945		3-24-22	0945	RICHARD CICCOLELLA
Relinquished by	Date	Time	Received by	Date	Time	P.O. Number
Relinquished by	Date 3-24-22	Time 1555	Received by T=2.4°C	Date 3/24/22	Time 1555	08-300-22

Pace Analytical Services, LLC (formerly Shealy Environmental Services, Inc.)
106 Vantage Point Drive West Columbia, SC 29172 (803) 791-9700 Fax (803) 791-9111 www.pacelabs.com

PACE ANALYTICAL SERVICES, LLC

ARM ENVIRONMENTAL SERVICES, INC.
ASSESSMENT & REMEDIAL SERVICES

CHAIN OF CUSTODY RECORD

PAGE 2 OF 2

1219 1st STREET SOUTH EXTENSION COLUMBIA, SOUTH CAROLINA 29209 PHONE: 803-783-3314 FAX: 803-783-2587

Project #	Preservative 2. NaOH 5. HCl 3. H_2SO_4 6. $Na_2S_2O_3$ 1. Unpreserved 4. HNO_3 7. 5035 Kit													# of Containers
08-300-22														Preservative
Project Name: 2114 BRR	Laboratory Utilized: PACE / EQI													
Sampler Name (print): RICHARD CICCOLELLA	Sampler Signature:													
Sample ID / Description	Date	Time	G = Grab C = Composite	Matrix S, GW, DW, DI, Other	BTEX, NAPH, MTBE	PAH								Remarks
SB-11	3/22/22	1426	G	S	X	X								
SB-12	3/22/22	1441	G	S	X	X								
SB-13	3/22/22	1500	G	S	X	X								

XC24070
Lab

Relinquished by / Sampler	Date	Time	Received by	Date	Time	Project Manager
	3/24/22	0945		3.24.22	094	RICHARD CICCOLELLA
Relinquished by	Date	Time	Received by	Date	Time	P.O. Number
			T-2-100			
Relinquished by	Date	Time	Received by	Date	Time	08-300-22
	3.24.22	1555		3/24/22	1555	

Pace Analytical Services, LLC (formerly Shealy Environmental Services, Inc.)
106 Vantage Point Drive West Columbia, SC 29172 (803) 791-9700 Fax (803) 791-9111 www.pacelabs.com

PACE ANALYTICAL SERVICES, LLC

Pace Analytical

Samples Receipt Checklist (SRC) (ME0018C-15)
Issuing Authority: Pace ENV - WCOL

Revised:9/29/2020
Page 1 of 1

Sample Receipt Checklist (SRC)

Client: ARM Cooler Inspected by/date: KDRW / 03/24/2022 Lot #: XC24070

Means of receipt: ☑ Pace ☐ Client ☐ UPS ☐ FedEx ☐ Other: ____

☐ Yes	☑ No		1. Were custody seals present on the cooler?
☐ Yes	☐ No	☑ NA	2. If custody seals were present, were they intact and unbroken?

pH Strip ID: NA Chlorine Strip ID: NA Tested by: NA

Original temperature upon receipt / Derived (Corrected) temperature upon receipt %Solid Snap-Cup ID: 22-3

2.4 / 2.4 °C NA / NA °C NA / NA °C NA / NA °C

Method: ☑ Temperature Blank ☐ Against Bottles IR Gun ID: 5 IR Gun Correction Factor: 0 °C

Method of coolant: ☑ Wet Ice ☐ Ice Packs ☐ Dry Ice ☐ None

☐ Yes	☐ No	☑ NA	3. If temperature of any cooler exceeded 6.0°C, was Project Manager Notified? PM was Notified by: phone / email / face-to-face (circle one).
☐ Yes	☐ No	☑ NA	4. Is the commercial courier's packing slip attached to this form?
☑ Yes	☐ No		5. Were proper custody procedures (relinquished/received) followed?
☑ Yes	☐ No		6. Were sample IDs listed on the COC?
☑ Yes	☐ No		7. Were sample IDs listed on all sample containers?
☑ Yes	☐ No		8. Was collection date & time listed on the COC?
☑ Yes	☐ No		9. Was collection date & time listed on all sample containers?
☑ Yes	☐ No		10. Did all container label information (ID, date, time) agree with the COC?
☑ Yes	☐ No		11. Were tests to be performed listed on the COC?
☑ Yes	☐ No		12. Did all samples arrive in the proper containers for each test and/or in good condition (unbroken, lids on, etc.)?
☑ Yes	☐ No		13. Was adequate sample volume available?
☐ Yes	☑ No		14. Were all samples received within ½ the holding time or 48 hours, whichever comes first?
☐ Yes	☑ No		15. Were any samples containers missing/excess (circle one) samples Not listed on COC?
☐ Yes	☐ No	☑ NA	16. For VOA and RSK-175 samples, were bubbles present >"pea-size" (¼"or 6mm in diameter) in any of the VOA vials?
☐ Yes	☐ No	☑ NA	17. Were all DRO/metals/nutrient samples received at a pH of < 2?
☐ Yes	☐ No	☑ NA	18. Were all cyanide samples received at a pH > 12 and sulfide samples received at a pH > 9?
☐ Yes	☐ No	☑ NA	19. Were all applicable NH_3/TKN/cyanide/phenol/625.1/608.3 (< 0.5mg/L) samples free of residual chlorine?
☐ Yes	☐ No	☑ NA	20. Were client remarks/requests (i.e. requested dilutions, MS/MSD designations, etc…) correctly transcribed from the COC into the comment section in LIMS?
☐ Yes	☑ No		21. Was the quote number listed on the container label? If yes, Quote #

Sample Preservation (Must be completed for any sample(s) incorrectly preserved or with headspace.)

Sample(s) NA were received incorrectly preserved and were adjusted accordingly in sample receiving with NA mL of circle one: H2SO4, HNO3, HCl, NaOH using SR # NA.
Time of preservation NA. If more than one preservative is needed, please note in the comments below.

Sample(s) NA were received with bubbles >6 mm in diameter.

Samples(s) NA were received with TRC > 0.5 mg/L (If #19 is *no*) and were adjusted accordingly in sample receiving with sodium thiosulfate ($Na_2S_2O_3$) with Shealy ID: NA.

SR barcode labels applied by: KDRW Date: 03/24/2022

Comments:

Attachment C

EM / GPR Information

www.REEDTECHINC.com
reedtechinc@gmail.com
(803) 750-9971
P.O. Box 61104
Columbia, SC 29260

March 9, 2022

Richard Ciccolella
ARM Environmental Services
1210 1st Street South Ext, Columbia, SC 29209

Re: Geophysical Evaluation – 2114 Broad River Rd. Columbia, SC

Mr. Ciccolella,

ARM Environmental Services contracted Reed Tech Utility and Geophysical locating to conduct a geophysical evaluation of the 2114 Broad River Rd. Columbia, SC property to identify any potential underground storage tanks (USTs). On March 8th, 2022, Reed Tech conducted a two phased geophysical evaluation using multi-frequency electromagnetic profiling and ground penetrating radar. No evidence of a UST was detected on the property.

Please do not hesitate to call if you have any questions concerning this summary of findings. We appreciate the opportunity to have worked with you on this project.

Sincerely,



Duke Brantley, PhD, PG
President
Reed Tech

www.REEDTECHINC.com
reedtechinc@gmail.com
(803) 750-9971
P.O. Box 61104
Columbia, SC 29260

March 9, 2022

Richard Ciccolella
ARM Environmental Services
1210 1st Street South Ext, Columbia, SC 29209

Re: Geophysical Evaluation – 2116 Broad River Rd. Columbia, SC

Mr. Ciccolella,

ARM Environmental Services contracted Reed Tech Utility and Geophysical locating to conduct a geophysical evaluation of the 2116 Broad River Rd. Columbia, SC property to identify any potential underground storage tanks (USTs). On March 8th, 2022, Reed Tech conducted a two-phased geophysical evaluation using multi-frequency electromagnetic profiling and ground penetrating radar. No evidence of a UST was detected on the property.

Please do not hesitate to call if you have any questions concerning this summary of findings. We appreciate the opportunity to have worked with you on this project.

Sincerely,

Duke Brantley, PhD, PG
President
Reed Tech

Appendix B:
Noise Analysis Addendum

Noise Addendum
Executive Summary
Carolina Crossroads Phase 2 – I-20 at Broad River Road Interchange
Richland and Lexington Counties, South Carolina
June 16, 2022

Project Description: This proposed *Carolina Crossroads* (CCR) project will increase capacity, improve operation, and reconstruct/improve 12 interchanges along the I-20/20/126 corridor in Richland and Lexington Counties, South Carolina. The Federal Highway Administration (FHWA) approved a final environmental impact statement (FEIS) and record of decision (ROD) on May 2, 2019, and three reevaluations have been approved since the FEIS.

The project will be constructed in five phases through the design-build (DB) process. This noise addendum covers work proposed in Phase 2. CCR Phase 2 includes improvements to the I-20 and Broad River Road interchange widening I-20 east of the Broad River Road interchange.

Project Changes: The DB Team identified an alternate design for the I-20 and Broad River Road interchange which changes the preferred configuration from a full access tight urban diamond interchange to a partial diverging diamond interchange [DDI]).

This addendum documents the geometric alignment changes proposed by the DB Team. Additionally, this addendum documents the analysis and resulting changes to the design of noise sensitive areas (NSA) Q, R, S and T as a result of the final roadway design information.

Prepared By: Luis Velasquez, PE



6/16/2022
Signature Date

QC/QA: Justin Maderia, PE, PTOE, PTP



6/16/2022
Signature Date

David P. Kelly 6/22/2022
Approved By: SCDOT Signature Date

Table of Contents

1. Introduction....1
1.1 What is The Proposed Project?....1
1.2 Project Changes....2
2. Re-Evaluation of Build Conditions Sound Levels....3
3. Re-Evaluation of Noise Barriers....3
3.1 Noise Barrier Q Re-Evaluation....4
3.2 Noise Barrier R Re-Evaluation....5
3.3 Noise Barrier S Re-Evaluation....6
3.4 Noise Barrier T Re-Evaluation....7
3.5 Parallel Barrier Analysis....8
4. What are the Conclusions?....9

Tables

Table 1: NSA Sound Level Changes....3
Table 2: Noise Barrier Q Design Changes....5
Table 3: Noise Barrier R Design Changes....6
Table 4: Noise Barrier S Design Changes....7
Table 5: Noise Barrier T Design Changes....8
Table 6: Parallel Barrier Analysis Locations....9

Attachments

Attachment A – Tables
Attachment B – Noise Levels & Noise Barrier Graphics
Attachment C – TNM 2.5 Runs
Attachment D – TNM 2.5 Sound Level Outputs
Attachment E – TNM 2.5 Noise Barrier Design Outputs
Attachment F – Updated SCDOT Reasonable and Feasible Worksheets
Attachment G – Noise Barrier Public Outreach Ballots

NOISE ADDENDUM
CAROLINA CROSSROADS PHASE 2 – I-20 AT BROAD RIVER ROAD INTERCHANGE
RICHLAND AND LEXINGTON COUNTIES, SOUTH CAROLINA
JUNE 16, 2022

1. INTRODUCTION

In compliance with 23 USC Section 109(h) and (i), the Federal Highway Administration (FHWA) established a standard for the assessment of highway traffic-generated noise. The standard, published as Part 772 of Title 23 of the Code of Federal Regulations (23 C.F.R. § 772), provides procedures to be followed in conducting noise analyses that will protect the public health, welfare, and livability. In accordance with the Noise Control Act of 1972, coordination of this regulation with the Environmental Protection Agency (EPA) has been completed. The following assessment has been prepared in accordance with 23 C.F.R. § 772 and SCDOT Traffic Noise Abatement Policy (2019).

This noise addendum serves as an update to the noise analysis included in the final environmental impact statement (FEIS) and record of decision (ROD) approved on May 2, 2019 (hereafter referred to as the May 2019 FEIS). SCDOT is administering the final design and construction of the project through a Design-Build (DB) contract. This addendum documents the geometric alignment changes proposed by the DB Team since design has been finalized for the I-20 at Broad River Road Interchange (the DB Team [2022] Final Design). Additionally, this addendum documents the analysis and resulting changes to the design of Noise Barriers Q, R, S and T as a result of the DB Team (2022) Final Design.

1.1 What is The Proposed Project?

FHWA and the South Carolina Department of Transportation (SCDOT) propose to implement various strategies that will improve the mobility and enhance traffic operations by reducing existing traffic congestion within the I-20/26/126 corridor in Richland and Lexington Counties, South Carolina. The proposed project, Carolina Crossroads (CCR), will ultimately increase capacity and improve operations along the corridor, including reconstructing/improving the following interchanges: the I-20 and I-26 system-to-system interchange, I-26 Exit 101 at Broad River Road, I-26 Exit 102 at Lake Murray Boulevard, I-26 Exit 103 at Harbison Boulevard, I-26 Exit 104 at Piney Grove Road, I-26 Exit 106 at St Andrews Road, I-26 Exit 108 at Bush River Road, the I-26/I-126 interchange, I-26 Exit 110 at US 378, I-126 at Colonial Life Boulevard, I-20 Exit 65 at Broad River Road, and I-20 Exit 63 at Bush River Road.

FHWA approved a FEIS and record of decision (ROD) for the project on May 2, 2019. Three reevaluations have been completed for the project since the FEIS/ROD: one for CCR Phase 1 design updates due to right-of-way (ROW) changes (approved August 3, 2020), one for Noise Barrier R updates (approved October 30, 2020), and one for demolition updates (approved December 8, 2020). The project has since progressed towards construction that will occur in five phases through the DB process. Project construction is anticipated to begin in fall 2022 with traffic control/maintenance activities and substantial project completion scheduled for March 2025.

Under CCR Phase 2, SCDOT proposes improvements to Interstate 20 (I-20) in Richland County, SC, including widening I-20, constructing new ramps and bridges, and replacing the I-20 at US 176 (Broad River Road) interchange with a new interchange design. The project will extend from approximately 0.2 mile east of the Browning Road overpass to just west of the existing bridge over the Broad River.

SCDOT is administering the final design and construction of the project through a DB contract. The DB team has slightly modified various design elements of the previous Refined Recommended Preferred Alternative (RRPA), including an alternative design for the I-20 at US 176 (Broad River Road) interchange to provide the most efficient and economical solution to SCDOT. As a result of these changes, the environmental noise impacts have been reevaluated, as discussed below.

1.2 Project Changes

The CCR Phase 2 DB Team evaluated the previous RRPA for CCR Phase 2 to develop more efficient and economical solutions based on design and construction. This included a detailed evaluation of the I-20 at US 176 (Broad River Road) interchange (Exit 65). A single point urban interchange (SPUI) was proposed as the RRPA design to replace the existing tight diamond interchange. The CCR Phase 2 DB Team proposes an alternative design for the I-20 at US 176 (Broad River Road) interchange—an offset diverging diamond interchange (DDI)—for I-20 at US 176. Following extensive analysis, the offset DDI was chosen as the most preferred concept based on several factors, such as constructability, cost effectiveness, and traffic operations. The proposed design does not include addition or removal of ramp connections to I-20 and I-26, which are proposed as part of the RRPA.

The purpose of the project is to provide traffic access to and from I-20 and Broad River Road efficiently and safely by replacing the old over capacity interchange and adding additional capacity along I-20 within the study limits, while keeping in view the ultimate design of the I-20/I-26/I-126 interchange. CCR Phase 2 includes adding lanes to I-20 and replacing the existing I-20/US 176 (Broad River Road) tight diamond interchange (Exit 65) with an offset DDI. These improvements include constructing new parallel bridges along Broad River Road over I-20, all new entrance and exit ramps, and other improvements to surface streets and frontage roads. This design creates two new "crossover" intersections instead of a single point intersection. The crossover is where three of the four interchange ramps intersect at a single location.

In addition, CCR Phase 2 will include construction of an exit ramp from I-20 westbound (WB) to I-26 eastbound (EB) and WB. This ramp will connect to a collector-distributor (CD) road which will include traffic from Broad River Road. The CD Road, at its maximum, will have three WB lanes. Two will split off and connect to WB I-26 and one will connect to EB I-26 once the I-20/I-26/I-126 interchange is complete. In the interim, the new connection will tie into the existing I-26 WB ramps and not reach its full capacity until the ultimate interchange is complete. Traffic that is bound for I-26 EB will continue to use the existing loop ramp until the ultimate system-to-system interchange is complete. The project will also include the relocation of Garner Lane from the I-20 EB entrance ramp to connect with Longcreek Drive north of the Broad River Road/Longcreek Drive intersection.

The following design changes were also made as part of the new offset DDI:

1. The entrance ramp from northbound (NB) Broad River Road to I-20 WB has been modified. The change reduced the ramp from two lanes to one lane. The amount of traffic using the ramp in the peak hour only required one lane. It also allows the merging with the ramp from southbound (SB) Broad River to I-20 WB to occur more efficiently.
2. The two-lane portion of the EB I-20 on-ramp from Broad River Road has been extended to provide a total of 800 feet from the south crossover intersection to improve safety and operations.
3. The south leg of Broad River Road at Briargate Circle/Marley Drive has been widened to accommodate the bicycle lane in the SB direction. The NB left turn is channelized at this approach allowing the NB and SB left-turn lanes to align with each other. The channelization is provided using pavement markings to provide guidance to drivers without presenting an obstruction in the roadway.

2. RE-EVALUATION OF BUILD CONDITIONS SOUND LEVELS

The DB Team (2022) Final Design modified the RRPA at the I-20 at US 176 (Broad River Road) interchange to an offset DDI which has the potential to influence sound levels at noise sensitive areas (NSAs) Q, R, S, T. The Build condition was reanalyzed assuming the full buildout conditions, after all phases of the CCR are completed. The Traffic Noise Model 2.5 (TNM) was updated to include the final design changes as a result of the DB Team changes and modifications to the proposed noise barrier alignment (Barriers R and S). The TNM predicted results are summarized in **Table 1**.

Table 1: NSA Sound Level Changes

NSA	# of Receivers	May 2019 FEIS	October 2020 Barrier R Re-Eval	DB Team (2022) Final Design	Change in Impacts from May 2019 FEIS to DB Team (2022) Final Design
		No. of Impacted Receivers	No. of Impacted Receivers	No. of Impacted Receivers	
Q	184	48	-	43	-5
R	93	78	77	84	+7
S	520	134	-	169	+35
T	61	20	-	24	+4
Total Impacts		**280**		**320**	**+41**

Table 1 summarizes the total number of receivers, the number of impacted receivers, and the change in impacts from either the May 2019 FEIS (for NSA Q, S, and T) or from the October 2020 Reevaluation (NSA R) and this addendum. The table shows that when the May 2019 FEIS sound levels are compared to the DB Team (2022) Final Design sound levels there is a reduction in impacted receivers in NSA Q and an increase in impacted receivers in NSA S and NSA T. The table also shows that when the October 2020 Reevaluation sound levels are compared to the DB Team (2022) Final Design sound levels there is an increase in impacted receivers in NSA R. Overall, there is an increase in the total number of impacts with the DB Team (2022) Final Design when compared to the May 2019 FEIS. The increase is likely caused by changes to the traffic volumes, truck percentages used in the TNM, and roadway geometry (horizontal and vertical design changes) in the DB Team (2022) Final Design.

Table 1, in Attachment A, provides a summary of the sound level results from the May 2019 FEIS and the results from this noise addendum. These results are shown graphically in Figure 1 in Attachment B. A comparison of the proposed concept included in the May 2019 FEIS to the DB Team (2022) Final Design is shown in Figure 2 in Attachment B. The TNM 2.5 files are in Attachment C. The TNM 2.5 sound level outputs are included in Attachment D.

3. RE-EVALUATION OF NOISE BARRIERS

The final location of the noise barriers was determined based on noise impacts provided in the May 2019 FEIS and as a result of DB Team (2022) Final Design noise impacts. The feasibleness, reasonableness, and design of Noise Barriers Q, R, S and T were re-evaluated as part of this addendum. This re-evaluation determined whether these four noise barriers would pass the feasible and reasonable criteria to construct each noise barrier. Details regarding the feasible and reasonableness criteria are listed below.

According to the SCDOT Traffic Noise Abatement Policy (October 10, 2019), a 5 dB(A) reduction must be achieved for 75 percent of the impacted receivers for the noise barrier to be acoustically feasible to construct. Additionally, the barrier shall pass the engineering feasibility criteria which includes a review of the following:

1. Topography – Determine if the abatement measure could be constructed given the topography of the location
2. Safety – Maintaining a clear recovery zone, sight distance and accommodation of disabled vehicles
3. Drainage – Issues created by directing water along, under, or away from an abatement measure
4. Utilities – Large overhead power lines, underground water, sewer, gas, oil, etc., can have a significant impact on costs and design options
5. Maintenance – Potential issues from location of abatement measure and construction materials
6. Access – Refers to the ingress and egress to properties that would be affected by the noise abatement measure
7. The exposed height of the noise abatement measure cannot exceed 25 feet based on constructability constraints

According to the SCDOT Noise Policy, three mandatory reasonable factors must be met for a noise barrier to be considered reasonable: viewpoint of the property owners and residents of benefited receptors, cost effectiveness, and noise reduction design goal.

This addendum discusses the results of the re-evaluation for Noise Barriers Q, R, S and T based on the revised DB Team (2022) Final Design. Overall, the roadway design and subsequent noise barrier design has been finalized using more refined and defined design elements.

3.1 Noise Barrier Q Re-Evaluation

The location of Noise Barrier Q was determined based on noise impacts provided in the May 2019 Detailed Noise Analysis Technical Report, and as a result of the DB Team (2022) Final Design noise impacts. Noise Barrier Q was analyzed to begin at station 161+26 and end at station 194+55 along the centerline of I-20. It would be located approximately 135 feet to 274 feet north of the centerline of I-20 and would be approximately 3,362 feet in length. The feasibleness and reasonableness of constructing Noise Barrier Q was re-evaluated as part of this noise addendum.

Noise Barrier Q was analyzed for feasibleness which resulted in 100 percent of the impacted receivers behind the barrier experiencing a reduction in sound levels of 5 dB(A) or greater. An engineering feasibility analysis was also completed reviewing the following areas:

1. Topography – The noise barrier can be constructed without significant issues with existing or proposed grades
2. Safety – The noise barrier can be placed outside the clear zone where possible or protected by using guardrail or concrete side barrier
3. Drainage – Drainage along the barrier would need be designed to allow for positive drainage and the noise barrier placement would need to avoid ditches, pipes, and culverts.
4. Utilities – There are large overhead utilities in the vicinity of the noise barrier, crossing perpendicular to I-26. Notches in the noise barrier heights, to avoid radial intrusions, would need to be considered in the final, reasonable design
5. Maintenance – The location of the noise barrier would be inside existing SCDOT ROW.
6. Access – Access to the noise barrier would need to be from I-26, not via private residences adjacent to the interstate
7. The exposed height of the noise abatement did not exceed 25 feet based on constructability constraints for this feasibility analysis

Therefore, according to the SCDOT Noise Policy, Noise Barrier Q is feasible to construct.

The reasonableness analysis for Noise Barrier Q included noise barrier panels that were 25 feet tall to achieve the largest number of benefited receptors and maximize the benefit at each receptor. The

reasonableness analysis resulted in 63 percent of the benefited first and second row receivers achieving an 8 dB(A) reduction, which is below SCDOT policy of more than 80 percent of the benefited front row receivers achieving an 8 dB(A) reduction. For this reason, Noise Barrier Q does not meet SCDOT's policy and is not reasonable to construct.

The associated design changes for Noise Barrier Q are listed in **Table 2**.

Table 2: Noise Barrier Q Design Changes

Report	Length (Ft.)	Wall Height Range (Min Ft. - Max Ft.)	No. of Impacted Receptors	No. of Benefited Receptors	% Impacted Receptors Achieving 5 dBA Reduction	% Impacted Receptors Achieving 8 dBA Reduction	Estimated Cost per Benefited Receptor ($)	Estimated Constr-uction Cost ($)
May 2019 FEIS	3,360	25	48	159	100	61	N/A	N/A
DB Team (2022) Final Design	3,362	25	43	128	100	63	N/A	N/A

Table 2 in Attachment A summarizes the results of the Noise Barrier Q evaluation. Figure 1 in Attachment B illustrates the results of the Noise Barrier Q evaluation. The TNM 2.5 files are in Attachment C. The TNM 2.5 sound level outputs are included in Attachment D. The barrier height data is summarized in Attachment E. An updated SCDOT Feasibility and Reasonableness Worksheet for Noise Barrier Q is in Attachment F.

3.2 Noise Barrier R Re-Evaluation

The location of Noise Barrier R was determined based on noise impacts provided in the May 2019 Detailed Noise Analysis Technical Report and as a result of the DB Team (2022) Final Design noise impacts. Noise Barrier R was analyzed to begin at station 216+73 and end at station 258+67 along the centerline of I-20. It would be located approximately 79 feet to 204 feet north of the centerline of I-20 and would be approximately 4,550 feet in length. The feasibleness and reasonableness of constructing Noise Barrier R was re-evaluated as part of this noise addendum.

Noise Barrier R was analyzed for feasibleness which resulted in 100 percent of the impacted receivers behind the barrier experiencing a reduction in sound levels of 5 dB(A) or greater. An engineering feasibility analysis was also completed by reviewing the following areas:

1. Topography – The noise barrier can be constructed without significant issues with existing or proposed grades
2. Safety – The noise barrier can be placed outside the clear zone where possible or protected by using guardrail or concrete side barrier
3. Drainage – Drainage along the barrier would need be designed to allow for positive drainage and the noise barrier placement would need to avoid ditches, pipes, and culverts
4. Utilities – There are large overhead utilities in the vicinity of the noise barrier, crossing perpendicular to I-26. Notches in the noise barrier heights, to avoid radial intrusions, would need to be considered in the final, reasonable design.
5. Maintenance – The location of the noise barrier would be inside existing SCDOT ROW
6. Access – Access to the noise barrier would need to be from I-26, not via private residences adjacent to the interstate
7. The exposed height of the noise abatement did not exceed 25 feet based on constructability constraints for this feasibility analysis

Therefore, according to the SCDOT Noise Policy, Noise Barrier R is feasible to construct.

The reasonableness analysis for Noise Barrier R included noise barrier panels that were 8 to 21 feet tall to achieve the largest number of benefited receptors and maximize the benefit at each receptor. The reasonableness analysis resulted in 81 percent of the benefited first and second row receivers achieving an 8 dB(A) reduction, which is above the SCDOT policy of 80 percent of the benefited front row receivers achieving an 8 dB(A) reduction. The estimated construction cost for Noise Barrier R is $2,693,180 and the benefit achieved by constructing Noise Barrier R is $29,924 per benefited receiver, which is below SCDOT policy of $30,000 per benefited receiver. Therefore, Noise Barrier R meets SCDOT's policy and is reasonable to construct.

The associated design changes for Noise Barrier R are listed in **Table 3**.

Table 3: Noise Barrier R Design Changes

Report	Length (Ft.)	Wall Height Range (Min Ft. - Max Ft.)	No. of Impacted Receptors	No. of Benefited Receptors	% Impacted Receptors Achieving 5 dBA Reduction	% Impacted Receptors Achieving 8 dBA Reduction	Estimated Cost per Benefited Receptor ($)	Estimated Constr-uction Cost ($)
May 2019 FEIS	4,320	11-22	78	87	**95**	**80**	32,680	2,843,120
October 2020 Barrier R Re-Eval	4,550	11-15	77	91	**75**	**81**	25,710	2,339,645
DB Team (2022) Final Design	4,200	8-21	84	90	**98**	**81**	29,924	2,693,180

Table 3 in Attachment A summarizes the results of the Noise Barrier R evaluation. Figure 1 in Attachment B illustrates the results of the Noise Barrier R evaluation. The TNM 2.5 files are in Attachment C. The TNM 2.5 sound level outputs are included in Attachment D. The barrier height data is summarized in Attachment E. An updated SCDOT Feasibility and Reasonableness Worksheet for Noise Barrier R is in Attachment F. A summary of the SCDOT completed public outreach/noise balloting is included in Attachment G.

3.3 Noise Barrier S Re-Evaluation

The location of Noise Barrier S was determined based on noise impacts provided in the May 2019 Detailed Noise Analysis Technical Report and as a result of the DB Team (2022) Final Design noise impacts. Noise Barrier S was analyzed to begin at station 215+73 and end at station 257+62 along the centerline of I-20. It would be located approximately 77 feet to 124 feet south of the centerline of I-20 and would be approximately 4,189 feet in length. The feasibleness and reasonableness of constructing Noise Barrier S was re-evaluated as part of this noise addendum.

Noise Barrier S was analyzed for feasibleness which resulted in 97 percent of the impacted receivers behind the barrier experiencing a reduction in sound levels of 5 dB(A) or greater. An engineering feasibility analysis was also completed by reviewing the following areas:

1. Topography – The noise barrier can be constructed without significant issues with existing or proposed grades
2. Safety – The noise barrier can be placed outside the clear zone where possible or protected by using guardrail or concrete side barrier
3. Drainage – Drainage along the barrier would need be designed to allow for positive drainage and the noise barrier placement would need to avoid ditches, pipes, and culverts

4. Utilities – There are large overhead utilities in the vicinity of the noise barrier, crossing perpendicular to I-26. Notches in the noise barrier heights, to avoid radial intrusions, would need to be considered in the final, reasonable design.
5. Maintenance – The location of the noise barrier would be inside existing SCDOT ROW
6. Access – Access to the noise barrier would need to be from I-26, not via private residences adjacent to the interstate
7. The exposed height of the noise abatement did not exceed 25 feet based on constructability constraints for this feasibility analysis

Therefore, according to the SCDOT Noise Policy, Noise Barrier S is feasible to construct.

The reasonableness analysis for Noise Barrier S included noise barrier panels that were 18 to 25 feet tall to achieve the largest number of benefited receptors and maximize the benefit at each receptor. The reasonableness analysis resulted in 88 percent of the benefited first and second row receivers achieving an 8 dB(A) reduction, which is above SCDOT policy of more than 80 percent of the benefited front row receivers achieving an 8 dB(A) reduction. The estimated construction cost for Noise Barrier S is $3,494,470 and the benefit achieved by constructing Noise Barrier S is $10,954 per benefited receiver, which is below SCDOT policy of $30,000 per benefited receiver. Therefore, Noise Barrier S meets SCDOT's policy and is reasonable to construct.

The associated design changes for Noise Barrier S are listed in **Table 4**.

Table 4: Noise Barrier S Design Changes

Report	Length (Ft.)	Wall Height Range (Min Ft. - Max Ft.)	No. of Impacted Receptors	No. of Benefited Receptors	% Impacted Receptors Achieving 5 dBA Reduction	% Impacted Receptors Achieving 8 dBA Reduction	Estimated Cost per Benefited Receptor ($)	Estimated Constr-uction Cost ($)
May 2019 FEIS	4,380	25	159	344	96	88	11,141	3,832,430
DB Team (2022) Final Design	4,189	18-25	174	319	97	88	10,954	3,494,470

Table 4 in Attachment A summarizes the results of the Noise Barrier S evaluation. Figure 1 in Attachment B illustrates the results of the Noise Barrier S evaluation. The TNM 2.5 files are located in Attachment C. The TNM 2.5 sound level outputs are included in Attachment D. The barrier height data is summarized in Attachment E. An updated SCDOT Feasibility and Reasonableness Worksheet for Noise Barrier S is in Attachment F. A summary of the SCDOT completed public outreach/noise balloting is included in Attachment G.

3.4 Noise Barrier T Re-Evaluation

The location of Noise Barrier T was determined based on noise impacts provided in the May 2019 Detailed Noise Analysis Technical Report and as a result of the DB Team (2022) Final Design noise impacts. Noise Barrier T was analyzed to begin at station 161+95 and end at station 198+06 along the centerline of I-20. It would be located approximately 150 feet to 370 feet south of the centerline of I-20 and would be approximately 3,660 feet in length. The feasibleness and reasonableness of constructing Noise Barrier T was re-evaluated as part of this noise addendum.

Noise Barrier T was analyzed for feasibleness which resulted in 96 percent of the impacted receivers behind the barrier experiencing a reduction in sound levels of 5 dB(A) or greater. An engineering feasibility analysis was also completed by reviewing the following areas:

1. Topography – The noise barrier can be constructed without significant issues with existing or proposed grades
2. Safety – The noise barrier can be placed outside the clear zone where possible or protected by using guardrail or concrete side barrier
3. Drainage – Drainage along the barrier would need be designed to allow for positive drainage and the noise barrier placement would need to avoid ditches, pipes, and culverts
4. Utilities – There are large overhead utilities in the vicinity of the noise barrier, crossing perpendicular to I-26. Notches in the noise barrier heights, to avoid radial intrusions, would need to be considered in the final, reasonable design.
5. Maintenance – The location of the noise barrier would be inside existing SCDOT ROW
6. Access – Access to the noise barrier would need to be from I-26, not via private residences adjacent to the interstate
7. The exposed height of the noise abatement did not exceed 25 feet based on constructability constraints for this feasibility analysis

Therefore, according to the SCDOT Noise Policy, Noise Barrier T is feasible to construct.

The reasonableness analysis for Noise Barrier T included noise barrier panels that were 25 feet tall to achieve the largest number of benefited receptors and maximize the benefit at each receptor. The reasonableness analysis resulted in 46 percent of the benefited first and second row receivers achieving an 8 dB(A) reduction, which is below SCDOT policy of more than 80 percent of the benefited front row receivers achieving an 8 dB(A) reduction. For this reason, Noise Barrier T does not meet SCDOT's policy and is not reasonable to construct.

The associated design changes for Noise Barrier T are listed in **Table 5**.

Table 5: Noise Barrier T Design Changes

Report	Length (Ft.)	Wall Height Range (Min Ft. - Max Ft.)	No. of Impacted Receptors	No. of Benefited Receptors	% Impacted Receptors Achieving 5 dBA Reduction	% Impacted Receptors Achieving 8 dBA Reduction	Estimated Cost per Benefited Receptor ($)	Estimated Constr-uction Cost ($)
May 2019 FEIS	3,660	25	20	39	100	46	N/A	N/A
DB Team (2022) Final Design	3,660	25	24	38	96	46	N/A	N/A

Table 5 in Attachment A summarizes the results of the Noise Barrier T evaluation. Figure 1 in Attachment B illustrates the results of the Noise Barrier T evaluation. The TNM 2.5 files are in Attachment C. The TNM 2.5 sound level outputs are included in Attachment D. The barrier height data is summarized in Attachment E. An updated SCDOT Feasibility and Reasonableness Worksheet for Noise Barrier T is in Attachment F.

3.5 Parallel Barrier Analysis

A parallel barrier analysis is recommended for all instances in which noise barriers are proposed on opposing sides of the roadway where the ratio of the distance between the noise barriers and the height of noise barrier panels is less than 10:1. Portions of proposed Noise Barrier R and S meet this criterion. The parallel barrier analysis was completed at 10 receivers across the entire length of the proposed noise barriers. The individual estimated increase behind each barrier is shown in Table 6.

Table 6: Parallel Barrier Analysis Locations

Barrier ID	Receiver Analysis	
	Receiver #	Projected Sound Level Increase dB(A)
R	R37	0.0
	R74	2.0
	R73	1.9
	R89	0.0
	R56	0.0
S	S219	0.0
	S427	0.7
	S437	0.3
	S511	1.4
	S326	0.0

The parallel barrier analysis indicates that sound levels behind Barrier R may increase due to the sound reflecting between the parallel noise barrier panels. The increase in sound levels could be up to 2.0 dBA above the sound levels with the proposed barriers in place. Because the increase is less than 3.0 dBA this degradation is barely perceptible to the human ear[1], therefore no action is to be considered regarding absorptive treatment for either of these noise barriers. The TNM exports for this analysis are included in Attachment D.

4. WHAT ARE THE CONCLUSIONS?

This addendum documents the geometric alignment changes proposed by the DB Team as design has been finalized for the I-20 at US 176 (Broad River Road) interchange. Additionally, this addendum documents the analysis and resulting changes to the design of Noise Barriers Q, R, S, and T as a result of the DB Team (2022) Final Design.

The DB Team identified an alternate interchange configuration for the I-20 at US 176 (Broad River Road) interchange. Specifically, the proposed project would construct an offset DDI which has the potential to influence sound levels at NSAs Q, R, S and T. Therefore, Noise Barriers Q, R, S and T have been re-evaluated based on the DB Team (2022) Final Design. The feasibleness and reasonableness of constructing each noise barrier was evaluated in this noise addendum.

Noise Barrier Q – Not Recommended for Construction

The feasibleness analysis for Noise Barrier Q indicates that 100 percent of the impacted receivers behind the barrier will experience a reduction in sound levels of 5 dB(A) or greater and that no topology, safety, drainage, utility, maintenance, access, or height issues will make constructing the barrier not feasible. Therefore, according to SCDOT policy, Noise Barrier Q is feasible to construct. The reasonable analysis for Noise Barrier Q included 25-foot-tall noise barrier panels and resulted in 63 percent of the benefited front row receivers achieving an 8 dB(A) reduction, which is below SCDOT policy of more than 80 percent of the benefited front row receivers achieving an 8 dB(A) reduction. For this reason, Noise Barrier Q does not meet SCDOT's policy and is not reasonable to construct. An updated SCDOT Feasibility and

[1] FHWA Highway Noise Barrier Design Handbook, Table 5, page 32.

Reasonableness Worksheet for Noise Barrier Q is in Attachment F. This noise addendum does not affect the outcome of the viewpoint summary that was completed in the FEIS/ROD.

Noise Barrier R – Recommended for Construction

The feasibleness analysis for Noise Barrier R indicates that 100 percent of the impacted receivers behind the barrier will experience a reduction in sound levels of 5 dB(A) or greater. and that no topology, safety, drainage, utility, maintenance, access, or height issues will make constructing the barrier not feasible. Therefore, according to SCDOT policy, Noise Barrier R is feasible to construct. The reasonable analysis for Noise Barrier R included 8 to 21-foot-tall noise barrier panels and resulted in 81 percent of the benefited front row receivers achieving an 8 dB(A) reduction, which is above SCDOT policy of more than 80 percent of the benefited front row receivers achieving an 8 dB(A) reduction. For this reason, Noise Barrier R meets SCDOT's policy and is reasonable to construct. An updated SCDOT Feasibility and Reasonableness Worksheet for Noise Barrier R is in Attachment F. This noise addendum does not affect the outcome of the viewpoint summary that was completed in the FONSI.

Noise Barrier S – Recommended for Construction

The feasibleness analysis for Noise Barrier S indicates that 97 percent of the impacted receivers behind the barrier will experience a reduction in sound levels of 5 dB(A) or greater and that no topology, safety, drainage, utility, maintenance, access, or height issues will make constructing the barrier not feasible. Therefore, according to SCDOT policy, Noise Barrier S is feasible to construct. The reasonable analysis for Noise Barrier S included 18 to 25-foot-tall noise barrier panels and resulted in 88 percent of the benefited front row receivers achieving an 8 dB(A) reduction, which is above SCDOT policy of more than 80 percent of the benefited front row receivers achieving an 8 dB(A) reduction. For this reason, Noise Barrier S meets SCDOT's policy and is reasonable to construct. An updated SCDOT Feasibility and Reasonableness Worksheet for Noise Barrier S is in Attachment F. This noise addendum does not affect the outcome of the viewpoint summary that was completed in the FONSI.

Noise Barrier T – Not Recommended for Construction

The feasibleness analysis for Noise Barrier T indicates 96 percent of the impacted receivers behind the barrier will experience a reduction in sound levels of 5 dB(A) or greater and that no topology, safety, drainage, utility, maintenance, access, or height issues will make constructing the barrier not feasible. Therefore, according to SCDOT policy, Noise Barrier T is feasible to construct. The reasonable analysis for Noise Barrier T included 25-foot-tall noise barrier panels and resulted in 46 percent of the benefited front row receivers achieving an 8 dB(A) reduction, which is below SCOT policy of more than 80 percent of the benefited front row receivers achieving an 8 dB(A) reduction. For this reason, Noise Barrier T does not meet SCDOT's policy and is not reasonable to construct. An updated SCDOT Feasibility and Reasonableness Worksheet for Noise Barrier T is in Attachment F. This noise addendum does not affect the outcome of the viewpoint summary that was completed in the FEIS/ROD.

CAROLINA CROSSROADS



Environmental Re-evaluation #6

U.S. Department of Transportation
Federal Highway Administration

South Carolina

1835 Assembly Street, Suite 1270
Columbia, South Carolina 29201
803-765-5411

October 15, 2024

Mr. Chad Long
Director Environmental Services Office
South Carolina Department of Transportation (SCDOT)
955 Park Street, P.O. Box 191
Columbia, South Carolina 29202

Dear Mr. Long:

The Federal Highway Administration (FHWA) has received your request for approval of reevaluation six for the I-26/126/20 (Carolina Crossroads) Environmental Impact Statement (Federal Project ID P0P027662). Project modifications analyzed within the reevaluation include,

1. Rephasing of construction phases to reduce risks related to utility relocations and geotechnical considerations.
2. Design changes to be incorporated into the project: Berryhill Road at Woodland Hill Road realignment, I-126 WB to I-26 EB semi-directional ramp, Willow Creek flood mitigation area, I-20/Bush River Road interchange.
3. Right of way updates, where acquired parcels extend beyond the previous project study area (PSA).

Based on the information provided within the reevaluation, FHWA finds that the proposed modifications to the project will not introduce any new significant impacts, therefore, a Supplemental EIS is not required. We also find the Alternative Technical Concept (ATC) revisions to the I-20/Bush River Road Interchange and the ATC revision to the I-126 WB to I-26 EB movement adequate and approved. The modifications will provide for improved constructability and provide for reduced impacts for businesses in the area. The level of service (LOS) for operational movements remains the same or improves from the original design concepts and there would be no increased impacts at these locations.

Please ensure that the project commitments made during the NEPA process remain included in the project construction contract and ultimately carried out. Please address any questions to Mr. J. Shane Belcher at jeffrey.belcher@dot.gov/803-253-3187 or Mr. Tad Kitowicz at thaddeus.kitowicz@dot.gov/803-253-3882.

Sincerely,

Emily O Lawton

Emily O. Lawton
Division Administrator

Enclosure

ec: Will McGoldrick, SCDOT Design Build NEPA Coordinator
Brian Klauk, SCDOT Program Manager

ENVIRONMENTAL RE-EVALUATION FORM

FHWA South Carolina

State File #		Fed Project #	P027662	Project ID	P027662	Route	I-20/I-26/I-126	County	Lexington and Richla

Project Name/Description

The FHWA and SCDOT propose to upgrade the I-20/26/126 corridor and reconstruct associated interchanges in Richland and Lexington Counties, South Carolina. The primary purpose of the proposed Carolina Crossroads project is to implement a transportation solution(s) that would improve mobility and enhance traffic operations by reducing existing traffic congestion within the I-20/26/126 corridor while accommodating future traffic needs.

1. DOCUMENT TYPE: ☒ EIS ☐ EA ☐ CE (non Programmatic) ☐ PCE (No FHWA Approval Required)

A. Other Actions Associated with the Project:

- ☐ Section 4(f) Evaluation
- ☒ Section 106 Compliance
- ☒ Wetland Finding/Section 404 Compliance
- ☒ T & E Species Biological Assessment
- ☐ None

2. DOCUMENT APPROVAL DATE: May 2, 2019

3. DATE(S) OF PRIOR RE-EVALUATIONS: 8/22; 10/20; 12/20; 5/23/22; 9/14/22

4. PROJECT DEVELOPMENT STAGE:

- ☐ Final Design
- ☒ ROW
- ☒ Construction
- ☐ Other, Specify

5. HAS DESIGN OR ROW CHANGED SINCE THE LAST APPROVAL?:
(if "NO" then Go To Item 7) ☒ YES ☐ NO

6. DESCRIPTION OF CURRENT PROJECT/DESIGN CHANGES:

Project changes include: 1. the rephasing of construction phases to reduce risks related to utility relocations and geotechnical considerations; 2. Design changes to be incorporated into the project: Berryhill Road at Woodland Hill Road realignment, I-126 WB to I-26 EB semi-directional ramp, Willow Creek flood mitigation area, I-20/Bush River Road interchange; 3. Right of way updates, where acquired parcels extend beyond the previous project study area (PSA).

7. HAVE THERE BEEN SIGNIFICANT CHANGES IN THE AFFECTED ENVIRONMENT OR HAVE THE ENVIRONMENTAL STUDIES BEEN UPDATED SINCE THE LAST PROJECT APPROVAL?: (If "NO" to both Items 5 and 7, Go To Item 10) ☒ YES ☐ NO

8. APPROVED DOCUMENT(S) RE-EVALUATION:

A. REVIEW OF EFFECTS: (Complete this section if "YES" to either Item 5 or Item 7)

SOCIAL ENVIRONMENT	CHANGE		REMARKS
1. Land Use	☐ YES	☒ NO	
2. Community	☐ YES	☒ NO	
3. Relocations	☐ YES	☒ NO	See attached documentation
4. Churches/Institutions	☐ YES	☒ NO	
5. Title VI/E.O. 12898	☐ YES	☒ NO	
6. Economic	☐ YES	☒ NO	
7. Controversy	☐ YES	☒ NO	
8. Other; Specify	☐ YES	☒ NO	

NATURAL ENVIRONMENT	CHANGE		REMARKS
1. Wetlands	☒ YES	☐ NO	See attached documentation
2. Water Quality	☐ YES	☒ NO	
3. Wild/Scenic Rivers	☐ YES	☒ NO	
4. Farmland	☐ YES	☒ NO	
5. T & E Species	☐ YES	☒ NO	See attached documentation
6. Floodplains	☐ YES	☒ NO	
7. Other; Specify	☐ YES	☒ NO	

PHYSICAL ENVIRONMENT	CHANGE		REMARKS
1. Noise	☒ YES	☐ NO	See attached documentation
2. Air Quality	☐ YES	☒ NO	
3. Energy/Mineral Resources	☐ YES	☒ NO	
4. Construction/Utilities	☐ YES	☒ NO	
5. UST's	☐ YES	☒ NO	
6. Hazardous Waste Sites	☐ YES	☒ NO	
7. Other; Specify	☐ YES	☒ NO	

CULTURAL ENVIRONMENT	CHANGE		REMARKS
1. Historic Sites	☐ YES	☒ NO	
2. Archaeological Resources	☐ YES	☒ NO	See attached documentation
7. Other; Specify	☐ YES	☒ NO	

PERMITS	CHANGE		REMARKS
1. U.S. Coast Guard	☐ YES	☒ NO	
2. Forest Service/USACE/USFWS Land	☐ YES	☒ NO	
3. Section 404	☐ YES	☒ NO	
4. Other; Specify	☐ YES	☒ NO	

Have the required permits been obtained? ☒ YES ☐ NO

If "YES" what is the expiration date? September 30, 2035

***If permits have expired, permits will need updated and attached to re-evaluation.**

9. NEED FOR PUBLIC INVOLVMENT:

☒ A public hearing/public information meeting was held for the project on: August 23, 2018

☒ There have been no changes in project design or environmental effects which would require a public hearing [or additional public hearing if one has already been held] or public information meeting.

☐ The change(s) in project design and/or effects require(s) an additional public hearing/public information meeting. The meeting is scheduled for:

10. FINDINGS/CONCLUSIONS:

☒ Based on the analysis contained in this re-evaluation, it has been determined that the change in project design and/or environmental effects would not significantly alter the conclusions reached in the approved environmental document and/or previous re-evaluation(s).

☐ There have been no changes in the design/ROW of this project nor have there been changes in project effects or the affected environment. Therefore, the conclusions reached in the approved environmental document and/or previous re-evaluation(s) remain valid.

Prepared By: Will McGoldrick Digitally signed by Will McGoldrick Date: 2024.10.03 08:25:03 -04'00' Date

For Non Programmatic CEs:

Concurred (FHWA): EMILY OLDHAM LAWTON Digitally signed by EMILY OLDHAM LAWTON Date: 2024.10.15 13:32:09 -04'00' Date

EC ID	Description	Category	Status	Phase 1 Updates	Phase 2 Updates
EC-01	SCDOT will work with the Central Midlands Rural Transit Authority / COMET (CMRTA/COMET) and the Central Midlands Council of Governments (CMCOG) to develop two park-and-ride lots to improve mobility during construction and mitigate congestion resulting from the project. SCDOT would construct the two sites and maintain them during construction of the project. Engineering feasibility, timing and continued maintenance of the sites would be determined in coordination with CMRTA and the CMCOG prior to the start of construction. In the event a permanent site cannot be developed, SCDOT would work with CMRTA and CMCOG to identify and provide funding for existing parking lots that could be leased for park-and-ride use during construction.	Programmatic	SCDOT has completed an evaluation to identify park and ride facilities. In coordination with FHWA a leasing option has been identified as the path forward. SCDOT is in the process of discussing the potential of leasing property from two state agencies. SCDOT met with Lexington County on Thursday, July 13 to discuss a potential leasing opportunity. Lexington County was receptive to the opportunity and requested	N/A	N/A
EC-02	SCDOT will implement a congestion management tool/commuter services application to improve mobility during construction and mitigate congestion by informing commuters of available options such as carpooling, ridesharing, vanpools and other transit oriented options.	Programmatic	SCDOT has met with the CMCOG who is in the process of developing a mobile application. SCDOT to follow up and determine when the application will be available.	N/A	N/A
EC-03	SCDOT will assist COMET/CMRTA ongoing efforts through such measures as accommodating transit (bus) stops at interchange locations, which may include bus turnout. In addition, SCDOT will work with CMRTA to monitor bus operations and capacity during construction and in the event that capacity is reached, SCDOT will provide support in determining funding for enhanced bus service during construction based upon a framework to be agreed upon with CMRTA.	Programmatic	SCDOT has met with the CMCOG and discussions are ongoing.	N/A	N/A
EC-04	Prior to final design, SCDOT will coordinate with the City of Columbia and CMCOG to ensure that existing and planned bicycle and pedestrian facilities identified in the local and regional plans and existing and proposed connections to such facilities are accommodated where located within the limits of the Carolina Crossroads project at crossing routes and interchanges where feasible.	Design	Status update to be phase specific.	Phase 1 Final design complete.	Phase 2 Final design plans are Released for Construction.
EC-05	During final construction, SCDOT will accommodate bicycle/pedestrian access. SCDOT will coordinate with the local municipalities and/ or trail groups to post information on temporary sidewalk or bicycle facility closures or detours. Sidewalk and/or bicycle lane/path closures will be communicated to the agency with jurisdiction at least 48 hours in advance and appropriate signage will be placed.	Construction	Status update to be phase specific.	Cooridnation is on-going.	Cooridnation is on-going.
EC-06	SCDOT will acquire all new right-of-way and process any relocations in compliance with the Uniform Relocation Assistance and Real Property Acquisition Policies Act of 1970, as amended (42 U.S.C. 4601 et seq.) and the SCDOT ROW Manual. The purpose of these regulations is to ensure that owners of real property to be acquired for federal and federally-assisted projects are treated fairly and consistently, to encourage and expedite acquisition by agreements with such owner, to minimize litigation and relieve congestion in the courts, and to promote public confidence in federal and federally-assisted land acquisition programs. Temporary construction easements may be needed for some properties. SCDOT will temporarily use these properties during construction and would provide compensation to the landowner for the temporary use. The property will be fully returned to the owner when the use of the property is no longer required, typically when construction is complete.	Programmatic	Phases 1 & 2 right-of-way acquisition is essentially complete with a few outstanding tracts to be acquired and Phase 3 is underway.	N/A	N/A

EC ID	Description	Category	Status	Phase 1 Updates	Phase 2 Updates
EC-07	Changes in access for school bus routes will be discussed with the school system in advance of when they will actually take place, so that the school systems can adjust routes in a timely manner. Coordination with local school districts will also occur during construction. SCDOT and the CONTRACTOR will coordinate with the school system during development of the community outreach program.	Construction	Status update to be phase specific.	Contractor will coordinate with local school districts as necessary.	Contractor will coordinate with local school districts as necessary.
EC-08	Written translations of public involvement documents will be provided for Spanish language speaking populations, as well as other measures determined by SCDOT to ensure meaningful access to project information during construction. Efforts will be made to ensure meaningful opportunities for public participation during construction. Additional meetings will be held when warranted to address community concerns.	Construction	Status update to be phase specific.	SCDOT has implemented a translation tool on the project website for Spanish language speaking populations.	SCDOT has implemented a translation tool on the project website for Spanish language speaking populations.
EC-09	The CONTRACTOR(s), through a community outreach program, will let the community know what types of closures to expect (i.e. temporary, long-term), when to expect them and who to contact, if needed. SCDOT and the CONTRACTOR(s) will coordinate with emergency service providers such as police, fire protection and ambulance services before construction to ensure that access for emergency vehicles will be maintained.	Programmatic	Community and public relations support plan has been approved and is being implemented.	N/A	N/A
EC-10	Based on the studies thus far accomplished, SCDOT intends to install highway traffic noise abatement measures in the form of a barrier at Noise Sensitive Area (NSA) O, R and S. These preliminary indications of likely abatement measures are based upon preliminary design for a barrier cost of $35.00 per square foot that will reduce the noise level by at least 5 dB(A) for residences. A final decision of the installation of the abatement measure(s) will be made upon completion of the project's design. Since there are residences located on the opposite side of the interstate adjacent to Barriers O, the use of sound absorption materials will be assessed during final design to minimize noise reflectivity of the barriers towards receptors on the other side of the interstate. If changes are proposed to the noise wall configuration during design, the CONTRACTOR shall be responsible for revising the environmental documents (re-evaluation), updating traffic noise analysis, public involvement and construction of noise wall(s).	Design	Status update to be phase specific.	Barriers are not located within this phase.	Barriers R and S are finalized in RFC Plans.
EC-11	In order to help local officials and developers consider highway traffic noise in the vicinity of a proposed Type I project, SCDOT will inform them of the predicted future noise levels and the required distance from the roadways needed to ensure that noise levels remain below the NAC for each type of land use per 23 CFR 772.J 7. The information will be provided within three months of the Record of Decision (ROD) publication.	Programmatic	SCDOT has complied.	N/A	N/A

EC ID	Description	Category	Status	Phase 1 Updates	Phase 2 Updates
EC-12	During construction, powered construction equipment will not be operated during the traditional evening and/or sleeping hours within 150 feet of a noise-sensitive site, to be decided either by local ordinances and/or agreement with SCDOT.	Construction	Status update to be phase specific.	Discussion will occur in pre-activity meeting with the Contractor and documented accordingly.	Discussion will occur in pre-activity meeting with the Contractor and documented accordingly.
EC-13	The CONTRACTOR(s) will be required to minimize possible water quality impacts through implementation of BMPs, reflecting policies contained in 23 CFR 650B and SCDOT's Supplemental Specification on Erosion Control Measures (latest edition) and Supplemental Technical Specifications on Seeding (latest edition). Other measures including seeding, silt fences, sediment basins, etc. as appropriate will be implemented during construction to minimize impacts to water quality.	Construction	Status update to be phase specific.	Environmental compliance inspections are on-going. Phase 1 Final design plans have been completed.	Environmental compliance inspections are on-going. Phase 2 Final design plans have been completed.
EC-14	Stormwater modeling will be completed for the final design of the Project. Stormwater runoff would be mitigated by discharging stormwater into appropriately designed BMP's before being released into receiving waters. During construction, the CONTRACTOR(s) will identify and avoid all point sources of fecal coliform as identified in Chapter 3, Section 3.6 of the FEIS.	Construction	Status update to be phase specific.	NOI approved by DHEC	NOI approved by DHEC.
EC-15	A Section 401 State Water Quality Certification will be required for the overall project. SCDOT is responsible for obtaining the certification as part of the Joint 404/401 permit application process.	Programmatic	Initial 401 water quality certification has been obtained.	N/A	N/A
EC-16	The CONTRACTOR(s) is responsible for development of a project specific SWPPP and for obtaining a Section 402 NPDES permit for the project prior to initiating land disturbing activities.	Construction	Status update to be phase specific.	Compliance inspection have been initiated and are ongoing. NOI nearing DHEC approval.	Contractor shall comply. NOI approved by DHEC.
EC-17	A State Navigable Waters permit will be required for construction over any navigable waterways (i.e., the Saluda River). The CONTRACTOR will be responsible for obtaining this permit.	Construction	Status update to be phase specific.	Permit has been obtained.	Permit has been obtained.
EC-18	Impacts to jurisdictional waters will be permitted under a Department of the Army Section 404 permit from the U.S. Army Corps of Engineers (USACE). Based on preliminary design, it is anticipated that the proposed project will be permitted under an Individual USACE Permit (IP). SCDOT will provide the USACE with information regarding any proposed activities during the Section 404 permitting process. One permit would be obtained for the overall project. The required mitigation for this project will be provided through a Permittee Responsible Mitigation (PRM) site, developed in consultation with the USACE and other resource agencies.	Construction	Status update to be phase specific.	Permit mods for Ph 1 approved.	Permit mod for Ph 2 approved.
EC-19	Detailed hydraulic and hydrologic studies for each bridge crossing will be performed to determine the correct sizing of bridges and culverts. The project will be designed to be consistent with local floodplain development plans. Prior to construction activity in the area, coordination with Dominion Energy and Federal Energy Regulatory Commission (FERC) will be required for the Lower Saluda River floodway crossings due to its function as part of a hydroelectric facility.	Design	Status update to be phase specific.	Phase 1 Final design complete.	Phase 2 Final design plans are Released for Construction.
EC-20	The project will be designed in an effort to meet "No-Rise" requirements. In the event a "No-Rise" condition cannot be achieved, coordination with FEMA will require the preparation of a CLOMR (Conditional Letter of Map Revision) / LOMR (Letter of Map Revision) package for the encroachment. Where regulatory floodplains are defined, hydraulic structures will be designed to accommodate a 100 year (1% annual chance) flood. Where no regulatory floodplains are defined, culverts and bridges will be designed to accommodate a 50-year or greater magnitude flood event. Ongoing design efforts to minimize floodplain impacts will be coordinated with resource and regulatory agencies during the final design process.	Design	Status update to be phase specific.	Phase 1 Final design complete.	Phase 2 Final design plans are Released for Construction.
EC-21	Prior to construction, the selected CONTRACTOR(s) will send a set of final plans and request for floodplain management compliance to the local County Floodplain Administrator.	Design	Status update to be phase specific.	Phase 1 Final design complete.	Phase 2 Final design plans are Released for Construction.
EC-22	No substantial impacts to floodplain values are anticipated from the proposed project. If conditions change based on final design, additional measures will be evaluated to restore lost floodplain values.	Design	Status update to be phase specific.	Phase 1 Final design complete.	Phase 2 Final design plans are Released for Construction.

EC ID	Description	Category	Status	Phase 1 Updates	Phase 2 Updates
EC-23	To mitigate for natural upland forested habitats, lost as a result of the project, SCDOT will plant trees (native species), as defined by the final design plans, within the rights-of-way adjacent to new or improved interchanges and roadways outside of required clear safety zones. Impacts to areas providing significant wildlife habitat, such as river floodplains and other large riparian buffers, will be minimized to the extent practicable through avoidance and minimization design measures such as the use of appropriate BMP's. Construction activities will be conducted within the disturbed footprint of the existing roadway and utility right-of-way to the maximum extent practicable.	Programmatic	(blank)	N/A	N/A
EC-24	To mitigate the temporary impacts to the Saluda Riverwalk Extension, SCDOT will notify the City of Columbia Parks and Recreation Department at least 48 hours in advance as to when the trail will be temporarily closed. SCDOT will also work closely with the Parks and Recreation Department to communicate the closing to trail users during construction. When construction is complete, the condition of the trail will be equal to existing conditions.	Construction	Status update to be phase specific.	Cooridination is on-going with the City of Columbia as needed relative to the Saluda Riverwalk.	N/A for Phase 2.
EC-25	Prior to construction, the project CONTRACTOR will perform Phase II ESAs on the properties identified within the footprint, including the subject properties, and/or on the adjoining properties or the ROW. Ultimately, the Phase II ESAs will include environmental sample collection (e.g. soil, soil gas, and groundwater), specifically, in areas where a potential for disturbance of soil and/or groundwater exists. Asbestos Containing Material (ACM) and/or Lead Based Paint (LBP) testing will be assessed separately. Materials containing asbestos and lead-based paints will be managed and disposed of properly at an appropriate permitted facility to minimize impacts during the construction and cleanup. Activities will be monitored by a professional that is certified in the removal, handling and disposal of lead-based paint and/or asbestos-containing materials.	Programmatic	SCDOT has completed some of the identified Phase II ESAs.	N/A	N/A
EC-26	A spill prevention, control, and countermeasures (SPCC) plan will be prepared in accordance with 40 CFR 112, for the handling of oils or oil-based products during construction to prevent a discharge of oil into navigable waters.	Design	Status update to be phase specific.	SPCC is currently being implemented.and it will be monitored during construction.	Contractor has submitted the SPCC and it will be monitored during construction.
EC-27	A hazardous waste management plan will be prepared for the handling of hazardous materials during construction, and an on-site health and safety plan will be developed for construction activities to protect human health (i.e. workers, residents, recreation and trespassers) and the environment within/proximate to the site. The hazardous waste management plan will also state that disposal of waste materials will be disposed of in approved landfills.	Construction	Status update to be phase specific.	Contractor has submitted a project specific hazardous waste management plan which is currently in place.	Contractor has submitted a project specific hazardous waste management plan which is currently in place.

EC ID	Description	Category	Status	Phase 1 Updates	Phase 2 Updates
EC-28	If avoidance of hazardous materials is not a viable alternative and soils that appear to be contaminated are encountered during construction, the South Carolina Department of Health and Environmental Control (SCDHEC) will be informed immediately. Hazardous materials will be tested and removed and/or treated in accordance with the United States Environmental Protection Agency and the SCDHEC requirements, if necessary. SCDHEC Hazardous Waste Treatment, Storage, and Disposal compliance staff can be contacted at 803-898-0290.	Construction	Status update to be phase specific.	When encountered during construction, hazardous materials will be tested and removed and/or treated in accordance with the United States Environmental Protection Agency and the SCDHEC	Should hazardous materials be encountered the will be properly disposed of according to the site specific hazardous waste management plan and this commitment.
EC-29	During the construction phase of the project, the CONTRACTOR and subCONTRACTORs must notify their workers to watch for the presence of any prehistoric or historic remains, including but not limited to arrowheads, pottery, ceramics, flakes, bones, graves, gravestones, or brick concentrations. If any such remains are encountered, the Construction Manager for Mega Projects would be immediately notified and all work in the vicinity of the discovered materials and site work shall cease until the SCDOT Chief Archaeologist directs otherwise. SCDOT Chief Archaeologist, Tracy Martin, can be contacted at 803-737-6371	Construction	Status update to be phase specific.	Discussion will occur in pre-activity meeting with the Contractor and documented accordingly. Minor clearing has been conducted.	Contractor and subcontractors shall comply.
EC-30	An archaeological professional will be present during any ground disturbing activities related to Site 38LX212 and 38RD59. Additionally, sites 38RD140, 38RD1175, and 38RD1176 will be protected from indirect effects, including borrow sites and equipment staging. Sites will be clearly marked in the field using orange construction fencing prior to beginning construction activities in the vicinity of the resources.	Construction	Status update to be phase specific.	A reminder was sent to archaeologies about ground disturbance activities near Saluda Canal (site 38RD59)	N/A for Phase 2
EC-31	The Saluda Canal (Site 38RD59) would be clearly plotted on all construction plans. SCDOT has reduced ROW widths in the vicinity of the canal to avoid impacts to the canal during construction & any future maintenance activities along the ROW. A 25-foot buffer will be maintained around the canal for the majority of the resource. This zone would be clearly marked in the field using orange fencing during construction, and all ground disturbance and construction staging activities would be conducted outside of this buffer in order to avoid all possible impacts to the resource. SCDOT proposes to revise the commitment of a 25-foot buffer for a distance of approximately 700 feet along the proposed ramp to allow room for temporary construction access & equipment near I-26 Ramp C. To protect the boundary of the canal at this location, the following will be added to the contract as commitments: •Prior to construction activities orange protective fencing will be installed along the edge of boundary of the Saluda Canal Historic District in areas that will maintain the original buffer as well as those areas where the buffer has been requested to be reduced between the two drainages and for a length to the south of the southernmost drainage. •Prior to construction activities silt fencing will be installed along the edge of SCDOT right of way to prevent runoff. •For areas along the identified Saluda Canal located along the I-26 Ramp C beginning Station 5412+50 and ending Station 5419+50 clearing will be allowable to the right of way but grubbing will be limited to within a distance of 5-feet inside of the right of way. Grubbing activities within the 5-foot buffer will require approval from SCDOT prior to occurring. •During land clearing activities prior to construction, an archaeologist will be present at all times to ensure that these activities undertaken close to the fencing do not damage the canal. •During construction, an archaeologist will visit the construction site twice a week to ensure that no activities have crossed over the protective fencing. Any observations during these visits will be recorded in an inspection log that will be made available to the SHPO. •As soon as an inadvertent impact is discovered, such as a previously unidentified cultural resource, archaeological feature, or artifact, construction in that area will stop immediately until an onsite consultation with SCDOT archaeologists and SHPO can determine the best strategies for avoiding, minimizing, or mitigating adverse effects upon the resource.	Construction	Status update to be phase specific.	Canal plotted on plans and orange fencing has been installed.	N/A for Phase 2

EC ID	Description	Category	Status	Phase 1 Updates	Phase 2 Updates
EC-32	The CONTRACTOR(s) will ensure that all construction equipment is properly tuned and maintained. Idling time will be minimized to save fuel and emissions.	Construction	Status update to be phase specific.	Discussion will occur in pre-activity meeting with the Contractor and documented accordingly.	Discussion will occur in pre-activity meeting with the Contractor and documented accordingly.
EC-33	Water will be applied to control dust as needed to prevent dust impacts off site. There will be no open burning of removed vegetation. Vegetation will be chipped or delivered to waste energy facilities.	Construction	Status update to be phase specific.	Water will be applied as necessary to control dust.	Water will be applied as necessary to control dust.
EC-34	The federal Migratory Bird Treaty Act, 16 USC § 703-711, states that it is unlawful to pursue, hunt, take, capture or kill; attempt to take, capture or kill; possess, offer to or sell, barter, purchase, deliver or cause to be shipped, exported, imported, transported, carried or received any migratory bird, part, nest, egg or product, manufactured or not. The South Carolina Department of Transportation (SCDOT) will comply with the Migratory Bird Treaty Act of 1918 in regard to the avoidance of taking of individual migratory birds and the destruction of their active nests. The CONTRACTOR will notify the Construction Manager for Mega Projects at least four (4)weeks prior to construction/demolition/maintenance of bridges and box culverts. The Construction Manager for Mega Projects will coordinate with SCDOT Environmental Services Office (ESO), Compliance Division, to determine if there are any active birds using the structure. SCDOT will be responsible for the removal/management of any active bird nests.	Construction	Status update to be phase specific.	Surveys were conducted on Ramps C and D prior to maintenance/rehab activities.	Prior to construction activities on bridges and culverts, ESO is notified.
EC-35	Potential borrow areas to be used for fill dirt for the project will be field reviewed and assessed for the presence of any jurisdictional features, and BMPs will be applied prior to disturbance to avoid and/or minimize erosion and runoff of sediments.	Construction	Status update to be phase specific.	Contractor shall comply.	Contractor shall comply.
EC-36	Construction operations will be scheduled for off-peak traffic hours when reasonable/feasible.	Construction	Status update to be phase specific.	Project specific traffic management plan has been submitted and is being monitored.	Project specific traffic management plan has been submitted.
EC-37	A traffic maintenance plan will be developed prior to construction initiation to minimize interference to traffic flow from construction equipment and activities.	Design	Status update to be phase specific.	Contractor has submitted a conceptual traffic maintenance plan and it is being monitored during construction.	Contractor has submitted a conceptual traffic maintenance plan and it is being monitored during construction.
EC-38	After SCDOT acquisition, wetland delineations will be performed on Parcels 270, 187 and 316; archaeological investigations will be conducted on Parcels 187 and 316.	Programmatic	SCDOT has complied.	N/A	N/A

Carolina Crossroads

NEPA RE-EVALUATION 6

Supporting Documentation

August 28, 2024

Contents

Introduction 1

1. Re-phasing of project construction 3

2. Design changes to be incorporated into the project 4

A. I-20 / Bush River Road Interchange 4

B. Berryhill Road Realignment 6

C. I-126/I-26 System to System Interchange: Semi-Directional Ramp 12

D. Willow Creek flood improvement 14

3. Right of way updates 17

4. Summary 34

Appendices

Appendix A: Berryhill Road Realignment Noise Memo

Appendix B: I-126 WB to I-26 EB Semi-directional Ramp Noise Analysis

Appendix C: FHWA SO&E Approvals

Appendix D: MSA Traffic Technical Report June 2022

Appendix E: Cultural Resources Short-form Report

Appendix F: Natural Resources Technical Memo Addendum

Introduction

The Federal Highway Administration (FHWA) and South Carolina Department of Transportation (SCDOT) propose to implement various strategies that will improve the mobility and enhance traffic operations within the I-20/26/126 corridors in Richland and Lexington Counties, South Carolina. The proposed project, Carolina Crossroads (CCR), will ultimately increase roadway capacity throughout the corridor and improve operations by reconstructing or improving the following interchanges: the I-20 and I-26 system to system interchange, I-26 at Broad River Road (Exit 101), I-26 at Lake Murray Boulevard (Exit 102), I-26 at Harbison Boulevard (Exit 103), I-25 at Piney Grove Road (Exit 104), I-26 at St. Andrews Road (Exit 106), I-26 at Bush River Road, I-26 at I-126, I-126 at Colonial Life Boulevard, I-20 at Broad River Road (Exit 65) and I-20 at Bush River Road (Exit 63).

FHWA approved a Final Environmental Impact Statement (FEIS) and Record of Decisions (ROD) for the Carolina Crossroads Project on May 2, 2019. Since that time, the project has progressed to construction of Phases 1 and 2 through the design-build process. Five re-evaluations have been approved for the project since the FEIS/ROD which have included design changes as design has progressed, design revisions based on the design-build process (Phases 1 and 2), and changes to right of way and parcel acquisitions based on right of way negotiations.

SCDOT is continuing to administer the project through multiple phases. The phases of construction are proposed to overlap or be performed consecutively with little or no time between phases.

This re-evaluation will address three types of project updates for the CCR project:

1. Re-phasing of the project construction
2. Design changes to be incorporated into the project
3. Right of way updates

These changes have led SCDOT to re-evaluate the environmental impacts documented in the FEIS/ROD and subsequent re-evaluations.

None of the proposed changes to project execution/construction and/or design changes would affect the ability of the CCR project to meet the purpose and need of the project as documented in the FEIS/ROD.

In addition to these updates, in re-evaluation #5, the contractor's proposed final design for Noise Barriers R and S reflected configuration changes from the originally proposed walls (refer to Table 3, Noise Barrier R Design Changes and Table 4: Noise Barrier S Design Changes in Re-eval 5 Noise Addendum dated June 16, 2022). In the Record of Decision, the use of absorptive material was originally recommended on Barriers O & S due to the potential reflections from the noise walls to unshielded receptors located on the other side of the highway. In the case of Barrier S, the original study did not recommend Barrier R, so those receptors would have been unshielded. Noise modeling was not completed to demonstrate the need for absorption; however, absorptive material was originally included as a precaution since there were unshielded receptors located across the highway. Per commitments, both walls were modeled based on the final proposed roadway design and documented in a traffic noise analysis. Portions of proposed Noise Barriers R and S run on opposing sides of the interstate where the ratio of the distance between the barriers and the height of the barrier panels is less than 10:1 (refer to Table 6: Parallel Barrier Analysis

Locations in Re-eval 5 Noise Addendum dated June 16, 2022). A parallel barrier analysis was completed at 10 receivers across the entire length of Noise Barriers R and S. The parallel barrier analysis indicated that sound levels behind Noise Barrier R may increase due to the sound reflecting between the parallel noise barrier panels. The increase in sound levels could be up to 2.0 dBA above the sound levels with the proposed barriers in place. Per guidance in the *FHWA Noise Barrier Design Handbook*, because the increase is less than 3.0 dBA this degradation is barely perceptible to the human ear. Therefore, sound absorptive material is not required to be added or included as part of Noise Barriers R and S.

These proposed changes to the barrier design resulted in additional benefited receptors and both barriers remained reasonable and feasible. Therefore, this updated design was approved as part of re-eval 5, signed November 14, 2022.

To provide additional clarification regarding the barrier designs proposed in the conclusion of the final noise analysis, SCDOT proposes the following revision to the environmental commitment EC 10:

SCDOT will install highway traffic noise abatement measures in the form of noise barriers at Noise Sensitive Areas (NSA) O, R and S. Since there are residences located on the opposite side of the interstate adjacent to Barrier O, the use of sound absorption materials will be assessed and analyzed during final design to minimize noise reflectivity of the barriers towards receptors on the other side of the interstate. If changes are proposed to the noise wall configuration during design, the CONTRACTOR shall be responsible for revising the environmental documents (re-evaluation), updating traffic noise analysis, public involvement and construction of noise wall(s).

1. Re-phasing of project construction

SCDOT has developed additional phases of work to continue the development and construction of the CCR project. The new phasing plan was developed to reduce project risk related primarily to complex utility relocations and geotechnical conditions discovered during the construction of Phases 1 and 2. The original Phase 3, which included the I-20 / I-26 system to system interchange has been divided into additional phases so that construction can continue as risks are minimized.

New phasing details and schedule are reflected in Figure 1, which includes:

- Phase 3A – Utility and Frontage Road Relocation
- Phase 3B – Clearing and Grubbing
- Phase 3C – I-20 Widening
- Phase 3D – I-26/ I-126 Improvements
- Phase 3E – I-20/I-26 System to System Interchange



Figure 1. CCR Updated Project Phasing

2. Design changes to be incorporated into the project

During detailed design and constructability reviews, the development of right of way plans, and right of way acquisition for construction of Phases 1 and 2 of the Carolina Crossroads Project, several design changes have been proposed to the Refined Recommended Preferred Alternative (RRPA) described in the FEIS/ROD. These changes are described below.

As a result of these changes, SCDOT has re-evaluated the social, environmental and economic impacts documented in the FEIS/ROD.

A. I-20 / Bush River Road Interchange

The RRPA originally proposed a diverging diamond design at the I-20 / Bush River Road interchange with an overpass across I-20 connecting Berryhill Road to Rockland Road. In efforts to improve constructability and minimize impacts to surrounding businesses, an alternative design was considered. The revised design would maintain the existing partial cloverleaf (parclo) configuration (No-build alternative in the EIS), and make improvements to ramps, intersections, and turn-lane storage thereby improving traffic operations and efficiency (Figure 2).

The revised design is within the previous project study area (PSA) and right-of-way has already been acquired. As a result of these design changes, there would be no change in impacts at this location. No other studies documented in the FEIS/ROD required updating as a result of this design change.

Traffic analyses for this design changes through a design year of 2040 were conducted during the Design-Build procurement phase; the study was reviewed by FHWA for SO&E (Safety, Operations and Engineering) approval, which was issued by FHWA Executive Director.

For this interchange, the level of service (LOS) for operational movements remains the same or improves from the original RPA concept. See LOS comparison at the I-20 / Bush River Road interchange summarized in the table below:

Table 1: Bush River Road Interchange at I-20 LOS Comparison

	RPA Design		**Parclo design**	
	AM Peak LOS	PM Peak LOS	AM Peak LOS	PM Peak LOS
I-20/Bush River Rd Merge LOS	B	F	B	D
I-20/Bush River Rd Diverge LOS	A	A	A	A

Please see Appendix C: FHWA SO&E Approvals for I-20 / Bush River for copies of FHWA approval and Appendix D: MSA Traffic Technical Report.

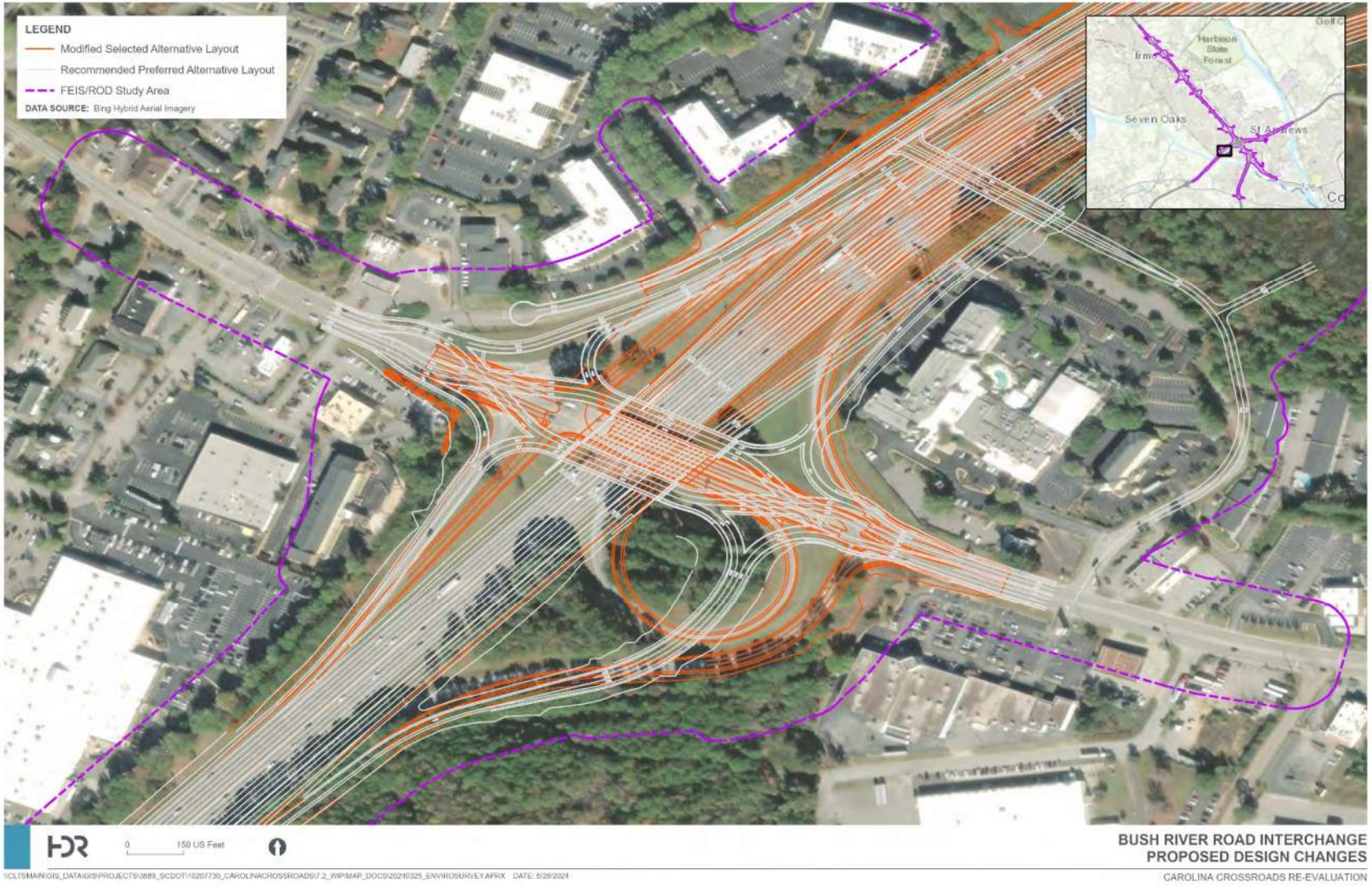

Figure 2. I-20 / Bush River Road Interchange

B. Berryhill Road Realignment

The RRPA did not make any adjustments to the alignment of Berryhill Road. An alternative design was developed which realigned Berryhill Road for approximately 750 feet through vacant parcels to its intersection with Woodland Hill Road. The realignment would relocate the existing intersection 350 feet further away from the Woodland Hill Road and St. Andrews Road intersection thereby increasing the intersection spacing by simplifying movements at the two intersections which also improves safety. In addition, the relocated Stoops Creek crossing will accommodate a bridge crossing and provide more room for utility relocations. (Figure 3).

All areas within the FEIS/ROD study have been surveyed and impacts have been assessed in the ROD and/or previous re-evaluations. Relocations in the vicinity of Berryhill Road, including the Red Roof Inn, were previously documented and this proposed realignment would not cause any additional relocations.

The re-alignment of Berryhill Rd would impact three parcels outside of the FIES/ROD PSA including Parcels 632, 633 and 634 (see Figure 3). The alignment crosses the southernmost boundary of Parcel 632 across a paved, parking lot behind the restaurant building. The alignment also crosses the northernmost boundary of Parcel 633 across a previously excavated, wooded area. Curb and drainage improvements along Woodland Hills Road could impact a minor amount of Parcel 634 along its western boundary; final amount of impacts would be dependent on the design proposed under Phase 3A.

Since these improvements/changes extend outside of the FEIS/ROD PSA, SCDOT has re-evaluated the social, environmental and economic impacts documented in the FEIS/ROD. Areas outside of the PSA (Parcels 632, 633 and 634) were surveyed for cultural resources, jurisdictional features (streams and wetlands) and threatened and endangered species (T&E) habitat. Field surveys identified no cultural resources, jurisdictional features or T&E habitat in the area of these proposed design changes.

In addition, the realignment of Berryhill Road from the FEIS alignment reduces the distance of the roadway to nearby residential receptors within noise sensitive areas (NSA) K to less than half of its original distance, so noise levels at those receptors were reanalyzed in TNM.

In the detailed noise analysis for the FEIS, the primary source of noise in the area was I-26 and therefore, traffic was not modeled on Berryhill Road. For the updated noise analysis, traffic was included along Berryhill Road to address the realignment of the road closer to the receptors. Despite modeling traffic on Berryhill Road in TNM and its realignment closer to the receptors, sound levels remained essentially the same, with a maximum increase of 0.1 dBA and a maximum decrease of 0.3 dBA. This is because of increased shielding of noise from the mainline by the profile of the realignment. This effect is generally greater than the noise from the added traffic, resulting in an overall decrease in noise levels. See attached Noise memo in Appendix A.

No new noise impacts are predicted as part of this change; therefore, no mitigation analysis is required.

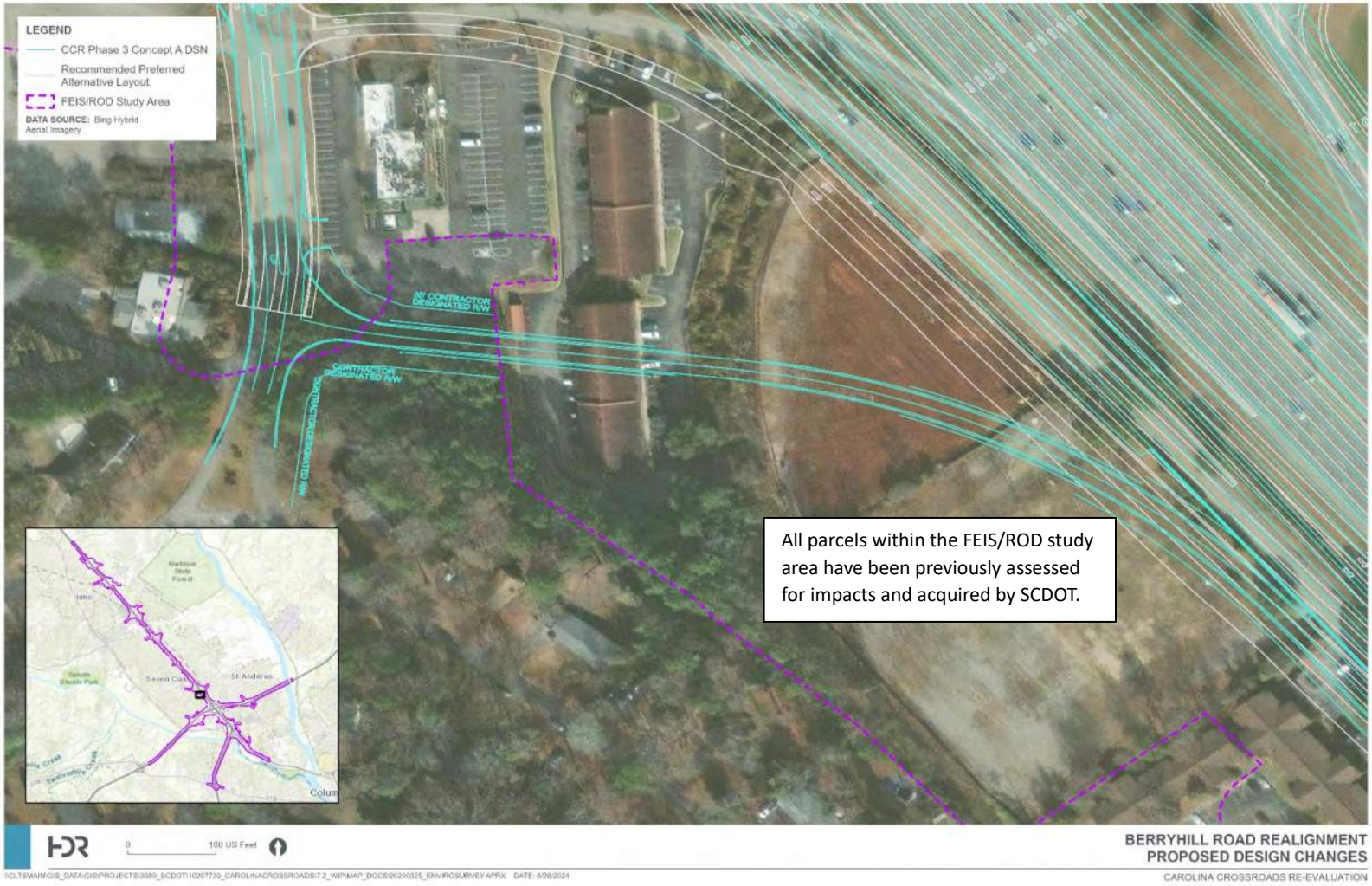

Figure 3. Berryhill Road Realignment

Parcel 632

The area outside of the PSA is located in a parking lot associated with the Tokyo Buffet restaurant along Woodland Hills Road, approximately 260 feet south of the intersection of Woodland Hills Road and Berryhill Road. The portion of the parcel observed during the field visit is approximately 0.43 acres and consists of an asphalt parking lot. The proposed right of way for the alignment would cross the southernmost portion of the parking lot. No shovel tests were excavated at Parcel 632, and no further survey is recommended at this location. No wetlands or streams were observed within this parcel. Figure 4 presents a street view of Parcel 632. Figure 5 presents a plan of Parcels 632, 633, and 634, which are contiguous but distinct.



Figure 4. Parcel 632, facing east (from Google Earth, April 10, 2024)

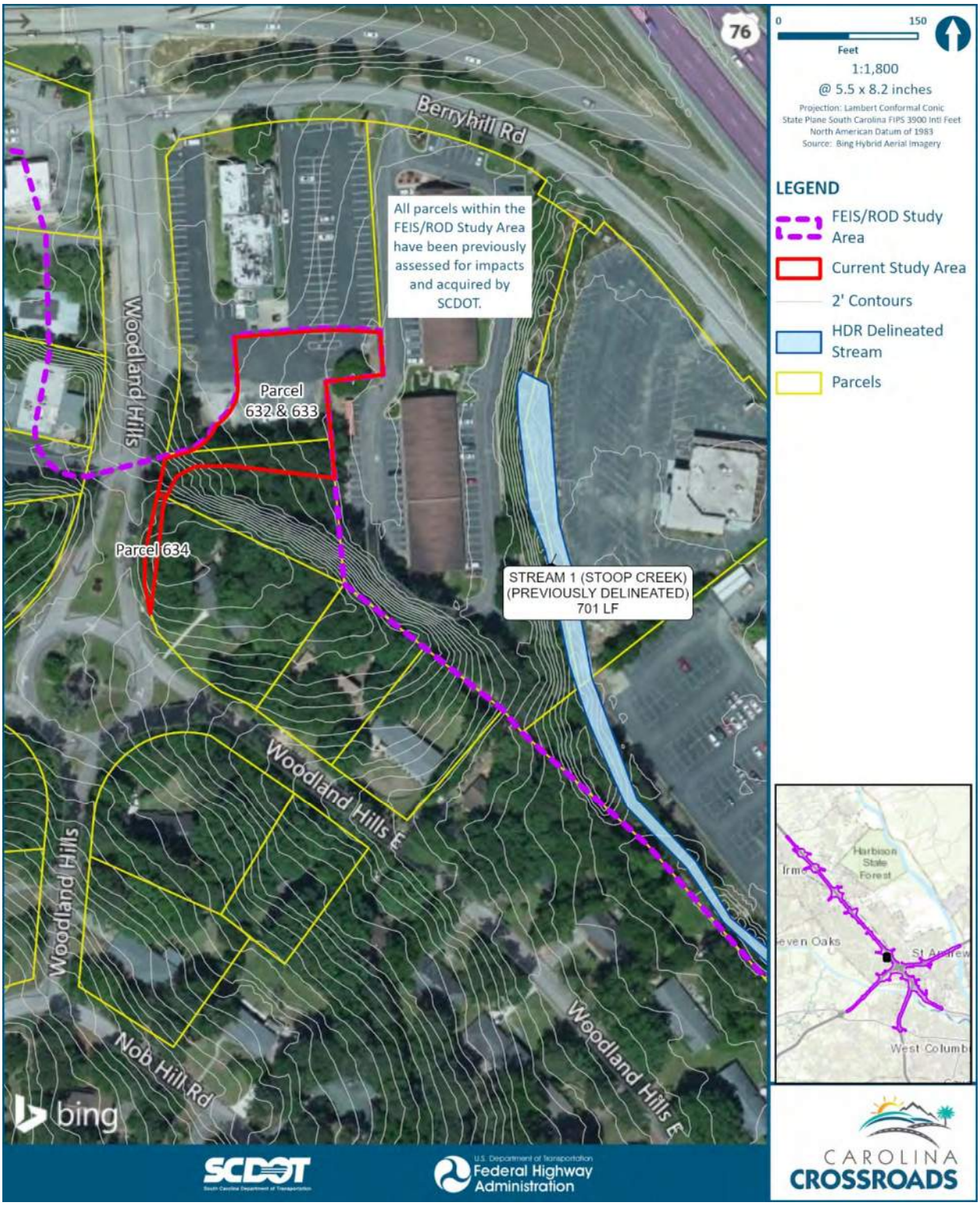

Figure 5. Parcels 632, 633, and 634

Parcel 633

The area outside of the PSA is in a wooded area along Woodland Hills Road, approximately 370 feet south of the intersection of Woodland Hills Road and Berryhill Road (refer to Figure 5). The area is approximately 0.42 acres and consists of a wooded pine and mixed hardwood forest. The area appears to have been excavated/leveled to allow for commercial development of the area. The right of way for the proposed alignment would cross the northern most portion of this parcel. No shovel tests were excavated at Parcel 633, and no further survey is recommended at this location. No wetlands or streams were observed within this parcel. Figure 6 presents a view of Parcel 633.



Figure 6. View of Parcel 633, facing southeast

Parcel 634

The area investigated is located at the intersection of Woodland Hills Road and Woodland Hills Road East (refer to Figure 5). The area is approximately 0.06 acres and consists of a landscaped yard of a single-family residence. Curb and drainage improvements could affect the western most portion of this parcel; however, final impacts at this location will be determined when design is completed for Phase 3A. No shovel tests were excavated at Parcel 634, and no further survey is recommended at this location. No wetlands or streams were observed within this parcel. Figure 7 presents a view of Parcel 634.



Figure 7. View of Parcel 634, facing south

C. I-126/I-26 System to System Interchange: Semi-Directional Ramp

The RRPA proposed a new flyover ramp to connect I-126 Westbound (WB) to I-26 Eastbound (EB). An alternative design, a semi-directional ramp was developed at this location, which shortens the length of the bridge by approximately 1,500 feet. In addition, the semi-directional ramp eliminates a heavily skewed span over the CSX railroad and eliminates a bridge over the Saluda River (Figure 8).

Although this design change is within the previously defined PSA and proposed right of way assessed in the FEIS/ROD, the new ramp alignment will shift the I-126 WB to I-26 EB alignment towards the Lexington Green Condominiums within NSA V. Noise modeling was performed to reflect these changes in the design. The proposed design reduced the number of impacted receptors from 21 to 11. An updated barrier analysis was conducted to evaluate the need for a noise barrier for these impacts, but the barrier was found to be not feasible as it could not achieve a minimum 5 dBA reduction for 75% of the impacted receptors. This is consistent with the NSA V barrier analysis for the original RRPA design, which was also found to be not feasible. See Noise Summary in Appendix B.

No other studies documented in the FEIS/ROD required updating as a result of this design change. No change of impacts presented in the FEIS/ROD are anticipated at this location.

Traffic analyses for this design change through a design year of 2040 were conducted during the Design-Build procurement phase; the study was reviewed by FHWA for SO&E (Safety, Operations and Engineering) approval, which was issued by FHWA Executive Director.

Ramp level of service (LOS) anticipated for the proposed design is the same in the original RPA concept. See LOS comparison at the I-126 / I-26 EB interchange summarized in the table below:

Table 2: I-126 WB to I-26 EB Ramp LOS Comparison

	RPA Design		**Proposed Semi-directional design**	
	AM Peak LOS	PM Peak LOS	AM Peak LOS	PM Peak LOS
I-126 WB Exit to I-26 EB	B	C	A	C

Please see Appendix C: FHWA SO&E Approvals for the I-126 / I-26 ramp for copies of FHWA approval.



Figure 8: I-126 Semi-directional Ramp

D. Willow Creek flood improvement

This 20-acre property is the site of a demolished apartment complex (Parcels 150 and 153) is anticipated to be a new right of way acquisition. SCDOT will explore the use of the property to provide floodplain storage capacity along Stoop Creek to minimize potential changes in flow conditions and water elevations as the result of the proposed project. SCDOT is performing a detailed hydraulic analysis of Stoop Creek and evaluating alternatives to retain the existing culvert structures at I-26 and I-20 reducing construction costs and traffic impacts during construction.

This proposed improvement would extend outside of the FEIS/ROD PSA and SCDOT has re-evaluated the social, environmental, and economic impacts documented in the FEIS/ROD. Areas outside of the PSA were surveyed for cultural resources, jurisdictional features (streams and wetlands) and T&E habitat.

Parcels 150 & 153

The areas outside of the PSA are located within a former multifamily housing development that was demolished and now lies barren, covered in asphalt and concrete with only small patches of trees along its edges, to the east of the former AirTime Climate Control, LLC along Fernandina Road, approximately 415 feet northwest of the intersection of St Andrews Road and Fernandina Road (see Figure 9). The area outside of the PSA is approximately 19.7 acres (Parcel 150 ~ 10.28 acres and Parcel 153 ~ 9.44 acres). The unpaved portion consists of graded uplands. No shovel tests were excavated at Parcels 150 and 153, and no further survey is recommended at these locations. Figures 10 and 11 present views of Parcels 150 and 153.

One stream (Stream 1, Stoop Creek) transects both Parcel 150 and Parcel 153 (approximately 1,259 linear feet) and flows north to south. Stoop Creek is a perennial stream with a bank height of between 8 and 10 feet and a bank full width of approximately 20 feet.

An additional perennial stream, Stream 2, was observed on the northern portion of Parcel 150 (approximately 92.6 linear feet) and flows from west to east. The stream was identified as a perennial stream with a bank height of between 3 and 8 feet and a bank full width of approximately 16 to 20 feet.

One ephemeral channel (Stream 3) was observed in the central portion of Parcel 153 (approximately 24.7 linear feet). The ephemeral channel was observed to be hydrologically connected to Stream 1 (Stoop Creek). The stream was identified as an ephemeral channel with a bank height of between 6 inches and 1 foot and a bank full width of approximately 1 foot. This ephemeral channel was observed conveying stormwater runoff during large rain events.

Marginal wetland areas have started emerging within the former paved parking areas and other impervious areas in portions of Parcels 150 and 153 due to stormwater runoff, resulting in pooling and the growth of vegetation typically found in wetland environments. These areas were observed after a large rain event. Although these areas exhibit wetland vegetation and hydric soil indicators, upon observation, they do not meet the hydrology standards set by the US Army Corps of Engineers (USACE) to classify them as potentially jurisdictional waters.

As currently proposed, the project would not impact wetlands or streams on this parcel; however, if an alternate design is proposed that did impact wetlands or streams at this location, those impacts would be documented in a re-evaluation and USACE IP modification.

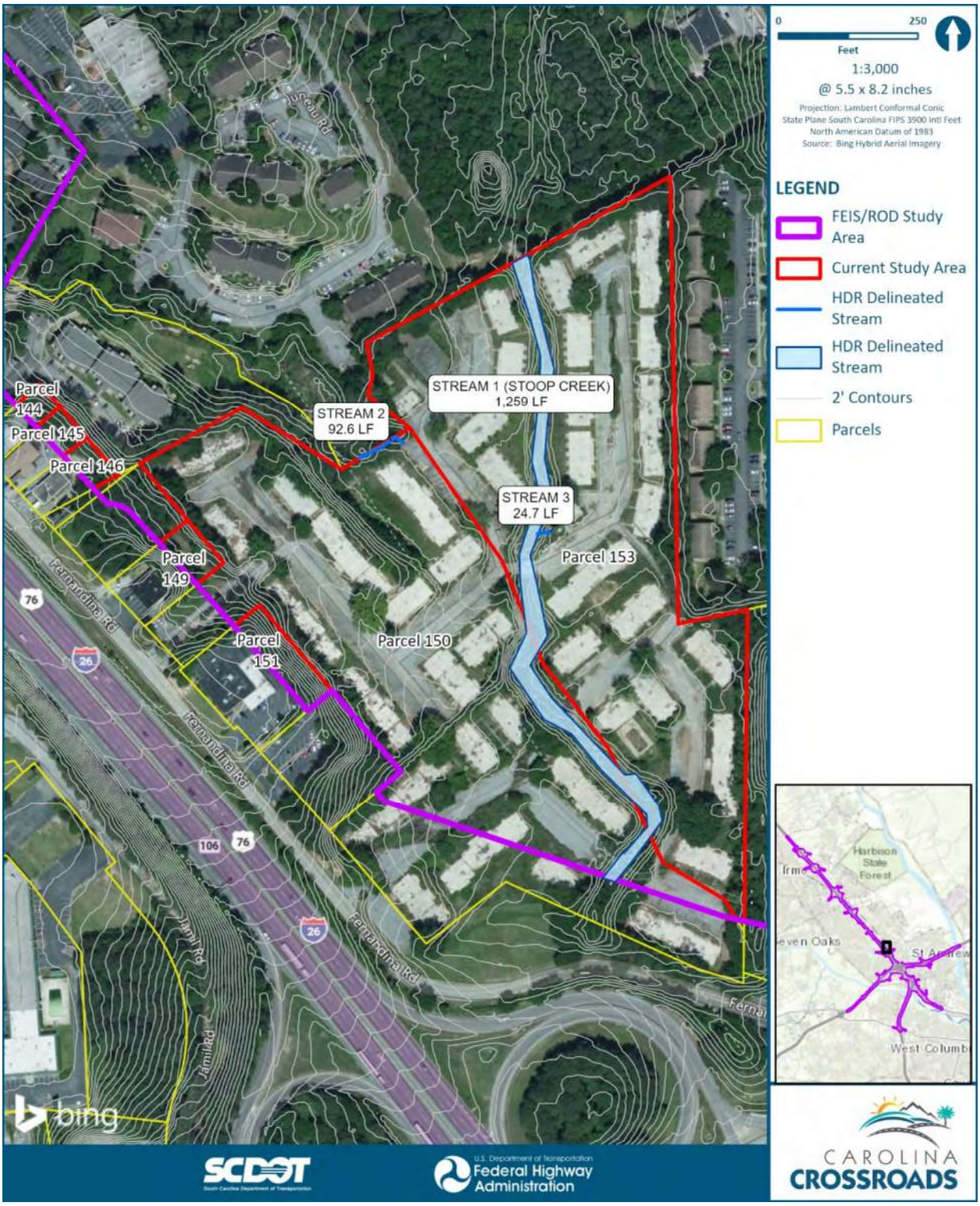

Figure 9. Parcels 144, 145, 146, 149, 150, 151, and 153



Figure 10. View of Parcel 150, facing northwest



Figure 11. View of Parcel 153, facing southwest

3. Right of way updates

As the right of way acquisition process for the CCR project continues, it has been determined that some acquired tracts included portions of the parcel(s) that extended beyond the FEIS/ROD PSA boundary. Thirteen (13) parcels had additional right-of-way extending beyond the PSA. These parcels are listed in Table 1. In Figures 5, 9, 18, 23, 25, and 27, the purple line shows the original FEIS PSA, and the red line is the updated Study Area limits that were not previously covered in the FEIS. These study area limits are generally the parcel boundary. On March 27-29, 2024, field investigations were conducted for cultural resources, jurisdictional features (streams and wetlands) and T&E habitat on all parcels that extended beyond the FEIS PSA. The investigations are summarized below.

Table 3 Summary of Parcels Extending Beyond the FEIS PSA		
General Parcel Location		
Fernandina Road	Jamil Road	Giles Parkway
151	660	698
149	661	699
146	681	
145	662	
144		
137		
109		

Parcel 151

The area outside of the PSA is located in a vacant lot along Fernandina Road, approximately 1,300 feet northwest of the intersection of Fernandina Road and St. Andrews Road (refer to Figure 9). The portion of the parcel observed during the field visit is approximately 0.33 acres and consists of a steep, wooded embankment, and paved lot. No shovel tests were excavated at Parcel 151, and no further survey is recommended at this location. No wetlands, streams, or T&E habitat were observed within this parcel. Figure 13 presents a view of Parcel 151.



Figure 13. View of Parcel 151, facing southeast

Parcel 149

The area outside of the PSA is in a vacant lot along Fernandina Road, approximately 1,650 feet northwest of the intersection of Fernandina Road and St. Andrews Road (refer to Figure 9). The portion of the parcel is approximately 0.2 acres and consists of a steep, wooded embankment, and a paved lot. No shovel tests were excavated at Parcel 149, and no further survey is recommended at this location. No wetlands, streams or T&E habitat were observed within this parcel. Figure 14 presents a view of Parcel 149.



Figure 14. View of Parcel 149, facing north

Parcels 144, 145, and 146

The area outside of the PSA is located in a vacant lot along Fernandina Road, approximately 900 feet southeast of the intersection of Fernandina Road and Evelyn Drive (refer to Figure 9). The portion of the parcels is approximately 0.27 acres (Parcel 144 ~0.07 acres, Parcel 145 ~ 0.10 acres, and Parcel 146 ~0.10 acres) and consists of a steep, wooded embankment, and a paved lot. No shovel tests were excavated at Parcels 144, 145, and 146, and no further survey is recommended at these locations. No wetlands, streams or T&E habitat were observed within these parcels. Figures 15-17 present views of Parcels 144, 145, and 146.



Figure 15. View of Parcel 144, facing north

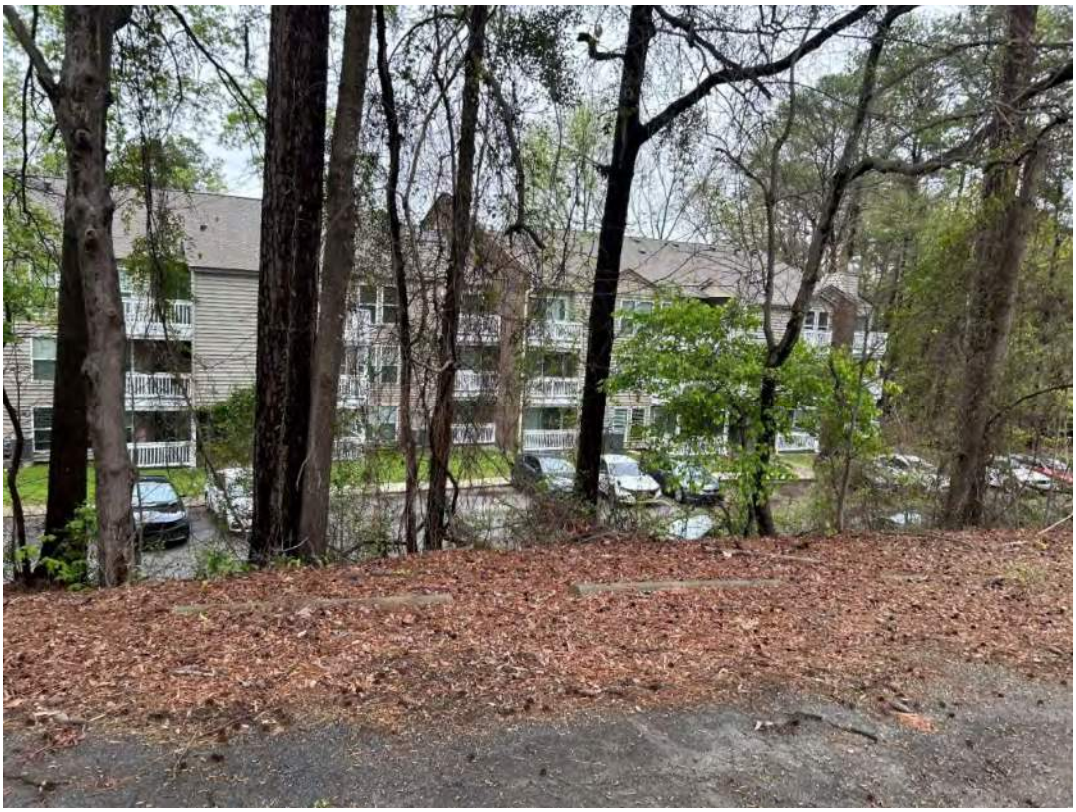

Figure 16. View of Parcel 145, facing east



Figure 17. View of Parcel 146, facing northeast

Parcels 660 and 661

The area outside of the PSA is occupied by a CubeSmart Self Storage facility and Parcel 661 is occupied by a vacant lot along Jamil Road, approximately 620 feet northwest of the intersection of Jamil Road and Paisley Lane (Figure 18). The western portions of Parcels 660 and 661 are wooded in a mix of pines and hardwoods. The portion of the parcels surveyed is approximately 3.78 acres (Parcel 660 ~2.94 acres and Parcel 661 ~0.84 acres). Portions of both parcels are covered in asphalt and concrete with only small patches of herbaceous vegetation growing in the margins between the impervious areas. Figures 19 and 20 present views of Parcels 660 and 661.

Two shovel tests were excavated at Parcel 660. The shovel tests generally exposed a 10YR4/3 brown loam from 0-25 centimeters below surface (cm bs) over a compact 10YR6/8 brownish yellow clay subsoil from 25-45+ cm bs. The fill from the shovel tests was sifted through ¼-inch mesh hardware cloth. No cultural materials were recovered from the investigations at Parcel 660. No shovel tests were excavated at Parcel 661. Therefore, no further archaeological survey is recommended at these locations.

One stream (Stream 4) transects Parcels 660 and 661 (approximately 336 linear feet) and flows from west to east. The stream was identified as intermittent with a bank height of between three to eight feet and a bank full width of approximately six feet.

One ephemeral stream (Stream 5) is located on the western border of Parcel 660 (approximately 480 linear feet) and flows from south to north. The stream was observed during the field reconnaissance to be potentially ephemeral with a bank height of between one to ten feet and a bank full width of approximately three to four feet. This ephemeral feature is hydrologically connected to intermittent stream (Stream 4).

One wetland was observed on the western edge of Parcel 660. This area exhibited indicators such as wetland vegetation, wetland hydrology, and hydric soils. This wetland feature is hydrologically connected to an ephemeral channel which drains into Stream 4.

Marginal wetland areas have started emerging within the former paved parking areas and other impervious areas in portions of Parcels 660 and 661 due to stormwater runoff, resulting in pooling and the growth of vegetation typically found in wetland environments. These areas were observed to be heavily disturbed and were examined after a large rain event. Although these areas exhibit wetland vegetation and hydric soil indicators upon observation, they do not meet the hydrology standards set by the USACE to classify them as potentially jurisdictional waters.

As currently proposed, the project would not impact wetlands or streams on this parcel; however, if an alternate design is proposed that did impact wetlands at this location, those impacts would be documented in a re-evaluation and USACE IP modification. No T&E habitat was observed on these parcels.

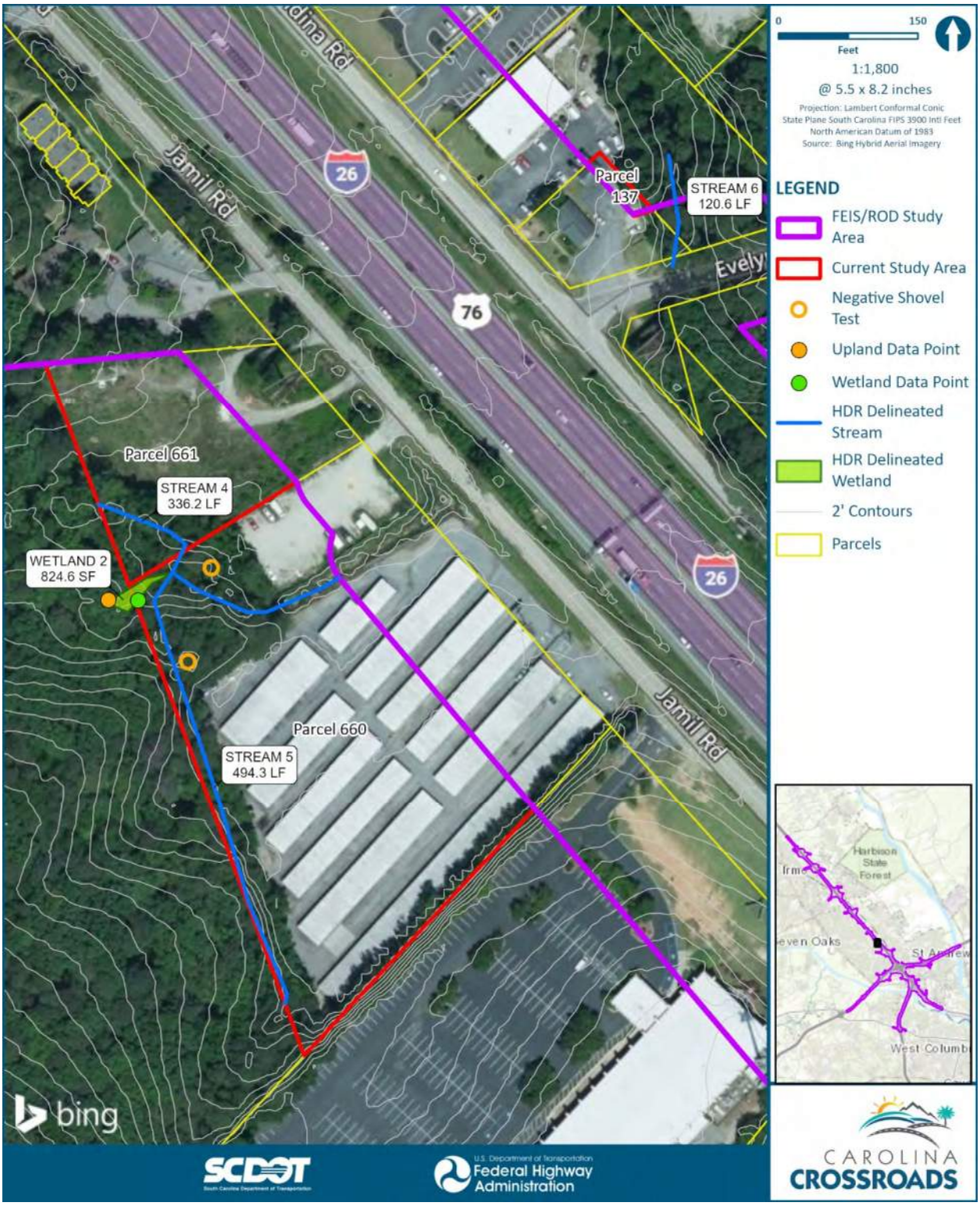

Figure 18. Parcels 660, 661, and 137



Figure 19. View of Stream 4 in Parcel 661, facing west



Figure 20. View of Parcel 661, facing southeast towards Parcel 660

Parcel 137

The area outside of the PSA is located in a parking lot of the "We the People Services" commercial building along Fernandina Road, approximately 130 feet north of the intersection of Fernandina Road and Evelyn Drive (refer to Figure 18). The portion of the parcel outside the current PSA is approximately 0.06 acres and consists of a paved parking area with sparse vegetation along the parcel boundary. No shovel tests were excavated at Parcel 137, and no further survey is recommended at this location. No wetlands, streams, or T&E habitat were observed within this parcel. Figure 21 presents a view of Parcel 137.



Figure 21. View of Parcel 137, facing north

Parcel 662

Parcel 662 is occupied by the Lakewood Village Condominium Complex on Jamil Road, just southeast of the intersection of Jamil Road and King George Way. The portions of the parcel outside of the PSA is temporary right of way that will be held by SCDOT until the end of project construction; however, this area is likely to be cleared during construction. The area is occupied by the foundations of condominiums and garages that were acquired for the project and subsequently demolished. Three small portions of the parcel total approximately 0.23 acres. All portions of the parcels are covered in asphalt and concrete with only small patches of herbaceous vegetation growing in the margins between the impervious areas. These areas were previously maintained as residential lawns prior to demolition. Figure 22 presents a view of Parcel 662. Figure 23 presents a plan view of Parcel 662.

No shovel tests were excavated at Parcel 662, and no further survey is recommended at this location. No wetlands, streams or T&E habitat were observed within this parcel.



Figure 22. View of Parcel 662, facing north

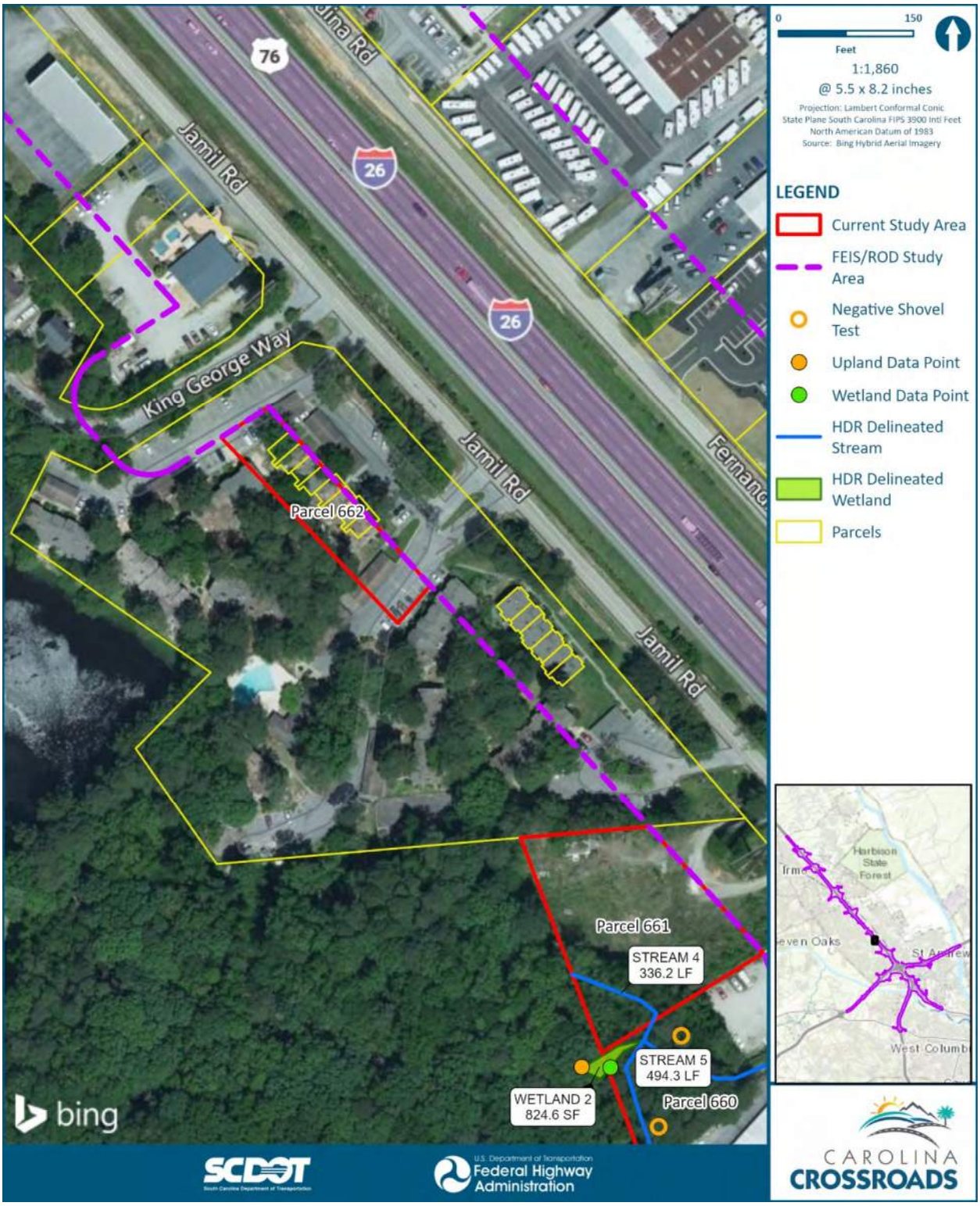

Figure 23. Parcel 662

Parcel 109

The outside of the PSA is located in a wooded area along Steward Drive, approximately 175 feet east of the intersection of Fernandina Road and Steward Drive. The portion of the parcel outside the PSA is approximately 0.02 acres located adjacent to a fenced-in tower and consists of a wooded pine and mixed hardwood forest along the parcel boundary. No shovel tests were excavated at Parcel 109, and no further survey is recommended at this location. No wetlands, streams or T&E habitat were observed within this parcel. Figure 24 presents a view of Parcel 109. Figure 25 presents a plan view of Parcel 109.



Figure 24. View of Parcel 109, facing southeast

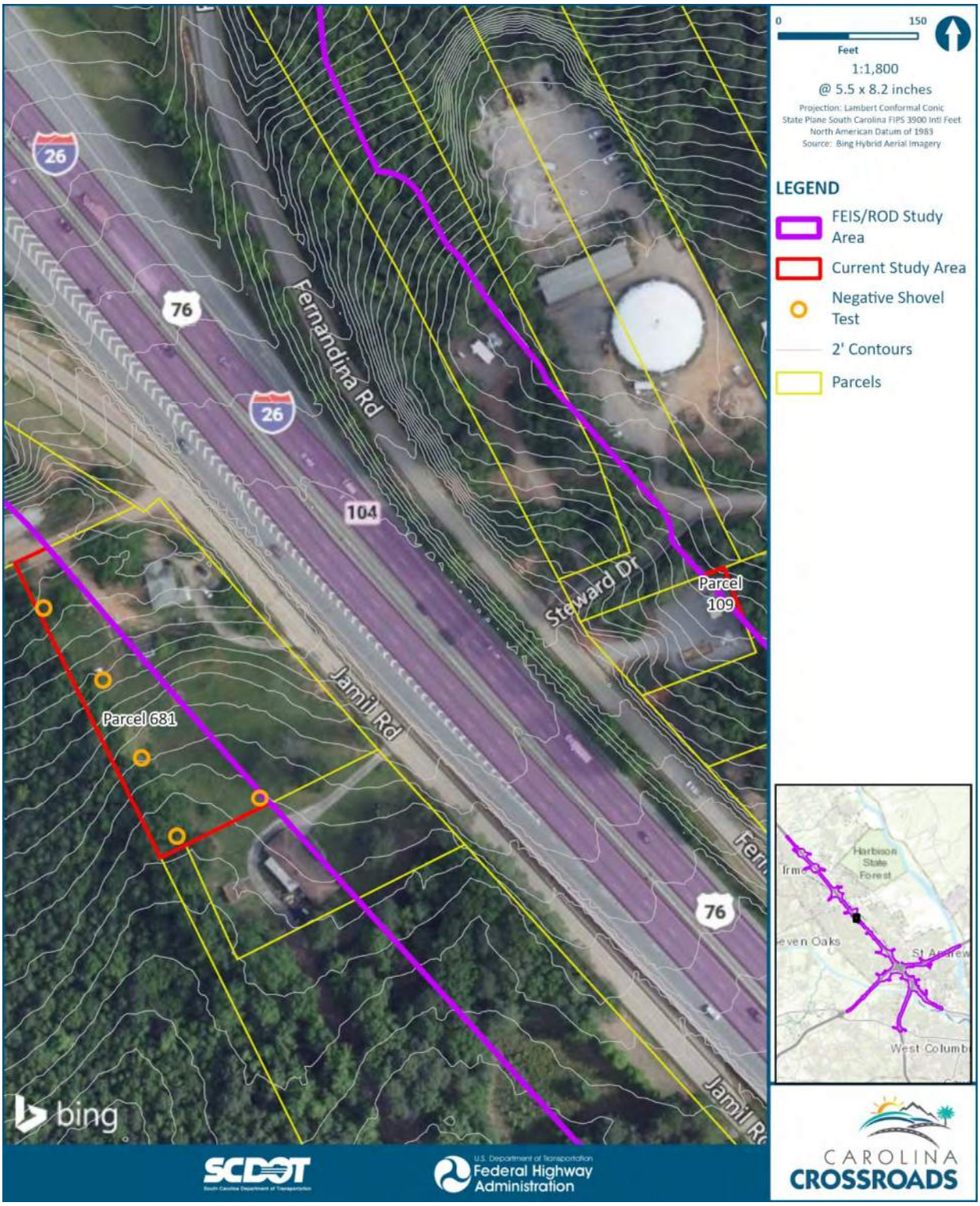

Figure 25. Parcels 109 and 681

Parcel 681

The area outside of the PSA is located in a lightly wooded area to the south of the intersection of Jamil Road and Paris Road (refer to Figure 25). A transmission line corridor borders the parcel to the north. The area is approximately 0.77 acres and consists of mixed evergreen and hardwoods with a moderate understory of small trees and vines.

Investigators excavated five shovel tests in the currently investigated western portion of the parcel. The shovel tests generally exposed a 10R3/4 dusky red clay loam from 0-10 cm bs over a compact 10R4/8 red clay subsoil from 10-30+ cm bs. The fill from the shovel tests was sifted through ¼-inch mesh hardware cloth. No cultural materials were recovered from the investigations at Parcel 681. No further archaeological survey is recommended at this location. No wetlands, streams or T&E habitat were observed within this parcel. Figure 26 presents a view of Parcel 681.



Figure 26. View of Parcel 681, facing southeast

Parcels 698 and 699

The area outside of the PSA is located along Giles Court, approximately 250 feet northwest of the intersection of Piney Grove Road and US Highway 26 (Figure 27). The portion of the parcels outside the PSA are approximately 0.71 acres combined and consist of a wooded pine and mixed shrub and vine species along the parcel boundaries. No shovel tests were excavated at Parcels 698 or 699, and no further survey is recommended at this location. No wetlands, streams or T&E habitat were observed within this parcel. Figures 28 and 29 present views of Parcels 698 and 699.

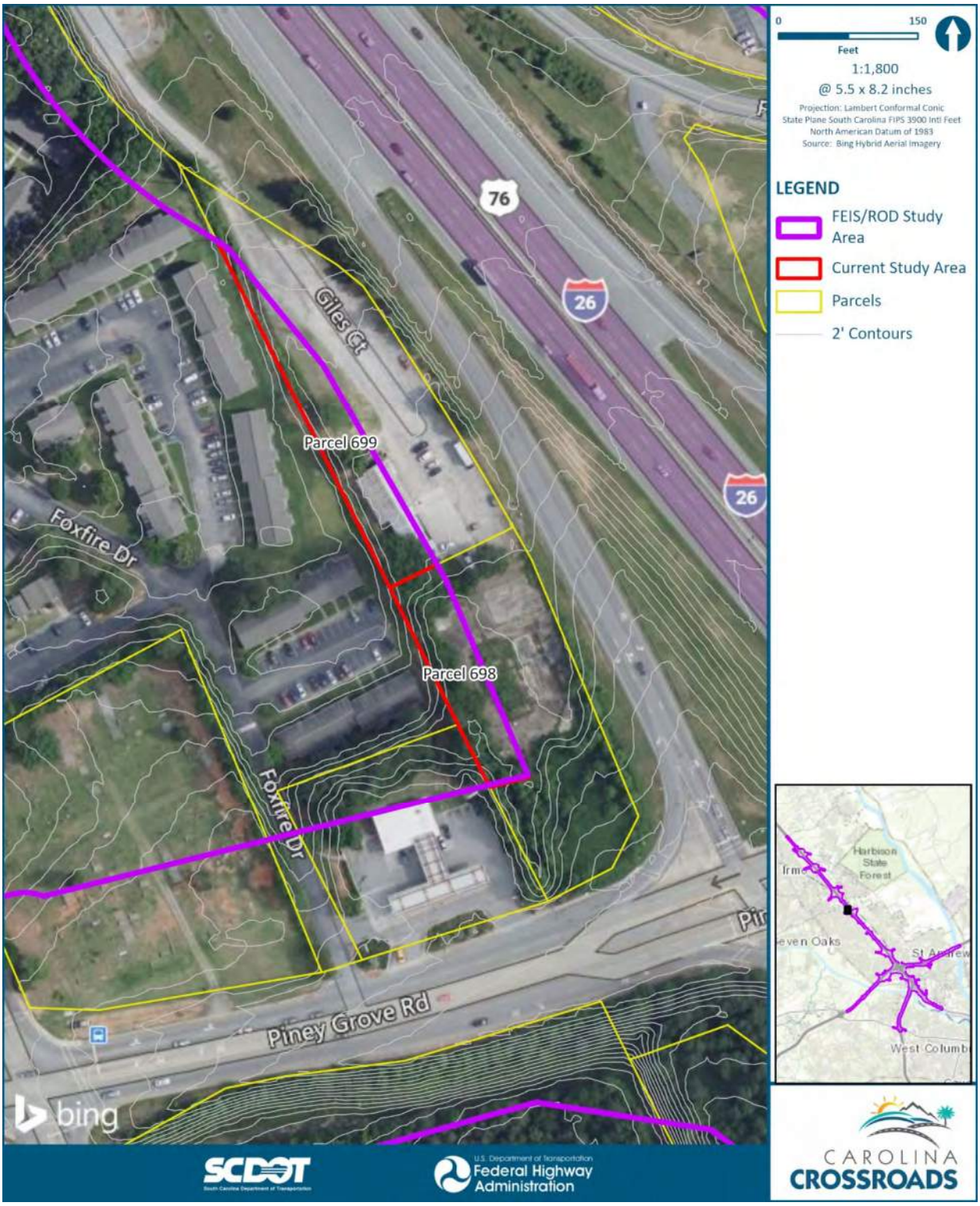

Figure 27. Parcels 698 and 699



Figure 28. View of Parcel 698, facing south



Figure 29. View of Parcel 699, facing south

4. Summary

Based on the surveys conducted for the proposed design changes, described in Section 2, no new significant impacts have been identified, therefore the previous NEPA decision remains valid. Based on surveys conducted for the right of way updates, new jurisdictional features identified are outside of the footprint of the proposed design and would not be impacted by the project; therefore, no impacts are anticipated. See impact matrix below.

If future design-build updates would require impacts to any newly documented WOTUS features, the contractor would be required to submit jurisdictional determinations and a Section 404 permit modification to the USACE.

See SHPO concurrence letter in Appendix E.

Table 4 Project Changes – Summary of Impact Changes from Previous NEPA decisions

	Wetlands/ Streams (acres)	Cultural Resources (sites/findings)	Relocations	Environmental Justice	T&E Habitat (presence)	Noise (Impacted receivers)
I-20/Bush River Rd Interchange	No new impacts	None found	No new impacts	No change in impacts	No	No new impacts
Berryhill Rd Realignment	No new impacts	None found	No new impacts	No change in impacts	No	No new impacts
I-126 to I-26 Semi-directional ramp	No new impacts	None found	No new impacts	No change in impacts	No	No new impacts
Willow Creek flood improvement	No new impacts	None found	No new impacts	No change in impacts	No	No new impacts
Right of way updates	No new impacts	None found	No new impacts	No change in impacts	No	No new impacts

Appendix B – Project Report Methodology

CAROLINA CROSSROADS



PROJECT METHODOLOGY REPORT

I-20/I-26/I-126 Systems Interchange Modification Report (Systems IMR) Reevaluation

April 3, 2024

Contents

Traffic Analysis Objective 1
Introduction 1
Background 2
Alternatives Traffic Analysis (April 2019) 2
The approved Systems IMR (May 2019) 3
NEPA 4
NEPA Re-evaluation #1 - Colonial Life Boulevard (Phase I) 5
NEPA Re-evaluation # 5 – Broad River Road Technical Memorandum (Phase II) 5
Modified Selected Alternative Phase 1/Phase 2 Traffic Technical Report (June 2022) 6
Systems IMR Reevaluation Overview 7
Systems IMR Re-evaluation Reasons 8
Systems IMR Re-evaluation Schedule 9
Study Area 9
Analysis Years 10
Analysis Periods 10
Project Alternatives 10
Data Collection and Traffic Forecasting 10
Data Collection 10
Traffic Factors 11
Traffic forecasting 11
Traffic Operational Analysis 12
Safety Analysis 12
Safety Analysis 12
Consistency with Other Plans/Projects 13
Environmental Considerations 13
Anticipated Design Exceptions and Variations 13
Conceptual Signing Plan 13
Access Management Plan 13
Documentation 13

List of Figures

Figure 1 - Carolina Crossroads Study Area from Alternatives Traffic Analysis (April 2019) 3
Figure 2 - Phase 1 Preferred Concept for Colonial Life Boulevard Interchange..... 5
Figure 3 - Phase 2 Preferred Concept for Broad River Road Interchange..... 6
Figure 4 - Exit 63 Bush River Road Existing Tie-In Concept..... 7
Figure 5 - The Latest Phasing Map 8

Traffic Analysis Objective

The South Carolina Department of Transportation (SCDOT) proposes multiple improvements to the I-20, I-26, and I-126 corridors within what is identified as the Carolina Crossroads study area. The limits of the Carolina Crossroads study area include approximately five miles of I-20 between Exit 61 (US-378/Sunset Boulevard) and the crossing over the Broad River, approximately nine miles of I-26 from Exit 101 (Broad River Rd) to Exit 110 (US 378), and approximately two miles of I-126 from I-26 to Grey Stone Boulevard.

This Methodology report outlines the limits, method, and assumptions that will be used to analyze and document existing and future traffic conditions within the Systems Interchange Modification Report (Systems IMR). The analysis results will be documented in the Systems IMR. The analysis will follow procedures and guidance from the latest Highway Capacity Manual (HCM) 7th Edition, Highway Safety Manual (HSM), 1st Edition, with 2014 Supplement, Federal Highway Administration (FHWA) Interstate System Access Information Guide (2010), FHWA Policy on Access to the Interstate System (2017), and SCDOT Interchange Modification Report (IMR)/ Interchange Justification Report (IJR) Guidelines (2019).

The 2019 approved Systems IMR is being reevaluated due to the change in the Design Year (from 2040 to 2050), Design Changes at multiple interchanges and the change in TransModeler Version**.** In this reevaluation, the study area will be calibrated using the latest TransModeler version (version 7) for 2024 conditions. Using the calibrated parameters, the approved 2019 Systems IMR concept will be compared with the proposed improvements in the Systems IMR Reevaluation for the Design Year 2050 conditions.

Introduction

The Carolina Crossroads Project includes three interstate routes and incorporates the modification of the I-20/I-26 system interchange (Exit 64/Exit 107) and the I-26/I-126 system interchange (Exit 108). Several immediately adjacent service interchanges are expected to be modified as well. Due to the proximity and interconnected movements of the service interchanges with the system interchanges, the modifications of all the interchanges are to be evaluated collectively.

I-20 is an east-west interstate highway that begins near Kent, Texas at I-10. From this origin, I-20 runs eastward through Texas, Mississippi, Alabama, Georgia, and South Carolina where it ends at I-95 in Florence, South Carolina. I-26 is an east-west interstate highway that begins at the junction of U.S. Route 11W and U.S. Route 23 in Kingsport, Tennessee. From this origin, I-26 runs generally southeastward through Tennessee, North Carolina, and South Carolina, where it ends at U.S. Route 17 in Charleston, South Carolina. I-126 is an east-west auxiliary route of I-26 that begins and ends in Columbia, South Carolina.

The proposed project is a transportation corridor improvement located in Lexington and Richland counties. To date, the project area has been defined as a mainline corridor including I-20 from US 378 to the Broad River (approximately five miles), I-26 from Broad River Road to US-378 (approximately nine miles), and I-126 from I-26 to Grey Stone Boulevard (approximately two miles). **Figure 1** illustrates the extent of the Carolina Crossroads study area.

The original I-20/I-26/I-126 Systems IMR, dated May 2019, evaluated the anticipated interchange modifications as depicted in the Final Environmental Impact Statement (FEIS) for the project. Since the approval of the Systems IMR, the Carolina Crossroads I-20/I-26/I-126 Corridor Improvement Project has been separated into five construction phases. The first three phases of the Carolina Crossroads Project comprise most of the work documented in the Systems IMR. Improvements to the I-126 at Colonial Life Boulevard interchange are now part of Phase 1 of the Carolina Crossroads Project Delivery while the I-20 Exit 65 Interchange at Broad River Road is now part of Phase 2. Phases 1 and 2 are both under

construction as design-build projects and the construction are expected to be completed in 2025. The improvements to I-20/I-26/I-126 system interchanges, along with I-20 Exit 63 (Bush River Road) and I-26 Exit 106 (St. Andrews Road) were part of Phase 3, which was also to be a design-build project. Traffic Technical Memoranda addressing changes to the I-126 Colonial Life Boulevard interchange and I-20 Exit 65 (Broad River Road) were submitted as part of the Phase 1 and Phase 2 design-build projects, ID P039718 and ID P039719, respectively.

As the evolution of the Carolina Crossroads Project through the phased construction delivery is discussed, it is important to understand the key terms that define various milestones in the evolution of the design as it relates to the FEIS and the Record of Decision (ROD) for the Carolina Crossroads Project and the Systems IMR. The design concept depicted in the FEIS was referred to as the **Refined Recommended Preferred Alternative (RRPA)**, which as the name implies was a refinement to the Recommended Preferred Alternative (RPA) presented the in the Draft Environmental Impact Statement (DEIS). Since the Systems IMR was developed in parallel with the EIS documents, the nomenclature associated with the design concept in the documents was consistent and therefore the Systems IMR refers to the design concept used in the "Build" analysis as the RRPA. Once the ROD was issued in May of 2019, the RRPA concept became known as the **Selected Alternative (SA)**; however, many of the reference documents to the FEIS/ROD were not updated to reflect this change in nomenclature, including the Systems IMR. *Therefore, the terms RRPA and SA are synonymous.*

As the Carolina Crossroads Project has advanced through the initial construction phases and right-of-way acquisition, the design concept has been updated periodically. These updates include changes to the design associated with the final design that have been developed during Phases 1 and 2 and changes made to the design concept outside of Phases 1 and 2 based on refinements made during right-of-way acquisition throughout the entire limits of the Carolina Crossroads Project. The version of the design concept that includes all these changes is referred to as the **Modified Selected Alternative (MSA)**.

Background

The following studies were conducted as a part of the Carolina Crossroads Project:

Alternatives Traffic Analysis (April 2019)

The traffic analysis of the Representative Alternatives (RA) consisted of an iterative process involving the development of traffic projections incorporating previously collected data, screening of interchange Accessory Options (AO) that led to the development of the individual RA, evaluating microsimulation networks of individual RA concepts that included microsimulation model calibration, review of areas of congestion within each alternative, and preparation of measures of effectiveness to facilitate the comparison of individual RA. As areas of congestion and improvements in conceptual design of the RA were addressed, the microsimulation networks were modified to incorporate improvements to the original RA concept. Detailed information regarding the alternatives development and screening process is contained in the Alternatives Development and Screening Report.

The Alternatives Traffic Analysis evaluated multiple improvements within the I-20/I-26/I-126 corridor designed to reduce existing traffic congestion, upgrade interchanges to meet design requirements, and accommodate future traffic needs. The study considered widening of I-20 from three to four lanes in each direction from about one mile west of Exit 63 (Bush River Road) to Broad River, widening of I-26 from three to four lanes in each direction from just west of Exit 101 (Broad River Road) to Exit 110 (US 378), and realigning the connection to I-126 from I-26 towards the Colonial Life Boulevard interchange. In addition, the study examined modifications to the I-20/I-26/I-126 system interchange, Exit 101 (Broad River Road), Exit 102 (Lake Murray Boulevard), Exit 103 (Harbison Boulevard), Exit 104 (Piney Grove

Road), Exit 106 (St. Andrews Road), Exit 108 (Bush River Road), Exit 110 (US 378), Exit 63 (Bush River Road), Exit 65 (Broad River Road), and the Colonial Life Boulevard interchange on I-126. The Study Area for the Alternatives Traffic Analysis is shown in **Figure 1**.

Figure 1 - Carolina Crossroads Study Area from Alternatives Traffic Analysis (April 2019)



The approved Systems IMR (May 2019)

The information discussed in the approved Systems IMR (May 2019) is derived from the Alternatives Traffic Analysis (April 2019). This report focused on traffic analysis of existing, future no-build, and future build conditions. The study area and TransModeler (version 4) remained consistent with the Alternatives Traffic Analysis (April 2019). The traffic conditions were analyzed for the following scenarios:

- Existing Conditions: An analysis of existing conditions in the year 2015
- 2040 No-Build: An analysis of conditions in the year 2040 with no changes to the interstate or interchanges.
- 2040 Build: An analysis of conditions in the year 2040 with modifications to the study area interstate and interchanges

As part of the project development, nine RAs for the entire Carolina Crossroads study area were developed and evaluated along with a tenth 'no-build' alternative. From these alternatives, the RRPA also known as the **SA** was identified. The I-20/I-26 and I-26/I-126 system interchanges and adjacent service interchanges in the RRPA were modified as follows:

- I-20/I-26 System Interchange: the existing full cloverleaf interchange (I-20 Exit 64 and I-26 Exit 107) will be modified to a directional 'turbine' interchange. Multiple existing complex weaving movements will be eliminated from the mainline and relocated to collector-distributor roads which will be constructed in each direction on I-20 and I-26 to separate movements traveling between I-20 and I-26 from through traffic on the mainline travel lanes.

- I-26/I-126 System Interchange: the existing interchange (I-26 Exit 108), which includes ramps from I-26 to Bush River Road, will be modified to eliminate the ramps to Bush River Road, improve the continuity of I-26, and revise the connection to and from I-126.

- I-20 Exit 63 (Bush River Road): the existing diamond interchange, which includes a loop on-ramp from eastbound Bush River Road to eastbound I-20, will be modified to provide a diverging diamond interchange. This modification includes eliminating the intersection of Berryhill Drive with Bush River Road and adding an overpass to connect Berryhill Drive over I-20 to Bush River Road via Rockland Road.

- I-20 Exit 65 (Broad River Road): the existing diamond interchange at Broad River Road, which includes a short, two-way segment on the eastbound on-ramp to connect Garner Lane to Broad River Road, will be modified to provide a single point urban interchange. The Garner Lane connection to the off-ramp was eliminated, making the interchange consistent with current standards and FHWA policy. A new connection was added to link Garner Road to Longcreek Drive.

- I-26 Exit 106 (St Andrews Road): the existing partial cloverleaf interchange includes a westbound loop off-ramp and eastbound loop on-ramp to and from westbound St Andrews Road. It will be modified to provide a single point urban interchange. The connections from the westbound off-ramp to eastbound St Andrews Road and to Burning Tree Drive will be maintained and adjusted to connect to the remainder of the modified interchange.

- I-26 Exit 110 (US 378): the existing single point urban interchange will remain unchanged; however, the eastbound off-ramp to US 378 will be relocated and extended by approximately 2,500 feet to reduce or eliminate the potential for off-ramp traffic queues from extending back to the eastbound I-26 mainline lanes.

- I-126 Colonial Life Boulevard: the existing partial interchange with ramps only oriented to and from downtown Columbia to the east will be replaced with a full access tight urban diamond interchange.

NEPA

A National Environmental Policy Act (NEPA) DEIS was completed in 2019, where the environmental impacts associated with the project were analyzed and documented. The Record of Decision was issued by FHWA in May 2019.

NEPA Re-evaluation #1 - Colonial Life Boulevard (Phase I)

For this interchange, a full access tight urban diamond interchange was proposed in the approved Systems IMR. As part of the Phase 1 construction, an alternative design (partial diverging diamond interchange) (see **Figure 2**) concept was chosen as the most preferred concept based on several factors such as design innovation, constructability, cost effectiveness, and traffic operations.
This analysis was conducted using TransModeler version 4 to ensure that the proposed interchange design would not have significant impacts on the traffic operations and safety during AM and PM peak hours under current year (2020) and design year (2040) traffic conditions. The full traffic analysis including the interchange justification for this preferred alternative can be found in the September 2021 *Technical Memorandum I-126 at Colonial Life Boulevard Interchange – Traffic Analysis.* The changes to the Phase 1 design from the 2019 Systems IMR concept were included in the NEPA Re-evaluation #1 approved in August 2020.

Figure 2 - Phase 1 Preferred Concept for Colonial Life Boulevard Interchange

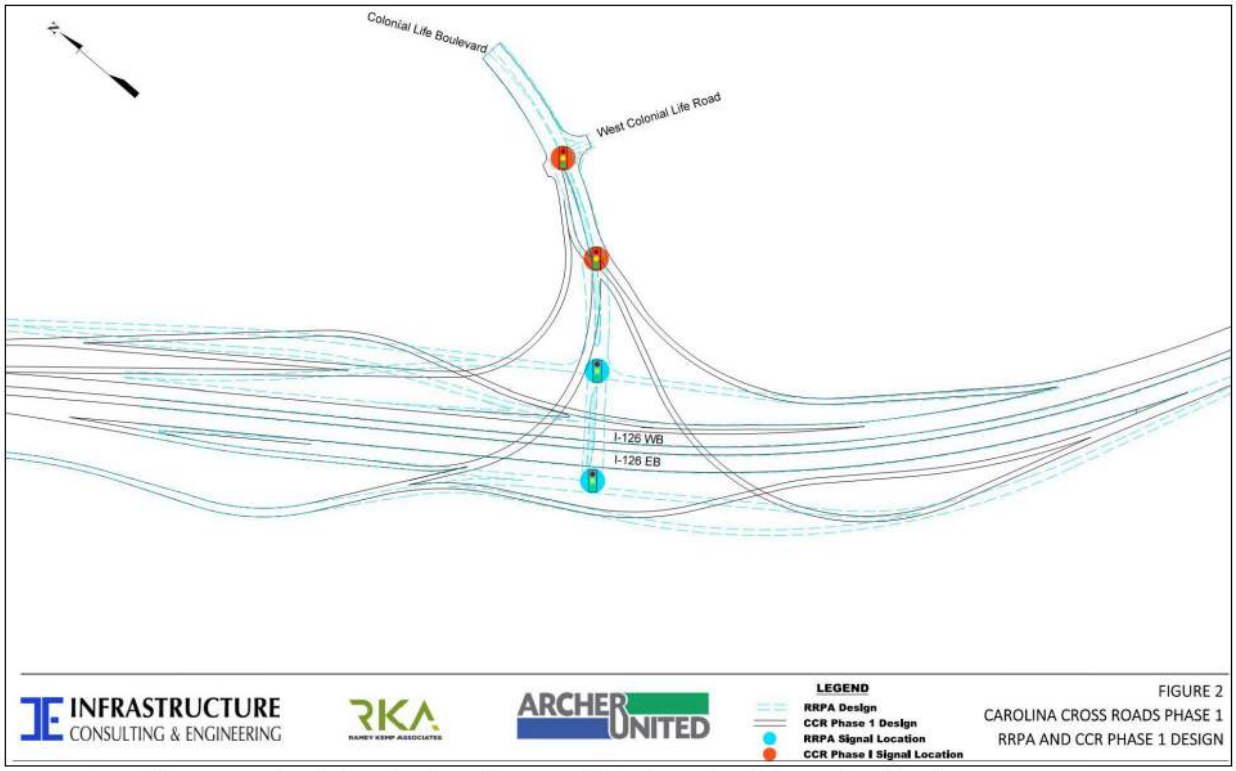

Source: Figure 2 of the *I-126 at Colonial Life Boulevard Interchange – Traffic Analysis Technical Memorandum (page 3)*

NEPA Re-evaluation # 5 – Broad River Road Technical Memorandum (Phase II)

For this interchange, a single point urban interchange (SPUI) was proposed in the approved Systems IMR. As part of the Phase 2 construction, an alternative design Offset Diverging Diamond Interchange (DDI) concept (see **Figure 3**) was chosen as the most preferred concept based on several factors such as design innovation, constructability, cost effectiveness, and traffic operations. This design incorporates two new crossover intersections rather than signal point intersection as part of the **Selected Alternative**. The analysis was conducted using TransModeler version 4 to ensure that the proposed interchange design would not have significant impacts on the traffic operations and safety during AM and PM peak hours under current year (2020) and design year (2040) traffic conditions. The full traffic analysis including the interchange justification for this preferred alternative can be found in the March 2022

Technical Memorandum I-20 at Broad River Road Interchange – Traffic Analysis. The changes to the Phase 2 design from the 2019 IMR concept were included in the NEPA Re-evaluation #5 approved in September 2022.

Figure 3 - Phase 2 Preferred Concept for Broad River Road Interchange

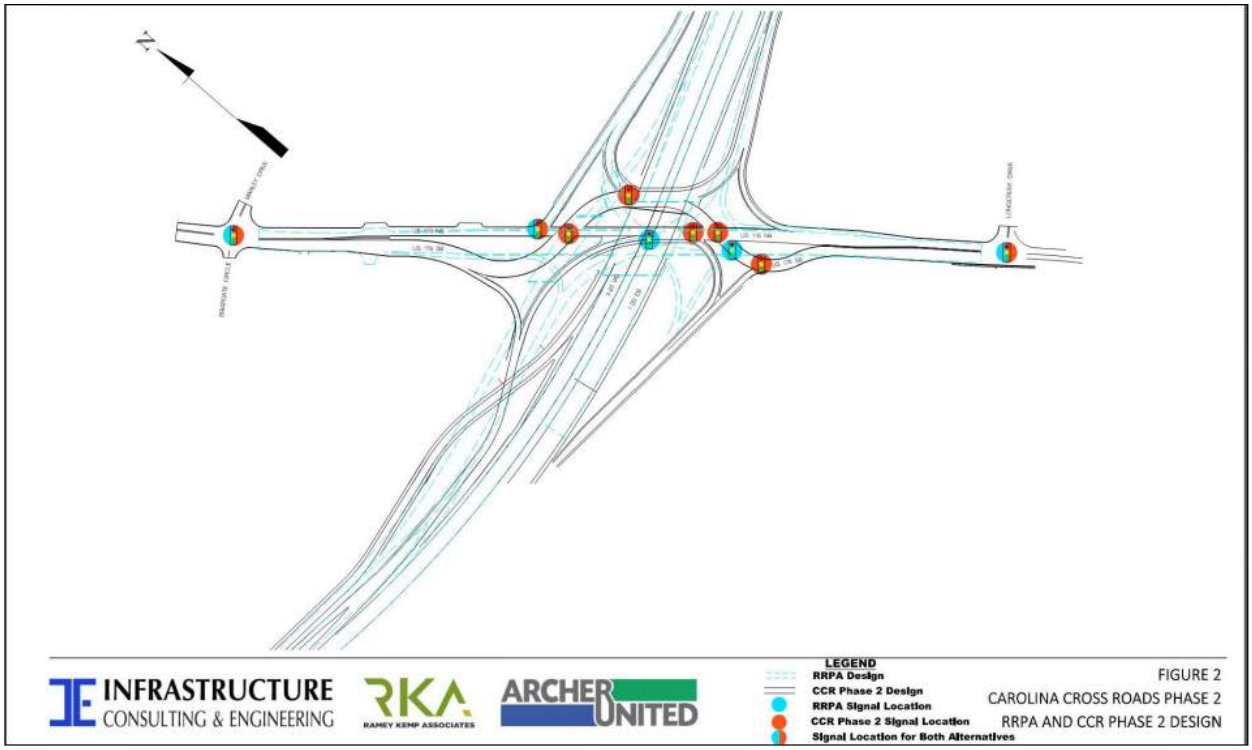

Source: Figure 2 of the *I-20 at Broad River Road Interchange – Traffic Analysis Technical Memorandum (page 3)*

Modified Selected Alternative Phase 1/Phase 2 Traffic Technical Report (June 2022)

As the Carolina Crossroads Project has advanced through the initial construction phases, the design concept has been updated to accommodate refinements made during right-of-way acquisition throughout the entire limits of the Carolina Crossroads Project. The version of the design concept that includes all of these changes is referred to as the **MSA**.

Due to substantial updates to the 2040 **SA** network, a simulation-based, dynamic traffic assignment (DTA) was completed for the 2040 AM and PM scenarios using TransModeler version 4. The analysis results of the mainline density segments for the 2040 SA (referred to the 2040 Build RRPA as part of the approved IMR) and the 2040 MSA conditions were compared and summarized in June of 2022 *Technical Memorandum Modified Selected Alternative Phase1/Phase 2 Traffic Report.* This report also summarized the updated MSA network analyses including the final design concepts for Phase 1 and Phase 2 and an updated interchange concept at I-20 Exit 63 (Tie-in) as shown in **Figure 4**. These three changes are described below and constitute the major changes from the RRPA/SA as it relates to effects on the Systems IMR. MSA network analyses MOEs were compared against the approved Systems IMR to demonstrate improved operations and safety.

Figure 4 - Exit 63 Bush River Road Existing Tie-In Concept



Systems IMR Reevaluation Overview

As documented in the approved Systems IMR, the primary purpose of Carolina Crossroads Project is to increase capacity and have an adequate future level of service along the I-20/I-26/I-126 System Interchanges and to find improvements to the issues that impact roadway traffic. These issues may include system linkage, capacity, modal interrelationships, and safety.

As the Carolina Crossroads Project has advanced through the initial construction phases and right-of-way acquisition, the design concept has been updated periodically and the latest phasing and the schedule is shown in **Figure 5**. The primary purpose of this Systems IMR Reevaluation is to reassess the safety and traffic operations of proposed design changes with updated data and forecasting projections. Additionally, the Systems IMR Reevaluation aims to address any changes in traffic volumes that may have emerged since the approval of the Systems IMR in 2019.

Figure 5 - The Latest Phasing Map

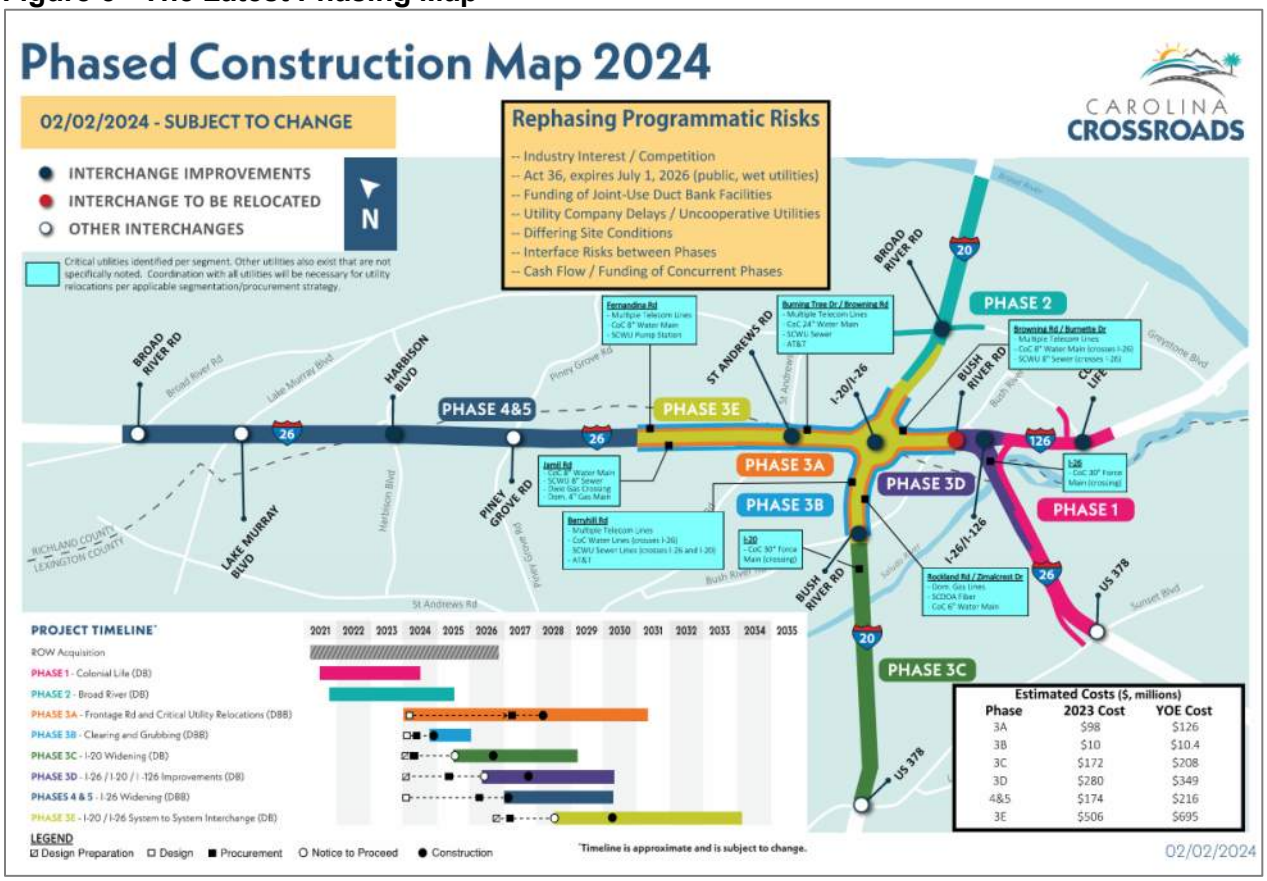

Systems IMR Re-evaluation Reasons

There are three primary reasons necessitating the reevaluation of the approved Systems IMR. These are listed below.

Reason 1 – Change in the Design Year

The approved IMR and subsequent traffic analyses for Phase 1, Phase 2 and MSA have used Design Year 2040. The basis for 2040 projected traffic volumes was the 2040 South Carolina Statewide Model (SCSWM) and a 20-year design life of the project. The SCSWM is currently updated to Horizon Year 2050 and will be used to project traffic volumes for the Design Year 2050. Procurement challenges have resulted in the rephasing of the Project in 2024 which extends the Carolina Crossroads construction schedule and results in the I-20/I-26 system interchange construction phase planned to start in 2028. To evaluate the 2020-year design life of the project, the design year has been revised to 2050.

Reason 2 – Design Changes

To obtain SO&E and NEPA approval for changes documented in the MSA and proposed design changes at the following interchanges:

- I-20 and I-26 System Interchange
- I-126 and I-26 System Interchange
- I-26 at St. Andrews Road

- I-20 at Bush River Road
- I-20/I-26 System Interchange collector-distributor system
- Colonial Life Boulevard at I-126
- Broad River Road at I-20

Reason 3 – Change in TransModeler Version

- The TransModeler (Version 4.0 Build 6275) was used for the approved Systems IMR and subsequent traffic analysis for Phase 1, Phase 2 and MSA. The Highway Capacity Manual (HCM) methodologies have evolved from HCM 2010 since the Systems IMR approval to the latest HCM 7th edition. Similarly, the current TransModeler is version 7 which implements the latest HCM methodologies. This reevaluation will conduct traffic analysis using the latest TransModeler version 7.

Systems IMR Re-evaluation Schedule

The current Systems IMR Reevaluation Study tentative schedule is as follows:

- Systems IMR Reevaluation Start: March 2024
- Data Collection: April/May 2024
- TransModeler Calibration: July 2024
- Draft Systems IMR Reevaluation for FHWA: October 2024

Study Area

The Systems IMR Reevaluation Study area will be same as the approved Systems IMR as shown in **Figure 1**. The study area includes the following:

I-26 from Broad River Road to US-378 (approximately nine miles) including eight interchanges:

- I-26 at Broad River Road (SR 176)
- I-26 at Lake Murray Boulevard (SR 60)
- I-26 at Harbison Boulevard
- I-26 at Piney Grove Road
- I-26 at St. Andrews Road
- I-26 at I-20
- I-26 at Bush River Road
- I-26 at I-126
- I-26 at Sunset Boulevard (US 378) -adjacent interchange analyzed to address FHWA requirements.

I-20 from east of US 378 to the Broad River (approximately five miles) including three interchanges:

- I-20 at Sunset Boulevard (US 378) -adjacent interchange analyzed to address FHWA requirements.
- I-20 at Bush River Road
- I-20 at Broad River Road

I-126 from I-26 to Grey Stone Boulevard (approximately two miles) including two interchanges:

- I-126 at Colonial Life Boulevard
- I-126 at Greystone Boulevard -adjacent interchange analyzed to address FHWA requirements.

All ramp terminal intersections adjacent to the thirteen study interchanges along I-20, I-26 and I-126 are included in the study area.

Analysis Years

The corridor will be analyzed for the following years:

- Existing Year 2024
- Design Year 2050

Analysis Periods

Morning (AM) peak, and afternoon (PM) peak hour traffic conditions will be evaluated within the study area to account for the significant directional flow of traffic in the respective peak hours.

Project Alternatives

The project will evaluate the following:

- **Existing Condition (2024)** – baseline for microsimulation calibration
- **Approved Systems IMR/SA Concept (2050)** – Baseline for comparison
- **Build Alternative (2050)** - Proposed improvements in the Systems IMR Reevaluation

Data Collection and Traffic Forecasting

Data Collection

Consistent with the approved Systems IMR the following data will be obtained:

- **Road Inventory Data:** Road Inventory Data will be obtained from SCDOT RIS Database.
- **Turning Movement Count:** New turning movement counts including pedestrian and bike counts will be collected at the study intersections and ramp terminal intersections as identified in the **Study Area Section**.
- **Vehicle Classification Counts:** Vehicle classification counts will be collected at the study segments identified in the **Study Area Section**.
- **Automatic Traffic Recorder (ATR) Data:** ATR data will be obtained from SCDOT for all active stations within the study area for available days in 2023 and 2024.
- **AADT Data:** Historic AADT data will be obtained from SCDOT from 1996 through 2023.

- **Speed Data:** SCDOT will provide NPMRDS (National Performance Management Research Data Set) speed data for the dates on which new traffic counts will be conducted.

- **Regional Origin-Destination Data**: 2024 StreetLight origin-destination data will be provided by SCDOT.

- **Crash Data:** Crash data for the study area will be provided by the SCDOT Safety Office for three years, from January 01, 2021, to December 31, 2023 (latest available data).

- **Traffic Signal Timing and Signal Plans:** Latest (2024) Traffic signal plans and coordinated signal timing plans will be obtained from SCDOT.

- **Travel Demand Model (TDM):** Regional TDM and SCSWM will be obtained from SCDOT.

Traffic Factors

The traffic factors for the mainline segments, ramps, and ramp terminal intersections will be developed from the existing data. These factors include the Directional Design Hour Volume factor (D), the Design Hour Volume factor (K), and the truck percentage (T).

Traffic forecasting

The methodology to be followed for the traffic forecasting is consistent with the approved Systems IMR and general SCDOT traffic forecasting guidelines. The methodology includes but it is not limited to the following:

- Collect traffic counts information from historical traffic count records, field count data, previous studies, traffic characteristics, and other relevant data. Existing counts will be adjusted for COVID-19 impacts if necessary.
- Based on the data collection process, estimate future travel characteristics of the corridor.
- Base year volumes will be developed and balanced using traffic counts information and traffic characteristics. Base year volume includes AM and PM peak hour intersection volumes, and directional peak hour volumes.
- Establish the growth rate by evaluating various independent sources including:
    - SCSWM and Regional Travel Demand Model will be reviewed to obtain growth rates. No model calibration will be conducted as a part of this project.
    - Traffic growth trends will be calculated for 10, 20 and 30 years of historic AADT. Linear, exponential, and decaying exponential methods will be evaluated and the best method in terms of R-squared (coefficient of determination) will be selected.
    - Population and employment growth trends will be estimated for Lexington and Richland Counties.
- Develop future year traffic volume forecasts for the corridor and turning movements based on trend analysis of historical traffic counts and/ or officially adopted travel demand models. Future year traffic volume includes AM and PM peak hour intersection volumes, and directional peak hour volumes.

Traffic Operational Analysis

TransModeler Traffic Simulation Software (version 7.0) will be used to evaluate the study area. A peak hour model will be developed for AM and PM conditions. Existing TransModeler models will be calibrated to 2024 conditions per FHWA Traffic Analysis Toolbox Volume III: Guidelines for Applying Traffic Microsimulation Modeling Software (2019) calibration criteria.

It is anticipated that NPMRDS travel time/speed data will be sufficient for model calibration and no field travel time runs will be conducted. The TransModeler simulation development and calibration procedures/parameters will be documented as part of the existing conditions analysis. The FHWA acceptable targets, as documented in the 2019 Traffic Analysis Toolbox Volume III: Guidelines for Applying Traffic Microsimulation Modeling Software for volume and speed criteria, will be used for calibration.

The following microsimulation analyses will be conducted for the existing and future conditions:

- Basic Freeway analysis
- Ramp merge, diverge, and weave analysis
- Intersection analysis

The following measures will be collected from TransModeler models:

- Freeway and ramp merge/diverge: Density, and LOS.
- Intersection: Intersection delay and intersection LOS

Safety Analysis

This section discusses a detailed methodology for existing and future safety analysis in the study area. The analysis will be consistent with the FHWA Interstate System Access Information Guide (2010).

Safety Analysis

The safety analysis will include historical crash analysis for crashes reported from January 01, 2021, to December 31, 2023. The historical crash analysis will include identification of crash trends and patterns, calculations of crash rate and safety ratio, and heat maps. Crash trends will be identified by evaluating observed crashes by location, type, time of day, year, severity, presence of lighting, weather, distraction, contributing factors, and other characteristics. Based on the data obtained, the existing safety analysis will identify high crash locations, areas of safety concern, and potential crash countermeasures based on probable causes and crash trends.

A predictive safety analysis will be conducted consistent with Highway Safety Manual (HSM) using the Enhanced Interchange Safety Analysis Tool (ISATe) for project alternatives for 2050 conditions. ISATe incorporates the disaggregate safety evaluation approach recommended by the Highway Safety Manual for its Part C predictive methods. In this regard, the freeway facility is disaggregated into one or more freeway sections and interchanges. The interchange is disaggregated into one or more ramps, C-D roads, and crossroad ramp terminals.

Future safety analyses will be performed for approved Systems IMR/SA Concept (2050) and Build Alternative (2050). For purposes of the comparative analysis, only facilities with geometric or volume differences between the approved Systems IMR/SA Concept and Build Alternative will be assessed. This

analysis method measures the effectiveness of a safety treatment by quantifying the change in average crash frequency as a result of a proposed design alternative. HSM resources, including the Crash Modification Factor (CMF) Clearing House, National Cooperative Highway Research Program (NCHRP), and Federal Highway Administration (FHWA) studies, will be used, as necessary.

The safety analysis will be documented in the Systems IMR Reevaluation. The documentation will include details of the analytical procedures and results of the existing and future safety analyses. It will include tables and figures summarizing crash data, crash rates, safety ratios, crash contributing factors, applicable CMFs, and other relevant data.

Consistency with Other Plans/Projects

This Project is included in the 2045 South Carolina Statewide Multimodal Transportation Plan and the South Carolina Statewide Transportation Improvement Program (STIP) (FY 2021 - 2027).

Environmental Considerations

Currently, a NEPA re-evaluation for proposed project changes is being developed concurrently with this document. The results of the re-evaluation will be documented in the Systems IMR Reevaluation.

Anticipated Design Exceptions and Variations

Any known exceptions/variations to SCDOT, AASHTO or FHWA rules, policies, standards, criteria, or procedures will be documented in the Systems IMR Reevaluation.

Conceptual Signing Plan

A conceptual signing and marking plan shall be prepared and included in the Systems IMR Reevaluation.

Access Management Plan

The access management plan within the interchange area will not be changed by the proposed improvements in this project.

Documentation

This traffic analysis will be documented in the Systems IMR Reevaluation. The documentation will include details of the analytical procedures and results of the travel demand forecasts, operational, and safety analyses. It will include tables and figures summarizing traffic forecasts (AM and PM peak hour intersection volumes, directional peak hour volumes) and results of the traffic operations and safety analyses.

Appendix C – Data Collection

Site 000000000095

0095 - I- 26 : SC 60 (LAKE MURRAY BLVD) TO S- 757 (HARBISON BLVD)

County: Richland
Route number: 26
Functional class: 1U - Interstate (Urban)

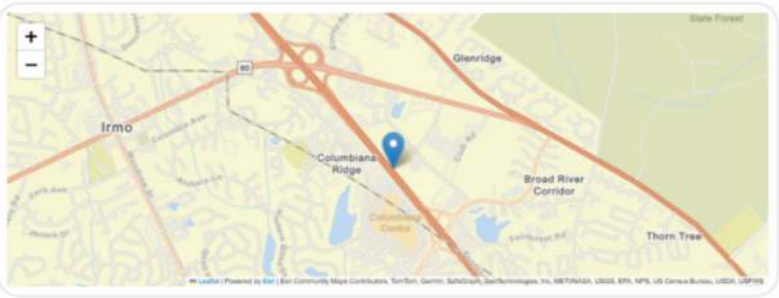

Weekday Average Traffic Count	Weekly Traffic Count	Weekend Average Traffic Count	Site Data
92,261	619,494	79,094	

Annual Statistics

Data Item	2015	2016	2017	2018	2019	2020	2021	2022	2023	2024
AADT	95,600	98,000	99,400	96,900	101,000	88,600	97,100	95,800	94,200	**89,600**
SU AADT	-	-	-	-	-	3,562	3,195	3,152	2,779	**2,751**
CU AADT	-	-	-	-	-	6,335	5,379	5,307	5,520	**5,206**
K-Factor	0.080	0.080	0.080	0.080	0.080	0.090	0.080	0.080	0.090	**0.080**
D-Factor	0.560	0.560	0.560	0.560	0.500	0.570	0.570	0.510	0.520	**0.600**

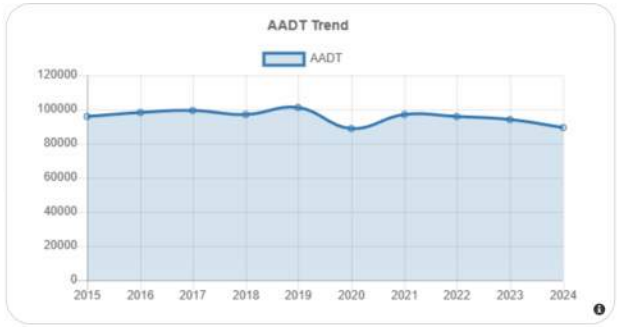





Vehicle Classification 2026

1. Motorcycles 2 axles, 2 or 3 wheels.	0.92%
2. Passenger cars 2 axles. Can have 1- or 2-axle trailers.	72.25%
3. Pickups, panels, vans 2-axle, 4-tire single units. Can have 1- or 2-axle trailers.	17.16%
4. Buses 2- or 3-axle, full length.	0.14%
5. Single-unit trucks 2-axle, 6-tire, (dual rear tires), single-unit trucks.	2.57%
6. Single-unit trucks 3-axle, single-unit trucks.	0.43%
7. Single-unit trucks 4 or more axle, single-unit trucks.	0.11%
8. Single-trailer trucks 3- or 4-axle, single-trailer trucks.	0.43%
9. Single-trailer trucks 5-axle, single-trailer trucks.	5.47%
10. Single-trailer trucks 6 or more axle, single-trailer trucks.	0.12%
11. Multi-trailer trucks 5 or less axle, multi-trailer trucks.	0.06%
12. Multi-trailer trucks 6-axle, multi-trailer trucks.	0.03%
13. Multi-trailer trucks 7 or more axle, multi-trailer trucks.	0.01%

0095 - I- 26 : SC 60 (LAKE MURRAY BLVD) TO S- 757 (HARBISON BLVD)

Route : I-26

County : Richland

Date	East	West	Total
April 1 2024	47263	49957	97220
April 2 2024	42350	48359	90709
April 3 2024	46581	48538	95119
April 4 2024	48221	50786	99007
April 5 2024	46380	52480	98860
April 6 2024	40938	47044	87982
April 7 2024	36444	44172	80616
April 8 2024	41745	47750	89495
April 9 2024	41230	48140	89370
April 10 2024	43789	49628	93417
April 11 2024	46001	50010	96011
April 12 2024	51489	53499	104988
April 13 2024	40762	45186	85948
April 14 2024	38094	41251	79345
April 15 2024	43738	48958	92696
April 16 2024	44534	49500	94034
April 17 2024	44957	49930	94887
April 18 2024	45498	52293	97791
April 19 2024	46465	53131	99596
April 20 2024	43864	45404	89268
April 21 2024	33781	39815	73596
April 22 2024	44945	49296	94241
April 23 2024	43344	49101	92445
April 24 2024	44677	50266	94943
April 25 2024	46821	52939	99760
April 26 2024	45418	54079	99497
April 27 2024	42180	44430	86610
April 28 2024	40177	43723	83900
April 29 2024	43129	48807	91936
April 30 2024	45383	50301	95684

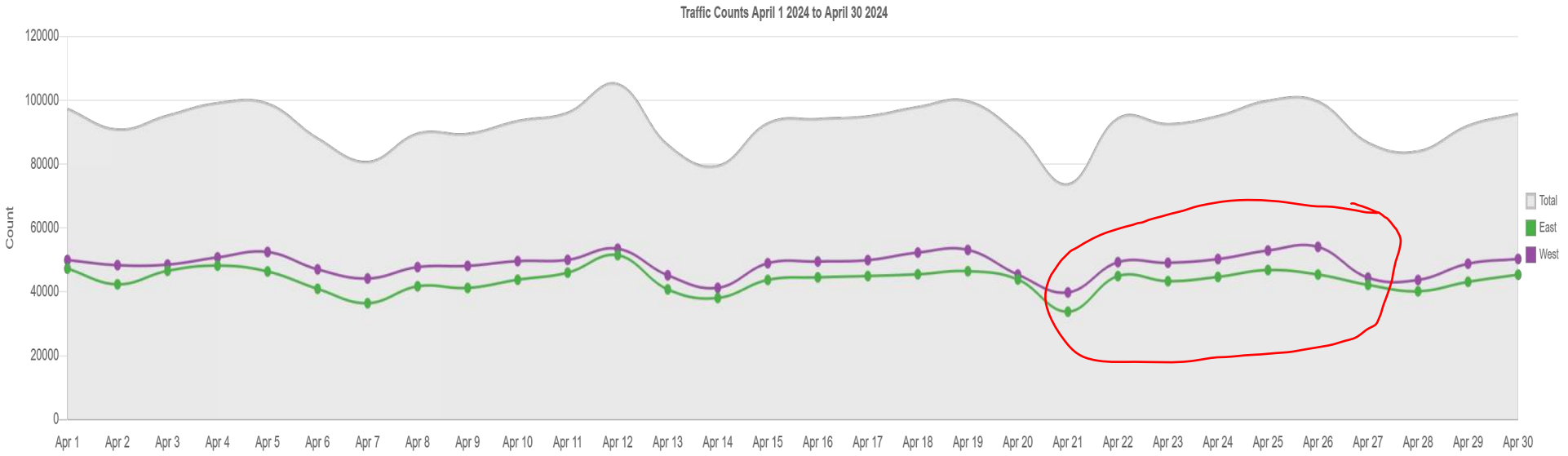
Traffic Counts April 1 2024 to April 30 2024
Count
120000
100000
80000
60000
40000
20000
0
Apr 1
Apr 2
Apr 3
Apr 4
Apr 5
Apr 6
Apr 7
Apr 8
Apr 9
Apr 10
Apr 11
Apr 12
Apr 13
Apr 14
Apr 15
Apr 16
Apr 17
Apr 18
Apr 19
Apr 20
Apr 21
Apr 22
Apr 23
Apr 24
Apr 25
Apr 26
Apr 27
Apr 28
Apr 29
Apr 30
Total
East
West

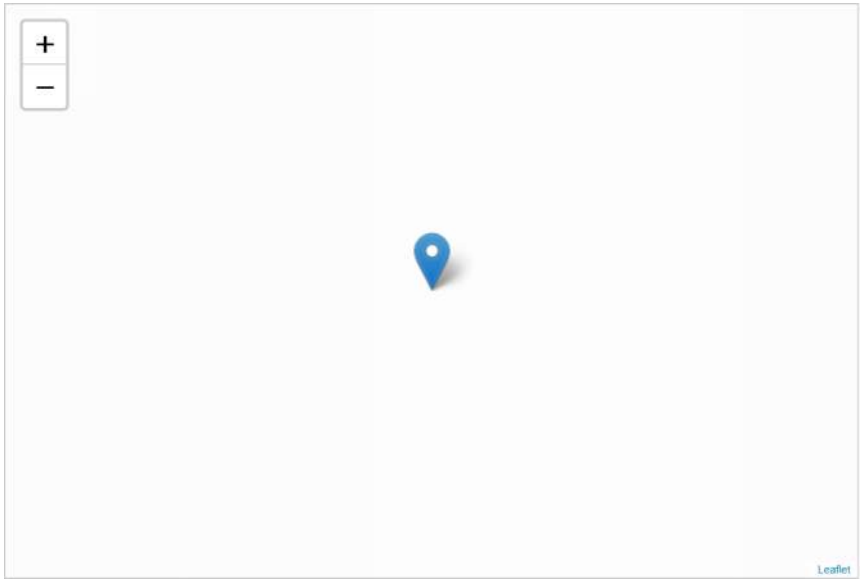
+
−
Leaflet

Bi-Directional Class Count || NB EB 15min

Columbia, SC

Marr Traffic DATA COLLECTION
www.marrtraffic.com

Site 1
I-26 E/Bound Off-Ramp,
west of US-76

Date
Sunday, April 21, 2024

Lat/Long
34.026924°, -81.101176°

Weather
Cloudy
66°F

Click here for Detailed Weather

Click here for Map

0000 - 2400 (Sunday 24h Session) (04-21-2024)
NB EB 15min

	Eastbound (Movement 1.1)													15min	60min
Time	1	2	3	4	5	6	7	8	9	10	11	12	13	Total	Total
0000 - 0015	0	16	2	0	0	0	0	0	0	0	0	0	0	**18**	
0015 - 0030	0	8	1	0	0	0	0	0	0	0	0	0	0	**9**	
0030 - 0045	0	7	2	0	0	0	0	0	0	0	0	0	0	**9**	
0045 - 0100	0	5	0	0	0	0	0	0	0	0	0	0	0	**5**	**41**
0100 - 0115	0	6	0	0	0	0	0	0	0	0	0	0	0	**6**	
0115 - 0130	0	5	0	0	0	0	0	0	0	0	0	0	0	**5**	
0130 - 0145	0	6	0	0	0	0	0	0	0	0	0	0	0	**6**	
0145 - 0200	0	5	1	0	0	0	0	0	0	0	0	0	0	**6**	**23**
0200 - 0215	0	6	0	0	0	0	0	0	0	0	0	0	0	**6**	
0215 - 0230	0	4	0	0	1	0	0	0	0	0	0	0	0	**5**	
0230 - 0245	0	8	0	0	0	0	0	0	0	0	0	0	0	**8**	
0245 - 0300	0	7	0	0	0	0	0	0	0	0	0	0	0	**7**	**26**
0300 - 0315	0	1	0	0	0	0	0	0	0	0	0	0	0	**1**	
0315 - 0330	0	3	0	0	0	0	0	0	0	0	0	0	0	**3**	
0330 - 0345	0	9	0	0	0	0	0	0	0	0	0	0	0	**9**	
0345 - 0400	0	1	0	0	1	0	0	0	0	0	0	0	0	**2**	**15**
0400 - 0415	0	2	1	0	0	0	0	0	0	0	0	0	0	**3**	
0415 - 0430	0	3	0	0	0	0	0	0	0	0	0	0	0	**3**	
0430 - 0445	0	6	0	0	0	0	0	0	0	0	0	0	0	**6**	
0445 - 0500	0	3	0	0	0	0	0	0	0	0	0	0	0	**3**	**15**
0500 - 0515	0	4	0	0	0	0	0	0	0	0	0	0	0	**4**	
0515 - 0530	0	3	0	0	0	0	0	0	0	0	0	0	0	**3**	
0530 - 0545	0	5	0	0	1	0	0	0	0	0	0	0	0	**6**	
0545 - 0600	0	7	0	0	0	0	0	0	0	0	0	0	0	**7**	**20**
0600 - 0615	0	9	0	0	0	0	0	0	0	0	0	0	0	**9**	
0615 - 0630	0	10	0	0	0	0	0	0	0	0	0	0	0	**10**	
0630 - 0645	0	21	2	0	0	0	0	0	0	0	0	0	0	**23**	
0645 - 0700	0	8	1	0	0	0	0	0	0	0	0	0	0	**9**	**51**
0700 - 0715	0	10	0	0	0	0	0	0	0	0	0	0	0	**10**	
0715 - 0730	0	17	2	0	0	0	0	0	0	0	0	0	0	**19**	
0730 - 0745	0	11	5	0	0	0	0	0	0	0	0	0	0	**16**	
0745 - 0800	0	11	3	0	0	0	0	0	0	0	0	0	0	**14**	**59**
0800 - 0815	0	8	2	0	1	0	0	0	0	0	0	0	0	**11**	
0815 - 0830	0	14	2	0	1	0	0	0	0	0	0	0	0	**17**	
0830 - 0845	0	16	1	0	1	0	0	0	0	0	0	0	0	**18**	
0845 - 0900	0	22	2	0	0	0	0	0	0	0	0	0	0	**24**	**70**
0900 - 0915	0	50	3	0	0	0	0	0	0	0	0	0	0	**53**	
0915 - 0930	0	23	3	0	0	0	0	0	0	0	0	0	0	**26**	
0930 - 0945	0	22	2	0	0	0	0	0	0	0	0	0	0	**24**	
0945 - 1000	0	33	3	0	0	0	0	0	0	0	0	0	0	**36**	**139**
1000 - 1015	0	25	0	0	0	0	0	0	0	0	0	0	0	**25**	
1015 - 1030	0	26	0	0	0	0	0	0	0	0	0	0	0	**26**	
1030 - 1045	0	24	5	0	1	0	0	0	0	0	0	0	0	**30**	
1045 - 1100	0	25	5	0	1	0	0	0	1	0	0	0	0	**32**	**113**
1100 - 1115	0	22	0	0	0	1	0	0	0	0	0	0	0	**23**	
1115 - 1130	0	21	5	0	1	0	0	0	0	0	0	0	0	**27**	
1130 - 1145	0	19	1	0	0	0	0	0	0	0	0	0	0	**20**	
1145 - 1200	0	18	2	0	0	0	0	0	0	0	0	0	0	**20**	**90**
1200 - 1215	0	22	2	0	1	0	0	0	0	0	0	0	0	**25**	
1215 - 1230	0	40	4	0	1	0	0	0	0	0	0	0	0	**45**	
1230 - 1245	0	32	0	0	2	0	0	0	0	0	0	0	0	**34**	
1245 - 1300	0	25	1	0	1	0	0	0	0	0	0	0	0	**27**	**131**
1300 - 1315	0	33	1	0	0	0	0	0	0	0	0	0	0	**34**	
1315 - 1330	0	32	5	0	1	0	0	0	0	0	0	0	0	**38**	
1330 - 1345	0	23	2	0	0	0	0	0	0	0	0	0	0	**25**	
1345 - 1400	0	33	3	0	0	0	0	0	0	0	0	0	0	**36**	**133**
1400 - 1415	0	29	2	0	2	0	0	0	0	0	0	0	0	**33**	
1415 - 1430	0	32	5	0	0	0	0	0	0	0	0	0	0	**37**	
1430 - 1445	0	33	3	0	0	0	0	0	0	0	0	0	0	**36**	
1445 - 1500	0	28	2	0	0	0	0	0	0	0	0	0	0	**30**	**136**
1500 - 1515	0	20	2	0	0	0	0	0	0	0	0	0	0	**22**	
1515 - 1530	0	27	4	0	0	0	0	0	0	0	0	0	0	**31**	
1530 - 1545	0	19	3	0	0	0	0	0	0	0	0	0	0	**22**	
1545 - 1600	0	38	0	0	0	0	0	0	0	0	0	0	0	**38**	**113**
1600 - 1615	0	22	1	0	0	0	0	0	0	0	0	0	0	**23**	
1615 - 1630	0	30	6	0	0	0	0	0	0	0	0	0	0	**36**	
1630 - 1645	0	32	3	0	0	0	0	0	0	0	0	0	0	**35**	
1645 - 1700	0	25	1	0	0	0	0	0	0	0	0	0	0	**26**	**120**
1700 - 1715	0	36	2	0	2	0	0	0	0	0	0	0	0	**40**	
1715 - 1730	0	26	1	0	0	0	0	0	0	0	0	0	0	**27**	
1730 - 1745	0	23	2	0	0	0	0	0	0	0	0	0	0	**25**	
1745 - 1800	0	28	4	0	0	0	0	0	0	0	0	0	0	**32**	**124**
1800 - 1815	0	33	0	0	0	0	0	0	0	0	0	0	0	**33**	
1815 - 1830	0	28	2	0	1	0	0	0	0	0	0	0	0	**31**	
1830 - 1845	0	28	4	0	0	0	0	0	0	0	0	0	0	**32**	
1845 - 1900	0	16	2	0	0	0	0	0	0	0	0	0	0	**18**	**114**
1900 - 1915	0	30	8	0	1	0	0	0	0	0	0	0	0	**39**	
1915 - 1930	0	24	5	0	2	0	0	0	0	0	0	0	0	**31**	
1930 - 1945	0	26	3	0	0	0	0	0	0	0	0	0	0	**29**	
1945 - 2000	0	22	1	0	3	0	0	0	0	0	0	0	0	**26**	**125**
2000 - 2015	0	9	3	0	0	0	0	0	0	0	0	0	0	**12**	
2015 - 2030	0	23	3	0	0	1	0	0	0	0	0	0	0	**27**	
2030 - 2045	0	18	2	0	0	0	0	0	0	0	0	0	0	**20**	
2045 - 2100	0	14	2	0	0	0	0	0	0	0	0	0	0	**16**	**75**
2100 - 2115	0	16	1	1	0	1	0	0	0	0	0	0	0	**19**	
2115 - 2130	0	15	2	0	0	0	0	0	0	0	0	0	0	**17**	
2130 - 2145	0	13	0	0	0	0	0	0	0	0	0	0	0	**13**	
2145 - 2200	0	15	1	0	0	0	0	0	0	0	0	0	0	**16**	**65**
2200 - 2215	0	15	2	0	0	1	0	0	0	0	0	0	0	**18**	
2215 - 2230	0	9	0	0	0	0	0	0	0	0	0	0	0	**9**	
2230 - 2245	0	7	0	0	0	0	0	0	0	0	0	0	0	**7**	
2245 - 2300	0	8	0	0	0	0	0	0	0	0	0	0	0	**8**	**42**
2300 - 2315	0	14	1	0	0	0	0	0	0	0	0	0	0	**15**	
2315 - 2330	0	7	0	0	0	0	0	0	0	0	0	0	0	**7**	
2330 - 2345	0	2	0	0	0	0	0	0	0	0	0	0	0	**2**	
2345 - 0000	0	1	0	0	0	0	0	0	0	0	0	0	0	**1**	**25**

Session Total	0	1676	157	1	26	4	0	0	1	0	0	0	0	**1865**
Session Average	0.00	17.46	1.64	0.01	0.27	0.04	0.00	0.00	0.01	0.00	0.00	0.00	0.00	**19.43**
Session Percentage	0.00	89.87	8.42	0.05	1.39	0.21	0.00	0.00	0.05	0.00	0.00	0.00	0.00	

AM Peak Hour	-	0900 - 1000	0715 - 0815	-	0745 - 0845	-	-	-	-	-	-	-	-	**0900 - 1000**
AM Peak Volume	0	128	12	0	3	0	0	0	0	0	0	0	0	**139**

Noon Peak Hour	-	1215 - 1315	1030 - 1130	-	1200 - 1300	1015 - 1115	-	-	1000 - 1100	-	-	-	-	**1345 - 1445**
Noon Peak Volume	0	130	15	0	5	1	0	0	1	0	0	0	0	**142**

PM Peak Hour	-	1615 - 1715	1830 - 1930	-	1900 - 2000	1930 - 2030	-	-	-	-	-	-	-	**1615 - 1715**
PM Peak Volume	0	123	19	0	6	1	0	0	0	0	0	0	0	**137**

Site 1
I-26 E/Bound Off-Ramp,
west of US-76

Date
Monday, April 22, 2024

Lat/Long
34.026924°, -81.101176°

Weather
Mostly Cloudy
57°F

Click here for Detailed Weather

0000 - 2400 (Weekday 24h Session) (04-22-2024)
NB EB 15min

	Eastbound (Movement 1.1)													15min	60min
Time	1	2	3	4	5	6	7	8	9	10	11	12	13	Total	Total
0000 - 0015	0	4	0	0	0	0	0	0	0	0	0	0	0	**4**	
0015 - 0030	0	5	0	0	0	0	0	0	0	0	0	0	0	**5**	
0030 - 0045	0	7	0	0	1	0	0	0	0	0	0	0	0	**8**	
0045 - 0100	0	1	0	0	0	0	0	0	0	0	0	0	0	**1**	**18**
0100 - 0115	0	6	0	0	0	0	0	0	0	0	0	0	0	**6**	
0115 - 0130	0	3	0	0	0	0	0	0	0	0	0	0	0	**3**	
0130 - 0145	0	1	0	0	0	0	0	0	0	0	0	0	0	**1**	
0145 - 0200	0	1	0	0	0	0	0	0	0	0	0	0	0	**1**	**11**
0200 - 0215	0	2	0	0	0	0	0	0	0	0	0	0	0	**2**	
0215 - 0230	0	4	0	0	1	0	0	0	0	0	0	0	0	**5**	
0230 - 0245	0	1	0	0	0	0	0	0	0	0	0	0	0	**1**	
0245 - 0300	0	4	1	0	1	0	0	0	0	0	0	0	0	**6**	**14**
0300 - 0315	0	4	0	0	0	0	0	0	0	0	0	0	0	**4**	
0315 - 0330	0	1	0	0	2	0	0	0	0	0	0	0	0	**3**	
0330 - 0345	0	4	0	0	0	0	0	0	0	0	0	0	0	**4**	
0345 - 0400	0	3	0	0	0	0	0	0	0	0	0	0	0	**3**	**14**
0400 - 0415	0	1	1	0	0	0	0	0	0	0	0	0	0	**2**	
0415 - 0430	0	5	0	0	1	0	0	0	0	0	0	0	0	**6**	
0430 - 0445	0	4	0	0	0	0	0	0	0	0	0	0	0	**4**	
0445 - 0500	0	9	0	0	0	1	0	0	0	0	0	0	0	**10**	**22**
0500 - 0515	0	6	0	0	0	0	0	0	0	0	0	0	0	**6**	
0515 - 0530	0	10	0	0	0	1	0	0	0	0	0	0	0	**11**	
0530 - 0545	0	20	1	0	1	0	0	0	0	0	0	0	0	**22**	
0545 - 0600	0	17	1	0	1	0	0	0	0	0	0	0	0	**19**	**58**
0600 - 0615	0	26	2	0	0	0	0	0	0	0	0	0	0	**28**	
0615 - 0630	0	28	5	0	1	0	0	0	0	0	0	0	0	**34**	
0630 - 0645	0	55	13	0	2	0	0	0	0	0	0	0	0	**70**	
0645 - 0700	0	62	12	0	2	0	0	0	1	0	0	0	0	**77**	**209**
0700 - 0715	0	55	14	0	0	0	1	0	0	0	0	0	0	**70**	
0715 - 0730	0	91	16	0	0	0	0	0	0	0	0	0	0	**107**	
0730 - 0745	0	113	16	0	2	0	2	0	0	0	0	0	0	**133**	
0745 - 0800	0	139	20	0	1	0	1	1	2	0	0	0	0	**164**	**474**
0800 - 0815	0	93	21	0	2	0	0	0	0	0	0	0	0	**116**	
0815 - 0830	0	105	14	0	4	0	0	0	0	0	0	0	0	**123**	
0830 - 0845	0	81	23	0	1	0	0	0	0	0	0	0	0	**105**	
0845 - 0900	0	78	13	0	2	0	0	1	0	0	0	0	0	**94**	**438**
0900 - 0915	0	72	9	0	3	1	0	1	0	0	0	0	0	**86**	
0915 - 0930	0	51	14	1	4	0	0	2	0	0	0	0	0	**72**	
0930 - 0945	0	59	9	1	1	0	1	2	0	0	0	0	0	**73**	
0945 - 1000	0	71	12	0	1	0	0	0	0	0	0	0	0	**84**	**315**
1000 - 1015	0	57	12	0	2	0	0	0	0	0	0	0	0	**71**	
1015 - 1030	0	60	9	0	0	0	0	1	0	0	0	0	0	**70**	
1030 - 1045	0	74	17	0	2	0	1	0	0	0	0	0	0	**94**	
1045 - 1100	0	69	4	1	0	0	0	0	0	0	0	0	0	**74**	**309**
1100 - 1115	0	58	17	0	0	0	1	1	2	0	0	0	0	**79**	
1115 - 1130	0	49	10	0	1	0	0	0	0	0	0	0	0	**60**	
1130 - 1145	0	44	10	0	0	0	0	0	0	0	0	0	0	**54**	
1145 - 1200	0	51	13	0	1	0	0	0	0	0	0	0	0	**65**	**258**
1200 - 1215	0	48	10	0	0	0	0	0	1	0	0	0	0	**59**	
1215 - 1230	0	50	11	1	2	0	0	0	0	0	0	0	0	**64**	
1230 - 1245	0	78	19	0	1	0	0	0	0	0	0	0	0	**98**	
1245 - 1300	0	63	18	1	0	0	0	2	0	0	0	0	0	**84**	**305**
1300 - 1315	0	70	13	1	0	0	0	0	0	0	0	0	0	**84**	
1315 - 1330	0	53	22	0	1	0	0	0	0	0	0	0	0	**76**	
1330 - 1345	0	52	10	1	1	0	0	0	0	0	0	0	0	**64**	
1345 - 1400	0	61	13	0	3	0	0	1	2	0	0	0	0	**80**	**304**
1400 - 1415	0	45	11	0	0	0	0	0	0	0	0	0	0	**56**	
1415 - 1430	0	61	18	0	1	1	0	0	1	0	0	0	0	**82**	
1430 - 1445	0	53	9	0	2	0	0	0	0	0	0	0	0	**64**	
1445 - 1500	0	71	14	0	0	0	0	0	0	1	0	0	0	**86**	**288**
1500 - 1515	0	45	7	0	1	0	0	0	0	0	0	0	0	**53**	
1515 - 1530	0	50	6	0	0	0	0	0	0	0	0	0	0	**56**	
1530 - 1545	0	0	0	0	0	1	0	0	0	0	0	0	0	**1**	
1545 - 1600	0	34	2	0	0	0	0	0	0	0	0	0	0	**36**	**146**
1600 - 1615	1	50	10	0	0	0	0	0	0	0	0	0	0	**61**	
1615 - 1630	0	38	6	0	1	0	0	0	0	0	0	0	0	**45**	
1630 - 1645	0	45	6	0	2	0	0	0	1	0	0	0	0	**54**	
1645 - 1700	0	40	10	0	1	0	0	1	0	0	0	0	0	**52**	**212**
1700 - 1715	0	52	9	0	2	0	0	0	1	0	0	0	0	**64**	
1715 - 1730	1	35	6	0	1	0	0	0	0	0	0	0	0	**43**	
1730 - 1745	1	45	8	0	0	0	0	1	0	0	0	0	0	**55**	
1745 - 1800	0	36	15	0	1	0	0	0	1	0	0	0	0	**53**	**215**
1800 - 1815	0	40	6	0	0	0	0	0	1	0	0	0	0	**47**	
1815 - 1830	0	20	10	0	0	0	0	0	0	0	0	0	0	**30**	
1830 - 1845	1	52	10	0	1	0	0	0	0	0	0	0	0	**64**	
1845 - 1900	0	34	5	0	0	0	0	0	0	0	0	0	0	**39**	**180**
1900 - 1915	0	36	4	0	0	0	0	0	0	0	0	0	0	**40**	
1915 - 1930	0	30	4	0	0	0	0	0	0	0	0	0	0	**34**	
1930 - 1945	0	25	5	0	0	0	0	0	0	0	0	0	0	**30**	
1945 - 2000	0	22	3	0	1	0	0	0	0	0	0	0	0	**26**	**130**
2000 - 2015	0	21	2	0	1	0	0	0	0	0	0	0	0	**24**	
2015 - 2030	0	25	3	0	0	0	0	0	0	0	0	0	0	**28**	
2030 - 2045	0	30	6	0	0	0	0	1	1	0	0	0	0	**38**	
2045 - 2100	0	25	3	0	0	0	0	0	0	0	0	0	0	**28**	**118**
2100 - 2115	0	22	2	0	2	0	0	0	1	0	0	0	0	**27**	
2115 - 2130	0	20	1	0	1	0	0	0	0	0	0	0	0	**22**	
2130 - 2145	0	18	1	0	0	0	0	0	0	0	0	0	0	**19**	
2145 - 2200	0	12	0	0	1	0	0	0	0	0	0	0	0	**13**	**81**
2200 - 2215	0	20	3	0	0	0	0	0	0	0	0	0	0	**23**	
2215 - 2230	0	18	2	0	0	0	0	0	0	0	0	0	0	**20**	
2230 - 2245	0	12	0	0	0	0	0	0	0	0	0	0	0	**12**	
2245 - 2300	0	11	1	0	0	0	0	0	0	0	0	0	0	**12**	**67**
2300 - 2315	0	10	0	0	0	0	0	0	0	0	0	0	0	**10**	
2315 - 2330	0	18	3	0	0	0	0	0	0	0	0	0	0	**21**	
2330 - 2345	0	10	0	0	0	0	0	0	2	0	0	0	0	**12**	
2345 - 0000	0	11	0	0	0	0	0	0	0	0	0	0	0	**11**	**54**

Session Total	4	3481	636	7	67	5	7	15	17	1	0	0	0	**4240**
Session Average	0.04	36.26	6.63	0.07	0.70	0.05	0.07	0.16	0.18	0.01	0.00	0.00	0.00	**44.17**
Session Percentage	0.09	82.10	15.00	0.17	1.58	0.12	0.17	0.35	0.40	0.02	0.00	0.00	0.00	

AM Peak Hour	-	0730 - 0830	0745 - 0845	0845 - 0945	0815 - 0915	0500 - 0600	0700 - 0800	0845 - 0945	0700 - 0800	-	-	-	-	**0730 - 0830**
AM Peak Volume	0	450	78	2	10	1	4	6	2	0	0	0	0	**536**

Noon Peak Hour	-	1230 - 1330	1230 - 1330	1215 - 1315	1345 - 1445	1330 - 1430	1015 - 1115	1015 - 1115	1330 - 1430	1400 - 1500	-	-	-	**1230 - 1330**
Noon Peak Volume	0	264	72	3	6	1	2	2	3	1	0	0	0	**342**

PM Peak Hour	1645 - 1745	1615 - 1715	1745 - 1845	-	1615 - 1715	1500 - 1600	-	1645 - 1745	1615 - 1715	-	-	-	-	**1615 - 1715**
PM Peak Volume	2	175	41	0	6	1	0	2	2	0	0	0	0	**215**

Site 1
I-26 E/Bound Off-Ramp,
west of US-76

Date
Tuesday, April 23, 2024

Lat/Long
34.026924°, -81.101176°

Weather
Fair
58°F

Click here for Detailed Weather

0000 - 2400 (Weekday 24h Session) (04-23-2024)
NB EB 15min

	Eastbound (Movement 1.1)													15min	60min
TIME	1	2	3	4	5	6	7	8	9	10	11	12	13	Total	Total
0000 - 0015	0	7	1	0	0	0	0	0	0	0	0	0	0	**8**	
0015 - 0030	0	9	0	0	0	0	0	0	0	0	0	0	0	**9**	
0030 - 0045	0	7	1	0	0	0	0	0	0	0	0	0	0	**8**	
0045 - 0100	0	3	0	0	0	0	0	0	0	0	0	0	0	**3**	**28**
0100 - 0115	0	2	0	0	0	0	0	0	0	0	0	0	0	**2**	
0115 - 0130	0	3	1	0	0	0	0	0	0	0	0	0	0	**4**	
0130 - 0145	0	4	0	0	0	0	0	0	0	0	0	0	0	**4**	
0145 - 0200	0	4	0	0	0	0	0	0	0	0	0	0	0	**4**	**14**
0200 - 0215	0	4	0	0	0	0	0	0	0	0	0	0	0	**4**	
0215 - 0230	0	3	0	0	0	0	0	0	0	0	0	0	0	**3**	
0230 - 0245	0	2	0	0	0	0	0	0	0	0	0	0	0	**2**	
0245 - 0300	0	5	1	0	0	0	0	0	0	0	0	0	0	**6**	**15**
0300 - 0315	0	2	0	0	0	0	0	0	0	0	0	0	0	**2**	
0315 - 0330	0	5	2	0	0	0	0	0	0	0	0	0	0	**7**	
0330 - 0345	0	8	0	0	1	0	0	0	0	0	0	0	0	**9**	
0345 - 0400	0	0	1	0	0	0	0	0	0	0	0	0	0	**1**	**19**
0400 - 0415	0	6	0	0	0	0	0	0	0	0	0	0	0	**6**	
0415 - 0430	0	8	1	0	2	0	0	0	0	0	0	0	0	**11**	
0430 - 0445	0	7	0	0	0	0	0	0	0	0	0	0	0	**7**	
0445 - 0500	0	11	0	0	0	0	0	0	0	0	0	0	0	**11**	**35**
0500 - 0515	0	13	0	0	0	0	0	0	0	0	0	0	0	**13**	
0515 - 0530	0	15	0	0	0	0	0	0	0	0	0	0	0	**15**	
0530 - 0545	0	24	1	0	2	0	0	0	0	0	0	0	0	**27**	
0545 - 0600	0	22	1	0	0	0	0	0	0	0	0	0	0	**23**	**78**
0600 - 0615	0	25	2	0	1	1	0	0	0	0	0	0	0	**29**	
0615 - 0630	0	41	4	0	1	0	0	0	0	0	0	0	0	**46**	
0630 - 0645	0	50	7	0	0	0	0	0	0	0	0	0	0	**57**	
0645 - 0700	0	69	15	0	1	0	0	0	0	0	0	0	0	**85**	**217**
0700 - 0715	0	68	10	0	1	1	0	0	0	0	0	0	0	**80**	
0715 - 0730	0	90	6	0	1	0	0	0	0	0	0	0	0	**97**	
0730 - 0745	0	120	16	0	0	0	0	0	1	0	0	0	0	**137**	
0745 - 0800	0	119	8	0	0	0	0	0	0	0	0	0	0	**127**	**441**
0800 - 0815	0	125	15	0	0	0	0	0	1	0	0	0	0	**141**	
0815 - 0830	0	126	13	0	2	1	0	0	0	0	0	0	0	**142**	
0830 - 0845	0	99	9	0	1	0	0	0	0	0	0	0	0	**109**	
0845 - 0900	0	88	21	0	1	0	0	0	1	0	0	0	0	**111**	**503**
0900 - 0915	0	81	13	0	4	0	0	0	0	0	0	0	0	**98**	
0915 - 0930	0	102	15	0	6	0	0	0	1	0	0	0	0	**124**	
0930 - 0945	0	92	11	0	2	0	0	0	6	0	0	0	0	**111**	
0945 - 1000	1	114	10	5	1	0	0	0	0	0	0	0	0	**131**	**464**
1000 - 1015	0	59	10	0	0	0	0	0	1	0	0	0	0	**70**	
1015 - 1030	0	65	10	1	0	0	0	0	0	0	0	0	0	**76**	
1030 - 1045	0	83	9	0	1	0	0	0	0	0	0	0	0	**93**	
1045 - 1100	0	47	7	0	3	0	0	0	0	0	0	0	0	**57**	**296**
1100 - 1115	0	64	9	0	1	0	0	0	1	0	0	0	0	**75**	
1115 - 1130	0	51	10	0	1	0	0	0	0	0	0	0	0	**62**	
1130 - 1145	0	69	19	0	4	0	0	0	0	0	0	0	0	**92**	
1145 - 1200	1	59	15	0	0	0	0	0	1	0	0	0	0	**76**	**305**
1200 - 1215	0	62	14	0	1	0	0	0	0	0	0	0	0	**77**	
1215 - 1230	0	56	12	0	0	1	0	0	0	0	0	0	0	**69**	
1230 - 1245	0	53	17	0	2	0	0	0	0	0	0	0	0	**72**	
1245 - 1300	0	81	11	1	0	0	0	1	0	0	0	0	0	**94**	**312**
1300 - 1315	0	65	13	1	2	0	0	0	0	0	0	0	0	**81**	
1315 - 1330	0	60	13	0	3	1	0	0	0	0	0	0	0	**77**	
1330 - 1345	0	57	7	1	2	0	0	0	1	0	0	0	0	**68**	
1345 - 1400	0	51	10	0	2	1	0	0	0	0	0	0	0	**64**	**290**
1400 - 1415	0	50	9	0	2	0	0	1	1	0	0	0	0	**63**	
1415 - 1430	0	51	18	0	1	0	0	0	0	0	0	0	0	**70**	
1430 - 1445	0	52	9	0	2	0	0	0	0	1	0	0	0	**64**	
1445 - 1500	1	64	9	1	2	1	0	0	0	0	0	0	0	**78**	**275**
1500 - 1515	0	51	7	0	1	1	0	1	0	0	0	0	0	**61**	
1515 - 1530	0	48	5	0	0	0	0	0	0	0	0	0	0	**53**	
1530 - 1545	0	72	7	0	1	0	0	0	0	0	0	0	0	**80**	
1545 - 1600	0	60	9	0	3	0	0	0	0	0	0	0	0	**72**	**266**
1600 - 1615	1	32	11	0	3	0	0	0	1	0	0	0	0	**48**	
1615 - 1630	0	50	12	0	3	0	1	0	0	0	0	0	0	**66**	
1630 - 1645	0	46	8	0	0	0	0	0	0	0	0	0	0	**54**	
1645 - 1700	0	52	20	0	1	1	0	0	0	0	0	0	0	**74**	**242**
1700 - 1715	0	49	9	0	0	0	0	2	0	0	0	0	0	**60**	
1715 - 1730	0	62	7	0	0	0	0	0	0	0	0	0	0	**69**	
1730 - 1745	0	41	13	0	0	0	0	0	0	0	0	0	0	**54**	
1745 - 1800	0	61	10	0	2	2	0	1	0	0	0	0	0	**76**	**259**
1800 - 1815	0	50	9	0	0	0	0	1	1	0	0	0	0	**61**	
1815 - 1830	0	38	5	0	0	0	0	0	0	0	0	0	0	**43**	
1830 - 1845	1	39	6	3	0	0	0	0	1	0	0	0	0	**50**	
1845 - 1900	0	41	7	0	0	0	0	0	0	0	0	0	0	**48**	**202**
1900 - 1915	0	26	4	0	0	0	0	0	0	0	0	0	0	**30**	
1915 - 1930	0	38	8	0	2	0	0	0	0	0	0	0	0	**48**	
1930 - 1945	1	28	4	0	2	0	0	0	0	0	0	0	0	**35**	
1945 - 2000	0	30	6	0	1	0	0	0	0	0	0	0	0	**37**	**150**
2000 - 2015	0	23	3	0	0	0	0	0	0	0	0	0	0	**26**	
2015 - 2030	0	21	5	0	1	0	0	0	0	0	0	0	0	**27**	
2030 - 2045	0	25	5	0	0	0	0	0	0	0	0	0	0	**30**	
2045 - 2100	0	24	5	0	0	0	0	0	0	0	0	0	0	**29**	**112**
2100 - 2115	0	23	4	0	0	0	0	0	0	0	0	0	0	**27**	
2115 - 2130	0	14	3	0	0	0	0	0	0	0	0	0	0	**17**	
2130 - 2145	0	17	3	0	0	0	0	0	0	0	0	0	0	**20**	
2145 - 2200	0	16	2	0	0	0	0	0	0	0	0	0	0	**18**	**82**
2200 - 2215	0	15	3	0	0	0	0	0	0	0	0	0	0	**18**	
2215 - 2230	0	13	3	0	0	0	0	0	0	0	0	0	0	**16**	
2230 - 2245	0	12	2	0	1	0	0	0	1	0	0	0	0	**16**	
2245 - 2300	0	13	3	0	0	0	0	0	0	0	0	0	0	**16**	**66**
2300 - 2315	0	13	2	0	0	0	0	0	0	0	0	0	0	**15**	
2315 - 2330	0	7	1	0	0	0	0	0	1	0	0	0	0	**9**	
2330 - 2345	0	12	2	0	0	0	0	0	1	0	0	0	0	**15**	
2345 - 0000	0	10	1	0	0	0	0	0	0	0	0	0	0	**11**	**50**

Session Total	6	3954	630	13	77	11	1	7	21	1	0	0	0	**4721**
Session Average	0.06	41.19	6.56	0.14	0.80	0.11	0.01	0.07	0.22	0.01	0.00	0.00	0.00	**49.18**
Session Percentage	0.13	83.75	13.34	0.28	1.63	0.23	0.02	0.15	0.44	0.02	0.00	0.00	0.00	

AM Peak Hour	0900 - 1000	0730 - 0830	0845 - 0945	0930 - 1030	0845 - 0945	0515 - 0615	-	-	0845 - 0945	-	-	-	-	**0730 - 0830**
AM Peak Hour Volume	1	490	60	6	13	1	0	0	8	0	0	0	0	**547**

Noon Peak Hour	1100 - 1200	1245 - 1345	1130 - 1230	1245 - 1345	1045 - 1145	1300 - 1400	-	1200 - 1300	1100 - 1200	1345 - 1445	-	-	-	**1230 - 1330**
Noon Peak Hour Volume	1	263	60	3	9	2	0	1	2	1	0	0	0	**324**

PM Peak Hour	1515 - 1615	1500 - 1600	1600 - 1700	1745 - 1845	1530 - 1630	1700 - 1800	1530 - 1630	1700 - 1800	1745 - 1845	-	-	-	-	**1500 - 1600**
PM Peak Hour Volume	1	231	51	3	10	2	1	3	2	0	0	0	0	**266**

Site 1
I-26 E/Bound Off-Ramp,
west of US-76

Date
Wednesday, April 24, 2024

Lat/Long
34.026924°, -81.101176°

Weather
Fair
66°F

Click here for Detailed Weather

0000 - 2400 (Weekday 24h Session) (04-24-2024)
NB EB 15min

	Eastbound (Movement 1.1)													15min	60min
TIME	1	2	3	4	5	6	7	8	9	10	11	12	13	Total	Total
0000 - 0015	0	8	2	0	0	0	0	0	0	0	0	0	0	**10**	
0015 - 0030	0	6	1	0	0	0	0	0	0	0	0	0	0	**7**	
0030 - 0045	0	5	2	0	0	0	0	0	0	0	0	0	0	**7**	
0045 - 0100	0	4	1	0	0	0	0	0	0	0	0	0	0	**5**	**29**
0100 - 0115	0	3	2	0	0	0	0	0	0	0	0	0	0	**5**	
0115 - 0130	0	4	2	0	0	0	0	0	0	0	0	0	0	**6**	
0130 - 0145	0	7	1	0	0	0	0	0	0	0	0	0	0	**8**	
0145 - 0200	0	2	1	0	0	0	0	0	0	0	0	0	0	**3**	**22**
0200 - 0215	0	1	1	0	0	0	0	0	0	0	0	0	0	**2**	
0215 - 0230	0	3	1	0	0	0	0	0	0	0	0	0	0	**4**	
0230 - 0245	0	2	0	0	0	0	0	0	0	0	0	0	0	**2**	
0245 - 0300	0	3	0	0	0	0	0	0	0	0	0	0	0	**3**	**11**
0300 - 0315	0	6	2	0	1	0	0	0	0	0	0	0	0	**9**	
0315 - 0330	0	2	1	0	0	0	0	0	0	0	0	0	0	**3**	
0330 - 0345	0	4	1	0	0	0	0	0	0	0	0	0	0	**5**	
0345 - 0400	0	3	0	0	0	1	0	0	0	0	0	0	0	**4**	**21**
0400 - 0415	0	3	1	0	0	0	0	0	0	0	0	0	0	**4**	
0415 - 0430	0	2	0	0	1	0	0	0	0	0	0	0	0	**3**	
0430 - 0445	0	3	1	0	0	0	0	0	0	0	0	0	0	**4**	
0445 - 0500	0	7	2	0	1	1	0	0	0	0	0	0	0	**11**	**22**
0500 - 0515	0	5	2	0	0	0	0	0	0	0	0	0	0	**7**	
0515 - 0530	0	6	3	0	0	0	0	0	0	0	0	0	0	**9**	
0530 - 0545	0	20	4	0	0	0	0	0	0	0	0	0	0	**24**	
0545 - 0600	0	15	2	0	1	0	0	0	0	0	0	0	0	**18**	**58**
0600 - 0615	0	19	5	0	1	0	0	0	0	0	0	0	0	**25**	
0615 - 0630	0	34	7	0	0	0	0	0	0	0	0	0	0	**41**	
0630 - 0645	0	66	3	0	0	0	0	0	0	0	0	0	0	**69**	
0645 - 0700	0	65	14	0	3	0	0	0	0	0	0	0	0	**82**	**217**
0700 - 0715	0	64	11	0	0	0	0	0	0	0	0	0	0	**75**	
0715 - 0730	0	99	10	0	1	0	0	0	1	0	0	0	0	**111**	
0730 - 0745	0	124	10	0	0	0	0	0	0	0	0	0	0	**134**	
0745 - 0800	1	123	22	0	1	0	0	0	1	1	0	0	0	**149**	**469**
0800 - 0815	0	129	17	0	1	1	0	0	1	0	0	0	0	**149**	
0815 - 0830	0	112	23	0	1	0	0	0	2	0	0	0	0	**138**	
0830 - 0845	0	78	14	0	1	0	0	0	0	0	0	0	0	**93**	
0845 - 0900	1	74	15	1	0	0	0	0	0	0	0	0	0	**91**	**471**
0900 - 0915	0	79	16	0	1	1	0	0	0	0	0	0	0	**97**	
0915 - 0930	0	61	10	0	2	0	0	0	0	0	0	0	0	**73**	
0930 - 0945	1	82	9	1	3	0	0	0	1	0	0	0	0	**97**	
0945 - 1000	0	65	12	0	2	1	0	1	0	0	0	0	0	**81**	**348**
1000 - 1015	0	60	11	1	2	0	0	2	1	1	0	0	0	**78**	
1015 - 1030	0	64	11	1	0	0	0	0	0	0	0	0	0	**76**	
1030 - 1045	0	60	11	0	1	0	0	1	0	0	0	0	0	**73**	
1045 - 1100	0	48	9	0	2	0	0	1	0	0	0	0	0	**60**	**287**
1100 - 1115	0	63	17	0	1	0	0	0	0	0	0	0	0	**81**	
1115 - 1130	0	51	14	0	0	1	0	0	1	0	0	0	0	**67**	
1130 - 1145	0	55	8	0	6	0	0	0	1	0	0	0	0	**70**	
1145 - 1200	0	71	16	0	3	0	0	0	0	0	0	0	0	**90**	**308**
1200 - 1215	0	47	12	0	1	0	0	1	0	0	0	0	0	**61**	
1215 - 1230	0	79	18	0	4	0	0	0	0	0	0	0	0	**101**	
1230 - 1245	0	63	18	1	1	2	0	0	0	0	0	0	0	**85**	
1245 - 1300	1	61	10	0	0	1	0	2	1	0	0	0	0	**76**	**323**
1300 - 1315	0	54	16	1	5	0	0	1	0	0	0	0	0	**77**	
1315 - 1330	0	52	16	0	2	0	0	0	1	0	0	0	0	**71**	
1330 - 1345	0	61	17	1	0	1	0	0	0	0	0	0	0	**80**	
1345 - 1400	0	51	6	0	1	0	0	1	0	0	0	0	0	**59**	**287**
1400 - 1415	0	52	16	0	2	1	0	0	1	0	0	0	0	**72**	
1415 - 1430	0	49	18	0	3	0	0	0	0	1	0	0	0	**71**	
1430 - 1445	0	50	11	0	1	3	0	0	0	0	0	0	0	**65**	
1445 - 1500	0	59	17	1	2	0	0	0	1	0	0	0	0	**80**	**288**
1500 - 1515	0	59	11	0	0	0	0	0	0	0	0	0	0	**70**	
1515 - 1530	0	42	13	0	0	1	0	0	0	0	0	0	0	**56**	
1530 - 1545	0	56	9	0	2	0	0	1	0	0	0	0	0	**68**	
1545 - 1600	0	66	9	0	0	0	0	0	0	0	0	0	0	**75**	**269**
1600 - 1615	0	48	14	1	2	0	0	0	0	0	0	0	0	**65**	
1615 - 1630	0	51	4	0	2	0	0	0	0	0	0	0	0	**57**	
1630 - 1645	0	50	6	0	0	0	0	1	0	0	0	0	0	**57**	
1645 - 1700	0	55	11	2	0	0	0	0	0	1	0	0	0	**69**	**248**
1700 - 1715	0	52	8	1	2	0	0	0	0	0	0	0	0	**63**	
1715 - 1730	0	40	6	0	0	0	0	1	0	0	0	0	0	**47**	
1730 - 1745	0	44	7	0	1	0	0	0	0	0	0	0	0	**52**	
1745 - 1800	0	55	7	0	1	0	0	0	0	0	0	0	0	**63**	**225**
1800 - 1815	0	30	6	0	2	1	0	0	0	0	0	0	0	**39**	
1815 - 1830	0	37	7	0	0	0	0	0	1	0	0	0	0	**45**	
1830 - 1845	1	44	12	0	1	0	0	0	0	0	0	0	0	**58**	
1845 - 1900	0	47	7	0	0	0	0	0	1	0	0	0	0	**55**	**197**
1900 - 1915	0	44	7	0	0	0	0	0	0	0	0	0	0	**51**	
1915 - 1930	0	39	2	0	1	0	0	0	0	0	0	0	0	**42**	
1930 - 1945	0	21	5	0	0	0	0	0	0	0	0	0	0	**26**	
1945 - 2000	3	20	2	0	1	0	0	0	1	0	0	0	0	**27**	**146**
2000 - 2015	0	18	2	0	1	0	0	0	0	0	0	0	0	**21**	
2015 - 2030	0	24	3	0	0	0	0	0	0	0	0	0	0	**27**	
2030 - 2045	0	19	5	0	0	0	0	0	0	0	0	0	0	**24**	
2045 - 2100	0	22	6	0	0	0	0	0	0	0	0	0	0	**28**	**100**
2100 - 2115	0	19	4	0	0	0	0	0	0	0	0	0	0	**23**	
2115 - 2130	0	18	3	0	0	0	0	0	0	0	0	0	0	**21**	
2130 - 2145	0	11	2	0	0	0	0	0	0	0	0	0	0	**13**	
2145 - 2200	0	17	4	0	1	0	0	0	0	0	0	0	0	**22**	**79**
2200 - 2215	0	15	4	0	0	0	0	0	1	0	0	0	0	**20**	
2215 - 2230	0	8	2	0	0	0	0	0	0	0	0	0	0	**10**	
2230 - 2245	0	9	1	0	0	0	0	0	0	0	0	0	0	**10**	
2245 - 2300	0	10	3	0	0	0	0	0	1	0	0	0	0	**14**	**54**
2300 - 2315	0	17	4	0	0	0	0	0	0	0	0	0	0	**21**	
2315 - 2330	0	10	2	0	1	0	0	0	0	0	0	0	0	**13**	
2330 - 2345	0	5	1	0	0	0	0	0	0	0	0	0	0	**6**	
2345 - 0000	0	4	2	0	0	0	0	0	0	0	0	0	0	**6**	**46**

Session Total	8	3674	704	12	76	16	0	13	18	4	0	0	0	**4525**
Session Average	0.08	38.27	7.33	0.13	0.79	0.17	0.00	0.14	0.19	0.04	0.00	0.00	0.00	**47.14**
Session Percentage	0.18	81.19	15.56	0.27	1.68	0.35	0.00	0.29	0.40	0.09	0.00	0.00	0.00	

AM Peak Hour	0845 - 0945	0730 - 0830	0745 - 0845	0930 - 1030	0915 - 1015	0900 - 1000	-	0945 - 1045	0730 - 0830	0700 - 0800	-	-	-	**0730 - 0830**
AM Peak Hour Volume	2	488	76	3	9	2	0	4	4	1	0	0	0	**570**

Noon Peak Hour	1200 - 1300	1145 - 1245	1145 - 1245	1000 - 1100	1130 - 1230	1345 - 1445	-	1000 - 1100	1045 - 1145	1000 - 1100	-	-	-	**1215 - 1315**
Noon Peak Hour Volume	1	260	64	2	14	4	0	4	2	1	0	0	0	**339**

PM Peak Hour	1900 - 2000	1500 - 1600	1515 - 1615	1600 - 1700	1530 - 1630	1500 - 1600	-	1630 - 1730	1800 - 1900	1600 - 1700	-	-	-	**1500 - 1600**
PM Peak Hour Volume	3	223	45	3	6	1	0	2	2	1	0	0	0	**269**

Site 1
I-26 E/Bound Off-Ramp,
west of US-76

Date
Thursday, April 25, 2024

Lat/Long
34.026924°, -81.101176°

Weather
Fair
67°F

Click here for Detailed Weather

0000 - 2400 (Weekday 24h Session) (04-25-2024)
NB EB 15min

	Eastbound (Movement 1.1)													15min	60min
TIME	1	2	3	4	5	6	7	8	9	10	11	12	13	Total	Total
0000 - 0015	0	3	0	0	0	0	0	0	0	0	0	0	0	**3**	
0015 - 0030	0	8	2	0	0	0	0	0	0	0	0	0	0	**10**	
0030 - 0045	0	5	0	0	0	0	0	0	0	0	0	0	0	**5**	
0045 - 0100	0	3	0	0	0	0	0	0	0	0	0	0	0	**3**	**21**
0100 - 0115	0	4	1	0	0	0	0	0	0	0	0	0	0	**5**	
0115 - 0130	0	3	0	0	0	0	0	0	0	0	0	0	0	**3**	
0130 - 0145	0	3	0	0	0	0	0	0	0	0	0	0	0	**3**	
0145 - 0200	0	3	0	0	0	0	0	0	0	0	0	0	0	**3**	**14**
0200 - 0215	0	0	0	0	0	0	0	0	0	0	0	0	0	**0**	
0215 - 0230	0	3	0	0	0	0	0	0	0	0	0	0	0	**3**	
0230 - 0245	0	1	1	0	0	0	0	0	0	0	0	0	0	**2**	
0245 - 0300	0	1	0	0	0	0	0	0	0	0	0	0	0	**1**	**6**
0300 - 0315	0	5	0	0	0	0	0	0	0	0	0	0	0	**5**	
0315 - 0330	0	4	0	0	1	0	0	0	0	0	0	0	0	**5**	
0330 - 0345	0	2	0	0	0	0	0	0	0	0	0	0	0	**2**	
0345 - 0400	0	3	0	0	1	0	0	0	0	0	0	0	0	**4**	**16**
0400 - 0415	0	6	0	0	0	0	0	0	0	0	0	0	0	**6**	
0415 - 0430	0	5	1	0	1	0	0	0	0	0	0	0	0	**7**	
0430 - 0445	0	11	1	0	0	0	0	0	0	0	0	0	0	**12**	
0445 - 0500	0	5	1	0	0	0	0	0	0	0	0	0	0	**6**	**31**
0500 - 0515	0	10	1	0	0	1	0	0	0	0	0	0	0	**12**	
0515 - 0530	0	8	1	0	0	0	0	0	0	0	0	0	0	**9**	
0530 - 0545	0	18	0	0	1	0	0	0	0	0	0	0	0	**19**	
0545 - 0600	0	17	0	0	0	0	0	0	0	0	0	0	0	**17**	**57**
0600 - 0615	0	21	2	0	0	0	0	0	0	0	0	0	0	**23**	
0615 - 0630	0	35	10	0	0	0	0	0	0	0	0	0	0	**45**	
0630 - 0645	0	54	12	0	1	0	0	0	0	1	0	0	0	**68**	
0645 - 0700	0	57	21	0	0	0	0	0	0	0	0	0	0	**78**	**214**
0700 - 0715	0	66	19	1	0	0	0	0	0	0	0	0	0	**86**	
0715 - 0730	0	93	22	0	1	0	0	0	0	0	0	0	0	**116**	
0730 - 0745	0	103	12	0	1	0	0	0	0	0	0	0	0	**116**	
0745 - 0800	1	132	25	0	0	0	0	1	0	0	0	0	0	**159**	**477**
0800 - 0815	0	119	24	0	1	0	0	0	0	0	0	0	0	**144**	
0815 - 0830	0	77	17	1	2	1	0	0	0	1	0	0	0	**99**	
0830 - 0845	0	84	15	0	3	0	0	1	0	0	0	0	0	**103**	
0845 - 0900	0	81	18	0	1	0	0	0	2	0	0	0	0	**102**	**448**
0900 - 0915	0	89	16	3	1	1	0	0	0	0	0	0	0	**110**	
0915 - 0930	0	65	14	0	1	1	0	0	0	0	0	0	0	**81**	
0930 - 0945	0	63	15	3	1	0	0	1	0	0	0	0	0	**83**	
0945 - 1000	0	76	18	3	3	0	0	2	1	0	0	0	0	**103**	**377**
1000 - 1015	0	56	10	0	1	0	0	2	1	1	0	0	0	**71**	
1015 - 1030	0	54	15	1	2	1	0	1	1	0	0	0	0	**75**	
1030 - 1045	0	58	8	0	1	0	0	0	1	0	0	0	0	**68**	
1045 - 1100	0	57	7	0	0	0	0	0	1	0	0	0	0	**65**	**279**
1100 - 1115	0	50	10	0	1	1	0	1	0	0	0	0	0	**63**	
1115 - 1130	0	57	12	0	4	0	0	2	0	0	0	0	0	**75**	
1130 - 1145	0	39	15	0	1	0	0	0	0	0	0	0	0	**55**	
1145 - 1200	0	55	18	1	1	0	1	1	0	0	0	0	0	**77**	**270**
1200 - 1215	0	55	10	0	2	0	0	0	0	0	0	0	0	**67**	
1215 - 1230	0	55	10	0	1	1	0	0	0	0	0	0	0	**67**	
1230 - 1245	1	53	15	0	1	0	0	0	0	0	0	0	0	**70**	
1245 - 1300	0	52	13	0	3	1	0	0	0	0	0	0	0	**69**	**273**
1300 - 1315	0	55	15	0	1	0	0	0	0	0	0	0	0	**71**	
1315 - 1330	0	52	16	0	1	2	0	0	0	0	0	0	0	**71**	
1330 - 1345	0	47	14	1	2	0	0	0	0	0	0	0	0	**64**	
1345 - 1400	0	50	16	0	0	0	0	0	1	0	0	0	0	**67**	**273**
1400 - 1415	0	55	18	1	1	0	0	0	1	0	0	0	0	**76**	
1415 - 1430	0	50	17	0	1	0	0	0	0	0	0	0	0	**68**	
1430 - 1445	0	58	15	0	1	1	0	0	0	0	0	0	0	**75**	
1445 - 1500	0	47	14	1	0	1	0	0	0	0	0	0	0	**63**	**282**
1500 - 1515	0	46	7	0	1	0	0	0	0	0	0	0	0	**54**	
1515 - 1530	0	46	9	0	1	0	0	0	0	0	0	0	0	**56**	
1530 - 1545	0	50	9	0	0	1	0	0	0	0	0	0	0	**60**	
1545 - 1600	0	62	9	0	0	0	0	0	0	0	0	0	0	**71**	**241**
1600 - 1615	0	50	8	0	1	0	0	0	0	0	0	0	0	**59**	
1615 - 1630	0	45	6	0	0	0	0	0	1	0	0	0	0	**52**	
1630 - 1645	0	47	6	0	1	1	0	0	0	0	0	0	0	**55**	
1645 - 1700	1	30	11	0	1	0	0	0	0	0	0	0	0	**43**	**209**
1700 - 1715	0	40	9	0	1	0	0	0	0	0	0	0	0	**50**	
1715 - 1730	0	35	6	0	0	0	0	0	0	0	0	0	0	**41**	
1730 - 1745	1	47	7	0	0	0	0	0	0	0	0	0	0	**55**	
1745 - 1800	0	41	7	0	1	0	0	0	0	0	0	0	0	**49**	**195**
1800 - 1815	0	50	8	0	0	0	0	0	0	0	0	0	0	**58**	
1815 - 1830	0	52	4	0	0	0	0	0	0	0	0	0	0	**56**	
1830 - 1845	2	42	7	0	1	0	0	1	0	0	0	0	0	**53**	
1845 - 1900	0	51	5	0	2	0	0	1	0	0	0	0	0	**59**	**226**
1900 - 1915	0	44	9	0	0	0	0	0	0	0	0	0	0	**53**	
1915 - 1930	0	31	5	0	1	1	0	0	0	0	0	0	0	**38**	
1930 - 1945	0	23	5	0	0	0	0	0	0	0	0	0	0	**28**	
1945 - 2000	0	24	7	0	0	0	0	0	0	0	0	0	0	**31**	**150**
2000 - 2015	1	27	4	0	0	0	0	0	0	0	0	0	0	**32**	
2015 - 2030	0	28	6	0	0	0	0	0	0	0	0	0	0	**34**	
2030 - 2045	0	21	3	0	0	0	0	0	0	0	0	0	0	**24**	
2045 - 2100	0	17	4	0	0	0	0	0	0	0	0	0	0	**21**	**111**
2100 - 2115	0	28	4	0	0	0	0	0	0	0	0	0	0	**32**	
2115 - 2130	0	21	2	0	0	0	0	0	0	0	0	0	0	**23**	
2130 - 2145	0	22	4	0	0	0	0	0	0	0	0	0	0	**26**	
2145 - 2200	0	13	1	0	0	0	0	0	0	0	0	0	0	**14**	**95**
2200 - 2215	0	22	4	0	2	0	0	0	0	0	0	0	0	**28**	
2215 - 2230	0	8	3	0	0	0	0	0	0	0	0	0	0	**11**	
2230 - 2245	0	9	1	0	0	0	0	0	0	0	0	0	0	**10**	
2245 - 2300	0	7	2	0	0	0	0	0	0	0	0	0	0	**9**	**58**
2300 - 2315	0	8	1	0	0	0	0	0	0	0	0	0	0	**9**	
2315 - 2330	0	12	2	0	0	0	0	0	0	0	0	0	0	**14**	
2330 - 2345	0	9	1	0	0	0	0	0	0	0	0	0	0	**10**	
2345 - 0000	0	7	2	0	0	0	0	0	0	0	0	0	0	**9**	**42**

Session Total	7	3516	725	16	58	15	1	14	10	3	0	0	0	**4365**
Session Average	0.07	36.63	7.55	0.17	0.60	0.16	0.01	0.15	0.10	0.03	0.00	0.00	0.00	**45.47**
Session Percentage	0.16	80.55	16.61	0.37	1.33	0.34	0.02	0.32	0.23	0.07	0.00	0.00	0.00	

AM Peak Hour	0700 - 0800	0715 - 0815	0715 - 0815	0900 - 1000	0800 - 0900	0815 - 0915	-	0930 - 1030	0945 - 1045	0545 - 0645	-	-	-	**0715 - 0815**
AM Peak Hour Volume	1	447	83	9	7	2	0	6	4	1	0	0	0	**535**

Noon Peak Hour	1145 - 1245	1000 - 1100	1345 - 1445	1315 - 1415	1115 - 1215	1230 - 1330	1100 - 1200	1100 - 1200	1000 - 1100	1000 - 1100	-	-	-	**1345 - 1445**
Noon Peak Hour Volume	1	225	66	2	8	3	1	4	4	1	0	0	0	**286**

PM Peak Hour	1645 - 1745	1515 - 1615	1515 - 1615	-	1830 - 1930	1500 - 1600	-	1800 - 1900	1530 - 1630	-	-	-	-	**1515 - 1615**
PM Peak Hour Volume	2	208	35	0	4	1	0	2	1	0	0	0	0	**246**

Site 1
I-26 E/Bound Off-Ramp,
west of US-76

Date
Friday, April 26, 2024

Lat/Long
34.026924°, -81.101176°

Weather
Cloudy
69°F

Click here for Detailed Weather

0000 - 2400 (Weekday 24h Session) (04-26-2024)
NB EB 15min

	Eastbound (Movement 1.1)													15min	60min
TIME	1	2	3	4	5	6	7	8	9	10	11	12	13	Total	Total
0000 - 0015	0	8	1	0	1	0	0	0	0	0	0	0	0	**10**	
0015 - 0030	0	5	0	0	0	0	0	0	0	0	0	0	0	**5**	
0030 - 0045	0	4	0	0	0	0	0	0	0	0	0	0	0	**4**	
0045 - 0100	0	2	0	0	0	0	0	0	0	0	0	0	0	**2**	**21**
0100 - 0115	0	6	0	0	0	0	0	0	0	0	0	0	0	**6**	
0115 - 0130	0	4	0	0	0	0	0	0	0	0	0	0	0	**4**	
0130 - 0145	0	3	0	0	0	0	0	0	0	0	0	0	0	**3**	
0145 - 0200	0	2	0	0	1	0	0	0	0	0	0	0	0	**3**	**16**
0200 - 0215	0	3	0	0	0	0	0	0	0	0	0	0	0	**3**	
0215 - 0230	0	1	0	0	0	0	0	0	0	0	0	0	0	**1**	
0230 - 0245	0	2	0	0	0	0	0	0	0	0	0	0	0	**2**	
0245 - 0300	0	4	0	0	0	0	0	0	0	0	0	0	0	**4**	**10**
0300 - 0315	0	6	0	0	0	0	0	0	0	0	0	0	0	**6**	
0315 - 0330	0	2	1	0	0	0	0	0	0	0	0	0	0	**3**	
0330 - 0345	0	3	0	0	0	0	0	0	0	0	0	0	0	**3**	
0345 - 0400	0	6	1	0	0	0	0	0	0	0	0	0	0	**7**	**19**
0400 - 0415	0	7	2	0	2	0	0	0	0	0	0	0	0	**11**	
0415 - 0430	0	5	0	0	0	0	0	0	0	0	0	0	0	**5**	
0430 - 0445	0	5	1	0	0	0	0	0	0	0	0	0	0	**6**	
0445 - 0500	0	10	2	0	0	0	0	0	0	0	0	0	0	**12**	**34**
0500 - 0515	0	5	1	0	0	0	0	0	0	0	0	0	0	**6**	
0515 - 0530	0	8	1	0	0	0	0	0	0	0	0	0	0	**9**	
0530 - 0545	0	18	2	0	0	0	0	0	0	0	0	0	0	**20**	
0545 - 0600	0	15	3	0	2	0	0	0	0	0	0	0	0	**20**	**55**
0600 - 0615	0	18	3	0	1	0	0	0	0	0	0	0	0	**22**	
0615 - 0630	0	25	5	0	0	0	0	0	0	0	0	0	0	**30**	
0630 - 0645	0	45	9	0	1	0	0	0	0	2	0	0	0	**57**	
0645 - 0700	0	45	17	0	0	0	0	0	0	0	0	0	0	**62**	**171**
0700 - 0715	0	46	10	0	0	0	0	0	1	0	0	0	0	**57**	
0715 - 0730	0	85	18	0	1	0	0	0	0	0	0	0	0	**104**	
0730 - 0745	0	92	19	0	0	0	0	0	0	0	0	0	0	**111**	
0745 - 0800	0	120	26	0	2	1	0	0	0	0	0	0	0	**149**	**421**
0800 - 0815	1	103	27	0	0	1	0	1	0	1	0	0	0	**134**	
0815 - 0830	0	105	19	1	4	0	0	0	1	0	0	0	0	**130**	
0830 - 0845	0	96	20	0	0	0	0	0	1	0	0	0	0	**117**	
0845 - 0900	0	100	23	0	0	0	0	0	0	0	0	0	0	**123**	**504**
0900 - 0915	0	83	15	5	1	0	0	0	0	0	0	0	0	**104**	
0915 - 0930	0	59	12	2	2	0	0	0	0	0	0	0	0	**75**	
0930 - 0945	0	63	15	0	2	0	0	1	0	0	0	0	0	**81**	
0945 - 1000	0	63	11	0	2	0	0	0	0	0	0	0	0	**76**	**336**
1000 - 1015	0	47	18	1	2	0	0	0	2	0	0	0	0	**70**	
1015 - 1030	0	51	17	0	1	0	0	1	2	0	0	0	0	**72**	
1030 - 1045	0	59	19	0	1	0	0	0	0	0	0	0	0	**79**	
1045 - 1100	0	56	13	3	2	0	0	1	0	0	0	0	0	**75**	**296**
1100 - 1115	0	49	18	0	0	0	0	1	0	0	0	0	0	**68**	
1115 - 1130	0	53	7	1	4	0	0	0	0	0	0	0	0	**65**	
1130 - 1145	0	62	15	0	4	0	0	0	0	0	0	0	0	**81**	
1145 - 1200	0	49	14	0	0	1	0	1	1	0	0	0	0	**66**	**280**
1200 - 1215	0	42	12	0	2	0	0	1	0	0	0	0	0	**57**	
1215 - 1230	0	41	18	0	2	0	0	0	0	0	0	0	0	**61**	
1230 - 1245	0	51	9	0	2	0	0	0	0	0	0	0	0	**62**	
1245 - 1300	1	37	12	0	1	0	0	0	2	0	0	0	0	**53**	**233**
1300 - 1315	0	52	13	0	3	0	0	0	0	0	0	0	0	**68**	
1315 - 1330	0	39	7	0	0	0	0	0	0	0	0	0	0	**46**	
1330 - 1345	0	46	11	0	1	0	0	0	0	0	0	0	0	**58**	
1345 - 1400	0	35	11	0	3	0	0	0	0	0	0	0	0	**49**	**221**
1400 - 1415	0	62	10	0	0	0	0	0	0	0	0	0	0	**72**	
1415 - 1430	0	55	9	0	1	0	0	0	0	0	0	0	0	**65**	
1430 - 1445	1	54	6	0	0	0	1	0	0	0	0	0	0	**62**	
1445 - 1500	0	55	13	0	1	0	0	0	1	0	0	0	0	**70**	**269**
1500 - 1515	0	42	12	0	0	0	0	0	1	0	0	0	0	**55**	
1515 - 1530	0	47	11	0	1	0	0	1	0	0	0	0	0	**60**	
1530 - 1545	0	57	7	0	3	0	0	0	0	0	0	0	0	**67**	
1545 - 1600	0	52	16	0	0	0	0	1	0	0	0	0	0	**69**	**251**
1600 - 1615	0	46	12	0	1	0	0	0	0	0	0	0	0	**59**	
1615 - 1630	0	44	9	0	1	0	0	0	0	0	0	0	0	**54**	
1630 - 1645	0	48	11	0	0	0	0	0	0	0	0	0	0	**59**	
1645 - 1700	0	38	9	0	0	0	0	0	0	0	0	0	0	**47**	**219**
1700 - 1715	0	45	13	0	1	0	0	0	0	0	0	0	0	**59**	
1715 - 1730	0	64	6	0	3	0	0	0	0	0	0	0	0	**73**	
1730 - 1745	0	48	13	0	2	0	0	0	1	0	0	0	0	**64**	
1745 - 1800	0	51	6	0	0	0	0	0	0	0	0	0	0	**57**	**253**
1800 - 1815	0	46	3	0	0	0	0	0	0	0	0	0	0	**49**	
1815 - 1830	0	47	3	0	0	0	0	0	0	0	0	0	0	**50**	
1830 - 1845	0	54	7	0	1	0	0	0	0	0	0	0	0	**62**	
1845 - 1900	0	53	5	0	0	0	0	0	0	0	0	0	0	**58**	**219**
1900 - 1915	0	50	5	0	0	0	0	0	0	0	0	0	0	**55**	
1915 - 1930	0	38	5	0	2	1	0	0	0	0	0	0	0	**46**	
1930 - 1945	0	29	5	0	0	0	0	0	0	0	0	0	0	**34**	
1945 - 2000	0	20	1	0	0	0	0	0	0	0	0	0	0	**21**	**156**
2000 - 2015	0	27	3	0	0	0	0	0	0	0	0	0	0	**30**	
2015 - 2030	0	28	1	0	2	0	0	0	0	0	0	0	0	**31**	
2030 - 2045	0	27	3	0	2	0	0	0	0	0	0	0	0	**32**	
2045 - 2100	0	20	2	0	2	0	0	0	0	0	0	0	0	**24**	**117**
2100 - 2115	0	19	3	0	1	0	0	0	0	0	0	0	0	**23**	
2115 - 2130	0	17	2	0	0	0	0	0	1	0	0	0	0	**20**	
2130 - 2145	0	21	2	0	0	0	0	0	1	0	0	0	0	**24**	
2145 - 2200	0	19	2	0	0	0	0	0	1	0	0	0	0	**22**	**89**
2200 - 2215	0	11	3	0	0	0	0	0	0	0	0	0	0	**14**	
2215 - 2230	0	13	2	0	0	0	0	0	0	0	0	0	0	**15**	
2230 - 2245	0	15	4	0	0	0	0	0	0	0	0	0	0	**19**	
2245 - 2300	0	14	4	0	0	0	0	0	0	0	0	0	0	**18**	**66**
2300 - 2315	0	9	2	0	0	0	0	0	0	0	0	0	0	**11**	
2315 - 2330	0	16	2	0	3	0	0	0	0	0	0	0	0	**21**	
2330 - 2345	0	10	1	0	0	0	0	0	0	0	0	0	0	**11**	
2345 - 0000	0	14	4	0	1	0	0	0	0	0	0	0	0	**19**	**62**

Session Total	3	3476	715	13	78	4	1	9	16	3	0	0	0	**4318**
Session Average	0.03	36.21	7.45	0.14	0.81	0.04	0.01	0.09	0.17	0.03	0.00	0.00	0.00	**44.98**
Session Percentage	0.07	80.50	16.56	0.30	1.81	0.09	0.02	0.21	0.37	0.07	0.00	0.00	0.00	

AM Peak Hour	0715 - 0815	0745 - 0845	0745 - 0845	0830 - 0930	0915 - 1015	0715 - 0815	-	0930 - 1030	0930 - 1030	0545 - 0645	-	-	-	**0745 - 0845**
AM Peak Hour Volume	1	424	92	7	8	2	0	2	4	2	0	0	0	**530**

Noon Peak Hour	1200 - 1300	1400 - 1500	1000 - 1100	1000 - 1100	1045 - 1145	1100 - 1200	1345 - 1445	1015 - 1115	1000 - 1100	-	-	-	-	**1000 - 1100**
Noon Peak Hour Volume	1	226	67	4	10	1	1	3	4	0	0	0	0	**296**

PM Peak Hour	-	1715 - 1815	1545 - 1645	-	1645 - 1745	1830 - 1930	-	1500 - 1600	1500 - 1600	-	-	-	-	**1515 - 1615**
PM Peak Hour Volume	0	209	48	0	6	1	0	2	1	0	0	0	0	**255**

Site 1
I-26 E/Bound Off-Ramp,
west of US-76

Date
Saturday, April 27, 2024

Lat/Long
34.026924°, -81.101176°

Weather
Mostly Cloudy
69°F

Click here for Detailed Weather

0000 - 2400 (Saturday 24h Session) (04-27-2024)
NB EB 15min

	Eastbound (Movement 1.1)													15min	60min
TIME	1	2	3	4	5	6	7	8	9	10	11	12	13	Total	Total
0000 - 0015	0	10	2	0	0	0	0	0	0	0	0	0	0	**12**	
0015 - 0030	0	6	1	0	0	0	0	0	0	0	0	0	0	**7**	
0030 - 0045	0	9	3	0	0	0	0	0	0	0	0	0	0	**12**	
0045 - 0100	0	5	2	0	0	0	0	0	0	0	0	0	0	**7**	**38**
0100 - 0115	0	3	1	0	0	0	0	0	0	0	0	0	0	**4**	
0115 - 0130	0	7	3	0	0	0	0	0	0	0	0	0	0	**10**	
0130 - 0145	0	2	0	0	0	0	0	0	0	0	0	0	0	**2**	
0145 - 0200	0	4	0	0	0	0	0	0	0	0	0	0	0	**4**	**20**
0200 - 0215	0	4	1	0	0	0	0	0	0	0	0	0	0	**5**	
0215 - 0230	0	5	1	0	0	0	0	0	0	0	0	0	0	**6**	
0230 - 0245	0	3	0	0	0	0	0	0	0	0	0	0	0	**3**	
0245 - 0300	0	6	0	0	0	0	0	0	0	0	0	0	0	**6**	**20**
0300 - 0315	0	5	0	0	0	0	0	0	0	0	0	0	0	**5**	
0315 - 0330	0	4	0	0	1	0	0	0	0	0	0	0	0	**5**	
0330 - 0345	0	5	0	0	0	0	0	0	0	0	0	0	0	**5**	
0345 - 0400	0	6	0	0	0	0	0	0	0	0	0	0	0	**6**	**21**
0400 - 0415	0	2	0	0	0	0	0	0	0	0	0	0	0	**2**	
0415 - 0430	0	5	1	0	0	0	0	0	0	0	0	0	0	**6**	
0430 - 0445	0	4	0	0	0	0	0	0	0	0	0	0	0	**4**	
0445 - 0500	0	3	0	0	0	0	0	0	0	0	0	0	0	**3**	**15**
0500 - 0515	0	4	0	0	0	0	0	0	0	0	0	0	0	**4**	
0515 - 0530	0	6	1	0	0	0	0	0	0	0	0	0	0	**7**	
0530 - 0545	0	9	3	0	0	0	0	0	0	0	0	0	0	**12**	
0545 - 0600	0	10	2	0	0	0	0	0	0	0	0	0	0	**12**	**35**
0600 - 0615	0	9	3	0	0	0	0	0	0	0	0	0	0	**12**	
0615 - 0630	0	12	4	0	0	0	0	0	0	0	0	0	0	**16**	
0630 - 0645	0	23	5	0	0	0	0	0	0	0	0	0	0	**28**	
0645 - 0700	0	28	3	0	0	0	0	0	0	0	0	0	0	**31**	**87**
0700 - 0715	0	22	2	0	1	0	0	0	0	0	0	0	0	**25**	
0715 - 0730	0	21	3	0	1	0	0	0	0	0	0	0	0	**25**	
0730 - 0745	0	19	4	0	0	1	0	0	0	0	0	0	0	**24**	
0745 - 0800	0	28	8	0	1	0	0	0	0	0	0	0	0	**37**	**111**
0800 - 0815	0	20	3	0	0	0	0	0	0	0	0	0	0	**23**	
0815 - 0830	0	30	4	0	0	0	0	0	0	0	0	0	0	**34**	
0830 - 0845	0	31	8	0	1	0	0	0	0	0	0	0	0	**40**	
0845 - 0900	0	43	9	0	2	0	0	0	0	0	0	0	0	**54**	**151**
0900 - 0915	1	40	6	0	1	1	0	0	0	0	0	0	0	**49**	
0915 - 0930	0	40	4	1	0	0	0	0	0	0	0	0	0	**45**	
0930 - 0945	0	50	10	0	1	0	0	0	0	0	0	0	0	**61**	
0945 - 1000	0	56	5	0	2	0	0	0	0	0	0	0	0	**63**	**218**
1000 - 1015	0	50	12	0	1	0	0	0	1	0	0	0	0	**64**	
1015 - 1030	0	37	12	1	0	0	0	0	0	0	0	0	0	**50**	
1030 - 1045	0	43	7	0	0	0	0	0	1	0	0	0	0	**51**	
1045 - 1100	1	45	16	0	2	0	0	0	0	0	0	0	0	**64**	**229**
1100 - 1115	0	37	9	0	0	0	0	0	0	0	0	0	0	**46**	
1115 - 1130	0	43	8	0	0	0	0	0	0	0	0	0	0	**51**	
1130 - 1145	0	47	5	0	1	0	0	0	0	0	0	0	0	**53**	
1145 - 1200	0	36	11	0	0	0	0	1	0	0	0	0	0	**48**	**198**
1200 - 1215	0	58	13	1	0	1	0	0	0	0	0	0	0	**73**	
1215 - 1230	0	44	9	0	0	0	0	0	0	0	0	0	0	**53**	
1230 - 1245	0	56	11	0	0	0	0	0	0	0	0	0	0	**67**	
1245 - 1300	0	57	5	0	0	0	0	0	0	0	0	0	0	**62**	**255**
1300 - 1315	0	51	7	0	0	0	0	0	0	0	0	0	0	**58**	
1315 - 1330	0	53	7	0	0	0	0	0	0	0	0	0	0	**60**	
1330 - 1345	0	46	7	0	0	0	0	0	0	0	0	0	0	**53**	
1345 - 1400	0	55	10	0	1	0	0	0	0	0	0	0	0	**66**	**237**
1400 - 1415	0	51	5	0	1	0	0	0	0	0	0	0	0	**57**	
1415 - 1430	0	63	0	0	1	0	0	0	0	0	0	0	0	**64**	
1430 - 1445	0	51	7	0	1	0	0	0	0	0	0	0	0	**59**	
1445 - 1500	1	64	8	0	0	0	0	0	0	0	0	0	0	**73**	**253**
1500 - 1515	0	42	6	0	2	0	0	0	0	0	0	0	0	**50**	
1515 - 1530	0	54	9	0	0	0	0	0	0	0	0	0	0	**63**	
1530 - 1545	1	45	4	0	0	0	0	0	0	0	0	0	0	**50**	
1545 - 1600	0	39	7	0	0	0	0	0	0	0	0	0	0	**46**	**209**
1600 - 1615	0	40	10	0	0	0	0	0	0	0	0	0	0	**50**	
1615 - 1630	1	35	7	0	0	0	0	0	0	0	0	0	0	**43**	
1630 - 1645	0	51	3	0	0	0	0	0	0	0	0	0	0	**54**	
1645 - 1700	0	62	11	0	0	0	0	1	0	0	0	0	0	**74**	**221**
1700 - 1715	0	41	12	0	0	1	0	0	0	0	0	0	0	**54**	
1715 - 1730	0	44	14	0	0	0	0	0	0	0	0	0	0	**58**	
1730 - 1745	0	54	6	0	0	0	0	0	0	0	0	0	0	**60**	
1745 - 1800	0	28	0	0	0	0	0	0	0	0	0	0	0	**28**	**200**
1800 - 1815	0	34	5	0	0	0	0	0	0	0	0	0	0	**39**	
1815 - 1830	0	32	5	0	0	0	0	0	0	0	0	0	0	**37**	
1830 - 1845	0	33	10	0	0	0	0	0	0	0	0	0	0	**43**	
1845 - 1900	0	29	1	0	0	0	0	0	0	0	0	0	0	**30**	**149**
1900 - 1915	0	35	2	0	0	0	0	0	0	0	0	0	0	**37**	
1915 - 1930	0	23	2	0	0	0	0	0	0	0	0	0	0	**25**	
1930 - 1945	0	35	2	0	1	0	0	0	0	0	0	0	0	**38**	
1945 - 2000	0	19	5	0	0	0	0	0	0	0	0	0	0	**24**	**124**
2000 - 2015	0	30	2	0	0	0	0	0	0	0	0	0	0	**32**	
2015 - 2030	0	27	2	0	0	0	0	0	0	0	0	0	0	**29**	
2030 - 2045	0	20	2	0	0	0	0	0	0	0	0	0	0	**22**	
2045 - 2100	0	20	2	0	0	0	0	0	0	0	0	0	0	**22**	**105**
2100 - 2115	0	17	1	1	0	0	0	0	0	0	0	0	0	**19**	
2115 - 2130	0	25	2	0	0	0	0	0	0	0	0	0	0	**27**	
2130 - 2145	0	24	1	0	0	0	0	0	0	0	0	0	0	**25**	
2145 - 2200	0	26	3	0	0	0	0	0	0	0	0	0	0	**29**	**100**
2200 - 2215	0	17	1	0	0	0	0	0	0	0	0	0	0	**18**	
2215 - 2230	0	16	2	0	0	0	0	0	0	0	0	0	0	**18**	
2230 - 2245	0	17	1	0	0	0	0	0	0	0	0	0	0	**18**	
2245 - 2300	0	9	1	0	0	0	0	0	0	0	0	0	0	**10**	**64**
2300 - 2315	0	10	1	0	0	0	0	0	0	0	0	0	0	**11**	
2315 - 2330	0	19	1	0	0	0	0	0	0	0	0	0	0	**20**	
2330 - 2345	0	18	1	0	0	0	0	0	0	0	0	0	0	**19**	
2345 - 0000	0	10	1	0	0	0	0	0	0	0	0	0	0	**11**	**61**

Session Total	5	2666	416	4	22	4	0	2	2	0	0	0	0	**3121**
Session Average	0.05	27.77	4.33	0.04	0.23	0.04	0.00	0.02	0.02	0.00	0.00	0.00	0.00	**32.51**
Session Percentage	0.16	85.42	13.33	0.13	0.70	0.13	0.00	0.06	0.06	0.00	0.00	0.00	0.00	

AM Peak Hour	0815 - 0915	0915 - 1015	0930 - 1030	0830 - 0930	0815 - 0915	0645 - 0745	-	-	0945 - 1045	-	-	-	-	**0930 - 1030**
AM Peak Hour Volume	1	196	39	1	4	1	0	0	2	0	0	0	0	**238**

Noon Peak Hour	1445 - 1545	1400 - 1500	1000 - 1100	1000 - 1100	1345 - 1445	1115 - 1215	-	1100 - 1200	1000 - 1100	-	-	-	-	**1200 - 1300**
Noon Peak Hour Volume	2	229	47	1	4	1	0	1	2	0	0	0	0	**255**

PM Peak Hour	1530 - 1630	1645 - 1745	1645 - 1745	-	1500 - 1600	1615 - 1715	-	1600 - 1700	-	-	-	-	-	**1645 - 1745**
PM Peak Hour Volume	2	201	43	0	2	1	0	1	0	0	0	0	0	**246**

Bi-Directional Class Count || NB EB Average 15min

Columbia, SC

Marr Traffic DATA COLLECTION
www.marrtraffic.com

Site 1
I-26 E/Bound Off-Ramp,
west of US-76

Date
Sunday, April 21, 2024

Weather
Cloudy
66°F

Lat/Long
34.026924°, -81.101176°

0000 - 2400 (Weekday 24h Session) (All Dates)
NB EB Average 15min

	NB EB Average 15min													15min	60min
Time	1	2	3	4	5	6	7	8	9	10	11	12	13	Total	Total
0000 - 0015	0	8	1	0	0	0	0	0	0	0	0	0	0	**9**	
0015 - 0030	0	7	1	0	0	0	0	0	0	0	0	0	0	**7**	
0030 - 0045	0	6	1	0	0	0	0	0	0	0	0	0	0	**8**	
0045 - 0100	0	3	0	0	0	0	0	0	0	0	0	0	0	**4**	**28**
0100 - 0115	0	4	1	0	0	0	0	0	0	0	0	0	0	**5**	
0115 - 0130	0	4	1	0	0	0	0	0	0	0	0	0	0	**5**	
0130 - 0145	0	4	0	0	0	0	0	0	0	0	0	0	0	**4**	
0145 - 0200	0	3	0	0	0	0	0	0	0	0	0	0	0	**3**	**17**
0200 - 0215	0	3	0	0	0	0	0	0	0	0	0	0	0	**3**	
0215 - 0230	0	3	0	0	0	0	0	0	0	0	0	0	0	**4**	
0230 - 0245	0	3	0	0	0	0	0	0	0	0	0	0	0	**3**	
0245 - 0300	0	4	0	0	0	0	0	0	0	0	0	0	0	**5**	**15**
0300 - 0315	0	4	0	0	0	0	0	0	0	0	0	0	0	**5**	
0315 - 0330	0	3	1	0	1	0	0	0	0	0	0	0	0	**4**	
0330 - 0345	0	5	0	0	0	0	0	0	0	0	0	0	0	**5**	
0345 - 0400	0	3	0	0	0	0	0	0	0	0	0	0	0	**4**	**18**
0400 - 0415	0	4	1	0	0	0	0	0	0	0	0	0	0	**5**	
0415 - 0430	0	5	0	0	1	0	0	0	0	0	0	0	0	**6**	
0430 - 0445	0	6	0	0	0	0	0	0	0	0	0	0	0	**6**	
0445 - 0500	0	7	1	0	0	0	0	0	0	0	0	0	0	**8**	**25**
0500 - 0515	0	7	1	0	0	0	0	0	0	0	0	0	0	**7**	
0515 - 0530	0	8	1	0	0	0	0	0	0	0	0	0	0	**9**	
0530 - 0545	0	16	2	0	1	0	0	0	0	0	0	0	0	**19**	
0545 - 0600	0	15	1	0	1	0	0	0	0	0	0	0	0	**17**	**52**
0600 - 0615	0	18	2	0	0	0	0	0	0	0	0	0	0	**21**	
0615 - 0630	0	26	5	0	0	0	0	0	0	0	0	0	0	**32**	
0630 - 0645	0	45	7	0	1	0	0	0	0	0	0	0	0	**53**	
0645 - 0700	0	48	12	0	1	0	0	0	0	0	0	0	0	**61**	**167**
0700 - 0715	0	47	9	0	0	0	0	0	0	0	0	0	0	**58**	
0715 - 0730	0	71	11	0	1	0	0	0	0	0	0	0	0	**83**	
0730 - 0745	0	83	12	0	0	0	0	0	0	0	0	0	0	**96**	
0745 - 0800	0	96	16	0	1	0	0	0	0	0	0	0	0	**114**	**350**
0800 - 0815	0	85	16	0	1	0	0	0	0	0	0	0	0	**103**	
0815 - 0830	0	81	13	0	2	0	0	0	0	0	0	0	0	**98**	
0830 - 0845	0	69	13	0	1	0	0	0	0	0	0	0	0	**84**	
0845 - 0900	0	69	14	0	1	0	0	0	0	0	0	0	0	**86**	**369**
0900 - 0915	0	71	11	1	2	1	0	0	0	0	0	0	0	**85**	
0915 - 0930	0	57	10	1	2	0	0	0	0	0	0	0	0	**71**	
0930 - 0945	0	62	10	1	1	0	0	1	1	0	0	0	0	**76**	
0945 - 1000	0	68	10	1	2	0	0	0	0	0	0	0	0	**82**	**314**
1000 - 1015	0	51	10	0	1	0	0	1	1	0	0	0	0	**64**	
1015 - 1030	0	51	11	1	0	0	0	0	0	0	0	0	0	**64**	
1030 - 1045	0	57	11	0	1	0	0	0	0	0	0	0	0	**70**	
1045 - 1100	0	50	9	1	1	0	0	0	0	0	0	0	0	**61**	**258**
1100 - 1115	0	49	11	0	0	0	0	0	0	0	0	0	0	**62**	
1115 - 1130	0	46	9	0	2	0	0	0	0	0	0	0	0	**58**	
1130 - 1145	0	48	10	0	2	0	0	0	0	0	0	0	0	**61**	
1145 - 1200	0	48	13	0	1	0	0	0	0	0	0	0	0	**63**	**244**
1200 - 1215	0	48	10	0	1	0	0	0	0	0	0	0	0	**60**	
1215 - 1230	0	52	12	0	1	0	0	0	0	0	0	0	0	**66**	
1230 - 1245	0	55	13	0	1	0	0	0	0	0	0	0	0	**70**	
1245 - 1300	0	54	10	0	1	0	0	1	0	0	0	0	0	**66**	**262**
1300 - 1315	0	54	11	0	2	0	0	0	0	0	0	0	0	**68**	
1315 - 1330	0	49	12	0	1	0	0	0	0	0	0	0	0	**63**	
1330 - 1345	0	47	10	1	1	0	0	0	0	0	0	0	0	**59**	
1345 - 1400	0	48	10	0	1	0	0	0	0	0	0	0	0	**60**	**249**
1400 - 1415	0	49	10	0	1	0	0	0	0	0	0	0	0	**61**	
1415 - 1430	0	52	12	0	1	0	0	0	0	0	0	0	0	**65**	
1430 - 1445	0	50	9	0	1	1	0	0	0	0	0	0	0	**61**	
1445 - 1500	0	55	11	0	1	0	0	0	0	0	0	0	0	**69**	**256**
1500 - 1515	0	44	7	0	1	0	0	0	0	0	0	0	0	**52**	
1515 - 1530	0	45	8	0	0	0	0	0	0	0	0	0	0	**54**	
1530 - 1545	0	43	6	0	1	0	0	0	0	0	0	0	0	**50**	
1545 - 1600	0	50	7	0	0	0	0	0	0	0	0	0	0	**58**	**214**
1600 - 1615	0	41	9	0	1	0	0	0	0	0	0	0	0	**52**	
1615 - 1630	0	42	7	0	1	0	0	0	0	0	0	0	0	**50**	
1630 - 1645	0	46	6	0	0	0	0	0	0	0	0	0	0	**53**	
1645 - 1700	0	43	10	0	0	0	0	0	0	0	0	0	0	**55**	**210**
1700 - 1715	0	45	9	0	1	0	0	0	0	0	0	0	0	**56**	
1715 - 1730	0	44	7	0	1	0	0	0	0	0	0	0	0	**51**	
1730 - 1745	0	43	8	0	0	0	0	0	0	0	0	0	0	**52**	
1745 - 1800	0	43	7	0	1	0	0	0	0	0	0	0	0	**51**	**210**
1800 - 1815	0	40	5	0	0	0	0	0	0	0	0	0	0	**47**	
1815 - 1830	0	36	5	0	0	0	0	0	0	0	0	0	0	**42**	
1830 - 1845	1	42	8	0	1	0	0	0	0	0	0	0	0	**52**	
1845 - 1900	0	39	5	0	0	0	0	0	0	0	0	0	0	**44**	**184**
1900 - 1915	0	38	6	0	0	0	0	0	0	0	0	0	0	**44**	
1915 - 1930	0	32	4	0	1	0	0	0	0	0	0	0	0	**38**	
1930 - 1945	0	27	4	0	0	0	0	0	0	0	0	0	0	**31**	
1945 - 2000	0	22	4	0	1	0	0	0	0	0	0	0	0	**27**	**140**
2000 - 2015	0	22	3	0	0	0	0	0	0	0	0	0	0	**25**	
2015 - 2030	0	25	3	0	0	0	0	0	0	0	0	0	0	**29**	
2030 - 2045	0	23	4	0	0	0	0	0	0	0	0	0	0	**27**	
2045 - 2100	0	20	3	0	0	0	0	0	0	0	0	0	0	**24**	**105**
2100 - 2115	0	21	3	0	0	0	0	0	0	0	0	0	0	**24**	
2115 - 2130	0	19	2	0	0	0	0	0	0	0	0	0	0	**21**	
2130 - 2145	0	18	2	0	0	0	0	0	0	0	0	0	0	**20**	
2145 - 2200	0	17	2	0	0	0	0	0	0	0	0	0	0	**19**	**84**
2200 - 2215	0	16	3	0	0	0	0	0	0	0	0	0	0	**20**	
2215 - 2230	0	12	2	0	0	0	0	0	0	0	0	0	0	**14**	
2230 - 2245	0	12	1	0	0	0	0	0	0	0	0	0	0	**13**	
2245 - 2300	0	10	2	0	0	0	0	0	0	0	0	0	0	**12**	**60**
2300 - 2315	0	12	2	0	0	0	0	0	0	0	0	0	0	**13**	
2315 - 2330	0	13	2	0	1	0	0	0	0	0	0	0	0	**15**	
2330 - 2345	0	9	1	0	0	0	0	0	0	0	0	0	0	**11**	
2345 - 0000	0	8	1	0	0	0	0	0	0	0	0	0	0	**10**	**49**

Session Total	5	3206	569	9	58	8	1	9	12	2	0	0	0	**3879**
Session Average	0.05	33.40	5.93	0.10	0.60	0.09	0.01	0.09	0.13	0.02	0.00	0.00	0.00	**40.41**
Session Percentage	0.12	82.65	14.67	0.24	1.49	0.22	0.04	0.22	0.31	0.04	0.00	0.00	0.00	

AM Peak Hour	0715 - 0815	0730 - 0830	0745 - 0845	0900 - 1000	0900 - 1000	0730 - 0830	0700 - 0800	0930 - 1030	0930 - 1030	0545 - 0645	-	-	-	**0730 - 0830**
AM Peak Volume	0	346	58	4	7	1	1	2	2	0	0	0	0	**410**

Noon Peak Hour	1200 - 1300	1215 - 1315	1145 - 1245	1000 - 1100	1045 - 1145	1400 - 1500	1015 - 1115	1000 - 1100	1000 - 1100	1400 - 1500	-	-	-	**1215 - 1315**
Noon Peak Volume	0	215	48	1	6	1	0	1	2	0	0	0	0	**269**

PM Peak Hour	1745 - 1845	1500 - 1600	1645 - 1745	1600 - 1700	1530 - 1630	1500 - 1600	1530 - 1630	1630 - 1730	1730 - 1830	1600 - 1700	-	-	-	**1630 - 1730**
PM Peak Volume	1	181	34	0	3	1	0	1	1	0	0	0	0	**214**

Bi-Directional Class Count || Volume Summary 15min

Columbia, SC

Marr Traffic DATA COLLECTION

www.marrtraffic.com

Site 1
I-26 E/Bound Off-Ramp,
west of US-76

Date
Sunday, April 21, 2024

Lat/Long
34.026924°, -81.101176°

Weather
Cloudy
66°F

Click here for Detailed Weather

0000 - 2400 (Sunday 24h Session) (04-21-2024)

Volume Summary 15min

TIME	Volume Summary 15min EB	WB	15min Total	60min Total
0000 - 0015	18	0	**18**	
0015 - 0030	9	0	**9**	
0030 - 0045	9	0	**9**	
0045 - 0100	5	0	**5**	**41**
0100 - 0115	6	0	**6**	
0115 - 0130	5	0	**5**	
0130 - 0145	6	0	**6**	
0145 - 0200	6	0	**6**	**23**
0200 - 0215	6	0	**6**	
0215 - 0230	5	0	**5**	
0230 - 0245	8	0	**8**	
0245 - 0300	7	0	**7**	**26**
0300 - 0315	1	0	**1**	
0315 - 0330	3	0	**3**	
0330 - 0345	9	0	**9**	
0345 - 0400	2	0	**2**	**15**
0400 - 0415	3	0	**3**	
0415 - 0430	3	0	**3**	
0430 - 0445	6	0	**6**	
0445 - 0500	3	0	**3**	**15**
0500 - 0515	4	0	**4**	
0515 - 0530	3	0	**3**	
0530 - 0545	6	0	**6**	
0545 - 0600	7	0	**7**	**20**
0600 - 0615	9	0	**9**	
0615 - 0630	10	0	**10**	
0630 - 0645	23	0	**23**	
0645 - 0700	9	0	**9**	**51**
0700 - 0715	10	0	**10**	
0715 - 0730	19	0	**19**	
0730 - 0745	16	0	**16**	
0745 - 0800	14	0	**14**	**59**
0800 - 0815	11	0	**11**	
0815 - 0830	17	0	**17**	
0830 - 0845	18	0	**18**	
0845 - 0900	24	0	**24**	**70**
0900 - 0915	53	0	**53**	
0915 - 0930	26	0	**26**	
0930 - 0945	24	0	**24**	
0945 - 1000	36	0	**36**	**139**
1000 - 1015	25	0	**25**	
1015 - 1030	26	0	**26**	
1030 - 1045	30	0	**30**	
1045 - 1100	32	0	**32**	**113**
1100 - 1115	23	0	**23**	
1115 - 1130	27	0	**27**	
1130 - 1145	20	0	**20**	
1145 - 1200	20	0	**20**	**90**

Time	Volume Summary 15min EB	WB	15min Total	60min Total
1200 - 1215	25	0	**25**	
1215 - 1230	45	0	**45**	
1230 - 1245	34	0	**34**	
1245 - 1300	27	0	**27**	**131**
1300 - 1315	34	0	**34**	
1315 - 1330	38	0	**38**	
1330 - 1345	25	0	**25**	
1345 - 1400	36	0	**36**	**133**
1400 - 1415	33	0	**33**	
1415 - 1430	37	0	**37**	
1430 - 1445	36	0	**36**	
1445 - 1500	30	0	**30**	**136**
1500 - 1515	22	0	**22**	
1515 - 1530	31	0	**31**	
1530 - 1545	22	0	**22**	
1545 - 1600	38	0	**38**	**113**
1600 - 1615	23	0	**23**	
1615 - 1630	36	0	**36**	
1630 - 1645	35	0	**35**	
1645 - 1700	26	0	**26**	**120**
1700 - 1715	40	0	**40**	
1715 - 1730	27	0	**27**	
1730 - 1745	25	0	**25**	
1745 - 1800	32	0	**32**	**124**
1800 - 1815	33	0	**33**	
1815 - 1830	31	0	**31**	
1830 - 1845	32	0	**32**	
1845 - 1900	18	0	**18**	**114**
1900 - 1915	39	0	**39**	
1915 - 1930	31	0	**31**	
1930 - 1945	29	0	**29**	
1945 - 2000	26	0	**26**	**125**
2000 - 2015	12	0	**12**	
2015 - 2030	27	0	**27**	
2030 - 2045	20	0	**20**	
2045 - 2100	16	0	**16**	**75**
2100 - 2115	19	0	**19**	
2115 - 2130	17	0	**17**	
2130 - 2145	13	0	**13**	
2145 - 2200	16	0	**16**	**65**
2200 - 2215	18	0	**18**	
2215 - 2230	9	0	**9**	
2230 - 2245	7	0	**7**	
2245 - 2300	8	0	**8**	**42**
2300 - 2315	15	0	**15**	
2315 - 2330	7	0	**7**	
2330 - 2345	2	0	**2**	
2345 - 0000	1	0	**1**	**25**

Session Total	1865	0	**1865**
Session Average	19.43	0.00	**19.43**
Session Percentage	100.00	0.00	

Site 1
I-26 E/Bound Off-Ramp,
west of US-76

Date
Monday, April 22, 2024

Lat/Long
34.026924°, -81.101176°

Weather
Mostly Cloudy
57°F

Click here for Detailed Weather

0000 - 2400 (Weekday 24h Session) (04-22-2024)
Volume Summary 15min

	Volume Summary 15min		15min	60min
TIME	EB	WB	Total	Total
0000 - 0015	4	0	**4**	
0015 - 0030	5	0	**5**	
0030 - 0045	8	0	**8**	
0045 - 0100	1	0	**1**	**18**
0100 - 0115	6	0	**6**	
0115 - 0130	3	0	**3**	
0130 - 0145	1	0	**1**	
0145 - 0200	1	0	**1**	**11**
0200 - 0215	2	0	**2**	
0215 - 0230	5	0	**5**	
0230 - 0245	1	0	**1**	
0245 - 0300	6	0	**6**	**14**
0300 - 0315	4	0	**4**	
0315 - 0330	3	0	**3**	
0330 - 0345	4	0	**4**	
0345 - 0400	3	0	**3**	**14**
0400 - 0415	2	0	**2**	
0415 - 0430	6	0	**6**	
0430 - 0445	4	0	**4**	
0445 - 0500	10	0	**10**	**22**
0500 - 0515	6	0	**6**	
0515 - 0530	11	0	**11**	
0530 - 0545	22	0	**22**	
0545 - 0600	19	0	**19**	**58**
0600 - 0615	28	0	**28**	
0615 - 0630	34	0	**34**	
0630 - 0645	70	0	**70**	
0645 - 0700	77	0	**77**	**209**
0700 - 0715	70	0	**70**	
0715 - 0730	107	0	**107**	
0730 - 0745	133	0	**133**	
0745 - 0800	164	0	**164**	**474**
0800 - 0815	116	0	**116**	
0815 - 0830	123	0	**123**	
0830 - 0845	105	0	**105**	
0845 - 0900	94	0	**94**	**438**
0900 - 0915	86	0	**86**	
0915 - 0930	72	0	**72**	
0930 - 0945	73	0	**73**	
0945 - 1000	84	0	**84**	**315**
1000 - 1015	71	0	**71**	
1015 - 1030	70	0	**70**	
1030 - 1045	94	0	**94**	
1045 - 1100	74	0	**74**	**309**
1100 - 1115	79	0	**79**	
1115 - 1130	60	0	**60**	
1130 - 1145	54	0	**54**	
1145 - 1200	65	0	**65**	**258**

	Volume Summary 15min		15min	60min
Time	EB	WB	Total	Total
1200 - 1215	59	0	**59**	
1215 - 1230	64	0	**64**	
1230 - 1245	98	0	**98**	
1245 - 1300	84	0	**84**	**305**
1300 - 1315	84	0	**84**	
1315 - 1330	76	0	**76**	
1330 - 1345	64	0	**64**	
1345 - 1400	80	0	**80**	**304**
1400 - 1415	56	0	**56**	
1415 - 1430	82	0	**82**	
1430 - 1445	64	0	**64**	
1445 - 1500	86	0	**86**	**288**
1500 - 1515	53	0	**53**	
1515 - 1530	56	0	**56**	
1530 - 1545	1	0	**1**	
1545 - 1600	36	0	**36**	**146**
1600 - 1615	61	0	**61**	
1615 - 1630	45	0	**45**	
1630 - 1645	54	0	**54**	
1645 - 1700	52	0	**52**	**212**
1700 - 1715	64	0	**64**	
1715 - 1730	43	0	**43**	
1730 - 1745	55	0	**55**	
1745 - 1800	53	0	**53**	**215**
1800 - 1815	47	0	**47**	
1815 - 1830	30	0	**30**	
1830 - 1845	64	0	**64**	
1845 - 1900	39	0	**39**	**180**
1900 - 1915	40	0	**40**	
1915 - 1930	34	0	**34**	
1930 - 1945	30	0	**30**	
1945 - 2000	26	0	**26**	**130**
2000 - 2015	24	0	**24**	
2015 - 2030	28	0	**28**	
2030 - 2045	38	0	**38**	
2045 - 2100	28	0	**28**	**118**
2100 - 2115	27	0	**27**	
2115 - 2130	22	0	**22**	
2130 - 2145	19	0	**19**	
2145 - 2200	13	0	**13**	**81**
2200 - 2215	23	0	**23**	
2215 - 2230	20	0	**20**	
2230 - 2245	12	0	**12**	
2245 - 2300	12	0	**12**	**67**
2300 - 2315	10	0	**10**	
2315 - 2330	21	0	**21**	
2330 - 2345	12	0	**12**	
2345 - 0000	11	0	**11**	**54**

Session Total	4240	0	**4240**
Session Average	44.17	0.00	**44.17**
Session Percentage	100.00	0.00	

Site 1
I-26 E/Bound Off-Ramp,
west of US-76

Date
Tuesday, April 23, 2024

Lat/Long
34.026924°, -81.101176°

Weather
Fair
58°F

Click here for Detailed Weather

0000 - 2400 (Weekday 24h Session) (04-23-2024)
Volume Summary 15min

TIME	Volume Summary 15min EB	WB	15min Total	60min Total
0000 - 0015	8	0	**8**	
0015 - 0030	9	0	**9**	
0030 - 0045	8	0	**8**	
0045 - 0100	3	0	**3**	**28**
0100 - 0115	2	0	**2**	
0115 - 0130	4	0	**4**	
0130 - 0145	4	0	**4**	
0145 - 0200	4	0	**4**	**14**
0200 - 0215	4	0	**4**	
0215 - 0230	3	0	**3**	
0230 - 0245	2	0	**2**	
0245 - 0300	6	0	**6**	**15**
0300 - 0315	2	0	**2**	
0315 - 0330	7	0	**7**	
0330 - 0345	9	0	**9**	
0345 - 0400	1	0	**1**	**19**
0400 - 0415	6	0	**6**	
0415 - 0430	11	0	**11**	
0430 - 0445	7	0	**7**	
0445 - 0500	11	0	**11**	**35**
0500 - 0515	13	0	**13**	
0515 - 0530	15	0	**15**	
0530 - 0545	27	0	**27**	
0545 - 0600	23	0	**23**	**78**
0600 - 0615	29	0	**29**	
0615 - 0630	46	0	**46**	
0630 - 0645	57	0	**57**	
0645 - 0700	85	0	**85**	**217**
0700 - 0715	80	0	**80**	
0715 - 0730	97	0	**97**	
0730 - 0745	137	0	**137**	
0745 - 0800	127	0	**127**	**441**
0800 - 0815	141	0	**141**	
0815 - 0830	142	0	**142**	
0830 - 0845	109	0	**109**	
0845 - 0900	111	0	**111**	**503**
0900 - 0915	98	0	**98**	
0915 - 0930	124	0	**124**	
0930 - 0945	111	0	**111**	
0945 - 1000	131	0	**131**	**464**
1000 - 1015	70	0	**70**	
1015 - 1030	76	0	**76**	
1030 - 1045	93	0	**93**	
1045 - 1100	57	0	**57**	**296**
1100 - 1115	75	0	**75**	
1115 - 1130	62	0	**62**	
1130 - 1145	92	0	**92**	
1145 - 1200	76	0	**76**	**305**

Time	Volume Summary 15min EB	WB	15min Total	60min Total
1200 - 1215	77	0	**77**	
1215 - 1230	69	0	**69**	
1230 - 1245	72	0	**72**	
1245 - 1300	94	0	**94**	**312**
1300 - 1315	81	0	**81**	
1315 - 1330	77	0	**77**	
1330 - 1345	68	0	**68**	
1345 - 1400	64	0	**64**	**290**
1400 - 1415	63	0	**63**	
1415 - 1430	70	0	**70**	
1430 - 1445	64	0	**64**	
1445 - 1500	78	0	**78**	**275**
1500 - 1515	61	0	**61**	
1515 - 1530	53	0	**53**	
1530 - 1545	80	0	**80**	
1545 - 1600	72	0	**72**	**266**
1600 - 1615	48	0	**48**	
1615 - 1630	66	0	**66**	
1630 - 1645	54	0	**54**	
1645 - 1700	74	0	**74**	**242**
1700 - 1715	60	0	**60**	
1715 - 1730	69	0	**69**	
1730 - 1745	54	0	**54**	
1745 - 1800	76	0	**76**	**259**
1800 - 1815	61	0	**61**	
1815 - 1830	43	0	**43**	
1830 - 1845	50	0	**50**	
1845 - 1900	48	0	**48**	**202**
1900 - 1915	30	0	**30**	
1915 - 1930	48	0	**48**	
1930 - 1945	35	0	**35**	
1945 - 2000	37	0	**37**	**150**
2000 - 2015	26	0	**26**	
2015 - 2030	27	0	**27**	
2030 - 2045	30	0	**30**	
2045 - 2100	29	0	**29**	**112**
2100 - 2115	27	0	**27**	
2115 - 2130	17	0	**17**	
2130 - 2145	20	0	**20**	
2145 - 2200	18	0	**18**	**82**
2200 - 2215	18	0	**18**	
2215 - 2230	16	0	**16**	
2230 - 2245	16	0	**16**	
2245 - 2300	16	0	**16**	**66**
2300 - 2315	15	0	**15**	
2315 - 2330	9	0	**9**	
2330 - 2345	15	0	**15**	
2345 - 0000	11	0	**11**	**50**

Session Total	4721	0	**4721**
Session Average	49.18	0.00	**49.18**
Session Percentage	100.00	0.00	

Site 1
I-26 E/Bound Off-Ramp,
west of US-76

Date
Wednesday, April 24, 2024

Lat/Long
34.026924°, -81.101176°

Weather
Fair
66°F

Click here for Detailed Weather

0000 - 2400 (Weekday 24h Session) (04-24-2024)
Volume Summary 15min

TIME	Volume Summary 15min EB	WB	15min Total	60min Total
0000 - 0015	10	0	**10**	
0015 - 0030	7	0	**7**	
0030 - 0045	7	0	**7**	
0045 - 0100	5	0	**5**	**29**
0100 - 0115	5	0	**5**	
0115 - 0130	6	0	**6**	
0130 - 0145	8	0	**8**	
0145 - 0200	3	0	**3**	**22**
0200 - 0215	2	0	**2**	
0215 - 0230	4	0	**4**	
0230 - 0245	2	0	**2**	
0245 - 0300	3	0	**3**	**11**
0300 - 0315	9	0	**9**	
0315 - 0330	3	0	**3**	
0330 - 0345	5	0	**5**	
0345 - 0400	4	0	**4**	**21**
0400 - 0415	4	0	**4**	
0415 - 0430	3	0	**3**	
0430 - 0445	4	0	**4**	
0445 - 0500	11	0	**11**	**22**
0500 - 0515	7	0	**7**	
0515 - 0530	9	0	**9**	
0530 - 0545	24	0	**24**	
0545 - 0600	18	0	**18**	**58**
0600 - 0615	25	0	**25**	
0615 - 0630	41	0	**41**	
0630 - 0645	69	0	**69**	
0645 - 0700	82	0	**82**	**217**
0700 - 0715	75	0	**75**	
0715 - 0730	111	0	**111**	
0730 - 0745	134	0	**134**	
0745 - 0800	149	0	**149**	**469**
0800 - 0815	149	0	**149**	
0815 - 0830	138	0	**138**	
0830 - 0845	93	0	**93**	
0845 - 0900	91	0	**91**	**471**
0900 - 0915	97	0	**97**	
0915 - 0930	73	0	**73**	
0930 - 0945	97	0	**97**	
0945 - 1000	81	0	**81**	**348**
1000 - 1015	78	0	**78**	
1015 - 1030	76	0	**76**	
1030 - 1045	73	0	**73**	
1045 - 1100	60	0	**60**	**287**
1100 - 1115	81	0	**81**	
1115 - 1130	67	0	**67**	
1130 - 1145	70	0	**70**	
1145 - 1200	90	0	**90**	**308**

Time	Volume Summary 15min EB	WB	15min Total	60min Total
1200 - 1215	61	0	**61**	
1215 - 1230	101	0	**101**	
1230 - 1245	85	0	**85**	
1245 - 1300	76	0	**76**	**323**
1300 - 1315	77	0	**77**	
1315 - 1330	71	0	**71**	
1330 - 1345	80	0	**80**	
1345 - 1400	59	0	**59**	**287**
1400 - 1415	72	0	**72**	
1415 - 1430	71	0	**71**	
1430 - 1445	65	0	**65**	
1445 - 1500	80	0	**80**	**288**
1500 - 1515	70	0	**70**	
1515 - 1530	56	0	**56**	
1530 - 1545	68	0	**68**	
1545 - 1600	75	0	**75**	**269**
1600 - 1615	65	0	**65**	
1615 - 1630	57	0	**57**	
1630 - 1645	57	0	**57**	
1645 - 1700	69	0	**69**	**248**
1700 - 1715	63	0	**63**	
1715 - 1730	47	0	**47**	
1730 - 1745	52	0	**52**	
1745 - 1800	63	0	**63**	**225**
1800 - 1815	39	0	**39**	
1815 - 1830	45	0	**45**	
1830 - 1845	58	0	**58**	
1845 - 1900	55	0	**55**	**197**
1900 - 1915	51	0	**51**	
1915 - 1930	42	0	**42**	
1930 - 1945	26	0	**26**	
1945 - 2000	27	0	**27**	**146**
2000 - 2015	21	0	**21**	
2015 - 2030	27	0	**27**	
2030 - 2045	24	0	**24**	
2045 - 2100	28	0	**28**	**100**
2100 - 2115	23	0	**23**	
2115 - 2130	21	0	**21**	
2130 - 2145	13	0	**13**	
2145 - 2200	22	0	**22**	**79**
2200 - 2215	20	0	**20**	
2215 - 2230	10	0	**10**	
2230 - 2245	10	0	**10**	
2245 - 2300	14	0	**14**	**54**
2300 - 2315	21	0	**21**	
2315 - 2330	13	0	**13**	
2330 - 2345	6	0	**6**	
2345 - 0000	6	0	**6**	**46**

Session Total	4525	0	**4525**
Session Average	47.14	0.00	**47.14**
Session Percentage	100.00	0.00	

Site 1
I-26 E/Bound Off-Ramp,
west of US-76

Date
Thursday, April 25, 2024

Lat/Long
34.026924°, -81.101176°

Weather
Fair
67°F

Click here for Detailed Weather

0000 - 2400 (Weekday 24h Session) (04-25-2024)
Volume Summary 15min

TIME	Volume Summary 15min EB	WB	15min Total	60min Total
0000 - 0015	3	0	**3**	
0015 - 0030	10	0	**10**	
0030 - 0045	5	0	**5**	
0045 - 0100	3	0	**3**	**21**
0100 - 0115	5	0	**5**	
0115 - 0130	3	0	**3**	
0130 - 0145	3	0	**3**	
0145 - 0200	3	0	**3**	**14**
0200 - 0215	0	0	**0**	
0215 - 0230	3	0	**3**	
0230 - 0245	2	0	**2**	
0245 - 0300	1	0	**1**	**6**
0300 - 0315	5	0	**5**	
0315 - 0330	5	0	**5**	
0330 - 0345	2	0	**2**	
0345 - 0400	4	0	**4**	**16**
0400 - 0415	6	0	**6**	
0415 - 0430	7	0	**7**	
0430 - 0445	12	0	**12**	
0445 - 0500	6	0	**6**	**31**
0500 - 0515	12	0	**12**	
0515 - 0530	9	0	**9**	
0530 - 0545	19	0	**19**	
0545 - 0600	17	0	**17**	**57**
0600 - 0615	23	0	**23**	
0615 - 0630	45	0	**45**	
0630 - 0645	68	0	**68**	
0645 - 0700	78	0	**78**	**214**
0700 - 0715	86	0	**86**	
0715 - 0730	116	0	**116**	
0730 - 0745	116	0	**116**	
0745 - 0800	159	0	**159**	**477**
0800 - 0815	144	0	**144**	
0815 - 0830	99	0	**99**	
0830 - 0845	103	0	**103**	
0845 - 0900	102	0	**102**	**448**
0900 - 0915	110	0	**110**	
0915 - 0930	81	0	**81**	
0930 - 0945	83	0	**83**	
0945 - 1000	103	0	**103**	**377**
1000 - 1015	71	0	**71**	
1015 - 1030	75	0	**75**	
1030 - 1045	68	0	**68**	
1045 - 1100	65	0	**65**	**279**
1100 - 1115	63	0	**63**	
1115 - 1130	75	0	**75**	
1130 - 1145	55	0	**55**	
1145 - 1200	77	0	**77**	**270**

Time	Volume Summary 15min EB	WB	15min Total	60min Total
1200 - 1215	67	0	**67**	
1215 - 1230	67	0	**67**	
1230 - 1245	70	0	**70**	
1245 - 1300	69	0	**69**	**273**
1300 - 1315	71	0	**71**	
1315 - 1330	71	0	**71**	
1330 - 1345	64	0	**64**	
1345 - 1400	67	0	**67**	**273**
1400 - 1415	76	0	**76**	
1415 - 1430	68	0	**68**	
1430 - 1445	75	0	**75**	
1445 - 1500	63	0	**63**	**282**
1500 - 1515	54	0	**54**	
1515 - 1530	56	0	**56**	
1530 - 1545	60	0	**60**	
1545 - 1600	71	0	**71**	**241**
1600 - 1615	59	0	**59**	
1615 - 1630	52	0	**52**	
1630 - 1645	55	0	**55**	
1645 - 1700	43	0	**43**	**209**
1700 - 1715	50	0	**50**	
1715 - 1730	41	0	**41**	
1730 - 1745	55	0	**55**	
1745 - 1800	49	0	**49**	**195**
1800 - 1815	58	0	**58**	
1815 - 1830	56	0	**56**	
1830 - 1845	53	0	**53**	
1845 - 1900	59	0	**59**	**226**
1900 - 1915	53	0	**53**	
1915 - 1930	38	0	**38**	
1930 - 1945	28	0	**28**	
1945 - 2000	31	0	**31**	**150**
2000 - 2015	32	0	**32**	
2015 - 2030	34	0	**34**	
2030 - 2045	24	0	**24**	
2045 - 2100	21	0	**21**	**111**
2100 - 2115	32	0	**32**	
2115 - 2130	23	0	**23**	
2130 - 2145	26	0	**26**	
2145 - 2200	14	0	**14**	**95**
2200 - 2215	28	0	**28**	
2215 - 2230	11	0	**11**	
2230 - 2245	10	0	**10**	
2245 - 2300	9	0	**9**	**58**
2300 - 2315	9	0	**9**	
2315 - 2330	14	0	**14**	
2330 - 2345	10	0	**10**	
2345 - 0000	9	0	**9**	**42**

Session Total	4365	0	**4365**
Session Average	45.47	0.00	**45.47**
Session Percentage	100.00	0.00	

Site 1
I-26 E/Bound Off-Ramp,
west of US-76

Date
Friday, April 26, 2024

Lat/Long
34.026924°, -81.101176°

Weather
Cloudy
69°F

Click here for Detailed Weather

0000 - 2400 (Weekday 24h Session) (04-26-2024)
Volume Summary 15min

TIME	Volume Summary 15min EB	WB	15min Total	60min Total
0000 - 0015	10	0	**10**	
0015 - 0030	5	0	**5**	
0030 - 0045	4	0	**4**	
0045 - 0100	2	0	**2**	**21**
0100 - 0115	6	0	**6**	
0115 - 0130	4	0	**4**	
0130 - 0145	3	0	**3**	
0145 - 0200	3	0	**3**	**16**
0200 - 0215	3	0	**3**	
0215 - 0230	1	0	**1**	
0230 - 0245	2	0	**2**	
0245 - 0300	4	0	**4**	**10**
0300 - 0315	6	0	**6**	
0315 - 0330	3	0	**3**	
0330 - 0345	3	0	**3**	
0345 - 0400	7	0	**7**	**19**
0400 - 0415	11	0	**11**	
0415 - 0430	5	0	**5**	
0430 - 0445	6	0	**6**	
0445 - 0500	12	0	**12**	**34**
0500 - 0515	6	0	**6**	
0515 - 0530	9	0	**9**	
0530 - 0545	20	0	**20**	
0545 - 0600	20	0	**20**	**55**
0600 - 0615	22	0	**22**	
0615 - 0630	30	0	**30**	
0630 - 0645	57	0	**57**	
0645 - 0700	62	0	**62**	**171**
0700 - 0715	57	0	**57**	
0715 - 0730	104	0	**104**	
0730 - 0745	111	0	**111**	
0745 - 0800	149	0	**149**	**421**
0800 - 0815	134	0	**134**	
0815 - 0830	130	0	**130**	
0830 - 0845	117	0	**117**	
0845 - 0900	123	0	**123**	**504**
0900 - 0915	104	0	**104**	
0915 - 0930	75	0	**75**	
0930 - 0945	81	0	**81**	
0945 - 1000	76	0	**76**	**336**
1000 - 1015	70	0	**70**	
1015 - 1030	72	0	**72**	
1030 - 1045	79	0	**79**	
1045 - 1100	75	0	**75**	**296**
1100 - 1115	68	0	**68**	
1115 - 1130	65	0	**65**	
1130 - 1145	81	0	**81**	
1145 - 1200	66	0	**66**	**280**

Time	Volume Summary 15min EB	WB	15min Total	60min Total
1200 - 1215	57	0	**57**	
1215 - 1230	61	0	**61**	
1230 - 1245	62	0	**62**	
1245 - 1300	53	0	**53**	**233**
1300 - 1315	68	0	**68**	
1315 - 1330	46	0	**46**	
1330 - 1345	58	0	**58**	
1345 - 1400	49	0	**49**	**221**
1400 - 1415	72	0	**72**	
1415 - 1430	65	0	**65**	
1430 - 1445	62	0	**62**	
1445 - 1500	70	0	**70**	**269**
1500 - 1515	55	0	**55**	
1515 - 1530	60	0	**60**	
1530 - 1545	67	0	**67**	
1545 - 1600	69	0	**69**	**251**
1600 - 1615	59	0	**59**	
1615 - 1630	54	0	**54**	
1630 - 1645	59	0	**59**	
1645 - 1700	47	0	**47**	**219**
1700 - 1715	59	0	**59**	
1715 - 1730	73	0	**73**	
1730 - 1745	64	0	**64**	
1745 - 1800	57	0	**57**	**253**
1800 - 1815	49	0	**49**	
1815 - 1830	50	0	**50**	
1830 - 1845	62	0	**62**	
1845 - 1900	58	0	**58**	**219**
1900 - 1915	55	0	**55**	
1915 - 1930	46	0	**46**	
1930 - 1945	34	0	**34**	
1945 - 2000	21	0	**21**	**156**
2000 - 2015	30	0	**30**	
2015 - 2030	31	0	**31**	
2030 - 2045	32	0	**32**	
2045 - 2100	24	0	**24**	**117**
2100 - 2115	23	0	**23**	
2115 - 2130	20	0	**20**	
2130 - 2145	24	0	**24**	
2145 - 2200	22	0	**22**	**89**
2200 - 2215	14	0	**14**	
2215 - 2230	15	0	**15**	
2230 - 2245	19	0	**19**	
2245 - 2300	18	0	**18**	**66**
2300 - 2315	11	0	**11**	
2315 - 2330	21	0	**21**	
2330 - 2345	11	0	**11**	
2345 - 0000	19	0	**19**	**62**

Session Total	4318	0	**4318**
Session Average	44.98	0.00	**44.98**
Session Percentage	100.00	0.00	

Site 1
I-26 E/Bound Off-Ramp,
west of US-76

Date
Saturday, April 27, 2024

Lat/Long
34.026924°, -81.101176°

Weather
Mostly Cloudy
69°F

Click here for Detailed Weather

0000 - 2400 (Saturday 24h Session) (04-27-2024)

Volume Summary 15min

TIME	Volume Summary 15min EB	WB	15min Total	60min Total
0000 - 0015	12	0	**12**	
0015 - 0030	7	0	**7**	
0030 - 0045	12	0	**12**	
0045 - 0100	7	0	**7**	**38**
0100 - 0115	4	0	**4**	
0115 - 0130	10	0	**10**	
0130 - 0145	2	0	**2**	
0145 - 0200	4	0	**4**	**20**
0200 - 0215	5	0	**5**	
0215 - 0230	6	0	**6**	
0230 - 0245	3	0	**3**	
0245 - 0300	6	0	**6**	**20**
0300 - 0315	5	0	**5**	
0315 - 0330	5	0	**5**	
0330 - 0345	5	0	**5**	
0345 - 0400	6	0	**6**	**21**
0400 - 0415	2	0	**2**	
0415 - 0430	6	0	**6**	
0430 - 0445	4	0	**4**	
0445 - 0500	3	0	**3**	**15**
0500 - 0515	4	0	**4**	
0515 - 0530	7	0	**7**	
0530 - 0545	12	0	**12**	
0545 - 0600	12	0	**12**	**35**
0600 - 0615	12	0	**12**	
0615 - 0630	16	0	**16**	
0630 - 0645	28	0	**28**	
0645 - 0700	31	0	**31**	**87**
0700 - 0715	25	0	**25**	
0715 - 0730	25	0	**25**	
0730 - 0745	24	0	**24**	
0745 - 0800	37	0	**37**	**111**
0800 - 0815	23	0	**23**	
0815 - 0830	34	0	**34**	
0830 - 0845	40	0	**40**	
0845 - 0900	54	0	**54**	**151**
0900 - 0915	49	0	**49**	
0915 - 0930	45	0	**45**	
0930 - 0945	61	0	**61**	
0945 - 1000	63	0	**63**	**218**
1000 - 1015	64	0	**64**	
1015 - 1030	50	0	**50**	
1030 - 1045	51	0	**51**	
1045 - 1100	64	0	**64**	**229**
1100 - 1115	46	0	**46**	
1115 - 1130	51	0	**51**	
1130 - 1145	53	0	**53**	
1145 - 1200	48	0	**48**	**198**

Time	Volume Summary 15min EB	WB	15min Total	60min Total
1200 - 1215	73	0	**73**	
1215 - 1230	53	0	**53**	
1230 - 1245	67	0	**67**	
1245 - 1300	62	0	**62**	**255**
1300 - 1315	58	0	**58**	
1315 - 1330	60	0	**60**	
1330 - 1345	53	0	**53**	
1345 - 1400	66	0	**66**	**237**
1400 - 1415	57	0	**57**	
1415 - 1430	64	0	**64**	
1430 - 1445	59	0	**59**	
1445 - 1500	73	0	**73**	**253**
1500 - 1515	50	0	**50**	
1515 - 1530	63	0	**63**	
1530 - 1545	50	0	**50**	
1545 - 1600	46	0	**46**	**209**
1600 - 1615	50	0	**50**	
1615 - 1630	43	0	**43**	
1630 - 1645	54	0	**54**	
1645 - 1700	74	0	**74**	**221**
1700 - 1715	54	0	**54**	
1715 - 1730	58	0	**58**	
1730 - 1745	60	0	**60**	
1745 - 1800	28	0	**28**	**200**
1800 - 1815	39	0	**39**	
1815 - 1830	37	0	**37**	
1830 - 1845	43	0	**43**	
1845 - 1900	30	0	**30**	**149**
1900 - 1915	37	0	**37**	
1915 - 1930	25	0	**25**	
1930 - 1945	38	0	**38**	
1945 - 2000	24	0	**24**	**124**
2000 - 2015	32	0	**32**	
2015 - 2030	29	0	**29**	
2030 - 2045	22	0	**22**	
2045 - 2100	22	0	**22**	**105**
2100 - 2115	19	0	**19**	
2115 - 2130	27	0	**27**	
2130 - 2145	25	0	**25**	
2145 - 2200	29	0	**29**	**100**
2200 - 2215	18	0	**18**	
2215 - 2230	18	0	**18**	
2230 - 2245	18	0	**18**	
2245 - 2300	10	0	**10**	**64**
2300 - 2315	11	0	**11**	
2315 - 2330	20	0	**20**	
2330 - 2345	19	0	**19**	
2345 - 0000	11	0	**11**	**61**

Session Total	3121	0	**3121**
Session Average	32.51	0.00	**32.51**
Session Percentage	100.00	0.00	

Bi-Directional Class Count || NB EB 60min

Columbia, SC

Marr Traffic DATA COLLECTION

www.marrtraffic.com

Site 1
I-26 E/Bound Off-Ramp,
west of US-76

Date
Sunday, April 21, 2024

Lat/Long
34.026924°, -81.101176°

Weather
Cloudy
66°F

Click here for Detailed Weather

0000 - 2400 (Sunday 24h Session) (04-21-2024)
NB EB 60min

	Eastbound (Movement 1.1)													
TIME	1	2	3	4	5	6	7	8	9	10	11	12	13	**Total**
0000 - 0100	0	36	5	0	0	0	0	0	0	0	0	0	0	**41**
0100 - 0200	0	22	1	0	0	0	0	0	0	0	0	0	0	**23**
0200 - 0300	0	25	0	0	1	0	0	0	0	0	0	0	0	**26**
0300 - 0400	0	14	0	0	1	0	0	0	0	0	0	0	0	**15**
0400 - 0500	0	14	1	0	0	0	0	0	0	0	0	0	0	**15**
0500 - 0600	0	19	0	0	1	0	0	0	0	0	0	0	0	**20**
0600 - 0700	0	48	3	0	0	0	0	0	0	0	0	0	0	**51**
0700 - 0800	0	49	10	0	0	0	0	0	0	0	0	0	0	**59**
0800 - 0900	0	60	7	0	3	0	0	0	0	0	0	0	0	**70**
0900 - 1000	0	128	11	0	0	0	0	0	0	0	0	0	0	**139**
1000 - 1100	0	100	10	0	2	0	0	0	1	0	0	0	0	**113**
1100 - 1200	0	80	8	0	1	1	0	0	0	0	0	0	0	**90**
1200 - 1300	0	119	7	0	5	0	0	0	0	0	0	0	0	**131**
1300 - 1400	0	121	11	0	1	0	0	0	0	0	0	0	0	**133**
1400 - 1500	0	122	12	0	2	0	0	0	0	0	0	0	0	**136**
1500 - 1600	0	104	9	0	0	0	0	0	0	0	0	0	0	**113**
1600 - 1700	0	109	11	0	0	0	0	0	0	0	0	0	0	**120**
1700 - 1800	0	113	9	0	2	0	0	0	0	0	0	0	0	**124**
1800 - 1900	0	105	8	0	1	0	0	0	0	0	0	0	0	**114**
1900 - 2000	0	102	17	0	6	0	0	0	0	0	0	0	0	**125**
2000 - 2100	0	64	10	0	0	1	0	0	0	0	0	0	0	**75**
2100 - 2200	0	59	4	1	0	1	0	0	0	0	0	0	0	**65**
2200 - 2300	0	39	2	0	0	1	0	0	0	0	0	0	0	**42**
2300 - 2400	0	24	1	0	0	0	0	0	0	0	0	0	0	**25**

Session Total	0	1676	157	1	26	4	0	0	1	0	0	0	0	**1865**
Session Average	0.00	69.83	6.54	0.04	1.08	0.17	0.00	0.00	0.04	0.00	0.00	0.00	0.00	**77.71**
Session Percentage	0.00	89.87	8.42	0.05	1.39	0.21	0.00	0.00	0.05	0.00	0.00	0.00	0.00	

AM Peak Hour	-	0900 - 1000	0900 - 1000	-	0800 - 0900	-	-	-	-	-	-	-	-	**0900 - 1000**
AM Peak Volume	0	128	11	0	3	0	0	0	0	0	0	0	0	**139**

Noon Peak Hour	-	1400 - 1500	1400 - 1500	-	1200 - 1300	1100 - 1200	-	-	1000 - 1100	-	-	-	-	**1400 - 1500**
Noon Peak Volume	0	122	12	0	5	1	0	0	1	0	0	0	0	**136**

PM Peak Hour	-	1700 - 1800	1900 - 2000	-	1900 - 2000	-	-	-	-	-	-	-	-	**1900 - 2000**
PM Peak Volume	0	113	17	0	6	0	0	0	0	0	0	0	0	**125**

Site 1
I-26 E/Bound Off-Ramp,
west of US-76

Date
Monday, April 22, 2024

Lat/Long
34.026924°, -81.101176°

Weather
Mostly Cloudy
57°F

Click here for Detailed Weather

0000 - 2400 (Weekday 24h Session) (04-22-2024)
NB EB 60min

	Eastbound (Movement 1.1)													
TIME	1	2	3	4	5	6	7	8	9	10	11	12	13	**Total**
0000 - 0100	0	17	0	0	1	0	0	0	0	0	0	0	0	**18**
0100 - 0200	0	11	0	0	0	0	0	0	0	0	0	0	0	**11**
0200 - 0300	0	11	1	0	2	0	0	0	0	0	0	0	0	**14**
0300 - 0400	0	12	0	0	2	0	0	0	0	0	0	0	0	**14**
0400 - 0500	0	19	1	0	1	1	0	0	0	0	0	0	0	**22**
0500 - 0600	0	53	2	0	2	1	0	0	0	0	0	0	0	**58**
0600 - 0700	0	171	32	0	5	0	0	0	1	0	0	0	0	**209**
0700 - 0800	0	398	66	0	3	0	4	1	2	0	0	0	0	**474**
0800 - 0900	0	357	71	0	9	0	0	1	0	0	0	0	0	**438**
0900 - 1000	0	253	44	2	9	1	1	5	0	0	0	0	0	**315**
1000 - 1100	0	260	42	1	4	0	1	1	0	0	0	0	0	**309**
1100 - 1200	0	202	50	0	2	0	1	1	2	0	0	0	0	**258**
1200 - 1300	0	239	58	2	3	0	0	2	1	0	0	0	0	**305**
1300 - 1400	0	236	58	2	5	0	0	1	2	0	0	0	0	**304**
1400 - 1500	0	230	52	0	3	1	0	0	1	1	0	0	0	**288**
1500 - 1600	0	129	15	0	1	1	0	0	0	0	0	0	0	**146**
1600 - 1700	1	173	32	0	4	0	0	1	1	0	0	0	0	**212**
1700 - 1800	2	168	38	0	4	0	0	1	2	0	0	0	0	**215**
1800 - 1900	1	146	31	0	1	0	0	0	1	0	0	0	0	**180**
1900 - 2000	0	113	16	0	1	0	0	0	0	0	0	0	0	**130**
2000 - 2100	0	101	14	0	1	0	0	1	1	0	0	0	0	**118**
2100 - 2200	0	72	4	0	4	0	0	0	1	0	0	0	0	**81**
2200 - 2300	0	61	6	0	0	0	0	0	0	0	0	0	0	**67**
2300 - 2400	0	49	3	0	0	0	0	0	2	0	0	0	0	**54**

Session Total	4	3481	636	7	67	5	7	15	17	1	0	0	0	**4240**
Session Average	0.17	145.04	26.50	0.29	2.79	0.21	0.29	0.63	0.71	0.04	0.00	0.00	0.00	**176.67**
Session Percentage	0.09	82.10	15.00	0.17	1.58	0.12	0.17	0.35	0.40	0.02	0.00	0.00	0.00	

AM Peak Hour	-	0700 - 0800	0800 - 0900	0900 - 1000	0800 - 0900	0500 - 0600	0700 - 0800	0900 - 1000	0700 - 0800	-	-	-	-	**0700 - 0800**
AM Peak Volume	0	398	71	2	9	1	4	5	2	0	0	0	0	**474**

Noon Peak Hour	-	1000 - 1100	1200 - 1300	1200 - 1300	1300 - 1400	1400 - 1500	1000 - 1100	1200 - 1300	1100 - 1200	1400 - 1500	-	-	-	**1000 - 1100**
Noon Peak Volume	0	260	58	2	5	1	1	2	2	1	0	0	0	**309**

PM Peak Hour	1700 - 1800	1600 - 1700	1700 - 1800	-	1600 - 1700	1500 - 1600	-	1600 - 1700	1700 - 1800	-	-	-	-	**1700 - 1800**
PM Peak Volume	2	173	38	0	4	1	0	1	2	0	0	0	0	**215**

Site 1
I-26 E/Bound Off-Ramp,
west of US-76

Date
Tuesday, April 23, 2024

Lat/Long
34.026924°, -81.101176°

Weather
Fair
58°F

Click here for Detailed Weather

0000 - 2400 (Weekday 24h Session) (04-23-2024)
NB EB 60min

	Eastbound (Movement 1.1)													
TIME	1	2	3	4	5	6	7	8	9	10	11	12	13	**Total**
0000 - 0100	0	26	2	0	0	0	0	0	0	0	0	0	0	**28**
0100 - 0200	0	13	1	0	0	0	0	0	0	0	0	0	0	**14**
0200 - 0300	0	14	1	0	0	0	0	0	0	0	0	0	0	**15**
0300 - 0400	0	15	3	0	1	0	0	0	0	0	0	0	0	**19**
0400 - 0500	0	32	1	0	2	0	0	0	0	0	0	0	0	**35**
0500 - 0600	0	74	2	0	2	0	0	0	0	0	0	0	0	**78**
0600 - 0700	0	185	28	0	3	1	0	0	0	0	0	0	0	**217**
0700 - 0800	0	397	40	0	2	1	0	0	1	0	0	0	0	**441**
0800 - 0900	0	438	58	0	4	1	0	0	2	0	0	0	0	**503**
0900 - 1000	1	389	49	5	13	0	0	0	7	0	0	0	0	**464**
1000 - 1100	0	254	36	1	4	0	0	0	1	0	0	0	0	**296**
1100 - 1200	1	243	53	0	6	0	0	0	2	0	0	0	0	**305**
1200 - 1300	0	252	54	1	3	1	0	1	0	0	0	0	0	**312**
1300 - 1400	0	233	43	2	9	2	0	0	1	0	0	0	0	**290**
1400 - 1500	1	217	45	1	7	1	0	1	1	1	0	0	0	**275**
1500 - 1600	0	231	28	0	5	1	0	1	0	0	0	0	0	**266**
1600 - 1700	1	180	51	0	7	1	1	0	1	0	0	0	0	**242**
1700 - 1800	0	213	39	0	2	2	0	3	0	0	0	0	0	**259**
1800 - 1900	1	168	27	3	0	0	0	1	2	0	0	0	0	**202**
1900 - 2000	1	122	22	0	5	0	0	0	0	0	0	0	0	**150**
2000 - 2100	0	93	18	0	1	0	0	0	0	0	0	0	0	**112**
2100 - 2200	0	70	12	0	0	0	0	0	0	0	0	0	0	**82**
2200 - 2300	0	53	11	0	1	0	0	0	1	0	0	0	0	**66**
2300 - 2400	0	42	6	0	0	0	0	0	2	0	0	0	0	**50**

Session Total	6	3954	630	13	77	11	1	7	21	1	0	0	0	**4721**
Session Average	0.25	164.75	26.25	0.54	3.21	0.46	0.04	0.29	0.88	0.04	0.00	0.00	0.00	**196.71**
Session Percentage	0.13	83.75	13.34	0.28	1.63	0.23	0.02	0.15	0.44	0.02	0.00	0.00	0.00	

AM Peak Hour	0900 - 1000	0800 - 0900	0800 - 0900	0900 - 1000	0900 - 1000	0600 - 0700	-	-	0900 - 1000	-	-	-	-	**0800 - 0900**
AM Peak Hour Volume	1	438	58	5	13	1	0	0	7	0	0	0	0	**503**

Noon Peak Hour	1100 - 1200	1000 - 1100	1200 - 1300	1300 - 1400	1300 - 1400	1300 - 1400	-	1200 - 1300	1100 - 1200	1400 - 1500	-	-	-	**1200 - 1300**
Noon Peak Hour Volume	1	254	54	2	9	2	0	1	2	1	0	0	0	**312**

PM Peak Hour	1600 - 1700	1500 - 1600	1600 - 1700	1800 - 1900	1600 - 1700	1700 - 1800	1600 - 1700	1700 - 1800	1800 - 1900	-	-	-	-	**1500 - 1600**
PM Peak Hour Volume	1	231	51	3	7	2	1	3	2	0	0	0	0	**266**

Site 1
I-26 E/Bound Off-Ramp,
west of US-76

Date
Wednesday, April 24, 2024

Lat/Long
34.026924°, -81.101176°

Weather
Fair
66°F

Click here for Detailed Weather

0000 - 2400 (Weekday 24h Session) (04-24-2024)
NB EB 60min

	Eastbound (Movement 1.1)													
TIME	1	2	3	4	5	6	7	8	9	10	11	12	13	**Total**
0000 - 0100	0	23	6	0	0	0	0	0	0	0	0	0	0	**29**
0100 - 0200	0	16	6	0	0	0	0	0	0	0	0	0	0	**22**
0200 - 0300	0	9	2	0	0	0	0	0	0	0	0	0	0	**11**
0300 - 0400	0	15	4	0	1	1	0	0	0	0	0	0	0	**21**
0400 - 0500	0	15	4	0	2	1	0	0	0	0	0	0	0	**22**
0500 - 0600	0	46	11	0	1	0	0	0	0	0	0	0	0	**58**
0600 - 0700	0	184	29	0	4	0	0	0	0	0	0	0	0	**217**
0700 - 0800	1	410	53	0	2	0	0	0	2	1	0	0	0	**469**
0800 - 0900	1	393	69	1	3	1	0	0	3	0	0	0	0	**471**
0900 - 1000	1	287	47	1	8	2	0	1	1	0	0	0	0	**348**
1000 - 1100	0	232	42	2	5	0	0	4	1	1	0	0	0	**287**
1100 - 1200	0	240	55	0	10	1	0	0	2	0	0	0	0	**308**
1200 - 1300	1	250	58	1	6	3	0	3	1	0	0	0	0	**323**
1300 - 1400	0	218	55	2	8	1	0	2	1	0	0	0	0	**287**
1400 - 1500	0	210	62	1	8	4	0	0	2	1	0	0	0	**288**
1500 - 1600	0	223	42	0	2	1	0	1	0	0	0	0	0	**269**
1600 - 1700	0	204	35	3	4	0	0	1	0	1	0	0	0	**248**
1700 - 1800	0	191	28	1	4	0	0	1	0	0	0	0	0	**225**
1800 - 1900	1	158	32	0	3	1	0	0	2	0	0	0	0	**197**
1900 - 2000	3	124	16	0	2	0	0	0	1	0	0	0	0	**146**
2000 - 2100	0	83	16	0	1	0	0	0	0	0	0	0	0	**100**
2100 - 2200	0	65	13	0	1	0	0	0	0	0	0	0	0	**79**
2200 - 2300	0	42	10	0	0	0	0	0	2	0	0	0	0	**54**
2300 - 2400	0	36	9	0	1	0	0	0	0	0	0	0	0	**46**

Session Total	8	3674	704	12	76	16	0	13	18	4	0	0	0	**4525**
Session Average	0.33	153.08	29.33	0.50	3.17	0.67	0.00	0.54	0.75	0.17	0.00	0.00	0.00	**188.54**
Session Percentage	0.18	81.19	15.56	0.27	1.68	0.35	0.00	0.29	0.40	0.09	0.00	0.00	0.00	

AM Peak Hour	0700 - 0800	0700 - 0800	0800 - 0900	0800 - 0900	0900 - 1000	0900 - 1000	-	0900 - 1000	0800 - 0900	0700 - 0800	-	-	-	**0800 - 0900**
AM Peak Hour Volume	1	410	69	1	8	2	0	1	3	1	0	0	0	**471**

Noon Peak Hour	1200 - 1300	1200 - 1300	1400 - 1500	1000 - 1100	1100 - 1200	1400 - 1500	-	1000 - 1100	1100 - 1200	1000 - 1100	-	-	-	**1200 - 1300**
Noon Peak Hour Volume	1	250	62	2	10	4	0	4	2	1	0	0	0	**323**

PM Peak Hour	1900 - 2000	1500 - 1600	1500 - 1600	1600 - 1700	1600 - 1700	1500 - 1600	-	1500 - 1600	1800 - 1900	1600 - 1700	-	-	-	**1500 - 1600**
PM Peak Hour Volume	3	223	42	3	4	1	0	1	2	1	0	0	0	**269**

Site 1
I-26 E/Bound Off-Ramp,
west of US-76

Date
Thursday, April 25, 2024

Lat/Long
34.026924°, -81.101176°

Weather
Fair
67°F

Click here for Detailed Weather

0000 - 2400 (Weekday 24h Session) (04-25-2024)
NB EB 60min

	Eastbound (Movement 1.1)													
TIME	1	2	3	4	5	6	7	8	9	10	11	12	13	**Total**
0000 - 0100	0	19	2	0	0	0	0	0	0	0	0	0	0	**21**
0100 - 0200	0	13	1	0	0	0	0	0	0	0	0	0	0	**14**
0200 - 0300	0	5	1	0	0	0	0	0	0	0	0	0	0	**6**
0300 - 0400	0	14	0	0	2	0	0	0	0	0	0	0	0	**16**
0400 - 0500	0	27	3	0	1	0	0	0	0	0	0	0	0	**31**
0500 - 0600	0	53	2	0	1	1	0	0	0	0	0	0	0	**57**
0600 - 0700	0	167	45	0	1	0	0	0	0	1	0	0	0	**214**
0700 - 0800	1	394	78	1	2	0	0	1	0	0	0	0	0	**477**
0800 - 0900	0	361	74	1	7	1	0	1	2	1	0	0	0	**448**
0900 - 1000	0	293	63	9	6	2	0	3	1	0	0	0	0	**377**
1000 - 1100	0	225	40	1	4	1	0	3	4	1	0	0	0	**279**
1100 - 1200	0	201	55	1	7	1	1	4	0	0	0	0	0	**270**
1200 - 1300	1	215	48	0	7	2	0	0	0	0	0	0	0	**273**
1300 - 1400	0	204	61	1	4	2	0	0	1	0	0	0	0	**273**
1400 - 1500	0	210	64	2	3	2	0	0	1	0	0	0	0	**282**
1500 - 1600	0	204	34	0	2	1	0	0	0	0	0	0	0	**241**
1600 - 1700	1	172	31	0	3	1	0	0	1	0	0	0	0	**209**
1700 - 1800	1	163	29	0	2	0	0	0	0	0	0	0	0	**195**
1800 - 1900	2	195	24	0	3	0	0	2	0	0	0	0	0	**226**
1900 - 2000	0	122	26	0	1	1	0	0	0	0	0	0	0	**150**
2000 - 2100	1	93	17	0	0	0	0	0	0	0	0	0	0	**111**
2100 - 2200	0	84	11	0	0	0	0	0	0	0	0	0	0	**95**
2200 - 2300	0	46	10	0	2	0	0	0	0	0	0	0	0	**58**
2300 - 2400	0	36	6	0	0	0	0	0	0	0	0	0	0	**42**

Session Total	7	3516	725	16	58	15	1	14	10	3	0	0	0	**4365**
Session Average	0.29	146.50	30.21	0.67	2.42	0.63	0.04	0.58	0.42	0.13	0.00	0.00	0.00	**181.88**
Session Percentage	0.16	80.55	16.61	0.37	1.33	0.34	0.02	0.32	0.23	0.07	0.00	0.00	0.00	

AM Peak Hour	0700 - 0800	0700 - 0800	0700 - 0800	0900 - 1000	0800 - 0900	0900 - 1000	-	0900 - 1000	0800 - 0900	0600 - 0700	-	-	-	**0700 - 0800**
AM Peak Hour Volume	1	394	78	9	7	2	0	3	2	1	0	0	0	**477**

Noon Peak Hour	1200 - 1300	1000 - 1100	1400 - 1500	1400 - 1500	1100 - 1200	1200 - 1300	1100 - 1200	1100 - 1200	1000 - 1100	1000 - 1100	-	-	-	**1400 - 1500**
Noon Peak Hour Volume	1	225	64	2	7	2	1	4	4	1	0	0	0	**282**

PM Peak Hour	1800 - 1900	1500 - 1600	1500 - 1600	-	1600 - 1700	1500 - 1600	-	1800 - 1900	1600 - 1700	-	-	-	-	**1500 - 1600**
PM Peak Hour Volume	2	204	34	0	3	1	0	2	1	0	0	0	0	**241**

Site 1
I-26 E/Bound Off-Ramp,
west of US-76

Date
Friday, April 26, 2024

Lat/Long
34.026924°, -81.101176°

Weather
Cloudy
69°F

Click here for Detailed Weather

0000 - 2400 (Weekday 24h Session) (04-26-2024)
NB EB 60min

	Eastbound (Movement 1.1)													
TIME	1	2	3	4	5	6	7	8	9	10	11	12	13	**Total**
0000 - 0100	0	19	1	0	1	0	0	0	0	0	0	0	0	**21**
0100 - 0200	0	15	0	0	1	0	0	0	0	0	0	0	0	**16**
0200 - 0300	0	10	0	0	0	0	0	0	0	0	0	0	0	**10**
0300 - 0400	0	17	2	0	0	0	0	0	0	0	0	0	0	**19**
0400 - 0500	0	27	5	0	2	0	0	0	0	0	0	0	0	**34**
0500 - 0600	0	46	7	0	2	0	0	0	0	0	0	0	0	**55**
0600 - 0700	0	133	34	0	2	0	0	0	0	2	0	0	0	**171**
0700 - 0800	0	343	73	0	3	1	0	0	1	0	0	0	0	**421**
0800 - 0900	1	404	89	1	4	1	0	1	2	1	0	0	0	**504**
0900 - 1000	0	268	53	7	7	0	0	1	0	0	0	0	0	**336**
1000 - 1100	0	213	67	4	6	0	0	2	4	0	0	0	0	**296**
1100 - 1200	0	213	54	1	8	1	0	2	1	0	0	0	0	**280**
1200 - 1300	1	171	51	0	7	0	0	1	2	0	0	0	0	**233**
1300 - 1400	0	172	42	0	7	0	0	0	0	0	0	0	0	**221**
1400 - 1500	1	226	38	0	2	0	1	0	1	0	0	0	0	**269**
1500 - 1600	0	198	46	0	4	0	0	2	1	0	0	0	0	**251**
1600 - 1700	0	176	41	0	2	0	0	0	0	0	0	0	0	**219**
1700 - 1800	0	208	38	0	6	0	0	0	1	0	0	0	0	**253**
1800 - 1900	0	200	18	0	1	0	0	0	0	0	0	0	0	**219**
1900 - 2000	0	137	16	0	2	1	0	0	0	0	0	0	0	**156**
2000 - 2100	0	102	9	0	6	0	0	0	0	0	0	0	0	**117**
2100 - 2200	0	76	9	0	1	0	0	0	3	0	0	0	0	**89**
2200 - 2300	0	53	13	0	0	0	0	0	0	0	0	0	0	**66**
2300 - 2400	0	49	9	0	4	0	0	0	0	0	0	0	0	**62**

Session Total	3	3476	715	13	78	4	1	9	16	3	0	0	0	**4318**
Session Average	0.13	144.83	29.79	0.54	3.25	0.17	0.04	0.38	0.67	0.13	0.00	0.00	0.00	**179.92**
Session Percentage	0.07	80.50	16.56	0.30	1.81	0.09	0.02	0.21	0.37	0.07	0.00	0.00	0.00	

AM Peak Hour	0800 - 0900	0800 - 0900	0800 - 0900	0900 - 1000	0900 - 1000	0700 - 0800	-	0800 - 0900	0800 - 0900	0600 - 0700	-	-	-	**0800 - 0900**
AM Peak Hour Volume	1	404	89	7	7	1	0	1	2	2	0	0	0	**504**

Noon Peak Hour	1200 - 1300	1400 - 1500	1000 - 1100	1000 - 1100	1100 - 1200	1100 - 1200	1400 - 1500	1000 - 1100	1000 - 1100	-	-	-	-	**1000 - 1100**
Noon Peak Hour Volume	1	226	67	4	8	1	1	2	4	0	0	0	0	**296**

PM Peak Hour	-	1700 - 1800	1500 - 1600	-	1700 - 1800	1900 - 2000	-	1500 - 1600	1500 - 1600	-	-	-	-	**1700 - 1800**
PM Peak Hour Volume	0	208	46	0	6	1	0	2	1	0	0	0	0	**253**

Site 1
I-26 E/Bound Off-Ramp,
west of US-76

Date
Saturday, April 27, 2024

Lat/Long
34.026924°, -81.101176°

Weather
Mostly Cloudy
69°F

Click here for Detailed Weather

0000 - 2400 (Saturday 24h Session) (04-27-2024)
NB EB 60min

	Eastbound (Movement 1.1)													
TIME	1	2	3	4	5	6	7	8	9	10	11	12	13	**Total**
0000 - 0100	0	30	8	0	0	0	0	0	0	0	0	0	0	**38**
0100 - 0200	0	16	4	0	0	0	0	0	0	0	0	0	0	**20**
0200 - 0300	0	18	2	0	0	0	0	0	0	0	0	0	0	**20**
0300 - 0400	0	20	0	0	1	0	0	0	0	0	0	0	0	**21**
0400 - 0500	0	14	1	0	0	0	0	0	0	0	0	0	0	**15**
0500 - 0600	0	29	6	0	0	0	0	0	0	0	0	0	0	**35**
0600 - 0700	0	72	15	0	0	0	0	0	0	0	0	0	0	**87**
0700 - 0800	0	90	17	0	3	1	0	0	0	0	0	0	0	**111**
0800 - 0900	0	124	24	0	3	0	0	0	0	0	0	0	0	**151**
0900 - 1000	1	186	25	1	4	1	0	0	0	0	0	0	0	**218**
1000 - 1100	1	175	47	1	3	0	0	0	2	0	0	0	0	**229**
1100 - 1200	0	163	33	0	1	0	0	1	0	0	0	0	0	**198**
1200 - 1300	0	215	38	1	0	1	0	0	0	0	0	0	0	**255**
1300 - 1400	0	205	31	0	1	0	0	0	0	0	0	0	0	**237**
1400 - 1500	1	229	20	0	3	0	0	0	0	0	0	0	0	**253**
1500 - 1600	1	180	26	0	2	0	0	0	0	0	0	0	0	**209**
1600 - 1700	1	188	31	0	0	0	0	1	0	0	0	0	0	**221**
1700 - 1800	0	167	32	0	0	1	0	0	0	0	0	0	0	**200**
1800 - 1900	0	128	21	0	0	0	0	0	0	0	0	0	0	**149**
1900 - 2000	0	112	11	0	1	0	0	0	0	0	0	0	0	**124**
2000 - 2100	0	97	8	0	0	0	0	0	0	0	0	0	0	**105**
2100 - 2200	0	92	7	1	0	0	0	0	0	0	0	0	0	**100**
2200 - 2300	0	59	5	0	0	0	0	0	0	0	0	0	0	**64**
2300 - 2400	0	57	4	0	0	0	0	0	0	0	0	0	0	**61**

Session Total	5	2666	416	4	22	4	0	2	2	0	0	0	0	**3121**
Session Average	0.21	111.08	17.33	0.17	0.92	0.17	0.00	0.08	0.08	0.00	0.00	0.00	0.00	**130.04**
Session Percentage	0.16	85.42	13.33	0.13	0.70	0.13	0.00	0.06	0.06	0.00	0.00	0.00	0.00	

AM Peak Hour	0900 - 1000	0900 - 1000	0900 - 1000	0900 - 1000	0900 - 1000	0700 - 0800	-	-	-	-	-	-	-	**0900 - 1000**
AM Peak Hour Volume	1	186	25	1	4	1	0	0	0	0	0	0	0	**218**

Noon Peak Hour	1000 - 1100	1400 - 1500	1000 - 1100	1000 - 1100	1000 - 1100	1200 - 1300	-	1100 - 1200	1000 - 1100	-	-	-	-	**1200 - 1300**
Noon Peak Hour Volume	1	229	47	1	3	1	0	1	2	0	0	0	0	**255**

PM Peak Hour	1500 - 1600	1600 - 1700	1700 - 1800	-	1500 - 1600	1700 - 1800	-	1600 - 1700	-	-	-	-	-	**1600 - 1700**
PM Peak Hour Volume	1	188	32	0	2	1	0	1	0	0	0	0	0	**221**

Bi-Directional Class Count || Volume Summary 60min

Columbia, SC

Marr Traffic DATA COLLECTION

www.marrtraffic.com

Site 1
I-26 E/Bound Off-Ramp,
west of US-76

Date
Sunday, April 21, 2024

Lat/Long
34.026924°, -81.101176°

Weather
Cloudy
66°F

Click here for Detailed Weather

0000 - 2400 (Sunday 24h Session) (04-21-2024)

Volume Summary 60min

	Volume Summary 60min		
TIME	EB	WB	**Total**
0000 - 0100	41	0	**41**
0100 - 0200	23	0	**23**
0200 - 0300	26	0	**26**
0300 - 0400	15	0	**15**
0400 - 0500	15	0	**15**
0500 - 0600	20	0	**20**
0600 - 0700	51	0	**51**
0700 - 0800	59	0	**59**
0800 - 0900	70	0	**70**
0900 - 1000	139	0	**139**
1000 - 1100	113	0	**113**
1100 - 1200	90	0	**90**

	Volume Summary 60min		
Time	EB	WB	**Total**
1200 - 1300	131	0	**131**
1300 - 1400	133	0	**133**
1400 - 1500	136	0	**136**
1500 - 1600	113	0	**113**
1600 - 1700	120	0	**120**
1700 - 1800	124	0	**124**
1800 - 1900	114	0	**114**
1900 - 2000	125	0	**125**
2000 - 2100	75	0	**75**
2100 - 2200	65	0	**65**
2200 - 2300	42	0	**42**
2300 - 2400	25	0	**25**

Session Total	1865	0	**1865**
Session Average	77.71	0.00	**77.71**
Session Percentage	100.00	0.00	

Site 1
I-26 E/Bound Off-Ramp,
west of US-76

Date
Monday, April 22, 2024

Lat/Long
34.026924°, -81.101176°

Weather
Mostly Cloudy
57°F

Click here for Detailed Weather

0000 - 2400 (Weekday 24h Session) (04-22-2024)
Volume Summary 60min

	Volume Summary 60min		
TIME	EB	WB	**Total**
0000 - 0100	18	0	**18**
0100 - 0200	11	0	**11**
0200 - 0300	14	0	**14**
0300 - 0400	14	0	**14**
0400 - 0500	22	0	**22**
0500 - 0600	58	0	**58**
0600 - 0700	209	0	**209**
0700 - 0800	474	0	**474**
0800 - 0900	438	0	**438**
0900 - 1000	315	0	**315**
1000 - 1100	309	0	**309**
1100 - 1200	258	0	**258**

Session Total	4240	0	**4240**
Session Average	176.67	0.00	**176.67**
Session Percentage	100.00	0.00	

	Volume Summary 60min		
Time	EB	WB	**Total**
1200 - 1300	305	0	**305**
1300 - 1400	304	0	**304**
1400 - 1500	288	0	**288**
1500 - 1600	146	0	**146**
1600 - 1700	212	0	**212**
1700 - 1800	215	0	**215**
1800 - 1900	180	0	**180**
1900 - 2000	130	0	**130**
2000 - 2100	118	0	**118**
2100 - 2200	81	0	**81**
2200 - 2300	67	0	**67**
2300 - 2400	54	0	**54**

Site 1
I-26 E/Bound Off-Ramp,
west of US-76

Date
Tuesday, April 23, 2024

Lat/Long
34.026924°, -81.101176°

Weather
Fair
58°F

Click here for Detailed Weather

0000 - 2400 (Weekday 24h Session) (04-23-2024)
Volume Summary 60min

	Volume Summary 60min		
TIME	EB	WB	**Total**
0000 - 0100	28	0	**28**
0100 - 0200	14	0	**14**
0200 - 0300	15	0	**15**
0300 - 0400	19	0	**19**
0400 - 0500	35	0	**35**
0500 - 0600	78	0	**78**
0600 - 0700	217	0	**217**
0700 - 0800	441	0	**441**
0800 - 0900	503	0	**503**
0900 - 1000	464	0	**464**
1000 - 1100	296	0	**296**
1100 - 1200	305	0	**305**

Session Total	4721	0	**4721**
Session Average	196.71	0.00	**196.71**
Session Percentage	100.00	0.00	

	Volume Summary 60min		
Time	EB	WB	**Total**
1200 - 1300	312	0	**312**
1300 - 1400	290	0	**290**
1400 - 1500	275	0	**275**
1500 - 1600	266	0	**266**
1600 - 1700	242	0	**242**
1700 - 1800	259	0	**259**
1800 - 1900	202	0	**202**
1900 - 2000	150	0	**150**
2000 - 2100	112	0	**112**
2100 - 2200	82	0	**82**
2200 - 2300	66	0	**66**
2300 - 2400	50	0	**50**

Site 1

I-26 E/Bound Off-Ramp,
west of US-76

Date

Wednesday, April 24, 2024

Lat/Long

34.026924°, -81.101176°

Weather

Fair
66°F

Click here for Detailed Weather

0000 - 2400 (Weekday 24h Session) (04-24-2024)

Volume Summary 60min

	Volume Summary 60min		
TIME	EB	WB	**Total**
0000 - 0100	29	0	**29**
0100 - 0200	22	0	**22**
0200 - 0300	11	0	**11**
0300 - 0400	21	0	**21**
0400 - 0500	22	0	**22**
0500 - 0600	58	0	**58**
0600 - 0700	217	0	**217**
0700 - 0800	469	0	**469**
0800 - 0900	471	0	**471**
0900 - 1000	348	0	**348**
1000 - 1100	287	0	**287**
1100 - 1200	308	0	**308**

	Volume Summary 60min		
Time	EB	WB	**Total**
1200 - 1300	323	0	**323**
1300 - 1400	287	0	**287**
1400 - 1500	288	0	**288**
1500 - 1600	269	0	**269**
1600 - 1700	248	0	**248**
1700 - 1800	225	0	**225**
1800 - 1900	197	0	**197**
1900 - 2000	146	0	**146**
2000 - 2100	100	0	**100**
2100 - 2200	79	0	**79**
2200 - 2300	54	0	**54**
2300 - 2400	46	0	**46**

Session Total	4525	0	**4525**
Session Average	188.54	0.00	**188.54**
Session Percentage	100.00	0.00	

Site 1

I-26 E/Bound Off-Ramp,
west of US-76

Date

Thursday, April 25, 2024

Lat/Long

34.026924°, -81.101176°

Weather

Fair
67°F

Click here for Detailed Weather

0000 - 2400 (Weekday 24h Session) (04-25-2024)

Volume Summary 60min

	Volume Summary 60min		
TIME	EB	WB	**Total**
0000 - 0100	21	0	**21**
0100 - 0200	14	0	**14**
0200 - 0300	6	0	**6**
0300 - 0400	16	0	**16**
0400 - 0500	31	0	**31**
0500 - 0600	57	0	**57**
0600 - 0700	214	0	**214**
0700 - 0800	477	0	**477**
0800 - 0900	448	0	**448**
0900 - 1000	377	0	**377**
1000 - 1100	279	0	**279**
1100 - 1200	270	0	**270**

	Volume Summary 60min		
Time	EB	WB	**Total**
1200 - 1300	273	0	**273**
1300 - 1400	273	0	**273**
1400 - 1500	282	0	**282**
1500 - 1600	241	0	**241**
1600 - 1700	209	0	**209**
1700 - 1800	195	0	**195**
1800 - 1900	226	0	**226**
1900 - 2000	150	0	**150**
2000 - 2100	111	0	**111**
2100 - 2200	95	0	**95**
2200 - 2300	58	0	**58**
2300 - 2400	42	0	**42**

Session Total	4365	0	**4365**
Session Average	181.88	0.00	**181.88**
Session Percentage	100.00	0.00	

Site 1
I-26 E/Bound Off-Ramp,
west of US-76

Date
Friday, April 26, 2024

Lat/Long
34.026924°, -81.101176°

Weather
Cloudy
69°F

Click here for Detailed Weather

0000 - 2400 (Weekday 24h Session) (04-26-2024)
Volume Summary 60min

	Volume Summary 60min		
TIME	EB	WB	**Total**
0000 - 0100	21	0	**21**
0100 - 0200	16	0	**16**
0200 - 0300	10	0	**10**
0300 - 0400	19	0	**19**
0400 - 0500	34	0	**34**
0500 - 0600	55	0	**55**
0600 - 0700	171	0	**171**
0700 - 0800	421	0	**421**
0800 - 0900	504	0	**504**
0900 - 1000	336	0	**336**
1000 - 1100	296	0	**296**
1100 - 1200	280	0	**280**

	Volume Summary 60min		
Time	EB	WB	**Total**
1200 - 1300	233	0	**233**
1300 - 1400	221	0	**221**
1400 - 1500	269	0	**269**
1500 - 1600	251	0	**251**
1600 - 1700	219	0	**219**
1700 - 1800	253	0	**253**
1800 - 1900	219	0	**219**
1900 - 2000	156	0	**156**
2000 - 2100	117	0	**117**
2100 - 2200	89	0	**89**
2200 - 2300	66	0	**66**
2300 - 2400	62	0	**62**

Session Total	4318	0	**4318**
Session Average	179.92	0.00	**179.92**
Session Percentage	100.00	0.00	

Site 1
I-26 E/Bound Off-Ramp,
west of US-76

Date
Saturday, April 27, 2024

Lat/Long
34.026924°, -81.101176°

Weather
Mostly Cloudy
69°F

Click here for Detailed Weather

0000 - 2400 (Saturday 24h Session) (04-27-2024)
Volume Summary 60min

	Volume Summary 60min		
TIME	EB	WB	**Total**
0000 - 0100	38	0	**38**
0100 - 0200	20	0	**20**
0200 - 0300	20	0	**20**
0300 - 0400	21	0	**21**
0400 - 0500	15	0	**15**
0500 - 0600	35	0	**35**
0600 - 0700	87	0	**87**
0700 - 0800	111	0	**111**
0800 - 0900	151	0	**151**
0900 - 1000	218	0	**218**
1000 - 1100	229	0	**229**
1100 - 1200	198	0	**198**

	Volume Summary 60min		
Time	EB	WB	**Total**
1200 - 1300	255	0	**255**
1300 - 1400	237	0	**237**
1400 - 1500	253	0	**253**
1500 - 1600	209	0	**209**
1600 - 1700	221	0	**221**
1700 - 1800	200	0	**200**
1800 - 1900	149	0	**149**
1900 - 2000	124	0	**124**
2000 - 2100	105	0	**105**
2100 - 2200	100	0	**100**
2200 - 2300	64	0	**64**
2300 - 2400	61	0	**61**

Session Total	3121	0	**3121**
Session Average	130.04	0.00	**130.04**
Session Percentage	100.00	0.00	

Bi-Directional Class Count || Graphical Analysis NB EB

Columbia, SC

Marr Traffic DATA COLLECTION

www.marrtraffic.com

Site 1

I-26 E/Bound Off-Ramp,
west of US-76

Lat/Long

34.026924°, -81.101176°

0000 - 2400 (Weekday 24h Session)

Graphical Analysis NB EB

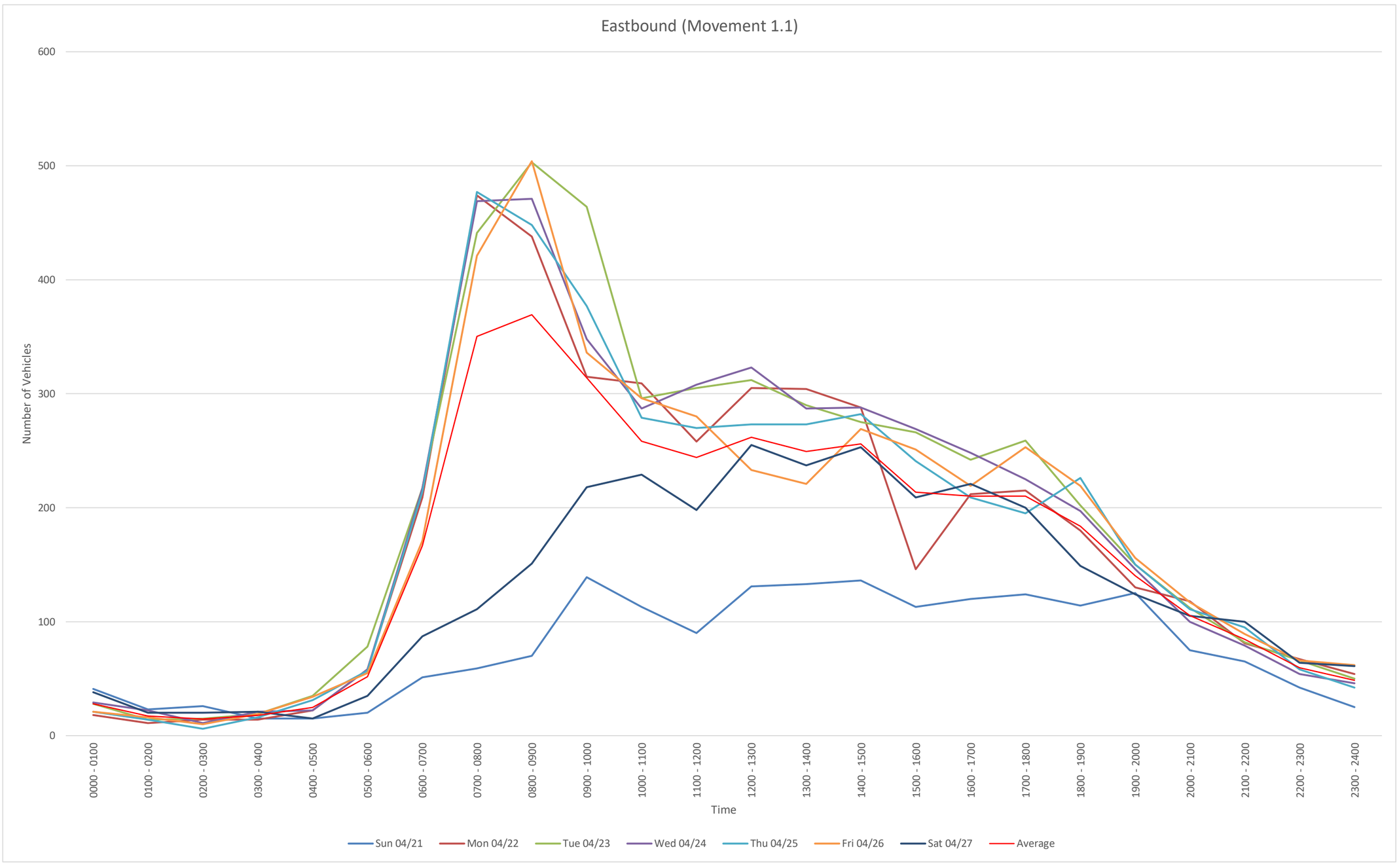

EB
File Name:
Start Date: 4/21/2024
Start Time: 0
Site Code: 1
Station ID: 1
Location 1: I-26 E/Bound Off-Ramp, west of US-76
Location 2:

Date	Time	1	2	3	4	5	6	7	8	9	10	11	12	13
4/21/2024	12:00 AM	0	16	2	0	0	0	0	0	0	0	0	0	0
4/21/2024	12:15 AM	0	8	1	0	0	0	0	0	0	0	0	0	0
4/21/2024	12:30 AM	0	7	2	0	0	0	0	0	0	0	0	0	0
4/21/2024	12:45 AM	0	5	0	0	0	0	0	0	0	0	0	0	0
4/21/2024	1:00 AM	0	6	0	0	0	0	0	0	0	0	0	0	0
4/21/2024	1:15 AM	0	5	0	0	0	0	0	0	0	0	0	0	0
4/21/2024	1:30 AM	0	6	0	0	0	0	0	0	0	0	0	0	0
4/21/2024	1:45 AM	0	5	1	0	0	0	0	0	0	0	0	0	0
4/21/2024	2:00 AM	0	6	0	0	0	0	0	0	0	0	0	0	0
4/21/2024	2:15 AM	0	4	0	0	1	0	0	0	0	0	0	0	0
4/21/2024	2:30 AM	0	8	0	0	0	0	0	0	0	0	0	0	0
4/21/2024	2:45 AM	0	7	0	0	0	0	0	0	0	0	0	0	0
4/21/2024	3:00 AM	0	1	0	0	0	0	0	0	0	0	0	0	0
4/21/2024	3:15 AM	0	3	0	0	0	0	0	0	0	0	0	0	0
4/21/2024	3:30 AM	0	9	0	0	0	0	0	0	0	0	0	0	0
4/21/2024	3:45 AM	0	1	0	0	1	0	0	0	0	0	0	0	0
4/21/2024	4:00 AM	0	2	1	0	0	0	0	0	0	0	0	0	0
4/21/2024	4:15 AM	0	3	0	0	0	0	0	0	0	0	0	0	0
4/21/2024	4:30 AM	0	6	0	0	0	0	0	0	0	0	0	0	0
4/21/2024	4:45 AM	0	3	0	0	0	0	0	0	0	0	0	0	0
4/21/2024	5:00 AM	0	4	0	0	0	0	0	0	0	0	0	0	0
4/21/2024	5:15 AM	0	3	0	0	0	0	0	0	0	0	0	0	0
4/21/2024	5:30 AM	0	5	0	0	1	0	0	0	0	0	0	0	0
4/21/2024	5:45 AM	0	7	0	0	0	0	0	0	0	0	0	0	0
4/21/2024	6:00 AM	0	9	0	0	0	0	0	0	0	0	0	0	0
4/21/2024	6:15 AM	0	10	0	0	0	0	0	0	0	0	0	0	0
4/21/2024	6:30 AM	0	21	2	0	0	0	0	0	0	0	0	0	0
4/21/2024	6:45 AM	0	8	1	0	0	0	0	0	0	0	0	0	0
4/21/2024	7:00 AM	0	10	0	0	0	0	0	0	0	0	0	0	0
4/21/2024	7:15 AM	0	17	2	0	0	0	0	0	0	0	0	0	0
4/21/2024	7:30 AM	0	11	5	0	0	0	0	0	0	0	0	0	0
4/21/2024	7:45 AM	0	11	3	0	0	0	0	0	0	0	0	0	0
4/21/2024	8:00 AM	0	8	2	0	1	0	0	0	0	0	0	0	0
4/21/2024	8:15 AM	0	14	2	0	1	0	0	0	0	0	0	0	0
4/21/2024	8:30 AM	0	16	1	0	1	0	0	0	0	0	0	0	0
4/21/2024	8:45 AM	0	22	2	0	0	0	0	0	0	0	0	0	0
4/21/2024	9:00 AM	0	50	3	0	0	0	0	0	0	0	0	0	0
4/21/2024	9:15 AM	0	23	3	0	0	0	0	0	0	0	0	0	0
4/21/2024	9:30 AM	0	22	2	0	0	0	0	0	0	0	0	0	0
4/21/2024	9:45 AM	0	33	3	0	0	0	0	0	0	0	0	0	0
4/21/2024	10:00 AM	0	25	0	0	0	0	0	0	0	0	0	0	0
4/21/2024	10:15 AM	0	26	0	0	0	0	0	0	0	0	0	0	0
4/21/2024	10:30 AM	0	24	5	0	1	0	0	0	0	0	0	0	0
4/21/2024	10:45 AM	0	25	5	0	1	0	0	0	1	0	0	0	0
4/21/2024	11:00 AM	0	22	0	0	0	1	0	0	0	0	0	0	0
4/21/2024	11:15 AM	0	21	5	0	1	0	0	0	0	0	0	0	0
4/21/2024	11:30 AM	0	19	1	0	0	0	0	0	0	0	0	0	0
4/21/2024	11:45 AM	0	18	2	0	0	0	0	0	0	0	0	0	0
4/21/2024	12:00 PM	0	22	2	0	1	0	0	0	0	0	0	0	0
4/21/2024	12:15 PM	0	40	4	0	1	0	0	0	0	0	0	0	0
4/21/2024	12:30 PM	0	32	0	0	2	0	0	0	0	0	0	0	0
4/21/2024	12:45 PM	0	25	1	0	1	0	0	0	0	0	0	0	0
4/21/2024	1:00 PM	0	33	1	0	0	0	0	0	0	0	0	0	0
4/21/2024	1:15 PM	0	32	5	0	1	0	0	0	0	0	0	0	0
4/21/2024	1:30 PM	0	23	2	0	0	0	0	0	0	0	0	0	0
4/21/2024	1:45 PM	0	33	3	0	0	0	0	0	0	0	0	0	0
4/21/2024	2:00 PM	0	29	2	0	2	0	0	0	0	0	0	0	0
4/21/2024	2:15 PM	0	32	5	0	0	0	0	0	0	0	0	0	0
4/21/2024	2:30 PM	0	33	3	0	0	0	0	0	0	0	0	0	0
4/21/2024	2:45 PM	0	28	2	0	0	0	0	0	0	0	0	0	0
4/21/2024	3:00 PM	0	20	2	0	0	0	0	0	0	0	0	0	0
4/21/2024	3:15 PM	0	27	4	0	0	0	0	0	0	0	0	0	0
4/21/2024	3:30 PM	0	19	3	0	0	0	0	0	0	0	0	0	0
4/21/2024	3:45 PM	0	38	0	0	0	0	0	0	0	0	0	0	0
4/21/2024	4:00 PM	0	22	1	0	0	0	0	0	0	0	0	0	0
4/21/2024	4:15 PM	0	30	6	0	0	0	0	0	0	0	0	0	0
4/21/2024	4:30 PM	0	32	3	0	0	0	0	0	0	0	0	0	0
4/21/2024	4:45 PM	0	25	1	0	0	0	0	0	0	0	0	0	0
4/21/2024	5:00 PM	0	36	2	0	2	0	0	0	0	0	0	0	0
4/21/2024	5:15 PM	0	26	1	0	0	0	0	0	0	0	0	0	0
4/21/2024	5:30 PM	0	23	2	0	0	0	0	0	0	0	0	0	0
4/21/2024	5:45 PM	0	28	4	0	0	0	0	0	0	0	0	0	0
4/21/2024	6:00 PM	0	33	0	0	0	0	0	0	0	0	0	0	0
4/21/2024	6:15 PM	0	28	2	0	1	0	0	0	0	0	0	0	0
4/21/2024	6:30 PM	0	28	4	0	0	0	0	0	0	0	0	0	0
4/21/2024	6:45 PM	0	16	2	0	0	0	0	0	0	0	0	0	0
4/21/2024	7:00 PM	0	30	8	0	1	0	0	0	0	0	0	0	0
4/21/2024	7:15 PM	0	24	5	0	2	0	0	0	0	0	0	0	0
4/21/2024	7:30 PM	0	26	3	0	0	0	0	0	0	0	0	0	0
4/21/2024	7:45 PM	0	22	1	0	3	0	0	0	0	0	0	0	0
4/21/2024	8:00 PM	0	9	3	0	0	0	0	0	0	0	0	0	0
4/21/2024	8:15 PM	0	23	3	0	0	1	0	0	0	0	0	0	0
4/21/2024	8:30 PM	0	18	2	0	0	0	0	0	0	0	0	0	0
4/21/2024	8:45 PM	0	14	2	0	0	0	0	0	0	0	0	0	0
4/21/2024	9:00 PM	0	16	1	1	0	1	0	0	0	0	0	0	0
4/21/2024	9:15 PM	0	15	2	0	0	0	0	0	0	0	0	0	0
4/21/2024	9:30 PM	0	13	0	0	0	0	0	0	0	0	0	0	0
4/21/2024	9:45 PM	0	15	1	0	0	0	0	0	0	0	0	0	0
4/21/2024	10:00 PM	0	15	2	0	0	1	0	0	0	0	0	0	0
4/21/2024	10:15 PM	0	9	0	0	0	0	0	0	0	0	0	0	0
4/21/2024	10:30 PM	0	7	0	0	0	0	0	0	0	0	0	0	0
4/21/2024	10:45 PM	0	8	0	0	0	0	0	0	0	0	0	0	0
4/21/2024	11:00 PM	0	14	1	0	0	0	0	0	0	0	0	0	0
4/21/2024	11:15 PM	0	7	0	0	0	0	0	0	0	0	0	0	0
4/21/2024	11:30 PM	0	2	0	0	0	0	0	0	0	0	0	0	0
4/21/2024	11:45 PM	0	1	0	0	0	0	0	0	0	0	0	0	0

4/22/2024	12:00 AM	0	4	0	0	0	0	0	0	0	0	0	0	0
4/22/2024	12:15 AM	0	5	0	0	0	0	0	0	0	0	0	0	0
4/22/2024	12:30 AM	0	7	0	0	1	0	0	0	0	0	0	0	0
4/22/2024	12:45 AM	0	1	0	0	0	0	0	0	0	0	0	0	0
4/22/2024	1:00 AM	0	6	0	0	0	0	0	0	0	0	0	0	0
4/22/2024	1:15 AM	0	3	0	0	0	0	0	0	0	0	0	0	0
4/22/2024	1:30 AM	0	1	0	0	0	0	0	0	0	0	0	0	0
4/22/2024	1:45 AM	0	1	0	0	0	0	0	0	0	0	0	0	0
4/22/2024	2:00 AM	0	2	0	0	0	0	0	0	0	0	0	0	0
4/22/2024	2:15 AM	0	4	0	0	1	0	0	0	0	0	0	0	0
4/22/2024	2:30 AM	0	1	0	0	0	0	0	0	0	0	0	0	0
4/22/2024	2:45 AM	0	4	1	0	1	0	0	0	0	0	0	0	0
4/22/2024	3:00 AM	0	4	0	0	0	0	0	0	0	0	0	0	0
4/22/2024	3:15 AM	0	1	0	0	2	0	0	0	0	0	0	0	0
4/22/2024	3:30 AM	0	4	0	0	0	0	0	0	0	0	0	0	0
4/22/2024	3:45 AM	0	3	0	0	0	0	0	0	0	0	0	0	0
4/22/2024	4:00 AM	0	1	1	0	0	0	0	0	0	0	0	0	0
4/22/2024	4:15 AM	0	5	0	0	1	0	0	0	0	0	0	0	0
4/22/2024	4:30 AM	0	4	0	0	0	0	0	0	0	0	0	0	0
4/22/2024	4:45 AM	0	9	0	0	0	1	0	0	0	0	0	0	0
4/22/2024	5:00 AM	0	6	0	0	0	0	0	0	0	0	0	0	0
4/22/2024	5:15 AM	0	10	0	0	0	1	0	0	0	0	0	0	0
4/22/2024	5:30 AM	0	20	1	0	1	0	0	0	0	0	0	0	0
4/22/2024	5:45 AM	0	17	1	0	1	0	0	0	0	0	0	0	0
4/22/2024	6:00 AM	0	26	2	0	0	0	0	0	0	0	0	0	0
4/22/2024	6:15 AM	0	28	5	0	1	0	0	0	0	0	0	0	0
4/22/2024	6:30 AM	0	55	13	0	2	0	0	0	0	0	0	0	0
4/22/2024	6:45 AM	0	62	12	0	2	0	0	0	1	0	0	0	0
4/22/2024	7:00 AM	0	55	14	0	0	0	1	0	0	0	0	0	0
4/22/2024	7:15 AM	0	91	16	0	0	0	0	0	0	0	0	0	0
4/22/2024	7:30 AM	0	113	16	0	2	0	2	0	0	0	0	0	0
4/22/2024	7:45 AM	0	139	20	0	1	0	1	1	2	0	0	0	0
4/22/2024	8:00 AM	0	93	21	0	2	0	0	0	0	0	0	0	0
4/22/2024	8:15 AM	0	105	14	0	4	0	0	0	0	0	0	0	0
4/22/2024	8:30 AM	0	81	23	0	1	0	0	0	0	0	0	0	0
4/22/2024	8:45 AM	0	78	13	0	2	0	0	1	0	0	0	0	0
4/22/2024	9:00 AM	0	72	9	0	3	1	0	1	0	0	0	0	0
4/22/2024	9:15 AM	0	51	14	1	4	0	0	2	0	0	0	0	0
4/22/2024	9:30 AM	0	59	9	1	1	0	1	2	0	0	0	0	0
4/22/2024	9:45 AM	0	71	12	0	1	0	0	0	0	0	0	0	0
4/22/2024	10:00 AM	0	57	12	0	2	0	0	0	0	0	0	0	0
4/22/2024	10:15 AM	0	60	9	0	0	0	0	1	0	0	0	0	0
4/22/2024	10:30 AM	0	74	17	0	2	0	1	0	0	0	0	0	0
4/22/2024	10:45 AM	0	69	4	1	0	0	0	0	0	0	0	0	0
4/22/2024	11:00 AM	0	58	17	0	0	0	1	1	2	0	0	0	0
4/22/2024	11:15 AM	0	49	10	0	1	0	0	0	0	0	0	0	0
4/22/2024	11:30 AM	0	44	10	0	0	0	0	0	0	0	0	0	0
4/22/2024	11:45 AM	0	51	13	0	1	0	0	0	0	0	0	0	0
4/22/2024	12:00 PM	0	48	10	0	0	0	0	0	1	0	0	0	0
4/22/2024	12:15 PM	0	50	11	1	2	0	0	0	0	0	0	0	0
4/22/2024	12:30 PM	0	78	19	0	1	0	0	0	0	0	0	0	0
4/22/2024	12:45 PM	0	63	18	1	0	0	0	2	0	0	0	0	0
4/22/2024	1:00 PM	0	70	13	1	0	0	0	0	0	0	0	0	0
4/22/2024	1:15 PM	0	53	22	0	1	0	0	0	0	0	0	0	0
4/22/2024	1:30 PM	0	52	10	1	1	0	0	0	0	0	0	0	0
4/22/2024	1:45 PM	0	61	13	0	3	0	0	1	2	0	0	0	0
4/22/2024	2:00 PM	0	45	11	0	0	0	0	0	0	0	0	0	0
4/22/2024	2:15 PM	0	61	18	0	1	1	0	0	1	0	0	0	0
4/22/2024	2:30 PM	0	53	9	0	2	0	0	0	0	0	0	0	0
4/22/2024	2:45 PM	0	71	14	0	0	0	0	0	0	1	0	0	0
4/22/2024	3:00 PM	0	45	7	0	1	0	0	0	0	0	0	0	0
4/22/2024	3:15 PM	0	50	6	0	0	0	0	0	0	0	0	0	0
4/22/2024	3:30 PM	0	0	0	0	0	1	0	0	0	0	0	0	0
4/22/2024	3:45 PM	0	34	2	0	0	0	0	0	0	0	0	0	0
4/22/2024	4:00 PM	1	50	10	0	0	0	0	0	0	0	0	0	0
4/22/2024	4:15 PM	0	38	6	0	1	0	0	0	0	0	0	0	0
4/22/2024	4:30 PM	0	45	6	0	2	0	0	0	1	0	0	0	0
4/22/2024	4:45 PM	0	40	10	0	1	0	0	1	0	0	0	0	0
4/22/2024	5:00 PM	0	52	9	0	2	0	0	0	1	0	0	0	0
4/22/2024	5:15 PM	1	35	6	0	1	0	0	0	0	0	0	0	0
4/22/2024	5:30 PM	1	45	8	0	0	0	0	1	0	0	0	0	0
4/22/2024	5:45 PM	0	36	15	0	1	0	0	0	1	0	0	0	0
4/22/2024	6:00 PM	0	40	6	0	0	0	0	0	1	0	0	0	0
4/22/2024	6:15 PM	0	20	10	0	0	0	0	0	0	0	0	0	0
4/22/2024	6:30 PM	1	52	10	0	1	0	0	0	0	0	0	0	0
4/22/2024	6:45 PM	0	34	5	0	0	0	0	0	0	0	0	0	0
4/22/2024	7:00 PM	0	36	4	0	0	0	0	0	0	0	0	0	0
4/22/2024	7:15 PM	0	30	4	0	0	0	0	0	0	0	0	0	0
4/22/2024	7:30 PM	0	25	5	0	0	0	0	0	0	0	0	0	0
4/22/2024	7:45 PM	0	22	3	0	1	0	0	0	0	0	0	0	0
4/22/2024	8:00 PM	0	21	2	0	1	0	0	0	0	0	0	0	0
4/22/2024	8:15 PM	0	25	3	0	0	0	0	0	0	0	0	0	0
4/22/2024	8:30 PM	0	30	6	0	0	0	0	1	1	0	0	0	0
4/22/2024	8:45 PM	0	25	3	0	0	0	0	0	0	0	0	0	0
4/22/2024	9:00 PM	0	22	2	0	2	0	0	0	1	0	0	0	0
4/22/2024	9:15 PM	0	20	1	0	1	0	0	0	0	0	0	0	0
4/22/2024	9:30 PM	0	18	1	0	0	0	0	0	0	0	0	0	0
4/22/2024	9:45 PM	0	12	0	0	1	0	0	0	0	0	0	0	0
4/22/2024	10:00 PM	0	20	3	0	0	0	0	0	0	0	0	0	0
4/22/2024	10:15 PM	0	18	2	0	0	0	0	0	0	0	0	0	0
4/22/2024	10:30 PM	0	12	0	0	0	0	0	0	0	0	0	0	0
4/22/2024	10:45 PM	0	11	1	0	0	0	0	0	0	0	0	0	0
4/22/2024	11:00 PM	0	10	0	0	0	0	0	0	0	0	0	0	0
4/22/2024	11:15 PM	0	18	3	0	0	0	0	0	0	0	0	0	0
4/22/2024	11:30 PM	0	10	0	0	0	0	0	0	2	0	0	0	0
4/22/2024	11:45 PM	0	11	0	0	0	0	0	0	0	0	0	0	0

4/23/2024	12:00 AM	0	7	1	0	0	0	0	0	0	0	0	0
4/23/2024	12:15 AM	0	9	0	0	0	0	0	0	0	0	0	0
4/23/2024	12:30 AM	0	7	1	0	0	0	0	0	0	0	0	0
4/23/2024	12:45 AM	0	3	0	0	0	0	0	0	0	0	0	0
4/23/2024	1:00 AM	0	2	0	0	0	0	0	0	0	0	0	0
4/23/2024	1:15 AM	0	3	1	0	0	0	0	0	0	0	0	0
4/23/2024	1:30 AM	0	4	0	0	0	0	0	0	0	0	0	0
4/23/2024	1:45 AM	0	4	0	0	0	0	0	0	0	0	0	0
4/23/2024	2:00 AM	0	4	0	0	0	0	0	0	0	0	0	0
4/23/2024	2:15 AM	0	3	0	0	0	0	0	0	0	0	0	0
4/23/2024	2:30 AM	0	2	0	0	0	0	0	0	0	0	0	0
4/23/2024	2:45 AM	0	5	1	0	0	0	0	0	0	0	0	0
4/23/2024	3:00 AM	0	2	0	0	0	0	0	0	0	0	0	0
4/23/2024	3:15 AM	0	5	2	0	0	0	0	0	0	0	0	0
4/23/2024	3:30 AM	0	8	0	0	1	0	0	0	0	0	0	0
4/23/2024	3:45 AM	0	0	1	0	0	0	0	0	0	0	0	0
4/23/2024	4:00 AM	0	6	0	0	0	0	0	0	0	0	0	0
4/23/2024	4:15 AM	0	8	1	0	2	0	0	0	0	0	0	0
4/23/2024	4:30 AM	0	7	0	0	0	0	0	0	0	0	0	0
4/23/2024	4:45 AM	0	11	0	0	0	0	0	0	0	0	0	0
4/23/2024	5:00 AM	0	13	0	0	0	0	0	0	0	0	0	0
4/23/2024	5:15 AM	0	15	0	0	0	0	0	0	0	0	0	0
4/23/2024	5:30 AM	0	24	1	0	2	0	0	0	0	0	0	0
4/23/2024	5:45 AM	0	22	1	0	0	0	0	0	0	0	0	0
4/23/2024	6:00 AM	0	25	2	0	1	1	0	0	0	0	0	0
4/23/2024	6:15 AM	0	41	4	0	1	0	0	0	0	0	0	0
4/23/2024	6:30 AM	0	50	7	0	0	0	0	0	0	0	0	0
4/23/2024	6:45 AM	0	69	15	0	1	0	0	0	0	0	0	0
4/23/2024	7:00 AM	0	68	10	0	1	1	0	0	0	0	0	0
4/23/2024	7:15 AM	0	90	6	0	1	0	0	0	0	0	0	0
4/23/2024	7:30 AM	0	120	16	0	0	0	0	0	1	0	0	0
4/23/2024	7:45 AM	0	119	8	0	0	0	0	0	0	0	0	0
4/23/2024	8:00 AM	0	125	15	0	0	0	0	0	1	0	0	0
4/23/2024	8:15 AM	0	126	13	0	2	1	0	0	0	0	0	0
4/23/2024	8:30 AM	0	99	9	0	1	0	0	0	0	0	0	0
4/23/2024	8:45 AM	0	88	21	0	1	0	0	0	1	0	0	0
4/23/2024	9:00 AM	0	81	13	0	4	0	0	0	0	0	0	0
4/23/2024	9:15 AM	0	102	15	0	6	0	0	0	1	0	0	0
4/23/2024	9:30 AM	0	92	11	0	2	0	0	0	6	0	0	0
4/23/2024	9:45 AM	1	114	10	5	1	0	0	0	0	0	0	0
4/23/2024	10:00 AM	0	59	10	0	0	0	0	0	1	0	0	0
4/23/2024	10:15 AM	0	65	10	1	0	0	0	0	0	0	0	0
4/23/2024	10:30 AM	0	83	9	0	1	0	0	0	0	0	0	0
4/23/2024	10:45 AM	0	47	7	0	3	0	0	0	0	0	0	0
4/23/2024	11:00 AM	0	64	9	0	1	0	0	0	1	0	0	0
4/23/2024	11:15 AM	0	51	10	0	1	0	0	0	0	0	0	0
4/23/2024	11:30 AM	0	69	19	0	4	0	0	0	0	0	0	0
4/23/2024	11:45 AM	1	59	15	0	0	0	0	0	1	0	0	0
4/23/2024	12:00 PM	0	62	14	0	1	0	0	0	0	0	0	0
4/23/2024	12:15 PM	0	56	12	0	0	1	0	0	0	0	0	0
4/23/2024	12:30 PM	0	53	17	0	2	0	0	0	0	0	0	0
4/23/2024	12:45 PM	0	81	11	1	0	0	0	1	0	0	0	0
4/23/2024	1:00 PM	0	65	13	1	2	0	0	0	0	0	0	0
4/23/2024	1:15 PM	0	60	13	0	3	1	0	0	0	0	0	0
4/23/2024	1:30 PM	0	57	7	1	2	0	0	0	1	0	0	0
4/23/2024	1:45 PM	0	51	10	0	2	1	0	0	0	0	0	0
4/23/2024	2:00 PM	0	50	9	0	2	0	0	1	1	0	0	0
4/23/2024	2:15 PM	0	51	18	0	1	0	0	0	0	0	0	0
4/23/2024	2:30 PM	0	52	9	0	2	0	0	0	0	1	0	0
4/23/2024	2:45 PM	1	64	9	1	2	1	0	0	0	0	0	0
4/23/2024	3:00 PM	0	51	7	0	1	1	0	1	0	0	0	0
4/23/2024	3:15 PM	0	48	5	0	0	0	0	0	0	0	0	0
4/23/2024	3:30 PM	0	72	7	0	1	0	0	0	0	0	0	0
4/23/2024	3:45 PM	0	60	9	0	3	0	0	0	0	0	0	0
4/23/2024	4:00 PM	1	32	11	0	3	0	0	0	1	0	0	0
4/23/2024	4:15 PM	0	50	12	0	3	0	1	0	0	0	0	0
4/23/2024	4:30 PM	0	46	8	0	0	0	0	0	0	0	0	0
4/23/2024	4:45 PM	0	52	20	0	1	1	0	0	0	0	0	0
4/23/2024	5:00 PM	0	49	9	0	0	0	0	2	0	0	0	0
4/23/2024	5:15 PM	0	62	7	0	0	0	0	0	0	0	0	0
4/23/2024	5:30 PM	0	41	13	0	0	0	0	0	0	0	0	0
4/23/2024	5:45 PM	0	61	10	0	2	2	0	1	0	0	0	0
4/23/2024	6:00 PM	0	50	9	0	0	0	0	1	1	0	0	0
4/23/2024	6:15 PM	0	38	5	0	0	0	0	0	0	0	0	0
4/23/2024	6:30 PM	1	39	6	3	0	0	0	0	1	0	0	0
4/23/2024	6:45 PM	0	41	7	0	0	0	0	0	0	0	0	0
4/23/2024	7:00 PM	0	26	4	0	0	0	0	0	0	0	0	0
4/23/2024	7:15 PM	0	38	8	0	2	0	0	0	0	0	0	0
4/23/2024	7:30 PM	1	28	4	0	2	0	0	0	0	0	0	0
4/23/2024	7:45 PM	0	30	6	0	1	0	0	0	0	0	0	0
4/23/2024	8:00 PM	0	23	3	0	0	0	0	0	0	0	0	0
4/23/2024	8:15 PM	0	21	5	0	1	0	0	0	0	0	0	0
4/23/2024	8:30 PM	0	25	5	0	0	0	0	0	0	0	0	0
4/23/2024	8:45 PM	0	24	5	0	0	0	0	0	0	0	0	0
4/23/2024	9:00 PM	0	23	4	0	0	0	0	0	0	0	0	0
4/23/2024	9:15 PM	0	14	3	0	0	0	0	0	0	0	0	0
4/23/2024	9:30 PM	0	17	3	0	0	0	0	0	0	0	0	0
4/23/2024	9:45 PM	0	16	2	0	0	0	0	0	0	0	0	0
4/23/2024	10:00 PM	0	15	3	0	0	0	0	0	0	0	0	0
4/23/2024	10:15 PM	0	13	3	0	0	0	0	0	0	0	0	0
4/23/2024	10:30 PM	0	12	2	0	1	0	0	0	1	0	0	0
4/23/2024	10:45 PM	0	13	3	0	0	0	0	0	0	0	0	0
4/23/2024	11:00 PM	0	13	2	0	0	0	0	0	0	0	0	0
4/23/2024	11:15 PM	0	7	1	0	0	0	0	0	1	0	0	0
4/23/2024	11:30 PM	0	12	2	0	0	0	0	0	1	0	0	0
4/23/2024	11:45 PM	0	10	1	0	0	0	0	0	0	0	0	0

4/24/2024	12:00 AM	0	8	2	0	0	0	0	0	0	0	0	0
4/24/2024	12:15 AM	0	6	1	0	0	0	0	0	0	0	0	0
4/24/2024	12:30 AM	0	5	2	0	0	0	0	0	0	0	0	0
4/24/2024	12:45 AM	0	4	1	0	0	0	0	0	0	0	0	0
4/24/2024	1:00 AM	0	3	2	0	0	0	0	0	0	0	0	0
4/24/2024	1:15 AM	0	4	2	0	0	0	0	0	0	0	0	0
4/24/2024	1:30 AM	0	7	1	0	0	0	0	0	0	0	0	0
4/24/2024	1:45 AM	0	2	1	0	0	0	0	0	0	0	0	0
4/24/2024	2:00 AM	0	1	1	0	0	0	0	0	0	0	0	0
4/24/2024	2:15 AM	0	3	1	0	0	0	0	0	0	0	0	0
4/24/2024	2:30 AM	0	2	0	0	0	0	0	0	0	0	0	0
4/24/2024	2:45 AM	0	3	0	0	0	0	0	0	0	0	0	0
4/24/2024	3:00 AM	0	6	2	0	1	0	0	0	0	0	0	0
4/24/2024	3:15 AM	0	2	1	0	0	0	0	0	0	0	0	0
4/24/2024	3:30 AM	0	4	1	0	0	0	0	0	0	0	0	0
4/24/2024	3:45 AM	0	3	0	0	0	1	0	0	0	0	0	0
4/24/2024	4:00 AM	0	3	1	0	0	0	0	0	0	0	0	0
4/24/2024	4:15 AM	0	2	0	0	1	0	0	0	0	0	0	0
4/24/2024	4:30 AM	0	3	1	0	0	0	0	0	0	0	0	0
4/24/2024	4:45 AM	0	7	2	0	1	1	0	0	0	0	0	0
4/24/2024	5:00 AM	0	5	2	0	0	0	0	0	0	0	0	0
4/24/2024	5:15 AM	0	6	3	0	0	0	0	0	0	0	0	0
4/24/2024	5:30 AM	0	20	4	0	0	0	0	0	0	0	0	0
4/24/2024	5:45 AM	0	15	2	0	1	0	0	0	0	0	0	0
4/24/2024	6:00 AM	0	19	5	0	1	0	0	0	0	0	0	0
4/24/2024	6:15 AM	0	34	7	0	0	0	0	0	0	0	0	0
4/24/2024	6:30 AM	0	66	3	0	0	0	0	0	0	0	0	0
4/24/2024	6:45 AM	0	65	14	0	3	0	0	0	0	0	0	0
4/24/2024	7:00 AM	0	64	11	0	0	0	0	0	0	0	0	0
4/24/2024	7:15 AM	0	99	10	0	1	0	0	0	1	0	0	0
4/24/2024	7:30 AM	0	124	10	0	0	0	0	0	0	0	0	0
4/24/2024	7:45 AM	1	123	22	0	1	0	0	0	1	1	0	0
4/24/2024	8:00 AM	0	129	17	0	1	1	0	0	1	0	0	0
4/24/2024	8:15 AM	0	112	23	0	1	0	0	0	2	0	0	0
4/24/2024	8:30 AM	0	78	14	0	1	0	0	0	0	0	0	0
4/24/2024	8:45 AM	1	74	15	1	0	0	0	0	0	0	0	0
4/24/2024	9:00 AM	0	79	16	0	1	1	0	0	0	0	0	0
4/24/2024	9:15 AM	0	61	10	0	2	0	0	0	0	0	0	0
4/24/2024	9:30 AM	1	82	9	1	3	0	0	0	1	0	0	0
4/24/2024	9:45 AM	0	65	12	0	2	1	0	1	0	0	0	0
4/24/2024	10:00 AM	0	60	11	1	2	0	0	2	1	1	0	0
4/24/2024	10:15 AM	0	64	11	1	0	0	0	0	0	0	0	0
4/24/2024	10:30 AM	0	60	11	0	1	0	0	1	0	0	0	0
4/24/2024	10:45 AM	0	48	9	0	2	0	0	1	0	0	0	0
4/24/2024	11:00 AM	0	63	17	0	1	0	0	0	0	0	0	0
4/24/2024	11:15 AM	0	51	14	0	0	1	0	0	1	0	0	0
4/24/2024	11:30 AM	0	55	8	0	6	0	0	0	1	0	0	0
4/24/2024	11:45 AM	0	71	16	0	3	0	0	0	0	0	0	0
4/24/2024	12:00 PM	0	47	12	0	1	0	0	1	0	0	0	0
4/24/2024	12:15 PM	0	79	18	0	4	0	0	0	0	0	0	0
4/24/2024	12:30 PM	0	63	18	1	1	2	0	0	0	0	0	0
4/24/2024	12:45 PM	1	61	10	0	0	1	0	2	1	0	0	0
4/24/2024	1:00 PM	0	54	16	1	5	0	0	1	0	0	0	0
4/24/2024	1:15 PM	0	52	16	0	2	0	0	0	1	0	0	0
4/24/2024	1:30 PM	0	61	17	1	0	1	0	0	0	0	0	0
4/24/2024	1:45 PM	0	51	6	0	1	0	0	1	0	0	0	0
4/24/2024	2:00 PM	0	52	16	0	2	1	0	0	1	0	0	0
4/24/2024	2:15 PM	0	49	18	0	3	0	0	0	0	1	0	0
4/24/2024	2:30 PM	0	50	11	0	1	3	0	0	0	0	0	0
4/24/2024	2:45 PM	0	59	17	1	2	0	0	0	1	0	0	0
4/24/2024	3:00 PM	0	59	11	0	0	0	0	0	0	0	0	0
4/24/2024	3:15 PM	0	42	13	0	0	1	0	0	0	0	0	0
4/24/2024	3:30 PM	0	56	9	0	2	0	0	1	0	0	0	0
4/24/2024	3:45 PM	0	66	9	0	0	0	0	0	0	0	0	0
4/24/2024	4:00 PM	0	48	14	1	2	0	0	0	0	0	0	0
4/24/2024	4:15 PM	0	51	4	0	2	0	0	0	0	0	0	0
4/24/2024	4:30 PM	0	50	6	0	0	0	0	1	0	0	0	0
4/24/2024	4:45 PM	0	55	11	2	0	0	0	0	0	1	0	0
4/24/2024	5:00 PM	0	52	8	1	2	0	0	0	0	0	0	0
4/24/2024	5:15 PM	0	40	6	0	0	0	0	1	0	0	0	0
4/24/2024	5:30 PM	0	44	7	0	1	0	0	0	0	0	0	0
4/24/2024	5:45 PM	0	55	7	0	1	0	0	0	0	0	0	0
4/24/2024	6:00 PM	0	30	6	0	2	1	0	0	0	0	0	0
4/24/2024	6:15 PM	0	37	7	0	0	0	0	0	1	0	0	0
4/24/2024	6:30 PM	1	44	12	0	1	0	0	0	0	0	0	0
4/24/2024	6:45 PM	0	47	7	0	0	0	0	0	1	0	0	0
4/24/2024	7:00 PM	0	44	7	0	0	0	0	0	0	0	0	0
4/24/2024	7:15 PM	0	39	2	0	1	0	0	0	0	0	0	0
4/24/2024	7:30 PM	0	21	5	0	0	0	0	0	0	0	0	0
4/24/2024	7:45 PM	3	20	2	0	1	0	0	0	1	0	0	0
4/24/2024	8:00 PM	0	18	2	0	1	0	0	0	0	0	0	0
4/24/2024	8:15 PM	0	24	3	0	0	0	0	0	0	0	0	0
4/24/2024	8:30 PM	0	19	5	0	0	0	0	0	0	0	0	0
4/24/2024	8:45 PM	0	22	6	0	0	0	0	0	0	0	0	0
4/24/2024	9:00 PM	0	19	4	0	0	0	0	0	0	0	0	0
4/24/2024	9:15 PM	0	18	3	0	0	0	0	0	0	0	0	0
4/24/2024	9:30 PM	0	11	2	0	0	0	0	0	0	0	0	0
4/24/2024	9:45 PM	0	17	4	0	1	0	0	0	0	0	0	0
4/24/2024	10:00 PM	0	15	4	0	0	0	0	0	1	0	0	0
4/24/2024	10:15 PM	0	8	2	0	0	0	0	0	0	0	0	0
4/24/2024	10:30 PM	0	9	1	0	0	0	0	0	0	0	0	0
4/24/2024	10:45 PM	0	10	3	0	0	0	0	0	1	0	0	0
4/24/2024	11:00 PM	0	17	4	0	0	0	0	0	0	0	0	0
4/24/2024	11:15 PM	0	10	2	0	1	0	0	0	0	0	0	0
4/24/2024	11:30 PM	0	5	1	0	0	0	0	0	0	0	0	0
4/24/2024	11:45 PM	0	4	2	0	0	0	0	0	0	0	0	0

4/25/2024	12:00 AM	0	3	0	0	0	0	0	0	0	0	0	0
4/25/2024	12:15 AM	0	8	2	0	0	0	0	0	0	0	0	0
4/25/2024	12:30 AM	0	5	0	0	0	0	0	0	0	0	0	0
4/25/2024	12:45 AM	0	3	0	0	0	0	0	0	0	0	0	0
4/25/2024	1:00 AM	0	4	1	0	0	0	0	0	0	0	0	0
4/25/2024	1:15 AM	0	3	0	0	0	0	0	0	0	0	0	0
4/25/2024	1:30 AM	0	3	0	0	0	0	0	0	0	0	0	0
4/25/2024	1:45 AM	0	3	0	0	0	0	0	0	0	0	0	0
4/25/2024	2:00 AM	0	0	0	0	0	0	0	0	0	0	0	0
4/25/2024	2:15 AM	0	3	0	0	0	0	0	0	0	0	0	0
4/25/2024	2:30 AM	0	1	1	0	0	0	0	0	0	0	0	0
4/25/2024	2:45 AM	0	1	0	0	0	0	0	0	0	0	0	0
4/25/2024	3:00 AM	0	5	0	0	0	0	0	0	0	0	0	0
4/25/2024	3:15 AM	0	4	0	0	1	0	0	0	0	0	0	0
4/25/2024	3:30 AM	0	2	0	0	0	0	0	0	0	0	0	0
4/25/2024	3:45 AM	0	3	0	0	1	0	0	0	0	0	0	0
4/25/2024	4:00 AM	0	6	0	0	0	0	0	0	0	0	0	0
4/25/2024	4:15 AM	0	5	1	0	1	0	0	0	0	0	0	0
4/25/2024	4:30 AM	0	11	1	0	0	0	0	0	0	0	0	0
4/25/2024	4:45 AM	0	5	1	0	0	0	0	0	0	0	0	0
4/25/2024	5:00 AM	0	10	1	0	0	1	0	0	0	0	0	0
4/25/2024	5:15 AM	0	8	1	0	0	0	0	0	0	0	0	0
4/25/2024	5:30 AM	0	18	0	0	1	0	0	0	0	0	0	0
4/25/2024	5:45 AM	0	17	0	0	0	0	0	0	0	0	0	0
4/25/2024	6:00 AM	0	21	2	0	0	0	0	0	0	0	0	0
4/25/2024	6:15 AM	0	35	10	0	0	0	0	0	0	0	0	0
4/25/2024	6:30 AM	0	54	12	0	1	0	0	0	0	1	0	0	0
4/25/2024	6:45 AM	0	57	21	0	0	0	0	0	0	0	0	0	0
4/25/2024	7:00 AM	0	66	19	1	0	0	0	0	0	0	0	0	0
4/25/2024	7:15 AM	0	93	22	0	1	0	0	0	0	0	0	0	0
4/25/2024	7:30 AM	0	103	12	0	1	0	0	0	0	0	0	0	0
4/25/2024	7:45 AM	1	132	25	0	0	0	0	1	0	0	0	0	0
4/25/2024	8:00 AM	0	119	24	0	1	0	0	0	0	0	0	0	0
4/25/2024	8:15 AM	0	77	17	1	2	1	0	0	0	1	0	0	0
4/25/2024	8:30 AM	0	84	15	0	3	0	0	1	0	0	0	0	0
4/25/2024	8:45 AM	0	81	18	0	1	0	0	0	2	0	0	0	0
4/25/2024	9:00 AM	0	89	16	3	1	1	0	0	0	0	0	0	0
4/25/2024	9:15 AM	0	65	14	0	1	1	0	0	0	0	0	0	0
4/25/2024	9:30 AM	0	63	15	3	1	0	0	1	0	0	0	0	0
4/25/2024	9:45 AM	0	76	18	3	3	0	0	2	1	0	0	0	0
4/25/2024	10:00 AM	0	56	10	0	1	0	0	2	1	1	0	0	0
4/25/2024	10:15 AM	0	54	15	1	2	1	0	1	1	0	0	0	0
4/25/2024	10:30 AM	0	58	8	0	1	0	0	0	1	0	0	0	0
4/25/2024	10:45 AM	0	57	7	0	0	0	0	0	1	0	0	0	0
4/25/2024	11:00 AM	0	50	10	0	1	1	0	1	0	0	0	0	0
4/25/2024	11:15 AM	0	57	12	0	4	0	0	2	0	0	0	0	0
4/25/2024	11:30 AM	0	39	15	0	1	0	0	0	0	0	0	0	0
4/25/2024	11:45 AM	0	55	18	1	1	0	1	1	0	0	0	0	0
4/25/2024	12:00 PM	0	55	10	0	2	0	0	0	0	0	0	0	0
4/25/2024	12:15 PM	0	55	10	0	1	1	0	0	0	0	0	0	0
4/25/2024	12:30 PM	1	53	15	0	1	0	0	0	0	0	0	0	0
4/25/2024	12:45 PM	0	52	13	0	3	1	0	0	0	0	0	0	0
4/25/2024	1:00 PM	0	55	15	0	1	0	0	0	0	0	0	0	0
4/25/2024	1:15 PM	0	52	16	0	1	2	0	0	0	0	0	0	0
4/25/2024	1:30 PM	0	47	14	1	2	0	0	0	0	0	0	0	0
4/25/2024	1:45 PM	0	50	16	0	0	0	0	0	1	0	0	0	0
4/25/2024	2:00 PM	0	55	18	1	1	0	0	0	1	0	0	0	0
4/25/2024	2:15 PM	0	50	17	0	1	0	0	0	0	0	0	0	0
4/25/2024	2:30 PM	0	58	15	0	1	1	0	0	0	0	0	0	0
4/25/2024	2:45 PM	0	47	14	1	0	1	0	0	0	0	0	0	0
4/25/2024	3:00 PM	0	46	7	0	1	0	0	0	0	0	0	0	0
4/25/2024	3:15 PM	0	46	9	0	1	0	0	0	0	0	0	0	0
4/25/2024	3:30 PM	0	50	9	0	0	1	0	0	0	0	0	0	0
4/25/2024	3:45 PM	0	62	9	0	0	0	0	0	0	0	0	0	0
4/25/2024	4:00 PM	0	50	8	0	1	0	0	0	0	0	0	0	0
4/25/2024	4:15 PM	0	45	6	0	0	0	0	0	1	0	0	0	0
4/25/2024	4:30 PM	0	47	6	0	1	1	0	0	0	0	0	0	0
4/25/2024	4:45 PM	1	30	11	0	1	0	0	0	0	0	0	0	0
4/25/2024	5:00 PM	0	40	9	0	1	0	0	0	0	0	0	0	0
4/25/2024	5:15 PM	0	35	6	0	0	0	0	0	0	0	0	0	0
4/25/2024	5:30 PM	1	47	7	0	0	0	0	0	0	0	0	0	0
4/25/2024	5:45 PM	0	41	7	0	1	0	0	0	0	0	0	0	0
4/25/2024	6:00 PM	0	50	8	0	0	0	0	0	0	0	0	0	0
4/25/2024	6:15 PM	0	52	4	0	0	0	0	0	0	0	0	0	0
4/25/2024	6:30 PM	2	42	7	0	1	0	0	1	0	0	0	0	0
4/25/2024	6:45 PM	0	51	5	0	2	0	0	1	0	0	0	0	0
4/25/2024	7:00 PM	0	44	9	0	0	0	0	0	0	0	0	0	0
4/25/2024	7:15 PM	0	31	5	0	1	1	0	0	0	0	0	0	0
4/25/2024	7:30 PM	0	23	5	0	0	0	0	0	0	0	0	0	0
4/25/2024	7:45 PM	0	24	7	0	0	0	0	0	0	0	0	0	0
4/25/2024	8:00 PM	1	27	4	0	0	0	0	0	0	0	0	0	0
4/25/2024	8:15 PM	0	28	6	0	0	0	0	0	0	0	0	0	0
4/25/2024	8:30 PM	0	21	3	0	0	0	0	0	0	0	0	0	0
4/25/2024	8:45 PM	0	17	4	0	0	0	0	0	0	0	0	0	0
4/25/2024	9:00 PM	0	28	4	0	0	0	0	0	0	0	0	0	0
4/25/2024	9:15 PM	0	21	2	0	0	0	0	0	0	0	0	0	0
4/25/2024	9:30 PM	0	22	4	0	0	0	0	0	0	0	0	0	0
4/25/2024	9:45 PM	0	13	1	0	0	0	0	0	0	0	0	0	0
4/25/2024	10:00 PM	0	22	4	0	2	0	0	0	0	0	0	0	0
4/25/2024	10:15 PM	0	8	3	0	0	0	0	0	0	0	0	0	0
4/25/2024	10:30 PM	0	9	1	0	0	0	0	0	0	0	0	0	0
4/25/2024	10:45 PM	0	7	2	0	0	0	0	0	0	0	0	0	0
4/25/2024	11:00 PM	0	8	1	0	0	0	0	0	0	0	0	0	0
4/25/2024	11:15 PM	0	12	2	0	0	0	0	0	0	0	0	0	0
4/25/2024	11:30 PM	0	9	1	0	0	0	0	0	0	0	0	0	0
4/25/2024	11:45 PM	0	7	2	0	0	0	0	0	0	0	0	0	0

4/26/2024	12:00 AM	0	8	1	0	1	0	0	0	0	0	0	0	0
4/26/2024	12:15 AM	0	5	0	0	0	0	0	0	0	0	0	0	0
4/26/2024	12:30 AM	0	4	0	0	0	0	0	0	0	0	0	0	0
4/26/2024	12:45 AM	0	2	0	0	0	0	0	0	0	0	0	0	0
4/26/2024	1:00 AM	0	6	0	0	0	0	0	0	0	0	0	0	0
4/26/2024	1:15 AM	0	4	0	0	0	0	0	0	0	0	0	0	0
4/26/2024	1:30 AM	0	3	0	0	0	0	0	0	0	0	0	0	0
4/26/2024	1:45 AM	0	2	0	0	1	0	0	0	0	0	0	0	0
4/26/2024	2:00 AM	0	3	0	0	0	0	0	0	0	0	0	0	0
4/26/2024	2:15 AM	0	1	0	0	0	0	0	0	0	0	0	0	0
4/26/2024	2:30 AM	0	2	0	0	0	0	0	0	0	0	0	0	0
4/26/2024	2:45 AM	0	4	0	0	0	0	0	0	0	0	0	0	0
4/26/2024	3:00 AM	0	6	0	0	0	0	0	0	0	0	0	0	0
4/26/2024	3:15 AM	0	2	1	0	0	0	0	0	0	0	0	0	0
4/26/2024	3:30 AM	0	3	0	0	0	0	0	0	0	0	0	0	0
4/26/2024	3:45 AM	0	6	1	0	0	0	0	0	0	0	0	0	0
4/26/2024	4:00 AM	0	7	2	0	2	0	0	0	0	0	0	0	0
4/26/2024	4:15 AM	0	5	0	0	0	0	0	0	0	0	0	0	0
4/26/2024	4:30 AM	0	5	1	0	0	0	0	0	0	0	0	0	0
4/26/2024	4:45 AM	0	10	2	0	0	0	0	0	0	0	0	0	0
4/26/2024	5:00 AM	0	5	1	0	0	0	0	0	0	0	0	0	0
4/26/2024	5:15 AM	0	8	1	0	0	0	0	0	0	0	0	0	0
4/26/2024	5:30 AM	0	18	2	0	0	0	0	0	0	0	0	0	0
4/26/2024	5:45 AM	0	15	3	0	2	0	0	0	0	0	0	0	0
4/26/2024	6:00 AM	0	18	3	0	1	0	0	0	0	0	0	0	0
4/26/2024	6:15 AM	0	25	5	0	0	0	0	0	0	0	0	0	0
4/26/2024	6:30 AM	0	45	9	0	1	0	0	0	0	2	0	0	0
4/26/2024	6:45 AM	0	45	17	0	0	0	0	0	0	0	0	0	0
4/26/2024	7:00 AM	0	46	10	0	0	0	0	0	1	0	0	0	0
4/26/2024	7:15 AM	0	85	18	0	1	0	0	0	0	0	0	0	0
4/26/2024	7:30 AM	0	92	19	0	0	0	0	0	0	0	0	0	0
4/26/2024	7:45 AM	0	120	26	0	2	1	0	0	0	0	0	0	0
4/26/2024	8:00 AM	1	103	27	0	0	1	0	1	0	1	0	0	0
4/26/2024	8:15 AM	0	105	19	1	4	0	0	0	1	0	0	0	0
4/26/2024	8:30 AM	0	96	20	0	0	0	0	0	1	0	0	0	0
4/26/2024	8:45 AM	0	100	23	0	0	0	0	0	0	0	0	0	0
4/26/2024	9:00 AM	0	83	15	5	1	0	0	0	0	0	0	0	0
4/26/2024	9:15 AM	0	59	12	2	2	0	0	0	0	0	0	0	0
4/26/2024	9:30 AM	0	63	15	0	2	0	0	1	0	0	0	0	0
4/26/2024	9:45 AM	0	63	11	0	2	0	0	0	0	0	0	0	0
4/26/2024	10:00 AM	0	47	18	1	2	0	0	0	2	0	0	0	0
4/26/2024	10:15 AM	0	51	17	0	1	0	0	1	2	0	0	0	0
4/26/2024	10:30 AM	0	59	19	0	1	0	0	0	0	0	0	0	0
4/26/2024	10:45 AM	0	56	13	3	2	0	0	1	0	0	0	0	0
4/26/2024	11:00 AM	0	49	18	0	0	0	0	1	0	0	0	0	0
4/26/2024	11:15 AM	0	53	7	1	4	0	0	0	0	0	0	0	0
4/26/2024	11:30 AM	0	62	15	0	4	0	0	0	0	0	0	0	0
4/26/2024	11:45 AM	0	49	14	0	0	1	0	1	1	0	0	0	0
4/26/2024	12:00 PM	0	42	12	0	2	0	0	1	0	0	0	0	0
4/26/2024	12:15 PM	0	41	18	0	2	0	0	0	0	0	0	0	0
4/26/2024	12:30 PM	0	51	9	0	2	0	0	0	0	0	0	0	0
4/26/2024	12:45 PM	1	37	12	0	1	0	0	0	2	0	0	0	0
4/26/2024	1:00 PM	0	52	13	0	3	0	0	0	0	0	0	0	0
4/26/2024	1:15 PM	0	39	7	0	0	0	0	0	0	0	0	0	0
4/26/2024	1:30 PM	0	46	11	0	1	0	0	0	0	0	0	0	0
4/26/2024	1:45 PM	0	35	11	0	3	0	0	0	0	0	0	0	0
4/26/2024	2:00 PM	0	62	10	0	0	0	0	0	0	0	0	0	0
4/26/2024	2:15 PM	0	55	9	0	1	0	0	0	0	0	0	0	0
4/26/2024	2:30 PM	1	54	6	0	0	0	1	0	0	0	0	0	0
4/26/2024	2:45 PM	0	55	13	0	1	0	0	0	1	0	0	0	0
4/26/2024	3:00 PM	0	42	12	0	0	0	0	0	1	0	0	0	0
4/26/2024	3:15 PM	0	47	11	0	1	0	0	1	0	0	0	0	0
4/26/2024	3:30 PM	0	57	7	0	3	0	0	0	0	0	0	0	0
4/26/2024	3:45 PM	0	52	16	0	0	0	0	1	0	0	0	0	0
4/26/2024	4:00 PM	0	46	12	0	1	0	0	0	0	0	0	0	0
4/26/2024	4:15 PM	0	44	9	0	1	0	0	0	0	0	0	0	0
4/26/2024	4:30 PM	0	48	11	0	0	0	0	0	0	0	0	0	0
4/26/2024	4:45 PM	0	38	9	0	0	0	0	0	0	0	0	0	0
4/26/2024	5:00 PM	0	45	13	0	1	0	0	0	0	0	0	0	0
4/26/2024	5:15 PM	0	64	6	0	3	0	0	0	0	0	0	0	0
4/26/2024	5:30 PM	0	48	13	0	2	0	0	0	1	0	0	0	0
4/26/2024	5:45 PM	0	51	6	0	0	0	0	0	0	0	0	0	0
4/26/2024	6:00 PM	0	46	3	0	0	0	0	0	0	0	0	0	0
4/26/2024	6:15 PM	0	47	3	0	0	0	0	0	0	0	0	0	0
4/26/2024	6:30 PM	0	54	7	0	1	0	0	0	0	0	0	0	0
4/26/2024	6:45 PM	0	53	5	0	0	0	0	0	0	0	0	0	0
4/26/2024	7:00 PM	0	50	5	0	0	0	0	0	0	0	0	0	0
4/26/2024	7:15 PM	0	38	5	0	2	1	0	0	0	0	0	0	0
4/26/2024	7:30 PM	0	29	5	0	0	0	0	0	0	0	0	0	0
4/26/2024	7:45 PM	0	20	1	0	0	0	0	0	0	0	0	0	0
4/26/2024	8:00 PM	0	27	3	0	0	0	0	0	0	0	0	0	0
4/26/2024	8:15 PM	0	28	1	0	2	0	0	0	0	0	0	0	0
4/26/2024	8:30 PM	0	27	3	0	2	0	0	0	0	0	0	0	0
4/26/2024	8:45 PM	0	20	2	0	2	0	0	0	0	0	0	0	0
4/26/2024	9:00 PM	0	19	3	0	1	0	0	0	0	0	0	0	0
4/26/2024	9:15 PM	0	17	2	0	0	0	0	0	1	0	0	0	0
4/26/2024	9:30 PM	0	21	2	0	0	0	0	0	1	0	0	0	0
4/26/2024	9:45 PM	0	19	2	0	0	0	0	0	1	0	0	0	0
4/26/2024	10:00 PM	0	11	3	0	0	0	0	0	0	0	0	0	0
4/26/2024	10:15 PM	0	13	2	0	0	0	0	0	0	0	0	0	0
4/26/2024	10:30 PM	0	15	4	0	0	0	0	0	0	0	0	0	0
4/26/2024	10:45 PM	0	14	4	0	0	0	0	0	0	0	0	0	0
4/26/2024	11:00 PM	0	9	2	0	0	0	0	0	0	0	0	0	0
4/26/2024	11:15 PM	0	16	2	0	3	0	0	0	0	0	0	0	0
4/26/2024	11:30 PM	0	10	1	0	0	0	0	0	0	0	0	0	0
4/26/2024	11:45 PM	0	14	4	0	1	0	0	0	0	0	0	0	0

4/27/2024	12:00 AM	0	10	2	0	0	0	0	0	0	0	0	0
4/27/2024	12:15 AM	0	6	1	0	0	0	0	0	0	0	0	0
4/27/2024	12:30 AM	0	9	3	0	0	0	0	0	0	0	0	0
4/27/2024	12:45 AM	0	5	2	0	0	0	0	0	0	0	0	0
4/27/2024	1:00 AM	0	3	1	0	0	0	0	0	0	0	0	0
4/27/2024	1:15 AM	0	7	3	0	0	0	0	0	0	0	0	0
4/27/2024	1:30 AM	0	2	0	0	0	0	0	0	0	0	0	0
4/27/2024	1:45 AM	0	4	0	0	0	0	0	0	0	0	0	0
4/27/2024	2:00 AM	0	4	1	0	0	0	0	0	0	0	0	0
4/27/2024	2:15 AM	0	5	1	0	0	0	0	0	0	0	0	0
4/27/2024	2:30 AM	0	3	0	0	0	0	0	0	0	0	0	0
4/27/2024	2:45 AM	0	6	0	0	0	0	0	0	0	0	0	0
4/27/2024	3:00 AM	0	5	0	0	0	0	0	0	0	0	0	0
4/27/2024	3:15 AM	0	4	0	0	1	0	0	0	0	0	0	0
4/27/2024	3:30 AM	0	5	0	0	0	0	0	0	0	0	0	0
4/27/2024	3:45 AM	0	6	0	0	0	0	0	0	0	0	0	0
4/27/2024	4:00 AM	0	2	0	0	0	0	0	0	0	0	0	0
4/27/2024	4:15 AM	0	5	1	0	0	0	0	0	0	0	0	0
4/27/2024	4:30 AM	0	4	0	0	0	0	0	0	0	0	0	0
4/27/2024	4:45 AM	0	3	0	0	0	0	0	0	0	0	0	0
4/27/2024	5:00 AM	0	4	0	0	0	0	0	0	0	0	0	0
4/27/2024	5:15 AM	0	6	1	0	0	0	0	0	0	0	0	0
4/27/2024	5:30 AM	0	9	3	0	0	0	0	0	0	0	0	0
4/27/2024	5:45 AM	0	10	2	0	0	0	0	0	0	0	0	0
4/27/2024	6:00 AM	0	9	3	0	0	0	0	0	0	0	0	0
4/27/2024	6:15 AM	0	12	4	0	0	0	0	0	0	0	0	0
4/27/2024	6:30 AM	0	23	5	0	0	0	0	0	0	0	0	0
4/27/2024	6:45 AM	0	28	3	0	0	0	0	0	0	0	0	0
4/27/2024	7:00 AM	0	22	2	0	1	0	0	0	0	0	0	0
4/27/2024	7:15 AM	0	21	3	0	1	0	0	0	0	0	0	0
4/27/2024	7:30 AM	0	19	4	0	0	1	0	0	0	0	0	0
4/27/2024	7:45 AM	0	28	8	0	1	0	0	0	0	0	0	0
4/27/2024	8:00 AM	0	20	3	0	0	0	0	0	0	0	0	0
4/27/2024	8:15 AM	0	30	4	0	0	0	0	0	0	0	0	0
4/27/2024	8:30 AM	0	31	8	0	1	0	0	0	0	0	0	0
4/27/2024	8:45 AM	0	43	9	0	2	0	0	0	0	0	0	0
4/27/2024	9:00 AM	1	40	6	0	1	1	0	0	0	0	0	0
4/27/2024	9:15 AM	0	40	4	1	0	0	0	0	0	0	0	0
4/27/2024	9:30 AM	0	50	10	0	1	0	0	0	0	0	0	0
4/27/2024	9:45 AM	0	56	5	0	2	0	0	0	0	0	0	0
4/27/2024	10:00 AM	0	50	12	0	1	0	0	0	1	0	0	0
4/27/2024	10:15 AM	0	37	12	1	0	0	0	0	0	0	0	0
4/27/2024	10:30 AM	0	43	7	0	0	0	0	0	1	0	0	0
4/27/2024	10:45 AM	1	45	16	0	2	0	0	0	0	0	0	0
4/27/2024	11:00 AM	0	37	9	0	0	0	0	0	0	0	0	0
4/27/2024	11:15 AM	0	43	8	0	0	0	0	0	0	0	0	0
4/27/2024	11:30 AM	0	47	5	0	1	0	0	0	0	0	0	0
4/27/2024	11:45 AM	0	36	11	0	0	0	0	1	0	0	0	0
4/27/2024	12:00 PM	0	58	13	1	0	1	0	0	0	0	0	0
4/27/2024	12:15 PM	0	44	9	0	0	0	0	0	0	0	0	0
4/27/2024	12:30 PM	0	56	11	0	0	0	0	0	0	0	0	0
4/27/2024	12:45 PM	0	57	5	0	0	0	0	0	0	0	0	0
4/27/2024	1:00 PM	0	51	7	0	0	0	0	0	0	0	0	0
4/27/2024	1:15 PM	0	53	7	0	0	0	0	0	0	0	0	0
4/27/2024	1:30 PM	0	46	7	0	0	0	0	0	0	0	0	0
4/27/2024	1:45 PM	0	55	10	0	1	0	0	0	0	0	0	0
4/27/2024	2:00 PM	0	51	5	0	1	0	0	0	0	0	0	0
4/27/2024	2:15 PM	0	63	0	0	1	0	0	0	0	0	0	0
4/27/2024	2:30 PM	0	51	7	0	1	0	0	0	0	0	0	0
4/27/2024	2:45 PM	1	64	8	0	0	0	0	0	0	0	0	0
4/27/2024	3:00 PM	0	42	6	0	2	0	0	0	0	0	0	0
4/27/2024	3:15 PM	0	54	9	0	0	0	0	0	0	0	0	0
4/27/2024	3:30 PM	1	45	4	0	0	0	0	0	0	0	0	0
4/27/2024	3:45 PM	0	39	7	0	0	0	0	0	0	0	0	0
4/27/2024	4:00 PM	0	40	10	0	0	0	0	0	0	0	0	0
4/27/2024	4:15 PM	1	35	7	0	0	0	0	0	0	0	0	0
4/27/2024	4:30 PM	0	51	3	0	0	0	0	0	0	0	0	0
4/27/2024	4:45 PM	0	62	11	0	0	0	0	1	0	0	0	0
4/27/2024	5:00 PM	0	41	12	0	0	1	0	0	0	0	0	0
4/27/2024	5:15 PM	0	44	14	0	0	0	0	0	0	0	0	0
4/27/2024	5:30 PM	0	54	6	0	0	0	0	0	0	0	0	0
4/27/2024	5:45 PM	0	28	0	0	0	0	0	0	0	0	0	0
4/27/2024	6:00 PM	0	34	5	0	0	0	0	0	0	0	0	0
4/27/2024	6:15 PM	0	32	5	0	0	0	0	0	0	0	0	0
4/27/2024	6:30 PM	0	33	10	0	0	0	0	0	0	0	0	0
4/27/2024	6:45 PM	0	29	1	0	0	0	0	0	0	0	0	0
4/27/2024	7:00 PM	0	35	2	0	0	0	0	0	0	0	0	0
4/27/2024	7:15 PM	0	23	2	0	0	0	0	0	0	0	0	0
4/27/2024	7:30 PM	0	35	2	0	1	0	0	0	0	0	0	0
4/27/2024	7:45 PM	0	19	5	0	0	0	0	0	0	0	0	0
4/27/2024	8:00 PM	0	30	2	0	0	0	0	0	0	0	0	0
4/27/2024	8:15 PM	0	27	2	0	0	0	0	0	0	0	0	0
4/27/2024	8:30 PM	0	20	2	0	0	0	0	0	0	0	0	0
4/27/2024	8:45 PM	0	20	2	0	0	0	0	0	0	0	0	0
4/27/2024	9:00 PM	0	17	1	1	0	0	0	0	0	0	0	0
4/27/2024	9:15 PM	0	25	2	0	0	0	0	0	0	0	0	0
4/27/2024	9:30 PM	0	24	1	0	0	0	0	0	0	0	0	0
4/27/2024	9:45 PM	0	26	3	0	0	0	0	0	0	0	0	0
4/27/2024	10:00 PM	0	17	1	0	0	0	0	0	0	0	0	0
4/27/2024	10:15 PM	0	16	2	0	0	0	0	0	0	0	0	0
4/27/2024	10:30 PM	0	17	1	0	0	0	0	0	0	0	0	0
4/27/2024	10:45 PM	0	9	1	0	0	0	0	0	0	0	0	0
4/27/2024	11:00 PM	0	10	1	0	0	0	0	0	0	0	0	0
4/27/2024	11:15 PM	0	19	1	0	0	0	0	0	0	0	0	0
4/27/2024	11:30 PM	0	18	1	0	0	0	0	0	0	0	0	0
4/27/2024	11:45 PM	0	10	1	0	0	0	0	0	0	0	0	0

WB
File Name:
Start Date: 4/21/2024
Start Time: 0
Site Code: 1
Station ID: 1
Location 1: I-26 E/Bound Off-Ramp, west of US-76
Location 2:

Date	Time	1	2	3	4	5	6	7	8	9	10	11	12	13
4/21/2024	12:00 AM	0	0	0	0	0	0	0	0	0	0	0	0	0
4/21/2024	12:15 AM	0	0	0	0	0	0	0	0	0	0	0	0	0
4/21/2024	12:30 AM	0	0	0	0	0	0	0	0	0	0	0	0	0
4/21/2024	12:45 AM	0	0	0	0	0	0	0	0	0	0	0	0	0
4/21/2024	1:00 AM	0	0	0	0	0	0	0	0	0	0	0	0	0
4/21/2024	1:15 AM	0	0	0	0	0	0	0	0	0	0	0	0	0
4/21/2024	1:30 AM	0	0	0	0	0	0	0	0	0	0	0	0	0
4/21/2024	1:45 AM	0	0	0	0	0	0	0	0	0	0	0	0	0
4/21/2024	2:00 AM	0	0	0	0	0	0	0	0	0	0	0	0	0
4/21/2024	2:15 AM	0	0	0	0	0	0	0	0	0	0	0	0	0
4/21/2024	2:30 AM	0	0	0	0	0	0	0	0	0	0	0	0	0
4/21/2024	2:45 AM	0	0	0	0	0	0	0	0	0	0	0	0	0
4/21/2024	3:00 AM	0	0	0	0	0	0	0	0	0	0	0	0	0
4/21/2024	3:15 AM	0	0	0	0	0	0	0	0	0	0	0	0	0
4/21/2024	3:30 AM	0	0	0	0	0	0	0	0	0	0	0	0	0
4/21/2024	3:45 AM	0	0	0	0	0	0	0	0	0	0	0	0	0
4/21/2024	4:00 AM	0	0	0	0	0	0	0	0	0	0	0	0	0
4/21/2024	4:15 AM	0	0	0	0	0	0	0	0	0	0	0	0	0
4/21/2024	4:30 AM	0	0	0	0	0	0	0	0	0	0	0	0	0
4/21/2024	4:45 AM	0	0	0	0	0	0	0	0	0	0	0	0	0
4/21/2024	5:00 AM	0	0	0	0	0	0	0	0	0	0	0	0	0
4/21/2024	5:15 AM	0	0	0	0	0	0	0	0	0	0	0	0	0
4/21/2024	5:30 AM	0	0	0	0	0	0	0	0	0	0	0	0	0
4/21/2024	5:45 AM	0	0	0	0	0	0	0	0	0	0	0	0	0
4/21/2024	6:00 AM	0	0	0	0	0	0	0	0	0	0	0	0	0
4/21/2024	6:15 AM	0	0	0	0	0	0	0	0	0	0	0	0	0
4/21/2024	6:30 AM	0	0	0	0	0	0	0	0	0	0	0	0	0
4/21/2024	6:45 AM	0	0	0	0	0	0	0	0	0	0	0	0	0
4/21/2024	7:00 AM	0	0	0	0	0	0	0	0	0	0	0	0	0
4/21/2024	7:15 AM	0	0	0	0	0	0	0	0	0	0	0	0	0
4/21/2024	7:30 AM	0	0	0	0	0	0	0	0	0	0	0	0	0
4/21/2024	7:45 AM	0	0	0	0	0	0	0	0	0	0	0	0	0
4/21/2024	8:00 AM	0	0	0	0	0	0	0	0	0	0	0	0	0
4/21/2024	8:15 AM	0	0	0	0	0	0	0	0	0	0	0	0	0
4/21/2024	8:30 AM	0	0	0	0	0	0	0	0	0	0	0	0	0
4/21/2024	8:45 AM	0	0	0	0	0	0	0	0	0	0	0	0	0
4/21/2024	9:00 AM	0	0	0	0	0	0	0	0	0	0	0	0	0
4/21/2024	9:15 AM	0	0	0	0	0	0	0	0	0	0	0	0	0
4/21/2024	9:30 AM	0	0	0	0	0	0	0	0	0	0	0	0	0
4/21/2024	9:45 AM	0	0	0	0	0	0	0	0	0	0	0	0	0
4/21/2024	10:00 AM	0	0	0	0	0	0	0	0	0	0	0	0	0
4/21/2024	10:15 AM	0	0	0	0	0	0	0	0	0	0	0	0	0
4/21/2024	10:30 AM	0	0	0	0	0	0	0	0	0	0	0	0	0
4/21/2024	10:45 AM	0	0	0	0	0	0	0	0	0	0	0	0	0
4/21/2024	11:00 AM	0	0	0	0	0	0	0	0	0	0	0	0	0
4/21/2024	11:15 AM	0	0	0	0	0	0	0	0	0	0	0	0	0
4/21/2024	11:30 AM	0	0	0	0	0	0	0	0	0	0	0	0	0
4/21/2024	11:45 AM	0	0	0	0	0	0	0	0	0	0	0	0	0
4/21/2024	12:00 PM	0	0	0	0	0	0	0	0	0	0	0	0	0
4/21/2024	12:15 PM	0	0	0	0	0	0	0	0	0	0	0	0	0
4/21/2024	12:30 PM	0	0	0	0	0	0	0	0	0	0	0	0	0
4/21/2024	12:45 PM	0	0	0	0	0	0	0	0	0	0	0	0	0
4/21/2024	1:00 PM	0	0	0	0	0	0	0	0	0	0	0	0	0
4/21/2024	1:15 PM	0	0	0	0	0	0	0	0	0	0	0	0	0
4/21/2024	1:30 PM	0	0	0	0	0	0	0	0	0	0	0	0	0
4/21/2024	1:45 PM	0	0	0	0	0	0	0	0	0	0	0	0	0
4/21/2024	2:00 PM	0	0	0	0	0	0	0	0	0	0	0	0	0
4/21/2024	2:15 PM	0	0	0	0	0	0	0	0	0	0	0	0	0
4/21/2024	2:30 PM	0	0	0	0	0	0	0	0	0	0	0	0	0
4/21/2024	2:45 PM	0	0	0	0	0	0	0	0	0	0	0	0	0
4/21/2024	3:00 PM	0	0	0	0	0	0	0	0	0	0	0	0	0
4/21/2024	3:15 PM	0	0	0	0	0	0	0	0	0	0	0	0	0
4/21/2024	3:30 PM	0	0	0	0	0	0	0	0	0	0	0	0	0
4/21/2024	3:45 PM	0	0	0	0	0	0	0	0	0	0	0	0	0
4/21/2024	4:00 PM	0	0	0	0	0	0	0	0	0	0	0	0	0
4/21/2024	4:15 PM	0	0	0	0	0	0	0	0	0	0	0	0	0
4/21/2024	4:30 PM	0	0	0	0	0	0	0	0	0	0	0	0	0
4/21/2024	4:45 PM	0	0	0	0	0	0	0	0	0	0	0	0	0
4/21/2024	5:00 PM	0	0	0	0	0	0	0	0	0	0	0	0	0
4/21/2024	5:15 PM	0	0	0	0	0	0	0	0	0	0	0	0	0
4/21/2024	5:30 PM	0	0	0	0	0	0	0	0	0	0	0	0	0
4/21/2024	5:45 PM	0	0	0	0	0	0	0	0	0	0	0	0	0
4/21/2024	6:00 PM	0	0	0	0	0	0	0	0	0	0	0	0	0
4/21/2024	6:15 PM	0	0	0	0	0	0	0	0	0	0	0	0	0
4/21/2024	6:30 PM	0	0	0	0	0	0	0	0	0	0	0	0	0
4/21/2024	6:45 PM	0	0	0	0	0	0	0	0	0	0	0	0	0
4/21/2024	7:00 PM	0	0	0	0	0	0	0	0	0	0	0	0	0
4/21/2024	7:15 PM	0	0	0	0	0	0	0	0	0	0	0	0	0
4/21/2024	7:30 PM	0	0	0	0	0	0	0	0	0	0	0	0	0
4/21/2024	7:45 PM	0	0	0	0	0	0	0	0	0	0	0	0	0
4/21/2024	8:00 PM	0	0	0	0	0	0	0	0	0	0	0	0	0
4/21/2024	8:15 PM	0	0	0	0	0	0	0	0	0	0	0	0	0
4/21/2024	8:30 PM	0	0	0	0	0	0	0	0	0	0	0	0	0
4/21/2024	8:45 PM	0	0	0	0	0	0	0	0	0	0	0	0	0
4/21/2024	9:00 PM	0	0	0	0	0	0	0	0	0	0	0	0	0
4/21/2024	9:15 PM	0	0	0	0	0	0	0	0	0	0	0	0	0
4/21/2024	9:30 PM	0	0	0	0	0	0	0	0	0	0	0	0	0
4/21/2024	9:45 PM	0	0	0	0	0	0	0	0	0	0	0	0	0
4/21/2024	10:00 PM	0	0	0	0	0	0	0	0	0	0	0	0	0
4/21/2024	10:15 PM	0	0	0	0	0	0	0	0	0	0	0	0	0
4/21/2024	10:30 PM	0	0	0	0	0	0	0	0	0	0	0	0	0
4/21/2024	10:45 PM	0	0	0	0	0	0	0	0	0	0	0	0	0
4/21/2024	11:00 PM	0	0	0	0	0	0	0	0	0	0	0	0	0
4/21/2024	11:15 PM	0	0	0	0	0	0	0	0	0	0	0	0	0
4/21/2024	11:30 PM	0	0	0	0	0	0	0	0	0	0	0	0	0
4/21/2024	11:45 PM	0	0	0	0	0	0	0	0	0	0	0	0	0

4/22/2024	12:00 AM	0	0	0	0	0	0	0	0	0	0	0	0	0
4/22/2024	12:15 AM	0	0	0	0	0	0	0	0	0	0	0	0	0
4/22/2024	12:30 AM	0	0	0	0	0	0	0	0	0	0	0	0	0
4/22/2024	12:45 AM	0	0	0	0	0	0	0	0	0	0	0	0	0
4/22/2024	1:00 AM	0	0	0	0	0	0	0	0	0	0	0	0	0
4/22/2024	1:15 AM	0	0	0	0	0	0	0	0	0	0	0	0	0
4/22/2024	1:30 AM	0	0	0	0	0	0	0	0	0	0	0	0	0
4/22/2024	1:45 AM	0	0	0	0	0	0	0	0	0	0	0	0	0
4/22/2024	2:00 AM	0	0	0	0	0	0	0	0	0	0	0	0	0
4/22/2024	2:15 AM	0	0	0	0	0	0	0	0	0	0	0	0	0
4/22/2024	2:30 AM	0	0	0	0	0	0	0	0	0	0	0	0	0
4/22/2024	2:45 AM	0	0	0	0	0	0	0	0	0	0	0	0	0
4/22/2024	3:00 AM	0	0	0	0	0	0	0	0	0	0	0	0	0
4/22/2024	3:15 AM	0	0	0	0	0	0	0	0	0	0	0	0	0
4/22/2024	3:30 AM	0	0	0	0	0	0	0	0	0	0	0	0	0
4/22/2024	3:45 AM	0	0	0	0	0	0	0	0	0	0	0	0	0
4/22/2024	4:00 AM	0	0	0	0	0	0	0	0	0	0	0	0	0
4/22/2024	4:15 AM	0	0	0	0	0	0	0	0	0	0	0	0	0
4/22/2024	4:30 AM	0	0	0	0	0	0	0	0	0	0	0	0	0
4/22/2024	4:45 AM	0	0	0	0	0	0	0	0	0	0	0	0	0
4/22/2024	5:00 AM	0	0	0	0	0	0	0	0	0	0	0	0	0
4/22/2024	5:15 AM	0	0	0	0	0	0	0	0	0	0	0	0	0
4/22/2024	5:30 AM	0	0	0	0	0	0	0	0	0	0	0	0	0
4/22/2024	5:45 AM	0	0	0	0	0	0	0	0	0	0	0	0	0
4/22/2024	6:00 AM	0	0	0	0	0	0	0	0	0	0	0	0	0
4/22/2024	6:15 AM	0	0	0	0	0	0	0	0	0	0	0	0	0
4/22/2024	6:30 AM	0	0	0	0	0	0	0	0	0	0	0	0	0
4/22/2024	6:45 AM	0	0	0	0	0	0	0	0	0	0	0	0	0
4/22/2024	7:00 AM	0	0	0	0	0	0	0	0	0	0	0	0	0
4/22/2024	7:15 AM	0	0	0	0	0	0	0	0	0	0	0	0	0
4/22/2024	7:30 AM	0	0	0	0	0	0	0	0	0	0	0	0	0
4/22/2024	7:45 AM	0	0	0	0	0	0	0	0	0	0	0	0	0
4/22/2024	8:00 AM	0	0	0	0	0	0	0	0	0	0	0	0	0
4/22/2024	8:15 AM	0	0	0	0	0	0	0	0	0	0	0	0	0
4/22/2024	8:30 AM	0	0	0	0	0	0	0	0	0	0	0	0	0
4/22/2024	8:45 AM	0	0	0	0	0	0	0	0	0	0	0	0	0
4/22/2024	9:00 AM	0	0	0	0	0	0	0	0	0	0	0	0	0
4/22/2024	9:15 AM	0	0	0	0	0	0	0	0	0	0	0	0	0
4/22/2024	9:30 AM	0	0	0	0	0	0	0	0	0	0	0	0	0
4/22/2024	9:45 AM	0	0	0	0	0	0	0	0	0	0	0	0	0
4/22/2024	10:00 AM	0	0	0	0	0	0	0	0	0	0	0	0	0
4/22/2024	10:15 AM	0	0	0	0	0	0	0	0	0	0	0	0	0
4/22/2024	10:30 AM	0	0	0	0	0	0	0	0	0	0	0	0	0
4/22/2024	10:45 AM	0	0	0	0	0	0	0	0	0	0	0	0	0
4/22/2024	11:00 AM	0	0	0	0	0	0	0	0	0	0	0	0	0
4/22/2024	11:15 AM	0	0	0	0	0	0	0	0	0	0	0	0	0
4/22/2024	11:30 AM	0	0	0	0	0	0	0	0	0	0	0	0	0
4/22/2024	11:45 AM	0	0	0	0	0	0	0	0	0	0	0	0	0
4/22/2024	12:00 PM	0	0	0	0	0	0	0	0	0	0	0	0	0
4/22/2024	12:15 PM	0	0	0	0	0	0	0	0	0	0	0	0	0
4/22/2024	12:30 PM	0	0	0	0	0	0	0	0	0	0	0	0	0
4/22/2024	12:45 PM	0	0	0	0	0	0	0	0	0	0	0	0	0
4/22/2024	1:00 PM	0	0	0	0	0	0	0	0	0	0	0	0	0
4/22/2024	1:15 PM	0	0	0	0	0	0	0	0	0	0	0	0	0
4/22/2024	1:30 PM	0	0	0	0	0	0	0	0	0	0	0	0	0
4/22/2024	1:45 PM	0	0	0	0	0	0	0	0	0	0	0	0	0
4/22/2024	2:00 PM	0	0	0	0	0	0	0	0	0	0	0	0	0
4/22/2024	2:15 PM	0	0	0	0	0	0	0	0	0	0	0	0	0
4/22/2024	2:30 PM	0	0	0	0	0	0	0	0	0	0	0	0	0
4/22/2024	2:45 PM	0	0	0	0	0	0	0	0	0	0	0	0	0
4/22/2024	3:00 PM	0	0	0	0	0	0	0	0	0	0	0	0	0
4/22/2024	3:15 PM	0	0	0	0	0	0	0	0	0	0	0	0	0
4/22/2024	3:30 PM	0	0	0	0	0	0	0	0	0	0	0	0	0
4/22/2024	3:45 PM	0	0	0	0	0	0	0	0	0	0	0	0	0
4/22/2024	4:00 PM	0	0	0	0	0	0	0	0	0	0	0	0	0
4/22/2024	4:15 PM	0	0	0	0	0	0	0	0	0	0	0	0	0
4/22/2024	4:30 PM	0	0	0	0	0	0	0	0	0	0	0	0	0
4/22/2024	4:45 PM	0	0	0	0	0	0	0	0	0	0	0	0	0
4/22/2024	5:00 PM	0	0	0	0	0	0	0	0	0	0	0	0	0
4/22/2024	5:15 PM	0	0	0	0	0	0	0	0	0	0	0	0	0
4/22/2024	5:30 PM	0	0	0	0	0	0	0	0	0	0	0	0	0
4/22/2024	5:45 PM	0	0	0	0	0	0	0	0	0	0	0	0	0
4/22/2024	6:00 PM	0	0	0	0	0	0	0	0	0	0	0	0	0
4/22/2024	6:15 PM	0	0	0	0	0	0	0	0	0	0	0	0	0
4/22/2024	6:30 PM	0	0	0	0	0	0	0	0	0	0	0	0	0
4/22/2024	6:45 PM	0	0	0	0	0	0	0	0	0	0	0	0	0
4/22/2024	7:00 PM	0	0	0	0	0	0	0	0	0	0	0	0	0
4/22/2024	7:15 PM	0	0	0	0	0	0	0	0	0	0	0	0	0
4/22/2024	7:30 PM	0	0	0	0	0	0	0	0	0	0	0	0	0
4/22/2024	7:45 PM	0	0	0	0	0	0	0	0	0	0	0	0	0
4/22/2024	8:00 PM	0	0	0	0	0	0	0	0	0	0	0	0	0
4/22/2024	8:15 PM	0	0	0	0	0	0	0	0	0	0	0	0	0
4/22/2024	8:30 PM	0	0	0	0	0	0	0	0	0	0	0	0	0
4/22/2024	8:45 PM	0	0	0	0	0	0	0	0	0	0	0	0	0
4/22/2024	9:00 PM	0	0	0	0	0	0	0	0	0	0	0	0	0
4/22/2024	9:15 PM	0	0	0	0	0	0	0	0	0	0	0	0	0
4/22/2024	9:30 PM	0	0	0	0	0	0	0	0	0	0	0	0	0
4/22/2024	9:45 PM	0	0	0	0	0	0	0	0	0	0	0	0	0
4/22/2024	10:00 PM	0	0	0	0	0	0	0	0	0	0	0	0	0
4/22/2024	10:15 PM	0	0	0	0	0	0	0	0	0	0	0	0	0
4/22/2024	10:30 PM	0	0	0	0	0	0	0	0	0	0	0	0	0
4/22/2024	10:45 PM	0	0	0	0	0	0	0	0	0	0	0	0	0
4/22/2024	11:00 PM	0	0	0	0	0	0	0	0	0	0	0	0	0
4/22/2024	11:15 PM	0	0	0	0	0	0	0	0	0	0	0	0	0
4/22/2024	11:30 PM	0	0	0	0	0	0	0	0	0	0	0	0	0
4/22/2024	11:45 PM	0	0	0	0	0	0	0	0	0	0	0	0	0

4/23/2024	12:00 AM	0	0	0	0	0	0	0	0	0	0	0	0	0
4/23/2024	12:15 AM	0	0	0	0	0	0	0	0	0	0	0	0	0
4/23/2024	12:30 AM	0	0	0	0	0	0	0	0	0	0	0	0	0
4/23/2024	12:45 AM	0	0	0	0	0	0	0	0	0	0	0	0	0
4/23/2024	1:00 AM	0	0	0	0	0	0	0	0	0	0	0	0	0
4/23/2024	1:15 AM	0	0	0	0	0	0	0	0	0	0	0	0	0
4/23/2024	1:30 AM	0	0	0	0	0	0	0	0	0	0	0	0	0
4/23/2024	1:45 AM	0	0	0	0	0	0	0	0	0	0	0	0	0
4/23/2024	2:00 AM	0	0	0	0	0	0	0	0	0	0	0	0	0
4/23/2024	2:15 AM	0	0	0	0	0	0	0	0	0	0	0	0	0
4/23/2024	2:30 AM	0	0	0	0	0	0	0	0	0	0	0	0	0
4/23/2024	2:45 AM	0	0	0	0	0	0	0	0	0	0	0	0	0
4/23/2024	3:00 AM	0	0	0	0	0	0	0	0	0	0	0	0	0
4/23/2024	3:15 AM	0	0	0	0	0	0	0	0	0	0	0	0	0
4/23/2024	3:30 AM	0	0	0	0	0	0	0	0	0	0	0	0	0
4/23/2024	3:45 AM	0	0	0	0	0	0	0	0	0	0	0	0	0
4/23/2024	4:00 AM	0	0	0	0	0	0	0	0	0	0	0	0	0
4/23/2024	4:15 AM	0	0	0	0	0	0	0	0	0	0	0	0	0
4/23/2024	4:30 AM	0	0	0	0	0	0	0	0	0	0	0	0	0
4/23/2024	4:45 AM	0	0	0	0	0	0	0	0	0	0	0	0	0
4/23/2024	5:00 AM	0	0	0	0	0	0	0	0	0	0	0	0	0
4/23/2024	5:15 AM	0	0	0	0	0	0	0	0	0	0	0	0	0
4/23/2024	5:30 AM	0	0	0	0	0	0	0	0	0	0	0	0	0
4/23/2024	5:45 AM	0	0	0	0	0	0	0	0	0	0	0	0	0
4/23/2024	6:00 AM	0	0	0	0	0	0	0	0	0	0	0	0	0
4/23/2024	6:15 AM	0	0	0	0	0	0	0	0	0	0	0	0	0
4/23/2024	6:30 AM	0	0	0	0	0	0	0	0	0	0	0	0	0
4/23/2024	6:45 AM	0	0	0	0	0	0	0	0	0	0	0	0	0
4/23/2024	7:00 AM	0	0	0	0	0	0	0	0	0	0	0	0	0
4/23/2024	7:15 AM	0	0	0	0	0	0	0	0	0	0	0	0	0
4/23/2024	7:30 AM	0	0	0	0	0	0	0	0	0	0	0	0	0
4/23/2024	7:45 AM	0	0	0	0	0	0	0	0	0	0	0	0	0
4/23/2024	8:00 AM	0	0	0	0	0	0	0	0	0	0	0	0	0
4/23/2024	8:15 AM	0	0	0	0	0	0	0	0	0	0	0	0	0
4/23/2024	8:30 AM	0	0	0	0	0	0	0	0	0	0	0	0	0
4/23/2024	8:45 AM	0	0	0	0	0	0	0	0	0	0	0	0	0
4/23/2024	9:00 AM	0	0	0	0	0	0	0	0	0	0	0	0	0
4/23/2024	9:15 AM	0	0	0	0	0	0	0	0	0	0	0	0	0
4/23/2024	9:30 AM	0	0	0	0	0	0	0	0	0	0	0	0	0
4/23/2024	9:45 AM	0	0	0	0	0	0	0	0	0	0	0	0	0
4/23/2024	10:00 AM	0	0	0	0	0	0	0	0	0	0	0	0	0
4/23/2024	10:15 AM	0	0	0	0	0	0	0	0	0	0	0	0	0
4/23/2024	10:30 AM	0	0	0	0	0	0	0	0	0	0	0	0	0
4/23/2024	10:45 AM	0	0	0	0	0	0	0	0	0	0	0	0	0
4/23/2024	11:00 AM	0	0	0	0	0	0	0	0	0	0	0	0	0
4/23/2024	11:15 AM	0	0	0	0	0	0	0	0	0	0	0	0	0
4/23/2024	11:30 AM	0	0	0	0	0	0	0	0	0	0	0	0	0
4/23/2024	11:45 AM	0	0	0	0	0	0	0	0	0	0	0	0	0
4/23/2024	12:00 PM	0	0	0	0	0	0	0	0	0	0	0	0	0
4/23/2024	12:15 PM	0	0	0	0	0	0	0	0	0	0	0	0	0
4/23/2024	12:30 PM	0	0	0	0	0	0	0	0	0	0	0	0	0
4/23/2024	12:45 PM	0	0	0	0	0	0	0	0	0	0	0	0	0
4/23/2024	1:00 PM	0	0	0	0	0	0	0	0	0	0	0	0	0
4/23/2024	1:15 PM	0	0	0	0	0	0	0	0	0	0	0	0	0
4/23/2024	1:30 PM	0	0	0	0	0	0	0	0	0	0	0	0	0
4/23/2024	1:45 PM	0	0	0	0	0	0	0	0	0	0	0	0	0
4/23/2024	2:00 PM	0	0	0	0	0	0	0	0	0	0	0	0	0
4/23/2024	2:15 PM	0	0	0	0	0	0	0	0	0	0	0	0	0
4/23/2024	2:30 PM	0	0	0	0	0	0	0	0	0	0	0	0	0
4/23/2024	2:45 PM	0	0	0	0	0	0	0	0	0	0	0	0	0
4/23/2024	3:00 PM	0	0	0	0	0	0	0	0	0	0	0	0	0
4/23/2024	3:15 PM	0	0	0	0	0	0	0	0	0	0	0	0	0
4/23/2024	3:30 PM	0	0	0	0	0	0	0	0	0	0	0	0	0
4/23/2024	3:45 PM	0	0	0	0	0	0	0	0	0	0	0	0	0
4/23/2024	4:00 PM	0	0	0	0	0	0	0	0	0	0	0	0	0
4/23/2024	4:15 PM	0	0	0	0	0	0	0	0	0	0	0	0	0
4/23/2024	4:30 PM	0	0	0	0	0	0	0	0	0	0	0	0	0
4/23/2024	4:45 PM	0	0	0	0	0	0	0	0	0	0	0	0	0
4/23/2024	5:00 PM	0	0	0	0	0	0	0	0	0	0	0	0	0
4/23/2024	5:15 PM	0	0	0	0	0	0	0	0	0	0	0	0	0
4/23/2024	5:30 PM	0	0	0	0	0	0	0	0	0	0	0	0	0
4/23/2024	5:45 PM	0	0	0	0	0	0	0	0	0	0	0	0	0
4/23/2024	6:00 PM	0	0	0	0	0	0	0	0	0	0	0	0	0
4/23/2024	6:15 PM	0	0	0	0	0	0	0	0	0	0	0	0	0
4/23/2024	6:30 PM	0	0	0	0	0	0	0	0	0	0	0	0	0
4/23/2024	6:45 PM	0	0	0	0	0	0	0	0	0	0	0	0	0
4/23/2024	7:00 PM	0	0	0	0	0	0	0	0	0	0	0	0	0
4/23/2024	7:15 PM	0	0	0	0	0	0	0	0	0	0	0	0	0
4/23/2024	7:30 PM	0	0	0	0	0	0	0	0	0	0	0	0	0
4/23/2024	7:45 PM	0	0	0	0	0	0	0	0	0	0	0	0	0
4/23/2024	8:00 PM	0	0	0	0	0	0	0	0	0	0	0	0	0
4/23/2024	8:15 PM	0	0	0	0	0	0	0	0	0	0	0	0	0
4/23/2024	8:30 PM	0	0	0	0	0	0	0	0	0	0	0	0	0
4/23/2024	8:45 PM	0	0	0	0	0	0	0	0	0	0	0	0	0
4/23/2024	9:00 PM	0	0	0	0	0	0	0	0	0	0	0	0	0
4/23/2024	9:15 PM	0	0	0	0	0	0	0	0	0	0	0	0	0
4/23/2024	9:30 PM	0	0	0	0	0	0	0	0	0	0	0	0	0
4/23/2024	9:45 PM	0	0	0	0	0	0	0	0	0	0	0	0	0
4/23/2024	10:00 PM	0	0	0	0	0	0	0	0	0	0	0	0	0
4/23/2024	10:15 PM	0	0	0	0	0	0	0	0	0	0	0	0	0
4/23/2024	10:30 PM	0	0	0	0	0	0	0	0	0	0	0	0	0
4/23/2024	10:45 PM	0	0	0	0	0	0	0	0	0	0	0	0	0
4/23/2024	11:00 PM	0	0	0	0	0	0	0	0	0	0	0	0	0
4/23/2024	11:15 PM	0	0	0	0	0	0	0	0	0	0	0	0	0
4/23/2024	11:30 PM	0	0	0	0	0	0	0	0	0	0	0	0	0
4/23/2024	11:45 PM	0	0	0	0	0	0	0	0	0	0	0	0	0

4/24/2024	12:00 AM	0	0	0	0	0	0	0	0	0	0	0	0	0
4/24/2024	12:15 AM	0	0	0	0	0	0	0	0	0	0	0	0	0
4/24/2024	12:30 AM	0	0	0	0	0	0	0	0	0	0	0	0	0
4/24/2024	12:45 AM	0	0	0	0	0	0	0	0	0	0	0	0	0
4/24/2024	1:00 AM	0	0	0	0	0	0	0	0	0	0	0	0	0
4/24/2024	1:15 AM	0	0	0	0	0	0	0	0	0	0	0	0	0
4/24/2024	1:30 AM	0	0	0	0	0	0	0	0	0	0	0	0	0
4/24/2024	1:45 AM	0	0	0	0	0	0	0	0	0	0	0	0	0
4/24/2024	2:00 AM	0	0	0	0	0	0	0	0	0	0	0	0	0
4/24/2024	2:15 AM	0	0	0	0	0	0	0	0	0	0	0	0	0
4/24/2024	2:30 AM	0	0	0	0	0	0	0	0	0	0	0	0	0
4/24/2024	2:45 AM	0	0	0	0	0	0	0	0	0	0	0	0	0
4/24/2024	3:00 AM	0	0	0	0	0	0	0	0	0	0	0	0	0
4/24/2024	3:15 AM	0	0	0	0	0	0	0	0	0	0	0	0	0
4/24/2024	3:30 AM	0	0	0	0	0	0	0	0	0	0	0	0	0
4/24/2024	3:45 AM	0	0	0	0	0	0	0	0	0	0	0	0	0
4/24/2024	4:00 AM	0	0	0	0	0	0	0	0	0	0	0	0	0
4/24/2024	4:15 AM	0	0	0	0	0	0	0	0	0	0	0	0	0
4/24/2024	4:30 AM	0	0	0	0	0	0	0	0	0	0	0	0	0
4/24/2024	4:45 AM	0	0	0	0	0	0	0	0	0	0	0	0	0
4/24/2024	5:00 AM	0	0	0	0	0	0	0	0	0	0	0	0	0
4/24/2024	5:15 AM	0	0	0	0	0	0	0	0	0	0	0	0	0
4/24/2024	5:30 AM	0	0	0	0	0	0	0	0	0	0	0	0	0
4/24/2024	5:45 AM	0	0	0	0	0	0	0	0	0	0	0	0	0
4/24/2024	6:00 AM	0	0	0	0	0	0	0	0	0	0	0	0	0
4/24/2024	6:15 AM	0	0	0	0	0	0	0	0	0	0	0	0	0
4/24/2024	6:30 AM	0	0	0	0	0	0	0	0	0	0	0	0	0
4/24/2024	6:45 AM	0	0	0	0	0	0	0	0	0	0	0	0	0
4/24/2024	7:00 AM	0	0	0	0	0	0	0	0	0	0	0	0	0
4/24/2024	7:15 AM	0	0	0	0	0	0	0	0	0	0	0	0	0
4/24/2024	7:30 AM	0	0	0	0	0	0	0	0	0	0	0	0	0
4/24/2024	7:45 AM	0	0	0	0	0	0	0	0	0	0	0	0	0
4/24/2024	8:00 AM	0	0	0	0	0	0	0	0	0	0	0	0	0
4/24/2024	8:15 AM	0	0	0	0	0	0	0	0	0	0	0	0	0
4/24/2024	8:30 AM	0	0	0	0	0	0	0	0	0	0	0	0	0
4/24/2024	8:45 AM	0	0	0	0	0	0	0	0	0	0	0	0	0
4/24/2024	9:00 AM	0	0	0	0	0	0	0	0	0	0	0	0	0
4/24/2024	9:15 AM	0	0	0	0	0	0	0	0	0	0	0	0	0
4/24/2024	9:30 AM	0	0	0	0	0	0	0	0	0	0	0	0	0
4/24/2024	9:45 AM	0	0	0	0	0	0	0	0	0	0	0	0	0
4/24/2024	10:00 AM	0	0	0	0	0	0	0	0	0	0	0	0	0
4/24/2024	10:15 AM	0	0	0	0	0	0	0	0	0	0	0	0	0
4/24/2024	10:30 AM	0	0	0	0	0	0	0	0	0	0	0	0	0
4/24/2024	10:45 AM	0	0	0	0	0	0	0	0	0	0	0	0	0
4/24/2024	11:00 AM	0	0	0	0	0	0	0	0	0	0	0	0	0
4/24/2024	11:15 AM	0	0	0	0	0	0	0	0	0	0	0	0	0
4/24/2024	11:30 AM	0	0	0	0	0	0	0	0	0	0	0	0	0
4/24/2024	11:45 AM	0	0	0	0	0	0	0	0	0	0	0	0	0
4/24/2024	12:00 PM	0	0	0	0	0	0	0	0	0	0	0	0	0
4/24/2024	12:15 PM	0	0	0	0	0	0	0	0	0	0	0	0	0
4/24/2024	12:30 PM	0	0	0	0	0	0	0	0	0	0	0	0	0
4/24/2024	12:45 PM	0	0	0	0	0	0	0	0	0	0	0	0	0
4/24/2024	1:00 PM	0	0	0	0	0	0	0	0	0	0	0	0	0
4/24/2024	1:15 PM	0	0	0	0	0	0	0	0	0	0	0	0	0
4/24/2024	1:30 PM	0	0	0	0	0	0	0	0	0	0	0	0	0
4/24/2024	1:45 PM	0	0	0	0	0	0	0	0	0	0	0	0	0
4/24/2024	2:00 PM	0	0	0	0	0	0	0	0	0	0	0	0	0
4/24/2024	2:15 PM	0	0	0	0	0	0	0	0	0	0	0	0	0
4/24/2024	2:30 PM	0	0	0	0	0	0	0	0	0	0	0	0	0
4/24/2024	2:45 PM	0	0	0	0	0	0	0	0	0	0	0	0	0
4/24/2024	3:00 PM	0	0	0	0	0	0	0	0	0	0	0	0	0
4/24/2024	3:15 PM	0	0	0	0	0	0	0	0	0	0	0	0	0
4/24/2024	3:30 PM	0	0	0	0	0	0	0	0	0	0	0	0	0
4/24/2024	3:45 PM	0	0	0	0	0	0	0	0	0	0	0	0	0
4/24/2024	4:00 PM	0	0	0	0	0	0	0	0	0	0	0	0	0
4/24/2024	4:15 PM	0	0	0	0	0	0	0	0	0	0	0	0	0
4/24/2024	4:30 PM	0	0	0	0	0	0	0	0	0	0	0	0	0
4/24/2024	4:45 PM	0	0	0	0	0	0	0	0	0	0	0	0	0
4/24/2024	5:00 PM	0	0	0	0	0	0	0	0	0	0	0	0	0
4/24/2024	5:15 PM	0	0	0	0	0	0	0	0	0	0	0	0	0
4/24/2024	5:30 PM	0	0	0	0	0	0	0	0	0	0	0	0	0
4/24/2024	5:45 PM	0	0	0	0	0	0	0	0	0	0	0	0	0
4/24/2024	6:00 PM	0	0	0	0	0	0	0	0	0	0	0	0	0
4/24/2024	6:15 PM	0	0	0	0	0	0	0	0	0	0	0	0	0
4/24/2024	6:30 PM	0	0	0	0	0	0	0	0	0	0	0	0	0
4/24/2024	6:45 PM	0	0	0	0	0	0	0	0	0	0	0	0	0
4/24/2024	7:00 PM	0	0	0	0	0	0	0	0	0	0	0	0	0
4/24/2024	7:15 PM	0	0	0	0	0	0	0	0	0	0	0	0	0
4/24/2024	7:30 PM	0	0	0	0	0	0	0	0	0	0	0	0	0
4/24/2024	7:45 PM	0	0	0	0	0	0	0	0	0	0	0	0	0
4/24/2024	8:00 PM	0	0	0	0	0	0	0	0	0	0	0	0	0
4/24/2024	8:15 PM	0	0	0	0	0	0	0	0	0	0	0	0	0
4/24/2024	8:30 PM	0	0	0	0	0	0	0	0	0	0	0	0	0
4/24/2024	8:45 PM	0	0	0	0	0	0	0	0	0	0	0	0	0
4/24/2024	9:00 PM	0	0	0	0	0	0	0	0	0	0	0	0	0
4/24/2024	9:15 PM	0	0	0	0	0	0	0	0	0	0	0	0	0
4/24/2024	9:30 PM	0	0	0	0	0	0	0	0	0	0	0	0	0
4/24/2024	9:45 PM	0	0	0	0	0	0	0	0	0	0	0	0	0
4/24/2024	10:00 PM	0	0	0	0	0	0	0	0	0	0	0	0	0
4/24/2024	10:15 PM	0	0	0	0	0	0	0	0	0	0	0	0	0
4/24/2024	10:30 PM	0	0	0	0	0	0	0	0	0	0	0	0	0
4/24/2024	10:45 PM	0	0	0	0	0	0	0	0	0	0	0	0	0
4/24/2024	11:00 PM	0	0	0	0	0	0	0	0	0	0	0	0	0
4/24/2024	11:15 PM	0	0	0	0	0	0	0	0	0	0	0	0	0
4/24/2024	11:30 PM	0	0	0	0	0	0	0	0	0	0	0	0	0
4/24/2024	11:45 PM	0	0	0	0	0	0	0	0	0	0	0	0	0

4/25/2024	12:00 AM	0	0	0	0	0	0	0	0	0	0	0	0	0
4/25/2024	12:15 AM	0	0	0	0	0	0	0	0	0	0	0	0	0
4/25/2024	12:30 AM	0	0	0	0	0	0	0	0	0	0	0	0	0
4/25/2024	12:45 AM	0	0	0	0	0	0	0	0	0	0	0	0	0
4/25/2024	1:00 AM	0	0	0	0	0	0	0	0	0	0	0	0	0
4/25/2024	1:15 AM	0	0	0	0	0	0	0	0	0	0	0	0	0
4/25/2024	1:30 AM	0	0	0	0	0	0	0	0	0	0	0	0	0
4/25/2024	1:45 AM	0	0	0	0	0	0	0	0	0	0	0	0	0
4/25/2024	2:00 AM	0	0	0	0	0	0	0	0	0	0	0	0	0
4/25/2024	2:15 AM	0	0	0	0	0	0	0	0	0	0	0	0	0
4/25/2024	2:30 AM	0	0	0	0	0	0	0	0	0	0	0	0	0
4/25/2024	2:45 AM	0	0	0	0	0	0	0	0	0	0	0	0	0
4/25/2024	3:00 AM	0	0	0	0	0	0	0	0	0	0	0	0	0
4/25/2024	3:15 AM	0	0	0	0	0	0	0	0	0	0	0	0	0
4/25/2024	3:30 AM	0	0	0	0	0	0	0	0	0	0	0	0	0
4/25/2024	3:45 AM	0	0	0	0	0	0	0	0	0	0	0	0	0
4/25/2024	4:00 AM	0	0	0	0	0	0	0	0	0	0	0	0	0
4/25/2024	4:15 AM	0	0	0	0	0	0	0	0	0	0	0	0	0
4/25/2024	4:30 AM	0	0	0	0	0	0	0	0	0	0	0	0	0
4/25/2024	4:45 AM	0	0	0	0	0	0	0	0	0	0	0	0	0
4/25/2024	5:00 AM	0	0	0	0	0	0	0	0	0	0	0	0	0
4/25/2024	5:15 AM	0	0	0	0	0	0	0	0	0	0	0	0	0
4/25/2024	5:30 AM	0	0	0	0	0	0	0	0	0	0	0	0	0
4/25/2024	5:45 AM	0	0	0	0	0	0	0	0	0	0	0	0	0
4/25/2024	6:00 AM	0	0	0	0	0	0	0	0	0	0	0	0	0
4/25/2024	6:15 AM	0	0	0	0	0	0	0	0	0	0	0	0	0
4/25/2024	6:30 AM	0	0	0	0	0	0	0	0	0	0	0	0	0
4/25/2024	6:45 AM	0	0	0	0	0	0	0	0	0	0	0	0	0
4/25/2024	7:00 AM	0	0	0	0	0	0	0	0	0	0	0	0	0
4/25/2024	7:15 AM	0	0	0	0	0	0	0	0	0	0	0	0	0
4/25/2024	7:30 AM	0	0	0	0	0	0	0	0	0	0	0	0	0
4/25/2024	7:45 AM	0	0	0	0	0	0	0	0	0	0	0	0	0
4/25/2024	8:00 AM	0	0	0	0	0	0	0	0	0	0	0	0	0
4/25/2024	8:15 AM	0	0	0	0	0	0	0	0	0	0	0	0	0
4/25/2024	8:30 AM	0	0	0	0	0	0	0	0	0	0	0	0	0
4/25/2024	8:45 AM	0	0	0	0	0	0	0	0	0	0	0	0	0
4/25/2024	9:00 AM	0	0	0	0	0	0	0	0	0	0	0	0	0
4/25/2024	9:15 AM	0	0	0	0	0	0	0	0	0	0	0	0	0
4/25/2024	9:30 AM	0	0	0	0	0	0	0	0	0	0	0	0	0
4/25/2024	9:45 AM	0	0	0	0	0	0	0	0	0	0	0	0	0
4/25/2024	10:00 AM	0	0	0	0	0	0	0	0	0	0	0	0	0
4/25/2024	10:15 AM	0	0	0	0	0	0	0	0	0	0	0	0	0
4/25/2024	10:30 AM	0	0	0	0	0	0	0	0	0	0	0	0	0
4/25/2024	10:45 AM	0	0	0	0	0	0	0	0	0	0	0	0	0
4/25/2024	11:00 AM	0	0	0	0	0	0	0	0	0	0	0	0	0
4/25/2024	11:15 AM	0	0	0	0	0	0	0	0	0	0	0	0	0
4/25/2024	11:30 AM	0	0	0	0	0	0	0	0	0	0	0	0	0
4/25/2024	11:45 AM	0	0	0	0	0	0	0	0	0	0	0	0	0
4/25/2024	12:00 PM	0	0	0	0	0	0	0	0	0	0	0	0	0
4/25/2024	12:15 PM	0	0	0	0	0	0	0	0	0	0	0	0	0
4/25/2024	12:30 PM	0	0	0	0	0	0	0	0	0	0	0	0	0
4/25/2024	12:45 PM	0	0	0	0	0	0	0	0	0	0	0	0	0
4/25/2024	1:00 PM	0	0	0	0	0	0	0	0	0	0	0	0	0
4/25/2024	1:15 PM	0	0	0	0	0	0	0	0	0	0	0	0	0
4/25/2024	1:30 PM	0	0	0	0	0	0	0	0	0	0	0	0	0
4/25/2024	1:45 PM	0	0	0	0	0	0	0	0	0	0	0	0	0
4/25/2024	2:00 PM	0	0	0	0	0	0	0	0	0	0	0	0	0
4/25/2024	2:15 PM	0	0	0	0	0	0	0	0	0	0	0	0	0
4/25/2024	2:30 PM	0	0	0	0	0	0	0	0	0	0	0	0	0
4/25/2024	2:45 PM	0	0	0	0	0	0	0	0	0	0	0	0	0
4/25/2024	3:00 PM	0	0	0	0	0	0	0	0	0	0	0	0	0
4/25/2024	3:15 PM	0	0	0	0	0	0	0	0	0	0	0	0	0
4/25/2024	3:30 PM	0	0	0	0	0	0	0	0	0	0	0	0	0
4/25/2024	3:45 PM	0	0	0	0	0	0	0	0	0	0	0	0	0
4/25/2024	4:00 PM	0	0	0	0	0	0	0	0	0	0	0	0	0
4/25/2024	4:15 PM	0	0	0	0	0	0	0	0	0	0	0	0	0
4/25/2024	4:30 PM	0	0	0	0	0	0	0	0	0	0	0	0	0
4/25/2024	4:45 PM	0	0	0	0	0	0	0	0	0	0	0	0	0
4/25/2024	5:00 PM	0	0	0	0	0	0	0	0	0	0	0	0	0
4/25/2024	5:15 PM	0	0	0	0	0	0	0	0	0	0	0	0	0
4/25/2024	5:30 PM	0	0	0	0	0	0	0	0	0	0	0	0	0
4/25/2024	5:45 PM	0	0	0	0	0	0	0	0	0	0	0	0	0
4/25/2024	6:00 PM	0	0	0	0	0	0	0	0	0	0	0	0	0
4/25/2024	6:15 PM	0	0	0	0	0	0	0	0	0	0	0	0	0
4/25/2024	6:30 PM	0	0	0	0	0	0	0	0	0	0	0	0	0
4/25/2024	6:45 PM	0	0	0	0	0	0	0	0	0	0	0	0	0
4/25/2024	7:00 PM	0	0	0	0	0	0	0	0	0	0	0	0	0
4/25/2024	7:15 PM	0	0	0	0	0	0	0	0	0	0	0	0	0
4/25/2024	7:30 PM	0	0	0	0	0	0	0	0	0	0	0	0	0
4/25/2024	7:45 PM	0	0	0	0	0	0	0	0	0	0	0	0	0
4/25/2024	8:00 PM	0	0	0	0	0	0	0	0	0	0	0	0	0
4/25/2024	8:15 PM	0	0	0	0	0	0	0	0	0	0	0	0	0
4/25/2024	8:30 PM	0	0	0	0	0	0	0	0	0	0	0	0	0
4/25/2024	8:45 PM	0	0	0	0	0	0	0	0	0	0	0	0	0
4/25/2024	9:00 PM	0	0	0	0	0	0	0	0	0	0	0	0	0
4/25/2024	9:15 PM	0	0	0	0	0	0	0	0	0	0	0	0	0
4/25/2024	9:30 PM	0	0	0	0	0	0	0	0	0	0	0	0	0
4/25/2024	9:45 PM	0	0	0	0	0	0	0	0	0	0	0	0	0
4/25/2024	10:00 PM	0	0	0	0	0	0	0	0	0	0	0	0	0
4/25/2024	10:15 PM	0	0	0	0	0	0	0	0	0	0	0	0	0
4/25/2024	10:30 PM	0	0	0	0	0	0	0	0	0	0	0	0	0
4/25/2024	10:45 PM	0	0	0	0	0	0	0	0	0	0	0	0	0
4/25/2024	11:00 PM	0	0	0	0	0	0	0	0	0	0	0	0	0
4/25/2024	11:15 PM	0	0	0	0	0	0	0	0	0	0	0	0	0
4/25/2024	11:30 PM	0	0	0	0	0	0	0	0	0	0	0	0	0
4/25/2024	11:45 PM	0	0	0	0	0	0	0	0	0	0	0	0	0

4/26/2024	12:00 AM	0	0	0	0	0	0	0	0	0	0	0	0	0
4/26/2024	12:15 AM	0	0	0	0	0	0	0	0	0	0	0	0	0
4/26/2024	12:30 AM	0	0	0	0	0	0	0	0	0	0	0	0	0
4/26/2024	12:45 AM	0	0	0	0	0	0	0	0	0	0	0	0	0
4/26/2024	1:00 AM	0	0	0	0	0	0	0	0	0	0	0	0	0
4/26/2024	1:15 AM	0	0	0	0	0	0	0	0	0	0	0	0	0
4/26/2024	1:30 AM	0	0	0	0	0	0	0	0	0	0	0	0	0
4/26/2024	1:45 AM	0	0	0	0	0	0	0	0	0	0	0	0	0
4/26/2024	2:00 AM	0	0	0	0	0	0	0	0	0	0	0	0	0
4/26/2024	2:15 AM	0	0	0	0	0	0	0	0	0	0	0	0	0
4/26/2024	2:30 AM	0	0	0	0	0	0	0	0	0	0	0	0	0
4/26/2024	2:45 AM	0	0	0	0	0	0	0	0	0	0	0	0	0
4/26/2024	3:00 AM	0	0	0	0	0	0	0	0	0	0	0	0	0
4/26/2024	3:15 AM	0	0	0	0	0	0	0	0	0	0	0	0	0
4/26/2024	3:30 AM	0	0	0	0	0	0	0	0	0	0	0	0	0
4/26/2024	3:45 AM	0	0	0	0	0	0	0	0	0	0	0	0	0
4/26/2024	4:00 AM	0	0	0	0	0	0	0	0	0	0	0	0	0
4/26/2024	4:15 AM	0	0	0	0	0	0	0	0	0	0	0	0	0
4/26/2024	4:30 AM	0	0	0	0	0	0	0	0	0	0	0	0	0
4/26/2024	4:45 AM	0	0	0	0	0	0	0	0	0	0	0	0	0
4/26/2024	5:00 AM	0	0	0	0	0	0	0	0	0	0	0	0	0
4/26/2024	5:15 AM	0	0	0	0	0	0	0	0	0	0	0	0	0
4/26/2024	5:30 AM	0	0	0	0	0	0	0	0	0	0	0	0	0
4/26/2024	5:45 AM	0	0	0	0	0	0	0	0	0	0	0	0	0
4/26/2024	6:00 AM	0	0	0	0	0	0	0	0	0	0	0	0	0
4/26/2024	6:15 AM	0	0	0	0	0	0	0	0	0	0	0	0	0
4/26/2024	6:30 AM	0	0	0	0	0	0	0	0	0	0	0	0	0
4/26/2024	6:45 AM	0	0	0	0	0	0	0	0	0	0	0	0	0
4/26/2024	7:00 AM	0	0	0	0	0	0	0	0	0	0	0	0	0
4/26/2024	7:15 AM	0	0	0	0	0	0	0	0	0	0	0	0	0
4/26/2024	7:30 AM	0	0	0	0	0	0	0	0	0	0	0	0	0
4/26/2024	7:45 AM	0	0	0	0	0	0	0	0	0	0	0	0	0
4/26/2024	8:00 AM	0	0	0	0	0	0	0	0	0	0	0	0	0
4/26/2024	8:15 AM	0	0	0	0	0	0	0	0	0	0	0	0	0
4/26/2024	8:30 AM	0	0	0	0	0	0	0	0	0	0	0	0	0
4/26/2024	8:45 AM	0	0	0	0	0	0	0	0	0	0	0	0	0
4/26/2024	9:00 AM	0	0	0	0	0	0	0	0	0	0	0	0	0
4/26/2024	9:15 AM	0	0	0	0	0	0	0	0	0	0	0	0	0
4/26/2024	9:30 AM	0	0	0	0	0	0	0	0	0	0	0	0	0
4/26/2024	9:45 AM	0	0	0	0	0	0	0	0	0	0	0	0	0
4/26/2024	10:00 AM	0	0	0	0	0	0	0	0	0	0	0	0	0
4/26/2024	10:15 AM	0	0	0	0	0	0	0	0	0	0	0	0	0
4/26/2024	10:30 AM	0	0	0	0	0	0	0	0	0	0	0	0	0
4/26/2024	10:45 AM	0	0	0	0	0	0	0	0	0	0	0	0	0
4/26/2024	11:00 AM	0	0	0	0	0	0	0	0	0	0	0	0	0
4/26/2024	11:15 AM	0	0	0	0	0	0	0	0	0	0	0	0	0
4/26/2024	11:30 AM	0	0	0	0	0	0	0	0	0	0	0	0	0
4/26/2024	11:45 AM	0	0	0	0	0	0	0	0	0	0	0	0	0
4/26/2024	12:00 PM	0	0	0	0	0	0	0	0	0	0	0	0	0
4/26/2024	12:15 PM	0	0	0	0	0	0	0	0	0	0	0	0	0
4/26/2024	12:30 PM	0	0	0	0	0	0	0	0	0	0	0	0	0
4/26/2024	12:45 PM	0	0	0	0	0	0	0	0	0	0	0	0	0
4/26/2024	1:00 PM	0	0	0	0	0	0	0	0	0	0	0	0	0
4/26/2024	1:15 PM	0	0	0	0	0	0	0	0	0	0	0	0	0
4/26/2024	1:30 PM	0	0	0	0	0	0	0	0	0	0	0	0	0
4/26/2024	1:45 PM	0	0	0	0	0	0	0	0	0	0	0	0	0
4/26/2024	2:00 PM	0	0	0	0	0	0	0	0	0	0	0	0	0
4/26/2024	2:15 PM	0	0	0	0	0	0	0	0	0	0	0	0	0
4/26/2024	2:30 PM	0	0	0	0	0	0	0	0	0	0	0	0	0
4/26/2024	2:45 PM	0	0	0	0	0	0	0	0	0	0	0	0	0
4/26/2024	3:00 PM	0	0	0	0	0	0	0	0	0	0	0	0	0
4/26/2024	3:15 PM	0	0	0	0	0	0	0	0	0	0	0	0	0
4/26/2024	3:30 PM	0	0	0	0	0	0	0	0	0	0	0	0	0
4/26/2024	3:45 PM	0	0	0	0	0	0	0	0	0	0	0	0	0
4/26/2024	4:00 PM	0	0	0	0	0	0	0	0	0	0	0	0	0
4/26/2024	4:15 PM	0	0	0	0	0	0	0	0	0	0	0	0	0
4/26/2024	4:30 PM	0	0	0	0	0	0	0	0	0	0	0	0	0
4/26/2024	4:45 PM	0	0	0	0	0	0	0	0	0	0	0	0	0
4/26/2024	5:00 PM	0	0	0	0	0	0	0	0	0	0	0	0	0
4/26/2024	5:15 PM	0	0	0	0	0	0	0	0	0	0	0	0	0
4/26/2024	5:30 PM	0	0	0	0	0	0	0	0	0	0	0	0	0
4/26/2024	5:45 PM	0	0	0	0	0	0	0	0	0	0	0	0	0
4/26/2024	6:00 PM	0	0	0	0	0	0	0	0	0	0	0	0	0
4/26/2024	6:15 PM	0	0	0	0	0	0	0	0	0	0	0	0	0
4/26/2024	6:30 PM	0	0	0	0	0	0	0	0	0	0	0	0	0
4/26/2024	6:45 PM	0	0	0	0	0	0	0	0	0	0	0	0	0
4/26/2024	7:00 PM	0	0	0	0	0	0	0	0	0	0	0	0	0
4/26/2024	7:15 PM	0	0	0	0	0	0	0	0	0	0	0	0	0
4/26/2024	7:30 PM	0	0	0	0	0	0	0	0	0	0	0	0	0
4/26/2024	7:45 PM	0	0	0	0	0	0	0	0	0	0	0	0	0
4/26/2024	8:00 PM	0	0	0	0	0	0	0	0	0	0	0	0	0
4/26/2024	8:15 PM	0	0	0	0	0	0	0	0	0	0	0	0	0
4/26/2024	8:30 PM	0	0	0	0	0	0	0	0	0	0	0	0	0
4/26/2024	8:45 PM	0	0	0	0	0	0	0	0	0	0	0	0	0
4/26/2024	9:00 PM	0	0	0	0	0	0	0	0	0	0	0	0	0
4/26/2024	9:15 PM	0	0	0	0	0	0	0	0	0	0	0	0	0
4/26/2024	9:30 PM	0	0	0	0	0	0	0	0	0	0	0	0	0
4/26/2024	9:45 PM	0	0	0	0	0	0	0	0	0	0	0	0	0
4/26/2024	10:00 PM	0	0	0	0	0	0	0	0	0	0	0	0	0
4/26/2024	10:15 PM	0	0	0	0	0	0	0	0	0	0	0	0	0
4/26/2024	10:30 PM	0	0	0	0	0	0	0	0	0	0	0	0	0
4/26/2024	10:45 PM	0	0	0	0	0	0	0	0	0	0	0	0	0
4/26/2024	11:00 PM	0	0	0	0	0	0	0	0	0	0	0	0	0
4/26/2024	11:15 PM	0	0	0	0	0	0	0	0	0	0	0	0	0
4/26/2024	11:30 PM	0	0	0	0	0	0	0	0	0	0	0	0	0
4/26/2024	11:45 PM	0	0	0	0	0	0	0	0	0	0	0	0	0

4/27/2024	12:00 AM	0	0	0	0	0	0	0	0	0	0	0	0	0
4/27/2024	12:15 AM	0	0	0	0	0	0	0	0	0	0	0	0	0
4/27/2024	12:30 AM	0	0	0	0	0	0	0	0	0	0	0	0	0
4/27/2024	12:45 AM	0	0	0	0	0	0	0	0	0	0	0	0	0
4/27/2024	1:00 AM	0	0	0	0	0	0	0	0	0	0	0	0	0
4/27/2024	1:15 AM	0	0	0	0	0	0	0	0	0	0	0	0	0
4/27/2024	1:30 AM	0	0	0	0	0	0	0	0	0	0	0	0	0
4/27/2024	1:45 AM	0	0	0	0	0	0	0	0	0	0	0	0	0
4/27/2024	2:00 AM	0	0	0	0	0	0	0	0	0	0	0	0	0
4/27/2024	2:15 AM	0	0	0	0	0	0	0	0	0	0	0	0	0
4/27/2024	2:30 AM	0	0	0	0	0	0	0	0	0	0	0	0	0
4/27/2024	2:45 AM	0	0	0	0	0	0	0	0	0	0	0	0	0
4/27/2024	3:00 AM	0	0	0	0	0	0	0	0	0	0	0	0	0
4/27/2024	3:15 AM	0	0	0	0	0	0	0	0	0	0	0	0	0
4/27/2024	3:30 AM	0	0	0	0	0	0	0	0	0	0	0	0	0
4/27/2024	3:45 AM	0	0	0	0	0	0	0	0	0	0	0	0	0
4/27/2024	4:00 AM	0	0	0	0	0	0	0	0	0	0	0	0	0
4/27/2024	4:15 AM	0	0	0	0	0	0	0	0	0	0	0	0	0
4/27/2024	4:30 AM	0	0	0	0	0	0	0	0	0	0	0	0	0
4/27/2024	4:45 AM	0	0	0	0	0	0	0	0	0	0	0	0	0
4/27/2024	5:00 AM	0	0	0	0	0	0	0	0	0	0	0	0	0
4/27/2024	5:15 AM	0	0	0	0	0	0	0	0	0	0	0	0	0
4/27/2024	5:30 AM	0	0	0	0	0	0	0	0	0	0	0	0	0
4/27/2024	5:45 AM	0	0	0	0	0	0	0	0	0	0	0	0	0
4/27/2024	6:00 AM	0	0	0	0	0	0	0	0	0	0	0	0	0
4/27/2024	6:15 AM	0	0	0	0	0	0	0	0	0	0	0	0	0
4/27/2024	6:30 AM	0	0	0	0	0	0	0	0	0	0	0	0	0
4/27/2024	6:45 AM	0	0	0	0	0	0	0	0	0	0	0	0	0
4/27/2024	7:00 AM	0	0	0	0	0	0	0	0	0	0	0	0	0
4/27/2024	7:15 AM	0	0	0	0	0	0	0	0	0	0	0	0	0
4/27/2024	7:30 AM	0	0	0	0	0	0	0	0	0	0	0	0	0
4/27/2024	7:45 AM	0	0	0	0	0	0	0	0	0	0	0	0	0
4/27/2024	8:00 AM	0	0	0	0	0	0	0	0	0	0	0	0	0
4/27/2024	8:15 AM	0	0	0	0	0	0	0	0	0	0	0	0	0
4/27/2024	8:30 AM	0	0	0	0	0	0	0	0	0	0	0	0	0
4/27/2024	8:45 AM	0	0	0	0	0	0	0	0	0	0	0	0	0
4/27/2024	9:00 AM	0	0	0	0	0	0	0	0	0	0	0	0	0
4/27/2024	9:15 AM	0	0	0	0	0	0	0	0	0	0	0	0	0
4/27/2024	9:30 AM	0	0	0	0	0	0	0	0	0	0	0	0	0
4/27/2024	9:45 AM	0	0	0	0	0	0	0	0	0	0	0	0	0
4/27/2024	10:00 AM	0	0	0	0	0	0	0	0	0	0	0	0	0
4/27/2024	10:15 AM	0	0	0	0	0	0	0	0	0	0	0	0	0
4/27/2024	10:30 AM	0	0	0	0	0	0	0	0	0	0	0	0	0
4/27/2024	10:45 AM	0	0	0	0	0	0	0	0	0	0	0	0	0
4/27/2024	11:00 AM	0	0	0	0	0	0	0	0	0	0	0	0	0
4/27/2024	11:15 AM	0	0	0	0	0	0	0	0	0	0	0	0	0
4/27/2024	11:30 AM	0	0	0	0	0	0	0	0	0	0	0	0	0
4/27/2024	11:45 AM	0	0	0	0	0	0	0	0	0	0	0	0	0
4/27/2024	12:00 PM	0	0	0	0	0	0	0	0	0	0	0	0	0
4/27/2024	12:15 PM	0	0	0	0	0	0	0	0	0	0	0	0	0
4/27/2024	12:30 PM	0	0	0	0	0	0	0	0	0	0	0	0	0
4/27/2024	12:45 PM	0	0	0	0	0	0	0	0	0	0	0	0	0
4/27/2024	1:00 PM	0	0	0	0	0	0	0	0	0	0	0	0	0
4/27/2024	1:15 PM	0	0	0	0	0	0	0	0	0	0	0	0	0
4/27/2024	1:30 PM	0	0	0	0	0	0	0	0	0	0	0	0	0
4/27/2024	1:45 PM	0	0	0	0	0	0	0	0	0	0	0	0	0
4/27/2024	2:00 PM	0	0	0	0	0	0	0	0	0	0	0	0	0
4/27/2024	2:15 PM	0	0	0	0	0	0	0	0	0	0	0	0	0
4/27/2024	2:30 PM	0	0	0	0	0	0	0	0	0	0	0	0	0
4/27/2024	2:45 PM	0	0	0	0	0	0	0	0	0	0	0	0	0
4/27/2024	3:00 PM	0	0	0	0	0	0	0	0	0	0	0	0	0
4/27/2024	3:15 PM	0	0	0	0	0	0	0	0	0	0	0	0	0
4/27/2024	3:30 PM	0	0	0	0	0	0	0	0	0	0	0	0	0
4/27/2024	3:45 PM	0	0	0	0	0	0	0	0	0	0	0	0	0
4/27/2024	4:00 PM	0	0	0	0	0	0	0	0	0	0	0	0	0
4/27/2024	4:15 PM	0	0	0	0	0	0	0	0	0	0	0	0	0
4/27/2024	4:30 PM	0	0	0	0	0	0	0	0	0	0	0	0	0
4/27/2024	4:45 PM	0	0	0	0	0	0	0	0	0	0	0	0	0
4/27/2024	5:00 PM	0	0	0	0	0	0	0	0	0	0	0	0	0
4/27/2024	5:15 PM	0	0	0	0	0	0	0	0	0	0	0	0	0
4/27/2024	5:30 PM	0	0	0	0	0	0	0	0	0	0	0	0	0
4/27/2024	5:45 PM	0	0	0	0	0	0	0	0	0	0	0	0	0
4/27/2024	6:00 PM	0	0	0	0	0	0	0	0	0	0	0	0	0
4/27/2024	6:15 PM	0	0	0	0	0	0	0	0	0	0	0	0	0
4/27/2024	6:30 PM	0	0	0	0	0	0	0	0	0	0	0	0	0
4/27/2024	6:45 PM	0	0	0	0	0	0	0	0	0	0	0	0	0
4/27/2024	7:00 PM	0	0	0	0	0	0	0	0	0	0	0	0	0
4/27/2024	7:15 PM	0	0	0	0	0	0	0	0	0	0	0	0	0
4/27/2024	7:30 PM	0	0	0	0	0	0	0	0	0	0	0	0	0
4/27/2024	7:45 PM	0	0	0	0	0	0	0	0	0	0	0	0	0
4/27/2024	8:00 PM	0	0	0	0	0	0	0	0	0	0	0	0	0
4/27/2024	8:15 PM	0	0	0	0	0	0	0	0	0	0	0	0	0
4/27/2024	8:30 PM	0	0	0	0	0	0	0	0	0	0	0	0	0
4/27/2024	8:45 PM	0	0	0	0	0	0	0	0	0	0	0	0	0
4/27/2024	9:00 PM	0	0	0	0	0	0	0	0	0	0	0	0	0
4/27/2024	9:15 PM	0	0	0	0	0	0	0	0	0	0	0	0	0
4/27/2024	9:30 PM	0	0	0	0	0	0	0	0	0	0	0	0	0
4/27/2024	9:45 PM	0	0	0	0	0	0	0	0	0	0	0	0	0
4/27/2024	10:00 PM	0	0	0	0	0	0	0	0	0	0	0	0	0
4/27/2024	10:15 PM	0	0	0	0	0	0	0	0	0	0	0	0	0
4/27/2024	10:30 PM	0	0	0	0	0	0	0	0	0	0	0	0	0
4/27/2024	10:45 PM	0	0	0	0	0	0	0	0	0	0	0	0	0
4/27/2024	11:00 PM	0	0	0	0	0	0	0	0	0	0	0	0	0
4/27/2024	11:15 PM	0	0	0	0	0	0	0	0	0	0	0	0	0
4/27/2024	11:30 PM	0	0	0	0	0	0	0	0	0	0	0	0	0
4/27/2024	11:45 PM	0	0	0	0	0	0	0	0	0	0	0	0	0

EB
File Name:
Start Date: 4/21/2024
Start Time: 0
Site Code: 1
Station ID: 1
Location 1: I-26 E/Bound Off-Ramp, west of US-76
Location 2:

Date	Time	1	2	3	4	5	6	7	8	9	10	11	12	13
4/21/2024	12:00 AM	0	36	5	0	0	0	0	0	0	0	0	0	0
4/21/2024	12:15 AM	0	26	3	0	0	0	0	0	0	0	0	0	0
4/21/2024	12:30 AM	0	23	2	0	0	0	0	0	0	0	0	0	0
4/21/2024	12:45 AM	0	22	0	0	0	0	0	0	0	0	0	0	0
4/21/2024	1:00 AM	0	22	1	0	0	0	0	0	0	0	0	0	0
4/21/2024	1:15 AM	0	22	1	0	0	0	0	0	0	0	0	0	0
4/21/2024	1:30 AM	0	21	1	0	1	0	0	0	0	0	0	0	0
4/21/2024	1:45 AM	0	23	1	0	1	0	0	0	0	0	0	0	0
4/21/2024	2:00 AM	0	25	0	0	1	0	0	0	0	0	0	0	0
4/21/2024	2:15 AM	0	20	0	0	1	0	0	0	0	0	0	0	0
4/21/2024	2:30 AM	0	19	0	0	0	0	0	0	0	0	0	0	0
4/21/2024	2:45 AM	0	20	0	0	0	0	0	0	0	0	0	0	0
4/21/2024	3:00 AM	0	14	0	0	1	0	0	0	0	0	0	0	0
4/21/2024	3:15 AM	0	15	1	0	1	0	0	0	0	0	0	0	0
4/21/2024	3:30 AM	0	15	1	0	1	0	0	0	0	0	0	0	0
4/21/2024	3:45 AM	0	12	1	0	1	0	0	0	0	0	0	0	0
4/21/2024	4:00 AM	0	14	1	0	0	0	0	0	0	0	0	0	0
4/21/2024	4:15 AM	0	16	0	0	0	0	0	0	0	0	0	0	0
4/21/2024	4:30 AM	0	16	0	0	0	0	0	0	0	0	0	0	0
4/21/2024	4:45 AM	0	15	0	0	1	0	0	0	0	0	0	0	0
4/21/2024	5:00 AM	0	19	0	0	1	0	0	0	0	0	0	0	0
4/21/2024	5:15 AM	0	24	0	0	1	0	0	0	0	0	0	0	0
4/21/2024	5:30 AM	0	31	0	0	1	0	0	0	0	0	0	0	0
4/21/2024	5:45 AM	0	47	2	0	0	0	0	0	0	0	0	0	0
4/21/2024	6:00 AM	0	48	3	0	0	0	0	0	0	0	0	0	0
4/21/2024	6:15 AM	0	49	3	0	0	0	0	0	0	0	0	0	0
4/21/2024	6:30 AM	0	56	5	0	0	0	0	0	0	0	0	0	0
4/21/2024	6:45 AM	0	46	8	0	0	0	0	0	0	0	0	0	0
4/21/2024	7:00 AM	0	49	10	0	0	0	0	0	0	0	0	0	0
4/21/2024	7:15 AM	0	47	12	0	1	0	0	0	0	0	0	0	0
4/21/2024	7:30 AM	0	44	12	0	2	0	0	0	0	0	0	0	0
4/21/2024	7:45 AM	0	49	8	0	3	0	0	0	0	0	0	0	0
4/21/2024	8:00 AM	0	60	7	0	3	0	0	0	0	0	0	0	0
4/21/2024	8:15 AM	0	102	8	0	2	0	0	0	0	0	0	0	0
4/21/2024	8:30 AM	0	111	9	0	1	0	0	0	0	0	0	0	0
4/21/2024	8:45 AM	0	117	10	0	0	0	0	0	0	0	0	0	0
4/21/2024	9:00 AM	0	128	11	0	0	0	0	0	0	0	0	0	0
4/21/2024	9:15 AM	0	103	8	0	0	0	0	0	0	0	0	0	0
4/21/2024	9:30 AM	0	106	5	0	0	0	0	0	0	0	0	0	0
4/21/2024	9:45 AM	0	108	8	0	1	0	0	0	0	0	0	0	0
4/21/2024	10:00 AM	0	100	10	0	2	0	0	0	1	0	0	0	0
4/21/2024	10:15 AM	0	97	10	0	2	1	0	0	1	0	0	0	0
4/21/2024	10:30 AM	0	92	15	0	3	1	0	0	1	0	0	0	0
4/21/2024	10:45 AM	0	87	11	0	2	1	0	0	1	0	0	0	0
4/21/2024	11:00 AM	0	80	8	0	1	1	0	0	0	0	0	0	0
4/21/2024	11:15 AM	0	80	10	0	2	0	0	0	0	0	0	0	0
4/21/2024	11:30 AM	0	99	9	0	2	0	0	0	0	0	0	0	0
4/21/2024	11:45 AM	0	112	8	0	4	0	0	0	0	0	0	0	0
4/21/2024	12:00 PM	0	119	7	0	5	0	0	0	0	0	0	0	0
4/21/2024	12:15 PM	0	130	6	0	4	0	0	0	0	0	0	0	0
4/21/2024	12:30 PM	0	122	7	0	4	0	0	0	0	0	0	0	0
4/21/2024	12:45 PM	0	113	9	0	2	0	0	0	0	0	0	0	0
4/21/2024	1:00 PM	0	121	11	0	1	0	0	0	0	0	0	0	0
4/21/2024	1:15 PM	0	117	12	0	3	0	0	0	0	0	0	0	0
4/21/2024	1:30 PM	0	117	12	0	2	0	0	0	0	0	0	0	0
4/21/2024	1:45 PM	0	127	13	0	2	0	0	0	0	0	0	0	0
4/21/2024	2:00 PM	0	122	12	0	2	0	0	0	0	0	0	0	0
4/21/2024	2:15 PM	0	113	12	0	0	0	0	0	0	0	0	0	0
4/21/2024	2:30 PM	0	108	11	0	0	0	0	0	0	0	0	0	0
4/21/2024	2:45 PM	0	94	11	0	0	0	0	0	0	0	0	0	0
4/21/2024	3:00 PM	0	104	9	0	0	0	0	0	0	0	0	0	0
4/21/2024	3:15 PM	0	106	8	0	0	0	0	0	0	0	0	0	0
4/21/2024	3:30 PM	0	109	10	0	0	0	0	0	0	0	0	0	0
4/21/2024	3:45 PM	0	122	10	0	0	0	0	0	0	0	0	0	0
4/21/2024	4:00 PM	0	109	11	0	0	0	0	0	0	0	0	0	0
4/21/2024	4:15 PM	0	123	12	0	2	0	0	0	0	0	0	0	0
4/21/2024	4:30 PM	0	119	7	0	2	0	0	0	0	0	0	0	0
4/21/2024	4:45 PM	0	110	6	0	2	0	0	0	0	0	0	0	0
4/21/2024	5:00 PM	0	113	9	0	2	0	0	0	0	0	0	0	0
4/21/2024	5:15 PM	0	110	7	0	0	0	0	0	0	0	0	0	0
4/21/2024	5:30 PM	0	112	8	0	1	0	0	0	0	0	0	0	0
4/21/2024	5:45 PM	0	117	10	0	1	0	0	0	0	0	0	0	0
4/21/2024	6:00 PM	0	105	8	0	1	0	0	0	0	0	0	0	0
4/21/2024	6:15 PM	0	102	16	0	2	0	0	0	0	0	0	0	0
4/21/2024	6:30 PM	0	98	19	0	3	0	0	0	0	0	0	0	0
4/21/2024	6:45 PM	0	96	18	0	3	0	0	0	0	0	0	0	0
4/21/2024	7:00 PM	0	102	17	0	6	0	0	0	0	0	0	0	0
4/21/2024	7:15 PM	0	81	12	0	5	0	0	0	0	0	0	0	0
4/21/2024	7:30 PM	0	80	10	0	3	1	0	0	0	0	0	0	0
4/21/2024	7:45 PM	0	72	9	0	3	1	0	0	0	0	0	0	0
4/21/2024	8:00 PM	0	64	10	0	0	1	0	0	0	0	0	0	0
4/21/2024	8:15 PM	0	71	8	1	0	2	0	0	0	0	0	0	0
4/21/2024	8:30 PM	0	63	7	1	0	1	0	0	0	0	0	0	0
4/21/2024	8:45 PM	0	58	5	1	0	1	0	0	0	0	0	0	0
4/21/2024	9:00 PM	0	59	4	1	0	1	0	0	0	0	0	0	0
4/21/2024	9:15 PM	0	58	5	0	0	1	0	0	0	0	0	0	0
4/21/2024	9:30 PM	0	52	3	0	0	1	0	0	0	0	0	0	0
4/21/2024	9:45 PM	0	46	3	0	0	1	0	0	0	0	0	0	0
4/21/2024	10:00 PM	0	39	2	0	0	1	0	0	0	0	0	0	0
4/21/2024	10:15 PM	0	38	1	0	0	0	0	0	0	0	0	0	0
4/21/2024	10:30 PM	0	36	1	0	0	0	0	0	0	0	0	0	0
4/21/2024	10:45 PM	0	31	1	0	0	0	0	0	0	0	0	0	0
4/21/2024	11:00 PM	0	24	1	0	0	0	0	0	0	0	0	0	0
4/21/2024	11:15 PM	0	14	0	0	0	0	0	0	0	0	0	0	0
4/21/2024	11:30 PM	0	12	0	0	0	0	0	0	0	0	0	0	0
4/21/2024	11:45 PM	0	17	0	0	1	0	0	0	0	0	0	0	0

4/22/2024	12:00 AM	0	17	0	0	1	0	0	0	0	0	0	0	0
4/22/2024	12:15 AM	0	19	0	0	1	0	0	0	0	0	0	0	0
4/22/2024	12:30 AM	0	17	0	0	1	0	0	0	0	0	0	0	0
4/22/2024	12:45 AM	0	11	0	0	0	0	0	0	0	0	0	0	0
4/22/2024	1:00 AM	0	11	0	0	0	0	0	0	0	0	0	0	0
4/22/2024	1:15 AM	0	7	0	0	0	0	0	0	0	0	0	0	0
4/22/2024	1:30 AM	0	8	0	0	1	0	0	0	0	0	0	0	0
4/22/2024	1:45 AM	0	8	0	0	1	0	0	0	0	0	0	0	0
4/22/2024	2:00 AM	0	11	1	0	2	0	0	0	0	0	0	0	0
4/22/2024	2:15 AM	0	13	1	0	2	0	0	0	0	0	0	0	0
4/22/2024	2:30 AM	0	10	1	0	3	0	0	0	0	0	0	0	0
4/22/2024	2:45 AM	0	13	1	0	3	0	0	0	0	0	0	0	0
4/22/2024	3:00 AM	0	12	0	0	2	0	0	0	0	0	0	0	0
4/22/2024	3:15 AM	0	9	1	0	2	0	0	0	0	0	0	0	0
4/22/2024	3:30 AM	0	13	1	0	1	0	0	0	0	0	0	0	0
4/22/2024	3:45 AM	0	13	1	0	1	0	0	0	0	0	0	0	0
4/22/2024	4:00 AM	0	19	1	0	1	1	0	0	0	0	0	0	0
4/22/2024	4:15 AM	0	24	0	0	1	1	0	0	0	0	0	0	0
4/22/2024	4:30 AM	0	29	0	0	0	2	0	0	0	0	0	0	0
4/22/2024	4:45 AM	0	45	1	0	1	2	0	0	0	0	0	0	0
4/22/2024	5:00 AM	0	53	2	0	2	1	0	0	0	0	0	0	0
4/22/2024	5:15 AM	0	73	4	0	2	1	0	0	0	0	0	0	0
4/22/2024	5:30 AM	0	91	9	0	3	0	0	0	0	0	0	0	0
4/22/2024	5:45 AM	0	126	21	0	4	0	0	0	0	0	0	0	0
4/22/2024	6:00 AM	0	171	32	0	5	0	0	0	1	0	0	0	0
4/22/2024	6:15 AM	0	200	44	0	5	0	1	0	1	0	0	0	0
4/22/2024	6:30 AM	0	263	55	0	4	0	1	0	1	0	0	0	0
4/22/2024	6:45 AM	0	321	58	0	4	0	3	0	1	0	0	0	0
4/22/2024	7:00 AM	0	398	66	0	3	0	4	1	2	0	0	0	0
4/22/2024	7:15 AM	0	436	73	0	5	0	3	1	2	0	0	0	0
4/22/2024	7:30 AM	0	450	71	0	9	0	3	1	2	0	0	0	0
4/22/2024	7:45 AM	0	418	78	0	8	0	1	1	2	0	0	0	0
4/22/2024	8:00 AM	0	357	71	0	9	0	0	1	0	0	0	0	0
4/22/2024	8:15 AM	0	336	59	0	10	1	0	2	0	0	0	0	0
4/22/2024	8:30 AM	0	282	59	1	10	1	0	4	0	0	0	0	0
4/22/2024	8:45 AM	0	260	45	2	10	1	1	6	0	0	0	0	0
4/22/2024	9:00 AM	0	253	44	2	9	1	1	5	0	0	0	0	0
4/22/2024	9:15 AM	0	238	47	2	8	0	1	4	0	0	0	0	0
4/22/2024	9:30 AM	0	247	42	1	4	0	1	3	0	0	0	0	0
4/22/2024	9:45 AM	0	262	50	0	5	0	1	1	0	0	0	0	0
4/22/2024	10:00 AM	0	260	42	1	4	0	1	1	0	0	0	0	0
4/22/2024	10:15 AM	0	261	47	1	2	0	2	2	2	0	0	0	0
4/22/2024	10:30 AM	0	250	48	1	3	0	2	1	2	0	0	0	0
4/22/2024	10:45 AM	0	220	41	1	1	0	1	1	2	0	0	0	0
4/22/2024	11:00 AM	0	202	50	0	2	0	1	1	2	0	0	0	0
4/22/2024	11:15 AM	0	192	43	0	2	0	0	0	1	0	0	0	0
4/22/2024	11:30 AM	0	193	44	1	3	0	0	0	1	0	0	0	0
4/22/2024	11:45 AM	0	227	53	1	4	0	0	0	1	0	0	0	0
4/22/2024	12:00 PM	0	239	58	2	3	0	0	2	1	0	0	0	0
4/22/2024	12:15 PM	0	261	61	3	3	0	0	2	0	0	0	0	0
4/22/2024	12:30 PM	0	264	72	2	2	0	0	2	0	0	0	0	0
4/22/2024	12:45 PM	0	238	63	3	2	0	0	2	0	0	0	0	0
4/22/2024	1:00 PM	0	236	58	2	5	0	0	1	2	0	0	0	0
4/22/2024	1:15 PM	0	211	56	1	5	0	0	1	2	0	0	0	0
4/22/2024	1:30 PM	0	219	52	1	5	1	0	1	3	0	0	0	0
4/22/2024	1:45 PM	0	220	51	0	6	1	0	1	3	0	0	0	0
4/22/2024	2:00 PM	0	230	52	0	3	1	0	0	1	1	0	0	0
4/22/2024	2:15 PM	0	230	48	0	4	1	0	0	1	1	0	0	0
4/22/2024	2:30 PM	0	219	36	0	3	0	0	0	0	1	0	0	0
4/22/2024	2:45 PM	0	166	27	0	1	1	0	0	0	1	0	0	0
4/22/2024	3:00 PM	0	129	15	0	1	1	0	0	0	0	0	0	0
4/22/2024	3:15 PM	1	134	18	0	0	1	0	0	0	0	0	0	0
4/22/2024	3:30 PM	1	122	18	0	1	1	0	0	0	0	0	0	0
4/22/2024	3:45 PM	1	167	24	0	3	0	0	0	1	0	0	0	0
4/22/2024	4:00 PM	1	173	32	0	4	0	0	1	1	0	0	0	0
4/22/2024	4:15 PM	0	175	31	0	6	0	0	1	2	0	0	0	0
4/22/2024	4:30 PM	1	172	31	0	6	0	0	1	2	0	0	0	0
4/22/2024	4:45 PM	2	172	33	0	4	0	0	2	1	0	0	0	0
4/22/2024	5:00 PM	2	168	38	0	4	0	0	1	2	0	0	0	0
4/22/2024	5:15 PM	2	156	35	0	2	0	0	1	2	0	0	0	0
4/22/2024	5:30 PM	1	141	39	0	1	0	0	1	2	0	0	0	0
4/22/2024	5:45 PM	1	148	41	0	2	0	0	0	2	0	0	0	0
4/22/2024	6:00 PM	1	146	31	0	1	0	0	0	1	0	0	0	0
4/22/2024	6:15 PM	1	142	29	0	1	0	0	0	0	0	0	0	0
4/22/2024	6:30 PM	1	152	23	0	1	0	0	0	0	0	0	0	0
4/22/2024	6:45 PM	0	125	18	0	0	0	0	0	0	0	0	0	0
4/22/2024	7:00 PM	0	113	16	0	1	0	0	0	0	0	0	0	0
4/22/2024	7:15 PM	0	98	14	0	2	0	0	0	0	0	0	0	0
4/22/2024	7:30 PM	0	93	13	0	2	0	0	0	0	0	0	0	0
4/22/2024	7:45 PM	0	98	14	0	2	0	0	1	1	0	0	0	0
4/22/2024	8:00 PM	0	101	14	0	1	0	0	1	1	0	0	0	0
4/22/2024	8:15 PM	0	102	14	0	2	0	0	1	2	0	0	0	0
4/22/2024	8:30 PM	0	97	12	0	3	0	0	1	2	0	0	0	0
4/22/2024	8:45 PM	0	85	7	0	3	0	0	0	1	0	0	0	0
4/22/2024	9:00 PM	0	72	4	0	4	0	0	0	1	0	0	0	0
4/22/2024	9:15 PM	0	70	5	0	2	0	0	0	0	0	0	0	0
4/22/2024	9:30 PM	0	68	6	0	1	0	0	0	0	0	0	0	0
4/22/2024	9:45 PM	0	62	5	0	1	0	0	0	0	0	0	0	0
4/22/2024	10:00 PM	0	61	6	0	0	0	0	0	0	0	0	0	0
4/22/2024	10:15 PM	0	51	3	0	0	0	0	0	0	0	0	0	0
4/22/2024	10:30 PM	0	51	4	0	0	0	0	0	0	0	0	0	0
4/22/2024	10:45 PM	0	49	4	0	0	0	0	0	2	0	0	0	0
4/22/2024	11:00 PM	0	49	3	0	0	0	0	0	2	0	0	0	0
4/22/2024	11:15 PM	0	46	4	0	0	0	0	0	2	0	0	0	0
4/22/2024	11:30 PM	0	37	1	0	0	0	0	0	2	0	0	0	0
4/22/2024	11:45 PM	0	34	2	0	0	0	0	0	0	0	0	0	0

4/23/2024	12:00 AM	0	26	2	0	0	0	0	0	0	0	0	0
4/23/2024	12:15 AM	0	21	1	0	0	0	0	0	0	0	0	0
4/23/2024	12:30 AM	0	15	2	0	0	0	0	0	0	0	0	0
4/23/2024	12:45 AM	0	12	1	0	0	0	0	0	0	0	0	0
4/23/2024	1:00 AM	0	13	1	0	0	0	0	0	0	0	0	0
4/23/2024	1:15 AM	0	15	1	0	0	0	0	0	0	0	0	0
4/23/2024	1:30 AM	0	15	0	0	0	0	0	0	0	0	0	0
4/23/2024	1:45 AM	0	13	0	0	0	0	0	0	0	0	0	0
4/23/2024	2:00 AM	0	14	1	0	0	0	0	0	0	0	0	0
4/23/2024	2:15 AM	0	12	1	0	0	0	0	0	0	0	0	0
4/23/2024	2:30 AM	0	14	3	0	0	0	0	0	0	0	0	0
4/23/2024	2:45 AM	0	20	3	0	1	0	0	0	0	0	0	0
4/23/2024	3:00 AM	0	15	3	0	1	0	0	0	0	0	0	0
4/23/2024	3:15 AM	0	19	3	0	1	0	0	0	0	0	0	0
4/23/2024	3:30 AM	0	22	2	0	3	0	0	0	0	0	0	0
4/23/2024	3:45 AM	0	21	2	0	2	0	0	0	0	0	0	0
4/23/2024	4:00 AM	0	32	1	0	2	0	0	0	0	0	0	0
4/23/2024	4:15 AM	0	39	1	0	2	0	0	0	0	0	0	0
4/23/2024	4:30 AM	0	46	0	0	0	0	0	0	0	0	0	0
4/23/2024	4:45 AM	0	63	1	0	2	0	0	0	0	0	0	0
4/23/2024	5:00 AM	0	74	2	0	2	0	0	0	0	0	0	0
4/23/2024	5:15 AM	0	86	4	0	3	1	0	0	0	0	0	0
4/23/2024	5:30 AM	0	112	8	0	4	1	0	0	0	0	0	0
4/23/2024	5:45 AM	0	138	14	0	2	1	0	0	0	0	0	0
4/23/2024	6:00 AM	0	185	28	0	3	1	0	0	0	0	0	0
4/23/2024	6:15 AM	0	228	36	0	3	1	0	0	0	0	0	0
4/23/2024	6:30 AM	0	277	38	0	3	1	0	0	0	0	0	0
4/23/2024	6:45 AM	0	347	47	0	3	1	0	0	1	0	0	0
4/23/2024	7:00 AM	0	397	40	0	2	1	0	0	1	0	0	0
4/23/2024	7:15 AM	0	454	45	0	1	0	0	0	2	0	0	0
4/23/2024	7:30 AM	0	490	52	0	2	1	0	0	2	0	0	0
4/23/2024	7:45 AM	0	469	45	0	3	1	0	0	1	0	0	0
4/23/2024	8:00 AM	0	438	58	0	4	1	0	0	2	0	0	0
4/23/2024	8:15 AM	0	394	56	0	8	1	0	0	1	0	0	0
4/23/2024	8:30 AM	0	370	58	0	12	0	0	0	2	0	0	0
4/23/2024	8:45 AM	0	363	60	0	13	0	0	0	8	0	0	0
4/23/2024	9:00 AM	1	389	49	5	13	0	0	0	7	0	0	0
4/23/2024	9:15 AM	1	367	46	5	9	0	0	0	8	0	0	0
4/23/2024	9:30 AM	1	330	41	6	3	0	0	0	7	0	0	0
4/23/2024	9:45 AM	1	321	39	6	2	0	0	0	1	0	0	0
4/23/2024	10:00 AM	0	254	36	1	4	0	0	0	1	0	0	0
4/23/2024	10:15 AM	0	259	35	1	5	0	0	0	1	0	0	0
4/23/2024	10:30 AM	0	245	35	0	6	0	0	0	1	0	0	0
4/23/2024	10:45 AM	0	231	45	0	9	0	0	0	1	0	0	0
4/23/2024	11:00 AM	1	243	53	0	6	0	0	0	2	0	0	0
4/23/2024	11:15 AM	1	241	58	0	6	0	0	0	1	0	0	0
4/23/2024	11:30 AM	1	246	60	0	5	1	0	0	1	0	0	0
4/23/2024	11:45 AM	1	230	58	0	3	1	0	0	1	0	0	0
4/23/2024	12:00 PM	0	252	54	1	3	1	0	1	0	0	0	0
4/23/2024	12:15 PM	0	255	53	2	4	1	0	1	0	0	0	0
4/23/2024	12:30 PM	0	259	54	2	7	1	0	1	0	0	0	0
4/23/2024	12:45 PM	0	263	44	3	7	1	0	1	1	0	0	0
4/23/2024	1:00 PM	0	233	43	2	9	2	0	0	1	0	0	0
4/23/2024	1:15 PM	0	218	39	1	9	2	0	1	2	0	0	0
4/23/2024	1:30 PM	0	209	44	1	7	1	0	1	2	0	0	0
4/23/2024	1:45 PM	0	204	46	0	7	1	0	1	1	1	0	0
4/23/2024	2:00 PM	1	217	45	1	7	1	0	1	1	1	0	0
4/23/2024	2:15 PM	1	218	43	1	6	2	0	1	0	1	0	0
4/23/2024	2:30 PM	1	215	30	1	5	2	0	1	0	1	0	0
4/23/2024	2:45 PM	1	235	28	1	4	2	0	1	0	0	0	0
4/23/2024	3:00 PM	0	231	28	0	5	1	0	1	0	0	0	0
4/23/2024	3:15 PM	1	212	32	0	7	0	0	0	1	0	0	0
4/23/2024	3:30 PM	1	214	39	0	10	0	1	0	1	0	0	0
4/23/2024	3:45 PM	1	188	40	0	9	0	1	0	1	0	0	0
4/23/2024	4:00 PM	1	180	51	0	7	1	1	0	1	0	0	0
4/23/2024	4:15 PM	0	197	49	0	4	1	1	2	0	0	0	0
4/23/2024	4:30 PM	0	209	44	0	1	1	0	2	0	0	0	0
4/23/2024	4:45 PM	0	204	49	0	1	1	0	2	0	0	0	0
4/23/2024	5:00 PM	0	213	39	0	2	2	0	3	0	0	0	0
4/23/2024	5:15 PM	0	214	39	0	2	2	0	2	1	0	0	0
4/23/2024	5:30 PM	0	190	37	0	2	2	0	2	1	0	0	0
4/23/2024	5:45 PM	1	188	30	3	2	2	0	2	2	0	0	0
4/23/2024	6:00 PM	1	168	27	3	0	0	0	1	2	0	0	0
4/23/2024	6:15 PM	1	144	22	3	0	0	0	0	1	0	0	0
4/23/2024	6:30 PM	1	144	25	3	2	0	0	0	1	0	0	0
4/23/2024	6:45 PM	1	133	23	0	4	0	0	0	0	0	0	0
4/23/2024	7:00 PM	1	122	22	0	5	0	0	0	0	0	0	0
4/23/2024	7:15 PM	1	119	21	0	5	0	0	0	0	0	0	0
4/23/2024	7:30 PM	1	102	18	0	4	0	0	0	0	0	0	0
4/23/2024	7:45 PM	0	99	19	0	2	0	0	0	0	0	0	0
4/23/2024	8:00 PM	0	93	18	0	1	0	0	0	0	0	0	0
4/23/2024	8:15 PM	0	93	19	0	1	0	0	0	0	0	0	0
4/23/2024	8:30 PM	0	86	17	0	0	0	0	0	0	0	0	0
4/23/2024	8:45 PM	0	78	15	0	0	0	0	0	0	0	0	0
4/23/2024	9:00 PM	0	70	12	0	0	0	0	0	0	0	0	0
4/23/2024	9:15 PM	0	62	11	0	0	0	0	0	0	0	0	0
4/23/2024	9:30 PM	0	61	11	0	0	0	0	0	0	0	0	0
4/23/2024	9:45 PM	0	56	10	0	1	0	0	0	1	0	0	0
4/23/2024	10:00 PM	0	53	11	0	1	0	0	0	1	0	0	0
4/23/2024	10:15 PM	0	51	10	0	1	0	0	0	1	0	0	0
4/23/2024	10:30 PM	0	45	8	0	1	0	0	0	2	0	0	0
4/23/2024	10:45 PM	0	45	8	0	0	0	0	0	2	0	0	0
4/23/2024	11:00 PM	0	42	6	0	0	0	0	0	2	0	0	0
4/23/2024	11:15 PM	0	37	6	0	0	0	0	0	2	0	0	0
4/23/2024	11:30 PM	0	36	6	0	0	0	0	0	1	0	0	0
4/23/2024	11:45 PM	0	29	6	0	0	0	0	0	0	0	0	0

4/24/2024	12:00 AM	0	23	6	0	0	0	0	0	0	0	0	0
4/24/2024	12:15 AM	0	18	6	0	0	0	0	0	0	0	0	0
4/24/2024	12:30 AM	0	16	7	0	0	0	0	0	0	0	0	0
4/24/2024	12:45 AM	0	18	6	0	0	0	0	0	0	0	0	0
4/24/2024	1:00 AM	0	16	6	0	0	0	0	0	0	0	0	0
4/24/2024	1:15 AM	0	14	5	0	0	0	0	0	0	0	0	0
4/24/2024	1:30 AM	0	13	4	0	0	0	0	0	0	0	0	0
4/24/2024	1:45 AM	0	8	3	0	0	0	0	0	0	0	0	0
4/24/2024	2:00 AM	0	9	2	0	0	0	0	0	0	0	0	0
4/24/2024	2:15 AM	0	14	3	0	1	0	0	0	0	0	0	0
4/24/2024	2:30 AM	0	13	3	0	1	0	0	0	0	0	0	0
4/24/2024	2:45 AM	0	15	4	0	1	0	0	0	0	0	0	0
4/24/2024	3:00 AM	0	15	4	0	1	1	0	0	0	0	0	0
4/24/2024	3:15 AM	0	12	3	0	0	1	0	0	0	0	0	0
4/24/2024	3:30 AM	0	12	2	0	1	1	0	0	0	0	0	0
4/24/2024	3:45 AM	0	11	2	0	1	1	0	0	0	0	0	0
4/24/2024	4:00 AM	0	15	4	0	2	1	0	0	0	0	0	0
4/24/2024	4:15 AM	0	17	5	0	2	1	0	0	0	0	0	0
4/24/2024	4:30 AM	0	21	8	0	1	1	0	0	0	0	0	0
4/24/2024	4:45 AM	0	38	11	0	1	1	0	0	0	0	0	0
4/24/2024	5:00 AM	0	46	11	0	1	0	0	0	0	0	0	0
4/24/2024	5:15 AM	0	60	14	0	2	0	0	0	0	0	0	0
4/24/2024	5:30 AM	0	88	18	0	2	0	0	0	0	0	0	0
4/24/2024	5:45 AM	0	134	17	0	2	0	0	0	0	0	0	0
4/24/2024	6:00 AM	0	184	29	0	4	0	0	0	0	0	0	0
4/24/2024	6:15 AM	0	229	35	0	3	0	0	0	0	0	0	0
4/24/2024	6:30 AM	0	294	38	0	4	0	0	0	1	0	0	0
4/24/2024	6:45 AM	0	352	45	0	4	0	0	0	1	0	0	0
4/24/2024	7:00 AM	1	410	53	0	2	0	0	0	2	1	0	0
4/24/2024	7:15 AM	1	475	59	0	3	1	0	0	3	1	0	0
4/24/2024	7:30 AM	1	488	72	0	3	1	0	0	4	1	0	0
4/24/2024	7:45 AM	1	442	76	0	4	1	0	0	4	1	0	0
4/24/2024	8:00 AM	1	393	69	1	3	1	0	0	3	0	0	0
4/24/2024	8:15 AM	1	343	68	1	3	1	0	0	2	0	0	0
4/24/2024	8:30 AM	1	292	55	1	4	1	0	0	0	0	0	0
4/24/2024	8:45 AM	2	296	50	2	6	1	0	0	1	0	0	0
4/24/2024	9:00 AM	1	287	47	1	8	2	0	1	1	0	0	0
4/24/2024	9:15 AM	1	268	42	2	9	1	0	3	2	1	0	0
4/24/2024	9:30 AM	1	271	43	3	7	1	0	3	2	1	0	0
4/24/2024	9:45 AM	0	249	45	2	5	1	0	4	1	1	0	0
4/24/2024	10:00 AM	0	232	42	2	5	0	0	4	1	1	0	0
4/24/2024	10:15 AM	0	235	48	1	4	0	0	2	0	0	0	0
4/24/2024	10:30 AM	0	222	51	0	4	1	0	2	1	0	0	0
4/24/2024	10:45 AM	0	217	48	0	9	1	0	1	2	0	0	0
4/24/2024	11:00 AM	0	240	55	0	10	1	0	0	2	0	0	0
4/24/2024	11:15 AM	0	224	50	0	10	1	0	1	2	0	0	0
4/24/2024	11:30 AM	0	252	54	0	14	0	0	1	1	0	0	0
4/24/2024	11:45 AM	0	260	64	1	9	2	0	1	0	0	0	0
4/24/2024	12:00 PM	1	250	58	1	6	3	0	3	1	0	0	0
4/24/2024	12:15 PM	1	257	62	2	10	3	0	3	1	0	0	0
4/24/2024	12:30 PM	1	230	60	2	8	3	0	3	2	0	0	0
4/24/2024	12:45 PM	1	228	59	2	7	2	0	3	2	0	0	0
4/24/2024	1:00 PM	0	218	55	2	8	1	0	2	1	0	0	0
4/24/2024	1:15 PM	0	216	55	1	5	2	0	1	2	0	0	0
4/24/2024	1:30 PM	0	213	57	1	6	2	0	1	1	1	0	0
4/24/2024	1:45 PM	0	202	51	0	7	4	0	1	1	1	0	0
4/24/2024	2:00 PM	0	210	62	1	8	4	0	0	2	1	0	0
4/24/2024	2:15 PM	0	217	57	1	6	3	0	0	1	1	0	0
4/24/2024	2:30 PM	0	210	52	1	3	4	0	0	1	0	0	0
4/24/2024	2:45 PM	0	216	50	1	4	1	0	1	1	0	0	0
4/24/2024	3:00 PM	0	223	42	0	2	1	0	1	0	0	0	0
4/24/2024	3:15 PM	0	212	45	1	4	1	0	1	0	0	0	0
4/24/2024	3:30 PM	0	221	36	1	6	0	0	1	0	0	0	0
4/24/2024	3:45 PM	0	215	33	1	4	0	0	1	0	0	0	0
4/24/2024	4:00 PM	0	204	35	3	4	0	0	1	0	1	0	0
4/24/2024	4:15 PM	0	208	29	3	4	0	0	1	0	1	0	0
4/24/2024	4:30 PM	0	197	31	3	2	0	0	2	0	1	0	0
4/24/2024	4:45 PM	0	191	32	3	3	0	0	1	0	1	0	0
4/24/2024	5:00 PM	0	191	28	1	4	0	0	1	0	0	0	0
4/24/2024	5:15 PM	0	169	26	0	4	1	0	1	0	0	0	0
4/24/2024	5:30 PM	0	166	27	0	4	1	0	0	1	0	0	0
4/24/2024	5:45 PM	1	166	32	0	4	1	0	0	1	0	0	0
4/24/2024	6:00 PM	1	158	32	0	3	1	0	0	2	0	0	0
4/24/2024	6:15 PM	1	172	33	0	1	0	0	0	2	0	0	0
4/24/2024	6:30 PM	1	174	28	0	2	0	0	0	1	0	0	0
4/24/2024	6:45 PM	0	151	21	0	1	0	0	0	1	0	0	0
4/24/2024	7:00 PM	3	124	16	0	2	0	0	0	1	0	0	0
4/24/2024	7:15 PM	3	98	11	0	3	0	0	0	1	0	0	0
4/24/2024	7:30 PM	3	83	12	0	2	0	0	0	1	0	0	0
4/24/2024	7:45 PM	3	81	12	0	2	0	0	0	1	0	0	0
4/24/2024	8:00 PM	0	83	16	0	1	0	0	0	0	0	0	0
4/24/2024	8:15 PM	0	84	18	0	0	0	0	0	0	0	0	0
4/24/2024	8:30 PM	0	78	18	0	0	0	0	0	0	0	0	0
4/24/2024	8:45 PM	0	70	15	0	0	0	0	0	0	0	0	0
4/24/2024	9:00 PM	0	65	13	0	1	0	0	0	0	0	0	0
4/24/2024	9:15 PM	0	61	13	0	1	0	0	0	1	0	0	0
4/24/2024	9:30 PM	0	51	12	0	1	0	0	0	1	0	0	0
4/24/2024	9:45 PM	0	49	11	0	1	0	0	0	1	0	0	0
4/24/2024	10:00 PM	0	42	10	0	0	0	0	0	2	0	0	0
4/24/2024	10:15 PM	0	44	10	0	0	0	0	0	1	0	0	0
4/24/2024	10:30 PM	0	46	10	0	1	0	0	0	1	0	0	0
4/24/2024	10:45 PM	0	42	10	0	1	0	0	0	1	0	0	0
4/24/2024	11:00 PM	0	36	9	0	1	0	0	0	0	0	0	0
4/24/2024	11:15 PM	0	22	5	0	1	0	0	0	0	0	0	0
4/24/2024	11:30 PM	0	20	5	0	0	0	0	0	0	0	0	0
4/24/2024	11:45 PM	0	20	4	0	0	0	0	0	0	0	0	0

4/25/2024	12:00 AM	0	19	2	0	0	0	0	0	0	0	0	0
4/25/2024	12:15 AM	0	20	3	0	0	0	0	0	0	0	0	0
4/25/2024	12:30 AM	0	15	1	0	0	0	0	0	0	0	0	0
4/25/2024	12:45 AM	0	13	1	0	0	0	0	0	0	0	0	0
4/25/2024	1:00 AM	0	13	1	0	0	0	0	0	0	0	0	0
4/25/2024	1:15 AM	0	9	0	0	0	0	0	0	0	0	0	0
4/25/2024	1:30 AM	0	9	0	0	0	0	0	0	0	0	0	0
4/25/2024	1:45 AM	0	7	1	0	0	0	0	0	0	0	0	0
4/25/2024	2:00 AM	0	5	1	0	0	0	0	0	0	0	0	0
4/25/2024	2:15 AM	0	10	1	0	0	0	0	0	0	0	0	0
4/25/2024	2:30 AM	0	11	1	0	1	0	0	0	0	0	0	0
4/25/2024	2:45 AM	0	12	0	0	1	0	0	0	0	0	0	0
4/25/2024	3:00 AM	0	14	0	0	2	0	0	0	0	0	0	0
4/25/2024	3:15 AM	0	15	0	0	2	0	0	0	0	0	0	0
4/25/2024	3:30 AM	0	16	1	0	2	0	0	0	0	0	0	0
4/25/2024	3:45 AM	0	25	2	0	2	0	0	0	0	0	0	0
4/25/2024	4:00 AM	0	27	3	0	1	0	0	0	0	0	0	0
4/25/2024	4:15 AM	0	31	4	0	1	1	0	0	0	0	0	0
4/25/2024	4:30 AM	0	34	4	0	0	1	0	0	0	0	0	0
4/25/2024	4:45 AM	0	41	3	0	1	1	0	0	0	0	0	0
4/25/2024	5:00 AM	0	53	2	0	1	1	0	0	0	0	0	0
4/25/2024	5:15 AM	0	64	3	0	1	0	0	0	0	0	0	0
4/25/2024	5:30 AM	0	91	12	0	1	0	0	0	0	0	0	0
4/25/2024	5:45 AM	0	127	24	0	1	0	0	0	0	1	0	0	0
4/25/2024	6:00 AM	0	167	45	0	1	0	0	0	0	1	0	0	0
4/25/2024	6:15 AM	0	212	62	1	1	0	0	0	0	1	0	0	0
4/25/2024	6:30 AM	0	270	74	1	2	0	0	0	0	1	0	0	0
4/25/2024	6:45 AM	0	319	74	1	2	0	0	0	0	0	0	0	0
4/25/2024	7:00 AM	1	394	78	1	2	0	0	1	0	0	0	0	0
4/25/2024	7:15 AM	1	447	83	0	3	0	0	1	0	0	0	0	0
4/25/2024	7:30 AM	1	431	78	1	4	1	0	1	0	1	0	0	0
4/25/2024	7:45 AM	1	412	81	1	6	1	0	2	0	1	0	0	0
4/25/2024	8:00 AM	0	361	74	1	7	1	0	1	2	1	0	0	0
4/25/2024	8:15 AM	0	331	66	4	7	2	0	1	2	1	0	0	0
4/25/2024	8:30 AM	0	319	63	3	6	2	0	1	2	0	0	0	0
4/25/2024	8:45 AM	0	298	63	6	4	2	0	1	2	0	0	0	0
4/25/2024	9:00 AM	0	293	63	9	6	2	0	3	1	0	0	0	0
4/25/2024	9:15 AM	0	260	57	6	6	1	0	5	2	1	0	0	0
4/25/2024	9:30 AM	0	249	58	7	7	1	0	6	3	1	0	0	0
4/25/2024	9:45 AM	0	244	51	4	7	1	0	5	4	1	0	0	0
4/25/2024	10:00 AM	0	225	40	1	4	1	0	3	4	1	0	0	0
4/25/2024	10:15 AM	0	219	40	1	4	2	0	2	3	0	0	0	0
4/25/2024	10:30 AM	0	222	37	0	6	1	0	3	2	0	0	0	0
4/25/2024	10:45 AM	0	203	44	0	6	1	0	3	1	0	0	0	0
4/25/2024	11:00 AM	0	201	55	1	7	1	1	4	0	0	0	0	0
4/25/2024	11:15 AM	0	206	55	1	8	0	1	3	0	0	0	0	0
4/25/2024	11:30 AM	0	204	53	1	5	1	1	1	0	0	0	0	0
4/25/2024	11:45 AM	1	218	53	1	5	1	1	1	0	0	0	0	0
4/25/2024	12:00 PM	1	215	48	0	7	2	0	0	0	0	0	0	0
4/25/2024	12:15 PM	1	215	53	0	6	2	0	0	0	0	0	0	0
4/25/2024	12:30 PM	1	212	59	0	6	3	0	0	0	0	0	0	0
4/25/2024	12:45 PM	0	206	58	1	7	3	0	0	0	0	0	0	0
4/25/2024	1:00 PM	0	204	61	1	4	2	0	0	1	0	0	0	0
4/25/2024	1:15 PM	0	204	64	2	4	2	0	0	2	0	0	0	0
4/25/2024	1:30 PM	0	202	65	2	4	0	0	0	2	0	0	0	0
4/25/2024	1:45 PM	0	213	66	1	3	1	0	0	2	0	0	0	0
4/25/2024	2:00 PM	0	210	64	2	3	2	0	0	1	0	0	0	0
4/25/2024	2:15 PM	0	201	53	1	3	2	0	0	0	0	0	0	0
4/25/2024	2:30 PM	0	197	45	1	3	2	0	0	0	0	0	0	0
4/25/2024	2:45 PM	0	189	39	1	2	2	0	0	0	0	0	0	0
4/25/2024	3:00 PM	0	204	34	0	2	1	0	0	0	0	0	0	0
4/25/2024	3:15 PM	0	208	35	0	2	1	0	0	0	0	0	0	0
4/25/2024	3:30 PM	0	207	32	0	1	1	0	0	1	0	0	0	0
4/25/2024	3:45 PM	0	204	29	0	2	1	0	0	1	0	0	0	0
4/25/2024	4:00 PM	1	172	31	0	3	1	0	0	1	0	0	0	0
4/25/2024	4:15 PM	1	162	32	0	3	1	0	0	1	0	0	0	0
4/25/2024	4:30 PM	1	152	32	0	3	1	0	0	0	0	0	0	0
4/25/2024	4:45 PM	2	152	33	0	2	0	0	0	0	0	0	0	0
4/25/2024	5:00 PM	1	163	29	0	2	0	0	0	0	0	0	0	0
4/25/2024	5:15 PM	1	173	28	0	1	0	0	0	0	0	0	0	0
4/25/2024	5:30 PM	1	190	26	0	1	0	0	0	0	0	0	0	0
4/25/2024	5:45 PM	2	185	26	0	2	0	0	1	0	0	0	0	0
4/25/2024	6:00 PM	2	195	24	0	3	0	0	2	0	0	0	0	0
4/25/2024	6:15 PM	2	189	25	0	3	0	0	2	0	0	0	0	0
4/25/2024	6:30 PM	2	168	26	0	4	1	0	2	0	0	0	0	0
4/25/2024	6:45 PM	0	149	24	0	3	1	0	1	0	0	0	0	0
4/25/2024	7:00 PM	0	122	26	0	1	1	0	0	0	0	0	0	0
4/25/2024	7:15 PM	1	105	21	0	1	1	0	0	0	0	0	0	0
4/25/2024	7:30 PM	1	102	22	0	0	0	0	0	0	0	0	0	0
4/25/2024	7:45 PM	1	100	20	0	0	0	0	0	0	0	0	0	0
4/25/2024	8:00 PM	1	93	17	0	0	0	0	0	0	0	0	0	0
4/25/2024	8:15 PM	0	94	17	0	0	0	0	0	0	0	0	0	0
4/25/2024	8:30 PM	0	87	13	0	0	0	0	0	0	0	0	0	0
4/25/2024	8:45 PM	0	88	14	0	0	0	0	0	0	0	0	0	0
4/25/2024	9:00 PM	0	84	11	0	0	0	0	0	0	0	0	0	0
4/25/2024	9:15 PM	0	78	11	0	2	0	0	0	0	0	0	0	0
4/25/2024	9:30 PM	0	65	12	0	2	0	0	0	0	0	0	0	0
4/25/2024	9:45 PM	0	52	9	0	2	0	0	0	0	0	0	0	0
4/25/2024	10:00 PM	0	46	10	0	2	0	0	0	0	0	0	0	0
4/25/2024	10:15 PM	0	32	7	0	0	0	0	0	0	0	0	0	0
4/25/2024	10:30 PM	0	36	6	0	0	0	0	0	0	0	0	0	0
4/25/2024	10:45 PM	0	36	6	0	0	0	0	0	0	0	0	0	0
4/25/2024	11:00 PM	0	36	6	0	0	0	0	0	0	0	0	0	0
4/25/2024	11:15 PM	0	28	5	0	0	0	0	0	0	0	0	0	0
4/25/2024	11:30 PM	0	16	3	0	0	0	0	0	0	0	0	0	0
4/25/2024	11:45 PM	0	7	2	0	0	0	0	0	0	0	0	0	0

4/26/2024	12:00 AM	0	19	1	0	1	0	0	0	0	0	0	0
4/26/2024	12:15 AM	0	17	0	0	0	0	0	0	0	0	0	0
4/26/2024	12:30 AM	0	16	0	0	0	0	0	0	0	0	0	0
4/26/2024	12:45 AM	0	15	0	0	0	0	0	0	0	0	0	0
4/26/2024	1:00 AM	0	15	0	0	1	0	0	0	0	0	0	0
4/26/2024	1:15 AM	0	12	0	0	1	0	0	0	0	0	0	0
4/26/2024	1:30 AM	0	9	0	0	1	0	0	0	0	0	0	0
4/26/2024	1:45 AM	0	8	0	0	1	0	0	0	0	0	0	0
4/26/2024	2:00 AM	0	10	0	0	0	0	0	0	0	0	0	0
4/26/2024	2:15 AM	0	13	0	0	0	0	0	0	0	0	0	0
4/26/2024	2:30 AM	0	14	1	0	0	0	0	0	0	0	0	0
4/26/2024	2:45 AM	0	15	1	0	0	0	0	0	0	0	0	0
4/26/2024	3:00 AM	0	17	2	0	0	0	0	0	0	0	0	0
4/26/2024	3:15 AM	0	18	4	0	2	0	0	0	0	0	0	0
4/26/2024	3:30 AM	0	21	3	0	2	0	0	0	0	0	0	0
4/26/2024	3:45 AM	0	23	4	0	2	0	0	0	0	0	0	0
4/26/2024	4:00 AM	0	27	5	0	2	0	0	0	0	0	0	0
4/26/2024	4:15 AM	0	25	4	0	0	0	0	0	0	0	0	0
4/26/2024	4:30 AM	0	28	5	0	0	0	0	0	0	0	0	0
4/26/2024	4:45 AM	0	41	6	0	0	0	0	0	0	0	0	0
4/26/2024	5:00 AM	0	46	7	0	2	0	0	0	0	0	0	0
4/26/2024	5:15 AM	0	59	9	0	3	0	0	0	0	0	0	0
4/26/2024	5:30 AM	0	76	13	0	3	0	0	0	0	0	0	0
4/26/2024	5:45 AM	0	103	20	0	4	0	0	0	0	2	0	0	0
4/26/2024	6:00 AM	0	133	34	0	2	0	0	0	0	2	0	0	0
4/26/2024	6:15 AM	0	161	41	0	1	0	0	0	1	2	0	0	0
4/26/2024	6:30 AM	0	221	54	0	2	0	0	0	1	2	0	0	0
4/26/2024	6:45 AM	0	268	64	0	1	0	0	0	1	0	0	0	0
4/26/2024	7:00 AM	0	343	73	0	3	1	0	0	1	0	0	0	0
4/26/2024	7:15 AM	1	400	90	0	3	2	0	1	0	1	0	0	0
4/26/2024	7:30 AM	1	420	91	1	6	2	0	1	1	1	0	0	0
4/26/2024	7:45 AM	1	424	92	1	6	2	0	1	2	1	0	0	0
4/26/2024	8:00 AM	1	404	89	1	4	1	0	1	2	1	0	0	0
4/26/2024	8:15 AM	0	384	77	6	5	0	0	0	2	0	0	0	0
4/26/2024	8:30 AM	0	338	70	7	3	0	0	0	1	0	0	0	0
4/26/2024	8:45 AM	0	305	65	7	5	0	0	1	0	0	0	0	0
4/26/2024	9:00 AM	0	268	53	7	7	0	0	1	0	0	0	0	0
4/26/2024	9:15 AM	0	232	56	3	8	0	0	1	2	0	0	0	0
4/26/2024	9:30 AM	0	224	61	1	7	0	0	2	4	0	0	0	0
4/26/2024	9:45 AM	0	220	65	1	6	0	0	1	4	0	0	0	0
4/26/2024	10:00 AM	0	213	67	4	6	0	0	2	4	0	0	0	0
4/26/2024	10:15 AM	0	215	67	3	4	0	0	3	2	0	0	0	0
4/26/2024	10:30 AM	0	217	57	4	7	0	0	2	0	0	0	0	0
4/26/2024	10:45 AM	0	220	53	4	10	0	0	2	0	0	0	0	0
4/26/2024	11:00 AM	0	213	54	1	8	1	0	2	1	0	0	0	0
4/26/2024	11:15 AM	0	206	48	1	10	1	0	2	1	0	0	0	0
4/26/2024	11:30 AM	0	194	59	0	8	1	0	2	1	0	0	0	0
4/26/2024	11:45 AM	0	183	53	0	6	1	0	2	1	0	0	0	0
4/26/2024	12:00 PM	1	171	51	0	7	0	0	1	2	0	0	0	0
4/26/2024	12:15 PM	1	181	52	0	8	0	0	0	2	0	0	0	0
4/26/2024	12:30 PM	1	179	41	0	6	0	0	0	2	0	0	0	0
4/26/2024	12:45 PM	1	174	43	0	5	0	0	0	2	0	0	0	0
4/26/2024	1:00 PM	0	172	42	0	7	0	0	0	0	0	0	0	0
4/26/2024	1:15 PM	0	182	39	0	4	0	0	0	0	0	0	0	0
4/26/2024	1:30 PM	0	198	41	0	5	0	0	0	0	0	0	0	0
4/26/2024	1:45 PM	1	206	36	0	4	0	1	0	0	0	0	0	0
4/26/2024	2:00 PM	1	226	38	0	2	0	1	0	1	0	0	0	0
4/26/2024	2:15 PM	1	206	40	0	2	0	1	0	2	0	0	0	0
4/26/2024	2:30 PM	1	198	42	0	2	0	1	1	2	0	0	0	0
4/26/2024	2:45 PM	0	201	43	0	5	0	0	1	2	0	0	0	0
4/26/2024	3:00 PM	0	198	46	0	4	0	0	2	1	0	0	0	0
4/26/2024	3:15 PM	0	202	46	0	5	0	0	2	0	0	0	0	0
4/26/2024	3:30 PM	0	199	44	0	5	0	0	1	0	0	0	0	0
4/26/2024	3:45 PM	0	190	48	0	2	0	0	1	0	0	0	0	0
4/26/2024	4:00 PM	0	176	41	0	2	0	0	0	0	0	0	0	0
4/26/2024	4:15 PM	0	175	42	0	2	0	0	0	0	0	0	0	0
4/26/2024	4:30 PM	0	195	39	0	4	0	0	0	0	0	0	0	0
4/26/2024	4:45 PM	0	195	41	0	6	0	0	0	1	0	0	0	0
4/26/2024	5:00 PM	0	208	38	0	6	0	0	0	1	0	0	0	0
4/26/2024	5:15 PM	0	209	28	0	5	0	0	0	1	0	0	0	0
4/26/2024	5:30 PM	0	192	25	0	2	0	0	0	1	0	0	0	0
4/26/2024	5:45 PM	0	198	19	0	1	0	0	0	0	0	0	0	0
4/26/2024	6:00 PM	0	200	18	0	1	0	0	0	0	0	0	0	0
4/26/2024	6:15 PM	0	204	20	0	1	0	0	0	0	0	0	0	0
4/26/2024	6:30 PM	0	195	22	0	3	1	0	0	0	0	0	0	0
4/26/2024	6:45 PM	0	170	20	0	2	1	0	0	0	0	0	0	0
4/26/2024	7:00 PM	0	137	16	0	2	1	0	0	0	0	0	0	0
4/26/2024	7:15 PM	0	114	14	0	2	1	0	0	0	0	0	0	0
4/26/2024	7:30 PM	0	104	10	0	2	0	0	0	0	0	0	0	0
4/26/2024	7:45 PM	0	102	8	0	4	0	0	0	0	0	0	0	0
4/26/2024	8:00 PM	0	102	9	0	6	0	0	0	0	0	0	0	0
4/26/2024	8:15 PM	0	94	9	0	7	0	0	0	0	0	0	0	0
4/26/2024	8:30 PM	0	83	10	0	5	0	0	0	1	0	0	0	0
4/26/2024	8:45 PM	0	77	9	0	3	0	0	0	2	0	0	0	0
4/26/2024	9:00 PM	0	76	9	0	1	0	0	0	3	0	0	0	0
4/26/2024	9:15 PM	0	68	9	0	0	0	0	0	3	0	0	0	0
4/26/2024	9:30 PM	0	64	9	0	0	0	0	0	2	0	0	0	0
4/26/2024	9:45 PM	0	58	11	0	0	0	0	0	1	0	0	0	0
4/26/2024	10:00 PM	0	53	13	0	0	0	0	0	0	0	0	0	0
4/26/2024	10:15 PM	0	51	12	0	0	0	0	0	0	0	0	0	0
4/26/2024	10:30 PM	0	54	12	0	3	0	0	0	0	0	0	0	0
4/26/2024	10:45 PM	0	49	9	0	3	0	0	0	0	0	0	0	0
4/26/2024	11:00 PM	0	49	9	0	4	0	0	0	0	0	0	0	0
4/26/2024	11:15 PM	0	40	7	0	4	0	0	0	0	0	0	0	0
4/26/2024	11:30 PM	0	24	5	0	1	0	0	0	0	0	0	0	0
4/26/2024	11:45 PM	0	14	4	0	1	0	0	0	0	0	0	0	0

4/27/2024	12:00 AM	0	30	8	0	0	0	0	0	0	0	0	0
4/27/2024	12:15 AM	0	23	7	0	0	0	0	0	0	0	0	0
4/27/2024	12:30 AM	0	24	9	0	0	0	0	0	0	0	0	0
4/27/2024	12:45 AM	0	17	6	0	0	0	0	0	0	0	0	0
4/27/2024	1:00 AM	0	16	4	0	0	0	0	0	0	0	0	0
4/27/2024	1:15 AM	0	17	4	0	0	0	0	0	0	0	0	0
4/27/2024	1:30 AM	0	15	2	0	0	0	0	0	0	0	0	0
4/27/2024	1:45 AM	0	16	2	0	0	0	0	0	0	0	0	0
4/27/2024	2:00 AM	0	18	2	0	0	0	0	0	0	0	0	0
4/27/2024	2:15 AM	0	19	1	0	0	0	0	0	0	0	0	0
4/27/2024	2:30 AM	0	18	0	0	1	0	0	0	0	0	0	0
4/27/2024	2:45 AM	0	20	0	0	1	0	0	0	0	0	0	0
4/27/2024	3:00 AM	0	20	0	0	1	0	0	0	0	0	0	0
4/27/2024	3:15 AM	0	17	0	0	1	0	0	0	0	0	0	0
4/27/2024	3:30 AM	0	18	1	0	0	0	0	0	0	0	0	0
4/27/2024	3:45 AM	0	17	1	0	0	0	0	0	0	0	0	0
4/27/2024	4:00 AM	0	14	1	0	0	0	0	0	0	0	0	0
4/27/2024	4:15 AM	0	16	1	0	0	0	0	0	0	0	0	0
4/27/2024	4:30 AM	0	17	1	0	0	0	0	0	0	0	0	0
4/27/2024	4:45 AM	0	22	4	0	0	0	0	0	0	0	0	0
4/27/2024	5:00 AM	0	29	6	0	0	0	0	0	0	0	0	0
4/27/2024	5:15 AM	0	34	9	0	0	0	0	0	0	0	0	0
4/27/2024	5:30 AM	0	40	12	0	0	0	0	0	0	0	0	0
4/27/2024	5:45 AM	0	54	14	0	0	0	0	0	0	0	0	0
4/27/2024	6:00 AM	0	72	15	0	0	0	0	0	0	0	0	0
4/27/2024	6:15 AM	0	85	14	0	1	0	0	0	0	0	0	0
4/27/2024	6:30 AM	0	94	13	0	2	0	0	0	0	0	0	0
4/27/2024	6:45 AM	0	90	12	0	2	1	0	0	0	0	0	0
4/27/2024	7:00 AM	0	90	17	0	3	1	0	0	0	0	0	0
4/27/2024	7:15 AM	0	88	18	0	2	1	0	0	0	0	0	0
4/27/2024	7:30 AM	0	97	19	0	1	1	0	0	0	0	0	0
4/27/2024	7:45 AM	0	109	23	0	2	0	0	0	0	0	0	0
4/27/2024	8:00 AM	0	124	24	0	3	0	0	0	0	0	0	0
4/27/2024	8:15 AM	1	144	27	0	4	1	0	0	0	0	0	0
4/27/2024	8:30 AM	1	154	27	1	4	1	0	0	0	0	0	0
4/27/2024	8:45 AM	1	173	29	1	4	1	0	0	0	0	0	0
4/27/2024	9:00 AM	1	186	25	1	4	1	0	0	0	0	0	0
4/27/2024	9:15 AM	0	196	31	1	4	0	0	0	1	0	0	0
4/27/2024	9:30 AM	0	193	39	1	4	0	0	0	1	0	0	0
4/27/2024	9:45 AM	0	186	36	1	3	0	0	0	2	0	0	0
4/27/2024	10:00 AM	1	175	47	1	3	0	0	0	2	0	0	0
4/27/2024	10:15 AM	1	162	44	1	2	0	0	0	1	0	0	0
4/27/2024	10:30 AM	1	168	40	0	2	0	0	0	1	0	0	0
4/27/2024	10:45 AM	1	172	38	0	3	0	0	0	0	0	0	0
4/27/2024	11:00 AM	0	163	33	0	1	0	0	1	0	0	0	0
4/27/2024	11:15 AM	0	184	37	1	1	1	0	1	0	0	0	0
4/27/2024	11:30 AM	0	185	38	1	1	1	0	1	0	0	0	0
4/27/2024	11:45 AM	0	194	44	1	0	1	0	1	0	0	0	0
4/27/2024	12:00 PM	0	215	38	1	0	1	0	0	0	0	0	0
4/27/2024	12:15 PM	0	208	32	0	0	0	0	0	0	0	0	0
4/27/2024	12:30 PM	0	217	30	0	0	0	0	0	0	0	0	0
4/27/2024	12:45 PM	0	207	26	0	0	0	0	0	0	0	0	0
4/27/2024	1:00 PM	0	205	31	0	1	0	0	0	0	0	0	0
4/27/2024	1:15 PM	0	205	29	0	2	0	0	0	0	0	0	0
4/27/2024	1:30 PM	0	215	22	0	3	0	0	0	0	0	0	0
4/27/2024	1:45 PM	0	220	22	0	4	0	0	0	0	0	0	0
4/27/2024	2:00 PM	1	229	20	0	3	0	0	0	0	0	0	0
4/27/2024	2:15 PM	1	220	21	0	4	0	0	0	0	0	0	0
4/27/2024	2:30 PM	1	211	30	0	3	0	0	0	0	0	0	0
4/27/2024	2:45 PM	2	205	27	0	2	0	0	0	0	0	0	0
4/27/2024	3:00 PM	1	180	26	0	2	0	0	0	0	0	0	0
4/27/2024	3:15 PM	1	178	30	0	0	0	0	0	0	0	0	0
4/27/2024	3:30 PM	2	159	28	0	0	0	0	0	0	0	0	0
4/27/2024	3:45 PM	1	165	27	0	0	0	0	0	0	0	0	0
4/27/2024	4:00 PM	1	188	31	0	0	0	0	1	0	0	0	0
4/27/2024	4:15 PM	1	189	33	0	0	1	0	1	0	0	0	0
4/27/2024	4:30 PM	0	198	40	0	0	1	0	1	0	0	0	0
4/27/2024	4:45 PM	0	201	43	0	0	1	0	1	0	0	0	0
4/27/2024	5:00 PM	0	167	32	0	0	1	0	0	0	0	0	0
4/27/2024	5:15 PM	0	160	25	0	0	0	0	0	0	0	0	0
4/27/2024	5:30 PM	0	148	16	0	0	0	0	0	0	0	0	0
4/27/2024	5:45 PM	0	127	20	0	0	0	0	0	0	0	0	0
4/27/2024	6:00 PM	0	128	21	0	0	0	0	0	0	0	0	0
4/27/2024	6:15 PM	0	129	18	0	0	0	0	0	0	0	0	0
4/27/2024	6:30 PM	0	120	15	0	0	0	0	0	0	0	0	0
4/27/2024	6:45 PM	0	122	7	0	1	0	0	0	0	0	0	0
4/27/2024	7:00 PM	0	112	11	0	1	0	0	0	0	0	0	0
4/27/2024	7:15 PM	0	107	11	0	1	0	0	0	0	0	0	0
4/27/2024	7:30 PM	0	111	11	0	1	0	0	0	0	0	0	0
4/27/2024	7:45 PM	0	96	11	0	0	0	0	0	0	0	0	0
4/27/2024	8:00 PM	0	97	8	0	0	0	0	0	0	0	0	0
4/27/2024	8:15 PM	0	84	7	1	0	0	0	0	0	0	0	0
4/27/2024	8:30 PM	0	82	7	1	0	0	0	0	0	0	0	0
4/27/2024	8:45 PM	0	86	6	1	0	0	0	0	0	0	0	0
4/27/2024	9:00 PM	0	92	7	1	0	0	0	0	0	0	0	0
4/27/2024	9:15 PM	0	92	7	0	0	0	0	0	0	0	0	0
4/27/2024	9:30 PM	0	83	7	0	0	0	0	0	0	0	0	0
4/27/2024	9:45 PM	0	76	7	0	0	0	0	0	0	0	0	0
4/27/2024	10:00 PM	0	59	5	0	0	0	0	0	0	0	0	0
4/27/2024	10:15 PM	0	52	5	0	0	0	0	0	0	0	0	0
4/27/2024	10:30 PM	0	55	4	0	0	0	0	0	0	0	0	0
4/27/2024	10:45 PM	0	56	4	0	0	0	0	0	0	0	0	0
4/27/2024	11:00 PM	0	57	4	0	0	0	0	0	0	0	0	0
4/27/2024	11:15 PM	0	47	3	0	0	0	0	0	0	0	0	0
4/27/2024	11:30 PM	0	28	2	0	0	0	0	0	0	0	0	0
4/27/2024	11:45 PM	0	10	1	0	0	0	0	0	0	0	0	0

WB
File Name:
Start Date: 4/21/2024
Start Time: 0
Site Code: 1
Station ID: 1
Location 1: I-26 E/Bound Off-Ramp, west of US-76
Location 2:

Date	Time	1	2	3	4	5	6	7	8	9	10	11	12	13
4/21/2024	12:00 AM	0	0	0	0	0	0	0	0	0	0	0	0	0
4/21/2024	12:15 AM	0	0	0	0	0	0	0	0	0	0	0	0	0
4/21/2024	12:30 AM	0	0	0	0	0	0	0	0	0	0	0	0	0
4/21/2024	12:45 AM	0	0	0	0	0	0	0	0	0	0	0	0	0
4/21/2024	1:00 AM	0	0	0	0	0	0	0	0	0	0	0	0	0
4/21/2024	1:15 AM	0	0	0	0	0	0	0	0	0	0	0	0	0
4/21/2024	1:30 AM	0	0	0	0	0	0	0	0	0	0	0	0	0
4/21/2024	1:45 AM	0	0	0	0	0	0	0	0	0	0	0	0	0
4/21/2024	2:00 AM	0	0	0	0	0	0	0	0	0	0	0	0	0
4/21/2024	2:15 AM	0	0	0	0	0	0	0	0	0	0	0	0	0
4/21/2024	2:30 AM	0	0	0	0	0	0	0	0	0	0	0	0	0
4/21/2024	2:45 AM	0	0	0	0	0	0	0	0	0	0	0	0	0
4/21/2024	3:00 AM	0	0	0	0	0	0	0	0	0	0	0	0	0
4/21/2024	3:15 AM	0	0	0	0	0	0	0	0	0	0	0	0	0
4/21/2024	3:30 AM	0	0	0	0	0	0	0	0	0	0	0	0	0
4/21/2024	3:45 AM	0	0	0	0	0	0	0	0	0	0	0	0	0
4/21/2024	4:00 AM	0	0	0	0	0	0	0	0	0	0	0	0	0
4/21/2024	4:15 AM	0	0	0	0	0	0	0	0	0	0	0	0	0
4/21/2024	4:30 AM	0	0	0	0	0	0	0	0	0	0	0	0	0
4/21/2024	4:45 AM	0	0	0	0	0	0	0	0	0	0	0	0	0
4/21/2024	5:00 AM	0	0	0	0	0	0	0	0	0	0	0	0	0
4/21/2024	5:15 AM	0	0	0	0	0	0	0	0	0	0	0	0	0
4/21/2024	5:30 AM	0	0	0	0	0	0	0	0	0	0	0	0	0
4/21/2024	5:45 AM	0	0	0	0	0	0	0	0	0	0	0	0	0
4/21/2024	6:00 AM	0	0	0	0	0	0	0	0	0	0	0	0	0
4/21/2024	6:15 AM	0	0	0	0	0	0	0	0	0	0	0	0	0
4/21/2024	6:30 AM	0	0	0	0	0	0	0	0	0	0	0	0	0
4/21/2024	6:45 AM	0	0	0	0	0	0	0	0	0	0	0	0	0
4/21/2024	7:00 AM	0	0	0	0	0	0	0	0	0	0	0	0	0
4/21/2024	7:15 AM	0	0	0	0	0	0	0	0	0	0	0	0	0
4/21/2024	7:30 AM	0	0	0	0	0	0	0	0	0	0	0	0	0
4/21/2024	7:45 AM	0	0	0	0	0	0	0	0	0	0	0	0	0
4/21/2024	8:00 AM	0	0	0	0	0	0	0	0	0	0	0	0	0
4/21/2024	8:15 AM	0	0	0	0	0	0	0	0	0	0	0	0	0
4/21/2024	8:30 AM	0	0	0	0	0	0	0	0	0	0	0	0	0
4/21/2024	8:45 AM	0	0	0	0	0	0	0	0	0	0	0	0	0
4/21/2024	9:00 AM	0	0	0	0	0	0	0	0	0	0	0	0	0
4/21/2024	9:15 AM	0	0	0	0	0	0	0	0	0	0	0	0	0
4/21/2024	9:30 AM	0	0	0	0	0	0	0	0	0	0	0	0	0
4/21/2024	9:45 AM	0	0	0	0	0	0	0	0	0	0	0	0	0
4/21/2024	10:00 AM	0	0	0	0	0	0	0	0	0	0	0	0	0
4/21/2024	10:15 AM	0	0	0	0	0	0	0	0	0	0	0	0	0
4/21/2024	10:30 AM	0	0	0	0	0	0	0	0	0	0	0	0	0
4/21/2024	10:45 AM	0	0	0	0	0	0	0	0	0	0	0	0	0
4/21/2024	11:00 AM	0	0	0	0	0	0	0	0	0	0	0	0	0
4/21/2024	11:15 AM	0	0	0	0	0	0	0	0	0	0	0	0	0
4/21/2024	11:30 AM	0	0	0	0	0	0	0	0	0	0	0	0	0
4/21/2024	11:45 AM	0	0	0	0	0	0	0	0	0	0	0	0	0
4/21/2024	12:00 PM	0	0	0	0	0	0	0	0	0	0	0	0	0
4/21/2024	12:15 PM	0	0	0	0	0	0	0	0	0	0	0	0	0
4/21/2024	12:30 PM	0	0	0	0	0	0	0	0	0	0	0	0	0
4/21/2024	12:45 PM	0	0	0	0	0	0	0	0	0	0	0	0	0
4/21/2024	1:00 PM	0	0	0	0	0	0	0	0	0	0	0	0	0
4/21/2024	1:15 PM	0	0	0	0	0	0	0	0	0	0	0	0	0
4/21/2024	1:30 PM	0	0	0	0	0	0	0	0	0	0	0	0	0
4/21/2024	1:45 PM	0	0	0	0	0	0	0	0	0	0	0	0	0
4/21/2024	2:00 PM	0	0	0	0	0	0	0	0	0	0	0	0	0
4/21/2024	2:15 PM	0	0	0	0	0	0	0	0	0	0	0	0	0
4/21/2024	2:30 PM	0	0	0	0	0	0	0	0	0	0	0	0	0
4/21/2024	2:45 PM	0	0	0	0	0	0	0	0	0	0	0	0	0
4/21/2024	3:00 PM	0	0	0	0	0	0	0	0	0	0	0	0	0
4/21/2024	3:15 PM	0	0	0	0	0	0	0	0	0	0	0	0	0
4/21/2024	3:30 PM	0	0	0	0	0	0	0	0	0	0	0	0	0
4/21/2024	3:45 PM	0	0	0	0	0	0	0	0	0	0	0	0	0
4/21/2024	4:00 PM	0	0	0	0	0	0	0	0	0	0	0	0	0
4/21/2024	4:15 PM	0	0	0	0	0	0	0	0	0	0	0	0	0
4/21/2024	4:30 PM	0	0	0	0	0	0	0	0	0	0	0	0	0
4/21/2024	4:45 PM	0	0	0	0	0	0	0	0	0	0	0	0	0
4/21/2024	5:00 PM	0	0	0	0	0	0	0	0	0	0	0	0	0
4/21/2024	5:15 PM	0	0	0	0	0	0	0	0	0	0	0	0	0
4/21/2024	5:30 PM	0	0	0	0	0	0	0	0	0	0	0	0	0
4/21/2024	5:45 PM	0	0	0	0	0	0	0	0	0	0	0	0	0
4/21/2024	6:00 PM	0	0	0	0	0	0	0	0	0	0	0	0	0
4/21/2024	6:15 PM	0	0	0	0	0	0	0	0	0	0	0	0	0
4/21/2024	6:30 PM	0	0	0	0	0	0	0	0	0	0	0	0	0
4/21/2024	6:45 PM	0	0	0	0	0	0	0	0	0	0	0	0	0
4/21/2024	7:00 PM	0	0	0	0	0	0	0	0	0	0	0	0	0
4/21/2024	7:15 PM	0	0	0	0	0	0	0	0	0	0	0	0	0
4/21/2024	7:30 PM	0	0	0	0	0	0	0	0	0	0	0	0	0
4/21/2024	7:45 PM	0	0	0	0	0	0	0	0	0	0	0	0	0
4/21/2024	8:00 PM	0	0	0	0	0	0	0	0	0	0	0	0	0
4/21/2024	8:15 PM	0	0	0	0	0	0	0	0	0	0	0	0	0
4/21/2024	8:30 PM	0	0	0	0	0	0	0	0	0	0	0	0	0
4/21/2024	8:45 PM	0	0	0	0	0	0	0	0	0	0	0	0	0
4/21/2024	9:00 PM	0	0	0	0	0	0	0	0	0	0	0	0	0
4/21/2024	9:15 PM	0	0	0	0	0	0	0	0	0	0	0	0	0
4/21/2024	9:30 PM	0	0	0	0	0	0	0	0	0	0	0	0	0
4/21/2024	9:45 PM	0	0	0	0	0	0	0	0	0	0	0	0	0
4/21/2024	10:00 PM	0	0	0	0	0	0	0	0	0	0	0	0	0
4/21/2024	10:15 PM	0	0	0	0	0	0	0	0	0	0	0	0	0
4/21/2024	10:30 PM	0	0	0	0	0	0	0	0	0	0	0	0	0
4/21/2024	10:45 PM	0	0	0	0	0	0	0	0	0	0	0	0	0
4/21/2024	11:00 PM	0	0	0	0	0	0	0	0	0	0	0	0	0
4/21/2024	11:15 PM	0	0	0	0	0	0	0	0	0	0	0	0	0
4/21/2024	11:30 PM	0	0	0	0	0	0	0	0	0	0	0	0	0
4/21/2024	11:45 PM	0	0	0	0	0	0	0	0	0	0	0	0	0

4/22/2024	12:00 AM	0	0	0	0	0	0	0	0	0	0	0	0	0
4/22/2024	12:15 AM	0	0	0	0	0	0	0	0	0	0	0	0	0
4/22/2024	12:30 AM	0	0	0	0	0	0	0	0	0	0	0	0	0
4/22/2024	12:45 AM	0	0	0	0	0	0	0	0	0	0	0	0	0
4/22/2024	1:00 AM	0	0	0	0	0	0	0	0	0	0	0	0	0
4/22/2024	1:15 AM	0	0	0	0	0	0	0	0	0	0	0	0	0
4/22/2024	1:30 AM	0	0	0	0	0	0	0	0	0	0	0	0	0
4/22/2024	1:45 AM	0	0	0	0	0	0	0	0	0	0	0	0	0
4/22/2024	2:00 AM	0	0	0	0	0	0	0	0	0	0	0	0	0
4/22/2024	2:15 AM	0	0	0	0	0	0	0	0	0	0	0	0	0
4/22/2024	2:30 AM	0	0	0	0	0	0	0	0	0	0	0	0	0
4/22/2024	2:45 AM	0	0	0	0	0	0	0	0	0	0	0	0	0
4/22/2024	3:00 AM	0	0	0	0	0	0	0	0	0	0	0	0	0
4/22/2024	3:15 AM	0	0	0	0	0	0	0	0	0	0	0	0	0
4/22/2024	3:30 AM	0	0	0	0	0	0	0	0	0	0	0	0	0
4/22/2024	3:45 AM	0	0	0	0	0	0	0	0	0	0	0	0	0
4/22/2024	4:00 AM	0	0	0	0	0	0	0	0	0	0	0	0	0
4/22/2024	4:15 AM	0	0	0	0	0	0	0	0	0	0	0	0	0
4/22/2024	4:30 AM	0	0	0	0	0	0	0	0	0	0	0	0	0
4/22/2024	4:45 AM	0	0	0	0	0	0	0	0	0	0	0	0	0
4/22/2024	5:00 AM	0	0	0	0	0	0	0	0	0	0	0	0	0
4/22/2024	5:15 AM	0	0	0	0	0	0	0	0	0	0	0	0	0
4/22/2024	5:30 AM	0	0	0	0	0	0	0	0	0	0	0	0	0
4/22/2024	5:45 AM	0	0	0	0	0	0	0	0	0	0	0	0	0
4/22/2024	6:00 AM	0	0	0	0	0	0	0	0	0	0	0	0	0
4/22/2024	6:15 AM	0	0	0	0	0	0	0	0	0	0	0	0	0
4/22/2024	6:30 AM	0	0	0	0	0	0	0	0	0	0	0	0	0
4/22/2024	6:45 AM	0	0	0	0	0	0	0	0	0	0	0	0	0
4/22/2024	7:00 AM	0	0	0	0	0	0	0	0	0	0	0	0	0
4/22/2024	7:15 AM	0	0	0	0	0	0	0	0	0	0	0	0	0
4/22/2024	7:30 AM	0	0	0	0	0	0	0	0	0	0	0	0	0
4/22/2024	7:45 AM	0	0	0	0	0	0	0	0	0	0	0	0	0
4/22/2024	8:00 AM	0	0	0	0	0	0	0	0	0	0	0	0	0
4/22/2024	8:15 AM	0	0	0	0	0	0	0	0	0	0	0	0	0
4/22/2024	8:30 AM	0	0	0	0	0	0	0	0	0	0	0	0	0
4/22/2024	8:45 AM	0	0	0	0	0	0	0	0	0	0	0	0	0
4/22/2024	9:00 AM	0	0	0	0	0	0	0	0	0	0	0	0	0
4/22/2024	9:15 AM	0	0	0	0	0	0	0	0	0	0	0	0	0
4/22/2024	9:30 AM	0	0	0	0	0	0	0	0	0	0	0	0	0
4/22/2024	9:45 AM	0	0	0	0	0	0	0	0	0	0	0	0	0
4/22/2024	10:00 AM	0	0	0	0	0	0	0	0	0	0	0	0	0
4/22/2024	10:15 AM	0	0	0	0	0	0	0	0	0	0	0	0	0
4/22/2024	10:30 AM	0	0	0	0	0	0	0	0	0	0	0	0	0
4/22/2024	10:45 AM	0	0	0	0	0	0	0	0	0	0	0	0	0
4/22/2024	11:00 AM	0	0	0	0	0	0	0	0	0	0	0	0	0
4/22/2024	11:15 AM	0	0	0	0	0	0	0	0	0	0	0	0	0
4/22/2024	11:30 AM	0	0	0	0	0	0	0	0	0	0	0	0	0
4/22/2024	11:45 AM	0	0	0	0	0	0	0	0	0	0	0	0	0
4/22/2024	12:00 PM	0	0	0	0	0	0	0	0	0	0	0	0	0
4/22/2024	12:15 PM	0	0	0	0	0	0	0	0	0	0	0	0	0
4/22/2024	12:30 PM	0	0	0	0	0	0	0	0	0	0	0	0	0
4/22/2024	12:45 PM	0	0	0	0	0	0	0	0	0	0	0	0	0
4/22/2024	1:00 PM	0	0	0	0	0	0	0	0	0	0	0	0	0
4/22/2024	1:15 PM	0	0	0	0	0	0	0	0	0	0	0	0	0
4/22/2024	1:30 PM	0	0	0	0	0	0	0	0	0	0	0	0	0
4/22/2024	1:45 PM	0	0	0	0	0	0	0	0	0	0	0	0	0
4/22/2024	2:00 PM	0	0	0	0	0	0	0	0	0	0	0	0	0
4/22/2024	2:15 PM	0	0	0	0	0	0	0	0	0	0	0	0	0
4/22/2024	2:30 PM	0	0	0	0	0	0	0	0	0	0	0	0	0
4/22/2024	2:45 PM	0	0	0	0	0	0	0	0	0	0	0	0	0
4/22/2024	3:00 PM	0	0	0	0	0	0	0	0	0	0	0	0	0
4/22/2024	3:15 PM	0	0	0	0	0	0	0	0	0	0	0	0	0
4/22/2024	3:30 PM	0	0	0	0	0	0	0	0	0	0	0	0	0
4/22/2024	3:45 PM	0	0	0	0	0	0	0	0	0	0	0	0	0
4/22/2024	4:00 PM	0	0	0	0	0	0	0	0	0	0	0	0	0
4/22/2024	4:15 PM	0	0	0	0	0	0	0	0	0	0	0	0	0
4/22/2024	4:30 PM	0	0	0	0	0	0	0	0	0	0	0	0	0
4/22/2024	4:45 PM	0	0	0	0	0	0	0	0	0	0	0	0	0
4/22/2024	5:00 PM	0	0	0	0	0	0	0	0	0	0	0	0	0
4/22/2024	5:15 PM	0	0	0	0	0	0	0	0	0	0	0	0	0
4/22/2024	5:30 PM	0	0	0	0	0	0	0	0	0	0	0	0	0
4/22/2024	5:45 PM	0	0	0	0	0	0	0	0	0	0	0	0	0
4/22/2024	6:00 PM	0	0	0	0	0	0	0	0	0	0	0	0	0
4/22/2024	6:15 PM	0	0	0	0	0	0	0	0	0	0	0	0	0
4/22/2024	6:30 PM	0	0	0	0	0	0	0	0	0	0	0	0	0
4/22/2024	6:45 PM	0	0	0	0	0	0	0	0	0	0	0	0	0
4/22/2024	7:00 PM	0	0	0	0	0	0	0	0	0	0	0	0	0
4/22/2024	7:15 PM	0	0	0	0	0	0	0	0	0	0	0	0	0
4/22/2024	7:30 PM	0	0	0	0	0	0	0	0	0	0	0	0	0
4/22/2024	7:45 PM	0	0	0	0	0	0	0	0	0	0	0	0	0
4/22/2024	8:00 PM	0	0	0	0	0	0	0	0	0	0	0	0	0
4/22/2024	8:15 PM	0	0	0	0	0	0	0	0	0	0	0	0	0
4/22/2024	8:30 PM	0	0	0	0	0	0	0	0	0	0	0	0	0
4/22/2024	8:45 PM	0	0	0	0	0	0	0	0	0	0	0	0	0
4/22/2024	9:00 PM	0	0	0	0	0	0	0	0	0	0	0	0	0
4/22/2024	9:15 PM	0	0	0	0	0	0	0	0	0	0	0	0	0
4/22/2024	9:30 PM	0	0	0	0	0	0	0	0	0	0	0	0	0
4/22/2024	9:45 PM	0	0	0	0	0	0	0	0	0	0	0	0	0
4/22/2024	10:00 PM	0	0	0	0	0	0	0	0	0	0	0	0	0
4/22/2024	10:15 PM	0	0	0	0	0	0	0	0	0	0	0	0	0
4/22/2024	10:30 PM	0	0	0	0	0	0	0	0	0	0	0	0	0
4/22/2024	10:45 PM	0	0	0	0	0	0	0	0	0	0	0	0	0
4/22/2024	11:00 PM	0	0	0	0	0	0	0	0	0	0	0	0	0
4/22/2024	11:15 PM	0	0	0	0	0	0	0	0	0	0	0	0	0
4/22/2024	11:30 PM	0	0	0	0	0	0	0	0	0	0	0	0	0
4/22/2024	11:45 PM	0	0	0	0	0	0	0	0	0	0	0	0	0

4/23/2024	12:00 AM	0	0	0	0	0	0	0	0	0	0	0	0	0
4/23/2024	12:15 AM	0	0	0	0	0	0	0	0	0	0	0	0	0
4/23/2024	12:30 AM	0	0	0	0	0	0	0	0	0	0	0	0	0
4/23/2024	12:45 AM	0	0	0	0	0	0	0	0	0	0	0	0	0
4/23/2024	1:00 AM	0	0	0	0	0	0	0	0	0	0	0	0	0
4/23/2024	1:15 AM	0	0	0	0	0	0	0	0	0	0	0	0	0
4/23/2024	1:30 AM	0	0	0	0	0	0	0	0	0	0	0	0	0
4/23/2024	1:45 AM	0	0	0	0	0	0	0	0	0	0	0	0	0
4/23/2024	2:00 AM	0	0	0	0	0	0	0	0	0	0	0	0	0
4/23/2024	2:15 AM	0	0	0	0	0	0	0	0	0	0	0	0	0
4/23/2024	2:30 AM	0	0	0	0	0	0	0	0	0	0	0	0	0
4/23/2024	2:45 AM	0	0	0	0	0	0	0	0	0	0	0	0	0
4/23/2024	3:00 AM	0	0	0	0	0	0	0	0	0	0	0	0	0
4/23/2024	3:15 AM	0	0	0	0	0	0	0	0	0	0	0	0	0
4/23/2024	3:30 AM	0	0	0	0	0	0	0	0	0	0	0	0	0
4/23/2024	3:45 AM	0	0	0	0	0	0	0	0	0	0	0	0	0
4/23/2024	4:00 AM	0	0	0	0	0	0	0	0	0	0	0	0	0
4/23/2024	4:15 AM	0	0	0	0	0	0	0	0	0	0	0	0	0
4/23/2024	4:30 AM	0	0	0	0	0	0	0	0	0	0	0	0	0
4/23/2024	4:45 AM	0	0	0	0	0	0	0	0	0	0	0	0	0
4/23/2024	5:00 AM	0	0	0	0	0	0	0	0	0	0	0	0	0
4/23/2024	5:15 AM	0	0	0	0	0	0	0	0	0	0	0	0	0
4/23/2024	5:30 AM	0	0	0	0	0	0	0	0	0	0	0	0	0
4/23/2024	5:45 AM	0	0	0	0	0	0	0	0	0	0	0	0	0
4/23/2024	6:00 AM	0	0	0	0	0	0	0	0	0	0	0	0	0
4/23/2024	6:15 AM	0	0	0	0	0	0	0	0	0	0	0	0	0
4/23/2024	6:30 AM	0	0	0	0	0	0	0	0	0	0	0	0	0
4/23/2024	6:45 AM	0	0	0	0	0	0	0	0	0	0	0	0	0
4/23/2024	7:00 AM	0	0	0	0	0	0	0	0	0	0	0	0	0
4/23/2024	7:15 AM	0	0	0	0	0	0	0	0	0	0	0	0	0
4/23/2024	7:30 AM	0	0	0	0	0	0	0	0	0	0	0	0	0
4/23/2024	7:45 AM	0	0	0	0	0	0	0	0	0	0	0	0	0
4/23/2024	8:00 AM	0	0	0	0	0	0	0	0	0	0	0	0	0
4/23/2024	8:15 AM	0	0	0	0	0	0	0	0	0	0	0	0	0
4/23/2024	8:30 AM	0	0	0	0	0	0	0	0	0	0	0	0	0
4/23/2024	8:45 AM	0	0	0	0	0	0	0	0	0	0	0	0	0
4/23/2024	9:00 AM	0	0	0	0	0	0	0	0	0	0	0	0	0
4/23/2024	9:15 AM	0	0	0	0	0	0	0	0	0	0	0	0	0
4/23/2024	9:30 AM	0	0	0	0	0	0	0	0	0	0	0	0	0
4/23/2024	9:45 AM	0	0	0	0	0	0	0	0	0	0	0	0	0
4/23/2024	10:00 AM	0	0	0	0	0	0	0	0	0	0	0	0	0
4/23/2024	10:15 AM	0	0	0	0	0	0	0	0	0	0	0	0	0
4/23/2024	10:30 AM	0	0	0	0	0	0	0	0	0	0	0	0	0
4/23/2024	10:45 AM	0	0	0	0	0	0	0	0	0	0	0	0	0
4/23/2024	11:00 AM	0	0	0	0	0	0	0	0	0	0	0	0	0
4/23/2024	11:15 AM	0	0	0	0	0	0	0	0	0	0	0	0	0
4/23/2024	11:30 AM	0	0	0	0	0	0	0	0	0	0	0	0	0
4/23/2024	11:45 AM	0	0	0	0	0	0	0	0	0	0	0	0	0
4/23/2024	12:00 PM	0	0	0	0	0	0	0	0	0	0	0	0	0
4/23/2024	12:15 PM	0	0	0	0	0	0	0	0	0	0	0	0	0
4/23/2024	12:30 PM	0	0	0	0	0	0	0	0	0	0	0	0	0
4/23/2024	12:45 PM	0	0	0	0	0	0	0	0	0	0	0	0	0
4/23/2024	1:00 PM	0	0	0	0	0	0	0	0	0	0	0	0	0
4/23/2024	1:15 PM	0	0	0	0	0	0	0	0	0	0	0	0	0
4/23/2024	1:30 PM	0	0	0	0	0	0	0	0	0	0	0	0	0
4/23/2024	1:45 PM	0	0	0	0	0	0	0	0	0	0	0	0	0
4/23/2024	2:00 PM	0	0	0	0	0	0	0	0	0	0	0	0	0
4/23/2024	2:15 PM	0	0	0	0	0	0	0	0	0	0	0	0	0
4/23/2024	2:30 PM	0	0	0	0	0	0	0	0	0	0	0	0	0
4/23/2024	2:45 PM	0	0	0	0	0	0	0	0	0	0	0	0	0
4/23/2024	3:00 PM	0	0	0	0	0	0	0	0	0	0	0	0	0
4/23/2024	3:15 PM	0	0	0	0	0	0	0	0	0	0	0	0	0
4/23/2024	3:30 PM	0	0	0	0	0	0	0	0	0	0	0	0	0
4/23/2024	3:45 PM	0	0	0	0	0	0	0	0	0	0	0	0	0
4/23/2024	4:00 PM	0	0	0	0	0	0	0	0	0	0	0	0	0
4/23/2024	4:15 PM	0	0	0	0	0	0	0	0	0	0	0	0	0
4/23/2024	4:30 PM	0	0	0	0	0	0	0	0	0	0	0	0	0
4/23/2024	4:45 PM	0	0	0	0	0	0	0	0	0	0	0	0	0
4/23/2024	5:00 PM	0	0	0	0	0	0	0	0	0	0	0	0	0
4/23/2024	5:15 PM	0	0	0	0	0	0	0	0	0	0	0	0	0
4/23/2024	5:30 PM	0	0	0	0	0	0	0	0	0	0	0	0	0
4/23/2024	5:45 PM	0	0	0	0	0	0	0	0	0	0	0	0	0
4/23/2024	6:00 PM	0	0	0	0	0	0	0	0	0	0	0	0	0
4/23/2024	6:15 PM	0	0	0	0	0	0	0	0	0	0	0	0	0
4/23/2024	6:30 PM	0	0	0	0	0	0	0	0	0	0	0	0	0
4/23/2024	6:45 PM	0	0	0	0	0	0	0	0	0	0	0	0	0
4/23/2024	7:00 PM	0	0	0	0	0	0	0	0	0	0	0	0	0
4/23/2024	7:15 PM	0	0	0	0	0	0	0	0	0	0	0	0	0
4/23/2024	7:30 PM	0	0	0	0	0	0	0	0	0	0	0	0	0
4/23/2024	7:45 PM	0	0	0	0	0	0	0	0	0	0	0	0	0
4/23/2024	8:00 PM	0	0	0	0	0	0	0	0	0	0	0	0	0
4/23/2024	8:15 PM	0	0	0	0	0	0	0	0	0	0	0	0	0
4/23/2024	8:30 PM	0	0	0	0	0	0	0	0	0	0	0	0	0
4/23/2024	8:45 PM	0	0	0	0	0	0	0	0	0	0	0	0	0
4/23/2024	9:00 PM	0	0	0	0	0	0	0	0	0	0	0	0	0
4/23/2024	9:15 PM	0	0	0	0	0	0	0	0	0	0	0	0	0
4/23/2024	9:30 PM	0	0	0	0	0	0	0	0	0	0	0	0	0
4/23/2024	9:45 PM	0	0	0	0	0	0	0	0	0	0	0	0	0
4/23/2024	10:00 PM	0	0	0	0	0	0	0	0	0	0	0	0	0
4/23/2024	10:15 PM	0	0	0	0	0	0	0	0	0	0	0	0	0
4/23/2024	10:30 PM	0	0	0	0	0	0	0	0	0	0	0	0	0
4/23/2024	10:45 PM	0	0	0	0	0	0	0	0	0	0	0	0	0
4/23/2024	11:00 PM	0	0	0	0	0	0	0	0	0	0	0	0	0
4/23/2024	11:15 PM	0	0	0	0	0	0	0	0	0	0	0	0	0
4/23/2024	11:30 PM	0	0	0	0	0	0	0	0	0	0	0	0	0
4/23/2024	11:45 PM	0	0	0	0	0	0	0	0	0	0	0	0	0

4/24/2024	12:00 AM	0	0	0	0	0	0	0	0	0	0	0	0	0
4/24/2024	12:15 AM	0	0	0	0	0	0	0	0	0	0	0	0	0
4/24/2024	12:30 AM	0	0	0	0	0	0	0	0	0	0	0	0	0
4/24/2024	12:45 AM	0	0	0	0	0	0	0	0	0	0	0	0	0
4/24/2024	1:00 AM	0	0	0	0	0	0	0	0	0	0	0	0	0
4/24/2024	1:15 AM	0	0	0	0	0	0	0	0	0	0	0	0	0
4/24/2024	1:30 AM	0	0	0	0	0	0	0	0	0	0	0	0	0
4/24/2024	1:45 AM	0	0	0	0	0	0	0	0	0	0	0	0	0
4/24/2024	2:00 AM	0	0	0	0	0	0	0	0	0	0	0	0	0
4/24/2024	2:15 AM	0	0	0	0	0	0	0	0	0	0	0	0	0
4/24/2024	2:30 AM	0	0	0	0	0	0	0	0	0	0	0	0	0
4/24/2024	2:45 AM	0	0	0	0	0	0	0	0	0	0	0	0	0
4/24/2024	3:00 AM	0	0	0	0	0	0	0	0	0	0	0	0	0
4/24/2024	3:15 AM	0	0	0	0	0	0	0	0	0	0	0	0	0
4/24/2024	3:30 AM	0	0	0	0	0	0	0	0	0	0	0	0	0
4/24/2024	3:45 AM	0	0	0	0	0	0	0	0	0	0	0	0	0
4/24/2024	4:00 AM	0	0	0	0	0	0	0	0	0	0	0	0	0
4/24/2024	4:15 AM	0	0	0	0	0	0	0	0	0	0	0	0	0
4/24/2024	4:30 AM	0	0	0	0	0	0	0	0	0	0	0	0	0
4/24/2024	4:45 AM	0	0	0	0	0	0	0	0	0	0	0	0	0
4/24/2024	5:00 AM	0	0	0	0	0	0	0	0	0	0	0	0	0
4/24/2024	5:15 AM	0	0	0	0	0	0	0	0	0	0	0	0	0
4/24/2024	5:30 AM	0	0	0	0	0	0	0	0	0	0	0	0	0
4/24/2024	5:45 AM	0	0	0	0	0	0	0	0	0	0	0	0	0
4/24/2024	6:00 AM	0	0	0	0	0	0	0	0	0	0	0	0	0
4/24/2024	6:15 AM	0	0	0	0	0	0	0	0	0	0	0	0	0
4/24/2024	6:30 AM	0	0	0	0	0	0	0	0	0	0	0	0	0
4/24/2024	6:45 AM	0	0	0	0	0	0	0	0	0	0	0	0	0
4/24/2024	7:00 AM	0	0	0	0	0	0	0	0	0	0	0	0	0
4/24/2024	7:15 AM	0	0	0	0	0	0	0	0	0	0	0	0	0
4/24/2024	7:30 AM	0	0	0	0	0	0	0	0	0	0	0	0	0
4/24/2024	7:45 AM	0	0	0	0	0	0	0	0	0	0	0	0	0
4/24/2024	8:00 AM	0	0	0	0	0	0	0	0	0	0	0	0	0
4/24/2024	8:15 AM	0	0	0	0	0	0	0	0	0	0	0	0	0
4/24/2024	8:30 AM	0	0	0	0	0	0	0	0	0	0	0	0	0
4/24/2024	8:45 AM	0	0	0	0	0	0	0	0	0	0	0	0	0
4/24/2024	9:00 AM	0	0	0	0	0	0	0	0	0	0	0	0	0
4/24/2024	9:15 AM	0	0	0	0	0	0	0	0	0	0	0	0	0
4/24/2024	9:30 AM	0	0	0	0	0	0	0	0	0	0	0	0	0
4/24/2024	9:45 AM	0	0	0	0	0	0	0	0	0	0	0	0	0
4/24/2024	10:00 AM	0	0	0	0	0	0	0	0	0	0	0	0	0
4/24/2024	10:15 AM	0	0	0	0	0	0	0	0	0	0	0	0	0
4/24/2024	10:30 AM	0	0	0	0	0	0	0	0	0	0	0	0	0
4/24/2024	10:45 AM	0	0	0	0	0	0	0	0	0	0	0	0	0
4/24/2024	11:00 AM	0	0	0	0	0	0	0	0	0	0	0	0	0
4/24/2024	11:15 AM	0	0	0	0	0	0	0	0	0	0	0	0	0
4/24/2024	11:30 AM	0	0	0	0	0	0	0	0	0	0	0	0	0
4/24/2024	11:45 AM	0	0	0	0	0	0	0	0	0	0	0	0	0
4/24/2024	12:00 PM	0	0	0	0	0	0	0	0	0	0	0	0	0
4/24/2024	12:15 PM	0	0	0	0	0	0	0	0	0	0	0	0	0
4/24/2024	12:30 PM	0	0	0	0	0	0	0	0	0	0	0	0	0
4/24/2024	12:45 PM	0	0	0	0	0	0	0	0	0	0	0	0	0
4/24/2024	1:00 PM	0	0	0	0	0	0	0	0	0	0	0	0	0
4/24/2024	1:15 PM	0	0	0	0	0	0	0	0	0	0	0	0	0
4/24/2024	1:30 PM	0	0	0	0	0	0	0	0	0	0	0	0	0
4/24/2024	1:45 PM	0	0	0	0	0	0	0	0	0	0	0	0	0
4/24/2024	2:00 PM	0	0	0	0	0	0	0	0	0	0	0	0	0
4/24/2024	2:15 PM	0	0	0	0	0	0	0	0	0	0	0	0	0
4/24/2024	2:30 PM	0	0	0	0	0	0	0	0	0	0	0	0	0
4/24/2024	2:45 PM	0	0	0	0	0	0	0	0	0	0	0	0	0
4/24/2024	3:00 PM	0	0	0	0	0	0	0	0	0	0	0	0	0
4/24/2024	3:15 PM	0	0	0	0	0	0	0	0	0	0	0	0	0
4/24/2024	3:30 PM	0	0	0	0	0	0	0	0	0	0	0	0	0
4/24/2024	3:45 PM	0	0	0	0	0	0	0	0	0	0	0	0	0
4/24/2024	4:00 PM	0	0	0	0	0	0	0	0	0	0	0	0	0
4/24/2024	4:15 PM	0	0	0	0	0	0	0	0	0	0	0	0	0
4/24/2024	4:30 PM	0	0	0	0	0	0	0	0	0	0	0	0	0
4/24/2024	4:45 PM	0	0	0	0	0	0	0	0	0	0	0	0	0
4/24/2024	5:00 PM	0	0	0	0	0	0	0	0	0	0	0	0	0
4/24/2024	5:15 PM	0	0	0	0	0	0	0	0	0	0	0	0	0
4/24/2024	5:30 PM	0	0	0	0	0	0	0	0	0	0	0	0	0
4/24/2024	5:45 PM	0	0	0	0	0	0	0	0	0	0	0	0	0
4/24/2024	6:00 PM	0	0	0	0	0	0	0	0	0	0	0	0	0
4/24/2024	6:15 PM	0	0	0	0	0	0	0	0	0	0	0	0	0
4/24/2024	6:30 PM	0	0	0	0	0	0	0	0	0	0	0	0	0
4/24/2024	6:45 PM	0	0	0	0	0	0	0	0	0	0	0	0	0
4/24/2024	7:00 PM	0	0	0	0	0	0	0	0	0	0	0	0	0
4/24/2024	7:15 PM	0	0	0	0	0	0	0	0	0	0	0	0	0
4/24/2024	7:30 PM	0	0	0	0	0	0	0	0	0	0	0	0	0
4/24/2024	7:45 PM	0	0	0	0	0	0	0	0	0	0	0	0	0
4/24/2024	8:00 PM	0	0	0	0	0	0	0	0	0	0	0	0	0
4/24/2024	8:15 PM	0	0	0	0	0	0	0	0	0	0	0	0	0
4/24/2024	8:30 PM	0	0	0	0	0	0	0	0	0	0	0	0	0
4/24/2024	8:45 PM	0	0	0	0	0	0	0	0	0	0	0	0	0
4/24/2024	9:00 PM	0	0	0	0	0	0	0	0	0	0	0	0	0
4/24/2024	9:15 PM	0	0	0	0	0	0	0	0	0	0	0	0	0
4/24/2024	9:30 PM	0	0	0	0	0	0	0	0	0	0	0	0	0
4/24/2024	9:45 PM	0	0	0	0	0	0	0	0	0	0	0	0	0
4/24/2024	10:00 PM	0	0	0	0	0	0	0	0	0	0	0	0	0
4/24/2024	10:15 PM	0	0	0	0	0	0	0	0	0	0	0	0	0
4/24/2024	10:30 PM	0	0	0	0	0	0	0	0	0	0	0	0	0
4/24/2024	10:45 PM	0	0	0	0	0	0	0	0	0	0	0	0	0
4/24/2024	11:00 PM	0	0	0	0	0	0	0	0	0	0	0	0	0
4/24/2024	11:15 PM	0	0	0	0	0	0	0	0	0	0	0	0	0
4/24/2024	11:30 PM	0	0	0	0	0	0	0	0	0	0	0	0	0
4/24/2024	11:45 PM	0	0	0	0	0	0	0	0	0	0	0	0	0

4/25/2024	12:00 AM	0	0	0	0	0	0	0	0	0	0	0	0	0
4/25/2024	12:15 AM	0	0	0	0	0	0	0	0	0	0	0	0	0
4/25/2024	12:30 AM	0	0	0	0	0	0	0	0	0	0	0	0	0
4/25/2024	12:45 AM	0	0	0	0	0	0	0	0	0	0	0	0	0
4/25/2024	1:00 AM	0	0	0	0	0	0	0	0	0	0	0	0	0
4/25/2024	1:15 AM	0	0	0	0	0	0	0	0	0	0	0	0	0
4/25/2024	1:30 AM	0	0	0	0	0	0	0	0	0	0	0	0	0
4/25/2024	1:45 AM	0	0	0	0	0	0	0	0	0	0	0	0	0
4/25/2024	2:00 AM	0	0	0	0	0	0	0	0	0	0	0	0	0
4/25/2024	2:15 AM	0	0	0	0	0	0	0	0	0	0	0	0	0
4/25/2024	2:30 AM	0	0	0	0	0	0	0	0	0	0	0	0	0
4/25/2024	2:45 AM	0	0	0	0	0	0	0	0	0	0	0	0	0
4/25/2024	3:00 AM	0	0	0	0	0	0	0	0	0	0	0	0	0
4/25/2024	3:15 AM	0	0	0	0	0	0	0	0	0	0	0	0	0
4/25/2024	3:30 AM	0	0	0	0	0	0	0	0	0	0	0	0	0
4/25/2024	3:45 AM	0	0	0	0	0	0	0	0	0	0	0	0	0
4/25/2024	4:00 AM	0	0	0	0	0	0	0	0	0	0	0	0	0
4/25/2024	4:15 AM	0	0	0	0	0	0	0	0	0	0	0	0	0
4/25/2024	4:30 AM	0	0	0	0	0	0	0	0	0	0	0	0	0
4/25/2024	4:45 AM	0	0	0	0	0	0	0	0	0	0	0	0	0
4/25/2024	5:00 AM	0	0	0	0	0	0	0	0	0	0	0	0	0
4/25/2024	5:15 AM	0	0	0	0	0	0	0	0	0	0	0	0	0
4/25/2024	5:30 AM	0	0	0	0	0	0	0	0	0	0	0	0	0
4/25/2024	5:45 AM	0	0	0	0	0	0	0	0	0	0	0	0	0
4/25/2024	6:00 AM	0	0	0	0	0	0	0	0	0	0	0	0	0
4/25/2024	6:15 AM	0	0	0	0	0	0	0	0	0	0	0	0	0
4/25/2024	6:30 AM	0	0	0	0	0	0	0	0	0	0	0	0	0
4/25/2024	6:45 AM	0	0	0	0	0	0	0	0	0	0	0	0	0
4/25/2024	7:00 AM	0	0	0	0	0	0	0	0	0	0	0	0	0
4/25/2024	7:15 AM	0	0	0	0	0	0	0	0	0	0	0	0	0
4/25/2024	7:30 AM	0	0	0	0	0	0	0	0	0	0	0	0	0
4/25/2024	7:45 AM	0	0	0	0	0	0	0	0	0	0	0	0	0
4/25/2024	8:00 AM	0	0	0	0	0	0	0	0	0	0	0	0	0
4/25/2024	8:15 AM	0	0	0	0	0	0	0	0	0	0	0	0	0
4/25/2024	8:30 AM	0	0	0	0	0	0	0	0	0	0	0	0	0
4/25/2024	8:45 AM	0	0	0	0	0	0	0	0	0	0	0	0	0
4/25/2024	9:00 AM	0	0	0	0	0	0	0	0	0	0	0	0	0
4/25/2024	9:15 AM	0	0	0	0	0	0	0	0	0	0	0	0	0
4/25/2024	9:30 AM	0	0	0	0	0	0	0	0	0	0	0	0	0
4/25/2024	9:45 AM	0	0	0	0	0	0	0	0	0	0	0	0	0
4/25/2024	10:00 AM	0	0	0	0	0	0	0	0	0	0	0	0	0
4/25/2024	10:15 AM	0	0	0	0	0	0	0	0	0	0	0	0	0
4/25/2024	10:30 AM	0	0	0	0	0	0	0	0	0	0	0	0	0
4/25/2024	10:45 AM	0	0	0	0	0	0	0	0	0	0	0	0	0
4/25/2024	11:00 AM	0	0	0	0	0	0	0	0	0	0	0	0	0
4/25/2024	11:15 AM	0	0	0	0	0	0	0	0	0	0	0	0	0
4/25/2024	11:30 AM	0	0	0	0	0	0	0	0	0	0	0	0	0
4/25/2024	11:45 AM	0	0	0	0	0	0	0	0	0	0	0	0	0
4/25/2024	12:00 PM	0	0	0	0	0	0	0	0	0	0	0	0	0
4/25/2024	12:15 PM	0	0	0	0	0	0	0	0	0	0	0	0	0
4/25/2024	12:30 PM	0	0	0	0	0	0	0	0	0	0	0	0	0
4/25/2024	12:45 PM	0	0	0	0	0	0	0	0	0	0	0	0	0
4/25/2024	1:00 PM	0	0	0	0	0	0	0	0	0	0	0	0	0
4/25/2024	1:15 PM	0	0	0	0	0	0	0	0	0	0	0	0	0
4/25/2024	1:30 PM	0	0	0	0	0	0	0	0	0	0	0	0	0
4/25/2024	1:45 PM	0	0	0	0	0	0	0	0	0	0	0	0	0
4/25/2024	2:00 PM	0	0	0	0	0	0	0	0	0	0	0	0	0
4/25/2024	2:15 PM	0	0	0	0	0	0	0	0	0	0	0	0	0
4/25/2024	2:30 PM	0	0	0	0	0	0	0	0	0	0	0	0	0
4/25/2024	2:45 PM	0	0	0	0	0	0	0	0	0	0	0	0	0
4/25/2024	3:00 PM	0	0	0	0	0	0	0	0	0	0	0	0	0
4/25/2024	3:15 PM	0	0	0	0	0	0	0	0	0	0	0	0	0
4/25/2024	3:30 PM	0	0	0	0	0	0	0	0	0	0	0	0	0
4/25/2024	3:45 PM	0	0	0	0	0	0	0	0	0	0	0	0	0
4/25/2024	4:00 PM	0	0	0	0	0	0	0	0	0	0	0	0	0
4/25/2024	4:15 PM	0	0	0	0	0	0	0	0	0	0	0	0	0
4/25/2024	4:30 PM	0	0	0	0	0	0	0	0	0	0	0	0	0
4/25/2024	4:45 PM	0	0	0	0	0	0	0	0	0	0	0	0	0
4/25/2024	5:00 PM	0	0	0	0	0	0	0	0	0	0	0	0	0
4/25/2024	5:15 PM	0	0	0	0	0	0	0	0	0	0	0	0	0
4/25/2024	5:30 PM	0	0	0	0	0	0	0	0	0	0	0	0	0
4/25/2024	5:45 PM	0	0	0	0	0	0	0	0	0	0	0	0	0
4/25/2024	6:00 PM	0	0	0	0	0	0	0	0	0	0	0	0	0
4/25/2024	6:15 PM	0	0	0	0	0	0	0	0	0	0	0	0	0
4/25/2024	6:30 PM	0	0	0	0	0	0	0	0	0	0	0	0	0
4/25/2024	6:45 PM	0	0	0	0	0	0	0	0	0	0	0	0	0
4/25/2024	7:00 PM	0	0	0	0	0	0	0	0	0	0	0	0	0
4/25/2024	7:15 PM	0	0	0	0	0	0	0	0	0	0	0	0	0
4/25/2024	7:30 PM	0	0	0	0	0	0	0	0	0	0	0	0	0
4/25/2024	7:45 PM	0	0	0	0	0	0	0	0	0	0	0	0	0
4/25/2024	8:00 PM	0	0	0	0	0	0	0	0	0	0	0	0	0
4/25/2024	8:15 PM	0	0	0	0	0	0	0	0	0	0	0	0	0
4/25/2024	8:30 PM	0	0	0	0	0	0	0	0	0	0	0	0	0
4/25/2024	8:45 PM	0	0	0	0	0	0	0	0	0	0	0	0	0
4/25/2024	9:00 PM	0	0	0	0	0	0	0	0	0	0	0	0	0
4/25/2024	9:15 PM	0	0	0	0	0	0	0	0	0	0	0	0	0
4/25/2024	9:30 PM	0	0	0	0	0	0	0	0	0	0	0	0	0
4/25/2024	9:45 PM	0	0	0	0	0	0	0	0	0	0	0	0	0
4/25/2024	10:00 PM	0	0	0	0	0	0	0	0	0	0	0	0	0
4/25/2024	10:15 PM	0	0	0	0	0	0	0	0	0	0	0	0	0
4/25/2024	10:30 PM	0	0	0	0	0	0	0	0	0	0	0	0	0
4/25/2024	10:45 PM	0	0	0	0	0	0	0	0	0	0	0	0	0
4/25/2024	11:00 PM	0	0	0	0	0	0	0	0	0	0	0	0	0
4/25/2024	11:15 PM	0	0	0	0	0	0	0	0	0	0	0	0	0
4/25/2024	11:30 PM	0	0	0	0	0	0	0	0	0	0	0	0	0
4/25/2024	11:45 PM	0	0	0	0	0	0	0	0	0	0	0	0	0

4/26/2024	12:00 AM	0	0	0	0	0	0	0	0	0	0	0	0	0
4/26/2024	12:15 AM	0	0	0	0	0	0	0	0	0	0	0	0	0
4/26/2024	12:30 AM	0	0	0	0	0	0	0	0	0	0	0	0	0
4/26/2024	12:45 AM	0	0	0	0	0	0	0	0	0	0	0	0	0
4/26/2024	1:00 AM	0	0	0	0	0	0	0	0	0	0	0	0	0
4/26/2024	1:15 AM	0	0	0	0	0	0	0	0	0	0	0	0	0
4/26/2024	1:30 AM	0	0	0	0	0	0	0	0	0	0	0	0	0
4/26/2024	1:45 AM	0	0	0	0	0	0	0	0	0	0	0	0	0
4/26/2024	2:00 AM	0	0	0	0	0	0	0	0	0	0	0	0	0
4/26/2024	2:15 AM	0	0	0	0	0	0	0	0	0	0	0	0	0
4/26/2024	2:30 AM	0	0	0	0	0	0	0	0	0	0	0	0	0
4/26/2024	2:45 AM	0	0	0	0	0	0	0	0	0	0	0	0	0
4/26/2024	3:00 AM	0	0	0	0	0	0	0	0	0	0	0	0	0
4/26/2024	3:15 AM	0	0	0	0	0	0	0	0	0	0	0	0	0
4/26/2024	3:30 AM	0	0	0	0	0	0	0	0	0	0	0	0	0
4/26/2024	3:45 AM	0	0	0	0	0	0	0	0	0	0	0	0	0
4/26/2024	4:00 AM	0	0	0	0	0	0	0	0	0	0	0	0	0
4/26/2024	4:15 AM	0	0	0	0	0	0	0	0	0	0	0	0	0
4/26/2024	4:30 AM	0	0	0	0	0	0	0	0	0	0	0	0	0
4/26/2024	4:45 AM	0	0	0	0	0	0	0	0	0	0	0	0	0
4/26/2024	5:00 AM	0	0	0	0	0	0	0	0	0	0	0	0	0
4/26/2024	5:15 AM	0	0	0	0	0	0	0	0	0	0	0	0	0
4/26/2024	5:30 AM	0	0	0	0	0	0	0	0	0	0	0	0	0
4/26/2024	5:45 AM	0	0	0	0	0	0	0	0	0	0	0	0	0
4/26/2024	6:00 AM	0	0	0	0	0	0	0	0	0	0	0	0	0
4/26/2024	6:15 AM	0	0	0	0	0	0	0	0	0	0	0	0	0
4/26/2024	6:30 AM	0	0	0	0	0	0	0	0	0	0	0	0	0
4/26/2024	6:45 AM	0	0	0	0	0	0	0	0	0	0	0	0	0
4/26/2024	7:00 AM	0	0	0	0	0	0	0	0	0	0	0	0	0
4/26/2024	7:15 AM	0	0	0	0	0	0	0	0	0	0	0	0	0
4/26/2024	7:30 AM	0	0	0	0	0	0	0	0	0	0	0	0	0
4/26/2024	7:45 AM	0	0	0	0	0	0	0	0	0	0	0	0	0
4/26/2024	8:00 AM	0	0	0	0	0	0	0	0	0	0	0	0	0
4/26/2024	8:15 AM	0	0	0	0	0	0	0	0	0	0	0	0	0
4/26/2024	8:30 AM	0	0	0	0	0	0	0	0	0	0	0	0	0
4/26/2024	8:45 AM	0	0	0	0	0	0	0	0	0	0	0	0	0
4/26/2024	9:00 AM	0	0	0	0	0	0	0	0	0	0	0	0	0
4/26/2024	9:15 AM	0	0	0	0	0	0	0	0	0	0	0	0	0
4/26/2024	9:30 AM	0	0	0	0	0	0	0	0	0	0	0	0	0
4/26/2024	9:45 AM	0	0	0	0	0	0	0	0	0	0	0	0	0
4/26/2024	10:00 AM	0	0	0	0	0	0	0	0	0	0	0	0	0
4/26/2024	10:15 AM	0	0	0	0	0	0	0	0	0	0	0	0	0
4/26/2024	10:30 AM	0	0	0	0	0	0	0	0	0	0	0	0	0
4/26/2024	10:45 AM	0	0	0	0	0	0	0	0	0	0	0	0	0
4/26/2024	11:00 AM	0	0	0	0	0	0	0	0	0	0	0	0	0
4/26/2024	11:15 AM	0	0	0	0	0	0	0	0	0	0	0	0	0
4/26/2024	11:30 AM	0	0	0	0	0	0	0	0	0	0	0	0	0
4/26/2024	11:45 AM	0	0	0	0	0	0	0	0	0	0	0	0	0
4/26/2024	12:00 PM	0	0	0	0	0	0	0	0	0	0	0	0	0
4/26/2024	12:15 PM	0	0	0	0	0	0	0	0	0	0	0	0	0
4/26/2024	12:30 PM	0	0	0	0	0	0	0	0	0	0	0	0	0
4/26/2024	12:45 PM	0	0	0	0	0	0	0	0	0	0	0	0	0
4/26/2024	1:00 PM	0	0	0	0	0	0	0	0	0	0	0	0	0
4/26/2024	1:15 PM	0	0	0	0	0	0	0	0	0	0	0	0	0
4/26/2024	1:30 PM	0	0	0	0	0	0	0	0	0	0	0	0	0
4/26/2024	1:45 PM	0	0	0	0	0	0	0	0	0	0	0	0	0
4/26/2024	2:00 PM	0	0	0	0	0	0	0	0	0	0	0	0	0
4/26/2024	2:15 PM	0	0	0	0	0	0	0	0	0	0	0	0	0
4/26/2024	2:30 PM	0	0	0	0	0	0	0	0	0	0	0	0	0
4/26/2024	2:45 PM	0	0	0	0	0	0	0	0	0	0	0	0	0
4/26/2024	3:00 PM	0	0	0	0	0	0	0	0	0	0	0	0	0
4/26/2024	3:15 PM	0	0	0	0	0	0	0	0	0	0	0	0	0
4/26/2024	3:30 PM	0	0	0	0	0	0	0	0	0	0	0	0	0
4/26/2024	3:45 PM	0	0	0	0	0	0	0	0	0	0	0	0	0
4/26/2024	4:00 PM	0	0	0	0	0	0	0	0	0	0	0	0	0
4/26/2024	4:15 PM	0	0	0	0	0	0	0	0	0	0	0	0	0
4/26/2024	4:30 PM	0	0	0	0	0	0	0	0	0	0	0	0	0
4/26/2024	4:45 PM	0	0	0	0	0	0	0	0	0	0	0	0	0
4/26/2024	5:00 PM	0	0	0	0	0	0	0	0	0	0	0	0	0
4/26/2024	5:15 PM	0	0	0	0	0	0	0	0	0	0	0	0	0
4/26/2024	5:30 PM	0	0	0	0	0	0	0	0	0	0	0	0	0
4/26/2024	5:45 PM	0	0	0	0	0	0	0	0	0	0	0	0	0
4/26/2024	6:00 PM	0	0	0	0	0	0	0	0	0	0	0	0	0
4/26/2024	6:15 PM	0	0	0	0	0	0	0	0	0	0	0	0	0
4/26/2024	6:30 PM	0	0	0	0	0	0	0	0	0	0	0	0	0
4/26/2024	6:45 PM	0	0	0	0	0	0	0	0	0	0	0	0	0
4/26/2024	7:00 PM	0	0	0	0	0	0	0	0	0	0	0	0	0
4/26/2024	7:15 PM	0	0	0	0	0	0	0	0	0	0	0	0	0
4/26/2024	7:30 PM	0	0	0	0	0	0	0	0	0	0	0	0	0
4/26/2024	7:45 PM	0	0	0	0	0	0	0	0	0	0	0	0	0
4/26/2024	8:00 PM	0	0	0	0	0	0	0	0	0	0	0	0	0
4/26/2024	8:15 PM	0	0	0	0	0	0	0	0	0	0	0	0	0
4/26/2024	8:30 PM	0	0	0	0	0	0	0	0	0	0	0	0	0
4/26/2024	8:45 PM	0	0	0	0	0	0	0	0	0	0	0	0	0
4/26/2024	9:00 PM	0	0	0	0	0	0	0	0	0	0	0	0	0
4/26/2024	9:15 PM	0	0	0	0	0	0	0	0	0	0	0	0	0
4/26/2024	9:30 PM	0	0	0	0	0	0	0	0	0	0	0	0	0
4/26/2024	9:45 PM	0	0	0	0	0	0	0	0	0	0	0	0	0
4/26/2024	10:00 PM	0	0	0	0	0	0	0	0	0	0	0	0	0
4/26/2024	10:15 PM	0	0	0	0	0	0	0	0	0	0	0	0	0
4/26/2024	10:30 PM	0	0	0	0	0	0	0	0	0	0	0	0	0
4/26/2024	10:45 PM	0	0	0	0	0	0	0	0	0	0	0	0	0
4/26/2024	11:00 PM	0	0	0	0	0	0	0	0	0	0	0	0	0
4/26/2024	11:15 PM	0	0	0	0	0	0	0	0	0	0	0	0	0
4/26/2024	11:30 PM	0	0	0	0	0	0	0	0	0	0	0	0	0
4/26/2024	11:45 PM	0	0	0	0	0	0	0	0	0	0	0	0	0

4/27/2024	12:00 AM	0	0	0	0	0	0	0	0	0	0	0	0	0
4/27/2024	12:15 AM	0	0	0	0	0	0	0	0	0	0	0	0	0
4/27/2024	12:30 AM	0	0	0	0	0	0	0	0	0	0	0	0	0
4/27/2024	12:45 AM	0	0	0	0	0	0	0	0	0	0	0	0	0
4/27/2024	1:00 AM	0	0	0	0	0	0	0	0	0	0	0	0	0
4/27/2024	1:15 AM	0	0	0	0	0	0	0	0	0	0	0	0	0
4/27/2024	1:30 AM	0	0	0	0	0	0	0	0	0	0	0	0	0
4/27/2024	1:45 AM	0	0	0	0	0	0	0	0	0	0	0	0	0
4/27/2024	2:00 AM	0	0	0	0	0	0	0	0	0	0	0	0	0
4/27/2024	2:15 AM	0	0	0	0	0	0	0	0	0	0	0	0	0
4/27/2024	2:30 AM	0	0	0	0	0	0	0	0	0	0	0	0	0
4/27/2024	2:45 AM	0	0	0	0	0	0	0	0	0	0	0	0	0
4/27/2024	3:00 AM	0	0	0	0	0	0	0	0	0	0	0	0	0
4/27/2024	3:15 AM	0	0	0	0	0	0	0	0	0	0	0	0	0
4/27/2024	3:30 AM	0	0	0	0	0	0	0	0	0	0	0	0	0
4/27/2024	3:45 AM	0	0	0	0	0	0	0	0	0	0	0	0	0
4/27/2024	4:00 AM	0	0	0	0	0	0	0	0	0	0	0	0	0
4/27/2024	4:15 AM	0	0	0	0	0	0	0	0	0	0	0	0	0
4/27/2024	4:30 AM	0	0	0	0	0	0	0	0	0	0	0	0	0
4/27/2024	4:45 AM	0	0	0	0	0	0	0	0	0	0	0	0	0
4/27/2024	5:00 AM	0	0	0	0	0	0	0	0	0	0	0	0	0
4/27/2024	5:15 AM	0	0	0	0	0	0	0	0	0	0	0	0	0
4/27/2024	5:30 AM	0	0	0	0	0	0	0	0	0	0	0	0	0
4/27/2024	5:45 AM	0	0	0	0	0	0	0	0	0	0	0	0	0
4/27/2024	6:00 AM	0	0	0	0	0	0	0	0	0	0	0	0	0
4/27/2024	6:15 AM	0	0	0	0	0	0	0	0	0	0	0	0	0
4/27/2024	6:30 AM	0	0	0	0	0	0	0	0	0	0	0	0	0
4/27/2024	6:45 AM	0	0	0	0	0	0	0	0	0	0	0	0	0
4/27/2024	7:00 AM	0	0	0	0	0	0	0	0	0	0	0	0	0
4/27/2024	7:15 AM	0	0	0	0	0	0	0	0	0	0	0	0	0
4/27/2024	7:30 AM	0	0	0	0	0	0	0	0	0	0	0	0	0
4/27/2024	7:45 AM	0	0	0	0	0	0	0	0	0	0	0	0	0
4/27/2024	8:00 AM	0	0	0	0	0	0	0	0	0	0	0	0	0
4/27/2024	8:15 AM	0	0	0	0	0	0	0	0	0	0	0	0	0
4/27/2024	8:30 AM	0	0	0	0	0	0	0	0	0	0	0	0	0
4/27/2024	8:45 AM	0	0	0	0	0	0	0	0	0	0	0	0	0
4/27/2024	9:00 AM	0	0	0	0	0	0	0	0	0	0	0	0	0
4/27/2024	9:15 AM	0	0	0	0	0	0	0	0	0	0	0	0	0
4/27/2024	9:30 AM	0	0	0	0	0	0	0	0	0	0	0	0	0
4/27/2024	9:45 AM	0	0	0	0	0	0	0	0	0	0	0	0	0
4/27/2024	10:00 AM	0	0	0	0	0	0	0	0	0	0	0	0	0
4/27/2024	10:15 AM	0	0	0	0	0	0	0	0	0	0	0	0	0
4/27/2024	10:30 AM	0	0	0	0	0	0	0	0	0	0	0	0	0
4/27/2024	10:45 AM	0	0	0	0	0	0	0	0	0	0	0	0	0
4/27/2024	11:00 AM	0	0	0	0	0	0	0	0	0	0	0	0	0
4/27/2024	11:15 AM	0	0	0	0	0	0	0	0	0	0	0	0	0
4/27/2024	11:30 AM	0	0	0	0	0	0	0	0	0	0	0	0	0
4/27/2024	11:45 AM	0	0	0	0	0	0	0	0	0	0	0	0	0
4/27/2024	12:00 PM	0	0	0	0	0	0	0	0	0	0	0	0	0
4/27/2024	12:15 PM	0	0	0	0	0	0	0	0	0	0	0	0	0
4/27/2024	12:30 PM	0	0	0	0	0	0	0	0	0	0	0	0	0
4/27/2024	12:45 PM	0	0	0	0	0	0	0	0	0	0	0	0	0
4/27/2024	1:00 PM	0	0	0	0	0	0	0	0	0	0	0	0	0
4/27/2024	1:15 PM	0	0	0	0	0	0	0	0	0	0	0	0	0
4/27/2024	1:30 PM	0	0	0	0	0	0	0	0	0	0	0	0	0
4/27/2024	1:45 PM	0	0	0	0	0	0	0	0	0	0	0	0	0
4/27/2024	2:00 PM	0	0	0	0	0	0	0	0	0	0	0	0	0
4/27/2024	2:15 PM	0	0	0	0	0	0	0	0	0	0	0	0	0
4/27/2024	2:30 PM	0	0	0	0	0	0	0	0	0	0	0	0	0
4/27/2024	2:45 PM	0	0	0	0	0	0	0	0	0	0	0	0	0
4/27/2024	3:00 PM	0	0	0	0	0	0	0	0	0	0	0	0	0
4/27/2024	3:15 PM	0	0	0	0	0	0	0	0	0	0	0	0	0
4/27/2024	3:30 PM	0	0	0	0	0	0	0	0	0	0	0	0	0
4/27/2024	3:45 PM	0	0	0	0	0	0	0	0	0	0	0	0	0
4/27/2024	4:00 PM	0	0	0	0	0	0	0	0	0	0	0	0	0
4/27/2024	4:15 PM	0	0	0	0	0	0	0	0	0	0	0	0	0
4/27/2024	4:30 PM	0	0	0	0	0	0	0	0	0	0	0	0	0
4/27/2024	4:45 PM	0	0	0	0	0	0	0	0	0	0	0	0	0
4/27/2024	5:00 PM	0	0	0	0	0	0	0	0	0	0	0	0	0
4/27/2024	5:15 PM	0	0	0	0	0	0	0	0	0	0	0	0	0
4/27/2024	5:30 PM	0	0	0	0	0	0	0	0	0	0	0	0	0
4/27/2024	5:45 PM	0	0	0	0	0	0	0	0	0	0	0	0	0
4/27/2024	6:00 PM	0	0	0	0	0	0	0	0	0	0	0	0	0
4/27/2024	6:15 PM	0	0	0	0	0	0	0	0	0	0	0	0	0
4/27/2024	6:30 PM	0	0	0	0	0	0	0	0	0	0	0	0	0
4/27/2024	6:45 PM	0	0	0	0	0	0	0	0	0	0	0	0	0
4/27/2024	7:00 PM	0	0	0	0	0	0	0	0	0	0	0	0	0
4/27/2024	7:15 PM	0	0	0	0	0	0	0	0	0	0	0	0	0
4/27/2024	7:30 PM	0	0	0	0	0	0	0	0	0	0	0	0	0
4/27/2024	7:45 PM	0	0	0	0	0	0	0	0	0	0	0	0	0
4/27/2024	8:00 PM	0	0	0	0	0	0	0	0	0	0	0	0	0
4/27/2024	8:15 PM	0	0	0	0	0	0	0	0	0	0	0	0	0
4/27/2024	8:30 PM	0	0	0	0	0	0	0	0	0	0	0	0	0
4/27/2024	8:45 PM	0	0	0	0	0	0	0	0	0	0	0	0	0
4/27/2024	9:00 PM	0	0	0	0	0	0	0	0	0	0	0	0	0
4/27/2024	9:15 PM	0	0	0	0	0	0	0	0	0	0	0	0	0
4/27/2024	9:30 PM	0	0	0	0	0	0	0	0	0	0	0	0	0
4/27/2024	9:45 PM	0	0	0	0	0	0	0	0	0	0	0	0	0
4/27/2024	10:00 PM	0	0	0	0	0	0	0	0	0	0	0	0	0
4/27/2024	10:15 PM	0	0	0	0	0	0	0	0	0	0	0	0	0
4/27/2024	10:30 PM	0	0	0	0	0	0	0	0	0	0	0	0	0
4/27/2024	10:45 PM	0	0	0	0	0	0	0	0	0	0	0	0	0
4/27/2024	11:00 PM	0	0	0	0	0	0	0	0	0	0	0	0	0
4/27/2024	11:15 PM	0	0	0	0	0	0	0	0	0	0	0	0	0
4/27/2024	11:30 PM	0	0	0	0	0	0	0	0	0	0	0	0	0
4/27/2024	11:45 PM	0	0	0	0	0	0	0	0	0	0	0	0	0

Bi-Directional Class Count || NB EB 15min

Columbia, SC

Marr Traffic DATA COLLECTION
www.marrtraffic.com

Site 2
I-126 E/Bound On-Ramp,
west of I-26

Date
Sunday, April 21, 2024

Lat/Long
34.025576°, -81.100903°

Weather
Cloudy
66°F

Click here for Detailed Weather

Click here for Map

0000 - 2400 (Sunday 24h Session) (04-21-2024)
NB EB 15min

	Eastbound (Movement 2.1)													15min	60min
Time	1	2	3	4	5	6	7	8	9	10	11	12	13	Total	Total
0000 - 0015	0	20	3	0	0	0	0	0	0	0	0	0	0	**23**	
0015 - 0030	0	21	3	0	0	0	0	0	0	0	0	0	0	**24**	
0030 - 0045	0	10	2	0	0	0	0	0	0	0	0	0	0	**12**	
0045 - 0100	0	7	1	0	0	0	0	0	0	0	0	0	0	**8**	**67**
0100 - 0115	0	20	2	0	0	0	0	0	0	0	0	0	0	**22**	
0115 - 0130	0	5	1	0	0	0	0	0	0	0	0	0	0	**6**	
0130 - 0145	0	15	3	0	0	0	0	0	0	0	0	0	0	**18**	
0145 - 0200	0	5	1	0	0	0	0	0	0	0	0	0	0	**6**	**52**
0200 - 0215	0	4	1	0	0	0	0	0	0	0	0	0	0	**5**	
0215 - 0230	0	9	1	0	0	0	0	0	0	0	0	0	0	**10**	
0230 - 0245	0	6	1	0	0	0	0	0	0	0	0	0	0	**7**	
0245 - 0300	0	4	1	0	0	0	0	0	0	0	0	0	0	**5**	**27**
0300 - 0315	0	9	1	0	0	0	0	0	0	0	0	0	0	**10**	
0315 - 0330	0	3	1	0	0	0	0	0	0	0	0	0	0	**4**	
0330 - 0345	0	4	0	0	0	0	0	0	0	0	0	0	0	**4**	
0345 - 0400	0	6	1	0	0	0	0	0	0	0	0	0	0	**7**	**25**
0400 - 0415	0	2	1	0	0	0	0	0	0	0	0	0	0	**3**	
0415 - 0430	0	3	2	0	0	0	0	0	0	0	0	0	0	**5**	
0430 - 0445	0	2	1	0	0	0	0	0	0	0	0	0	0	**3**	
0445 - 0500	0	5	2	0	0	0	0	0	1	0	0	0	0	**8**	**19**
0500 - 0515	0	3	1	0	0	0	0	0	0	0	0	0	0	**4**	
0515 - 0530	0	1	0	0	0	0	0	0	0	0	0	0	0	**1**	
0530 - 0545	0	5	1	0	0	0	0	0	0	0	0	0	0	**6**	
0545 - 0600	0	6	1	0	0	0	0	0	0	0	0	0	0	**7**	**18**
0600 - 0615	0	4	1	0	0	0	0	0	0	0	0	0	0	**5**	
0615 - 0630	0	12	2	0	0	0	0	0	0	0	0	0	0	**14**	
0630 - 0645	0	11	2	0	0	0	0	0	0	0	0	0	0	**13**	
0645 - 0700	0	12	3	0	1	0	0	0	0	0	0	0	0	**16**	**48**
0700 - 0715	0	18	2	0	0	0	0	0	0	0	0	0	0	**20**	
0715 - 0730	0	20	2	0	0	0	0	0	0	0	0	0	0	**22**	
0730 - 0745	0	24	3	0	1	0	0	0	0	0	0	0	0	**28**	
0745 - 0800	0	15	2	0	1	0	0	0	0	0	0	0	0	**18**	**88**
0800 - 0815	0	17	2	0	0	0	0	0	0	0	0	0	0	**19**	
0815 - 0830	0	16	4	0	0	0	0	0	0	0	0	0	0	**20**	
0830 - 0845	0	20	7	0	1	0	0	0	0	0	0	0	0	**28**	
0845 - 0900	0	28	6	0	0	0	0	0	0	0	0	0	0	**34**	**101**
0900 - 0915	0	31	4	0	1	0	0	1	1	0	0	0	0	**38**	
0915 - 0930	0	26	5	0	0	0	0	0	0	0	0	0	0	**31**	
0930 - 0945	0	23	5	0	0	0	0	0	0	0	0	0	0	**28**	
0945 - 1000	0	29	4	0	0	0	0	0	0	0	0	0	0	**33**	**130**
1000 - 1015	0	28	3	0	0	0	0	0	0	0	0	0	0	**31**	
1015 - 1030	0	33	3	0	1	0	0	0	0	0	0	0	0	**37**	
1030 - 1045	0	27	0	0	0	0	0	0	0	0	0	0	0	**27**	
1045 - 1100	0	29	6	0	0	0	0	0	0	0	0	0	0	**35**	**130**
1100 - 1115	0	37	5	0	0	0	0	0	0	0	0	0	0	**42**	
1115 - 1130	0	33	3	0	0	0	0	0	0	0	0	0	0	**36**	
1130 - 1145	0	45	6	0	0	0	0	0	0	0	0	0	0	**51**	
1145 - 1200	0	44	6	0	0	0	0	0	0	0	0	0	0	**50**	**179**
1200 - 1215	0	33	7	0	0	0	0	0	0	0	0	0	0	**40**	
1215 - 1230	0	46	6	0	0	0	0	0	0	0	0	0	0	**52**	
1230 - 1245	0	50	8	0	0	0	0	0	0	0	0	0	0	**58**	
1245 - 1300	0	64	4	0	2	0	0	0	0	0	0	0	0	**70**	**220**
1300 - 1315	0	40	2	0	0	0	0	0	0	0	0	0	0	**42**	
1315 - 1330	0	52	4	0	0	0	0	0	0	0	0	0	0	**56**	
1330 - 1345	0	40	8	0	0	0	0	0	0	0	0	0	0	**48**	
1345 - 1400	0	53	5	0	0	0	0	0	0	0	0	0	0	**58**	**204**
1400 - 1415	1	40	3	0	0	0	0	0	0	0	0	0	0	**44**	
1415 - 1430	0	37	9	0	0	0	0	0	0	0	0	0	0	**46**	
1430 - 1445	0	44	8	0	1	0	0	0	0	0	0	0	0	**53**	
1445 - 1500	0	35	4	0	0	0	0	0	0	0	0	0	0	**39**	**182**
1500 - 1515	0	44	3	0	0	0	0	0	0	0	0	0	0	**47**	
1515 - 1530	0	41	4	0	1	0	0	0	0	0	0	0	0	**46**	
1530 - 1545	0	52	6	0	0	0	0	0	0	0	0	0	0	**58**	
1545 - 1600	0	38	8	0	0	0	0	0	0	0	0	0	0	**46**	**197**
1600 - 1615	0	33	7	0	0	0	0	0	0	0	0	0	0	**40**	
1615 - 1630	0	35	2	0	0	0	0	0	0	0	0	0	0	**37**	
1630 - 1645	0	32	3	0	0	0	0	0	0	0	0	0	0	**35**	
1645 - 1700	0	35	4	0	1	0	0	0	0	0	0	0	0	**40**	**152**
1700 - 1715	0	37	4	0	0	0	0	0	0	0	0	0	0	**41**	
1715 - 1730	0	39	5	0	3	0	0	0	1	0	0	0	0	**48**	
1730 - 1745	0	40	3	0	1	0	0	0	0	0	0	0	0	**44**	
1745 - 1800	0	39	2	0	0	0	0	0	0	0	0	0	0	**41**	**174**
1800 - 1815	0	40	3	0	0	0	0	0	0	0	0	0	0	**43**	
1815 - 1830	0	44	3	0	0	0	0	0	0	0	0	0	0	**47**	
1830 - 1845	1	35	4	0	2	0	0	0	0	0	0	0	0	**42**	
1845 - 1900	0	27	5	0	1	0	0	0	0	0	0	0	0	**33**	**165**
1900 - 1915	0	36	5	0	1	0	0	0	0	0	0	0	0	**42**	
1915 - 1930	0	35	5	0	1	0	0	0	0	0	0	0	0	**41**	
1930 - 1945	0	37	6	0	1	0	0	0	0	0	0	0	0	**44**	
1945 - 2000	0	34	4	0	1	0	0	0	0	0	0	0	0	**39**	**166**
2000 - 2015	0	29	2	0	0	0	0	0	0	0	0	0	0	**31**	
2015 - 2030	0	25	1	0	0	0	0	0	0	0	0	0	0	**26**	
2030 - 2045	0	27	2	0	0	0	0	0	0	0	0	0	0	**29**	
2045 - 2100	0	20	2	0	0	0	0	0	0	0	0	0	0	**22**	**108**
2100 - 2115	0	16	1	0	0	0	0	0	0	0	0	0	0	**17**	
2115 - 2130	0	17	1	0	0	0	0	0	0	0	0	0	0	**18**	
2130 - 2145	0	19	3	0	0	0	0	0	0	0	0	0	0	**22**	
2145 - 2200	0	20	1	0	0	0	0	0	0	0	0	0	0	**21**	**78**
2200 - 2215	0	17	1	0	0	0	0	0	0	0	0	0	0	**18**	
2215 - 2230	0	10	1	0	0	0	0	0	0	0	0	0	0	**11**	
2230 - 2245	0	18	2	0	0	0	0	0	0	0	0	0	0	**20**	
2245 - 2300	0	13	1	0	0	0	0	0	0	0	0	0	0	**14**	**63**
2300 - 2315	0	14	1	0	0	0	0	0	0	0	0	0	0	**15**	
2315 - 2330	0	7	0	0	0	0	0	0	0	0	0	0	0	**7**	
2330 - 2345	0	5	0	0	0	0	0	0	0	0	0	0	0	**5**	
2345 - 0000	0	6	0	0	0	0	0	0	0	0	0	0	0	**6**	**33**

Session Total	2	2307	291	0	22	0	0	1	3	0	0	0	0	**2626**
Session Average	0.02	24.03	3.03	0.00	0.23	0.00	0.00	0.01	0.03	0.00	0.00	0.00	0.00	**27.35**
Session Percentage	0.08	87.85	11.08	0.00	0.84	0.00	0.00	0.04	0.11	0.00	0.00	0.00	0.00	

AM Peak Hour	-	0945 - 1045	0830 - 0930	-	0645 - 0745	-	-	0815 - 0915	0815 - 0915	-	-	-	-	**0830 - 0930**
AM Peak Volume	0	117	22	0	2	0	0	1	1	0	0	0	0	**131**

Noon Peak Hour	1315 - 1415	1230 - 1330	1145 - 1245	-	1200 - 1300	-	-	-	-	-	-	-	-	**1230 - 1330**
Noon Peak Volume	1	206	27	0	2	0	0	0	0	0	0	0	0	**226**

PM Peak Hour	1745 - 1845	1500 - 1600	1515 - 1615	-	1645 - 1745	-	-	-	1630 - 1730	-	-	-	-	**1500 - 1600**
PM Peak Volume	1	175	25	0	5	0	0	0	1	0	0	0	0	**197**

Site 2
I-126 E/Bound On-Ramp,
west of I-26

Date
Monday, April 22, 2024

Lat/Long
34.025576°, -81.100903°

Weather
Mostly Cloudy
57°F

Click here for Detailed Weather

0000 - 2400 (Weekday 24h Session) (04-22-2024)
NB EB 15min

	Eastbound (Movement 2.1)													15min	60min
Time	1	2	3	4	5	6	7	8	9	10	11	12	13	Total	Total
0000 - 0015	0	4	2	0	0	0	0	0	0	0	0	0	0	**6**	
0015 - 0030	0	6	1	0	0	0	0	0	0	0	0	0	0	**7**	
0030 - 0045	0	2	0	0	0	0	0	0	0	0	0	0	0	**2**	
0045 - 0100	0	6	1	0	0	0	0	0	0	0	0	0	0	**7**	**22**
0100 - 0115	0	7	2	0	1	0	0	0	0	0	0	0	0	**10**	
0115 - 0130	0	5	0	0	0	0	0	0	0	0	0	0	0	**5**	
0130 - 0145	0	4	0	0	1	0	0	0	0	0	0	0	0	**5**	
0145 - 0200	0	2	0	0	0	0	0	0	0	0	0	0	0	**2**	**22**
0200 - 0215	0	1	0	0	0	0	0	0	1	0	0	0	0	**2**	
0215 - 0230	0	1	0	0	0	0	0	0	0	0	0	0	0	**1**	
0230 - 0245	0	2	1	0	0	0	0	0	0	0	0	0	0	**3**	
0245 - 0300	0	4	0	0	1	0	0	0	0	0	0	0	0	**5**	**11**
0300 - 0315	0	2	1	0	0	0	0	0	0	0	0	0	0	**3**	
0315 - 0330	0	0	0	0	0	0	0	0	0	0	0	0	0	**0**	
0330 - 0345	0	4	1	0	0	0	0	0	0	0	0	0	0	**5**	
0345 - 0400	0	4	2	0	0	0	0	0	0	0	0	0	0	**6**	**14**
0400 - 0415	0	4	1	0	1	0	0	0	0	0	0	0	0	**6**	
0415 - 0430	0	5	4	0	0	0	0	0	0	0	0	0	0	**9**	
0430 - 0445	0	6	4	0	0	0	0	0	0	0	0	0	0	**10**	
0445 - 0500	0	11	1	0	0	0	0	0	0	0	0	0	0	**12**	**37**
0500 - 0515	0	12	3	0	1	0	0	0	0	0	0	0	0	**16**	
0515 - 0530	0	15	3	0	0	0	0	0	0	0	0	0	0	**18**	
0530 - 0545	0	26	4	0	2	0	0	0	0	0	0	0	0	**32**	
0545 - 0600	0	29	2	0	0	0	0	0	0	0	0	0	0	**31**	**97**
0600 - 0615	0	24	1	0	1	0	0	0	1	0	0	0	0	**27**	
0615 - 0630	0	27	4	0	0	0	0	0	0	0	0	0	0	**31**	
0630 - 0645	0	48	13	0	1	0	0	0	0	0	0	0	0	**62**	
0645 - 0700	0	47	19	0	0	0	0	0	1	0	0	0	0	**67**	**187**
0700 - 0715	0	42	16	0	1	0	0	0	0	0	0	0	0	**59**	
0715 - 0730	0	48	15	0	0	0	0	1	1	0	0	0	0	**65**	
0730 - 0745	0	70	15	0	3	0	0	1	0	0	0	0	0	**89**	
0745 - 0800	0	58	13	1	1	1	0	1	0	0	0	0	0	**75**	**288**
0800 - 0815	0	44	14	0	1	0	0	0	0	0	0	0	0	**59**	
0815 - 0830	0	51	10	0	1	0	0	0	0	0	0	0	0	**62**	
0830 - 0845	0	63	11	0	4	0	0	0	0	1	0	0	0	**79**	
0845 - 0900	0	46	15	1	1	1	0	1	1	0	0	0	0	**66**	**266**
0900 - 0915	0	48	15	0	4	0	0	3	0	1	0	0	0	**71**	
0915 - 0930	0	39	12	0	4	1	0	0	3	0	0	0	0	**59**	
0930 - 0945	0	51	18	0	3	0	0	1	0	0	0	0	0	**73**	
0945 - 1000	0	45	11	2	2	0	0	0	0	0	0	0	0	**60**	**263**
1000 - 1015	0	52	12	1	4	0	0	0	2	0	0	0	0	**71**	
1015 - 1030	0	55	16	0	3	0	0	1	0	0	0	0	0	**75**	
1030 - 1045	0	49	12	1	1	1	0	1	1	0	0	0	0	**66**	
1045 - 1100	0	52	22	0	1	0	0	0	1	0	0	0	0	**76**	**288**
1100 - 1115	0	49	23	1	1	0	0	0	1	0	0	0	0	**75**	
1115 - 1130	0	56	21	0	2	0	0	0	1	0	0	0	0	**80**	
1130 - 1145	0	64	10	0	2	0	0	1	0	0	0	0	0	**77**	
1145 - 1200	0	69	17	0	2	0	0	0	1	0	0	0	0	**89**	**321**
1200 - 1215	0	72	12	0	1	0	0	0	3	0	0	0	0	**88**	
1215 - 1230	0	58	11	1	1	0	0	1	1	0	0	0	0	**73**	
1230 - 1245	0	67	6	0	1	0	0	2	0	0	0	0	0	**76**	
1245 - 1300	0	72	16	0	4	0	0	1	0	0	0	0	0	**93**	**330**
1300 - 1315	0	62	19	0	3	0	0	1	0	0	0	0	0	**85**	
1315 - 1330	1	68	9	1	1	0	0	1	0	0	0	0	0	**81**	
1330 - 1345	0	68	10	1	3	0	0	0	1	0	0	0	0	**83**	
1345 - 1400	0	73	18	0	1	0	0	3	0	0	0	0	0	**95**	**344**
1400 - 1415	0	68	12	0	1	0	0	1	0	0	0	0	0	**82**	
1415 - 1430	0	59	14	0	2	0	0	1	0	0	0	0	0	**76**	
1430 - 1445	0	71	15	1	3	0	0	1	0	0	0	0	0	**91**	
1445 - 1500	0	87	12	1	2	0	0	0	1	0	0	0	0	**103**	**352**
1500 - 1515	0	80	14	0	4	0	0	1	1	0	0	0	0	**100**	
1515 - 1530	0	99	15	0	2	1	0	0	0	0	0	0	0	**117**	
1530 - 1545	0	98	24	1	2	0	0	1	0	0	0	0	0	**126**	
1545 - 1600	0	86	16	2	0	1	0	0	1	0	0	0	0	**106**	**449**
1600 - 1615	0	121	33	0	4	0	0	0	0	0	0	0	0	**158**	
1615 - 1630	0	119	15	0	1	1	0	0	0	0	0	0	0	**136**	
1630 - 1645	0	132	34	0	3	0	0	0	2	0	0	0	0	**171**	
1645 - 1700	0	115	29	0	0	0	0	0	0	0	0	0	0	**144**	**609**
1700 - 1715	0	172	32	0	3	0	0	0	1	0	0	0	0	**208**	
1715 - 1730	0	179	32	0	1	1	0	0	0	0	0	0	0	**213**	
1730 - 1745	0	127	18	0	0	0	0	0	1	0	0	0	0	**146**	
1745 - 1800	0	74	10	0	2	0	1	0	2	0	0	0	0	**89**	**656**
1800 - 1815	0	72	12	0	5	0	0	0	0	0	0	0	0	**89**	
1815 - 1830	0	69	10	0	0	0	0	0	1	0	0	0	0	**80**	
1830 - 1845	0	50	9	0	2	0	0	0	0	0	0	0	0	**61**	
1845 - 1900	0	44	11	0	1	0	0	0	0	0	0	0	0	**56**	**286**
1900 - 1915	0	45	13	0	0	0	0	0	0	0	0	0	0	**58**	
1915 - 1930	0	44	9	0	0	0	0	0	0	0	0	0	0	**53**	
1930 - 1945	0	23	7	0	0	0	0	0	0	0	0	0	0	**30**	
1945 - 2000	0	57	10	0	0	0	0	0	0	0	0	0	0	**67**	**208**
2000 - 2015	1	30	7	0	0	0	0	0	1	0	0	0	0	**39**	
2015 - 2030	0	25	2	0	0	0	0	0	0	0	0	0	0	**27**	
2030 - 2045	0	58	15	0	2	0	0	0	0	0	0	0	0	**75**	
2045 - 2100	0	30	6	0	2	0	0	0	0	0	0	0	0	**38**	**179**
2100 - 2115	0	19	5	0	0	0	0	0	2	0	0	0	0	**26**	
2115 - 2130	0	32	6	0	3	0	0	0	0	0	0	0	0	**41**	
2130 - 2145	0	19	5	0	2	0	0	0	1	0	0	0	0	**27**	
2145 - 2200	0	24	6	0	1	1	0	0	0	0	0	0	0	**32**	**126**
2200 - 2215	0	18	5	0	3	0	0	0	0	0	0	0	0	**26**	
2215 - 2230	0	20	2	0	0	0	0	0	0	0	0	0	0	**22**	
2230 - 2245	0	20	4	0	0	0	0	0	0	0	0	0	0	**24**	
2245 - 2300	1	17	4	0	1	0	0	0	0	0	0	0	0	**23**	**95**
2300 - 2315	0	14	3	0	0	0	0	0	0	0	0	0	0	**17**	
2315 - 2330	0	14	1	0	0	0	0	0	0	0	0	0	0	**15**	
2330 - 2345	0	12	1	0	0	0	0	0	0	0	0	0	0	**13**	
2345 - 0000	0	15	2	0	0	0	0	0	0	0	0	0	0	**17**	**62**

Session Total	3	4357	949	15	117	9	1	25	34	2	0	0	0	**5512**
Session Average	0.03	45.39	9.89	0.16	1.22	0.09	0.01	0.26	0.35	0.02	0.00	0.00	0.00	**57.42**
Session Percentage	0.05	79.05	17.22	0.27	2.12	0.16	0.02	0.45	0.62	0.04	0.00	0.00	0.00	

AM Peak Hour	-	0730 - 0830	0645 - 0745	0945 - 1045	0830 - 0930	0830 - 0930	-	0845 - 0945	0915 - 1015	0815 - 0915	-	-	-	**0700 - 0800**
AM Peak Volume	0	223	65	4	13	2	0	5	5	2	0	0	0	**288**

Noon Peak Hour	1230 - 1330	1445 - 1545	1030 - 1130	1000 - 1100	1245 - 1345	1000 - 1100	-	1345 - 1445	1115 - 1215	-	-	-	-	**1445 - 1545**
Noon Peak Volume	1	364	78	2	11	1	0	6	5	0	0	0	0	**446**

PM Peak Hour	1915 - 2015	1630 - 1730	1630 - 1730	1500 - 1600	1745 - 1845	1500 - 1600	1700 - 1800	1500 - 1600	1700 - 1800	-	-	-	-	**1630 - 1730**
PM Peak Volume	1	598	127	3	9	2	1	2	4	0	0	0	0	**736**

Site 2
I-126 E/Bound On-Ramp,
west of I-26

Date
Tuesday, April 23, 2024

Lat/Long
34.025576°, -81.100903°

Weather
Fair
58°F

Click here for Detailed Weather

0000 - 2400 (Weekday 24h Session) (04-23-2024)
NB EB 15min

	Eastbound (Movement 2.1)													15min	60min
TIME	1	2	3	4	5	6	7	8	9	10	11	12	13	Total	Total
0000 - 0015	0	12	1	0	0	0	0	0	0	0	0	0	0	**13**	
0015 - 0030	0	7	2	0	1	0	0	0	0	0	0	0	0	**10**	
0030 - 0045	0	5	2	0	0	0	0	0	0	0	0	0	0	**7**	
0045 - 0100	0	8	3	0	0	0	0	0	0	0	0	0	0	**11**	**41**
0100 - 0115	0	7	1	0	0	0	0	0	1	0	0	0	0	**9**	
0115 - 0130	0	3	3	0	0	0	0	0	0	0	0	0	0	**6**	
0130 - 0145	0	5	2	0	0	0	0	0	0	0	0	0	0	**7**	
0145 - 0200	0	3	0	0	0	0	0	0	0	0	0	0	0	**3**	**25**
0200 - 0215	0	3	1	0	0	0	0	0	0	0	0	0	0	**4**	
0215 - 0230	0	1	2	0	0	0	0	0	0	0	0	0	0	**3**	
0230 - 0245	0	2	2	0	0	0	0	0	0	0	0	0	0	**4**	
0245 - 0300	0	2	0	0	0	0	0	0	0	0	0	0	0	**2**	**13**
0300 - 0315	0	0	1	0	0	0	0	0	1	0	0	0	0	**2**	
0315 - 0330	0	1	2	0	0	0	0	0	1	0	0	0	0	**4**	
0330 - 0345	0	7	1	0	1	0	0	0	0	0	0	0	0	**9**	
0345 - 0400	0	7	0	0	0	0	0	0	0	0	0	0	0	**7**	**22**
0400 - 0415	0	6	1	0	0	0	0	0	2	0	0	0	0	**9**	
0415 - 0430	0	4	1	0	0	0	0	0	0	0	0	0	0	**5**	
0430 - 0445	0	9	3	0	0	0	0	0	0	0	0	0	0	**12**	
0445 - 0500	0	13	2	0	0	0	0	0	0	0	0	0	0	**15**	**41**
0500 - 0515	0	8	2	0	0	0	0	0	0	0	0	0	0	**10**	
0515 - 0530	0	17	3	0	0	0	0	0	0	0	0	0	0	**20**	
0530 - 0545	0	37	4	0	1	1	0	0	0	0	0	0	0	**43**	
0545 - 0600	0	32	4	0	0	0	0	0	1	0	0	0	0	**37**	**110**
0600 - 0615	0	35	5	0	2	0	0	0	0	0	0	0	0	**42**	
0615 - 0630	0	34	5	0	0	0	0	0	0	0	0	0	0	**39**	
0630 - 0645	0	51	3	0	0	0	0	0	0	0	0	0	0	**54**	
0645 - 0700	0	49	10	0	2	0	0	0	1	0	0	0	0	**62**	**197**
0700 - 0715	0	55	7	0	1	0	0	0	0	0	0	0	0	**63**	
0715 - 0730	0	59	6	0	2	0	0	0	0	0	0	0	0	**67**	
0730 - 0745	0	84	18	0	1	1	0	0	1	0	0	0	0	**105**	
0745 - 0800	0	63	14	0	1	0	0	0	0	0	0	0	0	**78**	**313**
0800 - 0815	0	54	8	0	1	0	0	0	0	0	0	0	0	**63**	
0815 - 0830	0	49	11	0	2	0	0	1	2	0	0	0	0	**65**	
0830 - 0845	0	48	13	0	2	0	0	0	0	0	0	0	0	**63**	
0845 - 0900	0	44	22	0	7	0	0	0	0	0	0	0	0	**73**	**264**
0900 - 0915	0	39	10	0	0	0	0	0	1	0	0	0	0	**50**	
0915 - 0930	0	58	21	0	1	1	0	2	0	0	0	0	0	**83**	
0930 - 0945	0	48	9	0	1	0	0	0	1	0	0	0	0	**59**	
0945 - 1000	0	64	14	0	2	1	0	1	0	0	0	0	0	**82**	**274**
1000 - 1015	0	39	9	0	1	0	0	1	1	0	0	0	0	**51**	
1015 - 1030	0	52	22	1	2	1	0	0	0	0	0	0	0	**78**	
1030 - 1045	0	53	16	0	2	0	0	0	0	0	0	0	0	**71**	
1045 - 1100	0	42	23	1	2	0	0	1	0	1	0	0	0	**70**	**270**
1100 - 1115	1	61	11	0	1	0	0	0	0	0	0	0	0	**74**	
1115 - 1130	0	58	12	1	1	0	0	2	0	0	0	0	0	**74**	
1130 - 1145	0	59	13	0	0	0	0	0	1	0	0	0	0	**73**	
1145 - 1200	0	58	17	0	3	0	0	0	1	0	0	0	0	**79**	**300**
1200 - 1215	0	61	18	0	0	0	0	0	0	0	0	0	0	**79**	
1215 - 1230	0	73	16	2	1	0	0	0	0	0	0	0	0	**92**	
1230 - 1245	0	64	11	0	1	1	0	0	1	0	0	0	0	**78**	
1245 - 1300	0	63	11	0	0	0	0	0	1	0	0	0	0	**75**	**324**
1300 - 1315	0	68	16	0	4	0	0	0	0	0	0	0	0	**88**	
1315 - 1330	0	107	22	0	5	0	0	0	0	0	0	0	0	**134**	
1330 - 1345	0	72	17	3	2	2	0	0	1	0	0	0	0	**97**	
1345 - 1400	0	72	16	0	0	0	0	0	0	0	0	0	0	**88**	**407**
1400 - 1415	0	74	12	0	3	0	0	1	0	0	0	0	0	**90**	
1415 - 1430	0	90	19	0	3	0	0	0	0	0	0	0	0	**112**	
1430 - 1445	0	97	14	0	0	0	0	0	2	0	0	0	0	**113**	
1445 - 1500	0	100	8	0	5	0	0	0	0	0	0	0	0	**113**	**428**
1500 - 1515	0	100	29	1	1	0	0	0	0	0	0	0	0	**131**	
1515 - 1530	1	99	15	2	1	0	0	1	0	0	0	0	0	**119**	
1530 - 1545	0	93	21	0	0	0	0	0	0	0	0	0	0	**114**	
1545 - 1600	0	89	26	0	3	0	0	0	1	0	0	0	0	**119**	**483**
1600 - 1615	0	114	33	3	1	0	0	1	0	0	0	0	0	**152**	
1615 - 1630	0	135	23	0	1	0	0	0	0	0	0	0	0	**159**	
1630 - 1645	0	155	26	0	5	1	0	0	1	0	0	0	0	**188**	
1645 - 1700	0	137	33	0	2	0	0	0	0	0	0	0	0	**172**	**671**
1700 - 1715	0	190	27	0	2	0	0	0	0	0	0	0	0	**219**	
1715 - 1730	0	179	37	1	1	0	0	0	0	0	0	0	0	**218**	
1730 - 1745	0	141	34	0	2	2	0	0	1	0	0	0	0	**180**	
1745 - 1800	1	102	25	0	3	0	0	1	1	0	0	0	0	**133**	**750**
1800 - 1815	0	94	20	0	3	0	0	1	0	0	0	0	0	**118**	
1815 - 1830	0	65	5	0	1	0	0	0	1	0	0	0	0	**72**	
1830 - 1845	0	55	8	0	1	0	0	0	0	0	0	0	0	**64**	
1845 - 1900	0	57	12	0	0	0	0	0	0	0	0	0	0	**69**	**323**
1900 - 1915	0	43	6	0	1	0	0	0	0	0	0	0	0	**50**	
1915 - 1930	0	38	4	0	0	0	0	0	0	0	0	0	0	**42**	
1930 - 1945	0	37	5	0	2	0	0	0	0	0	0	0	0	**44**	
1945 - 2000	0	57	2	0	3	0	0	0	0	0	0	0	0	**62**	**198**
2000 - 2015	0	46	6	0	1	0	0	0	0	0	0	0	0	**53**	
2015 - 2030	0	32	7	0	0	0	0	0	0	0	0	0	0	**39**	
2030 - 2045	0	28	6	0	0	0	0	0	0	0	0	0	0	**34**	
2045 - 2100	0	17	5	0	2	0	0	0	0	0	0	0	0	**24**	**150**
2100 - 2115	0	21	6	0	0	0	0	0	0	0	0	0	0	**27**	
2115 - 2130	0	29	7	0	0	0	0	0	0	0	0	0	0	**36**	
2130 - 2145	0	12	6	0	0	0	0	0	0	0	0	0	0	**18**	
2145 - 2200	0	18	5	0	0	0	0	0	0	0	0	0	0	**23**	**104**
2200 - 2215	0	13	6	0	0	0	0	0	0	0	0	0	0	**19**	
2215 - 2230	0	17	3	0	0	0	0	0	0	0	0	0	0	**20**	
2230 - 2245	0	18	7	0	0	0	0	0	0	0	0	0	0	**25**	
2245 - 2300	0	14	4	0	0	0	0	0	0	0	0	0	0	**18**	**82**
2300 - 2315	0	19	5	0	0	0	0	0	0	0	0	0	0	**24**	
2315 - 2330	0	7	3	0	0	0	0	0	0	0	0	0	0	**10**	
2330 - 2345	0	10	3	0	0	0	0	0	0	0	0	0	0	**13**	
2345 - 0000	0	7	2	0	0	0	0	0	0	0	0	0	0	**9**	**56**

Session Total	3	4684	994	15	100	11	0	13	25	1	0	0	0	**5846**
Session Average	0.03	48.79	10.35	0.16	1.04	0.11	0.00	0.14	0.26	0.01	0.00	0.00	0.00	**60.90**
Session Percentage	0.05	80.12	17.00	0.26	1.71	0.19	0.00	0.22	0.43	0.02	0.00	0.00	0.00	

AM Peak Hour	-	0700 - 0800	0830 - 0930	0930 - 1030	0800 - 0900	0900 - 1000	-	0915 - 1015	0730 - 0830	-	-	-	-	**0700 - 0800**
AM Peak Hour Volume	0	261	66	1	12	2	0	4	3	0	0	0	0	**313**

Noon Peak Hour	1015 - 1115	1430 - 1530	1445 - 1545	1245 - 1345	1245 - 1345	1245 - 1345	-	1030 - 1130	1100 - 1200	1000 - 1100	-	-	-	**1445 - 1545**
Noon Peak Hour Volume	1	396	73	3	11	2	0	3	2	1	0	0	0	**477**

PM Peak Hour	1500 - 1600	1630 - 1730	1645 - 1745	1515 - 1615	1545 - 1645	1645 - 1745	-	1515 - 1615	1730 - 1830	-	-	-	-	**1630 - 1730**
PM Peak Hour Volume	1	661	131	5	10	2	0	2	3	0	0	0	0	**797**

Site 2
I-126 E/Bound On-Ramp,
west of I-26

Date
Wednesday, April 24, 2024

Lat/Long
34.025576°, -81.100903°

Weather
Fair
66°F

Click here for Detailed Weather

0000 - 2400 (Weekday 24h Session) (04-24-2024)
NB EB 15min

	Eastbound (Movement 2.1)													15min	60min
TIME	1	2	3	4	5	6	7	8	9	10	11	12	13	Total	Total
0000 - 0015	0	4	1	0	0	0	0	0	0	0	0	0	0	**5**	
0015 - 0030	0	5	3	0	0	0	0	0	0	0	0	0	0	**8**	
0030 - 0045	0	2	1	0	0	0	0	0	0	0	0	0	0	**3**	
0045 - 0100	0	7	3	0	0	0	0	0	0	0	0	0	0	**10**	**26**
0100 - 0115	0	4	2	0	0	0	0	0	0	0	0	0	0	**6**	
0115 - 0130	0	5	3	0	0	0	0	0	0	0	0	0	0	**8**	
0130 - 0145	0	3	2	0	0	0	0	0	0	0	0	0	0	**5**	
0145 - 0200	0	5	2	0	0	0	0	0	0	0	0	0	0	**7**	**26**
0200 - 0215	0	3	1	0	0	0	0	0	0	0	0	0	0	**4**	
0215 - 0230	0	5	1	0	0	0	0	0	0	0	0	0	0	**6**	
0230 - 0245	0	4	2	0	0	0	0	0	0	0	0	0	0	**6**	
0245 - 0300	0	5	0	0	0	0	0	0	0	0	0	0	0	**5**	**21**
0300 - 0315	0	3	1	0	0	0	0	0	1	0	0	0	0	**5**	
0315 - 0330	0	2	0	0	0	0	0	0	0	0	0	0	0	**2**	
0330 - 0345	0	4	1	0	0	0	0	0	0	0	0	0	0	**5**	
0345 - 0400	0	4	1	0	0	0	0	0	1	0	0	0	0	**6**	**18**
0400 - 0415	0	1	0	0	0	0	0	0	0	0	0	0	0	**1**	
0415 - 0430	0	10	3	0	0	0	0	0	0	0	0	0	0	**13**	
0430 - 0445	0	6	2	0	0	0	0	0	0	0	0	0	0	**8**	
0445 - 0500	0	7	3	0	0	0	0	0	0	0	0	0	0	**10**	**32**
0500 - 0515	0	8	3	0	0	0	0	0	0	0	0	0	0	**11**	
0515 - 0530	0	10	4	0	0	0	0	0	0	0	0	0	0	**14**	
0530 - 0545	0	21	5	0	1	0	0	0	1	0	0	0	0	**28**	
0545 - 0600	0	19	6	0	0	0	0	0	0	0	0	0	0	**25**	**78**
0600 - 0615	0	24	6	0	2	0	0	0	0	0	0	0	0	**32**	
0615 - 0630	0	42	4	0	0	0	0	0	0	0	0	0	0	**46**	
0630 - 0645	0	46	12	0	0	0	0	0	0	0	0	0	0	**58**	
0645 - 0700	0	56	8	0	2	0	0	0	0	0	0	0	0	**66**	**202**
0700 - 0715	0	46	11	0	2	0	0	0	0	0	0	0	0	**59**	
0715 - 0730	0	64	23	0	0	1	0	0	0	0	0	0	0	**88**	
0730 - 0745	0	81	16	1	2	0	0	0	0	0	0	0	0	**100**	
0745 - 0800	0	73	20	0	1	0	0	0	0	1	0	0	0	**95**	**342**
0800 - 0815	1	67	17	0	2	0	0	0	3	0	0	0	0	**90**	
0815 - 0830	0	65	30	1	2	0	0	1	0	0	0	0	0	**99**	
0830 - 0845	0	66	23	1	1	0	0	0	1	0	0	0	0	**92**	
0845 - 0900	0	62	16	1	2	1	0	1	0	0	0	0	0	**83**	**364**
0900 - 0915	0	59	11	0	2	0	0	0	0	0	0	0	0	**72**	
0915 - 0930	0	51	13	1	0	0	0	1	1	0	0	0	0	**67**	
0930 - 0945	0	45	20	0	0	0	0	2	0	0	0	0	0	**67**	
0945 - 1000	0	52	14	0	1	0	0	0	0	0	0	0	0	**67**	**273**
1000 - 1015	0	47	17	0	1	0	0	0	0	0	0	0	0	**65**	
1015 - 1030	0	54	13	0	1	0	0	0	0	0	0	0	0	**68**	
1030 - 1045	0	50	15	1	5	0	0	0	0	0	0	0	0	**71**	
1045 - 1100	0	61	15	1	1	0	0	0	0	0	0	0	0	**78**	**282**
1100 - 1115	1	79	13	0	1	1	0	0	0	0	0	0	0	**95**	
1115 - 1130	0	64	18	0	1	0	0	0	2	0	0	0	0	**85**	
1130 - 1145	0	76	13	0	3	1	0	0	0	0	0	0	0	**93**	
1145 - 1200	0	75	16	1	2	0	0	0	2	1	0	0	0	**97**	**370**
1200 - 1215	1	77	23	1	3	1	0	1	0	0	0	0	0	**107**	
1215 - 1230	0	54	12	1	2	0	0	0	0	0	0	0	0	**69**	
1230 - 1245	0	81	18	0	0	1	0	2	0	0	0	0	0	**102**	
1245 - 1300	0	81	14	0	4	0	0	0	2	0	0	0	0	**101**	**379**
1300 - 1315	0	68	11	1	4	1	0	0	0	1	0	0	0	**86**	
1315 - 1330	0	63	18	0	1	0	0	0	0	0	0	0	0	**82**	
1330 - 1345	0	75	16	1	3	1	0	1	1	0	0	0	0	**98**	
1345 - 1400	0	67	13	0	1	0	0	1	0	0	0	0	0	**82**	**348**
1400 - 1415	0	78	23	1	2	0	0	1	0	0	0	0	0	**105**	
1415 - 1430	0	76	14	0	1	1	0	0	1	0	0	0	0	**93**	
1430 - 1445	0	88	17	0	2	1	0	1	0	0	0	0	0	**109**	
1445 - 1500	0	72	13	0	1	1	0	0	0	0	0	0	0	**87**	**394**
1500 - 1515	0	63	18	0	1	1	0	0	1	0	0	0	0	**84**	
1515 - 1530	0	82	13	0	1	1	0	0	0	0	0	0	0	**97**	
1530 - 1545	0	75	19	1	3	0	0	0	0	0	0	0	0	**98**	
1545 - 1600	0	97	24	1	1	1	0	1	2	0	0	0	0	**127**	**406**
1600 - 1615	0	137	32	0	1	0	0	0	0	0	0	0	0	**170**	
1615 - 1630	0	140	24	1	4	1	0	0	0	0	0	0	0	**170**	
1630 - 1645	0	140	26	0	0	0	0	0	0	0	0	0	0	**166**	
1645 - 1700	1	144	27	0	3	0	0	1	0	0	0	0	0	**176**	**682**
1700 - 1715	0	184	32	0	2	0	0	1	1	0	0	0	0	**220**	
1715 - 1730	1	141	24	0	1	1	0	0	0	0	0	0	0	**168**	
1730 - 1745	0	135	33	0	1	0	0	0	0	1	0	0	0	**170**	
1745 - 1800	0	91	17	0	2	2	0	1	0	0	0	0	0	**113**	**671**
1800 - 1815	0	66	18	0	2	0	0	0	0	0	0	0	0	**86**	
1815 - 1830	0	65	8	0	2	0	0	0	0	0	0	0	0	**75**	
1830 - 1845	0	58	8	0	0	0	0	0	0	0	0	0	0	**66**	
1845 - 1900	0	48	8	0	4	0	0	0	0	0	0	0	0	**60**	**287**
1900 - 1915	0	33	10	0	1	0	0	0	0	0	0	0	0	**44**	
1915 - 1930	0	53	9	0	0	0	0	0	0	0	0	0	0	**62**	
1930 - 1945	1	51	3	0	1	0	0	0	0	0	0	0	0	**56**	
1945 - 2000	0	40	12	0	1	0	0	0	1	0	0	0	0	**54**	**216**
2000 - 2015	0	47	10	0	1	0	0	0	1	0	0	0	0	**59**	
2015 - 2030	0	44	6	0	1	0	0	0	0	0	0	0	0	**51**	
2030 - 2045	0	28	10	0	2	0	0	0	0	0	0	0	0	**40**	
2045 - 2100	0	31	8	0	0	0	0	0	0	0	0	0	0	**39**	**189**
2100 - 2115	0	31	8	0	0	0	0	0	0	0	0	0	0	**39**	
2115 - 2130	0	29	10	0	0	0	0	0	0	0	0	0	0	**39**	
2130 - 2145	0	30	7	0	1	0	0	0	0	0	0	0	0	**38**	
2145 - 2200	0	32	9	0	1	0	0	0	0	0	0	0	0	**42**	**158**
2200 - 2215	0	16	6	0	0	0	0	0	0	0	0	0	0	**22**	
2215 - 2230	0	27	10	0	1	0	0	0	0	0	0	0	0	**38**	
2230 - 2245	1	16	6	0	0	0	0	0	1	0	0	0	0	**24**	
2245 - 2300	0	18	5	0	0	0	0	0	0	0	0	0	0	**23**	**107**
2300 - 2315	0	17	8	0	0	0	0	0	1	0	0	0	0	**26**	
2315 - 2330	0	10	2	0	1	0	0	0	0	0	0	0	0	**13**	
2330 - 2345	0	12	3	0	0	0	0	0	0	0	0	0	0	**15**	
2345 - 0000	0	8	3	0	0	0	0	0	0	0	0	0	0	**11**	**65**

Session Total	7	4671	1082	16	98	18	0	16	24	4	0	0	0	**5936**
Session Average	0.07	48.66	11.27	0.17	1.02	0.19	0.00	0.17	0.25	0.04	0.00	0.00	0.00	**61.83**
Session Percentage	0.12	78.69	18.23	0.27	1.65	0.30	0.00	0.27	0.40	0.07	0.00	0.00	0.00	

AM Peak Hour	0715 - 0815	0730 - 0830	0745 - 0845	0800 - 0900	0945 - 1045	0630 - 0730	-	0845 - 0945	0745 - 0845	0700 - 0800	-	-	-	**0730 - 0830**
AM Peak Hour Volume	1	286	90	3	8	1	0	4	4	1	0	0	0	**384**

Noon Peak Hour	1015 - 1115	1400 - 1500	1115 - 1215	1130 - 1230	1245 - 1345	1415 - 1515	-	1145 - 1245	1100 - 1200	1100 - 1200	-	-	-	**1400 - 1500**
Noon Peak Hour Volume	1	314	70	3	12	4	0	3	4	1	0	0	0	**394**

PM Peak Hour	1630 - 1730	1630 - 1730	1645 - 1745	1530 - 1630	1530 - 1630	1500 - 1600	-	1615 - 1715	1500 - 1600	1645 - 1745	-	-	-	**1645 - 1745**
PM Peak Hour Volume	2	609	116	3	9	3	0	2	3	1	0	0	0	**734**

Site 2
I-126 E/Bound On-Ramp,
west of I-26

Date
Thursday, April 25, 2024

Lat/Long
34.025576°, -81.100903°

Weather
Fair
67°F

Click here for Detailed Weather

0000 - 2400 (Weekday 24h Session) (04-25-2024)
NB EB 15min

	Eastbound (Movement 2.1)													15min	60min
TIME	1	2	3	4	5	6	7	8	9	10	11	12	13	Total	Total
0000 - 0015	0	8	2	0	0	0	0	0	0	0	0	0	0	**10**	
0015 - 0030	0	8	1	0	0	0	0	0	0	0	0	0	0	**9**	
0030 - 0045	0	6	0	0	0	1	0	0	0	0	0	0	0	**7**	
0045 - 0100	0	6	0	0	0	0	0	0	0	0	0	0	0	**6**	**32**
0100 - 0115	0	2	1	0	0	0	0	0	0	0	0	0	0	**3**	
0115 - 0130	0	1	1	0	0	0	0	0	0	0	0	0	0	**2**	
0130 - 0145	0	3	1	0	0	1	0	0	0	0	0	0	0	**5**	
0145 - 0200	0	5	1	0	0	0	0	0	0	0	0	0	0	**6**	**16**
0200 - 0215	0	6	0	1	0	0	0	0	0	0	0	0	0	**7**	
0215 - 0230	0	2	1	0	0	0	0	0	0	0	0	0	0	**3**	
0230 - 0245	0	3	2	0	0	0	0	0	0	0	0	0	0	**5**	
0245 - 0300	0	2	0	0	1	0	0	0	0	0	0	0	0	**3**	**18**
0300 - 0315	0	1	1	0	0	0	0	0	1	0	0	0	0	**3**	
0315 - 0330	0	2	0	0	0	0	0	0	0	0	0	0	0	**2**	
0330 - 0345	0	7	0	0	1	0	0	0	0	0	0	0	0	**8**	
0345 - 0400	0	7	0	1	1	0	0	0	1	0	0	0	0	**10**	**23**
0400 - 0415	0	12	1	0	0	0	0	0	1	0	0	0	0	**14**	
0415 - 0430	0	11	1	0	0	0	0	0	0	0	0	0	0	**12**	
0430 - 0445	0	9	1	0	1	0	0	0	0	0	0	0	0	**11**	
0445 - 0500	0	16	2	0	0	0	0	0	0	0	0	0	0	**18**	**55**
0500 - 0515	0	8	3	0	1	0	0	0	0	0	0	0	0	**12**	
0515 - 0530	0	17	0	0	2	0	0	0	0	0	0	0	0	**19**	
0530 - 0545	0	29	2	0	1	0	0	0	0	0	0	0	0	**32**	
0545 - 0600	0	31	2	0	1	0	0	0	1	0	0	0	0	**35**	**98**
0600 - 0615	0	27	2	0	2	0	0	0	0	0	0	0	0	**31**	
0615 - 0630	0	29	6	0	1	0	0	0	0	0	0	0	0	**36**	
0630 - 0645	0	44	4	0	0	0	0	0	1	0	0	0	0	**49**	
0645 - 0700	0	53	10	0	0	0	0	0	0	0	0	0	0	**63**	**179**
0700 - 0715	0	55	9	0	1	0	0	0	0	0	0	0	0	**65**	
0715 - 0730	0	58	16	0	0	0	0	0	0	0	0	0	0	**74**	
0730 - 0745	0	63	16	0	2	0	0	0	0	0	0	0	0	**81**	
0745 - 0800	1	75	10	0	1	0	0	1	1	0	0	0	0	**89**	**309**
0800 - 0815	0	54	11	0	1	0	0	0	0	0	0	0	0	**66**	
0815 - 0830	0	60	17	0	1	0	0	0	0	0	0	0	0	**78**	
0830 - 0845	0	66	18	0	1	0	0	0	1	0	0	0	0	**86**	
0845 - 0900	0	71	11	1	1	0	0	0	0	0	0	0	0	**84**	**314**
0900 - 0915	0	52	14	0	0	0	0	0	0	0	0	0	0	**66**	
0915 - 0930	0	47	18	0	1	0	0	0	0	0	0	0	0	**66**	
0930 - 0945	0	49	12	0	1	0	0	0	1	0	0	0	0	**63**	
0945 - 1000	0	52	18	0	4	0	0	0	1	0	0	0	0	**75**	**270**
1000 - 1015	0	63	7	0	0	0	0	0	1	0	0	0	0	**71**	
1015 - 1030	0	48	11	0	0	0	0	0	2	0	0	0	0	**61**	
1030 - 1045	0	56	19	1	2	0	0	0	0	0	0	0	0	**78**	
1045 - 1100	1	69	16	1	1	0	0	0	1	0	0	0	0	**89**	**299**
1100 - 1115	0	63	21	0	1	1	0	0	0	0	0	0	0	**86**	
1115 - 1130	0	51	17	0	1	0	0	0	1	0	0	0	0	**70**	
1130 - 1145	0	67	16	0	0	0	0	2	0	0	0	0	0	**85**	
1145 - 1200	0	71	16	2	1	1	0	0	0	0	0	0	0	**91**	**332**
1200 - 1215	0	70	16	0	1	1	0	0	0	0	0	0	0	**88**	
1215 - 1230	0	70	16	0	2	1	0	0	2	0	0	0	0	**91**	
1230 - 1245	0	62	15	0	0	0	0	0	0	0	0	0	0	**77**	
1245 - 1300	0	79	15	0	0	0	0	1	0	0	0	0	0	**95**	**351**
1300 - 1315	0	64	11	2	0	0	0	0	0	0	0	0	0	**77**	
1315 - 1330	0	83	10	0	4	0	0	0	0	0	0	0	0	**97**	
1330 - 1345	0	71	18	1	3	0	0	1	1	0	0	0	0	**95**	
1345 - 1400	0	72	10	0	2	1	0	0	1	0	0	0	0	**86**	**355**
1400 - 1415	0	66	16	0	2	0	0	0	0	0	0	0	0	**84**	
1415 - 1430	0	90	19	0	3	0	0	1	0	0	0	0	0	**113**	
1430 - 1445	0	82	28	0	1	0	0	1	0	0	0	0	0	**112**	
1445 - 1500	0	70	22	0	1	1	0	0	0	0	0	0	0	**94**	**403**
1500 - 1515	0	90	21	1	0	1	0	0	0	0	0	0	0	**113**	
1515 - 1530	1	80	17	2	1	0	0	0	1	0	0	0	0	**102**	
1530 - 1545	0	99	15	0	2	1	0	1	0	0	0	0	0	**118**	
1545 - 1600	0	79	22	0	2	2	0	0	1	0	0	0	0	**106**	**439**
1600 - 1615	0	127	24	0	3	2	0	2	0	0	0	0	0	**158**	
1615 - 1630	0	129	22	0	1	0	0	1	0	0	0	0	0	**153**	
1630 - 1645	1	151	26	0	1	1	0	0	1	0	0	0	0	**181**	
1645 - 1700	0	139	26	0	3	0	0	0	0	0	0	0	0	**168**	**660**
1700 - 1715	1	179	20	0	0	1	0	1	0	0	0	0	0	**202**	
1715 - 1730	0	159	28	1	1	0	0	0	0	0	0	0	0	**189**	
1730 - 1745	0	141	22	0	1	0	0	0	1	0	0	0	0	**165**	
1745 - 1800	0	113	25	0	0	0	0	0	0	0	0	0	0	**138**	**694**
1800 - 1815	1	80	17	0	1	1	0	0	0	0	0	0	0	**100**	
1815 - 1830	0	73	10	0	1	0	0	0	0	0	0	0	0	**84**	
1830 - 1845	0	55	6	0	2	0	0	0	0	0	0	0	0	**63**	
1845 - 1900	0	45	11	0	1	0	0	0	0	0	0	0	0	**57**	**304**
1900 - 1915	0	42	5	0	0	0	0	0	0	0	0	0	0	**47**	
1915 - 1930	0	71	10	0	0	0	0	0	0	0	0	0	0	**81**	
1930 - 1945	1	46	9	0	0	0	0	1	0	0	0	0	0	**57**	
1945 - 2000	0	47	6	0	1	0	0	0	0	0	0	0	0	**54**	**239**
2000 - 2015	0	45	4	0	2	0	0	0	0	0	0	0	0	**51**	
2015 - 2030	0	29	7	0	1	0	0	0	0	0	0	0	0	**37**	
2030 - 2045	0	27	6	0	0	0	0	0	0	0	0	0	0	**33**	
2045 - 2100	0	21	2	0	0	0	0	0	0	0	0	0	0	**23**	**144**
2100 - 2115	0	20	4	0	0	0	0	0	0	0	0	0	0	**24**	
2115 - 2130	0	28	4	0	1	0	0	0	0	0	0	0	0	**33**	
2130 - 2145	0	16	1	0	0	0	0	0	0	0	0	0	0	**17**	
2145 - 2200	0	22	3	0	0	0	0	0	0	0	0	0	0	**25**	**99**
2200 - 2215	1	21	2	0	0	0	0	0	0	0	0	0	0	**24**	
2215 - 2230	0	15	3	0	0	0	0	0	0	0	0	0	0	**18**	
2230 - 2245	0	16	4	0	0	0	0	0	0	0	0	0	0	**20**	
2245 - 2300	0	14	5	0	2	0	0	0	0	0	0	0	0	**21**	**83**
2300 - 2315	0	18	5	0	0	0	0	0	0	0	0	0	0	**23**	
2315 - 2330	0	12	3	0	0	0	0	0	0	0	0	0	0	**15**	
2330 - 2345	0	9	4	0	0	0	0	0	0	0	0	0	0	**13**	
2345 - 0000	0	8	1	0	0	0	0	0	0	0	0	0	0	**9**	**60**

Session Total	8	4690	934	14	78	17	0	13	22	0	0	0	0	**5776**
Session Average	0.08	48.85	9.73	0.15	0.81	0.18	0.00	0.14	0.23	0.00	0.00	0.00	0.00	**60.17**
Session Percentage	0.14	81.20	16.17	0.24	1.35	0.29	0.00	0.23	0.38	0.00	0.00	0.00	0.00	

AM Peak Hour	0700 - 0800	0745 - 0845	0900 - 1000	0800 - 0900	0515 - 0615	-	-	0700 - 0800	0930 - 1030	-	-	-	-	**0745 - 0845**
AM Peak Hour Volume	1	255	62	1	6	0	0	1	5	0	0	0	0	**319**

Noon Peak Hour	1000 - 1100	1445 - 1545	1415 - 1515	1245 - 1345	1315 - 1415	1130 - 1230	-	1045 - 1145	1000 - 1100	-	-	-	-	**1415 - 1515**
Noon Peak Hour Volume	1	339	90	3	11	3	0	2	4	0	0	0	0	**432**

PM Peak Hour	1615 - 1715	1630 - 1730	1630 - 1730	1500 - 1600	1515 - 1615	1515 - 1615	-	1530 - 1630	1500 - 1600	-	-	-	-	**1630 - 1730**
PM Peak Hour Volume	2	628	100	3	8	5	0	4	2	0	0	0	0	**740**

Site 2
I-126 E/Bound On-Ramp,
west of I-26

Date
Friday, April 26, 2024

Lat/Long
34.025576°, -81.100903°

Weather
Cloudy
69°F

Click here for Detailed Weather

0000 - 2400 (Weekday 24h Session) (04-26-2024)
NB EB 15min

	Eastbound (Movement 2.1)													15min	60min
TIME	1	2	3	4	5	6	7	8	9	10	11	12	13	Total	Total
0000 - 0015	0	5	2	0	0	0	0	0	0	0	0	0	0	**7**	
0015 - 0030	0	4	2	0	0	0	0	0	0	0	0	0	0	**6**	
0030 - 0045	0	6	1	0	0	0	0	0	0	0	0	0	0	**7**	
0045 - 0100	0	7	1	0	0	0	0	0	0	0	0	0	0	**8**	**28**
0100 - 0115	0	1	1	0	0	0	0	0	0	0	0	0	0	**2**	
0115 - 0130	0	1	0	0	0	0	0	0	0	0	0	0	0	**1**	
0130 - 0145	0	5	2	0	0	0	0	0	0	0	0	0	0	**7**	
0145 - 0200	0	6	1	0	0	0	0	0	0	0	0	0	0	**7**	**17**
0200 - 0215	0	3	0	0	0	0	0	0	0	0	0	0	0	**3**	
0215 - 0230	0	4	1	0	0	0	0	0	0	0	0	0	0	**5**	
0230 - 0245	0	1	0	0	0	0	0	0	0	0	0	0	0	**1**	
0245 - 0300	0	1	0	0	0	0	0	0	1	0	0	0	0	**2**	**11**
0300 - 0315	0	1	0	0	0	0	0	0	0	0	0	0	0	**1**	
0315 - 0330	0	4	2	0	0	0	0	0	1	0	0	0	0	**7**	
0330 - 0345	0	6	1	0	1	0	0	0	0	0	0	0	0	**8**	
0345 - 0400	0	4	2	0	0	0	0	0	0	0	0	0	0	**6**	**22**
0400 - 0415	0	4	1	0	0	0	0	0	0	0	0	0	0	**5**	
0415 - 0430	0	3	2	0	0	0	0	0	0	0	0	0	0	**5**	
0430 - 0445	0	6	2	0	0	0	0	0	0	0	0	0	0	**8**	
0445 - 0500	0	16	3	0	0	0	0	0	0	0	0	0	0	**19**	**37**
0500 - 0515	0	11	4	0	0	0	0	0	0	0	0	0	0	**15**	
0515 - 0530	0	12	4	0	0	0	0	0	1	0	0	0	0	**17**	
0530 - 0545	0	15	6	0	0	1	0	0	0	0	0	0	0	**22**	
0545 - 0600	0	22	5	0	0	0	0	0	0	0	0	0	0	**27**	**81**
0600 - 0615	0	24	7	0	1	0	0	0	0	0	0	0	0	**32**	
0615 - 0630	0	26	5	0	1	0	0	0	0	0	1	0	0	**33**	
0630 - 0645	0	36	8	0	0	0	0	0	0	0	0	0	0	**44**	
0645 - 0700	0	55	7	0	0	0	0	0	0	0	0	0	0	**62**	**171**
0700 - 0715	0	53	7	0	0	0	0	0	0	0	0	0	0	**60**	
0715 - 0730	0	45	4	0	2	1	0	0	0	2	0	0	0	**54**	
0730 - 0745	0	74	4	1	3	0	0	0	0	0	0	0	0	**82**	
0745 - 0800	1	66	11	0	1	0	0	2	1	0	0	0	0	**82**	**278**
0800 - 0815	0	49	6	0	6	1	0	0	1	0	0	0	0	**63**	
0815 - 0830	0	48	13	1	2	0	0	1	0	0	0	0	0	**65**	
0830 - 0845	0	64	14	0	1	0	0	0	0	0	0	0	0	**79**	
0845 - 0900	0	52	8	0	1	1	0	0	0	0	0	0	0	**62**	**269**
0900 - 0915	0	49	6	0	3	0	0	1	2	0	0	0	0	**61**	
0915 - 0930	0	53	16	0	3	0	0	0	0	0	0	0	0	**72**	
0930 - 0945	0	48	12	0	0	0	0	0	0	0	0	0	0	**60**	
0945 - 1000	0	53	9	0	1	0	0	0	0	0	0	0	0	**63**	**256**
1000 - 1015	0	43	12	1	1	0	0	0	0	0	0	0	0	**57**	
1015 - 1030	0	57	13	1	0	0	0	0	0	0	0	0	0	**71**	
1030 - 1045	0	56	13	1	0	0	0	2	0	0	0	0	0	**72**	
1045 - 1100	1	65	23	0	2	0	0	0	0	0	0	0	0	**91**	**291**
1100 - 1115	0	64	16	1	4	0	0	0	2	0	0	0	0	**87**	
1115 - 1130	0	77	15	1	1	0	0	0	2	0	0	0	0	**96**	
1130 - 1145	0	60	13	0	1	0	0	0	0	0	0	0	0	**74**	
1145 - 1200	0	62	16	1	0	1	0	0	0	0	0	0	0	**80**	**337**
1200 - 1215	0	96	17	2	1	0	0	1	0	0	0	0	0	**117**	
1215 - 1230	0	71	16	2	3	0	0	0	0	0	0	0	0	**92**	
1230 - 1245	0	73	19	0	2	0	0	0	1	0	0	0	0	**95**	
1245 - 1300	0	74	21	0	4	0	0	1	0	0	0	0	0	**100**	**404**
1300 - 1315	0	91	15	0	1	0	0	0	1	0	0	0	0	**108**	
1315 - 1330	0	80	16	0	0	0	0	0	0	0	0	0	0	**96**	
1330 - 1345	0	81	10	0	1	1	0	0	1	0	0	0	0	**94**	
1345 - 1400	0	76	12	1	1	0	0	0	0	0	0	0	0	**90**	**388**
1400 - 1415	0	90	19	0	1	1	0	0	0	0	0	0	0	**111**	
1415 - 1430	0	88	20	0	0	1	0	0	0	0	0	0	0	**109**	
1430 - 1445	0	96	26	0	3	0	0	0	1	0	0	0	0	**126**	
1445 - 1500	1	101	13	0	1	0	0	0	1	0	0	0	0	**117**	**463**
1500 - 1515	0	89	16	1	2	2	0	0	0	0	0	0	0	**110**	
1515 - 1530	0	91	13	1	0	0	0	1	0	0	0	0	0	**106**	
1530 - 1545	0	103	24	0	2	0	0	0	2	0	0	0	0	**131**	
1545 - 1600	0	84	19	0	0	1	0	1	0	0	0	0	0	**105**	**452**
1600 - 1615	0	121	32	0	0	1	0	0	0	0	0	0	0	**154**	
1615 - 1630	1	107	22	0	0	0	0	0	0	0	0	0	0	**130**	
1630 - 1645	0	124	21	0	6	0	0	1	0	0	0	0	0	**152**	
1645 - 1700	0	116	24	0	2	0	0	1	0	0	0	0	0	**143**	**579**
1700 - 1715	0	156	25	0	1	0	0	0	0	0	0	0	0	**182**	
1715 - 1730	0	108	18	0	1	0	0	1	2	0	0	0	0	**130**	
1730 - 1745	0	90	9	1	1	0	0	0	0	0	0	0	0	**101**	
1745 - 1800	0	72	9	0	1	0	0	0	1	0	0	0	0	**83**	**496**
1800 - 1815	2	79	12	0	0	0	0	0	0	0	0	0	0	**93**	
1815 - 1830	0	53	7	0	1	0	0	0	0	0	0	0	0	**61**	
1830 - 1845	0	65	8	0	2	0	0	0	0	0	0	0	0	**75**	
1845 - 1900	0	47	7	0	2	0	0	0	0	0	0	0	0	**56**	**285**
1900 - 1915	0	54	6	0	0	0	0	0	0	0	0	0	0	**60**	
1915 - 1930	0	44	5	0	0	0	0	0	0	0	0	0	0	**49**	
1930 - 1945	0	40	6	0	2	0	0	0	0	0	0	0	0	**48**	
1945 - 2000	1	48	8	0	0	0	0	0	0	0	0	0	0	**57**	**214**
2000 - 2015	0	44	6	0	0	0	0	0	0	0	0	0	0	**50**	
2015 - 2030	0	41	7	0	0	0	0	0	0	0	0	0	0	**48**	
2030 - 2045	0	40	8	0	0	0	0	0	0	0	0	0	0	**48**	
2045 - 2100	0	23	4	0	0	0	0	0	0	0	0	0	0	**27**	**173**
2100 - 2115	0	27	6	0	2	0	0	0	0	0	0	0	0	**35**	
2115 - 2130	0	37	8	0	0	0	0	0	0	0	0	0	0	**45**	
2130 - 2145	0	42	9	0	1	0	0	0	0	0	0	0	0	**52**	
2145 - 2200	0	40	6	0	0	0	0	0	0	0	0	0	0	**46**	**178**
2200 - 2215	0	45	7	0	1	0	0	0	0	0	0	0	0	**53**	
2215 - 2230	0	17	3	0	0	0	0	0	0	0	0	0	0	**20**	
2230 - 2245	0	23	4	0	0	0	0	0	0	0	0	0	0	**27**	
2245 - 2300	0	22	3	0	1	0	0	0	0	0	0	0	0	**26**	**126**
2300 - 2315	0	31	5	0	0	0	0	0	0	0	0	0	0	**36**	
2315 - 2330	0	17	4	0	0	0	0	0	1	0	0	0	0	**22**	
2330 - 2345	0	19	4	0	0	0	0	0	0	0	0	0	0	**23**	
2345 - 0000	0	15	2	0	0	0	0	0	0	0	0	0	0	**17**	**98**

Session Total	7	4618	882	16	81	12	0	13	22	2	1	0	0	**5654**
Session Average	0.07	48.10	9.19	0.17	0.84	0.13	0.00	0.14	0.23	0.02	0.01	0.00	0.00	**58.90**
Session Percentage	0.12	81.68	15.60	0.28	1.43	0.21	0.00	0.23	0.39	0.04	0.02	0.00	0.00	

AM Peak Hour	0700 - 0800	0700 - 0800	0915 - 1015	0945 - 1045	0715 - 0815	0715 - 0815	-	0730 - 0830	0715 - 0815	0630 - 0730	0530 - 0630	-	-	**0730 - 0830**
AM Peak Hour Volume	1	238	49	3	12	2	0	3	2	2	1	0	0	**292**

Noon Peak Hour	1000 - 1100	1445 - 1545	1400 - 1500	1130 - 1230	1200 - 1300	1330 - 1430	-	1000 - 1100	1030 - 1130	-	-	-	-	**1445 - 1545**
Noon Peak Hour Volume	1	384	78	5	10	3	0	2	4	0	0	0	0	**464**

PM Peak Hour	1715 - 1815	1630 - 1730	1600 - 1700	1500 - 1600	1630 - 1730	1500 - 1600	-	1630 - 1730	1700 - 1800	-	-	-	-	**1615 - 1715**
PM Peak Hour Volume	2	504	99	2	10	3	0	3	3	0	0	0	0	**607**

Site 2
I-126 E/Bound On-Ramp,
west of I-26

Date
Saturday, April 27, 2024

Lat/Long
34.025576°, -81.100903°

Weather
Mostly Cloudy
69°F

Click here for Detailed Weather

0000 - 2400 (Saturday 24h Session) (04-27-2024)
NB EB 15min

	Eastbound (Movement 2.1)													15min	60min
TIME	1	2	3	4	5	6	7	8	9	10	11	12	13	Total	Total
0000 - 0015	0	11	1	0	0	0	0	1	0	0	0	0	0	**13**	
0015 - 0030	0	8	3	0	0	0	0	0	0	0	0	0	0	**11**	
0030 - 0045	0	5	1	0	0	0	0	0	0	0	0	0	0	**6**	
0045 - 0100	0	6	0	0	0	0	0	0	0	0	0	0	0	**6**	**36**
0100 - 0115	0	9	1	0	0	0	0	0	0	0	0	0	0	**10**	
0115 - 0130	1	8	1	0	0	0	0	0	0	0	0	0	0	**10**	
0130 - 0145	0	4	0	0	0	0	0	0	0	0	0	0	0	**4**	
0145 - 0200	0	5	1	0	0	0	0	0	0	0	0	0	0	**6**	**30**
0200 - 0215	0	8	0	0	0	0	0	0	0	0	0	0	0	**8**	
0215 - 0230	0	7	0	0	0	0	0	0	0	0	0	0	0	**7**	
0230 - 0245	0	6	0	0	2	0	0	0	0	0	0	0	0	**8**	
0245 - 0300	0	5	0	0	0	0	0	0	1	0	0	0	0	**6**	**29**
0300 - 0315	0	6	1	0	0	0	0	0	0	0	0	0	0	**7**	
0315 - 0330	0	4	0	0	0	0	0	0	0	0	0	0	0	**4**	
0330 - 0345	0	5	1	0	0	0	0	0	0	0	0	0	0	**6**	
0345 - 0400	0	10	1	0	1	0	0	0	0	0	0	0	0	**12**	**29**
0400 - 0415	0	5	1	0	0	0	0	0	0	0	0	0	0	**6**	
0415 - 0430	0	4	1	0	0	0	0	0	0	0	0	0	0	**5**	
0430 - 0445	0	9	0	0	0	0	0	0	0	0	0	0	0	**9**	
0445 - 0500	0	8	1	0	0	0	0	0	0	0	0	0	0	**9**	**29**
0500 - 0515	0	8	1	0	0	0	0	0	0	0	0	0	0	**9**	
0515 - 0530	0	8	1	0	1	0	0	0	0	0	0	0	0	**10**	
0530 - 0545	0	10	0	0	0	0	0	0	0	0	0	0	0	**10**	
0545 - 0600	0	8	0	0	1	0	0	0	0	0	0	0	0	**9**	**38**
0600 - 0615	0	13	2	0	1	0	0	0	0	0	0	0	0	**16**	
0615 - 0630	0	12	6	0	1	1	0	0	0	0	0	0	0	**20**	
0630 - 0645	0	20	4	0	0	0	0	0	0	0	0	0	0	**24**	
0645 - 0700	0	29	5	0	0	0	0	0	0	0	0	0	0	**34**	**94**
0700 - 0715	0	23	6	0	0	0	0	0	0	0	0	0	0	**29**	
0715 - 0730	0	30	4	0	0	0	0	0	0	0	0	0	0	**34**	
0730 - 0745	0	21	5	0	0	0	0	0	0	0	0	0	0	**26**	
0745 - 0800	0	43	5	0	0	0	0	0	1	0	0	0	0	**49**	**138**
0800 - 0815	1	30	6	0	0	1	0	0	0	0	0	0	0	**38**	
0815 - 0830	0	30	4	0	3	0	0	0	0	0	0	0	0	**37**	
0830 - 0845	0	24	6	0	0	0	0	0	0	0	0	0	0	**30**	
0845 - 0900	0	36	5	0	0	0	0	0	1	0	0	0	0	**42**	**147**
0900 - 0915	0	39	5	0	0	1	0	1	0	0	0	0	0	**46**	
0915 - 0930	0	38	8	0	0	0	0	0	1	0	0	0	0	**47**	
0930 - 0945	1	43	7	0	1	0	0	0	0	0	0	0	0	**52**	
0945 - 1000	0	45	12	0	0	0	0	0	0	0	0	0	0	**57**	**202**
1000 - 1015	0	33	8	0	2	0	0	0	0	0	0	0	0	**43**	
1015 - 1030	0	41	11	0	1	0	0	0	0	0	0	0	0	**53**	
1030 - 1045	0	49	9	0	1	0	0	0	0	0	0	0	0	**59**	
1045 - 1100	0	44	7	0	0	0	0	0	1	0	0	0	0	**52**	**207**
1100 - 1115	0	48	12	0	0	0	0	0	0	0	0	0	0	**60**	
1115 - 1130	0	49	10	0	1	0	0	0	0	0	0	0	0	**60**	
1130 - 1145	0	57	4	0	0	0	0	0	0	0	0	0	0	**61**	
1145 - 1200	0	58	7	0	1	0	0	0	1	0	0	0	0	**67**	**248**
1200 - 1215	0	77	13	0	1	0	0	0	0	0	0	0	0	**91**	
1215 - 1230	1	53	8	0	1	0	0	0	0	0	0	0	0	**63**	
1230 - 1245	0	49	5	0	1	0	0	1	0	0	0	0	0	**56**	
1245 - 1300	0	54	9	0	0	0	0	0	0	0	0	0	0	**63**	**273**
1300 - 1315	0	67	14	0	0	0	0	0	0	0	0	0	0	**81**	
1315 - 1330	0	48	7	0	0	0	0	0	0	0	0	0	0	**55**	
1330 - 1345	0	73	7	0	0	0	0	0	0	0	0	0	0	**80**	
1345 - 1400	0	59	10	0	0	0	0	0	0	0	0	0	0	**69**	**285**
1400 - 1415	0	52	10	0	2	0	0	0	0	0	0	0	0	**64**	
1415 - 1430	0	66	9	0	0	0	0	0	0	0	0	0	0	**75**	
1430 - 1445	0	63	11	0	0	0	0	0	0	0	0	0	0	**74**	
1445 - 1500	0	70	11	0	0	0	0	1	0	0	0	0	0	**82**	**295**
1500 - 1515	0	77	7	0	0	0	0	0	0	0	0	0	0	**84**	
1515 - 1530	0	75	10	0	1	0	0	0	0	0	0	0	0	**86**	
1530 - 1545	0	63	18	0	0	0	0	0	0	0	0	0	0	**81**	
1545 - 1600	0	75	3	2	0	1	0	0	0	0	0	0	0	**81**	**332**
1600 - 1615	0	54	17	0	0	0	0	0	0	0	0	0	0	**71**	
1615 - 1630	0	57	7	0	0	0	0	0	0	0	0	0	0	**64**	
1630 - 1645	0	57	9	0	1	0	0	0	0	0	0	0	0	**67**	
1645 - 1700	0	80	9	0	1	0	0	1	0	0	0	0	0	**91**	**293**
1700 - 1715	0	42	6	0	2	0	0	0	0	0	0	0	0	**50**	
1715 - 1730	0	77	7	0	0	0	0	0	0	0	0	0	0	**84**	
1730 - 1745	0	55	7	0	1	0	0	1	0	0	0	0	0	**64**	
1745 - 1800	0	45	9	0	2	0	0	1	0	0	0	0	0	**57**	**255**
1800 - 1815	0	50	8	0	1	0	0	0	0	0	0	0	0	**59**	
1815 - 1830	0	56	8	0	1	0	0	0	0	0	0	0	0	**65**	
1830 - 1845	0	47	7	0	0	0	0	0	0	0	0	0	0	**54**	
1845 - 1900	0	45	7	0	1	0	0	0	0	0	0	0	0	**53**	**231**
1900 - 1915	0	41	3	0	0	0	0	0	0	0	0	0	0	**44**	
1915 - 1930	0	44	6	0	1	0	0	0	0	0	0	0	0	**51**	
1930 - 1945	0	49	7	0	0	0	0	0	0	0	0	0	0	**56**	
1945 - 2000	0	60	4	0	1	0	0	0	0	0	0	0	0	**65**	**216**
2000 - 2015	0	35	10	0	2	0	0	0	0	0	0	0	0	**47**	
2015 - 2030	0	32	2	0	2	0	0	0	0	0	0	0	0	**36**	
2030 - 2045	0	22	3	0	0	0	0	0	0	0	0	0	0	**25**	
2045 - 2100	0	31	2	0	1	0	0	0	0	0	0	0	0	**34**	**142**
2100 - 2115	0	21	2	0	1	0	0	0	0	0	0	0	0	**24**	
2115 - 2130	0	36	10	0	0	0	0	0	0	0	0	0	0	**46**	
2130 - 2145	0	29	7	0	0	0	0	0	0	0	0	0	0	**36**	
2145 - 2200	0	27	9	0	0	0	0	0	0	0	0	0	0	**36**	**142**
2200 - 2215	0	32	3	0	0	0	0	0	0	0	0	0	0	**35**	
2215 - 2230	0	27	5	0	0	0	0	0	0	0	0	0	0	**32**	
2230 - 2245	0	24	7	0	0	0	0	0	0	0	0	0	0	**31**	
2245 - 2300	0	14	2	0	1	0	0	0	1	0	0	0	0	**18**	**116**
2300 - 2315	0	18	1	0	0	0	0	0	0	0	0	0	0	**19**	
2315 - 2330	0	10	2	0	0	0	0	0	0	0	0	0	0	**12**	
2330 - 2345	0	17	2	0	0	0	0	0	0	0	0	0	0	**19**	
2345 - 0000	0	16	1	0	1	0	0	0	0	0	0	0	0	**18**	**68**

Session Total	4	3293	515	2	43	4	0	7	7	0	0	0	0	**3875**
Session Average	0.04	34.30	5.36	0.02	0.45	0.04	0.00	0.07	0.07	0.00	0.00	0.00	0.00	**40.36**
Session Percentage	0.10	84.98	13.29	0.05	1.11	0.10	0.00	0.18	0.18	0.00	0.00	0.00	0.00	

AM Peak Hour	0715 - 0815	0945 - 1045	0945 - 1045	-	0930 - 1030	0530 - 0630	-	0815 - 0915	0830 - 0930	-	-	-	-	**0945 - 1045**
AM Peak Hour Volume	1	168	40	0	4	1	0	1	2	0	0	0	0	**212**

Noon Peak Hour	1130 - 1230	1430 - 1530	1445 - 1545	-	1000 - 1100	-	-	1145 - 1245	1000 - 1100	-	-	-	-	**1445 - 1545**
Noon Peak Hour Volume	1	285	46	0	4	0	0	1	1	0	0	0	0	**333**

PM Peak Hour	-	1500 - 1600	1515 - 1615	1500 - 1600	1700 - 1800	1500 - 1600	-	1645 - 1745	-	-	-	-	-	**1500 - 1600**
PM Peak Hour Volume	0	290	48	2	5	1	0	2	0	0	0	0	0	**332**

Bi-Directional Class Count || NB EB Average 15min

Columbia, SC

Marr Traffic DATA COLLECTION
www.marrtraffic.com

Site 2
I-126 E/Bound On-Ramp,
west of I-26

Date
Sunday, April 21, 2024

Weather
Cloudy
66°F

Lat/Long
34.025576°, -81.100903°

0000 - 2400 (Weekday 24h Session) (All Dates)
NB EB Average 15min

	NB EB Average 15min													15min	60min
Time	1	2	3	4	5	6	7	8	9	10	11	12	13	Total	Total
0000 - 0015	0	9	2	0	0	0	0	0	0	0	0	0	0	**11**	
0015 - 0030	0	8	2	0	0	0	0	0	0	0	0	0	0	**11**	
0030 - 0045	0	5	1	0	0	0	0	0	0	0	0	0	0	**6**	
0045 - 0100	0	7	1	0	0	0	0	0	0	0	0	0	0	**8**	**36**
0100 - 0115	0	7	1	0	0	0	0	0	0	0	0	0	0	**9**	
0115 - 0130	0	4	1	0	0	0	0	0	0	0	0	0	0	**5**	
0130 - 0145	0	6	1	0	0	0	0	0	0	0	0	0	0	**7**	
0145 - 0200	0	4	1	0	0	0	0	0	0	0	0	0	0	**5**	**27**
0200 - 0215	0	4	0	0	0	0	0	0	0	0	0	0	0	**5**	
0215 - 0230	0	4	1	0	0	0	0	0	0	0	0	0	0	**5**	
0230 - 0245	0	3	1	0	0	0	0	0	0	0	0	0	0	**5**	
0245 - 0300	0	3	0	0	0	0	0	0	0	0	0	0	0	**4**	**19**
0300 - 0315	0	3	1	0	0	0	0	0	0	0	0	0	0	**4**	
0315 - 0330	0	2	1	0	0	0	0	0	0	0	0	0	0	**3**	
0330 - 0345	0	5	1	0	0	0	0	0	0	0	0	0	0	**6**	
0345 - 0400	0	6	1	0	0	0	0	0	0	0	0	0	0	**8**	**22**
0400 - 0415	0	5	1	0	0	0	0	0	0	0	0	0	0	**6**	
0415 - 0430	0	6	2	0	0	0	0	0	0	0	0	0	0	**8**	
0430 - 0445	0	7	2	0	0	0	0	0	0	0	0	0	0	**9**	
0445 - 0500	0	11	2	0	0	0	0	0	0	0	0	0	0	**13**	**36**
0500 - 0515	0	8	2	0	0	0	0	0	0	0	0	0	0	**11**	
0515 - 0530	0	11	2	0	0	0	0	0	0	0	0	0	0	**14**	
0530 - 0545	0	20	3	0	1	0	0	0	0	0	0	0	0	**25**	
0545 - 0600	0	21	3	0	0	0	0	0	0	0	0	0	0	**24**	**74**
0600 - 0615	0	22	3	0	1	0	0	0	0	0	0	0	0	**26**	
0615 - 0630	0	26	5	0	0	0	0	0	0	0	0	0	0	**31**	
0630 - 0645	0	37	7	0	0	0	0	0	0	0	0	0	0	**43**	
0645 - 0700	0	43	9	0	1	0	0	0	0	0	0	0	0	**53**	**154**
0700 - 0715	0	42	8	0	1	0	0	0	0	0	0	0	0	**51**	
0715 - 0730	0	46	10	0	1	0	0	0	0	0	0	0	0	**58**	
0730 - 0745	0	60	11	0	2	0	0	0	0	0	0	0	0	**73**	
0745 - 0800	0	56	11	0	1	0	0	1	0	0	0	0	0	**69**	**251**
0800 - 0815	0	45	9	0	2	0	0	0	1	0	0	0	0	**57**	
0815 - 0830	0	46	13	0	2	0	0	0	0	0	0	0	0	**61**	
0830 - 0845	0	50	13	0	1	0	0	0	0	0	0	0	0	**65**	
0845 - 0900	0	48	12	0	2	0	0	0	0	0	0	0	0	**63**	**246**
0900 - 0915	0	45	9	0	1	0	0	1	1	0	0	0	0	**58**	
0915 - 0930	0	45	13	0	1	0	0	0	1	0	0	0	0	**61**	
0930 - 0945	0	44	12	0	1	0	0	0	0	0	0	0	0	**57**	
0945 - 1000	0	49	12	0	1	0	0	0	0	0	0	0	0	**62**	**238**
1000 - 1015	0	44	10	0	1	0	0	0	1	0	0	0	0	**56**	
1015 - 1030	0	49	13	0	1	0	0	0	0	0	0	0	0	**63**	
1030 - 1045	0	49	12	1	2	0	0	0	0	0	0	0	0	**63**	
1045 - 1100	0	52	16	0	1	0	0	0	0	0	0	0	0	**70**	**252**
1100 - 1115	0	57	14	0	1	0	0	0	0	0	0	0	0	**74**	
1115 - 1130	0	55	14	0	1	0	0	0	1	0	0	0	0	**72**	
1130 - 1145	0	61	11	0	1	0	0	0	0	0	0	0	0	**73**	
1145 - 1200	0	62	14	1	1	0	0	0	1	0	0	0	0	**79**	**298**
1200 - 1215	0	69	15	0	1	0	0	0	0	0	0	0	0	**87**	
1215 - 1230	0	61	12	1	1	0	0	0	0	0	0	0	0	**76**	
1230 - 1245	0	64	12	0	1	0	0	1	0	0	0	0	0	**77**	
1245 - 1300	0	70	13	0	2	0	0	0	0	0	0	0	0	**85**	**326**
1300 - 1315	0	66	13	0	2	0	0	0	0	0	0	0	0	**81**	
1315 - 1330	0	72	12	0	2	0	0	0	0	0	0	0	0	**86**	
1330 - 1345	0	69	12	1	2	1	0	0	1	0	0	0	0	**85**	
1345 - 1400	0	67	12	0	1	0	0	1	0	0	0	0	0	**81**	**333**
1400 - 1415	0	67	14	0	2	0	0	0	0	0	0	0	0	**83**	
1415 - 1430	0	72	15	0	1	0	0	0	0	0	0	0	0	**89**	
1430 - 1445	0	77	17	0	1	0	0	0	0	0	0	0	0	**97**	
1445 - 1500	0	76	12	0	1	0	0	0	0	0	0	0	0	**91**	**360**
1500 - 1515	0	78	15	0	1	1	0	0	0	0	0	0	0	**96**	
1515 - 1530	0	81	12	1	1	0	0	0	0	0	0	0	0	**96**	
1530 - 1545	0	83	18	0	1	0	0	0	0	0	0	0	0	**104**	
1545 - 1600	0	78	17	1	1	1	0	0	1	0	0	0	0	**99**	**394**
1600 - 1615	0	101	25	0	1	0	0	0	0	0	0	0	0	**129**	
1615 - 1630	0	103	16	0	1	0	0	0	0	0	0	0	0	**121**	
1630 - 1645	0	113	21	0	2	0	0	0	1	0	0	0	0	**137**	
1645 - 1700	0	109	22	0	2	0	0	0	0	0	0	0	0	**133**	**521**
1700 - 1715	0	137	21	0	1	0	0	0	0	0	0	0	0	**160**	
1715 - 1730	0	126	22	0	1	0	0	0	0	0	0	0	0	**150**	
1730 - 1745	0	104	18	0	1	0	0	0	0	0	0	0	0	**124**	
1745 - 1800	0	77	14	0	1	0	0	0	1	0	0	0	0	**93**	**528**
1800 - 1815	0	69	13	0	2	0	0	0	0	0	0	0	0	**84**	
1815 - 1830	0	61	7	0	1	0	0	0	0	0	0	0	0	**69**	
1830 - 1845	0	52	7	0	1	0	0	0	0	0	0	0	0	**61**	
1845 - 1900	0	45	9	0	1	0	0	0	0	0	0	0	0	**55**	**269**
1900 - 1915	0	42	7	0	0	0	0	0	0	0	0	0	0	**49**	
1915 - 1930	0	47	7	0	0	0	0	0	0	0	0	0	0	**54**	
1930 - 1945	0	40	6	0	1	0	0	0	0	0	0	0	0	**48**	
1945 - 2000	0	49	7	0	1	0	0	0	0	0	0	0	0	**57**	**208**
2000 - 2015	0	39	6	0	1	0	0	0	0	0	0	0	0	**47**	
2015 - 2030	0	33	5	0	1	0	0	0	0	0	0	0	0	**38**	
2030 - 2045	0	33	7	0	1	0	0	0	0	0	0	0	0	**41**	
2045 - 2100	0	25	4	0	1	0	0	0	0	0	0	0	0	**30**	**155**
2100 - 2115	0	22	5	0	0	0	0	0	0	0	0	0	0	**27**	
2115 - 2130	0	30	7	0	1	0	0	0	0	0	0	0	0	**37**	
2130 - 2145	0	24	5	0	1	0	0	0	0	0	0	0	0	**30**	
2145 - 2200	0	26	6	0	0	0	0	0	0	0	0	0	0	**32**	**126**
2200 - 2215	0	23	4	0	1	0	0	0	0	0	0	0	0	**28**	
2215 - 2230	0	19	4	0	0	0	0	0	0	0	0	0	0	**23**	
2230 - 2245	0	19	5	0	0	0	0	0	0	0	0	0	0	**24**	
2245 - 2300	0	16	3	0	1	0	0	0	0	0	0	0	0	**20**	**96**
2300 - 2315	0	19	4	0	0	0	0	0	0	0	0	0	0	**23**	
2315 - 2330	0	11	2	0	0	0	0	0	0	0	0	0	0	**13**	
2330 - 2345	0	12	2	0	0	0	0	0	0	0	0	0	0	**14**	
2345 - 0000	0	11	2	0	0	0	0	0	0	0	0	0	0	**12**	**63**

Session Total	5	4089	807	11	77	10	0	13	20	1	0	0	0	**5032**
Session Average	0.05	42.59	8.40	0.12	0.80	0.11	0.00	0.13	0.20	0.01	0.00	0.00	0.00	**52.42**
Session Percentage	0.10	81.25	16.03	0.22	1.53	0.20	0.00	0.25	0.39	0.03	0.00	0.00	0.00	

AM Peak Hour	0715 - 0815	0715 - 0815	0830 - 0930	0945 - 1045	0800 - 0900	0715 - 0815	-	0845 - 0945	0830 - 0930	0700 - 0800	0530 - 0630	-	-	**0730 - 0830**
AM Peak Volume	1	207	48	1	6	1	0	2	2	0	0	0	0	**260**

Noon Peak Hour	1015 - 1115	1445 - 1545	1415 - 1515	1130 - 1230	1245 - 1345	1415 - 1515	-	1345 - 1445	1100 - 1200	1000 - 1100	-	-	-	**1445 - 1545**
Noon Peak Volume	1	318	59	2	7	1	0	2	2	0	0	0	0	**386**

PM Peak Hour	1715 - 1815	1630 - 1730	1630 - 1730	1500 - 1600	1630 - 1730	1500 - 1600	1700 - 1800	1515 - 1615	1700 - 1800	1645 - 1745	-	-	-	**1630 - 1730**
PM Peak Volume	1	486	85	2	7	2	0	1	2	0	0	0	0	**581**

Bi-Directional Class Count || Volume Summary 15min

Columbia, SC

Marr Traffic DATA COLLECTION

www.marrtraffic.com

Site 2
I-126 E/Bound On-Ramp,
west of I-26

Date
Sunday, April 21, 2024

Lat/Long
34.025576°, -81.100903°

Weather
Cloudy
66°F

Click here for Detailed Weather

0000 - 2400 (Sunday 24h Session) (04-21-2024)

Volume Summary 15min

TIME	Volume Summary 15min EB	WB	15min Total	60min Total
0000 - 0015	23	0	**23**	
0015 - 0030	24	0	**24**	
0030 - 0045	12	0	**12**	
0045 - 0100	8	0	**8**	**67**
0100 - 0115	22	0	**22**	
0115 - 0130	6	0	**6**	
0130 - 0145	18	0	**18**	
0145 - 0200	6	0	**6**	**52**
0200 - 0215	5	0	**5**	
0215 - 0230	10	0	**10**	
0230 - 0245	7	0	**7**	
0245 - 0300	5	0	**5**	**27**
0300 - 0315	10	0	**10**	
0315 - 0330	4	0	**4**	
0330 - 0345	4	0	**4**	
0345 - 0400	7	0	**7**	**25**
0400 - 0415	3	0	**3**	
0415 - 0430	5	0	**5**	
0430 - 0445	3	0	**3**	
0445 - 0500	8	0	**8**	**19**
0500 - 0515	4	0	**4**	
0515 - 0530	1	0	**1**	
0530 - 0545	6	0	**6**	
0545 - 0600	7	0	**7**	**18**
0600 - 0615	5	0	**5**	
0615 - 0630	14	0	**14**	
0630 - 0645	13	0	**13**	
0645 - 0700	16	0	**16**	**48**
0700 - 0715	20	0	**20**	
0715 - 0730	22	0	**22**	
0730 - 0745	28	0	**28**	
0745 - 0800	18	0	**18**	**88**
0800 - 0815	19	0	**19**	
0815 - 0830	20	0	**20**	
0830 - 0845	28	0	**28**	
0845 - 0900	34	0	**34**	**101**
0900 - 0915	38	0	**38**	
0915 - 0930	31	0	**31**	
0930 - 0945	28	0	**28**	
0945 - 1000	33	0	**33**	**130**
1000 - 1015	31	0	**31**	
1015 - 1030	37	0	**37**	
1030 - 1045	27	0	**27**	
1045 - 1100	35	0	**35**	**130**
1100 - 1115	42	0	**42**	
1115 - 1130	36	0	**36**	
1130 - 1145	51	0	**51**	
1145 - 1200	50	0	**50**	**179**

Time	Volume Summary 15min EB	WB	15min Total	60min Total
1200 - 1215	40	0	**40**	
1215 - 1230	52	0	**52**	
1230 - 1245	58	0	**58**	
1245 - 1300	70	0	**70**	**220**
1300 - 1315	42	0	**42**	
1315 - 1330	56	0	**56**	
1330 - 1345	48	0	**48**	
1345 - 1400	58	0	**58**	**204**
1400 - 1415	44	0	**44**	
1415 - 1430	46	0	**46**	
1430 - 1445	53	0	**53**	
1445 - 1500	39	0	**39**	**182**
1500 - 1515	47	0	**47**	
1515 - 1530	46	0	**46**	
1530 - 1545	58	0	**58**	
1545 - 1600	46	0	**46**	**197**
1600 - 1615	40	0	**40**	
1615 - 1630	37	0	**37**	
1630 - 1645	35	0	**35**	
1645 - 1700	40	0	**40**	**152**
1700 - 1715	41	0	**41**	
1715 - 1730	48	0	**48**	
1730 - 1745	44	0	**44**	
1745 - 1800	41	0	**41**	**174**
1800 - 1815	43	0	**43**	
1815 - 1830	47	0	**47**	
1830 - 1845	42	0	**42**	
1845 - 1900	33	0	**33**	**165**
1900 - 1915	42	0	**42**	
1915 - 1930	41	0	**41**	
1930 - 1945	44	0	**44**	
1945 - 2000	39	0	**39**	**166**
2000 - 2015	31	0	**31**	
2015 - 2030	26	0	**26**	
2030 - 2045	29	0	**29**	
2045 - 2100	22	0	**22**	**108**
2100 - 2115	17	0	**17**	
2115 - 2130	18	0	**18**	
2130 - 2145	22	0	**22**	
2145 - 2200	21	0	**21**	**78**
2200 - 2215	18	0	**18**	
2215 - 2230	11	0	**11**	
2230 - 2245	20	0	**20**	
2245 - 2300	14	0	**14**	**63**
2300 - 2315	15	0	**15**	
2315 - 2330	7	0	**7**	
2330 - 2345	5	0	**5**	
2345 - 0000	6	0	**6**	**33**

Session Total	2626	0	**2626**
Session Average	27.35	0.00	**27.35**
Session Percentage	100.00	0.00	

Site 2
I-126 E/Bound On-Ramp,
west of I-26

Date
Monday, April 22, 2024

Lat/Long
34.025576°, -81.100903°

Weather
Mostly Cloudy
57°F

Click here for Detailed Weather

0000 - 2400 (Weekday 24h Session) (04-22-2024)
Volume Summary 15min

TIME	Volume Summary 15min EB	WB	15min Total	60min Total
0000 - 0015	6	0	**6**	
0015 - 0030	7	0	**7**	
0030 - 0045	2	0	**2**	
0045 - 0100	7	0	**7**	**22**
0100 - 0115	10	0	**10**	
0115 - 0130	5	0	**5**	
0130 - 0145	5	0	**5**	
0145 - 0200	2	0	**2**	**22**
0200 - 0215	2	0	**2**	
0215 - 0230	1	0	**1**	
0230 - 0245	3	0	**3**	
0245 - 0300	5	0	**5**	**11**
0300 - 0315	3	0	**3**	
0315 - 0330	0	0	**0**	
0330 - 0345	5	0	**5**	
0345 - 0400	6	0	**6**	**14**
0400 - 0415	6	0	**6**	
0415 - 0430	9	0	**9**	
0430 - 0445	10	0	**10**	
0445 - 0500	12	0	**12**	**37**
0500 - 0515	16	0	**16**	
0515 - 0530	18	0	**18**	
0530 - 0545	32	0	**32**	
0545 - 0600	31	0	**31**	**97**
0600 - 0615	27	0	**27**	
0615 - 0630	31	0	**31**	
0630 - 0645	62	0	**62**	
0645 - 0700	67	0	**67**	**187**
0700 - 0715	59	0	**59**	
0715 - 0730	65	0	**65**	
0730 - 0745	89	0	**89**	
0745 - 0800	75	0	**75**	**288**
0800 - 0815	59	0	**59**	
0815 - 0830	62	0	**62**	
0830 - 0845	79	0	**79**	
0845 - 0900	66	0	**66**	**266**
0900 - 0915	71	0	**71**	
0915 - 0930	59	0	**59**	
0930 - 0945	73	0	**73**	
0945 - 1000	60	0	**60**	**263**
1000 - 1015	71	0	**71**	
1015 - 1030	75	0	**75**	
1030 - 1045	66	0	**66**	
1045 - 1100	76	0	**76**	**288**
1100 - 1115	75	0	**75**	
1115 - 1130	80	0	**80**	
1130 - 1145	77	0	**77**	
1145 - 1200	89	0	**89**	**321**

Time	Volume Summary 15min EB	WB	15min Total	60min Total
1200 - 1215	88	0	**88**	
1215 - 1230	73	0	**73**	
1230 - 1245	76	0	**76**	
1245 - 1300	93	0	**93**	**330**
1300 - 1315	85	0	**85**	
1315 - 1330	81	0	**81**	
1330 - 1345	83	0	**83**	
1345 - 1400	95	0	**95**	**344**
1400 - 1415	82	0	**82**	
1415 - 1430	76	0	**76**	
1430 - 1445	91	0	**91**	
1445 - 1500	103	0	**103**	**352**
1500 - 1515	100	0	**100**	
1515 - 1530	117	0	**117**	
1530 - 1545	126	0	**126**	
1545 - 1600	106	0	**106**	**449**
1600 - 1615	158	0	**158**	
1615 - 1630	136	0	**136**	
1630 - 1645	171	0	**171**	
1645 - 1700	144	0	**144**	**609**
1700 - 1715	208	0	**208**	
1715 - 1730	213	0	**213**	
1730 - 1745	146	0	**146**	
1745 - 1800	89	0	**89**	**656**
1800 - 1815	89	0	**89**	
1815 - 1830	80	0	**80**	
1830 - 1845	61	0	**61**	
1845 - 1900	56	0	**56**	**286**
1900 - 1915	58	0	**58**	
1915 - 1930	53	0	**53**	
1930 - 1945	30	0	**30**	
1945 - 2000	67	0	**67**	**208**
2000 - 2015	39	0	**39**	
2015 - 2030	27	0	**27**	
2030 - 2045	75	0	**75**	
2045 - 2100	38	0	**38**	**179**
2100 - 2115	26	0	**26**	
2115 - 2130	41	0	**41**	
2130 - 2145	27	0	**27**	
2145 - 2200	32	0	**32**	**126**
2200 - 2215	26	0	**26**	
2215 - 2230	22	0	**22**	
2230 - 2245	24	0	**24**	
2245 - 2300	23	0	**23**	**95**
2300 - 2315	17	0	**17**	
2315 - 2330	15	0	**15**	
2330 - 2345	13	0	**13**	
2345 - 0000	17	0	**17**	**62**

Session Total	5512	0	**5512**
Session Average	57.42	0.00	**57.42**
Session Percentage	100.00	0.00	

Site 2
I-126 E/Bound On-Ramp,
west of I-26

Date
Tuesday, April 23, 2024

Lat/Long
34.025576°, -81.100903°

Weather
Fair
58°F

Click here for Detailed Weather

0000 - 2400 (Weekday 24h Session) (04-23-2024)

Volume Summary 15min

TIME	Volume Summary 15min EB	WB	15min Total	60min Total
0000 - 0015	13	0	**13**	
0015 - 0030	10	0	**10**	
0030 - 0045	7	0	**7**	
0045 - 0100	11	0	**11**	**41**
0100 - 0115	9	0	**9**	
0115 - 0130	6	0	**6**	
0130 - 0145	7	0	**7**	
0145 - 0200	3	0	**3**	**25**
0200 - 0215	4	0	**4**	
0215 - 0230	3	0	**3**	
0230 - 0245	4	0	**4**	
0245 - 0300	2	0	**2**	**13**
0300 - 0315	2	0	**2**	
0315 - 0330	4	0	**4**	
0330 - 0345	9	0	**9**	
0345 - 0400	7	0	**7**	**22**
0400 - 0415	9	0	**9**	
0415 - 0430	5	0	**5**	
0430 - 0445	12	0	**12**	
0445 - 0500	15	0	**15**	**41**
0500 - 0515	10	0	**10**	
0515 - 0530	20	0	**20**	
0530 - 0545	43	0	**43**	
0545 - 0600	37	0	**37**	**110**
0600 - 0615	42	0	**42**	
0615 - 0630	39	0	**39**	
0630 - 0645	54	0	**54**	
0645 - 0700	62	0	**62**	**197**
0700 - 0715	63	0	**63**	
0715 - 0730	67	0	**67**	
0730 - 0745	105	0	**105**	
0745 - 0800	78	0	**78**	**313**
0800 - 0815	63	0	**63**	
0815 - 0830	65	0	**65**	
0830 - 0845	63	0	**63**	
0845 - 0900	73	0	**73**	**264**
0900 - 0915	50	0	**50**	
0915 - 0930	83	0	**83**	
0930 - 0945	59	0	**59**	
0945 - 1000	82	0	**82**	**274**
1000 - 1015	51	0	**51**	
1015 - 1030	78	0	**78**	
1030 - 1045	71	0	**71**	
1045 - 1100	70	0	**70**	**270**
1100 - 1115	74	0	**74**	
1115 - 1130	74	0	**74**	
1130 - 1145	73	0	**73**	
1145 - 1200	79	0	**79**	**300**

Time	Volume Summary 15min EB	WB	15min Total	60min Total
1200 - 1215	79	0	**79**	
1215 - 1230	92	0	**92**	
1230 - 1245	78	0	**78**	
1245 - 1300	75	0	**75**	**324**
1300 - 1315	88	0	**88**	
1315 - 1330	134	0	**134**	
1330 - 1345	97	0	**97**	
1345 - 1400	88	0	**88**	**407**
1400 - 1415	90	0	**90**	
1415 - 1430	112	0	**112**	
1430 - 1445	113	0	**113**	
1445 - 1500	113	0	**113**	**428**
1500 - 1515	131	0	**131**	
1515 - 1530	119	0	**119**	
1530 - 1545	114	0	**114**	
1545 - 1600	119	0	**119**	**483**
1600 - 1615	152	0	**152**	
1615 - 1630	159	0	**159**	
1630 - 1645	188	0	**188**	
1645 - 1700	172	0	**172**	**671**
1700 - 1715	219	0	**219**	
1715 - 1730	218	0	**218**	
1730 - 1745	180	0	**180**	
1745 - 1800	133	0	**133**	**750**
1800 - 1815	118	0	**118**	
1815 - 1830	72	0	**72**	
1830 - 1845	64	0	**64**	
1845 - 1900	69	0	**69**	**323**
1900 - 1915	50	0	**50**	
1915 - 1930	42	0	**42**	
1930 - 1945	44	0	**44**	
1945 - 2000	62	0	**62**	**198**
2000 - 2015	53	0	**53**	
2015 - 2030	39	0	**39**	
2030 - 2045	34	0	**34**	
2045 - 2100	24	0	**24**	**150**
2100 - 2115	27	0	**27**	
2115 - 2130	36	0	**36**	
2130 - 2145	18	0	**18**	
2145 - 2200	23	0	**23**	**104**
2200 - 2215	19	0	**19**	
2215 - 2230	20	0	**20**	
2230 - 2245	25	0	**25**	
2245 - 2300	18	0	**18**	**82**
2300 - 2315	24	0	**24**	
2315 - 2330	10	0	**10**	
2330 - 2345	13	0	**13**	
2345 - 0000	9	0	**9**	**56**

Session Total	5846	0	**5846**
Session Average	60.90	0.00	**60.90**
Session Percentage	100.00	0.00	

Site 2
I-126 E/Bound On-Ramp,
west of I-26

Date
Wednesday, April 24, 2024

Lat/Long
34.025576°, -81.100903°

Weather
Fair
66°F

Click here for Detailed Weather

0000 - 2400 (Weekday 24h Session) (04-24-2024)

Volume Summary 15min

TIME	Volume Summary 15min EB	WB	15min Total	60min Total
0000 - 0015	5	0	**5**	
0015 - 0030	8	0	**8**	
0030 - 0045	3	0	**3**	
0045 - 0100	10	0	**10**	**26**
0100 - 0115	6	0	**6**	
0115 - 0130	8	0	**8**	
0130 - 0145	5	0	**5**	
0145 - 0200	7	0	**7**	**26**
0200 - 0215	4	0	**4**	
0215 - 0230	6	0	**6**	
0230 - 0245	6	0	**6**	
0245 - 0300	5	0	**5**	**21**
0300 - 0315	5	0	**5**	
0315 - 0330	2	0	**2**	
0330 - 0345	5	0	**5**	
0345 - 0400	6	0	**6**	**18**
0400 - 0415	1	0	**1**	
0415 - 0430	13	0	**13**	
0430 - 0445	8	0	**8**	
0445 - 0500	10	0	**10**	**32**
0500 - 0515	11	0	**11**	
0515 - 0530	14	0	**14**	
0530 - 0545	28	0	**28**	
0545 - 0600	25	0	**25**	**78**
0600 - 0615	32	0	**32**	
0615 - 0630	46	0	**46**	
0630 - 0645	58	0	**58**	
0645 - 0700	66	0	**66**	**202**
0700 - 0715	59	0	**59**	
0715 - 0730	88	0	**88**	
0730 - 0745	100	0	**100**	
0745 - 0800	95	0	**95**	**342**
0800 - 0815	90	0	**90**	
0815 - 0830	99	0	**99**	
0830 - 0845	92	0	**92**	
0845 - 0900	83	0	**83**	**364**
0900 - 0915	72	0	**72**	
0915 - 0930	67	0	**67**	
0930 - 0945	67	0	**67**	
0945 - 1000	67	0	**67**	**273**
1000 - 1015	65	0	**65**	
1015 - 1030	68	0	**68**	
1030 - 1045	71	0	**71**	
1045 - 1100	78	0	**78**	**282**
1100 - 1115	95	0	**95**	
1115 - 1130	85	0	**85**	
1130 - 1145	93	0	**93**	
1145 - 1200	97	0	**97**	**370**

Time	Volume Summary 15min EB	WB	15min Total	60min Total
1200 - 1215	107	0	**107**	
1215 - 1230	69	0	**69**	
1230 - 1245	102	0	**102**	
1245 - 1300	101	0	**101**	**379**
1300 - 1315	86	0	**86**	
1315 - 1330	82	0	**82**	
1330 - 1345	98	0	**98**	
1345 - 1400	82	0	**82**	**348**
1400 - 1415	105	0	**105**	
1415 - 1430	93	0	**93**	
1430 - 1445	109	0	**109**	
1445 - 1500	87	0	**87**	**394**
1500 - 1515	84	0	**84**	
1515 - 1530	97	0	**97**	
1530 - 1545	98	0	**98**	
1545 - 1600	127	0	**127**	**406**
1600 - 1615	170	0	**170**	
1615 - 1630	170	0	**170**	
1630 - 1645	166	0	**166**	
1645 - 1700	176	0	**176**	**682**
1700 - 1715	220	0	**220**	
1715 - 1730	168	0	**168**	
1730 - 1745	170	0	**170**	
1745 - 1800	113	0	**113**	**671**
1800 - 1815	86	0	**86**	
1815 - 1830	75	0	**75**	
1830 - 1845	66	0	**66**	
1845 - 1900	60	0	**60**	**287**
1900 - 1915	44	0	**44**	
1915 - 1930	62	0	**62**	
1930 - 1945	56	0	**56**	
1945 - 2000	54	0	**54**	**216**
2000 - 2015	59	0	**59**	
2015 - 2030	51	0	**51**	
2030 - 2045	40	0	**40**	
2045 - 2100	39	0	**39**	**189**
2100 - 2115	39	0	**39**	
2115 - 2130	39	0	**39**	
2130 - 2145	38	0	**38**	
2145 - 2200	42	0	**42**	**158**
2200 - 2215	22	0	**22**	
2215 - 2230	38	0	**38**	
2230 - 2245	24	0	**24**	
2245 - 2300	23	0	**23**	**107**
2300 - 2315	26	0	**26**	
2315 - 2330	13	0	**13**	
2330 - 2345	15	0	**15**	
2345 - 0000	11	0	**11**	**65**

Session Total	5936	0	**5936**
Session Average	61.83	0.00	**61.83**
Session Percentage	100.00	0.00	

Site 2
I-126 E/Bound On-Ramp,
west of I-26

Date
Thursday, April 25, 2024

Lat/Long
34.025576°, -81.100903°

Weather
Fair
67°F

Click here for Detailed Weather

0000 - 2400 (Weekday 24h Session) (04-25-2024)

Volume Summary 15min

TIME	Volume Summary 15min EB	Volume Summary 15min WB	15min Total	60min Total
0000 - 0015	10	0	**10**	
0015 - 0030	9	0	**9**	
0030 - 0045	7	0	**7**	
0045 - 0100	6	0	**6**	**32**
0100 - 0115	3	0	**3**	
0115 - 0130	2	0	**2**	
0130 - 0145	5	0	**5**	
0145 - 0200	6	0	**6**	**16**
0200 - 0215	7	0	**7**	
0215 - 0230	3	0	**3**	
0230 - 0245	5	0	**5**	
0245 - 0300	3	0	**3**	**18**
0300 - 0315	3	0	**3**	
0315 - 0330	2	0	**2**	
0330 - 0345	8	0	**8**	
0345 - 0400	10	0	**10**	**23**
0400 - 0415	14	0	**14**	
0415 - 0430	12	0	**12**	
0430 - 0445	11	0	**11**	
0445 - 0500	18	0	**18**	**55**
0500 - 0515	12	0	**12**	
0515 - 0530	19	0	**19**	
0530 - 0545	32	0	**32**	
0545 - 0600	35	0	**35**	**98**
0600 - 0615	31	0	**31**	
0615 - 0630	36	0	**36**	
0630 - 0645	49	0	**49**	
0645 - 0700	63	0	**63**	**179**
0700 - 0715	65	0	**65**	
0715 - 0730	74	0	**74**	
0730 - 0745	81	0	**81**	
0745 - 0800	89	0	**89**	**309**
0800 - 0815	66	0	**66**	
0815 - 0830	78	0	**78**	
0830 - 0845	86	0	**86**	
0845 - 0900	84	0	**84**	**314**
0900 - 0915	66	0	**66**	
0915 - 0930	66	0	**66**	
0930 - 0945	63	0	**63**	
0945 - 1000	75	0	**75**	**270**
1000 - 1015	71	0	**71**	
1015 - 1030	61	0	**61**	
1030 - 1045	78	0	**78**	
1045 - 1100	89	0	**89**	**299**
1100 - 1115	86	0	**86**	
1115 - 1130	70	0	**70**	
1130 - 1145	85	0	**85**	
1145 - 1200	91	0	**91**	**332**

Time	Volume Summary 15min EB	Volume Summary 15min WB	15min Total	60min Total
1200 - 1215	88	0	**88**	
1215 - 1230	91	0	**91**	
1230 - 1245	77	0	**77**	
1245 - 1300	95	0	**95**	**351**
1300 - 1315	77	0	**77**	
1315 - 1330	97	0	**97**	
1330 - 1345	95	0	**95**	
1345 - 1400	86	0	**86**	**355**
1400 - 1415	84	0	**84**	
1415 - 1430	113	0	**113**	
1430 - 1445	112	0	**112**	
1445 - 1500	94	0	**94**	**403**
1500 - 1515	113	0	**113**	
1515 - 1530	102	0	**102**	
1530 - 1545	118	0	**118**	
1545 - 1600	106	0	**106**	**439**
1600 - 1615	158	0	**158**	
1615 - 1630	153	0	**153**	
1630 - 1645	181	0	**181**	
1645 - 1700	168	0	**168**	**660**
1700 - 1715	202	0	**202**	
1715 - 1730	189	0	**189**	
1730 - 1745	165	0	**165**	
1745 - 1800	138	0	**138**	**694**
1800 - 1815	100	0	**100**	
1815 - 1830	84	0	**84**	
1830 - 1845	63	0	**63**	
1845 - 1900	57	0	**57**	**304**
1900 - 1915	47	0	**47**	
1915 - 1930	81	0	**81**	
1930 - 1945	57	0	**57**	
1945 - 2000	54	0	**54**	**239**
2000 - 2015	51	0	**51**	
2015 - 2030	37	0	**37**	
2030 - 2045	33	0	**33**	
2045 - 2100	23	0	**23**	**144**
2100 - 2115	24	0	**24**	
2115 - 2130	33	0	**33**	
2130 - 2145	17	0	**17**	
2145 - 2200	25	0	**25**	**99**
2200 - 2215	24	0	**24**	
2215 - 2230	18	0	**18**	
2230 - 2245	20	0	**20**	
2245 - 2300	21	0	**21**	**83**
2300 - 2315	23	0	**23**	
2315 - 2330	15	0	**15**	
2330 - 2345	13	0	**13**	
2345 - 0000	9	0	**9**	**60**

Session Total	5776	0	**5776**
Session Average	60.17	0.00	**60.17**
Session Percentage	100.00	0.00	

Site 2
I-126 E/Bound On-Ramp,
west of I-26

Date
Friday, April 26, 2024

Lat/Long
34.025576°, -81.100903°

Weather
Cloudy
69°F

Click here for Detailed Weather

0000 - 2400 (Weekday 24h Session) (04-26-2024)
Volume Summary 15min

TIME	Volume Summary 15min EB	WB	15min Total	60min Total
0000 - 0015	7	0	**7**	
0015 - 0030	6	0	**6**	
0030 - 0045	7	0	**7**	
0045 - 0100	8	0	**8**	**28**
0100 - 0115	2	0	**2**	
0115 - 0130	1	0	**1**	
0130 - 0145	7	0	**7**	
0145 - 0200	7	0	**7**	**17**
0200 - 0215	3	0	**3**	
0215 - 0230	5	0	**5**	
0230 - 0245	1	0	**1**	
0245 - 0300	2	0	**2**	**11**
0300 - 0315	1	0	**1**	
0315 - 0330	7	0	**7**	
0330 - 0345	8	0	**8**	
0345 - 0400	6	0	**6**	**22**
0400 - 0415	5	0	**5**	
0415 - 0430	5	0	**5**	
0430 - 0445	8	0	**8**	
0445 - 0500	19	0	**19**	**37**
0500 - 0515	15	0	**15**	
0515 - 0530	17	0	**17**	
0530 - 0545	22	0	**22**	
0545 - 0600	27	0	**27**	**81**
0600 - 0615	32	0	**32**	
0615 - 0630	33	0	**33**	
0630 - 0645	44	0	**44**	
0645 - 0700	62	0	**62**	**171**
0700 - 0715	60	0	**60**	
0715 - 0730	54	0	**54**	
0730 - 0745	82	0	**82**	
0745 - 0800	82	0	**82**	**278**
0800 - 0815	63	0	**63**	
0815 - 0830	65	0	**65**	
0830 - 0845	79	0	**79**	
0845 - 0900	62	0	**62**	**269**
0900 - 0915	61	0	**61**	
0915 - 0930	72	0	**72**	
0930 - 0945	60	0	**60**	
0945 - 1000	63	0	**63**	**256**
1000 - 1015	57	0	**57**	
1015 - 1030	71	0	**71**	
1030 - 1045	72	0	**72**	
1045 - 1100	91	0	**91**	**291**
1100 - 1115	87	0	**87**	
1115 - 1130	96	0	**96**	
1130 - 1145	74	0	**74**	
1145 - 1200	80	0	**80**	**337**

Time	Volume Summary 15min EB	WB	15min Total	60min Total
1200 - 1215	117	0	**117**	
1215 - 1230	92	0	**92**	
1230 - 1245	95	0	**95**	
1245 - 1300	100	0	**100**	**404**
1300 - 1315	108	0	**108**	
1315 - 1330	96	0	**96**	
1330 - 1345	94	0	**94**	
1345 - 1400	90	0	**90**	**388**
1400 - 1415	111	0	**111**	
1415 - 1430	109	0	**109**	
1430 - 1445	126	0	**126**	
1445 - 1500	117	0	**117**	**463**
1500 - 1515	110	0	**110**	
1515 - 1530	106	0	**106**	
1530 - 1545	131	0	**131**	
1545 - 1600	105	0	**105**	**452**
1600 - 1615	154	0	**154**	
1615 - 1630	130	0	**130**	
1630 - 1645	152	0	**152**	
1645 - 1700	143	0	**143**	**579**
1700 - 1715	182	0	**182**	
1715 - 1730	130	0	**130**	
1730 - 1745	101	0	**101**	
1745 - 1800	83	0	**83**	**496**
1800 - 1815	93	0	**93**	
1815 - 1830	61	0	**61**	
1830 - 1845	75	0	**75**	
1845 - 1900	56	0	**56**	**285**
1900 - 1915	60	0	**60**	
1915 - 1930	49	0	**49**	
1930 - 1945	48	0	**48**	
1945 - 2000	57	0	**57**	**214**
2000 - 2015	50	0	**50**	
2015 - 2030	48	0	**48**	
2030 - 2045	48	0	**48**	
2045 - 2100	27	0	**27**	**173**
2100 - 2115	35	0	**35**	
2115 - 2130	45	0	**45**	
2130 - 2145	52	0	**52**	
2145 - 2200	46	0	**46**	**178**
2200 - 2215	53	0	**53**	
2215 - 2230	20	0	**20**	
2230 - 2245	27	0	**27**	
2245 - 2300	26	0	**26**	**126**
2300 - 2315	36	0	**36**	
2315 - 2330	22	0	**22**	
2330 - 2345	23	0	**23**	
2345 - 0000	17	0	**17**	**98**

Session Total	5654	0	**5654**
Session Average	58.90	0.00	**58.90**
Session Percentage	100.00	0.00	

Site 2
I-126 E/Bound On-Ramp,
west of I-26

Date
Saturday, April 27, 2024

Lat/Long
34.025576°, -81.100903°

Weather
Mostly Cloudy
69°F

Click here for Detailed Weather

0000 - 2400 (Saturday 24h Session) (04-27-2024)
Volume Summary 15min

TIME	Volume Summary 15min EB	WB	15min Total	60min Total
0000 - 0015	13	0	**13**	
0015 - 0030	11	0	**11**	
0030 - 0045	6	0	**6**	
0045 - 0100	6	0	**6**	**36**
0100 - 0115	10	0	**10**	
0115 - 0130	10	0	**10**	
0130 - 0145	4	0	**4**	
0145 - 0200	6	0	**6**	**30**
0200 - 0215	8	0	**8**	
0215 - 0230	7	0	**7**	
0230 - 0245	8	0	**8**	
0245 - 0300	6	0	**6**	**29**
0300 - 0315	7	0	**7**	
0315 - 0330	4	0	**4**	
0330 - 0345	6	0	**6**	
0345 - 0400	12	0	**12**	**29**
0400 - 0415	6	0	**6**	
0415 - 0430	5	0	**5**	
0430 - 0445	9	0	**9**	
0445 - 0500	9	0	**9**	**29**
0500 - 0515	9	0	**9**	
0515 - 0530	10	0	**10**	
0530 - 0545	10	0	**10**	
0545 - 0600	9	0	**9**	**38**
0600 - 0615	16	0	**16**	
0615 - 0630	20	0	**20**	
0630 - 0645	24	0	**24**	
0645 - 0700	34	0	**34**	**94**
0700 - 0715	29	0	**29**	
0715 - 0730	34	0	**34**	
0730 - 0745	26	0	**26**	
0745 - 0800	49	0	**49**	**138**
0800 - 0815	38	0	**38**	
0815 - 0830	37	0	**37**	
0830 - 0845	30	0	**30**	
0845 - 0900	42	0	**42**	**147**
0900 - 0915	46	0	**46**	
0915 - 0930	47	0	**47**	
0930 - 0945	52	0	**52**	
0945 - 1000	57	0	**57**	**202**
1000 - 1015	43	0	**43**	
1015 - 1030	53	0	**53**	
1030 - 1045	59	0	**59**	
1045 - 1100	52	0	**52**	**207**
1100 - 1115	60	0	**60**	
1115 - 1130	60	0	**60**	
1130 - 1145	61	0	**61**	
1145 - 1200	67	0	**67**	**248**

Time	Volume Summary 15min EB	WB	15min Total	60min Total
1200 - 1215	91	0	**91**	
1215 - 1230	63	0	**63**	
1230 - 1245	56	0	**56**	
1245 - 1300	63	0	**63**	**273**
1300 - 1315	81	0	**81**	
1315 - 1330	55	0	**55**	
1330 - 1345	80	0	**80**	
1345 - 1400	69	0	**69**	**285**
1400 - 1415	64	0	**64**	
1415 - 1430	75	0	**75**	
1430 - 1445	74	0	**74**	
1445 - 1500	82	0	**82**	**295**
1500 - 1515	84	0	**84**	
1515 - 1530	86	0	**86**	
1530 - 1545	81	0	**81**	
1545 - 1600	81	0	**81**	**332**
1600 - 1615	71	0	**71**	
1615 - 1630	64	0	**64**	
1630 - 1645	67	0	**67**	
1645 - 1700	91	0	**91**	**293**
1700 - 1715	50	0	**50**	
1715 - 1730	84	0	**84**	
1730 - 1745	64	0	**64**	
1745 - 1800	57	0	**57**	**255**
1800 - 1815	59	0	**59**	
1815 - 1830	65	0	**65**	
1830 - 1845	54	0	**54**	
1845 - 1900	53	0	**53**	**231**
1900 - 1915	44	0	**44**	
1915 - 1930	51	0	**51**	
1930 - 1945	56	0	**56**	
1945 - 2000	65	0	**65**	**216**
2000 - 2015	47	0	**47**	
2015 - 2030	36	0	**36**	
2030 - 2045	25	0	**25**	
2045 - 2100	34	0	**34**	**142**
2100 - 2115	24	0	**24**	
2115 - 2130	46	0	**46**	
2130 - 2145	36	0	**36**	
2145 - 2200	36	0	**36**	**142**
2200 - 2215	35	0	**35**	
2215 - 2230	32	0	**32**	
2230 - 2245	31	0	**31**	
2245 - 2300	18	0	**18**	**116**
2300 - 2315	19	0	**19**	
2315 - 2330	12	0	**12**	
2330 - 2345	19	0	**19**	
2345 - 0000	18	0	**18**	**68**

Session Total	3875	0	**3875**
Session Average	40.36	0.00	**40.36**
Session Percentage	100.00	0.00	

Bi-Directional Class Count || NB EB 60min

Columbia, SC

Marr Traffic DATA COLLECTION

www.marrtraffic.com

Site 2
I-126 E/Bound On-Ramp,
west of I-26

Date
Sunday, April 21, 2024

Lat/Long
34.025576°, -81.100903°

Weather
Cloudy
66°F

Click here for Detailed Weather

0000 - 2400 (Sunday 24h Session) (04-21-2024)
NB EB 60min

	Eastbound (Movement 2.1)													
TIME	1	2	3	4	5	6	7	8	9	10	11	12	13	**Total**
0000 - 0100	0	58	9	0	0	0	0	0	0	0	0	0	0	**67**
0100 - 0200	0	45	7	0	0	0	0	0	0	0	0	0	0	**52**
0200 - 0300	0	23	4	0	0	0	0	0	0	0	0	0	0	**27**
0300 - 0400	0	22	3	0	0	0	0	0	0	0	0	0	0	**25**
0400 - 0500	0	12	6	0	0	0	0	0	1	0	0	0	0	**19**
0500 - 0600	0	15	3	0	0	0	0	0	0	0	0	0	0	**18**
0600 - 0700	0	39	8	0	1	0	0	0	0	0	0	0	0	**48**
0700 - 0800	0	77	9	0	2	0	0	0	0	0	0	0	0	**88**
0800 - 0900	0	81	19	0	1	0	0	0	0	0	0	0	0	**101**
0900 - 1000	0	109	18	0	1	0	0	1	1	0	0	0	0	**130**
1000 - 1100	0	117	12	0	1	0	0	0	0	0	0	0	0	**130**
1100 - 1200	0	159	20	0	0	0	0	0	0	0	0	0	0	**179**
1200 - 1300	0	193	25	0	2	0	0	0	0	0	0	0	0	**220**
1300 - 1400	0	185	19	0	0	0	0	0	0	0	0	0	0	**204**
1400 - 1500	1	156	24	0	1	0	0	0	0	0	0	0	0	**182**
1500 - 1600	0	175	21	0	1	0	0	0	0	0	0	0	0	**197**
1600 - 1700	0	135	16	0	1	0	0	0	0	0	0	0	0	**152**
1700 - 1800	0	155	14	0	4	0	0	0	1	0	0	0	0	**174**
1800 - 1900	1	146	15	0	3	0	0	0	0	0	0	0	0	**165**
1900 - 2000	0	142	20	0	4	0	0	0	0	0	0	0	0	**166**
2000 - 2100	0	101	7	0	0	0	0	0	0	0	0	0	0	**108**
2100 - 2200	0	72	6	0	0	0	0	0	0	0	0	0	0	**78**
2200 - 2300	0	58	5	0	0	0	0	0	0	0	0	0	0	**63**
2300 - 2400	0	32	1	0	0	0	0	0	0	0	0	0	0	**33**

Session Total	2	2307	291	0	22	0	0	1	3	0	0	0	0	**2626**
Session Average	0.08	96.13	12.13	0.00	0.92	0.00	0.00	0.04	0.13	0.00	0.00	0.00	0.00	**109.42**
Session Percentage	0.08	87.85	11.08	0.00	0.84	0.00	0.00	0.04	0.11	0.00	0.00	0.00	0.00	

AM Peak Hour	-	0900 - 1000	0800 - 0900	-	0700 - 0800	-	-	0900 - 1000	0900 - 1000	-	-	-	-	**0900 - 1000**
AM Peak Volume	0	109	19	0	2	0	0	1	1	0	0	0	0	**130**

Noon Peak Hour	1400 - 1500	1200 - 1300	1200 - 1300	-	1200 - 1300	-	-	-	-	-	-	-	-	**1200 - 1300**
Noon Peak Volume	1	193	25	0	2	0	0	0	0	0	0	0	0	**220**

PM Peak Hour	1800 - 1900	1500 - 1600	1500 - 1600	-	1700 - 1800	-	-	-	1700 - 1800	-	-	-	-	**1500 - 1600**
PM Peak Volume	1	175	21	0	4	0	0	0	1	0	0	0	0	**197**

Site 2
I-126 E/Bound On-Ramp,
west of I-26

Date
Monday, April 22, 2024

Lat/Long
34.025576°, -81.100903°

Weather
Mostly Cloudy
57°F

Click here for Detailed Weather

0000 - 2400 (Weekday 24h Session) (04-22-2024)
NB EB 60min

	Eastbound (Movement 2.1)													
TIME	1	2	3	4	5	6	7	8	9	10	11	12	13	**Total**
0000 - 0100	0	18	4	0	0	0	0	0	0	0	0	0	0	**22**
0100 - 0200	0	18	2	0	2	0	0	0	0	0	0	0	0	**22**
0200 - 0300	0	8	1	0	1	0	0	0	1	0	0	0	0	**11**
0300 - 0400	0	10	4	0	0	0	0	0	0	0	0	0	0	**14**
0400 - 0500	0	26	10	0	1	0	0	0	0	0	0	0	0	**37**
0500 - 0600	0	82	12	0	3	0	0	0	0	0	0	0	0	**97**
0600 - 0700	0	146	37	0	2	0	0	0	2	0	0	0	0	**187**
0700 - 0800	0	218	59	1	5	1	0	3	1	0	0	0	0	**288**
0800 - 0900	0	204	50	1	7	1	0	1	1	1	0	0	0	**266**
0900 - 1000	0	183	56	2	13	1	0	4	3	1	0	0	0	**263**
1000 - 1100	0	208	62	2	9	1	0	2	4	0	0	0	0	**288**
1100 - 1200	0	238	71	1	7	0	0	1	3	0	0	0	0	**321**
1200 - 1300	0	269	45	1	7	0	0	4	4	0	0	0	0	**330**
1300 - 1400	1	271	56	2	8	0	0	5	1	0	0	0	0	**344**
1400 - 1500	0	285	53	2	8	0	0	3	1	0	0	0	0	**352**
1500 - 1600	0	363	69	3	8	2	0	2	2	0	0	0	0	**449**
1600 - 1700	0	487	111	0	8	1	0	0	2	0	0	0	0	**609**
1700 - 1800	0	552	92	0	6	1	1	0	4	0	0	0	0	**656**
1800 - 1900	0	235	42	0	8	0	0	0	1	0	0	0	0	**286**
1900 - 2000	0	169	39	0	0	0	0	0	0	0	0	0	0	**208**
2000 - 2100	1	143	30	0	4	0	0	0	1	0	0	0	0	**179**
2100 - 2200	0	94	22	0	6	1	0	0	3	0	0	0	0	**126**
2200 - 2300	1	75	15	0	4	0	0	0	0	0	0	0	0	**95**
2300 - 2400	0	55	7	0	0	0	0	0	0	0	0	0	0	**62**

Session Total	3	4357	949	15	117	9	1	25	34	2	0	0	0	**5512**
Session Average	0.13	181.54	39.54	0.63	4.88	0.38	0.04	1.04	1.42	0.08	0.00	0.00	0.00	**229.67**
Session Percentage	0.05	79.05	17.22	0.27	2.12	0.16	0.02	0.45	0.62	0.04	0.00	0.00	0.00	

AM Peak Hour	-	0700 - 0800	0700 - 0800	0900 - 1000	0900 - 1000	0700 - 0800	-	0900 - 1000	0900 - 1000	0800 - 0900	-	-	-	**0700 - 0800**
AM Peak Volume	0	218	59	2	13	1	0	4	3	1	0	0	0	**288**

Noon Peak Hour	1300 - 1400	1400 - 1500	1100 - 1200	1000 - 1100	1000 - 1100	1000 - 1100	-	1300 - 1400	1000 - 1100	-	-	-	-	**1400 - 1500**
Noon Peak Volume	1	285	71	2	9	1	0	5	4	0	0	0	0	**352**

PM Peak Hour	-	1700 - 1800	1600 - 1700	1500 - 1600	1500 - 1600	1500 - 1600	1700 - 1800	1500 - 1600	1700 - 1800	-	-	-	-	**1700 - 1800**
PM Peak Volume	0	552	111	3	8	2	1	2	4	0	0	0	0	**656**

Site 2
I-126 E/Bound On-Ramp,
west of I-26

Date
Tuesday, April 23, 2024

Lat/Long
34.025576°, -81.100903°

Weather
Fair
58°F

Click here for Detailed Weather

0000 - 2400 (Weekday 24h Session) (04-23-2024)
NB EB 60min

	Eastbound (Movement 2.1)													
TIME	1	2	3	4	5	6	7	8	9	10	11	12	13	**Total**
0000 - 0100	0	32	8	0	1	0	0	0	0	0	0	0	0	**41**
0100 - 0200	0	18	6	0	0	0	0	0	1	0	0	0	0	**25**
0200 - 0300	0	8	5	0	0	0	0	0	0	0	0	0	0	**13**
0300 - 0400	0	15	4	0	1	0	0	0	2	0	0	0	0	**22**
0400 - 0500	0	32	7	0	0	0	0	0	2	0	0	0	0	**41**
0500 - 0600	0	94	13	0	1	1	0	0	1	0	0	0	0	**110**
0600 - 0700	0	169	23	0	4	0	0	0	1	0	0	0	0	**197**
0700 - 0800	0	261	45	0	5	1	0	0	1	0	0	0	0	**313**
0800 - 0900	0	195	54	0	12	0	0	1	2	0	0	0	0	**264**
0900 - 1000	0	209	54	0	4	2	0	3	2	0	0	0	0	**274**
1000 - 1100	0	186	70	2	7	1	0	2	1	1	0	0	0	**270**
1100 - 1200	1	236	53	1	5	0	0	2	2	0	0	0	0	**300**
1200 - 1300	0	261	56	2	2	1	0	0	2	0	0	0	0	**324**
1300 - 1400	0	319	71	3	11	2	0	0	1	0	0	0	0	**407**
1400 - 1500	0	361	53	0	11	0	0	1	2	0	0	0	0	**428**
1500 - 1600	1	381	91	3	5	0	0	1	1	0	0	0	0	**483**
1600 - 1700	0	541	115	3	9	1	0	1	1	0	0	0	0	**671**
1700 - 1800	1	612	123	1	8	2	0	1	2	0	0	0	0	**750**
1800 - 1900	0	271	45	0	5	0	0	1	1	0	0	0	0	**323**
1900 - 2000	0	175	17	0	6	0	0	0	0	0	0	0	0	**198**
2000 - 2100	0	123	24	0	3	0	0	0	0	0	0	0	0	**150**
2100 - 2200	0	80	24	0	0	0	0	0	0	0	0	0	0	**104**
2200 - 2300	0	62	20	0	0	0	0	0	0	0	0	0	0	**82**
2300 - 2400	0	43	13	0	0	0	0	0	0	0	0	0	0	**56**

Session Total	3	4684	994	15	100	11	0	13	25	1	0	0	0	**5846**
Session Average	0.13	195.17	41.42	0.63	4.17	0.46	0.00	0.54	1.04	0.04	0.00	0.00	0.00	**243.58**
Session Percentage	0.05	80.12	17.00	0.26	1.71	0.19	0.00	0.22	0.43	0.02	0.00	0.00	0.00	

AM Peak Hour	-	0700 - 0800	0800 - 0900	-	0800 - 0900	0900 - 1000	-	0900 - 1000	0800 - 0900	-	-	-	-	**0700 - 0800**
AM Peak Hour Volume	0	261	54	0	12	2	0	3	2	0	0	0	0	**313**

Noon Peak Hour	1100 - 1200	1400 - 1500	1300 - 1400	1300 - 1400	1300 - 1400	1300 - 1400	-	1000 - 1100	1100 - 1200	1000 - 1100	-	-	-	**1400 - 1500**
Noon Peak Hour Volume	1	361	71	3	11	2	0	2	2	1	0	0	0	**428**

PM Peak Hour	1500 - 1600	1700 - 1800	1700 - 1800	1500 - 1600	1600 - 1700	1700 - 1800	-	1500 - 1600	1700 - 1800	-	-	-	-	**1700 - 1800**
PM Peak Hour Volume	1	612	123	3	9	2	0	1	2	0	0	0	0	**750**

Site 2
I-126 E/Bound On-Ramp,
west of I-26

Date
Wednesday, April 24, 2024

Weather
Fair
66°F

Lat/Long
34.025576°, -81.100903°

Click here for Detailed Weather

0000 - 2400 (Weekday 24h Session) (04-24-2024)
NB EB 60min

	Eastbound (Movement 2.1)													
TIME	1	2	3	4	5	6	7	8	9	10	11	12	13	**Total**
0000 - 0100	0	18	8	0	0	0	0	0	0	0	0	0	0	**26**
0100 - 0200	0	17	9	0	0	0	0	0	0	0	0	0	0	**26**
0200 - 0300	0	17	4	0	0	0	0	0	0	0	0	0	0	**21**
0300 - 0400	0	13	3	0	0	0	0	0	2	0	0	0	0	**18**
0400 - 0500	0	24	8	0	0	0	0	0	0	0	0	0	0	**32**
0500 - 0600	0	58	18	0	1	0	0	0	1	0	0	0	0	**78**
0600 - 0700	0	168	30	0	4	0	0	0	0	0	0	0	0	**202**
0700 - 0800	0	264	70	1	5	1	0	0	0	1	0	0	0	**342**
0800 - 0900	1	260	86	3	7	1	0	2	4	0	0	0	0	**364**
0900 - 1000	0	207	58	1	3	0	0	3	1	0	0	0	0	**273**
1000 - 1100	0	212	60	2	8	0	0	0	0	0	0	0	0	**282**
1100 - 1200	1	294	60	1	7	2	0	0	4	1	0	0	0	**370**
1200 - 1300	1	293	67	2	9	2	0	3	2	0	0	0	0	**379**
1300 - 1400	0	273	58	2	9	2	0	2	1	1	0	0	0	**348**
1400 - 1500	0	314	67	1	6	3	0	2	1	0	0	0	0	**394**
1500 - 1600	0	317	74	2	6	3	0	1	3	0	0	0	0	**406**
1600 - 1700	1	561	109	1	8	1	0	1	0	0	0	0	0	**682**
1700 - 1800	1	551	106	0	6	3	0	2	1	1	0	0	0	**671**
1800 - 1900	0	237	42	0	8	0	0	0	0	0	0	0	0	**287**
1900 - 2000	1	177	34	0	3	0	0	0	1	0	0	0	0	**216**
2000 - 2100	0	150	34	0	4	0	0	0	1	0	0	0	0	**189**
2100 - 2200	0	122	34	0	2	0	0	0	0	0	0	0	0	**158**
2200 - 2300	1	77	27	0	1	0	0	0	1	0	0	0	0	**107**
2300 - 2400	0	47	16	0	1	0	0	0	1	0	0	0	0	**65**

Session Total	7	4671	1082	16	98	18	0	16	24	4	0	0	0	**5936**
Session Average	0.29	194.63	45.08	0.67	4.08	0.75	0.00	0.67	1.00	0.17	0.00	0.00	0.00	**247.33**
Session Percentage	0.12	78.69	18.23	0.27	1.65	0.30	0.00	0.27	0.40	0.07	0.00	0.00	0.00	

AM Peak Hour	0800 - 0900	0700 - 0800	0800 - 0900	0800 - 0900	0800 - 0900	0700 - 0800	-	0900 - 1000	0800 - 0900	0700 - 0800	-	-	-	**0800 - 0900**
AM Peak Hour Volume	1	264	86	3	7	1	0	3	4	1	0	0	0	**364**

Noon Peak Hour	1100 - 1200	1400 - 1500	1200 - 1300	1000 - 1100	1200 - 1300	1400 - 1500	-	1200 - 1300	1100 - 1200	1100 - 1200	-	-	-	**1400 - 1500**
Noon Peak Hour Volume	1	314	67	2	9	3	0	3	4	1	0	0	0	**394**

PM Peak Hour	1600 - 1700	1600 - 1700	1600 - 1700	1500 - 1600	1600 - 1700	1500 - 1600	-	1700 - 1800	1500 - 1600	1700 - 1800	-	-	-	**1600 - 1700**
PM Peak Hour Volume	1	561	109	2	8	3	0	2	3	1	0	0	0	**682**

Site 2
I-126 E/Bound On-Ramp,
west of I-26

Date
Thursday, April 25, 2024

Weather
Fair
67°F

Lat/Long
34.025576°, -81.100903°

Click here for Detailed Weather

0000 - 2400 (Weekday 24h Session) (04-25-2024)
NB EB 60min

	Eastbound (Movement 2.1)													
TIME	1	2	3	4	5	6	7	8	9	10	11	12	13	**Total**
0000 - 0100	0	28	3	0	0	1	0	0	0	0	0	0	0	**32**
0100 - 0200	0	11	4	0	0	1	0	0	0	0	0	0	0	**16**
0200 - 0300	0	13	3	1	1	0	0	0	0	0	0	0	0	**18**
0300 - 0400	0	17	1	1	2	0	0	0	2	0	0	0	0	**23**
0400 - 0500	0	48	5	0	1	0	0	0	1	0	0	0	0	**55**
0500 - 0600	0	85	7	0	5	0	0	0	1	0	0	0	0	**98**
0600 - 0700	0	153	22	0	3	0	0	0	1	0	0	0	0	**179**
0700 - 0800	1	251	51	0	4	0	0	1	1	0	0	0	0	**309**
0800 - 0900	0	251	57	1	4	0	0	0	1	0	0	0	0	**314**
0900 - 1000	0	200	62	0	6	0	0	0	2	0	0	0	0	**270**
1000 - 1100	1	236	53	2	3	0	0	0	4	0	0	0	0	**299**
1100 - 1200	0	252	70	2	3	2	0	2	1	0	0	0	0	**332**
1200 - 1300	0	281	62	0	3	2	0	1	2	0	0	0	0	**351**
1300 - 1400	0	290	49	3	9	1	0	1	2	0	0	0	0	**355**
1400 - 1500	0	308	85	0	7	1	0	2	0	0	0	0	0	**403**
1500 - 1600	1	348	75	3	5	4	0	1	2	0	0	0	0	**439**
1600 - 1700	1	546	98	0	8	3	0	3	1	0	0	0	0	**660**
1700 - 1800	1	592	95	1	2	1	0	1	1	0	0	0	0	**694**
1800 - 1900	1	253	44	0	5	1	0	0	0	0	0	0	0	**304**
1900 - 2000	1	206	30	0	1	0	0	1	0	0	0	0	0	**239**
2000 - 2100	0	122	19	0	3	0	0	0	0	0	0	0	0	**144**
2100 - 2200	0	86	12	0	1	0	0	0	0	0	0	0	0	**99**
2200 - 2300	1	66	14	0	2	0	0	0	0	0	0	0	0	**83**
2300 - 2400	0	47	13	0	0	0	0	0	0	0	0	0	0	**60**

Session Total	8	4690	934	14	78	17	0	13	22	0	0	0	0	**5776**
Session Average	0.33	195.42	38.92	0.58	3.25	0.71	0.00	0.54	0.92	0.00	0.00	0.00	0.00	**240.67**
Session Percentage	0.14	81.20	16.17	0.24	1.35	0.29	0.00	0.23	0.38	0.00	0.00	0.00	0.00	

AM Peak Hour	0700 - 0800	0700 - 0800	0900 - 1000	0800 - 0900	0900 - 1000	-	-	0700 - 0800	0900 - 1000	-	-	-	-	**0800 - 0900**
AM Peak Hour Volume	1	251	62	1	6	0	0	1	2	0	0	0	0	**314**

Noon Peak Hour	1000 - 1100	1400 - 1500	1400 - 1500	1300 - 1400	1300 - 1400	1100 - 1200	-	1100 - 1200	1000 - 1100	-	-	-	-	**1400 - 1500**
Noon Peak Hour Volume	1	308	85	3	9	2	0	2	4	0	0	0	0	**403**

PM Peak Hour	1500 - 1600	1700 - 1800	1600 - 1700	1500 - 1600	1600 - 1700	1500 - 1600	-	1600 - 1700	1500 - 1600	-	-	-	-	**1700 - 1800**
PM Peak Hour Volume	1	592	98	3	8	4	0	3	2	0	0	0	0	**694**

Site 2
I-126 E/Bound On-Ramp,
west of I-26

Date
Friday, April 26, 2024

Lat/Long
34.025576°, -81.100903°

Weather
Cloudy
69°F

Click here for Detailed Weather

0000 - 2400 (Weekday 24h Session) (04-26-2024)
NB EB 60min

	Eastbound (Movement 2.1)													
TIME	1	2	3	4	5	6	7	8	9	10	11	12	13	**Total**
0000 - 0100	0	22	6	0	0	0	0	0	0	0	0	0	0	**28**
0100 - 0200	0	13	4	0	0	0	0	0	0	0	0	0	0	**17**
0200 - 0300	0	9	1	0	0	0	0	0	1	0	0	0	0	**11**
0300 - 0400	0	15	5	0	1	0	0	0	1	0	0	0	0	**22**
0400 - 0500	0	29	8	0	0	0	0	0	0	0	0	0	0	**37**
0500 - 0600	0	60	19	0	0	1	0	0	1	0	0	0	0	**81**
0600 - 0700	0	141	27	0	2	0	0	0	0	0	1	0	0	**171**
0700 - 0800	1	238	26	1	6	1	0	2	1	2	0	0	0	**278**
0800 - 0900	0	213	41	1	10	2	0	1	1	0	0	0	0	**269**
0900 - 1000	0	203	43	0	7	0	0	1	2	0	0	0	0	**256**
1000 - 1100	1	221	61	3	3	0	0	2	0	0	0	0	0	**291**
1100 - 1200	0	263	60	3	6	1	0	0	4	0	0	0	0	**337**
1200 - 1300	0	314	73	4	10	0	0	2	1	0	0	0	0	**404**
1300 - 1400	0	328	53	1	3	1	0	0	2	0	0	0	0	**388**
1400 - 1500	1	375	78	0	5	2	0	0	2	0	0	0	0	**463**
1500 - 1600	0	367	72	2	4	3	0	2	2	0	0	0	0	**452**
1600 - 1700	1	468	99	0	8	1	0	2	0	0	0	0	0	**579**
1700 - 1800	0	426	61	1	4	0	0	1	3	0	0	0	0	**496**
1800 - 1900	2	244	34	0	5	0	0	0	0	0	0	0	0	**285**
1900 - 2000	1	186	25	0	2	0	0	0	0	0	0	0	0	**214**
2000 - 2100	0	148	25	0	0	0	0	0	0	0	0	0	0	**173**
2100 - 2200	0	146	29	0	3	0	0	0	0	0	0	0	0	**178**
2200 - 2300	0	107	17	0	2	0	0	0	0	0	0	0	0	**126**
2300 - 2400	0	82	15	0	0	0	0	0	1	0	0	0	0	**98**

Session Total	7	4618	882	16	81	12	0	13	22	2	1	0	0	**5654**
Session Average	0.29	192.42	36.75	0.67	3.38	0.50	0.00	0.54	0.92	0.08	0.04	0.00	0.00	**235.58**
Session Percentage	0.12	81.68	15.60	0.28	1.43	0.21	0.00	0.23	0.39	0.04	0.02	0.00	0.00	

AM Peak Hour	0700 - 0800	0700 - 0800	0900 - 1000	0700 - 0800	0800 - 0900	0800 - 0900	-	0700 - 0800	0900 - 1000	0700 - 0800	0600 - 0700	-	-	**0700 - 0800**
AM Peak Hour Volume	1	238	43	1	10	2	0	2	2	2	1	0	0	**278**

Noon Peak Hour	1000 - 1100	1400 - 1500	1400 - 1500	1200 - 1300	1200 - 1300	1400 - 1500	-	1000 - 1100	1100 - 1200	-	-	-	-	**1400 - 1500**
Noon Peak Hour Volume	1	375	78	4	10	2	0	2	4	0	0	0	0	**463**

PM Peak Hour	1800 - 1900	1600 - 1700	1600 - 1700	1500 - 1600	1600 - 1700	1500 - 1600	-	1500 - 1600	1700 - 1800	-	-	-	-	**1600 - 1700**
PM Peak Hour Volume	2	468	99	2	8	3	0	2	3	0	0	0	0	**579**

Site 2
I-126 E/Bound On-Ramp,
west of I-26

Date
Saturday, April 27, 2024

Weather
Mostly Cloudy
69°F

Lat/Long
34.025576°, -81.100903°

Click here for Detailed Weather

0000 - 2400 (Saturday 24h Session) (04-27-2024)
NB EB 60min

	Eastbound (Movement 2.1)													
TIME	1	2	3	4	5	6	7	8	9	10	11	12	13	**Total**
0000 - 0100	0	30	5	0	0	0	0	1	0	0	0	0	0	**36**
0100 - 0200	1	26	3	0	0	0	0	0	0	0	0	0	0	**30**
0200 - 0300	0	26	0	0	2	0	0	0	1	0	0	0	0	**29**
0300 - 0400	0	25	3	0	1	0	0	0	0	0	0	0	0	**29**
0400 - 0500	0	26	3	0	0	0	0	0	0	0	0	0	0	**29**
0500 - 0600	0	34	2	0	2	0	0	0	0	0	0	0	0	**38**
0600 - 0700	0	74	17	0	2	1	0	0	0	0	0	0	0	**94**
0700 - 0800	0	117	20	0	0	0	0	0	1	0	0	0	0	**138**
0800 - 0900	1	120	21	0	3	1	0	0	1	0	0	0	0	**147**
0900 - 1000	1	165	32	0	1	1	0	1	1	0	0	0	0	**202**
1000 - 1100	0	167	35	0	4	0	0	0	1	0	0	0	0	**207**
1100 - 1200	0	212	33	0	2	0	0	0	1	0	0	0	0	**248**
1200 - 1300	1	233	35	0	3	0	0	1	0	0	0	0	0	**273**
1300 - 1400	0	247	38	0	0	0	0	0	0	0	0	0	0	**285**
1400 - 1500	0	251	41	0	2	0	0	1	0	0	0	0	0	**295**
1500 - 1600	0	290	38	2	1	1	0	0	0	0	0	0	0	**332**
1600 - 1700	0	248	42	0	2	0	0	1	0	0	0	0	0	**293**
1700 - 1800	0	219	29	0	5	0	0	2	0	0	0	0	0	**255**
1800 - 1900	0	198	30	0	3	0	0	0	0	0	0	0	0	**231**
1900 - 2000	0	194	20	0	2	0	0	0	0	0	0	0	0	**216**
2000 - 2100	0	120	17	0	5	0	0	0	0	0	0	0	0	**142**
2100 - 2200	0	113	28	0	1	0	0	0	0	0	0	0	0	**142**
2200 - 2300	0	97	17	0	1	0	0	0	1	0	0	0	0	**116**
2300 - 2400	0	61	6	0	1	0	0	0	0	0	0	0	0	**68**

Session Total	4	3293	515	2	43	4	0	7	7	0	0	0	0	**3875**
Session Average	0.17	137.21	21.46	0.08	1.79	0.17	0.00	0.29	0.29	0.00	0.00	0.00	0.00	**161.46**
Session Percentage	0.10	84.98	13.29	0.05	1.11	0.10	0.00	0.18	0.18	0.00	0.00	0.00	0.00	

AM Peak Hour	0800 - 0900	0900 - 1000	0900 - 1000	-	0800 - 0900	0600 - 0700	-	0900 - 1000	0700 - 0800	-	-	-	-	**0900 - 1000**
AM Peak Hour Volume	1	165	32	0	3	1	0	1	1	0	0	0	0	**202**

Noon Peak Hour	1200 - 1300	1400 - 1500	1400 - 1500	-	1000 - 1100	-	-	1200 - 1300	1000 - 1100	-	-	-	-	**1400 - 1500**
Noon Peak Hour Volume	1	251	41	0	4	0	0	1	1	0	0	0	0	**295**

PM Peak Hour	-	1500 - 1600	1600 - 1700	1500 - 1600	1700 - 1800	1500 - 1600	-	1700 - 1800	-	-	-	-	-	**1500 - 1600**
PM Peak Hour Volume	0	290	42	2	5	1	0	2	0	0	0	0	0	**332**

Bi-Directional Class Count || Volume Summary 60min

Columbia, SC

Marr Traffic DATA COLLECTION

www.marrtraffic.com

Site 2

I-126 E/Bound On-Ramp,
west of I-26

Date

Sunday, April 21, 2024

Lat/Long

34.025576°, -81.100903°

Weather

Cloudy
66°F

Click here for Detailed Weather

0000 - 2400 (Sunday 24h Session) (04-21-2024)

Volume Summary 60min

	Volume Summary 60min		
TIME	EB	WB	**Total**
0000 - 0100	67	0	**67**
0100 - 0200	52	0	**52**
0200 - 0300	27	0	**27**
0300 - 0400	25	0	**25**
0400 - 0500	19	0	**19**
0500 - 0600	18	0	**18**
0600 - 0700	48	0	**48**
0700 - 0800	88	0	**88**
0800 - 0900	101	0	**101**
0900 - 1000	130	0	**130**
1000 - 1100	130	0	**130**
1100 - 1200	179	0	**179**

	Volume Summary 60min		
Time	EB	WB	**Total**
1200 - 1300	220	0	**220**
1300 - 1400	204	0	**204**
1400 - 1500	182	0	**182**
1500 - 1600	197	0	**197**
1600 - 1700	152	0	**152**
1700 - 1800	174	0	**174**
1800 - 1900	165	0	**165**
1900 - 2000	166	0	**166**
2000 - 2100	108	0	**108**
2100 - 2200	78	0	**78**
2200 - 2300	63	0	**63**
2300 - 2400	33	0	**33**

Session Total	2626	0	**2626**
Session Average	109.42	0.00	**109.42**
Session Percentage	100.00	0.00	

Site 2
I-126 E/Bound On-Ramp,
west of I-26

Date
Monday, April 22, 2024

Lat/Long
34.025576°, -81.100903°

Weather
Mostly Cloudy
57°F

Click here for Detailed Weather

0000 - 2400 (Weekday 24h Session) (04-22-2024)
Volume Summary 60min

	Volume Summary 60min		
TIME	EB	WB	**Total**
0000 - 0100	22	0	**22**
0100 - 0200	22	0	**22**
0200 - 0300	11	0	**11**
0300 - 0400	14	0	**14**
0400 - 0500	37	0	**37**
0500 - 0600	97	0	**97**
0600 - 0700	187	0	**187**
0700 - 0800	288	0	**288**
0800 - 0900	266	0	**266**
0900 - 1000	263	0	**263**
1000 - 1100	288	0	**288**
1100 - 1200	321	0	**321**

	Volume Summary 60min		
Time	EB	WB	**Total**
1200 - 1300	330	0	**330**
1300 - 1400	344	0	**344**
1400 - 1500	352	0	**352**
1500 - 1600	449	0	**449**
1600 - 1700	609	0	**609**
1700 - 1800	656	0	**656**
1800 - 1900	286	0	**286**
1900 - 2000	208	0	**208**
2000 - 2100	179	0	**179**
2100 - 2200	126	0	**126**
2200 - 2300	95	0	**95**
2300 - 2400	62	0	**62**

Session Total	5512	0	**5512**
Session Average	229.67	0.00	**229.67**
Session Percentage	100.00	0.00	

Site 2

I-126 E/Bound On-Ramp,
west of I-26

Date

Tuesday, April 23, 2024

Lat/Long

34.025576°, -81.100903°

Weather

Fair
58°F

Click here for Detailed Weather

0000 - 2400 (Weekday 24h Session) (04-23-2024)

Volume Summary 60min

	Volume Summary 60min		
TIME	EB	WB	**Total**
0000 - 0100	41	0	**41**
0100 - 0200	25	0	**25**
0200 - 0300	13	0	**13**
0300 - 0400	22	0	**22**
0400 - 0500	41	0	**41**
0500 - 0600	110	0	**110**
0600 - 0700	197	0	**197**
0700 - 0800	313	0	**313**
0800 - 0900	264	0	**264**
0900 - 1000	274	0	**274**
1000 - 1100	270	0	**270**
1100 - 1200	300	0	**300**

Session Total	5846	0	**5846**
Session Average	243.58	0.00	**243.58**
Session Percentage	100.00	0.00	

	Volume Summary 60min		
Time	EB	WB	**Total**
1200 - 1300	324	0	**324**
1300 - 1400	407	0	**407**
1400 - 1500	428	0	**428**
1500 - 1600	483	0	**483**
1600 - 1700	671	0	**671**
1700 - 1800	750	0	**750**
1800 - 1900	323	0	**323**
1900 - 2000	198	0	**198**
2000 - 2100	150	0	**150**
2100 - 2200	104	0	**104**
2200 - 2300	82	0	**82**
2300 - 2400	56	0	**56**

Site 2
I-126 E/Bound On-Ramp,
west of I-26

Date
Wednesday, April 24, 2024

Lat/Long
34.025576°, -81.100903°

Weather
Fair
66°F

Click here for Detailed Weather

0000 - 2400 (Weekday 24h Session) (04-24-2024)
Volume Summary 60min

	Volume Summary 60min		
TIME	EB	WB	**Total**
0000 - 0100	26	0	**26**
0100 - 0200	26	0	**26**
0200 - 0300	21	0	**21**
0300 - 0400	18	0	**18**
0400 - 0500	32	0	**32**
0500 - 0600	78	0	**78**
0600 - 0700	202	0	**202**
0700 - 0800	342	0	**342**
0800 - 0900	364	0	**364**
0900 - 1000	273	0	**273**
1000 - 1100	282	0	**282**
1100 - 1200	370	0	**370**

Session Total	5936	0	**5936**
Session Average	247.33	0.00	**247.33**
Session Percentage	100.00	0.00	

	Volume Summary 60min		
Time	EB	WB	**Total**
1200 - 1300	379	0	**379**
1300 - 1400	348	0	**348**
1400 - 1500	394	0	**394**
1500 - 1600	406	0	**406**
1600 - 1700	682	0	**682**
1700 - 1800	671	0	**671**
1800 - 1900	287	0	**287**
1900 - 2000	216	0	**216**
2000 - 2100	189	0	**189**
2100 - 2200	158	0	**158**
2200 - 2300	107	0	**107**
2300 - 2400	65	0	**65**

Site 2
I-126 E/Bound On-Ramp,
west of I-26

Date
Thursday, April 25, 2024

Lat/Long
34.025576°, -81.100903°

Weather
Fair
67°F

Click here for Detailed Weather

0000 - 2400 (Weekday 24h Session) (04-25-2024)
Volume Summary 60min

	Volume Summary 60min		
TIME	EB	WB	**Total**
0000 - 0100	32	0	**32**
0100 - 0200	16	0	**16**
0200 - 0300	18	0	**18**
0300 - 0400	23	0	**23**
0400 - 0500	55	0	**55**
0500 - 0600	98	0	**98**
0600 - 0700	179	0	**179**
0700 - 0800	309	0	**309**
0800 - 0900	314	0	**314**
0900 - 1000	270	0	**270**
1000 - 1100	299	0	**299**
1100 - 1200	332	0	**332**

Session Total	5776	0	**5776**
Session Average	240.67	0.00	**240.67**
Session Percentage	100.00	0.00	

	Volume Summary 60min		
Time	EB	WB	**Total**
1200 - 1300	351	0	**351**
1300 - 1400	355	0	**355**
1400 - 1500	403	0	**403**
1500 - 1600	439	0	**439**
1600 - 1700	660	0	**660**
1700 - 1800	694	0	**694**
1800 - 1900	304	0	**304**
1900 - 2000	239	0	**239**
2000 - 2100	144	0	**144**
2100 - 2200	99	0	**99**
2200 - 2300	83	0	**83**
2300 - 2400	60	0	**60**

Site 2
I-126 E/Bound On-Ramp,
west of I-26

Date
Friday, April 26, 2024

Lat/Long
34.025576°, -81.100903°

Weather
Cloudy
69°F

Click here for Detailed Weather

0000 - 2400 (Weekday 24h Session) (04-26-2024)
Volume Summary 60min

	Volume Summary 60min		
TIME	EB	WB	**Total**
0000 - 0100	28	0	**28**
0100 - 0200	17	0	**17**
0200 - 0300	11	0	**11**
0300 - 0400	22	0	**22**
0400 - 0500	37	0	**37**
0500 - 0600	81	0	**81**
0600 - 0700	171	0	**171**
0700 - 0800	278	0	**278**
0800 - 0900	269	0	**269**
0900 - 1000	256	0	**256**
1000 - 1100	291	0	**291**
1100 - 1200	337	0	**337**
1200 - 1300	404	0	**404**
1300 - 1400	388	0	**388**
1400 - 1500	463	0	**463**
1500 - 1600	452	0	**452**
1600 - 1700	579	0	**579**
1700 - 1800	496	0	**496**
1800 - 1900	285	0	**285**
1900 - 2000	214	0	**214**
2000 - 2100	173	0	**173**
2100 - 2200	178	0	**178**
2200 - 2300	126	0	**126**
2300 - 2400	98	0	**98**
Session Total	5654	0	**5654**
Session Average	235.58	0.00	**235.58**
Session Percentage	100.00	0.00	

Site 2

I-126 E/Bound On-Ramp,
west of I-26

Date

Saturday, April 27, 2024

Lat/Long

34.025576°, -81.100903°

Weather

Mostly Cloudy
69°F

Click here for Detailed Weather

0000 - 2400 (Saturday 24h Session) (04-27-2024)

Volume Summary 60min

	Volume Summary 60min		
TIME	EB	WB	**Total**
0000 - 0100	36	0	**36**
0100 - 0200	30	0	**30**
0200 - 0300	29	0	**29**
0300 - 0400	29	0	**29**
0400 - 0500	29	0	**29**
0500 - 0600	38	0	**38**
0600 - 0700	94	0	**94**
0700 - 0800	138	0	**138**
0800 - 0900	147	0	**147**
0900 - 1000	202	0	**202**
1000 - 1100	207	0	**207**
1100 - 1200	248	0	**248**

	Volume Summary 60min		
Time	EB	WB	**Total**
1200 - 1300	273	0	**273**
1300 - 1400	285	0	**285**
1400 - 1500	295	0	**295**
1500 - 1600	332	0	**332**
1600 - 1700	293	0	**293**
1700 - 1800	255	0	**255**
1800 - 1900	231	0	**231**
1900 - 2000	216	0	**216**
2000 - 2100	142	0	**142**
2100 - 2200	142	0	**142**
2200 - 2300	116	0	**116**
2300 - 2400	68	0	**68**

Session Total	3875	0	**3875**
Session Average	161.46	0.00	**161.46**
Session Percentage	100.00	0.00	

Bi-Directional Class Count || Graphical Analysis NB EB

Columbia, SC

Marr Traffic DATA COLLECTION

www.marrtraffic.com

Site 2

I-126 E/Bound On-Ramp,
west of I-26

Lat/Long

34.025576°, -81.100903°

0000 - 2400 (Weekday 24h Session)

Graphical Analysis NB EB

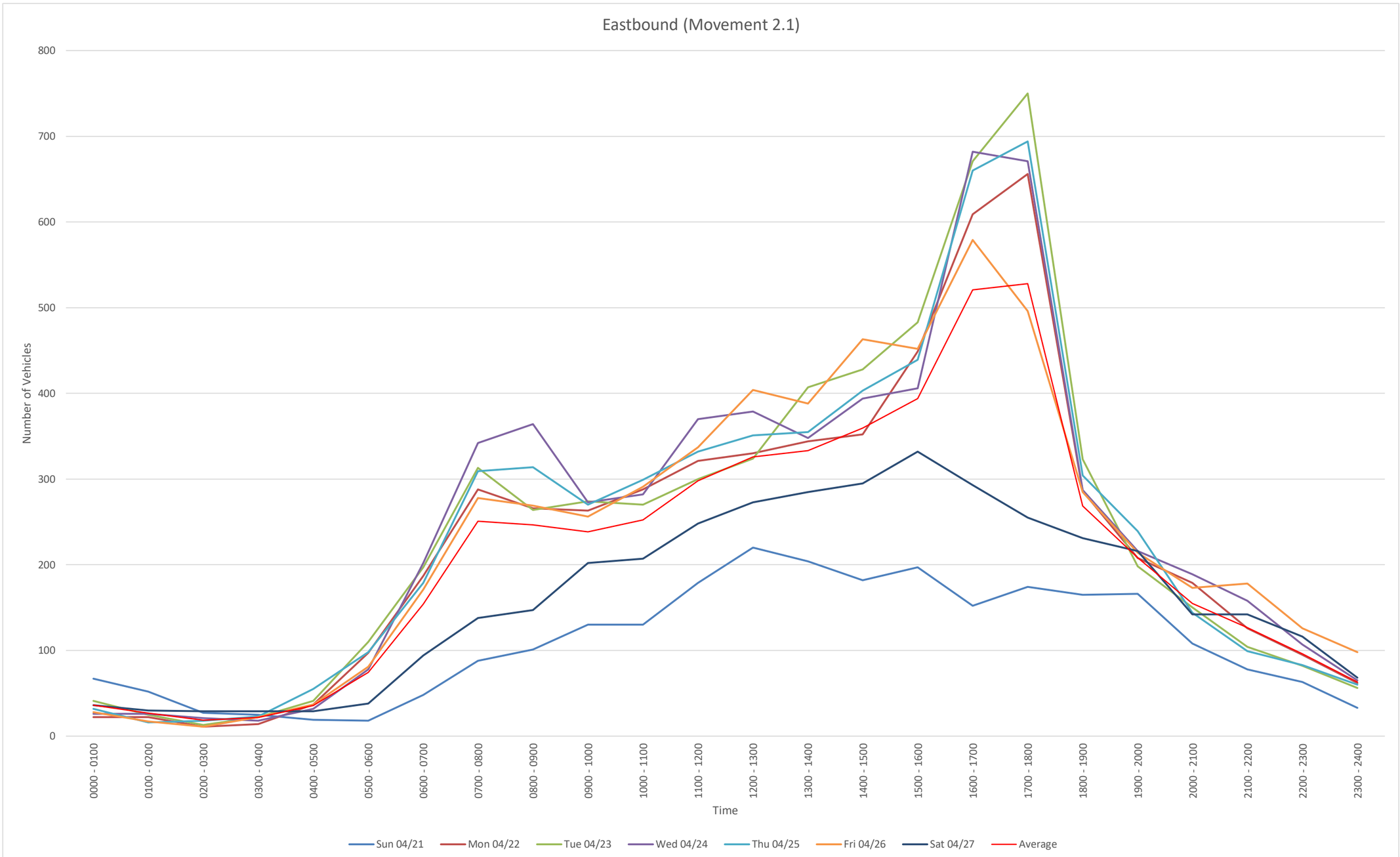

EB
File Name:
Start Date: 4/21/2024
Start Time: 0
Site Code: 2
Station ID: 1
Location 1: I-126 E/Bound On-Ramp, west of I-26
Location 2:

Date	Time	1	2	3	4	5	6	7	8	9	10	11	12	13
4/21/2024	12:00 AM	0	20	3	0	0	0	0	0	0	0	0	0	0
4/21/2024	12:15 AM	0	21	3	0	0	0	0	0	0	0	0	0	0
4/21/2024	12:30 AM	0	10	2	0	0	0	0	0	0	0	0	0	0
4/21/2024	12:45 AM	0	7	1	0	0	0	0	0	0	0	0	0	0
4/21/2024	1:00 AM	0	20	2	0	0	0	0	0	0	0	0	0	0
4/21/2024	1:15 AM	0	5	1	0	0	0	0	0	0	0	0	0	0
4/21/2024	1:30 AM	0	15	3	0	0	0	0	0	0	0	0	0	0
4/21/2024	1:45 AM	0	5	1	0	0	0	0	0	0	0	0	0	0
4/21/2024	2:00 AM	0	4	1	0	0	0	0	0	0	0	0	0	0
4/21/2024	2:15 AM	0	9	1	0	0	0	0	0	0	0	0	0	0
4/21/2024	2:30 AM	0	6	1	0	0	0	0	0	0	0	0	0	0
4/21/2024	2:45 AM	0	4	1	0	0	0	0	0	0	0	0	0	0
4/21/2024	3:00 AM	0	9	1	0	0	0	0	0	0	0	0	0	0
4/21/2024	3:15 AM	0	3	1	0	0	0	0	0	0	0	0	0	0
4/21/2024	3:30 AM	0	4	0	0	0	0	0	0	0	0	0	0	0
4/21/2024	3:45 AM	0	6	1	0	0	0	0	0	0	0	0	0	0
4/21/2024	4:00 AM	0	2	1	0	0	0	0	0	0	0	0	0	0
4/21/2024	4:15 AM	0	3	2	0	0	0	0	0	0	0	0	0	0
4/21/2024	4:30 AM	0	2	1	0	0	0	0	0	0	0	0	0	0
4/21/2024	4:45 AM	0	5	2	0	0	0	0	0	1	0	0	0	0
4/21/2024	5:00 AM	0	3	1	0	0	0	0	0	0	0	0	0	0
4/21/2024	5:15 AM	0	1	0	0	0	0	0	0	0	0	0	0	0
4/21/2024	5:30 AM	0	5	1	0	0	0	0	0	0	0	0	0	0
4/21/2024	5:45 AM	0	6	1	0	0	0	0	0	0	0	0	0	0
4/21/2024	6:00 AM	0	4	1	0	0	0	0	0	0	0	0	0	0
4/21/2024	6:15 AM	0	12	2	0	0	0	0	0	0	0	0	0	0
4/21/2024	6:30 AM	0	11	2	0	0	0	0	0	0	0	0	0	0
4/21/2024	6:45 AM	0	12	3	0	1	0	0	0	0	0	0	0	0
4/21/2024	7:00 AM	0	18	2	0	0	0	0	0	0	0	0	0	0
4/21/2024	7:15 AM	0	20	2	0	0	0	0	0	0	0	0	0	0
4/21/2024	7:30 AM	0	24	3	0	1	0	0	0	0	0	0	0	0
4/21/2024	7:45 AM	0	15	2	0	1	0	0	0	0	0	0	0	0
4/21/2024	8:00 AM	0	17	2	0	0	0	0	0	0	0	0	0	0
4/21/2024	8:15 AM	0	16	4	0	0	0	0	0	0	0	0	0	0
4/21/2024	8:30 AM	0	20	7	0	1	0	0	0	0	0	0	0	0
4/21/2024	8:45 AM	0	28	6	0	0	0	0	0	0	0	0	0	0
4/21/2024	9:00 AM	0	31	4	0	1	0	0	1	1	0	0	0	0
4/21/2024	9:15 AM	0	26	5	0	0	0	0	0	0	0	0	0	0
4/21/2024	9:30 AM	0	23	5	0	0	0	0	0	0	0	0	0	0
4/21/2024	9:45 AM	0	29	4	0	0	0	0	0	0	0	0	0	0
4/21/2024	10:00 AM	0	28	3	0	0	0	0	0	0	0	0	0	0
4/21/2024	10:15 AM	0	33	3	0	1	0	0	0	0	0	0	0	0
4/21/2024	10:30 AM	0	27	0	0	0	0	0	0	0	0	0	0	0
4/21/2024	10:45 AM	0	29	6	0	0	0	0	0	0	0	0	0	0
4/21/2024	11:00 AM	0	37	5	0	0	0	0	0	0	0	0	0	0
4/21/2024	11:15 AM	0	33	3	0	0	0	0	0	0	0	0	0	0
4/21/2024	11:30 AM	0	45	6	0	0	0	0	0	0	0	0	0	0
4/21/2024	11:45 AM	0	44	6	0	0	0	0	0	0	0	0	0	0
4/21/2024	12:00 PM	0	33	7	0	0	0	0	0	0	0	0	0	0
4/21/2024	12:15 PM	0	46	6	0	0	0	0	0	0	0	0	0	0
4/21/2024	12:30 PM	0	50	8	0	0	0	0	0	0	0	0	0	0
4/21/2024	12:45 PM	0	64	4	0	2	0	0	0	0	0	0	0	0
4/21/2024	1:00 PM	0	40	2	0	0	0	0	0	0	0	0	0	0
4/21/2024	1:15 PM	0	52	4	0	0	0	0	0	0	0	0	0	0
4/21/2024	1:30 PM	0	40	8	0	0	0	0	0	0	0	0	0	0
4/21/2024	1:45 PM	0	53	5	0	0	0	0	0	0	0	0	0	0
4/21/2024	2:00 PM	1	40	3	0	0	0	0	0	0	0	0	0	0
4/21/2024	2:15 PM	0	37	9	0	0	0	0	0	0	0	0	0	0
4/21/2024	2:30 PM	0	44	8	0	1	0	0	0	0	0	0	0	0
4/21/2024	2:45 PM	0	35	4	0	0	0	0	0	0	0	0	0	0
4/21/2024	3:00 PM	0	44	3	0	0	0	0	0	0	0	0	0	0
4/21/2024	3:15 PM	0	41	4	0	1	0	0	0	0	0	0	0	0
4/21/2024	3:30 PM	0	52	6	0	0	0	0	0	0	0	0	0	0
4/21/2024	3:45 PM	0	38	8	0	0	0	0	0	0	0	0	0	0
4/21/2024	4:00 PM	0	33	7	0	0	0	0	0	0	0	0	0	0
4/21/2024	4:15 PM	0	35	2	0	0	0	0	0	0	0	0	0	0
4/21/2024	4:30 PM	0	32	3	0	0	0	0	0	0	0	0	0	0
4/21/2024	4:45 PM	0	35	4	0	1	0	0	0	0	0	0	0	0
4/21/2024	5:00 PM	0	37	4	0	0	0	0	0	0	0	0	0	0
4/21/2024	5:15 PM	0	39	5	0	3	0	0	0	1	0	0	0	0
4/21/2024	5:30 PM	0	40	3	0	1	0	0	0	0	0	0	0	0
4/21/2024	5:45 PM	0	39	2	0	0	0	0	0	0	0	0	0	0
4/21/2024	6:00 PM	0	40	3	0	0	0	0	0	0	0	0	0	0
4/21/2024	6:15 PM	0	44	3	0	0	0	0	0	0	0	0	0	0
4/21/2024	6:30 PM	1	35	4	0	2	0	0	0	0	0	0	0	0
4/21/2024	6:45 PM	0	27	5	0	1	0	0	0	0	0	0	0	0
4/21/2024	7:00 PM	0	36	5	0	1	0	0	0	0	0	0	0	0
4/21/2024	7:15 PM	0	35	5	0	1	0	0	0	0	0	0	0	0
4/21/2024	7:30 PM	0	37	6	0	1	0	0	0	0	0	0	0	0
4/21/2024	7:45 PM	0	34	4	0	1	0	0	0	0	0	0	0	0
4/21/2024	8:00 PM	0	29	2	0	0	0	0	0	0	0	0	0	0
4/21/2024	8:15 PM	0	25	1	0	0	0	0	0	0	0	0	0	0
4/21/2024	8:30 PM	0	27	2	0	0	0	0	0	0	0	0	0	0
4/21/2024	8:45 PM	0	20	2	0	0	0	0	0	0	0	0	0	0
4/21/2024	9:00 PM	0	16	1	0	0	0	0	0	0	0	0	0	0
4/21/2024	9:15 PM	0	17	1	0	0	0	0	0	0	0	0	0	0
4/21/2024	9:30 PM	0	19	3	0	0	0	0	0	0	0	0	0	0
4/21/2024	9:45 PM	0	20	1	0	0	0	0	0	0	0	0	0	0
4/21/2024	10:00 PM	0	17	1	0	0	0	0	0	0	0	0	0	0
4/21/2024	10:15 PM	0	10	1	0	0	0	0	0	0	0	0	0	0
4/21/2024	10:30 PM	0	18	2	0	0	0	0	0	0	0	0	0	0
4/21/2024	10:45 PM	0	13	1	0	0	0	0	0	0	0	0	0	0
4/21/2024	11:00 PM	0	14	1	0	0	0	0	0	0	0	0	0	0
4/21/2024	11:15 PM	0	7	0	0	0	0	0	0	0	0	0	0	0
4/21/2024	11:30 PM	0	5	0	0	0	0	0	0	0	0	0	0	0
4/21/2024	11:45 PM	0	6	0	0	0	0	0	0	0	0	0	0	0

4/22/2024	12:00 AM	0	4	2	0	0	0	0	0	0	0	0	0
4/22/2024	12:15 AM	0	6	1	0	0	0	0	0	0	0	0	0
4/22/2024	12:30 AM	0	2	0	0	0	0	0	0	0	0	0	0
4/22/2024	12:45 AM	0	6	1	0	0	0	0	0	0	0	0	0
4/22/2024	1:00 AM	0	7	2	0	1	0	0	0	0	0	0	0
4/22/2024	1:15 AM	0	5	0	0	0	0	0	0	0	0	0	0
4/22/2024	1:30 AM	0	4	0	0	1	0	0	0	0	0	0	0
4/22/2024	1:45 AM	0	2	0	0	0	0	0	0	0	0	0	0
4/22/2024	2:00 AM	0	1	0	0	0	0	0	0	1	0	0	0
4/22/2024	2:15 AM	0	1	0	0	0	0	0	0	0	0	0	0
4/22/2024	2:30 AM	0	2	1	0	0	0	0	0	0	0	0	0
4/22/2024	2:45 AM	0	4	0	0	1	0	0	0	0	0	0	0
4/22/2024	3:00 AM	0	2	1	0	0	0	0	0	0	0	0	0
4/22/2024	3:15 AM	0	0	0	0	0	0	0	0	0	0	0	0
4/22/2024	3:30 AM	0	4	1	0	0	0	0	0	0	0	0	0
4/22/2024	3:45 AM	0	4	2	0	0	0	0	0	0	0	0	0
4/22/2024	4:00 AM	0	4	1	0	1	0	0	0	0	0	0	0
4/22/2024	4:15 AM	0	5	4	0	0	0	0	0	0	0	0	0
4/22/2024	4:30 AM	0	6	4	0	0	0	0	0	0	0	0	0
4/22/2024	4:45 AM	0	11	1	0	0	0	0	0	0	0	0	0
4/22/2024	5:00 AM	0	12	3	0	1	0	0	0	0	0	0	0
4/22/2024	5:15 AM	0	15	3	0	0	0	0	0	0	0	0	0
4/22/2024	5:30 AM	0	26	4	0	2	0	0	0	0	0	0	0
4/22/2024	5:45 AM	0	29	2	0	0	0	0	0	0	0	0	0
4/22/2024	6:00 AM	0	24	1	0	1	0	0	0	1	0	0	0
4/22/2024	6:15 AM	0	27	4	0	0	0	0	0	0	0	0	0
4/22/2024	6:30 AM	0	48	13	0	1	0	0	0	0	0	0	0
4/22/2024	6:45 AM	0	47	19	0	0	0	0	0	1	0	0	0
4/22/2024	7:00 AM	0	42	16	0	1	0	0	0	0	0	0	0
4/22/2024	7:15 AM	0	48	15	0	0	0	0	1	1	0	0	0
4/22/2024	7:30 AM	0	70	15	0	3	0	0	1	0	0	0	0
4/22/2024	7:45 AM	0	58	13	1	1	1	0	1	0	0	0	0
4/22/2024	8:00 AM	0	44	14	0	1	0	0	0	0	0	0	0
4/22/2024	8:15 AM	0	51	10	0	1	0	0	0	0	0	0	0
4/22/2024	8:30 AM	0	63	11	0	4	0	0	0	0	1	0	0	0
4/22/2024	8:45 AM	0	46	15	1	1	1	0	1	1	0	0	0	0
4/22/2024	9:00 AM	0	48	15	0	4	0	0	3	0	1	0	0	0
4/22/2024	9:15 AM	0	39	12	0	4	1	0	0	3	0	0	0	0
4/22/2024	9:30 AM	0	51	18	0	3	0	0	1	0	0	0	0	0
4/22/2024	9:45 AM	0	45	11	2	2	0	0	0	0	0	0	0	0
4/22/2024	10:00 AM	0	52	12	1	4	0	0	0	2	0	0	0	0
4/22/2024	10:15 AM	0	55	16	0	3	0	0	1	0	0	0	0	0
4/22/2024	10:30 AM	0	49	12	1	1	1	0	1	1	0	0	0	0
4/22/2024	10:45 AM	0	52	22	0	1	0	0	0	1	0	0	0	0
4/22/2024	11:00 AM	0	49	23	1	1	0	0	0	1	0	0	0	0
4/22/2024	11:15 AM	0	56	21	0	2	0	0	0	1	0	0	0	0
4/22/2024	11:30 AM	0	64	10	0	2	0	0	1	0	0	0	0	0
4/22/2024	11:45 AM	0	69	17	0	2	0	0	0	1	0	0	0	0
4/22/2024	12:00 PM	0	72	12	0	1	0	0	0	3	0	0	0	0
4/22/2024	12:15 PM	0	58	11	1	1	0	0	1	1	0	0	0	0
4/22/2024	12:30 PM	0	67	6	0	1	0	0	2	0	0	0	0	0
4/22/2024	12:45 PM	0	72	16	0	4	0	0	1	0	0	0	0	0
4/22/2024	1:00 PM	0	62	19	0	3	0	0	1	0	0	0	0	0
4/22/2024	1:15 PM	1	68	9	1	1	0	0	1	0	0	0	0	0
4/22/2024	1:30 PM	0	68	10	1	3	0	0	0	1	0	0	0	0
4/22/2024	1:45 PM	0	73	18	0	1	0	0	3	0	0	0	0	0
4/22/2024	2:00 PM	0	68	12	0	1	0	0	1	0	0	0	0	0
4/22/2024	2:15 PM	0	59	14	0	2	0	0	1	0	0	0	0	0
4/22/2024	2:30 PM	0	71	15	1	3	0	0	1	0	0	0	0	0
4/22/2024	2:45 PM	0	87	12	1	2	0	0	0	1	0	0	0	0
4/22/2024	3:00 PM	0	80	14	0	4	0	0	1	1	0	0	0	0
4/22/2024	3:15 PM	0	99	15	0	2	1	0	0	0	0	0	0	0
4/22/2024	3:30 PM	0	98	24	1	2	0	0	1	0	0	0	0	0
4/22/2024	3:45 PM	0	86	16	2	0	1	0	0	1	0	0	0	0
4/22/2024	4:00 PM	0	121	33	0	4	0	0	0	0	0	0	0	0
4/22/2024	4:15 PM	0	119	15	0	1	1	0	0	0	0	0	0	0
4/22/2024	4:30 PM	0	132	34	0	3	0	0	0	2	0	0	0	0
4/22/2024	4:45 PM	0	115	29	0	0	0	0	0	0	0	0	0	0
4/22/2024	5:00 PM	0	172	32	0	3	0	0	0	1	0	0	0	0
4/22/2024	5:15 PM	0	179	32	0	1	1	0	0	0	0	0	0	0
4/22/2024	5:30 PM	0	127	18	0	0	0	0	0	1	0	0	0	0
4/22/2024	5:45 PM	0	74	10	0	2	0	1	0	2	0	0	0	0
4/22/2024	6:00 PM	0	72	12	0	5	0	0	0	0	0	0	0	0
4/22/2024	6:15 PM	0	69	10	0	0	0	0	0	1	0	0	0	0
4/22/2024	6:30 PM	0	50	9	0	2	0	0	0	0	0	0	0	0
4/22/2024	6:45 PM	0	44	11	0	1	0	0	0	0	0	0	0	0
4/22/2024	7:00 PM	0	45	13	0	0	0	0	0	0	0	0	0	0
4/22/2024	7:15 PM	0	44	9	0	0	0	0	0	0	0	0	0	0
4/22/2024	7:30 PM	0	23	7	0	0	0	0	0	0	0	0	0	0
4/22/2024	7:45 PM	0	57	10	0	0	0	0	0	0	0	0	0	0
4/22/2024	8:00 PM	1	30	7	0	0	0	0	0	1	0	0	0	0
4/22/2024	8:15 PM	0	25	2	0	0	0	0	0	0	0	0	0	0
4/22/2024	8:30 PM	0	58	15	0	2	0	0	0	0	0	0	0	0
4/22/2024	8:45 PM	0	30	6	0	2	0	0	0	0	0	0	0	0
4/22/2024	9:00 PM	0	19	5	0	0	0	0	0	2	0	0	0	0
4/22/2024	9:15 PM	0	32	6	0	3	0	0	0	0	0	0	0	0
4/22/2024	9:30 PM	0	19	5	0	2	0	0	0	1	0	0	0	0
4/22/2024	9:45 PM	0	24	6	0	1	1	0	0	0	0	0	0	0
4/22/2024	10:00 PM	0	18	5	0	3	0	0	0	0	0	0	0	0
4/22/2024	10:15 PM	0	20	2	0	0	0	0	0	0	0	0	0	0
4/22/2024	10:30 PM	0	20	4	0	0	0	0	0	0	0	0	0	0
4/22/2024	10:45 PM	1	17	4	0	1	0	0	0	0	0	0	0	0
4/22/2024	11:00 PM	0	14	3	0	0	0	0	0	0	0	0	0	0
4/22/2024	11:15 PM	0	14	1	0	0	0	0	0	0	0	0	0	0
4/22/2024	11:30 PM	0	12	1	0	0	0	0	0	0	0	0	0	0
4/22/2024	11:45 PM	0	15	2	0	0	0	0	0	0	0	0	0	0

4/23/2024	12:00 AM	0	12	1	0	0	0	0	0	0	0	0	0
4/23/2024	12:15 AM	0	7	2	0	1	0	0	0	0	0	0	0
4/23/2024	12:30 AM	0	5	2	0	0	0	0	0	0	0	0	0
4/23/2024	12:45 AM	0	8	3	0	0	0	0	0	0	0	0	0
4/23/2024	1:00 AM	0	7	1	0	0	0	0	0	1	0	0	0
4/23/2024	1:15 AM	0	3	3	0	0	0	0	0	0	0	0	0
4/23/2024	1:30 AM	0	5	2	0	0	0	0	0	0	0	0	0
4/23/2024	1:45 AM	0	3	0	0	0	0	0	0	0	0	0	0
4/23/2024	2:00 AM	0	3	1	0	0	0	0	0	0	0	0	0
4/23/2024	2:15 AM	0	1	2	0	0	0	0	0	0	0	0	0
4/23/2024	2:30 AM	0	2	2	0	0	0	0	0	0	0	0	0
4/23/2024	2:45 AM	0	2	0	0	0	0	0	0	0	0	0	0
4/23/2024	3:00 AM	0	0	1	0	0	0	0	0	1	0	0	0
4/23/2024	3:15 AM	0	1	2	0	0	0	0	0	1	0	0	0
4/23/2024	3:30 AM	0	7	1	0	1	0	0	0	0	0	0	0
4/23/2024	3:45 AM	0	7	0	0	0	0	0	0	0	0	0	0
4/23/2024	4:00 AM	0	6	1	0	0	0	0	0	2	0	0	0
4/23/2024	4:15 AM	0	4	1	0	0	0	0	0	0	0	0	0
4/23/2024	4:30 AM	0	9	3	0	0	0	0	0	0	0	0	0
4/23/2024	4:45 AM	0	13	2	0	0	0	0	0	0	0	0	0
4/23/2024	5:00 AM	0	8	2	0	0	0	0	0	0	0	0	0
4/23/2024	5:15 AM	0	17	3	0	0	0	0	0	0	0	0	0
4/23/2024	5:30 AM	0	37	4	0	1	1	0	0	0	0	0	0
4/23/2024	5:45 AM	0	32	4	0	0	0	0	0	1	0	0	0
4/23/2024	6:00 AM	0	35	5	0	2	0	0	0	0	0	0	0
4/23/2024	6:15 AM	0	34	5	0	0	0	0	0	0	0	0	0
4/23/2024	6:30 AM	0	51	3	0	0	0	0	0	0	0	0	0
4/23/2024	6:45 AM	0	49	10	0	2	0	0	0	1	0	0	0
4/23/2024	7:00 AM	0	55	7	0	1	0	0	0	0	0	0	0
4/23/2024	7:15 AM	0	59	6	0	2	0	0	0	0	0	0	0
4/23/2024	7:30 AM	0	84	18	0	1	1	0	0	1	0	0	0
4/23/2024	7:45 AM	0	63	14	0	1	0	0	0	0	0	0	0
4/23/2024	8:00 AM	0	54	8	0	1	0	0	0	0	0	0	0
4/23/2024	8:15 AM	0	49	11	0	2	0	0	1	2	0	0	0
4/23/2024	8:30 AM	0	48	13	0	2	0	0	0	0	0	0	0
4/23/2024	8:45 AM	0	44	22	0	7	0	0	0	0	0	0	0
4/23/2024	9:00 AM	0	39	10	0	0	0	0	0	1	0	0	0
4/23/2024	9:15 AM	0	58	21	0	1	1	0	2	0	0	0	0
4/23/2024	9:30 AM	0	48	9	0	1	0	0	0	1	0	0	0
4/23/2024	9:45 AM	0	64	14	0	2	1	0	1	0	0	0	0
4/23/2024	10:00 AM	0	39	9	0	1	0	0	1	1	0	0	0
4/23/2024	10:15 AM	0	52	22	1	2	1	0	0	0	0	0	0
4/23/2024	10:30 AM	0	53	16	0	2	0	0	0	0	0	0	0
4/23/2024	10:45 AM	0	42	23	1	2	0	0	1	0	1	0	0
4/23/2024	11:00 AM	1	61	11	0	1	0	0	0	0	0	0	0
4/23/2024	11:15 AM	0	58	12	1	1	0	0	2	0	0	0	0
4/23/2024	11:30 AM	0	59	13	0	0	0	0	0	1	0	0	0
4/23/2024	11:45 AM	0	58	17	0	3	0	0	0	1	0	0	0
4/23/2024	12:00 PM	0	61	18	0	0	0	0	0	0	0	0	0
4/23/2024	12:15 PM	0	73	16	2	1	0	0	0	0	0	0	0
4/23/2024	12:30 PM	0	64	11	0	1	1	0	0	1	0	0	0
4/23/2024	12:45 PM	0	63	11	0	0	0	0	0	1	0	0	0
4/23/2024	1:00 PM	0	68	16	0	4	0	0	0	0	0	0	0
4/23/2024	1:15 PM	0	107	22	0	5	0	0	0	0	0	0	0
4/23/2024	1:30 PM	0	72	17	3	2	2	0	0	1	0	0	0
4/23/2024	1:45 PM	0	72	16	0	0	0	0	0	0	0	0	0
4/23/2024	2:00 PM	0	74	12	0	3	0	0	1	0	0	0	0
4/23/2024	2:15 PM	0	90	19	0	3	0	0	0	0	0	0	0
4/23/2024	2:30 PM	0	97	14	0	0	0	0	0	2	0	0	0
4/23/2024	2:45 PM	0	100	8	0	5	0	0	0	0	0	0	0
4/23/2024	3:00 PM	0	100	29	1	1	0	0	0	0	0	0	0
4/23/2024	3:15 PM	1	99	15	2	1	0	0	1	0	0	0	0
4/23/2024	3:30 PM	0	93	21	0	0	0	0	0	0	0	0	0
4/23/2024	3:45 PM	0	89	26	0	3	0	0	0	1	0	0	0
4/23/2024	4:00 PM	0	114	33	3	1	0	0	1	0	0	0	0
4/23/2024	4:15 PM	0	135	23	0	1	0	0	0	0	0	0	0
4/23/2024	4:30 PM	0	155	26	0	5	1	0	0	1	0	0	0
4/23/2024	4:45 PM	0	137	33	0	2	0	0	0	0	0	0	0
4/23/2024	5:00 PM	0	190	27	0	2	0	0	0	0	0	0	0
4/23/2024	5:15 PM	0	179	37	1	1	0	0	0	0	0	0	0
4/23/2024	5:30 PM	0	141	34	0	2	2	0	0	1	0	0	0
4/23/2024	5:45 PM	1	102	25	0	3	0	0	1	1	0	0	0
4/23/2024	6:00 PM	0	94	20	0	3	0	0	1	0	0	0	0
4/23/2024	6:15 PM	0	65	5	0	1	0	0	0	1	0	0	0
4/23/2024	6:30 PM	0	55	8	0	1	0	0	0	0	0	0	0
4/23/2024	6:45 PM	0	57	12	0	0	0	0	0	0	0	0	0
4/23/2024	7:00 PM	0	43	6	0	1	0	0	0	0	0	0	0
4/23/2024	7:15 PM	0	38	4	0	0	0	0	0	0	0	0	0
4/23/2024	7:30 PM	0	37	5	0	2	0	0	0	0	0	0	0
4/23/2024	7:45 PM	0	57	2	0	3	0	0	0	0	0	0	0
4/23/2024	8:00 PM	0	46	6	0	1	0	0	0	0	0	0	0
4/23/2024	8:15 PM	0	32	7	0	0	0	0	0	0	0	0	0
4/23/2024	8:30 PM	0	28	6	0	0	0	0	0	0	0	0	0
4/23/2024	8:45 PM	0	17	5	0	2	0	0	0	0	0	0	0
4/23/2024	9:00 PM	0	21	6	0	0	0	0	0	0	0	0	0
4/23/2024	9:15 PM	0	29	7	0	0	0	0	0	0	0	0	0
4/23/2024	9:30 PM	0	12	6	0	0	0	0	0	0	0	0	0
4/23/2024	9:45 PM	0	18	5	0	0	0	0	0	0	0	0	0
4/23/2024	10:00 PM	0	13	6	0	0	0	0	0	0	0	0	0
4/23/2024	10:15 PM	0	17	3	0	0	0	0	0	0	0	0	0
4/23/2024	10:30 PM	0	18	7	0	0	0	0	0	0	0	0	0
4/23/2024	10:45 PM	0	14	4	0	0	0	0	0	0	0	0	0
4/23/2024	11:00 PM	0	19	5	0	0	0	0	0	0	0	0	0
4/23/2024	11:15 PM	0	7	3	0	0	0	0	0	0	0	0	0
4/23/2024	11:30 PM	0	10	3	0	0	0	0	0	0	0	0	0
4/23/2024	11:45 PM	0	7	2	0	0	0	0	0	0	0	0	0

4/24/2024	12:00 AM	0	4	1	0	0	0	0	0	0	0	0	0
4/24/2024	12:15 AM	0	5	3	0	0	0	0	0	0	0	0	0
4/24/2024	12:30 AM	0	2	1	0	0	0	0	0	0	0	0	0
4/24/2024	12:45 AM	0	7	3	0	0	0	0	0	0	0	0	0
4/24/2024	1:00 AM	0	4	2	0	0	0	0	0	0	0	0	0
4/24/2024	1:15 AM	0	5	3	0	0	0	0	0	0	0	0	0
4/24/2024	1:30 AM	0	3	2	0	0	0	0	0	0	0	0	0
4/24/2024	1:45 AM	0	5	2	0	0	0	0	0	0	0	0	0
4/24/2024	2:00 AM	0	3	1	0	0	0	0	0	0	0	0	0
4/24/2024	2:15 AM	0	5	1	0	0	0	0	0	0	0	0	0
4/24/2024	2:30 AM	0	4	2	0	0	0	0	0	0	0	0	0
4/24/2024	2:45 AM	0	5	0	0	0	0	0	0	0	0	0	0
4/24/2024	3:00 AM	0	3	1	0	0	0	0	0	1	0	0	0
4/24/2024	3:15 AM	0	2	0	0	0	0	0	0	0	0	0	0
4/24/2024	3:30 AM	0	4	1	0	0	0	0	0	0	0	0	0
4/24/2024	3:45 AM	0	4	1	0	0	0	0	0	1	0	0	0
4/24/2024	4:00 AM	0	1	0	0	0	0	0	0	0	0	0	0
4/24/2024	4:15 AM	0	10	3	0	0	0	0	0	0	0	0	0
4/24/2024	4:30 AM	0	6	2	0	0	0	0	0	0	0	0	0
4/24/2024	4:45 AM	0	7	3	0	0	0	0	0	0	0	0	0
4/24/2024	5:00 AM	0	8	3	0	0	0	0	0	0	0	0	0
4/24/2024	5:15 AM	0	10	4	0	0	0	0	0	0	0	0	0
4/24/2024	5:30 AM	0	21	5	0	1	0	0	0	1	0	0	0
4/24/2024	5:45 AM	0	19	6	0	0	0	0	0	0	0	0	0
4/24/2024	6:00 AM	0	24	6	0	2	0	0	0	0	0	0	0
4/24/2024	6:15 AM	0	42	4	0	0	0	0	0	0	0	0	0
4/24/2024	6:30 AM	0	46	12	0	0	0	0	0	0	0	0	0
4/24/2024	6:45 AM	0	56	8	0	2	0	0	0	0	0	0	0
4/24/2024	7:00 AM	0	46	11	0	2	0	0	0	0	0	0	0
4/24/2024	7:15 AM	0	64	23	0	0	1	0	0	0	0	0	0
4/24/2024	7:30 AM	0	81	16	1	2	0	0	0	0	0	0	0
4/24/2024	7:45 AM	0	73	20	0	1	0	0	0	0	1	0	0
4/24/2024	8:00 AM	1	67	17	0	2	0	0	0	3	0	0	0
4/24/2024	8:15 AM	0	65	30	1	2	0	0	1	0	0	0	0
4/24/2024	8:30 AM	0	66	23	1	1	0	0	0	1	0	0	0
4/24/2024	8:45 AM	0	62	16	1	2	1	0	1	0	0	0	0
4/24/2024	9:00 AM	0	59	11	0	2	0	0	0	0	0	0	0
4/24/2024	9:15 AM	0	51	13	1	0	0	0	1	1	0	0	0
4/24/2024	9:30 AM	0	45	20	0	0	0	0	2	0	0	0	0
4/24/2024	9:45 AM	0	52	14	0	1	0	0	0	0	0	0	0
4/24/2024	10:00 AM	0	47	17	0	1	0	0	0	0	0	0	0
4/24/2024	10:15 AM	0	54	13	0	1	0	0	0	0	0	0	0
4/24/2024	10:30 AM	0	50	15	1	5	0	0	0	0	0	0	0
4/24/2024	10:45 AM	0	61	15	1	1	0	0	0	0	0	0	0
4/24/2024	11:00 AM	1	79	13	0	1	1	0	0	0	0	0	0
4/24/2024	11:15 AM	0	64	18	0	1	0	0	0	2	0	0	0
4/24/2024	11:30 AM	0	76	13	0	3	1	0	0	0	0	0	0
4/24/2024	11:45 AM	0	75	16	1	2	0	0	0	2	1	0	0
4/24/2024	12:00 PM	1	77	23	1	3	1	0	1	0	0	0	0
4/24/2024	12:15 PM	0	54	12	1	2	0	0	0	0	0	0	0
4/24/2024	12:30 PM	0	81	18	0	0	1	0	2	0	0	0	0
4/24/2024	12:45 PM	0	81	14	0	4	0	0	0	2	0	0	0
4/24/2024	1:00 PM	0	68	11	1	4	1	0	0	0	1	0	0
4/24/2024	1:15 PM	0	63	18	0	1	0	0	0	0	0	0	0
4/24/2024	1:30 PM	0	75	16	1	3	1	0	1	1	0	0	0
4/24/2024	1:45 PM	0	67	13	0	1	0	0	1	0	0	0	0
4/24/2024	2:00 PM	0	78	23	1	2	0	0	1	0	0	0	0
4/24/2024	2:15 PM	0	76	14	0	1	1	0	0	1	0	0	0
4/24/2024	2:30 PM	0	88	17	0	2	1	0	1	0	0	0	0
4/24/2024	2:45 PM	0	72	13	0	1	1	0	0	0	0	0	0
4/24/2024	3:00 PM	0	63	18	0	1	1	0	0	1	0	0	0
4/24/2024	3:15 PM	0	82	13	0	1	1	0	0	0	0	0	0
4/24/2024	3:30 PM	0	75	19	1	3	0	0	0	0	0	0	0
4/24/2024	3:45 PM	0	97	24	1	1	1	0	1	2	0	0	0
4/24/2024	4:00 PM	0	137	32	0	1	0	0	0	0	0	0	0
4/24/2024	4:15 PM	0	140	24	1	4	1	0	0	0	0	0	0
4/24/2024	4:30 PM	0	140	26	0	0	0	0	0	0	0	0	0
4/24/2024	4:45 PM	1	144	27	0	3	0	0	1	0	0	0	0
4/24/2024	5:00 PM	0	184	32	0	2	0	0	1	1	0	0	0
4/24/2024	5:15 PM	1	141	24	0	1	1	0	0	0	0	0	0
4/24/2024	5:30 PM	0	135	33	0	1	0	0	0	0	1	0	0
4/24/2024	5:45 PM	0	91	17	0	2	2	0	1	0	0	0	0
4/24/2024	6:00 PM	0	66	18	0	2	0	0	0	0	0	0	0
4/24/2024	6:15 PM	0	65	8	0	2	0	0	0	0	0	0	0
4/24/2024	6:30 PM	0	58	8	0	0	0	0	0	0	0	0	0
4/24/2024	6:45 PM	0	48	8	0	4	0	0	0	0	0	0	0
4/24/2024	7:00 PM	0	33	10	0	1	0	0	0	0	0	0	0
4/24/2024	7:15 PM	0	53	9	0	0	0	0	0	0	0	0	0
4/24/2024	7:30 PM	1	51	3	0	1	0	0	0	0	0	0	0
4/24/2024	7:45 PM	0	40	12	0	1	0	0	0	1	0	0	0
4/24/2024	8:00 PM	0	47	10	0	1	0	0	0	1	0	0	0
4/24/2024	8:15 PM	0	44	6	0	1	0	0	0	0	0	0	0
4/24/2024	8:30 PM	0	28	10	0	2	0	0	0	0	0	0	0
4/24/2024	8:45 PM	0	31	8	0	0	0	0	0	0	0	0	0
4/24/2024	9:00 PM	0	31	8	0	0	0	0	0	0	0	0	0
4/24/2024	9:15 PM	0	29	10	0	0	0	0	0	0	0	0	0
4/24/2024	9:30 PM	0	30	7	0	1	0	0	0	0	0	0	0
4/24/2024	9:45 PM	0	32	9	0	1	0	0	0	0	0	0	0
4/24/2024	10:00 PM	0	16	6	0	0	0	0	0	0	0	0	0
4/24/2024	10:15 PM	0	27	10	0	1	0	0	0	0	0	0	0
4/24/2024	10:30 PM	1	16	6	0	0	0	0	0	1	0	0	0
4/24/2024	10:45 PM	0	18	5	0	0	0	0	0	0	0	0	0
4/24/2024	11:00 PM	0	17	8	0	0	0	0	0	1	0	0	0
4/24/2024	11:15 PM	0	10	2	0	1	0	0	0	0	0	0	0
4/24/2024	11:30 PM	0	12	3	0	0	0	0	0	0	0	0	0
4/24/2024	11:45 PM	0	8	3	0	0	0	0	0	0	0	0	0

4/25/2024	12:00 AM	0	8	2	0	0	0	0	0	0	0	0	0
4/25/2024	12:15 AM	0	8	1	0	0	0	0	0	0	0	0	0
4/25/2024	12:30 AM	0	6	0	0	0	1	0	0	0	0	0	0
4/25/2024	12:45 AM	0	6	0	0	0	0	0	0	0	0	0	0
4/25/2024	1:00 AM	0	2	1	0	0	0	0	0	0	0	0	0
4/25/2024	1:15 AM	0	1	1	0	0	0	0	0	0	0	0	0
4/25/2024	1:30 AM	0	3	1	0	0	1	0	0	0	0	0	0
4/25/2024	1:45 AM	0	5	1	0	0	0	0	0	0	0	0	0
4/25/2024	2:00 AM	0	6	0	1	0	0	0	0	0	0	0	0
4/25/2024	2:15 AM	0	2	1	0	0	0	0	0	0	0	0	0
4/25/2024	2:30 AM	0	3	2	0	0	0	0	0	0	0	0	0
4/25/2024	2:45 AM	0	2	0	0	1	0	0	0	0	0	0	0
4/25/2024	3:00 AM	0	1	1	0	0	0	0	0	1	0	0	0
4/25/2024	3:15 AM	0	2	0	0	0	0	0	0	0	0	0	0
4/25/2024	3:30 AM	0	7	0	0	1	0	0	0	0	0	0	0
4/25/2024	3:45 AM	0	7	0	1	1	0	0	0	1	0	0	0
4/25/2024	4:00 AM	0	12	1	0	0	0	0	0	1	0	0	0
4/25/2024	4:15 AM	0	11	1	0	0	0	0	0	0	0	0	0
4/25/2024	4:30 AM	0	9	1	0	1	0	0	0	0	0	0	0
4/25/2024	4:45 AM	0	16	2	0	0	0	0	0	0	0	0	0
4/25/2024	5:00 AM	0	8	3	0	1	0	0	0	0	0	0	0
4/25/2024	5:15 AM	0	17	0	0	2	0	0	0	0	0	0	0
4/25/2024	5:30 AM	0	29	2	0	1	0	0	0	0	0	0	0
4/25/2024	5:45 AM	0	31	2	0	1	0	0	0	1	0	0	0
4/25/2024	6:00 AM	0	27	2	0	2	0	0	0	0	0	0	0
4/25/2024	6:15 AM	0	29	6	0	1	0	0	0	0	0	0	0
4/25/2024	6:30 AM	0	44	4	0	0	0	0	0	1	0	0	0
4/25/2024	6:45 AM	0	53	10	0	0	0	0	0	0	0	0	0
4/25/2024	7:00 AM	0	55	9	0	1	0	0	0	0	0	0	0
4/25/2024	7:15 AM	0	58	16	0	0	0	0	0	0	0	0	0
4/25/2024	7:30 AM	0	63	16	0	2	0	0	0	0	0	0	0
4/25/2024	7:45 AM	1	75	10	0	1	0	0	1	1	0	0	0
4/25/2024	8:00 AM	0	54	11	0	1	0	0	0	0	0	0	0
4/25/2024	8:15 AM	0	60	17	0	1	0	0	0	0	0	0	0
4/25/2024	8:30 AM	0	66	18	0	1	0	0	0	1	0	0	0
4/25/2024	8:45 AM	0	71	11	1	1	0	0	0	0	0	0	0
4/25/2024	9:00 AM	0	52	14	0	0	0	0	0	0	0	0	0
4/25/2024	9:15 AM	0	47	18	0	1	0	0	0	0	0	0	0
4/25/2024	9:30 AM	0	49	12	0	1	0	0	0	1	0	0	0
4/25/2024	9:45 AM	0	52	18	0	4	0	0	0	1	0	0	0
4/25/2024	10:00 AM	0	63	7	0	0	0	0	0	1	0	0	0
4/25/2024	10:15 AM	0	48	11	0	0	0	0	0	2	0	0	0
4/25/2024	10:30 AM	0	56	19	1	2	0	0	0	0	0	0	0
4/25/2024	10:45 AM	1	69	16	1	1	0	0	0	1	0	0	0
4/25/2024	11:00 AM	0	63	21	0	1	1	0	0	0	0	0	0
4/25/2024	11:15 AM	0	51	17	0	1	0	0	0	1	0	0	0
4/25/2024	11:30 AM	0	67	16	0	0	0	0	2	0	0	0	0
4/25/2024	11:45 AM	0	71	16	2	1	1	0	0	0	0	0	0
4/25/2024	12:00 PM	0	70	16	0	1	1	0	0	0	0	0	0
4/25/2024	12:15 PM	0	70	16	0	2	1	0	0	2	0	0	0
4/25/2024	12:30 PM	0	62	15	0	0	0	0	0	0	0	0	0
4/25/2024	12:45 PM	0	79	15	0	0	0	0	1	0	0	0	0
4/25/2024	1:00 PM	0	64	11	2	0	0	0	0	0	0	0	0
4/25/2024	1:15 PM	0	83	10	0	4	0	0	0	0	0	0	0
4/25/2024	1:30 PM	0	71	18	1	3	0	0	1	1	0	0	0
4/25/2024	1:45 PM	0	72	10	0	2	1	0	0	1	0	0	0
4/25/2024	2:00 PM	0	66	16	0	2	0	0	0	0	0	0	0
4/25/2024	2:15 PM	0	90	19	0	3	0	0	1	0	0	0	0
4/25/2024	2:30 PM	0	82	28	0	1	0	0	1	0	0	0	0
4/25/2024	2:45 PM	0	70	22	0	1	1	0	0	0	0	0	0
4/25/2024	3:00 PM	0	90	21	1	0	1	0	0	0	0	0	0
4/25/2024	3:15 PM	1	80	17	2	1	0	0	0	1	0	0	0
4/25/2024	3:30 PM	0	99	15	0	2	1	0	1	0	0	0	0
4/25/2024	3:45 PM	0	79	22	0	2	2	0	0	1	0	0	0
4/25/2024	4:00 PM	0	127	24	0	3	2	0	2	0	0	0	0
4/25/2024	4:15 PM	0	129	22	0	1	0	0	1	0	0	0	0
4/25/2024	4:30 PM	1	151	26	0	1	1	0	0	1	0	0	0
4/25/2024	4:45 PM	0	139	26	0	3	0	0	0	0	0	0	0
4/25/2024	5:00 PM	1	179	20	0	0	1	0	1	0	0	0	0
4/25/2024	5:15 PM	0	159	28	1	1	0	0	0	0	0	0	0
4/25/2024	5:30 PM	0	141	22	0	1	0	0	0	1	0	0	0
4/25/2024	5:45 PM	0	113	25	0	0	0	0	0	0	0	0	0
4/25/2024	6:00 PM	1	80	17	0	1	1	0	0	0	0	0	0
4/25/2024	6:15 PM	0	73	10	0	1	0	0	0	0	0	0	0
4/25/2024	6:30 PM	0	55	6	0	2	0	0	0	0	0	0	0
4/25/2024	6:45 PM	0	45	11	0	1	0	0	0	0	0	0	0
4/25/2024	7:00 PM	0	42	5	0	0	0	0	0	0	0	0	0
4/25/2024	7:15 PM	0	71	10	0	0	0	0	0	0	0	0	0
4/25/2024	7:30 PM	1	46	9	0	0	0	0	1	0	0	0	0
4/25/2024	7:45 PM	0	47	6	0	1	0	0	0	0	0	0	0
4/25/2024	8:00 PM	0	45	4	0	2	0	0	0	0	0	0	0
4/25/2024	8:15 PM	0	29	7	0	1	0	0	0	0	0	0	0
4/25/2024	8:30 PM	0	27	6	0	0	0	0	0	0	0	0	0
4/25/2024	8:45 PM	0	21	2	0	0	0	0	0	0	0	0	0
4/25/2024	9:00 PM	0	20	4	0	0	0	0	0	0	0	0	0
4/25/2024	9:15 PM	0	28	4	0	1	0	0	0	0	0	0	0
4/25/2024	9:30 PM	0	16	1	0	0	0	0	0	0	0	0	0
4/25/2024	9:45 PM	0	22	3	0	0	0	0	0	0	0	0	0
4/25/2024	10:00 PM	1	21	2	0	0	0	0	0	0	0	0	0
4/25/2024	10:15 PM	0	15	3	0	0	0	0	0	0	0	0	0
4/25/2024	10:30 PM	0	16	4	0	0	0	0	0	0	0	0	0
4/25/2024	10:45 PM	0	14	5	0	2	0	0	0	0	0	0	0
4/25/2024	11:00 PM	0	18	5	0	0	0	0	0	0	0	0	0
4/25/2024	11:15 PM	0	12	3	0	0	0	0	0	0	0	0	0
4/25/2024	11:30 PM	0	9	4	0	0	0	0	0	0	0	0	0
4/25/2024	11:45 PM	0	8	1	0	0	0	0	0	0	0	0	0

4/26/2024	12:00 AM	0	5	2	0	0	0	0	0	0	0	0	0
4/26/2024	12:15 AM	0	4	2	0	0	0	0	0	0	0	0	0
4/26/2024	12:30 AM	0	6	1	0	0	0	0	0	0	0	0	0
4/26/2024	12:45 AM	0	7	1	0	0	0	0	0	0	0	0	0
4/26/2024	1:00 AM	0	1	1	0	0	0	0	0	0	0	0	0
4/26/2024	1:15 AM	0	1	0	0	0	0	0	0	0	0	0	0
4/26/2024	1:30 AM	0	5	2	0	0	0	0	0	0	0	0	0
4/26/2024	1:45 AM	0	6	1	0	0	0	0	0	0	0	0	0
4/26/2024	2:00 AM	0	3	0	0	0	0	0	0	0	0	0	0
4/26/2024	2:15 AM	0	4	1	0	0	0	0	0	0	0	0	0
4/26/2024	2:30 AM	0	1	0	0	0	0	0	0	0	0	0	0
4/26/2024	2:45 AM	0	1	0	0	0	0	0	0	1	0	0	0
4/26/2024	3:00 AM	0	1	0	0	0	0	0	0	0	0	0	0
4/26/2024	3:15 AM	0	4	2	0	0	0	0	0	1	0	0	0
4/26/2024	3:30 AM	0	6	1	0	1	0	0	0	0	0	0	0
4/26/2024	3:45 AM	0	4	2	0	0	0	0	0	0	0	0	0
4/26/2024	4:00 AM	0	4	1	0	0	0	0	0	0	0	0	0
4/26/2024	4:15 AM	0	3	2	0	0	0	0	0	0	0	0	0
4/26/2024	4:30 AM	0	6	2	0	0	0	0	0	0	0	0	0
4/26/2024	4:45 AM	0	16	3	0	0	0	0	0	0	0	0	0
4/26/2024	5:00 AM	0	11	4	0	0	0	0	0	0	0	0	0
4/26/2024	5:15 AM	0	12	4	0	0	0	0	0	1	0	0	0
4/26/2024	5:30 AM	0	15	6	0	0	1	0	0	0	0	0	0
4/26/2024	5:45 AM	0	22	5	0	0	0	0	0	0	0	0	0
4/26/2024	6:00 AM	0	24	7	0	1	0	0	0	0	0	0	0
4/26/2024	6:15 AM	0	26	5	0	1	0	0	0	0	1	0	0
4/26/2024	6:30 AM	0	36	8	0	0	0	0	0	0	0	0	0
4/26/2024	6:45 AM	0	55	7	0	0	0	0	0	0	0	0	0
4/26/2024	7:00 AM	0	53	7	0	0	0	0	0	0	0	0	0
4/26/2024	7:15 AM	0	45	4	0	2	1	0	0	0	2	0	0
4/26/2024	7:30 AM	0	74	4	1	3	0	0	0	0	0	0	0
4/26/2024	7:45 AM	1	66	11	0	1	0	0	2	1	0	0	0
4/26/2024	8:00 AM	0	49	6	0	6	1	0	0	1	0	0	0
4/26/2024	8:15 AM	0	48	13	1	2	0	0	1	0	0	0	0
4/26/2024	8:30 AM	0	64	14	0	1	0	0	0	0	0	0	0
4/26/2024	8:45 AM	0	52	8	0	1	1	0	0	0	0	0	0
4/26/2024	9:00 AM	0	49	6	0	3	0	0	1	2	0	0	0
4/26/2024	9:15 AM	0	53	16	0	3	0	0	0	0	0	0	0
4/26/2024	9:30 AM	0	48	12	0	0	0	0	0	0	0	0	0
4/26/2024	9:45 AM	0	53	9	0	1	0	0	0	0	0	0	0
4/26/2024	10:00 AM	0	43	12	1	1	0	0	0	0	0	0	0
4/26/2024	10:15 AM	0	57	13	1	0	0	0	0	0	0	0	0
4/26/2024	10:30 AM	0	56	13	1	0	0	0	2	0	0	0	0
4/26/2024	10:45 AM	1	65	23	0	2	0	0	0	0	0	0	0
4/26/2024	11:00 AM	0	64	16	1	4	0	0	0	2	0	0	0
4/26/2024	11:15 AM	0	77	15	1	1	0	0	0	2	0	0	0
4/26/2024	11:30 AM	0	60	13	0	1	0	0	0	0	0	0	0
4/26/2024	11:45 AM	0	62	16	1	0	1	0	0	0	0	0	0
4/26/2024	12:00 PM	0	96	17	2	1	0	0	1	0	0	0	0
4/26/2024	12:15 PM	0	71	16	2	3	0	0	0	0	0	0	0
4/26/2024	12:30 PM	0	73	19	0	2	0	0	0	1	0	0	0
4/26/2024	12:45 PM	0	74	21	0	4	0	0	1	0	0	0	0
4/26/2024	1:00 PM	0	91	15	0	1	0	0	0	1	0	0	0
4/26/2024	1:15 PM	0	80	16	0	0	0	0	0	0	0	0	0
4/26/2024	1:30 PM	0	81	10	0	1	1	0	0	1	0	0	0
4/26/2024	1:45 PM	0	76	12	1	1	0	0	0	0	0	0	0
4/26/2024	2:00 PM	0	90	19	0	1	1	0	0	0	0	0	0
4/26/2024	2:15 PM	0	88	20	0	0	1	0	0	0	0	0	0
4/26/2024	2:30 PM	0	96	26	0	3	0	0	0	1	0	0	0
4/26/2024	2:45 PM	1	101	13	0	1	0	0	0	1	0	0	0
4/26/2024	3:00 PM	0	89	16	1	2	2	0	0	0	0	0	0
4/26/2024	3:15 PM	0	91	13	1	0	0	0	1	0	0	0	0
4/26/2024	3:30 PM	0	103	24	0	2	0	0	0	2	0	0	0
4/26/2024	3:45 PM	0	84	19	0	0	1	0	1	0	0	0	0
4/26/2024	4:00 PM	0	121	32	0	0	1	0	0	0	0	0	0
4/26/2024	4:15 PM	1	107	22	0	0	0	0	0	0	0	0	0
4/26/2024	4:30 PM	0	124	21	0	6	0	0	1	0	0	0	0
4/26/2024	4:45 PM	0	116	24	0	2	0	0	1	0	0	0	0
4/26/2024	5:00 PM	0	156	25	0	1	0	0	0	0	0	0	0
4/26/2024	5:15 PM	0	108	18	0	1	0	0	1	2	0	0	0
4/26/2024	5:30 PM	0	90	9	1	1	0	0	0	0	0	0	0
4/26/2024	5:45 PM	0	72	9	0	1	0	0	0	1	0	0	0
4/26/2024	6:00 PM	2	79	12	0	0	0	0	0	0	0	0	0
4/26/2024	6:15 PM	0	53	7	0	1	0	0	0	0	0	0	0
4/26/2024	6:30 PM	0	65	8	0	2	0	0	0	0	0	0	0
4/26/2024	6:45 PM	0	47	7	0	2	0	0	0	0	0	0	0
4/26/2024	7:00 PM	0	54	6	0	0	0	0	0	0	0	0	0
4/26/2024	7:15 PM	0	44	5	0	0	0	0	0	0	0	0	0
4/26/2024	7:30 PM	0	40	6	0	2	0	0	0	0	0	0	0
4/26/2024	7:45 PM	1	48	8	0	0	0	0	0	0	0	0	0
4/26/2024	8:00 PM	0	44	6	0	0	0	0	0	0	0	0	0
4/26/2024	8:15 PM	0	41	7	0	0	0	0	0	0	0	0	0
4/26/2024	8:30 PM	0	40	8	0	0	0	0	0	0	0	0	0
4/26/2024	8:45 PM	0	23	4	0	0	0	0	0	0	0	0	0
4/26/2024	9:00 PM	0	27	6	0	2	0	0	0	0	0	0	0
4/26/2024	9:15 PM	0	37	8	0	0	0	0	0	0	0	0	0
4/26/2024	9:30 PM	0	42	9	0	1	0	0	0	0	0	0	0
4/26/2024	9:45 PM	0	40	6	0	0	0	0	0	0	0	0	0
4/26/2024	10:00 PM	0	45	7	0	1	0	0	0	0	0	0	0
4/26/2024	10:15 PM	0	17	3	0	0	0	0	0	0	0	0	0
4/26/2024	10:30 PM	0	23	4	0	0	0	0	0	0	0	0	0
4/26/2024	10:45 PM	0	22	3	0	1	0	0	0	0	0	0	0
4/26/2024	11:00 PM	0	31	5	0	0	0	0	0	0	0	0	0
4/26/2024	11:15 PM	0	17	4	0	0	0	0	0	1	0	0	0
4/26/2024	11:30 PM	0	19	4	0	0	0	0	0	0	0	0	0
4/26/2024	11:45 PM	0	15	2	0	0	0	0	0	0	0	0	0

4/27/2024	12:00 AM	0	11	1	0	0	0	0	1	0	0	0	0	0
4/27/2024	12:15 AM	0	8	3	0	0	0	0	0	0	0	0	0	0
4/27/2024	12:30 AM	0	5	1	0	0	0	0	0	0	0	0	0	0
4/27/2024	12:45 AM	0	6	0	0	0	0	0	0	0	0	0	0	0
4/27/2024	1:00 AM	0	9	1	0	0	0	0	0	0	0	0	0	0
4/27/2024	1:15 AM	1	8	1	0	0	0	0	0	0	0	0	0	0
4/27/2024	1:30 AM	0	4	0	0	0	0	0	0	0	0	0	0	0
4/27/2024	1:45 AM	0	5	1	0	0	0	0	0	0	0	0	0	0
4/27/2024	2:00 AM	0	8	0	0	0	0	0	0	0	0	0	0	0
4/27/2024	2:15 AM	0	7	0	0	0	0	0	0	0	0	0	0	0
4/27/2024	2:30 AM	0	6	0	0	2	0	0	0	0	0	0	0	0
4/27/2024	2:45 AM	0	5	0	0	0	0	0	0	1	0	0	0	0
4/27/2024	3:00 AM	0	6	1	0	0	0	0	0	0	0	0	0	0
4/27/2024	3:15 AM	0	4	0	0	0	0	0	0	0	0	0	0	0
4/27/2024	3:30 AM	0	5	1	0	0	0	0	0	0	0	0	0	0
4/27/2024	3:45 AM	0	10	1	0	1	0	0	0	0	0	0	0	0
4/27/2024	4:00 AM	0	5	1	0	0	0	0	0	0	0	0	0	0
4/27/2024	4:15 AM	0	4	1	0	0	0	0	0	0	0	0	0	0
4/27/2024	4:30 AM	0	9	0	0	0	0	0	0	0	0	0	0	0
4/27/2024	4:45 AM	0	8	1	0	0	0	0	0	0	0	0	0	0
4/27/2024	5:00 AM	0	8	1	0	0	0	0	0	0	0	0	0	0
4/27/2024	5:15 AM	0	8	1	0	1	0	0	0	0	0	0	0	0
4/27/2024	5:30 AM	0	10	0	0	0	0	0	0	0	0	0	0	0
4/27/2024	5:45 AM	0	8	0	0	1	0	0	0	0	0	0	0	0
4/27/2024	6:00 AM	0	13	2	0	1	0	0	0	0	0	0	0	0
4/27/2024	6:15 AM	0	12	6	0	1	1	0	0	0	0	0	0	0
4/27/2024	6:30 AM	0	20	4	0	0	0	0	0	0	0	0	0	0
4/27/2024	6:45 AM	0	29	5	0	0	0	0	0	0	0	0	0	0
4/27/2024	7:00 AM	0	23	6	0	0	0	0	0	0	0	0	0	0
4/27/2024	7:15 AM	0	30	4	0	0	0	0	0	0	0	0	0	0
4/27/2024	7:30 AM	0	21	5	0	0	0	0	0	0	0	0	0	0
4/27/2024	7:45 AM	0	43	5	0	0	0	0	0	1	0	0	0	0
4/27/2024	8:00 AM	1	30	6	0	0	1	0	0	0	0	0	0	0
4/27/2024	8:15 AM	0	30	4	0	3	0	0	0	0	0	0	0	0
4/27/2024	8:30 AM	0	24	6	0	0	0	0	0	0	0	0	0	0
4/27/2024	8:45 AM	0	36	5	0	0	0	0	0	1	0	0	0	0
4/27/2024	9:00 AM	0	39	5	0	0	1	0	1	0	0	0	0	0
4/27/2024	9:15 AM	0	38	8	0	0	0	0	0	1	0	0	0	0
4/27/2024	9:30 AM	1	43	7	0	1	0	0	0	0	0	0	0	0
4/27/2024	9:45 AM	0	45	12	0	0	0	0	0	0	0	0	0	0
4/27/2024	10:00 AM	0	33	8	0	2	0	0	0	0	0	0	0	0
4/27/2024	10:15 AM	0	41	11	0	1	0	0	0	0	0	0	0	0
4/27/2024	10:30 AM	0	49	9	0	1	0	0	0	0	0	0	0	0
4/27/2024	10:45 AM	0	44	7	0	0	0	0	0	1	0	0	0	0
4/27/2024	11:00 AM	0	48	12	0	0	0	0	0	0	0	0	0	0
4/27/2024	11:15 AM	0	49	10	0	1	0	0	0	0	0	0	0	0
4/27/2024	11:30 AM	0	57	4	0	0	0	0	0	0	0	0	0	0
4/27/2024	11:45 AM	0	58	7	0	1	0	0	0	1	0	0	0	0
4/27/2024	12:00 PM	0	77	13	0	1	0	0	0	0	0	0	0	0
4/27/2024	12:15 PM	1	53	8	0	1	0	0	0	0	0	0	0	0
4/27/2024	12:30 PM	0	49	5	0	1	0	0	1	0	0	0	0	0
4/27/2024	12:45 PM	0	54	9	0	0	0	0	0	0	0	0	0	0
4/27/2024	1:00 PM	0	67	14	0	0	0	0	0	0	0	0	0	0
4/27/2024	1:15 PM	0	48	7	0	0	0	0	0	0	0	0	0	0
4/27/2024	1:30 PM	0	73	7	0	0	0	0	0	0	0	0	0	0
4/27/2024	1:45 PM	0	59	10	0	0	0	0	0	0	0	0	0	0
4/27/2024	2:00 PM	0	52	10	0	2	0	0	0	0	0	0	0	0
4/27/2024	2:15 PM	0	66	9	0	0	0	0	0	0	0	0	0	0
4/27/2024	2:30 PM	0	63	11	0	0	0	0	0	0	0	0	0	0
4/27/2024	2:45 PM	0	70	11	0	0	0	0	1	0	0	0	0	0
4/27/2024	3:00 PM	0	77	7	0	0	0	0	0	0	0	0	0	0
4/27/2024	3:15 PM	0	75	10	0	1	0	0	0	0	0	0	0	0
4/27/2024	3:30 PM	0	63	18	0	0	0	0	0	0	0	0	0	0
4/27/2024	3:45 PM	0	75	3	2	0	1	0	0	0	0	0	0	0
4/27/2024	4:00 PM	0	54	17	0	0	0	0	0	0	0	0	0	0
4/27/2024	4:15 PM	0	57	7	0	0	0	0	0	0	0	0	0	0
4/27/2024	4:30 PM	0	57	9	0	1	0	0	0	0	0	0	0	0
4/27/2024	4:45 PM	0	80	9	0	1	0	0	1	0	0	0	0	0
4/27/2024	5:00 PM	0	42	6	0	2	0	0	0	0	0	0	0	0
4/27/2024	5:15 PM	0	77	7	0	0	0	0	0	0	0	0	0	0
4/27/2024	5:30 PM	0	55	7	0	1	0	0	1	0	0	0	0	0
4/27/2024	5:45 PM	0	45	9	0	2	0	0	1	0	0	0	0	0
4/27/2024	6:00 PM	0	50	8	0	1	0	0	0	0	0	0	0	0
4/27/2024	6:15 PM	0	56	8	0	1	0	0	0	0	0	0	0	0
4/27/2024	6:30 PM	0	47	7	0	0	0	0	0	0	0	0	0	0
4/27/2024	6:45 PM	0	45	7	0	1	0	0	0	0	0	0	0	0
4/27/2024	7:00 PM	0	41	3	0	0	0	0	0	0	0	0	0	0
4/27/2024	7:15 PM	0	44	6	0	1	0	0	0	0	0	0	0	0
4/27/2024	7:30 PM	0	49	7	0	0	0	0	0	0	0	0	0	0
4/27/2024	7:45 PM	0	60	4	0	1	0	0	0	0	0	0	0	0
4/27/2024	8:00 PM	0	35	10	0	2	0	0	0	0	0	0	0	0
4/27/2024	8:15 PM	0	32	2	0	2	0	0	0	0	0	0	0	0
4/27/2024	8:30 PM	0	22	3	0	0	0	0	0	0	0	0	0	0
4/27/2024	8:45 PM	0	31	2	0	1	0	0	0	0	0	0	0	0
4/27/2024	9:00 PM	0	21	2	0	1	0	0	0	0	0	0	0	0
4/27/2024	9:15 PM	0	36	10	0	0	0	0	0	0	0	0	0	0
4/27/2024	9:30 PM	0	29	7	0	0	0	0	0	0	0	0	0	0
4/27/2024	9:45 PM	0	27	9	0	0	0	0	0	0	0	0	0	0
4/27/2024	10:00 PM	0	32	3	0	0	0	0	0	0	0	0	0	0
4/27/2024	10:15 PM	0	27	5	0	0	0	0	0	0	0	0	0	0
4/27/2024	10:30 PM	0	24	7	0	0	0	0	0	0	0	0	0	0
4/27/2024	10:45 PM	0	14	2	0	1	0	0	0	1	0	0	0	0
4/27/2024	11:00 PM	0	18	1	0	0	0	0	0	0	0	0	0	0
4/27/2024	11:15 PM	0	10	2	0	0	0	0	0	0	0	0	0	0
4/27/2024	11:30 PM	0	17	2	0	0	0	0	0	0	0	0	0	0
4/27/2024	11:45 PM	0	16	1	0	1	0	0	0	0	0	0	0	0

WB
File Name:
Start Date: 4/21/2024
Start Time: 0
Site Code: 2
Station ID: 1
Location 1: I-126 E/Bound On-Ramp, west of I-26
Location 2:

Date	Time	1	2	3	4	5	6	7	8	9	10	11	12	13
4/21/2024	12:00 AM	0	0	0	0	0	0	0	0	0	0	0	0	0
4/21/2024	12:15 AM	0	0	0	0	0	0	0	0	0	0	0	0	0
4/21/2024	12:30 AM	0	0	0	0	0	0	0	0	0	0	0	0	0
4/21/2024	12:45 AM	0	0	0	0	0	0	0	0	0	0	0	0	0
4/21/2024	1:00 AM	0	0	0	0	0	0	0	0	0	0	0	0	0
4/21/2024	1:15 AM	0	0	0	0	0	0	0	0	0	0	0	0	0
4/21/2024	1:30 AM	0	0	0	0	0	0	0	0	0	0	0	0	0
4/21/2024	1:45 AM	0	0	0	0	0	0	0	0	0	0	0	0	0
4/21/2024	2:00 AM	0	0	0	0	0	0	0	0	0	0	0	0	0
4/21/2024	2:15 AM	0	0	0	0	0	0	0	0	0	0	0	0	0
4/21/2024	2:30 AM	0	0	0	0	0	0	0	0	0	0	0	0	0
4/21/2024	2:45 AM	0	0	0	0	0	0	0	0	0	0	0	0	0
4/21/2024	3:00 AM	0	0	0	0	0	0	0	0	0	0	0	0	0
4/21/2024	3:15 AM	0	0	0	0	0	0	0	0	0	0	0	0	0
4/21/2024	3:30 AM	0	0	0	0	0	0	0	0	0	0	0	0	0
4/21/2024	3:45 AM	0	0	0	0	0	0	0	0	0	0	0	0	0
4/21/2024	4:00 AM	0	0	0	0	0	0	0	0	0	0	0	0	0
4/21/2024	4:15 AM	0	0	0	0	0	0	0	0	0	0	0	0	0
4/21/2024	4:30 AM	0	0	0	0	0	0	0	0	0	0	0	0	0
4/21/2024	4:45 AM	0	0	0	0	0	0	0	0	0	0	0	0	0
4/21/2024	5:00 AM	0	0	0	0	0	0	0	0	0	0	0	0	0
4/21/2024	5:15 AM	0	0	0	0	0	0	0	0	0	0	0	0	0
4/21/2024	5:30 AM	0	0	0	0	0	0	0	0	0	0	0	0	0
4/21/2024	5:45 AM	0	0	0	0	0	0	0	0	0	0	0	0	0
4/21/2024	6:00 AM	0	0	0	0	0	0	0	0	0	0	0	0	0
4/21/2024	6:15 AM	0	0	0	0	0	0	0	0	0	0	0	0	0
4/21/2024	6:30 AM	0	0	0	0	0	0	0	0	0	0	0	0	0
4/21/2024	6:45 AM	0	0	0	0	0	0	0	0	0	0	0	0	0
4/21/2024	7:00 AM	0	0	0	0	0	0	0	0	0	0	0	0	0
4/21/2024	7:15 AM	0	0	0	0	0	0	0	0	0	0	0	0	0
4/21/2024	7:30 AM	0	0	0	0	0	0	0	0	0	0	0	0	0
4/21/2024	7:45 AM	0	0	0	0	0	0	0	0	0	0	0	0	0
4/21/2024	8:00 AM	0	0	0	0	0	0	0	0	0	0	0	0	0
4/21/2024	8:15 AM	0	0	0	0	0	0	0	0	0	0	0	0	0
4/21/2024	8:30 AM	0	0	0	0	0	0	0	0	0	0	0	0	0
4/21/2024	8:45 AM	0	0	0	0	0	0	0	0	0	0	0	0	0
4/21/2024	9:00 AM	0	0	0	0	0	0	0	0	0	0	0	0	0
4/21/2024	9:15 AM	0	0	0	0	0	0	0	0	0	0	0	0	0
4/21/2024	9:30 AM	0	0	0	0	0	0	0	0	0	0	0	0	0
4/21/2024	9:45 AM	0	0	0	0	0	0	0	0	0	0	0	0	0
4/21/2024	10:00 AM	0	0	0	0	0	0	0	0	0	0	0	0	0
4/21/2024	10:15 AM	0	0	0	0	0	0	0	0	0	0	0	0	0
4/21/2024	10:30 AM	0	0	0	0	0	0	0	0	0	0	0	0	0
4/21/2024	10:45 AM	0	0	0	0	0	0	0	0	0	0	0	0	0
4/21/2024	11:00 AM	0	0	0	0	0	0	0	0	0	0	0	0	0
4/21/2024	11:15 AM	0	0	0	0	0	0	0	0	0	0	0	0	0
4/21/2024	11:30 AM	0	0	0	0	0	0	0	0	0	0	0	0	0
4/21/2024	11:45 AM	0	0	0	0	0	0	0	0	0	0	0	0	0
4/21/2024	12:00 PM	0	0	0	0	0	0	0	0	0	0	0	0	0
4/21/2024	12:15 PM	0	0	0	0	0	0	0	0	0	0	0	0	0
4/21/2024	12:30 PM	0	0	0	0	0	0	0	0	0	0	0	0	0
4/21/2024	12:45 PM	0	0	0	0	0	0	0	0	0	0	0	0	0
4/21/2024	1:00 PM	0	0	0	0	0	0	0	0	0	0	0	0	0
4/21/2024	1:15 PM	0	0	0	0	0	0	0	0	0	0	0	0	0
4/21/2024	1:30 PM	0	0	0	0	0	0	0	0	0	0	0	0	0
4/21/2024	1:45 PM	0	0	0	0	0	0	0	0	0	0	0	0	0
4/21/2024	2:00 PM	0	0	0	0	0	0	0	0	0	0	0	0	0
4/21/2024	2:15 PM	0	0	0	0	0	0	0	0	0	0	0	0	0
4/21/2024	2:30 PM	0	0	0	0	0	0	0	0	0	0	0	0	0
4/21/2024	2:45 PM	0	0	0	0	0	0	0	0	0	0	0	0	0
4/21/2024	3:00 PM	0	0	0	0	0	0	0	0	0	0	0	0	0
4/21/2024	3:15 PM	0	0	0	0	0	0	0	0	0	0	0	0	0
4/21/2024	3:30 PM	0	0	0	0	0	0	0	0	0	0	0	0	0
4/21/2024	3:45 PM	0	0	0	0	0	0	0	0	0	0	0	0	0
4/21/2024	4:00 PM	0	0	0	0	0	0	0	0	0	0	0	0	0
4/21/2024	4:15 PM	0	0	0	0	0	0	0	0	0	0	0	0	0
4/21/2024	4:30 PM	0	0	0	0	0	0	0	0	0	0	0	0	0
4/21/2024	4:45 PM	0	0	0	0	0	0	0	0	0	0	0	0	0
4/21/2024	5:00 PM	0	0	0	0	0	0	0	0	0	0	0	0	0
4/21/2024	5:15 PM	0	0	0	0	0	0	0	0	0	0	0	0	0
4/21/2024	5:30 PM	0	0	0	0	0	0	0	0	0	0	0	0	0
4/21/2024	5:45 PM	0	0	0	0	0	0	0	0	0	0	0	0	0
4/21/2024	6:00 PM	0	0	0	0	0	0	0	0	0	0	0	0	0
4/21/2024	6:15 PM	0	0	0	0	0	0	0	0	0	0	0	0	0
4/21/2024	6:30 PM	0	0	0	0	0	0	0	0	0	0	0	0	0
4/21/2024	6:45 PM	0	0	0	0	0	0	0	0	0	0	0	0	0
4/21/2024	7:00 PM	0	0	0	0	0	0	0	0	0	0	0	0	0
4/21/2024	7:15 PM	0	0	0	0	0	0	0	0	0	0	0	0	0
4/21/2024	7:30 PM	0	0	0	0	0	0	0	0	0	0	0	0	0
4/21/2024	7:45 PM	0	0	0	0	0	0	0	0	0	0	0	0	0
4/21/2024	8:00 PM	0	0	0	0	0	0	0	0	0	0	0	0	0
4/21/2024	8:15 PM	0	0	0	0	0	0	0	0	0	0	0	0	0
4/21/2024	8:30 PM	0	0	0	0	0	0	0	0	0	0	0	0	0
4/21/2024	8:45 PM	0	0	0	0	0	0	0	0	0	0	0	0	0
4/21/2024	9:00 PM	0	0	0	0	0	0	0	0	0	0	0	0	0
4/21/2024	9:15 PM	0	0	0	0	0	0	0	0	0	0	0	0	0
4/21/2024	9:30 PM	0	0	0	0	0	0	0	0	0	0	0	0	0
4/21/2024	9:45 PM	0	0	0	0	0	0	0	0	0	0	0	0	0
4/21/2024	10:00 PM	0	0	0	0	0	0	0	0	0	0	0	0	0
4/21/2024	10:15 PM	0	0	0	0	0	0	0	0	0	0	0	0	0
4/21/2024	10:30 PM	0	0	0	0	0	0	0	0	0	0	0	0	0
4/21/2024	10:45 PM	0	0	0	0	0	0	0	0	0	0	0	0	0
4/21/2024	11:00 PM	0	0	0	0	0	0	0	0	0	0	0	0	0
4/21/2024	11:15 PM	0	0	0	0	0	0	0	0	0	0	0	0	0
4/21/2024	11:30 PM	0	0	0	0	0	0	0	0	0	0	0	0	0
4/21/2024	11:45 PM	0	0	0	0	0	0	0	0	0	0	0	0	0

4/22/2024	12:00 AM	0	0	0	0	0	0	0	0	0	0	0	0	0
4/22/2024	12:15 AM	0	0	0	0	0	0	0	0	0	0	0	0	0
4/22/2024	12:30 AM	0	0	0	0	0	0	0	0	0	0	0	0	0
4/22/2024	12:45 AM	0	0	0	0	0	0	0	0	0	0	0	0	0
4/22/2024	1:00 AM	0	0	0	0	0	0	0	0	0	0	0	0	0
4/22/2024	1:15 AM	0	0	0	0	0	0	0	0	0	0	0	0	0
4/22/2024	1:30 AM	0	0	0	0	0	0	0	0	0	0	0	0	0
4/22/2024	1:45 AM	0	0	0	0	0	0	0	0	0	0	0	0	0
4/22/2024	2:00 AM	0	0	0	0	0	0	0	0	0	0	0	0	0
4/22/2024	2:15 AM	0	0	0	0	0	0	0	0	0	0	0	0	0
4/22/2024	2:30 AM	0	0	0	0	0	0	0	0	0	0	0	0	0
4/22/2024	2:45 AM	0	0	0	0	0	0	0	0	0	0	0	0	0
4/22/2024	3:00 AM	0	0	0	0	0	0	0	0	0	0	0	0	0
4/22/2024	3:15 AM	0	0	0	0	0	0	0	0	0	0	0	0	0
4/22/2024	3:30 AM	0	0	0	0	0	0	0	0	0	0	0	0	0
4/22/2024	3:45 AM	0	0	0	0	0	0	0	0	0	0	0	0	0
4/22/2024	4:00 AM	0	0	0	0	0	0	0	0	0	0	0	0	0
4/22/2024	4:15 AM	0	0	0	0	0	0	0	0	0	0	0	0	0
4/22/2024	4:30 AM	0	0	0	0	0	0	0	0	0	0	0	0	0
4/22/2024	4:45 AM	0	0	0	0	0	0	0	0	0	0	0	0	0
4/22/2024	5:00 AM	0	0	0	0	0	0	0	0	0	0	0	0	0
4/22/2024	5:15 AM	0	0	0	0	0	0	0	0	0	0	0	0	0
4/22/2024	5:30 AM	0	0	0	0	0	0	0	0	0	0	0	0	0
4/22/2024	5:45 AM	0	0	0	0	0	0	0	0	0	0	0	0	0
4/22/2024	6:00 AM	0	0	0	0	0	0	0	0	0	0	0	0	0
4/22/2024	6:15 AM	0	0	0	0	0	0	0	0	0	0	0	0	0
4/22/2024	6:30 AM	0	0	0	0	0	0	0	0	0	0	0	0	0
4/22/2024	6:45 AM	0	0	0	0	0	0	0	0	0	0	0	0	0
4/22/2024	7:00 AM	0	0	0	0	0	0	0	0	0	0	0	0	0
4/22/2024	7:15 AM	0	0	0	0	0	0	0	0	0	0	0	0	0
4/22/2024	7:30 AM	0	0	0	0	0	0	0	0	0	0	0	0	0
4/22/2024	7:45 AM	0	0	0	0	0	0	0	0	0	0	0	0	0
4/22/2024	8:00 AM	0	0	0	0	0	0	0	0	0	0	0	0	0
4/22/2024	8:15 AM	0	0	0	0	0	0	0	0	0	0	0	0	0
4/22/2024	8:30 AM	0	0	0	0	0	0	0	0	0	0	0	0	0
4/22/2024	8:45 AM	0	0	0	0	0	0	0	0	0	0	0	0	0
4/22/2024	9:00 AM	0	0	0	0	0	0	0	0	0	0	0	0	0
4/22/2024	9:15 AM	0	0	0	0	0	0	0	0	0	0	0	0	0
4/22/2024	9:30 AM	0	0	0	0	0	0	0	0	0	0	0	0	0
4/22/2024	9:45 AM	0	0	0	0	0	0	0	0	0	0	0	0	0
4/22/2024	10:00 AM	0	0	0	0	0	0	0	0	0	0	0	0	0
4/22/2024	10:15 AM	0	0	0	0	0	0	0	0	0	0	0	0	0
4/22/2024	10:30 AM	0	0	0	0	0	0	0	0	0	0	0	0	0
4/22/2024	10:45 AM	0	0	0	0	0	0	0	0	0	0	0	0	0
4/22/2024	11:00 AM	0	0	0	0	0	0	0	0	0	0	0	0	0
4/22/2024	11:15 AM	0	0	0	0	0	0	0	0	0	0	0	0	0
4/22/2024	11:30 AM	0	0	0	0	0	0	0	0	0	0	0	0	0
4/22/2024	11:45 AM	0	0	0	0	0	0	0	0	0	0	0	0	0
4/22/2024	12:00 PM	0	0	0	0	0	0	0	0	0	0	0	0	0
4/22/2024	12:15 PM	0	0	0	0	0	0	0	0	0	0	0	0	0
4/22/2024	12:30 PM	0	0	0	0	0	0	0	0	0	0	0	0	0
4/22/2024	12:45 PM	0	0	0	0	0	0	0	0	0	0	0	0	0
4/22/2024	1:00 PM	0	0	0	0	0	0	0	0	0	0	0	0	0
4/22/2024	1:15 PM	0	0	0	0	0	0	0	0	0	0	0	0	0
4/22/2024	1:30 PM	0	0	0	0	0	0	0	0	0	0	0	0	0
4/22/2024	1:45 PM	0	0	0	0	0	0	0	0	0	0	0	0	0
4/22/2024	2:00 PM	0	0	0	0	0	0	0	0	0	0	0	0	0
4/22/2024	2:15 PM	0	0	0	0	0	0	0	0	0	0	0	0	0
4/22/2024	2:30 PM	0	0	0	0	0	0	0	0	0	0	0	0	0
4/22/2024	2:45 PM	0	0	0	0	0	0	0	0	0	0	0	0	0
4/22/2024	3:00 PM	0	0	0	0	0	0	0	0	0	0	0	0	0
4/22/2024	3:15 PM	0	0	0	0	0	0	0	0	0	0	0	0	0
4/22/2024	3:30 PM	0	0	0	0	0	0	0	0	0	0	0	0	0
4/22/2024	3:45 PM	0	0	0	0	0	0	0	0	0	0	0	0	0
4/22/2024	4:00 PM	0	0	0	0	0	0	0	0	0	0	0	0	0
4/22/2024	4:15 PM	0	0	0	0	0	0	0	0	0	0	0	0	0
4/22/2024	4:30 PM	0	0	0	0	0	0	0	0	0	0	0	0	0
4/22/2024	4:45 PM	0	0	0	0	0	0	0	0	0	0	0	0	0
4/22/2024	5:00 PM	0	0	0	0	0	0	0	0	0	0	0	0	0
4/22/2024	5:15 PM	0	0	0	0	0	0	0	0	0	0	0	0	0
4/22/2024	5:30 PM	0	0	0	0	0	0	0	0	0	0	0	0	0
4/22/2024	5:45 PM	0	0	0	0	0	0	0	0	0	0	0	0	0
4/22/2024	6:00 PM	0	0	0	0	0	0	0	0	0	0	0	0	0
4/22/2024	6:15 PM	0	0	0	0	0	0	0	0	0	0	0	0	0
4/22/2024	6:30 PM	0	0	0	0	0	0	0	0	0	0	0	0	0
4/22/2024	6:45 PM	0	0	0	0	0	0	0	0	0	0	0	0	0
4/22/2024	7:00 PM	0	0	0	0	0	0	0	0	0	0	0	0	0
4/22/2024	7:15 PM	0	0	0	0	0	0	0	0	0	0	0	0	0
4/22/2024	7:30 PM	0	0	0	0	0	0	0	0	0	0	0	0	0
4/22/2024	7:45 PM	0	0	0	0	0	0	0	0	0	0	0	0	0
4/22/2024	8:00 PM	0	0	0	0	0	0	0	0	0	0	0	0	0
4/22/2024	8:15 PM	0	0	0	0	0	0	0	0	0	0	0	0	0
4/22/2024	8:30 PM	0	0	0	0	0	0	0	0	0	0	0	0	0
4/22/2024	8:45 PM	0	0	0	0	0	0	0	0	0	0	0	0	0
4/22/2024	9:00 PM	0	0	0	0	0	0	0	0	0	0	0	0	0
4/22/2024	9:15 PM	0	0	0	0	0	0	0	0	0	0	0	0	0
4/22/2024	9:30 PM	0	0	0	0	0	0	0	0	0	0	0	0	0
4/22/2024	9:45 PM	0	0	0	0	0	0	0	0	0	0	0	0	0
4/22/2024	10:00 PM	0	0	0	0	0	0	0	0	0	0	0	0	0
4/22/2024	10:15 PM	0	0	0	0	0	0	0	0	0	0	0	0	0
4/22/2024	10:30 PM	0	0	0	0	0	0	0	0	0	0	0	0	0
4/22/2024	10:45 PM	0	0	0	0	0	0	0	0	0	0	0	0	0
4/22/2024	11:00 PM	0	0	0	0	0	0	0	0	0	0	0	0	0
4/22/2024	11:15 PM	0	0	0	0	0	0	0	0	0	0	0	0	0
4/22/2024	11:30 PM	0	0	0	0	0	0	0	0	0	0	0	0	0
4/22/2024	11:45 PM	0	0	0	0	0	0	0	0	0	0	0	0	0

4/23/2024	12:00 AM	0	0	0	0	0	0	0	0	0	0	0	0	0
4/23/2024	12:15 AM	0	0	0	0	0	0	0	0	0	0	0	0	0
4/23/2024	12:30 AM	0	0	0	0	0	0	0	0	0	0	0	0	0
4/23/2024	12:45 AM	0	0	0	0	0	0	0	0	0	0	0	0	0
4/23/2024	1:00 AM	0	0	0	0	0	0	0	0	0	0	0	0	0
4/23/2024	1:15 AM	0	0	0	0	0	0	0	0	0	0	0	0	0
4/23/2024	1:30 AM	0	0	0	0	0	0	0	0	0	0	0	0	0
4/23/2024	1:45 AM	0	0	0	0	0	0	0	0	0	0	0	0	0
4/23/2024	2:00 AM	0	0	0	0	0	0	0	0	0	0	0	0	0
4/23/2024	2:15 AM	0	0	0	0	0	0	0	0	0	0	0	0	0
4/23/2024	2:30 AM	0	0	0	0	0	0	0	0	0	0	0	0	0
4/23/2024	2:45 AM	0	0	0	0	0	0	0	0	0	0	0	0	0
4/23/2024	3:00 AM	0	0	0	0	0	0	0	0	0	0	0	0	0
4/23/2024	3:15 AM	0	0	0	0	0	0	0	0	0	0	0	0	0
4/23/2024	3:30 AM	0	0	0	0	0	0	0	0	0	0	0	0	0
4/23/2024	3:45 AM	0	0	0	0	0	0	0	0	0	0	0	0	0
4/23/2024	4:00 AM	0	0	0	0	0	0	0	0	0	0	0	0	0
4/23/2024	4:15 AM	0	0	0	0	0	0	0	0	0	0	0	0	0
4/23/2024	4:30 AM	0	0	0	0	0	0	0	0	0	0	0	0	0
4/23/2024	4:45 AM	0	0	0	0	0	0	0	0	0	0	0	0	0
4/23/2024	5:00 AM	0	0	0	0	0	0	0	0	0	0	0	0	0
4/23/2024	5:15 AM	0	0	0	0	0	0	0	0	0	0	0	0	0
4/23/2024	5:30 AM	0	0	0	0	0	0	0	0	0	0	0	0	0
4/23/2024	5:45 AM	0	0	0	0	0	0	0	0	0	0	0	0	0
4/23/2024	6:00 AM	0	0	0	0	0	0	0	0	0	0	0	0	0
4/23/2024	6:15 AM	0	0	0	0	0	0	0	0	0	0	0	0	0
4/23/2024	6:30 AM	0	0	0	0	0	0	0	0	0	0	0	0	0
4/23/2024	6:45 AM	0	0	0	0	0	0	0	0	0	0	0	0	0
4/23/2024	7:00 AM	0	0	0	0	0	0	0	0	0	0	0	0	0
4/23/2024	7:15 AM	0	0	0	0	0	0	0	0	0	0	0	0	0
4/23/2024	7:30 AM	0	0	0	0	0	0	0	0	0	0	0	0	0
4/23/2024	7:45 AM	0	0	0	0	0	0	0	0	0	0	0	0	0
4/23/2024	8:00 AM	0	0	0	0	0	0	0	0	0	0	0	0	0
4/23/2024	8:15 AM	0	0	0	0	0	0	0	0	0	0	0	0	0
4/23/2024	8:30 AM	0	0	0	0	0	0	0	0	0	0	0	0	0
4/23/2024	8:45 AM	0	0	0	0	0	0	0	0	0	0	0	0	0
4/23/2024	9:00 AM	0	0	0	0	0	0	0	0	0	0	0	0	0
4/23/2024	9:15 AM	0	0	0	0	0	0	0	0	0	0	0	0	0
4/23/2024	9:30 AM	0	0	0	0	0	0	0	0	0	0	0	0	0
4/23/2024	9:45 AM	0	0	0	0	0	0	0	0	0	0	0	0	0
4/23/2024	10:00 AM	0	0	0	0	0	0	0	0	0	0	0	0	0
4/23/2024	10:15 AM	0	0	0	0	0	0	0	0	0	0	0	0	0
4/23/2024	10:30 AM	0	0	0	0	0	0	0	0	0	0	0	0	0
4/23/2024	10:45 AM	0	0	0	0	0	0	0	0	0	0	0	0	0
4/23/2024	11:00 AM	0	0	0	0	0	0	0	0	0	0	0	0	0
4/23/2024	11:15 AM	0	0	0	0	0	0	0	0	0	0	0	0	0
4/23/2024	11:30 AM	0	0	0	0	0	0	0	0	0	0	0	0	0
4/23/2024	11:45 AM	0	0	0	0	0	0	0	0	0	0	0	0	0
4/23/2024	12:00 PM	0	0	0	0	0	0	0	0	0	0	0	0	0
4/23/2024	12:15 PM	0	0	0	0	0	0	0	0	0	0	0	0	0
4/23/2024	12:30 PM	0	0	0	0	0	0	0	0	0	0	0	0	0
4/23/2024	12:45 PM	0	0	0	0	0	0	0	0	0	0	0	0	0
4/23/2024	1:00 PM	0	0	0	0	0	0	0	0	0	0	0	0	0
4/23/2024	1:15 PM	0	0	0	0	0	0	0	0	0	0	0	0	0
4/23/2024	1:30 PM	0	0	0	0	0	0	0	0	0	0	0	0	0
4/23/2024	1:45 PM	0	0	0	0	0	0	0	0	0	0	0	0	0
4/23/2024	2:00 PM	0	0	0	0	0	0	0	0	0	0	0	0	0
4/23/2024	2:15 PM	0	0	0	0	0	0	0	0	0	0	0	0	0
4/23/2024	2:30 PM	0	0	0	0	0	0	0	0	0	0	0	0	0
4/23/2024	2:45 PM	0	0	0	0	0	0	0	0	0	0	0	0	0
4/23/2024	3:00 PM	0	0	0	0	0	0	0	0	0	0	0	0	0
4/23/2024	3:15 PM	0	0	0	0	0	0	0	0	0	0	0	0	0
4/23/2024	3:30 PM	0	0	0	0	0	0	0	0	0	0	0	0	0
4/23/2024	3:45 PM	0	0	0	0	0	0	0	0	0	0	0	0	0
4/23/2024	4:00 PM	0	0	0	0	0	0	0	0	0	0	0	0	0
4/23/2024	4:15 PM	0	0	0	0	0	0	0	0	0	0	0	0	0
4/23/2024	4:30 PM	0	0	0	0	0	0	0	0	0	0	0	0	0
4/23/2024	4:45 PM	0	0	0	0	0	0	0	0	0	0	0	0	0
4/23/2024	5:00 PM	0	0	0	0	0	0	0	0	0	0	0	0	0
4/23/2024	5:15 PM	0	0	0	0	0	0	0	0	0	0	0	0	0
4/23/2024	5:30 PM	0	0	0	0	0	0	0	0	0	0	0	0	0
4/23/2024	5:45 PM	0	0	0	0	0	0	0	0	0	0	0	0	0
4/23/2024	6:00 PM	0	0	0	0	0	0	0	0	0	0	0	0	0
4/23/2024	6:15 PM	0	0	0	0	0	0	0	0	0	0	0	0	0
4/23/2024	6:30 PM	0	0	0	0	0	0	0	0	0	0	0	0	0
4/23/2024	6:45 PM	0	0	0	0	0	0	0	0	0	0	0	0	0
4/23/2024	7:00 PM	0	0	0	0	0	0	0	0	0	0	0	0	0
4/23/2024	7:15 PM	0	0	0	0	0	0	0	0	0	0	0	0	0
4/23/2024	7:30 PM	0	0	0	0	0	0	0	0	0	0	0	0	0
4/23/2024	7:45 PM	0	0	0	0	0	0	0	0	0	0	0	0	0
4/23/2024	8:00 PM	0	0	0	0	0	0	0	0	0	0	0	0	0
4/23/2024	8:15 PM	0	0	0	0	0	0	0	0	0	0	0	0	0
4/23/2024	8:30 PM	0	0	0	0	0	0	0	0	0	0	0	0	0
4/23/2024	8:45 PM	0	0	0	0	0	0	0	0	0	0	0	0	0
4/23/2024	9:00 PM	0	0	0	0	0	0	0	0	0	0	0	0	0
4/23/2024	9:15 PM	0	0	0	0	0	0	0	0	0	0	0	0	0
4/23/2024	9:30 PM	0	0	0	0	0	0	0	0	0	0	0	0	0
4/23/2024	9:45 PM	0	0	0	0	0	0	0	0	0	0	0	0	0
4/23/2024	10:00 PM	0	0	0	0	0	0	0	0	0	0	0	0	0
4/23/2024	10:15 PM	0	0	0	0	0	0	0	0	0	0	0	0	0
4/23/2024	10:30 PM	0	0	0	0	0	0	0	0	0	0	0	0	0
4/23/2024	10:45 PM	0	0	0	0	0	0	0	0	0	0	0	0	0
4/23/2024	11:00 PM	0	0	0	0	0	0	0	0	0	0	0	0	0
4/23/2024	11:15 PM	0	0	0	0	0	0	0	0	0	0	0	0	0
4/23/2024	11:30 PM	0	0	0	0	0	0	0	0	0	0	0	0	0
4/23/2024	11:45 PM	0	0	0	0	0	0	0	0	0	0	0	0	0

4/24/2024	12:00 AM	0	0	0	0	0	0	0	0	0	0	0	0	0
4/24/2024	12:15 AM	0	0	0	0	0	0	0	0	0	0	0	0	0
4/24/2024	12:30 AM	0	0	0	0	0	0	0	0	0	0	0	0	0
4/24/2024	12:45 AM	0	0	0	0	0	0	0	0	0	0	0	0	0
4/24/2024	1:00 AM	0	0	0	0	0	0	0	0	0	0	0	0	0
4/24/2024	1:15 AM	0	0	0	0	0	0	0	0	0	0	0	0	0
4/24/2024	1:30 AM	0	0	0	0	0	0	0	0	0	0	0	0	0
4/24/2024	1:45 AM	0	0	0	0	0	0	0	0	0	0	0	0	0
4/24/2024	2:00 AM	0	0	0	0	0	0	0	0	0	0	0	0	0
4/24/2024	2:15 AM	0	0	0	0	0	0	0	0	0	0	0	0	0
4/24/2024	2:30 AM	0	0	0	0	0	0	0	0	0	0	0	0	0
4/24/2024	2:45 AM	0	0	0	0	0	0	0	0	0	0	0	0	0
4/24/2024	3:00 AM	0	0	0	0	0	0	0	0	0	0	0	0	0
4/24/2024	3:15 AM	0	0	0	0	0	0	0	0	0	0	0	0	0
4/24/2024	3:30 AM	0	0	0	0	0	0	0	0	0	0	0	0	0
4/24/2024	3:45 AM	0	0	0	0	0	0	0	0	0	0	0	0	0
4/24/2024	4:00 AM	0	0	0	0	0	0	0	0	0	0	0	0	0
4/24/2024	4:15 AM	0	0	0	0	0	0	0	0	0	0	0	0	0
4/24/2024	4:30 AM	0	0	0	0	0	0	0	0	0	0	0	0	0
4/24/2024	4:45 AM	0	0	0	0	0	0	0	0	0	0	0	0	0
4/24/2024	5:00 AM	0	0	0	0	0	0	0	0	0	0	0	0	0
4/24/2024	5:15 AM	0	0	0	0	0	0	0	0	0	0	0	0	0
4/24/2024	5:30 AM	0	0	0	0	0	0	0	0	0	0	0	0	0
4/24/2024	5:45 AM	0	0	0	0	0	0	0	0	0	0	0	0	0
4/24/2024	6:00 AM	0	0	0	0	0	0	0	0	0	0	0	0	0
4/24/2024	6:15 AM	0	0	0	0	0	0	0	0	0	0	0	0	0
4/24/2024	6:30 AM	0	0	0	0	0	0	0	0	0	0	0	0	0
4/24/2024	6:45 AM	0	0	0	0	0	0	0	0	0	0	0	0	0
4/24/2024	7:00 AM	0	0	0	0	0	0	0	0	0	0	0	0	0
4/24/2024	7:15 AM	0	0	0	0	0	0	0	0	0	0	0	0	0
4/24/2024	7:30 AM	0	0	0	0	0	0	0	0	0	0	0	0	0
4/24/2024	7:45 AM	0	0	0	0	0	0	0	0	0	0	0	0	0
4/24/2024	8:00 AM	0	0	0	0	0	0	0	0	0	0	0	0	0
4/24/2024	8:15 AM	0	0	0	0	0	0	0	0	0	0	0	0	0
4/24/2024	8:30 AM	0	0	0	0	0	0	0	0	0	0	0	0	0
4/24/2024	8:45 AM	0	0	0	0	0	0	0	0	0	0	0	0	0
4/24/2024	9:00 AM	0	0	0	0	0	0	0	0	0	0	0	0	0
4/24/2024	9:15 AM	0	0	0	0	0	0	0	0	0	0	0	0	0
4/24/2024	9:30 AM	0	0	0	0	0	0	0	0	0	0	0	0	0
4/24/2024	9:45 AM	0	0	0	0	0	0	0	0	0	0	0	0	0
4/24/2024	10:00 AM	0	0	0	0	0	0	0	0	0	0	0	0	0
4/24/2024	10:15 AM	0	0	0	0	0	0	0	0	0	0	0	0	0
4/24/2024	10:30 AM	0	0	0	0	0	0	0	0	0	0	0	0	0
4/24/2024	10:45 AM	0	0	0	0	0	0	0	0	0	0	0	0	0
4/24/2024	11:00 AM	0	0	0	0	0	0	0	0	0	0	0	0	0
4/24/2024	11:15 AM	0	0	0	0	0	0	0	0	0	0	0	0	0
4/24/2024	11:30 AM	0	0	0	0	0	0	0	0	0	0	0	0	0
4/24/2024	11:45 AM	0	0	0	0	0	0	0	0	0	0	0	0	0
4/24/2024	12:00 PM	0	0	0	0	0	0	0	0	0	0	0	0	0
4/24/2024	12:15 PM	0	0	0	0	0	0	0	0	0	0	0	0	0
4/24/2024	12:30 PM	0	0	0	0	0	0	0	0	0	0	0	0	0
4/24/2024	12:45 PM	0	0	0	0	0	0	0	0	0	0	0	0	0
4/24/2024	1:00 PM	0	0	0	0	0	0	0	0	0	0	0	0	0
4/24/2024	1:15 PM	0	0	0	0	0	0	0	0	0	0	0	0	0
4/24/2024	1:30 PM	0	0	0	0	0	0	0	0	0	0	0	0	0
4/24/2024	1:45 PM	0	0	0	0	0	0	0	0	0	0	0	0	0
4/24/2024	2:00 PM	0	0	0	0	0	0	0	0	0	0	0	0	0
4/24/2024	2:15 PM	0	0	0	0	0	0	0	0	0	0	0	0	0
4/24/2024	2:30 PM	0	0	0	0	0	0	0	0	0	0	0	0	0
4/24/2024	2:45 PM	0	0	0	0	0	0	0	0	0	0	0	0	0
4/24/2024	3:00 PM	0	0	0	0	0	0	0	0	0	0	0	0	0
4/24/2024	3:15 PM	0	0	0	0	0	0	0	0	0	0	0	0	0
4/24/2024	3:30 PM	0	0	0	0	0	0	0	0	0	0	0	0	0
4/24/2024	3:45 PM	0	0	0	0	0	0	0	0	0	0	0	0	0
4/24/2024	4:00 PM	0	0	0	0	0	0	0	0	0	0	0	0	0
4/24/2024	4:15 PM	0	0	0	0	0	0	0	0	0	0	0	0	0
4/24/2024	4:30 PM	0	0	0	0	0	0	0	0	0	0	0	0	0
4/24/2024	4:45 PM	0	0	0	0	0	0	0	0	0	0	0	0	0
4/24/2024	5:00 PM	0	0	0	0	0	0	0	0	0	0	0	0	0
4/24/2024	5:15 PM	0	0	0	0	0	0	0	0	0	0	0	0	0
4/24/2024	5:30 PM	0	0	0	0	0	0	0	0	0	0	0	0	0
4/24/2024	5:45 PM	0	0	0	0	0	0	0	0	0	0	0	0	0
4/24/2024	6:00 PM	0	0	0	0	0	0	0	0	0	0	0	0	0
4/24/2024	6:15 PM	0	0	0	0	0	0	0	0	0	0	0	0	0
4/24/2024	6:30 PM	0	0	0	0	0	0	0	0	0	0	0	0	0
4/24/2024	6:45 PM	0	0	0	0	0	0	0	0	0	0	0	0	0
4/24/2024	7:00 PM	0	0	0	0	0	0	0	0	0	0	0	0	0
4/24/2024	7:15 PM	0	0	0	0	0	0	0	0	0	0	0	0	0
4/24/2024	7:30 PM	0	0	0	0	0	0	0	0	0	0	0	0	0
4/24/2024	7:45 PM	0	0	0	0	0	0	0	0	0	0	0	0	0
4/24/2024	8:00 PM	0	0	0	0	0	0	0	0	0	0	0	0	0
4/24/2024	8:15 PM	0	0	0	0	0	0	0	0	0	0	0	0	0
4/24/2024	8:30 PM	0	0	0	0	0	0	0	0	0	0	0	0	0
4/24/2024	8:45 PM	0	0	0	0	0	0	0	0	0	0	0	0	0
4/24/2024	9:00 PM	0	0	0	0	0	0	0	0	0	0	0	0	0
4/24/2024	9:15 PM	0	0	0	0	0	0	0	0	0	0	0	0	0
4/24/2024	9:30 PM	0	0	0	0	0	0	0	0	0	0	0	0	0
4/24/2024	9:45 PM	0	0	0	0	0	0	0	0	0	0	0	0	0
4/24/2024	10:00 PM	0	0	0	0	0	0	0	0	0	0	0	0	0
4/24/2024	10:15 PM	0	0	0	0	0	0	0	0	0	0	0	0	0
4/24/2024	10:30 PM	0	0	0	0	0	0	0	0	0	0	0	0	0
4/24/2024	10:45 PM	0	0	0	0	0	0	0	0	0	0	0	0	0
4/24/2024	11:00 PM	0	0	0	0	0	0	0	0	0	0	0	0	0
4/24/2024	11:15 PM	0	0	0	0	0	0	0	0	0	0	0	0	0
4/24/2024	11:30 PM	0	0	0	0	0	0	0	0	0	0	0	0	0
4/24/2024	11:45 PM	0	0	0	0	0	0	0	0	0	0	0	0	0

4/25/2024	12:00 AM	0	0	0	0	0	0	0	0	0	0	0	0	0
4/25/2024	12:15 AM	0	0	0	0	0	0	0	0	0	0	0	0	0
4/25/2024	12:30 AM	0	0	0	0	0	0	0	0	0	0	0	0	0
4/25/2024	12:45 AM	0	0	0	0	0	0	0	0	0	0	0	0	0
4/25/2024	1:00 AM	0	0	0	0	0	0	0	0	0	0	0	0	0
4/25/2024	1:15 AM	0	0	0	0	0	0	0	0	0	0	0	0	0
4/25/2024	1:30 AM	0	0	0	0	0	0	0	0	0	0	0	0	0
4/25/2024	1:45 AM	0	0	0	0	0	0	0	0	0	0	0	0	0
4/25/2024	2:00 AM	0	0	0	0	0	0	0	0	0	0	0	0	0
4/25/2024	2:15 AM	0	0	0	0	0	0	0	0	0	0	0	0	0
4/25/2024	2:30 AM	0	0	0	0	0	0	0	0	0	0	0	0	0
4/25/2024	2:45 AM	0	0	0	0	0	0	0	0	0	0	0	0	0
4/25/2024	3:00 AM	0	0	0	0	0	0	0	0	0	0	0	0	0
4/25/2024	3:15 AM	0	0	0	0	0	0	0	0	0	0	0	0	0
4/25/2024	3:30 AM	0	0	0	0	0	0	0	0	0	0	0	0	0
4/25/2024	3:45 AM	0	0	0	0	0	0	0	0	0	0	0	0	0
4/25/2024	4:00 AM	0	0	0	0	0	0	0	0	0	0	0	0	0
4/25/2024	4:15 AM	0	0	0	0	0	0	0	0	0	0	0	0	0
4/25/2024	4:30 AM	0	0	0	0	0	0	0	0	0	0	0	0	0
4/25/2024	4:45 AM	0	0	0	0	0	0	0	0	0	0	0	0	0
4/25/2024	5:00 AM	0	0	0	0	0	0	0	0	0	0	0	0	0
4/25/2024	5:15 AM	0	0	0	0	0	0	0	0	0	0	0	0	0
4/25/2024	5:30 AM	0	0	0	0	0	0	0	0	0	0	0	0	0
4/25/2024	5:45 AM	0	0	0	0	0	0	0	0	0	0	0	0	0
4/25/2024	6:00 AM	0	0	0	0	0	0	0	0	0	0	0	0	0
4/25/2024	6:15 AM	0	0	0	0	0	0	0	0	0	0	0	0	0
4/25/2024	6:30 AM	0	0	0	0	0	0	0	0	0	0	0	0	0
4/25/2024	6:45 AM	0	0	0	0	0	0	0	0	0	0	0	0	0
4/25/2024	7:00 AM	0	0	0	0	0	0	0	0	0	0	0	0	0
4/25/2024	7:15 AM	0	0	0	0	0	0	0	0	0	0	0	0	0
4/25/2024	7:30 AM	0	0	0	0	0	0	0	0	0	0	0	0	0
4/25/2024	7:45 AM	0	0	0	0	0	0	0	0	0	0	0	0	0
4/25/2024	8:00 AM	0	0	0	0	0	0	0	0	0	0	0	0	0
4/25/2024	8:15 AM	0	0	0	0	0	0	0	0	0	0	0	0	0
4/25/2024	8:30 AM	0	0	0	0	0	0	0	0	0	0	0	0	0
4/25/2024	8:45 AM	0	0	0	0	0	0	0	0	0	0	0	0	0
4/25/2024	9:00 AM	0	0	0	0	0	0	0	0	0	0	0	0	0
4/25/2024	9:15 AM	0	0	0	0	0	0	0	0	0	0	0	0	0
4/25/2024	9:30 AM	0	0	0	0	0	0	0	0	0	0	0	0	0
4/25/2024	9:45 AM	0	0	0	0	0	0	0	0	0	0	0	0	0
4/25/2024	10:00 AM	0	0	0	0	0	0	0	0	0	0	0	0	0
4/25/2024	10:15 AM	0	0	0	0	0	0	0	0	0	0	0	0	0
4/25/2024	10:30 AM	0	0	0	0	0	0	0	0	0	0	0	0	0
4/25/2024	10:45 AM	0	0	0	0	0	0	0	0	0	0	0	0	0
4/25/2024	11:00 AM	0	0	0	0	0	0	0	0	0	0	0	0	0
4/25/2024	11:15 AM	0	0	0	0	0	0	0	0	0	0	0	0	0
4/25/2024	11:30 AM	0	0	0	0	0	0	0	0	0	0	0	0	0
4/25/2024	11:45 AM	0	0	0	0	0	0	0	0	0	0	0	0	0
4/25/2024	12:00 PM	0	0	0	0	0	0	0	0	0	0	0	0	0
4/25/2024	12:15 PM	0	0	0	0	0	0	0	0	0	0	0	0	0
4/25/2024	12:30 PM	0	0	0	0	0	0	0	0	0	0	0	0	0
4/25/2024	12:45 PM	0	0	0	0	0	0	0	0	0	0	0	0	0
4/25/2024	1:00 PM	0	0	0	0	0	0	0	0	0	0	0	0	0
4/25/2024	1:15 PM	0	0	0	0	0	0	0	0	0	0	0	0	0
4/25/2024	1:30 PM	0	0	0	0	0	0	0	0	0	0	0	0	0
4/25/2024	1:45 PM	0	0	0	0	0	0	0	0	0	0	0	0	0
4/25/2024	2:00 PM	0	0	0	0	0	0	0	0	0	0	0	0	0
4/25/2024	2:15 PM	0	0	0	0	0	0	0	0	0	0	0	0	0
4/25/2024	2:30 PM	0	0	0	0	0	0	0	0	0	0	0	0	0
4/25/2024	2:45 PM	0	0	0	0	0	0	0	0	0	0	0	0	0
4/25/2024	3:00 PM	0	0	0	0	0	0	0	0	0	0	0	0	0
4/25/2024	3:15 PM	0	0	0	0	0	0	0	0	0	0	0	0	0
4/25/2024	3:30 PM	0	0	0	0	0	0	0	0	0	0	0	0	0
4/25/2024	3:45 PM	0	0	0	0	0	0	0	0	0	0	0	0	0
4/25/2024	4:00 PM	0	0	0	0	0	0	0	0	0	0	0	0	0
4/25/2024	4:15 PM	0	0	0	0	0	0	0	0	0	0	0	0	0
4/25/2024	4:30 PM	0	0	0	0	0	0	0	0	0	0	0	0	0
4/25/2024	4:45 PM	0	0	0	0	0	0	0	0	0	0	0	0	0
4/25/2024	5:00 PM	0	0	0	0	0	0	0	0	0	0	0	0	0
4/25/2024	5:15 PM	0	0	0	0	0	0	0	0	0	0	0	0	0
4/25/2024	5:30 PM	0	0	0	0	0	0	0	0	0	0	0	0	0
4/25/2024	5:45 PM	0	0	0	0	0	0	0	0	0	0	0	0	0
4/25/2024	6:00 PM	0	0	0	0	0	0	0	0	0	0	0	0	0
4/25/2024	6:15 PM	0	0	0	0	0	0	0	0	0	0	0	0	0
4/25/2024	6:30 PM	0	0	0	0	0	0	0	0	0	0	0	0	0
4/25/2024	6:45 PM	0	0	0	0	0	0	0	0	0	0	0	0	0
4/25/2024	7:00 PM	0	0	0	0	0	0	0	0	0	0	0	0	0
4/25/2024	7:15 PM	0	0	0	0	0	0	0	0	0	0	0	0	0
4/25/2024	7:30 PM	0	0	0	0	0	0	0	0	0	0	0	0	0
4/25/2024	7:45 PM	0	0	0	0	0	0	0	0	0	0	0	0	0
4/25/2024	8:00 PM	0	0	0	0	0	0	0	0	0	0	0	0	0
4/25/2024	8:15 PM	0	0	0	0	0	0	0	0	0	0	0	0	0
4/25/2024	8:30 PM	0	0	0	0	0	0	0	0	0	0	0	0	0
4/25/2024	8:45 PM	0	0	0	0	0	0	0	0	0	0	0	0	0
4/25/2024	9:00 PM	0	0	0	0	0	0	0	0	0	0	0	0	0
4/25/2024	9:15 PM	0	0	0	0	0	0	0	0	0	0	0	0	0
4/25/2024	9:30 PM	0	0	0	0	0	0	0	0	0	0	0	0	0
4/25/2024	9:45 PM	0	0	0	0	0	0	0	0	0	0	0	0	0
4/25/2024	10:00 PM	0	0	0	0	0	0	0	0	0	0	0	0	0
4/25/2024	10:15 PM	0	0	0	0	0	0	0	0	0	0	0	0	0
4/25/2024	10:30 PM	0	0	0	0	0	0	0	0	0	0	0	0	0
4/25/2024	10:45 PM	0	0	0	0	0	0	0	0	0	0	0	0	0
4/25/2024	11:00 PM	0	0	0	0	0	0	0	0	0	0	0	0	0
4/25/2024	11:15 PM	0	0	0	0	0	0	0	0	0	0	0	0	0
4/25/2024	11:30 PM	0	0	0	0	0	0	0	0	0	0	0	0	0
4/25/2024	11:45 PM	0	0	0	0	0	0	0	0	0	0	0	0	0

4/26/2024	12:00 AM	0	0	0	0	0	0	0	0	0	0	0	0	0
4/26/2024	12:15 AM	0	0	0	0	0	0	0	0	0	0	0	0	0
4/26/2024	12:30 AM	0	0	0	0	0	0	0	0	0	0	0	0	0
4/26/2024	12:45 AM	0	0	0	0	0	0	0	0	0	0	0	0	0
4/26/2024	1:00 AM	0	0	0	0	0	0	0	0	0	0	0	0	0
4/26/2024	1:15 AM	0	0	0	0	0	0	0	0	0	0	0	0	0
4/26/2024	1:30 AM	0	0	0	0	0	0	0	0	0	0	0	0	0
4/26/2024	1:45 AM	0	0	0	0	0	0	0	0	0	0	0	0	0
4/26/2024	2:00 AM	0	0	0	0	0	0	0	0	0	0	0	0	0
4/26/2024	2:15 AM	0	0	0	0	0	0	0	0	0	0	0	0	0
4/26/2024	2:30 AM	0	0	0	0	0	0	0	0	0	0	0	0	0
4/26/2024	2:45 AM	0	0	0	0	0	0	0	0	0	0	0	0	0
4/26/2024	3:00 AM	0	0	0	0	0	0	0	0	0	0	0	0	0
4/26/2024	3:15 AM	0	0	0	0	0	0	0	0	0	0	0	0	0
4/26/2024	3:30 AM	0	0	0	0	0	0	0	0	0	0	0	0	0
4/26/2024	3:45 AM	0	0	0	0	0	0	0	0	0	0	0	0	0
4/26/2024	4:00 AM	0	0	0	0	0	0	0	0	0	0	0	0	0
4/26/2024	4:15 AM	0	0	0	0	0	0	0	0	0	0	0	0	0
4/26/2024	4:30 AM	0	0	0	0	0	0	0	0	0	0	0	0	0
4/26/2024	4:45 AM	0	0	0	0	0	0	0	0	0	0	0	0	0
4/26/2024	5:00 AM	0	0	0	0	0	0	0	0	0	0	0	0	0
4/26/2024	5:15 AM	0	0	0	0	0	0	0	0	0	0	0	0	0
4/26/2024	5:30 AM	0	0	0	0	0	0	0	0	0	0	0	0	0
4/26/2024	5:45 AM	0	0	0	0	0	0	0	0	0	0	0	0	0
4/26/2024	6:00 AM	0	0	0	0	0	0	0	0	0	0	0	0	0
4/26/2024	6:15 AM	0	0	0	0	0	0	0	0	0	0	0	0	0
4/26/2024	6:30 AM	0	0	0	0	0	0	0	0	0	0	0	0	0
4/26/2024	6:45 AM	0	0	0	0	0	0	0	0	0	0	0	0	0
4/26/2024	7:00 AM	0	0	0	0	0	0	0	0	0	0	0	0	0
4/26/2024	7:15 AM	0	0	0	0	0	0	0	0	0	0	0	0	0
4/26/2024	7:30 AM	0	0	0	0	0	0	0	0	0	0	0	0	0
4/26/2024	7:45 AM	0	0	0	0	0	0	0	0	0	0	0	0	0
4/26/2024	8:00 AM	0	0	0	0	0	0	0	0	0	0	0	0	0
4/26/2024	8:15 AM	0	0	0	0	0	0	0	0	0	0	0	0	0
4/26/2024	8:30 AM	0	0	0	0	0	0	0	0	0	0	0	0	0
4/26/2024	8:45 AM	0	0	0	0	0	0	0	0	0	0	0	0	0
4/26/2024	9:00 AM	0	0	0	0	0	0	0	0	0	0	0	0	0
4/26/2024	9:15 AM	0	0	0	0	0	0	0	0	0	0	0	0	0
4/26/2024	9:30 AM	0	0	0	0	0	0	0	0	0	0	0	0	0
4/26/2024	9:45 AM	0	0	0	0	0	0	0	0	0	0	0	0	0
4/26/2024	10:00 AM	0	0	0	0	0	0	0	0	0	0	0	0	0
4/26/2024	10:15 AM	0	0	0	0	0	0	0	0	0	0	0	0	0
4/26/2024	10:30 AM	0	0	0	0	0	0	0	0	0	0	0	0	0
4/26/2024	10:45 AM	0	0	0	0	0	0	0	0	0	0	0	0	0
4/26/2024	11:00 AM	0	0	0	0	0	0	0	0	0	0	0	0	0
4/26/2024	11:15 AM	0	0	0	0	0	0	0	0	0	0	0	0	0
4/26/2024	11:30 AM	0	0	0	0	0	0	0	0	0	0	0	0	0
4/26/2024	11:45 AM	0	0	0	0	0	0	0	0	0	0	0	0	0
4/26/2024	12:00 PM	0	0	0	0	0	0	0	0	0	0	0	0	0
4/26/2024	12:15 PM	0	0	0	0	0	0	0	0	0	0	0	0	0
4/26/2024	12:30 PM	0	0	0	0	0	0	0	0	0	0	0	0	0
4/26/2024	12:45 PM	0	0	0	0	0	0	0	0	0	0	0	0	0
4/26/2024	1:00 PM	0	0	0	0	0	0	0	0	0	0	0	0	0
4/26/2024	1:15 PM	0	0	0	0	0	0	0	0	0	0	0	0	0
4/26/2024	1:30 PM	0	0	0	0	0	0	0	0	0	0	0	0	0
4/26/2024	1:45 PM	0	0	0	0	0	0	0	0	0	0	0	0	0
4/26/2024	2:00 PM	0	0	0	0	0	0	0	0	0	0	0	0	0
4/26/2024	2:15 PM	0	0	0	0	0	0	0	0	0	0	0	0	0
4/26/2024	2:30 PM	0	0	0	0	0	0	0	0	0	0	0	0	0
4/26/2024	2:45 PM	0	0	0	0	0	0	0	0	0	0	0	0	0
4/26/2024	3:00 PM	0	0	0	0	0	0	0	0	0	0	0	0	0
4/26/2024	3:15 PM	0	0	0	0	0	0	0	0	0	0	0	0	0
4/26/2024	3:30 PM	0	0	0	0	0	0	0	0	0	0	0	0	0
4/26/2024	3:45 PM	0	0	0	0	0	0	0	0	0	0	0	0	0
4/26/2024	4:00 PM	0	0	0	0	0	0	0	0	0	0	0	0	0
4/26/2024	4:15 PM	0	0	0	0	0	0	0	0	0	0	0	0	0
4/26/2024	4:30 PM	0	0	0	0	0	0	0	0	0	0	0	0	0
4/26/2024	4:45 PM	0	0	0	0	0	0	0	0	0	0	0	0	0
4/26/2024	5:00 PM	0	0	0	0	0	0	0	0	0	0	0	0	0
4/26/2024	5:15 PM	0	0	0	0	0	0	0	0	0	0	0	0	0
4/26/2024	5:30 PM	0	0	0	0	0	0	0	0	0	0	0	0	0
4/26/2024	5:45 PM	0	0	0	0	0	0	0	0	0	0	0	0	0
4/26/2024	6:00 PM	0	0	0	0	0	0	0	0	0	0	0	0	0
4/26/2024	6:15 PM	0	0	0	0	0	0	0	0	0	0	0	0	0
4/26/2024	6:30 PM	0	0	0	0	0	0	0	0	0	0	0	0	0
4/26/2024	6:45 PM	0	0	0	0	0	0	0	0	0	0	0	0	0
4/26/2024	7:00 PM	0	0	0	0	0	0	0	0	0	0	0	0	0
4/26/2024	7:15 PM	0	0	0	0	0	0	0	0	0	0	0	0	0
4/26/2024	7:30 PM	0	0	0	0	0	0	0	0	0	0	0	0	0
4/26/2024	7:45 PM	0	0	0	0	0	0	0	0	0	0	0	0	0
4/26/2024	8:00 PM	0	0	0	0	0	0	0	0	0	0	0	0	0
4/26/2024	8:15 PM	0	0	0	0	0	0	0	0	0	0	0	0	0
4/26/2024	8:30 PM	0	0	0	0	0	0	0	0	0	0	0	0	0
4/26/2024	8:45 PM	0	0	0	0	0	0	0	0	0	0	0	0	0
4/26/2024	9:00 PM	0	0	0	0	0	0	0	0	0	0	0	0	0
4/26/2024	9:15 PM	0	0	0	0	0	0	0	0	0	0	0	0	0
4/26/2024	9:30 PM	0	0	0	0	0	0	0	0	0	0	0	0	0
4/26/2024	9:45 PM	0	0	0	0	0	0	0	0	0	0	0	0	0
4/26/2024	10:00 PM	0	0	0	0	0	0	0	0	0	0	0	0	0
4/26/2024	10:15 PM	0	0	0	0	0	0	0	0	0	0	0	0	0
4/26/2024	10:30 PM	0	0	0	0	0	0	0	0	0	0	0	0	0
4/26/2024	10:45 PM	0	0	0	0	0	0	0	0	0	0	0	0	0
4/26/2024	11:00 PM	0	0	0	0	0	0	0	0	0	0	0	0	0
4/26/2024	11:15 PM	0	0	0	0	0	0	0	0	0	0	0	0	0
4/26/2024	11:30 PM	0	0	0	0	0	0	0	0	0	0	0	0	0
4/26/2024	11:45 PM	0	0	0	0	0	0	0	0	0	0	0	0	0

4/27/2024	12:00 AM	0	0	0	0	0	0	0	0	0	0	0	0	0
4/27/2024	12:15 AM	0	0	0	0	0	0	0	0	0	0	0	0	0
4/27/2024	12:30 AM	0	0	0	0	0	0	0	0	0	0	0	0	0
4/27/2024	12:45 AM	0	0	0	0	0	0	0	0	0	0	0	0	0
4/27/2024	1:00 AM	0	0	0	0	0	0	0	0	0	0	0	0	0
4/27/2024	1:15 AM	0	0	0	0	0	0	0	0	0	0	0	0	0
4/27/2024	1:30 AM	0	0	0	0	0	0	0	0	0	0	0	0	0
4/27/2024	1:45 AM	0	0	0	0	0	0	0	0	0	0	0	0	0
4/27/2024	2:00 AM	0	0	0	0	0	0	0	0	0	0	0	0	0
4/27/2024	2:15 AM	0	0	0	0	0	0	0	0	0	0	0	0	0
4/27/2024	2:30 AM	0	0	0	0	0	0	0	0	0	0	0	0	0
4/27/2024	2:45 AM	0	0	0	0	0	0	0	0	0	0	0	0	0
4/27/2024	3:00 AM	0	0	0	0	0	0	0	0	0	0	0	0	0
4/27/2024	3:15 AM	0	0	0	0	0	0	0	0	0	0	0	0	0
4/27/2024	3:30 AM	0	0	0	0	0	0	0	0	0	0	0	0	0
4/27/2024	3:45 AM	0	0	0	0	0	0	0	0	0	0	0	0	0
4/27/2024	4:00 AM	0	0	0	0	0	0	0	0	0	0	0	0	0
4/27/2024	4:15 AM	0	0	0	0	0	0	0	0	0	0	0	0	0
4/27/2024	4:30 AM	0	0	0	0	0	0	0	0	0	0	0	0	0
4/27/2024	4:45 AM	0	0	0	0	0	0	0	0	0	0	0	0	0
4/27/2024	5:00 AM	0	0	0	0	0	0	0	0	0	0	0	0	0
4/27/2024	5:15 AM	0	0	0	0	0	0	0	0	0	0	0	0	0
4/27/2024	5:30 AM	0	0	0	0	0	0	0	0	0	0	0	0	0
4/27/2024	5:45 AM	0	0	0	0	0	0	0	0	0	0	0	0	0
4/27/2024	6:00 AM	0	0	0	0	0	0	0	0	0	0	0	0	0
4/27/2024	6:15 AM	0	0	0	0	0	0	0	0	0	0	0	0	0
4/27/2024	6:30 AM	0	0	0	0	0	0	0	0	0	0	0	0	0
4/27/2024	6:45 AM	0	0	0	0	0	0	0	0	0	0	0	0	0
4/27/2024	7:00 AM	0	0	0	0	0	0	0	0	0	0	0	0	0
4/27/2024	7:15 AM	0	0	0	0	0	0	0	0	0	0	0	0	0
4/27/2024	7:30 AM	0	0	0	0	0	0	0	0	0	0	0	0	0
4/27/2024	7:45 AM	0	0	0	0	0	0	0	0	0	0	0	0	0
4/27/2024	8:00 AM	0	0	0	0	0	0	0	0	0	0	0	0	0
4/27/2024	8:15 AM	0	0	0	0	0	0	0	0	0	0	0	0	0
4/27/2024	8:30 AM	0	0	0	0	0	0	0	0	0	0	0	0	0
4/27/2024	8:45 AM	0	0	0	0	0	0	0	0	0	0	0	0	0
4/27/2024	9:00 AM	0	0	0	0	0	0	0	0	0	0	0	0	0
4/27/2024	9:15 AM	0	0	0	0	0	0	0	0	0	0	0	0	0
4/27/2024	9:30 AM	0	0	0	0	0	0	0	0	0	0	0	0	0
4/27/2024	9:45 AM	0	0	0	0	0	0	0	0	0	0	0	0	0
4/27/2024	10:00 AM	0	0	0	0	0	0	0	0	0	0	0	0	0
4/27/2024	10:15 AM	0	0	0	0	0	0	0	0	0	0	0	0	0
4/27/2024	10:30 AM	0	0	0	0	0	0	0	0	0	0	0	0	0
4/27/2024	10:45 AM	0	0	0	0	0	0	0	0	0	0	0	0	0
4/27/2024	11:00 AM	0	0	0	0	0	0	0	0	0	0	0	0	0
4/27/2024	11:15 AM	0	0	0	0	0	0	0	0	0	0	0	0	0
4/27/2024	11:30 AM	0	0	0	0	0	0	0	0	0	0	0	0	0
4/27/2024	11:45 AM	0	0	0	0	0	0	0	0	0	0	0	0	0
4/27/2024	12:00 PM	0	0	0	0	0	0	0	0	0	0	0	0	0
4/27/2024	12:15 PM	0	0	0	0	0	0	0	0	0	0	0	0	0
4/27/2024	12:30 PM	0	0	0	0	0	0	0	0	0	0	0	0	0
4/27/2024	12:45 PM	0	0	0	0	0	0	0	0	0	0	0	0	0
4/27/2024	1:00 PM	0	0	0	0	0	0	0	0	0	0	0	0	0
4/27/2024	1:15 PM	0	0	0	0	0	0	0	0	0	0	0	0	0
4/27/2024	1:30 PM	0	0	0	0	0	0	0	0	0	0	0	0	0
4/27/2024	1:45 PM	0	0	0	0	0	0	0	0	0	0	0	0	0
4/27/2024	2:00 PM	0	0	0	0	0	0	0	0	0	0	0	0	0
4/27/2024	2:15 PM	0	0	0	0	0	0	0	0	0	0	0	0	0
4/27/2024	2:30 PM	0	0	0	0	0	0	0	0	0	0	0	0	0
4/27/2024	2:45 PM	0	0	0	0	0	0	0	0	0	0	0	0	0
4/27/2024	3:00 PM	0	0	0	0	0	0	0	0	0	0	0	0	0
4/27/2024	3:15 PM	0	0	0	0	0	0	0	0	0	0	0	0	0
4/27/2024	3:30 PM	0	0	0	0	0	0	0	0	0	0	0	0	0
4/27/2024	3:45 PM	0	0	0	0	0	0	0	0	0	0	0	0	0
4/27/2024	4:00 PM	0	0	0	0	0	0	0	0	0	0	0	0	0
4/27/2024	4:15 PM	0	0	0	0	0	0	0	0	0	0	0	0	0
4/27/2024	4:30 PM	0	0	0	0	0	0	0	0	0	0	0	0	0
4/27/2024	4:45 PM	0	0	0	0	0	0	0	0	0	0	0	0	0
4/27/2024	5:00 PM	0	0	0	0	0	0	0	0	0	0	0	0	0
4/27/2024	5:15 PM	0	0	0	0	0	0	0	0	0	0	0	0	0
4/27/2024	5:30 PM	0	0	0	0	0	0	0	0	0	0	0	0	0
4/27/2024	5:45 PM	0	0	0	0	0	0	0	0	0	0	0	0	0
4/27/2024	6:00 PM	0	0	0	0	0	0	0	0	0	0	0	0	0
4/27/2024	6:15 PM	0	0	0	0	0	0	0	0	0	0	0	0	0
4/27/2024	6:30 PM	0	0	0	0	0	0	0	0	0	0	0	0	0
4/27/2024	6:45 PM	0	0	0	0	0	0	0	0	0	0	0	0	0
4/27/2024	7:00 PM	0	0	0	0	0	0	0	0	0	0	0	0	0
4/27/2024	7:15 PM	0	0	0	0	0	0	0	0	0	0	0	0	0
4/27/2024	7:30 PM	0	0	0	0	0	0	0	0	0	0	0	0	0
4/27/2024	7:45 PM	0	0	0	0	0	0	0	0	0	0	0	0	0
4/27/2024	8:00 PM	0	0	0	0	0	0	0	0	0	0	0	0	0
4/27/2024	8:15 PM	0	0	0	0	0	0	0	0	0	0	0	0	0
4/27/2024	8:30 PM	0	0	0	0	0	0	0	0	0	0	0	0	0
4/27/2024	8:45 PM	0	0	0	0	0	0	0	0	0	0	0	0	0
4/27/2024	9:00 PM	0	0	0	0	0	0	0	0	0	0	0	0	0
4/27/2024	9:15 PM	0	0	0	0	0	0	0	0	0	0	0	0	0
4/27/2024	9:30 PM	0	0	0	0	0	0	0	0	0	0	0	0	0
4/27/2024	9:45 PM	0	0	0	0	0	0	0	0	0	0	0	0	0
4/27/2024	10:00 PM	0	0	0	0	0	0	0	0	0	0	0	0	0
4/27/2024	10:15 PM	0	0	0	0	0	0	0	0	0	0	0	0	0
4/27/2024	10:30 PM	0	0	0	0	0	0	0	0	0	0	0	0	0
4/27/2024	10:45 PM	0	0	0	0	0	0	0	0	0	0	0	0	0
4/27/2024	11:00 PM	0	0	0	0	0	0	0	0	0	0	0	0	0
4/27/2024	11:15 PM	0	0	0	0	0	0	0	0	0	0	0	0	0
4/27/2024	11:30 PM	0	0	0	0	0	0	0	0	0	0	0	0	0
4/27/2024	11:45 PM	0	0	0	0	0	0	0	0	0	0	0	0	0

EB
File Name:
Start Date: 4/21/2024
Start Time: 0
Site Code: 2
Station ID: 1
Location 1: I-126 E/Bound On-Ramp, west of I-26
Location 2:

Date	Time	1	2	3	4	5	6	7	8	9	10	11	12	13
4/21/2024	12:00 AM	0	58	9	0	0	0	0	0	0	0	0	0	0
4/21/2024	12:15 AM	0	58	8	0	0	0	0	0	0	0	0	0	0
4/21/2024	12:30 AM	0	42	6	0	0	0	0	0	0	0	0	0	0
4/21/2024	12:45 AM	0	47	7	0	0	0	0	0	0	0	0	0	0
4/21/2024	1:00 AM	0	45	7	0	0	0	0	0	0	0	0	0	0
4/21/2024	1:15 AM	0	29	6	0	0	0	0	0	0	0	0	0	0
4/21/2024	1:30 AM	0	33	6	0	0	0	0	0	0	0	0	0	0
4/21/2024	1:45 AM	0	24	4	0	0	0	0	0	0	0	0	0	0
4/21/2024	2:00 AM	0	23	4	0	0	0	0	0	0	0	0	0	0
4/21/2024	2:15 AM	0	28	4	0	0	0	0	0	0	0	0	0	0
4/21/2024	2:30 AM	0	22	4	0	0	0	0	0	0	0	0	0	0
4/21/2024	2:45 AM	0	20	3	0	0	0	0	0	0	0	0	0	0
4/21/2024	3:00 AM	0	22	3	0	0	0	0	0	0	0	0	0	0
4/21/2024	3:15 AM	0	15	3	0	0	0	0	0	0	0	0	0	0
4/21/2024	3:30 AM	0	15	4	0	0	0	0	0	0	0	0	0	0
4/21/2024	3:45 AM	0	13	5	0	0	0	0	0	0	0	0	0	0
4/21/2024	4:00 AM	0	12	6	0	0	0	0	0	1	0	0	0	0
4/21/2024	4:15 AM	0	13	6	0	0	0	0	0	1	0	0	0	0
4/21/2024	4:30 AM	0	11	4	0	0	0	0	0	1	0	0	0	0
4/21/2024	4:45 AM	0	14	4	0	0	0	0	0	1	0	0	0	0
4/21/2024	5:00 AM	0	15	3	0	0	0	0	0	0	0	0	0	0
4/21/2024	5:15 AM	0	16	3	0	0	0	0	0	0	0	0	0	0
4/21/2024	5:30 AM	0	27	5	0	0	0	0	0	0	0	0	0	0
4/21/2024	5:45 AM	0	33	6	0	0	0	0	0	0	0	0	0	0
4/21/2024	6:00 AM	0	39	8	0	1	0	0	0	0	0	0	0	0
4/21/2024	6:15 AM	0	53	9	0	1	0	0	0	0	0	0	0	0
4/21/2024	6:30 AM	0	61	9	0	1	0	0	0	0	0	0	0	0
4/21/2024	6:45 AM	0	74	10	0	2	0	0	0	0	0	0	0	0
4/21/2024	7:00 AM	0	77	9	0	2	0	0	0	0	0	0	0	0
4/21/2024	7:15 AM	0	76	9	0	2	0	0	0	0	0	0	0	0
4/21/2024	7:30 AM	0	72	11	0	2	0	0	0	0	0	0	0	0
4/21/2024	7:45 AM	0	68	15	0	2	0	0	0	0	0	0	0	0
4/21/2024	8:00 AM	0	81	19	0	1	0	0	0	0	0	0	0	0
4/21/2024	8:15 AM	0	95	21	0	2	0	0	1	1	0	0	0	0
4/21/2024	8:30 AM	0	105	22	0	2	0	0	1	1	0	0	0	0
4/21/2024	8:45 AM	0	108	20	0	1	0	0	1	1	0	0	0	0
4/21/2024	9:00 AM	0	109	18	0	1	0	0	1	1	0	0	0	0
4/21/2024	9:15 AM	0	106	17	0	0	0	0	0	0	0	0	0	0
4/21/2024	9:30 AM	0	113	15	0	1	0	0	0	0	0	0	0	0
4/21/2024	9:45 AM	0	117	10	0	1	0	0	0	0	0	0	0	0
4/21/2024	10:00 AM	0	117	12	0	1	0	0	0	0	0	0	0	0
4/21/2024	10:15 AM	0	126	14	0	1	0	0	0	0	0	0	0	0
4/21/2024	10:30 AM	0	126	14	0	0	0	0	0	0	0	0	0	0
4/21/2024	10:45 AM	0	144	20	0	0	0	0	0	0	0	0	0	0
4/21/2024	11:00 AM	0	159	20	0	0	0	0	0	0	0	0	0	0
4/21/2024	11:15 AM	0	155	22	0	0	0	0	0	0	0	0	0	0
4/21/2024	11:30 AM	0	168	25	0	0	0	0	0	0	0	0	0	0
4/21/2024	11:45 AM	0	173	27	0	0	0	0	0	0	0	0	0	0
4/21/2024	12:00 PM	0	193	25	0	2	0	0	0	0	0	0	0	0
4/21/2024	12:15 PM	0	200	20	0	2	0	0	0	0	0	0	0	0
4/21/2024	12:30 PM	0	206	18	0	2	0	0	0	0	0	0	0	0
4/21/2024	12:45 PM	0	196	18	0	2	0	0	0	0	0	0	0	0
4/21/2024	1:00 PM	0	185	19	0	0	0	0	0	0	0	0	0	0
4/21/2024	1:15 PM	1	185	20	0	0	0	0	0	0	0	0	0	0
4/21/2024	1:30 PM	1	170	25	0	0	0	0	0	0	0	0	0	0
4/21/2024	1:45 PM	1	174	25	0	1	0	0	0	0	0	0	0	0
4/21/2024	2:00 PM	1	156	24	0	1	0	0	0	0	0	0	0	0
4/21/2024	2:15 PM	0	160	24	0	1	0	0	0	0	0	0	0	0
4/21/2024	2:30 PM	0	164	19	0	2	0	0	0	0	0	0	0	0
4/21/2024	2:45 PM	0	172	17	0	1	0	0	0	0	0	0	0	0
4/21/2024	3:00 PM	0	175	21	0	1	0	0	0	0	0	0	0	0
4/21/2024	3:15 PM	0	164	25	0	1	0	0	0	0	0	0	0	0
4/21/2024	3:30 PM	0	158	23	0	0	0	0	0	0	0	0	0	0
4/21/2024	3:45 PM	0	138	20	0	0	0	0	0	0	0	0	0	0
4/21/2024	4:00 PM	0	135	16	0	1	0	0	0	0	0	0	0	0
4/21/2024	4:15 PM	0	139	13	0	1	0	0	0	0	0	0	0	0
4/21/2024	4:30 PM	0	143	16	0	4	0	0	0	1	0	0	0	0
4/21/2024	4:45 PM	0	151	16	0	5	0	0	0	1	0	0	0	0
4/21/2024	5:00 PM	0	155	14	0	4	0	0	0	1	0	0	0	0
4/21/2024	5:15 PM	0	158	13	0	4	0	0	0	1	0	0	0	0
4/21/2024	5:30 PM	0	163	11	0	1	0	0	0	0	0	0	0	0
4/21/2024	5:45 PM	1	158	12	0	2	0	0	0	0	0	0	0	0
4/21/2024	6:00 PM	1	146	15	0	3	0	0	0	0	0	0	0	0
4/21/2024	6:15 PM	1	142	17	0	4	0	0	0	0	0	0	0	0
4/21/2024	6:30 PM	1	133	19	0	5	0	0	0	0	0	0	0	0
4/21/2024	6:45 PM	0	135	21	0	4	0	0	0	0	0	0	0	0
4/21/2024	7:00 PM	0	142	20	0	4	0	0	0	0	0	0	0	0
4/21/2024	7:15 PM	0	135	17	0	3	0	0	0	0	0	0	0	0
4/21/2024	7:30 PM	0	125	13	0	2	0	0	0	0	0	0	0	0
4/21/2024	7:45 PM	0	115	9	0	1	0	0	0	0	0	0	0	0
4/21/2024	8:00 PM	0	101	7	0	0	0	0	0	0	0	0	0	0
4/21/2024	8:15 PM	0	88	6	0	0	0	0	0	0	0	0	0	0
4/21/2024	8:30 PM	0	80	6	0	0	0	0	0	0	0	0	0	0
4/21/2024	8:45 PM	0	72	7	0	0	0	0	0	0	0	0	0	0
4/21/2024	9:00 PM	0	72	6	0	0	0	0	0	0	0	0	0	0
4/21/2024	9:15 PM	0	73	6	0	0	0	0	0	0	0	0	0	0
4/21/2024	9:30 PM	0	66	6	0	0	0	0	0	0	0	0	0	0
4/21/2024	9:45 PM	0	65	5	0	0	0	0	0	0	0	0	0	0
4/21/2024	10:00 PM	0	58	5	0	0	0	0	0	0	0	0	0	0
4/21/2024	10:15 PM	0	55	5	0	0	0	0	0	0	0	0	0	0
4/21/2024	10:30 PM	0	52	4	0	0	0	0	0	0	0	0	0	0
4/21/2024	10:45 PM	0	39	2	0	0	0	0	0	0	0	0	0	0
4/21/2024	11:00 PM	0	32	1	0	0	0	0	0	0	0	0	0	0
4/21/2024	11:15 PM	0	22	2	0	0	0	0	0	0	0	0	0	0
4/21/2024	11:30 PM	0	21	3	0	0	0	0	0	0	0	0	0	0
4/21/2024	11:45 PM	0	18	3	0	0	0	0	0	0	0	0	0	0

4/22/2024	12:00 AM	0	18	4	0	0	0	0	0	0	0	0	0
4/22/2024	12:15 AM	0	21	4	0	1	0	0	0	0	0	0	0
4/22/2024	12:30 AM	0	20	3	0	1	0	0	0	0	0	0	0
4/22/2024	12:45 AM	0	22	3	0	2	0	0	0	0	0	0	0
4/22/2024	1:00 AM	0	18	2	0	2	0	0	0	0	0	0	0
4/22/2024	1:15 AM	0	12	0	0	1	0	0	0	1	0	0	0
4/22/2024	1:30 AM	0	8	0	0	1	0	0	0	1	0	0	0
4/22/2024	1:45 AM	0	6	1	0	0	0	0	0	1	0	0	0
4/22/2024	2:00 AM	0	8	1	0	1	0	0	0	1	0	0	0
4/22/2024	2:15 AM	0	9	2	0	1	0	0	0	0	0	0	0
4/22/2024	2:30 AM	0	8	2	0	1	0	0	0	0	0	0	0
4/22/2024	2:45 AM	0	10	2	0	1	0	0	0	0	0	0	0
4/22/2024	3:00 AM	0	10	4	0	0	0	0	0	0	0	0	0
4/22/2024	3:15 AM	0	12	4	0	1	0	0	0	0	0	0	0
4/22/2024	3:30 AM	0	17	8	0	1	0	0	0	0	0	0	0
4/22/2024	3:45 AM	0	19	11	0	1	0	0	0	0	0	0	0
4/22/2024	4:00 AM	0	26	10	0	1	0	0	0	0	0	0	0
4/22/2024	4:15 AM	0	34	12	0	1	0	0	0	0	0	0	0
4/22/2024	4:30 AM	0	44	11	0	1	0	0	0	0	0	0	0
4/22/2024	4:45 AM	0	64	11	0	3	0	0	0	0	0	0	0
4/22/2024	5:00 AM	0	82	12	0	3	0	0	0	0	0	0	0
4/22/2024	5:15 AM	0	94	10	0	3	0	0	0	1	0	0	0
4/22/2024	5:30 AM	0	106	11	0	3	0	0	0	1	0	0	0
4/22/2024	5:45 AM	0	128	20	0	2	0	0	0	1	0	0	0
4/22/2024	6:00 AM	0	146	37	0	2	0	0	0	2	0	0	0
4/22/2024	6:15 AM	0	164	52	0	2	0	0	0	1	0	0	0
4/22/2024	6:30 AM	0	185	63	0	2	0	0	1	2	0	0	0
4/22/2024	6:45 AM	0	207	65	0	4	0	0	2	2	0	0	0
4/22/2024	7:00 AM	0	218	59	1	5	1	0	3	1	0	0	0
4/22/2024	7:15 AM	0	220	57	1	5	1	0	3	1	0	0	0
4/22/2024	7:30 AM	0	223	52	1	6	1	0	2	0	0	0	0
4/22/2024	7:45 AM	0	216	48	1	7	1	0	1	0	1	0	0
4/22/2024	8:00 AM	0	204	50	1	7	1	0	1	1	1	0	0
4/22/2024	8:15 AM	0	208	51	1	10	1	0	4	1	2	0	0
4/22/2024	8:30 AM	0	196	53	1	13	2	0	4	4	2	0	0
4/22/2024	8:45 AM	0	184	60	1	12	2	0	5	4	1	0	0
4/22/2024	9:00 AM	0	183	56	2	13	1	0	4	3	1	0	0
4/22/2024	9:15 AM	0	187	53	3	13	1	0	1	5	0	0	0
4/22/2024	9:30 AM	0	203	57	3	12	0	0	2	2	0	0	0
4/22/2024	9:45 AM	0	201	51	4	10	1	0	2	3	0	0	0
4/22/2024	10:00 AM	0	208	62	2	9	1	0	2	4	0	0	0
4/22/2024	10:15 AM	0	205	73	2	6	1	0	2	3	0	0	0
4/22/2024	10:30 AM	0	206	78	2	5	1	0	1	4	0	0	0
4/22/2024	10:45 AM	0	221	76	1	6	0	0	1	3	0	0	0
4/22/2024	11:00 AM	0	238	71	1	7	0	0	1	3	0	0	0
4/22/2024	11:15 AM	0	261	60	0	7	0	0	1	5	0	0	0
4/22/2024	11:30 AM	0	263	50	1	6	0	0	2	5	0	0	0
4/22/2024	11:45 AM	0	266	46	1	5	0	0	3	5	0	0	0
4/22/2024	12:00 PM	0	269	45	1	7	0	0	4	4	0	0	0
4/22/2024	12:15 PM	0	259	52	1	9	0	0	5	1	0	0	0
4/22/2024	12:30 PM	1	269	50	1	9	0	0	5	0	0	0	0
4/22/2024	12:45 PM	1	270	54	2	11	0	0	3	1	0	0	0
4/22/2024	1:00 PM	1	271	56	2	8	0	0	5	1	0	0	0
4/22/2024	1:15 PM	1	277	49	2	6	0	0	5	1	0	0	0
4/22/2024	1:30 PM	0	268	54	1	7	0	0	5	1	0	0	0
4/22/2024	1:45 PM	0	271	59	1	7	0	0	6	0	0	0	0
4/22/2024	2:00 PM	0	285	53	2	8	0	0	3	1	0	0	0
4/22/2024	2:15 PM	0	297	55	2	11	0	0	3	2	0	0	0
4/22/2024	2:30 PM	0	337	56	2	11	1	0	2	2	0	0	0
4/22/2024	2:45 PM	0	364	65	2	10	1	0	2	2	0	0	0
4/22/2024	3:00 PM	0	363	69	3	8	2	0	2	2	0	0	0
4/22/2024	3:15 PM	0	404	88	3	8	2	0	1	1	0	0	0
4/22/2024	3:30 PM	0	424	88	3	7	2	0	1	1	0	0	0
4/22/2024	3:45 PM	0	458	98	2	8	2	0	0	3	0	0	0
4/22/2024	4:00 PM	0	487	111	0	8	1	0	0	2	0	0	0
4/22/2024	4:15 PM	0	538	110	0	7	1	0	0	3	0	0	0
4/22/2024	4:30 PM	0	598	127	0	7	1	0	0	3	0	0	0
4/22/2024	4:45 PM	0	593	111	0	4	1	0	0	2	0	0	0
4/22/2024	5:00 PM	0	552	92	0	6	1	1	0	4	0	0	0
4/22/2024	5:15 PM	0	452	72	0	8	1	1	0	3	0	0	0
4/22/2024	5:30 PM	0	342	50	0	7	0	1	0	4	0	0	0
4/22/2024	5:45 PM	0	265	41	0	9	0	1	0	3	0	0	0
4/22/2024	6:00 PM	0	235	42	0	8	0	0	0	1	0	0	0
4/22/2024	6:15 PM	0	208	43	0	3	0	0	0	1	0	0	0
4/22/2024	6:30 PM	0	183	42	0	3	0	0	0	0	0	0	0
4/22/2024	6:45 PM	0	156	40	0	1	0	0	0	0	0	0	0
4/22/2024	7:00 PM	0	169	39	0	0	0	0	0	0	0	0	0
4/22/2024	7:15 PM	1	154	33	0	0	0	0	0	1	0	0	0
4/22/2024	7:30 PM	1	135	26	0	0	0	0	0	1	0	0	0
4/22/2024	7:45 PM	1	170	34	0	2	0	0	0	1	0	0	0
4/22/2024	8:00 PM	1	143	30	0	4	0	0	0	1	0	0	0
4/22/2024	8:15 PM	0	132	28	0	4	0	0	0	2	0	0	0
4/22/2024	8:30 PM	0	139	32	0	7	0	0	0	2	0	0	0
4/22/2024	8:45 PM	0	100	22	0	7	0	0	0	3	0	0	0
4/22/2024	9:00 PM	0	94	22	0	6	1	0	0	3	0	0	0
4/22/2024	9:15 PM	0	93	22	0	9	1	0	0	1	0	0	0
4/22/2024	9:30 PM	0	81	18	0	6	1	0	0	1	0	0	0
4/22/2024	9:45 PM	0	82	17	0	4	1	0	0	0	0	0	0
4/22/2024	10:00 PM	1	75	15	0	4	0	0	0	0	0	0	0
4/22/2024	10:15 PM	1	71	13	0	1	0	0	0	0	0	0	0
4/22/2024	10:30 PM	1	65	12	0	1	0	0	0	0	0	0	0
4/22/2024	10:45 PM	1	57	9	0	1	0	0	0	0	0	0	0
4/22/2024	11:00 PM	0	55	7	0	0	0	0	0	0	0	0	0
4/22/2024	11:15 PM	0	53	5	0	0	0	0	0	0	0	0	0
4/22/2024	11:30 PM	0	46	6	0	1	0	0	0	0	0	0	0
4/22/2024	11:45 PM	0	39	7	0	1	0	0	0	0	0	0	0

4/23/2024	12:00 AM	0	32	8	0	1	0	0	0	0	0	0	0	0
4/23/2024	12:15 AM	0	27	8	0	1	0	0	0	1	0	0	0	0
4/23/2024	12:30 AM	0	23	9	0	0	0	0	0	1	0	0	0	0
4/23/2024	12:45 AM	0	23	9	0	0	0	0	0	1	0	0	0	0
4/23/2024	1:00 AM	0	18	6	0	0	0	0	0	1	0	0	0	0
4/23/2024	1:15 AM	0	14	6	0	0	0	0	0	0	0	0	0	0
4/23/2024	1:30 AM	0	12	5	0	0	0	0	0	0	0	0	0	0
4/23/2024	1:45 AM	0	9	5	0	0	0	0	0	0	0	0	0	0
4/23/2024	2:00 AM	0	8	5	0	0	0	0	0	0	0	0	0	0
4/23/2024	2:15 AM	0	5	5	0	0	0	0	0	1	0	0	0	0
4/23/2024	2:30 AM	0	5	5	0	0	0	0	0	2	0	0	0	0
4/23/2024	2:45 AM	0	10	4	0	1	0	0	0	2	0	0	0	0
4/23/2024	3:00 AM	0	15	4	0	1	0	0	0	2	0	0	0	0
4/23/2024	3:15 AM	0	21	4	0	1	0	0	0	3	0	0	0	0
4/23/2024	3:30 AM	0	24	3	0	1	0	0	0	2	0	0	0	0
4/23/2024	3:45 AM	0	26	5	0	0	0	0	0	2	0	0	0	0
4/23/2024	4:00 AM	0	32	7	0	0	0	0	0	2	0	0	0	0
4/23/2024	4:15 AM	0	34	8	0	0	0	0	0	0	0	0	0	0
4/23/2024	4:30 AM	0	47	10	0	0	0	0	0	0	0	0	0	0
4/23/2024	4:45 AM	0	75	11	0	1	1	0	0	0	0	0	0	0
4/23/2024	5:00 AM	0	94	13	0	1	1	0	0	1	0	0	0	0
4/23/2024	5:15 AM	0	121	16	0	3	1	0	0	1	0	0	0	0
4/23/2024	5:30 AM	0	138	18	0	3	1	0	0	1	0	0	0	0
4/23/2024	5:45 AM	0	152	17	0	2	0	0	0	1	0	0	0	0
4/23/2024	6:00 AM	0	169	23	0	4	0	0	0	1	0	0	0	0
4/23/2024	6:15 AM	0	189	25	0	3	0	0	0	1	0	0	0	0
4/23/2024	6:30 AM	0	214	26	0	5	0	0	0	1	0	0	0	0
4/23/2024	6:45 AM	0	247	41	0	6	1	0	0	2	0	0	0	0
4/23/2024	7:00 AM	0	261	45	0	5	1	0	0	1	0	0	0	0
4/23/2024	7:15 AM	0	260	46	0	5	1	0	0	1	0	0	0	0
4/23/2024	7:30 AM	0	250	51	0	5	1	0	1	3	0	0	0	0
4/23/2024	7:45 AM	0	214	46	0	6	0	0	1	2	0	0	0	0
4/23/2024	8:00 AM	0	195	54	0	12	0	0	1	2	0	0	0	0
4/23/2024	8:15 AM	0	180	56	0	11	0	0	1	3	0	0	0	0
4/23/2024	8:30 AM	0	189	66	0	10	1	0	2	1	0	0	0	0
4/23/2024	8:45 AM	0	189	62	0	9	1	0	2	2	0	0	0	0
4/23/2024	9:00 AM	0	209	54	0	4	2	0	3	2	0	0	0	0
4/23/2024	9:15 AM	0	209	53	0	5	2	0	4	2	0	0	0	0
4/23/2024	9:30 AM	0	203	54	1	6	2	0	2	2	0	0	0	0
4/23/2024	9:45 AM	0	208	61	1	7	2	0	2	1	0	0	0	0
4/23/2024	10:00 AM	0	186	70	2	7	1	0	2	1	1	0	0	0
4/23/2024	10:15 AM	1	208	72	2	7	1	0	1	0	1	0	0	0
4/23/2024	10:30 AM	1	214	62	2	6	0	0	3	0	1	0	0	0
4/23/2024	10:45 AM	1	220	59	2	4	0	0	3	1	1	0	0	0
4/23/2024	11:00 AM	1	236	53	1	5	0	0	2	2	0	0	0	0
4/23/2024	11:15 AM	0	236	60	1	4	0	0	2	2	0	0	0	0
4/23/2024	11:30 AM	0	251	64	2	4	0	0	0	2	0	0	0	0
4/23/2024	11:45 AM	0	256	62	2	5	1	0	0	2	0	0	0	0
4/23/2024	12:00 PM	0	261	56	2	2	1	0	0	2	0	0	0	0
4/23/2024	12:15 PM	0	268	54	2	6	1	0	0	2	0	0	0	0
4/23/2024	12:30 PM	0	302	60	0	10	1	0	0	2	0	0	0	0
4/23/2024	12:45 PM	0	310	66	3	11	2	0	0	2	0	0	0	0
4/23/2024	1:00 PM	0	319	71	3	11	2	0	0	1	0	0	0	0
4/23/2024	1:15 PM	0	325	67	3	10	2	0	1	1	0	0	0	0
4/23/2024	1:30 PM	0	308	64	3	8	2	0	1	1	0	0	0	0
4/23/2024	1:45 PM	0	333	61	0	6	0	0	1	2	0	0	0	0
4/23/2024	2:00 PM	0	361	53	0	11	0	0	1	2	0	0	0	0
4/23/2024	2:15 PM	0	387	70	1	9	0	0	0	2	0	0	0	0
4/23/2024	2:30 PM	1	396	66	3	7	0	0	1	2	0	0	0	0
4/23/2024	2:45 PM	1	392	73	3	7	0	0	1	0	0	0	0	0
4/23/2024	3:00 PM	1	381	91	3	5	0	0	1	1	0	0	0	0
4/23/2024	3:15 PM	1	395	95	5	5	0	0	2	1	0	0	0	0
4/23/2024	3:30 PM	0	431	103	3	5	0	0	1	1	0	0	0	0
4/23/2024	3:45 PM	0	493	108	3	10	1	0	1	2	0	0	0	0
4/23/2024	4:00 PM	0	541	115	3	9	1	0	1	1	0	0	0	0
4/23/2024	4:15 PM	0	617	109	0	10	1	0	0	1	0	0	0	0
4/23/2024	4:30 PM	0	661	123	1	10	1	0	0	1	0	0	0	0
4/23/2024	4:45 PM	0	647	131	1	7	2	0	0	1	0	0	0	0
4/23/2024	5:00 PM	1	612	123	1	8	2	0	1	2	0	0	0	0
4/23/2024	5:15 PM	1	516	116	1	9	2	0	2	2	0	0	0	0
4/23/2024	5:30 PM	1	402	84	0	9	2	0	2	3	0	0	0	0
4/23/2024	5:45 PM	1	316	58	0	8	0	0	2	2	0	0	0	0
4/23/2024	6:00 PM	0	271	45	0	5	0	0	1	1	0	0	0	0
4/23/2024	6:15 PM	0	220	31	0	3	0	0	0	1	0	0	0	0
4/23/2024	6:30 PM	0	193	30	0	2	0	0	0	0	0	0	0	0
4/23/2024	6:45 PM	0	175	27	0	3	0	0	0	0	0	0	0	0
4/23/2024	7:00 PM	0	175	17	0	6	0	0	0	0	0	0	0	0
4/23/2024	7:15 PM	0	178	17	0	6	0	0	0	0	0	0	0	0
4/23/2024	7:30 PM	0	172	20	0	6	0	0	0	0	0	0	0	0
4/23/2024	7:45 PM	0	163	21	0	4	0	0	0	0	0	0	0	0
4/23/2024	8:00 PM	0	123	24	0	3	0	0	0	0	0	0	0	0
4/23/2024	8:15 PM	0	98	24	0	2	0	0	0	0	0	0	0	0
4/23/2024	8:30 PM	0	95	24	0	2	0	0	0	0	0	0	0	0
4/23/2024	8:45 PM	0	79	24	0	2	0	0	0	0	0	0	0	0
4/23/2024	9:00 PM	0	80	24	0	0	0	0	0	0	0	0	0	0
4/23/2024	9:15 PM	0	72	24	0	0	0	0	0	0	0	0	0	0
4/23/2024	9:30 PM	0	60	20	0	0	0	0	0	0	0	0	0	0
4/23/2024	9:45 PM	0	66	21	0	0	0	0	0	0	0	0	0	0
4/23/2024	10:00 PM	0	62	20	0	0	0	0	0	0	0	0	0	0
4/23/2024	10:15 PM	0	68	19	0	0	0	0	0	0	0	0	0	0
4/23/2024	10:30 PM	0	58	19	0	0	0	0	0	0	0	0	0	0
4/23/2024	10:45 PM	0	50	15	0	0	0	0	0	0	0	0	0	0
4/23/2024	11:00 PM	0	43	13	0	0	0	0	0	0	0	0	0	0
4/23/2024	11:15 PM	0	28	9	0	0	0	0	0	0	0	0	0	0
4/23/2024	11:30 PM	0	26	9	0	0	0	0	0	0	0	0	0	0
4/23/2024	11:45 PM	0	18	7	0	0	0	0	0	0	0	0	0	0

4/24/2024	12:00 AM	0	18	8	0	0	0	0	0	0	0	0	0
4/24/2024	12:15 AM	0	18	9	0	0	0	0	0	0	0	0	0
4/24/2024	12:30 AM	0	18	9	0	0	0	0	0	0	0	0	0
4/24/2024	12:45 AM	0	19	10	0	0	0	0	0	0	0	0	0
4/24/2024	1:00 AM	0	17	9	0	0	0	0	0	0	0	0	0
4/24/2024	1:15 AM	0	16	8	0	0	0	0	0	0	0	0	0
4/24/2024	1:30 AM	0	16	6	0	0	0	0	0	0	0	0	0
4/24/2024	1:45 AM	0	17	6	0	0	0	0	0	0	0	0	0
4/24/2024	2:00 AM	0	17	4	0	0	0	0	0	0	0	0	0
4/24/2024	2:15 AM	0	17	4	0	0	0	0	0	1	0	0	0
4/24/2024	2:30 AM	0	14	3	0	0	0	0	0	1	0	0	0
4/24/2024	2:45 AM	0	14	2	0	0	0	0	0	1	0	0	0
4/24/2024	3:00 AM	0	13	3	0	0	0	0	0	2	0	0	0
4/24/2024	3:15 AM	0	11	2	0	0	0	0	0	1	0	0	0
4/24/2024	3:30 AM	0	19	5	0	0	0	0	0	1	0	0	0
4/24/2024	3:45 AM	0	21	6	0	0	0	0	0	1	0	0	0
4/24/2024	4:00 AM	0	24	8	0	0	0	0	0	0	0	0	0
4/24/2024	4:15 AM	0	31	11	0	0	0	0	0	0	0	0	0
4/24/2024	4:30 AM	0	31	12	0	0	0	0	0	0	0	0	0
4/24/2024	4:45 AM	0	46	15	0	1	0	0	0	1	0	0	0
4/24/2024	5:00 AM	0	58	18	0	1	0	0	0	1	0	0	0
4/24/2024	5:15 AM	0	74	21	0	3	0	0	0	1	0	0	0
4/24/2024	5:30 AM	0	106	21	0	3	0	0	0	1	0	0	0
4/24/2024	5:45 AM	0	131	28	0	2	0	0	0	0	0	0	0
4/24/2024	6:00 AM	0	168	30	0	4	0	0	0	0	0	0	0
4/24/2024	6:15 AM	0	190	35	0	4	0	0	0	0	0	0	0
4/24/2024	6:30 AM	0	212	54	0	4	1	0	0	0	0	0	0
4/24/2024	6:45 AM	0	247	58	1	6	1	0	0	0	0	0	0
4/24/2024	7:00 AM	0	264	70	1	5	1	0	0	0	1	0	0
4/24/2024	7:15 AM	1	285	76	1	5	1	0	0	3	1	0	0
4/24/2024	7:30 AM	1	286	83	2	7	0	0	1	3	1	0	0
4/24/2024	7:45 AM	1	271	90	2	6	0	0	1	4	1	0	0
4/24/2024	8:00 AM	1	260	86	3	7	1	0	2	4	0	0	0
4/24/2024	8:15 AM	0	252	80	3	7	1	0	2	1	0	0	0
4/24/2024	8:30 AM	0	238	63	3	5	1	0	2	2	0	0	0
4/24/2024	8:45 AM	0	217	60	2	4	1	0	4	1	0	0	0
4/24/2024	9:00 AM	0	207	58	1	3	0	0	3	1	0	0	0
4/24/2024	9:15 AM	0	195	64	1	2	0	0	3	1	0	0	0
4/24/2024	9:30 AM	0	198	64	0	3	0	0	2	0	0	0	0
4/24/2024	9:45 AM	0	203	59	1	8	0	0	0	0	0	0	0
4/24/2024	10:00 AM	0	212	60	2	8	0	0	0	0	0	0	0
4/24/2024	10:15 AM	1	244	56	2	8	1	0	0	0	0	0	0
4/24/2024	10:30 AM	1	254	61	2	8	1	0	0	2	0	0	0
4/24/2024	10:45 AM	1	280	59	1	6	2	0	0	2	0	0	0
4/24/2024	11:00 AM	1	294	60	1	7	2	0	0	4	1	0	0
4/24/2024	11:15 AM	1	292	70	2	9	2	0	1	4	1	0	0
4/24/2024	11:30 AM	1	282	64	3	10	2	0	1	2	1	0	0
4/24/2024	11:45 AM	1	287	69	3	7	2	0	3	2	1	0	0
4/24/2024	12:00 PM	1	293	67	2	9	2	0	3	2	0	0	0
4/24/2024	12:15 PM	0	284	55	2	10	2	0	2	2	1	0	0
4/24/2024	12:30 PM	0	293	61	1	9	2	0	2	2	1	0	0
4/24/2024	12:45 PM	0	287	59	2	12	2	0	1	3	1	0	0
4/24/2024	1:00 PM	0	273	58	2	9	2	0	2	1	1	0	0
4/24/2024	1:15 PM	0	283	70	2	7	1	0	3	1	0	0	0
4/24/2024	1:30 PM	0	296	66	2	7	2	0	3	2	0	0	0
4/24/2024	1:45 PM	0	309	67	1	6	2	0	3	1	0	0	0
4/24/2024	2:00 PM	0	314	67	1	6	3	0	2	1	0	0	0
4/24/2024	2:15 PM	0	299	62	0	5	4	0	1	2	0	0	0
4/24/2024	2:30 PM	0	305	61	0	5	4	0	1	1	0	0	0
4/24/2024	2:45 PM	0	292	63	1	6	3	0	0	1	0	0	0
4/24/2024	3:00 PM	0	317	74	2	6	3	0	1	3	0	0	0
4/24/2024	3:15 PM	0	391	88	2	6	2	0	1	2	0	0	0
4/24/2024	3:30 PM	0	449	99	3	9	2	0	1	2	0	0	0
4/24/2024	3:45 PM	0	514	106	2	6	2	0	1	2	0	0	0
4/24/2024	4:00 PM	1	561	109	1	8	1	0	1	0	0	0	0
4/24/2024	4:15 PM	1	608	109	1	9	1	0	2	1	0	0	0
4/24/2024	4:30 PM	2	609	109	0	6	1	0	2	1	0	0	0
4/24/2024	4:45 PM	2	604	116	0	7	1	0	2	1	1	0	0
4/24/2024	5:00 PM	1	551	106	0	6	3	0	2	1	1	0	0
4/24/2024	5:15 PM	1	433	92	0	6	3	0	1	0	1	0	0
4/24/2024	5:30 PM	0	357	76	0	7	2	0	1	0	1	0	0
4/24/2024	5:45 PM	0	280	51	0	6	2	0	1	0	0	0	0
4/24/2024	6:00 PM	0	237	42	0	8	0	0	0	0	0	0	0
4/24/2024	6:15 PM	0	204	34	0	7	0	0	0	0	0	0	0
4/24/2024	6:30 PM	0	192	35	0	5	0	0	0	0	0	0	0
4/24/2024	6:45 PM	1	185	30	0	6	0	0	0	0	0	0	0
4/24/2024	7:00 PM	1	177	34	0	3	0	0	0	1	0	0	0
4/24/2024	7:15 PM	1	191	34	0	3	0	0	0	2	0	0	0
4/24/2024	7:30 PM	1	182	31	0	4	0	0	0	2	0	0	0
4/24/2024	7:45 PM	0	159	38	0	5	0	0	0	2	0	0	0
4/24/2024	8:00 PM	0	150	34	0	4	0	0	0	1	0	0	0
4/24/2024	8:15 PM	0	134	32	0	3	0	0	0	0	0	0	0
4/24/2024	8:30 PM	0	119	36	0	2	0	0	0	0	0	0	0
4/24/2024	8:45 PM	0	121	33	0	1	0	0	0	0	0	0	0
4/24/2024	9:00 PM	0	122	34	0	2	0	0	0	0	0	0	0
4/24/2024	9:15 PM	0	107	32	0	2	0	0	0	0	0	0	0
4/24/2024	9:30 PM	0	105	32	0	3	0	0	0	0	0	0	0
4/24/2024	9:45 PM	1	91	31	0	2	0	0	0	1	0	0	0
4/24/2024	10:00 PM	1	77	27	0	1	0	0	0	1	0	0	0
4/24/2024	10:15 PM	1	78	29	0	1	0	0	0	2	0	0	0
4/24/2024	10:30 PM	1	61	21	0	1	0	0	0	2	0	0	0
4/24/2024	10:45 PM	0	57	18	0	1	0	0	0	1	0	0	0
4/24/2024	11:00 PM	0	47	16	0	1	0	0	0	1	0	0	0
4/24/2024	11:15 PM	0	38	10	0	1	0	0	0	0	0	0	0
4/24/2024	11:30 PM	0	36	9	0	0	0	0	0	0	0	0	0
4/24/2024	11:45 PM	0	30	6	0	0	1	0	0	0	0	0	0

4/25/2024	12:00 AM	0	28	3	0	0	1	0	0	0	0	0	0	0
4/25/2024	12:15 AM	0	22	2	0	0	1	0	0	0	0	0	0	0
4/25/2024	12:30 AM	0	15	2	0	0	1	0	0	0	0	0	0	0
4/25/2024	12:45 AM	0	12	3	0	0	1	0	0	0	0	0	0	0
4/25/2024	1:00 AM	0	11	4	0	0	1	0	0	0	0	0	0	0
4/25/2024	1:15 AM	0	15	3	1	0	1	0	0	0	0	0	0	0
4/25/2024	1:30 AM	0	16	3	1	0	1	0	0	0	0	0	0	0
4/25/2024	1:45 AM	0	16	4	1	0	0	0	0	0	0	0	0	0
4/25/2024	2:00 AM	0	13	3	1	1	0	0	0	0	0	0	0	0
4/25/2024	2:15 AM	0	8	4	0	1	0	0	0	1	0	0	0	0
4/25/2024	2:30 AM	0	8	3	0	1	0	0	0	1	0	0	0	0
4/25/2024	2:45 AM	0	12	1	0	2	0	0	0	1	0	0	0	0
4/25/2024	3:00 AM	0	17	1	1	2	0	0	0	2	0	0	0	0
4/25/2024	3:15 AM	0	28	1	1	2	0	0	0	2	0	0	0	0
4/25/2024	3:30 AM	0	37	2	1	2	0	0	0	2	0	0	0	0
4/25/2024	3:45 AM	0	39	3	1	2	0	0	0	2	0	0	0	0
4/25/2024	4:00 AM	0	48	5	0	1	0	0	0	1	0	0	0	0
4/25/2024	4:15 AM	0	44	7	0	2	0	0	0	0	0	0	0	0
4/25/2024	4:30 AM	0	50	6	0	4	0	0	0	0	0	0	0	0
4/25/2024	4:45 AM	0	70	7	0	4	0	0	0	0	0	0	0	0
4/25/2024	5:00 AM	0	85	7	0	5	0	0	0	1	0	0	0	0
4/25/2024	5:15 AM	0	104	6	0	6	0	0	0	1	0	0	0	0
4/25/2024	5:30 AM	0	116	12	0	5	0	0	0	1	0	0	0	0
4/25/2024	5:45 AM	0	131	14	0	4	0	0	0	2	0	0	0	0
4/25/2024	6:00 AM	0	153	22	0	3	0	0	0	1	0	0	0	0
4/25/2024	6:15 AM	0	181	29	0	2	0	0	0	1	0	0	0	0
4/25/2024	6:30 AM	0	210	39	0	1	0	0	0	1	0	0	0	0
4/25/2024	6:45 AM	0	229	51	0	3	0	0	0	0	0	0	0	0
4/25/2024	7:00 AM	1	251	51	0	4	0	0	1	1	0	0	0	0
4/25/2024	7:15 AM	1	250	53	0	4	0	0	1	1	0	0	0	0
4/25/2024	7:30 AM	1	252	54	0	5	0	0	1	1	0	0	0	0
4/25/2024	7:45 AM	1	255	56	0	4	0	0	1	2	0	0	0	0
4/25/2024	8:00 AM	0	251	57	1	4	0	0	0	1	0	0	0	0
4/25/2024	8:15 AM	0	249	60	1	3	0	0	0	1	0	0	0	0
4/25/2024	8:30 AM	0	236	61	1	3	0	0	0	1	0	0	0	0
4/25/2024	8:45 AM	0	219	55	1	3	0	0	0	1	0	0	0	0
4/25/2024	9:00 AM	0	200	62	0	6	0	0	0	2	0	0	0	0
4/25/2024	9:15 AM	0	211	55	0	6	0	0	0	3	0	0	0	0
4/25/2024	9:30 AM	0	212	48	0	5	0	0	0	5	0	0	0	0
4/25/2024	9:45 AM	0	219	55	1	6	0	0	0	4	0	0	0	0
4/25/2024	10:00 AM	1	236	53	2	3	0	0	0	4	0	0	0	0
4/25/2024	10:15 AM	1	236	67	2	4	1	0	0	3	0	0	0	0
4/25/2024	10:30 AM	1	239	73	2	5	1	0	0	2	0	0	0	0
4/25/2024	10:45 AM	1	250	70	1	3	1	0	2	2	0	0	0	0
4/25/2024	11:00 AM	0	252	70	2	3	2	0	2	1	0	0	0	0
4/25/2024	11:15 AM	0	259	65	2	3	2	0	2	1	0	0	0	0
4/25/2024	11:30 AM	0	278	64	2	4	3	0	2	2	0	0	0	0
4/25/2024	11:45 AM	0	273	63	2	4	3	0	0	2	0	0	0	0
4/25/2024	12:00 PM	0	281	62	0	3	2	0	1	2	0	0	0	0
4/25/2024	12:15 PM	0	275	57	2	2	1	0	1	2	0	0	0	0
4/25/2024	12:30 PM	0	288	51	2	4	0	0	1	0	0	0	0	0
4/25/2024	12:45 PM	0	297	54	3	7	0	0	2	1	0	0	0	0
4/25/2024	1:00 PM	0	290	49	3	9	1	0	1	2	0	0	0	0
4/25/2024	1:15 PM	0	292	54	1	11	1	0	1	2	0	0	0	0
4/25/2024	1:30 PM	0	299	63	1	10	1	0	2	2	0	0	0	0
4/25/2024	1:45 PM	0	310	73	0	8	1	0	2	1	0	0	0	0
4/25/2024	2:00 PM	0	308	85	0	7	1	0	2	0	0	0	0	0
4/25/2024	2:15 PM	0	332	90	1	5	2	0	2	0	0	0	0	0
4/25/2024	2:30 PM	1	322	88	3	3	2	0	1	1	0	0	0	0
4/25/2024	2:45 PM	1	339	75	3	4	3	0	1	1	0	0	0	0
4/25/2024	3:00 PM	1	348	75	3	5	4	0	1	2	0	0	0	0
4/25/2024	3:15 PM	1	385	78	2	8	5	0	3	2	0	0	0	0
4/25/2024	3:30 PM	0	434	83	0	8	5	0	4	1	0	0	0	0
4/25/2024	3:45 PM	1	486	94	0	7	5	0	3	2	0	0	0	0
4/25/2024	4:00 PM	1	546	98	0	8	3	0	3	1	0	0	0	0
4/25/2024	4:15 PM	2	598	94	0	5	2	0	2	1	0	0	0	0
4/25/2024	4:30 PM	2	628	100	1	5	2	0	1	1	0	0	0	0
4/25/2024	4:45 PM	1	618	96	1	5	1	0	1	1	0	0	0	0
4/25/2024	5:00 PM	1	592	95	1	2	1	0	1	1	0	0	0	0
4/25/2024	5:15 PM	1	493	92	1	3	1	0	0	1	0	0	0	0
4/25/2024	5:30 PM	1	407	74	0	3	1	0	0	1	0	0	0	0
4/25/2024	5:45 PM	1	321	58	0	4	1	0	0	0	0	0	0	0
4/25/2024	6:00 PM	1	253	44	0	5	1	0	0	0	0	0	0	0
4/25/2024	6:15 PM	0	215	32	0	4	0	0	0	0	0	0	0	0
4/25/2024	6:30 PM	0	213	32	0	3	0	0	0	0	0	0	0	0
4/25/2024	6:45 PM	1	204	35	0	1	0	0	1	0	0	0	0	0
4/25/2024	7:00 PM	1	206	30	0	1	0	0	1	0	0	0	0	0
4/25/2024	7:15 PM	1	209	29	0	3	0	0	1	0	0	0	0	0
4/25/2024	7:30 PM	1	167	26	0	4	0	0	1	0	0	0	0	0
4/25/2024	7:45 PM	0	148	23	0	4	0	0	0	0	0	0	0	0
4/25/2024	8:00 PM	0	122	19	0	3	0	0	0	0	0	0	0	0
4/25/2024	8:15 PM	0	97	19	0	1	0	0	0	0	0	0	0	0
4/25/2024	8:30 PM	0	96	16	0	1	0	0	0	0	0	0	0	0
4/25/2024	8:45 PM	0	85	11	0	1	0	0	0	0	0	0	0	0
4/25/2024	9:00 PM	0	86	12	0	1	0	0	0	0	0	0	0	0
4/25/2024	9:15 PM	1	87	10	0	1	0	0	0	0	0	0	0	0
4/25/2024	9:30 PM	1	74	9	0	0	0	0	0	0	0	0	0	0
4/25/2024	9:45 PM	1	74	12	0	0	0	0	0	0	0	0	0	0
4/25/2024	10:00 PM	1	66	14	0	2	0	0	0	0	0	0	0	0
4/25/2024	10:15 PM	0	63	17	0	2	0	0	0	0	0	0	0	0
4/25/2024	10:30 PM	0	60	17	0	2	0	0	0	0	0	0	0	0
4/25/2024	10:45 PM	0	53	17	0	2	0	0	0	0	0	0	0	0
4/25/2024	11:00 PM	0	47	13	0	0	0	0	0	0	0	0	0	0
4/25/2024	11:15 PM	0	29	8	0	0	0	0	0	0	0	0	0	0
4/25/2024	11:30 PM	0	17	5	0	0	0	0	0	0	0	0	0	0
4/25/2024	11:45 PM	0	8	1	0	0	0	0	0	0	0	0	0	0

4/26/2024	12:00 AM	0	22	6	0	0	0	0	0	0	0	0	0
4/26/2024	12:15 AM	0	18	5	0	0	0	0	0	0	0	0	0
4/26/2024	12:30 AM	0	15	3	0	0	0	0	0	0	0	0	0
4/26/2024	12:45 AM	0	14	4	0	0	0	0	0	0	0	0	0
4/26/2024	1:00 AM	0	13	4	0	0	0	0	0	0	0	0	0
4/26/2024	1:15 AM	0	15	3	0	0	0	0	0	0	0	0	0
4/26/2024	1:30 AM	0	18	4	0	0	0	0	0	0	0	0	0
4/26/2024	1:45 AM	0	14	2	0	0	0	0	0	0	0	0	0
4/26/2024	2:00 AM	0	9	1	0	0	0	0	1	0	0	0	0
4/26/2024	2:15 AM	0	7	1	0	0	0	0	1	0	0	0	0
4/26/2024	2:30 AM	0	7	2	0	0	0	0	2	0	0	0	0
4/26/2024	2:45 AM	0	12	3	0	1	0	0	2	0	0	0	0
4/26/2024	3:00 AM	0	15	5	0	1	0	0	1	0	0	0	0
4/26/2024	3:15 AM	0	18	6	0	1	0	0	1	0	0	0	0
4/26/2024	3:30 AM	0	17	6	0	1	0	0	0	0	0	0	0
4/26/2024	3:45 AM	0	17	7	0	0	0	0	0	0	0	0	0
4/26/2024	4:00 AM	0	29	8	0	0	0	0	0	0	0	0	0
4/26/2024	4:15 AM	0	36	11	0	0	0	0	0	0	0	0	0
4/26/2024	4:30 AM	0	45	13	0	0	0	0	1	0	0	0	0
4/26/2024	4:45 AM	0	54	17	0	0	1	0	1	0	0	0	0
4/26/2024	5:00 AM	0	60	19	0	0	1	0	1	0	0	0	0
4/26/2024	5:15 AM	0	73	22	0	1	1	0	1	0	0	0	0
4/26/2024	5:30 AM	0	87	23	0	2	1	0	0	0	1	0	0
4/26/2024	5:45 AM	0	108	25	0	2	0	0	0	0	1	0	0
4/26/2024	6:00 AM	0	141	27	0	2	0	0	0	0	1	0	0
4/26/2024	6:15 AM	0	170	27	0	1	0	0	0	0	1	0	0
4/26/2024	6:30 AM	0	189	26	0	2	1	0	0	0	2	0	0
4/26/2024	6:45 AM	0	227	22	1	5	1	0	0	0	2	0	0
4/26/2024	7:00 AM	1	238	26	1	6	1	0	2	1	2	0	0
4/26/2024	7:15 AM	1	234	25	1	12	2	0	2	2	2	0	0
4/26/2024	7:30 AM	1	237	34	2	12	1	0	3	2	0	0	0
4/26/2024	7:45 AM	1	227	44	1	10	1	0	3	2	0	0	0
4/26/2024	8:00 AM	0	213	41	1	10	2	0	1	1	0	0	0
4/26/2024	8:15 AM	0	213	41	1	7	1	0	2	2	0	0	0
4/26/2024	8:30 AM	0	218	44	0	8	1	0	1	2	0	0	0
4/26/2024	8:45 AM	0	202	42	0	7	1	0	1	2	0	0	0
4/26/2024	9:00 AM	0	203	43	0	7	0	0	1	2	0	0	0
4/26/2024	9:15 AM	0	197	49	1	5	0	0	0	0	0	0	0
4/26/2024	9:30 AM	0	201	46	2	2	0	0	0	0	0	0	0
4/26/2024	9:45 AM	0	209	47	3	2	0	0	2	0	0	0	0
4/26/2024	10:00 AM	1	221	61	3	3	0	0	2	0	0	0	0
4/26/2024	10:15 AM	1	242	65	3	6	0	0	2	2	0	0	0
4/26/2024	10:30 AM	1	262	67	3	7	0	0	2	4	0	0	0
4/26/2024	10:45 AM	1	266	67	2	8	0	0	0	4	0	0	0
4/26/2024	11:00 AM	0	263	60	3	6	1	0	0	4	0	0	0
4/26/2024	11:15 AM	0	295	61	4	3	1	0	1	2	0	0	0
4/26/2024	11:30 AM	0	289	62	5	5	1	0	1	0	0	0	0
4/26/2024	11:45 AM	0	302	68	5	6	1	0	1	1	0	0	0
4/26/2024	12:00 PM	0	314	73	4	10	0	0	2	1	0	0	0
4/26/2024	12:15 PM	0	309	71	2	10	0	0	1	2	0	0	0
4/26/2024	12:30 PM	0	318	71	0	7	0	0	1	2	0	0	0
4/26/2024	12:45 PM	0	326	62	0	6	1	0	1	2	0	0	0
4/26/2024	1:00 PM	0	328	53	1	3	1	0	0	2	0	0	0
4/26/2024	1:15 PM	0	327	57	1	3	2	0	0	1	0	0	0
4/26/2024	1:30 PM	0	335	61	1	3	3	0	0	1	0	0	0
4/26/2024	1:45 PM	0	350	77	1	5	2	0	0	1	0	0	0
4/26/2024	2:00 PM	1	375	78	0	5	2	0	0	2	0	0	0
4/26/2024	2:15 PM	1	374	75	1	6	3	0	0	2	0	0	0
4/26/2024	2:30 PM	1	377	68	2	6	2	0	1	2	0	0	0
4/26/2024	2:45 PM	1	384	66	2	5	2	0	1	3	0	0	0
4/26/2024	3:00 PM	0	367	72	2	4	3	0	2	2	0	0	0
4/26/2024	3:15 PM	0	399	88	1	2	2	0	2	2	0	0	0
4/26/2024	3:30 PM	1	415	97	0	2	2	0	1	2	0	0	0
4/26/2024	3:45 PM	1	436	94	0	6	2	0	2	0	0	0	0
4/26/2024	4:00 PM	1	468	99	0	8	1	0	2	0	0	0	0
4/26/2024	4:15 PM	1	503	92	0	9	0	0	2	0	0	0	0
4/26/2024	4:30 PM	0	504	88	0	10	0	0	3	2	0	0	0
4/26/2024	4:45 PM	0	470	76	1	5	0	0	2	2	0	0	0
4/26/2024	5:00 PM	0	426	61	1	4	0	0	1	3	0	0	0
4/26/2024	5:15 PM	2	349	48	1	3	0	0	1	3	0	0	0
4/26/2024	5:30 PM	2	294	37	1	3	0	0	0	1	0	0	0
4/26/2024	5:45 PM	2	269	36	0	4	0	0	0	1	0	0	0
4/26/2024	6:00 PM	2	244	34	0	5	0	0	0	0	0	0	0
4/26/2024	6:15 PM	0	219	28	0	5	0	0	0	0	0	0	0
4/26/2024	6:30 PM	0	210	26	0	4	0	0	0	0	0	0	0
4/26/2024	6:45 PM	0	185	24	0	4	0	0	0	0	0	0	0
4/26/2024	7:00 PM	1	186	25	0	2	0	0	0	0	0	0	0
4/26/2024	7:15 PM	1	176	25	0	2	0	0	0	0	0	0	0
4/26/2024	7:30 PM	1	173	27	0	2	0	0	0	0	0	0	0
4/26/2024	7:45 PM	1	173	29	0	0	0	0	0	0	0	0	0
4/26/2024	8:00 PM	0	148	25	0	0	0	0	0	0	0	0	0
4/26/2024	8:15 PM	0	131	25	0	2	0	0	0	0	0	0	0
4/26/2024	8:30 PM	0	127	26	0	2	0	0	0	0	0	0	0
4/26/2024	8:45 PM	0	129	27	0	3	0	0	0	0	0	0	0
4/26/2024	9:00 PM	0	146	29	0	3	0	0	0	0	0	0	0
4/26/2024	9:15 PM	0	164	30	0	2	0	0	0	0	0	0	0
4/26/2024	9:30 PM	0	144	25	0	2	0	0	0	0	0	0	0
4/26/2024	9:45 PM	0	125	20	0	1	0	0	0	0	0	0	0
4/26/2024	10:00 PM	0	107	17	0	2	0	0	0	0	0	0	0
4/26/2024	10:15 PM	0	93	15	0	1	0	0	0	0	0	0	0
4/26/2024	10:30 PM	0	93	16	0	1	0	0	0	1	0	0	0
4/26/2024	10:45 PM	0	89	16	0	1	0	0	0	1	0	0	0
4/26/2024	11:00 PM	0	82	15	0	0	0	0	0	1	0	0	0
4/26/2024	11:15 PM	0	51	10	0	0	0	0	0	1	0	0	0
4/26/2024	11:30 PM	0	34	6	0	0	0	0	0	0	0	0	0
4/26/2024	11:45 PM	0	15	2	0	0	0	0	0	0	0	0	0

4/27/2024	12:00 AM	0	30	5	0	0	0	0	1	0	0	0	0	0
4/27/2024	12:15 AM	0	28	5	0	0	0	0	0	0	0	0	0	0
4/27/2024	12:30 AM	1	28	3	0	0	0	0	0	0	0	0	0	0
4/27/2024	12:45 AM	1	27	2	0	0	0	0	0	0	0	0	0	0
4/27/2024	1:00 AM	1	26	3	0	0	0	0	0	0	0	0	0	0
4/27/2024	1:15 AM	1	25	2	0	0	0	0	0	0	0	0	0	0
4/27/2024	1:30 AM	0	24	1	0	0	0	0	0	0	0	0	0	0
4/27/2024	1:45 AM	0	26	1	0	2	0	0	0	0	0	0	0	0
4/27/2024	2:00 AM	0	26	0	0	2	0	0	0	1	0	0	0	0
4/27/2024	2:15 AM	0	24	1	0	2	0	0	0	1	0	0	0	0
4/27/2024	2:30 AM	0	21	1	0	2	0	0	0	1	0	0	0	0
4/27/2024	2:45 AM	0	20	2	0	0	0	0	0	1	0	0	0	0
4/27/2024	3:00 AM	0	25	3	0	1	0	0	0	0	0	0	0	0
4/27/2024	3:15 AM	0	24	3	0	1	0	0	0	0	0	0	0	0
4/27/2024	3:30 AM	0	24	4	0	1	0	0	0	0	0	0	0	0
4/27/2024	3:45 AM	0	28	3	0	1	0	0	0	0	0	0	0	0
4/27/2024	4:00 AM	0	26	3	0	0	0	0	0	0	0	0	0	0
4/27/2024	4:15 AM	0	29	3	0	0	0	0	0	0	0	0	0	0
4/27/2024	4:30 AM	0	33	3	0	1	0	0	0	0	0	0	0	0
4/27/2024	4:45 AM	0	34	3	0	1	0	0	0	0	0	0	0	0
4/27/2024	5:00 AM	0	34	2	0	2	0	0	0	0	0	0	0	0
4/27/2024	5:15 AM	0	39	3	0	3	0	0	0	0	0	0	0	0
4/27/2024	5:30 AM	0	43	8	0	3	1	0	0	0	0	0	0	0
4/27/2024	5:45 AM	0	53	12	0	3	1	0	0	0	0	0	0	0
4/27/2024	6:00 AM	0	74	17	0	2	1	0	0	0	0	0	0	0
4/27/2024	6:15 AM	0	84	21	0	1	1	0	0	0	0	0	0	0
4/27/2024	6:30 AM	0	102	19	0	0	0	0	0	0	0	0	0	0
4/27/2024	6:45 AM	0	103	20	0	0	0	0	0	0	0	0	0	0
4/27/2024	7:00 AM	0	117	20	0	0	0	0	0	1	0	0	0	0
4/27/2024	7:15 AM	1	124	20	0	0	1	0	0	1	0	0	0	0
4/27/2024	7:30 AM	1	124	20	0	3	1	0	0	1	0	0	0	0
4/27/2024	7:45 AM	1	127	21	0	3	1	0	0	1	0	0	0	0
4/27/2024	8:00 AM	1	120	21	0	3	1	0	0	1	0	0	0	0
4/27/2024	8:15 AM	0	129	20	0	3	1	0	1	1	0	0	0	0
4/27/2024	8:30 AM	0	137	24	0	0	1	0	1	2	0	0	0	0
4/27/2024	8:45 AM	1	156	25	0	1	1	0	1	2	0	0	0	0
4/27/2024	9:00 AM	1	165	32	0	1	1	0	1	1	0	0	0	0
4/27/2024	9:15 AM	1	159	35	0	3	0	0	0	1	0	0	0	0
4/27/2024	9:30 AM	1	162	38	0	4	0	0	0	0	0	0	0	0
4/27/2024	9:45 AM	0	168	40	0	4	0	0	0	0	0	0	0	0
4/27/2024	10:00 AM	0	167	35	0	4	0	0	0	1	0	0	0	0
4/27/2024	10:15 AM	0	182	39	0	2	0	0	0	1	0	0	0	0
4/27/2024	10:30 AM	0	190	38	0	2	0	0	0	1	0	0	0	0
4/27/2024	10:45 AM	0	198	33	0	1	0	0	0	1	0	0	0	0
4/27/2024	11:00 AM	0	212	33	0	2	0	0	0	1	0	0	0	0
4/27/2024	11:15 AM	0	241	34	0	3	0	0	0	1	0	0	0	0
4/27/2024	11:30 AM	1	245	32	0	3	0	0	0	1	0	0	0	0
4/27/2024	11:45 AM	1	237	33	0	4	0	0	1	1	0	0	0	0
4/27/2024	12:00 PM	1	233	35	0	3	0	0	1	0	0	0	0	0
4/27/2024	12:15 PM	1	223	36	0	2	0	0	1	0	0	0	0	0
4/27/2024	12:30 PM	0	218	35	0	1	0	0	1	0	0	0	0	0
4/27/2024	12:45 PM	0	242	37	0	0	0	0	0	0	0	0	0	0
4/27/2024	1:00 PM	0	247	38	0	0	0	0	0	0	0	0	0	0
4/27/2024	1:15 PM	0	232	34	0	2	0	0	0	0	0	0	0	0
4/27/2024	1:30 PM	0	250	36	0	2	0	0	0	0	0	0	0	0
4/27/2024	1:45 PM	0	240	40	0	2	0	0	0	0	0	0	0	0
4/27/2024	2:00 PM	0	251	41	0	2	0	0	1	0	0	0	0	0
4/27/2024	2:15 PM	0	276	38	0	0	0	0	1	0	0	0	0	0
4/27/2024	2:30 PM	0	285	39	0	1	0	0	1	0	0	0	0	0
4/27/2024	2:45 PM	0	285	46	0	1	0	0	1	0	0	0	0	0
4/27/2024	3:00 PM	0	290	38	2	1	1	0	0	0	0	0	0	0
4/27/2024	3:15 PM	0	267	48	2	1	1	0	0	0	0	0	0	0
4/27/2024	3:30 PM	0	249	45	2	0	1	0	0	0	0	0	0	0
4/27/2024	3:45 PM	0	243	36	2	1	1	0	0	0	0	0	0	0
4/27/2024	4:00 PM	0	248	42	0	2	0	0	1	0	0	0	0	0
4/27/2024	4:15 PM	0	236	31	0	4	0	0	1	0	0	0	0	0
4/27/2024	4:30 PM	0	256	31	0	4	0	0	1	0	0	0	0	0
4/27/2024	4:45 PM	0	254	29	0	4	0	0	2	0	0	0	0	0
4/27/2024	5:00 PM	0	219	29	0	5	0	0	2	0	0	0	0	0
4/27/2024	5:15 PM	0	227	31	0	4	0	0	2	0	0	0	0	0
4/27/2024	5:30 PM	0	206	32	0	5	0	0	2	0	0	0	0	0
4/27/2024	5:45 PM	0	198	32	0	4	0	0	1	0	0	0	0	0
4/27/2024	6:00 PM	0	198	30	0	3	0	0	0	0	0	0	0	0
4/27/2024	6:15 PM	0	189	25	0	2	0	0	0	0	0	0	0	0
4/27/2024	6:30 PM	0	177	23	0	2	0	0	0	0	0	0	0	0
4/27/2024	6:45 PM	0	179	23	0	2	0	0	0	0	0	0	0	0
4/27/2024	7:00 PM	0	194	20	0	2	0	0	0	0	0	0	0	0
4/27/2024	7:15 PM	0	188	27	0	4	0	0	0	0	0	0	0	0
4/27/2024	7:30 PM	0	176	23	0	5	0	0	0	0	0	0	0	0
4/27/2024	7:45 PM	0	149	19	0	5	0	0	0	0	0	0	0	0
4/27/2024	8:00 PM	0	120	17	0	5	0	0	0	0	0	0	0	0
4/27/2024	8:15 PM	0	106	9	0	4	0	0	0	0	0	0	0	0
4/27/2024	8:30 PM	0	110	17	0	2	0	0	0	0	0	0	0	0
4/27/2024	8:45 PM	0	117	21	0	2	0	0	0	0	0	0	0	0
4/27/2024	9:00 PM	0	113	28	0	1	0	0	0	0	0	0	0	0
4/27/2024	9:15 PM	0	124	29	0	0	0	0	0	0	0	0	0	0
4/27/2024	9:30 PM	0	115	24	0	0	0	0	0	0	0	0	0	0
4/27/2024	9:45 PM	0	110	24	0	0	0	0	0	0	0	0	0	0
4/27/2024	10:00 PM	0	97	17	0	1	0	0	0	1	0	0	0	0
4/27/2024	10:15 PM	0	83	15	0	1	0	0	0	1	0	0	0	0
4/27/2024	10:30 PM	0	66	12	0	1	0	0	0	1	0	0	0	0
4/27/2024	10:45 PM	0	59	7	0	1	0	0	0	1	0	0	0	0
4/27/2024	11:00 PM	0	61	6	0	1	0	0	0	0	0	0	0	0
4/27/2024	11:15 PM	0	43	5	0	1	0	0	0	0	0	0	0	0
4/27/2024	11:30 PM	0	33	3	0	1	0	0	0	0	0	0	0	0
4/27/2024	11:45 PM	0	16	1	0	1	0	0	0	0	0	0	0	0

WB
File Name:
Start Date: 4/21/2024
Start Time: 0
Site Code: 2
Station ID: 1
Location 1: I-126 E/Bound On-Ramp, west of I-26
Location 2:

Date	Time	1	2	3	4	5	6	7	8	9	10	11	12	13
4/21/2024	12:00 AM	0	0	0	0	0	0	0	0	0	0	0	0	0
4/21/2024	12:15 AM	0	0	0	0	0	0	0	0	0	0	0	0	0
4/21/2024	12:30 AM	0	0	0	0	0	0	0	0	0	0	0	0	0
4/21/2024	12:45 AM	0	0	0	0	0	0	0	0	0	0	0	0	0
4/21/2024	1:00 AM	0	0	0	0	0	0	0	0	0	0	0	0	0
4/21/2024	1:15 AM	0	0	0	0	0	0	0	0	0	0	0	0	0
4/21/2024	1:30 AM	0	0	0	0	0	0	0	0	0	0	0	0	0
4/21/2024	1:45 AM	0	0	0	0	0	0	0	0	0	0	0	0	0
4/21/2024	2:00 AM	0	0	0	0	0	0	0	0	0	0	0	0	0
4/21/2024	2:15 AM	0	0	0	0	0	0	0	0	0	0	0	0	0
4/21/2024	2:30 AM	0	0	0	0	0	0	0	0	0	0	0	0	0
4/21/2024	2:45 AM	0	0	0	0	0	0	0	0	0	0	0	0	0
4/21/2024	3:00 AM	0	0	0	0	0	0	0	0	0	0	0	0	0
4/21/2024	3:15 AM	0	0	0	0	0	0	0	0	0	0	0	0	0
4/21/2024	3:30 AM	0	0	0	0	0	0	0	0	0	0	0	0	0
4/21/2024	3:45 AM	0	0	0	0	0	0	0	0	0	0	0	0	0
4/21/2024	4:00 AM	0	0	0	0	0	0	0	0	0	0	0	0	0
4/21/2024	4:15 AM	0	0	0	0	0	0	0	0	0	0	0	0	0
4/21/2024	4:30 AM	0	0	0	0	0	0	0	0	0	0	0	0	0
4/21/2024	4:45 AM	0	0	0	0	0	0	0	0	0	0	0	0	0
4/21/2024	5:00 AM	0	0	0	0	0	0	0	0	0	0	0	0	0
4/21/2024	5:15 AM	0	0	0	0	0	0	0	0	0	0	0	0	0
4/21/2024	5:30 AM	0	0	0	0	0	0	0	0	0	0	0	0	0
4/21/2024	5:45 AM	0	0	0	0	0	0	0	0	0	0	0	0	0
4/21/2024	6:00 AM	0	0	0	0	0	0	0	0	0	0	0	0	0
4/21/2024	6:15 AM	0	0	0	0	0	0	0	0	0	0	0	0	0
4/21/2024	6:30 AM	0	0	0	0	0	0	0	0	0	0	0	0	0
4/21/2024	6:45 AM	0	0	0	0	0	0	0	0	0	0	0	0	0
4/21/2024	7:00 AM	0	0	0	0	0	0	0	0	0	0	0	0	0
4/21/2024	7:15 AM	0	0	0	0	0	0	0	0	0	0	0	0	0
4/21/2024	7:30 AM	0	0	0	0	0	0	0	0	0	0	0	0	0
4/21/2024	7:45 AM	0	0	0	0	0	0	0	0	0	0	0	0	0
4/21/2024	8:00 AM	0	0	0	0	0	0	0	0	0	0	0	0	0
4/21/2024	8:15 AM	0	0	0	0	0	0	0	0	0	0	0	0	0
4/21/2024	8:30 AM	0	0	0	0	0	0	0	0	0	0	0	0	0
4/21/2024	8:45 AM	0	0	0	0	0	0	0	0	0	0	0	0	0
4/21/2024	9:00 AM	0	0	0	0	0	0	0	0	0	0	0	0	0
4/21/2024	9:15 AM	0	0	0	0	0	0	0	0	0	0	0	0	0
4/21/2024	9:30 AM	0	0	0	0	0	0	0	0	0	0	0	0	0
4/21/2024	9:45 AM	0	0	0	0	0	0	0	0	0	0	0	0	0
4/21/2024	10:00 AM	0	0	0	0	0	0	0	0	0	0	0	0	0
4/21/2024	10:15 AM	0	0	0	0	0	0	0	0	0	0	0	0	0
4/21/2024	10:30 AM	0	0	0	0	0	0	0	0	0	0	0	0	0
4/21/2024	10:45 AM	0	0	0	0	0	0	0	0	0	0	0	0	0
4/21/2024	11:00 AM	0	0	0	0	0	0	0	0	0	0	0	0	0
4/21/2024	11:15 AM	0	0	0	0	0	0	0	0	0	0	0	0	0
4/21/2024	11:30 AM	0	0	0	0	0	0	0	0	0	0	0	0	0
4/21/2024	11:45 AM	0	0	0	0	0	0	0	0	0	0	0	0	0
4/21/2024	12:00 PM	0	0	0	0	0	0	0	0	0	0	0	0	0
4/21/2024	12:15 PM	0	0	0	0	0	0	0	0	0	0	0	0	0
4/21/2024	12:30 PM	0	0	0	0	0	0	0	0	0	0	0	0	0
4/21/2024	12:45 PM	0	0	0	0	0	0	0	0	0	0	0	0	0
4/21/2024	1:00 PM	0	0	0	0	0	0	0	0	0	0	0	0	0
4/21/2024	1:15 PM	0	0	0	0	0	0	0	0	0	0	0	0	0
4/21/2024	1:30 PM	0	0	0	0	0	0	0	0	0	0	0	0	0
4/21/2024	1:45 PM	0	0	0	0	0	0	0	0	0	0	0	0	0
4/21/2024	2:00 PM	0	0	0	0	0	0	0	0	0	0	0	0	0
4/21/2024	2:15 PM	0	0	0	0	0	0	0	0	0	0	0	0	0
4/21/2024	2:30 PM	0	0	0	0	0	0	0	0	0	0	0	0	0
4/21/2024	2:45 PM	0	0	0	0	0	0	0	0	0	0	0	0	0
4/21/2024	3:00 PM	0	0	0	0	0	0	0	0	0	0	0	0	0
4/21/2024	3:15 PM	0	0	0	0	0	0	0	0	0	0	0	0	0
4/21/2024	3:30 PM	0	0	0	0	0	0	0	0	0	0	0	0	0
4/21/2024	3:45 PM	0	0	0	0	0	0	0	0	0	0	0	0	0
4/21/2024	4:00 PM	0	0	0	0	0	0	0	0	0	0	0	0	0
4/21/2024	4:15 PM	0	0	0	0	0	0	0	0	0	0	0	0	0
4/21/2024	4:30 PM	0	0	0	0	0	0	0	0	0	0	0	0	0
4/21/2024	4:45 PM	0	0	0	0	0	0	0	0	0	0	0	0	0
4/21/2024	5:00 PM	0	0	0	0	0	0	0	0	0	0	0	0	0
4/21/2024	5:15 PM	0	0	0	0	0	0	0	0	0	0	0	0	0
4/21/2024	5:30 PM	0	0	0	0	0	0	0	0	0	0	0	0	0
4/21/2024	5:45 PM	0	0	0	0	0	0	0	0	0	0	0	0	0
4/21/2024	6:00 PM	0	0	0	0	0	0	0	0	0	0	0	0	0
4/21/2024	6:15 PM	0	0	0	0	0	0	0	0	0	0	0	0	0
4/21/2024	6:30 PM	0	0	0	0	0	0	0	0	0	0	0	0	0
4/21/2024	6:45 PM	0	0	0	0	0	0	0	0	0	0	0	0	0
4/21/2024	7:00 PM	0	0	0	0	0	0	0	0	0	0	0	0	0
4/21/2024	7:15 PM	0	0	0	0	0	0	0	0	0	0	0	0	0
4/21/2024	7:30 PM	0	0	0	0	0	0	0	0	0	0	0	0	0
4/21/2024	7:45 PM	0	0	0	0	0	0	0	0	0	0	0	0	0
4/21/2024	8:00 PM	0	0	0	0	0	0	0	0	0	0	0	0	0
4/21/2024	8:15 PM	0	0	0	0	0	0	0	0	0	0	0	0	0
4/21/2024	8:30 PM	0	0	0	0	0	0	0	0	0	0	0	0	0
4/21/2024	8:45 PM	0	0	0	0	0	0	0	0	0	0	0	0	0
4/21/2024	9:00 PM	0	0	0	0	0	0	0	0	0	0	0	0	0
4/21/2024	9:15 PM	0	0	0	0	0	0	0	0	0	0	0	0	0
4/21/2024	9:30 PM	0	0	0	0	0	0	0	0	0	0	0	0	0
4/21/2024	9:45 PM	0	0	0	0	0	0	0	0	0	0	0	0	0
4/21/2024	10:00 PM	0	0	0	0	0	0	0	0	0	0	0	0	0
4/21/2024	10:15 PM	0	0	0	0	0	0	0	0	0	0	0	0	0
4/21/2024	10:30 PM	0	0	0	0	0	0	0	0	0	0	0	0	0
4/21/2024	10:45 PM	0	0	0	0	0	0	0	0	0	0	0	0	0
4/21/2024	11:00 PM	0	0	0	0	0	0	0	0	0	0	0	0	0
4/21/2024	11:15 PM	0	0	0	0	0	0	0	0	0	0	0	0	0
4/21/2024	11:30 PM	0	0	0	0	0	0	0	0	0	0	0	0	0
4/21/2024	11:45 PM	0	0	0	0	0	0	0	0	0	0	0	0	0

4/22/2024	12:00 AM	0	0	0	0	0	0	0	0	0	0	0	0	0
4/22/2024	12:15 AM	0	0	0	0	0	0	0	0	0	0	0	0	0
4/22/2024	12:30 AM	0	0	0	0	0	0	0	0	0	0	0	0	0
4/22/2024	12:45 AM	0	0	0	0	0	0	0	0	0	0	0	0	0
4/22/2024	1:00 AM	0	0	0	0	0	0	0	0	0	0	0	0	0
4/22/2024	1:15 AM	0	0	0	0	0	0	0	0	0	0	0	0	0
4/22/2024	1:30 AM	0	0	0	0	0	0	0	0	0	0	0	0	0
4/22/2024	1:45 AM	0	0	0	0	0	0	0	0	0	0	0	0	0
4/22/2024	2:00 AM	0	0	0	0	0	0	0	0	0	0	0	0	0
4/22/2024	2:15 AM	0	0	0	0	0	0	0	0	0	0	0	0	0
4/22/2024	2:30 AM	0	0	0	0	0	0	0	0	0	0	0	0	0
4/22/2024	2:45 AM	0	0	0	0	0	0	0	0	0	0	0	0	0
4/22/2024	3:00 AM	0	0	0	0	0	0	0	0	0	0	0	0	0
4/22/2024	3:15 AM	0	0	0	0	0	0	0	0	0	0	0	0	0
4/22/2024	3:30 AM	0	0	0	0	0	0	0	0	0	0	0	0	0
4/22/2024	3:45 AM	0	0	0	0	0	0	0	0	0	0	0	0	0
4/22/2024	4:00 AM	0	0	0	0	0	0	0	0	0	0	0	0	0
4/22/2024	4:15 AM	0	0	0	0	0	0	0	0	0	0	0	0	0
4/22/2024	4:30 AM	0	0	0	0	0	0	0	0	0	0	0	0	0
4/22/2024	4:45 AM	0	0	0	0	0	0	0	0	0	0	0	0	0
4/22/2024	5:00 AM	0	0	0	0	0	0	0	0	0	0	0	0	0
4/22/2024	5:15 AM	0	0	0	0	0	0	0	0	0	0	0	0	0
4/22/2024	5:30 AM	0	0	0	0	0	0	0	0	0	0	0	0	0
4/22/2024	5:45 AM	0	0	0	0	0	0	0	0	0	0	0	0	0
4/22/2024	6:00 AM	0	0	0	0	0	0	0	0	0	0	0	0	0
4/22/2024	6:15 AM	0	0	0	0	0	0	0	0	0	0	0	0	0
4/22/2024	6:30 AM	0	0	0	0	0	0	0	0	0	0	0	0	0
4/22/2024	6:45 AM	0	0	0	0	0	0	0	0	0	0	0	0	0
4/22/2024	7:00 AM	0	0	0	0	0	0	0	0	0	0	0	0	0
4/22/2024	7:15 AM	0	0	0	0	0	0	0	0	0	0	0	0	0
4/22/2024	7:30 AM	0	0	0	0	0	0	0	0	0	0	0	0	0
4/22/2024	7:45 AM	0	0	0	0	0	0	0	0	0	0	0	0	0
4/22/2024	8:00 AM	0	0	0	0	0	0	0	0	0	0	0	0	0
4/22/2024	8:15 AM	0	0	0	0	0	0	0	0	0	0	0	0	0
4/22/2024	8:30 AM	0	0	0	0	0	0	0	0	0	0	0	0	0
4/22/2024	8:45 AM	0	0	0	0	0	0	0	0	0	0	0	0	0
4/22/2024	9:00 AM	0	0	0	0	0	0	0	0	0	0	0	0	0
4/22/2024	9:15 AM	0	0	0	0	0	0	0	0	0	0	0	0	0
4/22/2024	9:30 AM	0	0	0	0	0	0	0	0	0	0	0	0	0
4/22/2024	9:45 AM	0	0	0	0	0	0	0	0	0	0	0	0	0
4/22/2024	10:00 AM	0	0	0	0	0	0	0	0	0	0	0	0	0
4/22/2024	10:15 AM	0	0	0	0	0	0	0	0	0	0	0	0	0
4/22/2024	10:30 AM	0	0	0	0	0	0	0	0	0	0	0	0	0
4/22/2024	10:45 AM	0	0	0	0	0	0	0	0	0	0	0	0	0
4/22/2024	11:00 AM	0	0	0	0	0	0	0	0	0	0	0	0	0
4/22/2024	11:15 AM	0	0	0	0	0	0	0	0	0	0	0	0	0
4/22/2024	11:30 AM	0	0	0	0	0	0	0	0	0	0	0	0	0
4/22/2024	11:45 AM	0	0	0	0	0	0	0	0	0	0	0	0	0
4/22/2024	12:00 PM	0	0	0	0	0	0	0	0	0	0	0	0	0
4/22/2024	12:15 PM	0	0	0	0	0	0	0	0	0	0	0	0	0
4/22/2024	12:30 PM	0	0	0	0	0	0	0	0	0	0	0	0	0
4/22/2024	12:45 PM	0	0	0	0	0	0	0	0	0	0	0	0	0
4/22/2024	1:00 PM	0	0	0	0	0	0	0	0	0	0	0	0	0
4/22/2024	1:15 PM	0	0	0	0	0	0	0	0	0	0	0	0	0
4/22/2024	1:30 PM	0	0	0	0	0	0	0	0	0	0	0	0	0
4/22/2024	1:45 PM	0	0	0	0	0	0	0	0	0	0	0	0	0
4/22/2024	2:00 PM	0	0	0	0	0	0	0	0	0	0	0	0	0
4/22/2024	2:15 PM	0	0	0	0	0	0	0	0	0	0	0	0	0
4/22/2024	2:30 PM	0	0	0	0	0	0	0	0	0	0	0	0	0
4/22/2024	2:45 PM	0	0	0	0	0	0	0	0	0	0	0	0	0
4/22/2024	3:00 PM	0	0	0	0	0	0	0	0	0	0	0	0	0
4/22/2024	3:15 PM	0	0	0	0	0	0	0	0	0	0	0	0	0
4/22/2024	3:30 PM	0	0	0	0	0	0	0	0	0	0	0	0	0
4/22/2024	3:45 PM	0	0	0	0	0	0	0	0	0	0	0	0	0
4/22/2024	4:00 PM	0	0	0	0	0	0	0	0	0	0	0	0	0
4/22/2024	4:15 PM	0	0	0	0	0	0	0	0	0	0	0	0	0
4/22/2024	4:30 PM	0	0	0	0	0	0	0	0	0	0	0	0	0
4/22/2024	4:45 PM	0	0	0	0	0	0	0	0	0	0	0	0	0
4/22/2024	5:00 PM	0	0	0	0	0	0	0	0	0	0	0	0	0
4/22/2024	5:15 PM	0	0	0	0	0	0	0	0	0	0	0	0	0
4/22/2024	5:30 PM	0	0	0	0	0	0	0	0	0	0	0	0	0
4/22/2024	5:45 PM	0	0	0	0	0	0	0	0	0	0	0	0	0
4/22/2024	6:00 PM	0	0	0	0	0	0	0	0	0	0	0	0	0
4/22/2024	6:15 PM	0	0	0	0	0	0	0	0	0	0	0	0	0
4/22/2024	6:30 PM	0	0	0	0	0	0	0	0	0	0	0	0	0
4/22/2024	6:45 PM	0	0	0	0	0	0	0	0	0	0	0	0	0
4/22/2024	7:00 PM	0	0	0	0	0	0	0	0	0	0	0	0	0
4/22/2024	7:15 PM	0	0	0	0	0	0	0	0	0	0	0	0	0
4/22/2024	7:30 PM	0	0	0	0	0	0	0	0	0	0	0	0	0
4/22/2024	7:45 PM	0	0	0	0	0	0	0	0	0	0	0	0	0
4/22/2024	8:00 PM	0	0	0	0	0	0	0	0	0	0	0	0	0
4/22/2024	8:15 PM	0	0	0	0	0	0	0	0	0	0	0	0	0
4/22/2024	8:30 PM	0	0	0	0	0	0	0	0	0	0	0	0	0
4/22/2024	8:45 PM	0	0	0	0	0	0	0	0	0	0	0	0	0
4/22/2024	9:00 PM	0	0	0	0	0	0	0	0	0	0	0	0	0
4/22/2024	9:15 PM	0	0	0	0	0	0	0	0	0	0	0	0	0
4/22/2024	9:30 PM	0	0	0	0	0	0	0	0	0	0	0	0	0
4/22/2024	9:45 PM	0	0	0	0	0	0	0	0	0	0	0	0	0
4/22/2024	10:00 PM	0	0	0	0	0	0	0	0	0	0	0	0	0
4/22/2024	10:15 PM	0	0	0	0	0	0	0	0	0	0	0	0	0
4/22/2024	10:30 PM	0	0	0	0	0	0	0	0	0	0	0	0	0
4/22/2024	10:45 PM	0	0	0	0	0	0	0	0	0	0	0	0	0
4/22/2024	11:00 PM	0	0	0	0	0	0	0	0	0	0	0	0	0
4/22/2024	11:15 PM	0	0	0	0	0	0	0	0	0	0	0	0	0
4/22/2024	11:30 PM	0	0	0	0	0	0	0	0	0	0	0	0	0
4/22/2024	11:45 PM	0	0	0	0	0	0	0	0	0	0	0	0	0

4/23/2024	12:00 AM	0	0	0	0	0	0	0	0	0	0	0	0	0
4/23/2024	12:15 AM	0	0	0	0	0	0	0	0	0	0	0	0	0
4/23/2024	12:30 AM	0	0	0	0	0	0	0	0	0	0	0	0	0
4/23/2024	12:45 AM	0	0	0	0	0	0	0	0	0	0	0	0	0
4/23/2024	1:00 AM	0	0	0	0	0	0	0	0	0	0	0	0	0
4/23/2024	1:15 AM	0	0	0	0	0	0	0	0	0	0	0	0	0
4/23/2024	1:30 AM	0	0	0	0	0	0	0	0	0	0	0	0	0
4/23/2024	1:45 AM	0	0	0	0	0	0	0	0	0	0	0	0	0
4/23/2024	2:00 AM	0	0	0	0	0	0	0	0	0	0	0	0	0
4/23/2024	2:15 AM	0	0	0	0	0	0	0	0	0	0	0	0	0
4/23/2024	2:30 AM	0	0	0	0	0	0	0	0	0	0	0	0	0
4/23/2024	2:45 AM	0	0	0	0	0	0	0	0	0	0	0	0	0
4/23/2024	3:00 AM	0	0	0	0	0	0	0	0	0	0	0	0	0
4/23/2024	3:15 AM	0	0	0	0	0	0	0	0	0	0	0	0	0
4/23/2024	3:30 AM	0	0	0	0	0	0	0	0	0	0	0	0	0
4/23/2024	3:45 AM	0	0	0	0	0	0	0	0	0	0	0	0	0
4/23/2024	4:00 AM	0	0	0	0	0	0	0	0	0	0	0	0	0
4/23/2024	4:15 AM	0	0	0	0	0	0	0	0	0	0	0	0	0
4/23/2024	4:30 AM	0	0	0	0	0	0	0	0	0	0	0	0	0
4/23/2024	4:45 AM	0	0	0	0	0	0	0	0	0	0	0	0	0
4/23/2024	5:00 AM	0	0	0	0	0	0	0	0	0	0	0	0	0
4/23/2024	5:15 AM	0	0	0	0	0	0	0	0	0	0	0	0	0
4/23/2024	5:30 AM	0	0	0	0	0	0	0	0	0	0	0	0	0
4/23/2024	5:45 AM	0	0	0	0	0	0	0	0	0	0	0	0	0
4/23/2024	6:00 AM	0	0	0	0	0	0	0	0	0	0	0	0	0
4/23/2024	6:15 AM	0	0	0	0	0	0	0	0	0	0	0	0	0
4/23/2024	6:30 AM	0	0	0	0	0	0	0	0	0	0	0	0	0
4/23/2024	6:45 AM	0	0	0	0	0	0	0	0	0	0	0	0	0
4/23/2024	7:00 AM	0	0	0	0	0	0	0	0	0	0	0	0	0
4/23/2024	7:15 AM	0	0	0	0	0	0	0	0	0	0	0	0	0
4/23/2024	7:30 AM	0	0	0	0	0	0	0	0	0	0	0	0	0
4/23/2024	7:45 AM	0	0	0	0	0	0	0	0	0	0	0	0	0
4/23/2024	8:00 AM	0	0	0	0	0	0	0	0	0	0	0	0	0
4/23/2024	8:15 AM	0	0	0	0	0	0	0	0	0	0	0	0	0
4/23/2024	8:30 AM	0	0	0	0	0	0	0	0	0	0	0	0	0
4/23/2024	8:45 AM	0	0	0	0	0	0	0	0	0	0	0	0	0
4/23/2024	9:00 AM	0	0	0	0	0	0	0	0	0	0	0	0	0
4/23/2024	9:15 AM	0	0	0	0	0	0	0	0	0	0	0	0	0
4/23/2024	9:30 AM	0	0	0	0	0	0	0	0	0	0	0	0	0
4/23/2024	9:45 AM	0	0	0	0	0	0	0	0	0	0	0	0	0
4/23/2024	10:00 AM	0	0	0	0	0	0	0	0	0	0	0	0	0
4/23/2024	10:15 AM	0	0	0	0	0	0	0	0	0	0	0	0	0
4/23/2024	10:30 AM	0	0	0	0	0	0	0	0	0	0	0	0	0
4/23/2024	10:45 AM	0	0	0	0	0	0	0	0	0	0	0	0	0
4/23/2024	11:00 AM	0	0	0	0	0	0	0	0	0	0	0	0	0
4/23/2024	11:15 AM	0	0	0	0	0	0	0	0	0	0	0	0	0
4/23/2024	11:30 AM	0	0	0	0	0	0	0	0	0	0	0	0	0
4/23/2024	11:45 AM	0	0	0	0	0	0	0	0	0	0	0	0	0
4/23/2024	12:00 PM	0	0	0	0	0	0	0	0	0	0	0	0	0
4/23/2024	12:15 PM	0	0	0	0	0	0	0	0	0	0	0	0	0
4/23/2024	12:30 PM	0	0	0	0	0	0	0	0	0	0	0	0	0
4/23/2024	12:45 PM	0	0	0	0	0	0	0	0	0	0	0	0	0
4/23/2024	1:00 PM	0	0	0	0	0	0	0	0	0	0	0	0	0
4/23/2024	1:15 PM	0	0	0	0	0	0	0	0	0	0	0	0	0
4/23/2024	1:30 PM	0	0	0	0	0	0	0	0	0	0	0	0	0
4/23/2024	1:45 PM	0	0	0	0	0	0	0	0	0	0	0	0	0
4/23/2024	2:00 PM	0	0	0	0	0	0	0	0	0	0	0	0	0
4/23/2024	2:15 PM	0	0	0	0	0	0	0	0	0	0	0	0	0
4/23/2024	2:30 PM	0	0	0	0	0	0	0	0	0	0	0	0	0
4/23/2024	2:45 PM	0	0	0	0	0	0	0	0	0	0	0	0	0
4/23/2024	3:00 PM	0	0	0	0	0	0	0	0	0	0	0	0	0
4/23/2024	3:15 PM	0	0	0	0	0	0	0	0	0	0	0	0	0
4/23/2024	3:30 PM	0	0	0	0	0	0	0	0	0	0	0	0	0
4/23/2024	3:45 PM	0	0	0	0	0	0	0	0	0	0	0	0	0
4/23/2024	4:00 PM	0	0	0	0	0	0	0	0	0	0	0	0	0
4/23/2024	4:15 PM	0	0	0	0	0	0	0	0	0	0	0	0	0
4/23/2024	4:30 PM	0	0	0	0	0	0	0	0	0	0	0	0	0
4/23/2024	4:45 PM	0	0	0	0	0	0	0	0	0	0	0	0	0
4/23/2024	5:00 PM	0	0	0	0	0	0	0	0	0	0	0	0	0
4/23/2024	5:15 PM	0	0	0	0	0	0	0	0	0	0	0	0	0
4/23/2024	5:30 PM	0	0	0	0	0	0	0	0	0	0	0	0	0
4/23/2024	5:45 PM	0	0	0	0	0	0	0	0	0	0	0	0	0
4/23/2024	6:00 PM	0	0	0	0	0	0	0	0	0	0	0	0	0
4/23/2024	6:15 PM	0	0	0	0	0	0	0	0	0	0	0	0	0
4/23/2024	6:30 PM	0	0	0	0	0	0	0	0	0	0	0	0	0
4/23/2024	6:45 PM	0	0	0	0	0	0	0	0	0	0	0	0	0
4/23/2024	7:00 PM	0	0	0	0	0	0	0	0	0	0	0	0	0
4/23/2024	7:15 PM	0	0	0	0	0	0	0	0	0	0	0	0	0
4/23/2024	7:30 PM	0	0	0	0	0	0	0	0	0	0	0	0	0
4/23/2024	7:45 PM	0	0	0	0	0	0	0	0	0	0	0	0	0
4/23/2024	8:00 PM	0	0	0	0	0	0	0	0	0	0	0	0	0
4/23/2024	8:15 PM	0	0	0	0	0	0	0	0	0	0	0	0	0
4/23/2024	8:30 PM	0	0	0	0	0	0	0	0	0	0	0	0	0
4/23/2024	8:45 PM	0	0	0	0	0	0	0	0	0	0	0	0	0
4/23/2024	9:00 PM	0	0	0	0	0	0	0	0	0	0	0	0	0
4/23/2024	9:15 PM	0	0	0	0	0	0	0	0	0	0	0	0	0
4/23/2024	9:30 PM	0	0	0	0	0	0	0	0	0	0	0	0	0
4/23/2024	9:45 PM	0	0	0	0	0	0	0	0	0	0	0	0	0
4/23/2024	10:00 PM	0	0	0	0	0	0	0	0	0	0	0	0	0
4/23/2024	10:15 PM	0	0	0	0	0	0	0	0	0	0	0	0	0
4/23/2024	10:30 PM	0	0	0	0	0	0	0	0	0	0	0	0	0
4/23/2024	10:45 PM	0	0	0	0	0	0	0	0	0	0	0	0	0
4/23/2024	11:00 PM	0	0	0	0	0	0	0	0	0	0	0	0	0
4/23/2024	11:15 PM	0	0	0	0	0	0	0	0	0	0	0	0	0
4/23/2024	11:30 PM	0	0	0	0	0	0	0	0	0	0	0	0	0
4/23/2024	11:45 PM	0	0	0	0	0	0	0	0	0	0	0	0	0

4/24/2024	12:00 AM	0	0	0	0	0	0	0	0	0	0	0	0	0
4/24/2024	12:15 AM	0	0	0	0	0	0	0	0	0	0	0	0	0
4/24/2024	12:30 AM	0	0	0	0	0	0	0	0	0	0	0	0	0
4/24/2024	12:45 AM	0	0	0	0	0	0	0	0	0	0	0	0	0
4/24/2024	1:00 AM	0	0	0	0	0	0	0	0	0	0	0	0	0
4/24/2024	1:15 AM	0	0	0	0	0	0	0	0	0	0	0	0	0
4/24/2024	1:30 AM	0	0	0	0	0	0	0	0	0	0	0	0	0
4/24/2024	1:45 AM	0	0	0	0	0	0	0	0	0	0	0	0	0
4/24/2024	2:00 AM	0	0	0	0	0	0	0	0	0	0	0	0	0
4/24/2024	2:15 AM	0	0	0	0	0	0	0	0	0	0	0	0	0
4/24/2024	2:30 AM	0	0	0	0	0	0	0	0	0	0	0	0	0
4/24/2024	2:45 AM	0	0	0	0	0	0	0	0	0	0	0	0	0
4/24/2024	3:00 AM	0	0	0	0	0	0	0	0	0	0	0	0	0
4/24/2024	3:15 AM	0	0	0	0	0	0	0	0	0	0	0	0	0
4/24/2024	3:30 AM	0	0	0	0	0	0	0	0	0	0	0	0	0
4/24/2024	3:45 AM	0	0	0	0	0	0	0	0	0	0	0	0	0
4/24/2024	4:00 AM	0	0	0	0	0	0	0	0	0	0	0	0	0
4/24/2024	4:15 AM	0	0	0	0	0	0	0	0	0	0	0	0	0
4/24/2024	4:30 AM	0	0	0	0	0	0	0	0	0	0	0	0	0
4/24/2024	4:45 AM	0	0	0	0	0	0	0	0	0	0	0	0	0
4/24/2024	5:00 AM	0	0	0	0	0	0	0	0	0	0	0	0	0
4/24/2024	5:15 AM	0	0	0	0	0	0	0	0	0	0	0	0	0
4/24/2024	5:30 AM	0	0	0	0	0	0	0	0	0	0	0	0	0
4/24/2024	5:45 AM	0	0	0	0	0	0	0	0	0	0	0	0	0
4/24/2024	6:00 AM	0	0	0	0	0	0	0	0	0	0	0	0	0
4/24/2024	6:15 AM	0	0	0	0	0	0	0	0	0	0	0	0	0
4/24/2024	6:30 AM	0	0	0	0	0	0	0	0	0	0	0	0	0
4/24/2024	6:45 AM	0	0	0	0	0	0	0	0	0	0	0	0	0
4/24/2024	7:00 AM	0	0	0	0	0	0	0	0	0	0	0	0	0
4/24/2024	7:15 AM	0	0	0	0	0	0	0	0	0	0	0	0	0
4/24/2024	7:30 AM	0	0	0	0	0	0	0	0	0	0	0	0	0
4/24/2024	7:45 AM	0	0	0	0	0	0	0	0	0	0	0	0	0
4/24/2024	8:00 AM	0	0	0	0	0	0	0	0	0	0	0	0	0
4/24/2024	8:15 AM	0	0	0	0	0	0	0	0	0	0	0	0	0
4/24/2024	8:30 AM	0	0	0	0	0	0	0	0	0	0	0	0	0
4/24/2024	8:45 AM	0	0	0	0	0	0	0	0	0	0	0	0	0
4/24/2024	9:00 AM	0	0	0	0	0	0	0	0	0	0	0	0	0
4/24/2024	9:15 AM	0	0	0	0	0	0	0	0	0	0	0	0	0
4/24/2024	9:30 AM	0	0	0	0	0	0	0	0	0	0	0	0	0
4/24/2024	9:45 AM	0	0	0	0	0	0	0	0	0	0	0	0	0
4/24/2024	10:00 AM	0	0	0	0	0	0	0	0	0	0	0	0	0
4/24/2024	10:15 AM	0	0	0	0	0	0	0	0	0	0	0	0	0
4/24/2024	10:30 AM	0	0	0	0	0	0	0	0	0	0	0	0	0
4/24/2024	10:45 AM	0	0	0	0	0	0	0	0	0	0	0	0	0
4/24/2024	11:00 AM	0	0	0	0	0	0	0	0	0	0	0	0	0
4/24/2024	11:15 AM	0	0	0	0	0	0	0	0	0	0	0	0	0
4/24/2024	11:30 AM	0	0	0	0	0	0	0	0	0	0	0	0	0
4/24/2024	11:45 AM	0	0	0	0	0	0	0	0	0	0	0	0	0
4/24/2024	12:00 PM	0	0	0	0	0	0	0	0	0	0	0	0	0
4/24/2024	12:15 PM	0	0	0	0	0	0	0	0	0	0	0	0	0
4/24/2024	12:30 PM	0	0	0	0	0	0	0	0	0	0	0	0	0
4/24/2024	12:45 PM	0	0	0	0	0	0	0	0	0	0	0	0	0
4/24/2024	1:00 PM	0	0	0	0	0	0	0	0	0	0	0	0	0
4/24/2024	1:15 PM	0	0	0	0	0	0	0	0	0	0	0	0	0
4/24/2024	1:30 PM	0	0	0	0	0	0	0	0	0	0	0	0	0
4/24/2024	1:45 PM	0	0	0	0	0	0	0	0	0	0	0	0	0
4/24/2024	2:00 PM	0	0	0	0	0	0	0	0	0	0	0	0	0
4/24/2024	2:15 PM	0	0	0	0	0	0	0	0	0	0	0	0	0
4/24/2024	2:30 PM	0	0	0	0	0	0	0	0	0	0	0	0	0
4/24/2024	2:45 PM	0	0	0	0	0	0	0	0	0	0	0	0	0
4/24/2024	3:00 PM	0	0	0	0	0	0	0	0	0	0	0	0	0
4/24/2024	3:15 PM	0	0	0	0	0	0	0	0	0	0	0	0	0
4/24/2024	3:30 PM	0	0	0	0	0	0	0	0	0	0	0	0	0
4/24/2024	3:45 PM	0	0	0	0	0	0	0	0	0	0	0	0	0
4/24/2024	4:00 PM	0	0	0	0	0	0	0	0	0	0	0	0	0
4/24/2024	4:15 PM	0	0	0	0	0	0	0	0	0	0	0	0	0
4/24/2024	4:30 PM	0	0	0	0	0	0	0	0	0	0	0	0	0
4/24/2024	4:45 PM	0	0	0	0	0	0	0	0	0	0	0	0	0
4/24/2024	5:00 PM	0	0	0	0	0	0	0	0	0	0	0	0	0
4/24/2024	5:15 PM	0	0	0	0	0	0	0	0	0	0	0	0	0
4/24/2024	5:30 PM	0	0	0	0	0	0	0	0	0	0	0	0	0
4/24/2024	5:45 PM	0	0	0	0	0	0	0	0	0	0	0	0	0
4/24/2024	6:00 PM	0	0	0	0	0	0	0	0	0	0	0	0	0
4/24/2024	6:15 PM	0	0	0	0	0	0	0	0	0	0	0	0	0
4/24/2024	6:30 PM	0	0	0	0	0	0	0	0	0	0	0	0	0
4/24/2024	6:45 PM	0	0	0	0	0	0	0	0	0	0	0	0	0
4/24/2024	7:00 PM	0	0	0	0	0	0	0	0	0	0	0	0	0
4/24/2024	7:15 PM	0	0	0	0	0	0	0	0	0	0	0	0	0
4/24/2024	7:30 PM	0	0	0	0	0	0	0	0	0	0	0	0	0
4/24/2024	7:45 PM	0	0	0	0	0	0	0	0	0	0	0	0	0
4/24/2024	8:00 PM	0	0	0	0	0	0	0	0	0	0	0	0	0
4/24/2024	8:15 PM	0	0	0	0	0	0	0	0	0	0	0	0	0
4/24/2024	8:30 PM	0	0	0	0	0	0	0	0	0	0	0	0	0
4/24/2024	8:45 PM	0	0	0	0	0	0	0	0	0	0	0	0	0
4/24/2024	9:00 PM	0	0	0	0	0	0	0	0	0	0	0	0	0
4/24/2024	9:15 PM	0	0	0	0	0	0	0	0	0	0	0	0	0
4/24/2024	9:30 PM	0	0	0	0	0	0	0	0	0	0	0	0	0
4/24/2024	9:45 PM	0	0	0	0	0	0	0	0	0	0	0	0	0
4/24/2024	10:00 PM	0	0	0	0	0	0	0	0	0	0	0	0	0
4/24/2024	10:15 PM	0	0	0	0	0	0	0	0	0	0	0	0	0
4/24/2024	10:30 PM	0	0	0	0	0	0	0	0	0	0	0	0	0
4/24/2024	10:45 PM	0	0	0	0	0	0	0	0	0	0	0	0	0
4/24/2024	11:00 PM	0	0	0	0	0	0	0	0	0	0	0	0	0
4/24/2024	11:15 PM	0	0	0	0	0	0	0	0	0	0	0	0	0
4/24/2024	11:30 PM	0	0	0	0	0	0	0	0	0	0	0	0	0
4/24/2024	11:45 PM	0	0	0	0	0	0	0	0	0	0	0	0	0

4/25/2024	12:00 AM	0	0	0	0	0	0	0	0	0	0	0	0	0
4/25/2024	12:15 AM	0	0	0	0	0	0	0	0	0	0	0	0	0
4/25/2024	12:30 AM	0	0	0	0	0	0	0	0	0	0	0	0	0
4/25/2024	12:45 AM	0	0	0	0	0	0	0	0	0	0	0	0	0
4/25/2024	1:00 AM	0	0	0	0	0	0	0	0	0	0	0	0	0
4/25/2024	1:15 AM	0	0	0	0	0	0	0	0	0	0	0	0	0
4/25/2024	1:30 AM	0	0	0	0	0	0	0	0	0	0	0	0	0
4/25/2024	1:45 AM	0	0	0	0	0	0	0	0	0	0	0	0	0
4/25/2024	2:00 AM	0	0	0	0	0	0	0	0	0	0	0	0	0
4/25/2024	2:15 AM	0	0	0	0	0	0	0	0	0	0	0	0	0
4/25/2024	2:30 AM	0	0	0	0	0	0	0	0	0	0	0	0	0
4/25/2024	2:45 AM	0	0	0	0	0	0	0	0	0	0	0	0	0
4/25/2024	3:00 AM	0	0	0	0	0	0	0	0	0	0	0	0	0
4/25/2024	3:15 AM	0	0	0	0	0	0	0	0	0	0	0	0	0
4/25/2024	3:30 AM	0	0	0	0	0	0	0	0	0	0	0	0	0
4/25/2024	3:45 AM	0	0	0	0	0	0	0	0	0	0	0	0	0
4/25/2024	4:00 AM	0	0	0	0	0	0	0	0	0	0	0	0	0
4/25/2024	4:15 AM	0	0	0	0	0	0	0	0	0	0	0	0	0
4/25/2024	4:30 AM	0	0	0	0	0	0	0	0	0	0	0	0	0
4/25/2024	4:45 AM	0	0	0	0	0	0	0	0	0	0	0	0	0
4/25/2024	5:00 AM	0	0	0	0	0	0	0	0	0	0	0	0	0
4/25/2024	5:15 AM	0	0	0	0	0	0	0	0	0	0	0	0	0
4/25/2024	5:30 AM	0	0	0	0	0	0	0	0	0	0	0	0	0
4/25/2024	5:45 AM	0	0	0	0	0	0	0	0	0	0	0	0	0
4/25/2024	6:00 AM	0	0	0	0	0	0	0	0	0	0	0	0	0
4/25/2024	6:15 AM	0	0	0	0	0	0	0	0	0	0	0	0	0
4/25/2024	6:30 AM	0	0	0	0	0	0	0	0	0	0	0	0	0
4/25/2024	6:45 AM	0	0	0	0	0	0	0	0	0	0	0	0	0
4/25/2024	7:00 AM	0	0	0	0	0	0	0	0	0	0	0	0	0
4/25/2024	7:15 AM	0	0	0	0	0	0	0	0	0	0	0	0	0
4/25/2024	7:30 AM	0	0	0	0	0	0	0	0	0	0	0	0	0
4/25/2024	7:45 AM	0	0	0	0	0	0	0	0	0	0	0	0	0
4/25/2024	8:00 AM	0	0	0	0	0	0	0	0	0	0	0	0	0
4/25/2024	8:15 AM	0	0	0	0	0	0	0	0	0	0	0	0	0
4/25/2024	8:30 AM	0	0	0	0	0	0	0	0	0	0	0	0	0
4/25/2024	8:45 AM	0	0	0	0	0	0	0	0	0	0	0	0	0
4/25/2024	9:00 AM	0	0	0	0	0	0	0	0	0	0	0	0	0
4/25/2024	9:15 AM	0	0	0	0	0	0	0	0	0	0	0	0	0
4/25/2024	9:30 AM	0	0	0	0	0	0	0	0	0	0	0	0	0
4/25/2024	9:45 AM	0	0	0	0	0	0	0	0	0	0	0	0	0
4/25/2024	10:00 AM	0	0	0	0	0	0	0	0	0	0	0	0	0
4/25/2024	10:15 AM	0	0	0	0	0	0	0	0	0	0	0	0	0
4/25/2024	10:30 AM	0	0	0	0	0	0	0	0	0	0	0	0	0
4/25/2024	10:45 AM	0	0	0	0	0	0	0	0	0	0	0	0	0
4/25/2024	11:00 AM	0	0	0	0	0	0	0	0	0	0	0	0	0
4/25/2024	11:15 AM	0	0	0	0	0	0	0	0	0	0	0	0	0
4/25/2024	11:30 AM	0	0	0	0	0	0	0	0	0	0	0	0	0
4/25/2024	11:45 AM	0	0	0	0	0	0	0	0	0	0	0	0	0
4/25/2024	12:00 PM	0	0	0	0	0	0	0	0	0	0	0	0	0
4/25/2024	12:15 PM	0	0	0	0	0	0	0	0	0	0	0	0	0
4/25/2024	12:30 PM	0	0	0	0	0	0	0	0	0	0	0	0	0
4/25/2024	12:45 PM	0	0	0	0	0	0	0	0	0	0	0	0	0
4/25/2024	1:00 PM	0	0	0	0	0	0	0	0	0	0	0	0	0
4/25/2024	1:15 PM	0	0	0	0	0	0	0	0	0	0	0	0	0
4/25/2024	1:30 PM	0	0	0	0	0	0	0	0	0	0	0	0	0
4/25/2024	1:45 PM	0	0	0	0	0	0	0	0	0	0	0	0	0
4/25/2024	2:00 PM	0	0	0	0	0	0	0	0	0	0	0	0	0
4/25/2024	2:15 PM	0	0	0	0	0	0	0	0	0	0	0	0	0
4/25/2024	2:30 PM	0	0	0	0	0	0	0	0	0	0	0	0	0
4/25/2024	2:45 PM	0	0	0	0	0	0	0	0	0	0	0	0	0
4/25/2024	3:00 PM	0	0	0	0	0	0	0	0	0	0	0	0	0
4/25/2024	3:15 PM	0	0	0	0	0	0	0	0	0	0	0	0	0
4/25/2024	3:30 PM	0	0	0	0	0	0	0	0	0	0	0	0	0
4/25/2024	3:45 PM	0	0	0	0	0	0	0	0	0	0	0	0	0
4/25/2024	4:00 PM	0	0	0	0	0	0	0	0	0	0	0	0	0
4/25/2024	4:15 PM	0	0	0	0	0	0	0	0	0	0	0	0	0
4/25/2024	4:30 PM	0	0	0	0	0	0	0	0	0	0	0	0	0
4/25/2024	4:45 PM	0	0	0	0	0	0	0	0	0	0	0	0	0
4/25/2024	5:00 PM	0	0	0	0	0	0	0	0	0	0	0	0	0
4/25/2024	5:15 PM	0	0	0	0	0	0	0	0	0	0	0	0	0
4/25/2024	5:30 PM	0	0	0	0	0	0	0	0	0	0	0	0	0
4/25/2024	5:45 PM	0	0	0	0	0	0	0	0	0	0	0	0	0
4/25/2024	6:00 PM	0	0	0	0	0	0	0	0	0	0	0	0	0
4/25/2024	6:15 PM	0	0	0	0	0	0	0	0	0	0	0	0	0
4/25/2024	6:30 PM	0	0	0	0	0	0	0	0	0	0	0	0	0
4/25/2024	6:45 PM	0	0	0	0	0	0	0	0	0	0	0	0	0
4/25/2024	7:00 PM	0	0	0	0	0	0	0	0	0	0	0	0	0
4/25/2024	7:15 PM	0	0	0	0	0	0	0	0	0	0	0	0	0
4/25/2024	7:30 PM	0	0	0	0	0	0	0	0	0	0	0	0	0
4/25/2024	7:45 PM	0	0	0	0	0	0	0	0	0	0	0	0	0
4/25/2024	8:00 PM	0	0	0	0	0	0	0	0	0	0	0	0	0
4/25/2024	8:15 PM	0	0	0	0	0	0	0	0	0	0	0	0	0
4/25/2024	8:30 PM	0	0	0	0	0	0	0	0	0	0	0	0	0
4/25/2024	8:45 PM	0	0	0	0	0	0	0	0	0	0	0	0	0
4/25/2024	9:00 PM	0	0	0	0	0	0	0	0	0	0	0	0	0
4/25/2024	9:15 PM	0	0	0	0	0	0	0	0	0	0	0	0	0
4/25/2024	9:30 PM	0	0	0	0	0	0	0	0	0	0	0	0	0
4/25/2024	9:45 PM	0	0	0	0	0	0	0	0	0	0	0	0	0
4/25/2024	10:00 PM	0	0	0	0	0	0	0	0	0	0	0	0	0
4/25/2024	10:15 PM	0	0	0	0	0	0	0	0	0	0	0	0	0
4/25/2024	10:30 PM	0	0	0	0	0	0	0	0	0	0	0	0	0
4/25/2024	10:45 PM	0	0	0	0	0	0	0	0	0	0	0	0	0
4/25/2024	11:00 PM	0	0	0	0	0	0	0	0	0	0	0	0	0
4/25/2024	11:15 PM	0	0	0	0	0	0	0	0	0	0	0	0	0
4/25/2024	11:30 PM	0	0	0	0	0	0	0	0	0	0	0	0	0
4/25/2024	11:45 PM	0	0	0	0	0	0	0	0	0	0	0	0	0

4/26/2024	12:00 AM	0	0	0	0	0	0	0	0	0	0	0	0	0
4/26/2024	12:15 AM	0	0	0	0	0	0	0	0	0	0	0	0	0
4/26/2024	12:30 AM	0	0	0	0	0	0	0	0	0	0	0	0	0
4/26/2024	12:45 AM	0	0	0	0	0	0	0	0	0	0	0	0	0
4/26/2024	1:00 AM	0	0	0	0	0	0	0	0	0	0	0	0	0
4/26/2024	1:15 AM	0	0	0	0	0	0	0	0	0	0	0	0	0
4/26/2024	1:30 AM	0	0	0	0	0	0	0	0	0	0	0	0	0
4/26/2024	1:45 AM	0	0	0	0	0	0	0	0	0	0	0	0	0
4/26/2024	2:00 AM	0	0	0	0	0	0	0	0	0	0	0	0	0
4/26/2024	2:15 AM	0	0	0	0	0	0	0	0	0	0	0	0	0
4/26/2024	2:30 AM	0	0	0	0	0	0	0	0	0	0	0	0	0
4/26/2024	2:45 AM	0	0	0	0	0	0	0	0	0	0	0	0	0
4/26/2024	3:00 AM	0	0	0	0	0	0	0	0	0	0	0	0	0
4/26/2024	3:15 AM	0	0	0	0	0	0	0	0	0	0	0	0	0
4/26/2024	3:30 AM	0	0	0	0	0	0	0	0	0	0	0	0	0
4/26/2024	3:45 AM	0	0	0	0	0	0	0	0	0	0	0	0	0
4/26/2024	4:00 AM	0	0	0	0	0	0	0	0	0	0	0	0	0
4/26/2024	4:15 AM	0	0	0	0	0	0	0	0	0	0	0	0	0
4/26/2024	4:30 AM	0	0	0	0	0	0	0	0	0	0	0	0	0
4/26/2024	4:45 AM	0	0	0	0	0	0	0	0	0	0	0	0	0
4/26/2024	5:00 AM	0	0	0	0	0	0	0	0	0	0	0	0	0
4/26/2024	5:15 AM	0	0	0	0	0	0	0	0	0	0	0	0	0
4/26/2024	5:30 AM	0	0	0	0	0	0	0	0	0	0	0	0	0
4/26/2024	5:45 AM	0	0	0	0	0	0	0	0	0	0	0	0	0
4/26/2024	6:00 AM	0	0	0	0	0	0	0	0	0	0	0	0	0
4/26/2024	6:15 AM	0	0	0	0	0	0	0	0	0	0	0	0	0
4/26/2024	6:30 AM	0	0	0	0	0	0	0	0	0	0	0	0	0
4/26/2024	6:45 AM	0	0	0	0	0	0	0	0	0	0	0	0	0
4/26/2024	7:00 AM	0	0	0	0	0	0	0	0	0	0	0	0	0
4/26/2024	7:15 AM	0	0	0	0	0	0	0	0	0	0	0	0	0
4/26/2024	7:30 AM	0	0	0	0	0	0	0	0	0	0	0	0	0
4/26/2024	7:45 AM	0	0	0	0	0	0	0	0	0	0	0	0	0
4/26/2024	8:00 AM	0	0	0	0	0	0	0	0	0	0	0	0	0
4/26/2024	8:15 AM	0	0	0	0	0	0	0	0	0	0	0	0	0
4/26/2024	8:30 AM	0	0	0	0	0	0	0	0	0	0	0	0	0
4/26/2024	8:45 AM	0	0	0	0	0	0	0	0	0	0	0	0	0
4/26/2024	9:00 AM	0	0	0	0	0	0	0	0	0	0	0	0	0
4/26/2024	9:15 AM	0	0	0	0	0	0	0	0	0	0	0	0	0
4/26/2024	9:30 AM	0	0	0	0	0	0	0	0	0	0	0	0	0
4/26/2024	9:45 AM	0	0	0	0	0	0	0	0	0	0	0	0	0
4/26/2024	10:00 AM	0	0	0	0	0	0	0	0	0	0	0	0	0
4/26/2024	10:15 AM	0	0	0	0	0	0	0	0	0	0	0	0	0
4/26/2024	10:30 AM	0	0	0	0	0	0	0	0	0	0	0	0	0
4/26/2024	10:45 AM	0	0	0	0	0	0	0	0	0	0	0	0	0
4/26/2024	11:00 AM	0	0	0	0	0	0	0	0	0	0	0	0	0
4/26/2024	11:15 AM	0	0	0	0	0	0	0	0	0	0	0	0	0
4/26/2024	11:30 AM	0	0	0	0	0	0	0	0	0	0	0	0	0
4/26/2024	11:45 AM	0	0	0	0	0	0	0	0	0	0	0	0	0
4/26/2024	12:00 PM	0	0	0	0	0	0	0	0	0	0	0	0	0
4/26/2024	12:15 PM	0	0	0	0	0	0	0	0	0	0	0	0	0
4/26/2024	12:30 PM	0	0	0	0	0	0	0	0	0	0	0	0	0
4/26/2024	12:45 PM	0	0	0	0	0	0	0	0	0	0	0	0	0
4/26/2024	1:00 PM	0	0	0	0	0	0	0	0	0	0	0	0	0
4/26/2024	1:15 PM	0	0	0	0	0	0	0	0	0	0	0	0	0
4/26/2024	1:30 PM	0	0	0	0	0	0	0	0	0	0	0	0	0
4/26/2024	1:45 PM	0	0	0	0	0	0	0	0	0	0	0	0	0
4/26/2024	2:00 PM	0	0	0	0	0	0	0	0	0	0	0	0	0
4/26/2024	2:15 PM	0	0	0	0	0	0	0	0	0	0	0	0	0
4/26/2024	2:30 PM	0	0	0	0	0	0	0	0	0	0	0	0	0
4/26/2024	2:45 PM	0	0	0	0	0	0	0	0	0	0	0	0	0
4/26/2024	3:00 PM	0	0	0	0	0	0	0	0	0	0	0	0	0
4/26/2024	3:15 PM	0	0	0	0	0	0	0	0	0	0	0	0	0
4/26/2024	3:30 PM	0	0	0	0	0	0	0	0	0	0	0	0	0
4/26/2024	3:45 PM	0	0	0	0	0	0	0	0	0	0	0	0	0
4/26/2024	4:00 PM	0	0	0	0	0	0	0	0	0	0	0	0	0
4/26/2024	4:15 PM	0	0	0	0	0	0	0	0	0	0	0	0	0
4/26/2024	4:30 PM	0	0	0	0	0	0	0	0	0	0	0	0	0
4/26/2024	4:45 PM	0	0	0	0	0	0	0	0	0	0	0	0	0
4/26/2024	5:00 PM	0	0	0	0	0	0	0	0	0	0	0	0	0
4/26/2024	5:15 PM	0	0	0	0	0	0	0	0	0	0	0	0	0
4/26/2024	5:30 PM	0	0	0	0	0	0	0	0	0	0	0	0	0
4/26/2024	5:45 PM	0	0	0	0	0	0	0	0	0	0	0	0	0
4/26/2024	6:00 PM	0	0	0	0	0	0	0	0	0	0	0	0	0
4/26/2024	6:15 PM	0	0	0	0	0	0	0	0	0	0	0	0	0
4/26/2024	6:30 PM	0	0	0	0	0	0	0	0	0	0	0	0	0
4/26/2024	6:45 PM	0	0	0	0	0	0	0	0	0	0	0	0	0
4/26/2024	7:00 PM	0	0	0	0	0	0	0	0	0	0	0	0	0
4/26/2024	7:15 PM	0	0	0	0	0	0	0	0	0	0	0	0	0
4/26/2024	7:30 PM	0	0	0	0	0	0	0	0	0	0	0	0	0
4/26/2024	7:45 PM	0	0	0	0	0	0	0	0	0	0	0	0	0
4/26/2024	8:00 PM	0	0	0	0	0	0	0	0	0	0	0	0	0
4/26/2024	8:15 PM	0	0	0	0	0	0	0	0	0	0	0	0	0
4/26/2024	8:30 PM	0	0	0	0	0	0	0	0	0	0	0	0	0
4/26/2024	8:45 PM	0	0	0	0	0	0	0	0	0	0	0	0	0
4/26/2024	9:00 PM	0	0	0	0	0	0	0	0	0	0	0	0	0
4/26/2024	9:15 PM	0	0	0	0	0	0	0	0	0	0	0	0	0
4/26/2024	9:30 PM	0	0	0	0	0	0	0	0	0	0	0	0	0
4/26/2024	9:45 PM	0	0	0	0	0	0	0	0	0	0	0	0	0
4/26/2024	10:00 PM	0	0	0	0	0	0	0	0	0	0	0	0	0
4/26/2024	10:15 PM	0	0	0	0	0	0	0	0	0	0	0	0	0
4/26/2024	10:30 PM	0	0	0	0	0	0	0	0	0	0	0	0	0
4/26/2024	10:45 PM	0	0	0	0	0	0	0	0	0	0	0	0	0
4/26/2024	11:00 PM	0	0	0	0	0	0	0	0	0	0	0	0	0
4/26/2024	11:15 PM	0	0	0	0	0	0	0	0	0	0	0	0	0
4/26/2024	11:30 PM	0	0	0	0	0	0	0	0	0	0	0	0	0
4/26/2024	11:45 PM	0	0	0	0	0	0	0	0	0	0	0	0	0

4/27/2024	12:00 AM	0	0	0	0	0	0	0	0	0	0	0	0	0
4/27/2024	12:15 AM	0	0	0	0	0	0	0	0	0	0	0	0	0
4/27/2024	12:30 AM	0	0	0	0	0	0	0	0	0	0	0	0	0
4/27/2024	12:45 AM	0	0	0	0	0	0	0	0	0	0	0	0	0
4/27/2024	1:00 AM	0	0	0	0	0	0	0	0	0	0	0	0	0
4/27/2024	1:15 AM	0	0	0	0	0	0	0	0	0	0	0	0	0
4/27/2024	1:30 AM	0	0	0	0	0	0	0	0	0	0	0	0	0
4/27/2024	1:45 AM	0	0	0	0	0	0	0	0	0	0	0	0	0
4/27/2024	2:00 AM	0	0	0	0	0	0	0	0	0	0	0	0	0
4/27/2024	2:15 AM	0	0	0	0	0	0	0	0	0	0	0	0	0
4/27/2024	2:30 AM	0	0	0	0	0	0	0	0	0	0	0	0	0
4/27/2024	2:45 AM	0	0	0	0	0	0	0	0	0	0	0	0	0
4/27/2024	3:00 AM	0	0	0	0	0	0	0	0	0	0	0	0	0
4/27/2024	3:15 AM	0	0	0	0	0	0	0	0	0	0	0	0	0
4/27/2024	3:30 AM	0	0	0	0	0	0	0	0	0	0	0	0	0
4/27/2024	3:45 AM	0	0	0	0	0	0	0	0	0	0	0	0	0
4/27/2024	4:00 AM	0	0	0	0	0	0	0	0	0	0	0	0	0
4/27/2024	4:15 AM	0	0	0	0	0	0	0	0	0	0	0	0	0
4/27/2024	4:30 AM	0	0	0	0	0	0	0	0	0	0	0	0	0
4/27/2024	4:45 AM	0	0	0	0	0	0	0	0	0	0	0	0	0
4/27/2024	5:00 AM	0	0	0	0	0	0	0	0	0	0	0	0	0
4/27/2024	5:15 AM	0	0	0	0	0	0	0	0	0	0	0	0	0
4/27/2024	5:30 AM	0	0	0	0	0	0	0	0	0	0	0	0	0
4/27/2024	5:45 AM	0	0	0	0	0	0	0	0	0	0	0	0	0
4/27/2024	6:00 AM	0	0	0	0	0	0	0	0	0	0	0	0	0
4/27/2024	6:15 AM	0	0	0	0	0	0	0	0	0	0	0	0	0
4/27/2024	6:30 AM	0	0	0	0	0	0	0	0	0	0	0	0	0
4/27/2024	6:45 AM	0	0	0	0	0	0	0	0	0	0	0	0	0
4/27/2024	7:00 AM	0	0	0	0	0	0	0	0	0	0	0	0	0
4/27/2024	7:15 AM	0	0	0	0	0	0	0	0	0	0	0	0	0
4/27/2024	7:30 AM	0	0	0	0	0	0	0	0	0	0	0	0	0
4/27/2024	7:45 AM	0	0	0	0	0	0	0	0	0	0	0	0	0
4/27/2024	8:00 AM	0	0	0	0	0	0	0	0	0	0	0	0	0
4/27/2024	8:15 AM	0	0	0	0	0	0	0	0	0	0	0	0	0
4/27/2024	8:30 AM	0	0	0	0	0	0	0	0	0	0	0	0	0
4/27/2024	8:45 AM	0	0	0	0	0	0	0	0	0	0	0	0	0
4/27/2024	9:00 AM	0	0	0	0	0	0	0	0	0	0	0	0	0
4/27/2024	9:15 AM	0	0	0	0	0	0	0	0	0	0	0	0	0
4/27/2024	9:30 AM	0	0	0	0	0	0	0	0	0	0	0	0	0
4/27/2024	9:45 AM	0	0	0	0	0	0	0	0	0	0	0	0	0
4/27/2024	10:00 AM	0	0	0	0	0	0	0	0	0	0	0	0	0
4/27/2024	10:15 AM	0	0	0	0	0	0	0	0	0	0	0	0	0
4/27/2024	10:30 AM	0	0	0	0	0	0	0	0	0	0	0	0	0
4/27/2024	10:45 AM	0	0	0	0	0	0	0	0	0	0	0	0	0
4/27/2024	11:00 AM	0	0	0	0	0	0	0	0	0	0	0	0	0
4/27/2024	11:15 AM	0	0	0	0	0	0	0	0	0	0	0	0	0
4/27/2024	11:30 AM	0	0	0	0	0	0	0	0	0	0	0	0	0
4/27/2024	11:45 AM	0	0	0	0	0	0	0	0	0	0	0	0	0
4/27/2024	12:00 PM	0	0	0	0	0	0	0	0	0	0	0	0	0
4/27/2024	12:15 PM	0	0	0	0	0	0	0	0	0	0	0	0	0
4/27/2024	12:30 PM	0	0	0	0	0	0	0	0	0	0	0	0	0
4/27/2024	12:45 PM	0	0	0	0	0	0	0	0	0	0	0	0	0
4/27/2024	1:00 PM	0	0	0	0	0	0	0	0	0	0	0	0	0
4/27/2024	1:15 PM	0	0	0	0	0	0	0	0	0	0	0	0	0
4/27/2024	1:30 PM	0	0	0	0	0	0	0	0	0	0	0	0	0
4/27/2024	1:45 PM	0	0	0	0	0	0	0	0	0	0	0	0	0
4/27/2024	2:00 PM	0	0	0	0	0	0	0	0	0	0	0	0	0
4/27/2024	2:15 PM	0	0	0	0	0	0	0	0	0	0	0	0	0
4/27/2024	2:30 PM	0	0	0	0	0	0	0	0	0	0	0	0	0
4/27/2024	2:45 PM	0	0	0	0	0	0	0	0	0	0	0	0	0
4/27/2024	3:00 PM	0	0	0	0	0	0	0	0	0	0	0	0	0
4/27/2024	3:15 PM	0	0	0	0	0	0	0	0	0	0	0	0	0
4/27/2024	3:30 PM	0	0	0	0	0	0	0	0	0	0	0	0	0
4/27/2024	3:45 PM	0	0	0	0	0	0	0	0	0	0	0	0	0
4/27/2024	4:00 PM	0	0	0	0	0	0	0	0	0	0	0	0	0
4/27/2024	4:15 PM	0	0	0	0	0	0	0	0	0	0	0	0	0
4/27/2024	4:30 PM	0	0	0	0	0	0	0	0	0	0	0	0	0
4/27/2024	4:45 PM	0	0	0	0	0	0	0	0	0	0	0	0	0
4/27/2024	5:00 PM	0	0	0	0	0	0	0	0	0	0	0	0	0
4/27/2024	5:15 PM	0	0	0	0	0	0	0	0	0	0	0	0	0
4/27/2024	5:30 PM	0	0	0	0	0	0	0	0	0	0	0	0	0
4/27/2024	5:45 PM	0	0	0	0	0	0	0	0	0	0	0	0	0
4/27/2024	6:00 PM	0	0	0	0	0	0	0	0	0	0	0	0	0
4/27/2024	6:15 PM	0	0	0	0	0	0	0	0	0	0	0	0	0
4/27/2024	6:30 PM	0	0	0	0	0	0	0	0	0	0	0	0	0
4/27/2024	6:45 PM	0	0	0	0	0	0	0	0	0	0	0	0	0
4/27/2024	7:00 PM	0	0	0	0	0	0	0	0	0	0	0	0	0
4/27/2024	7:15 PM	0	0	0	0	0	0	0	0	0	0	0	0	0
4/27/2024	7:30 PM	0	0	0	0	0	0	0	0	0	0	0	0	0
4/27/2024	7:45 PM	0	0	0	0	0	0	0	0	0	0	0	0	0
4/27/2024	8:00 PM	0	0	0	0	0	0	0	0	0	0	0	0	0
4/27/2024	8:15 PM	0	0	0	0	0	0	0	0	0	0	0	0	0
4/27/2024	8:30 PM	0	0	0	0	0	0	0	0	0	0	0	0	0
4/27/2024	8:45 PM	0	0	0	0	0	0	0	0	0	0	0	0	0
4/27/2024	9:00 PM	0	0	0	0	0	0	0	0	0	0	0	0	0
4/27/2024	9:15 PM	0	0	0	0	0	0	0	0	0	0	0	0	0
4/27/2024	9:30 PM	0	0	0	0	0	0	0	0	0	0	0	0	0
4/27/2024	9:45 PM	0	0	0	0	0	0	0	0	0	0	0	0	0
4/27/2024	10:00 PM	0	0	0	0	0	0	0	0	0	0	0	0	0
4/27/2024	10:15 PM	0	0	0	0	0	0	0	0	0	0	0	0	0
4/27/2024	10:30 PM	0	0	0	0	0	0	0	0	0	0	0	0	0
4/27/2024	10:45 PM	0	0	0	0	0	0	0	0	0	0	0	0	0
4/27/2024	11:00 PM	0	0	0	0	0	0	0	0	0	0	0	0	0
4/27/2024	11:15 PM	0	0	0	0	0	0	0	0	0	0	0	0	0
4/27/2024	11:30 PM	0	0	0	0	0	0	0	0	0	0	0	0	0
4/27/2024	11:45 PM	0	0	0	0	0	0	0	0	0	0	0	0	0

Bi-Directional Class Count || SB WB 15min

Columbia, SC

Marr Traffic DATA COLLECTION
www.marrtraffic.com

Site 3
I-26 W/Bound Off-Ramp,
east of I-26

Date
Sunday, April 21, 2024

Lat/Long
34.027654°, -81.101691°

Weather
Cloudy
66°F

Click here for Detailed Weather

Click here for Map

0000 - 2400 (Sunday 24h Session) (04-21-2024)
SB WB 15min

	Westbound (Movement 3.1)													15min	60min
Time	1	2	3	4	5	6	7	8	9	10	11	12	13	Total	Total
0000 - 0015	1	102	32	1	0	0	0	0	2	0	0	0	0	**138**	
0015 - 0030	0	100	19	0	1	1	0	0	5	0	0	0	0	**126**	
0030 - 0045	0	106	17	1	1	1	0	0	3	0	0	0	0	**129**	
0045 - 0100	0	78	16	0	0	0	0	1	3	0	0	0	0	**98**	**491**
0100 - 0115	0	63	14	0	1	0	0	1	1	0	1	0	0	**81**	
0115 - 0130	1	60	17	0	0	1	0	0	4	0	0	0	0	**83**	
0130 - 0145	0	53	11	0	1	0	0	0	1	0	0	0	0	**66**	
0145 - 0200	0	58	13	0	2	0	0	0	2	0	0	0	0	**75**	**305**
0200 - 0215	0	39	9	0	0	0	0	0	4	0	0	0	0	**52**	
0215 - 0230	0	42	8	0	0	0	0	0	2	0	0	0	0	**52**	
0230 - 0245	0	43	5	0	1	0	0	0	3	0	0	0	0	**52**	
0245 - 0300	0	25	3	0	1	0	0	0	4	0	0	0	0	**33**	**189**
0300 - 0315	0	36	10	0	0	0	0	0	2	0	1	0	0	**49**	
0315 - 0330	0	42	7	0	0	0	0	0	4	0	0	0	0	**53**	
0330 - 0345	0	30	8	0	1	0	0	0	6	0	1	0	0	**46**	
0345 - 0400	0	24	8	0	0	0	0	0	3	0	0	0	0	**35**	**183**
0400 - 0415	0	27	5	0	1	0	0	0	0	0	0	0	0	**33**	
0415 - 0430	0	35	5	0	1	1	0	0	5	0	0	0	0	**47**	
0430 - 0445	0	33	7	0	4	0	0	0	3	0	0	0	0	**47**	
0445 - 0500	0	45	11	0	0	0	0	0	3	0	0	0	0	**59**	**186**
0500 - 0515	0	40	9	0	0	0	0	0	1	0	0	0	0	**50**	
0515 - 0530	0	37	11	0	1	0	0	0	7	0	0	0	0	**56**	
0530 - 0545	0	68	8	0	0	0	0	0	5	0	0	0	0	**81**	
0545 - 0600	0	58	13	0	0	0	0	0	6	0	0	0	0	**77**	**264**
0600 - 0615	0	48	9	0	2	0	0	0	2	0	0	0	0	**61**	
0615 - 0630	0	85	11	0	3	0	0	0	4	0	0	0	0	**103**	
0630 - 0645	2	83	13	0	3	0	0	0	5	0	0	0	0	**106**	
0645 - 0700	0	86	24	0	2	0	0	0	3	0	0	0	0	**115**	**385**
0700 - 0715	1	108	21	0	6	1	0	0	6	0	0	0	0	**143**	
0715 - 0730	0	113	38	0	3	0	0	1	6	0	0	0	0	**161**	
0730 - 0745	0	173	22	0	1	0	0	1	5	0	0	0	0	**202**	
0745 - 0800	0	170	33	1	1	1	0	0	7	0	0	0	0	**213**	**719**
0800 - 0815	0	156	34	0	1	0	0	1	9	0	0	0	0	**201**	
0815 - 0830	0	155	39	1	2	0	0	1	4	0	0	0	0	**202**	
0830 - 0845	1	190	49	0	3	0	0	0	7	0	0	0	0	**250**	
0845 - 0900	0	201	44	0	3	0	0	0	3	0	0	0	0	**251**	**904**
0900 - 0915	0	229	51	1	3	1	0	0	8	0	1	0	0	**294**	
0915 - 0930	0	236	47	2	0	0	0	1	8	0	0	0	0	**294**	
0930 - 0945	0	320	63	1	3	1	0	1	5	0	0	0	0	**394**	
0945 - 1000	0	330	93	1	3	1	0	2	11	0	0	0	0	**441**	**1423**
1000 - 1015	0	367	75	1	4	0	0	2	4	0	0	0	0	**453**	
1015 - 1030	0	356	106	0	1	0	0	0	8	0	0	0	0	**471**	
1030 - 1045	0	416	101	1	2	1	0	2	15	0	0	0	0	**538**	
1045 - 1100	0	424	87	0	3	0	0	2	9	0	0	0	0	**525**	**1987**
1100 - 1115	0	425	102	1	4	0	0	1	6	0	0	0	0	**539**	
1115 - 1130	0	452	89	1	2	0	0	1	15	0	1	0	0	**561**	
1130 - 1145	1	385	112	0	2	0	0	3	4	0	0	0	0	**507**	
1145 - 1200	1	475	92	0	4	1	0	2	20	0	0	0	0	**595**	**2202**
1200 - 1215	3	531	113	3	2	0	0	0	8	0	0	0	0	**660**	
1215 - 1230	0	527	108	4	2	1	0	0	5	0	0	0	0	**647**	
1230 - 1245	1	576	130	0	5	1	0	1	7	0	0	0	0	**721**	
1245 - 1300	0	622	125	1	5	0	0	0	12	0	0	0	0	**765**	**2793**
1300 - 1315	0	556	124	1	7	1	0	1	11	0	0	0	0	**701**	
1315 - 1330	0	592	133	0	5	0	0	0	5	0	0	0	0	**735**	
1330 - 1345	0	559	104	0	3	1	0	0	8	0	1	0	0	**676**	
1345 - 1400	0	581	124	1	5	1	0	2	6	0	0	0	0	**720**	**2832**
1400 - 1415	0	532	91	0	6	2	0	0	7	0	0	0	0	**638**	
1415 - 1430	0	552	98	0	7	2	0	0	18	0	0	0	0	**677**	
1430 - 1445	0	541	96	1	3	0	0	0	7	0	0	0	0	**648**	
1445 - 1500	0	509	97	0	5	0	0	0	11	0	0	0	0	**622**	**2585**
1500 - 1515	0	544	91	1	4	0	0	0	9	0	0	0	0	**649**	
1515 - 1530	0	519	92	2	5	0	0	0	13	0	0	0	0	**631**	
1530 - 1545	0	510	103	0	2	1	0	0	7	0	0	0	0	**623**	
1545 - 1600	0	522	111	1	3	1	0	1	2	0	0	0	0	**641**	**2544**
1600 - 1615	0	522	82	0	5	1	0	0	13	0	0	0	0	**623**	
1615 - 1630	0	525	97	0	5	0	0	0	12	0	0	0	0	**639**	
1630 - 1645	1	495	82	2	7	0	0	0	12	0	0	0	0	**599**	
1645 - 1700	0	492	87	1	5	0	0	0	11	0	0	0	0	**596**	**2457**
1700 - 1715	0	510	85	1	4	1	0	1	13	0	0	0	0	**615**	
1715 - 1730	0	435	85	1	4	0	0	0	13	0	0	0	0	**538**	
1730 - 1745	0	463	89	0	3	1	0	2	17	0	0	0	0	**575**	
1745 - 1800	0	460	103	0	2	2	0	1	11	0	0	0	0	**579**	**2307**
1800 - 1815	0	452	78	1	4	1	0	0	8	0	0	0	0	**544**	
1815 - 1830	0	488	99	1	3	0	0	1	12	0	0	0	0	**604**	
1830 - 1845	0	370	72	0	1	0	0	0	17	0	0	0	0	**460**	
1845 - 1900	1	346	59	0	2	1	0	0	13	0	0	0	0	**422**	**2030**
1900 - 1915	1	311	54	0	5	0	0	0	9	0	0	0	0	**380**	
1915 - 1930	0	326	51	0	3	1	0	2	16	0	0	0	0	**399**	
1930 - 1945	0	321	55	0	3	0	0	1	10	0	2	0	0	**392**	
1945 - 2000	0	267	47	0	0	0	0	2	10	0	1	0	0	**327**	**1498**
2000 - 2015	0	246	48	0	2	0	0	0	12	0	0	0	0	**308**	
2015 - 2030	0	232	31	1	5	0	0	1	12	0	0	0	0	**282**	
2030 - 2045	0	200	40	0	3	0	0	0	8	0	0	0	0	**251**	
2045 - 2100	0	150	39	1	2	0	0	0	11	0	0	0	0	**203**	**1044**
2100 - 2115	0	176	44	0	2	1	0	0	7	0	0	0	0	**230**	
2115 - 2130	0	155	31	0	2	0	0	0	4	0	0	0	0	**192**	
2130 - 2145	0	147	35	1	1	0	0	0	11	0	0	0	0	**195**	
2145 - 2200	0	123	24	0	2	0	0	0	12	0	0	0	0	**161**	**778**
2200 - 2215	0	106	23	0	4	0	0	0	16	0	0	0	0	**149**	
2215 - 2230	0	109	18	0	2	1	0	2	12	0	0	0	0	**144**	
2230 - 2245	0	85	18	0	1	0	0	0	8	0	0	0	0	**112**	
2245 - 2300	0	88	16	0	1	1	0	0	5	0	3	0	0	**114**	**519**
2300 - 2315	0	93	15	0	0	0	0	0	5	0	0	0	0	**113**	
2315 - 2330	0	89	15	1	1	0	0	0	3	0	0	0	0	**109**	
2330 - 2345	0	72	10	0	0	0	1	0	10	0	0	0	0	**93**	
2345 - 0000	0	52	6	0	1	0	0	0	6	0	0	0	0	**65**	**380**

Session Total	15	24906	4999	39	231	33	1	41	728	0	12	0	0	**31005**
Session Average	0.16	259.44	52.07	0.41	2.41	0.34	0.01	0.43	7.58	0.00	0.13	0.00	0.00	**322.97**
Session Percentage	0.05	80.33	16.12	0.13	0.75	0.11	0.00	0.13	2.35	0.00	0.04	0.00	0.00	

AM Peak Hour	0615 - 0715	0945 - 1045	0945 - 1045	0900 - 1000	0615 - 0715	0900 - 1000	-	0915 - 1015	0945 - 1045	-	0815 - 0915	-	-	**0945 - 1045**
AM Peak Volume	3	1469	375	5	14	3	0	6	38	0	1	0	0	**1903**

Noon Peak Hour	1115 - 1215	1230 - 1330	1230 - 1330	1200 - 1300	1230 - 1330	1330 - 1430	-	1045 - 1145	1115 - 1215	-	1030 - 1130	-	-	**1230 - 1330**
Noon Peak Volume	5	2346	512	8	22	6	0	7	47	0	1	0	0	**2922**

PM Peak Hour	1815 - 1915	1500 - 1600	1500 - 1600	1630 - 1730	1600 - 1700	1700 - 1800	-	1900 - 2000	1830 - 1930	-	1900 - 2000	-	-	**1500 - 1600**
PM Peak Volume	2	2095	397	5	22	4	0	5	55	0	3	0	0	**2544**

Site 3
I-26 W/Bound Off-Ramp,
east of I-26

Date
Monday, April 22, 2024

Lat/Long
34.027654°, -81.101691°

Weather
Mostly Cloudy
57°F

Click here for Detailed Weather

0000 - 2400 (Weekday 24h Session) (04-22-2024)
SB WB 15min

	Westbound (Movement 3.1)													15min	60min
Time	1	2	3	4	5	6	7	8	9	10	11	12	13	Total	Total
0000 - 0015	0	50	10	0	0	0	0	0	5	0	0	0	0	**65**	
0015 - 0030	0	70	8	0	0	0	0	0	5	0	0	0	0	**83**	
0030 - 0045	0	78	9	0	2	0	0	1	6	0	0	0	0	**96**	
0045 - 0100	0	47	5	0	1	0	0	0	4	0	0	0	0	**57**	**301**
0100 - 0115	0	54	7	0	1	0	0	0	5	0	1	0	0	**68**	
0115 - 0130	0	47	5	0	0	0	0	0	8	0	0	0	0	**60**	
0130 - 0145	0	31	3	0	1	0	0	0	7	0	1	0	0	**43**	
0145 - 0200	0	30	4	0	2	0	0	0	3	0	0	0	0	**39**	**210**
0200 - 0215	0	30	4	0	0	1	0	1	5	0	0	0	0	**41**	
0215 - 0230	0	31	2	0	2	1	0	0	10	1	0	0	0	**47**	
0230 - 0245	0	34	3	0	2	0	0	0	9	0	0	0	0	**48**	
0245 - 0300	0	20	2	0	1	0	0	1	9	0	0	0	0	**33**	**169**
0300 - 0315	0	23	3	0	3	1	0	1	18	1	0	0	0	**50**	
0315 - 0330	0	27	4	0	2	1	0	1	14	0	2	0	0	**51**	
0330 - 0345	0	41	6	0	1	1	0	1	15	1	0	0	0	**66**	
0345 - 0400	0	39	5	0	1	2	0	2	20	1	1	0	0	**71**	**238**
0400 - 0415	0	35	5	0	1	1	0	2	17	0	1	0	0	**62**	
0415 - 0430	0	43	5	0	5	1	0	0	16	1	0	0	0	**71**	
0430 - 0445	0	58	7	0	6	3	0	3	20	1	2	0	0	**100**	
0445 - 0500	0	62	12	0	3	4	0	2	21	2	2	0	0	**108**	**341**
0500 - 0515	0	73	13	0	6	2	0	1	28	2	0	0	0	**125**	
0515 - 0530	0	105	22	0	6	3	0	1	26	1	0	0	0	**164**	
0530 - 0545	0	135	26	0	5	2	0	2	40	2	1	0	0	**213**	
0545 - 0600	0	136	27	1	6	1	0	1	35	1	0	0	0	**208**	**710**
0600 - 0615	0	180	35	1	9	4	0	2	26	2	0	0	0	**259**	
0615 - 0630	0	256	42	0	10	6	0	2	40	4	1	0	0	**361**	
0630 - 0645	0	282	68	0	8	3	0	3	55	3	0	0	0	**422**	
0645 - 0700	0	309	92	0	8	4	0	2	40	1	0	0	0	**456**	**1498**
0700 - 0715	1	325	104	0	9	6	0	3	54	3	0	0	0	**505**	
0715 - 0730	0	418	124	0	19	8	0	3	47	2	0	0	0	**621**	
0730 - 0745	0	530	153	0	24	5	0	3	50	2	0	0	0	**767**	
0745 - 0800	0	565	138	1	20	5	0	4	50	1	0	0	0	**784**	**2677**
0800 - 0815	0	453	115	0	20	9	0	3	49	2	0	0	0	**651**	
0815 - 0830	0	433	101	0	19	5	0	3	44	1	0	1	0	**607**	
0830 - 0845	0	385	134	0	19	5	0	2	36	2	0	0	0	**583**	
0845 - 0900	0	392	122	2	28	4	0	6	37	1	0	0	0	**592**	**2433**
0900 - 0915	0	362	124	1	35	8	0	7	43	2	0	0	0	**582**	
0915 - 0930	0	361	101	1	25	8	0	3	51	3	0	0	0	**553**	
0930 - 0945	0	392	112	1	18	8	0	1	55	2	0	1	0	**590**	
0945 - 1000	0	390	91	1	14	4	0	4	54	2	0	0	0	**560**	**2285**
1000 - 1015	0	355	111	0	20	7	0	2	43	1	0	0	0	**539**	
1015 - 1030	0	372	90	0	13	5	0	7	44	1	0	0	0	**532**	
1030 - 1045	0	370	98	0	10	5	0	5	46	2	0	0	0	**536**	
1045 - 1100	0	422	82	2	13	9	0	3	38	1	0	0	0	**570**	**2177**
1100 - 1115	0	380	131	0	18	8	0	8	64	4	0	0	0	**613**	
1115 - 1130	0	402	136	2	13	2	0	4	46	1	0	0	0	**606**	
1130 - 1145	0	405	117	0	17	6	0	4	60	2	0	1	0	**612**	
1145 - 1200	2	416	128	1	10	8	0	4	47	2	0	0	0	**618**	**2449**
1200 - 1215	1	385	129	0	16	7	1	2	48	1	1	0	0	**591**	
1215 - 1230	2	431	126	1	15	4	1	6	47	0	0	1	0	**634**	
1230 - 1245	0	399	152	1	14	7	1	5	43	0	0	0	0	**622**	
1245 - 1300	0	386	137	1	12	5	0	3	60	2	0	0	0	**606**	**2453**
1300 - 1315	0	399	131	1	17	10	0	0	60	0	1	0	0	**619**	
1315 - 1330	0	390	112	0	16	3	0	4	53	0	0	0	0	**578**	
1330 - 1345	1	414	129	2	10	5	0	1	64	0	0	0	0	**626**	
1345 - 1400	4	400	108	1	14	6	0	1	49	0	0	0	0	**583**	**2406**
1400 - 1415	1	441	135	0	15	4	0	2	45	0	1	0	0	**644**	
1415 - 1430	1	472	126	0	19	5	0	0	66	1	0	0	0	**690**	
1430 - 1445	0	469	126	0	19	8	1	5	56	0	0	0	0	**684**	
1445 - 1500	1	426	154	1	16	5	0	10	57	0	0	0	0	**670**	**2688**
1500 - 1515	1	459	121	3	11	4	1	1	56	1	0	1	0	**659**	
1515 - 1530	0	495	143	4	16	2	2	3	43	0	1	0	0	**709**	
1530 - 1545	0	298	89	2	9	0	1	1	22	0	0	0	0	**422**	
1545 - 1600	0	226	66	1	7	7	0	0	21	0	0	0	0	**328**	**2118**
1600 - 1615	0	469	130	2	14	4	0	1	57	0	1	0	0	**678**	
1615 - 1630	0	353	93	0	9	5	1	1	62	0	0	0	0	**524**	
1630 - 1645	0	332	93	0	7	3	0	1	46	0	0	0	0	**482**	
1645 - 1700	0	349	106	1	1	0	0	1	45	0	0	0	0	**503**	**2187**
1700 - 1715	0	330	88	0	4	3	0	0	38	0	0	0	0	**463**	
1715 - 1730	0	345	92	0	7	1	0	1	44	0	1	0	0	**491**	
1730 - 1745	0	353	95	0	9	3	0	1	28	0	2	0	0	**491**	
1745 - 1800	0	388	113	1	1	2	0	3	41	0	0	0	0	**549**	**1994**
1800 - 1815	1	421	115	0	8	4	0	2	23	0	0	0	0	**574**	
1815 - 1830	0	390	81	0	7	1	0	1	30	0	0	0	0	**510**	
1830 - 1845	2	341	77	0	2	2	0	1	29	0	0	0	0	**454**	
1845 - 1900	0	345	72	0	3	2	0	1	24	0	0	0	0	**447**	**1985**
1900 - 1915	1	293	81	0	1	1	0	0	27	0	0	0	0	**404**	
1915 - 1930	0	302	57	0	3	0	0	0	31	0	0	0	0	**393**	
1930 - 1945	0	266	54	0	5	4	0	1	22	0	0	0	0	**352**	
1945 - 2000	0	289	61	0	4	0	0	0	21	0	1	0	0	**376**	**1525**
2000 - 2015	0	207	54	0	3	0	0	1	18	0	0	0	0	**283**	
2015 - 2030	1	226	41	0	3	4	0	2	19	0	0	0	0	**296**	
2030 - 2045	0	221	39	0	2	1	0	0	19	0	0	0	0	**282**	
2045 - 2100	0	169	27	0	1	1	0	1	20	0	0	0	0	**219**	**1080**
2100 - 2115	0	180	37	1	3	0	0	0	9	0	1	0	0	**231**	
2115 - 2130	0	150	26	0	1	0	0	0	15	0	1	0	0	**193**	
2130 - 2145	0	135	21	0	3	0	0	1	26	0	2	0	0	**188**	
2145 - 2200	0	118	26	0	1	1	0	0	13	0	1	1	0	**161**	**773**
2200 - 2215	0	125	24	0	0	0	0	0	12	0	0	0	0	**161**	
2215 - 2230	0	111	26	0	2	1	0	2	11	0	2	0	0	**155**	
2230 - 2245	0	95	20	0	2	1	0	2	12	0	4	1	0	**137**	
2245 - 2300	0	77	16	0	2	1	0	1	13	0	2	0	0	**112**	**565**
2300 - 2315	0	75	18	0	1	2	0	0	13	0	3	0	0	**112**	
2315 - 2330	0	81	23	1	2	0	0	0	7	0	1	0	0	**115**	
2330 - 2345	0	77	24	0	1	0	0	0	9	0	3	0	0	**114**	
2345 - 0000	0	51	14	0	1	0	0	1	13	0	4	0	0	**84**	**425**

Session Total	20	24608	6574	38	795	295	9	178	3052	66	45	7	0	**35687**
Session Average	0.21	256.33	68.48	0.40	8.28	3.07	0.09	1.85	31.79	0.69	0.47	0.07	0.00	**371.74**
Session Percentage	0.06	68.96	18.42	0.11	2.23	0.83	0.03	0.50	8.55	0.18	0.13	0.02	0.00	

AM Peak Hour	0615 - 0715	0730 - 0830	0715 - 0815	0845 - 0945	0830 - 0930	0845 - 0945	-	0815 - 0915	0900 - 1000	0615 - 0715	0530 - 0630	0730 - 0830	-	**0715 - 0815**
AM Peak Volume	1	1981	530	5	107	28	0	18	203	11	2	1	0	**2823**

Noon Peak Hour	1330 - 1430	1430 - 1530	1215 - 1315	1445 - 1545	1400 - 1500	1015 - 1115	1430 - 1530	1015 - 1115	1245 - 1345	1100 - 1200	1115 - 1215	1130 - 1230	-	**1430 - 1530**
Noon Peak Volume	7	1849	546	10	69	27	4	23	237	9	1	2	0	**2722**

PM Peak Hour	1745 - 1845	1730 - 1830	1515 - 1615	1500 - 1600	1515 - 1615	1545 - 1645	1500 - 1600	1715 - 1815	1600 - 1700	1500 - 1600	1645 - 1745	1500 - 1600	-	**1600 - 1700**
PM Peak Volume	3	1552	428	10	46	19	4	7	210	1	3	1	0	**2187**

Site 3
I-26 W/Bound Off-Ramp,
east of I-26

Date
Tuesday, April 23, 2024

Lat/Long
34.027654°, -81.101691°

Weather
Fair
58°F

Click here for Detailed Weather

0000 - 2400 (Weekday 24h Session) (04-23-2024)
SB WB 15min

	Westbound (Movement 3.1)													15min	60min
TIME	1	2	3	4	5	6	7	8	9	10	11	12	13	Total	Total
0000 - 0015	1	69	8	0	0	0	0	0	14	0	0	0	0	**92**	
0015 - 0030	1	81	11	0	2	0	0	2	14	0	0	0	0	**111**	
0030 - 0045	0	54	11	0	0	0	0	0	13	0	1	0	0	**79**	
0045 - 0100	0	42	6	0	1	0	0	0	6	0	3	0	0	**58**	**340**
0100 - 0115	0	42	8	0	2	0	0	2	13	0	2	0	0	**69**	
0115 - 0130	0	41	5	0	1	0	0	1	9	0	1	0	0	**58**	
0130 - 0145	0	30	6	0	6	1	0	2	13	0	2	0	0	**60**	
0145 - 0200	0	25	4	0	1	0	0	1	17	0	2	0	0	**50**	**237**
0200 - 0215	0	27	7	0	0	0	0	1	17	0	5	0	0	**57**	
0215 - 0230	0	21	3	0	4	0	0	2	8	0	3	0	0	**41**	
0230 - 0245	0	21	2	0	2	0	0	0	10	0	0	0	0	**35**	
0245 - 0300	0	18	4	0	1	0	0	0	9	0	5	0	0	**37**	**170**
0300 - 0315	1	19	7	0	2	0	0	3	17	0	4	0	0	**53**	
0315 - 0330	0	24	9	0	4	0	0	5	13	0	3	0	0	**58**	
0330 - 0345	0	34	10	0	2	1	0	1	18	0	2	0	0	**68**	
0345 - 0400	0	29	8	0	4	1	0	0	30	0	4	0	1	**77**	**256**
0400 - 0415	0	29	7	0	7	2	0	2	20	0	2	0	0	**69**	
0415 - 0430	0	35	15	0	6	2	0	0	32	0	3	0	0	**93**	
0430 - 0445	0	55	20	0	9	3	0	0	38	0	3	0	0	**128**	
0445 - 0500	0	52	19	0	6	1	0	0	39	0	1	0	0	**118**	**408**
0500 - 0515	0	60	30	0	8	0	0	1	30	0	8	0	0	**137**	
0515 - 0530	0	78	40	0	12	4	0	1	43	0	1	0	0	**179**	
0530 - 0545	0	103	49	0	12	3	0	0	43	0	2	0	0	**212**	
0545 - 0600	0	99	54	0	12	1	0	0	31	0	0	0	0	**197**	**725**
0600 - 0615	0	147	46	1	11	4	0	0	51	0	1	0	0	**261**	
0615 - 0630	0	158	85	0	18	4	0	1	55	0	1	0	0	**322**	
0630 - 0645	0	241	99	0	20	7	3	5	53	1	1	0	0	**430**	
0645 - 0700	0	267	136	0	19	1	0	3	58	2	1	0	0	**487**	**1500**
0700 - 0715	1	322	119	0	20	2	0	3	55	3	1	0	0	**526**	
0715 - 0730	0	399	144	0	26	7	0	7	68	4	2	0	0	**657**	
0730 - 0745	0	427	178	0	24	5	1	7	74	2	0	0	0	**718**	
0745 - 0800	0	467	149	0	32	5	1	6	65	0	0	0	0	**725**	**2626**
0800 - 0815	1	367	165	0	26	6	1	7	69	0	1	0	0	**643**	
0815 - 0830	0	427	139	1	41	4	3	6	59	0	1	0	0	**681**	
0830 - 0845	0	371	135	2	27	8	1	3	47	0	1	0	0	**595**	
0845 - 0900	0	341	127	0	28	5	2	11	53	2	1	0	0	**570**	**2489**
0900 - 0915	2	290	138	0	38	6	2	6	66	5	0	0	0	**553**	
0915 - 0930	1	295	130	2	45	4	1	3	59	2	1	0	0	**543**	
0930 - 0945	1	325	136	2	39	4	0	6	54	1	0	0	0	**568**	
0945 - 1000	1	337	119	0	20	4	1	4	58	2	2	0	0	**548**	**2212**
1000 - 1015	0	308	95	3	21	5	0	6	64	2	0	0	0	**504**	
1015 - 1030	0	286	116	2	29	1	1	6	64	0	0	0	0	**505**	
1030 - 1045	0	290	143	0	15	7	6	7	54	0	0	0	0	**522**	
1045 - 1100	0	327	105	1	27	4	0	6	67	3	0	0	0	**540**	**2071**
1100 - 1115	0	361	126	1	18	6	3	10	57	2	0	0	0	**584**	
1115 - 1130	0	339	100	0	9	2	1	6	53	2	0	0	0	**512**	
1130 - 1145	0	348	111	1	21	7	4	8	69	1	0	0	0	**570**	
1145 - 1200	0	361	97	0	25	6	0	3	51	1	1	0	0	**545**	**2211**
1200 - 1215	0	364	107	0	17	3	2	2	54	0	0	0	0	**549**	
1215 - 1230	0	367	102	1	22	1	2	4	62	2	0	0	0	**563**	
1230 - 1245	0	325	95	0	13	5	2	2	68	1	0	0	0	**511**	
1245 - 1300	0	318	91	1	6	1	3	1	66	1	0	0	0	**488**	**2111**
1300 - 1315	0	343	105	2	11	6	1	3	67	3	0	0	0	**541**	
1315 - 1330	0	361	121	0	9	6	1	4	65	0	0	0	0	**567**	
1330 - 1345	4	351	115	1	16	2	4	3	71	0	0	0	0	**567**	
1345 - 1400	1	378	134	0	13	2	2	2	65	1	0	0	0	**598**	**2273**
1400 - 1415	1	392	154	0	8	3	4	2	53	1	0	0	0	**618**	
1415 - 1430	2	410	141	0	18	2	4	5	56	2	0	0	0	**640**	
1430 - 1445	0	414	146	1	11	8	1	1	65	1	0	0	0	**648**	
1445 - 1500	2	453	163	1	14	5	1	2	58	0	0	0	0	**699**	**2605**
1500 - 1515	3	432	151	1	13	3	5	2	64	0	0	0	0	**674**	
1515 - 1530	1	477	172	2	18	2	2	3	65	0	0	0	0	**742**	
1530 - 1545	1	486	168	1	17	4	2	1	43	1	1	0	0	**725**	
1545 - 1600	0	472	176	1	10	3	1	1	50	0	1	0	0	**715**	**2856**
1600 - 1615	0	459	163	3	5	2	3	1	48	2	0	0	0	**686**	
1615 - 1630	1	388	137	0	5	2	0	1	40	0	1	0	0	**575**	
1630 - 1645	0	408	145	0	6	2	3	1	47	0	1	0	0	**613**	
1645 - 1700	0	385	128	0	7	1	2	1	32	1	1	0	0	**558**	**2432**
1700 - 1715	0	386	131	2	5	3	2	2	31	0	0	0	0	**562**	
1715 - 1730	0	370	126	5	8	1	1	1	36	1	0	0	0	**549**	
1730 - 1745	0	349	121	0	7	2	1	1	35	0	0	0	0	**516**	
1745 - 1800	0	342	108	0	1	4	0	0	48	1	0	0	0	**504**	**2131**
1800 - 1815	0	329	102	0	5	5	1	2	29	0	0	0	0	**473**	
1815 - 1830	0	362	114	0	6	1	1	1	48	0	0	0	0	**533**	
1830 - 1845	3	291	82	0	5	3	0	1	40	0	0	0	0	**425**	
1845 - 1900	1	291	86	0	4	0	0	0	24	0	0	0	0	**406**	**1837**
1900 - 1915	1	289	70	1	7	1	0	0	30	0	0	0	0	**399**	
1915 - 1930	0	274	68	0	3	3	0	0	28	0	0	0	0	**376**	
1930 - 1945	1	268	62	1	4	1	0	0	22	0	0	0	0	**359**	
1945 - 2000	0	238	53	0	2	3	0	0	17	0	1	0	0	**314**	**1448**
2000 - 2015	0	213	42	0	1	1	0	0	18	0	1	0	0	**276**	
2015 - 2030	0	204	41	0	2	1	0	1	23	0	0	0	0	**272**	
2030 - 2045	0	184	38	0	5	2	0	0	19	0	0	0	0	**248**	
2045 - 2100	0	188	39	0	2	1	0	0	22	0	1	0	0	**253**	**1049**
2100 - 2115	0	178	34	0	4	0	0	0	34	0	0	0	0	**250**	
2115 - 2130	0	189	44	0	6	1	0	0	19	0	1	0	0	**260**	
2130 - 2145	0	162	27	1	1	0	0	0	18	0	3	0	0	**212**	
2145 - 2200	0	145	21	1	5	1	0	0	10	0	1	0	0	**184**	**906**
2200 - 2215	0	133	23	0	1	0	0	0	13	0	2	0	0	**172**	
2215 - 2230	0	120	17	0	3	0	0	0	15	0	4	0	0	**159**	
2230 - 2245	0	104	14	0	2	0	0	0	11	0	2	0	0	**133**	
2245 - 2300	0	92	11	0	0	0	0	0	8	0	2	0	0	**113**	**577**
2300 - 2315	0	90	13	0	3	0	0	0	14	0	3	0	0	**123**	
2315 - 2330	0	70	11	1	1	0	0	0	11	0	4	0	0	**98**	
2330 - 2345	0	63	9	0	1	0	0	0	15	0	2	0	0	**90**	
2345 - 0000	0	65	8	0	1	0	0	0	16	0	1	0	0	**91**	**402**

Session Total	32	22861	7510	43	1037	230	82	205	3713	53	105	0	1	**35872**
Session Average	0.33	238.14	78.23	0.45	10.80	2.40	0.85	2.14	38.68	0.55	1.09	0.00	0.01	**373.67**
Session Percentage	0.09	63.73	20.94	0.12	2.89	0.64	0.23	0.57	10.35	0.15	0.29	0.00	0.00	

AM Peak Hour	0900 - 1000	0730 - 0830	0715 - 0815	0915 - 1015	0845 - 0945	0715 - 0815	0815 - 0915	0715 - 0815	0715 - 0815	0645 - 0745	0500 - 0600	-	-	**0730 - 0830**
AM Peak Hour Volume	5	1688	636	7	150	23	8	27	276	11	11	0	0	**2767**

Noon Peak Hour	1330 - 1430	1445 - 1545	1445 - 1545	1000 - 1100	1000 - 1100	1100 - 1200	1330 - 1430	1045 - 1145	1245 - 1345	1045 - 1145	1100 - 1200	-	-	**1445 - 1545**
Noon Peak Hour Volume	8	1848	654	6	92	21	14	30	269	8	1	0	0	**2840**

PM Peak Hour	1500 - 1600	1515 - 1615	1515 - 1615	1515 - 1615	1500 - 1600	1745 - 1845	1500 - 1600	1500 - 1600	1500 - 1600	1515 - 1615	1530 - 1630	-	-	**1515 - 1615**
PM Peak Hour Volume	5	1894	679	7	58	13	10	7	222	3	3	0	0	**2868**

Site 3
I-26 W/Bound Off-Ramp,
east of I-26

Date
Wednesday, April 24, 2024

Lat/Long
34.027654°, -81.101691°

Weather
Fair
66°F

Click here for Detailed Weather

0000 - 2400 (Weekday 24h Session) (04-24-2024)
SB WB 15min

	Westbound (Movement 3.1)													15min	60min
TIME	1	2	3	4	5	6	7	8	9	10	11	12	13	Total	Total
0000 - 0015	0	61	4	0	1	0	0	0	16	0	2	0	0	**84**	
0015 - 0030	0	80	1	0	2	0	0	0	13	0	1	0	0	**97**	
0030 - 0045	0	74	1	0	1	0	0	0	11	0	2	0	0	**89**	
0045 - 0100	0	54	3	0	0	0	0	0	14	0	3	0	0	**74**	**344**
0100 - 0115	0	42	2	0	0	0	0	0	7	0	1	0	0	**52**	
0115 - 0130	0	48	3	0	5	0	0	0	13	0	1	0	0	**70**	
0130 - 0145	0	34	1	0	2	0	0	0	14	0	1	0	0	**52**	
0145 - 0200	0	31	2	0	1	0	0	0	12	0	3	0	0	**49**	**223**
0200 - 0215	0	31	1	0	4	0	0	0	10	0	2	0	0	**48**	
0215 - 0230	0	30	2	0	2	0	0	0	11	0	3	0	0	**48**	
0230 - 0245	0	28	1	0	2	2	0	2	17	0	6	0	0	**58**	
0245 - 0300	0	25	1	0	4	0	0	0	16	0	1	0	0	**47**	**201**
0300 - 0315	0	39	2	0	1	0	0	0	18	0	1	0	0	**61**	
0315 - 0330	0	34	0	0	2	2	0	0	17	0	1	0	0	**56**	
0330 - 0345	0	39	0	0	3	0	0	0	24	0	2	0	0	**68**	
0345 - 0400	0	37	2	0	4	0	0	0	18	0	5	0	0	**66**	**251**
0400 - 0415	0	50	1	0	4	0	0	0	36	0	1	0	0	**92**	
0415 - 0430	0	40	0	0	9	1	0	0	41	0	1	0	0	**92**	
0430 - 0445	0	60	0	0	9	0	0	0	33	0	2	0	0	**104**	
0445 - 0500	0	72	3	0	3	0	0	0	32	0	3	0	0	**113**	**401**
0500 - 0515	0	77	0	0	10	0	0	0	51	0	1	0	0	**139**	
0515 - 0530	0	104	4	0	6	0	0	0	53	0	1	0	0	**168**	
0530 - 0545	0	144	5	0	9	0	0	1	42	0	1	0	0	**202**	
0545 - 0600	0	154	3	0	14	0	0	0	49	0	1	0	0	**221**	**730**
0600 - 0615	0	201	9	1	23	2	0	0	53	0	2	0	0	**291**	
0615 - 0630	0	223	45	0	9	7	0	0	52	0	3	0	0	**339**	
0630 - 0645	0	267	92	0	11	4	0	2	62	0	0	0	0	**438**	
0645 - 0700	0	273	105	0	15	4	0	3	51	1	1	0	0	**453**	**1521**
0700 - 0715	0	309	147	0	13	4	1	5	39	0	0	0	0	**518**	
0715 - 0730	1	389	137	0	16	4	0	6	71	2	1	0	0	**627**	
0730 - 0745	0	515	177	0	21	8	2	7	57	3	1	0	0	**791**	
0745 - 0800	0	467	181	1	25	5	0	6	62	0	1	0	0	**748**	**2684**
0800 - 0815	0	411	154	2	26	2	6	6	58	0	2	1	0	**668**	
0815 - 0830	0	395	156	0	34	4	3	1	63	0	0	0	0	**656**	
0830 - 0845	0	360	133	2	18	5	0	11	68	1	4	1	0	**603**	
0845 - 0900	1	373	156	1	30	2	2	7	59	0	1	0	0	**632**	**2559**
0900 - 0915	0	322	144	1	28	3	0	5	60	3	1	1	0	**568**	
0915 - 0930	0	302	135	1	32	2	1	10	61	1	2	0	0	**547**	
0930 - 0945	0	326	133	1	49	4	6	5	60	1	0	0	0	**585**	
0945 - 1000	1	330	121	1	13	5	1	5	75	2	0	0	0	**554**	**2254**
1000 - 1015	1	311	126	0	18	7	1	8	60	3	0	1	0	**536**	
1015 - 1030	1	337	118	1	16	3	0	2	62	4	0	0	0	**544**	
1030 - 1045	1	343	138	0	14	6	1	8	48	4	0	0	0	**563**	
1045 - 1100	0	374	151	0	16	3	1	6	56	3	0	0	0	**610**	**2253**
1100 - 1115	1	329	115	1	15	1	3	4	52	4	0	0	0	**525**	
1115 - 1130	0	379	120	0	11	3	2	8	49	3	0	0	0	**575**	
1130 - 1145	4	399	136	0	14	1	4	3	64	4	0	0	0	**629**	
1145 - 1200	0	359	125	0	14	3	7	3	47	3	0	0	0	**561**	**2290**
1200 - 1215	1	397	119	2	16	5	5	7	65	2	0	0	0	**619**	
1215 - 1230	1	387	141	1	9	4	2	0	60	4	0	0	0	**609**	
1230 - 1245	0	372	117	0	11	4	0	3	50	4	0	0	0	**561**	
1245 - 1300	1	404	121	0	11	1	0	1	52	2	0	1	0	**594**	**2383**
1300 - 1315	0	378	124	4	12	6	0	2	59	5	0	0	0	**590**	
1315 - 1330	1	396	122	1	11	7	3	3	61	2	0	0	0	**607**	
1330 - 1345	0	421	131	1	8	5	4	2	56	3	0	0	0	**631**	
1345 - 1400	1	429	161	3	12	1	1	3	69	0	0	0	0	**680**	**2508**
1400 - 1415	1	433	141	1	4	2	4	1	57	1	0	0	0	**645**	
1415 - 1430	0	432	123	0	13	6	2	4	67	1	0	0	0	**648**	
1430 - 1445	0	477	137	3	20	1	4	2	44	0	2	0	0	**690**	
1445 - 1500	1	489	143	5	4	1	4	2	62	1	1	1	0	**714**	**2697**
1500 - 1515	1	478	147	0	13	4	4	1	59	4	0	0	0	**711**	
1515 - 1530	2	523	171	3	12	5	3	1	48	1	1	0	0	**770**	
1530 - 1545	0	547	125	0	7	5	4	2	40	2	1	0	0	**733**	
1545 - 1600	1	593	139	1	9	1	2	1	38	3	0	0	0	**788**	**3002**
1600 - 1615	2	572	135	0	10	3	4	2	54	3	0	0	0	**785**	
1615 - 1630	0	476	133	1	6	6	2	2	44	1	0	0	0	**671**	
1630 - 1645	2	465	121	1	5	2	0	1	42	1	0	0	0	**640**	
1645 - 1700	1	364	142	0	5	2	1	2	26	0	0	0	0	**543**	**2639**
1700 - 1715	1	331	126	2	4	4	0	3	43	3	0	0	0	**517**	
1715 - 1730	0	338	81	0	7	1	0	0	40	0	0	0	0	**467**	
1730 - 1745	0	351	102	0	6	1	0	1	24	1	1	0	0	**487**	
1745 - 1800	1	370	125	1	6	3	0	1	50	1	1	0	0	**559**	**2030**
1800 - 1815	0	405	122	0	5	4	1	1	33	1	0	0	0	**572**	
1815 - 1830	1	419	95	1	2	1	0	0	38	0	0	0	0	**557**	
1830 - 1845	1	340	88	0	5	0	1	2	31	0	0	0	0	**468**	
1845 - 1900	1	346	77	0	2	0	0	1	22	1	0	0	0	**450**	**2047**
1900 - 1915	1	357	74	0	5	2	0	0	34	0	0	0	0	**473**	
1915 - 1930	1	303	84	0	8	2	0	1	27	1	0	0	0	**427**	
1930 - 1945	0	286	68	0	2	1	0	2	27	0	0	0	0	**386**	
1945 - 2000	1	260	61	0	1	2	0	1	31	1	1	0	0	**359**	**1645**
2000 - 2015	0	261	41	0	2	2	0	0	19	0	0	0	0	**325**	
2015 - 2030	0	209	31	0	5	2	0	1	22	0	0	0	0	**270**	
2030 - 2045	0	200	32	0	5	0	0	0	28	0	1	0	0	**266**	
2045 - 2100	0	207	32	0	4	0	0	1	23	0	1	0	0	**268**	**1129**
2100 - 2115	0	190	27	0	3	0	0	0	14	0	2	0	0	**236**	
2115 - 2130	0	181	25	1	1	1	0	0	17	0	0	0	0	**226**	
2130 - 2145	0	158	21	0	3	0	0	0	14	0	2	0	0	**198**	
2145 - 2200	0	142	16	0	3	0	0	0	20	0	0	0	0	**181**	**841**
2200 - 2215	0	140	14	0	4	0	0	0	19	0	3	0	0	**180**	
2215 - 2230	1	129	12	1	1	0	0	0	14	0	1	0	0	**159**	
2230 - 2245	0	112	9	0	1	0	0	0	7	0	1	0	0	**130**	
2245 - 2300	0	109	7	0	0	0	0	0	12	0	3	0	0	**131**	**600**
2300 - 2315	0	85	7	0	2	0	0	0	15	0	0	0	0	**109**	
2315 - 2330	0	118	14	1	1	0	0	0	14	0	2	0	0	**150**	
2330 - 2345	0	72	5	0	2	1	0	0	16	0	0	0	0	**96**	
2345 - 0000	0	80	8	0	2	0	0	0	11	0	1	0	0	**102**	**457**

Session Total	36	25214	7193	47	869	195	92	181	3675	91	90	6	0	**37689**
Session Average	0.38	262.65	74.93	0.49	9.05	2.03	0.96	1.89	38.28	0.95	0.94	0.06	0.00	**392.59**
Session Percentage	0.10	66.90	19.09	0.12	2.31	0.52	0.24	0.48	9.75	0.24	0.24	0.02	0.00	

AM Peak Hour	0945 - 1045	0730 - 0830	0730 - 0830	0745 - 0845	0845 - 0945	0700 - 0800	0730 - 0830	0830 - 0930	0930 - 1030	0945 - 1045	0830 - 0930	0745 - 0845	-	**0730 - 0830**
AM Peak Hour Volume	4	1788	668	5	139	21	11	33	257	13	8	2	0	**2863**

Noon Peak Hour	1130 - 1230	1445 - 1545	1430 - 1530	1430 - 1530	1000 - 1100	1000 - 1100	1115 - 1215	1030 - 1130	1330 - 1430	1015 - 1115	1430 - 1530	1000 - 1100	-	**1445 - 1545**
Noon Peak Hour Volume	6	2037	598	11	64	19	18	26	249	15	4	1	0	**2928**

PM Peak Hour	1515 - 1615	1515 - 1615	1500 - 1600	1500 - 1600	1500 - 1600	1500 - 1600	1500 - 1600	1615 - 1715	1500 - 1600	1500 - 1600	1500 - 1600	-	-	**1515 - 1615**
PM Peak Hour Volume	5	2235	582	4	41	15	13	8	185	10	2	0	0	**3076**

Site 3
I-26 W/Bound Off-Ramp,
east of I-26

Date
Thursday, April 25, 2024

Lat/Long
34.027654°, -81.101691°

Weather
Fair
67°F

Click here for Detailed Weather

0000 - 2400 (Weekday 24h Session) (04-25-2024)
SB WB 15min

	Westbound (Movement 3.1)													15min	60min
TIME	1	2	3	4	5	6	7	8	9	10	11	12	13	Total	Total
0000 - 0015	2	70	9	0	0	0	0	0	12	0	0	0	0	**93**	
0015 - 0030	1	90	16	0	2	0	0	0	15	0	3	0	0	**127**	
0030 - 0045	0	82	11	0	3	0	0	1	11	0	0	0	0	**108**	
0045 - 0100	0	54	4	0	2	0	0	1	11	0	0	0	0	**72**	**400**
0100 - 0115	0	47	4	0	0	0	0	0	13	0	2	0	0	**66**	
0115 - 0130	0	35	2	0	1	1	0	0	12	0	1	0	0	**52**	
0130 - 0145	0	31	4	0	1	0	0	0	15	0	1	0	0	**52**	
0145 - 0200	0	25	4	0	3	0	0	0	10	0	1	0	0	**43**	**213**
0200 - 0215	0	40	3	0	1	1	0	0	16	0	2	1	0	**64**	
0215 - 0230	0	34	4	0	1	0	0	1	12	0	0	0	0	**52**	
0230 - 0245	0	17	2	0	1	0	0	0	16	0	2	0	0	**38**	
0245 - 0300	0	23	7	0	1	0	0	0	14	0	1	0	0	**46**	**200**
0300 - 0315	0	21	2	0	5	0	0	0	14	0	2	1	0	**45**	
0315 - 0330	0	38	5	0	2	0	0	0	17	0	3	1	0	**66**	
0330 - 0345	0	41	4	0	2	1	0	0	24	0	2	0	0	**74**	
0345 - 0400	0	35	5	0	6	1	0	0	29	0	0	0	0	**76**	**261**
0400 - 0415	0	44	3	0	8	0	0	0	27	0	2	0	0	**84**	
0415 - 0430	0	37	4	0	6	0	0	1	33	0	1	0	0	**82**	
0430 - 0445	0	55	10	0	9	3	0	2	38	0	2	0	0	**119**	
0445 - 0500	0	83	6	0	4	1	0	1	30	0	2	0	0	**127**	**412**
0500 - 0515	0	72	12	0	6	1	0	1	33	0	2	1	0	**128**	
0515 - 0530	0	86	19	0	12	2	0	3	45	0	0	0	0	**167**	
0530 - 0545	0	101	25	0	14	1	0	1	50	0	1	0	0	**193**	
0545 - 0600	0	128	32	0	10	2	0	1	49	0	1	0	0	**223**	**711**
0600 - 0615	0	161	37	2	18	4	1	2	59	0	1	2	0	**287**	
0615 - 0630	0	209	59	0	14	4	0	2	46	1	0	0	0	**335**	
0630 - 0645	0	285	93	0	16	3	0	1	51	1	1	0	0	**451**	
0645 - 0700	0	276	126	0	13	3	2	5	60	1	1	0	0	**487**	**1560**
0700 - 0715	2	287	121	0	17	7	2	6	51	5	0	0	0	**498**	
0715 - 0730	2	418	132	0	15	9	0	8	57	1	1	1	0	**644**	
0730 - 0745	2	468	166	0	35	13	2	1	70	4	0	0	0	**761**	
0745 - 0800	0	490	176	0	24	4	1	5	56	3	0	0	0	**759**	**2662**
0800 - 0815	0	383	181	1	22	5	4	8	61	2	0	1	0	**668**	
0815 - 0830	1	399	154	0	17	4	7	2	62	1	0	0	0	**647**	
0830 - 0845	0	360	153	1	32	2	7	7	50	0	1	1	0	**614**	
0845 - 0900	0	370	170	2	15	4	1	1	61	1	3	0	0	**628**	**2557**
0900 - 0915	0	289	150	0	26	7	0	2	56	1	0	0	0	**531**	
0915 - 0930	0	288	147	0	35	4	2	4	44	2	0	0	0	**526**	
0930 - 0945	1	355	143	0	35	5	2	4	56	0	0	0	0	**601**	
0945 - 1000	2	366	146	2	21	4	0	2	49	3	0	0	0	**595**	**2253**
1000 - 1015	2	359	125	3	27	4	2	5	58	3	0	1	0	**589**	
1015 - 1030	0	351	145	0	22	2	10	2	66	2	0	0	0	**600**	
1030 - 1045	1	385	116	0	16	6	1	7	63	2	0	0	0	**597**	
1045 - 1100	3	383	158	0	23	4	0	5	64	1	0	0	0	**641**	**2427**
1100 - 1115	2	368	106	1	25	6	0	5	61	2	0	0	0	**576**	
1115 - 1130	0	416	121	0	19	3	0	8	54	0	0	0	0	**621**	
1130 - 1145	0	420	117	2	12	5	0	3	63	2	0	0	0	**624**	
1145 - 1200	0	430	105	0	13	12	1	7	44	0	0	0	0	**612**	**2433**
1200 - 1215	0	388	136	0	19	8	0	5	45	1	0	0	0	**602**	
1215 - 1230	0	372	142	0	14	5	0	2	59	1	0	0	0	**595**	
1230 - 1245	0	441	138	0	13	3	2	3	62	0	0	0	0	**662**	
1245 - 1300	2	407	141	1	16	5	0	4	62	3	0	0	0	**641**	**2500**
1300 - 1315	0	416	414	2	20	5	0	2	59	0	0	0	0	**918**	
1315 - 1330	0	404	142	0	15	7	0	3	52	2	0	0	0	**625**	
1330 - 1345	0	421	135	4	10	7	0	0	45	1	0	0	0	**623**	
1345 - 1400	0	435	167	0	11	12	0	0	57	0	1	0	0	**683**	**2849**
1400 - 1415	0	431	141	0	16	5	0	3	58	0	0	0	0	**654**	
1415 - 1430	0	488	168	4	14	8	0	3	61	1	1	0	0	**748**	
1430 - 1445	1	444	159	3	13	6	0	5	45	1	1	0	0	**678**	
1445 - 1500	1	476	153	0	20	7	0	6	35	0	1	0	0	**699**	**2779**
1500 - 1515	0	515	151	2	17	7	0	2	53	1	0	0	0	**748**	
1515 - 1530	0	532	146	2	10	7	0	1	33	0	0	0	0	**731**	
1530 - 1545	0	544	157	0	9	2	0	2	39	1	1	0	0	**755**	
1545 - 1600	0	470	144	0	13	5	1	0	37	0	1	0	0	**671**	**2905**
1600 - 1615	0	381	124	1	8	3	0	1	31	0	0	0	0	**549**	
1615 - 1630	1	386	127	0	7	6	0	2	27	0	0	0	0	**556**	
1630 - 1645	0	359	139	0	10	3	0	1	38	0	0	0	0	**550**	
1645 - 1700	1	415	133	0	11	4	0	0	32	1	1	0	0	**598**	**2253**
1700 - 1715	0	322	102	1	7	2	0	6	41	0	0	0	0	**481**	
1715 - 1730	0	333	116	0	6	2	0	1	29	0	0	0	0	**487**	
1730 - 1745	0	291	101	0	6	1	0	0	33	1	0	0	0	**433**	
1745 - 1800	0	331	125	1	9	1	0	0	47	0	0	0	0	**514**	**1915**
1800 - 1815	0	438	133	0	11	2	0	2	55	0	0	0	0	**641**	
1815 - 1830	2	363	112	1	7	1	0	2	30	0	0	0	0	**518**	
1830 - 1845	3	344	123	0	3	0	0	1	31	0	0	0	0	**505**	
1845 - 1900	0	356	97	3	7	2	0	0	15	0	0	0	0	**480**	**2144**
1900 - 1915	0	301	91	0	7	3	0	0	30	0	0	0	0	**432**	
1915 - 1930	1	338	96	1	7	1	0	0	26	0	0	0	0	**470**	
1930 - 1945	0	303	63	0	7	0	0	1	22	0	0	0	0	**396**	
1945 - 2000	0	301	73	1	2	1	0	0	16	0	0	0	0	**394**	**1692**
2000 - 2015	0	271	76	0	6	0	0	0	19	0	1	0	0	**373**	
2015 - 2030	0	238	61	0	4	2	0	0	21	0	0	0	0	**326**	
2030 - 2045	0	234	58	1	3	2	0	0	23	0	0	0	0	**321**	
2045 - 2100	0	243	62	0	2	1	0	0	28	0	1	0	0	**337**	**1357**
2100 - 2115	0	161	54	0	2	1	0	0	19	0	1	0	0	**238**	
2115 - 2130	0	143	44	0	2	0	0	0	20	0	1	0	0	**210**	
2130 - 2145	0	139	49	0	2	0	0	0	18	0	1	0	0	**209**	
2145 - 2200	0	125	47	0	4	2	0	0	15	0	1	0	0	**194**	**851**
2200 - 2215	0	121	49	0	0	0	0	0	18	0	0	0	0	**188**	
2215 - 2230	0	119	47	0	2	1	0	0	15	0	1	0	0	**185**	
2230 - 2245	0	121	46	0	2	0	0	0	14	0	0	0	0	**183**	
2245 - 2300	0	97	39	0	2	0	0	0	11	0	3	0	0	**152**	**708**
2300 - 2315	0	98	37	0	1	0	0	0	9	0	1	0	0	**146**	
2315 - 2330	0	84	45	0	4	0	0	0	18	0	1	0	0	**152**	
2330 - 2345	0	69	41	0	0	0	0	0	13	0	2	0	0	**125**	
2345 - 0000	0	55	29	0	4	0	0	0	9	0	1	0	0	**98**	**521**

Session Total	33	24869	8517	42	997	278	48	173	3483	52	61	10	0	**38563**
Session Average	0.34	259.05	88.72	0.44	10.39	2.90	0.50	1.80	36.28	0.54	0.64	0.10	0.00	**401.70**
Session Percentage	0.09	64.49	22.09	0.11	2.59	0.72	0.12	0.45	9.03	0.13	0.16	0.03	0.00	

AM Peak Hour	0645 - 0745	0715 - 0815	0730 - 0830	0915 - 1015	0915 - 1015	0700 - 0800	0745 - 0845	0715 - 0815	0730 - 0830	0700 - 0800	0500 - 0600	0515 - 0615	-	**0730 - 0830**
AM Peak Hour Volume	6	1759	677	5	118	33	19	22	249	13	4	2	0	**2835**

Noon Peak Hour	1000 - 1100	1445 - 1545	1300 - 1400	1415 - 1515	1000 - 1100	1330 - 1430	1000 - 1100	1030 - 1130	1015 - 1115	1000 - 1100	1345 - 1445	1000 - 1100	-	**1445 - 1545**
Noon Peak Hour Volume	6	2067	858	9	88	32	13	25	254	8	3	1	0	**2933**

PM Peak Hour	1745 - 1845	1500 - 1600	1500 - 1600	1500 - 1600	1500 - 1600	1500 - 1600	1500 - 1600	1615 - 1715	1730 - 1830	1500 - 1600	1500 - 1600	-	-	**1500 - 1600**
PM Peak Hour Volume	5	2061	598	4	49	21	1	9	165	2	2	0	0	**2905**

Site 3
I-26 W/Bound Off-Ramp,
east of I-26

Date
Friday, April 26, 2024

Lat/Long
34.027654°, -81.101691°

Weather
Cloudy
69°F

Click here for Detailed Weather

0000 - 2400 (Weekday 24h Session) (04-26-2024)
SB WB 15min

	Westbound (Movement 3.1)													15min	60min
TIME	1	2	3	4	5	6	7	8	9	10	11	12	13	Total	Total
0000 - 0015	0	69	10	0	3	1	0	0	16	0	1	0	0	**100**	
0015 - 0030	0	79	11	0	1	1	0	0	9	0	0	0	0	**101**	
0030 - 0045	0	78	14	0	3	1	0	1	6	0	2	1	0	**106**	
0045 - 0100	0	58	7	0	2	2	0	0	10	0	1	0	0	**80**	**387**
0100 - 0115	0	50	6	0	1	0	0	0	11	0	1	0	0	**69**	
0115 - 0130	0	48	5	0	3	1	0	0	9	0	0	1	0	**67**	
0130 - 0145	0	29	4	0	1	0	0	0	14	0	2	1	0	**51**	
0145 - 0200	0	35	8	0	0	2	0	1	10	0	1	1	0	**58**	**245**
0200 - 0215	0	30	4	0	2	2	0	0	15	0	1	0	0	**54**	
0215 - 0230	0	26	3	0	2	2	0	1	13	0	1	0	0	**48**	
0230 - 0245	0	28	4	0	1	3	0	1	15	0	1	0	0	**53**	
0245 - 0300	0	37	5	0	1	2	0	1	15	0	2	0	0	**63**	**218**
0300 - 0315	0	35	4	0	1	3	0	0	12	0	2	1	0	**58**	
0315 - 0330	0	30	2	0	3	1	0	0	13	0	2	1	0	**52**	
0330 - 0345	0	35	6	0	4	4	0	2	22	0	0	0	0	**73**	
0345 - 0400	0	45	6	0	4	4	0	1	26	0	3	1	0	**90**	**273**
0400 - 0415	0	37	3	0	3	6	0	3	26	0	1	0	0	**79**	
0415 - 0430	0	44	4	0	6	7	0	1	25	0	2	0	0	**89**	
0430 - 0445	0	51	12	0	5	1	0	0	22	0	0	1	0	**92**	
0445 - 0500	0	57	18	0	3	0	0	0	41	0	1	2	0	**122**	**382**
0500 - 0515	0	66	30	0	6	0	0	0	40	0	1	1	0	**144**	
0515 - 0530	0	87	30	0	9	5	0	0	47	0	0	1	0	**179**	
0530 - 0545	0	98	28	0	5	2	0	0	46	0	1	0	0	**180**	
0545 - 0600	0	112	39	0	7	2	0	0	61	0	1	0	0	**222**	**725**
0600 - 0615	0	127	34	0	7	3	0	0	44	0	0	0	0	**215**	
0615 - 0630	0	202	57	0	11	4	0	0	44	0	2	2	0	**322**	
0630 - 0645	0	242	92	0	13	8	0	0	47	0	1	1	0	**404**	
0645 - 0700	0	250	99	1	9	3	0	3	52	0	1	1	0	**419**	**1360**
0700 - 0715	1	283	112	0	11	7	1	1	52	0	0	0	0	**468**	
0715 - 0730	3	382	156	0	12	12	1	2	59	2	1	0	0	**630**	
0730 - 0745	2	467	153	0	23	10	0	2	56	1	1	0	0	**715**	
0745 - 0800	0	456	167	0	10	9	0	0	44	2	2	0	0	**690**	**2503**
0800 - 0815	0	376	160	0	17	11	1	4	42	0	0	0	0	**611**	
0815 - 0830	0	382	178	1	19	5	0	0	69	0	1	1	0	**656**	
0830 - 0845	1	404	168	4	16	16	0	6	63	1	1	2	0	**682**	
0845 - 0900	1	376	154	2	12	8	0	1	43	1	0	1	0	**599**	**2548**
0900 - 0915	1	302	170	4	20	16	0	2	41	1	0	0	0	**557**	
0915 - 0930	1	333	158	0	40	14	0	4	65	0	0	0	0	**615**	
0930 - 0945	3	391	141	0	27	6	0	5	64	1	0	0	0	**638**	
0945 - 1000	0	352	149	1	17	4	0	1	44	0	0	0	0	**568**	**2378**
1000 - 1015	0	349	146	3	22	5	0	5	51	1	0	0	0	**582**	
1015 - 1030	0	413	148	0	11	12	0	3	47	0	0	0	0	**634**	
1030 - 1045	0	428	145	1	9	6	4	3	46	1	0	0	0	**643**	
1045 - 1100	1	462	144	1	9	4	3	4	49	3	0	0	0	**680**	**2539**
1100 - 1115	1	464	151	0	14	4	4	2	48	2	0	0	0	**690**	
1115 - 1130	1	493	138	4	20	3	5	5	53	5	1	0	0	**728**	
1130 - 1145	0	484	133	3	10	5	2	4	48	1	0	0	0	**690**	
1145 - 1200	2	506	126	0	18	4	2	3	57	2	0	0	0	**720**	**2828**
1200 - 1215	2	460	147	3	20	6	2	3	32	3	0	1	0	**679**	
1215 - 1230	0	482	150	1	16	10	5	3	40	3	0	0	0	**710**	
1230 - 1245	3	498	156	0	19	6	1	1	58	0	0	0	0	**742**	
1245 - 1300	0	520	141	4	19	6	1	5	51	2	0	0	0	**749**	**2880**
1300 - 1315	0	260	69	0	5	0	2	1	29	0	1	0	0	**367**	
1315 - 1330	0	266	75	0	4	0	1	0	40	0	0	0	0	**386**	
1330 - 1345	0	440	146	0	9	7	4	3	48	4	0	0	0	**661**	
1345 - 1400	1	405	118	0	4	0	7	2	49	1	0	0	0	**587**	**2001**
1400 - 1415	0	364	129	1	16	2	8	3	42	4	0	1	0	**570**	
1415 - 1430	6	435	120	1	12	6	0	5	40	0	0	0	0	**625**	
1430 - 1445	1	469	133	0	12	0	0	9	41	1	1	0	0	**667**	
1445 - 1500	4	538	14	0	9	1	2	2	35	1	0	0	0	**606**	**2468**
1500 - 1515	0	484	144	0	9	8	2	1	31	2	0	1	0	**682**	
1515 - 1530	0	568	145	3	13	1	2	1	32	1	0	0	0	**766**	
1530 - 1545	1	574	170	1	15	0	1	4	21	1	0	0	0	**788**	
1545 - 1600	1	473	138	4	8	0	1	1	27	1	0	0	0	**654**	**2890**
1600 - 1615	1	522	150	1	15	4	3	0	37	2	0	0	0	**735**	
1615 - 1630	4	439	120	2	8	1	0	1	18	0	0	0	0	**593**	
1630 - 1645	2	503	151	0	9	3	2	5	22	2	0	0	0	**699**	
1645 - 1700	2	467	108	0	11	0	0	2	19	1	0	0	0	**610**	**2637**
1700 - 1715	0	498	139	0	7	2	2	0	26	0	0	0	0	**674**	
1715 - 1730	3	481	105	0	5	1	0	1	21	0	0	0	0	**617**	
1730 - 1745	3	471	103	0	4	2	0	2	26	0	0	0	0	**611**	
1745 - 1800	1	467	118	1	7	2	0	2	31	0	0	0	0	**629**	**2531**
1800 - 1815	2	442	121	0	8	3	1	1	21	0	0	0	0	**599**	
1815 - 1830	1	488	166	4	8	2	1	0	22	0	0	0	0	**692**	
1830 - 1845	0	455	124	0	6	1	0	3	25	0	0	0	0	**614**	
1845 - 1900	3	430	102	0	9	5	0	2	21	0	0	0	0	**572**	**2477**
1900 - 1915	1	408	113	0	8	1	0	0	25	0	0	0	0	**556**	
1915 - 1930	5	390	105	0	4	2	0	3	18	0	0	0	0	**527**	
1930 - 1945	0	369	82	0	6	1	0	1	16	0	0	0	0	**475**	
1945 - 2000	1	286	80	3	7	1	0	1	18	0	0	0	0	**397**	**1955**
2000 - 2015	0	297	96	0	8	3	0	1	19	0	1	0	0	**425**	
2015 - 2030	0	218	129	0	2	1	0	6	16	0	0	0	0	**372**	
2030 - 2045	0	194	127	0	5	1	0	2	19	0	0	0	0	**348**	
2045 - 2100	0	180	163	3	6	0	0	3	16	0	1	0	0	**372**	**1517**
2100 - 2115	1	187	158	1	3	0	0	0	19	0	0	0	0	**369**	
2115 - 2130	1	144	152	0	4	1	0	4	11	0	0	0	0	**317**	
2130 - 2145	0	152	136	0	2	1	0	0	14	0	3	0	0	**308**	
2145 - 2200	0	141	131	0	2	3	0	1	6	0	0	0	0	**284**	**1278**
2200 - 2215	0	212	38	0	2	1	0	1	15	1	0	0	0	**270**	
2215 - 2230	0	181	23	0	1	1	0	0	14	2	2	0	0	**224**	
2230 - 2245	0	184	28	0	2	1	0	0	13	1	2	0	0	**231**	
2245 - 2300	0	158	27	0	0	0	0	0	14	1	0	0	0	**200**	**925**
2300 - 2315	0	144	22	0	3	0	0	0	9	0	1	0	0	**179**	
2315 - 2330	0	150	21	1	2	1	0	0	10	0	0	0	0	**185**	
2330 - 2345	0	125	20	0	1	0	0	0	11	0	0	0	0	**157**	
2345 - 0000	1	87	12	0	1	0	0	0	10	1	0	0	0	**112**	**633**

Session Total	69	27294	8707	59	809	329	71	158	2950	59	50	23	0	**40578**
Session Average	0.72	284.31	90.70	0.61	8.43	3.43	0.74	1.65	30.73	0.61	0.52	0.24	0.00	**422.69**
Session Percentage	0.17	67.26	21.46	0.15	1.99	0.81	0.17	0.39	7.27	0.15	0.12	0.06	0.00	

AM Peak Hour	0645 - 0745	0715 - 0815	0745 - 0845	0815 - 0915	0915 - 1015	0830 - 0930	0945 - 1045	0915 - 1015	0915 - 1015	0700 - 0800	0530 - 0630	0600 - 0700	-	**0730 - 0830**
AM Peak Hour Volume	6	1681	673	11	106	54	4	15	224	5	4	4	0	**2672**

Noon Peak Hour	1400 - 1500	1445 - 1545	1200 - 1300	1115 - 1215	1200 - 1300	1200 - 1300	1315 - 1415	1345 - 1445	1100 - 1200	1030 - 1130	1030 - 1130	1115 - 1215	-	**1200 - 1300**
Noon Peak Hour Volume	11	2164	594	10	74	28	20	19	206	11	1	1	0	**2880**

PM Peak Hour	1600 - 1700	1515 - 1615	1515 - 1615	1515 - 1615	1515 - 1615	1800 - 1900	1515 - 1615	1945 - 2045	1515 - 1615	1500 - 1600	1915 - 2015	1500 - 1600	-	**1515 - 1615**
PM Peak Hour Volume	9	2137	603	9	51	11	7	10	117	5	1	1	0	**2943**

Site 3
I-26 W/Bound Off-Ramp,
east of I-26

Date
Saturday, April 27, 2024

Lat/Long
34.027654°, -81.101691°

Weather
Mostly Cloudy
69°F

Click here for Detailed Weather

0000 - 2400 (Saturday 24h Session) (04-27-2024)
SB WB 15min

	Westbound (Movement 3.1)													15min	60min
TIME	1	2	3	4	5	6	7	8	9	10	11	12	13	Total	Total
0000 - 0015	0	82	18	0	1	0	0	0	8	0	2	0	0	**111**	
0015 - 0030	0	96	21	0	0	1	0	0	11	0	2	0	0	**131**	
0030 - 0045	0	92	19	0	1	0	0	0	7	0	0	0	0	**119**	
0045 - 0100	0	58	17	0	0	1	0	0	10	0	1	0	0	**87**	**448**
0100 - 0115	0	52	15	0	0	0	0	0	9	0	0	0	0	**76**	
0115 - 0130	0	56	11	0	0	0	0	0	8	0	2	0	0	**77**	
0130 - 0145	0	41	9	0	3	1	0	0	7	0	0	0	0	**61**	
0145 - 0200	0	33	5	0	0	0	0	0	11	0	2	0	0	**51**	**265**
0200 - 0215	0	36	7	0	1	0	0	0	6	0	2	0	0	**52**	
0215 - 0230	0	38	10	0	1	4	0	0	5	0	0	0	0	**58**	
0230 - 0245	0	26	8	0	1	0	0	0	6	0	2	0	0	**43**	
0245 - 0300	0	31	9	0	2	0	0	0	6	0	3	0	0	**51**	**204**
0300 - 0315	0	21	7	0	1	1	0	0	6	0	2	0	0	**38**	
0315 - 0330	0	22	6	0	3	1	0	0	10	0	1	0	0	**43**	
0330 - 0345	0	30	13	0	0	0	0	0	7	0	1	0	0	**51**	
0345 - 0400	0	36	12	0	3	2	0	0	10	0	0	0	0	**63**	**195**
0400 - 0415	0	39	10	0	2	2	0	0	15	0	3	0	0	**71**	
0415 - 0430	0	42	12	0	1	4	0	0	13	0	4	0	0	**76**	
0430 - 0445	0	39	12	0	4	0	0	0	12	0	2	0	0	**69**	
0445 - 0500	0	53	16	0	2	0	0	0	9	0	0	0	0	**80**	**296**
0500 - 0515	0	65	11	1	2	0	0	0	2	0	0	0	0	**81**	
0515 - 0530	0	68	15	0	5	0	0	0	10	0	1	0	0	**99**	
0530 - 0545	0	81	14	0	7	2	0	0	10	0	0	0	0	**114**	
0545 - 0600	0	62	12	0	5	0	0	0	11	0	1	0	0	**91**	**385**
0600 - 0615	0	80	27	0	2	1	0	0	14	0	3	0	0	**127**	
0615 - 0630	0	104	33	0	3	1	0	0	10	0	1	0	0	**152**	
0630 - 0645	2	143	35	0	3	1	0	0	13	0	0	0	0	**197**	
0645 - 0700	2	153	54	0	3	1	0	0	8	0	0	0	0	**221**	**697**
0700 - 0715	0	148	44	1	7	1	0	0	12	0	3	0	0	**216**	
0715 - 0730	0	193	49	1	6	1	0	2	22	0	0	0	0	**274**	
0730 - 0745	1	196	76	0	4	1	0	1	16	0	0	0	0	**295**	
0745 - 0800	0	275	84	0	3	2	0	0	17	0	0	0	0	**381**	**1166**
0800 - 0815	0	269	74	0	13	2	0	1	10	0	1	0	0	**370**	
0815 - 0830	0	274	81	0	4	3	0	2	18	0	0	0	0	**382**	
0830 - 0845	0	342	102	0	6	5	0	3	19	0	0	0	0	**477**	
0845 - 0900	1	326	89	1	10	1	0	5	15	0	0	0	0	**448**	**1677**
0900 - 0915	3	342	74	1	16	4	0	0	22	0	0	0	0	**462**	
0915 - 0930	4	326	91	0	10	1	0	0	19	0	0	0	0	**451**	
0930 - 0945	1	470	106	0	11	2	0	1	18	0	0	0	0	**609**	
0945 - 1000	0	485	97	1	10	4	0	2	19	0	0	0	0	**618**	**2140**
1000 - 1015	1	407	93	1	10	1	0	1	20	0	0	0	0	**534**	
1015 - 1030	0	440	93	0	5	0	0	6	22	0	0	0	0	**566**	
1030 - 1045	3	493	97	0	7	3	0	1	15	0	0	0	0	**619**	
1045 - 1100	4	498	132	2	8	3	0	1	11	0	0	0	0	**659**	**2378**
1100 - 1115	2	479	109	1	3	3	0	1	19	0	0	0	0	**617**	
1115 - 1130	1	500	119	0	5	2	0	0	12	0	0	0	0	**639**	
1130 - 1145	4	506	127	0	6	1	0	2	21	0	0	0	0	**667**	
1145 - 1200	3	508	121	0	8	1	0	0	16	0	0	0	0	**657**	**2580**
1200 - 1215	2	530	109	0	3	2	0	2	12	0	0	0	0	**660**	
1215 - 1230	4	544	112	0	6	2	0	4	18	0	0	0	0	**690**	
1230 - 1245	1	533	117	1	4	1	0	5	14	0	0	0	0	**676**	
1245 - 1300	0	521	121	0	16	2	0	2	12	0	0	0	0	**674**	**2700**
1300 - 1315	1	539	101	2	7	1	0	3	16	0	0	0	0	**670**	
1315 - 1330	5	554	118	1	6	2	0	1	18	0	0	0	0	**705**	
1330 - 1345	8	520	106	0	10	0	0	4	17	0	0	0	0	**665**	
1345 - 1400	2	549	129	0	5	1	0	3	14	0	0	0	0	**703**	**2743**
1400 - 1415	1	512	121	0	4	3	0	1	20	0	0	0	0	**662**	
1415 - 1430	0	510	79	0	4	1	0	4	10	0	0	0	0	**608**	
1430 - 1445	3	535	115	1	4	2	0	3	7	0	0	0	0	**670**	
1445 - 1500	2	585	117	2	8	0	0	2	20	0	0	0	0	**736**	**2676**
1500 - 1515	3	526	98	2	10	1	0	0	8	0	0	0	0	**648**	
1515 - 1530	0	512	97	0	5	2	0	2	5	0	0	0	0	**623**	
1530 - 1545	4	526	103	0	8	2	0	1	8	0	0	0	0	**652**	
1545 - 1600	1	510	117	1	4	2	0	0	11	1	0	0	0	**647**	**2570**
1600 - 1615	0	491	104	1	5	0	0	2	11	0	0	0	0	**614**	
1615 - 1630	1	424	89	0	4	1	0	1	13	0	0	0	0	**533**	
1630 - 1645	2	481	103	1	6	1	0	1	9	0	0	0	0	**604**	
1645 - 1700	1	507	89	0	3	0	0	6	12	0	0	0	0	**618**	**2369**
1700 - 1715	3	454	93	1	3	1	0	1	15	0	0	0	0	**571**	
1715 - 1730	2	468	84	0	6	1	0	0	9	0	0	0	0	**570**	
1730 - 1745	4	406	96	1	3	0	0	3	11	0	0	0	0	**524**	
1745 - 1800	3	450	77	0	4	2	0	6	11	0	0	0	0	**553**	**2218**
1800 - 1815	2	395	75	1	3	1	0	4	8	0	0	0	0	**489**	
1815 - 1830	0	390	83	2	4	0	0	0	4	0	0	0	0	**483**	
1830 - 1845	0	397	73	1	2	0	0	0	7	0	0	0	0	**480**	
1845 - 1900	1	380	62	0	5	1	0	2	11	0	0	0	0	**462**	**1914**
1900 - 1915	1	318	67	1	2	0	0	3	6	0	0	0	0	**398**	
1915 - 1930	1	349	64	1	3	0	0	2	6	0	0	0	0	**426**	
1930 - 1945	0	307	56	0	4	0	0	0	6	0	1	0	0	**374**	
1945 - 2000	3	296	55	0	0	0	0	1	8	0	0	0	0	**363**	**1561**
2000 - 2015	1	262	86	0	2	0	0	0	7	0	0	0	0	**358**	
2015 - 2030	0	228	55	0	0	0	0	0	6	0	0	1	0	**290**	
2030 - 2045	0	223	87	1	2	0	0	1	9	0	0	0	0	**323**	
2045 - 2100	0	198	63	1	7	0	0	0	7	0	0	0	0	**276**	**1247**
2100 - 2115	0	234	59	0	1	1	0	0	6	0	0	0	0	**301**	
2115 - 2130	0	181	45	0	3	0	0	0	7	0	0	0	0	**236**	
2130 - 2145	0	187	50	0	4	3	0	0	4	0	0	0	0	**248**	
2145 - 2200	0	185	36	0	1	0	0	0	3	0	0	0	0	**225**	**1010**
2200 - 2215	0	164	46	0	0	1	0	0	3	0	0	0	0	**214**	
2215 - 2230	0	152	34	0	1	0	0	0	4	0	0	0	0	**191**	
2230 - 2245	0	144	34	0	2	0	0	0	6	0	0	0	0	**186**	
2245 - 2300	0	144	31	2	2	0	0	0	2	0	0	0	0	**181**	**772**
2300 - 2315	0	137	34	1	1	0	0	0	4	0	0	0	0	**177**	
2315 - 2330	1	114	29	0	0	0	0	0	7	0	0	0	0	**151**	
2330 - 2345	0	111	31	0	2	0	0	0	3	0	0	0	0	**147**	
2345 - 0000	0	102	19	1	1	0	0	0	2	0	0	0	0	**125**	**600**

Session Total	95	26941	6065	36	398	101	0	99	1034	1	40	1	0	**34811**
Session Average	0.99	280.64	63.18	0.38	4.15	1.05	0.00	1.03	10.77	0.01	0.42	0.01	0.00	**362.61**
Session Percentage	0.27	77.39	17.42	0.10	1.14	0.29	0.00	0.28	2.97	0.00	0.11	0.00	0.00	

AM Peak Hour	0845 - 0945	0945 - 1045	0930 - 1030	0630 - 0730	0845 - 0945	0815 - 0915	-	0800 - 0900	0930 - 1030	-	0515 - 0615	-	-	**0945 - 1045**
AM Peak Hour Volume	9	1825	389	2	47	13	0	11	79	0	5	0	0	**2337**

Noon Peak Hour	1300 - 1400	1300 - 1400	1045 - 1145	1415 - 1515	1245 - 1345	1030 - 1130	-	1215 - 1315	1315 - 1415	-	-	-	-	**1300 - 1400**
Noon Peak Hour Volume	16	2162	487	5	39	11	0	14	69	0	0	0	0	**2743**

PM Peak Hour	1700 - 1800	1500 - 1600	1515 - 1615	1730 - 1830	1500 - 1600	1500 - 1600	-	1715 - 1815	1615 - 1715	1500 - 1600	1845 - 1945	1930 - 2030	-	**1500 - 1600**
PM Peak Hour Volume	12	2074	421	4	27	7	0	13	49	1	1	1	0	**2570**

Bi-Directional Class Count || SB WB Average 15min

Columbia, SC

Marr Traffic DATA COLLECTION
www.marrtraffic.com

Site 3
I-26 W/Bound Off-Ramp,
east of I-26

Date
Sunday, April 21, 2024

Lat/Long
34.027654°, -81.101691°

Weather
Cloudy
66°F

0000 - 2400 (Weekday 24h Session) (All Dates)
SB WB Average 15min

	SB WB Average 15min													15min	60min
Time	1	2	3	4	5	6	7	8	9	10	11	12	13	Total	Total
0000 - 0015	1	72	13	0	1	0	0	0	10	0	1	0	0	**98**	
0015 - 0030	0	85	12	0	1	0	0	0	10	0	1	0	0	**111**	
0030 - 0045	0	81	12	0	2	0	0	0	8	0	1	0	0	**104**	
0045 - 0100	0	56	8	0	1	0	0	0	8	0	1	0	0	**75**	**387**
0100 - 0115	0	50	8	0	1	0	0	0	8	0	1	0	0	**69**	
0115 - 0130	0	48	7	0	1	0	0	0	9	0	1	0	0	**67**	
0130 - 0145	0	36	5	0	2	0	0	0	10	0	1	0	0	**55**	
0145 - 0200	0	34	6	0	1	0	0	0	9	0	1	0	0	**52**	**243**
0200 - 0215	0	33	5	0	1	1	0	0	10	0	2	0	0	**53**	
0215 - 0230	0	32	5	0	2	1	0	1	9	0	1	0	0	**49**	
0230 - 0245	0	28	4	0	1	1	0	0	11	0	2	0	0	**47**	
0245 - 0300	0	26	4	0	2	0	0	0	10	0	2	0	0	**44**	**193**
0300 - 0315	0	28	5	0	2	1	0	1	12	0	2	0	0	**51**	
0315 - 0330	0	31	5	0	2	1	0	1	13	0	2	0	0	**54**	
0330 - 0345	0	36	7	0	2	1	0	1	17	0	1	0	0	**64**	
0345 - 0400	0	35	7	0	3	1	0	0	19	0	2	0	0	**68**	**237**
0400 - 0415	0	37	5	0	4	2	0	1	20	0	1	0	0	**70**	
0415 - 0430	0	39	6	0	5	2	0	0	24	0	2	0	0	**79**	
0430 - 0445	0	50	10	0	7	1	0	1	24	0	2	0	0	**94**	
0445 - 0500	0	61	12	0	3	1	0	0	25	0	1	0	0	**104**	**347**
0500 - 0515	0	65	15	0	5	0	0	0	26	0	2	0	0	**115**	
0515 - 0530	0	81	20	0	7	2	0	1	33	0	0	0	0	**145**	
0530 - 0545	0	104	22	0	7	1	0	1	34	0	1	0	0	**171**	
0545 - 0600	0	107	26	0	8	1	0	0	35	0	1	0	0	**177**	**607**
0600 - 0615	0	135	28	1	10	3	0	1	36	0	1	0	0	**214**	
0615 - 0630	0	177	47	0	10	4	0	1	36	1	1	0	0	**276**	
0630 - 0645	1	220	70	0	11	4	0	2	41	1	0	0	0	**350**	
0645 - 0700	0	231	91	0	10	2	0	2	39	1	1	0	0	**377**	**1217**
0700 - 0715	1	255	95	0	12	4	1	3	38	2	1	0	0	**411**	
0715 - 0730	1	330	111	0	14	6	0	4	47	2	1	0	0	**516**	
0730 - 0745	1	397	132	0	19	6	1	3	47	2	0	0	0	**607**	
0745 - 0800	0	413	133	0	16	4	0	3	43	1	0	0	0	**614**	**2148**
0800 - 0815	0	345	126	0	18	5	2	4	43	1	1	0	0	**545**	
0815 - 0830	0	352	121	0	19	4	2	2	46	0	0	0	0	**547**	
0830 - 0845	0	345	125	1	17	6	1	5	41	1	1	1	0	**543**	
0845 - 0900	0	340	123	1	18	3	1	4	39	1	1	0	0	**531**	**2167**
0900 - 0915	1	305	122	1	24	6	0	3	42	2	0	0	0	**507**	
0915 - 0930	1	306	116	1	27	5	1	4	44	1	0	0	0	**504**	
0930 - 0945	1	368	119	1	26	4	1	3	45	1	0	0	0	**569**	
0945 - 1000	1	370	117	1	14	4	0	3	44	1	0	0	0	**555**	**2135**
1000 - 1015	1	351	110	2	17	4	0	4	43	1	0	0	0	**534**	
1015 - 1030	0	365	117	0	14	3	2	4	45	1	0	0	0	**550**	
1030 - 1045	1	389	120	0	10	5	2	5	41	1	0	0	0	**574**	
1045 - 1100	1	413	123	1	14	4	1	4	42	2	0	0	0	**604**	**2262**
1100 - 1115	1	401	120	1	14	4	1	4	44	2	0	0	0	**592**	
1115 - 1130	0	426	118	1	11	2	1	5	40	2	0	0	0	**606**	
1130 - 1145	1	421	122	1	12	4	1	4	47	1	0	0	0	**614**	
1145 - 1200	1	436	113	0	13	5	1	3	40	1	0	0	0	**615**	**2428**
1200 - 1215	1	436	123	1	13	4	1	3	38	1	0	0	0	**623**	
1215 - 1230	1	444	126	1	12	4	1	3	42	1	0	0	0	**635**	
1230 - 1245	1	449	129	0	11	4	1	3	43	1	0	0	0	**642**	
1245 - 1300	0	454	125	1	12	3	1	2	45	1	0	0	0	**645**	**2546**
1300 - 1315	0	413	153	2	11	4	0	2	43	1	0	0	0	**629**	
1315 - 1330	1	423	118	0	9	4	1	2	42	1	0	0	0	**600**	
1330 - 1345	2	447	124	1	9	4	2	2	44	1	0	0	0	**636**	
1345 - 1400	1	454	134	1	9	3	1	2	44	0	0	0	0	**651**	**2516**
1400 - 1415	1	444	130	0	10	3	2	2	40	1	0	0	0	**633**	
1415 - 1430	1	471	122	1	12	4	1	3	45	1	0	0	0	**662**	
1430 - 1445	1	478	130	1	12	4	1	4	38	0	1	0	0	**669**	
1445 - 1500	2	497	120	1	11	3	1	3	40	0	0	0	0	**678**	**2643**
1500 - 1515	1	491	129	1	11	4	2	1	40	1	0	0	0	**682**	
1515 - 1530	0	518	138	2	11	3	1	2	34	0	0	0	0	**710**	
1530 - 1545	1	498	131	1	10	2	1	2	26	1	0	0	0	**671**	
1545 - 1600	0	467	127	1	8	3	1	1	27	1	0	0	0	**635**	**2698**
1600 - 1615	0	488	127	1	9	2	1	1	36	1	0	0	0	**667**	
1615 - 1630	1	427	114	0	6	3	0	1	31	0	0	0	0	**584**	
1630 - 1645	1	435	119	1	7	2	1	1	31	0	0	0	0	**598**	
1645 - 1700	1	426	113	0	6	1	0	2	25	0	0	0	0	**575**	**2425**
1700 - 1715	1	404	109	1	5	2	1	2	30	0	0	0	0	**555**	
1715 - 1730	1	396	98	1	6	1	0	1	27	0	0	0	0	**531**	
1730 - 1745	1	383	101	0	5	1	0	1	25	0	0	0	0	**520**	
1745 - 1800	1	401	110	1	4	2	0	2	34	0	0	0	0	**555**	**2161**
1800 - 1815	1	412	107	0	6	3	0	2	25	0	0	0	0	**556**	
1815 - 1830	1	414	107	1	5	1	0	1	26	0	0	0	0	**557**	
1830 - 1845	1	363	91	0	3	1	0	1	26	0	0	0	0	**487**	
1845 - 1900	1	356	79	0	5	2	0	1	19	0	0	0	0	**463**	**2062**
1900 - 1915	1	325	79	0	5	1	0	0	23	0	0	0	0	**435**	
1915 - 1930	1	326	75	0	4	1	0	1	22	0	0	0	0	**431**	
1930 - 1945	0	303	63	0	4	1	0	1	18	0	0	0	0	**391**	
1945 - 2000	1	277	61	1	2	1	0	1	17	0	1	0	0	**361**	**1618**
2000 - 2015	0	251	63	0	3	1	0	0	16	0	0	0	0	**335**	
2015 - 2030	0	222	56	0	3	1	0	2	17	0	0	0	0	**301**	
2030 - 2045	0	208	60	0	4	1	0	0	18	0	0	0	0	**291**	
2045 - 2100	0	191	61	1	3	0	0	1	18	0	1	0	0	**275**	**1203**
2100 - 2115	0	187	59	0	3	0	0	0	15	0	1	0	0	**265**	
2115 - 2130	0	163	52	0	3	0	0	1	13	0	0	0	0	**233**	
2130 - 2145	0	154	48	0	2	1	0	0	15	0	2	0	0	**223**	
2145 - 2200	0	140	43	0	3	1	0	0	11	0	0	0	0	**199**	**920**
2200 - 2215	0	143	31	0	2	0	0	0	14	0	1	0	0	**191**	
2215 - 2230	0	132	25	0	2	1	0	1	12	0	1	0	0	**174**	
2230 - 2245	0	121	24	0	2	0	0	0	10	0	1	0	0	**159**	
2245 - 2300	0	109	21	0	1	0	0	0	9	0	2	0	0	**143**	**667**
2300 - 2315	0	103	21	0	2	0	0	0	10	0	1	0	0	**137**	
2315 - 2330	0	101	23	1	2	0	0	0	10	0	1	0	0	**137**	
2330 - 2345	0	84	20	0	1	0	0	0	11	0	1	0	0	**117**	
2345 - 0000	0	70	14	0	2	0	0	0	10	0	1	0	0	**97**	**488**

Session Total	43	25242	7081	43	734	209	43	148	2662	46	58	7	0	**36315**
Session Average	0.45	262.94	73.76	0.45	7.64	2.17	0.45	1.54	27.73	0.48	0.60	0.07	0.00	**378.28**
Session Percentage	0.12	69.51	19.50	0.12	2.02	0.57	0.12	0.41	7.33	0.13	0.16	0.02	0.00	

AM Peak Hour	0900 - 1000	0730 - 0830	0730 - 0830	0830 - 0930	0845 - 0945	0715 - 0815	0800 - 0900	0830 - 0930	0715 - 0815	0700 - 0800	0500 - 0600	0800 - 0900	-	**0730 - 0830**
AM Peak Volume	3	1507	512	4	94	21	5	16	180	6	4	1	0	**2313**

Noon Peak Hour	1330 - 1430	1445 - 1545	1215 - 1315	1430 - 1530	1000 - 1100	1145 - 1245	1330 - 1430	1030 - 1130	1245 - 1345	1045 - 1145	1400 - 1500	1130 - 1230	-	**1445 - 1545**
Noon Peak Volume	5	2004	533	6	56	17	6	18	174	7	1	0	0	**2741**

PM Peak Hour	1830 - 1930	1500 - 1600	1500 - 1600	1500 - 1600	1500 - 1600	1500 - 1600	1500 - 1600	1615 - 1715	1500 - 1600	1500 - 1600	1915 - 2015	1500 - 1600	-	**1500 - 1600**
PM Peak Volume	4	1974	525	5	40	11	5	6	126	3	1	0	0	**2698**

Bi-Directional Class Count || Volume Summary 15min

Columbia, SC

Marr Traffic DATA COLLECTION

www.marrtraffic.com

Site 3

I-26 W/Bound Off-Ramp,
east of I-26

Date

Sunday, April 21, 2024

Lat/Long

34.027654°, -81.101691°

Weather

Cloudy
66°F

Click here for Detailed Weather

0000 - 2400 (Sunday 24h Session) (04-21-2024)

Volume Summary 15min

TIME	Volume Summary 15min EB	Volume Summary 15min WB	15min Total	60min Total
0000 - 0015	0	138	**138**	
0015 - 0030	0	126	**126**	
0030 - 0045	0	129	**129**	
0045 - 0100	0	98	**98**	**491**
0100 - 0115	0	81	**81**	
0115 - 0130	0	83	**83**	
0130 - 0145	0	66	**66**	
0145 - 0200	0	75	**75**	**305**
0200 - 0215	0	52	**52**	
0215 - 0230	0	52	**52**	
0230 - 0245	0	52	**52**	
0245 - 0300	0	33	**33**	**189**
0300 - 0315	0	49	**49**	
0315 - 0330	0	53	**53**	
0330 - 0345	0	46	**46**	
0345 - 0400	0	35	**35**	**183**
0400 - 0415	0	33	**33**	
0415 - 0430	0	47	**47**	
0430 - 0445	0	47	**47**	
0445 - 0500	0	59	**59**	**186**
0500 - 0515	0	50	**50**	
0515 - 0530	0	56	**56**	
0530 - 0545	0	81	**81**	
0545 - 0600	0	77	**77**	**264**
0600 - 0615	0	61	**61**	
0615 - 0630	0	103	**103**	
0630 - 0645	0	106	**106**	
0645 - 0700	0	115	**115**	**385**
0700 - 0715	0	143	**143**	
0715 - 0730	0	161	**161**	
0730 - 0745	0	202	**202**	
0745 - 0800	0	213	**213**	**719**
0800 - 0815	0	201	**201**	
0815 - 0830	0	202	**202**	
0830 - 0845	0	250	**250**	
0845 - 0900	0	251	**251**	**904**
0900 - 0915	0	294	**294**	
0915 - 0930	0	294	**294**	
0930 - 0945	0	394	**394**	
0945 - 1000	0	441	**441**	**1423**
1000 - 1015	0	453	**453**	
1015 - 1030	0	471	**471**	
1030 - 1045	0	538	**538**	
1045 - 1100	0	525	**525**	**1987**
1100 - 1115	0	539	**539**	
1115 - 1130	0	561	**561**	
1130 - 1145	0	507	**507**	
1145 - 1200	0	595	**595**	**2202**

Time	Volume Summary 15min EB	Volume Summary 15min WB	15min Total	60min Total
1200 - 1215	0	660	**660**	
1215 - 1230	0	647	**647**	
1230 - 1245	0	721	**721**	
1245 - 1300	0	765	**765**	**2793**
1300 - 1315	0	701	**701**	
1315 - 1330	0	735	**735**	
1330 - 1345	0	676	**676**	
1345 - 1400	0	720	**720**	**2832**
1400 - 1415	0	638	**638**	
1415 - 1430	0	677	**677**	
1430 - 1445	0	648	**648**	
1445 - 1500	0	622	**622**	**2585**
1500 - 1515	0	649	**649**	
1515 - 1530	0	631	**631**	
1530 - 1545	0	623	**623**	
1545 - 1600	0	641	**641**	**2544**
1600 - 1615	0	623	**623**	
1615 - 1630	0	639	**639**	
1630 - 1645	0	599	**599**	
1645 - 1700	0	596	**596**	**2457**
1700 - 1715	0	615	**615**	
1715 - 1730	0	538	**538**	
1730 - 1745	0	575	**575**	
1745 - 1800	0	579	**579**	**2307**
1800 - 1815	0	544	**544**	
1815 - 1830	0	604	**604**	
1830 - 1845	0	460	**460**	
1845 - 1900	0	422	**422**	**2030**
1900 - 1915	0	380	**380**	
1915 - 1930	0	399	**399**	
1930 - 1945	0	392	**392**	
1945 - 2000	0	327	**327**	**1498**
2000 - 2015	0	308	**308**	
2015 - 2030	0	282	**282**	
2030 - 2045	0	251	**251**	
2045 - 2100	0	203	**203**	**1044**
2100 - 2115	0	230	**230**	
2115 - 2130	0	192	**192**	
2130 - 2145	0	195	**195**	
2145 - 2200	0	161	**161**	**778**
2200 - 2215	0	149	**149**	
2215 - 2230	0	144	**144**	
2230 - 2245	0	112	**112**	
2245 - 2300	0	114	**114**	**519**
2300 - 2315	0	113	**113**	
2315 - 2330	0	109	**109**	
2330 - 2345	0	93	**93**	
2345 - 0000	0	65	**65**	**380**

Session Total	0	31005	**31005**
Session Average	0.00	322.97	**322.97**
Session Percentage	0.00	100.00	

Site 3
I-26 W/Bound Off-Ramp,
east of I-26

Date
Monday, April 22, 2024

Lat/Long
34.027654°, -81.101691°

Weather
Mostly Cloudy
57°F

Click here for Detailed Weather

0000 - 2400 (Weekday 24h Session) (04-22-2024)
Volume Summary 15min

TIME	Volume Summary 15min EB	WB	15min Total	60min Total
0000 - 0015	0	65	**65**	
0015 - 0030	0	83	**83**	
0030 - 0045	0	96	**96**	
0045 - 0100	0	57	**57**	**301**
0100 - 0115	0	68	**68**	
0115 - 0130	0	60	**60**	
0130 - 0145	0	43	**43**	
0145 - 0200	0	39	**39**	**210**
0200 - 0215	0	41	**41**	
0215 - 0230	0	47	**47**	
0230 - 0245	0	48	**48**	
0245 - 0300	0	33	**33**	**169**
0300 - 0315	0	50	**50**	
0315 - 0330	0	51	**51**	
0330 - 0345	0	66	**66**	
0345 - 0400	0	71	**71**	**238**
0400 - 0415	0	62	**62**	
0415 - 0430	0	71	**71**	
0430 - 0445	0	100	**100**	
0445 - 0500	0	108	**108**	**341**
0500 - 0515	0	125	**125**	
0515 - 0530	0	164	**164**	
0530 - 0545	0	213	**213**	
0545 - 0600	0	208	**208**	**710**
0600 - 0615	0	259	**259**	
0615 - 0630	0	361	**361**	
0630 - 0645	0	422	**422**	
0645 - 0700	0	456	**456**	**1498**
0700 - 0715	0	505	**505**	
0715 - 0730	0	621	**621**	
0730 - 0745	0	767	**767**	
0745 - 0800	0	784	**784**	**2677**
0800 - 0815	0	651	**651**	
0815 - 0830	0	607	**607**	
0830 - 0845	0	583	**583**	
0845 - 0900	0	592	**592**	**2433**
0900 - 0915	0	582	**582**	
0915 - 0930	0	553	**553**	
0930 - 0945	0	590	**590**	
0945 - 1000	0	560	**560**	**2285**
1000 - 1015	0	539	**539**	
1015 - 1030	0	532	**532**	
1030 - 1045	0	536	**536**	
1045 - 1100	0	570	**570**	**2177**
1100 - 1115	0	613	**613**	
1115 - 1130	0	606	**606**	
1130 - 1145	0	612	**612**	
1145 - 1200	0	618	**618**	**2449**

Time	Volume Summary 15min EB	WB	15min Total	60min Total
1200 - 1215	0	591	**591**	
1215 - 1230	0	634	**634**	
1230 - 1245	0	622	**622**	
1245 - 1300	0	606	**606**	**2453**
1300 - 1315	0	619	**619**	
1315 - 1330	0	578	**578**	
1330 - 1345	0	626	**626**	
1345 - 1400	0	583	**583**	**2406**
1400 - 1415	0	644	**644**	
1415 - 1430	0	690	**690**	
1430 - 1445	0	684	**684**	
1445 - 1500	0	670	**670**	**2688**
1500 - 1515	0	659	**659**	
1515 - 1530	0	709	**709**	
1530 - 1545	0	422	**422**	
1545 - 1600	0	328	**328**	**2118**
1600 - 1615	0	678	**678**	
1615 - 1630	0	524	**524**	
1630 - 1645	0	482	**482**	
1645 - 1700	0	503	**503**	**2187**
1700 - 1715	0	463	**463**	
1715 - 1730	0	491	**491**	
1730 - 1745	0	491	**491**	
1745 - 1800	0	549	**549**	**1994**
1800 - 1815	0	574	**574**	
1815 - 1830	0	510	**510**	
1830 - 1845	0	454	**454**	
1845 - 1900	0	447	**447**	**1985**
1900 - 1915	0	404	**404**	
1915 - 1930	0	393	**393**	
1930 - 1945	0	352	**352**	
1945 - 2000	0	376	**376**	**1525**
2000 - 2015	0	283	**283**	
2015 - 2030	0	296	**296**	
2030 - 2045	0	282	**282**	
2045 - 2100	0	219	**219**	**1080**
2100 - 2115	0	231	**231**	
2115 - 2130	0	193	**193**	
2130 - 2145	0	188	**188**	
2145 - 2200	0	161	**161**	**773**
2200 - 2215	0	161	**161**	
2215 - 2230	0	155	**155**	
2230 - 2245	0	137	**137**	
2245 - 2300	0	112	**112**	**565**
2300 - 2315	0	112	**112**	
2315 - 2330	0	115	**115**	
2330 - 2345	0	114	**114**	
2345 - 0000	0	84	**84**	**425**

Session Total	0	35687	**35687**
Session Average	0.00	371.74	**371.74**
Session Percentage	0.00	100.00	

Site 3
I-26 W/Bound Off-Ramp,
east of I-26

Date
Tuesday, April 23, 2024

Lat/Long
34.027654°, -81.101691°

Weather
Fair
58°F

Click here for Detailed Weather

0000 - 2400 (Weekday 24h Session) (04-23-2024)

Volume Summary 15min

TIME	Volume Summary 15min EB	Volume Summary 15min WB	15min Total	60min Total
0000 - 0015	0	92	**92**	
0015 - 0030	0	111	**111**	
0030 - 0045	0	79	**79**	
0045 - 0100	0	58	**58**	**340**
0100 - 0115	0	69	**69**	
0115 - 0130	0	58	**58**	
0130 - 0145	0	60	**60**	
0145 - 0200	0	50	**50**	**237**
0200 - 0215	0	57	**57**	
0215 - 0230	0	41	**41**	
0230 - 0245	0	35	**35**	
0245 - 0300	0	37	**37**	**170**
0300 - 0315	0	53	**53**	
0315 - 0330	0	58	**58**	
0330 - 0345	0	68	**68**	
0345 - 0400	0	77	**77**	**256**
0400 - 0415	0	69	**69**	
0415 - 0430	0	93	**93**	
0430 - 0445	0	128	**128**	
0445 - 0500	0	118	**118**	**408**
0500 - 0515	0	137	**137**	
0515 - 0530	0	179	**179**	
0530 - 0545	0	212	**212**	
0545 - 0600	0	197	**197**	**725**
0600 - 0615	0	261	**261**	
0615 - 0630	0	322	**322**	
0630 - 0645	0	430	**430**	
0645 - 0700	0	487	**487**	**1500**
0700 - 0715	0	526	**526**	
0715 - 0730	0	657	**657**	
0730 - 0745	0	718	**718**	
0745 - 0800	0	725	**725**	**2626**
0800 - 0815	0	643	**643**	
0815 - 0830	0	681	**681**	
0830 - 0845	0	595	**595**	
0845 - 0900	0	570	**570**	**2489**
0900 - 0915	0	553	**553**	
0915 - 0930	0	543	**543**	
0930 - 0945	0	568	**568**	
0945 - 1000	0	548	**548**	**2212**
1000 - 1015	0	504	**504**	
1015 - 1030	0	505	**505**	
1030 - 1045	0	522	**522**	
1045 - 1100	0	540	**540**	**2071**
1100 - 1115	0	584	**584**	
1115 - 1130	0	512	**512**	
1130 - 1145	0	570	**570**	
1145 - 1200	0	545	**545**	**2211**

Time	Volume Summary 15min EB	Volume Summary 15min WB	15min Total	60min Total
1200 - 1215	0	549	**549**	
1215 - 1230	0	563	**563**	
1230 - 1245	0	511	**511**	
1245 - 1300	0	488	**488**	**2111**
1300 - 1315	0	541	**541**	
1315 - 1330	0	567	**567**	
1330 - 1345	0	567	**567**	
1345 - 1400	0	598	**598**	**2273**
1400 - 1415	0	618	**618**	
1415 - 1430	0	640	**640**	
1430 - 1445	0	648	**648**	
1445 - 1500	0	699	**699**	**2605**
1500 - 1515	0	674	**674**	
1515 - 1530	0	742	**742**	
1530 - 1545	0	725	**725**	
1545 - 1600	0	715	**715**	**2856**
1600 - 1615	0	686	**686**	
1615 - 1630	0	575	**575**	
1630 - 1645	0	613	**613**	
1645 - 1700	0	558	**558**	**2432**
1700 - 1715	0	562	**562**	
1715 - 1730	0	549	**549**	
1730 - 1745	0	516	**516**	
1745 - 1800	0	504	**504**	**2131**
1800 - 1815	0	473	**473**	
1815 - 1830	0	533	**533**	
1830 - 1845	0	425	**425**	
1845 - 1900	0	406	**406**	**1837**
1900 - 1915	0	399	**399**	
1915 - 1930	0	376	**376**	
1930 - 1945	0	359	**359**	
1945 - 2000	0	314	**314**	**1448**
2000 - 2015	0	276	**276**	
2015 - 2030	0	272	**272**	
2030 - 2045	0	248	**248**	
2045 - 2100	0	253	**253**	**1049**
2100 - 2115	0	250	**250**	
2115 - 2130	0	260	**260**	
2130 - 2145	0	212	**212**	
2145 - 2200	0	184	**184**	**906**
2200 - 2215	0	172	**172**	
2215 - 2230	0	159	**159**	
2230 - 2245	0	133	**133**	
2245 - 2300	0	113	**113**	**577**
2300 - 2315	0	123	**123**	
2315 - 2330	0	98	**98**	
2330 - 2345	0	90	**90**	
2345 - 0000	0	91	**91**	**402**

Session Total	0	35872	**35872**
Session Average	0.00	373.67	**373.67**
Session Percentage	0.00	100.00	

Site 3
I-26 W/Bound Off-Ramp,
east of I-26

Date
Wednesday, April 24, 2024

Lat/Long
34.027654°, -81.101691°

Weather
Fair
66°F

Click here for Detailed Weather

0000 - 2400 (Weekday 24h Session) (04-24-2024)
Volume Summary 15min

TIME	Volume Summary 15min EB	Volume Summary 15min WB	15min Total	60min Total
0000 - 0015	0	84	**84**	
0015 - 0030	0	97	**97**	
0030 - 0045	0	89	**89**	
0045 - 0100	0	74	**74**	**344**
0100 - 0115	0	52	**52**	
0115 - 0130	0	70	**70**	
0130 - 0145	0	52	**52**	
0145 - 0200	0	49	**49**	**223**
0200 - 0215	0	48	**48**	
0215 - 0230	0	48	**48**	
0230 - 0245	0	58	**58**	
0245 - 0300	0	47	**47**	**201**
0300 - 0315	0	61	**61**	
0315 - 0330	0	56	**56**	
0330 - 0345	0	68	**68**	
0345 - 0400	0	66	**66**	**251**
0400 - 0415	0	92	**92**	
0415 - 0430	0	92	**92**	
0430 - 0445	0	104	**104**	
0445 - 0500	0	113	**113**	**401**
0500 - 0515	0	139	**139**	
0515 - 0530	0	168	**168**	
0530 - 0545	0	202	**202**	
0545 - 0600	0	221	**221**	**730**
0600 - 0615	0	291	**291**	
0615 - 0630	0	339	**339**	
0630 - 0645	0	438	**438**	
0645 - 0700	0	453	**453**	**1521**
0700 - 0715	0	518	**518**	
0715 - 0730	0	627	**627**	
0730 - 0745	0	791	**791**	
0745 - 0800	0	748	**748**	**2684**
0800 - 0815	0	668	**668**	
0815 - 0830	0	656	**656**	
0830 - 0845	0	603	**603**	
0845 - 0900	0	632	**632**	**2559**
0900 - 0915	0	568	**568**	
0915 - 0930	0	547	**547**	
0930 - 0945	0	585	**585**	
0945 - 1000	0	554	**554**	**2254**
1000 - 1015	0	536	**536**	
1015 - 1030	0	544	**544**	
1030 - 1045	0	563	**563**	
1045 - 1100	0	610	**610**	**2253**
1100 - 1115	0	525	**525**	
1115 - 1130	0	575	**575**	
1130 - 1145	0	629	**629**	
1145 - 1200	0	561	**561**	**2290**

Time	Volume Summary 15min EB	Volume Summary 15min WB	15min Total	60min Total
1200 - 1215	0	619	**619**	
1215 - 1230	0	609	**609**	
1230 - 1245	0	561	**561**	
1245 - 1300	0	594	**594**	**2383**
1300 - 1315	0	590	**590**	
1315 - 1330	0	607	**607**	
1330 - 1345	0	631	**631**	
1345 - 1400	0	680	**680**	**2508**
1400 - 1415	0	645	**645**	
1415 - 1430	0	648	**648**	
1430 - 1445	0	690	**690**	
1445 - 1500	0	714	**714**	**2697**
1500 - 1515	0	711	**711**	
1515 - 1530	0	770	**770**	
1530 - 1545	0	733	**733**	
1545 - 1600	0	788	**788**	**3002**
1600 - 1615	0	785	**785**	
1615 - 1630	0	671	**671**	
1630 - 1645	0	640	**640**	
1645 - 1700	0	543	**543**	**2639**
1700 - 1715	0	517	**517**	
1715 - 1730	0	467	**467**	
1730 - 1745	0	487	**487**	
1745 - 1800	0	559	**559**	**2030**
1800 - 1815	0	572	**572**	
1815 - 1830	0	557	**557**	
1830 - 1845	0	468	**468**	
1845 - 1900	0	450	**450**	**2047**
1900 - 1915	0	473	**473**	
1915 - 1930	0	427	**427**	
1930 - 1945	0	386	**386**	
1945 - 2000	0	359	**359**	**1645**
2000 - 2015	0	325	**325**	
2015 - 2030	0	270	**270**	
2030 - 2045	0	266	**266**	
2045 - 2100	0	268	**268**	**1129**
2100 - 2115	0	236	**236**	
2115 - 2130	0	226	**226**	
2130 - 2145	0	198	**198**	
2145 - 2200	0	181	**181**	**841**
2200 - 2215	0	180	**180**	
2215 - 2230	0	159	**159**	
2230 - 2245	0	130	**130**	
2245 - 2300	0	131	**131**	**600**
2300 - 2315	0	109	**109**	
2315 - 2330	0	150	**150**	
2330 - 2345	0	96	**96**	
2345 - 0000	0	102	**102**	**457**

Session Total	0	37689	**37689**
Session Average	0.00	392.59	**392.59**
Session Percentage	0.00	100.00	

Site 3
I-26 W/Bound Off-Ramp,
east of I-26

Date
Thursday, April 25, 2024

Lat/Long
34.027654°, -81.101691°

Weather
Fair
67°F

Click here for Detailed Weather

0000 - 2400 (Weekday 24h Session) (04-25-2024)
Volume Summary 15min

TIME	Volume Summary 15min EB	Volume Summary 15min WB	15min Total	60min Total
0000 - 0015	0	93	**93**	
0015 - 0030	0	127	**127**	
0030 - 0045	0	108	**108**	
0045 - 0100	0	72	**72**	**400**
0100 - 0115	0	66	**66**	
0115 - 0130	0	52	**52**	
0130 - 0145	0	52	**52**	
0145 - 0200	0	43	**43**	**213**
0200 - 0215	0	64	**64**	
0215 - 0230	0	52	**52**	
0230 - 0245	0	38	**38**	
0245 - 0300	0	46	**46**	**200**
0300 - 0315	0	45	**45**	
0315 - 0330	0	66	**66**	
0330 - 0345	0	74	**74**	
0345 - 0400	0	76	**76**	**261**
0400 - 0415	0	84	**84**	
0415 - 0430	0	82	**82**	
0430 - 0445	0	119	**119**	
0445 - 0500	0	127	**127**	**412**
0500 - 0515	0	128	**128**	
0515 - 0530	0	167	**167**	
0530 - 0545	0	193	**193**	
0545 - 0600	0	223	**223**	**711**
0600 - 0615	0	287	**287**	
0615 - 0630	0	335	**335**	
0630 - 0645	0	451	**451**	
0645 - 0700	0	487	**487**	**1560**
0700 - 0715	0	498	**498**	
0715 - 0730	0	644	**644**	
0730 - 0745	0	761	**761**	
0745 - 0800	0	759	**759**	**2662**
0800 - 0815	0	668	**668**	
0815 - 0830	0	647	**647**	
0830 - 0845	0	614	**614**	
0845 - 0900	0	628	**628**	**2557**
0900 - 0915	0	531	**531**	
0915 - 0930	0	526	**526**	
0930 - 0945	0	601	**601**	
0945 - 1000	0	595	**595**	**2253**
1000 - 1015	0	589	**589**	
1015 - 1030	0	600	**600**	
1030 - 1045	0	597	**597**	
1045 - 1100	0	641	**641**	**2427**
1100 - 1115	0	576	**576**	
1115 - 1130	0	621	**621**	
1130 - 1145	0	624	**624**	
1145 - 1200	0	612	**612**	**2433**

Time	Volume Summary 15min EB	Volume Summary 15min WB	15min Total	60min Total
1200 - 1215	0	602	**602**	
1215 - 1230	0	595	**595**	
1230 - 1245	0	662	**662**	
1245 - 1300	0	641	**641**	**2500**
1300 - 1315	0	918	**918**	
1315 - 1330	0	625	**625**	
1330 - 1345	0	623	**623**	
1345 - 1400	0	683	**683**	**2849**
1400 - 1415	0	654	**654**	
1415 - 1430	0	748	**748**	
1430 - 1445	0	678	**678**	
1445 - 1500	0	699	**699**	**2779**
1500 - 1515	0	748	**748**	
1515 - 1530	0	731	**731**	
1530 - 1545	0	755	**755**	
1545 - 1600	0	671	**671**	**2905**
1600 - 1615	0	549	**549**	
1615 - 1630	0	556	**556**	
1630 - 1645	0	550	**550**	
1645 - 1700	0	598	**598**	**2253**
1700 - 1715	0	481	**481**	
1715 - 1730	0	487	**487**	
1730 - 1745	0	433	**433**	
1745 - 1800	0	514	**514**	**1915**
1800 - 1815	0	641	**641**	
1815 - 1830	0	518	**518**	
1830 - 1845	0	505	**505**	
1845 - 1900	0	480	**480**	**2144**
1900 - 1915	0	432	**432**	
1915 - 1930	0	470	**470**	
1930 - 1945	0	396	**396**	
1945 - 2000	0	394	**394**	**1692**
2000 - 2015	0	373	**373**	
2015 - 2030	0	326	**326**	
2030 - 2045	0	321	**321**	
2045 - 2100	0	337	**337**	**1357**
2100 - 2115	0	238	**238**	
2115 - 2130	0	210	**210**	
2130 - 2145	0	209	**209**	
2145 - 2200	0	194	**194**	**851**
2200 - 2215	0	188	**188**	
2215 - 2230	0	185	**185**	
2230 - 2245	0	183	**183**	
2245 - 2300	0	152	**152**	**708**
2300 - 2315	0	146	**146**	
2315 - 2330	0	152	**152**	
2330 - 2345	0	125	**125**	
2345 - 0000	0	98	**98**	**521**

Session Total	0	38563	**38563**
Session Average	0.00	401.70	**401.70**
Session Percentage	0.00	100.00	

Site 3
I-26 W/Bound Off-Ramp,
east of I-26

Date
Friday, April 26, 2024

Lat/Long
34.027654°, -81.101691°

Weather
Cloudy
69°F

Click here for Detailed Weather

0000 - 2400 (Weekday 24h Session) (04-26-2024)
Volume Summary 15min

TIME	Volume Summary 15min EB	Volume Summary 15min WB	15min Total	60min Total
0000 - 0015	0	100	**100**	
0015 - 0030	0	101	**101**	
0030 - 0045	0	106	**106**	
0045 - 0100	0	80	**80**	**387**
0100 - 0115	0	69	**69**	
0115 - 0130	0	67	**67**	
0130 - 0145	0	51	**51**	
0145 - 0200	0	58	**58**	**245**
0200 - 0215	0	54	**54**	
0215 - 0230	0	48	**48**	
0230 - 0245	0	53	**53**	
0245 - 0300	0	63	**63**	**218**
0300 - 0315	0	58	**58**	
0315 - 0330	0	52	**52**	
0330 - 0345	0	73	**73**	
0345 - 0400	0	90	**90**	**273**
0400 - 0415	0	79	**79**	
0415 - 0430	0	89	**89**	
0430 - 0445	0	92	**92**	
0445 - 0500	0	122	**122**	**382**
0500 - 0515	0	144	**144**	
0515 - 0530	0	179	**179**	
0530 - 0545	0	180	**180**	
0545 - 0600	0	222	**222**	**725**
0600 - 0615	0	215	**215**	
0615 - 0630	0	322	**322**	
0630 - 0645	0	404	**404**	
0645 - 0700	0	419	**419**	**1360**
0700 - 0715	0	468	**468**	
0715 - 0730	0	630	**630**	
0730 - 0745	0	715	**715**	
0745 - 0800	0	690	**690**	**2503**
0800 - 0815	0	611	**611**	
0815 - 0830	0	656	**656**	
0830 - 0845	0	682	**682**	
0845 - 0900	0	599	**599**	**2548**
0900 - 0915	0	557	**557**	
0915 - 0930	0	615	**615**	
0930 - 0945	0	638	**638**	
0945 - 1000	0	568	**568**	**2378**
1000 - 1015	0	582	**582**	
1015 - 1030	0	634	**634**	
1030 - 1045	0	643	**643**	
1045 - 1100	0	680	**680**	**2539**
1100 - 1115	0	690	**690**	
1115 - 1130	0	728	**728**	
1130 - 1145	0	690	**690**	
1145 - 1200	0	720	**720**	**2828**

Time	Volume Summary 15min EB	Volume Summary 15min WB	15min Total	60min Total
1200 - 1215	0	679	**679**	
1215 - 1230	0	710	**710**	
1230 - 1245	0	742	**742**	
1245 - 1300	0	749	**749**	**2880**
1300 - 1315	0	367	**367**	
1315 - 1330	0	386	**386**	
1330 - 1345	0	661	**661**	
1345 - 1400	0	587	**587**	**2001**
1400 - 1415	0	570	**570**	
1415 - 1430	0	625	**625**	
1430 - 1445	0	667	**667**	
1445 - 1500	0	606	**606**	**2468**
1500 - 1515	0	682	**682**	
1515 - 1530	0	766	**766**	
1530 - 1545	0	788	**788**	
1545 - 1600	0	654	**654**	**2890**
1600 - 1615	0	735	**735**	
1615 - 1630	0	593	**593**	
1630 - 1645	0	699	**699**	
1645 - 1700	0	610	**610**	**2637**
1700 - 1715	0	674	**674**	
1715 - 1730	0	617	**617**	
1730 - 1745	0	611	**611**	
1745 - 1800	0	629	**629**	**2531**
1800 - 1815	0	599	**599**	
1815 - 1830	0	692	**692**	
1830 - 1845	0	614	**614**	
1845 - 1900	0	572	**572**	**2477**
1900 - 1915	0	556	**556**	
1915 - 1930	0	527	**527**	
1930 - 1945	0	475	**475**	
1945 - 2000	0	397	**397**	**1955**
2000 - 2015	0	425	**425**	
2015 - 2030	0	372	**372**	
2030 - 2045	0	348	**348**	
2045 - 2100	0	372	**372**	**1517**
2100 - 2115	0	369	**369**	
2115 - 2130	0	317	**317**	
2130 - 2145	0	308	**308**	
2145 - 2200	0	284	**284**	**1278**
2200 - 2215	0	270	**270**	
2215 - 2230	0	224	**224**	
2230 - 2245	0	231	**231**	
2245 - 2300	0	200	**200**	**925**
2300 - 2315	0	179	**179**	
2315 - 2330	0	185	**185**	
2330 - 2345	0	157	**157**	
2345 - 0000	0	112	**112**	**633**

Session Total	0	40578	**40578**
Session Average	0.00	422.69	**422.69**
Session Percentage	0.00	100.00	

Site 3
I-26 W/Bound Off-Ramp,
east of I-26

Date
Saturday, April 27, 2024

Lat/Long
34.027654°, -81.101691°

Weather
Mostly Cloudy
69°F

Click here for Detailed Weather

0000 - 2400 (Saturday 24h Session) (04-27-2024)

Volume Summary 15min

TIME	Volume Summary 15min EB	Volume Summary 15min WB	15min Total	60min Total
0000 - 0015	0	111	**111**	
0015 - 0030	0	131	**131**	
0030 - 0045	0	119	**119**	
0045 - 0100	0	87	**87**	**448**
0100 - 0115	0	76	**76**	
0115 - 0130	0	77	**77**	
0130 - 0145	0	61	**61**	
0145 - 0200	0	51	**51**	**265**
0200 - 0215	0	52	**52**	
0215 - 0230	0	58	**58**	
0230 - 0245	0	43	**43**	
0245 - 0300	0	51	**51**	**204**
0300 - 0315	0	38	**38**	
0315 - 0330	0	43	**43**	
0330 - 0345	0	51	**51**	
0345 - 0400	0	63	**63**	**195**
0400 - 0415	0	71	**71**	
0415 - 0430	0	76	**76**	
0430 - 0445	0	69	**69**	
0445 - 0500	0	80	**80**	**296**
0500 - 0515	0	81	**81**	
0515 - 0530	0	99	**99**	
0530 - 0545	0	114	**114**	
0545 - 0600	0	91	**91**	**385**
0600 - 0615	0	127	**127**	
0615 - 0630	0	152	**152**	
0630 - 0645	0	197	**197**	
0645 - 0700	0	221	**221**	**697**
0700 - 0715	0	216	**216**	
0715 - 0730	0	274	**274**	
0730 - 0745	0	295	**295**	
0745 - 0800	0	381	**381**	**1166**
0800 - 0815	0	370	**370**	
0815 - 0830	0	382	**382**	
0830 - 0845	0	477	**477**	
0845 - 0900	0	448	**448**	**1677**
0900 - 0915	0	462	**462**	
0915 - 0930	0	451	**451**	
0930 - 0945	0	609	**609**	
0945 - 1000	0	618	**618**	**2140**
1000 - 1015	0	534	**534**	
1015 - 1030	0	566	**566**	
1030 - 1045	0	619	**619**	
1045 - 1100	0	659	**659**	**2378**
1100 - 1115	0	617	**617**	
1115 - 1130	0	639	**639**	
1130 - 1145	0	667	**667**	
1145 - 1200	0	657	**657**	**2580**

Time	Volume Summary 15min EB	Volume Summary 15min WB	15min Total	60min Total
1200 - 1215	0	660	**660**	
1215 - 1230	0	690	**690**	
1230 - 1245	0	676	**676**	
1245 - 1300	0	674	**674**	**2700**
1300 - 1315	0	670	**670**	
1315 - 1330	0	705	**705**	
1330 - 1345	0	665	**665**	
1345 - 1400	0	703	**703**	**2743**
1400 - 1415	0	662	**662**	
1415 - 1430	0	608	**608**	
1430 - 1445	0	670	**670**	
1445 - 1500	0	736	**736**	**2676**
1500 - 1515	0	648	**648**	
1515 - 1530	0	623	**623**	
1530 - 1545	0	652	**652**	
1545 - 1600	0	647	**647**	**2570**
1600 - 1615	0	614	**614**	
1615 - 1630	0	533	**533**	
1630 - 1645	0	604	**604**	
1645 - 1700	0	618	**618**	**2369**
1700 - 1715	0	571	**571**	
1715 - 1730	0	570	**570**	
1730 - 1745	0	524	**524**	
1745 - 1800	0	553	**553**	**2218**
1800 - 1815	0	489	**489**	
1815 - 1830	0	483	**483**	
1830 - 1845	0	480	**480**	
1845 - 1900	0	462	**462**	**1914**
1900 - 1915	0	398	**398**	
1915 - 1930	0	426	**426**	
1930 - 1945	0	374	**374**	
1945 - 2000	0	363	**363**	**1561**
2000 - 2015	0	358	**358**	
2015 - 2030	0	290	**290**	
2030 - 2045	0	323	**323**	
2045 - 2100	0	276	**276**	**1247**
2100 - 2115	0	301	**301**	
2115 - 2130	0	236	**236**	
2130 - 2145	0	248	**248**	
2145 - 2200	0	225	**225**	**1010**
2200 - 2215	0	214	**214**	
2215 - 2230	0	191	**191**	
2230 - 2245	0	186	**186**	
2245 - 2300	0	181	**181**	**772**
2300 - 2315	0	177	**177**	
2315 - 2330	0	151	**151**	
2330 - 2345	0	147	**147**	
2345 - 0000	0	125	**125**	**600**

Session Total	0	34811	**34811**
Session Average	0.00	362.61	**362.61**
Session Percentage	0.00	100.00	

Bi-Directional Class Count || SB WB 60min

Columbia, SC

Marr Traffic DATA COLLECTION

www.marrtraffic.com

Site 3
I-26 W/Bound Off-Ramp,
east of I-26

Date
Sunday, April 21, 2024

Lat/Long
34.027654°, -81.101691°

Weather
Cloudy
66°F

Click here for Detailed Weather

0000 - 2400 (Sunday 24h Session) (04-21-2024)
SB WB 60min

	Westbound (Movement 3.1)													
TIME	1	2	3	4	5	6	7	8	9	10	11	12	13	**Total**
0000 - 0100	1	386	84	2	2	2	0	1	13	0	0	0	0	**491**
0100 - 0200	1	234	55	0	4	1	0	1	8	0	1	0	0	**305**
0200 - 0300	0	149	25	0	2	0	0	0	13	0	0	0	0	**189**
0300 - 0400	0	132	33	0	1	0	0	0	15	0	2	0	0	**183**
0400 - 0500	0	140	28	0	6	1	0	0	11	0	0	0	0	**186**
0500 - 0600	0	203	41	0	1	0	0	0	19	0	0	0	0	**264**
0600 - 0700	2	302	57	0	10	0	0	0	14	0	0	0	0	**385**
0700 - 0800	1	564	114	1	11	2	0	2	24	0	0	0	0	**719**
0800 - 0900	1	702	166	1	9	0	0	2	23	0	0	0	0	**904**
0900 - 1000	0	1115	254	5	9	3	0	4	32	0	1	0	0	**1423**
1000 - 1100	0	1563	369	2	10	1	0	6	36	0	0	0	0	**1987**
1100 - 1200	2	1737	395	2	12	1	0	7	45	0	1	0	0	**2202**
1200 - 1300	4	2256	476	8	14	2	0	1	32	0	0	0	0	**2793**
1300 - 1400	0	2288	485	2	20	3	0	3	30	0	1	0	0	**2832**
1400 - 1500	0	2134	382	1	21	4	0	0	43	0	0	0	0	**2585**
1500 - 1600	0	2095	397	4	14	2	0	1	31	0	0	0	0	**2544**
1600 - 1700	1	2034	348	3	22	1	0	0	48	0	0	0	0	**2457**
1700 - 1800	0	1868	362	2	13	4	0	4	54	0	0	0	0	**2307**
1800 - 1900	1	1656	308	2	10	2	0	1	50	0	0	0	0	**2030**
1900 - 2000	1	1225	207	0	11	1	0	5	45	0	3	0	0	**1498**
2000 - 2100	0	828	158	2	12	0	0	1	43	0	0	0	0	**1044**
2100 - 2200	0	601	134	1	7	1	0	0	34	0	0	0	0	**778**
2200 - 2300	0	388	75	0	8	2	0	2	41	0	3	0	0	**519**
2300 - 2400	0	306	46	1	2	0	1	0	24	0	0	0	0	**380**

Session Total	15	24906	4999	39	231	33	1	41	728	0	12	0	0	**31005**
Session Average	0.63	1037.75	208.29	1.63	9.63	1.38	0.04	1.71	30.33	0.00	0.50	0.00	0.00	**1291.88**
Session Percentage	0.05	80.33	16.12	0.13	0.75	0.11	0.00	0.13	2.35	0.00	0.04	0.00	0.00	

AM Peak Hour	0600 - 0700	0900 - 1000	0900 - 1000	0900 - 1000	0700 - 0800	0900 - 1000	-	0900 - 1000	0900 - 1000	-	0900 - 1000	-	-	**0900 - 1000**
AM Peak Volume	2	1115	254	5	11	3	0	4	32	0	1	0	0	**1423**

Noon Peak Hour	1200 - 1300	1300 - 1400	1300 - 1400	1200 - 1300	1400 - 1500	1400 - 1500	-	1100 - 1200	1100 - 1200	-	1100 - 1200	-	-	**1300 - 1400**
Noon Peak Volume	4	2288	485	8	21	4	0	7	45	0	1	0	0	**2832**

PM Peak Hour	1600 - 1700	1500 - 1600	1500 - 1600	1500 - 1600	1600 - 1700	1700 - 1800	-	1900 - 2000	1700 - 1800	-	1900 - 2000	-	-	**1500 - 1600**
PM Peak Volume	1	2095	397	4	22	4	0	5	54	0	3	0	0	**2544**

Site 3
I-26 W/Bound Off-Ramp,
east of I-26

Date
Monday, April 22, 2024

Weather
Mostly Cloudy
57°F

Lat/Long
34.027654°, -81.101691°

Click here for Detailed Weather

0000 - 2400 (Weekday 24h Session) (04-22-2024)
SB WB 60min

	Westbound (Movement 3.1)													
TIME	1	2	3	4	5	6	7	8	9	10	11	12	13	**Total**
0000 - 0100	0	245	32	0	3	0	0	1	20	0	0	0	0	**301**
0100 - 0200	0	162	19	0	4	0	0	0	23	0	2	0	0	**210**
0200 - 0300	0	115	11	0	5	2	0	2	33	1	0	0	0	**169**
0300 - 0400	0	130	18	0	7	5	0	5	67	3	3	0	0	**238**
0400 - 0500	0	198	29	0	15	9	0	7	74	4	5	0	0	**341**
0500 - 0600	0	449	88	1	23	8	0	5	129	6	1	0	0	**710**
0600 - 0700	0	1027	237	1	35	17	0	9	161	10	1	0	0	**1498**
0700 - 0800	1	1838	519	1	72	24	0	13	201	8	0	0	0	**2677**
0800 - 0900	0	1663	472	2	86	23	0	14	166	6	0	1	0	**2433**
0900 - 1000	0	1505	428	4	92	28	0	15	203	9	0	1	0	**2285**
1000 - 1100	0	1519	381	2	56	26	0	17	171	5	0	0	0	**2177**
1100 - 1200	2	1603	512	3	58	24	0	20	217	9	0	1	0	**2449**
1200 - 1300	3	1601	544	3	57	23	3	16	198	3	1	1	0	**2453**
1300 - 1400	5	1603	480	4	57	24	0	6	226	0	1	0	0	**2406**
1400 - 1500	3	1808	541	1	69	22	1	17	224	1	1	0	0	**2688**
1500 - 1600	1	1478	419	10	43	13	4	5	142	1	1	1	0	**2118**
1600 - 1700	0	1503	422	3	31	12	1	4	210	0	1	0	0	**2187**
1700 - 1800	0	1416	388	1	21	9	0	5	151	0	3	0	0	**1994**
1800 - 1900	3	1497	345	0	20	9	0	5	106	0	0	0	0	**1985**
1900 - 2000	1	1150	253	0	13	5	0	1	101	0	1	0	0	**1525**
2000 - 2100	1	823	161	0	9	6	0	4	76	0	0	0	0	**1080**
2100 - 2200	0	583	110	1	8	1	0	1	63	0	5	1	0	**773**
2200 - 2300	0	408	86	0	6	3	0	5	48	0	8	1	0	**565**
2300 - 2400	0	284	79	1	5	2	0	1	42	0	11	0	0	**425**

Session Total	20	24608	6574	38	795	295	9	178	3052	66	45	7	0	**35687**
Session Average	0.83	1025.33	273.92	1.58	33.13	12.29	0.38	7.42	127.17	2.75	1.88	0.29	0.00	**1486.96**
Session Percentage	0.06	68.96	18.42	0.11	2.23	0.83	0.03	0.50	8.55	0.18	0.13	0.02	0.00	

AM Peak Hour	0700 - 0800	0700 - 0800	0700 - 0800	0900 - 1000	0900 - 1000	0900 - 1000	-	0900 - 1000	0900 - 1000	0600 - 0700	0500 - 0600	0800 - 0900	-	**0700 - 0800**
AM Peak Volume	1	1838	519	4	92	28	0	15	203	10	1	1	0	**2677**

Noon Peak Hour	1300 - 1400	1400 - 1500	1200 - 1300	1300 - 1400	1400 - 1500	1000 - 1100	1200 - 1300	1100 - 1200	1300 - 1400	1100 - 1200	1200 - 1300	1100 - 1200	-	**1400 - 1500**
Noon Peak Volume	5	1808	544	4	69	26	3	20	226	9	1	1	0	**2688**

PM Peak Hour	1800 - 1900	1600 - 1700	1600 - 1700	1500 - 1600	1500 - 1600	1500 - 1600	1500 - 1600	1500 - 1600	1600 - 1700	1500 - 1600	1700 - 1800	1500 - 1600	-	**1600 - 1700**
PM Peak Volume	3	1503	422	10	43	13	4	5	210	1	3	1	0	**2187**

Site 3
I-26 W/Bound Off-Ramp,
east of I-26

Date
Tuesday, April 23, 2024

Weather
Fair
58°F

Lat/Long
34.027654°, -81.101691°

Click here for Detailed Weather

0000 - 2400 (Weekday 24h Session) (04-23-2024)
SB WB 60min

	Westbound (Movement 3.1)													
TIME	1	2	3	4	5	6	7	8	9	10	11	12	13	**Total**
0000 - 0100	2	246	36	0	3	0	0	2	47	0	4	0	0	**340**
0100 - 0200	0	138	23	0	10	1	0	6	52	0	7	0	0	**237**
0200 - 0300	0	87	16	0	7	0	0	3	44	0	13	0	0	**170**
0300 - 0400	1	106	34	0	12	2	0	9	78	0	13	0	1	**256**
0400 - 0500	0	171	61	0	28	8	0	2	129	0	9	0	0	**408**
0500 - 0600	0	340	173	0	44	8	0	2	147	0	11	0	0	**725**
0600 - 0700	0	813	366	1	68	16	3	9	217	3	4	0	0	**1500**
0700 - 0800	1	1615	590	0	102	19	2	23	262	9	3	0	0	**2626**
0800 - 0900	1	1506	566	3	122	23	7	27	228	2	4	0	0	**2489**
0900 - 1000	5	1247	523	4	142	18	4	19	237	10	3	0	0	**2212**
1000 - 1100	0	1211	459	6	92	17	7	25	249	5	0	0	0	**2071**
1100 - 1200	0	1409	434	2	73	21	8	27	230	6	1	0	0	**2211**
1200 - 1300	0	1374	395	2	58	10	9	9	250	4	0	0	0	**2111**
1300 - 1400	5	1433	475	3	49	16	8	12	268	4	0	0	0	**2273**
1400 - 1500	5	1669	604	2	51	18	10	10	232	4	0	0	0	**2605**
1500 - 1600	5	1867	667	5	58	12	10	7	222	1	2	0	0	**2856**
1600 - 1700	1	1640	573	3	23	7	8	4	167	3	3	0	0	**2432**
1700 - 1800	0	1447	486	7	21	10	4	4	150	2	0	0	0	**2131**
1800 - 1900	4	1273	384	0	20	9	2	4	141	0	0	0	0	**1837**
1900 - 2000	2	1069	253	2	16	8	0	0	97	0	1	0	0	**1448**
2000 - 2100	0	789	160	0	10	5	0	1	82	0	2	0	0	**1049**
2100 - 2200	0	674	126	2	16	2	0	0	81	0	5	0	0	**906**
2200 - 2300	0	449	65	0	6	0	0	0	47	0	10	0	0	**577**
2300 - 2400	0	288	41	1	6	0	0	0	56	0	10	0	0	**402**

Session Total	32	22861	7510	43	1037	230	82	205	3713	53	105	0	1	**35872**
Session Average	1.33	952.54	312.92	1.79	43.21	9.58	3.42	8.54	154.71	2.21	4.38	0.00	0.04	**1494.67**
Session Percentage	0.09	63.73	20.94	0.12	2.89	0.64	0.23	0.57	10.35	0.15	0.29	0.00	0.00	

AM Peak Hour	0900 - 1000	0700 - 0800	0700 - 0800	0900 - 1000	0900 - 1000	0800 - 0900	0800 - 0900	0800 - 0900	0700 - 0800	0900 - 1000	0500 - 0600	-	-	**0700 - 0800**
AM Peak Hour Volume	5	1615	590	4	142	23	7	27	262	10	11	0	0	**2626**

Noon Peak Hour	1300 - 1400	1400 - 1500	1400 - 1500	1000 - 1100	1000 - 1100	1100 - 1200	1400 - 1500	1100 - 1200	1300 - 1400	1100 - 1200	1100 - 1200	-	-	**1400 - 1500**
Noon Peak Hour Volume	5	1669	604	6	92	21	10	27	268	6	1	0	0	**2605**

PM Peak Hour	1500 - 1600	1500 - 1600	1500 - 1600	1700 - 1800	1500 - 1600	1500 - 1600	1500 - 1600	1500 - 1600	1500 - 1600	1600 - 1700	1600 - 1700	-	-	**1500 - 1600**
PM Peak Hour Volume	5	1867	667	7	58	12	10	7	222	3	3	0	0	**2856**

Site 3
I-26 W/Bound Off-Ramp,
east of I-26

Date
Wednesday, April 24, 2024

Weather
Fair
66°F

Lat/Long
34.027654°, -81.101691°

Click here for Detailed Weather

0000 - 2400 (Weekday 24h Session) (04-24-2024)
SB WB 60min

	Westbound (Movement 3.1)													
TIME	1	2	3	4	5	6	7	8	9	10	11	12	13	**Total**
0000 - 0100	0	269	9	0	4	0	0	0	54	0	8	0	0	**344**
0100 - 0200	0	155	8	0	8	0	0	0	46	0	6	0	0	**223**
0200 - 0300	0	114	5	0	12	2	0	2	54	0	12	0	0	**201**
0300 - 0400	0	149	4	0	10	2	0	0	77	0	9	0	0	**251**
0400 - 0500	0	222	4	0	25	1	0	0	142	0	7	0	0	**401**
0500 - 0600	0	479	12	0	39	0	0	1	195	0	4	0	0	**730**
0600 - 0700	0	964	251	1	58	17	0	5	218	1	6	0	0	**1521**
0700 - 0800	1	1680	642	1	75	21	3	24	229	5	3	0	0	**2684**
0800 - 0900	1	1539	599	5	108	13	11	25	248	1	7	2	0	**2559**
0900 - 1000	1	1280	533	4	122	14	8	25	256	7	3	1	0	**2254**
1000 - 1100	3	1365	533	1	64	19	3	24	226	14	0	1	0	**2253**
1100 - 1200	5	1466	496	1	54	8	16	18	212	14	0	0	0	**2290**
1200 - 1300	3	1560	498	3	47	14	7	11	227	12	0	1	0	**2383**
1300 - 1400	2	1624	538	9	43	19	8	10	245	10	0	0	0	**2508**
1400 - 1500	2	1831	544	9	41	10	14	9	230	3	3	1	0	**2697**
1500 - 1600	4	2141	582	4	41	15	13	5	185	10	2	0	0	**3002**
1600 - 1700	5	1877	531	2	26	13	7	7	166	5	0	0	0	**2639**
1700 - 1800	2	1390	434	3	23	9	0	5	157	5	2	0	0	**2030**
1800 - 1900	3	1510	382	1	14	5	2	4	124	2	0	0	0	**2047**
1900 - 2000	3	1206	287	0	16	7	0	4	119	2	1	0	0	**1645**
2000 - 2100	0	877	136	0	16	4	0	2	92	0	2	0	0	**1129**
2100 - 2200	0	671	89	1	10	1	0	0	65	0	4	0	0	**841**
2200 - 2300	1	490	42	1	6	0	0	0	52	0	8	0	0	**600**
2300 - 2400	0	355	34	1	7	1	0	0	56	0	3	0	0	**457**

Session Total	36	25214	7193	47	869	195	92	181	3675	91	90	6	0	**37689**
Session Average	1.50	1050.58	299.71	1.96	36.21	8.13	3.83	7.54	153.13	3.79	3.75	0.25	0.00	**1570.38**
Session Percentage	0.10	66.90	19.09	0.12	2.31	0.52	0.24	0.48	9.75	0.24	0.24	0.02	0.00	

AM Peak Hour	0700 - 0800	0700 - 0800	0700 - 0800	0800 - 0900	0900 - 1000	0700 - 0800	0800 - 0900	0800 - 0900	0900 - 1000	0900 - 1000	0800 - 0900	0800 - 0900	-	**0700 - 0800**
AM Peak Hour Volume	1	1680	642	5	122	21	11	25	256	7	7	2	0	**2684**

Noon Peak Hour	1100 - 1200	1400 - 1500	1400 - 1500	1300 - 1400	1000 - 1100	1000 - 1100	1100 - 1200	1000 - 1100	1300 - 1400	1000 - 1100	1400 - 1500	1000 - 1100	-	**1400 - 1500**
Noon Peak Hour Volume	5	1831	544	9	64	19	16	24	245	14	3	1	0	**2697**

PM Peak Hour	1600 - 1700	1500 - 1600	1500 - 1600	1500 - 1600	1500 - 1600	1500 - 1600	1500 - 1600	1600 - 1700	1500 - 1600	1500 - 1600	1500 - 1600	-	-	**1500 - 1600**
PM Peak Hour Volume	5	2141	582	4	41	15	13	7	185	10	2	0	0	**3002**

Site 3
I-26 W/Bound Off-Ramp,
east of I-26

Date
Thursday, April 25, 2024

Weather
Fair
67°F

Lat/Long
34.027654°, -81.101691°

Click here for Detailed Weather

0000 - 2400 (Weekday 24h Session) (04-25-2024)
SB WB 60min

	Westbound (Movement 3.1)													
TIME	1	2	3	4	5	6	7	8	9	10	11	12	13	**Total**
0000 - 0100	3	296	40	0	7	0	0	2	49	0	3	0	0	**400**
0100 - 0200	0	138	14	0	5	1	0	0	50	0	5	0	0	**213**
0200 - 0300	0	114	16	0	4	1	0	1	58	0	5	1	0	**200**
0300 - 0400	0	135	16	0	15	2	0	0	84	0	7	2	0	**261**
0400 - 0500	0	219	23	0	27	4	0	4	128	0	7	0	0	**412**
0500 - 0600	0	387	88	0	42	6	0	6	177	0	4	1	0	**711**
0600 - 0700	0	931	315	2	61	14	3	10	216	3	3	2	0	**1560**
0700 - 0800	6	1663	595	0	91	33	5	20	234	13	1	1	0	**2662**
0800 - 0900	1	1512	658	4	86	15	19	18	234	4	4	2	0	**2557**
0900 - 1000	3	1298	586	2	117	20	4	12	205	6	0	0	0	**2253**
1000 - 1100	6	1478	544	3	88	16	13	19	251	8	0	1	0	**2427**
1100 - 1200	2	1634	449	3	69	26	1	23	222	4	0	0	0	**2433**
1200 - 1300	2	1608	557	1	62	21	2	14	228	5	0	0	0	**2500**
1300 - 1400	0	1676	858	6	56	31	0	5	213	3	1	0	0	**2849**
1400 - 1500	2	1839	621	7	63	26	0	17	199	2	3	0	0	**2779**
1500 - 1600	0	2061	598	4	49	21	1	5	162	2	2	0	0	**2905**
1600 - 1700	2	1541	523	1	36	16	0	4	128	1	1	0	0	**2253**
1700 - 1800	0	1277	444	2	28	6	0	7	150	1	0	0	0	**1915**
1800 - 1900	5	1501	465	4	28	5	0	5	131	0	0	0	0	**2144**
1900 - 2000	1	1243	323	2	23	5	0	1	94	0	0	0	0	**1692**
2000 - 2100	0	986	257	1	15	5	0	0	91	0	2	0	0	**1357**
2100 - 2200	0	568	194	0	10	3	0	0	72	0	4	0	0	**851**
2200 - 2300	0	458	181	0	6	1	0	0	58	0	4	0	0	**708**
2300 - 2400	0	306	152	0	9	0	0	0	49	0	5	0	0	**521**

Session Total	33	24869	8517	42	997	278	48	173	3483	52	61	10	0	**38563**
Session Average	1.38	1036.21	354.88	1.75	41.54	11.58	2.00	7.21	145.13	2.17	2.54	0.42	0.00	**1606.79**
Session Percentage	0.09	64.49	22.09	0.11	2.59	0.72	0.12	0.45	9.03	0.13	0.16	0.03	0.00	

AM Peak Hour	0700 - 0800	0700 - 0800	0800 - 0900	0800 - 0900	0900 - 1000	0700 - 0800	0800 - 0900	0700 - 0800	0700 - 0800	0700 - 0800	0500 - 0600	0600 - 0700	-	**0700 - 0800**
AM Peak Hour Volume	6	1663	658	4	117	33	19	20	234	13	4	2	0	**2662**

Noon Peak Hour	1000 - 1100	1400 - 1500	1300 - 1400	1400 - 1500	1000 - 1100	1300 - 1400	1000 - 1100	1100 - 1200	1000 - 1100	1000 - 1100	1400 - 1500	1000 - 1100	-	**1300 - 1400**
Noon Peak Hour Volume	6	1839	858	7	88	31	13	23	251	8	3	1	0	**2849**

PM Peak Hour	1800 - 1900	1500 - 1600	1500 - 1600	1500 - 1600	1500 - 1600	1500 - 1600	1500 - 1600	1700 - 1800	1500 - 1600	1500 - 1600	1500 - 1600	-	-	**1500 - 1600**
PM Peak Hour Volume	5	2061	598	4	49	21	1	7	162	2	2	0	0	**2905**

Site 3
I-26 W/Bound Off-Ramp,
east of I-26

Date
Friday, April 26, 2024

Lat/Long
34.027654°, -81.101691°

Weather
Cloudy
69°F

Click here for Detailed Weather

0000 - 2400 (Weekday 24h Session) (04-26-2024)
SB WB 60min

	Westbound (Movement 3.1)													
TIME	1	2	3	4	5	6	7	8	9	10	11	12	13	**Total**
0000 - 0100	0	284	42	0	9	5	0	1	41	0	4	1	0	**387**
0100 - 0200	0	162	23	0	5	3	0	1	44	0	4	3	0	**245**
0200 - 0300	0	121	16	0	6	9	0	3	58	0	5	0	0	**218**
0300 - 0400	0	145	18	0	12	12	0	3	73	0	7	3	0	**273**
0400 - 0500	0	189	37	0	17	14	0	4	114	0	4	3	0	**382**
0500 - 0600	0	363	127	0	27	9	0	0	194	0	3	2	0	**725**
0600 - 0700	0	821	282	1	40	18	0	3	187	0	4	4	0	**1360**
0700 - 0800	6	1588	588	0	56	38	2	5	211	5	4	0	0	**2503**
0800 - 0900	2	1538	660	7	64	40	1	11	217	2	2	4	0	**2548**
0900 - 1000	5	1378	618	5	104	40	0	12	214	2	0	0	0	**2378**
1000 - 1100	1	1652	583	5	51	27	7	15	193	5	0	0	0	**2539**
1100 - 1200	4	1947	548	7	62	16	13	14	206	10	1	0	0	**2828**
1200 - 1300	5	1960	594	8	74	28	9	12	181	8	0	1	0	**2880**
1300 - 1400	1	1371	408	0	22	7	14	6	166	5	1	0	0	**2001**
1400 - 1500	11	1806	396	2	49	9	10	19	158	6	1	1	0	**2468**
1500 - 1600	2	2099	597	8	45	9	6	7	111	5	0	1	0	**2890**
1600 - 1700	9	1931	529	3	43	8	5	8	96	5	0	0	0	**2637**
1700 - 1800	7	1917	465	1	23	7	2	5	104	0	0	0	0	**2531**
1800 - 1900	6	1815	513	4	31	11	2	6	89	0	0	0	0	**2477**
1900 - 2000	7	1453	380	3	25	5	0	5	77	0	0	0	0	**1955**
2000 - 2100	0	889	515	3	21	5	0	12	70	0	2	0	0	**1517**
2100 - 2200	2	624	577	1	11	5	0	5	50	0	3	0	0	**1278**
2200 - 2300	0	735	116	0	5	3	0	1	56	5	4	0	0	**925**
2300 - 2400	1	506	75	1	7	1	0	0	40	1	1	0	0	**633**

Session Total	69	27294	8707	59	809	329	71	158	2950	59	50	23	0	**40578**
Session Average	2.88	1137.25	362.79	2.46	33.71	13.71	2.96	6.58	122.92	2.46	2.08	0.96	0.00	**1690.75**
Session Percentage	0.17	67.26	21.46	0.15	1.99	0.81	0.17	0.39	7.27	0.15	0.12	0.06	0.00	

AM Peak Hour	0700 - 0800	0700 - 0800	0800 - 0900	0800 - 0900	0900 - 1000	0800 - 0900	0700 - 0800	0900 - 1000	0800 - 0900	0700 - 0800	0600 - 0700	0600 - 0700	-	**0800 - 0900**
AM Peak Hour Volume	6	1588	660	7	104	40	2	12	217	5	4	4	0	**2548**

Noon Peak Hour	1400 - 1500	1200 - 1300	1200 - 1300	1200 - 1300	1200 - 1300	1200 - 1300	1300 - 1400	1400 - 1500	1100 - 1200	1100 - 1200	1100 - 1200	1200 - 1300	-	**1200 - 1300**
Noon Peak Hour Volume	11	1960	594	8	74	28	14	19	206	10	1	1	0	**2880**

PM Peak Hour	1600 - 1700	1500 - 1600	1500 - 1600	1500 - 1600	1500 - 1600	1800 - 1900	1500 - 1600	1600 - 1700	1500 - 1600	1500 - 1600	-	1500 - 1600	-	**1500 - 1600**
PM Peak Hour Volume	9	2099	597	8	45	11	6	8	111	5	0	1	0	**2890**

Site 3
I-26 W/Bound Off-Ramp,
east of I-26

Date
Saturday, April 27, 2024

Weather
Mostly Cloudy
69°F

Lat/Long
34.027654°, -81.101691°

Click here for Detailed Weather

0000 - 2400 (Saturday 24h Session) (04-27-2024)
SB WB 60min

	Westbound (Movement 3.1)													
TIME	1	2	3	4	5	6	7	8	9	10	11	12	13	**Total**
0000 - 0100	0	328	75	0	2	2	0	0	36	0	5	0	0	**448**
0100 - 0200	0	182	40	0	3	1	0	0	35	0	4	0	0	**265**
0200 - 0300	0	131	34	0	5	4	0	0	23	0	7	0	0	**204**
0300 - 0400	0	109	38	0	7	4	0	0	33	0	4	0	0	**195**
0400 - 0500	0	173	50	0	9	6	0	0	49	0	9	0	0	**296**
0500 - 0600	0	276	52	1	19	2	0	0	33	0	2	0	0	**385**
0600 - 0700	4	480	149	0	11	4	0	0	45	0	4	0	0	**697**
0700 - 0800	1	812	253	2	20	5	0	3	67	0	3	0	0	**1166**
0800 - 0900	1	1211	346	1	33	11	0	11	62	0	1	0	0	**1677**
0900 - 1000	8	1623	368	2	47	11	0	3	78	0	0	0	0	**2140**
1000 - 1100	8	1838	415	3	30	7	0	9	68	0	0	0	0	**2378**
1100 - 1200	10	1993	476	1	22	7	0	3	68	0	0	0	0	**2580**
1200 - 1300	7	2128	459	1	29	7	0	13	56	0	0	0	0	**2700**
1300 - 1400	16	2162	454	3	28	4	0	11	65	0	0	0	0	**2743**
1400 - 1500	6	2142	432	3	20	6	0	10	57	0	0	0	0	**2676**
1500 - 1600	8	2074	415	3	27	7	0	3	32	1	0	0	0	**2570**
1600 - 1700	4	1903	385	2	18	2	0	10	45	0	0	0	0	**2369**
1700 - 1800	12	1778	350	2	16	4	0	10	46	0	0	0	0	**2218**
1800 - 1900	3	1562	293	4	14	2	0	6	30	0	0	0	0	**1914**
1900 - 2000	5	1270	242	2	9	0	0	6	26	0	1	0	0	**1561**
2000 - 2100	1	911	291	2	11	0	0	1	29	0	0	1	0	**1247**
2100 - 2200	0	787	190	0	9	4	0	0	20	0	0	0	0	**1010**
2200 - 2300	0	604	145	2	5	1	0	0	15	0	0	0	0	**772**
2300 - 2400	1	464	113	2	4	0	0	0	16	0	0	0	0	**600**

Session Total	95	26941	6065	36	398	101	0	99	1034	1	40	1	0	**34811**
Session Average	3.96	1122.54	252.71	1.50	16.58	4.21	0.00	4.13	43.08	0.04	1.67	0.04	0.00	**1450.46**
Session Percentage	0.27	77.39	17.42	0.10	1.14	0.29	0.00	0.28	2.97	0.00	0.11	0.00	0.00	

AM Peak Hour	0900 - 1000	0900 - 1000	0900 - 1000	0700 - 0800	0900 - 1000	0800 - 0900	-	0800 - 0900	0900 - 1000	-	0600 - 0700	-	-	**0900 - 1000**
AM Peak Hour Volume	8	1623	368	2	47	11	0	11	78	0	4	0	0	**2140**

Noon Peak Hour	1300 - 1400	1300 - 1400	1100 - 1200	1000 - 1100	1000 - 1100	1000 - 1100	-	1200 - 1300	1000 - 1100	-	-	-	-	**1300 - 1400**
Noon Peak Hour Volume	16	2162	476	3	30	7	0	13	68	0	0	0	0	**2743**

PM Peak Hour	1700 - 1800	1500 - 1600	1500 - 1600	1800 - 1900	1500 - 1600	1500 - 1600	-	1600 - 1700	1700 - 1800	1500 - 1600	1900 - 2000	-	-	**1500 - 1600**
PM Peak Hour Volume	12	2074	415	4	27	7	0	10	46	1	1	0	0	**2570**

Bi-Directional Class Count || Volume Summary 60min

Columbia, SC

Marr Traffic DATA COLLECTION

www.marrtraffic.com

Site 3

I-26 W/Bound Off-Ramp,
east of I-26

Date

Sunday, April 21, 2024

Lat/Long

34.027654°, -81.101691°

Weather

Cloudy
66°F

Click here for Detailed Weather

0000 - 2400 (Sunday 24h Session) (04-21-2024)

Volume Summary 60min

	Volume Summary 60min		
TIME	EB	WB	**Total**
0000 - 0100	0	491	**491**
0100 - 0200	0	305	**305**
0200 - 0300	0	189	**189**
0300 - 0400	0	183	**183**
0400 - 0500	0	186	**186**
0500 - 0600	0	264	**264**
0600 - 0700	0	385	**385**
0700 - 0800	0	719	**719**
0800 - 0900	0	904	**904**
0900 - 1000	0	1423	**1423**
1000 - 1100	0	1987	**1987**
1100 - 1200	0	2202	**2202**

	Volume Summary 60min		
Time	EB	WB	**Total**
1200 - 1300	0	2793	**2793**
1300 - 1400	0	2832	**2832**
1400 - 1500	0	2585	**2585**
1500 - 1600	0	2544	**2544**
1600 - 1700	0	2457	**2457**
1700 - 1800	0	2307	**2307**
1800 - 1900	0	2030	**2030**
1900 - 2000	0	1498	**1498**
2000 - 2100	0	1044	**1044**
2100 - 2200	0	778	**778**
2200 - 2300	0	519	**519**
2300 - 2400	0	380	**380**

Session Total	0	31005	**31005**
Session Average	0.00	1291.88	**1291.88**
Session Percentage	0.00	100.00	

Site 3
I-26 W/Bound Off-Ramp,
east of I-26

Date
Monday, April 22, 2024

Lat/Long
34.027654°, -81.101691°

Weather
Mostly Cloudy
57°F

Click here for Detailed Weather

0000 - 2400 (Weekday 24h Session) (04-22-2024)
Volume Summary 60min

	Volume Summary 60min		
TIME	EB	WB	**Total**
0000 - 0100	0	301	**301**
0100 - 0200	0	210	**210**
0200 - 0300	0	169	**169**
0300 - 0400	0	238	**238**
0400 - 0500	0	341	**341**
0500 - 0600	0	710	**710**
0600 - 0700	0	1498	**1498**
0700 - 0800	0	2677	**2677**
0800 - 0900	0	2433	**2433**
0900 - 1000	0	2285	**2285**
1000 - 1100	0	2177	**2177**
1100 - 1200	0	2449	**2449**

Session Total	0	35687	**35687**
Session Average	0.00	1486.96	**1486.96**
Session Percentage	0.00	100.00	

	Volume Summary 60min		
Time	EB	WB	**Total**
1200 - 1300	0	2453	**2453**
1300 - 1400	0	2406	**2406**
1400 - 1500	0	2688	**2688**
1500 - 1600	0	2118	**2118**
1600 - 1700	0	2187	**2187**
1700 - 1800	0	1994	**1994**
1800 - 1900	0	1985	**1985**
1900 - 2000	0	1525	**1525**
2000 - 2100	0	1080	**1080**
2100 - 2200	0	773	**773**
2200 - 2300	0	565	**565**
2300 - 2400	0	425	**425**

Site 3
I-26 W/Bound Off-Ramp,
east of I-26

Date
Tuesday, April 23, 2024

Lat/Long
34.027654°, -81.101691°

Weather
Fair
58°F

Click here for Detailed Weather

0000 - 2400 (Weekday 24h Session) (04-23-2024)
Volume Summary 60min

	Volume Summary 60min		
TIME	EB	WB	**Total**
0000 - 0100	0	340	**340**
0100 - 0200	0	237	**237**
0200 - 0300	0	170	**170**
0300 - 0400	0	256	**256**
0400 - 0500	0	408	**408**
0500 - 0600	0	725	**725**
0600 - 0700	0	1500	**1500**
0700 - 0800	0	2626	**2626**
0800 - 0900	0	2489	**2489**
0900 - 1000	0	2212	**2212**
1000 - 1100	0	2071	**2071**
1100 - 1200	0	2211	**2211**

Session Total	0	35872	**35872**
Session Average	0.00	1494.67	**1494.67**
Session Percentage	0.00	100.00	

	Volume Summary 60min		
Time	EB	WB	**Total**
1200 - 1300	0	2111	**2111**
1300 - 1400	0	2273	**2273**
1400 - 1500	0	2605	**2605**
1500 - 1600	0	2856	**2856**
1600 - 1700	0	2432	**2432**
1700 - 1800	0	2131	**2131**
1800 - 1900	0	1837	**1837**
1900 - 2000	0	1448	**1448**
2000 - 2100	0	1049	**1049**
2100 - 2200	0	906	**906**
2200 - 2300	0	577	**577**
2300 - 2400	0	402	**402**

Site 3

I-26 W/Bound Off-Ramp,
east of I-26

Date

Wednesday, April 24, 2024

Lat/Long

34.027654°, -81.101691°

Weather

Fair
66°F

Click here for Detailed Weather

0000 - 2400 (Weekday 24h Session) (04-24-2024)

Volume Summary 60min

	Volume Summary 60min		
TIME	EB	WB	**Total**
0000 - 0100	0	344	**344**
0100 - 0200	0	223	**223**
0200 - 0300	0	201	**201**
0300 - 0400	0	251	**251**
0400 - 0500	0	401	**401**
0500 - 0600	0	730	**730**
0600 - 0700	0	1521	**1521**
0700 - 0800	0	2684	**2684**
0800 - 0900	0	2559	**2559**
0900 - 1000	0	2254	**2254**
1000 - 1100	0	2253	**2253**
1100 - 1200	0	2290	**2290**

Session Total	0	37689	**37689**
Session Average	0.00	1570.38	**1570.38**
Session Percentage	0.00	100.00	

	Volume Summary 60min		
Time	EB	WB	**Total**
1200 - 1300	0	2383	**2383**
1300 - 1400	0	2508	**2508**
1400 - 1500	0	2697	**2697**
1500 - 1600	0	3002	**3002**
1600 - 1700	0	2639	**2639**
1700 - 1800	0	2030	**2030**
1800 - 1900	0	2047	**2047**
1900 - 2000	0	1645	**1645**
2000 - 2100	0	1129	**1129**
2100 - 2200	0	841	**841**
2200 - 2300	0	600	**600**
2300 - 2400	0	457	**457**

Site 3
I-26 W/Bound Off-Ramp,
east of I-26

Date
Thursday, April 25, 2024

Lat/Long
34.027654°, -81.101691°

Weather
Fair
67°F

Click here for Detailed Weather

0000 - 2400 (Weekday 24h Session) (04-25-2024)
Volume Summary 60min

	Volume Summary 60min		
TIME	EB	WB	**Total**
0000 - 0100	0	400	**400**
0100 - 0200	0	213	**213**
0200 - 0300	0	200	**200**
0300 - 0400	0	261	**261**
0400 - 0500	0	412	**412**
0500 - 0600	0	711	**711**
0600 - 0700	0	1560	**1560**
0700 - 0800	0	2662	**2662**
0800 - 0900	0	2557	**2557**
0900 - 1000	0	2253	**2253**
1000 - 1100	0	2427	**2427**
1100 - 1200	0	2433	**2433**

Session Total	0	38563	**38563**
Session Average	0.00	1606.79	**1606.79**
Session Percentage	0.00	100.00	

	Volume Summary 60min		
Time	EB	WB	**Total**
1200 - 1300	0	2500	**2500**
1300 - 1400	0	2849	**2849**
1400 - 1500	0	2779	**2779**
1500 - 1600	0	2905	**2905**
1600 - 1700	0	2253	**2253**
1700 - 1800	0	1915	**1915**
1800 - 1900	0	2144	**2144**
1900 - 2000	0	1692	**1692**
2000 - 2100	0	1357	**1357**
2100 - 2200	0	851	**851**
2200 - 2300	0	708	**708**
2300 - 2400	0	521	**521**

Site 3

I-26 W/Bound Off-Ramp,
east of I-26

Date

Friday, April 26, 2024

Lat/Long

34.027654°, -81.101691°

Weather

Cloudy
69°F

Click here for Detailed Weather

0000 - 2400 (Weekday 24h Session) (04-26-2024)

Volume Summary 60min

	Volume Summary 60min		
TIME	EB	WB	**Total**
0000 - 0100	0	387	**387**
0100 - 0200	0	245	**245**
0200 - 0300	0	218	**218**
0300 - 0400	0	273	**273**
0400 - 0500	0	382	**382**
0500 - 0600	0	725	**725**
0600 - 0700	0	1360	**1360**
0700 - 0800	0	2503	**2503**
0800 - 0900	0	2548	**2548**
0900 - 1000	0	2378	**2378**
1000 - 1100	0	2539	**2539**
1100 - 1200	0	2828	**2828**
1200 - 1300	0	2880	**2880**
1300 - 1400	0	2001	**2001**
1400 - 1500	0	2468	**2468**
1500 - 1600	0	2890	**2890**
1600 - 1700	0	2637	**2637**
1700 - 1800	0	2531	**2531**
1800 - 1900	0	2477	**2477**
1900 - 2000	0	1955	**1955**
2000 - 2100	0	1517	**1517**
2100 - 2200	0	1278	**1278**
2200 - 2300	0	925	**925**
2300 - 2400	0	633	**633**
Session Total	0	40578	**40578**
Session Average	0.00	1690.75	**1690.75**
Session Percentage	0.00	100.00	

Site 3

I-26 W/Bound Off-Ramp,
east of I-26

Date

Saturday, April 27, 2024

Lat/Long

34.027654°, -81.101691°

Weather

Mostly Cloudy
69°F

Click here for Detailed Weather

0000 - 2400 (Saturday 24h Session) (04-27-2024)

Volume Summary 60min

	Volume Summary 60min		
TIME	EB	WB	**Total**
0000 - 0100	0	448	**448**
0100 - 0200	0	265	**265**
0200 - 0300	0	204	**204**
0300 - 0400	0	195	**195**
0400 - 0500	0	296	**296**
0500 - 0600	0	385	**385**
0600 - 0700	0	697	**697**
0700 - 0800	0	1166	**1166**
0800 - 0900	0	1677	**1677**
0900 - 1000	0	2140	**2140**
1000 - 1100	0	2378	**2378**
1100 - 1200	0	2580	**2580**
1200 - 1300	0	2700	**2700**
1300 - 1400	0	2743	**2743**
1400 - 1500	0	2676	**2676**
1500 - 1600	0	2570	**2570**
1600 - 1700	0	2369	**2369**
1700 - 1800	0	2218	**2218**
1800 - 1900	0	1914	**1914**
1900 - 2000	0	1561	**1561**
2000 - 2100	0	1247	**1247**
2100 - 2200	0	1010	**1010**
2200 - 2300	0	772	**772**
2300 - 2400	0	600	**600**

Session Total	0	34811	**34811**
Session Average	0.00	1450.46	**1450.46**
Session Percentage	0.00	100.00	

Bi-Directional Class Count || Graphical Analysis SB WB

Columbia, SC

Marr Traffic DATA COLLECTION

www.marrtraffic.com

Site 3

I-26 W/Bound Off-Ramp,
east of I-26

Lat/Long

34.027654°, -81.101691°

0000 - 2400 (Weekday 24h Session)

Graphical Analysis SB WB

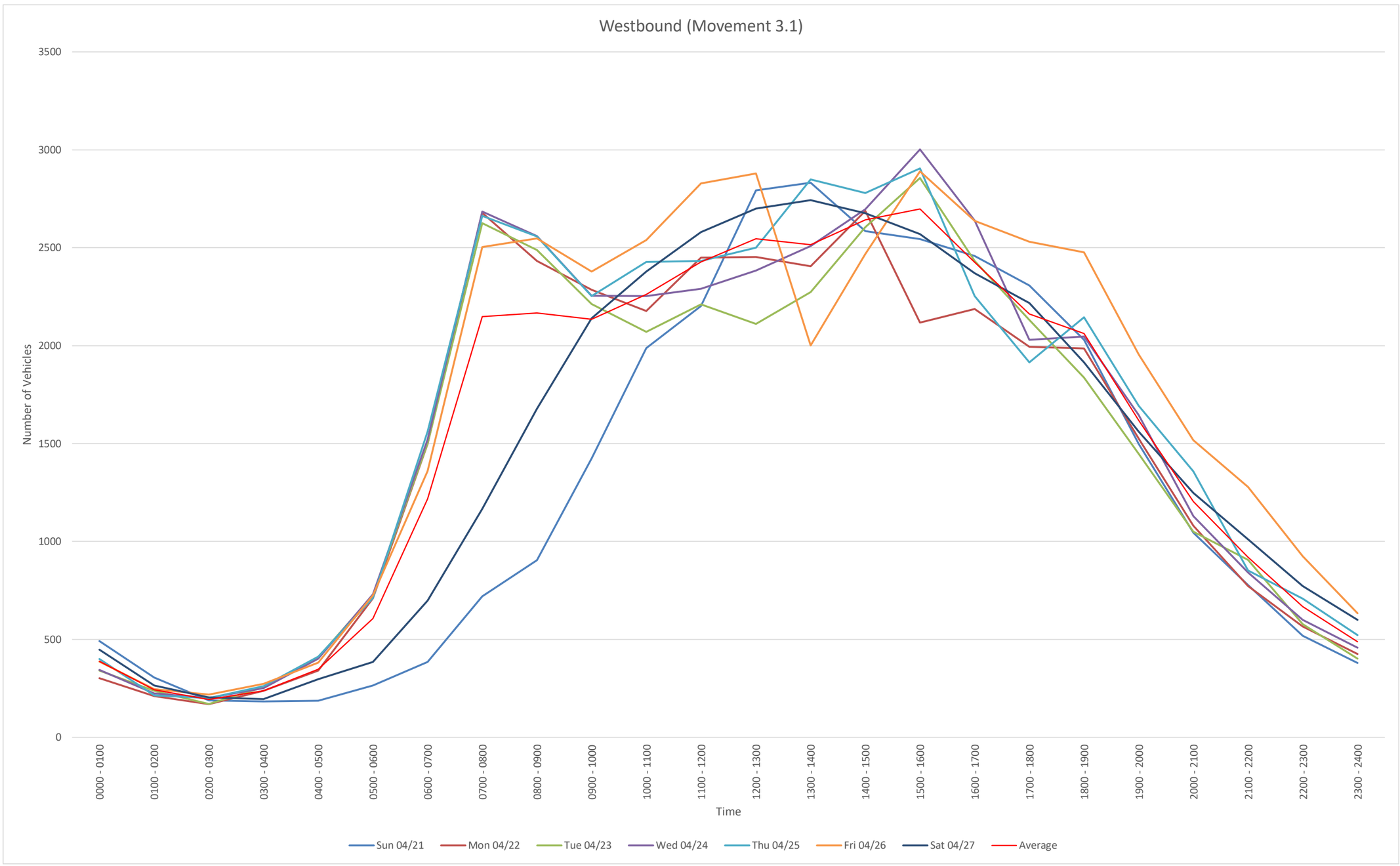

EB
File Name:
Start Date: 4/21/2024
Start Time: 0
Site Code: 3
Station ID: 1
Location 1: I-26 W/Bound Off-Ramp, east of I-26
Location 2:

Date	Time	1	2	3	4	5	6	7	8	9	10	11	12	13
4/21/2024	12:00 AM	0	0	0	0	0	0	0	0	0	0	0	0	0
4/21/2024	12:15 AM	0	0	0	0	0	0	0	0	0	0	0	0	0
4/21/2024	12:30 AM	0	0	0	0	0	0	0	0	0	0	0	0	0
4/21/2024	12:45 AM	0	0	0	0	0	0	0	0	0	0	0	0	0
4/21/2024	1:00 AM	0	0	0	0	0	0	0	0	0	0	0	0	0
4/21/2024	1:15 AM	0	0	0	0	0	0	0	0	0	0	0	0	0
4/21/2024	1:30 AM	0	0	0	0	0	0	0	0	0	0	0	0	0
4/21/2024	1:45 AM	0	0	0	0	0	0	0	0	0	0	0	0	0
4/21/2024	2:00 AM	0	0	0	0	0	0	0	0	0	0	0	0	0
4/21/2024	2:15 AM	0	0	0	0	0	0	0	0	0	0	0	0	0
4/21/2024	2:30 AM	0	0	0	0	0	0	0	0	0	0	0	0	0
4/21/2024	2:45 AM	0	0	0	0	0	0	0	0	0	0	0	0	0
4/21/2024	3:00 AM	0	0	0	0	0	0	0	0	0	0	0	0	0
4/21/2024	3:15 AM	0	0	0	0	0	0	0	0	0	0	0	0	0
4/21/2024	3:30 AM	0	0	0	0	0	0	0	0	0	0	0	0	0
4/21/2024	3:45 AM	0	0	0	0	0	0	0	0	0	0	0	0	0
4/21/2024	4:00 AM	0	0	0	0	0	0	0	0	0	0	0	0	0
4/21/2024	4:15 AM	0	0	0	0	0	0	0	0	0	0	0	0	0
4/21/2024	4:30 AM	0	0	0	0	0	0	0	0	0	0	0	0	0
4/21/2024	4:45 AM	0	0	0	0	0	0	0	0	0	0	0	0	0
4/21/2024	5:00 AM	0	0	0	0	0	0	0	0	0	0	0	0	0
4/21/2024	5:15 AM	0	0	0	0	0	0	0	0	0	0	0	0	0
4/21/2024	5:30 AM	0	0	0	0	0	0	0	0	0	0	0	0	0
4/21/2024	5:45 AM	0	0	0	0	0	0	0	0	0	0	0	0	0
4/21/2024	6:00 AM	0	0	0	0	0	0	0	0	0	0	0	0	0
4/21/2024	6:15 AM	0	0	0	0	0	0	0	0	0	0	0	0	0
4/21/2024	6:30 AM	0	0	0	0	0	0	0	0	0	0	0	0	0
4/21/2024	6:45 AM	0	0	0	0	0	0	0	0	0	0	0	0	0
4/21/2024	7:00 AM	0	0	0	0	0	0	0	0	0	0	0	0	0
4/21/2024	7:15 AM	0	0	0	0	0	0	0	0	0	0	0	0	0
4/21/2024	7:30 AM	0	0	0	0	0	0	0	0	0	0	0	0	0
4/21/2024	7:45 AM	0	0	0	0	0	0	0	0	0	0	0	0	0
4/21/2024	8:00 AM	0	0	0	0	0	0	0	0	0	0	0	0	0
4/21/2024	8:15 AM	0	0	0	0	0	0	0	0	0	0	0	0	0
4/21/2024	8:30 AM	0	0	0	0	0	0	0	0	0	0	0	0	0
4/21/2024	8:45 AM	0	0	0	0	0	0	0	0	0	0	0	0	0
4/21/2024	9:00 AM	0	0	0	0	0	0	0	0	0	0	0	0	0
4/21/2024	9:15 AM	0	0	0	0	0	0	0	0	0	0	0	0	0
4/21/2024	9:30 AM	0	0	0	0	0	0	0	0	0	0	0	0	0
4/21/2024	9:45 AM	0	0	0	0	0	0	0	0	0	0	0	0	0
4/21/2024	10:00 AM	0	0	0	0	0	0	0	0	0	0	0	0	0
4/21/2024	10:15 AM	0	0	0	0	0	0	0	0	0	0	0	0	0
4/21/2024	10:30 AM	0	0	0	0	0	0	0	0	0	0	0	0	0
4/21/2024	10:45 AM	0	0	0	0	0	0	0	0	0	0	0	0	0
4/21/2024	11:00 AM	0	0	0	0	0	0	0	0	0	0	0	0	0
4/21/2024	11:15 AM	0	0	0	0	0	0	0	0	0	0	0	0	0
4/21/2024	11:30 AM	0	0	0	0	0	0	0	0	0	0	0	0	0
4/21/2024	11:45 AM	0	0	0	0	0	0	0	0	0	0	0	0	0
4/21/2024	12:00 PM	0	0	0	0	0	0	0	0	0	0	0	0	0
4/21/2024	12:15 PM	0	0	0	0	0	0	0	0	0	0	0	0	0
4/21/2024	12:30 PM	0	0	0	0	0	0	0	0	0	0	0	0	0
4/21/2024	12:45 PM	0	0	0	0	0	0	0	0	0	0	0	0	0
4/21/2024	1:00 PM	0	0	0	0	0	0	0	0	0	0	0	0	0
4/21/2024	1:15 PM	0	0	0	0	0	0	0	0	0	0	0	0	0
4/21/2024	1:30 PM	0	0	0	0	0	0	0	0	0	0	0	0	0
4/21/2024	1:45 PM	0	0	0	0	0	0	0	0	0	0	0	0	0
4/21/2024	2:00 PM	0	0	0	0	0	0	0	0	0	0	0	0	0
4/21/2024	2:15 PM	0	0	0	0	0	0	0	0	0	0	0	0	0
4/21/2024	2:30 PM	0	0	0	0	0	0	0	0	0	0	0	0	0
4/21/2024	2:45 PM	0	0	0	0	0	0	0	0	0	0	0	0	0
4/21/2024	3:00 PM	0	0	0	0	0	0	0	0	0	0	0	0	0
4/21/2024	3:15 PM	0	0	0	0	0	0	0	0	0	0	0	0	0
4/21/2024	3:30 PM	0	0	0	0	0	0	0	0	0	0	0	0	0
4/21/2024	3:45 PM	0	0	0	0	0	0	0	0	0	0	0	0	0
4/21/2024	4:00 PM	0	0	0	0	0	0	0	0	0	0	0	0	0
4/21/2024	4:15 PM	0	0	0	0	0	0	0	0	0	0	0	0	0
4/21/2024	4:30 PM	0	0	0	0	0	0	0	0	0	0	0	0	0
4/21/2024	4:45 PM	0	0	0	0	0	0	0	0	0	0	0	0	0
4/21/2024	5:00 PM	0	0	0	0	0	0	0	0	0	0	0	0	0
4/21/2024	5:15 PM	0	0	0	0	0	0	0	0	0	0	0	0	0
4/21/2024	5:30 PM	0	0	0	0	0	0	0	0	0	0	0	0	0
4/21/2024	5:45 PM	0	0	0	0	0	0	0	0	0	0	0	0	0
4/21/2024	6:00 PM	0	0	0	0	0	0	0	0	0	0	0	0	0
4/21/2024	6:15 PM	0	0	0	0	0	0	0	0	0	0	0	0	0
4/21/2024	6:30 PM	0	0	0	0	0	0	0	0	0	0	0	0	0
4/21/2024	6:45 PM	0	0	0	0	0	0	0	0	0	0	0	0	0
4/21/2024	7:00 PM	0	0	0	0	0	0	0	0	0	0	0	0	0
4/21/2024	7:15 PM	0	0	0	0	0	0	0	0	0	0	0	0	0
4/21/2024	7:30 PM	0	0	0	0	0	0	0	0	0	0	0	0	0
4/21/2024	7:45 PM	0	0	0	0	0	0	0	0	0	0	0	0	0
4/21/2024	8:00 PM	0	0	0	0	0	0	0	0	0	0	0	0	0
4/21/2024	8:15 PM	0	0	0	0	0	0	0	0	0	0	0	0	0
4/21/2024	8:30 PM	0	0	0	0	0	0	0	0	0	0	0	0	0
4/21/2024	8:45 PM	0	0	0	0	0	0	0	0	0	0	0	0	0
4/21/2024	9:00 PM	0	0	0	0	0	0	0	0	0	0	0	0	0
4/21/2024	9:15 PM	0	0	0	0	0	0	0	0	0	0	0	0	0
4/21/2024	9:30 PM	0	0	0	0	0	0	0	0	0	0	0	0	0
4/21/2024	9:45 PM	0	0	0	0	0	0	0	0	0	0	0	0	0
4/21/2024	10:00 PM	0	0	0	0	0	0	0	0	0	0	0	0	0
4/21/2024	10:15 PM	0	0	0	0	0	0	0	0	0	0	0	0	0
4/21/2024	10:30 PM	0	0	0	0	0	0	0	0	0	0	0	0	0
4/21/2024	10:45 PM	0	0	0	0	0	0	0	0	0	0	0	0	0
4/21/2024	11:00 PM	0	0	0	0	0	0	0	0	0	0	0	0	0
4/21/2024	11:15 PM	0	0	0	0	0	0	0	0	0	0	0	0	0
4/21/2024	11:30 PM	0	0	0	0	0	0	0	0	0	0	0	0	0
4/21/2024	11:45 PM	0	0	0	0	0	0	0	0	0	0	0	0	0

4/22/2024	12:00 AM	0	0	0	0	0	0	0	0	0	0	0	0	0
4/22/2024	12:15 AM	0	0	0	0	0	0	0	0	0	0	0	0	0
4/22/2024	12:30 AM	0	0	0	0	0	0	0	0	0	0	0	0	0
4/22/2024	12:45 AM	0	0	0	0	0	0	0	0	0	0	0	0	0
4/22/2024	1:00 AM	0	0	0	0	0	0	0	0	0	0	0	0	0
4/22/2024	1:15 AM	0	0	0	0	0	0	0	0	0	0	0	0	0
4/22/2024	1:30 AM	0	0	0	0	0	0	0	0	0	0	0	0	0
4/22/2024	1:45 AM	0	0	0	0	0	0	0	0	0	0	0	0	0
4/22/2024	2:00 AM	0	0	0	0	0	0	0	0	0	0	0	0	0
4/22/2024	2:15 AM	0	0	0	0	0	0	0	0	0	0	0	0	0
4/22/2024	2:30 AM	0	0	0	0	0	0	0	0	0	0	0	0	0
4/22/2024	2:45 AM	0	0	0	0	0	0	0	0	0	0	0	0	0
4/22/2024	3:00 AM	0	0	0	0	0	0	0	0	0	0	0	0	0
4/22/2024	3:15 AM	0	0	0	0	0	0	0	0	0	0	0	0	0
4/22/2024	3:30 AM	0	0	0	0	0	0	0	0	0	0	0	0	0
4/22/2024	3:45 AM	0	0	0	0	0	0	0	0	0	0	0	0	0
4/22/2024	4:00 AM	0	0	0	0	0	0	0	0	0	0	0	0	0
4/22/2024	4:15 AM	0	0	0	0	0	0	0	0	0	0	0	0	0
4/22/2024	4:30 AM	0	0	0	0	0	0	0	0	0	0	0	0	0
4/22/2024	4:45 AM	0	0	0	0	0	0	0	0	0	0	0	0	0
4/22/2024	5:00 AM	0	0	0	0	0	0	0	0	0	0	0	0	0
4/22/2024	5:15 AM	0	0	0	0	0	0	0	0	0	0	0	0	0
4/22/2024	5:30 AM	0	0	0	0	0	0	0	0	0	0	0	0	0
4/22/2024	5:45 AM	0	0	0	0	0	0	0	0	0	0	0	0	0
4/22/2024	6:00 AM	0	0	0	0	0	0	0	0	0	0	0	0	0
4/22/2024	6:15 AM	0	0	0	0	0	0	0	0	0	0	0	0	0
4/22/2024	6:30 AM	0	0	0	0	0	0	0	0	0	0	0	0	0
4/22/2024	6:45 AM	0	0	0	0	0	0	0	0	0	0	0	0	0
4/22/2024	7:00 AM	0	0	0	0	0	0	0	0	0	0	0	0	0
4/22/2024	7:15 AM	0	0	0	0	0	0	0	0	0	0	0	0	0
4/22/2024	7:30 AM	0	0	0	0	0	0	0	0	0	0	0	0	0
4/22/2024	7:45 AM	0	0	0	0	0	0	0	0	0	0	0	0	0
4/22/2024	8:00 AM	0	0	0	0	0	0	0	0	0	0	0	0	0
4/22/2024	8:15 AM	0	0	0	0	0	0	0	0	0	0	0	0	0
4/22/2024	8:30 AM	0	0	0	0	0	0	0	0	0	0	0	0	0
4/22/2024	8:45 AM	0	0	0	0	0	0	0	0	0	0	0	0	0
4/22/2024	9:00 AM	0	0	0	0	0	0	0	0	0	0	0	0	0
4/22/2024	9:15 AM	0	0	0	0	0	0	0	0	0	0	0	0	0
4/22/2024	9:30 AM	0	0	0	0	0	0	0	0	0	0	0	0	0
4/22/2024	9:45 AM	0	0	0	0	0	0	0	0	0	0	0	0	0
4/22/2024	10:00 AM	0	0	0	0	0	0	0	0	0	0	0	0	0
4/22/2024	10:15 AM	0	0	0	0	0	0	0	0	0	0	0	0	0
4/22/2024	10:30 AM	0	0	0	0	0	0	0	0	0	0	0	0	0
4/22/2024	10:45 AM	0	0	0	0	0	0	0	0	0	0	0	0	0
4/22/2024	11:00 AM	0	0	0	0	0	0	0	0	0	0	0	0	0
4/22/2024	11:15 AM	0	0	0	0	0	0	0	0	0	0	0	0	0
4/22/2024	11:30 AM	0	0	0	0	0	0	0	0	0	0	0	0	0
4/22/2024	11:45 AM	0	0	0	0	0	0	0	0	0	0	0	0	0
4/22/2024	12:00 PM	0	0	0	0	0	0	0	0	0	0	0	0	0
4/22/2024	12:15 PM	0	0	0	0	0	0	0	0	0	0	0	0	0
4/22/2024	12:30 PM	0	0	0	0	0	0	0	0	0	0	0	0	0
4/22/2024	12:45 PM	0	0	0	0	0	0	0	0	0	0	0	0	0
4/22/2024	1:00 PM	0	0	0	0	0	0	0	0	0	0	0	0	0
4/22/2024	1:15 PM	0	0	0	0	0	0	0	0	0	0	0	0	0
4/22/2024	1:30 PM	0	0	0	0	0	0	0	0	0	0	0	0	0
4/22/2024	1:45 PM	0	0	0	0	0	0	0	0	0	0	0	0	0
4/22/2024	2:00 PM	0	0	0	0	0	0	0	0	0	0	0	0	0
4/22/2024	2:15 PM	0	0	0	0	0	0	0	0	0	0	0	0	0
4/22/2024	2:30 PM	0	0	0	0	0	0	0	0	0	0	0	0	0
4/22/2024	2:45 PM	0	0	0	0	0	0	0	0	0	0	0	0	0
4/22/2024	3:00 PM	0	0	0	0	0	0	0	0	0	0	0	0	0
4/22/2024	3:15 PM	0	0	0	0	0	0	0	0	0	0	0	0	0
4/22/2024	3:30 PM	0	0	0	0	0	0	0	0	0	0	0	0	0
4/22/2024	3:45 PM	0	0	0	0	0	0	0	0	0	0	0	0	0
4/22/2024	4:00 PM	0	0	0	0	0	0	0	0	0	0	0	0	0
4/22/2024	4:15 PM	0	0	0	0	0	0	0	0	0	0	0	0	0
4/22/2024	4:30 PM	0	0	0	0	0	0	0	0	0	0	0	0	0
4/22/2024	4:45 PM	0	0	0	0	0	0	0	0	0	0	0	0	0
4/22/2024	5:00 PM	0	0	0	0	0	0	0	0	0	0	0	0	0
4/22/2024	5:15 PM	0	0	0	0	0	0	0	0	0	0	0	0	0
4/22/2024	5:30 PM	0	0	0	0	0	0	0	0	0	0	0	0	0
4/22/2024	5:45 PM	0	0	0	0	0	0	0	0	0	0	0	0	0
4/22/2024	6:00 PM	0	0	0	0	0	0	0	0	0	0	0	0	0
4/22/2024	6:15 PM	0	0	0	0	0	0	0	0	0	0	0	0	0
4/22/2024	6:30 PM	0	0	0	0	0	0	0	0	0	0	0	0	0
4/22/2024	6:45 PM	0	0	0	0	0	0	0	0	0	0	0	0	0
4/22/2024	7:00 PM	0	0	0	0	0	0	0	0	0	0	0	0	0
4/22/2024	7:15 PM	0	0	0	0	0	0	0	0	0	0	0	0	0
4/22/2024	7:30 PM	0	0	0	0	0	0	0	0	0	0	0	0	0
4/22/2024	7:45 PM	0	0	0	0	0	0	0	0	0	0	0	0	0
4/22/2024	8:00 PM	0	0	0	0	0	0	0	0	0	0	0	0	0
4/22/2024	8:15 PM	0	0	0	0	0	0	0	0	0	0	0	0	0
4/22/2024	8:30 PM	0	0	0	0	0	0	0	0	0	0	0	0	0
4/22/2024	8:45 PM	0	0	0	0	0	0	0	0	0	0	0	0	0
4/22/2024	9:00 PM	0	0	0	0	0	0	0	0	0	0	0	0	0
4/22/2024	9:15 PM	0	0	0	0	0	0	0	0	0	0	0	0	0
4/22/2024	9:30 PM	0	0	0	0	0	0	0	0	0	0	0	0	0
4/22/2024	9:45 PM	0	0	0	0	0	0	0	0	0	0	0	0	0
4/22/2024	10:00 PM	0	0	0	0	0	0	0	0	0	0	0	0	0
4/22/2024	10:15 PM	0	0	0	0	0	0	0	0	0	0	0	0	0
4/22/2024	10:30 PM	0	0	0	0	0	0	0	0	0	0	0	0	0
4/22/2024	10:45 PM	0	0	0	0	0	0	0	0	0	0	0	0	0
4/22/2024	11:00 PM	0	0	0	0	0	0	0	0	0	0	0	0	0
4/22/2024	11:15 PM	0	0	0	0	0	0	0	0	0	0	0	0	0
4/22/2024	11:30 PM	0	0	0	0	0	0	0	0	0	0	0	0	0
4/22/2024	11:45 PM	0	0	0	0	0	0	0	0	0	0	0	0	0

4/23/2024	12:00 AM	0	0	0	0	0	0	0	0	0	0	0	0	0
4/23/2024	12:15 AM	0	0	0	0	0	0	0	0	0	0	0	0	0
4/23/2024	12:30 AM	0	0	0	0	0	0	0	0	0	0	0	0	0
4/23/2024	12:45 AM	0	0	0	0	0	0	0	0	0	0	0	0	0
4/23/2024	1:00 AM	0	0	0	0	0	0	0	0	0	0	0	0	0
4/23/2024	1:15 AM	0	0	0	0	0	0	0	0	0	0	0	0	0
4/23/2024	1:30 AM	0	0	0	0	0	0	0	0	0	0	0	0	0
4/23/2024	1:45 AM	0	0	0	0	0	0	0	0	0	0	0	0	0
4/23/2024	2:00 AM	0	0	0	0	0	0	0	0	0	0	0	0	0
4/23/2024	2:15 AM	0	0	0	0	0	0	0	0	0	0	0	0	0
4/23/2024	2:30 AM	0	0	0	0	0	0	0	0	0	0	0	0	0
4/23/2024	2:45 AM	0	0	0	0	0	0	0	0	0	0	0	0	0
4/23/2024	3:00 AM	0	0	0	0	0	0	0	0	0	0	0	0	0
4/23/2024	3:15 AM	0	0	0	0	0	0	0	0	0	0	0	0	0
4/23/2024	3:30 AM	0	0	0	0	0	0	0	0	0	0	0	0	0
4/23/2024	3:45 AM	0	0	0	0	0	0	0	0	0	0	0	0	0
4/23/2024	4:00 AM	0	0	0	0	0	0	0	0	0	0	0	0	0
4/23/2024	4:15 AM	0	0	0	0	0	0	0	0	0	0	0	0	0
4/23/2024	4:30 AM	0	0	0	0	0	0	0	0	0	0	0	0	0
4/23/2024	4:45 AM	0	0	0	0	0	0	0	0	0	0	0	0	0
4/23/2024	5:00 AM	0	0	0	0	0	0	0	0	0	0	0	0	0
4/23/2024	5:15 AM	0	0	0	0	0	0	0	0	0	0	0	0	0
4/23/2024	5:30 AM	0	0	0	0	0	0	0	0	0	0	0	0	0
4/23/2024	5:45 AM	0	0	0	0	0	0	0	0	0	0	0	0	0
4/23/2024	6:00 AM	0	0	0	0	0	0	0	0	0	0	0	0	0
4/23/2024	6:15 AM	0	0	0	0	0	0	0	0	0	0	0	0	0
4/23/2024	6:30 AM	0	0	0	0	0	0	0	0	0	0	0	0	0
4/23/2024	6:45 AM	0	0	0	0	0	0	0	0	0	0	0	0	0
4/23/2024	7:00 AM	0	0	0	0	0	0	0	0	0	0	0	0	0
4/23/2024	7:15 AM	0	0	0	0	0	0	0	0	0	0	0	0	0
4/23/2024	7:30 AM	0	0	0	0	0	0	0	0	0	0	0	0	0
4/23/2024	7:45 AM	0	0	0	0	0	0	0	0	0	0	0	0	0
4/23/2024	8:00 AM	0	0	0	0	0	0	0	0	0	0	0	0	0
4/23/2024	8:15 AM	0	0	0	0	0	0	0	0	0	0	0	0	0
4/23/2024	8:30 AM	0	0	0	0	0	0	0	0	0	0	0	0	0
4/23/2024	8:45 AM	0	0	0	0	0	0	0	0	0	0	0	0	0
4/23/2024	9:00 AM	0	0	0	0	0	0	0	0	0	0	0	0	0
4/23/2024	9:15 AM	0	0	0	0	0	0	0	0	0	0	0	0	0
4/23/2024	9:30 AM	0	0	0	0	0	0	0	0	0	0	0	0	0
4/23/2024	9:45 AM	0	0	0	0	0	0	0	0	0	0	0	0	0
4/23/2024	10:00 AM	0	0	0	0	0	0	0	0	0	0	0	0	0
4/23/2024	10:15 AM	0	0	0	0	0	0	0	0	0	0	0	0	0
4/23/2024	10:30 AM	0	0	0	0	0	0	0	0	0	0	0	0	0
4/23/2024	10:45 AM	0	0	0	0	0	0	0	0	0	0	0	0	0
4/23/2024	11:00 AM	0	0	0	0	0	0	0	0	0	0	0	0	0
4/23/2024	11:15 AM	0	0	0	0	0	0	0	0	0	0	0	0	0
4/23/2024	11:30 AM	0	0	0	0	0	0	0	0	0	0	0	0	0
4/23/2024	11:45 AM	0	0	0	0	0	0	0	0	0	0	0	0	0
4/23/2024	12:00 PM	0	0	0	0	0	0	0	0	0	0	0	0	0
4/23/2024	12:15 PM	0	0	0	0	0	0	0	0	0	0	0	0	0
4/23/2024	12:30 PM	0	0	0	0	0	0	0	0	0	0	0	0	0
4/23/2024	12:45 PM	0	0	0	0	0	0	0	0	0	0	0	0	0
4/23/2024	1:00 PM	0	0	0	0	0	0	0	0	0	0	0	0	0
4/23/2024	1:15 PM	0	0	0	0	0	0	0	0	0	0	0	0	0
4/23/2024	1:30 PM	0	0	0	0	0	0	0	0	0	0	0	0	0
4/23/2024	1:45 PM	0	0	0	0	0	0	0	0	0	0	0	0	0
4/23/2024	2:00 PM	0	0	0	0	0	0	0	0	0	0	0	0	0
4/23/2024	2:15 PM	0	0	0	0	0	0	0	0	0	0	0	0	0
4/23/2024	2:30 PM	0	0	0	0	0	0	0	0	0	0	0	0	0
4/23/2024	2:45 PM	0	0	0	0	0	0	0	0	0	0	0	0	0
4/23/2024	3:00 PM	0	0	0	0	0	0	0	0	0	0	0	0	0
4/23/2024	3:15 PM	0	0	0	0	0	0	0	0	0	0	0	0	0
4/23/2024	3:30 PM	0	0	0	0	0	0	0	0	0	0	0	0	0
4/23/2024	3:45 PM	0	0	0	0	0	0	0	0	0	0	0	0	0
4/23/2024	4:00 PM	0	0	0	0	0	0	0	0	0	0	0	0	0
4/23/2024	4:15 PM	0	0	0	0	0	0	0	0	0	0	0	0	0
4/23/2024	4:30 PM	0	0	0	0	0	0	0	0	0	0	0	0	0
4/23/2024	4:45 PM	0	0	0	0	0	0	0	0	0	0	0	0	0
4/23/2024	5:00 PM	0	0	0	0	0	0	0	0	0	0	0	0	0
4/23/2024	5:15 PM	0	0	0	0	0	0	0	0	0	0	0	0	0
4/23/2024	5:30 PM	0	0	0	0	0	0	0	0	0	0	0	0	0
4/23/2024	5:45 PM	0	0	0	0	0	0	0	0	0	0	0	0	0
4/23/2024	6:00 PM	0	0	0	0	0	0	0	0	0	0	0	0	0
4/23/2024	6:15 PM	0	0	0	0	0	0	0	0	0	0	0	0	0
4/23/2024	6:30 PM	0	0	0	0	0	0	0	0	0	0	0	0	0
4/23/2024	6:45 PM	0	0	0	0	0	0	0	0	0	0	0	0	0
4/23/2024	7:00 PM	0	0	0	0	0	0	0	0	0	0	0	0	0
4/23/2024	7:15 PM	0	0	0	0	0	0	0	0	0	0	0	0	0
4/23/2024	7:30 PM	0	0	0	0	0	0	0	0	0	0	0	0	0
4/23/2024	7:45 PM	0	0	0	0	0	0	0	0	0	0	0	0	0
4/23/2024	8:00 PM	0	0	0	0	0	0	0	0	0	0	0	0	0
4/23/2024	8:15 PM	0	0	0	0	0	0	0	0	0	0	0	0	0
4/23/2024	8:30 PM	0	0	0	0	0	0	0	0	0	0	0	0	0
4/23/2024	8:45 PM	0	0	0	0	0	0	0	0	0	0	0	0	0
4/23/2024	9:00 PM	0	0	0	0	0	0	0	0	0	0	0	0	0
4/23/2024	9:15 PM	0	0	0	0	0	0	0	0	0	0	0	0	0
4/23/2024	9:30 PM	0	0	0	0	0	0	0	0	0	0	0	0	0
4/23/2024	9:45 PM	0	0	0	0	0	0	0	0	0	0	0	0	0
4/23/2024	10:00 PM	0	0	0	0	0	0	0	0	0	0	0	0	0
4/23/2024	10:15 PM	0	0	0	0	0	0	0	0	0	0	0	0	0
4/23/2024	10:30 PM	0	0	0	0	0	0	0	0	0	0	0	0	0
4/23/2024	10:45 PM	0	0	0	0	0	0	0	0	0	0	0	0	0
4/23/2024	11:00 PM	0	0	0	0	0	0	0	0	0	0	0	0	0
4/23/2024	11:15 PM	0	0	0	0	0	0	0	0	0	0	0	0	0
4/23/2024	11:30 PM	0	0	0	0	0	0	0	0	0	0	0	0	0
4/23/2024	11:45 PM	0	0	0	0	0	0	0	0	0	0	0	0	0

4/24/2024	12:00 AM	0	0	0	0	0	0	0	0	0	0	0	0	0
4/24/2024	12:15 AM	0	0	0	0	0	0	0	0	0	0	0	0	0
4/24/2024	12:30 AM	0	0	0	0	0	0	0	0	0	0	0	0	0
4/24/2024	12:45 AM	0	0	0	0	0	0	0	0	0	0	0	0	0
4/24/2024	1:00 AM	0	0	0	0	0	0	0	0	0	0	0	0	0
4/24/2024	1:15 AM	0	0	0	0	0	0	0	0	0	0	0	0	0
4/24/2024	1:30 AM	0	0	0	0	0	0	0	0	0	0	0	0	0
4/24/2024	1:45 AM	0	0	0	0	0	0	0	0	0	0	0	0	0
4/24/2024	2:00 AM	0	0	0	0	0	0	0	0	0	0	0	0	0
4/24/2024	2:15 AM	0	0	0	0	0	0	0	0	0	0	0	0	0
4/24/2024	2:30 AM	0	0	0	0	0	0	0	0	0	0	0	0	0
4/24/2024	2:45 AM	0	0	0	0	0	0	0	0	0	0	0	0	0
4/24/2024	3:00 AM	0	0	0	0	0	0	0	0	0	0	0	0	0
4/24/2024	3:15 AM	0	0	0	0	0	0	0	0	0	0	0	0	0
4/24/2024	3:30 AM	0	0	0	0	0	0	0	0	0	0	0	0	0
4/24/2024	3:45 AM	0	0	0	0	0	0	0	0	0	0	0	0	0
4/24/2024	4:00 AM	0	0	0	0	0	0	0	0	0	0	0	0	0
4/24/2024	4:15 AM	0	0	0	0	0	0	0	0	0	0	0	0	0
4/24/2024	4:30 AM	0	0	0	0	0	0	0	0	0	0	0	0	0
4/24/2024	4:45 AM	0	0	0	0	0	0	0	0	0	0	0	0	0
4/24/2024	5:00 AM	0	0	0	0	0	0	0	0	0	0	0	0	0
4/24/2024	5:15 AM	0	0	0	0	0	0	0	0	0	0	0	0	0
4/24/2024	5:30 AM	0	0	0	0	0	0	0	0	0	0	0	0	0
4/24/2024	5:45 AM	0	0	0	0	0	0	0	0	0	0	0	0	0
4/24/2024	6:00 AM	0	0	0	0	0	0	0	0	0	0	0	0	0
4/24/2024	6:15 AM	0	0	0	0	0	0	0	0	0	0	0	0	0
4/24/2024	6:30 AM	0	0	0	0	0	0	0	0	0	0	0	0	0
4/24/2024	6:45 AM	0	0	0	0	0	0	0	0	0	0	0	0	0
4/24/2024	7:00 AM	0	0	0	0	0	0	0	0	0	0	0	0	0
4/24/2024	7:15 AM	0	0	0	0	0	0	0	0	0	0	0	0	0
4/24/2024	7:30 AM	0	0	0	0	0	0	0	0	0	0	0	0	0
4/24/2024	7:45 AM	0	0	0	0	0	0	0	0	0	0	0	0	0
4/24/2024	8:00 AM	0	0	0	0	0	0	0	0	0	0	0	0	0
4/24/2024	8:15 AM	0	0	0	0	0	0	0	0	0	0	0	0	0
4/24/2024	8:30 AM	0	0	0	0	0	0	0	0	0	0	0	0	0
4/24/2024	8:45 AM	0	0	0	0	0	0	0	0	0	0	0	0	0
4/24/2024	9:00 AM	0	0	0	0	0	0	0	0	0	0	0	0	0
4/24/2024	9:15 AM	0	0	0	0	0	0	0	0	0	0	0	0	0
4/24/2024	9:30 AM	0	0	0	0	0	0	0	0	0	0	0	0	0
4/24/2024	9:45 AM	0	0	0	0	0	0	0	0	0	0	0	0	0
4/24/2024	10:00 AM	0	0	0	0	0	0	0	0	0	0	0	0	0
4/24/2024	10:15 AM	0	0	0	0	0	0	0	0	0	0	0	0	0
4/24/2024	10:30 AM	0	0	0	0	0	0	0	0	0	0	0	0	0
4/24/2024	10:45 AM	0	0	0	0	0	0	0	0	0	0	0	0	0
4/24/2024	11:00 AM	0	0	0	0	0	0	0	0	0	0	0	0	0
4/24/2024	11:15 AM	0	0	0	0	0	0	0	0	0	0	0	0	0
4/24/2024	11:30 AM	0	0	0	0	0	0	0	0	0	0	0	0	0
4/24/2024	11:45 AM	0	0	0	0	0	0	0	0	0	0	0	0	0
4/24/2024	12:00 PM	0	0	0	0	0	0	0	0	0	0	0	0	0
4/24/2024	12:15 PM	0	0	0	0	0	0	0	0	0	0	0	0	0
4/24/2024	12:30 PM	0	0	0	0	0	0	0	0	0	0	0	0	0
4/24/2024	12:45 PM	0	0	0	0	0	0	0	0	0	0	0	0	0
4/24/2024	1:00 PM	0	0	0	0	0	0	0	0	0	0	0	0	0
4/24/2024	1:15 PM	0	0	0	0	0	0	0	0	0	0	0	0	0
4/24/2024	1:30 PM	0	0	0	0	0	0	0	0	0	0	0	0	0
4/24/2024	1:45 PM	0	0	0	0	0	0	0	0	0	0	0	0	0
4/24/2024	2:00 PM	0	0	0	0	0	0	0	0	0	0	0	0	0
4/24/2024	2:15 PM	0	0	0	0	0	0	0	0	0	0	0	0	0
4/24/2024	2:30 PM	0	0	0	0	0	0	0	0	0	0	0	0	0
4/24/2024	2:45 PM	0	0	0	0	0	0	0	0	0	0	0	0	0
4/24/2024	3:00 PM	0	0	0	0	0	0	0	0	0	0	0	0	0
4/24/2024	3:15 PM	0	0	0	0	0	0	0	0	0	0	0	0	0
4/24/2024	3:30 PM	0	0	0	0	0	0	0	0	0	0	0	0	0
4/24/2024	3:45 PM	0	0	0	0	0	0	0	0	0	0	0	0	0
4/24/2024	4:00 PM	0	0	0	0	0	0	0	0	0	0	0	0	0
4/24/2024	4:15 PM	0	0	0	0	0	0	0	0	0	0	0	0	0
4/24/2024	4:30 PM	0	0	0	0	0	0	0	0	0	0	0	0	0
4/24/2024	4:45 PM	0	0	0	0	0	0	0	0	0	0	0	0	0
4/24/2024	5:00 PM	0	0	0	0	0	0	0	0	0	0	0	0	0
4/24/2024	5:15 PM	0	0	0	0	0	0	0	0	0	0	0	0	0
4/24/2024	5:30 PM	0	0	0	0	0	0	0	0	0	0	0	0	0
4/24/2024	5:45 PM	0	0	0	0	0	0	0	0	0	0	0	0	0
4/24/2024	6:00 PM	0	0	0	0	0	0	0	0	0	0	0	0	0
4/24/2024	6:15 PM	0	0	0	0	0	0	0	0	0	0	0	0	0
4/24/2024	6:30 PM	0	0	0	0	0	0	0	0	0	0	0	0	0
4/24/2024	6:45 PM	0	0	0	0	0	0	0	0	0	0	0	0	0
4/24/2024	7:00 PM	0	0	0	0	0	0	0	0	0	0	0	0	0
4/24/2024	7:15 PM	0	0	0	0	0	0	0	0	0	0	0	0	0
4/24/2024	7:30 PM	0	0	0	0	0	0	0	0	0	0	0	0	0
4/24/2024	7:45 PM	0	0	0	0	0	0	0	0	0	0	0	0	0
4/24/2024	8:00 PM	0	0	0	0	0	0	0	0	0	0	0	0	0
4/24/2024	8:15 PM	0	0	0	0	0	0	0	0	0	0	0	0	0
4/24/2024	8:30 PM	0	0	0	0	0	0	0	0	0	0	0	0	0
4/24/2024	8:45 PM	0	0	0	0	0	0	0	0	0	0	0	0	0
4/24/2024	9:00 PM	0	0	0	0	0	0	0	0	0	0	0	0	0
4/24/2024	9:15 PM	0	0	0	0	0	0	0	0	0	0	0	0	0
4/24/2024	9:30 PM	0	0	0	0	0	0	0	0	0	0	0	0	0
4/24/2024	9:45 PM	0	0	0	0	0	0	0	0	0	0	0	0	0
4/24/2024	10:00 PM	0	0	0	0	0	0	0	0	0	0	0	0	0
4/24/2024	10:15 PM	0	0	0	0	0	0	0	0	0	0	0	0	0
4/24/2024	10:30 PM	0	0	0	0	0	0	0	0	0	0	0	0	0
4/24/2024	10:45 PM	0	0	0	0	0	0	0	0	0	0	0	0	0
4/24/2024	11:00 PM	0	0	0	0	0	0	0	0	0	0	0	0	0
4/24/2024	11:15 PM	0	0	0	0	0	0	0	0	0	0	0	0	0
4/24/2024	11:30 PM	0	0	0	0	0	0	0	0	0	0	0	0	0
4/24/2024	11:45 PM	0	0	0	0	0	0	0	0	0	0	0	0	0

4/25/2024	12:00 AM	0	0	0	0	0	0	0	0	0	0	0	0	0
4/25/2024	12:15 AM	0	0	0	0	0	0	0	0	0	0	0	0	0
4/25/2024	12:30 AM	0	0	0	0	0	0	0	0	0	0	0	0	0
4/25/2024	12:45 AM	0	0	0	0	0	0	0	0	0	0	0	0	0
4/25/2024	1:00 AM	0	0	0	0	0	0	0	0	0	0	0	0	0
4/25/2024	1:15 AM	0	0	0	0	0	0	0	0	0	0	0	0	0
4/25/2024	1:30 AM	0	0	0	0	0	0	0	0	0	0	0	0	0
4/25/2024	1:45 AM	0	0	0	0	0	0	0	0	0	0	0	0	0
4/25/2024	2:00 AM	0	0	0	0	0	0	0	0	0	0	0	0	0
4/25/2024	2:15 AM	0	0	0	0	0	0	0	0	0	0	0	0	0
4/25/2024	2:30 AM	0	0	0	0	0	0	0	0	0	0	0	0	0
4/25/2024	2:45 AM	0	0	0	0	0	0	0	0	0	0	0	0	0
4/25/2024	3:00 AM	0	0	0	0	0	0	0	0	0	0	0	0	0
4/25/2024	3:15 AM	0	0	0	0	0	0	0	0	0	0	0	0	0
4/25/2024	3:30 AM	0	0	0	0	0	0	0	0	0	0	0	0	0
4/25/2024	3:45 AM	0	0	0	0	0	0	0	0	0	0	0	0	0
4/25/2024	4:00 AM	0	0	0	0	0	0	0	0	0	0	0	0	0
4/25/2024	4:15 AM	0	0	0	0	0	0	0	0	0	0	0	0	0
4/25/2024	4:30 AM	0	0	0	0	0	0	0	0	0	0	0	0	0
4/25/2024	4:45 AM	0	0	0	0	0	0	0	0	0	0	0	0	0
4/25/2024	5:00 AM	0	0	0	0	0	0	0	0	0	0	0	0	0
4/25/2024	5:15 AM	0	0	0	0	0	0	0	0	0	0	0	0	0
4/25/2024	5:30 AM	0	0	0	0	0	0	0	0	0	0	0	0	0
4/25/2024	5:45 AM	0	0	0	0	0	0	0	0	0	0	0	0	0
4/25/2024	6:00 AM	0	0	0	0	0	0	0	0	0	0	0	0	0
4/25/2024	6:15 AM	0	0	0	0	0	0	0	0	0	0	0	0	0
4/25/2024	6:30 AM	0	0	0	0	0	0	0	0	0	0	0	0	0
4/25/2024	6:45 AM	0	0	0	0	0	0	0	0	0	0	0	0	0
4/25/2024	7:00 AM	0	0	0	0	0	0	0	0	0	0	0	0	0
4/25/2024	7:15 AM	0	0	0	0	0	0	0	0	0	0	0	0	0
4/25/2024	7:30 AM	0	0	0	0	0	0	0	0	0	0	0	0	0
4/25/2024	7:45 AM	0	0	0	0	0	0	0	0	0	0	0	0	0
4/25/2024	8:00 AM	0	0	0	0	0	0	0	0	0	0	0	0	0
4/25/2024	8:15 AM	0	0	0	0	0	0	0	0	0	0	0	0	0
4/25/2024	8:30 AM	0	0	0	0	0	0	0	0	0	0	0	0	0
4/25/2024	8:45 AM	0	0	0	0	0	0	0	0	0	0	0	0	0
4/25/2024	9:00 AM	0	0	0	0	0	0	0	0	0	0	0	0	0
4/25/2024	9:15 AM	0	0	0	0	0	0	0	0	0	0	0	0	0
4/25/2024	9:30 AM	0	0	0	0	0	0	0	0	0	0	0	0	0
4/25/2024	9:45 AM	0	0	0	0	0	0	0	0	0	0	0	0	0
4/25/2024	10:00 AM	0	0	0	0	0	0	0	0	0	0	0	0	0
4/25/2024	10:15 AM	0	0	0	0	0	0	0	0	0	0	0	0	0
4/25/2024	10:30 AM	0	0	0	0	0	0	0	0	0	0	0	0	0
4/25/2024	10:45 AM	0	0	0	0	0	0	0	0	0	0	0	0	0
4/25/2024	11:00 AM	0	0	0	0	0	0	0	0	0	0	0	0	0
4/25/2024	11:15 AM	0	0	0	0	0	0	0	0	0	0	0	0	0
4/25/2024	11:30 AM	0	0	0	0	0	0	0	0	0	0	0	0	0
4/25/2024	11:45 AM	0	0	0	0	0	0	0	0	0	0	0	0	0
4/25/2024	12:00 PM	0	0	0	0	0	0	0	0	0	0	0	0	0
4/25/2024	12:15 PM	0	0	0	0	0	0	0	0	0	0	0	0	0
4/25/2024	12:30 PM	0	0	0	0	0	0	0	0	0	0	0	0	0
4/25/2024	12:45 PM	0	0	0	0	0	0	0	0	0	0	0	0	0
4/25/2024	1:00 PM	0	0	0	0	0	0	0	0	0	0	0	0	0
4/25/2024	1:15 PM	0	0	0	0	0	0	0	0	0	0	0	0	0
4/25/2024	1:30 PM	0	0	0	0	0	0	0	0	0	0	0	0	0
4/25/2024	1:45 PM	0	0	0	0	0	0	0	0	0	0	0	0	0
4/25/2024	2:00 PM	0	0	0	0	0	0	0	0	0	0	0	0	0
4/25/2024	2:15 PM	0	0	0	0	0	0	0	0	0	0	0	0	0
4/25/2024	2:30 PM	0	0	0	0	0	0	0	0	0	0	0	0	0
4/25/2024	2:45 PM	0	0	0	0	0	0	0	0	0	0	0	0	0
4/25/2024	3:00 PM	0	0	0	0	0	0	0	0	0	0	0	0	0
4/25/2024	3:15 PM	0	0	0	0	0	0	0	0	0	0	0	0	0
4/25/2024	3:30 PM	0	0	0	0	0	0	0	0	0	0	0	0	0
4/25/2024	3:45 PM	0	0	0	0	0	0	0	0	0	0	0	0	0
4/25/2024	4:00 PM	0	0	0	0	0	0	0	0	0	0	0	0	0
4/25/2024	4:15 PM	0	0	0	0	0	0	0	0	0	0	0	0	0
4/25/2024	4:30 PM	0	0	0	0	0	0	0	0	0	0	0	0	0
4/25/2024	4:45 PM	0	0	0	0	0	0	0	0	0	0	0	0	0
4/25/2024	5:00 PM	0	0	0	0	0	0	0	0	0	0	0	0	0
4/25/2024	5:15 PM	0	0	0	0	0	0	0	0	0	0	0	0	0
4/25/2024	5:30 PM	0	0	0	0	0	0	0	0	0	0	0	0	0
4/25/2024	5:45 PM	0	0	0	0	0	0	0	0	0	0	0	0	0
4/25/2024	6:00 PM	0	0	0	0	0	0	0	0	0	0	0	0	0
4/25/2024	6:15 PM	0	0	0	0	0	0	0	0	0	0	0	0	0
4/25/2024	6:30 PM	0	0	0	0	0	0	0	0	0	0	0	0	0
4/25/2024	6:45 PM	0	0	0	0	0	0	0	0	0	0	0	0	0
4/25/2024	7:00 PM	0	0	0	0	0	0	0	0	0	0	0	0	0
4/25/2024	7:15 PM	0	0	0	0	0	0	0	0	0	0	0	0	0
4/25/2024	7:30 PM	0	0	0	0	0	0	0	0	0	0	0	0	0
4/25/2024	7:45 PM	0	0	0	0	0	0	0	0	0	0	0	0	0
4/25/2024	8:00 PM	0	0	0	0	0	0	0	0	0	0	0	0	0
4/25/2024	8:15 PM	0	0	0	0	0	0	0	0	0	0	0	0	0
4/25/2024	8:30 PM	0	0	0	0	0	0	0	0	0	0	0	0	0
4/25/2024	8:45 PM	0	0	0	0	0	0	0	0	0	0	0	0	0
4/25/2024	9:00 PM	0	0	0	0	0	0	0	0	0	0	0	0	0
4/25/2024	9:15 PM	0	0	0	0	0	0	0	0	0	0	0	0	0
4/25/2024	9:30 PM	0	0	0	0	0	0	0	0	0	0	0	0	0
4/25/2024	9:45 PM	0	0	0	0	0	0	0	0	0	0	0	0	0
4/25/2024	10:00 PM	0	0	0	0	0	0	0	0	0	0	0	0	0
4/25/2024	10:15 PM	0	0	0	0	0	0	0	0	0	0	0	0	0
4/25/2024	10:30 PM	0	0	0	0	0	0	0	0	0	0	0	0	0
4/25/2024	10:45 PM	0	0	0	0	0	0	0	0	0	0	0	0	0
4/25/2024	11:00 PM	0	0	0	0	0	0	0	0	0	0	0	0	0
4/25/2024	11:15 PM	0	0	0	0	0	0	0	0	0	0	0	0	0
4/25/2024	11:30 PM	0	0	0	0	0	0	0	0	0	0	0	0	0
4/25/2024	11:45 PM	0	0	0	0	0	0	0	0	0	0	0	0	0

4/26/2024	12:00 AM	0	0	0	0	0	0	0	0	0	0	0	0	0
4/26/2024	12:15 AM	0	0	0	0	0	0	0	0	0	0	0	0	0
4/26/2024	12:30 AM	0	0	0	0	0	0	0	0	0	0	0	0	0
4/26/2024	12:45 AM	0	0	0	0	0	0	0	0	0	0	0	0	0
4/26/2024	1:00 AM	0	0	0	0	0	0	0	0	0	0	0	0	0
4/26/2024	1:15 AM	0	0	0	0	0	0	0	0	0	0	0	0	0
4/26/2024	1:30 AM	0	0	0	0	0	0	0	0	0	0	0	0	0
4/26/2024	1:45 AM	0	0	0	0	0	0	0	0	0	0	0	0	0
4/26/2024	2:00 AM	0	0	0	0	0	0	0	0	0	0	0	0	0
4/26/2024	2:15 AM	0	0	0	0	0	0	0	0	0	0	0	0	0
4/26/2024	2:30 AM	0	0	0	0	0	0	0	0	0	0	0	0	0
4/26/2024	2:45 AM	0	0	0	0	0	0	0	0	0	0	0	0	0
4/26/2024	3:00 AM	0	0	0	0	0	0	0	0	0	0	0	0	0
4/26/2024	3:15 AM	0	0	0	0	0	0	0	0	0	0	0	0	0
4/26/2024	3:30 AM	0	0	0	0	0	0	0	0	0	0	0	0	0
4/26/2024	3:45 AM	0	0	0	0	0	0	0	0	0	0	0	0	0
4/26/2024	4:00 AM	0	0	0	0	0	0	0	0	0	0	0	0	0
4/26/2024	4:15 AM	0	0	0	0	0	0	0	0	0	0	0	0	0
4/26/2024	4:30 AM	0	0	0	0	0	0	0	0	0	0	0	0	0
4/26/2024	4:45 AM	0	0	0	0	0	0	0	0	0	0	0	0	0
4/26/2024	5:00 AM	0	0	0	0	0	0	0	0	0	0	0	0	0
4/26/2024	5:15 AM	0	0	0	0	0	0	0	0	0	0	0	0	0
4/26/2024	5:30 AM	0	0	0	0	0	0	0	0	0	0	0	0	0
4/26/2024	5:45 AM	0	0	0	0	0	0	0	0	0	0	0	0	0
4/26/2024	6:00 AM	0	0	0	0	0	0	0	0	0	0	0	0	0
4/26/2024	6:15 AM	0	0	0	0	0	0	0	0	0	0	0	0	0
4/26/2024	6:30 AM	0	0	0	0	0	0	0	0	0	0	0	0	0
4/26/2024	6:45 AM	0	0	0	0	0	0	0	0	0	0	0	0	0
4/26/2024	7:00 AM	0	0	0	0	0	0	0	0	0	0	0	0	0
4/26/2024	7:15 AM	0	0	0	0	0	0	0	0	0	0	0	0	0
4/26/2024	7:30 AM	0	0	0	0	0	0	0	0	0	0	0	0	0
4/26/2024	7:45 AM	0	0	0	0	0	0	0	0	0	0	0	0	0
4/26/2024	8:00 AM	0	0	0	0	0	0	0	0	0	0	0	0	0
4/26/2024	8:15 AM	0	0	0	0	0	0	0	0	0	0	0	0	0
4/26/2024	8:30 AM	0	0	0	0	0	0	0	0	0	0	0	0	0
4/26/2024	8:45 AM	0	0	0	0	0	0	0	0	0	0	0	0	0
4/26/2024	9:00 AM	0	0	0	0	0	0	0	0	0	0	0	0	0
4/26/2024	9:15 AM	0	0	0	0	0	0	0	0	0	0	0	0	0
4/26/2024	9:30 AM	0	0	0	0	0	0	0	0	0	0	0	0	0
4/26/2024	9:45 AM	0	0	0	0	0	0	0	0	0	0	0	0	0
4/26/2024	10:00 AM	0	0	0	0	0	0	0	0	0	0	0	0	0
4/26/2024	10:15 AM	0	0	0	0	0	0	0	0	0	0	0	0	0
4/26/2024	10:30 AM	0	0	0	0	0	0	0	0	0	0	0	0	0
4/26/2024	10:45 AM	0	0	0	0	0	0	0	0	0	0	0	0	0
4/26/2024	11:00 AM	0	0	0	0	0	0	0	0	0	0	0	0	0
4/26/2024	11:15 AM	0	0	0	0	0	0	0	0	0	0	0	0	0
4/26/2024	11:30 AM	0	0	0	0	0	0	0	0	0	0	0	0	0
4/26/2024	11:45 AM	0	0	0	0	0	0	0	0	0	0	0	0	0
4/26/2024	12:00 PM	0	0	0	0	0	0	0	0	0	0	0	0	0
4/26/2024	12:15 PM	0	0	0	0	0	0	0	0	0	0	0	0	0
4/26/2024	12:30 PM	0	0	0	0	0	0	0	0	0	0	0	0	0
4/26/2024	12:45 PM	0	0	0	0	0	0	0	0	0	0	0	0	0
4/26/2024	1:00 PM	0	0	0	0	0	0	0	0	0	0	0	0	0
4/26/2024	1:15 PM	0	0	0	0	0	0	0	0	0	0	0	0	0
4/26/2024	1:30 PM	0	0	0	0	0	0	0	0	0	0	0	0	0
4/26/2024	1:45 PM	0	0	0	0	0	0	0	0	0	0	0	0	0
4/26/2024	2:00 PM	0	0	0	0	0	0	0	0	0	0	0	0	0
4/26/2024	2:15 PM	0	0	0	0	0	0	0	0	0	0	0	0	0
4/26/2024	2:30 PM	0	0	0	0	0	0	0	0	0	0	0	0	0
4/26/2024	2:45 PM	0	0	0	0	0	0	0	0	0	0	0	0	0
4/26/2024	3:00 PM	0	0	0	0	0	0	0	0	0	0	0	0	0
4/26/2024	3:15 PM	0	0	0	0	0	0	0	0	0	0	0	0	0
4/26/2024	3:30 PM	0	0	0	0	0	0	0	0	0	0	0	0	0
4/26/2024	3:45 PM	0	0	0	0	0	0	0	0	0	0	0	0	0
4/26/2024	4:00 PM	0	0	0	0	0	0	0	0	0	0	0	0	0
4/26/2024	4:15 PM	0	0	0	0	0	0	0	0	0	0	0	0	0
4/26/2024	4:30 PM	0	0	0	0	0	0	0	0	0	0	0	0	0
4/26/2024	4:45 PM	0	0	0	0	0	0	0	0	0	0	0	0	0
4/26/2024	5:00 PM	0	0	0	0	0	0	0	0	0	0	0	0	0
4/26/2024	5:15 PM	0	0	0	0	0	0	0	0	0	0	0	0	0
4/26/2024	5:30 PM	0	0	0	0	0	0	0	0	0	0	0	0	0
4/26/2024	5:45 PM	0	0	0	0	0	0	0	0	0	0	0	0	0
4/26/2024	6:00 PM	0	0	0	0	0	0	0	0	0	0	0	0	0
4/26/2024	6:15 PM	0	0	0	0	0	0	0	0	0	0	0	0	0
4/26/2024	6:30 PM	0	0	0	0	0	0	0	0	0	0	0	0	0
4/26/2024	6:45 PM	0	0	0	0	0	0	0	0	0	0	0	0	0
4/26/2024	7:00 PM	0	0	0	0	0	0	0	0	0	0	0	0	0
4/26/2024	7:15 PM	0	0	0	0	0	0	0	0	0	0	0	0	0
4/26/2024	7:30 PM	0	0	0	0	0	0	0	0	0	0	0	0	0
4/26/2024	7:45 PM	0	0	0	0	0	0	0	0	0	0	0	0	0
4/26/2024	8:00 PM	0	0	0	0	0	0	0	0	0	0	0	0	0
4/26/2024	8:15 PM	0	0	0	0	0	0	0	0	0	0	0	0	0
4/26/2024	8:30 PM	0	0	0	0	0	0	0	0	0	0	0	0	0
4/26/2024	8:45 PM	0	0	0	0	0	0	0	0	0	0	0	0	0
4/26/2024	9:00 PM	0	0	0	0	0	0	0	0	0	0	0	0	0
4/26/2024	9:15 PM	0	0	0	0	0	0	0	0	0	0	0	0	0
4/26/2024	9:30 PM	0	0	0	0	0	0	0	0	0	0	0	0	0
4/26/2024	9:45 PM	0	0	0	0	0	0	0	0	0	0	0	0	0
4/26/2024	10:00 PM	0	0	0	0	0	0	0	0	0	0	0	0	0
4/26/2024	10:15 PM	0	0	0	0	0	0	0	0	0	0	0	0	0
4/26/2024	10:30 PM	0	0	0	0	0	0	0	0	0	0	0	0	0
4/26/2024	10:45 PM	0	0	0	0	0	0	0	0	0	0	0	0	0
4/26/2024	11:00 PM	0	0	0	0	0	0	0	0	0	0	0	0	0
4/26/2024	11:15 PM	0	0	0	0	0	0	0	0	0	0	0	0	0
4/26/2024	11:30 PM	0	0	0	0	0	0	0	0	0	0	0	0	0
4/26/2024	11:45 PM	0	0	0	0	0	0	0	0	0	0	0	0	0

4/27/2024	12:00 AM	0	0	0	0	0	0	0	0	0	0	0	0	0
4/27/2024	12:15 AM	0	0	0	0	0	0	0	0	0	0	0	0	0
4/27/2024	12:30 AM	0	0	0	0	0	0	0	0	0	0	0	0	0
4/27/2024	12:45 AM	0	0	0	0	0	0	0	0	0	0	0	0	0
4/27/2024	1:00 AM	0	0	0	0	0	0	0	0	0	0	0	0	0
4/27/2024	1:15 AM	0	0	0	0	0	0	0	0	0	0	0	0	0
4/27/2024	1:30 AM	0	0	0	0	0	0	0	0	0	0	0	0	0
4/27/2024	1:45 AM	0	0	0	0	0	0	0	0	0	0	0	0	0
4/27/2024	2:00 AM	0	0	0	0	0	0	0	0	0	0	0	0	0
4/27/2024	2:15 AM	0	0	0	0	0	0	0	0	0	0	0	0	0
4/27/2024	2:30 AM	0	0	0	0	0	0	0	0	0	0	0	0	0
4/27/2024	2:45 AM	0	0	0	0	0	0	0	0	0	0	0	0	0
4/27/2024	3:00 AM	0	0	0	0	0	0	0	0	0	0	0	0	0
4/27/2024	3:15 AM	0	0	0	0	0	0	0	0	0	0	0	0	0
4/27/2024	3:30 AM	0	0	0	0	0	0	0	0	0	0	0	0	0
4/27/2024	3:45 AM	0	0	0	0	0	0	0	0	0	0	0	0	0
4/27/2024	4:00 AM	0	0	0	0	0	0	0	0	0	0	0	0	0
4/27/2024	4:15 AM	0	0	0	0	0	0	0	0	0	0	0	0	0
4/27/2024	4:30 AM	0	0	0	0	0	0	0	0	0	0	0	0	0
4/27/2024	4:45 AM	0	0	0	0	0	0	0	0	0	0	0	0	0
4/27/2024	5:00 AM	0	0	0	0	0	0	0	0	0	0	0	0	0
4/27/2024	5:15 AM	0	0	0	0	0	0	0	0	0	0	0	0	0
4/27/2024	5:30 AM	0	0	0	0	0	0	0	0	0	0	0	0	0
4/27/2024	5:45 AM	0	0	0	0	0	0	0	0	0	0	0	0	0
4/27/2024	6:00 AM	0	0	0	0	0	0	0	0	0	0	0	0	0
4/27/2024	6:15 AM	0	0	0	0	0	0	0	0	0	0	0	0	0
4/27/2024	6:30 AM	0	0	0	0	0	0	0	0	0	0	0	0	0
4/27/2024	6:45 AM	0	0	0	0	0	0	0	0	0	0	0	0	0
4/27/2024	7:00 AM	0	0	0	0	0	0	0	0	0	0	0	0	0
4/27/2024	7:15 AM	0	0	0	0	0	0	0	0	0	0	0	0	0
4/27/2024	7:30 AM	0	0	0	0	0	0	0	0	0	0	0	0	0
4/27/2024	7:45 AM	0	0	0	0	0	0	0	0	0	0	0	0	0
4/27/2024	8:00 AM	0	0	0	0	0	0	0	0	0	0	0	0	0
4/27/2024	8:15 AM	0	0	0	0	0	0	0	0	0	0	0	0	0
4/27/2024	8:30 AM	0	0	0	0	0	0	0	0	0	0	0	0	0
4/27/2024	8:45 AM	0	0	0	0	0	0	0	0	0	0	0	0	0
4/27/2024	9:00 AM	0	0	0	0	0	0	0	0	0	0	0	0	0
4/27/2024	9:15 AM	0	0	0	0	0	0	0	0	0	0	0	0	0
4/27/2024	9:30 AM	0	0	0	0	0	0	0	0	0	0	0	0	0
4/27/2024	9:45 AM	0	0	0	0	0	0	0	0	0	0	0	0	0
4/27/2024	10:00 AM	0	0	0	0	0	0	0	0	0	0	0	0	0
4/27/2024	10:15 AM	0	0	0	0	0	0	0	0	0	0	0	0	0
4/27/2024	10:30 AM	0	0	0	0	0	0	0	0	0	0	0	0	0
4/27/2024	10:45 AM	0	0	0	0	0	0	0	0	0	0	0	0	0
4/27/2024	11:00 AM	0	0	0	0	0	0	0	0	0	0	0	0	0
4/27/2024	11:15 AM	0	0	0	0	0	0	0	0	0	0	0	0	0
4/27/2024	11:30 AM	0	0	0	0	0	0	0	0	0	0	0	0	0
4/27/2024	11:45 AM	0	0	0	0	0	0	0	0	0	0	0	0	0
4/27/2024	12:00 PM	0	0	0	0	0	0	0	0	0	0	0	0	0
4/27/2024	12:15 PM	0	0	0	0	0	0	0	0	0	0	0	0	0
4/27/2024	12:30 PM	0	0	0	0	0	0	0	0	0	0	0	0	0
4/27/2024	12:45 PM	0	0	0	0	0	0	0	0	0	0	0	0	0
4/27/2024	1:00 PM	0	0	0	0	0	0	0	0	0	0	0	0	0
4/27/2024	1:15 PM	0	0	0	0	0	0	0	0	0	0	0	0	0
4/27/2024	1:30 PM	0	0	0	0	0	0	0	0	0	0	0	0	0
4/27/2024	1:45 PM	0	0	0	0	0	0	0	0	0	0	0	0	0
4/27/2024	2:00 PM	0	0	0	0	0	0	0	0	0	0	0	0	0
4/27/2024	2:15 PM	0	0	0	0	0	0	0	0	0	0	0	0	0
4/27/2024	2:30 PM	0	0	0	0	0	0	0	0	0	0	0	0	0
4/27/2024	2:45 PM	0	0	0	0	0	0	0	0	0	0	0	0	0
4/27/2024	3:00 PM	0	0	0	0	0	0	0	0	0	0	0	0	0
4/27/2024	3:15 PM	0	0	0	0	0	0	0	0	0	0	0	0	0
4/27/2024	3:30 PM	0	0	0	0	0	0	0	0	0	0	0	0	0
4/27/2024	3:45 PM	0	0	0	0	0	0	0	0	0	0	0	0	0
4/27/2024	4:00 PM	0	0	0	0	0	0	0	0	0	0	0	0	0
4/27/2024	4:15 PM	0	0	0	0	0	0	0	0	0	0	0	0	0
4/27/2024	4:30 PM	0	0	0	0	0	0	0	0	0	0	0	0	0
4/27/2024	4:45 PM	0	0	0	0	0	0	0	0	0	0	0	0	0
4/27/2024	5:00 PM	0	0	0	0	0	0	0	0	0	0	0	0	0
4/27/2024	5:15 PM	0	0	0	0	0	0	0	0	0	0	0	0	0
4/27/2024	5:30 PM	0	0	0	0	0	0	0	0	0	0	0	0	0
4/27/2024	5:45 PM	0	0	0	0	0	0	0	0	0	0	0	0	0
4/27/2024	6:00 PM	0	0	0	0	0	0	0	0	0	0	0	0	0
4/27/2024	6:15 PM	0	0	0	0	0	0	0	0	0	0	0	0	0
4/27/2024	6:30 PM	0	0	0	0	0	0	0	0	0	0	0	0	0
4/27/2024	6:45 PM	0	0	0	0	0	0	0	0	0	0	0	0	0
4/27/2024	7:00 PM	0	0	0	0	0	0	0	0	0	0	0	0	0
4/27/2024	7:15 PM	0	0	0	0	0	0	0	0	0	0	0	0	0
4/27/2024	7:30 PM	0	0	0	0	0	0	0	0	0	0	0	0	0
4/27/2024	7:45 PM	0	0	0	0	0	0	0	0	0	0	0	0	0
4/27/2024	8:00 PM	0	0	0	0	0	0	0	0	0	0	0	0	0
4/27/2024	8:15 PM	0	0	0	0	0	0	0	0	0	0	0	0	0
4/27/2024	8:30 PM	0	0	0	0	0	0	0	0	0	0	0	0	0
4/27/2024	8:45 PM	0	0	0	0	0	0	0	0	0	0	0	0	0
4/27/2024	9:00 PM	0	0	0	0	0	0	0	0	0	0	0	0	0
4/27/2024	9:15 PM	0	0	0	0	0	0	0	0	0	0	0	0	0
4/27/2024	9:30 PM	0	0	0	0	0	0	0	0	0	0	0	0	0
4/27/2024	9:45 PM	0	0	0	0	0	0	0	0	0	0	0	0	0
4/27/2024	10:00 PM	0	0	0	0	0	0	0	0	0	0	0	0	0
4/27/2024	10:15 PM	0	0	0	0	0	0	0	0	0	0	0	0	0
4/27/2024	10:30 PM	0	0	0	0	0	0	0	0	0	0	0	0	0
4/27/2024	10:45 PM	0	0	0	0	0	0	0	0	0	0	0	0	0
4/27/2024	11:00 PM	0	0	0	0	0	0	0	0	0	0	0	0	0
4/27/2024	11:15 PM	0	0	0	0	0	0	0	0	0	0	0	0	0
4/27/2024	11:30 PM	0	0	0	0	0	0	0	0	0	0	0	0	0
4/27/2024	11:45 PM	0	0	0	0	0	0	0	0	0	0	0	0	0

WB
File Name:
Start Date: 4/21/2024
Start Time: 0
Site Code: 3
Station ID: 1
Location 1: I-26 W/Bound Off-Ramp, east of I-26
Location 2:

Date	Time	1	2	3	4	5	6	7	8	9	10	11	12	13
4/21/2024	12:00 AM	1	102	32	1	0	0	0	0	2	0	0	0	0
4/21/2024	12:15 AM	0	100	19	0	1	1	0	0	5	0	0	0	0
4/21/2024	12:30 AM	0	106	17	1	1	1	0	0	3	0	0	0	0
4/21/2024	12:45 AM	0	78	16	0	0	0	0	1	3	0	0	0	0
4/21/2024	1:00 AM	0	63	14	0	1	0	0	1	1	0	1	0	0
4/21/2024	1:15 AM	1	60	17	0	0	1	0	0	4	0	0	0	0
4/21/2024	1:30 AM	0	53	11	0	1	0	0	0	1	0	0	0	0
4/21/2024	1:45 AM	0	58	13	0	2	0	0	0	2	0	0	0	0
4/21/2024	2:00 AM	0	39	9	0	0	0	0	0	4	0	0	0	0
4/21/2024	2:15 AM	0	42	8	0	0	0	0	0	2	0	0	0	0
4/21/2024	2:30 AM	0	43	5	0	1	0	0	0	3	0	0	0	0
4/21/2024	2:45 AM	0	25	3	0	1	0	0	0	4	0	0	0	0
4/21/2024	3:00 AM	0	36	10	0	0	0	0	0	2	0	1	0	0
4/21/2024	3:15 AM	0	42	7	0	0	0	0	0	4	0	0	0	0
4/21/2024	3:30 AM	0	30	8	0	1	0	0	0	6	0	1	0	0
4/21/2024	3:45 AM	0	24	8	0	0	0	0	0	3	0	0	0	0
4/21/2024	4:00 AM	0	27	5	0	1	0	0	0	0	0	0	0	0
4/21/2024	4:15 AM	0	35	5	0	1	1	0	0	5	0	0	0	0
4/21/2024	4:30 AM	0	33	7	0	4	0	0	0	3	0	0	0	0
4/21/2024	4:45 AM	0	45	11	0	0	0	0	0	3	0	0	0	0
4/21/2024	5:00 AM	0	40	9	0	0	0	0	0	1	0	0	0	0
4/21/2024	5:15 AM	0	37	11	0	1	0	0	0	7	0	0	0	0
4/21/2024	5:30 AM	0	68	8	0	0	0	0	0	5	0	0	0	0
4/21/2024	5:45 AM	0	58	13	0	0	0	0	0	6	0	0	0	0
4/21/2024	6:00 AM	0	48	9	0	2	0	0	0	2	0	0	0	0
4/21/2024	6:15 AM	0	85	11	0	3	0	0	0	4	0	0	0	0
4/21/2024	6:30 AM	2	83	13	0	3	0	0	0	5	0	0	0	0
4/21/2024	6:45 AM	0	86	24	0	2	0	0	0	3	0	0	0	0
4/21/2024	7:00 AM	1	108	21	0	6	1	0	0	6	0	0	0	0
4/21/2024	7:15 AM	0	113	38	0	3	0	0	1	6	0	0	0	0
4/21/2024	7:30 AM	0	173	22	0	1	0	0	1	5	0	0	0	0
4/21/2024	7:45 AM	0	170	33	1	1	1	0	0	7	0	0	0	0
4/21/2024	8:00 AM	0	156	34	0	1	0	0	1	9	0	0	0	0
4/21/2024	8:15 AM	0	155	39	1	2	0	0	1	4	0	0	0	0
4/21/2024	8:30 AM	1	190	49	0	3	0	0	0	7	0	0	0	0
4/21/2024	8:45 AM	0	201	44	0	3	0	0	0	3	0	0	0	0
4/21/2024	9:00 AM	0	229	51	1	3	1	0	0	8	0	1	0	0
4/21/2024	9:15 AM	0	236	47	2	0	0	0	1	8	0	0	0	0
4/21/2024	9:30 AM	0	320	63	1	3	1	0	1	5	0	0	0	0
4/21/2024	9:45 AM	0	330	93	1	3	1	0	2	11	0	0	0	0
4/21/2024	10:00 AM	0	367	75	1	4	0	0	2	4	0	0	0	0
4/21/2024	10:15 AM	0	356	106	0	1	0	0	0	8	0	0	0	0
4/21/2024	10:30 AM	0	416	101	1	2	1	0	2	15	0	0	0	0
4/21/2024	10:45 AM	0	424	87	0	3	0	0	2	9	0	0	0	0
4/21/2024	11:00 AM	0	425	102	1	4	0	0	1	6	0	0	0	0
4/21/2024	11:15 AM	0	452	89	1	2	0	0	1	15	0	1	0	0
4/21/2024	11:30 AM	1	385	112	0	2	0	0	3	4	0	0	0	0
4/21/2024	11:45 AM	1	475	92	0	4	1	0	2	20	0	0	0	0
4/21/2024	12:00 PM	3	531	113	3	2	0	0	0	8	0	0	0	0
4/21/2024	12:15 PM	0	527	108	4	2	1	0	0	5	0	0	0	0
4/21/2024	12:30 PM	1	576	130	0	5	1	0	1	7	0	0	0	0
4/21/2024	12:45 PM	0	622	125	1	5	0	0	0	12	0	0	0	0
4/21/2024	1:00 PM	0	556	124	1	7	1	0	1	11	0	0	0	0
4/21/2024	1:15 PM	0	592	133	0	5	0	0	0	5	0	0	0	0
4/21/2024	1:30 PM	0	559	104	0	3	1	0	0	8	0	1	0	0
4/21/2024	1:45 PM	0	581	124	1	5	1	0	2	6	0	0	0	0
4/21/2024	2:00 PM	0	532	91	0	6	2	0	0	7	0	0	0	0
4/21/2024	2:15 PM	0	552	98	0	7	2	0	0	18	0	0	0	0
4/21/2024	2:30 PM	0	541	96	1	3	0	0	0	7	0	0	0	0
4/21/2024	2:45 PM	0	509	97	0	5	0	0	0	11	0	0	0	0
4/21/2024	3:00 PM	0	544	91	1	4	0	0	0	9	0	0	0	0
4/21/2024	3:15 PM	0	519	92	2	5	0	0	0	13	0	0	0	0
4/21/2024	3:30 PM	0	510	103	0	2	1	0	0	7	0	0	0	0
4/21/2024	3:45 PM	0	522	111	1	3	1	0	1	2	0	0	0	0
4/21/2024	4:00 PM	0	522	82	0	5	1	0	0	13	0	0	0	0
4/21/2024	4:15 PM	0	525	97	0	5	0	0	0	12	0	0	0	0
4/21/2024	4:30 PM	1	495	82	2	7	0	0	0	12	0	0	0	0
4/21/2024	4:45 PM	0	492	87	1	5	0	0	0	11	0	0	0	0
4/21/2024	5:00 PM	0	510	85	1	4	1	0	1	13	0	0	0	0
4/21/2024	5:15 PM	0	435	85	1	4	0	0	0	13	0	0	0	0
4/21/2024	5:30 PM	0	463	89	0	3	1	0	2	17	0	0	0	0
4/21/2024	5:45 PM	0	460	103	0	2	2	0	1	11	0	0	0	0
4/21/2024	6:00 PM	0	452	78	1	4	1	0	0	8	0	0	0	0
4/21/2024	6:15 PM	0	488	99	1	3	0	0	1	12	0	0	0	0
4/21/2024	6:30 PM	0	370	72	0	1	0	0	0	17	0	0	0	0
4/21/2024	6:45 PM	1	346	59	0	2	1	0	0	13	0	0	0	0
4/21/2024	7:00 PM	1	311	54	0	5	0	0	0	9	0	0	0	0
4/21/2024	7:15 PM	0	326	51	0	3	1	0	2	16	0	0	0	0
4/21/2024	7:30 PM	0	321	55	0	3	0	0	1	10	0	2	0	0
4/21/2024	7:45 PM	0	267	47	0	0	0	0	2	10	0	1	0	0
4/21/2024	8:00 PM	0	246	48	0	2	0	0	0	12	0	0	0	0
4/21/2024	8:15 PM	0	232	31	1	5	0	0	1	12	0	0	0	0
4/21/2024	8:30 PM	0	200	40	0	3	0	0	0	8	0	0	0	0
4/21/2024	8:45 PM	0	150	39	1	2	0	0	0	11	0	0	0	0
4/21/2024	9:00 PM	0	176	44	0	2	1	0	0	7	0	0	0	0
4/21/2024	9:15 PM	0	155	31	0	2	0	0	0	4	0	0	0	0
4/21/2024	9:30 PM	0	147	35	1	1	0	0	0	11	0	0	0	0
4/21/2024	9:45 PM	0	123	24	0	2	0	0	0	12	0	0	0	0
4/21/2024	10:00 PM	0	106	23	0	4	0	0	0	16	0	0	0	0
4/21/2024	10:15 PM	0	109	18	0	2	1	0	2	12	0	0	0	0
4/21/2024	10:30 PM	0	85	18	0	1	0	0	0	8	0	0	0	0
4/21/2024	10:45 PM	0	88	16	0	1	1	0	0	5	0	3	0	0
4/21/2024	11:00 PM	0	93	15	0	0	0	0	0	5	0	0	0	0
4/21/2024	11:15 PM	0	89	15	1	1	0	0	0	3	0	0	0	0
4/21/2024	11:30 PM	0	72	10	0	0	0	1	0	10	0	0	0	0
4/21/2024	11:45 PM	0	52	6	0	1	0	0	0	6	0	0	0	0

4/22/2024	12:00 AM	0	50	10	0	0	0	0	0	5	0	0	0	0
4/22/2024	12:15 AM	0	70	8	0	0	0	0	0	5	0	0	0	0
4/22/2024	12:30 AM	0	78	9	0	2	0	0	1	6	0	0	0	0
4/22/2024	12:45 AM	0	47	5	0	1	0	0	0	4	0	0	0	0
4/22/2024	1:00 AM	0	54	7	0	1	0	0	0	5	0	1	0	0
4/22/2024	1:15 AM	0	47	5	0	0	0	0	0	8	0	0	0	0
4/22/2024	1:30 AM	0	31	3	0	1	0	0	0	7	0	1	0	0
4/22/2024	1:45 AM	0	30	4	0	2	0	0	0	3	0	0	0	0
4/22/2024	2:00 AM	0	30	4	0	0	1	0	1	5	0	0	0	0
4/22/2024	2:15 AM	0	31	2	0	2	1	0	0	10	1	0	0	0
4/22/2024	2:30 AM	0	34	3	0	2	0	0	0	9	0	0	0	0
4/22/2024	2:45 AM	0	20	2	0	1	0	0	1	9	0	0	0	0
4/22/2024	3:00 AM	0	23	3	0	3	1	0	1	18	1	0	0	0
4/22/2024	3:15 AM	0	27	4	0	2	1	0	1	14	0	2	0	0
4/22/2024	3:30 AM	0	41	6	0	1	1	0	1	15	1	0	0	0
4/22/2024	3:45 AM	0	39	5	0	1	2	0	2	20	1	1	0	0
4/22/2024	4:00 AM	0	35	5	0	1	1	0	2	17	0	1	0	0
4/22/2024	4:15 AM	0	43	5	0	5	1	0	0	16	1	0	0	0
4/22/2024	4:30 AM	0	58	7	0	6	3	0	3	20	1	2	0	0
4/22/2024	4:45 AM	0	62	12	0	3	4	0	2	21	2	2	0	0
4/22/2024	5:00 AM	0	73	13	0	6	2	0	1	28	2	0	0	0
4/22/2024	5:15 AM	0	105	22	0	6	3	0	1	26	1	0	0	0
4/22/2024	5:30 AM	0	135	26	0	5	2	0	2	40	2	1	0	0
4/22/2024	5:45 AM	0	136	27	1	6	1	0	1	35	1	0	0	0
4/22/2024	6:00 AM	0	180	35	1	9	4	0	2	26	2	0	0	0
4/22/2024	6:15 AM	0	256	42	0	10	6	0	2	40	4	1	0	0
4/22/2024	6:30 AM	0	282	68	0	8	3	0	3	55	3	0	0	0
4/22/2024	6:45 AM	0	309	92	0	8	4	0	2	40	1	0	0	0
4/22/2024	7:00 AM	1	325	104	0	9	6	0	3	54	3	0	0	0
4/22/2024	7:15 AM	0	418	124	0	19	8	0	3	47	2	0	0	0
4/22/2024	7:30 AM	0	530	153	0	24	5	0	3	50	2	0	0	0
4/22/2024	7:45 AM	0	565	138	1	20	5	0	4	50	1	0	0	0
4/22/2024	8:00 AM	0	453	115	0	20	9	0	3	49	2	0	0	0
4/22/2024	8:15 AM	0	433	101	0	19	5	0	3	44	1	0	1	0
4/22/2024	8:30 AM	0	385	134	0	19	5	0	2	36	2	0	0	0
4/22/2024	8:45 AM	0	392	122	2	28	4	0	6	37	1	0	0	0
4/22/2024	9:00 AM	0	362	124	1	35	8	0	7	43	2	0	0	0
4/22/2024	9:15 AM	0	361	101	1	25	8	0	3	51	3	0	0	0
4/22/2024	9:30 AM	0	392	112	1	18	8	0	1	55	2	0	1	0
4/22/2024	9:45 AM	0	390	91	1	14	4	0	4	54	2	0	0	0
4/22/2024	10:00 AM	0	355	111	0	20	7	0	2	43	1	0	0	0
4/22/2024	10:15 AM	0	372	90	0	13	5	0	7	44	1	0	0	0
4/22/2024	10:30 AM	0	370	98	0	10	5	0	5	46	2	0	0	0
4/22/2024	10:45 AM	0	422	82	2	13	9	0	3	38	1	0	0	0
4/22/2024	11:00 AM	0	380	131	0	18	8	0	8	64	4	0	0	0
4/22/2024	11:15 AM	0	402	136	2	13	2	0	4	46	1	0	0	0
4/22/2024	11:30 AM	0	405	117	0	17	6	0	4	60	2	0	1	0
4/22/2024	11:45 AM	2	416	128	1	10	8	0	4	47	2	0	0	0
4/22/2024	12:00 PM	1	385	129	0	16	7	1	2	48	1	1	0	0
4/22/2024	12:15 PM	2	431	126	1	15	4	1	6	47	0	0	1	0
4/22/2024	12:30 PM	0	399	152	1	14	7	1	5	43	0	0	0	0
4/22/2024	12:45 PM	0	386	137	1	12	5	0	3	60	2	0	0	0
4/22/2024	1:00 PM	0	399	131	1	17	10	0	0	60	0	1	0	0
4/22/2024	1:15 PM	0	390	112	0	16	3	0	4	53	0	0	0	0
4/22/2024	1:30 PM	1	414	129	2	10	5	0	1	64	0	0	0	0
4/22/2024	1:45 PM	4	400	108	1	14	6	0	1	49	0	0	0	0
4/22/2024	2:00 PM	1	441	135	0	15	4	0	2	45	0	1	0	0
4/22/2024	2:15 PM	1	472	126	0	19	5	0	0	66	1	0	0	0
4/22/2024	2:30 PM	0	469	126	0	19	8	1	5	56	0	0	0	0
4/22/2024	2:45 PM	1	426	154	1	16	5	0	10	57	0	0	0	0
4/22/2024	3:00 PM	1	459	121	3	11	4	1	1	56	1	0	1	0
4/22/2024	3:15 PM	0	495	143	4	16	2	2	3	43	0	1	0	0
4/22/2024	3:30 PM	0	298	89	2	9	0	1	1	22	0	0	0	0
4/22/2024	3:45 PM	0	226	66	1	7	7	0	0	21	0	0	0	0
4/22/2024	4:00 PM	0	469	130	2	14	4	0	1	57	0	1	0	0
4/22/2024	4:15 PM	0	353	93	0	9	5	1	1	62	0	0	0	0
4/22/2024	4:30 PM	0	332	93	0	7	3	0	1	46	0	0	0	0
4/22/2024	4:45 PM	0	349	106	1	1	0	0	1	45	0	0	0	0
4/22/2024	5:00 PM	0	330	88	0	4	3	0	0	38	0	0	0	0
4/22/2024	5:15 PM	0	345	92	0	7	1	0	1	44	0	1	0	0
4/22/2024	5:30 PM	0	353	95	0	9	3	0	1	28	0	2	0	0
4/22/2024	5:45 PM	0	388	113	1	1	2	0	3	41	0	0	0	0
4/22/2024	6:00 PM	1	421	115	0	8	4	0	2	23	0	0	0	0
4/22/2024	6:15 PM	0	390	81	0	7	1	0	1	30	0	0	0	0
4/22/2024	6:30 PM	2	341	77	0	2	2	0	1	29	0	0	0	0
4/22/2024	6:45 PM	0	345	72	0	3	2	0	1	24	0	0	0	0
4/22/2024	7:00 PM	1	293	81	0	1	1	0	0	27	0	0	0	0
4/22/2024	7:15 PM	0	302	57	0	3	0	0	0	31	0	0	0	0
4/22/2024	7:30 PM	0	266	54	0	5	4	0	1	22	0	0	0	0
4/22/2024	7:45 PM	0	289	61	0	4	0	0	0	21	0	1	0	0
4/22/2024	8:00 PM	0	207	54	0	3	0	0	1	18	0	0	0	0
4/22/2024	8:15 PM	1	226	41	0	3	4	0	2	19	0	0	0	0
4/22/2024	8:30 PM	0	221	39	0	2	1	0	0	19	0	0	0	0
4/22/2024	8:45 PM	0	169	27	0	1	1	0	1	20	0	0	0	0
4/22/2024	9:00 PM	0	180	37	1	3	0	0	0	9	0	1	0	0
4/22/2024	9:15 PM	0	150	26	0	1	0	0	0	15	0	1	0	0
4/22/2024	9:30 PM	0	135	21	0	3	0	0	1	26	0	2	0	0
4/22/2024	9:45 PM	0	118	26	0	1	1	0	0	13	0	1	1	0
4/22/2024	10:00 PM	0	125	24	0	0	0	0	0	12	0	0	0	0
4/22/2024	10:15 PM	0	111	26	0	2	1	0	2	11	0	2	0	0
4/22/2024	10:30 PM	0	95	20	0	2	1	0	2	12	0	4	1	0
4/22/2024	10:45 PM	0	77	16	0	2	1	0	1	13	0	2	0	0
4/22/2024	11:00 PM	0	75	18	0	1	2	0	0	13	0	3	0	0
4/22/2024	11:15 PM	0	81	23	1	2	0	0	0	7	0	1	0	0
4/22/2024	11:30 PM	0	77	24	0	1	0	0	0	9	0	3	0	0
4/22/2024	11:45 PM	0	51	14	0	1	0	0	1	13	0	4	0	0

4/23/2024	12:00 AM	1	69	8	0	0	0	0	0	14	0	0	0	0
4/23/2024	12:15 AM	1	81	11	0	2	0	0	2	14	0	0	0	0
4/23/2024	12:30 AM	0	54	11	0	0	0	0	0	13	0	1	0	0
4/23/2024	12:45 AM	0	42	6	0	1	0	0	0	6	0	3	0	0
4/23/2024	1:00 AM	0	42	8	0	2	0	0	2	13	0	2	0	0
4/23/2024	1:15 AM	0	41	5	0	1	0	0	1	9	0	1	0	0
4/23/2024	1:30 AM	0	30	6	0	6	1	0	2	13	0	2	0	0
4/23/2024	1:45 AM	0	25	4	0	1	0	0	1	17	0	2	0	0
4/23/2024	2:00 AM	0	27	7	0	0	0	0	1	17	0	5	0	0
4/23/2024	2:15 AM	0	21	3	0	4	0	0	2	8	0	3	0	0
4/23/2024	2:30 AM	0	21	2	0	2	0	0	0	10	0	0	0	0
4/23/2024	2:45 AM	0	18	4	0	1	0	0	0	9	0	5	0	0
4/23/2024	3:00 AM	1	19	7	0	2	0	0	3	17	0	4	0	0
4/23/2024	3:15 AM	0	24	9	0	4	0	0	5	13	0	3	0	0
4/23/2024	3:30 AM	0	34	10	0	2	1	0	1	18	0	2	0	0
4/23/2024	3:45 AM	0	29	8	0	4	1	0	0	30	0	4	0	1
4/23/2024	4:00 AM	0	29	7	0	7	2	0	2	20	0	2	0	0
4/23/2024	4:15 AM	0	35	15	0	6	2	0	0	32	0	3	0	0
4/23/2024	4:30 AM	0	55	20	0	9	3	0	0	38	0	3	0	0
4/23/2024	4:45 AM	0	52	19	0	6	1	0	0	39	0	1	0	0
4/23/2024	5:00 AM	0	60	30	0	8	0	0	1	30	0	8	0	0
4/23/2024	5:15 AM	0	78	40	0	12	4	0	1	43	0	1	0	0
4/23/2024	5:30 AM	0	103	49	0	12	3	0	0	43	0	2	0	0
4/23/2024	5:45 AM	0	99	54	0	12	1	0	0	31	0	0	0	0
4/23/2024	6:00 AM	0	147	46	1	11	4	0	0	51	0	1	0	0
4/23/2024	6:15 AM	0	158	85	0	18	4	0	1	55	0	1	0	0
4/23/2024	6:30 AM	0	241	99	0	20	7	3	5	53	1	1	0	0
4/23/2024	6:45 AM	0	267	136	0	19	1	0	3	58	2	1	0	0
4/23/2024	7:00 AM	1	322	119	0	20	2	0	3	55	3	1	0	0
4/23/2024	7:15 AM	0	399	144	0	26	7	0	7	68	4	2	0	0
4/23/2024	7:30 AM	0	427	178	0	24	5	1	7	74	2	0	0	0
4/23/2024	7:45 AM	0	467	149	0	32	5	1	6	65	0	0	0	0
4/23/2024	8:00 AM	1	367	165	0	26	6	1	7	69	0	1	0	0
4/23/2024	8:15 AM	0	427	139	1	41	4	3	6	59	0	1	0	0
4/23/2024	8:30 AM	0	371	135	2	27	8	1	3	47	0	1	0	0
4/23/2024	8:45 AM	0	341	127	0	28	5	2	11	53	2	1	0	0
4/23/2024	9:00 AM	2	290	138	0	38	6	2	6	66	5	0	0	0
4/23/2024	9:15 AM	1	295	130	2	45	4	1	3	59	2	1	0	0
4/23/2024	9:30 AM	1	325	136	2	39	4	0	6	54	1	0	0	0
4/23/2024	9:45 AM	1	337	119	0	20	4	1	4	58	2	2	0	0
4/23/2024	10:00 AM	0	308	95	3	21	5	0	6	64	2	0	0	0
4/23/2024	10:15 AM	0	286	116	2	29	1	1	6	64	0	0	0	0
4/23/2024	10:30 AM	0	290	143	0	15	7	6	7	54	0	0	0	0
4/23/2024	10:45 AM	0	327	105	1	27	4	0	6	67	3	0	0	0
4/23/2024	11:00 AM	0	361	126	1	18	6	3	10	57	2	0	0	0
4/23/2024	11:15 AM	0	339	100	0	9	2	1	6	53	2	0	0	0
4/23/2024	11:30 AM	0	348	111	1	21	7	4	8	69	1	0	0	0
4/23/2024	11:45 AM	0	361	97	0	25	6	0	3	51	1	1	0	0
4/23/2024	12:00 PM	0	364	107	0	17	3	2	2	54	0	0	0	0
4/23/2024	12:15 PM	0	367	102	1	22	1	2	4	62	2	0	0	0
4/23/2024	12:30 PM	0	325	95	0	13	5	2	2	68	1	0	0	0
4/23/2024	12:45 PM	0	318	91	1	6	1	3	1	66	1	0	0	0
4/23/2024	1:00 PM	0	343	105	2	11	6	1	3	67	3	0	0	0
4/23/2024	1:15 PM	0	361	121	0	9	6	1	4	65	0	0	0	0
4/23/2024	1:30 PM	4	351	115	1	16	2	4	3	71	0	0	0	0
4/23/2024	1:45 PM	1	378	134	0	13	2	2	2	65	1	0	0	0
4/23/2024	2:00 PM	1	392	154	0	8	3	4	2	53	1	0	0	0
4/23/2024	2:15 PM	2	410	141	0	18	2	4	5	56	2	0	0	0
4/23/2024	2:30 PM	0	414	146	1	11	8	1	1	65	1	0	0	0
4/23/2024	2:45 PM	2	453	163	1	14	5	1	2	58	0	0	0	0
4/23/2024	3:00 PM	3	432	151	1	13	3	5	2	64	0	0	0	0
4/23/2024	3:15 PM	1	477	172	2	18	2	2	3	65	0	0	0	0
4/23/2024	3:30 PM	1	486	168	1	17	4	2	1	43	1	1	0	0
4/23/2024	3:45 PM	0	472	176	1	10	3	1	1	50	0	1	0	0
4/23/2024	4:00 PM	0	459	163	3	5	2	3	1	48	2	0	0	0
4/23/2024	4:15 PM	1	388	137	0	5	2	0	1	40	0	1	0	0
4/23/2024	4:30 PM	0	408	145	0	6	2	3	1	47	0	1	0	0
4/23/2024	4:45 PM	0	385	128	0	7	1	2	1	32	1	1	0	0
4/23/2024	5:00 PM	0	386	131	2	5	3	2	2	31	0	0	0	0
4/23/2024	5:15 PM	0	370	126	5	8	1	1	1	36	1	0	0	0
4/23/2024	5:30 PM	0	349	121	0	7	2	1	1	35	0	0	0	0
4/23/2024	5:45 PM	0	342	108	0	1	4	0	0	48	1	0	0	0
4/23/2024	6:00 PM	0	329	102	0	5	5	1	2	29	0	0	0	0
4/23/2024	6:15 PM	0	362	114	0	6	1	1	1	48	0	0	0	0
4/23/2024	6:30 PM	3	291	82	0	5	3	0	1	40	0	0	0	0
4/23/2024	6:45 PM	1	291	86	0	4	0	0	0	24	0	0	0	0
4/23/2024	7:00 PM	1	289	70	1	7	1	0	0	30	0	0	0	0
4/23/2024	7:15 PM	0	274	68	0	3	3	0	0	28	0	0	0	0
4/23/2024	7:30 PM	1	268	62	1	4	1	0	0	22	0	0	0	0
4/23/2024	7:45 PM	0	238	53	0	2	3	0	0	17	0	1	0	0
4/23/2024	8:00 PM	0	213	42	0	1	1	0	0	18	0	1	0	0
4/23/2024	8:15 PM	0	204	41	0	2	1	0	1	23	0	0	0	0
4/23/2024	8:30 PM	0	184	38	0	5	2	0	0	19	0	0	0	0
4/23/2024	8:45 PM	0	188	39	0	2	1	0	0	22	0	1	0	0
4/23/2024	9:00 PM	0	178	34	0	4	0	0	0	34	0	0	0	0
4/23/2024	9:15 PM	0	189	44	0	6	1	0	0	19	0	1	0	0
4/23/2024	9:30 PM	0	162	27	1	1	0	0	0	18	0	3	0	0
4/23/2024	9:45 PM	0	145	21	1	5	1	0	0	10	0	1	0	0
4/23/2024	10:00 PM	0	133	23	0	1	0	0	0	13	0	2	0	0
4/23/2024	10:15 PM	0	120	17	0	3	0	0	0	15	0	4	0	0
4/23/2024	10:30 PM	0	104	14	0	2	0	0	0	11	0	2	0	0
4/23/2024	10:45 PM	0	92	11	0	0	0	0	0	8	0	2	0	0
4/23/2024	11:00 PM	0	90	13	0	3	0	0	0	14	0	3	0	0
4/23/2024	11:15 PM	0	70	11	1	1	0	0	0	11	0	4	0	0
4/23/2024	11:30 PM	0	63	9	0	1	0	0	0	15	0	2	0	0
4/23/2024	11:45 PM	0	65	8	0	1	0	0	0	16	0	1	0	0

4/24/2024	12:00 AM	0	61	4	0	1	0	0	0	16	0	2	0	0
4/24/2024	12:15 AM	0	80	1	0	2	0	0	0	13	0	1	0	0
4/24/2024	12:30 AM	0	74	1	0	1	0	0	0	11	0	2	0	0
4/24/2024	12:45 AM	0	54	3	0	0	0	0	0	14	0	3	0	0
4/24/2024	1:00 AM	0	42	2	0	0	0	0	0	7	0	1	0	0
4/24/2024	1:15 AM	0	48	3	0	5	0	0	0	13	0	1	0	0
4/24/2024	1:30 AM	0	34	1	0	2	0	0	0	14	0	1	0	0
4/24/2024	1:45 AM	0	31	2	0	1	0	0	0	12	0	3	0	0
4/24/2024	2:00 AM	0	31	1	0	4	0	0	0	10	0	2	0	0
4/24/2024	2:15 AM	0	30	2	0	2	0	0	0	11	0	3	0	0
4/24/2024	2:30 AM	0	28	1	0	2	2	0	2	17	0	6	0	0
4/24/2024	2:45 AM	0	25	1	0	4	0	0	0	16	0	1	0	0
4/24/2024	3:00 AM	0	39	2	0	1	0	0	0	18	0	1	0	0
4/24/2024	3:15 AM	0	34	0	0	2	2	0	0	17	0	1	0	0
4/24/2024	3:30 AM	0	39	0	0	3	0	0	0	24	0	2	0	0
4/24/2024	3:45 AM	0	37	2	0	4	0	0	0	18	0	5	0	0
4/24/2024	4:00 AM	0	50	1	0	4	0	0	0	36	0	1	0	0
4/24/2024	4:15 AM	0	40	0	0	9	1	0	0	41	0	1	0	0
4/24/2024	4:30 AM	0	60	0	0	9	0	0	0	33	0	2	0	0
4/24/2024	4:45 AM	0	72	3	0	3	0	0	0	32	0	3	0	0
4/24/2024	5:00 AM	0	77	0	0	10	0	0	0	51	0	1	0	0
4/24/2024	5:15 AM	0	104	4	0	6	0	0	0	53	0	1	0	0
4/24/2024	5:30 AM	0	144	5	0	9	0	0	1	42	0	1	0	0
4/24/2024	5:45 AM	0	154	3	0	14	0	0	0	49	0	1	0	0
4/24/2024	6:00 AM	0	201	9	1	23	2	0	0	53	0	2	0	0
4/24/2024	6:15 AM	0	223	45	0	9	7	0	0	52	0	3	0	0
4/24/2024	6:30 AM	0	267	92	0	11	4	0	2	62	0	0	0	0
4/24/2024	6:45 AM	0	273	105	0	15	4	0	3	51	1	1	0	0
4/24/2024	7:00 AM	0	309	147	0	13	4	1	5	39	0	0	0	0
4/24/2024	7:15 AM	1	389	137	0	16	4	0	6	71	2	1	0	0
4/24/2024	7:30 AM	0	515	177	0	21	8	2	7	57	3	1	0	0
4/24/2024	7:45 AM	0	467	181	1	25	5	0	6	62	0	1	0	0
4/24/2024	8:00 AM	0	411	154	2	26	2	6	6	58	0	2	1	0
4/24/2024	8:15 AM	0	395	156	0	34	4	3	1	63	0	0	0	0
4/24/2024	8:30 AM	0	360	133	2	18	5	0	11	68	1	4	1	0
4/24/2024	8:45 AM	1	373	156	1	30	2	2	7	59	0	1	0	0
4/24/2024	9:00 AM	0	322	144	1	28	3	0	5	60	3	1	1	0
4/24/2024	9:15 AM	0	302	135	1	32	2	1	10	61	1	2	0	0
4/24/2024	9:30 AM	0	326	133	1	49	4	6	5	60	1	0	0	0
4/24/2024	9:45 AM	1	330	121	1	13	5	1	5	75	2	0	0	0
4/24/2024	10:00 AM	1	311	126	0	18	7	1	8	60	3	0	1	0
4/24/2024	10:15 AM	1	337	118	1	16	3	0	2	62	4	0	0	0
4/24/2024	10:30 AM	1	343	138	0	14	6	1	8	48	4	0	0	0
4/24/2024	10:45 AM	0	374	151	0	16	3	1	6	56	3	0	0	0
4/24/2024	11:00 AM	1	329	115	1	15	1	3	4	52	4	0	0	0
4/24/2024	11:15 AM	0	379	120	0	11	3	2	8	49	3	0	0	0
4/24/2024	11:30 AM	4	399	136	0	14	1	4	3	64	4	0	0	0
4/24/2024	11:45 AM	0	359	125	0	14	3	7	3	47	3	0	0	0
4/24/2024	12:00 PM	1	397	119	2	16	5	5	7	65	2	0	0	0
4/24/2024	12:15 PM	1	387	141	1	9	4	2	0	60	4	0	0	0
4/24/2024	12:30 PM	0	372	117	0	11	4	0	3	50	4	0	0	0
4/24/2024	12:45 PM	1	404	121	0	11	1	0	1	52	2	0	1	0
4/24/2024	1:00 PM	0	378	124	4	12	6	0	2	59	5	0	0	0
4/24/2024	1:15 PM	1	396	122	1	11	7	3	3	61	2	0	0	0
4/24/2024	1:30 PM	0	421	131	1	8	5	4	2	56	3	0	0	0
4/24/2024	1:45 PM	1	429	161	3	12	1	1	3	69	0	0	0	0
4/24/2024	2:00 PM	1	433	141	1	4	2	4	1	57	1	0	0	0
4/24/2024	2:15 PM	0	432	123	0	13	6	2	4	67	1	0	0	0
4/24/2024	2:30 PM	0	477	137	3	20	1	4	2	44	0	2	0	0
4/24/2024	2:45 PM	1	489	143	5	4	1	4	2	62	1	1	1	0
4/24/2024	3:00 PM	1	478	147	0	13	4	4	1	59	4	0	0	0
4/24/2024	3:15 PM	2	523	171	3	12	5	3	1	48	1	1	0	0
4/24/2024	3:30 PM	0	547	125	0	7	5	4	2	40	2	1	0	0
4/24/2024	3:45 PM	1	593	139	1	9	1	2	1	38	3	0	0	0
4/24/2024	4:00 PM	2	572	135	0	10	3	4	2	54	3	0	0	0
4/24/2024	4:15 PM	0	476	133	1	6	6	2	2	44	1	0	0	0
4/24/2024	4:30 PM	2	465	121	1	5	2	0	1	42	1	0	0	0
4/24/2024	4:45 PM	1	364	142	0	5	2	1	2	26	0	0	0	0
4/24/2024	5:00 PM	1	331	126	2	4	4	0	3	43	3	0	0	0
4/24/2024	5:15 PM	0	338	81	0	7	1	0	0	40	0	0	0	0
4/24/2024	5:30 PM	0	351	102	0	6	1	0	1	24	1	1	0	0
4/24/2024	5:45 PM	1	370	125	1	6	3	0	1	50	1	1	0	0
4/24/2024	6:00 PM	0	405	122	0	5	4	1	1	33	1	0	0	0
4/24/2024	6:15 PM	1	419	95	1	2	1	0	0	38	0	0	0	0
4/24/2024	6:30 PM	1	340	88	0	5	0	1	2	31	0	0	0	0
4/24/2024	6:45 PM	1	346	77	0	2	0	0	1	22	1	0	0	0
4/24/2024	7:00 PM	1	357	74	0	5	2	0	0	34	0	0	0	0
4/24/2024	7:15 PM	1	303	84	0	8	2	0	1	27	1	0	0	0
4/24/2024	7:30 PM	0	286	68	0	2	1	0	2	27	0	0	0	0
4/24/2024	7:45 PM	1	260	61	0	1	2	0	1	31	1	1	0	0
4/24/2024	8:00 PM	0	261	41	0	2	2	0	0	19	0	0	0	0
4/24/2024	8:15 PM	0	209	31	0	5	2	0	1	22	0	0	0	0
4/24/2024	8:30 PM	0	200	32	0	5	0	0	0	28	0	1	0	0
4/24/2024	8:45 PM	0	207	32	0	4	0	0	1	23	0	1	0	0
4/24/2024	9:00 PM	0	190	27	0	3	0	0	0	14	0	2	0	0
4/24/2024	9:15 PM	0	181	25	1	1	1	0	0	17	0	0	0	0
4/24/2024	9:30 PM	0	158	21	0	3	0	0	0	14	0	2	0	0
4/24/2024	9:45 PM	0	142	16	0	3	0	0	0	20	0	0	0	0
4/24/2024	10:00 PM	0	140	14	0	4	0	0	0	19	0	3	0	0
4/24/2024	10:15 PM	1	129	12	1	1	0	0	0	14	0	1	0	0
4/24/2024	10:30 PM	0	112	9	0	1	0	0	0	7	0	1	0	0
4/24/2024	10:45 PM	0	109	7	0	0	0	0	0	12	0	3	0	0
4/24/2024	11:00 PM	0	85	7	0	2	0	0	0	15	0	0	0	0
4/24/2024	11:15 PM	0	118	14	1	1	0	0	0	14	0	2	0	0
4/24/2024	11:30 PM	0	72	5	0	2	1	0	0	16	0	0	0	0
4/24/2024	11:45 PM	0	80	8	0	2	0	0	0	11	0	1	0	0

4/25/2024	12:00 AM	2	70	9	0	0	0	0	0	12	0	0	0	0
4/25/2024	12:15 AM	1	90	16	0	2	0	0	0	15	0	3	0	0
4/25/2024	12:30 AM	0	82	11	0	3	0	0	1	11	0	0	0	0
4/25/2024	12:45 AM	0	54	4	0	2	0	0	1	11	0	0	0	0
4/25/2024	1:00 AM	0	47	4	0	0	0	0	0	13	0	2	0	0
4/25/2024	1:15 AM	0	35	2	0	1	1	0	0	12	0	1	0	0
4/25/2024	1:30 AM	0	31	4	0	1	0	0	0	15	0	1	0	0
4/25/2024	1:45 AM	0	25	4	0	3	0	0	0	10	0	1	0	0
4/25/2024	2:00 AM	0	40	3	0	1	1	0	0	16	0	2	1	0
4/25/2024	2:15 AM	0	34	4	0	1	0	0	1	12	0	0	0	0
4/25/2024	2:30 AM	0	17	2	0	1	0	0	0	16	0	2	0	0
4/25/2024	2:45 AM	0	23	7	0	1	0	0	0	14	0	1	0	0
4/25/2024	3:00 AM	0	21	2	0	5	0	0	0	14	0	2	1	0
4/25/2024	3:15 AM	0	38	5	0	2	0	0	0	17	0	3	1	0
4/25/2024	3:30 AM	0	41	4	0	2	1	0	0	24	0	2	0	0
4/25/2024	3:45 AM	0	35	5	0	6	1	0	0	29	0	0	0	0
4/25/2024	4:00 AM	0	44	3	0	8	0	0	0	27	0	2	0	0
4/25/2024	4:15 AM	0	37	4	0	6	0	0	1	33	0	1	0	0
4/25/2024	4:30 AM	0	55	10	0	9	3	0	2	38	0	2	0	0
4/25/2024	4:45 AM	0	83	6	0	4	1	0	1	30	0	2	0	0
4/25/2024	5:00 AM	0	72	12	0	6	1	0	1	33	0	2	1	0
4/25/2024	5:15 AM	0	86	19	0	12	2	0	3	45	0	0	0	0
4/25/2024	5:30 AM	0	101	25	0	14	1	0	1	50	0	1	0	0
4/25/2024	5:45 AM	0	128	32	0	10	2	0	1	49	0	1	0	0
4/25/2024	6:00 AM	0	161	37	2	18	4	1	2	59	0	1	2	0
4/25/2024	6:15 AM	0	209	59	0	14	4	0	2	46	1	0	0	0
4/25/2024	6:30 AM	0	285	93	0	16	3	0	1	51	1	1	0	0
4/25/2024	6:45 AM	0	276	126	0	13	3	2	5	60	1	1	0	0
4/25/2024	7:00 AM	2	287	121	0	17	7	2	6	51	5	0	0	0
4/25/2024	7:15 AM	2	418	132	0	15	9	0	8	57	1	1	1	0
4/25/2024	7:30 AM	2	468	166	0	35	13	2	1	70	4	0	0	0
4/25/2024	7:45 AM	0	490	176	0	24	4	1	5	56	3	0	0	0
4/25/2024	8:00 AM	0	383	181	1	22	5	4	8	61	2	0	1	0
4/25/2024	8:15 AM	1	399	154	0	17	4	7	2	62	1	0	0	0
4/25/2024	8:30 AM	0	360	153	1	32	2	7	7	50	0	1	1	0
4/25/2024	8:45 AM	0	370	170	2	15	4	1	1	61	1	3	0	0
4/25/2024	9:00 AM	0	289	150	0	26	7	0	2	56	1	0	0	0
4/25/2024	9:15 AM	0	288	147	0	35	4	2	4	44	2	0	0	0
4/25/2024	9:30 AM	1	355	143	0	35	5	2	4	56	0	0	0	0
4/25/2024	9:45 AM	2	366	146	2	21	4	0	2	49	3	0	0	0
4/25/2024	10:00 AM	2	359	125	3	27	4	2	5	58	3	0	1	0
4/25/2024	10:15 AM	0	351	145	0	22	2	10	2	66	2	0	0	0
4/25/2024	10:30 AM	1	385	116	0	16	6	1	7	63	2	0	0	0
4/25/2024	10:45 AM	3	383	158	0	23	4	0	5	64	1	0	0	0
4/25/2024	11:00 AM	2	368	106	1	25	6	0	5	61	2	0	0	0
4/25/2024	11:15 AM	0	416	121	0	19	3	0	8	54	0	0	0	0
4/25/2024	11:30 AM	0	420	117	2	12	5	0	3	63	2	0	0	0
4/25/2024	11:45 AM	0	430	105	0	13	12	1	7	44	0	0	0	0
4/25/2024	12:00 PM	0	388	136	0	19	8	0	5	45	1	0	0	0
4/25/2024	12:15 PM	0	372	142	0	14	5	0	2	59	1	0	0	0
4/25/2024	12:30 PM	0	441	138	0	13	3	2	3	62	0	0	0	0
4/25/2024	12:45 PM	2	407	141	1	16	5	0	4	62	3	0	0	0
4/25/2024	1:00 PM	0	416	414	2	20	5	0	2	59	0	0	0	0
4/25/2024	1:15 PM	0	404	142	0	15	7	0	3	52	2	0	0	0
4/25/2024	1:30 PM	0	421	135	4	10	7	0	0	45	1	0	0	0
4/25/2024	1:45 PM	0	435	167	0	11	12	0	0	57	0	1	0	0
4/25/2024	2:00 PM	0	431	141	0	16	5	0	3	58	0	0	0	0
4/25/2024	2:15 PM	0	488	168	4	14	8	0	3	61	1	1	0	0
4/25/2024	2:30 PM	1	444	159	3	13	6	0	5	45	1	1	0	0
4/25/2024	2:45 PM	1	476	153	0	20	7	0	6	35	0	1	0	0
4/25/2024	3:00 PM	0	515	151	2	17	7	0	2	53	1	0	0	0
4/25/2024	3:15 PM	0	532	146	2	10	7	0	1	33	0	0	0	0
4/25/2024	3:30 PM	0	544	157	0	9	2	0	2	39	1	1	0	0
4/25/2024	3:45 PM	0	470	144	0	13	5	1	0	37	0	1	0	0
4/25/2024	4:00 PM	0	381	124	1	8	3	0	1	31	0	0	0	0
4/25/2024	4:15 PM	1	386	127	0	7	6	0	2	27	0	0	0	0
4/25/2024	4:30 PM	0	359	139	0	10	3	0	1	38	0	0	0	0
4/25/2024	4:45 PM	1	415	133	0	11	4	0	0	32	1	1	0	0
4/25/2024	5:00 PM	0	322	102	1	7	2	0	6	41	0	0	0	0
4/25/2024	5:15 PM	0	333	116	0	6	2	0	1	29	0	0	0	0
4/25/2024	5:30 PM	0	291	101	0	6	1	0	0	33	1	0	0	0
4/25/2024	5:45 PM	0	331	125	1	9	1	0	0	47	0	0	0	0
4/25/2024	6:00 PM	0	438	133	0	11	2	0	2	55	0	0	0	0
4/25/2024	6:15 PM	2	363	112	1	7	1	0	2	30	0	0	0	0
4/25/2024	6:30 PM	3	344	123	0	3	0	0	1	31	0	0	0	0
4/25/2024	6:45 PM	0	356	97	3	7	2	0	0	15	0	0	0	0
4/25/2024	7:00 PM	0	301	91	0	7	3	0	0	30	0	0	0	0
4/25/2024	7:15 PM	1	338	96	1	7	1	0	0	26	0	0	0	0
4/25/2024	7:30 PM	0	303	63	0	7	0	0	1	22	0	0	0	0
4/25/2024	7:45 PM	0	301	73	1	2	1	0	0	16	0	0	0	0
4/25/2024	8:00 PM	0	271	76	0	6	0	0	0	19	0	1	0	0
4/25/2024	8:15 PM	0	238	61	0	4	2	0	0	21	0	0	0	0
4/25/2024	8:30 PM	0	234	58	1	3	2	0	0	23	0	0	0	0
4/25/2024	8:45 PM	0	243	62	0	2	1	0	0	28	0	1	0	0
4/25/2024	9:00 PM	0	161	54	0	2	1	0	0	19	0	1	0	0
4/25/2024	9:15 PM	0	143	44	0	2	0	0	0	20	0	1	0	0
4/25/2024	9:30 PM	0	139	49	0	2	0	0	0	18	0	1	0	0
4/25/2024	9:45 PM	0	125	47	0	4	2	0	0	15	0	1	0	0
4/25/2024	10:00 PM	0	121	49	0	0	0	0	0	18	0	0	0	0
4/25/2024	10:15 PM	0	119	47	0	2	1	0	0	15	0	1	0	0
4/25/2024	10:30 PM	0	121	46	0	2	0	0	0	14	0	0	0	0
4/25/2024	10:45 PM	0	97	39	0	2	0	0	0	11	0	3	0	0
4/25/2024	11:00 PM	0	98	37	0	1	0	0	0	9	0	1	0	0
4/25/2024	11:15 PM	0	84	45	0	4	0	0	0	18	0	1	0	0
4/25/2024	11:30 PM	0	69	41	0	0	0	0	0	13	0	2	0	0
4/25/2024	11:45 PM	0	55	29	0	4	0	0	0	9	0	1	0	0

4/26/2024	12:00 AM	0	69	10	0	3	1	0	0	16	0	1	0	0
4/26/2024	12:15 AM	0	79	11	0	1	1	0	0	9	0	0	0	0
4/26/2024	12:30 AM	0	78	14	0	3	1	0	1	6	0	2	1	0
4/26/2024	12:45 AM	0	58	7	0	2	2	0	0	10	0	1	0	0
4/26/2024	1:00 AM	0	50	6	0	1	0	0	0	11	0	1	0	0
4/26/2024	1:15 AM	0	48	5	0	3	1	0	0	9	0	0	1	0
4/26/2024	1:30 AM	0	29	4	0	1	0	0	0	14	0	2	1	0
4/26/2024	1:45 AM	0	35	8	0	0	2	0	1	10	0	1	1	0
4/26/2024	2:00 AM	0	30	4	0	2	2	0	0	15	0	1	0	0
4/26/2024	2:15 AM	0	26	3	0	2	2	0	1	13	0	1	0	0
4/26/2024	2:30 AM	0	28	4	0	1	3	0	1	15	0	1	0	0
4/26/2024	2:45 AM	0	37	5	0	1	2	0	1	15	0	2	0	0
4/26/2024	3:00 AM	0	35	4	0	1	3	0	0	12	0	2	1	0
4/26/2024	3:15 AM	0	30	2	0	3	1	0	0	13	0	2	1	0
4/26/2024	3:30 AM	0	35	6	0	4	4	0	2	22	0	0	0	0
4/26/2024	3:45 AM	0	45	6	0	4	4	0	1	26	0	3	1	0
4/26/2024	4:00 AM	0	37	3	0	3	6	0	3	26	0	1	0	0
4/26/2024	4:15 AM	0	44	4	0	6	7	0	1	25	0	2	0	0
4/26/2024	4:30 AM	0	51	12	0	5	1	0	0	22	0	0	1	0
4/26/2024	4:45 AM	0	57	18	0	3	0	0	0	41	0	1	2	0
4/26/2024	5:00 AM	0	66	30	0	6	0	0	0	40	0	1	1	0
4/26/2024	5:15 AM	0	87	30	0	9	5	0	0	47	0	0	1	0
4/26/2024	5:30 AM	0	98	28	0	5	2	0	0	46	0	1	0	0
4/26/2024	5:45 AM	0	112	39	0	7	2	0	0	61	0	1	0	0
4/26/2024	6:00 AM	0	127	34	0	7	3	0	0	44	0	0	0	0
4/26/2024	6:15 AM	0	202	57	0	11	4	0	0	44	0	2	2	0
4/26/2024	6:30 AM	0	242	92	0	13	8	0	0	47	0	1	1	0
4/26/2024	6:45 AM	0	250	99	1	9	3	0	3	52	0	1	1	0
4/26/2024	7:00 AM	1	283	112	0	11	7	1	1	52	0	0	0	0
4/26/2024	7:15 AM	3	382	156	0	12	12	1	2	59	2	1	0	0
4/26/2024	7:30 AM	2	467	153	0	23	10	0	2	56	1	1	0	0
4/26/2024	7:45 AM	0	456	167	0	10	9	0	0	44	2	2	0	0
4/26/2024	8:00 AM	0	376	160	0	17	11	1	4	42	0	0	0	0
4/26/2024	8:15 AM	0	382	178	1	19	5	0	0	69	0	1	1	0
4/26/2024	8:30 AM	1	404	168	4	16	16	0	6	63	1	1	2	0
4/26/2024	8:45 AM	1	376	154	2	12	8	0	1	43	1	0	1	0
4/26/2024	9:00 AM	1	302	170	4	20	16	0	2	41	1	0	0	0
4/26/2024	9:15 AM	1	333	158	0	40	14	0	4	65	0	0	0	0
4/26/2024	9:30 AM	3	391	141	0	27	6	0	5	64	1	0	0	0
4/26/2024	9:45 AM	0	352	149	1	17	4	0	1	44	0	0	0	0
4/26/2024	10:00 AM	0	349	146	3	22	5	0	5	51	1	0	0	0
4/26/2024	10:15 AM	0	413	148	0	11	12	0	3	47	0	0	0	0
4/26/2024	10:30 AM	0	428	145	1	9	6	4	3	46	1	0	0	0
4/26/2024	10:45 AM	1	462	144	1	9	4	3	4	49	3	0	0	0
4/26/2024	11:00 AM	1	464	151	0	14	4	4	2	48	2	0	0	0
4/26/2024	11:15 AM	1	493	138	4	20	3	5	5	53	5	1	0	0
4/26/2024	11:30 AM	0	484	133	3	10	5	2	4	48	1	0	0	0
4/26/2024	11:45 AM	2	506	126	0	18	4	2	3	57	2	0	0	0
4/26/2024	12:00 PM	2	460	147	3	20	6	2	3	32	3	0	1	0
4/26/2024	12:15 PM	0	482	150	1	16	10	5	3	40	3	0	0	0
4/26/2024	12:30 PM	3	498	156	0	19	6	1	1	58	0	0	0	0
4/26/2024	12:45 PM	0	520	141	4	19	6	1	5	51	2	0	0	0
4/26/2024	1:00 PM	0	260	69	0	5	0	2	1	29	0	1	0	0
4/26/2024	1:15 PM	0	266	75	0	4	0	1	0	40	0	0	0	0
4/26/2024	1:30 PM	0	440	146	0	9	7	4	3	48	4	0	0	0
4/26/2024	1:45 PM	1	405	118	0	4	0	7	2	49	1	0	0	0
4/26/2024	2:00 PM	0	364	129	1	16	2	8	3	42	4	0	1	0
4/26/2024	2:15 PM	6	435	120	1	12	6	0	5	40	0	0	0	0
4/26/2024	2:30 PM	1	469	133	0	12	0	0	9	41	1	1	0	0
4/26/2024	2:45 PM	4	538	14	0	9	1	2	2	35	1	0	0	0
4/26/2024	3:00 PM	0	484	144	0	9	8	2	1	31	2	0	1	0
4/26/2024	3:15 PM	0	568	145	3	13	1	2	1	32	1	0	0	0
4/26/2024	3:30 PM	1	574	170	1	15	0	1	4	21	1	0	0	0
4/26/2024	3:45 PM	1	473	138	4	8	0	1	1	27	1	0	0	0
4/26/2024	4:00 PM	1	522	150	1	15	4	3	0	37	2	0	0	0
4/26/2024	4:15 PM	4	439	120	2	8	1	0	1	18	0	0	0	0
4/26/2024	4:30 PM	2	503	151	0	9	3	2	5	22	2	0	0	0
4/26/2024	4:45 PM	2	467	108	0	11	0	0	2	19	1	0	0	0
4/26/2024	5:00 PM	0	498	139	0	7	2	2	0	26	0	0	0	0
4/26/2024	5:15 PM	3	481	105	0	5	1	0	1	21	0	0	0	0
4/26/2024	5:30 PM	3	471	103	0	4	2	0	2	26	0	0	0	0
4/26/2024	5:45 PM	1	467	118	1	7	2	0	2	31	0	0	0	0
4/26/2024	6:00 PM	2	442	121	0	8	3	1	1	21	0	0	0	0
4/26/2024	6:15 PM	1	488	166	4	8	2	1	0	22	0	0	0	0
4/26/2024	6:30 PM	0	455	124	0	6	1	0	3	25	0	0	0	0
4/26/2024	6:45 PM	3	430	102	0	9	5	0	2	21	0	0	0	0
4/26/2024	7:00 PM	1	408	113	0	8	1	0	0	25	0	0	0	0
4/26/2024	7:15 PM	5	390	105	0	4	2	0	3	18	0	0	0	0
4/26/2024	7:30 PM	0	369	82	0	6	1	0	1	16	0	0	0	0
4/26/2024	7:45 PM	1	286	80	3	7	1	0	1	18	0	0	0	0
4/26/2024	8:00 PM	0	297	96	0	8	3	0	1	19	0	1	0	0
4/26/2024	8:15 PM	0	218	129	0	2	1	0	6	16	0	0	0	0
4/26/2024	8:30 PM	0	194	127	0	5	1	0	2	19	0	0	0	0
4/26/2024	8:45 PM	0	180	163	3	6	0	0	3	16	0	1	0	0
4/26/2024	9:00 PM	1	187	158	1	3	0	0	0	19	0	0	0	0
4/26/2024	9:15 PM	1	144	152	0	4	1	0	4	11	0	0	0	0
4/26/2024	9:30 PM	0	152	136	0	2	1	0	0	14	0	3	0	0
4/26/2024	9:45 PM	0	141	131	0	2	3	0	1	6	0	0	0	0
4/26/2024	10:00 PM	0	212	38	0	2	1	0	1	15	1	0	0	0
4/26/2024	10:15 PM	0	181	23	0	1	1	0	0	14	2	2	0	0
4/26/2024	10:30 PM	0	184	28	0	2	1	0	0	13	1	2	0	0
4/26/2024	10:45 PM	0	158	27	0	0	0	0	0	14	1	0	0	0
4/26/2024	11:00 PM	0	144	22	0	3	0	0	0	9	0	1	0	0
4/26/2024	11:15 PM	0	150	21	1	2	1	0	0	10	0	0	0	0
4/26/2024	11:30 PM	0	125	20	0	1	0	0	0	11	0	0	0	0
4/26/2024	11:45 PM	1	87	12	0	1	0	0	0	10	1	0	0	0

4/27/2024	12:00 AM	0	82	18	0	1	0	0	0	8	0	2	0	0
4/27/2024	12:15 AM	0	96	21	0	0	1	0	0	11	0	2	0	0
4/27/2024	12:30 AM	0	92	19	0	1	0	0	0	7	0	0	0	0
4/27/2024	12:45 AM	0	58	17	0	0	1	0	0	10	0	1	0	0
4/27/2024	1:00 AM	0	52	15	0	0	0	0	0	9	0	0	0	0
4/27/2024	1:15 AM	0	56	11	0	0	0	0	0	8	0	2	0	0
4/27/2024	1:30 AM	0	41	9	0	3	1	0	0	7	0	0	0	0
4/27/2024	1:45 AM	0	33	5	0	0	0	0	0	11	0	2	0	0
4/27/2024	2:00 AM	0	36	7	0	1	0	0	0	6	0	2	0	0
4/27/2024	2:15 AM	0	38	10	0	1	4	0	0	5	0	0	0	0
4/27/2024	2:30 AM	0	26	8	0	1	0	0	0	6	0	2	0	0
4/27/2024	2:45 AM	0	31	9	0	2	0	0	0	6	0	3	0	0
4/27/2024	3:00 AM	0	21	7	0	1	1	0	0	6	0	2	0	0
4/27/2024	3:15 AM	0	22	6	0	3	1	0	0	10	0	1	0	0
4/27/2024	3:30 AM	0	30	13	0	0	0	0	0	7	0	1	0	0
4/27/2024	3:45 AM	0	36	12	0	3	2	0	0	10	0	0	0	0
4/27/2024	4:00 AM	0	39	10	0	2	2	0	0	15	0	3	0	0
4/27/2024	4:15 AM	0	42	12	0	1	4	0	0	13	0	4	0	0
4/27/2024	4:30 AM	0	39	12	0	4	0	0	0	12	0	2	0	0
4/27/2024	4:45 AM	0	53	16	0	2	0	0	0	9	0	0	0	0
4/27/2024	5:00 AM	0	65	11	1	2	0	0	0	2	0	0	0	0
4/27/2024	5:15 AM	0	68	15	0	5	0	0	0	10	0	1	0	0
4/27/2024	5:30 AM	0	81	14	0	7	2	0	0	10	0	0	0	0
4/27/2024	5:45 AM	0	62	12	0	5	0	0	0	11	0	1	0	0
4/27/2024	6:00 AM	0	80	27	0	2	1	0	0	14	0	3	0	0
4/27/2024	6:15 AM	0	104	33	0	3	1	0	0	10	0	1	0	0
4/27/2024	6:30 AM	2	143	35	0	3	1	0	0	13	0	0	0	0
4/27/2024	6:45 AM	2	153	54	0	3	1	0	0	8	0	0	0	0
4/27/2024	7:00 AM	0	148	44	1	7	1	0	0	12	0	3	0	0
4/27/2024	7:15 AM	0	193	49	1	6	1	0	2	22	0	0	0	0
4/27/2024	7:30 AM	1	196	76	0	4	1	0	1	16	0	0	0	0
4/27/2024	7:45 AM	0	275	84	0	3	2	0	0	17	0	0	0	0
4/27/2024	8:00 AM	0	269	74	0	13	2	0	1	10	0	1	0	0
4/27/2024	8:15 AM	0	274	81	0	4	3	0	2	18	0	0	0	0
4/27/2024	8:30 AM	0	342	102	0	6	5	0	3	19	0	0	0	0
4/27/2024	8:45 AM	1	326	89	1	10	1	0	5	15	0	0	0	0
4/27/2024	9:00 AM	3	342	74	1	16	4	0	0	22	0	0	0	0
4/27/2024	9:15 AM	4	326	91	0	10	1	0	0	19	0	0	0	0
4/27/2024	9:30 AM	1	470	106	0	11	2	0	1	18	0	0	0	0
4/27/2024	9:45 AM	0	485	97	1	10	4	0	2	19	0	0	0	0
4/27/2024	10:00 AM	1	407	93	1	10	1	0	1	20	0	0	0	0
4/27/2024	10:15 AM	0	440	93	0	5	0	0	6	22	0	0	0	0
4/27/2024	10:30 AM	3	493	97	0	7	3	0	1	15	0	0	0	0
4/27/2024	10:45 AM	4	498	132	2	8	3	0	1	11	0	0	0	0
4/27/2024	11:00 AM	2	479	109	1	3	3	0	1	19	0	0	0	0
4/27/2024	11:15 AM	1	500	119	0	5	2	0	0	12	0	0	0	0
4/27/2024	11:30 AM	4	506	127	0	6	1	0	2	21	0	0	0	0
4/27/2024	11:45 AM	3	508	121	0	8	1	0	0	16	0	0	0	0
4/27/2024	12:00 PM	2	530	109	0	3	2	0	2	12	0	0	0	0
4/27/2024	12:15 PM	4	544	112	0	6	2	0	4	18	0	0	0	0
4/27/2024	12:30 PM	1	533	117	1	4	1	0	5	14	0	0	0	0
4/27/2024	12:45 PM	0	521	121	0	16	2	0	2	12	0	0	0	0
4/27/2024	1:00 PM	1	539	101	2	7	1	0	3	16	0	0	0	0
4/27/2024	1:15 PM	5	554	118	1	6	2	0	1	18	0	0	0	0
4/27/2024	1:30 PM	8	520	106	0	10	0	0	4	17	0	0	0	0
4/27/2024	1:45 PM	2	549	129	0	5	1	0	3	14	0	0	0	0
4/27/2024	2:00 PM	1	512	121	0	4	3	0	1	20	0	0	0	0
4/27/2024	2:15 PM	0	510	79	0	4	1	0	4	10	0	0	0	0
4/27/2024	2:30 PM	3	535	115	1	4	2	0	3	7	0	0	0	0
4/27/2024	2:45 PM	2	585	117	2	8	0	0	2	20	0	0	0	0
4/27/2024	3:00 PM	3	526	98	2	10	1	0	0	8	0	0	0	0
4/27/2024	3:15 PM	0	512	97	0	5	2	0	2	5	0	0	0	0
4/27/2024	3:30 PM	4	526	103	0	8	2	0	1	8	0	0	0	0
4/27/2024	3:45 PM	1	510	117	1	4	2	0	0	11	1	0	0	0
4/27/2024	4:00 PM	0	491	104	1	5	0	0	2	11	0	0	0	0
4/27/2024	4:15 PM	1	424	89	0	4	1	0	1	13	0	0	0	0
4/27/2024	4:30 PM	2	481	103	1	6	1	0	1	9	0	0	0	0
4/27/2024	4:45 PM	1	507	89	0	3	0	0	6	12	0	0	0	0
4/27/2024	5:00 PM	3	454	93	1	3	1	0	1	15	0	0	0	0
4/27/2024	5:15 PM	2	468	84	0	6	1	0	0	9	0	0	0	0
4/27/2024	5:30 PM	4	406	96	1	3	0	0	3	11	0	0	0	0
4/27/2024	5:45 PM	3	450	77	0	4	2	0	6	11	0	0	0	0
4/27/2024	6:00 PM	2	395	75	1	3	1	0	4	8	0	0	0	0
4/27/2024	6:15 PM	0	390	83	2	4	0	0	0	4	0	0	0	0
4/27/2024	6:30 PM	0	397	73	1	2	0	0	0	7	0	0	0	0
4/27/2024	6:45 PM	1	380	62	0	5	1	0	2	11	0	0	0	0
4/27/2024	7:00 PM	1	318	67	1	2	0	0	3	6	0	0	0	0
4/27/2024	7:15 PM	1	349	64	1	3	0	0	2	6	0	0	0	0
4/27/2024	7:30 PM	0	307	56	0	4	0	0	0	6	0	1	0	0
4/27/2024	7:45 PM	3	296	55	0	0	0	0	1	8	0	0	0	0
4/27/2024	8:00 PM	1	262	86	0	2	0	0	0	7	0	0	0	0
4/27/2024	8:15 PM	0	228	55	0	0	0	0	0	6	0	0	1	0
4/27/2024	8:30 PM	0	223	87	1	2	0	0	1	9	0	0	0	0
4/27/2024	8:45 PM	0	198	63	1	7	0	0	0	7	0	0	0	0
4/27/2024	9:00 PM	0	234	59	0	1	1	0	0	6	0	0	0	0
4/27/2024	9:15 PM	0	181	45	0	3	0	0	0	7	0	0	0	0
4/27/2024	9:30 PM	0	187	50	0	4	3	0	0	4	0	0	0	0
4/27/2024	9:45 PM	0	185	36	0	1	0	0	0	3	0	0	0	0
4/27/2024	10:00 PM	0	164	46	0	0	1	0	0	3	0	0	0	0
4/27/2024	10:15 PM	0	152	34	0	1	0	0	0	4	0	0	0	0
4/27/2024	10:30 PM	0	144	34	0	2	0	0	0	6	0	0	0	0
4/27/2024	10:45 PM	0	144	31	2	2	0	0	0	2	0	0	0	0
4/27/2024	11:00 PM	0	137	34	1	1	0	0	0	4	0	0	0	0
4/27/2024	11:15 PM	1	114	29	0	0	0	0	0	7	0	0	0	0
4/27/2024	11:30 PM	0	111	31	0	2	0	0	0	3	0	0	0	0
4/27/2024	11:45 PM	0	102	19	1	1	0	0	0	2	0	0	0	0

EB
File Name:
Start Date: 4/21/2024
Start Time: 0
Site Code: 3
Station ID: 1
Location 1: I-26 W/Bound Off-Ramp, east of I-26
Location 2:

Date	Time	1	2	3	4	5	6	7	8	9	10	11	12	13
4/21/2024	12:00 AM	0	0	0	0	0	0	0	0	0	0	0	0	0
4/21/2024	12:15 AM	0	0	0	0	0	0	0	0	0	0	0	0	0
4/21/2024	12:30 AM	0	0	0	0	0	0	0	0	0	0	0	0	0
4/21/2024	12:45 AM	0	0	0	0	0	0	0	0	0	0	0	0	0
4/21/2024	1:00 AM	0	0	0	0	0	0	0	0	0	0	0	0	0
4/21/2024	1:15 AM	0	0	0	0	0	0	0	0	0	0	0	0	0
4/21/2024	1:30 AM	0	0	0	0	0	0	0	0	0	0	0	0	0
4/21/2024	1:45 AM	0	0	0	0	0	0	0	0	0	0	0	0	0
4/21/2024	2:00 AM	0	0	0	0	0	0	0	0	0	0	0	0	0
4/21/2024	2:15 AM	0	0	0	0	0	0	0	0	0	0	0	0	0
4/21/2024	2:30 AM	0	0	0	0	0	0	0	0	0	0	0	0	0
4/21/2024	2:45 AM	0	0	0	0	0	0	0	0	0	0	0	0	0
4/21/2024	3:00 AM	0	0	0	0	0	0	0	0	0	0	0	0	0
4/21/2024	3:15 AM	0	0	0	0	0	0	0	0	0	0	0	0	0
4/21/2024	3:30 AM	0	0	0	0	0	0	0	0	0	0	0	0	0
4/21/2024	3:45 AM	0	0	0	0	0	0	0	0	0	0	0	0	0
4/21/2024	4:00 AM	0	0	0	0	0	0	0	0	0	0	0	0	0
4/21/2024	4:15 AM	0	0	0	0	0	0	0	0	0	0	0	0	0
4/21/2024	4:30 AM	0	0	0	0	0	0	0	0	0	0	0	0	0
4/21/2024	4:45 AM	0	0	0	0	0	0	0	0	0	0	0	0	0
4/21/2024	5:00 AM	0	0	0	0	0	0	0	0	0	0	0	0	0
4/21/2024	5:15 AM	0	0	0	0	0	0	0	0	0	0	0	0	0
4/21/2024	5:30 AM	0	0	0	0	0	0	0	0	0	0	0	0	0
4/21/2024	5:45 AM	0	0	0	0	0	0	0	0	0	0	0	0	0
4/21/2024	6:00 AM	0	0	0	0	0	0	0	0	0	0	0	0	0
4/21/2024	6:15 AM	0	0	0	0	0	0	0	0	0	0	0	0	0
4/21/2024	6:30 AM	0	0	0	0	0	0	0	0	0	0	0	0	0
4/21/2024	6:45 AM	0	0	0	0	0	0	0	0	0	0	0	0	0
4/21/2024	7:00 AM	0	0	0	0	0	0	0	0	0	0	0	0	0
4/21/2024	7:15 AM	0	0	0	0	0	0	0	0	0	0	0	0	0
4/21/2024	7:30 AM	0	0	0	0	0	0	0	0	0	0	0	0	0
4/21/2024	7:45 AM	0	0	0	0	0	0	0	0	0	0	0	0	0
4/21/2024	8:00 AM	0	0	0	0	0	0	0	0	0	0	0	0	0
4/21/2024	8:15 AM	0	0	0	0	0	0	0	0	0	0	0	0	0
4/21/2024	8:30 AM	0	0	0	0	0	0	0	0	0	0	0	0	0
4/21/2024	8:45 AM	0	0	0	0	0	0	0	0	0	0	0	0	0
4/21/2024	9:00 AM	0	0	0	0	0	0	0	0	0	0	0	0	0
4/21/2024	9:15 AM	0	0	0	0	0	0	0	0	0	0	0	0	0
4/21/2024	9:30 AM	0	0	0	0	0	0	0	0	0	0	0	0	0
4/21/2024	9:45 AM	0	0	0	0	0	0	0	0	0	0	0	0	0
4/21/2024	10:00 AM	0	0	0	0	0	0	0	0	0	0	0	0	0
4/21/2024	10:15 AM	0	0	0	0	0	0	0	0	0	0	0	0	0
4/21/2024	10:30 AM	0	0	0	0	0	0	0	0	0	0	0	0	0
4/21/2024	10:45 AM	0	0	0	0	0	0	0	0	0	0	0	0	0
4/21/2024	11:00 AM	0	0	0	0	0	0	0	0	0	0	0	0	0
4/21/2024	11:15 AM	0	0	0	0	0	0	0	0	0	0	0	0	0
4/21/2024	11:30 AM	0	0	0	0	0	0	0	0	0	0	0	0	0
4/21/2024	11:45 AM	0	0	0	0	0	0	0	0	0	0	0	0	0
4/21/2024	12:00 PM	0	0	0	0	0	0	0	0	0	0	0	0	0
4/21/2024	12:15 PM	0	0	0	0	0	0	0	0	0	0	0	0	0
4/21/2024	12:30 PM	0	0	0	0	0	0	0	0	0	0	0	0	0
4/21/2024	12:45 PM	0	0	0	0	0	0	0	0	0	0	0	0	0
4/21/2024	1:00 PM	0	0	0	0	0	0	0	0	0	0	0	0	0
4/21/2024	1:15 PM	0	0	0	0	0	0	0	0	0	0	0	0	0
4/21/2024	1:30 PM	0	0	0	0	0	0	0	0	0	0	0	0	0
4/21/2024	1:45 PM	0	0	0	0	0	0	0	0	0	0	0	0	0
4/21/2024	2:00 PM	0	0	0	0	0	0	0	0	0	0	0	0	0
4/21/2024	2:15 PM	0	0	0	0	0	0	0	0	0	0	0	0	0
4/21/2024	2:30 PM	0	0	0	0	0	0	0	0	0	0	0	0	0
4/21/2024	2:45 PM	0	0	0	0	0	0	0	0	0	0	0	0	0
4/21/2024	3:00 PM	0	0	0	0	0	0	0	0	0	0	0	0	0
4/21/2024	3:15 PM	0	0	0	0	0	0	0	0	0	0	0	0	0
4/21/2024	3:30 PM	0	0	0	0	0	0	0	0	0	0	0	0	0
4/21/2024	3:45 PM	0	0	0	0	0	0	0	0	0	0	0	0	0
4/21/2024	4:00 PM	0	0	0	0	0	0	0	0	0	0	0	0	0
4/21/2024	4:15 PM	0	0	0	0	0	0	0	0	0	0	0	0	0
4/21/2024	4:30 PM	0	0	0	0	0	0	0	0	0	0	0	0	0
4/21/2024	4:45 PM	0	0	0	0	0	0	0	0	0	0	0	0	0
4/21/2024	5:00 PM	0	0	0	0	0	0	0	0	0	0	0	0	0
4/21/2024	5:15 PM	0	0	0	0	0	0	0	0	0	0	0	0	0
4/21/2024	5:30 PM	0	0	0	0	0	0	0	0	0	0	0	0	0
4/21/2024	5:45 PM	0	0	0	0	0	0	0	0	0	0	0	0	0
4/21/2024	6:00 PM	0	0	0	0	0	0	0	0	0	0	0	0	0
4/21/2024	6:15 PM	0	0	0	0	0	0	0	0	0	0	0	0	0
4/21/2024	6:30 PM	0	0	0	0	0	0	0	0	0	0	0	0	0
4/21/2024	6:45 PM	0	0	0	0	0	0	0	0	0	0	0	0	0
4/21/2024	7:00 PM	0	0	0	0	0	0	0	0	0	0	0	0	0
4/21/2024	7:15 PM	0	0	0	0	0	0	0	0	0	0	0	0	0
4/21/2024	7:30 PM	0	0	0	0	0	0	0	0	0	0	0	0	0
4/21/2024	7:45 PM	0	0	0	0	0	0	0	0	0	0	0	0	0
4/21/2024	8:00 PM	0	0	0	0	0	0	0	0	0	0	0	0	0
4/21/2024	8:15 PM	0	0	0	0	0	0	0	0	0	0	0	0	0
4/21/2024	8:30 PM	0	0	0	0	0	0	0	0	0	0	0	0	0
4/21/2024	8:45 PM	0	0	0	0	0	0	0	0	0	0	0	0	0
4/21/2024	9:00 PM	0	0	0	0	0	0	0	0	0	0	0	0	0
4/21/2024	9:15 PM	0	0	0	0	0	0	0	0	0	0	0	0	0
4/21/2024	9:30 PM	0	0	0	0	0	0	0	0	0	0	0	0	0
4/21/2024	9:45 PM	0	0	0	0	0	0	0	0	0	0	0	0	0
4/21/2024	10:00 PM	0	0	0	0	0	0	0	0	0	0	0	0	0
4/21/2024	10:15 PM	0	0	0	0	0	0	0	0	0	0	0	0	0
4/21/2024	10:30 PM	0	0	0	0	0	0	0	0	0	0	0	0	0
4/21/2024	10:45 PM	0	0	0	0	0	0	0	0	0	0	0	0	0
4/21/2024	11:00 PM	0	0	0	0	0	0	0	0	0	0	0	0	0
4/21/2024	11:15 PM	0	0	0	0	0	0	0	0	0	0	0	0	0
4/21/2024	11:30 PM	0	0	0	0	0	0	0	0	0	0	0	0	0
4/21/2024	11:45 PM	0	0	0	0	0	0	0	0	0	0	0	0	0

4/22/2024	12:00 AM	0	0	0	0	0	0	0	0	0	0	0	0	0
4/22/2024	12:15 AM	0	0	0	0	0	0	0	0	0	0	0	0	0
4/22/2024	12:30 AM	0	0	0	0	0	0	0	0	0	0	0	0	0
4/22/2024	12:45 AM	0	0	0	0	0	0	0	0	0	0	0	0	0
4/22/2024	1:00 AM	0	0	0	0	0	0	0	0	0	0	0	0	0
4/22/2024	1:15 AM	0	0	0	0	0	0	0	0	0	0	0	0	0
4/22/2024	1:30 AM	0	0	0	0	0	0	0	0	0	0	0	0	0
4/22/2024	1:45 AM	0	0	0	0	0	0	0	0	0	0	0	0	0
4/22/2024	2:00 AM	0	0	0	0	0	0	0	0	0	0	0	0	0
4/22/2024	2:15 AM	0	0	0	0	0	0	0	0	0	0	0	0	0
4/22/2024	2:30 AM	0	0	0	0	0	0	0	0	0	0	0	0	0
4/22/2024	2:45 AM	0	0	0	0	0	0	0	0	0	0	0	0	0
4/22/2024	3:00 AM	0	0	0	0	0	0	0	0	0	0	0	0	0
4/22/2024	3:15 AM	0	0	0	0	0	0	0	0	0	0	0	0	0
4/22/2024	3:30 AM	0	0	0	0	0	0	0	0	0	0	0	0	0
4/22/2024	3:45 AM	0	0	0	0	0	0	0	0	0	0	0	0	0
4/22/2024	4:00 AM	0	0	0	0	0	0	0	0	0	0	0	0	0
4/22/2024	4:15 AM	0	0	0	0	0	0	0	0	0	0	0	0	0
4/22/2024	4:30 AM	0	0	0	0	0	0	0	0	0	0	0	0	0
4/22/2024	4:45 AM	0	0	0	0	0	0	0	0	0	0	0	0	0
4/22/2024	5:00 AM	0	0	0	0	0	0	0	0	0	0	0	0	0
4/22/2024	5:15 AM	0	0	0	0	0	0	0	0	0	0	0	0	0
4/22/2024	5:30 AM	0	0	0	0	0	0	0	0	0	0	0	0	0
4/22/2024	5:45 AM	0	0	0	0	0	0	0	0	0	0	0	0	0
4/22/2024	6:00 AM	0	0	0	0	0	0	0	0	0	0	0	0	0
4/22/2024	6:15 AM	0	0	0	0	0	0	0	0	0	0	0	0	0
4/22/2024	6:30 AM	0	0	0	0	0	0	0	0	0	0	0	0	0
4/22/2024	6:45 AM	0	0	0	0	0	0	0	0	0	0	0	0	0
4/22/2024	7:00 AM	0	0	0	0	0	0	0	0	0	0	0	0	0
4/22/2024	7:15 AM	0	0	0	0	0	0	0	0	0	0	0	0	0
4/22/2024	7:30 AM	0	0	0	0	0	0	0	0	0	0	0	0	0
4/22/2024	7:45 AM	0	0	0	0	0	0	0	0	0	0	0	0	0
4/22/2024	8:00 AM	0	0	0	0	0	0	0	0	0	0	0	0	0
4/22/2024	8:15 AM	0	0	0	0	0	0	0	0	0	0	0	0	0
4/22/2024	8:30 AM	0	0	0	0	0	0	0	0	0	0	0	0	0
4/22/2024	8:45 AM	0	0	0	0	0	0	0	0	0	0	0	0	0
4/22/2024	9:00 AM	0	0	0	0	0	0	0	0	0	0	0	0	0
4/22/2024	9:15 AM	0	0	0	0	0	0	0	0	0	0	0	0	0
4/22/2024	9:30 AM	0	0	0	0	0	0	0	0	0	0	0	0	0
4/22/2024	9:45 AM	0	0	0	0	0	0	0	0	0	0	0	0	0
4/22/2024	10:00 AM	0	0	0	0	0	0	0	0	0	0	0	0	0
4/22/2024	10:15 AM	0	0	0	0	0	0	0	0	0	0	0	0	0
4/22/2024	10:30 AM	0	0	0	0	0	0	0	0	0	0	0	0	0
4/22/2024	10:45 AM	0	0	0	0	0	0	0	0	0	0	0	0	0
4/22/2024	11:00 AM	0	0	0	0	0	0	0	0	0	0	0	0	0
4/22/2024	11:15 AM	0	0	0	0	0	0	0	0	0	0	0	0	0
4/22/2024	11:30 AM	0	0	0	0	0	0	0	0	0	0	0	0	0
4/22/2024	11:45 AM	0	0	0	0	0	0	0	0	0	0	0	0	0
4/22/2024	12:00 PM	0	0	0	0	0	0	0	0	0	0	0	0	0
4/22/2024	12:15 PM	0	0	0	0	0	0	0	0	0	0	0	0	0
4/22/2024	12:30 PM	0	0	0	0	0	0	0	0	0	0	0	0	0
4/22/2024	12:45 PM	0	0	0	0	0	0	0	0	0	0	0	0	0
4/22/2024	1:00 PM	0	0	0	0	0	0	0	0	0	0	0	0	0
4/22/2024	1:15 PM	0	0	0	0	0	0	0	0	0	0	0	0	0
4/22/2024	1:30 PM	0	0	0	0	0	0	0	0	0	0	0	0	0
4/22/2024	1:45 PM	0	0	0	0	0	0	0	0	0	0	0	0	0
4/22/2024	2:00 PM	0	0	0	0	0	0	0	0	0	0	0	0	0
4/22/2024	2:15 PM	0	0	0	0	0	0	0	0	0	0	0	0	0
4/22/2024	2:30 PM	0	0	0	0	0	0	0	0	0	0	0	0	0
4/22/2024	2:45 PM	0	0	0	0	0	0	0	0	0	0	0	0	0
4/22/2024	3:00 PM	0	0	0	0	0	0	0	0	0	0	0	0	0
4/22/2024	3:15 PM	0	0	0	0	0	0	0	0	0	0	0	0	0
4/22/2024	3:30 PM	0	0	0	0	0	0	0	0	0	0	0	0	0
4/22/2024	3:45 PM	0	0	0	0	0	0	0	0	0	0	0	0	0
4/22/2024	4:00 PM	0	0	0	0	0	0	0	0	0	0	0	0	0
4/22/2024	4:15 PM	0	0	0	0	0	0	0	0	0	0	0	0	0
4/22/2024	4:30 PM	0	0	0	0	0	0	0	0	0	0	0	0	0
4/22/2024	4:45 PM	0	0	0	0	0	0	0	0	0	0	0	0	0
4/22/2024	5:00 PM	0	0	0	0	0	0	0	0	0	0	0	0	0
4/22/2024	5:15 PM	0	0	0	0	0	0	0	0	0	0	0	0	0
4/22/2024	5:30 PM	0	0	0	0	0	0	0	0	0	0	0	0	0
4/22/2024	5:45 PM	0	0	0	0	0	0	0	0	0	0	0	0	0
4/22/2024	6:00 PM	0	0	0	0	0	0	0	0	0	0	0	0	0
4/22/2024	6:15 PM	0	0	0	0	0	0	0	0	0	0	0	0	0
4/22/2024	6:30 PM	0	0	0	0	0	0	0	0	0	0	0	0	0
4/22/2024	6:45 PM	0	0	0	0	0	0	0	0	0	0	0	0	0
4/22/2024	7:00 PM	0	0	0	0	0	0	0	0	0	0	0	0	0
4/22/2024	7:15 PM	0	0	0	0	0	0	0	0	0	0	0	0	0
4/22/2024	7:30 PM	0	0	0	0	0	0	0	0	0	0	0	0	0
4/22/2024	7:45 PM	0	0	0	0	0	0	0	0	0	0	0	0	0
4/22/2024	8:00 PM	0	0	0	0	0	0	0	0	0	0	0	0	0
4/22/2024	8:15 PM	0	0	0	0	0	0	0	0	0	0	0	0	0
4/22/2024	8:30 PM	0	0	0	0	0	0	0	0	0	0	0	0	0
4/22/2024	8:45 PM	0	0	0	0	0	0	0	0	0	0	0	0	0
4/22/2024	9:00 PM	0	0	0	0	0	0	0	0	0	0	0	0	0
4/22/2024	9:15 PM	0	0	0	0	0	0	0	0	0	0	0	0	0
4/22/2024	9:30 PM	0	0	0	0	0	0	0	0	0	0	0	0	0
4/22/2024	9:45 PM	0	0	0	0	0	0	0	0	0	0	0	0	0
4/22/2024	10:00 PM	0	0	0	0	0	0	0	0	0	0	0	0	0
4/22/2024	10:15 PM	0	0	0	0	0	0	0	0	0	0	0	0	0
4/22/2024	10:30 PM	0	0	0	0	0	0	0	0	0	0	0	0	0
4/22/2024	10:45 PM	0	0	0	0	0	0	0	0	0	0	0	0	0
4/22/2024	11:00 PM	0	0	0	0	0	0	0	0	0	0	0	0	0
4/22/2024	11:15 PM	0	0	0	0	0	0	0	0	0	0	0	0	0
4/22/2024	11:30 PM	0	0	0	0	0	0	0	0	0	0	0	0	0
4/22/2024	11:45 PM	0	0	0	0	0	0	0	0	0	0	0	0	0

4/23/2024	12:00 AM	0	0	0	0	0	0	0	0	0	0	0	0	0
4/23/2024	12:15 AM	0	0	0	0	0	0	0	0	0	0	0	0	0
4/23/2024	12:30 AM	0	0	0	0	0	0	0	0	0	0	0	0	0
4/23/2024	12:45 AM	0	0	0	0	0	0	0	0	0	0	0	0	0
4/23/2024	1:00 AM	0	0	0	0	0	0	0	0	0	0	0	0	0
4/23/2024	1:15 AM	0	0	0	0	0	0	0	0	0	0	0	0	0
4/23/2024	1:30 AM	0	0	0	0	0	0	0	0	0	0	0	0	0
4/23/2024	1:45 AM	0	0	0	0	0	0	0	0	0	0	0	0	0
4/23/2024	2:00 AM	0	0	0	0	0	0	0	0	0	0	0	0	0
4/23/2024	2:15 AM	0	0	0	0	0	0	0	0	0	0	0	0	0
4/23/2024	2:30 AM	0	0	0	0	0	0	0	0	0	0	0	0	0
4/23/2024	2:45 AM	0	0	0	0	0	0	0	0	0	0	0	0	0
4/23/2024	3:00 AM	0	0	0	0	0	0	0	0	0	0	0	0	0
4/23/2024	3:15 AM	0	0	0	0	0	0	0	0	0	0	0	0	0
4/23/2024	3:30 AM	0	0	0	0	0	0	0	0	0	0	0	0	0
4/23/2024	3:45 AM	0	0	0	0	0	0	0	0	0	0	0	0	0
4/23/2024	4:00 AM	0	0	0	0	0	0	0	0	0	0	0	0	0
4/23/2024	4:15 AM	0	0	0	0	0	0	0	0	0	0	0	0	0
4/23/2024	4:30 AM	0	0	0	0	0	0	0	0	0	0	0	0	0
4/23/2024	4:45 AM	0	0	0	0	0	0	0	0	0	0	0	0	0
4/23/2024	5:00 AM	0	0	0	0	0	0	0	0	0	0	0	0	0
4/23/2024	5:15 AM	0	0	0	0	0	0	0	0	0	0	0	0	0
4/23/2024	5:30 AM	0	0	0	0	0	0	0	0	0	0	0	0	0
4/23/2024	5:45 AM	0	0	0	0	0	0	0	0	0	0	0	0	0
4/23/2024	6:00 AM	0	0	0	0	0	0	0	0	0	0	0	0	0
4/23/2024	6:15 AM	0	0	0	0	0	0	0	0	0	0	0	0	0
4/23/2024	6:30 AM	0	0	0	0	0	0	0	0	0	0	0	0	0
4/23/2024	6:45 AM	0	0	0	0	0	0	0	0	0	0	0	0	0
4/23/2024	7:00 AM	0	0	0	0	0	0	0	0	0	0	0	0	0
4/23/2024	7:15 AM	0	0	0	0	0	0	0	0	0	0	0	0	0
4/23/2024	7:30 AM	0	0	0	0	0	0	0	0	0	0	0	0	0
4/23/2024	7:45 AM	0	0	0	0	0	0	0	0	0	0	0	0	0
4/23/2024	8:00 AM	0	0	0	0	0	0	0	0	0	0	0	0	0
4/23/2024	8:15 AM	0	0	0	0	0	0	0	0	0	0	0	0	0
4/23/2024	8:30 AM	0	0	0	0	0	0	0	0	0	0	0	0	0
4/23/2024	8:45 AM	0	0	0	0	0	0	0	0	0	0	0	0	0
4/23/2024	9:00 AM	0	0	0	0	0	0	0	0	0	0	0	0	0
4/23/2024	9:15 AM	0	0	0	0	0	0	0	0	0	0	0	0	0
4/23/2024	9:30 AM	0	0	0	0	0	0	0	0	0	0	0	0	0
4/23/2024	9:45 AM	0	0	0	0	0	0	0	0	0	0	0	0	0
4/23/2024	10:00 AM	0	0	0	0	0	0	0	0	0	0	0	0	0
4/23/2024	10:15 AM	0	0	0	0	0	0	0	0	0	0	0	0	0
4/23/2024	10:30 AM	0	0	0	0	0	0	0	0	0	0	0	0	0
4/23/2024	10:45 AM	0	0	0	0	0	0	0	0	0	0	0	0	0
4/23/2024	11:00 AM	0	0	0	0	0	0	0	0	0	0	0	0	0
4/23/2024	11:15 AM	0	0	0	0	0	0	0	0	0	0	0	0	0
4/23/2024	11:30 AM	0	0	0	0	0	0	0	0	0	0	0	0	0
4/23/2024	11:45 AM	0	0	0	0	0	0	0	0	0	0	0	0	0
4/23/2024	12:00 PM	0	0	0	0	0	0	0	0	0	0	0	0	0
4/23/2024	12:15 PM	0	0	0	0	0	0	0	0	0	0	0	0	0
4/23/2024	12:30 PM	0	0	0	0	0	0	0	0	0	0	0	0	0
4/23/2024	12:45 PM	0	0	0	0	0	0	0	0	0	0	0	0	0
4/23/2024	1:00 PM	0	0	0	0	0	0	0	0	0	0	0	0	0
4/23/2024	1:15 PM	0	0	0	0	0	0	0	0	0	0	0	0	0
4/23/2024	1:30 PM	0	0	0	0	0	0	0	0	0	0	0	0	0
4/23/2024	1:45 PM	0	0	0	0	0	0	0	0	0	0	0	0	0
4/23/2024	2:00 PM	0	0	0	0	0	0	0	0	0	0	0	0	0
4/23/2024	2:15 PM	0	0	0	0	0	0	0	0	0	0	0	0	0
4/23/2024	2:30 PM	0	0	0	0	0	0	0	0	0	0	0	0	0
4/23/2024	2:45 PM	0	0	0	0	0	0	0	0	0	0	0	0	0
4/23/2024	3:00 PM	0	0	0	0	0	0	0	0	0	0	0	0	0
4/23/2024	3:15 PM	0	0	0	0	0	0	0	0	0	0	0	0	0
4/23/2024	3:30 PM	0	0	0	0	0	0	0	0	0	0	0	0	0
4/23/2024	3:45 PM	0	0	0	0	0	0	0	0	0	0	0	0	0
4/23/2024	4:00 PM	0	0	0	0	0	0	0	0	0	0	0	0	0
4/23/2024	4:15 PM	0	0	0	0	0	0	0	0	0	0	0	0	0
4/23/2024	4:30 PM	0	0	0	0	0	0	0	0	0	0	0	0	0
4/23/2024	4:45 PM	0	0	0	0	0	0	0	0	0	0	0	0	0
4/23/2024	5:00 PM	0	0	0	0	0	0	0	0	0	0	0	0	0
4/23/2024	5:15 PM	0	0	0	0	0	0	0	0	0	0	0	0	0
4/23/2024	5:30 PM	0	0	0	0	0	0	0	0	0	0	0	0	0
4/23/2024	5:45 PM	0	0	0	0	0	0	0	0	0	0	0	0	0
4/23/2024	6:00 PM	0	0	0	0	0	0	0	0	0	0	0	0	0
4/23/2024	6:15 PM	0	0	0	0	0	0	0	0	0	0	0	0	0
4/23/2024	6:30 PM	0	0	0	0	0	0	0	0	0	0	0	0	0
4/23/2024	6:45 PM	0	0	0	0	0	0	0	0	0	0	0	0	0
4/23/2024	7:00 PM	0	0	0	0	0	0	0	0	0	0	0	0	0
4/23/2024	7:15 PM	0	0	0	0	0	0	0	0	0	0	0	0	0
4/23/2024	7:30 PM	0	0	0	0	0	0	0	0	0	0	0	0	0
4/23/2024	7:45 PM	0	0	0	0	0	0	0	0	0	0	0	0	0
4/23/2024	8:00 PM	0	0	0	0	0	0	0	0	0	0	0	0	0
4/23/2024	8:15 PM	0	0	0	0	0	0	0	0	0	0	0	0	0
4/23/2024	8:30 PM	0	0	0	0	0	0	0	0	0	0	0	0	0
4/23/2024	8:45 PM	0	0	0	0	0	0	0	0	0	0	0	0	0
4/23/2024	9:00 PM	0	0	0	0	0	0	0	0	0	0	0	0	0
4/23/2024	9:15 PM	0	0	0	0	0	0	0	0	0	0	0	0	0
4/23/2024	9:30 PM	0	0	0	0	0	0	0	0	0	0	0	0	0
4/23/2024	9:45 PM	0	0	0	0	0	0	0	0	0	0	0	0	0
4/23/2024	10:00 PM	0	0	0	0	0	0	0	0	0	0	0	0	0
4/23/2024	10:15 PM	0	0	0	0	0	0	0	0	0	0	0	0	0
4/23/2024	10:30 PM	0	0	0	0	0	0	0	0	0	0	0	0	0
4/23/2024	10:45 PM	0	0	0	0	0	0	0	0	0	0	0	0	0
4/23/2024	11:00 PM	0	0	0	0	0	0	0	0	0	0	0	0	0
4/23/2024	11:15 PM	0	0	0	0	0	0	0	0	0	0	0	0	0
4/23/2024	11:30 PM	0	0	0	0	0	0	0	0	0	0	0	0	0
4/23/2024	11:45 PM	0	0	0	0	0	0	0	0	0	0	0	0	0

4/24/2024	12:00 AM	0	0	0	0	0	0	0	0	0	0	0	0	0
4/24/2024	12:15 AM	0	0	0	0	0	0	0	0	0	0	0	0	0
4/24/2024	12:30 AM	0	0	0	0	0	0	0	0	0	0	0	0	0
4/24/2024	12:45 AM	0	0	0	0	0	0	0	0	0	0	0	0	0
4/24/2024	1:00 AM	0	0	0	0	0	0	0	0	0	0	0	0	0
4/24/2024	1:15 AM	0	0	0	0	0	0	0	0	0	0	0	0	0
4/24/2024	1:30 AM	0	0	0	0	0	0	0	0	0	0	0	0	0
4/24/2024	1:45 AM	0	0	0	0	0	0	0	0	0	0	0	0	0
4/24/2024	2:00 AM	0	0	0	0	0	0	0	0	0	0	0	0	0
4/24/2024	2:15 AM	0	0	0	0	0	0	0	0	0	0	0	0	0
4/24/2024	2:30 AM	0	0	0	0	0	0	0	0	0	0	0	0	0
4/24/2024	2:45 AM	0	0	0	0	0	0	0	0	0	0	0	0	0
4/24/2024	3:00 AM	0	0	0	0	0	0	0	0	0	0	0	0	0
4/24/2024	3:15 AM	0	0	0	0	0	0	0	0	0	0	0	0	0
4/24/2024	3:30 AM	0	0	0	0	0	0	0	0	0	0	0	0	0
4/24/2024	3:45 AM	0	0	0	0	0	0	0	0	0	0	0	0	0
4/24/2024	4:00 AM	0	0	0	0	0	0	0	0	0	0	0	0	0
4/24/2024	4:15 AM	0	0	0	0	0	0	0	0	0	0	0	0	0
4/24/2024	4:30 AM	0	0	0	0	0	0	0	0	0	0	0	0	0
4/24/2024	4:45 AM	0	0	0	0	0	0	0	0	0	0	0	0	0
4/24/2024	5:00 AM	0	0	0	0	0	0	0	0	0	0	0	0	0
4/24/2024	5:15 AM	0	0	0	0	0	0	0	0	0	0	0	0	0
4/24/2024	5:30 AM	0	0	0	0	0	0	0	0	0	0	0	0	0
4/24/2024	5:45 AM	0	0	0	0	0	0	0	0	0	0	0	0	0
4/24/2024	6:00 AM	0	0	0	0	0	0	0	0	0	0	0	0	0
4/24/2024	6:15 AM	0	0	0	0	0	0	0	0	0	0	0	0	0
4/24/2024	6:30 AM	0	0	0	0	0	0	0	0	0	0	0	0	0
4/24/2024	6:45 AM	0	0	0	0	0	0	0	0	0	0	0	0	0
4/24/2024	7:00 AM	0	0	0	0	0	0	0	0	0	0	0	0	0
4/24/2024	7:15 AM	0	0	0	0	0	0	0	0	0	0	0	0	0
4/24/2024	7:30 AM	0	0	0	0	0	0	0	0	0	0	0	0	0
4/24/2024	7:45 AM	0	0	0	0	0	0	0	0	0	0	0	0	0
4/24/2024	8:00 AM	0	0	0	0	0	0	0	0	0	0	0	0	0
4/24/2024	8:15 AM	0	0	0	0	0	0	0	0	0	0	0	0	0
4/24/2024	8:30 AM	0	0	0	0	0	0	0	0	0	0	0	0	0
4/24/2024	8:45 AM	0	0	0	0	0	0	0	0	0	0	0	0	0
4/24/2024	9:00 AM	0	0	0	0	0	0	0	0	0	0	0	0	0
4/24/2024	9:15 AM	0	0	0	0	0	0	0	0	0	0	0	0	0
4/24/2024	9:30 AM	0	0	0	0	0	0	0	0	0	0	0	0	0
4/24/2024	9:45 AM	0	0	0	0	0	0	0	0	0	0	0	0	0
4/24/2024	10:00 AM	0	0	0	0	0	0	0	0	0	0	0	0	0
4/24/2024	10:15 AM	0	0	0	0	0	0	0	0	0	0	0	0	0
4/24/2024	10:30 AM	0	0	0	0	0	0	0	0	0	0	0	0	0
4/24/2024	10:45 AM	0	0	0	0	0	0	0	0	0	0	0	0	0
4/24/2024	11:00 AM	0	0	0	0	0	0	0	0	0	0	0	0	0
4/24/2024	11:15 AM	0	0	0	0	0	0	0	0	0	0	0	0	0
4/24/2024	11:30 AM	0	0	0	0	0	0	0	0	0	0	0	0	0
4/24/2024	11:45 AM	0	0	0	0	0	0	0	0	0	0	0	0	0
4/24/2024	12:00 PM	0	0	0	0	0	0	0	0	0	0	0	0	0
4/24/2024	12:15 PM	0	0	0	0	0	0	0	0	0	0	0	0	0
4/24/2024	12:30 PM	0	0	0	0	0	0	0	0	0	0	0	0	0
4/24/2024	12:45 PM	0	0	0	0	0	0	0	0	0	0	0	0	0
4/24/2024	1:00 PM	0	0	0	0	0	0	0	0	0	0	0	0	0
4/24/2024	1:15 PM	0	0	0	0	0	0	0	0	0	0	0	0	0
4/24/2024	1:30 PM	0	0	0	0	0	0	0	0	0	0	0	0	0
4/24/2024	1:45 PM	0	0	0	0	0	0	0	0	0	0	0	0	0
4/24/2024	2:00 PM	0	0	0	0	0	0	0	0	0	0	0	0	0
4/24/2024	2:15 PM	0	0	0	0	0	0	0	0	0	0	0	0	0
4/24/2024	2:30 PM	0	0	0	0	0	0	0	0	0	0	0	0	0
4/24/2024	2:45 PM	0	0	0	0	0	0	0	0	0	0	0	0	0
4/24/2024	3:00 PM	0	0	0	0	0	0	0	0	0	0	0	0	0
4/24/2024	3:15 PM	0	0	0	0	0	0	0	0	0	0	0	0	0
4/24/2024	3:30 PM	0	0	0	0	0	0	0	0	0	0	0	0	0
4/24/2024	3:45 PM	0	0	0	0	0	0	0	0	0	0	0	0	0
4/24/2024	4:00 PM	0	0	0	0	0	0	0	0	0	0	0	0	0
4/24/2024	4:15 PM	0	0	0	0	0	0	0	0	0	0	0	0	0
4/24/2024	4:30 PM	0	0	0	0	0	0	0	0	0	0	0	0	0
4/24/2024	4:45 PM	0	0	0	0	0	0	0	0	0	0	0	0	0
4/24/2024	5:00 PM	0	0	0	0	0	0	0	0	0	0	0	0	0
4/24/2024	5:15 PM	0	0	0	0	0	0	0	0	0	0	0	0	0
4/24/2024	5:30 PM	0	0	0	0	0	0	0	0	0	0	0	0	0
4/24/2024	5:45 PM	0	0	0	0	0	0	0	0	0	0	0	0	0
4/24/2024	6:00 PM	0	0	0	0	0	0	0	0	0	0	0	0	0
4/24/2024	6:15 PM	0	0	0	0	0	0	0	0	0	0	0	0	0
4/24/2024	6:30 PM	0	0	0	0	0	0	0	0	0	0	0	0	0
4/24/2024	6:45 PM	0	0	0	0	0	0	0	0	0	0	0	0	0
4/24/2024	7:00 PM	0	0	0	0	0	0	0	0	0	0	0	0	0
4/24/2024	7:15 PM	0	0	0	0	0	0	0	0	0	0	0	0	0
4/24/2024	7:30 PM	0	0	0	0	0	0	0	0	0	0	0	0	0
4/24/2024	7:45 PM	0	0	0	0	0	0	0	0	0	0	0	0	0
4/24/2024	8:00 PM	0	0	0	0	0	0	0	0	0	0	0	0	0
4/24/2024	8:15 PM	0	0	0	0	0	0	0	0	0	0	0	0	0
4/24/2024	8:30 PM	0	0	0	0	0	0	0	0	0	0	0	0	0
4/24/2024	8:45 PM	0	0	0	0	0	0	0	0	0	0	0	0	0
4/24/2024	9:00 PM	0	0	0	0	0	0	0	0	0	0	0	0	0
4/24/2024	9:15 PM	0	0	0	0	0	0	0	0	0	0	0	0	0
4/24/2024	9:30 PM	0	0	0	0	0	0	0	0	0	0	0	0	0
4/24/2024	9:45 PM	0	0	0	0	0	0	0	0	0	0	0	0	0
4/24/2024	10:00 PM	0	0	0	0	0	0	0	0	0	0	0	0	0
4/24/2024	10:15 PM	0	0	0	0	0	0	0	0	0	0	0	0	0
4/24/2024	10:30 PM	0	0	0	0	0	0	0	0	0	0	0	0	0
4/24/2024	10:45 PM	0	0	0	0	0	0	0	0	0	0	0	0	0
4/24/2024	11:00 PM	0	0	0	0	0	0	0	0	0	0	0	0	0
4/24/2024	11:15 PM	0	0	0	0	0	0	0	0	0	0	0	0	0
4/24/2024	11:30 PM	0	0	0	0	0	0	0	0	0	0	0	0	0
4/24/2024	11:45 PM	0	0	0	0	0	0	0	0	0	0	0	0	0

4/25/2024	12:00 AM	0	0	0	0	0	0	0	0	0	0	0	0	0
4/25/2024	12:15 AM	0	0	0	0	0	0	0	0	0	0	0	0	0
4/25/2024	12:30 AM	0	0	0	0	0	0	0	0	0	0	0	0	0
4/25/2024	12:45 AM	0	0	0	0	0	0	0	0	0	0	0	0	0
4/25/2024	1:00 AM	0	0	0	0	0	0	0	0	0	0	0	0	0
4/25/2024	1:15 AM	0	0	0	0	0	0	0	0	0	0	0	0	0
4/25/2024	1:30 AM	0	0	0	0	0	0	0	0	0	0	0	0	0
4/25/2024	1:45 AM	0	0	0	0	0	0	0	0	0	0	0	0	0
4/25/2024	2:00 AM	0	0	0	0	0	0	0	0	0	0	0	0	0
4/25/2024	2:15 AM	0	0	0	0	0	0	0	0	0	0	0	0	0
4/25/2024	2:30 AM	0	0	0	0	0	0	0	0	0	0	0	0	0
4/25/2024	2:45 AM	0	0	0	0	0	0	0	0	0	0	0	0	0
4/25/2024	3:00 AM	0	0	0	0	0	0	0	0	0	0	0	0	0
4/25/2024	3:15 AM	0	0	0	0	0	0	0	0	0	0	0	0	0
4/25/2024	3:30 AM	0	0	0	0	0	0	0	0	0	0	0	0	0
4/25/2024	3:45 AM	0	0	0	0	0	0	0	0	0	0	0	0	0
4/25/2024	4:00 AM	0	0	0	0	0	0	0	0	0	0	0	0	0
4/25/2024	4:15 AM	0	0	0	0	0	0	0	0	0	0	0	0	0
4/25/2024	4:30 AM	0	0	0	0	0	0	0	0	0	0	0	0	0
4/25/2024	4:45 AM	0	0	0	0	0	0	0	0	0	0	0	0	0
4/25/2024	5:00 AM	0	0	0	0	0	0	0	0	0	0	0	0	0
4/25/2024	5:15 AM	0	0	0	0	0	0	0	0	0	0	0	0	0
4/25/2024	5:30 AM	0	0	0	0	0	0	0	0	0	0	0	0	0
4/25/2024	5:45 AM	0	0	0	0	0	0	0	0	0	0	0	0	0
4/25/2024	6:00 AM	0	0	0	0	0	0	0	0	0	0	0	0	0
4/25/2024	6:15 AM	0	0	0	0	0	0	0	0	0	0	0	0	0
4/25/2024	6:30 AM	0	0	0	0	0	0	0	0	0	0	0	0	0
4/25/2024	6:45 AM	0	0	0	0	0	0	0	0	0	0	0	0	0
4/25/2024	7:00 AM	0	0	0	0	0	0	0	0	0	0	0	0	0
4/25/2024	7:15 AM	0	0	0	0	0	0	0	0	0	0	0	0	0
4/25/2024	7:30 AM	0	0	0	0	0	0	0	0	0	0	0	0	0
4/25/2024	7:45 AM	0	0	0	0	0	0	0	0	0	0	0	0	0
4/25/2024	8:00 AM	0	0	0	0	0	0	0	0	0	0	0	0	0
4/25/2024	8:15 AM	0	0	0	0	0	0	0	0	0	0	0	0	0
4/25/2024	8:30 AM	0	0	0	0	0	0	0	0	0	0	0	0	0
4/25/2024	8:45 AM	0	0	0	0	0	0	0	0	0	0	0	0	0
4/25/2024	9:00 AM	0	0	0	0	0	0	0	0	0	0	0	0	0
4/25/2024	9:15 AM	0	0	0	0	0	0	0	0	0	0	0	0	0
4/25/2024	9:30 AM	0	0	0	0	0	0	0	0	0	0	0	0	0
4/25/2024	9:45 AM	0	0	0	0	0	0	0	0	0	0	0	0	0
4/25/2024	10:00 AM	0	0	0	0	0	0	0	0	0	0	0	0	0
4/25/2024	10:15 AM	0	0	0	0	0	0	0	0	0	0	0	0	0
4/25/2024	10:30 AM	0	0	0	0	0	0	0	0	0	0	0	0	0
4/25/2024	10:45 AM	0	0	0	0	0	0	0	0	0	0	0	0	0
4/25/2024	11:00 AM	0	0	0	0	0	0	0	0	0	0	0	0	0
4/25/2024	11:15 AM	0	0	0	0	0	0	0	0	0	0	0	0	0
4/25/2024	11:30 AM	0	0	0	0	0	0	0	0	0	0	0	0	0
4/25/2024	11:45 AM	0	0	0	0	0	0	0	0	0	0	0	0	0
4/25/2024	12:00 PM	0	0	0	0	0	0	0	0	0	0	0	0	0
4/25/2024	12:15 PM	0	0	0	0	0	0	0	0	0	0	0	0	0
4/25/2024	12:30 PM	0	0	0	0	0	0	0	0	0	0	0	0	0
4/25/2024	12:45 PM	0	0	0	0	0	0	0	0	0	0	0	0	0
4/25/2024	1:00 PM	0	0	0	0	0	0	0	0	0	0	0	0	0
4/25/2024	1:15 PM	0	0	0	0	0	0	0	0	0	0	0	0	0
4/25/2024	1:30 PM	0	0	0	0	0	0	0	0	0	0	0	0	0
4/25/2024	1:45 PM	0	0	0	0	0	0	0	0	0	0	0	0	0
4/25/2024	2:00 PM	0	0	0	0	0	0	0	0	0	0	0	0	0
4/25/2024	2:15 PM	0	0	0	0	0	0	0	0	0	0	0	0	0
4/25/2024	2:30 PM	0	0	0	0	0	0	0	0	0	0	0	0	0
4/25/2024	2:45 PM	0	0	0	0	0	0	0	0	0	0	0	0	0
4/25/2024	3:00 PM	0	0	0	0	0	0	0	0	0	0	0	0	0
4/25/2024	3:15 PM	0	0	0	0	0	0	0	0	0	0	0	0	0
4/25/2024	3:30 PM	0	0	0	0	0	0	0	0	0	0	0	0	0
4/25/2024	3:45 PM	0	0	0	0	0	0	0	0	0	0	0	0	0
4/25/2024	4:00 PM	0	0	0	0	0	0	0	0	0	0	0	0	0
4/25/2024	4:15 PM	0	0	0	0	0	0	0	0	0	0	0	0	0
4/25/2024	4:30 PM	0	0	0	0	0	0	0	0	0	0	0	0	0
4/25/2024	4:45 PM	0	0	0	0	0	0	0	0	0	0	0	0	0
4/25/2024	5:00 PM	0	0	0	0	0	0	0	0	0	0	0	0	0
4/25/2024	5:15 PM	0	0	0	0	0	0	0	0	0	0	0	0	0
4/25/2024	5:30 PM	0	0	0	0	0	0	0	0	0	0	0	0	0
4/25/2024	5:45 PM	0	0	0	0	0	0	0	0	0	0	0	0	0
4/25/2024	6:00 PM	0	0	0	0	0	0	0	0	0	0	0	0	0
4/25/2024	6:15 PM	0	0	0	0	0	0	0	0	0	0	0	0	0
4/25/2024	6:30 PM	0	0	0	0	0	0	0	0	0	0	0	0	0
4/25/2024	6:45 PM	0	0	0	0	0	0	0	0	0	0	0	0	0
4/25/2024	7:00 PM	0	0	0	0	0	0	0	0	0	0	0	0	0
4/25/2024	7:15 PM	0	0	0	0	0	0	0	0	0	0	0	0	0
4/25/2024	7:30 PM	0	0	0	0	0	0	0	0	0	0	0	0	0
4/25/2024	7:45 PM	0	0	0	0	0	0	0	0	0	0	0	0	0
4/25/2024	8:00 PM	0	0	0	0	0	0	0	0	0	0	0	0	0
4/25/2024	8:15 PM	0	0	0	0	0	0	0	0	0	0	0	0	0
4/25/2024	8:30 PM	0	0	0	0	0	0	0	0	0	0	0	0	0
4/25/2024	8:45 PM	0	0	0	0	0	0	0	0	0	0	0	0	0
4/25/2024	9:00 PM	0	0	0	0	0	0	0	0	0	0	0	0	0
4/25/2024	9:15 PM	0	0	0	0	0	0	0	0	0	0	0	0	0
4/25/2024	9:30 PM	0	0	0	0	0	0	0	0	0	0	0	0	0
4/25/2024	9:45 PM	0	0	0	0	0	0	0	0	0	0	0	0	0
4/25/2024	10:00 PM	0	0	0	0	0	0	0	0	0	0	0	0	0
4/25/2024	10:15 PM	0	0	0	0	0	0	0	0	0	0	0	0	0
4/25/2024	10:30 PM	0	0	0	0	0	0	0	0	0	0	0	0	0
4/25/2024	10:45 PM	0	0	0	0	0	0	0	0	0	0	0	0	0
4/25/2024	11:00 PM	0	0	0	0	0	0	0	0	0	0	0	0	0
4/25/2024	11:15 PM	0	0	0	0	0	0	0	0	0	0	0	0	0
4/25/2024	11:30 PM	0	0	0	0	0	0	0	0	0	0	0	0	0
4/25/2024	11:45 PM	0	0	0	0	0	0	0	0	0	0	0	0	0

4/26/2024	12:00 AM	0	0	0	0	0	0	0	0	0	0	0	0	0
4/26/2024	12:15 AM	0	0	0	0	0	0	0	0	0	0	0	0	0
4/26/2024	12:30 AM	0	0	0	0	0	0	0	0	0	0	0	0	0
4/26/2024	12:45 AM	0	0	0	0	0	0	0	0	0	0	0	0	0
4/26/2024	1:00 AM	0	0	0	0	0	0	0	0	0	0	0	0	0
4/26/2024	1:15 AM	0	0	0	0	0	0	0	0	0	0	0	0	0
4/26/2024	1:30 AM	0	0	0	0	0	0	0	0	0	0	0	0	0
4/26/2024	1:45 AM	0	0	0	0	0	0	0	0	0	0	0	0	0
4/26/2024	2:00 AM	0	0	0	0	0	0	0	0	0	0	0	0	0
4/26/2024	2:15 AM	0	0	0	0	0	0	0	0	0	0	0	0	0
4/26/2024	2:30 AM	0	0	0	0	0	0	0	0	0	0	0	0	0
4/26/2024	2:45 AM	0	0	0	0	0	0	0	0	0	0	0	0	0
4/26/2024	3:00 AM	0	0	0	0	0	0	0	0	0	0	0	0	0
4/26/2024	3:15 AM	0	0	0	0	0	0	0	0	0	0	0	0	0
4/26/2024	3:30 AM	0	0	0	0	0	0	0	0	0	0	0	0	0
4/26/2024	3:45 AM	0	0	0	0	0	0	0	0	0	0	0	0	0
4/26/2024	4:00 AM	0	0	0	0	0	0	0	0	0	0	0	0	0
4/26/2024	4:15 AM	0	0	0	0	0	0	0	0	0	0	0	0	0
4/26/2024	4:30 AM	0	0	0	0	0	0	0	0	0	0	0	0	0
4/26/2024	4:45 AM	0	0	0	0	0	0	0	0	0	0	0	0	0
4/26/2024	5:00 AM	0	0	0	0	0	0	0	0	0	0	0	0	0
4/26/2024	5:15 AM	0	0	0	0	0	0	0	0	0	0	0	0	0
4/26/2024	5:30 AM	0	0	0	0	0	0	0	0	0	0	0	0	0
4/26/2024	5:45 AM	0	0	0	0	0	0	0	0	0	0	0	0	0
4/26/2024	6:00 AM	0	0	0	0	0	0	0	0	0	0	0	0	0
4/26/2024	6:15 AM	0	0	0	0	0	0	0	0	0	0	0	0	0
4/26/2024	6:30 AM	0	0	0	0	0	0	0	0	0	0	0	0	0
4/26/2024	6:45 AM	0	0	0	0	0	0	0	0	0	0	0	0	0
4/26/2024	7:00 AM	0	0	0	0	0	0	0	0	0	0	0	0	0
4/26/2024	7:15 AM	0	0	0	0	0	0	0	0	0	0	0	0	0
4/26/2024	7:30 AM	0	0	0	0	0	0	0	0	0	0	0	0	0
4/26/2024	7:45 AM	0	0	0	0	0	0	0	0	0	0	0	0	0
4/26/2024	8:00 AM	0	0	0	0	0	0	0	0	0	0	0	0	0
4/26/2024	8:15 AM	0	0	0	0	0	0	0	0	0	0	0	0	0
4/26/2024	8:30 AM	0	0	0	0	0	0	0	0	0	0	0	0	0
4/26/2024	8:45 AM	0	0	0	0	0	0	0	0	0	0	0	0	0
4/26/2024	9:00 AM	0	0	0	0	0	0	0	0	0	0	0	0	0
4/26/2024	9:15 AM	0	0	0	0	0	0	0	0	0	0	0	0	0
4/26/2024	9:30 AM	0	0	0	0	0	0	0	0	0	0	0	0	0
4/26/2024	9:45 AM	0	0	0	0	0	0	0	0	0	0	0	0	0
4/26/2024	10:00 AM	0	0	0	0	0	0	0	0	0	0	0	0	0
4/26/2024	10:15 AM	0	0	0	0	0	0	0	0	0	0	0	0	0
4/26/2024	10:30 AM	0	0	0	0	0	0	0	0	0	0	0	0	0
4/26/2024	10:45 AM	0	0	0	0	0	0	0	0	0	0	0	0	0
4/26/2024	11:00 AM	0	0	0	0	0	0	0	0	0	0	0	0	0
4/26/2024	11:15 AM	0	0	0	0	0	0	0	0	0	0	0	0	0
4/26/2024	11:30 AM	0	0	0	0	0	0	0	0	0	0	0	0	0
4/26/2024	11:45 AM	0	0	0	0	0	0	0	0	0	0	0	0	0
4/26/2024	12:00 PM	0	0	0	0	0	0	0	0	0	0	0	0	0
4/26/2024	12:15 PM	0	0	0	0	0	0	0	0	0	0	0	0	0
4/26/2024	12:30 PM	0	0	0	0	0	0	0	0	0	0	0	0	0
4/26/2024	12:45 PM	0	0	0	0	0	0	0	0	0	0	0	0	0
4/26/2024	1:00 PM	0	0	0	0	0	0	0	0	0	0	0	0	0
4/26/2024	1:15 PM	0	0	0	0	0	0	0	0	0	0	0	0	0
4/26/2024	1:30 PM	0	0	0	0	0	0	0	0	0	0	0	0	0
4/26/2024	1:45 PM	0	0	0	0	0	0	0	0	0	0	0	0	0
4/26/2024	2:00 PM	0	0	0	0	0	0	0	0	0	0	0	0	0
4/26/2024	2:15 PM	0	0	0	0	0	0	0	0	0	0	0	0	0
4/26/2024	2:30 PM	0	0	0	0	0	0	0	0	0	0	0	0	0
4/26/2024	2:45 PM	0	0	0	0	0	0	0	0	0	0	0	0	0
4/26/2024	3:00 PM	0	0	0	0	0	0	0	0	0	0	0	0	0
4/26/2024	3:15 PM	0	0	0	0	0	0	0	0	0	0	0	0	0
4/26/2024	3:30 PM	0	0	0	0	0	0	0	0	0	0	0	0	0
4/26/2024	3:45 PM	0	0	0	0	0	0	0	0	0	0	0	0	0
4/26/2024	4:00 PM	0	0	0	0	0	0	0	0	0	0	0	0	0
4/26/2024	4:15 PM	0	0	0	0	0	0	0	0	0	0	0	0	0
4/26/2024	4:30 PM	0	0	0	0	0	0	0	0	0	0	0	0	0
4/26/2024	4:45 PM	0	0	0	0	0	0	0	0	0	0	0	0	0
4/26/2024	5:00 PM	0	0	0	0	0	0	0	0	0	0	0	0	0
4/26/2024	5:15 PM	0	0	0	0	0	0	0	0	0	0	0	0	0
4/26/2024	5:30 PM	0	0	0	0	0	0	0	0	0	0	0	0	0
4/26/2024	5:45 PM	0	0	0	0	0	0	0	0	0	0	0	0	0
4/26/2024	6:00 PM	0	0	0	0	0	0	0	0	0	0	0	0	0
4/26/2024	6:15 PM	0	0	0	0	0	0	0	0	0	0	0	0	0
4/26/2024	6:30 PM	0	0	0	0	0	0	0	0	0	0	0	0	0
4/26/2024	6:45 PM	0	0	0	0	0	0	0	0	0	0	0	0	0
4/26/2024	7:00 PM	0	0	0	0	0	0	0	0	0	0	0	0	0
4/26/2024	7:15 PM	0	0	0	0	0	0	0	0	0	0	0	0	0
4/26/2024	7:30 PM	0	0	0	0	0	0	0	0	0	0	0	0	0
4/26/2024	7:45 PM	0	0	0	0	0	0	0	0	0	0	0	0	0
4/26/2024	8:00 PM	0	0	0	0	0	0	0	0	0	0	0	0	0
4/26/2024	8:15 PM	0	0	0	0	0	0	0	0	0	0	0	0	0
4/26/2024	8:30 PM	0	0	0	0	0	0	0	0	0	0	0	0	0
4/26/2024	8:45 PM	0	0	0	0	0	0	0	0	0	0	0	0	0
4/26/2024	9:00 PM	0	0	0	0	0	0	0	0	0	0	0	0	0
4/26/2024	9:15 PM	0	0	0	0	0	0	0	0	0	0	0	0	0
4/26/2024	9:30 PM	0	0	0	0	0	0	0	0	0	0	0	0	0
4/26/2024	9:45 PM	0	0	0	0	0	0	0	0	0	0	0	0	0
4/26/2024	10:00 PM	0	0	0	0	0	0	0	0	0	0	0	0	0
4/26/2024	10:15 PM	0	0	0	0	0	0	0	0	0	0	0	0	0
4/26/2024	10:30 PM	0	0	0	0	0	0	0	0	0	0	0	0	0
4/26/2024	10:45 PM	0	0	0	0	0	0	0	0	0	0	0	0	0
4/26/2024	11:00 PM	0	0	0	0	0	0	0	0	0	0	0	0	0
4/26/2024	11:15 PM	0	0	0	0	0	0	0	0	0	0	0	0	0
4/26/2024	11:30 PM	0	0	0	0	0	0	0	0	0	0	0	0	0
4/26/2024	11:45 PM	0	0	0	0	0	0	0	0	0	0	0	0	0

4/27/2024	12:00 AM	0	0	0	0	0	0	0	0	0	0	0	0	0
4/27/2024	12:15 AM	0	0	0	0	0	0	0	0	0	0	0	0	0
4/27/2024	12:30 AM	0	0	0	0	0	0	0	0	0	0	0	0	0
4/27/2024	12:45 AM	0	0	0	0	0	0	0	0	0	0	0	0	0
4/27/2024	1:00 AM	0	0	0	0	0	0	0	0	0	0	0	0	0
4/27/2024	1:15 AM	0	0	0	0	0	0	0	0	0	0	0	0	0
4/27/2024	1:30 AM	0	0	0	0	0	0	0	0	0	0	0	0	0
4/27/2024	1:45 AM	0	0	0	0	0	0	0	0	0	0	0	0	0
4/27/2024	2:00 AM	0	0	0	0	0	0	0	0	0	0	0	0	0
4/27/2024	2:15 AM	0	0	0	0	0	0	0	0	0	0	0	0	0
4/27/2024	2:30 AM	0	0	0	0	0	0	0	0	0	0	0	0	0
4/27/2024	2:45 AM	0	0	0	0	0	0	0	0	0	0	0	0	0
4/27/2024	3:00 AM	0	0	0	0	0	0	0	0	0	0	0	0	0
4/27/2024	3:15 AM	0	0	0	0	0	0	0	0	0	0	0	0	0
4/27/2024	3:30 AM	0	0	0	0	0	0	0	0	0	0	0	0	0
4/27/2024	3:45 AM	0	0	0	0	0	0	0	0	0	0	0	0	0
4/27/2024	4:00 AM	0	0	0	0	0	0	0	0	0	0	0	0	0
4/27/2024	4:15 AM	0	0	0	0	0	0	0	0	0	0	0	0	0
4/27/2024	4:30 AM	0	0	0	0	0	0	0	0	0	0	0	0	0
4/27/2024	4:45 AM	0	0	0	0	0	0	0	0	0	0	0	0	0
4/27/2024	5:00 AM	0	0	0	0	0	0	0	0	0	0	0	0	0
4/27/2024	5:15 AM	0	0	0	0	0	0	0	0	0	0	0	0	0
4/27/2024	5:30 AM	0	0	0	0	0	0	0	0	0	0	0	0	0
4/27/2024	5:45 AM	0	0	0	0	0	0	0	0	0	0	0	0	0
4/27/2024	6:00 AM	0	0	0	0	0	0	0	0	0	0	0	0	0
4/27/2024	6:15 AM	0	0	0	0	0	0	0	0	0	0	0	0	0
4/27/2024	6:30 AM	0	0	0	0	0	0	0	0	0	0	0	0	0
4/27/2024	6:45 AM	0	0	0	0	0	0	0	0	0	0	0	0	0
4/27/2024	7:00 AM	0	0	0	0	0	0	0	0	0	0	0	0	0
4/27/2024	7:15 AM	0	0	0	0	0	0	0	0	0	0	0	0	0
4/27/2024	7:30 AM	0	0	0	0	0	0	0	0	0	0	0	0	0
4/27/2024	7:45 AM	0	0	0	0	0	0	0	0	0	0	0	0	0
4/27/2024	8:00 AM	0	0	0	0	0	0	0	0	0	0	0	0	0
4/27/2024	8:15 AM	0	0	0	0	0	0	0	0	0	0	0	0	0
4/27/2024	8:30 AM	0	0	0	0	0	0	0	0	0	0	0	0	0
4/27/2024	8:45 AM	0	0	0	0	0	0	0	0	0	0	0	0	0
4/27/2024	9:00 AM	0	0	0	0	0	0	0	0	0	0	0	0	0
4/27/2024	9:15 AM	0	0	0	0	0	0	0	0	0	0	0	0	0
4/27/2024	9:30 AM	0	0	0	0	0	0	0	0	0	0	0	0	0
4/27/2024	9:45 AM	0	0	0	0	0	0	0	0	0	0	0	0	0
4/27/2024	10:00 AM	0	0	0	0	0	0	0	0	0	0	0	0	0
4/27/2024	10:15 AM	0	0	0	0	0	0	0	0	0	0	0	0	0
4/27/2024	10:30 AM	0	0	0	0	0	0	0	0	0	0	0	0	0
4/27/2024	10:45 AM	0	0	0	0	0	0	0	0	0	0	0	0	0
4/27/2024	11:00 AM	0	0	0	0	0	0	0	0	0	0	0	0	0
4/27/2024	11:15 AM	0	0	0	0	0	0	0	0	0	0	0	0	0
4/27/2024	11:30 AM	0	0	0	0	0	0	0	0	0	0	0	0	0
4/27/2024	11:45 AM	0	0	0	0	0	0	0	0	0	0	0	0	0
4/27/2024	12:00 PM	0	0	0	0	0	0	0	0	0	0	0	0	0
4/27/2024	12:15 PM	0	0	0	0	0	0	0	0	0	0	0	0	0
4/27/2024	12:30 PM	0	0	0	0	0	0	0	0	0	0	0	0	0
4/27/2024	12:45 PM	0	0	0	0	0	0	0	0	0	0	0	0	0
4/27/2024	1:00 PM	0	0	0	0	0	0	0	0	0	0	0	0	0
4/27/2024	1:15 PM	0	0	0	0	0	0	0	0	0	0	0	0	0
4/27/2024	1:30 PM	0	0	0	0	0	0	0	0	0	0	0	0	0
4/27/2024	1:45 PM	0	0	0	0	0	0	0	0	0	0	0	0	0
4/27/2024	2:00 PM	0	0	0	0	0	0	0	0	0	0	0	0	0
4/27/2024	2:15 PM	0	0	0	0	0	0	0	0	0	0	0	0	0
4/27/2024	2:30 PM	0	0	0	0	0	0	0	0	0	0	0	0	0
4/27/2024	2:45 PM	0	0	0	0	0	0	0	0	0	0	0	0	0
4/27/2024	3:00 PM	0	0	0	0	0	0	0	0	0	0	0	0	0
4/27/2024	3:15 PM	0	0	0	0	0	0	0	0	0	0	0	0	0
4/27/2024	3:30 PM	0	0	0	0	0	0	0	0	0	0	0	0	0
4/27/2024	3:45 PM	0	0	0	0	0	0	0	0	0	0	0	0	0
4/27/2024	4:00 PM	0	0	0	0	0	0	0	0	0	0	0	0	0
4/27/2024	4:15 PM	0	0	0	0	0	0	0	0	0	0	0	0	0
4/27/2024	4:30 PM	0	0	0	0	0	0	0	0	0	0	0	0	0
4/27/2024	4:45 PM	0	0	0	0	0	0	0	0	0	0	0	0	0
4/27/2024	5:00 PM	0	0	0	0	0	0	0	0	0	0	0	0	0
4/27/2024	5:15 PM	0	0	0	0	0	0	0	0	0	0	0	0	0
4/27/2024	5:30 PM	0	0	0	0	0	0	0	0	0	0	0	0	0
4/27/2024	5:45 PM	0	0	0	0	0	0	0	0	0	0	0	0	0
4/27/2024	6:00 PM	0	0	0	0	0	0	0	0	0	0	0	0	0
4/27/2024	6:15 PM	0	0	0	0	0	0	0	0	0	0	0	0	0
4/27/2024	6:30 PM	0	0	0	0	0	0	0	0	0	0	0	0	0
4/27/2024	6:45 PM	0	0	0	0	0	0	0	0	0	0	0	0	0
4/27/2024	7:00 PM	0	0	0	0	0	0	0	0	0	0	0	0	0
4/27/2024	7:15 PM	0	0	0	0	0	0	0	0	0	0	0	0	0
4/27/2024	7:30 PM	0	0	0	0	0	0	0	0	0	0	0	0	0
4/27/2024	7:45 PM	0	0	0	0	0	0	0	0	0	0	0	0	0
4/27/2024	8:00 PM	0	0	0	0	0	0	0	0	0	0	0	0	0
4/27/2024	8:15 PM	0	0	0	0	0	0	0	0	0	0	0	0	0
4/27/2024	8:30 PM	0	0	0	0	0	0	0	0	0	0	0	0	0
4/27/2024	8:45 PM	0	0	0	0	0	0	0	0	0	0	0	0	0
4/27/2024	9:00 PM	0	0	0	0	0	0	0	0	0	0	0	0	0
4/27/2024	9:15 PM	0	0	0	0	0	0	0	0	0	0	0	0	0
4/27/2024	9:30 PM	0	0	0	0	0	0	0	0	0	0	0	0	0
4/27/2024	9:45 PM	0	0	0	0	0	0	0	0	0	0	0	0	0
4/27/2024	10:00 PM	0	0	0	0	0	0	0	0	0	0	0	0	0
4/27/2024	10:15 PM	0	0	0	0	0	0	0	0	0	0	0	0	0
4/27/2024	10:30 PM	0	0	0	0	0	0	0	0	0	0	0	0	0
4/27/2024	10:45 PM	0	0	0	0	0	0	0	0	0	0	0	0	0
4/27/2024	11:00 PM	0	0	0	0	0	0	0	0	0	0	0	0	0
4/27/2024	11:15 PM	0	0	0	0	0	0	0	0	0	0	0	0	0
4/27/2024	11:30 PM	0	0	0	0	0	0	0	0	0	0	0	0	0
4/27/2024	11:45 PM	0	0	0	0	0	0	0	0	0	0	0	0	0

WB
File Name:
Start Date: 4/21/2024
Start Time: 0
Site Code: 3
Station ID: 1
Location 1: I-26 W/Bound Off-Ramp, east of I-26
Location 2:

Date	Time	1	2	3	4	5	6	7	8	9	10	11	12	13
4/21/2024	12:00 AM	1	386	84	2	2	2	0	1	13	0	0	0	0
4/21/2024	12:15 AM	0	347	66	1	3	2	0	2	12	0	1	0	0
4/21/2024	12:30 AM	1	307	64	1	2	2	0	2	11	0	1	0	0
4/21/2024	12:45 AM	1	254	58	0	2	1	0	2	9	0	1	0	0
4/21/2024	1:00 AM	1	234	55	0	4	1	0	1	8	0	1	0	0
4/21/2024	1:15 AM	1	210	50	0	3	1	0	0	11	0	0	0	0
4/21/2024	1:30 AM	0	192	41	0	3	0	0	0	9	0	0	0	0
4/21/2024	1:45 AM	0	182	35	0	3	0	0	0	11	0	0	0	0
4/21/2024	2:00 AM	0	149	25	0	2	0	0	0	13	0	0	0	0
4/21/2024	2:15 AM	0	146	26	0	2	0	0	0	11	0	1	0	0
4/21/2024	2:30 AM	0	146	25	0	2	0	0	0	13	0	1	0	0
4/21/2024	2:45 AM	0	133	28	0	2	0	0	0	16	0	2	0	0
4/21/2024	3:00 AM	0	132	33	0	1	0	0	0	15	0	2	0	0
4/21/2024	3:15 AM	0	123	28	0	2	0	0	0	13	0	1	0	0
4/21/2024	3:30 AM	0	116	26	0	3	1	0	0	14	0	1	0	0
4/21/2024	3:45 AM	0	119	25	0	6	1	0	0	11	0	0	0	0
4/21/2024	4:00 AM	0	140	28	0	6	1	0	0	11	0	0	0	0
4/21/2024	4:15 AM	0	153	32	0	5	1	0	0	12	0	0	0	0
4/21/2024	4:30 AM	0	155	38	0	5	0	0	0	14	0	0	0	0
4/21/2024	4:45 AM	0	190	39	0	1	0	0	0	16	0	0	0	0
4/21/2024	5:00 AM	0	203	41	0	1	0	0	0	19	0	0	0	0
4/21/2024	5:15 AM	0	211	41	0	3	0	0	0	20	0	0	0	0
4/21/2024	5:30 AM	0	259	41	0	5	0	0	0	17	0	0	0	0
4/21/2024	5:45 AM	2	274	46	0	8	0	0	0	17	0	0	0	0
4/21/2024	6:00 AM	2	302	57	0	10	0	0	0	14	0	0	0	0
4/21/2024	6:15 AM	3	362	69	0	14	1	0	0	18	0	0	0	0
4/21/2024	6:30 AM	3	390	96	0	14	1	0	1	20	0	0	0	0
4/21/2024	6:45 AM	1	480	105	0	12	1	0	2	20	0	0	0	0
4/21/2024	7:00 AM	1	564	114	1	11	2	0	2	24	0	0	0	0
4/21/2024	7:15 AM	0	612	127	1	6	1	0	3	27	0	0	0	0
4/21/2024	7:30 AM	0	654	128	2	5	1	0	3	25	0	0	0	0
4/21/2024	7:45 AM	1	671	155	2	7	1	0	2	27	0	0	0	0
4/21/2024	8:00 AM	1	702	166	1	9	0	0	2	23	0	0	0	0
4/21/2024	8:15 AM	1	775	183	2	11	1	0	1	22	0	1	0	0
4/21/2024	8:30 AM	1	856	191	3	9	1	0	1	26	0	1	0	0
4/21/2024	8:45 AM	0	986	205	4	9	2	0	2	24	0	1	0	0
4/21/2024	9:00 AM	0	1115	254	5	9	3	0	4	32	0	1	0	0
4/21/2024	9:15 AM	0	1253	278	5	10	2	0	6	28	0	0	0	0
4/21/2024	9:30 AM	0	1373	337	3	11	2	0	5	28	0	0	0	0
4/21/2024	9:45 AM	0	1469	375	3	10	2	0	6	38	0	0	0	0
4/21/2024	10:00 AM	0	1563	369	2	10	1	0	6	36	0	0	0	0
4/21/2024	10:15 AM	0	1621	396	2	10	1	0	5	38	0	0	0	0
4/21/2024	10:30 AM	0	1717	379	3	11	1	0	6	45	0	1	0	0
4/21/2024	10:45 AM	1	1686	390	2	11	0	0	7	34	0	1	0	0
4/21/2024	11:00 AM	2	1737	395	2	12	1	0	7	45	0	1	0	0
4/21/2024	11:15 AM	5	1843	406	4	10	1	0	6	47	0	1	0	0
4/21/2024	11:30 AM	5	1918	425	7	10	2	0	5	37	0	0	0	0
4/21/2024	11:45 AM	5	2109	443	7	13	3	0	3	40	0	0	0	0
4/21/2024	12:00 PM	4	2256	476	8	14	2	0	1	32	0	0	0	0
4/21/2024	12:15 PM	1	2281	487	6	19	3	0	2	35	0	0	0	0
4/21/2024	12:30 PM	1	2346	512	2	22	2	0	2	35	0	0	0	0
4/21/2024	12:45 PM	0	2329	486	2	20	2	0	1	36	0	1	0	0
4/21/2024	1:00 PM	0	2288	485	2	20	3	0	3	30	0	1	0	0
4/21/2024	1:15 PM	0	2264	452	1	19	4	0	2	26	0	1	0	0
4/21/2024	1:30 PM	0	2224	417	1	21	6	0	2	39	0	1	0	0
4/21/2024	1:45 PM	0	2206	409	2	21	5	0	2	38	0	0	0	0
4/21/2024	2:00 PM	0	2134	382	1	21	4	0	0	43	0	0	0	0
4/21/2024	2:15 PM	0	2146	382	2	19	2	0	0	45	0	0	0	0
4/21/2024	2:30 PM	0	2113	376	4	17	0	0	0	40	0	0	0	0
4/21/2024	2:45 PM	0	2082	383	3	16	1	0	0	40	0	0	0	0
4/21/2024	3:00 PM	0	2095	397	4	14	2	0	1	31	0	0	0	0
4/21/2024	3:15 PM	0	2073	388	3	15	3	0	1	35	0	0	0	0
4/21/2024	3:30 PM	0	2079	393	1	15	3	0	1	34	0	0	0	0
4/21/2024	3:45 PM	1	2064	372	3	20	2	0	1	39	0	0	0	0
4/21/2024	4:00 PM	1	2034	348	3	22	1	0	0	48	0	0	0	0
4/21/2024	4:15 PM	1	2022	351	4	21	1	0	1	48	0	0	0	0
4/21/2024	4:30 PM	1	1932	339	5	20	1	0	1	49	0	0	0	0
4/21/2024	4:45 PM	0	1900	346	3	16	2	0	3	54	0	0	0	0
4/21/2024	5:00 PM	0	1868	362	2	13	4	0	4	54	0	0	0	0
4/21/2024	5:15 PM	0	1810	355	2	13	4	0	3	49	0	0	0	0
4/21/2024	5:30 PM	0	1863	369	2	12	4	0	4	48	0	0	0	0
4/21/2024	5:45 PM	0	1770	352	2	10	3	0	2	48	0	0	0	0
4/21/2024	6:00 PM	1	1656	308	2	10	2	0	1	50	0	0	0	0
4/21/2024	6:15 PM	2	1515	284	1	11	1	0	1	51	0	0	0	0
4/21/2024	6:30 PM	2	1353	236	0	11	2	0	2	55	0	0	0	0
4/21/2024	6:45 PM	2	1304	219	0	13	2	0	3	48	0	2	0	0
4/21/2024	7:00 PM	1	1225	207	0	11	1	0	5	45	0	3	0	0
4/21/2024	7:15 PM	0	1160	201	0	8	1	0	5	48	0	3	0	0
4/21/2024	7:30 PM	0	1066	181	1	10	0	0	4	44	0	3	0	0
4/21/2024	7:45 PM	0	945	166	1	10	0	0	3	42	0	1	0	0
4/21/2024	8:00 PM	0	828	158	2	12	0	0	1	43	0	0	0	0
4/21/2024	8:15 PM	0	758	154	2	12	1	0	1	38	0	0	0	0
4/21/2024	8:30 PM	0	681	154	1	9	1	0	0	30	0	0	0	0
4/21/2024	8:45 PM	0	628	149	2	7	1	0	0	33	0	0	0	0
4/21/2024	9:00 PM	0	601	134	1	7	1	0	0	34	0	0	0	0
4/21/2024	9:15 PM	0	531	113	1	9	0	0	0	43	0	0	0	0
4/21/2024	9:30 PM	0	485	100	1	9	1	0	2	51	0	0	0	0
4/21/2024	9:45 PM	0	423	83	0	9	1	0	2	48	0	0	0	0
4/21/2024	10:00 PM	0	388	75	0	8	2	0	2	41	0	3	0	0
4/21/2024	10:15 PM	0	375	67	0	4	2	0	2	30	0	3	0	0
4/21/2024	10:30 PM	0	355	64	1	3	1	0	0	21	0	3	0	0
4/21/2024	10:45 PM	0	342	56	1	2	1	1	0	23	0	3	0	0
4/21/2024	11:00 PM	0	306	46	1	2	0	1	0	24	0	0	0	0
4/21/2024	11:15 PM	0	213	31	1	2	0	1	0	19	0	0	0	0
4/21/2024	11:30 PM	0	124	16	0	1	0	1	0	16	0	0	0	0
4/21/2024	11:45 PM	0	52	6	0	1	0	0	0	6	0	0	0	0

4/22/2024	12:00 AM	0	245	32	0	3	0	0	1	20	0	0	0	0
4/22/2024	12:15 AM	0	249	29	0	4	0	0	1	20	0	1	0	0
4/22/2024	12:30 AM	0	226	26	0	4	0	0	1	23	0	1	0	0
4/22/2024	12:45 AM	0	179	20	0	3	0	0	0	24	0	2	0	0
4/22/2024	1:00 AM	0	162	19	0	4	0	0	0	23	0	2	0	0
4/22/2024	1:15 AM	0	138	16	0	3	1	0	1	23	0	1	0	0
4/22/2024	1:30 AM	0	122	13	0	5	2	0	1	25	1	1	0	0
4/22/2024	1:45 AM	0	125	13	0	6	2	0	1	27	1	0	0	0
4/22/2024	2:00 AM	0	115	11	0	5	2	0	2	33	1	0	0	0
4/22/2024	2:15 AM	0	108	10	0	8	2	0	2	46	2	0	0	0
4/22/2024	2:30 AM	0	104	12	0	8	2	0	3	50	1	2	0	0
4/22/2024	2:45 AM	0	111	15	0	7	3	0	4	56	2	2	0	0
4/22/2024	3:00 AM	0	130	18	0	7	5	0	5	67	3	3	0	0
4/22/2024	3:15 AM	0	142	20	0	5	5	0	6	66	2	4	0	0
4/22/2024	3:30 AM	0	158	21	0	8	5	0	5	68	3	2	0	0
4/22/2024	3:45 AM	0	175	22	0	13	7	0	7	73	3	4	0	0
4/22/2024	4:00 AM	0	198	29	0	15	9	0	7	74	4	5	0	0
4/22/2024	4:15 AM	0	236	37	0	20	10	0	6	85	6	4	0	0
4/22/2024	4:30 AM	0	298	54	0	21	12	0	7	95	6	4	0	0
4/22/2024	4:45 AM	0	375	73	0	20	11	0	6	115	7	3	0	0
4/22/2024	5:00 AM	0	449	88	1	23	8	0	5	129	6	1	0	0
4/22/2024	5:15 AM	0	556	110	2	26	10	0	6	127	6	1	0	0
4/22/2024	5:30 AM	0	707	130	2	30	13	0	7	141	9	2	0	0
4/22/2024	5:45 AM	0	854	172	2	33	14	0	8	156	10	1	0	0
4/22/2024	6:00 AM	0	1027	237	1	35	17	0	9	161	10	1	0	0
4/22/2024	6:15 AM	1	1172	306	0	35	19	0	10	189	11	1	0	0
4/22/2024	6:30 AM	1	1334	388	0	44	21	0	11	196	9	0	0	0
4/22/2024	6:45 AM	1	1582	473	0	60	23	0	11	191	8	0	0	0
4/22/2024	7:00 AM	1	1838	519	1	72	24	0	13	201	8	0	0	0
4/22/2024	7:15 AM	0	1966	530	1	83	27	0	13	196	7	0	0	0
4/22/2024	7:30 AM	0	1981	507	1	83	24	0	13	193	6	0	1	0
4/22/2024	7:45 AM	0	1836	488	1	78	24	0	12	179	6	0	1	0
4/22/2024	8:00 AM	0	1663	472	2	86	23	0	14	166	6	0	1	0
4/22/2024	8:15 AM	0	1572	481	3	101	22	0	18	160	6	0	1	0
4/22/2024	8:30 AM	0	1500	481	4	107	25	0	18	167	8	0	0	0
4/22/2024	8:45 AM	0	1507	459	5	106	28	0	17	186	8	0	1	0
4/22/2024	9:00 AM	0	1505	428	4	92	28	0	15	203	9	0	1	0
4/22/2024	9:15 AM	0	1498	415	3	77	27	0	10	203	8	0	1	0
4/22/2024	9:30 AM	0	1509	404	2	65	24	0	14	196	6	0	1	0
4/22/2024	9:45 AM	0	1487	390	1	57	21	0	18	187	6	0	0	0
4/22/2024	10:00 AM	0	1519	381	2	56	26	0	17	171	5	0	0	0
4/22/2024	10:15 AM	0	1544	401	2	54	27	0	23	192	8	0	0	0
4/22/2024	10:30 AM	0	1574	447	4	54	24	0	20	194	8	0	0	0
4/22/2024	10:45 AM	0	1609	466	4	61	25	0	19	208	8	0	1	0
4/22/2024	11:00 AM	2	1603	512	3	58	24	0	20	217	9	0	1	0
4/22/2024	11:15 AM	3	1608	510	3	56	23	1	14	201	6	1	1	0
4/22/2024	11:30 AM	5	1637	500	2	58	25	2	16	202	5	1	2	0
4/22/2024	11:45 AM	5	1631	535	3	55	26	3	17	185	3	1	1	0
4/22/2024	12:00 PM	3	1601	544	3	57	23	3	16	198	3	1	1	0
4/22/2024	12:15 PM	2	1615	546	4	58	26	2	14	210	2	1	1	0
4/22/2024	12:30 PM	0	1574	532	3	59	25	1	12	216	2	1	0	0
4/22/2024	12:45 PM	1	1589	509	4	55	23	0	8	237	2	1	0	0
4/22/2024	1:00 PM	5	1603	480	4	57	24	0	6	226	0	1	0	0
4/22/2024	1:15 PM	6	1645	484	3	55	18	0	8	211	0	1	0	0
4/22/2024	1:30 PM	7	1727	498	3	58	20	0	4	224	1	1	0	0
4/22/2024	1:45 PM	6	1782	495	1	67	23	1	8	216	1	1	0	0
4/22/2024	2:00 PM	3	1808	541	1	69	22	1	17	224	1	1	0	0
4/22/2024	2:15 PM	3	1826	527	4	65	22	2	16	235	2	0	1	0
4/22/2024	2:30 PM	2	1849	544	8	62	19	4	19	212	1	1	1	0
4/22/2024	2:45 PM	2	1678	507	10	52	11	4	15	178	1	1	1	0
4/22/2024	3:00 PM	1	1478	419	10	43	13	4	5	142	1	1	1	0
4/22/2024	3:15 PM	0	1488	428	9	46	13	3	5	143	0	2	0	0
4/22/2024	3:30 PM	0	1346	378	5	39	16	2	3	162	0	1	0	0
4/22/2024	3:45 PM	0	1380	382	3	37	19	1	3	186	0	1	0	0
4/22/2024	4:00 PM	0	1503	422	3	31	12	1	4	210	0	1	0	0
4/22/2024	4:15 PM	0	1364	380	1	21	11	1	3	191	0	0	0	0
4/22/2024	4:30 PM	0	1356	379	1	19	7	0	3	173	0	1	0	0
4/22/2024	4:45 PM	0	1377	381	1	21	7	0	3	155	0	3	0	0
4/22/2024	5:00 PM	0	1416	388	1	21	9	0	5	151	0	3	0	0
4/22/2024	5:15 PM	1	1507	415	1	25	10	0	7	136	0	3	0	0
4/22/2024	5:30 PM	1	1552	404	1	25	10	0	7	122	0	2	0	0
4/22/2024	5:45 PM	3	1540	386	1	18	9	0	7	123	0	0	0	0
4/22/2024	6:00 PM	3	1497	345	0	20	9	0	5	106	0	0	0	0
4/22/2024	6:15 PM	3	1369	311	0	13	6	0	3	110	0	0	0	0
4/22/2024	6:30 PM	3	1281	287	0	9	5	0	2	111	0	0	0	0
4/22/2024	6:45 PM	1	1206	264	0	12	7	0	2	104	0	0	0	0
4/22/2024	7:00 PM	1	1150	253	0	13	5	0	1	101	0	1	0	0
4/22/2024	7:15 PM	0	1064	226	0	15	4	0	2	92	0	1	0	0
4/22/2024	7:30 PM	1	988	210	0	15	8	0	4	80	0	1	0	0
4/22/2024	7:45 PM	1	943	195	0	12	5	0	3	77	0	1	0	0
4/22/2024	8:00 PM	1	823	161	0	9	6	0	4	76	0	0	0	0
4/22/2024	8:15 PM	1	796	144	1	9	6	0	3	67	0	1	0	0
4/22/2024	8:30 PM	0	720	129	1	7	2	0	1	63	0	2	0	0
4/22/2024	8:45 PM	0	634	111	1	8	1	0	2	70	0	4	0	0
4/22/2024	9:00 PM	0	583	110	1	8	1	0	1	63	0	5	1	0
4/22/2024	9:15 PM	0	528	97	0	5	1	0	1	66	0	4	1	0
4/22/2024	9:30 PM	0	489	97	0	6	2	0	3	62	0	5	1	0
4/22/2024	9:45 PM	0	449	96	0	5	3	0	4	48	0	7	2	0
4/22/2024	10:00 PM	0	408	86	0	6	3	0	5	48	0	8	1	0
4/22/2024	10:15 PM	0	358	80	0	7	5	0	5	49	0	11	1	0
4/22/2024	10:30 PM	0	328	77	1	7	4	0	3	45	0	10	1	0
4/22/2024	10:45 PM	0	310	81	1	6	3	0	1	42	0	9	0	0
4/22/2024	11:00 PM	0	284	79	1	5	2	0	1	42	0	11	0	0
4/22/2024	11:15 PM	0	209	61	1	4	0	0	1	29	0	8	0	0
4/22/2024	11:30 PM	0	128	38	0	2	0	0	1	22	0	7	0	0
4/22/2024	11:45 PM	0	51	14	0	1	0	0	1	13	0	4	0	0

4/23/2024	12:00 AM	2	246	36	0	3	0	0	2	47	0	4	0	0
4/23/2024	12:15 AM	1	219	36	0	5	0	0	4	46	0	6	0	0
4/23/2024	12:30 AM	0	179	30	0	4	0	0	3	41	0	7	0	0
4/23/2024	12:45 AM	0	155	25	0	10	1	0	5	41	0	8	0	0
4/23/2024	1:00 AM	0	138	23	0	10	1	0	6	52	0	7	0	0
4/23/2024	1:15 AM	0	123	22	0	8	1	0	5	56	0	10	0	0
4/23/2024	1:30 AM	0	103	20	0	11	1	0	6	55	0	12	0	0
4/23/2024	1:45 AM	0	94	16	0	7	0	0	4	52	0	10	0	0
4/23/2024	2:00 AM	0	87	16	0	7	0	0	3	44	0	13	0	0
4/23/2024	2:15 AM	1	79	16	0	9	0	0	5	44	0	12	0	0
4/23/2024	2:30 AM	1	82	22	0	9	0	0	8	49	0	12	0	0
4/23/2024	2:45 AM	1	95	30	0	9	1	0	9	57	0	14	0	0
4/23/2024	3:00 AM	1	106	34	0	12	2	0	9	78	0	13	0	1
4/23/2024	3:15 AM	0	116	34	0	17	4	0	8	81	0	11	0	1
4/23/2024	3:30 AM	0	127	40	0	19	6	0	3	100	0	11	0	1
4/23/2024	3:45 AM	0	148	50	0	26	8	0	2	120	0	12	0	1
4/23/2024	4:00 AM	0	171	61	0	28	8	0	2	129	0	9	0	0
4/23/2024	4:15 AM	0	202	84	0	29	6	0	1	139	0	15	0	0
4/23/2024	4:30 AM	0	245	109	0	35	8	0	2	150	0	13	0	0
4/23/2024	4:45 AM	0	293	138	0	38	8	0	2	155	0	12	0	0
4/23/2024	5:00 AM	0	340	173	0	44	8	0	2	147	0	11	0	0
4/23/2024	5:15 AM	0	427	189	1	47	12	0	1	168	0	4	0	0
4/23/2024	5:30 AM	0	507	234	1	53	12	0	1	180	0	4	0	0
4/23/2024	5:45 AM	0	645	284	1	61	16	3	6	190	1	3	0	0
4/23/2024	6:00 AM	0	813	366	1	68	16	3	9	217	3	4	0	0
4/23/2024	6:15 AM	1	988	439	0	77	14	3	12	221	6	4	0	0
4/23/2024	6:30 AM	1	1229	498	0	85	17	3	18	234	10	5	0	0
4/23/2024	6:45 AM	1	1415	577	0	89	15	1	20	255	11	4	0	0
4/23/2024	7:00 AM	1	1615	590	0	102	19	2	23	262	9	3	0	0
4/23/2024	7:15 AM	1	1660	636	0	108	23	3	27	276	6	3	0	0
4/23/2024	7:30 AM	1	1688	631	1	123	20	6	26	267	2	2	0	0
4/23/2024	7:45 AM	1	1632	588	3	126	23	6	22	240	0	3	0	0
4/23/2024	8:00 AM	1	1506	566	3	122	23	7	27	228	2	4	0	0
4/23/2024	8:15 AM	2	1429	539	3	134	23	8	26	225	7	3	0	0
4/23/2024	8:30 AM	3	1297	530	4	138	23	6	23	225	9	3	0	0
4/23/2024	8:45 AM	4	1251	531	4	150	19	5	26	232	10	2	0	0
4/23/2024	9:00 AM	5	1247	523	4	142	18	4	19	237	10	3	0	0
4/23/2024	9:15 AM	3	1265	480	7	125	17	2	19	235	7	3	0	0
4/23/2024	9:30 AM	2	1256	466	7	109	14	2	22	240	5	2	0	0
4/23/2024	9:45 AM	1	1221	473	5	85	17	8	23	240	4	2	0	0
4/23/2024	10:00 AM	0	1211	459	6	92	17	7	25	249	5	0	0	0
4/23/2024	10:15 AM	0	1264	490	4	89	18	10	29	242	5	0	0	0
4/23/2024	10:30 AM	0	1317	474	2	69	19	10	29	231	7	0	0	0
4/23/2024	10:45 AM	0	1375	442	3	75	19	8	30	246	8	0	0	0
4/23/2024	11:00 AM	0	1409	434	2	73	21	8	27	230	6	1	0	0
4/23/2024	11:15 AM	0	1412	415	1	72	18	7	19	227	4	1	0	0
4/23/2024	11:30 AM	0	1440	417	2	85	17	8	17	236	4	1	0	0
4/23/2024	11:45 AM	0	1417	401	1	77	15	6	11	235	4	1	0	0
4/23/2024	12:00 PM	0	1374	395	2	58	10	9	9	250	4	0	0	0
4/23/2024	12:15 PM	0	1353	393	4	52	13	8	10	263	7	0	0	0
4/23/2024	12:30 PM	0	1347	412	3	39	18	7	10	266	5	0	0	0
4/23/2024	12:45 PM	4	1373	432	4	42	15	9	11	269	4	0	0	0
4/23/2024	1:00 PM	5	1433	475	3	49	16	8	12	268	4	0	0	0
4/23/2024	1:15 PM	6	1482	524	1	46	13	11	11	254	2	0	0	0
4/23/2024	1:30 PM	8	1531	544	1	55	9	14	12	245	4	0	0	0
4/23/2024	1:45 PM	4	1594	575	1	50	15	11	10	239	5	0	0	0
4/23/2024	2:00 PM	5	1669	604	2	51	18	10	10	232	4	0	0	0
4/23/2024	2:15 PM	7	1709	601	3	56	18	11	10	243	3	0	0	0
4/23/2024	2:30 PM	6	1776	632	5	56	18	9	8	252	1	0	0	0
4/23/2024	2:45 PM	7	1848	654	5	62	14	10	8	230	1	1	0	0
4/23/2024	3:00 PM	5	1867	667	5	58	12	10	7	222	1	2	0	0
4/23/2024	3:15 PM	2	1894	679	7	50	11	8	6	206	3	2	0	0
4/23/2024	3:30 PM	2	1805	644	5	37	11	6	4	181	3	3	0	0
4/23/2024	3:45 PM	1	1727	621	4	26	9	7	4	185	2	3	0	0
4/23/2024	4:00 PM	1	1640	573	3	23	7	8	4	167	3	3	0	0
4/23/2024	4:15 PM	1	1567	541	2	23	8	7	5	150	1	3	0	0
4/23/2024	4:30 PM	0	1549	530	7	26	7	8	5	146	2	2	0	0
4/23/2024	4:45 PM	0	1490	506	7	27	7	6	5	134	2	1	0	0
4/23/2024	5:00 PM	0	1447	486	7	21	10	4	4	150	2	0	0	0
4/23/2024	5:15 PM	0	1390	457	5	21	12	3	4	148	2	0	0	0
4/23/2024	5:30 PM	0	1382	445	0	19	12	3	4	160	1	0	0	0
4/23/2024	5:45 PM	3	1324	406	0	17	13	2	4	165	1	0	0	0
4/23/2024	6:00 PM	4	1273	384	0	20	9	2	4	141	0	0	0	0
4/23/2024	6:15 PM	5	1233	352	1	22	5	1	2	142	0	0	0	0
4/23/2024	6:30 PM	5	1145	306	1	19	7	0	1	122	0	0	0	0
4/23/2024	6:45 PM	3	1122	286	2	18	5	0	0	104	0	0	0	0
4/23/2024	7:00 PM	2	1069	253	2	16	8	0	0	97	0	1	0	0
4/23/2024	7:15 PM	1	993	225	1	10	8	0	0	85	0	2	0	0
4/23/2024	7:30 PM	1	923	198	1	9	6	0	1	80	0	2	0	0
4/23/2024	7:45 PM	0	839	174	0	10	7	0	1	77	0	2	0	0
4/23/2024	8:00 PM	0	789	160	0	10	5	0	1	82	0	2	0	0
4/23/2024	8:15 PM	0	754	152	0	13	4	0	1	98	0	1	0	0
4/23/2024	8:30 PM	0	739	155	0	17	4	0	0	94	0	2	0	0
4/23/2024	8:45 PM	0	717	144	1	13	2	0	0	93	0	5	0	0
4/23/2024	9:00 PM	0	674	126	2	16	2	0	0	81	0	5	0	0
4/23/2024	9:15 PM	0	629	115	2	13	2	0	0	60	0	7	0	0
4/23/2024	9:30 PM	0	560	88	2	10	1	0	0	56	0	10	0	0
4/23/2024	9:45 PM	0	502	75	1	11	1	0	0	49	0	9	0	0
4/23/2024	10:00 PM	0	449	65	0	6	0	0	0	47	0	10	0	0
4/23/2024	10:15 PM	0	406	55	0	8	0	0	0	48	0	11	0	0
4/23/2024	10:30 PM	0	356	49	1	6	0	0	0	44	0	11	0	0
4/23/2024	10:45 PM	0	315	44	1	5	0	0	0	48	0	11	0	0
4/23/2024	11:00 PM	0	288	41	1	6	0	0	0	56	0	10	0	0
4/23/2024	11:15 PM	0	198	28	1	3	0	0	0	42	0	7	0	0
4/23/2024	11:30 PM	0	128	17	0	2	0	0	0	31	0	3	0	0
4/23/2024	11:45 PM	0	65	8	0	1	0	0	0	16	0	1	0	0

4/24/2024	12:00 AM	0	269	9	0	4	0	0	0	54	0	8	0	0
4/24/2024	12:15 AM	0	250	7	0	3	0	0	0	45	0	7	0	0
4/24/2024	12:30 AM	0	218	9	0	6	0	0	0	45	0	7	0	0
4/24/2024	12:45 AM	0	178	9	0	7	0	0	0	48	0	6	0	0
4/24/2024	1:00 AM	0	155	8	0	8	0	0	0	46	0	6	0	0
4/24/2024	1:15 AM	0	144	7	0	12	0	0	0	49	0	7	0	0
4/24/2024	1:30 AM	0	126	6	0	9	0	0	0	47	0	9	0	0
4/24/2024	1:45 AM	0	120	6	0	9	2	0	2	50	0	14	0	0
4/24/2024	2:00 AM	0	114	5	0	12	2	0	2	54	0	12	0	0
4/24/2024	2:15 AM	0	122	6	0	9	2	0	2	62	0	11	0	0
4/24/2024	2:30 AM	0	126	4	0	9	4	0	2	68	0	9	0	0
4/24/2024	2:45 AM	0	137	3	0	10	2	0	0	75	0	5	0	0
4/24/2024	3:00 AM	0	149	4	0	10	2	0	0	77	0	9	0	0
4/24/2024	3:15 AM	0	160	3	0	13	2	0	0	95	0	9	0	0
4/24/2024	3:30 AM	0	166	3	0	20	1	0	0	119	0	9	0	0
4/24/2024	3:45 AM	0	187	3	0	26	1	0	0	128	0	9	0	0
4/24/2024	4:00 AM	0	222	4	0	25	1	0	0	142	0	7	0	0
4/24/2024	4:15 AM	0	249	3	0	31	1	0	0	157	0	7	0	0
4/24/2024	4:30 AM	0	313	7	0	28	0	0	0	169	0	7	0	0
4/24/2024	4:45 AM	0	397	12	0	28	0	0	1	178	0	6	0	0
4/24/2024	5:00 AM	0	479	12	0	39	0	0	1	195	0	4	0	0
4/24/2024	5:15 AM	0	603	21	1	52	2	0	1	197	0	5	0	0
4/24/2024	5:30 AM	0	722	62	1	55	9	0	1	196	0	7	0	0
4/24/2024	5:45 AM	0	845	149	1	57	13	0	2	216	0	6	0	0
4/24/2024	6:00 AM	0	964	251	1	58	17	0	5	218	1	6	0	0
4/24/2024	6:15 AM	0	1072	389	0	48	19	1	10	204	1	4	0	0
4/24/2024	6:30 AM	1	1238	481	0	55	16	1	16	223	3	2	0	0
4/24/2024	6:45 AM	1	1486	566	0	65	20	3	21	218	6	3	0	0
4/24/2024	7:00 AM	1	1680	642	1	75	21	3	24	229	5	3	0	0
4/24/2024	7:15 AM	1	1782	649	3	88	19	8	25	248	5	5	1	0
4/24/2024	7:30 AM	0	1788	668	3	106	19	11	20	240	3	4	1	0
4/24/2024	7:45 AM	0	1633	624	5	103	16	9	24	251	1	7	2	0
4/24/2024	8:00 AM	1	1539	599	5	108	13	11	25	248	1	7	2	0
4/24/2024	8:15 AM	1	1450	589	4	110	14	5	24	250	4	6	2	0
4/24/2024	8:30 AM	1	1357	568	5	108	12	3	33	248	5	8	2	0
4/24/2024	8:45 AM	1	1323	568	4	139	11	9	27	240	5	4	1	0
4/24/2024	9:00 AM	1	1280	533	4	122	14	8	25	256	7	3	1	0
4/24/2024	9:15 AM	2	1269	515	3	112	18	9	28	256	7	2	1	0
4/24/2024	9:30 AM	3	1304	498	3	96	19	8	20	257	10	0	1	0
4/24/2024	9:45 AM	4	1321	503	2	61	21	3	23	245	13	0	1	0
4/24/2024	10:00 AM	3	1365	533	1	64	19	3	24	226	14	0	1	0
4/24/2024	10:15 AM	3	1383	522	2	61	13	5	20	218	15	0	0	0
4/24/2024	10:30 AM	2	1425	524	1	56	13	7	26	205	14	0	0	0
4/24/2024	10:45 AM	5	1481	522	1	56	8	10	21	221	14	0	0	0
4/24/2024	11:00 AM	5	1466	496	1	54	8	16	18	212	14	0	0	0
4/24/2024	11:15 AM	5	1534	500	2	55	12	18	21	225	12	0	0	0
4/24/2024	11:30 AM	6	1542	521	3	53	13	18	13	236	13	0	0	0
4/24/2024	11:45 AM	2	1515	502	3	50	16	14	13	222	13	0	0	0
4/24/2024	12:00 PM	3	1560	498	3	47	14	7	11	227	12	0	1	0
4/24/2024	12:15 PM	2	1541	503	5	43	15	2	6	221	15	0	1	0
4/24/2024	12:30 PM	2	1550	484	5	45	18	3	9	222	13	0	1	0
4/24/2024	12:45 PM	2	1599	498	6	42	19	7	8	228	12	0	1	0
4/24/2024	1:00 PM	2	1624	538	9	43	19	8	10	245	10	0	0	0
4/24/2024	1:15 PM	3	1679	555	6	35	15	12	9	243	6	0	0	0
4/24/2024	1:30 PM	2	1715	556	5	37	14	11	10	249	5	0	0	0
4/24/2024	1:45 PM	2	1771	562	7	49	10	11	10	237	2	2	0	0
4/24/2024	2:00 PM	2	1831	544	9	41	10	14	9	230	3	3	1	0
4/24/2024	2:15 PM	2	1876	550	8	50	12	14	9	232	6	3	1	0
4/24/2024	2:30 PM	4	1967	598	11	49	11	15	6	213	6	4	1	0
4/24/2024	2:45 PM	4	2037	586	8	36	15	15	6	209	8	3	1	0
4/24/2024	3:00 PM	4	2141	582	4	41	15	13	5	185	10	2	0	0
4/24/2024	3:15 PM	5	2235	570	4	38	14	13	6	180	9	2	0	0
4/24/2024	3:30 PM	3	2188	532	2	32	15	12	7	176	9	1	0	0
4/24/2024	3:45 PM	5	2106	528	3	30	12	8	6	178	8	0	0	0
4/24/2024	4:00 PM	5	1877	531	2	26	13	7	7	166	5	0	0	0
4/24/2024	4:15 PM	4	1636	522	4	20	14	3	8	155	5	0	0	0
4/24/2024	4:30 PM	4	1498	470	3	21	9	1	6	151	4	0	0	0
4/24/2024	4:45 PM	2	1384	451	2	22	8	1	6	133	4	1	0	0
4/24/2024	5:00 PM	2	1390	434	3	23	9	0	5	157	5	2	0	0
4/24/2024	5:15 PM	1	1464	430	1	24	9	1	3	147	3	2	0	0
4/24/2024	5:30 PM	2	1545	444	2	19	9	1	3	145	3	2	0	0
4/24/2024	5:45 PM	3	1534	430	2	18	8	2	4	152	2	1	0	0
4/24/2024	6:00 PM	3	1510	382	1	14	5	2	4	124	2	0	0	0
4/24/2024	6:15 PM	4	1462	334	1	14	3	1	3	125	1	0	0	0
4/24/2024	6:30 PM	4	1346	323	0	20	4	1	4	114	2	0	0	0
4/24/2024	6:45 PM	3	1292	303	0	17	5	0	4	110	2	0	0	0
4/24/2024	7:00 PM	3	1206	287	0	16	7	0	4	119	2	1	0	0
4/24/2024	7:15 PM	2	1110	254	0	13	7	0	4	104	2	1	0	0
4/24/2024	7:30 PM	1	1016	201	0	10	7	0	4	99	1	1	0	0
4/24/2024	7:45 PM	1	930	165	0	13	6	0	2	100	1	2	0	0
4/24/2024	8:00 PM	0	877	136	0	16	4	0	2	92	0	2	0	0
4/24/2024	8:15 PM	0	806	122	0	17	2	0	2	87	0	4	0	0
4/24/2024	8:30 PM	0	778	116	1	13	1	0	1	82	0	4	0	0
4/24/2024	8:45 PM	0	736	105	1	11	1	0	1	68	0	5	0	0
4/24/2024	9:00 PM	0	671	89	1	10	1	0	0	65	0	4	0	0
4/24/2024	9:15 PM	0	621	76	1	11	1	0	0	70	0	5	0	0
4/24/2024	9:30 PM	1	569	63	1	11	0	0	0	67	0	6	0	0
4/24/2024	9:45 PM	1	523	51	1	9	0	0	0	60	0	5	0	0
4/24/2024	10:00 PM	1	490	42	1	6	0	0	0	52	0	8	0	0
4/24/2024	10:15 PM	1	435	35	1	4	0	0	0	48	0	5	0	0
4/24/2024	10:30 PM	0	424	37	1	4	0	0	0	48	0	6	0	0
4/24/2024	10:45 PM	0	384	33	1	5	1	0	0	57	0	5	0	0
4/24/2024	11:00 PM	0	355	34	1	7	1	0	0	56	0	3	0	0
4/24/2024	11:15 PM	0	270	27	1	5	1	0	0	41	0	3	0	0
4/24/2024	11:30 PM	0	152	13	0	4	1	0	0	27	0	1	0	0
4/24/2024	11:45 PM	0	80	8	0	2	0	0	0	11	0	1	0	0

4/25/2024	12:00 AM	3	296	40	0	7	0	0	2	49	0	3	0	0
4/25/2024	12:15 AM	1	273	35	0	7	0	0	2	50	0	5	0	0
4/25/2024	12:30 AM	0	218	21	0	6	1	0	2	47	0	3	0	0
4/25/2024	12:45 AM	0	167	14	0	4	1	0	1	51	0	4	0	0
4/25/2024	1:00 AM	0	138	14	0	5	1	0	0	50	0	5	0	0
4/25/2024	1:15 AM	0	131	13	0	6	2	0	0	53	0	5	1	0
4/25/2024	1:30 AM	0	130	15	0	6	1	0	1	53	0	4	1	0
4/25/2024	1:45 AM	0	116	13	0	6	1	0	1	54	0	5	1	0
4/25/2024	2:00 AM	0	114	16	0	4	1	0	1	58	0	5	1	0
4/25/2024	2:15 AM	0	95	15	0	8	0	0	1	56	0	5	1	0
4/25/2024	2:30 AM	0	99	16	0	9	0	0	0	61	0	8	2	0
4/25/2024	2:45 AM	0	123	18	0	10	1	0	0	69	0	8	2	0
4/25/2024	3:00 AM	0	135	16	0	15	2	0	0	84	0	7	2	0
4/25/2024	3:15 AM	0	158	17	0	18	2	0	0	97	0	7	1	0
4/25/2024	3:30 AM	0	157	16	0	22	2	0	1	113	0	5	0	0
4/25/2024	3:45 AM	0	171	22	0	29	4	0	3	127	0	5	0	0
4/25/2024	4:00 AM	0	219	23	0	27	4	0	4	128	0	7	0	0
4/25/2024	4:15 AM	0	247	32	0	25	5	0	5	134	0	7	1	0
4/25/2024	4:30 AM	0	296	47	0	31	7	0	7	146	0	6	1	0
4/25/2024	4:45 AM	0	342	62	0	36	5	0	6	158	0	5	1	0
4/25/2024	5:00 AM	0	387	88	0	42	6	0	6	177	0	4	1	0
4/25/2024	5:15 AM	0	476	113	2	54	9	1	7	203	0	3	2	0
4/25/2024	5:30 AM	0	599	153	2	56	11	1	6	204	1	3	2	0
4/25/2024	5:45 AM	0	783	221	2	58	13	1	6	205	2	3	2	0
4/25/2024	6:00 AM	0	931	315	2	61	14	3	10	216	3	3	2	0
4/25/2024	6:15 AM	2	1057	399	0	60	17	4	14	208	8	2	0	0
4/25/2024	6:30 AM	4	1266	472	0	61	22	4	20	219	8	3	1	0
4/25/2024	6:45 AM	6	1449	545	0	80	32	6	20	238	11	2	1	0
4/25/2024	7:00 AM	6	1663	595	0	91	33	5	20	234	13	1	1	0
4/25/2024	7:15 AM	4	1759	655	1	96	31	7	22	244	10	1	2	0
4/25/2024	7:30 AM	3	1740	677	1	98	26	14	16	249	10	0	1	0
4/25/2024	7:45 AM	1	1632	664	2	95	15	19	22	229	6	1	2	0
4/25/2024	8:00 AM	1	1512	658	4	86	15	19	18	234	4	4	2	0
4/25/2024	8:15 AM	1	1418	627	3	90	17	15	12	229	3	4	1	0
4/25/2024	8:30 AM	0	1307	620	3	108	17	10	14	211	4	4	1	0
4/25/2024	8:45 AM	1	1302	610	2	111	20	5	11	217	4	3	0	0
4/25/2024	9:00 AM	3	1298	586	2	117	20	4	12	205	6	0	0	0
4/25/2024	9:15 AM	5	1368	561	5	118	17	6	15	207	8	0	1	0
4/25/2024	9:30 AM	5	1431	559	5	105	15	14	13	229	8	0	1	0
4/25/2024	9:45 AM	5	1461	532	5	86	16	13	16	236	10	0	1	0
4/25/2024	10:00 AM	6	1478	544	3	88	16	13	19	251	8	0	1	0
4/25/2024	10:15 AM	6	1487	525	1	86	18	11	19	254	7	0	0	0
4/25/2024	10:30 AM	6	1552	501	1	83	19	1	25	242	5	0	0	0
4/25/2024	10:45 AM	5	1587	502	3	79	18	0	21	242	5	0	0	0
4/25/2024	11:00 AM	2	1634	449	3	69	26	1	23	222	4	0	0	0
4/25/2024	11:15 AM	0	1654	479	2	63	28	1	23	206	3	0	0	0
4/25/2024	11:30 AM	0	1610	500	2	58	30	1	17	211	4	0	0	0
4/25/2024	11:45 AM	0	1631	521	0	59	28	3	17	210	2	0	0	0
4/25/2024	12:00 PM	2	1608	557	1	62	21	2	14	228	5	0	0	0
4/25/2024	12:15 PM	2	1636	835	3	63	18	2	11	242	4	0	0	0
4/25/2024	12:30 PM	2	1668	835	3	64	20	2	12	235	5	0	0	0
4/25/2024	12:45 PM	2	1648	832	7	61	24	0	9	218	6	0	0	0
4/25/2024	1:00 PM	0	1676	858	6	56	31	0	5	213	3	1	0	0
4/25/2024	1:15 PM	0	1691	585	4	52	31	0	6	212	3	1	0	0
4/25/2024	1:30 PM	0	1775	611	8	51	32	0	6	221	2	2	0	0
4/25/2024	1:45 PM	1	1798	635	7	54	31	0	11	221	2	3	0	0
4/25/2024	2:00 PM	2	1839	621	7	63	26	0	17	199	2	3	0	0
4/25/2024	2:15 PM	2	1923	631	9	64	28	0	16	194	3	3	0	0
4/25/2024	2:30 PM	2	1967	609	7	60	27	0	14	166	2	2	0	0
4/25/2024	2:45 PM	1	2067	607	4	56	23	0	11	160	2	2	0	0
4/25/2024	3:00 PM	0	2061	598	4	49	21	1	5	162	2	2	0	0
4/25/2024	3:15 PM	0	1927	571	3	40	17	1	4	140	1	2	0	0
4/25/2024	3:30 PM	1	1781	552	1	37	16	1	5	134	1	2	0	0
4/25/2024	3:45 PM	1	1596	534	1	38	17	1	4	133	0	1	0	0
4/25/2024	4:00 PM	2	1541	523	1	36	16	0	4	128	1	1	0	0
4/25/2024	4:15 PM	2	1482	501	1	35	15	0	9	138	1	1	0	0
4/25/2024	4:30 PM	1	1429	490	1	34	11	0	8	140	1	1	0	0
4/25/2024	4:45 PM	1	1361	452	1	30	9	0	7	135	2	1	0	0
4/25/2024	5:00 PM	0	1277	444	2	28	6	0	7	150	1	0	0	0
4/25/2024	5:15 PM	0	1393	475	1	32	6	0	3	164	1	0	0	0
4/25/2024	5:30 PM	2	1423	471	2	33	5	0	4	165	1	0	0	0
4/25/2024	5:45 PM	5	1476	493	2	30	4	0	5	163	0	0	0	0
4/25/2024	6:00 PM	5	1501	465	4	28	5	0	5	131	0	0	0	0
4/25/2024	6:15 PM	5	1364	423	4	24	6	0	3	106	0	0	0	0
4/25/2024	6:30 PM	4	1339	407	4	24	6	0	1	102	0	0	0	0
4/25/2024	6:45 PM	1	1298	347	4	28	6	0	1	93	0	0	0	0
4/25/2024	7:00 PM	1	1243	323	2	23	5	0	1	94	0	0	0	0
4/25/2024	7:15 PM	1	1213	308	2	22	2	0	1	83	0	1	0	0
4/25/2024	7:30 PM	0	1113	273	1	19	3	0	1	78	0	1	0	0
4/25/2024	7:45 PM	0	1044	268	2	15	5	0	0	79	0	1	0	0
4/25/2024	8:00 PM	0	986	257	1	15	5	0	0	91	0	2	0	0
4/25/2024	8:15 PM	0	876	235	1	11	6	0	0	91	0	2	0	0
4/25/2024	8:30 PM	0	781	218	1	9	4	0	0	90	0	3	0	0
4/25/2024	8:45 PM	0	686	209	0	8	2	0	0	85	0	4	0	0
4/25/2024	9:00 PM	0	568	194	0	10	3	0	0	72	0	4	0	0
4/25/2024	9:15 PM	0	528	189	0	8	2	0	0	71	0	3	0	0
4/25/2024	9:30 PM	0	504	192	0	8	3	0	0	66	0	3	0	0
4/25/2024	9:45 PM	0	486	189	0	8	3	0	0	62	0	2	0	0
4/25/2024	10:00 PM	0	458	181	0	6	1	0	0	58	0	4	0	0
4/25/2024	10:15 PM	0	435	169	0	7	1	0	0	49	0	5	0	0
4/25/2024	10:30 PM	0	400	167	0	9	0	0	0	52	0	5	0	0
4/25/2024	10:45 PM	0	348	162	0	7	0	0	0	51	0	7	0	0
4/25/2024	11:00 PM	0	306	152	0	9	0	0	0	49	0	5	0	0
4/25/2024	11:15 PM	0	208	115	0	8	0	0	0	40	0	4	0	0
4/25/2024	11:30 PM	0	124	70	0	4	0	0	0	22	0	3	0	0
4/25/2024	11:45 PM	0	55	29	0	4	0	0	0	9	0	1	0	0

4/26/2024	12:00 AM	0	284	42	0	9	5	0	1	41	0	4	1	0
4/26/2024	12:15 AM	0	265	38	0	7	4	0	1	36	0	4	1	0
4/26/2024	12:30 AM	0	234	32	0	9	4	0	1	36	0	4	2	0
4/26/2024	12:45 AM	0	185	22	0	7	3	0	0	44	0	4	2	0
4/26/2024	1:00 AM	0	162	23	0	5	3	0	1	44	0	4	3	0
4/26/2024	1:15 AM	0	142	21	0	6	5	0	1	48	0	4	3	0
4/26/2024	1:30 AM	0	120	19	0	5	6	0	2	52	0	5	2	0
4/26/2024	1:45 AM	0	119	19	0	5	9	0	3	53	0	4	1	0
4/26/2024	2:00 AM	0	121	16	0	6	9	0	3	58	0	5	0	0
4/26/2024	2:15 AM	0	126	16	0	5	10	0	3	55	0	6	1	0
4/26/2024	2:30 AM	0	130	15	0	6	9	0	2	55	0	7	2	0
4/26/2024	2:45 AM	0	137	17	0	9	10	0	3	62	0	6	2	0
4/26/2024	3:00 AM	0	145	18	0	12	12	0	3	73	0	7	3	0
4/26/2024	3:15 AM	0	147	17	0	14	15	0	6	87	0	6	2	0
4/26/2024	3:30 AM	0	161	19	0	17	21	0	7	99	0	6	1	0
4/26/2024	3:45 AM	0	177	25	0	18	18	0	5	99	0	6	2	0
4/26/2024	4:00 AM	0	189	37	0	17	14	0	4	114	0	4	3	0
4/26/2024	4:15 AM	0	218	64	0	20	8	0	1	128	0	4	4	0
4/26/2024	4:30 AM	0	261	90	0	23	6	0	0	150	0	2	5	0
4/26/2024	4:45 AM	0	308	106	0	23	7	0	0	174	0	3	4	0
4/26/2024	5:00 AM	0	363	127	0	27	9	0	0	194	0	3	2	0
4/26/2024	5:15 AM	0	424	131	0	28	12	0	0	198	0	2	1	0
4/26/2024	5:30 AM	0	539	158	0	30	11	0	0	195	0	4	2	0
4/26/2024	5:45 AM	0	683	222	0	38	17	0	0	196	0	4	3	0
4/26/2024	6:00 AM	0	821	282	1	40	18	0	3	187	0	4	4	0
4/26/2024	6:15 AM	1	977	360	1	44	22	1	4	195	0	4	4	0
4/26/2024	6:30 AM	4	1157	459	1	45	30	2	6	210	2	3	2	0
4/26/2024	6:45 AM	6	1382	520	1	55	32	2	8	219	3	3	1	0
4/26/2024	7:00 AM	6	1588	588	0	56	38	2	5	211	5	4	0	0
4/26/2024	7:15 AM	5	1681	636	0	62	42	2	8	201	5	4	0	0
4/26/2024	7:30 AM	2	1681	658	1	69	35	1	6	211	3	4	1	0
4/26/2024	7:45 AM	1	1618	673	5	62	41	1	10	218	3	4	3	0
4/26/2024	8:00 AM	2	1538	660	7	64	40	1	11	217	2	2	4	0
4/26/2024	8:15 AM	3	1464	670	11	67	45	0	9	216	3	2	4	0
4/26/2024	8:30 AM	4	1415	650	10	88	54	0	13	212	3	1	3	0
4/26/2024	8:45 AM	6	1402	623	6	99	44	0	12	213	3	0	1	0
4/26/2024	9:00 AM	5	1378	618	5	104	40	0	12	214	2	0	0	0
4/26/2024	9:15 AM	4	1425	594	4	106	29	0	15	224	2	0	0	0
4/26/2024	9:30 AM	3	1505	584	4	77	27	0	14	206	2	0	0	0
4/26/2024	9:45 AM	0	1542	588	5	59	27	4	12	188	2	0	0	0
4/26/2024	10:00 AM	1	1652	583	5	51	27	7	15	193	5	0	0	0
4/26/2024	10:15 AM	2	1767	588	2	43	26	11	12	190	6	0	0	0
4/26/2024	10:30 AM	3	1847	578	6	52	17	16	14	196	11	1	0	0
4/26/2024	10:45 AM	3	1903	566	8	53	16	14	15	198	11	1	0	0
4/26/2024	11:00 AM	4	1947	548	7	62	16	13	14	206	10	1	0	0
4/26/2024	11:15 AM	5	1943	544	10	68	18	11	15	190	11	1	1	0
4/26/2024	11:30 AM	4	1932	556	7	64	25	11	13	177	9	0	1	0
4/26/2024	11:45 AM	7	1946	579	4	73	26	10	10	187	8	0	1	0
4/26/2024	12:00 PM	5	1960	594	8	74	28	9	12	181	8	0	1	0
4/26/2024	12:15 PM	3	1760	516	5	59	22	9	10	178	5	1	0	0
4/26/2024	12:30 PM	3	1544	441	4	47	12	5	7	178	2	1	0	0
4/26/2024	12:45 PM	0	1486	431	4	37	13	8	9	168	6	1	0	0
4/26/2024	1:00 PM	1	1371	408	0	22	7	14	6	166	5	1	0	0
4/26/2024	1:15 PM	1	1475	468	1	33	9	20	8	179	9	0	1	0
4/26/2024	1:30 PM	7	1644	513	2	41	15	19	13	179	9	0	1	0
4/26/2024	1:45 PM	8	1673	500	2	44	8	15	19	172	6	1	1	0
4/26/2024	2:00 PM	11	1806	396	2	49	9	10	19	158	6	1	1	0
4/26/2024	2:15 PM	11	1926	411	1	42	15	4	17	147	4	1	1	0
4/26/2024	2:30 PM	5	2059	436	3	43	10	6	13	139	5	1	1	0
4/26/2024	2:45 PM	5	2164	473	4	46	10	7	8	119	5	0	1	0
4/26/2024	3:00 PM	2	2099	597	8	45	9	6	7	111	5	0	1	0
4/26/2024	3:15 PM	3	2137	603	9	51	5	7	6	117	5	0	0	0
4/26/2024	3:30 PM	7	2008	578	8	46	5	5	6	103	4	0	0	0
4/26/2024	3:45 PM	8	1937	559	7	40	8	6	7	104	5	0	0	0
4/26/2024	4:00 PM	9	1931	529	3	43	8	5	8	96	5	0	0	0
4/26/2024	4:15 PM	8	1907	518	2	35	6	4	8	85	3	0	0	0
4/26/2024	4:30 PM	7	1949	503	0	32	6	4	8	88	3	0	0	0
4/26/2024	4:45 PM	8	1917	455	0	27	5	2	5	92	1	0	0	0
4/26/2024	5:00 PM	7	1917	465	1	23	7	2	5	104	0	0	0	0
4/26/2024	5:15 PM	9	1861	447	1	24	8	1	6	99	0	0	0	0
4/26/2024	5:30 PM	7	1868	508	5	27	9	2	5	100	0	0	0	0
4/26/2024	5:45 PM	4	1852	529	5	29	8	2	6	99	0	0	0	0
4/26/2024	6:00 PM	6	1815	513	4	31	11	2	6	89	0	0	0	0
4/26/2024	6:15 PM	5	1781	505	4	31	9	1	5	93	0	0	0	0
4/26/2024	6:30 PM	9	1683	444	0	27	9	0	8	89	0	0	0	0
4/26/2024	6:45 PM	9	1597	402	0	27	9	0	6	80	0	0	0	0
4/26/2024	7:00 PM	7	1453	380	3	25	5	0	5	77	0	0	0	0
4/26/2024	7:15 PM	6	1342	363	3	25	7	0	6	71	0	1	0	0
4/26/2024	7:30 PM	1	1170	387	3	23	6	0	9	69	0	1	0	0
4/26/2024	7:45 PM	1	995	432	3	22	6	0	10	72	0	1	0	0
4/26/2024	8:00 PM	0	889	515	3	21	5	0	12	70	0	2	0	0
4/26/2024	8:15 PM	1	779	577	4	16	2	0	11	70	0	1	0	0
4/26/2024	8:30 PM	2	705	600	4	18	2	0	9	65	0	1	0	0
4/26/2024	8:45 PM	2	663	609	4	15	2	0	7	60	0	4	0	0
4/26/2024	9:00 PM	2	624	577	1	11	5	0	5	50	0	3	0	0
4/26/2024	9:15 PM	1	649	457	0	10	6	0	6	46	1	3	0	0
4/26/2024	9:30 PM	0	686	328	0	7	6	0	2	49	3	5	0	0
4/26/2024	9:45 PM	0	718	220	0	7	6	0	2	48	4	4	0	0
4/26/2024	10:00 PM	0	735	116	0	5	3	0	1	56	5	4	0	0
4/26/2024	10:15 PM	0	667	100	0	6	2	0	0	50	4	5	0	0
4/26/2024	10:30 PM	0	636	98	1	7	2	0	0	46	2	3	0	0
4/26/2024	10:45 PM	0	577	90	1	6	1	0	0	44	1	1	0	0
4/26/2024	11:00 PM	1	506	75	1	7	1	0	0	40	1	1	0	0
4/26/2024	11:15 PM	1	362	53	1	4	1	0	0	31	1	0	0	0
4/26/2024	11:30 PM	1	212	32	0	2	0	0	0	21	1	0	0	0
4/26/2024	11:45 PM	1	87	12	0	1	0	0	0	10	1	0	0	0

4/27/2024	12:00 AM	0	328	75	0	2	2	0	0	36	0	5	0	0
4/27/2024	12:15 AM	0	298	72	0	1	2	0	0	37	0	3	0	0
4/27/2024	12:30 AM	0	258	62	0	1	1	0	0	34	0	3	0	0
4/27/2024	12:45 AM	0	207	52	0	3	2	0	0	34	0	3	0	0
4/27/2024	1:00 AM	0	182	40	0	3	1	0	0	35	0	4	0	0
4/27/2024	1:15 AM	0	166	32	0	4	1	0	0	32	0	6	0	0
4/27/2024	1:30 AM	0	148	31	0	5	5	0	0	29	0	4	0	0
4/27/2024	1:45 AM	0	133	30	0	3	4	0	0	28	0	6	0	0
4/27/2024	2:00 AM	0	131	34	0	5	4	0	0	23	0	7	0	0
4/27/2024	2:15 AM	0	116	34	0	5	5	0	0	23	0	7	0	0
4/27/2024	2:30 AM	0	100	30	0	7	2	0	0	28	0	8	0	0
4/27/2024	2:45 AM	0	104	35	0	6	2	0	0	29	0	7	0	0
4/27/2024	3:00 AM	0	109	38	0	7	4	0	0	33	0	4	0	0
4/27/2024	3:15 AM	0	127	41	0	8	5	0	0	42	0	5	0	0
4/27/2024	3:30 AM	0	147	47	0	6	8	0	0	45	0	8	0	0
4/27/2024	3:45 AM	0	156	46	0	10	8	0	0	50	0	9	0	0
4/27/2024	4:00 AM	0	173	50	0	9	6	0	0	49	0	9	0	0
4/27/2024	4:15 AM	0	199	51	1	9	4	0	0	36	0	6	0	0
4/27/2024	4:30 AM	0	225	54	1	13	0	0	0	33	0	3	0	0
4/27/2024	4:45 AM	0	267	56	1	16	2	0	0	31	0	1	0	0
4/27/2024	5:00 AM	0	276	52	1	19	2	0	0	33	0	2	0	0
4/27/2024	5:15 AM	0	291	68	0	19	3	0	0	45	0	5	0	0
4/27/2024	5:30 AM	0	327	86	0	17	4	0	0	45	0	5	0	0
4/27/2024	5:45 AM	2	389	107	0	13	3	0	0	48	0	5	0	0
4/27/2024	6:00 AM	4	480	149	0	11	4	0	0	45	0	4	0	0
4/27/2024	6:15 AM	4	548	166	1	16	4	0	0	43	0	4	0	0
4/27/2024	6:30 AM	4	637	182	2	19	4	0	2	55	0	3	0	0
4/27/2024	6:45 AM	3	690	223	2	20	4	0	3	58	0	3	0	0
4/27/2024	7:00 AM	1	812	253	2	20	5	0	3	67	0	3	0	0
4/27/2024	7:15 AM	1	933	283	1	26	6	0	4	65	0	1	0	0
4/27/2024	7:30 AM	1	1014	315	0	24	8	0	4	61	0	1	0	0
4/27/2024	7:45 AM	0	1160	341	0	26	12	0	6	64	0	1	0	0
4/27/2024	8:00 AM	1	1211	346	1	33	11	0	11	62	0	1	0	0
4/27/2024	8:15 AM	4	1284	346	2	36	13	0	10	74	0	0	0	0
4/27/2024	8:30 AM	8	1336	356	2	42	11	0	8	75	0	0	0	0
4/27/2024	8:45 AM	9	1464	360	2	47	8	0	6	74	0	0	0	0
4/27/2024	9:00 AM	8	1623	368	2	47	11	0	3	78	0	0	0	0
4/27/2024	9:15 AM	6	1688	387	2	41	8	0	4	76	0	0	0	0
4/27/2024	9:30 AM	2	1802	389	2	36	7	0	10	79	0	0	0	0
4/27/2024	9:45 AM	4	1825	380	2	32	8	0	10	76	0	0	0	0
4/27/2024	10:00 AM	8	1838	415	3	30	7	0	9	68	0	0	0	0
4/27/2024	10:15 AM	9	1910	431	3	23	9	0	9	67	0	0	0	0
4/27/2024	10:30 AM	10	1970	457	3	23	11	0	3	57	0	0	0	0
4/27/2024	10:45 AM	11	1983	487	3	22	9	0	4	63	0	0	0	0
4/27/2024	11:00 AM	10	1993	476	1	22	7	0	3	68	0	0	0	0
4/27/2024	11:15 AM	10	2044	476	0	22	6	0	4	61	0	0	0	0
4/27/2024	11:30 AM	13	2088	469	0	23	6	0	8	67	0	0	0	0
4/27/2024	11:45 AM	10	2115	459	1	21	6	0	11	60	0	0	0	0
4/27/2024	12:00 PM	7	2128	459	1	29	7	0	13	56	0	0	0	0
4/27/2024	12:15 PM	6	2137	451	3	33	6	0	14	60	0	0	0	0
4/27/2024	12:30 PM	7	2147	457	4	33	6	0	11	60	0	0	0	0
4/27/2024	12:45 PM	14	2134	446	3	39	5	0	10	63	0	0	0	0
4/27/2024	1:00 PM	16	2162	454	3	28	4	0	11	65	0	0	0	0
4/27/2024	1:15 PM	16	2135	474	1	25	6	0	9	69	0	0	0	0
4/27/2024	1:30 PM	11	2091	435	0	23	5	0	12	61	0	0	0	0
4/27/2024	1:45 PM	6	2106	444	1	17	7	0	11	51	0	0	0	0
4/27/2024	2:00 PM	6	2142	432	3	20	6	0	10	57	0	0	0	0
4/27/2024	2:15 PM	8	2156	409	5	26	4	0	9	45	0	0	0	0
4/27/2024	2:30 PM	8	2158	427	5	27	5	0	7	40	0	0	0	0
4/27/2024	2:45 PM	9	2149	415	4	31	5	0	5	41	0	0	0	0
4/27/2024	3:00 PM	8	2074	415	3	27	7	0	3	32	1	0	0	0
4/27/2024	3:15 PM	5	2039	421	2	22	6	0	5	35	1	0	0	0
4/27/2024	3:30 PM	6	1951	413	2	21	5	0	4	43	1	0	0	0
4/27/2024	3:45 PM	4	1906	413	3	19	4	0	4	44	1	0	0	0
4/27/2024	4:00 PM	4	1903	385	2	18	2	0	10	45	0	0	0	0
4/27/2024	4:15 PM	7	1866	374	2	16	3	0	9	49	0	0	0	0
4/27/2024	4:30 PM	8	1910	369	2	18	3	0	8	45	0	0	0	0
4/27/2024	4:45 PM	10	1835	362	2	15	2	0	10	47	0	0	0	0
4/27/2024	5:00 PM	12	1778	350	2	16	4	0	10	46	0	0	0	0
4/27/2024	5:15 PM	11	1719	332	2	16	4	0	13	39	0	0	0	0
4/27/2024	5:30 PM	9	1641	331	4	14	3	0	13	34	0	0	0	0
4/27/2024	5:45 PM	5	1632	308	4	13	3	0	10	30	0	0	0	0
4/27/2024	6:00 PM	3	1562	293	4	14	2	0	6	30	0	0	0	0
4/27/2024	6:15 PM	2	1485	285	4	13	1	0	5	28	0	0	0	0
4/27/2024	6:30 PM	3	1444	266	3	12	1	0	7	30	0	0	0	0
4/27/2024	6:45 PM	3	1354	249	2	14	1	0	7	29	0	1	0	0
4/27/2024	7:00 PM	5	1270	242	2	9	0	0	6	26	0	1	0	0
4/27/2024	7:15 PM	5	1214	261	1	9	0	0	3	27	0	1	0	0
4/27/2024	7:30 PM	4	1093	252	0	6	0	0	1	27	0	1	1	0
4/27/2024	7:45 PM	4	1009	283	1	4	0	0	2	30	0	0	1	0
4/27/2024	8:00 PM	1	911	291	2	11	0	0	1	29	0	0	1	0
4/27/2024	8:15 PM	0	883	264	2	10	1	0	1	28	0	0	1	0
4/27/2024	8:30 PM	0	836	254	2	13	1	0	1	29	0	0	0	0
4/27/2024	8:45 PM	0	800	217	1	15	4	0	0	24	0	0	0	0
4/27/2024	9:00 PM	0	787	190	0	9	4	0	0	20	0	0	0	0
4/27/2024	9:15 PM	0	717	177	0	8	4	0	0	17	0	0	0	0
4/27/2024	9:30 PM	0	688	166	0	6	4	0	0	14	0	0	0	0
4/27/2024	9:45 PM	0	645	150	0	4	1	0	0	16	0	0	0	0
4/27/2024	10:00 PM	0	604	145	2	5	1	0	0	15	0	0	0	0
4/27/2024	10:15 PM	0	577	133	3	6	0	0	0	16	0	0	0	0
4/27/2024	10:30 PM	1	539	128	3	5	0	0	0	19	0	0	0	0
4/27/2024	10:45 PM	1	506	125	3	5	0	0	0	16	0	0	0	0
4/27/2024	11:00 PM	1	464	113	2	4	0	0	0	16	0	0	0	0
4/27/2024	11:15 PM	1	327	79	1	3	0	0	0	12	0	0	0	0
4/27/2024	11:30 PM	0	213	50	1	3	0	0	0	5	0	0	0	0
4/27/2024	11:45 PM	0	102	19	1	1	0	0	0	2	0	0	0	0

Bi-Directional Class Count || SB WB 15min

Columbia, SC

Marr Traffic DATA COLLECTION
www.marrtraffic.com

Site 4
I-26 W/Bound Off-Ramp,
east of US-76

Date
Sunday, April 21, 2024

Lat/Long
34.030082°, -81.103054°

Weather
Cloudy
66°F

Click here for Detailed Weather

Click here for Map

0000 - 2400 (Sunday 24h Session) (04-21-2024)
SB WB 15min

	Westbound (Movement 4.1)													15min	60min
Time	1	2	3	4	5	6	7	8	9	10	11	12	13	Total	Total
0000 - 0015	1	102	32	1	0	0	0	0	2	0	0	0	0	**138**	
0015 - 0030	0	100	19	0	1	1	0	0	5	0	0	0	0	**126**	
0030 - 0045	0	106	17	1	1	1	0	0	3	0	0	0	0	**129**	
0045 - 0100	0	78	16	0	0	0	0	1	3	0	0	0	0	**98**	**491**
0100 - 0115	0	63	14	0	1	0	0	1	1	0	1	0	0	**81**	
0115 - 0130	1	60	17	0	0	1	0	0	4	0	0	0	0	**83**	
0130 - 0145	0	53	11	0	1	0	0	0	1	0	0	0	0	**66**	
0145 - 0200	0	58	13	0	2	0	0	0	2	0	0	0	0	**75**	**305**
0200 - 0215	0	39	9	0	0	0	0	0	4	0	0	0	0	**52**	
0215 - 0230	0	42	8	0	0	0	0	0	2	0	0	0	0	**52**	
0230 - 0245	0	43	5	0	1	0	0	0	3	0	0	0	0	**52**	
0245 - 0300	0	25	3	0	1	0	0	0	4	0	0	0	0	**33**	**189**
0300 - 0315	0	36	10	0	0	0	0	0	2	0	1	0	0	**49**	
0315 - 0330	0	42	7	0	0	0	0	0	4	0	0	0	0	**53**	
0330 - 0345	0	30	8	0	1	0	0	0	6	0	1	0	0	**46**	
0345 - 0400	0	24	8	0	0	0	0	0	3	0	0	0	0	**35**	**183**
0400 - 0415	0	27	5	0	1	0	0	0	0	0	0	0	0	**33**	
0415 - 0430	0	35	5	0	1	1	0	0	5	0	0	0	0	**47**	
0430 - 0445	0	33	7	0	4	0	0	0	3	0	0	0	0	**47**	
0445 - 0500	0	45	11	0	0	0	0	0	3	0	0	0	0	**59**	**186**
0500 - 0515	0	40	9	0	0	0	0	0	1	0	0	0	0	**50**	
0515 - 0530	0	37	11	0	1	0	0	0	7	0	0	0	0	**56**	
0530 - 0545	0	68	8	0	0	0	0	0	5	0	0	0	0	**81**	
0545 - 0600	0	58	13	0	0	0	0	0	6	0	0	0	0	**77**	**264**
0600 - 0615	0	48	9	0	2	0	0	0	2	0	0	0	0	**61**	
0615 - 0630	0	85	11	0	3	0	0	0	4	0	0	0	0	**103**	
0630 - 0645	2	83	13	0	3	0	0	0	5	0	0	0	0	**106**	
0645 - 0700	0	86	24	0	2	0	0	0	3	0	0	0	0	**115**	**385**
0700 - 0715	1	108	21	0	6	1	0	0	6	0	0	0	0	**143**	
0715 - 0730	0	113	38	0	3	0	0	1	6	0	0	0	0	**161**	
0730 - 0745	0	173	22	0	1	0	0	1	5	0	0	0	0	**202**	
0745 - 0800	0	170	33	1	1	1	0	0	7	0	0	0	0	**213**	**719**
0800 - 0815	0	156	34	0	1	0	0	1	9	0	0	0	0	**201**	
0815 - 0830	0	155	39	1	2	0	0	1	4	0	0	0	0	**202**	
0830 - 0845	1	190	49	0	3	0	0	0	7	0	0	0	0	**250**	
0845 - 0900	0	201	44	0	3	0	0	0	3	0	0	0	0	**251**	**904**
0900 - 0915	0	229	51	1	3	1	0	0	8	0	1	0	0	**294**	
0915 - 0930	0	236	47	2	0	0	0	1	8	0	0	0	0	**294**	
0930 - 0945	0	320	63	1	3	1	0	1	5	0	0	0	0	**394**	
0945 - 1000	0	330	93	1	3	1	0	2	11	0	0	0	0	**441**	**1423**
1000 - 1015	0	367	75	1	4	0	0	2	4	0	0	0	0	**453**	
1015 - 1030	0	356	106	0	1	0	0	0	8	0	0	0	0	**471**	
1030 - 1045	0	416	101	1	2	1	0	2	15	0	0	0	0	**538**	
1045 - 1100	0	424	87	0	3	0	0	2	9	0	0	0	0	**525**	**1987**
1100 - 1115	0	425	102	1	4	0	0	1	6	0	0	0	0	**539**	
1115 - 1130	0	452	89	1	2	0	0	1	15	0	1	0	0	**561**	
1130 - 1145	1	385	112	0	2	0	0	3	4	0	0	0	0	**507**	
1145 - 1200	1	475	92	0	4	1	0	2	20	0	0	0	0	**595**	**2202**
1200 - 1215	3	531	113	3	2	0	0	0	8	0	0	0	0	**660**	
1215 - 1230	0	527	108	4	2	1	0	0	5	0	0	0	0	**647**	
1230 - 1245	1	576	130	0	5	1	0	1	7	0	0	0	0	**721**	
1245 - 1300	0	622	125	1	5	0	0	0	12	0	0	0	0	**765**	**2793**
1300 - 1315	0	556	124	1	7	1	0	1	11	0	0	0	0	**701**	
1315 - 1330	0	592	133	0	5	0	0	0	5	0	0	0	0	**735**	
1330 - 1345	0	559	104	0	3	1	0	0	8	0	1	0	0	**676**	
1345 - 1400	0	581	124	1	5	1	0	2	6	0	0	0	0	**720**	**2832**
1400 - 1415	0	532	91	0	6	2	0	0	7	0	0	0	0	**638**	
1415 - 1430	0	552	98	0	7	2	0	0	18	0	0	0	0	**677**	
1430 - 1445	0	541	96	1	3	0	0	0	7	0	0	0	0	**648**	
1445 - 1500	0	509	97	0	5	0	0	0	11	0	0	0	0	**622**	**2585**
1500 - 1515	0	544	91	1	4	0	0	0	9	0	0	0	0	**649**	
1515 - 1530	0	519	92	2	5	0	0	0	13	0	0	0	0	**631**	
1530 - 1545	0	510	103	0	2	1	0	0	7	0	0	0	0	**623**	
1545 - 1600	0	522	111	1	3	1	0	1	2	0	0	0	0	**641**	**2544**
1600 - 1615	0	522	82	0	5	1	0	0	13	0	0	0	0	**623**	
1615 - 1630	0	525	97	0	5	0	0	0	12	0	0	0	0	**639**	
1630 - 1645	1	495	82	2	7	0	0	0	12	0	0	0	0	**599**	
1645 - 1700	0	492	87	1	5	0	0	0	11	0	0	0	0	**596**	**2457**
1700 - 1715	0	510	85	1	4	1	0	1	13	0	0	0	0	**615**	
1715 - 1730	0	435	85	1	4	0	0	0	13	0	0	0	0	**538**	
1730 - 1745	0	463	89	0	3	1	0	2	17	0	0	0	0	**575**	
1745 - 1800	0	460	103	0	2	2	0	1	11	0	0	0	0	**579**	**2307**
1800 - 1815	0	452	78	1	4	1	0	0	8	0	0	0	0	**544**	
1815 - 1830	0	488	99	1	3	0	0	1	12	0	0	0	0	**604**	
1830 - 1845	0	370	72	0	1	0	0	0	17	0	0	0	0	**460**	
1845 - 1900	1	346	59	0	2	1	0	0	13	0	0	0	0	**422**	**2030**
1900 - 1915	1	311	54	0	5	0	0	0	9	0	0	0	0	**380**	
1915 - 1930	0	326	51	0	3	1	0	2	16	0	0	0	0	**399**	
1930 - 1945	0	321	55	0	3	0	0	1	10	0	2	0	0	**392**	
1945 - 2000	0	267	47	0	0	0	0	2	10	0	1	0	0	**327**	**1498**
2000 - 2015	0	246	48	0	2	0	0	0	12	0	0	0	0	**308**	
2015 - 2030	0	232	31	1	5	0	0	1	12	0	0	0	0	**282**	
2030 - 2045	0	200	40	0	3	0	0	0	8	0	0	0	0	**251**	
2045 - 2100	0	150	39	1	2	0	0	0	11	0	0	0	0	**203**	**1044**
2100 - 2115	0	176	44	0	2	1	0	0	7	0	0	0	0	**230**	
2115 - 2130	0	155	31	0	2	0	0	0	4	0	0	0	0	**192**	
2130 - 2145	0	147	35	1	1	0	0	0	11	0	0	0	0	**195**	
2145 - 2200	0	123	24	0	2	0	0	0	12	0	0	0	0	**161**	**778**
2200 - 2215	0	106	23	0	4	0	0	0	16	0	0	0	0	**149**	
2215 - 2230	0	109	18	0	2	1	0	2	12	0	0	0	0	**144**	
2230 - 2245	0	85	18	0	1	0	0	0	8	0	0	0	0	**112**	
2245 - 2300	0	88	16	0	1	1	0	0	5	0	3	0	0	**114**	**519**
2300 - 2315	0	93	15	0	0	0	0	0	5	0	0	0	0	**113**	
2315 - 2330	0	89	15	1	1	0	0	0	3	0	0	0	0	**109**	
2330 - 2345	0	72	10	0	0	0	1	0	10	0	0	0	0	**93**	
2345 - 0000	0	52	6	0	1	0	0	0	6	0	0	0	0	**65**	**380**

Session Total	15	24906	4999	39	231	33	1	41	728	0	12	0	0	**31005**
Session Average	0.16	259.44	52.07	0.41	2.41	0.34	0.01	0.43	7.58	0.00	0.13	0.00	0.00	**322.97**
Session Percentage	0.05	80.33	16.12	0.13	0.75	0.11	0.00	0.13	2.35	0.00	0.04	0.00	0.00	

AM Peak Hour	0615 - 0715	0945 - 1045	0945 - 1045	0900 - 1000	0615 - 0715	0900 - 1000	-	0915 - 1015	0945 - 1045	-	0815 - 0915	-	-	**0945 - 1045**
AM Peak Volume	3	1469	375	5	14	3	0	6	38	0	1	0	0	**1903**

Noon Peak Hour	1115 - 1215	1230 - 1330	1230 - 1330	1200 - 1300	1230 - 1330	1330 - 1430	-	1045 - 1145	1115 - 1215	-	1030 - 1130	-	-	**1230 - 1330**
Noon Peak Volume	5	2346	512	8	22	6	0	7	47	0	1	0	0	**2922**

PM Peak Hour	1815 - 1915	1500 - 1600	1500 - 1600	1630 - 1730	1600 - 1700	1700 - 1800	-	1900 - 2000	1830 - 1930	-	1900 - 2000	-	-	**1500 - 1600**
PM Peak Volume	2	2095	397	5	22	4	0	5	55	0	3	0	0	**2544**

Site 4
I-26 W/Bound Off-Ramp,
east of US-76

Date
Monday, April 22, 2024

Lat/Long
34.030082°, -81.103054°

Weather
Mostly Cloudy
57°F

Click here for Detailed Weather

0000 - 2400 (Weekday 24h Session) (04-22-2024)
SB WB 15min

	Westbound (Movement 4.1)													15min	60min
Time	1	2	3	4	5	6	7	8	9	10	11	12	13	Total	Total
0000 - 0015	0	50	10	0	0	0	0	0	5	0	0	0	0	**65**	
0015 - 0030	0	70	8	0	0	0	0	0	5	0	0	0	0	**83**	
0030 - 0045	0	78	9	0	2	0	0	1	6	0	0	0	0	**96**	
0045 - 0100	0	47	5	0	1	0	0	0	4	0	0	0	0	**57**	**301**
0100 - 0115	0	54	7	0	1	0	0	0	5	0	1	0	0	**68**	
0115 - 0130	0	47	5	0	0	0	0	0	8	0	0	0	0	**60**	
0130 - 0145	0	31	3	0	1	0	0	0	7	0	1	0	0	**43**	
0145 - 0200	0	30	4	0	2	0	0	0	3	0	0	0	0	**39**	**210**
0200 - 0215	0	30	4	0	0	1	0	1	5	0	0	0	0	**41**	
0215 - 0230	0	31	2	0	2	1	0	0	10	1	0	0	0	**47**	
0230 - 0245	0	34	3	0	2	0	0	0	9	0	0	0	0	**48**	
0245 - 0300	0	20	2	0	1	0	0	1	9	0	0	0	0	**33**	**169**
0300 - 0315	0	23	3	0	3	1	0	1	18	1	0	0	0	**50**	
0315 - 0330	0	27	4	0	2	1	0	1	14	0	2	0	0	**51**	
0330 - 0345	0	41	6	0	1	1	0	1	15	1	0	0	0	**66**	
0345 - 0400	0	39	5	0	1	2	0	2	20	1	1	0	0	**71**	**238**
0400 - 0415	0	35	5	0	1	1	0	2	17	0	1	0	0	**62**	
0415 - 0430	0	43	5	0	5	1	0	0	16	1	0	0	0	**71**	
0430 - 0445	0	58	7	0	6	3	0	3	20	1	2	0	0	**100**	
0445 - 0500	0	62	12	0	3	4	0	2	21	2	2	0	0	**108**	**341**
0500 - 0515	0	73	13	0	6	2	0	1	28	2	0	0	0	**125**	
0515 - 0530	0	105	22	0	6	3	0	1	26	1	0	0	0	**164**	
0530 - 0545	0	135	26	0	5	2	0	2	40	2	1	0	0	**213**	
0545 - 0600	0	136	27	1	6	1	0	1	35	1	0	0	0	**208**	**710**
0600 - 0615	0	180	35	1	9	4	0	2	26	2	0	0	0	**259**	
0615 - 0630	0	256	42	0	10	6	0	2	40	4	1	0	0	**361**	
0630 - 0645	0	282	68	0	8	3	0	3	55	3	0	0	0	**422**	
0645 - 0700	0	309	92	0	8	4	0	2	40	1	0	0	0	**456**	**1498**
0700 - 0715	1	325	104	0	9	6	0	3	54	3	0	0	0	**505**	
0715 - 0730	0	418	124	0	19	8	0	3	47	2	0	0	0	**621**	
0730 - 0745	0	530	153	0	24	5	0	3	50	2	0	0	0	**767**	
0745 - 0800	0	565	138	1	20	5	0	4	50	1	0	0	0	**784**	**2677**
0800 - 0815	0	453	115	0	20	9	0	3	49	2	0	0	0	**651**	
0815 - 0830	0	433	101	0	19	5	0	3	44	1	0	1	0	**607**	
0830 - 0845	0	385	134	0	19	5	0	2	36	2	0	0	0	**583**	
0845 - 0900	0	392	122	2	28	4	0	6	37	1	0	0	0	**592**	**2433**
0900 - 0915	0	362	124	1	35	8	0	7	43	2	0	0	0	**582**	
0915 - 0930	0	361	101	1	25	8	0	3	51	3	0	0	0	**553**	
0930 - 0945	0	392	112	1	18	8	0	1	55	2	0	1	0	**590**	
0945 - 1000	0	390	91	1	14	4	0	4	54	2	0	0	0	**560**	**2285**
1000 - 1015	0	355	111	0	20	7	0	2	43	1	0	0	0	**539**	
1015 - 1030	0	372	90	0	13	5	0	7	44	1	0	0	0	**532**	
1030 - 1045	0	370	98	0	10	5	0	5	46	2	0	0	0	**536**	
1045 - 1100	0	422	82	2	13	9	0	3	38	1	0	0	0	**570**	**2177**
1100 - 1115	0	380	131	0	18	8	0	8	64	4	0	0	0	**613**	
1115 - 1130	0	402	136	2	13	2	0	4	46	1	0	0	0	**606**	
1130 - 1145	0	405	117	0	17	6	0	4	60	2	0	1	0	**612**	
1145 - 1200	2	416	128	1	10	8	0	4	47	2	0	0	0	**618**	**2449**
1200 - 1215	1	385	129	0	16	7	1	2	48	1	1	0	0	**591**	
1215 - 1230	2	431	126	1	15	4	1	6	47	0	0	1	0	**634**	
1230 - 1245	0	399	152	1	14	7	1	5	43	0	0	0	0	**622**	
1245 - 1300	0	386	137	1	12	5	0	3	60	2	0	0	0	**606**	**2453**
1300 - 1315	0	399	131	1	17	10	0	0	60	0	1	0	0	**619**	
1315 - 1330	0	390	112	0	16	3	0	4	53	0	0	0	0	**578**	
1330 - 1345	1	414	129	2	10	5	0	1	64	0	0	0	0	**626**	
1345 - 1400	4	400	108	1	14	6	0	1	49	0	0	0	0	**583**	**2406**
1400 - 1415	1	441	135	0	15	4	0	2	45	0	1	0	0	**644**	
1415 - 1430	1	472	126	0	19	5	0	0	66	1	0	0	0	**690**	
1430 - 1445	0	469	126	0	19	8	1	5	56	0	0	0	0	**684**	
1445 - 1500	1	426	154	1	16	5	0	10	57	0	0	0	0	**670**	**2688**
1500 - 1515	1	459	121	3	11	4	1	1	56	1	0	1	0	**659**	
1515 - 1530	0	495	143	4	16	2	2	3	43	0	1	0	0	**709**	
1530 - 1545	0	298	89	2	9	0	1	1	22	0	0	0	0	**422**	
1545 - 1600	0	226	66	1	7	7	0	0	21	0	0	0	0	**328**	**2118**
1600 - 1615	0	469	130	2	14	4	0	1	57	0	1	0	0	**678**	
1615 - 1630	0	353	93	0	9	5	1	1	62	0	0	0	0	**524**	
1630 - 1645	0	332	93	0	7	3	0	1	46	0	0	0	0	**482**	
1645 - 1700	0	349	106	1	1	0	0	1	45	0	0	0	0	**503**	**2187**
1700 - 1715	0	330	88	0	4	3	0	0	38	0	0	0	0	**463**	
1715 - 1730	0	345	92	0	7	1	0	1	44	0	1	0	0	**491**	
1730 - 1745	0	353	95	0	9	3	0	1	28	0	2	0	0	**491**	
1745 - 1800	0	388	113	1	1	2	0	3	41	0	0	0	0	**549**	**1994**
1800 - 1815	1	421	115	0	8	4	0	2	23	0	0	0	0	**574**	
1815 - 1830	0	390	81	0	7	1	0	1	30	0	0	0	0	**510**	
1830 - 1845	2	341	77	0	2	2	0	1	29	0	0	0	0	**454**	
1845 - 1900	0	345	72	0	3	2	0	1	24	0	0	0	0	**447**	**1985**
1900 - 1915	1	293	81	0	1	1	0	0	27	0	0	0	0	**404**	
1915 - 1930	0	302	57	0	3	0	0	0	31	0	0	0	0	**393**	
1930 - 1945	0	266	54	0	5	4	0	1	22	0	0	0	0	**352**	
1945 - 2000	0	289	61	0	4	0	0	0	21	0	1	0	0	**376**	**1525**
2000 - 2015	0	207	54	0	3	0	0	1	18	0	0	0	0	**283**	
2015 - 2030	1	226	41	0	3	4	0	2	19	0	0	0	0	**296**	
2030 - 2045	0	221	39	0	2	1	0	0	19	0	0	0	0	**282**	
2045 - 2100	0	169	27	0	1	1	0	1	20	0	0	0	0	**219**	**1080**
2100 - 2115	0	180	37	1	3	0	0	0	9	0	1	0	0	**231**	
2115 - 2130	0	150	26	0	1	0	0	0	15	0	1	0	0	**193**	
2130 - 2145	0	135	21	0	3	0	0	1	26	0	2	0	0	**188**	
2145 - 2200	0	118	26	0	1	1	0	0	13	0	1	1	0	**161**	**773**
2200 - 2215	0	125	24	0	0	0	0	0	12	0	0	0	0	**161**	
2215 - 2230	0	111	26	0	2	1	0	2	11	0	2	0	0	**155**	
2230 - 2245	0	95	20	0	2	1	0	2	12	0	4	1	0	**137**	
2245 - 2300	0	77	16	0	2	1	0	1	13	0	2	0	0	**112**	**565**
2300 - 2315	0	75	18	0	1	2	0	0	13	0	3	0	0	**112**	
2315 - 2330	0	81	23	1	2	0	0	0	7	0	1	0	0	**115**	
2330 - 2345	0	77	24	0	1	0	0	0	9	0	3	0	0	**114**	
2345 - 0000	0	51	14	0	1	0	0	1	13	0	4	0	0	**84**	**425**

Session Total	20	24608	6574	38	795	295	9	178	3052	66	45	7	0	**35687**
Session Average	0.21	256.33	68.48	0.40	8.28	3.07	0.09	1.85	31.79	0.69	0.47	0.07	0.00	**371.74**
Session Percentage	0.06	68.96	18.42	0.11	2.23	0.83	0.03	0.50	8.55	0.18	0.13	0.02	0.00	

AM Peak Hour	0615 - 0715	0730 - 0830	0715 - 0815	0845 - 0945	0830 - 0930	0845 - 0945	-	0815 - 0915	0900 - 1000	0615 - 0715	0530 - 0630	0730 - 0830	-	**0715 - 0815**
AM Peak Volume	1	1981	530	5	107	28	0	18	203	11	2	1	0	**2823**

Noon Peak Hour	1330 - 1430	1430 - 1530	1215 - 1315	1445 - 1545	1400 - 1500	1015 - 1115	1430 - 1530	1015 - 1115	1245 - 1345	1100 - 1200	1115 - 1215	1130 - 1230	-	**1430 - 1530**
Noon Peak Volume	7	1849	546	10	69	27	4	23	237	9	1	2	0	**2722**

PM Peak Hour	1745 - 1845	1730 - 1830	1515 - 1615	1500 - 1600	1515 - 1615	1545 - 1645	1500 - 1600	1715 - 1815	1600 - 1700	1500 - 1600	1645 - 1745	1500 - 1600	-	**1600 - 1700**
PM Peak Volume	3	1552	428	10	46	19	4	7	210	1	3	1	0	**2187**

Site 4
I-26 W/Bound Off-Ramp,
east of US-76

Date
Tuesday, April 23, 2024

Lat/Long
34.030082°, -81.103054°

Weather
Fair
58°F

Click here for Detailed Weather

0000 - 2400 (Weekday 24h Session) (04-23-2024)
SB WB 15min

	Westbound (Movement 4.1)													15min	60min
TIME	1	2	3	4	5	6	7	8	9	10	11	12	13	Total	Total
0000 - 0015	1	69	8	0	0	0	0	0	14	0	0	0	0	**92**	
0015 - 0030	1	81	11	0	2	0	0	2	14	0	0	0	0	**111**	
0030 - 0045	0	54	11	0	0	0	0	0	13	0	1	0	0	**79**	
0045 - 0100	0	42	6	0	1	0	0	0	6	0	3	0	0	**58**	**340**
0100 - 0115	0	42	8	0	2	0	0	2	13	0	2	0	0	**69**	
0115 - 0130	0	41	5	0	1	0	0	1	9	0	1	0	0	**58**	
0130 - 0145	0	30	6	0	6	1	0	2	13	0	2	0	0	**60**	
0145 - 0200	0	25	4	0	1	0	0	1	17	0	2	0	0	**50**	**237**
0200 - 0215	0	27	7	0	0	0	0	1	17	0	5	0	0	**57**	
0215 - 0230	0	21	3	0	4	0	0	2	8	0	3	0	0	**41**	
0230 - 0245	0	21	2	0	2	0	0	0	10	0	0	0	0	**35**	
0245 - 0300	0	18	4	0	1	0	0	0	9	0	5	0	0	**37**	**170**
0300 - 0315	1	19	7	0	2	0	0	3	17	0	4	0	0	**53**	
0315 - 0330	0	24	9	0	4	0	0	5	13	0	3	0	0	**58**	
0330 - 0345	0	34	10	0	2	1	0	1	18	0	2	0	0	**68**	
0345 - 0400	0	29	8	0	4	1	0	0	30	0	4	0	1	**77**	**256**
0400 - 0415	0	29	7	0	7	2	0	2	20	0	2	0	0	**69**	
0415 - 0430	0	35	15	0	6	2	0	0	32	0	3	0	0	**93**	
0430 - 0445	0	55	20	0	9	3	0	0	38	0	3	0	0	**128**	
0445 - 0500	0	52	19	0	6	1	0	0	39	0	1	0	0	**118**	**408**
0500 - 0515	0	60	30	0	8	0	0	1	30	0	8	0	0	**137**	
0515 - 0530	0	78	40	0	12	4	0	1	43	0	1	0	0	**179**	
0530 - 0545	0	103	49	0	12	3	0	0	43	0	2	0	0	**212**	
0545 - 0600	0	99	54	0	12	1	0	0	31	0	0	0	0	**197**	**725**
0600 - 0615	0	147	46	1	11	4	0	0	51	0	1	0	0	**261**	
0615 - 0630	0	158	85	0	18	4	0	1	55	0	1	0	0	**322**	
0630 - 0645	0	241	99	0	20	7	3	5	53	1	1	0	0	**430**	
0645 - 0700	0	267	136	0	19	1	0	3	58	2	1	0	0	**487**	**1500**
0700 - 0715	1	322	119	0	20	2	0	3	55	3	1	0	0	**526**	
0715 - 0730	0	399	144	0	26	7	0	7	68	4	2	0	0	**657**	
0730 - 0745	0	427	178	0	24	5	1	7	74	2	0	0	0	**718**	
0745 - 0800	0	467	149	0	32	5	1	6	65	0	0	0	0	**725**	**2626**
0800 - 0815	1	367	165	0	26	6	1	7	69	0	1	0	0	**643**	
0815 - 0830	0	427	139	1	41	4	3	6	59	0	1	0	0	**681**	
0830 - 0845	0	371	135	2	27	8	1	3	47	0	1	0	0	**595**	
0845 - 0900	0	341	127	0	28	5	2	11	53	2	1	0	0	**570**	**2489**
0900 - 0915	2	290	138	0	38	6	2	6	66	5	0	0	0	**553**	
0915 - 0930	1	295	130	2	45	4	1	3	59	2	1	0	0	**543**	
0930 - 0945	1	325	136	2	39	4	0	6	54	1	0	0	0	**568**	
0945 - 1000	1	337	119	0	20	4	1	4	58	2	2	0	0	**548**	**2212**
1000 - 1015	0	308	95	3	21	5	0	6	64	2	0	0	0	**504**	
1015 - 1030	0	286	116	2	29	1	1	6	64	0	0	0	0	**505**	
1030 - 1045	0	290	143	0	15	7	6	7	54	0	0	0	0	**522**	
1045 - 1100	0	327	105	1	27	4	0	6	67	3	0	0	0	**540**	**2071**
1100 - 1115	0	361	126	1	18	6	3	10	57	2	0	0	0	**584**	
1115 - 1130	0	339	100	0	9	2	1	6	53	2	0	0	0	**512**	
1130 - 1145	0	348	111	1	21	7	4	8	69	1	0	0	0	**570**	
1145 - 1200	0	361	97	0	25	6	0	3	51	1	1	0	0	**545**	**2211**
1200 - 1215	0	364	107	0	17	3	2	2	54	0	0	0	0	**549**	
1215 - 1230	0	367	102	1	22	1	2	4	62	2	0	0	0	**563**	
1230 - 1245	0	325	95	0	13	5	2	2	68	1	0	0	0	**511**	
1245 - 1300	0	318	91	1	6	1	3	1	66	1	0	0	0	**488**	**2111**
1300 - 1315	0	343	105	2	11	6	1	3	67	3	0	0	0	**541**	
1315 - 1330	0	361	121	0	9	6	1	4	65	0	0	0	0	**567**	
1330 - 1345	4	351	115	1	16	2	4	3	71	0	0	0	0	**567**	
1345 - 1400	1	378	134	0	13	2	2	2	65	1	0	0	0	**598**	**2273**
1400 - 1415	1	392	154	0	8	3	4	2	53	1	0	0	0	**618**	
1415 - 1430	2	410	141	0	18	2	4	5	56	2	0	0	0	**640**	
1430 - 1445	0	414	146	1	11	8	1	1	65	1	0	0	0	**648**	
1445 - 1500	2	453	163	1	14	5	1	2	58	0	0	0	0	**699**	**2605**
1500 - 1515	3	432	151	1	13	3	5	2	64	0	0	0	0	**674**	
1515 - 1530	1	477	172	2	18	2	2	3	65	0	0	0	0	**742**	
1530 - 1545	1	486	168	1	17	4	2	1	43	1	1	0	0	**725**	
1545 - 1600	0	472	176	1	10	3	1	1	50	0	1	0	0	**715**	**2856**
1600 - 1615	0	459	163	3	5	2	3	1	48	2	0	0	0	**686**	
1615 - 1630	1	388	137	0	5	2	0	1	40	0	1	0	0	**575**	
1630 - 1645	0	408	145	0	6	2	3	1	47	0	1	0	0	**613**	
1645 - 1700	0	385	128	0	7	1	2	1	32	1	1	0	0	**558**	**2432**
1700 - 1715	0	386	131	2	5	3	2	2	31	0	0	0	0	**562**	
1715 - 1730	0	370	126	5	8	1	1	1	36	1	0	0	0	**549**	
1730 - 1745	0	349	121	0	7	2	1	1	35	0	0	0	0	**516**	
1745 - 1800	0	342	108	0	1	4	0	0	48	1	0	0	0	**504**	**2131**
1800 - 1815	0	329	102	0	5	5	1	2	29	0	0	0	0	**473**	
1815 - 1830	0	362	114	0	6	1	1	1	48	0	0	0	0	**533**	
1830 - 1845	3	291	82	0	5	3	0	1	40	0	0	0	0	**425**	
1845 - 1900	1	291	86	0	4	0	0	0	24	0	0	0	0	**406**	**1837**
1900 - 1915	1	289	70	1	7	1	0	0	30	0	0	0	0	**399**	
1915 - 1930	0	274	68	0	3	3	0	0	28	0	0	0	0	**376**	
1930 - 1945	1	268	62	1	4	1	0	0	22	0	0	0	0	**359**	
1945 - 2000	0	238	53	0	2	3	0	0	17	0	1	0	0	**314**	**1448**
2000 - 2015	0	213	42	0	1	1	0	0	18	0	1	0	0	**276**	
2015 - 2030	0	204	41	0	2	1	0	1	23	0	0	0	0	**272**	
2030 - 2045	0	184	38	0	5	2	0	0	19	0	0	0	0	**248**	
2045 - 2100	0	188	39	0	2	1	0	0	22	0	1	0	0	**253**	**1049**
2100 - 2115	0	178	34	0	4	0	0	0	34	0	0	0	0	**250**	
2115 - 2130	0	189	44	0	6	1	0	0	19	0	1	0	0	**260**	
2130 - 2145	0	162	27	1	1	0	0	0	18	0	3	0	0	**212**	
2145 - 2200	0	145	21	1	5	1	0	0	10	0	1	0	0	**184**	**906**
2200 - 2215	0	133	23	0	1	0	0	0	13	0	2	0	0	**172**	
2215 - 2230	0	120	17	0	3	0	0	0	15	0	4	0	0	**159**	
2230 - 2245	0	104	14	0	2	0	0	0	11	0	2	0	0	**133**	
2245 - 2300	0	92	11	0	0	0	0	0	8	0	2	0	0	**113**	**577**
2300 - 2315	0	90	13	0	3	0	0	0	14	0	3	0	0	**123**	
2315 - 2330	0	70	11	1	1	0	0	0	11	0	4	0	0	**98**	
2330 - 2345	0	63	9	0	1	0	0	0	15	0	2	0	0	**90**	
2345 - 0000	0	65	8	0	1	0	0	0	16	0	1	0	0	**91**	**402**

Session Total	32	22861	7510	43	1037	230	82	205	3713	53	105	0	1	**35872**
Session Average	0.33	238.14	78.23	0.45	10.80	2.40	0.85	2.14	38.68	0.55	1.09	0.00	0.01	**373.67**
Session Percentage	0.09	63.73	20.94	0.12	2.89	0.64	0.23	0.57	10.35	0.15	0.29	0.00	0.00	

AM Peak Hour	0900 - 1000	0730 - 0830	0715 - 0815	0915 - 1015	0845 - 0945	0715 - 0815	0815 - 0915	0715 - 0815	0715 - 0815	0645 - 0745	0500 - 0600	-	-	**0730 - 0830**
AM Peak Hour Volume	5	1688	636	7	150	23	8	27	276	11	11	0	0	**2767**

Noon Peak Hour	1330 - 1430	1445 - 1545	1445 - 1545	1000 - 1100	1000 - 1100	1100 - 1200	1330 - 1430	1045 - 1145	1245 - 1345	1045 - 1145	1100 - 1200	-	-	**1445 - 1545**
Noon Peak Hour Volume	8	1848	654	6	92	21	14	30	269	8	1	0	0	**2840**

PM Peak Hour	1500 - 1600	1515 - 1615	1515 - 1615	1515 - 1615	1500 - 1600	1745 - 1845	1500 - 1600	1500 - 1600	1500 - 1600	1515 - 1615	1530 - 1630	-	-	**1515 - 1615**
PM Peak Hour Volume	5	1894	679	7	58	13	10	7	222	3	3	0	0	**2868**

Site 4
I-26 W/Bound Off-Ramp,
east of US-76

Date
Wednesday, April 24, 2024

Lat/Long
34.030082°, -81.103054°

Weather
Fair
66°F

Click here for Detailed Weather

0000 - 2400 (Weekday 24h Session) (04-24-2024)
SB WB 15min

	Westbound (Movement 4.1)													15min	60min
TIME	1	2	3	4	5	6	7	8	9	10	11	12	13	Total	Total
0000 - 0015	0	61	4	0	1	0	0	0	16	0	2	0	0	**84**	
0015 - 0030	0	80	1	0	2	0	0	0	13	0	1	0	0	**97**	
0030 - 0045	0	74	1	0	1	0	0	0	11	0	2	0	0	**89**	
0045 - 0100	0	54	3	0	0	0	0	0	14	0	3	0	0	**74**	**344**
0100 - 0115	0	42	2	0	0	0	0	0	7	0	1	0	0	**52**	
0115 - 0130	0	48	3	0	5	0	0	0	13	0	1	0	0	**70**	
0130 - 0145	0	34	1	0	2	0	0	0	14	0	1	0	0	**52**	
0145 - 0200	0	31	2	0	1	0	0	0	12	0	3	0	0	**49**	**223**
0200 - 0215	0	31	1	0	4	0	0	0	10	0	2	0	0	**48**	
0215 - 0230	0	30	2	0	2	0	0	0	11	0	3	0	0	**48**	
0230 - 0245	0	28	1	0	2	2	0	2	17	0	6	0	0	**58**	
0245 - 0300	0	25	1	0	4	0	0	0	16	0	1	0	0	**47**	**201**
0300 - 0315	0	39	2	0	1	0	0	0	18	0	1	0	0	**61**	
0315 - 0330	0	34	0	0	2	2	0	0	17	0	1	0	0	**56**	
0330 - 0345	0	39	0	0	3	0	0	0	24	0	2	0	0	**68**	
0345 - 0400	0	37	2	0	4	0	0	0	18	0	5	0	0	**66**	**251**
0400 - 0415	0	50	1	0	4	0	0	0	36	0	1	0	0	**92**	
0415 - 0430	0	40	0	0	9	1	0	0	41	0	1	0	0	**92**	
0430 - 0445	0	60	0	0	9	0	0	0	33	0	2	0	0	**104**	
0445 - 0500	0	72	3	0	3	0	0	0	32	0	3	0	0	**113**	**401**
0500 - 0515	0	77	0	0	10	0	0	0	51	0	1	0	0	**139**	
0515 - 0530	0	104	4	0	6	0	0	0	53	0	1	0	0	**168**	
0530 - 0545	0	144	5	0	9	0	0	1	42	0	1	0	0	**202**	
0545 - 0600	0	154	3	0	14	0	0	0	49	0	1	0	0	**221**	**730**
0600 - 0615	0	201	9	1	23	2	0	0	53	0	2	0	0	**291**	
0615 - 0630	0	223	45	0	9	7	0	0	52	0	3	0	0	**339**	
0630 - 0645	0	267	92	0	11	4	0	2	62	0	0	0	0	**438**	
0645 - 0700	0	273	105	0	15	4	0	3	51	1	1	0	0	**453**	**1521**
0700 - 0715	0	309	147	0	13	4	1	5	39	0	0	0	0	**518**	
0715 - 0730	1	389	137	0	16	4	0	6	71	2	1	0	0	**627**	
0730 - 0745	0	515	177	0	21	8	2	7	57	3	1	0	0	**791**	
0745 - 0800	0	467	181	1	25	5	0	6	62	0	1	0	0	**748**	**2684**
0800 - 0815	0	411	154	2	26	2	6	6	58	0	2	1	0	**668**	
0815 - 0830	0	395	156	0	34	4	3	1	63	0	0	0	0	**656**	
0830 - 0845	0	360	133	2	18	5	0	11	68	1	4	1	0	**603**	
0845 - 0900	1	373	156	1	30	2	2	7	59	0	1	0	0	**632**	**2559**
0900 - 0915	0	322	144	1	28	3	0	5	60	3	1	1	0	**568**	
0915 - 0930	0	302	135	1	32	2	1	10	61	1	2	0	0	**547**	
0930 - 0945	0	326	133	1	49	4	6	5	60	1	0	0	0	**585**	
0945 - 1000	1	330	121	1	13	5	1	5	75	2	0	0	0	**554**	**2254**
1000 - 1015	1	311	126	0	18	7	1	8	60	3	0	1	0	**536**	
1015 - 1030	1	337	118	1	16	3	0	2	62	4	0	0	0	**544**	
1030 - 1045	1	343	138	0	14	6	1	8	48	4	0	0	0	**563**	
1045 - 1100	0	374	151	0	16	3	1	6	56	3	0	0	0	**610**	**2253**
1100 - 1115	1	329	115	1	15	1	3	4	52	4	0	0	0	**525**	
1115 - 1130	0	379	120	0	11	3	2	8	49	3	0	0	0	**575**	
1130 - 1145	4	399	136	0	14	1	4	3	64	4	0	0	0	**629**	
1145 - 1200	0	359	125	0	14	3	7	3	47	3	0	0	0	**561**	**2290**
1200 - 1215	1	397	119	2	16	5	5	7	65	2	0	0	0	**619**	
1215 - 1230	1	387	141	1	9	4	2	0	60	4	0	0	0	**609**	
1230 - 1245	0	372	117	0	11	4	0	3	50	4	0	0	0	**561**	
1245 - 1300	1	404	121	0	11	1	0	1	52	2	0	1	0	**594**	**2383**
1300 - 1315	0	378	124	4	12	6	0	2	59	5	0	0	0	**590**	
1315 - 1330	1	396	122	1	11	7	3	3	61	2	0	0	0	**607**	
1330 - 1345	0	421	131	1	8	5	4	2	56	3	0	0	0	**631**	
1345 - 1400	1	429	161	3	12	1	1	3	69	0	0	0	0	**680**	**2508**
1400 - 1415	1	433	141	1	4	2	4	1	57	1	0	0	0	**645**	
1415 - 1430	0	432	123	0	13	6	2	4	67	1	0	0	0	**648**	
1430 - 1445	0	477	137	3	20	1	4	2	44	0	2	0	0	**690**	
1445 - 1500	1	489	143	5	4	1	4	2	62	1	1	1	0	**714**	**2697**
1500 - 1515	1	478	147	0	13	4	4	1	59	4	0	0	0	**711**	
1515 - 1530	2	523	171	3	12	5	3	1	48	1	1	0	0	**770**	
1530 - 1545	0	547	125	0	7	5	4	2	40	2	1	0	0	**733**	
1545 - 1600	1	593	139	1	9	1	2	1	38	3	0	0	0	**788**	**3002**
1600 - 1615	2	572	135	0	10	3	4	2	54	3	0	0	0	**785**	
1615 - 1630	0	476	133	1	6	6	2	2	44	1	0	0	0	**671**	
1630 - 1645	2	465	121	1	5	2	0	1	42	1	0	0	0	**640**	
1645 - 1700	1	364	142	0	5	2	1	2	26	0	0	0	0	**543**	**2639**
1700 - 1715	1	331	126	2	4	4	0	3	43	3	0	0	0	**517**	
1715 - 1730	0	338	81	0	7	1	0	0	40	0	0	0	0	**467**	
1730 - 1745	0	351	102	0	6	1	0	1	24	1	1	0	0	**487**	
1745 - 1800	1	370	125	1	6	3	0	1	50	1	1	0	0	**559**	**2030**
1800 - 1815	0	405	122	0	5	4	1	1	33	1	0	0	0	**572**	
1815 - 1830	1	419	95	1	2	1	0	0	38	0	0	0	0	**557**	
1830 - 1845	1	340	88	0	5	0	1	2	31	0	0	0	0	**468**	
1845 - 1900	1	346	77	0	2	0	0	1	22	1	0	0	0	**450**	**2047**
1900 - 1915	1	357	74	0	5	2	0	0	34	0	0	0	0	**473**	
1915 - 1930	1	303	84	0	8	2	0	1	27	1	0	0	0	**427**	
1930 - 1945	0	286	68	0	2	1	0	2	27	0	0	0	0	**386**	
1945 - 2000	1	260	61	0	1	2	0	1	31	1	1	0	0	**359**	**1645**
2000 - 2015	0	261	41	0	2	2	0	0	19	0	0	0	0	**325**	
2015 - 2030	0	209	31	0	5	2	0	1	22	0	0	0	0	**270**	
2030 - 2045	0	200	32	0	5	0	0	0	28	0	1	0	0	**266**	
2045 - 2100	0	207	32	0	4	0	0	1	23	0	1	0	0	**268**	**1129**
2100 - 2115	0	190	27	0	3	0	0	0	14	0	2	0	0	**236**	
2115 - 2130	0	181	25	1	1	1	0	0	17	0	0	0	0	**226**	
2130 - 2145	0	158	21	0	3	0	0	0	14	0	2	0	0	**198**	
2145 - 2200	0	142	16	0	3	0	0	0	20	0	0	0	0	**181**	**841**
2200 - 2215	0	140	14	0	4	0	0	0	19	0	3	0	0	**180**	
2215 - 2230	1	129	12	1	1	0	0	0	14	0	1	0	0	**159**	
2230 - 2245	0	112	9	0	1	0	0	0	7	0	1	0	0	**130**	
2245 - 2300	0	109	7	0	0	0	0	0	12	0	3	0	0	**131**	**600**
2300 - 2315	0	85	7	0	2	0	0	0	15	0	0	0	0	**109**	
2315 - 2330	0	118	14	1	1	0	0	0	14	0	2	0	0	**150**	
2330 - 2345	0	72	5	0	2	1	0	0	16	0	0	0	0	**96**	
2345 - 0000	0	80	8	0	2	0	0	0	11	0	1	0	0	**102**	**457**

Session Total	36	25214	7193	47	869	195	92	181	3675	91	90	6	0	**37689**
Session Average	0.38	262.65	74.93	0.49	9.05	2.03	0.96	1.89	38.28	0.95	0.94	0.06	0.00	**392.59**
Session Percentage	0.10	66.90	19.09	0.12	2.31	0.52	0.24	0.48	9.75	0.24	0.24	0.02	0.00	

AM Peak Hour	0945 - 1045	0730 - 0830	0730 - 0830	0745 - 0845	0845 - 0945	0700 - 0800	0730 - 0830	0830 - 0930	0930 - 1030	0945 - 1045	0830 - 0930	0745 - 0845	-	**0730 - 0830**
AM Peak Hour Volume	4	1788	668	5	139	21	11	33	257	13	8	2	0	**2863**

Noon Peak Hour	1130 - 1230	1445 - 1545	1430 - 1530	1430 - 1530	1000 - 1100	1000 - 1100	1115 - 1215	1030 - 1130	1330 - 1430	1015 - 1115	1430 - 1530	1000 - 1100	-	**1445 - 1545**
Noon Peak Hour Volume	6	2037	598	11	64	19	18	26	249	15	4	1	0	**2928**

PM Peak Hour	1515 - 1615	1515 - 1615	1500 - 1600	1500 - 1600	1500 - 1600	1500 - 1600	1500 - 1600	1615 - 1715	1500 - 1600	1500 - 1600	1500 - 1600	-	-	**1515 - 1615**
PM Peak Hour Volume	5	2235	582	4	41	15	13	8	185	10	2	0	0	**3076**

Site 4
I-26 W/Bound Off-Ramp,
east of US-76

Date
Thursday, April 25, 2024

Lat/Long
34.030082°, -81.103054°

Weather
Fair
67°F

Click here for Detailed Weather

0000 - 2400 (Weekday 24h Session) (04-25-2024)
SB WB 15min

	Westbound (Movement 4.1)													15min	60min
TIME	1	2	3	4	5	6	7	8	9	10	11	12	13	Total	Total
0000 - 0015	2	70	9	0	0	0	0	0	12	0	0	0	0	**93**	
0015 - 0030	1	90	16	0	2	0	0	0	15	0	3	0	0	**127**	
0030 - 0045	0	82	11	0	3	0	0	1	11	0	0	0	0	**108**	
0045 - 0100	0	54	4	0	2	0	0	1	11	0	0	0	0	**72**	**400**
0100 - 0115	0	47	4	0	0	0	0	0	13	0	2	0	0	**66**	
0115 - 0130	0	35	2	0	1	1	0	0	12	0	1	0	0	**52**	
0130 - 0145	0	31	4	0	1	0	0	0	15	0	1	0	0	**52**	
0145 - 0200	0	25	4	0	3	0	0	0	10	0	1	0	0	**43**	**213**
0200 - 0215	0	40	3	0	1	1	0	0	16	0	2	1	0	**64**	
0215 - 0230	0	34	4	0	1	0	0	1	12	0	0	0	0	**52**	
0230 - 0245	0	17	2	0	1	0	0	0	16	0	2	0	0	**38**	
0245 - 0300	0	23	7	0	1	0	0	0	14	0	1	0	0	**46**	**200**
0300 - 0315	0	21	2	0	5	0	0	0	14	0	2	1	0	**45**	
0315 - 0330	0	38	5	0	2	0	0	0	17	0	3	1	0	**66**	
0330 - 0345	0	41	4	0	2	1	0	0	24	0	2	0	0	**74**	
0345 - 0400	0	35	5	0	6	1	0	0	29	0	0	0	0	**76**	**261**
0400 - 0415	0	44	3	0	8	0	0	0	27	0	2	0	0	**84**	
0415 - 0430	0	37	4	0	6	0	0	1	33	0	1	0	0	**82**	
0430 - 0445	0	55	10	0	9	3	0	2	38	0	2	0	0	**119**	
0445 - 0500	0	83	6	0	4	1	0	1	30	0	2	0	0	**127**	**412**
0500 - 0515	0	72	12	0	6	1	0	1	33	0	2	1	0	**128**	
0515 - 0530	0	86	19	0	12	2	0	3	45	0	0	0	0	**167**	
0530 - 0545	0	101	25	0	14	1	0	1	50	0	1	0	0	**193**	
0545 - 0600	0	128	32	0	10	2	0	1	49	0	1	0	0	**223**	**711**
0600 - 0615	0	161	37	2	18	4	1	2	59	0	1	2	0	**287**	
0615 - 0630	0	209	59	0	14	4	0	2	46	1	0	0	0	**335**	
0630 - 0645	0	285	93	0	16	3	0	1	51	1	1	0	0	**451**	
0645 - 0700	0	276	126	0	13	3	2	5	60	1	1	0	0	**487**	**1560**
0700 - 0715	2	287	121	0	17	7	2	6	51	5	0	0	0	**498**	
0715 - 0730	2	418	132	0	15	9	0	8	57	1	1	1	0	**644**	
0730 - 0745	2	468	166	0	35	13	2	1	70	4	0	0	0	**761**	
0745 - 0800	0	490	176	0	24	4	1	5	56	3	0	0	0	**759**	**2662**
0800 - 0815	0	383	181	1	22	5	4	8	61	2	0	1	0	**668**	
0815 - 0830	1	399	154	0	17	4	7	2	62	1	0	0	0	**647**	
0830 - 0845	0	360	153	1	32	2	7	7	50	0	1	1	0	**614**	
0845 - 0900	0	370	170	2	15	4	1	1	61	1	3	0	0	**628**	**2557**
0900 - 0915	0	289	150	0	26	7	0	2	56	1	0	0	0	**531**	
0915 - 0930	0	288	147	0	35	4	2	4	44	2	0	0	0	**526**	
0930 - 0945	1	355	143	0	35	5	2	4	56	0	0	0	0	**601**	
0945 - 1000	2	366	146	2	21	4	0	2	49	3	0	0	0	**595**	**2253**
1000 - 1015	2	359	125	3	27	4	2	5	58	3	0	1	0	**589**	
1015 - 1030	0	351	145	0	22	2	10	2	66	2	0	0	0	**600**	
1030 - 1045	1	385	116	0	16	6	1	7	63	2	0	0	0	**597**	
1045 - 1100	3	383	158	0	23	4	0	5	64	1	0	0	0	**641**	**2427**
1100 - 1115	2	368	106	1	25	6	0	5	61	2	0	0	0	**576**	
1115 - 1130	0	416	121	0	19	3	0	8	54	0	0	0	0	**621**	
1130 - 1145	0	420	117	2	12	5	0	3	63	2	0	0	0	**624**	
1145 - 1200	0	430	105	0	13	12	1	7	44	0	0	0	0	**612**	**2433**
1200 - 1215	0	388	136	0	19	8	0	5	45	1	0	0	0	**602**	
1215 - 1230	0	372	142	0	14	5	0	2	59	1	0	0	0	**595**	
1230 - 1245	0	441	138	0	13	3	2	3	62	0	0	0	0	**662**	
1245 - 1300	2	407	141	1	16	5	0	4	62	3	0	0	0	**641**	**2500**
1300 - 1315	0	416	414	2	20	5	0	2	59	0	0	0	0	**918**	
1315 - 1330	0	404	142	0	15	7	0	3	52	2	0	0	0	**625**	
1330 - 1345	0	421	135	4	10	7	0	0	45	1	0	0	0	**623**	
1345 - 1400	0	435	167	0	11	12	0	0	57	0	1	0	0	**683**	**2849**
1400 - 1415	0	431	141	0	16	5	0	3	58	0	0	0	0	**654**	
1415 - 1430	0	488	168	4	14	8	0	3	61	1	1	0	0	**748**	
1430 - 1445	1	444	159	3	13	6	0	5	45	1	1	0	0	**678**	
1445 - 1500	1	476	153	0	20	7	0	6	35	0	1	0	0	**699**	**2779**
1500 - 1515	0	515	151	2	17	7	0	2	53	1	0	0	0	**748**	
1515 - 1530	0	532	146	2	10	7	0	1	33	0	0	0	0	**731**	
1530 - 1545	0	544	157	0	9	2	0	2	39	1	1	0	0	**755**	
1545 - 1600	0	470	144	0	13	5	1	0	37	0	1	0	0	**671**	**2905**
1600 - 1615	0	381	124	1	8	3	0	1	31	0	0	0	0	**549**	
1615 - 1630	1	386	127	0	7	6	0	2	27	0	0	0	0	**556**	
1630 - 1645	0	359	139	0	10	3	0	1	38	0	0	0	0	**550**	
1645 - 1700	1	415	133	0	11	4	0	0	32	1	1	0	0	**598**	**2253**
1700 - 1715	0	322	102	1	7	2	0	6	41	0	0	0	0	**481**	
1715 - 1730	0	333	116	0	6	2	0	1	29	0	0	0	0	**487**	
1730 - 1745	0	291	101	0	6	1	0	0	33	1	0	0	0	**433**	
1745 - 1800	0	331	125	1	9	1	0	0	47	0	0	0	0	**514**	**1915**
1800 - 1815	0	438	133	0	11	2	0	2	55	0	0	0	0	**641**	
1815 - 1830	2	363	112	1	7	1	0	2	30	0	0	0	0	**518**	
1830 - 1845	3	344	123	0	3	0	0	1	31	0	0	0	0	**505**	
1845 - 1900	0	356	97	3	7	2	0	0	15	0	0	0	0	**480**	**2144**
1900 - 1915	0	301	91	0	7	3	0	0	30	0	0	0	0	**432**	
1915 - 1930	1	338	96	1	7	1	0	0	26	0	0	0	0	**470**	
1930 - 1945	0	303	63	0	7	0	0	1	22	0	0	0	0	**396**	
1945 - 2000	0	301	73	1	2	1	0	0	16	0	0	0	0	**394**	**1692**
2000 - 2015	0	271	76	0	6	0	0	0	19	0	1	0	0	**373**	
2015 - 2030	0	238	61	0	4	2	0	0	21	0	0	0	0	**326**	
2030 - 2045	0	234	58	1	3	2	0	0	23	0	0	0	0	**321**	
2045 - 2100	0	243	62	0	2	1	0	0	28	0	1	0	0	**337**	**1357**
2100 - 2115	0	161	54	0	2	1	0	0	19	0	1	0	0	**238**	
2115 - 2130	0	143	44	0	2	0	0	0	20	0	1	0	0	**210**	
2130 - 2145	0	139	49	0	2	0	0	0	18	0	1	0	0	**209**	
2145 - 2200	0	125	47	0	4	2	0	0	15	0	1	0	0	**194**	**851**
2200 - 2215	0	121	49	0	0	0	0	0	18	0	0	0	0	**188**	
2215 - 2230	0	119	47	0	2	1	0	0	15	0	1	0	0	**185**	
2230 - 2245	0	121	46	0	2	0	0	0	14	0	0	0	0	**183**	
2245 - 2300	0	97	39	0	2	0	0	0	11	0	3	0	0	**152**	**708**
2300 - 2315	0	98	37	0	1	0	0	0	9	0	1	0	0	**146**	
2315 - 2330	0	84	45	0	4	0	0	0	18	0	1	0	0	**152**	
2330 - 2345	0	69	41	0	0	0	0	0	13	0	2	0	0	**125**	
2345 - 0000	0	55	29	0	4	0	0	0	9	0	1	0	0	**98**	**521**

Session Total	33	24869	8517	42	997	278	48	173	3483	52	61	10	0	**38563**
Session Average	0.34	259.05	88.72	0.44	10.39	2.90	0.50	1.80	36.28	0.54	0.64	0.10	0.00	**401.70**
Session Percentage	0.09	64.49	22.09	0.11	2.59	0.72	0.12	0.45	9.03	0.13	0.16	0.03	0.00	

AM Peak Hour	0645 - 0745	0715 - 0815	0730 - 0830	0915 - 1015	0915 - 1015	0700 - 0800	0745 - 0845	0715 - 0815	0730 - 0830	0700 - 0800	0500 - 0600	0515 - 0615	-	**0730 - 0830**
AM Peak Hour Volume	6	1759	677	5	118	33	19	22	249	13	4	2	0	**2835**

Noon Peak Hour	1000 - 1100	1445 - 1545	1300 - 1400	1415 - 1515	1000 - 1100	1330 - 1430	1000 - 1100	1030 - 1130	1015 - 1115	1000 - 1100	1345 - 1445	1000 - 1100	-	**1445 - 1545**
Noon Peak Hour Volume	6	2067	858	9	88	32	13	25	254	8	3	1	0	**2933**

PM Peak Hour	1745 - 1845	1500 - 1600	1500 - 1600	1500 - 1600	1500 - 1600	1500 - 1600	1500 - 1600	1615 - 1715	1730 - 1830	1500 - 1600	1500 - 1600	-	-	**1500 - 1600**
PM Peak Hour Volume	5	2061	598	4	49	21	1	9	165	2	2	0	0	**2905**

Site 4
I-26 W/Bound Off-Ramp,
east of US-76

Date
Friday, April 26, 2024

Lat/Long
34.030082°, -81.103054°

Weather
Cloudy
69°F

Click here for Detailed Weather

0000 - 2400 (Weekday 24h Session) (04-26-2024)
SB WB 15min

	Westbound (Movement 4.1)													15min	60min
TIME	1	2	3	4	5	6	7	8	9	10	11	12	13	Total	Total
0000 - 0015	0	69	10	0	3	1	0	0	16	0	1	0	0	**100**	
0015 - 0030	0	79	11	0	1	1	0	0	9	0	0	0	0	**101**	
0030 - 0045	0	78	14	0	3	1	0	1	6	0	2	1	0	**106**	
0045 - 0100	0	58	7	0	2	2	0	0	10	0	1	0	0	**80**	**387**
0100 - 0115	0	50	6	0	1	0	0	0	11	0	1	0	0	**69**	
0115 - 0130	0	48	5	0	3	1	0	0	9	0	0	1	0	**67**	
0130 - 0145	0	29	4	0	1	0	0	0	14	0	2	1	0	**51**	
0145 - 0200	0	35	8	0	0	2	0	1	10	0	1	1	0	**58**	**245**
0200 - 0215	0	30	4	0	2	2	0	0	15	0	1	0	0	**54**	
0215 - 0230	0	26	3	0	2	2	0	1	13	0	1	0	0	**48**	
0230 - 0245	0	28	4	0	1	3	0	1	15	0	1	0	0	**53**	
0245 - 0300	0	37	5	0	1	2	0	1	15	0	2	0	0	**63**	**218**
0300 - 0315	0	35	4	0	1	3	0	0	12	0	2	1	0	**58**	
0315 - 0330	0	30	2	0	3	1	0	0	13	0	2	1	0	**52**	
0330 - 0345	0	35	6	0	4	4	0	2	22	0	0	0	0	**73**	
0345 - 0400	0	45	6	0	4	4	0	1	26	0	3	1	0	**90**	**273**
0400 - 0415	0	37	3	0	3	6	0	3	26	0	1	0	0	**79**	
0415 - 0430	0	44	4	0	6	7	0	1	25	0	2	0	0	**89**	
0430 - 0445	0	51	12	0	5	1	0	0	22	0	0	1	0	**92**	
0445 - 0500	0	57	18	0	3	0	0	0	41	0	1	2	0	**122**	**382**
0500 - 0515	0	66	30	0	6	0	0	0	40	0	1	1	0	**144**	
0515 - 0530	0	87	30	0	9	5	0	0	47	0	0	1	0	**179**	
0530 - 0545	0	98	28	0	5	2	0	0	46	0	1	0	0	**180**	
0545 - 0600	0	112	39	0	7	2	0	0	61	0	1	0	0	**222**	**725**
0600 - 0615	0	127	34	0	7	3	0	0	44	0	0	0	0	**215**	
0615 - 0630	0	202	57	0	11	4	0	0	44	0	2	2	0	**322**	
0630 - 0645	0	242	92	0	13	8	0	0	47	0	1	1	0	**404**	
0645 - 0700	0	250	99	1	9	3	0	3	52	0	1	1	0	**419**	**1360**
0700 - 0715	1	283	112	0	11	7	1	1	52	0	0	0	0	**468**	
0715 - 0730	3	382	156	0	12	12	1	2	59	2	1	0	0	**630**	
0730 - 0745	2	467	153	0	23	10	0	2	56	1	1	0	0	**715**	
0745 - 0800	0	456	167	0	10	9	0	0	44	2	2	0	0	**690**	**2503**
0800 - 0815	0	376	160	0	17	11	1	4	42	0	0	0	0	**611**	
0815 - 0830	0	382	178	1	19	5	0	0	69	0	1	1	0	**656**	
0830 - 0845	1	404	168	4	16	16	0	6	63	1	1	2	0	**682**	
0845 - 0900	1	376	154	2	12	8	0	1	43	1	0	1	0	**599**	**2548**
0900 - 0915	1	302	170	4	20	16	0	2	41	1	0	0	0	**557**	
0915 - 0930	1	333	158	0	40	14	0	4	65	0	0	0	0	**615**	
0930 - 0945	3	391	141	0	27	6	0	5	64	1	0	0	0	**638**	
0945 - 1000	0	352	149	1	17	4	0	1	44	0	0	0	0	**568**	**2378**
1000 - 1015	0	349	146	3	22	5	0	5	51	1	0	0	0	**582**	
1015 - 1030	0	413	148	0	11	12	0	3	47	0	0	0	0	**634**	
1030 - 1045	0	428	145	1	9	6	4	3	46	1	0	0	0	**643**	
1045 - 1100	1	462	144	1	9	4	3	4	49	3	0	0	0	**680**	**2539**
1100 - 1115	1	464	151	0	14	4	4	2	48	2	0	0	0	**690**	
1115 - 1130	1	493	138	4	20	3	5	5	53	5	1	0	0	**728**	
1130 - 1145	0	484	133	3	10	5	2	4	48	1	0	0	0	**690**	
1145 - 1200	2	506	126	0	18	4	2	3	57	2	0	0	0	**720**	**2828**
1200 - 1215	2	460	147	3	20	6	2	3	32	3	0	1	0	**679**	
1215 - 1230	0	482	150	1	16	10	5	3	40	3	0	0	0	**710**	
1230 - 1245	3	498	156	0	19	6	1	1	58	0	0	0	0	**742**	
1245 - 1300	0	520	141	4	19	6	1	5	51	2	0	0	0	**749**	**2880**
1300 - 1315	0	260	69	0	5	0	2	1	29	0	1	0	0	**367**	
1315 - 1330	0	266	75	0	4	0	1	0	40	0	0	0	0	**386**	
1330 - 1345	0	440	146	0	9	7	4	3	48	4	0	0	0	**661**	
1345 - 1400	1	405	118	0	4	0	7	2	49	1	0	0	0	**587**	**2001**
1400 - 1415	0	364	129	1	16	2	8	3	42	4	0	1	0	**570**	
1415 - 1430	6	435	120	1	12	6	0	5	40	0	0	0	0	**625**	
1430 - 1445	1	469	133	0	12	0	0	9	41	1	1	0	0	**667**	
1445 - 1500	4	538	140	0	9	1	2	2	35	1	0	0	0	**732**	**2594**
1500 - 1515	0	484	144	0	9	8	2	1	31	2	0	1	0	**682**	
1515 - 1530	0	568	145	3	13	1	2	1	32	1	0	0	0	**766**	
1530 - 1545	1	574	170	1	15	0	1	4	21	1	0	0	0	**788**	
1545 - 1600	1	473	138	4	8	0	1	1	27	1	0	0	0	**654**	**2890**
1600 - 1615	1	522	150	1	15	4	3	0	37	2	0	0	0	**735**	
1615 - 1630	4	439	120	2	8	1	0	1	18	0	0	0	0	**593**	
1630 - 1645	2	503	151	0	9	3	2	5	22	2	0	0	0	**699**	
1645 - 1700	2	467	108	0	11	0	0	2	19	1	0	0	0	**610**	**2637**
1700 - 1715	0	498	139	0	7	2	2	0	26	0	0	0	0	**674**	
1715 - 1730	3	481	105	0	5	1	0	1	21	0	0	0	0	**617**	
1730 - 1745	3	471	103	0	4	2	0	2	26	0	0	0	0	**611**	
1745 - 1800	1	467	118	1	7	2	0	2	31	0	0	0	0	**629**	**2531**
1800 - 1815	2	442	121	0	8	3	1	1	21	0	0	0	0	**599**	
1815 - 1830	1	488	166	4	8	2	1	0	22	0	0	0	0	**692**	
1830 - 1845	0	455	124	0	6	1	0	3	25	0	0	0	0	**614**	
1845 - 1900	3	430	102	0	9	5	0	2	21	0	0	0	0	**572**	**2477**
1900 - 1915	1	408	113	0	8	1	0	0	25	0	0	0	0	**556**	
1915 - 1930	5	390	105	0	4	2	0	3	18	0	0	0	0	**527**	
1930 - 1945	0	369	82	0	6	1	0	1	16	0	0	0	0	**475**	
1945 - 2000	1	286	80	3	7	1	0	1	18	0	0	0	0	**397**	**1955**
2000 - 2015	0	297	96	0	8	3	0	1	19	0	1	0	0	**425**	
2015 - 2030	0	218	129	0	2	1	0	6	16	0	0	0	0	**372**	
2030 - 2045	0	194	127	0	5	1	0	2	19	0	0	0	0	**348**	
2045 - 2100	0	180	163	3	6	0	0	3	16	0	1	0	0	**372**	**1517**
2100 - 2115	1	187	158	1	3	0	0	0	19	0	0	0	0	**369**	
2115 - 2130	1	144	152	0	4	1	0	4	11	0	0	0	0	**317**	
2130 - 2145	0	152	136	0	2	1	0	0	14	0	3	0	0	**308**	
2145 - 2200	0	141	131	0	2	3	0	1	6	0	0	0	0	**284**	**1278**
2200 - 2215	0	212	38	0	2	1	0	1	15	1	0	0	0	**270**	
2215 - 2230	0	181	23	0	1	1	0	0	14	2	2	0	0	**224**	
2230 - 2245	0	184	28	0	2	1	0	0	13	1	2	0	0	**231**	
2245 - 2300	0	158	27	0	0	0	0	0	14	1	0	0	0	**200**	**925**
2300 - 2315	0	144	22	0	3	0	0	0	9	0	1	0	0	**179**	
2315 - 2330	0	150	21	1	2	1	0	0	10	0	0	0	0	**185**	
2330 - 2345	0	125	20	0	1	0	0	0	11	0	0	0	0	**157**	
2345 - 0000	1	87	12	0	1	0	0	0	10	1	0	0	0	**112**	**633**

Session Total	69	27294	8833	59	809	329	71	158	2950	59	50	23	0	**40704**
Session Average	0.72	284.31	92.01	0.61	8.43	3.43	0.74	1.65	30.73	0.61	0.52	0.24	0.00	**424.00**
Session Percentage	0.17	67.05	21.70	0.14	1.99	0.81	0.17	0.39	7.25	0.14	0.12	0.06	0.00	

AM Peak Hour	0645 - 0745	0715 - 0815	0745 - 0845	0815 - 0915	0915 - 1015	0830 - 0930	0945 - 1045	0915 - 1015	0915 - 1015	0700 - 0800	0530 - 0630	0600 - 0700	-	**0730 - 0830**
AM Peak Hour Volume	6	1681	673	11	106	54	4	15	224	5	4	4	0	**2672**

Noon Peak Hour	1400 - 1500	1445 - 1545	1445 - 1545	1115 - 1215	1200 - 1300	1200 - 1300	1315 - 1415	1345 - 1445	1100 - 1200	1030 - 1130	1030 - 1130	1115 - 1215	-	**1445 - 1545**
Noon Peak Hour Volume	11	2164	599	10	74	28	20	19	206	11	1	1	0	**2968**

PM Peak Hour	1600 - 1700	1515 - 1615	1515 - 1615	1515 - 1615	1515 - 1615	1800 - 1900	1515 - 1615	1945 - 2045	1515 - 1615	1500 - 1600	1915 - 2015	1500 - 1600	-	**1515 - 1615**
PM Peak Hour Volume	9	2137	603	9	51	11	7	10	117	5	1	1	0	**2943**

Site 4
I-26 W/Bound Off-Ramp,
east of US-76

Date
Saturday, April 27, 2024

Lat/Long
34.030082°, -81.103054°

Weather
Mostly Cloudy
69°F

Click here for Detailed Weather

0000 - 2400 (Saturday 24h Session) (04-27-2024)
SB WB 15min

	Westbound (Movement 4.1)													15min	60min
TIME	1	2	3	4	5	6	7	8	9	10	11	12	13	Total	Total
0000 - 0015	0	82	18	0	1	0	0	0	8	0	2	0	0	**111**	
0015 - 0030	0	96	21	0	0	1	0	0	11	0	2	0	0	**131**	
0030 - 0045	0	92	19	0	1	0	0	0	7	0	0	0	0	**119**	
0045 - 0100	0	58	17	0	0	1	0	0	10	0	1	0	0	**87**	**448**
0100 - 0115	0	52	15	0	0	0	0	0	9	0	0	0	0	**76**	
0115 - 0130	0	56	11	0	0	0	0	0	8	0	2	0	0	**77**	
0130 - 0145	0	41	9	0	3	1	0	0	7	0	0	0	0	**61**	
0145 - 0200	0	33	5	0	0	0	0	0	11	0	2	0	0	**51**	**265**
0200 - 0215	0	36	7	0	1	0	0	0	6	0	2	0	0	**52**	
0215 - 0230	0	38	10	0	1	4	0	0	5	0	0	0	0	**58**	
0230 - 0245	0	26	8	0	1	0	0	0	6	0	2	0	0	**43**	
0245 - 0300	0	31	9	0	2	0	0	0	6	0	3	0	0	**51**	**204**
0300 - 0315	0	21	7	0	1	1	0	0	6	0	2	0	0	**38**	
0315 - 0330	0	22	6	0	3	1	0	0	10	0	1	0	0	**43**	
0330 - 0345	0	30	13	0	0	0	0	0	7	0	1	0	0	**51**	
0345 - 0400	0	36	12	0	3	2	0	0	10	0	0	0	0	**63**	**195**
0400 - 0415	0	39	10	0	2	2	0	0	15	0	3	0	0	**71**	
0415 - 0430	0	42	12	0	1	4	0	0	13	0	4	0	0	**76**	
0430 - 0445	0	39	12	0	4	0	0	0	12	0	2	0	0	**69**	
0445 - 0500	0	53	16	0	2	0	0	0	9	0	0	0	0	**80**	**296**
0500 - 0515	0	65	11	1	2	0	0	0	2	0	0	0	0	**81**	
0515 - 0530	0	68	15	0	5	0	0	0	10	0	1	0	0	**99**	
0530 - 0545	0	81	14	0	7	2	0	0	10	0	0	0	0	**114**	
0545 - 0600	0	62	12	0	5	0	0	0	11	0	1	0	0	**91**	**385**
0600 - 0615	0	80	27	0	2	1	0	0	14	0	3	0	0	**127**	
0615 - 0630	0	104	33	0	3	1	0	0	10	0	1	0	0	**152**	
0630 - 0645	2	143	35	0	3	1	0	0	13	0	0	0	0	**197**	
0645 - 0700	2	153	54	0	3	1	0	0	8	0	0	0	0	**221**	**697**
0700 - 0715	0	148	44	1	7	1	0	0	12	0	3	0	0	**216**	
0715 - 0730	0	193	49	1	6	1	0	2	22	0	0	0	0	**274**	
0730 - 0745	1	196	76	0	4	1	0	1	16	0	0	0	0	**295**	
0745 - 0800	0	275	84	0	3	2	0	0	17	0	0	0	0	**381**	**1166**
0800 - 0815	0	269	74	0	13	2	0	1	10	0	1	0	0	**370**	
0815 - 0830	0	274	81	0	4	3	0	2	18	0	0	0	0	**382**	
0830 - 0845	0	342	102	0	6	5	0	3	19	0	0	0	0	**477**	
0845 - 0900	1	326	89	1	10	1	0	5	15	0	0	0	0	**448**	**1677**
0900 - 0915	3	342	74	1	16	4	0	0	22	0	0	0	0	**462**	
0915 - 0930	4	326	91	0	10	1	0	0	19	0	0	0	0	**451**	
0930 - 0945	1	470	106	0	11	2	0	1	18	0	0	0	0	**609**	
0945 - 1000	0	485	97	1	10	4	0	2	19	0	0	0	0	**618**	**2140**
1000 - 1015	1	407	93	1	10	1	0	1	20	0	0	0	0	**534**	
1015 - 1030	0	440	93	0	5	0	0	6	22	0	0	0	0	**566**	
1030 - 1045	3	493	97	0	7	3	0	1	15	0	0	0	0	**619**	
1045 - 1100	4	498	132	2	8	3	0	1	11	0	0	0	0	**659**	**2378**
1100 - 1115	2	479	109	1	3	3	0	1	19	0	0	0	0	**617**	
1115 - 1130	1	500	119	0	5	2	0	0	12	0	0	0	0	**639**	
1130 - 1145	4	506	127	0	6	1	0	2	21	0	0	0	0	**667**	
1145 - 1200	3	508	121	0	8	1	0	0	16	0	0	0	0	**657**	**2580**
1200 - 1215	2	530	109	0	3	2	0	2	12	0	0	0	0	**660**	
1215 - 1230	4	544	112	0	6	2	0	4	18	0	0	0	0	**690**	
1230 - 1245	1	533	117	1	4	1	0	5	14	0	0	0	0	**676**	
1245 - 1300	0	521	121	0	16	2	0	2	12	0	0	0	0	**674**	**2700**
1300 - 1315	1	539	101	2	7	1	0	3	16	0	0	0	0	**670**	
1315 - 1330	5	554	118	1	6	2	0	1	18	0	0	0	0	**705**	
1330 - 1345	8	520	106	0	10	0	0	4	17	0	0	0	0	**665**	
1345 - 1400	2	549	129	0	5	1	0	3	14	0	0	0	0	**703**	**2743**
1400 - 1415	1	512	121	0	4	3	0	1	20	0	0	0	0	**662**	
1415 - 1430	0	510	79	0	4	1	0	4	10	0	0	0	0	**608**	
1430 - 1445	3	535	115	1	4	2	0	3	7	0	0	0	0	**670**	
1445 - 1500	2	585	117	2	8	0	0	2	20	0	0	0	0	**736**	**2676**
1500 - 1515	3	526	98	2	10	1	0	0	8	0	0	0	0	**648**	
1515 - 1530	0	512	97	0	5	2	0	2	5	0	0	0	0	**623**	
1530 - 1545	4	526	103	0	8	2	0	1	8	0	0	0	0	**652**	
1545 - 1600	1	510	117	1	4	2	0	0	11	1	0	0	0	**647**	**2570**
1600 - 1615	0	491	104	1	5	0	0	2	11	0	0	0	0	**614**	
1615 - 1630	1	424	89	0	4	1	0	1	13	0	0	0	0	**533**	
1630 - 1645	2	481	103	1	6	1	0	1	9	0	0	0	0	**604**	
1645 - 1700	1	507	89	0	3	0	0	6	12	0	0	0	0	**618**	**2369**
1700 - 1715	3	454	93	1	3	1	0	1	15	0	0	0	0	**571**	
1715 - 1730	2	468	84	0	6	1	0	0	9	0	0	0	0	**570**	
1730 - 1745	4	406	96	1	3	0	0	3	11	0	0	0	0	**524**	
1745 - 1800	3	450	77	0	4	2	0	6	11	0	0	0	0	**553**	**2218**
1800 - 1815	2	395	75	1	3	1	0	4	8	0	0	0	0	**489**	
1815 - 1830	0	390	83	2	4	0	0	0	4	0	0	0	0	**483**	
1830 - 1845	0	397	73	1	2	0	0	0	7	0	0	0	0	**480**	
1845 - 1900	1	380	62	0	5	1	0	2	11	0	0	0	0	**462**	**1914**
1900 - 1915	1	318	67	1	2	0	0	3	6	0	0	0	0	**398**	
1915 - 1930	1	349	64	1	3	0	0	2	6	0	0	0	0	**426**	
1930 - 1945	0	307	56	0	4	0	0	0	6	0	1	0	0	**374**	
1945 - 2000	3	296	55	0	0	0	0	1	8	0	0	0	0	**363**	**1561**
2000 - 2015	1	262	86	0	2	0	0	0	7	0	0	0	0	**358**	
2015 - 2030	0	228	55	0	0	0	0	0	6	0	0	1	0	**290**	
2030 - 2045	0	223	87	1	2	0	0	1	9	0	0	0	0	**323**	
2045 - 2100	0	198	63	1	7	0	0	0	7	0	0	0	0	**276**	**1247**
2100 - 2115	0	234	59	0	1	1	0	0	6	0	0	0	0	**301**	
2115 - 2130	0	181	45	0	3	0	0	0	7	0	0	0	0	**236**	
2130 - 2145	0	187	50	0	4	3	0	0	4	0	0	0	0	**248**	
2145 - 2200	0	185	36	0	1	0	0	0	3	0	0	0	0	**225**	**1010**
2200 - 2215	0	164	46	0	0	1	0	0	3	0	0	0	0	**214**	
2215 - 2230	0	152	34	0	1	0	0	0	4	0	0	0	0	**191**	
2230 - 2245	0	144	34	0	2	0	0	0	6	0	0	0	0	**186**	
2245 - 2300	0	144	31	2	2	0	0	0	2	0	0	0	0	**181**	**772**
2300 - 2315	0	137	34	1	1	0	0	0	4	0	0	0	0	**177**	
2315 - 2330	1	114	29	0	0	0	0	0	7	0	0	0	0	**151**	
2330 - 2345	0	111	31	0	2	0	0	0	3	0	0	0	0	**147**	
2345 - 0000	0	102	19	1	1	0	0	0	2	0	0	0	0	**125**	**600**

Session Total	95	26941	6065	36	398	101	0	99	1034	1	40	1	0	**34811**
Session Average	0.99	280.64	63.18	0.38	4.15	1.05	0.00	1.03	10.77	0.01	0.42	0.01	0.00	**362.61**
Session Percentage	0.27	77.39	17.42	0.10	1.14	0.29	0.00	0.28	2.97	0.00	0.11	0.00	0.00	

AM Peak Hour	0845 - 0945	0945 - 1045	0930 - 1030	0630 - 0730	0845 - 0945	0815 - 0915	-	0800 - 0900	0930 - 1030	-	0515 - 0615	-	-	**0945 - 1045**
AM Peak Hour Volume	9	1825	389	2	47	13	0	11	79	0	5	0	0	**2337**

Noon Peak Hour	1300 - 1400	1300 - 1400	1045 - 1145	1415 - 1515	1245 - 1345	1030 - 1130	-	1215 - 1315	1315 - 1415	-	-	-	-	**1300 - 1400**
Noon Peak Hour Volume	16	2162	487	5	39	11	0	14	69	0	0	0	0	**2743**

PM Peak Hour	1700 - 1800	1500 - 1600	1515 - 1615	1730 - 1830	1500 - 1600	1500 - 1600	-	1715 - 1815	1615 - 1715	1500 - 1600	1845 - 1945	1930 - 2030	-	**1500 - 1600**
PM Peak Hour Volume	12	2074	421	4	27	7	0	13	49	1	1	1	0	**2570**

Bi-Directional Class Count || SB WB Average 15min

Columbia, SC

Marr Traffic DATA COLLECTION
www.marrtraffic.com

Site 4
I-26 W/Bound Off-Ramp,
east of US-76

Date
Sunday, April 21, 2024

Lat/Long
34.030082°, -81.103054°

Weather
Cloudy
66°F

0000 - 2400 (Weekday 24h Session) (All Dates)
SB WB Average 15min

	SB WB Average 15min													15min	60min
Time	1	2	3	4	5	6	7	8	9	10	11	12	13	Total	Total
0000 - 0015	1	72	13	0	1	0	0	0	10	0	1	0	0	**98**	
0015 - 0030	0	85	12	0	1	0	0	0	10	0	1	0	0	**111**	
0030 - 0045	0	81	12	0	2	0	0	0	8	0	1	0	0	**104**	
0045 - 0100	0	56	8	0	1	0	0	0	8	0	1	0	0	**75**	**387**
0100 - 0115	0	50	8	0	1	0	0	0	8	0	1	0	0	**69**	
0115 - 0130	0	48	7	0	1	0	0	0	9	0	1	0	0	**67**	
0130 - 0145	0	36	5	0	2	0	0	0	10	0	1	0	0	**55**	
0145 - 0200	0	34	6	0	1	0	0	0	9	0	1	0	0	**52**	**243**
0200 - 0215	0	33	5	0	1	1	0	0	10	0	2	0	0	**53**	
0215 - 0230	0	32	5	0	2	1	0	1	9	0	1	0	0	**49**	
0230 - 0245	0	28	4	0	1	1	0	0	11	0	2	0	0	**47**	
0245 - 0300	0	26	4	0	2	0	0	0	10	0	2	0	0	**44**	**193**
0300 - 0315	0	28	5	0	2	1	0	1	12	0	2	0	0	**51**	
0315 - 0330	0	31	5	0	2	1	0	1	13	0	2	0	0	**54**	
0330 - 0345	0	36	7	0	2	1	0	1	17	0	1	0	0	**64**	
0345 - 0400	0	35	7	0	3	1	0	0	19	0	2	0	0	**68**	**237**
0400 - 0415	0	37	5	0	4	2	0	1	20	0	1	0	0	**70**	
0415 - 0430	0	39	6	0	5	2	0	0	24	0	2	0	0	**79**	
0430 - 0445	0	50	10	0	7	1	0	1	24	0	2	0	0	**94**	
0445 - 0500	0	61	12	0	3	1	0	0	25	0	1	0	0	**104**	**347**
0500 - 0515	0	65	15	0	5	0	0	0	26	0	2	0	0	**115**	
0515 - 0530	0	81	20	0	7	2	0	1	33	0	0	0	0	**145**	
0530 - 0545	0	104	22	0	7	1	0	1	34	0	1	0	0	**171**	
0545 - 0600	0	107	26	0	8	1	0	0	35	0	1	0	0	**177**	**607**
0600 - 0615	0	135	28	1	10	3	0	1	36	0	1	0	0	**214**	
0615 - 0630	0	177	47	0	10	4	0	1	36	1	1	0	0	**276**	
0630 - 0645	1	220	70	0	11	4	0	2	41	1	0	0	0	**350**	
0645 - 0700	0	231	91	0	10	2	0	2	39	1	1	0	0	**377**	**1217**
0700 - 0715	1	255	95	0	12	4	1	3	38	2	1	0	0	**411**	
0715 - 0730	1	330	111	0	14	6	0	4	47	2	1	0	0	**516**	
0730 - 0745	1	397	132	0	19	6	1	3	47	2	0	0	0	**607**	
0745 - 0800	0	413	133	0	16	4	0	3	43	1	0	0	0	**614**	**2148**
0800 - 0815	0	345	126	0	18	5	2	4	43	1	1	0	0	**545**	
0815 - 0830	0	352	121	0	19	4	2	2	46	0	0	0	0	**547**	
0830 - 0845	0	345	125	1	17	6	1	5	41	1	1	1	0	**543**	
0845 - 0900	0	340	123	1	18	3	1	4	39	1	1	0	0	**531**	**2167**
0900 - 0915	1	305	122	1	24	6	0	3	42	2	0	0	0	**507**	
0915 - 0930	1	306	116	1	27	5	1	4	44	1	0	0	0	**504**	
0930 - 0945	1	368	119	1	26	4	1	3	45	1	0	0	0	**569**	
0945 - 1000	1	370	117	1	14	4	0	3	44	1	0	0	0	**555**	**2135**
1000 - 1015	1	351	110	2	17	4	0	4	43	1	0	0	0	**534**	
1015 - 1030	0	365	117	0	14	3	2	4	45	1	0	0	0	**550**	
1030 - 1045	1	389	120	0	10	5	2	5	41	1	0	0	0	**574**	
1045 - 1100	1	413	123	1	14	4	1	4	42	2	0	0	0	**604**	**2262**
1100 - 1115	1	401	120	1	14	4	1	4	44	2	0	0	0	**592**	
1115 - 1130	0	426	118	1	11	2	1	5	40	2	0	0	0	**606**	
1130 - 1145	1	421	122	1	12	4	1	4	47	1	0	0	0	**614**	
1145 - 1200	1	436	113	0	13	5	1	3	40	1	0	0	0	**615**	**2428**
1200 - 1215	1	436	123	1	13	4	1	3	38	1	0	0	0	**623**	
1215 - 1230	1	444	126	1	12	4	1	3	42	1	0	0	0	**635**	
1230 - 1245	1	449	129	0	11	4	1	3	43	1	0	0	0	**642**	
1245 - 1300	0	454	125	1	12	3	1	2	45	1	0	0	0	**645**	**2546**
1300 - 1315	0	413	153	2	11	4	0	2	43	1	0	0	0	**629**	
1315 - 1330	1	423	118	0	9	4	1	2	42	1	0	0	0	**600**	
1330 - 1345	2	447	124	1	9	4	2	2	44	1	0	0	0	**636**	
1345 - 1400	1	454	134	1	9	3	1	2	44	0	0	0	0	**651**	**2516**
1400 - 1415	1	444	130	0	10	3	2	2	40	1	0	0	0	**633**	
1415 - 1430	1	471	122	1	12	4	1	3	45	1	0	0	0	**662**	
1430 - 1445	1	478	130	1	12	4	1	4	38	0	1	0	0	**669**	
1445 - 1500	2	497	138	1	11	3	1	3	40	0	0	0	0	**696**	**2661**
1500 - 1515	1	491	129	1	11	4	2	1	40	1	0	0	0	**682**	
1515 - 1530	0	518	138	2	11	3	1	2	34	0	0	0	0	**710**	
1530 - 1545	1	498	131	1	10	2	1	2	26	1	0	0	0	**671**	
1545 - 1600	0	467	127	1	8	3	1	1	27	1	0	0	0	**635**	**2698**
1600 - 1615	0	488	127	1	9	2	1	1	36	1	0	0	0	**667**	
1615 - 1630	1	427	114	0	6	3	0	1	31	0	0	0	0	**584**	
1630 - 1645	1	435	119	1	7	2	1	1	31	0	0	0	0	**598**	
1645 - 1700	1	426	113	0	6	1	0	2	25	0	0	0	0	**575**	**2425**
1700 - 1715	1	404	109	1	5	2	1	2	30	0	0	0	0	**555**	
1715 - 1730	1	396	98	1	6	1	0	1	27	0	0	0	0	**531**	
1730 - 1745	1	383	101	0	5	1	0	1	25	0	0	0	0	**520**	
1745 - 1800	1	401	110	1	4	2	0	2	34	0	0	0	0	**555**	**2161**
1800 - 1815	1	412	107	0	6	3	0	2	25	0	0	0	0	**556**	
1815 - 1830	1	414	107	1	5	1	0	1	26	0	0	0	0	**557**	
1830 - 1845	1	363	91	0	3	1	0	1	26	0	0	0	0	**487**	
1845 - 1900	1	356	79	0	5	2	0	1	19	0	0	0	0	**463**	**2062**
1900 - 1915	1	325	79	0	5	1	0	0	23	0	0	0	0	**435**	
1915 - 1930	1	326	75	0	4	1	0	1	22	0	0	0	0	**431**	
1930 - 1945	0	303	63	0	4	1	0	1	18	0	0	0	0	**391**	
1945 - 2000	1	277	61	1	2	1	0	1	17	0	1	0	0	**361**	**1618**
2000 - 2015	0	251	63	0	3	1	0	0	16	0	0	0	0	**335**	
2015 - 2030	0	222	56	0	3	1	0	2	17	0	0	0	0	**301**	
2030 - 2045	0	208	60	0	4	1	0	0	18	0	0	0	0	**291**	
2045 - 2100	0	191	61	1	3	0	0	1	18	0	1	0	0	**275**	**1203**
2100 - 2115	0	187	59	0	3	0	0	0	15	0	1	0	0	**265**	
2115 - 2130	0	163	52	0	3	0	0	1	13	0	0	0	0	**233**	
2130 - 2145	0	154	48	0	2	1	0	0	15	0	2	0	0	**223**	
2145 - 2200	0	140	43	0	3	1	0	0	11	0	0	0	0	**199**	**920**
2200 - 2215	0	143	31	0	2	0	0	0	14	0	1	0	0	**191**	
2215 - 2230	0	132	25	0	2	1	0	1	12	0	1	0	0	**174**	
2230 - 2245	0	121	24	0	2	0	0	0	10	0	1	0	0	**159**	
2245 - 2300	0	109	21	0	1	0	0	0	9	0	2	0	0	**143**	**667**
2300 - 2315	0	103	21	0	2	0	0	0	10	0	1	0	0	**137**	
2315 - 2330	0	101	23	1	2	0	0	0	10	0	1	0	0	**137**	
2330 - 2345	0	84	20	0	1	0	0	0	11	0	1	0	0	**117**	
2345 - 0000	0	70	14	0	2	0	0	0	10	0	1	0	0	**97**	**488**

Session Total	43	25242	7099	43	734	209	43	148	2662	46	58	7	0	**36333**
Session Average	0.45	262.94	73.94	0.45	7.64	2.17	0.45	1.54	27.73	0.48	0.60	0.07	0.00	**378.47**
Session Percentage	0.12	69.47	19.54	0.12	2.02	0.57	0.12	0.41	7.33	0.13	0.16	0.02	0.00	

AM Peak Hour	0900 - 1000	0730 - 0830	0730 - 0830	0830 - 0930	0845 - 0945	0715 - 0815	0800 - 0900	0830 - 0930	0715 - 0815	0700 - 0800	0500 - 0600	0800 - 0900	-	**0730 - 0830**
AM Peak Volume	3	1507	512	4	94	21	5	16	180	6	4	1	0	**2313**

Noon Peak Hour	1330 - 1430	1445 - 1545	1445 - 1545	1430 - 1530	1000 - 1100	1145 - 1245	1330 - 1430	1030 - 1130	1245 - 1345	1045 - 1145	1400 - 1500	1130 - 1230	-	**1445 - 1545**
Noon Peak Volume	5	2004	536	6	56	17	6	18	174	7	1	0	0	**2759**

PM Peak Hour	1830 - 1930	1500 - 1600	1500 - 1600	1500 - 1600	1500 - 1600	1500 - 1600	1500 - 1600	1615 - 1715	1500 - 1600	1500 - 1600	1915 - 2015	1500 - 1600	-	**1500 - 1600**
PM Peak Volume	4	1974	525	5	40	11	5	6	126	3	1	0	0	**2698**

Bi-Directional Class Count || Volume Summary 15min

Columbia, SC

Marr Traffic DATA COLLECTION

www.marrtraffic.com

Site 4

I-26 W/Bound Off-Ramp,
east of US-76

Date

Sunday, April 21, 2024

Lat/Long

34.030082°, -81.103054°

Weather

Cloudy
66°F

Click here for Detailed Weather

0000 - 2400 (Sunday 24h Session) (04-21-2024)

Volume Summary 15min

TIME	Volume Summary 15min EB	Volume Summary 15min WB	15min Total	60min Total
0000 - 0015	0	138	**138**	
0015 - 0030	0	126	**126**	
0030 - 0045	0	129	**129**	
0045 - 0100	0	98	**98**	**491**
0100 - 0115	0	81	**81**	
0115 - 0130	0	83	**83**	
0130 - 0145	0	66	**66**	
0145 - 0200	0	75	**75**	**305**
0200 - 0215	0	52	**52**	
0215 - 0230	0	52	**52**	
0230 - 0245	0	52	**52**	
0245 - 0300	0	33	**33**	**189**
0300 - 0315	0	49	**49**	
0315 - 0330	0	53	**53**	
0330 - 0345	0	46	**46**	
0345 - 0400	0	35	**35**	**183**
0400 - 0415	0	33	**33**	
0415 - 0430	0	47	**47**	
0430 - 0445	0	47	**47**	
0445 - 0500	0	59	**59**	**186**
0500 - 0515	0	50	**50**	
0515 - 0530	0	56	**56**	
0530 - 0545	0	81	**81**	
0545 - 0600	0	77	**77**	**264**
0600 - 0615	0	61	**61**	
0615 - 0630	0	103	**103**	
0630 - 0645	0	106	**106**	
0645 - 0700	0	115	**115**	**385**
0700 - 0715	0	143	**143**	
0715 - 0730	0	161	**161**	
0730 - 0745	0	202	**202**	
0745 - 0800	0	213	**213**	**719**
0800 - 0815	0	201	**201**	
0815 - 0830	0	202	**202**	
0830 - 0845	0	250	**250**	
0845 - 0900	0	251	**251**	**904**
0900 - 0915	0	294	**294**	
0915 - 0930	0	294	**294**	
0930 - 0945	0	394	**394**	
0945 - 1000	0	441	**441**	**1423**
1000 - 1015	0	453	**453**	
1015 - 1030	0	471	**471**	
1030 - 1045	0	538	**538**	
1045 - 1100	0	525	**525**	**1987**
1100 - 1115	0	539	**539**	
1115 - 1130	0	561	**561**	
1130 - 1145	0	507	**507**	
1145 - 1200	0	595	**595**	**2202**

Time	Volume Summary 15min EB	Volume Summary 15min WB	15min Total	60min Total
1200 - 1215	0	660	**660**	
1215 - 1230	0	647	**647**	
1230 - 1245	0	721	**721**	
1245 - 1300	0	765	**765**	**2793**
1300 - 1315	0	701	**701**	
1315 - 1330	0	735	**735**	
1330 - 1345	0	676	**676**	
1345 - 1400	0	720	**720**	**2832**
1400 - 1415	0	638	**638**	
1415 - 1430	0	677	**677**	
1430 - 1445	0	648	**648**	
1445 - 1500	0	622	**622**	**2585**
1500 - 1515	0	649	**649**	
1515 - 1530	0	631	**631**	
1530 - 1545	0	623	**623**	
1545 - 1600	0	641	**641**	**2544**
1600 - 1615	0	623	**623**	
1615 - 1630	0	639	**639**	
1630 - 1645	0	599	**599**	
1645 - 1700	0	596	**596**	**2457**
1700 - 1715	0	615	**615**	
1715 - 1730	0	538	**538**	
1730 - 1745	0	575	**575**	
1745 - 1800	0	579	**579**	**2307**
1800 - 1815	0	544	**544**	
1815 - 1830	0	604	**604**	
1830 - 1845	0	460	**460**	
1845 - 1900	0	422	**422**	**2030**
1900 - 1915	0	380	**380**	
1915 - 1930	0	399	**399**	
1930 - 1945	0	392	**392**	
1945 - 2000	0	327	**327**	**1498**
2000 - 2015	0	308	**308**	
2015 - 2030	0	282	**282**	
2030 - 2045	0	251	**251**	
2045 - 2100	0	203	**203**	**1044**
2100 - 2115	0	230	**230**	
2115 - 2130	0	192	**192**	
2130 - 2145	0	195	**195**	
2145 - 2200	0	161	**161**	**778**
2200 - 2215	0	149	**149**	
2215 - 2230	0	144	**144**	
2230 - 2245	0	112	**112**	
2245 - 2300	0	114	**114**	**519**
2300 - 2315	0	113	**113**	
2315 - 2330	0	109	**109**	
2330 - 2345	0	93	**93**	
2345 - 0000	0	65	**65**	**380**

Session Total	0	31005	**31005**
Session Average	0.00	322.97	**322.97**
Session Percentage	0.00	100.00	

Site 4
I-26 W/Bound Off-Ramp,
east of US-76

Date
Monday, April 22, 2024

Lat/Long
34.030082°, -81.103054°

Weather
Mostly Cloudy
57°F

Click here for Detailed Weather

0000 - 2400 (Weekday 24h Session) (04-22-2024)
Volume Summary 15min

	Volume Summary 15min		15min	60min
TIME	EB	WB	Total	Total
0000 - 0015	0	65	**65**	
0015 - 0030	0	83	**83**	
0030 - 0045	0	96	**96**	
0045 - 0100	0	57	**57**	**301**
0100 - 0115	0	68	**68**	
0115 - 0130	0	60	**60**	
0130 - 0145	0	43	**43**	
0145 - 0200	0	39	**39**	**210**
0200 - 0215	0	41	**41**	
0215 - 0230	0	47	**47**	
0230 - 0245	0	48	**48**	
0245 - 0300	0	33	**33**	**169**
0300 - 0315	0	50	**50**	
0315 - 0330	0	51	**51**	
0330 - 0345	0	66	**66**	
0345 - 0400	0	71	**71**	**238**
0400 - 0415	0	62	**62**	
0415 - 0430	0	71	**71**	
0430 - 0445	0	100	**100**	
0445 - 0500	0	108	**108**	**341**
0500 - 0515	0	125	**125**	
0515 - 0530	0	164	**164**	
0530 - 0545	0	213	**213**	
0545 - 0600	0	208	**208**	**710**
0600 - 0615	0	259	**259**	
0615 - 0630	0	361	**361**	
0630 - 0645	0	422	**422**	
0645 - 0700	0	456	**456**	**1498**
0700 - 0715	0	505	**505**	
0715 - 0730	0	621	**621**	
0730 - 0745	0	767	**767**	
0745 - 0800	0	784	**784**	**2677**
0800 - 0815	0	651	**651**	
0815 - 0830	0	607	**607**	
0830 - 0845	0	583	**583**	
0845 - 0900	0	592	**592**	**2433**
0900 - 0915	0	582	**582**	
0915 - 0930	0	553	**553**	
0930 - 0945	0	590	**590**	
0945 - 1000	0	560	**560**	**2285**
1000 - 1015	0	539	**539**	
1015 - 1030	0	532	**532**	
1030 - 1045	0	536	**536**	
1045 - 1100	0	570	**570**	**2177**
1100 - 1115	0	613	**613**	
1115 - 1130	0	606	**606**	
1130 - 1145	0	612	**612**	
1145 - 1200	0	618	**618**	**2449**

	Volume Summary 15min		15min	60min
Time	EB	WB	Total	Total
1200 - 1215	0	591	**591**	
1215 - 1230	0	634	**634**	
1230 - 1245	0	622	**622**	
1245 - 1300	0	606	**606**	**2453**
1300 - 1315	0	619	**619**	
1315 - 1330	0	578	**578**	
1330 - 1345	0	626	**626**	
1345 - 1400	0	583	**583**	**2406**
1400 - 1415	0	644	**644**	
1415 - 1430	0	690	**690**	
1430 - 1445	0	684	**684**	
1445 - 1500	0	670	**670**	**2688**
1500 - 1515	0	659	**659**	
1515 - 1530	0	709	**709**	
1530 - 1545	0	422	**422**	
1545 - 1600	0	328	**328**	**2118**
1600 - 1615	0	678	**678**	
1615 - 1630	0	524	**524**	
1630 - 1645	0	482	**482**	
1645 - 1700	0	503	**503**	**2187**
1700 - 1715	0	463	**463**	
1715 - 1730	0	491	**491**	
1730 - 1745	0	491	**491**	
1745 - 1800	0	549	**549**	**1994**
1800 - 1815	0	574	**574**	
1815 - 1830	0	510	**510**	
1830 - 1845	0	454	**454**	
1845 - 1900	0	447	**447**	**1985**
1900 - 1915	0	404	**404**	
1915 - 1930	0	393	**393**	
1930 - 1945	0	352	**352**	
1945 - 2000	0	376	**376**	**1525**
2000 - 2015	0	283	**283**	
2015 - 2030	0	296	**296**	
2030 - 2045	0	282	**282**	
2045 - 2100	0	219	**219**	**1080**
2100 - 2115	0	231	**231**	
2115 - 2130	0	193	**193**	
2130 - 2145	0	188	**188**	
2145 - 2200	0	161	**161**	**773**
2200 - 2215	0	161	**161**	
2215 - 2230	0	155	**155**	
2230 - 2245	0	137	**137**	
2245 - 2300	0	112	**112**	**565**
2300 - 2315	0	112	**112**	
2315 - 2330	0	115	**115**	
2330 - 2345	0	114	**114**	
2345 - 0000	0	84	**84**	**425**

Session Total	0	35687	**35687**
Session Average	0.00	371.74	**371.74**
Session Percentage	0.00	100.00	

Site 4
I-26 W/Bound Off-Ramp,
east of US-76

Date
Tuesday, April 23, 2024

Lat/Long
34.030082°, -81.103054°

Weather
Fair
58°F

Click here for Detailed Weather

0000 - 2400 (Weekday 24h Session) (04-23-2024)
Volume Summary 15min

TIME	Volume Summary 15min EB	Volume Summary 15min WB	15min Total	60min Total
0000 - 0015	0	92	**92**	
0015 - 0030	0	111	**111**	
0030 - 0045	0	79	**79**	
0045 - 0100	0	58	**58**	**340**
0100 - 0115	0	69	**69**	
0115 - 0130	0	58	**58**	
0130 - 0145	0	60	**60**	
0145 - 0200	0	50	**50**	**237**
0200 - 0215	0	57	**57**	
0215 - 0230	0	41	**41**	
0230 - 0245	0	35	**35**	
0245 - 0300	0	37	**37**	**170**
0300 - 0315	0	53	**53**	
0315 - 0330	0	58	**58**	
0330 - 0345	0	68	**68**	
0345 - 0400	0	77	**77**	**256**
0400 - 0415	0	69	**69**	
0415 - 0430	0	93	**93**	
0430 - 0445	0	128	**128**	
0445 - 0500	0	118	**118**	**408**
0500 - 0515	0	137	**137**	
0515 - 0530	0	179	**179**	
0530 - 0545	0	212	**212**	
0545 - 0600	0	197	**197**	**725**
0600 - 0615	0	261	**261**	
0615 - 0630	0	322	**322**	
0630 - 0645	0	430	**430**	
0645 - 0700	0	487	**487**	**1500**
0700 - 0715	0	526	**526**	
0715 - 0730	0	657	**657**	
0730 - 0745	0	718	**718**	
0745 - 0800	0	725	**725**	**2626**
0800 - 0815	0	643	**643**	
0815 - 0830	0	681	**681**	
0830 - 0845	0	595	**595**	
0845 - 0900	0	570	**570**	**2489**
0900 - 0915	0	553	**553**	
0915 - 0930	0	543	**543**	
0930 - 0945	0	568	**568**	
0945 - 1000	0	548	**548**	**2212**
1000 - 1015	0	504	**504**	
1015 - 1030	0	505	**505**	
1030 - 1045	0	522	**522**	
1045 - 1100	0	540	**540**	**2071**
1100 - 1115	0	584	**584**	
1115 - 1130	0	512	**512**	
1130 - 1145	0	570	**570**	
1145 - 1200	0	545	**545**	**2211**

Time	Volume Summary 15min EB	Volume Summary 15min WB	15min Total	60min Total
1200 - 1215	0	549	**549**	
1215 - 1230	0	563	**563**	
1230 - 1245	0	511	**511**	
1245 - 1300	0	488	**488**	**2111**
1300 - 1315	0	541	**541**	
1315 - 1330	0	567	**567**	
1330 - 1345	0	567	**567**	
1345 - 1400	0	598	**598**	**2273**
1400 - 1415	0	618	**618**	
1415 - 1430	0	640	**640**	
1430 - 1445	0	648	**648**	
1445 - 1500	0	699	**699**	**2605**
1500 - 1515	0	674	**674**	
1515 - 1530	0	742	**742**	
1530 - 1545	0	725	**725**	
1545 - 1600	0	715	**715**	**2856**
1600 - 1615	0	686	**686**	
1615 - 1630	0	575	**575**	
1630 - 1645	0	613	**613**	
1645 - 1700	0	558	**558**	**2432**
1700 - 1715	0	562	**562**	
1715 - 1730	0	549	**549**	
1730 - 1745	0	516	**516**	
1745 - 1800	0	504	**504**	**2131**
1800 - 1815	0	473	**473**	
1815 - 1830	0	533	**533**	
1830 - 1845	0	425	**425**	
1845 - 1900	0	406	**406**	**1837**
1900 - 1915	0	399	**399**	
1915 - 1930	0	376	**376**	
1930 - 1945	0	359	**359**	
1945 - 2000	0	314	**314**	**1448**
2000 - 2015	0	276	**276**	
2015 - 2030	0	272	**272**	
2030 - 2045	0	248	**248**	
2045 - 2100	0	253	**253**	**1049**
2100 - 2115	0	250	**250**	
2115 - 2130	0	260	**260**	
2130 - 2145	0	212	**212**	
2145 - 2200	0	184	**184**	**906**
2200 - 2215	0	172	**172**	
2215 - 2230	0	159	**159**	
2230 - 2245	0	133	**133**	
2245 - 2300	0	113	**113**	**577**
2300 - 2315	0	123	**123**	
2315 - 2330	0	98	**98**	
2330 - 2345	0	90	**90**	
2345 - 0000	0	91	**91**	**402**

Session Total	0	35872	**35872**
Session Average	0.00	373.67	**373.67**
Session Percentage	0.00	100.00	

Site 4
I-26 W/Bound Off-Ramp,
east of US-76

Date
Wednesday, April 24, 2024

Lat/Long
34.030082°, -81.103054°

Weather
Fair
66°F

Click here for Detailed Weather

0000 - 2400 (Weekday 24h Session) (04-24-2024)

Volume Summary 15min

TIME	Volume Summary 15min EB	Volume Summary 15min WB	15min Total	60min Total
0000 - 0015	0	84	**84**	
0015 - 0030	0	97	**97**	
0030 - 0045	0	89	**89**	
0045 - 0100	0	74	**74**	**344**
0100 - 0115	0	52	**52**	
0115 - 0130	0	70	**70**	
0130 - 0145	0	52	**52**	
0145 - 0200	0	49	**49**	**223**
0200 - 0215	0	48	**48**	
0215 - 0230	0	48	**48**	
0230 - 0245	0	58	**58**	
0245 - 0300	0	47	**47**	**201**
0300 - 0315	0	61	**61**	
0315 - 0330	0	56	**56**	
0330 - 0345	0	68	**68**	
0345 - 0400	0	66	**66**	**251**
0400 - 0415	0	92	**92**	
0415 - 0430	0	92	**92**	
0430 - 0445	0	104	**104**	
0445 - 0500	0	113	**113**	**401**
0500 - 0515	0	139	**139**	
0515 - 0530	0	168	**168**	
0530 - 0545	0	202	**202**	
0545 - 0600	0	221	**221**	**730**
0600 - 0615	0	291	**291**	
0615 - 0630	0	339	**339**	
0630 - 0645	0	438	**438**	
0645 - 0700	0	453	**453**	**1521**
0700 - 0715	0	518	**518**	
0715 - 0730	0	627	**627**	
0730 - 0745	0	791	**791**	
0745 - 0800	0	748	**748**	**2684**
0800 - 0815	0	668	**668**	
0815 - 0830	0	656	**656**	
0830 - 0845	0	603	**603**	
0845 - 0900	0	632	**632**	**2559**
0900 - 0915	0	568	**568**	
0915 - 0930	0	547	**547**	
0930 - 0945	0	585	**585**	
0945 - 1000	0	554	**554**	**2254**
1000 - 1015	0	536	**536**	
1015 - 1030	0	544	**544**	
1030 - 1045	0	563	**563**	
1045 - 1100	0	610	**610**	**2253**
1100 - 1115	0	525	**525**	
1115 - 1130	0	575	**575**	
1130 - 1145	0	629	**629**	
1145 - 1200	0	561	**561**	**2290**

Time	Volume Summary 15min EB	Volume Summary 15min WB	15min Total	60min Total
1200 - 1215	0	619	**619**	
1215 - 1230	0	609	**609**	
1230 - 1245	0	561	**561**	
1245 - 1300	0	594	**594**	**2383**
1300 - 1315	0	590	**590**	
1315 - 1330	0	607	**607**	
1330 - 1345	0	631	**631**	
1345 - 1400	0	680	**680**	**2508**
1400 - 1415	0	645	**645**	
1415 - 1430	0	648	**648**	
1430 - 1445	0	690	**690**	
1445 - 1500	0	714	**714**	**2697**
1500 - 1515	0	711	**711**	
1515 - 1530	0	770	**770**	
1530 - 1545	0	733	**733**	
1545 - 1600	0	788	**788**	**3002**
1600 - 1615	0	785	**785**	
1615 - 1630	0	671	**671**	
1630 - 1645	0	640	**640**	
1645 - 1700	0	543	**543**	**2639**
1700 - 1715	0	517	**517**	
1715 - 1730	0	467	**467**	
1730 - 1745	0	487	**487**	
1745 - 1800	0	559	**559**	**2030**
1800 - 1815	0	572	**572**	
1815 - 1830	0	557	**557**	
1830 - 1845	0	468	**468**	
1845 - 1900	0	450	**450**	**2047**
1900 - 1915	0	473	**473**	
1915 - 1930	0	427	**427**	
1930 - 1945	0	386	**386**	
1945 - 2000	0	359	**359**	**1645**
2000 - 2015	0	325	**325**	
2015 - 2030	0	270	**270**	
2030 - 2045	0	266	**266**	
2045 - 2100	0	268	**268**	**1129**
2100 - 2115	0	236	**236**	
2115 - 2130	0	226	**226**	
2130 - 2145	0	198	**198**	
2145 - 2200	0	181	**181**	**841**
2200 - 2215	0	180	**180**	
2215 - 2230	0	159	**159**	
2230 - 2245	0	130	**130**	
2245 - 2300	0	131	**131**	**600**
2300 - 2315	0	109	**109**	
2315 - 2330	0	150	**150**	
2330 - 2345	0	96	**96**	
2345 - 0000	0	102	**102**	**457**

Session Total	0	37689	**37689**
Session Average	0.00	392.59	**392.59**
Session Percentage	0.00	100.00	

Site 4
I-26 W/Bound Off-Ramp,
east of US-76

Date
Thursday, April 25, 2024

Lat/Long
34.030082°, -81.103054°

Weather
Fair
67°F

Click here for Detailed Weather

0000 - 2400 (Weekday 24h Session) (04-25-2024)
Volume Summary 15min

TIME	Volume Summary 15min EB	Volume Summary 15min WB	15min Total	60min Total
0000 - 0015	0	93	**93**	
0015 - 0030	0	127	**127**	
0030 - 0045	0	108	**108**	
0045 - 0100	0	72	**72**	**400**
0100 - 0115	0	66	**66**	
0115 - 0130	0	52	**52**	
0130 - 0145	0	52	**52**	
0145 - 0200	0	43	**43**	**213**
0200 - 0215	0	64	**64**	
0215 - 0230	0	52	**52**	
0230 - 0245	0	38	**38**	
0245 - 0300	0	46	**46**	**200**
0300 - 0315	0	45	**45**	
0315 - 0330	0	66	**66**	
0330 - 0345	0	74	**74**	
0345 - 0400	0	76	**76**	**261**
0400 - 0415	0	84	**84**	
0415 - 0430	0	82	**82**	
0430 - 0445	0	119	**119**	
0445 - 0500	0	127	**127**	**412**
0500 - 0515	0	128	**128**	
0515 - 0530	0	167	**167**	
0530 - 0545	0	193	**193**	
0545 - 0600	0	223	**223**	**711**
0600 - 0615	0	287	**287**	
0615 - 0630	0	335	**335**	
0630 - 0645	0	451	**451**	
0645 - 0700	0	487	**487**	**1560**
0700 - 0715	0	498	**498**	
0715 - 0730	0	644	**644**	
0730 - 0745	0	761	**761**	
0745 - 0800	0	759	**759**	**2662**
0800 - 0815	0	668	**668**	
0815 - 0830	0	647	**647**	
0830 - 0845	0	614	**614**	
0845 - 0900	0	628	**628**	**2557**
0900 - 0915	0	531	**531**	
0915 - 0930	0	526	**526**	
0930 - 0945	0	601	**601**	
0945 - 1000	0	595	**595**	**2253**
1000 - 1015	0	589	**589**	
1015 - 1030	0	600	**600**	
1030 - 1045	0	597	**597**	
1045 - 1100	0	641	**641**	**2427**
1100 - 1115	0	576	**576**	
1115 - 1130	0	621	**621**	
1130 - 1145	0	624	**624**	
1145 - 1200	0	612	**612**	**2433**

Time	Volume Summary 15min EB	Volume Summary 15min WB	15min Total	60min Total
1200 - 1215	0	602	**602**	
1215 - 1230	0	595	**595**	
1230 - 1245	0	662	**662**	
1245 - 1300	0	641	**641**	**2500**
1300 - 1315	0	918	**918**	
1315 - 1330	0	625	**625**	
1330 - 1345	0	623	**623**	
1345 - 1400	0	683	**683**	**2849**
1400 - 1415	0	654	**654**	
1415 - 1430	0	748	**748**	
1430 - 1445	0	678	**678**	
1445 - 1500	0	699	**699**	**2779**
1500 - 1515	0	748	**748**	
1515 - 1530	0	731	**731**	
1530 - 1545	0	755	**755**	
1545 - 1600	0	671	**671**	**2905**
1600 - 1615	0	549	**549**	
1615 - 1630	0	556	**556**	
1630 - 1645	0	550	**550**	
1645 - 1700	0	598	**598**	**2253**
1700 - 1715	0	481	**481**	
1715 - 1730	0	487	**487**	
1730 - 1745	0	433	**433**	
1745 - 1800	0	514	**514**	**1915**
1800 - 1815	0	641	**641**	
1815 - 1830	0	518	**518**	
1830 - 1845	0	505	**505**	
1845 - 1900	0	480	**480**	**2144**
1900 - 1915	0	432	**432**	
1915 - 1930	0	470	**470**	
1930 - 1945	0	396	**396**	
1945 - 2000	0	394	**394**	**1692**
2000 - 2015	0	373	**373**	
2015 - 2030	0	326	**326**	
2030 - 2045	0	321	**321**	
2045 - 2100	0	337	**337**	**1357**
2100 - 2115	0	238	**238**	
2115 - 2130	0	210	**210**	
2130 - 2145	0	209	**209**	
2145 - 2200	0	194	**194**	**851**
2200 - 2215	0	188	**188**	
2215 - 2230	0	185	**185**	
2230 - 2245	0	183	**183**	
2245 - 2300	0	152	**152**	**708**
2300 - 2315	0	146	**146**	
2315 - 2330	0	152	**152**	
2330 - 2345	0	125	**125**	
2345 - 0000	0	98	**98**	**521**

Session Total	0	38563	**38563**
Session Average	0.00	401.70	**401.70**
Session Percentage	0.00	100.00	

Site 4
I-26 W/Bound Off-Ramp,
east of US-76

Date
Friday, April 26, 2024

Lat/Long
34.030082°, -81.103054°

Weather
Cloudy
69°F

Click here for Detailed Weather

0000 - 2400 (Weekday 24h Session) (04-26-2024)
Volume Summary 15min

TIME	Volume Summary 15min EB	Volume Summary 15min WB	15min Total	60min Total
0000 - 0015	0	100	**100**	
0015 - 0030	0	101	**101**	
0030 - 0045	0	106	**106**	
0045 - 0100	0	80	**80**	**387**
0100 - 0115	0	69	**69**	
0115 - 0130	0	67	**67**	
0130 - 0145	0	51	**51**	
0145 - 0200	0	58	**58**	**245**
0200 - 0215	0	54	**54**	
0215 - 0230	0	48	**48**	
0230 - 0245	0	53	**53**	
0245 - 0300	0	63	**63**	**218**
0300 - 0315	0	58	**58**	
0315 - 0330	0	52	**52**	
0330 - 0345	0	73	**73**	
0345 - 0400	0	90	**90**	**273**
0400 - 0415	0	79	**79**	
0415 - 0430	0	89	**89**	
0430 - 0445	0	92	**92**	
0445 - 0500	0	122	**122**	**382**
0500 - 0515	0	144	**144**	
0515 - 0530	0	179	**179**	
0530 - 0545	0	180	**180**	
0545 - 0600	0	222	**222**	**725**
0600 - 0615	0	215	**215**	
0615 - 0630	0	322	**322**	
0630 - 0645	0	404	**404**	
0645 - 0700	0	419	**419**	**1360**
0700 - 0715	0	468	**468**	
0715 - 0730	0	630	**630**	
0730 - 0745	0	715	**715**	
0745 - 0800	0	690	**690**	**2503**
0800 - 0815	0	611	**611**	
0815 - 0830	0	656	**656**	
0830 - 0845	0	682	**682**	
0845 - 0900	0	599	**599**	**2548**
0900 - 0915	0	557	**557**	
0915 - 0930	0	615	**615**	
0930 - 0945	0	638	**638**	
0945 - 1000	0	568	**568**	**2378**
1000 - 1015	0	582	**582**	
1015 - 1030	0	634	**634**	
1030 - 1045	0	643	**643**	
1045 - 1100	0	680	**680**	**2539**
1100 - 1115	0	690	**690**	
1115 - 1130	0	728	**728**	
1130 - 1145	0	690	**690**	
1145 - 1200	0	720	**720**	**2828**

Time	Volume Summary 15min EB	Volume Summary 15min WB	15min Total	60min Total
1200 - 1215	0	679	**679**	
1215 - 1230	0	710	**710**	
1230 - 1245	0	742	**742**	
1245 - 1300	0	749	**749**	**2880**
1300 - 1315	0	367	**367**	
1315 - 1330	0	386	**386**	
1330 - 1345	0	661	**661**	
1345 - 1400	0	587	**587**	**2001**
1400 - 1415	0	570	**570**	
1415 - 1430	0	625	**625**	
1430 - 1445	0	667	**667**	
1445 - 1500	0	732	**732**	**2594**
1500 - 1515	0	682	**682**	
1515 - 1530	0	766	**766**	
1530 - 1545	0	788	**788**	
1545 - 1600	0	654	**654**	**2890**
1600 - 1615	0	735	**735**	
1615 - 1630	0	593	**593**	
1630 - 1645	0	699	**699**	
1645 - 1700	0	610	**610**	**2637**
1700 - 1715	0	674	**674**	
1715 - 1730	0	617	**617**	
1730 - 1745	0	611	**611**	
1745 - 1800	0	629	**629**	**2531**
1800 - 1815	0	599	**599**	
1815 - 1830	0	692	**692**	
1830 - 1845	0	614	**614**	
1845 - 1900	0	572	**572**	**2477**
1900 - 1915	0	556	**556**	
1915 - 1930	0	527	**527**	
1930 - 1945	0	475	**475**	
1945 - 2000	0	397	**397**	**1955**
2000 - 2015	0	425	**425**	
2015 - 2030	0	372	**372**	
2030 - 2045	0	348	**348**	
2045 - 2100	0	372	**372**	**1517**
2100 - 2115	0	369	**369**	
2115 - 2130	0	317	**317**	
2130 - 2145	0	308	**308**	
2145 - 2200	0	284	**284**	**1278**
2200 - 2215	0	270	**270**	
2215 - 2230	0	224	**224**	
2230 - 2245	0	231	**231**	
2245 - 2300	0	200	**200**	**925**
2300 - 2315	0	179	**179**	
2315 - 2330	0	185	**185**	
2330 - 2345	0	157	**157**	
2345 - 0000	0	112	**112**	**633**

Session Total	0	40704	**40704**
Session Average	0.00	424.00	**424.00**
Session Percentage	0.00	100.00	

Site 4
I-26 W/Bound Off-Ramp,
east of US-76

Date
Saturday, April 27, 2024

Lat/Long
34.030082°, -81.103054°

Weather
Mostly Cloudy
69°F

Click here for Detailed Weather

0000 - 2400 (Saturday 24h Session) (04-27-2024)
Volume Summary 15min

TIME	Volume Summary 15min EB	WB	15min Total	60min Total
0000 - 0015	0	111	**111**	
0015 - 0030	0	131	**131**	
0030 - 0045	0	119	**119**	
0045 - 0100	0	87	**87**	**448**
0100 - 0115	0	76	**76**	
0115 - 0130	0	77	**77**	
0130 - 0145	0	61	**61**	
0145 - 0200	0	51	**51**	**265**
0200 - 0215	0	52	**52**	
0215 - 0230	0	58	**58**	
0230 - 0245	0	43	**43**	
0245 - 0300	0	51	**51**	**204**
0300 - 0315	0	38	**38**	
0315 - 0330	0	43	**43**	
0330 - 0345	0	51	**51**	
0345 - 0400	0	63	**63**	**195**
0400 - 0415	0	71	**71**	
0415 - 0430	0	76	**76**	
0430 - 0445	0	69	**69**	
0445 - 0500	0	80	**80**	**296**
0500 - 0515	0	81	**81**	
0515 - 0530	0	99	**99**	
0530 - 0545	0	114	**114**	
0545 - 0600	0	91	**91**	**385**
0600 - 0615	0	127	**127**	
0615 - 0630	0	152	**152**	
0630 - 0645	0	197	**197**	
0645 - 0700	0	221	**221**	**697**
0700 - 0715	0	216	**216**	
0715 - 0730	0	274	**274**	
0730 - 0745	0	295	**295**	
0745 - 0800	0	381	**381**	**1166**
0800 - 0815	0	370	**370**	
0815 - 0830	0	382	**382**	
0830 - 0845	0	477	**477**	
0845 - 0900	0	448	**448**	**1677**
0900 - 0915	0	462	**462**	
0915 - 0930	0	451	**451**	
0930 - 0945	0	609	**609**	
0945 - 1000	0	618	**618**	**2140**
1000 - 1015	0	534	**534**	
1015 - 1030	0	566	**566**	
1030 - 1045	0	619	**619**	
1045 - 1100	0	659	**659**	**2378**
1100 - 1115	0	617	**617**	
1115 - 1130	0	639	**639**	
1130 - 1145	0	667	**667**	
1145 - 1200	0	657	**657**	**2580**

Time	Volume Summary 15min EB	WB	15min Total	60min Total
1200 - 1215	0	660	**660**	
1215 - 1230	0	690	**690**	
1230 - 1245	0	676	**676**	
1245 - 1300	0	674	**674**	**2700**
1300 - 1315	0	670	**670**	
1315 - 1330	0	705	**705**	
1330 - 1345	0	665	**665**	
1345 - 1400	0	703	**703**	**2743**
1400 - 1415	0	662	**662**	
1415 - 1430	0	608	**608**	
1430 - 1445	0	670	**670**	
1445 - 1500	0	736	**736**	**2676**
1500 - 1515	0	648	**648**	
1515 - 1530	0	623	**623**	
1530 - 1545	0	652	**652**	
1545 - 1600	0	647	**647**	**2570**
1600 - 1615	0	614	**614**	
1615 - 1630	0	533	**533**	
1630 - 1645	0	604	**604**	
1645 - 1700	0	618	**618**	**2369**
1700 - 1715	0	571	**571**	
1715 - 1730	0	570	**570**	
1730 - 1745	0	524	**524**	
1745 - 1800	0	553	**553**	**2218**
1800 - 1815	0	489	**489**	
1815 - 1830	0	483	**483**	
1830 - 1845	0	480	**480**	
1845 - 1900	0	462	**462**	**1914**
1900 - 1915	0	398	**398**	
1915 - 1930	0	426	**426**	
1930 - 1945	0	374	**374**	
1945 - 2000	0	363	**363**	**1561**
2000 - 2015	0	358	**358**	
2015 - 2030	0	290	**290**	
2030 - 2045	0	323	**323**	
2045 - 2100	0	276	**276**	**1247**
2100 - 2115	0	301	**301**	
2115 - 2130	0	236	**236**	
2130 - 2145	0	248	**248**	
2145 - 2200	0	225	**225**	**1010**
2200 - 2215	0	214	**214**	
2215 - 2230	0	191	**191**	
2230 - 2245	0	186	**186**	
2245 - 2300	0	181	**181**	**772**
2300 - 2315	0	177	**177**	
2315 - 2330	0	151	**151**	
2330 - 2345	0	147	**147**	
2345 - 0000	0	125	**125**	**600**

Session Total	0	34811	**34811**
Session Average	0.00	362.61	**362.61**
Session Percentage	0.00	100.00	

Bi-Directional Class Count || SB WB 60min

Columbia, SC

Marr Traffic DATA COLLECTION

www.marrtraffic.com

Site 4
I-26 W/Bound Off-Ramp,
east of US-76

Date
Sunday, April 21, 2024

Lat/Long
34.030082°, -81.103054°

Weather
Cloudy
66°F

Click here for Detailed Weather

0000 - 2400 (Sunday 24h Session) (04-21-2024)
SB WB 60min

	Westbound (Movement 4.1)													
TIME	1	2	3	4	5	6	7	8	9	10	11	12	13	**Total**
0000 - 0100	1	386	84	2	2	2	0	1	13	0	0	0	0	**491**
0100 - 0200	1	234	55	0	4	1	0	1	8	0	1	0	0	**305**
0200 - 0300	0	149	25	0	2	0	0	0	13	0	0	0	0	**189**
0300 - 0400	0	132	33	0	1	0	0	0	15	0	2	0	0	**183**
0400 - 0500	0	140	28	0	6	1	0	0	11	0	0	0	0	**186**
0500 - 0600	0	203	41	0	1	0	0	0	19	0	0	0	0	**264**
0600 - 0700	2	302	57	0	10	0	0	0	14	0	0	0	0	**385**
0700 - 0800	1	564	114	1	11	2	0	2	24	0	0	0	0	**719**
0800 - 0900	1	702	166	1	9	0	0	2	23	0	0	0	0	**904**
0900 - 1000	0	1115	254	5	9	3	0	4	32	0	1	0	0	**1423**
1000 - 1100	0	1563	369	2	10	1	0	6	36	0	0	0	0	**1987**
1100 - 1200	2	1737	395	2	12	1	0	7	45	0	1	0	0	**2202**
1200 - 1300	4	2256	476	8	14	2	0	1	32	0	0	0	0	**2793**
1300 - 1400	0	2288	485	2	20	3	0	3	30	0	1	0	0	**2832**
1400 - 1500	0	2134	382	1	21	4	0	0	43	0	0	0	0	**2585**
1500 - 1600	0	2095	397	4	14	2	0	1	31	0	0	0	0	**2544**
1600 - 1700	1	2034	348	3	22	1	0	0	48	0	0	0	0	**2457**
1700 - 1800	0	1868	362	2	13	4	0	4	54	0	0	0	0	**2307**
1800 - 1900	1	1656	308	2	10	2	0	1	50	0	0	0	0	**2030**
1900 - 2000	1	1225	207	0	11	1	0	5	45	0	3	0	0	**1498**
2000 - 2100	0	828	158	2	12	0	0	1	43	0	0	0	0	**1044**
2100 - 2200	0	601	134	1	7	1	0	0	34	0	0	0	0	**778**
2200 - 2300	0	388	75	0	8	2	0	2	41	0	3	0	0	**519**
2300 - 2400	0	306	46	1	2	0	1	0	24	0	0	0	0	**380**

Session Total	15	24906	4999	39	231	33	1	41	728	0	12	0	0	**31005**
Session Average	0.63	1037.75	208.29	1.63	9.63	1.38	0.04	1.71	30.33	0.00	0.50	0.00	0.00	**1291.88**
Session Percentage	0.05	80.33	16.12	0.13	0.75	0.11	0.00	0.13	2.35	0.00	0.04	0.00	0.00	

AM Peak Hour	0600 - 0700	0900 - 1000	0900 - 1000	0900 - 1000	0700 - 0800	0900 - 1000	-	0900 - 1000	0900 - 1000	-	0900 - 1000	-	-	**0900 - 1000**
AM Peak Volume	2	1115	254	5	11	3	0	4	32	0	1	0	0	**1423**

Noon Peak Hour	1200 - 1300	1300 - 1400	1300 - 1400	1200 - 1300	1400 - 1500	1400 - 1500	-	1100 - 1200	1100 - 1200	-	1100 - 1200	-	-	**1300 - 1400**
Noon Peak Volume	4	2288	485	8	21	4	0	7	45	0	1	0	0	**2832**

PM Peak Hour	1600 - 1700	1500 - 1600	1500 - 1600	1500 - 1600	1600 - 1700	1700 - 1800	-	1900 - 2000	1700 - 1800	-	1900 - 2000	-	-	**1500 - 1600**
PM Peak Volume	1	2095	397	4	22	4	0	5	54	0	3	0	0	**2544**

Site 4
I-26 W/Bound Off-Ramp,
east of US-76

Date
Monday, April 22, 2024

Lat/Long
34.030082°, -81.103054°

Weather
Mostly Cloudy
57°F

Click here for Detailed Weather

0000 - 2400 (Weekday 24h Session) (04-22-2024)
SB WB 60min

	Westbound (Movement 4.1)													
TIME	1	2	3	4	5	6	7	8	9	10	11	12	13	**Total**
0000 - 0100	0	245	32	0	3	0	0	1	20	0	0	0	0	**301**
0100 - 0200	0	162	19	0	4	0	0	0	23	0	2	0	0	**210**
0200 - 0300	0	115	11	0	5	2	0	2	33	1	0	0	0	**169**
0300 - 0400	0	130	18	0	7	5	0	5	67	3	3	0	0	**238**
0400 - 0500	0	198	29	0	15	9	0	7	74	4	5	0	0	**341**
0500 - 0600	0	449	88	1	23	8	0	5	129	6	1	0	0	**710**
0600 - 0700	0	1027	237	1	35	17	0	9	161	10	1	0	0	**1498**
0700 - 0800	1	1838	519	1	72	24	0	13	201	8	0	0	0	**2677**
0800 - 0900	0	1663	472	2	86	23	0	14	166	6	0	1	0	**2433**
0900 - 1000	0	1505	428	4	92	28	0	15	203	9	0	1	0	**2285**
1000 - 1100	0	1519	381	2	56	26	0	17	171	5	0	0	0	**2177**
1100 - 1200	2	1603	512	3	58	24	0	20	217	9	0	1	0	**2449**
1200 - 1300	3	1601	544	3	57	23	3	16	198	3	1	1	0	**2453**
1300 - 1400	5	1603	480	4	57	24	0	6	226	0	1	0	0	**2406**
1400 - 1500	3	1808	541	1	69	22	1	17	224	1	1	0	0	**2688**
1500 - 1600	1	1478	419	10	43	13	4	5	142	1	1	1	0	**2118**
1600 - 1700	0	1503	422	3	31	12	1	4	210	0	1	0	0	**2187**
1700 - 1800	0	1416	388	1	21	9	0	5	151	0	3	0	0	**1994**
1800 - 1900	3	1497	345	0	20	9	0	5	106	0	0	0	0	**1985**
1900 - 2000	1	1150	253	0	13	5	0	1	101	0	1	0	0	**1525**
2000 - 2100	1	823	161	0	9	6	0	4	76	0	0	0	0	**1080**
2100 - 2200	0	583	110	1	8	1	0	1	63	0	5	1	0	**773**
2200 - 2300	0	408	86	0	6	3	0	5	48	0	8	1	0	**565**
2300 - 2400	0	284	79	1	5	2	0	1	42	0	11	0	0	**425**

Session Total	20	24608	6574	38	795	295	9	178	3052	66	45	7	0	**35687**
Session Average	0.83	1025.33	273.92	1.58	33.13	12.29	0.38	7.42	127.17	2.75	1.88	0.29	0.00	**1486.96**
Session Percentage	0.06	68.96	18.42	0.11	2.23	0.83	0.03	0.50	8.55	0.18	0.13	0.02	0.00	

AM Peak Hour	0700 - 0800	0700 - 0800	0700 - 0800	0900 - 1000	0900 - 1000	0900 - 1000	-	0900 - 1000	0900 - 1000	0600 - 0700	0500 - 0600	0800 - 0900	-	**0700 - 0800**
AM Peak Volume	1	1838	519	4	92	28	0	15	203	10	1	1	0	**2677**

Noon Peak Hour	1300 - 1400	1400 - 1500	1200 - 1300	1300 - 1400	1400 - 1500	1000 - 1100	1200 - 1300	1100 - 1200	1300 - 1400	1100 - 1200	1200 - 1300	1100 - 1200	-	**1400 - 1500**
Noon Peak Volume	5	1808	544	4	69	26	3	20	226	9	1	1	0	**2688**

PM Peak Hour	1800 - 1900	1600 - 1700	1600 - 1700	1500 - 1600	1500 - 1600	1500 - 1600	1500 - 1600	1500 - 1600	1600 - 1700	1500 - 1600	1700 - 1800	1500 - 1600	-	**1600 - 1700**
PM Peak Volume	3	1503	422	10	43	13	4	5	210	1	3	1	0	**2187**

Site 4
I-26 W/Bound Off-Ramp,
east of US-76

Date
Tuesday, April 23, 2024

Lat/Long
34.030082°, -81.103054°

Weather
Fair
58°F

Click here for Detailed Weather

0000 - 2400 (Weekday 24h Session) (04-23-2024)
SB WB 60min

	Westbound (Movement 4.1)													
TIME	1	2	3	4	5	6	7	8	9	10	11	12	13	**Total**
0000 - 0100	2	246	36	0	3	0	0	2	47	0	4	0	0	**340**
0100 - 0200	0	138	23	0	10	1	0	6	52	0	7	0	0	**237**
0200 - 0300	0	87	16	0	7	0	0	3	44	0	13	0	0	**170**
0300 - 0400	1	106	34	0	12	2	0	9	78	0	13	0	1	**256**
0400 - 0500	0	171	61	0	28	8	0	2	129	0	9	0	0	**408**
0500 - 0600	0	340	173	0	44	8	0	2	147	0	11	0	0	**725**
0600 - 0700	0	813	366	1	68	16	3	9	217	3	4	0	0	**1500**
0700 - 0800	1	1615	590	0	102	19	2	23	262	9	3	0	0	**2626**
0800 - 0900	1	1506	566	3	122	23	7	27	228	2	4	0	0	**2489**
0900 - 1000	5	1247	523	4	142	18	4	19	237	10	3	0	0	**2212**
1000 - 1100	0	1211	459	6	92	17	7	25	249	5	0	0	0	**2071**
1100 - 1200	0	1409	434	2	73	21	8	27	230	6	1	0	0	**2211**
1200 - 1300	0	1374	395	2	58	10	9	9	250	4	0	0	0	**2111**
1300 - 1400	5	1433	475	3	49	16	8	12	268	4	0	0	0	**2273**
1400 - 1500	5	1669	604	2	51	18	10	10	232	4	0	0	0	**2605**
1500 - 1600	5	1867	667	5	58	12	10	7	222	1	2	0	0	**2856**
1600 - 1700	1	1640	573	3	23	7	8	4	167	3	3	0	0	**2432**
1700 - 1800	0	1447	486	7	21	10	4	4	150	2	0	0	0	**2131**
1800 - 1900	4	1273	384	0	20	9	2	4	141	0	0	0	0	**1837**
1900 - 2000	2	1069	253	2	16	8	0	0	97	0	1	0	0	**1448**
2000 - 2100	0	789	160	0	10	5	0	1	82	0	2	0	0	**1049**
2100 - 2200	0	674	126	2	16	2	0	0	81	0	5	0	0	**906**
2200 - 2300	0	449	65	0	6	0	0	0	47	0	10	0	0	**577**
2300 - 2400	0	288	41	1	6	0	0	0	56	0	10	0	0	**402**

Session Total	32	22861	7510	43	1037	230	82	205	3713	53	105	0	1	**35872**
Session Average	1.33	952.54	312.92	1.79	43.21	9.58	3.42	8.54	154.71	2.21	4.38	0.00	0.04	**1494.67**
Session Percentage	0.09	63.73	20.94	0.12	2.89	0.64	0.23	0.57	10.35	0.15	0.29	0.00	0.00	

AM Peak Hour	0900 - 1000	0700 - 0800	0700 - 0800	0900 - 1000	0900 - 1000	0800 - 0900	0800 - 0900	0800 - 0900	0700 - 0800	0900 - 1000	0500 - 0600	-	-	**0700 - 0800**
AM Peak Hour Volume	5	1615	590	4	142	23	7	27	262	10	11	0	0	**2626**

Noon Peak Hour	1300 - 1400	1400 - 1500	1400 - 1500	1000 - 1100	1000 - 1100	1100 - 1200	1400 - 1500	1100 - 1200	1300 - 1400	1100 - 1200	1100 - 1200	-	-	**1400 - 1500**
Noon Peak Hour Volume	5	1669	604	6	92	21	10	27	268	6	1	0	0	**2605**

PM Peak Hour	1500 - 1600	1500 - 1600	1500 - 1600	1700 - 1800	1500 - 1600	1500 - 1600	1500 - 1600	1500 - 1600	1500 - 1600	1600 - 1700	1600 - 1700	-	-	**1500 - 1600**
PM Peak Hour Volume	5	1867	667	7	58	12	10	7	222	3	3	0	0	**2856**

Site 4
I-26 W/Bound Off-Ramp,
east of US-76

Date
Wednesday, April 24, 2024

Lat/Long
34.030082°, -81.103054°

Weather
Fair
66°F

Click here for Detailed Weather

0000 - 2400 (Weekday 24h Session) (04-24-2024)
SB WB 60min

	Westbound (Movement 4.1)													
TIME	1	2	3	4	5	6	7	8	9	10	11	12	13	**Total**
0000 - 0100	0	269	9	0	4	0	0	0	54	0	8	0	0	**344**
0100 - 0200	0	155	8	0	8	0	0	0	46	0	6	0	0	**223**
0200 - 0300	0	114	5	0	12	2	0	2	54	0	12	0	0	**201**
0300 - 0400	0	149	4	0	10	2	0	0	77	0	9	0	0	**251**
0400 - 0500	0	222	4	0	25	1	0	0	142	0	7	0	0	**401**
0500 - 0600	0	479	12	0	39	0	0	1	195	0	4	0	0	**730**
0600 - 0700	0	964	251	1	58	17	0	5	218	1	6	0	0	**1521**
0700 - 0800	1	1680	642	1	75	21	3	24	229	5	3	0	0	**2684**
0800 - 0900	1	1539	599	5	108	13	11	25	248	1	7	2	0	**2559**
0900 - 1000	1	1280	533	4	122	14	8	25	256	7	3	1	0	**2254**
1000 - 1100	3	1365	533	1	64	19	3	24	226	14	0	1	0	**2253**
1100 - 1200	5	1466	496	1	54	8	16	18	212	14	0	0	0	**2290**
1200 - 1300	3	1560	498	3	47	14	7	11	227	12	0	1	0	**2383**
1300 - 1400	2	1624	538	9	43	19	8	10	245	10	0	0	0	**2508**
1400 - 1500	2	1831	544	9	41	10	14	9	230	3	3	1	0	**2697**
1500 - 1600	4	2141	582	4	41	15	13	5	185	10	2	0	0	**3002**
1600 - 1700	5	1877	531	2	26	13	7	7	166	5	0	0	0	**2639**
1700 - 1800	2	1390	434	3	23	9	0	5	157	5	2	0	0	**2030**
1800 - 1900	3	1510	382	1	14	5	2	4	124	2	0	0	0	**2047**
1900 - 2000	3	1206	287	0	16	7	0	4	119	2	1	0	0	**1645**
2000 - 2100	0	877	136	0	16	4	0	2	92	0	2	0	0	**1129**
2100 - 2200	0	671	89	1	10	1	0	0	65	0	4	0	0	**841**
2200 - 2300	1	490	42	1	6	0	0	0	52	0	8	0	0	**600**
2300 - 2400	0	355	34	1	7	1	0	0	56	0	3	0	0	**457**

Session Total	36	25214	7193	47	869	195	92	181	3675	91	90	6	0	**37689**
Session Average	1.50	1050.58	299.71	1.96	36.21	8.13	3.83	7.54	153.13	3.79	3.75	0.25	0.00	**1570.38**
Session Percentage	0.10	66.90	19.09	0.12	2.31	0.52	0.24	0.48	9.75	0.24	0.24	0.02	0.00	

AM Peak Hour	0700 - 0800	0700 - 0800	0700 - 0800	0800 - 0900	0900 - 1000	0700 - 0800	0800 - 0900	0800 - 0900	0900 - 1000	0900 - 1000	0800 - 0900	0800 - 0900	-	**0700 - 0800**
AM Peak Hour Volume	1	1680	642	5	122	21	11	25	256	7	7	2	0	**2684**

Noon Peak Hour	1100 - 1200	1400 - 1500	1400 - 1500	1300 - 1400	1000 - 1100	1000 - 1100	1100 - 1200	1000 - 1100	1300 - 1400	1000 - 1100	1400 - 1500	1000 - 1100	-	**1400 - 1500**
Noon Peak Hour Volume	5	1831	544	9	64	19	16	24	245	14	3	1	0	**2697**

PM Peak Hour	1600 - 1700	1500 - 1600	1500 - 1600	1500 - 1600	1500 - 1600	1500 - 1600	1500 - 1600	1600 - 1700	1500 - 1600	1500 - 1600	1500 - 1600	-	-	**1500 - 1600**
PM Peak Hour Volume	5	2141	582	4	41	15	13	7	185	10	2	0	0	**3002**

Site 4
I-26 W/Bound Off-Ramp,
east of US-76

Date
Thursday, April 25, 2024

Lat/Long
34.030082°, -81.103054°

Weather
Fair
67°F

Click here for Detailed Weather

0000 - 2400 (Weekday 24h Session) (04-25-2024)
SB WB 60min

	Westbound (Movement 4.1)													
TIME	1	2	3	4	5	6	7	8	9	10	11	12	13	**Total**
0000 - 0100	3	296	40	0	7	0	0	2	49	0	3	0	0	**400**
0100 - 0200	0	138	14	0	5	1	0	0	50	0	5	0	0	**213**
0200 - 0300	0	114	16	0	4	1	0	1	58	0	5	1	0	**200**
0300 - 0400	0	135	16	0	15	2	0	0	84	0	7	2	0	**261**
0400 - 0500	0	219	23	0	27	4	0	4	128	0	7	0	0	**412**
0500 - 0600	0	387	88	0	42	6	0	6	177	0	4	1	0	**711**
0600 - 0700	0	931	315	2	61	14	3	10	216	3	3	2	0	**1560**
0700 - 0800	6	1663	595	0	91	33	5	20	234	13	1	1	0	**2662**
0800 - 0900	1	1512	658	4	86	15	19	18	234	4	4	2	0	**2557**
0900 - 1000	3	1298	586	2	117	20	4	12	205	6	0	0	0	**2253**
1000 - 1100	6	1478	544	3	88	16	13	19	251	8	0	1	0	**2427**
1100 - 1200	2	1634	449	3	69	26	1	23	222	4	0	0	0	**2433**
1200 - 1300	2	1608	557	1	62	21	2	14	228	5	0	0	0	**2500**
1300 - 1400	0	1676	858	6	56	31	0	5	213	3	1	0	0	**2849**
1400 - 1500	2	1839	621	7	63	26	0	17	199	2	3	0	0	**2779**
1500 - 1600	0	2061	598	4	49	21	1	5	162	2	2	0	0	**2905**
1600 - 1700	2	1541	523	1	36	16	0	4	128	1	1	0	0	**2253**
1700 - 1800	0	1277	444	2	28	6	0	7	150	1	0	0	0	**1915**
1800 - 1900	5	1501	465	4	28	5	0	5	131	0	0	0	0	**2144**
1900 - 2000	1	1243	323	2	23	5	0	1	94	0	0	0	0	**1692**
2000 - 2100	0	986	257	1	15	5	0	0	91	0	2	0	0	**1357**
2100 - 2200	0	568	194	0	10	3	0	0	72	0	4	0	0	**851**
2200 - 2300	0	458	181	0	6	1	0	0	58	0	4	0	0	**708**
2300 - 2400	0	306	152	0	9	0	0	0	49	0	5	0	0	**521**

Session Total	33	24869	8517	42	997	278	48	173	3483	52	61	10	0	**38563**
Session Average	1.38	1036.21	354.88	1.75	41.54	11.58	2.00	7.21	145.13	2.17	2.54	0.42	0.00	**1606.79**
Session Percentage	0.09	64.49	22.09	0.11	2.59	0.72	0.12	0.45	9.03	0.13	0.16	0.03	0.00	

AM Peak Hour	0700 - 0800	0700 - 0800	0800 - 0900	0800 - 0900	0900 - 1000	0700 - 0800	0800 - 0900	0700 - 0800	0700 - 0800	0700 - 0800	0500 - 0600	0600 - 0700	-	**0700 - 0800**
AM Peak Hour Volume	6	1663	658	4	117	33	19	20	234	13	4	2	0	**2662**

Noon Peak Hour	1000 - 1100	1400 - 1500	1300 - 1400	1400 - 1500	1000 - 1100	1300 - 1400	1000 - 1100	1100 - 1200	1000 - 1100	1000 - 1100	1400 - 1500	1000 - 1100	-	**1300 - 1400**
Noon Peak Hour Volume	6	1839	858	7	88	31	13	23	251	8	3	1	0	**2849**

PM Peak Hour	1800 - 1900	1500 - 1600	1500 - 1600	1500 - 1600	1500 - 1600	1500 - 1600	1500 - 1600	1700 - 1800	1500 - 1600	1500 - 1600	1500 - 1600	-	-	**1500 - 1600**
PM Peak Hour Volume	5	2061	598	4	49	21	1	7	162	2	2	0	0	**2905**

Site 4
I-26 W/Bound Off-Ramp,
east of US-76

Date
Friday, April 26, 2024

Lat/Long
34.030082°, -81.103054°

Weather
Cloudy
69°F

Click here for Detailed Weather

0000 - 2400 (Weekday 24h Session) (04-26-2024)
SB WB 60min

	Westbound (Movement 4.1)													
TIME	1	2	3	4	5	6	7	8	9	10	11	12	13	**Total**
0000 - 0100	0	284	42	0	9	5	0	1	41	0	4	1	0	**387**
0100 - 0200	0	162	23	0	5	3	0	1	44	0	4	3	0	**245**
0200 - 0300	0	121	16	0	6	9	0	3	58	0	5	0	0	**218**
0300 - 0400	0	145	18	0	12	12	0	3	73	0	7	3	0	**273**
0400 - 0500	0	189	37	0	17	14	0	4	114	0	4	3	0	**382**
0500 - 0600	0	363	127	0	27	9	0	0	194	0	3	2	0	**725**
0600 - 0700	0	821	282	1	40	18	0	3	187	0	4	4	0	**1360**
0700 - 0800	6	1588	588	0	56	38	2	5	211	5	4	0	0	**2503**
0800 - 0900	2	1538	660	7	64	40	1	11	217	2	2	4	0	**2548**
0900 - 1000	5	1378	618	5	104	40	0	12	214	2	0	0	0	**2378**
1000 - 1100	1	1652	583	5	51	27	7	15	193	5	0	0	0	**2539**
1100 - 1200	4	1947	548	7	62	16	13	14	206	10	1	0	0	**2828**
1200 - 1300	5	1960	594	8	74	28	9	12	181	8	0	1	0	**2880**
1300 - 1400	1	1371	408	0	22	7	14	6	166	5	1	0	0	**2001**
1400 - 1500	11	1806	522	2	49	9	10	19	158	6	1	1	0	**2594**
1500 - 1600	2	2099	597	8	45	9	6	7	111	5	0	1	0	**2890**
1600 - 1700	9	1931	529	3	43	8	5	8	96	5	0	0	0	**2637**
1700 - 1800	7	1917	465	1	23	7	2	5	104	0	0	0	0	**2531**
1800 - 1900	6	1815	513	4	31	11	2	6	89	0	0	0	0	**2477**
1900 - 2000	7	1453	380	3	25	5	0	5	77	0	0	0	0	**1955**
2000 - 2100	0	889	515	3	21	5	0	12	70	0	2	0	0	**1517**
2100 - 2200	2	624	577	1	11	5	0	5	50	0	3	0	0	**1278**
2200 - 2300	0	735	116	0	5	3	0	1	56	5	4	0	0	**925**
2300 - 2400	1	506	75	1	7	1	0	0	40	1	1	0	0	**633**

Session Total	69	27294	8833	59	809	329	71	158	2950	59	50	23	0	**40704**
Session Average	2.88	1137.25	368.04	2.46	33.71	13.71	2.96	6.58	122.92	2.46	2.08	0.96	0.00	**1696.00**
Session Percentage	0.17	67.05	21.70	0.14	1.99	0.81	0.17	0.39	7.25	0.14	0.12	0.06	0.00	

AM Peak Hour	0700 - 0800	0700 - 0800	0800 - 0900	0800 - 0900	0900 - 1000	0800 - 0900	0700 - 0800	0900 - 1000	0800 - 0900	0700 - 0800	0600 - 0700	0600 - 0700	-	**0800 - 0900**
AM Peak Hour Volume	6	1588	660	7	104	40	2	12	217	5	4	4	0	**2548**

Noon Peak Hour	1400 - 1500	1200 - 1300	1200 - 1300	1200 - 1300	1200 - 1300	1200 - 1300	1300 - 1400	1400 - 1500	1100 - 1200	1100 - 1200	1100 - 1200	1200 - 1300	-	**1200 - 1300**
Noon Peak Hour Volume	11	1960	594	8	74	28	14	19	206	10	1	1	0	**2880**

PM Peak Hour	1600 - 1700	1500 - 1600	1500 - 1600	1500 - 1600	1500 - 1600	1800 - 1900	1500 - 1600	1600 - 1700	1500 - 1600	1500 - 1600	-	1500 - 1600	-	**1500 - 1600**
PM Peak Hour Volume	9	2099	597	8	45	11	6	8	111	5	0	1	0	**2890**

Site 4
I-26 W/Bound Off-Ramp,
east of US-76

Date
Saturday, April 27, 2024

Lat/Long
34.030082°, -81.103054°

Weather
Mostly Cloudy
69°F

Click here for Detailed Weather

0000 - 2400 (Saturday 24h Session) (04-27-2024)
SB WB 60min

	Westbound (Movement 4.1)													
TIME	1	2	3	4	5	6	7	8	9	10	11	12	13	**Total**
0000 - 0100	0	328	75	0	2	2	0	0	36	0	5	0	0	**448**
0100 - 0200	0	182	40	0	3	1	0	0	35	0	4	0	0	**265**
0200 - 0300	0	131	34	0	5	4	0	0	23	0	7	0	0	**204**
0300 - 0400	0	109	38	0	7	4	0	0	33	0	4	0	0	**195**
0400 - 0500	0	173	50	0	9	6	0	0	49	0	9	0	0	**296**
0500 - 0600	0	276	52	1	19	2	0	0	33	0	2	0	0	**385**
0600 - 0700	4	480	149	0	11	4	0	0	45	0	4	0	0	**697**
0700 - 0800	1	812	253	2	20	5	0	3	67	0	3	0	0	**1166**
0800 - 0900	1	1211	346	1	33	11	0	11	62	0	1	0	0	**1677**
0900 - 1000	8	1623	368	2	47	11	0	3	78	0	0	0	0	**2140**
1000 - 1100	8	1838	415	3	30	7	0	9	68	0	0	0	0	**2378**
1100 - 1200	10	1993	476	1	22	7	0	3	68	0	0	0	0	**2580**
1200 - 1300	7	2128	459	1	29	7	0	13	56	0	0	0	0	**2700**
1300 - 1400	16	2162	454	3	28	4	0	11	65	0	0	0	0	**2743**
1400 - 1500	6	2142	432	3	20	6	0	10	57	0	0	0	0	**2676**
1500 - 1600	8	2074	415	3	27	7	0	3	32	1	0	0	0	**2570**
1600 - 1700	4	1903	385	2	18	2	0	10	45	0	0	0	0	**2369**
1700 - 1800	12	1778	350	2	16	4	0	10	46	0	0	0	0	**2218**
1800 - 1900	3	1562	293	4	14	2	0	6	30	0	0	0	0	**1914**
1900 - 2000	5	1270	242	2	9	0	0	6	26	0	1	0	0	**1561**
2000 - 2100	1	911	291	2	11	0	0	1	29	0	0	1	0	**1247**
2100 - 2200	0	787	190	0	9	4	0	0	20	0	0	0	0	**1010**
2200 - 2300	0	604	145	2	5	1	0	0	15	0	0	0	0	**772**
2300 - 2400	1	464	113	2	4	0	0	0	16	0	0	0	0	**600**

Session Total	95	26941	6065	36	398	101	0	99	1034	1	40	1	0	**34811**
Session Average	3.96	1122.54	252.71	1.50	16.58	4.21	0.00	4.13	43.08	0.04	1.67	0.04	0.00	**1450.46**
Session Percentage	0.27	77.39	17.42	0.10	1.14	0.29	0.00	0.28	2.97	0.00	0.11	0.00	0.00	

AM Peak Hour	0900 - 1000	0900 - 1000	0900 - 1000	0700 - 0800	0900 - 1000	0800 - 0900	-	0800 - 0900	0900 - 1000	-	0600 - 0700	-	-	**0900 - 1000**
AM Peak Hour Volume	8	1623	368	2	47	11	0	11	78	0	4	0	0	**2140**

Noon Peak Hour	1300 - 1400	1300 - 1400	1100 - 1200	1000 - 1100	1000 - 1100	1000 - 1100	-	1200 - 1300	1000 - 1100	-	-	-	-	**1300 - 1400**
Noon Peak Hour Volume	16	2162	476	3	30	7	0	13	68	0	0	0	0	**2743**

PM Peak Hour	1700 - 1800	1500 - 1600	1500 - 1600	1800 - 1900	1500 - 1600	1500 - 1600	-	1600 - 1700	1700 - 1800	1500 - 1600	1900 - 2000	-	-	**1500 - 1600**
PM Peak Hour Volume	12	2074	415	4	27	7	0	10	46	1	1	0	0	**2570**

Bi-Directional Class Count || Volume Summary 60min

Columbia, SC

Marr Traffic DATA COLLECTION

www.marrtraffic.com

Site 4

I-26 W/Bound Off-Ramp,
east of US-76

Date

Sunday, April 21, 2024

Lat/Long

34.030082°, -81.103054°

Weather

Cloudy
66°F

Click here for Detailed Weather

0000 - 2400 (Sunday 24h Session) (04-21-2024)

Volume Summary 60min

	Volume Summary 60min		
TIME	EB	WB	**Total**
0000 - 0100	0	491	**491**
0100 - 0200	0	305	**305**
0200 - 0300	0	189	**189**
0300 - 0400	0	183	**183**
0400 - 0500	0	186	**186**
0500 - 0600	0	264	**264**
0600 - 0700	0	385	**385**
0700 - 0800	0	719	**719**
0800 - 0900	0	904	**904**
0900 - 1000	0	1423	**1423**
1000 - 1100	0	1987	**1987**
1100 - 1200	0	2202	**2202**

	Volume Summary 60min		
Time	EB	WB	**Total**
1200 - 1300	0	2793	**2793**
1300 - 1400	0	2832	**2832**
1400 - 1500	0	2585	**2585**
1500 - 1600	0	2544	**2544**
1600 - 1700	0	2457	**2457**
1700 - 1800	0	2307	**2307**
1800 - 1900	0	2030	**2030**
1900 - 2000	0	1498	**1498**
2000 - 2100	0	1044	**1044**
2100 - 2200	0	778	**778**
2200 - 2300	0	519	**519**
2300 - 2400	0	380	**380**

Session Total	0	31005	**31005**
Session Average	0.00	1291.88	**1291.88**
Session Percentage	0.00	100.00	

Site 4

I-26 W/Bound Off-Ramp,
east of US-76

Date

Monday, April 22, 2024

Lat/Long

34.030082°, -81.103054°

Weather

Mostly Cloudy
57°F

Click here for Detailed Weather

0000 - 2400 (Weekday 24h Session) (04-22-2024)

Volume Summary 60min

	Volume Summary 60min		
TIME	EB	WB	**Total**
0000 - 0100	0	301	**301**
0100 - 0200	0	210	**210**
0200 - 0300	0	169	**169**
0300 - 0400	0	238	**238**
0400 - 0500	0	341	**341**
0500 - 0600	0	710	**710**
0600 - 0700	0	1498	**1498**
0700 - 0800	0	2677	**2677**
0800 - 0900	0	2433	**2433**
0900 - 1000	0	2285	**2285**
1000 - 1100	0	2177	**2177**
1100 - 1200	0	2449	**2449**

Session Total	0	35687	**35687**
Session Average	0.00	1486.96	**1486.96**
Session Percentage	0.00	100.00	

	Volume Summary 60min		
Time	EB	WB	**Total**
1200 - 1300	0	2453	**2453**
1300 - 1400	0	2406	**2406**
1400 - 1500	0	2688	**2688**
1500 - 1600	0	2118	**2118**
1600 - 1700	0	2187	**2187**
1700 - 1800	0	1994	**1994**
1800 - 1900	0	1985	**1985**
1900 - 2000	0	1525	**1525**
2000 - 2100	0	1080	**1080**
2100 - 2200	0	773	**773**
2200 - 2300	0	565	**565**
2300 - 2400	0	425	**425**

Site 4

I-26 W/Bound Off-Ramp,
east of US-76

Date

Tuesday, April 23, 2024

Lat/Long

34.030082°, -81.103054°

Weather

Fair
58°F

Click here for Detailed Weather

0000 - 2400 (Weekday 24h Session) (04-23-2024)

Volume Summary 60min

	Volume Summary 60min		
TIME	EB	WB	**Total**
0000 - 0100	0	340	**340**
0100 - 0200	0	237	**237**
0200 - 0300	0	170	**170**
0300 - 0400	0	256	**256**
0400 - 0500	0	408	**408**
0500 - 0600	0	725	**725**
0600 - 0700	0	1500	**1500**
0700 - 0800	0	2626	**2626**
0800 - 0900	0	2489	**2489**
0900 - 1000	0	2212	**2212**
1000 - 1100	0	2071	**2071**
1100 - 1200	0	2211	**2211**

	Volume Summary 60min		
Time	EB	WB	**Total**
1200 - 1300	0	2111	**2111**
1300 - 1400	0	2273	**2273**
1400 - 1500	0	2605	**2605**
1500 - 1600	0	2856	**2856**
1600 - 1700	0	2432	**2432**
1700 - 1800	0	2131	**2131**
1800 - 1900	0	1837	**1837**
1900 - 2000	0	1448	**1448**
2000 - 2100	0	1049	**1049**
2100 - 2200	0	906	**906**
2200 - 2300	0	577	**577**
2300 - 2400	0	402	**402**

Session Total	0	35872	**35872**
Session Average	0.00	1494.67	**1494.67**
Session Percentage	0.00	100.00	

Site 4

I-26 W/Bound Off-Ramp,
east of US-76

Date

Wednesday, April 24, 2024

Lat/Long

34.030082°, -81.103054°

Weather

Fair
66°F

Click here for Detailed Weather

0000 - 2400 (Weekday 24h Session) (04-24-2024)

Volume Summary 60min

	Volume Summary 60min		
TIME	EB	WB	**Total**
0000 - 0100	0	344	**344**
0100 - 0200	0	223	**223**
0200 - 0300	0	201	**201**
0300 - 0400	0	251	**251**
0400 - 0500	0	401	**401**
0500 - 0600	0	730	**730**
0600 - 0700	0	1521	**1521**
0700 - 0800	0	2684	**2684**
0800 - 0900	0	2559	**2559**
0900 - 1000	0	2254	**2254**
1000 - 1100	0	2253	**2253**
1100 - 1200	0	2290	**2290**

Session Total	0	37689	**37689**
Session Average	0.00	1570.38	**1570.38**
Session Percentage	0.00	100.00	

	Volume Summary 60min		
Time	EB	WB	**Total**
1200 - 1300	0	2383	**2383**
1300 - 1400	0	2508	**2508**
1400 - 1500	0	2697	**2697**
1500 - 1600	0	3002	**3002**
1600 - 1700	0	2639	**2639**
1700 - 1800	0	2030	**2030**
1800 - 1900	0	2047	**2047**
1900 - 2000	0	1645	**1645**
2000 - 2100	0	1129	**1129**
2100 - 2200	0	841	**841**
2200 - 2300	0	600	**600**
2300 - 2400	0	457	**457**

Site 4

I-26 W/Bound Off-Ramp,
east of US-76

Date

Thursday, April 25, 2024

Lat/Long

34.030082°, -81.103054°

Weather

Fair
67°F

Click here for Detailed Weather

0000 - 2400 (Weekday 24h Session) (04-25-2024)

Volume Summary 60min

	Volume Summary 60min		
TIME	EB	WB	**Total**
0000 - 0100	0	400	**400**
0100 - 0200	0	213	**213**
0200 - 0300	0	200	**200**
0300 - 0400	0	261	**261**
0400 - 0500	0	412	**412**
0500 - 0600	0	711	**711**
0600 - 0700	0	1560	**1560**
0700 - 0800	0	2662	**2662**
0800 - 0900	0	2557	**2557**
0900 - 1000	0	2253	**2253**
1000 - 1100	0	2427	**2427**
1100 - 1200	0	2433	**2433**

Session Total	0	38563	**38563**
Session Average	0.00	1606.79	**1606.79**
Session Percentage	0.00	100.00	

	Volume Summary 60min		
Time	EB	WB	**Total**
1200 - 1300	0	2500	**2500**
1300 - 1400	0	2849	**2849**
1400 - 1500	0	2779	**2779**
1500 - 1600	0	2905	**2905**
1600 - 1700	0	2253	**2253**
1700 - 1800	0	1915	**1915**
1800 - 1900	0	2144	**2144**
1900 - 2000	0	1692	**1692**
2000 - 2100	0	1357	**1357**
2100 - 2200	0	851	**851**
2200 - 2300	0	708	**708**
2300 - 2400	0	521	**521**

Site 4

I-26 W/Bound Off-Ramp,
east of US-76

Date

Friday, April 26, 2024

Lat/Long

34.030082°, -81.103054°

Weather

Cloudy
69°F

Click here for Detailed Weather

0000 - 2400 (Weekday 24h Session) (04-26-2024)

Volume Summary 60min

	Volume Summary 60min		
TIME	EB	WB	**Total**
0000 - 0100	0	387	**387**
0100 - 0200	0	245	**245**
0200 - 0300	0	218	**218**
0300 - 0400	0	273	**273**
0400 - 0500	0	382	**382**
0500 - 0600	0	725	**725**
0600 - 0700	0	1360	**1360**
0700 - 0800	0	2503	**2503**
0800 - 0900	0	2548	**2548**
0900 - 1000	0	2378	**2378**
1000 - 1100	0	2539	**2539**
1100 - 1200	0	2828	**2828**
1200 - 1300	0	2880	**2880**
1300 - 1400	0	2001	**2001**
1400 - 1500	0	2594	**2594**
1500 - 1600	0	2890	**2890**
1600 - 1700	0	2637	**2637**
1700 - 1800	0	2531	**2531**
1800 - 1900	0	2477	**2477**
1900 - 2000	0	1955	**1955**
2000 - 2100	0	1517	**1517**
2100 - 2200	0	1278	**1278**
2200 - 2300	0	925	**925**
2300 - 2400	0	633	**633**
Session Total	0	40704	**40704**
Session Average	0.00	1696.00	**1696.00**
Session Percentage	0.00	100.00	

Site 4

I-26 W/Bound Off-Ramp,
east of US-76

Date

Saturday, April 27, 2024

Lat/Long

34.030082°, -81.103054°

Weather

Mostly Cloudy
69°F

Click here for Detailed Weather

0000 - 2400 (Saturday 24h Session) (04-27-2024)

Volume Summary 60min

	Volume Summary 60min		
TIME	EB	WB	**Total**
0000 - 0100	0	448	**448**
0100 - 0200	0	265	**265**
0200 - 0300	0	204	**204**
0300 - 0400	0	195	**195**
0400 - 0500	0	296	**296**
0500 - 0600	0	385	**385**
0600 - 0700	0	697	**697**
0700 - 0800	0	1166	**1166**
0800 - 0900	0	1677	**1677**
0900 - 1000	0	2140	**2140**
1000 - 1100	0	2378	**2378**
1100 - 1200	0	2580	**2580**
1200 - 1300	0	2700	**2700**
1300 - 1400	0	2743	**2743**
1400 - 1500	0	2676	**2676**
1500 - 1600	0	2570	**2570**
1600 - 1700	0	2369	**2369**
1700 - 1800	0	2218	**2218**
1800 - 1900	0	1914	**1914**
1900 - 2000	0	1561	**1561**
2000 - 2100	0	1247	**1247**
2100 - 2200	0	1010	**1010**
2200 - 2300	0	772	**772**
2300 - 2400	0	600	**600**
Session Total	0	34811	**34811**
Session Average	0.00	1450.46	**1450.46**
Session Percentage	0.00	100.00	

Bi-Directional Class Count || Graphical Analysis SB WB

Columbia, SC

Marr Traffic DATA COLLECTION

www.marrtraffic.com

Site 4

I-26 W/Bound Off-Ramp,
east of US-76

Lat/Long

34.030082°, -81.103054°

0000 - 2400 (Weekday 24h Session)

Graphical Analysis SB WB

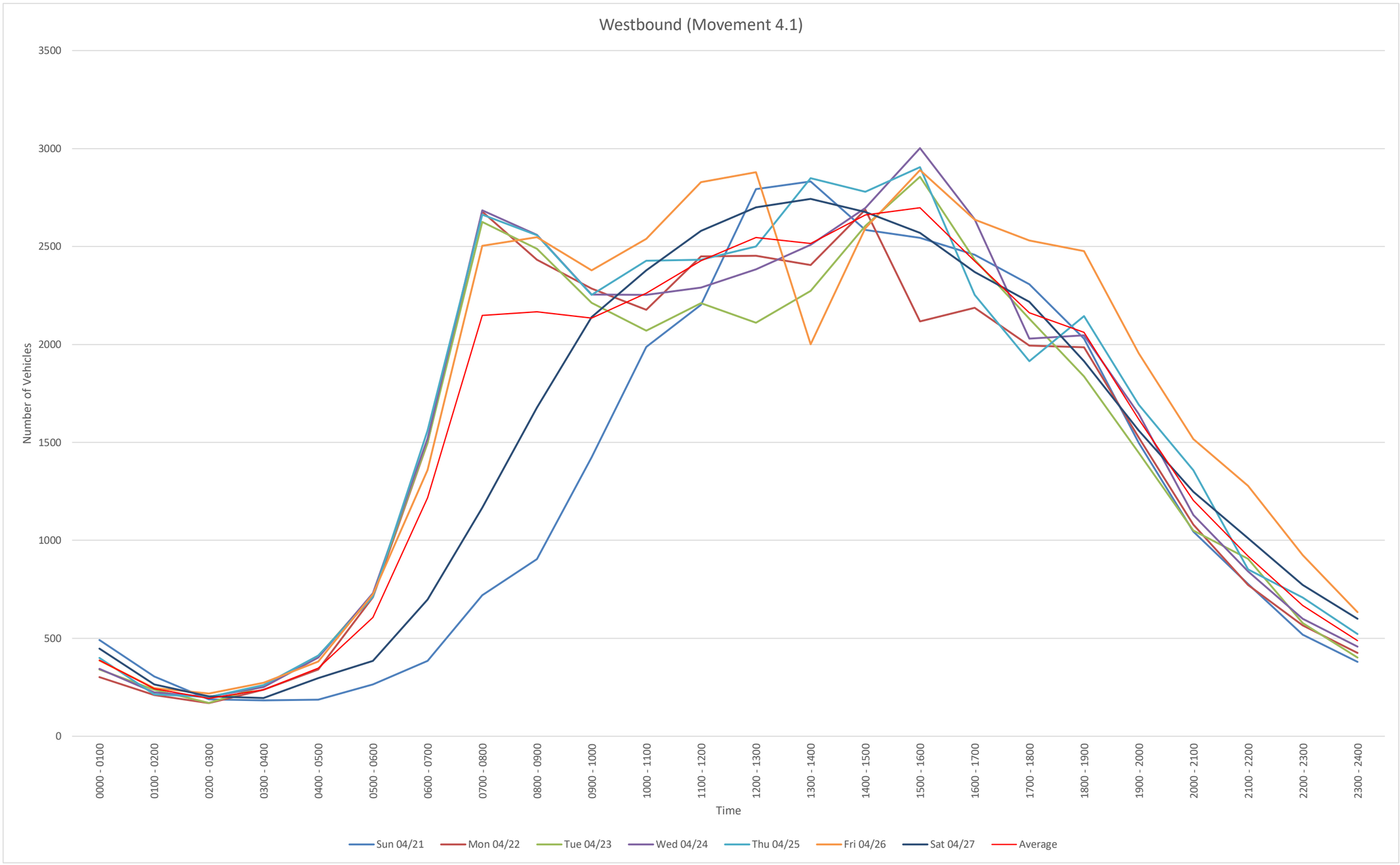

EB
File Name:
Start Date: 4/21/2024
Start Time: 0
Site Code: 4
Station ID: 1
Location 1: I-26 W/Bound Off-Ramp, east of US-76
Location 2:

Date	Time	1	2	3	4	5	6	7	8	9	10	11	12	13
4/21/2024	12:00 AM	0	0	0	0	0	0	0	0	0	0	0	0	0
4/21/2024	12:15 AM	0	0	0	0	0	0	0	0	0	0	0	0	0
4/21/2024	12:30 AM	0	0	0	0	0	0	0	0	0	0	0	0	0
4/21/2024	12:45 AM	0	0	0	0	0	0	0	0	0	0	0	0	0
4/21/2024	1:00 AM	0	0	0	0	0	0	0	0	0	0	0	0	0
4/21/2024	1:15 AM	0	0	0	0	0	0	0	0	0	0	0	0	0
4/21/2024	1:30 AM	0	0	0	0	0	0	0	0	0	0	0	0	0
4/21/2024	1:45 AM	0	0	0	0	0	0	0	0	0	0	0	0	0
4/21/2024	2:00 AM	0	0	0	0	0	0	0	0	0	0	0	0	0
4/21/2024	2:15 AM	0	0	0	0	0	0	0	0	0	0	0	0	0
4/21/2024	2:30 AM	0	0	0	0	0	0	0	0	0	0	0	0	0
4/21/2024	2:45 AM	0	0	0	0	0	0	0	0	0	0	0	0	0
4/21/2024	3:00 AM	0	0	0	0	0	0	0	0	0	0	0	0	0
4/21/2024	3:15 AM	0	0	0	0	0	0	0	0	0	0	0	0	0
4/21/2024	3:30 AM	0	0	0	0	0	0	0	0	0	0	0	0	0
4/21/2024	3:45 AM	0	0	0	0	0	0	0	0	0	0	0	0	0
4/21/2024	4:00 AM	0	0	0	0	0	0	0	0	0	0	0	0	0
4/21/2024	4:15 AM	0	0	0	0	0	0	0	0	0	0	0	0	0
4/21/2024	4:30 AM	0	0	0	0	0	0	0	0	0	0	0	0	0
4/21/2024	4:45 AM	0	0	0	0	0	0	0	0	0	0	0	0	0
4/21/2024	5:00 AM	0	0	0	0	0	0	0	0	0	0	0	0	0
4/21/2024	5:15 AM	0	0	0	0	0	0	0	0	0	0	0	0	0
4/21/2024	5:30 AM	0	0	0	0	0	0	0	0	0	0	0	0	0
4/21/2024	5:45 AM	0	0	0	0	0	0	0	0	0	0	0	0	0
4/21/2024	6:00 AM	0	0	0	0	0	0	0	0	0	0	0	0	0
4/21/2024	6:15 AM	0	0	0	0	0	0	0	0	0	0	0	0	0
4/21/2024	6:30 AM	0	0	0	0	0	0	0	0	0	0	0	0	0
4/21/2024	6:45 AM	0	0	0	0	0	0	0	0	0	0	0	0	0
4/21/2024	7:00 AM	0	0	0	0	0	0	0	0	0	0	0	0	0
4/21/2024	7:15 AM	0	0	0	0	0	0	0	0	0	0	0	0	0
4/21/2024	7:30 AM	0	0	0	0	0	0	0	0	0	0	0	0	0
4/21/2024	7:45 AM	0	0	0	0	0	0	0	0	0	0	0	0	0
4/21/2024	8:00 AM	0	0	0	0	0	0	0	0	0	0	0	0	0
4/21/2024	8:15 AM	0	0	0	0	0	0	0	0	0	0	0	0	0
4/21/2024	8:30 AM	0	0	0	0	0	0	0	0	0	0	0	0	0
4/21/2024	8:45 AM	0	0	0	0	0	0	0	0	0	0	0	0	0
4/21/2024	9:00 AM	0	0	0	0	0	0	0	0	0	0	0	0	0
4/21/2024	9:15 AM	0	0	0	0	0	0	0	0	0	0	0	0	0
4/21/2024	9:30 AM	0	0	0	0	0	0	0	0	0	0	0	0	0
4/21/2024	9:45 AM	0	0	0	0	0	0	0	0	0	0	0	0	0
4/21/2024	10:00 AM	0	0	0	0	0	0	0	0	0	0	0	0	0
4/21/2024	10:15 AM	0	0	0	0	0	0	0	0	0	0	0	0	0
4/21/2024	10:30 AM	0	0	0	0	0	0	0	0	0	0	0	0	0
4/21/2024	10:45 AM	0	0	0	0	0	0	0	0	0	0	0	0	0
4/21/2024	11:00 AM	0	0	0	0	0	0	0	0	0	0	0	0	0
4/21/2024	11:15 AM	0	0	0	0	0	0	0	0	0	0	0	0	0
4/21/2024	11:30 AM	0	0	0	0	0	0	0	0	0	0	0	0	0
4/21/2024	11:45 AM	0	0	0	0	0	0	0	0	0	0	0	0	0
4/21/2024	12:00 PM	0	0	0	0	0	0	0	0	0	0	0	0	0
4/21/2024	12:15 PM	0	0	0	0	0	0	0	0	0	0	0	0	0
4/21/2024	12:30 PM	0	0	0	0	0	0	0	0	0	0	0	0	0
4/21/2024	12:45 PM	0	0	0	0	0	0	0	0	0	0	0	0	0
4/21/2024	1:00 PM	0	0	0	0	0	0	0	0	0	0	0	0	0
4/21/2024	1:15 PM	0	0	0	0	0	0	0	0	0	0	0	0	0
4/21/2024	1:30 PM	0	0	0	0	0	0	0	0	0	0	0	0	0
4/21/2024	1:45 PM	0	0	0	0	0	0	0	0	0	0	0	0	0
4/21/2024	2:00 PM	0	0	0	0	0	0	0	0	0	0	0	0	0
4/21/2024	2:15 PM	0	0	0	0	0	0	0	0	0	0	0	0	0
4/21/2024	2:30 PM	0	0	0	0	0	0	0	0	0	0	0	0	0
4/21/2024	2:45 PM	0	0	0	0	0	0	0	0	0	0	0	0	0
4/21/2024	3:00 PM	0	0	0	0	0	0	0	0	0	0	0	0	0
4/21/2024	3:15 PM	0	0	0	0	0	0	0	0	0	0	0	0	0
4/21/2024	3:30 PM	0	0	0	0	0	0	0	0	0	0	0	0	0
4/21/2024	3:45 PM	0	0	0	0	0	0	0	0	0	0	0	0	0
4/21/2024	4:00 PM	0	0	0	0	0	0	0	0	0	0	0	0	0
4/21/2024	4:15 PM	0	0	0	0	0	0	0	0	0	0	0	0	0
4/21/2024	4:30 PM	0	0	0	0	0	0	0	0	0	0	0	0	0
4/21/2024	4:45 PM	0	0	0	0	0	0	0	0	0	0	0	0	0
4/21/2024	5:00 PM	0	0	0	0	0	0	0	0	0	0	0	0	0
4/21/2024	5:15 PM	0	0	0	0	0	0	0	0	0	0	0	0	0
4/21/2024	5:30 PM	0	0	0	0	0	0	0	0	0	0	0	0	0
4/21/2024	5:45 PM	0	0	0	0	0	0	0	0	0	0	0	0	0
4/21/2024	6:00 PM	0	0	0	0	0	0	0	0	0	0	0	0	0
4/21/2024	6:15 PM	0	0	0	0	0	0	0	0	0	0	0	0	0
4/21/2024	6:30 PM	0	0	0	0	0	0	0	0	0	0	0	0	0
4/21/2024	6:45 PM	0	0	0	0	0	0	0	0	0	0	0	0	0
4/21/2024	7:00 PM	0	0	0	0	0	0	0	0	0	0	0	0	0
4/21/2024	7:15 PM	0	0	0	0	0	0	0	0	0	0	0	0	0
4/21/2024	7:30 PM	0	0	0	0	0	0	0	0	0	0	0	0	0
4/21/2024	7:45 PM	0	0	0	0	0	0	0	0	0	0	0	0	0
4/21/2024	8:00 PM	0	0	0	0	0	0	0	0	0	0	0	0	0
4/21/2024	8:15 PM	0	0	0	0	0	0	0	0	0	0	0	0	0
4/21/2024	8:30 PM	0	0	0	0	0	0	0	0	0	0	0	0	0
4/21/2024	8:45 PM	0	0	0	0	0	0	0	0	0	0	0	0	0
4/21/2024	9:00 PM	0	0	0	0	0	0	0	0	0	0	0	0	0
4/21/2024	9:15 PM	0	0	0	0	0	0	0	0	0	0	0	0	0
4/21/2024	9:30 PM	0	0	0	0	0	0	0	0	0	0	0	0	0
4/21/2024	9:45 PM	0	0	0	0	0	0	0	0	0	0	0	0	0
4/21/2024	10:00 PM	0	0	0	0	0	0	0	0	0	0	0	0	0
4/21/2024	10:15 PM	0	0	0	0	0	0	0	0	0	0	0	0	0
4/21/2024	10:30 PM	0	0	0	0	0	0	0	0	0	0	0	0	0
4/21/2024	10:45 PM	0	0	0	0	0	0	0	0	0	0	0	0	0
4/21/2024	11:00 PM	0	0	0	0	0	0	0	0	0	0	0	0	0
4/21/2024	11:15 PM	0	0	0	0	0	0	0	0	0	0	0	0	0
4/21/2024	11:30 PM	0	0	0	0	0	0	0	0	0	0	0	0	0
4/21/2024	11:45 PM	0	0	0	0	0	0	0	0	0	0	0	0	0

4/22/2024	12:00 AM	0	0	0	0	0	0	0	0	0	0	0	0	0
4/22/2024	12:15 AM	0	0	0	0	0	0	0	0	0	0	0	0	0
4/22/2024	12:30 AM	0	0	0	0	0	0	0	0	0	0	0	0	0
4/22/2024	12:45 AM	0	0	0	0	0	0	0	0	0	0	0	0	0
4/22/2024	1:00 AM	0	0	0	0	0	0	0	0	0	0	0	0	0
4/22/2024	1:15 AM	0	0	0	0	0	0	0	0	0	0	0	0	0
4/22/2024	1:30 AM	0	0	0	0	0	0	0	0	0	0	0	0	0
4/22/2024	1:45 AM	0	0	0	0	0	0	0	0	0	0	0	0	0
4/22/2024	2:00 AM	0	0	0	0	0	0	0	0	0	0	0	0	0
4/22/2024	2:15 AM	0	0	0	0	0	0	0	0	0	0	0	0	0
4/22/2024	2:30 AM	0	0	0	0	0	0	0	0	0	0	0	0	0
4/22/2024	2:45 AM	0	0	0	0	0	0	0	0	0	0	0	0	0
4/22/2024	3:00 AM	0	0	0	0	0	0	0	0	0	0	0	0	0
4/22/2024	3:15 AM	0	0	0	0	0	0	0	0	0	0	0	0	0
4/22/2024	3:30 AM	0	0	0	0	0	0	0	0	0	0	0	0	0
4/22/2024	3:45 AM	0	0	0	0	0	0	0	0	0	0	0	0	0
4/22/2024	4:00 AM	0	0	0	0	0	0	0	0	0	0	0	0	0
4/22/2024	4:15 AM	0	0	0	0	0	0	0	0	0	0	0	0	0
4/22/2024	4:30 AM	0	0	0	0	0	0	0	0	0	0	0	0	0
4/22/2024	4:45 AM	0	0	0	0	0	0	0	0	0	0	0	0	0
4/22/2024	5:00 AM	0	0	0	0	0	0	0	0	0	0	0	0	0
4/22/2024	5:15 AM	0	0	0	0	0	0	0	0	0	0	0	0	0
4/22/2024	5:30 AM	0	0	0	0	0	0	0	0	0	0	0	0	0
4/22/2024	5:45 AM	0	0	0	0	0	0	0	0	0	0	0	0	0
4/22/2024	6:00 AM	0	0	0	0	0	0	0	0	0	0	0	0	0
4/22/2024	6:15 AM	0	0	0	0	0	0	0	0	0	0	0	0	0
4/22/2024	6:30 AM	0	0	0	0	0	0	0	0	0	0	0	0	0
4/22/2024	6:45 AM	0	0	0	0	0	0	0	0	0	0	0	0	0
4/22/2024	7:00 AM	0	0	0	0	0	0	0	0	0	0	0	0	0
4/22/2024	7:15 AM	0	0	0	0	0	0	0	0	0	0	0	0	0
4/22/2024	7:30 AM	0	0	0	0	0	0	0	0	0	0	0	0	0
4/22/2024	7:45 AM	0	0	0	0	0	0	0	0	0	0	0	0	0
4/22/2024	8:00 AM	0	0	0	0	0	0	0	0	0	0	0	0	0
4/22/2024	8:15 AM	0	0	0	0	0	0	0	0	0	0	0	0	0
4/22/2024	8:30 AM	0	0	0	0	0	0	0	0	0	0	0	0	0
4/22/2024	8:45 AM	0	0	0	0	0	0	0	0	0	0	0	0	0
4/22/2024	9:00 AM	0	0	0	0	0	0	0	0	0	0	0	0	0
4/22/2024	9:15 AM	0	0	0	0	0	0	0	0	0	0	0	0	0
4/22/2024	9:30 AM	0	0	0	0	0	0	0	0	0	0	0	0	0
4/22/2024	9:45 AM	0	0	0	0	0	0	0	0	0	0	0	0	0
4/22/2024	10:00 AM	0	0	0	0	0	0	0	0	0	0	0	0	0
4/22/2024	10:15 AM	0	0	0	0	0	0	0	0	0	0	0	0	0
4/22/2024	10:30 AM	0	0	0	0	0	0	0	0	0	0	0	0	0
4/22/2024	10:45 AM	0	0	0	0	0	0	0	0	0	0	0	0	0
4/22/2024	11:00 AM	0	0	0	0	0	0	0	0	0	0	0	0	0
4/22/2024	11:15 AM	0	0	0	0	0	0	0	0	0	0	0	0	0
4/22/2024	11:30 AM	0	0	0	0	0	0	0	0	0	0	0	0	0
4/22/2024	11:45 AM	0	0	0	0	0	0	0	0	0	0	0	0	0
4/22/2024	12:00 PM	0	0	0	0	0	0	0	0	0	0	0	0	0
4/22/2024	12:15 PM	0	0	0	0	0	0	0	0	0	0	0	0	0
4/22/2024	12:30 PM	0	0	0	0	0	0	0	0	0	0	0	0	0
4/22/2024	12:45 PM	0	0	0	0	0	0	0	0	0	0	0	0	0
4/22/2024	1:00 PM	0	0	0	0	0	0	0	0	0	0	0	0	0
4/22/2024	1:15 PM	0	0	0	0	0	0	0	0	0	0	0	0	0
4/22/2024	1:30 PM	0	0	0	0	0	0	0	0	0	0	0	0	0
4/22/2024	1:45 PM	0	0	0	0	0	0	0	0	0	0	0	0	0
4/22/2024	2:00 PM	0	0	0	0	0	0	0	0	0	0	0	0	0
4/22/2024	2:15 PM	0	0	0	0	0	0	0	0	0	0	0	0	0
4/22/2024	2:30 PM	0	0	0	0	0	0	0	0	0	0	0	0	0
4/22/2024	2:45 PM	0	0	0	0	0	0	0	0	0	0	0	0	0
4/22/2024	3:00 PM	0	0	0	0	0	0	0	0	0	0	0	0	0
4/22/2024	3:15 PM	0	0	0	0	0	0	0	0	0	0	0	0	0
4/22/2024	3:30 PM	0	0	0	0	0	0	0	0	0	0	0	0	0
4/22/2024	3:45 PM	0	0	0	0	0	0	0	0	0	0	0	0	0
4/22/2024	4:00 PM	0	0	0	0	0	0	0	0	0	0	0	0	0
4/22/2024	4:15 PM	0	0	0	0	0	0	0	0	0	0	0	0	0
4/22/2024	4:30 PM	0	0	0	0	0	0	0	0	0	0	0	0	0
4/22/2024	4:45 PM	0	0	0	0	0	0	0	0	0	0	0	0	0
4/22/2024	5:00 PM	0	0	0	0	0	0	0	0	0	0	0	0	0
4/22/2024	5:15 PM	0	0	0	0	0	0	0	0	0	0	0	0	0
4/22/2024	5:30 PM	0	0	0	0	0	0	0	0	0	0	0	0	0
4/22/2024	5:45 PM	0	0	0	0	0	0	0	0	0	0	0	0	0
4/22/2024	6:00 PM	0	0	0	0	0	0	0	0	0	0	0	0	0
4/22/2024	6:15 PM	0	0	0	0	0	0	0	0	0	0	0	0	0
4/22/2024	6:30 PM	0	0	0	0	0	0	0	0	0	0	0	0	0
4/22/2024	6:45 PM	0	0	0	0	0	0	0	0	0	0	0	0	0
4/22/2024	7:00 PM	0	0	0	0	0	0	0	0	0	0	0	0	0
4/22/2024	7:15 PM	0	0	0	0	0	0	0	0	0	0	0	0	0
4/22/2024	7:30 PM	0	0	0	0	0	0	0	0	0	0	0	0	0
4/22/2024	7:45 PM	0	0	0	0	0	0	0	0	0	0	0	0	0
4/22/2024	8:00 PM	0	0	0	0	0	0	0	0	0	0	0	0	0
4/22/2024	8:15 PM	0	0	0	0	0	0	0	0	0	0	0	0	0
4/22/2024	8:30 PM	0	0	0	0	0	0	0	0	0	0	0	0	0
4/22/2024	8:45 PM	0	0	0	0	0	0	0	0	0	0	0	0	0
4/22/2024	9:00 PM	0	0	0	0	0	0	0	0	0	0	0	0	0
4/22/2024	9:15 PM	0	0	0	0	0	0	0	0	0	0	0	0	0
4/22/2024	9:30 PM	0	0	0	0	0	0	0	0	0	0	0	0	0
4/22/2024	9:45 PM	0	0	0	0	0	0	0	0	0	0	0	0	0
4/22/2024	10:00 PM	0	0	0	0	0	0	0	0	0	0	0	0	0
4/22/2024	10:15 PM	0	0	0	0	0	0	0	0	0	0	0	0	0
4/22/2024	10:30 PM	0	0	0	0	0	0	0	0	0	0	0	0	0
4/22/2024	10:45 PM	0	0	0	0	0	0	0	0	0	0	0	0	0
4/22/2024	11:00 PM	0	0	0	0	0	0	0	0	0	0	0	0	0
4/22/2024	11:15 PM	0	0	0	0	0	0	0	0	0	0	0	0	0
4/22/2024	11:30 PM	0	0	0	0	0	0	0	0	0	0	0	0	0
4/22/2024	11:45 PM	0	0	0	0	0	0	0	0	0	0	0	0	0

4/23/2024	12:00 AM	0	0	0	0	0	0	0	0	0	0	0	0	0
4/23/2024	12:15 AM	0	0	0	0	0	0	0	0	0	0	0	0	0
4/23/2024	12:30 AM	0	0	0	0	0	0	0	0	0	0	0	0	0
4/23/2024	12:45 AM	0	0	0	0	0	0	0	0	0	0	0	0	0
4/23/2024	1:00 AM	0	0	0	0	0	0	0	0	0	0	0	0	0
4/23/2024	1:15 AM	0	0	0	0	0	0	0	0	0	0	0	0	0
4/23/2024	1:30 AM	0	0	0	0	0	0	0	0	0	0	0	0	0
4/23/2024	1:45 AM	0	0	0	0	0	0	0	0	0	0	0	0	0
4/23/2024	2:00 AM	0	0	0	0	0	0	0	0	0	0	0	0	0
4/23/2024	2:15 AM	0	0	0	0	0	0	0	0	0	0	0	0	0
4/23/2024	2:30 AM	0	0	0	0	0	0	0	0	0	0	0	0	0
4/23/2024	2:45 AM	0	0	0	0	0	0	0	0	0	0	0	0	0
4/23/2024	3:00 AM	0	0	0	0	0	0	0	0	0	0	0	0	0
4/23/2024	3:15 AM	0	0	0	0	0	0	0	0	0	0	0	0	0
4/23/2024	3:30 AM	0	0	0	0	0	0	0	0	0	0	0	0	0
4/23/2024	3:45 AM	0	0	0	0	0	0	0	0	0	0	0	0	0
4/23/2024	4:00 AM	0	0	0	0	0	0	0	0	0	0	0	0	0
4/23/2024	4:15 AM	0	0	0	0	0	0	0	0	0	0	0	0	0
4/23/2024	4:30 AM	0	0	0	0	0	0	0	0	0	0	0	0	0
4/23/2024	4:45 AM	0	0	0	0	0	0	0	0	0	0	0	0	0
4/23/2024	5:00 AM	0	0	0	0	0	0	0	0	0	0	0	0	0
4/23/2024	5:15 AM	0	0	0	0	0	0	0	0	0	0	0	0	0
4/23/2024	5:30 AM	0	0	0	0	0	0	0	0	0	0	0	0	0
4/23/2024	5:45 AM	0	0	0	0	0	0	0	0	0	0	0	0	0
4/23/2024	6:00 AM	0	0	0	0	0	0	0	0	0	0	0	0	0
4/23/2024	6:15 AM	0	0	0	0	0	0	0	0	0	0	0	0	0
4/23/2024	6:30 AM	0	0	0	0	0	0	0	0	0	0	0	0	0
4/23/2024	6:45 AM	0	0	0	0	0	0	0	0	0	0	0	0	0
4/23/2024	7:00 AM	0	0	0	0	0	0	0	0	0	0	0	0	0
4/23/2024	7:15 AM	0	0	0	0	0	0	0	0	0	0	0	0	0
4/23/2024	7:30 AM	0	0	0	0	0	0	0	0	0	0	0	0	0
4/23/2024	7:45 AM	0	0	0	0	0	0	0	0	0	0	0	0	0
4/23/2024	8:00 AM	0	0	0	0	0	0	0	0	0	0	0	0	0
4/23/2024	8:15 AM	0	0	0	0	0	0	0	0	0	0	0	0	0
4/23/2024	8:30 AM	0	0	0	0	0	0	0	0	0	0	0	0	0
4/23/2024	8:45 AM	0	0	0	0	0	0	0	0	0	0	0	0	0
4/23/2024	9:00 AM	0	0	0	0	0	0	0	0	0	0	0	0	0
4/23/2024	9:15 AM	0	0	0	0	0	0	0	0	0	0	0	0	0
4/23/2024	9:30 AM	0	0	0	0	0	0	0	0	0	0	0	0	0
4/23/2024	9:45 AM	0	0	0	0	0	0	0	0	0	0	0	0	0
4/23/2024	10:00 AM	0	0	0	0	0	0	0	0	0	0	0	0	0
4/23/2024	10:15 AM	0	0	0	0	0	0	0	0	0	0	0	0	0
4/23/2024	10:30 AM	0	0	0	0	0	0	0	0	0	0	0	0	0
4/23/2024	10:45 AM	0	0	0	0	0	0	0	0	0	0	0	0	0
4/23/2024	11:00 AM	0	0	0	0	0	0	0	0	0	0	0	0	0
4/23/2024	11:15 AM	0	0	0	0	0	0	0	0	0	0	0	0	0
4/23/2024	11:30 AM	0	0	0	0	0	0	0	0	0	0	0	0	0
4/23/2024	11:45 AM	0	0	0	0	0	0	0	0	0	0	0	0	0
4/23/2024	12:00 PM	0	0	0	0	0	0	0	0	0	0	0	0	0
4/23/2024	12:15 PM	0	0	0	0	0	0	0	0	0	0	0	0	0
4/23/2024	12:30 PM	0	0	0	0	0	0	0	0	0	0	0	0	0
4/23/2024	12:45 PM	0	0	0	0	0	0	0	0	0	0	0	0	0
4/23/2024	1:00 PM	0	0	0	0	0	0	0	0	0	0	0	0	0
4/23/2024	1:15 PM	0	0	0	0	0	0	0	0	0	0	0	0	0
4/23/2024	1:30 PM	0	0	0	0	0	0	0	0	0	0	0	0	0
4/23/2024	1:45 PM	0	0	0	0	0	0	0	0	0	0	0	0	0
4/23/2024	2:00 PM	0	0	0	0	0	0	0	0	0	0	0	0	0
4/23/2024	2:15 PM	0	0	0	0	0	0	0	0	0	0	0	0	0
4/23/2024	2:30 PM	0	0	0	0	0	0	0	0	0	0	0	0	0
4/23/2024	2:45 PM	0	0	0	0	0	0	0	0	0	0	0	0	0
4/23/2024	3:00 PM	0	0	0	0	0	0	0	0	0	0	0	0	0
4/23/2024	3:15 PM	0	0	0	0	0	0	0	0	0	0	0	0	0
4/23/2024	3:30 PM	0	0	0	0	0	0	0	0	0	0	0	0	0
4/23/2024	3:45 PM	0	0	0	0	0	0	0	0	0	0	0	0	0
4/23/2024	4:00 PM	0	0	0	0	0	0	0	0	0	0	0	0	0
4/23/2024	4:15 PM	0	0	0	0	0	0	0	0	0	0	0	0	0
4/23/2024	4:30 PM	0	0	0	0	0	0	0	0	0	0	0	0	0
4/23/2024	4:45 PM	0	0	0	0	0	0	0	0	0	0	0	0	0
4/23/2024	5:00 PM	0	0	0	0	0	0	0	0	0	0	0	0	0
4/23/2024	5:15 PM	0	0	0	0	0	0	0	0	0	0	0	0	0
4/23/2024	5:30 PM	0	0	0	0	0	0	0	0	0	0	0	0	0
4/23/2024	5:45 PM	0	0	0	0	0	0	0	0	0	0	0	0	0
4/23/2024	6:00 PM	0	0	0	0	0	0	0	0	0	0	0	0	0
4/23/2024	6:15 PM	0	0	0	0	0	0	0	0	0	0	0	0	0
4/23/2024	6:30 PM	0	0	0	0	0	0	0	0	0	0	0	0	0
4/23/2024	6:45 PM	0	0	0	0	0	0	0	0	0	0	0	0	0
4/23/2024	7:00 PM	0	0	0	0	0	0	0	0	0	0	0	0	0
4/23/2024	7:15 PM	0	0	0	0	0	0	0	0	0	0	0	0	0
4/23/2024	7:30 PM	0	0	0	0	0	0	0	0	0	0	0	0	0
4/23/2024	7:45 PM	0	0	0	0	0	0	0	0	0	0	0	0	0
4/23/2024	8:00 PM	0	0	0	0	0	0	0	0	0	0	0	0	0
4/23/2024	8:15 PM	0	0	0	0	0	0	0	0	0	0	0	0	0
4/23/2024	8:30 PM	0	0	0	0	0	0	0	0	0	0	0	0	0
4/23/2024	8:45 PM	0	0	0	0	0	0	0	0	0	0	0	0	0
4/23/2024	9:00 PM	0	0	0	0	0	0	0	0	0	0	0	0	0
4/23/2024	9:15 PM	0	0	0	0	0	0	0	0	0	0	0	0	0
4/23/2024	9:30 PM	0	0	0	0	0	0	0	0	0	0	0	0	0
4/23/2024	9:45 PM	0	0	0	0	0	0	0	0	0	0	0	0	0
4/23/2024	10:00 PM	0	0	0	0	0	0	0	0	0	0	0	0	0
4/23/2024	10:15 PM	0	0	0	0	0	0	0	0	0	0	0	0	0
4/23/2024	10:30 PM	0	0	0	0	0	0	0	0	0	0	0	0	0
4/23/2024	10:45 PM	0	0	0	0	0	0	0	0	0	0	0	0	0
4/23/2024	11:00 PM	0	0	0	0	0	0	0	0	0	0	0	0	0
4/23/2024	11:15 PM	0	0	0	0	0	0	0	0	0	0	0	0	0
4/23/2024	11:30 PM	0	0	0	0	0	0	0	0	0	0	0	0	0
4/23/2024	11:45 PM	0	0	0	0	0	0	0	0	0	0	0	0	0

4/24/2024	12:00 AM	0	0	0	0	0	0	0	0	0	0	0	0	0
4/24/2024	12:15 AM	0	0	0	0	0	0	0	0	0	0	0	0	0
4/24/2024	12:30 AM	0	0	0	0	0	0	0	0	0	0	0	0	0
4/24/2024	12:45 AM	0	0	0	0	0	0	0	0	0	0	0	0	0
4/24/2024	1:00 AM	0	0	0	0	0	0	0	0	0	0	0	0	0
4/24/2024	1:15 AM	0	0	0	0	0	0	0	0	0	0	0	0	0
4/24/2024	1:30 AM	0	0	0	0	0	0	0	0	0	0	0	0	0
4/24/2024	1:45 AM	0	0	0	0	0	0	0	0	0	0	0	0	0
4/24/2024	2:00 AM	0	0	0	0	0	0	0	0	0	0	0	0	0
4/24/2024	2:15 AM	0	0	0	0	0	0	0	0	0	0	0	0	0
4/24/2024	2:30 AM	0	0	0	0	0	0	0	0	0	0	0	0	0
4/24/2024	2:45 AM	0	0	0	0	0	0	0	0	0	0	0	0	0
4/24/2024	3:00 AM	0	0	0	0	0	0	0	0	0	0	0	0	0
4/24/2024	3:15 AM	0	0	0	0	0	0	0	0	0	0	0	0	0
4/24/2024	3:30 AM	0	0	0	0	0	0	0	0	0	0	0	0	0
4/24/2024	3:45 AM	0	0	0	0	0	0	0	0	0	0	0	0	0
4/24/2024	4:00 AM	0	0	0	0	0	0	0	0	0	0	0	0	0
4/24/2024	4:15 AM	0	0	0	0	0	0	0	0	0	0	0	0	0
4/24/2024	4:30 AM	0	0	0	0	0	0	0	0	0	0	0	0	0
4/24/2024	4:45 AM	0	0	0	0	0	0	0	0	0	0	0	0	0
4/24/2024	5:00 AM	0	0	0	0	0	0	0	0	0	0	0	0	0
4/24/2024	5:15 AM	0	0	0	0	0	0	0	0	0	0	0	0	0
4/24/2024	5:30 AM	0	0	0	0	0	0	0	0	0	0	0	0	0
4/24/2024	5:45 AM	0	0	0	0	0	0	0	0	0	0	0	0	0
4/24/2024	6:00 AM	0	0	0	0	0	0	0	0	0	0	0	0	0
4/24/2024	6:15 AM	0	0	0	0	0	0	0	0	0	0	0	0	0
4/24/2024	6:30 AM	0	0	0	0	0	0	0	0	0	0	0	0	0
4/24/2024	6:45 AM	0	0	0	0	0	0	0	0	0	0	0	0	0
4/24/2024	7:00 AM	0	0	0	0	0	0	0	0	0	0	0	0	0
4/24/2024	7:15 AM	0	0	0	0	0	0	0	0	0	0	0	0	0
4/24/2024	7:30 AM	0	0	0	0	0	0	0	0	0	0	0	0	0
4/24/2024	7:45 AM	0	0	0	0	0	0	0	0	0	0	0	0	0
4/24/2024	8:00 AM	0	0	0	0	0	0	0	0	0	0	0	0	0
4/24/2024	8:15 AM	0	0	0	0	0	0	0	0	0	0	0	0	0
4/24/2024	8:30 AM	0	0	0	0	0	0	0	0	0	0	0	0	0
4/24/2024	8:45 AM	0	0	0	0	0	0	0	0	0	0	0	0	0
4/24/2024	9:00 AM	0	0	0	0	0	0	0	0	0	0	0	0	0
4/24/2024	9:15 AM	0	0	0	0	0	0	0	0	0	0	0	0	0
4/24/2024	9:30 AM	0	0	0	0	0	0	0	0	0	0	0	0	0
4/24/2024	9:45 AM	0	0	0	0	0	0	0	0	0	0	0	0	0
4/24/2024	10:00 AM	0	0	0	0	0	0	0	0	0	0	0	0	0
4/24/2024	10:15 AM	0	0	0	0	0	0	0	0	0	0	0	0	0
4/24/2024	10:30 AM	0	0	0	0	0	0	0	0	0	0	0	0	0
4/24/2024	10:45 AM	0	0	0	0	0	0	0	0	0	0	0	0	0
4/24/2024	11:00 AM	0	0	0	0	0	0	0	0	0	0	0	0	0
4/24/2024	11:15 AM	0	0	0	0	0	0	0	0	0	0	0	0	0
4/24/2024	11:30 AM	0	0	0	0	0	0	0	0	0	0	0	0	0
4/24/2024	11:45 AM	0	0	0	0	0	0	0	0	0	0	0	0	0
4/24/2024	12:00 PM	0	0	0	0	0	0	0	0	0	0	0	0	0
4/24/2024	12:15 PM	0	0	0	0	0	0	0	0	0	0	0	0	0
4/24/2024	12:30 PM	0	0	0	0	0	0	0	0	0	0	0	0	0
4/24/2024	12:45 PM	0	0	0	0	0	0	0	0	0	0	0	0	0
4/24/2024	1:00 PM	0	0	0	0	0	0	0	0	0	0	0	0	0
4/24/2024	1:15 PM	0	0	0	0	0	0	0	0	0	0	0	0	0
4/24/2024	1:30 PM	0	0	0	0	0	0	0	0	0	0	0	0	0
4/24/2024	1:45 PM	0	0	0	0	0	0	0	0	0	0	0	0	0
4/24/2024	2:00 PM	0	0	0	0	0	0	0	0	0	0	0	0	0
4/24/2024	2:15 PM	0	0	0	0	0	0	0	0	0	0	0	0	0
4/24/2024	2:30 PM	0	0	0	0	0	0	0	0	0	0	0	0	0
4/24/2024	2:45 PM	0	0	0	0	0	0	0	0	0	0	0	0	0
4/24/2024	3:00 PM	0	0	0	0	0	0	0	0	0	0	0	0	0
4/24/2024	3:15 PM	0	0	0	0	0	0	0	0	0	0	0	0	0
4/24/2024	3:30 PM	0	0	0	0	0	0	0	0	0	0	0	0	0
4/24/2024	3:45 PM	0	0	0	0	0	0	0	0	0	0	0	0	0
4/24/2024	4:00 PM	0	0	0	0	0	0	0	0	0	0	0	0	0
4/24/2024	4:15 PM	0	0	0	0	0	0	0	0	0	0	0	0	0
4/24/2024	4:30 PM	0	0	0	0	0	0	0	0	0	0	0	0	0
4/24/2024	4:45 PM	0	0	0	0	0	0	0	0	0	0	0	0	0
4/24/2024	5:00 PM	0	0	0	0	0	0	0	0	0	0	0	0	0
4/24/2024	5:15 PM	0	0	0	0	0	0	0	0	0	0	0	0	0
4/24/2024	5:30 PM	0	0	0	0	0	0	0	0	0	0	0	0	0
4/24/2024	5:45 PM	0	0	0	0	0	0	0	0	0	0	0	0	0
4/24/2024	6:00 PM	0	0	0	0	0	0	0	0	0	0	0	0	0
4/24/2024	6:15 PM	0	0	0	0	0	0	0	0	0	0	0	0	0
4/24/2024	6:30 PM	0	0	0	0	0	0	0	0	0	0	0	0	0
4/24/2024	6:45 PM	0	0	0	0	0	0	0	0	0	0	0	0	0
4/24/2024	7:00 PM	0	0	0	0	0	0	0	0	0	0	0	0	0
4/24/2024	7:15 PM	0	0	0	0	0	0	0	0	0	0	0	0	0
4/24/2024	7:30 PM	0	0	0	0	0	0	0	0	0	0	0	0	0
4/24/2024	7:45 PM	0	0	0	0	0	0	0	0	0	0	0	0	0
4/24/2024	8:00 PM	0	0	0	0	0	0	0	0	0	0	0	0	0
4/24/2024	8:15 PM	0	0	0	0	0	0	0	0	0	0	0	0	0
4/24/2024	8:30 PM	0	0	0	0	0	0	0	0	0	0	0	0	0
4/24/2024	8:45 PM	0	0	0	0	0	0	0	0	0	0	0	0	0
4/24/2024	9:00 PM	0	0	0	0	0	0	0	0	0	0	0	0	0
4/24/2024	9:15 PM	0	0	0	0	0	0	0	0	0	0	0	0	0
4/24/2024	9:30 PM	0	0	0	0	0	0	0	0	0	0	0	0	0
4/24/2024	9:45 PM	0	0	0	0	0	0	0	0	0	0	0	0	0
4/24/2024	10:00 PM	0	0	0	0	0	0	0	0	0	0	0	0	0
4/24/2024	10:15 PM	0	0	0	0	0	0	0	0	0	0	0	0	0
4/24/2024	10:30 PM	0	0	0	0	0	0	0	0	0	0	0	0	0
4/24/2024	10:45 PM	0	0	0	0	0	0	0	0	0	0	0	0	0
4/24/2024	11:00 PM	0	0	0	0	0	0	0	0	0	0	0	0	0
4/24/2024	11:15 PM	0	0	0	0	0	0	0	0	0	0	0	0	0
4/24/2024	11:30 PM	0	0	0	0	0	0	0	0	0	0	0	0	0
4/24/2024	11:45 PM	0	0	0	0	0	0	0	0	0	0	0	0	0

4/25/2024	12:00 AM	0	0	0	0	0	0	0	0	0	0	0	0	0
4/25/2024	12:15 AM	0	0	0	0	0	0	0	0	0	0	0	0	0
4/25/2024	12:30 AM	0	0	0	0	0	0	0	0	0	0	0	0	0
4/25/2024	12:45 AM	0	0	0	0	0	0	0	0	0	0	0	0	0
4/25/2024	1:00 AM	0	0	0	0	0	0	0	0	0	0	0	0	0
4/25/2024	1:15 AM	0	0	0	0	0	0	0	0	0	0	0	0	0
4/25/2024	1:30 AM	0	0	0	0	0	0	0	0	0	0	0	0	0
4/25/2024	1:45 AM	0	0	0	0	0	0	0	0	0	0	0	0	0
4/25/2024	2:00 AM	0	0	0	0	0	0	0	0	0	0	0	0	0
4/25/2024	2:15 AM	0	0	0	0	0	0	0	0	0	0	0	0	0
4/25/2024	2:30 AM	0	0	0	0	0	0	0	0	0	0	0	0	0
4/25/2024	2:45 AM	0	0	0	0	0	0	0	0	0	0	0	0	0
4/25/2024	3:00 AM	0	0	0	0	0	0	0	0	0	0	0	0	0
4/25/2024	3:15 AM	0	0	0	0	0	0	0	0	0	0	0	0	0
4/25/2024	3:30 AM	0	0	0	0	0	0	0	0	0	0	0	0	0
4/25/2024	3:45 AM	0	0	0	0	0	0	0	0	0	0	0	0	0
4/25/2024	4:00 AM	0	0	0	0	0	0	0	0	0	0	0	0	0
4/25/2024	4:15 AM	0	0	0	0	0	0	0	0	0	0	0	0	0
4/25/2024	4:30 AM	0	0	0	0	0	0	0	0	0	0	0	0	0
4/25/2024	4:45 AM	0	0	0	0	0	0	0	0	0	0	0	0	0
4/25/2024	5:00 AM	0	0	0	0	0	0	0	0	0	0	0	0	0
4/25/2024	5:15 AM	0	0	0	0	0	0	0	0	0	0	0	0	0
4/25/2024	5:30 AM	0	0	0	0	0	0	0	0	0	0	0	0	0
4/25/2024	5:45 AM	0	0	0	0	0	0	0	0	0	0	0	0	0
4/25/2024	6:00 AM	0	0	0	0	0	0	0	0	0	0	0	0	0
4/25/2024	6:15 AM	0	0	0	0	0	0	0	0	0	0	0	0	0
4/25/2024	6:30 AM	0	0	0	0	0	0	0	0	0	0	0	0	0
4/25/2024	6:45 AM	0	0	0	0	0	0	0	0	0	0	0	0	0
4/25/2024	7:00 AM	0	0	0	0	0	0	0	0	0	0	0	0	0
4/25/2024	7:15 AM	0	0	0	0	0	0	0	0	0	0	0	0	0
4/25/2024	7:30 AM	0	0	0	0	0	0	0	0	0	0	0	0	0
4/25/2024	7:45 AM	0	0	0	0	0	0	0	0	0	0	0	0	0
4/25/2024	8:00 AM	0	0	0	0	0	0	0	0	0	0	0	0	0
4/25/2024	8:15 AM	0	0	0	0	0	0	0	0	0	0	0	0	0
4/25/2024	8:30 AM	0	0	0	0	0	0	0	0	0	0	0	0	0
4/25/2024	8:45 AM	0	0	0	0	0	0	0	0	0	0	0	0	0
4/25/2024	9:00 AM	0	0	0	0	0	0	0	0	0	0	0	0	0
4/25/2024	9:15 AM	0	0	0	0	0	0	0	0	0	0	0	0	0
4/25/2024	9:30 AM	0	0	0	0	0	0	0	0	0	0	0	0	0
4/25/2024	9:45 AM	0	0	0	0	0	0	0	0	0	0	0	0	0
4/25/2024	10:00 AM	0	0	0	0	0	0	0	0	0	0	0	0	0
4/25/2024	10:15 AM	0	0	0	0	0	0	0	0	0	0	0	0	0
4/25/2024	10:30 AM	0	0	0	0	0	0	0	0	0	0	0	0	0
4/25/2024	10:45 AM	0	0	0	0	0	0	0	0	0	0	0	0	0
4/25/2024	11:00 AM	0	0	0	0	0	0	0	0	0	0	0	0	0
4/25/2024	11:15 AM	0	0	0	0	0	0	0	0	0	0	0	0	0
4/25/2024	11:30 AM	0	0	0	0	0	0	0	0	0	0	0	0	0
4/25/2024	11:45 AM	0	0	0	0	0	0	0	0	0	0	0	0	0
4/25/2024	12:00 PM	0	0	0	0	0	0	0	0	0	0	0	0	0
4/25/2024	12:15 PM	0	0	0	0	0	0	0	0	0	0	0	0	0
4/25/2024	12:30 PM	0	0	0	0	0	0	0	0	0	0	0	0	0
4/25/2024	12:45 PM	0	0	0	0	0	0	0	0	0	0	0	0	0
4/25/2024	1:00 PM	0	0	0	0	0	0	0	0	0	0	0	0	0
4/25/2024	1:15 PM	0	0	0	0	0	0	0	0	0	0	0	0	0
4/25/2024	1:30 PM	0	0	0	0	0	0	0	0	0	0	0	0	0
4/25/2024	1:45 PM	0	0	0	0	0	0	0	0	0	0	0	0	0
4/25/2024	2:00 PM	0	0	0	0	0	0	0	0	0	0	0	0	0
4/25/2024	2:15 PM	0	0	0	0	0	0	0	0	0	0	0	0	0
4/25/2024	2:30 PM	0	0	0	0	0	0	0	0	0	0	0	0	0
4/25/2024	2:45 PM	0	0	0	0	0	0	0	0	0	0	0	0	0
4/25/2024	3:00 PM	0	0	0	0	0	0	0	0	0	0	0	0	0
4/25/2024	3:15 PM	0	0	0	0	0	0	0	0	0	0	0	0	0
4/25/2024	3:30 PM	0	0	0	0	0	0	0	0	0	0	0	0	0
4/25/2024	3:45 PM	0	0	0	0	0	0	0	0	0	0	0	0	0
4/25/2024	4:00 PM	0	0	0	0	0	0	0	0	0	0	0	0	0
4/25/2024	4:15 PM	0	0	0	0	0	0	0	0	0	0	0	0	0
4/25/2024	4:30 PM	0	0	0	0	0	0	0	0	0	0	0	0	0
4/25/2024	4:45 PM	0	0	0	0	0	0	0	0	0	0	0	0	0
4/25/2024	5:00 PM	0	0	0	0	0	0	0	0	0	0	0	0	0
4/25/2024	5:15 PM	0	0	0	0	0	0	0	0	0	0	0	0	0
4/25/2024	5:30 PM	0	0	0	0	0	0	0	0	0	0	0	0	0
4/25/2024	5:45 PM	0	0	0	0	0	0	0	0	0	0	0	0	0
4/25/2024	6:00 PM	0	0	0	0	0	0	0	0	0	0	0	0	0
4/25/2024	6:15 PM	0	0	0	0	0	0	0	0	0	0	0	0	0
4/25/2024	6:30 PM	0	0	0	0	0	0	0	0	0	0	0	0	0
4/25/2024	6:45 PM	0	0	0	0	0	0	0	0	0	0	0	0	0
4/25/2024	7:00 PM	0	0	0	0	0	0	0	0	0	0	0	0	0
4/25/2024	7:15 PM	0	0	0	0	0	0	0	0	0	0	0	0	0
4/25/2024	7:30 PM	0	0	0	0	0	0	0	0	0	0	0	0	0
4/25/2024	7:45 PM	0	0	0	0	0	0	0	0	0	0	0	0	0
4/25/2024	8:00 PM	0	0	0	0	0	0	0	0	0	0	0	0	0
4/25/2024	8:15 PM	0	0	0	0	0	0	0	0	0	0	0	0	0
4/25/2024	8:30 PM	0	0	0	0	0	0	0	0	0	0	0	0	0
4/25/2024	8:45 PM	0	0	0	0	0	0	0	0	0	0	0	0	0
4/25/2024	9:00 PM	0	0	0	0	0	0	0	0	0	0	0	0	0
4/25/2024	9:15 PM	0	0	0	0	0	0	0	0	0	0	0	0	0
4/25/2024	9:30 PM	0	0	0	0	0	0	0	0	0	0	0	0	0
4/25/2024	9:45 PM	0	0	0	0	0	0	0	0	0	0	0	0	0
4/25/2024	10:00 PM	0	0	0	0	0	0	0	0	0	0	0	0	0
4/25/2024	10:15 PM	0	0	0	0	0	0	0	0	0	0	0	0	0
4/25/2024	10:30 PM	0	0	0	0	0	0	0	0	0	0	0	0	0
4/25/2024	10:45 PM	0	0	0	0	0	0	0	0	0	0	0	0	0
4/25/2024	11:00 PM	0	0	0	0	0	0	0	0	0	0	0	0	0
4/25/2024	11:15 PM	0	0	0	0	0	0	0	0	0	0	0	0	0
4/25/2024	11:30 PM	0	0	0	0	0	0	0	0	0	0	0	0	0
4/25/2024	11:45 PM	0	0	0	0	0	0	0	0	0	0	0	0	0

4/26/2024	12:00 AM	0	0	0	0	0	0	0	0	0	0	0	0	0
4/26/2024	12:15 AM	0	0	0	0	0	0	0	0	0	0	0	0	0
4/26/2024	12:30 AM	0	0	0	0	0	0	0	0	0	0	0	0	0
4/26/2024	12:45 AM	0	0	0	0	0	0	0	0	0	0	0	0	0
4/26/2024	1:00 AM	0	0	0	0	0	0	0	0	0	0	0	0	0
4/26/2024	1:15 AM	0	0	0	0	0	0	0	0	0	0	0	0	0
4/26/2024	1:30 AM	0	0	0	0	0	0	0	0	0	0	0	0	0
4/26/2024	1:45 AM	0	0	0	0	0	0	0	0	0	0	0	0	0
4/26/2024	2:00 AM	0	0	0	0	0	0	0	0	0	0	0	0	0
4/26/2024	2:15 AM	0	0	0	0	0	0	0	0	0	0	0	0	0
4/26/2024	2:30 AM	0	0	0	0	0	0	0	0	0	0	0	0	0
4/26/2024	2:45 AM	0	0	0	0	0	0	0	0	0	0	0	0	0
4/26/2024	3:00 AM	0	0	0	0	0	0	0	0	0	0	0	0	0
4/26/2024	3:15 AM	0	0	0	0	0	0	0	0	0	0	0	0	0
4/26/2024	3:30 AM	0	0	0	0	0	0	0	0	0	0	0	0	0
4/26/2024	3:45 AM	0	0	0	0	0	0	0	0	0	0	0	0	0
4/26/2024	4:00 AM	0	0	0	0	0	0	0	0	0	0	0	0	0
4/26/2024	4:15 AM	0	0	0	0	0	0	0	0	0	0	0	0	0
4/26/2024	4:30 AM	0	0	0	0	0	0	0	0	0	0	0	0	0
4/26/2024	4:45 AM	0	0	0	0	0	0	0	0	0	0	0	0	0
4/26/2024	5:00 AM	0	0	0	0	0	0	0	0	0	0	0	0	0
4/26/2024	5:15 AM	0	0	0	0	0	0	0	0	0	0	0	0	0
4/26/2024	5:30 AM	0	0	0	0	0	0	0	0	0	0	0	0	0
4/26/2024	5:45 AM	0	0	0	0	0	0	0	0	0	0	0	0	0
4/26/2024	6:00 AM	0	0	0	0	0	0	0	0	0	0	0	0	0
4/26/2024	6:15 AM	0	0	0	0	0	0	0	0	0	0	0	0	0
4/26/2024	6:30 AM	0	0	0	0	0	0	0	0	0	0	0	0	0
4/26/2024	6:45 AM	0	0	0	0	0	0	0	0	0	0	0	0	0
4/26/2024	7:00 AM	0	0	0	0	0	0	0	0	0	0	0	0	0
4/26/2024	7:15 AM	0	0	0	0	0	0	0	0	0	0	0	0	0
4/26/2024	7:30 AM	0	0	0	0	0	0	0	0	0	0	0	0	0
4/26/2024	7:45 AM	0	0	0	0	0	0	0	0	0	0	0	0	0
4/26/2024	8:00 AM	0	0	0	0	0	0	0	0	0	0	0	0	0
4/26/2024	8:15 AM	0	0	0	0	0	0	0	0	0	0	0	0	0
4/26/2024	8:30 AM	0	0	0	0	0	0	0	0	0	0	0	0	0
4/26/2024	8:45 AM	0	0	0	0	0	0	0	0	0	0	0	0	0
4/26/2024	9:00 AM	0	0	0	0	0	0	0	0	0	0	0	0	0
4/26/2024	9:15 AM	0	0	0	0	0	0	0	0	0	0	0	0	0
4/26/2024	9:30 AM	0	0	0	0	0	0	0	0	0	0	0	0	0
4/26/2024	9:45 AM	0	0	0	0	0	0	0	0	0	0	0	0	0
4/26/2024	10:00 AM	0	0	0	0	0	0	0	0	0	0	0	0	0
4/26/2024	10:15 AM	0	0	0	0	0	0	0	0	0	0	0	0	0
4/26/2024	10:30 AM	0	0	0	0	0	0	0	0	0	0	0	0	0
4/26/2024	10:45 AM	0	0	0	0	0	0	0	0	0	0	0	0	0
4/26/2024	11:00 AM	0	0	0	0	0	0	0	0	0	0	0	0	0
4/26/2024	11:15 AM	0	0	0	0	0	0	0	0	0	0	0	0	0
4/26/2024	11:30 AM	0	0	0	0	0	0	0	0	0	0	0	0	0
4/26/2024	11:45 AM	0	0	0	0	0	0	0	0	0	0	0	0	0
4/26/2024	12:00 PM	0	0	0	0	0	0	0	0	0	0	0	0	0
4/26/2024	12:15 PM	0	0	0	0	0	0	0	0	0	0	0	0	0
4/26/2024	12:30 PM	0	0	0	0	0	0	0	0	0	0	0	0	0
4/26/2024	12:45 PM	0	0	0	0	0	0	0	0	0	0	0	0	0
4/26/2024	1:00 PM	0	0	0	0	0	0	0	0	0	0	0	0	0
4/26/2024	1:15 PM	0	0	0	0	0	0	0	0	0	0	0	0	0
4/26/2024	1:30 PM	0	0	0	0	0	0	0	0	0	0	0	0	0
4/26/2024	1:45 PM	0	0	0	0	0	0	0	0	0	0	0	0	0
4/26/2024	2:00 PM	0	0	0	0	0	0	0	0	0	0	0	0	0
4/26/2024	2:15 PM	0	0	0	0	0	0	0	0	0	0	0	0	0
4/26/2024	2:30 PM	0	0	0	0	0	0	0	0	0	0	0	0	0
4/26/2024	2:45 PM	0	0	0	0	0	0	0	0	0	0	0	0	0
4/26/2024	3:00 PM	0	0	0	0	0	0	0	0	0	0	0	0	0
4/26/2024	3:15 PM	0	0	0	0	0	0	0	0	0	0	0	0	0
4/26/2024	3:30 PM	0	0	0	0	0	0	0	0	0	0	0	0	0
4/26/2024	3:45 PM	0	0	0	0	0	0	0	0	0	0	0	0	0
4/26/2024	4:00 PM	0	0	0	0	0	0	0	0	0	0	0	0	0
4/26/2024	4:15 PM	0	0	0	0	0	0	0	0	0	0	0	0	0
4/26/2024	4:30 PM	0	0	0	0	0	0	0	0	0	0	0	0	0
4/26/2024	4:45 PM	0	0	0	0	0	0	0	0	0	0	0	0	0
4/26/2024	5:00 PM	0	0	0	0	0	0	0	0	0	0	0	0	0
4/26/2024	5:15 PM	0	0	0	0	0	0	0	0	0	0	0	0	0
4/26/2024	5:30 PM	0	0	0	0	0	0	0	0	0	0	0	0	0
4/26/2024	5:45 PM	0	0	0	0	0	0	0	0	0	0	0	0	0
4/26/2024	6:00 PM	0	0	0	0	0	0	0	0	0	0	0	0	0
4/26/2024	6:15 PM	0	0	0	0	0	0	0	0	0	0	0	0	0
4/26/2024	6:30 PM	0	0	0	0	0	0	0	0	0	0	0	0	0
4/26/2024	6:45 PM	0	0	0	0	0	0	0	0	0	0	0	0	0
4/26/2024	7:00 PM	0	0	0	0	0	0	0	0	0	0	0	0	0
4/26/2024	7:15 PM	0	0	0	0	0	0	0	0	0	0	0	0	0
4/26/2024	7:30 PM	0	0	0	0	0	0	0	0	0	0	0	0	0
4/26/2024	7:45 PM	0	0	0	0	0	0	0	0	0	0	0	0	0
4/26/2024	8:00 PM	0	0	0	0	0	0	0	0	0	0	0	0	0
4/26/2024	8:15 PM	0	0	0	0	0	0	0	0	0	0	0	0	0
4/26/2024	8:30 PM	0	0	0	0	0	0	0	0	0	0	0	0	0
4/26/2024	8:45 PM	0	0	0	0	0	0	0	0	0	0	0	0	0
4/26/2024	9:00 PM	0	0	0	0	0	0	0	0	0	0	0	0	0
4/26/2024	9:15 PM	0	0	0	0	0	0	0	0	0	0	0	0	0
4/26/2024	9:30 PM	0	0	0	0	0	0	0	0	0	0	0	0	0
4/26/2024	9:45 PM	0	0	0	0	0	0	0	0	0	0	0	0	0
4/26/2024	10:00 PM	0	0	0	0	0	0	0	0	0	0	0	0	0
4/26/2024	10:15 PM	0	0	0	0	0	0	0	0	0	0	0	0	0
4/26/2024	10:30 PM	0	0	0	0	0	0	0	0	0	0	0	0	0
4/26/2024	10:45 PM	0	0	0	0	0	0	0	0	0	0	0	0	0
4/26/2024	11:00 PM	0	0	0	0	0	0	0	0	0	0	0	0	0
4/26/2024	11:15 PM	0	0	0	0	0	0	0	0	0	0	0	0	0
4/26/2024	11:30 PM	0	0	0	0	0	0	0	0	0	0	0	0	0
4/26/2024	11:45 PM	0	0	0	0	0	0	0	0	0	0	0	0	0

4/27/2024	12:00 AM	0	0	0	0	0	0	0	0	0	0	0	0	0
4/27/2024	12:15 AM	0	0	0	0	0	0	0	0	0	0	0	0	0
4/27/2024	12:30 AM	0	0	0	0	0	0	0	0	0	0	0	0	0
4/27/2024	12:45 AM	0	0	0	0	0	0	0	0	0	0	0	0	0
4/27/2024	1:00 AM	0	0	0	0	0	0	0	0	0	0	0	0	0
4/27/2024	1:15 AM	0	0	0	0	0	0	0	0	0	0	0	0	0
4/27/2024	1:30 AM	0	0	0	0	0	0	0	0	0	0	0	0	0
4/27/2024	1:45 AM	0	0	0	0	0	0	0	0	0	0	0	0	0
4/27/2024	2:00 AM	0	0	0	0	0	0	0	0	0	0	0	0	0
4/27/2024	2:15 AM	0	0	0	0	0	0	0	0	0	0	0	0	0
4/27/2024	2:30 AM	0	0	0	0	0	0	0	0	0	0	0	0	0
4/27/2024	2:45 AM	0	0	0	0	0	0	0	0	0	0	0	0	0
4/27/2024	3:00 AM	0	0	0	0	0	0	0	0	0	0	0	0	0
4/27/2024	3:15 AM	0	0	0	0	0	0	0	0	0	0	0	0	0
4/27/2024	3:30 AM	0	0	0	0	0	0	0	0	0	0	0	0	0
4/27/2024	3:45 AM	0	0	0	0	0	0	0	0	0	0	0	0	0
4/27/2024	4:00 AM	0	0	0	0	0	0	0	0	0	0	0	0	0
4/27/2024	4:15 AM	0	0	0	0	0	0	0	0	0	0	0	0	0
4/27/2024	4:30 AM	0	0	0	0	0	0	0	0	0	0	0	0	0
4/27/2024	4:45 AM	0	0	0	0	0	0	0	0	0	0	0	0	0
4/27/2024	5:00 AM	0	0	0	0	0	0	0	0	0	0	0	0	0
4/27/2024	5:15 AM	0	0	0	0	0	0	0	0	0	0	0	0	0
4/27/2024	5:30 AM	0	0	0	0	0	0	0	0	0	0	0	0	0
4/27/2024	5:45 AM	0	0	0	0	0	0	0	0	0	0	0	0	0
4/27/2024	6:00 AM	0	0	0	0	0	0	0	0	0	0	0	0	0
4/27/2024	6:15 AM	0	0	0	0	0	0	0	0	0	0	0	0	0
4/27/2024	6:30 AM	0	0	0	0	0	0	0	0	0	0	0	0	0
4/27/2024	6:45 AM	0	0	0	0	0	0	0	0	0	0	0	0	0
4/27/2024	7:00 AM	0	0	0	0	0	0	0	0	0	0	0	0	0
4/27/2024	7:15 AM	0	0	0	0	0	0	0	0	0	0	0	0	0
4/27/2024	7:30 AM	0	0	0	0	0	0	0	0	0	0	0	0	0
4/27/2024	7:45 AM	0	0	0	0	0	0	0	0	0	0	0	0	0
4/27/2024	8:00 AM	0	0	0	0	0	0	0	0	0	0	0	0	0
4/27/2024	8:15 AM	0	0	0	0	0	0	0	0	0	0	0	0	0
4/27/2024	8:30 AM	0	0	0	0	0	0	0	0	0	0	0	0	0
4/27/2024	8:45 AM	0	0	0	0	0	0	0	0	0	0	0	0	0
4/27/2024	9:00 AM	0	0	0	0	0	0	0	0	0	0	0	0	0
4/27/2024	9:15 AM	0	0	0	0	0	0	0	0	0	0	0	0	0
4/27/2024	9:30 AM	0	0	0	0	0	0	0	0	0	0	0	0	0
4/27/2024	9:45 AM	0	0	0	0	0	0	0	0	0	0	0	0	0
4/27/2024	10:00 AM	0	0	0	0	0	0	0	0	0	0	0	0	0
4/27/2024	10:15 AM	0	0	0	0	0	0	0	0	0	0	0	0	0
4/27/2024	10:30 AM	0	0	0	0	0	0	0	0	0	0	0	0	0
4/27/2024	10:45 AM	0	0	0	0	0	0	0	0	0	0	0	0	0
4/27/2024	11:00 AM	0	0	0	0	0	0	0	0	0	0	0	0	0
4/27/2024	11:15 AM	0	0	0	0	0	0	0	0	0	0	0	0	0
4/27/2024	11:30 AM	0	0	0	0	0	0	0	0	0	0	0	0	0
4/27/2024	11:45 AM	0	0	0	0	0	0	0	0	0	0	0	0	0
4/27/2024	12:00 PM	0	0	0	0	0	0	0	0	0	0	0	0	0
4/27/2024	12:15 PM	0	0	0	0	0	0	0	0	0	0	0	0	0
4/27/2024	12:30 PM	0	0	0	0	0	0	0	0	0	0	0	0	0
4/27/2024	12:45 PM	0	0	0	0	0	0	0	0	0	0	0	0	0
4/27/2024	1:00 PM	0	0	0	0	0	0	0	0	0	0	0	0	0
4/27/2024	1:15 PM	0	0	0	0	0	0	0	0	0	0	0	0	0
4/27/2024	1:30 PM	0	0	0	0	0	0	0	0	0	0	0	0	0
4/27/2024	1:45 PM	0	0	0	0	0	0	0	0	0	0	0	0	0
4/27/2024	2:00 PM	0	0	0	0	0	0	0	0	0	0	0	0	0
4/27/2024	2:15 PM	0	0	0	0	0	0	0	0	0	0	0	0	0
4/27/2024	2:30 PM	0	0	0	0	0	0	0	0	0	0	0	0	0
4/27/2024	2:45 PM	0	0	0	0	0	0	0	0	0	0	0	0	0
4/27/2024	3:00 PM	0	0	0	0	0	0	0	0	0	0	0	0	0
4/27/2024	3:15 PM	0	0	0	0	0	0	0	0	0	0	0	0	0
4/27/2024	3:30 PM	0	0	0	0	0	0	0	0	0	0	0	0	0
4/27/2024	3:45 PM	0	0	0	0	0	0	0	0	0	0	0	0	0
4/27/2024	4:00 PM	0	0	0	0	0	0	0	0	0	0	0	0	0
4/27/2024	4:15 PM	0	0	0	0	0	0	0	0	0	0	0	0	0
4/27/2024	4:30 PM	0	0	0	0	0	0	0	0	0	0	0	0	0
4/27/2024	4:45 PM	0	0	0	0	0	0	0	0	0	0	0	0	0
4/27/2024	5:00 PM	0	0	0	0	0	0	0	0	0	0	0	0	0
4/27/2024	5:15 PM	0	0	0	0	0	0	0	0	0	0	0	0	0
4/27/2024	5:30 PM	0	0	0	0	0	0	0	0	0	0	0	0	0
4/27/2024	5:45 PM	0	0	0	0	0	0	0	0	0	0	0	0	0
4/27/2024	6:00 PM	0	0	0	0	0	0	0	0	0	0	0	0	0
4/27/2024	6:15 PM	0	0	0	0	0	0	0	0	0	0	0	0	0
4/27/2024	6:30 PM	0	0	0	0	0	0	0	0	0	0	0	0	0
4/27/2024	6:45 PM	0	0	0	0	0	0	0	0	0	0	0	0	0
4/27/2024	7:00 PM	0	0	0	0	0	0	0	0	0	0	0	0	0
4/27/2024	7:15 PM	0	0	0	0	0	0	0	0	0	0	0	0	0
4/27/2024	7:30 PM	0	0	0	0	0	0	0	0	0	0	0	0	0
4/27/2024	7:45 PM	0	0	0	0	0	0	0	0	0	0	0	0	0
4/27/2024	8:00 PM	0	0	0	0	0	0	0	0	0	0	0	0	0
4/27/2024	8:15 PM	0	0	0	0	0	0	0	0	0	0	0	0	0
4/27/2024	8:30 PM	0	0	0	0	0	0	0	0	0	0	0	0	0
4/27/2024	8:45 PM	0	0	0	0	0	0	0	0	0	0	0	0	0
4/27/2024	9:00 PM	0	0	0	0	0	0	0	0	0	0	0	0	0
4/27/2024	9:15 PM	0	0	0	0	0	0	0	0	0	0	0	0	0
4/27/2024	9:30 PM	0	0	0	0	0	0	0	0	0	0	0	0	0
4/27/2024	9:45 PM	0	0	0	0	0	0	0	0	0	0	0	0	0
4/27/2024	10:00 PM	0	0	0	0	0	0	0	0	0	0	0	0	0
4/27/2024	10:15 PM	0	0	0	0	0	0	0	0	0	0	0	0	0
4/27/2024	10:30 PM	0	0	0	0	0	0	0	0	0	0	0	0	0
4/27/2024	10:45 PM	0	0	0	0	0	0	0	0	0	0	0	0	0
4/27/2024	11:00 PM	0	0	0	0	0	0	0	0	0	0	0	0	0
4/27/2024	11:15 PM	0	0	0	0	0	0	0	0	0	0	0	0	0
4/27/2024	11:30 PM	0	0	0	0	0	0	0	0	0	0	0	0	0
4/27/2024	11:45 PM	0	0	0	0	0	0	0	0	0	0	0	0	0

WB
File Name:
Start Date: 4/21/2024
Start Time: 0
Site Code: 4
Station ID: 1
Location 1: I-26 W/Bound Off-Ramp, east of US-76
Location 2:

Date	Time	1	2	3	4	5	6	7	8	9	10	11	12	13
4/21/2024	12:00 AM	1	102	32	1	0	0	0	0	2	0	0	0	0
4/21/2024	12:15 AM	0	100	19	0	1	1	0	0	5	0	0	0	0
4/21/2024	12:30 AM	0	106	17	1	1	1	0	0	3	0	0	0	0
4/21/2024	12:45 AM	0	78	16	0	0	0	0	1	3	0	0	0	0
4/21/2024	1:00 AM	0	63	14	0	1	0	0	1	1	0	1	0	0
4/21/2024	1:15 AM	1	60	17	0	0	1	0	0	4	0	0	0	0
4/21/2024	1:30 AM	0	53	11	0	1	0	0	0	1	0	0	0	0
4/21/2024	1:45 AM	0	58	13	0	2	0	0	0	2	0	0	0	0
4/21/2024	2:00 AM	0	39	9	0	0	0	0	0	4	0	0	0	0
4/21/2024	2:15 AM	0	42	8	0	0	0	0	0	2	0	0	0	0
4/21/2024	2:30 AM	0	43	5	0	1	0	0	0	3	0	0	0	0
4/21/2024	2:45 AM	0	25	3	0	1	0	0	0	4	0	0	0	0
4/21/2024	3:00 AM	0	36	10	0	0	0	0	0	2	0	1	0	0
4/21/2024	3:15 AM	0	42	7	0	0	0	0	0	4	0	0	0	0
4/21/2024	3:30 AM	0	30	8	0	1	0	0	0	6	0	1	0	0
4/21/2024	3:45 AM	0	24	8	0	0	0	0	0	3	0	0	0	0
4/21/2024	4:00 AM	0	27	5	0	1	0	0	0	0	0	0	0	0
4/21/2024	4:15 AM	0	35	5	0	1	1	0	0	5	0	0	0	0
4/21/2024	4:30 AM	0	33	7	0	4	0	0	0	3	0	0	0	0
4/21/2024	4:45 AM	0	45	11	0	0	0	0	0	3	0	0	0	0
4/21/2024	5:00 AM	0	40	9	0	0	0	0	0	1	0	0	0	0
4/21/2024	5:15 AM	0	37	11	0	1	0	0	0	7	0	0	0	0
4/21/2024	5:30 AM	0	68	8	0	0	0	0	0	5	0	0	0	0
4/21/2024	5:45 AM	0	58	13	0	0	0	0	0	6	0	0	0	0
4/21/2024	6:00 AM	0	48	9	0	2	0	0	0	2	0	0	0	0
4/21/2024	6:15 AM	0	85	11	0	3	0	0	0	4	0	0	0	0
4/21/2024	6:30 AM	2	83	13	0	3	0	0	0	5	0	0	0	0
4/21/2024	6:45 AM	0	86	24	0	2	0	0	0	3	0	0	0	0
4/21/2024	7:00 AM	1	108	21	0	6	1	0	0	6	0	0	0	0
4/21/2024	7:15 AM	0	113	38	0	3	0	0	1	6	0	0	0	0
4/21/2024	7:30 AM	0	173	22	0	1	0	0	1	5	0	0	0	0
4/21/2024	7:45 AM	0	170	33	1	1	1	0	0	7	0	0	0	0
4/21/2024	8:00 AM	0	156	34	0	1	0	0	1	9	0	0	0	0
4/21/2024	8:15 AM	0	155	39	1	2	0	0	1	4	0	0	0	0
4/21/2024	8:30 AM	1	190	49	0	3	0	0	0	7	0	0	0	0
4/21/2024	8:45 AM	0	201	44	0	3	0	0	0	3	0	0	0	0
4/21/2024	9:00 AM	0	229	51	1	3	1	0	0	8	0	1	0	0
4/21/2024	9:15 AM	0	236	47	2	0	0	0	1	8	0	0	0	0
4/21/2024	9:30 AM	0	320	63	1	3	1	0	1	5	0	0	0	0
4/21/2024	9:45 AM	0	330	93	1	3	1	0	2	11	0	0	0	0
4/21/2024	10:00 AM	0	367	75	1	4	0	0	2	4	0	0	0	0
4/21/2024	10:15 AM	0	356	106	0	1	0	0	0	8	0	0	0	0
4/21/2024	10:30 AM	0	416	101	1	2	1	0	2	15	0	0	0	0
4/21/2024	10:45 AM	0	424	87	0	3	0	0	2	9	0	0	0	0
4/21/2024	11:00 AM	0	425	102	1	4	0	0	1	6	0	0	0	0
4/21/2024	11:15 AM	0	452	89	1	2	0	0	1	15	0	1	0	0
4/21/2024	11:30 AM	1	385	112	0	2	0	0	3	4	0	0	0	0
4/21/2024	11:45 AM	1	475	92	0	4	1	0	2	20	0	0	0	0
4/21/2024	12:00 PM	3	531	113	3	2	0	0	0	8	0	0	0	0
4/21/2024	12:15 PM	0	527	108	4	2	1	0	0	5	0	0	0	0
4/21/2024	12:30 PM	1	576	130	0	5	1	0	1	7	0	0	0	0
4/21/2024	12:45 PM	0	622	125	1	5	0	0	0	12	0	0	0	0
4/21/2024	1:00 PM	0	556	124	1	7	1	0	1	11	0	0	0	0
4/21/2024	1:15 PM	0	592	133	0	5	0	0	0	5	0	0	0	0
4/21/2024	1:30 PM	0	559	104	0	3	1	0	0	8	0	1	0	0
4/21/2024	1:45 PM	0	581	124	1	5	1	0	2	6	0	0	0	0
4/21/2024	2:00 PM	0	532	91	0	6	2	0	0	7	0	0	0	0
4/21/2024	2:15 PM	0	552	98	0	7	2	0	0	18	0	0	0	0
4/21/2024	2:30 PM	0	541	96	1	3	0	0	0	7	0	0	0	0
4/21/2024	2:45 PM	0	509	97	0	5	0	0	0	11	0	0	0	0
4/21/2024	3:00 PM	0	544	91	1	4	0	0	0	9	0	0	0	0
4/21/2024	3:15 PM	0	519	92	2	5	0	0	0	13	0	0	0	0
4/21/2024	3:30 PM	0	510	103	0	2	1	0	0	7	0	0	0	0
4/21/2024	3:45 PM	0	522	111	1	3	1	0	1	2	0	0	0	0
4/21/2024	4:00 PM	0	522	82	0	5	1	0	0	13	0	0	0	0
4/21/2024	4:15 PM	0	525	97	0	5	0	0	0	12	0	0	0	0
4/21/2024	4:30 PM	1	495	82	2	7	0	0	0	12	0	0	0	0
4/21/2024	4:45 PM	0	492	87	1	5	0	0	0	11	0	0	0	0
4/21/2024	5:00 PM	0	510	85	1	4	1	0	1	13	0	0	0	0
4/21/2024	5:15 PM	0	435	85	1	4	0	0	0	13	0	0	0	0
4/21/2024	5:30 PM	0	463	89	0	3	1	0	2	17	0	0	0	0
4/21/2024	5:45 PM	0	460	103	0	2	2	0	1	11	0	0	0	0
4/21/2024	6:00 PM	0	452	78	1	4	1	0	0	8	0	0	0	0
4/21/2024	6:15 PM	0	488	99	1	3	0	0	1	12	0	0	0	0
4/21/2024	6:30 PM	0	370	72	0	1	0	0	0	17	0	0	0	0
4/21/2024	6:45 PM	1	346	59	0	2	1	0	0	13	0	0	0	0
4/21/2024	7:00 PM	1	311	54	0	5	0	0	0	9	0	0	0	0
4/21/2024	7:15 PM	0	326	51	0	3	1	0	2	16	0	0	0	0
4/21/2024	7:30 PM	0	321	55	0	3	0	0	1	10	0	2	0	0
4/21/2024	7:45 PM	0	267	47	0	0	0	0	2	10	0	1	0	0
4/21/2024	8:00 PM	0	246	48	0	2	0	0	0	12	0	0	0	0
4/21/2024	8:15 PM	0	232	31	1	5	0	0	1	12	0	0	0	0
4/21/2024	8:30 PM	0	200	40	0	3	0	0	0	8	0	0	0	0
4/21/2024	8:45 PM	0	150	39	1	2	0	0	0	11	0	0	0	0
4/21/2024	9:00 PM	0	176	44	0	2	1	0	0	7	0	0	0	0
4/21/2024	9:15 PM	0	155	31	0	2	0	0	0	4	0	0	0	0
4/21/2024	9:30 PM	0	147	35	1	1	0	0	0	11	0	0	0	0
4/21/2024	9:45 PM	0	123	24	0	2	0	0	0	12	0	0	0	0
4/21/2024	10:00 PM	0	106	23	0	4	0	0	0	16	0	0	0	0
4/21/2024	10:15 PM	0	109	18	0	2	1	0	2	12	0	0	0	0
4/21/2024	10:30 PM	0	85	18	0	1	0	0	0	8	0	0	0	0
4/21/2024	10:45 PM	0	88	16	0	1	1	0	0	5	0	3	0	0
4/21/2024	11:00 PM	0	93	15	0	0	0	0	0	5	0	0	0	0
4/21/2024	11:15 PM	0	89	15	1	1	0	0	0	3	0	0	0	0
4/21/2024	11:30 PM	0	72	10	0	0	0	1	0	10	0	0	0	0
4/21/2024	11:45 PM	0	52	6	0	1	0	0	0	6	0	0	0	0

4/22/2024	12:00 AM	0	50	10	0	0	0	0	0	5	0	0	0	0
4/22/2024	12:15 AM	0	70	8	0	0	0	0	0	5	0	0	0	0
4/22/2024	12:30 AM	0	78	9	0	2	0	0	1	6	0	0	0	0
4/22/2024	12:45 AM	0	47	5	0	1	0	0	0	4	0	0	0	0
4/22/2024	1:00 AM	0	54	7	0	1	0	0	0	5	0	1	0	0
4/22/2024	1:15 AM	0	47	5	0	0	0	0	0	8	0	0	0	0
4/22/2024	1:30 AM	0	31	3	0	1	0	0	0	7	0	1	0	0
4/22/2024	1:45 AM	0	30	4	0	2	0	0	0	3	0	0	0	0
4/22/2024	2:00 AM	0	30	4	0	0	1	0	1	5	0	0	0	0
4/22/2024	2:15 AM	0	31	2	0	2	1	0	0	10	1	0	0	0
4/22/2024	2:30 AM	0	34	3	0	2	0	0	0	9	0	0	0	0
4/22/2024	2:45 AM	0	20	2	0	1	0	0	1	9	0	0	0	0
4/22/2024	3:00 AM	0	23	3	0	3	1	0	1	18	1	0	0	0
4/22/2024	3:15 AM	0	27	4	0	2	1	0	1	14	0	2	0	0
4/22/2024	3:30 AM	0	41	6	0	1	1	0	1	15	1	0	0	0
4/22/2024	3:45 AM	0	39	5	0	1	2	0	2	20	1	1	0	0
4/22/2024	4:00 AM	0	35	5	0	1	1	0	2	17	0	1	0	0
4/22/2024	4:15 AM	0	43	5	0	5	1	0	0	16	1	0	0	0
4/22/2024	4:30 AM	0	58	7	0	6	3	0	3	20	1	2	0	0
4/22/2024	4:45 AM	0	62	12	0	3	4	0	2	21	2	2	0	0
4/22/2024	5:00 AM	0	73	13	0	6	2	0	1	28	2	0	0	0
4/22/2024	5:15 AM	0	105	22	0	6	3	0	1	26	1	0	0	0
4/22/2024	5:30 AM	0	135	26	0	5	2	0	2	40	2	1	0	0
4/22/2024	5:45 AM	0	136	27	1	6	1	0	1	35	1	0	0	0
4/22/2024	6:00 AM	0	180	35	1	9	4	0	2	26	2	0	0	0
4/22/2024	6:15 AM	0	256	42	0	10	6	0	2	40	4	1	0	0
4/22/2024	6:30 AM	0	282	68	0	8	3	0	3	55	3	0	0	0
4/22/2024	6:45 AM	0	309	92	0	8	4	0	2	40	1	0	0	0
4/22/2024	7:00 AM	1	325	104	0	9	6	0	3	54	3	0	0	0
4/22/2024	7:15 AM	0	418	124	0	19	8	0	3	47	2	0	0	0
4/22/2024	7:30 AM	0	530	153	0	24	5	0	3	50	2	0	0	0
4/22/2024	7:45 AM	0	565	138	1	20	5	0	4	50	1	0	0	0
4/22/2024	8:00 AM	0	453	115	0	20	9	0	3	49	2	0	0	0
4/22/2024	8:15 AM	0	433	101	0	19	5	0	3	44	1	0	1	0
4/22/2024	8:30 AM	0	385	134	0	19	5	0	2	36	2	0	0	0
4/22/2024	8:45 AM	0	392	122	2	28	4	0	6	37	1	0	0	0
4/22/2024	9:00 AM	0	362	124	1	35	8	0	7	43	2	0	0	0
4/22/2024	9:15 AM	0	361	101	1	25	8	0	3	51	3	0	0	0
4/22/2024	9:30 AM	0	392	112	1	18	8	0	1	55	2	0	1	0
4/22/2024	9:45 AM	0	390	91	1	14	4	0	4	54	2	0	0	0
4/22/2024	10:00 AM	0	355	111	0	20	7	0	2	43	1	0	0	0
4/22/2024	10:15 AM	0	372	90	0	13	5	0	7	44	1	0	0	0
4/22/2024	10:30 AM	0	370	98	0	10	5	0	5	46	2	0	0	0
4/22/2024	10:45 AM	0	422	82	2	13	9	0	3	38	1	0	0	0
4/22/2024	11:00 AM	0	380	131	0	18	8	0	8	64	4	0	0	0
4/22/2024	11:15 AM	0	402	136	2	13	2	0	4	46	1	0	0	0
4/22/2024	11:30 AM	0	405	117	0	17	6	0	4	60	2	0	1	0
4/22/2024	11:45 AM	2	416	128	1	10	8	0	4	47	2	0	0	0
4/22/2024	12:00 PM	1	385	129	0	16	7	1	2	48	1	1	0	0
4/22/2024	12:15 PM	2	431	126	1	15	4	1	6	47	0	0	1	0
4/22/2024	12:30 PM	0	399	152	1	14	7	1	5	43	0	0	0	0
4/22/2024	12:45 PM	0	386	137	1	12	5	0	3	60	2	0	0	0
4/22/2024	1:00 PM	0	399	131	1	17	10	0	0	60	0	1	0	0
4/22/2024	1:15 PM	0	390	112	0	16	3	0	4	53	0	0	0	0
4/22/2024	1:30 PM	1	414	129	2	10	5	0	1	64	0	0	0	0
4/22/2024	1:45 PM	4	400	108	1	14	6	0	1	49	0	0	0	0
4/22/2024	2:00 PM	1	441	135	0	15	4	0	2	45	0	1	0	0
4/22/2024	2:15 PM	1	472	126	0	19	5	0	0	66	1	0	0	0
4/22/2024	2:30 PM	0	469	126	0	19	8	1	5	56	0	0	0	0
4/22/2024	2:45 PM	1	426	154	1	16	5	0	10	57	0	0	0	0
4/22/2024	3:00 PM	1	459	121	3	11	4	1	1	56	1	0	1	0
4/22/2024	3:15 PM	0	495	143	4	16	2	2	3	43	0	1	0	0
4/22/2024	3:30 PM	0	298	89	2	9	0	1	1	22	0	0	0	0
4/22/2024	3:45 PM	0	226	66	1	7	7	0	0	21	0	0	0	0
4/22/2024	4:00 PM	0	469	130	2	14	4	0	1	57	0	1	0	0
4/22/2024	4:15 PM	0	353	93	0	9	5	1	1	62	0	0	0	0
4/22/2024	4:30 PM	0	332	93	0	7	3	0	1	46	0	0	0	0
4/22/2024	4:45 PM	0	349	106	1	1	0	0	1	45	0	0	0	0
4/22/2024	5:00 PM	0	330	88	0	4	3	0	0	38	0	0	0	0
4/22/2024	5:15 PM	0	345	92	0	7	1	0	1	44	0	1	0	0
4/22/2024	5:30 PM	0	353	95	0	9	3	0	1	28	0	2	0	0
4/22/2024	5:45 PM	0	388	113	1	1	2	0	3	41	0	0	0	0
4/22/2024	6:00 PM	1	421	115	0	8	4	0	2	23	0	0	0	0
4/22/2024	6:15 PM	0	390	81	0	7	1	0	1	30	0	0	0	0
4/22/2024	6:30 PM	2	341	77	0	2	2	0	1	29	0	0	0	0
4/22/2024	6:45 PM	0	345	72	0	3	2	0	1	24	0	0	0	0
4/22/2024	7:00 PM	1	293	81	0	1	1	0	0	27	0	0	0	0
4/22/2024	7:15 PM	0	302	57	0	3	0	0	0	31	0	0	0	0
4/22/2024	7:30 PM	0	266	54	0	5	4	0	1	22	0	0	0	0
4/22/2024	7:45 PM	0	289	61	0	4	0	0	0	21	0	1	0	0
4/22/2024	8:00 PM	0	207	54	0	3	0	0	1	18	0	0	0	0
4/22/2024	8:15 PM	1	226	41	0	3	4	0	2	19	0	0	0	0
4/22/2024	8:30 PM	0	221	39	0	2	1	0	0	19	0	0	0	0
4/22/2024	8:45 PM	0	169	27	0	1	1	0	1	20	0	0	0	0
4/22/2024	9:00 PM	0	180	37	1	3	0	0	0	9	0	1	0	0
4/22/2024	9:15 PM	0	150	26	0	1	0	0	0	15	0	1	0	0
4/22/2024	9:30 PM	0	135	21	0	3	0	0	1	26	0	2	0	0
4/22/2024	9:45 PM	0	118	26	0	1	1	0	0	13	0	1	1	0
4/22/2024	10:00 PM	0	125	24	0	0	0	0	0	12	0	0	0	0
4/22/2024	10:15 PM	0	111	26	0	2	1	0	2	11	0	2	0	0
4/22/2024	10:30 PM	0	95	20	0	2	1	0	2	12	0	4	1	0
4/22/2024	10:45 PM	0	77	16	0	2	1	0	1	13	0	2	0	0
4/22/2024	11:00 PM	0	75	18	0	1	2	0	0	13	0	3	0	0
4/22/2024	11:15 PM	0	81	23	1	2	0	0	0	7	0	1	0	0
4/22/2024	11:30 PM	0	77	24	0	1	0	0	0	9	0	3	0	0
4/22/2024	11:45 PM	0	51	14	0	1	0	0	1	13	0	4	0	0

4/23/2024	12:00 AM	1	69	8	0	0	0	0	0	14	0	0	0	0
4/23/2024	12:15 AM	1	81	11	0	2	0	0	2	14	0	0	0	0
4/23/2024	12:30 AM	0	54	11	0	0	0	0	0	13	0	1	0	0
4/23/2024	12:45 AM	0	42	6	0	1	0	0	0	6	0	3	0	0
4/23/2024	1:00 AM	0	42	8	0	2	0	0	2	13	0	2	0	0
4/23/2024	1:15 AM	0	41	5	0	1	0	0	1	9	0	1	0	0
4/23/2024	1:30 AM	0	30	6	0	6	1	0	2	13	0	2	0	0
4/23/2024	1:45 AM	0	25	4	0	1	0	0	1	17	0	2	0	0
4/23/2024	2:00 AM	0	27	7	0	0	0	0	1	17	0	5	0	0
4/23/2024	2:15 AM	0	21	3	0	4	0	0	2	8	0	3	0	0
4/23/2024	2:30 AM	0	21	2	0	2	0	0	0	10	0	0	0	0
4/23/2024	2:45 AM	0	18	4	0	1	0	0	0	9	0	5	0	0
4/23/2024	3:00 AM	1	19	7	0	2	0	0	3	17	0	4	0	0
4/23/2024	3:15 AM	0	24	9	0	4	0	0	5	13	0	3	0	0
4/23/2024	3:30 AM	0	34	10	0	2	1	0	1	18	0	2	0	0
4/23/2024	3:45 AM	0	29	8	0	4	1	0	0	30	0	4	0	1
4/23/2024	4:00 AM	0	29	7	0	7	2	0	2	20	0	2	0	0
4/23/2024	4:15 AM	0	35	15	0	6	2	0	0	32	0	3	0	0
4/23/2024	4:30 AM	0	55	20	0	9	3	0	0	38	0	3	0	0
4/23/2024	4:45 AM	0	52	19	0	6	1	0	0	39	0	1	0	0
4/23/2024	5:00 AM	0	60	30	0	8	0	0	1	30	0	8	0	0
4/23/2024	5:15 AM	0	78	40	0	12	4	0	1	43	0	1	0	0
4/23/2024	5:30 AM	0	103	49	0	12	3	0	0	43	0	2	0	0
4/23/2024	5:45 AM	0	99	54	0	12	1	0	0	31	0	0	0	0
4/23/2024	6:00 AM	0	147	46	1	11	4	0	0	51	0	1	0	0
4/23/2024	6:15 AM	0	158	85	0	18	4	0	1	55	0	1	0	0
4/23/2024	6:30 AM	0	241	99	0	20	7	3	5	53	1	1	0	0
4/23/2024	6:45 AM	0	267	136	0	19	1	0	3	58	2	1	0	0
4/23/2024	7:00 AM	1	322	119	0	20	2	0	3	55	3	1	0	0
4/23/2024	7:15 AM	0	399	144	0	26	7	0	7	68	4	2	0	0
4/23/2024	7:30 AM	0	427	178	0	24	5	1	7	74	2	0	0	0
4/23/2024	7:45 AM	0	467	149	0	32	5	1	6	65	0	0	0	0
4/23/2024	8:00 AM	1	367	165	0	26	6	1	7	69	0	1	0	0
4/23/2024	8:15 AM	0	427	139	1	41	4	3	6	59	0	1	0	0
4/23/2024	8:30 AM	0	371	135	2	27	8	1	3	47	0	1	0	0
4/23/2024	8:45 AM	0	341	127	0	28	5	2	11	53	2	1	0	0
4/23/2024	9:00 AM	2	290	138	0	38	6	2	6	66	5	0	0	0
4/23/2024	9:15 AM	1	295	130	2	45	4	1	3	59	2	1	0	0
4/23/2024	9:30 AM	1	325	136	2	39	4	0	6	54	1	0	0	0
4/23/2024	9:45 AM	1	337	119	0	20	4	1	4	58	2	2	0	0
4/23/2024	10:00 AM	0	308	95	3	21	5	0	6	64	2	0	0	0
4/23/2024	10:15 AM	0	286	116	2	29	1	1	6	64	0	0	0	0
4/23/2024	10:30 AM	0	290	143	0	15	7	6	7	54	0	0	0	0
4/23/2024	10:45 AM	0	327	105	1	27	4	0	6	67	3	0	0	0
4/23/2024	11:00 AM	0	361	126	1	18	6	3	10	57	2	0	0	0
4/23/2024	11:15 AM	0	339	100	0	9	2	1	6	53	2	0	0	0
4/23/2024	11:30 AM	0	348	111	1	21	7	4	8	69	1	0	0	0
4/23/2024	11:45 AM	0	361	97	0	25	6	0	3	51	1	1	0	0
4/23/2024	12:00 PM	0	364	107	0	17	3	2	2	54	0	0	0	0
4/23/2024	12:15 PM	0	367	102	1	22	1	2	4	62	2	0	0	0
4/23/2024	12:30 PM	0	325	95	0	13	5	2	2	68	1	0	0	0
4/23/2024	12:45 PM	0	318	91	1	6	1	3	1	66	1	0	0	0
4/23/2024	1:00 PM	0	343	105	2	11	6	1	3	67	3	0	0	0
4/23/2024	1:15 PM	0	361	121	0	9	6	1	4	65	0	0	0	0
4/23/2024	1:30 PM	4	351	115	1	16	2	4	3	71	0	0	0	0
4/23/2024	1:45 PM	1	378	134	0	13	2	2	2	65	1	0	0	0
4/23/2024	2:00 PM	1	392	154	0	8	3	4	2	53	1	0	0	0
4/23/2024	2:15 PM	2	410	141	0	18	2	4	5	56	2	0	0	0
4/23/2024	2:30 PM	0	414	146	1	11	8	1	1	65	1	0	0	0
4/23/2024	2:45 PM	2	453	163	1	14	5	1	2	58	0	0	0	0
4/23/2024	3:00 PM	3	432	151	1	13	3	5	2	64	0	0	0	0
4/23/2024	3:15 PM	1	477	172	2	18	2	2	3	65	0	0	0	0
4/23/2024	3:30 PM	1	486	168	1	17	4	2	1	43	1	1	0	0
4/23/2024	3:45 PM	0	472	176	1	10	3	1	1	50	0	1	0	0
4/23/2024	4:00 PM	0	459	163	3	5	2	3	1	48	2	0	0	0
4/23/2024	4:15 PM	1	388	137	0	5	2	0	1	40	0	1	0	0
4/23/2024	4:30 PM	0	408	145	0	6	2	3	1	47	0	1	0	0
4/23/2024	4:45 PM	0	385	128	0	7	1	2	1	32	1	1	0	0
4/23/2024	5:00 PM	0	386	131	2	5	3	2	2	31	0	0	0	0
4/23/2024	5:15 PM	0	370	126	5	8	1	1	1	36	1	0	0	0
4/23/2024	5:30 PM	0	349	121	0	7	2	1	1	35	0	0	0	0
4/23/2024	5:45 PM	0	342	108	0	1	4	0	0	48	1	0	0	0
4/23/2024	6:00 PM	0	329	102	0	5	5	1	2	29	0	0	0	0
4/23/2024	6:15 PM	0	362	114	0	6	1	1	1	48	0	0	0	0
4/23/2024	6:30 PM	3	291	82	0	5	3	0	1	40	0	0	0	0
4/23/2024	6:45 PM	1	291	86	0	4	0	0	0	24	0	0	0	0
4/23/2024	7:00 PM	1	289	70	1	7	1	0	0	30	0	0	0	0
4/23/2024	7:15 PM	0	274	68	0	3	3	0	0	28	0	0	0	0
4/23/2024	7:30 PM	1	268	62	1	4	1	0	0	22	0	0	0	0
4/23/2024	7:45 PM	0	238	53	0	2	3	0	0	17	0	1	0	0
4/23/2024	8:00 PM	0	213	42	0	1	1	0	0	18	0	1	0	0
4/23/2024	8:15 PM	0	204	41	0	2	1	0	1	23	0	0	0	0
4/23/2024	8:30 PM	0	184	38	0	5	2	0	0	19	0	0	0	0
4/23/2024	8:45 PM	0	188	39	0	2	1	0	0	22	0	1	0	0
4/23/2024	9:00 PM	0	178	34	0	4	0	0	0	34	0	0	0	0
4/23/2024	9:15 PM	0	189	44	0	6	1	0	0	19	0	1	0	0
4/23/2024	9:30 PM	0	162	27	1	1	0	0	0	18	0	3	0	0
4/23/2024	9:45 PM	0	145	21	1	5	1	0	0	10	0	1	0	0
4/23/2024	10:00 PM	0	133	23	0	1	0	0	0	13	0	2	0	0
4/23/2024	10:15 PM	0	120	17	0	3	0	0	0	15	0	4	0	0
4/23/2024	10:30 PM	0	104	14	0	2	0	0	0	11	0	2	0	0
4/23/2024	10:45 PM	0	92	11	0	0	0	0	0	8	0	2	0	0
4/23/2024	11:00 PM	0	90	13	0	3	0	0	0	14	0	3	0	0
4/23/2024	11:15 PM	0	70	11	1	1	0	0	0	11	0	4	0	0
4/23/2024	11:30 PM	0	63	9	0	1	0	0	0	15	0	2	0	0
4/23/2024	11:45 PM	0	65	8	0	1	0	0	0	16	0	1	0	0

4/24/2024	12:00 AM	0	61	4	0	1	0	0	0	16	0	2	0	0
4/24/2024	12:15 AM	0	80	1	0	2	0	0	0	13	0	1	0	0
4/24/2024	12:30 AM	0	74	1	0	1	0	0	0	11	0	2	0	0
4/24/2024	12:45 AM	0	54	3	0	0	0	0	0	14	0	3	0	0
4/24/2024	1:00 AM	0	42	2	0	0	0	0	0	7	0	1	0	0
4/24/2024	1:15 AM	0	48	3	0	5	0	0	0	13	0	1	0	0
4/24/2024	1:30 AM	0	34	1	0	2	0	0	0	14	0	1	0	0
4/24/2024	1:45 AM	0	31	2	0	1	0	0	0	12	0	3	0	0
4/24/2024	2:00 AM	0	31	1	0	4	0	0	0	10	0	2	0	0
4/24/2024	2:15 AM	0	30	2	0	2	0	0	0	11	0	3	0	0
4/24/2024	2:30 AM	0	28	1	0	2	2	0	2	17	0	6	0	0
4/24/2024	2:45 AM	0	25	1	0	4	0	0	0	16	0	1	0	0
4/24/2024	3:00 AM	0	39	2	0	1	0	0	0	18	0	1	0	0
4/24/2024	3:15 AM	0	34	0	0	2	2	0	0	17	0	1	0	0
4/24/2024	3:30 AM	0	39	0	0	3	0	0	0	24	0	2	0	0
4/24/2024	3:45 AM	0	37	2	0	4	0	0	0	18	0	5	0	0
4/24/2024	4:00 AM	0	50	1	0	4	0	0	0	36	0	1	0	0
4/24/2024	4:15 AM	0	40	0	0	9	1	0	0	41	0	1	0	0
4/24/2024	4:30 AM	0	60	0	0	9	0	0	0	33	0	2	0	0
4/24/2024	4:45 AM	0	72	3	0	3	0	0	0	32	0	3	0	0
4/24/2024	5:00 AM	0	77	0	0	10	0	0	0	51	0	1	0	0
4/24/2024	5:15 AM	0	104	4	0	6	0	0	0	53	0	1	0	0
4/24/2024	5:30 AM	0	144	5	0	9	0	0	1	42	0	1	0	0
4/24/2024	5:45 AM	0	154	3	0	14	0	0	0	49	0	1	0	0
4/24/2024	6:00 AM	0	201	9	1	23	2	0	0	53	0	2	0	0
4/24/2024	6:15 AM	0	223	45	0	9	7	0	0	52	0	3	0	0
4/24/2024	6:30 AM	0	267	92	0	11	4	0	2	62	0	0	0	0
4/24/2024	6:45 AM	0	273	105	0	15	4	0	3	51	1	1	0	0
4/24/2024	7:00 AM	0	309	147	0	13	4	1	5	39	0	0	0	0
4/24/2024	7:15 AM	1	389	137	0	16	4	0	6	71	2	1	0	0
4/24/2024	7:30 AM	0	515	177	0	21	8	2	7	57	3	1	0	0
4/24/2024	7:45 AM	0	467	181	1	25	5	0	6	62	0	1	0	0
4/24/2024	8:00 AM	0	411	154	2	26	2	6	6	58	0	2	1	0
4/24/2024	8:15 AM	0	395	156	0	34	4	3	1	63	0	0	0	0
4/24/2024	8:30 AM	0	360	133	2	18	5	0	11	68	1	4	1	0
4/24/2024	8:45 AM	1	373	156	1	30	2	2	7	59	0	1	0	0
4/24/2024	9:00 AM	0	322	144	1	28	3	0	5	60	3	1	1	0
4/24/2024	9:15 AM	0	302	135	1	32	2	1	10	61	1	2	0	0
4/24/2024	9:30 AM	0	326	133	1	49	4	6	5	60	1	0	0	0
4/24/2024	9:45 AM	1	330	121	1	13	5	1	5	75	2	0	0	0
4/24/2024	10:00 AM	1	311	126	0	18	7	1	8	60	3	0	1	0
4/24/2024	10:15 AM	1	337	118	1	16	3	0	2	62	4	0	0	0
4/24/2024	10:30 AM	1	343	138	0	14	6	1	8	48	4	0	0	0
4/24/2024	10:45 AM	0	374	151	0	16	3	1	6	56	3	0	0	0
4/24/2024	11:00 AM	1	329	115	1	15	1	3	4	52	4	0	0	0
4/24/2024	11:15 AM	0	379	120	0	11	3	2	8	49	3	0	0	0
4/24/2024	11:30 AM	4	399	136	0	14	1	4	3	64	4	0	0	0
4/24/2024	11:45 AM	0	359	125	0	14	3	7	3	47	3	0	0	0
4/24/2024	12:00 PM	1	397	119	2	16	5	5	7	65	2	0	0	0
4/24/2024	12:15 PM	1	387	141	1	9	4	2	0	60	4	0	0	0
4/24/2024	12:30 PM	0	372	117	0	11	4	0	3	50	4	0	0	0
4/24/2024	12:45 PM	1	404	121	0	11	1	0	1	52	2	0	1	0
4/24/2024	1:00 PM	0	378	124	4	12	6	0	2	59	5	0	0	0
4/24/2024	1:15 PM	1	396	122	1	11	7	3	3	61	2	0	0	0
4/24/2024	1:30 PM	0	421	131	1	8	5	4	2	56	3	0	0	0
4/24/2024	1:45 PM	1	429	161	3	12	1	1	3	69	0	0	0	0
4/24/2024	2:00 PM	1	433	141	1	4	2	4	1	57	1	0	0	0
4/24/2024	2:15 PM	0	432	123	0	13	6	2	4	67	1	0	0	0
4/24/2024	2:30 PM	0	477	137	3	20	1	4	2	44	0	2	0	0
4/24/2024	2:45 PM	1	489	143	5	4	1	4	2	62	1	1	1	0
4/24/2024	3:00 PM	1	478	147	0	13	4	4	1	59	4	0	0	0
4/24/2024	3:15 PM	2	523	171	3	12	5	3	1	48	1	1	0	0
4/24/2024	3:30 PM	0	547	125	0	7	5	4	2	40	2	1	0	0
4/24/2024	3:45 PM	1	593	139	1	9	1	2	1	38	3	0	0	0
4/24/2024	4:00 PM	2	572	135	0	10	3	4	2	54	3	0	0	0
4/24/2024	4:15 PM	0	476	133	1	6	6	2	2	44	1	0	0	0
4/24/2024	4:30 PM	2	465	121	1	5	2	0	1	42	1	0	0	0
4/24/2024	4:45 PM	1	364	142	0	5	2	1	2	26	0	0	0	0
4/24/2024	5:00 PM	1	331	126	2	4	4	0	3	43	3	0	0	0
4/24/2024	5:15 PM	0	338	81	0	7	1	0	0	40	0	0	0	0
4/24/2024	5:30 PM	0	351	102	0	6	1	0	1	24	1	1	0	0
4/24/2024	5:45 PM	1	370	125	1	6	3	0	1	50	1	1	0	0
4/24/2024	6:00 PM	0	405	122	0	5	4	1	1	33	1	0	0	0
4/24/2024	6:15 PM	1	419	95	1	2	1	0	0	38	0	0	0	0
4/24/2024	6:30 PM	1	340	88	0	5	0	1	2	31	0	0	0	0
4/24/2024	6:45 PM	1	346	77	0	2	0	0	1	22	1	0	0	0
4/24/2024	7:00 PM	1	357	74	0	5	2	0	0	34	0	0	0	0
4/24/2024	7:15 PM	1	303	84	0	8	2	0	1	27	1	0	0	0
4/24/2024	7:30 PM	0	286	68	0	2	1	0	2	27	0	0	0	0
4/24/2024	7:45 PM	1	260	61	0	1	2	0	1	31	1	1	0	0
4/24/2024	8:00 PM	0	261	41	0	2	2	0	0	19	0	0	0	0
4/24/2024	8:15 PM	0	209	31	0	5	2	0	1	22	0	0	0	0
4/24/2024	8:30 PM	0	200	32	0	5	0	0	0	28	0	1	0	0
4/24/2024	8:45 PM	0	207	32	0	4	0	0	1	23	0	1	0	0
4/24/2024	9:00 PM	0	190	27	0	3	0	0	0	14	0	2	0	0
4/24/2024	9:15 PM	0	181	25	1	1	1	0	0	17	0	0	0	0
4/24/2024	9:30 PM	0	158	21	0	3	0	0	0	14	0	2	0	0
4/24/2024	9:45 PM	0	142	16	0	3	0	0	0	20	0	0	0	0
4/24/2024	10:00 PM	0	140	14	0	4	0	0	0	19	0	3	0	0
4/24/2024	10:15 PM	1	129	12	1	1	0	0	0	14	0	1	0	0
4/24/2024	10:30 PM	0	112	9	0	1	0	0	0	7	0	1	0	0
4/24/2024	10:45 PM	0	109	7	0	0	0	0	0	12	0	3	0	0
4/24/2024	11:00 PM	0	85	7	0	2	0	0	0	15	0	0	0	0
4/24/2024	11:15 PM	0	118	14	1	1	0	0	0	14	0	2	0	0
4/24/2024	11:30 PM	0	72	5	0	2	1	0	0	16	0	0	0	0
4/24/2024	11:45 PM	0	80	8	0	2	0	0	0	11	0	1	0	0

4/25/2024	12:00 AM	2	70	9	0	0	0	0	0	12	0	0	0	0
4/25/2024	12:15 AM	1	90	16	0	2	0	0	0	15	0	3	0	0
4/25/2024	12:30 AM	0	82	11	0	3	0	0	1	11	0	0	0	0
4/25/2024	12:45 AM	0	54	4	0	2	0	0	1	11	0	0	0	0
4/25/2024	1:00 AM	0	47	4	0	0	0	0	0	13	0	2	0	0
4/25/2024	1:15 AM	0	35	2	0	1	1	0	0	12	0	1	0	0
4/25/2024	1:30 AM	0	31	4	0	1	0	0	0	15	0	1	0	0
4/25/2024	1:45 AM	0	25	4	0	3	0	0	0	10	0	1	0	0
4/25/2024	2:00 AM	0	40	3	0	1	1	0	0	16	0	2	1	0
4/25/2024	2:15 AM	0	34	4	0	1	0	0	1	12	0	0	0	0
4/25/2024	2:30 AM	0	17	2	0	1	0	0	0	16	0	2	0	0
4/25/2024	2:45 AM	0	23	7	0	1	0	0	0	14	0	1	0	0
4/25/2024	3:00 AM	0	21	2	0	5	0	0	0	14	0	2	1	0
4/25/2024	3:15 AM	0	38	5	0	2	0	0	0	17	0	3	1	0
4/25/2024	3:30 AM	0	41	4	0	2	1	0	0	24	0	2	0	0
4/25/2024	3:45 AM	0	35	5	0	6	1	0	0	29	0	0	0	0
4/25/2024	4:00 AM	0	44	3	0	8	0	0	0	27	0	2	0	0
4/25/2024	4:15 AM	0	37	4	0	6	0	0	1	33	0	1	0	0
4/25/2024	4:30 AM	0	55	10	0	9	3	0	2	38	0	2	0	0
4/25/2024	4:45 AM	0	83	6	0	4	1	0	1	30	0	2	0	0
4/25/2024	5:00 AM	0	72	12	0	6	1	0	1	33	0	2	1	0
4/25/2024	5:15 AM	0	86	19	0	12	2	0	3	45	0	0	0	0
4/25/2024	5:30 AM	0	101	25	0	14	1	0	1	50	0	1	0	0
4/25/2024	5:45 AM	0	128	32	0	10	2	0	1	49	0	1	0	0
4/25/2024	6:00 AM	0	161	37	2	18	4	1	2	59	0	1	2	0
4/25/2024	6:15 AM	0	209	59	0	14	4	0	2	46	1	0	0	0
4/25/2024	6:30 AM	0	285	93	0	16	3	0	1	51	1	1	0	0
4/25/2024	6:45 AM	0	276	126	0	13	3	2	5	60	1	1	0	0
4/25/2024	7:00 AM	2	287	121	0	17	7	2	6	51	5	0	0	0
4/25/2024	7:15 AM	2	418	132	0	15	9	0	8	57	1	1	1	0
4/25/2024	7:30 AM	2	468	166	0	35	13	2	1	70	4	0	0	0
4/25/2024	7:45 AM	0	490	176	0	24	4	1	5	56	3	0	0	0
4/25/2024	8:00 AM	0	383	181	1	22	5	4	8	61	2	0	1	0
4/25/2024	8:15 AM	1	399	154	0	17	4	7	2	62	1	0	0	0
4/25/2024	8:30 AM	0	360	153	1	32	2	7	7	50	0	1	1	0
4/25/2024	8:45 AM	0	370	170	2	15	4	1	1	61	1	3	0	0
4/25/2024	9:00 AM	0	289	150	0	26	7	0	2	56	1	0	0	0
4/25/2024	9:15 AM	0	288	147	0	35	4	2	4	44	2	0	0	0
4/25/2024	9:30 AM	1	355	143	0	35	5	2	4	56	0	0	0	0
4/25/2024	9:45 AM	2	366	146	2	21	4	0	2	49	3	0	0	0
4/25/2024	10:00 AM	2	359	125	3	27	4	2	5	58	3	0	1	0
4/25/2024	10:15 AM	0	351	145	0	22	2	10	2	66	2	0	0	0
4/25/2024	10:30 AM	1	385	116	0	16	6	1	7	63	2	0	0	0
4/25/2024	10:45 AM	3	383	158	0	23	4	0	5	64	1	0	0	0
4/25/2024	11:00 AM	2	368	106	1	25	6	0	5	61	2	0	0	0
4/25/2024	11:15 AM	0	416	121	0	19	3	0	8	54	0	0	0	0
4/25/2024	11:30 AM	0	420	117	2	12	5	0	3	63	2	0	0	0
4/25/2024	11:45 AM	0	430	105	0	13	12	1	7	44	0	0	0	0
4/25/2024	12:00 PM	0	388	136	0	19	8	0	5	45	1	0	0	0
4/25/2024	12:15 PM	0	372	142	0	14	5	0	2	59	1	0	0	0
4/25/2024	12:30 PM	0	441	138	0	13	3	2	3	62	0	0	0	0
4/25/2024	12:45 PM	2	407	141	1	16	5	0	4	62	3	0	0	0
4/25/2024	1:00 PM	0	416	414	2	20	5	0	2	59	0	0	0	0
4/25/2024	1:15 PM	0	404	142	0	15	7	0	3	52	2	0	0	0
4/25/2024	1:30 PM	0	421	135	4	10	7	0	0	45	1	0	0	0
4/25/2024	1:45 PM	0	435	167	0	11	12	0	0	57	0	1	0	0
4/25/2024	2:00 PM	0	431	141	0	16	5	0	3	58	0	0	0	0
4/25/2024	2:15 PM	0	488	168	4	14	8	0	3	61	1	1	0	0
4/25/2024	2:30 PM	1	444	159	3	13	6	0	5	45	1	1	0	0
4/25/2024	2:45 PM	1	476	153	0	20	7	0	6	35	0	1	0	0
4/25/2024	3:00 PM	0	515	151	2	17	7	0	2	53	1	0	0	0
4/25/2024	3:15 PM	0	532	146	2	10	7	0	1	33	0	0	0	0
4/25/2024	3:30 PM	0	544	157	0	9	2	0	2	39	1	1	0	0
4/25/2024	3:45 PM	0	470	144	0	13	5	1	0	37	0	1	0	0
4/25/2024	4:00 PM	0	381	124	1	8	3	0	1	31	0	0	0	0
4/25/2024	4:15 PM	1	386	127	0	7	6	0	2	27	0	0	0	0
4/25/2024	4:30 PM	0	359	139	0	10	3	0	1	38	0	0	0	0
4/25/2024	4:45 PM	1	415	133	0	11	4	0	0	32	1	1	0	0
4/25/2024	5:00 PM	0	322	102	1	7	2	0	6	41	0	0	0	0
4/25/2024	5:15 PM	0	333	116	0	6	2	0	1	29	0	0	0	0
4/25/2024	5:30 PM	0	291	101	0	6	1	0	0	33	1	0	0	0
4/25/2024	5:45 PM	0	331	125	1	9	1	0	0	47	0	0	0	0
4/25/2024	6:00 PM	0	438	133	0	11	2	0	2	55	0	0	0	0
4/25/2024	6:15 PM	2	363	112	1	7	1	0	2	30	0	0	0	0
4/25/2024	6:30 PM	3	344	123	0	3	0	0	1	31	0	0	0	0
4/25/2024	6:45 PM	0	356	97	3	7	2	0	0	15	0	0	0	0
4/25/2024	7:00 PM	0	301	91	0	7	3	0	0	30	0	0	0	0
4/25/2024	7:15 PM	1	338	96	1	7	1	0	0	26	0	0	0	0
4/25/2024	7:30 PM	0	303	63	0	7	0	0	1	22	0	0	0	0
4/25/2024	7:45 PM	0	301	73	1	2	1	0	0	16	0	0	0	0
4/25/2024	8:00 PM	0	271	76	0	6	0	0	0	19	0	1	0	0
4/25/2024	8:15 PM	0	238	61	0	4	2	0	0	21	0	0	0	0
4/25/2024	8:30 PM	0	234	58	1	3	2	0	0	23	0	0	0	0
4/25/2024	8:45 PM	0	243	62	0	2	1	0	0	28	0	1	0	0
4/25/2024	9:00 PM	0	161	54	0	2	1	0	0	19	0	1	0	0
4/25/2024	9:15 PM	0	143	44	0	2	0	0	0	20	0	1	0	0
4/25/2024	9:30 PM	0	139	49	0	2	0	0	0	18	0	1	0	0
4/25/2024	9:45 PM	0	125	47	0	4	2	0	0	15	0	1	0	0
4/25/2024	10:00 PM	0	121	49	0	0	0	0	0	18	0	0	0	0
4/25/2024	10:15 PM	0	119	47	0	2	1	0	0	15	0	1	0	0
4/25/2024	10:30 PM	0	121	46	0	2	0	0	0	14	0	0	0	0
4/25/2024	10:45 PM	0	97	39	0	2	0	0	0	11	0	3	0	0
4/25/2024	11:00 PM	0	98	37	0	1	0	0	0	9	0	1	0	0
4/25/2024	11:15 PM	0	84	45	0	4	0	0	0	18	0	1	0	0
4/25/2024	11:30 PM	0	69	41	0	0	0	0	0	13	0	2	0	0
4/25/2024	11:45 PM	0	55	29	0	4	0	0	0	9	0	1	0	0

4/26/2024	12:00 AM	0	69	10	0	3	1	0	0	16	0	1	0	0
4/26/2024	12:15 AM	0	79	11	0	1	1	0	0	9	0	0	0	0
4/26/2024	12:30 AM	0	78	14	0	3	1	0	1	6	0	2	1	0
4/26/2024	12:45 AM	0	58	7	0	2	2	0	0	10	0	1	0	0
4/26/2024	1:00 AM	0	50	6	0	1	0	0	0	11	0	1	0	0
4/26/2024	1:15 AM	0	48	5	0	3	1	0	0	9	0	0	1	0
4/26/2024	1:30 AM	0	29	4	0	1	0	0	0	14	0	2	1	0
4/26/2024	1:45 AM	0	35	8	0	0	2	0	1	10	0	1	1	0
4/26/2024	2:00 AM	0	30	4	0	2	2	0	0	15	0	1	0	0
4/26/2024	2:15 AM	0	26	3	0	2	2	0	1	13	0	1	0	0
4/26/2024	2:30 AM	0	28	4	0	1	3	0	1	15	0	1	0	0
4/26/2024	2:45 AM	0	37	5	0	1	2	0	1	15	0	2	0	0
4/26/2024	3:00 AM	0	35	4	0	1	3	0	0	12	0	2	1	0
4/26/2024	3:15 AM	0	30	2	0	3	1	0	0	13	0	2	1	0
4/26/2024	3:30 AM	0	35	6	0	4	4	0	2	22	0	0	0	0
4/26/2024	3:45 AM	0	45	6	0	4	4	0	1	26	0	3	1	0
4/26/2024	4:00 AM	0	37	3	0	3	6	0	3	26	0	1	0	0
4/26/2024	4:15 AM	0	44	4	0	6	7	0	1	25	0	2	0	0
4/26/2024	4:30 AM	0	51	12	0	5	1	0	0	22	0	0	1	0
4/26/2024	4:45 AM	0	57	18	0	3	0	0	0	41	0	1	2	0
4/26/2024	5:00 AM	0	66	30	0	6	0	0	0	40	0	1	1	0
4/26/2024	5:15 AM	0	87	30	0	9	5	0	0	47	0	0	1	0
4/26/2024	5:30 AM	0	98	28	0	5	2	0	0	46	0	1	0	0
4/26/2024	5:45 AM	0	112	39	0	7	2	0	0	61	0	1	0	0
4/26/2024	6:00 AM	0	127	34	0	7	3	0	0	44	0	0	0	0
4/26/2024	6:15 AM	0	202	57	0	11	4	0	0	44	0	2	2	0
4/26/2024	6:30 AM	0	242	92	0	13	8	0	0	47	0	1	1	0
4/26/2024	6:45 AM	0	250	99	1	9	3	0	3	52	0	1	1	0
4/26/2024	7:00 AM	1	283	112	0	11	7	1	1	52	0	0	0	0
4/26/2024	7:15 AM	3	382	156	0	12	12	1	2	59	2	1	0	0
4/26/2024	7:30 AM	2	467	153	0	23	10	0	2	56	1	1	0	0
4/26/2024	7:45 AM	0	456	167	0	10	9	0	0	44	2	2	0	0
4/26/2024	8:00 AM	0	376	160	0	17	11	1	4	42	0	0	0	0
4/26/2024	8:15 AM	0	382	178	1	19	5	0	0	69	0	1	1	0
4/26/2024	8:30 AM	1	404	168	4	16	16	0	6	63	1	1	2	0
4/26/2024	8:45 AM	1	376	154	2	12	8	0	1	43	1	0	1	0
4/26/2024	9:00 AM	1	302	170	4	20	16	0	2	41	1	0	0	0
4/26/2024	9:15 AM	1	333	158	0	40	14	0	4	65	0	0	0	0
4/26/2024	9:30 AM	3	391	141	0	27	6	0	5	64	1	0	0	0
4/26/2024	9:45 AM	0	352	149	1	17	4	0	1	44	0	0	0	0
4/26/2024	10:00 AM	0	349	146	3	22	5	0	5	51	1	0	0	0
4/26/2024	10:15 AM	0	413	148	0	11	12	0	3	47	0	0	0	0
4/26/2024	10:30 AM	0	428	145	1	9	6	4	3	46	1	0	0	0
4/26/2024	10:45 AM	1	462	144	1	9	4	3	4	49	3	0	0	0
4/26/2024	11:00 AM	1	464	151	0	14	4	4	2	48	2	0	0	0
4/26/2024	11:15 AM	1	493	138	4	20	3	5	5	53	5	1	0	0
4/26/2024	11:30 AM	0	484	133	3	10	5	2	4	48	1	0	0	0
4/26/2024	11:45 AM	2	506	126	0	18	4	2	3	57	2	0	0	0
4/26/2024	12:00 PM	2	460	147	3	20	6	2	3	32	3	0	1	0
4/26/2024	12:15 PM	0	482	150	1	16	10	5	3	40	3	0	0	0
4/26/2024	12:30 PM	3	498	156	0	19	6	1	1	58	0	0	0	0
4/26/2024	12:45 PM	0	520	141	4	19	6	1	5	51	2	0	0	0
4/26/2024	1:00 PM	0	260	69	0	5	0	2	1	29	0	1	0	0
4/26/2024	1:15 PM	0	266	75	0	4	0	1	0	40	0	0	0	0
4/26/2024	1:30 PM	0	440	146	0	9	7	4	3	48	4	0	0	0
4/26/2024	1:45 PM	1	405	118	0	4	0	7	2	49	1	0	0	0
4/26/2024	2:00 PM	0	364	129	1	16	2	8	3	42	4	0	1	0
4/26/2024	2:15 PM	6	435	120	1	12	6	0	5	40	0	0	0	0
4/26/2024	2:30 PM	1	469	133	0	12	0	0	9	41	1	1	0	0
4/26/2024	2:45 PM	4	538	140	0	9	1	2	2	35	1	0	0	0
4/26/2024	3:00 PM	0	484	144	0	9	8	2	1	31	2	0	1	0
4/26/2024	3:15 PM	0	568	145	3	13	1	2	1	32	1	0	0	0
4/26/2024	3:30 PM	1	574	170	1	15	0	1	4	21	1	0	0	0
4/26/2024	3:45 PM	1	473	138	4	8	0	1	1	27	1	0	0	0
4/26/2024	4:00 PM	1	522	150	1	15	4	3	0	37	2	0	0	0
4/26/2024	4:15 PM	4	439	120	2	8	1	0	1	18	0	0	0	0
4/26/2024	4:30 PM	2	503	151	0	9	3	2	5	22	2	0	0	0
4/26/2024	4:45 PM	2	467	108	0	11	0	0	2	19	1	0	0	0
4/26/2024	5:00 PM	0	498	139	0	7	2	2	0	26	0	0	0	0
4/26/2024	5:15 PM	3	481	105	0	5	1	0	1	21	0	0	0	0
4/26/2024	5:30 PM	3	471	103	0	4	2	0	2	26	0	0	0	0
4/26/2024	5:45 PM	1	467	118	1	7	2	0	2	31	0	0	0	0
4/26/2024	6:00 PM	2	442	121	0	8	3	1	1	21	0	0	0	0
4/26/2024	6:15 PM	1	488	166	4	8	2	1	0	22	0	0	0	0
4/26/2024	6:30 PM	0	455	124	0	6	1	0	3	25	0	0	0	0
4/26/2024	6:45 PM	3	430	102	0	9	5	0	2	21	0	0	0	0
4/26/2024	7:00 PM	1	408	113	0	8	1	0	0	25	0	0	0	0
4/26/2024	7:15 PM	5	390	105	0	4	2	0	3	18	0	0	0	0
4/26/2024	7:30 PM	0	369	82	0	6	1	0	1	16	0	0	0	0
4/26/2024	7:45 PM	1	286	80	3	7	1	0	1	18	0	0	0	0
4/26/2024	8:00 PM	0	297	96	0	8	3	0	1	19	0	1	0	0
4/26/2024	8:15 PM	0	218	129	0	2	1	0	6	16	0	0	0	0
4/26/2024	8:30 PM	0	194	127	0	5	1	0	2	19	0	0	0	0
4/26/2024	8:45 PM	0	180	163	3	6	0	0	3	16	0	1	0	0
4/26/2024	9:00 PM	1	187	158	1	3	0	0	0	19	0	0	0	0
4/26/2024	9:15 PM	1	144	152	0	4	1	0	4	11	0	0	0	0
4/26/2024	9:30 PM	0	152	136	0	2	1	0	0	14	0	3	0	0
4/26/2024	9:45 PM	0	141	131	0	2	3	0	1	6	0	0	0	0
4/26/2024	10:00 PM	0	212	38	0	2	1	0	1	15	1	0	0	0
4/26/2024	10:15 PM	0	181	23	0	1	1	0	0	14	2	2	0	0
4/26/2024	10:30 PM	0	184	28	0	2	1	0	0	13	1	2	0	0
4/26/2024	10:45 PM	0	158	27	0	0	0	0	0	14	1	0	0	0
4/26/2024	11:00 PM	0	144	22	0	3	0	0	0	9	0	1	0	0
4/26/2024	11:15 PM	0	150	21	1	2	1	0	0	10	0	0	0	0
4/26/2024	11:30 PM	0	125	20	0	1	0	0	0	11	0	0	0	0
4/26/2024	11:45 PM	1	87	12	0	1	0	0	0	10	1	0	0	0

4/27/2024	12:00 AM	0	82	18	0	1	0	0	0	8	0	2	0	0
4/27/2024	12:15 AM	0	96	21	0	0	1	0	0	11	0	2	0	0
4/27/2024	12:30 AM	0	92	19	0	1	0	0	0	7	0	0	0	0
4/27/2024	12:45 AM	0	58	17	0	0	1	0	0	10	0	1	0	0
4/27/2024	1:00 AM	0	52	15	0	0	0	0	0	9	0	0	0	0
4/27/2024	1:15 AM	0	56	11	0	0	0	0	0	8	0	2	0	0
4/27/2024	1:30 AM	0	41	9	0	3	1	0	0	7	0	0	0	0
4/27/2024	1:45 AM	0	33	5	0	0	0	0	0	11	0	2	0	0
4/27/2024	2:00 AM	0	36	7	0	1	0	0	0	6	0	2	0	0
4/27/2024	2:15 AM	0	38	10	0	1	4	0	0	5	0	0	0	0
4/27/2024	2:30 AM	0	26	8	0	1	0	0	0	6	0	2	0	0
4/27/2024	2:45 AM	0	31	9	0	2	0	0	0	6	0	3	0	0
4/27/2024	3:00 AM	0	21	7	0	1	1	0	0	6	0	2	0	0
4/27/2024	3:15 AM	0	22	6	0	3	1	0	0	10	0	1	0	0
4/27/2024	3:30 AM	0	30	13	0	0	0	0	0	7	0	1	0	0
4/27/2024	3:45 AM	0	36	12	0	3	2	0	0	10	0	0	0	0
4/27/2024	4:00 AM	0	39	10	0	2	2	0	0	15	0	3	0	0
4/27/2024	4:15 AM	0	42	12	0	1	4	0	0	13	0	4	0	0
4/27/2024	4:30 AM	0	39	12	0	4	0	0	0	12	0	2	0	0
4/27/2024	4:45 AM	0	53	16	0	2	0	0	0	9	0	0	0	0
4/27/2024	5:00 AM	0	65	11	1	2	0	0	0	2	0	0	0	0
4/27/2024	5:15 AM	0	68	15	0	5	0	0	0	10	0	1	0	0
4/27/2024	5:30 AM	0	81	14	0	7	2	0	0	10	0	0	0	0
4/27/2024	5:45 AM	0	62	12	0	5	0	0	0	11	0	1	0	0
4/27/2024	6:00 AM	0	80	27	0	2	1	0	0	14	0	3	0	0
4/27/2024	6:15 AM	0	104	33	0	3	1	0	0	10	0	1	0	0
4/27/2024	6:30 AM	2	143	35	0	3	1	0	0	13	0	0	0	0
4/27/2024	6:45 AM	2	153	54	0	3	1	0	0	8	0	0	0	0
4/27/2024	7:00 AM	0	148	44	1	7	1	0	0	12	0	3	0	0
4/27/2024	7:15 AM	0	193	49	1	6	1	0	2	22	0	0	0	0
4/27/2024	7:30 AM	1	196	76	0	4	1	0	1	16	0	0	0	0
4/27/2024	7:45 AM	0	275	84	0	3	2	0	0	17	0	0	0	0
4/27/2024	8:00 AM	0	269	74	0	13	2	0	1	10	0	1	0	0
4/27/2024	8:15 AM	0	274	81	0	4	3	0	2	18	0	0	0	0
4/27/2024	8:30 AM	0	342	102	0	6	5	0	3	19	0	0	0	0
4/27/2024	8:45 AM	1	326	89	1	10	1	0	5	15	0	0	0	0
4/27/2024	9:00 AM	3	342	74	1	16	4	0	0	22	0	0	0	0
4/27/2024	9:15 AM	4	326	91	0	10	1	0	0	19	0	0	0	0
4/27/2024	9:30 AM	1	470	106	0	11	2	0	1	18	0	0	0	0
4/27/2024	9:45 AM	0	485	97	1	10	4	0	2	19	0	0	0	0
4/27/2024	10:00 AM	1	407	93	1	10	1	0	1	20	0	0	0	0
4/27/2024	10:15 AM	0	440	93	0	5	0	0	6	22	0	0	0	0
4/27/2024	10:30 AM	3	493	97	0	7	3	0	1	15	0	0	0	0
4/27/2024	10:45 AM	4	498	132	2	8	3	0	1	11	0	0	0	0
4/27/2024	11:00 AM	2	479	109	1	3	3	0	1	19	0	0	0	0
4/27/2024	11:15 AM	1	500	119	0	5	2	0	0	12	0	0	0	0
4/27/2024	11:30 AM	4	506	127	0	6	1	0	2	21	0	0	0	0
4/27/2024	11:45 AM	3	508	121	0	8	1	0	0	16	0	0	0	0
4/27/2024	12:00 PM	2	530	109	0	3	2	0	2	12	0	0	0	0
4/27/2024	12:15 PM	4	544	112	0	6	2	0	4	18	0	0	0	0
4/27/2024	12:30 PM	1	533	117	1	4	1	0	5	14	0	0	0	0
4/27/2024	12:45 PM	0	521	121	0	16	2	0	2	12	0	0	0	0
4/27/2024	1:00 PM	1	539	101	2	7	1	0	3	16	0	0	0	0
4/27/2024	1:15 PM	5	554	118	1	6	2	0	1	18	0	0	0	0
4/27/2024	1:30 PM	8	520	106	0	10	0	0	4	17	0	0	0	0
4/27/2024	1:45 PM	2	549	129	0	5	1	0	3	14	0	0	0	0
4/27/2024	2:00 PM	1	512	121	0	4	3	0	1	20	0	0	0	0
4/27/2024	2:15 PM	0	510	79	0	4	1	0	4	10	0	0	0	0
4/27/2024	2:30 PM	3	535	115	1	4	2	0	3	7	0	0	0	0
4/27/2024	2:45 PM	2	585	117	2	8	0	0	2	20	0	0	0	0
4/27/2024	3:00 PM	3	526	98	2	10	1	0	0	8	0	0	0	0
4/27/2024	3:15 PM	0	512	97	0	5	2	0	2	5	0	0	0	0
4/27/2024	3:30 PM	4	526	103	0	8	2	0	1	8	0	0	0	0
4/27/2024	3:45 PM	1	510	117	1	4	2	0	0	11	1	0	0	0
4/27/2024	4:00 PM	0	491	104	1	5	0	0	2	11	0	0	0	0
4/27/2024	4:15 PM	1	424	89	0	4	1	0	1	13	0	0	0	0
4/27/2024	4:30 PM	2	481	103	1	6	1	0	1	9	0	0	0	0
4/27/2024	4:45 PM	1	507	89	0	3	0	0	6	12	0	0	0	0
4/27/2024	5:00 PM	3	454	93	1	3	1	0	1	15	0	0	0	0
4/27/2024	5:15 PM	2	468	84	0	6	1	0	0	9	0	0	0	0
4/27/2024	5:30 PM	4	406	96	1	3	0	0	3	11	0	0	0	0
4/27/2024	5:45 PM	3	450	77	0	4	2	0	6	11	0	0	0	0
4/27/2024	6:00 PM	2	395	75	1	3	1	0	4	8	0	0	0	0
4/27/2024	6:15 PM	0	390	83	2	4	0	0	0	4	0	0	0	0
4/27/2024	6:30 PM	0	397	73	1	2	0	0	0	7	0	0	0	0
4/27/2024	6:45 PM	1	380	62	0	5	1	0	2	11	0	0	0	0
4/27/2024	7:00 PM	1	318	67	1	2	0	0	3	6	0	0	0	0
4/27/2024	7:15 PM	1	349	64	1	3	0	0	2	6	0	0	0	0
4/27/2024	7:30 PM	0	307	56	0	4	0	0	0	6	0	1	0	0
4/27/2024	7:45 PM	3	296	55	0	0	0	0	1	8	0	0	0	0
4/27/2024	8:00 PM	1	262	86	0	2	0	0	0	7	0	0	0	0
4/27/2024	8:15 PM	0	228	55	0	0	0	0	0	6	0	0	1	0
4/27/2024	8:30 PM	0	223	87	1	2	0	0	1	9	0	0	0	0
4/27/2024	8:45 PM	0	198	63	1	7	0	0	0	7	0	0	0	0
4/27/2024	9:00 PM	0	234	59	0	1	1	0	0	6	0	0	0	0
4/27/2024	9:15 PM	0	181	45	0	3	0	0	0	7	0	0	0	0
4/27/2024	9:30 PM	0	187	50	0	4	3	0	0	4	0	0	0	0
4/27/2024	9:45 PM	0	185	36	0	1	0	0	0	3	0	0	0	0
4/27/2024	10:00 PM	0	164	46	0	0	1	0	0	3	0	0	0	0
4/27/2024	10:15 PM	0	152	34	0	1	0	0	0	4	0	0	0	0
4/27/2024	10:30 PM	0	144	34	0	2	0	0	0	6	0	0	0	0
4/27/2024	10:45 PM	0	144	31	2	2	0	0	0	2	0	0	0	0
4/27/2024	11:00 PM	0	137	34	1	1	0	0	0	4	0	0	0	0
4/27/2024	11:15 PM	1	114	29	0	0	0	0	0	7	0	0	0	0
4/27/2024	11:30 PM	0	111	31	0	2	0	0	0	3	0	0	0	0
4/27/2024	11:45 PM	0	102	19	1	1	0	0	0	2	0	0	0	0

EB
File Name:
Start Date: 4/21/2024
Start Time: 0
Site Code: 4
Station ID: 1
Location 1: I-26 W/Bound Off-Ramp, east of US-76
Location 2:

Date	Time	1	2	3	4	5	6	7	8	9	10	11	12	13
4/21/2024	12:00 AM	0	0	0	0	0	0	0	0	0	0	0	0	0
4/21/2024	12:15 AM	0	0	0	0	0	0	0	0	0	0	0	0	0
4/21/2024	12:30 AM	0	0	0	0	0	0	0	0	0	0	0	0	0
4/21/2024	12:45 AM	0	0	0	0	0	0	0	0	0	0	0	0	0
4/21/2024	1:00 AM	0	0	0	0	0	0	0	0	0	0	0	0	0
4/21/2024	1:15 AM	0	0	0	0	0	0	0	0	0	0	0	0	0
4/21/2024	1:30 AM	0	0	0	0	0	0	0	0	0	0	0	0	0
4/21/2024	1:45 AM	0	0	0	0	0	0	0	0	0	0	0	0	0
4/21/2024	2:00 AM	0	0	0	0	0	0	0	0	0	0	0	0	0
4/21/2024	2:15 AM	0	0	0	0	0	0	0	0	0	0	0	0	0
4/21/2024	2:30 AM	0	0	0	0	0	0	0	0	0	0	0	0	0
4/21/2024	2:45 AM	0	0	0	0	0	0	0	0	0	0	0	0	0
4/21/2024	3:00 AM	0	0	0	0	0	0	0	0	0	0	0	0	0
4/21/2024	3:15 AM	0	0	0	0	0	0	0	0	0	0	0	0	0
4/21/2024	3:30 AM	0	0	0	0	0	0	0	0	0	0	0	0	0
4/21/2024	3:45 AM	0	0	0	0	0	0	0	0	0	0	0	0	0
4/21/2024	4:00 AM	0	0	0	0	0	0	0	0	0	0	0	0	0
4/21/2024	4:15 AM	0	0	0	0	0	0	0	0	0	0	0	0	0
4/21/2024	4:30 AM	0	0	0	0	0	0	0	0	0	0	0	0	0
4/21/2024	4:45 AM	0	0	0	0	0	0	0	0	0	0	0	0	0
4/21/2024	5:00 AM	0	0	0	0	0	0	0	0	0	0	0	0	0
4/21/2024	5:15 AM	0	0	0	0	0	0	0	0	0	0	0	0	0
4/21/2024	5:30 AM	0	0	0	0	0	0	0	0	0	0	0	0	0
4/21/2024	5:45 AM	0	0	0	0	0	0	0	0	0	0	0	0	0
4/21/2024	6:00 AM	0	0	0	0	0	0	0	0	0	0	0	0	0
4/21/2024	6:15 AM	0	0	0	0	0	0	0	0	0	0	0	0	0
4/21/2024	6:30 AM	0	0	0	0	0	0	0	0	0	0	0	0	0
4/21/2024	6:45 AM	0	0	0	0	0	0	0	0	0	0	0	0	0
4/21/2024	7:00 AM	0	0	0	0	0	0	0	0	0	0	0	0	0
4/21/2024	7:15 AM	0	0	0	0	0	0	0	0	0	0	0	0	0
4/21/2024	7:30 AM	0	0	0	0	0	0	0	0	0	0	0	0	0
4/21/2024	7:45 AM	0	0	0	0	0	0	0	0	0	0	0	0	0
4/21/2024	8:00 AM	0	0	0	0	0	0	0	0	0	0	0	0	0
4/21/2024	8:15 AM	0	0	0	0	0	0	0	0	0	0	0	0	0
4/21/2024	8:30 AM	0	0	0	0	0	0	0	0	0	0	0	0	0
4/21/2024	8:45 AM	0	0	0	0	0	0	0	0	0	0	0	0	0
4/21/2024	9:00 AM	0	0	0	0	0	0	0	0	0	0	0	0	0
4/21/2024	9:15 AM	0	0	0	0	0	0	0	0	0	0	0	0	0
4/21/2024	9:30 AM	0	0	0	0	0	0	0	0	0	0	0	0	0
4/21/2024	9:45 AM	0	0	0	0	0	0	0	0	0	0	0	0	0
4/21/2024	10:00 AM	0	0	0	0	0	0	0	0	0	0	0	0	0
4/21/2024	10:15 AM	0	0	0	0	0	0	0	0	0	0	0	0	0
4/21/2024	10:30 AM	0	0	0	0	0	0	0	0	0	0	0	0	0
4/21/2024	10:45 AM	0	0	0	0	0	0	0	0	0	0	0	0	0
4/21/2024	11:00 AM	0	0	0	0	0	0	0	0	0	0	0	0	0
4/21/2024	11:15 AM	0	0	0	0	0	0	0	0	0	0	0	0	0
4/21/2024	11:30 AM	0	0	0	0	0	0	0	0	0	0	0	0	0
4/21/2024	11:45 AM	0	0	0	0	0	0	0	0	0	0	0	0	0
4/21/2024	12:00 PM	0	0	0	0	0	0	0	0	0	0	0	0	0
4/21/2024	12:15 PM	0	0	0	0	0	0	0	0	0	0	0	0	0
4/21/2024	12:30 PM	0	0	0	0	0	0	0	0	0	0	0	0	0
4/21/2024	12:45 PM	0	0	0	0	0	0	0	0	0	0	0	0	0
4/21/2024	1:00 PM	0	0	0	0	0	0	0	0	0	0	0	0	0
4/21/2024	1:15 PM	0	0	0	0	0	0	0	0	0	0	0	0	0
4/21/2024	1:30 PM	0	0	0	0	0	0	0	0	0	0	0	0	0
4/21/2024	1:45 PM	0	0	0	0	0	0	0	0	0	0	0	0	0
4/21/2024	2:00 PM	0	0	0	0	0	0	0	0	0	0	0	0	0
4/21/2024	2:15 PM	0	0	0	0	0	0	0	0	0	0	0	0	0
4/21/2024	2:30 PM	0	0	0	0	0	0	0	0	0	0	0	0	0
4/21/2024	2:45 PM	0	0	0	0	0	0	0	0	0	0	0	0	0
4/21/2024	3:00 PM	0	0	0	0	0	0	0	0	0	0	0	0	0
4/21/2024	3:15 PM	0	0	0	0	0	0	0	0	0	0	0	0	0
4/21/2024	3:30 PM	0	0	0	0	0	0	0	0	0	0	0	0	0
4/21/2024	3:45 PM	0	0	0	0	0	0	0	0	0	0	0	0	0
4/21/2024	4:00 PM	0	0	0	0	0	0	0	0	0	0	0	0	0
4/21/2024	4:15 PM	0	0	0	0	0	0	0	0	0	0	0	0	0
4/21/2024	4:30 PM	0	0	0	0	0	0	0	0	0	0	0	0	0
4/21/2024	4:45 PM	0	0	0	0	0	0	0	0	0	0	0	0	0
4/21/2024	5:00 PM	0	0	0	0	0	0	0	0	0	0	0	0	0
4/21/2024	5:15 PM	0	0	0	0	0	0	0	0	0	0	0	0	0
4/21/2024	5:30 PM	0	0	0	0	0	0	0	0	0	0	0	0	0
4/21/2024	5:45 PM	0	0	0	0	0	0	0	0	0	0	0	0	0
4/21/2024	6:00 PM	0	0	0	0	0	0	0	0	0	0	0	0	0
4/21/2024	6:15 PM	0	0	0	0	0	0	0	0	0	0	0	0	0
4/21/2024	6:30 PM	0	0	0	0	0	0	0	0	0	0	0	0	0
4/21/2024	6:45 PM	0	0	0	0	0	0	0	0	0	0	0	0	0
4/21/2024	7:00 PM	0	0	0	0	0	0	0	0	0	0	0	0	0
4/21/2024	7:15 PM	0	0	0	0	0	0	0	0	0	0	0	0	0
4/21/2024	7:30 PM	0	0	0	0	0	0	0	0	0	0	0	0	0
4/21/2024	7:45 PM	0	0	0	0	0	0	0	0	0	0	0	0	0
4/21/2024	8:00 PM	0	0	0	0	0	0	0	0	0	0	0	0	0
4/21/2024	8:15 PM	0	0	0	0	0	0	0	0	0	0	0	0	0
4/21/2024	8:30 PM	0	0	0	0	0	0	0	0	0	0	0	0	0
4/21/2024	8:45 PM	0	0	0	0	0	0	0	0	0	0	0	0	0
4/21/2024	9:00 PM	0	0	0	0	0	0	0	0	0	0	0	0	0
4/21/2024	9:15 PM	0	0	0	0	0	0	0	0	0	0	0	0	0
4/21/2024	9:30 PM	0	0	0	0	0	0	0	0	0	0	0	0	0
4/21/2024	9:45 PM	0	0	0	0	0	0	0	0	0	0	0	0	0
4/21/2024	10:00 PM	0	0	0	0	0	0	0	0	0	0	0	0	0
4/21/2024	10:15 PM	0	0	0	0	0	0	0	0	0	0	0	0	0
4/21/2024	10:30 PM	0	0	0	0	0	0	0	0	0	0	0	0	0
4/21/2024	10:45 PM	0	0	0	0	0	0	0	0	0	0	0	0	0
4/21/2024	11:00 PM	0	0	0	0	0	0	0	0	0	0	0	0	0
4/21/2024	11:15 PM	0	0	0	0	0	0	0	0	0	0	0	0	0
4/21/2024	11:30 PM	0	0	0	0	0	0	0	0	0	0	0	0	0
4/21/2024	11:45 PM	0	0	0	0	0	0	0	0	0	0	0	0	0

4/22/2024	12:00 AM	0	0	0	0	0	0	0	0	0	0	0	0	0
4/22/2024	12:15 AM	0	0	0	0	0	0	0	0	0	0	0	0	0
4/22/2024	12:30 AM	0	0	0	0	0	0	0	0	0	0	0	0	0
4/22/2024	12:45 AM	0	0	0	0	0	0	0	0	0	0	0	0	0
4/22/2024	1:00 AM	0	0	0	0	0	0	0	0	0	0	0	0	0
4/22/2024	1:15 AM	0	0	0	0	0	0	0	0	0	0	0	0	0
4/22/2024	1:30 AM	0	0	0	0	0	0	0	0	0	0	0	0	0
4/22/2024	1:45 AM	0	0	0	0	0	0	0	0	0	0	0	0	0
4/22/2024	2:00 AM	0	0	0	0	0	0	0	0	0	0	0	0	0
4/22/2024	2:15 AM	0	0	0	0	0	0	0	0	0	0	0	0	0
4/22/2024	2:30 AM	0	0	0	0	0	0	0	0	0	0	0	0	0
4/22/2024	2:45 AM	0	0	0	0	0	0	0	0	0	0	0	0	0
4/22/2024	3:00 AM	0	0	0	0	0	0	0	0	0	0	0	0	0
4/22/2024	3:15 AM	0	0	0	0	0	0	0	0	0	0	0	0	0
4/22/2024	3:30 AM	0	0	0	0	0	0	0	0	0	0	0	0	0
4/22/2024	3:45 AM	0	0	0	0	0	0	0	0	0	0	0	0	0
4/22/2024	4:00 AM	0	0	0	0	0	0	0	0	0	0	0	0	0
4/22/2024	4:15 AM	0	0	0	0	0	0	0	0	0	0	0	0	0
4/22/2024	4:30 AM	0	0	0	0	0	0	0	0	0	0	0	0	0
4/22/2024	4:45 AM	0	0	0	0	0	0	0	0	0	0	0	0	0
4/22/2024	5:00 AM	0	0	0	0	0	0	0	0	0	0	0	0	0
4/22/2024	5:15 AM	0	0	0	0	0	0	0	0	0	0	0	0	0
4/22/2024	5:30 AM	0	0	0	0	0	0	0	0	0	0	0	0	0
4/22/2024	5:45 AM	0	0	0	0	0	0	0	0	0	0	0	0	0
4/22/2024	6:00 AM	0	0	0	0	0	0	0	0	0	0	0	0	0
4/22/2024	6:15 AM	0	0	0	0	0	0	0	0	0	0	0	0	0
4/22/2024	6:30 AM	0	0	0	0	0	0	0	0	0	0	0	0	0
4/22/2024	6:45 AM	0	0	0	0	0	0	0	0	0	0	0	0	0
4/22/2024	7:00 AM	0	0	0	0	0	0	0	0	0	0	0	0	0
4/22/2024	7:15 AM	0	0	0	0	0	0	0	0	0	0	0	0	0
4/22/2024	7:30 AM	0	0	0	0	0	0	0	0	0	0	0	0	0
4/22/2024	7:45 AM	0	0	0	0	0	0	0	0	0	0	0	0	0
4/22/2024	8:00 AM	0	0	0	0	0	0	0	0	0	0	0	0	0
4/22/2024	8:15 AM	0	0	0	0	0	0	0	0	0	0	0	0	0
4/22/2024	8:30 AM	0	0	0	0	0	0	0	0	0	0	0	0	0
4/22/2024	8:45 AM	0	0	0	0	0	0	0	0	0	0	0	0	0
4/22/2024	9:00 AM	0	0	0	0	0	0	0	0	0	0	0	0	0
4/22/2024	9:15 AM	0	0	0	0	0	0	0	0	0	0	0	0	0
4/22/2024	9:30 AM	0	0	0	0	0	0	0	0	0	0	0	0	0
4/22/2024	9:45 AM	0	0	0	0	0	0	0	0	0	0	0	0	0
4/22/2024	10:00 AM	0	0	0	0	0	0	0	0	0	0	0	0	0
4/22/2024	10:15 AM	0	0	0	0	0	0	0	0	0	0	0	0	0
4/22/2024	10:30 AM	0	0	0	0	0	0	0	0	0	0	0	0	0
4/22/2024	10:45 AM	0	0	0	0	0	0	0	0	0	0	0	0	0
4/22/2024	11:00 AM	0	0	0	0	0	0	0	0	0	0	0	0	0
4/22/2024	11:15 AM	0	0	0	0	0	0	0	0	0	0	0	0	0
4/22/2024	11:30 AM	0	0	0	0	0	0	0	0	0	0	0	0	0
4/22/2024	11:45 AM	0	0	0	0	0	0	0	0	0	0	0	0	0
4/22/2024	12:00 PM	0	0	0	0	0	0	0	0	0	0	0	0	0
4/22/2024	12:15 PM	0	0	0	0	0	0	0	0	0	0	0	0	0
4/22/2024	12:30 PM	0	0	0	0	0	0	0	0	0	0	0	0	0
4/22/2024	12:45 PM	0	0	0	0	0	0	0	0	0	0	0	0	0
4/22/2024	1:00 PM	0	0	0	0	0	0	0	0	0	0	0	0	0
4/22/2024	1:15 PM	0	0	0	0	0	0	0	0	0	0	0	0	0
4/22/2024	1:30 PM	0	0	0	0	0	0	0	0	0	0	0	0	0
4/22/2024	1:45 PM	0	0	0	0	0	0	0	0	0	0	0	0	0
4/22/2024	2:00 PM	0	0	0	0	0	0	0	0	0	0	0	0	0
4/22/2024	2:15 PM	0	0	0	0	0	0	0	0	0	0	0	0	0
4/22/2024	2:30 PM	0	0	0	0	0	0	0	0	0	0	0	0	0
4/22/2024	2:45 PM	0	0	0	0	0	0	0	0	0	0	0	0	0
4/22/2024	3:00 PM	0	0	0	0	0	0	0	0	0	0	0	0	0
4/22/2024	3:15 PM	0	0	0	0	0	0	0	0	0	0	0	0	0
4/22/2024	3:30 PM	0	0	0	0	0	0	0	0	0	0	0	0	0
4/22/2024	3:45 PM	0	0	0	0	0	0	0	0	0	0	0	0	0
4/22/2024	4:00 PM	0	0	0	0	0	0	0	0	0	0	0	0	0
4/22/2024	4:15 PM	0	0	0	0	0	0	0	0	0	0	0	0	0
4/22/2024	4:30 PM	0	0	0	0	0	0	0	0	0	0	0	0	0
4/22/2024	4:45 PM	0	0	0	0	0	0	0	0	0	0	0	0	0
4/22/2024	5:00 PM	0	0	0	0	0	0	0	0	0	0	0	0	0
4/22/2024	5:15 PM	0	0	0	0	0	0	0	0	0	0	0	0	0
4/22/2024	5:30 PM	0	0	0	0	0	0	0	0	0	0	0	0	0
4/22/2024	5:45 PM	0	0	0	0	0	0	0	0	0	0	0	0	0
4/22/2024	6:00 PM	0	0	0	0	0	0	0	0	0	0	0	0	0
4/22/2024	6:15 PM	0	0	0	0	0	0	0	0	0	0	0	0	0
4/22/2024	6:30 PM	0	0	0	0	0	0	0	0	0	0	0	0	0
4/22/2024	6:45 PM	0	0	0	0	0	0	0	0	0	0	0	0	0
4/22/2024	7:00 PM	0	0	0	0	0	0	0	0	0	0	0	0	0
4/22/2024	7:15 PM	0	0	0	0	0	0	0	0	0	0	0	0	0
4/22/2024	7:30 PM	0	0	0	0	0	0	0	0	0	0	0	0	0
4/22/2024	7:45 PM	0	0	0	0	0	0	0	0	0	0	0	0	0
4/22/2024	8:00 PM	0	0	0	0	0	0	0	0	0	0	0	0	0
4/22/2024	8:15 PM	0	0	0	0	0	0	0	0	0	0	0	0	0
4/22/2024	8:30 PM	0	0	0	0	0	0	0	0	0	0	0	0	0
4/22/2024	8:45 PM	0	0	0	0	0	0	0	0	0	0	0	0	0
4/22/2024	9:00 PM	0	0	0	0	0	0	0	0	0	0	0	0	0
4/22/2024	9:15 PM	0	0	0	0	0	0	0	0	0	0	0	0	0
4/22/2024	9:30 PM	0	0	0	0	0	0	0	0	0	0	0	0	0
4/22/2024	9:45 PM	0	0	0	0	0	0	0	0	0	0	0	0	0
4/22/2024	10:00 PM	0	0	0	0	0	0	0	0	0	0	0	0	0
4/22/2024	10:15 PM	0	0	0	0	0	0	0	0	0	0	0	0	0
4/22/2024	10:30 PM	0	0	0	0	0	0	0	0	0	0	0	0	0
4/22/2024	10:45 PM	0	0	0	0	0	0	0	0	0	0	0	0	0
4/22/2024	11:00 PM	0	0	0	0	0	0	0	0	0	0	0	0	0
4/22/2024	11:15 PM	0	0	0	0	0	0	0	0	0	0	0	0	0
4/22/2024	11:30 PM	0	0	0	0	0	0	0	0	0	0	0	0	0
4/22/2024	11:45 PM	0	0	0	0	0	0	0	0	0	0	0	0	0

4/23/2024	12:00 AM	0	0	0	0	0	0	0	0	0	0	0	0	0
4/23/2024	12:15 AM	0	0	0	0	0	0	0	0	0	0	0	0	0
4/23/2024	12:30 AM	0	0	0	0	0	0	0	0	0	0	0	0	0
4/23/2024	12:45 AM	0	0	0	0	0	0	0	0	0	0	0	0	0
4/23/2024	1:00 AM	0	0	0	0	0	0	0	0	0	0	0	0	0
4/23/2024	1:15 AM	0	0	0	0	0	0	0	0	0	0	0	0	0
4/23/2024	1:30 AM	0	0	0	0	0	0	0	0	0	0	0	0	0
4/23/2024	1:45 AM	0	0	0	0	0	0	0	0	0	0	0	0	0
4/23/2024	2:00 AM	0	0	0	0	0	0	0	0	0	0	0	0	0
4/23/2024	2:15 AM	0	0	0	0	0	0	0	0	0	0	0	0	0
4/23/2024	2:30 AM	0	0	0	0	0	0	0	0	0	0	0	0	0
4/23/2024	2:45 AM	0	0	0	0	0	0	0	0	0	0	0	0	0
4/23/2024	3:00 AM	0	0	0	0	0	0	0	0	0	0	0	0	0
4/23/2024	3:15 AM	0	0	0	0	0	0	0	0	0	0	0	0	0
4/23/2024	3:30 AM	0	0	0	0	0	0	0	0	0	0	0	0	0
4/23/2024	3:45 AM	0	0	0	0	0	0	0	0	0	0	0	0	0
4/23/2024	4:00 AM	0	0	0	0	0	0	0	0	0	0	0	0	0
4/23/2024	4:15 AM	0	0	0	0	0	0	0	0	0	0	0	0	0
4/23/2024	4:30 AM	0	0	0	0	0	0	0	0	0	0	0	0	0
4/23/2024	4:45 AM	0	0	0	0	0	0	0	0	0	0	0	0	0
4/23/2024	5:00 AM	0	0	0	0	0	0	0	0	0	0	0	0	0
4/23/2024	5:15 AM	0	0	0	0	0	0	0	0	0	0	0	0	0
4/23/2024	5:30 AM	0	0	0	0	0	0	0	0	0	0	0	0	0
4/23/2024	5:45 AM	0	0	0	0	0	0	0	0	0	0	0	0	0
4/23/2024	6:00 AM	0	0	0	0	0	0	0	0	0	0	0	0	0
4/23/2024	6:15 AM	0	0	0	0	0	0	0	0	0	0	0	0	0
4/23/2024	6:30 AM	0	0	0	0	0	0	0	0	0	0	0	0	0
4/23/2024	6:45 AM	0	0	0	0	0	0	0	0	0	0	0	0	0
4/23/2024	7:00 AM	0	0	0	0	0	0	0	0	0	0	0	0	0
4/23/2024	7:15 AM	0	0	0	0	0	0	0	0	0	0	0	0	0
4/23/2024	7:30 AM	0	0	0	0	0	0	0	0	0	0	0	0	0
4/23/2024	7:45 AM	0	0	0	0	0	0	0	0	0	0	0	0	0
4/23/2024	8:00 AM	0	0	0	0	0	0	0	0	0	0	0	0	0
4/23/2024	8:15 AM	0	0	0	0	0	0	0	0	0	0	0	0	0
4/23/2024	8:30 AM	0	0	0	0	0	0	0	0	0	0	0	0	0
4/23/2024	8:45 AM	0	0	0	0	0	0	0	0	0	0	0	0	0
4/23/2024	9:00 AM	0	0	0	0	0	0	0	0	0	0	0	0	0
4/23/2024	9:15 AM	0	0	0	0	0	0	0	0	0	0	0	0	0
4/23/2024	9:30 AM	0	0	0	0	0	0	0	0	0	0	0	0	0
4/23/2024	9:45 AM	0	0	0	0	0	0	0	0	0	0	0	0	0
4/23/2024	10:00 AM	0	0	0	0	0	0	0	0	0	0	0	0	0
4/23/2024	10:15 AM	0	0	0	0	0	0	0	0	0	0	0	0	0
4/23/2024	10:30 AM	0	0	0	0	0	0	0	0	0	0	0	0	0
4/23/2024	10:45 AM	0	0	0	0	0	0	0	0	0	0	0	0	0
4/23/2024	11:00 AM	0	0	0	0	0	0	0	0	0	0	0	0	0
4/23/2024	11:15 AM	0	0	0	0	0	0	0	0	0	0	0	0	0
4/23/2024	11:30 AM	0	0	0	0	0	0	0	0	0	0	0	0	0
4/23/2024	11:45 AM	0	0	0	0	0	0	0	0	0	0	0	0	0
4/23/2024	12:00 PM	0	0	0	0	0	0	0	0	0	0	0	0	0
4/23/2024	12:15 PM	0	0	0	0	0	0	0	0	0	0	0	0	0
4/23/2024	12:30 PM	0	0	0	0	0	0	0	0	0	0	0	0	0
4/23/2024	12:45 PM	0	0	0	0	0	0	0	0	0	0	0	0	0
4/23/2024	1:00 PM	0	0	0	0	0	0	0	0	0	0	0	0	0
4/23/2024	1:15 PM	0	0	0	0	0	0	0	0	0	0	0	0	0
4/23/2024	1:30 PM	0	0	0	0	0	0	0	0	0	0	0	0	0
4/23/2024	1:45 PM	0	0	0	0	0	0	0	0	0	0	0	0	0
4/23/2024	2:00 PM	0	0	0	0	0	0	0	0	0	0	0	0	0
4/23/2024	2:15 PM	0	0	0	0	0	0	0	0	0	0	0	0	0
4/23/2024	2:30 PM	0	0	0	0	0	0	0	0	0	0	0	0	0
4/23/2024	2:45 PM	0	0	0	0	0	0	0	0	0	0	0	0	0
4/23/2024	3:00 PM	0	0	0	0	0	0	0	0	0	0	0	0	0
4/23/2024	3:15 PM	0	0	0	0	0	0	0	0	0	0	0	0	0
4/23/2024	3:30 PM	0	0	0	0	0	0	0	0	0	0	0	0	0
4/23/2024	3:45 PM	0	0	0	0	0	0	0	0	0	0	0	0	0
4/23/2024	4:00 PM	0	0	0	0	0	0	0	0	0	0	0	0	0
4/23/2024	4:15 PM	0	0	0	0	0	0	0	0	0	0	0	0	0
4/23/2024	4:30 PM	0	0	0	0	0	0	0	0	0	0	0	0	0
4/23/2024	4:45 PM	0	0	0	0	0	0	0	0	0	0	0	0	0
4/23/2024	5:00 PM	0	0	0	0	0	0	0	0	0	0	0	0	0
4/23/2024	5:15 PM	0	0	0	0	0	0	0	0	0	0	0	0	0
4/23/2024	5:30 PM	0	0	0	0	0	0	0	0	0	0	0	0	0
4/23/2024	5:45 PM	0	0	0	0	0	0	0	0	0	0	0	0	0
4/23/2024	6:00 PM	0	0	0	0	0	0	0	0	0	0	0	0	0
4/23/2024	6:15 PM	0	0	0	0	0	0	0	0	0	0	0	0	0
4/23/2024	6:30 PM	0	0	0	0	0	0	0	0	0	0	0	0	0
4/23/2024	6:45 PM	0	0	0	0	0	0	0	0	0	0	0	0	0
4/23/2024	7:00 PM	0	0	0	0	0	0	0	0	0	0	0	0	0
4/23/2024	7:15 PM	0	0	0	0	0	0	0	0	0	0	0	0	0
4/23/2024	7:30 PM	0	0	0	0	0	0	0	0	0	0	0	0	0
4/23/2024	7:45 PM	0	0	0	0	0	0	0	0	0	0	0	0	0
4/23/2024	8:00 PM	0	0	0	0	0	0	0	0	0	0	0	0	0
4/23/2024	8:15 PM	0	0	0	0	0	0	0	0	0	0	0	0	0
4/23/2024	8:30 PM	0	0	0	0	0	0	0	0	0	0	0	0	0
4/23/2024	8:45 PM	0	0	0	0	0	0	0	0	0	0	0	0	0
4/23/2024	9:00 PM	0	0	0	0	0	0	0	0	0	0	0	0	0
4/23/2024	9:15 PM	0	0	0	0	0	0	0	0	0	0	0	0	0
4/23/2024	9:30 PM	0	0	0	0	0	0	0	0	0	0	0	0	0
4/23/2024	9:45 PM	0	0	0	0	0	0	0	0	0	0	0	0	0
4/23/2024	10:00 PM	0	0	0	0	0	0	0	0	0	0	0	0	0
4/23/2024	10:15 PM	0	0	0	0	0	0	0	0	0	0	0	0	0
4/23/2024	10:30 PM	0	0	0	0	0	0	0	0	0	0	0	0	0
4/23/2024	10:45 PM	0	0	0	0	0	0	0	0	0	0	0	0	0
4/23/2024	11:00 PM	0	0	0	0	0	0	0	0	0	0	0	0	0
4/23/2024	11:15 PM	0	0	0	0	0	0	0	0	0	0	0	0	0
4/23/2024	11:30 PM	0	0	0	0	0	0	0	0	0	0	0	0	0
4/23/2024	11:45 PM	0	0	0	0	0	0	0	0	0	0	0	0	0

4/24/2024	12:00 AM	0	0	0	0	0	0	0	0	0	0	0	0	0
4/24/2024	12:15 AM	0	0	0	0	0	0	0	0	0	0	0	0	0
4/24/2024	12:30 AM	0	0	0	0	0	0	0	0	0	0	0	0	0
4/24/2024	12:45 AM	0	0	0	0	0	0	0	0	0	0	0	0	0
4/24/2024	1:00 AM	0	0	0	0	0	0	0	0	0	0	0	0	0
4/24/2024	1:15 AM	0	0	0	0	0	0	0	0	0	0	0	0	0
4/24/2024	1:30 AM	0	0	0	0	0	0	0	0	0	0	0	0	0
4/24/2024	1:45 AM	0	0	0	0	0	0	0	0	0	0	0	0	0
4/24/2024	2:00 AM	0	0	0	0	0	0	0	0	0	0	0	0	0
4/24/2024	2:15 AM	0	0	0	0	0	0	0	0	0	0	0	0	0
4/24/2024	2:30 AM	0	0	0	0	0	0	0	0	0	0	0	0	0
4/24/2024	2:45 AM	0	0	0	0	0	0	0	0	0	0	0	0	0
4/24/2024	3:00 AM	0	0	0	0	0	0	0	0	0	0	0	0	0
4/24/2024	3:15 AM	0	0	0	0	0	0	0	0	0	0	0	0	0
4/24/2024	3:30 AM	0	0	0	0	0	0	0	0	0	0	0	0	0
4/24/2024	3:45 AM	0	0	0	0	0	0	0	0	0	0	0	0	0
4/24/2024	4:00 AM	0	0	0	0	0	0	0	0	0	0	0	0	0
4/24/2024	4:15 AM	0	0	0	0	0	0	0	0	0	0	0	0	0
4/24/2024	4:30 AM	0	0	0	0	0	0	0	0	0	0	0	0	0
4/24/2024	4:45 AM	0	0	0	0	0	0	0	0	0	0	0	0	0
4/24/2024	5:00 AM	0	0	0	0	0	0	0	0	0	0	0	0	0
4/24/2024	5:15 AM	0	0	0	0	0	0	0	0	0	0	0	0	0
4/24/2024	5:30 AM	0	0	0	0	0	0	0	0	0	0	0	0	0
4/24/2024	5:45 AM	0	0	0	0	0	0	0	0	0	0	0	0	0
4/24/2024	6:00 AM	0	0	0	0	0	0	0	0	0	0	0	0	0
4/24/2024	6:15 AM	0	0	0	0	0	0	0	0	0	0	0	0	0
4/24/2024	6:30 AM	0	0	0	0	0	0	0	0	0	0	0	0	0
4/24/2024	6:45 AM	0	0	0	0	0	0	0	0	0	0	0	0	0
4/24/2024	7:00 AM	0	0	0	0	0	0	0	0	0	0	0	0	0
4/24/2024	7:15 AM	0	0	0	0	0	0	0	0	0	0	0	0	0
4/24/2024	7:30 AM	0	0	0	0	0	0	0	0	0	0	0	0	0
4/24/2024	7:45 AM	0	0	0	0	0	0	0	0	0	0	0	0	0
4/24/2024	8:00 AM	0	0	0	0	0	0	0	0	0	0	0	0	0
4/24/2024	8:15 AM	0	0	0	0	0	0	0	0	0	0	0	0	0
4/24/2024	8:30 AM	0	0	0	0	0	0	0	0	0	0	0	0	0
4/24/2024	8:45 AM	0	0	0	0	0	0	0	0	0	0	0	0	0
4/24/2024	9:00 AM	0	0	0	0	0	0	0	0	0	0	0	0	0
4/24/2024	9:15 AM	0	0	0	0	0	0	0	0	0	0	0	0	0
4/24/2024	9:30 AM	0	0	0	0	0	0	0	0	0	0	0	0	0
4/24/2024	9:45 AM	0	0	0	0	0	0	0	0	0	0	0	0	0
4/24/2024	10:00 AM	0	0	0	0	0	0	0	0	0	0	0	0	0
4/24/2024	10:15 AM	0	0	0	0	0	0	0	0	0	0	0	0	0
4/24/2024	10:30 AM	0	0	0	0	0	0	0	0	0	0	0	0	0
4/24/2024	10:45 AM	0	0	0	0	0	0	0	0	0	0	0	0	0
4/24/2024	11:00 AM	0	0	0	0	0	0	0	0	0	0	0	0	0
4/24/2024	11:15 AM	0	0	0	0	0	0	0	0	0	0	0	0	0
4/24/2024	11:30 AM	0	0	0	0	0	0	0	0	0	0	0	0	0
4/24/2024	11:45 AM	0	0	0	0	0	0	0	0	0	0	0	0	0
4/24/2024	12:00 PM	0	0	0	0	0	0	0	0	0	0	0	0	0
4/24/2024	12:15 PM	0	0	0	0	0	0	0	0	0	0	0	0	0
4/24/2024	12:30 PM	0	0	0	0	0	0	0	0	0	0	0	0	0
4/24/2024	12:45 PM	0	0	0	0	0	0	0	0	0	0	0	0	0
4/24/2024	1:00 PM	0	0	0	0	0	0	0	0	0	0	0	0	0
4/24/2024	1:15 PM	0	0	0	0	0	0	0	0	0	0	0	0	0
4/24/2024	1:30 PM	0	0	0	0	0	0	0	0	0	0	0	0	0
4/24/2024	1:45 PM	0	0	0	0	0	0	0	0	0	0	0	0	0
4/24/2024	2:00 PM	0	0	0	0	0	0	0	0	0	0	0	0	0
4/24/2024	2:15 PM	0	0	0	0	0	0	0	0	0	0	0	0	0
4/24/2024	2:30 PM	0	0	0	0	0	0	0	0	0	0	0	0	0
4/24/2024	2:45 PM	0	0	0	0	0	0	0	0	0	0	0	0	0
4/24/2024	3:00 PM	0	0	0	0	0	0	0	0	0	0	0	0	0
4/24/2024	3:15 PM	0	0	0	0	0	0	0	0	0	0	0	0	0
4/24/2024	3:30 PM	0	0	0	0	0	0	0	0	0	0	0	0	0
4/24/2024	3:45 PM	0	0	0	0	0	0	0	0	0	0	0	0	0
4/24/2024	4:00 PM	0	0	0	0	0	0	0	0	0	0	0	0	0
4/24/2024	4:15 PM	0	0	0	0	0	0	0	0	0	0	0	0	0
4/24/2024	4:30 PM	0	0	0	0	0	0	0	0	0	0	0	0	0
4/24/2024	4:45 PM	0	0	0	0	0	0	0	0	0	0	0	0	0
4/24/2024	5:00 PM	0	0	0	0	0	0	0	0	0	0	0	0	0
4/24/2024	5:15 PM	0	0	0	0	0	0	0	0	0	0	0	0	0
4/24/2024	5:30 PM	0	0	0	0	0	0	0	0	0	0	0	0	0
4/24/2024	5:45 PM	0	0	0	0	0	0	0	0	0	0	0	0	0
4/24/2024	6:00 PM	0	0	0	0	0	0	0	0	0	0	0	0	0
4/24/2024	6:15 PM	0	0	0	0	0	0	0	0	0	0	0	0	0
4/24/2024	6:30 PM	0	0	0	0	0	0	0	0	0	0	0	0	0
4/24/2024	6:45 PM	0	0	0	0	0	0	0	0	0	0	0	0	0
4/24/2024	7:00 PM	0	0	0	0	0	0	0	0	0	0	0	0	0
4/24/2024	7:15 PM	0	0	0	0	0	0	0	0	0	0	0	0	0
4/24/2024	7:30 PM	0	0	0	0	0	0	0	0	0	0	0	0	0
4/24/2024	7:45 PM	0	0	0	0	0	0	0	0	0	0	0	0	0
4/24/2024	8:00 PM	0	0	0	0	0	0	0	0	0	0	0	0	0
4/24/2024	8:15 PM	0	0	0	0	0	0	0	0	0	0	0	0	0
4/24/2024	8:30 PM	0	0	0	0	0	0	0	0	0	0	0	0	0
4/24/2024	8:45 PM	0	0	0	0	0	0	0	0	0	0	0	0	0
4/24/2024	9:00 PM	0	0	0	0	0	0	0	0	0	0	0	0	0
4/24/2024	9:15 PM	0	0	0	0	0	0	0	0	0	0	0	0	0
4/24/2024	9:30 PM	0	0	0	0	0	0	0	0	0	0	0	0	0
4/24/2024	9:45 PM	0	0	0	0	0	0	0	0	0	0	0	0	0
4/24/2024	10:00 PM	0	0	0	0	0	0	0	0	0	0	0	0	0
4/24/2024	10:15 PM	0	0	0	0	0	0	0	0	0	0	0	0	0
4/24/2024	10:30 PM	0	0	0	0	0	0	0	0	0	0	0	0	0
4/24/2024	10:45 PM	0	0	0	0	0	0	0	0	0	0	0	0	0
4/24/2024	11:00 PM	0	0	0	0	0	0	0	0	0	0	0	0	0
4/24/2024	11:15 PM	0	0	0	0	0	0	0	0	0	0	0	0	0
4/24/2024	11:30 PM	0	0	0	0	0	0	0	0	0	0	0	0	0
4/24/2024	11:45 PM	0	0	0	0	0	0	0	0	0	0	0	0	0

4/25/2024	12:00 AM	0	0	0	0	0	0	0	0	0	0	0	0	0
4/25/2024	12:15 AM	0	0	0	0	0	0	0	0	0	0	0	0	0
4/25/2024	12:30 AM	0	0	0	0	0	0	0	0	0	0	0	0	0
4/25/2024	12:45 AM	0	0	0	0	0	0	0	0	0	0	0	0	0
4/25/2024	1:00 AM	0	0	0	0	0	0	0	0	0	0	0	0	0
4/25/2024	1:15 AM	0	0	0	0	0	0	0	0	0	0	0	0	0
4/25/2024	1:30 AM	0	0	0	0	0	0	0	0	0	0	0	0	0
4/25/2024	1:45 AM	0	0	0	0	0	0	0	0	0	0	0	0	0
4/25/2024	2:00 AM	0	0	0	0	0	0	0	0	0	0	0	0	0
4/25/2024	2:15 AM	0	0	0	0	0	0	0	0	0	0	0	0	0
4/25/2024	2:30 AM	0	0	0	0	0	0	0	0	0	0	0	0	0
4/25/2024	2:45 AM	0	0	0	0	0	0	0	0	0	0	0	0	0
4/25/2024	3:00 AM	0	0	0	0	0	0	0	0	0	0	0	0	0
4/25/2024	3:15 AM	0	0	0	0	0	0	0	0	0	0	0	0	0
4/25/2024	3:30 AM	0	0	0	0	0	0	0	0	0	0	0	0	0
4/25/2024	3:45 AM	0	0	0	0	0	0	0	0	0	0	0	0	0
4/25/2024	4:00 AM	0	0	0	0	0	0	0	0	0	0	0	0	0
4/25/2024	4:15 AM	0	0	0	0	0	0	0	0	0	0	0	0	0
4/25/2024	4:30 AM	0	0	0	0	0	0	0	0	0	0	0	0	0
4/25/2024	4:45 AM	0	0	0	0	0	0	0	0	0	0	0	0	0
4/25/2024	5:00 AM	0	0	0	0	0	0	0	0	0	0	0	0	0
4/25/2024	5:15 AM	0	0	0	0	0	0	0	0	0	0	0	0	0
4/25/2024	5:30 AM	0	0	0	0	0	0	0	0	0	0	0	0	0
4/25/2024	5:45 AM	0	0	0	0	0	0	0	0	0	0	0	0	0
4/25/2024	6:00 AM	0	0	0	0	0	0	0	0	0	0	0	0	0
4/25/2024	6:15 AM	0	0	0	0	0	0	0	0	0	0	0	0	0
4/25/2024	6:30 AM	0	0	0	0	0	0	0	0	0	0	0	0	0
4/25/2024	6:45 AM	0	0	0	0	0	0	0	0	0	0	0	0	0
4/25/2024	7:00 AM	0	0	0	0	0	0	0	0	0	0	0	0	0
4/25/2024	7:15 AM	0	0	0	0	0	0	0	0	0	0	0	0	0
4/25/2024	7:30 AM	0	0	0	0	0	0	0	0	0	0	0	0	0
4/25/2024	7:45 AM	0	0	0	0	0	0	0	0	0	0	0	0	0
4/25/2024	8:00 AM	0	0	0	0	0	0	0	0	0	0	0	0	0
4/25/2024	8:15 AM	0	0	0	0	0	0	0	0	0	0	0	0	0
4/25/2024	8:30 AM	0	0	0	0	0	0	0	0	0	0	0	0	0
4/25/2024	8:45 AM	0	0	0	0	0	0	0	0	0	0	0	0	0
4/25/2024	9:00 AM	0	0	0	0	0	0	0	0	0	0	0	0	0
4/25/2024	9:15 AM	0	0	0	0	0	0	0	0	0	0	0	0	0
4/25/2024	9:30 AM	0	0	0	0	0	0	0	0	0	0	0	0	0
4/25/2024	9:45 AM	0	0	0	0	0	0	0	0	0	0	0	0	0
4/25/2024	10:00 AM	0	0	0	0	0	0	0	0	0	0	0	0	0
4/25/2024	10:15 AM	0	0	0	0	0	0	0	0	0	0	0	0	0
4/25/2024	10:30 AM	0	0	0	0	0	0	0	0	0	0	0	0	0
4/25/2024	10:45 AM	0	0	0	0	0	0	0	0	0	0	0	0	0
4/25/2024	11:00 AM	0	0	0	0	0	0	0	0	0	0	0	0	0
4/25/2024	11:15 AM	0	0	0	0	0	0	0	0	0	0	0	0	0
4/25/2024	11:30 AM	0	0	0	0	0	0	0	0	0	0	0	0	0
4/25/2024	11:45 AM	0	0	0	0	0	0	0	0	0	0	0	0	0
4/25/2024	12:00 PM	0	0	0	0	0	0	0	0	0	0	0	0	0
4/25/2024	12:15 PM	0	0	0	0	0	0	0	0	0	0	0	0	0
4/25/2024	12:30 PM	0	0	0	0	0	0	0	0	0	0	0	0	0
4/25/2024	12:45 PM	0	0	0	0	0	0	0	0	0	0	0	0	0
4/25/2024	1:00 PM	0	0	0	0	0	0	0	0	0	0	0	0	0
4/25/2024	1:15 PM	0	0	0	0	0	0	0	0	0	0	0	0	0
4/25/2024	1:30 PM	0	0	0	0	0	0	0	0	0	0	0	0	0
4/25/2024	1:45 PM	0	0	0	0	0	0	0	0	0	0	0	0	0
4/25/2024	2:00 PM	0	0	0	0	0	0	0	0	0	0	0	0	0
4/25/2024	2:15 PM	0	0	0	0	0	0	0	0	0	0	0	0	0
4/25/2024	2:30 PM	0	0	0	0	0	0	0	0	0	0	0	0	0
4/25/2024	2:45 PM	0	0	0	0	0	0	0	0	0	0	0	0	0
4/25/2024	3:00 PM	0	0	0	0	0	0	0	0	0	0	0	0	0
4/25/2024	3:15 PM	0	0	0	0	0	0	0	0	0	0	0	0	0
4/25/2024	3:30 PM	0	0	0	0	0	0	0	0	0	0	0	0	0
4/25/2024	3:45 PM	0	0	0	0	0	0	0	0	0	0	0	0	0
4/25/2024	4:00 PM	0	0	0	0	0	0	0	0	0	0	0	0	0
4/25/2024	4:15 PM	0	0	0	0	0	0	0	0	0	0	0	0	0
4/25/2024	4:30 PM	0	0	0	0	0	0	0	0	0	0	0	0	0
4/25/2024	4:45 PM	0	0	0	0	0	0	0	0	0	0	0	0	0
4/25/2024	5:00 PM	0	0	0	0	0	0	0	0	0	0	0	0	0
4/25/2024	5:15 PM	0	0	0	0	0	0	0	0	0	0	0	0	0
4/25/2024	5:30 PM	0	0	0	0	0	0	0	0	0	0	0	0	0
4/25/2024	5:45 PM	0	0	0	0	0	0	0	0	0	0	0	0	0
4/25/2024	6:00 PM	0	0	0	0	0	0	0	0	0	0	0	0	0
4/25/2024	6:15 PM	0	0	0	0	0	0	0	0	0	0	0	0	0
4/25/2024	6:30 PM	0	0	0	0	0	0	0	0	0	0	0	0	0
4/25/2024	6:45 PM	0	0	0	0	0	0	0	0	0	0	0	0	0
4/25/2024	7:00 PM	0	0	0	0	0	0	0	0	0	0	0	0	0
4/25/2024	7:15 PM	0	0	0	0	0	0	0	0	0	0	0	0	0
4/25/2024	7:30 PM	0	0	0	0	0	0	0	0	0	0	0	0	0
4/25/2024	7:45 PM	0	0	0	0	0	0	0	0	0	0	0	0	0
4/25/2024	8:00 PM	0	0	0	0	0	0	0	0	0	0	0	0	0
4/25/2024	8:15 PM	0	0	0	0	0	0	0	0	0	0	0	0	0
4/25/2024	8:30 PM	0	0	0	0	0	0	0	0	0	0	0	0	0
4/25/2024	8:45 PM	0	0	0	0	0	0	0	0	0	0	0	0	0
4/25/2024	9:00 PM	0	0	0	0	0	0	0	0	0	0	0	0	0
4/25/2024	9:15 PM	0	0	0	0	0	0	0	0	0	0	0	0	0
4/25/2024	9:30 PM	0	0	0	0	0	0	0	0	0	0	0	0	0
4/25/2024	9:45 PM	0	0	0	0	0	0	0	0	0	0	0	0	0
4/25/2024	10:00 PM	0	0	0	0	0	0	0	0	0	0	0	0	0
4/25/2024	10:15 PM	0	0	0	0	0	0	0	0	0	0	0	0	0
4/25/2024	10:30 PM	0	0	0	0	0	0	0	0	0	0	0	0	0
4/25/2024	10:45 PM	0	0	0	0	0	0	0	0	0	0	0	0	0
4/25/2024	11:00 PM	0	0	0	0	0	0	0	0	0	0	0	0	0
4/25/2024	11:15 PM	0	0	0	0	0	0	0	0	0	0	0	0	0
4/25/2024	11:30 PM	0	0	0	0	0	0	0	0	0	0	0	0	0
4/25/2024	11:45 PM	0	0	0	0	0	0	0	0	0	0	0	0	0

4/26/2024	12:00 AM	0	0	0	0	0	0	0	0	0	0	0	0	0
4/26/2024	12:15 AM	0	0	0	0	0	0	0	0	0	0	0	0	0
4/26/2024	12:30 AM	0	0	0	0	0	0	0	0	0	0	0	0	0
4/26/2024	12:45 AM	0	0	0	0	0	0	0	0	0	0	0	0	0
4/26/2024	1:00 AM	0	0	0	0	0	0	0	0	0	0	0	0	0
4/26/2024	1:15 AM	0	0	0	0	0	0	0	0	0	0	0	0	0
4/26/2024	1:30 AM	0	0	0	0	0	0	0	0	0	0	0	0	0
4/26/2024	1:45 AM	0	0	0	0	0	0	0	0	0	0	0	0	0
4/26/2024	2:00 AM	0	0	0	0	0	0	0	0	0	0	0	0	0
4/26/2024	2:15 AM	0	0	0	0	0	0	0	0	0	0	0	0	0
4/26/2024	2:30 AM	0	0	0	0	0	0	0	0	0	0	0	0	0
4/26/2024	2:45 AM	0	0	0	0	0	0	0	0	0	0	0	0	0
4/26/2024	3:00 AM	0	0	0	0	0	0	0	0	0	0	0	0	0
4/26/2024	3:15 AM	0	0	0	0	0	0	0	0	0	0	0	0	0
4/26/2024	3:30 AM	0	0	0	0	0	0	0	0	0	0	0	0	0
4/26/2024	3:45 AM	0	0	0	0	0	0	0	0	0	0	0	0	0
4/26/2024	4:00 AM	0	0	0	0	0	0	0	0	0	0	0	0	0
4/26/2024	4:15 AM	0	0	0	0	0	0	0	0	0	0	0	0	0
4/26/2024	4:30 AM	0	0	0	0	0	0	0	0	0	0	0	0	0
4/26/2024	4:45 AM	0	0	0	0	0	0	0	0	0	0	0	0	0
4/26/2024	5:00 AM	0	0	0	0	0	0	0	0	0	0	0	0	0
4/26/2024	5:15 AM	0	0	0	0	0	0	0	0	0	0	0	0	0
4/26/2024	5:30 AM	0	0	0	0	0	0	0	0	0	0	0	0	0
4/26/2024	5:45 AM	0	0	0	0	0	0	0	0	0	0	0	0	0
4/26/2024	6:00 AM	0	0	0	0	0	0	0	0	0	0	0	0	0
4/26/2024	6:15 AM	0	0	0	0	0	0	0	0	0	0	0	0	0
4/26/2024	6:30 AM	0	0	0	0	0	0	0	0	0	0	0	0	0
4/26/2024	6:45 AM	0	0	0	0	0	0	0	0	0	0	0	0	0
4/26/2024	7:00 AM	0	0	0	0	0	0	0	0	0	0	0	0	0
4/26/2024	7:15 AM	0	0	0	0	0	0	0	0	0	0	0	0	0
4/26/2024	7:30 AM	0	0	0	0	0	0	0	0	0	0	0	0	0
4/26/2024	7:45 AM	0	0	0	0	0	0	0	0	0	0	0	0	0
4/26/2024	8:00 AM	0	0	0	0	0	0	0	0	0	0	0	0	0
4/26/2024	8:15 AM	0	0	0	0	0	0	0	0	0	0	0	0	0
4/26/2024	8:30 AM	0	0	0	0	0	0	0	0	0	0	0	0	0
4/26/2024	8:45 AM	0	0	0	0	0	0	0	0	0	0	0	0	0
4/26/2024	9:00 AM	0	0	0	0	0	0	0	0	0	0	0	0	0
4/26/2024	9:15 AM	0	0	0	0	0	0	0	0	0	0	0	0	0
4/26/2024	9:30 AM	0	0	0	0	0	0	0	0	0	0	0	0	0
4/26/2024	9:45 AM	0	0	0	0	0	0	0	0	0	0	0	0	0
4/26/2024	10:00 AM	0	0	0	0	0	0	0	0	0	0	0	0	0
4/26/2024	10:15 AM	0	0	0	0	0	0	0	0	0	0	0	0	0
4/26/2024	10:30 AM	0	0	0	0	0	0	0	0	0	0	0	0	0
4/26/2024	10:45 AM	0	0	0	0	0	0	0	0	0	0	0	0	0
4/26/2024	11:00 AM	0	0	0	0	0	0	0	0	0	0	0	0	0
4/26/2024	11:15 AM	0	0	0	0	0	0	0	0	0	0	0	0	0
4/26/2024	11:30 AM	0	0	0	0	0	0	0	0	0	0	0	0	0
4/26/2024	11:45 AM	0	0	0	0	0	0	0	0	0	0	0	0	0
4/26/2024	12:00 PM	0	0	0	0	0	0	0	0	0	0	0	0	0
4/26/2024	12:15 PM	0	0	0	0	0	0	0	0	0	0	0	0	0
4/26/2024	12:30 PM	0	0	0	0	0	0	0	0	0	0	0	0	0
4/26/2024	12:45 PM	0	0	0	0	0	0	0	0	0	0	0	0	0
4/26/2024	1:00 PM	0	0	0	0	0	0	0	0	0	0	0	0	0
4/26/2024	1:15 PM	0	0	0	0	0	0	0	0	0	0	0	0	0
4/26/2024	1:30 PM	0	0	0	0	0	0	0	0	0	0	0	0	0
4/26/2024	1:45 PM	0	0	0	0	0	0	0	0	0	0	0	0	0
4/26/2024	2:00 PM	0	0	0	0	0	0	0	0	0	0	0	0	0
4/26/2024	2:15 PM	0	0	0	0	0	0	0	0	0	0	0	0	0
4/26/2024	2:30 PM	0	0	0	0	0	0	0	0	0	0	0	0	0
4/26/2024	2:45 PM	0	0	0	0	0	0	0	0	0	0	0	0	0
4/26/2024	3:00 PM	0	0	0	0	0	0	0	0	0	0	0	0	0
4/26/2024	3:15 PM	0	0	0	0	0	0	0	0	0	0	0	0	0
4/26/2024	3:30 PM	0	0	0	0	0	0	0	0	0	0	0	0	0
4/26/2024	3:45 PM	0	0	0	0	0	0	0	0	0	0	0	0	0
4/26/2024	4:00 PM	0	0	0	0	0	0	0	0	0	0	0	0	0
4/26/2024	4:15 PM	0	0	0	0	0	0	0	0	0	0	0	0	0
4/26/2024	4:30 PM	0	0	0	0	0	0	0	0	0	0	0	0	0
4/26/2024	4:45 PM	0	0	0	0	0	0	0	0	0	0	0	0	0
4/26/2024	5:00 PM	0	0	0	0	0	0	0	0	0	0	0	0	0
4/26/2024	5:15 PM	0	0	0	0	0	0	0	0	0	0	0	0	0
4/26/2024	5:30 PM	0	0	0	0	0	0	0	0	0	0	0	0	0
4/26/2024	5:45 PM	0	0	0	0	0	0	0	0	0	0	0	0	0
4/26/2024	6:00 PM	0	0	0	0	0	0	0	0	0	0	0	0	0
4/26/2024	6:15 PM	0	0	0	0	0	0	0	0	0	0	0	0	0
4/26/2024	6:30 PM	0	0	0	0	0	0	0	0	0	0	0	0	0
4/26/2024	6:45 PM	0	0	0	0	0	0	0	0	0	0	0	0	0
4/26/2024	7:00 PM	0	0	0	0	0	0	0	0	0	0	0	0	0
4/26/2024	7:15 PM	0	0	0	0	0	0	0	0	0	0	0	0	0
4/26/2024	7:30 PM	0	0	0	0	0	0	0	0	0	0	0	0	0
4/26/2024	7:45 PM	0	0	0	0	0	0	0	0	0	0	0	0	0
4/26/2024	8:00 PM	0	0	0	0	0	0	0	0	0	0	0	0	0
4/26/2024	8:15 PM	0	0	0	0	0	0	0	0	0	0	0	0	0
4/26/2024	8:30 PM	0	0	0	0	0	0	0	0	0	0	0	0	0
4/26/2024	8:45 PM	0	0	0	0	0	0	0	0	0	0	0	0	0
4/26/2024	9:00 PM	0	0	0	0	0	0	0	0	0	0	0	0	0
4/26/2024	9:15 PM	0	0	0	0	0	0	0	0	0	0	0	0	0
4/26/2024	9:30 PM	0	0	0	0	0	0	0	0	0	0	0	0	0
4/26/2024	9:45 PM	0	0	0	0	0	0	0	0	0	0	0	0	0
4/26/2024	10:00 PM	0	0	0	0	0	0	0	0	0	0	0	0	0
4/26/2024	10:15 PM	0	0	0	0	0	0	0	0	0	0	0	0	0
4/26/2024	10:30 PM	0	0	0	0	0	0	0	0	0	0	0	0	0
4/26/2024	10:45 PM	0	0	0	0	0	0	0	0	0	0	0	0	0
4/26/2024	11:00 PM	0	0	0	0	0	0	0	0	0	0	0	0	0
4/26/2024	11:15 PM	0	0	0	0	0	0	0	0	0	0	0	0	0
4/26/2024	11:30 PM	0	0	0	0	0	0	0	0	0	0	0	0	0
4/26/2024	11:45 PM	0	0	0	0	0	0	0	0	0	0	0	0	0

4/27/2024	12:00 AM	0	0	0	0	0	0	0	0	0	0	0	0	0
4/27/2024	12:15 AM	0	0	0	0	0	0	0	0	0	0	0	0	0
4/27/2024	12:30 AM	0	0	0	0	0	0	0	0	0	0	0	0	0
4/27/2024	12:45 AM	0	0	0	0	0	0	0	0	0	0	0	0	0
4/27/2024	1:00 AM	0	0	0	0	0	0	0	0	0	0	0	0	0
4/27/2024	1:15 AM	0	0	0	0	0	0	0	0	0	0	0	0	0
4/27/2024	1:30 AM	0	0	0	0	0	0	0	0	0	0	0	0	0
4/27/2024	1:45 AM	0	0	0	0	0	0	0	0	0	0	0	0	0
4/27/2024	2:00 AM	0	0	0	0	0	0	0	0	0	0	0	0	0
4/27/2024	2:15 AM	0	0	0	0	0	0	0	0	0	0	0	0	0
4/27/2024	2:30 AM	0	0	0	0	0	0	0	0	0	0	0	0	0
4/27/2024	2:45 AM	0	0	0	0	0	0	0	0	0	0	0	0	0
4/27/2024	3:00 AM	0	0	0	0	0	0	0	0	0	0	0	0	0
4/27/2024	3:15 AM	0	0	0	0	0	0	0	0	0	0	0	0	0
4/27/2024	3:30 AM	0	0	0	0	0	0	0	0	0	0	0	0	0
4/27/2024	3:45 AM	0	0	0	0	0	0	0	0	0	0	0	0	0
4/27/2024	4:00 AM	0	0	0	0	0	0	0	0	0	0	0	0	0
4/27/2024	4:15 AM	0	0	0	0	0	0	0	0	0	0	0	0	0
4/27/2024	4:30 AM	0	0	0	0	0	0	0	0	0	0	0	0	0
4/27/2024	4:45 AM	0	0	0	0	0	0	0	0	0	0	0	0	0
4/27/2024	5:00 AM	0	0	0	0	0	0	0	0	0	0	0	0	0
4/27/2024	5:15 AM	0	0	0	0	0	0	0	0	0	0	0	0	0
4/27/2024	5:30 AM	0	0	0	0	0	0	0	0	0	0	0	0	0
4/27/2024	5:45 AM	0	0	0	0	0	0	0	0	0	0	0	0	0
4/27/2024	6:00 AM	0	0	0	0	0	0	0	0	0	0	0	0	0
4/27/2024	6:15 AM	0	0	0	0	0	0	0	0	0	0	0	0	0
4/27/2024	6:30 AM	0	0	0	0	0	0	0	0	0	0	0	0	0
4/27/2024	6:45 AM	0	0	0	0	0	0	0	0	0	0	0	0	0
4/27/2024	7:00 AM	0	0	0	0	0	0	0	0	0	0	0	0	0
4/27/2024	7:15 AM	0	0	0	0	0	0	0	0	0	0	0	0	0
4/27/2024	7:30 AM	0	0	0	0	0	0	0	0	0	0	0	0	0
4/27/2024	7:45 AM	0	0	0	0	0	0	0	0	0	0	0	0	0
4/27/2024	8:00 AM	0	0	0	0	0	0	0	0	0	0	0	0	0
4/27/2024	8:15 AM	0	0	0	0	0	0	0	0	0	0	0	0	0
4/27/2024	8:30 AM	0	0	0	0	0	0	0	0	0	0	0	0	0
4/27/2024	8:45 AM	0	0	0	0	0	0	0	0	0	0	0	0	0
4/27/2024	9:00 AM	0	0	0	0	0	0	0	0	0	0	0	0	0
4/27/2024	9:15 AM	0	0	0	0	0	0	0	0	0	0	0	0	0
4/27/2024	9:30 AM	0	0	0	0	0	0	0	0	0	0	0	0	0
4/27/2024	9:45 AM	0	0	0	0	0	0	0	0	0	0	0	0	0
4/27/2024	10:00 AM	0	0	0	0	0	0	0	0	0	0	0	0	0
4/27/2024	10:15 AM	0	0	0	0	0	0	0	0	0	0	0	0	0
4/27/2024	10:30 AM	0	0	0	0	0	0	0	0	0	0	0	0	0
4/27/2024	10:45 AM	0	0	0	0	0	0	0	0	0	0	0	0	0
4/27/2024	11:00 AM	0	0	0	0	0	0	0	0	0	0	0	0	0
4/27/2024	11:15 AM	0	0	0	0	0	0	0	0	0	0	0	0	0
4/27/2024	11:30 AM	0	0	0	0	0	0	0	0	0	0	0	0	0
4/27/2024	11:45 AM	0	0	0	0	0	0	0	0	0	0	0	0	0
4/27/2024	12:00 PM	0	0	0	0	0	0	0	0	0	0	0	0	0
4/27/2024	12:15 PM	0	0	0	0	0	0	0	0	0	0	0	0	0
4/27/2024	12:30 PM	0	0	0	0	0	0	0	0	0	0	0	0	0
4/27/2024	12:45 PM	0	0	0	0	0	0	0	0	0	0	0	0	0
4/27/2024	1:00 PM	0	0	0	0	0	0	0	0	0	0	0	0	0
4/27/2024	1:15 PM	0	0	0	0	0	0	0	0	0	0	0	0	0
4/27/2024	1:30 PM	0	0	0	0	0	0	0	0	0	0	0	0	0
4/27/2024	1:45 PM	0	0	0	0	0	0	0	0	0	0	0	0	0
4/27/2024	2:00 PM	0	0	0	0	0	0	0	0	0	0	0	0	0
4/27/2024	2:15 PM	0	0	0	0	0	0	0	0	0	0	0	0	0
4/27/2024	2:30 PM	0	0	0	0	0	0	0	0	0	0	0	0	0
4/27/2024	2:45 PM	0	0	0	0	0	0	0	0	0	0	0	0	0
4/27/2024	3:00 PM	0	0	0	0	0	0	0	0	0	0	0	0	0
4/27/2024	3:15 PM	0	0	0	0	0	0	0	0	0	0	0	0	0
4/27/2024	3:30 PM	0	0	0	0	0	0	0	0	0	0	0	0	0
4/27/2024	3:45 PM	0	0	0	0	0	0	0	0	0	0	0	0	0
4/27/2024	4:00 PM	0	0	0	0	0	0	0	0	0	0	0	0	0
4/27/2024	4:15 PM	0	0	0	0	0	0	0	0	0	0	0	0	0
4/27/2024	4:30 PM	0	0	0	0	0	0	0	0	0	0	0	0	0
4/27/2024	4:45 PM	0	0	0	0	0	0	0	0	0	0	0	0	0
4/27/2024	5:00 PM	0	0	0	0	0	0	0	0	0	0	0	0	0
4/27/2024	5:15 PM	0	0	0	0	0	0	0	0	0	0	0	0	0
4/27/2024	5:30 PM	0	0	0	0	0	0	0	0	0	0	0	0	0
4/27/2024	5:45 PM	0	0	0	0	0	0	0	0	0	0	0	0	0
4/27/2024	6:00 PM	0	0	0	0	0	0	0	0	0	0	0	0	0
4/27/2024	6:15 PM	0	0	0	0	0	0	0	0	0	0	0	0	0
4/27/2024	6:30 PM	0	0	0	0	0	0	0	0	0	0	0	0	0
4/27/2024	6:45 PM	0	0	0	0	0	0	0	0	0	0	0	0	0
4/27/2024	7:00 PM	0	0	0	0	0	0	0	0	0	0	0	0	0
4/27/2024	7:15 PM	0	0	0	0	0	0	0	0	0	0	0	0	0
4/27/2024	7:30 PM	0	0	0	0	0	0	0	0	0	0	0	0	0
4/27/2024	7:45 PM	0	0	0	0	0	0	0	0	0	0	0	0	0
4/27/2024	8:00 PM	0	0	0	0	0	0	0	0	0	0	0	0	0
4/27/2024	8:15 PM	0	0	0	0	0	0	0	0	0	0	0	0	0
4/27/2024	8:30 PM	0	0	0	0	0	0	0	0	0	0	0	0	0
4/27/2024	8:45 PM	0	0	0	0	0	0	0	0	0	0	0	0	0
4/27/2024	9:00 PM	0	0	0	0	0	0	0	0	0	0	0	0	0
4/27/2024	9:15 PM	0	0	0	0	0	0	0	0	0	0	0	0	0
4/27/2024	9:30 PM	0	0	0	0	0	0	0	0	0	0	0	0	0
4/27/2024	9:45 PM	0	0	0	0	0	0	0	0	0	0	0	0	0
4/27/2024	10:00 PM	0	0	0	0	0	0	0	0	0	0	0	0	0
4/27/2024	10:15 PM	0	0	0	0	0	0	0	0	0	0	0	0	0
4/27/2024	10:30 PM	0	0	0	0	0	0	0	0	0	0	0	0	0
4/27/2024	10:45 PM	0	0	0	0	0	0	0	0	0	0	0	0	0
4/27/2024	11:00 PM	0	0	0	0	0	0	0	0	0	0	0	0	0
4/27/2024	11:15 PM	0	0	0	0	0	0	0	0	0	0	0	0	0
4/27/2024	11:30 PM	0	0	0	0	0	0	0	0	0	0	0	0	0
4/27/2024	11:45 PM	0	0	0	0	0	0	0	0	0	0	0	0	0

WB
File Name:
Start Date: 4/21/2024
Start Time: 0
Site Code: 4
Station ID: 1
Location 1: I-26 W/Bound Off-Ramp, east of US-76
Location 2:

Date	Time	1	2	3	4	5	6	7	8	9	10	11	12	13
4/21/2024	12:00 AM	1	386	84	2	2	2	0	1	13	0	0	0	0
4/21/2024	12:15 AM	0	347	66	1	3	2	0	2	12	0	1	0	0
4/21/2024	12:30 AM	1	307	64	1	2	2	0	2	11	0	1	0	0
4/21/2024	12:45 AM	1	254	58	0	2	1	0	2	9	0	1	0	0
4/21/2024	1:00 AM	1	234	55	0	4	1	0	1	8	0	1	0	0
4/21/2024	1:15 AM	1	210	50	0	3	1	0	0	11	0	0	0	0
4/21/2024	1:30 AM	0	192	41	0	3	0	0	0	9	0	0	0	0
4/21/2024	1:45 AM	0	182	35	0	3	0	0	0	11	0	0	0	0
4/21/2024	2:00 AM	0	149	25	0	2	0	0	0	13	0	0	0	0
4/21/2024	2:15 AM	0	146	26	0	2	0	0	0	11	0	1	0	0
4/21/2024	2:30 AM	0	146	25	0	2	0	0	0	13	0	1	0	0
4/21/2024	2:45 AM	0	133	28	0	2	0	0	0	16	0	2	0	0
4/21/2024	3:00 AM	0	132	33	0	1	0	0	0	15	0	2	0	0
4/21/2024	3:15 AM	0	123	28	0	2	0	0	0	13	0	1	0	0
4/21/2024	3:30 AM	0	116	26	0	3	1	0	0	14	0	1	0	0
4/21/2024	3:45 AM	0	119	25	0	6	1	0	0	11	0	0	0	0
4/21/2024	4:00 AM	0	140	28	0	6	1	0	0	11	0	0	0	0
4/21/2024	4:15 AM	0	153	32	0	5	1	0	0	12	0	0	0	0
4/21/2024	4:30 AM	0	155	38	0	5	0	0	0	14	0	0	0	0
4/21/2024	4:45 AM	0	190	39	0	1	0	0	0	16	0	0	0	0
4/21/2024	5:00 AM	0	203	41	0	1	0	0	0	19	0	0	0	0
4/21/2024	5:15 AM	0	211	41	0	3	0	0	0	20	0	0	0	0
4/21/2024	5:30 AM	0	259	41	0	5	0	0	0	17	0	0	0	0
4/21/2024	5:45 AM	2	274	46	0	8	0	0	0	17	0	0	0	0
4/21/2024	6:00 AM	2	302	57	0	10	0	0	0	14	0	0	0	0
4/21/2024	6:15 AM	3	362	69	0	14	1	0	0	18	0	0	0	0
4/21/2024	6:30 AM	3	390	96	0	14	1	0	1	20	0	0	0	0
4/21/2024	6:45 AM	1	480	105	0	12	1	0	2	20	0	0	0	0
4/21/2024	7:00 AM	1	564	114	1	11	2	0	2	24	0	0	0	0
4/21/2024	7:15 AM	0	612	127	1	6	1	0	3	27	0	0	0	0
4/21/2024	7:30 AM	0	654	128	2	5	1	0	3	25	0	0	0	0
4/21/2024	7:45 AM	1	671	155	2	7	1	0	2	27	0	0	0	0
4/21/2024	8:00 AM	1	702	166	1	9	0	0	2	23	0	0	0	0
4/21/2024	8:15 AM	1	775	183	2	11	1	0	1	22	0	1	0	0
4/21/2024	8:30 AM	1	856	191	3	9	1	0	1	26	0	1	0	0
4/21/2024	8:45 AM	0	986	205	4	9	2	0	2	24	0	1	0	0
4/21/2024	9:00 AM	0	1115	254	5	9	3	0	4	32	0	1	0	0
4/21/2024	9:15 AM	0	1253	278	5	10	2	0	6	28	0	0	0	0
4/21/2024	9:30 AM	0	1373	337	3	11	2	0	5	28	0	0	0	0
4/21/2024	9:45 AM	0	1469	375	3	10	2	0	6	38	0	0	0	0
4/21/2024	10:00 AM	0	1563	369	2	10	1	0	6	36	0	0	0	0
4/21/2024	10:15 AM	0	1621	396	2	10	1	0	5	38	0	0	0	0
4/21/2024	10:30 AM	0	1717	379	3	11	1	0	6	45	0	1	0	0
4/21/2024	10:45 AM	1	1686	390	2	11	0	0	7	34	0	1	0	0
4/21/2024	11:00 AM	2	1737	395	2	12	1	0	7	45	0	1	0	0
4/21/2024	11:15 AM	5	1843	406	4	10	1	0	6	47	0	1	0	0
4/21/2024	11:30 AM	5	1918	425	7	10	2	0	5	37	0	0	0	0
4/21/2024	11:45 AM	5	2109	443	7	13	3	0	3	40	0	0	0	0
4/21/2024	12:00 PM	4	2256	476	8	14	2	0	1	32	0	0	0	0
4/21/2024	12:15 PM	1	2281	487	6	19	3	0	2	35	0	0	0	0
4/21/2024	12:30 PM	1	2346	512	2	22	2	0	2	35	0	0	0	0
4/21/2024	12:45 PM	0	2329	486	2	20	2	0	1	36	0	1	0	0
4/21/2024	1:00 PM	0	2288	485	2	20	3	0	3	30	0	1	0	0
4/21/2024	1:15 PM	0	2264	452	1	19	4	0	2	26	0	1	0	0
4/21/2024	1:30 PM	0	2224	417	1	21	6	0	2	39	0	1	0	0
4/21/2024	1:45 PM	0	2206	409	2	21	5	0	2	38	0	0	0	0
4/21/2024	2:00 PM	0	2134	382	1	21	4	0	0	43	0	0	0	0
4/21/2024	2:15 PM	0	2146	382	2	19	2	0	0	45	0	0	0	0
4/21/2024	2:30 PM	0	2113	376	4	17	0	0	0	40	0	0	0	0
4/21/2024	2:45 PM	0	2082	383	3	16	1	0	0	40	0	0	0	0
4/21/2024	3:00 PM	0	2095	397	4	14	2	0	1	31	0	0	0	0
4/21/2024	3:15 PM	0	2073	388	3	15	3	0	1	35	0	0	0	0
4/21/2024	3:30 PM	0	2079	393	1	15	3	0	1	34	0	0	0	0
4/21/2024	3:45 PM	1	2064	372	3	20	2	0	1	39	0	0	0	0
4/21/2024	4:00 PM	1	2034	348	3	22	1	0	0	48	0	0	0	0
4/21/2024	4:15 PM	1	2022	351	4	21	1	0	1	48	0	0	0	0
4/21/2024	4:30 PM	1	1932	339	5	20	1	0	1	49	0	0	0	0
4/21/2024	4:45 PM	0	1900	346	3	16	2	0	3	54	0	0	0	0
4/21/2024	5:00 PM	0	1868	362	2	13	4	0	4	54	0	0	0	0
4/21/2024	5:15 PM	0	1810	355	2	13	4	0	3	49	0	0	0	0
4/21/2024	5:30 PM	0	1863	369	2	12	4	0	4	48	0	0	0	0
4/21/2024	5:45 PM	0	1770	352	2	10	3	0	2	48	0	0	0	0
4/21/2024	6:00 PM	1	1656	308	2	10	2	0	1	50	0	0	0	0
4/21/2024	6:15 PM	2	1515	284	1	11	1	0	1	51	0	0	0	0
4/21/2024	6:30 PM	2	1353	236	0	11	2	0	2	55	0	0	0	0
4/21/2024	6:45 PM	2	1304	219	0	13	2	0	3	48	0	2	0	0
4/21/2024	7:00 PM	1	1225	207	0	11	1	0	5	45	0	3	0	0
4/21/2024	7:15 PM	0	1160	201	0	8	1	0	5	48	0	3	0	0
4/21/2024	7:30 PM	0	1066	181	1	10	0	0	4	44	0	3	0	0
4/21/2024	7:45 PM	0	945	166	1	10	0	0	3	42	0	1	0	0
4/21/2024	8:00 PM	0	828	158	2	12	0	0	1	43	0	0	0	0
4/21/2024	8:15 PM	0	758	154	2	12	1	0	1	38	0	0	0	0
4/21/2024	8:30 PM	0	681	154	1	9	1	0	0	30	0	0	0	0
4/21/2024	8:45 PM	0	628	149	2	7	1	0	0	33	0	0	0	0
4/21/2024	9:00 PM	0	601	134	1	7	1	0	0	34	0	0	0	0
4/21/2024	9:15 PM	0	531	113	1	9	0	0	0	43	0	0	0	0
4/21/2024	9:30 PM	0	485	100	1	9	1	0	2	51	0	0	0	0
4/21/2024	9:45 PM	0	423	83	0	9	1	0	2	48	0	0	0	0
4/21/2024	10:00 PM	0	388	75	0	8	2	0	2	41	0	3	0	0
4/21/2024	10:15 PM	0	375	67	0	4	2	0	2	30	0	3	0	0
4/21/2024	10:30 PM	0	355	64	1	3	1	0	0	21	0	3	0	0
4/21/2024	10:45 PM	0	342	56	1	2	1	1	0	23	0	3	0	0
4/21/2024	11:00 PM	0	306	46	1	2	0	1	0	24	0	0	0	0
4/21/2024	11:15 PM	0	213	31	1	2	0	1	0	19	0	0	0	0
4/21/2024	11:30 PM	0	124	16	0	1	0	1	0	16	0	0	0	0
4/21/2024	11:45 PM	0	52	6	0	1	0	0	0	6	0	0	0	0

4/22/2024	12:00 AM	0	245	32	0	3	0	0	1	20	0	0	0	0
4/22/2024	12:15 AM	0	249	29	0	4	0	0	1	20	0	1	0	0
4/22/2024	12:30 AM	0	226	26	0	4	0	0	1	23	0	1	0	0
4/22/2024	12:45 AM	0	179	20	0	3	0	0	0	24	0	2	0	0
4/22/2024	1:00 AM	0	162	19	0	4	0	0	0	23	0	2	0	0
4/22/2024	1:15 AM	0	138	16	0	3	1	0	1	23	0	1	0	0
4/22/2024	1:30 AM	0	122	13	0	5	2	0	1	25	1	1	0	0
4/22/2024	1:45 AM	0	125	13	0	6	2	0	1	27	1	0	0	0
4/22/2024	2:00 AM	0	115	11	0	5	2	0	2	33	1	0	0	0
4/22/2024	2:15 AM	0	108	10	0	8	2	0	2	46	2	0	0	0
4/22/2024	2:30 AM	0	104	12	0	8	2	0	3	50	1	2	0	0
4/22/2024	2:45 AM	0	111	15	0	7	3	0	4	56	2	2	0	0
4/22/2024	3:00 AM	0	130	18	0	7	5	0	5	67	3	3	0	0
4/22/2024	3:15 AM	0	142	20	0	5	5	0	6	66	2	4	0	0
4/22/2024	3:30 AM	0	158	21	0	8	5	0	5	68	3	2	0	0
4/22/2024	3:45 AM	0	175	22	0	13	7	0	7	73	3	4	0	0
4/22/2024	4:00 AM	0	198	29	0	15	9	0	7	74	4	5	0	0
4/22/2024	4:15 AM	0	236	37	0	20	10	0	6	85	6	4	0	0
4/22/2024	4:30 AM	0	298	54	0	21	12	0	7	95	6	4	0	0
4/22/2024	4:45 AM	0	375	73	0	20	11	0	6	115	7	3	0	0
4/22/2024	5:00 AM	0	449	88	1	23	8	0	5	129	6	1	0	0
4/22/2024	5:15 AM	0	556	110	2	26	10	0	6	127	6	1	0	0
4/22/2024	5:30 AM	0	707	130	2	30	13	0	7	141	9	2	0	0
4/22/2024	5:45 AM	0	854	172	2	33	14	0	8	156	10	1	0	0
4/22/2024	6:00 AM	0	1027	237	1	35	17	0	9	161	10	1	0	0
4/22/2024	6:15 AM	1	1172	306	0	35	19	0	10	189	11	1	0	0
4/22/2024	6:30 AM	1	1334	388	0	44	21	0	11	196	9	0	0	0
4/22/2024	6:45 AM	1	1582	473	0	60	23	0	11	191	8	0	0	0
4/22/2024	7:00 AM	1	1838	519	1	72	24	0	13	201	8	0	0	0
4/22/2024	7:15 AM	0	1966	530	1	83	27	0	13	196	7	0	0	0
4/22/2024	7:30 AM	0	1981	507	1	83	24	0	13	193	6	0	1	0
4/22/2024	7:45 AM	0	1836	488	1	78	24	0	12	179	6	0	1	0
4/22/2024	8:00 AM	0	1663	472	2	86	23	0	14	166	6	0	1	0
4/22/2024	8:15 AM	0	1572	481	3	101	22	0	18	160	6	0	1	0
4/22/2024	8:30 AM	0	1500	481	4	107	25	0	18	167	8	0	0	0
4/22/2024	8:45 AM	0	1507	459	5	106	28	0	17	186	8	0	1	0
4/22/2024	9:00 AM	0	1505	428	4	92	28	0	15	203	9	0	1	0
4/22/2024	9:15 AM	0	1498	415	3	77	27	0	10	203	8	0	1	0
4/22/2024	9:30 AM	0	1509	404	2	65	24	0	14	196	6	0	1	0
4/22/2024	9:45 AM	0	1487	390	1	57	21	0	18	187	6	0	0	0
4/22/2024	10:00 AM	0	1519	381	2	56	26	0	17	171	5	0	0	0
4/22/2024	10:15 AM	0	1544	401	2	54	27	0	23	192	8	0	0	0
4/22/2024	10:30 AM	0	1574	447	4	54	24	0	20	194	8	0	0	0
4/22/2024	10:45 AM	0	1609	466	4	61	25	0	19	208	8	0	1	0
4/22/2024	11:00 AM	2	1603	512	3	58	24	0	20	217	9	0	1	0
4/22/2024	11:15 AM	3	1608	510	3	56	23	1	14	201	6	1	1	0
4/22/2024	11:30 AM	5	1637	500	2	58	25	2	16	202	5	1	2	0
4/22/2024	11:45 AM	5	1631	535	3	55	26	3	17	185	3	1	1	0
4/22/2024	12:00 PM	3	1601	544	3	57	23	3	16	198	3	1	1	0
4/22/2024	12:15 PM	2	1615	546	4	58	26	2	14	210	2	1	1	0
4/22/2024	12:30 PM	0	1574	532	3	59	25	1	12	216	2	1	0	0
4/22/2024	12:45 PM	1	1589	509	4	55	23	0	8	237	2	1	0	0
4/22/2024	1:00 PM	5	1603	480	4	57	24	0	6	226	0	1	0	0
4/22/2024	1:15 PM	6	1645	484	3	55	18	0	8	211	0	1	0	0
4/22/2024	1:30 PM	7	1727	498	3	58	20	0	4	224	1	1	0	0
4/22/2024	1:45 PM	6	1782	495	1	67	23	1	8	216	1	1	0	0
4/22/2024	2:00 PM	3	1808	541	1	69	22	1	17	224	1	1	0	0
4/22/2024	2:15 PM	3	1826	527	4	65	22	2	16	235	2	0	1	0
4/22/2024	2:30 PM	2	1849	544	8	62	19	4	19	212	1	1	1	0
4/22/2024	2:45 PM	2	1678	507	10	52	11	4	15	178	1	1	1	0
4/22/2024	3:00 PM	1	1478	419	10	43	13	4	5	142	1	1	1	0
4/22/2024	3:15 PM	0	1488	428	9	46	13	3	5	143	0	2	0	0
4/22/2024	3:30 PM	0	1346	378	5	39	16	2	3	162	0	1	0	0
4/22/2024	3:45 PM	0	1380	382	3	37	19	1	3	186	0	1	0	0
4/22/2024	4:00 PM	0	1503	422	3	31	12	1	4	210	0	1	0	0
4/22/2024	4:15 PM	0	1364	380	1	21	11	1	3	191	0	0	0	0
4/22/2024	4:30 PM	0	1356	379	1	19	7	0	3	173	0	1	0	0
4/22/2024	4:45 PM	0	1377	381	1	21	7	0	3	155	0	3	0	0
4/22/2024	5:00 PM	0	1416	388	1	21	9	0	5	151	0	3	0	0
4/22/2024	5:15 PM	1	1507	415	1	25	10	0	7	136	0	3	0	0
4/22/2024	5:30 PM	1	1552	404	1	25	10	0	7	122	0	2	0	0
4/22/2024	5:45 PM	3	1540	386	1	18	9	0	7	123	0	0	0	0
4/22/2024	6:00 PM	3	1497	345	0	20	9	0	5	106	0	0	0	0
4/22/2024	6:15 PM	3	1369	311	0	13	6	0	3	110	0	0	0	0
4/22/2024	6:30 PM	3	1281	287	0	9	5	0	2	111	0	0	0	0
4/22/2024	6:45 PM	1	1206	264	0	12	7	0	2	104	0	0	0	0
4/22/2024	7:00 PM	1	1150	253	0	13	5	0	1	101	0	1	0	0
4/22/2024	7:15 PM	0	1064	226	0	15	4	0	2	92	0	1	0	0
4/22/2024	7:30 PM	1	988	210	0	15	8	0	4	80	0	1	0	0
4/22/2024	7:45 PM	1	943	195	0	12	5	0	3	77	0	1	0	0
4/22/2024	8:00 PM	1	823	161	0	9	6	0	4	76	0	0	0	0
4/22/2024	8:15 PM	1	796	144	1	9	6	0	3	67	0	1	0	0
4/22/2024	8:30 PM	0	720	129	1	7	2	0	1	63	0	2	0	0
4/22/2024	8:45 PM	0	634	111	1	8	1	0	2	70	0	4	0	0
4/22/2024	9:00 PM	0	583	110	1	8	1	0	1	63	0	5	1	0
4/22/2024	9:15 PM	0	528	97	0	5	1	0	1	66	0	4	1	0
4/22/2024	9:30 PM	0	489	97	0	6	2	0	3	62	0	5	1	0
4/22/2024	9:45 PM	0	449	96	0	5	3	0	4	48	0	7	2	0
4/22/2024	10:00 PM	0	408	86	0	6	3	0	5	48	0	8	1	0
4/22/2024	10:15 PM	0	358	80	0	7	5	0	5	49	0	11	1	0
4/22/2024	10:30 PM	0	328	77	1	7	4	0	3	45	0	10	1	0
4/22/2024	10:45 PM	0	310	81	1	6	3	0	1	42	0	9	0	0
4/22/2024	11:00 PM	0	284	79	1	5	2	0	1	42	0	11	0	0
4/22/2024	11:15 PM	0	209	61	1	4	0	0	1	29	0	8	0	0
4/22/2024	11:30 PM	0	128	38	0	2	0	0	1	22	0	7	0	0
4/22/2024	11:45 PM	0	51	14	0	1	0	0	1	13	0	4	0	0

4/23/2024	12:00 AM	2	246	36	0	3	0	0	2	47	0	4	0	0
4/23/2024	12:15 AM	1	219	36	0	5	0	0	4	46	0	6	0	0
4/23/2024	12:30 AM	0	179	30	0	4	0	0	3	41	0	7	0	0
4/23/2024	12:45 AM	0	155	25	0	10	1	0	5	41	0	8	0	0
4/23/2024	1:00 AM	0	138	23	0	10	1	0	6	52	0	7	0	0
4/23/2024	1:15 AM	0	123	22	0	8	1	0	5	56	0	10	0	0
4/23/2024	1:30 AM	0	103	20	0	11	1	0	6	55	0	12	0	0
4/23/2024	1:45 AM	0	94	16	0	7	0	0	4	52	0	10	0	0
4/23/2024	2:00 AM	0	87	16	0	7	0	0	3	44	0	13	0	0
4/23/2024	2:15 AM	1	79	16	0	9	0	0	5	44	0	12	0	0
4/23/2024	2:30 AM	1	82	22	0	9	0	0	8	49	0	12	0	0
4/23/2024	2:45 AM	1	95	30	0	9	1	0	9	57	0	14	0	0
4/23/2024	3:00 AM	1	106	34	0	12	2	0	9	78	0	13	0	1
4/23/2024	3:15 AM	0	116	34	0	17	4	0	8	81	0	11	0	1
4/23/2024	3:30 AM	0	127	40	0	19	6	0	3	100	0	11	0	1
4/23/2024	3:45 AM	0	148	50	0	26	8	0	2	120	0	12	0	1
4/23/2024	4:00 AM	0	171	61	0	28	8	0	2	129	0	9	0	0
4/23/2024	4:15 AM	0	202	84	0	29	6	0	1	139	0	15	0	0
4/23/2024	4:30 AM	0	245	109	0	35	8	0	2	150	0	13	0	0
4/23/2024	4:45 AM	0	293	138	0	38	8	0	2	155	0	12	0	0
4/23/2024	5:00 AM	0	340	173	0	44	8	0	2	147	0	11	0	0
4/23/2024	5:15 AM	0	427	189	1	47	12	0	1	168	0	4	0	0
4/23/2024	5:30 AM	0	507	234	1	53	12	0	1	180	0	4	0	0
4/23/2024	5:45 AM	0	645	284	1	61	16	3	6	190	1	3	0	0
4/23/2024	6:00 AM	0	813	366	1	68	16	3	9	217	3	4	0	0
4/23/2024	6:15 AM	1	988	439	0	77	14	3	12	221	6	4	0	0
4/23/2024	6:30 AM	1	1229	498	0	85	17	3	18	234	10	5	0	0
4/23/2024	6:45 AM	1	1415	577	0	89	15	1	20	255	11	4	0	0
4/23/2024	7:00 AM	1	1615	590	0	102	19	2	23	262	9	3	0	0
4/23/2024	7:15 AM	1	1660	636	0	108	23	3	27	276	6	3	0	0
4/23/2024	7:30 AM	1	1688	631	1	123	20	6	26	267	2	2	0	0
4/23/2024	7:45 AM	1	1632	588	3	126	23	6	22	240	0	3	0	0
4/23/2024	8:00 AM	1	1506	566	3	122	23	7	27	228	2	4	0	0
4/23/2024	8:15 AM	2	1429	539	3	134	23	8	26	225	7	3	0	0
4/23/2024	8:30 AM	3	1297	530	4	138	23	6	23	225	9	3	0	0
4/23/2024	8:45 AM	4	1251	531	4	150	19	5	26	232	10	2	0	0
4/23/2024	9:00 AM	5	1247	523	4	142	18	4	19	237	10	3	0	0
4/23/2024	9:15 AM	3	1265	480	7	125	17	2	19	235	7	3	0	0
4/23/2024	9:30 AM	2	1256	466	7	109	14	2	22	240	5	2	0	0
4/23/2024	9:45 AM	1	1221	473	5	85	17	8	23	240	4	2	0	0
4/23/2024	10:00 AM	0	1211	459	6	92	17	7	25	249	5	0	0	0
4/23/2024	10:15 AM	0	1264	490	4	89	18	10	29	242	5	0	0	0
4/23/2024	10:30 AM	0	1317	474	2	69	19	10	29	231	7	0	0	0
4/23/2024	10:45 AM	0	1375	442	3	75	19	8	30	246	8	0	0	0
4/23/2024	11:00 AM	0	1409	434	2	73	21	8	27	230	6	1	0	0
4/23/2024	11:15 AM	0	1412	415	1	72	18	7	19	227	4	1	0	0
4/23/2024	11:30 AM	0	1440	417	2	85	17	8	17	236	4	1	0	0
4/23/2024	11:45 AM	0	1417	401	1	77	15	6	11	235	4	1	0	0
4/23/2024	12:00 PM	0	1374	395	2	58	10	9	9	250	4	0	0	0
4/23/2024	12:15 PM	0	1353	393	4	52	13	8	10	263	7	0	0	0
4/23/2024	12:30 PM	0	1347	412	3	39	18	7	10	266	5	0	0	0
4/23/2024	12:45 PM	4	1373	432	4	42	15	9	11	269	4	0	0	0
4/23/2024	1:00 PM	5	1433	475	3	49	16	8	12	268	4	0	0	0
4/23/2024	1:15 PM	6	1482	524	1	46	13	11	11	254	2	0	0	0
4/23/2024	1:30 PM	8	1531	544	1	55	9	14	12	245	4	0	0	0
4/23/2024	1:45 PM	4	1594	575	1	50	15	11	10	239	5	0	0	0
4/23/2024	2:00 PM	5	1669	604	2	51	18	10	10	232	4	0	0	0
4/23/2024	2:15 PM	7	1709	601	3	56	18	11	10	243	3	0	0	0
4/23/2024	2:30 PM	6	1776	632	5	56	18	9	8	252	1	0	0	0
4/23/2024	2:45 PM	7	1848	654	5	62	14	10	8	230	1	1	0	0
4/23/2024	3:00 PM	5	1867	667	5	58	12	10	7	222	1	2	0	0
4/23/2024	3:15 PM	2	1894	679	7	50	11	8	6	206	3	2	0	0
4/23/2024	3:30 PM	2	1805	644	5	37	11	6	4	181	3	3	0	0
4/23/2024	3:45 PM	1	1727	621	4	26	9	7	4	185	2	3	0	0
4/23/2024	4:00 PM	1	1640	573	3	23	7	8	4	167	3	3	0	0
4/23/2024	4:15 PM	1	1567	541	2	23	8	7	5	150	1	3	0	0
4/23/2024	4:30 PM	0	1549	530	7	26	7	8	5	146	2	2	0	0
4/23/2024	4:45 PM	0	1490	506	7	27	7	6	5	134	2	1	0	0
4/23/2024	5:00 PM	0	1447	486	7	21	10	4	4	150	2	0	0	0
4/23/2024	5:15 PM	0	1390	457	5	21	12	3	4	148	2	0	0	0
4/23/2024	5:30 PM	0	1382	445	0	19	12	3	4	160	1	0	0	0
4/23/2024	5:45 PM	3	1324	406	0	17	13	2	4	165	1	0	0	0
4/23/2024	6:00 PM	4	1273	384	0	20	9	2	4	141	0	0	0	0
4/23/2024	6:15 PM	5	1233	352	1	22	5	1	2	142	0	0	0	0
4/23/2024	6:30 PM	5	1145	306	1	19	7	0	1	122	0	0	0	0
4/23/2024	6:45 PM	3	1122	286	2	18	5	0	0	104	0	0	0	0
4/23/2024	7:00 PM	2	1069	253	2	16	8	0	0	97	0	1	0	0
4/23/2024	7:15 PM	1	993	225	1	10	8	0	0	85	0	2	0	0
4/23/2024	7:30 PM	1	923	198	1	9	6	0	1	80	0	2	0	0
4/23/2024	7:45 PM	0	839	174	0	10	7	0	1	77	0	2	0	0
4/23/2024	8:00 PM	0	789	160	0	10	5	0	1	82	0	2	0	0
4/23/2024	8:15 PM	0	754	152	0	13	4	0	1	98	0	1	0	0
4/23/2024	8:30 PM	0	739	155	0	17	4	0	0	94	0	2	0	0
4/23/2024	8:45 PM	0	717	144	1	13	2	0	0	93	0	5	0	0
4/23/2024	9:00 PM	0	674	126	2	16	2	0	0	81	0	5	0	0
4/23/2024	9:15 PM	0	629	115	2	13	2	0	0	60	0	7	0	0
4/23/2024	9:30 PM	0	560	88	2	10	1	0	0	56	0	10	0	0
4/23/2024	9:45 PM	0	502	75	1	11	1	0	0	49	0	9	0	0
4/23/2024	10:00 PM	0	449	65	0	6	0	0	0	47	0	10	0	0
4/23/2024	10:15 PM	0	406	55	0	8	0	0	0	48	0	11	0	0
4/23/2024	10:30 PM	0	356	49	1	6	0	0	0	44	0	11	0	0
4/23/2024	10:45 PM	0	315	44	1	5	0	0	0	48	0	11	0	0
4/23/2024	11:00 PM	0	288	41	1	6	0	0	0	56	0	10	0	0
4/23/2024	11:15 PM	0	198	28	1	3	0	0	0	42	0	7	0	0
4/23/2024	11:30 PM	0	128	17	0	2	0	0	0	31	0	3	0	0
4/23/2024	11:45 PM	0	65	8	0	1	0	0	0	16	0	1	0	0

4/24/2024	12:00 AM	0	269	9	0	4	0	0	0	54	0	8	0	0
4/24/2024	12:15 AM	0	250	7	0	3	0	0	0	45	0	7	0	0
4/24/2024	12:30 AM	0	218	9	0	6	0	0	0	45	0	7	0	0
4/24/2024	12:45 AM	0	178	9	0	7	0	0	0	48	0	6	0	0
4/24/2024	1:00 AM	0	155	8	0	8	0	0	0	46	0	6	0	0
4/24/2024	1:15 AM	0	144	7	0	12	0	0	0	49	0	7	0	0
4/24/2024	1:30 AM	0	126	6	0	9	0	0	0	47	0	9	0	0
4/24/2024	1:45 AM	0	120	6	0	9	2	0	2	50	0	14	0	0
4/24/2024	2:00 AM	0	114	5	0	12	2	0	2	54	0	12	0	0
4/24/2024	2:15 AM	0	122	6	0	9	2	0	2	62	0	11	0	0
4/24/2024	2:30 AM	0	126	4	0	9	4	0	2	68	0	9	0	0
4/24/2024	2:45 AM	0	137	3	0	10	2	0	0	75	0	5	0	0
4/24/2024	3:00 AM	0	149	4	0	10	2	0	0	77	0	9	0	0
4/24/2024	3:15 AM	0	160	3	0	13	2	0	0	95	0	9	0	0
4/24/2024	3:30 AM	0	166	3	0	20	1	0	0	119	0	9	0	0
4/24/2024	3:45 AM	0	187	3	0	26	1	0	0	128	0	9	0	0
4/24/2024	4:00 AM	0	222	4	0	25	1	0	0	142	0	7	0	0
4/24/2024	4:15 AM	0	249	3	0	31	1	0	0	157	0	7	0	0
4/24/2024	4:30 AM	0	313	7	0	28	0	0	0	169	0	7	0	0
4/24/2024	4:45 AM	0	397	12	0	28	0	0	1	178	0	6	0	0
4/24/2024	5:00 AM	0	479	12	0	39	0	0	1	195	0	4	0	0
4/24/2024	5:15 AM	0	603	21	1	52	2	0	1	197	0	5	0	0
4/24/2024	5:30 AM	0	722	62	1	55	9	0	1	196	0	7	0	0
4/24/2024	5:45 AM	0	845	149	1	57	13	0	2	216	0	6	0	0
4/24/2024	6:00 AM	0	964	251	1	58	17	0	5	218	1	6	0	0
4/24/2024	6:15 AM	0	1072	389	0	48	19	1	10	204	1	4	0	0
4/24/2024	6:30 AM	1	1238	481	0	55	16	1	16	223	3	2	0	0
4/24/2024	6:45 AM	1	1486	566	0	65	20	3	21	218	6	3	0	0
4/24/2024	7:00 AM	1	1680	642	1	75	21	3	24	229	5	3	0	0
4/24/2024	7:15 AM	1	1782	649	3	88	19	8	25	248	5	5	1	0
4/24/2024	7:30 AM	0	1788	668	3	106	19	11	20	240	3	4	1	0
4/24/2024	7:45 AM	0	1633	624	5	103	16	9	24	251	1	7	2	0
4/24/2024	8:00 AM	1	1539	599	5	108	13	11	25	248	1	7	2	0
4/24/2024	8:15 AM	1	1450	589	4	110	14	5	24	250	4	6	2	0
4/24/2024	8:30 AM	1	1357	568	5	108	12	3	33	248	5	8	2	0
4/24/2024	8:45 AM	1	1323	568	4	139	11	9	27	240	5	4	1	0
4/24/2024	9:00 AM	1	1280	533	4	122	14	8	25	256	7	3	1	0
4/24/2024	9:15 AM	2	1269	515	3	112	18	9	28	256	7	2	1	0
4/24/2024	9:30 AM	3	1304	498	3	96	19	8	20	257	10	0	1	0
4/24/2024	9:45 AM	4	1321	503	2	61	21	3	23	245	13	0	1	0
4/24/2024	10:00 AM	3	1365	533	1	64	19	3	24	226	14	0	1	0
4/24/2024	10:15 AM	3	1383	522	2	61	13	5	20	218	15	0	0	0
4/24/2024	10:30 AM	2	1425	524	1	56	13	7	26	205	14	0	0	0
4/24/2024	10:45 AM	5	1481	522	1	56	8	10	21	221	14	0	0	0
4/24/2024	11:00 AM	5	1466	496	1	54	8	16	18	212	14	0	0	0
4/24/2024	11:15 AM	5	1534	500	2	55	12	18	21	225	12	0	0	0
4/24/2024	11:30 AM	6	1542	521	3	53	13	18	13	236	13	0	0	0
4/24/2024	11:45 AM	2	1515	502	3	50	16	14	13	222	13	0	0	0
4/24/2024	12:00 PM	3	1560	498	3	47	14	7	11	227	12	0	1	0
4/24/2024	12:15 PM	2	1541	503	5	43	15	2	6	221	15	0	1	0
4/24/2024	12:30 PM	2	1550	484	5	45	18	3	9	222	13	0	1	0
4/24/2024	12:45 PM	2	1599	498	6	42	19	7	8	228	12	0	1	0
4/24/2024	1:00 PM	2	1624	538	9	43	19	8	10	245	10	0	0	0
4/24/2024	1:15 PM	3	1679	555	6	35	15	12	9	243	6	0	0	0
4/24/2024	1:30 PM	2	1715	556	5	37	14	11	10	249	5	0	0	0
4/24/2024	1:45 PM	2	1771	562	7	49	10	11	10	237	2	2	0	0
4/24/2024	2:00 PM	2	1831	544	9	41	10	14	9	230	3	3	1	0
4/24/2024	2:15 PM	2	1876	550	8	50	12	14	9	232	6	3	1	0
4/24/2024	2:30 PM	4	1967	598	11	49	11	15	6	213	6	4	1	0
4/24/2024	2:45 PM	4	2037	586	8	36	15	15	6	209	8	3	1	0
4/24/2024	3:00 PM	4	2141	582	4	41	15	13	5	185	10	2	0	0
4/24/2024	3:15 PM	5	2235	570	4	38	14	13	6	180	9	2	0	0
4/24/2024	3:30 PM	3	2188	532	2	32	15	12	7	176	9	1	0	0
4/24/2024	3:45 PM	5	2106	528	3	30	12	8	6	178	8	0	0	0
4/24/2024	4:00 PM	5	1877	531	2	26	13	7	7	166	5	0	0	0
4/24/2024	4:15 PM	4	1636	522	4	20	14	3	8	155	5	0	0	0
4/24/2024	4:30 PM	4	1498	470	3	21	9	1	6	151	4	0	0	0
4/24/2024	4:45 PM	2	1384	451	2	22	8	1	6	133	4	1	0	0
4/24/2024	5:00 PM	2	1390	434	3	23	9	0	5	157	5	2	0	0
4/24/2024	5:15 PM	1	1464	430	1	24	9	1	3	147	3	2	0	0
4/24/2024	5:30 PM	2	1545	444	2	19	9	1	3	145	3	2	0	0
4/24/2024	5:45 PM	3	1534	430	2	18	8	2	4	152	2	1	0	0
4/24/2024	6:00 PM	3	1510	382	1	14	5	2	4	124	2	0	0	0
4/24/2024	6:15 PM	4	1462	334	1	14	3	1	3	125	1	0	0	0
4/24/2024	6:30 PM	4	1346	323	0	20	4	1	4	114	2	0	0	0
4/24/2024	6:45 PM	3	1292	303	0	17	5	0	4	110	2	0	0	0
4/24/2024	7:00 PM	3	1206	287	0	16	7	0	4	119	2	1	0	0
4/24/2024	7:15 PM	2	1110	254	0	13	7	0	4	104	2	1	0	0
4/24/2024	7:30 PM	1	1016	201	0	10	7	0	4	99	1	1	0	0
4/24/2024	7:45 PM	1	930	165	0	13	6	0	2	100	1	2	0	0
4/24/2024	8:00 PM	0	877	136	0	16	4	0	2	92	0	2	0	0
4/24/2024	8:15 PM	0	806	122	0	17	2	0	2	87	0	4	0	0
4/24/2024	8:30 PM	0	778	116	1	13	1	0	1	82	0	4	0	0
4/24/2024	8:45 PM	0	736	105	1	11	1	0	1	68	0	5	0	0
4/24/2024	9:00 PM	0	671	89	1	10	1	0	0	65	0	4	0	0
4/24/2024	9:15 PM	0	621	76	1	11	1	0	0	70	0	5	0	0
4/24/2024	9:30 PM	1	569	63	1	11	0	0	0	67	0	6	0	0
4/24/2024	9:45 PM	1	523	51	1	9	0	0	0	60	0	5	0	0
4/24/2024	10:00 PM	1	490	42	1	6	0	0	0	52	0	8	0	0
4/24/2024	10:15 PM	1	435	35	1	4	0	0	0	48	0	5	0	0
4/24/2024	10:30 PM	0	424	37	1	4	0	0	0	48	0	6	0	0
4/24/2024	10:45 PM	0	384	33	1	5	1	0	0	57	0	5	0	0
4/24/2024	11:00 PM	0	355	34	1	7	1	0	0	56	0	3	0	0
4/24/2024	11:15 PM	0	270	27	1	5	1	0	0	41	0	3	0	0
4/24/2024	11:30 PM	0	152	13	0	4	1	0	0	27	0	1	0	0
4/24/2024	11:45 PM	0	80	8	0	2	0	0	0	11	0	1	0	0

4/25/2024	12:00 AM	3	296	40	0	7	0	0	2	49	0	3	0	0
4/25/2024	12:15 AM	1	273	35	0	7	0	0	2	50	0	5	0	0
4/25/2024	12:30 AM	0	218	21	0	6	1	0	2	47	0	3	0	0
4/25/2024	12:45 AM	0	167	14	0	4	1	0	1	51	0	4	0	0
4/25/2024	1:00 AM	0	138	14	0	5	1	0	0	50	0	5	0	0
4/25/2024	1:15 AM	0	131	13	0	6	2	0	0	53	0	5	1	0
4/25/2024	1:30 AM	0	130	15	0	6	1	0	1	53	0	4	1	0
4/25/2024	1:45 AM	0	116	13	0	6	1	0	1	54	0	5	1	0
4/25/2024	2:00 AM	0	114	16	0	4	1	0	1	58	0	5	1	0
4/25/2024	2:15 AM	0	95	15	0	8	0	0	1	56	0	5	1	0
4/25/2024	2:30 AM	0	99	16	0	9	0	0	0	61	0	8	2	0
4/25/2024	2:45 AM	0	123	18	0	10	1	0	0	69	0	8	2	0
4/25/2024	3:00 AM	0	135	16	0	15	2	0	0	84	0	7	2	0
4/25/2024	3:15 AM	0	158	17	0	18	2	0	0	97	0	7	1	0
4/25/2024	3:30 AM	0	157	16	0	22	2	0	1	113	0	5	0	0
4/25/2024	3:45 AM	0	171	22	0	29	4	0	3	127	0	5	0	0
4/25/2024	4:00 AM	0	219	23	0	27	4	0	4	128	0	7	0	0
4/25/2024	4:15 AM	0	247	32	0	25	5	0	5	134	0	7	1	0
4/25/2024	4:30 AM	0	296	47	0	31	7	0	7	146	0	6	1	0
4/25/2024	4:45 AM	0	342	62	0	36	5	0	6	158	0	5	1	0
4/25/2024	5:00 AM	0	387	88	0	42	6	0	6	177	0	4	1	0
4/25/2024	5:15 AM	0	476	113	2	54	9	1	7	203	0	3	2	0
4/25/2024	5:30 AM	0	599	153	2	56	11	1	6	204	1	3	2	0
4/25/2024	5:45 AM	0	783	221	2	58	13	1	6	205	2	3	2	0
4/25/2024	6:00 AM	0	931	315	2	61	14	3	10	216	3	3	2	0
4/25/2024	6:15 AM	2	1057	399	0	60	17	4	14	208	8	2	0	0
4/25/2024	6:30 AM	4	1266	472	0	61	22	4	20	219	8	3	1	0
4/25/2024	6:45 AM	6	1449	545	0	80	32	6	20	238	11	2	1	0
4/25/2024	7:00 AM	6	1663	595	0	91	33	5	20	234	13	1	1	0
4/25/2024	7:15 AM	4	1759	655	1	96	31	7	22	244	10	1	2	0
4/25/2024	7:30 AM	3	1740	677	1	98	26	14	16	249	10	0	1	0
4/25/2024	7:45 AM	1	1632	664	2	95	15	19	22	229	6	1	2	0
4/25/2024	8:00 AM	1	1512	658	4	86	15	19	18	234	4	4	2	0
4/25/2024	8:15 AM	1	1418	627	3	90	17	15	12	229	3	4	1	0
4/25/2024	8:30 AM	0	1307	620	3	108	17	10	14	211	4	4	1	0
4/25/2024	8:45 AM	1	1302	610	2	111	20	5	11	217	4	3	0	0
4/25/2024	9:00 AM	3	1298	586	2	117	20	4	12	205	6	0	0	0
4/25/2024	9:15 AM	5	1368	561	5	118	17	6	15	207	8	0	1	0
4/25/2024	9:30 AM	5	1431	559	5	105	15	14	13	229	8	0	1	0
4/25/2024	9:45 AM	5	1461	532	5	86	16	13	16	236	10	0	1	0
4/25/2024	10:00 AM	6	1478	544	3	88	16	13	19	251	8	0	1	0
4/25/2024	10:15 AM	6	1487	525	1	86	18	11	19	254	7	0	0	0
4/25/2024	10:30 AM	6	1552	501	1	83	19	1	25	242	5	0	0	0
4/25/2024	10:45 AM	5	1587	502	3	79	18	0	21	242	5	0	0	0
4/25/2024	11:00 AM	2	1634	449	3	69	26	1	23	222	4	0	0	0
4/25/2024	11:15 AM	0	1654	479	2	63	28	1	23	206	3	0	0	0
4/25/2024	11:30 AM	0	1610	500	2	58	30	1	17	211	4	0	0	0
4/25/2024	11:45 AM	0	1631	521	0	59	28	3	17	210	2	0	0	0
4/25/2024	12:00 PM	2	1608	557	1	62	21	2	14	228	5	0	0	0
4/25/2024	12:15 PM	2	1636	835	3	63	18	2	11	242	4	0	0	0
4/25/2024	12:30 PM	2	1668	835	3	64	20	2	12	235	5	0	0	0
4/25/2024	12:45 PM	2	1648	832	7	61	24	0	9	218	6	0	0	0
4/25/2024	1:00 PM	0	1676	858	6	56	31	0	5	213	3	1	0	0
4/25/2024	1:15 PM	0	1691	585	4	52	31	0	6	212	3	1	0	0
4/25/2024	1:30 PM	0	1775	611	8	51	32	0	6	221	2	2	0	0
4/25/2024	1:45 PM	1	1798	635	7	54	31	0	11	221	2	3	0	0
4/25/2024	2:00 PM	2	1839	621	7	63	26	0	17	199	2	3	0	0
4/25/2024	2:15 PM	2	1923	631	9	64	28	0	16	194	3	3	0	0
4/25/2024	2:30 PM	2	1967	609	7	60	27	0	14	166	2	2	0	0
4/25/2024	2:45 PM	1	2067	607	4	56	23	0	11	160	2	2	0	0
4/25/2024	3:00 PM	0	2061	598	4	49	21	1	5	162	2	2	0	0
4/25/2024	3:15 PM	0	1927	571	3	40	17	1	4	140	1	2	0	0
4/25/2024	3:30 PM	1	1781	552	1	37	16	1	5	134	1	2	0	0
4/25/2024	3:45 PM	1	1596	534	1	38	17	1	4	133	0	1	0	0
4/25/2024	4:00 PM	2	1541	523	1	36	16	0	4	128	1	1	0	0
4/25/2024	4:15 PM	2	1482	501	1	35	15	0	9	138	1	1	0	0
4/25/2024	4:30 PM	1	1429	490	1	34	11	0	8	140	1	1	0	0
4/25/2024	4:45 PM	1	1361	452	1	30	9	0	7	135	2	1	0	0
4/25/2024	5:00 PM	0	1277	444	2	28	6	0	7	150	1	0	0	0
4/25/2024	5:15 PM	0	1393	475	1	32	6	0	3	164	1	0	0	0
4/25/2024	5:30 PM	2	1423	471	2	33	5	0	4	165	1	0	0	0
4/25/2024	5:45 PM	5	1476	493	2	30	4	0	5	163	0	0	0	0
4/25/2024	6:00 PM	5	1501	465	4	28	5	0	5	131	0	0	0	0
4/25/2024	6:15 PM	5	1364	423	4	24	6	0	3	106	0	0	0	0
4/25/2024	6:30 PM	4	1339	407	4	24	6	0	1	102	0	0	0	0
4/25/2024	6:45 PM	1	1298	347	4	28	6	0	1	93	0	0	0	0
4/25/2024	7:00 PM	1	1243	323	2	23	5	0	1	94	0	0	0	0
4/25/2024	7:15 PM	1	1213	308	2	22	2	0	1	83	0	1	0	0
4/25/2024	7:30 PM	0	1113	273	1	19	3	0	1	78	0	1	0	0
4/25/2024	7:45 PM	0	1044	268	2	15	5	0	0	79	0	1	0	0
4/25/2024	8:00 PM	0	986	257	1	15	5	0	0	91	0	2	0	0
4/25/2024	8:15 PM	0	876	235	1	11	6	0	0	91	0	2	0	0
4/25/2024	8:30 PM	0	781	218	1	9	4	0	0	90	0	3	0	0
4/25/2024	8:45 PM	0	686	209	0	8	2	0	0	85	0	4	0	0
4/25/2024	9:00 PM	0	568	194	0	10	3	0	0	72	0	4	0	0
4/25/2024	9:15 PM	0	528	189	0	8	2	0	0	71	0	3	0	0
4/25/2024	9:30 PM	0	504	192	0	8	3	0	0	66	0	3	0	0
4/25/2024	9:45 PM	0	486	189	0	8	3	0	0	62	0	2	0	0
4/25/2024	10:00 PM	0	458	181	0	6	1	0	0	58	0	4	0	0
4/25/2024	10:15 PM	0	435	169	0	7	1	0	0	49	0	5	0	0
4/25/2024	10:30 PM	0	400	167	0	9	0	0	0	52	0	5	0	0
4/25/2024	10:45 PM	0	348	162	0	7	0	0	0	51	0	7	0	0
4/25/2024	11:00 PM	0	306	152	0	9	0	0	0	49	0	5	0	0
4/25/2024	11:15 PM	0	208	115	0	8	0	0	0	40	0	4	0	0
4/25/2024	11:30 PM	0	124	70	0	4	0	0	0	22	0	3	0	0
4/25/2024	11:45 PM	0	55	29	0	4	0	0	0	9	0	1	0	0

4/26/2024	12:00 AM	0	284	42	0	9	5	0	1	41	0	4	1	0
4/26/2024	12:15 AM	0	265	38	0	7	4	0	1	36	0	4	1	0
4/26/2024	12:30 AM	0	234	32	0	9	4	0	1	36	0	4	2	0
4/26/2024	12:45 AM	0	185	22	0	7	3	0	0	44	0	4	2	0
4/26/2024	1:00 AM	0	162	23	0	5	3	0	1	44	0	4	3	0
4/26/2024	1:15 AM	0	142	21	0	6	5	0	1	48	0	4	3	0
4/26/2024	1:30 AM	0	120	19	0	5	6	0	2	52	0	5	2	0
4/26/2024	1:45 AM	0	119	19	0	5	9	0	3	53	0	4	1	0
4/26/2024	2:00 AM	0	121	16	0	6	9	0	3	58	0	5	0	0
4/26/2024	2:15 AM	0	126	16	0	5	10	0	3	55	0	6	1	0
4/26/2024	2:30 AM	0	130	15	0	6	9	0	2	55	0	7	2	0
4/26/2024	2:45 AM	0	137	17	0	9	10	0	3	62	0	6	2	0
4/26/2024	3:00 AM	0	145	18	0	12	12	0	3	73	0	7	3	0
4/26/2024	3:15 AM	0	147	17	0	14	15	0	6	87	0	6	2	0
4/26/2024	3:30 AM	0	161	19	0	17	21	0	7	99	0	6	1	0
4/26/2024	3:45 AM	0	177	25	0	18	18	0	5	99	0	6	2	0
4/26/2024	4:00 AM	0	189	37	0	17	14	0	4	114	0	4	3	0
4/26/2024	4:15 AM	0	218	64	0	20	8	0	1	128	0	4	4	0
4/26/2024	4:30 AM	0	261	90	0	23	6	0	0	150	0	2	5	0
4/26/2024	4:45 AM	0	308	106	0	23	7	0	0	174	0	3	4	0
4/26/2024	5:00 AM	0	363	127	0	27	9	0	0	194	0	3	2	0
4/26/2024	5:15 AM	0	424	131	0	28	12	0	0	198	0	2	1	0
4/26/2024	5:30 AM	0	539	158	0	30	11	0	0	195	0	4	2	0
4/26/2024	5:45 AM	0	683	222	0	38	17	0	0	196	0	4	3	0
4/26/2024	6:00 AM	0	821	282	1	40	18	0	3	187	0	4	4	0
4/26/2024	6:15 AM	1	977	360	1	44	22	1	4	195	0	4	4	0
4/26/2024	6:30 AM	4	1157	459	1	45	30	2	6	210	2	3	2	0
4/26/2024	6:45 AM	6	1382	520	1	55	32	2	8	219	3	3	1	0
4/26/2024	7:00 AM	6	1588	588	0	56	38	2	5	211	5	4	0	0
4/26/2024	7:15 AM	5	1681	636	0	62	42	2	8	201	5	4	0	0
4/26/2024	7:30 AM	2	1681	658	1	69	35	1	6	211	3	4	1	0
4/26/2024	7:45 AM	1	1618	673	5	62	41	1	10	218	3	4	3	0
4/26/2024	8:00 AM	2	1538	660	7	64	40	1	11	217	2	2	4	0
4/26/2024	8:15 AM	3	1464	670	11	67	45	0	9	216	3	2	4	0
4/26/2024	8:30 AM	4	1415	650	10	88	54	0	13	212	3	1	3	0
4/26/2024	8:45 AM	6	1402	623	6	99	44	0	12	213	3	0	1	0
4/26/2024	9:00 AM	5	1378	618	5	104	40	0	12	214	2	0	0	0
4/26/2024	9:15 AM	4	1425	594	4	106	29	0	15	224	2	0	0	0
4/26/2024	9:30 AM	3	1505	584	4	77	27	0	14	206	2	0	0	0
4/26/2024	9:45 AM	0	1542	588	5	59	27	4	12	188	2	0	0	0
4/26/2024	10:00 AM	1	1652	583	5	51	27	7	15	193	5	0	0	0
4/26/2024	10:15 AM	2	1767	588	2	43	26	11	12	190	6	0	0	0
4/26/2024	10:30 AM	3	1847	578	6	52	17	16	14	196	11	1	0	0
4/26/2024	10:45 AM	3	1903	566	8	53	16	14	15	198	11	1	0	0
4/26/2024	11:00 AM	4	1947	548	7	62	16	13	14	206	10	1	0	0
4/26/2024	11:15 AM	5	1943	544	10	68	18	11	15	190	11	1	1	0
4/26/2024	11:30 AM	4	1932	556	7	64	25	11	13	177	9	0	1	0
4/26/2024	11:45 AM	7	1946	579	4	73	26	10	10	187	8	0	1	0
4/26/2024	12:00 PM	5	1960	594	8	74	28	9	12	181	8	0	1	0
4/26/2024	12:15 PM	3	1760	516	5	59	22	9	10	178	5	1	0	0
4/26/2024	12:30 PM	3	1544	441	4	47	12	5	7	178	2	1	0	0
4/26/2024	12:45 PM	0	1486	431	4	37	13	8	9	168	6	1	0	0
4/26/2024	1:00 PM	1	1371	408	0	22	7	14	6	166	5	1	0	0
4/26/2024	1:15 PM	1	1475	468	1	33	9	20	8	179	9	0	1	0
4/26/2024	1:30 PM	7	1644	513	2	41	15	19	13	179	9	0	1	0
4/26/2024	1:45 PM	8	1673	500	2	44	8	15	19	172	6	1	1	0
4/26/2024	2:00 PM	11	1806	522	2	49	9	10	19	158	6	1	1	0
4/26/2024	2:15 PM	11	1926	537	1	42	15	4	17	147	4	1	1	0
4/26/2024	2:30 PM	5	2059	562	3	43	10	6	13	139	5	1	1	0
4/26/2024	2:45 PM	5	2164	599	4	46	10	7	8	119	5	0	1	0
4/26/2024	3:00 PM	2	2099	597	8	45	9	6	7	111	5	0	1	0
4/26/2024	3:15 PM	3	2137	603	9	51	5	7	6	117	5	0	0	0
4/26/2024	3:30 PM	7	2008	578	8	46	5	5	6	103	4	0	0	0
4/26/2024	3:45 PM	8	1937	559	7	40	8	6	7	104	5	0	0	0
4/26/2024	4:00 PM	9	1931	529	3	43	8	5	8	96	5	0	0	0
4/26/2024	4:15 PM	8	1907	518	2	35	6	4	8	85	3	0	0	0
4/26/2024	4:30 PM	7	1949	503	0	32	6	4	8	88	3	0	0	0
4/26/2024	4:45 PM	8	1917	455	0	27	5	2	5	92	1	0	0	0
4/26/2024	5:00 PM	7	1917	465	1	23	7	2	5	104	0	0	0	0
4/26/2024	5:15 PM	9	1861	447	1	24	8	1	6	99	0	0	0	0
4/26/2024	5:30 PM	7	1868	508	5	27	9	2	5	100	0	0	0	0
4/26/2024	5:45 PM	4	1852	529	5	29	8	2	6	99	0	0	0	0
4/26/2024	6:00 PM	6	1815	513	4	31	11	2	6	89	0	0	0	0
4/26/2024	6:15 PM	5	1781	505	4	31	9	1	5	93	0	0	0	0
4/26/2024	6:30 PM	9	1683	444	0	27	9	0	8	89	0	0	0	0
4/26/2024	6:45 PM	9	1597	402	0	27	9	0	6	80	0	0	0	0
4/26/2024	7:00 PM	7	1453	380	3	25	5	0	5	77	0	0	0	0
4/26/2024	7:15 PM	6	1342	363	3	25	7	0	6	71	0	1	0	0
4/26/2024	7:30 PM	1	1170	387	3	23	6	0	9	69	0	1	0	0
4/26/2024	7:45 PM	1	995	432	3	22	6	0	10	72	0	1	0	0
4/26/2024	8:00 PM	0	889	515	3	21	5	0	12	70	0	2	0	0
4/26/2024	8:15 PM	1	779	577	4	16	2	0	11	70	0	1	0	0
4/26/2024	8:30 PM	2	705	600	4	18	2	0	9	65	0	1	0	0
4/26/2024	8:45 PM	2	663	609	4	15	2	0	7	60	0	4	0	0
4/26/2024	9:00 PM	2	624	577	1	11	5	0	5	50	0	3	0	0
4/26/2024	9:15 PM	1	649	457	0	10	6	0	6	46	1	3	0	0
4/26/2024	9:30 PM	0	686	328	0	7	6	0	2	49	3	5	0	0
4/26/2024	9:45 PM	0	718	220	0	7	6	0	2	48	4	4	0	0
4/26/2024	10:00 PM	0	735	116	0	5	3	0	1	56	5	4	0	0
4/26/2024	10:15 PM	0	667	100	0	6	2	0	0	50	4	5	0	0
4/26/2024	10:30 PM	0	636	98	1	7	2	0	0	46	2	3	0	0
4/26/2024	10:45 PM	0	577	90	1	6	1	0	0	44	1	1	0	0
4/26/2024	11:00 PM	1	506	75	1	7	1	0	0	40	1	1	0	0
4/26/2024	11:15 PM	1	362	53	1	4	1	0	0	31	1	0	0	0
4/26/2024	11:30 PM	1	212	32	0	2	0	0	0	21	1	0	0	0
4/26/2024	11:45 PM	1	87	12	0	1	0	0	0	10	1	0	0	0

4/27/2024	12:00 AM	0	328	75	0	2	2	0	0	36	0	5	0	0
4/27/2024	12:15 AM	0	298	72	0	1	2	0	0	37	0	3	0	0
4/27/2024	12:30 AM	0	258	62	0	1	1	0	0	34	0	3	0	0
4/27/2024	12:45 AM	0	207	52	0	3	2	0	0	34	0	3	0	0
4/27/2024	1:00 AM	0	182	40	0	3	1	0	0	35	0	4	0	0
4/27/2024	1:15 AM	0	166	32	0	4	1	0	0	32	0	6	0	0
4/27/2024	1:30 AM	0	148	31	0	5	5	0	0	29	0	4	0	0
4/27/2024	1:45 AM	0	133	30	0	3	4	0	0	28	0	6	0	0
4/27/2024	2:00 AM	0	131	34	0	5	4	0	0	23	0	7	0	0
4/27/2024	2:15 AM	0	116	34	0	5	5	0	0	23	0	7	0	0
4/27/2024	2:30 AM	0	100	30	0	7	2	0	0	28	0	8	0	0
4/27/2024	2:45 AM	0	104	35	0	6	2	0	0	29	0	7	0	0
4/27/2024	3:00 AM	0	109	38	0	7	4	0	0	33	0	4	0	0
4/27/2024	3:15 AM	0	127	41	0	8	5	0	0	42	0	5	0	0
4/27/2024	3:30 AM	0	147	47	0	6	8	0	0	45	0	8	0	0
4/27/2024	3:45 AM	0	156	46	0	10	8	0	0	50	0	9	0	0
4/27/2024	4:00 AM	0	173	50	0	9	6	0	0	49	0	9	0	0
4/27/2024	4:15 AM	0	199	51	1	9	4	0	0	36	0	6	0	0
4/27/2024	4:30 AM	0	225	54	1	13	0	0	0	33	0	3	0	0
4/27/2024	4:45 AM	0	267	56	1	16	2	0	0	31	0	1	0	0
4/27/2024	5:00 AM	0	276	52	1	19	2	0	0	33	0	2	0	0
4/27/2024	5:15 AM	0	291	68	0	19	3	0	0	45	0	5	0	0
4/27/2024	5:30 AM	0	327	86	0	17	4	0	0	45	0	5	0	0
4/27/2024	5:45 AM	2	389	107	0	13	3	0	0	48	0	5	0	0
4/27/2024	6:00 AM	4	480	149	0	11	4	0	0	45	0	4	0	0
4/27/2024	6:15 AM	4	548	166	1	16	4	0	0	43	0	4	0	0
4/27/2024	6:30 AM	4	637	182	2	19	4	0	2	55	0	3	0	0
4/27/2024	6:45 AM	3	690	223	2	20	4	0	3	58	0	3	0	0
4/27/2024	7:00 AM	1	812	253	2	20	5	0	3	67	0	3	0	0
4/27/2024	7:15 AM	1	933	283	1	26	6	0	4	65	0	1	0	0
4/27/2024	7:30 AM	1	1014	315	0	24	8	0	4	61	0	1	0	0
4/27/2024	7:45 AM	0	1160	341	0	26	12	0	6	64	0	1	0	0
4/27/2024	8:00 AM	1	1211	346	1	33	11	0	11	62	0	1	0	0
4/27/2024	8:15 AM	4	1284	346	2	36	13	0	10	74	0	0	0	0
4/27/2024	8:30 AM	8	1336	356	2	42	11	0	8	75	0	0	0	0
4/27/2024	8:45 AM	9	1464	360	2	47	8	0	6	74	0	0	0	0
4/27/2024	9:00 AM	8	1623	368	2	47	11	0	3	78	0	0	0	0
4/27/2024	9:15 AM	6	1688	387	2	41	8	0	4	76	0	0	0	0
4/27/2024	9:30 AM	2	1802	389	2	36	7	0	10	79	0	0	0	0
4/27/2024	9:45 AM	4	1825	380	2	32	8	0	10	76	0	0	0	0
4/27/2024	10:00 AM	8	1838	415	3	30	7	0	9	68	0	0	0	0
4/27/2024	10:15 AM	9	1910	431	3	23	9	0	9	67	0	0	0	0
4/27/2024	10:30 AM	10	1970	457	3	23	11	0	3	57	0	0	0	0
4/27/2024	10:45 AM	11	1983	487	3	22	9	0	4	63	0	0	0	0
4/27/2024	11:00 AM	10	1993	476	1	22	7	0	3	68	0	0	0	0
4/27/2024	11:15 AM	10	2044	476	0	22	6	0	4	61	0	0	0	0
4/27/2024	11:30 AM	13	2088	469	0	23	6	0	8	67	0	0	0	0
4/27/2024	11:45 AM	10	2115	459	1	21	6	0	11	60	0	0	0	0
4/27/2024	12:00 PM	7	2128	459	1	29	7	0	13	56	0	0	0	0
4/27/2024	12:15 PM	6	2137	451	3	33	6	0	14	60	0	0	0	0
4/27/2024	12:30 PM	7	2147	457	4	33	6	0	11	60	0	0	0	0
4/27/2024	12:45 PM	14	2134	446	3	39	5	0	10	63	0	0	0	0
4/27/2024	1:00 PM	16	2162	454	3	28	4	0	11	65	0	0	0	0
4/27/2024	1:15 PM	16	2135	474	1	25	6	0	9	69	0	0	0	0
4/27/2024	1:30 PM	11	2091	435	0	23	5	0	12	61	0	0	0	0
4/27/2024	1:45 PM	6	2106	444	1	17	7	0	11	51	0	0	0	0
4/27/2024	2:00 PM	6	2142	432	3	20	6	0	10	57	0	0	0	0
4/27/2024	2:15 PM	8	2156	409	5	26	4	0	9	45	0	0	0	0
4/27/2024	2:30 PM	8	2158	427	5	27	5	0	7	40	0	0	0	0
4/27/2024	2:45 PM	9	2149	415	4	31	5	0	5	41	0	0	0	0
4/27/2024	3:00 PM	8	2074	415	3	27	7	0	3	32	1	0	0	0
4/27/2024	3:15 PM	5	2039	421	2	22	6	0	5	35	1	0	0	0
4/27/2024	3:30 PM	6	1951	413	2	21	5	0	4	43	1	0	0	0
4/27/2024	3:45 PM	4	1906	413	3	19	4	0	4	44	1	0	0	0
4/27/2024	4:00 PM	4	1903	385	2	18	2	0	10	45	0	0	0	0
4/27/2024	4:15 PM	7	1866	374	2	16	3	0	9	49	0	0	0	0
4/27/2024	4:30 PM	8	1910	369	2	18	3	0	8	45	0	0	0	0
4/27/2024	4:45 PM	10	1835	362	2	15	2	0	10	47	0	0	0	0
4/27/2024	5:00 PM	12	1778	350	2	16	4	0	10	46	0	0	0	0
4/27/2024	5:15 PM	11	1719	332	2	16	4	0	13	39	0	0	0	0
4/27/2024	5:30 PM	9	1641	331	4	14	3	0	13	34	0	0	0	0
4/27/2024	5:45 PM	5	1632	308	4	13	3	0	10	30	0	0	0	0
4/27/2024	6:00 PM	3	1562	293	4	14	2	0	6	30	0	0	0	0
4/27/2024	6:15 PM	2	1485	285	4	13	1	0	5	28	0	0	0	0
4/27/2024	6:30 PM	3	1444	266	3	12	1	0	7	30	0	0	0	0
4/27/2024	6:45 PM	3	1354	249	2	14	1	0	7	29	0	1	0	0
4/27/2024	7:00 PM	5	1270	242	2	9	0	0	6	26	0	1	0	0
4/27/2024	7:15 PM	5	1214	261	1	9	0	0	3	27	0	1	0	0
4/27/2024	7:30 PM	4	1093	252	0	6	0	0	1	27	0	1	1	0
4/27/2024	7:45 PM	4	1009	283	1	4	0	0	2	30	0	0	1	0
4/27/2024	8:00 PM	1	911	291	2	11	0	0	1	29	0	0	1	0
4/27/2024	8:15 PM	0	883	264	2	10	1	0	1	28	0	0	1	0
4/27/2024	8:30 PM	0	836	254	2	13	1	0	1	29	0	0	0	0
4/27/2024	8:45 PM	0	800	217	1	15	4	0	0	24	0	0	0	0
4/27/2024	9:00 PM	0	787	190	0	9	4	0	0	20	0	0	0	0
4/27/2024	9:15 PM	0	717	177	0	8	4	0	0	17	0	0	0	0
4/27/2024	9:30 PM	0	688	166	0	6	4	0	0	14	0	0	0	0
4/27/2024	9:45 PM	0	645	150	0	4	1	0	0	16	0	0	0	0
4/27/2024	10:00 PM	0	604	145	2	5	1	0	0	15	0	0	0	0
4/27/2024	10:15 PM	0	577	133	3	6	0	0	0	16	0	0	0	0
4/27/2024	10:30 PM	1	539	128	3	5	0	0	0	19	0	0	0	0
4/27/2024	10:45 PM	1	506	125	3	5	0	0	0	16	0	0	0	0
4/27/2024	11:00 PM	1	464	113	2	4	0	0	0	16	0	0	0	0
4/27/2024	11:15 PM	1	327	79	1	3	0	0	0	12	0	0	0	0
4/27/2024	11:30 PM	0	213	50	1	3	0	0	0	5	0	0	0	0
4/27/2024	11:45 PM	0	102	19	1	1	0	0	0	2	0	0	0	0

Bi-Directional Class Count || NB EB 15min

Columbia, SC

Marr Traffic DATA COLLECTION
www.marrtraffic.com

Site 5
I-26 E/Bound On-Ramp,
east of US-76

Date
Sunday, April 21, 2024

Lat/Long
34.029304°, -81.101953°

Weather
Cloudy
66°F

Click here for Detailed Weather

Click here for Map

0000 - 2400 (Sunday 24h Session) (04-21-2024)
NB EB 15min

	Eastbound (Movement 5.1)													15min	60min
Time	1	2	3	4	5	6	7	8	9	10	11	12	13	Total	Total
0000 - 0015	0	30	2	0	0	0	0	0	0	0	0	0	0	**32**	
0015 - 0030	0	23	1	0	0	0	0	0	0	0	0	0	0	**24**	
0030 - 0045	0	16	0	0	0	0	0	0	0	0	0	0	0	**16**	
0045 - 0100	0	15	0	0	0	0	0	0	0	0	0	0	0	**15**	**87**
0100 - 0115	0	14	0	0	0	0	0	0	0	0	0	0	0	**14**	
0115 - 0130	0	10	1	0	0	0	0	0	0	0	0	0	0	**11**	
0130 - 0145	0	16	0	0	0	0	0	0	0	0	0	0	0	**16**	
0145 - 0200	0	12	0	0	0	0	0	0	0	0	0	0	0	**12**	**53**
0200 - 0215	0	12	1	0	0	0	0	0	0	0	0	0	0	**13**	
0215 - 0230	0	5	0	0	0	0	0	0	0	0	0	0	0	**5**	
0230 - 0245	0	5	0	0	0	0	0	0	0	0	0	0	0	**5**	
0245 - 0300	0	7	0	0	0	0	0	0	0	0	0	0	0	**7**	**30**
0300 - 0315	0	2	0	0	0	0	0	0	0	0	0	0	0	**2**	
0315 - 0330	0	5	0	0	0	0	0	0	0	0	0	0	0	**5**	
0330 - 0345	0	6	0	0	0	0	0	0	0	0	0	0	0	**6**	
0345 - 0400	0	2	0	0	0	0	0	0	0	0	0	0	0	**2**	**15**
0400 - 0415	0	2	0	0	0	0	0	0	0	0	0	0	0	**2**	
0415 - 0430	0	5	0	0	0	0	0	0	0	0	0	0	0	**5**	
0430 - 0445	0	6	0	0	1	0	0	0	0	0	0	0	0	**7**	
0445 - 0500	0	5	0	0	0	0	0	0	0	0	0	0	0	**5**	**19**
0500 - 0515	0	3	0	0	0	0	0	0	0	0	0	0	0	**3**	
0515 - 0530	0	3	0	0	0	0	0	0	0	0	0	0	0	**3**	
0530 - 0545	0	2	1	0	0	0	0	0	0	0	0	0	0	**3**	
0545 - 0600	0	3	0	0	0	0	0	0	0	0	0	0	0	**3**	**12**
0600 - 0615	0	9	1	0	0	0	0	0	0	0	0	0	0	**10**	
0615 - 0630	0	10	0	0	0	0	0	0	0	0	0	0	0	**10**	
0630 - 0645	0	7	0	0	0	0	0	0	0	0	0	0	0	**7**	
0645 - 0700	0	6	0	0	0	0	0	0	0	0	0	0	0	**6**	**33**
0700 - 0715	0	9	0	0	0	0	0	0	0	0	0	0	0	**9**	
0715 - 0730	0	21	1	0	0	0	0	0	0	0	0	0	0	**22**	
0730 - 0745	0	25	5	0	0	0	0	0	0	0	0	0	0	**30**	
0745 - 0800	0	15	1	0	1	0	0	0	0	0	0	0	0	**17**	**78**
0800 - 0815	0	16	2	0	0	0	0	0	0	0	0	0	0	**18**	
0815 - 0830	0	19	1	0	1	0	0	0	0	0	0	0	0	**21**	
0830 - 0845	0	18	3	0	0	0	0	0	0	0	0	0	0	**21**	
0845 - 0900	0	18	1	0	0	0	0	0	0	0	0	0	0	**19**	**79**
0900 - 0915	0	25	4	0	0	0	0	0	0	0	0	0	0	**29**	
0915 - 0930	0	36	3	0	0	0	0	0	0	0	0	0	0	**39**	
0930 - 0945	0	39	1	0	0	0	0	0	1	0	0	0	0	**41**	
0945 - 1000	0	49	3	2	0	0	0	0	0	0	0	0	0	**54**	**163**
1000 - 1015	0	51	7	0	0	0	0	0	0	0	0	0	0	**58**	
1015 - 1030	0	48	8	0	0	0	0	0	0	0	0	0	0	**56**	
1030 - 1045	0	49	7	0	0	0	0	0	0	0	0	0	0	**56**	
1045 - 1100	0	43	3	0	0	0	0	0	0	0	0	0	0	**46**	**216**
1100 - 1115	0	45	4	0	0	0	0	0	0	0	0	0	0	**49**	
1115 - 1130	0	39	3	0	0	0	0	0	0	0	0	0	0	**42**	
1130 - 1145	0	65	5	0	0	0	0	1	0	0	0	0	0	**71**	
1145 - 1200	0	80	10	0	1	0	0	0	0	0	0	0	0	**91**	**253**
1200 - 1215	0	73	5	0	0	0	0	0	0	0	0	0	0	**78**	
1215 - 1230	0	44	9	0	0	0	0	0	0	0	0	0	0	**53**	
1230 - 1245	0	85	10	0	1	0	0	0	1	0	0	0	0	**97**	
1245 - 1300	0	78	5	0	0	0	0	0	0	0	0	0	0	**83**	**311**
1300 - 1315	0	55	8	0	0	0	0	0	1	0	0	0	0	**64**	
1315 - 1330	0	54	7	0	0	0	0	0	0	0	0	0	0	**61**	
1330 - 1345	0	53	9	0	0	0	0	0	1	0	0	0	0	**63**	
1345 - 1400	0	57	8	0	0	0	0	0	0	0	0	0	0	**65**	**253**
1400 - 1415	0	76	4	0	0	0	0	0	0	0	0	0	0	**80**	
1415 - 1430	0	63	8	0	0	0	0	0	0	0	0	0	0	**71**	
1430 - 1445	0	65	6	0	0	0	0	0	0	0	0	0	0	**71**	
1445 - 1500	0	58	6	0	2	0	0	0	0	0	0	0	0	**66**	**288**
1500 - 1515	0	54	3	1	0	0	0	0	0	0	0	0	0	**58**	
1515 - 1530	0	41	10	0	0	0	0	0	0	0	0	0	0	**51**	
1530 - 1545	0	45	5	0	0	0	0	0	0	0	0	0	0	**50**	
1545 - 1600	0	54	8	0	0	0	0	0	0	0	0	0	0	**62**	**221**
1600 - 1615	0	49	9	0	0	0	0	0	0	0	0	0	0	**58**	
1615 - 1630	0	61	4	0	0	0	0	0	0	0	0	0	0	**65**	
1630 - 1645	0	36	2	0	0	0	0	0	0	0	0	0	0	**38**	
1645 - 1700	0	40	4	0	0	0	0	0	0	0	0	0	0	**44**	**205**
1700 - 1715	0	42	8	0	0	0	0	0	0	0	0	0	0	**50**	
1715 - 1730	0	46	4	0	0	0	0	0	0	0	0	0	0	**50**	
1730 - 1745	0	47	2	0	1	0	0	0	0	0	0	0	0	**50**	
1745 - 1800	0	36	7	0	0	0	0	0	0	0	0	0	0	**43**	**193**
1800 - 1815	0	53	6	0	0	0	0	0	1	0	0	0	0	**60**	
1815 - 1830	0	54	6	0	0	0	0	0	0	0	0	0	0	**60**	
1830 - 1845	0	41	2	0	0	0	0	0	0	0	0	0	0	**43**	
1845 - 1900	0	28	2	0	0	0	0	0	1	0	0	0	0	**31**	**194**
1900 - 1915	0	44	3	0	0	0	0	0	0	0	0	0	0	**47**	
1915 - 1930	0	40	8	0	0	0	0	0	0	0	0	0	0	**48**	
1930 - 1945	0	68	5	0	0	0	0	0	0	0	0	0	0	**73**	
1945 - 2000	0	43	5	0	0	0	0	0	0	0	0	0	0	**48**	**216**
2000 - 2015	0	34	4	0	1	0	0	0	0	0	0	0	0	**39**	
2015 - 2030	0	29	3	0	0	0	0	0	0	0	0	0	0	**32**	
2030 - 2045	0	37	4	0	0	0	0	0	0	0	0	0	0	**41**	
2045 - 2100	0	17	4	0	0	0	0	0	0	0	0	0	0	**21**	**133**
2100 - 2115	0	24	2	0	0	0	0	0	0	0	0	0	0	**26**	
2115 - 2130	0	21	4	0	0	0	0	0	0	0	0	0	0	**25**	
2130 - 2145	0	21	3	0	0	0	0	0	0	0	0	0	0	**24**	
2145 - 2200	0	18	2	0	0	0	0	0	0	0	0	0	0	**20**	**95**
2200 - 2215	0	18	1	0	0	0	0	0	0	0	0	0	0	**19**	
2215 - 2230	0	5	2	0	0	0	0	0	0	0	0	0	0	**7**	
2230 - 2245	0	11	2	0	0	0	0	0	0	0	0	0	0	**13**	
2245 - 2300	0	9	3	0	0	0	0	0	0	0	0	0	0	**12**	**51**
2300 - 2315	0	14	1	0	0	0	0	0	0	0	0	0	0	**15**	
2315 - 2330	0	13	3	0	0	0	0	0	0	0	0	0	0	**16**	
2330 - 2345	0	12	0	0	0	0	0	0	0	0	0	0	0	**12**	
2345 - 0000	0	6	1	0	0	0	0	0	0	0	0	0	0	**7**	**50**

Session Total	0	2923	306	3	9	0	0	1	6	0	0	0	0	**3248**
Session Average	0.00	30.45	3.19	0.03	0.09	0.00	0.00	0.01	0.06	0.00	0.00	0.00	0.00	**33.83**
Session Percentage	0.00	89.99	9.42	0.09	0.28	0.00	0.00	0.03	0.18	0.00	0.00	0.00	0.00	

AM Peak Hour	-	0945 - 1045	0945 - 1045	0900 - 1000	0730 - 0830	-	-	-	0845 - 0945	-	-	-	-	**0945 - 1045**
AM Peak Volume	0	197	25	2	2	0	0	0	1	0	0	0	0	**224**

Noon Peak Hour	-	1145 - 1245	1145 - 1245	1415 - 1515	1145 - 1245	-	-	1045 - 1145	1215 - 1315	-	-	-	-	**1145 - 1245**
Noon Peak Volume	0	282	34	1	2	0	0	1	2	0	0	0	0	**319**

PM Peak Hour	-	1530 - 1630	1515 - 1615	1500 - 1600	1645 - 1745	-	-	-	1800 - 1900	-	-	-	-	**1530 - 1630**
PM Peak Volume	0	209	32	1	1	0	0	0	2	0	0	0	0	**235**

Site 5
I-26 E/Bound On-Ramp,
east of US-76

Date
Monday, April 22, 2024

Lat/Long
34.029304°, -81.101953°

Weather
Mostly Cloudy
57°F

Click here for Detailed Weather

0000 - 2400 (Weekday 24h Session) (04-22-2024)
NB EB 15min

	Eastbound (Movement 5.1)													15min	60min
Time	1	2	3	4	5	6	7	8	9	10	11	12	13	Total	Total
0000 - 0015	0	2	0	0	0	0	0	1	0	0	0	0	0	**3**	
0015 - 0030	0	3	1	0	1	0	0	0	0	0	0	0	0	**5**	
0030 - 0045	0	4	0	0	0	0	0	0	0	0	0	0	0	**4**	
0045 - 0100	0	3	0	0	0	0	0	0	0	0	0	0	0	**3**	**15**
0100 - 0115	0	3	0	0	0	0	0	0	0	0	0	0	0	**3**	
0115 - 0130	0	2	0	0	1	0	0	0	0	0	0	0	0	**3**	
0130 - 0145	0	4	0	0	0	0	0	0	0	0	0	0	0	**4**	
0145 - 0200	0	3	0	0	0	0	0	0	0	0	0	0	0	**3**	**13**
0200 - 0215	0	4	1	0	0	0	0	0	0	0	0	0	0	**5**	
0215 - 0230	0	3	0	0	0	0	0	0	1	0	0	0	0	**4**	
0230 - 0245	0	1	0	0	0	0	0	0	0	0	0	0	0	**1**	
0245 - 0300	0	3	1	0	0	0	0	0	0	0	0	0	0	**4**	**14**
0300 - 0315	0	3	1	0	0	0	0	0	0	0	0	0	0	**4**	
0315 - 0330	0	1	0	0	0	0	0	0	0	0	0	0	0	**1**	
0330 - 0345	0	1	0	0	0	0	0	0	0	0	0	0	0	**1**	
0345 - 0400	0	2	0	0	0	0	0	0	0	0	0	0	0	**2**	**8**
0400 - 0415	0	2	0	0	0	0	0	0	0	0	0	0	0	**2**	
0415 - 0430	0	4	1	0	0	0	0	0	0	0	0	0	0	**5**	
0430 - 0445	0	1	0	0	0	0	0	0	0	0	0	0	0	**1**	
0445 - 0500	0	3	1	0	0	0	0	0	0	0	0	0	0	**4**	**12**
0500 - 0515	0	7	1	0	0	0	0	0	0	0	0	0	0	**8**	
0515 - 0530	0	5	1	0	1	0	0	0	1	0	0	0	0	**8**	
0530 - 0545	0	14	2	0	0	0	0	0	0	0	0	0	0	**16**	
0545 - 0600	0	13	3	0	2	0	0	0	0	0	0	0	0	**18**	**50**
0600 - 0615	0	13	2	0	2	0	0	0	1	0	0	0	0	**18**	
0615 - 0630	0	20	3	0	1	0	0	0	0	0	0	0	0	**24**	
0630 - 0645	0	35	9	0	0	0	0	0	2	0	0	0	0	**46**	
0645 - 0700	0	31	4	0	1	0	0	0	0	0	0	0	0	**36**	**124**
0700 - 0715	0	51	5	1	4	0	0	0	1	0	0	0	0	**62**	
0715 - 0730	0	61	9	0	3	1	0	0	0	0	0	0	0	**74**	
0730 - 0745	0	67	15	0	0	0	0	0	0	0	0	0	0	**82**	
0745 - 0800	0	74	11	0	2	1	0	1	1	0	0	0	0	**90**	**308**
0800 - 0815	0	56	9	0	3	0	0	0	0	0	0	0	0	**68**	
0815 - 0830	0	63	21	0	0	0	0	0	0	0	0	0	0	**84**	
0830 - 0845	0	60	10	0	1	0	0	1	1	0	0	0	0	**73**	
0845 - 0900	0	57	15	0	2	0	0	1	0	0	0	0	0	**75**	**300**
0900 - 0915	0	47	9	0	5	0	0	1	0	0	0	0	0	**62**	
0915 - 0930	0	45	9	1	0	0	0	1	0	0	0	0	0	**56**	
0930 - 0945	0	53	15	0	3	2	0	0	3	0	0	0	0	**76**	
0945 - 1000	0	48	11	0	0	0	0	0	2	0	0	0	0	**61**	**255**
1000 - 1015	0	50	18	1	1	0	0	1	0	0	0	0	0	**71**	
1015 - 1030	0	59	19	0	3	0	0	0	0	0	0	0	0	**81**	
1030 - 1045	0	60	19	0	1	0	0	0	0	0	0	0	0	**80**	
1045 - 1100	0	62	19	0	1	0	0	0	0	0	0	0	0	**82**	**314**
1100 - 1115	0	77	16	0	2	1	0	0	0	0	0	0	0	**96**	
1115 - 1130	0	72	21	1	1	2	0	0	0	0	0	0	0	**97**	
1130 - 1145	0	75	17	0	2	0	0	0	4	0	0	0	0	**98**	
1145 - 1200	0	81	21	0	0	0	0	0	0	0	0	0	0	**102**	**393**
1200 - 1215	0	71	20	0	1	0	0	0	0	0	0	0	0	**92**	
1215 - 1230	0	68	23	0	2	1	0	0	0	0	0	0	0	**94**	
1230 - 1245	0	85	26	0	2	1	0	0	0	0	0	0	0	**114**	
1245 - 1300	0	65	19	0	2	1	0	1	0	0	0	0	0	**88**	**388**
1300 - 1315	0	90	18	0	2	2	0	0	1	0	0	0	0	**113**	
1315 - 1330	0	81	24	0	1	0	0	0	0	0	0	0	0	**106**	
1330 - 1345	0	86	24	2	4	0	0	0	1	0	0	0	0	**117**	
1345 - 1400	0	75	19	0	1	1	0	0	2	0	0	0	0	**98**	**434**
1400 - 1415	0	92	18	0	2	1	0	0	0	0	0	0	0	**113**	
1415 - 1430	0	113	24	2	3	0	0	0	1	0	0	0	0	**143**	
1430 - 1445	0	108	31	3	3	0	0	0	1	0	0	0	0	**146**	
1445 - 1500	0	106	32	0	0	0	0	0	0	0	0	0	0	**138**	**540**
1500 - 1515	0	125	34	2	2	0	0	0	0	0	0	0	0	**163**	
1515 - 1530	0	138	25	1	1	0	0	1	1	0	0	0	0	**167**	
1530 - 1545	0	155	36	0	0	2	0	0	1	0	0	0	0	**194**	
1545 - 1600	0	170	38	0	2	0	0	0	0	0	0	0	0	**210**	**734**
1600 - 1615	0	192	48	0	3	0	0	0	0	0	0	0	0	**243**	
1615 - 1630	0	211	32	0	3	0	0	0	0	0	0	0	0	**246**	
1630 - 1645	1	187	42	0	2	0	0	1	0	0	0	0	0	**233**	
1645 - 1700	2	228	40	1	0	0	0	0	1	0	0	0	0	**272**	**994**
1700 - 1715	2	194	27	0	3	0	0	0	0	0	0	0	0	**226**	
1715 - 1730	0	214	39	0	0	0	0	0	0	0	0	0	0	**253**	
1730 - 1745	0	198	45	0	0	0	0	0	4	0	0	0	0	**247**	
1745 - 1800	0	145	39	0	1	0	0	0	0	0	0	0	0	**185**	**911**
1800 - 1815	0	103	45	0	0	0	0	0	0	0	0	0	0	**148**	
1815 - 1830	0	102	29	0	0	0	0	0	0	0	0	0	0	**131**	
1830 - 1845	0	67	15	0	0	0	0	0	1	0	0	0	0	**83**	
1845 - 1900	0	91	9	0	0	0	0	0	0	0	0	0	0	**100**	**462**
1900 - 1915	0	68	21	0	0	0	0	0	0	0	0	0	0	**89**	
1915 - 1930	0	65	11	0	0	0	0	0	1	0	0	0	0	**77**	
1930 - 1945	0	37	7	0	0	0	0	0	0	0	0	0	0	**44**	
1945 - 2000	0	86	17	0	0	0	0	0	0	0	0	0	0	**103**	**313**
2000 - 2015	0	49	5	0	0	0	0	0	1	0	0	0	0	**55**	
2015 - 2030	0	30	3	0	0	0	0	0	1	0	0	0	0	**34**	
2030 - 2045	1	44	5	0	0	0	0	0	0	0	0	0	0	**50**	
2045 - 2100	0	42	6	0	0	0	0	0	0	0	0	0	0	**48**	**187**
2100 - 2115	0	36	4	0	2	1	0	0	0	0	0	0	0	**43**	
2115 - 2130	0	35	4	0	1	1	0	0	0	0	0	0	0	**41**	
2130 - 2145	0	31	3	0	1	1	0	0	0	0	0	0	0	**36**	
2145 - 2200	0	29	2	0	1	1	0	0	0	0	0	0	0	**33**	**153**
2200 - 2215	0	27	2	0	1	0	0	0	1	0	0	0	0	**31**	
2215 - 2230	0	15	1	0	1	0	0	0	0	0	0	0	0	**17**	
2230 - 2245	0	30	4	0	2	0	0	0	0	0	0	0	0	**36**	
2245 - 2300	0	24	3	0	1	1	0	0	0	0	0	0	0	**29**	**113**
2300 - 2315	0	19	2	0	1	0	0	0	0	0	0	0	0	**22**	
2315 - 2330	0	16	1	0	1	0	0	0	0	0	0	0	0	**18**	
2330 - 2345	0	15	2	0	1	0	0	0	0	0	0	0	0	**18**	
2345 - 0000	0	10	1	0	0	0	0	0	0	0	0	0	0	**11**	**69**

Session Total	6	5676	1245	15	96	21	0	10	35	0	0	0	0	**7104**
Session Average	0.06	59.13	12.97	0.16	1.00	0.22	0.00	0.10	0.36	0.00	0.00	0.00	0.00	**74.00**
Session Percentage	0.08	79.90	17.53	0.21	1.35	0.30	0.00	0.14	0.49	0.00	0.00	0.00	0.00	

AM Peak Hour	-	0730 - 0830	0945 - 1045	0915 - 1015	0845 - 0945	0700 - 0800	-	0830 - 0930	0900 - 1000	-	-	-	-	**0730 - 0830**
AM Peak Volume	0	260	67	2	10	2	0	4	5	0	0	0	0	**324**

Noon Peak Hour	-	1445 - 1545	1445 - 1545	1415 - 1515	1330 - 1430	1215 - 1315	-	1000 - 1100	1045 - 1145	-	-	-	-	**1445 - 1545**
Noon Peak Volume	0	524	127	7	10	5	0	1	4	0	0	0	0	**662**

PM Peak Hour	1615 - 1715	1645 - 1745	1715 - 1815	1500 - 1600	1545 - 1645	1500 - 1600	-	1500 - 1600	1645 - 1745	-	-	-	-	**1645 - 1745**
PM Peak Volume	5	834	168	3	10	2	0	1	5	0	0	0	0	**998**

Site 5
I-26 E/Bound On-Ramp,
east of US-76

Date
Tuesday, April 23, 2024

Lat/Long
34.029304°, -81.101953°

Weather
Fair
58°F

Click here for Detailed Weather

0000 - 2400 (Weekday 24h Session) (04-23-2024)
NB EB 15min

	Eastbound (Movement 5.1)													15min	60min
TIME	1	2	3	4	5	6	7	8	9	10	11	12	13	Total	Total
0000 - 0015	0	8	1	0	1	1	0	0	0	0	0	0	0	**11**	
0015 - 0030	0	9	2	0	0	0	0	0	0	0	0	0	0	**11**	
0030 - 0045	0	8	0	0	0	0	0	0	0	0	0	0	0	**8**	
0045 - 0100	0	5	0	0	0	0	0	0	0	0	0	0	0	**5**	**35**
0100 - 0115	0	6	0	0	0	0	0	0	0	0	0	0	0	**6**	
0115 - 0130	0	7	0	0	0	0	0	0	0	0	0	0	0	**7**	
0130 - 0145	0	3	1	0	0	0	0	0	0	0	0	0	0	**4**	
0145 - 0200	0	2	1	0	0	0	0	0	0	0	0	0	0	**3**	**20**
0200 - 0215	0	4	0	0	0	0	0	0	0	0	0	0	0	**4**	
0215 - 0230	0	2	0	0	0	0	0	0	0	0	0	0	0	**2**	
0230 - 0245	0	5	0	0	0	1	0	0	0	0	0	0	0	**6**	
0245 - 0300	0	3	1	0	1	0	0	0	0	0	0	0	0	**5**	**17**
0300 - 0315	0	0	0	0	0	0	0	0	0	0	0	0	0	**0**	
0315 - 0330	0	2	0	0	0	0	0	0	0	0	0	0	0	**2**	
0330 - 0345	0	4	0	0	0	0	0	0	0	0	0	0	0	**4**	
0345 - 0400	0	1	0	0	0	0	0	0	0	0	0	0	0	**1**	**7**
0400 - 0415	0	6	0	0	0	0	0	0	0	0	0	0	0	**6**	
0415 - 0430	0	2	0	0	0	0	0	0	0	0	0	0	0	**2**	
0430 - 0445	0	5	1	0	0	0	0	0	0	0	0	0	0	**6**	
0445 - 0500	0	4	0	0	0	0	0	0	1	0	0	0	0	**5**	**19**
0500 - 0515	0	2	0	0	0	0	0	0	0	0	0	0	0	**2**	
0515 - 0530	0	11	1	0	0	0	0	0	0	0	0	0	0	**12**	
0530 - 0545	0	11	0	0	0	0	0	0	0	0	0	0	0	**11**	
0545 - 0600	0	14	2	0	0	0	0	0	0	0	0	0	0	**16**	**41**
0600 - 0615	0	17	2	0	2	0	0	0	0	0	0	0	0	**21**	
0615 - 0630	0	21	4	0	0	0	0	0	0	0	0	0	0	**25**	
0630 - 0645	0	32	8	0	2	0	0	0	0	0	0	0	0	**42**	
0645 - 0700	0	33	5	0	4	2	0	0	0	0	0	0	0	**44**	**132**
0700 - 0715	0	41	7	1	2	0	0	0	0	0	0	0	0	**51**	
0715 - 0730	0	62	15	0	4	1	0	0	0	0	0	0	0	**82**	
0730 - 0745	0	60	12	0	1	0	0	1	0	0	0	0	0	**74**	
0745 - 0800	0	76	11	0	2	0	0	1	0	0	0	0	0	**90**	**297**
0800 - 0815	0	62	11	0	3	1	0	1	0	0	0	0	0	**78**	
0815 - 0830	0	67	14	0	2	1	0	0	1	0	0	0	0	**85**	
0830 - 0845	0	60	16	0	3	1	0	0	1	0	0	0	0	**81**	
0845 - 0900	0	62	15	0	3	0	0	1	1	0	0	0	0	**82**	**326**
0900 - 0915	0	54	13	0	0	0	0	0	0	0	0	0	0	**67**	
0915 - 0930	0	48	7	0	3	1	0	0	1	0	0	0	0	**60**	
0930 - 0945	0	66	13	1	2	1	0	1	2	0	0	0	0	**86**	
0945 - 1000	0	49	10	0	1	1	0	0	1	0	0	0	0	**62**	**275**
1000 - 1015	0	64	11	1	0	0	0	0	1	0	0	0	0	**77**	
1015 - 1030	0	58	14	0	7	2	0	0	2	0	0	0	0	**83**	
1030 - 1045	0	65	19	0	0	1	0	1	1	0	0	0	0	**87**	
1045 - 1100	0	56	13	0	2	0	0	0	1	0	0	0	0	**72**	**319**
1100 - 1115	0	75	16	0	0	0	0	0	0	0	0	0	0	**91**	
1115 - 1130	0	85	15	0	2	0	0	0	0	0	0	0	0	**102**	
1130 - 1145	0	70	22	0	2	0	0	2	1	0	0	0	0	**97**	
1145 - 1200	0	83	20	1	0	2	0	0	0	0	0	0	0	**106**	**396**
1200 - 1215	0	86	14	0	1	0	0	0	2	0	0	0	0	**103**	
1215 - 1230	0	85	18	0	3	1	0	2	0	0	0	0	0	**109**	
1230 - 1245	0	79	14	0	2	0	0	0	2	0	0	0	0	**97**	
1245 - 1300	0	72	24	1	2	0	0	0	0	0	0	0	0	**99**	**408**
1300 - 1315	0	96	17	3	0	3	0	1	1	0	0	0	0	**121**	
1315 - 1330	1	104	18	3	1	0	1	0	1	0	0	0	0	**129**	
1330 - 1345	0	91	11	1	0	0	0	0	0	0	0	0	0	**103**	
1345 - 1400	0	83	19	1	0	0	0	0	0	0	0	0	0	**103**	**456**
1400 - 1415	0	97	20	3	0	0	0	0	0	0	0	0	0	**120**	
1415 - 1430	0	105	25	0	1	0	0	0	1	0	0	0	0	**132**	
1430 - 1445	0	123	27	0	3	0	1	1	1	0	0	0	0	**156**	
1445 - 1500	0	121	32	1	2	0	0	0	1	0	0	0	0	**157**	**565**
1500 - 1515	0	140	21	1	3	0	0	2	0	0	0	0	0	**167**	
1515 - 1530	0	129	28	0	2	2	0	0	1	0	0	0	0	**162**	
1530 - 1545	1	166	34	0	1	0	0	0	1	0	0	0	0	**203**	
1545 - 1600	0	160	40	0	2	0	0	0	1	0	0	0	0	**203**	**735**
1600 - 1615	0	193	52	0	2	0	1	0	1	0	0	0	0	**249**	
1615 - 1630	0	228	45	0	2	0	0	0	0	0	0	0	0	**275**	
1630 - 1645	0	249	39	0	4	0	0	1	0	0	0	0	0	**293**	
1645 - 1700	0	232	35	0	1	1	0	0	1	3	0	0	0	**273**	**1090**
1700 - 1715	0	224	41	0	1	0	0	0	1	0	0	0	0	**267**	
1715 - 1730	0	239	40	0	1	0	0	0	1	0	0	0	0	**281**	
1730 - 1745	0	197	49	0	0	0	0	1	2	0	0	0	0	**249**	
1745 - 1800	0	142	39	0	1	0	0	0	1	0	0	0	0	**183**	**980**
1800 - 1815	0	143	28	0	2	0	0	0	0	0	0	0	0	**173**	
1815 - 1830	1	99	21	0	0	0	0	0	0	0	0	0	0	**121**	
1830 - 1845	0	90	16	0	2	0	0	0	0	0	0	0	0	**108**	
1845 - 1900	0	76	11	0	0	0	0	0	0	0	0	0	0	**87**	**489**
1900 - 1915	1	63	10	0	0	0	0	0	0	0	0	0	0	**74**	
1915 - 1930	0	67	8	0	0	0	0	0	1	0	0	0	0	**76**	
1930 - 1945	0	59	11	0	0	0	0	0	0	0	0	0	0	**70**	
1945 - 2000	0	60	9	0	0	0	0	1	0	0	0	0	0	**70**	**290**
2000 - 2015	0	47	15	0	0	0	0	0	0	0	0	0	0	**62**	
2015 - 2030	0	46	11	0	1	0	0	0	0	0	0	0	0	**58**	
2030 - 2045	0	47	8	0	1	0	0	0	0	0	0	0	0	**56**	
2045 - 2100	0	22	4	0	0	0	0	0	0	0	0	0	0	**26**	**202**
2100 - 2115	1	34	6	0	1	0	0	0	0	0	0	0	0	**42**	
2115 - 2130	0	28	6	0	0	0	0	0	0	0	0	0	0	**34**	
2130 - 2145	0	35	5	0	0	1	0	1	0	0	0	0	0	**42**	
2145 - 2200	0	20	4	0	0	1	0	0	1	0	0	0	0	**26**	**144**
2200 - 2215	0	17	3	0	0	3	0	0	0	0	0	0	0	**23**	
2215 - 2230	0	43	7	0	2	0	0	1	0	0	0	0	0	**53**	
2230 - 2245	0	27	5	0	0	0	0	0	0	0	0	0	0	**32**	
2245 - 2300	0	10	2	0	1	0	0	0	0	0	0	0	0	**13**	**121**
2300 - 2315	0	15	3	0	0	0	0	0	0	0	0	0	0	**18**	
2315 - 2330	0	14	2	0	3	2	0	0	0	0	0	0	0	**21**	
2330 - 2345	0	6	1	0	0	1	0	0	0	0	0	0	0	**8**	
2345 - 0000	0	3	0	0	0	0	0	0	0	0	0	0	0	**3**	**50**

Session Total	5	6002	1201	18	97	31	3	19	35	3	0	0	0	**7414**
Session Average	0.05	62.52	12.51	0.19	1.01	0.32	0.03	0.20	0.36	0.03	0.00	0.00	0.00	**77.23**
Session Percentage	0.07	80.95	16.20	0.24	1.31	0.42	0.04	0.26	0.47	0.04	0.00	0.00	0.00	

AM Peak Hour	-	0730 - 0830	0815 - 0915	0915 - 1015	0630 - 0730	0930 - 1030	-	0715 - 0815	0930 - 1030	-	-	-	-	**0745 - 0845**
AM Peak Hour Volume	0	265	58	2	12	4	0	3	6	0	0	0	0	**334**

Noon Peak Hour	1230 - 1330	1445 - 1545	1445 - 1545	1245 - 1345	1430 - 1530	1215 - 1315	1230 - 1330	1130 - 1230	1000 - 1100	-	-	-	-	**1445 - 1545**
Noon Peak Hour Volume	1	556	115	8	10	4	1	4	5	0	0	0	0	**689**

PM Peak Hour	1815 - 1915	1630 - 1730	1545 - 1645	1500 - 1600	1545 - 1645	1500 - 1600	1515 - 1615	1500 - 1600	1645 - 1745	1600 - 1700	-	-	-	**1630 - 1730**
PM Peak Hour Volume	2	944	176	1	10	2	1	2	5	3	0	0	0	**1114**

Site 5
I-26 E/Bound On-Ramp,
east of US-76

Date
Wednesday, April 24, 2024

Lat/Long
34.029304°, -81.101953°

Weather
Fair
66°F

Click here for Detailed Weather

0000 - 2400 (Weekday 24h Session) (04-24-2024)
NB EB 15min

	Eastbound (Movement 5.1)													15min	60min
TIME	1	2	3	4	5	6	7	8	9	10	11	12	13	Total	Total
0000 - 0015	0	7	4	0	0	1	0	0	0	0	0	0	0	**12**	
0015 - 0030	0	7	0	0	2	0	0	0	0	0	0	0	0	**9**	
0030 - 0045	0	6	0	0	2	0	0	0	0	0	0	0	0	**8**	
0045 - 0100	0	3	0	0	3	0	0	0	0	0	0	0	0	**6**	**35**
0100 - 0115	0	3	1	0	4	0	0	0	0	0	0	0	0	**8**	
0115 - 0130	0	9	0	0	1	0	0	0	0	0	0	0	0	**10**	
0130 - 0145	0	3	0	0	1	0	0	0	0	0	0	0	0	**4**	
0145 - 0200	0	3	1	0	0	0	0	0	0	0	0	0	0	**4**	**26**
0200 - 0215	0	3	0	0	0	0	0	0	0	0	0	0	0	**3**	
0215 - 0230	0	5	3	0	2	0	0	0	0	0	0	0	0	**10**	
0230 - 0245	0	0	0	0	1	0	0	0	0	0	0	0	0	**1**	
0245 - 0300	0	1	1	0	0	0	0	0	0	0	0	0	0	**2**	**16**
0300 - 0315	0	3	0	0	0	0	0	0	0	0	0	0	0	**3**	
0315 - 0330	0	2	0	0	0	1	0	0	0	0	0	0	0	**3**	
0330 - 0345	0	2	1	0	1	0	0	0	0	0	0	0	0	**4**	
0345 - 0400	0	3	0	0	0	0	0	0	0	0	0	0	0	**3**	**13**
0400 - 0415	0	3	0	0	0	0	0	0	0	0	0	0	0	**3**	
0415 - 0430	0	1	2	0	0	0	0	0	0	0	0	0	0	**3**	
0430 - 0445	0	7	1	0	0	0	0	0	0	0	0	0	0	**8**	
0445 - 0500	0	0	0	0	0	0	0	0	1	0	0	0	0	**1**	**15**
0500 - 0515	0	6	1	0	0	0	0	0	0	0	0	0	0	**7**	
0515 - 0530	0	7	0	0	0	0	0	0	0	0	0	0	0	**7**	
0530 - 0545	0	10	1	0	1	0	0	0	0	0	0	0	0	**12**	
0545 - 0600	0	12	1	0	0	0	0	0	0	0	0	0	0	**13**	**39**
0600 - 0615	0	17	3	0	2	0	0	0	0	0	0	0	0	**22**	
0615 - 0630	0	13	2	0	1	2	0	0	0	0	0	0	0	**18**	
0630 - 0645	0	30	13	0	0	0	0	0	0	0	0	0	0	**43**	
0645 - 0700	0	32	6	0	6	1	0	1	1	0	0	0	0	**47**	**130**
0700 - 0715	0	45	12	1	1	0	0	0	0	0	0	0	0	**59**	
0715 - 0730	0	68	18	0	2	1	0	0	0	0	0	0	0	**89**	
0730 - 0745	0	80	21	0	4	1	0	0	1	0	0	0	0	**107**	
0745 - 0800	1	78	21	0	3	0	0	0	1	0	0	0	0	**104**	**359**
0800 - 0815	0	57	15	0	0	0	0	0	0	0	0	0	0	**72**	
0815 - 0830	0	66	22	0	1	0	0	0	1	0	0	0	0	**90**	
0830 - 0845	0	47	16	0	0	0	0	1	0	0	0	0	0	**64**	
0845 - 0900	0	55	20	0	0	0	0	0	0	0	0	0	0	**75**	**301**
0900 - 0915	0	52	12	0	2	0	0	0	1	0	0	0	0	**67**	
0915 - 0930	0	42	11	0	3	0	0	0	3	0	0	0	0	**59**	
0930 - 0945	0	58	18	0	2	0	0	0	0	0	0	0	0	**78**	
0945 - 1000	0	58	22	0	1	0	1	1	0	0	0	0	0	**83**	**287**
1000 - 1015	0	63	21	1	1	0	0	0	1	0	0	0	0	**87**	
1015 - 1030	0	51	19	0	3	0	0	0	1	0	0	0	0	**74**	
1030 - 1045	0	64	21	0	1	0	0	0	0	0	0	0	0	**86**	
1045 - 1100	0	68	27	0	2	1	0	0	0	0	0	0	0	**98**	**345**
1100 - 1115	0	53	19	0	1	1	0	0	0	0	0	0	0	**74**	
1115 - 1130	0	74	17	0	1	0	0	1	0	0	0	0	0	**93**	
1130 - 1145	0	62	13	0	0	2	1	0	0	0	0	0	0	**78**	
1145 - 1200	0	86	20	0	0	0	0	0	1	0	0	0	0	**107**	**352**
1200 - 1215	0	63	22	0	2	0	0	0	2	0	0	0	0	**89**	
1215 - 1230	0	83	20	1	1	0	0	0	0	0	0	0	0	**105**	
1230 - 1245	0	85	19	1	2	0	0	0	1	0	0	0	0	**108**	
1245 - 1300	0	100	11	0	3	0	0	2	1	0	0	0	0	**117**	**419**
1300 - 1315	0	106	15	1	0	0	0	0	0	0	0	0	0	**122**	
1315 - 1330	0	94	24	0	2	0	0	0	1	0	0	0	0	**121**	
1330 - 1345	0	103	20	0	3	0	0	0	0	0	0	0	0	**126**	
1345 - 1400	0	97	18	0	2	0	0	1	2	0	0	0	0	**120**	**489**
1400 - 1415	0	108	21	0	4	0	0	0	0	1	0	0	0	**134**	
1415 - 1430	0	130	24	1	2	0	0	1	1	0	0	0	0	**159**	
1430 - 1445	1	112	20	1	1	0	0	1	2	0	0	0	0	**138**	
1445 - 1500	0	105	17	3	2	0	0	1	0	0	0	0	0	**128**	**559**
1500 - 1515	2	156	23	2	3	0	0	1	3	0	0	0	0	**190**	
1515 - 1530	0	154	28	0	0	0	0	0	1	0	0	0	0	**183**	
1530 - 1545	0	151	39	3	3	0	0	0	0	0	0	0	0	**196**	
1545 - 1600	0	170	41	0	1	0	0	0	1	0	0	0	0	**213**	**782**
1600 - 1615	0	204	55	0	3	0	0	0	0	0	0	0	0	**262**	
1615 - 1630	1	208	44	0	8	0	0	0	0	0	0	0	0	**261**	
1630 - 1645	0	224	45	0	0	0	0	1	0	0	0	0	0	**270**	
1645 - 1700	0	225	34	0	2	0	0	0	0	0	0	0	0	**261**	**1054**
1700 - 1715	0	200	37	0	0	0	0	0	0	0	0	0	0	**237**	
1715 - 1730	0	183	32	0	1	0	0	0	0	0	0	0	0	**216**	
1730 - 1745	0	185	40	0	1	0	0	0	0	0	0	0	0	**226**	
1745 - 1800	0	180	37	0	1	0	0	0	0	0	0	0	0	**218**	**897**
1800 - 1815	0	124	26	0	1	0	0	0	1	0	0	0	0	**152**	
1815 - 1830	0	112	25	0	3	0	0	0	0	0	0	0	0	**140**	
1830 - 1845	1	104	18	0	1	0	0	0	0	0	0	0	0	**124**	
1845 - 1900	0	68	20	0	1	0	0	0	0	0	0	0	0	**89**	**505**
1900 - 1915	0	58	10	0	1	0	0	0	0	0	0	0	0	**69**	
1915 - 1930	0	85	13	0	1	0	1	0	0	0	0	0	0	**100**	
1930 - 1945	0	70	11	0	1	0	0	1	0	0	0	0	0	**83**	
1945 - 2000	1	89	17	0	0	0	0	0	1	0	0	0	0	**108**	**360**
2000 - 2015	0	68	10	0	0	0	0	0	1	0	0	0	0	**79**	
2015 - 2030	0	78	16	0	1	0	0	0	0	0	0	0	0	**95**	
2030 - 2045	0	69	12	0	2	0	0	0	1	0	0	0	0	**84**	
2045 - 2100	0	57	9	0	1	0	0	0	1	0	0	0	0	**68**	**326**
2100 - 2115	0	48	7	0	2	0	0	0	0	0	0	0	0	**57**	
2115 - 2130	0	40	9	0	0	0	0	0	0	0	0	0	0	**49**	
2130 - 2145	0	23	3	0	0	0	0	0	1	0	0	0	0	**27**	
2145 - 2200	0	39	8	0	0	0	0	0	0	0	0	0	0	**47**	**180**
2200 - 2215	0	36	7	0	1	0	0	0	0	0	0	0	0	**44**	
2215 - 2230	0	55	15	0	1	0	0	0	0	0	0	0	0	**71**	
2230 - 2245	0	52	14	0	0	0	0	0	0	0	0	0	0	**66**	
2245 - 2300	0	23	5	0	0	0	0	0	0	0	0	0	0	**28**	**209**
2300 - 2315	0	23	6	0	0	0	0	0	0	0	0	0	0	**29**	
2315 - 2330	0	21	4	0	0	0	0	0	0	0	0	0	0	**25**	
2330 - 2345	0	17	2	0	0	0	0	0	0	0	0	0	0	**19**	
2345 - 0000	0	12	0	0	0	0	0	0	0	0	0	0	0	**12**	**85**

Session Total	7	6222	1359	15	119	11	3	13	33	1	0	0	0	**7783**
Session Average	0.07	64.81	14.16	0.16	1.24	0.11	0.03	0.14	0.34	0.01	0.00	0.00	0.00	**81.07**
Session Percentage	0.09	79.94	17.46	0.19	1.53	0.14	0.04	0.17	0.42	0.01	0.00	0.00	0.00	

AM Peak Hour	0700 - 0800	0715 - 0815	0945 - 1045	0615 - 0715	0645 - 0745	0600 - 0700	0900 - 1000	0600 - 0700	0830 - 0930	-	-	-	-	**0730 - 0830**
AM Peak Hour Volume	1	283	83	1	13	3	1	1	4	0	0	0	0	**373**

Noon Peak Hour	1415 - 1515	1445 - 1545	1445 - 1545	1445 - 1545	1315 - 1415	1045 - 1145	1045 - 1145	1415 - 1515	1415 - 1515	1315 - 1415	-	-	-	**1445 - 1545**
Noon Peak Hour Volume	3	566	107	8	11	4	1	4	6	1	0	0	0	**697**

PM Peak Hour	1500 - 1600	1600 - 1700	1545 - 1645	1500 - 1600	1530 - 1630	-	1830 - 1930	1500 - 1600	1500 - 1600	-	-	-	-	**1600 - 1700**
PM Peak Hour Volume	2	861	185	5	15	0	1	1	5	0	0	0	0	**1054**

Site 5
I-26 E/Bound On-Ramp,
east of US-76

Date
Thursday, April 25, 2024

Lat/Long
34.029304°, -81.101953°

Weather
Fair
67°F

Click here for Detailed Weather

0000 - 2400 (Weekday 24h Session) (04-25-2024)
NB EB 15min

	Eastbound (Movement 5.1)													15min	60min
TIME	1	2	3	4	5	6	7	8	9	10	11	12	13	Total	Total
0000 - 0015	0	5	1	0	2	0	0	0	1	0	0	0	0	**9**	
0015 - 0030	0	9	2	0	0	0	0	0	0	0	0	0	0	**11**	
0030 - 0045	0	7	1	0	3	0	0	0	0	0	0	0	0	**11**	
0045 - 0100	0	5	1	0	2	0	0	0	0	0	0	0	0	**8**	**39**
0100 - 0115	0	8	1	0	0	0	0	0	0	0	0	0	0	**9**	
0115 - 0130	0	9	0	0	1	0	0	0	0	0	0	0	0	**10**	
0130 - 0145	0	6	1	0	2	0	0	0	0	0	0	0	0	**9**	
0145 - 0200	0	2	2	0	0	0	0	0	1	0	0	0	0	**5**	**33**
0200 - 0215	0	4	1	0	2	0	0	0	0	0	0	0	0	**7**	
0215 - 0230	0	4	0	0	4	0	0	0	0	0	0	0	0	**8**	
0230 - 0245	0	2	0	0	2	0	0	0	0	0	0	0	0	**4**	
0245 - 0300	0	6	1	0	2	0	0	0	1	0	0	0	0	**10**	**29**
0300 - 0315	0	2	1	0	1	0	0	0	0	0	0	0	0	**4**	
0315 - 0330	0	7	2	0	0	0	0	0	0	0	0	0	0	**9**	
0330 - 0345	0	1	0	0	0	0	0	0	0	0	0	0	0	**1**	
0345 - 0400	0	3	1	0	1	0	0	0	1	0	0	0	0	**6**	**20**
0400 - 0415	0	2	1	0	0	0	0	0	0	0	0	0	0	**3**	
0415 - 0430	0	4	1	0	1	0	0	0	0	0	0	0	0	**6**	
0430 - 0445	0	7	1	0	0	0	0	0	1	0	0	0	0	**9**	
0445 - 0500	0	5	2	0	1	0	0	0	1	0	0	0	0	**9**	**27**
0500 - 0515	0	4	1	0	0	0	0	0	0	0	0	0	0	**5**	
0515 - 0530	0	5	1	0	0	0	0	0	0	0	0	0	0	**6**	
0530 - 0545	0	15	4	1	0	0	0	0	0	0	0	0	0	**20**	
0545 - 0600	0	20	3	0	0	0	0	0	0	0	0	0	0	**23**	**54**
0600 - 0615	0	17	3	0	1	0	0	0	0	0	0	0	0	**21**	
0615 - 0630	0	16	5	0	4	0	0	0	0	0	0	0	0	**25**	
0630 - 0645	0	35	7	0	0	0	0	0	0	0	0	0	0	**42**	
0645 - 0700	0	28	9	0	2	0	0	0	0	0	0	0	0	**39**	**127**
0700 - 0715	0	49	6	1	4	1	1	1	1	0	0	0	0	**64**	
0715 - 0730	0	59	11	1	3	0	0	0	0	0	0	0	0	**74**	
0730 - 0745	1	63	10	0	0	0	0	1	0	2	0	0	0	**77**	
0745 - 0800	0	82	17	0	0	0	0	0	0	0	0	0	0	**99**	**314**
0800 - 0815	0	66	7	0	0	0	0	1	0	0	0	0	0	**74**	
0815 - 0830	0	51	18	0	1	0	0	0	1	0	0	0	0	**71**	
0830 - 0845	0	60	21	0	1	0	0	0	0	0	0	0	0	**82**	
0845 - 0900	0	62	19	0	0	0	0	1	1	0	0	0	0	**83**	**310**
0900 - 0915	0	46	12	0	0	0	0	0	5	0	0	0	0	**63**	
0915 - 0930	0	50	17	0	2	0	0	0	0	2	0	0	0	**71**	
0930 - 0945	0	63	17	0	0	0	0	0	0	0	0	0	0	**80**	
0945 - 1000	0	63	18	1	2	0	0	1	2	0	0	0	0	**87**	**301**
1000 - 1015	0	72	16	0	0	2	0	0	1	0	0	0	0	**91**	
1015 - 1030	0	56	11	0	0	0	0	1	1	0	0	0	0	**69**	
1030 - 1045	0	58	13	1	5	0	0	1	2	0	0	0	0	**80**	
1045 - 1100	0	61	17	0	1	1	0	0	1	0	0	0	0	**81**	**321**
1100 - 1115	0	68	12	1	4	0	0	0	0	0	0	0	0	**85**	
1115 - 1130	0	77	22	1	1	0	0	0	1	0	0	0	0	**102**	
1130 - 1145	0	90	17	0	1	0	0	0	0	0	0	0	0	**108**	
1145 - 1200	0	78	21	1	2	0	0	0	0	0	0	0	0	**102**	**397**
1200 - 1215	0	73	28	1	3	0	0	0	0	0	0	0	0	**105**	
1215 - 1230	0	80	29	0	0	0	0	0	0	0	0	0	0	**109**	
1230 - 1245	0	93	18	0	0	0	0	0	1	0	0	0	0	**112**	
1245 - 1300	0	99	27	4	1	0	0	0	1	0	0	0	0	**132**	**458**
1300 - 1315	1	83	21	3	2	0	0	1	0	0	0	0	0	**111**	
1315 - 1330	0	105	17	0	2	0	1	0	2	0	0	0	0	**127**	
1330 - 1345	0	97	13	1	4	2	1	0	1	0	0	0	0	**119**	
1345 - 1400	0	94	20	0	2	0	0	1	0	0	0	0	0	**117**	**474**
1400 - 1415	0	104	27	0	1	0	0	1	0	0	0	0	0	**133**	
1415 - 1430	0	115	19	0	1	0	0	0	0	0	0	0	0	**135**	
1430 - 1445	0	116	26	0	2	1	0	2	1	0	0	0	0	**148**	
1445 - 1500	0	141	32	0	1	0	0	1	0	0	0	0	0	**175**	**591**
1500 - 1515	0	160	25	3	3	0	0	1	0	0	0	0	0	**192**	
1515 - 1530	0	170	23	3	1	0	0	1	0	0	0	0	0	**198**	
1530 - 1545	0	167	29	0	3	1	0	0	0	0	0	0	0	**200**	
1545 - 1600	1	182	34	0	2	0	0	0	0	0	0	0	0	**219**	**809**
1600 - 1615	0	201	26	1	5	0	0	0	0	0	0	0	0	**233**	
1615 - 1630	0	203	46	0	2	0	0	0	0	0	0	0	0	**251**	
1630 - 1645	0	205	53	0	3	0	0	0	1	0	0	0	0	**262**	
1645 - 1700	0	249	41	0	1	0	1	0	0	0	0	0	0	**292**	**1038**
1700 - 1715	0	197	34	0	0	0	0	0	0	0	0	0	0	**231**	
1715 - 1730	0	203	19	0	0	0	0	0	1	0	0	0	0	**223**	
1730 - 1745	0	175	34	0	0	1	0	0	0	0	0	0	0	**210**	
1745 - 1800	0	176	29	0	0	0	0	0	2	0	0	0	0	**207**	**871**
1800 - 1815	0	119	28	0	0	0	0	0	0	0	0	0	0	**147**	
1815 - 1830	1	103	22	0	1	0	0	0	0	0	0	0	0	**127**	
1830 - 1845	0	93	14	0	0	0	0	0	0	0	0	0	0	**107**	
1845 - 1900	0	72	17	0	1	0	0	0	0	0	0	0	0	**90**	**471**
1900 - 1915	0	69	13	0	1	0	0	0	0	0	0	0	0	**83**	
1915 - 1930	0	58	13	0	0	0	0	0	0	0	0	0	0	**71**	
1930 - 1945	0	73	7	0	0	0	0	0	0	0	0	0	0	**80**	
1945 - 2000	0	66	3	0	1	0	0	0	0	0	0	0	0	**70**	**304**
2000 - 2015	0	54	13	0	0	0	0	0	0	0	0	0	0	**67**	
2015 - 2030	0	45	4	0	0	0	0	0	0	0	0	0	0	**49**	
2030 - 2045	0	63	7	0	0	0	0	0	0	0	0	0	0	**70**	
2045 - 2100	0	56	8	0	1	0	0	0	0	0	0	0	0	**65**	**251**
2100 - 2115	0	47	6	0	1	0	0	0	0	0	0	0	0	**54**	
2115 - 2130	0	34	5	0	0	0	0	0	1	0	0	0	0	**40**	
2130 - 2145	0	33	2	0	0	0	0	0	0	0	0	0	0	**35**	
2145 - 2200	0	43	3	0	0	0	0	0	0	0	0	0	0	**46**	**175**
2200 - 2215	0	24	6	0	0	0	0	0	0	0	0	0	0	**30**	
2215 - 2230	0	75	5	0	0	0	0	0	0	0	0	0	0	**80**	
2230 - 2245	0	45	2	0	0	0	0	0	0	0	0	0	0	**47**	
2245 - 2300	0	12	3	0	0	0	0	0	0	0	0	0	0	**15**	**172**
2300 - 2315	0	26	2	0	0	0	0	0	0	0	0	0	0	**28**	
2315 - 2330	0	16	3	0	2	0	0	0	0	0	0	0	0	**21**	
2330 - 2345	0	20	1	0	1	0	0	0	0	0	0	0	0	**22**	
2345 - 0000	0	9	0	0	1	0	0	0	0	0	0	0	0	**10**	**81**

Session Total	4	6255	1212	24	107	9	4	15	33	4	0	0	0	**7667**
Session Average	0.04	65.16	12.63	0.25	1.11	0.09	0.04	0.16	0.34	0.04	0.00	0.00	0.00	**79.86**
Session Percentage	0.05	81.58	15.81	0.31	1.40	0.12	0.05	0.20	0.43	0.05	0.00	0.00	0.00	

AM Peak Hour	0645 - 0745	0715 - 0815	0815 - 0915	0630 - 0730	0615 - 0715	0915 - 1015	0615 - 0715	0945 - 1045	0815 - 0915	0645 - 0745	-	-	-	**0915 - 1015**
AM Peak Hour Volume	1	270	70	2	10	2	1	3	7	2	0	0	0	**329**

Noon Peak Hour	1215 - 1315	1445 - 1545	1445 - 1545	1245 - 1345	1030 - 1130	1000 - 1100	1245 - 1345	1430 - 1530	1000 - 1100	-	-	-	-	**1445 - 1545**
Noon Peak Hour Volume	1	638	109	8	11	3	2	5	5	0	0	0	0	**765**

PM Peak Hour	1500 - 1600	1600 - 1700	1615 - 1715	1500 - 1600	1530 - 1630	1500 - 1600	1600 - 1700	1500 - 1600	1700 - 1800	-	-	-	-	**1600 - 1700**
PM Peak Hour Volume	1	858	174	6	12	1	1	2	3	0	0	0	0	**1038**

Site 5
I-26 E/Bound On-Ramp,
east of US-76

Date
Friday, April 26, 2024

Lat/Long
34.029304°, -81.101953°

Weather
Cloudy
69°F

Click here for Detailed Weather

0000 - 2400 (Weekday 24h Session) (04-26-2024)
NB EB 15min

	Eastbound (Movement 5.1)													15min	60min
TIME	1	2	3	4	5	6	7	8	9	10	11	12	13	Total	Total
0000 - 0015	0	5	3	0	3	2	0	0	0	0	0	0	0	**13**	
0015 - 0030	0	4	1	0	2	0	0	0	0	0	0	0	0	**7**	
0030 - 0045	0	3	2	0	1	1	0	0	0	0	0	0	0	**7**	
0045 - 0100	0	2	1	0	0	0	0	0	0	0	0	0	0	**3**	**30**
0100 - 0115	0	0	0	0	1	0	0	0	0	0	0	0	0	**1**	
0115 - 0130	0	4	2	0	1	2	0	0	0	0	0	0	0	**9**	
0130 - 0145	0	3	1	0	1	0	0	0	0	0	0	0	0	**5**	
0145 - 0200	0	4	1	0	2	0	0	0	0	0	0	0	0	**7**	**22**
0200 - 0215	0	4	1	0	2	1	0	0	0	0	0	0	0	**8**	
0215 - 0230	0	2	1	0	1	2	0	0	0	0	0	0	0	**6**	
0230 - 0245	0	3	1	0	0	0	0	0	0	0	0	0	0	**4**	
0245 - 0300	0	2	2	0	0	0	0	0	0	0	0	0	0	**4**	**22**
0300 - 0315	0	3	2	0	2	0	0	0	0	0	0	0	0	**7**	
0315 - 0330	0	1	0	0	1	0	0	0	0	0	0	0	0	**2**	
0330 - 0345	0	3	0	0	0	0	0	0	0	0	0	0	0	**3**	
0345 - 0400	0	1	1	0	0	0	0	0	0	0	0	0	0	**2**	**14**
0400 - 0415	0	2	2	0	1	1	0	1	0	0	0	0	0	**7**	
0415 - 0430	0	2	1	0	0	1	0	0	0	0	0	0	0	**4**	
0430 - 0445	0	4	1	0	0	0	0	0	0	0	0	0	0	**5**	
0445 - 0500	0	3	3	0	1	0	0	0	0	0	0	0	0	**7**	**23**
0500 - 0515	0	6	2	0	0	1	0	0	0	0	0	0	0	**9**	
0515 - 0530	0	3	2	0	0	0	0	0	0	0	0	0	0	**5**	
0530 - 0545	0	9	2	0	0	0	0	0	0	0	0	0	0	**11**	
0545 - 0600	0	5	2	0	1	0	0	0	0	0	0	0	0	**8**	**33**
0600 - 0615	0	13	6	0	2	0	0	0	0	0	0	0	0	**21**	
0615 - 0630	0	23	4	0	1	0	0	0	0	0	0	0	0	**28**	
0630 - 0645	0	19	9	0	1	0	0	0	0	0	0	0	0	**29**	
0645 - 0700	0	29	12	0	0	3	0	0	0	0	0	0	0	**44**	**122**
0700 - 0715	0	37	6	1	4	0	0	0	0	0	0	0	0	**48**	
0715 - 0730	0	67	9	0	5	2	0	0	0	0	0	0	0	**83**	
0730 - 0745	0	59	10	0	1	0	0	0	0	0	0	0	0	**70**	
0745 - 0800	1	62	16	0	2	0	0	0	1	0	0	0	0	**82**	**283**
0800 - 0815	0	77	10	0	1	0	0	0	0	0	0	0	0	**88**	
0815 - 0830	0	60	16	0	2	0	0	0	1	0	0	0	0	**79**	
0830 - 0845	0	51	12	1	0	0	0	1	0	0	0	0	0	**65**	
0845 - 0900	0	49	16	0	1	0	0	1	0	0	0	0	0	**67**	**299**
0900 - 0915	0	37	19	0	4	0	0	0	0	0	0	0	0	**60**	
0915 - 0930	0	51	14	1	1	0	0	0	0	0	0	0	0	**67**	
0930 - 0945	0	63	13	0	3	1	0	0	2	0	0	0	0	**82**	
0945 - 1000	0	38	9	0	1	1	0	0	1	0	0	0	0	**50**	**259**
1000 - 1015	0	67	22	0	5	0	0	0	0	0	0	0	0	**94**	
1015 - 1030	0	66	12	0	3	0	0	0	1	0	0	0	0	**82**	
1030 - 1045	0	64	6	1	1	0	0	0	0	0	0	0	0	**72**	
1045 - 1100	0	68	18	0	6	1	0	0	1	0	0	0	0	**94**	**342**
1100 - 1115	0	97	14	2	5	1	0	0	0	0	0	0	0	**119**	
1115 - 1130	0	114	25	2	3	0	0	0	0	0	0	0	0	**144**	
1130 - 1145	0	87	28	0	3	1	0	0	1	0	0	0	0	**120**	
1145 - 1200	0	81	14	0	2	0	0	0	1	0	0	0	0	**98**	**481**
1200 - 1215	0	102	23	0	0	0	0	1	0	1	0	0	0	**127**	
1215 - 1230	0	120	30	5	0	0	0	0	0	0	0	0	0	**155**	
1230 - 1245	1	121	24	4	2	0	1	0	0	0	0	0	0	**153**	
1245 - 1300	0	117	35	0	3	1	0	2	0	0	0	0	0	**158**	**593**
1300 - 1315	0	98	25	3	2	0	0	1	0	0	0	0	0	**129**	
1315 - 1330	0	130	22	0	0	0	0	0	1	0	0	0	0	**153**	
1330 - 1345	0	115	28	5	2	0	0	0	0	0	0	0	0	**150**	
1345 - 1400	0	92	29	0	1	0	0	0	0	0	0	0	0	**122**	**554**
1400 - 1415	0	124	31	0	1	0	0	0	0	0	0	0	0	**156**	
1415 - 1430	0	102	19	1	3	1	0	0	0	0	0	0	0	**126**	
1430 - 1445	0	146	27	1	2	1	0	1	1	0	0	0	0	**179**	
1445 - 1500	0	125	22	0	1	0	0	0	2	0	0	0	0	**150**	**611**
1500 - 1515	0	132	29	1	0	0	0	0	0	0	0	0	0	**162**	
1515 - 1530	0	120	25	0	1	0	0	0	0	0	0	0	0	**146**	
1530 - 1545	0	158	31	0	1	0	0	0	2	0	0	0	0	**192**	
1545 - 1600	1	140	32	0	0	0	0	0	0	0	0	0	0	**173**	**673**
1600 - 1615	0	160	41	0	1	0	0	0	0	0	0	0	0	**202**	
1615 - 1630	0	185	45	0	2	1	0	0	2	0	0	0	0	**235**	
1630 - 1645	0	155	39	0	0	0	0	0	0	0	0	0	0	**194**	
1645 - 1700	3	182	33	0	0	0	0	0	1	0	0	0	0	**219**	**850**
1700 - 1715	0	190	28	0	1	0	0	0	1	0	0	0	0	**220**	
1715 - 1730	0	165	25	0	2	0	0	0	2	0	0	0	0	**194**	
1730 - 1745	0	145	26	0	1	0	0	0	1	0	0	0	0	**173**	
1745 - 1800	0	120	19	0	2	0	0	0	0	0	0	0	0	**141**	**728**
1800 - 1815	0	97	13	0	0	0	0	0	0	0	0	0	0	**110**	
1815 - 1830	0	95	12	0	1	0	0	0	0	0	0	0	0	**108**	
1830 - 1845	0	71	9	0	0	0	0	0	0	0	0	0	0	**80**	
1845 - 1900	0	56	10	0	0	0	0	0	0	0	0	0	0	**66**	**364**
1900 - 1915	2	67	14	0	1	0	0	0	0	0	0	0	0	**84**	
1915 - 1930	0	64	11	0	1	0	0	0	0	0	0	0	0	**76**	
1930 - 1945	0	58	9	0	0	0	0	0	0	0	0	0	0	**67**	
1945 - 2000	0	55	7	0	0	0	0	0	0	0	0	0	0	**62**	**289**
2000 - 2015	0	55	8	0	0	0	0	0	0	0	0	0	0	**63**	
2015 - 2030	0	54	7	0	0	0	0	0	0	0	0	0	0	**61**	
2030 - 2045	0	43	6	0	0	0	0	0	0	0	0	0	0	**49**	
2045 - 2100	0	51	9	0	0	0	0	0	0	0	0	0	0	**60**	**233**
2100 - 2115	0	54	5	0	0	0	0	0	0	0	0	0	0	**59**	
2115 - 2130	0	66	8	0	0	0	0	0	1	0	0	0	0	**75**	
2130 - 2145	0	62	7	0	0	0	0	0	0	0	0	0	0	**69**	
2145 - 2200	0	69	11	0	0	0	0	0	0	0	0	0	0	**80**	**283**
2200 - 2215	0	52	7	0	0	0	0	0	0	0	0	0	0	**59**	
2215 - 2230	0	43	5	0	1	0	0	0	0	0	0	0	0	**49**	
2230 - 2245	0	55	6	0	0	0	0	0	0	0	0	0	0	**61**	
2245 - 2300	0	99	18	0	0	0	0	0	0	0	0	0	0	**117**	**286**
2300 - 2315	0	85	7	0	0	0	0	0	0	0	0	0	0	**92**	
2315 - 2330	0	28	3	0	0	0	0	0	0	0	0	0	0	**31**	
2330 - 2345	1	24	2	0	0	0	0	0	0	0	0	0	0	**27**	
2345 - 0000	0	21	3	0	0	0	0	0	0	0	0	0	0	**24**	**174**

Session Total	9	6125	1239	28	109	25	1	8	23	1	0	0	0	**7568**
Session Average	0.09	63.80	12.91	0.29	1.14	0.26	0.01	0.08	0.24	0.01	0.00	0.00	0.00	**78.83**
Session Percentage	0.12	80.93	16.37	0.37	1.44	0.33	0.01	0.11	0.30	0.01	0.00	0.00	0.00	

AM Peak Hour	0700 - 0800	0715 - 0815	0815 - 0915	0830 - 0930	0700 - 0800	0630 - 0730	-	0800 - 0900	0930 - 1030	-	-	-	-	**0715 - 0815**
AM Peak Hour Volume	1	265	63	2	12	5	0	2	4	0	0	0	0	**323**

Noon Peak Hour	1145 - 1245	1445 - 1545	1215 - 1315	1215 - 1315	1045 - 1145	1045 - 1145	1145 - 1245	1200 - 1300	1445 - 1545	1115 - 1215	-	-	-	**1445 - 1545**
Noon Peak Hour Volume	1	535	114	12	17	3	1	3	4	1	0	0	0	**650**

PM Peak Hour	1600 - 1700	1615 - 1715	1600 - 1700	1500 - 1600	1700 - 1800	1530 - 1630	-	-	1645 - 1745	-	-	-	-	**1615 - 1715**
PM Peak Hour Volume	3	712	158	1	6	1	0	0	5	0	0	0	0	**868**

Site 5
I-26 E/Bound On-Ramp,
east of US-76

Date
Saturday, April 27, 2024

Lat/Long
34.029304°, -81.101953°

Weather
Mostly Cloudy
69°F

Click here for Detailed Weather

0000 - 2400 (Saturday 24h Session) (04-27-2024)
NB EB 15min

	Eastbound (Movement 5.1)													15min	60min
TIME	1	2	3	4	5	6	7	8	9	10	11	12	13	Total	Total
0000 - 0015	0	15	3	0	0	0	0	0	0	0	0	0	0	**18**	
0015 - 0030	0	20	3	0	1	0	0	0	0	0	0	0	0	**24**	
0030 - 0045	0	8	2	0	1	0	0	0	0	0	0	0	0	**11**	
0045 - 0100	0	14	2	0	1	0	0	0	0	0	0	0	0	**17**	**70**
0100 - 0115	0	8	1	0	0	0	0	0	0	0	0	0	0	**9**	
0115 - 0130	1	5	1	0	0	0	0	0	0	0	0	0	0	**7**	
0130 - 0145	0	18	3	0	0	0	0	0	0	0	0	0	0	**21**	
0145 - 0200	0	10	1	0	0	0	0	0	0	0	0	0	0	**11**	**48**
0200 - 0215	0	8	1	0	0	0	0	0	0	0	0	0	0	**9**	
0215 - 0230	0	15	2	0	0	0	0	0	0	0	0	0	0	**17**	
0230 - 0245	0	10	1	0	0	0	0	0	0	0	0	0	0	**11**	
0245 - 0300	0	14	2	0	0	0	0	0	0	0	0	0	0	**16**	**53**
0300 - 0315	0	5	0	0	0	0	0	0	0	0	0	0	0	**5**	
0315 - 0330	0	4	1	0	0	0	0	0	0	0	0	0	0	**5**	
0330 - 0345	0	3	0	0	0	0	0	0	0	0	0	0	0	**3**	
0345 - 0400	0	2	0	0	0	0	0	0	0	0	0	0	0	**2**	**15**
0400 - 0415	0	1	0	0	0	0	0	0	0	0	0	0	0	**1**	
0415 - 0430	0	4	0	0	0	0	0	0	0	0	0	0	0	**4**	
0430 - 0445	0	2	0	0	1	0	0	0	0	0	0	0	0	**3**	
0445 - 0500	0	2	0	0	1	0	0	0	0	0	0	0	0	**3**	**11**
0500 - 0515	0	6	1	0	1	0	0	0	0	0	0	0	0	**8**	
0515 - 0530	0	5	0	0	0	0	0	0	0	0	0	0	0	**5**	
0530 - 0545	0	8	1	0	0	0	0	0	0	0	0	0	0	**9**	
0545 - 0600	0	7	1	0	1	0	0	0	0	0	0	0	0	**9**	**31**
0600 - 0615	0	13	2	0	0	0	0	0	0	0	0	0	0	**15**	
0615 - 0630	0	7	1	0	0	0	0	0	0	0	0	0	0	**8**	
0630 - 0645	0	9	3	0	1	0	0	0	0	0	0	0	0	**13**	
0645 - 0700	0	13	2	0	0	0	0	0	0	0	0	0	0	**15**	**51**
0700 - 0715	0	19	1	0	0	0	0	0	0	0	0	0	0	**20**	
0715 - 0730	0	31	4	0	1	0	0	0	1	0	0	0	0	**37**	
0730 - 0745	0	27	1	0	0	0	0	0	0	0	0	0	0	**28**	
0745 - 0800	0	27	6	0	0	0	0	0	0	0	0	0	0	**33**	**118**
0800 - 0815	0	19	3	0	1	0	0	0	0	0	0	0	0	**23**	
0815 - 0830	0	21	4	0	0	0	0	0	1	0	0	0	0	**26**	
0830 - 0845	0	26	3	0	0	0	0	0	0	0	0	0	0	**29**	
0845 - 0900	0	32	5	0	1	0	0	0	0	0	0	0	0	**38**	**116**
0900 - 0915	0	30	11	0	0	0	0	0	0	0	0	0	0	**41**	
0915 - 0930	0	39	11	0	1	0	0	0	0	0	0	0	0	**51**	
0930 - 0945	0	44	1	0	0	0	0	0	1	0	0	0	0	**46**	
0945 - 1000	0	39	9	0	0	0	0	0	1	0	0	0	0	**49**	**187**
1000 - 1015	0	41	6	0	1	0	0	1	0	0	0	0	0	**49**	
1015 - 1030	0	38	6	1	1	0	0	0	0	0	0	0	0	**46**	
1030 - 1045	1	53	10	0	0	0	0	0	0	0	0	0	0	**64**	
1045 - 1100	0	61	13	0	1	0	0	0	0	0	0	0	0	**75**	**234**
1100 - 1115	0	66	5	0	0	0	0	0	0	0	0	0	0	**71**	
1115 - 1130	0	69	9	0	0	0	0	0	0	0	0	0	0	**78**	
1130 - 1145	0	56	9	0	0	0	0	0	0	0	0	0	0	**65**	
1145 - 1200	0	78	9	0	1	0	0	0	0	0	0	0	0	**88**	**302**
1200 - 1215	0	81	11	0	1	0	0	0	0	0	0	0	0	**93**	
1215 - 1230	0	61	16	0	0	0	0	0	0	0	0	0	0	**77**	
1230 - 1245	0	64	10	0	1	0	0	1	0	0	0	0	0	**76**	
1245 - 1300	1	63	13	0	1	0	0	0	0	0	0	0	0	**78**	**324**
1300 - 1315	0	69	10	0	1	0	0	0	0	0	0	0	0	**80**	
1315 - 1330	0	81	15	0	1	0	0	0	0	0	0	0	0	**97**	
1330 - 1345	1	87	20	0	2	0	0	0	0	0	0	0	0	**110**	
1345 - 1400	0	82	20	0	1	0	0	0	0	0	0	0	0	**103**	**390**
1400 - 1415	0	69	6	0	0	0	0	0	0	0	0	0	0	**75**	
1415 - 1430	1	85	27	1	0	0	0	0	0	0	0	0	0	**114**	
1430 - 1445	0	73	10	0	0	0	0	0	1	0	0	0	0	**84**	
1445 - 1500	0	70	9	0	0	0	0	0	0	0	0	0	0	**79**	**352**
1500 - 1515	0	71	17	0	0	0	0	0	0	0	0	0	0	**88**	
1515 - 1530	0	86	10	0	0	0	0	0	0	0	0	0	0	**96**	
1530 - 1545	0	101	11	0	0	0	0	0	0	0	0	0	0	**112**	
1545 - 1600	0	103	20	0	0	0	0	0	0	0	0	0	0	**123**	**419**
1600 - 1615	0	85	12	0	0	0	0	0	1	0	0	0	0	**98**	
1615 - 1630	0	71	11	0	1	0	0	0	0	0	0	0	0	**83**	
1630 - 1645	0	74	8	0	0	0	0	0	0	0	0	0	0	**82**	
1645 - 1700	0	66	9	0	0	0	0	0	0	0	0	0	0	**75**	**338**
1700 - 1715	0	54	9	0	0	0	0	0	0	0	0	0	0	**63**	
1715 - 1730	0	90	8	0	1	0	0	0	0	0	0	0	0	**99**	
1730 - 1745	0	57	9	0	0	0	0	0	0	0	0	0	0	**66**	
1745 - 1800	0	46	16	0	0	0	0	0	0	0	0	0	0	**62**	**290**
1800 - 1815	0	87	14	0	2	0	0	0	0	0	0	0	0	**103**	
1815 - 1830	0	80	9	0	0	0	0	0	1	0	0	0	0	**90**	
1830 - 1845	0	47	4	0	0	0	0	0	1	0	0	0	0	**52**	
1845 - 1900	0	50	9	0	1	0	0	0	0	0	0	0	0	**60**	**305**
1900 - 1915	0	50	6	0	0	0	0	0	0	0	0	0	0	**56**	
1915 - 1930	0	62	4	0	0	0	0	0	0	0	0	0	0	**66**	
1930 - 1945	0	66	14	0	0	0	0	0	0	0	0	0	0	**80**	
1945 - 2000	0	80	9	0	0	0	0	0	0	0	0	0	0	**89**	**291**
2000 - 2015	0	57	12	0	0	0	0	0	0	0	0	0	0	**69**	
2015 - 2030	0	41	6	0	1	0	0	0	0	0	0	0	0	**48**	
2030 - 2045	0	34	8	0	1	0	0	0	0	0	0	0	0	**43**	
2045 - 2100	0	37	16	0	0	0	0	0	0	0	0	0	0	**53**	**213**
2100 - 2115	1	39	14	0	1	0	0	0	0	0	0	0	0	**55**	
2115 - 2130	0	86	19	0	0	0	0	0	0	0	0	0	0	**105**	
2130 - 2145	0	72	26	0	0	0	0	0	0	0	0	0	0	**98**	
2145 - 2200	0	43	11	0	0	0	0	0	0	0	0	0	0	**54**	**312**
2200 - 2215	0	49	15	0	0	0	0	0	0	0	0	0	0	**64**	
2215 - 2230	0	63	19	0	0	0	0	0	0	0	0	0	0	**82**	
2230 - 2245	0	43	17	0	0	0	0	0	0	0	0	0	0	**60**	
2245 - 2300	0	18	9	0	0	0	0	0	0	0	0	0	0	**27**	**233**
2300 - 2315	0	27	11	0	0	0	0	0	0	0	0	0	0	**38**	
2315 - 2330	0	19	7	0	0	0	0	0	0	0	0	0	0	**26**	
2330 - 2345	0	18	6	0	0	0	0	0	0	0	0	0	0	**24**	
2345 - 0000	0	18	7	0	0	0	0	0	0	0	0	0	0	**25**	**113**

Session Total	6	4027	739	2	32	0	0	2	8	0	0	0	0	**4816**
Session Average	0.06	41.95	7.70	0.02	0.33	0.00	0.00	0.02	0.08	0.00	0.00	0.00	0.00	**50.17**
Session Percentage	0.12	83.62	15.34	0.04	0.66	0.00	0.00	0.04	0.17	0.00	0.00	0.00	0.00	

AM Peak Hour	0945 - 1045	0945 - 1045	0900 - 1000	0930 - 1030	0500 - 0600	-	-	0915 - 1015	0900 - 1000	-	-	-	-	**0945 - 1045**
AM Peak Hour Volume	1	171	32	1	2	0	0	1	2	0	0	0	0	**208**

Noon Peak Hour	1245 - 1345	1445 - 1545	1330 - 1430	1000 - 1100	1245 - 1345	-	-	1000 - 1100	1345 - 1445	-	-	-	-	**1330 - 1430**
Noon Peak Hour Volume	2	328	73	1	5	0	0	1	1	0	0	0	0	**402**

PM Peak Hour	-	1515 - 1615	1500 - 1600	-	1715 - 1815	-	-	-	1745 - 1845	-	-	-	-	**1515 - 1615**
PM Peak Hour Volume	0	375	58	0	3	0	0	0	2	0	0	0	0	**429**

Bi-Directional Class Count || NB EB Average 15min

Columbia, SC

Marr Traffic DATA COLLECTION
www.marrtraffic.com

Site 5
I-26 E/Bound On-Ramp,
east of US-76

Date
Sunday, April 21, 2024

Lat/Long
34.029304°, -81.101953°

Weather
Cloudy
66°F

0000 - 2400 (Weekday 24h Session) (All Dates)
NB EB Average 15min

	NB EB Average 15min													15min	60min
Time	1	2	3	4	5	6	7	8	9	10	11	12	13	Total	Total
0000 - 0015	0	10	2	0	1	1	0	0	0	0	0	0	0	**14**	
0015 - 0030	0	11	1	0	1	0	0	0	0	0	0	0	0	**13**	
0030 - 0045	0	7	1	0	1	0	0	0	0	0	0	0	0	**9**	
0045 - 0100	0	7	1	0	1	0	0	0	0	0	0	0	0	**8**	**44**
0100 - 0115	0	6	0	0	1	0	0	0	0	0	0	0	0	**7**	
0115 - 0130	0	7	1	0	1	0	0	0	0	0	0	0	0	**8**	
0130 - 0145	0	8	1	0	1	0	0	0	0	0	0	0	0	**9**	
0145 - 0200	0	5	1	0	0	0	0	0	0	0	0	0	0	**6**	**31**
0200 - 0215	0	6	1	0	1	0	0	0	0	0	0	0	0	**7**	
0215 - 0230	0	5	1	0	1	0	0	0	0	0	0	0	0	**7**	
0230 - 0245	0	4	0	0	0	0	0	0	0	0	0	0	0	**5**	
0245 - 0300	0	5	1	0	0	0	0	0	0	0	0	0	0	**7**	**26**
0300 - 0315	0	3	1	0	0	0	0	0	0	0	0	0	0	**4**	
0315 - 0330	0	3	0	0	0	0	0	0	0	0	0	0	0	**4**	
0330 - 0345	0	3	0	0	0	0	0	0	0	0	0	0	0	**3**	
0345 - 0400	0	2	0	0	0	0	0	0	0	0	0	0	0	**3**	**13**
0400 - 0415	0	3	0	0	0	0	0	0	0	0	0	0	0	**3**	
0415 - 0430	0	3	1	0	0	0	0	0	0	0	0	0	0	**4**	
0430 - 0445	0	5	1	0	0	0	0	0	0	0	0	0	0	**6**	
0445 - 0500	0	3	1	0	0	0	0	0	0	0	0	0	0	**5**	**18**
0500 - 0515	0	5	1	0	0	0	0	0	0	0	0	0	0	**6**	
0515 - 0530	0	6	1	0	0	0	0	0	0	0	0	0	0	**7**	
0530 - 0545	0	10	2	0	0	0	0	0	0	0	0	0	0	**12**	
0545 - 0600	0	11	2	0	1	0	0	0	0	0	0	0	0	**13**	**37**
0600 - 0615	0	14	3	0	1	0	0	0	0	0	0	0	0	**18**	
0615 - 0630	0	16	3	0	1	0	0	0	0	0	0	0	0	**20**	
0630 - 0645	0	24	7	0	1	0	0	0	0	0	0	0	0	**32**	
0645 - 0700	0	25	5	0	2	1	0	0	0	0	0	0	0	**33**	**103**
0700 - 0715	0	36	5	1	2	0	0	0	0	0	0	0	0	**45**	
0715 - 0730	0	53	10	0	3	1	0	0	0	0	0	0	0	**66**	
0730 - 0745	0	54	11	0	1	0	0	0	0	0	0	0	0	**67**	
0745 - 0800	0	59	12	0	1	0	0	0	0	0	0	0	0	**74**	**251**
0800 - 0815	0	50	8	0	1	0	0	0	0	0	0	0	0	**60**	
0815 - 0830	0	50	14	0	1	0	0	0	1	0	0	0	0	**65**	
0830 - 0845	0	46	12	0	1	0	0	0	0	0	0	0	0	**59**	
0845 - 0900	0	48	13	0	1	0	0	1	0	0	0	0	0	**63**	**247**
0900 - 0915	0	42	11	0	2	0	0	0	1	0	0	0	0	**56**	
0915 - 0930	0	44	10	0	1	0	0	0	1	0	0	0	0	**58**	
0930 - 0945	0	55	11	0	1	1	0	0	1	0	0	0	0	**70**	
0945 - 1000	0	49	12	0	1	0	0	0	1	0	0	0	0	**64**	**247**
1000 - 1015	0	58	14	0	1	0	0	0	0	0	0	0	0	**75**	
1015 - 1030	0	54	13	0	2	0	0	0	1	0	0	0	0	**70**	
1030 - 1045	0	59	14	0	1	0	0	0	0	0	0	0	0	**75**	
1045 - 1100	0	60	16	0	2	0	0	0	0	0	0	0	0	**78**	**299**
1100 - 1115	0	69	12	0	2	0	0	0	0	0	0	0	0	**84**	
1115 - 1130	0	76	16	1	1	0	0	0	0	0	0	0	0	**94**	
1130 - 1145	0	72	16	0	1	0	0	0	1	0	0	0	0	**91**	
1145 - 1200	0	81	16	0	1	0	0	0	0	0	0	0	0	**99**	**368**
1200 - 1215	0	78	18	0	1	0	0	0	1	0	0	0	0	**98**	
1215 - 1230	0	77	21	1	1	0	0	0	0	0	0	0	0	**100**	
1230 - 1245	0	87	17	1	1	0	0	0	1	0	0	0	0	**108**	
1245 - 1300	0	85	19	1	2	0	0	1	0	0	0	0	0	**108**	**414**
1300 - 1315	0	85	16	1	1	1	0	0	0	0	0	0	0	**106**	
1315 - 1330	0	93	18	0	1	0	0	0	1	0	0	0	0	**113**	
1330 - 1345	0	90	18	1	2	0	0	0	0	0	0	0	0	**113**	
1345 - 1400	0	83	19	0	1	0	0	0	1	0	0	0	0	**104**	**436**
1400 - 1415	0	96	18	0	1	0	0	0	0	0	0	0	0	**116**	
1415 - 1430	0	102	21	1	1	0	0	0	0	0	0	0	0	**126**	
1430 - 1445	0	106	21	1	2	0	0	1	1	0	0	0	0	**132**	
1445 - 1500	0	104	21	1	1	0	0	0	0	0	0	0	0	**128**	**501**
1500 - 1515	0	120	22	1	2	0	0	1	0	0	0	0	0	**146**	
1515 - 1530	0	120	21	1	1	0	0	0	0	0	0	0	0	**143**	
1530 - 1545	0	135	26	0	1	0	0	0	1	0	0	0	0	**164**	
1545 - 1600	0	140	30	0	1	0	0	0	0	0	0	0	0	**172**	**625**
1600 - 1615	0	155	35	0	2	0	0	0	0	0	0	0	0	**192**	
1615 - 1630	0	167	32	0	3	0	0	0	0	0	0	0	0	**202**	
1630 - 1645	0	161	33	0	1	0	0	0	0	0	0	0	0	**196**	
1645 - 1700	1	175	28	0	1	0	0	0	0	0	0	0	0	**205**	**796**
1700 - 1715	0	157	26	0	1	0	0	0	0	0	0	0	0	**185**	
1715 - 1730	0	163	24	0	1	0	0	0	1	0	0	0	0	**188**	
1730 - 1745	0	143	29	0	0	0	0	0	1	0	0	0	0	**174**	
1745 - 1800	0	121	27	0	1	0	0	0	0	0	0	0	0	**148**	**696**
1800 - 1815	0	104	23	0	1	0	0	0	0	0	0	0	0	**128**	
1815 - 1830	0	92	18	0	1	0	0	0	0	0	0	0	0	**111**	
1830 - 1845	0	73	11	0	0	0	0	0	0	0	0	0	0	**85**	
1845 - 1900	0	63	11	0	0	0	0	0	0	0	0	0	0	**75**	**399**
1900 - 1915	0	60	11	0	0	0	0	0	0	0	0	0	0	**72**	
1915 - 1930	0	63	10	0	0	0	0	0	0	0	0	0	0	**73**	
1930 - 1945	0	62	9	0	0	0	0	0	0	0	0	0	0	**71**	
1945 - 2000	0	68	10	0	0	0	0	0	0	0	0	0	0	**79**	**295**
2000 - 2015	0	52	10	0	0	0	0	0	0	0	0	0	0	**62**	
2015 - 2030	0	46	7	0	0	0	0	0	0	0	0	0	0	**54**	
2030 - 2045	0	48	7	0	1	0	0	0	0	0	0	0	0	**56**	
2045 - 2100	0	40	8	0	0	0	0	0	0	0	0	0	0	**49**	**221**
2100 - 2115	0	40	6	0	1	0	0	0	0	0	0	0	0	**48**	
2115 - 2130	0	44	8	0	0	0	0	0	0	0	0	0	0	**53**	
2130 - 2145	0	40	7	0	0	0	0	0	0	0	0	0	0	**47**	
2145 - 2200	0	37	6	0	0	0	0	0	0	0	0	0	0	**44**	**192**
2200 - 2215	0	32	6	0	0	0	0	0	0	0	0	0	0	**39**	
2215 - 2230	0	43	8	0	1	0	0	0	0	0	0	0	0	**51**	
2230 - 2245	0	38	7	0	0	0	0	0	0	0	0	0	0	**45**	
2245 - 2300	0	28	6	0	0	0	0	0	0	0	0	0	0	**34**	**169**
2300 - 2315	0	30	5	0	0	0	0	0	0	0	0	0	0	**35**	
2315 - 2330	0	18	3	0	1	0	0	0	0	0	0	0	0	**23**	
2330 - 2345	0	16	2	0	0	0	0	0	0	0	0	0	0	**19**	
2345 - 0000	0	11	2	0	0	0	0	0	0	0	0	0	0	**13**	**89**

Session Total	5	5319	1043	15	81	14	2	10	25	1	0	0	0	**6514**
Session Average	0.06	55.40	10.86	0.16	0.85	0.14	0.02	0.10	0.26	0.01	0.00	0.00	0.00	**67.86**
Session Percentage	0.08	81.64	16.01	0.23	1.25	0.21	0.02	0.15	0.38	0.02	0.00	0.00	0.00	

AM Peak Hour	0700 - 0800	0945 - 1045	0945 - 1045	0915 - 1015	0645 - 0745	0645 - 0745	0615 - 0715	0800 - 0900	0900 - 1000	0645 - 0745	-	-	-	**0945 - 1045**
AM Peak Volume	0	220	52	1	7	2	0	1	4	0	0	0	0	**284**

Noon Peak Hour	1230 - 1330	1445 - 1545	1445 - 1545	1245 - 1345	1015 - 1115	1045 - 1145	1230 - 1330	1430 - 1530	1415 - 1515	1115 - 1215	-	-	-	**1445 - 1545**
Noon Peak Volume	1	478	91	4	7	2	0	2	2	0	0	0	0	**580**

PM Peak Hour	1615 - 1715	1615 - 1715	1545 - 1645	1500 - 1600	1545 - 1645	1500 - 1600	1600 - 1700	1500 - 1600	1645 - 1745	1600 - 1700	-	-	-	**1600 - 1700**
PM Peak Volume	1	660	130	2	7	1	0	1	2	0	0	0	0	**796**

Bi-Directional Class Count || Volume Summary 15min

Columbia, SC

Marr Traffic DATA COLLECTION

www.marrtraffic.com

Site 5
I-26 E/Bound On-Ramp,
east of US-76

Date
Sunday, April 21, 2024

Lat/Long
34.029304°, -81.101953°

Weather
Cloudy
66°F

Click here for Detailed Weather

0000 - 2400 (Sunday 24h Session) (04-21-2024)

Volume Summary 15min

	Volume Summary 15min		15min	60min
TIME	EB	WB	Total	Total
0000 - 0015	32	0	**32**	
0015 - 0030	24	0	**24**	
0030 - 0045	16	0	**16**	
0045 - 0100	15	0	**15**	**87**
0100 - 0115	14	0	**14**	
0115 - 0130	11	0	**11**	
0130 - 0145	16	0	**16**	
0145 - 0200	12	0	**12**	**53**
0200 - 0215	13	0	**13**	
0215 - 0230	5	0	**5**	
0230 - 0245	5	0	**5**	
0245 - 0300	7	0	**7**	**30**
0300 - 0315	2	0	**2**	
0315 - 0330	5	0	**5**	
0330 - 0345	6	0	**6**	
0345 - 0400	2	0	**2**	**15**
0400 - 0415	2	0	**2**	
0415 - 0430	5	0	**5**	
0430 - 0445	7	0	**7**	
0445 - 0500	5	0	**5**	**19**
0500 - 0515	3	0	**3**	
0515 - 0530	3	0	**3**	
0530 - 0545	3	0	**3**	
0545 - 0600	3	0	**3**	**12**
0600 - 0615	10	0	**10**	
0615 - 0630	10	0	**10**	
0630 - 0645	7	0	**7**	
0645 - 0700	6	0	**6**	**33**
0700 - 0715	9	0	**9**	
0715 - 0730	22	0	**22**	
0730 - 0745	30	0	**30**	
0745 - 0800	17	0	**17**	**78**
0800 - 0815	18	0	**18**	
0815 - 0830	21	0	**21**	
0830 - 0845	21	0	**21**	
0845 - 0900	19	0	**19**	**79**
0900 - 0915	29	0	**29**	
0915 - 0930	39	0	**39**	
0930 - 0945	41	0	**41**	
0945 - 1000	54	0	**54**	**163**
1000 - 1015	58	0	**58**	
1015 - 1030	56	0	**56**	
1030 - 1045	56	0	**56**	
1045 - 1100	46	0	**46**	**216**
1100 - 1115	49	0	**49**	
1115 - 1130	42	0	**42**	
1130 - 1145	71	0	**71**	
1145 - 1200	91	0	**91**	**253**

	Volume Summary 15min		15min	60min
Time	EB	WB	Total	Total
1200 - 1215	78	0	**78**	
1215 - 1230	53	0	**53**	
1230 - 1245	97	0	**97**	
1245 - 1300	83	0	**83**	**311**
1300 - 1315	64	0	**64**	
1315 - 1330	61	0	**61**	
1330 - 1345	63	0	**63**	
1345 - 1400	65	0	**65**	**253**
1400 - 1415	80	0	**80**	
1415 - 1430	71	0	**71**	
1430 - 1445	71	0	**71**	
1445 - 1500	66	0	**66**	**288**
1500 - 1515	58	0	**58**	
1515 - 1530	51	0	**51**	
1530 - 1545	50	0	**50**	
1545 - 1600	62	0	**62**	**221**
1600 - 1615	58	0	**58**	
1615 - 1630	65	0	**65**	
1630 - 1645	38	0	**38**	
1645 - 1700	44	0	**44**	**205**
1700 - 1715	50	0	**50**	
1715 - 1730	50	0	**50**	
1730 - 1745	50	0	**50**	
1745 - 1800	43	0	**43**	**193**
1800 - 1815	60	0	**60**	
1815 - 1830	60	0	**60**	
1830 - 1845	43	0	**43**	
1845 - 1900	31	0	**31**	**194**
1900 - 1915	47	0	**47**	
1915 - 1930	48	0	**48**	
1930 - 1945	73	0	**73**	
1945 - 2000	48	0	**48**	**216**
2000 - 2015	39	0	**39**	
2015 - 2030	32	0	**32**	
2030 - 2045	41	0	**41**	
2045 - 2100	21	0	**21**	**133**
2100 - 2115	26	0	**26**	
2115 - 2130	25	0	**25**	
2130 - 2145	24	0	**24**	
2145 - 2200	20	0	**20**	**95**
2200 - 2215	19	0	**19**	
2215 - 2230	7	0	**7**	
2230 - 2245	13	0	**13**	
2245 - 2300	12	0	**12**	**51**
2300 - 2315	15	0	**15**	
2315 - 2330	16	0	**16**	
2330 - 2345	12	0	**12**	
2345 - 0000	7	0	**7**	**50**

Session Total	3248	0	**3248**
Session Average	33.83	0.00	**33.83**
Session Percentage	100.00	0.00	

Site 5
I-26 E/Bound On-Ramp,
east of US-76

Date
Monday, April 22, 2024

Lat/Long
34.029304°, -81.101953°

Weather
Mostly Cloudy
57°F

Click here for Detailed Weather

0000 - 2400 (Weekday 24h Session) (04-22-2024)
Volume Summary 15min

TIME	Volume Summary 15min EB	WB	15min Total	60min Total
0000 - 0015	3	0	**3**	
0015 - 0030	5	0	**5**	
0030 - 0045	4	0	**4**	
0045 - 0100	3	0	**3**	**15**
0100 - 0115	3	0	**3**	
0115 - 0130	3	0	**3**	
0130 - 0145	4	0	**4**	
0145 - 0200	3	0	**3**	**13**
0200 - 0215	5	0	**5**	
0215 - 0230	4	0	**4**	
0230 - 0245	1	0	**1**	
0245 - 0300	4	0	**4**	**14**
0300 - 0315	4	0	**4**	
0315 - 0330	1	0	**1**	
0330 - 0345	1	0	**1**	
0345 - 0400	2	0	**2**	**8**
0400 - 0415	2	0	**2**	
0415 - 0430	5	0	**5**	
0430 - 0445	1	0	**1**	
0445 - 0500	4	0	**4**	**12**
0500 - 0515	8	0	**8**	
0515 - 0530	8	0	**8**	
0530 - 0545	16	0	**16**	
0545 - 0600	18	0	**18**	**50**
0600 - 0615	18	0	**18**	
0615 - 0630	24	0	**24**	
0630 - 0645	46	0	**46**	
0645 - 0700	36	0	**36**	**124**
0700 - 0715	62	0	**62**	
0715 - 0730	74	0	**74**	
0730 - 0745	82	0	**82**	
0745 - 0800	90	0	**90**	**308**
0800 - 0815	68	0	**68**	
0815 - 0830	84	0	**84**	
0830 - 0845	73	0	**73**	
0845 - 0900	75	0	**75**	**300**
0900 - 0915	62	0	**62**	
0915 - 0930	56	0	**56**	
0930 - 0945	76	0	**76**	
0945 - 1000	61	0	**61**	**255**
1000 - 1015	71	0	**71**	
1015 - 1030	81	0	**81**	
1030 - 1045	80	0	**80**	
1045 - 1100	82	0	**82**	**314**
1100 - 1115	96	0	**96**	
1115 - 1130	97	0	**97**	
1130 - 1145	98	0	**98**	
1145 - 1200	102	0	**102**	**393**

Time	Volume Summary 15min EB	WB	15min Total	60min Total
1200 - 1215	92	0	**92**	
1215 - 1230	94	0	**94**	
1230 - 1245	114	0	**114**	
1245 - 1300	88	0	**88**	**388**
1300 - 1315	113	0	**113**	
1315 - 1330	106	0	**106**	
1330 - 1345	117	0	**117**	
1345 - 1400	98	0	**98**	**434**
1400 - 1415	113	0	**113**	
1415 - 1430	143	0	**143**	
1430 - 1445	146	0	**146**	
1445 - 1500	138	0	**138**	**540**
1500 - 1515	163	0	**163**	
1515 - 1530	167	0	**167**	
1530 - 1545	194	0	**194**	
1545 - 1600	210	0	**210**	**734**
1600 - 1615	243	0	**243**	
1615 - 1630	246	0	**246**	
1630 - 1645	233	0	**233**	
1645 - 1700	272	0	**272**	**994**
1700 - 1715	226	0	**226**	
1715 - 1730	253	0	**253**	
1730 - 1745	247	0	**247**	
1745 - 1800	185	0	**185**	**911**
1800 - 1815	148	0	**148**	
1815 - 1830	131	0	**131**	
1830 - 1845	83	0	**83**	
1845 - 1900	100	0	**100**	**462**
1900 - 1915	89	0	**89**	
1915 - 1930	77	0	**77**	
1930 - 1945	44	0	**44**	
1945 - 2000	103	0	**103**	**313**
2000 - 2015	55	0	**55**	
2015 - 2030	34	0	**34**	
2030 - 2045	50	0	**50**	
2045 - 2100	48	0	**48**	**187**
2100 - 2115	43	0	**43**	
2115 - 2130	41	0	**41**	
2130 - 2145	36	0	**36**	
2145 - 2200	33	0	**33**	**153**
2200 - 2215	31	0	**31**	
2215 - 2230	17	0	**17**	
2230 - 2245	36	0	**36**	
2245 - 2300	29	0	**29**	**113**
2300 - 2315	22	0	**22**	
2315 - 2330	18	0	**18**	
2330 - 2345	18	0	**18**	
2345 - 0000	11	0	**11**	**69**

Session Total	7104	0	**7104**
Session Average	74.00	0.00	**74.00**
Session Percentage	100.00	0.00	

Site 5
I-26 E/Bound On-Ramp,
east of US-76

Date
Tuesday, April 23, 2024

Lat/Long
34.029304°, -81.101953°

Weather
Fair
58°F

Click here for Detailed Weather

0000 - 2400 (Weekday 24h Session) (04-23-2024)
Volume Summary 15min

TIME	Volume Summary 15min EB	WB	15min Total	60min Total
0000 - 0015	11	0	**11**	
0015 - 0030	11	0	**11**	
0030 - 0045	8	0	**8**	
0045 - 0100	5	0	**5**	**35**
0100 - 0115	6	0	**6**	
0115 - 0130	7	0	**7**	
0130 - 0145	4	0	**4**	
0145 - 0200	3	0	**3**	**20**
0200 - 0215	4	0	**4**	
0215 - 0230	2	0	**2**	
0230 - 0245	6	0	**6**	
0245 - 0300	5	0	**5**	**17**
0300 - 0315	0	0	**0**	
0315 - 0330	2	0	**2**	
0330 - 0345	4	0	**4**	
0345 - 0400	1	0	**1**	**7**
0400 - 0415	6	0	**6**	
0415 - 0430	2	0	**2**	
0430 - 0445	6	0	**6**	
0445 - 0500	5	0	**5**	**19**
0500 - 0515	2	0	**2**	
0515 - 0530	12	0	**12**	
0530 - 0545	11	0	**11**	
0545 - 0600	16	0	**16**	**41**
0600 - 0615	21	0	**21**	
0615 - 0630	25	0	**25**	
0630 - 0645	42	0	**42**	
0645 - 0700	44	0	**44**	**132**
0700 - 0715	51	0	**51**	
0715 - 0730	82	0	**82**	
0730 - 0745	74	0	**74**	
0745 - 0800	90	0	**90**	**297**
0800 - 0815	78	0	**78**	
0815 - 0830	85	0	**85**	
0830 - 0845	81	0	**81**	
0845 - 0900	82	0	**82**	**326**
0900 - 0915	67	0	**67**	
0915 - 0930	60	0	**60**	
0930 - 0945	86	0	**86**	
0945 - 1000	62	0	**62**	**275**
1000 - 1015	77	0	**77**	
1015 - 1030	83	0	**83**	
1030 - 1045	87	0	**87**	
1045 - 1100	72	0	**72**	**319**
1100 - 1115	91	0	**91**	
1115 - 1130	102	0	**102**	
1130 - 1145	97	0	**97**	
1145 - 1200	106	0	**106**	**396**

Time	Volume Summary 15min EB	WB	15min Total	60min Total
1200 - 1215	103	0	**103**	
1215 - 1230	109	0	**109**	
1230 - 1245	97	0	**97**	
1245 - 1300	99	0	**99**	**408**
1300 - 1315	121	0	**121**	
1315 - 1330	129	0	**129**	
1330 - 1345	103	0	**103**	
1345 - 1400	103	0	**103**	**456**
1400 - 1415	120	0	**120**	
1415 - 1430	132	0	**132**	
1430 - 1445	156	0	**156**	
1445 - 1500	157	0	**157**	**565**
1500 - 1515	167	0	**167**	
1515 - 1530	162	0	**162**	
1530 - 1545	203	0	**203**	
1545 - 1600	203	0	**203**	**735**
1600 - 1615	249	0	**249**	
1615 - 1630	275	0	**275**	
1630 - 1645	293	0	**293**	
1645 - 1700	273	0	**273**	**1090**
1700 - 1715	267	0	**267**	
1715 - 1730	281	0	**281**	
1730 - 1745	249	0	**249**	
1745 - 1800	183	0	**183**	**980**
1800 - 1815	173	0	**173**	
1815 - 1830	121	0	**121**	
1830 - 1845	108	0	**108**	
1845 - 1900	87	0	**87**	**489**
1900 - 1915	74	0	**74**	
1915 - 1930	76	0	**76**	
1930 - 1945	70	0	**70**	
1945 - 2000	70	0	**70**	**290**
2000 - 2015	62	0	**62**	
2015 - 2030	58	0	**58**	
2030 - 2045	56	0	**56**	
2045 - 2100	26	0	**26**	**202**
2100 - 2115	42	0	**42**	
2115 - 2130	34	0	**34**	
2130 - 2145	42	0	**42**	
2145 - 2200	26	0	**26**	**144**
2200 - 2215	23	0	**23**	
2215 - 2230	53	0	**53**	
2230 - 2245	32	0	**32**	
2245 - 2300	13	0	**13**	**121**
2300 - 2315	18	0	**18**	
2315 - 2330	21	0	**21**	
2330 - 2345	8	0	**8**	
2345 - 0000	3	0	**3**	**50**

Session Total	7414	0	**7414**
Session Average	77.23	0.00	**77.23**
Session Percentage	100.00	0.00	

Site 5
I-26 E/Bound On-Ramp,
east of US-76

Date
Wednesday, April 24, 2024

Lat/Long
34.029304°, -81.101953°

Weather
Fair
66°F

Click here for Detailed Weather

0000 - 2400 (Weekday 24h Session) (04-24-2024)
Volume Summary 15min

TIME	Volume Summary 15min EB	WB	15min Total	60min Total
0000 - 0015	12	0	**12**	
0015 - 0030	9	0	**9**	
0030 - 0045	8	0	**8**	
0045 - 0100	6	0	**6**	**35**
0100 - 0115	8	0	**8**	
0115 - 0130	10	0	**10**	
0130 - 0145	4	0	**4**	
0145 - 0200	4	0	**4**	**26**
0200 - 0215	3	0	**3**	
0215 - 0230	10	0	**10**	
0230 - 0245	1	0	**1**	
0245 - 0300	2	0	**2**	**16**
0300 - 0315	3	0	**3**	
0315 - 0330	3	0	**3**	
0330 - 0345	4	0	**4**	
0345 - 0400	3	0	**3**	**13**
0400 - 0415	3	0	**3**	
0415 - 0430	3	0	**3**	
0430 - 0445	8	0	**8**	
0445 - 0500	1	0	**1**	**15**
0500 - 0515	7	0	**7**	
0515 - 0530	7	0	**7**	
0530 - 0545	12	0	**12**	
0545 - 0600	13	0	**13**	**39**
0600 - 0615	22	0	**22**	
0615 - 0630	18	0	**18**	
0630 - 0645	43	0	**43**	
0645 - 0700	47	0	**47**	**130**
0700 - 0715	59	0	**59**	
0715 - 0730	89	0	**89**	
0730 - 0745	107	0	**107**	
0745 - 0800	104	0	**104**	**359**
0800 - 0815	72	0	**72**	
0815 - 0830	90	0	**90**	
0830 - 0845	64	0	**64**	
0845 - 0900	75	0	**75**	**301**
0900 - 0915	67	0	**67**	
0915 - 0930	59	0	**59**	
0930 - 0945	78	0	**78**	
0945 - 1000	83	0	**83**	**287**
1000 - 1015	87	0	**87**	
1015 - 1030	74	0	**74**	
1030 - 1045	86	0	**86**	
1045 - 1100	98	0	**98**	**345**
1100 - 1115	74	0	**74**	
1115 - 1130	93	0	**93**	
1130 - 1145	78	0	**78**	
1145 - 1200	107	0	**107**	**352**

Time	Volume Summary 15min EB	WB	15min Total	60min Total
1200 - 1215	89	0	**89**	
1215 - 1230	105	0	**105**	
1230 - 1245	108	0	**108**	
1245 - 1300	117	0	**117**	**419**
1300 - 1315	122	0	**122**	
1315 - 1330	121	0	**121**	
1330 - 1345	126	0	**126**	
1345 - 1400	120	0	**120**	**489**
1400 - 1415	134	0	**134**	
1415 - 1430	159	0	**159**	
1430 - 1445	138	0	**138**	
1445 - 1500	128	0	**128**	**559**
1500 - 1515	190	0	**190**	
1515 - 1530	183	0	**183**	
1530 - 1545	196	0	**196**	
1545 - 1600	213	0	**213**	**782**
1600 - 1615	262	0	**262**	
1615 - 1630	261	0	**261**	
1630 - 1645	270	0	**270**	
1645 - 1700	261	0	**261**	**1054**
1700 - 1715	237	0	**237**	
1715 - 1730	216	0	**216**	
1730 - 1745	226	0	**226**	
1745 - 1800	218	0	**218**	**897**
1800 - 1815	152	0	**152**	
1815 - 1830	140	0	**140**	
1830 - 1845	124	0	**124**	
1845 - 1900	89	0	**89**	**505**
1900 - 1915	69	0	**69**	
1915 - 1930	100	0	**100**	
1930 - 1945	83	0	**83**	
1945 - 2000	108	0	**108**	**360**
2000 - 2015	79	0	**79**	
2015 - 2030	95	0	**95**	
2030 - 2045	84	0	**84**	
2045 - 2100	68	0	**68**	**326**
2100 - 2115	57	0	**57**	
2115 - 2130	49	0	**49**	
2130 - 2145	27	0	**27**	
2145 - 2200	47	0	**47**	**180**
2200 - 2215	44	0	**44**	
2215 - 2230	71	0	**71**	
2230 - 2245	66	0	**66**	
2245 - 2300	28	0	**28**	**209**
2300 - 2315	29	0	**29**	
2315 - 2330	25	0	**25**	
2330 - 2345	19	0	**19**	
2345 - 0000	12	0	**12**	**85**

Session Total	7783	0	**7783**
Session Average	81.07	0.00	**81.07**
Session Percentage	100.00	0.00	

Site 5
I-26 E/Bound On-Ramp,
east of US-76

Date
Thursday, April 25, 2024

Lat/Long
34.029304°, -81.101953°

Weather
Fair
67°F

Click here for Detailed Weather

0000 - 2400 (Weekday 24h Session) (04-25-2024)
Volume Summary 15min

TIME	Volume Summary 15min EB	WB	15min Total	60min Total
0000 - 0015	9	0	**9**	
0015 - 0030	11	0	**11**	
0030 - 0045	11	0	**11**	
0045 - 0100	8	0	**8**	**39**
0100 - 0115	9	0	**9**	
0115 - 0130	10	0	**10**	
0130 - 0145	9	0	**9**	
0145 - 0200	5	0	**5**	**33**
0200 - 0215	7	0	**7**	
0215 - 0230	8	0	**8**	
0230 - 0245	4	0	**4**	
0245 - 0300	10	0	**10**	**29**
0300 - 0315	4	0	**4**	
0315 - 0330	9	0	**9**	
0330 - 0345	1	0	**1**	
0345 - 0400	6	0	**6**	**20**
0400 - 0415	3	0	**3**	
0415 - 0430	6	0	**6**	
0430 - 0445	9	0	**9**	
0445 - 0500	9	0	**9**	**27**
0500 - 0515	5	0	**5**	
0515 - 0530	6	0	**6**	
0530 - 0545	20	0	**20**	
0545 - 0600	23	0	**23**	**54**
0600 - 0615	21	0	**21**	
0615 - 0630	25	0	**25**	
0630 - 0645	42	0	**42**	
0645 - 0700	39	0	**39**	**127**
0700 - 0715	64	0	**64**	
0715 - 0730	74	0	**74**	
0730 - 0745	77	0	**77**	
0745 - 0800	99	0	**99**	**314**
0800 - 0815	74	0	**74**	
0815 - 0830	71	0	**71**	
0830 - 0845	82	0	**82**	
0845 - 0900	83	0	**83**	**310**
0900 - 0915	63	0	**63**	
0915 - 0930	71	0	**71**	
0930 - 0945	80	0	**80**	
0945 - 1000	87	0	**87**	**301**
1000 - 1015	91	0	**91**	
1015 - 1030	69	0	**69**	
1030 - 1045	80	0	**80**	
1045 - 1100	81	0	**81**	**321**
1100 - 1115	85	0	**85**	
1115 - 1130	102	0	**102**	
1130 - 1145	108	0	**108**	
1145 - 1200	102	0	**102**	**397**

Time	Volume Summary 15min EB	WB	15min Total	60min Total
1200 - 1215	105	0	**105**	
1215 - 1230	109	0	**109**	
1230 - 1245	112	0	**112**	
1245 - 1300	132	0	**132**	**458**
1300 - 1315	111	0	**111**	
1315 - 1330	127	0	**127**	
1330 - 1345	119	0	**119**	
1345 - 1400	117	0	**117**	**474**
1400 - 1415	133	0	**133**	
1415 - 1430	135	0	**135**	
1430 - 1445	148	0	**148**	
1445 - 1500	175	0	**175**	**591**
1500 - 1515	192	0	**192**	
1515 - 1530	198	0	**198**	
1530 - 1545	200	0	**200**	
1545 - 1600	219	0	**219**	**809**
1600 - 1615	233	0	**233**	
1615 - 1630	251	0	**251**	
1630 - 1645	262	0	**262**	
1645 - 1700	292	0	**292**	**1038**
1700 - 1715	231	0	**231**	
1715 - 1730	223	0	**223**	
1730 - 1745	210	0	**210**	
1745 - 1800	207	0	**207**	**871**
1800 - 1815	147	0	**147**	
1815 - 1830	127	0	**127**	
1830 - 1845	107	0	**107**	
1845 - 1900	90	0	**90**	**471**
1900 - 1915	83	0	**83**	
1915 - 1930	71	0	**71**	
1930 - 1945	80	0	**80**	
1945 - 2000	70	0	**70**	**304**
2000 - 2015	67	0	**67**	
2015 - 2030	49	0	**49**	
2030 - 2045	70	0	**70**	
2045 - 2100	65	0	**65**	**251**
2100 - 2115	54	0	**54**	
2115 - 2130	40	0	**40**	
2130 - 2145	35	0	**35**	
2145 - 2200	46	0	**46**	**175**
2200 - 2215	30	0	**30**	
2215 - 2230	80	0	**80**	
2230 - 2245	47	0	**47**	
2245 - 2300	15	0	**15**	**172**
2300 - 2315	28	0	**28**	
2315 - 2330	21	0	**21**	
2330 - 2345	22	0	**22**	
2345 - 0000	10	0	**10**	**81**

Session Total	7667	0	**7667**
Session Average	79.86	0.00	**79.86**
Session Percentage	100.00	0.00	

Site 5
I-26 E/Bound On-Ramp,
east of US-76

Date
Friday, April 26, 2024

Lat/Long
34.029304°, -81.101953°

Weather
Cloudy
69°F

Click here for Detailed Weather

0000 - 2400 (Weekday 24h Session) (04-26-2024)
Volume Summary 15min

TIME	Volume Summary 15min EB	Volume Summary 15min WB	15min Total	60min Total
0000 - 0015	13	0	**13**	
0015 - 0030	7	0	**7**	
0030 - 0045	7	0	**7**	
0045 - 0100	3	0	**3**	**30**
0100 - 0115	1	0	**1**	
0115 - 0130	9	0	**9**	
0130 - 0145	5	0	**5**	
0145 - 0200	7	0	**7**	**22**
0200 - 0215	8	0	**8**	
0215 - 0230	6	0	**6**	
0230 - 0245	4	0	**4**	
0245 - 0300	4	0	**4**	**22**
0300 - 0315	7	0	**7**	
0315 - 0330	2	0	**2**	
0330 - 0345	3	0	**3**	
0345 - 0400	2	0	**2**	**14**
0400 - 0415	7	0	**7**	
0415 - 0430	4	0	**4**	
0430 - 0445	5	0	**5**	
0445 - 0500	7	0	**7**	**23**
0500 - 0515	9	0	**9**	
0515 - 0530	5	0	**5**	
0530 - 0545	11	0	**11**	
0545 - 0600	8	0	**8**	**33**
0600 - 0615	21	0	**21**	
0615 - 0630	28	0	**28**	
0630 - 0645	29	0	**29**	
0645 - 0700	44	0	**44**	**122**
0700 - 0715	48	0	**48**	
0715 - 0730	83	0	**83**	
0730 - 0745	70	0	**70**	
0745 - 0800	82	0	**82**	**283**
0800 - 0815	88	0	**88**	
0815 - 0830	79	0	**79**	
0830 - 0845	65	0	**65**	
0845 - 0900	67	0	**67**	**299**
0900 - 0915	60	0	**60**	
0915 - 0930	67	0	**67**	
0930 - 0945	82	0	**82**	
0945 - 1000	50	0	**50**	**259**
1000 - 1015	94	0	**94**	
1015 - 1030	82	0	**82**	
1030 - 1045	72	0	**72**	
1045 - 1100	94	0	**94**	**342**
1100 - 1115	119	0	**119**	
1115 - 1130	144	0	**144**	
1130 - 1145	120	0	**120**	
1145 - 1200	98	0	**98**	**481**

Time	Volume Summary 15min EB	Volume Summary 15min WB	15min Total	60min Total
1200 - 1215	127	0	**127**	
1215 - 1230	155	0	**155**	
1230 - 1245	153	0	**153**	
1245 - 1300	158	0	**158**	**593**
1300 - 1315	129	0	**129**	
1315 - 1330	153	0	**153**	
1330 - 1345	150	0	**150**	
1345 - 1400	122	0	**122**	**554**
1400 - 1415	156	0	**156**	
1415 - 1430	126	0	**126**	
1430 - 1445	179	0	**179**	
1445 - 1500	150	0	**150**	**611**
1500 - 1515	162	0	**162**	
1515 - 1530	146	0	**146**	
1530 - 1545	192	0	**192**	
1545 - 1600	173	0	**173**	**673**
1600 - 1615	202	0	**202**	
1615 - 1630	235	0	**235**	
1630 - 1645	194	0	**194**	
1645 - 1700	219	0	**219**	**850**
1700 - 1715	220	0	**220**	
1715 - 1730	194	0	**194**	
1730 - 1745	173	0	**173**	
1745 - 1800	141	0	**141**	**728**
1800 - 1815	110	0	**110**	
1815 - 1830	108	0	**108**	
1830 - 1845	80	0	**80**	
1845 - 1900	66	0	**66**	**364**
1900 - 1915	84	0	**84**	
1915 - 1930	76	0	**76**	
1930 - 1945	67	0	**67**	
1945 - 2000	62	0	**62**	**289**
2000 - 2015	63	0	**63**	
2015 - 2030	61	0	**61**	
2030 - 2045	49	0	**49**	
2045 - 2100	60	0	**60**	**233**
2100 - 2115	59	0	**59**	
2115 - 2130	75	0	**75**	
2130 - 2145	69	0	**69**	
2145 - 2200	80	0	**80**	**283**
2200 - 2215	59	0	**59**	
2215 - 2230	49	0	**49**	
2230 - 2245	61	0	**61**	
2245 - 2300	117	0	**117**	**286**
2300 - 2315	92	0	**92**	
2315 - 2330	31	0	**31**	
2330 - 2345	27	0	**27**	
2345 - 0000	24	0	**24**	**174**

Session Total	7568	0	**7568**
Session Average	78.83	0.00	**78.83**
Session Percentage	100.00	0.00	

Site 5
I-26 E/Bound On-Ramp,
east of US-76

Date
Saturday, April 27, 2024

Lat/Long
34.029304°, -81.101953°

Weather
Mostly Cloudy
69°F

Click here for Detailed Weather

0000 - 2400 (Saturday 24h Session) (04-27-2024)
Volume Summary 15min

	Volume Summary 15min		15min	60min
TIME	EB	WB	Total	Total
0000 - 0015	18	0	**18**	
0015 - 0030	24	0	**24**	
0030 - 0045	11	0	**11**	
0045 - 0100	17	0	**17**	**70**
0100 - 0115	9	0	**9**	
0115 - 0130	7	0	**7**	
0130 - 0145	21	0	**21**	
0145 - 0200	11	0	**11**	**48**
0200 - 0215	9	0	**9**	
0215 - 0230	17	0	**17**	
0230 - 0245	11	0	**11**	
0245 - 0300	16	0	**16**	**53**
0300 - 0315	5	0	**5**	
0315 - 0330	5	0	**5**	
0330 - 0345	3	0	**3**	
0345 - 0400	2	0	**2**	**15**
0400 - 0415	1	0	**1**	
0415 - 0430	4	0	**4**	
0430 - 0445	3	0	**3**	
0445 - 0500	3	0	**3**	**11**
0500 - 0515	8	0	**8**	
0515 - 0530	5	0	**5**	
0530 - 0545	9	0	**9**	
0545 - 0600	9	0	**9**	**31**
0600 - 0615	15	0	**15**	
0615 - 0630	8	0	**8**	
0630 - 0645	13	0	**13**	
0645 - 0700	15	0	**15**	**51**
0700 - 0715	20	0	**20**	
0715 - 0730	37	0	**37**	
0730 - 0745	28	0	**28**	
0745 - 0800	33	0	**33**	**118**
0800 - 0815	23	0	**23**	
0815 - 0830	26	0	**26**	
0830 - 0845	29	0	**29**	
0845 - 0900	38	0	**38**	**116**
0900 - 0915	41	0	**41**	
0915 - 0930	51	0	**51**	
0930 - 0945	46	0	**46**	
0945 - 1000	49	0	**49**	**187**
1000 - 1015	49	0	**49**	
1015 - 1030	46	0	**46**	
1030 - 1045	64	0	**64**	
1045 - 1100	75	0	**75**	**234**
1100 - 1115	71	0	**71**	
1115 - 1130	78	0	**78**	
1130 - 1145	65	0	**65**	
1145 - 1200	88	0	**88**	**302**

	Volume Summary 15min		15min	60min
Time	EB	WB	Total	Total
1200 - 1215	93	0	**93**	
1215 - 1230	77	0	**77**	
1230 - 1245	76	0	**76**	
1245 - 1300	78	0	**78**	**324**
1300 - 1315	80	0	**80**	
1315 - 1330	97	0	**97**	
1330 - 1345	110	0	**110**	
1345 - 1400	103	0	**103**	**390**
1400 - 1415	75	0	**75**	
1415 - 1430	114	0	**114**	
1430 - 1445	84	0	**84**	
1445 - 1500	79	0	**79**	**352**
1500 - 1515	88	0	**88**	
1515 - 1530	96	0	**96**	
1530 - 1545	112	0	**112**	
1545 - 1600	123	0	**123**	**419**
1600 - 1615	98	0	**98**	
1615 - 1630	83	0	**83**	
1630 - 1645	82	0	**82**	
1645 - 1700	75	0	**75**	**338**
1700 - 1715	63	0	**63**	
1715 - 1730	99	0	**99**	
1730 - 1745	66	0	**66**	
1745 - 1800	62	0	**62**	**290**
1800 - 1815	103	0	**103**	
1815 - 1830	90	0	**90**	
1830 - 1845	52	0	**52**	
1845 - 1900	60	0	**60**	**305**
1900 - 1915	56	0	**56**	
1915 - 1930	66	0	**66**	
1930 - 1945	80	0	**80**	
1945 - 2000	89	0	**89**	**291**
2000 - 2015	69	0	**69**	
2015 - 2030	48	0	**48**	
2030 - 2045	43	0	**43**	
2045 - 2100	53	0	**53**	**213**
2100 - 2115	55	0	**55**	
2115 - 2130	105	0	**105**	
2130 - 2145	98	0	**98**	
2145 - 2200	54	0	**54**	**312**
2200 - 2215	64	0	**64**	
2215 - 2230	82	0	**82**	
2230 - 2245	60	0	**60**	
2245 - 2300	27	0	**27**	**233**
2300 - 2315	38	0	**38**	
2315 - 2330	26	0	**26**	
2330 - 2345	24	0	**24**	
2345 - 0000	25	0	**25**	**113**

Session Total	4816	0	**4816**
Session Average	50.17	0.00	**50.17**
Session Percentage	100.00	0.00	

Bi-Directional Class Count || NB EB 60min

Columbia, SC

Marr Traffic DATA COLLECTION

www.marrtraffic.com

Site 5
I-26 E/Bound On-Ramp,
east of US-76

Date
Sunday, April 21, 2024

Lat/Long
34.029304°, -81.101953°

Weather
Cloudy
66°F

Click here for Detailed Weather

0000 - 2400 (Sunday 24h Session) (04-21-2024)
NB EB 60min

	Eastbound (Movement 5.1)													
TIME	1	2	3	4	5	6	7	8	9	10	11	12	13	**Total**
0000 - 0100	0	84	3	0	0	0	0	0	0	0	0	0	0	**87**
0100 - 0200	0	52	1	0	0	0	0	0	0	0	0	0	0	**53**
0200 - 0300	0	29	1	0	0	0	0	0	0	0	0	0	0	**30**
0300 - 0400	0	15	0	0	0	0	0	0	0	0	0	0	0	**15**
0400 - 0500	0	18	0	0	1	0	0	0	0	0	0	0	0	**19**
0500 - 0600	0	11	1	0	0	0	0	0	0	0	0	0	0	**12**
0600 - 0700	0	32	1	0	0	0	0	0	0	0	0	0	0	**33**
0700 - 0800	0	70	7	0	1	0	0	0	0	0	0	0	0	**78**
0800 - 0900	0	71	7	0	1	0	0	0	0	0	0	0	0	**79**
0900 - 1000	0	149	11	2	0	0	0	0	1	0	0	0	0	**163**
1000 - 1100	0	191	25	0	0	0	0	0	0	0	0	0	0	**216**
1100 - 1200	0	229	22	0	1	0	0	1	0	0	0	0	0	**253**
1200 - 1300	0	280	29	0	1	0	0	0	1	0	0	0	0	**311**
1300 - 1400	0	219	32	0	0	0	0	0	2	0	0	0	0	**253**
1400 - 1500	0	262	24	0	2	0	0	0	0	0	0	0	0	**288**
1500 - 1600	0	194	26	1	0	0	0	0	0	0	0	0	0	**221**
1600 - 1700	0	186	19	0	0	0	0	0	0	0	0	0	0	**205**
1700 - 1800	0	171	21	0	1	0	0	0	0	0	0	0	0	**193**
1800 - 1900	0	176	16	0	0	0	0	0	2	0	0	0	0	**194**
1900 - 2000	0	195	21	0	0	0	0	0	0	0	0	0	0	**216**
2000 - 2100	0	117	15	0	1	0	0	0	0	0	0	0	0	**133**
2100 - 2200	0	84	11	0	0	0	0	0	0	0	0	0	0	**95**
2200 - 2300	0	43	8	0	0	0	0	0	0	0	0	0	0	**51**
2300 - 2400	0	45	5	0	0	0	0	0	0	0	0	0	0	**50**
Session Total	0	2923	306	3	9	0	0	1	6	0	0	0	0	**3248**
Session Average	0.00	121.79	12.75	0.13	0.38	0.00	0.00	0.04	0.25	0.00	0.00	0.00	0.00	**135.33**
Session Percentage	0.00	89.99	9.42	0.09	0.28	0.00	0.00	0.03	0.18	0.00	0.00	0.00	0.00	
AM Peak Hour	-	0900 - 1000	0900 - 1000	0900 - 1000	0700 - 0800	-	-	-	0900 - 1000	-	-	-	-	**0900 - 1000**
AM Peak Volume	0	149	11	2	1	0	0	0	1	0	0	0	0	**163**
Noon Peak Hour	-	1200 - 1300	1300 - 1400	-	1400 - 1500	-	-	1100 - 1200	1300 - 1400	-	-	-	-	**1200 - 1300**
Noon Peak Volume	0	280	32	0	2	0	0	1	2	0	0	0	0	**311**
PM Peak Hour	-	1900 - 2000	1500 - 1600	1500 - 1600	1700 - 1800	-	-	-	1800 - 1900	-	-	-	-	**1500 - 1600**
PM Peak Volume	0	195	26	1	1	0	0	0	2	0	0	0	0	**221**

Site 5
I-26 E/Bound On-Ramp,
east of US-76

Date
Monday, April 22, 2024

Lat/Long
34.029304°, -81.101953°

Weather
Mostly Cloudy
57°F

Click here for Detailed Weather

0000 - 2400 (Weekday 24h Session) (04-22-2024)
NB EB 60min

	Eastbound (Movement 5.1)													
TIME	1	2	3	4	5	6	7	8	9	10	11	12	13	**Total**
0000 - 0100	0	12	1	0	1	0	0	1	0	0	0	0	0	**15**
0100 - 0200	0	12	0	0	1	0	0	0	0	0	0	0	0	**13**
0200 - 0300	0	11	2	0	0	0	0	0	1	0	0	0	0	**14**
0300 - 0400	0	7	1	0	0	0	0	0	0	0	0	0	0	**8**
0400 - 0500	0	10	2	0	0	0	0	0	0	0	0	0	0	**12**
0500 - 0600	0	39	7	0	3	0	0	0	1	0	0	0	0	**50**
0600 - 0700	0	99	18	0	4	0	0	0	3	0	0	0	0	**124**
0700 - 0800	0	253	40	1	9	2	0	1	2	0	0	0	0	**308**
0800 - 0900	0	236	55	0	6	0	0	2	1	0	0	0	0	**300**
0900 - 1000	0	193	44	1	8	2	0	2	5	0	0	0	0	**255**
1000 - 1100	0	231	75	1	6	0	0	1	0	0	0	0	0	**314**
1100 - 1200	0	305	75	1	5	3	0	0	4	0	0	0	0	**393**
1200 - 1300	0	289	88	0	7	3	0	1	0	0	0	0	0	**388**
1300 - 1400	0	332	85	2	8	3	0	0	4	0	0	0	0	**434**
1400 - 1500	0	419	105	5	8	1	0	0	2	0	0	0	0	**540**
1500 - 1600	0	588	133	3	5	2	0	1	2	0	0	0	0	**734**
1600 - 1700	3	818	162	1	8	0	0	1	1	0	0	0	0	**994**
1700 - 1800	2	751	150	0	4	0	0	0	4	0	0	0	0	**911**
1800 - 1900	0	363	98	0	0	0	0	0	1	0	0	0	0	**462**
1900 - 2000	0	256	56	0	0	0	0	0	1	0	0	0	0	**313**
2000 - 2100	1	165	19	0	0	0	0	0	2	0	0	0	0	**187**
2100 - 2200	0	131	13	0	5	4	0	0	0	0	0	0	0	**153**
2200 - 2300	0	96	10	0	5	1	0	0	1	0	0	0	0	**113**
2300 - 2400	0	60	6	0	3	0	0	0	0	0	0	0	0	**69**

Session Total	6	5676	1245	15	96	21	0	10	35	0	0	0	0	**7104**
Session Average	0.25	236.50	51.88	0.63	4.00	0.88	0.00	0.42	1.46	0.00	0.00	0.00	0.00	**296.00**
Session Percentage	0.08	79.90	17.53	0.21	1.35	0.30	0.00	0.14	0.49	0.00	0.00	0.00	0.00	

AM Peak Hour	-	0700 - 0800	0800 - 0900	0700 - 0800	0700 - 0800	0700 - 0800	-	0800 - 0900	0900 - 1000	-	-	-	-	**0700 - 0800**
AM Peak Volume	0	253	55	1	9	2	0	2	5	0	0	0	0	**308**

Noon Peak Hour	-	1400 - 1500	1400 - 1500	1400 - 1500	1300 - 1400	1100 - 1200	-	1000 - 1100	1100 - 1200	-	-	-	-	**1400 - 1500**
Noon Peak Volume	0	419	105	5	8	3	0	1	4	0	0	0	0	**540**

PM Peak Hour	1600 - 1700	1600 - 1700	1600 - 1700	1500 - 1600	1600 - 1700	1500 - 1600	-	1500 - 1600	1700 - 1800	-	-	-	-	**1600 - 1700**
PM Peak Volume	3	818	162	3	8	2	0	1	4	0	0	0	0	**994**

Site 5
I-26 E/Bound On-Ramp,
east of US-76

Date
Tuesday, April 23, 2024

Lat/Long
34.029304°, -81.101953°

Weather
Fair
58°F

Click here for Detailed Weather

0000 - 2400 (Weekday 24h Session) (04-23-2024)
NB EB 60min

	Eastbound (Movement 5.1)													
TIME	1	2	3	4	5	6	7	8	9	10	11	12	13	**Total**
0000 - 0100	0	30	3	0	1	1	0	0	0	0	0	0	0	**35**
0100 - 0200	0	18	2	0	0	0	0	0	0	0	0	0	0	**20**
0200 - 0300	0	14	1	0	1	1	0	0	0	0	0	0	0	**17**
0300 - 0400	0	7	0	0	0	0	0	0	0	0	0	0	0	**7**
0400 - 0500	0	17	1	0	0	0	0	0	1	0	0	0	0	**19**
0500 - 0600	0	38	3	0	0	0	0	0	0	0	0	0	0	**41**
0600 - 0700	0	103	19	0	8	2	0	0	0	0	0	0	0	**132**
0700 - 0800	0	239	45	1	9	1	0	2	0	0	0	0	0	**297**
0800 - 0900	0	251	56	0	11	3	0	2	3	0	0	0	0	**326**
0900 - 1000	0	217	43	1	6	3	0	1	4	0	0	0	0	**275**
1000 - 1100	0	243	57	1	9	3	0	1	5	0	0	0	0	**319**
1100 - 1200	0	313	73	1	4	2	0	2	1	0	0	0	0	**396**
1200 - 1300	0	322	70	1	8	1	0	2	4	0	0	0	0	**408**
1300 - 1400	1	374	65	8	1	3	1	1	2	0	0	0	0	**456**
1400 - 1500	0	446	104	4	6	0	1	1	3	0	0	0	0	**565**
1500 - 1600	1	595	123	1	8	2	0	2	3	0	0	0	0	**735**
1600 - 1700	0	902	171	0	9	1	1	1	2	3	0	0	0	**1090**
1700 - 1800	0	802	169	0	3	0	0	1	5	0	0	0	0	**980**
1800 - 1900	1	408	76	0	4	0	0	0	0	0	0	0	0	**489**
1900 - 2000	1	249	38	0	0	0	0	1	1	0	0	0	0	**290**
2000 - 2100	0	162	38	0	2	0	0	0	0	0	0	0	0	**202**
2100 - 2200	1	117	21	0	1	2	0	1	1	0	0	0	0	**144**
2200 - 2300	0	97	17	0	3	3	0	1	0	0	0	0	0	**121**
2300 - 2400	0	38	6	0	3	3	0	0	0	0	0	0	0	**50**

Session Total	5	6002	1201	18	97	31	3	19	35	3	0	0	0	**7414**
Session Average	0.21	250.08	50.04	0.75	4.04	1.29	0.13	0.79	1.46	0.13	0.00	0.00	0.00	**308.92**
Session Percentage	0.07	80.95	16.20	0.24	1.31	0.42	0.04	0.26	0.47	0.04	0.00	0.00	0.00	

AM Peak Hour	-	0800 - 0900	0800 - 0900	0700 - 0800	0800 - 0900	0800 - 0900	-	0700 - 0800	0900 - 1000	-	-	-	-	**0800 - 0900**
AM Peak Hour Volume	0	251	56	1	11	3	0	2	4	0	0	0	0	**326**

Noon Peak Hour	1300 - 1400	1400 - 1500	1400 - 1500	1300 - 1400	1000 - 1100	1000 - 1100	1300 - 1400	1100 - 1200	1000 - 1100	-	-	-	-	**1400 - 1500**
Noon Peak Hour Volume	1	446	104	8	9	3	1	2	5	0	0	0	0	**565**

PM Peak Hour	1500 - 1600	1600 - 1700	1600 - 1700	1500 - 1600	1600 - 1700	1500 - 1600	1600 - 1700	1500 - 1600	1700 - 1800	1600 - 1700	-	-	-	**1600 - 1700**
PM Peak Hour Volume	1	902	171	1	9	2	1	2	5	3	0	0	0	**1090**

Site 5
I-26 E/Bound On-Ramp,
east of US-76

Date
Wednesday, April 24, 2024

Lat/Long
34.029304°, -81.101953°

Weather
Fair
66°F

Click here for Detailed Weather

0000 - 2400 (Weekday 24h Session) (04-24-2024)
NB EB 60min

	Eastbound (Movement 5.1)													
TIME	1	2	3	4	5	6	7	8	9	10	11	12	13	**Total**
0000 - 0100	0	23	4	0	7	1	0	0	0	0	0	0	0	**35**
0100 - 0200	0	18	2	0	6	0	0	0	0	0	0	0	0	**26**
0200 - 0300	0	9	4	0	3	0	0	0	0	0	0	0	0	**16**
0300 - 0400	0	10	1	0	1	1	0	0	0	0	0	0	0	**13**
0400 - 0500	0	11	3	0	0	0	0	0	1	0	0	0	0	**15**
0500 - 0600	0	35	3	0	1	0	0	0	0	0	0	0	0	**39**
0600 - 0700	0	92	24	0	9	3	0	1	1	0	0	0	0	**130**
0700 - 0800	1	271	72	1	10	2	0	0	2	0	0	0	0	**359**
0800 - 0900	0	225	73	0	1	0	0	1	1	0	0	0	0	**301**
0900 - 1000	0	210	63	0	8	0	1	1	4	0	0	0	0	**287**
1000 - 1100	0	246	88	1	7	1	0	0	2	0	0	0	0	**345**
1100 - 1200	0	275	69	0	2	3	1	1	1	0	0	0	0	**352**
1200 - 1300	0	331	72	2	8	0	0	2	4	0	0	0	0	**419**
1300 - 1400	0	400	77	1	7	0	0	1	3	0	0	0	0	**489**
1400 - 1500	1	455	82	5	9	0	0	3	3	1	0	0	0	**559**
1500 - 1600	2	631	131	5	7	0	0	1	5	0	0	0	0	**782**
1600 - 1700	1	861	178	0	13	0	0	1	0	0	0	0	0	**1054**
1700 - 1800	0	748	146	0	3	0	0	0	0	0	0	0	0	**897**
1800 - 1900	1	408	89	0	6	0	0	0	1	0	0	0	0	**505**
1900 - 2000	1	302	51	0	3	0	1	1	1	0	0	0	0	**360**
2000 - 2100	0	272	47	0	4	0	0	0	3	0	0	0	0	**326**
2100 - 2200	0	150	27	0	2	0	0	0	1	0	0	0	0	**180**
2200 - 2300	0	166	41	0	2	0	0	0	0	0	0	0	0	**209**
2300 - 2400	0	73	12	0	0	0	0	0	0	0	0	0	0	**85**

Session Total	7	6222	1359	15	119	11	3	13	33	1	0	0	0	**7783**
Session Average	0.29	259.25	56.63	0.63	4.96	0.46	0.13	0.54	1.38	0.04	0.00	0.00	0.00	**324.29**
Session Percentage	0.09	79.94	17.46	0.19	1.53	0.14	0.04	0.17	0.42	0.01	0.00	0.00	0.00	

AM Peak Hour	0700 - 0800	0700 - 0800	0800 - 0900	0700 - 0800	0700 - 0800	0600 - 0700	0900 - 1000	0600 - 0700	0900 - 1000	-	-	-	-	**0700 - 0800**
AM Peak Hour Volume	1	271	73	1	10	3	1	1	4	0	0	0	0	**359**

Noon Peak Hour	1400 - 1500	1400 - 1500	1000 - 1100	1400 - 1500	1400 - 1500	1100 - 1200	1100 - 1200	1400 - 1500	1200 - 1300	1400 - 1500	-	-	-	**1400 - 1500**
Noon Peak Hour Volume	1	455	88	5	9	3	1	3	4	1	0	0	0	**559**

PM Peak Hour	1500 - 1600	1600 - 1700	1600 - 1700	1500 - 1600	1600 - 1700	-	1900 - 2000	1500 - 1600	1500 - 1600	-	-	-	-	**1600 - 1700**
PM Peak Hour Volume	2	861	178	5	13	0	1	1	5	0	0	0	0	**1054**

Site 5
I-26 E/Bound On-Ramp,
east of US-76

Date
Thursday, April 25, 2024

Lat/Long
34.029304°, -81.101953°

Weather
Fair
67°F

Click here for Detailed Weather

0000 - 2400 (Weekday 24h Session) (04-25-2024)
NB EB 60min

	Eastbound (Movement 5.1)													
TIME	1	2	3	4	5	6	7	8	9	10	11	12	13	**Total**
0000 - 0100	0	26	5	0	7	0	0	0	1	0	0	0	0	**39**
0100 - 0200	0	25	4	0	3	0	0	0	1	0	0	0	0	**33**
0200 - 0300	0	16	2	0	10	0	0	0	1	0	0	0	0	**29**
0300 - 0400	0	13	4	0	2	0	0	0	1	0	0	0	0	**20**
0400 - 0500	0	18	5	0	2	0	0	0	2	0	0	0	0	**27**
0500 - 0600	0	44	9	1	0	0	0	0	0	0	0	0	0	**54**
0600 - 0700	0	96	24	0	7	0	0	0	0	0	0	0	0	**127**
0700 - 0800	1	253	44	2	7	1	1	2	1	2	0	0	0	**314**
0800 - 0900	0	239	65	0	2	0	0	2	2	0	0	0	0	**310**
0900 - 1000	0	222	64	1	4	0	0	1	7	2	0	0	0	**301**
1000 - 1100	0	247	57	1	6	3	0	2	5	0	0	0	0	**321**
1100 - 1200	0	313	72	3	8	0	0	0	1	0	0	0	0	**397**
1200 - 1300	0	345	102	5	4	0	0	0	2	0	0	0	0	**458**
1300 - 1400	1	379	71	4	10	2	2	2	3	0	0	0	0	**474**
1400 - 1500	0	476	104	0	5	1	0	4	1	0	0	0	0	**591**
1500 - 1600	1	679	111	6	9	1	0	2	0	0	0	0	0	**809**
1600 - 1700	0	858	166	1	11	0	1	0	1	0	0	0	0	**1038**
1700 - 1800	0	751	116	0	0	1	0	0	3	0	0	0	0	**871**
1800 - 1900	1	387	81	0	2	0	0	0	0	0	0	0	0	**471**
1900 - 2000	0	266	36	0	2	0	0	0	0	0	0	0	0	**304**
2000 - 2100	0	218	32	0	1	0	0	0	0	0	0	0	0	**251**
2100 - 2200	0	157	16	0	1	0	0	0	1	0	0	0	0	**175**
2200 - 2300	0	156	16	0	0	0	0	0	0	0	0	0	0	**172**
2300 - 2400	0	71	6	0	4	0	0	0	0	0	0	0	0	**81**

Session Total	4	6255	1212	24	107	9	4	15	33	4	0	0	0	**7667**
Session Average	0.17	260.63	50.50	1.00	4.46	0.38	0.17	0.63	1.38	0.17	0.00	0.00	0.00	**319.46**
Session Percentage	0.05	81.58	15.81	0.31	1.40	0.12	0.05	0.20	0.43	0.05	0.00	0.00	0.00	

AM Peak Hour	0700 - 0800	0700 - 0800	0800 - 0900	0700 - 0800	0600 - 0700	0700 - 0800	0700 - 0800	0700 - 0800	0900 - 1000	0700 - 0800	-	-	-	**0700 - 0800**
AM Peak Hour Volume	1	253	65	2	7	1	1	2	7	2	0	0	0	**314**

Noon Peak Hour	1300 - 1400	1400 - 1500	1400 - 1500	1200 - 1300	1300 - 1400	1000 - 1100	1300 - 1400	1400 - 1500	1000 - 1100	-	-	-	-	**1400 - 1500**
Noon Peak Hour Volume	1	476	104	5	10	3	2	4	5	0	0	0	0	**591**

PM Peak Hour	1500 - 1600	1600 - 1700	1600 - 1700	1500 - 1600	1600 - 1700	1500 - 1600	1600 - 1700	1500 - 1600	1700 - 1800	-	-	-	-	**1600 - 1700**
PM Peak Hour Volume	1	858	166	6	11	1	1	2	3	0	0	0	0	**1038**

Site 5
I-26 E/Bound On-Ramp,
east of US-76

Date
Friday, April 26, 2024

Lat/Long
34.029304°, -81.101953°

Weather
Cloudy
69°F

Click here for Detailed Weather

0000 - 2400 (Weekday 24h Session) (04-26-2024)
NB EB 60min

	Eastbound (Movement 5.1)													
TIME	1	2	3	4	5	6	7	8	9	10	11	12	13	**Total**
0000 - 0100	0	14	7	0	6	3	0	0	0	0	0	0	0	**30**
0100 - 0200	0	11	4	0	5	2	0	0	0	0	0	0	0	**22**
0200 - 0300	0	11	5	0	3	3	0	0	0	0	0	0	0	**22**
0300 - 0400	0	8	3	0	3	0	0	0	0	0	0	0	0	**14**
0400 - 0500	0	11	7	0	2	2	0	1	0	0	0	0	0	**23**
0500 - 0600	0	23	8	0	1	1	0	0	0	0	0	0	0	**33**
0600 - 0700	0	84	31	0	4	3	0	0	0	0	0	0	0	**122**
0700 - 0800	1	225	41	1	12	2	0	0	1	0	0	0	0	**283**
0800 - 0900	0	237	54	1	4	0	0	2	1	0	0	0	0	**299**
0900 - 1000	0	189	55	1	9	2	0	0	3	0	0	0	0	**259**
1000 - 1100	0	265	58	1	15	1	0	0	2	0	0	0	0	**342**
1100 - 1200	0	379	81	4	13	2	0	0	2	0	0	0	0	**481**
1200 - 1300	1	460	112	9	5	1	1	3	0	1	0	0	0	**593**
1300 - 1400	0	435	104	8	5	0	0	1	1	0	0	0	0	**554**
1400 - 1500	0	497	99	2	7	2	0	1	3	0	0	0	0	**611**
1500 - 1600	1	550	117	1	2	0	0	0	2	0	0	0	0	**673**
1600 - 1700	3	682	158	0	3	1	0	0	3	0	0	0	0	**850**
1700 - 1800	0	620	98	0	6	0	0	0	4	0	0	0	0	**728**
1800 - 1900	0	319	44	0	1	0	0	0	0	0	0	0	0	**364**
1900 - 2000	2	244	41	0	2	0	0	0	0	0	0	0	0	**289**
2000 - 2100	0	203	30	0	0	0	0	0	0	0	0	0	0	**233**
2100 - 2200	0	251	31	0	0	0	0	0	1	0	0	0	0	**283**
2200 - 2300	0	249	36	0	1	0	0	0	0	0	0	0	0	**286**
2300 - 2400	1	158	15	0	0	0	0	0	0	0	0	0	0	**174**

Session Total	9	6125	1239	28	109	25	1	8	23	1	0	0	0	**7568**
Session Average	0.38	255.21	51.63	1.17	4.54	1.04	0.04	0.33	0.96	0.04	0.00	0.00	0.00	**315.33**
Session Percentage	0.12	80.93	16.37	0.37	1.44	0.33	0.01	0.11	0.30	0.01	0.00	0.00	0.00	

AM Peak Hour	0700 - 0800	0800 - 0900	0900 - 1000	0700 - 0800	0700 - 0800	0600 - 0700	-	0800 - 0900	0900 - 1000	-	-	-	-	**0800 - 0900**
AM Peak Hour Volume	1	237	55	1	12	3	0	2	3	0	0	0	0	**299**

Noon Peak Hour	1200 - 1300	1400 - 1500	1200 - 1300	1200 - 1300	1000 - 1100	1100 - 1200	1200 - 1300	1200 - 1300	1400 - 1500	1200 - 1300	-	-	-	**1400 - 1500**
Noon Peak Hour Volume	1	497	112	9	15	2	1	3	3	1	0	0	0	**611**

PM Peak Hour	1600 - 1700	1600 - 1700	1600 - 1700	1500 - 1600	1700 - 1800	1600 - 1700	-	-	1700 - 1800	-	-	-	-	**1600 - 1700**
PM Peak Hour Volume	3	682	158	1	6	1	0	0	4	0	0	0	0	**850**

Site 5
I-26 E/Bound On-Ramp,
east of US-76

Date
Saturday, April 27, 2024

Lat/Long
34.029304°, -81.101953°

Weather
Mostly Cloudy
69°F

Click here for Detailed Weather

0000 - 2400 (Saturday 24h Session) (04-27-2024)
NB EB 60min

	Eastbound (Movement 5.1)													
TIME	1	2	3	4	5	6	7	8	9	10	11	12	13	**Total**
0000 - 0100	0	57	10	0	3	0	0	0	0	0	0	0	0	**70**
0100 - 0200	1	41	6	0	0	0	0	0	0	0	0	0	0	**48**
0200 - 0300	0	47	6	0	0	0	0	0	0	0	0	0	0	**53**
0300 - 0400	0	14	1	0	0	0	0	0	0	0	0	0	0	**15**
0400 - 0500	0	9	0	0	2	0	0	0	0	0	0	0	0	**11**
0500 - 0600	0	26	3	0	2	0	0	0	0	0	0	0	0	**31**
0600 - 0700	0	42	8	0	1	0	0	0	0	0	0	0	0	**51**
0700 - 0800	0	104	12	0	1	0	0	0	1	0	0	0	0	**118**
0800 - 0900	0	98	15	0	2	0	0	0	1	0	0	0	0	**116**
0900 - 1000	0	152	32	0	1	0	0	0	2	0	0	0	0	**187**
1000 - 1100	1	193	35	1	3	0	0	1	0	0	0	0	0	**234**
1100 - 1200	0	269	32	0	1	0	0	0	0	0	0	0	0	**302**
1200 - 1300	1	269	50	0	3	0	0	1	0	0	0	0	0	**324**
1300 - 1400	1	319	65	0	5	0	0	0	0	0	0	0	0	**390**
1400 - 1500	1	297	52	1	0	0	0	0	1	0	0	0	0	**352**
1500 - 1600	0	361	58	0	0	0	0	0	0	0	0	0	0	**419**
1600 - 1700	0	296	40	0	1	0	0	0	1	0	0	0	0	**338**
1700 - 1800	0	247	42	0	1	0	0	0	0	0	0	0	0	**290**
1800 - 1900	0	264	36	0	3	0	0	0	2	0	0	0	0	**305**
1900 - 2000	0	258	33	0	0	0	0	0	0	0	0	0	0	**291**
2000 - 2100	0	169	42	0	2	0	0	0	0	0	0	0	0	**213**
2100 - 2200	1	240	70	0	1	0	0	0	0	0	0	0	0	**312**
2200 - 2300	0	173	60	0	0	0	0	0	0	0	0	0	0	**233**
2300 - 2400	0	82	31	0	0	0	0	0	0	0	0	0	0	**113**

Session Total	6	4027	739	2	32	0	0	2	8	0	0	0	0	**4816**
Session Average	0.25	167.79	30.79	0.08	1.33	0.00	0.00	0.08	0.33	0.00	0.00	0.00	0.00	**200.67**
Session Percentage	0.12	83.62	15.34	0.04	0.66	0.00	0.00	0.04	0.17	0.00	0.00	0.00	0.00	

AM Peak Hour	-	0900 - 1000	0900 - 1000	-	0500 - 0600	-	-	-	0900 - 1000	-	-	-	-	**0900 - 1000**
AM Peak Hour Volume	0	152	32	0	2	0	0	0	2	0	0	0	0	**187**

Noon Peak Hour	1000 - 1100	1300 - 1400	1300 - 1400	1000 - 1100	1300 - 1400	-	-	1000 - 1100	1400 - 1500	-	-	-	-	**1300 - 1400**
Noon Peak Hour Volume	1	319	65	1	5	0	0	1	1	0	0	0	0	**390**

PM Peak Hour	-	1500 - 1600	1500 - 1600	-	1800 - 1900	-	-	-	1800 - 1900	-	-	-	-	**1500 - 1600**
PM Peak Hour Volume	0	361	58	0	3	0	0	0	2	0	0	0	0	**419**

Bi-Directional Class Count || Volume Summary 60min

Columbia, SC

Marr Traffic DATA COLLECTION

www.marrtraffic.com

Site 5

I-26 E/Bound On-Ramp,
east of US-76

Date

Sunday, April 21, 2024

Lat/Long

34.029304°, -81.101953°

Weather

Cloudy
66°F

Click here for Detailed Weather

0000 - 2400 (Sunday 24h Session) (04-21-2024)

Volume Summary 60min

	Volume Summary 60min		
TIME	EB	WB	**Total**
0000 - 0100	87	0	**87**
0100 - 0200	53	0	**53**
0200 - 0300	30	0	**30**
0300 - 0400	15	0	**15**
0400 - 0500	19	0	**19**
0500 - 0600	12	0	**12**
0600 - 0700	33	0	**33**
0700 - 0800	78	0	**78**
0800 - 0900	79	0	**79**
0900 - 1000	163	0	**163**
1000 - 1100	216	0	**216**
1100 - 1200	253	0	**253**

	Volume Summary 60min		
Time	EB	WB	**Total**
1200 - 1300	311	0	**311**
1300 - 1400	253	0	**253**
1400 - 1500	288	0	**288**
1500 - 1600	221	0	**221**
1600 - 1700	205	0	**205**
1700 - 1800	193	0	**193**
1800 - 1900	194	0	**194**
1900 - 2000	216	0	**216**
2000 - 2100	133	0	**133**
2100 - 2200	95	0	**95**
2200 - 2300	51	0	**51**
2300 - 2400	50	0	**50**

Session Total	3248	0	**3248**
Session Average	135.33	0.00	**135.33**
Session Percentage	100.00	0.00	

Site 5

I-26 E/Bound On-Ramp,
east of US-76

Date

Monday, April 22, 2024

Lat/Long

34.029304°, -81.101953°

Weather

Mostly Cloudy
57°F

Click here for Detailed Weather

0000 - 2400 (Weekday 24h Session) (04-22-2024)

Volume Summary 60min

	Volume Summary 60min		
TIME	EB	WB	**Total**
0000 - 0100	15	0	**15**
0100 - 0200	13	0	**13**
0200 - 0300	14	0	**14**
0300 - 0400	8	0	**8**
0400 - 0500	12	0	**12**
0500 - 0600	50	0	**50**
0600 - 0700	124	0	**124**
0700 - 0800	308	0	**308**
0800 - 0900	300	0	**300**
0900 - 1000	255	0	**255**
1000 - 1100	314	0	**314**
1100 - 1200	393	0	**393**

Session Total	7104	0	**7104**
Session Average	296.00	0.00	**296.00**
Session Percentage	100.00	0.00	

	Volume Summary 60min		
Time	EB	WB	**Total**
1200 - 1300	388	0	**388**
1300 - 1400	434	0	**434**
1400 - 1500	540	0	**540**
1500 - 1600	734	0	**734**
1600 - 1700	994	0	**994**
1700 - 1800	911	0	**911**
1800 - 1900	462	0	**462**
1900 - 2000	313	0	**313**
2000 - 2100	187	0	**187**
2100 - 2200	153	0	**153**
2200 - 2300	113	0	**113**
2300 - 2400	69	0	**69**

Site 5

I-26 E/Bound On-Ramp,
east of US-76

Date

Tuesday, April 23, 2024

Lat/Long

34.029304°, -81.101953°

Weather

Fair
58°F

Click here for Detailed Weather

0000 - 2400 (Weekday 24h Session) (04-23-2024)

Volume Summary 60min

	Volume Summary 60min		
TIME	EB	WB	**Total**
0000 - 0100	35	0	**35**
0100 - 0200	20	0	**20**
0200 - 0300	17	0	**17**
0300 - 0400	7	0	**7**
0400 - 0500	19	0	**19**
0500 - 0600	41	0	**41**
0600 - 0700	132	0	**132**
0700 - 0800	297	0	**297**
0800 - 0900	326	0	**326**
0900 - 1000	275	0	**275**
1000 - 1100	319	0	**319**
1100 - 1200	396	0	**396**

	Volume Summary 60min		
Time	EB	WB	**Total**
1200 - 1300	408	0	**408**
1300 - 1400	456	0	**456**
1400 - 1500	565	0	**565**
1500 - 1600	735	0	**735**
1600 - 1700	1090	0	**1090**
1700 - 1800	980	0	**980**
1800 - 1900	489	0	**489**
1900 - 2000	290	0	**290**
2000 - 2100	202	0	**202**
2100 - 2200	144	0	**144**
2200 - 2300	121	0	**121**
2300 - 2400	50	0	**50**

Session Total	7414	0	**7414**
Session Average	308.92	0.00	**308.92**
Session Percentage	100.00	0.00	

Site 5

I-26 E/Bound On-Ramp,
east of US-76

Date

Wednesday, April 24, 2024

Lat/Long

34.029304°, -81.101953°

Weather

Fair
66°F

Click here for Detailed Weather

0000 - 2400 (Weekday 24h Session) (04-24-2024)

Volume Summary 60min

	Volume Summary 60min		
TIME	EB	WB	**Total**
0000 - 0100	35	0	**35**
0100 - 0200	26	0	**26**
0200 - 0300	16	0	**16**
0300 - 0400	13	0	**13**
0400 - 0500	15	0	**15**
0500 - 0600	39	0	**39**
0600 - 0700	130	0	**130**
0700 - 0800	359	0	**359**
0800 - 0900	301	0	**301**
0900 - 1000	287	0	**287**
1000 - 1100	345	0	**345**
1100 - 1200	352	0	**352**

	Volume Summary 60min		
Time	EB	WB	**Total**
1200 - 1300	419	0	**419**
1300 - 1400	489	0	**489**
1400 - 1500	559	0	**559**
1500 - 1600	782	0	**782**
1600 - 1700	1054	0	**1054**
1700 - 1800	897	0	**897**
1800 - 1900	505	0	**505**
1900 - 2000	360	0	**360**
2000 - 2100	326	0	**326**
2100 - 2200	180	0	**180**
2200 - 2300	209	0	**209**
2300 - 2400	85	0	**85**

Session Total	7783	0	**7783**
Session Average	324.29	0.00	**324.29**
Session Percentage	100.00	0.00	

Site 5

I-26 E/Bound On-Ramp,
east of US-76

Date

Thursday, April 25, 2024

Lat/Long

34.029304°, -81.101953°

Weather

Fair
67°F

Click here for Detailed Weather

0000 - 2400 (Weekday 24h Session) (04-25-2024)

Volume Summary 60min

	Volume Summary 60min		
TIME	EB	WB	**Total**
0000 - 0100	39	0	**39**
0100 - 0200	33	0	**33**
0200 - 0300	29	0	**29**
0300 - 0400	20	0	**20**
0400 - 0500	27	0	**27**
0500 - 0600	54	0	**54**
0600 - 0700	127	0	**127**
0700 - 0800	314	0	**314**
0800 - 0900	310	0	**310**
0900 - 1000	301	0	**301**
1000 - 1100	321	0	**321**
1100 - 1200	397	0	**397**

Session Total	7667	0	**7667**
Session Average	319.46	0.00	**319.46**
Session Percentage	100.00	0.00	

	Volume Summary 60min		
Time	EB	WB	**Total**
1200 - 1300	458	0	**458**
1300 - 1400	474	0	**474**
1400 - 1500	591	0	**591**
1500 - 1600	809	0	**809**
1600 - 1700	1038	0	**1038**
1700 - 1800	871	0	**871**
1800 - 1900	471	0	**471**
1900 - 2000	304	0	**304**
2000 - 2100	251	0	**251**
2100 - 2200	175	0	**175**
2200 - 2300	172	0	**172**
2300 - 2400	81	0	**81**

Site 5

I-26 E/Bound On-Ramp,
east of US-76

Date

Friday, April 26, 2024

Lat/Long

34.029304°, -81.101953°

Weather

Cloudy
69°F

Click here for Detailed Weather

0000 - 2400 (Weekday 24h Session) (04-26-2024)

Volume Summary 60min

	Volume Summary 60min		
TIME	EB	WB	**Total**
0000 - 0100	30	0	**30**
0100 - 0200	22	0	**22**
0200 - 0300	22	0	**22**
0300 - 0400	14	0	**14**
0400 - 0500	23	0	**23**
0500 - 0600	33	0	**33**
0600 - 0700	122	0	**122**
0700 - 0800	283	0	**283**
0800 - 0900	299	0	**299**
0900 - 1000	259	0	**259**
1000 - 1100	342	0	**342**
1100 - 1200	481	0	**481**

	Volume Summary 60min		
Time	EB	WB	**Total**
1200 - 1300	593	0	**593**
1300 - 1400	554	0	**554**
1400 - 1500	611	0	**611**
1500 - 1600	673	0	**673**
1600 - 1700	850	0	**850**
1700 - 1800	728	0	**728**
1800 - 1900	364	0	**364**
1900 - 2000	289	0	**289**
2000 - 2100	233	0	**233**
2100 - 2200	283	0	**283**
2200 - 2300	286	0	**286**
2300 - 2400	174	0	**174**

Session Total	7568	0	**7568**
Session Average	315.33	0.00	**315.33**
Session Percentage	100.00	0.00	

Site 5

I-26 E/Bound On-Ramp,
east of US-76

Date

Saturday, April 27, 2024

Lat/Long

34.029304°, -81.101953°

Weather

Mostly Cloudy
69°F

Click here for Detailed Weather

0000 - 2400 (Saturday 24h Session) (04-27-2024)

Volume Summary 60min

	Volume Summary 60min		
TIME	EB	WB	**Total**
0000 - 0100	70	0	**70**
0100 - 0200	48	0	**48**
0200 - 0300	53	0	**53**
0300 - 0400	15	0	**15**
0400 - 0500	11	0	**11**
0500 - 0600	31	0	**31**
0600 - 0700	51	0	**51**
0700 - 0800	118	0	**118**
0800 - 0900	116	0	**116**
0900 - 1000	187	0	**187**
1000 - 1100	234	0	**234**
1100 - 1200	302	0	**302**

	Volume Summary 60min		
Time	EB	WB	**Total**
1200 - 1300	324	0	**324**
1300 - 1400	390	0	**390**
1400 - 1500	352	0	**352**
1500 - 1600	419	0	**419**
1600 - 1700	338	0	**338**
1700 - 1800	290	0	**290**
1800 - 1900	305	0	**305**
1900 - 2000	291	0	**291**
2000 - 2100	213	0	**213**
2100 - 2200	312	0	**312**
2200 - 2300	233	0	**233**
2300 - 2400	113	0	**113**

Session Total	4816	0	**4816**
Session Average	200.67	0.00	**200.67**
Session Percentage	100.00	0.00	

Bi-Directional Class Count || Graphical Analysis NB EB

Columbia, SC

Marr Traffic DATA COLLECTION

www.marrtraffic.com

Site 5

I-26 E/Bound On-Ramp,
east of US-76

Lat/Long

34.029304°, -81.101953°

0000 - 2400 (Weekday 24h Session)

Graphical Analysis NB EB

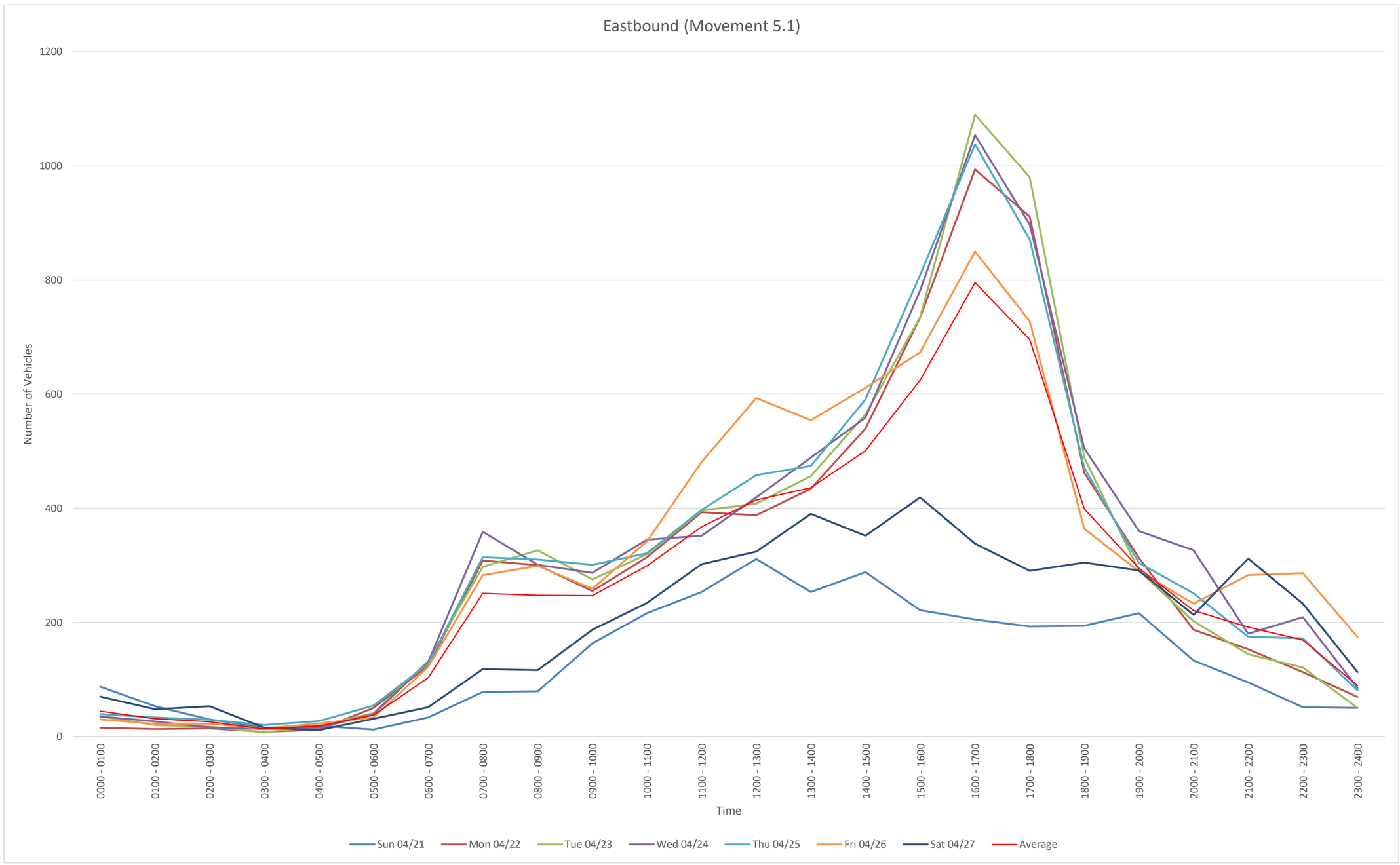

EB
File Name:
Start Date: 4/21/2024
Start Time: 0
Site Code: 5
Station ID: 1
Location 1: I-26 E/Bound On-Ramp, east of US-76
Location 2:

Date	Time	1	2	3	4	5	6	7	8	9	10	11	12	13
4/21/2024	12:00 AM	0	30	2	0	0	0	0	0	0	0	0	0	0
4/21/2024	12:15 AM	0	23	1	0	0	0	0	0	0	0	0	0	0
4/21/2024	12:30 AM	0	16	0	0	0	0	0	0	0	0	0	0	0
4/21/2024	12:45 AM	0	15	0	0	0	0	0	0	0	0	0	0	0
4/21/2024	1:00 AM	0	14	0	0	0	0	0	0	0	0	0	0	0
4/21/2024	1:15 AM	0	10	1	0	0	0	0	0	0	0	0	0	0
4/21/2024	1:30 AM	0	16	0	0	0	0	0	0	0	0	0	0	0
4/21/2024	1:45 AM	0	12	0	0	0	0	0	0	0	0	0	0	0
4/21/2024	2:00 AM	0	12	1	0	0	0	0	0	0	0	0	0	0
4/21/2024	2:15 AM	0	5	0	0	0	0	0	0	0	0	0	0	0
4/21/2024	2:30 AM	0	5	0	0	0	0	0	0	0	0	0	0	0
4/21/2024	2:45 AM	0	7	0	0	0	0	0	0	0	0	0	0	0
4/21/2024	3:00 AM	0	2	0	0	0	0	0	0	0	0	0	0	0
4/21/2024	3:15 AM	0	5	0	0	0	0	0	0	0	0	0	0	0
4/21/2024	3:30 AM	0	6	0	0	0	0	0	0	0	0	0	0	0
4/21/2024	3:45 AM	0	2	0	0	0	0	0	0	0	0	0	0	0
4/21/2024	4:00 AM	0	2	0	0	0	0	0	0	0	0	0	0	0
4/21/2024	4:15 AM	0	5	0	0	0	0	0	0	0	0	0	0	0
4/21/2024	4:30 AM	0	6	0	0	1	0	0	0	0	0	0	0	0
4/21/2024	4:45 AM	0	5	0	0	0	0	0	0	0	0	0	0	0
4/21/2024	5:00 AM	0	3	0	0	0	0	0	0	0	0	0	0	0
4/21/2024	5:15 AM	0	3	0	0	0	0	0	0	0	0	0	0	0
4/21/2024	5:30 AM	0	2	1	0	0	0	0	0	0	0	0	0	0
4/21/2024	5:45 AM	0	3	0	0	0	0	0	0	0	0	0	0	0
4/21/2024	6:00 AM	0	9	1	0	0	0	0	0	0	0	0	0	0
4/21/2024	6:15 AM	0	10	0	0	0	0	0	0	0	0	0	0	0
4/21/2024	6:30 AM	0	7	0	0	0	0	0	0	0	0	0	0	0
4/21/2024	6:45 AM	0	6	0	0	0	0	0	0	0	0	0	0	0
4/21/2024	7:00 AM	0	9	0	0	0	0	0	0	0	0	0	0	0
4/21/2024	7:15 AM	0	21	1	0	0	0	0	0	0	0	0	0	0
4/21/2024	7:30 AM	0	25	5	0	0	0	0	0	0	0	0	0	0
4/21/2024	7:45 AM	0	15	1	0	1	0	0	0	0	0	0	0	0
4/21/2024	8:00 AM	0	16	2	0	0	0	0	0	0	0	0	0	0
4/21/2024	8:15 AM	0	19	1	0	1	0	0	0	0	0	0	0	0
4/21/2024	8:30 AM	0	18	3	0	0	0	0	0	0	0	0	0	0
4/21/2024	8:45 AM	0	18	1	0	0	0	0	0	0	0	0	0	0
4/21/2024	9:00 AM	0	25	4	0	0	0	0	0	0	0	0	0	0
4/21/2024	9:15 AM	0	36	3	0	0	0	0	0	0	0	0	0	0
4/21/2024	9:30 AM	0	39	1	0	0	0	0	0	1	0	0	0	0
4/21/2024	9:45 AM	0	49	3	2	0	0	0	0	0	0	0	0	0
4/21/2024	10:00 AM	0	51	7	0	0	0	0	0	0	0	0	0	0
4/21/2024	10:15 AM	0	48	8	0	0	0	0	0	0	0	0	0	0
4/21/2024	10:30 AM	0	49	7	0	0	0	0	0	0	0	0	0	0
4/21/2024	10:45 AM	0	43	3	0	0	0	0	0	0	0	0	0	0
4/21/2024	11:00 AM	0	45	4	0	0	0	0	0	0	0	0	0	0
4/21/2024	11:15 AM	0	39	3	0	0	0	0	0	0	0	0	0	0
4/21/2024	11:30 AM	0	65	5	0	0	0	0	1	0	0	0	0	0
4/21/2024	11:45 AM	0	80	10	0	1	0	0	0	0	0	0	0	0
4/21/2024	12:00 PM	0	73	5	0	0	0	0	0	0	0	0	0	0
4/21/2024	12:15 PM	0	44	9	0	0	0	0	0	0	0	0	0	0
4/21/2024	12:30 PM	0	85	10	0	1	0	0	0	1	0	0	0	0
4/21/2024	12:45 PM	0	78	5	0	0	0	0	0	0	0	0	0	0
4/21/2024	1:00 PM	0	55	8	0	0	0	0	0	1	0	0	0	0
4/21/2024	1:15 PM	0	54	7	0	0	0	0	0	0	0	0	0	0
4/21/2024	1:30 PM	0	53	9	0	0	0	0	0	1	0	0	0	0
4/21/2024	1:45 PM	0	57	8	0	0	0	0	0	0	0	0	0	0
4/21/2024	2:00 PM	0	76	4	0	0	0	0	0	0	0	0	0	0
4/21/2024	2:15 PM	0	63	8	0	0	0	0	0	0	0	0	0	0
4/21/2024	2:30 PM	0	65	6	0	0	0	0	0	0	0	0	0	0
4/21/2024	2:45 PM	0	58	6	0	2	0	0	0	0	0	0	0	0
4/21/2024	3:00 PM	0	54	3	1	0	0	0	0	0	0	0	0	0
4/21/2024	3:15 PM	0	41	10	0	0	0	0	0	0	0	0	0	0
4/21/2024	3:30 PM	0	45	5	0	0	0	0	0	0	0	0	0	0
4/21/2024	3:45 PM	0	54	8	0	0	0	0	0	0	0	0	0	0
4/21/2024	4:00 PM	0	49	9	0	0	0	0	0	0	0	0	0	0
4/21/2024	4:15 PM	0	61	4	0	0	0	0	0	0	0	0	0	0
4/21/2024	4:30 PM	0	36	2	0	0	0	0	0	0	0	0	0	0
4/21/2024	4:45 PM	0	40	4	0	0	0	0	0	0	0	0	0	0
4/21/2024	5:00 PM	0	42	8	0	0	0	0	0	0	0	0	0	0
4/21/2024	5:15 PM	0	46	4	0	0	0	0	0	0	0	0	0	0
4/21/2024	5:30 PM	0	47	2	0	1	0	0	0	0	0	0	0	0
4/21/2024	5:45 PM	0	36	7	0	0	0	0	0	0	0	0	0	0
4/21/2024	6:00 PM	0	53	6	0	0	0	0	0	1	0	0	0	0
4/21/2024	6:15 PM	0	54	6	0	0	0	0	0	0	0	0	0	0
4/21/2024	6:30 PM	0	41	2	0	0	0	0	0	0	0	0	0	0
4/21/2024	6:45 PM	0	28	2	0	0	0	0	0	1	0	0	0	0
4/21/2024	7:00 PM	0	44	3	0	0	0	0	0	0	0	0	0	0
4/21/2024	7:15 PM	0	40	8	0	0	0	0	0	0	0	0	0	0
4/21/2024	7:30 PM	0	68	5	0	0	0	0	0	0	0	0	0	0
4/21/2024	7:45 PM	0	43	5	0	0	0	0	0	0	0	0	0	0
4/21/2024	8:00 PM	0	34	4	0	1	0	0	0	0	0	0	0	0
4/21/2024	8:15 PM	0	29	3	0	0	0	0	0	0	0	0	0	0
4/21/2024	8:30 PM	0	37	4	0	0	0	0	0	0	0	0	0	0
4/21/2024	8:45 PM	0	17	4	0	0	0	0	0	0	0	0	0	0
4/21/2024	9:00 PM	0	24	2	0	0	0	0	0	0	0	0	0	0
4/21/2024	9:15 PM	0	21	4	0	0	0	0	0	0	0	0	0	0
4/21/2024	9:30 PM	0	21	3	0	0	0	0	0	0	0	0	0	0
4/21/2024	9:45 PM	0	18	2	0	0	0	0	0	0	0	0	0	0
4/21/2024	10:00 PM	0	18	1	0	0	0	0	0	0	0	0	0	0
4/21/2024	10:15 PM	0	5	2	0	0	0	0	0	0	0	0	0	0
4/21/2024	10:30 PM	0	11	2	0	0	0	0	0	0	0	0	0	0
4/21/2024	10:45 PM	0	9	3	0	0	0	0	0	0	0	0	0	0
4/21/2024	11:00 PM	0	14	1	0	0	0	0	0	0	0	0	0	0
4/21/2024	11:15 PM	0	13	3	0	0	0	0	0	0	0	0	0	0
4/21/2024	11:30 PM	0	12	0	0	0	0	0	0	0	0	0	0	0
4/21/2024	11:45 PM	0	6	1	0	0	0	0	0	0	0	0	0	0

4/22/2024	12:00 AM	0	2	0	0	0	0	0	1	0	0	0	0	0
4/22/2024	12:15 AM	0	3	1	0	1	0	0	0	0	0	0	0	0
4/22/2024	12:30 AM	0	4	0	0	0	0	0	0	0	0	0	0	0
4/22/2024	12:45 AM	0	3	0	0	0	0	0	0	0	0	0	0	0
4/22/2024	1:00 AM	0	3	0	0	0	0	0	0	0	0	0	0	0
4/22/2024	1:15 AM	0	2	0	0	1	0	0	0	0	0	0	0	0
4/22/2024	1:30 AM	0	4	0	0	0	0	0	0	0	0	0	0	0
4/22/2024	1:45 AM	0	3	0	0	0	0	0	0	0	0	0	0	0
4/22/2024	2:00 AM	0	4	1	0	0	0	0	0	0	0	0	0	0
4/22/2024	2:15 AM	0	3	0	0	0	0	0	0	1	0	0	0	0
4/22/2024	2:30 AM	0	1	0	0	0	0	0	0	0	0	0	0	0
4/22/2024	2:45 AM	0	3	1	0	0	0	0	0	0	0	0	0	0
4/22/2024	3:00 AM	0	3	1	0	0	0	0	0	0	0	0	0	0
4/22/2024	3:15 AM	0	1	0	0	0	0	0	0	0	0	0	0	0
4/22/2024	3:30 AM	0	1	0	0	0	0	0	0	0	0	0	0	0
4/22/2024	3:45 AM	0	2	0	0	0	0	0	0	0	0	0	0	0
4/22/2024	4:00 AM	0	2	0	0	0	0	0	0	0	0	0	0	0
4/22/2024	4:15 AM	0	4	1	0	0	0	0	0	0	0	0	0	0
4/22/2024	4:30 AM	0	1	0	0	0	0	0	0	0	0	0	0	0
4/22/2024	4:45 AM	0	3	1	0	0	0	0	0	0	0	0	0	0
4/22/2024	5:00 AM	0	7	1	0	0	0	0	0	0	0	0	0	0
4/22/2024	5:15 AM	0	5	1	0	1	0	0	0	1	0	0	0	0
4/22/2024	5:30 AM	0	14	2	0	0	0	0	0	0	0	0	0	0
4/22/2024	5:45 AM	0	13	3	0	2	0	0	0	0	0	0	0	0
4/22/2024	6:00 AM	0	13	2	0	2	0	0	0	1	0	0	0	0
4/22/2024	6:15 AM	0	20	3	0	1	0	0	0	0	0	0	0	0
4/22/2024	6:30 AM	0	35	9	0	0	0	0	0	2	0	0	0	0
4/22/2024	6:45 AM	0	31	4	0	1	0	0	0	0	0	0	0	0
4/22/2024	7:00 AM	0	51	5	1	4	0	0	0	1	0	0	0	0
4/22/2024	7:15 AM	0	61	9	0	3	1	0	0	0	0	0	0	0
4/22/2024	7:30 AM	0	67	15	0	0	0	0	0	0	0	0	0	0
4/22/2024	7:45 AM	0	74	11	0	2	1	0	1	1	0	0	0	0
4/22/2024	8:00 AM	0	56	9	0	3	0	0	0	0	0	0	0	0
4/22/2024	8:15 AM	0	63	21	0	0	0	0	0	0	0	0	0	0
4/22/2024	8:30 AM	0	60	10	0	1	0	0	1	1	0	0	0	0
4/22/2024	8:45 AM	0	57	15	0	2	0	0	1	0	0	0	0	0
4/22/2024	9:00 AM	0	47	9	0	5	0	0	1	0	0	0	0	0
4/22/2024	9:15 AM	0	45	9	1	0	0	0	1	0	0	0	0	0
4/22/2024	9:30 AM	0	53	15	0	3	2	0	0	3	0	0	0	0
4/22/2024	9:45 AM	0	48	11	0	0	0	0	0	2	0	0	0	0
4/22/2024	10:00 AM	0	50	18	1	1	0	0	1	0	0	0	0	0
4/22/2024	10:15 AM	0	59	19	0	3	0	0	0	0	0	0	0	0
4/22/2024	10:30 AM	0	60	19	0	1	0	0	0	0	0	0	0	0
4/22/2024	10:45 AM	0	62	19	0	1	0	0	0	0	0	0	0	0
4/22/2024	11:00 AM	0	77	16	0	2	1	0	0	0	0	0	0	0
4/22/2024	11:15 AM	0	72	21	1	1	2	0	0	0	0	0	0	0
4/22/2024	11:30 AM	0	75	17	0	2	0	0	0	4	0	0	0	0
4/22/2024	11:45 AM	0	81	21	0	0	0	0	0	0	0	0	0	0
4/22/2024	12:00 PM	0	71	20	0	1	0	0	0	0	0	0	0	0
4/22/2024	12:15 PM	0	68	23	0	2	1	0	0	0	0	0	0	0
4/22/2024	12:30 PM	0	85	26	0	2	1	0	0	0	0	0	0	0
4/22/2024	12:45 PM	0	65	19	0	2	1	0	1	0	0	0	0	0
4/22/2024	1:00 PM	0	90	18	0	2	2	0	0	1	0	0	0	0
4/22/2024	1:15 PM	0	81	24	0	1	0	0	0	0	0	0	0	0
4/22/2024	1:30 PM	0	86	24	2	4	0	0	0	1	0	0	0	0
4/22/2024	1:45 PM	0	75	19	0	1	1	0	0	2	0	0	0	0
4/22/2024	2:00 PM	0	92	18	0	2	1	0	0	0	0	0	0	0
4/22/2024	2:15 PM	0	113	24	2	3	0	0	0	1	0	0	0	0
4/22/2024	2:30 PM	0	108	31	3	3	0	0	0	1	0	0	0	0
4/22/2024	2:45 PM	0	106	32	0	0	0	0	0	0	0	0	0	0
4/22/2024	3:00 PM	0	125	34	2	2	0	0	0	0	0	0	0	0
4/22/2024	3:15 PM	0	138	25	1	1	0	0	1	1	0	0	0	0
4/22/2024	3:30 PM	0	155	36	0	0	2	0	0	1	0	0	0	0
4/22/2024	3:45 PM	0	170	38	0	2	0	0	0	0	0	0	0	0
4/22/2024	4:00 PM	0	192	48	0	3	0	0	0	0	0	0	0	0
4/22/2024	4:15 PM	0	211	32	0	3	0	0	0	0	0	0	0	0
4/22/2024	4:30 PM	1	187	42	0	2	0	0	1	0	0	0	0	0
4/22/2024	4:45 PM	2	228	40	1	0	0	0	0	1	0	0	0	0
4/22/2024	5:00 PM	2	194	27	0	3	0	0	0	0	0	0	0	0
4/22/2024	5:15 PM	0	214	39	0	0	0	0	0	0	0	0	0	0
4/22/2024	5:30 PM	0	198	45	0	0	0	0	0	4	0	0	0	0
4/22/2024	5:45 PM	0	145	39	0	1	0	0	0	0	0	0	0	0
4/22/2024	6:00 PM	0	103	45	0	0	0	0	0	0	0	0	0	0
4/22/2024	6:15 PM	0	102	29	0	0	0	0	0	0	0	0	0	0
4/22/2024	6:30 PM	0	67	15	0	0	0	0	0	1	0	0	0	0
4/22/2024	6:45 PM	0	91	9	0	0	0	0	0	0	0	0	0	0
4/22/2024	7:00 PM	0	68	21	0	0	0	0	0	0	0	0	0	0
4/22/2024	7:15 PM	0	65	11	0	0	0	0	0	1	0	0	0	0
4/22/2024	7:30 PM	0	37	7	0	0	0	0	0	0	0	0	0	0
4/22/2024	7:45 PM	0	86	17	0	0	0	0	0	0	0	0	0	0
4/22/2024	8:00 PM	0	49	5	0	0	0	0	0	1	0	0	0	0
4/22/2024	8:15 PM	0	30	3	0	0	0	0	0	1	0	0	0	0
4/22/2024	8:30 PM	1	44	5	0	0	0	0	0	0	0	0	0	0
4/22/2024	8:45 PM	0	42	6	0	0	0	0	0	0	0	0	0	0
4/22/2024	9:00 PM	0	36	4	0	2	1	0	0	0	0	0	0	0
4/22/2024	9:15 PM	0	35	4	0	1	1	0	0	0	0	0	0	0
4/22/2024	9:30 PM	0	31	3	0	1	1	0	0	0	0	0	0	0
4/22/2024	9:45 PM	0	29	2	0	1	1	0	0	0	0	0	0	0
4/22/2024	10:00 PM	0	27	2	0	1	0	0	0	1	0	0	0	0
4/22/2024	10:15 PM	0	15	1	0	1	0	0	0	0	0	0	0	0
4/22/2024	10:30 PM	0	30	4	0	2	0	0	0	0	0	0	0	0
4/22/2024	10:45 PM	0	24	3	0	1	1	0	0	0	0	0	0	0
4/22/2024	11:00 PM	0	19	2	0	1	0	0	0	0	0	0	0	0
4/22/2024	11:15 PM	0	16	1	0	1	0	0	0	0	0	0	0	0
4/22/2024	11:30 PM	0	15	2	0	1	0	0	0	0	0	0	0	0
4/22/2024	11:45 PM	0	10	1	0	0	0	0	0	0	0	0	0	0

4/23/2024	12:00 AM	0	8	1	0	1	1	0	0	0	0	0	0	0
4/23/2024	12:15 AM	0	9	2	0	0	0	0	0	0	0	0	0	0
4/23/2024	12:30 AM	0	8	0	0	0	0	0	0	0	0	0	0	0
4/23/2024	12:45 AM	0	5	0	0	0	0	0	0	0	0	0	0	0
4/23/2024	1:00 AM	0	6	0	0	0	0	0	0	0	0	0	0	0
4/23/2024	1:15 AM	0	7	0	0	0	0	0	0	0	0	0	0	0
4/23/2024	1:30 AM	0	3	1	0	0	0	0	0	0	0	0	0	0
4/23/2024	1:45 AM	0	2	1	0	0	0	0	0	0	0	0	0	0
4/23/2024	2:00 AM	0	4	0	0	0	0	0	0	0	0	0	0	0
4/23/2024	2:15 AM	0	2	0	0	0	0	0	0	0	0	0	0	0
4/23/2024	2:30 AM	0	5	0	0	0	1	0	0	0	0	0	0	0
4/23/2024	2:45 AM	0	3	1	0	1	0	0	0	0	0	0	0	0
4/23/2024	3:00 AM	0	0	0	0	0	0	0	0	0	0	0	0	0
4/23/2024	3:15 AM	0	2	0	0	0	0	0	0	0	0	0	0	0
4/23/2024	3:30 AM	0	4	0	0	0	0	0	0	0	0	0	0	0
4/23/2024	3:45 AM	0	1	0	0	0	0	0	0	0	0	0	0	0
4/23/2024	4:00 AM	0	6	0	0	0	0	0	0	0	0	0	0	0
4/23/2024	4:15 AM	0	2	0	0	0	0	0	0	0	0	0	0	0
4/23/2024	4:30 AM	0	5	1	0	0	0	0	0	0	0	0	0	0
4/23/2024	4:45 AM	0	4	0	0	0	0	0	0	1	0	0	0	0
4/23/2024	5:00 AM	0	2	0	0	0	0	0	0	0	0	0	0	0
4/23/2024	5:15 AM	0	11	1	0	0	0	0	0	0	0	0	0	0
4/23/2024	5:30 AM	0	11	0	0	0	0	0	0	0	0	0	0	0
4/23/2024	5:45 AM	0	14	2	0	0	0	0	0	0	0	0	0	0
4/23/2024	6:00 AM	0	17	2	0	2	0	0	0	0	0	0	0	0
4/23/2024	6:15 AM	0	21	4	0	0	0	0	0	0	0	0	0	0
4/23/2024	6:30 AM	0	32	8	0	2	0	0	0	0	0	0	0	0
4/23/2024	6:45 AM	0	33	5	0	4	2	0	0	0	0	0	0	0
4/23/2024	7:00 AM	0	41	7	1	2	0	0	0	0	0	0	0	0
4/23/2024	7:15 AM	0	62	15	0	4	1	0	0	0	0	0	0	0
4/23/2024	7:30 AM	0	60	12	0	1	0	0	1	0	0	0	0	0
4/23/2024	7:45 AM	0	76	11	0	2	0	0	1	0	0	0	0	0
4/23/2024	8:00 AM	0	62	11	0	3	1	0	1	0	0	0	0	0
4/23/2024	8:15 AM	0	67	14	0	2	1	0	0	1	0	0	0	0
4/23/2024	8:30 AM	0	60	16	0	3	1	0	0	1	0	0	0	0
4/23/2024	8:45 AM	0	62	15	0	3	0	0	1	1	0	0	0	0
4/23/2024	9:00 AM	0	54	13	0	0	0	0	0	0	0	0	0	0
4/23/2024	9:15 AM	0	48	7	0	3	1	0	0	1	0	0	0	0
4/23/2024	9:30 AM	0	66	13	1	2	1	0	1	2	0	0	0	0
4/23/2024	9:45 AM	0	49	10	0	1	1	0	0	1	0	0	0	0
4/23/2024	10:00 AM	0	64	11	1	0	0	0	0	1	0	0	0	0
4/23/2024	10:15 AM	0	58	14	0	7	2	0	0	2	0	0	0	0
4/23/2024	10:30 AM	0	65	19	0	0	1	0	1	1	0	0	0	0
4/23/2024	10:45 AM	0	56	13	0	2	0	0	0	1	0	0	0	0
4/23/2024	11:00 AM	0	75	16	0	0	0	0	0	0	0	0	0	0
4/23/2024	11:15 AM	0	85	15	0	2	0	0	0	0	0	0	0	0
4/23/2024	11:30 AM	0	70	22	0	2	0	0	2	1	0	0	0	0
4/23/2024	11:45 AM	0	83	20	1	0	2	0	0	0	0	0	0	0
4/23/2024	12:00 PM	0	86	14	0	1	0	0	0	2	0	0	0	0
4/23/2024	12:15 PM	0	85	18	0	3	1	0	2	0	0	0	0	0
4/23/2024	12:30 PM	0	79	14	0	2	0	0	0	2	0	0	0	0
4/23/2024	12:45 PM	0	72	24	1	2	0	0	0	0	0	0	0	0
4/23/2024	1:00 PM	0	96	17	3	0	3	0	1	1	0	0	0	0
4/23/2024	1:15 PM	1	104	18	3	1	0	1	0	1	0	0	0	0
4/23/2024	1:30 PM	0	91	11	1	0	0	0	0	0	0	0	0	0
4/23/2024	1:45 PM	0	83	19	1	0	0	0	0	0	0	0	0	0
4/23/2024	2:00 PM	0	97	20	3	0	0	0	0	0	0	0	0	0
4/23/2024	2:15 PM	0	105	25	0	1	0	0	0	1	0	0	0	0
4/23/2024	2:30 PM	0	123	27	0	3	0	1	1	1	0	0	0	0
4/23/2024	2:45 PM	0	121	32	1	2	0	0	0	1	0	0	0	0
4/23/2024	3:00 PM	0	140	21	1	3	0	0	2	0	0	0	0	0
4/23/2024	3:15 PM	0	129	28	0	2	2	0	0	1	0	0	0	0
4/23/2024	3:30 PM	1	166	34	0	1	0	0	0	1	0	0	0	0
4/23/2024	3:45 PM	0	160	40	0	2	0	0	0	1	0	0	0	0
4/23/2024	4:00 PM	0	193	52	0	2	0	1	0	1	0	0	0	0
4/23/2024	4:15 PM	0	228	45	0	2	0	0	0	0	0	0	0	0
4/23/2024	4:30 PM	0	249	39	0	4	0	0	1	0	0	0	0	0
4/23/2024	4:45 PM	0	232	35	0	1	1	0	0	1	3	0	0	0
4/23/2024	5:00 PM	0	224	41	0	1	0	0	0	1	0	0	0	0
4/23/2024	5:15 PM	0	239	40	0	1	0	0	0	1	0	0	0	0
4/23/2024	5:30 PM	0	197	49	0	0	0	0	1	2	0	0	0	0
4/23/2024	5:45 PM	0	142	39	0	1	0	0	0	1	0	0	0	0
4/23/2024	6:00 PM	0	143	28	0	2	0	0	0	0	0	0	0	0
4/23/2024	6:15 PM	1	99	21	0	0	0	0	0	0	0	0	0	0
4/23/2024	6:30 PM	0	90	16	0	2	0	0	0	0	0	0	0	0
4/23/2024	6:45 PM	0	76	11	0	0	0	0	0	0	0	0	0	0
4/23/2024	7:00 PM	1	63	10	0	0	0	0	0	0	0	0	0	0
4/23/2024	7:15 PM	0	67	8	0	0	0	0	0	1	0	0	0	0
4/23/2024	7:30 PM	0	59	11	0	0	0	0	0	0	0	0	0	0
4/23/2024	7:45 PM	0	60	9	0	0	0	0	1	0	0	0	0	0
4/23/2024	8:00 PM	0	47	15	0	0	0	0	0	0	0	0	0	0
4/23/2024	8:15 PM	0	46	11	0	1	0	0	0	0	0	0	0	0
4/23/2024	8:30 PM	0	47	8	0	1	0	0	0	0	0	0	0	0
4/23/2024	8:45 PM	0	22	4	0	0	0	0	0	0	0	0	0	0
4/23/2024	9:00 PM	1	34	6	0	1	0	0	0	0	0	0	0	0
4/23/2024	9:15 PM	0	28	6	0	0	0	0	0	0	0	0	0	0
4/23/2024	9:30 PM	0	35	5	0	0	1	0	1	0	0	0	0	0
4/23/2024	9:45 PM	0	20	4	0	0	1	0	0	1	0	0	0	0
4/23/2024	10:00 PM	0	17	3	0	0	3	0	0	0	0	0	0	0
4/23/2024	10:15 PM	0	43	7	0	2	0	0	1	0	0	0	0	0
4/23/2024	10:30 PM	0	27	5	0	0	0	0	0	0	0	0	0	0
4/23/2024	10:45 PM	0	10	2	0	1	0	0	0	0	0	0	0	0
4/23/2024	11:00 PM	0	15	3	0	0	0	0	0	0	0	0	0	0
4/23/2024	11:15 PM	0	14	2	0	3	2	0	0	0	0	0	0	0
4/23/2024	11:30 PM	0	6	1	0	0	1	0	0	0	0	0	0	0
4/23/2024	11:45 PM	0	3	0	0	0	0	0	0	0	0	0	0	0

4/24/2024	12:00 AM	0	7	4	0	0	1	0	0	0	0	0	0	0
4/24/2024	12:15 AM	0	7	0	0	2	0	0	0	0	0	0	0	0
4/24/2024	12:30 AM	0	6	0	0	2	0	0	0	0	0	0	0	0
4/24/2024	12:45 AM	0	3	0	0	3	0	0	0	0	0	0	0	0
4/24/2024	1:00 AM	0	3	1	0	4	0	0	0	0	0	0	0	0
4/24/2024	1:15 AM	0	9	0	0	1	0	0	0	0	0	0	0	0
4/24/2024	1:30 AM	0	3	0	0	1	0	0	0	0	0	0	0	0
4/24/2024	1:45 AM	0	3	1	0	0	0	0	0	0	0	0	0	0
4/24/2024	2:00 AM	0	3	0	0	0	0	0	0	0	0	0	0	0
4/24/2024	2:15 AM	0	5	3	0	2	0	0	0	0	0	0	0	0
4/24/2024	2:30 AM	0	0	0	0	1	0	0	0	0	0	0	0	0
4/24/2024	2:45 AM	0	1	1	0	0	0	0	0	0	0	0	0	0
4/24/2024	3:00 AM	0	3	0	0	0	0	0	0	0	0	0	0	0
4/24/2024	3:15 AM	0	2	0	0	0	1	0	0	0	0	0	0	0
4/24/2024	3:30 AM	0	2	1	0	1	0	0	0	0	0	0	0	0
4/24/2024	3:45 AM	0	3	0	0	0	0	0	0	0	0	0	0	0
4/24/2024	4:00 AM	0	3	0	0	0	0	0	0	0	0	0	0	0
4/24/2024	4:15 AM	0	1	2	0	0	0	0	0	0	0	0	0	0
4/24/2024	4:30 AM	0	7	1	0	0	0	0	0	0	0	0	0	0
4/24/2024	4:45 AM	0	0	0	0	0	0	0	0	1	0	0	0	0
4/24/2024	5:00 AM	0	6	1	0	0	0	0	0	0	0	0	0	0
4/24/2024	5:15 AM	0	7	0	0	0	0	0	0	0	0	0	0	0
4/24/2024	5:30 AM	0	10	1	0	1	0	0	0	0	0	0	0	0
4/24/2024	5:45 AM	0	12	1	0	0	0	0	0	0	0	0	0	0
4/24/2024	6:00 AM	0	17	3	0	2	0	0	0	0	0	0	0	0
4/24/2024	6:15 AM	0	13	2	0	1	2	0	0	0	0	0	0	0
4/24/2024	6:30 AM	0	30	13	0	0	0	0	0	0	0	0	0	0
4/24/2024	6:45 AM	0	32	6	0	6	1	0	1	1	0	0	0	0
4/24/2024	7:00 AM	0	45	12	1	1	0	0	0	0	0	0	0	0
4/24/2024	7:15 AM	0	68	18	0	2	1	0	0	0	0	0	0	0
4/24/2024	7:30 AM	0	80	21	0	4	1	0	0	1	0	0	0	0
4/24/2024	7:45 AM	1	78	21	0	3	0	0	0	1	0	0	0	0
4/24/2024	8:00 AM	0	57	15	0	0	0	0	0	0	0	0	0	0
4/24/2024	8:15 AM	0	66	22	0	1	0	0	0	1	0	0	0	0
4/24/2024	8:30 AM	0	47	16	0	0	0	0	1	0	0	0	0	0
4/24/2024	8:45 AM	0	55	20	0	0	0	0	0	0	0	0	0	0
4/24/2024	9:00 AM	0	52	12	0	2	0	0	0	1	0	0	0	0
4/24/2024	9:15 AM	0	42	11	0	3	0	0	0	3	0	0	0	0
4/24/2024	9:30 AM	0	58	18	0	2	0	0	0	0	0	0	0	0
4/24/2024	9:45 AM	0	58	22	0	1	0	1	1	0	0	0	0	0
4/24/2024	10:00 AM	0	63	21	1	1	0	0	0	1	0	0	0	0
4/24/2024	10:15 AM	0	51	19	0	3	0	0	0	1	0	0	0	0
4/24/2024	10:30 AM	0	64	21	0	1	0	0	0	0	0	0	0	0
4/24/2024	10:45 AM	0	68	27	0	2	1	0	0	0	0	0	0	0
4/24/2024	11:00 AM	0	53	19	0	1	1	0	0	0	0	0	0	0
4/24/2024	11:15 AM	0	74	17	0	1	0	0	1	0	0	0	0	0
4/24/2024	11:30 AM	0	62	13	0	0	2	1	0	0	0	0	0	0
4/24/2024	11:45 AM	0	86	20	0	0	0	0	0	1	0	0	0	0
4/24/2024	12:00 PM	0	63	22	0	2	0	0	0	2	0	0	0	0
4/24/2024	12:15 PM	0	83	20	1	1	0	0	0	0	0	0	0	0
4/24/2024	12:30 PM	0	85	19	1	2	0	0	0	1	0	0	0	0
4/24/2024	12:45 PM	0	100	11	0	3	0	0	2	1	0	0	0	0
4/24/2024	1:00 PM	0	106	15	1	0	0	0	0	0	0	0	0	0
4/24/2024	1:15 PM	0	94	24	0	2	0	0	0	1	0	0	0	0
4/24/2024	1:30 PM	0	103	20	0	3	0	0	0	0	0	0	0	0
4/24/2024	1:45 PM	0	97	18	0	2	0	0	1	2	0	0	0	0
4/24/2024	2:00 PM	0	108	21	0	4	0	0	0	0	1	0	0	0
4/24/2024	2:15 PM	0	130	24	1	2	0	0	1	1	0	0	0	0
4/24/2024	2:30 PM	1	112	20	1	1	0	0	1	2	0	0	0	0
4/24/2024	2:45 PM	0	105	17	3	2	0	0	1	0	0	0	0	0
4/24/2024	3:00 PM	2	156	23	2	3	0	0	1	3	0	0	0	0
4/24/2024	3:15 PM	0	154	28	0	0	0	0	0	1	0	0	0	0
4/24/2024	3:30 PM	0	151	39	3	3	0	0	0	0	0	0	0	0
4/24/2024	3:45 PM	0	170	41	0	1	0	0	0	1	0	0	0	0
4/24/2024	4:00 PM	0	204	55	0	3	0	0	0	0	0	0	0	0
4/24/2024	4:15 PM	1	208	44	0	8	0	0	0	0	0	0	0	0
4/24/2024	4:30 PM	0	224	45	0	0	0	0	1	0	0	0	0	0
4/24/2024	4:45 PM	0	225	34	0	2	0	0	0	0	0	0	0	0
4/24/2024	5:00 PM	0	200	37	0	0	0	0	0	0	0	0	0	0
4/24/2024	5:15 PM	0	183	32	0	1	0	0	0	0	0	0	0	0
4/24/2024	5:30 PM	0	185	40	0	1	0	0	0	0	0	0	0	0
4/24/2024	5:45 PM	0	180	37	0	1	0	0	0	0	0	0	0	0
4/24/2024	6:00 PM	0	124	26	0	1	0	0	0	1	0	0	0	0
4/24/2024	6:15 PM	0	112	25	0	3	0	0	0	0	0	0	0	0
4/24/2024	6:30 PM	1	104	18	0	1	0	0	0	0	0	0	0	0
4/24/2024	6:45 PM	0	68	20	0	1	0	0	0	0	0	0	0	0
4/24/2024	7:00 PM	0	58	10	0	1	0	0	0	0	0	0	0	0
4/24/2024	7:15 PM	0	85	13	0	1	0	1	0	0	0	0	0	0
4/24/2024	7:30 PM	0	70	11	0	1	0	0	1	0	0	0	0	0
4/24/2024	7:45 PM	1	89	17	0	0	0	0	0	1	0	0	0	0
4/24/2024	8:00 PM	0	68	10	0	0	0	0	0	1	0	0	0	0
4/24/2024	8:15 PM	0	78	16	0	1	0	0	0	0	0	0	0	0
4/24/2024	8:30 PM	0	69	12	0	2	0	0	0	1	0	0	0	0
4/24/2024	8:45 PM	0	57	9	0	1	0	0	0	1	0	0	0	0
4/24/2024	9:00 PM	0	48	7	0	2	0	0	0	0	0	0	0	0
4/24/2024	9:15 PM	0	40	9	0	0	0	0	0	0	0	0	0	0
4/24/2024	9:30 PM	0	23	3	0	0	0	0	0	1	0	0	0	0
4/24/2024	9:45 PM	0	39	8	0	0	0	0	0	0	0	0	0	0
4/24/2024	10:00 PM	0	36	7	0	1	0	0	0	0	0	0	0	0
4/24/2024	10:15 PM	0	55	15	0	1	0	0	0	0	0	0	0	0
4/24/2024	10:30 PM	0	52	14	0	0	0	0	0	0	0	0	0	0
4/24/2024	10:45 PM	0	23	5	0	0	0	0	0	0	0	0	0	0
4/24/2024	11:00 PM	0	23	6	0	0	0	0	0	0	0	0	0	0
4/24/2024	11:15 PM	0	21	4	0	0	0	0	0	0	0	0	0	0
4/24/2024	11:30 PM	0	17	2	0	0	0	0	0	0	0	0	0	0
4/24/2024	11:45 PM	0	12	0	0	0	0	0	0	0	0	0	0	0

4/25/2024	12:00 AM	0	5	1	0	2	0	0	0	1	0	0	0	0
4/25/2024	12:15 AM	0	9	2	0	0	0	0	0	0	0	0	0	0
4/25/2024	12:30 AM	0	7	1	0	3	0	0	0	0	0	0	0	0
4/25/2024	12:45 AM	0	5	1	0	2	0	0	0	0	0	0	0	0
4/25/2024	1:00 AM	0	8	1	0	0	0	0	0	0	0	0	0	0
4/25/2024	1:15 AM	0	9	0	0	1	0	0	0	0	0	0	0	0
4/25/2024	1:30 AM	0	6	1	0	2	0	0	0	0	0	0	0	0
4/25/2024	1:45 AM	0	2	2	0	0	0	0	0	1	0	0	0	0
4/25/2024	2:00 AM	0	4	1	0	2	0	0	0	0	0	0	0	0
4/25/2024	2:15 AM	0	4	0	0	4	0	0	0	0	0	0	0	0
4/25/2024	2:30 AM	0	2	0	0	2	0	0	0	0	0	0	0	0
4/25/2024	2:45 AM	0	6	1	0	2	0	0	0	1	0	0	0	0
4/25/2024	3:00 AM	0	2	1	0	1	0	0	0	0	0	0	0	0
4/25/2024	3:15 AM	0	7	2	0	0	0	0	0	0	0	0	0	0
4/25/2024	3:30 AM	0	1	0	0	0	0	0	0	0	0	0	0	0
4/25/2024	3:45 AM	0	3	1	0	1	0	0	0	1	0	0	0	0
4/25/2024	4:00 AM	0	2	1	0	0	0	0	0	0	0	0	0	0
4/25/2024	4:15 AM	0	4	1	0	1	0	0	0	0	0	0	0	0
4/25/2024	4:30 AM	0	7	1	0	0	0	0	0	1	0	0	0	0
4/25/2024	4:45 AM	0	5	2	0	1	0	0	0	1	0	0	0	0
4/25/2024	5:00 AM	0	4	1	0	0	0	0	0	0	0	0	0	0
4/25/2024	5:15 AM	0	5	1	0	0	0	0	0	0	0	0	0	0
4/25/2024	5:30 AM	0	15	4	1	0	0	0	0	0	0	0	0	0
4/25/2024	5:45 AM	0	20	3	0	0	0	0	0	0	0	0	0	0
4/25/2024	6:00 AM	0	17	3	0	1	0	0	0	0	0	0	0	0
4/25/2024	6:15 AM	0	16	5	0	4	0	0	0	0	0	0	0	0
4/25/2024	6:30 AM	0	35	7	0	0	0	0	0	0	0	0	0	0
4/25/2024	6:45 AM	0	28	9	0	2	0	0	0	0	0	0	0	0
4/25/2024	7:00 AM	0	49	6	1	4	1	1	1	1	0	0	0	0
4/25/2024	7:15 AM	0	59	11	1	3	0	0	0	0	0	0	0	0
4/25/2024	7:30 AM	1	63	10	0	0	0	0	1	0	2	0	0	0
4/25/2024	7:45 AM	0	82	17	0	0	0	0	0	0	0	0	0	0
4/25/2024	8:00 AM	0	66	7	0	0	0	0	1	0	0	0	0	0
4/25/2024	8:15 AM	0	51	18	0	1	0	0	0	1	0	0	0	0
4/25/2024	8:30 AM	0	60	21	0	1	0	0	0	0	0	0	0	0
4/25/2024	8:45 AM	0	62	19	0	0	0	0	1	1	0	0	0	0
4/25/2024	9:00 AM	0	46	12	0	0	0	0	0	5	0	0	0	0
4/25/2024	9:15 AM	0	50	17	0	2	0	0	0	0	2	0	0	0
4/25/2024	9:30 AM	0	63	17	0	0	0	0	0	0	0	0	0	0
4/25/2024	9:45 AM	0	63	18	1	2	0	0	1	2	0	0	0	0
4/25/2024	10:00 AM	0	72	16	0	0	2	0	0	1	0	0	0	0
4/25/2024	10:15 AM	0	56	11	0	0	0	0	1	1	0	0	0	0
4/25/2024	10:30 AM	0	58	13	1	5	0	0	1	2	0	0	0	0
4/25/2024	10:45 AM	0	61	17	0	1	1	0	0	1	0	0	0	0
4/25/2024	11:00 AM	0	68	12	1	4	0	0	0	0	0	0	0	0
4/25/2024	11:15 AM	0	77	22	1	1	0	0	0	1	0	0	0	0
4/25/2024	11:30 AM	0	90	17	0	1	0	0	0	0	0	0	0	0
4/25/2024	11:45 AM	0	78	21	1	2	0	0	0	0	0	0	0	0
4/25/2024	12:00 PM	0	73	28	1	3	0	0	0	0	0	0	0	0
4/25/2024	12:15 PM	0	80	29	0	0	0	0	0	0	0	0	0	0
4/25/2024	12:30 PM	0	93	18	0	0	0	0	0	1	0	0	0	0
4/25/2024	12:45 PM	0	99	27	4	1	0	0	0	1	0	0	0	0
4/25/2024	1:00 PM	1	83	21	3	2	0	0	1	0	0	0	0	0
4/25/2024	1:15 PM	0	105	17	0	2	0	1	0	2	0	0	0	0
4/25/2024	1:30 PM	0	97	13	1	4	2	1	0	1	0	0	0	0
4/25/2024	1:45 PM	0	94	20	0	2	0	0	1	0	0	0	0	0
4/25/2024	2:00 PM	0	104	27	0	1	0	0	1	0	0	0	0	0
4/25/2024	2:15 PM	0	115	19	0	1	0	0	0	0	0	0	0	0
4/25/2024	2:30 PM	0	116	26	0	2	1	0	2	1	0	0	0	0
4/25/2024	2:45 PM	0	141	32	0	1	0	0	1	0	0	0	0	0
4/25/2024	3:00 PM	0	160	25	3	3	0	0	1	0	0	0	0	0
4/25/2024	3:15 PM	0	170	23	3	1	0	0	1	0	0	0	0	0
4/25/2024	3:30 PM	0	167	29	0	3	1	0	0	0	0	0	0	0
4/25/2024	3:45 PM	1	182	34	0	2	0	0	0	0	0	0	0	0
4/25/2024	4:00 PM	0	201	26	1	5	0	0	0	0	0	0	0	0
4/25/2024	4:15 PM	0	203	46	0	2	0	0	0	0	0	0	0	0
4/25/2024	4:30 PM	0	205	53	0	3	0	0	0	1	0	0	0	0
4/25/2024	4:45 PM	0	249	41	0	1	0	1	0	0	0	0	0	0
4/25/2024	5:00 PM	0	197	34	0	0	0	0	0	0	0	0	0	0
4/25/2024	5:15 PM	0	203	19	0	0	0	0	0	1	0	0	0	0
4/25/2024	5:30 PM	0	175	34	0	0	1	0	0	0	0	0	0	0
4/25/2024	5:45 PM	0	176	29	0	0	0	0	0	2	0	0	0	0
4/25/2024	6:00 PM	0	119	28	0	0	0	0	0	0	0	0	0	0
4/25/2024	6:15 PM	1	103	22	0	1	0	0	0	0	0	0	0	0
4/25/2024	6:30 PM	0	93	14	0	0	0	0	0	0	0	0	0	0
4/25/2024	6:45 PM	0	72	17	0	1	0	0	0	0	0	0	0	0
4/25/2024	7:00 PM	0	69	13	0	1	0	0	0	0	0	0	0	0
4/25/2024	7:15 PM	0	58	13	0	0	0	0	0	0	0	0	0	0
4/25/2024	7:30 PM	0	73	7	0	0	0	0	0	0	0	0	0	0
4/25/2024	7:45 PM	0	66	3	0	1	0	0	0	0	0	0	0	0
4/25/2024	8:00 PM	0	54	13	0	0	0	0	0	0	0	0	0	0
4/25/2024	8:15 PM	0	45	4	0	0	0	0	0	0	0	0	0	0
4/25/2024	8:30 PM	0	63	7	0	0	0	0	0	0	0	0	0	0
4/25/2024	8:45 PM	0	56	8	0	1	0	0	0	0	0	0	0	0
4/25/2024	9:00 PM	0	47	6	0	1	0	0	0	0	0	0	0	0
4/25/2024	9:15 PM	0	34	5	0	0	0	0	0	1	0	0	0	0
4/25/2024	9:30 PM	0	33	2	0	0	0	0	0	0	0	0	0	0
4/25/2024	9:45 PM	0	43	3	0	0	0	0	0	0	0	0	0	0
4/25/2024	10:00 PM	0	24	6	0	0	0	0	0	0	0	0	0	0
4/25/2024	10:15 PM	0	75	5	0	0	0	0	0	0	0	0	0	0
4/25/2024	10:30 PM	0	45	2	0	0	0	0	0	0	0	0	0	0
4/25/2024	10:45 PM	0	12	3	0	0	0	0	0	0	0	0	0	0
4/25/2024	11:00 PM	0	26	2	0	0	0	0	0	0	0	0	0	0
4/25/2024	11:15 PM	0	16	3	0	2	0	0	0	0	0	0	0	0
4/25/2024	11:30 PM	0	20	1	0	1	0	0	0	0	0	0	0	0
4/25/2024	11:45 PM	0	9	0	0	1	0	0	0	0	0	0	0	0

4/26/2024	12:00 AM	0	5	3	0	3	2	0	0	0	0	0	0	0
4/26/2024	12:15 AM	0	4	1	0	2	0	0	0	0	0	0	0	0
4/26/2024	12:30 AM	0	3	2	0	1	1	0	0	0	0	0	0	0
4/26/2024	12:45 AM	0	2	1	0	0	0	0	0	0	0	0	0	0
4/26/2024	1:00 AM	0	0	0	0	1	0	0	0	0	0	0	0	0
4/26/2024	1:15 AM	0	4	2	0	1	2	0	0	0	0	0	0	0
4/26/2024	1:30 AM	0	3	1	0	1	0	0	0	0	0	0	0	0
4/26/2024	1:45 AM	0	4	1	0	2	0	0	0	0	0	0	0	0
4/26/2024	2:00 AM	0	4	1	0	2	1	0	0	0	0	0	0	0
4/26/2024	2:15 AM	0	2	1	0	1	2	0	0	0	0	0	0	0
4/26/2024	2:30 AM	0	3	1	0	0	0	0	0	0	0	0	0	0
4/26/2024	2:45 AM	0	2	2	0	0	0	0	0	0	0	0	0	0
4/26/2024	3:00 AM	0	3	2	0	2	0	0	0	0	0	0	0	0
4/26/2024	3:15 AM	0	1	0	0	1	0	0	0	0	0	0	0	0
4/26/2024	3:30 AM	0	3	0	0	0	0	0	0	0	0	0	0	0
4/26/2024	3:45 AM	0	1	1	0	0	0	0	0	0	0	0	0	0
4/26/2024	4:00 AM	0	2	2	0	1	1	0	1	0	0	0	0	0
4/26/2024	4:15 AM	0	2	1	0	0	1	0	0	0	0	0	0	0
4/26/2024	4:30 AM	0	4	1	0	0	0	0	0	0	0	0	0	0
4/26/2024	4:45 AM	0	3	3	0	1	0	0	0	0	0	0	0	0
4/26/2024	5:00 AM	0	6	2	0	0	1	0	0	0	0	0	0	0
4/26/2024	5:15 AM	0	3	2	0	0	0	0	0	0	0	0	0	0
4/26/2024	5:30 AM	0	9	2	0	0	0	0	0	0	0	0	0	0
4/26/2024	5:45 AM	0	5	2	0	1	0	0	0	0	0	0	0	0
4/26/2024	6:00 AM	0	13	6	0	2	0	0	0	0	0	0	0	0
4/26/2024	6:15 AM	0	23	4	0	1	0	0	0	0	0	0	0	0
4/26/2024	6:30 AM	0	19	9	0	1	0	0	0	0	0	0	0	0
4/26/2024	6:45 AM	0	29	12	0	0	3	0	0	0	0	0	0	0
4/26/2024	7:00 AM	0	37	6	1	4	0	0	0	0	0	0	0	0
4/26/2024	7:15 AM	0	67	9	0	5	2	0	0	0	0	0	0	0
4/26/2024	7:30 AM	0	59	10	0	1	0	0	0	0	0	0	0	0
4/26/2024	7:45 AM	1	62	16	0	2	0	0	0	1	0	0	0	0
4/26/2024	8:00 AM	0	77	10	0	1	0	0	0	0	0	0	0	0
4/26/2024	8:15 AM	0	60	16	0	2	0	0	0	1	0	0	0	0
4/26/2024	8:30 AM	0	51	12	1	0	0	0	1	0	0	0	0	0
4/26/2024	8:45 AM	0	49	16	0	1	0	0	1	0	0	0	0	0
4/26/2024	9:00 AM	0	37	19	0	4	0	0	0	0	0	0	0	0
4/26/2024	9:15 AM	0	51	14	1	1	0	0	0	0	0	0	0	0
4/26/2024	9:30 AM	0	63	13	0	3	1	0	0	2	0	0	0	0
4/26/2024	9:45 AM	0	38	9	0	1	1	0	0	1	0	0	0	0
4/26/2024	10:00 AM	0	67	22	0	5	0	0	0	0	0	0	0	0
4/26/2024	10:15 AM	0	66	12	0	3	0	0	0	1	0	0	0	0
4/26/2024	10:30 AM	0	64	6	1	1	0	0	0	0	0	0	0	0
4/26/2024	10:45 AM	0	68	18	0	6	1	0	0	1	0	0	0	0
4/26/2024	11:00 AM	0	97	14	2	5	1	0	0	0	0	0	0	0
4/26/2024	11:15 AM	0	114	25	2	3	0	0	0	0	0	0	0	0
4/26/2024	11:30 AM	0	87	28	0	3	1	0	0	1	0	0	0	0
4/26/2024	11:45 AM	0	81	14	0	2	0	0	0	1	0	0	0	0
4/26/2024	12:00 PM	0	102	23	0	0	0	0	1	0	1	0	0	0
4/26/2024	12:15 PM	0	120	30	5	0	0	0	0	0	0	0	0	0
4/26/2024	12:30 PM	1	121	24	4	2	0	1	0	0	0	0	0	0
4/26/2024	12:45 PM	0	117	35	0	3	1	0	2	0	0	0	0	0
4/26/2024	1:00 PM	0	98	25	3	2	0	0	1	0	0	0	0	0
4/26/2024	1:15 PM	0	130	22	0	0	0	0	0	1	0	0	0	0
4/26/2024	1:30 PM	0	115	28	5	2	0	0	0	0	0	0	0	0
4/26/2024	1:45 PM	0	92	29	0	1	0	0	0	0	0	0	0	0
4/26/2024	2:00 PM	0	124	31	0	1	0	0	0	0	0	0	0	0
4/26/2024	2:15 PM	0	102	19	1	3	1	0	0	0	0	0	0	0
4/26/2024	2:30 PM	0	146	27	1	2	1	0	1	1	0	0	0	0
4/26/2024	2:45 PM	0	125	22	0	1	0	0	0	2	0	0	0	0
4/26/2024	3:00 PM	0	132	29	1	0	0	0	0	0	0	0	0	0
4/26/2024	3:15 PM	0	120	25	0	1	0	0	0	0	0	0	0	0
4/26/2024	3:30 PM	0	158	31	0	1	0	0	0	2	0	0	0	0
4/26/2024	3:45 PM	1	140	32	0	0	0	0	0	0	0	0	0	0
4/26/2024	4:00 PM	0	160	41	0	1	0	0	0	0	0	0	0	0
4/26/2024	4:15 PM	0	185	45	0	2	1	0	0	2	0	0	0	0
4/26/2024	4:30 PM	0	155	39	0	0	0	0	0	0	0	0	0	0
4/26/2024	4:45 PM	3	182	33	0	0	0	0	0	1	0	0	0	0
4/26/2024	5:00 PM	0	190	28	0	1	0	0	0	1	0	0	0	0
4/26/2024	5:15 PM	0	165	25	0	2	0	0	0	2	0	0	0	0
4/26/2024	5:30 PM	0	145	26	0	1	0	0	0	1	0	0	0	0
4/26/2024	5:45 PM	0	120	19	0	2	0	0	0	0	0	0	0	0
4/26/2024	6:00 PM	0	97	13	0	0	0	0	0	0	0	0	0	0
4/26/2024	6:15 PM	0	95	12	0	1	0	0	0	0	0	0	0	0
4/26/2024	6:30 PM	0	71	9	0	0	0	0	0	0	0	0	0	0
4/26/2024	6:45 PM	0	56	10	0	0	0	0	0	0	0	0	0	0
4/26/2024	7:00 PM	2	67	14	0	1	0	0	0	0	0	0	0	0
4/26/2024	7:15 PM	0	64	11	0	1	0	0	0	0	0	0	0	0
4/26/2024	7:30 PM	0	58	9	0	0	0	0	0	0	0	0	0	0
4/26/2024	7:45 PM	0	55	7	0	0	0	0	0	0	0	0	0	0
4/26/2024	8:00 PM	0	55	8	0	0	0	0	0	0	0	0	0	0
4/26/2024	8:15 PM	0	54	7	0	0	0	0	0	0	0	0	0	0
4/26/2024	8:30 PM	0	43	6	0	0	0	0	0	0	0	0	0	0
4/26/2024	8:45 PM	0	51	9	0	0	0	0	0	0	0	0	0	0
4/26/2024	9:00 PM	0	54	5	0	0	0	0	0	0	0	0	0	0
4/26/2024	9:15 PM	0	66	8	0	0	0	0	0	1	0	0	0	0
4/26/2024	9:30 PM	0	62	7	0	0	0	0	0	0	0	0	0	0
4/26/2024	9:45 PM	0	69	11	0	0	0	0	0	0	0	0	0	0
4/26/2024	10:00 PM	0	52	7	0	0	0	0	0	0	0	0	0	0
4/26/2024	10:15 PM	0	43	5	0	1	0	0	0	0	0	0	0	0
4/26/2024	10:30 PM	0	55	6	0	0	0	0	0	0	0	0	0	0
4/26/2024	10:45 PM	0	99	18	0	0	0	0	0	0	0	0	0	0
4/26/2024	11:00 PM	0	85	7	0	0	0	0	0	0	0	0	0	0
4/26/2024	11:15 PM	0	28	3	0	0	0	0	0	0	0	0	0	0
4/26/2024	11:30 PM	1	24	2	0	0	0	0	0	0	0	0	0	0
4/26/2024	11:45 PM	0	21	3	0	0	0	0	0	0	0	0	0	0

4/27/2024	12:00 AM	0	15	3	0	0	0	0	0	0	0	0	0	0
4/27/2024	12:15 AM	0	20	3	0	1	0	0	0	0	0	0	0	0
4/27/2024	12:30 AM	0	8	2	0	1	0	0	0	0	0	0	0	0
4/27/2024	12:45 AM	0	14	2	0	1	0	0	0	0	0	0	0	0
4/27/2024	1:00 AM	0	8	1	0	0	0	0	0	0	0	0	0	0
4/27/2024	1:15 AM	1	5	1	0	0	0	0	0	0	0	0	0	0
4/27/2024	1:30 AM	0	18	3	0	0	0	0	0	0	0	0	0	0
4/27/2024	1:45 AM	0	10	1	0	0	0	0	0	0	0	0	0	0
4/27/2024	2:00 AM	0	8	1	0	0	0	0	0	0	0	0	0	0
4/27/2024	2:15 AM	0	15	2	0	0	0	0	0	0	0	0	0	0
4/27/2024	2:30 AM	0	10	1	0	0	0	0	0	0	0	0	0	0
4/27/2024	2:45 AM	0	14	2	0	0	0	0	0	0	0	0	0	0
4/27/2024	3:00 AM	0	5	0	0	0	0	0	0	0	0	0	0	0
4/27/2024	3:15 AM	0	4	1	0	0	0	0	0	0	0	0	0	0
4/27/2024	3:30 AM	0	3	0	0	0	0	0	0	0	0	0	0	0
4/27/2024	3:45 AM	0	2	0	0	0	0	0	0	0	0	0	0	0
4/27/2024	4:00 AM	0	1	0	0	0	0	0	0	0	0	0	0	0
4/27/2024	4:15 AM	0	4	0	0	0	0	0	0	0	0	0	0	0
4/27/2024	4:30 AM	0	2	0	0	1	0	0	0	0	0	0	0	0
4/27/2024	4:45 AM	0	2	0	0	1	0	0	0	0	0	0	0	0
4/27/2024	5:00 AM	0	6	1	0	1	0	0	0	0	0	0	0	0
4/27/2024	5:15 AM	0	5	0	0	0	0	0	0	0	0	0	0	0
4/27/2024	5:30 AM	0	8	1	0	0	0	0	0	0	0	0	0	0
4/27/2024	5:45 AM	0	7	1	0	1	0	0	0	0	0	0	0	0
4/27/2024	6:00 AM	0	13	2	0	0	0	0	0	0	0	0	0	0
4/27/2024	6:15 AM	0	7	1	0	0	0	0	0	0	0	0	0	0
4/27/2024	6:30 AM	0	9	3	0	1	0	0	0	0	0	0	0	0
4/27/2024	6:45 AM	0	13	2	0	0	0	0	0	0	0	0	0	0
4/27/2024	7:00 AM	0	19	1	0	0	0	0	0	0	0	0	0	0
4/27/2024	7:15 AM	0	31	4	0	1	0	0	0	1	0	0	0	0
4/27/2024	7:30 AM	0	27	1	0	0	0	0	0	0	0	0	0	0
4/27/2024	7:45 AM	0	27	6	0	0	0	0	0	0	0	0	0	0
4/27/2024	8:00 AM	0	19	3	0	1	0	0	0	0	0	0	0	0
4/27/2024	8:15 AM	0	21	4	0	0	0	0	0	1	0	0	0	0
4/27/2024	8:30 AM	0	26	3	0	0	0	0	0	0	0	0	0	0
4/27/2024	8:45 AM	0	32	5	0	1	0	0	0	0	0	0	0	0
4/27/2024	9:00 AM	0	30	11	0	0	0	0	0	0	0	0	0	0
4/27/2024	9:15 AM	0	39	11	0	1	0	0	0	0	0	0	0	0
4/27/2024	9:30 AM	0	44	1	0	0	0	0	0	1	0	0	0	0
4/27/2024	9:45 AM	0	39	9	0	0	0	0	0	1	0	0	0	0
4/27/2024	10:00 AM	0	41	6	0	1	0	0	1	0	0	0	0	0
4/27/2024	10:15 AM	0	38	6	1	1	0	0	0	0	0	0	0	0
4/27/2024	10:30 AM	1	53	10	0	0	0	0	0	0	0	0	0	0
4/27/2024	10:45 AM	0	61	13	0	1	0	0	0	0	0	0	0	0
4/27/2024	11:00 AM	0	66	5	0	0	0	0	0	0	0	0	0	0
4/27/2024	11:15 AM	0	69	9	0	0	0	0	0	0	0	0	0	0
4/27/2024	11:30 AM	0	56	9	0	0	0	0	0	0	0	0	0	0
4/27/2024	11:45 AM	0	78	9	0	1	0	0	0	0	0	0	0	0
4/27/2024	12:00 PM	0	81	11	0	1	0	0	0	0	0	0	0	0
4/27/2024	12:15 PM	0	61	16	0	0	0	0	0	0	0	0	0	0
4/27/2024	12:30 PM	0	64	10	0	1	0	0	1	0	0	0	0	0
4/27/2024	12:45 PM	1	63	13	0	1	0	0	0	0	0	0	0	0
4/27/2024	1:00 PM	0	69	10	0	1	0	0	0	0	0	0	0	0
4/27/2024	1:15 PM	0	81	15	0	1	0	0	0	0	0	0	0	0
4/27/2024	1:30 PM	1	87	20	0	2	0	0	0	0	0	0	0	0
4/27/2024	1:45 PM	0	82	20	0	1	0	0	0	0	0	0	0	0
4/27/2024	2:00 PM	0	69	6	0	0	0	0	0	0	0	0	0	0
4/27/2024	2:15 PM	1	85	27	1	0	0	0	0	0	0	0	0	0
4/27/2024	2:30 PM	0	73	10	0	0	0	0	0	1	0	0	0	0
4/27/2024	2:45 PM	0	70	9	0	0	0	0	0	0	0	0	0	0
4/27/2024	3:00 PM	0	71	17	0	0	0	0	0	0	0	0	0	0
4/27/2024	3:15 PM	0	86	10	0	0	0	0	0	0	0	0	0	0
4/27/2024	3:30 PM	0	101	11	0	0	0	0	0	0	0	0	0	0
4/27/2024	3:45 PM	0	103	20	0	0	0	0	0	0	0	0	0	0
4/27/2024	4:00 PM	0	85	12	0	0	0	0	0	1	0	0	0	0
4/27/2024	4:15 PM	0	71	11	0	1	0	0	0	0	0	0	0	0
4/27/2024	4:30 PM	0	74	8	0	0	0	0	0	0	0	0	0	0
4/27/2024	4:45 PM	0	66	9	0	0	0	0	0	0	0	0	0	0
4/27/2024	5:00 PM	0	54	9	0	0	0	0	0	0	0	0	0	0
4/27/2024	5:15 PM	0	90	8	0	1	0	0	0	0	0	0	0	0
4/27/2024	5:30 PM	0	57	9	0	0	0	0	0	0	0	0	0	0
4/27/2024	5:45 PM	0	46	16	0	0	0	0	0	0	0	0	0	0
4/27/2024	6:00 PM	0	87	14	0	2	0	0	0	0	0	0	0	0
4/27/2024	6:15 PM	0	80	9	0	0	0	0	0	1	0	0	0	0
4/27/2024	6:30 PM	0	47	4	0	0	0	0	0	1	0	0	0	0
4/27/2024	6:45 PM	0	50	9	0	1	0	0	0	0	0	0	0	0
4/27/2024	7:00 PM	0	50	6	0	0	0	0	0	0	0	0	0	0
4/27/2024	7:15 PM	0	62	4	0	0	0	0	0	0	0	0	0	0
4/27/2024	7:30 PM	0	66	14	0	0	0	0	0	0	0	0	0	0
4/27/2024	7:45 PM	0	80	9	0	0	0	0	0	0	0	0	0	0
4/27/2024	8:00 PM	0	57	12	0	0	0	0	0	0	0	0	0	0
4/27/2024	8:15 PM	0	41	6	0	1	0	0	0	0	0	0	0	0
4/27/2024	8:30 PM	0	34	8	0	1	0	0	0	0	0	0	0	0
4/27/2024	8:45 PM	0	37	16	0	0	0	0	0	0	0	0	0	0
4/27/2024	9:00 PM	1	39	14	0	1	0	0	0	0	0	0	0	0
4/27/2024	9:15 PM	0	86	19	0	0	0	0	0	0	0	0	0	0
4/27/2024	9:30 PM	0	72	26	0	0	0	0	0	0	0	0	0	0
4/27/2024	9:45 PM	0	43	11	0	0	0	0	0	0	0	0	0	0
4/27/2024	10:00 PM	0	49	15	0	0	0	0	0	0	0	0	0	0
4/27/2024	10:15 PM	0	63	19	0	0	0	0	0	0	0	0	0	0
4/27/2024	10:30 PM	0	43	17	0	0	0	0	0	0	0	0	0	0
4/27/2024	10:45 PM	0	18	9	0	0	0	0	0	0	0	0	0	0
4/27/2024	11:00 PM	0	27	11	0	0	0	0	0	0	0	0	0	0
4/27/2024	11:15 PM	0	19	7	0	0	0	0	0	0	0	0	0	0
4/27/2024	11:30 PM	0	18	6	0	0	0	0	0	0	0	0	0	0
4/27/2024	11:45 PM	0	18	7	0	0	0	0	0	0	0	0	0	0

WB
File Name:
Start Date: 4/21/2024
Start Time: 0
Site Code: 5
Station ID: 1
Location 1: I-26 E/Bound On-Ramp, east of US-76
Location 2:

Date	Time	1	2	3	4	5	6	7	8	9	10	11	12	13
4/21/2024	12:00 AM	0	0	0	0	0	0	0	0	0	0	0	0	0
4/21/2024	12:15 AM	0	0	0	0	0	0	0	0	0	0	0	0	0
4/21/2024	12:30 AM	0	0	0	0	0	0	0	0	0	0	0	0	0
4/21/2024	12:45 AM	0	0	0	0	0	0	0	0	0	0	0	0	0
4/21/2024	1:00 AM	0	0	0	0	0	0	0	0	0	0	0	0	0
4/21/2024	1:15 AM	0	0	0	0	0	0	0	0	0	0	0	0	0
4/21/2024	1:30 AM	0	0	0	0	0	0	0	0	0	0	0	0	0
4/21/2024	1:45 AM	0	0	0	0	0	0	0	0	0	0	0	0	0
4/21/2024	2:00 AM	0	0	0	0	0	0	0	0	0	0	0	0	0
4/21/2024	2:15 AM	0	0	0	0	0	0	0	0	0	0	0	0	0
4/21/2024	2:30 AM	0	0	0	0	0	0	0	0	0	0	0	0	0
4/21/2024	2:45 AM	0	0	0	0	0	0	0	0	0	0	0	0	0
4/21/2024	3:00 AM	0	0	0	0	0	0	0	0	0	0	0	0	0
4/21/2024	3:15 AM	0	0	0	0	0	0	0	0	0	0	0	0	0
4/21/2024	3:30 AM	0	0	0	0	0	0	0	0	0	0	0	0	0
4/21/2024	3:45 AM	0	0	0	0	0	0	0	0	0	0	0	0	0
4/21/2024	4:00 AM	0	0	0	0	0	0	0	0	0	0	0	0	0
4/21/2024	4:15 AM	0	0	0	0	0	0	0	0	0	0	0	0	0
4/21/2024	4:30 AM	0	0	0	0	0	0	0	0	0	0	0	0	0
4/21/2024	4:45 AM	0	0	0	0	0	0	0	0	0	0	0	0	0
4/21/2024	5:00 AM	0	0	0	0	0	0	0	0	0	0	0	0	0
4/21/2024	5:15 AM	0	0	0	0	0	0	0	0	0	0	0	0	0
4/21/2024	5:30 AM	0	0	0	0	0	0	0	0	0	0	0	0	0
4/21/2024	5:45 AM	0	0	0	0	0	0	0	0	0	0	0	0	0
4/21/2024	6:00 AM	0	0	0	0	0	0	0	0	0	0	0	0	0
4/21/2024	6:15 AM	0	0	0	0	0	0	0	0	0	0	0	0	0
4/21/2024	6:30 AM	0	0	0	0	0	0	0	0	0	0	0	0	0
4/21/2024	6:45 AM	0	0	0	0	0	0	0	0	0	0	0	0	0
4/21/2024	7:00 AM	0	0	0	0	0	0	0	0	0	0	0	0	0
4/21/2024	7:15 AM	0	0	0	0	0	0	0	0	0	0	0	0	0
4/21/2024	7:30 AM	0	0	0	0	0	0	0	0	0	0	0	0	0
4/21/2024	7:45 AM	0	0	0	0	0	0	0	0	0	0	0	0	0
4/21/2024	8:00 AM	0	0	0	0	0	0	0	0	0	0	0	0	0
4/21/2024	8:15 AM	0	0	0	0	0	0	0	0	0	0	0	0	0
4/21/2024	8:30 AM	0	0	0	0	0	0	0	0	0	0	0	0	0
4/21/2024	8:45 AM	0	0	0	0	0	0	0	0	0	0	0	0	0
4/21/2024	9:00 AM	0	0	0	0	0	0	0	0	0	0	0	0	0
4/21/2024	9:15 AM	0	0	0	0	0	0	0	0	0	0	0	0	0
4/21/2024	9:30 AM	0	0	0	0	0	0	0	0	0	0	0	0	0
4/21/2024	9:45 AM	0	0	0	0	0	0	0	0	0	0	0	0	0
4/21/2024	10:00 AM	0	0	0	0	0	0	0	0	0	0	0	0	0
4/21/2024	10:15 AM	0	0	0	0	0	0	0	0	0	0	0	0	0
4/21/2024	10:30 AM	0	0	0	0	0	0	0	0	0	0	0	0	0
4/21/2024	10:45 AM	0	0	0	0	0	0	0	0	0	0	0	0	0
4/21/2024	11:00 AM	0	0	0	0	0	0	0	0	0	0	0	0	0
4/21/2024	11:15 AM	0	0	0	0	0	0	0	0	0	0	0	0	0
4/21/2024	11:30 AM	0	0	0	0	0	0	0	0	0	0	0	0	0
4/21/2024	11:45 AM	0	0	0	0	0	0	0	0	0	0	0	0	0
4/21/2024	12:00 PM	0	0	0	0	0	0	0	0	0	0	0	0	0
4/21/2024	12:15 PM	0	0	0	0	0	0	0	0	0	0	0	0	0
4/21/2024	12:30 PM	0	0	0	0	0	0	0	0	0	0	0	0	0
4/21/2024	12:45 PM	0	0	0	0	0	0	0	0	0	0	0	0	0
4/21/2024	1:00 PM	0	0	0	0	0	0	0	0	0	0	0	0	0
4/21/2024	1:15 PM	0	0	0	0	0	0	0	0	0	0	0	0	0
4/21/2024	1:30 PM	0	0	0	0	0	0	0	0	0	0	0	0	0
4/21/2024	1:45 PM	0	0	0	0	0	0	0	0	0	0	0	0	0
4/21/2024	2:00 PM	0	0	0	0	0	0	0	0	0	0	0	0	0
4/21/2024	2:15 PM	0	0	0	0	0	0	0	0	0	0	0	0	0
4/21/2024	2:30 PM	0	0	0	0	0	0	0	0	0	0	0	0	0
4/21/2024	2:45 PM	0	0	0	0	0	0	0	0	0	0	0	0	0
4/21/2024	3:00 PM	0	0	0	0	0	0	0	0	0	0	0	0	0
4/21/2024	3:15 PM	0	0	0	0	0	0	0	0	0	0	0	0	0
4/21/2024	3:30 PM	0	0	0	0	0	0	0	0	0	0	0	0	0
4/21/2024	3:45 PM	0	0	0	0	0	0	0	0	0	0	0	0	0
4/21/2024	4:00 PM	0	0	0	0	0	0	0	0	0	0	0	0	0
4/21/2024	4:15 PM	0	0	0	0	0	0	0	0	0	0	0	0	0
4/21/2024	4:30 PM	0	0	0	0	0	0	0	0	0	0	0	0	0
4/21/2024	4:45 PM	0	0	0	0	0	0	0	0	0	0	0	0	0
4/21/2024	5:00 PM	0	0	0	0	0	0	0	0	0	0	0	0	0
4/21/2024	5:15 PM	0	0	0	0	0	0	0	0	0	0	0	0	0
4/21/2024	5:30 PM	0	0	0	0	0	0	0	0	0	0	0	0	0
4/21/2024	5:45 PM	0	0	0	0	0	0	0	0	0	0	0	0	0
4/21/2024	6:00 PM	0	0	0	0	0	0	0	0	0	0	0	0	0
4/21/2024	6:15 PM	0	0	0	0	0	0	0	0	0	0	0	0	0
4/21/2024	6:30 PM	0	0	0	0	0	0	0	0	0	0	0	0	0
4/21/2024	6:45 PM	0	0	0	0	0	0	0	0	0	0	0	0	0
4/21/2024	7:00 PM	0	0	0	0	0	0	0	0	0	0	0	0	0
4/21/2024	7:15 PM	0	0	0	0	0	0	0	0	0	0	0	0	0
4/21/2024	7:30 PM	0	0	0	0	0	0	0	0	0	0	0	0	0
4/21/2024	7:45 PM	0	0	0	0	0	0	0	0	0	0	0	0	0
4/21/2024	8:00 PM	0	0	0	0	0	0	0	0	0	0	0	0	0
4/21/2024	8:15 PM	0	0	0	0	0	0	0	0	0	0	0	0	0
4/21/2024	8:30 PM	0	0	0	0	0	0	0	0	0	0	0	0	0
4/21/2024	8:45 PM	0	0	0	0	0	0	0	0	0	0	0	0	0
4/21/2024	9:00 PM	0	0	0	0	0	0	0	0	0	0	0	0	0
4/21/2024	9:15 PM	0	0	0	0	0	0	0	0	0	0	0	0	0
4/21/2024	9:30 PM	0	0	0	0	0	0	0	0	0	0	0	0	0
4/21/2024	9:45 PM	0	0	0	0	0	0	0	0	0	0	0	0	0
4/21/2024	10:00 PM	0	0	0	0	0	0	0	0	0	0	0	0	0
4/21/2024	10:15 PM	0	0	0	0	0	0	0	0	0	0	0	0	0
4/21/2024	10:30 PM	0	0	0	0	0	0	0	0	0	0	0	0	0
4/21/2024	10:45 PM	0	0	0	0	0	0	0	0	0	0	0	0	0
4/21/2024	11:00 PM	0	0	0	0	0	0	0	0	0	0	0	0	0
4/21/2024	11:15 PM	0	0	0	0	0	0	0	0	0	0	0	0	0
4/21/2024	11:30 PM	0	0	0	0	0	0	0	0	0	0	0	0	0
4/21/2024	11:45 PM	0	0	0	0	0	0	0	0	0	0	0	0	0

4/22/2024	12:00 AM	0	0	0	0	0	0	0	0	0	0	0	0	0
4/22/2024	12:15 AM	0	0	0	0	0	0	0	0	0	0	0	0	0
4/22/2024	12:30 AM	0	0	0	0	0	0	0	0	0	0	0	0	0
4/22/2024	12:45 AM	0	0	0	0	0	0	0	0	0	0	0	0	0
4/22/2024	1:00 AM	0	0	0	0	0	0	0	0	0	0	0	0	0
4/22/2024	1:15 AM	0	0	0	0	0	0	0	0	0	0	0	0	0
4/22/2024	1:30 AM	0	0	0	0	0	0	0	0	0	0	0	0	0
4/22/2024	1:45 AM	0	0	0	0	0	0	0	0	0	0	0	0	0
4/22/2024	2:00 AM	0	0	0	0	0	0	0	0	0	0	0	0	0
4/22/2024	2:15 AM	0	0	0	0	0	0	0	0	0	0	0	0	0
4/22/2024	2:30 AM	0	0	0	0	0	0	0	0	0	0	0	0	0
4/22/2024	2:45 AM	0	0	0	0	0	0	0	0	0	0	0	0	0
4/22/2024	3:00 AM	0	0	0	0	0	0	0	0	0	0	0	0	0
4/22/2024	3:15 AM	0	0	0	0	0	0	0	0	0	0	0	0	0
4/22/2024	3:30 AM	0	0	0	0	0	0	0	0	0	0	0	0	0
4/22/2024	3:45 AM	0	0	0	0	0	0	0	0	0	0	0	0	0
4/22/2024	4:00 AM	0	0	0	0	0	0	0	0	0	0	0	0	0
4/22/2024	4:15 AM	0	0	0	0	0	0	0	0	0	0	0	0	0
4/22/2024	4:30 AM	0	0	0	0	0	0	0	0	0	0	0	0	0
4/22/2024	4:45 AM	0	0	0	0	0	0	0	0	0	0	0	0	0
4/22/2024	5:00 AM	0	0	0	0	0	0	0	0	0	0	0	0	0
4/22/2024	5:15 AM	0	0	0	0	0	0	0	0	0	0	0	0	0
4/22/2024	5:30 AM	0	0	0	0	0	0	0	0	0	0	0	0	0
4/22/2024	5:45 AM	0	0	0	0	0	0	0	0	0	0	0	0	0
4/22/2024	6:00 AM	0	0	0	0	0	0	0	0	0	0	0	0	0
4/22/2024	6:15 AM	0	0	0	0	0	0	0	0	0	0	0	0	0
4/22/2024	6:30 AM	0	0	0	0	0	0	0	0	0	0	0	0	0
4/22/2024	6:45 AM	0	0	0	0	0	0	0	0	0	0	0	0	0
4/22/2024	7:00 AM	0	0	0	0	0	0	0	0	0	0	0	0	0
4/22/2024	7:15 AM	0	0	0	0	0	0	0	0	0	0	0	0	0
4/22/2024	7:30 AM	0	0	0	0	0	0	0	0	0	0	0	0	0
4/22/2024	7:45 AM	0	0	0	0	0	0	0	0	0	0	0	0	0
4/22/2024	8:00 AM	0	0	0	0	0	0	0	0	0	0	0	0	0
4/22/2024	8:15 AM	0	0	0	0	0	0	0	0	0	0	0	0	0
4/22/2024	8:30 AM	0	0	0	0	0	0	0	0	0	0	0	0	0
4/22/2024	8:45 AM	0	0	0	0	0	0	0	0	0	0	0	0	0
4/22/2024	9:00 AM	0	0	0	0	0	0	0	0	0	0	0	0	0
4/22/2024	9:15 AM	0	0	0	0	0	0	0	0	0	0	0	0	0
4/22/2024	9:30 AM	0	0	0	0	0	0	0	0	0	0	0	0	0
4/22/2024	9:45 AM	0	0	0	0	0	0	0	0	0	0	0	0	0
4/22/2024	10:00 AM	0	0	0	0	0	0	0	0	0	0	0	0	0
4/22/2024	10:15 AM	0	0	0	0	0	0	0	0	0	0	0	0	0
4/22/2024	10:30 AM	0	0	0	0	0	0	0	0	0	0	0	0	0
4/22/2024	10:45 AM	0	0	0	0	0	0	0	0	0	0	0	0	0
4/22/2024	11:00 AM	0	0	0	0	0	0	0	0	0	0	0	0	0
4/22/2024	11:15 AM	0	0	0	0	0	0	0	0	0	0	0	0	0
4/22/2024	11:30 AM	0	0	0	0	0	0	0	0	0	0	0	0	0
4/22/2024	11:45 AM	0	0	0	0	0	0	0	0	0	0	0	0	0
4/22/2024	12:00 PM	0	0	0	0	0	0	0	0	0	0	0	0	0
4/22/2024	12:15 PM	0	0	0	0	0	0	0	0	0	0	0	0	0
4/22/2024	12:30 PM	0	0	0	0	0	0	0	0	0	0	0	0	0
4/22/2024	12:45 PM	0	0	0	0	0	0	0	0	0	0	0	0	0
4/22/2024	1:00 PM	0	0	0	0	0	0	0	0	0	0	0	0	0
4/22/2024	1:15 PM	0	0	0	0	0	0	0	0	0	0	0	0	0
4/22/2024	1:30 PM	0	0	0	0	0	0	0	0	0	0	0	0	0
4/22/2024	1:45 PM	0	0	0	0	0	0	0	0	0	0	0	0	0
4/22/2024	2:00 PM	0	0	0	0	0	0	0	0	0	0	0	0	0
4/22/2024	2:15 PM	0	0	0	0	0	0	0	0	0	0	0	0	0
4/22/2024	2:30 PM	0	0	0	0	0	0	0	0	0	0	0	0	0
4/22/2024	2:45 PM	0	0	0	0	0	0	0	0	0	0	0	0	0
4/22/2024	3:00 PM	0	0	0	0	0	0	0	0	0	0	0	0	0
4/22/2024	3:15 PM	0	0	0	0	0	0	0	0	0	0	0	0	0
4/22/2024	3:30 PM	0	0	0	0	0	0	0	0	0	0	0	0	0
4/22/2024	3:45 PM	0	0	0	0	0	0	0	0	0	0	0	0	0
4/22/2024	4:00 PM	0	0	0	0	0	0	0	0	0	0	0	0	0
4/22/2024	4:15 PM	0	0	0	0	0	0	0	0	0	0	0	0	0
4/22/2024	4:30 PM	0	0	0	0	0	0	0	0	0	0	0	0	0
4/22/2024	4:45 PM	0	0	0	0	0	0	0	0	0	0	0	0	0
4/22/2024	5:00 PM	0	0	0	0	0	0	0	0	0	0	0	0	0
4/22/2024	5:15 PM	0	0	0	0	0	0	0	0	0	0	0	0	0
4/22/2024	5:30 PM	0	0	0	0	0	0	0	0	0	0	0	0	0
4/22/2024	5:45 PM	0	0	0	0	0	0	0	0	0	0	0	0	0
4/22/2024	6:00 PM	0	0	0	0	0	0	0	0	0	0	0	0	0
4/22/2024	6:15 PM	0	0	0	0	0	0	0	0	0	0	0	0	0
4/22/2024	6:30 PM	0	0	0	0	0	0	0	0	0	0	0	0	0
4/22/2024	6:45 PM	0	0	0	0	0	0	0	0	0	0	0	0	0
4/22/2024	7:00 PM	0	0	0	0	0	0	0	0	0	0	0	0	0
4/22/2024	7:15 PM	0	0	0	0	0	0	0	0	0	0	0	0	0
4/22/2024	7:30 PM	0	0	0	0	0	0	0	0	0	0	0	0	0
4/22/2024	7:45 PM	0	0	0	0	0	0	0	0	0	0	0	0	0
4/22/2024	8:00 PM	0	0	0	0	0	0	0	0	0	0	0	0	0
4/22/2024	8:15 PM	0	0	0	0	0	0	0	0	0	0	0	0	0
4/22/2024	8:30 PM	0	0	0	0	0	0	0	0	0	0	0	0	0
4/22/2024	8:45 PM	0	0	0	0	0	0	0	0	0	0	0	0	0
4/22/2024	9:00 PM	0	0	0	0	0	0	0	0	0	0	0	0	0
4/22/2024	9:15 PM	0	0	0	0	0	0	0	0	0	0	0	0	0
4/22/2024	9:30 PM	0	0	0	0	0	0	0	0	0	0	0	0	0
4/22/2024	9:45 PM	0	0	0	0	0	0	0	0	0	0	0	0	0
4/22/2024	10:00 PM	0	0	0	0	0	0	0	0	0	0	0	0	0
4/22/2024	10:15 PM	0	0	0	0	0	0	0	0	0	0	0	0	0
4/22/2024	10:30 PM	0	0	0	0	0	0	0	0	0	0	0	0	0
4/22/2024	10:45 PM	0	0	0	0	0	0	0	0	0	0	0	0	0
4/22/2024	11:00 PM	0	0	0	0	0	0	0	0	0	0	0	0	0
4/22/2024	11:15 PM	0	0	0	0	0	0	0	0	0	0	0	0	0
4/22/2024	11:30 PM	0	0	0	0	0	0	0	0	0	0	0	0	0
4/22/2024	11:45 PM	0	0	0	0	0	0	0	0	0	0	0	0	0

4/23/2024	12:00 AM	0	0	0	0	0	0	0	0	0	0	0	0	0
4/23/2024	12:15 AM	0	0	0	0	0	0	0	0	0	0	0	0	0
4/23/2024	12:30 AM	0	0	0	0	0	0	0	0	0	0	0	0	0
4/23/2024	12:45 AM	0	0	0	0	0	0	0	0	0	0	0	0	0
4/23/2024	1:00 AM	0	0	0	0	0	0	0	0	0	0	0	0	0
4/23/2024	1:15 AM	0	0	0	0	0	0	0	0	0	0	0	0	0
4/23/2024	1:30 AM	0	0	0	0	0	0	0	0	0	0	0	0	0
4/23/2024	1:45 AM	0	0	0	0	0	0	0	0	0	0	0	0	0
4/23/2024	2:00 AM	0	0	0	0	0	0	0	0	0	0	0	0	0
4/23/2024	2:15 AM	0	0	0	0	0	0	0	0	0	0	0	0	0
4/23/2024	2:30 AM	0	0	0	0	0	0	0	0	0	0	0	0	0
4/23/2024	2:45 AM	0	0	0	0	0	0	0	0	0	0	0	0	0
4/23/2024	3:00 AM	0	0	0	0	0	0	0	0	0	0	0	0	0
4/23/2024	3:15 AM	0	0	0	0	0	0	0	0	0	0	0	0	0
4/23/2024	3:30 AM	0	0	0	0	0	0	0	0	0	0	0	0	0
4/23/2024	3:45 AM	0	0	0	0	0	0	0	0	0	0	0	0	0
4/23/2024	4:00 AM	0	0	0	0	0	0	0	0	0	0	0	0	0
4/23/2024	4:15 AM	0	0	0	0	0	0	0	0	0	0	0	0	0
4/23/2024	4:30 AM	0	0	0	0	0	0	0	0	0	0	0	0	0
4/23/2024	4:45 AM	0	0	0	0	0	0	0	0	0	0	0	0	0
4/23/2024	5:00 AM	0	0	0	0	0	0	0	0	0	0	0	0	0
4/23/2024	5:15 AM	0	0	0	0	0	0	0	0	0	0	0	0	0
4/23/2024	5:30 AM	0	0	0	0	0	0	0	0	0	0	0	0	0
4/23/2024	5:45 AM	0	0	0	0	0	0	0	0	0	0	0	0	0
4/23/2024	6:00 AM	0	0	0	0	0	0	0	0	0	0	0	0	0
4/23/2024	6:15 AM	0	0	0	0	0	0	0	0	0	0	0	0	0
4/23/2024	6:30 AM	0	0	0	0	0	0	0	0	0	0	0	0	0
4/23/2024	6:45 AM	0	0	0	0	0	0	0	0	0	0	0	0	0
4/23/2024	7:00 AM	0	0	0	0	0	0	0	0	0	0	0	0	0
4/23/2024	7:15 AM	0	0	0	0	0	0	0	0	0	0	0	0	0
4/23/2024	7:30 AM	0	0	0	0	0	0	0	0	0	0	0	0	0
4/23/2024	7:45 AM	0	0	0	0	0	0	0	0	0	0	0	0	0
4/23/2024	8:00 AM	0	0	0	0	0	0	0	0	0	0	0	0	0
4/23/2024	8:15 AM	0	0	0	0	0	0	0	0	0	0	0	0	0
4/23/2024	8:30 AM	0	0	0	0	0	0	0	0	0	0	0	0	0
4/23/2024	8:45 AM	0	0	0	0	0	0	0	0	0	0	0	0	0
4/23/2024	9:00 AM	0	0	0	0	0	0	0	0	0	0	0	0	0
4/23/2024	9:15 AM	0	0	0	0	0	0	0	0	0	0	0	0	0
4/23/2024	9:30 AM	0	0	0	0	0	0	0	0	0	0	0	0	0
4/23/2024	9:45 AM	0	0	0	0	0	0	0	0	0	0	0	0	0
4/23/2024	10:00 AM	0	0	0	0	0	0	0	0	0	0	0	0	0
4/23/2024	10:15 AM	0	0	0	0	0	0	0	0	0	0	0	0	0
4/23/2024	10:30 AM	0	0	0	0	0	0	0	0	0	0	0	0	0
4/23/2024	10:45 AM	0	0	0	0	0	0	0	0	0	0	0	0	0
4/23/2024	11:00 AM	0	0	0	0	0	0	0	0	0	0	0	0	0
4/23/2024	11:15 AM	0	0	0	0	0	0	0	0	0	0	0	0	0
4/23/2024	11:30 AM	0	0	0	0	0	0	0	0	0	0	0	0	0
4/23/2024	11:45 AM	0	0	0	0	0	0	0	0	0	0	0	0	0
4/23/2024	12:00 PM	0	0	0	0	0	0	0	0	0	0	0	0	0
4/23/2024	12:15 PM	0	0	0	0	0	0	0	0	0	0	0	0	0
4/23/2024	12:30 PM	0	0	0	0	0	0	0	0	0	0	0	0	0
4/23/2024	12:45 PM	0	0	0	0	0	0	0	0	0	0	0	0	0
4/23/2024	1:00 PM	0	0	0	0	0	0	0	0	0	0	0	0	0
4/23/2024	1:15 PM	0	0	0	0	0	0	0	0	0	0	0	0	0
4/23/2024	1:30 PM	0	0	0	0	0	0	0	0	0	0	0	0	0
4/23/2024	1:45 PM	0	0	0	0	0	0	0	0	0	0	0	0	0
4/23/2024	2:00 PM	0	0	0	0	0	0	0	0	0	0	0	0	0
4/23/2024	2:15 PM	0	0	0	0	0	0	0	0	0	0	0	0	0
4/23/2024	2:30 PM	0	0	0	0	0	0	0	0	0	0	0	0	0
4/23/2024	2:45 PM	0	0	0	0	0	0	0	0	0	0	0	0	0
4/23/2024	3:00 PM	0	0	0	0	0	0	0	0	0	0	0	0	0
4/23/2024	3:15 PM	0	0	0	0	0	0	0	0	0	0	0	0	0
4/23/2024	3:30 PM	0	0	0	0	0	0	0	0	0	0	0	0	0
4/23/2024	3:45 PM	0	0	0	0	0	0	0	0	0	0	0	0	0
4/23/2024	4:00 PM	0	0	0	0	0	0	0	0	0	0	0	0	0
4/23/2024	4:15 PM	0	0	0	0	0	0	0	0	0	0	0	0	0
4/23/2024	4:30 PM	0	0	0	0	0	0	0	0	0	0	0	0	0
4/23/2024	4:45 PM	0	0	0	0	0	0	0	0	0	0	0	0	0
4/23/2024	5:00 PM	0	0	0	0	0	0	0	0	0	0	0	0	0
4/23/2024	5:15 PM	0	0	0	0	0	0	0	0	0	0	0	0	0
4/23/2024	5:30 PM	0	0	0	0	0	0	0	0	0	0	0	0	0
4/23/2024	5:45 PM	0	0	0	0	0	0	0	0	0	0	0	0	0
4/23/2024	6:00 PM	0	0	0	0	0	0	0	0	0	0	0	0	0
4/23/2024	6:15 PM	0	0	0	0	0	0	0	0	0	0	0	0	0
4/23/2024	6:30 PM	0	0	0	0	0	0	0	0	0	0	0	0	0
4/23/2024	6:45 PM	0	0	0	0	0	0	0	0	0	0	0	0	0
4/23/2024	7:00 PM	0	0	0	0	0	0	0	0	0	0	0	0	0
4/23/2024	7:15 PM	0	0	0	0	0	0	0	0	0	0	0	0	0
4/23/2024	7:30 PM	0	0	0	0	0	0	0	0	0	0	0	0	0
4/23/2024	7:45 PM	0	0	0	0	0	0	0	0	0	0	0	0	0
4/23/2024	8:00 PM	0	0	0	0	0	0	0	0	0	0	0	0	0
4/23/2024	8:15 PM	0	0	0	0	0	0	0	0	0	0	0	0	0
4/23/2024	8:30 PM	0	0	0	0	0	0	0	0	0	0	0	0	0
4/23/2024	8:45 PM	0	0	0	0	0	0	0	0	0	0	0	0	0
4/23/2024	9:00 PM	0	0	0	0	0	0	0	0	0	0	0	0	0
4/23/2024	9:15 PM	0	0	0	0	0	0	0	0	0	0	0	0	0
4/23/2024	9:30 PM	0	0	0	0	0	0	0	0	0	0	0	0	0
4/23/2024	9:45 PM	0	0	0	0	0	0	0	0	0	0	0	0	0
4/23/2024	10:00 PM	0	0	0	0	0	0	0	0	0	0	0	0	0
4/23/2024	10:15 PM	0	0	0	0	0	0	0	0	0	0	0	0	0
4/23/2024	10:30 PM	0	0	0	0	0	0	0	0	0	0	0	0	0
4/23/2024	10:45 PM	0	0	0	0	0	0	0	0	0	0	0	0	0
4/23/2024	11:00 PM	0	0	0	0	0	0	0	0	0	0	0	0	0
4/23/2024	11:15 PM	0	0	0	0	0	0	0	0	0	0	0	0	0
4/23/2024	11:30 PM	0	0	0	0	0	0	0	0	0	0	0	0	0
4/23/2024	11:45 PM	0	0	0	0	0	0	0	0	0	0	0	0	0

4/24/2024	12:00 AM	0	0	0	0	0	0	0	0	0	0	0	0	0
4/24/2024	12:15 AM	0	0	0	0	0	0	0	0	0	0	0	0	0
4/24/2024	12:30 AM	0	0	0	0	0	0	0	0	0	0	0	0	0
4/24/2024	12:45 AM	0	0	0	0	0	0	0	0	0	0	0	0	0
4/24/2024	1:00 AM	0	0	0	0	0	0	0	0	0	0	0	0	0
4/24/2024	1:15 AM	0	0	0	0	0	0	0	0	0	0	0	0	0
4/24/2024	1:30 AM	0	0	0	0	0	0	0	0	0	0	0	0	0
4/24/2024	1:45 AM	0	0	0	0	0	0	0	0	0	0	0	0	0
4/24/2024	2:00 AM	0	0	0	0	0	0	0	0	0	0	0	0	0
4/24/2024	2:15 AM	0	0	0	0	0	0	0	0	0	0	0	0	0
4/24/2024	2:30 AM	0	0	0	0	0	0	0	0	0	0	0	0	0
4/24/2024	2:45 AM	0	0	0	0	0	0	0	0	0	0	0	0	0
4/24/2024	3:00 AM	0	0	0	0	0	0	0	0	0	0	0	0	0
4/24/2024	3:15 AM	0	0	0	0	0	0	0	0	0	0	0	0	0
4/24/2024	3:30 AM	0	0	0	0	0	0	0	0	0	0	0	0	0
4/24/2024	3:45 AM	0	0	0	0	0	0	0	0	0	0	0	0	0
4/24/2024	4:00 AM	0	0	0	0	0	0	0	0	0	0	0	0	0
4/24/2024	4:15 AM	0	0	0	0	0	0	0	0	0	0	0	0	0
4/24/2024	4:30 AM	0	0	0	0	0	0	0	0	0	0	0	0	0
4/24/2024	4:45 AM	0	0	0	0	0	0	0	0	0	0	0	0	0
4/24/2024	5:00 AM	0	0	0	0	0	0	0	0	0	0	0	0	0
4/24/2024	5:15 AM	0	0	0	0	0	0	0	0	0	0	0	0	0
4/24/2024	5:30 AM	0	0	0	0	0	0	0	0	0	0	0	0	0
4/24/2024	5:45 AM	0	0	0	0	0	0	0	0	0	0	0	0	0
4/24/2024	6:00 AM	0	0	0	0	0	0	0	0	0	0	0	0	0
4/24/2024	6:15 AM	0	0	0	0	0	0	0	0	0	0	0	0	0
4/24/2024	6:30 AM	0	0	0	0	0	0	0	0	0	0	0	0	0
4/24/2024	6:45 AM	0	0	0	0	0	0	0	0	0	0	0	0	0
4/24/2024	7:00 AM	0	0	0	0	0	0	0	0	0	0	0	0	0
4/24/2024	7:15 AM	0	0	0	0	0	0	0	0	0	0	0	0	0
4/24/2024	7:30 AM	0	0	0	0	0	0	0	0	0	0	0	0	0
4/24/2024	7:45 AM	0	0	0	0	0	0	0	0	0	0	0	0	0
4/24/2024	8:00 AM	0	0	0	0	0	0	0	0	0	0	0	0	0
4/24/2024	8:15 AM	0	0	0	0	0	0	0	0	0	0	0	0	0
4/24/2024	8:30 AM	0	0	0	0	0	0	0	0	0	0	0	0	0
4/24/2024	8:45 AM	0	0	0	0	0	0	0	0	0	0	0	0	0
4/24/2024	9:00 AM	0	0	0	0	0	0	0	0	0	0	0	0	0
4/24/2024	9:15 AM	0	0	0	0	0	0	0	0	0	0	0	0	0
4/24/2024	9:30 AM	0	0	0	0	0	0	0	0	0	0	0	0	0
4/24/2024	9:45 AM	0	0	0	0	0	0	0	0	0	0	0	0	0
4/24/2024	10:00 AM	0	0	0	0	0	0	0	0	0	0	0	0	0
4/24/2024	10:15 AM	0	0	0	0	0	0	0	0	0	0	0	0	0
4/24/2024	10:30 AM	0	0	0	0	0	0	0	0	0	0	0	0	0
4/24/2024	10:45 AM	0	0	0	0	0	0	0	0	0	0	0	0	0
4/24/2024	11:00 AM	0	0	0	0	0	0	0	0	0	0	0	0	0
4/24/2024	11:15 AM	0	0	0	0	0	0	0	0	0	0	0	0	0
4/24/2024	11:30 AM	0	0	0	0	0	0	0	0	0	0	0	0	0
4/24/2024	11:45 AM	0	0	0	0	0	0	0	0	0	0	0	0	0
4/24/2024	12:00 PM	0	0	0	0	0	0	0	0	0	0	0	0	0
4/24/2024	12:15 PM	0	0	0	0	0	0	0	0	0	0	0	0	0
4/24/2024	12:30 PM	0	0	0	0	0	0	0	0	0	0	0	0	0
4/24/2024	12:45 PM	0	0	0	0	0	0	0	0	0	0	0	0	0
4/24/2024	1:00 PM	0	0	0	0	0	0	0	0	0	0	0	0	0
4/24/2024	1:15 PM	0	0	0	0	0	0	0	0	0	0	0	0	0
4/24/2024	1:30 PM	0	0	0	0	0	0	0	0	0	0	0	0	0
4/24/2024	1:45 PM	0	0	0	0	0	0	0	0	0	0	0	0	0
4/24/2024	2:00 PM	0	0	0	0	0	0	0	0	0	0	0	0	0
4/24/2024	2:15 PM	0	0	0	0	0	0	0	0	0	0	0	0	0
4/24/2024	2:30 PM	0	0	0	0	0	0	0	0	0	0	0	0	0
4/24/2024	2:45 PM	0	0	0	0	0	0	0	0	0	0	0	0	0
4/24/2024	3:00 PM	0	0	0	0	0	0	0	0	0	0	0	0	0
4/24/2024	3:15 PM	0	0	0	0	0	0	0	0	0	0	0	0	0
4/24/2024	3:30 PM	0	0	0	0	0	0	0	0	0	0	0	0	0
4/24/2024	3:45 PM	0	0	0	0	0	0	0	0	0	0	0	0	0
4/24/2024	4:00 PM	0	0	0	0	0	0	0	0	0	0	0	0	0
4/24/2024	4:15 PM	0	0	0	0	0	0	0	0	0	0	0	0	0
4/24/2024	4:30 PM	0	0	0	0	0	0	0	0	0	0	0	0	0
4/24/2024	4:45 PM	0	0	0	0	0	0	0	0	0	0	0	0	0
4/24/2024	5:00 PM	0	0	0	0	0	0	0	0	0	0	0	0	0
4/24/2024	5:15 PM	0	0	0	0	0	0	0	0	0	0	0	0	0
4/24/2024	5:30 PM	0	0	0	0	0	0	0	0	0	0	0	0	0
4/24/2024	5:45 PM	0	0	0	0	0	0	0	0	0	0	0	0	0
4/24/2024	6:00 PM	0	0	0	0	0	0	0	0	0	0	0	0	0
4/24/2024	6:15 PM	0	0	0	0	0	0	0	0	0	0	0	0	0
4/24/2024	6:30 PM	0	0	0	0	0	0	0	0	0	0	0	0	0
4/24/2024	6:45 PM	0	0	0	0	0	0	0	0	0	0	0	0	0
4/24/2024	7:00 PM	0	0	0	0	0	0	0	0	0	0	0	0	0
4/24/2024	7:15 PM	0	0	0	0	0	0	0	0	0	0	0	0	0
4/24/2024	7:30 PM	0	0	0	0	0	0	0	0	0	0	0	0	0
4/24/2024	7:45 PM	0	0	0	0	0	0	0	0	0	0	0	0	0
4/24/2024	8:00 PM	0	0	0	0	0	0	0	0	0	0	0	0	0
4/24/2024	8:15 PM	0	0	0	0	0	0	0	0	0	0	0	0	0
4/24/2024	8:30 PM	0	0	0	0	0	0	0	0	0	0	0	0	0
4/24/2024	8:45 PM	0	0	0	0	0	0	0	0	0	0	0	0	0
4/24/2024	9:00 PM	0	0	0	0	0	0	0	0	0	0	0	0	0
4/24/2024	9:15 PM	0	0	0	0	0	0	0	0	0	0	0	0	0
4/24/2024	9:30 PM	0	0	0	0	0	0	0	0	0	0	0	0	0
4/24/2024	9:45 PM	0	0	0	0	0	0	0	0	0	0	0	0	0
4/24/2024	10:00 PM	0	0	0	0	0	0	0	0	0	0	0	0	0
4/24/2024	10:15 PM	0	0	0	0	0	0	0	0	0	0	0	0	0
4/24/2024	10:30 PM	0	0	0	0	0	0	0	0	0	0	0	0	0
4/24/2024	10:45 PM	0	0	0	0	0	0	0	0	0	0	0	0	0
4/24/2024	11:00 PM	0	0	0	0	0	0	0	0	0	0	0	0	0
4/24/2024	11:15 PM	0	0	0	0	0	0	0	0	0	0	0	0	0
4/24/2024	11:30 PM	0	0	0	0	0	0	0	0	0	0	0	0	0
4/24/2024	11:45 PM	0	0	0	0	0	0	0	0	0	0	0	0	0

4/25/2024	12:00 AM	0	0	0	0	0	0	0	0	0	0	0	0	0
4/25/2024	12:15 AM	0	0	0	0	0	0	0	0	0	0	0	0	0
4/25/2024	12:30 AM	0	0	0	0	0	0	0	0	0	0	0	0	0
4/25/2024	12:45 AM	0	0	0	0	0	0	0	0	0	0	0	0	0
4/25/2024	1:00 AM	0	0	0	0	0	0	0	0	0	0	0	0	0
4/25/2024	1:15 AM	0	0	0	0	0	0	0	0	0	0	0	0	0
4/25/2024	1:30 AM	0	0	0	0	0	0	0	0	0	0	0	0	0
4/25/2024	1:45 AM	0	0	0	0	0	0	0	0	0	0	0	0	0
4/25/2024	2:00 AM	0	0	0	0	0	0	0	0	0	0	0	0	0
4/25/2024	2:15 AM	0	0	0	0	0	0	0	0	0	0	0	0	0
4/25/2024	2:30 AM	0	0	0	0	0	0	0	0	0	0	0	0	0
4/25/2024	2:45 AM	0	0	0	0	0	0	0	0	0	0	0	0	0
4/25/2024	3:00 AM	0	0	0	0	0	0	0	0	0	0	0	0	0
4/25/2024	3:15 AM	0	0	0	0	0	0	0	0	0	0	0	0	0
4/25/2024	3:30 AM	0	0	0	0	0	0	0	0	0	0	0	0	0
4/25/2024	3:45 AM	0	0	0	0	0	0	0	0	0	0	0	0	0
4/25/2024	4:00 AM	0	0	0	0	0	0	0	0	0	0	0	0	0
4/25/2024	4:15 AM	0	0	0	0	0	0	0	0	0	0	0	0	0
4/25/2024	4:30 AM	0	0	0	0	0	0	0	0	0	0	0	0	0
4/25/2024	4:45 AM	0	0	0	0	0	0	0	0	0	0	0	0	0
4/25/2024	5:00 AM	0	0	0	0	0	0	0	0	0	0	0	0	0
4/25/2024	5:15 AM	0	0	0	0	0	0	0	0	0	0	0	0	0
4/25/2024	5:30 AM	0	0	0	0	0	0	0	0	0	0	0	0	0
4/25/2024	5:45 AM	0	0	0	0	0	0	0	0	0	0	0	0	0
4/25/2024	6:00 AM	0	0	0	0	0	0	0	0	0	0	0	0	0
4/25/2024	6:15 AM	0	0	0	0	0	0	0	0	0	0	0	0	0
4/25/2024	6:30 AM	0	0	0	0	0	0	0	0	0	0	0	0	0
4/25/2024	6:45 AM	0	0	0	0	0	0	0	0	0	0	0	0	0
4/25/2024	7:00 AM	0	0	0	0	0	0	0	0	0	0	0	0	0
4/25/2024	7:15 AM	0	0	0	0	0	0	0	0	0	0	0	0	0
4/25/2024	7:30 AM	0	0	0	0	0	0	0	0	0	0	0	0	0
4/25/2024	7:45 AM	0	0	0	0	0	0	0	0	0	0	0	0	0
4/25/2024	8:00 AM	0	0	0	0	0	0	0	0	0	0	0	0	0
4/25/2024	8:15 AM	0	0	0	0	0	0	0	0	0	0	0	0	0
4/25/2024	8:30 AM	0	0	0	0	0	0	0	0	0	0	0	0	0
4/25/2024	8:45 AM	0	0	0	0	0	0	0	0	0	0	0	0	0
4/25/2024	9:00 AM	0	0	0	0	0	0	0	0	0	0	0	0	0
4/25/2024	9:15 AM	0	0	0	0	0	0	0	0	0	0	0	0	0
4/25/2024	9:30 AM	0	0	0	0	0	0	0	0	0	0	0	0	0
4/25/2024	9:45 AM	0	0	0	0	0	0	0	0	0	0	0	0	0
4/25/2024	10:00 AM	0	0	0	0	0	0	0	0	0	0	0	0	0
4/25/2024	10:15 AM	0	0	0	0	0	0	0	0	0	0	0	0	0
4/25/2024	10:30 AM	0	0	0	0	0	0	0	0	0	0	0	0	0
4/25/2024	10:45 AM	0	0	0	0	0	0	0	0	0	0	0	0	0
4/25/2024	11:00 AM	0	0	0	0	0	0	0	0	0	0	0	0	0
4/25/2024	11:15 AM	0	0	0	0	0	0	0	0	0	0	0	0	0
4/25/2024	11:30 AM	0	0	0	0	0	0	0	0	0	0	0	0	0
4/25/2024	11:45 AM	0	0	0	0	0	0	0	0	0	0	0	0	0
4/25/2024	12:00 PM	0	0	0	0	0	0	0	0	0	0	0	0	0
4/25/2024	12:15 PM	0	0	0	0	0	0	0	0	0	0	0	0	0
4/25/2024	12:30 PM	0	0	0	0	0	0	0	0	0	0	0	0	0
4/25/2024	12:45 PM	0	0	0	0	0	0	0	0	0	0	0	0	0
4/25/2024	1:00 PM	0	0	0	0	0	0	0	0	0	0	0	0	0
4/25/2024	1:15 PM	0	0	0	0	0	0	0	0	0	0	0	0	0
4/25/2024	1:30 PM	0	0	0	0	0	0	0	0	0	0	0	0	0
4/25/2024	1:45 PM	0	0	0	0	0	0	0	0	0	0	0	0	0
4/25/2024	2:00 PM	0	0	0	0	0	0	0	0	0	0	0	0	0
4/25/2024	2:15 PM	0	0	0	0	0	0	0	0	0	0	0	0	0
4/25/2024	2:30 PM	0	0	0	0	0	0	0	0	0	0	0	0	0
4/25/2024	2:45 PM	0	0	0	0	0	0	0	0	0	0	0	0	0
4/25/2024	3:00 PM	0	0	0	0	0	0	0	0	0	0	0	0	0
4/25/2024	3:15 PM	0	0	0	0	0	0	0	0	0	0	0	0	0
4/25/2024	3:30 PM	0	0	0	0	0	0	0	0	0	0	0	0	0
4/25/2024	3:45 PM	0	0	0	0	0	0	0	0	0	0	0	0	0
4/25/2024	4:00 PM	0	0	0	0	0	0	0	0	0	0	0	0	0
4/25/2024	4:15 PM	0	0	0	0	0	0	0	0	0	0	0	0	0
4/25/2024	4:30 PM	0	0	0	0	0	0	0	0	0	0	0	0	0
4/25/2024	4:45 PM	0	0	0	0	0	0	0	0	0	0	0	0	0
4/25/2024	5:00 PM	0	0	0	0	0	0	0	0	0	0	0	0	0
4/25/2024	5:15 PM	0	0	0	0	0	0	0	0	0	0	0	0	0
4/25/2024	5:30 PM	0	0	0	0	0	0	0	0	0	0	0	0	0
4/25/2024	5:45 PM	0	0	0	0	0	0	0	0	0	0	0	0	0
4/25/2024	6:00 PM	0	0	0	0	0	0	0	0	0	0	0	0	0
4/25/2024	6:15 PM	0	0	0	0	0	0	0	0	0	0	0	0	0
4/25/2024	6:30 PM	0	0	0	0	0	0	0	0	0	0	0	0	0
4/25/2024	6:45 PM	0	0	0	0	0	0	0	0	0	0	0	0	0
4/25/2024	7:00 PM	0	0	0	0	0	0	0	0	0	0	0	0	0
4/25/2024	7:15 PM	0	0	0	0	0	0	0	0	0	0	0	0	0
4/25/2024	7:30 PM	0	0	0	0	0	0	0	0	0	0	0	0	0
4/25/2024	7:45 PM	0	0	0	0	0	0	0	0	0	0	0	0	0
4/25/2024	8:00 PM	0	0	0	0	0	0	0	0	0	0	0	0	0
4/25/2024	8:15 PM	0	0	0	0	0	0	0	0	0	0	0	0	0
4/25/2024	8:30 PM	0	0	0	0	0	0	0	0	0	0	0	0	0
4/25/2024	8:45 PM	0	0	0	0	0	0	0	0	0	0	0	0	0
4/25/2024	9:00 PM	0	0	0	0	0	0	0	0	0	0	0	0	0
4/25/2024	9:15 PM	0	0	0	0	0	0	0	0	0	0	0	0	0
4/25/2024	9:30 PM	0	0	0	0	0	0	0	0	0	0	0	0	0
4/25/2024	9:45 PM	0	0	0	0	0	0	0	0	0	0	0	0	0
4/25/2024	10:00 PM	0	0	0	0	0	0	0	0	0	0	0	0	0
4/25/2024	10:15 PM	0	0	0	0	0	0	0	0	0	0	0	0	0
4/25/2024	10:30 PM	0	0	0	0	0	0	0	0	0	0	0	0	0
4/25/2024	10:45 PM	0	0	0	0	0	0	0	0	0	0	0	0	0
4/25/2024	11:00 PM	0	0	0	0	0	0	0	0	0	0	0	0	0
4/25/2024	11:15 PM	0	0	0	0	0	0	0	0	0	0	0	0	0
4/25/2024	11:30 PM	0	0	0	0	0	0	0	0	0	0	0	0	0
4/25/2024	11:45 PM	0	0	0	0	0	0	0	0	0	0	0	0	0

4/26/2024	12:00 AM	0	0	0	0	0	0	0	0	0	0	0	0	0
4/26/2024	12:15 AM	0	0	0	0	0	0	0	0	0	0	0	0	0
4/26/2024	12:30 AM	0	0	0	0	0	0	0	0	0	0	0	0	0
4/26/2024	12:45 AM	0	0	0	0	0	0	0	0	0	0	0	0	0
4/26/2024	1:00 AM	0	0	0	0	0	0	0	0	0	0	0	0	0
4/26/2024	1:15 AM	0	0	0	0	0	0	0	0	0	0	0	0	0
4/26/2024	1:30 AM	0	0	0	0	0	0	0	0	0	0	0	0	0
4/26/2024	1:45 AM	0	0	0	0	0	0	0	0	0	0	0	0	0
4/26/2024	2:00 AM	0	0	0	0	0	0	0	0	0	0	0	0	0
4/26/2024	2:15 AM	0	0	0	0	0	0	0	0	0	0	0	0	0
4/26/2024	2:30 AM	0	0	0	0	0	0	0	0	0	0	0	0	0
4/26/2024	2:45 AM	0	0	0	0	0	0	0	0	0	0	0	0	0
4/26/2024	3:00 AM	0	0	0	0	0	0	0	0	0	0	0	0	0
4/26/2024	3:15 AM	0	0	0	0	0	0	0	0	0	0	0	0	0
4/26/2024	3:30 AM	0	0	0	0	0	0	0	0	0	0	0	0	0
4/26/2024	3:45 AM	0	0	0	0	0	0	0	0	0	0	0	0	0
4/26/2024	4:00 AM	0	0	0	0	0	0	0	0	0	0	0	0	0
4/26/2024	4:15 AM	0	0	0	0	0	0	0	0	0	0	0	0	0
4/26/2024	4:30 AM	0	0	0	0	0	0	0	0	0	0	0	0	0
4/26/2024	4:45 AM	0	0	0	0	0	0	0	0	0	0	0	0	0
4/26/2024	5:00 AM	0	0	0	0	0	0	0	0	0	0	0	0	0
4/26/2024	5:15 AM	0	0	0	0	0	0	0	0	0	0	0	0	0
4/26/2024	5:30 AM	0	0	0	0	0	0	0	0	0	0	0	0	0
4/26/2024	5:45 AM	0	0	0	0	0	0	0	0	0	0	0	0	0
4/26/2024	6:00 AM	0	0	0	0	0	0	0	0	0	0	0	0	0
4/26/2024	6:15 AM	0	0	0	0	0	0	0	0	0	0	0	0	0
4/26/2024	6:30 AM	0	0	0	0	0	0	0	0	0	0	0	0	0
4/26/2024	6:45 AM	0	0	0	0	0	0	0	0	0	0	0	0	0
4/26/2024	7:00 AM	0	0	0	0	0	0	0	0	0	0	0	0	0
4/26/2024	7:15 AM	0	0	0	0	0	0	0	0	0	0	0	0	0
4/26/2024	7:30 AM	0	0	0	0	0	0	0	0	0	0	0	0	0
4/26/2024	7:45 AM	0	0	0	0	0	0	0	0	0	0	0	0	0
4/26/2024	8:00 AM	0	0	0	0	0	0	0	0	0	0	0	0	0
4/26/2024	8:15 AM	0	0	0	0	0	0	0	0	0	0	0	0	0
4/26/2024	8:30 AM	0	0	0	0	0	0	0	0	0	0	0	0	0
4/26/2024	8:45 AM	0	0	0	0	0	0	0	0	0	0	0	0	0
4/26/2024	9:00 AM	0	0	0	0	0	0	0	0	0	0	0	0	0
4/26/2024	9:15 AM	0	0	0	0	0	0	0	0	0	0	0	0	0
4/26/2024	9:30 AM	0	0	0	0	0	0	0	0	0	0	0	0	0
4/26/2024	9:45 AM	0	0	0	0	0	0	0	0	0	0	0	0	0
4/26/2024	10:00 AM	0	0	0	0	0	0	0	0	0	0	0	0	0
4/26/2024	10:15 AM	0	0	0	0	0	0	0	0	0	0	0	0	0
4/26/2024	10:30 AM	0	0	0	0	0	0	0	0	0	0	0	0	0
4/26/2024	10:45 AM	0	0	0	0	0	0	0	0	0	0	0	0	0
4/26/2024	11:00 AM	0	0	0	0	0	0	0	0	0	0	0	0	0
4/26/2024	11:15 AM	0	0	0	0	0	0	0	0	0	0	0	0	0
4/26/2024	11:30 AM	0	0	0	0	0	0	0	0	0	0	0	0	0
4/26/2024	11:45 AM	0	0	0	0	0	0	0	0	0	0	0	0	0
4/26/2024	12:00 PM	0	0	0	0	0	0	0	0	0	0	0	0	0
4/26/2024	12:15 PM	0	0	0	0	0	0	0	0	0	0	0	0	0
4/26/2024	12:30 PM	0	0	0	0	0	0	0	0	0	0	0	0	0
4/26/2024	12:45 PM	0	0	0	0	0	0	0	0	0	0	0	0	0
4/26/2024	1:00 PM	0	0	0	0	0	0	0	0	0	0	0	0	0
4/26/2024	1:15 PM	0	0	0	0	0	0	0	0	0	0	0	0	0
4/26/2024	1:30 PM	0	0	0	0	0	0	0	0	0	0	0	0	0
4/26/2024	1:45 PM	0	0	0	0	0	0	0	0	0	0	0	0	0
4/26/2024	2:00 PM	0	0	0	0	0	0	0	0	0	0	0	0	0
4/26/2024	2:15 PM	0	0	0	0	0	0	0	0	0	0	0	0	0
4/26/2024	2:30 PM	0	0	0	0	0	0	0	0	0	0	0	0	0
4/26/2024	2:45 PM	0	0	0	0	0	0	0	0	0	0	0	0	0
4/26/2024	3:00 PM	0	0	0	0	0	0	0	0	0	0	0	0	0
4/26/2024	3:15 PM	0	0	0	0	0	0	0	0	0	0	0	0	0
4/26/2024	3:30 PM	0	0	0	0	0	0	0	0	0	0	0	0	0
4/26/2024	3:45 PM	0	0	0	0	0	0	0	0	0	0	0	0	0
4/26/2024	4:00 PM	0	0	0	0	0	0	0	0	0	0	0	0	0
4/26/2024	4:15 PM	0	0	0	0	0	0	0	0	0	0	0	0	0
4/26/2024	4:30 PM	0	0	0	0	0	0	0	0	0	0	0	0	0
4/26/2024	4:45 PM	0	0	0	0	0	0	0	0	0	0	0	0	0
4/26/2024	5:00 PM	0	0	0	0	0	0	0	0	0	0	0	0	0
4/26/2024	5:15 PM	0	0	0	0	0	0	0	0	0	0	0	0	0
4/26/2024	5:30 PM	0	0	0	0	0	0	0	0	0	0	0	0	0
4/26/2024	5:45 PM	0	0	0	0	0	0	0	0	0	0	0	0	0
4/26/2024	6:00 PM	0	0	0	0	0	0	0	0	0	0	0	0	0
4/26/2024	6:15 PM	0	0	0	0	0	0	0	0	0	0	0	0	0
4/26/2024	6:30 PM	0	0	0	0	0	0	0	0	0	0	0	0	0
4/26/2024	6:45 PM	0	0	0	0	0	0	0	0	0	0	0	0	0
4/26/2024	7:00 PM	0	0	0	0	0	0	0	0	0	0	0	0	0
4/26/2024	7:15 PM	0	0	0	0	0	0	0	0	0	0	0	0	0
4/26/2024	7:30 PM	0	0	0	0	0	0	0	0	0	0	0	0	0
4/26/2024	7:45 PM	0	0	0	0	0	0	0	0	0	0	0	0	0
4/26/2024	8:00 PM	0	0	0	0	0	0	0	0	0	0	0	0	0
4/26/2024	8:15 PM	0	0	0	0	0	0	0	0	0	0	0	0	0
4/26/2024	8:30 PM	0	0	0	0	0	0	0	0	0	0	0	0	0
4/26/2024	8:45 PM	0	0	0	0	0	0	0	0	0	0	0	0	0
4/26/2024	9:00 PM	0	0	0	0	0	0	0	0	0	0	0	0	0
4/26/2024	9:15 PM	0	0	0	0	0	0	0	0	0	0	0	0	0
4/26/2024	9:30 PM	0	0	0	0	0	0	0	0	0	0	0	0	0
4/26/2024	9:45 PM	0	0	0	0	0	0	0	0	0	0	0	0	0
4/26/2024	10:00 PM	0	0	0	0	0	0	0	0	0	0	0	0	0
4/26/2024	10:15 PM	0	0	0	0	0	0	0	0	0	0	0	0	0
4/26/2024	10:30 PM	0	0	0	0	0	0	0	0	0	0	0	0	0
4/26/2024	10:45 PM	0	0	0	0	0	0	0	0	0	0	0	0	0
4/26/2024	11:00 PM	0	0	0	0	0	0	0	0	0	0	0	0	0
4/26/2024	11:15 PM	0	0	0	0	0	0	0	0	0	0	0	0	0
4/26/2024	11:30 PM	0	0	0	0	0	0	0	0	0	0	0	0	0
4/26/2024	11:45 PM	0	0	0	0	0	0	0	0	0	0	0	0	0

4/27/2024	12:00 AM	0	0	0	0	0	0	0	0	0	0	0	0	0
4/27/2024	12:15 AM	0	0	0	0	0	0	0	0	0	0	0	0	0
4/27/2024	12:30 AM	0	0	0	0	0	0	0	0	0	0	0	0	0
4/27/2024	12:45 AM	0	0	0	0	0	0	0	0	0	0	0	0	0
4/27/2024	1:00 AM	0	0	0	0	0	0	0	0	0	0	0	0	0
4/27/2024	1:15 AM	0	0	0	0	0	0	0	0	0	0	0	0	0
4/27/2024	1:30 AM	0	0	0	0	0	0	0	0	0	0	0	0	0
4/27/2024	1:45 AM	0	0	0	0	0	0	0	0	0	0	0	0	0
4/27/2024	2:00 AM	0	0	0	0	0	0	0	0	0	0	0	0	0
4/27/2024	2:15 AM	0	0	0	0	0	0	0	0	0	0	0	0	0
4/27/2024	2:30 AM	0	0	0	0	0	0	0	0	0	0	0	0	0
4/27/2024	2:45 AM	0	0	0	0	0	0	0	0	0	0	0	0	0
4/27/2024	3:00 AM	0	0	0	0	0	0	0	0	0	0	0	0	0
4/27/2024	3:15 AM	0	0	0	0	0	0	0	0	0	0	0	0	0
4/27/2024	3:30 AM	0	0	0	0	0	0	0	0	0	0	0	0	0
4/27/2024	3:45 AM	0	0	0	0	0	0	0	0	0	0	0	0	0
4/27/2024	4:00 AM	0	0	0	0	0	0	0	0	0	0	0	0	0
4/27/2024	4:15 AM	0	0	0	0	0	0	0	0	0	0	0	0	0
4/27/2024	4:30 AM	0	0	0	0	0	0	0	0	0	0	0	0	0
4/27/2024	4:45 AM	0	0	0	0	0	0	0	0	0	0	0	0	0
4/27/2024	5:00 AM	0	0	0	0	0	0	0	0	0	0	0	0	0
4/27/2024	5:15 AM	0	0	0	0	0	0	0	0	0	0	0	0	0
4/27/2024	5:30 AM	0	0	0	0	0	0	0	0	0	0	0	0	0
4/27/2024	5:45 AM	0	0	0	0	0	0	0	0	0	0	0	0	0
4/27/2024	6:00 AM	0	0	0	0	0	0	0	0	0	0	0	0	0
4/27/2024	6:15 AM	0	0	0	0	0	0	0	0	0	0	0	0	0
4/27/2024	6:30 AM	0	0	0	0	0	0	0	0	0	0	0	0	0
4/27/2024	6:45 AM	0	0	0	0	0	0	0	0	0	0	0	0	0
4/27/2024	7:00 AM	0	0	0	0	0	0	0	0	0	0	0	0	0
4/27/2024	7:15 AM	0	0	0	0	0	0	0	0	0	0	0	0	0
4/27/2024	7:30 AM	0	0	0	0	0	0	0	0	0	0	0	0	0
4/27/2024	7:45 AM	0	0	0	0	0	0	0	0	0	0	0	0	0
4/27/2024	8:00 AM	0	0	0	0	0	0	0	0	0	0	0	0	0
4/27/2024	8:15 AM	0	0	0	0	0	0	0	0	0	0	0	0	0
4/27/2024	8:30 AM	0	0	0	0	0	0	0	0	0	0	0	0	0
4/27/2024	8:45 AM	0	0	0	0	0	0	0	0	0	0	0	0	0
4/27/2024	9:00 AM	0	0	0	0	0	0	0	0	0	0	0	0	0
4/27/2024	9:15 AM	0	0	0	0	0	0	0	0	0	0	0	0	0
4/27/2024	9:30 AM	0	0	0	0	0	0	0	0	0	0	0	0	0
4/27/2024	9:45 AM	0	0	0	0	0	0	0	0	0	0	0	0	0
4/27/2024	10:00 AM	0	0	0	0	0	0	0	0	0	0	0	0	0
4/27/2024	10:15 AM	0	0	0	0	0	0	0	0	0	0	0	0	0
4/27/2024	10:30 AM	0	0	0	0	0	0	0	0	0	0	0	0	0
4/27/2024	10:45 AM	0	0	0	0	0	0	0	0	0	0	0	0	0
4/27/2024	11:00 AM	0	0	0	0	0	0	0	0	0	0	0	0	0
4/27/2024	11:15 AM	0	0	0	0	0	0	0	0	0	0	0	0	0
4/27/2024	11:30 AM	0	0	0	0	0	0	0	0	0	0	0	0	0
4/27/2024	11:45 AM	0	0	0	0	0	0	0	0	0	0	0	0	0
4/27/2024	12:00 PM	0	0	0	0	0	0	0	0	0	0	0	0	0
4/27/2024	12:15 PM	0	0	0	0	0	0	0	0	0	0	0	0	0
4/27/2024	12:30 PM	0	0	0	0	0	0	0	0	0	0	0	0	0
4/27/2024	12:45 PM	0	0	0	0	0	0	0	0	0	0	0	0	0
4/27/2024	1:00 PM	0	0	0	0	0	0	0	0	0	0	0	0	0
4/27/2024	1:15 PM	0	0	0	0	0	0	0	0	0	0	0	0	0
4/27/2024	1:30 PM	0	0	0	0	0	0	0	0	0	0	0	0	0
4/27/2024	1:45 PM	0	0	0	0	0	0	0	0	0	0	0	0	0
4/27/2024	2:00 PM	0	0	0	0	0	0	0	0	0	0	0	0	0
4/27/2024	2:15 PM	0	0	0	0	0	0	0	0	0	0	0	0	0
4/27/2024	2:30 PM	0	0	0	0	0	0	0	0	0	0	0	0	0
4/27/2024	2:45 PM	0	0	0	0	0	0	0	0	0	0	0	0	0
4/27/2024	3:00 PM	0	0	0	0	0	0	0	0	0	0	0	0	0
4/27/2024	3:15 PM	0	0	0	0	0	0	0	0	0	0	0	0	0
4/27/2024	3:30 PM	0	0	0	0	0	0	0	0	0	0	0	0	0
4/27/2024	3:45 PM	0	0	0	0	0	0	0	0	0	0	0	0	0
4/27/2024	4:00 PM	0	0	0	0	0	0	0	0	0	0	0	0	0
4/27/2024	4:15 PM	0	0	0	0	0	0	0	0	0	0	0	0	0
4/27/2024	4:30 PM	0	0	0	0	0	0	0	0	0	0	0	0	0
4/27/2024	4:45 PM	0	0	0	0	0	0	0	0	0	0	0	0	0
4/27/2024	5:00 PM	0	0	0	0	0	0	0	0	0	0	0	0	0
4/27/2024	5:15 PM	0	0	0	0	0	0	0	0	0	0	0	0	0
4/27/2024	5:30 PM	0	0	0	0	0	0	0	0	0	0	0	0	0
4/27/2024	5:45 PM	0	0	0	0	0	0	0	0	0	0	0	0	0
4/27/2024	6:00 PM	0	0	0	0	0	0	0	0	0	0	0	0	0
4/27/2024	6:15 PM	0	0	0	0	0	0	0	0	0	0	0	0	0
4/27/2024	6:30 PM	0	0	0	0	0	0	0	0	0	0	0	0	0
4/27/2024	6:45 PM	0	0	0	0	0	0	0	0	0	0	0	0	0
4/27/2024	7:00 PM	0	0	0	0	0	0	0	0	0	0	0	0	0
4/27/2024	7:15 PM	0	0	0	0	0	0	0	0	0	0	0	0	0
4/27/2024	7:30 PM	0	0	0	0	0	0	0	0	0	0	0	0	0
4/27/2024	7:45 PM	0	0	0	0	0	0	0	0	0	0	0	0	0
4/27/2024	8:00 PM	0	0	0	0	0	0	0	0	0	0	0	0	0
4/27/2024	8:15 PM	0	0	0	0	0	0	0	0	0	0	0	0	0
4/27/2024	8:30 PM	0	0	0	0	0	0	0	0	0	0	0	0	0
4/27/2024	8:45 PM	0	0	0	0	0	0	0	0	0	0	0	0	0
4/27/2024	9:00 PM	0	0	0	0	0	0	0	0	0	0	0	0	0
4/27/2024	9:15 PM	0	0	0	0	0	0	0	0	0	0	0	0	0
4/27/2024	9:30 PM	0	0	0	0	0	0	0	0	0	0	0	0	0
4/27/2024	9:45 PM	0	0	0	0	0	0	0	0	0	0	0	0	0
4/27/2024	10:00 PM	0	0	0	0	0	0	0	0	0	0	0	0	0
4/27/2024	10:15 PM	0	0	0	0	0	0	0	0	0	0	0	0	0
4/27/2024	10:30 PM	0	0	0	0	0	0	0	0	0	0	0	0	0
4/27/2024	10:45 PM	0	0	0	0	0	0	0	0	0	0	0	0	0
4/27/2024	11:00 PM	0	0	0	0	0	0	0	0	0	0	0	0	0
4/27/2024	11:15 PM	0	0	0	0	0	0	0	0	0	0	0	0	0
4/27/2024	11:30 PM	0	0	0	0	0	0	0	0	0	0	0	0	0
4/27/2024	11:45 PM	0	0	0	0	0	0	0	0	0	0	0	0	0

EB
File Name:
Start Date: 4/21/2024
Start Time: 0
Site Code: 5
Station ID: 1
Location 1: I-26 E/Bound On-Ramp, east of US-76
Location 2:

Date	Time	1	2	3	4	5	6	7	8	9	10	11	12	13
4/21/2024	12:00 AM	0	84	3	0	0	0	0	0	0	0	0	0	0
4/21/2024	12:15 AM	0	68	1	0	0	0	0	0	0	0	0	0	0
4/21/2024	12:30 AM	0	55	1	0	0	0	0	0	0	0	0	0	0
4/21/2024	12:45 AM	0	55	1	0	0	0	0	0	0	0	0	0	0
4/21/2024	1:00 AM	0	52	1	0	0	0	0	0	0	0	0	0	0
4/21/2024	1:15 AM	0	50	2	0	0	0	0	0	0	0	0	0	0
4/21/2024	1:30 AM	0	45	1	0	0	0	0	0	0	0	0	0	0
4/21/2024	1:45 AM	0	34	1	0	0	0	0	0	0	0	0	0	0
4/21/2024	2:00 AM	0	29	1	0	0	0	0	0	0	0	0	0	0
4/21/2024	2:15 AM	0	19	0	0	0	0	0	0	0	0	0	0	0
4/21/2024	2:30 AM	0	19	0	0	0	0	0	0	0	0	0	0	0
4/21/2024	2:45 AM	0	20	0	0	0	0	0	0	0	0	0	0	0
4/21/2024	3:00 AM	0	15	0	0	0	0	0	0	0	0	0	0	0
4/21/2024	3:15 AM	0	15	0	0	0	0	0	0	0	0	0	0	0
4/21/2024	3:30 AM	0	15	0	0	0	0	0	0	0	0	0	0	0
4/21/2024	3:45 AM	0	15	0	0	1	0	0	0	0	0	0	0	0
4/21/2024	4:00 AM	0	18	0	0	1	0	0	0	0	0	0	0	0
4/21/2024	4:15 AM	0	19	0	0	1	0	0	0	0	0	0	0	0
4/21/2024	4:30 AM	0	17	0	0	1	0	0	0	0	0	0	0	0
4/21/2024	4:45 AM	0	13	1	0	0	0	0	0	0	0	0	0	0
4/21/2024	5:00 AM	0	11	1	0	0	0	0	0	0	0	0	0	0
4/21/2024	5:15 AM	0	17	2	0	0	0	0	0	0	0	0	0	0
4/21/2024	5:30 AM	0	24	2	0	0	0	0	0	0	0	0	0	0
4/21/2024	5:45 AM	0	29	1	0	0	0	0	0	0	0	0	0	0
4/21/2024	6:00 AM	0	32	1	0	0	0	0	0	0	0	0	0	0
4/21/2024	6:15 AM	0	32	0	0	0	0	0	0	0	0	0	0	0
4/21/2024	6:30 AM	0	43	1	0	0	0	0	0	0	0	0	0	0
4/21/2024	6:45 AM	0	61	6	0	0	0	0	0	0	0	0	0	0
4/21/2024	7:00 AM	0	70	7	0	1	0	0	0	0	0	0	0	0
4/21/2024	7:15 AM	0	77	9	0	1	0	0	0	0	0	0	0	0
4/21/2024	7:30 AM	0	75	9	0	2	0	0	0	0	0	0	0	0
4/21/2024	7:45 AM	0	68	7	0	2	0	0	0	0	0	0	0	0
4/21/2024	8:00 AM	0	71	7	0	1	0	0	0	0	0	0	0	0
4/21/2024	8:15 AM	0	80	9	0	1	0	0	0	0	0	0	0	0
4/21/2024	8:30 AM	0	97	11	0	0	0	0	0	0	0	0	0	0
4/21/2024	8:45 AM	0	118	9	0	0	0	0	0	1	0	0	0	0
4/21/2024	9:00 AM	0	149	11	2	0	0	0	0	1	0	0	0	0
4/21/2024	9:15 AM	0	175	14	2	0	0	0	0	1	0	0	0	0
4/21/2024	9:30 AM	0	187	19	2	0	0	0	0	1	0	0	0	0
4/21/2024	9:45 AM	0	197	25	2	0	0	0	0	0	0	0	0	0
4/21/2024	10:00 AM	0	191	25	0	0	0	0	0	0	0	0	0	0
4/21/2024	10:15 AM	0	185	22	0	0	0	0	0	0	0	0	0	0
4/21/2024	10:30 AM	0	176	17	0	0	0	0	0	0	0	0	0	0
4/21/2024	10:45 AM	0	192	15	0	0	0	0	1	0	0	0	0	0
4/21/2024	11:00 AM	0	229	22	0	1	0	0	1	0	0	0	0	0
4/21/2024	11:15 AM	0	257	23	0	1	0	0	1	0	0	0	0	0
4/21/2024	11:30 AM	0	262	29	0	1	0	0	1	0	0	0	0	0
4/21/2024	11:45 AM	0	282	34	0	2	0	0	0	1	0	0	0	0
4/21/2024	12:00 PM	0	280	29	0	1	0	0	0	1	0	0	0	0
4/21/2024	12:15 PM	0	262	32	0	1	0	0	0	2	0	0	0	0
4/21/2024	12:30 PM	0	272	30	0	1	0	0	0	2	0	0	0	0
4/21/2024	12:45 PM	0	240	29	0	0	0	0	0	2	0	0	0	0
4/21/2024	1:00 PM	0	219	32	0	0	0	0	0	2	0	0	0	0
4/21/2024	1:15 PM	0	240	28	0	0	0	0	0	1	0	0	0	0
4/21/2024	1:30 PM	0	249	29	0	0	0	0	0	1	0	0	0	0
4/21/2024	1:45 PM	0	261	26	0	0	0	0	0	0	0	0	0	0
4/21/2024	2:00 PM	0	262	24	0	2	0	0	0	0	0	0	0	0
4/21/2024	2:15 PM	0	240	23	1	2	0	0	0	0	0	0	0	0
4/21/2024	2:30 PM	0	218	25	1	2	0	0	0	0	0	0	0	0
4/21/2024	2:45 PM	0	198	24	1	2	0	0	0	0	0	0	0	0
4/21/2024	3:00 PM	0	194	26	1	0	0	0	0	0	0	0	0	0
4/21/2024	3:15 PM	0	189	32	0	0	0	0	0	0	0	0	0	0
4/21/2024	3:30 PM	0	209	26	0	0	0	0	0	0	0	0	0	0
4/21/2024	3:45 PM	0	200	23	0	0	0	0	0	0	0	0	0	0
4/21/2024	4:00 PM	0	186	19	0	0	0	0	0	0	0	0	0	0
4/21/2024	4:15 PM	0	179	18	0	0	0	0	0	0	0	0	0	0
4/21/2024	4:30 PM	0	164	18	0	0	0	0	0	0	0	0	0	0
4/21/2024	4:45 PM	0	175	18	0	1	0	0	0	0	0	0	0	0
4/21/2024	5:00 PM	0	171	21	0	1	0	0	0	0	0	0	0	0
4/21/2024	5:15 PM	0	182	19	0	1	0	0	0	1	0	0	0	0
4/21/2024	5:30 PM	0	190	21	0	1	0	0	0	1	0	0	0	0
4/21/2024	5:45 PM	0	184	21	0	0	0	0	0	1	0	0	0	0
4/21/2024	6:00 PM	0	176	16	0	0	0	0	0	2	0	0	0	0
4/21/2024	6:15 PM	0	167	13	0	0	0	0	0	1	0	0	0	0
4/21/2024	6:30 PM	0	153	15	0	0	0	0	0	1	0	0	0	0
4/21/2024	6:45 PM	0	180	18	0	0	0	0	0	1	0	0	0	0
4/21/2024	7:00 PM	0	195	21	0	0	0	0	0	0	0	0	0	0
4/21/2024	7:15 PM	0	185	22	0	1	0	0	0	0	0	0	0	0
4/21/2024	7:30 PM	0	174	17	0	1	0	0	0	0	0	0	0	0
4/21/2024	7:45 PM	0	143	16	0	1	0	0	0	0	0	0	0	0
4/21/2024	8:00 PM	0	117	15	0	1	0	0	0	0	0	0	0	0
4/21/2024	8:15 PM	0	107	13	0	0	0	0	0	0	0	0	0	0
4/21/2024	8:30 PM	0	99	14	0	0	0	0	0	0	0	0	0	0
4/21/2024	8:45 PM	0	83	13	0	0	0	0	0	0	0	0	0	0
4/21/2024	9:00 PM	0	84	11	0	0	0	0	0	0	0	0	0	0
4/21/2024	9:15 PM	0	78	10	0	0	0	0	0	0	0	0	0	0
4/21/2024	9:30 PM	0	62	8	0	0	0	0	0	0	0	0	0	0
4/21/2024	9:45 PM	0	52	7	0	0	0	0	0	0	0	0	0	0
4/21/2024	10:00 PM	0	43	8	0	0	0	0	0	0	0	0	0	0
4/21/2024	10:15 PM	0	39	8	0	0	0	0	0	0	0	0	0	0
4/21/2024	10:30 PM	0	47	9	0	0	0	0	0	0	0	0	0	0
4/21/2024	10:45 PM	0	48	7	0	0	0	0	0	0	0	0	0	0
4/21/2024	11:00 PM	0	45	5	0	0	0	0	0	0	0	0	0	0
4/21/2024	11:15 PM	0	33	4	0	0	0	0	1	0	0	0	0	0
4/21/2024	11:30 PM	0	23	2	0	1	0	0	1	0	0	0	0	0
4/21/2024	11:45 PM	0	15	2	0	1	0	0	1	0	0	0	0	0

4/22/2024	12:00 AM	0	12	1	0	1	0	0	1	0	0	0	0	0
4/22/2024	12:15 AM	0	13	1	0	1	0	0	0	0	0	0	0	0
4/22/2024	12:30 AM	0	12	0	0	1	0	0	0	0	0	0	0	0
4/22/2024	12:45 AM	0	12	0	0	1	0	0	0	0	0	0	0	0
4/22/2024	1:00 AM	0	12	0	0	1	0	0	0	0	0	0	0	0
4/22/2024	1:15 AM	0	13	1	0	1	0	0	0	0	0	0	0	0
4/22/2024	1:30 AM	0	14	1	0	0	0	0	0	1	0	0	0	0
4/22/2024	1:45 AM	0	11	1	0	0	0	0	0	1	0	0	0	0
4/22/2024	2:00 AM	0	11	2	0	0	0	0	0	1	0	0	0	0
4/22/2024	2:15 AM	0	10	2	0	0	0	0	0	1	0	0	0	0
4/22/2024	2:30 AM	0	8	2	0	0	0	0	0	0	0	0	0	0
4/22/2024	2:45 AM	0	8	2	0	0	0	0	0	0	0	0	0	0
4/22/2024	3:00 AM	0	7	1	0	0	0	0	0	0	0	0	0	0
4/22/2024	3:15 AM	0	6	0	0	0	0	0	0	0	0	0	0	0
4/22/2024	3:30 AM	0	9	1	0	0	0	0	0	0	0	0	0	0
4/22/2024	3:45 AM	0	9	1	0	0	0	0	0	0	0	0	0	0
4/22/2024	4:00 AM	0	10	2	0	0	0	0	0	0	0	0	0	0
4/22/2024	4:15 AM	0	15	3	0	0	0	0	0	0	0	0	0	0
4/22/2024	4:30 AM	0	16	3	0	1	0	0	0	1	0	0	0	0
4/22/2024	4:45 AM	0	29	5	0	1	0	0	0	1	0	0	0	0
4/22/2024	5:00 AM	0	39	7	0	3	0	0	0	1	0	0	0	0
4/22/2024	5:15 AM	0	45	8	0	5	0	0	0	2	0	0	0	0
4/22/2024	5:30 AM	0	60	10	0	5	0	0	0	1	0	0	0	0
4/22/2024	5:45 AM	0	81	17	0	5	0	0	0	3	0	0	0	0
4/22/2024	6:00 AM	0	99	18	0	4	0	0	0	3	0	0	0	0
4/22/2024	6:15 AM	0	137	21	1	6	0	0	0	3	0	0	0	0
4/22/2024	6:30 AM	0	178	27	1	8	1	0	0	3	0	0	0	0
4/22/2024	6:45 AM	0	210	33	1	8	1	0	0	1	0	0	0	0
4/22/2024	7:00 AM	0	253	40	1	9	2	0	1	2	0	0	0	0
4/22/2024	7:15 AM	0	258	44	0	8	2	0	1	1	0	0	0	0
4/22/2024	7:30 AM	0	260	56	0	5	1	0	1	1	0	0	0	0
4/22/2024	7:45 AM	0	253	51	0	6	1	0	2	2	0	0	0	0
4/22/2024	8:00 AM	0	236	55	0	6	0	0	2	1	0	0	0	0
4/22/2024	8:15 AM	0	227	55	0	8	0	0	3	1	0	0	0	0
4/22/2024	8:30 AM	0	209	43	1	8	0	0	4	1	0	0	0	0
4/22/2024	8:45 AM	0	202	48	1	10	2	0	3	3	0	0	0	0
4/22/2024	9:00 AM	0	193	44	1	8	2	0	2	5	0	0	0	0
4/22/2024	9:15 AM	0	196	53	2	4	2	0	2	5	0	0	0	0
4/22/2024	9:30 AM	0	210	63	1	7	2	0	1	5	0	0	0	0
4/22/2024	9:45 AM	0	217	67	1	5	0	0	1	2	0	0	0	0
4/22/2024	10:00 AM	0	231	75	1	6	0	0	1	0	0	0	0	0
4/22/2024	10:15 AM	0	258	73	0	7	1	0	0	0	0	0	0	0
4/22/2024	10:30 AM	0	271	75	1	5	3	0	0	0	0	0	0	0
4/22/2024	10:45 AM	0	286	73	1	6	3	0	0	4	0	0	0	0
4/22/2024	11:00 AM	0	305	75	1	5	3	0	0	4	0	0	0	0
4/22/2024	11:15 AM	0	299	79	1	4	2	0	0	4	0	0	0	0
4/22/2024	11:30 AM	0	295	81	0	5	1	0	0	4	0	0	0	0
4/22/2024	11:45 AM	0	305	90	0	5	2	0	0	0	0	0	0	0
4/22/2024	12:00 PM	0	289	88	0	7	3	0	1	0	0	0	0	0
4/22/2024	12:15 PM	0	308	86	0	8	5	0	1	1	0	0	0	0
4/22/2024	12:30 PM	0	321	87	0	7	4	0	1	1	0	0	0	0
4/22/2024	12:45 PM	0	322	85	2	9	3	0	1	2	0	0	0	0
4/22/2024	1:00 PM	0	332	85	2	8	3	0	0	4	0	0	0	0
4/22/2024	1:15 PM	0	334	85	2	8	2	0	0	3	0	0	0	0
4/22/2024	1:30 PM	0	366	85	4	10	2	0	0	4	0	0	0	0
4/22/2024	1:45 PM	0	388	92	5	9	2	0	0	4	0	0	0	0
4/22/2024	2:00 PM	0	419	105	5	8	1	0	0	2	0	0	0	0
4/22/2024	2:15 PM	0	452	121	7	8	0	0	0	2	0	0	0	0
4/22/2024	2:30 PM	0	477	122	6	6	0	0	1	2	0	0	0	0
4/22/2024	2:45 PM	0	524	127	3	3	2	0	1	2	0	0	0	0
4/22/2024	3:00 PM	0	588	133	3	5	2	0	1	2	0	0	0	0
4/22/2024	3:15 PM	0	655	147	1	6	2	0	1	2	0	0	0	0
4/22/2024	3:30 PM	0	728	154	0	8	2	0	0	1	0	0	0	0
4/22/2024	3:45 PM	1	760	160	0	10	0	0	1	0	0	0	0	0
4/22/2024	4:00 PM	3	818	162	1	8	0	0	1	1	0	0	0	0
4/22/2024	4:15 PM	5	820	141	1	8	0	0	1	1	0	0	0	0
4/22/2024	4:30 PM	5	823	148	1	5	0	0	1	1	0	0	0	0
4/22/2024	4:45 PM	4	834	151	1	3	0	0	0	5	0	0	0	0
4/22/2024	5:00 PM	2	751	150	0	4	0	0	0	4	0	0	0	0
4/22/2024	5:15 PM	0	660	168	0	1	0	0	0	4	0	0	0	0
4/22/2024	5:30 PM	0	548	158	0	1	0	0	0	4	0	0	0	0
4/22/2024	5:45 PM	0	417	128	0	1	0	0	0	1	0	0	0	0
4/22/2024	6:00 PM	0	363	98	0	0	0	0	0	1	0	0	0	0
4/22/2024	6:15 PM	0	328	74	0	0	0	0	0	1	0	0	0	0
4/22/2024	6:30 PM	0	291	56	0	0	0	0	0	2	0	0	0	0
4/22/2024	6:45 PM	0	261	48	0	0	0	0	0	1	0	0	0	0
4/22/2024	7:00 PM	0	256	56	0	0	0	0	0	1	0	0	0	0
4/22/2024	7:15 PM	0	237	40	0	0	0	0	0	2	0	0	0	0
4/22/2024	7:30 PM	0	202	32	0	0	0	0	0	2	0	0	0	0
4/22/2024	7:45 PM	1	209	30	0	0	0	0	0	2	0	0	0	0
4/22/2024	8:00 PM	1	165	19	0	0	0	0	0	2	0	0	0	0
4/22/2024	8:15 PM	1	152	18	0	2	1	0	0	1	0	0	0	0
4/22/2024	8:30 PM	1	157	19	0	3	2	0	0	0	0	0	0	0
4/22/2024	8:45 PM	0	144	17	0	4	3	0	0	0	0	0	0	0
4/22/2024	9:00 PM	0	131	13	0	5	4	0	0	0	0	0	0	0
4/22/2024	9:15 PM	0	122	11	0	4	3	0	0	1	0	0	0	0
4/22/2024	9:30 PM	0	102	8	0	4	2	0	0	1	0	0	0	0
4/22/2024	9:45 PM	0	101	9	0	5	1	0	0	1	0	0	0	0
4/22/2024	10:00 PM	0	96	10	0	5	1	0	0	1	0	0	0	0
4/22/2024	10:15 PM	0	88	10	0	5	1	0	0	0	0	0	0	0
4/22/2024	10:30 PM	0	89	10	0	5	1	0	0	0	0	0	0	0
4/22/2024	10:45 PM	0	74	8	0	4	1	0	0	0	0	0	0	0
4/22/2024	11:00 PM	0	60	6	0	3	0	0	0	0	0	0	0	0
4/22/2024	11:15 PM	0	49	5	0	3	1	0	0	0	0	0	0	0
4/22/2024	11:30 PM	0	42	6	0	2	1	0	0	0	0	0	0	0
4/22/2024	11:45 PM	0	35	4	0	1	1	0	0	0	0	0	0	0

4/23/2024	12:00 AM	0	30	3	0	1	1	0	0	0	0	0	0	0
4/23/2024	12:15 AM	0	28	2	0	0	0	0	0	0	0	0	0	0
4/23/2024	12:30 AM	0	26	0	0	0	0	0	0	0	0	0	0	0
4/23/2024	12:45 AM	0	21	1	0	0	0	0	0	0	0	0	0	0
4/23/2024	1:00 AM	0	18	2	0	0	0	0	0	0	0	0	0	0
4/23/2024	1:15 AM	0	16	2	0	0	0	0	0	0	0	0	0	0
4/23/2024	1:30 AM	0	11	2	0	0	0	0	0	0	0	0	0	0
4/23/2024	1:45 AM	0	13	1	0	0	1	0	0	0	0	0	0	0
4/23/2024	2:00 AM	0	14	1	0	1	1	0	0	0	0	0	0	0
4/23/2024	2:15 AM	0	10	1	0	1	1	0	0	0	0	0	0	0
4/23/2024	2:30 AM	0	10	1	0	1	1	0	0	0	0	0	0	0
4/23/2024	2:45 AM	0	9	1	0	1	0	0	0	0	0	0	0	0
4/23/2024	3:00 AM	0	7	0	0	0	0	0	0	0	0	0	0	0
4/23/2024	3:15 AM	0	13	0	0	0	0	0	0	0	0	0	0	0
4/23/2024	3:30 AM	0	13	0	0	0	0	0	0	0	0	0	0	0
4/23/2024	3:45 AM	0	14	1	0	0	0	0	0	0	0	0	0	0
4/23/2024	4:00 AM	0	17	1	0	0	0	0	0	1	0	0	0	0
4/23/2024	4:15 AM	0	13	1	0	0	0	0	0	1	0	0	0	0
4/23/2024	4:30 AM	0	22	2	0	0	0	0	0	1	0	0	0	0
4/23/2024	4:45 AM	0	28	1	0	0	0	0	0	1	0	0	0	0
4/23/2024	5:00 AM	0	38	3	0	0	0	0	0	0	0	0	0	0
4/23/2024	5:15 AM	0	53	5	0	2	0	0	0	0	0	0	0	0
4/23/2024	5:30 AM	0	63	8	0	2	0	0	0	0	0	0	0	0
4/23/2024	5:45 AM	0	84	16	0	4	0	0	0	0	0	0	0	0
4/23/2024	6:00 AM	0	103	19	0	8	2	0	0	0	0	0	0	0
4/23/2024	6:15 AM	0	127	24	1	8	2	0	0	0	0	0	0	0
4/23/2024	6:30 AM	0	168	35	1	12	3	0	0	0	0	0	0	0
4/23/2024	6:45 AM	0	196	39	1	11	3	0	1	0	0	0	0	0
4/23/2024	7:00 AM	0	239	45	1	9	1	0	2	0	0	0	0	0
4/23/2024	7:15 AM	0	260	49	0	10	2	0	3	0	0	0	0	0
4/23/2024	7:30 AM	0	265	48	0	8	2	0	3	1	0	0	0	0
4/23/2024	7:45 AM	0	265	52	0	10	3	0	2	2	0	0	0	0
4/23/2024	8:00 AM	0	251	56	0	11	3	0	2	3	0	0	0	0
4/23/2024	8:15 AM	0	243	58	0	8	2	0	1	3	0	0	0	0
4/23/2024	8:30 AM	0	224	51	0	9	2	0	1	3	0	0	0	0
4/23/2024	8:45 AM	0	230	48	1	8	2	0	2	4	0	0	0	0
4/23/2024	9:00 AM	0	217	43	1	6	3	0	1	4	0	0	0	0
4/23/2024	9:15 AM	0	227	41	2	6	3	0	1	5	0	0	0	0
4/23/2024	9:30 AM	0	237	48	2	10	4	0	1	6	0	0	0	0
4/23/2024	9:45 AM	0	236	54	1	8	4	0	1	5	0	0	0	0
4/23/2024	10:00 AM	0	243	57	1	9	3	0	1	5	0	0	0	0
4/23/2024	10:15 AM	0	254	62	0	9	3	0	1	4	0	0	0	0
4/23/2024	10:30 AM	0	281	63	0	4	1	0	1	2	0	0	0	0
4/23/2024	10:45 AM	0	286	66	0	6	0	0	2	2	0	0	0	0
4/23/2024	11:00 AM	0	313	73	1	4	2	0	2	1	0	0	0	0
4/23/2024	11:15 AM	0	324	71	1	5	2	0	2	3	0	0	0	0
4/23/2024	11:30 AM	0	324	74	1	6	3	0	4	3	0	0	0	0
4/23/2024	11:45 AM	0	333	66	1	6	3	0	2	4	0	0	0	0
4/23/2024	12:00 PM	0	322	70	1	8	1	0	2	4	0	0	0	0
4/23/2024	12:15 PM	0	332	73	4	7	4	0	3	3	0	0	0	0
4/23/2024	12:30 PM	1	351	73	7	5	3	1	1	4	0	0	0	0
4/23/2024	12:45 PM	1	363	70	8	3	3	1	1	2	0	0	0	0
4/23/2024	1:00 PM	1	374	65	8	1	3	1	1	2	0	0	0	0
4/23/2024	1:15 PM	1	375	68	8	1	0	1	0	1	0	0	0	0
4/23/2024	1:30 PM	0	376	75	5	1	0	0	0	1	0	0	0	0
4/23/2024	1:45 PM	0	408	91	4	4	0	1	1	2	0	0	0	0
4/23/2024	2:00 PM	0	446	104	4	6	0	1	1	3	0	0	0	0
4/23/2024	2:15 PM	0	489	105	2	9	0	1	3	3	0	0	0	0
4/23/2024	2:30 PM	0	513	108	2	10	2	1	3	3	0	0	0	0
4/23/2024	2:45 PM	1	556	115	2	8	2	0	2	3	0	0	0	0
4/23/2024	3:00 PM	1	595	123	1	8	2	0	2	3	0	0	0	0
4/23/2024	3:15 PM	1	648	154	0	7	2	1	0	4	0	0	0	0
4/23/2024	3:30 PM	1	747	171	0	7	0	1	0	3	0	0	0	0
4/23/2024	3:45 PM	0	830	176	0	10	0	1	1	2	0	0	0	0
4/23/2024	4:00 PM	0	902	171	0	9	1	1	1	2	3	0	0	0
4/23/2024	4:15 PM	0	933	160	0	8	1	0	1	2	3	0	0	0
4/23/2024	4:30 PM	0	944	155	0	7	1	0	1	3	3	0	0	0
4/23/2024	4:45 PM	0	892	165	0	3	1	0	1	5	3	0	0	0
4/23/2024	5:00 PM	0	802	169	0	3	0	0	1	5	0	0	0	0
4/23/2024	5:15 PM	0	721	156	0	4	0	0	1	4	0	0	0	0
4/23/2024	5:30 PM	1	581	137	0	3	0	0	1	3	0	0	0	0
4/23/2024	5:45 PM	1	474	104	0	5	0	0	0	1	0	0	0	0
4/23/2024	6:00 PM	1	408	76	0	4	0	0	0	0	0	0	0	0
4/23/2024	6:15 PM	2	328	58	0	2	0	0	0	0	0	0	0	0
4/23/2024	6:30 PM	1	296	45	0	2	0	0	0	1	0	0	0	0
4/23/2024	6:45 PM	1	265	40	0	0	0	0	0	1	0	0	0	0
4/23/2024	7:00 PM	1	249	38	0	0	0	0	1	1	0	0	0	0
4/23/2024	7:15 PM	0	233	43	0	0	0	0	1	1	0	0	0	0
4/23/2024	7:30 PM	0	212	46	0	1	0	0	1	0	0	0	0	0
4/23/2024	7:45 PM	0	200	43	0	2	0	0	1	0	0	0	0	0
4/23/2024	8:00 PM	0	162	38	0	2	0	0	0	0	0	0	0	0
4/23/2024	8:15 PM	1	149	29	0	3	0	0	0	0	0	0	0	0
4/23/2024	8:30 PM	1	131	24	0	2	0	0	0	0	0	0	0	0
4/23/2024	8:45 PM	1	119	21	0	1	1	0	1	0	0	0	0	0
4/23/2024	9:00 PM	1	117	21	0	1	2	0	1	1	0	0	0	0
4/23/2024	9:15 PM	0	100	18	0	0	5	0	1	1	0	0	0	0
4/23/2024	9:30 PM	0	115	19	0	2	5	0	2	1	0	0	0	0
4/23/2024	9:45 PM	0	107	19	0	2	4	0	1	1	0	0	0	0
4/23/2024	10:00 PM	0	97	17	0	3	3	0	1	0	0	0	0	0
4/23/2024	10:15 PM	0	95	17	0	3	0	0	1	0	0	0	0	0
4/23/2024	10:30 PM	0	66	12	0	4	2	0	0	0	0	0	0	0
4/23/2024	10:45 PM	0	45	8	0	4	3	0	0	0	0	0	0	0
4/23/2024	11:00 PM	0	38	6	0	3	3	0	0	0	0	0	0	0
4/23/2024	11:15 PM	0	30	7	0	3	4	0	0	0	0	0	0	0
4/23/2024	11:30 PM	0	23	5	0	2	2	0	0	0	0	0	0	0
4/23/2024	11:45 PM	0	23	4	0	4	1	0	0	0	0	0	0	0

4/24/2024	12:00 AM	0	23	4	0	7	1	0	0	0	0	0	0	0
4/24/2024	12:15 AM	0	19	1	0	11	0	0	0	0	0	0	0	0
4/24/2024	12:30 AM	0	21	1	0	10	0	0	0	0	0	0	0	0
4/24/2024	12:45 AM	0	18	1	0	9	0	0	0	0	0	0	0	0
4/24/2024	1:00 AM	0	18	2	0	6	0	0	0	0	0	0	0	0
4/24/2024	1:15 AM	0	18	1	0	2	0	0	0	0	0	0	0	0
4/24/2024	1:30 AM	0	14	4	0	3	0	0	0	0	0	0	0	0
4/24/2024	1:45 AM	0	11	4	0	3	0	0	0	0	0	0	0	0
4/24/2024	2:00 AM	0	9	4	0	3	0	0	0	0	0	0	0	0
4/24/2024	2:15 AM	0	9	4	0	3	0	0	0	0	0	0	0	0
4/24/2024	2:30 AM	0	6	1	0	1	1	0	0	0	0	0	0	0
4/24/2024	2:45 AM	0	8	2	0	1	1	0	0	0	0	0	0	0
4/24/2024	3:00 AM	0	10	1	0	1	1	0	0	0	0	0	0	0
4/24/2024	3:15 AM	0	10	1	0	1	1	0	0	0	0	0	0	0
4/24/2024	3:30 AM	0	9	3	0	1	0	0	0	0	0	0	0	0
4/24/2024	3:45 AM	0	14	3	0	0	0	0	0	0	0	0	0	0
4/24/2024	4:00 AM	0	11	3	0	0	0	0	0	1	0	0	0	0
4/24/2024	4:15 AM	0	14	4	0	0	0	0	0	1	0	0	0	0
4/24/2024	4:30 AM	0	20	2	0	0	0	0	0	1	0	0	0	0
4/24/2024	4:45 AM	0	23	2	0	1	0	0	0	1	0	0	0	0
4/24/2024	5:00 AM	0	35	3	0	1	0	0	0	0	0	0	0	0
4/24/2024	5:15 AM	0	46	5	0	3	0	0	0	0	0	0	0	0
4/24/2024	5:30 AM	0	52	7	0	4	2	0	0	0	0	0	0	0
4/24/2024	5:45 AM	0	72	19	0	3	2	0	0	0	0	0	0	0
4/24/2024	6:00 AM	0	92	24	0	9	3	0	1	1	0	0	0	0
4/24/2024	6:15 AM	0	120	33	1	8	3	0	1	1	0	0	0	0
4/24/2024	6:30 AM	0	175	49	1	9	2	0	1	1	0	0	0	0
4/24/2024	6:45 AM	0	225	57	1	13	3	0	1	2	0	0	0	0
4/24/2024	7:00 AM	1	271	72	1	10	2	0	0	2	0	0	0	0
4/24/2024	7:15 AM	1	283	75	0	9	2	0	0	2	0	0	0	0
4/24/2024	7:30 AM	1	281	79	0	8	1	0	0	3	0	0	0	0
4/24/2024	7:45 AM	1	248	74	0	4	0	0	1	2	0	0	0	0
4/24/2024	8:00 AM	0	225	73	0	1	0	0	1	1	0	0	0	0
4/24/2024	8:15 AM	0	220	70	0	3	0	0	1	2	0	0	0	0
4/24/2024	8:30 AM	0	196	59	0	5	0	0	1	4	0	0	0	0
4/24/2024	8:45 AM	0	207	61	0	7	0	0	0	4	0	0	0	0
4/24/2024	9:00 AM	0	210	63	0	8	0	1	1	4	0	0	0	0
4/24/2024	9:15 AM	0	221	72	1	7	0	1	1	4	0	0	0	0
4/24/2024	9:30 AM	0	230	80	1	7	0	1	1	2	0	0	0	0
4/24/2024	9:45 AM	0	236	83	1	6	0	1	1	2	0	0	0	0
4/24/2024	10:00 AM	0	246	88	1	7	1	0	0	2	0	0	0	0
4/24/2024	10:15 AM	0	236	86	0	7	2	0	0	1	0	0	0	0
4/24/2024	10:30 AM	0	259	84	0	5	2	0	1	0	0	0	0	0
4/24/2024	10:45 AM	0	257	76	0	4	4	1	1	0	0	0	0	0
4/24/2024	11:00 AM	0	275	69	0	2	3	1	1	1	0	0	0	0
4/24/2024	11:15 AM	0	285	72	0	3	2	1	1	3	0	0	0	0
4/24/2024	11:30 AM	0	294	75	1	3	2	1	0	3	0	0	0	0
4/24/2024	11:45 AM	0	317	81	2	5	0	0	0	4	0	0	0	0
4/24/2024	12:00 PM	0	331	72	2	8	0	0	2	4	0	0	0	0
4/24/2024	12:15 PM	0	374	65	3	6	0	0	2	2	0	0	0	0
4/24/2024	12:30 PM	0	385	69	2	7	0	0	2	3	0	0	0	0
4/24/2024	12:45 PM	0	403	70	1	8	0	0	2	2	0	0	0	0
4/24/2024	1:00 PM	0	400	77	1	7	0	0	1	3	0	0	0	0
4/24/2024	1:15 PM	0	402	83	0	11	0	0	1	3	1	0	0	0
4/24/2024	1:30 PM	0	438	83	1	11	0	0	2	3	1	0	0	0
4/24/2024	1:45 PM	1	447	83	2	9	0	0	3	5	1	0	0	0
4/24/2024	2:00 PM	1	455	82	5	9	0	0	3	3	1	0	0	0
4/24/2024	2:15 PM	3	503	84	7	8	0	0	4	6	0	0	0	0
4/24/2024	2:30 PM	3	527	88	6	6	0	0	3	6	0	0	0	0
4/24/2024	2:45 PM	2	566	107	8	8	0	0	2	4	0	0	0	0
4/24/2024	3:00 PM	2	631	131	5	7	0	0	1	5	0	0	0	0
4/24/2024	3:15 PM	0	679	163	3	7	0	0	0	2	0	0	0	0
4/24/2024	3:30 PM	1	733	179	3	15	0	0	0	1	0	0	0	0
4/24/2024	3:45 PM	1	806	185	0	12	0	0	1	1	0	0	0	0
4/24/2024	4:00 PM	1	861	178	0	13	0	0	1	0	0	0	0	0
4/24/2024	4:15 PM	1	857	160	0	10	0	0	1	0	0	0	0	0
4/24/2024	4:30 PM	0	832	148	0	3	0	0	1	0	0	0	0	0
4/24/2024	4:45 PM	0	793	143	0	4	0	0	0	0	0	0	0	0
4/24/2024	5:00 PM	0	748	146	0	3	0	0	0	0	0	0	0	0
4/24/2024	5:15 PM	0	672	135	0	4	0	0	0	1	0	0	0	0
4/24/2024	5:30 PM	0	601	128	0	6	0	0	0	1	0	0	0	0
4/24/2024	5:45 PM	1	520	106	0	6	0	0	0	1	0	0	0	0
4/24/2024	6:00 PM	1	408	89	0	6	0	0	0	1	0	0	0	0
4/24/2024	6:15 PM	1	342	73	0	6	0	0	0	0	0	0	0	0
4/24/2024	6:30 PM	1	315	61	0	4	0	1	0	0	0	0	0	0
4/24/2024	6:45 PM	0	281	54	0	4	0	1	1	0	0	0	0	0
4/24/2024	7:00 PM	1	302	51	0	3	0	1	1	1	0	0	0	0
4/24/2024	7:15 PM	1	312	51	0	2	0	1	1	2	0	0	0	0
4/24/2024	7:30 PM	1	305	54	0	2	0	0	1	2	0	0	0	0
4/24/2024	7:45 PM	1	304	55	0	3	0	0	0	3	0	0	0	0
4/24/2024	8:00 PM	0	272	47	0	4	0	0	0	3	0	0	0	0
4/24/2024	8:15 PM	0	252	44	0	6	0	0	0	2	0	0	0	0
4/24/2024	8:30 PM	0	214	37	0	5	0	0	0	2	0	0	0	0
4/24/2024	8:45 PM	0	168	28	0	3	0	0	0	2	0	0	0	0
4/24/2024	9:00 PM	0	150	27	0	2	0	0	0	1	0	0	0	0
4/24/2024	9:15 PM	0	138	27	0	1	0	0	0	1	0	0	0	0
4/24/2024	9:30 PM	0	153	33	0	2	0	0	0	1	0	0	0	0
4/24/2024	9:45 PM	0	182	44	0	2	0	0	0	0	0	0	0	0
4/24/2024	10:00 PM	0	166	41	0	2	0	0	0	0	0	0	0	0
4/24/2024	10:15 PM	0	153	40	0	1	0	0	0	0	0	0	0	0
4/24/2024	10:30 PM	0	119	29	0	0	0	0	0	0	0	0	0	0
4/24/2024	10:45 PM	0	84	17	0	0	0	0	0	0	0	0	0	0
4/24/2024	11:00 PM	0	73	12	0	0	0	0	0	0	0	0	0	0
4/24/2024	11:15 PM	0	55	7	0	2	0	0	0	1	0	0	0	0
4/24/2024	11:30 PM	0	43	5	0	2	0	0	0	1	0	0	0	0
4/24/2024	11:45 PM	0	33	4	0	5	0	0	0	1	0	0	0	0

4/25/2024	12:00 AM	0	26	5	0	7	0	0	0	1	0	0	0	0
4/25/2024	12:15 AM	0	29	5	0	5	0	0	0	0	0	0	0	0
4/25/2024	12:30 AM	0	29	3	0	6	0	0	0	0	0	0	0	0
4/25/2024	12:45 AM	0	28	3	0	5	0	0	0	0	0	0	0	0
4/25/2024	1:00 AM	0	25	4	0	3	0	0	0	1	0	0	0	0
4/25/2024	1:15 AM	0	21	4	0	5	0	0	0	1	0	0	0	0
4/25/2024	1:30 AM	0	16	4	0	8	0	0	0	1	0	0	0	0
4/25/2024	1:45 AM	0	12	3	0	8	0	0	0	1	0	0	0	0
4/25/2024	2:00 AM	0	16	2	0	10	0	0	0	1	0	0	0	0
4/25/2024	2:15 AM	0	14	2	0	9	0	0	0	1	0	0	0	0
4/25/2024	2:30 AM	0	17	4	0	5	0	0	0	1	0	0	0	0
4/25/2024	2:45 AM	0	16	4	0	3	0	0	0	1	0	0	0	0
4/25/2024	3:00 AM	0	13	4	0	2	0	0	0	1	0	0	0	0
4/25/2024	3:15 AM	0	13	4	0	1	0	0	0	1	0	0	0	0
4/25/2024	3:30 AM	0	10	3	0	2	0	0	0	1	0	0	0	0
4/25/2024	3:45 AM	0	16	4	0	2	0	0	0	2	0	0	0	0
4/25/2024	4:00 AM	0	18	5	0	2	0	0	0	2	0	0	0	0
4/25/2024	4:15 AM	0	20	5	0	2	0	0	0	2	0	0	0	0
4/25/2024	4:30 AM	0	21	5	0	1	0	0	0	2	0	0	0	0
4/25/2024	4:45 AM	0	29	8	1	1	0	0	0	1	0	0	0	0
4/25/2024	5:00 AM	0	44	9	1	0	0	0	0	0	0	0	0	0
4/25/2024	5:15 AM	0	57	11	1	1	0	0	0	0	0	0	0	0
4/25/2024	5:30 AM	0	68	15	1	5	0	0	0	0	0	0	0	0
4/25/2024	5:45 AM	0	88	18	0	5	0	0	0	0	0	0	0	0
4/25/2024	6:00 AM	0	96	24	0	7	0	0	0	0	0	0	0	0
4/25/2024	6:15 AM	0	128	27	1	10	1	1	1	1	0	0	0	0
4/25/2024	6:30 AM	0	171	33	2	9	1	1	1	1	0	0	0	0
4/25/2024	6:45 AM	1	199	36	2	9	1	1	2	1	2	0	0	0
4/25/2024	7:00 AM	1	253	44	2	7	1	1	2	1	2	0	0	0
4/25/2024	7:15 AM	1	270	45	1	3	0	0	2	0	2	0	0	0
4/25/2024	7:30 AM	1	262	52	0	1	0	0	2	1	2	0	0	0
4/25/2024	7:45 AM	0	259	63	0	2	0	0	1	1	0	0	0	0
4/25/2024	8:00 AM	0	239	65	0	2	0	0	2	2	0	0	0	0
4/25/2024	8:15 AM	0	219	70	0	2	0	0	1	7	0	0	0	0
4/25/2024	8:30 AM	0	218	69	0	3	0	0	1	6	2	0	0	0
4/25/2024	8:45 AM	0	221	65	0	2	0	0	1	6	2	0	0	0
4/25/2024	9:00 AM	0	222	64	1	4	0	0	1	7	2	0	0	0
4/25/2024	9:15 AM	0	248	68	1	4	2	0	1	3	2	0	0	0
4/25/2024	9:30 AM	0	254	62	1	2	2	0	2	4	0	0	0	0
4/25/2024	9:45 AM	0	249	58	2	7	2	0	3	6	0	0	0	0
4/25/2024	10:00 AM	0	247	57	1	6	3	0	2	5	0	0	0	0
4/25/2024	10:15 AM	0	243	53	2	10	1	0	2	4	0	0	0	0
4/25/2024	10:30 AM	0	264	64	3	11	1	0	1	4	0	0	0	0
4/25/2024	10:45 AM	0	296	68	2	7	1	0	0	2	0	0	0	0
4/25/2024	11:00 AM	0	313	72	3	8	0	0	0	1	0	0	0	0
4/25/2024	11:15 AM	0	318	88	3	7	0	0	0	1	0	0	0	0
4/25/2024	11:30 AM	0	321	95	2	6	0	0	0	0	0	0	0	0
4/25/2024	11:45 AM	0	324	96	2	5	0	0	0	1	0	0	0	0
4/25/2024	12:00 PM	0	345	102	5	4	0	0	0	2	0	0	0	0
4/25/2024	12:15 PM	1	355	95	7	3	0	0	1	2	0	0	0	0
4/25/2024	12:30 PM	1	380	83	7	5	0	1	1	4	0	0	0	0
4/25/2024	12:45 PM	1	384	78	8	9	2	2	1	4	0	0	0	0
4/25/2024	1:00 PM	1	379	71	4	10	2	2	2	3	0	0	0	0
4/25/2024	1:15 PM	0	400	77	1	9	2	2	2	3	0	0	0	0
4/25/2024	1:30 PM	0	410	79	1	8	2	1	2	1	0	0	0	0
4/25/2024	1:45 PM	0	429	92	0	6	1	0	4	1	0	0	0	0
4/25/2024	2:00 PM	0	476	104	0	5	1	0	4	1	0	0	0	0
4/25/2024	2:15 PM	0	532	102	3	7	1	0	4	1	0	0	0	0
4/25/2024	2:30 PM	0	587	106	6	7	1	0	5	1	0	0	0	0
4/25/2024	2:45 PM	0	638	109	6	8	1	0	3	0	0	0	0	0
4/25/2024	3:00 PM	1	679	111	6	9	1	0	2	0	0	0	0	0
4/25/2024	3:15 PM	1	720	112	4	11	1	0	1	0	0	0	0	0
4/25/2024	3:30 PM	1	753	135	1	12	1	0	0	0	0	0	0	0
4/25/2024	3:45 PM	1	791	159	1	12	0	0	0	1	0	0	0	0
4/25/2024	4:00 PM	0	858	166	1	11	0	1	0	1	0	0	0	0
4/25/2024	4:15 PM	0	854	174	0	6	0	1	0	1	0	0	0	0
4/25/2024	4:30 PM	0	854	147	0	4	0	1	0	2	0	0	0	0
4/25/2024	4:45 PM	0	824	128	0	1	1	1	0	1	0	0	0	0
4/25/2024	5:00 PM	0	751	116	0	0	1	0	0	3	0	0	0	0
4/25/2024	5:15 PM	0	673	110	0	0	1	0	0	3	0	0	0	0
4/25/2024	5:30 PM	1	573	113	0	1	1	0	0	2	0	0	0	0
4/25/2024	5:45 PM	1	491	93	0	1	0	0	0	2	0	0	0	0
4/25/2024	6:00 PM	1	387	81	0	2	0	0	0	0	0	0	0	0
4/25/2024	6:15 PM	1	337	66	0	3	0	0	0	0	0	0	0	0
4/25/2024	6:30 PM	0	292	57	0	2	0	0	0	0	0	0	0	0
4/25/2024	6:45 PM	0	272	50	0	2	0	0	0	0	0	0	0	0
4/25/2024	7:00 PM	0	266	36	0	2	0	0	0	0	0	0	0	0
4/25/2024	7:15 PM	0	251	36	0	1	0	0	0	0	0	0	0	0
4/25/2024	7:30 PM	0	238	27	0	1	0	0	0	0	0	0	0	0
4/25/2024	7:45 PM	0	228	27	0	1	0	0	0	0	0	0	0	0
4/25/2024	8:00 PM	0	218	32	0	1	0	0	0	0	0	0	0	0
4/25/2024	8:15 PM	0	211	25	0	2	0	0	0	0	0	0	0	0
4/25/2024	8:30 PM	0	200	26	0	2	0	0	0	1	0	0	0	0
4/25/2024	8:45 PM	0	170	21	0	2	0	0	0	1	0	0	0	0
4/25/2024	9:00 PM	0	157	16	0	1	0	0	0	1	0	0	0	0
4/25/2024	9:15 PM	0	134	16	0	0	0	0	0	1	0	0	0	0
4/25/2024	9:30 PM	0	175	16	0	0	0	0	0	0	0	0	0	0
4/25/2024	9:45 PM	0	187	16	0	0	0	0	0	0	0	0	0	0
4/25/2024	10:00 PM	0	156	16	0	0	0	0	0	0	0	0	0	0
4/25/2024	10:15 PM	0	158	12	0	0	0	0	0	0	0	0	0	0
4/25/2024	10:30 PM	0	99	10	0	2	0	0	0	0	0	0	0	0
4/25/2024	10:45 PM	0	74	9	0	3	0	0	0	0	0	0	0	0
4/25/2024	11:00 PM	0	71	6	0	4	0	0	0	0	0	0	0	0
4/25/2024	11:15 PM	0	45	4	0	4	0	0	0	0	0	0	0	0
4/25/2024	11:30 PM	0	29	1	0	2	0	0	0	0	0	0	0	0
4/25/2024	11:45 PM	0	9	0	0	1	0	0	0	0	0	0	0	0

4/26/2024	12:00 AM	0	14	7	0	6	3	0	0	0	0	0	0	0
4/26/2024	12:15 AM	0	9	4	0	4	1	0	0	0	0	0	0	0
4/26/2024	12:30 AM	0	9	5	0	3	3	0	0	0	0	0	0	0
4/26/2024	12:45 AM	0	9	4	0	3	2	0	0	0	0	0	0	0
4/26/2024	1:00 AM	0	11	4	0	5	2	0	0	0	0	0	0	0
4/26/2024	1:15 AM	0	15	5	0	6	3	0	0	0	0	0	0	0
4/26/2024	1:30 AM	0	13	4	0	6	3	0	0	0	0	0	0	0
4/26/2024	1:45 AM	0	13	4	0	5	3	0	0	0	0	0	0	0
4/26/2024	2:00 AM	0	11	5	0	3	3	0	0	0	0	0	0	0
4/26/2024	2:15 AM	0	10	6	0	3	2	0	0	0	0	0	0	0
4/26/2024	2:30 AM	0	9	5	0	3	0	0	0	0	0	0	0	0
4/26/2024	2:45 AM	0	9	4	0	3	0	0	0	0	0	0	0	0
4/26/2024	3:00 AM	0	8	3	0	3	0	0	0	0	0	0	0	0
4/26/2024	3:15 AM	0	7	3	0	2	1	0	1	0	0	0	0	0
4/26/2024	3:30 AM	0	8	4	0	1	2	0	1	0	0	0	0	0
4/26/2024	3:45 AM	0	9	5	0	1	2	0	1	0	0	0	0	0
4/26/2024	4:00 AM	0	11	7	0	2	2	0	1	0	0	0	0	0
4/26/2024	4:15 AM	0	15	7	0	1	2	0	0	0	0	0	0	0
4/26/2024	4:30 AM	0	16	8	0	1	1	0	0	0	0	0	0	0
4/26/2024	4:45 AM	0	21	9	0	1	1	0	0	0	0	0	0	0
4/26/2024	5:00 AM	0	23	8	0	1	1	0	0	0	0	0	0	0
4/26/2024	5:15 AM	0	30	12	0	3	0	0	0	0	0	0	0	0
4/26/2024	5:30 AM	0	50	14	0	4	0	0	0	0	0	0	0	0
4/26/2024	5:45 AM	0	60	21	0	5	0	0	0	0	0	0	0	0
4/26/2024	6:00 AM	0	84	31	0	4	3	0	0	0	0	0	0	0
4/26/2024	6:15 AM	0	108	31	1	6	3	0	0	0	0	0	0	0
4/26/2024	6:30 AM	0	152	36	1	10	5	0	0	0	0	0	0	0
4/26/2024	6:45 AM	0	192	37	1	10	5	0	0	0	0	0	0	0
4/26/2024	7:00 AM	1	225	41	1	12	2	0	0	1	0	0	0	0
4/26/2024	7:15 AM	1	265	45	0	9	2	0	0	1	0	0	0	0
4/26/2024	7:30 AM	1	258	52	0	6	0	0	0	2	0	0	0	0
4/26/2024	7:45 AM	1	250	54	1	5	0	0	1	2	0	0	0	0
4/26/2024	8:00 AM	0	237	54	1	4	0	0	2	1	0	0	0	0
4/26/2024	8:15 AM	0	197	63	1	7	0	0	2	1	0	0	0	0
4/26/2024	8:30 AM	0	188	61	2	6	0	0	2	0	0	0	0	0
4/26/2024	8:45 AM	0	200	62	1	9	1	0	1	2	0	0	0	0
4/26/2024	9:00 AM	0	189	55	1	9	2	0	0	3	0	0	0	0
4/26/2024	9:15 AM	0	219	58	1	10	2	0	0	3	0	0	0	0
4/26/2024	9:30 AM	0	234	56	0	12	2	0	0	4	0	0	0	0
4/26/2024	9:45 AM	0	235	49	1	10	1	0	0	2	0	0	0	0
4/26/2024	10:00 AM	0	265	58	1	15	1	0	0	2	0	0	0	0
4/26/2024	10:15 AM	0	295	50	3	15	2	0	0	2	0	0	0	0
4/26/2024	10:30 AM	0	343	63	5	15	2	0	0	1	0	0	0	0
4/26/2024	10:45 AM	0	366	85	4	17	3	0	0	2	0	0	0	0
4/26/2024	11:00 AM	0	379	81	4	13	2	0	0	2	0	0	0	0
4/26/2024	11:15 AM	0	384	90	2	8	1	0	1	2	1	0	0	0
4/26/2024	11:30 AM	0	390	95	5	5	1	0	1	2	1	0	0	0
4/26/2024	11:45 AM	1	424	91	9	4	0	1	1	1	1	0	0	0
4/26/2024	12:00 PM	1	460	112	9	5	1	1	3	0	1	0	0	0
4/26/2024	12:15 PM	1	456	114	12	7	1	1	3	0	0	0	0	0
4/26/2024	12:30 PM	1	466	106	7	7	1	1	3	1	0	0	0	0
4/26/2024	12:45 PM	0	460	110	8	7	1	0	3	1	0	0	0	0
4/26/2024	1:00 PM	0	435	104	8	5	0	0	1	1	0	0	0	0
4/26/2024	1:15 PM	0	461	110	5	4	0	0	0	1	0	0	0	0
4/26/2024	1:30 PM	0	433	107	6	7	1	0	0	0	0	0	0	0
4/26/2024	1:45 PM	0	464	106	2	7	2	0	1	1	0	0	0	0
4/26/2024	2:00 PM	0	497	99	2	7	2	0	1	3	0	0	0	0
4/26/2024	2:15 PM	0	505	97	3	6	2	0	1	3	0	0	0	0
4/26/2024	2:30 PM	0	523	103	2	4	1	0	1	3	0	0	0	0
4/26/2024	2:45 PM	0	535	107	1	3	0	0	0	4	0	0	0	0
4/26/2024	3:00 PM	1	550	117	1	2	0	0	0	2	0	0	0	0
4/26/2024	3:15 PM	1	578	129	0	3	0	0	0	2	0	0	0	0
4/26/2024	3:30 PM	1	643	149	0	4	1	0	0	4	0	0	0	0
4/26/2024	3:45 PM	1	640	157	0	3	1	0	0	2	0	0	0	0
4/26/2024	4:00 PM	3	682	158	0	3	1	0	0	3	0	0	0	0
4/26/2024	4:15 PM	3	712	145	0	3	1	0	0	4	0	0	0	0
4/26/2024	4:30 PM	3	692	125	0	3	0	0	0	4	0	0	0	0
4/26/2024	4:45 PM	3	682	112	0	4	0	0	0	5	0	0	0	0
4/26/2024	5:00 PM	0	620	98	0	6	0	0	0	4	0	0	0	0
4/26/2024	5:15 PM	0	527	83	0	5	0	0	0	3	0	0	0	0
4/26/2024	5:30 PM	0	457	70	0	4	0	0	0	1	0	0	0	0
4/26/2024	5:45 PM	0	383	53	0	3	0	0	0	0	0	0	0	0
4/26/2024	6:00 PM	0	319	44	0	1	0	0	0	0	0	0	0	0
4/26/2024	6:15 PM	2	289	45	0	2	0	0	0	0	0	0	0	0
4/26/2024	6:30 PM	2	258	44	0	2	0	0	0	0	0	0	0	0
4/26/2024	6:45 PM	2	245	44	0	2	0	0	0	0	0	0	0	0
4/26/2024	7:00 PM	2	244	41	0	2	0	0	0	0	0	0	0	0
4/26/2024	7:15 PM	0	232	35	0	1	0	0	0	0	0	0	0	0
4/26/2024	7:30 PM	0	222	31	0	0	0	0	0	0	0	0	0	0
4/26/2024	7:45 PM	0	207	28	0	0	0	0	0	0	0	0	0	0
4/26/2024	8:00 PM	0	203	30	0	0	0	0	0	0	0	0	0	0
4/26/2024	8:15 PM	0	202	27	0	0	0	0	0	0	0	0	0	0
4/26/2024	8:30 PM	0	214	28	0	0	0	0	0	1	0	0	0	0
4/26/2024	8:45 PM	0	233	29	0	0	0	0	0	1	0	0	0	0
4/26/2024	9:00 PM	0	251	31	0	0	0	0	0	1	0	0	0	0
4/26/2024	9:15 PM	0	249	33	0	0	0	0	0	1	0	0	0	0
4/26/2024	9:30 PM	0	226	30	0	1	0	0	0	0	0	0	0	0
4/26/2024	9:45 PM	0	219	29	0	1	0	0	0	0	0	0	0	0
4/26/2024	10:00 PM	0	249	36	0	1	0	0	0	0	0	0	0	0
4/26/2024	10:15 PM	0	282	36	0	1	0	0	0	0	0	0	0	0
4/26/2024	10:30 PM	0	267	34	0	0	0	0	0	0	0	0	0	0
4/26/2024	10:45 PM	1	236	30	0	0	0	0	0	0	0	0	0	0
4/26/2024	11:00 PM	1	158	15	0	0	0	0	0	0	0	0	0	0
4/26/2024	11:15 PM	1	73	8	0	0	0	0	0	0	0	0	0	0
4/26/2024	11:30 PM	1	45	5	0	0	0	0	0	0	0	0	0	0
4/26/2024	11:45 PM	0	21	3	0	0	0	0	0	0	0	0	0	0

4/27/2024	12:00 AM	0	57	10	0	3	0	0	0	0	0	0	0	0
4/27/2024	12:15 AM	0	50	8	0	3	0	0	0	0	0	0	0	0
4/27/2024	12:30 AM	1	35	6	0	2	0	0	0	0	0	0	0	0
4/27/2024	12:45 AM	1	45	7	0	1	0	0	0	0	0	0	0	0
4/27/2024	1:00 AM	1	41	6	0	0	0	0	0	0	0	0	0	0
4/27/2024	1:15 AM	1	41	6	0	0	0	0	0	0	0	0	0	0
4/27/2024	1:30 AM	0	51	7	0	0	0	0	0	0	0	0	0	0
4/27/2024	1:45 AM	0	43	5	0	0	0	0	0	0	0	0	0	0
4/27/2024	2:00 AM	0	47	6	0	0	0	0	0	0	0	0	0	0
4/27/2024	2:15 AM	0	44	5	0	0	0	0	0	0	0	0	0	0
4/27/2024	2:30 AM	0	33	4	0	0	0	0	0	0	0	0	0	0
4/27/2024	2:45 AM	0	26	3	0	0	0	0	0	0	0	0	0	0
4/27/2024	3:00 AM	0	14	1	0	0	0	0	0	0	0	0	0	0
4/27/2024	3:15 AM	0	10	1	0	0	0	0	0	0	0	0	0	0
4/27/2024	3:30 AM	0	10	0	0	0	0	0	0	0	0	0	0	0
4/27/2024	3:45 AM	0	9	0	0	1	0	0	0	0	0	0	0	0
4/27/2024	4:00 AM	0	9	0	0	2	0	0	0	0	0	0	0	0
4/27/2024	4:15 AM	0	14	1	0	3	0	0	0	0	0	0	0	0
4/27/2024	4:30 AM	0	15	1	0	3	0	0	0	0	0	0	0	0
4/27/2024	4:45 AM	0	21	2	0	2	0	0	0	0	0	0	0	0
4/27/2024	5:00 AM	0	26	3	0	2	0	0	0	0	0	0	0	0
4/27/2024	5:15 AM	0	33	4	0	1	0	0	0	0	0	0	0	0
4/27/2024	5:30 AM	0	35	5	0	1	0	0	0	0	0	0	0	0
4/27/2024	5:45 AM	0	36	7	0	2	0	0	0	0	0	0	0	0
4/27/2024	6:00 AM	0	42	8	0	1	0	0	0	0	0	0	0	0
4/27/2024	6:15 AM	0	48	7	0	1	0	0	0	0	0	0	0	0
4/27/2024	6:30 AM	0	72	10	0	2	0	0	0	1	0	0	0	0
4/27/2024	6:45 AM	0	90	8	0	1	0	0	0	1	0	0	0	0
4/27/2024	7:00 AM	0	104	12	0	1	0	0	0	1	0	0	0	0
4/27/2024	7:15 AM	0	104	14	0	2	0	0	0	1	0	0	0	0
4/27/2024	7:30 AM	0	94	14	0	1	0	0	0	1	0	0	0	0
4/27/2024	7:45 AM	0	93	16	0	1	0	0	0	1	0	0	0	0
4/27/2024	8:00 AM	0	98	15	0	2	0	0	0	1	0	0	0	0
4/27/2024	8:15 AM	0	109	23	0	1	0	0	0	1	0	0	0	0
4/27/2024	8:30 AM	0	127	30	0	2	0	0	0	0	0	0	0	0
4/27/2024	8:45 AM	0	145	28	0	2	0	0	0	1	0	0	0	0
4/27/2024	9:00 AM	0	152	32	0	1	0	0	0	2	0	0	0	0
4/27/2024	9:15 AM	0	163	27	0	2	0	0	1	2	0	0	0	0
4/27/2024	9:30 AM	0	162	22	1	2	0	0	1	2	0	0	0	0
4/27/2024	9:45 AM	1	171	31	1	2	0	0	1	1	0	0	0	0
4/27/2024	10:00 AM	1	193	35	1	3	0	0	1	0	0	0	0	0
4/27/2024	10:15 AM	1	218	34	1	2	0	0	0	0	0	0	0	0
4/27/2024	10:30 AM	1	249	37	0	1	0	0	0	0	0	0	0	0
4/27/2024	10:45 AM	0	252	36	0	1	0	0	0	0	0	0	0	0
4/27/2024	11:00 AM	0	269	32	0	1	0	0	0	0	0	0	0	0
4/27/2024	11:15 AM	0	284	38	0	2	0	0	0	0	0	0	0	0
4/27/2024	11:30 AM	0	276	45	0	2	0	0	0	0	0	0	0	0
4/27/2024	11:45 AM	0	284	46	0	3	0	0	1	0	0	0	0	0
4/27/2024	12:00 PM	1	269	50	0	3	0	0	1	0	0	0	0	0
4/27/2024	12:15 PM	1	257	49	0	3	0	0	1	0	0	0	0	0
4/27/2024	12:30 PM	1	277	48	0	4	0	0	1	0	0	0	0	0
4/27/2024	12:45 PM	2	300	58	0	5	0	0	0	0	0	0	0	0
4/27/2024	1:00 PM	1	319	65	0	5	0	0	0	0	0	0	0	0
4/27/2024	1:15 PM	1	319	61	0	4	0	0	0	0	0	0	0	0
4/27/2024	1:30 PM	2	323	73	1	3	0	0	0	0	0	0	0	0
4/27/2024	1:45 PM	1	309	63	1	1	0	0	0	1	0	0	0	0
4/27/2024	2:00 PM	1	297	52	1	0	0	0	0	1	0	0	0	0
4/27/2024	2:15 PM	1	299	63	1	0	0	0	0	1	0	0	0	0
4/27/2024	2:30 PM	0	300	46	0	0	0	0	0	1	0	0	0	0
4/27/2024	2:45 PM	0	328	47	0	0	0	0	0	0	0	0	0	0
4/27/2024	3:00 PM	0	361	58	0	0	0	0	0	0	0	0	0	0
4/27/2024	3:15 PM	0	375	53	0	0	0	0	0	1	0	0	0	0
4/27/2024	3:30 PM	0	360	54	0	1	0	0	0	1	0	0	0	0
4/27/2024	3:45 PM	0	333	51	0	1	0	0	0	1	0	0	0	0
4/27/2024	4:00 PM	0	296	40	0	1	0	0	0	1	0	0	0	0
4/27/2024	4:15 PM	0	265	37	0	1	0	0	0	0	0	0	0	0
4/27/2024	4:30 PM	0	284	34	0	1	0	0	0	0	0	0	0	0
4/27/2024	4:45 PM	0	267	35	0	1	0	0	0	0	0	0	0	0
4/27/2024	5:00 PM	0	247	42	0	1	0	0	0	0	0	0	0	0
4/27/2024	5:15 PM	0	280	47	0	3	0	0	0	0	0	0	0	0
4/27/2024	5:30 PM	0	270	48	0	2	0	0	0	1	0	0	0	0
4/27/2024	5:45 PM	0	260	43	0	2	0	0	0	2	0	0	0	0
4/27/2024	6:00 PM	0	264	36	0	3	0	0	0	2	0	0	0	0
4/27/2024	6:15 PM	0	227	28	0	1	0	0	0	2	0	0	0	0
4/27/2024	6:30 PM	0	209	23	0	1	0	0	0	1	0	0	0	0
4/27/2024	6:45 PM	0	228	33	0	1	0	0	0	0	0	0	0	0
4/27/2024	7:00 PM	0	258	33	0	0	0	0	0	0	0	0	0	0
4/27/2024	7:15 PM	0	265	39	0	0	0	0	0	0	0	0	0	0
4/27/2024	7:30 PM	0	244	41	0	1	0	0	0	0	0	0	0	0
4/27/2024	7:45 PM	0	212	35	0	2	0	0	0	0	0	0	0	0
4/27/2024	8:00 PM	0	169	42	0	2	0	0	0	0	0	0	0	0
4/27/2024	8:15 PM	1	151	44	0	3	0	0	0	0	0	0	0	0
4/27/2024	8:30 PM	1	196	57	0	2	0	0	0	0	0	0	0	0
4/27/2024	8:45 PM	1	234	75	0	1	0	0	0	0	0	0	0	0
4/27/2024	9:00 PM	1	240	70	0	1	0	0	0	0	0	0	0	0
4/27/2024	9:15 PM	0	250	71	0	0	0	0	0	0	0	0	0	0
4/27/2024	9:30 PM	0	227	71	0	0	0	0	0	0	0	0	0	0
4/27/2024	9:45 PM	0	198	62	0	0	0	0	0	0	0	0	0	0
4/27/2024	10:00 PM	0	173	60	0	0	0	0	0	0	0	0	0	0
4/27/2024	10:15 PM	0	151	56	0	0	0	0	0	0	0	0	0	0
4/27/2024	10:30 PM	0	107	44	0	0	0	0	0	0	0	0	0	0
4/27/2024	10:45 PM	0	82	33	0	0	0	0	0	0	0	0	0	0
4/27/2024	11:00 PM	0	82	31	0	0	0	0	0	0	0	0	0	0
4/27/2024	11:15 PM	0	55	20	0	0	0	0	0	0	0	0	0	0
4/27/2024	11:30 PM	0	36	13	0	0	0	0	0	0	0	0	0	0
4/27/2024	11:45 PM	0	18	7	0	0	0	0	0	0	0	0	0	0

WB
File Name:
Start Date: 4/21/2024
Start Time: 0
Site Code: 5
Station ID: 1
Location 1: I-26 E/Bound On-Ramp, east of US-76
Location 2:

Date	Time	1	2	3	4	5	6	7	8	9	10	11	12	13
4/21/2024	12:00 AM	0	0	0	0	0	0	0	0	0	0	0	0	0
4/21/2024	12:15 AM	0	0	0	0	0	0	0	0	0	0	0	0	0
4/21/2024	12:30 AM	0	0	0	0	0	0	0	0	0	0	0	0	0
4/21/2024	12:45 AM	0	0	0	0	0	0	0	0	0	0	0	0	0
4/21/2024	1:00 AM	0	0	0	0	0	0	0	0	0	0	0	0	0
4/21/2024	1:15 AM	0	0	0	0	0	0	0	0	0	0	0	0	0
4/21/2024	1:30 AM	0	0	0	0	0	0	0	0	0	0	0	0	0
4/21/2024	1:45 AM	0	0	0	0	0	0	0	0	0	0	0	0	0
4/21/2024	2:00 AM	0	0	0	0	0	0	0	0	0	0	0	0	0
4/21/2024	2:15 AM	0	0	0	0	0	0	0	0	0	0	0	0	0
4/21/2024	2:30 AM	0	0	0	0	0	0	0	0	0	0	0	0	0
4/21/2024	2:45 AM	0	0	0	0	0	0	0	0	0	0	0	0	0
4/21/2024	3:00 AM	0	0	0	0	0	0	0	0	0	0	0	0	0
4/21/2024	3:15 AM	0	0	0	0	0	0	0	0	0	0	0	0	0
4/21/2024	3:30 AM	0	0	0	0	0	0	0	0	0	0	0	0	0
4/21/2024	3:45 AM	0	0	0	0	0	0	0	0	0	0	0	0	0
4/21/2024	4:00 AM	0	0	0	0	0	0	0	0	0	0	0	0	0
4/21/2024	4:15 AM	0	0	0	0	0	0	0	0	0	0	0	0	0
4/21/2024	4:30 AM	0	0	0	0	0	0	0	0	0	0	0	0	0
4/21/2024	4:45 AM	0	0	0	0	0	0	0	0	0	0	0	0	0
4/21/2024	5:00 AM	0	0	0	0	0	0	0	0	0	0	0	0	0
4/21/2024	5:15 AM	0	0	0	0	0	0	0	0	0	0	0	0	0
4/21/2024	5:30 AM	0	0	0	0	0	0	0	0	0	0	0	0	0
4/21/2024	5:45 AM	0	0	0	0	0	0	0	0	0	0	0	0	0
4/21/2024	6:00 AM	0	0	0	0	0	0	0	0	0	0	0	0	0
4/21/2024	6:15 AM	0	0	0	0	0	0	0	0	0	0	0	0	0
4/21/2024	6:30 AM	0	0	0	0	0	0	0	0	0	0	0	0	0
4/21/2024	6:45 AM	0	0	0	0	0	0	0	0	0	0	0	0	0
4/21/2024	7:00 AM	0	0	0	0	0	0	0	0	0	0	0	0	0
4/21/2024	7:15 AM	0	0	0	0	0	0	0	0	0	0	0	0	0
4/21/2024	7:30 AM	0	0	0	0	0	0	0	0	0	0	0	0	0
4/21/2024	7:45 AM	0	0	0	0	0	0	0	0	0	0	0	0	0
4/21/2024	8:00 AM	0	0	0	0	0	0	0	0	0	0	0	0	0
4/21/2024	8:15 AM	0	0	0	0	0	0	0	0	0	0	0	0	0
4/21/2024	8:30 AM	0	0	0	0	0	0	0	0	0	0	0	0	0
4/21/2024	8:45 AM	0	0	0	0	0	0	0	0	0	0	0	0	0
4/21/2024	9:00 AM	0	0	0	0	0	0	0	0	0	0	0	0	0
4/21/2024	9:15 AM	0	0	0	0	0	0	0	0	0	0	0	0	0
4/21/2024	9:30 AM	0	0	0	0	0	0	0	0	0	0	0	0	0
4/21/2024	9:45 AM	0	0	0	0	0	0	0	0	0	0	0	0	0
4/21/2024	10:00 AM	0	0	0	0	0	0	0	0	0	0	0	0	0
4/21/2024	10:15 AM	0	0	0	0	0	0	0	0	0	0	0	0	0
4/21/2024	10:30 AM	0	0	0	0	0	0	0	0	0	0	0	0	0
4/21/2024	10:45 AM	0	0	0	0	0	0	0	0	0	0	0	0	0
4/21/2024	11:00 AM	0	0	0	0	0	0	0	0	0	0	0	0	0
4/21/2024	11:15 AM	0	0	0	0	0	0	0	0	0	0	0	0	0
4/21/2024	11:30 AM	0	0	0	0	0	0	0	0	0	0	0	0	0
4/21/2024	11:45 AM	0	0	0	0	0	0	0	0	0	0	0	0	0
4/21/2024	12:00 PM	0	0	0	0	0	0	0	0	0	0	0	0	0
4/21/2024	12:15 PM	0	0	0	0	0	0	0	0	0	0	0	0	0
4/21/2024	12:30 PM	0	0	0	0	0	0	0	0	0	0	0	0	0
4/21/2024	12:45 PM	0	0	0	0	0	0	0	0	0	0	0	0	0
4/21/2024	1:00 PM	0	0	0	0	0	0	0	0	0	0	0	0	0
4/21/2024	1:15 PM	0	0	0	0	0	0	0	0	0	0	0	0	0
4/21/2024	1:30 PM	0	0	0	0	0	0	0	0	0	0	0	0	0
4/21/2024	1:45 PM	0	0	0	0	0	0	0	0	0	0	0	0	0
4/21/2024	2:00 PM	0	0	0	0	0	0	0	0	0	0	0	0	0
4/21/2024	2:15 PM	0	0	0	0	0	0	0	0	0	0	0	0	0
4/21/2024	2:30 PM	0	0	0	0	0	0	0	0	0	0	0	0	0
4/21/2024	2:45 PM	0	0	0	0	0	0	0	0	0	0	0	0	0
4/21/2024	3:00 PM	0	0	0	0	0	0	0	0	0	0	0	0	0
4/21/2024	3:15 PM	0	0	0	0	0	0	0	0	0	0	0	0	0
4/21/2024	3:30 PM	0	0	0	0	0	0	0	0	0	0	0	0	0
4/21/2024	3:45 PM	0	0	0	0	0	0	0	0	0	0	0	0	0
4/21/2024	4:00 PM	0	0	0	0	0	0	0	0	0	0	0	0	0
4/21/2024	4:15 PM	0	0	0	0	0	0	0	0	0	0	0	0	0
4/21/2024	4:30 PM	0	0	0	0	0	0	0	0	0	0	0	0	0
4/21/2024	4:45 PM	0	0	0	0	0	0	0	0	0	0	0	0	0
4/21/2024	5:00 PM	0	0	0	0	0	0	0	0	0	0	0	0	0
4/21/2024	5:15 PM	0	0	0	0	0	0	0	0	0	0	0	0	0
4/21/2024	5:30 PM	0	0	0	0	0	0	0	0	0	0	0	0	0
4/21/2024	5:45 PM	0	0	0	0	0	0	0	0	0	0	0	0	0
4/21/2024	6:00 PM	0	0	0	0	0	0	0	0	0	0	0	0	0
4/21/2024	6:15 PM	0	0	0	0	0	0	0	0	0	0	0	0	0
4/21/2024	6:30 PM	0	0	0	0	0	0	0	0	0	0	0	0	0
4/21/2024	6:45 PM	0	0	0	0	0	0	0	0	0	0	0	0	0
4/21/2024	7:00 PM	0	0	0	0	0	0	0	0	0	0	0	0	0
4/21/2024	7:15 PM	0	0	0	0	0	0	0	0	0	0	0	0	0
4/21/2024	7:30 PM	0	0	0	0	0	0	0	0	0	0	0	0	0
4/21/2024	7:45 PM	0	0	0	0	0	0	0	0	0	0	0	0	0
4/21/2024	8:00 PM	0	0	0	0	0	0	0	0	0	0	0	0	0
4/21/2024	8:15 PM	0	0	0	0	0	0	0	0	0	0	0	0	0
4/21/2024	8:30 PM	0	0	0	0	0	0	0	0	0	0	0	0	0
4/21/2024	8:45 PM	0	0	0	0	0	0	0	0	0	0	0	0	0
4/21/2024	9:00 PM	0	0	0	0	0	0	0	0	0	0	0	0	0
4/21/2024	9:15 PM	0	0	0	0	0	0	0	0	0	0	0	0	0
4/21/2024	9:30 PM	0	0	0	0	0	0	0	0	0	0	0	0	0
4/21/2024	9:45 PM	0	0	0	0	0	0	0	0	0	0	0	0	0
4/21/2024	10:00 PM	0	0	0	0	0	0	0	0	0	0	0	0	0
4/21/2024	10:15 PM	0	0	0	0	0	0	0	0	0	0	0	0	0
4/21/2024	10:30 PM	0	0	0	0	0	0	0	0	0	0	0	0	0
4/21/2024	10:45 PM	0	0	0	0	0	0	0	0	0	0	0	0	0
4/21/2024	11:00 PM	0	0	0	0	0	0	0	0	0	0	0	0	0
4/21/2024	11:15 PM	0	0	0	0	0	0	0	0	0	0	0	0	0
4/21/2024	11:30 PM	0	0	0	0	0	0	0	0	0	0	0	0	0
4/21/2024	11:45 PM	0	0	0	0	0	0	0	0	0	0	0	0	0

4/22/2024	12:00 AM	0	0	0	0	0	0	0	0	0	0	0	0	0
4/22/2024	12:15 AM	0	0	0	0	0	0	0	0	0	0	0	0	0
4/22/2024	12:30 AM	0	0	0	0	0	0	0	0	0	0	0	0	0
4/22/2024	12:45 AM	0	0	0	0	0	0	0	0	0	0	0	0	0
4/22/2024	1:00 AM	0	0	0	0	0	0	0	0	0	0	0	0	0
4/22/2024	1:15 AM	0	0	0	0	0	0	0	0	0	0	0	0	0
4/22/2024	1:30 AM	0	0	0	0	0	0	0	0	0	0	0	0	0
4/22/2024	1:45 AM	0	0	0	0	0	0	0	0	0	0	0	0	0
4/22/2024	2:00 AM	0	0	0	0	0	0	0	0	0	0	0	0	0
4/22/2024	2:15 AM	0	0	0	0	0	0	0	0	0	0	0	0	0
4/22/2024	2:30 AM	0	0	0	0	0	0	0	0	0	0	0	0	0
4/22/2024	2:45 AM	0	0	0	0	0	0	0	0	0	0	0	0	0
4/22/2024	3:00 AM	0	0	0	0	0	0	0	0	0	0	0	0	0
4/22/2024	3:15 AM	0	0	0	0	0	0	0	0	0	0	0	0	0
4/22/2024	3:30 AM	0	0	0	0	0	0	0	0	0	0	0	0	0
4/22/2024	3:45 AM	0	0	0	0	0	0	0	0	0	0	0	0	0
4/22/2024	4:00 AM	0	0	0	0	0	0	0	0	0	0	0	0	0
4/22/2024	4:15 AM	0	0	0	0	0	0	0	0	0	0	0	0	0
4/22/2024	4:30 AM	0	0	0	0	0	0	0	0	0	0	0	0	0
4/22/2024	4:45 AM	0	0	0	0	0	0	0	0	0	0	0	0	0
4/22/2024	5:00 AM	0	0	0	0	0	0	0	0	0	0	0	0	0
4/22/2024	5:15 AM	0	0	0	0	0	0	0	0	0	0	0	0	0
4/22/2024	5:30 AM	0	0	0	0	0	0	0	0	0	0	0	0	0
4/22/2024	5:45 AM	0	0	0	0	0	0	0	0	0	0	0	0	0
4/22/2024	6:00 AM	0	0	0	0	0	0	0	0	0	0	0	0	0
4/22/2024	6:15 AM	0	0	0	0	0	0	0	0	0	0	0	0	0
4/22/2024	6:30 AM	0	0	0	0	0	0	0	0	0	0	0	0	0
4/22/2024	6:45 AM	0	0	0	0	0	0	0	0	0	0	0	0	0
4/22/2024	7:00 AM	0	0	0	0	0	0	0	0	0	0	0	0	0
4/22/2024	7:15 AM	0	0	0	0	0	0	0	0	0	0	0	0	0
4/22/2024	7:30 AM	0	0	0	0	0	0	0	0	0	0	0	0	0
4/22/2024	7:45 AM	0	0	0	0	0	0	0	0	0	0	0	0	0
4/22/2024	8:00 AM	0	0	0	0	0	0	0	0	0	0	0	0	0
4/22/2024	8:15 AM	0	0	0	0	0	0	0	0	0	0	0	0	0
4/22/2024	8:30 AM	0	0	0	0	0	0	0	0	0	0	0	0	0
4/22/2024	8:45 AM	0	0	0	0	0	0	0	0	0	0	0	0	0
4/22/2024	9:00 AM	0	0	0	0	0	0	0	0	0	0	0	0	0
4/22/2024	9:15 AM	0	0	0	0	0	0	0	0	0	0	0	0	0
4/22/2024	9:30 AM	0	0	0	0	0	0	0	0	0	0	0	0	0
4/22/2024	9:45 AM	0	0	0	0	0	0	0	0	0	0	0	0	0
4/22/2024	10:00 AM	0	0	0	0	0	0	0	0	0	0	0	0	0
4/22/2024	10:15 AM	0	0	0	0	0	0	0	0	0	0	0	0	0
4/22/2024	10:30 AM	0	0	0	0	0	0	0	0	0	0	0	0	0
4/22/2024	10:45 AM	0	0	0	0	0	0	0	0	0	0	0	0	0
4/22/2024	11:00 AM	0	0	0	0	0	0	0	0	0	0	0	0	0
4/22/2024	11:15 AM	0	0	0	0	0	0	0	0	0	0	0	0	0
4/22/2024	11:30 AM	0	0	0	0	0	0	0	0	0	0	0	0	0
4/22/2024	11:45 AM	0	0	0	0	0	0	0	0	0	0	0	0	0
4/22/2024	12:00 PM	0	0	0	0	0	0	0	0	0	0	0	0	0
4/22/2024	12:15 PM	0	0	0	0	0	0	0	0	0	0	0	0	0
4/22/2024	12:30 PM	0	0	0	0	0	0	0	0	0	0	0	0	0
4/22/2024	12:45 PM	0	0	0	0	0	0	0	0	0	0	0	0	0
4/22/2024	1:00 PM	0	0	0	0	0	0	0	0	0	0	0	0	0
4/22/2024	1:15 PM	0	0	0	0	0	0	0	0	0	0	0	0	0
4/22/2024	1:30 PM	0	0	0	0	0	0	0	0	0	0	0	0	0
4/22/2024	1:45 PM	0	0	0	0	0	0	0	0	0	0	0	0	0
4/22/2024	2:00 PM	0	0	0	0	0	0	0	0	0	0	0	0	0
4/22/2024	2:15 PM	0	0	0	0	0	0	0	0	0	0	0	0	0
4/22/2024	2:30 PM	0	0	0	0	0	0	0	0	0	0	0	0	0
4/22/2024	2:45 PM	0	0	0	0	0	0	0	0	0	0	0	0	0
4/22/2024	3:00 PM	0	0	0	0	0	0	0	0	0	0	0	0	0
4/22/2024	3:15 PM	0	0	0	0	0	0	0	0	0	0	0	0	0
4/22/2024	3:30 PM	0	0	0	0	0	0	0	0	0	0	0	0	0
4/22/2024	3:45 PM	0	0	0	0	0	0	0	0	0	0	0	0	0
4/22/2024	4:00 PM	0	0	0	0	0	0	0	0	0	0	0	0	0
4/22/2024	4:15 PM	0	0	0	0	0	0	0	0	0	0	0	0	0
4/22/2024	4:30 PM	0	0	0	0	0	0	0	0	0	0	0	0	0
4/22/2024	4:45 PM	0	0	0	0	0	0	0	0	0	0	0	0	0
4/22/2024	5:00 PM	0	0	0	0	0	0	0	0	0	0	0	0	0
4/22/2024	5:15 PM	0	0	0	0	0	0	0	0	0	0	0	0	0
4/22/2024	5:30 PM	0	0	0	0	0	0	0	0	0	0	0	0	0
4/22/2024	5:45 PM	0	0	0	0	0	0	0	0	0	0	0	0	0
4/22/2024	6:00 PM	0	0	0	0	0	0	0	0	0	0	0	0	0
4/22/2024	6:15 PM	0	0	0	0	0	0	0	0	0	0	0	0	0
4/22/2024	6:30 PM	0	0	0	0	0	0	0	0	0	0	0	0	0
4/22/2024	6:45 PM	0	0	0	0	0	0	0	0	0	0	0	0	0
4/22/2024	7:00 PM	0	0	0	0	0	0	0	0	0	0	0	0	0
4/22/2024	7:15 PM	0	0	0	0	0	0	0	0	0	0	0	0	0
4/22/2024	7:30 PM	0	0	0	0	0	0	0	0	0	0	0	0	0
4/22/2024	7:45 PM	0	0	0	0	0	0	0	0	0	0	0	0	0
4/22/2024	8:00 PM	0	0	0	0	0	0	0	0	0	0	0	0	0
4/22/2024	8:15 PM	0	0	0	0	0	0	0	0	0	0	0	0	0
4/22/2024	8:30 PM	0	0	0	0	0	0	0	0	0	0	0	0	0
4/22/2024	8:45 PM	0	0	0	0	0	0	0	0	0	0	0	0	0
4/22/2024	9:00 PM	0	0	0	0	0	0	0	0	0	0	0	0	0
4/22/2024	9:15 PM	0	0	0	0	0	0	0	0	0	0	0	0	0
4/22/2024	9:30 PM	0	0	0	0	0	0	0	0	0	0	0	0	0
4/22/2024	9:45 PM	0	0	0	0	0	0	0	0	0	0	0	0	0
4/22/2024	10:00 PM	0	0	0	0	0	0	0	0	0	0	0	0	0
4/22/2024	10:15 PM	0	0	0	0	0	0	0	0	0	0	0	0	0
4/22/2024	10:30 PM	0	0	0	0	0	0	0	0	0	0	0	0	0
4/22/2024	10:45 PM	0	0	0	0	0	0	0	0	0	0	0	0	0
4/22/2024	11:00 PM	0	0	0	0	0	0	0	0	0	0	0	0	0
4/22/2024	11:15 PM	0	0	0	0	0	0	0	0	0	0	0	0	0
4/22/2024	11:30 PM	0	0	0	0	0	0	0	0	0	0	0	0	0
4/22/2024	11:45 PM	0	0	0	0	0	0	0	0	0	0	0	0	0

4/23/2024	12:00 AM	0	0	0	0	0	0	0	0	0	0	0	0	0
4/23/2024	12:15 AM	0	0	0	0	0	0	0	0	0	0	0	0	0
4/23/2024	12:30 AM	0	0	0	0	0	0	0	0	0	0	0	0	0
4/23/2024	12:45 AM	0	0	0	0	0	0	0	0	0	0	0	0	0
4/23/2024	1:00 AM	0	0	0	0	0	0	0	0	0	0	0	0	0
4/23/2024	1:15 AM	0	0	0	0	0	0	0	0	0	0	0	0	0
4/23/2024	1:30 AM	0	0	0	0	0	0	0	0	0	0	0	0	0
4/23/2024	1:45 AM	0	0	0	0	0	0	0	0	0	0	0	0	0
4/23/2024	2:00 AM	0	0	0	0	0	0	0	0	0	0	0	0	0
4/23/2024	2:15 AM	0	0	0	0	0	0	0	0	0	0	0	0	0
4/23/2024	2:30 AM	0	0	0	0	0	0	0	0	0	0	0	0	0
4/23/2024	2:45 AM	0	0	0	0	0	0	0	0	0	0	0	0	0
4/23/2024	3:00 AM	0	0	0	0	0	0	0	0	0	0	0	0	0
4/23/2024	3:15 AM	0	0	0	0	0	0	0	0	0	0	0	0	0
4/23/2024	3:30 AM	0	0	0	0	0	0	0	0	0	0	0	0	0
4/23/2024	3:45 AM	0	0	0	0	0	0	0	0	0	0	0	0	0
4/23/2024	4:00 AM	0	0	0	0	0	0	0	0	0	0	0	0	0
4/23/2024	4:15 AM	0	0	0	0	0	0	0	0	0	0	0	0	0
4/23/2024	4:30 AM	0	0	0	0	0	0	0	0	0	0	0	0	0
4/23/2024	4:45 AM	0	0	0	0	0	0	0	0	0	0	0	0	0
4/23/2024	5:00 AM	0	0	0	0	0	0	0	0	0	0	0	0	0
4/23/2024	5:15 AM	0	0	0	0	0	0	0	0	0	0	0	0	0
4/23/2024	5:30 AM	0	0	0	0	0	0	0	0	0	0	0	0	0
4/23/2024	5:45 AM	0	0	0	0	0	0	0	0	0	0	0	0	0
4/23/2024	6:00 AM	0	0	0	0	0	0	0	0	0	0	0	0	0
4/23/2024	6:15 AM	0	0	0	0	0	0	0	0	0	0	0	0	0
4/23/2024	6:30 AM	0	0	0	0	0	0	0	0	0	0	0	0	0
4/23/2024	6:45 AM	0	0	0	0	0	0	0	0	0	0	0	0	0
4/23/2024	7:00 AM	0	0	0	0	0	0	0	0	0	0	0	0	0
4/23/2024	7:15 AM	0	0	0	0	0	0	0	0	0	0	0	0	0
4/23/2024	7:30 AM	0	0	0	0	0	0	0	0	0	0	0	0	0
4/23/2024	7:45 AM	0	0	0	0	0	0	0	0	0	0	0	0	0
4/23/2024	8:00 AM	0	0	0	0	0	0	0	0	0	0	0	0	0
4/23/2024	8:15 AM	0	0	0	0	0	0	0	0	0	0	0	0	0
4/23/2024	8:30 AM	0	0	0	0	0	0	0	0	0	0	0	0	0
4/23/2024	8:45 AM	0	0	0	0	0	0	0	0	0	0	0	0	0
4/23/2024	9:00 AM	0	0	0	0	0	0	0	0	0	0	0	0	0
4/23/2024	9:15 AM	0	0	0	0	0	0	0	0	0	0	0	0	0
4/23/2024	9:30 AM	0	0	0	0	0	0	0	0	0	0	0	0	0
4/23/2024	9:45 AM	0	0	0	0	0	0	0	0	0	0	0	0	0
4/23/2024	10:00 AM	0	0	0	0	0	0	0	0	0	0	0	0	0
4/23/2024	10:15 AM	0	0	0	0	0	0	0	0	0	0	0	0	0
4/23/2024	10:30 AM	0	0	0	0	0	0	0	0	0	0	0	0	0
4/23/2024	10:45 AM	0	0	0	0	0	0	0	0	0	0	0	0	0
4/23/2024	11:00 AM	0	0	0	0	0	0	0	0	0	0	0	0	0
4/23/2024	11:15 AM	0	0	0	0	0	0	0	0	0	0	0	0	0
4/23/2024	11:30 AM	0	0	0	0	0	0	0	0	0	0	0	0	0
4/23/2024	11:45 AM	0	0	0	0	0	0	0	0	0	0	0	0	0
4/23/2024	12:00 PM	0	0	0	0	0	0	0	0	0	0	0	0	0
4/23/2024	12:15 PM	0	0	0	0	0	0	0	0	0	0	0	0	0
4/23/2024	12:30 PM	0	0	0	0	0	0	0	0	0	0	0	0	0
4/23/2024	12:45 PM	0	0	0	0	0	0	0	0	0	0	0	0	0
4/23/2024	1:00 PM	0	0	0	0	0	0	0	0	0	0	0	0	0
4/23/2024	1:15 PM	0	0	0	0	0	0	0	0	0	0	0	0	0
4/23/2024	1:30 PM	0	0	0	0	0	0	0	0	0	0	0	0	0
4/23/2024	1:45 PM	0	0	0	0	0	0	0	0	0	0	0	0	0
4/23/2024	2:00 PM	0	0	0	0	0	0	0	0	0	0	0	0	0
4/23/2024	2:15 PM	0	0	0	0	0	0	0	0	0	0	0	0	0
4/23/2024	2:30 PM	0	0	0	0	0	0	0	0	0	0	0	0	0
4/23/2024	2:45 PM	0	0	0	0	0	0	0	0	0	0	0	0	0
4/23/2024	3:00 PM	0	0	0	0	0	0	0	0	0	0	0	0	0
4/23/2024	3:15 PM	0	0	0	0	0	0	0	0	0	0	0	0	0
4/23/2024	3:30 PM	0	0	0	0	0	0	0	0	0	0	0	0	0
4/23/2024	3:45 PM	0	0	0	0	0	0	0	0	0	0	0	0	0
4/23/2024	4:00 PM	0	0	0	0	0	0	0	0	0	0	0	0	0
4/23/2024	4:15 PM	0	0	0	0	0	0	0	0	0	0	0	0	0
4/23/2024	4:30 PM	0	0	0	0	0	0	0	0	0	0	0	0	0
4/23/2024	4:45 PM	0	0	0	0	0	0	0	0	0	0	0	0	0
4/23/2024	5:00 PM	0	0	0	0	0	0	0	0	0	0	0	0	0
4/23/2024	5:15 PM	0	0	0	0	0	0	0	0	0	0	0	0	0
4/23/2024	5:30 PM	0	0	0	0	0	0	0	0	0	0	0	0	0
4/23/2024	5:45 PM	0	0	0	0	0	0	0	0	0	0	0	0	0
4/23/2024	6:00 PM	0	0	0	0	0	0	0	0	0	0	0	0	0
4/23/2024	6:15 PM	0	0	0	0	0	0	0	0	0	0	0	0	0
4/23/2024	6:30 PM	0	0	0	0	0	0	0	0	0	0	0	0	0
4/23/2024	6:45 PM	0	0	0	0	0	0	0	0	0	0	0	0	0
4/23/2024	7:00 PM	0	0	0	0	0	0	0	0	0	0	0	0	0
4/23/2024	7:15 PM	0	0	0	0	0	0	0	0	0	0	0	0	0
4/23/2024	7:30 PM	0	0	0	0	0	0	0	0	0	0	0	0	0
4/23/2024	7:45 PM	0	0	0	0	0	0	0	0	0	0	0	0	0
4/23/2024	8:00 PM	0	0	0	0	0	0	0	0	0	0	0	0	0
4/23/2024	8:15 PM	0	0	0	0	0	0	0	0	0	0	0	0	0
4/23/2024	8:30 PM	0	0	0	0	0	0	0	0	0	0	0	0	0
4/23/2024	8:45 PM	0	0	0	0	0	0	0	0	0	0	0	0	0
4/23/2024	9:00 PM	0	0	0	0	0	0	0	0	0	0	0	0	0
4/23/2024	9:15 PM	0	0	0	0	0	0	0	0	0	0	0	0	0
4/23/2024	9:30 PM	0	0	0	0	0	0	0	0	0	0	0	0	0
4/23/2024	9:45 PM	0	0	0	0	0	0	0	0	0	0	0	0	0
4/23/2024	10:00 PM	0	0	0	0	0	0	0	0	0	0	0	0	0
4/23/2024	10:15 PM	0	0	0	0	0	0	0	0	0	0	0	0	0
4/23/2024	10:30 PM	0	0	0	0	0	0	0	0	0	0	0	0	0
4/23/2024	10:45 PM	0	0	0	0	0	0	0	0	0	0	0	0	0
4/23/2024	11:00 PM	0	0	0	0	0	0	0	0	0	0	0	0	0
4/23/2024	11:15 PM	0	0	0	0	0	0	0	0	0	0	0	0	0
4/23/2024	11:30 PM	0	0	0	0	0	0	0	0	0	0	0	0	0
4/23/2024	11:45 PM	0	0	0	0	0	0	0	0	0	0	0	0	0

4/24/2024	12:00 AM	0	0	0	0	0	0	0	0	0	0	0	0	0
4/24/2024	12:15 AM	0	0	0	0	0	0	0	0	0	0	0	0	0
4/24/2024	12:30 AM	0	0	0	0	0	0	0	0	0	0	0	0	0
4/24/2024	12:45 AM	0	0	0	0	0	0	0	0	0	0	0	0	0
4/24/2024	1:00 AM	0	0	0	0	0	0	0	0	0	0	0	0	0
4/24/2024	1:15 AM	0	0	0	0	0	0	0	0	0	0	0	0	0
4/24/2024	1:30 AM	0	0	0	0	0	0	0	0	0	0	0	0	0
4/24/2024	1:45 AM	0	0	0	0	0	0	0	0	0	0	0	0	0
4/24/2024	2:00 AM	0	0	0	0	0	0	0	0	0	0	0	0	0
4/24/2024	2:15 AM	0	0	0	0	0	0	0	0	0	0	0	0	0
4/24/2024	2:30 AM	0	0	0	0	0	0	0	0	0	0	0	0	0
4/24/2024	2:45 AM	0	0	0	0	0	0	0	0	0	0	0	0	0
4/24/2024	3:00 AM	0	0	0	0	0	0	0	0	0	0	0	0	0
4/24/2024	3:15 AM	0	0	0	0	0	0	0	0	0	0	0	0	0
4/24/2024	3:30 AM	0	0	0	0	0	0	0	0	0	0	0	0	0
4/24/2024	3:45 AM	0	0	0	0	0	0	0	0	0	0	0	0	0
4/24/2024	4:00 AM	0	0	0	0	0	0	0	0	0	0	0	0	0
4/24/2024	4:15 AM	0	0	0	0	0	0	0	0	0	0	0	0	0
4/24/2024	4:30 AM	0	0	0	0	0	0	0	0	0	0	0	0	0
4/24/2024	4:45 AM	0	0	0	0	0	0	0	0	0	0	0	0	0
4/24/2024	5:00 AM	0	0	0	0	0	0	0	0	0	0	0	0	0
4/24/2024	5:15 AM	0	0	0	0	0	0	0	0	0	0	0	0	0
4/24/2024	5:30 AM	0	0	0	0	0	0	0	0	0	0	0	0	0
4/24/2024	5:45 AM	0	0	0	0	0	0	0	0	0	0	0	0	0
4/24/2024	6:00 AM	0	0	0	0	0	0	0	0	0	0	0	0	0
4/24/2024	6:15 AM	0	0	0	0	0	0	0	0	0	0	0	0	0
4/24/2024	6:30 AM	0	0	0	0	0	0	0	0	0	0	0	0	0
4/24/2024	6:45 AM	0	0	0	0	0	0	0	0	0	0	0	0	0
4/24/2024	7:00 AM	0	0	0	0	0	0	0	0	0	0	0	0	0
4/24/2024	7:15 AM	0	0	0	0	0	0	0	0	0	0	0	0	0
4/24/2024	7:30 AM	0	0	0	0	0	0	0	0	0	0	0	0	0
4/24/2024	7:45 AM	0	0	0	0	0	0	0	0	0	0	0	0	0
4/24/2024	8:00 AM	0	0	0	0	0	0	0	0	0	0	0	0	0
4/24/2024	8:15 AM	0	0	0	0	0	0	0	0	0	0	0	0	0
4/24/2024	8:30 AM	0	0	0	0	0	0	0	0	0	0	0	0	0
4/24/2024	8:45 AM	0	0	0	0	0	0	0	0	0	0	0	0	0
4/24/2024	9:00 AM	0	0	0	0	0	0	0	0	0	0	0	0	0
4/24/2024	9:15 AM	0	0	0	0	0	0	0	0	0	0	0	0	0
4/24/2024	9:30 AM	0	0	0	0	0	0	0	0	0	0	0	0	0
4/24/2024	9:45 AM	0	0	0	0	0	0	0	0	0	0	0	0	0
4/24/2024	10:00 AM	0	0	0	0	0	0	0	0	0	0	0	0	0
4/24/2024	10:15 AM	0	0	0	0	0	0	0	0	0	0	0	0	0
4/24/2024	10:30 AM	0	0	0	0	0	0	0	0	0	0	0	0	0
4/24/2024	10:45 AM	0	0	0	0	0	0	0	0	0	0	0	0	0
4/24/2024	11:00 AM	0	0	0	0	0	0	0	0	0	0	0	0	0
4/24/2024	11:15 AM	0	0	0	0	0	0	0	0	0	0	0	0	0
4/24/2024	11:30 AM	0	0	0	0	0	0	0	0	0	0	0	0	0
4/24/2024	11:45 AM	0	0	0	0	0	0	0	0	0	0	0	0	0
4/24/2024	12:00 PM	0	0	0	0	0	0	0	0	0	0	0	0	0
4/24/2024	12:15 PM	0	0	0	0	0	0	0	0	0	0	0	0	0
4/24/2024	12:30 PM	0	0	0	0	0	0	0	0	0	0	0	0	0
4/24/2024	12:45 PM	0	0	0	0	0	0	0	0	0	0	0	0	0
4/24/2024	1:00 PM	0	0	0	0	0	0	0	0	0	0	0	0	0
4/24/2024	1:15 PM	0	0	0	0	0	0	0	0	0	0	0	0	0
4/24/2024	1:30 PM	0	0	0	0	0	0	0	0	0	0	0	0	0
4/24/2024	1:45 PM	0	0	0	0	0	0	0	0	0	0	0	0	0
4/24/2024	2:00 PM	0	0	0	0	0	0	0	0	0	0	0	0	0
4/24/2024	2:15 PM	0	0	0	0	0	0	0	0	0	0	0	0	0
4/24/2024	2:30 PM	0	0	0	0	0	0	0	0	0	0	0	0	0
4/24/2024	2:45 PM	0	0	0	0	0	0	0	0	0	0	0	0	0
4/24/2024	3:00 PM	0	0	0	0	0	0	0	0	0	0	0	0	0
4/24/2024	3:15 PM	0	0	0	0	0	0	0	0	0	0	0	0	0
4/24/2024	3:30 PM	0	0	0	0	0	0	0	0	0	0	0	0	0
4/24/2024	3:45 PM	0	0	0	0	0	0	0	0	0	0	0	0	0
4/24/2024	4:00 PM	0	0	0	0	0	0	0	0	0	0	0	0	0
4/24/2024	4:15 PM	0	0	0	0	0	0	0	0	0	0	0	0	0
4/24/2024	4:30 PM	0	0	0	0	0	0	0	0	0	0	0	0	0
4/24/2024	4:45 PM	0	0	0	0	0	0	0	0	0	0	0	0	0
4/24/2024	5:00 PM	0	0	0	0	0	0	0	0	0	0	0	0	0
4/24/2024	5:15 PM	0	0	0	0	0	0	0	0	0	0	0	0	0
4/24/2024	5:30 PM	0	0	0	0	0	0	0	0	0	0	0	0	0
4/24/2024	5:45 PM	0	0	0	0	0	0	0	0	0	0	0	0	0
4/24/2024	6:00 PM	0	0	0	0	0	0	0	0	0	0	0	0	0
4/24/2024	6:15 PM	0	0	0	0	0	0	0	0	0	0	0	0	0
4/24/2024	6:30 PM	0	0	0	0	0	0	0	0	0	0	0	0	0
4/24/2024	6:45 PM	0	0	0	0	0	0	0	0	0	0	0	0	0
4/24/2024	7:00 PM	0	0	0	0	0	0	0	0	0	0	0	0	0
4/24/2024	7:15 PM	0	0	0	0	0	0	0	0	0	0	0	0	0
4/24/2024	7:30 PM	0	0	0	0	0	0	0	0	0	0	0	0	0
4/24/2024	7:45 PM	0	0	0	0	0	0	0	0	0	0	0	0	0
4/24/2024	8:00 PM	0	0	0	0	0	0	0	0	0	0	0	0	0
4/24/2024	8:15 PM	0	0	0	0	0	0	0	0	0	0	0	0	0
4/24/2024	8:30 PM	0	0	0	0	0	0	0	0	0	0	0	0	0
4/24/2024	8:45 PM	0	0	0	0	0	0	0	0	0	0	0	0	0
4/24/2024	9:00 PM	0	0	0	0	0	0	0	0	0	0	0	0	0
4/24/2024	9:15 PM	0	0	0	0	0	0	0	0	0	0	0	0	0
4/24/2024	9:30 PM	0	0	0	0	0	0	0	0	0	0	0	0	0
4/24/2024	9:45 PM	0	0	0	0	0	0	0	0	0	0	0	0	0
4/24/2024	10:00 PM	0	0	0	0	0	0	0	0	0	0	0	0	0
4/24/2024	10:15 PM	0	0	0	0	0	0	0	0	0	0	0	0	0
4/24/2024	10:30 PM	0	0	0	0	0	0	0	0	0	0	0	0	0
4/24/2024	10:45 PM	0	0	0	0	0	0	0	0	0	0	0	0	0
4/24/2024	11:00 PM	0	0	0	0	0	0	0	0	0	0	0	0	0
4/24/2024	11:15 PM	0	0	0	0	0	0	0	0	0	0	0	0	0
4/24/2024	11:30 PM	0	0	0	0	0	0	0	0	0	0	0	0	0
4/24/2024	11:45 PM	0	0	0	0	0	0	0	0	0	0	0	0	0

4/25/2024	12:00 AM	0	0	0	0	0	0	0	0	0	0	0	0	0
4/25/2024	12:15 AM	0	0	0	0	0	0	0	0	0	0	0	0	0
4/25/2024	12:30 AM	0	0	0	0	0	0	0	0	0	0	0	0	0
4/25/2024	12:45 AM	0	0	0	0	0	0	0	0	0	0	0	0	0
4/25/2024	1:00 AM	0	0	0	0	0	0	0	0	0	0	0	0	0
4/25/2024	1:15 AM	0	0	0	0	0	0	0	0	0	0	0	0	0
4/25/2024	1:30 AM	0	0	0	0	0	0	0	0	0	0	0	0	0
4/25/2024	1:45 AM	0	0	0	0	0	0	0	0	0	0	0	0	0
4/25/2024	2:00 AM	0	0	0	0	0	0	0	0	0	0	0	0	0
4/25/2024	2:15 AM	0	0	0	0	0	0	0	0	0	0	0	0	0
4/25/2024	2:30 AM	0	0	0	0	0	0	0	0	0	0	0	0	0
4/25/2024	2:45 AM	0	0	0	0	0	0	0	0	0	0	0	0	0
4/25/2024	3:00 AM	0	0	0	0	0	0	0	0	0	0	0	0	0
4/25/2024	3:15 AM	0	0	0	0	0	0	0	0	0	0	0	0	0
4/25/2024	3:30 AM	0	0	0	0	0	0	0	0	0	0	0	0	0
4/25/2024	3:45 AM	0	0	0	0	0	0	0	0	0	0	0	0	0
4/25/2024	4:00 AM	0	0	0	0	0	0	0	0	0	0	0	0	0
4/25/2024	4:15 AM	0	0	0	0	0	0	0	0	0	0	0	0	0
4/25/2024	4:30 AM	0	0	0	0	0	0	0	0	0	0	0	0	0
4/25/2024	4:45 AM	0	0	0	0	0	0	0	0	0	0	0	0	0
4/25/2024	5:00 AM	0	0	0	0	0	0	0	0	0	0	0	0	0
4/25/2024	5:15 AM	0	0	0	0	0	0	0	0	0	0	0	0	0
4/25/2024	5:30 AM	0	0	0	0	0	0	0	0	0	0	0	0	0
4/25/2024	5:45 AM	0	0	0	0	0	0	0	0	0	0	0	0	0
4/25/2024	6:00 AM	0	0	0	0	0	0	0	0	0	0	0	0	0
4/25/2024	6:15 AM	0	0	0	0	0	0	0	0	0	0	0	0	0
4/25/2024	6:30 AM	0	0	0	0	0	0	0	0	0	0	0	0	0
4/25/2024	6:45 AM	0	0	0	0	0	0	0	0	0	0	0	0	0
4/25/2024	7:00 AM	0	0	0	0	0	0	0	0	0	0	0	0	0
4/25/2024	7:15 AM	0	0	0	0	0	0	0	0	0	0	0	0	0
4/25/2024	7:30 AM	0	0	0	0	0	0	0	0	0	0	0	0	0
4/25/2024	7:45 AM	0	0	0	0	0	0	0	0	0	0	0	0	0
4/25/2024	8:00 AM	0	0	0	0	0	0	0	0	0	0	0	0	0
4/25/2024	8:15 AM	0	0	0	0	0	0	0	0	0	0	0	0	0
4/25/2024	8:30 AM	0	0	0	0	0	0	0	0	0	0	0	0	0
4/25/2024	8:45 AM	0	0	0	0	0	0	0	0	0	0	0	0	0
4/25/2024	9:00 AM	0	0	0	0	0	0	0	0	0	0	0	0	0
4/25/2024	9:15 AM	0	0	0	0	0	0	0	0	0	0	0	0	0
4/25/2024	9:30 AM	0	0	0	0	0	0	0	0	0	0	0	0	0
4/25/2024	9:45 AM	0	0	0	0	0	0	0	0	0	0	0	0	0
4/25/2024	10:00 AM	0	0	0	0	0	0	0	0	0	0	0	0	0
4/25/2024	10:15 AM	0	0	0	0	0	0	0	0	0	0	0	0	0
4/25/2024	10:30 AM	0	0	0	0	0	0	0	0	0	0	0	0	0
4/25/2024	10:45 AM	0	0	0	0	0	0	0	0	0	0	0	0	0
4/25/2024	11:00 AM	0	0	0	0	0	0	0	0	0	0	0	0	0
4/25/2024	11:15 AM	0	0	0	0	0	0	0	0	0	0	0	0	0
4/25/2024	11:30 AM	0	0	0	0	0	0	0	0	0	0	0	0	0
4/25/2024	11:45 AM	0	0	0	0	0	0	0	0	0	0	0	0	0
4/25/2024	12:00 PM	0	0	0	0	0	0	0	0	0	0	0	0	0
4/25/2024	12:15 PM	0	0	0	0	0	0	0	0	0	0	0	0	0
4/25/2024	12:30 PM	0	0	0	0	0	0	0	0	0	0	0	0	0
4/25/2024	12:45 PM	0	0	0	0	0	0	0	0	0	0	0	0	0
4/25/2024	1:00 PM	0	0	0	0	0	0	0	0	0	0	0	0	0
4/25/2024	1:15 PM	0	0	0	0	0	0	0	0	0	0	0	0	0
4/25/2024	1:30 PM	0	0	0	0	0	0	0	0	0	0	0	0	0
4/25/2024	1:45 PM	0	0	0	0	0	0	0	0	0	0	0	0	0
4/25/2024	2:00 PM	0	0	0	0	0	0	0	0	0	0	0	0	0
4/25/2024	2:15 PM	0	0	0	0	0	0	0	0	0	0	0	0	0
4/25/2024	2:30 PM	0	0	0	0	0	0	0	0	0	0	0	0	0
4/25/2024	2:45 PM	0	0	0	0	0	0	0	0	0	0	0	0	0
4/25/2024	3:00 PM	0	0	0	0	0	0	0	0	0	0	0	0	0
4/25/2024	3:15 PM	0	0	0	0	0	0	0	0	0	0	0	0	0
4/25/2024	3:30 PM	0	0	0	0	0	0	0	0	0	0	0	0	0
4/25/2024	3:45 PM	0	0	0	0	0	0	0	0	0	0	0	0	0
4/25/2024	4:00 PM	0	0	0	0	0	0	0	0	0	0	0	0	0
4/25/2024	4:15 PM	0	0	0	0	0	0	0	0	0	0	0	0	0
4/25/2024	4:30 PM	0	0	0	0	0	0	0	0	0	0	0	0	0
4/25/2024	4:45 PM	0	0	0	0	0	0	0	0	0	0	0	0	0
4/25/2024	5:00 PM	0	0	0	0	0	0	0	0	0	0	0	0	0
4/25/2024	5:15 PM	0	0	0	0	0	0	0	0	0	0	0	0	0
4/25/2024	5:30 PM	0	0	0	0	0	0	0	0	0	0	0	0	0
4/25/2024	5:45 PM	0	0	0	0	0	0	0	0	0	0	0	0	0
4/25/2024	6:00 PM	0	0	0	0	0	0	0	0	0	0	0	0	0
4/25/2024	6:15 PM	0	0	0	0	0	0	0	0	0	0	0	0	0
4/25/2024	6:30 PM	0	0	0	0	0	0	0	0	0	0	0	0	0
4/25/2024	6:45 PM	0	0	0	0	0	0	0	0	0	0	0	0	0
4/25/2024	7:00 PM	0	0	0	0	0	0	0	0	0	0	0	0	0
4/25/2024	7:15 PM	0	0	0	0	0	0	0	0	0	0	0	0	0
4/25/2024	7:30 PM	0	0	0	0	0	0	0	0	0	0	0	0	0
4/25/2024	7:45 PM	0	0	0	0	0	0	0	0	0	0	0	0	0
4/25/2024	8:00 PM	0	0	0	0	0	0	0	0	0	0	0	0	0
4/25/2024	8:15 PM	0	0	0	0	0	0	0	0	0	0	0	0	0
4/25/2024	8:30 PM	0	0	0	0	0	0	0	0	0	0	0	0	0
4/25/2024	8:45 PM	0	0	0	0	0	0	0	0	0	0	0	0	0
4/25/2024	9:00 PM	0	0	0	0	0	0	0	0	0	0	0	0	0
4/25/2024	9:15 PM	0	0	0	0	0	0	0	0	0	0	0	0	0
4/25/2024	9:30 PM	0	0	0	0	0	0	0	0	0	0	0	0	0
4/25/2024	9:45 PM	0	0	0	0	0	0	0	0	0	0	0	0	0
4/25/2024	10:00 PM	0	0	0	0	0	0	0	0	0	0	0	0	0
4/25/2024	10:15 PM	0	0	0	0	0	0	0	0	0	0	0	0	0
4/25/2024	10:30 PM	0	0	0	0	0	0	0	0	0	0	0	0	0
4/25/2024	10:45 PM	0	0	0	0	0	0	0	0	0	0	0	0	0
4/25/2024	11:00 PM	0	0	0	0	0	0	0	0	0	0	0	0	0
4/25/2024	11:15 PM	0	0	0	0	0	0	0	0	0	0	0	0	0
4/25/2024	11:30 PM	0	0	0	0	0	0	0	0	0	0	0	0	0
4/25/2024	11:45 PM	0	0	0	0	0	0	0	0	0	0	0	0	0

4/26/2024	12:00 AM	0	0	0	0	0	0	0	0	0	0	0	0	0
4/26/2024	12:15 AM	0	0	0	0	0	0	0	0	0	0	0	0	0
4/26/2024	12:30 AM	0	0	0	0	0	0	0	0	0	0	0	0	0
4/26/2024	12:45 AM	0	0	0	0	0	0	0	0	0	0	0	0	0
4/26/2024	1:00 AM	0	0	0	0	0	0	0	0	0	0	0	0	0
4/26/2024	1:15 AM	0	0	0	0	0	0	0	0	0	0	0	0	0
4/26/2024	1:30 AM	0	0	0	0	0	0	0	0	0	0	0	0	0
4/26/2024	1:45 AM	0	0	0	0	0	0	0	0	0	0	0	0	0
4/26/2024	2:00 AM	0	0	0	0	0	0	0	0	0	0	0	0	0
4/26/2024	2:15 AM	0	0	0	0	0	0	0	0	0	0	0	0	0
4/26/2024	2:30 AM	0	0	0	0	0	0	0	0	0	0	0	0	0
4/26/2024	2:45 AM	0	0	0	0	0	0	0	0	0	0	0	0	0
4/26/2024	3:00 AM	0	0	0	0	0	0	0	0	0	0	0	0	0
4/26/2024	3:15 AM	0	0	0	0	0	0	0	0	0	0	0	0	0
4/26/2024	3:30 AM	0	0	0	0	0	0	0	0	0	0	0	0	0
4/26/2024	3:45 AM	0	0	0	0	0	0	0	0	0	0	0	0	0
4/26/2024	4:00 AM	0	0	0	0	0	0	0	0	0	0	0	0	0
4/26/2024	4:15 AM	0	0	0	0	0	0	0	0	0	0	0	0	0
4/26/2024	4:30 AM	0	0	0	0	0	0	0	0	0	0	0	0	0
4/26/2024	4:45 AM	0	0	0	0	0	0	0	0	0	0	0	0	0
4/26/2024	5:00 AM	0	0	0	0	0	0	0	0	0	0	0	0	0
4/26/2024	5:15 AM	0	0	0	0	0	0	0	0	0	0	0	0	0
4/26/2024	5:30 AM	0	0	0	0	0	0	0	0	0	0	0	0	0
4/26/2024	5:45 AM	0	0	0	0	0	0	0	0	0	0	0	0	0
4/26/2024	6:00 AM	0	0	0	0	0	0	0	0	0	0	0	0	0
4/26/2024	6:15 AM	0	0	0	0	0	0	0	0	0	0	0	0	0
4/26/2024	6:30 AM	0	0	0	0	0	0	0	0	0	0	0	0	0
4/26/2024	6:45 AM	0	0	0	0	0	0	0	0	0	0	0	0	0
4/26/2024	7:00 AM	0	0	0	0	0	0	0	0	0	0	0	0	0
4/26/2024	7:15 AM	0	0	0	0	0	0	0	0	0	0	0	0	0
4/26/2024	7:30 AM	0	0	0	0	0	0	0	0	0	0	0	0	0
4/26/2024	7:45 AM	0	0	0	0	0	0	0	0	0	0	0	0	0
4/26/2024	8:00 AM	0	0	0	0	0	0	0	0	0	0	0	0	0
4/26/2024	8:15 AM	0	0	0	0	0	0	0	0	0	0	0	0	0
4/26/2024	8:30 AM	0	0	0	0	0	0	0	0	0	0	0	0	0
4/26/2024	8:45 AM	0	0	0	0	0	0	0	0	0	0	0	0	0
4/26/2024	9:00 AM	0	0	0	0	0	0	0	0	0	0	0	0	0
4/26/2024	9:15 AM	0	0	0	0	0	0	0	0	0	0	0	0	0
4/26/2024	9:30 AM	0	0	0	0	0	0	0	0	0	0	0	0	0
4/26/2024	9:45 AM	0	0	0	0	0	0	0	0	0	0	0	0	0
4/26/2024	10:00 AM	0	0	0	0	0	0	0	0	0	0	0	0	0
4/26/2024	10:15 AM	0	0	0	0	0	0	0	0	0	0	0	0	0
4/26/2024	10:30 AM	0	0	0	0	0	0	0	0	0	0	0	0	0
4/26/2024	10:45 AM	0	0	0	0	0	0	0	0	0	0	0	0	0
4/26/2024	11:00 AM	0	0	0	0	0	0	0	0	0	0	0	0	0
4/26/2024	11:15 AM	0	0	0	0	0	0	0	0	0	0	0	0	0
4/26/2024	11:30 AM	0	0	0	0	0	0	0	0	0	0	0	0	0
4/26/2024	11:45 AM	0	0	0	0	0	0	0	0	0	0	0	0	0
4/26/2024	12:00 PM	0	0	0	0	0	0	0	0	0	0	0	0	0
4/26/2024	12:15 PM	0	0	0	0	0	0	0	0	0	0	0	0	0
4/26/2024	12:30 PM	0	0	0	0	0	0	0	0	0	0	0	0	0
4/26/2024	12:45 PM	0	0	0	0	0	0	0	0	0	0	0	0	0
4/26/2024	1:00 PM	0	0	0	0	0	0	0	0	0	0	0	0	0
4/26/2024	1:15 PM	0	0	0	0	0	0	0	0	0	0	0	0	0
4/26/2024	1:30 PM	0	0	0	0	0	0	0	0	0	0	0	0	0
4/26/2024	1:45 PM	0	0	0	0	0	0	0	0	0	0	0	0	0
4/26/2024	2:00 PM	0	0	0	0	0	0	0	0	0	0	0	0	0
4/26/2024	2:15 PM	0	0	0	0	0	0	0	0	0	0	0	0	0
4/26/2024	2:30 PM	0	0	0	0	0	0	0	0	0	0	0	0	0
4/26/2024	2:45 PM	0	0	0	0	0	0	0	0	0	0	0	0	0
4/26/2024	3:00 PM	0	0	0	0	0	0	0	0	0	0	0	0	0
4/26/2024	3:15 PM	0	0	0	0	0	0	0	0	0	0	0	0	0
4/26/2024	3:30 PM	0	0	0	0	0	0	0	0	0	0	0	0	0
4/26/2024	3:45 PM	0	0	0	0	0	0	0	0	0	0	0	0	0
4/26/2024	4:00 PM	0	0	0	0	0	0	0	0	0	0	0	0	0
4/26/2024	4:15 PM	0	0	0	0	0	0	0	0	0	0	0	0	0
4/26/2024	4:30 PM	0	0	0	0	0	0	0	0	0	0	0	0	0
4/26/2024	4:45 PM	0	0	0	0	0	0	0	0	0	0	0	0	0
4/26/2024	5:00 PM	0	0	0	0	0	0	0	0	0	0	0	0	0
4/26/2024	5:15 PM	0	0	0	0	0	0	0	0	0	0	0	0	0
4/26/2024	5:30 PM	0	0	0	0	0	0	0	0	0	0	0	0	0
4/26/2024	5:45 PM	0	0	0	0	0	0	0	0	0	0	0	0	0
4/26/2024	6:00 PM	0	0	0	0	0	0	0	0	0	0	0	0	0
4/26/2024	6:15 PM	0	0	0	0	0	0	0	0	0	0	0	0	0
4/26/2024	6:30 PM	0	0	0	0	0	0	0	0	0	0	0	0	0
4/26/2024	6:45 PM	0	0	0	0	0	0	0	0	0	0	0	0	0
4/26/2024	7:00 PM	0	0	0	0	0	0	0	0	0	0	0	0	0
4/26/2024	7:15 PM	0	0	0	0	0	0	0	0	0	0	0	0	0
4/26/2024	7:30 PM	0	0	0	0	0	0	0	0	0	0	0	0	0
4/26/2024	7:45 PM	0	0	0	0	0	0	0	0	0	0	0	0	0
4/26/2024	8:00 PM	0	0	0	0	0	0	0	0	0	0	0	0	0
4/26/2024	8:15 PM	0	0	0	0	0	0	0	0	0	0	0	0	0
4/26/2024	8:30 PM	0	0	0	0	0	0	0	0	0	0	0	0	0
4/26/2024	8:45 PM	0	0	0	0	0	0	0	0	0	0	0	0	0
4/26/2024	9:00 PM	0	0	0	0	0	0	0	0	0	0	0	0	0
4/26/2024	9:15 PM	0	0	0	0	0	0	0	0	0	0	0	0	0
4/26/2024	9:30 PM	0	0	0	0	0	0	0	0	0	0	0	0	0
4/26/2024	9:45 PM	0	0	0	0	0	0	0	0	0	0	0	0	0
4/26/2024	10:00 PM	0	0	0	0	0	0	0	0	0	0	0	0	0
4/26/2024	10:15 PM	0	0	0	0	0	0	0	0	0	0	0	0	0
4/26/2024	10:30 PM	0	0	0	0	0	0	0	0	0	0	0	0	0
4/26/2024	10:45 PM	0	0	0	0	0	0	0	0	0	0	0	0	0
4/26/2024	11:00 PM	0	0	0	0	0	0	0	0	0	0	0	0	0
4/26/2024	11:15 PM	0	0	0	0	0	0	0	0	0	0	0	0	0
4/26/2024	11:30 PM	0	0	0	0	0	0	0	0	0	0	0	0	0
4/26/2024	11:45 PM	0	0	0	0	0	0	0	0	0	0	0	0	0

4/27/2024	12:00 AM	0	0	0	0	0	0	0	0	0	0	0	0	0
4/27/2024	12:15 AM	0	0	0	0	0	0	0	0	0	0	0	0	0
4/27/2024	12:30 AM	0	0	0	0	0	0	0	0	0	0	0	0	0
4/27/2024	12:45 AM	0	0	0	0	0	0	0	0	0	0	0	0	0
4/27/2024	1:00 AM	0	0	0	0	0	0	0	0	0	0	0	0	0
4/27/2024	1:15 AM	0	0	0	0	0	0	0	0	0	0	0	0	0
4/27/2024	1:30 AM	0	0	0	0	0	0	0	0	0	0	0	0	0
4/27/2024	1:45 AM	0	0	0	0	0	0	0	0	0	0	0	0	0
4/27/2024	2:00 AM	0	0	0	0	0	0	0	0	0	0	0	0	0
4/27/2024	2:15 AM	0	0	0	0	0	0	0	0	0	0	0	0	0
4/27/2024	2:30 AM	0	0	0	0	0	0	0	0	0	0	0	0	0
4/27/2024	2:45 AM	0	0	0	0	0	0	0	0	0	0	0	0	0
4/27/2024	3:00 AM	0	0	0	0	0	0	0	0	0	0	0	0	0
4/27/2024	3:15 AM	0	0	0	0	0	0	0	0	0	0	0	0	0
4/27/2024	3:30 AM	0	0	0	0	0	0	0	0	0	0	0	0	0
4/27/2024	3:45 AM	0	0	0	0	0	0	0	0	0	0	0	0	0
4/27/2024	4:00 AM	0	0	0	0	0	0	0	0	0	0	0	0	0
4/27/2024	4:15 AM	0	0	0	0	0	0	0	0	0	0	0	0	0
4/27/2024	4:30 AM	0	0	0	0	0	0	0	0	0	0	0	0	0
4/27/2024	4:45 AM	0	0	0	0	0	0	0	0	0	0	0	0	0
4/27/2024	5:00 AM	0	0	0	0	0	0	0	0	0	0	0	0	0
4/27/2024	5:15 AM	0	0	0	0	0	0	0	0	0	0	0	0	0
4/27/2024	5:30 AM	0	0	0	0	0	0	0	0	0	0	0	0	0
4/27/2024	5:45 AM	0	0	0	0	0	0	0	0	0	0	0	0	0
4/27/2024	6:00 AM	0	0	0	0	0	0	0	0	0	0	0	0	0
4/27/2024	6:15 AM	0	0	0	0	0	0	0	0	0	0	0	0	0
4/27/2024	6:30 AM	0	0	0	0	0	0	0	0	0	0	0	0	0
4/27/2024	6:45 AM	0	0	0	0	0	0	0	0	0	0	0	0	0
4/27/2024	7:00 AM	0	0	0	0	0	0	0	0	0	0	0	0	0
4/27/2024	7:15 AM	0	0	0	0	0	0	0	0	0	0	0	0	0
4/27/2024	7:30 AM	0	0	0	0	0	0	0	0	0	0	0	0	0
4/27/2024	7:45 AM	0	0	0	0	0	0	0	0	0	0	0	0	0
4/27/2024	8:00 AM	0	0	0	0	0	0	0	0	0	0	0	0	0
4/27/2024	8:15 AM	0	0	0	0	0	0	0	0	0	0	0	0	0
4/27/2024	8:30 AM	0	0	0	0	0	0	0	0	0	0	0	0	0
4/27/2024	8:45 AM	0	0	0	0	0	0	0	0	0	0	0	0	0
4/27/2024	9:00 AM	0	0	0	0	0	0	0	0	0	0	0	0	0
4/27/2024	9:15 AM	0	0	0	0	0	0	0	0	0	0	0	0	0
4/27/2024	9:30 AM	0	0	0	0	0	0	0	0	0	0	0	0	0
4/27/2024	9:45 AM	0	0	0	0	0	0	0	0	0	0	0	0	0
4/27/2024	10:00 AM	0	0	0	0	0	0	0	0	0	0	0	0	0
4/27/2024	10:15 AM	0	0	0	0	0	0	0	0	0	0	0	0	0
4/27/2024	10:30 AM	0	0	0	0	0	0	0	0	0	0	0	0	0
4/27/2024	10:45 AM	0	0	0	0	0	0	0	0	0	0	0	0	0
4/27/2024	11:00 AM	0	0	0	0	0	0	0	0	0	0	0	0	0
4/27/2024	11:15 AM	0	0	0	0	0	0	0	0	0	0	0	0	0
4/27/2024	11:30 AM	0	0	0	0	0	0	0	0	0	0	0	0	0
4/27/2024	11:45 AM	0	0	0	0	0	0	0	0	0	0	0	0	0
4/27/2024	12:00 PM	0	0	0	0	0	0	0	0	0	0	0	0	0
4/27/2024	12:15 PM	0	0	0	0	0	0	0	0	0	0	0	0	0
4/27/2024	12:30 PM	0	0	0	0	0	0	0	0	0	0	0	0	0
4/27/2024	12:45 PM	0	0	0	0	0	0	0	0	0	0	0	0	0
4/27/2024	1:00 PM	0	0	0	0	0	0	0	0	0	0	0	0	0
4/27/2024	1:15 PM	0	0	0	0	0	0	0	0	0	0	0	0	0
4/27/2024	1:30 PM	0	0	0	0	0	0	0	0	0	0	0	0	0
4/27/2024	1:45 PM	0	0	0	0	0	0	0	0	0	0	0	0	0
4/27/2024	2:00 PM	0	0	0	0	0	0	0	0	0	0	0	0	0
4/27/2024	2:15 PM	0	0	0	0	0	0	0	0	0	0	0	0	0
4/27/2024	2:30 PM	0	0	0	0	0	0	0	0	0	0	0	0	0
4/27/2024	2:45 PM	0	0	0	0	0	0	0	0	0	0	0	0	0
4/27/2024	3:00 PM	0	0	0	0	0	0	0	0	0	0	0	0	0
4/27/2024	3:15 PM	0	0	0	0	0	0	0	0	0	0	0	0	0
4/27/2024	3:30 PM	0	0	0	0	0	0	0	0	0	0	0	0	0
4/27/2024	3:45 PM	0	0	0	0	0	0	0	0	0	0	0	0	0
4/27/2024	4:00 PM	0	0	0	0	0	0	0	0	0	0	0	0	0
4/27/2024	4:15 PM	0	0	0	0	0	0	0	0	0	0	0	0	0
4/27/2024	4:30 PM	0	0	0	0	0	0	0	0	0	0	0	0	0
4/27/2024	4:45 PM	0	0	0	0	0	0	0	0	0	0	0	0	0
4/27/2024	5:00 PM	0	0	0	0	0	0	0	0	0	0	0	0	0
4/27/2024	5:15 PM	0	0	0	0	0	0	0	0	0	0	0	0	0
4/27/2024	5:30 PM	0	0	0	0	0	0	0	0	0	0	0	0	0
4/27/2024	5:45 PM	0	0	0	0	0	0	0	0	0	0	0	0	0
4/27/2024	6:00 PM	0	0	0	0	0	0	0	0	0	0	0	0	0
4/27/2024	6:15 PM	0	0	0	0	0	0	0	0	0	0	0	0	0
4/27/2024	6:30 PM	0	0	0	0	0	0	0	0	0	0	0	0	0
4/27/2024	6:45 PM	0	0	0	0	0	0	0	0	0	0	0	0	0
4/27/2024	7:00 PM	0	0	0	0	0	0	0	0	0	0	0	0	0
4/27/2024	7:15 PM	0	0	0	0	0	0	0	0	0	0	0	0	0
4/27/2024	7:30 PM	0	0	0	0	0	0	0	0	0	0	0	0	0
4/27/2024	7:45 PM	0	0	0	0	0	0	0	0	0	0	0	0	0
4/27/2024	8:00 PM	0	0	0	0	0	0	0	0	0	0	0	0	0
4/27/2024	8:15 PM	0	0	0	0	0	0	0	0	0	0	0	0	0
4/27/2024	8:30 PM	0	0	0	0	0	0	0	0	0	0	0	0	0
4/27/2024	8:45 PM	0	0	0	0	0	0	0	0	0	0	0	0	0
4/27/2024	9:00 PM	0	0	0	0	0	0	0	0	0	0	0	0	0
4/27/2024	9:15 PM	0	0	0	0	0	0	0	0	0	0	0	0	0
4/27/2024	9:30 PM	0	0	0	0	0	0	0	0	0	0	0	0	0
4/27/2024	9:45 PM	0	0	0	0	0	0	0	0	0	0	0	0	0
4/27/2024	10:00 PM	0	0	0	0	0	0	0	0	0	0	0	0	0
4/27/2024	10:15 PM	0	0	0	0	0	0	0	0	0	0	0	0	0
4/27/2024	10:30 PM	0	0	0	0	0	0	0	0	0	0	0	0	0
4/27/2024	10:45 PM	0	0	0	0	0	0	0	0	0	0	0	0	0
4/27/2024	11:00 PM	0	0	0	0	0	0	0	0	0	0	0	0	0
4/27/2024	11:15 PM	0	0	0	0	0	0	0	0	0	0	0	0	0
4/27/2024	11:30 PM	0	0	0	0	0	0	0	0	0	0	0	0	0
4/27/2024	11:45 PM	0	0	0	0	0	0	0	0	0	0	0	0	0

Bi-Directional Class Count || SB WB 15min

Columbia, SC

Marr Traffic DATA COLLECTION
www.marrtraffic.com

Site 6
I-26 W/Bound On-Ramp,
west of US-76

Date
Sunday, April 21, 2024

Lat/Long
34.028681°, -81.102438°

Weather
Cloudy
66°F

Click here for Detailed Weather

Click here for Map

0000 - 2400 (Sunday 24h Session) (04-21-2024)
SB WB 15min

	Westbound (Movement 6.1)													15min	60min
Time	1	2	3	4	5	6	7	8	9	10	11	12	13	Total	Total
0000 - 0015	0	85	20	0	0	0	0	1	1	0	0	1	0	**108**	
0015 - 0030	0	101	19	0	0	0	0	0	1	0	0	0	0	**121**	
0030 - 0045	0	60	17	0	1	0	0	0	1	0	0	0	0	**79**	
0045 - 0100	0	68	21	0	0	0	0	0	2	0	0	0	0	**91**	**399**
0100 - 0115	0	70	24	0	1	1	0	0	6	0	0	0	0	**102**	
0115 - 0130	0	77	13	1	0	1	0	0	0	0	0	0	0	**92**	
0130 - 0145	0	62	13	0	0	0	0	0	2	0	0	0	0	**77**	
0145 - 0200	0	50	13	1	0	0	0	0	2	0	0	0	0	**66**	**337**
0200 - 0215	0	44	11	0	0	0	0	0	0	0	1	1	0	**57**	
0215 - 0230	0	49	11	0	2	1	0	1	1	0	0	0	0	**65**	
0230 - 0245	0	39	10	0	0	0	0	0	4	0	0	0	0	**53**	
0245 - 0300	0	47	12	0	0	1	0	0	3	0	0	0	0	**63**	**238**
0300 - 0315	0	30	9	0	0	0	0	1	1	0	0	0	0	**41**	
0315 - 0330	0	31	8	1	0	0	0	0	2	0	0	0	0	**42**	
0330 - 0345	0	38	7	0	2	0	0	0	2	0	0	1	0	**50**	
0345 - 0400	0	30	8	1	0	0	0	0	2	0	0	0	0	**41**	**174**
0400 - 0415	0	37	11	0	1	0	0	0	1	0	0	0	0	**50**	
0415 - 0430	0	41	12	0	0	0	0	0	2	0	0	0	0	**55**	
0430 - 0445	0	44	11	0	0	1	0	0	2	0	0	0	0	**58**	
0445 - 0500	0	63	15	0	0	0	0	0	4	0	0	0	0	**82**	**245**
0500 - 0515	0	57	14	0	1	0	0	0	5	0	0	1	0	**78**	
0515 - 0530	0	66	15	0	0	0	0	0	2	0	0	0	0	**83**	
0530 - 0545	0	78	15	0	0	0	0	0	1	0	0	0	0	**94**	
0545 - 0600	0	79	17	3	1	0	0	0	7	0	0	0	0	**107**	**362**
0600 - 0615	0	81	10	0	2	0	0	0	3	0	0	0	0	**96**	
0615 - 0630	0	113	19	0	2	0	0	0	7	0	0	0	0	**141**	
0630 - 0645	0	174	19	0	0	2	0	0	9	0	0	0	0	**204**	
0645 - 0700	1	154	17	0	0	0	0	0	4	0	0	0	0	**176**	**617**
0700 - 0715	0	129	27	0	1	1	0	0	4	0	0	0	0	**162**	
0715 - 0730	0	133	24	0	2	0	0	0	2	0	0	0	0	**161**	
0730 - 0745	0	142	27	1	0	1	0	0	9	0	0	0	0	**180**	
0745 - 0800	1	149	36	0	3	0	0	0	11	0	0	0	0	**200**	**703**
0800 - 0815	0	160	19	0	2	0	0	0	11	0	0	0	0	**192**	
0815 - 0830	0	153	25	1	2	0	0	0	9	0	0	0	0	**190**	
0830 - 0845	0	195	29	0	2	1	0	0	5	0	0	0	0	**232**	
0845 - 0900	0	241	43	1	3	1	0	0	11	0	0	0	0	**300**	**914**
0900 - 0915	0	283	45	0	1	1	0	1	7	0	0	0	0	**338**	
0915 - 0930	0	267	69	0	4	0	0	0	9	0	0	0	0	**349**	
0930 - 0945	0	266	57	0	3	0	0	0	3	0	0	0	0	**329**	
0945 - 1000	3	298	69	0	1	0	0	0	3	0	0	0	0	**374**	**1390**
1000 - 1015	0	302	64	0	4	0	0	1	7	0	0	0	0	**378**	
1015 - 1030	1	348	61	0	3	0	0	0	15	0	0	0	0	**428**	
1030 - 1045	0	355	73	0	5	0	0	1	2	0	0	0	0	**436**	
1045 - 1100	0	389	62	0	4	0	0	0	3	0	0	0	0	**458**	**1700**
1100 - 1115	4	350	69	0	4	0	0	0	6	0	0	0	0	**433**	
1115 - 1130	0	333	80	0	2	0	0	2	8	0	0	0	0	**425**	
1130 - 1145	0	327	81	0	5	1	0	1	5	1	0	0	0	**421**	
1145 - 1200	1	336	77	0	6	1	0	0	8	0	0	0	0	**429**	**1708**
1200 - 1215	1	406	78	0	3	1	0	0	11	0	0	0	0	**500**	
1215 - 1230	0	454	99	0	1	0	0	0	7	1	0	0	0	**562**	
1230 - 1245	0	434	109	0	6	1	0	0	5	0	0	0	0	**555**	
1245 - 1300	1	469	107	1	9	0	0	0	10	0	0	0	0	**597**	**2214**
1300 - 1315	0	470	121	2	4	2	0	0	10	0	0	0	0	**609**	
1315 - 1330	1	463	98	0	4	0	0	0	9	0	0	0	0	**575**	
1330 - 1345	0	473	113	0	5	3	0	1	14	0	0	0	0	**609**	
1345 - 1400	0	494	99	0	4	0	0	0	7	0	0	0	0	**604**	**2397**
1400 - 1415	0	328	80	0	2	0	0	1	0	0	0	0	0	**411**	
1415 - 1430	0	488	88	1	2	0	0	0	8	0	0	0	0	**587**	
1430 - 1445	0	585	110	0	4	1	0	0	12	0	0	0	0	**712**	
1445 - 1500	0	487	118	2	3	0	1	0	9	0	0	0	0	**620**	**2330**
1500 - 1515	0	485	92	0	5	1	0	0	9	0	0	0	0	**592**	
1515 - 1530	0	496	132	1	5	0	0	2	9	1	1	0	0	**647**	
1530 - 1545	0	487	123	1	5	1	0	0	11	0	1	0	0	**629**	
1545 - 1600	0	503	13	1	5	0	0	0	12	0	0	0	0	**534**	**2402**
1600 - 1615	0	447	102	2	3	0	0	0	6	0	0	0	0	**560**	
1615 - 1630	0	467	81	0	1	1	0	1	5	0	0	0	0	**556**	
1630 - 1645	0	441	90	2	5	0	0	2	6	0	0	0	0	**546**	
1645 - 1700	0	402	73	0	2	2	0	0	7	0	0	0	0	**486**	**2148**
1700 - 1715	0	467	97	1	7	1	0	0	17	0	0	0	0	**590**	
1715 - 1730	0	455	85	0	4	2	0	0	8	0	0	0	0	**554**	
1730 - 1745	0	459	90	1	9	0	0	2	16	1	0	0	0	**578**	
1745 - 1800	0	411	91	4	6	0	0	1	14	2	0	0	0	**529**	**2251**
1800 - 1815	0	387	80	0	2	1	1	1	13	2	1	0	0	**488**	
1815 - 1830	0	419	70	0	5	1	0	0	10	0	0	0	0	**505**	
1830 - 1845	0	381	84	0	1	0	0	1	15	0	0	0	0	**482**	
1845 - 1900	0	360	66	1	3	0	0	0	15	0	0	1	0	**446**	**1921**
1900 - 1915	0	338	71	0	2	1	0	0	5	0	0	0	0	**417**	
1915 - 1930	0	299	83	0	3	1	0	0	10	0	1	0	0	**397**	
1930 - 1945	0	292	62	3	3	1	0	0	8	0	1	0	0	**370**	
1945 - 2000	0	276	47	1	3	1	0	1	12	0	0	0	0	**341**	**1525**
2000 - 2015	0	270	58	0	2	0	0	0	11	0	0	0	0	**341**	
2015 - 2030	0	218	34	0	2	1	0	0	18	0	0	0	0	**273**	
2030 - 2045	0	221	39	0	1	1	0	0	9	0	0	0	0	**271**	
2045 - 2100	0	225	42	0	2	0	0	1	12	0	0	0	0	**282**	**1167**
2100 - 2115	0	201	35	0	1	0	0	0	13	0	0	0	0	**250**	
2115 - 2130	0	161	19	0	1	0	0	0	7	0	0	0	0	**188**	
2130 - 2145	0	165	21	0	1	0	0	0	2	0	0	0	0	**189**	
2145 - 2200	0	183	27	0	3	0	0	2	16	0	0	0	0	**231**	**858**
2200 - 2215	0	145	15	0	1	1	0	0	12	0	1	0	0	**175**	
2215 - 2230	0	131	11	0	1	3	0	0	7	0	0	0	0	**153**	
2230 - 2245	0	124	9	0	0	0	0	0	7	0	0	0	0	**140**	
2245 - 2300	0	100	11	0	0	0	0	0	6	0	0	0	0	**117**	**585**
2300 - 2315	0	78	7	0	0	0	0	1	10	0	1	0	0	**97**	
2315 - 2330	0	75	9	0	1	1	0	0	13	0	1	0	0	**100**	
2330 - 2345	0	81	11	0	0	1	0	0	9	0	0	0	0	**102**	
2345 - 0000	0	83	10	0	1	0	0	1	5	0	0	0	0	**100**	**399**

Session Total	14	23308	4638	34	213	44	2	27	682	8	9	5	0	**28984**
Session Average	0.15	242.79	48.31	0.35	2.22	0.46	0.02	0.28	7.10	0.08	0.09	0.05	0.00	**301.92**
Session Percentage	0.05	80.42	16.00	0.12	0.73	0.15	0.01	0.09	2.35	0.03	0.03	0.02	0.00	

AM Peak Hour	0930 - 1030	0945 - 1045	0945 - 1045	0500 - 0600	0945 - 1045	0615 - 0715	-	0945 - 1045	0730 - 0830	-	-	0500 - 0600	-	**0945 - 1045**
AM Peak Volume	4	1303	267	3	13	3	0	2	40	0	0	1	0	**1616**

Noon Peak Hour	1015 - 1115	1430 - 1530	1445 - 1545	1445 - 1545	1230 - 1330	1245 - 1345	1400 - 1500	1030 - 1130	1245 - 1345	1130 - 1230	1445 - 1545	-	-	**1430 - 1530**
Noon Peak Volume	5	2053	465	4	23	5	1	3	43	2	2	0	0	**2571**

PM Peak Hour	-	1500 - 1600	1515 - 1615	1700 - 1800	1700 - 1800	1630 - 1730	1715 - 1815	1715 - 1815	1700 - 1800	1715 - 1815	1500 - 1600	1800 - 1900	-	**1500 - 1600**
PM Peak Volume	0	1971	370	6	26	5	1	4	55	5	2	1	0	**2402**

Site 6
I-26 W/Bound On-Ramp,
west of US-76

Date
Monday, April 22, 2024

Lat/Long
34.028681°, -81.102438°

Weather
Mostly Cloudy
57°F

Click here for Detailed Weather

0000 - 2400 (Weekday 24h Session) (04-22-2024)
SB WB 15min

	Westbound (Movement 6.1)													15min	60min
Time	1	2	3	4	5	6	7	8	9	10	11	12	13	Total	Total
0000 - 0015	0	37	8	0	2	0	0	0	2	0	0	0	0	**49**	
0015 - 0030	0	47	6	0	0	0	0	0	7	0	0	0	0	**60**	
0030 - 0045	0	27	9	0	0	0	0	0	11	2	0	0	0	**49**	
0045 - 0100	0	41	6	0	2	0	0	0	10	0	0	0	0	**59**	**217**
0100 - 0115	0	22	5	0	0	0	0	0	10	0	0	0	0	**37**	
0115 - 0130	0	38	9	0	0	0	0	0	9	0	0	0	0	**56**	
0130 - 0145	0	19	7	0	0	0	0	0	6	0	0	0	0	**32**	
0145 - 0200	0	22	8	0	0	0	0	0	12	0	0	0	0	**42**	**167**
0200 - 0215	0	22	4	0	1	0	0	1	10	0	0	0	0	**38**	
0215 - 0230	0	21	6	0	2	0	0	1	3	0	0	0	0	**33**	
0230 - 0245	0	28	5	0	0	0	0	0	15	0	0	0	0	**48**	
0245 - 0300	0	36	8	0	0	0	0	0	17	0	0	0	0	**61**	**180**
0300 - 0315	0	32	10	0	1	1	0	1	5	0	0	0	0	**50**	
0315 - 0330	0	30	12	0	1	1	0	0	10	0	0	0	0	**54**	
0330 - 0345	0	58	14	0	1	0	0	0	17	0	0	0	0	**90**	
0345 - 0400	0	43	20	0	1	0	0	0	11	0	0	0	0	**75**	**269**
0400 - 0415	0	55	19	0	3	1	0	0	22	0	0	0	0	**100**	
0415 - 0430	0	60	25	0	1	0	0	1	25	0	0	0	0	**112**	
0430 - 0445	0	85	30	0	1	3	0	0	20	0	0	0	0	**139**	
0445 - 0500	0	117	37	0	2	0	0	0	16	0	0	0	0	**172**	**523**
0500 - 0515	0	135	57	0	4	0	0	0	25	1	0	0	0	**222**	
0515 - 0530	0	148	44	0	3	1	0	0	32	2	0	0	0	**230**	
0530 - 0545	0	249	93	0	5	0	0	0	22	0	0	0	0	**369**	
0545 - 0600	0	231	83	0	4	1	0	0	30	0	0	0	0	**349**	**1170**
0600 - 0615	0	255	69	1	4	2	0	1	16	0	0	0	0	**348**	
0615 - 0630	1	329	86	0	13	3	0	0	33	0	0	0	0	**465**	
0630 - 0645	1	451	144	0	6	9	0	1	35	1	0	0	0	**648**	
0645 - 0700	0	480	170	0	7	4	2	0	32	0	0	0	0	**695**	**2156**
0700 - 0715	0	467	195	0	8	7	1	3	33	1	1	0	0	**716**	
0715 - 0730	1	534	151	0	14	7	1	0	41	1	1	0	0	**751**	
0730 - 0745	0	521	174	1	10	4	1	2	22	0	0	0	0	**735**	
0745 - 0800	1	511	148	0	13	4	0	3	26	0	0	0	0	**706**	**2908**
0800 - 0815	0	467	161	0	8	6	0	1	31	1	1	0	0	**676**	
0815 - 0830	0	403	116	2	12	3	0	4	49	1	1	0	0	**591**	
0830 - 0845	1	402	122	1	14	3	1	4	43	1	0	0	0	**592**	
0845 - 0900	0	398	117	2	15	6	0	3	47	0	0	0	0	**588**	**2447**
0900 - 0915	0	345	113	1	18	4	1	3	40	0	0	0	0	**525**	
0915 - 0930	0	346	94	3	16	3	0	2	47	0	0	0	0	**511**	
0930 - 0945	1	367	95	3	16	1	0	2	45	0	0	0	0	**530**	
0945 - 1000	0	352	91	0	13	6	0	1	41	1	0	0	0	**505**	**2071**
1000 - 1015	0	314	91	0	12	3	0	4	48	1	0	0	0	**473**	
1015 - 1030	0	311	92	2	19	6	0	2	55	0	0	0	0	**487**	
1030 - 1045	0	357	100	0	6	3	0	6	58	0	0	0	0	**530**	
1045 - 1100	0	347	85	0	15	7	0	4	55	2	0	0	0	**515**	**2005**
1100 - 1115	0	314	85	0	12	2	0	2	57	1	0	0	0	**473**	
1115 - 1130	0	323	95	1	13	6	1	0	49	0	0	0	0	**488**	
1130 - 1145	1	359	103	1	11	1	0	6	45	2	0	0	0	**529**	
1145 - 1200	0	338	91	0	12	3	0	2	50	2	0	0	0	**498**	**1988**
1200 - 1215	0	342	98	0	15	10	0	2	53	1	0	0	0	**521**	
1215 - 1230	1	413	121	0	11	7	0	4	52	0	0	0	0	**609**	
1230 - 1245	3	363	113	0	10	4	0	7	63	0	0	0	0	**563**	
1245 - 1300	0	337	126	1	19	4	1	3	65	0	0	1	0	**557**	**2250**
1300 - 1315	1	318	116	0	14	7	1	4	46	0	0	0	0	**507**	
1315 - 1330	0	341	105	0	14	4	4	4	52	1	0	0	0	**525**	
1330 - 1345	4	393	130	1	15	3	0	7	51	2	0	1	0	**607**	
1345 - 1400	1	358	123	0	12	3	1	5	47	1	0	0	0	**551**	**2190**
1400 - 1415	1	430	134	0	26	10	2	3	44	0	0	0	0	**650**	
1415 - 1430	1	381	112	1	16	5	0	7	50	0	0	1	0	**574**	
1430 - 1445	0	443	116	0	24	7	1	3	48	1	0	0	0	**643**	
1445 - 1500	2	375	135	0	14	5	2	4	45	0	0	0	0	**582**	**2449**
1500 - 1515	0	425	124	1	21	6	0	8	46	1	0	1	0	**633**	
1515 - 1530	0	414	111	0	15	3	0	1	39	1	0	1	0	**585**	
1530 - 1545	0	406	118	1	15	10	0	6	48	1	0	0	0	**605**	
1545 - 1600	0	375	135	0	19	6	1	2	44	0	0	0	0	**582**	**2405**
1600 - 1615	0	429	114	2	18	1	0	1	42	0	1	0	0	**608**	
1615 - 1630	0	425	122	0	13	5	0	4	34	0	0	0	0	**603**	
1630 - 1645	0	381	113	4	9	5	0	4	36	0	0	0	0	**552**	
1645 - 1700	0	374	122	2	21	3	0	3	36	0	0	0	0	**561**	**2324**
1700 - 1715	0	440	129	0	11	6	1	1	23	0	0	0	0	**611**	
1715 - 1730	2	434	128	0	13	2	0	1	26	0	0	0	0	**606**	
1730 - 1745	0	408	122	0	10	0	0	3	35	1	0	0	0	**579**	
1745 - 1800	0	331	96	0	11	3	0	3	17	1	0	0	0	**462**	**2258**
1800 - 1815	0	369	118	1	6	4	0	4	30	0	2	0	0	**534**	
1815 - 1830	1	352	101	0	8	1	0	4	31	0	1	1	0	**500**	
1830 - 1845	0	310	82	0	12	0	0	2	24	0	1	0	0	**431**	
1845 - 1900	1	269	87	0	5	0	0	1	31	1	0	0	0	**395**	**1860**
1900 - 1915	0	209	79	0	6	2	0	5	21	2	0	0	0	**324**	
1915 - 1930	0	249	74	0	4	0	0	1	24	0	2	0	0	**354**	
1930 - 1945	0	199	54	0	6	1	0	2	16	0	1	0	0	**279**	
1945 - 2000	1	217	56	0	2	1	0	2	19	1	0	0	0	**299**	**1256**
2000 - 2015	0	203	52	0	5	1	0	1	21	1	0	0	0	**284**	
2015 - 2030	1	168	45	0	2	0	0	0	18	0	0	0	0	**234**	
2030 - 2045	1	185	33	0	2	2	0	1	14	0	0	0	0	**238**	
2045 - 2100	1	184	21	0	2	0	0	2	15	0	1	0	0	**226**	**982**
2100 - 2115	0	148	22	0	0	1	0	0	14	0	2	0	0	**187**	
2115 - 2130	0	181	27	1	0	3	0	3	14	0	0	0	0	**229**	
2130 - 2145	0	128	24	0	1	1	0	0	14	0	0	0	0	**168**	
2145 - 2200	0	131	18	0	3	1	0	2	8	0	1	0	0	**164**	**748**
2200 - 2215	0	119	23	0	0	1	0	1	13	0	0	0	0	**157**	
2215 - 2230	0	111	8	0	1	0	0	0	12	0	0	0	0	**132**	
2230 - 2245	0	122	8	0	0	1	0	1	16	0	0	0	0	**148**	
2245 - 2300	0	98	3	0	0	0	0	0	10	0	0	0	0	**111**	**548**
2300 - 2315	0	79	12	0	1	0	0	0	12	0	0	0	0	**104**	
2315 - 2330	0	56	13	0	0	0	0	0	10	0	0	0	0	**79**	
2330 - 2345	0	51	10	0	1	1	0	0	13	0	0	0	0	**76**	
2345 - 0000	0	54	2	0	0	1	0	1	12	0	4	0	0	**74**	**333**

Session Total	29	24422	7148	33	754	252	22	183	2799	36	20	6	0	**35704**
Session Average	0.30	254.40	74.46	0.34	7.85	2.63	0.23	1.91	29.16	0.38	0.21	0.06	0.00	**371.92**
Session Percentage	0.08	68.40	20.02	0.09	2.11	0.71	0.06	0.51	7.84	0.10	0.06	0.02	0.00	

AM Peak Hour	0545 - 0645	0700 - 0800	0645 - 0745	0845 - 0945	0845 - 0945	0630 - 0730	0645 - 0745	0815 - 0915	0945 - 1045	0500 - 0600	0630 - 0730	-	-	**0700 - 0800**
AM Peak Volume	2	2033	690	9	65	27	5	14	202	3	2	0	0	**2908**

Noon Peak Hour	1330 - 1430	1430 - 1530	1330 - 1430	1000 - 1100	1400 - 1500	1400 - 1500	1315 - 1415	1330 - 1430	1200 - 1300	1045 - 1145	-	1245 - 1345	-	**1400 - 1500**
Noon Peak Volume	7	1657	499	2	80	27	7	22	233	5	0	2	0	**2449**

PM Peak Hour	1945 - 2045	1645 - 1745	1645 - 1745	1600 - 1700	1500 - 1600	1500 - 1600	1500 - 1600	1500 - 1600	1500 - 1600	1500 - 1600	1745 - 1845	1500 - 1600	-	**1500 - 1600**
PM Peak Volume	3	1656	501	8	70	25	1	17	177	3	4	2	0	**2405**

Site 6
I-26 W/Bound On-Ramp,
west of US-76

Date
Tuesday, April 23, 2024

Lat/Long
34.028681°, -81.102438°

Weather
Fair
58°F

Click here for Detailed Weather

0000 - 2400 (Weekday 24h Session) (04-23-2024)
SB WB 15min

	Westbound (Movement 6.1)													15min	60min
TIME	1	2	3	4	5	6	7	8	9	10	11	12	13	Total	Total
0000 - 0015	0	40	10	0	6	0	0	1	10	0	2	0	0	**69**	
0015 - 0030	0	27	9	0	0	0	0	1	6	0	0	0	0	**43**	
0030 - 0045	1	41	7	1	0	0	0	1	20	0	6	0	0	**77**	
0045 - 0100	0	34	6	0	1	1	0	0	5	0	1	0	0	**48**	**237**
0100 - 0115	0	26	6	0	1	0	0	0	14	0	0	0	0	**47**	
0115 - 0130	0	25	7	0	3	0	0	0	15	0	1	0	0	**51**	
0130 - 0145	0	17	3	0	1	2	0	0	11	0	0	0	0	**34**	
0145 - 0200	0	22	4	0	4	2	0	0	14	0	1	0	0	**47**	**179**
0200 - 0215	0	23	2	0	1	0	0	0	10	0	0	0	0	**36**	
0215 - 0230	0	24	6	0	1	0	0	0	14	0	1	0	0	**46**	
0230 - 0245	0	27	6	0	1	0	0	1	21	0	3	0	0	**59**	
0245 - 0300	0	40	11	0	3	1	0	1	11	0	1	0	0	**68**	**209**
0300 - 0315	0	35	7	0	1	1	0	1	18	0	1	0	0	**64**	
0315 - 0330	0	37	8	0	3	4	0	0	15	0	0	0	0	**67**	
0330 - 0345	0	54	13	0	4	2	0	2	16	0	1	0	0	**92**	
0345 - 0400	0	52	12	0	0	1	0	2	15	0	0	0	0	**82**	**305**
0400 - 0415	0	58	15	0	1	1	0	1	28	1	2	0	0	**107**	
0415 - 0430	0	73	18	0	1	0	0	1	20	1	0	0	0	**114**	
0430 - 0445	0	101	23	0	3	0	0	3	19	0	2	0	0	**151**	
0445 - 0500	0	114	26	0	3	0	0	0	21	0	1	0	0	**165**	**537**
0500 - 0515	0	128	27	0	5	2	0	1	26	1	1	0	0	**191**	
0515 - 0530	1	168	38	0	5	0	0	2	38	0	2	0	0	**254**	
0530 - 0545	0	247	60	0	1	1	0	2	39	0	0	0	0	**350**	
0545 - 0600	0	249	60	0	7	2	0	0	28	1	1	0	0	**348**	**1143**
0600 - 0615	0	212	67	0	3	2	0	0	37	0	1	0	0	**322**	
0615 - 0630	0	331	102	0	9	0	0	1	35	0	1	0	0	**479**	
0630 - 0645	0	474	148	2	9	8	0	2	39	1	2	1	0	**686**	
0645 - 0700	1	531	172	0	8	10	0	4	33	0	0	0	0	**759**	**2246**
0700 - 0715	0	491	148	0	8	17	0	1	35	0	0	1	0	**701**	
0715 - 0730	1	556	181	0	13	7	0	2	29	0	0	0	0	**789**	
0730 - 0745	0	476	146	1	14	5	0	2	30	0	1	0	0	**675**	
0745 - 0800	1	484	128	3	10	3	0	0	31	0	0	0	0	**660**	**2825**
0800 - 0815	0	458	146	0	22	1	0	2	38	0	1	0	0	**668**	
0815 - 0830	0	412	143	0	18	6	0	3	43	0	1	0	0	**626**	
0830 - 0845	1	400	176	4	11	3	1	4	52	0	1	0	0	**653**	
0845 - 0900	1	370	128	1	25	4	0	1	51	0	0	0	0	**581**	**2528**
0900 - 0915	0	295	113	0	22	2	0	2	46	0	0	0	0	**480**	
0915 - 0930	0	321	109	0	18	4	0	1	43	0	0	1	0	**497**	
0930 - 0945	0	333	116	3	19	3	0	4	45	0	1	0	0	**524**	
0945 - 1000	0	369	101	0	11	7	0	0	34	1	1	0	0	**524**	**2025**
1000 - 1015	0	295	117	1	16	6	1	2	55	1	0	0	0	**494**	
1015 - 1030	1	319	106	0	17	5	1	3	64	0	0	0	0	**516**	
1030 - 1045	1	320	117	0	21	4	0	2	64	0	1	0	0	**530**	
1045 - 1100	0	298	88	2	17	9	1	2	48	2	1	0	0	**468**	**2008**
1100 - 1115	1	355	96	0	15	2	0	1	66	2	0	0	0	**538**	
1115 - 1130	0	329	95	2	11	3	0	4	54	0	0	0	0	**498**	
1130 - 1145	0	361	103	0	18	7	0	2	67	0	0	2	0	**560**	
1145 - 1200	1	345	90	1	14	3	0	2	61	0	0	0	0	**517**	**2113**
1200 - 1215	0	325	101	1	14	7	1	5	52	1	0	0	0	**507**	
1215 - 1230	0	327	114	0	17	6	0	3	58	1	0	0	0	**526**	
1230 - 1245	0	367	96	2	24	8	0	7	55	1	0	0	0	**560**	
1245 - 1300	1	352	92	1	23	10	0	6	49	0	1	0	0	**535**	**2128**
1300 - 1315	1	349	97	0	15	4	0	4	62	1	3	0	0	**536**	
1315 - 1330	1	322	119	2	29	7	0	3	53	5	0	0	0	**541**	
1330 - 1345	0	365	109	0	10	5	0	1	59	2	1	0	0	**552**	
1345 - 1400	5	372	113	0	18	9	0	3	47	1	0	0	0	**568**	**2197**
1400 - 1415	1	366	100	2	15	7	3	8	57	2	0	0	0	**561**	
1415 - 1430	0	389	97	1	29	9	2	6	47	2	0	0	0	**582**	
1430 - 1445	0	363	106	0	22	5	1	4	39	1	0	0	0	**541**	
1445 - 1500	1	367	108	0	19	7	0	2	39	1	1	0	0	**545**	**2229**
1500 - 1515	0	403	120	2	27	12	0	6	46	1	0	0	0	**617**	
1515 - 1530	0	366	114	0	16	4	0	8	45	0	0	0	0	**553**	
1530 - 1545	1	398	144	1	22	2	0	8	41	0	0	0	0	**617**	
1545 - 1600	0	384	143	0	20	8	2	8	31	1	0	0	0	**597**	**2384**
1600 - 1615	1	446	127	3	13	11	0	8	45	2	1	0	0	**657**	
1615 - 1630	0	436	158	1	32	4	1	9	45	1	0	0	0	**687**	
1630 - 1645	0	431	140	0	26	9	3	7	54	1	0	0	0	**671**	
1645 - 1700	1	433	120	0	18	2	0	3	40	0	0	0	0	**617**	**2632**
1700 - 1715	1	423	118	0	21	6	1	4	37	0	0	0	0	**611**	
1715 - 1730	1	424	101	0	21	2	0	6	29	2	0	0	0	**586**	
1730 - 1745	1	379	112	0	23	2	0	5	32	1	0	0	0	**555**	
1745 - 1800	0	411	105	1	17	2	0	3	47	0	1	0	0	**587**	**2339**
1800 - 1815	2	350	104	1	15	4	0	1	20	2	1	0	0	**500**	
1815 - 1830	3	351	110	0	12	2	0	4	19	2	1	0	0	**504**	
1830 - 1845	1	352	101	1	19	2	0	9	20	3	0	0	0	**508**	
1845 - 1900	0	284	103	1	7	0	0	4	21	2	1	1	0	**424**	**1936**
1900 - 1915	0	274	82	0	9	1	0	2	23	2	0	0	0	**393**	
1915 - 1930	0	266	68	0	8	0	0	0	19	1	1	1	0	**364**	
1930 - 1945	0	206	57	0	5	3	0	4	26	2	0	1	0	**304**	
1945 - 2000	0	212	61	1	6	0	0	0	23	1	1	1	0	**306**	**1367**
2000 - 2015	0	208	71	0	3	2	0	3	20	1	0	0	0	**308**	
2015 - 2030	0	220	50	0	2	0	0	1	19	1	1	0	0	**294**	
2030 - 2045	0	191	37	0	2	1	0	0	21	3	0	0	0	**255**	
2045 - 2100	0	188	31	0	1	1	0	1	14	1	0	0	0	**237**	**1094**
2100 - 2115	0	190	30	0	3	1	0	1	19	2	1	0	0	**247**	
2115 - 2130	0	185	25	0	1	0	0	0	9	0	4	0	0	**224**	
2130 - 2145	0	172	20	0	2	1	0	0	10	1	0	0	0	**206**	
2145 - 2200	0	154	19	0	2	1	0	0	13	1	0	0	0	**190**	**867**
2200 - 2215	0	120	15	0	3	2	0	0	14	2	0	0	0	**156**	
2215 - 2230	0	140	20	0	2	0	0	1	15	2	0	0	0	**180**	
2230 - 2245	0	101	17	0	2	0	0	0	16	0	1	0	0	**137**	
2245 - 2300	0	91	10	1	1	0	0	0	11	0	2	0	0	**116**	**589**
2300 - 2315	1	81	11	0	2	0	0	0	10	1	2	0	0	**108**	
2315 - 2330	0	64	9	0	2	1	0	1	7	0	1	0	0	**85**	
2330 - 2345	0	52	10	0	1	0	0	1	11	1	3	0	0	**79**	
2345 - 0000	0	65	15	0	1	0	0	2	10	1	2	0	0	**96**	**368**

Session Total	34	24512	7150	43	1007	311	18	229	3033	70	69	9	0	**36485**
Session Average	0.35	255.33	74.48	0.45	10.49	3.24	0.19	2.39	31.59	0.73	0.72	0.09	0.00	**380.05**
Session Percentage	0.09	67.18	19.60	0.12	2.76	0.85	0.05	0.63	8.31	0.19	0.19	0.02	0.00	

AM Peak Hour	0630 - 0730	0645 - 0745	0630 - 0730	0745 - 0845	0845 - 0945	0630 - 0730	0930 - 1030	0800 - 0900	0945 - 1045	0500 - 0600	0545 - 0645	0615 - 0715	-	**0630 - 0730**
AM Peak Hour Volume	2	2054	649	7	84	42	2	10	217	2	5	2	0	**2935**

Noon Peak Hour	1300 - 1400	1445 - 1545	1445 - 1545	1230 - 1330	1415 - 1515	1415 - 1515	1345 - 1445	1445 - 1545	1100 - 1200	1315 - 1415	1245 - 1345	1045 - 1145	-	**1445 - 1545**
Noon Peak Hour Volume	7	1534	486	5	97	33	6	24	248	10	5	2	0	**2332**

PM Peak Hour	1730 - 1830	1600 - 1700	1530 - 1630	1530 - 1630	1615 - 1715	1545 - 1645	1545 - 1645	1530 - 1630	1600 - 1700	1800 - 1900	1730 - 1830	1845 - 1945	-	**1600 - 1700**
PM Peak Hour Volume	6	1746	572	5	97	32	6	33	184	9	3	3	0	**2632**

Site 6
I-26 W/Bound On-Ramp,
west of US-76

Date
Wednesday, April 24, 2024

Lat/Long
34.028681°, -81.102438°

Weather
Fair
66°F

Click here for Detailed Weather

0000 - 2400 (Weekday 24h Session) (04-24-2024)
SB WB 15min

	Westbound (Movement 6.1)													15min	60min
TIME	1	2	3	4	5	6	7	8	9	10	11	12	13	Total	Total
0000 - 0015	0	59	8	0	1	0	0	0	13	0	0	0	0	**81**	
0015 - 0030	0	42	5	0	1	0	0	0	11	0	0	0	0	**59**	
0030 - 0045	0	52	7	0	0	0	0	0	16	0	0	0	0	**75**	
0045 - 0100	0	26	3	0	1	1	0	0	11	0	1	0	0	**43**	**258**
0100 - 0115	0	29	4	0	2	0	0	0	13	0	0	0	0	**48**	
0115 - 0130	0	30	3	0	1	0	0	1	18	0	0	0	0	**53**	
0130 - 0145	0	27	2	0	0	1	0	0	15	0	0	0	0	**45**	
0145 - 0200	0	22	2	0	1	1	0	0	14	0	0	0	0	**40**	**186**
0200 - 0215	0	23	4	0	0	0	0	0	17	0	2	0	0	**46**	
0215 - 0230	0	25	2	0	0	0	0	0	10	0	0	0	0	**37**	
0230 - 0245	0	29	5	0	2	1	0	0	11	0	2	0	0	**50**	
0245 - 0300	0	53	7	0	0	1	0	0	12	0	1	0	0	**74**	**207**
0300 - 0315	0	51	8	0	0	0	0	0	19	0	3	0	0	**81**	
0315 - 0330	0	52	6	0	2	2	0	0	15	0	0	0	0	**77**	
0330 - 0345	0	58	9	0	1	1	0	0	21	0	1	0	0	**91**	
0345 - 0400	0	62	7	0	2	0	0	0	22	0	3	0	0	**96**	**345**
0400 - 0415	0	69	12	0	4	5	0	0	22	0	0	0	0	**112**	
0415 - 0430	0	74	15	0	2	2	0	0	31	0	0	0	0	**124**	
0430 - 0445	0	107	22	0	1	0	0	0	18	0	1	0	0	**149**	
0445 - 0500	0	110	27	0	4	1	0	0	18	0	1	0	0	**161**	**546**
0500 - 0515	0	121	31	0	4	1	0	0	25	0	0	0	0	**182**	
0515 - 0530	0	186	38	0	6	3	0	0	27	0	0	0	0	**260**	
0530 - 0545	0	231	44	0	3	1	0	1	28	0	2	0	0	**310**	
0545 - 0600	0	269	53	0	4	2	0	0	41	0	2	0	0	**371**	**1123**
0600 - 0615	1	243	77	0	7	0	0	0	43	0	0	0	0	**371**	
0615 - 0630	0	302	111	0	8	5	0	1	34	0	0	0	0	**461**	
0630 - 0645	0	451	153	0	12	3	0	1	46	0	0	0	0	**666**	
0645 - 0700	1	502	185	0	12	13	0	0	41	1	0	0	0	**755**	**2253**
0700 - 0715	0	519	161	0	8	15	0	1	41	0	0	0	0	**745**	
0715 - 0730	1	565	183	0	9	4	0	2	34	0	3	0	0	**801**	
0730 - 0745	0	559	173	1	11	2	0	0	44	0	0	0	0	**790**	
0745 - 0800	1	501	152	0	11	2	0	4	37	1	1	0	0	**710**	**3046**
0800 - 0815	0	456	145	0	10	7	0	4	37	0	1	0	0	**660**	
0815 - 0830	1	412	132	3	9	3	0	3	41	0	1	0	0	**605**	
0830 - 0845	0	328	151	1	19	5	0	3	40	0	1	0	0	**548**	
0845 - 0900	0	329	110	1	10	5	0	3	48	0	3	0	0	**509**	**2322**
0900 - 0915	0	317	137	3	10	5	0	6	49	0	2	0	0	**529**	
0915 - 0930	1	331	118	1	18	5	0	2	44	0	0	0	0	**520**	
0930 - 0945	0	308	147	1	12	6	0	1	59	0	2	0	0	**536**	
0945 - 1000	1	332	129	1	9	4	0	3	40	0	0	0	0	**519**	**2104**
1000 - 1015	0	343	116	0	15	7	0	6	47	0	0	0	0	**534**	
1015 - 1030	0	317	121	0	15	8	0	4	51	1	0	0	0	**517**	
1030 - 1045	0	278	121	0	8	7	0	3	31	0	0	0	0	**448**	
1045 - 1100	2	307	102	1	8	4	0	2	49	0	0	0	0	**475**	**1974**
1100 - 1115	0	276	105	0	13	5	0	2	37	0	0	0	0	**438**	
1115 - 1130	0	288	106	0	10	4	0	5	44	0	0	0	0	**457**	
1130 - 1145	0	266	114	0	11	8	0	4	40	0	0	0	0	**443**	
1145 - 1200	0	386	146	6	13	4	0	6	96	0	0	0	0	**657**	**1995**
1200 - 1215	0	403	148	0	19	3	0	4	100	3	0	0	0	**680**	
1215 - 1230	1	426	104	0	12	2	0	6	74	1	0	0	0	**626**	
1230 - 1245	1	427	132	0	12	5	0	6	81	1	0	0	0	**665**	
1245 - 1300	1	392	122	0	17	11	0	5	58	1	0	1	0	**608**	**2579**
1300 - 1315	0	365	130	1	5	5	0	3	44	5	0	0	0	**558**	
1315 - 1330	0	378	140	0	22	8	0	3	45	4	1	0	0	**601**	
1330 - 1345	2	427	110	0	16	5	0	6	54	0	0	1	0	**621**	
1345 - 1400	4	385	132	0	17	4	1	4	66	0	0	0	0	**613**	**2393**
1400 - 1415	3	350	108	2	16	6	0	6	53	2	0	0	0	**546**	
1415 - 1430	0	428	135	1	14	6	0	4	43	0	0	1	0	**632**	
1430 - 1445	2	448	130	4	22	6	0	5	44	1	0	0	0	**662**	
1445 - 1500	4	372	112	1	17	11	0	4	45	1	0	1	0	**568**	**2408**
1500 - 1515	1	375	126	1	15	10	0	5	55	0	0	0	0	**588**	
1515 - 1530	1	410	112	1	11	7	0	9	44	0	0	1	0	**596**	
1530 - 1545	1	447	127	0	25	4	0	5	40	0	1	0	0	**650**	
1545 - 1600	1	443	122	1	14	4	0	2	38	1	0	2	0	**628**	**2462**
1600 - 1615	4	457	144	1	22	5	0	8	46	0	0	0	0	**687**	
1615 - 1630	0	472	141	0	19	8	0	7	39	1	0	0	0	**687**	
1630 - 1645	3	454	123	0	16	2	0	3	31	0	0	0	0	**632**	
1645 - 1700	0	452	126	0	15	2	0	6	41	0	0	1	0	**643**	**2649**
1700 - 1715	0	480	133	0	15	7	0	3	28	0	0	0	0	**666**	
1715 - 1730	0	468	110	0	9	3	2	5	31	1	1	0	0	**630**	
1730 - 1745	0	402	115	0	14	5	0	2	32	0	0	0	0	**570**	
1745 - 1800	0	412	106	0	9	2	1	2	25	0	0	0	0	**557**	**2423**
1800 - 1815	1	365	112	0	10	1	0	3	37	0	2	0	0	**531**	
1815 - 1830	0	369	108	1	7	0	0	2	26	1	0	1	0	**515**	
1830 - 1845	0	301	99	0	5	1	0	3	31	1	0	0	0	**441**	
1845 - 1900	1	306	76	1	14	1	0	2	22	2	0	0	0	**425**	**1912**
1900 - 1915	1	273	82	0	10	1	0	3	14	1	0	0	0	**385**	
1915 - 1930	0	273	73	0	15	4	0	0	25	0	0	0	0	**390**	
1930 - 1945	1	211	74	0	11	1	0	1	14	0	0	0	0	**313**	
1945 - 2000	1	224	62	0	6	1	0	1	13	0	0	0	0	**308**	**1396**
2000 - 2015	3	265	68	0	8	2	0	2	32	0	1	0	0	**381**	
2015 - 2030	0	222	41	1	7	0	0	0	21	0	1	0	0	**293**	
2030 - 2045	0	210	34	0	3	1	0	0	18	0	0	0	0	**266**	
2045 - 2100	3	227	19	0	4	0	0	1	12	0	1	0	0	**267**	**1207**
2100 - 2115	0	196	24	1	2	0	0	1	23	0	1	0	0	**248**	
2115 - 2130	1	172	14	1	0	0	0	0	7	0	2	0	0	**197**	
2130 - 2145	0	158	14	0	2	0	0	0	19	0	0	0	0	**193**	
2145 - 2200	0	144	10	0	4	0	0	0	14	0	0	0	0	**172**	**810**
2200 - 2215	0	145	13	0	3	0	0	0	16	0	0	0	0	**177**	
2215 - 2230	1	148	11	0	2	0	0	0	12	0	0	0	0	**174**	
2230 - 2245	1	138	10	1	3	1	0	0	10	0	1	0	0	**165**	
2245 - 2300	0	109	7	0	0	0	0	1	16	0	0	0	0	**133**	**649**
2300 - 2315	1	104	7	0	3	0	0	0	8	0	2	0	0	**125**	
2315 - 2330	0	74	5	0	2	0	0	0	12	0	2	0	0	**95**	
2330 - 2345	0	91	6	1	5	0	0	0	10	0	0	0	0	**113**	
2345 - 0000	1	81	5	0	0	0	0	0	12	0	1	0	0	**100**	**433**

Session Total	54	25602	7481	39	809	299	4	201	3102	30	50	9	0	**37680**
Session Average	0.56	266.69	77.93	0.41	8.43	3.11	0.04	2.09	32.31	0.31	0.52	0.09	0.00	**392.50**
Session Percentage	0.14	67.95	19.85	0.10	2.15	0.79	0.01	0.53	8.23	0.08	0.13	0.02	0.00	

AM Peak Hour	0600 - 0700	0645 - 0745	0645 - 0745	0815 - 0915	0830 - 0930	0615 - 0715	-	0945 - 1045	0845 - 0945	0600 - 0700	0815 - 0915	-	-	**0645 - 0745**
AM Peak Hour Volume	2	2145	702	8	57	36	0	16	200	1	7	0	0	**3091**

Noon Peak Hour	1315 - 1415	1200 - 1300	1145 - 1245	1400 - 1500	1315 - 1415	1430 - 1530	1300 - 1400	1430 - 1530	1145 - 1245	1230 - 1330	1230 - 1330	1245 - 1345	-	**1145 - 1245**
Noon Peak Hour Volume	9	1648	530	8	71	34	1	23	351	11	1	2	0	**2628**

PM Peak Hour	1545 - 1645	1615 - 1715	1530 - 1630	1500 - 1600	1530 - 1630	1500 - 1600	1700 - 1800	1515 - 1615	1500 - 1600	1815 - 1915	1715 - 1815	1500 - 1600	-	**1530 - 1630**
PM Peak Hour Volume	8	1858	534	3	80	25	3	24	177	5	3	3	0	**2652**

Site 6
I-26 W/Bound On-Ramp,
west of US-76

Date
Thursday, April 25, 2024

Lat/Long
34.028681°, -81.102438°

Weather
Fair
67°F

Click here for Detailed Weather

0000 - 2400 (Weekday 24h Session) (04-25-2024)
SB WB 15min

	Westbound (Movement 6.1)														
TIME	1	2	3	4	5	6	7	8	9	10	11	12	13	15min Total	60min Total
0000 - 0015	0	45	10	0	1	1	0	0	11	0	1	0	0	**69**	
0015 - 0030	0	37	13	0	0	1	0	2	18	0	3	0	0	**74**	
0030 - 0045	0	29	11	0	0	0	0	0	16	0	1	0	0	**57**	
0045 - 0100	0	31	11	2	1	0	0	0	17	0	1	0	0	**63**	**263**
0100 - 0115	0	36	14	0	0	0	0	0	17	0	4	0	0	**71**	
0115 - 0130	0	26	6	0	0	1	0	0	12	0	2	0	0	**47**	
0130 - 0145	0	26	11	0	2	0	0	0	12	0	1	0	0	**52**	
0145 - 0200	0	32	3	0	1	0	0	1	14	0	3	0	0	**54**	**224**
0200 - 0215	0	32	3	0	0	0	0	1	16	0	5	0	0	**57**	
0215 - 0230	0	18	6	0	1	0	0	0	10	0	3	0	0	**38**	
0230 - 0245	0	27	5	0	2	0	0	0	17	0	2	0	0	**53**	
0245 - 0300	0	37	8	0	4	0	0	0	17	0	0	0	0	**66**	**214**
0300 - 0315	0	48	12	0	1	0	0	0	18	0	3	0	0	**82**	
0315 - 0330	0	34	9	0	0	0	0	2	17	0	1	0	0	**63**	
0330 - 0345	0	64	16	0	2	0	0	1	15	0	2	0	0	**100**	
0345 - 0400	0	61	12	0	2	0	0	0	22	0	2	0	0	**99**	**344**
0400 - 0415	0	64	18	0	3	1	0	3	28	0	0	0	0	**117**	
0415 - 0430	0	70	14	0	5	0	0	0	22	0	1	0	0	**112**	
0430 - 0445	0	106	17	0	3	1	0	1	26	0	1	0	0	**155**	
0445 - 0500	0	110	15	0	5	0	0	0	31	0	1	0	0	**162**	**546**
0500 - 0515	0	243	41	0	9	1	0	2	62	0	1	0	0	**359**	
0515 - 0530	0	194	35	0	3	0	0	2	37	0	1	0	0	**272**	
0530 - 0545	0	252	56	0	5	0	0	0	31	0	0	0	0	**344**	
0545 - 0600	0	268	50	0	4	2	0	1	31	0	1	0	0	**357**	**1332**
0600 - 0615	0	253	56	0	5	0	0	2	38	0	1	0	0	**355**	
0615 - 0630	2	325	105	0	4	2	0	0	37	0	0	0	0	**475**	
0630 - 0645	0	454	168	1	9	8	0	1	46	0	0	0	0	**687**	
0645 - 0700	1	495	201	1	8	5	0	0	41	1	0	1	0	**754**	**2271**
0700 - 0715	1	463	179	0	9	13	0	2	49	0	2	0	0	**718**	
0715 - 0730	0	554	152	0	11	3	0	1	33	0	1	0	0	**755**	
0730 - 0745	1	529	156	2	8	4	0	2	29	1	1	0	0	**733**	
0745 - 0800	2	503	149	0	17	6	0	1	35	0	0	0	0	**713**	**2919**
0800 - 0815	0	440	140	2	11	6	0	5	32	0	2	0	0	**638**	
0815 - 0830	0	396	144	0	17	4	0	0	41	0	0	0	0	**602**	
0830 - 0845	0	425	152	1	12	4	0	1	35	2	2	0	0	**634**	
0845 - 0900	0	368	115	0	12	4	0	2	47	0	0	0	0	**548**	**2422**
0900 - 0915	1	314	127	0	7	4	1	1	53	0	0	0	0	**508**	
0915 - 0930	0	348	110	2	12	5	0	1	46	0	0	0	0	**524**	
0930 - 0945	0	323	131	1	9	10	0	1	51	0	2	0	0	**528**	
0945 - 1000	1	337	134	3	13	7	0	0	55	1	0	0	0	**551**	**2111**
1000 - 1015	0	325	107	1	13	2	0	2	54	2	0	0	0	**506**	
1015 - 1030	0	332	104	1	6	5	0	2	57	2	0	0	0	**509**	
1030 - 1045	0	332	113	0	14	7	0	4	49	2	0	0	0	**521**	
1045 - 1100	1	336	105	0	13	6	0	1	62	1	1	0	0	**526**	**2062**
1100 - 1115	1	283	102	1	14	3	0	3	43	0	0	0	0	**450**	
1115 - 1130	1	394	138	1	13	6	1	4	69	0	0	0	0	**627**	
1130 - 1145	1	351	126	0	12	6	0	6	49	2	0	0	0	**553**	
1145 - 1200	0	341	128	0	11	5	0	1	52	2	0	0	0	**540**	**2170**
1200 - 1215	1	423	130	1	16	2	0	7	51	0	1	0	0	**632**	
1215 - 1230	0	355	124	0	16	7	0	7	60	0	1	0	0	**570**	
1230 - 1245	0	422	112	2	17	4	0	9	58	5	1	0	0	**630**	
1245 - 1300	0	406	106	1	19	15	0	13	59	1	1	0	0	**621**	**2453**
1300 - 1315	1	408	118	2	16	9	0	7	59	4	1	0	0	**625**	
1315 - 1330	2	454	120	1	9	7	0	7	40	1	0	0	0	**641**	
1330 - 1345	1	429	115	1	14	6	0	10	46	1	0	0	0	**623**	
1345 - 1400	1	438	122	1	21	3	0	3	53	1	0	0	0	**643**	**2532**
1400 - 1415	2	434	122	1	27	4	0	9	36	3	0	0	0	**638**	
1415 - 1430	0	461	132	2	11	1	0	9	38	2	0	0	0	**656**	
1430 - 1445	1	435	122	2	19	9	0	9	51	0	1	0	0	**649**	
1445 - 1500	1	437	92	1	19	16	0	4	50	1	0	0	0	**621**	**2564**
1500 - 1515	3	421	148	1	20	6	0	15	53	0	0	0	0	**667**	
1515 - 1530	0	411	129	4	10	11	0	6	52	0	0	0	0	**623**	
1530 - 1545	2	457	139	0	19	12	0	6	41	0	1	0	0	**677**	
1545 - 1600	1	432	146	0	17	2	0	5	36	0	0	0	0	**639**	**2606**
1600 - 1615	1	479	127	3	20	8	0	9	44	1	1	0	0	**693**	
1615 - 1630	1	446	143	0	12	6	0	8	35	2	0	0	0	**653**	
1630 - 1645	0	477	148	0	18	10	0	6	33	1	0	0	0	**693**	
1645 - 1700	1	444	134	0	10	4	0	4	34	1	0	0	0	**632**	**2671**
1700 - 1715	0	486	116	0	16	4	0	4	24	0	0	0	0	**650**	
1715 - 1730	0	467	119	0	9	6	0	5	34	0	0	0	0	**640**	
1730 - 1745	1	384	117	0	13	4	0	8	41	1	0	0	0	**569**	
1745 - 1800	0	444	108	1	16	4	0	5	29	0	0	0	0	**607**	**2466**
1800 - 1815	3	408	129	1	11	1	0	1	29	0	0	0	0	**583**	
1815 - 1830	0	409	115	1	20	2	0	3	27	0	1	0	0	**578**	
1830 - 1845	0	363	99	0	8	2	1	2	33	2	0	0	0	**510**	
1845 - 1900	1	348	81	1	7	2	0	2	34	0	0	1	0	**477**	**2148**
1900 - 1915	0	323	105	1	7	3	0	1	26	0	0	0	0	**466**	
1915 - 1930	1	316	77	0	11	0	0	1	24	1	0	0	0	**431**	
1930 - 1945	0	305	90	0	11	1	0	2	16	2	0	0	0	**427**	
1945 - 2000	2	295	82	0	5	2	0	0	25	0	1	0	0	**412**	**1736**
2000 - 2015	0	294	55	0	3	3	0	0	13	0	0	0	0	**368**	
2015 - 2030	2	249	20	0	6	0	0	0	24	0	1	0	0	**302**	
2030 - 2045	2	260	17	0	3	0	0	0	19	0	0	0	0	**301**	
2045 - 2100	0	223	26	0	4	0	0	0	21	0	1	0	0	**275**	**1246**
2100 - 2115	0	256	15	0	1	0	0	0	24	0	0	0	0	**296**	
2115 - 2130	0	276	12	0	2	0	0	0	13	0	0	0	0	**303**	
2130 - 2145	0	235	10	0	3	0	0	0	11	0	1	0	0	**260**	
2145 - 2200	1	168	6	0	5	0	0	0	9	0	1	0	0	**190**	**1049**
2200 - 2215	0	155	3	0	2	2	0	0	6	0	0	0	0	**168**	
2215 - 2230	1	153	3	0	3	0	0	0	7	0	0	0	0	**167**	
2230 - 2245	0	183	10	1	3	1	0	0	16	0	1	0	0	**215**	
2245 - 2300	0	131	12	0	4	0	0	0	12	0	1	0	0	**160**	**710**
2300 - 2315	0	99	2	0	1	0	0	0	5	0	2	0	0	**109**	
2315 - 2330	0	76	4	0	0	0	0	0	5	0	1	0	0	**86**	
2330 - 2345	0	128	8	0	2	1	0	0	16	0	2	0	0	**157**	
2345 - 0000	0	94	6	0	3	2	0	0	29	0	0	0	0	**134**	**486**

Session Total	46	27308	7514	48	823	315	3	246	3121	46	73	2	0	**39545**
Session Average	0.48	284.46	78.27	0.50	8.57	3.28	0.03	2.56	32.51	0.48	0.76	0.02	0.00	**411.93**
Session Percentage	0.12	69.06	19.00	0.12	2.08	0.80	0.01	0.62	7.89	0.12	0.18	0.01	0.00	

AM Peak Hour	0615 - 0715	0700 - 0800	0630 - 0730	0915 - 1015	0745 - 0845	0630 - 0730	0815 - 0915	0715 - 0815	0930 - 1030	0945 - 1045	0645 - 0745	0600 - 0700	-	**0645 - 0745**
AM Peak Hour Volume	4	2049	700	7	57	29	1	9	217	7	4	1	0	**2960**

Noon Peak Hour	1315 - 1415	1345 - 1445	1115 - 1215	1430 - 1530	1345 - 1445	1445 - 1545	1030 - 1130	1245 - 1345	1215 - 1315	1230 - 1330	1200 - 1300	-	-	**1415 - 1515**
Noon Peak Hour Volume	6	1768	522	8	78	45	1	37	236	11	4	0	0	**2593**

PM Peak Hour	1500 - 1600	1630 - 1730	1545 - 1645	1515 - 1615	1530 - 1630	1515 - 1615	1745 - 1845	1500 - 1600	1500 - 1600	1600 - 1700	1515 - 1615	1800 - 1900	-	**1545 - 1645**
PM Peak Hour Volume	6	1874	564	7	68	33	1	32	182	5	2	1	0	**2678**

Site 6
I-26 W/Bound On-Ramp,
west of US-76

Date
Friday, April 26, 2024

Lat/Long
34.028681°, -81.102438°

Weather
Cloudy
69°F

Click here for Detailed Weather

0000 - 2400 (Weekday 24h Session) (04-26-2024)
SB WB 15min

	Westbound (Movement 6.1)													15min	60min
TIME	1	2	3	4	5	6	7	8	9	10	11	12	13	Total	Total
0000 - 0015	0	49	14	0	0	0	0	0	6	0	4	0	0	**73**	
0015 - 0030	0	40	11	0	1	0	0	0	4	0	0	0	0	**56**	
0030 - 0045	0	69	16	0	5	2	0	0	24	0	4	0	0	**120**	
0045 - 0100	0	37	13	0	1	0	0	0	16	0	1	0	0	**68**	**317**
0100 - 0115	0	30	6	0	0	0	0	0	7	0	2	0	0	**45**	
0115 - 0130	0	26	6	0	0	0	0	1	5	0	1	0	0	**39**	
0130 - 0145	0	29	9	0	1	2	0	0	14	0	2	0	0	**57**	
0145 - 0200	0	24	5	0	4	0	0	0	14	0	1	0	0	**48**	**189**
0200 - 0215	0	23	5	0	0	0	0	0	7	0	3	0	0	**38**	
0215 - 0230	0	27	3	0	1	0	0	0	6	0	2	0	0	**39**	
0230 - 0245	0	49	9	0	2	1	0	1	29	0	6	0	0	**97**	
0245 - 0300	0	35	8	0	0	2	0	0	19	0	2	0	0	**66**	**240**
0300 - 0315	0	37	5	0	1	0	0	0	22	0	1	0	0	**66**	
0315 - 0330	0	47	4	2	0	1	1	1	22	0	2	0	0	**80**	
0330 - 0345	0	60	6	0	3	2	0	1	20	0	2	0	0	**94**	
0345 - 0400	0	58	13	0	1	0	1	0	18	0	1	0	0	**92**	**332**
0400 - 0415	1	58	22	0	2	0	0	0	26	0	0	0	0	**109**	
0415 - 0430	0	78	10	0	2	0	0	0	20	0	1	0	0	**111**	
0430 - 0445	1	118	24	0	3	2	0	0	34	0	3	0	0	**185**	
0445 - 0500	0	151	27	0	4	2	0	0	21	0	0	0	0	**205**	**610**
0500 - 0515	0	132	38	0	3	0	0	0	25	0	1	0	0	**199**	
0515 - 0530	0	164	41	0	2	2	0	1	29	0	0	0	0	**239**	
0530 - 0545	0	218	60	0	6	1	0	1	33	0	2	0	0	**321**	
0545 - 0600	3	233	60	0	10	3	0	0	30	0	0	0	0	**339**	**1098**
0600 - 0615	0	234	64	0	7	1	0	0	38	0	0	0	0	**344**	
0615 - 0630	0	297	83	0	5	5	1	2	35	0	0	0	0	**428**	
0630 - 0645	1	463	91	1	8	0	0	2	41	0	0	0	0	**607**	
0645 - 0700	1	455	127	0	4	6	1	0	35	1	1	0	0	**631**	**2010**
0700 - 0715	0	469	129	0	5	10	0	0	40	1	1	0	0	**655**	
0715 - 0730	0	528	148	1	10	15	0	2	39	0	0	0	0	**743**	
0730 - 0745	1	567	139	2	7	6	0	2	46	1	0	0	0	**771**	
0745 - 0800	2	545	150	1	10	2	1	2	43	1	2	0	0	**759**	**2928**
0800 - 0815	1	428	118	0	11	4	1	1	42	0	0	0	0	**606**	
0815 - 0830	3	405	111	0	9	3	1	2	30	0	1	0	0	**565**	
0830 - 0845	0	413	116	4	9	4	0	2	41	0	1	0	0	**590**	
0845 - 0900	0	395	113	0	10	4	2	2	31	0	1	0	0	**558**	**2319**
0900 - 0915	1	344	102	1	5	8	0	3	43	4	2	0	0	**513**	
0915 - 0930	0	411	113	1	12	4	2	2	44	0	0	0	0	**589**	
0930 - 0945	2	415	96	1	6	5	1	1	40	0	1	0	0	**568**	
0945 - 1000	0	428	98	0	7	3	1	4	52	0	0	0	0	**593**	**2263**
1000 - 1015	1	409	84	1	16	8	2	3	64	4	0	0	0	**592**	
1015 - 1030	1	411	127	0	18	5	0	1	55	0	1	0	0	**619**	
1030 - 1045	1	458	111	0	16	8	2	4	59	1	0	0	0	**660**	
1045 - 1100	2	452	134	0	12	7	1	7	57	2	1	0	0	**675**	**2546**
1100 - 1115	0	493	120	1	12	6	1	1	70	2	0	0	0	**706**	
1115 - 1130	0	439	112	2	17	3	1	8	46	0	0	0	0	**628**	
1130 - 1145	1	406	139	1	15	6	3	7	60	0	0	0	0	**638**	
1145 - 1200	0	442	155	2	24	12	0	5	54	1	0	0	0	**695**	**2667**
1200 - 1215	1	454	138	0	9	4	1	4	58	3	0	0	0	**672**	
1215 - 1230	0	464	149	1	12	8	0	4	50	1	0	0	0	**689**	
1230 - 1245	0	423	119	3	16	8	1	2	48	3	0	0	0	**623**	
1245 - 1300	4	432	122	0	8	4	0	3	43	0	1	0	0	**617**	**2601**
1300 - 1315	2	470	154	0	11	4	0	2	38	3	0	1	0	**685**	
1315 - 1330	1	492	124	0	14	9	1	1	40	0	0	0	0	**682**	
1330 - 1345	0	471	131	2	9	6	0	3	44	0	0	0	0	**666**	
1345 - 1400	1	444	144	1	9	7	0	1	31	0	0	0	0	**638**	**2671**
1400 - 1415	3	380	98	3	11	12	0	3	30	0	0	0	0	**540**	
1415 - 1430	1	459	136	1	17	1	0	1	36	0	0	0	0	**652**	
1430 - 1445	5	478	154	2	16	6	1	1	34	0	0	0	0	**697**	
1445 - 1500	1	477	132	2	7	10	0	2	38	0	0	0	0	**669**	**2558**
1500 - 1515	1	489	120	0	9	8	0	2	37	1	0	0	0	**667**	
1515 - 1530	1	465	129	0	11	4	1	4	31	1	0	0	0	**647**	
1530 - 1545	0	483	142	0	12	4	0	2	29	0	0	0	0	**672**	
1545 - 1600	0	486	147	0	17	7	0	1	27	0	0	2	0	**687**	**2673**
1600 - 1615	0	454	108	0	16	5	0	3	26	0	0	0	0	**612**	
1615 - 1630	0	478	130	1	9	0	0	3	22	0	1	0	0	**644**	
1630 - 1645	3	434	143	0	7	5	0	0	24	0	1	1	0	**618**	
1645 - 1700	4	495	126	1	15	4	0	2	19	0	0	1	0	**667**	**2541**
1700 - 1715	0	499	134	0	11	2	0	4	20	0	0	0	0	**670**	
1715 - 1730	1	536	112	1	10	3	0	5	29	0	0	0	0	**697**	
1730 - 1745	1	516	133	0	11	1	0	2	26	3	0	1	0	**694**	
1745 - 1800	4	486	127	3	13	6	0	1	18	0	0	0	0	**658**	**2719**
1800 - 1815	0	443	114	1	8	1	0	1	15	1	0	0	0	**584**	
1815 - 1830	0	483	103	1	17	2	0	1	17	0	0	0	0	**624**	
1830 - 1845	1	421	100	0	14	0	0	2	11	0	0	0	0	**549**	
1845 - 1900	0	419	102	1	17	0	0	1	18	0	0	1	0	**559**	**2316**
1900 - 1915	1	367	96	0	9	2	0	1	14	1	0	0	0	**491**	
1915 - 1930	0	319	92	1	8	0	0	2	24	0	1	0	0	**447**	
1930 - 1945	0	274	76	0	5	0	0	0	18	0	0	0	0	**373**	
1945 - 2000	3	290	72	3	5	2	0	0	10	0	0	0	0	**385**	**1696**
2000 - 2015	1	305	68	0	3	0	0	1	11	0	0	0	0	**389**	
2015 - 2030	0	252	65	0	8	1	0	1	5	0	0	0	0	**332**	
2030 - 2045	0	264	51	0	5	0	0	2	12	0	0	0	0	**334**	
2045 - 2100	0	239	45	0	2	0	0	1	16	0	0	0	0	**303**	**1358**
2100 - 2115	0	219	44	0	1	0	0	0	12	0	0	0	0	**276**	
2115 - 2130	0	221	41	0	2	1	0	0	6	0	0	0	0	**271**	
2130 - 2145	0	212	44	0	2	1	0	0	12	0	0	0	0	**271**	
2145 - 2200	0	224	37	0	1	0	0	0	7	0	0	0	0	**269**	**1087**
2200 - 2215	0	193	32	1	4	0	0	0	6	0	0	0	0	**236**	
2215 - 2230	0	190	34	0	1	0	0	0	6	0	0	0	0	**231**	
2230 - 2245	0	144	26	0	1	1	0	3	16	0	0	0	0	**191**	
2245 - 2300	0	137	28	0	1	0	0	0	10	0	0	0	0	**176**	**834**
2300 - 2315	0	127	29	0	1	0	0	0	12	0	0	0	0	**169**	
2315 - 2330	0	116	26	0	0	2	0	0	9	0	0	0	0	**153**	
2330 - 2345	0	103	26	0	0	0	0	0	6	0	0	0	0	**135**	
2345 - 0000	0	82	14	0	1	2	0	0	6	0	0	0	0	**105**	**562**

Session Total	63	29408	7712	50	703	298	28	141	2633	35	57	7	0	**41135**
Session Average	0.66	306.33	80.33	0.52	7.32	3.10	0.29	1.47	27.43	0.36	0.59	0.07	0.00	**428.49**
Session Percentage	0.15	71.49	18.75	0.12	1.71	0.72	0.07	0.34	6.40	0.09	0.14	0.02	0.00	

AM Peak Hour	0730 - 0830	0700 - 0800	0700 - 0800	0830 - 0930	0945 - 1045	0645 - 0745	0915 - 1015	0945 - 1045	0945 - 1045	0945 - 1045	0815 - 0915	-	-	**0700 - 0800**
AM Peak Hour Volume	7	2109	566	6	57	37	6	12	230	5	5	0	0	**2928**

Noon Peak Hour	1345 - 1445	1445 - 1545	1130 - 1230	1400 - 1500	1100 - 1200	1315 - 1415	1045 - 1145	1115 - 1215	1015 - 1115	1145 - 1245	1000 - 1100	1215 - 1315	-	**1130 - 1230**
Noon Peak Hour Volume	10	1914	581	8	68	34	6	24	241	8	2	1	0	**2694**

PM Peak Hour	1630 - 1730	1645 - 1745	1500 - 1600	1715 - 1815	1815 - 1915	1500 - 1600	1500 - 1600	1645 - 1745	1500 - 1600	1715 - 1815	1545 - 1645	1545 - 1645	-	**1645 - 1745**
PM Peak Hour Volume	8	2046	538	5	57	23	1	13	124	4	2	3	0	**2728**

Site 6
I-26 W/Bound On-Ramp,
west of US-76

Date
Saturday, April 27, 2024

Lat/Long
34.028681°, -81.102438°

Weather
Mostly Cloudy
69°F

Click here for Detailed Weather

0000 - 2400 (Saturday 24h Session) (04-27-2024)
SB WB 15min

	Westbound (Movement 6.1)													15min	60min
TIME	1	2	3	4	5	6	7	8	9	10	11	12	13	Total	Total
0000 - 0015	0	96	16	0	0	0	0	0	11	0	1	0	0	**124**	
0015 - 0030	0	89	10	0	0	0	0	0	6	0	2	0	0	**107**	
0030 - 0045	0	85	8	0	0	0	0	0	6	0	2	0	0	**101**	
0045 - 0100	0	52	7	0	1	0	0	0	12	0	2	0	0	**74**	**406**
0100 - 0115	1	42	8	0	1	0	0	1	8	0	1	0	0	**62**	
0115 - 0130	0	35	8	0	0	0	0	1	9	0	1	0	0	**54**	
0130 - 0145	0	42	4	0	1	0	0	0	6	0	0	0	0	**53**	
0145 - 0200	0	54	7	0	2	0	0	1	5	0	3	0	0	**72**	**241**
0200 - 0215	0	41	4	0	1	0	0	0	5	0	5	0	0	**56**	
0215 - 0230	0	39	6	0	0	0	0	0	6	0	5	0	0	**56**	
0230 - 0245	0	36	3	0	0	0	0	0	9	0	0	0	0	**48**	
0245 - 0300	0	46	8	0	1	0	0	0	4	0	1	0	0	**60**	**220**
0300 - 0315	0	47	11	1	0	0	0	0	6	0	2	0	0	**67**	
0315 - 0330	0	48	10	0	0	1	0	1	10	0	0	0	0	**70**	
0330 - 0345	0	50	7	0	2	1	0	0	10	0	0	0	0	**70**	
0345 - 0400	0	62	7	0	1	0	0	0	2	0	1	0	0	**73**	**280**
0400 - 0415	0	48	5	0	3	0	0	1	6	0	2	0	0	**65**	
0415 - 0430	0	57	7	0	1	0	0	1	8	0	2	0	0	**76**	
0430 - 0445	0	87	10	0	0	0	0	0	6	0	2	0	0	**105**	
0445 - 0500	1	86	12	0	3	0	0	0	9	0	0	0	0	**111**	**357**
0500 - 0515	0	75	15	0	1	0	0	1	2	0	0	0	0	**94**	
0515 - 0530	0	98	21	0	0	0	0	0	3	0	0	0	0	**122**	
0530 - 0545	1	106	22	1	2	1	0	1	8	0	1	0	0	**143**	
0545 - 0600	1	116	18	0	2	0	0	0	12	0	0	0	0	**149**	**508**
0600 - 0615	0	92	27	0	0	1	0	0	6	0	1	0	0	**127**	
0615 - 0630	1	154	39	0	1	0	0	0	6	0	1	0	0	**202**	
0630 - 0645	0	189	55	0	3	2	0	0	5	0	1	0	0	**255**	
0645 - 0700	2	192	40	0	2	1	0	0	10	0	1	0	0	**248**	**832**
0700 - 0715	0	177	31	0	5	2	0	1	21	0	1	0	0	**238**	
0715 - 0730	0	192	54	0	4	1	0	4	4	0	1	0	0	**260**	
0730 - 0745	0	239	79	0	8	2	0	1	10	0	0	0	0	**339**	
0745 - 0800	0	261	67	3	2	4	0	0	15	0	3	0	0	**355**	**1192**
0800 - 0815	0	271	68	0	6	1	0	2	11	0	0	0	0	**359**	
0815 - 0830	2	309	65	1	2	1	0	3	13	0	0	0	0	**396**	
0830 - 0845	10	357	85	0	4	3	0	0	12	0	0	0	0	**471**	
0845 - 0900	1	352	91	1	6	1	0	3	11	0	0	0	0	**466**	**1692**
0900 - 0915	1	340	87	0	6	2	0	0	15	0	1	0	0	**452**	
0915 - 0930	0	357	109	0	6	2	0	0	11	0	0	0	0	**485**	
0930 - 0945	3	429	100	0	12	2	0	0	14	0	0	0	0	**560**	
0945 - 1000	2	444	92	1	7	1	0	2	19	0	0	0	0	**568**	**2065**
1000 - 1015	17	422	97	0	7	0	0	2	12	0	0	0	0	**557**	
1015 - 1030	1	442	89	0	5	0	0	1	18	0	0	0	0	**556**	
1030 - 1045	5	436	96	0	2	4	0	0	13	0	0	0	0	**556**	
1045 - 1100	2	411	95	0	5	1	0	4	11	0	0	0	0	**529**	**2198**
1100 - 1115	0	374	90	1	1	1	0	2	7	0	0	0	0	**476**	
1115 - 1130	1	373	92	0	3	2	0	0	10	0	0	0	0	**481**	
1130 - 1145	1	422	95	0	4	1	0	0	11	0	0	0	0	**534**	
1145 - 1200	3	570	133	3	8	1	0	0	10	0	1	0	0	**729**	**2220**
1200 - 1215	1	540	120	0	4	1	0	0	21	0	0	0	0	**687**	
1215 - 1230	2	545	127	0	7	2	0	0	20	0	0	0	0	**703**	
1230 - 1245	2	447	123	0	5	0	0	0	7	0	0	0	0	**584**	
1245 - 1300	2	446	124	0	12	2	0	0	9	0	0	0	0	**595**	**2569**
1300 - 1315	3	464	104	0	12	1	0	1	8	0	0	0	0	**593**	
1315 - 1330	4	462	125	0	4	4	0	0	13	0	0	0	0	**612**	
1330 - 1345	4	490	101	2	8	0	0	0	12	0	0	0	0	**617**	
1345 - 1400	1	450	129	0	11	5	0	1	11	0	1	0	0	**609**	**2431**
1400 - 1415	3	492	103	0	6	0	0	0	5	0	0	0	0	**609**	
1415 - 1430	0	460	106	1	2	1	0	0	11	0	0	0	0	**581**	
1430 - 1445	0	464	115	0	8	3	0	0	10	0	0	0	0	**600**	
1445 - 1500	1	475	93	0	5	2	0	1	13	0	0	0	0	**590**	**2380**
1500 - 1515	2	424	98	0	9	0	0	0	12	0	0	0	0	**545**	
1515 - 1530	5	447	119	0	5	0	0	0	9	0	0	0	0	**585**	
1530 - 1545	5	454	129	0	3	0	0	0	6	0	0	0	0	**597**	
1545 - 1600	3	426	105	0	8	2	0	3	9	0	0	0	0	**556**	**2283**
1600 - 1615	1	429	102	0	6	0	0	0	9	0	1	0	0	**548**	
1615 - 1630	1	452	98	1	2	0	0	2	6	0	0	0	0	**562**	
1630 - 1645	0	387	100	1	7	1	0	2	4	0	0	0	0	**502**	
1645 - 1700	2	402	93	0	5	1	0	0	11	0	0	0	0	**514**	**2126**
1700 - 1715	0	420	120	0	3	0	0	0	14	0	0	0	0	**557**	
1715 - 1730	3	447	77	0	4	0	0	0	12	0	0	0	0	**543**	
1730 - 1745	5	362	97	0	3	0	0	0	7	0	0	0	0	**474**	
1745 - 1800	2	398	89	1	2	0	0	0	10	0	0	0	0	**502**	**2076**
1800 - 1815	2	390	81	0	3	0	0	0	11	0	0	0	0	**487**	
1815 - 1830	7	399	85	0	2	0	0	0	7	0	0	0	0	**500**	
1830 - 1845	0	418	77	0	4	0	0	2	8	0	0	0	0	**509**	
1845 - 1900	0	361	65	1	5	0	0	1	5	0	0	0	0	**438**	**1934**
1900 - 1915	1	343	63	1	1	1	0	1	7	0	0	1	0	**419**	
1915 - 1930	0	304	49	0	4	0	0	1	10	0	0	0	0	**368**	
1930 - 1945	2	319	62	0	2	0	0	1	5	0	0	0	0	**391**	
1945 - 2000	2	278	49	0	2	0	0	1	9	0	0	0	0	**341**	**1519**
2000 - 2015	1	310	66	0	1	1	0	0	4	0	1	0	0	**384**	
2015 - 2030	0	295	53	2	2	2	0	0	5	0	0	0	0	**359**	
2030 - 2045	0	280	44	0	5	0	0	0	5	0	0	0	0	**334**	
2045 - 2100	0	257	52	0	2	2	0	0	6	0	0	0	0	**319**	**1396**
2100 - 2115	0	220	34	0	0	0	0	0	1	0	0	0	0	**255**	
2115 - 2130	0	234	40	0	1	0	0	0	4	0	0	0	0	**279**	
2130 - 2145	0	210	38	0	2	0	0	0	2	0	0	0	0	**252**	
2145 - 2200	0	180	26	0	1	0	0	1	2	0	0	0	0	**210**	**996**
2200 - 2215	0	188	28	0	1	0	0	0	1	0	0	0	0	**218**	
2215 - 2230	0	190	25	0	1	0	0	0	1	0	0	0	0	**217**	
2230 - 2245	0	188	35	0	2	0	0	0	3	0	0	0	0	**228**	
2245 - 2300	0	130	26	0	3	0	0	0	2	0	0	0	0	**161**	**824**
2300 - 2315	0	140	25	1	1	0	0	0	5	0	0	0	0	**172**	
2315 - 2330	0	123	22	0	1	0	0	0	7	0	0	0	0	**153**	
2330 - 2345	0	94	19	0	0	0	0	0	6	0	0	0	0	**119**	
2345 - 0000	0	92	17	0	0	0	0	0	4	0	0	0	0	**113**	**557**

Session Total	123	26068	5788	23	318	70	0	51	813	0	47	1	0	**33302**
Session Average	1.28	271.54	60.29	0.24	3.31	0.73	0.00	0.53	8.47	0.00	0.49	0.01	0.00	**346.90**
Session Percentage	0.37	78.28	17.38	0.07	0.95	0.21	0.00	0.15	2.44	0.00	0.14	0.00	0.00	

AM Peak Hour	0945 - 1045	0945 - 1045	0915 - 1015	0730 - 0830	0915 - 1015	0700 - 0800	-	0800 - 0900	0930 - 1030	-	0700 - 0800	-	-	**0930 - 1030**
AM Peak Hour Volume	25	1744	398	4	32	9	0	8	63	0	5	0	0	**2241**

Noon Peak Hour	1000 - 1100	1145 - 1245	1145 - 1245	1100 - 1200	1215 - 1315	1300 - 1400	-	1000 - 1100	1130 - 1230	-	1100 - 1200	-	-	**1145 - 1245**
Noon Peak Hour Volume	25	2102	503	4	36	10	0	7	62	0	1	0	0	**2703**

PM Peak Hour	1730 - 1830	1530 - 1630	1515 - 1615	1545 - 1645	1500 - 1600	1545 - 1645	-	1545 - 1645	1645 - 1745	-	1515 - 1615	1815 - 1915	-	**1515 - 1615**
PM Peak Hour Volume	16	1761	455	2	25	3	0	7	44	0	1	1	0	**2286**

Bi-Directional Class Count || SB WB Average 15min

Columbia, SC

Marr Traffic DATA COLLECTION
www.marrtraffic.com

Site 6
I-26 W/Bound On-Ramp,
west of US-76

Date
Sunday, April 21, 2024

Lat/Long
34.028681°, -81.102438°

Weather
Cloudy
66°F

0000 - 2400 (Weekday 24h Session) (All Dates)
SB WB Average 15min

	SB WB Average 15min													15min	60min
Time	1	2	3	4	5	6	7	8	9	10	11	12	13	Total	Total
0000 - 0015	0	59	12	0	1	0	0	0	8	0	1	0	0	**82**	
0015 - 0030	0	55	10	0	0	0	0	0	8	0	1	0	0	**74**	
0030 - 0045	0	52	11	0	1	0	0	0	13	0	2	0	0	**80**	
0045 - 0100	0	41	10	0	1	0	0	0	10	0	1	0	0	**64**	**300**
0100 - 0115	0	36	10	0	1	0	0	0	11	0	1	0	0	**59**	
0115 - 0130	0	37	7	0	1	0	0	0	10	0	1	0	0	**56**	
0130 - 0145	0	32	7	0	1	1	0	0	9	0	0	0	0	**50**	
0145 - 0200	0	32	6	0	2	0	0	0	11	0	1	0	0	**53**	**218**
0200 - 0215	0	30	5	0	0	0	0	0	9	0	2	0	0	**47**	
0215 - 0230	0	29	6	0	1	0	0	0	7	0	2	0	0	**45**	
0230 - 0245	0	34	6	0	1	0	0	0	15	0	2	0	0	**58**	
0245 - 0300	0	42	9	0	1	1	0	0	12	0	1	0	0	**65**	**215**
0300 - 0315	0	40	9	0	1	0	0	0	13	0	1	0	0	**64**	
0315 - 0330	0	40	8	0	1	1	0	1	13	0	0	0	0	**65**	
0330 - 0345	0	55	10	0	2	1	0	1	14	0	1	0	0	**84**	
0345 - 0400	0	53	11	0	1	0	0	0	13	0	1	0	0	**80**	**293**
0400 - 0415	0	56	15	0	2	1	0	1	19	0	1	0	0	**94**	
0415 - 0430	0	65	14	0	2	0	0	0	18	0	1	0	0	**101**	
0430 - 0445	0	93	20	0	2	1	0	1	18	0	1	0	0	**135**	
0445 - 0500	0	107	23	0	3	0	0	0	17	0	0	0	0	**151**	**481**
0500 - 0515	0	127	32	0	4	1	0	1	24	0	0	0	0	**189**	
0515 - 0530	0	146	33	0	3	1	0	1	24	0	0	0	0	**209**	
0530 - 0545	0	197	50	0	3	1	0	1	23	0	1	0	0	**276**	
0545 - 0600	1	206	49	0	5	1	0	0	26	0	1	0	0	**289**	**962**
0600 - 0615	0	196	53	0	4	1	0	0	26	0	0	0	0	**280**	
0615 - 0630	1	264	78	0	6	2	0	1	27	0	0	0	0	**379**	
0630 - 0645	0	379	111	1	7	5	0	1	32	0	0	0	0	**536**	
0645 - 0700	1	401	130	0	6	6	0	1	28	0	0	0	0	**574**	**1769**
0700 - 0715	0	388	124	0	6	9	0	1	32	0	1	0	0	**562**	
0715 - 0730	0	437	128	0	9	5	0	2	26	0	1	0	0	**609**	
0730 - 0745	0	433	128	1	8	3	0	1	27	0	0	0	0	**603**	
0745 - 0800	1	422	119	1	9	3	0	1	28	0	1	0	0	**586**	**2360**
0800 - 0815	0	383	114	0	10	4	0	2	29	0	1	0	0	**543**	
0815 - 0830	1	356	105	1	10	3	0	2	32	0	1	0	0	**511**	
0830 - 0845	2	360	119	2	10	3	0	2	33	0	1	0	0	**531**	
0845 - 0900	0	350	102	1	12	4	0	2	35	0	1	0	0	**507**	**2092**
0900 - 0915	0	320	103	1	10	4	0	2	36	1	1	0	0	**478**	
0915 - 0930	0	340	103	1	12	3	0	1	35	0	0	0	0	**496**	
0930 - 0945	1	349	106	1	11	4	0	1	37	0	1	0	0	**511**	
0945 - 1000	1	366	102	1	9	4	0	1	35	0	0	0	0	**519**	**2004**
1000 - 1015	3	344	97	0	12	4	0	3	41	1	0	0	0	**505**	
1015 - 1030	1	354	100	0	12	4	0	2	45	0	0	0	0	**519**	
1030 - 1045	1	362	104	0	10	5	0	3	39	0	0	0	0	**526**	
1045 - 1100	1	363	96	0	11	5	0	3	41	1	0	0	0	**521**	**2070**
1100 - 1115	1	349	95	0	10	3	0	2	41	1	0	0	0	**502**	
1115 - 1130	0	354	103	1	10	3	0	3	40	0	0	0	0	**515**	
1130 - 1145	1	356	109	0	11	4	0	4	40	1	0	0	0	**525**	
1145 - 1200	1	394	117	2	13	4	0	2	47	1	0	0	0	**581**	**2123**
1200 - 1215	1	413	116	0	11	4	0	3	49	1	0	0	0	**600**	
1215 - 1230	1	426	120	0	11	5	0	3	46	1	0	0	0	**612**	
1230 - 1245	1	412	115	1	13	4	0	4	45	1	0	0	0	**597**	
1245 - 1300	1	405	114	1	15	7	0	4	42	0	0	0	0	**590**	**2399**
1300 - 1315	1	406	120	1	11	5	0	3	38	2	1	0	0	**588**	
1315 - 1330	1	416	119	0	14	6	1	3	36	2	0	0	0	**597**	
1330 - 1345	2	435	116	1	11	4	0	4	40	1	0	0	0	**614**	
1345 - 1400	2	420	123	0	13	4	0	2	37	0	0	0	0	**604**	**2402**
1400 - 1415	2	397	106	1	15	6	1	4	32	1	0	0	0	**565**	
1415 - 1430	0	438	115	1	13	3	0	4	33	1	0	0	0	**609**	
1430 - 1445	1	459	122	1	16	5	0	3	34	0	0	0	0	**643**	
1445 - 1500	1	427	113	1	12	7	0	2	34	0	0	0	0	**599**	**2417**
1500 - 1515	1	432	118	1	15	6	0	5	37	0	0	0	0	**616**	
1515 - 1530	1	430	121	1	10	4	0	4	33	0	0	0	0	**605**	
1530 - 1545	1	447	132	0	14	5	0	4	31	0	0	0	0	**635**	
1545 - 1600	1	436	116	0	14	4	0	3	28	0	0	1	0	**603**	**2459**
1600 - 1615	1	449	118	2	14	4	0	4	31	0	1	0	0	**624**	
1615 - 1630	0	454	125	0	13	3	0	5	27	1	0	0	0	**627**	
1630 - 1645	1	429	122	1	13	5	0	3	27	0	0	0	0	**602**	
1645 - 1700	1	429	113	0	12	3	0	3	27	0	0	0	0	**589**	**2442**
1700 - 1715	0	459	121	0	12	4	0	2	23	0	0	0	0	**622**	
1715 - 1730	1	462	105	0	10	3	0	3	24	0	0	0	0	**608**	
1730 - 1745	1	416	112	0	12	2	0	3	27	1	0	0	0	**574**	
1745 - 1800	1	413	103	1	11	2	0	2	23	0	0	0	0	**557**	**2362**
1800 - 1815	1	387	105	1	8	2	0	2	22	1	1	0	0	**530**	
1815 - 1830	2	397	99	0	10	1	0	2	20	0	0	0	0	**532**	
1830 - 1845	0	364	92	0	9	1	0	3	20	1	0	0	0	**490**	
1845 - 1900	0	335	83	1	8	0	0	2	21	1	0	1	0	**452**	**2004**
1900 - 1915	0	304	83	0	6	2	0	2	16	1	0	0	0	**414**	
1915 - 1930	0	289	74	0	8	1	0	1	19	0	1	0	0	**393**	
1930 - 1945	0	258	68	0	6	1	0	1	15	1	0	0	0	**351**	
1945 - 2000	1	256	61	1	4	1	0	1	16	0	0	0	0	**342**	**1499**
2000 - 2015	1	265	63	0	4	1	0	1	16	0	0	0	0	**351**	
2015 - 2030	0	232	44	0	4	1	0	0	16	0	0	0	0	**298**	
2030 - 2045	0	230	36	0	3	1	0	0	14	0	0	0	0	**286**	
2045 - 2100	1	220	34	0	2	0	0	1	14	0	0	0	0	**273**	**1207**
2100 - 2115	0	204	29	0	1	0	0	0	15	0	1	0	0	**251**	
2115 - 2130	0	204	25	0	1	1	0	0	9	0	1	0	0	**242**	
2130 - 2145	0	183	24	0	2	0	0	0	10	0	0	0	0	**220**	
2145 - 2200	0	169	20	0	3	0	0	1	10	0	0	0	0	**204**	**916**
2200 - 2215	0	152	18	0	2	1	0	0	10	0	0	0	0	**184**	
2215 - 2230	0	152	16	0	2	0	0	0	9	0	0	0	0	**179**	
2230 - 2245	0	143	16	0	2	1	0	1	12	0	0	0	0	**175**	
2245 - 2300	0	114	14	0	1	0	0	0	10	0	0	0	0	**139**	**677**
2300 - 2315	0	101	13	0	1	0	0	0	9	0	1	0	0	**126**	
2315 - 2330	0	83	13	0	1	1	0	0	9	0	1	0	0	**107**	
2330 - 2345	0	86	13	0	1	0	0	0	10	0	1	0	0	**112**	
2345 - 0000	0	79	10	0	1	1	0	1	11	0	1	0	0	**103**	**448**

Session Total	52	25804	6776	39	661	227	11	154	2312	32	46	6	0	**36119**
Session Average	0.54	268.79	70.58	0.40	6.89	2.36	0.11	1.60	24.08	0.33	0.48	0.06	0.00	**376.24**
Session Percentage	0.14	71.44	18.76	0.11	1.83	0.63	0.03	0.43	6.40	0.09	0.13	0.02	0.00	

AM Peak Hour	0945 - 1045	0700 - 0800	0645 - 0745	0815 - 0915	0845 - 0945	0630 - 0730	0830 - 0930	0945 - 1045	0945 - 1045	0945 - 1045	0745 - 0845	0615 - 0715	-	**0700 - 0800**
AM Peak Volume	5	1681	510	4	45	25	1	9	160	2	3	0	0	**2360**

Noon Peak Hour	1315 - 1415	1415 - 1515	1445 - 1545	1400 - 1500	1345 - 1445	1430 - 1530	1400 - 1500	1445 - 1545	1145 - 1245	1230 - 1330	1215 - 1315	1245 - 1345	-	**1415 - 1515**
Noon Peak Volume	7	1756	484	4	57	23	2	16	188	5	1	1	0	**2467**

PM Peak Hour	1730 - 1830	1530 - 1630	1530 - 1630	1600 - 1700	1530 - 1630	1500 - 1600	1545 - 1645	1500 - 1600	1500 - 1600	1815 - 1915	1745 - 1845	1500 - 1600	-	**1530 - 1630**
PM Peak Volume	5	1785	490	3	55	19	1	16	129	3	2	1	0	**2490**

Bi-Directional Class Count || Volume Summary 15min

Columbia, SC

Marr Traffic DATA COLLECTION

www.marrtraffic.com

Site 6

I-26 W/Bound On-Ramp,
west of US-76

Date

Sunday, April 21, 2024

Lat/Long

34.028681°, -81.102438°

Weather

Cloudy
66°F

Click here for Detailed Weather

0000 - 2400 (Sunday 24h Session) (04-21-2024)

Volume Summary 15min

	Volume Summary 15min		15min	60min
TIME	EB	WB	Total	Total
0000 - 0015	0	108	**108**	
0015 - 0030	0	121	**121**	
0030 - 0045	0	79	**79**	
0045 - 0100	0	91	**91**	**399**
0100 - 0115	0	102	**102**	
0115 - 0130	0	92	**92**	
0130 - 0145	0	77	**77**	
0145 - 0200	0	66	**66**	**337**
0200 - 0215	0	57	**57**	
0215 - 0230	0	65	**65**	
0230 - 0245	0	53	**53**	
0245 - 0300	0	63	**63**	**238**
0300 - 0315	0	41	**41**	
0315 - 0330	0	42	**42**	
0330 - 0345	0	50	**50**	
0345 - 0400	0	41	**41**	**174**
0400 - 0415	0	50	**50**	
0415 - 0430	0	55	**55**	
0430 - 0445	0	58	**58**	
0445 - 0500	0	82	**82**	**245**
0500 - 0515	0	78	**78**	
0515 - 0530	0	83	**83**	
0530 - 0545	0	94	**94**	
0545 - 0600	0	107	**107**	**362**
0600 - 0615	0	96	**96**	
0615 - 0630	0	141	**141**	
0630 - 0645	0	204	**204**	
0645 - 0700	0	176	**176**	**617**
0700 - 0715	0	162	**162**	
0715 - 0730	0	161	**161**	
0730 - 0745	0	180	**180**	
0745 - 0800	0	200	**200**	**703**
0800 - 0815	0	192	**192**	
0815 - 0830	0	190	**190**	
0830 - 0845	0	232	**232**	
0845 - 0900	0	300	**300**	**914**
0900 - 0915	0	338	**338**	
0915 - 0930	0	349	**349**	
0930 - 0945	0	329	**329**	
0945 - 1000	0	374	**374**	**1390**
1000 - 1015	0	378	**378**	
1015 - 1030	0	428	**428**	
1030 - 1045	0	436	**436**	
1045 - 1100	0	458	**458**	**1700**
1100 - 1115	0	433	**433**	
1115 - 1130	0	425	**425**	
1130 - 1145	0	421	**421**	
1145 - 1200	0	429	**429**	**1708**

	Volume Summary 15min		15min	60min
Time	EB	WB	Total	Total
1200 - 1215	0	500	**500**	
1215 - 1230	0	562	**562**	
1230 - 1245	0	555	**555**	
1245 - 1300	0	597	**597**	**2214**
1300 - 1315	0	609	**609**	
1315 - 1330	0	575	**575**	
1330 - 1345	0	609	**609**	
1345 - 1400	0	604	**604**	**2397**
1400 - 1415	0	411	**411**	
1415 - 1430	0	587	**587**	
1430 - 1445	0	712	**712**	
1445 - 1500	0	620	**620**	**2330**
1500 - 1515	0	592	**592**	
1515 - 1530	0	647	**647**	
1530 - 1545	0	629	**629**	
1545 - 1600	0	534	**534**	**2402**
1600 - 1615	0	560	**560**	
1615 - 1630	0	556	**556**	
1630 - 1645	0	546	**546**	
1645 - 1700	0	486	**486**	**2148**
1700 - 1715	0	590	**590**	
1715 - 1730	0	554	**554**	
1730 - 1745	0	578	**578**	
1745 - 1800	0	529	**529**	**2251**
1800 - 1815	0	488	**488**	
1815 - 1830	0	505	**505**	
1830 - 1845	0	482	**482**	
1845 - 1900	0	446	**446**	**1921**
1900 - 1915	0	417	**417**	
1915 - 1930	0	397	**397**	
1930 - 1945	0	370	**370**	
1945 - 2000	0	341	**341**	**1525**
2000 - 2015	0	341	**341**	
2015 - 2030	0	273	**273**	
2030 - 2045	0	271	**271**	
2045 - 2100	0	282	**282**	**1167**
2100 - 2115	0	250	**250**	
2115 - 2130	0	188	**188**	
2130 - 2145	0	189	**189**	
2145 - 2200	0	231	**231**	**858**
2200 - 2215	0	175	**175**	
2215 - 2230	0	153	**153**	
2230 - 2245	0	140	**140**	
2245 - 2300	0	117	**117**	**585**
2300 - 2315	0	97	**97**	
2315 - 2330	0	100	**100**	
2330 - 2345	0	102	**102**	
2345 - 0000	0	100	**100**	**399**

Session Total	0	28984	**28984**
Session Average	0.00	301.92	**301.92**
Session Percentage	0.00	100.00	

Site 6
I-26 W/Bound On-Ramp,
west of US-76

Date
Monday, April 22, 2024

Lat/Long
34.028681°, -81.102438°

Weather
Mostly Cloudy
57°F

Click here for Detailed Weather

0000 - 2400 (Weekday 24h Session) (04-22-2024)

Volume Summary 15min

TIME	Volume Summary 15min EB	Volume Summary 15min WB	15min Total	60min Total
0000 - 0015	0	49	**49**	
0015 - 0030	0	60	**60**	
0030 - 0045	0	49	**49**	
0045 - 0100	0	59	**59**	**217**
0100 - 0115	0	37	**37**	
0115 - 0130	0	56	**56**	
0130 - 0145	0	32	**32**	
0145 - 0200	0	42	**42**	**167**
0200 - 0215	0	38	**38**	
0215 - 0230	0	33	**33**	
0230 - 0245	0	48	**48**	
0245 - 0300	0	61	**61**	**180**
0300 - 0315	0	50	**50**	
0315 - 0330	0	54	**54**	
0330 - 0345	0	90	**90**	
0345 - 0400	0	75	**75**	**269**
0400 - 0415	0	100	**100**	
0415 - 0430	0	112	**112**	
0430 - 0445	0	139	**139**	
0445 - 0500	0	172	**172**	**523**
0500 - 0515	0	222	**222**	
0515 - 0530	0	230	**230**	
0530 - 0545	0	369	**369**	
0545 - 0600	0	349	**349**	**1170**
0600 - 0615	0	348	**348**	
0615 - 0630	0	465	**465**	
0630 - 0645	0	648	**648**	
0645 - 0700	0	695	**695**	**2156**
0700 - 0715	0	716	**716**	
0715 - 0730	0	751	**751**	
0730 - 0745	0	735	**735**	
0745 - 0800	0	706	**706**	**2908**
0800 - 0815	0	676	**676**	
0815 - 0830	0	591	**591**	
0830 - 0845	0	592	**592**	
0845 - 0900	0	588	**588**	**2447**
0900 - 0915	0	525	**525**	
0915 - 0930	0	511	**511**	
0930 - 0945	0	530	**530**	
0945 - 1000	0	505	**505**	**2071**
1000 - 1015	0	473	**473**	
1015 - 1030	0	487	**487**	
1030 - 1045	0	530	**530**	
1045 - 1100	0	515	**515**	**2005**
1100 - 1115	0	473	**473**	
1115 - 1130	0	488	**488**	
1130 - 1145	0	529	**529**	
1145 - 1200	0	498	**498**	**1988**

Time	Volume Summary 15min EB	Volume Summary 15min WB	15min Total	60min Total
1200 - 1215	0	521	**521**	
1215 - 1230	0	609	**609**	
1230 - 1245	0	563	**563**	
1245 - 1300	0	557	**557**	**2250**
1300 - 1315	0	507	**507**	
1315 - 1330	0	525	**525**	
1330 - 1345	0	607	**607**	
1345 - 1400	0	551	**551**	**2190**
1400 - 1415	0	650	**650**	
1415 - 1430	0	574	**574**	
1430 - 1445	0	643	**643**	
1445 - 1500	0	582	**582**	**2449**
1500 - 1515	0	633	**633**	
1515 - 1530	0	585	**585**	
1530 - 1545	0	605	**605**	
1545 - 1600	0	582	**582**	**2405**
1600 - 1615	0	608	**608**	
1615 - 1630	0	603	**603**	
1630 - 1645	0	552	**552**	
1645 - 1700	0	561	**561**	**2324**
1700 - 1715	0	611	**611**	
1715 - 1730	0	606	**606**	
1730 - 1745	0	579	**579**	
1745 - 1800	0	462	**462**	**2258**
1800 - 1815	0	534	**534**	
1815 - 1830	0	500	**500**	
1830 - 1845	0	431	**431**	
1845 - 1900	0	395	**395**	**1860**
1900 - 1915	0	324	**324**	
1915 - 1930	0	354	**354**	
1930 - 1945	0	279	**279**	
1945 - 2000	0	299	**299**	**1256**
2000 - 2015	0	284	**284**	
2015 - 2030	0	234	**234**	
2030 - 2045	0	238	**238**	
2045 - 2100	0	226	**226**	**982**
2100 - 2115	0	187	**187**	
2115 - 2130	0	229	**229**	
2130 - 2145	0	168	**168**	
2145 - 2200	0	164	**164**	**748**
2200 - 2215	0	157	**157**	
2215 - 2230	0	132	**132**	
2230 - 2245	0	148	**148**	
2245 - 2300	0	111	**111**	**548**
2300 - 2315	0	104	**104**	
2315 - 2330	0	79	**79**	
2330 - 2345	0	76	**76**	
2345 - 0000	0	74	**74**	**333**

Session Total	0	35704	**35704**
Session Average	0.00	371.92	**371.92**
Session Percentage	0.00	100.00	

Site 6
I-26 W/Bound On-Ramp,
west of US-76

Date
Tuesday, April 23, 2024

Lat/Long
34.028681°, -81.102438°

Weather
Fair
58°F

Click here for Detailed Weather

0000 - 2400 (Weekday 24h Session) (04-23-2024)

Volume Summary 15min

TIME	Volume Summary 15min EB	Volume Summary 15min WB	15min Total	60min Total
0000 - 0015	0	69	**69**	
0015 - 0030	0	43	**43**	
0030 - 0045	0	77	**77**	
0045 - 0100	0	48	**48**	**237**
0100 - 0115	0	47	**47**	
0115 - 0130	0	51	**51**	
0130 - 0145	0	34	**34**	
0145 - 0200	0	47	**47**	**179**
0200 - 0215	0	36	**36**	
0215 - 0230	0	46	**46**	
0230 - 0245	0	59	**59**	
0245 - 0300	0	68	**68**	**209**
0300 - 0315	0	64	**64**	
0315 - 0330	0	67	**67**	
0330 - 0345	0	92	**92**	
0345 - 0400	0	82	**82**	**305**
0400 - 0415	0	107	**107**	
0415 - 0430	0	114	**114**	
0430 - 0445	0	151	**151**	
0445 - 0500	0	165	**165**	**537**
0500 - 0515	0	191	**191**	
0515 - 0530	0	254	**254**	
0530 - 0545	0	350	**350**	
0545 - 0600	0	348	**348**	**1143**
0600 - 0615	0	322	**322**	
0615 - 0630	0	479	**479**	
0630 - 0645	0	686	**686**	
0645 - 0700	0	759	**759**	**2246**
0700 - 0715	0	701	**701**	
0715 - 0730	0	789	**789**	
0730 - 0745	0	675	**675**	
0745 - 0800	0	660	**660**	**2825**
0800 - 0815	0	668	**668**	
0815 - 0830	0	626	**626**	
0830 - 0845	0	653	**653**	
0845 - 0900	0	581	**581**	**2528**
0900 - 0915	0	480	**480**	
0915 - 0930	0	497	**497**	
0930 - 0945	0	524	**524**	
0945 - 1000	0	524	**524**	**2025**
1000 - 1015	0	494	**494**	
1015 - 1030	0	516	**516**	
1030 - 1045	0	530	**530**	
1045 - 1100	0	468	**468**	**2008**
1100 - 1115	0	538	**538**	
1115 - 1130	0	498	**498**	
1130 - 1145	0	560	**560**	
1145 - 1200	0	517	**517**	**2113**

Time	Volume Summary 15min EB	Volume Summary 15min WB	15min Total	60min Total
1200 - 1215	0	507	**507**	
1215 - 1230	0	526	**526**	
1230 - 1245	0	560	**560**	
1245 - 1300	0	535	**535**	**2128**
1300 - 1315	0	536	**536**	
1315 - 1330	0	541	**541**	
1330 - 1345	0	552	**552**	
1345 - 1400	0	568	**568**	**2197**
1400 - 1415	0	561	**561**	
1415 - 1430	0	582	**582**	
1430 - 1445	0	541	**541**	
1445 - 1500	0	545	**545**	**2229**
1500 - 1515	0	617	**617**	
1515 - 1530	0	553	**553**	
1530 - 1545	0	617	**617**	
1545 - 1600	0	597	**597**	**2384**
1600 - 1615	0	657	**657**	
1615 - 1630	0	687	**687**	
1630 - 1645	0	671	**671**	
1645 - 1700	0	617	**617**	**2632**
1700 - 1715	0	611	**611**	
1715 - 1730	0	586	**586**	
1730 - 1745	0	555	**555**	
1745 - 1800	0	587	**587**	**2339**
1800 - 1815	0	500	**500**	
1815 - 1830	0	504	**504**	
1830 - 1845	0	508	**508**	
1845 - 1900	0	424	**424**	**1936**
1900 - 1915	0	393	**393**	
1915 - 1930	0	364	**364**	
1930 - 1945	0	304	**304**	
1945 - 2000	0	306	**306**	**1367**
2000 - 2015	0	308	**308**	
2015 - 2030	0	294	**294**	
2030 - 2045	0	255	**255**	
2045 - 2100	0	237	**237**	**1094**
2100 - 2115	0	247	**247**	
2115 - 2130	0	224	**224**	
2130 - 2145	0	206	**206**	
2145 - 2200	0	190	**190**	**867**
2200 - 2215	0	156	**156**	
2215 - 2230	0	180	**180**	
2230 - 2245	0	137	**137**	
2245 - 2300	0	116	**116**	**589**
2300 - 2315	0	108	**108**	
2315 - 2330	0	85	**85**	
2330 - 2345	0	79	**79**	
2345 - 0000	0	96	**96**	**368**

Session Total	0	36485	**36485**
Session Average	0.00	380.05	**380.05**
Session Percentage	0.00	100.00	

Site 6
I-26 W/Bound On-Ramp,
west of US-76

Date
Wednesday, April 24, 2024

Lat/Long
34.028681°, -81.102438°

Weather
Fair
66°F

Click here for Detailed Weather

0000 - 2400 (Weekday 24h Session) (04-24-2024)
Volume Summary 15min

TIME	Volume Summary 15min EB	WB	15min Total	60min Total
0000 - 0015	0	81	**81**	
0015 - 0030	0	59	**59**	
0030 - 0045	0	75	**75**	
0045 - 0100	0	43	**43**	**258**
0100 - 0115	0	48	**48**	
0115 - 0130	0	53	**53**	
0130 - 0145	0	45	**45**	
0145 - 0200	0	40	**40**	**186**
0200 - 0215	0	46	**46**	
0215 - 0230	0	37	**37**	
0230 - 0245	0	50	**50**	
0245 - 0300	0	74	**74**	**207**
0300 - 0315	0	81	**81**	
0315 - 0330	0	77	**77**	
0330 - 0345	0	91	**91**	
0345 - 0400	0	96	**96**	**345**
0400 - 0415	0	112	**112**	
0415 - 0430	0	124	**124**	
0430 - 0445	0	149	**149**	
0445 - 0500	0	161	**161**	**546**
0500 - 0515	0	182	**182**	
0515 - 0530	0	260	**260**	
0530 - 0545	0	310	**310**	
0545 - 0600	0	371	**371**	**1123**
0600 - 0615	0	371	**371**	
0615 - 0630	0	461	**461**	
0630 - 0645	0	666	**666**	
0645 - 0700	0	755	**755**	**2253**
0700 - 0715	0	745	**745**	
0715 - 0730	0	801	**801**	
0730 - 0745	0	790	**790**	
0745 - 0800	0	710	**710**	**3046**
0800 - 0815	0	660	**660**	
0815 - 0830	0	605	**605**	
0830 - 0845	0	548	**548**	
0845 - 0900	0	509	**509**	**2322**
0900 - 0915	0	529	**529**	
0915 - 0930	0	520	**520**	
0930 - 0945	0	536	**536**	
0945 - 1000	0	519	**519**	**2104**
1000 - 1015	0	534	**534**	
1015 - 1030	0	517	**517**	
1030 - 1045	0	448	**448**	
1045 - 1100	0	475	**475**	**1974**
1100 - 1115	0	438	**438**	
1115 - 1130	0	457	**457**	
1130 - 1145	0	443	**443**	
1145 - 1200	0	657	**657**	**1995**

Time	Volume Summary 15min EB	WB	15min Total	60min Total
1200 - 1215	0	680	**680**	
1215 - 1230	0	626	**626**	
1230 - 1245	0	665	**665**	
1245 - 1300	0	608	**608**	**2579**
1300 - 1315	0	558	**558**	
1315 - 1330	0	601	**601**	
1330 - 1345	0	621	**621**	
1345 - 1400	0	613	**613**	**2393**
1400 - 1415	0	546	**546**	
1415 - 1430	0	632	**632**	
1430 - 1445	0	662	**662**	
1445 - 1500	0	568	**568**	**2408**
1500 - 1515	0	588	**588**	
1515 - 1530	0	596	**596**	
1530 - 1545	0	650	**650**	
1545 - 1600	0	628	**628**	**2462**
1600 - 1615	0	687	**687**	
1615 - 1630	0	687	**687**	
1630 - 1645	0	632	**632**	
1645 - 1700	0	643	**643**	**2649**
1700 - 1715	0	666	**666**	
1715 - 1730	0	630	**630**	
1730 - 1745	0	570	**570**	
1745 - 1800	0	557	**557**	**2423**
1800 - 1815	0	531	**531**	
1815 - 1830	0	515	**515**	
1830 - 1845	0	441	**441**	
1845 - 1900	0	425	**425**	**1912**
1900 - 1915	0	385	**385**	
1915 - 1930	0	390	**390**	
1930 - 1945	0	313	**313**	
1945 - 2000	0	308	**308**	**1396**
2000 - 2015	0	381	**381**	
2015 - 2030	0	293	**293**	
2030 - 2045	0	266	**266**	
2045 - 2100	0	267	**267**	**1207**
2100 - 2115	0	248	**248**	
2115 - 2130	0	197	**197**	
2130 - 2145	0	193	**193**	
2145 - 2200	0	172	**172**	**810**
2200 - 2215	0	177	**177**	
2215 - 2230	0	174	**174**	
2230 - 2245	0	165	**165**	
2245 - 2300	0	133	**133**	**649**
2300 - 2315	0	125	**125**	
2315 - 2330	0	95	**95**	
2330 - 2345	0	113	**113**	
2345 - 0000	0	100	**100**	**433**

Session Total	0	37680	**37680**
Session Average	0.00	392.50	**392.50**
Session Percentage	0.00	100.00	

Site 6
I-26 W/Bound On-Ramp,
west of US-76

Date
Thursday, April 25, 2024

Lat/Long
34.028681°, -81.102438°

Weather
Fair
67°F

Click here for Detailed Weather

0000 - 2400 (Weekday 24h Session) (04-25-2024)
Volume Summary 15min

TIME	Volume Summary 15min EB	Volume Summary 15min WB	15min Total	60min Total
0000 - 0015	0	69	**69**	
0015 - 0030	0	74	**74**	
0030 - 0045	0	57	**57**	
0045 - 0100	0	63	**63**	**263**
0100 - 0115	0	71	**71**	
0115 - 0130	0	47	**47**	
0130 - 0145	0	52	**52**	
0145 - 0200	0	54	**54**	**224**
0200 - 0215	0	57	**57**	
0215 - 0230	0	38	**38**	
0230 - 0245	0	53	**53**	
0245 - 0300	0	66	**66**	**214**
0300 - 0315	0	82	**82**	
0315 - 0330	0	63	**63**	
0330 - 0345	0	100	**100**	
0345 - 0400	0	99	**99**	**344**
0400 - 0415	0	117	**117**	
0415 - 0430	0	112	**112**	
0430 - 0445	0	155	**155**	
0445 - 0500	0	162	**162**	**546**
0500 - 0515	0	359	**359**	
0515 - 0530	0	272	**272**	
0530 - 0545	0	344	**344**	
0545 - 0600	0	357	**357**	**1332**
0600 - 0615	0	355	**355**	
0615 - 0630	0	475	**475**	
0630 - 0645	0	687	**687**	
0645 - 0700	0	754	**754**	**2271**
0700 - 0715	0	718	**718**	
0715 - 0730	0	755	**755**	
0730 - 0745	0	733	**733**	
0745 - 0800	0	713	**713**	**2919**
0800 - 0815	0	638	**638**	
0815 - 0830	0	602	**602**	
0830 - 0845	0	634	**634**	
0845 - 0900	0	548	**548**	**2422**
0900 - 0915	0	508	**508**	
0915 - 0930	0	524	**524**	
0930 - 0945	0	528	**528**	
0945 - 1000	0	551	**551**	**2111**
1000 - 1015	0	506	**506**	
1015 - 1030	0	509	**509**	
1030 - 1045	0	521	**521**	
1045 - 1100	0	526	**526**	**2062**
1100 - 1115	0	450	**450**	
1115 - 1130	0	627	**627**	
1130 - 1145	0	553	**553**	
1145 - 1200	0	540	**540**	**2170**

Time	Volume Summary 15min EB	Volume Summary 15min WB	15min Total	60min Total
1200 - 1215	0	632	**632**	
1215 - 1230	0	570	**570**	
1230 - 1245	0	630	**630**	
1245 - 1300	0	621	**621**	**2453**
1300 - 1315	0	625	**625**	
1315 - 1330	0	641	**641**	
1330 - 1345	0	623	**623**	
1345 - 1400	0	643	**643**	**2532**
1400 - 1415	0	638	**638**	
1415 - 1430	0	656	**656**	
1430 - 1445	0	649	**649**	
1445 - 1500	0	621	**621**	**2564**
1500 - 1515	0	667	**667**	
1515 - 1530	0	623	**623**	
1530 - 1545	0	677	**677**	
1545 - 1600	0	639	**639**	**2606**
1600 - 1615	0	693	**693**	
1615 - 1630	0	653	**653**	
1630 - 1645	0	693	**693**	
1645 - 1700	0	632	**632**	**2671**
1700 - 1715	0	650	**650**	
1715 - 1730	0	640	**640**	
1730 - 1745	0	569	**569**	
1745 - 1800	0	607	**607**	**2466**
1800 - 1815	0	583	**583**	
1815 - 1830	0	578	**578**	
1830 - 1845	0	510	**510**	
1845 - 1900	0	477	**477**	**2148**
1900 - 1915	0	466	**466**	
1915 - 1930	0	431	**431**	
1930 - 1945	0	427	**427**	
1945 - 2000	0	412	**412**	**1736**
2000 - 2015	0	368	**368**	
2015 - 2030	0	302	**302**	
2030 - 2045	0	301	**301**	
2045 - 2100	0	275	**275**	**1246**
2100 - 2115	0	296	**296**	
2115 - 2130	0	303	**303**	
2130 - 2145	0	260	**260**	
2145 - 2200	0	190	**190**	**1049**
2200 - 2215	0	168	**168**	
2215 - 2230	0	167	**167**	
2230 - 2245	0	215	**215**	
2245 - 2300	0	160	**160**	**710**
2300 - 2315	0	109	**109**	
2315 - 2330	0	86	**86**	
2330 - 2345	0	157	**157**	
2345 - 0000	0	134	**134**	**486**

Session Total	0	39545	**39545**
Session Average	0.00	411.93	**411.93**
Session Percentage	0.00	100.00	

Site 6
I-26 W/Bound On-Ramp,
west of US-76

Date
Friday, April 26, 2024

Lat/Long
34.028681°, -81.102438°

Weather
Cloudy
69°F

Click here for Detailed Weather

0000 - 2400 (Weekday 24h Session) (04-26-2024)
Volume Summary 15min

TIME	Volume Summary 15min EB	Volume Summary 15min WB	15min Total	60min Total
0000 - 0015	0	73	**73**	
0015 - 0030	0	56	**56**	
0030 - 0045	0	120	**120**	
0045 - 0100	0	68	**68**	**317**
0100 - 0115	0	45	**45**	
0115 - 0130	0	39	**39**	
0130 - 0145	0	57	**57**	
0145 - 0200	0	48	**48**	**189**
0200 - 0215	0	38	**38**	
0215 - 0230	0	39	**39**	
0230 - 0245	0	97	**97**	
0245 - 0300	0	66	**66**	**240**
0300 - 0315	0	66	**66**	
0315 - 0330	0	80	**80**	
0330 - 0345	0	94	**94**	
0345 - 0400	0	92	**92**	**332**
0400 - 0415	0	109	**109**	
0415 - 0430	0	111	**111**	
0430 - 0445	0	185	**185**	
0445 - 0500	0	205	**205**	**610**
0500 - 0515	0	199	**199**	
0515 - 0530	0	239	**239**	
0530 - 0545	0	321	**321**	
0545 - 0600	0	339	**339**	**1098**
0600 - 0615	0	344	**344**	
0615 - 0630	0	428	**428**	
0630 - 0645	0	607	**607**	
0645 - 0700	0	631	**631**	**2010**
0700 - 0715	0	655	**655**	
0715 - 0730	0	743	**743**	
0730 - 0745	0	771	**771**	
0745 - 0800	0	759	**759**	**2928**
0800 - 0815	0	606	**606**	
0815 - 0830	0	565	**565**	
0830 - 0845	0	590	**590**	
0845 - 0900	0	558	**558**	**2319**
0900 - 0915	0	513	**513**	
0915 - 0930	0	589	**589**	
0930 - 0945	0	568	**568**	
0945 - 1000	0	593	**593**	**2263**
1000 - 1015	0	592	**592**	
1015 - 1030	0	619	**619**	
1030 - 1045	0	660	**660**	
1045 - 1100	0	675	**675**	**2546**
1100 - 1115	0	706	**706**	
1115 - 1130	0	628	**628**	
1130 - 1145	0	638	**638**	
1145 - 1200	0	695	**695**	**2667**

Time	Volume Summary 15min EB	Volume Summary 15min WB	15min Total	60min Total
1200 - 1215	0	672	**672**	
1215 - 1230	0	689	**689**	
1230 - 1245	0	623	**623**	
1245 - 1300	0	617	**617**	**2601**
1300 - 1315	0	685	**685**	
1315 - 1330	0	682	**682**	
1330 - 1345	0	666	**666**	
1345 - 1400	0	638	**638**	**2671**
1400 - 1415	0	540	**540**	
1415 - 1430	0	652	**652**	
1430 - 1445	0	697	**697**	
1445 - 1500	0	669	**669**	**2558**
1500 - 1515	0	667	**667**	
1515 - 1530	0	647	**647**	
1530 - 1545	0	672	**672**	
1545 - 1600	0	687	**687**	**2673**
1600 - 1615	0	612	**612**	
1615 - 1630	0	644	**644**	
1630 - 1645	0	618	**618**	
1645 - 1700	0	667	**667**	**2541**
1700 - 1715	0	670	**670**	
1715 - 1730	0	697	**697**	
1730 - 1745	0	694	**694**	
1745 - 1800	0	658	**658**	**2719**
1800 - 1815	0	584	**584**	
1815 - 1830	0	624	**624**	
1830 - 1845	0	549	**549**	
1845 - 1900	0	559	**559**	**2316**
1900 - 1915	0	491	**491**	
1915 - 1930	0	447	**447**	
1930 - 1945	0	373	**373**	
1945 - 2000	0	385	**385**	**1696**
2000 - 2015	0	389	**389**	
2015 - 2030	0	332	**332**	
2030 - 2045	0	334	**334**	
2045 - 2100	0	303	**303**	**1358**
2100 - 2115	0	276	**276**	
2115 - 2130	0	271	**271**	
2130 - 2145	0	271	**271**	
2145 - 2200	0	269	**269**	**1087**
2200 - 2215	0	236	**236**	
2215 - 2230	0	231	**231**	
2230 - 2245	0	191	**191**	
2245 - 2300	0	176	**176**	**834**
2300 - 2315	0	169	**169**	
2315 - 2330	0	153	**153**	
2330 - 2345	0	135	**135**	
2345 - 0000	0	105	**105**	**562**

Session Total	0	41135	**41135**
Session Average	0.00	428.49	**428.49**
Session Percentage	0.00	100.00	

Site 6
I-26 W/Bound On-Ramp,
west of US-76

Date
Saturday, April 27, 2024

Lat/Long
34.028681°, -81.102438°

Weather
Mostly Cloudy
69°F

Click here for Detailed Weather

0000 - 2400 (Saturday 24h Session) (04-27-2024)
Volume Summary 15min

	Volume Summary 15min		15min	60min
TIME	EB	WB	Total	Total
0000 - 0015	0	124	**124**	
0015 - 0030	0	107	**107**	
0030 - 0045	0	101	**101**	
0045 - 0100	0	74	**74**	**406**
0100 - 0115	0	62	**62**	
0115 - 0130	0	54	**54**	
0130 - 0145	0	53	**53**	
0145 - 0200	0	72	**72**	**241**
0200 - 0215	0	56	**56**	
0215 - 0230	0	56	**56**	
0230 - 0245	0	48	**48**	
0245 - 0300	0	60	**60**	**220**
0300 - 0315	0	67	**67**	
0315 - 0330	0	70	**70**	
0330 - 0345	0	70	**70**	
0345 - 0400	0	73	**73**	**280**
0400 - 0415	0	65	**65**	
0415 - 0430	0	76	**76**	
0430 - 0445	0	105	**105**	
0445 - 0500	0	111	**111**	**357**
0500 - 0515	0	94	**94**	
0515 - 0530	0	122	**122**	
0530 - 0545	0	143	**143**	
0545 - 0600	0	149	**149**	**508**
0600 - 0615	0	127	**127**	
0615 - 0630	0	202	**202**	
0630 - 0645	0	255	**255**	
0645 - 0700	0	248	**248**	**832**
0700 - 0715	0	238	**238**	
0715 - 0730	0	260	**260**	
0730 - 0745	0	339	**339**	
0745 - 0800	0	355	**355**	**1192**
0800 - 0815	0	359	**359**	
0815 - 0830	0	396	**396**	
0830 - 0845	0	471	**471**	
0845 - 0900	0	466	**466**	**1692**
0900 - 0915	0	452	**452**	
0915 - 0930	0	485	**485**	
0930 - 0945	0	560	**560**	
0945 - 1000	0	568	**568**	**2065**
1000 - 1015	0	557	**557**	
1015 - 1030	0	556	**556**	
1030 - 1045	0	556	**556**	
1045 - 1100	0	529	**529**	**2198**
1100 - 1115	0	476	**476**	
1115 - 1130	0	481	**481**	
1130 - 1145	0	534	**534**	
1145 - 1200	0	729	**729**	**2220**

	Volume Summary 15min		15min	60min
Time	EB	WB	Total	Total
1200 - 1215	0	687	**687**	
1215 - 1230	0	703	**703**	
1230 - 1245	0	584	**584**	
1245 - 1300	0	595	**595**	**2569**
1300 - 1315	0	593	**593**	
1315 - 1330	0	612	**612**	
1330 - 1345	0	617	**617**	
1345 - 1400	0	609	**609**	**2431**
1400 - 1415	0	609	**609**	
1415 - 1430	0	581	**581**	
1430 - 1445	0	600	**600**	
1445 - 1500	0	590	**590**	**2380**
1500 - 1515	0	545	**545**	
1515 - 1530	0	585	**585**	
1530 - 1545	0	597	**597**	
1545 - 1600	0	556	**556**	**2283**
1600 - 1615	0	548	**548**	
1615 - 1630	0	562	**562**	
1630 - 1645	0	502	**502**	
1645 - 1700	0	514	**514**	**2126**
1700 - 1715	0	557	**557**	
1715 - 1730	0	543	**543**	
1730 - 1745	0	474	**474**	
1745 - 1800	0	502	**502**	**2076**
1800 - 1815	0	487	**487**	
1815 - 1830	0	500	**500**	
1830 - 1845	0	509	**509**	
1845 - 1900	0	438	**438**	**1934**
1900 - 1915	0	419	**419**	
1915 - 1930	0	368	**368**	
1930 - 1945	0	391	**391**	
1945 - 2000	0	341	**341**	**1519**
2000 - 2015	0	384	**384**	
2015 - 2030	0	359	**359**	
2030 - 2045	0	334	**334**	
2045 - 2100	0	319	**319**	**1396**
2100 - 2115	0	255	**255**	
2115 - 2130	0	279	**279**	
2130 - 2145	0	252	**252**	
2145 - 2200	0	210	**210**	**996**
2200 - 2215	0	218	**218**	
2215 - 2230	0	217	**217**	
2230 - 2245	0	228	**228**	
2245 - 2300	0	161	**161**	**824**
2300 - 2315	0	172	**172**	
2315 - 2330	0	153	**153**	
2330 - 2345	0	119	**119**	
2345 - 0000	0	113	**113**	**557**

Session Total	0	33302	**33302**
Session Average	0.00	346.90	**346.90**
Session Percentage	0.00	100.00	

Bi-Directional Class Count || SB WB 60min

Columbia, SC

Marr Traffic DATA COLLECTION

www.marrtraffic.com

Site 6
I-26 W/Bound On-Ramp,
west of US-76

Date
Sunday, April 21, 2024

Lat/Long
34.028681°, -81.102438°

Weather
Cloudy
66°F

Click here for Detailed Weather

0000 - 2400 (Sunday 24h Session) (04-21-2024)
SB WB 60min

	Westbound (Movement 6.1)													
TIME	1	2	3	4	5	6	7	8	9	10	11	12	13	**Total**
0000 - 0100	0	314	77	0	1	0	0	1	5	0	0	1	0	**399**
0100 - 0200	0	259	63	2	1	2	0	0	10	0	0	0	0	**337**
0200 - 0300	0	179	44	0	2	2	0	1	8	0	1	1	0	**238**
0300 - 0400	0	129	32	2	2	0	0	1	7	0	0	1	0	**174**
0400 - 0500	0	185	49	0	1	1	0	0	9	0	0	0	0	**245**
0500 - 0600	0	280	61	3	2	0	0	0	15	0	0	1	0	**362**
0600 - 0700	1	522	65	0	4	2	0	0	23	0	0	0	0	**617**
0700 - 0800	1	553	114	1	6	2	0	0	26	0	0	0	0	**703**
0800 - 0900	0	749	116	2	9	2	0	0	36	0	0	0	0	**914**
0900 - 1000	3	1114	240	0	9	1	0	1	22	0	0	0	0	**1390**
1000 - 1100	1	1394	260	0	16	0	0	2	27	0	0	0	0	**1700**
1100 - 1200	5	1346	307	0	17	2	0	3	27	1	0	0	0	**1708**
1200 - 1300	2	1763	393	1	19	2	0	0	33	1	0	0	0	**2214**
1300 - 1400	1	1900	431	2	17	5	0	1	40	0	0	0	0	**2397**
1400 - 1500	0	1888	396	3	11	1	1	1	29	0	0	0	0	**2330**
1500 - 1600	0	1971	360	3	20	2	0	2	41	1	2	0	0	**2402**
1600 - 1700	0	1757	346	4	11	3	0	3	24	0	0	0	0	**2148**
1700 - 1800	0	1792	363	6	26	3	0	3	55	3	0	0	0	**2251**
1800 - 1900	0	1547	300	1	11	2	1	2	53	2	1	1	0	**1921**
1900 - 2000	0	1205	263	4	11	4	0	1	35	0	2	0	0	**1525**
2000 - 2100	0	934	173	0	7	2	0	1	50	0	0	0	0	**1167**
2100 - 2200	0	710	102	0	6	0	0	2	38	0	0	0	0	**858**
2200 - 2300	0	500	46	0	2	4	0	0	32	0	1	0	0	**585**
2300 - 2400	0	317	37	0	2	2	0	2	37	0	2	0	0	**399**

Session Total	14	23308	4638	34	213	44	2	27	682	8	9	5	0	**28984**
Session Average	0.58	971.17	193.25	1.42	8.88	1.83	0.08	1.13	28.42	0.33	0.38	0.21	0.00	**1207.67**
Session Percentage	0.05	80.42	16.00	0.12	0.73	0.15	0.01	0.09	2.35	0.03	0.03	0.02	0.00	

AM Peak Hour	0900 - 1000	0900 - 1000	0900 - 1000	0500 - 0600	0800 - 0900	0600 - 0700	-	0900 - 1000	0800 - 0900	-	-	0500 - 0600	-	**0900 - 1000**
AM Peak Volume	3	1114	240	3	9	2	0	1	36	0	0	1	0	**1390**

Noon Peak Hour	1100 - 1200	1300 - 1400	1300 - 1400	1400 - 1500	1200 - 1300	1300 - 1400	1400 - 1500	1100 - 1200	1300 - 1400	1100 - 1200	-	-	-	**1300 - 1400**
Noon Peak Volume	5	1900	431	3	19	5	1	3	40	1	0	0	0	**2397**

PM Peak Hour	-	1500 - 1600	1700 - 1800	1700 - 1800	1700 - 1800	1900 - 2000	1800 - 1900	1600 - 1700	1700 - 1800	1700 - 1800	1500 - 1600	1800 - 1900	-	**1500 - 1600**
PM Peak Volume	0	1971	363	6	26	4	1	3	55	3	2	1	0	**2402**

Site 6
I-26 W/Bound On-Ramp,
west of US-76

Date
Monday, April 22, 2024

Lat/Long
34.028681°, -81.102438°

Weather
Mostly Cloudy
57°F

Click here for Detailed Weather

0000 - 2400 (Weekday 24h Session) (04-22-2024)
SB WB 60min

	Westbound (Movement 6.1)													
TIME	1	2	3	4	5	6	7	8	9	10	11	12	13	**Total**
0000 - 0100	0	152	29	0	4	0	0	0	30	2	0	0	0	**217**
0100 - 0200	0	101	29	0	0	0	0	0	37	0	0	0	0	**167**
0200 - 0300	0	107	23	0	3	0	0	2	45	0	0	0	0	**180**
0300 - 0400	0	163	56	0	4	2	0	1	43	0	0	0	0	**269**
0400 - 0500	0	317	111	0	7	4	0	1	83	0	0	0	0	**523**
0500 - 0600	0	763	277	0	16	2	0	0	109	3	0	0	0	**1170**
0600 - 0700	2	1515	469	1	30	18	2	2	116	1	0	0	0	**2156**
0700 - 0800	2	2033	668	1	45	22	3	8	122	2	2	0	0	**2908**
0800 - 0900	1	1670	516	5	49	18	1	12	170	3	2	0	0	**2447**
0900 - 1000	1	1410	393	7	63	14	1	8	173	1	0	0	0	**2071**
1000 - 1100	0	1329	368	2	52	19	0	16	216	3	0	0	0	**2005**
1100 - 1200	1	1334	374	2	48	12	1	10	201	5	0	0	0	**1988**
1200 - 1300	4	1455	458	1	55	25	1	16	233	1	0	1	0	**2250**
1300 - 1400	6	1410	474	1	55	17	6	20	196	4	0	1	0	**2190**
1400 - 1500	4	1629	497	1	80	27	5	17	187	1	0	1	0	**2449**
1500 - 1600	0	1620	488	2	70	25	1	17	177	3	0	2	0	**2405**
1600 - 1700	0	1609	471	8	61	14	0	12	148	0	1	0	0	**2324**
1700 - 1800	2	1613	475	0	45	11	1	8	101	2	0	0	0	**2258**
1800 - 1900	2	1300	388	1	31	5	0	11	116	1	4	1	0	**1860**
1900 - 2000	1	874	263	0	18	4	0	10	80	3	3	0	0	**1256**
2000 - 2100	3	740	151	0	11	3	0	4	68	1	1	0	0	**982**
2100 - 2200	0	588	91	1	4	6	0	5	50	0	3	0	0	**748**
2200 - 2300	0	450	42	0	1	2	0	2	51	0	0	0	0	**548**
2300 - 2400	0	240	37	0	2	2	0	1	47	0	4	0	0	**333**

Session Total	29	24422	7148	33	754	252	22	183	2799	36	20	6	0	**35704**
Session Average	1.21	1017.58	297.83	1.38	31.42	10.50	0.92	7.63	116.63	1.50	0.83	0.25	0.00	**1487.67**
Session Percentage	0.08	68.40	20.02	0.09	2.11	0.71	0.06	0.51	7.84	0.10	0.06	0.02	0.00	

AM Peak Hour	0600 - 0700	0700 - 0800	0700 - 0800	0900 - 1000	0900 - 1000	0700 - 0800	0700 - 0800	0800 - 0900	0900 - 1000	0500 - 0600	0700 - 0800	-	-	**0700 - 0800**
AM Peak Volume	2	2033	668	7	63	22	3	12	173	3	2	0	0	**2908**

Noon Peak Hour	1300 - 1400	1400 - 1500	1400 - 1500	1000 - 1100	1400 - 1500	1400 - 1500	1300 - 1400	1300 - 1400	1200 - 1300	1100 - 1200	-	1200 - 1300	-	**1400 - 1500**
Noon Peak Volume	6	1629	497	2	80	27	6	20	233	5	0	1	0	**2449**

PM Peak Hour	1700 - 1800	1500 - 1600	1500 - 1600	1600 - 1700	1500 - 1600	1500 - 1600	1500 - 1600	1500 - 1600	1500 - 1600	1500 - 1600	1800 - 1900	1500 - 1600	-	**1500 - 1600**
PM Peak Volume	2	1620	488	8	70	25	1	17	177	3	4	2	0	**2405**

Site 6
I-26 W/Bound On-Ramp,
west of US-76

Date
Tuesday, April 23, 2024

Lat/Long
34.028681°, -81.102438°

Weather
Fair
58°F

Click here for Detailed Weather

0000 - 2400 (Weekday 24h Session) (04-23-2024)
SB WB 60min

	Westbound (Movement 6.1)													
TIME	1	2	3	4	5	6	7	8	9	10	11	12	13	**Total**
0000 - 0100	1	142	32	1	7	1	0	3	41	0	9	0	0	**237**
0100 - 0200	0	90	20	0	9	4	0	0	54	0	2	0	0	**179**
0200 - 0300	0	114	25	0	6	1	0	2	56	0	5	0	0	**209**
0300 - 0400	0	178	40	0	8	8	0	5	64	0	2	0	0	**305**
0400 - 0500	0	346	82	0	8	1	0	5	88	2	5	0	0	**537**
0500 - 0600	1	792	185	0	18	5	0	5	131	2	4	0	0	**1143**
0600 - 0700	1	1548	489	2	29	20	0	7	144	1	4	1	0	**2246**
0700 - 0800	2	2007	603	4	45	32	0	5	125	0	1	1	0	**2825**
0800 - 0900	2	1640	593	5	76	14	1	10	184	0	3	0	0	**2528**
0900 - 1000	0	1318	439	3	70	16	0	7	168	1	2	1	0	**2025**
1000 - 1100	2	1232	428	3	71	24	3	9	231	3	2	0	0	**2008**
1100 - 1200	2	1390	384	3	58	15	0	9	248	2	0	2	0	**2113**
1200 - 1300	1	1371	403	4	78	31	1	21	214	3	1	0	0	**2128**
1300 - 1400	7	1408	438	2	72	25	0	11	221	9	4	0	0	**2197**
1400 - 1500	2	1485	411	3	85	28	6	20	182	6	1	0	0	**2229**
1500 - 1600	1	1551	521	3	85	26	2	30	163	2	0	0	0	**2384**
1600 - 1700	2	1746	545	4	89	26	4	27	184	4	1	0	0	**2632**
1700 - 1800	3	1637	436	1	82	12	1	18	145	3	1	0	0	**2339**
1800 - 1900	6	1337	418	3	53	8	0	18	80	9	3	1	0	**1936**
1900 - 2000	0	958	268	1	28	4	0	6	91	6	2	3	0	**1367**
2000 - 2100	0	807	189	0	8	4	0	5	74	6	1	0	0	**1094**
2100 - 2200	0	701	94	0	8	3	0	1	51	4	5	0	0	**867**
2200 - 2300	0	452	62	1	8	2	0	1	56	4	3	0	0	**589**
2300 - 2400	1	262	45	0	6	1	0	4	38	3	8	0	0	**368**

Session Total	34	24512	7150	43	1007	311	18	229	3033	70	69	9	0	**36485**
Session Average	1.42	1021.33	297.92	1.79	41.96	12.96	0.75	9.54	126.38	2.92	2.88	0.38	0.00	**1520.21**
Session Percentage	0.09	67.18	19.60	0.12	2.76	0.85	0.05	0.63	8.31	0.19	0.19	0.02	0.00	

AM Peak Hour	0700 - 0800	0700 - 0800	0700 - 0800	0800 - 0900	0800 - 0900	0700 - 0800	0800 - 0900	0800 - 0900	0800 - 0900	0500 - 0600	0500 - 0600	0600 - 0700	-	**0700 - 0800**
AM Peak Hour Volume	2	2007	603	5	76	32	1	10	184	2	4	1	0	**2825**

Noon Peak Hour	1300 - 1400	1400 - 1500	1300 - 1400	1200 - 1300	1400 - 1500	1200 - 1300	1400 - 1500	1200 - 1300	1100 - 1200	1300 - 1400	1300 - 1400	1100 - 1200	-	**1400 - 1500**
Noon Peak Hour Volume	7	1485	438	4	85	31	6	21	248	9	4	2	0	**2229**

PM Peak Hour	1800 - 1900	1600 - 1700	1600 - 1700	1600 - 1700	1600 - 1700	1500 - 1600	1600 - 1700	1500 - 1600	1600 - 1700	1800 - 1900	1800 - 1900	1900 - 2000	-	**1600 - 1700**
PM Peak Hour Volume	6	1746	545	4	89	26	4	30	184	9	3	3	0	**2632**

Site 6
I-26 W/Bound On-Ramp,
west of US-76

Date
Wednesday, April 24, 2024

Lat/Long
34.028681°, -81.102438°

Weather
Fair
66°F

Click here for Detailed Weather

0000 - 2400 (Weekday 24h Session) (04-24-2024)
SB WB 60min

	Westbound (Movement 6.1)													
TIME	1	2	3	4	5	6	7	8	9	10	11	12	13	**Total**
0000 - 0100	0	179	23	0	3	1	0	0	51	0	1	0	0	**258**
0100 - 0200	0	108	11	0	4	2	0	1	60	0	0	0	0	**186**
0200 - 0300	0	130	18	0	2	2	0	0	50	0	5	0	0	**207**
0300 - 0400	0	223	30	0	5	3	0	0	77	0	7	0	0	**345**
0400 - 0500	0	360	76	0	11	8	0	0	89	0	2	0	0	**546**
0500 - 0600	0	807	166	0	17	7	0	1	121	0	4	0	0	**1123**
0600 - 0700	2	1498	526	0	39	21	0	2	164	1	0	0	0	**2253**
0700 - 0800	2	2144	669	1	39	23	0	7	156	1	4	0	0	**3046**
0800 - 0900	1	1525	538	5	48	20	0	13	166	0	6	0	0	**2322**
0900 - 1000	2	1288	531	6	49	20	0	12	192	0	4	0	0	**2104**
1000 - 1100	2	1245	460	1	46	26	0	15	178	1	0	0	0	**1974**
1100 - 1200	0	1216	471	6	47	21	0	17	217	0	0	0	0	**1995**
1200 - 1300	3	1648	506	0	60	21	0	21	313	6	0	1	0	**2579**
1300 - 1400	6	1555	512	1	60	22	1	16	209	9	1	1	0	**2393**
1400 - 1500	9	1598	485	8	69	29	0	19	185	4	0	2	0	**2408**
1500 - 1600	4	1675	487	3	65	25	0	21	177	1	1	3	0	**2462**
1600 - 1700	7	1835	534	1	72	17	0	24	157	1	0	1	0	**2649**
1700 - 1800	0	1762	464	0	47	17	3	12	116	1	1	0	0	**2423**
1800 - 1900	2	1341	395	2	36	3	0	10	116	4	2	1	0	**1912**
1900 - 2000	3	981	291	0	42	7	0	5	66	1	0	0	0	**1396**
2000 - 2100	6	924	162	1	22	3	0	3	83	0	3	0	0	**1207**
2100 - 2200	1	670	62	2	8	0	0	1	63	0	3	0	0	**810**
2200 - 2300	2	540	41	1	8	1	0	1	54	0	1	0	0	**649**
2300 - 2400	2	350	23	1	10	0	0	0	42	0	5	0	0	**433**

Session Total	54	25602	7481	39	809	299	4	201	3102	30	50	9	0	**37680**
Session Average	2.25	1066.75	311.71	1.63	33.71	12.46	0.17	8.38	129.25	1.25	2.08	0.38	0.00	**1570.00**
Session Percentage	0.14	67.95	19.85	0.10	2.15	0.79	0.01	0.53	8.23	0.08	0.13	0.02	0.00	

AM Peak Hour	0600 - 0700	0700 - 0800	0700 - 0800	0900 - 1000	0900 - 1000	0700 - 0800	-	0800 - 0900	0900 - 1000	0600 - 0700	0800 - 0900	-	-	**0700 - 0800**
AM Peak Hour Volume	2	2144	669	6	49	23	0	13	192	1	6	0	0	**3046**

Noon Peak Hour	1400 - 1500	1200 - 1300	1300 - 1400	1400 - 1500	1400 - 1500	1400 - 1500	1300 - 1400	1200 - 1300	1200 - 1300	1300 - 1400	1300 - 1400	1400 - 1500	-	**1200 - 1300**
Noon Peak Hour Volume	9	1648	512	8	69	29	1	21	313	9	1	2	0	**2579**

PM Peak Hour	1600 - 1700	1600 - 1700	1600 - 1700	1500 - 1600	1600 - 1700	1500 - 1600	1700 - 1800	1600 - 1700	1500 - 1600	1800 - 1900	1800 - 1900	1500 - 1600	-	**1600 - 1700**
PM Peak Hour Volume	7	1835	534	3	72	25	3	24	177	4	2	3	0	**2649**

Site 6
I-26 W/Bound On-Ramp,
west of US-76

Date
Thursday, April 25, 2024

Lat/Long
34.028681°, -81.102438°

Weather
Fair
67°F

Click here for Detailed Weather

0000 - 2400 (Weekday 24h Session) (04-25-2024)
SB WB 60min

	Westbound (Movement 6.1)													
TIME	1	2	3	4	5	6	7	8	9	10	11	12	13	**Total**
0000 - 0100	0	142	45	2	2	2	0	2	62	0	6	0	0	**263**
0100 - 0200	0	120	34	0	3	1	0	1	55	0	10	0	0	**224**
0200 - 0300	0	114	22	0	7	0	0	1	60	0	10	0	0	**214**
0300 - 0400	0	207	49	0	5	0	0	3	72	0	8	0	0	**344**
0400 - 0500	0	350	64	0	16	2	0	4	107	0	3	0	0	**546**
0500 - 0600	0	957	182	0	21	3	0	5	161	0	3	0	0	**1332**
0600 - 0700	3	1527	530	2	26	15	0	3	162	1	1	1	0	**2271**
0700 - 0800	4	2049	636	2	45	26	0	6	146	1	4	0	0	**2919**
0800 - 0900	0	1629	551	3	52	18	0	8	155	2	4	0	0	**2422**
0900 - 1000	2	1322	502	6	41	26	1	3	205	1	2	0	0	**2111**
1000 - 1100	1	1325	429	2	46	20	0	9	222	7	1	0	0	**2062**
1100 - 1200	3	1369	494	2	50	20	1	14	213	4	0	0	0	**2170**
1200 - 1300	1	1606	472	4	68	28	0	36	228	6	4	0	0	**2453**
1300 - 1400	5	1729	475	5	60	25	0	27	198	7	1	0	0	**2532**
1400 - 1500	4	1767	468	6	76	30	0	31	175	6	1	0	0	**2564**
1500 - 1600	6	1721	562	5	66	31	0	32	182	0	1	0	0	**2606**
1600 - 1700	3	1846	552	3	60	28	0	27	146	5	1	0	0	**2671**
1700 - 1800	1	1781	460	1	54	18	0	22	128	1	0	0	0	**2466**
1800 - 1900	4	1528	424	3	46	7	1	8	123	2	1	1	0	**2148**
1900 - 2000	3	1239	354	1	34	6	0	4	91	3	1	0	0	**1736**
2000 - 2100	4	1026	118	0	16	3	0	0	77	0	2	0	0	**1246**
2100 - 2200	1	935	43	0	11	0	0	0	57	0	2	0	0	**1049**
2200 - 2300	1	622	28	1	12	3	0	0	41	0	2	0	0	**710**
2300 - 2400	0	397	20	0	6	3	0	0	55	0	5	0	0	**486**

Session Total	46	27308	7514	48	823	315	3	246	3121	46	73	2	0	**39545**
Session Average	1.92	1137.83	313.08	2.00	34.29	13.13	0.13	10.25	130.04	1.92	3.04	0.08	0.00	**1647.71**
Session Percentage	0.12	69.06	19.00	0.12	2.08	0.80	0.01	0.62	7.89	0.12	0.18	0.01	0.00	

AM Peak Hour	0700 - 0800	0700 - 0800	0700 - 0800	0900 - 1000	0800 - 0900	0700 - 0800	0900 - 1000	0800 - 0900	0900 - 1000	0800 - 0900	0700 - 0800	0600 - 0700	-	**0700 - 0800**
AM Peak Hour Volume	4	2049	636	6	52	26	1	8	205	2	4	1	0	**2919**

Noon Peak Hour	1300 - 1400	1400 - 1500	1100 - 1200	1400 - 1500	1400 - 1500	1400 - 1500	1100 - 1200	1200 - 1300	1200 - 1300	1000 - 1100	1200 - 1300	-	-	**1400 - 1500**
Noon Peak Hour Volume	5	1767	494	6	76	30	1	36	228	7	4	0	0	**2564**

PM Peak Hour	1500 - 1600	1600 - 1700	1500 - 1600	1500 - 1600	1500 - 1600	1500 - 1600	1800 - 1900	1500 - 1600	1500 - 1600	1600 - 1700	1500 - 1600	1800 - 1900	-	**1600 - 1700**
PM Peak Hour Volume	6	1846	562	5	66	31	1	32	182	5	1	1	0	**2671**

Site 6
I-26 W/Bound On-Ramp,
west of US-76

Date
Friday, April 26, 2024

Lat/Long
34.028681°, -81.102438°

Weather
Cloudy
69°F

Click here for Detailed Weather

0000 - 2400 (Weekday 24h Session) (04-26-2024)
SB WB 60min

	Westbound (Movement 6.1)													
TIME	1	2	3	4	5	6	7	8	9	10	11	12	13	**Total**
0000 - 0100	0	195	54	0	7	2	0	0	50	0	9	0	0	**317**
0100 - 0200	0	109	26	0	5	2	0	1	40	0	6	0	0	**189**
0200 - 0300	0	134	25	0	3	3	0	1	61	0	13	0	0	**240**
0300 - 0400	0	202	28	2	5	3	2	2	82	0	6	0	0	**332**
0400 - 0500	2	405	83	0	11	4	0	0	101	0	4	0	0	**610**
0500 - 0600	3	747	199	0	21	6	0	2	117	0	3	0	0	**1098**
0600 - 0700	2	1449	365	1	24	12	2	4	149	1	1	0	0	**2010**
0700 - 0800	3	2109	566	4	32	33	1	6	168	3	3	0	0	**2928**
0800 - 0900	4	1641	458	4	39	15	4	7	144	0	3	0	0	**2319**
0900 - 1000	3	1598	409	3	30	20	4	10	179	4	3	0	0	**2263**
1000 - 1100	5	1730	456	1	62	28	5	15	235	7	2	0	0	**2546**
1100 - 1200	1	1780	526	6	68	27	5	21	230	3	0	0	0	**2667**
1200 - 1300	5	1773	528	4	45	24	2	13	199	7	1	0	0	**2601**
1300 - 1400	4	1877	553	3	43	26	1	7	153	3	0	1	0	**2671**
1400 - 1500	10	1794	520	8	51	29	1	7	138	0	0	0	0	**2558**
1500 - 1600	2	1923	538	0	49	23	1	9	124	2	0	2	0	**2673**
1600 - 1700	7	1861	507	2	47	14	0	8	91	0	2	2	0	**2541**
1700 - 1800	6	2037	506	4	45	12	0	12	93	3	0	1	0	**2719**
1800 - 1900	1	1766	419	3	56	3	0	5	61	1	0	1	0	**2316**
1900 - 2000	4	1250	336	4	27	4	0	3	66	1	1	0	0	**1696**
2000 - 2100	1	1060	229	0	18	1	0	5	44	0	0	0	0	**1358**
2100 - 2200	0	876	166	0	6	2	0	0	37	0	0	0	0	**1087**
2200 - 2300	0	664	120	1	7	1	0	3	38	0	0	0	0	**834**
2300 - 2400	0	428	95	0	2	4	0	0	33	0	0	0	0	**562**

Session Total	63	29408	7712	50	703	298	28	141	2633	35	57	7	0	**41135**
Session Average	2.63	1225.33	321.33	2.08	29.29	12.42	1.17	5.88	109.71	1.46	2.38	0.29	0.00	**1713.96**
Session Percentage	0.15	71.49	18.75	0.12	1.71	0.72	0.07	0.34	6.40	0.09	0.14	0.02	0.00	

AM Peak Hour	0800 - 0900	0700 - 0800	0700 - 0800	0700 - 0800	0800 - 0900	0700 - 0800	0800 - 0900	0900 - 1000	0900 - 1000	0900 - 1000	0500 - 0600	-	-	**0700 - 0800**
AM Peak Hour Volume	4	2109	566	4	39	33	4	10	179	4	3	0	0	**2928**

Noon Peak Hour	1400 - 1500	1300 - 1400	1300 - 1400	1400 - 1500	1100 - 1200	1400 - 1500	1000 - 1100	1100 - 1200	1000 - 1100	1000 - 1100	1000 - 1100	1300 - 1400	-	**1300 - 1400**
Noon Peak Hour Volume	10	1877	553	8	68	29	5	21	235	7	2	1	0	**2671**

PM Peak Hour	1600 - 1700	1700 - 1800	1500 - 1600	1700 - 1800	1800 - 1900	1500 - 1600	1500 - 1600	1700 - 1800	1500 - 1600	1700 - 1800	1600 - 1700	1500 - 1600	-	**1700 - 1800**
PM Peak Hour Volume	7	2037	538	4	56	23	1	12	124	3	2	2	0	**2719**

Site 6
I-26 W/Bound On-Ramp,
west of US-76

Date
Saturday, April 27, 2024

Lat/Long
34.028681°, -81.102438°

Weather
Mostly Cloudy
69°F

Click here for Detailed Weather

0000 - 2400 (Saturday 24h Session) (04-27-2024)
SB WB 60min

	Westbound (Movement 6.1)													
TIME	1	2	3	4	5	6	7	8	9	10	11	12	13	**Total**
0000 - 0100	0	322	41	0	1	0	0	0	35	0	7	0	0	**406**
0100 - 0200	1	173	27	0	4	0	0	3	28	0	5	0	0	**241**
0200 - 0300	0	162	21	0	2	0	0	0	24	0	11	0	0	**220**
0300 - 0400	0	207	35	1	3	2	0	1	28	0	3	0	0	**280**
0400 - 0500	1	278	34	0	7	0	0	2	29	0	6	0	0	**357**
0500 - 0600	2	395	76	1	5	1	0	2	25	0	1	0	0	**508**
0600 - 0700	3	627	161	0	6	4	0	0	27	0	4	0	0	**832**
0700 - 0800	0	869	231	3	19	9	0	6	50	0	5	0	0	**1192**
0800 - 0900	13	1289	309	2	18	6	0	8	47	0	0	0	0	**1692**
0900 - 1000	6	1570	388	1	31	7	0	2	59	0	1	0	0	**2065**
1000 - 1100	25	1711	377	0	19	5	0	7	54	0	0	0	0	**2198**
1100 - 1200	5	1739	410	4	16	5	0	2	38	0	1	0	0	**2220**
1200 - 1300	7	1978	494	0	28	5	0	0	57	0	0	0	0	**2569**
1300 - 1400	12	1866	459	2	35	10	0	2	44	0	1	0	0	**2431**
1400 - 1500	4	1891	417	1	21	6	0	1	39	0	0	0	0	**2380**
1500 - 1600	15	1751	451	0	25	2	0	3	36	0	0	0	0	**2283**
1600 - 1700	4	1670	393	2	20	2	0	4	30	0	1	0	0	**2126**
1700 - 1800	10	1627	383	1	12	0	0	0	43	0	0	0	0	**2076**
1800 - 1900	9	1568	308	1	14	0	0	3	31	0	0	0	0	**1934**
1900 - 2000	5	1244	223	1	9	1	0	4	31	0	0	1	0	**1519**
2000 - 2100	1	1142	215	2	10	5	0	0	20	0	1	0	0	**1396**
2100 - 2200	0	844	138	0	4	0	0	1	9	0	0	0	0	**996**
2200 - 2300	0	696	114	0	7	0	0	0	7	0	0	0	0	**824**
2300 - 2400	0	449	83	1	2	0	0	0	22	0	0	0	0	**557**

Session Total	123	26068	5788	23	318	70	0	51	813	0	47	1	0	**33302**
Session Average	5.13	1086.17	241.17	0.96	13.25	2.92	0.00	2.13	33.88	0.00	1.96	0.04	0.00	**1387.58**
Session Percentage	0.37	78.28	17.38	0.07	0.95	0.21	0.00	0.15	2.44	0.00	0.14	0.00	0.00	

AM Peak Hour	0800 - 0900	0900 - 1000	0900 - 1000	0700 - 0800	0900 - 1000	0700 - 0800	-	0800 - 0900	0900 - 1000	-	0700 - 0800	-	-	**0900 - 1000**
AM Peak Hour Volume	13	1570	388	3	31	9	0	8	59	0	5	0	0	**2065**

Noon Peak Hour	1000 - 1100	1200 - 1300	1200 - 1300	1100 - 1200	1300 - 1400	1300 - 1400	-	1000 - 1100	1200 - 1300	-	1100 - 1200	-	-	**1200 - 1300**
Noon Peak Hour Volume	25	1978	494	4	35	10	0	7	57	0	1	0	0	**2569**

PM Peak Hour	1500 - 1600	1500 - 1600	1500 - 1600	1600 - 1700	1500 - 1600	1500 - 1600	-	1600 - 1700	1700 - 1800	-	1600 - 1700	1900 - 2000	-	**1500 - 1600**
PM Peak Hour Volume	15	1751	451	2	25	2	0	4	43	0	1	1	0	**2283**

Bi-Directional Class Count || Volume Summary 60min

Columbia, SC

Marr Traffic DATA COLLECTION

www.marrtraffic.com

Site 6

I-26 W/Bound On-Ramp,
west of US-76

Date

Sunday, April 21, 2024

Lat/Long

34.028681°, -81.102438°

Weather

Cloudy
66°F

Click here for Detailed Weather

0000 - 2400 (Sunday 24h Session) (04-21-2024)

Volume Summary 60min

	Volume Summary 60min		
TIME	EB	WB	**Total**
0000 - 0100	0	399	**399**
0100 - 0200	0	337	**337**
0200 - 0300	0	238	**238**
0300 - 0400	0	174	**174**
0400 - 0500	0	245	**245**
0500 - 0600	0	362	**362**
0600 - 0700	0	617	**617**
0700 - 0800	0	703	**703**
0800 - 0900	0	914	**914**
0900 - 1000	0	1390	**1390**
1000 - 1100	0	1700	**1700**
1100 - 1200	0	1708	**1708**

	Volume Summary 60min		
Time	EB	WB	**Total**
1200 - 1300	0	2214	**2214**
1300 - 1400	0	2397	**2397**
1400 - 1500	0	2330	**2330**
1500 - 1600	0	2402	**2402**
1600 - 1700	0	2148	**2148**
1700 - 1800	0	2251	**2251**
1800 - 1900	0	1921	**1921**
1900 - 2000	0	1525	**1525**
2000 - 2100	0	1167	**1167**
2100 - 2200	0	858	**858**
2200 - 2300	0	585	**585**
2300 - 2400	0	399	**399**

Session Total	0	28984	**28984**
Session Average	0.00	1207.67	**1207.67**
Session Percentage	0.00	100.00	

Site 6

I-26 W/Bound On-Ramp,
west of US-76

Date

Monday, April 22, 2024

Lat/Long

34.028681°, -81.102438°

Weather

Mostly Cloudy
57°F

Click here for Detailed Weather

0000 - 2400 (Weekday 24h Session) (04-22-2024)

Volume Summary 60min

	Volume Summary 60min		
TIME	EB	WB	**Total**
0000 - 0100	0	217	**217**
0100 - 0200	0	167	**167**
0200 - 0300	0	180	**180**
0300 - 0400	0	269	**269**
0400 - 0500	0	523	**523**
0500 - 0600	0	1170	**1170**
0600 - 0700	0	2156	**2156**
0700 - 0800	0	2908	**2908**
0800 - 0900	0	2447	**2447**
0900 - 1000	0	2071	**2071**
1000 - 1100	0	2005	**2005**
1100 - 1200	0	1988	**1988**

Session Total	0	35704	**35704**
Session Average	0.00	1487.67	**1487.67**
Session Percentage	0.00	100.00	

	Volume Summary 60min		
Time	EB	WB	**Total**
1200 - 1300	0	2250	**2250**
1300 - 1400	0	2190	**2190**
1400 - 1500	0	2449	**2449**
1500 - 1600	0	2405	**2405**
1600 - 1700	0	2324	**2324**
1700 - 1800	0	2258	**2258**
1800 - 1900	0	1860	**1860**
1900 - 2000	0	1256	**1256**
2000 - 2100	0	982	**982**
2100 - 2200	0	748	**748**
2200 - 2300	0	548	**548**
2300 - 2400	0	333	**333**

Site 6

I-26 W/Bound On-Ramp,
west of US-76

Date

Tuesday, April 23, 2024

Lat/Long

34.028681°, -81.102438°

Weather

Fair
58°F

Click here for Detailed Weather

0000 - 2400 (Weekday 24h Session) (04-23-2024)

Volume Summary 60min

	Volume Summary 60min		
TIME	EB	WB	**Total**
0000 - 0100	0	237	**237**
0100 - 0200	0	179	**179**
0200 - 0300	0	209	**209**
0300 - 0400	0	305	**305**
0400 - 0500	0	537	**537**
0500 - 0600	0	1143	**1143**
0600 - 0700	0	2246	**2246**
0700 - 0800	0	2825	**2825**
0800 - 0900	0	2528	**2528**
0900 - 1000	0	2025	**2025**
1000 - 1100	0	2008	**2008**
1100 - 1200	0	2113	**2113**

Session Total	0	36485	**36485**
Session Average	0.00	1520.21	**1520.21**
Session Percentage	0.00	100.00	

	Volume Summary 60min		
Time	EB	WB	**Total**
1200 - 1300	0	2128	**2128**
1300 - 1400	0	2197	**2197**
1400 - 1500	0	2229	**2229**
1500 - 1600	0	2384	**2384**
1600 - 1700	0	2632	**2632**
1700 - 1800	0	2339	**2339**
1800 - 1900	0	1936	**1936**
1900 - 2000	0	1367	**1367**
2000 - 2100	0	1094	**1094**
2100 - 2200	0	867	**867**
2200 - 2300	0	589	**589**
2300 - 2400	0	368	**368**

Site 6

I-26 W/Bound On-Ramp,
west of US-76

Date

Wednesday, April 24, 2024

Lat/Long

34.028681°, -81.102438°

Weather

Fair
66°F

Click here for Detailed Weather

0000 - 2400 (Weekday 24h Session) (04-24-2024)

Volume Summary 60min

	Volume Summary 60min		
TIME	EB	WB	**Total**
0000 - 0100	0	258	**258**
0100 - 0200	0	186	**186**
0200 - 0300	0	207	**207**
0300 - 0400	0	345	**345**
0400 - 0500	0	546	**546**
0500 - 0600	0	1123	**1123**
0600 - 0700	0	2253	**2253**
0700 - 0800	0	3046	**3046**
0800 - 0900	0	2322	**2322**
0900 - 1000	0	2104	**2104**
1000 - 1100	0	1974	**1974**
1100 - 1200	0	1995	**1995**

Session Total	0	37680	**37680**
Session Average	0.00	1570.00	**1570.00**
Session Percentage	0.00	100.00	

	Volume Summary 60min		
Time	EB	WB	**Total**
1200 - 1300	0	2579	**2579**
1300 - 1400	0	2393	**2393**
1400 - 1500	0	2408	**2408**
1500 - 1600	0	2462	**2462**
1600 - 1700	0	2649	**2649**
1700 - 1800	0	2423	**2423**
1800 - 1900	0	1912	**1912**
1900 - 2000	0	1396	**1396**
2000 - 2100	0	1207	**1207**
2100 - 2200	0	810	**810**
2200 - 2300	0	649	**649**
2300 - 2400	0	433	**433**

Site 6

I-26 W/Bound On-Ramp,
west of US-76

Date

Thursday, April 25, 2024

Lat/Long

34.028681°, -81.102438°

Weather

Fair
67°F

Click here for Detailed Weather

0000 - 2400 (Weekday 24h Session) (04-25-2024)

Volume Summary 60min

	Volume Summary 60min		
TIME	EB	WB	**Total**
0000 - 0100	0	263	**263**
0100 - 0200	0	224	**224**
0200 - 0300	0	214	**214**
0300 - 0400	0	344	**344**
0400 - 0500	0	546	**546**
0500 - 0600	0	1332	**1332**
0600 - 0700	0	2271	**2271**
0700 - 0800	0	2919	**2919**
0800 - 0900	0	2422	**2422**
0900 - 1000	0	2111	**2111**
1000 - 1100	0	2062	**2062**
1100 - 1200	0	2170	**2170**

Session Total	0	39545	**39545**
Session Average	0.00	1647.71	**1647.71**
Session Percentage	0.00	100.00	

	Volume Summary 60min		
Time	EB	WB	**Total**
1200 - 1300	0	2453	**2453**
1300 - 1400	0	2532	**2532**
1400 - 1500	0	2564	**2564**
1500 - 1600	0	2606	**2606**
1600 - 1700	0	2671	**2671**
1700 - 1800	0	2466	**2466**
1800 - 1900	0	2148	**2148**
1900 - 2000	0	1736	**1736**
2000 - 2100	0	1246	**1246**
2100 - 2200	0	1049	**1049**
2200 - 2300	0	710	**710**
2300 - 2400	0	486	**486**

Site 6

I-26 W/Bound On-Ramp,
west of US-76

Date

Friday, April 26, 2024

Lat/Long

34.028681°, -81.102438°

Weather

Cloudy
69°F

Click here for Detailed Weather

0000 - 2400 (Weekday 24h Session) (04-26-2024)

Volume Summary 60min

	Volume Summary 60min		
TIME	EB	WB	**Total**
0000 - 0100	0	317	**317**
0100 - 0200	0	189	**189**
0200 - 0300	0	240	**240**
0300 - 0400	0	332	**332**
0400 - 0500	0	610	**610**
0500 - 0600	0	1098	**1098**
0600 - 0700	0	2010	**2010**
0700 - 0800	0	2928	**2928**
0800 - 0900	0	2319	**2319**
0900 - 1000	0	2263	**2263**
1000 - 1100	0	2546	**2546**
1100 - 1200	0	2667	**2667**
1200 - 1300	0	2601	**2601**
1300 - 1400	0	2671	**2671**
1400 - 1500	0	2558	**2558**
1500 - 1600	0	2673	**2673**
1600 - 1700	0	2541	**2541**
1700 - 1800	0	2719	**2719**
1800 - 1900	0	2316	**2316**
1900 - 2000	0	1696	**1696**
2000 - 2100	0	1358	**1358**
2100 - 2200	0	1087	**1087**
2200 - 2300	0	834	**834**
2300 - 2400	0	562	**562**
Session Total	0	41135	**41135**
Session Average	0.00	1713.96	**1713.96**
Session Percentage	0.00	100.00	

Site 6

I-26 W/Bound On-Ramp,
west of US-76

Date

Saturday, April 27, 2024

Lat/Long

34.028681°, -81.102438°

Weather

Mostly Cloudy
69°F

Click here for Detailed Weather

0000 - 2400 (Saturday 24h Session) (04-27-2024)

Volume Summary 60min

	Volume Summary 60min		
TIME	EB	WB	**Total**
0000 - 0100	0	406	**406**
0100 - 0200	0	241	**241**
0200 - 0300	0	220	**220**
0300 - 0400	0	280	**280**
0400 - 0500	0	357	**357**
0500 - 0600	0	508	**508**
0600 - 0700	0	832	**832**
0700 - 0800	0	1192	**1192**
0800 - 0900	0	1692	**1692**
0900 - 1000	0	2065	**2065**
1000 - 1100	0	2198	**2198**
1100 - 1200	0	2220	**2220**
1200 - 1300	0	2569	**2569**
1300 - 1400	0	2431	**2431**
1400 - 1500	0	2380	**2380**
1500 - 1600	0	2283	**2283**
1600 - 1700	0	2126	**2126**
1700 - 1800	0	2076	**2076**
1800 - 1900	0	1934	**1934**
1900 - 2000	0	1519	**1519**
2000 - 2100	0	1396	**1396**
2100 - 2200	0	996	**996**
2200 - 2300	0	824	**824**
2300 - 2400	0	557	**557**
Session Total	0	33302	**33302**
Session Average	0.00	1387.58	**1387.58**
Session Percentage	0.00	100.00	

Bi-Directional Class Count || Graphical Analysis SB WB

Columbia, SC

Marr Traffic DATA COLLECTION

www.marrtraffic.com

Site 6

I-26 W/Bound On-Ramp,
west of US-76

Lat/Long

34.028681°, -81.102438°

0000 - 2400 (Weekday 24h Session)

Graphical Analysis SB WB

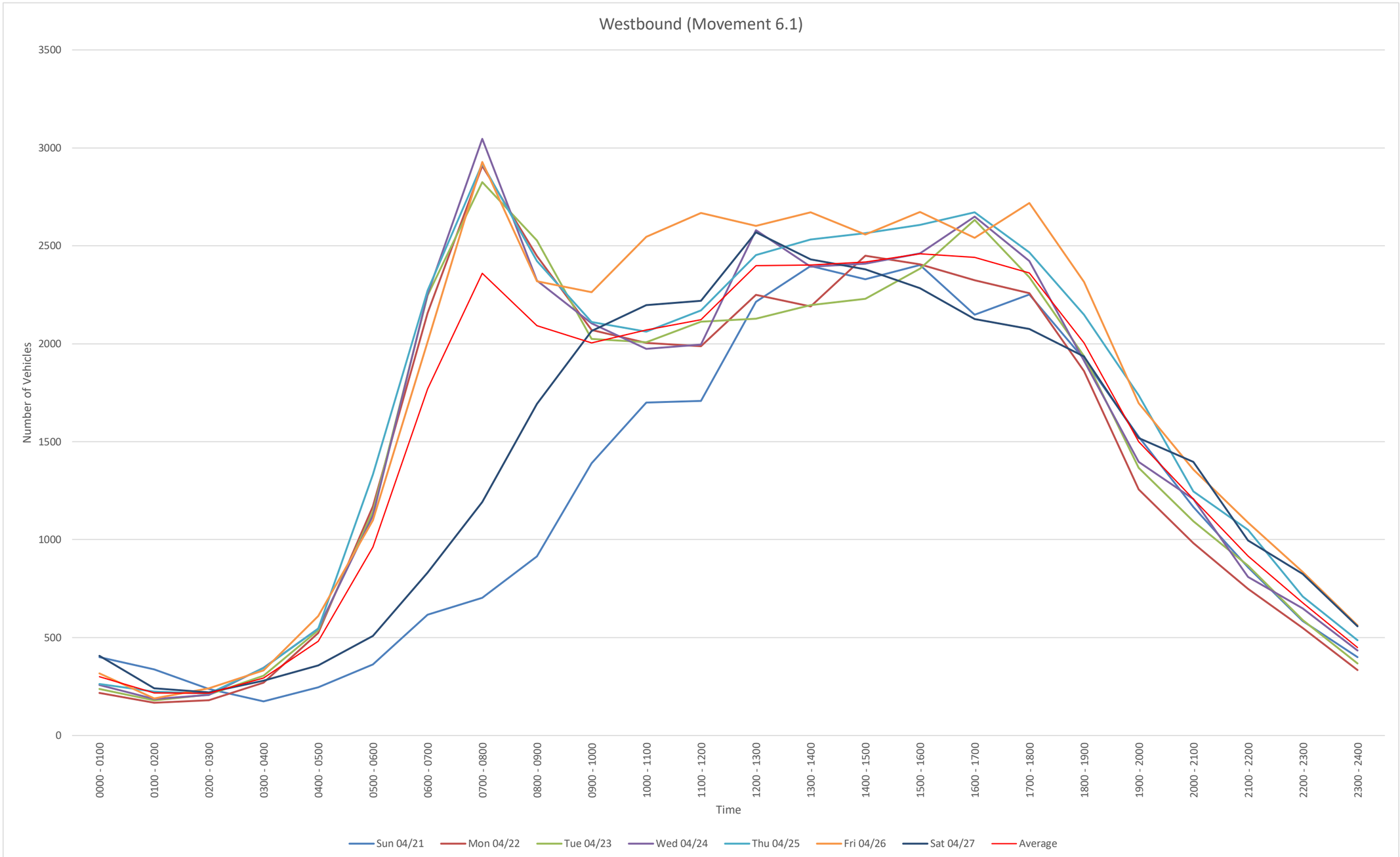

EB
File Name:
Start Date: 4/21/2024
Start Time: 0
Site Code: 6
Station ID: 1
Location 1: I-26 W/Bound On-Ramp, west of US-76
Location 2:

Date	Time	1	2	3	4	5	6	7	8	9	10	11	12	13
4/21/2024	12:00 AM	0	0	0	0	0	0	0	0	0	0	0	0	0
4/21/2024	12:15 AM	0	0	0	0	0	0	0	0	0	0	0	0	0
4/21/2024	12:30 AM	0	0	0	0	0	0	0	0	0	0	0	0	0
4/21/2024	12:45 AM	0	0	0	0	0	0	0	0	0	0	0	0	0
4/21/2024	1:00 AM	0	0	0	0	0	0	0	0	0	0	0	0	0
4/21/2024	1:15 AM	0	0	0	0	0	0	0	0	0	0	0	0	0
4/21/2024	1:30 AM	0	0	0	0	0	0	0	0	0	0	0	0	0
4/21/2024	1:45 AM	0	0	0	0	0	0	0	0	0	0	0	0	0
4/21/2024	2:00 AM	0	0	0	0	0	0	0	0	0	0	0	0	0
4/21/2024	2:15 AM	0	0	0	0	0	0	0	0	0	0	0	0	0
4/21/2024	2:30 AM	0	0	0	0	0	0	0	0	0	0	0	0	0
4/21/2024	2:45 AM	0	0	0	0	0	0	0	0	0	0	0	0	0
4/21/2024	3:00 AM	0	0	0	0	0	0	0	0	0	0	0	0	0
4/21/2024	3:15 AM	0	0	0	0	0	0	0	0	0	0	0	0	0
4/21/2024	3:30 AM	0	0	0	0	0	0	0	0	0	0	0	0	0
4/21/2024	3:45 AM	0	0	0	0	0	0	0	0	0	0	0	0	0
4/21/2024	4:00 AM	0	0	0	0	0	0	0	0	0	0	0	0	0
4/21/2024	4:15 AM	0	0	0	0	0	0	0	0	0	0	0	0	0
4/21/2024	4:30 AM	0	0	0	0	0	0	0	0	0	0	0	0	0
4/21/2024	4:45 AM	0	0	0	0	0	0	0	0	0	0	0	0	0
4/21/2024	5:00 AM	0	0	0	0	0	0	0	0	0	0	0	0	0
4/21/2024	5:15 AM	0	0	0	0	0	0	0	0	0	0	0	0	0
4/21/2024	5:30 AM	0	0	0	0	0	0	0	0	0	0	0	0	0
4/21/2024	5:45 AM	0	0	0	0	0	0	0	0	0	0	0	0	0
4/21/2024	6:00 AM	0	0	0	0	0	0	0	0	0	0	0	0	0
4/21/2024	6:15 AM	0	0	0	0	0	0	0	0	0	0	0	0	0
4/21/2024	6:30 AM	0	0	0	0	0	0	0	0	0	0	0	0	0
4/21/2024	6:45 AM	0	0	0	0	0	0	0	0	0	0	0	0	0
4/21/2024	7:00 AM	0	0	0	0	0	0	0	0	0	0	0	0	0
4/21/2024	7:15 AM	0	0	0	0	0	0	0	0	0	0	0	0	0
4/21/2024	7:30 AM	0	0	0	0	0	0	0	0	0	0	0	0	0
4/21/2024	7:45 AM	0	0	0	0	0	0	0	0	0	0	0	0	0
4/21/2024	8:00 AM	0	0	0	0	0	0	0	0	0	0	0	0	0
4/21/2024	8:15 AM	0	0	0	0	0	0	0	0	0	0	0	0	0
4/21/2024	8:30 AM	0	0	0	0	0	0	0	0	0	0	0	0	0
4/21/2024	8:45 AM	0	0	0	0	0	0	0	0	0	0	0	0	0
4/21/2024	9:00 AM	0	0	0	0	0	0	0	0	0	0	0	0	0
4/21/2024	9:15 AM	0	0	0	0	0	0	0	0	0	0	0	0	0
4/21/2024	9:30 AM	0	0	0	0	0	0	0	0	0	0	0	0	0
4/21/2024	9:45 AM	0	0	0	0	0	0	0	0	0	0	0	0	0
4/21/2024	10:00 AM	0	0	0	0	0	0	0	0	0	0	0	0	0
4/21/2024	10:15 AM	0	0	0	0	0	0	0	0	0	0	0	0	0
4/21/2024	10:30 AM	0	0	0	0	0	0	0	0	0	0	0	0	0
4/21/2024	10:45 AM	0	0	0	0	0	0	0	0	0	0	0	0	0
4/21/2024	11:00 AM	0	0	0	0	0	0	0	0	0	0	0	0	0
4/21/2024	11:15 AM	0	0	0	0	0	0	0	0	0	0	0	0	0
4/21/2024	11:30 AM	0	0	0	0	0	0	0	0	0	0	0	0	0
4/21/2024	11:45 AM	0	0	0	0	0	0	0	0	0	0	0	0	0
4/21/2024	12:00 PM	0	0	0	0	0	0	0	0	0	0	0	0	0
4/21/2024	12:15 PM	0	0	0	0	0	0	0	0	0	0	0	0	0
4/21/2024	12:30 PM	0	0	0	0	0	0	0	0	0	0	0	0	0
4/21/2024	12:45 PM	0	0	0	0	0	0	0	0	0	0	0	0	0
4/21/2024	1:00 PM	0	0	0	0	0	0	0	0	0	0	0	0	0
4/21/2024	1:15 PM	0	0	0	0	0	0	0	0	0	0	0	0	0
4/21/2024	1:30 PM	0	0	0	0	0	0	0	0	0	0	0	0	0
4/21/2024	1:45 PM	0	0	0	0	0	0	0	0	0	0	0	0	0
4/21/2024	2:00 PM	0	0	0	0	0	0	0	0	0	0	0	0	0
4/21/2024	2:15 PM	0	0	0	0	0	0	0	0	0	0	0	0	0
4/21/2024	2:30 PM	0	0	0	0	0	0	0	0	0	0	0	0	0
4/21/2024	2:45 PM	0	0	0	0	0	0	0	0	0	0	0	0	0
4/21/2024	3:00 PM	0	0	0	0	0	0	0	0	0	0	0	0	0
4/21/2024	3:15 PM	0	0	0	0	0	0	0	0	0	0	0	0	0
4/21/2024	3:30 PM	0	0	0	0	0	0	0	0	0	0	0	0	0
4/21/2024	3:45 PM	0	0	0	0	0	0	0	0	0	0	0	0	0
4/21/2024	4:00 PM	0	0	0	0	0	0	0	0	0	0	0	0	0
4/21/2024	4:15 PM	0	0	0	0	0	0	0	0	0	0	0	0	0
4/21/2024	4:30 PM	0	0	0	0	0	0	0	0	0	0	0	0	0
4/21/2024	4:45 PM	0	0	0	0	0	0	0	0	0	0	0	0	0
4/21/2024	5:00 PM	0	0	0	0	0	0	0	0	0	0	0	0	0
4/21/2024	5:15 PM	0	0	0	0	0	0	0	0	0	0	0	0	0
4/21/2024	5:30 PM	0	0	0	0	0	0	0	0	0	0	0	0	0
4/21/2024	5:45 PM	0	0	0	0	0	0	0	0	0	0	0	0	0
4/21/2024	6:00 PM	0	0	0	0	0	0	0	0	0	0	0	0	0
4/21/2024	6:15 PM	0	0	0	0	0	0	0	0	0	0	0	0	0
4/21/2024	6:30 PM	0	0	0	0	0	0	0	0	0	0	0	0	0
4/21/2024	6:45 PM	0	0	0	0	0	0	0	0	0	0	0	0	0
4/21/2024	7:00 PM	0	0	0	0	0	0	0	0	0	0	0	0	0
4/21/2024	7:15 PM	0	0	0	0	0	0	0	0	0	0	0	0	0
4/21/2024	7:30 PM	0	0	0	0	0	0	0	0	0	0	0	0	0
4/21/2024	7:45 PM	0	0	0	0	0	0	0	0	0	0	0	0	0
4/21/2024	8:00 PM	0	0	0	0	0	0	0	0	0	0	0	0	0
4/21/2024	8:15 PM	0	0	0	0	0	0	0	0	0	0	0	0	0
4/21/2024	8:30 PM	0	0	0	0	0	0	0	0	0	0	0	0	0
4/21/2024	8:45 PM	0	0	0	0	0	0	0	0	0	0	0	0	0
4/21/2024	9:00 PM	0	0	0	0	0	0	0	0	0	0	0	0	0
4/21/2024	9:15 PM	0	0	0	0	0	0	0	0	0	0	0	0	0
4/21/2024	9:30 PM	0	0	0	0	0	0	0	0	0	0	0	0	0
4/21/2024	9:45 PM	0	0	0	0	0	0	0	0	0	0	0	0	0
4/21/2024	10:00 PM	0	0	0	0	0	0	0	0	0	0	0	0	0
4/21/2024	10:15 PM	0	0	0	0	0	0	0	0	0	0	0	0	0
4/21/2024	10:30 PM	0	0	0	0	0	0	0	0	0	0	0	0	0
4/21/2024	10:45 PM	0	0	0	0	0	0	0	0	0	0	0	0	0
4/21/2024	11:00 PM	0	0	0	0	0	0	0	0	0	0	0	0	0
4/21/2024	11:15 PM	0	0	0	0	0	0	0	0	0	0	0	0	0
4/21/2024	11:30 PM	0	0	0	0	0	0	0	0	0	0	0	0	0
4/21/2024	11:45 PM	0	0	0	0	0	0	0	0	0	0	0	0	0

4/22/2024	12:00 AM	0	0	0	0	0	0	0	0	0	0	0	0	0
4/22/2024	12:15 AM	0	0	0	0	0	0	0	0	0	0	0	0	0
4/22/2024	12:30 AM	0	0	0	0	0	0	0	0	0	0	0	0	0
4/22/2024	12:45 AM	0	0	0	0	0	0	0	0	0	0	0	0	0
4/22/2024	1:00 AM	0	0	0	0	0	0	0	0	0	0	0	0	0
4/22/2024	1:15 AM	0	0	0	0	0	0	0	0	0	0	0	0	0
4/22/2024	1:30 AM	0	0	0	0	0	0	0	0	0	0	0	0	0
4/22/2024	1:45 AM	0	0	0	0	0	0	0	0	0	0	0	0	0
4/22/2024	2:00 AM	0	0	0	0	0	0	0	0	0	0	0	0	0
4/22/2024	2:15 AM	0	0	0	0	0	0	0	0	0	0	0	0	0
4/22/2024	2:30 AM	0	0	0	0	0	0	0	0	0	0	0	0	0
4/22/2024	2:45 AM	0	0	0	0	0	0	0	0	0	0	0	0	0
4/22/2024	3:00 AM	0	0	0	0	0	0	0	0	0	0	0	0	0
4/22/2024	3:15 AM	0	0	0	0	0	0	0	0	0	0	0	0	0
4/22/2024	3:30 AM	0	0	0	0	0	0	0	0	0	0	0	0	0
4/22/2024	3:45 AM	0	0	0	0	0	0	0	0	0	0	0	0	0
4/22/2024	4:00 AM	0	0	0	0	0	0	0	0	0	0	0	0	0
4/22/2024	4:15 AM	0	0	0	0	0	0	0	0	0	0	0	0	0
4/22/2024	4:30 AM	0	0	0	0	0	0	0	0	0	0	0	0	0
4/22/2024	4:45 AM	0	0	0	0	0	0	0	0	0	0	0	0	0
4/22/2024	5:00 AM	0	0	0	0	0	0	0	0	0	0	0	0	0
4/22/2024	5:15 AM	0	0	0	0	0	0	0	0	0	0	0	0	0
4/22/2024	5:30 AM	0	0	0	0	0	0	0	0	0	0	0	0	0
4/22/2024	5:45 AM	0	0	0	0	0	0	0	0	0	0	0	0	0
4/22/2024	6:00 AM	0	0	0	0	0	0	0	0	0	0	0	0	0
4/22/2024	6:15 AM	0	0	0	0	0	0	0	0	0	0	0	0	0
4/22/2024	6:30 AM	0	0	0	0	0	0	0	0	0	0	0	0	0
4/22/2024	6:45 AM	0	0	0	0	0	0	0	0	0	0	0	0	0
4/22/2024	7:00 AM	0	0	0	0	0	0	0	0	0	0	0	0	0
4/22/2024	7:15 AM	0	0	0	0	0	0	0	0	0	0	0	0	0
4/22/2024	7:30 AM	0	0	0	0	0	0	0	0	0	0	0	0	0
4/22/2024	7:45 AM	0	0	0	0	0	0	0	0	0	0	0	0	0
4/22/2024	8:00 AM	0	0	0	0	0	0	0	0	0	0	0	0	0
4/22/2024	8:15 AM	0	0	0	0	0	0	0	0	0	0	0	0	0
4/22/2024	8:30 AM	0	0	0	0	0	0	0	0	0	0	0	0	0
4/22/2024	8:45 AM	0	0	0	0	0	0	0	0	0	0	0	0	0
4/22/2024	9:00 AM	0	0	0	0	0	0	0	0	0	0	0	0	0
4/22/2024	9:15 AM	0	0	0	0	0	0	0	0	0	0	0	0	0
4/22/2024	9:30 AM	0	0	0	0	0	0	0	0	0	0	0	0	0
4/22/2024	9:45 AM	0	0	0	0	0	0	0	0	0	0	0	0	0
4/22/2024	10:00 AM	0	0	0	0	0	0	0	0	0	0	0	0	0
4/22/2024	10:15 AM	0	0	0	0	0	0	0	0	0	0	0	0	0
4/22/2024	10:30 AM	0	0	0	0	0	0	0	0	0	0	0	0	0
4/22/2024	10:45 AM	0	0	0	0	0	0	0	0	0	0	0	0	0
4/22/2024	11:00 AM	0	0	0	0	0	0	0	0	0	0	0	0	0
4/22/2024	11:15 AM	0	0	0	0	0	0	0	0	0	0	0	0	0
4/22/2024	11:30 AM	0	0	0	0	0	0	0	0	0	0	0	0	0
4/22/2024	11:45 AM	0	0	0	0	0	0	0	0	0	0	0	0	0
4/22/2024	12:00 PM	0	0	0	0	0	0	0	0	0	0	0	0	0
4/22/2024	12:15 PM	0	0	0	0	0	0	0	0	0	0	0	0	0
4/22/2024	12:30 PM	0	0	0	0	0	0	0	0	0	0	0	0	0
4/22/2024	12:45 PM	0	0	0	0	0	0	0	0	0	0	0	0	0
4/22/2024	1:00 PM	0	0	0	0	0	0	0	0	0	0	0	0	0
4/22/2024	1:15 PM	0	0	0	0	0	0	0	0	0	0	0	0	0
4/22/2024	1:30 PM	0	0	0	0	0	0	0	0	0	0	0	0	0
4/22/2024	1:45 PM	0	0	0	0	0	0	0	0	0	0	0	0	0
4/22/2024	2:00 PM	0	0	0	0	0	0	0	0	0	0	0	0	0
4/22/2024	2:15 PM	0	0	0	0	0	0	0	0	0	0	0	0	0
4/22/2024	2:30 PM	0	0	0	0	0	0	0	0	0	0	0	0	0
4/22/2024	2:45 PM	0	0	0	0	0	0	0	0	0	0	0	0	0
4/22/2024	3:00 PM	0	0	0	0	0	0	0	0	0	0	0	0	0
4/22/2024	3:15 PM	0	0	0	0	0	0	0	0	0	0	0	0	0
4/22/2024	3:30 PM	0	0	0	0	0	0	0	0	0	0	0	0	0
4/22/2024	3:45 PM	0	0	0	0	0	0	0	0	0	0	0	0	0
4/22/2024	4:00 PM	0	0	0	0	0	0	0	0	0	0	0	0	0
4/22/2024	4:15 PM	0	0	0	0	0	0	0	0	0	0	0	0	0
4/22/2024	4:30 PM	0	0	0	0	0	0	0	0	0	0	0	0	0
4/22/2024	4:45 PM	0	0	0	0	0	0	0	0	0	0	0	0	0
4/22/2024	5:00 PM	0	0	0	0	0	0	0	0	0	0	0	0	0
4/22/2024	5:15 PM	0	0	0	0	0	0	0	0	0	0	0	0	0
4/22/2024	5:30 PM	0	0	0	0	0	0	0	0	0	0	0	0	0
4/22/2024	5:45 PM	0	0	0	0	0	0	0	0	0	0	0	0	0
4/22/2024	6:00 PM	0	0	0	0	0	0	0	0	0	0	0	0	0
4/22/2024	6:15 PM	0	0	0	0	0	0	0	0	0	0	0	0	0
4/22/2024	6:30 PM	0	0	0	0	0	0	0	0	0	0	0	0	0
4/22/2024	6:45 PM	0	0	0	0	0	0	0	0	0	0	0	0	0
4/22/2024	7:00 PM	0	0	0	0	0	0	0	0	0	0	0	0	0
4/22/2024	7:15 PM	0	0	0	0	0	0	0	0	0	0	0	0	0
4/22/2024	7:30 PM	0	0	0	0	0	0	0	0	0	0	0	0	0
4/22/2024	7:45 PM	0	0	0	0	0	0	0	0	0	0	0	0	0
4/22/2024	8:00 PM	0	0	0	0	0	0	0	0	0	0	0	0	0
4/22/2024	8:15 PM	0	0	0	0	0	0	0	0	0	0	0	0	0
4/22/2024	8:30 PM	0	0	0	0	0	0	0	0	0	0	0	0	0
4/22/2024	8:45 PM	0	0	0	0	0	0	0	0	0	0	0	0	0
4/22/2024	9:00 PM	0	0	0	0	0	0	0	0	0	0	0	0	0
4/22/2024	9:15 PM	0	0	0	0	0	0	0	0	0	0	0	0	0
4/22/2024	9:30 PM	0	0	0	0	0	0	0	0	0	0	0	0	0
4/22/2024	9:45 PM	0	0	0	0	0	0	0	0	0	0	0	0	0
4/22/2024	10:00 PM	0	0	0	0	0	0	0	0	0	0	0	0	0
4/22/2024	10:15 PM	0	0	0	0	0	0	0	0	0	0	0	0	0
4/22/2024	10:30 PM	0	0	0	0	0	0	0	0	0	0	0	0	0
4/22/2024	10:45 PM	0	0	0	0	0	0	0	0	0	0	0	0	0
4/22/2024	11:00 PM	0	0	0	0	0	0	0	0	0	0	0	0	0
4/22/2024	11:15 PM	0	0	0	0	0	0	0	0	0	0	0	0	0
4/22/2024	11:30 PM	0	0	0	0	0	0	0	0	0	0	0	0	0
4/22/2024	11:45 PM	0	0	0	0	0	0	0	0	0	0	0	0	0

4/23/2024	12:00 AM	0	0	0	0	0	0	0	0	0	0	0	0	0
4/23/2024	12:15 AM	0	0	0	0	0	0	0	0	0	0	0	0	0
4/23/2024	12:30 AM	0	0	0	0	0	0	0	0	0	0	0	0	0
4/23/2024	12:45 AM	0	0	0	0	0	0	0	0	0	0	0	0	0
4/23/2024	1:00 AM	0	0	0	0	0	0	0	0	0	0	0	0	0
4/23/2024	1:15 AM	0	0	0	0	0	0	0	0	0	0	0	0	0
4/23/2024	1:30 AM	0	0	0	0	0	0	0	0	0	0	0	0	0
4/23/2024	1:45 AM	0	0	0	0	0	0	0	0	0	0	0	0	0
4/23/2024	2:00 AM	0	0	0	0	0	0	0	0	0	0	0	0	0
4/23/2024	2:15 AM	0	0	0	0	0	0	0	0	0	0	0	0	0
4/23/2024	2:30 AM	0	0	0	0	0	0	0	0	0	0	0	0	0
4/23/2024	2:45 AM	0	0	0	0	0	0	0	0	0	0	0	0	0
4/23/2024	3:00 AM	0	0	0	0	0	0	0	0	0	0	0	0	0
4/23/2024	3:15 AM	0	0	0	0	0	0	0	0	0	0	0	0	0
4/23/2024	3:30 AM	0	0	0	0	0	0	0	0	0	0	0	0	0
4/23/2024	3:45 AM	0	0	0	0	0	0	0	0	0	0	0	0	0
4/23/2024	4:00 AM	0	0	0	0	0	0	0	0	0	0	0	0	0
4/23/2024	4:15 AM	0	0	0	0	0	0	0	0	0	0	0	0	0
4/23/2024	4:30 AM	0	0	0	0	0	0	0	0	0	0	0	0	0
4/23/2024	4:45 AM	0	0	0	0	0	0	0	0	0	0	0	0	0
4/23/2024	5:00 AM	0	0	0	0	0	0	0	0	0	0	0	0	0
4/23/2024	5:15 AM	0	0	0	0	0	0	0	0	0	0	0	0	0
4/23/2024	5:30 AM	0	0	0	0	0	0	0	0	0	0	0	0	0
4/23/2024	5:45 AM	0	0	0	0	0	0	0	0	0	0	0	0	0
4/23/2024	6:00 AM	0	0	0	0	0	0	0	0	0	0	0	0	0
4/23/2024	6:15 AM	0	0	0	0	0	0	0	0	0	0	0	0	0
4/23/2024	6:30 AM	0	0	0	0	0	0	0	0	0	0	0	0	0
4/23/2024	6:45 AM	0	0	0	0	0	0	0	0	0	0	0	0	0
4/23/2024	7:00 AM	0	0	0	0	0	0	0	0	0	0	0	0	0
4/23/2024	7:15 AM	0	0	0	0	0	0	0	0	0	0	0	0	0
4/23/2024	7:30 AM	0	0	0	0	0	0	0	0	0	0	0	0	0
4/23/2024	7:45 AM	0	0	0	0	0	0	0	0	0	0	0	0	0
4/23/2024	8:00 AM	0	0	0	0	0	0	0	0	0	0	0	0	0
4/23/2024	8:15 AM	0	0	0	0	0	0	0	0	0	0	0	0	0
4/23/2024	8:30 AM	0	0	0	0	0	0	0	0	0	0	0	0	0
4/23/2024	8:45 AM	0	0	0	0	0	0	0	0	0	0	0	0	0
4/23/2024	9:00 AM	0	0	0	0	0	0	0	0	0	0	0	0	0
4/23/2024	9:15 AM	0	0	0	0	0	0	0	0	0	0	0	0	0
4/23/2024	9:30 AM	0	0	0	0	0	0	0	0	0	0	0	0	0
4/23/2024	9:45 AM	0	0	0	0	0	0	0	0	0	0	0	0	0
4/23/2024	10:00 AM	0	0	0	0	0	0	0	0	0	0	0	0	0
4/23/2024	10:15 AM	0	0	0	0	0	0	0	0	0	0	0	0	0
4/23/2024	10:30 AM	0	0	0	0	0	0	0	0	0	0	0	0	0
4/23/2024	10:45 AM	0	0	0	0	0	0	0	0	0	0	0	0	0
4/23/2024	11:00 AM	0	0	0	0	0	0	0	0	0	0	0	0	0
4/23/2024	11:15 AM	0	0	0	0	0	0	0	0	0	0	0	0	0
4/23/2024	11:30 AM	0	0	0	0	0	0	0	0	0	0	0	0	0
4/23/2024	11:45 AM	0	0	0	0	0	0	0	0	0	0	0	0	0
4/23/2024	12:00 PM	0	0	0	0	0	0	0	0	0	0	0	0	0
4/23/2024	12:15 PM	0	0	0	0	0	0	0	0	0	0	0	0	0
4/23/2024	12:30 PM	0	0	0	0	0	0	0	0	0	0	0	0	0
4/23/2024	12:45 PM	0	0	0	0	0	0	0	0	0	0	0	0	0
4/23/2024	1:00 PM	0	0	0	0	0	0	0	0	0	0	0	0	0
4/23/2024	1:15 PM	0	0	0	0	0	0	0	0	0	0	0	0	0
4/23/2024	1:30 PM	0	0	0	0	0	0	0	0	0	0	0	0	0
4/23/2024	1:45 PM	0	0	0	0	0	0	0	0	0	0	0	0	0
4/23/2024	2:00 PM	0	0	0	0	0	0	0	0	0	0	0	0	0
4/23/2024	2:15 PM	0	0	0	0	0	0	0	0	0	0	0	0	0
4/23/2024	2:30 PM	0	0	0	0	0	0	0	0	0	0	0	0	0
4/23/2024	2:45 PM	0	0	0	0	0	0	0	0	0	0	0	0	0
4/23/2024	3:00 PM	0	0	0	0	0	0	0	0	0	0	0	0	0
4/23/2024	3:15 PM	0	0	0	0	0	0	0	0	0	0	0	0	0
4/23/2024	3:30 PM	0	0	0	0	0	0	0	0	0	0	0	0	0
4/23/2024	3:45 PM	0	0	0	0	0	0	0	0	0	0	0	0	0
4/23/2024	4:00 PM	0	0	0	0	0	0	0	0	0	0	0	0	0
4/23/2024	4:15 PM	0	0	0	0	0	0	0	0	0	0	0	0	0
4/23/2024	4:30 PM	0	0	0	0	0	0	0	0	0	0	0	0	0
4/23/2024	4:45 PM	0	0	0	0	0	0	0	0	0	0	0	0	0
4/23/2024	5:00 PM	0	0	0	0	0	0	0	0	0	0	0	0	0
4/23/2024	5:15 PM	0	0	0	0	0	0	0	0	0	0	0	0	0
4/23/2024	5:30 PM	0	0	0	0	0	0	0	0	0	0	0	0	0
4/23/2024	5:45 PM	0	0	0	0	0	0	0	0	0	0	0	0	0
4/23/2024	6:00 PM	0	0	0	0	0	0	0	0	0	0	0	0	0
4/23/2024	6:15 PM	0	0	0	0	0	0	0	0	0	0	0	0	0
4/23/2024	6:30 PM	0	0	0	0	0	0	0	0	0	0	0	0	0
4/23/2024	6:45 PM	0	0	0	0	0	0	0	0	0	0	0	0	0
4/23/2024	7:00 PM	0	0	0	0	0	0	0	0	0	0	0	0	0
4/23/2024	7:15 PM	0	0	0	0	0	0	0	0	0	0	0	0	0
4/23/2024	7:30 PM	0	0	0	0	0	0	0	0	0	0	0	0	0
4/23/2024	7:45 PM	0	0	0	0	0	0	0	0	0	0	0	0	0
4/23/2024	8:00 PM	0	0	0	0	0	0	0	0	0	0	0	0	0
4/23/2024	8:15 PM	0	0	0	0	0	0	0	0	0	0	0	0	0
4/23/2024	8:30 PM	0	0	0	0	0	0	0	0	0	0	0	0	0
4/23/2024	8:45 PM	0	0	0	0	0	0	0	0	0	0	0	0	0
4/23/2024	9:00 PM	0	0	0	0	0	0	0	0	0	0	0	0	0
4/23/2024	9:15 PM	0	0	0	0	0	0	0	0	0	0	0	0	0
4/23/2024	9:30 PM	0	0	0	0	0	0	0	0	0	0	0	0	0
4/23/2024	9:45 PM	0	0	0	0	0	0	0	0	0	0	0	0	0
4/23/2024	10:00 PM	0	0	0	0	0	0	0	0	0	0	0	0	0
4/23/2024	10:15 PM	0	0	0	0	0	0	0	0	0	0	0	0	0
4/23/2024	10:30 PM	0	0	0	0	0	0	0	0	0	0	0	0	0
4/23/2024	10:45 PM	0	0	0	0	0	0	0	0	0	0	0	0	0
4/23/2024	11:00 PM	0	0	0	0	0	0	0	0	0	0	0	0	0
4/23/2024	11:15 PM	0	0	0	0	0	0	0	0	0	0	0	0	0
4/23/2024	11:30 PM	0	0	0	0	0	0	0	0	0	0	0	0	0
4/23/2024	11:45 PM	0	0	0	0	0	0	0	0	0	0	0	0	0

4/24/2024	12:00 AM	0	0	0	0	0	0	0	0	0	0	0	0	0
4/24/2024	12:15 AM	0	0	0	0	0	0	0	0	0	0	0	0	0
4/24/2024	12:30 AM	0	0	0	0	0	0	0	0	0	0	0	0	0
4/24/2024	12:45 AM	0	0	0	0	0	0	0	0	0	0	0	0	0
4/24/2024	1:00 AM	0	0	0	0	0	0	0	0	0	0	0	0	0
4/24/2024	1:15 AM	0	0	0	0	0	0	0	0	0	0	0	0	0
4/24/2024	1:30 AM	0	0	0	0	0	0	0	0	0	0	0	0	0
4/24/2024	1:45 AM	0	0	0	0	0	0	0	0	0	0	0	0	0
4/24/2024	2:00 AM	0	0	0	0	0	0	0	0	0	0	0	0	0
4/24/2024	2:15 AM	0	0	0	0	0	0	0	0	0	0	0	0	0
4/24/2024	2:30 AM	0	0	0	0	0	0	0	0	0	0	0	0	0
4/24/2024	2:45 AM	0	0	0	0	0	0	0	0	0	0	0	0	0
4/24/2024	3:00 AM	0	0	0	0	0	0	0	0	0	0	0	0	0
4/24/2024	3:15 AM	0	0	0	0	0	0	0	0	0	0	0	0	0
4/24/2024	3:30 AM	0	0	0	0	0	0	0	0	0	0	0	0	0
4/24/2024	3:45 AM	0	0	0	0	0	0	0	0	0	0	0	0	0
4/24/2024	4:00 AM	0	0	0	0	0	0	0	0	0	0	0	0	0
4/24/2024	4:15 AM	0	0	0	0	0	0	0	0	0	0	0	0	0
4/24/2024	4:30 AM	0	0	0	0	0	0	0	0	0	0	0	0	0
4/24/2024	4:45 AM	0	0	0	0	0	0	0	0	0	0	0	0	0
4/24/2024	5:00 AM	0	0	0	0	0	0	0	0	0	0	0	0	0
4/24/2024	5:15 AM	0	0	0	0	0	0	0	0	0	0	0	0	0
4/24/2024	5:30 AM	0	0	0	0	0	0	0	0	0	0	0	0	0
4/24/2024	5:45 AM	0	0	0	0	0	0	0	0	0	0	0	0	0
4/24/2024	6:00 AM	0	0	0	0	0	0	0	0	0	0	0	0	0
4/24/2024	6:15 AM	0	0	0	0	0	0	0	0	0	0	0	0	0
4/24/2024	6:30 AM	0	0	0	0	0	0	0	0	0	0	0	0	0
4/24/2024	6:45 AM	0	0	0	0	0	0	0	0	0	0	0	0	0
4/24/2024	7:00 AM	0	0	0	0	0	0	0	0	0	0	0	0	0
4/24/2024	7:15 AM	0	0	0	0	0	0	0	0	0	0	0	0	0
4/24/2024	7:30 AM	0	0	0	0	0	0	0	0	0	0	0	0	0
4/24/2024	7:45 AM	0	0	0	0	0	0	0	0	0	0	0	0	0
4/24/2024	8:00 AM	0	0	0	0	0	0	0	0	0	0	0	0	0
4/24/2024	8:15 AM	0	0	0	0	0	0	0	0	0	0	0	0	0
4/24/2024	8:30 AM	0	0	0	0	0	0	0	0	0	0	0	0	0
4/24/2024	8:45 AM	0	0	0	0	0	0	0	0	0	0	0	0	0
4/24/2024	9:00 AM	0	0	0	0	0	0	0	0	0	0	0	0	0
4/24/2024	9:15 AM	0	0	0	0	0	0	0	0	0	0	0	0	0
4/24/2024	9:30 AM	0	0	0	0	0	0	0	0	0	0	0	0	0
4/24/2024	9:45 AM	0	0	0	0	0	0	0	0	0	0	0	0	0
4/24/2024	10:00 AM	0	0	0	0	0	0	0	0	0	0	0	0	0
4/24/2024	10:15 AM	0	0	0	0	0	0	0	0	0	0	0	0	0
4/24/2024	10:30 AM	0	0	0	0	0	0	0	0	0	0	0	0	0
4/24/2024	10:45 AM	0	0	0	0	0	0	0	0	0	0	0	0	0
4/24/2024	11:00 AM	0	0	0	0	0	0	0	0	0	0	0	0	0
4/24/2024	11:15 AM	0	0	0	0	0	0	0	0	0	0	0	0	0
4/24/2024	11:30 AM	0	0	0	0	0	0	0	0	0	0	0	0	0
4/24/2024	11:45 AM	0	0	0	0	0	0	0	0	0	0	0	0	0
4/24/2024	12:00 PM	0	0	0	0	0	0	0	0	0	0	0	0	0
4/24/2024	12:15 PM	0	0	0	0	0	0	0	0	0	0	0	0	0
4/24/2024	12:30 PM	0	0	0	0	0	0	0	0	0	0	0	0	0
4/24/2024	12:45 PM	0	0	0	0	0	0	0	0	0	0	0	0	0
4/24/2024	1:00 PM	0	0	0	0	0	0	0	0	0	0	0	0	0
4/24/2024	1:15 PM	0	0	0	0	0	0	0	0	0	0	0	0	0
4/24/2024	1:30 PM	0	0	0	0	0	0	0	0	0	0	0	0	0
4/24/2024	1:45 PM	0	0	0	0	0	0	0	0	0	0	0	0	0
4/24/2024	2:00 PM	0	0	0	0	0	0	0	0	0	0	0	0	0
4/24/2024	2:15 PM	0	0	0	0	0	0	0	0	0	0	0	0	0
4/24/2024	2:30 PM	0	0	0	0	0	0	0	0	0	0	0	0	0
4/24/2024	2:45 PM	0	0	0	0	0	0	0	0	0	0	0	0	0
4/24/2024	3:00 PM	0	0	0	0	0	0	0	0	0	0	0	0	0
4/24/2024	3:15 PM	0	0	0	0	0	0	0	0	0	0	0	0	0
4/24/2024	3:30 PM	0	0	0	0	0	0	0	0	0	0	0	0	0
4/24/2024	3:45 PM	0	0	0	0	0	0	0	0	0	0	0	0	0
4/24/2024	4:00 PM	0	0	0	0	0	0	0	0	0	0	0	0	0
4/24/2024	4:15 PM	0	0	0	0	0	0	0	0	0	0	0	0	0
4/24/2024	4:30 PM	0	0	0	0	0	0	0	0	0	0	0	0	0
4/24/2024	4:45 PM	0	0	0	0	0	0	0	0	0	0	0	0	0
4/24/2024	5:00 PM	0	0	0	0	0	0	0	0	0	0	0	0	0
4/24/2024	5:15 PM	0	0	0	0	0	0	0	0	0	0	0	0	0
4/24/2024	5:30 PM	0	0	0	0	0	0	0	0	0	0	0	0	0
4/24/2024	5:45 PM	0	0	0	0	0	0	0	0	0	0	0	0	0
4/24/2024	6:00 PM	0	0	0	0	0	0	0	0	0	0	0	0	0
4/24/2024	6:15 PM	0	0	0	0	0	0	0	0	0	0	0	0	0
4/24/2024	6:30 PM	0	0	0	0	0	0	0	0	0	0	0	0	0
4/24/2024	6:45 PM	0	0	0	0	0	0	0	0	0	0	0	0	0
4/24/2024	7:00 PM	0	0	0	0	0	0	0	0	0	0	0	0	0
4/24/2024	7:15 PM	0	0	0	0	0	0	0	0	0	0	0	0	0
4/24/2024	7:30 PM	0	0	0	0	0	0	0	0	0	0	0	0	0
4/24/2024	7:45 PM	0	0	0	0	0	0	0	0	0	0	0	0	0
4/24/2024	8:00 PM	0	0	0	0	0	0	0	0	0	0	0	0	0
4/24/2024	8:15 PM	0	0	0	0	0	0	0	0	0	0	0	0	0
4/24/2024	8:30 PM	0	0	0	0	0	0	0	0	0	0	0	0	0
4/24/2024	8:45 PM	0	0	0	0	0	0	0	0	0	0	0	0	0
4/24/2024	9:00 PM	0	0	0	0	0	0	0	0	0	0	0	0	0
4/24/2024	9:15 PM	0	0	0	0	0	0	0	0	0	0	0	0	0
4/24/2024	9:30 PM	0	0	0	0	0	0	0	0	0	0	0	0	0
4/24/2024	9:45 PM	0	0	0	0	0	0	0	0	0	0	0	0	0
4/24/2024	10:00 PM	0	0	0	0	0	0	0	0	0	0	0	0	0
4/24/2024	10:15 PM	0	0	0	0	0	0	0	0	0	0	0	0	0
4/24/2024	10:30 PM	0	0	0	0	0	0	0	0	0	0	0	0	0
4/24/2024	10:45 PM	0	0	0	0	0	0	0	0	0	0	0	0	0
4/24/2024	11:00 PM	0	0	0	0	0	0	0	0	0	0	0	0	0
4/24/2024	11:15 PM	0	0	0	0	0	0	0	0	0	0	0	0	0
4/24/2024	11:30 PM	0	0	0	0	0	0	0	0	0	0	0	0	0
4/24/2024	11:45 PM	0	0	0	0	0	0	0	0	0	0	0	0	0

4/25/2024	12:00 AM	0	0	0	0	0	0	0	0	0	0	0	0	0
4/25/2024	12:15 AM	0	0	0	0	0	0	0	0	0	0	0	0	0
4/25/2024	12:30 AM	0	0	0	0	0	0	0	0	0	0	0	0	0
4/25/2024	12:45 AM	0	0	0	0	0	0	0	0	0	0	0	0	0
4/25/2024	1:00 AM	0	0	0	0	0	0	0	0	0	0	0	0	0
4/25/2024	1:15 AM	0	0	0	0	0	0	0	0	0	0	0	0	0
4/25/2024	1:30 AM	0	0	0	0	0	0	0	0	0	0	0	0	0
4/25/2024	1:45 AM	0	0	0	0	0	0	0	0	0	0	0	0	0
4/25/2024	2:00 AM	0	0	0	0	0	0	0	0	0	0	0	0	0
4/25/2024	2:15 AM	0	0	0	0	0	0	0	0	0	0	0	0	0
4/25/2024	2:30 AM	0	0	0	0	0	0	0	0	0	0	0	0	0
4/25/2024	2:45 AM	0	0	0	0	0	0	0	0	0	0	0	0	0
4/25/2024	3:00 AM	0	0	0	0	0	0	0	0	0	0	0	0	0
4/25/2024	3:15 AM	0	0	0	0	0	0	0	0	0	0	0	0	0
4/25/2024	3:30 AM	0	0	0	0	0	0	0	0	0	0	0	0	0
4/25/2024	3:45 AM	0	0	0	0	0	0	0	0	0	0	0	0	0
4/25/2024	4:00 AM	0	0	0	0	0	0	0	0	0	0	0	0	0
4/25/2024	4:15 AM	0	0	0	0	0	0	0	0	0	0	0	0	0
4/25/2024	4:30 AM	0	0	0	0	0	0	0	0	0	0	0	0	0
4/25/2024	4:45 AM	0	0	0	0	0	0	0	0	0	0	0	0	0
4/25/2024	5:00 AM	0	0	0	0	0	0	0	0	0	0	0	0	0
4/25/2024	5:15 AM	0	0	0	0	0	0	0	0	0	0	0	0	0
4/25/2024	5:30 AM	0	0	0	0	0	0	0	0	0	0	0	0	0
4/25/2024	5:45 AM	0	0	0	0	0	0	0	0	0	0	0	0	0
4/25/2024	6:00 AM	0	0	0	0	0	0	0	0	0	0	0	0	0
4/25/2024	6:15 AM	0	0	0	0	0	0	0	0	0	0	0	0	0
4/25/2024	6:30 AM	0	0	0	0	0	0	0	0	0	0	0	0	0
4/25/2024	6:45 AM	0	0	0	0	0	0	0	0	0	0	0	0	0
4/25/2024	7:00 AM	0	0	0	0	0	0	0	0	0	0	0	0	0
4/25/2024	7:15 AM	0	0	0	0	0	0	0	0	0	0	0	0	0
4/25/2024	7:30 AM	0	0	0	0	0	0	0	0	0	0	0	0	0
4/25/2024	7:45 AM	0	0	0	0	0	0	0	0	0	0	0	0	0
4/25/2024	8:00 AM	0	0	0	0	0	0	0	0	0	0	0	0	0
4/25/2024	8:15 AM	0	0	0	0	0	0	0	0	0	0	0	0	0
4/25/2024	8:30 AM	0	0	0	0	0	0	0	0	0	0	0	0	0
4/25/2024	8:45 AM	0	0	0	0	0	0	0	0	0	0	0	0	0
4/25/2024	9:00 AM	0	0	0	0	0	0	0	0	0	0	0	0	0
4/25/2024	9:15 AM	0	0	0	0	0	0	0	0	0	0	0	0	0
4/25/2024	9:30 AM	0	0	0	0	0	0	0	0	0	0	0	0	0
4/25/2024	9:45 AM	0	0	0	0	0	0	0	0	0	0	0	0	0
4/25/2024	10:00 AM	0	0	0	0	0	0	0	0	0	0	0	0	0
4/25/2024	10:15 AM	0	0	0	0	0	0	0	0	0	0	0	0	0
4/25/2024	10:30 AM	0	0	0	0	0	0	0	0	0	0	0	0	0
4/25/2024	10:45 AM	0	0	0	0	0	0	0	0	0	0	0	0	0
4/25/2024	11:00 AM	0	0	0	0	0	0	0	0	0	0	0	0	0
4/25/2024	11:15 AM	0	0	0	0	0	0	0	0	0	0	0	0	0
4/25/2024	11:30 AM	0	0	0	0	0	0	0	0	0	0	0	0	0
4/25/2024	11:45 AM	0	0	0	0	0	0	0	0	0	0	0	0	0
4/25/2024	12:00 PM	0	0	0	0	0	0	0	0	0	0	0	0	0
4/25/2024	12:15 PM	0	0	0	0	0	0	0	0	0	0	0	0	0
4/25/2024	12:30 PM	0	0	0	0	0	0	0	0	0	0	0	0	0
4/25/2024	12:45 PM	0	0	0	0	0	0	0	0	0	0	0	0	0
4/25/2024	1:00 PM	0	0	0	0	0	0	0	0	0	0	0	0	0
4/25/2024	1:15 PM	0	0	0	0	0	0	0	0	0	0	0	0	0
4/25/2024	1:30 PM	0	0	0	0	0	0	0	0	0	0	0	0	0
4/25/2024	1:45 PM	0	0	0	0	0	0	0	0	0	0	0	0	0
4/25/2024	2:00 PM	0	0	0	0	0	0	0	0	0	0	0	0	0
4/25/2024	2:15 PM	0	0	0	0	0	0	0	0	0	0	0	0	0
4/25/2024	2:30 PM	0	0	0	0	0	0	0	0	0	0	0	0	0
4/25/2024	2:45 PM	0	0	0	0	0	0	0	0	0	0	0	0	0
4/25/2024	3:00 PM	0	0	0	0	0	0	0	0	0	0	0	0	0
4/25/2024	3:15 PM	0	0	0	0	0	0	0	0	0	0	0	0	0
4/25/2024	3:30 PM	0	0	0	0	0	0	0	0	0	0	0	0	0
4/25/2024	3:45 PM	0	0	0	0	0	0	0	0	0	0	0	0	0
4/25/2024	4:00 PM	0	0	0	0	0	0	0	0	0	0	0	0	0
4/25/2024	4:15 PM	0	0	0	0	0	0	0	0	0	0	0	0	0
4/25/2024	4:30 PM	0	0	0	0	0	0	0	0	0	0	0	0	0
4/25/2024	4:45 PM	0	0	0	0	0	0	0	0	0	0	0	0	0
4/25/2024	5:00 PM	0	0	0	0	0	0	0	0	0	0	0	0	0
4/25/2024	5:15 PM	0	0	0	0	0	0	0	0	0	0	0	0	0
4/25/2024	5:30 PM	0	0	0	0	0	0	0	0	0	0	0	0	0
4/25/2024	5:45 PM	0	0	0	0	0	0	0	0	0	0	0	0	0
4/25/2024	6:00 PM	0	0	0	0	0	0	0	0	0	0	0	0	0
4/25/2024	6:15 PM	0	0	0	0	0	0	0	0	0	0	0	0	0
4/25/2024	6:30 PM	0	0	0	0	0	0	0	0	0	0	0	0	0
4/25/2024	6:45 PM	0	0	0	0	0	0	0	0	0	0	0	0	0
4/25/2024	7:00 PM	0	0	0	0	0	0	0	0	0	0	0	0	0
4/25/2024	7:15 PM	0	0	0	0	0	0	0	0	0	0	0	0	0
4/25/2024	7:30 PM	0	0	0	0	0	0	0	0	0	0	0	0	0
4/25/2024	7:45 PM	0	0	0	0	0	0	0	0	0	0	0	0	0
4/25/2024	8:00 PM	0	0	0	0	0	0	0	0	0	0	0	0	0
4/25/2024	8:15 PM	0	0	0	0	0	0	0	0	0	0	0	0	0
4/25/2024	8:30 PM	0	0	0	0	0	0	0	0	0	0	0	0	0
4/25/2024	8:45 PM	0	0	0	0	0	0	0	0	0	0	0	0	0
4/25/2024	9:00 PM	0	0	0	0	0	0	0	0	0	0	0	0	0
4/25/2024	9:15 PM	0	0	0	0	0	0	0	0	0	0	0	0	0
4/25/2024	9:30 PM	0	0	0	0	0	0	0	0	0	0	0	0	0
4/25/2024	9:45 PM	0	0	0	0	0	0	0	0	0	0	0	0	0
4/25/2024	10:00 PM	0	0	0	0	0	0	0	0	0	0	0	0	0
4/25/2024	10:15 PM	0	0	0	0	0	0	0	0	0	0	0	0	0
4/25/2024	10:30 PM	0	0	0	0	0	0	0	0	0	0	0	0	0
4/25/2024	10:45 PM	0	0	0	0	0	0	0	0	0	0	0	0	0
4/25/2024	11:00 PM	0	0	0	0	0	0	0	0	0	0	0	0	0
4/25/2024	11:15 PM	0	0	0	0	0	0	0	0	0	0	0	0	0
4/25/2024	11:30 PM	0	0	0	0	0	0	0	0	0	0	0	0	0
4/25/2024	11:45 PM	0	0	0	0	0	0	0	0	0	0	0	0	0

4/26/2024	12:00 AM	0	0	0	0	0	0	0	0	0	0	0	0	0
4/26/2024	12:15 AM	0	0	0	0	0	0	0	0	0	0	0	0	0
4/26/2024	12:30 AM	0	0	0	0	0	0	0	0	0	0	0	0	0
4/26/2024	12:45 AM	0	0	0	0	0	0	0	0	0	0	0	0	0
4/26/2024	1:00 AM	0	0	0	0	0	0	0	0	0	0	0	0	0
4/26/2024	1:15 AM	0	0	0	0	0	0	0	0	0	0	0	0	0
4/26/2024	1:30 AM	0	0	0	0	0	0	0	0	0	0	0	0	0
4/26/2024	1:45 AM	0	0	0	0	0	0	0	0	0	0	0	0	0
4/26/2024	2:00 AM	0	0	0	0	0	0	0	0	0	0	0	0	0
4/26/2024	2:15 AM	0	0	0	0	0	0	0	0	0	0	0	0	0
4/26/2024	2:30 AM	0	0	0	0	0	0	0	0	0	0	0	0	0
4/26/2024	2:45 AM	0	0	0	0	0	0	0	0	0	0	0	0	0
4/26/2024	3:00 AM	0	0	0	0	0	0	0	0	0	0	0	0	0
4/26/2024	3:15 AM	0	0	0	0	0	0	0	0	0	0	0	0	0
4/26/2024	3:30 AM	0	0	0	0	0	0	0	0	0	0	0	0	0
4/26/2024	3:45 AM	0	0	0	0	0	0	0	0	0	0	0	0	0
4/26/2024	4:00 AM	0	0	0	0	0	0	0	0	0	0	0	0	0
4/26/2024	4:15 AM	0	0	0	0	0	0	0	0	0	0	0	0	0
4/26/2024	4:30 AM	0	0	0	0	0	0	0	0	0	0	0	0	0
4/26/2024	4:45 AM	0	0	0	0	0	0	0	0	0	0	0	0	0
4/26/2024	5:00 AM	0	0	0	0	0	0	0	0	0	0	0	0	0
4/26/2024	5:15 AM	0	0	0	0	0	0	0	0	0	0	0	0	0
4/26/2024	5:30 AM	0	0	0	0	0	0	0	0	0	0	0	0	0
4/26/2024	5:45 AM	0	0	0	0	0	0	0	0	0	0	0	0	0
4/26/2024	6:00 AM	0	0	0	0	0	0	0	0	0	0	0	0	0
4/26/2024	6:15 AM	0	0	0	0	0	0	0	0	0	0	0	0	0
4/26/2024	6:30 AM	0	0	0	0	0	0	0	0	0	0	0	0	0
4/26/2024	6:45 AM	0	0	0	0	0	0	0	0	0	0	0	0	0
4/26/2024	7:00 AM	0	0	0	0	0	0	0	0	0	0	0	0	0
4/26/2024	7:15 AM	0	0	0	0	0	0	0	0	0	0	0	0	0
4/26/2024	7:30 AM	0	0	0	0	0	0	0	0	0	0	0	0	0
4/26/2024	7:45 AM	0	0	0	0	0	0	0	0	0	0	0	0	0
4/26/2024	8:00 AM	0	0	0	0	0	0	0	0	0	0	0	0	0
4/26/2024	8:15 AM	0	0	0	0	0	0	0	0	0	0	0	0	0
4/26/2024	8:30 AM	0	0	0	0	0	0	0	0	0	0	0	0	0
4/26/2024	8:45 AM	0	0	0	0	0	0	0	0	0	0	0	0	0
4/26/2024	9:00 AM	0	0	0	0	0	0	0	0	0	0	0	0	0
4/26/2024	9:15 AM	0	0	0	0	0	0	0	0	0	0	0	0	0
4/26/2024	9:30 AM	0	0	0	0	0	0	0	0	0	0	0	0	0
4/26/2024	9:45 AM	0	0	0	0	0	0	0	0	0	0	0	0	0
4/26/2024	10:00 AM	0	0	0	0	0	0	0	0	0	0	0	0	0
4/26/2024	10:15 AM	0	0	0	0	0	0	0	0	0	0	0	0	0
4/26/2024	10:30 AM	0	0	0	0	0	0	0	0	0	0	0	0	0
4/26/2024	10:45 AM	0	0	0	0	0	0	0	0	0	0	0	0	0
4/26/2024	11:00 AM	0	0	0	0	0	0	0	0	0	0	0	0	0
4/26/2024	11:15 AM	0	0	0	0	0	0	0	0	0	0	0	0	0
4/26/2024	11:30 AM	0	0	0	0	0	0	0	0	0	0	0	0	0
4/26/2024	11:45 AM	0	0	0	0	0	0	0	0	0	0	0	0	0
4/26/2024	12:00 PM	0	0	0	0	0	0	0	0	0	0	0	0	0
4/26/2024	12:15 PM	0	0	0	0	0	0	0	0	0	0	0	0	0
4/26/2024	12:30 PM	0	0	0	0	0	0	0	0	0	0	0	0	0
4/26/2024	12:45 PM	0	0	0	0	0	0	0	0	0	0	0	0	0
4/26/2024	1:00 PM	0	0	0	0	0	0	0	0	0	0	0	0	0
4/26/2024	1:15 PM	0	0	0	0	0	0	0	0	0	0	0	0	0
4/26/2024	1:30 PM	0	0	0	0	0	0	0	0	0	0	0	0	0
4/26/2024	1:45 PM	0	0	0	0	0	0	0	0	0	0	0	0	0
4/26/2024	2:00 PM	0	0	0	0	0	0	0	0	0	0	0	0	0
4/26/2024	2:15 PM	0	0	0	0	0	0	0	0	0	0	0	0	0
4/26/2024	2:30 PM	0	0	0	0	0	0	0	0	0	0	0	0	0
4/26/2024	2:45 PM	0	0	0	0	0	0	0	0	0	0	0	0	0
4/26/2024	3:00 PM	0	0	0	0	0	0	0	0	0	0	0	0	0
4/26/2024	3:15 PM	0	0	0	0	0	0	0	0	0	0	0	0	0
4/26/2024	3:30 PM	0	0	0	0	0	0	0	0	0	0	0	0	0
4/26/2024	3:45 PM	0	0	0	0	0	0	0	0	0	0	0	0	0
4/26/2024	4:00 PM	0	0	0	0	0	0	0	0	0	0	0	0	0
4/26/2024	4:15 PM	0	0	0	0	0	0	0	0	0	0	0	0	0
4/26/2024	4:30 PM	0	0	0	0	0	0	0	0	0	0	0	0	0
4/26/2024	4:45 PM	0	0	0	0	0	0	0	0	0	0	0	0	0
4/26/2024	5:00 PM	0	0	0	0	0	0	0	0	0	0	0	0	0
4/26/2024	5:15 PM	0	0	0	0	0	0	0	0	0	0	0	0	0
4/26/2024	5:30 PM	0	0	0	0	0	0	0	0	0	0	0	0	0
4/26/2024	5:45 PM	0	0	0	0	0	0	0	0	0	0	0	0	0
4/26/2024	6:00 PM	0	0	0	0	0	0	0	0	0	0	0	0	0
4/26/2024	6:15 PM	0	0	0	0	0	0	0	0	0	0	0	0	0
4/26/2024	6:30 PM	0	0	0	0	0	0	0	0	0	0	0	0	0
4/26/2024	6:45 PM	0	0	0	0	0	0	0	0	0	0	0	0	0
4/26/2024	7:00 PM	0	0	0	0	0	0	0	0	0	0	0	0	0
4/26/2024	7:15 PM	0	0	0	0	0	0	0	0	0	0	0	0	0
4/26/2024	7:30 PM	0	0	0	0	0	0	0	0	0	0	0	0	0
4/26/2024	7:45 PM	0	0	0	0	0	0	0	0	0	0	0	0	0
4/26/2024	8:00 PM	0	0	0	0	0	0	0	0	0	0	0	0	0
4/26/2024	8:15 PM	0	0	0	0	0	0	0	0	0	0	0	0	0
4/26/2024	8:30 PM	0	0	0	0	0	0	0	0	0	0	0	0	0
4/26/2024	8:45 PM	0	0	0	0	0	0	0	0	0	0	0	0	0
4/26/2024	9:00 PM	0	0	0	0	0	0	0	0	0	0	0	0	0
4/26/2024	9:15 PM	0	0	0	0	0	0	0	0	0	0	0	0	0
4/26/2024	9:30 PM	0	0	0	0	0	0	0	0	0	0	0	0	0
4/26/2024	9:45 PM	0	0	0	0	0	0	0	0	0	0	0	0	0
4/26/2024	10:00 PM	0	0	0	0	0	0	0	0	0	0	0	0	0
4/26/2024	10:15 PM	0	0	0	0	0	0	0	0	0	0	0	0	0
4/26/2024	10:30 PM	0	0	0	0	0	0	0	0	0	0	0	0	0
4/26/2024	10:45 PM	0	0	0	0	0	0	0	0	0	0	0	0	0
4/26/2024	11:00 PM	0	0	0	0	0	0	0	0	0	0	0	0	0
4/26/2024	11:15 PM	0	0	0	0	0	0	0	0	0	0	0	0	0
4/26/2024	11:30 PM	0	0	0	0	0	0	0	0	0	0	0	0	0
4/26/2024	11:45 PM	0	0	0	0	0	0	0	0	0	0	0	0	0

4/27/2024	12:00 AM	0	0	0	0	0	0	0	0	0	0	0	0	0
4/27/2024	12:15 AM	0	0	0	0	0	0	0	0	0	0	0	0	0
4/27/2024	12:30 AM	0	0	0	0	0	0	0	0	0	0	0	0	0
4/27/2024	12:45 AM	0	0	0	0	0	0	0	0	0	0	0	0	0
4/27/2024	1:00 AM	0	0	0	0	0	0	0	0	0	0	0	0	0
4/27/2024	1:15 AM	0	0	0	0	0	0	0	0	0	0	0	0	0
4/27/2024	1:30 AM	0	0	0	0	0	0	0	0	0	0	0	0	0
4/27/2024	1:45 AM	0	0	0	0	0	0	0	0	0	0	0	0	0
4/27/2024	2:00 AM	0	0	0	0	0	0	0	0	0	0	0	0	0
4/27/2024	2:15 AM	0	0	0	0	0	0	0	0	0	0	0	0	0
4/27/2024	2:30 AM	0	0	0	0	0	0	0	0	0	0	0	0	0
4/27/2024	2:45 AM	0	0	0	0	0	0	0	0	0	0	0	0	0
4/27/2024	3:00 AM	0	0	0	0	0	0	0	0	0	0	0	0	0
4/27/2024	3:15 AM	0	0	0	0	0	0	0	0	0	0	0	0	0
4/27/2024	3:30 AM	0	0	0	0	0	0	0	0	0	0	0	0	0
4/27/2024	3:45 AM	0	0	0	0	0	0	0	0	0	0	0	0	0
4/27/2024	4:00 AM	0	0	0	0	0	0	0	0	0	0	0	0	0
4/27/2024	4:15 AM	0	0	0	0	0	0	0	0	0	0	0	0	0
4/27/2024	4:30 AM	0	0	0	0	0	0	0	0	0	0	0	0	0
4/27/2024	4:45 AM	0	0	0	0	0	0	0	0	0	0	0	0	0
4/27/2024	5:00 AM	0	0	0	0	0	0	0	0	0	0	0	0	0
4/27/2024	5:15 AM	0	0	0	0	0	0	0	0	0	0	0	0	0
4/27/2024	5:30 AM	0	0	0	0	0	0	0	0	0	0	0	0	0
4/27/2024	5:45 AM	0	0	0	0	0	0	0	0	0	0	0	0	0
4/27/2024	6:00 AM	0	0	0	0	0	0	0	0	0	0	0	0	0
4/27/2024	6:15 AM	0	0	0	0	0	0	0	0	0	0	0	0	0
4/27/2024	6:30 AM	0	0	0	0	0	0	0	0	0	0	0	0	0
4/27/2024	6:45 AM	0	0	0	0	0	0	0	0	0	0	0	0	0
4/27/2024	7:00 AM	0	0	0	0	0	0	0	0	0	0	0	0	0
4/27/2024	7:15 AM	0	0	0	0	0	0	0	0	0	0	0	0	0
4/27/2024	7:30 AM	0	0	0	0	0	0	0	0	0	0	0	0	0
4/27/2024	7:45 AM	0	0	0	0	0	0	0	0	0	0	0	0	0
4/27/2024	8:00 AM	0	0	0	0	0	0	0	0	0	0	0	0	0
4/27/2024	8:15 AM	0	0	0	0	0	0	0	0	0	0	0	0	0
4/27/2024	8:30 AM	0	0	0	0	0	0	0	0	0	0	0	0	0
4/27/2024	8:45 AM	0	0	0	0	0	0	0	0	0	0	0	0	0
4/27/2024	9:00 AM	0	0	0	0	0	0	0	0	0	0	0	0	0
4/27/2024	9:15 AM	0	0	0	0	0	0	0	0	0	0	0	0	0
4/27/2024	9:30 AM	0	0	0	0	0	0	0	0	0	0	0	0	0
4/27/2024	9:45 AM	0	0	0	0	0	0	0	0	0	0	0	0	0
4/27/2024	10:00 AM	0	0	0	0	0	0	0	0	0	0	0	0	0
4/27/2024	10:15 AM	0	0	0	0	0	0	0	0	0	0	0	0	0
4/27/2024	10:30 AM	0	0	0	0	0	0	0	0	0	0	0	0	0
4/27/2024	10:45 AM	0	0	0	0	0	0	0	0	0	0	0	0	0
4/27/2024	11:00 AM	0	0	0	0	0	0	0	0	0	0	0	0	0
4/27/2024	11:15 AM	0	0	0	0	0	0	0	0	0	0	0	0	0
4/27/2024	11:30 AM	0	0	0	0	0	0	0	0	0	0	0	0	0
4/27/2024	11:45 AM	0	0	0	0	0	0	0	0	0	0	0	0	0
4/27/2024	12:00 PM	0	0	0	0	0	0	0	0	0	0	0	0	0
4/27/2024	12:15 PM	0	0	0	0	0	0	0	0	0	0	0	0	0
4/27/2024	12:30 PM	0	0	0	0	0	0	0	0	0	0	0	0	0
4/27/2024	12:45 PM	0	0	0	0	0	0	0	0	0	0	0	0	0
4/27/2024	1:00 PM	0	0	0	0	0	0	0	0	0	0	0	0	0
4/27/2024	1:15 PM	0	0	0	0	0	0	0	0	0	0	0	0	0
4/27/2024	1:30 PM	0	0	0	0	0	0	0	0	0	0	0	0	0
4/27/2024	1:45 PM	0	0	0	0	0	0	0	0	0	0	0	0	0
4/27/2024	2:00 PM	0	0	0	0	0	0	0	0	0	0	0	0	0
4/27/2024	2:15 PM	0	0	0	0	0	0	0	0	0	0	0	0	0
4/27/2024	2:30 PM	0	0	0	0	0	0	0	0	0	0	0	0	0
4/27/2024	2:45 PM	0	0	0	0	0	0	0	0	0	0	0	0	0
4/27/2024	3:00 PM	0	0	0	0	0	0	0	0	0	0	0	0	0
4/27/2024	3:15 PM	0	0	0	0	0	0	0	0	0	0	0	0	0
4/27/2024	3:30 PM	0	0	0	0	0	0	0	0	0	0	0	0	0
4/27/2024	3:45 PM	0	0	0	0	0	0	0	0	0	0	0	0	0
4/27/2024	4:00 PM	0	0	0	0	0	0	0	0	0	0	0	0	0
4/27/2024	4:15 PM	0	0	0	0	0	0	0	0	0	0	0	0	0
4/27/2024	4:30 PM	0	0	0	0	0	0	0	0	0	0	0	0	0
4/27/2024	4:45 PM	0	0	0	0	0	0	0	0	0	0	0	0	0
4/27/2024	5:00 PM	0	0	0	0	0	0	0	0	0	0	0	0	0
4/27/2024	5:15 PM	0	0	0	0	0	0	0	0	0	0	0	0	0
4/27/2024	5:30 PM	0	0	0	0	0	0	0	0	0	0	0	0	0
4/27/2024	5:45 PM	0	0	0	0	0	0	0	0	0	0	0	0	0
4/27/2024	6:00 PM	0	0	0	0	0	0	0	0	0	0	0	0	0
4/27/2024	6:15 PM	0	0	0	0	0	0	0	0	0	0	0	0	0
4/27/2024	6:30 PM	0	0	0	0	0	0	0	0	0	0	0	0	0
4/27/2024	6:45 PM	0	0	0	0	0	0	0	0	0	0	0	0	0
4/27/2024	7:00 PM	0	0	0	0	0	0	0	0	0	0	0	0	0
4/27/2024	7:15 PM	0	0	0	0	0	0	0	0	0	0	0	0	0
4/27/2024	7:30 PM	0	0	0	0	0	0	0	0	0	0	0	0	0
4/27/2024	7:45 PM	0	0	0	0	0	0	0	0	0	0	0	0	0
4/27/2024	8:00 PM	0	0	0	0	0	0	0	0	0	0	0	0	0
4/27/2024	8:15 PM	0	0	0	0	0	0	0	0	0	0	0	0	0
4/27/2024	8:30 PM	0	0	0	0	0	0	0	0	0	0	0	0	0
4/27/2024	8:45 PM	0	0	0	0	0	0	0	0	0	0	0	0	0
4/27/2024	9:00 PM	0	0	0	0	0	0	0	0	0	0	0	0	0
4/27/2024	9:15 PM	0	0	0	0	0	0	0	0	0	0	0	0	0
4/27/2024	9:30 PM	0	0	0	0	0	0	0	0	0	0	0	0	0
4/27/2024	9:45 PM	0	0	0	0	0	0	0	0	0	0	0	0	0
4/27/2024	10:00 PM	0	0	0	0	0	0	0	0	0	0	0	0	0
4/27/2024	10:15 PM	0	0	0	0	0	0	0	0	0	0	0	0	0
4/27/2024	10:30 PM	0	0	0	0	0	0	0	0	0	0	0	0	0
4/27/2024	10:45 PM	0	0	0	0	0	0	0	0	0	0	0	0	0
4/27/2024	11:00 PM	0	0	0	0	0	0	0	0	0	0	0	0	0
4/27/2024	11:15 PM	0	0	0	0	0	0	0	0	0	0	0	0	0
4/27/2024	11:30 PM	0	0	0	0	0	0	0	0	0	0	0	0	0
4/27/2024	11:45 PM	0	0	0	0	0	0	0	0	0	0	0	0	0

WB
File Name:
Start Date: 4/21/2024
Start Time: 0
Site Code: 6
Station ID: 1
Location 1: I-26 W/Bound On-Ramp, west of US-76
Location 2:

Date	Time	1	2	3	4	5	6	7	8	9	10	11	12	13
4/21/2024	12:00 AM	0	85	20	0	0	0	0	1	1	0	0	1	0
4/21/2024	12:15 AM	0	101	19	0	0	0	0	0	1	0	0	0	0
4/21/2024	12:30 AM	0	60	17	0	1	0	0	0	1	0	0	0	0
4/21/2024	12:45 AM	0	68	21	0	0	0	0	0	2	0	0	0	0
4/21/2024	1:00 AM	0	70	24	0	1	1	0	0	6	0	0	0	0
4/21/2024	1:15 AM	0	77	13	1	0	1	0	0	0	0	0	0	0
4/21/2024	1:30 AM	0	62	13	0	0	0	0	0	2	0	0	0	0
4/21/2024	1:45 AM	0	50	13	1	0	0	0	0	2	0	0	0	0
4/21/2024	2:00 AM	0	44	11	0	0	0	0	0	0	0	1	1	0
4/21/2024	2:15 AM	0	49	11	0	2	1	0	1	1	0	0	0	0
4/21/2024	2:30 AM	0	39	10	0	0	0	0	0	4	0	0	0	0
4/21/2024	2:45 AM	0	47	12	0	0	1	0	0	3	0	0	0	0
4/21/2024	3:00 AM	0	30	9	0	0	0	0	1	1	0	0	0	0
4/21/2024	3:15 AM	0	31	8	1	0	0	0	0	2	0	0	0	0
4/21/2024	3:30 AM	0	38	7	0	2	0	0	0	2	0	0	1	0
4/21/2024	3:45 AM	0	30	8	1	0	0	0	0	2	0	0	0	0
4/21/2024	4:00 AM	0	37	11	0	1	0	0	0	1	0	0	0	0
4/21/2024	4:15 AM	0	41	12	0	0	0	0	0	2	0	0	0	0
4/21/2024	4:30 AM	0	44	11	0	0	1	0	0	2	0	0	0	0
4/21/2024	4:45 AM	0	63	15	0	0	0	0	0	4	0	0	0	0
4/21/2024	5:00 AM	0	57	14	0	1	0	0	0	5	0	0	1	0
4/21/2024	5:15 AM	0	66	15	0	0	0	0	0	2	0	0	0	0
4/21/2024	5:30 AM	0	78	15	0	0	0	0	0	1	0	0	0	0
4/21/2024	5:45 AM	0	79	17	3	1	0	0	0	7	0	0	0	0
4/21/2024	6:00 AM	0	81	10	0	2	0	0	0	3	0	0	0	0
4/21/2024	6:15 AM	0	113	19	0	2	0	0	0	7	0	0	0	0
4/21/2024	6:30 AM	0	174	19	0	0	2	0	0	9	0	0	0	0
4/21/2024	6:45 AM	1	154	17	0	0	0	0	0	4	0	0	0	0
4/21/2024	7:00 AM	0	129	27	0	1	1	0	0	4	0	0	0	0
4/21/2024	7:15 AM	0	133	24	0	2	0	0	0	2	0	0	0	0
4/21/2024	7:30 AM	0	142	27	1	0	1	0	0	9	0	0	0	0
4/21/2024	7:45 AM	1	149	36	0	3	0	0	0	11	0	0	0	0
4/21/2024	8:00 AM	0	160	19	0	2	0	0	0	11	0	0	0	0
4/21/2024	8:15 AM	0	153	25	1	2	0	0	0	9	0	0	0	0
4/21/2024	8:30 AM	0	195	29	0	2	1	0	0	5	0	0	0	0
4/21/2024	8:45 AM	0	241	43	1	3	1	0	0	11	0	0	0	0
4/21/2024	9:00 AM	0	283	45	0	1	1	0	1	7	0	0	0	0
4/21/2024	9:15 AM	0	267	69	0	4	0	0	0	9	0	0	0	0
4/21/2024	9:30 AM	0	266	57	0	3	0	0	0	3	0	0	0	0
4/21/2024	9:45 AM	3	298	69	0	1	0	0	0	3	0	0	0	0
4/21/2024	10:00 AM	0	302	64	0	4	0	0	1	7	0	0	0	0
4/21/2024	10:15 AM	1	348	61	0	3	0	0	0	15	0	0	0	0
4/21/2024	10:30 AM	0	355	73	0	5	0	0	1	2	0	0	0	0
4/21/2024	10:45 AM	0	389	62	0	4	0	0	0	3	0	0	0	0
4/21/2024	11:00 AM	4	350	69	0	4	0	0	0	6	0	0	0	0
4/21/2024	11:15 AM	0	333	80	0	2	0	0	2	8	0	0	0	0
4/21/2024	11:30 AM	0	327	81	0	5	1	0	1	5	1	0	0	0
4/21/2024	11:45 AM	1	336	77	0	6	1	0	0	8	0	0	0	0
4/21/2024	12:00 PM	1	406	78	0	3	1	0	0	11	0	0	0	0
4/21/2024	12:15 PM	0	454	99	0	1	0	0	0	7	1	0	0	0
4/21/2024	12:30 PM	0	434	109	0	6	1	0	0	5	0	0	0	0
4/21/2024	12:45 PM	1	469	107	1	9	0	0	0	10	0	0	0	0
4/21/2024	1:00 PM	0	470	121	2	4	2	0	0	10	0	0	0	0
4/21/2024	1:15 PM	1	463	98	0	4	0	0	0	9	0	0	0	0
4/21/2024	1:30 PM	0	473	113	0	5	3	0	1	14	0	0	0	0
4/21/2024	1:45 PM	0	494	99	0	4	0	0	0	7	0	0	0	0
4/21/2024	2:00 PM	0	328	80	0	2	0	0	1	0	0	0	0	0
4/21/2024	2:15 PM	0	488	88	1	2	0	0	0	8	0	0	0	0
4/21/2024	2:30 PM	0	585	110	0	4	1	0	0	12	0	0	0	0
4/21/2024	2:45 PM	0	487	118	2	3	0	1	0	9	0	0	0	0
4/21/2024	3:00 PM	0	485	92	0	5	1	0	0	9	0	0	0	0
4/21/2024	3:15 PM	0	496	132	1	5	0	0	2	9	1	1	0	0
4/21/2024	3:30 PM	0	487	123	1	5	1	0	0	11	0	1	0	0
4/21/2024	3:45 PM	0	503	13	1	5	0	0	0	12	0	0	0	0
4/21/2024	4:00 PM	0	447	102	2	3	0	0	0	6	0	0	0	0
4/21/2024	4:15 PM	0	467	81	0	1	1	0	1	5	0	0	0	0
4/21/2024	4:30 PM	0	441	90	2	5	0	0	2	6	0	0	0	0
4/21/2024	4:45 PM	0	402	73	0	2	2	0	0	7	0	0	0	0
4/21/2024	5:00 PM	0	467	97	1	7	1	0	0	17	0	0	0	0
4/21/2024	5:15 PM	0	455	85	0	4	2	0	0	8	0	0	0	0
4/21/2024	5:30 PM	0	459	90	1	9	0	0	2	16	1	0	0	0
4/21/2024	5:45 PM	0	411	91	4	6	0	0	1	14	2	0	0	0
4/21/2024	6:00 PM	0	387	80	0	2	1	1	1	13	2	1	0	0
4/21/2024	6:15 PM	0	419	70	0	5	1	0	0	10	0	0	0	0
4/21/2024	6:30 PM	0	381	84	0	1	0	0	1	15	0	0	0	0
4/21/2024	6:45 PM	0	360	66	1	3	0	0	0	15	0	0	1	0
4/21/2024	7:00 PM	0	338	71	0	2	1	0	0	5	0	0	0	0
4/21/2024	7:15 PM	0	299	83	0	3	1	0	0	10	0	1	0	0
4/21/2024	7:30 PM	0	292	62	3	3	1	0	0	8	0	1	0	0
4/21/2024	7:45 PM	0	276	47	1	3	1	0	1	12	0	0	0	0
4/21/2024	8:00 PM	0	270	58	0	2	0	0	0	11	0	0	0	0
4/21/2024	8:15 PM	0	218	34	0	2	1	0	0	18	0	0	0	0
4/21/2024	8:30 PM	0	221	39	0	1	1	0	0	9	0	0	0	0
4/21/2024	8:45 PM	0	225	42	0	2	0	0	1	12	0	0	0	0
4/21/2024	9:00 PM	0	201	35	0	1	0	0	0	13	0	0	0	0
4/21/2024	9:15 PM	0	161	19	0	1	0	0	0	7	0	0	0	0
4/21/2024	9:30 PM	0	165	21	0	1	0	0	0	2	0	0	0	0
4/21/2024	9:45 PM	0	183	27	0	3	0	0	2	16	0	0	0	0
4/21/2024	10:00 PM	0	145	15	0	1	1	0	0	12	0	1	0	0
4/21/2024	10:15 PM	0	131	11	0	1	3	0	0	7	0	0	0	0
4/21/2024	10:30 PM	0	124	9	0	0	0	0	0	7	0	0	0	0
4/21/2024	10:45 PM	0	100	11	0	0	0	0	0	6	0	0	0	0
4/21/2024	11:00 PM	0	78	7	0	0	0	0	1	10	0	1	0	0
4/21/2024	11:15 PM	0	75	9	0	1	1	0	0	13	0	1	0	0
4/21/2024	11:30 PM	0	81	11	0	0	1	0	0	9	0	0	0	0
4/21/2024	11:45 PM	0	83	10	0	1	0	0	1	5	0	0	0	0

4/22/2024	12:00 AM	0	37	8	0	2	0	0	0	2	0	0	0	0
4/22/2024	12:15 AM	0	47	6	0	0	0	0	0	7	0	0	0	0
4/22/2024	12:30 AM	0	27	9	0	0	0	0	0	11	2	0	0	0
4/22/2024	12:45 AM	0	41	6	0	2	0	0	0	10	0	0	0	0
4/22/2024	1:00 AM	0	22	5	0	0	0	0	0	10	0	0	0	0
4/22/2024	1:15 AM	0	38	9	0	0	0	0	0	9	0	0	0	0
4/22/2024	1:30 AM	0	19	7	0	0	0	0	0	6	0	0	0	0
4/22/2024	1:45 AM	0	22	8	0	0	0	0	0	12	0	0	0	0
4/22/2024	2:00 AM	0	22	4	0	1	0	0	1	10	0	0	0	0
4/22/2024	2:15 AM	0	21	6	0	2	0	0	1	3	0	0	0	0
4/22/2024	2:30 AM	0	28	5	0	0	0	0	0	15	0	0	0	0
4/22/2024	2:45 AM	0	36	8	0	0	0	0	0	17	0	0	0	0
4/22/2024	3:00 AM	0	32	10	0	1	1	0	1	5	0	0	0	0
4/22/2024	3:15 AM	0	30	12	0	1	1	0	0	10	0	0	0	0
4/22/2024	3:30 AM	0	58	14	0	1	0	0	0	17	0	0	0	0
4/22/2024	3:45 AM	0	43	20	0	1	0	0	0	11	0	0	0	0
4/22/2024	4:00 AM	0	55	19	0	3	1	0	0	22	0	0	0	0
4/22/2024	4:15 AM	0	60	25	0	1	0	0	1	25	0	0	0	0
4/22/2024	4:30 AM	0	85	30	0	1	3	0	0	20	0	0	0	0
4/22/2024	4:45 AM	0	117	37	0	2	0	0	0	16	0	0	0	0
4/22/2024	5:00 AM	0	135	57	0	4	0	0	0	25	1	0	0	0
4/22/2024	5:15 AM	0	148	44	0	3	1	0	0	32	2	0	0	0
4/22/2024	5:30 AM	0	249	93	0	5	0	0	0	22	0	0	0	0
4/22/2024	5:45 AM	0	231	83	0	4	1	0	0	30	0	0	0	0
4/22/2024	6:00 AM	0	255	69	1	4	2	0	1	16	0	0	0	0
4/22/2024	6:15 AM	1	329	86	0	13	3	0	0	33	0	0	0	0
4/22/2024	6:30 AM	1	451	144	0	6	9	0	1	35	1	0	0	0
4/22/2024	6:45 AM	0	480	170	0	7	4	2	0	32	0	0	0	0
4/22/2024	7:00 AM	0	467	195	0	8	7	1	3	33	1	1	0	0
4/22/2024	7:15 AM	1	534	151	0	14	7	1	0	41	1	1	0	0
4/22/2024	7:30 AM	0	521	174	1	10	4	1	2	22	0	0	0	0
4/22/2024	7:45 AM	1	511	148	0	13	4	0	3	26	0	0	0	0
4/22/2024	8:00 AM	0	467	161	0	8	6	0	1	31	1	1	0	0
4/22/2024	8:15 AM	0	403	116	2	12	3	0	4	49	1	1	0	0
4/22/2024	8:30 AM	1	402	122	1	14	3	1	4	43	1	0	0	0
4/22/2024	8:45 AM	0	398	117	2	15	6	0	3	47	0	0	0	0
4/22/2024	9:00 AM	0	345	113	1	18	4	1	3	40	0	0	0	0
4/22/2024	9:15 AM	0	346	94	3	16	3	0	2	47	0	0	0	0
4/22/2024	9:30 AM	1	367	95	3	16	1	0	2	45	0	0	0	0
4/22/2024	9:45 AM	0	352	91	0	13	6	0	1	41	1	0	0	0
4/22/2024	10:00 AM	0	314	91	0	12	3	0	4	48	1	0	0	0
4/22/2024	10:15 AM	0	311	92	2	19	6	0	2	55	0	0	0	0
4/22/2024	10:30 AM	0	357	100	0	6	3	0	6	58	0	0	0	0
4/22/2024	10:45 AM	0	347	85	0	15	7	0	4	55	2	0	0	0
4/22/2024	11:00 AM	0	314	85	0	12	2	0	2	57	1	0	0	0
4/22/2024	11:15 AM	0	323	95	1	13	6	1	0	49	0	0	0	0
4/22/2024	11:30 AM	1	359	103	1	11	1	0	6	45	2	0	0	0
4/22/2024	11:45 AM	0	338	91	0	12	3	0	2	50	2	0	0	0
4/22/2024	12:00 PM	0	342	98	0	15	10	0	2	53	1	0	0	0
4/22/2024	12:15 PM	1	413	121	0	11	7	0	4	52	0	0	0	0
4/22/2024	12:30 PM	3	363	113	0	10	4	0	7	63	0	0	0	0
4/22/2024	12:45 PM	0	337	126	1	19	4	1	3	65	0	0	1	0
4/22/2024	1:00 PM	1	318	116	0	14	7	1	4	46	0	0	0	0
4/22/2024	1:15 PM	0	341	105	0	14	4	4	4	52	1	0	0	0
4/22/2024	1:30 PM	4	393	130	1	15	3	0	7	51	2	0	1	0
4/22/2024	1:45 PM	1	358	123	0	12	3	1	5	47	1	0	0	0
4/22/2024	2:00 PM	1	430	134	0	26	10	2	3	44	0	0	0	0
4/22/2024	2:15 PM	1	381	112	1	16	5	0	7	50	0	0	1	0
4/22/2024	2:30 PM	0	443	116	0	24	7	1	3	48	1	0	0	0
4/22/2024	2:45 PM	2	375	135	0	14	5	2	4	45	0	0	0	0
4/22/2024	3:00 PM	0	425	124	1	21	6	0	8	46	1	0	1	0
4/22/2024	3:15 PM	0	414	111	0	15	3	0	1	39	1	0	1	0
4/22/2024	3:30 PM	0	406	118	1	15	10	0	6	48	1	0	0	0
4/22/2024	3:45 PM	0	375	135	0	19	6	1	2	44	0	0	0	0
4/22/2024	4:00 PM	0	429	114	2	18	1	0	1	42	0	1	0	0
4/22/2024	4:15 PM	0	425	122	0	13	5	0	4	34	0	0	0	0
4/22/2024	4:30 PM	0	381	113	4	9	5	0	4	36	0	0	0	0
4/22/2024	4:45 PM	0	374	122	2	21	3	0	3	36	0	0	0	0
4/22/2024	5:00 PM	0	440	129	0	11	6	1	1	23	0	0	0	0
4/22/2024	5:15 PM	2	434	128	0	13	2	0	1	26	0	0	0	0
4/22/2024	5:30 PM	0	408	122	0	10	0	0	3	35	1	0	0	0
4/22/2024	5:45 PM	0	331	96	0	11	3	0	3	17	1	0	0	0
4/22/2024	6:00 PM	0	369	118	1	6	4	0	4	30	0	2	0	0
4/22/2024	6:15 PM	1	352	101	0	8	1	0	4	31	0	1	1	0
4/22/2024	6:30 PM	0	310	82	0	12	0	0	2	24	0	1	0	0
4/22/2024	6:45 PM	1	269	87	0	5	0	0	1	31	1	0	0	0
4/22/2024	7:00 PM	0	209	79	0	6	2	0	5	21	2	0	0	0
4/22/2024	7:15 PM	0	249	74	0	4	0	0	1	24	0	2	0	0
4/22/2024	7:30 PM	0	199	54	0	6	1	0	2	16	0	1	0	0
4/22/2024	7:45 PM	1	217	56	0	2	1	0	2	19	1	0	0	0
4/22/2024	8:00 PM	0	203	52	0	5	1	0	1	21	1	0	0	0
4/22/2024	8:15 PM	1	168	45	0	2	0	0	0	18	0	0	0	0
4/22/2024	8:30 PM	1	185	33	0	2	2	0	1	14	0	0	0	0
4/22/2024	8:45 PM	1	184	21	0	2	0	0	2	15	0	1	0	0
4/22/2024	9:00 PM	0	148	22	0	0	1	0	0	14	0	2	0	0
4/22/2024	9:15 PM	0	181	27	1	0	3	0	3	14	0	0	0	0
4/22/2024	9:30 PM	0	128	24	0	1	1	0	0	14	0	0	0	0
4/22/2024	9:45 PM	0	131	18	0	3	1	0	2	8	0	1	0	0
4/22/2024	10:00 PM	0	119	23	0	0	1	0	1	13	0	0	0	0
4/22/2024	10:15 PM	0	111	8	0	1	0	0	0	12	0	0	0	0
4/22/2024	10:30 PM	0	122	8	0	0	1	0	1	16	0	0	0	0
4/22/2024	10:45 PM	0	98	3	0	0	0	0	0	10	0	0	0	0
4/22/2024	11:00 PM	0	79	12	0	1	0	0	0	12	0	0	0	0
4/22/2024	11:15 PM	0	56	13	0	0	0	0	0	10	0	0	0	0
4/22/2024	11:30 PM	0	51	10	0	1	1	0	0	13	0	0	0	0
4/22/2024	11:45 PM	0	54	2	0	0	1	0	1	12	0	4	0	0

4/23/2024	12:00 AM	0	40	10	0	6	0	0	1	10	0	2	0	0
4/23/2024	12:15 AM	0	27	9	0	0	0	0	1	6	0	0	0	0
4/23/2024	12:30 AM	1	41	7	1	0	0	0	1	20	0	6	0	0
4/23/2024	12:45 AM	0	34	6	0	1	1	0	0	5	0	1	0	0
4/23/2024	1:00 AM	0	26	6	0	1	0	0	0	14	0	0	0	0
4/23/2024	1:15 AM	0	25	7	0	3	0	0	0	15	0	1	0	0
4/23/2024	1:30 AM	0	17	3	0	1	2	0	0	11	0	0	0	0
4/23/2024	1:45 AM	0	22	4	0	4	2	0	0	14	0	1	0	0
4/23/2024	2:00 AM	0	23	2	0	1	0	0	0	10	0	0	0	0
4/23/2024	2:15 AM	0	24	6	0	1	0	0	0	14	0	1	0	0
4/23/2024	2:30 AM	0	27	6	0	1	0	0	1	21	0	3	0	0
4/23/2024	2:45 AM	0	40	11	0	3	1	0	1	11	0	1	0	0
4/23/2024	3:00 AM	0	35	7	0	1	1	0	1	18	0	1	0	0
4/23/2024	3:15 AM	0	37	8	0	3	4	0	0	15	0	0	0	0
4/23/2024	3:30 AM	0	54	13	0	4	2	0	2	16	0	1	0	0
4/23/2024	3:45 AM	0	52	12	0	0	1	0	2	15	0	0	0	0
4/23/2024	4:00 AM	0	58	15	0	1	1	0	1	28	1	2	0	0
4/23/2024	4:15 AM	0	73	18	0	1	0	0	1	20	1	0	0	0
4/23/2024	4:30 AM	0	101	23	0	3	0	0	3	19	0	2	0	0
4/23/2024	4:45 AM	0	114	26	0	3	0	0	0	21	0	1	0	0
4/23/2024	5:00 AM	0	128	27	0	5	2	0	1	26	1	1	0	0
4/23/2024	5:15 AM	1	168	38	0	5	0	0	2	38	0	2	0	0
4/23/2024	5:30 AM	0	247	60	0	1	1	0	2	39	0	0	0	0
4/23/2024	5:45 AM	0	249	60	0	7	2	0	0	28	1	1	0	0
4/23/2024	6:00 AM	0	212	67	0	3	2	0	0	37	0	1	0	0
4/23/2024	6:15 AM	0	331	102	0	9	0	0	1	35	0	1	0	0
4/23/2024	6:30 AM	0	474	148	2	9	8	0	2	39	1	2	1	0
4/23/2024	6:45 AM	1	531	172	0	8	10	0	4	33	0	0	0	0
4/23/2024	7:00 AM	0	491	148	0	8	17	0	1	35	0	0	1	0
4/23/2024	7:15 AM	1	556	181	0	13	7	0	2	29	0	0	0	0
4/23/2024	7:30 AM	0	476	146	1	14	5	0	2	30	0	1	0	0
4/23/2024	7:45 AM	1	484	128	3	10	3	0	0	31	0	0	0	0
4/23/2024	8:00 AM	0	458	146	0	22	1	0	2	38	0	1	0	0
4/23/2024	8:15 AM	0	412	143	0	18	6	0	3	43	0	1	0	0
4/23/2024	8:30 AM	1	400	176	4	11	3	1	4	52	0	1	0	0
4/23/2024	8:45 AM	1	370	128	1	25	4	0	1	51	0	0	0	0
4/23/2024	9:00 AM	0	295	113	0	22	2	0	2	46	0	0	0	0
4/23/2024	9:15 AM	0	321	109	0	18	4	0	1	43	0	0	1	0
4/23/2024	9:30 AM	0	333	116	3	19	3	0	4	45	0	1	0	0
4/23/2024	9:45 AM	0	369	101	0	11	7	0	0	34	1	1	0	0
4/23/2024	10:00 AM	0	295	117	1	16	6	1	2	55	1	0	0	0
4/23/2024	10:15 AM	1	319	106	0	17	5	1	3	64	0	0	0	0
4/23/2024	10:30 AM	1	320	117	0	21	4	0	2	64	0	1	0	0
4/23/2024	10:45 AM	0	298	88	2	17	9	1	2	48	2	1	0	0
4/23/2024	11:00 AM	1	355	96	0	15	2	0	1	66	2	0	0	0
4/23/2024	11:15 AM	0	329	95	2	11	3	0	4	54	0	0	0	0
4/23/2024	11:30 AM	0	361	103	0	18	7	0	2	67	0	0	2	0
4/23/2024	11:45 AM	1	345	90	1	14	3	0	2	61	0	0	0	0
4/23/2024	12:00 PM	0	325	101	1	14	7	1	5	52	1	0	0	0
4/23/2024	12:15 PM	0	327	114	0	17	6	0	3	58	1	0	0	0
4/23/2024	12:30 PM	0	367	96	2	24	8	0	7	55	1	0	0	0
4/23/2024	12:45 PM	1	352	92	1	23	10	0	6	49	0	1	0	0
4/23/2024	1:00 PM	1	349	97	0	15	4	0	4	62	1	3	0	0
4/23/2024	1:15 PM	1	322	119	2	29	7	0	3	53	5	0	0	0
4/23/2024	1:30 PM	0	365	109	0	10	5	0	1	59	2	1	0	0
4/23/2024	1:45 PM	5	372	113	0	18	9	0	3	47	1	0	0	0
4/23/2024	2:00 PM	1	366	100	2	15	7	3	8	57	2	0	0	0
4/23/2024	2:15 PM	0	389	97	1	29	9	2	6	47	2	0	0	0
4/23/2024	2:30 PM	0	363	106	0	22	5	1	4	39	1	0	0	0
4/23/2024	2:45 PM	1	367	108	0	19	7	0	2	39	1	1	0	0
4/23/2024	3:00 PM	0	403	120	2	27	12	0	6	46	1	0	0	0
4/23/2024	3:15 PM	0	366	114	0	16	4	0	8	45	0	0	0	0
4/23/2024	3:30 PM	1	398	144	1	22	2	0	8	41	0	0	0	0
4/23/2024	3:45 PM	0	384	143	0	20	8	2	8	31	1	0	0	0
4/23/2024	4:00 PM	1	446	127	3	13	11	0	8	45	2	1	0	0
4/23/2024	4:15 PM	0	436	158	1	32	4	1	9	45	1	0	0	0
4/23/2024	4:30 PM	0	431	140	0	26	9	3	7	54	1	0	0	0
4/23/2024	4:45 PM	1	433	120	0	18	2	0	3	40	0	0	0	0
4/23/2024	5:00 PM	1	423	118	0	21	6	1	4	37	0	0	0	0
4/23/2024	5:15 PM	1	424	101	0	21	2	0	6	29	2	0	0	0
4/23/2024	5:30 PM	1	379	112	0	23	2	0	5	32	1	0	0	0
4/23/2024	5:45 PM	0	411	105	1	17	2	0	3	47	0	1	0	0
4/23/2024	6:00 PM	2	350	104	1	15	4	0	1	20	2	1	0	0
4/23/2024	6:15 PM	3	351	110	0	12	2	0	4	19	2	1	0	0
4/23/2024	6:30 PM	1	352	101	1	19	2	0	9	20	3	0	0	0
4/23/2024	6:45 PM	0	284	103	1	7	0	0	4	21	2	1	1	0
4/23/2024	7:00 PM	0	274	82	0	9	1	0	2	23	2	0	0	0
4/23/2024	7:15 PM	0	266	68	0	8	0	0	0	19	1	1	1	0
4/23/2024	7:30 PM	0	206	57	0	5	3	0	4	26	2	0	1	0
4/23/2024	7:45 PM	0	212	61	1	6	0	0	0	23	1	1	1	0
4/23/2024	8:00 PM	0	208	71	0	3	2	0	3	20	1	0	0	0
4/23/2024	8:15 PM	0	220	50	0	2	0	0	1	19	1	1	0	0
4/23/2024	8:30 PM	0	191	37	0	2	1	0	0	21	3	0	0	0
4/23/2024	8:45 PM	0	188	31	0	1	1	0	1	14	1	0	0	0
4/23/2024	9:00 PM	0	190	30	0	3	1	0	1	19	2	1	0	0
4/23/2024	9:15 PM	0	185	25	0	1	0	0	0	9	0	4	0	0
4/23/2024	9:30 PM	0	172	20	0	2	1	0	0	10	1	0	0	0
4/23/2024	9:45 PM	0	154	19	0	2	1	0	0	13	1	0	0	0
4/23/2024	10:00 PM	0	120	15	0	3	2	0	0	14	2	0	0	0
4/23/2024	10:15 PM	0	140	20	0	2	0	0	1	15	2	0	0	0
4/23/2024	10:30 PM	0	101	17	0	2	0	0	0	16	0	1	0	0
4/23/2024	10:45 PM	0	91	10	1	1	0	0	0	11	0	2	0	0
4/23/2024	11:00 PM	1	81	11	0	2	0	0	0	10	1	2	0	0
4/23/2024	11:15 PM	0	64	9	0	2	1	0	1	7	0	1	0	0
4/23/2024	11:30 PM	0	52	10	0	1	0	0	1	11	1	3	0	0
4/23/2024	11:45 PM	0	65	15	0	1	0	0	2	10	1	2	0	0

4/24/2024	12:00 AM	0	59	8	0	1	0	0	0	13	0	0	0	0
4/24/2024	12:15 AM	0	42	5	0	1	0	0	0	11	0	0	0	0
4/24/2024	12:30 AM	0	52	7	0	0	0	0	0	16	0	0	0	0
4/24/2024	12:45 AM	0	26	3	0	1	1	0	0	11	0	1	0	0
4/24/2024	1:00 AM	0	29	4	0	2	0	0	0	13	0	0	0	0
4/24/2024	1:15 AM	0	30	3	0	1	0	0	1	18	0	0	0	0
4/24/2024	1:30 AM	0	27	2	0	0	1	0	0	15	0	0	0	0
4/24/2024	1:45 AM	0	22	2	0	1	1	0	0	14	0	0	0	0
4/24/2024	2:00 AM	0	23	4	0	0	0	0	0	17	0	2	0	0
4/24/2024	2:15 AM	0	25	2	0	0	0	0	0	10	0	0	0	0
4/24/2024	2:30 AM	0	29	5	0	2	1	0	0	11	0	2	0	0
4/24/2024	2:45 AM	0	53	7	0	0	1	0	0	12	0	1	0	0
4/24/2024	3:00 AM	0	51	8	0	0	0	0	0	19	0	3	0	0
4/24/2024	3:15 AM	0	52	6	0	2	2	0	0	15	0	0	0	0
4/24/2024	3:30 AM	0	58	9	0	1	1	0	0	21	0	1	0	0
4/24/2024	3:45 AM	0	62	7	0	2	0	0	0	22	0	3	0	0
4/24/2024	4:00 AM	0	69	12	0	4	5	0	0	22	0	0	0	0
4/24/2024	4:15 AM	0	74	15	0	2	2	0	0	31	0	0	0	0
4/24/2024	4:30 AM	0	107	22	0	1	0	0	0	18	0	1	0	0
4/24/2024	4:45 AM	0	110	27	0	4	1	0	0	18	0	1	0	0
4/24/2024	5:00 AM	0	121	31	0	4	1	0	0	25	0	0	0	0
4/24/2024	5:15 AM	0	186	38	0	6	3	0	0	27	0	0	0	0
4/24/2024	5:30 AM	0	231	44	0	3	1	0	1	28	0	2	0	0
4/24/2024	5:45 AM	0	269	53	0	4	2	0	0	41	0	2	0	0
4/24/2024	6:00 AM	1	243	77	0	7	0	0	0	43	0	0	0	0
4/24/2024	6:15 AM	0	302	111	0	8	5	0	1	34	0	0	0	0
4/24/2024	6:30 AM	0	451	153	0	12	3	0	1	46	0	0	0	0
4/24/2024	6:45 AM	1	502	185	0	12	13	0	0	41	1	0	0	0
4/24/2024	7:00 AM	0	519	161	0	8	15	0	1	41	0	0	0	0
4/24/2024	7:15 AM	1	565	183	0	9	4	0	2	34	0	3	0	0
4/24/2024	7:30 AM	0	559	173	1	11	2	0	0	44	0	0	0	0
4/24/2024	7:45 AM	1	501	152	0	11	2	0	4	37	1	1	0	0
4/24/2024	8:00 AM	0	456	145	0	10	7	0	4	37	0	1	0	0
4/24/2024	8:15 AM	1	412	132	3	9	3	0	3	41	0	1	0	0
4/24/2024	8:30 AM	0	328	151	1	19	5	0	3	40	0	1	0	0
4/24/2024	8:45 AM	0	329	110	1	10	5	0	3	48	0	3	0	0
4/24/2024	9:00 AM	0	317	137	3	10	5	0	6	49	0	2	0	0
4/24/2024	9:15 AM	1	331	118	1	18	5	0	2	44	0	0	0	0
4/24/2024	9:30 AM	0	308	147	1	12	6	0	1	59	0	2	0	0
4/24/2024	9:45 AM	1	332	129	1	9	4	0	3	40	0	0	0	0
4/24/2024	10:00 AM	0	343	116	0	15	7	0	6	47	0	0	0	0
4/24/2024	10:15 AM	0	317	121	0	15	8	0	4	51	1	0	0	0
4/24/2024	10:30 AM	0	278	121	0	8	7	0	3	31	0	0	0	0
4/24/2024	10:45 AM	2	307	102	1	8	4	0	2	49	0	0	0	0
4/24/2024	11:00 AM	0	276	105	0	13	5	0	2	37	0	0	0	0
4/24/2024	11:15 AM	0	288	106	0	10	4	0	5	44	0	0	0	0
4/24/2024	11:30 AM	0	266	114	0	11	8	0	4	40	0	0	0	0
4/24/2024	11:45 AM	0	386	146	6	13	4	0	6	96	0	0	0	0
4/24/2024	12:00 PM	0	403	148	0	19	3	0	4	100	3	0	0	0
4/24/2024	12:15 PM	1	426	104	0	12	2	0	6	74	1	0	0	0
4/24/2024	12:30 PM	1	427	132	0	12	5	0	6	81	1	0	0	0
4/24/2024	12:45 PM	1	392	122	0	17	11	0	5	58	1	0	1	0
4/24/2024	1:00 PM	0	365	130	1	5	5	0	3	44	5	0	0	0
4/24/2024	1:15 PM	0	378	140	0	22	8	0	3	45	4	1	0	0
4/24/2024	1:30 PM	2	427	110	0	16	5	0	6	54	0	0	1	0
4/24/2024	1:45 PM	4	385	132	0	17	4	1	4	66	0	0	0	0
4/24/2024	2:00 PM	3	350	108	2	16	6	0	6	53	2	0	0	0
4/24/2024	2:15 PM	0	428	135	1	14	6	0	4	43	0	0	1	0
4/24/2024	2:30 PM	2	448	130	4	22	6	0	5	44	1	0	0	0
4/24/2024	2:45 PM	4	372	112	1	17	11	0	4	45	1	0	1	0
4/24/2024	3:00 PM	1	375	126	1	15	10	0	5	55	0	0	0	0
4/24/2024	3:15 PM	1	410	112	1	11	7	0	9	44	0	0	1	0
4/24/2024	3:30 PM	1	447	127	0	25	4	0	5	40	0	1	0	0
4/24/2024	3:45 PM	1	443	122	1	14	4	0	2	38	1	0	2	0
4/24/2024	4:00 PM	4	457	144	1	22	5	0	8	46	0	0	0	0
4/24/2024	4:15 PM	0	472	141	0	19	8	0	7	39	1	0	0	0
4/24/2024	4:30 PM	3	454	123	0	16	2	0	3	31	0	0	0	0
4/24/2024	4:45 PM	0	452	126	0	15	2	0	6	41	0	0	1	0
4/24/2024	5:00 PM	0	480	133	0	15	7	0	3	28	0	0	0	0
4/24/2024	5:15 PM	0	468	110	0	9	3	2	5	31	1	1	0	0
4/24/2024	5:30 PM	0	402	115	0	14	5	0	2	32	0	0	0	0
4/24/2024	5:45 PM	0	412	106	0	9	2	1	2	25	0	0	0	0
4/24/2024	6:00 PM	1	365	112	0	10	1	0	3	37	0	2	0	0
4/24/2024	6:15 PM	0	369	108	1	7	0	0	2	26	1	0	1	0
4/24/2024	6:30 PM	0	301	99	0	5	1	0	3	31	1	0	0	0
4/24/2024	6:45 PM	1	306	76	1	14	1	0	2	22	2	0	0	0
4/24/2024	7:00 PM	1	273	82	0	10	1	0	3	14	1	0	0	0
4/24/2024	7:15 PM	0	273	73	0	15	4	0	0	25	0	0	0	0
4/24/2024	7:30 PM	1	211	74	0	11	1	0	1	14	0	0	0	0
4/24/2024	7:45 PM	1	224	62	0	6	1	0	1	13	0	0	0	0
4/24/2024	8:00 PM	3	265	68	0	8	2	0	2	32	0	1	0	0
4/24/2024	8:15 PM	0	222	41	1	7	0	0	0	21	0	1	0	0
4/24/2024	8:30 PM	0	210	34	0	3	1	0	0	18	0	0	0	0
4/24/2024	8:45 PM	3	227	19	0	4	0	0	1	12	0	1	0	0
4/24/2024	9:00 PM	0	196	24	1	2	0	0	1	23	0	1	0	0
4/24/2024	9:15 PM	1	172	14	1	0	0	0	0	7	0	2	0	0
4/24/2024	9:30 PM	0	158	14	0	2	0	0	0	19	0	0	0	0
4/24/2024	9:45 PM	0	144	10	0	4	0	0	0	14	0	0	0	0
4/24/2024	10:00 PM	0	145	13	0	3	0	0	0	16	0	0	0	0
4/24/2024	10:15 PM	1	148	11	0	2	0	0	0	12	0	0	0	0
4/24/2024	10:30 PM	1	138	10	1	3	1	0	0	10	0	1	0	0
4/24/2024	10:45 PM	0	109	7	0	0	0	0	1	16	0	0	0	0
4/24/2024	11:00 PM	1	104	7	0	3	0	0	0	8	0	2	0	0
4/24/2024	11:15 PM	0	74	5	0	2	0	0	0	12	0	2	0	0
4/24/2024	11:30 PM	0	91	6	1	5	0	0	0	10	0	0	0	0
4/24/2024	11:45 PM	1	81	5	0	0	0	0	0	12	0	1	0	0

4/25/2024	12:00 AM	0	45	10	0	1	1	0	0	11	0	1	0	0
4/25/2024	12:15 AM	0	37	13	0	0	1	0	2	18	0	3	0	0
4/25/2024	12:30 AM	0	29	11	0	0	0	0	0	16	0	1	0	0
4/25/2024	12:45 AM	0	31	11	2	1	0	0	0	17	0	1	0	0
4/25/2024	1:00 AM	0	36	14	0	0	0	0	0	17	0	4	0	0
4/25/2024	1:15 AM	0	26	6	0	0	1	0	0	12	0	2	0	0
4/25/2024	1:30 AM	0	26	11	0	2	0	0	0	12	0	1	0	0
4/25/2024	1:45 AM	0	32	3	0	1	0	0	1	14	0	3	0	0
4/25/2024	2:00 AM	0	32	3	0	0	0	0	1	16	0	5	0	0
4/25/2024	2:15 AM	0	18	6	0	1	0	0	0	10	0	3	0	0
4/25/2024	2:30 AM	0	27	5	0	2	0	0	0	17	0	2	0	0
4/25/2024	2:45 AM	0	37	8	0	4	0	0	0	17	0	0	0	0
4/25/2024	3:00 AM	0	48	12	0	1	0	0	0	18	0	3	0	0
4/25/2024	3:15 AM	0	34	9	0	0	0	0	2	17	0	1	0	0
4/25/2024	3:30 AM	0	64	16	0	2	0	0	1	15	0	2	0	0
4/25/2024	3:45 AM	0	61	12	0	2	0	0	0	22	0	2	0	0
4/25/2024	4:00 AM	0	64	18	0	3	1	0	3	28	0	0	0	0
4/25/2024	4:15 AM	0	70	14	0	5	0	0	0	22	0	1	0	0
4/25/2024	4:30 AM	0	106	17	0	3	1	0	1	26	0	1	0	0
4/25/2024	4:45 AM	0	110	15	0	5	0	0	0	31	0	1	0	0
4/25/2024	5:00 AM	0	243	41	0	9	1	0	2	62	0	1	0	0
4/25/2024	5:15 AM	0	194	35	0	3	0	0	2	37	0	1	0	0
4/25/2024	5:30 AM	0	252	56	0	5	0	0	0	31	0	0	0	0
4/25/2024	5:45 AM	0	268	50	0	4	2	0	1	31	0	1	0	0
4/25/2024	6:00 AM	0	253	56	0	5	0	0	2	38	0	1	0	0
4/25/2024	6:15 AM	2	325	105	0	4	2	0	0	37	0	0	0	0
4/25/2024	6:30 AM	0	454	168	1	9	8	0	1	46	0	0	0	0
4/25/2024	6:45 AM	1	495	201	1	8	5	0	0	41	1	0	1	0
4/25/2024	7:00 AM	1	463	179	0	9	13	0	2	49	0	2	0	0
4/25/2024	7:15 AM	0	554	152	0	11	3	0	1	33	0	1	0	0
4/25/2024	7:30 AM	1	529	156	2	8	4	0	2	29	1	1	0	0
4/25/2024	7:45 AM	2	503	149	0	17	6	0	1	35	0	0	0	0
4/25/2024	8:00 AM	0	440	140	2	11	6	0	5	32	0	2	0	0
4/25/2024	8:15 AM	0	396	144	0	17	4	0	0	41	0	0	0	0
4/25/2024	8:30 AM	0	425	152	1	12	4	0	1	35	2	2	0	0
4/25/2024	8:45 AM	0	368	115	0	12	4	0	2	47	0	0	0	0
4/25/2024	9:00 AM	1	314	127	0	7	4	1	1	53	0	0	0	0
4/25/2024	9:15 AM	0	348	110	2	12	5	0	1	46	0	0	0	0
4/25/2024	9:30 AM	0	323	131	1	9	10	0	1	51	0	2	0	0
4/25/2024	9:45 AM	1	337	134	3	13	7	0	0	55	1	0	0	0
4/25/2024	10:00 AM	0	325	107	1	13	2	0	2	54	2	0	0	0
4/25/2024	10:15 AM	0	332	104	1	6	5	0	2	57	2	0	0	0
4/25/2024	10:30 AM	0	332	113	0	14	7	0	4	49	2	0	0	0
4/25/2024	10:45 AM	1	336	105	0	13	6	0	1	62	1	1	0	0
4/25/2024	11:00 AM	1	283	102	1	14	3	0	3	43	0	0	0	0
4/25/2024	11:15 AM	1	394	138	1	13	6	1	4	69	0	0	0	0
4/25/2024	11:30 AM	1	351	126	0	12	6	0	6	49	2	0	0	0
4/25/2024	11:45 AM	0	341	128	0	11	5	0	1	52	2	0	0	0
4/25/2024	12:00 PM	1	423	130	1	16	2	0	7	51	0	1	0	0
4/25/2024	12:15 PM	0	355	124	0	16	7	0	7	60	0	1	0	0
4/25/2024	12:30 PM	0	422	112	2	17	4	0	9	58	5	1	0	0
4/25/2024	12:45 PM	0	406	106	1	19	15	0	13	59	1	1	0	0
4/25/2024	1:00 PM	1	408	118	2	16	9	0	7	59	4	1	0	0
4/25/2024	1:15 PM	2	454	120	1	9	7	0	7	40	1	0	0	0
4/25/2024	1:30 PM	1	429	115	1	14	6	0	10	46	1	0	0	0
4/25/2024	1:45 PM	1	438	122	1	21	3	0	3	53	1	0	0	0
4/25/2024	2:00 PM	2	434	122	1	27	4	0	9	36	3	0	0	0
4/25/2024	2:15 PM	0	461	132	2	11	1	0	9	38	2	0	0	0
4/25/2024	2:30 PM	1	435	122	2	19	9	0	9	51	0	1	0	0
4/25/2024	2:45 PM	1	437	92	1	19	16	0	4	50	1	0	0	0
4/25/2024	3:00 PM	3	421	148	1	20	6	0	15	53	0	0	0	0
4/25/2024	3:15 PM	0	411	129	4	10	11	0	6	52	0	0	0	0
4/25/2024	3:30 PM	2	457	139	0	19	12	0	6	41	0	1	0	0
4/25/2024	3:45 PM	1	432	146	0	17	2	0	5	36	0	0	0	0
4/25/2024	4:00 PM	1	479	127	3	20	8	0	9	44	1	1	0	0
4/25/2024	4:15 PM	1	446	143	0	12	6	0	8	35	2	0	0	0
4/25/2024	4:30 PM	0	477	148	0	18	10	0	6	33	1	0	0	0
4/25/2024	4:45 PM	1	444	134	0	10	4	0	4	34	1	0	0	0
4/25/2024	5:00 PM	0	486	116	0	16	4	0	4	24	0	0	0	0
4/25/2024	5:15 PM	0	467	119	0	9	6	0	5	34	0	0	0	0
4/25/2024	5:30 PM	1	384	117	0	13	4	0	8	41	1	0	0	0
4/25/2024	5:45 PM	0	444	108	1	16	4	0	5	29	0	0	0	0
4/25/2024	6:00 PM	3	408	129	1	11	1	0	1	29	0	0	0	0
4/25/2024	6:15 PM	0	409	115	1	20	2	0	3	27	0	1	0	0
4/25/2024	6:30 PM	0	363	99	0	8	2	1	2	33	2	0	0	0
4/25/2024	6:45 PM	1	348	81	1	7	2	0	2	34	0	0	1	0
4/25/2024	7:00 PM	0	323	105	1	7	3	0	1	26	0	0	0	0
4/25/2024	7:15 PM	1	316	77	0	11	0	0	1	24	1	0	0	0
4/25/2024	7:30 PM	0	305	90	0	11	1	0	2	16	2	0	0	0
4/25/2024	7:45 PM	2	295	82	0	5	2	0	0	25	0	1	0	0
4/25/2024	8:00 PM	0	294	55	0	3	3	0	0	13	0	0	0	0
4/25/2024	8:15 PM	2	249	20	0	6	0	0	0	24	0	1	0	0
4/25/2024	8:30 PM	2	260	17	0	3	0	0	0	19	0	0	0	0
4/25/2024	8:45 PM	0	223	26	0	4	0	0	0	21	0	1	0	0
4/25/2024	9:00 PM	0	256	15	0	1	0	0	0	24	0	0	0	0
4/25/2024	9:15 PM	0	276	12	0	2	0	0	0	13	0	0	0	0
4/25/2024	9:30 PM	0	235	10	0	3	0	0	0	11	0	1	0	0
4/25/2024	9:45 PM	1	168	6	0	5	0	0	0	9	0	1	0	0
4/25/2024	10:00 PM	0	155	3	0	2	2	0	0	6	0	0	0	0
4/25/2024	10:15 PM	1	153	3	0	3	0	0	0	7	0	0	0	0
4/25/2024	10:30 PM	0	183	10	1	3	1	0	0	16	0	1	0	0
4/25/2024	10:45 PM	0	131	12	0	4	0	0	0	12	0	1	0	0
4/25/2024	11:00 PM	0	99	2	0	1	0	0	0	5	0	2	0	0
4/25/2024	11:15 PM	0	76	4	0	0	0	0	0	5	0	1	0	0
4/25/2024	11:30 PM	0	128	8	0	2	1	0	0	16	0	2	0	0
4/25/2024	11:45 PM	0	94	6	0	3	2	0	0	29	0	0	0	0

4/26/2024	12:00 AM	0	49	14	0	0	0	0	0	6	0	4	0	0
4/26/2024	12:15 AM	0	40	11	0	1	0	0	0	4	0	0	0	0
4/26/2024	12:30 AM	0	69	16	0	5	2	0	0	24	0	4	0	0
4/26/2024	12:45 AM	0	37	13	0	1	0	0	0	16	0	1	0	0
4/26/2024	1:00 AM	0	30	6	0	0	0	0	0	7	0	2	0	0
4/26/2024	1:15 AM	0	26	6	0	0	0	0	1	5	0	1	0	0
4/26/2024	1:30 AM	0	29	9	0	1	2	0	0	14	0	2	0	0
4/26/2024	1:45 AM	0	24	5	0	4	0	0	0	14	0	1	0	0
4/26/2024	2:00 AM	0	23	5	0	0	0	0	0	7	0	3	0	0
4/26/2024	2:15 AM	0	27	3	0	1	0	0	0	6	0	2	0	0
4/26/2024	2:30 AM	0	49	9	0	2	1	0	1	29	0	6	0	0
4/26/2024	2:45 AM	0	35	8	0	0	2	0	0	19	0	2	0	0
4/26/2024	3:00 AM	0	37	5	0	1	0	0	0	22	0	1	0	0
4/26/2024	3:15 AM	0	47	4	2	0	1	1	1	22	0	2	0	0
4/26/2024	3:30 AM	0	60	6	0	3	2	0	1	20	0	2	0	0
4/26/2024	3:45 AM	0	58	13	0	1	0	1	0	18	0	1	0	0
4/26/2024	4:00 AM	1	58	22	0	2	0	0	0	26	0	0	0	0
4/26/2024	4:15 AM	0	78	10	0	2	0	0	0	20	0	1	0	0
4/26/2024	4:30 AM	1	118	24	0	3	2	0	0	34	0	3	0	0
4/26/2024	4:45 AM	0	151	27	0	4	2	0	0	21	0	0	0	0
4/26/2024	5:00 AM	0	132	38	0	3	0	0	0	25	0	1	0	0
4/26/2024	5:15 AM	0	164	41	0	2	2	0	1	29	0	0	0	0
4/26/2024	5:30 AM	0	218	60	0	6	1	0	1	33	0	2	0	0
4/26/2024	5:45 AM	3	233	60	0	10	3	0	0	30	0	0	0	0
4/26/2024	6:00 AM	0	234	64	0	7	1	0	0	38	0	0	0	0
4/26/2024	6:15 AM	0	297	83	0	5	5	1	2	35	0	0	0	0
4/26/2024	6:30 AM	1	463	91	1	8	0	0	2	41	0	0	0	0
4/26/2024	6:45 AM	1	455	127	0	4	6	1	0	35	1	1	0	0
4/26/2024	7:00 AM	0	469	129	0	5	10	0	0	40	1	1	0	0
4/26/2024	7:15 AM	0	528	148	1	10	15	0	2	39	0	0	0	0
4/26/2024	7:30 AM	1	567	139	2	7	6	0	2	46	1	0	0	0
4/26/2024	7:45 AM	2	545	150	1	10	2	1	2	43	1	2	0	0
4/26/2024	8:00 AM	1	428	118	0	11	4	1	1	42	0	0	0	0
4/26/2024	8:15 AM	3	405	111	0	9	3	1	2	30	0	1	0	0
4/26/2024	8:30 AM	0	413	116	4	9	4	0	2	41	0	1	0	0
4/26/2024	8:45 AM	0	395	113	0	10	4	2	2	31	0	1	0	0
4/26/2024	9:00 AM	1	344	102	1	5	8	0	3	43	4	2	0	0
4/26/2024	9:15 AM	0	411	113	1	12	4	2	2	44	0	0	0	0
4/26/2024	9:30 AM	2	415	96	1	6	5	1	1	40	0	1	0	0
4/26/2024	9:45 AM	0	428	98	0	7	3	1	4	52	0	0	0	0
4/26/2024	10:00 AM	1	409	84	1	16	8	2	3	64	4	0	0	0
4/26/2024	10:15 AM	1	411	127	0	18	5	0	1	55	0	1	0	0
4/26/2024	10:30 AM	1	458	111	0	16	8	2	4	59	1	0	0	0
4/26/2024	10:45 AM	2	452	134	0	12	7	1	7	57	2	1	0	0
4/26/2024	11:00 AM	0	493	120	1	12	6	1	1	70	2	0	0	0
4/26/2024	11:15 AM	0	439	112	2	17	3	1	8	46	0	0	0	0
4/26/2024	11:30 AM	1	406	139	1	15	6	3	7	60	0	0	0	0
4/26/2024	11:45 AM	0	442	155	2	24	12	0	5	54	1	0	0	0
4/26/2024	12:00 PM	1	454	138	0	9	4	1	4	58	3	0	0	0
4/26/2024	12:15 PM	0	464	149	1	12	8	0	4	50	1	0	0	0
4/26/2024	12:30 PM	0	423	119	3	16	8	1	2	48	3	0	0	0
4/26/2024	12:45 PM	4	432	122	0	8	4	0	3	43	0	1	0	0
4/26/2024	1:00 PM	2	470	154	0	11	4	0	2	38	3	0	1	0
4/26/2024	1:15 PM	1	492	124	0	14	9	1	1	40	0	0	0	0
4/26/2024	1:30 PM	0	471	131	2	9	6	0	3	44	0	0	0	0
4/26/2024	1:45 PM	1	444	144	1	9	7	0	1	31	0	0	0	0
4/26/2024	2:00 PM	3	380	98	3	11	12	0	3	30	0	0	0	0
4/26/2024	2:15 PM	1	459	136	1	17	1	0	1	36	0	0	0	0
4/26/2024	2:30 PM	5	478	154	2	16	6	1	1	34	0	0	0	0
4/26/2024	2:45 PM	1	477	132	2	7	10	0	2	38	0	0	0	0
4/26/2024	3:00 PM	1	489	120	0	9	8	0	2	37	1	0	0	0
4/26/2024	3:15 PM	1	465	129	0	11	4	1	4	31	1	0	0	0
4/26/2024	3:30 PM	0	483	142	0	12	4	0	2	29	0	0	0	0
4/26/2024	3:45 PM	0	486	147	0	17	7	0	1	27	0	0	2	0
4/26/2024	4:00 PM	0	454	108	0	16	5	0	3	26	0	0	0	0
4/26/2024	4:15 PM	0	478	130	1	9	0	0	3	22	0	1	0	0
4/26/2024	4:30 PM	3	434	143	0	7	5	0	0	24	0	1	1	0
4/26/2024	4:45 PM	4	495	126	1	15	4	0	2	19	0	0	1	0
4/26/2024	5:00 PM	0	499	134	0	11	2	0	4	20	0	0	0	0
4/26/2024	5:15 PM	1	536	112	1	10	3	0	5	29	0	0	0	0
4/26/2024	5:30 PM	1	516	133	0	11	1	0	2	26	3	0	1	0
4/26/2024	5:45 PM	4	486	127	3	13	6	0	1	18	0	0	0	0
4/26/2024	6:00 PM	0	443	114	1	8	1	0	1	15	1	0	0	0
4/26/2024	6:15 PM	0	483	103	1	17	2	0	1	17	0	0	0	0
4/26/2024	6:30 PM	1	421	100	0	14	0	0	2	11	0	0	0	0
4/26/2024	6:45 PM	0	419	102	1	17	0	0	1	18	0	0	1	0
4/26/2024	7:00 PM	1	367	96	0	9	2	0	1	14	1	0	0	0
4/26/2024	7:15 PM	0	319	92	1	8	0	0	2	24	0	1	0	0
4/26/2024	7:30 PM	0	274	76	0	5	0	0	0	18	0	0	0	0
4/26/2024	7:45 PM	3	290	72	3	5	2	0	0	10	0	0	0	0
4/26/2024	8:00 PM	1	305	68	0	3	0	0	1	11	0	0	0	0
4/26/2024	8:15 PM	0	252	65	0	8	1	0	1	5	0	0	0	0
4/26/2024	8:30 PM	0	264	51	0	5	0	0	2	12	0	0	0	0
4/26/2024	8:45 PM	0	239	45	0	2	0	0	1	16	0	0	0	0
4/26/2024	9:00 PM	0	219	44	0	1	0	0	0	12	0	0	0	0
4/26/2024	9:15 PM	0	221	41	0	2	1	0	0	6	0	0	0	0
4/26/2024	9:30 PM	0	212	44	0	2	1	0	0	12	0	0	0	0
4/26/2024	9:45 PM	0	224	37	0	1	0	0	0	7	0	0	0	0
4/26/2024	10:00 PM	0	193	32	1	4	0	0	0	6	0	0	0	0
4/26/2024	10:15 PM	0	190	34	0	1	0	0	0	6	0	0	0	0
4/26/2024	10:30 PM	0	144	26	0	1	1	0	3	16	0	0	0	0
4/26/2024	10:45 PM	0	137	28	0	1	0	0	0	10	0	0	0	0
4/26/2024	11:00 PM	0	127	29	0	1	0	0	0	12	0	0	0	0
4/26/2024	11:15 PM	0	116	26	0	0	2	0	0	9	0	0	0	0
4/26/2024	11:30 PM	0	103	26	0	0	0	0	0	6	0	0	0	0
4/26/2024	11:45 PM	0	82	14	0	1	2	0	0	6	0	0	0	0

4/27/2024	12:00 AM	0	96	16	0	0	0	0	0	11	0	1	0	0
4/27/2024	12:15 AM	0	89	10	0	0	0	0	0	6	0	2	0	0
4/27/2024	12:30 AM	0	85	8	0	0	0	0	0	6	0	2	0	0
4/27/2024	12:45 AM	0	52	7	0	1	0	0	0	12	0	2	0	0
4/27/2024	1:00 AM	1	42	8	0	1	0	0	1	8	0	1	0	0
4/27/2024	1:15 AM	0	35	8	0	0	0	0	1	9	0	1	0	0
4/27/2024	1:30 AM	0	42	4	0	1	0	0	0	6	0	0	0	0
4/27/2024	1:45 AM	0	54	7	0	2	0	0	1	5	0	3	0	0
4/27/2024	2:00 AM	0	41	4	0	1	0	0	0	5	0	5	0	0
4/27/2024	2:15 AM	0	39	6	0	0	0	0	0	6	0	5	0	0
4/27/2024	2:30 AM	0	36	3	0	0	0	0	0	9	0	0	0	0
4/27/2024	2:45 AM	0	46	8	0	1	0	0	0	4	0	1	0	0
4/27/2024	3:00 AM	0	47	11	1	0	0	0	0	6	0	2	0	0
4/27/2024	3:15 AM	0	48	10	0	0	1	0	1	10	0	0	0	0
4/27/2024	3:30 AM	0	50	7	0	2	1	0	0	10	0	0	0	0
4/27/2024	3:45 AM	0	62	7	0	1	0	0	0	2	0	1	0	0
4/27/2024	4:00 AM	0	48	5	0	3	0	0	1	6	0	2	0	0
4/27/2024	4:15 AM	0	57	7	0	1	0	0	1	8	0	2	0	0
4/27/2024	4:30 AM	0	87	10	0	0	0	0	0	6	0	2	0	0
4/27/2024	4:45 AM	1	86	12	0	3	0	0	0	9	0	0	0	0
4/27/2024	5:00 AM	0	75	15	0	1	0	0	1	2	0	0	0	0
4/27/2024	5:15 AM	0	98	21	0	0	0	0	0	3	0	0	0	0
4/27/2024	5:30 AM	1	106	22	1	2	1	0	1	8	0	1	0	0
4/27/2024	5:45 AM	1	116	18	0	2	0	0	0	12	0	0	0	0
4/27/2024	6:00 AM	0	92	27	0	0	1	0	0	6	0	1	0	0
4/27/2024	6:15 AM	1	154	39	0	1	0	0	0	6	0	1	0	0
4/27/2024	6:30 AM	0	189	55	0	3	2	0	0	5	0	1	0	0
4/27/2024	6:45 AM	2	192	40	0	2	1	0	0	10	0	1	0	0
4/27/2024	7:00 AM	0	177	31	0	5	2	0	1	21	0	1	0	0
4/27/2024	7:15 AM	0	192	54	0	4	1	0	4	4	0	1	0	0
4/27/2024	7:30 AM	0	239	79	0	8	2	0	1	10	0	0	0	0
4/27/2024	7:45 AM	0	261	67	3	2	4	0	0	15	0	3	0	0
4/27/2024	8:00 AM	0	271	68	0	6	1	0	2	11	0	0	0	0
4/27/2024	8:15 AM	2	309	65	1	2	1	0	3	13	0	0	0	0
4/27/2024	8:30 AM	10	357	85	0	4	3	0	0	12	0	0	0	0
4/27/2024	8:45 AM	1	352	91	1	6	1	0	3	11	0	0	0	0
4/27/2024	9:00 AM	1	340	87	0	6	2	0	0	15	0	1	0	0
4/27/2024	9:15 AM	0	357	109	0	6	2	0	0	11	0	0	0	0
4/27/2024	9:30 AM	3	429	100	0	12	2	0	0	14	0	0	0	0
4/27/2024	9:45 AM	2	444	92	1	7	1	0	2	19	0	0	0	0
4/27/2024	10:00 AM	17	422	97	0	7	0	0	2	12	0	0	0	0
4/27/2024	10:15 AM	1	442	89	0	5	0	0	1	18	0	0	0	0
4/27/2024	10:30 AM	5	436	96	0	2	4	0	0	13	0	0	0	0
4/27/2024	10:45 AM	2	411	95	0	5	1	0	4	11	0	0	0	0
4/27/2024	11:00 AM	0	374	90	1	1	1	0	2	7	0	0	0	0
4/27/2024	11:15 AM	1	373	92	0	3	2	0	0	10	0	0	0	0
4/27/2024	11:30 AM	1	422	95	0	4	1	0	0	11	0	0	0	0
4/27/2024	11:45 AM	3	570	133	3	8	1	0	0	10	0	1	0	0
4/27/2024	12:00 PM	1	540	120	0	4	1	0	0	21	0	0	0	0
4/27/2024	12:15 PM	2	545	127	0	7	2	0	0	20	0	0	0	0
4/27/2024	12:30 PM	2	447	123	0	5	0	0	0	7	0	0	0	0
4/27/2024	12:45 PM	2	446	124	0	12	2	0	0	9	0	0	0	0
4/27/2024	1:00 PM	3	464	104	0	12	1	0	1	8	0	0	0	0
4/27/2024	1:15 PM	4	462	125	0	4	4	0	0	13	0	0	0	0
4/27/2024	1:30 PM	4	490	101	2	8	0	0	0	12	0	0	0	0
4/27/2024	1:45 PM	1	450	129	0	11	5	0	1	11	0	1	0	0
4/27/2024	2:00 PM	3	492	103	0	6	0	0	0	5	0	0	0	0
4/27/2024	2:15 PM	0	460	106	1	2	1	0	0	11	0	0	0	0
4/27/2024	2:30 PM	0	464	115	0	8	3	0	0	10	0	0	0	0
4/27/2024	2:45 PM	1	475	93	0	5	2	0	1	13	0	0	0	0
4/27/2024	3:00 PM	2	424	98	0	9	0	0	0	12	0	0	0	0
4/27/2024	3:15 PM	5	447	119	0	5	0	0	0	9	0	0	0	0
4/27/2024	3:30 PM	5	454	129	0	3	0	0	0	6	0	0	0	0
4/27/2024	3:45 PM	3	426	105	0	8	2	0	3	9	0	0	0	0
4/27/2024	4:00 PM	1	429	102	0	6	0	0	0	9	0	1	0	0
4/27/2024	4:15 PM	1	452	98	1	2	0	0	2	6	0	0	0	0
4/27/2024	4:30 PM	0	387	100	1	7	1	0	2	4	0	0	0	0
4/27/2024	4:45 PM	2	402	93	0	5	1	0	0	11	0	0	0	0
4/27/2024	5:00 PM	0	420	120	0	3	0	0	0	14	0	0	0	0
4/27/2024	5:15 PM	3	447	77	0	4	0	0	0	12	0	0	0	0
4/27/2024	5:30 PM	5	362	97	0	3	0	0	0	7	0	0	0	0
4/27/2024	5:45 PM	2	398	89	1	2	0	0	0	10	0	0	0	0
4/27/2024	6:00 PM	2	390	81	0	3	0	0	0	11	0	0	0	0
4/27/2024	6:15 PM	7	399	85	0	2	0	0	0	7	0	0	0	0
4/27/2024	6:30 PM	0	418	77	0	4	0	0	2	8	0	0	0	0
4/27/2024	6:45 PM	0	361	65	1	5	0	0	1	5	0	0	0	0
4/27/2024	7:00 PM	1	343	63	1	1	1	0	1	7	0	0	1	0
4/27/2024	7:15 PM	0	304	49	0	4	0	0	1	10	0	0	0	0
4/27/2024	7:30 PM	2	319	62	0	2	0	0	1	5	0	0	0	0
4/27/2024	7:45 PM	2	278	49	0	2	0	0	1	9	0	0	0	0
4/27/2024	8:00 PM	1	310	66	0	1	1	0	0	4	0	1	0	0
4/27/2024	8:15 PM	0	295	53	2	2	2	0	0	5	0	0	0	0
4/27/2024	8:30 PM	0	280	44	0	5	0	0	0	5	0	0	0	0
4/27/2024	8:45 PM	0	257	52	0	2	2	0	0	6	0	0	0	0
4/27/2024	9:00 PM	0	220	34	0	0	0	0	0	1	0	0	0	0
4/27/2024	9:15 PM	0	234	40	0	1	0	0	0	4	0	0	0	0
4/27/2024	9:30 PM	0	210	38	0	2	0	0	0	2	0	0	0	0
4/27/2024	9:45 PM	0	180	26	0	1	0	0	1	2	0	0	0	0
4/27/2024	10:00 PM	0	188	28	0	1	0	0	0	1	0	0	0	0
4/27/2024	10:15 PM	0	190	25	0	1	0	0	0	1	0	0	0	0
4/27/2024	10:30 PM	0	188	35	0	2	0	0	0	3	0	0	0	0
4/27/2024	10:45 PM	0	130	26	0	3	0	0	0	2	0	0	0	0
4/27/2024	11:00 PM	0	140	25	1	1	0	0	0	5	0	0	0	0
4/27/2024	11:15 PM	0	123	22	0	1	0	0	0	7	0	0	0	0
4/27/2024	11:30 PM	0	94	19	0	0	0	0	0	6	0	0	0	0
4/27/2024	11:45 PM	0	92	17	0	0	0	0	0	4	0	0	0	0

EB
File Name:
Start Date: 4/21/2024
Start Time: 0
Site Code: 6
Station ID: 1
Location 1: I-26 W/Bound On-Ramp, west of US-76
Location 2:

Date	Time	1	2	3	4	5	6	7	8	9	10	11	12	13
4/21/2024	12:00 AM	0	0	0	0	0	0	0	0	0	0	0	0	0
4/21/2024	12:15 AM	0	0	0	0	0	0	0	0	0	0	0	0	0
4/21/2024	12:30 AM	0	0	0	0	0	0	0	0	0	0	0	0	0
4/21/2024	12:45 AM	0	0	0	0	0	0	0	0	0	0	0	0	0
4/21/2024	1:00 AM	0	0	0	0	0	0	0	0	0	0	0	0	0
4/21/2024	1:15 AM	0	0	0	0	0	0	0	0	0	0	0	0	0
4/21/2024	1:30 AM	0	0	0	0	0	0	0	0	0	0	0	0	0
4/21/2024	1:45 AM	0	0	0	0	0	0	0	0	0	0	0	0	0
4/21/2024	2:00 AM	0	0	0	0	0	0	0	0	0	0	0	0	0
4/21/2024	2:15 AM	0	0	0	0	0	0	0	0	0	0	0	0	0
4/21/2024	2:30 AM	0	0	0	0	0	0	0	0	0	0	0	0	0
4/21/2024	2:45 AM	0	0	0	0	0	0	0	0	0	0	0	0	0
4/21/2024	3:00 AM	0	0	0	0	0	0	0	0	0	0	0	0	0
4/21/2024	3:15 AM	0	0	0	0	0	0	0	0	0	0	0	0	0
4/21/2024	3:30 AM	0	0	0	0	0	0	0	0	0	0	0	0	0
4/21/2024	3:45 AM	0	0	0	0	0	0	0	0	0	0	0	0	0
4/21/2024	4:00 AM	0	0	0	0	0	0	0	0	0	0	0	0	0
4/21/2024	4:15 AM	0	0	0	0	0	0	0	0	0	0	0	0	0
4/21/2024	4:30 AM	0	0	0	0	0	0	0	0	0	0	0	0	0
4/21/2024	4:45 AM	0	0	0	0	0	0	0	0	0	0	0	0	0
4/21/2024	5:00 AM	0	0	0	0	0	0	0	0	0	0	0	0	0
4/21/2024	5:15 AM	0	0	0	0	0	0	0	0	0	0	0	0	0
4/21/2024	5:30 AM	0	0	0	0	0	0	0	0	0	0	0	0	0
4/21/2024	5:45 AM	0	0	0	0	0	0	0	0	0	0	0	0	0
4/21/2024	6:00 AM	0	0	0	0	0	0	0	0	0	0	0	0	0
4/21/2024	6:15 AM	0	0	0	0	0	0	0	0	0	0	0	0	0
4/21/2024	6:30 AM	0	0	0	0	0	0	0	0	0	0	0	0	0
4/21/2024	6:45 AM	0	0	0	0	0	0	0	0	0	0	0	0	0
4/21/2024	7:00 AM	0	0	0	0	0	0	0	0	0	0	0	0	0
4/21/2024	7:15 AM	0	0	0	0	0	0	0	0	0	0	0	0	0
4/21/2024	7:30 AM	0	0	0	0	0	0	0	0	0	0	0	0	0
4/21/2024	7:45 AM	0	0	0	0	0	0	0	0	0	0	0	0	0
4/21/2024	8:00 AM	0	0	0	0	0	0	0	0	0	0	0	0	0
4/21/2024	8:15 AM	0	0	0	0	0	0	0	0	0	0	0	0	0
4/21/2024	8:30 AM	0	0	0	0	0	0	0	0	0	0	0	0	0
4/21/2024	8:45 AM	0	0	0	0	0	0	0	0	0	0	0	0	0
4/21/2024	9:00 AM	0	0	0	0	0	0	0	0	0	0	0	0	0
4/21/2024	9:15 AM	0	0	0	0	0	0	0	0	0	0	0	0	0
4/21/2024	9:30 AM	0	0	0	0	0	0	0	0	0	0	0	0	0
4/21/2024	9:45 AM	0	0	0	0	0	0	0	0	0	0	0	0	0
4/21/2024	10:00 AM	0	0	0	0	0	0	0	0	0	0	0	0	0
4/21/2024	10:15 AM	0	0	0	0	0	0	0	0	0	0	0	0	0
4/21/2024	10:30 AM	0	0	0	0	0	0	0	0	0	0	0	0	0
4/21/2024	10:45 AM	0	0	0	0	0	0	0	0	0	0	0	0	0
4/21/2024	11:00 AM	0	0	0	0	0	0	0	0	0	0	0	0	0
4/21/2024	11:15 AM	0	0	0	0	0	0	0	0	0	0	0	0	0
4/21/2024	11:30 AM	0	0	0	0	0	0	0	0	0	0	0	0	0
4/21/2024	11:45 AM	0	0	0	0	0	0	0	0	0	0	0	0	0
4/21/2024	12:00 PM	0	0	0	0	0	0	0	0	0	0	0	0	0
4/21/2024	12:15 PM	0	0	0	0	0	0	0	0	0	0	0	0	0
4/21/2024	12:30 PM	0	0	0	0	0	0	0	0	0	0	0	0	0
4/21/2024	12:45 PM	0	0	0	0	0	0	0	0	0	0	0	0	0
4/21/2024	1:00 PM	0	0	0	0	0	0	0	0	0	0	0	0	0
4/21/2024	1:15 PM	0	0	0	0	0	0	0	0	0	0	0	0	0
4/21/2024	1:30 PM	0	0	0	0	0	0	0	0	0	0	0	0	0
4/21/2024	1:45 PM	0	0	0	0	0	0	0	0	0	0	0	0	0
4/21/2024	2:00 PM	0	0	0	0	0	0	0	0	0	0	0	0	0
4/21/2024	2:15 PM	0	0	0	0	0	0	0	0	0	0	0	0	0
4/21/2024	2:30 PM	0	0	0	0	0	0	0	0	0	0	0	0	0
4/21/2024	2:45 PM	0	0	0	0	0	0	0	0	0	0	0	0	0
4/21/2024	3:00 PM	0	0	0	0	0	0	0	0	0	0	0	0	0
4/21/2024	3:15 PM	0	0	0	0	0	0	0	0	0	0	0	0	0
4/21/2024	3:30 PM	0	0	0	0	0	0	0	0	0	0	0	0	0
4/21/2024	3:45 PM	0	0	0	0	0	0	0	0	0	0	0	0	0
4/21/2024	4:00 PM	0	0	0	0	0	0	0	0	0	0	0	0	0
4/21/2024	4:15 PM	0	0	0	0	0	0	0	0	0	0	0	0	0
4/21/2024	4:30 PM	0	0	0	0	0	0	0	0	0	0	0	0	0
4/21/2024	4:45 PM	0	0	0	0	0	0	0	0	0	0	0	0	0
4/21/2024	5:00 PM	0	0	0	0	0	0	0	0	0	0	0	0	0
4/21/2024	5:15 PM	0	0	0	0	0	0	0	0	0	0	0	0	0
4/21/2024	5:30 PM	0	0	0	0	0	0	0	0	0	0	0	0	0
4/21/2024	5:45 PM	0	0	0	0	0	0	0	0	0	0	0	0	0
4/21/2024	6:00 PM	0	0	0	0	0	0	0	0	0	0	0	0	0
4/21/2024	6:15 PM	0	0	0	0	0	0	0	0	0	0	0	0	0
4/21/2024	6:30 PM	0	0	0	0	0	0	0	0	0	0	0	0	0
4/21/2024	6:45 PM	0	0	0	0	0	0	0	0	0	0	0	0	0
4/21/2024	7:00 PM	0	0	0	0	0	0	0	0	0	0	0	0	0
4/21/2024	7:15 PM	0	0	0	0	0	0	0	0	0	0	0	0	0
4/21/2024	7:30 PM	0	0	0	0	0	0	0	0	0	0	0	0	0
4/21/2024	7:45 PM	0	0	0	0	0	0	0	0	0	0	0	0	0
4/21/2024	8:00 PM	0	0	0	0	0	0	0	0	0	0	0	0	0
4/21/2024	8:15 PM	0	0	0	0	0	0	0	0	0	0	0	0	0
4/21/2024	8:30 PM	0	0	0	0	0	0	0	0	0	0	0	0	0
4/21/2024	8:45 PM	0	0	0	0	0	0	0	0	0	0	0	0	0
4/21/2024	9:00 PM	0	0	0	0	0	0	0	0	0	0	0	0	0
4/21/2024	9:15 PM	0	0	0	0	0	0	0	0	0	0	0	0	0
4/21/2024	9:30 PM	0	0	0	0	0	0	0	0	0	0	0	0	0
4/21/2024	9:45 PM	0	0	0	0	0	0	0	0	0	0	0	0	0
4/21/2024	10:00 PM	0	0	0	0	0	0	0	0	0	0	0	0	0
4/21/2024	10:15 PM	0	0	0	0	0	0	0	0	0	0	0	0	0
4/21/2024	10:30 PM	0	0	0	0	0	0	0	0	0	0	0	0	0
4/21/2024	10:45 PM	0	0	0	0	0	0	0	0	0	0	0	0	0
4/21/2024	11:00 PM	0	0	0	0	0	0	0	0	0	0	0	0	0
4/21/2024	11:15 PM	0	0	0	0	0	0	0	0	0	0	0	0	0
4/21/2024	11:30 PM	0	0	0	0	0	0	0	0	0	0	0	0	0
4/21/2024	11:45 PM	0	0	0	0	0	0	0	0	0	0	0	0	0

4/22/2024	12:00 AM	0	0	0	0	0	0	0	0	0	0	0	0	0
4/22/2024	12:15 AM	0	0	0	0	0	0	0	0	0	0	0	0	0
4/22/2024	12:30 AM	0	0	0	0	0	0	0	0	0	0	0	0	0
4/22/2024	12:45 AM	0	0	0	0	0	0	0	0	0	0	0	0	0
4/22/2024	1:00 AM	0	0	0	0	0	0	0	0	0	0	0	0	0
4/22/2024	1:15 AM	0	0	0	0	0	0	0	0	0	0	0	0	0
4/22/2024	1:30 AM	0	0	0	0	0	0	0	0	0	0	0	0	0
4/22/2024	1:45 AM	0	0	0	0	0	0	0	0	0	0	0	0	0
4/22/2024	2:00 AM	0	0	0	0	0	0	0	0	0	0	0	0	0
4/22/2024	2:15 AM	0	0	0	0	0	0	0	0	0	0	0	0	0
4/22/2024	2:30 AM	0	0	0	0	0	0	0	0	0	0	0	0	0
4/22/2024	2:45 AM	0	0	0	0	0	0	0	0	0	0	0	0	0
4/22/2024	3:00 AM	0	0	0	0	0	0	0	0	0	0	0	0	0
4/22/2024	3:15 AM	0	0	0	0	0	0	0	0	0	0	0	0	0
4/22/2024	3:30 AM	0	0	0	0	0	0	0	0	0	0	0	0	0
4/22/2024	3:45 AM	0	0	0	0	0	0	0	0	0	0	0	0	0
4/22/2024	4:00 AM	0	0	0	0	0	0	0	0	0	0	0	0	0
4/22/2024	4:15 AM	0	0	0	0	0	0	0	0	0	0	0	0	0
4/22/2024	4:30 AM	0	0	0	0	0	0	0	0	0	0	0	0	0
4/22/2024	4:45 AM	0	0	0	0	0	0	0	0	0	0	0	0	0
4/22/2024	5:00 AM	0	0	0	0	0	0	0	0	0	0	0	0	0
4/22/2024	5:15 AM	0	0	0	0	0	0	0	0	0	0	0	0	0
4/22/2024	5:30 AM	0	0	0	0	0	0	0	0	0	0	0	0	0
4/22/2024	5:45 AM	0	0	0	0	0	0	0	0	0	0	0	0	0
4/22/2024	6:00 AM	0	0	0	0	0	0	0	0	0	0	0	0	0
4/22/2024	6:15 AM	0	0	0	0	0	0	0	0	0	0	0	0	0
4/22/2024	6:30 AM	0	0	0	0	0	0	0	0	0	0	0	0	0
4/22/2024	6:45 AM	0	0	0	0	0	0	0	0	0	0	0	0	0
4/22/2024	7:00 AM	0	0	0	0	0	0	0	0	0	0	0	0	0
4/22/2024	7:15 AM	0	0	0	0	0	0	0	0	0	0	0	0	0
4/22/2024	7:30 AM	0	0	0	0	0	0	0	0	0	0	0	0	0
4/22/2024	7:45 AM	0	0	0	0	0	0	0	0	0	0	0	0	0
4/22/2024	8:00 AM	0	0	0	0	0	0	0	0	0	0	0	0	0
4/22/2024	8:15 AM	0	0	0	0	0	0	0	0	0	0	0	0	0
4/22/2024	8:30 AM	0	0	0	0	0	0	0	0	0	0	0	0	0
4/22/2024	8:45 AM	0	0	0	0	0	0	0	0	0	0	0	0	0
4/22/2024	9:00 AM	0	0	0	0	0	0	0	0	0	0	0	0	0
4/22/2024	9:15 AM	0	0	0	0	0	0	0	0	0	0	0	0	0
4/22/2024	9:30 AM	0	0	0	0	0	0	0	0	0	0	0	0	0
4/22/2024	9:45 AM	0	0	0	0	0	0	0	0	0	0	0	0	0
4/22/2024	10:00 AM	0	0	0	0	0	0	0	0	0	0	0	0	0
4/22/2024	10:15 AM	0	0	0	0	0	0	0	0	0	0	0	0	0
4/22/2024	10:30 AM	0	0	0	0	0	0	0	0	0	0	0	0	0
4/22/2024	10:45 AM	0	0	0	0	0	0	0	0	0	0	0	0	0
4/22/2024	11:00 AM	0	0	0	0	0	0	0	0	0	0	0	0	0
4/22/2024	11:15 AM	0	0	0	0	0	0	0	0	0	0	0	0	0
4/22/2024	11:30 AM	0	0	0	0	0	0	0	0	0	0	0	0	0
4/22/2024	11:45 AM	0	0	0	0	0	0	0	0	0	0	0	0	0
4/22/2024	12:00 PM	0	0	0	0	0	0	0	0	0	0	0	0	0
4/22/2024	12:15 PM	0	0	0	0	0	0	0	0	0	0	0	0	0
4/22/2024	12:30 PM	0	0	0	0	0	0	0	0	0	0	0	0	0
4/22/2024	12:45 PM	0	0	0	0	0	0	0	0	0	0	0	0	0
4/22/2024	1:00 PM	0	0	0	0	0	0	0	0	0	0	0	0	0
4/22/2024	1:15 PM	0	0	0	0	0	0	0	0	0	0	0	0	0
4/22/2024	1:30 PM	0	0	0	0	0	0	0	0	0	0	0	0	0
4/22/2024	1:45 PM	0	0	0	0	0	0	0	0	0	0	0	0	0
4/22/2024	2:00 PM	0	0	0	0	0	0	0	0	0	0	0	0	0
4/22/2024	2:15 PM	0	0	0	0	0	0	0	0	0	0	0	0	0
4/22/2024	2:30 PM	0	0	0	0	0	0	0	0	0	0	0	0	0
4/22/2024	2:45 PM	0	0	0	0	0	0	0	0	0	0	0	0	0
4/22/2024	3:00 PM	0	0	0	0	0	0	0	0	0	0	0	0	0
4/22/2024	3:15 PM	0	0	0	0	0	0	0	0	0	0	0	0	0
4/22/2024	3:30 PM	0	0	0	0	0	0	0	0	0	0	0	0	0
4/22/2024	3:45 PM	0	0	0	0	0	0	0	0	0	0	0	0	0
4/22/2024	4:00 PM	0	0	0	0	0	0	0	0	0	0	0	0	0
4/22/2024	4:15 PM	0	0	0	0	0	0	0	0	0	0	0	0	0
4/22/2024	4:30 PM	0	0	0	0	0	0	0	0	0	0	0	0	0
4/22/2024	4:45 PM	0	0	0	0	0	0	0	0	0	0	0	0	0
4/22/2024	5:00 PM	0	0	0	0	0	0	0	0	0	0	0	0	0
4/22/2024	5:15 PM	0	0	0	0	0	0	0	0	0	0	0	0	0
4/22/2024	5:30 PM	0	0	0	0	0	0	0	0	0	0	0	0	0
4/22/2024	5:45 PM	0	0	0	0	0	0	0	0	0	0	0	0	0
4/22/2024	6:00 PM	0	0	0	0	0	0	0	0	0	0	0	0	0
4/22/2024	6:15 PM	0	0	0	0	0	0	0	0	0	0	0	0	0
4/22/2024	6:30 PM	0	0	0	0	0	0	0	0	0	0	0	0	0
4/22/2024	6:45 PM	0	0	0	0	0	0	0	0	0	0	0	0	0
4/22/2024	7:00 PM	0	0	0	0	0	0	0	0	0	0	0	0	0
4/22/2024	7:15 PM	0	0	0	0	0	0	0	0	0	0	0	0	0
4/22/2024	7:30 PM	0	0	0	0	0	0	0	0	0	0	0	0	0
4/22/2024	7:45 PM	0	0	0	0	0	0	0	0	0	0	0	0	0
4/22/2024	8:00 PM	0	0	0	0	0	0	0	0	0	0	0	0	0
4/22/2024	8:15 PM	0	0	0	0	0	0	0	0	0	0	0	0	0
4/22/2024	8:30 PM	0	0	0	0	0	0	0	0	0	0	0	0	0
4/22/2024	8:45 PM	0	0	0	0	0	0	0	0	0	0	0	0	0
4/22/2024	9:00 PM	0	0	0	0	0	0	0	0	0	0	0	0	0
4/22/2024	9:15 PM	0	0	0	0	0	0	0	0	0	0	0	0	0
4/22/2024	9:30 PM	0	0	0	0	0	0	0	0	0	0	0	0	0
4/22/2024	9:45 PM	0	0	0	0	0	0	0	0	0	0	0	0	0
4/22/2024	10:00 PM	0	0	0	0	0	0	0	0	0	0	0	0	0
4/22/2024	10:15 PM	0	0	0	0	0	0	0	0	0	0	0	0	0
4/22/2024	10:30 PM	0	0	0	0	0	0	0	0	0	0	0	0	0
4/22/2024	10:45 PM	0	0	0	0	0	0	0	0	0	0	0	0	0
4/22/2024	11:00 PM	0	0	0	0	0	0	0	0	0	0	0	0	0
4/22/2024	11:15 PM	0	0	0	0	0	0	0	0	0	0	0	0	0
4/22/2024	11:30 PM	0	0	0	0	0	0	0	0	0	0	0	0	0
4/22/2024	11:45 PM	0	0	0	0	0	0	0	0	0	0	0	0	0

4/23/2024	12:00 AM	0	0	0	0	0	0	0	0	0	0	0	0	0
4/23/2024	12:15 AM	0	0	0	0	0	0	0	0	0	0	0	0	0
4/23/2024	12:30 AM	0	0	0	0	0	0	0	0	0	0	0	0	0
4/23/2024	12:45 AM	0	0	0	0	0	0	0	0	0	0	0	0	0
4/23/2024	1:00 AM	0	0	0	0	0	0	0	0	0	0	0	0	0
4/23/2024	1:15 AM	0	0	0	0	0	0	0	0	0	0	0	0	0
4/23/2024	1:30 AM	0	0	0	0	0	0	0	0	0	0	0	0	0
4/23/2024	1:45 AM	0	0	0	0	0	0	0	0	0	0	0	0	0
4/23/2024	2:00 AM	0	0	0	0	0	0	0	0	0	0	0	0	0
4/23/2024	2:15 AM	0	0	0	0	0	0	0	0	0	0	0	0	0
4/23/2024	2:30 AM	0	0	0	0	0	0	0	0	0	0	0	0	0
4/23/2024	2:45 AM	0	0	0	0	0	0	0	0	0	0	0	0	0
4/23/2024	3:00 AM	0	0	0	0	0	0	0	0	0	0	0	0	0
4/23/2024	3:15 AM	0	0	0	0	0	0	0	0	0	0	0	0	0
4/23/2024	3:30 AM	0	0	0	0	0	0	0	0	0	0	0	0	0
4/23/2024	3:45 AM	0	0	0	0	0	0	0	0	0	0	0	0	0
4/23/2024	4:00 AM	0	0	0	0	0	0	0	0	0	0	0	0	0
4/23/2024	4:15 AM	0	0	0	0	0	0	0	0	0	0	0	0	0
4/23/2024	4:30 AM	0	0	0	0	0	0	0	0	0	0	0	0	0
4/23/2024	4:45 AM	0	0	0	0	0	0	0	0	0	0	0	0	0
4/23/2024	5:00 AM	0	0	0	0	0	0	0	0	0	0	0	0	0
4/23/2024	5:15 AM	0	0	0	0	0	0	0	0	0	0	0	0	0
4/23/2024	5:30 AM	0	0	0	0	0	0	0	0	0	0	0	0	0
4/23/2024	5:45 AM	0	0	0	0	0	0	0	0	0	0	0	0	0
4/23/2024	6:00 AM	0	0	0	0	0	0	0	0	0	0	0	0	0
4/23/2024	6:15 AM	0	0	0	0	0	0	0	0	0	0	0	0	0
4/23/2024	6:30 AM	0	0	0	0	0	0	0	0	0	0	0	0	0
4/23/2024	6:45 AM	0	0	0	0	0	0	0	0	0	0	0	0	0
4/23/2024	7:00 AM	0	0	0	0	0	0	0	0	0	0	0	0	0
4/23/2024	7:15 AM	0	0	0	0	0	0	0	0	0	0	0	0	0
4/23/2024	7:30 AM	0	0	0	0	0	0	0	0	0	0	0	0	0
4/23/2024	7:45 AM	0	0	0	0	0	0	0	0	0	0	0	0	0
4/23/2024	8:00 AM	0	0	0	0	0	0	0	0	0	0	0	0	0
4/23/2024	8:15 AM	0	0	0	0	0	0	0	0	0	0	0	0	0
4/23/2024	8:30 AM	0	0	0	0	0	0	0	0	0	0	0	0	0
4/23/2024	8:45 AM	0	0	0	0	0	0	0	0	0	0	0	0	0
4/23/2024	9:00 AM	0	0	0	0	0	0	0	0	0	0	0	0	0
4/23/2024	9:15 AM	0	0	0	0	0	0	0	0	0	0	0	0	0
4/23/2024	9:30 AM	0	0	0	0	0	0	0	0	0	0	0	0	0
4/23/2024	9:45 AM	0	0	0	0	0	0	0	0	0	0	0	0	0
4/23/2024	10:00 AM	0	0	0	0	0	0	0	0	0	0	0	0	0
4/23/2024	10:15 AM	0	0	0	0	0	0	0	0	0	0	0	0	0
4/23/2024	10:30 AM	0	0	0	0	0	0	0	0	0	0	0	0	0
4/23/2024	10:45 AM	0	0	0	0	0	0	0	0	0	0	0	0	0
4/23/2024	11:00 AM	0	0	0	0	0	0	0	0	0	0	0	0	0
4/23/2024	11:15 AM	0	0	0	0	0	0	0	0	0	0	0	0	0
4/23/2024	11:30 AM	0	0	0	0	0	0	0	0	0	0	0	0	0
4/23/2024	11:45 AM	0	0	0	0	0	0	0	0	0	0	0	0	0
4/23/2024	12:00 PM	0	0	0	0	0	0	0	0	0	0	0	0	0
4/23/2024	12:15 PM	0	0	0	0	0	0	0	0	0	0	0	0	0
4/23/2024	12:30 PM	0	0	0	0	0	0	0	0	0	0	0	0	0
4/23/2024	12:45 PM	0	0	0	0	0	0	0	0	0	0	0	0	0
4/23/2024	1:00 PM	0	0	0	0	0	0	0	0	0	0	0	0	0
4/23/2024	1:15 PM	0	0	0	0	0	0	0	0	0	0	0	0	0
4/23/2024	1:30 PM	0	0	0	0	0	0	0	0	0	0	0	0	0
4/23/2024	1:45 PM	0	0	0	0	0	0	0	0	0	0	0	0	0
4/23/2024	2:00 PM	0	0	0	0	0	0	0	0	0	0	0	0	0
4/23/2024	2:15 PM	0	0	0	0	0	0	0	0	0	0	0	0	0
4/23/2024	2:30 PM	0	0	0	0	0	0	0	0	0	0	0	0	0
4/23/2024	2:45 PM	0	0	0	0	0	0	0	0	0	0	0	0	0
4/23/2024	3:00 PM	0	0	0	0	0	0	0	0	0	0	0	0	0
4/23/2024	3:15 PM	0	0	0	0	0	0	0	0	0	0	0	0	0
4/23/2024	3:30 PM	0	0	0	0	0	0	0	0	0	0	0	0	0
4/23/2024	3:45 PM	0	0	0	0	0	0	0	0	0	0	0	0	0
4/23/2024	4:00 PM	0	0	0	0	0	0	0	0	0	0	0	0	0
4/23/2024	4:15 PM	0	0	0	0	0	0	0	0	0	0	0	0	0
4/23/2024	4:30 PM	0	0	0	0	0	0	0	0	0	0	0	0	0
4/23/2024	4:45 PM	0	0	0	0	0	0	0	0	0	0	0	0	0
4/23/2024	5:00 PM	0	0	0	0	0	0	0	0	0	0	0	0	0
4/23/2024	5:15 PM	0	0	0	0	0	0	0	0	0	0	0	0	0
4/23/2024	5:30 PM	0	0	0	0	0	0	0	0	0	0	0	0	0
4/23/2024	5:45 PM	0	0	0	0	0	0	0	0	0	0	0	0	0
4/23/2024	6:00 PM	0	0	0	0	0	0	0	0	0	0	0	0	0
4/23/2024	6:15 PM	0	0	0	0	0	0	0	0	0	0	0	0	0
4/23/2024	6:30 PM	0	0	0	0	0	0	0	0	0	0	0	0	0
4/23/2024	6:45 PM	0	0	0	0	0	0	0	0	0	0	0	0	0
4/23/2024	7:00 PM	0	0	0	0	0	0	0	0	0	0	0	0	0
4/23/2024	7:15 PM	0	0	0	0	0	0	0	0	0	0	0	0	0
4/23/2024	7:30 PM	0	0	0	0	0	0	0	0	0	0	0	0	0
4/23/2024	7:45 PM	0	0	0	0	0	0	0	0	0	0	0	0	0
4/23/2024	8:00 PM	0	0	0	0	0	0	0	0	0	0	0	0	0
4/23/2024	8:15 PM	0	0	0	0	0	0	0	0	0	0	0	0	0
4/23/2024	8:30 PM	0	0	0	0	0	0	0	0	0	0	0	0	0
4/23/2024	8:45 PM	0	0	0	0	0	0	0	0	0	0	0	0	0
4/23/2024	9:00 PM	0	0	0	0	0	0	0	0	0	0	0	0	0
4/23/2024	9:15 PM	0	0	0	0	0	0	0	0	0	0	0	0	0
4/23/2024	9:30 PM	0	0	0	0	0	0	0	0	0	0	0	0	0
4/23/2024	9:45 PM	0	0	0	0	0	0	0	0	0	0	0	0	0
4/23/2024	10:00 PM	0	0	0	0	0	0	0	0	0	0	0	0	0
4/23/2024	10:15 PM	0	0	0	0	0	0	0	0	0	0	0	0	0
4/23/2024	10:30 PM	0	0	0	0	0	0	0	0	0	0	0	0	0
4/23/2024	10:45 PM	0	0	0	0	0	0	0	0	0	0	0	0	0
4/23/2024	11:00 PM	0	0	0	0	0	0	0	0	0	0	0	0	0
4/23/2024	11:15 PM	0	0	0	0	0	0	0	0	0	0	0	0	0
4/23/2024	11:30 PM	0	0	0	0	0	0	0	0	0	0	0	0	0
4/23/2024	11:45 PM	0	0	0	0	0	0	0	0	0	0	0	0	0

4/24/2024	12:00 AM	0	0	0	0	0	0	0	0	0	0	0	0	0
4/24/2024	12:15 AM	0	0	0	0	0	0	0	0	0	0	0	0	0
4/24/2024	12:30 AM	0	0	0	0	0	0	0	0	0	0	0	0	0
4/24/2024	12:45 AM	0	0	0	0	0	0	0	0	0	0	0	0	0
4/24/2024	1:00 AM	0	0	0	0	0	0	0	0	0	0	0	0	0
4/24/2024	1:15 AM	0	0	0	0	0	0	0	0	0	0	0	0	0
4/24/2024	1:30 AM	0	0	0	0	0	0	0	0	0	0	0	0	0
4/24/2024	1:45 AM	0	0	0	0	0	0	0	0	0	0	0	0	0
4/24/2024	2:00 AM	0	0	0	0	0	0	0	0	0	0	0	0	0
4/24/2024	2:15 AM	0	0	0	0	0	0	0	0	0	0	0	0	0
4/24/2024	2:30 AM	0	0	0	0	0	0	0	0	0	0	0	0	0
4/24/2024	2:45 AM	0	0	0	0	0	0	0	0	0	0	0	0	0
4/24/2024	3:00 AM	0	0	0	0	0	0	0	0	0	0	0	0	0
4/24/2024	3:15 AM	0	0	0	0	0	0	0	0	0	0	0	0	0
4/24/2024	3:30 AM	0	0	0	0	0	0	0	0	0	0	0	0	0
4/24/2024	3:45 AM	0	0	0	0	0	0	0	0	0	0	0	0	0
4/24/2024	4:00 AM	0	0	0	0	0	0	0	0	0	0	0	0	0
4/24/2024	4:15 AM	0	0	0	0	0	0	0	0	0	0	0	0	0
4/24/2024	4:30 AM	0	0	0	0	0	0	0	0	0	0	0	0	0
4/24/2024	4:45 AM	0	0	0	0	0	0	0	0	0	0	0	0	0
4/24/2024	5:00 AM	0	0	0	0	0	0	0	0	0	0	0	0	0
4/24/2024	5:15 AM	0	0	0	0	0	0	0	0	0	0	0	0	0
4/24/2024	5:30 AM	0	0	0	0	0	0	0	0	0	0	0	0	0
4/24/2024	5:45 AM	0	0	0	0	0	0	0	0	0	0	0	0	0
4/24/2024	6:00 AM	0	0	0	0	0	0	0	0	0	0	0	0	0
4/24/2024	6:15 AM	0	0	0	0	0	0	0	0	0	0	0	0	0
4/24/2024	6:30 AM	0	0	0	0	0	0	0	0	0	0	0	0	0
4/24/2024	6:45 AM	0	0	0	0	0	0	0	0	0	0	0	0	0
4/24/2024	7:00 AM	0	0	0	0	0	0	0	0	0	0	0	0	0
4/24/2024	7:15 AM	0	0	0	0	0	0	0	0	0	0	0	0	0
4/24/2024	7:30 AM	0	0	0	0	0	0	0	0	0	0	0	0	0
4/24/2024	7:45 AM	0	0	0	0	0	0	0	0	0	0	0	0	0
4/24/2024	8:00 AM	0	0	0	0	0	0	0	0	0	0	0	0	0
4/24/2024	8:15 AM	0	0	0	0	0	0	0	0	0	0	0	0	0
4/24/2024	8:30 AM	0	0	0	0	0	0	0	0	0	0	0	0	0
4/24/2024	8:45 AM	0	0	0	0	0	0	0	0	0	0	0	0	0
4/24/2024	9:00 AM	0	0	0	0	0	0	0	0	0	0	0	0	0
4/24/2024	9:15 AM	0	0	0	0	0	0	0	0	0	0	0	0	0
4/24/2024	9:30 AM	0	0	0	0	0	0	0	0	0	0	0	0	0
4/24/2024	9:45 AM	0	0	0	0	0	0	0	0	0	0	0	0	0
4/24/2024	10:00 AM	0	0	0	0	0	0	0	0	0	0	0	0	0
4/24/2024	10:15 AM	0	0	0	0	0	0	0	0	0	0	0	0	0
4/24/2024	10:30 AM	0	0	0	0	0	0	0	0	0	0	0	0	0
4/24/2024	10:45 AM	0	0	0	0	0	0	0	0	0	0	0	0	0
4/24/2024	11:00 AM	0	0	0	0	0	0	0	0	0	0	0	0	0
4/24/2024	11:15 AM	0	0	0	0	0	0	0	0	0	0	0	0	0
4/24/2024	11:30 AM	0	0	0	0	0	0	0	0	0	0	0	0	0
4/24/2024	11:45 AM	0	0	0	0	0	0	0	0	0	0	0	0	0
4/24/2024	12:00 PM	0	0	0	0	0	0	0	0	0	0	0	0	0
4/24/2024	12:15 PM	0	0	0	0	0	0	0	0	0	0	0	0	0
4/24/2024	12:30 PM	0	0	0	0	0	0	0	0	0	0	0	0	0
4/24/2024	12:45 PM	0	0	0	0	0	0	0	0	0	0	0	0	0
4/24/2024	1:00 PM	0	0	0	0	0	0	0	0	0	0	0	0	0
4/24/2024	1:15 PM	0	0	0	0	0	0	0	0	0	0	0	0	0
4/24/2024	1:30 PM	0	0	0	0	0	0	0	0	0	0	0	0	0
4/24/2024	1:45 PM	0	0	0	0	0	0	0	0	0	0	0	0	0
4/24/2024	2:00 PM	0	0	0	0	0	0	0	0	0	0	0	0	0
4/24/2024	2:15 PM	0	0	0	0	0	0	0	0	0	0	0	0	0
4/24/2024	2:30 PM	0	0	0	0	0	0	0	0	0	0	0	0	0
4/24/2024	2:45 PM	0	0	0	0	0	0	0	0	0	0	0	0	0
4/24/2024	3:00 PM	0	0	0	0	0	0	0	0	0	0	0	0	0
4/24/2024	3:15 PM	0	0	0	0	0	0	0	0	0	0	0	0	0
4/24/2024	3:30 PM	0	0	0	0	0	0	0	0	0	0	0	0	0
4/24/2024	3:45 PM	0	0	0	0	0	0	0	0	0	0	0	0	0
4/24/2024	4:00 PM	0	0	0	0	0	0	0	0	0	0	0	0	0
4/24/2024	4:15 PM	0	0	0	0	0	0	0	0	0	0	0	0	0
4/24/2024	4:30 PM	0	0	0	0	0	0	0	0	0	0	0	0	0
4/24/2024	4:45 PM	0	0	0	0	0	0	0	0	0	0	0	0	0
4/24/2024	5:00 PM	0	0	0	0	0	0	0	0	0	0	0	0	0
4/24/2024	5:15 PM	0	0	0	0	0	0	0	0	0	0	0	0	0
4/24/2024	5:30 PM	0	0	0	0	0	0	0	0	0	0	0	0	0
4/24/2024	5:45 PM	0	0	0	0	0	0	0	0	0	0	0	0	0
4/24/2024	6:00 PM	0	0	0	0	0	0	0	0	0	0	0	0	0
4/24/2024	6:15 PM	0	0	0	0	0	0	0	0	0	0	0	0	0
4/24/2024	6:30 PM	0	0	0	0	0	0	0	0	0	0	0	0	0
4/24/2024	6:45 PM	0	0	0	0	0	0	0	0	0	0	0	0	0
4/24/2024	7:00 PM	0	0	0	0	0	0	0	0	0	0	0	0	0
4/24/2024	7:15 PM	0	0	0	0	0	0	0	0	0	0	0	0	0
4/24/2024	7:30 PM	0	0	0	0	0	0	0	0	0	0	0	0	0
4/24/2024	7:45 PM	0	0	0	0	0	0	0	0	0	0	0	0	0
4/24/2024	8:00 PM	0	0	0	0	0	0	0	0	0	0	0	0	0
4/24/2024	8:15 PM	0	0	0	0	0	0	0	0	0	0	0	0	0
4/24/2024	8:30 PM	0	0	0	0	0	0	0	0	0	0	0	0	0
4/24/2024	8:45 PM	0	0	0	0	0	0	0	0	0	0	0	0	0
4/24/2024	9:00 PM	0	0	0	0	0	0	0	0	0	0	0	0	0
4/24/2024	9:15 PM	0	0	0	0	0	0	0	0	0	0	0	0	0
4/24/2024	9:30 PM	0	0	0	0	0	0	0	0	0	0	0	0	0
4/24/2024	9:45 PM	0	0	0	0	0	0	0	0	0	0	0	0	0
4/24/2024	10:00 PM	0	0	0	0	0	0	0	0	0	0	0	0	0
4/24/2024	10:15 PM	0	0	0	0	0	0	0	0	0	0	0	0	0
4/24/2024	10:30 PM	0	0	0	0	0	0	0	0	0	0	0	0	0
4/24/2024	10:45 PM	0	0	0	0	0	0	0	0	0	0	0	0	0
4/24/2024	11:00 PM	0	0	0	0	0	0	0	0	0	0	0	0	0
4/24/2024	11:15 PM	0	0	0	0	0	0	0	0	0	0	0	0	0
4/24/2024	11:30 PM	0	0	0	0	0	0	0	0	0	0	0	0	0
4/24/2024	11:45 PM	0	0	0	0	0	0	0	0	0	0	0	0	0

4/25/2024	12:00 AM	0	0	0	0	0	0	0	0	0	0	0	0	0
4/25/2024	12:15 AM	0	0	0	0	0	0	0	0	0	0	0	0	0
4/25/2024	12:30 AM	0	0	0	0	0	0	0	0	0	0	0	0	0
4/25/2024	12:45 AM	0	0	0	0	0	0	0	0	0	0	0	0	0
4/25/2024	1:00 AM	0	0	0	0	0	0	0	0	0	0	0	0	0
4/25/2024	1:15 AM	0	0	0	0	0	0	0	0	0	0	0	0	0
4/25/2024	1:30 AM	0	0	0	0	0	0	0	0	0	0	0	0	0
4/25/2024	1:45 AM	0	0	0	0	0	0	0	0	0	0	0	0	0
4/25/2024	2:00 AM	0	0	0	0	0	0	0	0	0	0	0	0	0
4/25/2024	2:15 AM	0	0	0	0	0	0	0	0	0	0	0	0	0
4/25/2024	2:30 AM	0	0	0	0	0	0	0	0	0	0	0	0	0
4/25/2024	2:45 AM	0	0	0	0	0	0	0	0	0	0	0	0	0
4/25/2024	3:00 AM	0	0	0	0	0	0	0	0	0	0	0	0	0
4/25/2024	3:15 AM	0	0	0	0	0	0	0	0	0	0	0	0	0
4/25/2024	3:30 AM	0	0	0	0	0	0	0	0	0	0	0	0	0
4/25/2024	3:45 AM	0	0	0	0	0	0	0	0	0	0	0	0	0
4/25/2024	4:00 AM	0	0	0	0	0	0	0	0	0	0	0	0	0
4/25/2024	4:15 AM	0	0	0	0	0	0	0	0	0	0	0	0	0
4/25/2024	4:30 AM	0	0	0	0	0	0	0	0	0	0	0	0	0
4/25/2024	4:45 AM	0	0	0	0	0	0	0	0	0	0	0	0	0
4/25/2024	5:00 AM	0	0	0	0	0	0	0	0	0	0	0	0	0
4/25/2024	5:15 AM	0	0	0	0	0	0	0	0	0	0	0	0	0
4/25/2024	5:30 AM	0	0	0	0	0	0	0	0	0	0	0	0	0
4/25/2024	5:45 AM	0	0	0	0	0	0	0	0	0	0	0	0	0
4/25/2024	6:00 AM	0	0	0	0	0	0	0	0	0	0	0	0	0
4/25/2024	6:15 AM	0	0	0	0	0	0	0	0	0	0	0	0	0
4/25/2024	6:30 AM	0	0	0	0	0	0	0	0	0	0	0	0	0
4/25/2024	6:45 AM	0	0	0	0	0	0	0	0	0	0	0	0	0
4/25/2024	7:00 AM	0	0	0	0	0	0	0	0	0	0	0	0	0
4/25/2024	7:15 AM	0	0	0	0	0	0	0	0	0	0	0	0	0
4/25/2024	7:30 AM	0	0	0	0	0	0	0	0	0	0	0	0	0
4/25/2024	7:45 AM	0	0	0	0	0	0	0	0	0	0	0	0	0
4/25/2024	8:00 AM	0	0	0	0	0	0	0	0	0	0	0	0	0
4/25/2024	8:15 AM	0	0	0	0	0	0	0	0	0	0	0	0	0
4/25/2024	8:30 AM	0	0	0	0	0	0	0	0	0	0	0	0	0
4/25/2024	8:45 AM	0	0	0	0	0	0	0	0	0	0	0	0	0
4/25/2024	9:00 AM	0	0	0	0	0	0	0	0	0	0	0	0	0
4/25/2024	9:15 AM	0	0	0	0	0	0	0	0	0	0	0	0	0
4/25/2024	9:30 AM	0	0	0	0	0	0	0	0	0	0	0	0	0
4/25/2024	9:45 AM	0	0	0	0	0	0	0	0	0	0	0	0	0
4/25/2024	10:00 AM	0	0	0	0	0	0	0	0	0	0	0	0	0
4/25/2024	10:15 AM	0	0	0	0	0	0	0	0	0	0	0	0	0
4/25/2024	10:30 AM	0	0	0	0	0	0	0	0	0	0	0	0	0
4/25/2024	10:45 AM	0	0	0	0	0	0	0	0	0	0	0	0	0
4/25/2024	11:00 AM	0	0	0	0	0	0	0	0	0	0	0	0	0
4/25/2024	11:15 AM	0	0	0	0	0	0	0	0	0	0	0	0	0
4/25/2024	11:30 AM	0	0	0	0	0	0	0	0	0	0	0	0	0
4/25/2024	11:45 AM	0	0	0	0	0	0	0	0	0	0	0	0	0
4/25/2024	12:00 PM	0	0	0	0	0	0	0	0	0	0	0	0	0
4/25/2024	12:15 PM	0	0	0	0	0	0	0	0	0	0	0	0	0
4/25/2024	12:30 PM	0	0	0	0	0	0	0	0	0	0	0	0	0
4/25/2024	12:45 PM	0	0	0	0	0	0	0	0	0	0	0	0	0
4/25/2024	1:00 PM	0	0	0	0	0	0	0	0	0	0	0	0	0
4/25/2024	1:15 PM	0	0	0	0	0	0	0	0	0	0	0	0	0
4/25/2024	1:30 PM	0	0	0	0	0	0	0	0	0	0	0	0	0
4/25/2024	1:45 PM	0	0	0	0	0	0	0	0	0	0	0	0	0
4/25/2024	2:00 PM	0	0	0	0	0	0	0	0	0	0	0	0	0
4/25/2024	2:15 PM	0	0	0	0	0	0	0	0	0	0	0	0	0
4/25/2024	2:30 PM	0	0	0	0	0	0	0	0	0	0	0	0	0
4/25/2024	2:45 PM	0	0	0	0	0	0	0	0	0	0	0	0	0
4/25/2024	3:00 PM	0	0	0	0	0	0	0	0	0	0	0	0	0
4/25/2024	3:15 PM	0	0	0	0	0	0	0	0	0	0	0	0	0
4/25/2024	3:30 PM	0	0	0	0	0	0	0	0	0	0	0	0	0
4/25/2024	3:45 PM	0	0	0	0	0	0	0	0	0	0	0	0	0
4/25/2024	4:00 PM	0	0	0	0	0	0	0	0	0	0	0	0	0
4/25/2024	4:15 PM	0	0	0	0	0	0	0	0	0	0	0	0	0
4/25/2024	4:30 PM	0	0	0	0	0	0	0	0	0	0	0	0	0
4/25/2024	4:45 PM	0	0	0	0	0	0	0	0	0	0	0	0	0
4/25/2024	5:00 PM	0	0	0	0	0	0	0	0	0	0	0	0	0
4/25/2024	5:15 PM	0	0	0	0	0	0	0	0	0	0	0	0	0
4/25/2024	5:30 PM	0	0	0	0	0	0	0	0	0	0	0	0	0
4/25/2024	5:45 PM	0	0	0	0	0	0	0	0	0	0	0	0	0
4/25/2024	6:00 PM	0	0	0	0	0	0	0	0	0	0	0	0	0
4/25/2024	6:15 PM	0	0	0	0	0	0	0	0	0	0	0	0	0
4/25/2024	6:30 PM	0	0	0	0	0	0	0	0	0	0	0	0	0
4/25/2024	6:45 PM	0	0	0	0	0	0	0	0	0	0	0	0	0
4/25/2024	7:00 PM	0	0	0	0	0	0	0	0	0	0	0	0	0
4/25/2024	7:15 PM	0	0	0	0	0	0	0	0	0	0	0	0	0
4/25/2024	7:30 PM	0	0	0	0	0	0	0	0	0	0	0	0	0
4/25/2024	7:45 PM	0	0	0	0	0	0	0	0	0	0	0	0	0
4/25/2024	8:00 PM	0	0	0	0	0	0	0	0	0	0	0	0	0
4/25/2024	8:15 PM	0	0	0	0	0	0	0	0	0	0	0	0	0
4/25/2024	8:30 PM	0	0	0	0	0	0	0	0	0	0	0	0	0
4/25/2024	8:45 PM	0	0	0	0	0	0	0	0	0	0	0	0	0
4/25/2024	9:00 PM	0	0	0	0	0	0	0	0	0	0	0	0	0
4/25/2024	9:15 PM	0	0	0	0	0	0	0	0	0	0	0	0	0
4/25/2024	9:30 PM	0	0	0	0	0	0	0	0	0	0	0	0	0
4/25/2024	9:45 PM	0	0	0	0	0	0	0	0	0	0	0	0	0
4/25/2024	10:00 PM	0	0	0	0	0	0	0	0	0	0	0	0	0
4/25/2024	10:15 PM	0	0	0	0	0	0	0	0	0	0	0	0	0
4/25/2024	10:30 PM	0	0	0	0	0	0	0	0	0	0	0	0	0
4/25/2024	10:45 PM	0	0	0	0	0	0	0	0	0	0	0	0	0
4/25/2024	11:00 PM	0	0	0	0	0	0	0	0	0	0	0	0	0
4/25/2024	11:15 PM	0	0	0	0	0	0	0	0	0	0	0	0	0
4/25/2024	11:30 PM	0	0	0	0	0	0	0	0	0	0	0	0	0
4/25/2024	11:45 PM	0	0	0	0	0	0	0	0	0	0	0	0	0

4/26/2024	12:00 AM	0	0	0	0	0	0	0	0	0	0	0	0	0
4/26/2024	12:15 AM	0	0	0	0	0	0	0	0	0	0	0	0	0
4/26/2024	12:30 AM	0	0	0	0	0	0	0	0	0	0	0	0	0
4/26/2024	12:45 AM	0	0	0	0	0	0	0	0	0	0	0	0	0
4/26/2024	1:00 AM	0	0	0	0	0	0	0	0	0	0	0	0	0
4/26/2024	1:15 AM	0	0	0	0	0	0	0	0	0	0	0	0	0
4/26/2024	1:30 AM	0	0	0	0	0	0	0	0	0	0	0	0	0
4/26/2024	1:45 AM	0	0	0	0	0	0	0	0	0	0	0	0	0
4/26/2024	2:00 AM	0	0	0	0	0	0	0	0	0	0	0	0	0
4/26/2024	2:15 AM	0	0	0	0	0	0	0	0	0	0	0	0	0
4/26/2024	2:30 AM	0	0	0	0	0	0	0	0	0	0	0	0	0
4/26/2024	2:45 AM	0	0	0	0	0	0	0	0	0	0	0	0	0
4/26/2024	3:00 AM	0	0	0	0	0	0	0	0	0	0	0	0	0
4/26/2024	3:15 AM	0	0	0	0	0	0	0	0	0	0	0	0	0
4/26/2024	3:30 AM	0	0	0	0	0	0	0	0	0	0	0	0	0
4/26/2024	3:45 AM	0	0	0	0	0	0	0	0	0	0	0	0	0
4/26/2024	4:00 AM	0	0	0	0	0	0	0	0	0	0	0	0	0
4/26/2024	4:15 AM	0	0	0	0	0	0	0	0	0	0	0	0	0
4/26/2024	4:30 AM	0	0	0	0	0	0	0	0	0	0	0	0	0
4/26/2024	4:45 AM	0	0	0	0	0	0	0	0	0	0	0	0	0
4/26/2024	5:00 AM	0	0	0	0	0	0	0	0	0	0	0	0	0
4/26/2024	5:15 AM	0	0	0	0	0	0	0	0	0	0	0	0	0
4/26/2024	5:30 AM	0	0	0	0	0	0	0	0	0	0	0	0	0
4/26/2024	5:45 AM	0	0	0	0	0	0	0	0	0	0	0	0	0
4/26/2024	6:00 AM	0	0	0	0	0	0	0	0	0	0	0	0	0
4/26/2024	6:15 AM	0	0	0	0	0	0	0	0	0	0	0	0	0
4/26/2024	6:30 AM	0	0	0	0	0	0	0	0	0	0	0	0	0
4/26/2024	6:45 AM	0	0	0	0	0	0	0	0	0	0	0	0	0
4/26/2024	7:00 AM	0	0	0	0	0	0	0	0	0	0	0	0	0
4/26/2024	7:15 AM	0	0	0	0	0	0	0	0	0	0	0	0	0
4/26/2024	7:30 AM	0	0	0	0	0	0	0	0	0	0	0	0	0
4/26/2024	7:45 AM	0	0	0	0	0	0	0	0	0	0	0	0	0
4/26/2024	8:00 AM	0	0	0	0	0	0	0	0	0	0	0	0	0
4/26/2024	8:15 AM	0	0	0	0	0	0	0	0	0	0	0	0	0
4/26/2024	8:30 AM	0	0	0	0	0	0	0	0	0	0	0	0	0
4/26/2024	8:45 AM	0	0	0	0	0	0	0	0	0	0	0	0	0
4/26/2024	9:00 AM	0	0	0	0	0	0	0	0	0	0	0	0	0
4/26/2024	9:15 AM	0	0	0	0	0	0	0	0	0	0	0	0	0
4/26/2024	9:30 AM	0	0	0	0	0	0	0	0	0	0	0	0	0
4/26/2024	9:45 AM	0	0	0	0	0	0	0	0	0	0	0	0	0
4/26/2024	10:00 AM	0	0	0	0	0	0	0	0	0	0	0	0	0
4/26/2024	10:15 AM	0	0	0	0	0	0	0	0	0	0	0	0	0
4/26/2024	10:30 AM	0	0	0	0	0	0	0	0	0	0	0	0	0
4/26/2024	10:45 AM	0	0	0	0	0	0	0	0	0	0	0	0	0
4/26/2024	11:00 AM	0	0	0	0	0	0	0	0	0	0	0	0	0
4/26/2024	11:15 AM	0	0	0	0	0	0	0	0	0	0	0	0	0
4/26/2024	11:30 AM	0	0	0	0	0	0	0	0	0	0	0	0	0
4/26/2024	11:45 AM	0	0	0	0	0	0	0	0	0	0	0	0	0
4/26/2024	12:00 PM	0	0	0	0	0	0	0	0	0	0	0	0	0
4/26/2024	12:15 PM	0	0	0	0	0	0	0	0	0	0	0	0	0
4/26/2024	12:30 PM	0	0	0	0	0	0	0	0	0	0	0	0	0
4/26/2024	12:45 PM	0	0	0	0	0	0	0	0	0	0	0	0	0
4/26/2024	1:00 PM	0	0	0	0	0	0	0	0	0	0	0	0	0
4/26/2024	1:15 PM	0	0	0	0	0	0	0	0	0	0	0	0	0
4/26/2024	1:30 PM	0	0	0	0	0	0	0	0	0	0	0	0	0
4/26/2024	1:45 PM	0	0	0	0	0	0	0	0	0	0	0	0	0
4/26/2024	2:00 PM	0	0	0	0	0	0	0	0	0	0	0	0	0
4/26/2024	2:15 PM	0	0	0	0	0	0	0	0	0	0	0	0	0
4/26/2024	2:30 PM	0	0	0	0	0	0	0	0	0	0	0	0	0
4/26/2024	2:45 PM	0	0	0	0	0	0	0	0	0	0	0	0	0
4/26/2024	3:00 PM	0	0	0	0	0	0	0	0	0	0	0	0	0
4/26/2024	3:15 PM	0	0	0	0	0	0	0	0	0	0	0	0	0
4/26/2024	3:30 PM	0	0	0	0	0	0	0	0	0	0	0	0	0
4/26/2024	3:45 PM	0	0	0	0	0	0	0	0	0	0	0	0	0
4/26/2024	4:00 PM	0	0	0	0	0	0	0	0	0	0	0	0	0
4/26/2024	4:15 PM	0	0	0	0	0	0	0	0	0	0	0	0	0
4/26/2024	4:30 PM	0	0	0	0	0	0	0	0	0	0	0	0	0
4/26/2024	4:45 PM	0	0	0	0	0	0	0	0	0	0	0	0	0
4/26/2024	5:00 PM	0	0	0	0	0	0	0	0	0	0	0	0	0
4/26/2024	5:15 PM	0	0	0	0	0	0	0	0	0	0	0	0	0
4/26/2024	5:30 PM	0	0	0	0	0	0	0	0	0	0	0	0	0
4/26/2024	5:45 PM	0	0	0	0	0	0	0	0	0	0	0	0	0
4/26/2024	6:00 PM	0	0	0	0	0	0	0	0	0	0	0	0	0
4/26/2024	6:15 PM	0	0	0	0	0	0	0	0	0	0	0	0	0
4/26/2024	6:30 PM	0	0	0	0	0	0	0	0	0	0	0	0	0
4/26/2024	6:45 PM	0	0	0	0	0	0	0	0	0	0	0	0	0
4/26/2024	7:00 PM	0	0	0	0	0	0	0	0	0	0	0	0	0
4/26/2024	7:15 PM	0	0	0	0	0	0	0	0	0	0	0	0	0
4/26/2024	7:30 PM	0	0	0	0	0	0	0	0	0	0	0	0	0
4/26/2024	7:45 PM	0	0	0	0	0	0	0	0	0	0	0	0	0
4/26/2024	8:00 PM	0	0	0	0	0	0	0	0	0	0	0	0	0
4/26/2024	8:15 PM	0	0	0	0	0	0	0	0	0	0	0	0	0
4/26/2024	8:30 PM	0	0	0	0	0	0	0	0	0	0	0	0	0
4/26/2024	8:45 PM	0	0	0	0	0	0	0	0	0	0	0	0	0
4/26/2024	9:00 PM	0	0	0	0	0	0	0	0	0	0	0	0	0
4/26/2024	9:15 PM	0	0	0	0	0	0	0	0	0	0	0	0	0
4/26/2024	9:30 PM	0	0	0	0	0	0	0	0	0	0	0	0	0
4/26/2024	9:45 PM	0	0	0	0	0	0	0	0	0	0	0	0	0
4/26/2024	10:00 PM	0	0	0	0	0	0	0	0	0	0	0	0	0
4/26/2024	10:15 PM	0	0	0	0	0	0	0	0	0	0	0	0	0
4/26/2024	10:30 PM	0	0	0	0	0	0	0	0	0	0	0	0	0
4/26/2024	10:45 PM	0	0	0	0	0	0	0	0	0	0	0	0	0
4/26/2024	11:00 PM	0	0	0	0	0	0	0	0	0	0	0	0	0
4/26/2024	11:15 PM	0	0	0	0	0	0	0	0	0	0	0	0	0
4/26/2024	11:30 PM	0	0	0	0	0	0	0	0	0	0	0	0	0
4/26/2024	11:45 PM	0	0	0	0	0	0	0	0	0	0	0	0	0

4/27/2024	12:00 AM	0	0	0	0	0	0	0	0	0	0	0	0	0
4/27/2024	12:15 AM	0	0	0	0	0	0	0	0	0	0	0	0	0
4/27/2024	12:30 AM	0	0	0	0	0	0	0	0	0	0	0	0	0
4/27/2024	12:45 AM	0	0	0	0	0	0	0	0	0	0	0	0	0
4/27/2024	1:00 AM	0	0	0	0	0	0	0	0	0	0	0	0	0
4/27/2024	1:15 AM	0	0	0	0	0	0	0	0	0	0	0	0	0
4/27/2024	1:30 AM	0	0	0	0	0	0	0	0	0	0	0	0	0
4/27/2024	1:45 AM	0	0	0	0	0	0	0	0	0	0	0	0	0
4/27/2024	2:00 AM	0	0	0	0	0	0	0	0	0	0	0	0	0
4/27/2024	2:15 AM	0	0	0	0	0	0	0	0	0	0	0	0	0
4/27/2024	2:30 AM	0	0	0	0	0	0	0	0	0	0	0	0	0
4/27/2024	2:45 AM	0	0	0	0	0	0	0	0	0	0	0	0	0
4/27/2024	3:00 AM	0	0	0	0	0	0	0	0	0	0	0	0	0
4/27/2024	3:15 AM	0	0	0	0	0	0	0	0	0	0	0	0	0
4/27/2024	3:30 AM	0	0	0	0	0	0	0	0	0	0	0	0	0
4/27/2024	3:45 AM	0	0	0	0	0	0	0	0	0	0	0	0	0
4/27/2024	4:00 AM	0	0	0	0	0	0	0	0	0	0	0	0	0
4/27/2024	4:15 AM	0	0	0	0	0	0	0	0	0	0	0	0	0
4/27/2024	4:30 AM	0	0	0	0	0	0	0	0	0	0	0	0	0
4/27/2024	4:45 AM	0	0	0	0	0	0	0	0	0	0	0	0	0
4/27/2024	5:00 AM	0	0	0	0	0	0	0	0	0	0	0	0	0
4/27/2024	5:15 AM	0	0	0	0	0	0	0	0	0	0	0	0	0
4/27/2024	5:30 AM	0	0	0	0	0	0	0	0	0	0	0	0	0
4/27/2024	5:45 AM	0	0	0	0	0	0	0	0	0	0	0	0	0
4/27/2024	6:00 AM	0	0	0	0	0	0	0	0	0	0	0	0	0
4/27/2024	6:15 AM	0	0	0	0	0	0	0	0	0	0	0	0	0
4/27/2024	6:30 AM	0	0	0	0	0	0	0	0	0	0	0	0	0
4/27/2024	6:45 AM	0	0	0	0	0	0	0	0	0	0	0	0	0
4/27/2024	7:00 AM	0	0	0	0	0	0	0	0	0	0	0	0	0
4/27/2024	7:15 AM	0	0	0	0	0	0	0	0	0	0	0	0	0
4/27/2024	7:30 AM	0	0	0	0	0	0	0	0	0	0	0	0	0
4/27/2024	7:45 AM	0	0	0	0	0	0	0	0	0	0	0	0	0
4/27/2024	8:00 AM	0	0	0	0	0	0	0	0	0	0	0	0	0
4/27/2024	8:15 AM	0	0	0	0	0	0	0	0	0	0	0	0	0
4/27/2024	8:30 AM	0	0	0	0	0	0	0	0	0	0	0	0	0
4/27/2024	8:45 AM	0	0	0	0	0	0	0	0	0	0	0	0	0
4/27/2024	9:00 AM	0	0	0	0	0	0	0	0	0	0	0	0	0
4/27/2024	9:15 AM	0	0	0	0	0	0	0	0	0	0	0	0	0
4/27/2024	9:30 AM	0	0	0	0	0	0	0	0	0	0	0	0	0
4/27/2024	9:45 AM	0	0	0	0	0	0	0	0	0	0	0	0	0
4/27/2024	10:00 AM	0	0	0	0	0	0	0	0	0	0	0	0	0
4/27/2024	10:15 AM	0	0	0	0	0	0	0	0	0	0	0	0	0
4/27/2024	10:30 AM	0	0	0	0	0	0	0	0	0	0	0	0	0
4/27/2024	10:45 AM	0	0	0	0	0	0	0	0	0	0	0	0	0
4/27/2024	11:00 AM	0	0	0	0	0	0	0	0	0	0	0	0	0
4/27/2024	11:15 AM	0	0	0	0	0	0	0	0	0	0	0	0	0
4/27/2024	11:30 AM	0	0	0	0	0	0	0	0	0	0	0	0	0
4/27/2024	11:45 AM	0	0	0	0	0	0	0	0	0	0	0	0	0
4/27/2024	12:00 PM	0	0	0	0	0	0	0	0	0	0	0	0	0
4/27/2024	12:15 PM	0	0	0	0	0	0	0	0	0	0	0	0	0
4/27/2024	12:30 PM	0	0	0	0	0	0	0	0	0	0	0	0	0
4/27/2024	12:45 PM	0	0	0	0	0	0	0	0	0	0	0	0	0
4/27/2024	1:00 PM	0	0	0	0	0	0	0	0	0	0	0	0	0
4/27/2024	1:15 PM	0	0	0	0	0	0	0	0	0	0	0	0	0
4/27/2024	1:30 PM	0	0	0	0	0	0	0	0	0	0	0	0	0
4/27/2024	1:45 PM	0	0	0	0	0	0	0	0	0	0	0	0	0
4/27/2024	2:00 PM	0	0	0	0	0	0	0	0	0	0	0	0	0
4/27/2024	2:15 PM	0	0	0	0	0	0	0	0	0	0	0	0	0
4/27/2024	2:30 PM	0	0	0	0	0	0	0	0	0	0	0	0	0
4/27/2024	2:45 PM	0	0	0	0	0	0	0	0	0	0	0	0	0
4/27/2024	3:00 PM	0	0	0	0	0	0	0	0	0	0	0	0	0
4/27/2024	3:15 PM	0	0	0	0	0	0	0	0	0	0	0	0	0
4/27/2024	3:30 PM	0	0	0	0	0	0	0	0	0	0	0	0	0
4/27/2024	3:45 PM	0	0	0	0	0	0	0	0	0	0	0	0	0
4/27/2024	4:00 PM	0	0	0	0	0	0	0	0	0	0	0	0	0
4/27/2024	4:15 PM	0	0	0	0	0	0	0	0	0	0	0	0	0
4/27/2024	4:30 PM	0	0	0	0	0	0	0	0	0	0	0	0	0
4/27/2024	4:45 PM	0	0	0	0	0	0	0	0	0	0	0	0	0
4/27/2024	5:00 PM	0	0	0	0	0	0	0	0	0	0	0	0	0
4/27/2024	5:15 PM	0	0	0	0	0	0	0	0	0	0	0	0	0
4/27/2024	5:30 PM	0	0	0	0	0	0	0	0	0	0	0	0	0
4/27/2024	5:45 PM	0	0	0	0	0	0	0	0	0	0	0	0	0
4/27/2024	6:00 PM	0	0	0	0	0	0	0	0	0	0	0	0	0
4/27/2024	6:15 PM	0	0	0	0	0	0	0	0	0	0	0	0	0
4/27/2024	6:30 PM	0	0	0	0	0	0	0	0	0	0	0	0	0
4/27/2024	6:45 PM	0	0	0	0	0	0	0	0	0	0	0	0	0
4/27/2024	7:00 PM	0	0	0	0	0	0	0	0	0	0	0	0	0
4/27/2024	7:15 PM	0	0	0	0	0	0	0	0	0	0	0	0	0
4/27/2024	7:30 PM	0	0	0	0	0	0	0	0	0	0	0	0	0
4/27/2024	7:45 PM	0	0	0	0	0	0	0	0	0	0	0	0	0
4/27/2024	8:00 PM	0	0	0	0	0	0	0	0	0	0	0	0	0
4/27/2024	8:15 PM	0	0	0	0	0	0	0	0	0	0	0	0	0
4/27/2024	8:30 PM	0	0	0	0	0	0	0	0	0	0	0	0	0
4/27/2024	8:45 PM	0	0	0	0	0	0	0	0	0	0	0	0	0
4/27/2024	9:00 PM	0	0	0	0	0	0	0	0	0	0	0	0	0
4/27/2024	9:15 PM	0	0	0	0	0	0	0	0	0	0	0	0	0
4/27/2024	9:30 PM	0	0	0	0	0	0	0	0	0	0	0	0	0
4/27/2024	9:45 PM	0	0	0	0	0	0	0	0	0	0	0	0	0
4/27/2024	10:00 PM	0	0	0	0	0	0	0	0	0	0	0	0	0
4/27/2024	10:15 PM	0	0	0	0	0	0	0	0	0	0	0	0	0
4/27/2024	10:30 PM	0	0	0	0	0	0	0	0	0	0	0	0	0
4/27/2024	10:45 PM	0	0	0	0	0	0	0	0	0	0	0	0	0
4/27/2024	11:00 PM	0	0	0	0	0	0	0	0	0	0	0	0	0
4/27/2024	11:15 PM	0	0	0	0	0	0	0	0	0	0	0	0	0
4/27/2024	11:30 PM	0	0	0	0	0	0	0	0	0	0	0	0	0
4/27/2024	11:45 PM	0	0	0	0	0	0	0	0	0	0	0	0	0

WB
File Name:
Start Date: 4/21/2024
Start Time: 0
Site Code: 6
Station ID: 1
Location 1: I-26 W/Bound On-Ramp, west of US-76
Location 2:

Date	Time	1	2	3	4	5	6	7	8	9	10	11	12	13
4/21/2024	12:00 AM	0	314	77	0	1	0	0	1	5	0	0	1	0
4/21/2024	12:15 AM	0	299	81	0	2	1	0	0	10	0	0	0	0
4/21/2024	12:30 AM	0	275	75	1	2	2	0	0	9	0	0	0	0
4/21/2024	12:45 AM	0	277	71	1	1	2	0	0	10	0	0	0	0
4/21/2024	1:00 AM	0	259	63	2	1	2	0	0	10	0	0	0	0
4/21/2024	1:15 AM	0	233	50	2	0	1	0	0	4	0	1	1	0
4/21/2024	1:30 AM	0	205	48	1	2	1	0	1	5	0	1	1	0
4/21/2024	1:45 AM	0	182	45	1	2	1	0	1	7	0	1	1	0
4/21/2024	2:00 AM	0	179	44	0	2	2	0	1	8	0	1	1	0
4/21/2024	2:15 AM	0	165	42	0	2	2	0	2	9	0	0	0	0
4/21/2024	2:30 AM	0	147	39	1	0	1	0	1	10	0	0	0	0
4/21/2024	2:45 AM	0	146	36	1	2	1	0	1	8	0	0	1	0
4/21/2024	3:00 AM	0	129	32	2	2	0	0	1	7	0	0	1	0
4/21/2024	3:15 AM	0	136	34	2	3	0	0	0	7	0	0	1	0
4/21/2024	3:30 AM	0	146	38	1	3	0	0	0	7	0	0	1	0
4/21/2024	3:45 AM	0	152	42	1	1	1	0	0	7	0	0	0	0
4/21/2024	4:00 AM	0	185	49	0	1	1	0	0	9	0	0	0	0
4/21/2024	4:15 AM	0	205	52	0	1	1	0	0	13	0	0	1	0
4/21/2024	4:30 AM	0	230	55	0	1	1	0	0	13	0	0	1	0
4/21/2024	4:45 AM	0	264	59	0	1	0	0	0	12	0	0	1	0
4/21/2024	5:00 AM	0	280	61	3	2	0	0	0	15	0	0	1	0
4/21/2024	5:15 AM	0	304	57	3	3	0	0	0	13	0	0	0	0
4/21/2024	5:30 AM	0	351	61	3	5	0	0	0	18	0	0	0	0
4/21/2024	5:45 AM	0	447	65	3	5	2	0	0	26	0	0	0	0
4/21/2024	6:00 AM	1	522	65	0	4	2	0	0	23	0	0	0	0
4/21/2024	6:15 AM	1	570	82	0	3	3	0	0	24	0	0	0	0
4/21/2024	6:30 AM	1	590	87	0	3	3	0	0	19	0	0	0	0
4/21/2024	6:45 AM	1	558	95	1	3	2	0	0	19	0	0	0	0
4/21/2024	7:00 AM	1	553	114	1	6	2	0	0	26	0	0	0	0
4/21/2024	7:15 AM	1	584	106	1	7	1	0	0	33	0	0	0	0
4/21/2024	7:30 AM	1	604	107	2	7	1	0	0	40	0	0	0	0
4/21/2024	7:45 AM	1	657	109	1	9	1	0	0	36	0	0	0	0
4/21/2024	8:00 AM	0	749	116	2	9	2	0	0	36	0	0	0	0
4/21/2024	8:15 AM	0	872	142	2	8	3	0	1	32	0	0	0	0
4/21/2024	8:30 AM	0	986	186	1	10	3	0	1	32	0	0	0	0
4/21/2024	8:45 AM	0	1057	214	1	11	2	0	1	30	0	0	0	0
4/21/2024	9:00 AM	3	1114	240	0	9	1	0	1	22	0	0	0	0
4/21/2024	9:15 AM	3	1133	259	0	12	0	0	1	22	0	0	0	0
4/21/2024	9:30 AM	4	1214	251	0	11	0	0	1	28	0	0	0	0
4/21/2024	9:45 AM	4	1303	267	0	13	0	0	2	27	0	0	0	0
4/21/2024	10:00 AM	1	1394	260	0	16	0	0	2	27	0	0	0	0
4/21/2024	10:15 AM	5	1442	265	0	16	0	0	1	26	0	0	0	0
4/21/2024	10:30 AM	4	1427	284	0	15	0	0	3	19	0	0	0	0
4/21/2024	10:45 AM	4	1399	292	0	15	1	0	3	22	1	0	0	0
4/21/2024	11:00 AM	5	1346	307	0	17	2	0	3	27	1	0	0	0
4/21/2024	11:15 AM	2	1402	316	0	16	3	0	3	32	1	0	0	0
4/21/2024	11:30 AM	2	1523	335	0	15	3	0	1	31	2	0	0	0
4/21/2024	11:45 AM	2	1630	363	0	16	3	0	0	31	1	0	0	0
4/21/2024	12:00 PM	2	1763	393	1	19	2	0	0	33	1	0	0	0
4/21/2024	12:15 PM	1	1827	436	3	20	3	0	0	32	1	0	0	0
4/21/2024	12:30 PM	2	1836	435	3	23	3	0	0	34	0	0	0	0
4/21/2024	12:45 PM	2	1875	439	3	22	5	0	1	43	0	0	0	0
4/21/2024	1:00 PM	1	1900	431	2	17	5	0	1	40	0	0	0	0
4/21/2024	1:15 PM	1	1758	390	0	15	3	0	2	30	0	0	0	0
4/21/2024	1:30 PM	0	1783	380	1	13	3	0	2	29	0	0	0	0
4/21/2024	1:45 PM	0	1895	377	1	12	1	0	1	27	0	0	0	0
4/21/2024	2:00 PM	0	1888	396	3	11	1	1	1	29	0	0	0	0
4/21/2024	2:15 PM	0	2045	408	3	14	2	1	0	38	0	0	0	0
4/21/2024	2:30 PM	0	2053	452	3	17	2	1	2	39	1	1	0	0
4/21/2024	2:45 PM	0	1955	465	4	18	2	1	2	38	1	2	0	0
4/21/2024	3:00 PM	0	1971	360	3	20	2	0	2	41	1	2	0	0
4/21/2024	3:15 PM	0	1933	370	5	18	1	0	2	38	1	2	0	0
4/21/2024	3:30 PM	0	1904	319	4	14	2	0	1	34	0	1	0	0
4/21/2024	3:45 PM	0	1858	286	5	14	1	0	3	29	0	0	0	0
4/21/2024	4:00 PM	0	1757	346	4	11	3	0	3	24	0	0	0	0
4/21/2024	4:15 PM	0	1777	341	3	15	4	0	3	35	0	0	0	0
4/21/2024	4:30 PM	0	1765	345	3	18	5	0	2	38	0	0	0	0
4/21/2024	4:45 PM	0	1783	345	2	22	5	0	2	48	1	0	0	0
4/21/2024	5:00 PM	0	1792	363	6	26	3	0	3	55	3	0	0	0
4/21/2024	5:15 PM	0	1712	346	5	21	3	1	4	51	5	1	0	0
4/21/2024	5:30 PM	0	1676	331	5	22	2	1	4	53	5	1	0	0
4/21/2024	5:45 PM	0	1598	325	4	14	2	1	3	52	4	1	0	0
4/21/2024	6:00 PM	0	1547	300	1	11	2	1	2	53	2	1	1	0
4/21/2024	6:15 PM	0	1498	291	1	11	2	0	1	45	0	0	1	0
4/21/2024	6:30 PM	0	1378	304	1	9	2	0	1	45	0	1	1	0
4/21/2024	6:45 PM	0	1289	282	4	11	3	0	0	38	0	2	1	0
4/21/2024	7:00 PM	0	1205	263	4	11	4	0	1	35	0	2	0	0
4/21/2024	7:15 PM	0	1137	250	4	11	3	0	1	41	0	2	0	0
4/21/2024	7:30 PM	0	1056	201	4	10	3	0	1	49	0	1	0	0
4/21/2024	7:45 PM	0	985	178	1	8	3	0	1	50	0	0	0	0
4/21/2024	8:00 PM	0	934	173	0	7	2	0	1	50	0	0	0	0
4/21/2024	8:15 PM	0	865	150	0	6	2	0	1	52	0	0	0	0
4/21/2024	8:30 PM	0	808	135	0	5	1	0	1	41	0	0	0	0
4/21/2024	8:45 PM	0	752	117	0	5	0	0	1	34	0	0	0	0
4/21/2024	9:00 PM	0	710	102	0	6	0	0	2	38	0	0	0	0
4/21/2024	9:15 PM	0	654	82	0	6	1	0	2	37	0	1	0	0
4/21/2024	9:30 PM	0	624	74	0	6	4	0	2	37	0	1	0	0
4/21/2024	9:45 PM	0	583	62	0	5	4	0	2	42	0	1	0	0
4/21/2024	10:00 PM	0	500	46	0	2	4	0	0	32	0	1	0	0
4/21/2024	10:15 PM	0	433	38	0	1	3	0	1	30	0	1	0	0
4/21/2024	10:30 PM	0	377	36	0	1	1	0	1	36	0	2	0	0
4/21/2024	10:45 PM	0	334	38	0	1	2	0	1	38	0	2	0	0
4/21/2024	11:00 PM	0	317	37	0	2	2	0	2	37	0	2	0	0
4/21/2024	11:15 PM	0	239	30	0	2	2	0	1	27	0	1	0	0
4/21/2024	11:30 PM	0	164	21	0	1	1	0	1	14	0	0	0	0
4/21/2024	11:45 PM	0	83	10	0	1	0	0	1	5	0	0	0	0

4/22/2024	12:00 AM	0	152	29	0	4	0	0	0	30	2	0	0	0
4/22/2024	12:15 AM	0	137	26	0	2	0	0	0	38	2	0	0	0
4/22/2024	12:30 AM	0	128	29	0	2	0	0	0	40	2	0	0	0
4/22/2024	12:45 AM	0	120	27	0	2	0	0	0	35	0	0	0	0
4/22/2024	1:00 AM	0	101	29	0	0	0	0	0	37	0	0	0	0
4/22/2024	1:15 AM	0	101	28	0	1	0	0	1	37	0	0	0	0
4/22/2024	1:30 AM	0	84	25	0	3	0	0	2	31	0	0	0	0
4/22/2024	1:45 AM	0	93	23	0	3	0	0	2	40	0	0	0	0
4/22/2024	2:00 AM	0	107	23	0	3	0	0	2	45	0	0	0	0
4/22/2024	2:15 AM	0	117	29	0	3	1	0	2	40	0	0	0	0
4/22/2024	2:30 AM	0	126	35	0	2	2	0	1	47	0	0	0	0
4/22/2024	2:45 AM	0	156	44	0	3	2	0	1	49	0	0	0	0
4/22/2024	3:00 AM	0	163	56	0	4	2	0	1	43	0	0	0	0
4/22/2024	3:15 AM	0	186	65	0	6	2	0	0	60	0	0	0	0
4/22/2024	3:30 AM	0	216	78	0	6	1	0	1	75	0	0	0	0
4/22/2024	3:45 AM	0	243	94	0	6	4	0	1	78	0	0	0	0
4/22/2024	4:00 AM	0	317	111	0	7	4	0	1	83	0	0	0	0
4/22/2024	4:15 AM	0	397	149	0	8	3	0	1	86	1	0	0	0
4/22/2024	4:30 AM	0	485	168	0	10	4	0	0	93	3	0	0	0
4/22/2024	4:45 AM	0	649	231	0	14	1	0	0	95	3	0	0	0
4/22/2024	5:00 AM	0	763	277	0	16	2	0	0	109	3	0	0	0
4/22/2024	5:15 AM	0	883	289	1	16	4	0	1	100	2	0	0	0
4/22/2024	5:30 AM	1	1064	331	1	26	6	0	1	101	0	0	0	0
4/22/2024	5:45 AM	2	1266	382	1	27	15	0	2	114	1	0	0	0
4/22/2024	6:00 AM	2	1515	469	1	30	18	2	2	116	1	0	0	0
4/22/2024	6:15 AM	2	1727	595	0	34	23	3	4	133	2	1	0	0
4/22/2024	6:30 AM	2	1932	660	0	35	27	4	4	141	3	2	0	0
4/22/2024	6:45 AM	1	2002	690	1	39	22	5	5	128	2	2	0	0
4/22/2024	7:00 AM	2	2033	668	1	45	22	3	8	122	2	2	0	0
4/22/2024	7:15 AM	2	2033	634	1	45	21	2	6	120	2	2	0	0
4/22/2024	7:30 AM	1	1902	599	3	43	17	1	10	128	2	2	0	0
4/22/2024	7:45 AM	2	1783	547	3	47	16	1	12	149	3	2	0	0
4/22/2024	8:00 AM	1	1670	516	5	49	18	1	12	170	3	2	0	0
4/22/2024	8:15 AM	1	1548	468	6	59	16	2	14	179	2	1	0	0
4/22/2024	8:30 AM	1	1491	446	7	63	16	2	12	177	1	0	0	0
4/22/2024	8:45 AM	1	1456	419	9	65	14	1	10	179	0	0	0	0
4/22/2024	9:00 AM	1	1410	393	7	63	14	1	8	173	1	0	0	0
4/22/2024	9:15 AM	1	1379	371	6	57	13	0	9	181	2	0	0	0
4/22/2024	9:30 AM	1	1344	369	5	60	16	0	9	189	2	0	0	0
4/22/2024	9:45 AM	0	1334	374	2	50	18	0	13	202	2	0	0	0
4/22/2024	10:00 AM	0	1329	368	2	52	19	0	16	216	3	0	0	0
4/22/2024	10:15 AM	0	1329	362	2	52	18	0	14	225	3	0	0	0
4/22/2024	10:30 AM	0	1341	365	1	46	18	1	12	219	3	0	0	0
4/22/2024	10:45 AM	1	1343	368	2	51	16	1	12	206	5	0	0	0
4/22/2024	11:00 AM	1	1334	374	2	48	12	1	10	201	5	0	0	0
4/22/2024	11:15 AM	1	1362	387	2	51	20	1	10	197	5	0	0	0
4/22/2024	11:30 AM	2	1452	413	1	49	21	0	14	200	5	0	0	0
4/22/2024	11:45 AM	4	1456	423	0	48	24	0	15	218	3	0	0	0
4/22/2024	12:00 PM	4	1455	458	1	55	25	1	16	233	1	0	1	0
4/22/2024	12:15 PM	5	1431	476	1	54	22	2	18	226	0	0	1	0
4/22/2024	12:30 PM	4	1359	460	1	57	19	6	18	226	1	0	1	0
4/22/2024	12:45 PM	5	1389	477	2	62	18	6	18	214	3	0	2	0
4/22/2024	1:00 PM	6	1410	474	1	55	17	6	20	196	4	0	1	0
4/22/2024	1:15 PM	6	1522	492	1	67	20	7	19	194	4	0	1	0
4/22/2024	1:30 PM	7	1562	499	2	69	21	3	22	192	3	0	2	0
4/22/2024	1:45 PM	3	1612	485	1	78	25	4	18	189	2	0	1	0
4/22/2024	2:00 PM	4	1629	497	1	80	27	5	17	187	1	0	1	0
4/22/2024	2:15 PM	3	1624	487	2	75	23	3	22	189	2	0	2	0
4/22/2024	2:30 PM	2	1657	486	1	74	21	3	16	178	3	0	2	0
4/22/2024	2:45 PM	2	1620	488	2	65	24	2	19	178	3	0	2	0
4/22/2024	3:00 PM	0	1620	488	2	70	25	1	17	177	3	0	2	0
4/22/2024	3:15 PM	0	1624	478	3	67	20	1	10	173	2	1	1	0
4/22/2024	3:30 PM	0	1635	489	3	65	22	1	13	168	1	1	0	0
4/22/2024	3:45 PM	0	1610	484	6	59	17	1	11	156	0	1	0	0
4/22/2024	4:00 PM	0	1609	471	8	61	14	0	12	148	0	1	0	0
4/22/2024	4:15 PM	0	1620	486	6	54	19	1	12	129	0	0	0	0
4/22/2024	4:30 PM	2	1629	492	6	54	16	1	9	121	0	0	0	0
4/22/2024	4:45 PM	2	1656	501	2	55	11	1	8	120	1	0	0	0
4/22/2024	5:00 PM	2	1613	475	0	45	11	1	8	101	2	0	0	0
4/22/2024	5:15 PM	2	1542	464	1	40	9	0	11	108	2	2	0	0
4/22/2024	5:30 PM	1	1460	437	1	35	8	0	14	113	2	3	1	0
4/22/2024	5:45 PM	1	1362	397	1	37	8	0	13	102	1	4	1	0
4/22/2024	6:00 PM	2	1300	388	1	31	5	0	11	116	1	4	1	0
4/22/2024	6:15 PM	2	1140	349	0	31	3	0	12	107	3	2	1	0
4/22/2024	6:30 PM	1	1037	322	0	27	2	0	9	100	3	3	0	0
4/22/2024	6:45 PM	1	926	294	0	21	3	0	9	92	3	3	0	0
4/22/2024	7:00 PM	1	874	263	0	18	4	0	10	80	3	3	0	0
4/22/2024	7:15 PM	1	868	236	0	17	3	0	6	80	2	3	0	0
4/22/2024	7:30 PM	2	787	207	0	15	3	0	5	74	2	1	0	0
4/22/2024	7:45 PM	3	773	186	0	11	4	0	4	72	2	0	0	0
4/22/2024	8:00 PM	3	740	151	0	11	3	0	4	68	1	1	0	0
4/22/2024	8:15 PM	3	685	121	0	6	3	0	3	61	0	3	0	0
4/22/2024	8:30 PM	2	698	103	1	4	6	0	6	57	0	3	0	0
4/22/2024	8:45 PM	1	641	94	1	3	5	0	5	57	0	3	0	0
4/22/2024	9:00 PM	0	588	91	1	4	6	0	5	50	0	3	0	0
4/22/2024	9:15 PM	0	559	92	1	4	6	0	6	49	0	1	0	0
4/22/2024	9:30 PM	0	489	73	0	5	3	0	3	47	0	1	0	0
4/22/2024	9:45 PM	0	483	57	0	4	3	0	4	49	0	1	0	0
4/22/2024	10:00 PM	0	450	42	0	1	2	0	2	51	0	0	0	0
4/22/2024	10:15 PM	0	410	31	0	2	1	0	1	50	0	0	0	0
4/22/2024	10:30 PM	0	355	36	0	1	1	0	1	48	0	0	0	0
4/22/2024	10:45 PM	0	284	38	0	2	1	0	0	45	0	0	0	0
4/22/2024	11:00 PM	0	240	37	0	2	2	0	1	47	0	4	0	0
4/22/2024	11:15 PM	0	161	25	0	1	2	0	1	35	0	4	0	0
4/22/2024	11:30 PM	0	105	12	0	1	2	0	1	25	0	4	0	0
4/22/2024	11:45 PM	0	54	2	0	0	1	0	1	12	0	4	0	0

4/23/2024	12:00 AM	1	142	32	1	7	1	0	3	41	0	9	0	0
4/23/2024	12:15 AM	1	128	28	1	2	1	0	2	45	0	7	0	0
4/23/2024	12:30 AM	1	126	26	1	5	1	0	1	54	0	8	0	0
4/23/2024	12:45 AM	0	102	22	0	6	3	0	0	45	0	2	0	0
4/23/2024	1:00 AM	0	90	20	0	9	4	0	0	54	0	2	0	0
4/23/2024	1:15 AM	0	87	16	0	9	4	0	0	50	0	2	0	0
4/23/2024	1:30 AM	0	86	15	0	7	4	0	0	49	0	2	0	0
4/23/2024	1:45 AM	0	96	18	0	7	2	0	1	59	0	5	0	0
4/23/2024	2:00 AM	0	114	25	0	6	1	0	2	56	0	5	0	0
4/23/2024	2:15 AM	0	126	30	0	6	2	0	3	64	0	6	0	0
4/23/2024	2:30 AM	0	139	32	0	8	6	0	3	65	0	5	0	0
4/23/2024	2:45 AM	0	166	39	0	11	8	0	4	60	0	3	0	0
4/23/2024	3:00 AM	0	178	40	0	8	8	0	5	64	0	2	0	0
4/23/2024	3:15 AM	0	201	48	0	8	8	0	5	74	1	3	0	0
4/23/2024	3:30 AM	0	237	58	0	6	4	0	6	79	2	3	0	0
4/23/2024	3:45 AM	0	284	68	0	5	2	0	7	82	2	4	0	0
4/23/2024	4:00 AM	0	346	82	0	8	1	0	5	88	2	5	0	0
4/23/2024	4:15 AM	0	416	94	0	12	2	0	5	86	2	4	0	0
4/23/2024	4:30 AM	1	511	114	0	16	2	0	6	104	1	6	0	0
4/23/2024	4:45 AM	1	657	151	0	14	3	0	5	124	1	4	0	0
4/23/2024	5:00 AM	1	792	185	0	18	5	0	5	131	2	4	0	0
4/23/2024	5:15 AM	1	876	225	0	16	5	0	4	142	1	4	0	0
4/23/2024	5:30 AM	0	1039	289	0	20	5	0	3	139	1	3	0	0
4/23/2024	5:45 AM	0	1266	377	2	28	12	0	3	139	2	5	1	0
4/23/2024	6:00 AM	1	1548	489	2	29	20	0	7	144	1	4	1	0
4/23/2024	6:15 AM	1	1827	570	2	34	35	0	8	142	1	3	2	0
4/23/2024	6:30 AM	2	2052	649	2	38	42	0	9	136	1	2	2	0
4/23/2024	6:45 AM	2	2054	647	1	43	39	0	9	127	0	1	1	0
4/23/2024	7:00 AM	2	2007	603	4	45	32	0	5	125	0	1	1	0
4/23/2024	7:15 AM	2	1974	601	4	59	16	0	6	128	0	2	0	0
4/23/2024	7:30 AM	1	1830	563	4	64	15	0	7	142	0	3	0	0
4/23/2024	7:45 AM	2	1754	593	7	61	13	1	9	164	0	3	0	0
4/23/2024	8:00 AM	2	1640	593	5	76	14	1	10	184	0	3	0	0
4/23/2024	8:15 AM	2	1477	560	5	76	15	1	10	192	0	2	0	0
4/23/2024	8:30 AM	2	1386	526	5	76	13	1	8	192	0	1	1	0
4/23/2024	8:45 AM	1	1319	466	4	84	13	0	8	185	0	1	1	0
4/23/2024	9:00 AM	0	1318	439	3	70	16	0	7	168	1	2	1	0
4/23/2024	9:15 AM	0	1318	443	4	64	20	1	7	177	2	2	1	0
4/23/2024	9:30 AM	1	1316	440	4	63	21	2	9	198	2	2	0	0
4/23/2024	9:45 AM	2	1303	441	1	65	22	2	7	217	2	2	0	0
4/23/2024	10:00 AM	2	1232	428	3	71	24	3	9	231	3	2	0	0
4/23/2024	10:15 AM	3	1292	407	2	70	20	2	8	242	4	2	0	0
4/23/2024	10:30 AM	2	1302	396	4	64	18	1	9	232	4	2	0	0
4/23/2024	10:45 AM	1	1343	382	4	61	21	1	9	235	4	1	2	0
4/23/2024	11:00 AM	2	1390	384	3	58	15	0	9	248	2	0	2	0
4/23/2024	11:15 AM	1	1360	389	4	57	20	1	13	234	1	0	2	0
4/23/2024	11:30 AM	1	1358	408	2	63	23	1	12	238	2	0	2	0
4/23/2024	11:45 AM	1	1364	401	4	69	24	1	17	226	3	0	0	0
4/23/2024	12:00 PM	1	1371	403	4	78	31	1	21	214	3	1	0	0
4/23/2024	12:15 PM	2	1395	399	3	79	28	0	20	224	3	4	0	0
4/23/2024	12:30 PM	3	1390	404	5	91	29	0	20	219	7	4	0	0
4/23/2024	12:45 PM	3	1388	417	3	77	26	0	14	223	8	5	0	0
4/23/2024	1:00 PM	7	1408	438	2	72	25	0	11	221	9	4	0	0
4/23/2024	1:15 PM	7	1425	441	4	72	28	3	15	216	10	1	0	0
4/23/2024	1:30 PM	6	1492	419	3	72	30	5	18	210	7	1	0	0
4/23/2024	1:45 PM	6	1490	416	3	84	30	6	21	190	6	0	0	0
4/23/2024	2:00 PM	2	1485	411	3	85	28	6	20	182	6	1	0	0
4/23/2024	2:15 PM	1	1522	431	3	97	33	3	18	171	5	1	0	0
4/23/2024	2:30 PM	1	1499	448	2	84	28	1	20	169	3	1	0	0
4/23/2024	2:45 PM	2	1534	486	3	84	25	0	24	171	2	1	0	0
4/23/2024	3:00 PM	1	1551	521	3	85	26	2	30	163	2	0	0	0
4/23/2024	3:15 PM	2	1594	528	4	71	25	2	32	162	3	1	0	0
4/23/2024	3:30 PM	2	1664	572	5	87	25	3	33	162	4	1	0	0
4/23/2024	3:45 PM	1	1697	568	4	91	32	6	32	175	5	1	0	0
4/23/2024	4:00 PM	2	1746	545	4	89	26	4	27	184	4	1	0	0
4/23/2024	4:15 PM	2	1723	536	1	97	21	5	23	176	2	0	0	0
4/23/2024	4:30 PM	3	1711	479	0	86	19	4	20	160	3	0	0	0
4/23/2024	4:45 PM	4	1659	451	0	83	12	1	18	138	3	0	0	0
4/23/2024	5:00 PM	3	1637	436	1	82	12	1	18	145	3	1	0	0
4/23/2024	5:15 PM	4	1564	422	2	76	10	0	15	128	5	2	0	0
4/23/2024	5:30 PM	6	1491	431	2	67	10	0	13	118	5	3	0	0
4/23/2024	5:45 PM	6	1464	420	3	63	10	0	17	106	7	3	0	0
4/23/2024	6:00 PM	6	1337	418	3	53	8	0	18	80	9	3	1	0
4/23/2024	6:15 PM	4	1261	396	2	47	5	0	19	83	9	2	1	0
4/23/2024	6:30 PM	1	1176	354	2	43	3	0	15	83	8	2	2	0
4/23/2024	6:45 PM	0	1030	310	1	29	4	0	10	89	7	2	3	0
4/23/2024	7:00 PM	0	958	268	1	28	4	0	6	91	6	2	3	0
4/23/2024	7:15 PM	0	892	257	1	22	5	0	7	88	5	2	3	0
4/23/2024	7:30 PM	0	846	239	1	16	5	0	8	88	5	2	2	0
4/23/2024	7:45 PM	0	831	219	1	13	3	0	4	83	6	2	1	0
4/23/2024	8:00 PM	0	807	189	0	8	4	0	5	74	6	1	0	0
4/23/2024	8:15 PM	0	789	148	0	8	3	0	3	73	7	2	0	0
4/23/2024	8:30 PM	0	754	123	0	7	3	0	2	63	6	5	0	0
4/23/2024	8:45 PM	0	735	106	0	7	3	0	2	52	4	5	0	0
4/23/2024	9:00 PM	0	701	94	0	8	3	0	1	51	4	5	0	0
4/23/2024	9:15 PM	0	631	79	0	8	4	0	0	46	4	4	0	0
4/23/2024	9:30 PM	0	586	74	0	9	4	0	1	52	6	0	0	0
4/23/2024	9:45 PM	0	515	71	0	9	3	0	1	58	5	1	0	0
4/23/2024	10:00 PM	0	452	62	1	8	2	0	1	56	4	3	0	0
4/23/2024	10:15 PM	1	413	58	1	7	0	0	1	52	3	5	0	0
4/23/2024	10:30 PM	1	337	47	1	7	1	0	1	44	1	6	0	0
4/23/2024	10:45 PM	1	288	40	1	6	1	0	2	39	2	8	0	0
4/23/2024	11:00 PM	1	262	45	0	6	1	0	4	38	3	8	0	0
4/23/2024	11:15 PM	0	181	34	0	4	1	0	4	28	2	6	0	0
4/23/2024	11:30 PM	0	117	25	0	2	0	0	3	21	2	5	0	0
4/23/2024	11:45 PM	0	65	15	0	1	0	0	2	10	1	2	0	0

4/24/2024	12:00 AM	0	179	23	0	3	1	0	0	51	0	1	0	0
4/24/2024	12:15 AM	0	149	19	0	4	1	0	0	51	0	1	0	0
4/24/2024	12:30 AM	0	137	17	0	4	1	0	1	58	0	1	0	0
4/24/2024	12:45 AM	0	112	12	0	4	2	0	1	57	0	1	0	0
4/24/2024	1:00 AM	0	108	11	0	4	2	0	1	60	0	0	0	0
4/24/2024	1:15 AM	0	102	11	0	2	2	0	1	64	0	2	0	0
4/24/2024	1:30 AM	0	97	10	0	1	2	0	0	56	0	2	0	0
4/24/2024	1:45 AM	0	99	13	0	3	2	0	0	52	0	4	0	0
4/24/2024	2:00 AM	0	130	18	0	2	2	0	0	50	0	5	0	0
4/24/2024	2:15 AM	0	158	22	0	2	2	0	0	52	0	6	0	0
4/24/2024	2:30 AM	0	185	26	0	4	4	0	0	57	0	6	0	0
4/24/2024	2:45 AM	0	214	30	0	3	4	0	0	67	0	5	0	0
4/24/2024	3:00 AM	0	223	30	0	5	3	0	0	77	0	7	0	0
4/24/2024	3:15 AM	0	241	34	0	9	8	0	0	80	0	4	0	0
4/24/2024	3:30 AM	0	263	43	0	9	8	0	0	96	0	4	0	0
4/24/2024	3:45 AM	0	312	56	0	9	7	0	0	93	0	4	0	0
4/24/2024	4:00 AM	0	360	76	0	11	8	0	0	89	0	2	0	0
4/24/2024	4:15 AM	0	412	95	0	11	4	0	0	92	0	2	0	0
4/24/2024	4:30 AM	0	524	118	0	15	5	0	0	88	0	2	0	0
4/24/2024	4:45 AM	0	648	140	0	17	6	0	1	98	0	3	0	0
4/24/2024	5:00 AM	0	807	166	0	17	7	0	1	121	0	4	0	0
4/24/2024	5:15 AM	1	929	212	0	20	6	0	1	139	0	4	0	0
4/24/2024	5:30 AM	1	1045	285	0	22	8	0	2	146	0	4	0	0
4/24/2024	5:45 AM	1	1265	394	0	31	10	0	2	164	0	2	0	0
4/24/2024	6:00 AM	2	1498	526	0	39	21	0	2	164	1	0	0	0
4/24/2024	6:15 AM	1	1774	610	0	40	36	0	3	162	1	0	0	0
4/24/2024	6:30 AM	2	2037	682	0	41	35	0	4	162	1	3	0	0
4/24/2024	6:45 AM	2	2145	702	1	40	34	0	3	160	1	3	0	0
4/24/2024	7:00 AM	2	2144	669	1	39	23	0	7	156	1	4	0	0
4/24/2024	7:15 AM	2	2081	653	1	41	15	0	10	152	1	5	0	0
4/24/2024	7:30 AM	2	1928	602	4	41	14	0	11	159	1	3	0	0
4/24/2024	7:45 AM	2	1697	580	4	49	17	0	14	155	1	4	0	0
4/24/2024	8:00 AM	1	1525	538	5	48	20	0	13	166	0	6	0	0
4/24/2024	8:15 AM	1	1386	530	8	48	18	0	15	178	0	7	0	0
4/24/2024	8:30 AM	1	1305	516	6	57	20	0	14	181	0	6	0	0
4/24/2024	8:45 AM	1	1285	512	6	50	21	0	12	200	0	7	0	0
4/24/2024	9:00 AM	2	1288	531	6	49	20	0	12	192	0	4	0	0
4/24/2024	9:15 AM	2	1314	510	3	54	22	0	12	190	0	2	0	0
4/24/2024	9:30 AM	1	1300	513	2	51	25	0	14	197	1	2	0	0
4/24/2024	9:45 AM	1	1270	487	1	47	26	0	16	169	1	0	0	0
4/24/2024	10:00 AM	2	1245	460	1	46	26	0	15	178	1	0	0	0
4/24/2024	10:15 AM	2	1178	449	1	44	24	0	11	168	1	0	0	0
4/24/2024	10:30 AM	2	1149	434	1	39	20	0	12	161	0	0	0	0
4/24/2024	10:45 AM	2	1137	427	1	42	21	0	13	170	0	0	0	0
4/24/2024	11:00 AM	0	1216	471	6	47	21	0	17	217	0	0	0	0
4/24/2024	11:15 AM	0	1343	514	6	53	19	0	19	280	3	0	0	0
4/24/2024	11:30 AM	1	1481	512	6	55	17	0	20	310	4	0	0	0
4/24/2024	11:45 AM	2	1642	530	6	56	14	0	22	351	5	0	0	0
4/24/2024	12:00 PM	3	1648	506	0	60	21	0	21	313	6	0	1	0
4/24/2024	12:15 PM	3	1610	488	1	46	23	0	20	257	8	0	1	0
4/24/2024	12:30 PM	2	1562	524	1	56	29	0	17	228	11	1	1	0
4/24/2024	12:45 PM	3	1562	502	1	60	29	0	17	201	10	1	2	0
4/24/2024	1:00 PM	6	1555	512	1	60	22	1	16	209	9	1	1	0
4/24/2024	1:15 PM	9	1540	490	2	71	23	1	19	218	6	1	1	0
4/24/2024	1:30 PM	9	1590	485	3	63	21	1	20	216	2	0	2	0
4/24/2024	1:45 PM	9	1611	505	7	69	22	1	19	206	3	0	1	0
4/24/2024	2:00 PM	9	1598	485	8	69	29	0	19	185	4	0	2	0
4/24/2024	2:15 PM	7	1623	503	7	68	33	0	18	187	2	0	2	0
4/24/2024	2:30 PM	8	1605	480	7	65	34	0	23	188	2	0	2	0
4/24/2024	2:45 PM	7	1604	477	3	68	32	0	23	184	1	1	2	0
4/24/2024	3:00 PM	4	1675	487	3	65	25	0	21	177	1	1	3	0
4/24/2024	3:15 PM	7	1757	505	3	72	20	0	24	168	1	1	3	0
4/24/2024	3:30 PM	6	1819	534	2	80	21	0	22	163	2	1	2	0
4/24/2024	3:45 PM	8	1826	530	2	71	19	0	20	154	2	0	2	0
4/24/2024	4:00 PM	7	1835	534	1	72	17	0	24	157	1	0	1	0
4/24/2024	4:15 PM	3	1858	523	0	65	19	0	19	139	1	0	1	0
4/24/2024	4:30 PM	3	1854	492	0	55	14	2	17	131	1	1	1	0
4/24/2024	4:45 PM	0	1802	484	0	53	17	2	16	132	1	1	1	0
4/24/2024	5:00 PM	0	1762	464	0	47	17	3	12	116	1	1	0	0
4/24/2024	5:15 PM	1	1647	443	0	42	11	3	12	125	1	3	0	0
4/24/2024	5:30 PM	1	1548	441	1	40	8	1	9	120	1	2	1	0
4/24/2024	5:45 PM	1	1447	425	1	31	4	1	10	119	2	2	1	0
4/24/2024	6:00 PM	2	1341	395	2	36	3	0	10	116	4	2	1	0
4/24/2024	6:15 PM	2	1249	365	2	36	3	0	10	93	5	0	1	0
4/24/2024	6:30 PM	2	1153	330	1	44	7	0	8	92	4	0	0	0
4/24/2024	6:45 PM	3	1063	305	1	50	7	0	6	75	3	0	0	0
4/24/2024	7:00 PM	3	981	291	0	42	7	0	5	66	1	0	0	0
4/24/2024	7:15 PM	5	973	277	0	40	8	0	4	84	0	1	0	0
4/24/2024	7:30 PM	5	922	245	1	32	4	0	4	80	0	2	0	0
4/24/2024	7:45 PM	4	921	205	1	24	4	0	3	84	0	2	0	0
4/24/2024	8:00 PM	6	924	162	1	22	3	0	3	83	0	3	0	0
4/24/2024	8:15 PM	3	855	118	2	16	1	0	2	74	0	3	0	0
4/24/2024	8:30 PM	4	805	91	2	9	1	0	2	60	0	4	0	0
4/24/2024	8:45 PM	4	753	71	2	8	0	0	2	61	0	4	0	0
4/24/2024	9:00 PM	1	670	62	2	8	0	0	1	63	0	3	0	0
4/24/2024	9:15 PM	1	619	51	1	9	0	0	0	56	0	2	0	0
4/24/2024	9:30 PM	1	595	48	0	11	0	0	0	61	0	0	0	0
4/24/2024	9:45 PM	2	575	44	1	12	1	0	0	52	0	1	0	0
4/24/2024	10:00 PM	2	540	41	1	8	1	0	1	54	0	1	0	0
4/24/2024	10:15 PM	3	499	35	1	8	1	0	1	46	0	3	0	0
4/24/2024	10:30 PM	2	425	29	1	8	1	0	1	46	0	5	0	0
4/24/2024	10:45 PM	1	378	25	1	10	0	0	1	46	0	4	0	0
4/24/2024	11:00 PM	2	350	23	1	10	0	0	0	42	0	5	0	0
4/24/2024	11:15 PM	1	246	16	1	7	0	0	0	34	0	3	0	0
4/24/2024	11:30 PM	1	172	11	1	5	0	0	0	22	0	1	0	0
4/24/2024	11:45 PM	1	81	5	0	0	0	0	0	12	0	1	0	0

4/25/2024	12:00 AM	0	142	45	2	2	2	0	2	62	0	6	0	0
4/25/2024	12:15 AM	0	133	49	2	1	1	0	2	68	0	9	0	0
4/25/2024	12:30 AM	0	122	42	2	1	1	0	0	62	0	8	0	0
4/25/2024	12:45 AM	0	119	42	2	3	1	0	0	58	0	8	0	0
4/25/2024	1:00 AM	0	120	34	0	3	1	0	1	55	0	10	0	0
4/25/2024	1:15 AM	0	116	23	0	3	1	0	2	54	0	11	0	0
4/25/2024	1:30 AM	0	108	23	0	4	0	0	2	52	0	12	0	0
4/25/2024	1:45 AM	0	109	17	0	4	0	0	2	57	0	13	0	0
4/25/2024	2:00 AM	0	114	22	0	7	0	0	1	60	0	10	0	0
4/25/2024	2:15 AM	0	130	31	0	8	0	0	0	62	0	8	0	0
4/25/2024	2:30 AM	0	146	34	0	7	0	0	2	69	0	6	0	0
4/25/2024	2:45 AM	0	183	45	0	7	0	0	3	67	0	6	0	0
4/25/2024	3:00 AM	0	207	49	0	5	0	0	3	72	0	8	0	0
4/25/2024	3:15 AM	0	223	55	0	7	1	0	6	82	0	5	0	0
4/25/2024	3:30 AM	0	259	60	0	12	1	0	4	87	0	5	0	0
4/25/2024	3:45 AM	0	301	61	0	13	2	0	4	98	0	4	0	0
4/25/2024	4:00 AM	0	350	64	0	16	2	0	4	107	0	3	0	0
4/25/2024	4:15 AM	0	529	87	0	22	2	0	3	141	0	4	0	0
4/25/2024	4:30 AM	0	653	108	0	20	2	0	5	156	0	4	0	0
4/25/2024	4:45 AM	0	799	147	0	22	1	0	4	161	0	3	0	0
4/25/2024	5:00 AM	0	957	182	0	21	3	0	5	161	0	3	0	0
4/25/2024	5:15 AM	0	967	197	0	17	2	0	5	137	0	3	0	0
4/25/2024	5:30 AM	2	1098	267	0	18	4	0	3	137	0	2	0	0
4/25/2024	5:45 AM	2	1300	379	1	22	12	0	4	152	0	2	0	0
4/25/2024	6:00 AM	3	1527	530	2	26	15	0	3	162	1	1	1	0
4/25/2024	6:15 AM	4	1737	653	2	30	28	0	3	173	1	2	1	0
4/25/2024	6:30 AM	2	1966	700	2	37	29	0	4	169	1	3	1	0
4/25/2024	6:45 AM	3	2041	688	3	36	25	0	5	152	2	4	1	0
4/25/2024	7:00 AM	4	2049	636	2	45	26	0	6	146	1	4	0	0
4/25/2024	7:15 AM	3	2026	597	4	47	19	0	9	129	1	4	0	0
4/25/2024	7:30 AM	3	1868	589	4	53	20	0	8	137	1	3	0	0
4/25/2024	7:45 AM	2	1764	585	3	57	20	0	7	143	2	4	0	0
4/25/2024	8:00 AM	0	1629	551	3	52	18	0	8	155	2	4	0	0
4/25/2024	8:15 AM	1	1503	538	1	48	16	1	4	176	2	2	0	0
4/25/2024	8:30 AM	1	1455	504	3	43	17	1	5	181	2	2	0	0
4/25/2024	8:45 AM	1	1353	483	3	40	23	1	5	197	0	2	0	0
4/25/2024	9:00 AM	2	1322	502	6	41	26	1	3	205	1	2	0	0
4/25/2024	9:15 AM	1	1333	482	7	47	24	0	4	206	3	2	0	0
4/25/2024	9:30 AM	1	1317	476	6	41	24	0	5	217	5	2	0	0
4/25/2024	9:45 AM	1	1326	458	5	46	21	0	8	215	7	0	0	0
4/25/2024	10:00 AM	1	1325	429	2	46	20	0	9	222	7	1	0	0
4/25/2024	10:15 AM	2	1283	424	2	47	21	0	10	211	5	1	0	0
4/25/2024	10:30 AM	3	1345	458	2	54	22	1	12	223	3	1	0	0
4/25/2024	10:45 AM	4	1364	471	2	52	21	1	14	223	3	1	0	0
4/25/2024	11:00 AM	3	1369	494	2	50	20	1	14	213	4	0	0	0
4/25/2024	11:15 AM	3	1509	522	2	52	19	1	18	221	4	1	0	0
4/25/2024	11:30 AM	2	1470	508	1	55	20	0	21	212	4	2	0	0
4/25/2024	11:45 AM	1	1541	494	3	60	18	0	24	221	7	3	0	0
4/25/2024	12:00 PM	1	1606	472	4	68	28	0	36	228	6	4	0	0
4/25/2024	12:15 PM	1	1591	460	5	68	35	0	36	236	10	4	0	0
4/25/2024	12:30 PM	3	1690	456	6	61	35	0	36	216	11	3	0	0
4/25/2024	12:45 PM	4	1697	459	5	58	37	0	37	204	7	2	0	0
4/25/2024	1:00 PM	5	1729	475	5	60	25	0	27	198	7	1	0	0
4/25/2024	1:15 PM	6	1755	479	4	71	20	0	29	175	6	0	0	0
4/25/2024	1:30 PM	4	1762	491	5	73	14	0	31	173	7	0	0	0
4/25/2024	1:45 PM	4	1768	498	6	78	17	0	30	178	6	1	0	0
4/25/2024	2:00 PM	4	1767	468	6	76	30	0	31	175	6	1	0	0
4/25/2024	2:15 PM	5	1754	494	6	69	32	0	37	192	3	1	0	0
4/25/2024	2:30 PM	5	1704	491	8	68	42	0	34	206	1	1	0	0
4/25/2024	2:45 PM	6	1726	508	6	68	45	0	31	196	1	1	0	0
4/25/2024	3:00 PM	6	1721	562	5	66	31	0	32	182	0	1	0	0
4/25/2024	3:15 PM	4	1779	541	7	66	33	0	26	173	1	2	0	0
4/25/2024	3:30 PM	5	1814	555	3	68	28	0	28	156	3	2	0	0
4/25/2024	3:45 PM	3	1834	564	3	67	26	0	28	148	4	1	0	0
4/25/2024	4:00 PM	3	1846	552	3	60	28	0	27	146	5	1	0	0
4/25/2024	4:15 PM	2	1853	541	0	56	24	0	22	126	4	0	0	0
4/25/2024	4:30 PM	1	1874	517	0	53	24	0	19	125	2	0	0	0
4/25/2024	4:45 PM	2	1781	486	0	48	18	0	21	133	2	0	0	0
4/25/2024	5:00 PM	1	1781	460	1	54	18	0	22	128	1	0	0	0
4/25/2024	5:15 PM	4	1703	473	2	49	15	0	19	133	1	0	0	0
4/25/2024	5:30 PM	4	1645	469	3	60	11	0	17	126	1	1	0	0
4/25/2024	5:45 PM	3	1624	451	3	55	9	1	11	118	2	1	0	0
4/25/2024	6:00 PM	4	1528	424	3	46	7	1	8	123	2	1	1	0
4/25/2024	6:15 PM	1	1443	400	3	42	9	1	8	120	2	1	1	0
4/25/2024	6:30 PM	2	1350	362	2	33	7	1	6	117	3	0	1	0
4/25/2024	6:45 PM	2	1292	353	2	36	6	0	6	100	3	0	1	0
4/25/2024	7:00 PM	3	1239	354	1	34	6	0	4	91	3	1	0	0
4/25/2024	7:15 PM	3	1210	304	0	30	6	0	3	78	3	1	0	0
4/25/2024	7:30 PM	4	1143	247	0	25	6	0	2	78	2	2	0	0
4/25/2024	7:45 PM	6	1098	174	0	17	5	0	0	81	0	2	0	0
4/25/2024	8:00 PM	4	1026	118	0	16	3	0	0	77	0	2	0	0
4/25/2024	8:15 PM	4	988	78	0	14	0	0	0	88	0	2	0	0
4/25/2024	8:30 PM	2	1015	70	0	10	0	0	0	77	0	1	0	0
4/25/2024	8:45 PM	0	990	63	0	10	0	0	0	69	0	2	0	0
4/25/2024	9:00 PM	1	935	43	0	11	0	0	0	57	0	2	0	0
4/25/2024	9:15 PM	1	834	31	0	12	2	0	0	39	0	2	0	0
4/25/2024	9:30 PM	2	711	22	0	13	2	0	0	33	0	2	0	0
4/25/2024	9:45 PM	2	659	22	1	13	3	0	0	38	0	2	0	0
4/25/2024	10:00 PM	1	622	28	1	12	3	0	0	41	0	2	0	0
4/25/2024	10:15 PM	1	566	27	1	11	1	0	0	40	0	4	0	0
4/25/2024	10:30 PM	0	489	28	1	8	1	0	0	38	0	5	0	0
4/25/2024	10:45 PM	0	434	26	0	7	1	0	0	38	0	6	0	0
4/25/2024	11:00 PM	0	397	20	0	6	3	0	0	55	0	5	0	0
4/25/2024	11:15 PM	0	298	18	0	5	3	0	0	50	0	3	0	0
4/25/2024	11:30 PM	0	222	14	0	5	3	0	0	45	0	2	0	0
4/25/2024	11:45 PM	0	94	6	0	3	2	0	0	29	0	0	0	0

4/26/2024	12:00 AM	0	195	54	0	7	2	0	0	50	0	9	0	0
4/26/2024	12:15 AM	0	176	46	0	7	2	0	0	51	0	7	0	0
4/26/2024	12:30 AM	0	162	41	0	6	2	0	1	52	0	8	0	0
4/26/2024	12:45 AM	0	122	34	0	2	2	0	1	42	0	6	0	0
4/26/2024	1:00 AM	0	109	26	0	5	2	0	1	40	0	6	0	0
4/26/2024	1:15 AM	0	102	25	0	5	2	0	1	40	0	7	0	0
4/26/2024	1:30 AM	0	103	22	0	6	2	0	0	41	0	8	0	0
4/26/2024	1:45 AM	0	123	22	0	7	1	0	1	56	0	12	0	0
4/26/2024	2:00 AM	0	134	25	0	3	3	0	1	61	0	13	0	0
4/26/2024	2:15 AM	0	148	25	0	4	3	0	1	76	0	11	0	0
4/26/2024	2:30 AM	0	168	26	2	3	4	1	2	92	0	11	0	0
4/26/2024	2:45 AM	0	179	23	2	4	5	1	2	83	0	7	0	0
4/26/2024	3:00 AM	0	202	28	2	5	3	2	2	82	0	6	0	0
4/26/2024	3:15 AM	1	223	45	2	6	3	2	2	86	0	5	0	0
4/26/2024	3:30 AM	1	254	51	0	8	2	1	1	84	0	4	0	0
4/26/2024	3:45 AM	2	312	69	0	8	2	1	0	98	0	5	0	0
4/26/2024	4:00 AM	2	405	83	0	11	4	0	0	101	0	4	0	0
4/26/2024	4:15 AM	1	479	99	0	12	4	0	0	100	0	5	0	0
4/26/2024	4:30 AM	1	565	130	0	12	6	0	1	109	0	4	0	0
4/26/2024	4:45 AM	0	665	166	0	15	5	0	2	108	0	3	0	0
4/26/2024	5:00 AM	3	747	199	0	21	6	0	2	117	0	3	0	0
4/26/2024	5:15 AM	3	849	225	0	25	7	0	2	130	0	2	0	0
4/26/2024	5:30 AM	3	982	267	0	28	10	1	3	136	0	2	0	0
4/26/2024	5:45 AM	4	1227	298	1	30	9	1	4	144	0	0	0	0
4/26/2024	6:00 AM	2	1449	365	1	24	12	2	4	149	1	1	0	0
4/26/2024	6:15 AM	2	1684	430	1	22	21	2	4	151	2	2	0	0
4/26/2024	6:30 AM	2	1915	495	2	27	31	1	4	155	2	2	0	0
4/26/2024	6:45 AM	2	2019	543	3	26	37	1	4	160	3	2	0	0
4/26/2024	7:00 AM	3	2109	566	4	32	33	1	6	168	3	3	0	0
4/26/2024	7:15 AM	4	2068	555	4	38	27	2	7	170	2	2	0	0
4/26/2024	7:30 AM	7	1945	518	3	37	15	3	7	161	2	3	0	0
4/26/2024	7:45 AM	6	1791	495	5	39	13	3	7	156	1	4	0	0
4/26/2024	8:00 AM	4	1641	458	4	39	15	4	7	144	0	3	0	0
4/26/2024	8:15 AM	4	1557	442	5	33	19	3	9	145	4	5	0	0
4/26/2024	8:30 AM	1	1563	444	6	36	20	4	9	159	4	4	0	0
4/26/2024	8:45 AM	3	1565	424	3	33	21	5	8	158	4	4	0	0
4/26/2024	9:00 AM	3	1598	409	3	30	20	4	10	179	4	3	0	0
4/26/2024	9:15 AM	3	1663	391	3	41	20	6	10	200	4	1	0	0
4/26/2024	9:30 AM	4	1663	405	2	47	21	4	9	211	4	2	0	0
4/26/2024	9:45 AM	3	1706	420	1	57	24	5	12	230	5	1	0	0
4/26/2024	10:00 AM	5	1730	456	1	62	28	5	15	235	7	2	0	0
4/26/2024	10:15 AM	4	1814	492	1	58	26	4	13	241	5	2	0	0
4/26/2024	10:30 AM	3	1842	477	3	57	24	5	20	232	5	1	0	0
4/26/2024	10:45 AM	3	1790	505	4	56	22	6	23	233	4	1	0	0
4/26/2024	11:00 AM	1	1780	526	6	68	27	5	21	230	3	0	0	0
4/26/2024	11:15 AM	2	1741	544	5	65	25	5	24	218	4	0	0	0
4/26/2024	11:30 AM	2	1766	581	4	60	30	4	20	222	5	0	0	0
4/26/2024	11:45 AM	1	1783	561	6	61	32	2	15	210	8	0	0	0
4/26/2024	12:00 PM	5	1773	528	4	45	24	2	13	199	7	1	0	0
4/26/2024	12:15 PM	6	1789	544	4	47	24	1	11	179	7	1	1	0
4/26/2024	12:30 PM	7	1817	519	3	49	25	2	8	169	6	1	1	0
4/26/2024	12:45 PM	7	1865	531	2	42	23	1	9	165	3	1	1	0
4/26/2024	1:00 PM	4	1877	553	3	43	26	1	7	153	3	0	1	0
4/26/2024	1:15 PM	5	1787	497	6	43	34	1	8	145	0	0	0	0
4/26/2024	1:30 PM	5	1754	509	7	46	26	0	8	141	0	0	0	0
4/26/2024	1:45 PM	10	1761	532	7	53	26	1	6	131	0	0	0	0
4/26/2024	2:00 PM	10	1794	520	8	51	29	1	7	138	0	0	0	0
4/26/2024	2:15 PM	8	1903	542	5	49	25	1	6	145	1	0	0	0
4/26/2024	2:30 PM	8	1909	535	4	43	28	2	9	140	2	0	0	0
4/26/2024	2:45 PM	3	1914	523	2	39	26	1	10	135	2	0	0	0
4/26/2024	3:00 PM	2	1923	538	0	49	23	1	9	124	2	0	2	0
4/26/2024	3:15 PM	1	1888	526	0	56	20	1	10	113	1	0	2	0
4/26/2024	3:30 PM	0	1901	527	1	54	16	0	9	104	0	1	2	0
4/26/2024	3:45 PM	3	1852	528	1	49	17	0	7	99	0	2	3	0
4/26/2024	4:00 PM	7	1861	507	2	47	14	0	8	91	0	2	2	0
4/26/2024	4:15 PM	7	1906	533	2	42	11	0	9	85	0	2	2	0
4/26/2024	4:30 PM	8	1964	515	2	43	14	0	11	92	0	1	2	0
4/26/2024	4:45 PM	6	2046	505	2	47	10	0	13	94	3	0	2	0
4/26/2024	5:00 PM	6	2037	506	4	45	12	0	12	93	3	0	1	0
4/26/2024	5:15 PM	6	1981	486	5	42	11	0	9	88	4	0	1	0
4/26/2024	5:30 PM	5	1928	477	5	49	10	0	5	76	4	0	1	0
4/26/2024	5:45 PM	5	1833	444	5	52	9	0	5	61	1	0	0	0
4/26/2024	6:00 PM	1	1766	419	3	56	3	0	5	61	1	0	1	0
4/26/2024	6:15 PM	2	1690	401	2	57	4	0	5	60	1	0	1	0
4/26/2024	6:30 PM	2	1526	390	2	48	2	0	6	67	1	1	1	0
4/26/2024	6:45 PM	1	1379	366	2	39	2	0	4	74	1	1	1	0
4/26/2024	7:00 PM	4	1250	336	4	27	4	0	3	66	1	1	0	0
4/26/2024	7:15 PM	4	1188	308	4	21	2	0	3	63	0	1	0	0
4/26/2024	7:30 PM	4	1121	281	3	21	3	0	2	44	0	0	0	0
4/26/2024	7:45 PM	4	1111	256	3	21	3	0	4	38	0	0	0	0
4/26/2024	8:00 PM	1	1060	229	0	18	1	0	5	44	0	0	0	0
4/26/2024	8:15 PM	0	974	205	0	16	1	0	4	45	0	0	0	0
4/26/2024	8:30 PM	0	943	181	0	10	1	0	3	46	0	0	0	0
4/26/2024	8:45 PM	0	891	174	0	7	2	0	1	46	0	0	0	0
4/26/2024	9:00 PM	0	876	166	0	6	2	0	0	37	0	0	0	0
4/26/2024	9:15 PM	0	850	154	1	9	2	0	0	31	0	0	0	0
4/26/2024	9:30 PM	0	819	147	1	8	1	0	0	31	0	0	0	0
4/26/2024	9:45 PM	0	751	129	1	7	1	0	3	35	0	0	0	0
4/26/2024	10:00 PM	0	664	120	1	7	1	0	3	38	0	0	0	0
4/26/2024	10:15 PM	0	598	117	0	4	1	0	3	44	0	0	0	0
4/26/2024	10:30 PM	0	524	109	0	3	3	0	3	47	0	0	0	0
4/26/2024	10:45 PM	0	483	109	0	2	2	0	0	37	0	0	0	0
4/26/2024	11:00 PM	0	428	95	0	2	4	0	0	33	0	0	0	0
4/26/2024	11:15 PM	0	301	66	0	1	4	0	0	21	0	0	0	0
4/26/2024	11:30 PM	0	185	40	0	1	2	0	0	12	0	0	0	0
4/26/2024	11:45 PM	0	82	14	0	1	2	0	0	6	0	0	0	0

4/27/2024	12:00 AM	0	322	41	0	1	0	0	0	35	0	7	0	0
4/27/2024	12:15 AM	1	268	33	0	2	0	0	1	32	0	7	0	0
4/27/2024	12:30 AM	1	214	31	0	2	0	0	2	35	0	6	0	0
4/27/2024	12:45 AM	1	171	27	0	3	0	0	2	35	0	4	0	0
4/27/2024	1:00 AM	1	173	27	0	4	0	0	3	28	0	5	0	0
4/27/2024	1:15 AM	0	172	23	0	4	0	0	2	25	0	9	0	0
4/27/2024	1:30 AM	0	176	21	0	4	0	0	1	22	0	13	0	0
4/27/2024	1:45 AM	0	170	20	0	3	0	0	1	25	0	13	0	0
4/27/2024	2:00 AM	0	162	21	0	2	0	0	0	24	0	11	0	0
4/27/2024	2:15 AM	0	168	28	1	1	0	0	0	25	0	8	0	0
4/27/2024	2:30 AM	0	177	32	1	1	1	0	1	29	0	3	0	0
4/27/2024	2:45 AM	0	191	36	1	3	2	0	1	30	0	3	0	0
4/27/2024	3:00 AM	0	207	35	1	3	2	0	1	28	0	3	0	0
4/27/2024	3:15 AM	0	208	29	0	6	2	0	2	28	0	3	0	0
4/27/2024	3:30 AM	0	217	26	0	7	1	0	2	26	0	5	0	0
4/27/2024	3:45 AM	0	254	29	0	5	0	0	2	22	0	7	0	0
4/27/2024	4:00 AM	1	278	34	0	7	0	0	2	29	0	6	0	0
4/27/2024	4:15 AM	1	305	44	0	5	0	0	2	25	0	4	0	0
4/27/2024	4:30 AM	1	346	58	0	4	0	0	1	20	0	2	0	0
4/27/2024	4:45 AM	2	365	70	1	6	1	0	2	22	0	1	0	0
4/27/2024	5:00 AM	2	395	76	1	5	1	0	2	25	0	1	0	0
4/27/2024	5:15 AM	2	412	88	1	4	2	0	1	29	0	2	0	0
4/27/2024	5:30 AM	3	468	106	1	5	2	0	1	32	0	3	0	0
4/27/2024	5:45 AM	2	551	139	0	6	3	0	0	29	0	3	0	0
4/27/2024	6:00 AM	3	627	161	0	6	4	0	0	27	0	4	0	0
4/27/2024	6:15 AM	3	712	165	0	11	5	0	1	42	0	4	0	0
4/27/2024	6:30 AM	2	750	180	0	14	6	0	5	40	0	4	0	0
4/27/2024	6:45 AM	2	800	204	0	19	6	0	6	45	0	3	0	0
4/27/2024	7:00 AM	0	869	231	3	19	9	0	6	50	0	5	0	0
4/27/2024	7:15 AM	0	963	268	3	20	8	0	7	40	0	4	0	0
4/27/2024	7:30 AM	2	1080	279	4	18	8	0	6	49	0	3	0	0
4/27/2024	7:45 AM	12	1198	285	4	14	9	0	5	51	0	3	0	0
4/27/2024	8:00 AM	13	1289	309	2	18	6	0	8	47	0	0	0	0
4/27/2024	8:15 AM	14	1358	328	2	18	7	0	6	51	0	1	0	0
4/27/2024	8:30 AM	12	1406	372	1	22	8	0	3	49	0	1	0	0
4/27/2024	8:45 AM	5	1478	387	1	30	7	0	3	51	0	1	0	0
4/27/2024	9:00 AM	6	1570	388	1	31	7	0	2	59	0	1	0	0
4/27/2024	9:15 AM	22	1652	398	1	32	5	0	4	56	0	0	0	0
4/27/2024	9:30 AM	23	1737	378	1	31	3	0	5	63	0	0	0	0
4/27/2024	9:45 AM	25	1744	374	1	21	5	0	5	62	0	0	0	0
4/27/2024	10:00 AM	25	1711	377	0	19	5	0	7	54	0	0	0	0
4/27/2024	10:15 AM	8	1663	370	1	13	6	0	7	49	0	0	0	0
4/27/2024	10:30 AM	8	1594	373	1	11	8	0	6	41	0	0	0	0
4/27/2024	10:45 AM	4	1580	372	1	13	5	0	6	39	0	0	0	0
4/27/2024	11:00 AM	5	1739	410	4	16	5	0	2	38	0	1	0	0
4/27/2024	11:15 AM	6	1905	440	3	19	5	0	0	52	0	1	0	0
4/27/2024	11:30 AM	7	2077	475	3	23	5	0	0	62	0	1	0	0
4/27/2024	11:45 AM	8	2102	503	3	24	4	0	0	58	0	1	0	0
4/27/2024	12:00 PM	7	1978	494	0	28	5	0	0	57	0	0	0	0
4/27/2024	12:15 PM	9	1902	478	0	36	5	0	1	44	0	0	0	0
4/27/2024	12:30 PM	11	1819	476	0	33	7	0	1	37	0	0	0	0
4/27/2024	12:45 PM	13	1862	454	2	36	7	0	1	42	0	0	0	0
4/27/2024	1:00 PM	12	1866	459	2	35	10	0	2	44	0	1	0	0
4/27/2024	1:15 PM	12	1894	458	2	29	9	0	1	41	0	1	0	0
4/27/2024	1:30 PM	8	1892	439	3	27	6	0	1	39	0	1	0	0
4/27/2024	1:45 PM	4	1866	453	1	27	9	0	1	37	0	1	0	0
4/27/2024	2:00 PM	4	1891	417	1	21	6	0	1	39	0	0	0	0
4/27/2024	2:15 PM	3	1823	412	1	24	6	0	1	46	0	0	0	0
4/27/2024	2:30 PM	8	1810	425	0	27	5	0	1	44	0	0	0	0
4/27/2024	2:45 PM	13	1800	439	0	22	2	0	1	40	0	0	0	0
4/27/2024	3:00 PM	15	1751	451	0	25	2	0	3	36	0	0	0	0
4/27/2024	3:15 PM	14	1756	455	0	22	2	0	3	33	0	1	0	0
4/27/2024	3:30 PM	10	1761	434	1	19	2	0	5	30	0	1	0	0
4/27/2024	3:45 PM	5	1694	405	2	23	3	0	7	28	0	1	0	0
4/27/2024	4:00 PM	4	1670	393	2	20	2	0	4	30	0	1	0	0
4/27/2024	4:15 PM	3	1661	411	2	17	2	0	4	35	0	0	0	0
4/27/2024	4:30 PM	5	1656	390	1	19	2	0	2	41	0	0	0	0
4/27/2024	4:45 PM	10	1631	387	0	15	1	0	0	44	0	0	0	0
4/27/2024	5:00 PM	10	1627	383	1	12	0	0	0	43	0	0	0	0
4/27/2024	5:15 PM	12	1597	344	1	12	0	0	0	40	0	0	0	0
4/27/2024	5:30 PM	16	1549	352	1	10	0	0	0	35	0	0	0	0
4/27/2024	5:45 PM	11	1605	332	1	11	0	0	2	36	0	0	0	0
4/27/2024	6:00 PM	9	1568	308	1	14	0	0	3	31	0	0	0	0
4/27/2024	6:15 PM	8	1521	290	2	12	1	0	4	27	0	0	1	0
4/27/2024	6:30 PM	1	1426	254	2	14	1	0	5	30	0	0	1	0
4/27/2024	6:45 PM	3	1327	239	2	12	1	0	4	27	0	0	1	0
4/27/2024	7:00 PM	5	1244	223	1	9	1	0	4	31	0	0	1	0
4/27/2024	7:15 PM	5	1211	226	0	9	1	0	3	28	0	1	0	0
4/27/2024	7:30 PM	5	1202	230	2	7	3	0	2	23	0	1	0	0
4/27/2024	7:45 PM	3	1163	212	2	10	3	0	1	23	0	1	0	0
4/27/2024	8:00 PM	1	1142	215	2	10	5	0	0	20	0	1	0	0
4/27/2024	8:15 PM	0	1052	183	2	9	4	0	0	17	0	0	0	0
4/27/2024	8:30 PM	0	991	170	0	8	2	0	0	16	0	0	0	0
4/27/2024	8:45 PM	0	921	164	0	5	2	0	0	13	0	0	0	0
4/27/2024	9:00 PM	0	844	138	0	4	0	0	1	9	0	0	0	0
4/27/2024	9:15 PM	0	812	132	0	5	0	0	1	9	0	0	0	0
4/27/2024	9:30 PM	0	768	117	0	5	0	0	1	6	0	0	0	0
4/27/2024	9:45 PM	0	746	114	0	5	0	0	1	7	0	0	0	0
4/27/2024	10:00 PM	0	696	114	0	7	0	0	0	7	0	0	0	0
4/27/2024	10:15 PM	0	648	111	1	7	0	0	0	11	0	0	0	0
4/27/2024	10:30 PM	0	581	108	1	7	0	0	0	17	0	0	0	0
4/27/2024	10:45 PM	0	487	92	1	5	0	0	0	20	0	0	0	0
4/27/2024	11:00 PM	0	449	83	1	2	0	0	0	22	0	0	0	0
4/27/2024	11:15 PM	0	309	58	0	1	0	0	0	17	0	0	0	0
4/27/2024	11:30 PM	0	186	36	0	0	0	0	0	10	0	0	0	0
4/27/2024	11:45 PM	0	92	17	0	0	0	0	0	4	0	0	0	0

Bi-Directional Class Count || SB WB 15min

Columbia, SC

Marr Traffic DATA COLLECTION
www.marrtraffic.com

Site 7
I-26 S/Bound Off-Ramp,
north of I-20

Date
Sunday, April 21, 2024

Lat/Long
34.037496°, -81.113416°

Weather
Cloudy
66°F

Click here for Detailed Weather

Click here for Map

0000 - 2400 (Sunday 24h Session) (04-21-2024)
SB WB 15min

	Southbound (Movement 7.1)													15min	60min
Time	1	2	3	4	5	6	7	8	9	10	11	12	13	Total	Total
0000 - 0015	0	27	5	0	0	0	0	0	0	0	0	0	0	**32**	
0015 - 0030	0	20	5	0	0	0	0	0	1	0	0	0	0	**26**	
0030 - 0045	0	19	5	0	0	0	0	0	0	0	0	0	0	**24**	
0045 - 0100	0	24	7	0	0	0	0	0	0	0	0	0	0	**31**	**113**
0100 - 0115	0	20	5	0	1	0	0	0	1	0	0	0	0	**27**	
0115 - 0130	0	14	6	0	0	0	0	0	1	0	0	0	0	**21**	
0130 - 0145	0	12	3	0	0	0	0	0	0	0	0	0	0	**15**	
0145 - 0200	0	17	2	0	0	0	0	0	1	0	0	0	0	**20**	**83**
0200 - 0215	0	8	2	0	0	0	0	0	0	0	0	0	0	**10**	
0215 - 0230	0	12	3	0	0	0	0	0	1	0	0	0	0	**16**	
0230 - 0245	0	8	4	0	0	0	0	1	1	0	0	0	0	**14**	
0245 - 0300	0	7	2	0	1	0	0	0	0	0	0	0	0	**10**	**50**
0300 - 0315	0	7	2	0	0	0	0	0	1	0	0	0	0	**10**	
0315 - 0330	0	7	1	0	0	0	0	0	1	0	0	0	0	**9**	
0330 - 0345	0	6	3	0	0	0	0	0	1	0	0	0	0	**10**	
0345 - 0400	0	5	3	0	0	0	0	0	0	0	0	0	0	**8**	**37**
0400 - 0415	0	8	3	0	1	0	0	0	0	0	0	0	0	**12**	
0415 - 0430	0	4	2	0	0	0	0	0	1	0	0	0	0	**7**	
0430 - 0445	0	8	2	0	0	0	0	1	0	0	0	0	0	**11**	
0445 - 0500	0	3	1	0	0	0	0	0	2	0	0	0	0	**6**	**36**
0500 - 0515	0	3	1	0	0	0	0	0	3	0	0	0	0	**7**	
0515 - 0530	0	3	1	0	0	0	0	0	0	0	0	0	0	**4**	
0530 - 0545	0	12	5	0	0	0	0	1	1	0	0	0	0	**19**	
0545 - 0600	0	8	2	0	0	0	0	0	2	0	0	0	0	**12**	**42**
0600 - 0615	0	12	4	0	0	0	0	0	1	0	0	0	0	**17**	
0615 - 0630	0	27	5	0	0	0	0	0	1	0	0	0	0	**33**	
0630 - 0645	0	20	6	0	0	0	0	0	0	0	0	0	0	**26**	
0645 - 0700	0	20	2	0	0	0	0	0	0	0	0	0	0	**22**	**98**
0700 - 0715	0	21	7	0	0	0	0	0	1	0	0	0	0	**29**	
0715 - 0730	0	23	4	0	0	0	0	0	2	0	0	0	0	**29**	
0730 - 0745	0	29	9	0	0	0	0	0	1	0	0	0	0	**39**	
0745 - 0800	0	18	11	0	0	0	0	0	4	0	0	0	0	**33**	**130**
0800 - 0815	0	28	5	0	0	0	0	0	1	0	0	0	0	**34**	
0815 - 0830	0	33	9	0	1	1	0	0	3	0	0	0	0	**47**	
0830 - 0845	0	44	5	0	0	0	0	0	0	0	0	0	0	**49**	
0845 - 0900	0	45	9	0	0	0	0	0	2	0	0	0	0	**56**	**186**
0900 - 0915	0	40	10	0	0	0	0	0	2	0	0	0	0	**52**	
0915 - 0930	0	56	11	0	0	0	0	0	1	0	0	0	0	**68**	
0930 - 0945	0	56	17	1	0	1	0	0	1	0	0	0	0	**76**	
0945 - 1000	0	66	13	0	0	0	0	0	0	0	0	0	0	**79**	**275**
1000 - 1015	0	55	13	0	0	1	0	0	4	0	0	0	0	**73**	
1015 - 1030	0	81	12	1	0	0	0	0	1	0	0	0	0	**95**	
1030 - 1045	0	87	23	1	0	0	0	0	2	0	0	0	0	**113**	
1045 - 1100	0	82	18	0	0	0	0	0	1	0	0	0	0	**101**	**382**
1100 - 1115	0	73	19	0	2	0	0	0	1	0	0	0	0	**95**	
1115 - 1130	0	74	26	0	1	0	0	0	0	0	0	0	0	**101**	
1130 - 1145	0	98	14	0	1	0	0	0	1	0	0	0	0	**114**	
1145 - 1200	0	119	27	0	1	0	0	0	0	0	0	0	0	**147**	**457**
1200 - 1215	0	105	21	0	0	0	0	0	2	0	0	0	0	**128**	
1215 - 1230	0	150	28	0	0	0	0	0	1	0	0	0	0	**179**	
1230 - 1245	0	112	27	0	0	0	0	0	2	0	0	0	0	**141**	
1245 - 1300	0	134	23	3	0	0	0	0	2	0	0	0	0	**162**	**610**
1300 - 1315	0	135	33	0	0	0	1	0	0	0	0	0	0	**169**	
1315 - 1330	0	128	36	0	1	0	0	0	2	0	0	0	0	**167**	
1330 - 1345	0	147	32	0	0	0	0	0	3	0	0	0	0	**182**	
1345 - 1400	0	134	22	0	3	0	0	0	1	0	0	0	0	**160**	**678**
1400 - 1415	0	99	25	0	0	0	0	1	0	0	0	0	0	**125**	
1415 - 1430	0	133	26	0	1	0	0	0	0	0	0	0	0	**160**	
1430 - 1445	0	132	27	0	1	0	0	0	3	0	0	0	0	**163**	
1445 - 1500	0	129	20	0	0	0	0	0	1	0	0	0	0	**150**	**598**
1500 - 1515	0	121	21	0	2	0	0	0	1	0	0	0	0	**145**	
1515 - 1530	0	121	28	0	0	0	0	0	2	0	0	0	0	**151**	
1530 - 1545	0	107	23	1	0	0	0	1	2	0	0	0	0	**134**	
1545 - 1600	0	129	16	0	0	0	0	0	0	0	0	0	0	**145**	**575**
1600 - 1615	0	123	22	0	1	0	0	0	1	0	0	0	0	**147**	
1615 - 1630	0	112	15	0	2	0	0	1	2	0	0	0	0	**132**	
1630 - 1645	0	113	29	0	0	0	0	0	0	0	0	0	0	**142**	
1645 - 1700	0	97	36	0	1	0	0	0	1	0	0	0	0	**135**	**556**
1700 - 1715	0	109	18	0	0	0	0	0	1	0	0	0	0	**128**	
1715 - 1730	0	129	13	0	0	0	0	0	0	0	0	0	0	**142**	
1730 - 1745	0	107	17	0	0	0	0	0	2	0	0	0	0	**126**	
1745 - 1800	0	112	14	0	1	0	0	0	0	0	0	0	0	**127**	**523**
1800 - 1815	0	112	23	0	0	0	0	0	2	0	0	0	0	**137**	
1815 - 1830	0	116	17	0	1	0	0	0	0	0	0	0	0	**134**	
1830 - 1845	0	101	12	0	0	0	0	0	1	0	0	0	0	**114**	
1845 - 1900	0	90	15	0	0	0	0	0	1	0	0	0	0	**106**	**491**
1900 - 1915	0	86	16	0	1	0	0	0	0	0	0	0	0	**103**	
1915 - 1930	0	65	14	0	0	0	0	1	6	0	0	0	0	**86**	
1930 - 1945	0	70	19	0	0	0	0	0	0	0	0	0	0	**89**	
1945 - 2000	0	51	9	0	0	0	0	0	2	0	0	0	0	**62**	**340**
2000 - 2015	0	54	19	0	0	0	0	2	4	0	0	0	0	**79**	
2015 - 2030	0	51	10	0	0	0	0	1	3	0	0	0	0	**65**	
2030 - 2045	0	67	4	0	0	0	0	0	0	0	0	0	0	**71**	
2045 - 2100	0	55	5	0	1	0	0	2	1	0	0	0	0	**64**	**279**
2100 - 2115	0	48	8	0	1	0	0	0	3	0	0	0	0	**60**	
2115 - 2130	0	52	8	0	1	0	0	0	1	0	0	0	0	**62**	
2130 - 2145	0	42	7	0	0	0	0	2	1	0	0	0	0	**52**	
2145 - 2200	0	30	7	0	0	0	0	0	6	0	0	0	0	**43**	**217**
2200 - 2215	0	36	8	0	0	0	0	1	2	0	0	0	0	**47**	
2215 - 2230	0	28	9	0	1	0	0	0	2	0	0	0	0	**40**	
2230 - 2245	0	18	6	0	0	0	0	1	1	0	0	0	0	**26**	
2245 - 2300	0	16	8	0	1	0	0	0	1	0	0	0	0	**26**	**139**
2300 - 2315	0	21	7	0	0	0	0	0	2	0	0	0	0	**30**	
2315 - 2330	0	13	2	0	0	0	0	0	0	0	0	0	0	**15**	
2330 - 2345	0	9	2	0	0	0	0	0	2	0	0	0	0	**13**	
2345 - 0000	0	9	3	0	0	0	0	0	3	0	0	0	0	**15**	**73**

Session Total	0	5627	1164	7	29	3	1	16	121	0	0	0	0	**6968**
Session Average	0.00	58.61	12.13	0.07	0.30	0.03	0.01	0.17	1.26	0.00	0.00	0.00	0.00	**72.58**
Session Percentage	0.00	80.75	16.70	0.10	0.42	0.04	0.01	0.23	1.74	0.00	0.00	0.00	0.00	

AM Peak Hour	-	0945 - 1045	0945 - 1045	0930 - 1030	0730 - 0830	0915 - 1015	-	0500 - 0600	0730 - 0830	-	-	-	-	**0945 - 1045**
AM Peak Volume	0	289	61	2	1	2	0	1	9	0	0	0	0	**360**

Noon Peak Hour	-	1245 - 1345	1245 - 1345	1200 - 1300	1100 - 1200	1000 - 1100	1215 - 1315	1315 - 1415	1000 - 1100	-	-	-	-	**1245 - 1345**
Noon Peak Volume	0	544	124	3	5	1	1	1	8	0	0	0	0	**680**

PM Peak Hour	-	1515 - 1615	1600 - 1700	1500 - 1600	1600 - 1700	-	-	1915 - 2015	1915 - 2015	-	-	-	-	**1515 - 1615**
PM Peak Volume	0	480	102	1	4	0	0	3	12	0	0	0	0	**577**

Site 7
I-26 S/Bound Off-Ramp,
north of I-20

Date
Monday, April 22, 2024

Lat/Long
34.037496°, -81.113416°

Weather
Mostly Cloudy
57°F

Click here for Detailed Weather

0000 - 2400 (Weekday 24h Session) (04-22-2024)
SB WB 15min

	Southbound (Movement 7.1)													15min	60min
Time	1	2	3	4	5	6	7	8	9	10	11	12	13	Total	Total
0000 - 0015	0	8	2	0	1	0	0	0	0	0	0	0	0	**11**	
0015 - 0030	0	9	1	0	0	0	0	0	2	0	0	0	0	**12**	
0030 - 0045	0	6	1	0	0	0	0	0	2	0	0	0	0	**9**	
0045 - 0100	0	8	2	0	0	0	0	0	1	0	0	0	0	**11**	**43**
0100 - 0115	0	5	0	0	0	0	0	0	0	0	0	0	0	**5**	
0115 - 0130	0	4	0	0	0	1	0	0	1	0	0	0	0	**6**	
0130 - 0145	0	7	2	0	0	0	0	0	0	0	0	0	0	**9**	
0145 - 0200	0	3	0	0	0	0	0	0	0	0	0	0	0	**3**	**23**
0200 - 0215	0	7	2	0	0	0	0	0	2	0	0	0	0	**11**	
0215 - 0230	0	2	0	0	0	0	0	0	1	0	0	0	0	**3**	
0230 - 0245	0	5	1	0	0	0	0	0	1	0	0	0	0	**7**	
0245 - 0300	0	9	2	0	0	0	0	0	1	0	0	0	0	**12**	**33**
0300 - 0315	0	4	0	0	0	1	0	0	1	0	0	0	0	**6**	
0315 - 0330	0	6	2	0	1	0	0	0	1	0	0	0	0	**10**	
0330 - 0345	0	7	2	0	1	0	0	0	1	0	0	0	0	**11**	
0345 - 0400	0	8	2	0	0	0	0	0	2	0	0	0	0	**12**	**39**
0400 - 0415	0	10	2	0	1	0	0	0	1	0	0	0	0	**14**	
0415 - 0430	0	11	2	0	0	0	0	0	1	0	0	0	0	**14**	
0430 - 0445	0	5	1	0	0	0	0	0	1	0	0	0	0	**7**	
0445 - 0500	0	11	3	0	1	0	0	0	2	0	0	0	0	**17**	**52**
0500 - 0515	0	15	3	0	0	0	0	1	2	0	0	0	0	**21**	
0515 - 0530	0	25	4	0	0	0	0	0	3	0	0	0	0	**32**	
0530 - 0545	0	38	7	0	1	0	0	0	0	0	0	0	0	**46**	
0545 - 0600	0	42	7	0	1	0	0	0	3	0	0	0	0	**53**	**152**
0600 - 0615	0	55	8	0	1	0	0	0	2	0	0	0	0	**66**	
0615 - 0630	0	79	11	0	2	1	0	0	3	0	0	0	0	**96**	
0630 - 0645	0	110	21	0	1	1	0	0	2	0	0	0	0	**135**	
0645 - 0700	0	133	23	1	3	0	0	0	1	0	0	0	0	**161**	**458**
0700 - 0715	0	131	23	1	2	0	0	0	6	0	0	0	0	**163**	
0715 - 0730	0	148	39	0	0	1	0	0	5	0	0	0	0	**193**	
0730 - 0745	0	147	32	0	2	0	0	0	2	0	0	0	0	**183**	
0745 - 0800	0	130	21	0	1	2	0	0	4	0	0	0	0	**158**	**697**
0800 - 0815	0	108	24	0	1	1	0	0	0	0	0	0	0	**134**	
0815 - 0830	0	97	14	1	0	1	0	1	3	0	0	0	0	**117**	
0830 - 0845	0	112	22	0	6	0	0	0	2	0	0	0	0	**142**	
0845 - 0900	0	89	20	0	6	0	0	0	4	0	0	0	0	**119**	**512**
0900 - 0915	0	85	11	0	3	1	0	0	4	0	0	0	0	**104**	
0915 - 0930	0	89	20	0	4	1	0	1	8	0	0	0	0	**123**	
0930 - 0945	0	84	16	0	3	0	0	0	6	0	0	0	0	**109**	
0945 - 1000	0	80	17	0	3	1	0	0	3	0	0	0	0	**104**	**440**
1000 - 1015	0	64	23	0	3	2	0	1	3	0	0	0	0	**96**	
1015 - 1030	0	66	27	0	3	0	0	0	5	0	0	0	0	**101**	
1030 - 1045	0	90	14	0	3	0	0	1	7	0	0	0	0	**115**	
1045 - 1100	0	88	22	1	3	1	0	0	3	0	0	0	0	**118**	**430**
1100 - 1115	0	96	22	0	3	0	0	1	3	0	0	0	0	**125**	
1115 - 1130	0	76	18	0	4	0	0	0	2	0	0	0	0	**100**	
1130 - 1145	1	89	27	0	3	1	0	1	1	0	0	0	0	**123**	
1145 - 1200	0	95	11	0	2	0	0	0	5	0	0	0	0	**113**	**461**
1200 - 1215	0	118	20	0	3	0	0	0	6	0	0	0	0	**147**	
1215 - 1230	0	101	30	0	1	0	0	1	0	0	0	0	0	**133**	
1230 - 1245	0	117	24	0	0	0	0	1	7	0	0	0	0	**149**	
1245 - 1300	0	128	24	0	1	3	0	0	1	0	0	0	0	**157**	**586**
1300 - 1315	0	108	23	0	2	0	0	0	5	0	0	0	0	**138**	
1315 - 1330	0	102	21	1	4	1	0	1	6	0	0	0	0	**136**	
1330 - 1345	0	112	33	0	5	0	0	0	7	0	0	0	0	**157**	
1345 - 1400	0	136	16	0	1	1	0	1	2	0	0	0	0	**157**	**588**
1400 - 1415	0	125	30	0	2	0	0	0	6	0	0	0	0	**163**	
1415 - 1430	0	108	23	2	3	1	0	1	6	0	0	0	0	**144**	
1430 - 1445	0	125	28	0	2	0	0	0	4	0	0	0	0	**159**	
1445 - 1500	0	117	22	0	4	2	0	0	4	0	0	0	0	**149**	**615**
1500 - 1515	0	164	25	0	1	0	0	2	2	0	0	0	0	**194**	
1515 - 1530	0	137	20	0	1	2	0	0	1	0	0	0	0	**161**	
1530 - 1545	0	145	30	0	4	1	0	0	3	0	0	0	0	**183**	
1545 - 1600	0	134	26	0	2	0	0	1	3	0	0	0	0	**166**	**704**
1600 - 1615	0	201	37	1	2	0	0	0	1	0	0	0	0	**242**	
1615 - 1630	0	135	27	0	2	1	0	0	2	0	0	0	0	**167**	
1630 - 1645	0	175	30	0	6	1	0	1	4	0	0	0	0	**217**	
1645 - 1700	0	148	25	0	2	0	0	0	1	0	0	0	0	**176**	**802**
1700 - 1715	0	190	21	0	1	0	0	0	5	0	0	0	0	**217**	
1715 - 1730	0	165	22	0	6	1	0	0	7	0	0	0	0	**201**	
1730 - 1745	0	132	22	0	2	1	0	1	1	0	0	0	0	**159**	
1745 - 1800	0	119	23	0	1	0	0	0	4	0	0	0	0	**147**	**724**
1800 - 1815	0	133	19	0	2	0	0	0	2	0	0	0	0	**156**	
1815 - 1830	0	117	11	0	2	0	0	0	1	0	0	0	0	**131**	
1830 - 1845	0	112	21	0	2	0	0	0	2	0	0	0	0	**137**	
1845 - 1900	0	92	13	0	0	0	0	0	0	0	0	0	0	**105**	**529**
1900 - 1915	0	106	21	0	1	1	0	0	3	0	0	0	0	**132**	
1915 - 1930	0	75	15	0	1	0	0	0	3	0	0	0	0	**94**	
1930 - 1945	0	85	15	0	2	0	0	0	2	0	0	0	0	**104**	
1945 - 2000	0	87	20	0	2	1	0	0	1	0	0	0	0	**111**	**441**
2000 - 2015	0	75	13	0	2	0	0	0	1	0	0	0	0	**91**	
2015 - 2030	0	70	18	0	0	0	0	0	1	0	0	0	0	**89**	
2030 - 2045	0	71	10	0	0	0	0	0	2	0	0	0	0	**83**	
2045 - 2100	0	69	11	0	0	0	0	0	1	0	0	0	0	**81**	**344**
2100 - 2115	0	68	7	0	0	0	0	0	1	0	0	0	0	**76**	
2115 - 2130	0	45	8	0	0	0	0	0	0	0	0	0	0	**53**	
2130 - 2145	0	55	10	1	0	0	0	0	1	0	0	0	0	**67**	
2145 - 2200	0	36	8	0	0	0	0	0	1	0	0	0	0	**45**	**241**
2200 - 2215	0	30	5	0	0	0	0	0	0	0	0	0	0	**35**	
2215 - 2230	0	28	5	0	0	0	0	0	0	0	0	0	0	**33**	
2230 - 2245	0	26	6	0	0	0	0	0	2	0	1	0	0	**35**	
2245 - 2300	0	30	7	0	0	0	0	0	2	0	1	0	0	**40**	**143**
2300 - 2315	0	26	5	0	1	0	0	0	0	0	0	0	0	**32**	
2315 - 2330	0	9	1	0	0	0	0	0	0	0	0	0	0	**10**	
2330 - 2345	0	17	2	0	0	0	0	0	2	0	1	0	0	**22**	
2345 - 0000	0	8	1	0	0	0	0	0	0	0	0	0	0	**9**	**73**

Session Total	1	7308	1388	9	142	33	0	17	229	0	3	0	0	**9130**
Session Average	0.01	76.13	14.46	0.09	1.48	0.34	0.00	0.18	2.39	0.00	0.03	0.00	0.00	**95.10**
Session Percentage	0.01	80.04	15.20	0.10	1.56	0.36	0.00	0.19	2.51	0.00	0.03	0.00	0.00	

AM Peak Hour	-	0645 - 0745	0645 - 0745	0615 - 0715	0830 - 0930	0715 - 0815	-	0915 - 1015	0845 - 0945	-	-	-	-	**0645 - 0745**
AM Peak Volume	0	559	117	2	19	4	0	2	22	0	0	0	0	**700**

Noon Peak Hour	1045 - 1145	1445 - 1545	1400 - 1500	1330 - 1430	1030 - 1130	1445 - 1545	-	1415 - 1515	1315 - 1415	-	-	-	-	**1445 - 1545**
Noon Peak Volume	1	563	103	2	13	5	0	3	21	0	0	0	0	**687**

PM Peak Hour	-	1630 - 1730	1530 - 1630	1515 - 1615	1630 - 1730	1500 - 1600	-	1500 - 1600	1630 - 1730	-	-	-	-	**1630 - 1730**
PM Peak Volume	0	678	120	1	15	3	0	3	17	0	0	0	0	**811**

Site 7
I-26 S/Bound Off-Ramp,
north of I-20

Date
Tuesday, April 23, 2024

Lat/Long
34.037496°, -81.113416°

Weather
Fair
58°F

Click here for Detailed Weather

0000 - 2400 (Weekday 24h Session) (04-23-2024)
SB WB 15min

	Southbound (Movement 7.1)													15min	60min
TIME	1	2	3	4	5	6	7	8	9	10	11	12	13	Total	Total
0000 - 0015	0	11	3	0	0	0	0	0	0	0	0	0	0	**14**	
0015 - 0030	0	12	2	0	0	0	0	0	0	0	0	0	0	**14**	
0030 - 0045	0	9	1	0	0	0	0	0	3	0	0	0	0	**13**	
0045 - 0100	0	9	5	0	0	0	0	0	2	0	1	0	0	**17**	**58**
0100 - 0115	0	8	3	0	0	0	0	0	1	0	1	0	0	**13**	
0115 - 0130	0	3	1	0	0	0	0	0	4	0	0	0	0	**8**	
0130 - 0145	0	7	2	0	0	0	0	0	0	0	0	0	0	**9**	
0145 - 0200	0	5	1	0	0	0	0	0	0	0	0	0	0	**6**	**36**
0200 - 0215	0	3	2	0	0	0	0	0	0	0	2	0	0	**7**	
0215 - 0230	0	2	0	0	0	0	0	0	2	0	0	0	0	**4**	
0230 - 0245	0	5	2	0	0	0	0	0	1	0	1	0	0	**9**	
0245 - 0300	0	4	1	0	1	0	0	0	1	0	1	0	0	**8**	**28**
0300 - 0315	0	6	1	0	0	0	0	0	1	0	1	0	0	**9**	
0315 - 0330	0	5	2	0	0	0	0	0	2	0	0	0	0	**9**	
0330 - 0345	0	9	2	0	0	0	0	0	1	0	0	0	0	**12**	
0345 - 0400	0	10	3	0	0	0	0	0	0	0	0	0	0	**13**	**43**
0400 - 0415	0	5	2	0	0	0	0	0	2	0	0	0	0	**9**	
0415 - 0430	0	9	3	0	0	0	0	0	3	0	0	0	0	**15**	
0430 - 0445	0	12	5	0	0	0	0	0	2	0	0	0	0	**19**	
0445 - 0500	0	13	2	0	0	0	0	0	3	0	0	0	0	**18**	**61**
0500 - 0515	0	18	6	0	0	0	0	0	3	0	0	0	0	**27**	
0515 - 0530	0	25	6	0	1	0	0	0	4	0	0	0	0	**36**	
0530 - 0545	0	34	5	0	0	0	0	0	4	0	0	0	0	**43**	
0545 - 0600	0	33	13	0	0	0	0	0	2	0	0	0	0	**48**	**154**
0600 - 0615	0	46	16	0	2	0	0	0	1	0	0	0	0	**65**	
0615 - 0630	0	66	22	0	1	0	0	0	2	0	0	0	0	**91**	
0630 - 0645	0	107	20	0	2	0	0	0	1	0	0	0	0	**130**	
0645 - 0700	0	129	35	0	1	0	0	0	5	0	0	0	0	**170**	**456**
0700 - 0715	0	119	36	0	1	0	0	0	4	0	0	0	0	**160**	
0715 - 0730	0	150	39	1	0	0	0	0	5	0	0	0	0	**195**	
0730 - 0745	0	126	28	0	1	2	0	0	1	0	0	0	0	**158**	
0745 - 0800	0	112	15	1	1	1	0	0	1	1	0	0	0	**132**	**645**
0800 - 0815	0	107	25	1	2	0	0	1	4	0	0	0	0	**140**	
0815 - 0830	0	102	18	0	5	0	0	1	3	0	0	0	0	**129**	
0830 - 0845	0	90	30	0	1	1	0	1	4	0	0	0	0	**127**	
0845 - 0900	0	109	23	0	3	1	0	1	5	0	0	0	0	**142**	**538**
0900 - 0915	0	76	25	0	1	0	0	1	3	0	0	0	0	**106**	
0915 - 0930	0	86	30	0	3	1	0	0	9	0	0	0	0	**129**	
0930 - 0945	0	81	27	0	2	0	0	0	4	0	0	0	0	**114**	
0945 - 1000	0	76	23	0	2	0	0	2	6	0	0	0	0	**109**	**458**
1000 - 1015	0	70	29	0	1	1	0	0	3	0	0	0	0	**104**	
1015 - 1030	0	94	30	0	0	1	0	3	2	0	0	0	0	**130**	
1030 - 1045	0	90	12	0	1	0	0	0	2	0	0	0	0	**105**	
1045 - 1100	0	84	33	0	1	1	0	0	7	0	0	0	0	**126**	**465**
1100 - 1115	0	76	35	0	4	0	0	0	4	0	0	0	0	**119**	
1115 - 1130	0	79	29	2	2	0	0	0	0	0	0	0	0	**112**	
1130 - 1145	1	90	37	0	2	0	0	0	4	0	0	0	0	**134**	
1145 - 1200	0	115	31	0	2	0	0	1	4	0	0	0	0	**153**	**518**
1200 - 1215	0	85	23	1	3	0	0	2	4	0	0	0	0	**118**	
1215 - 1230	0	95	34	0	4	0	0	2	1	0	0	0	0	**136**	
1230 - 1245	0	110	32	0	3	0	0	1	2	0	0	0	0	**148**	
1245 - 1300	1	115	31	0	2	0	0	2	6	0	0	0	0	**157**	**559**
1300 - 1315	0	113	25	0	2	2	0	1	5	0	0	0	0	**148**	
1315 - 1330	0	114	26	0	4	1	0	0	6	0	0	0	0	**151**	
1330 - 1345	1	134	20	0	1	1	0	0	7	0	0	0	0	**164**	
1345 - 1400	0	123	34	0	5	1	0	0	7	0	0	0	0	**170**	**633**
1400 - 1415	1	113	30	0	4	1	0	3	5	0	0	0	0	**157**	
1415 - 1430	0	123	38	0	3	0	0	0	2	0	0	0	0	**166**	
1430 - 1445	0	128	44	0	1	0	0	2	4	0	0	0	0	**179**	
1445 - 1500	0	118	34	0	3	1	0	1	3	0	0	0	0	**160**	**662**
1500 - 1515	0	145	41	0	3	3	0	1	2	0	0	0	0	**195**	
1515 - 1530	0	126	37	0	0	1	0	0	6	0	0	0	0	**170**	
1530 - 1545	0	125	42	0	4	2	0	0	6	1	0	0	0	**180**	
1545 - 1600	1	141	37	1	2	0	0	0	3	0	0	0	0	**185**	**730**
1600 - 1615	0	140	41	1	1	1	0	2	5	0	0	0	0	**191**	
1615 - 1630	0	172	48	2	2	0	0	0	7	0	0	0	0	**231**	
1630 - 1645	0	184	42	0	4	1	0	0	5	0	0	0	0	**236**	
1645 - 1700	0	154	29	0	5	3	0	0	1	0	0	0	0	**192**	**850**
1700 - 1715	0	188	29	0	7	0	0	2	3	0	0	0	0	**229**	
1715 - 1730	0	156	33	0	2	0	0	0	1	0	0	0	0	**192**	
1730 - 1745	0	134	34	1	0	1	0	1	3	0	0	0	0	**174**	
1745 - 1800	0	167	27	0	6	1	0	0	3	0	0	0	0	**204**	**799**
1800 - 1815	0	141	22	0	1	0	0	0	2	0	0	0	0	**166**	
1815 - 1830	0	104	14	0	4	0	0	0	3	0	0	0	0	**125**	
1830 - 1845	0	116	15	0	0	1	0	0	1	0	0	0	0	**133**	
1845 - 1900	0	100	10	0	3	0	0	0	3	0	0	0	0	**116**	**540**
1900 - 1915	0	114	15	0	2	0	0	0	1	0	0	0	0	**132**	
1915 - 1930	0	96	14	0	1	0	0	1	2	0	0	0	0	**114**	
1930 - 1945	0	78	13	0	0	1	0	1	3	0	0	0	0	**96**	
1945 - 2000	0	87	14	1	1	0	0	0	2	0	0	0	0	**105**	**447**
2000 - 2015	0	80	10	0	2	0	0	0	5	0	0	0	0	**97**	
2015 - 2030	0	89	11	0	1	0	0	0	3	0	0	0	0	**104**	
2030 - 2045	0	78	4	0	2	0	0	0	2	0	0	0	0	**86**	
2045 - 2100	0	70	6	0	0	0	0	0	2	0	0	0	0	**78**	**365**
2100 - 2115	0	60	3	0	0	0	0	0	1	0	0	0	0	**64**	
2115 - 2130	0	61	3	0	0	0	0	0	1	0	0	0	0	**65**	
2130 - 2145	0	57	4	0	0	0	0	0	1	0	0	0	0	**62**	
2145 - 2200	0	40	5	0	0	0	0	0	3	0	0	0	0	**48**	**239**
2200 - 2215	0	23	2	0	0	0	0	0	3	0	0	0	0	**28**	
2215 - 2230	0	35	5	0	0	0	0	0	4	0	0	0	0	**44**	
2230 - 2245	0	25	4	0	0	0	0	0	2	0	0	0	0	**31**	
2245 - 2300	0	36	4	0	0	0	0	0	2	0	0	0	0	**42**	**145**
2300 - 2315	0	40	3	0	0	0	0	0	0	0	0	0	0	**43**	
2315 - 2330	0	20	2	0	0	0	0	0	0	0	0	0	0	**22**	
2330 - 2345	0	18	2	0	0	0	0	0	2	0	0	0	0	**22**	
2345 - 0000	0	8	1	0	0	0	0	0	2	0	0	0	0	**11**	**98**

Session Total	5	7316	1718	12	131	31	0	33	272	2	7	0	0	**9527**
Session Average	0.05	76.21	17.90	0.13	1.36	0.32	0.00	0.34	2.83	0.02	0.07	0.00	0.00	**99.24**
Session Percentage	0.05	76.79	18.03	0.13	1.38	0.33	0.00	0.35	2.86	0.02	0.07	0.00	0.00	

AM Peak Hour	-	0645 - 0745	0645 - 0745	0715 - 0815	0800 - 0900	0700 - 0800	-	0930 - 1030	0900 - 1000	0700 - 0800	-	-	-	**0645 - 0745**
AM Peak Hour Volume	0	524	138	3	11	3	0	5	22	1	0	0	0	**683**

Noon Peak Hour	1245 - 1345	1430 - 1530	1415 - 1515	1115 - 1215	1315 - 1415	1445 - 1545	-	1200 - 1300	1300 - 1400	1445 - 1545	-	-	-	**1445 - 1545**
Noon Peak Hour Volume	2	517	157	3	14	7	0	7	25	1	0	0	0	**705**

PM Peak Hour	1500 - 1600	1615 - 1715	1530 - 1630	1530 - 1630	1615 - 1715	1500 - 1600	-	1645 - 1745	1530 - 1630	1500 - 1600	-	-	-	**1615 - 1715**
PM Peak Hour Volume	1	698	168	4	18	6	0	3	21	1	0	0	0	**888**

Site 7
I-26 S/Bound Off-Ramp,
north of I-20

Date
Wednesday, April 24, 2024

Lat/Long
34.037496°, -81.113416°

Weather
Fair
66°F

Click here for Detailed Weather

0000 - 2400 (Weekday 24h Session) (04-24-2024)
SB WB 15min

	Southbound (Movement 7.1)													15min	60min
TIME	1	2	3	4	5	6	7	8	9	10	11	12	13	Total	Total
0000 - 0015	0	10	2	0	0	0	0	0	1	0	0	0	0	**13**	
0015 - 0030	0	12	1	0	0	0	0	0	0	0	0	0	0	**13**	
0030 - 0045	0	13	3	0	1	0	0	0	0	0	0	0	0	**17**	
0045 - 0100	0	8	1	0	0	0	0	1	4	0	0	0	0	**14**	**57**
0100 - 0115	0	12	2	0	2	0	0	0	3	0	0	0	0	**19**	
0115 - 0130	0	10	1	0	0	0	0	0	2	0	0	0	0	**13**	
0130 - 0145	0	5	1	0	0	0	0	0	3	0	0	0	0	**9**	
0145 - 0200	0	4	1	0	0	0	0	0	2	0	0	0	0	**7**	**48**
0200 - 0215	0	9	2	0	0	0	0	0	1	0	0	0	0	**12**	
0215 - 0230	0	3	1	0	1	0	0	0	5	0	0	0	0	**10**	
0230 - 0245	0	4	1	0	0	0	0	0	1	0	0	0	0	**6**	
0245 - 0300	0	1	0	0	0	0	0	0	2	0	0	0	0	**3**	**31**
0300 - 0315	0	4	1	0	0	0	0	0	0	0	0	0	0	**5**	
0315 - 0330	0	6	2	0	0	0	0	0	0	0	0	0	0	**8**	
0330 - 0345	0	4	1	0	0	0	0	0	2	0	0	0	0	**7**	
0345 - 0400	0	15	3	0	0	0	0	0	0	0	0	0	0	**18**	**38**
0400 - 0415	0	12	2	0	0	0	0	0	3	0	0	0	0	**17**	
0415 - 0430	0	10	2	0	0	0	0	0	1	0	0	0	0	**13**	
0430 - 0445	0	9	3	0	0	0	0	0	2	0	0	0	0	**14**	
0445 - 0500	0	12	2	0	0	0	0	0	2	0	0	0	0	**16**	**60**
0500 - 0515	0	20	4	0	1	0	0	0	1	0	0	0	0	**26**	
0515 - 0530	0	19	4	0	0	0	0	0	4	0	0	0	0	**27**	
0530 - 0545	0	30	5	0	0	0	0	0	1	0	0	0	0	**36**	
0545 - 0600	0	44	9	0	2	0	0	0	3	0	0	0	0	**58**	**147**
0600 - 0615	0	46	10	0	3	0	0	0	4	0	0	0	0	**63**	
0615 - 0630	0	80	19	0	2	0	0	0	2	0	0	0	0	**103**	
0630 - 0645	0	96	32	0	0	0	0	0	2	0	0	0	0	**130**	
0645 - 0700	0	114	26	0	2	0	0	0	3	0	0	0	0	**145**	**441**
0700 - 0715	0	120	46	0	1	1	0	0	3	0	0	0	0	**171**	
0715 - 0730	0	162	43	0	1	0	0	0	3	0	0	0	0	**209**	
0730 - 0745	0	137	36	0	0	0	0	0	0	0	0	0	0	**173**	
0745 - 0800	0	115	31	0	2	0	0	0	1	0	0	0	0	**149**	**702**
0800 - 0815	0	108	27	0	1	1	0	0	3	0	0	0	0	**140**	
0815 - 0830	0	86	34	0	3	1	0	0	4	0	0	0	0	**128**	
0830 - 0845	0	95	27	0	1	0	0	0	3	0	0	0	0	**126**	
0845 - 0900	1	87	26	0	2	1	0	0	0	0	0	0	0	**117**	**511**
0900 - 0915	0	81	17	0	4	2	0	0	5	0	0	0	0	**109**	
0915 - 0930	0	92	21	0	4	2	0	0	8	0	0	0	0	**127**	
0930 - 0945	0	81	33	2	2	0	0	0	4	0	0	0	0	**122**	
0945 - 1000	1	93	23	1	1	1	0	1	4	0	0	0	0	**125**	**483**
1000 - 1015	0	91	24	0	5	0	0	1	4	0	0	0	0	**125**	
1015 - 1030	0	88	33	0	1	2	0	0	4	0	0	0	0	**128**	
1030 - 1045	0	100	25	0	2	1	0	0	2	0	0	0	0	**130**	
1045 - 1100	0	100	22	0	1	1	0	1	0	0	0	0	0	**125**	**508**
1100 - 1115	0	89	22	0	4	1	0	0	1	0	0	0	0	**117**	
1115 - 1130	0	80	25	0	1	1	0	3	3	0	0	0	0	**113**	
1130 - 1145	0	87	26	0	1	0	0	1	2	0	0	0	0	**117**	
1145 - 1200	0	74	35	0	3	3	0	0	4	0	0	0	0	**119**	**466**
1200 - 1215	0	99	20	0	2	1	0	0	2	0	0	0	0	**124**	
1215 - 1230	1	101	28	0	4	2	0	1	5	0	0	0	0	**142**	
1230 - 1245	0	113	25	2	5	0	0	0	8	0	0	0	0	**153**	
1245 - 1300	0	125	34	0	1	1	0	1	3	0	0	0	0	**165**	**584**
1300 - 1315	0	116	25	0	4	3	0	0	6	0	0	0	0	**154**	
1315 - 1330	0	115	37	0	1	1	0	1	2	0	0	0	0	**157**	
1330 - 1345	0	135	20	0	3	1	0	1	6	0	0	0	0	**166**	
1345 - 1400	0	137	18	5	0	1	0	0	4	0	0	0	0	**165**	**642**
1400 - 1415	0	117	16	0	3	0	0	0	8	0	0	0	0	**144**	
1415 - 1430	0	126	29	0	0	0	0	0	2	0	0	0	0	**157**	
1430 - 1445	0	117	28	0	1	0	0	1	8	0	0	0	0	**155**	
1445 - 1500	1	123	29	0	2	1	0	0	6	0	0	0	0	**162**	**618**
1500 - 1515	0	151	43	0	2	1	0	0	3	0	0	0	0	**200**	
1515 - 1530	1	125	49	0	3	2	0	0	1	0	0	0	0	**181**	
1530 - 1545	2	122	47	0	2	1	0	2	2	0	0	0	0	**178**	
1545 - 1600	0	127	46	1	3	0	0	0	5	0	0	0	0	**182**	**741**
1600 - 1615	1	165	36	0	2	0	0	0	5	0	0	0	0	**209**	
1615 - 1630	0	158	48	0	5	1	0	0	4	0	0	0	0	**216**	
1630 - 1645	0	166	42	0	5	2	0	0	7	0	0	0	0	**222**	
1645 - 1700	0	175	49	0	4	0	0	0	6	0	0	0	0	**234**	**881**
1700 - 1715	1	192	40	0	5	1	0	0	4	0	0	0	0	**243**	
1715 - 1730	0	149	35	0	3	0	0	0	1	0	0	0	0	**188**	
1730 - 1745	0	150	28	0	2	0	0	0	1	0	0	0	0	**181**	
1745 - 1800	0	129	30	0	2	1	0	1	3	0	0	0	0	**166**	**778**
1800 - 1815	0	123	27	0	2	0	0	0	3	0	0	0	0	**155**	
1815 - 1830	0	132	36	0	1	1	0	0	3	0	0	0	0	**173**	
1830 - 1845	0	93	30	0	1	1	0	0	3	0	0	0	0	**128**	
1845 - 1900	0	109	20	0	2	0	0	1	3	0	0	0	0	**135**	**591**
1900 - 1915	0	97	17	0	1	0	0	0	2	0	0	0	0	**117**	
1915 - 1930	0	101	15	0	0	0	0	0	2	0	0	0	0	**118**	
1930 - 1945	0	91	14	0	0	2	0	0	1	0	0	0	0	**108**	
1945 - 2000	0	62	15	0	1	0	0	0	2	0	0	0	0	**80**	**423**
2000 - 2015	0	76	23	0	0	0	0	0	2	0	0	0	0	**101**	
2015 - 2030	0	91	15	0	0	0	0	0	1	0	0	0	0	**107**	
2030 - 2045	0	90	10	0	0	0	0	0	1	0	0	0	0	**101**	
2045 - 2100	0	87	12	0	0	0	0	0	6	0	0	0	0	**105**	**414**
2100 - 2115	0	61	13	0	0	0	0	0	2	0	0	0	0	**76**	
2115 - 2130	0	55	9	0	1	0	0	0	6	0	0	0	0	**71**	
2130 - 2145	0	45	11	0	0	0	0	0	2	0	0	0	0	**58**	
2145 - 2200	0	42	10	0	0	0	0	0	1	0	0	0	0	**53**	**258**
2200 - 2215	0	39	4	0	0	0	0	0	3	0	0	0	0	**46**	
2215 - 2230	0	34	8	0	0	0	0	0	3	0	0	0	0	**45**	
2230 - 2245	0	22	9	0	0	0	0	0	3	0	0	0	0	**34**	
2245 - 2300	0	25	6	0	0	0	0	0	2	0	0	0	0	**33**	**158**
2300 - 2315	0	27	8	0	0	0	0	0	0	0	0	0	0	**35**	
2315 - 2330	0	15	4	0	0	0	0	0	3	0	0	0	0	**22**	
2330 - 2345	0	18	3	0	0	0	0	0	0	0	0	0	0	**21**	
2345 - 0000	0	11	2	0	0	0	0	0	0	0	0	0	0	**13**	**91**

Session Total	9	7357	1840	11	127	42	0	17	268	0	0	0	0	**9671**
Session Average	0.09	76.64	19.17	0.11	1.32	0.44	0.00	0.18	2.79	0.00	0.00	0.00	0.00	**100.74**
Session Percentage	0.09	76.07	19.03	0.11	1.31	0.43	0.00	0.18	2.77	0.00	0.00	0.00	0.00	

AM Peak Hour	0800 - 0900	0700 - 0800	0700 - 0800	0900 - 1000	0845 - 0945	0830 - 0930	-	0915 - 1015	0900 - 1000	-	-	-	-	**0700 - 0800**
AM Peak Hour Volume	1	534	156	3	12	5	0	2	21	0	0	0	0	**702**

Noon Peak Hour	1445 - 1545	1445 - 1545	1445 - 1545	1300 - 1400	1145 - 1245	1130 - 1230	-	1045 - 1145	1400 - 1500	-	-	-	-	**1445 - 1545**
Noon Peak Hour Volume	4	521	168	5	14	6	0	5	24	0	0	0	0	**721**

PM Peak Hour	1515 - 1615	1615 - 1715	1500 - 1600	1500 - 1600	1615 - 1715	1500 - 1600	-	1500 - 1600	1600 - 1700	-	-	-	-	**1615 - 1715**
PM Peak Hour Volume	4	691	185	1	19	4	0	2	22	0	0	0	0	**915**

Site 7
I-26 S/Bound Off-Ramp,
north of I-20

Date
Thursday, April 25, 2024

Lat/Long
34.037496°, -81.113416°

Weather
Fair
67°F

Click here for Detailed Weather

0000 - 2400 (Weekday 24h Session) (04-25-2024)
SB WB 15min

	Southbound (Movement 7.1)													15min	60min
TIME	1	2	3	4	5	6	7	8	9	10	11	12	13	Total	Total
0000 - 0015	0	16	2	0	0	0	0	0	2	0	0	1	0	**21**	
0015 - 0030	0	9	2	0	1	0	0	0	1	0	0	0	0	**13**	
0030 - 0045	0	6	2	0	0	0	0	0	5	0	0	0	0	**13**	
0045 - 0100	0	11	0	0	0	0	0	0	1	0	0	1	0	**13**	**60**
0100 - 0115	0	7	1	0	0	0	0	0	2	0	0	0	0	**10**	
0115 - 0130	0	11	1	0	0	0	0	0	2	0	0	0	0	**14**	
0130 - 0145	0	11	0	0	0	0	0	0	3	0	0	0	0	**14**	
0145 - 0200	0	9	0	0	1	0	0	0	1	0	0	0	0	**11**	**49**
0200 - 0215	0	6	1	0	1	0	0	0	2	0	0	0	0	**10**	
0215 - 0230	0	8	2	0	0	0	0	0	1	0	0	0	0	**11**	
0230 - 0245	0	5	2	0	0	0	0	0	0	0	0	0	0	**7**	
0245 - 0300	0	4	0	0	0	0	0	0	2	0	0	0	0	**6**	**34**
0300 - 0315	0	3	0	0	0	0	0	0	1	0	0	0	0	**4**	
0315 - 0330	0	1	1	0	0	0	0	0	0	0	0	0	0	**2**	
0330 - 0345	0	10	1	0	0	0	0	0	1	0	0	0	0	**12**	
0345 - 0400	0	13	1	0	0	0	0	0	2	0	0	0	0	**16**	**34**
0400 - 0415	0	9	2	0	0	0	0	0	0	0	0	0	0	**11**	
0415 - 0430	0	8	1	0	1	0	0	0	4	0	0	0	0	**14**	
0430 - 0445	0	13	1	0	0	0	0	0	2	0	0	0	0	**16**	
0445 - 0500	0	12	2	0	0	0	0	0	0	0	0	0	0	**14**	**55**
0500 - 0515	0	15	3	0	0	0	0	0	3	0	0	0	0	**21**	
0515 - 0530	0	16	3	0	0	0	0	0	3	0	0	0	0	**22**	
0530 - 0545	0	45	8	0	0	0	0	0	7	0	0	0	0	**60**	
0545 - 0600	0	43	8	0	0	0	0	0	4	0	0	0	0	**55**	**158**
0600 - 0615	0	56	11	0	1	0	0	0	2	0	0	0	0	**70**	
0615 - 0630	0	75	21	0	1	0	0	0	2	0	0	0	0	**99**	
0630 - 0645	0	108	23	0	0	0	0	0	2	0	0	0	0	**133**	
0645 - 0700	0	115	30	0	3	1	0	0	5	0	0	0	0	**154**	**456**
0700 - 0715	1	117	37	0	3	3	0	0	4	0	1	0	0	**166**	
0715 - 0730	0	144	32	0	4	0	0	0	6	0	0	0	0	**186**	
0730 - 0745	0	137	28	0	0	0	0	0	4	0	0	0	0	**169**	
0745 - 0800	0	113	33	0	2	0	0	0	3	0	0	0	0	**151**	**672**
0800 - 0815	0	91	31	0	1	1	0	0	3	0	0	0	0	**127**	
0815 - 0830	0	103	34	0	5	0	0	0	6	0	0	0	0	**148**	
0830 - 0845	0	99	19	0	1	0	0	1	1	0	0	0	0	**121**	
0845 - 0900	1	91	34	0	3	2	0	0	6	0	0	0	0	**137**	**533**
0900 - 0915	0	89	23	0	3	0	0	0	8	0	0	0	0	**123**	
0915 - 0930	0	70	30	0	5	3	0	1	11	0	0	0	0	**120**	
0930 - 0945	0	86	20	0	2	0	0	0	5	0	0	0	0	**113**	
0945 - 1000	0	97	23	0	3	2	0	0	1	0	0	0	0	**126**	**482**
1000 - 1015	0	87	28	0	5	1	0	1	6	0	0	0	0	**128**	
1015 - 1030	0	86	38	0	2	2	0	2	0	0	0	0	0	**130**	
1030 - 1045	0	97	24	0	2	0	0	0	5	0	0	0	0	**128**	
1045 - 1100	0	88	31	0	3	0	0	1	6	0	0	0	0	**129**	**515**
1100 - 1115	0	83	24	0	1	2	0	1	1	0	0	0	0	**112**	
1115 - 1130	0	97	39	0	4	1	0	0	7	0	0	0	0	**148**	
1130 - 1145	1	106	36	0	3	1	0	1	4	0	0	0	0	**152**	
1145 - 1200	1	91	27	0	6	2	0	0	5	0	0	0	0	**132**	**544**
1200 - 1215	2	113	41	0	8	0	0	3	2	0	0	0	0	**169**	
1215 - 1230	0	116	45	0	1	0	0	2	4	0	0	0	0	**168**	
1230 - 1245	1	89	42	0	2	0	0	0	5	0	0	0	0	**139**	
1245 - 1300	0	103	17	0	4	0	0	2	4	0	0	0	0	**130**	**606**
1300 - 1315	1	108	35	0	4	1	0	1	5	0	0	0	0	**155**	
1315 - 1330	0	121	35	0	2	1	0	3	2	0	0	0	0	**164**	
1330 - 1345	1	138	33	1	2	0	0	2	3	0	0	0	0	**180**	
1345 - 1400	0	120	42	0	1	0	0	0	4	0	0	0	0	**167**	**666**
1400 - 1415	0	135	34	0	4	0	0	0	3	0	0	0	0	**176**	
1415 - 1430	0	140	14	0	3	0	0	0	8	0	0	0	0	**165**	
1430 - 1445	0	128	31	0	11	1	0	2	5	0	0	0	0	**178**	
1445 - 1500	0	106	30	0	4	1	0	4	3	1	0	0	0	**149**	**668**
1500 - 1515	0	136	39	0	5	0	0	1	3	0	0	0	0	**184**	
1515 - 1530	0	119	43	0	5	0	0	3	1	0	0	0	0	**171**	
1530 - 1545	1	121	51	0	10	0	0	1	7	0	0	0	0	**191**	
1545 - 1600	0	135	51	1	8	0	0	1	3	0	0	0	0	**199**	**745**
1600 - 1615	0	164	57	0	2	1	0	0	5	0	0	0	0	**229**	
1615 - 1630	0	170	55	1	3	0	0	0	4	0	0	0	0	**233**	
1630 - 1645	1	151	41	0	0	0	0	0	4	0	0	0	0	**197**	
1645 - 1700	0	150	45	0	5	1	0	0	6	0	0	0	0	**207**	**866**
1700 - 1715	0	180	41	0	4	0	0	1	1	0	0	0	0	**227**	
1715 - 1730	0	156	34	0	0	0	0	0	2	0	0	0	0	**192**	
1730 - 1745	2	128	37	0	0	1	0	0	4	0	0	0	0	**172**	
1745 - 1800	0	141	33	0	1	0	0	0	2	0	0	0	0	**177**	**768**
1800 - 1815	0	161	34	0	1	0	0	0	0	0	0	0	0	**196**	
1815 - 1830	1	118	21	0	2	0	0	0	1	0	0	0	0	**143**	
1830 - 1845	0	116	24	0	4	0	0	0	1	0	0	0	0	**145**	
1845 - 1900	0	108	25	0	4	0	0	0	1	0	0	0	0	**138**	**622**
1900 - 1915	2	105	24	0	3	0	0	0	1	0	0	0	0	**135**	
1915 - 1930	0	110	14	1	0	0	0	0	2	0	0	0	0	**127**	
1930 - 1945	0	101	17	0	2	0	0	0	4	0	0	0	0	**124**	
1945 - 2000	0	88	22	0	0	0	0	0	0	0	0	0	0	**110**	**496**
2000 - 2015	0	81	15	0	0	0	0	0	2	0	0	0	0	**98**	
2015 - 2030	0	59	17	0	1	1	0	0	0	0	0	0	0	**78**	
2030 - 2045	0	81	13	0	0	0	0	0	3	0	0	0	0	**97**	
2045 - 2100	0	77	13	0	1	0	0	0	2	0	0	0	0	**93**	**366**
2100 - 2115	0	74	13	0	0	0	0	0	0	0	0	0	0	**87**	
2115 - 2130	1	61	7	0	1	0	0	0	0	0	0	0	0	**70**	
2130 - 2145	0	47	10	0	0	0	0	0	1	0	0	0	0	**58**	
2145 - 2200	1	39	8	0	2	0	0	0	2	0	0	0	0	**52**	**267**
2200 - 2215	0	39	6	0	2	0	0	0	0	0	0	0	0	**47**	
2215 - 2230	0	46	8	0	0	0	0	0	0	0	0	0	0	**54**	
2230 - 2245	0	38	5	0	0	0	0	0	2	0	0	0	0	**45**	
2245 - 2300	0	31	6	1	0	0	0	0	1	0	0	0	0	**39**	**185**
2300 - 2315	0	27	4	0	0	0	0	0	1	0	0	0	0	**32**	
2315 - 2330	0	17	4	0	0	0	0	0	0	0	0	0	0	**21**	
2330 - 2345	0	26	5	0	0	0	0	0	3	0	0	0	0	**34**	
2345 - 0000	0	23	2	0	0	0	0	0	4	0	0	0	0	**29**	**116**

Session Total	18	7458	1963	5	179	29	0	34	273	1	1	2	0	**9963**
Session Average	0.19	77.69	20.45	0.05	1.86	0.30	0.00	0.35	2.84	0.01	0.01	0.02	0.00	**103.78**
Session Percentage	0.18	74.86	19.70	0.05	1.80	0.29	0.00	0.34	2.74	0.01	0.01	0.02	0.00	

AM Peak Hour	0615 - 0715	0645 - 0745	0700 - 0800	-	0915 - 1015	0915 - 1015	-	0930 - 1030	0845 - 0945	-	0615 - 0715	-	-	**0645 - 0745**
AM Peak Hour Volume	1	513	130	0	15	6	0	3	30	0	1	0	0	**675**

Noon Peak Hour	1115 - 1215	1330 - 1430	1445 - 1545	1245 - 1345	1430 - 1530	1100 - 1200	-	1430 - 1530	1345 - 1445	1400 - 1500	-	-	-	**1445 - 1545**
Noon Peak Hour Volume	4	533	163	1	25	6	0	10	20	1	0	0	0	**695**

PM Peak Hour	1730 - 1830	1615 - 1715	1530 - 1630	1530 - 1630	1500 - 1600	1600 - 1700	-	1500 - 1600	1530 - 1630	-	-	-	-	**1600 - 1700**
PM Peak Hour Volume	3	651	214	2	28	2	0	6	19	0	0	0	0	**866**

Site 7
I-26 S/Bound Off-Ramp,
north of I-20

Date
Friday, April 26, 2024

Lat/Long
34.037496°, -81.113416°

Weather
Cloudy
69°F

Click here for Detailed Weather

0000 - 2400 (Weekday 24h Session) (04-26-2024)
SB WB 15min

	Southbound (Movement 7.1)													15min	60min
TIME	1	2	3	4	5	6	7	8	9	10	11	12	13	Total	Total
0000 - 0015	0	8	3	0	0	1	0	0	1	0	1	0	0	**14**	
0015 - 0030	0	5	3	0	0	0	0	0	0	0	0	0	0	**8**	
0030 - 0045	0	12	5	0	0	0	0	0	3	0	0	0	0	**20**	
0045 - 0100	0	5	2	0	0	0	0	0	1	0	0	0	0	**8**	**50**
0100 - 0115	0	6	3	0	1	0	0	0	1	0	1	0	0	**12**	
0115 - 0130	0	5	1	0	0	0	0	0	0	0	0	0	0	**6**	
0130 - 0145	0	13	4	0	0	0	0	0	1	0	1	0	0	**19**	
0145 - 0200	0	6	2	0	0	0	0	0	4	0	0	0	0	**12**	**49**
0200 - 0215	0	6	2	0	0	0	0	0	2	0	0	0	0	**10**	
0215 - 0230	0	5	3	0	0	0	0	0	2	0	0	0	0	**10**	
0230 - 0245	0	2	1	0	0	0	0	0	1	0	1	0	0	**5**	
0245 - 0300	0	3	2	0	0	0	0	0	3	0	0	0	0	**8**	**33**
0300 - 0315	0	4	2	0	0	0	0	0	1	0	0	0	0	**7**	
0315 - 0330	0	5	1	0	0	0	0	0	1	0	1	0	0	**8**	
0330 - 0345	0	2	3	0	0	0	0	0	1	0	0	0	0	**6**	
0345 - 0400	0	5	4	0	1	2	0	0	1	0	0	0	0	**13**	**34**
0400 - 0415	0	6	2	3	0	0	0	0	2	0	0	0	0	**13**	
0415 - 0430	0	10	4	1	0	0	0	0	0	0	0	0	0	**15**	
0430 - 0445	0	9	6	0	0	0	0	0	3	0	0	0	0	**18**	
0445 - 0500	0	9	4	0	0	0	0	0	2	0	0	0	0	**15**	**61**
0500 - 0515	0	11	4	0	1	0	0	0	3	0	0	0	0	**19**	
0515 - 0530	0	20	7	0	0	0	0	0	2	0	0	0	0	**29**	
0530 - 0545	0	30	9	1	0	1	0	0	3	0	0	0	0	**44**	
0545 - 0600	0	40	10	0	2	0	0	0	1	0	0	0	0	**53**	**145**
0600 - 0615	0	42	11	2	0	0	0	1	3	0	0	0	0	**59**	
0615 - 0630	0	47	19	0	1	0	0	0	5	0	0	0	0	**72**	
0630 - 0645	0	95	30	0	0	0	0	0	3	0	0	0	0	**128**	
0645 - 0700	0	96	22	0	2	0	0	0	4	0	0	0	0	**124**	**383**
0700 - 0715	0	117	32	0	5	0	0	1	5	0	0	0	0	**160**	
0715 - 0730	0	126	44	0	3	0	0	0	3	0	0	0	0	**176**	
0730 - 0745	0	134	32	0	5	0	0	0	2	0	0	0	0	**173**	
0745 - 0800	1	120	29	0	1	1	0	0	1	0	0	0	0	**153**	**662**
0800 - 0815	0	89	29	0	0	0	0	0	2	0	0	0	0	**120**	
0815 - 0830	0	90	23	0	3	0	0	0	1	0	0	0	0	**117**	
0830 - 0845	0	100	22	0	4	0	0	0	4	0	0	0	0	**130**	
0845 - 0900	0	100	25	0	5	2	0	1	4	0	0	0	0	**137**	**504**
0900 - 0915	0	79	28	0	3	1	0	1	6	0	0	0	0	**118**	
0915 - 0930	0	72	36	0	1	2	0	0	3	0	0	0	0	**114**	
0930 - 0945	0	89	25	0	5	0	0	1	3	0	0	0	0	**123**	
0945 - 1000	1	92	22	0	3	0	0	3	3	0	0	0	0	**124**	**479**
1000 - 1015	0	73	32	0	3	3	0	4	3	0	0	0	0	**118**	
1015 - 1030	0	78	24	0	4	2	0	1	4	0	0	0	0	**113**	
1030 - 1045	0	100	30	0	3	0	0	1	5	0	0	0	0	**139**	
1045 - 1100	0	98	34	3	4	2	0	2	5	0	0	0	0	**148**	**518**
1100 - 1115	0	99	39	0	1	0	0	1	4	0	0	0	0	**144**	
1115 - 1130	0	98	42	0	1	1	0	0	9	0	0	0	0	**151**	
1130 - 1145	0	108	43	0	6	0	0	0	5	0	0	0	0	**162**	
1145 - 1200	0	113	37	0	4	0	0	0	7	0	0	0	0	**161**	**618**
1200 - 1215	1	115	45	0	2	1	0	0	9	0	0	0	0	**173**	
1215 - 1230	0	117	35	0	6	2	0	0	2	0	0	0	0	**162**	
1230 - 1245	0	122	34	0	4	1	0	1	2	0	0	0	0	**164**	
1245 - 1300	1	127	41	0	3	1	0	0	4	0	0	0	0	**177**	**676**
1300 - 1315	0	150	36	1	3	1	0	1	5	0	0	0	0	**197**	
1315 - 1330	0	120	32	0	2	1	0	0	6	0	0	0	0	**161**	
1330 - 1345	0	131	38	1	6	0	0	1	4	0	0	0	0	**181**	
1345 - 1400	3	97	29	1	5	0	0	0	2	0	0	0	0	**137**	**676**
1400 - 1415	0	90	20	0	3	2	0	0	3	0	0	0	0	**118**	
1415 - 1430	0	119	25	0	4	3	0	1	6	0	0	0	0	**158**	
1430 - 1445	0	107	33	0	5	0	0	2	6	0	0	0	0	**153**	
1445 - 1500	0	118	31	0	4	1	0	1	2	0	0	0	0	**157**	**586**
1500 - 1515	0	130	24	0	2	1	0	0	5	0	0	0	0	**162**	
1515 - 1530	0	115	30	0	5	1	0	1	4	0	0	0	0	**156**	
1530 - 1545	0	114	31	0	5	0	0	2	7	0	0	0	0	**159**	
1545 - 1600	0	137	33	0	3	0	0	0	5	0	0	0	0	**178**	**655**
1600 - 1615	0	102	31	1	2	0	0	1	2	0	0	0	0	**139**	
1615 - 1630	2	124	41	0	2	1	0	0	1	0	0	0	0	**171**	
1630 - 1645	0	126	28	0	4	0	0	2	0	0	0	0	0	**160**	
1645 - 1700	1	137	30	0	2	2	0	2	2	0	0	0	0	**176**	**646**
1700 - 1715	0	159	25	0	2	1	0	0	1	0	0	0	0	**188**	
1715 - 1730	0	193	37	0	2	0	0	0	2	0	0	0	0	**234**	
1730 - 1745	0	146	43	0	2	0	0	0	0	0	0	0	0	**191**	
1745 - 1800	0	130	27	0	4	0	0	1	2	0	0	0	0	**164**	**777**
1800 - 1815	0	155	25	0	2	0	0	1	2	0	0	0	0	**185**	
1815 - 1830	0	137	26	0	3	0	0	1	0	0	0	0	0	**167**	
1830 - 1845	0	129	25	0	2	0	0	0	2	0	0	0	0	**158**	
1845 - 1900	0	91	17	0	2	0	0	0	4	0	0	0	0	**114**	**624**
1900 - 1915	0	94	25	0	5	0	0	0	1	0	0	0	0	**125**	
1915 - 1930	0	96	20	0	0	0	0	0	2	0	0	0	0	**118**	
1930 - 1945	1	98	15	0	2	0	0	0	0	0	0	0	0	**116**	
1945 - 2000	0	115	19	0	0	0	0	0	1	0	0	0	0	**135**	**494**
2000 - 2015	0	100	22	0	0	0	0	0	3	0	0	0	0	**125**	
2015 - 2030	0	87	20	0	0	1	0	0	1	0	0	0	0	**109**	
2030 - 2045	0	67	19	0	0	0	0	0	1	0	0	0	0	**87**	
2045 - 2100	0	48	21	0	0	0	0	0	1	0	0	0	0	**70**	**391**
2100 - 2115	0	73	11	0	0	0	0	0	0	0	0	0	0	**84**	
2115 - 2130	0	77	9	2	0	0	0	0	1	0	0	0	0	**89**	
2130 - 2145	0	69	5	0	1	0	0	0	1	0	0	0	0	**76**	
2145 - 2200	0	65	4	0	2	0	0	0	1	0	0	0	0	**72**	**321**
2200 - 2215	0	54	4	0	0	0	0	0	3	0	0	0	0	**61**	
2215 - 2230	0	65	5	0	0	0	0	0	2	0	0	0	0	**72**	
2230 - 2245	0	55	3	0	1	0	0	0	2	0	0	0	0	**61**	
2245 - 2300	0	49	5	0	0	0	0	0	1	0	0	0	0	**55**	**249**
2300 - 2315	0	46	5	0	1	0	0	1	3	0	0	0	0	**56**	
2315 - 2330	0	35	2	0	0	0	0	0	1	0	0	0	0	**38**	
2330 - 2345	0	27	2	0	0	0	0	0	2	0	0	0	0	**31**	
2345 - 0000	0	28	2	0	1	0	0	0	1	0	0	0	0	**32**	**157**

Session Total	11	7368	1887	16	176	38	0	36	251	0	5	0	0	**9788**
Session Average	0.11	76.75	19.66	0.17	1.83	0.40	0.00	0.38	2.61	0.00	0.05	0.00	0.00	**101.96**
Session Percentage	0.11	75.28	19.28	0.16	1.80	0.39	0.00	0.37	2.56	0.00	0.05	0.00	0.00	

AM Peak Hour	0700 - 0800	0700 - 0800	0700 - 0800	0515 - 0615	0645 - 0745	0830 - 0930	-	0930 - 1030	0615 - 0715	-	-	-	-	**0700 - 0800**
AM Peak Hour Volume	1	497	137	3	15	5	0	9	17	0	0	0	0	**662**

Noon Peak Hour	1300 - 1400	1245 - 1345	1115 - 1215	1000 - 1100	1130 - 1230	1000 - 1100	-	1000 - 1100	1115 - 1215	-	-	-	-	**1245 - 1345**
Noon Peak Hour Volume	3	528	167	3	18	7	0	8	30	0	0	0	0	**716**

PM Peak Hour	1600 - 1700	1645 - 1745	1530 - 1630	1515 - 1615	1500 - 1600	1615 - 1715	-	1600 - 1700	1500 - 1600	-	-	-	-	**1645 - 1745**
PM Peak Hour Volume	3	635	136	1	15	4	0	5	21	0	0	0	0	**789**

Site 7
I-26 S/Bound Off-Ramp,
north of I-20

Date
Saturday, April 27, 2024

Lat/Long
34.037496°, -81.113416°

Weather
Mostly Cloudy
69°F

Click here for Detailed Weather

0000 - 2400 (Saturday 24h Session) (04-27-2024)
SB WB 15min

	Southbound (Movement 7.1)													15min	60min
TIME	1	2	3	4	5	6	7	8	9	10	11	12	13	Total	Total
0000 - 0015	0	25	2	0	0	0	0	0	2	0	1	0	0	**30**	
0015 - 0030	0	24	2	0	1	0	0	0	2	0	0	0	0	**29**	
0030 - 0045	0	10	0	0	0	0	0	0	4	0	0	0	0	**14**	
0045 - 0100	0	8	0	0	0	0	0	0	1	0	1	0	0	**10**	**83**
0100 - 0115	0	15	1	0	0	0	0	0	1	0	0	0	0	**17**	
0115 - 0130	0	19	2	0	0	0	0	0	0	0	0	0	0	**21**	
0130 - 0145	0	8	0	0	0	0	0	0	0	0	0	0	0	**8**	
0145 - 0200	0	8	2	0	2	0	0	0	0	0	0	0	0	**12**	**58**
0200 - 0215	0	10	1	0	0	0	0	0	1	0	1	0	0	**13**	
0215 - 0230	0	9	1	0	0	0	0	0	0	0	0	0	0	**10**	
0230 - 0245	0	7	0	0	0	0	0	0	1	0	0	0	0	**8**	
0245 - 0300	0	6	0	0	0	0	0	0	2	0	0	0	0	**8**	**39**
0300 - 0315	0	3	0	0	0	0	0	0	0	0	0	0	0	**3**	
0315 - 0330	0	7	2	0	0	0	0	0	2	0	0	0	0	**11**	
0330 - 0345	0	4	0	0	0	0	0	0	0	0	0	0	0	**4**	
0345 - 0400	0	3	0	0	0	0	0	0	1	0	2	0	0	**6**	**24**
0400 - 0415	0	5	0	0	1	0	0	0	2	0	0	0	0	**8**	
0415 - 0430	0	7	1	0	0	0	0	0	2	0	0	0	0	**10**	
0430 - 0445	0	7	0	0	0	0	0	0	4	0	0	0	0	**11**	
0445 - 0500	0	3	1	0	0	0	0	0	2	0	0	0	0	**6**	**35**
0500 - 0515	0	9	3	0	0	0	0	0	1	0	0	0	0	**13**	
0515 - 0530	0	10	3	0	0	0	0	0	1	0	0	0	0	**14**	
0530 - 0545	0	16	2	0	0	0	0	0	1	0	0	0	0	**19**	
0545 - 0600	0	15	4	0	1	0	0	0	1	0	1	0	0	**22**	**68**
0600 - 0615	0	15	3	0	0	0	0	0	4	0	0	0	0	**22**	
0615 - 0630	0	24	4	0	1	0	0	0	2	0	0	0	0	**31**	
0630 - 0645	0	29	7	0	0	0	0	0	3	0	0	0	0	**39**	
0645 - 0700	0	38	5	0	1	0	0	0	3	0	0	0	0	**47**	**139**
0700 - 0715	0	31	8	0	0	0	0	0	1	0	0	0	0	**40**	
0715 - 0730	0	49	10	0	1	1	0	0	2	0	0	0	0	**63**	
0730 - 0745	0	42	13	0	3	0	0	0	0	0	0	0	0	**58**	
0745 - 0800	0	48	11	0	2	0	0	0	3	0	0	0	0	**64**	**225**
0800 - 0815	0	58	15	0	0	1	0	0	3	0	0	0	0	**77**	
0815 - 0830	0	44	15	0	4	0	0	0	1	0	0	0	0	**64**	
0830 - 0845	0	63	13	0	0	0	0	0	4	0	0	0	0	**80**	
0845 - 0900	0	68	16	0	0	1	0	1	0	0	0	0	0	**86**	**307**
0900 - 0915	0	51	19	0	2	0	0	0	0	0	0	0	0	**72**	
0915 - 0930	1	64	26	0	1	1	0	0	3	0	0	0	0	**96**	
0930 - 0945	0	85	28	0	1	0	0	0	0	0	0	0	0	**114**	
0945 - 1000	1	81	21	0	0	1	0	0	3	0	0	0	0	**107**	**389**
1000 - 1015	1	87	26	0	2	0	0	2	3	0	0	0	0	**121**	
1015 - 1030	0	77	18	0	0	0	0	0	2	0	0	0	0	**97**	
1030 - 1045	1	104	29	0	1	0	0	0	3	0	0	0	0	**138**	
1045 - 1100	1	91	26	0	0	0	0	0	0	0	0	0	0	**118**	**474**
1100 - 1115	0	97	30	0	1	0	0	0	1	0	0	0	0	**129**	
1115 - 1130	0	96	23	0	0	0	0	0	2	0	0	0	0	**121**	
1130 - 1145	1	99	35	0	2	0	0	0	0	0	0	0	0	**137**	
1145 - 1200	0	115	33	0	0	0	0	0	2	0	0	0	0	**150**	**537**
1200 - 1215	0	143	25	0	1	0	0	0	3	0	0	0	0	**172**	
1215 - 1230	0	138	19	0	0	0	0	1	2	0	0	0	0	**160**	
1230 - 1245	1	108	35	0	2	0	0	0	6	0	0	0	0	**152**	
1245 - 1300	1	132	30	0	0	0	0	0	1	0	0	0	0	**164**	**648**
1300 - 1315	1	122	31	0	0	0	0	2	2	0	0	0	0	**158**	
1315 - 1330	0	135	37	0	2	1	0	0	3	0	0	0	0	**178**	
1330 - 1345	0	146	27	0	0	0	0	0	1	0	0	0	0	**174**	
1345 - 1400	0	138	36	0	2	0	0	1	2	0	0	0	0	**179**	**689**
1400 - 1415	0	135	50	0	1	0	0	2	0	0	0	0	0	**188**	
1415 - 1430	0	134	33	0	1	0	0	1	2	0	0	0	0	**171**	
1430 - 1445	0	164	32	0	2	0	0	0	1	0	0	0	0	**199**	
1445 - 1500	0	147	31	0	1	0	0	0	1	0	0	0	0	**180**	**738**
1500 - 1515	0	145	39	0	1	0	0	0	0	0	0	0	0	**185**	
1515 - 1530	0	154	22	0	0	0	0	0	1	0	0	0	0	**177**	
1530 - 1545	0	163	37	0	2	0	0	0	3	0	0	0	0	**205**	
1545 - 1600	0	133	42	0	1	0	0	0	1	0	0	0	0	**177**	**744**
1600 - 1615	0	185	30	0	3	2	0	0	2	0	0	0	0	**222**	
1615 - 1630	0	139	26	0	0	0	0	0	2	0	0	0	0	**167**	
1630 - 1645	0	141	19	0	0	0	0	0	2	0	0	0	0	**162**	
1645 - 1700	0	149	29	0	2	0	0	0	1	0	0	0	0	**181**	**732**
1700 - 1715	0	143	25	0	2	1	0	0	1	0	0	0	0	**172**	
1715 - 1730	0	150	15	0	0	0	0	0	3	0	0	0	0	**168**	
1730 - 1745	0	135	30	0	1	0	0	0	2	0	0	0	0	**168**	
1745 - 1800	0	131	20	0	0	0	0	1	0	0	0	0	0	**152**	**660**
1800 - 1815	1	158	23	0	1	0	0	0	0	0	0	0	0	**183**	
1815 - 1830	2	117	22	0	0	0	0	0	0	0	0	0	0	**141**	
1830 - 1845	0	127	18	0	0	0	0	0	0	0	0	0	0	**145**	
1845 - 1900	2	107	26	0	1	0	0	0	0	0	0	0	0	**136**	**605**
1900 - 1915	0	115	29	0	0	0	0	0	0	0	0	0	0	**144**	
1915 - 1930	0	119	22	0	1	0	0	0	1	0	0	0	0	**143**	
1930 - 1945	1	90	21	0	0	0	0	0	0	0	0	0	0	**112**	
1945 - 2000	1	95	18	0	0	0	0	0	1	0	0	0	0	**115**	**514**
2000 - 2015	0	95	22	0	0	0	0	1	0	0	0	0	0	**118**	
2015 - 2030	0	90	15	0	2	0	0	0	3	0	0	0	0	**110**	
2030 - 2045	0	92	21	0	0	0	0	0	2	0	0	0	0	**115**	
2045 - 2100	0	97	12	0	0	0	0	0	0	0	0	0	0	**109**	**452**
2100 - 2115	0	90	22	0	1	0	0	0	2	0	0	0	0	**115**	
2115 - 2130	0	86	15	0	1	0	0	0	2	0	0	0	0	**104**	
2130 - 2145	0	87	16	0	0	0	0	0	0	0	0	0	0	**103**	
2145 - 2200	0	89	21	0	0	0	0	0	0	0	0	0	0	**110**	**432**
2200 - 2215	0	60	10	0	0	0	0	0	0	0	0	0	0	**70**	
2215 - 2230	0	65	11	0	1	0	0	0	1	0	0	0	0	**78**	
2230 - 2245	0	50	7	0	0	0	0	0	0	0	0	0	0	**57**	
2245 - 2300	0	48	8	0	0	0	0	0	0	0	0	0	0	**56**	**261**
2300 - 2315	0	36	6	0	0	0	0	0	2	0	0	0	0	**44**	
2315 - 2330	0	42	8	0	0	0	0	2	1	0	0	0	0	**53**	
2330 - 2345	0	20	4	0	0	0	0	0	0	0	0	0	0	**24**	
2345 - 0000	0	21	6	0	0	1	0	0	0	0	0	0	0	**28**	**149**

Session Total	16	7200	1564	0	59	10	0	14	133	0	6	0	0	**9002**
Session Average	0.17	75.00	16.29	0.00	0.61	0.10	0.00	0.15	1.39	0.00	0.06	0.00	0.00	**93.77**
Session Percentage	0.18	79.98	17.37	0.00	0.66	0.11	0.00	0.16	1.48	0.00	0.07	0.00	0.00	

AM Peak Hour	0915 - 1015	0945 - 1045	0915 - 1015	-	0730 - 0830	0715 - 0815	-	0915 - 1015	0600 - 0700	-	0500 - 0600	-	-	**0945 - 1045**
AM Peak Hour Volume	3	349	101	0	9	2	0	2	12	0	1	0	0	**463**

Noon Peak Hour	1000 - 1100	1430 - 1530	1345 - 1445	-	1345 - 1445	1230 - 1330	-	1330 - 1430	1145 - 1245	-	-	-	-	**1445 - 1545**
Noon Peak Hour Volume	3	610	151	0	6	1	0	4	13	0	0	0	0	**747**

PM Peak Hour	1800 - 1900	1515 - 1615	1500 - 1600	-	1515 - 1615	1515 - 1615	-	1700 - 1800	1530 - 1630	-	-	-	-	**1515 - 1615**
PM Peak Hour Volume	5	635	140	0	6	2	0	1	8	0	0	0	0	**781**

Bi-Directional Class Count || SB WB Average 15min

Columbia, SC

Marr Traffic DATA COLLECTION
www.marrtraffic.com

Site 7
I-26 S/Bound Off-Ramp,
north of I-20

Date
Sunday, April 21, 2024

Lat/Long
34.037496°, -81.113416°

Weather
Cloudy
66°F

0000 - 2400 (Weekday 24h Session) (All Dates)
SB WB Average 15min

	SB WB Average 15min													15min	60min
Time	1	2	3	4	5	6	7	8	9	10	11	12	13	Total	Total
0000 - 0015	0	15	3	0	0	0	0	0	1	0	0	0	0	**19**	
0015 - 0030	0	13	2	0	0	0	0	0	1	0	0	0	0	**16**	
0030 - 0045	0	11	2	0	0	0	0	0	2	0	0	0	0	**16**	
0045 - 0100	0	10	2	0	0	0	0	0	1	0	0	0	0	**15**	**66**
0100 - 0115	0	10	2	0	1	0	0	0	1	0	0	0	0	**15**	
0115 - 0130	0	9	2	0	0	0	0	0	1	0	0	0	0	**13**	
0130 - 0145	0	9	2	0	0	0	0	0	1	0	0	0	0	**12**	
0145 - 0200	0	7	1	0	0	0	0	0	1	0	0	0	0	**10**	**49**
0200 - 0215	0	7	2	0	0	0	0	0	1	0	0	0	0	**10**	
0215 - 0230	0	6	1	0	0	0	0	0	2	0	0	0	0	**9**	
0230 - 0245	0	5	2	0	0	0	0	0	1	0	0	0	0	**8**	
0245 - 0300	0	5	1	0	0	0	0	0	2	0	0	0	0	**8**	**35**
0300 - 0315	0	4	1	0	0	0	0	0	1	0	0	0	0	**6**	
0315 - 0330	0	5	2	0	0	0	0	0	1	0	0	0	0	**8**	
0330 - 0345	0	6	2	0	0	0	0	0	1	0	0	0	0	**9**	
0345 - 0400	0	8	2	0	0	0	0	0	1	0	0	0	0	**12**	**36**
0400 - 0415	0	8	2	0	0	0	0	0	1	0	0	0	0	**12**	
0415 - 0430	0	8	2	0	0	0	0	0	2	0	0	0	0	**13**	
0430 - 0445	0	9	3	0	0	0	0	0	2	0	0	0	0	**14**	
0445 - 0500	0	9	2	0	0	0	0	0	2	0	0	0	0	**13**	**51**
0500 - 0515	0	13	3	0	0	0	0	0	2	0	0	0	0	**19**	
0515 - 0530	0	17	4	0	0	0	0	0	2	0	0	0	0	**23**	
0530 - 0545	0	29	6	0	0	0	0	0	2	0	0	0	0	**38**	
0545 - 0600	0	32	8	0	1	0	0	0	2	0	0	0	0	**43**	**124**
0600 - 0615	0	39	9	0	1	0	0	0	2	0	0	0	0	**52**	
0615 - 0630	0	57	14	0	1	0	0	0	2	0	0	0	0	**75**	
0630 - 0645	0	81	20	0	0	0	0	0	2	0	0	0	0	**103**	
0645 - 0700	0	92	20	0	2	0	0	0	3	0	0	0	0	**118**	**347**
0700 - 0715	0	94	27	0	2	1	0	0	3	0	0	0	0	**127**	
0715 - 0730	0	115	30	0	1	0	0	0	4	0	0	0	0	**150**	
0730 - 0745	0	107	25	0	2	0	0	0	1	0	0	0	0	**136**	
0745 - 0800	0	94	22	0	1	1	0	0	2	0	0	0	0	**120**	**533**
0800 - 0815	0	84	22	0	1	1	0	0	2	0	0	0	0	**110**	
0815 - 0830	0	79	21	0	3	0	0	0	3	0	0	0	0	**107**	
0830 - 0845	0	86	20	0	2	0	0	0	3	0	0	0	0	**111**	
0845 - 0900	0	84	22	0	3	1	0	0	3	0	0	0	0	**113**	**442**
0900 - 0915	0	72	19	0	2	1	0	0	4	0	0	0	0	**98**	
0915 - 0930	0	76	25	0	3	1	0	0	6	0	0	0	0	**111**	
0930 - 0945	0	80	24	0	2	0	0	0	3	0	0	0	0	**110**	
0945 - 1000	0	84	20	0	2	1	0	1	3	0	0	0	0	**111**	**429**
1000 - 1015	0	75	25	0	3	1	0	1	4	0	0	0	0	**109**	
1015 - 1030	0	81	26	0	1	1	0	1	3	0	0	0	0	**113**	
1030 - 1045	0	95	22	0	2	0	0	0	4	0	0	0	0	**124**	
1045 - 1100	0	90	27	1	2	1	0	1	3	0	0	0	0	**124**	**470**
1100 - 1115	0	88	27	0	2	0	0	0	2	0	0	0	0	**120**	
1115 - 1130	0	86	29	0	2	0	0	0	3	0	0	0	0	**121**	
1130 - 1145	1	97	31	0	3	0	0	0	2	0	0	0	0	**134**	
1145 - 1200	0	103	29	0	3	1	0	0	4	0	0	0	0	**139**	**514**
1200 - 1215	0	111	28	0	3	0	0	1	4	0	0	0	0	**147**	
1215 - 1230	0	117	31	0	2	1	0	1	2	0	0	0	0	**154**	
1230 - 1245	0	110	31	0	2	0	0	0	5	0	0	0	0	**149**	
1245 - 1300	0	123	29	0	2	1	0	1	3	0	0	0	0	**159**	**610**
1300 - 1315	0	122	30	0	2	1	0	1	4	0	0	0	0	**160**	
1315 - 1330	0	119	32	0	2	1	0	1	4	0	0	0	0	**159**	
1330 - 1345	0	135	29	0	2	0	0	1	4	0	0	0	0	**172**	
1345 - 1400	0	126	28	1	2	0	0	0	3	0	0	0	0	**162**	**653**
1400 - 1415	0	116	29	0	2	0	0	1	4	0	0	0	0	**153**	
1415 - 1430	0	126	27	0	2	1	0	0	4	0	0	0	0	**160**	
1430 - 1445	0	129	32	0	3	0	0	1	4	0	0	0	0	**169**	
1445 - 1500	0	123	28	0	3	1	0	1	3	0	0	0	0	**158**	**641**
1500 - 1515	0	142	33	0	2	1	0	1	2	0	0	0	0	**181**	
1515 - 1530	0	128	33	0	2	1	0	1	2	0	0	0	0	**167**	
1530 - 1545	0	128	37	0	4	1	0	1	4	0	0	0	0	**176**	
1545 - 1600	0	134	36	0	3	0	0	0	3	0	0	0	0	**176**	**699**
1600 - 1615	0	154	36	0	2	1	0	0	3	0	0	0	0	**197**	
1615 - 1630	0	144	37	0	2	0	0	0	3	0	0	0	0	**188**	
1630 - 1645	0	151	33	0	3	1	0	0	3	0	0	0	0	**191**	
1645 - 1700	0	144	35	0	3	1	0	0	3	0	0	0	0	**186**	**762**
1700 - 1715	0	166	28	0	3	0	0	0	2	0	0	0	0	**201**	
1715 - 1730	0	157	27	0	2	0	0	0	2	0	0	0	0	**188**	
1730 - 1745	0	133	30	0	1	0	0	0	2	0	0	0	0	**167**	
1745 - 1800	0	133	25	0	2	0	0	0	2	0	0	0	0	**162**	**718**
1800 - 1815	0	140	25	0	1	0	0	0	2	0	0	0	0	**168**	
1815 - 1830	0	120	21	0	2	0	0	0	1	0	0	0	0	**145**	
1830 - 1845	0	113	21	0	1	0	0	0	1	0	0	0	0	**137**	
1845 - 1900	0	100	18	0	2	0	0	0	2	0	0	0	0	**121**	**572**
1900 - 1915	0	102	21	0	2	0	0	0	1	0	0	0	0	**127**	
1915 - 1930	0	95	16	0	0	0	0	0	3	0	0	0	0	**114**	
1930 - 1945	0	88	16	0	1	0	0	0	1	0	0	0	0	**107**	
1945 - 2000	0	84	17	0	1	0	0	0	1	0	0	0	0	**103**	**451**
2000 - 2015	0	80	18	0	1	0	0	0	2	0	0	0	0	**101**	
2015 - 2030	0	77	15	0	1	0	0	0	2	0	0	0	0	**95**	
2030 - 2045	0	78	12	0	0	0	0	0	2	0	0	0	0	**91**	
2045 - 2100	0	72	11	0	0	0	0	0	2	0	0	0	0	**86**	**373**
2100 - 2115	0	68	11	0	0	0	0	0	1	0	0	0	0	**80**	
2115 - 2130	0	62	8	0	1	0	0	0	2	0	0	0	0	**73**	
2130 - 2145	0	57	9	0	0	0	0	0	1	0	0	0	0	**68**	
2145 - 2200	0	49	9	0	1	0	0	0	2	0	0	0	0	**60**	**282**
2200 - 2215	0	40	6	0	0	0	0	0	2	0	0	0	0	**48**	
2215 - 2230	0	43	7	0	0	0	0	0	2	0	0	0	0	**52**	
2230 - 2245	0	33	6	0	0	0	0	0	2	0	0	0	0	**41**	
2245 - 2300	0	34	6	0	0	0	0	0	1	0	0	0	0	**42**	**183**
2300 - 2315	0	32	5	0	0	0	0	0	1	0	0	0	0	**39**	
2315 - 2330	0	22	3	0	0	0	0	0	1	0	0	0	0	**26**	
2330 - 2345	0	19	3	0	0	0	0	0	2	0	0	0	0	**24**	
2345 - 0000	0	15	2	0	0	0	0	0	1	0	0	0	0	**20**	**108**

Session Total	9	7091	1646	9	120	27	0	24	221	0	3	0	0	**9150**
Session Average	0.09	73.86	17.15	0.09	1.25	0.28	0.00	0.25	2.30	0.00	0.03	0.00	0.00	**95.31**
Session Percentage	0.09	77.49	17.99	0.09	1.32	0.29	0.00	0.26	2.42	0.00	0.03	0.00	0.00	

AM Peak Hour	0915 - 1015	0700 - 0800	0700 - 0800	0930 - 1030	0815 - 0915	0915 - 1015	-	0945 - 1045	0845 - 0945	0700 - 0800	0500 - 0600	-	-	**0700 - 0800**
AM Peak Volume	1	409	104	1	10	3	0	3	16	0	0	0	0	**533**

Noon Peak Hour	1130 - 1230	1430 - 1530	1445 - 1545	1300 - 1400	1445 - 1545	1000 - 1100	1215 - 1315	1400 - 1500	1230 - 1330	1445 - 1545	-	-	-	**1445 - 1545**
Noon Peak Volume	1	521	131	1	11	3	0	3	15	0	0	0	0	**681**

PM Peak Hour	1530 - 1630	1630 - 1730	1530 - 1630	1530 - 1630	1615 - 1715	1600 - 1700	-	1500 - 1600	1530 - 1630	1500 - 1600	-	-	-	**1615 - 1715**
PM Peak Volume	1	618	147	1	11	2	0	2	13	0	0	0	0	**765**

Bi-Directional Class Count || Volume Summary 15min

Columbia, SC

Marr Traffic DATA COLLECTION

www.marrtraffic.com

Site 7

I-26 S/Bound Off-Ramp,
north of I-20

Date

Sunday, April 21, 2024

Lat/Long

34.037496°, -81.113416°

Weather

Cloudy
66°F

Click here for Detailed Weather

0000 - 2400 (Sunday 24h Session) (04-21-2024)

Volume Summary 15min

TIME	Volume Summary 15min NB	SB	15min Total	60min Total
0000 - 0015	0	32	**32**	
0015 - 0030	0	26	**26**	
0030 - 0045	0	24	**24**	
0045 - 0100	0	31	**31**	**113**
0100 - 0115	0	27	**27**	
0115 - 0130	0	21	**21**	
0130 - 0145	0	15	**15**	
0145 - 0200	0	20	**20**	**83**
0200 - 0215	0	10	**10**	
0215 - 0230	0	16	**16**	
0230 - 0245	0	14	**14**	
0245 - 0300	0	10	**10**	**50**
0300 - 0315	0	10	**10**	
0315 - 0330	0	9	**9**	
0330 - 0345	0	10	**10**	
0345 - 0400	0	8	**8**	**37**
0400 - 0415	0	12	**12**	
0415 - 0430	0	7	**7**	
0430 - 0445	0	11	**11**	
0445 - 0500	0	6	**6**	**36**
0500 - 0515	0	7	**7**	
0515 - 0530	0	4	**4**	
0530 - 0545	0	19	**19**	
0545 - 0600	0	12	**12**	**42**
0600 - 0615	0	17	**17**	
0615 - 0630	0	33	**33**	
0630 - 0645	0	26	**26**	
0645 - 0700	0	22	**22**	**98**
0700 - 0715	0	29	**29**	
0715 - 0730	0	29	**29**	
0730 - 0745	0	39	**39**	
0745 - 0800	0	33	**33**	**130**
0800 - 0815	0	34	**34**	
0815 - 0830	0	47	**47**	
0830 - 0845	0	49	**49**	
0845 - 0900	0	56	**56**	**186**
0900 - 0915	0	52	**52**	
0915 - 0930	0	68	**68**	
0930 - 0945	0	76	**76**	
0945 - 1000	0	79	**79**	**275**
1000 - 1015	0	73	**73**	
1015 - 1030	0	95	**95**	
1030 - 1045	0	113	**113**	
1045 - 1100	0	101	**101**	**382**
1100 - 1115	0	95	**95**	
1115 - 1130	0	101	**101**	
1130 - 1145	0	114	**114**	
1145 - 1200	0	147	**147**	**457**

Time	Volume Summary 15min NB	SB	15min Total	60min Total
1200 - 1215	0	128	**128**	
1215 - 1230	0	179	**179**	
1230 - 1245	0	141	**141**	
1245 - 1300	0	162	**162**	**610**
1300 - 1315	0	169	**169**	
1315 - 1330	0	167	**167**	
1330 - 1345	0	182	**182**	
1345 - 1400	0	160	**160**	**678**
1400 - 1415	0	125	**125**	
1415 - 1430	0	160	**160**	
1430 - 1445	0	163	**163**	
1445 - 1500	0	150	**150**	**598**
1500 - 1515	0	145	**145**	
1515 - 1530	0	151	**151**	
1530 - 1545	0	134	**134**	
1545 - 1600	0	145	**145**	**575**
1600 - 1615	0	147	**147**	
1615 - 1630	0	132	**132**	
1630 - 1645	0	142	**142**	
1645 - 1700	0	135	**135**	**556**
1700 - 1715	0	128	**128**	
1715 - 1730	0	142	**142**	
1730 - 1745	0	126	**126**	
1745 - 1800	0	127	**127**	**523**
1800 - 1815	0	137	**137**	
1815 - 1830	0	134	**134**	
1830 - 1845	0	114	**114**	
1845 - 1900	0	106	**106**	**491**
1900 - 1915	0	103	**103**	
1915 - 1930	0	86	**86**	
1930 - 1945	0	89	**89**	
1945 - 2000	0	62	**62**	**340**
2000 - 2015	0	79	**79**	
2015 - 2030	0	65	**65**	
2030 - 2045	0	71	**71**	
2045 - 2100	0	64	**64**	**279**
2100 - 2115	0	60	**60**	
2115 - 2130	0	62	**62**	
2130 - 2145	0	52	**52**	
2145 - 2200	0	43	**43**	**217**
2200 - 2215	0	47	**47**	
2215 - 2230	0	40	**40**	
2230 - 2245	0	26	**26**	
2245 - 2300	0	26	**26**	**139**
2300 - 2315	0	30	**30**	
2315 - 2330	0	15	**15**	
2330 - 2345	0	13	**13**	
2345 - 0000	0	15	**15**	**73**

Session Total	0	6968	**6968**
Session Average	0.00	72.58	**72.58**
Session Percentage	0.00	100.00	

Site 7
I-26 S/Bound Off-Ramp,
north of I-20

Date
Monday, April 22, 2024

Lat/Long
34.037496°, -81.113416°

Weather
Mostly Cloudy
57°F

Click here for Detailed Weather

0000 - 2400 (Weekday 24h Session) (04-22-2024)

Volume Summary 15min

TIME	Volume Summary 15min NB	SB	15min Total	60min Total
0000 - 0015	0	11	**11**	
0015 - 0030	0	12	**12**	
0030 - 0045	0	9	**9**	
0045 - 0100	0	11	**11**	**43**
0100 - 0115	0	5	**5**	
0115 - 0130	0	6	**6**	
0130 - 0145	0	9	**9**	
0145 - 0200	0	3	**3**	**23**
0200 - 0215	0	11	**11**	
0215 - 0230	0	3	**3**	
0230 - 0245	0	7	**7**	
0245 - 0300	0	12	**12**	**33**
0300 - 0315	0	6	**6**	
0315 - 0330	0	10	**10**	
0330 - 0345	0	11	**11**	
0345 - 0400	0	12	**12**	**39**
0400 - 0415	0	14	**14**	
0415 - 0430	0	14	**14**	
0430 - 0445	0	7	**7**	
0445 - 0500	0	17	**17**	**52**
0500 - 0515	0	21	**21**	
0515 - 0530	0	32	**32**	
0530 - 0545	0	46	**46**	
0545 - 0600	0	53	**53**	**152**
0600 - 0615	0	66	**66**	
0615 - 0630	0	96	**96**	
0630 - 0645	0	135	**135**	
0645 - 0700	0	161	**161**	**458**
0700 - 0715	0	163	**163**	
0715 - 0730	0	193	**193**	
0730 - 0745	0	183	**183**	
0745 - 0800	0	158	**158**	**697**
0800 - 0815	0	134	**134**	
0815 - 0830	0	117	**117**	
0830 - 0845	0	142	**142**	
0845 - 0900	0	119	**119**	**512**
0900 - 0915	0	104	**104**	
0915 - 0930	0	123	**123**	
0930 - 0945	0	109	**109**	
0945 - 1000	0	104	**104**	**440**
1000 - 1015	0	96	**96**	
1015 - 1030	0	101	**101**	
1030 - 1045	0	115	**115**	
1045 - 1100	0	118	**118**	**430**
1100 - 1115	0	125	**125**	
1115 - 1130	0	100	**100**	
1130 - 1145	0	123	**123**	
1145 - 1200	0	113	**113**	**461**

Time	Volume Summary 15min NB	SB	15min Total	60min Total
1200 - 1215	0	147	**147**	
1215 - 1230	0	133	**133**	
1230 - 1245	0	149	**149**	
1245 - 1300	0	157	**157**	**586**
1300 - 1315	0	138	**138**	
1315 - 1330	0	136	**136**	
1330 - 1345	0	157	**157**	
1345 - 1400	0	157	**157**	**588**
1400 - 1415	0	163	**163**	
1415 - 1430	0	144	**144**	
1430 - 1445	0	159	**159**	
1445 - 1500	0	149	**149**	**615**
1500 - 1515	0	194	**194**	
1515 - 1530	0	161	**161**	
1530 - 1545	0	183	**183**	
1545 - 1600	0	166	**166**	**704**
1600 - 1615	0	242	**242**	
1615 - 1630	0	167	**167**	
1630 - 1645	0	217	**217**	
1645 - 1700	0	176	**176**	**802**
1700 - 1715	0	217	**217**	
1715 - 1730	0	201	**201**	
1730 - 1745	0	159	**159**	
1745 - 1800	0	147	**147**	**724**
1800 - 1815	0	156	**156**	
1815 - 1830	0	131	**131**	
1830 - 1845	0	137	**137**	
1845 - 1900	0	105	**105**	**529**
1900 - 1915	0	132	**132**	
1915 - 1930	0	94	**94**	
1930 - 1945	0	104	**104**	
1945 - 2000	0	111	**111**	**441**
2000 - 2015	0	91	**91**	
2015 - 2030	0	89	**89**	
2030 - 2045	0	83	**83**	
2045 - 2100	0	81	**81**	**344**
2100 - 2115	0	76	**76**	
2115 - 2130	0	53	**53**	
2130 - 2145	0	67	**67**	
2145 - 2200	0	45	**45**	**241**
2200 - 2215	0	35	**35**	
2215 - 2230	0	33	**33**	
2230 - 2245	0	35	**35**	
2245 - 2300	0	40	**40**	**143**
2300 - 2315	0	32	**32**	
2315 - 2330	0	10	**10**	
2330 - 2345	0	22	**22**	
2345 - 0000	0	9	**9**	**73**

Session Total	0	9130	**9130**
Session Average	0.00	95.10	**95.10**
Session Percentage	0.00	100.00	

Site 7
I-26 S/Bound Off-Ramp,
north of I-20

Date
Tuesday, April 23, 2024

Lat/Long
34.037496°, -81.113416°

Weather
Fair
58°F

Click here for Detailed Weather

0000 - 2400 (Weekday 24h Session) (04-23-2024)

Volume Summary 15min

TIME	Volume Summary 15min NB	Volume Summary 15min SB	15min Total	60min Total
0000 - 0015	0	14	**14**	
0015 - 0030	0	14	**14**	
0030 - 0045	0	13	**13**	
0045 - 0100	0	17	**17**	**58**
0100 - 0115	0	13	**13**	
0115 - 0130	0	8	**8**	
0130 - 0145	0	9	**9**	
0145 - 0200	0	6	**6**	**36**
0200 - 0215	0	7	**7**	
0215 - 0230	0	4	**4**	
0230 - 0245	0	9	**9**	
0245 - 0300	0	8	**8**	**28**
0300 - 0315	0	9	**9**	
0315 - 0330	0	9	**9**	
0330 - 0345	0	12	**12**	
0345 - 0400	0	13	**13**	**43**
0400 - 0415	0	9	**9**	
0415 - 0430	0	15	**15**	
0430 - 0445	0	19	**19**	
0445 - 0500	0	18	**18**	**61**
0500 - 0515	0	27	**27**	
0515 - 0530	0	36	**36**	
0530 - 0545	0	43	**43**	
0545 - 0600	0	48	**48**	**154**
0600 - 0615	0	65	**65**	
0615 - 0630	0	91	**91**	
0630 - 0645	0	130	**130**	
0645 - 0700	0	170	**170**	**456**
0700 - 0715	0	160	**160**	
0715 - 0730	0	195	**195**	
0730 - 0745	0	158	**158**	
0745 - 0800	0	132	**132**	**645**
0800 - 0815	0	140	**140**	
0815 - 0830	0	129	**129**	
0830 - 0845	0	127	**127**	
0845 - 0900	0	142	**142**	**538**
0900 - 0915	0	106	**106**	
0915 - 0930	0	129	**129**	
0930 - 0945	0	114	**114**	
0945 - 1000	0	109	**109**	**458**
1000 - 1015	0	104	**104**	
1015 - 1030	0	130	**130**	
1030 - 1045	0	105	**105**	
1045 - 1100	0	126	**126**	**465**
1100 - 1115	0	119	**119**	
1115 - 1130	0	112	**112**	
1130 - 1145	0	134	**134**	
1145 - 1200	0	153	**153**	**518**

Time	Volume Summary 15min NB	Volume Summary 15min SB	15min Total	60min Total
1200 - 1215	0	118	**118**	
1215 - 1230	0	136	**136**	
1230 - 1245	0	148	**148**	
1245 - 1300	0	157	**157**	**559**
1300 - 1315	0	148	**148**	
1315 - 1330	0	151	**151**	
1330 - 1345	0	164	**164**	
1345 - 1400	0	170	**170**	**633**
1400 - 1415	0	157	**157**	
1415 - 1430	0	166	**166**	
1430 - 1445	0	179	**179**	
1445 - 1500	0	160	**160**	**662**
1500 - 1515	0	195	**195**	
1515 - 1530	0	170	**170**	
1530 - 1545	0	180	**180**	
1545 - 1600	0	185	**185**	**730**
1600 - 1615	0	191	**191**	
1615 - 1630	0	231	**231**	
1630 - 1645	0	236	**236**	
1645 - 1700	0	192	**192**	**850**
1700 - 1715	0	229	**229**	
1715 - 1730	0	192	**192**	
1730 - 1745	0	174	**174**	
1745 - 1800	0	204	**204**	**799**
1800 - 1815	0	166	**166**	
1815 - 1830	0	125	**125**	
1830 - 1845	0	133	**133**	
1845 - 1900	0	116	**116**	**540**
1900 - 1915	0	132	**132**	
1915 - 1930	0	114	**114**	
1930 - 1945	0	96	**96**	
1945 - 2000	0	105	**105**	**447**
2000 - 2015	0	97	**97**	
2015 - 2030	0	104	**104**	
2030 - 2045	0	86	**86**	
2045 - 2100	0	78	**78**	**365**
2100 - 2115	0	64	**64**	
2115 - 2130	0	65	**65**	
2130 - 2145	0	62	**62**	
2145 - 2200	0	48	**48**	**239**
2200 - 2215	0	28	**28**	
2215 - 2230	0	44	**44**	
2230 - 2245	0	31	**31**	
2245 - 2300	0	42	**42**	**145**
2300 - 2315	0	43	**43**	
2315 - 2330	0	22	**22**	
2330 - 2345	0	22	**22**	
2345 - 0000	0	11	**11**	**98**

Session Total	0	9527	**9527**
Session Average	0.00	99.24	**99.24**
Session Percentage	0.00	100.00	

Site 7
I-26 S/Bound Off-Ramp,
north of I-20

Date
Wednesday, April 24, 2024

Lat/Long
34.037496°, -81.113416°

Weather
Fair
66°F

Click here for Detailed Weather

0000 - 2400 (Weekday 24h Session) (04-24-2024)

Volume Summary 15min

TIME	Volume Summary 15min NB	SB	15min Total	60min Total
0000 - 0015	0	13	**13**	
0015 - 0030	0	13	**13**	
0030 - 0045	0	17	**17**	
0045 - 0100	0	14	**14**	**57**
0100 - 0115	0	19	**19**	
0115 - 0130	0	13	**13**	
0130 - 0145	0	9	**9**	
0145 - 0200	0	7	**7**	**48**
0200 - 0215	0	12	**12**	
0215 - 0230	0	10	**10**	
0230 - 0245	0	6	**6**	
0245 - 0300	0	3	**3**	**31**
0300 - 0315	0	5	**5**	
0315 - 0330	0	8	**8**	
0330 - 0345	0	7	**7**	
0345 - 0400	0	18	**18**	**38**
0400 - 0415	0	17	**17**	
0415 - 0430	0	13	**13**	
0430 - 0445	0	14	**14**	
0445 - 0500	0	16	**16**	**60**
0500 - 0515	0	26	**26**	
0515 - 0530	0	27	**27**	
0530 - 0545	0	36	**36**	
0545 - 0600	0	58	**58**	**147**
0600 - 0615	0	63	**63**	
0615 - 0630	0	103	**103**	
0630 - 0645	0	130	**130**	
0645 - 0700	0	145	**145**	**441**
0700 - 0715	0	171	**171**	
0715 - 0730	0	209	**209**	
0730 - 0745	0	173	**173**	
0745 - 0800	0	149	**149**	**702**
0800 - 0815	0	140	**140**	
0815 - 0830	0	128	**128**	
0830 - 0845	0	126	**126**	
0845 - 0900	0	117	**117**	**511**
0900 - 0915	0	109	**109**	
0915 - 0930	0	127	**127**	
0930 - 0945	0	122	**122**	
0945 - 1000	0	125	**125**	**483**
1000 - 1015	0	125	**125**	
1015 - 1030	0	128	**128**	
1030 - 1045	0	130	**130**	
1045 - 1100	0	125	**125**	**508**
1100 - 1115	0	117	**117**	
1115 - 1130	0	113	**113**	
1130 - 1145	0	117	**117**	
1145 - 1200	0	119	**119**	**466**

Time	Volume Summary 15min NB	SB	15min Total	60min Total
1200 - 1215	0	124	**124**	
1215 - 1230	0	142	**142**	
1230 - 1245	0	153	**153**	
1245 - 1300	0	165	**165**	**584**
1300 - 1315	0	154	**154**	
1315 - 1330	0	157	**157**	
1330 - 1345	0	166	**166**	
1345 - 1400	0	165	**165**	**642**
1400 - 1415	0	144	**144**	
1415 - 1430	0	157	**157**	
1430 - 1445	0	155	**155**	
1445 - 1500	0	162	**162**	**618**
1500 - 1515	0	200	**200**	
1515 - 1530	0	181	**181**	
1530 - 1545	0	178	**178**	
1545 - 1600	0	182	**182**	**741**
1600 - 1615	0	209	**209**	
1615 - 1630	0	216	**216**	
1630 - 1645	0	222	**222**	
1645 - 1700	0	234	**234**	**881**
1700 - 1715	0	243	**243**	
1715 - 1730	0	188	**188**	
1730 - 1745	0	181	**181**	
1745 - 1800	0	166	**166**	**778**
1800 - 1815	0	155	**155**	
1815 - 1830	0	173	**173**	
1830 - 1845	0	128	**128**	
1845 - 1900	0	135	**135**	**591**
1900 - 1915	0	117	**117**	
1915 - 1930	0	118	**118**	
1930 - 1945	0	108	**108**	
1945 - 2000	0	80	**80**	**423**
2000 - 2015	0	101	**101**	
2015 - 2030	0	107	**107**	
2030 - 2045	0	101	**101**	
2045 - 2100	0	105	**105**	**414**
2100 - 2115	0	76	**76**	
2115 - 2130	0	71	**71**	
2130 - 2145	0	58	**58**	
2145 - 2200	0	53	**53**	**258**
2200 - 2215	0	46	**46**	
2215 - 2230	0	45	**45**	
2230 - 2245	0	34	**34**	
2245 - 2300	0	33	**33**	**158**
2300 - 2315	0	35	**35**	
2315 - 2330	0	22	**22**	
2330 - 2345	0	21	**21**	
2345 - 0000	0	13	**13**	**91**

Session Total	0	9671	**9671**
Session Average	0.00	100.74	**100.74**
Session Percentage	0.00	100.00	

Site 7
I-26 S/Bound Off-Ramp,
north of I-20

Date
Thursday, April 25, 2024

Lat/Long
34.037496°, -81.113416°

Weather
Fair
67°F

Click here for Detailed Weather

0000 - 2400 (Weekday 24h Session) (04-25-2024)

Volume Summary 15min

TIME	Volume Summary 15min NB	Volume Summary 15min SB	15min Total	60min Total
0000 - 0015	0	21	**21**	
0015 - 0030	0	13	**13**	
0030 - 0045	0	13	**13**	
0045 - 0100	0	13	**13**	**60**
0100 - 0115	0	10	**10**	
0115 - 0130	0	14	**14**	
0130 - 0145	0	14	**14**	
0145 - 0200	0	11	**11**	**49**
0200 - 0215	0	10	**10**	
0215 - 0230	0	11	**11**	
0230 - 0245	0	7	**7**	
0245 - 0300	0	6	**6**	**34**
0300 - 0315	0	4	**4**	
0315 - 0330	0	2	**2**	
0330 - 0345	0	12	**12**	
0345 - 0400	0	16	**16**	**34**
0400 - 0415	0	11	**11**	
0415 - 0430	0	14	**14**	
0430 - 0445	0	16	**16**	
0445 - 0500	0	14	**14**	**55**
0500 - 0515	0	21	**21**	
0515 - 0530	0	22	**22**	
0530 - 0545	0	60	**60**	
0545 - 0600	0	55	**55**	**158**
0600 - 0615	0	70	**70**	
0615 - 0630	0	99	**99**	
0630 - 0645	0	133	**133**	
0645 - 0700	0	154	**154**	**456**
0700 - 0715	0	166	**166**	
0715 - 0730	0	186	**186**	
0730 - 0745	0	169	**169**	
0745 - 0800	0	151	**151**	**672**
0800 - 0815	0	127	**127**	
0815 - 0830	0	148	**148**	
0830 - 0845	0	121	**121**	
0845 - 0900	0	137	**137**	**533**
0900 - 0915	0	123	**123**	
0915 - 0930	0	120	**120**	
0930 - 0945	0	113	**113**	
0945 - 1000	0	126	**126**	**482**
1000 - 1015	0	128	**128**	
1015 - 1030	0	130	**130**	
1030 - 1045	0	128	**128**	
1045 - 1100	0	129	**129**	**515**
1100 - 1115	0	112	**112**	
1115 - 1130	0	148	**148**	
1130 - 1145	0	152	**152**	
1145 - 1200	0	132	**132**	**544**

Time	Volume Summary 15min NB	Volume Summary 15min SB	15min Total	60min Total
1200 - 1215	0	169	**169**	
1215 - 1230	0	168	**168**	
1230 - 1245	0	139	**139**	
1245 - 1300	0	130	**130**	**606**
1300 - 1315	0	155	**155**	
1315 - 1330	0	164	**164**	
1330 - 1345	0	180	**180**	
1345 - 1400	0	167	**167**	**666**
1400 - 1415	0	176	**176**	
1415 - 1430	0	165	**165**	
1430 - 1445	0	178	**178**	
1445 - 1500	0	149	**149**	**668**
1500 - 1515	0	184	**184**	
1515 - 1530	0	171	**171**	
1530 - 1545	0	191	**191**	
1545 - 1600	0	199	**199**	**745**
1600 - 1615	0	229	**229**	
1615 - 1630	0	233	**233**	
1630 - 1645	0	197	**197**	
1645 - 1700	0	207	**207**	**866**
1700 - 1715	0	227	**227**	
1715 - 1730	0	192	**192**	
1730 - 1745	0	172	**172**	
1745 - 1800	0	177	**177**	**768**
1800 - 1815	0	196	**196**	
1815 - 1830	0	143	**143**	
1830 - 1845	0	145	**145**	
1845 - 1900	0	138	**138**	**622**
1900 - 1915	0	135	**135**	
1915 - 1930	0	127	**127**	
1930 - 1945	0	124	**124**	
1945 - 2000	0	110	**110**	**496**
2000 - 2015	0	98	**98**	
2015 - 2030	0	78	**78**	
2030 - 2045	0	97	**97**	
2045 - 2100	0	93	**93**	**366**
2100 - 2115	0	87	**87**	
2115 - 2130	0	70	**70**	
2130 - 2145	0	58	**58**	
2145 - 2200	0	52	**52**	**267**
2200 - 2215	0	47	**47**	
2215 - 2230	0	54	**54**	
2230 - 2245	0	45	**45**	
2245 - 2300	0	39	**39**	**185**
2300 - 2315	0	32	**32**	
2315 - 2330	0	21	**21**	
2330 - 2345	0	34	**34**	
2345 - 0000	0	29	**29**	**116**

Session Total	0	9963	**9963**
Session Average	0.00	103.78	**103.78**
Session Percentage	0.00	100.00	

Site 7
I-26 S/Bound Off-Ramp,
north of I-20

Date
Friday, April 26, 2024

Lat/Long
34.037496°, -81.113416°

Weather
Cloudy
69°F

Click here for Detailed Weather

0000 - 2400 (Weekday 24h Session) (04-26-2024)

Volume Summary 15min

TIME	Volume Summary 15min NB	SB	15min Total	60min Total
0000 - 0015	0	14	**14**	
0015 - 0030	0	8	**8**	
0030 - 0045	0	20	**20**	
0045 - 0100	0	8	**8**	**50**
0100 - 0115	0	12	**12**	
0115 - 0130	0	6	**6**	
0130 - 0145	0	19	**19**	
0145 - 0200	0	12	**12**	**49**
0200 - 0215	0	10	**10**	
0215 - 0230	0	10	**10**	
0230 - 0245	0	5	**5**	
0245 - 0300	0	8	**8**	**33**
0300 - 0315	0	7	**7**	
0315 - 0330	0	8	**8**	
0330 - 0345	0	6	**6**	
0345 - 0400	0	13	**13**	**34**
0400 - 0415	0	13	**13**	
0415 - 0430	0	15	**15**	
0430 - 0445	0	18	**18**	
0445 - 0500	0	15	**15**	**61**
0500 - 0515	0	19	**19**	
0515 - 0530	0	29	**29**	
0530 - 0545	0	44	**44**	
0545 - 0600	0	53	**53**	**145**
0600 - 0615	0	59	**59**	
0615 - 0630	0	72	**72**	
0630 - 0645	0	128	**128**	
0645 - 0700	0	124	**124**	**383**
0700 - 0715	0	160	**160**	
0715 - 0730	0	176	**176**	
0730 - 0745	0	173	**173**	
0745 - 0800	0	153	**153**	**662**
0800 - 0815	0	120	**120**	
0815 - 0830	0	117	**117**	
0830 - 0845	0	130	**130**	
0845 - 0900	0	137	**137**	**504**
0900 - 0915	0	118	**118**	
0915 - 0930	0	114	**114**	
0930 - 0945	0	123	**123**	
0945 - 1000	0	124	**124**	**479**
1000 - 1015	0	118	**118**	
1015 - 1030	0	113	**113**	
1030 - 1045	0	139	**139**	
1045 - 1100	0	148	**148**	**518**
1100 - 1115	0	144	**144**	
1115 - 1130	0	151	**151**	
1130 - 1145	0	162	**162**	
1145 - 1200	0	161	**161**	**618**

Time	Volume Summary 15min NB	SB	15min Total	60min Total
1200 - 1215	0	173	**173**	
1215 - 1230	0	162	**162**	
1230 - 1245	0	164	**164**	
1245 - 1300	0	177	**177**	**676**
1300 - 1315	0	197	**197**	
1315 - 1330	0	161	**161**	
1330 - 1345	0	181	**181**	
1345 - 1400	0	137	**137**	**676**
1400 - 1415	0	118	**118**	
1415 - 1430	0	158	**158**	
1430 - 1445	0	153	**153**	
1445 - 1500	0	157	**157**	**586**
1500 - 1515	0	162	**162**	
1515 - 1530	0	156	**156**	
1530 - 1545	0	159	**159**	
1545 - 1600	0	178	**178**	**655**
1600 - 1615	0	139	**139**	
1615 - 1630	0	171	**171**	
1630 - 1645	0	160	**160**	
1645 - 1700	0	176	**176**	**646**
1700 - 1715	0	188	**188**	
1715 - 1730	0	234	**234**	
1730 - 1745	0	191	**191**	
1745 - 1800	0	164	**164**	**777**
1800 - 1815	0	185	**185**	
1815 - 1830	0	167	**167**	
1830 - 1845	0	158	**158**	
1845 - 1900	0	114	**114**	**624**
1900 - 1915	0	125	**125**	
1915 - 1930	0	118	**118**	
1930 - 1945	0	116	**116**	
1945 - 2000	0	135	**135**	**494**
2000 - 2015	0	125	**125**	
2015 - 2030	0	109	**109**	
2030 - 2045	0	87	**87**	
2045 - 2100	0	70	**70**	**391**
2100 - 2115	0	84	**84**	
2115 - 2130	0	89	**89**	
2130 - 2145	0	76	**76**	
2145 - 2200	0	72	**72**	**321**
2200 - 2215	0	61	**61**	
2215 - 2230	0	72	**72**	
2230 - 2245	0	61	**61**	
2245 - 2300	0	55	**55**	**249**
2300 - 2315	0	56	**56**	
2315 - 2330	0	38	**38**	
2330 - 2345	0	31	**31**	
2345 - 0000	0	32	**32**	**157**

Session Total	0	9788	**9788**
Session Average	0.00	101.96	**101.96**
Session Percentage	0.00	100.00	

Site 7
I-26 S/Bound Off-Ramp,
north of I-20

Date
Saturday, April 27, 2024

Lat/Long
34.037496°, -81.113416°

Weather
Mostly Cloudy
69°F

Click here for Detailed Weather

0000 - 2400 (Saturday 24h Session) (04-27-2024)

Volume Summary 15min

TIME	Volume Summary 15min NB	SB	15min Total	60min Total
0000 - 0015	0	30	**30**	
0015 - 0030	0	29	**29**	
0030 - 0045	0	14	**14**	
0045 - 0100	0	10	**10**	**83**
0100 - 0115	0	17	**17**	
0115 - 0130	0	21	**21**	
0130 - 0145	0	8	**8**	
0145 - 0200	0	12	**12**	**58**
0200 - 0215	0	13	**13**	
0215 - 0230	0	10	**10**	
0230 - 0245	0	8	**8**	
0245 - 0300	0	8	**8**	**39**
0300 - 0315	0	3	**3**	
0315 - 0330	0	11	**11**	
0330 - 0345	0	4	**4**	
0345 - 0400	0	6	**6**	**24**
0400 - 0415	0	8	**8**	
0415 - 0430	0	10	**10**	
0430 - 0445	0	11	**11**	
0445 - 0500	0	6	**6**	**35**
0500 - 0515	0	13	**13**	
0515 - 0530	0	14	**14**	
0530 - 0545	0	19	**19**	
0545 - 0600	0	22	**22**	**68**
0600 - 0615	0	22	**22**	
0615 - 0630	0	31	**31**	
0630 - 0645	0	39	**39**	
0645 - 0700	0	47	**47**	**139**
0700 - 0715	0	40	**40**	
0715 - 0730	0	63	**63**	
0730 - 0745	0	58	**58**	
0745 - 0800	0	64	**64**	**225**
0800 - 0815	0	77	**77**	
0815 - 0830	0	64	**64**	
0830 - 0845	0	80	**80**	
0845 - 0900	0	86	**86**	**307**
0900 - 0915	0	72	**72**	
0915 - 0930	0	96	**96**	
0930 - 0945	0	114	**114**	
0945 - 1000	0	107	**107**	**389**
1000 - 1015	0	121	**121**	
1015 - 1030	0	97	**97**	
1030 - 1045	0	138	**138**	
1045 - 1100	0	118	**118**	**474**
1100 - 1115	0	129	**129**	
1115 - 1130	0	121	**121**	
1130 - 1145	0	137	**137**	
1145 - 1200	0	150	**150**	**537**

Time	Volume Summary 15min NB	SB	15min Total	60min Total
1200 - 1215	0	172	**172**	
1215 - 1230	0	160	**160**	
1230 - 1245	0	152	**152**	
1245 - 1300	0	164	**164**	**648**
1300 - 1315	0	158	**158**	
1315 - 1330	0	178	**178**	
1330 - 1345	0	174	**174**	
1345 - 1400	0	179	**179**	**689**
1400 - 1415	0	188	**188**	
1415 - 1430	0	171	**171**	
1430 - 1445	0	199	**199**	
1445 - 1500	0	180	**180**	**738**
1500 - 1515	0	185	**185**	
1515 - 1530	0	177	**177**	
1530 - 1545	0	205	**205**	
1545 - 1600	0	177	**177**	**744**
1600 - 1615	0	222	**222**	
1615 - 1630	0	167	**167**	
1630 - 1645	0	162	**162**	
1645 - 1700	0	181	**181**	**732**
1700 - 1715	0	172	**172**	
1715 - 1730	0	168	**168**	
1730 - 1745	0	168	**168**	
1745 - 1800	0	152	**152**	**660**
1800 - 1815	0	183	**183**	
1815 - 1830	0	141	**141**	
1830 - 1845	0	145	**145**	
1845 - 1900	0	136	**136**	**605**
1900 - 1915	0	144	**144**	
1915 - 1930	0	143	**143**	
1930 - 1945	0	112	**112**	
1945 - 2000	0	115	**115**	**514**
2000 - 2015	0	118	**118**	
2015 - 2030	0	110	**110**	
2030 - 2045	0	115	**115**	
2045 - 2100	0	109	**109**	**452**
2100 - 2115	0	115	**115**	
2115 - 2130	0	104	**104**	
2130 - 2145	0	103	**103**	
2145 - 2200	0	110	**110**	**432**
2200 - 2215	0	70	**70**	
2215 - 2230	0	78	**78**	
2230 - 2245	0	57	**57**	
2245 - 2300	0	56	**56**	**261**
2300 - 2315	0	44	**44**	
2315 - 2330	0	53	**53**	
2330 - 2345	0	24	**24**	
2345 - 0000	0	28	**28**	**149**

Session Total	0	9002	**9002**
Session Average	0.00	93.77	**93.77**
Session Percentage	0.00	100.00	

Bi-Directional Class Count || SB WB 60min

Columbia, SC

Marr Traffic DATA COLLECTION

www.marrtraffic.com

Site 7
I-26 S/Bound Off-Ramp,
north of I-20

Date
Sunday, April 21, 2024

Lat/Long
34.037496°, -81.113416°

Weather
Cloudy
66°F

Click here for Detailed Weather

0000 - 2400 (Sunday 24h Session) (04-21-2024)
SB WB 60min

	Southbound (Movement 7.1)													
TIME	1	2	3	4	5	6	7	8	9	10	11	12	13	**Total**
0000 - 0100	0	90	22	0	0	0	0	0	1	0	0	0	0	**113**
0100 - 0200	0	63	16	0	1	0	0	0	3	0	0	0	0	**83**
0200 - 0300	0	35	11	0	1	0	0	1	2	0	0	0	0	**50**
0300 - 0400	0	25	9	0	0	0	0	0	3	0	0	0	0	**37**
0400 - 0500	0	23	8	0	1	0	0	1	3	0	0	0	0	**36**
0500 - 0600	0	26	9	0	0	0	0	1	6	0	0	0	0	**42**
0600 - 0700	0	79	17	0	0	0	0	0	2	0	0	0	0	**98**
0700 - 0800	0	91	31	0	0	0	0	0	8	0	0	0	0	**130**
0800 - 0900	0	150	28	0	1	1	0	0	6	0	0	0	0	**186**
0900 - 1000	0	218	51	1	0	1	0	0	4	0	0	0	0	**275**
1000 - 1100	0	305	66	2	0	1	0	0	8	0	0	0	0	**382**
1100 - 1200	0	364	86	0	5	0	0	0	2	0	0	0	0	**457**
1200 - 1300	0	501	99	3	0	0	0	0	7	0	0	0	0	**610**
1300 - 1400	0	544	123	0	4	0	1	0	6	0	0	0	0	**678**
1400 - 1500	0	493	98	0	2	0	0	1	4	0	0	0	0	**598**
1500 - 1600	0	478	88	1	2	0	0	1	5	0	0	0	0	**575**
1600 - 1700	0	445	102	0	4	0	0	1	4	0	0	0	0	**556**
1700 - 1800	0	457	62	0	1	0	0	0	3	0	0	0	0	**523**
1800 - 1900	0	419	67	0	1	0	0	0	4	0	0	0	0	**491**
1900 - 2000	0	272	58	0	1	0	0	1	8	0	0	0	0	**340**
2000 - 2100	0	227	38	0	1	0	0	5	8	0	0	0	0	**279**
2100 - 2200	0	172	30	0	2	0	0	2	11	0	0	0	0	**217**
2200 - 2300	0	98	31	0	2	0	0	2	6	0	0	0	0	**139**
2300 - 2400	0	52	14	0	0	0	0	0	7	0	0	0	0	**73**

Session Total	0	5627	1164	7	29	3	1	16	121	0	0	0	0	**6968**
Session Average	0.00	234.46	48.50	0.29	1.21	0.13	0.04	0.67	5.04	0.00	0.00	0.00	0.00	**290.33**
Session Percentage	0.00	80.75	16.70	0.10	0.42	0.04	0.01	0.23	1.74	0.00	0.00	0.00	0.00	

AM Peak Hour	-	0900 - 1000	0900 - 1000	0900 - 1000	0800 - 0900	0800 - 0900	-	0500 - 0600	0700 - 0800	-	-	-	-	**0900 - 1000**
AM Peak Volume	0	218	51	1	1	1	0	1	8	0	0	0	0	**275**

Noon Peak Hour	-	1300 - 1400	1300 - 1400	1200 - 1300	1100 - 1200	1000 - 1100	1300 - 1400	1400 - 1500	1000 - 1100	-	-	-	-	**1300 - 1400**
Noon Peak Volume	0	544	123	3	5	1	1	1	8	0	0	0	0	**678**

PM Peak Hour	-	1500 - 1600	1600 - 1700	1500 - 1600	1600 - 1700	-	-	1500 - 1600	1900 - 2000	-	-	-	-	**1500 - 1600**
PM Peak Volume	0	478	102	1	4	0	0	1	8	0	0	0	0	**575**

Site 7
I-26 S/Bound Off-Ramp,
north of I-20

Date
Monday, April 22, 2024

Lat/Long
34.037496°, -81.113416°

Weather
Mostly Cloudy
57°F

Click here for Detailed Weather

0000 - 2400 (Weekday 24h Session) (04-22-2024)
SB WB 60min

	Southbound (Movement 7.1)													
TIME	1	2	3	4	5	6	7	8	9	10	11	12	13	**Total**
0000 - 0100	0	31	6	0	1	0	0	0	5	0	0	0	0	**43**
0100 - 0200	0	19	2	0	0	1	0	0	1	0	0	0	0	**23**
0200 - 0300	0	23	5	0	0	0	0	0	5	0	0	0	0	**33**
0300 - 0400	0	25	6	0	2	1	0	0	5	0	0	0	0	**39**
0400 - 0500	0	37	8	0	2	0	0	0	5	0	0	0	0	**52**
0500 - 0600	0	120	21	0	2	0	0	1	8	0	0	0	0	**152**
0600 - 0700	0	377	63	1	7	2	0	0	8	0	0	0	0	**458**
0700 - 0800	0	556	115	1	5	3	0	0	17	0	0	0	0	**697**
0800 - 0900	0	406	80	1	13	2	0	1	9	0	0	0	0	**512**
0900 - 1000	0	338	64	0	13	3	0	1	21	0	0	0	0	**440**
1000 - 1100	0	308	86	1	12	3	0	2	18	0	0	0	0	**430**
1100 - 1200	1	356	78	0	12	1	0	2	11	0	0	0	0	**461**
1200 - 1300	0	464	98	0	5	3	0	2	14	0	0	0	0	**586**
1300 - 1400	0	458	93	1	12	2	0	2	20	0	0	0	0	**588**
1400 - 1500	0	475	103	2	11	3	0	1	20	0	0	0	0	**615**
1500 - 1600	0	580	101	0	8	3	0	3	9	0	0	0	0	**704**
1600 - 1700	0	659	119	1	12	2	0	1	8	0	0	0	0	**802**
1700 - 1800	0	606	88	0	10	2	0	1	17	0	0	0	0	**724**
1800 - 1900	0	454	64	0	6	0	0	0	5	0	0	0	0	**529**
1900 - 2000	0	353	71	0	6	2	0	0	9	0	0	0	0	**441**
2000 - 2100	0	285	52	0	2	0	0	0	5	0	0	0	0	**344**
2100 - 2200	0	204	33	1	0	0	0	0	3	0	0	0	0	**241**
2200 - 2300	0	114	23	0	0	0	0	0	4	0	2	0	0	**143**
2300 - 2400	0	60	9	0	1	0	0	0	2	0	1	0	0	**73**

Session Total	1	7308	1388	9	142	33	0	17	229	0	3	0	0	**9130**
Session Average	0.04	304.50	57.83	0.38	5.92	1.38	0.00	0.71	9.54	0.00	0.13	0.00	0.00	**380.42**
Session Percentage	0.01	80.04	15.20	0.10	1.56	0.36	0.00	0.19	2.51	0.00	0.03	0.00	0.00	

AM Peak Hour	-	0700 - 0800	0700 - 0800	0600 - 0700	0800 - 0900	0700 - 0800	-	0500 - 0600	0900 - 1000	-	-	-	-	**0700 - 0800**
AM Peak Volume	0	556	115	1	13	3	0	1	21	0	0	0	0	**697**

Noon Peak Hour	1100 - 1200	1400 - 1500	1400 - 1500	1400 - 1500	1000 - 1100	1000 - 1100	-	1000 - 1100	1300 - 1400	-	-	-	-	**1400 - 1500**
Noon Peak Volume	1	475	103	2	12	3	0	2	20	0	0	0	0	**615**

PM Peak Hour	-	1600 - 1700	1600 - 1700	1600 - 1700	1600 - 1700	1500 - 1600	-	1500 - 1600	1700 - 1800	-	-	-	-	**1600 - 1700**
PM Peak Volume	0	659	119	1	12	3	0	3	17	0	0	0	0	**802**

Site 7
I-26 S/Bound Off-Ramp,
north of I-20

Date
Tuesday, April 23, 2024

Weather
Fair
58°F

Lat/Long
34.037496°, -81.113416°

Click here for Detailed Weather

0000 - 2400 (Weekday 24h Session) (04-23-2024)
SB WB 60min

	Southbound (Movement 7.1)													
TIME	1	2	3	4	5	6	7	8	9	10	11	12	13	**Total**
0000 - 0100	0	41	11	0	0	0	0	0	5	0	1	0	0	**58**
0100 - 0200	0	23	7	0	0	0	0	0	5	0	1	0	0	**36**
0200 - 0300	0	14	5	0	1	0	0	0	4	0	4	0	0	**28**
0300 - 0400	0	30	8	0	0	0	0	0	4	0	1	0	0	**43**
0400 - 0500	0	39	12	0	0	0	0	0	10	0	0	0	0	**61**
0500 - 0600	0	110	30	0	1	0	0	0	13	0	0	0	0	**154**
0600 - 0700	0	348	93	0	6	0	0	0	9	0	0	0	0	**456**
0700 - 0800	0	507	118	2	3	3	0	0	11	1	0	0	0	**645**
0800 - 0900	0	408	96	1	11	2	0	4	16	0	0	0	0	**538**
0900 - 1000	0	319	105	0	8	1	0	3	22	0	0	0	0	**458**
1000 - 1100	0	338	104	0	3	3	0	3	14	0	0	0	0	**465**
1100 - 1200	1	360	132	2	10	0	0	1	12	0	0	0	0	**518**
1200 - 1300	1	405	120	1	12	0	0	7	13	0	0	0	0	**559**
1300 - 1400	1	484	105	0	12	5	0	1	25	0	0	0	0	**633**
1400 - 1500	1	482	146	0	11	2	0	6	14	0	0	0	0	**662**
1500 - 1600	1	537	157	1	9	6	0	1	17	1	0	0	0	**730**
1600 - 1700	0	650	160	3	12	5	0	2	18	0	0	0	0	**850**
1700 - 1800	0	645	123	1	15	2	0	3	10	0	0	0	0	**799**
1800 - 1900	0	461	61	0	8	1	0	0	9	0	0	0	0	**540**
1900 - 2000	0	375	56	1	4	1	0	2	8	0	0	0	0	**447**
2000 - 2100	0	317	31	0	5	0	0	0	12	0	0	0	0	**365**
2100 - 2200	0	218	15	0	0	0	0	0	6	0	0	0	0	**239**
2200 - 2300	0	119	15	0	0	0	0	0	11	0	0	0	0	**145**
2300 - 2400	0	86	8	0	0	0	0	0	4	0	0	0	0	**98**
Session Total	5	7316	1718	12	131	31	0	33	272	2	7	0	0	**9527**
Session Average	0.21	304.83	71.58	0.50	5.46	1.29	0.00	1.38	11.33	0.08	0.29	0.00	0.00	**396.96**
Session Percentage	0.05	76.79	18.03	0.13	1.38	0.33	0.00	0.35	2.86	0.02	0.07	0.00	0.00	
AM Peak Hour	-	0700 - 0800	0700 - 0800	0700 - 0800	0800 - 0900	0700 - 0800	-	0800 - 0900	0900 - 1000	0700 - 0800	-	-	-	**0700 - 0800**
AM Peak Hour Volume	0	507	118	2	11	3	0	4	22	1	0	0	0	**645**
Noon Peak Hour	1100 - 1200	1300 - 1400	1400 - 1500	1100 - 1200	1200 - 1300	1300 - 1400	-	1200 - 1300	1300 - 1400	-	-	-	-	**1400 - 1500**
Noon Peak Hour Volume	1	484	146	2	12	5	0	7	25	0	0	0	0	**662**
PM Peak Hour	1500 - 1600	1600 - 1700	1600 - 1700	1600 - 1700	1700 - 1800	1500 - 1600	-	1700 - 1800	1600 - 1700	1500 - 1600	-	-	-	**1600 - 1700**
PM Peak Hour Volume	1	650	160	3	15	6	0	3	18	1	0	0	0	**850**

Site 7
I-26 S/Bound Off-Ramp,
north of I-20

Date
Wednesday, April 24, 2024

Weather
Fair
66°F

Lat/Long
34.037496°, -81.113416°

Click here for Detailed Weather

0000 - 2400 (Weekday 24h Session) (04-24-2024)
SB WB 60min

	Southbound (Movement 7.1)													
TIME	1	2	3	4	5	6	7	8	9	10	11	12	13	**Total**
0000 - 0100	0	43	7	0	1	0	0	1	5	0	0	0	0	**57**
0100 - 0200	0	31	5	0	2	0	0	0	10	0	0	0	0	**48**
0200 - 0300	0	17	4	0	1	0	0	0	9	0	0	0	0	**31**
0300 - 0400	0	29	7	0	0	0	0	0	2	0	0	0	0	**38**
0400 - 0500	0	43	9	0	0	0	0	0	8	0	0	0	0	**60**
0500 - 0600	0	113	22	0	3	0	0	0	9	0	0	0	0	**147**
0600 - 0700	0	336	87	0	7	0	0	0	11	0	0	0	0	**441**
0700 - 0800	0	534	156	0	4	1	0	0	7	0	0	0	0	**702**
0800 - 0900	1	376	114	0	7	3	0	0	10	0	0	0	0	**511**
0900 - 1000	1	347	94	3	11	5	0	1	21	0	0	0	0	**483**
1000 - 1100	0	379	104	0	9	4	0	2	10	0	0	0	0	**508**
1100 - 1200	0	330	108	0	9	5	0	4	10	0	0	0	0	**466**
1200 - 1300	1	438	107	2	12	4	0	2	18	0	0	0	0	**584**
1300 - 1400	0	503	100	5	8	6	0	2	18	0	0	0	0	**642**
1400 - 1500	1	483	102	0	6	1	0	1	24	0	0	0	0	**618**
1500 - 1600	3	525	185	1	10	4	0	2	11	0	0	0	0	**741**
1600 - 1700	1	664	175	0	16	3	0	0	22	0	0	0	0	**881**
1700 - 1800	1	620	133	0	12	2	0	1	9	0	0	0	0	**778**
1800 - 1900	0	457	113	0	6	2	0	1	12	0	0	0	0	**591**
1900 - 2000	0	351	61	0	2	2	0	0	7	0	0	0	0	**423**
2000 - 2100	0	344	60	0	0	0	0	0	10	0	0	0	0	**414**
2100 - 2200	0	203	43	0	1	0	0	0	11	0	0	0	0	**258**
2200 - 2300	0	120	27	0	0	0	0	0	11	0	0	0	0	**158**
2300 - 2400	0	71	17	0	0	0	0	0	3	0	0	0	0	**91**
Session Total	9	7357	1840	11	127	42	0	17	268	0	0	0	0	**9671**
Session Average	0.38	306.54	76.67	0.46	5.29	1.75	0.00	0.71	11.17	0.00	0.00	0.00	0.00	**402.96**
Session Percentage	0.09	76.07	19.03	0.11	1.31	0.43	0.00	0.18	2.77	0.00	0.00	0.00	0.00	
AM Peak Hour	0800 - 0900	0700 - 0800	0700 - 0800	0900 - 1000	0900 - 1000	0900 - 1000	-	0900 - 1000	0900 - 1000	-	-	-	-	**0700 - 0800**
AM Peak Hour Volume	1	534	156	3	11	5	0	1	21	0	0	0	0	**702**
Noon Peak Hour	1200 - 1300	1300 - 1400	1100 - 1200	1300 - 1400	1200 - 1300	1300 - 1400	-	1100 - 1200	1400 - 1500	-	-	-	-	**1300 - 1400**
Noon Peak Hour Volume	1	503	108	5	12	6	0	4	24	0	0	0	0	**642**
PM Peak Hour	1500 - 1600	1600 - 1700	1500 - 1600	1500 - 1600	1600 - 1700	1500 - 1600	-	1500 - 1600	1600 - 1700	-	-	-	-	**1600 - 1700**
PM Peak Hour Volume	3	664	185	1	16	4	0	2	22	0	0	0	0	**881**

Site 7
I-26 S/Bound Off-Ramp,
north of I-20

Date
Thursday, April 25, 2024

Weather
Fair
67°F

Lat/Long
34.037496°, -81.113416°

Click here for Detailed Weather

0000 - 2400 (Weekday 24h Session) (04-25-2024)
SB WB 60min

	Southbound (Movement 7.1)													
TIME	1	2	3	4	5	6	7	8	9	10	11	12	13	**Total**
0000 - 0100	0	42	6	0	1	0	0	0	9	0	0	2	0	**60**
0100 - 0200	0	38	2	0	1	0	0	0	8	0	0	0	0	**49**
0200 - 0300	0	23	5	0	1	0	0	0	5	0	0	0	0	**34**
0300 - 0400	0	27	3	0	0	0	0	0	4	0	0	0	0	**34**
0400 - 0500	0	42	6	0	1	0	0	0	6	0	0	0	0	**55**
0500 - 0600	0	119	22	0	0	0	0	0	17	0	0	0	0	**158**
0600 - 0700	0	354	85	0	5	1	0	0	11	0	0	0	0	**456**
0700 - 0800	1	511	130	0	9	3	0	0	17	0	1	0	0	**672**
0800 - 0900	1	384	118	0	10	3	0	1	16	0	0	0	0	**533**
0900 - 1000	0	342	96	0	13	5	0	1	25	0	0	0	0	**482**
1000 - 1100	0	358	121	0	12	3	0	4	17	0	0	0	0	**515**
1100 - 1200	2	377	126	0	14	6	0	2	17	0	0	0	0	**544**
1200 - 1300	3	421	145	0	15	0	0	7	15	0	0	0	0	**606**
1300 - 1400	2	487	145	1	9	2	0	6	14	0	0	0	0	**666**
1400 - 1500	0	509	109	0	22	2	0	6	19	1	0	0	0	**668**
1500 - 1600	1	511	184	1	28	0	0	6	14	0	0	0	0	**745**
1600 - 1700	1	635	198	1	10	2	0	0	19	0	0	0	0	**866**
1700 - 1800	2	605	145	0	5	1	0	1	9	0	0	0	0	**768**
1800 - 1900	1	503	104	0	11	0	0	0	3	0	0	0	0	**622**
1900 - 2000	2	404	77	1	5	0	0	0	7	0	0	0	0	**496**
2000 - 2100	0	298	58	0	2	1	0	0	7	0	0	0	0	**366**
2100 - 2200	2	221	38	0	3	0	0	0	3	0	0	0	0	**267**
2200 - 2300	0	154	25	1	2	0	0	0	3	0	0	0	0	**185**
2300 - 2400	0	93	15	0	0	0	0	0	8	0	0	0	0	**116**

Session Total	18	7458	1963	5	179	29	0	34	273	1	1	2	0	**9963**
Session Average	0.75	310.75	81.79	0.21	7.46	1.21	0.00	1.42	11.38	0.04	0.04	0.08	0.00	**415.13**
Session Percentage	0.18	74.86	19.70	0.05	1.80	0.29	0.00	0.34	2.74	0.01	0.01	0.02	0.00	

AM Peak Hour	0700 - 0800	0700 - 0800	0700 - 0800	-	0900 - 1000	0900 - 1000	-	0800 - 0900	0900 - 1000	-	0700 - 0800	-	-	**0700 - 0800**
AM Peak Hour Volume	1	511	130	0	13	5	0	1	25	0	1	0	0	**672**

Noon Peak Hour	1200 - 1300	1400 - 1500	1200 - 1300	1300 - 1400	1400 - 1500	1100 - 1200	-	1200 - 1300	1400 - 1500	1400 - 1500	-	-	-	**1400 - 1500**
Noon Peak Hour Volume	3	509	145	1	22	6	0	7	19	1	0	0	0	**668**

PM Peak Hour	1700 - 1800	1600 - 1700	1600 - 1700	1500 - 1600	1500 - 1600	1600 - 1700	-	1500 - 1600	1600 - 1700	-	-	-	-	**1600 - 1700**
PM Peak Hour Volume	2	635	198	1	28	2	0	6	19	0	0	0	0	**866**

Site 7
I-26 S/Bound Off-Ramp,
north of I-20

Date
Friday, April 26, 2024

Lat/Long
34.037496°, -81.113416°

Weather
Cloudy
69°F

Click here for Detailed Weather

0000 - 2400 (Weekday 24h Session) (04-26-2024)
SB WB 60min

	Southbound (Movement 7.1)													
TIME	1	2	3	4	5	6	7	8	9	10	11	12	13	**Total**
0000 - 0100	0	30	13	0	0	1	0	0	5	0	1	0	0	**50**
0100 - 0200	0	30	10	0	1	0	0	0	6	0	2	0	0	**49**
0200 - 0300	0	16	8	0	0	0	0	0	8	0	1	0	0	**33**
0300 - 0400	0	16	10	0	1	2	0	0	4	0	1	0	0	**34**
0400 - 0500	0	34	16	4	0	0	0	0	7	0	0	0	0	**61**
0500 - 0600	0	101	30	1	3	1	0	0	9	0	0	0	0	**145**
0600 - 0700	0	280	82	2	3	0	0	1	15	0	0	0	0	**383**
0700 - 0800	1	497	137	0	14	1	0	1	11	0	0	0	0	**662**
0800 - 0900	0	379	99	0	12	2	0	1	11	0	0	0	0	**504**
0900 - 1000	1	332	111	0	12	3	0	5	15	0	0	0	0	**479**
1000 - 1100	0	349	120	3	14	7	0	8	17	0	0	0	0	**518**
1100 - 1200	0	418	161	0	12	1	0	1	25	0	0	0	0	**618**
1200 - 1300	2	481	155	0	15	5	0	1	17	0	0	0	0	**676**
1300 - 1400	3	498	135	3	16	2	0	2	17	0	0	0	0	**676**
1400 - 1500	0	434	109	0	16	6	0	4	17	0	0	0	0	**586**
1500 - 1600	0	496	118	0	15	2	0	3	21	0	0	0	0	**655**
1600 - 1700	3	489	130	1	10	3	0	5	5	0	0	0	0	**646**
1700 - 1800	0	628	132	0	10	1	0	1	5	0	0	0	0	**777**
1800 - 1900	0	512	93	0	9	0	0	2	8	0	0	0	0	**624**
1900 - 2000	1	403	79	0	7	0	0	0	4	0	0	0	0	**494**
2000 - 2100	0	302	82	0	0	1	0	0	6	0	0	0	0	**391**
2100 - 2200	0	284	29	2	3	0	0	0	3	0	0	0	0	**321**
2200 - 2300	0	223	17	0	1	0	0	0	8	0	0	0	0	**249**
2300 - 2400	0	136	11	0	2	0	0	1	7	0	0	0	0	**157**

Session Total	11	7368	1887	16	176	38	0	36	251	0	5	0	0	**9788**
Session Average	0.46	307.00	78.63	0.67	7.33	1.58	0.00	1.50	10.46	0.00	0.21	0.00	0.00	**407.83**
Session Percentage	0.11	75.28	19.28	0.16	1.80	0.39	0.00	0.37	2.56	0.00	0.05	0.00	0.00	

AM Peak Hour	0700 - 0800	0700 - 0800	0700 - 0800	0600 - 0700	0700 - 0800	0900 - 1000	-	0900 - 1000	0600 - 0700	-	-	-	-	**0700 - 0800**
AM Peak Hour Volume	1	497	137	2	14	3	0	5	15	0	0	0	0	**662**

Noon Peak Hour	1300 - 1400	1300 - 1400	1100 - 1200	1000 - 1100	1300 - 1400	1000 - 1100	-	1000 - 1100	1100 - 1200	-	-	-	-	**1200 - 1300**
Noon Peak Hour Volume	3	498	161	3	16	7	0	8	25	0	0	0	0	**676**

PM Peak Hour	1600 - 1700	1700 - 1800	1700 - 1800	1600 - 1700	1500 - 1600	1600 - 1700	-	1600 - 1700	1500 - 1600	-	-	-	-	**1700 - 1800**
PM Peak Hour Volume	3	628	132	1	15	3	0	5	21	0	0	0	0	**777**

Site 7
I-26 S/Bound Off-Ramp,
north of I-20

Date
Saturday, April 27, 2024

Lat/Long
34.037496°, -81.113416°

Weather
Mostly Cloudy
69°F

Click here for Detailed Weather

0000 - 2400 (Saturday 24h Session) (04-27-2024)
SB WB 60min

	Southbound (Movement 7.1)													
TIME	1	2	3	4	5	6	7	8	9	10	11	12	13	**Total**
0000 - 0100	0	67	4	0	1	0	0	0	9	0	2	0	0	**83**
0100 - 0200	0	50	5	0	2	0	0	0	1	0	0	0	0	**58**
0200 - 0300	0	32	2	0	0	0	0	0	4	0	1	0	0	**39**
0300 - 0400	0	17	2	0	0	0	0	0	3	0	2	0	0	**24**
0400 - 0500	0	22	2	0	1	0	0	0	10	0	0	0	0	**35**
0500 - 0600	0	50	12	0	1	0	0	0	4	0	1	0	0	**68**
0600 - 0700	0	106	19	0	2	0	0	0	12	0	0	0	0	**139**
0700 - 0800	0	170	42	0	6	1	0	0	6	0	0	0	0	**225**
0800 - 0900	0	233	59	0	4	2	0	1	8	0	0	0	0	**307**
0900 - 1000	2	281	94	0	4	2	0	0	6	0	0	0	0	**389**
1000 - 1100	3	359	99	0	3	0	0	2	8	0	0	0	0	**474**
1100 - 1200	1	407	121	0	3	0	0	0	5	0	0	0	0	**537**
1200 - 1300	2	521	109	0	3	0	0	1	12	0	0	0	0	**648**
1300 - 1400	1	541	131	0	4	1	0	3	8	0	0	0	0	**689**
1400 - 1500	0	580	146	0	5	0	0	3	4	0	0	0	0	**738**
1500 - 1600	0	595	140	0	4	0	0	0	5	0	0	0	0	**744**
1600 - 1700	0	614	104	0	5	2	0	0	7	0	0	0	0	**732**
1700 - 1800	0	559	90	0	3	1	0	1	6	0	0	0	0	**660**
1800 - 1900	5	509	89	0	2	0	0	0	0	0	0	0	0	**605**
1900 - 2000	2	419	90	0	1	0	0	0	2	0	0	0	0	**514**
2000 - 2100	0	374	70	0	2	0	0	1	5	0	0	0	0	**452**
2100 - 2200	0	352	74	0	2	0	0	0	4	0	0	0	0	**432**
2200 - 2300	0	223	36	0	1	0	0	0	1	0	0	0	0	**261**
2300 - 2400	0	119	24	0	0	1	0	2	3	0	0	0	0	**149**

Session Total	16	7200	1564	0	59	10	0	14	133	0	6	0	0	**9002**
Session Average	0.67	300.00	65.17	0.00	2.46	0.42	0.00	0.58	5.54	0.00	0.25	0.00	0.00	**375.08**
Session Percentage	0.18	79.98	17.37	0.00	0.66	0.11	0.00	0.16	1.48	0.00	0.07	0.00	0.00	

AM Peak Hour	0900 - 1000	0900 - 1000	0900 - 1000	-	0700 - 0800	0800 - 0900	-	0800 - 0900	0600 - 0700	-	0500 - 0600	-	-	**0900 - 1000**
AM Peak Hour Volume	2	281	94	0	6	2	0	1	12	0	1	0	0	**389**

Noon Peak Hour	1000 - 1100	1400 - 1500	1400 - 1500	-	1400 - 1500	1300 - 1400	-	1300 - 1400	1200 - 1300	-	-	-	-	**1400 - 1500**
Noon Peak Hour Volume	3	580	146	0	5	1	0	3	12	0	0	0	0	**738**

PM Peak Hour	1800 - 1900	1600 - 1700	1500 - 1600	-	1600 - 1700	1600 - 1700	-	1700 - 1800	1600 - 1700	-	-	-	-	**1500 - 1600**
PM Peak Hour Volume	5	614	140	0	5	2	0	1	7	0	0	0	0	**744**

Bi-Directional Class Count || Volume Summary 60min

Columbia, SC

Marr Traffic DATA COLLECTION

www.marrtraffic.com

Site 7

I-26 S/Bound Off-Ramp,
north of I-20

Date

Sunday, April 21, 2024

Lat/Long

34.037496°, -81.113416°

Weather

Cloudy
66°F

Click here for Detailed Weather

0000 - 2400 (Sunday 24h Session) (04-21-2024)

Volume Summary 60min

	Volume Summary 60min		
TIME	NB	SB	**Total**
0000 - 0100	0	113	**113**
0100 - 0200	0	83	**83**
0200 - 0300	0	50	**50**
0300 - 0400	0	37	**37**
0400 - 0500	0	36	**36**
0500 - 0600	0	42	**42**
0600 - 0700	0	98	**98**
0700 - 0800	0	130	**130**
0800 - 0900	0	186	**186**
0900 - 1000	0	275	**275**
1000 - 1100	0	382	**382**
1100 - 1200	0	457	**457**

	Volume Summary 60min		
Time	NB	SB	**Total**
1200 - 1300	0	610	**610**
1300 - 1400	0	678	**678**
1400 - 1500	0	598	**598**
1500 - 1600	0	575	**575**
1600 - 1700	0	556	**556**
1700 - 1800	0	523	**523**
1800 - 1900	0	491	**491**
1900 - 2000	0	340	**340**
2000 - 2100	0	279	**279**
2100 - 2200	0	217	**217**
2200 - 2300	0	139	**139**
2300 - 2400	0	73	**73**

Session Total	0	6968	**6968**
Session Average	0.00	290.33	**290.33**
Session Percentage	0.00	100.00	

Site 7

I-26 S/Bound Off-Ramp,
north of I-20

Date

Monday, April 22, 2024

Lat/Long

34.037496°, -81.113416°

Weather

Mostly Cloudy
57°F

Click here for Detailed Weather

0000 - 2400 (Weekday 24h Session) (04-22-2024)

Volume Summary 60min

	Volume Summary 60min		
TIME	NB	SB	**Total**
0000 - 0100	0	43	**43**
0100 - 0200	0	23	**23**
0200 - 0300	0	33	**33**
0300 - 0400	0	39	**39**
0400 - 0500	0	52	**52**
0500 - 0600	0	152	**152**
0600 - 0700	0	458	**458**
0700 - 0800	0	697	**697**
0800 - 0900	0	512	**512**
0900 - 1000	0	440	**440**
1000 - 1100	0	430	**430**
1100 - 1200	0	461	**461**

Session Total	0	9130	**9130**
Session Average	0.00	380.42	**380.42**
Session Percentage	0.00	100.00	

	Volume Summary 60min		
Time	NB	SB	**Total**
1200 - 1300	0	586	**586**
1300 - 1400	0	588	**588**
1400 - 1500	0	615	**615**
1500 - 1600	0	704	**704**
1600 - 1700	0	802	**802**
1700 - 1800	0	724	**724**
1800 - 1900	0	529	**529**
1900 - 2000	0	441	**441**
2000 - 2100	0	344	**344**
2100 - 2200	0	241	**241**
2200 - 2300	0	143	**143**
2300 - 2400	0	73	**73**

Site 7

I-26 S/Bound Off-Ramp,
north of I-20

Date

Tuesday, April 23, 2024

Lat/Long

34.037496°, -81.113416°

Weather

Fair
58°F

Click here for Detailed Weather

0000 - 2400 (Weekday 24h Session) (04-23-2024)

Volume Summary 60min

	Volume Summary 60min		
TIME	NB	SB	**Total**
0000 - 0100	0	58	**58**
0100 - 0200	0	36	**36**
0200 - 0300	0	28	**28**
0300 - 0400	0	43	**43**
0400 - 0500	0	61	**61**
0500 - 0600	0	154	**154**
0600 - 0700	0	456	**456**
0700 - 0800	0	645	**645**
0800 - 0900	0	538	**538**
0900 - 1000	0	458	**458**
1000 - 1100	0	465	**465**
1100 - 1200	0	518	**518**

Session Total	0	9527	**9527**
Session Average	0.00	396.96	**396.96**
Session Percentage	0.00	100.00	

	Volume Summary 60min		
Time	NB	SB	**Total**
1200 - 1300	0	559	**559**
1300 - 1400	0	633	**633**
1400 - 1500	0	662	**662**
1500 - 1600	0	730	**730**
1600 - 1700	0	850	**850**
1700 - 1800	0	799	**799**
1800 - 1900	0	540	**540**
1900 - 2000	0	447	**447**
2000 - 2100	0	365	**365**
2100 - 2200	0	239	**239**
2200 - 2300	0	145	**145**
2300 - 2400	0	98	**98**

Site 7

I-26 S/Bound Off-Ramp,
north of I-20

Date

Wednesday, April 24, 2024

Lat/Long

34.037496°, -81.113416°

Weather

Fair
66°F

Click here for Detailed Weather

0000 - 2400 (Weekday 24h Session) (04-24-2024)

Volume Summary 60min

	Volume Summary 60min		
TIME	NB	SB	**Total**
0000 - 0100	0	57	**57**
0100 - 0200	0	48	**48**
0200 - 0300	0	31	**31**
0300 - 0400	0	38	**38**
0400 - 0500	0	60	**60**
0500 - 0600	0	147	**147**
0600 - 0700	0	441	**441**
0700 - 0800	0	702	**702**
0800 - 0900	0	511	**511**
0900 - 1000	0	483	**483**
1000 - 1100	0	508	**508**
1100 - 1200	0	466	**466**

Session Total	0	9671	**9671**
Session Average	0.00	402.96	**402.96**
Session Percentage	0.00	100.00	

	Volume Summary 60min		
Time	NB	SB	**Total**
1200 - 1300	0	584	**584**
1300 - 1400	0	642	**642**
1400 - 1500	0	618	**618**
1500 - 1600	0	741	**741**
1600 - 1700	0	881	**881**
1700 - 1800	0	778	**778**
1800 - 1900	0	591	**591**
1900 - 2000	0	423	**423**
2000 - 2100	0	414	**414**
2100 - 2200	0	258	**258**
2200 - 2300	0	158	**158**
2300 - 2400	0	91	**91**

Site 7
I-26 S/Bound Off-Ramp,
north of I-20

Date
Thursday, April 25, 2024

Lat/Long
34.037496°, -81.113416°

Weather
Fair
67°F

Click here for Detailed Weather

0000 - 2400 (Weekday 24h Session) (04-25-2024)
Volume Summary 60min

	Volume Summary 60min		
TIME	NB	SB	**Total**
0000 - 0100	0	60	**60**
0100 - 0200	0	49	**49**
0200 - 0300	0	34	**34**
0300 - 0400	0	34	**34**
0400 - 0500	0	55	**55**
0500 - 0600	0	158	**158**
0600 - 0700	0	456	**456**
0700 - 0800	0	672	**672**
0800 - 0900	0	533	**533**
0900 - 1000	0	482	**482**
1000 - 1100	0	515	**515**
1100 - 1200	0	544	**544**

Session Total	0	9963	**9963**
Session Average	0.00	415.13	**415.13**
Session Percentage	0.00	100.00	

	Volume Summary 60min		
Time	NB	SB	**Total**
1200 - 1300	0	606	**606**
1300 - 1400	0	666	**666**
1400 - 1500	0	668	**668**
1500 - 1600	0	745	**745**
1600 - 1700	0	866	**866**
1700 - 1800	0	768	**768**
1800 - 1900	0	622	**622**
1900 - 2000	0	496	**496**
2000 - 2100	0	366	**366**
2100 - 2200	0	267	**267**
2200 - 2300	0	185	**185**
2300 - 2400	0	116	**116**

Site 7

I-26 S/Bound Off-Ramp,
north of I-20

Date

Friday, April 26, 2024

Lat/Long

34.037496°, -81.113416°

Weather

Cloudy
69°F

Click here for Detailed Weather

0000 - 2400 (Weekday 24h Session) (04-26-2024)

Volume Summary 60min

	Volume Summary 60min		
TIME	NB	SB	**Total**
0000 - 0100	0	50	**50**
0100 - 0200	0	49	**49**
0200 - 0300	0	33	**33**
0300 - 0400	0	34	**34**
0400 - 0500	0	61	**61**
0500 - 0600	0	145	**145**
0600 - 0700	0	383	**383**
0700 - 0800	0	662	**662**
0800 - 0900	0	504	**504**
0900 - 1000	0	479	**479**
1000 - 1100	0	518	**518**
1100 - 1200	0	618	**618**

	Volume Summary 60min		
Time	NB	SB	**Total**
1200 - 1300	0	676	**676**
1300 - 1400	0	676	**676**
1400 - 1500	0	586	**586**
1500 - 1600	0	655	**655**
1600 - 1700	0	646	**646**
1700 - 1800	0	777	**777**
1800 - 1900	0	624	**624**
1900 - 2000	0	494	**494**
2000 - 2100	0	391	**391**
2100 - 2200	0	321	**321**
2200 - 2300	0	249	**249**
2300 - 2400	0	157	**157**

Session Total	0	9788	**9788**
Session Average	0.00	407.83	**407.83**
Session Percentage	0.00	100.00	

Site 7

I-26 S/Bound Off-Ramp,
north of I-20

Date

Saturday, April 27, 2024

Lat/Long

34.037496°, -81.113416°

Weather

Mostly Cloudy
69°F

Click here for Detailed Weather

0000 - 2400 (Saturday 24h Session) (04-27-2024)

Volume Summary 60min

	Volume Summary 60min		
TIME	NB	SB	**Total**
0000 - 0100	0	83	**83**
0100 - 0200	0	58	**58**
0200 - 0300	0	39	**39**
0300 - 0400	0	24	**24**
0400 - 0500	0	35	**35**
0500 - 0600	0	68	**68**
0600 - 0700	0	139	**139**
0700 - 0800	0	225	**225**
0800 - 0900	0	307	**307**
0900 - 1000	0	389	**389**
1000 - 1100	0	474	**474**
1100 - 1200	0	537	**537**

	Volume Summary 60min		
Time	NB	SB	**Total**
1200 - 1300	0	648	**648**
1300 - 1400	0	689	**689**
1400 - 1500	0	738	**738**
1500 - 1600	0	744	**744**
1600 - 1700	0	732	**732**
1700 - 1800	0	660	**660**
1800 - 1900	0	605	**605**
1900 - 2000	0	514	**514**
2000 - 2100	0	452	**452**
2100 - 2200	0	432	**432**
2200 - 2300	0	261	**261**
2300 - 2400	0	149	**149**

Session Total	0	9002	**9002**
Session Average	0.00	375.08	**375.08**
Session Percentage	0.00	100.00	

Bi-Directional Class Count || Graphical Analysis SB WB

Columbia, SC

Marr Traffic DATA COLLECTION

www.marrtraffic.com

Site 7

I-26 S/Bound Off-Ramp,
north of I-20

Lat/Long

34.037496°, -81.113416°

0000 - 2400 (Weekday 24h Session)

Graphical Analysis SB WB

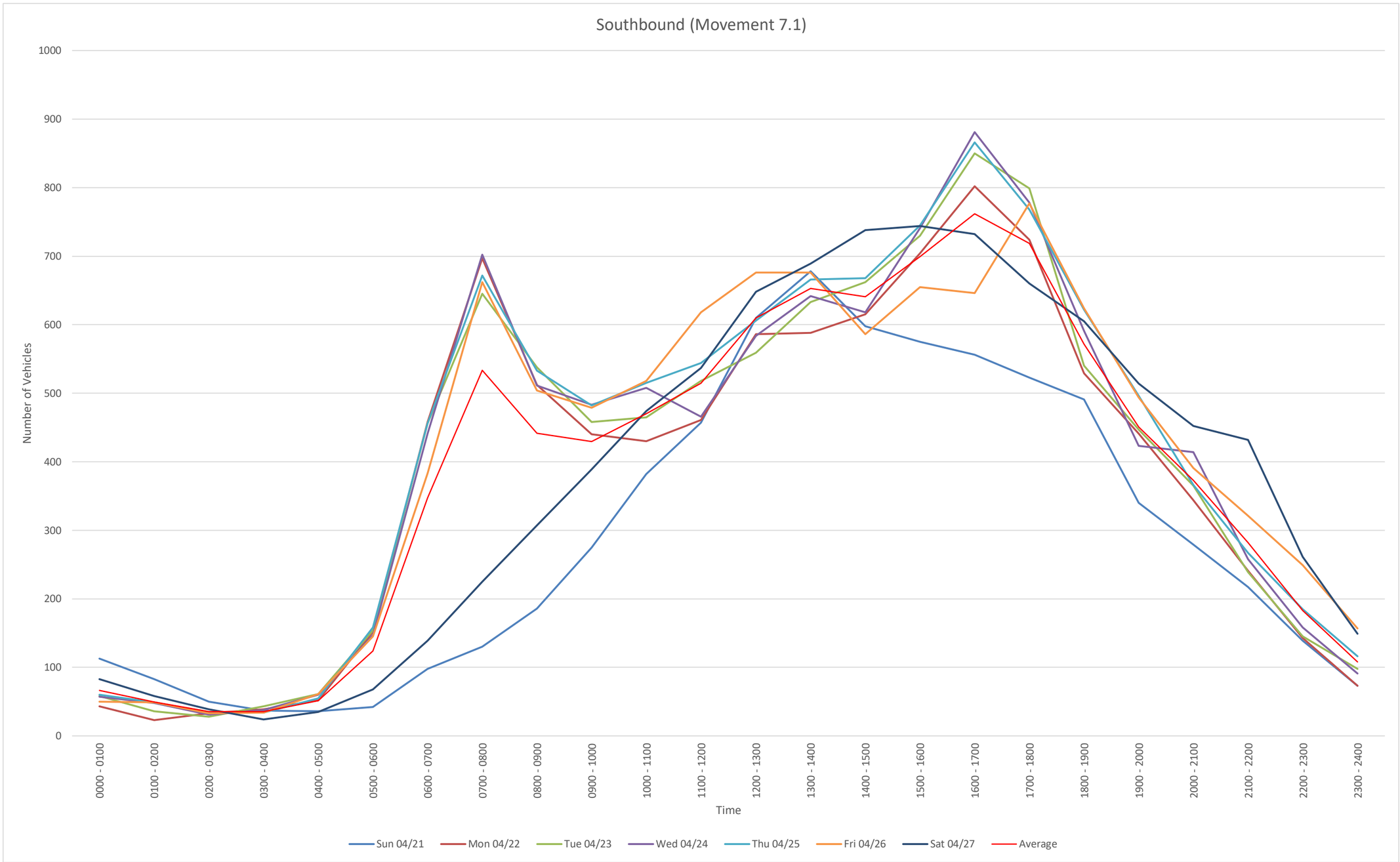

NB
File Name:
Start Date: 4/21/2024
Start Time: 0
Site Code: 7
Station ID: 1
Location 1: I-26 S/Bound Off-Ramp, north of I-20
Location 2:

Date	Time	1	2	3	4	5	6	7	8	9	10	11	12	13
4/21/2024	12:00 AM	0	0	0	0	0	0	0	0	0	0	0	0	0
4/21/2024	12:15 AM	0	0	0	0	0	0	0	0	0	0	0	0	0
4/21/2024	12:30 AM	0	0	0	0	0	0	0	0	0	0	0	0	0
4/21/2024	12:45 AM	0	0	0	0	0	0	0	0	0	0	0	0	0
4/21/2024	1:00 AM	0	0	0	0	0	0	0	0	0	0	0	0	0
4/21/2024	1:15 AM	0	0	0	0	0	0	0	0	0	0	0	0	0
4/21/2024	1:30 AM	0	0	0	0	0	0	0	0	0	0	0	0	0
4/21/2024	1:45 AM	0	0	0	0	0	0	0	0	0	0	0	0	0
4/21/2024	2:00 AM	0	0	0	0	0	0	0	0	0	0	0	0	0
4/21/2024	2:15 AM	0	0	0	0	0	0	0	0	0	0	0	0	0
4/21/2024	2:30 AM	0	0	0	0	0	0	0	0	0	0	0	0	0
4/21/2024	2:45 AM	0	0	0	0	0	0	0	0	0	0	0	0	0
4/21/2024	3:00 AM	0	0	0	0	0	0	0	0	0	0	0	0	0
4/21/2024	3:15 AM	0	0	0	0	0	0	0	0	0	0	0	0	0
4/21/2024	3:30 AM	0	0	0	0	0	0	0	0	0	0	0	0	0
4/21/2024	3:45 AM	0	0	0	0	0	0	0	0	0	0	0	0	0
4/21/2024	4:00 AM	0	0	0	0	0	0	0	0	0	0	0	0	0
4/21/2024	4:15 AM	0	0	0	0	0	0	0	0	0	0	0	0	0
4/21/2024	4:30 AM	0	0	0	0	0	0	0	0	0	0	0	0	0
4/21/2024	4:45 AM	0	0	0	0	0	0	0	0	0	0	0	0	0
4/21/2024	5:00 AM	0	0	0	0	0	0	0	0	0	0	0	0	0
4/21/2024	5:15 AM	0	0	0	0	0	0	0	0	0	0	0	0	0
4/21/2024	5:30 AM	0	0	0	0	0	0	0	0	0	0	0	0	0
4/21/2024	5:45 AM	0	0	0	0	0	0	0	0	0	0	0	0	0
4/21/2024	6:00 AM	0	0	0	0	0	0	0	0	0	0	0	0	0
4/21/2024	6:15 AM	0	0	0	0	0	0	0	0	0	0	0	0	0
4/21/2024	6:30 AM	0	0	0	0	0	0	0	0	0	0	0	0	0
4/21/2024	6:45 AM	0	0	0	0	0	0	0	0	0	0	0	0	0
4/21/2024	7:00 AM	0	0	0	0	0	0	0	0	0	0	0	0	0
4/21/2024	7:15 AM	0	0	0	0	0	0	0	0	0	0	0	0	0
4/21/2024	7:30 AM	0	0	0	0	0	0	0	0	0	0	0	0	0
4/21/2024	7:45 AM	0	0	0	0	0	0	0	0	0	0	0	0	0
4/21/2024	8:00 AM	0	0	0	0	0	0	0	0	0	0	0	0	0
4/21/2024	8:15 AM	0	0	0	0	0	0	0	0	0	0	0	0	0
4/21/2024	8:30 AM	0	0	0	0	0	0	0	0	0	0	0	0	0
4/21/2024	8:45 AM	0	0	0	0	0	0	0	0	0	0	0	0	0
4/21/2024	9:00 AM	0	0	0	0	0	0	0	0	0	0	0	0	0
4/21/2024	9:15 AM	0	0	0	0	0	0	0	0	0	0	0	0	0
4/21/2024	9:30 AM	0	0	0	0	0	0	0	0	0	0	0	0	0
4/21/2024	9:45 AM	0	0	0	0	0	0	0	0	0	0	0	0	0
4/21/2024	10:00 AM	0	0	0	0	0	0	0	0	0	0	0	0	0
4/21/2024	10:15 AM	0	0	0	0	0	0	0	0	0	0	0	0	0
4/21/2024	10:30 AM	0	0	0	0	0	0	0	0	0	0	0	0	0
4/21/2024	10:45 AM	0	0	0	0	0	0	0	0	0	0	0	0	0
4/21/2024	11:00 AM	0	0	0	0	0	0	0	0	0	0	0	0	0
4/21/2024	11:15 AM	0	0	0	0	0	0	0	0	0	0	0	0	0
4/21/2024	11:30 AM	0	0	0	0	0	0	0	0	0	0	0	0	0
4/21/2024	11:45 AM	0	0	0	0	0	0	0	0	0	0	0	0	0
4/21/2024	12:00 PM	0	0	0	0	0	0	0	0	0	0	0	0	0
4/21/2024	12:15 PM	0	0	0	0	0	0	0	0	0	0	0	0	0
4/21/2024	12:30 PM	0	0	0	0	0	0	0	0	0	0	0	0	0
4/21/2024	12:45 PM	0	0	0	0	0	0	0	0	0	0	0	0	0
4/21/2024	1:00 PM	0	0	0	0	0	0	0	0	0	0	0	0	0
4/21/2024	1:15 PM	0	0	0	0	0	0	0	0	0	0	0	0	0
4/21/2024	1:30 PM	0	0	0	0	0	0	0	0	0	0	0	0	0
4/21/2024	1:45 PM	0	0	0	0	0	0	0	0	0	0	0	0	0
4/21/2024	2:00 PM	0	0	0	0	0	0	0	0	0	0	0	0	0
4/21/2024	2:15 PM	0	0	0	0	0	0	0	0	0	0	0	0	0
4/21/2024	2:30 PM	0	0	0	0	0	0	0	0	0	0	0	0	0
4/21/2024	2:45 PM	0	0	0	0	0	0	0	0	0	0	0	0	0
4/21/2024	3:00 PM	0	0	0	0	0	0	0	0	0	0	0	0	0
4/21/2024	3:15 PM	0	0	0	0	0	0	0	0	0	0	0	0	0
4/21/2024	3:30 PM	0	0	0	0	0	0	0	0	0	0	0	0	0
4/21/2024	3:45 PM	0	0	0	0	0	0	0	0	0	0	0	0	0
4/21/2024	4:00 PM	0	0	0	0	0	0	0	0	0	0	0	0	0
4/21/2024	4:15 PM	0	0	0	0	0	0	0	0	0	0	0	0	0
4/21/2024	4:30 PM	0	0	0	0	0	0	0	0	0	0	0	0	0
4/21/2024	4:45 PM	0	0	0	0	0	0	0	0	0	0	0	0	0
4/21/2024	5:00 PM	0	0	0	0	0	0	0	0	0	0	0	0	0
4/21/2024	5:15 PM	0	0	0	0	0	0	0	0	0	0	0	0	0
4/21/2024	5:30 PM	0	0	0	0	0	0	0	0	0	0	0	0	0
4/21/2024	5:45 PM	0	0	0	0	0	0	0	0	0	0	0	0	0
4/21/2024	6:00 PM	0	0	0	0	0	0	0	0	0	0	0	0	0
4/21/2024	6:15 PM	0	0	0	0	0	0	0	0	0	0	0	0	0
4/21/2024	6:30 PM	0	0	0	0	0	0	0	0	0	0	0	0	0
4/21/2024	6:45 PM	0	0	0	0	0	0	0	0	0	0	0	0	0
4/21/2024	7:00 PM	0	0	0	0	0	0	0	0	0	0	0	0	0
4/21/2024	7:15 PM	0	0	0	0	0	0	0	0	0	0	0	0	0
4/21/2024	7:30 PM	0	0	0	0	0	0	0	0	0	0	0	0	0
4/21/2024	7:45 PM	0	0	0	0	0	0	0	0	0	0	0	0	0
4/21/2024	8:00 PM	0	0	0	0	0	0	0	0	0	0	0	0	0
4/21/2024	8:15 PM	0	0	0	0	0	0	0	0	0	0	0	0	0
4/21/2024	8:30 PM	0	0	0	0	0	0	0	0	0	0	0	0	0
4/21/2024	8:45 PM	0	0	0	0	0	0	0	0	0	0	0	0	0
4/21/2024	9:00 PM	0	0	0	0	0	0	0	0	0	0	0	0	0
4/21/2024	9:15 PM	0	0	0	0	0	0	0	0	0	0	0	0	0
4/21/2024	9:30 PM	0	0	0	0	0	0	0	0	0	0	0	0	0
4/21/2024	9:45 PM	0	0	0	0	0	0	0	0	0	0	0	0	0
4/21/2024	10:00 PM	0	0	0	0	0	0	0	0	0	0	0	0	0
4/21/2024	10:15 PM	0	0	0	0	0	0	0	0	0	0	0	0	0
4/21/2024	10:30 PM	0	0	0	0	0	0	0	0	0	0	0	0	0
4/21/2024	10:45 PM	0	0	0	0	0	0	0	0	0	0	0	0	0
4/21/2024	11:00 PM	0	0	0	0	0	0	0	0	0	0	0	0	0
4/21/2024	11:15 PM	0	0	0	0	0	0	0	0	0	0	0	0	0
4/21/2024	11:30 PM	0	0	0	0	0	0	0	0	0	0	0	0	0
4/21/2024	11:45 PM	0	0	0	0	0	0	0	0	0	0	0	0	0

4/22/2024	12:00 AM	0	0	0	0	0	0	0	0	0	0	0	0	0
4/22/2024	12:15 AM	0	0	0	0	0	0	0	0	0	0	0	0	0
4/22/2024	12:30 AM	0	0	0	0	0	0	0	0	0	0	0	0	0
4/22/2024	12:45 AM	0	0	0	0	0	0	0	0	0	0	0	0	0
4/22/2024	1:00 AM	0	0	0	0	0	0	0	0	0	0	0	0	0
4/22/2024	1:15 AM	0	0	0	0	0	0	0	0	0	0	0	0	0
4/22/2024	1:30 AM	0	0	0	0	0	0	0	0	0	0	0	0	0
4/22/2024	1:45 AM	0	0	0	0	0	0	0	0	0	0	0	0	0
4/22/2024	2:00 AM	0	0	0	0	0	0	0	0	0	0	0	0	0
4/22/2024	2:15 AM	0	0	0	0	0	0	0	0	0	0	0	0	0
4/22/2024	2:30 AM	0	0	0	0	0	0	0	0	0	0	0	0	0
4/22/2024	2:45 AM	0	0	0	0	0	0	0	0	0	0	0	0	0
4/22/2024	3:00 AM	0	0	0	0	0	0	0	0	0	0	0	0	0
4/22/2024	3:15 AM	0	0	0	0	0	0	0	0	0	0	0	0	0
4/22/2024	3:30 AM	0	0	0	0	0	0	0	0	0	0	0	0	0
4/22/2024	3:45 AM	0	0	0	0	0	0	0	0	0	0	0	0	0
4/22/2024	4:00 AM	0	0	0	0	0	0	0	0	0	0	0	0	0
4/22/2024	4:15 AM	0	0	0	0	0	0	0	0	0	0	0	0	0
4/22/2024	4:30 AM	0	0	0	0	0	0	0	0	0	0	0	0	0
4/22/2024	4:45 AM	0	0	0	0	0	0	0	0	0	0	0	0	0
4/22/2024	5:00 AM	0	0	0	0	0	0	0	0	0	0	0	0	0
4/22/2024	5:15 AM	0	0	0	0	0	0	0	0	0	0	0	0	0
4/22/2024	5:30 AM	0	0	0	0	0	0	0	0	0	0	0	0	0
4/22/2024	5:45 AM	0	0	0	0	0	0	0	0	0	0	0	0	0
4/22/2024	6:00 AM	0	0	0	0	0	0	0	0	0	0	0	0	0
4/22/2024	6:15 AM	0	0	0	0	0	0	0	0	0	0	0	0	0
4/22/2024	6:30 AM	0	0	0	0	0	0	0	0	0	0	0	0	0
4/22/2024	6:45 AM	0	0	0	0	0	0	0	0	0	0	0	0	0
4/22/2024	7:00 AM	0	0	0	0	0	0	0	0	0	0	0	0	0
4/22/2024	7:15 AM	0	0	0	0	0	0	0	0	0	0	0	0	0
4/22/2024	7:30 AM	0	0	0	0	0	0	0	0	0	0	0	0	0
4/22/2024	7:45 AM	0	0	0	0	0	0	0	0	0	0	0	0	0
4/22/2024	8:00 AM	0	0	0	0	0	0	0	0	0	0	0	0	0
4/22/2024	8:15 AM	0	0	0	0	0	0	0	0	0	0	0	0	0
4/22/2024	8:30 AM	0	0	0	0	0	0	0	0	0	0	0	0	0
4/22/2024	8:45 AM	0	0	0	0	0	0	0	0	0	0	0	0	0
4/22/2024	9:00 AM	0	0	0	0	0	0	0	0	0	0	0	0	0
4/22/2024	9:15 AM	0	0	0	0	0	0	0	0	0	0	0	0	0
4/22/2024	9:30 AM	0	0	0	0	0	0	0	0	0	0	0	0	0
4/22/2024	9:45 AM	0	0	0	0	0	0	0	0	0	0	0	0	0
4/22/2024	10:00 AM	0	0	0	0	0	0	0	0	0	0	0	0	0
4/22/2024	10:15 AM	0	0	0	0	0	0	0	0	0	0	0	0	0
4/22/2024	10:30 AM	0	0	0	0	0	0	0	0	0	0	0	0	0
4/22/2024	10:45 AM	0	0	0	0	0	0	0	0	0	0	0	0	0
4/22/2024	11:00 AM	0	0	0	0	0	0	0	0	0	0	0	0	0
4/22/2024	11:15 AM	0	0	0	0	0	0	0	0	0	0	0	0	0
4/22/2024	11:30 AM	0	0	0	0	0	0	0	0	0	0	0	0	0
4/22/2024	11:45 AM	0	0	0	0	0	0	0	0	0	0	0	0	0
4/22/2024	12:00 PM	0	0	0	0	0	0	0	0	0	0	0	0	0
4/22/2024	12:15 PM	0	0	0	0	0	0	0	0	0	0	0	0	0
4/22/2024	12:30 PM	0	0	0	0	0	0	0	0	0	0	0	0	0
4/22/2024	12:45 PM	0	0	0	0	0	0	0	0	0	0	0	0	0
4/22/2024	1:00 PM	0	0	0	0	0	0	0	0	0	0	0	0	0
4/22/2024	1:15 PM	0	0	0	0	0	0	0	0	0	0	0	0	0
4/22/2024	1:30 PM	0	0	0	0	0	0	0	0	0	0	0	0	0
4/22/2024	1:45 PM	0	0	0	0	0	0	0	0	0	0	0	0	0
4/22/2024	2:00 PM	0	0	0	0	0	0	0	0	0	0	0	0	0
4/22/2024	2:15 PM	0	0	0	0	0	0	0	0	0	0	0	0	0
4/22/2024	2:30 PM	0	0	0	0	0	0	0	0	0	0	0	0	0
4/22/2024	2:45 PM	0	0	0	0	0	0	0	0	0	0	0	0	0
4/22/2024	3:00 PM	0	0	0	0	0	0	0	0	0	0	0	0	0
4/22/2024	3:15 PM	0	0	0	0	0	0	0	0	0	0	0	0	0
4/22/2024	3:30 PM	0	0	0	0	0	0	0	0	0	0	0	0	0
4/22/2024	3:45 PM	0	0	0	0	0	0	0	0	0	0	0	0	0
4/22/2024	4:00 PM	0	0	0	0	0	0	0	0	0	0	0	0	0
4/22/2024	4:15 PM	0	0	0	0	0	0	0	0	0	0	0	0	0
4/22/2024	4:30 PM	0	0	0	0	0	0	0	0	0	0	0	0	0
4/22/2024	4:45 PM	0	0	0	0	0	0	0	0	0	0	0	0	0
4/22/2024	5:00 PM	0	0	0	0	0	0	0	0	0	0	0	0	0
4/22/2024	5:15 PM	0	0	0	0	0	0	0	0	0	0	0	0	0
4/22/2024	5:30 PM	0	0	0	0	0	0	0	0	0	0	0	0	0
4/22/2024	5:45 PM	0	0	0	0	0	0	0	0	0	0	0	0	0
4/22/2024	6:00 PM	0	0	0	0	0	0	0	0	0	0	0	0	0
4/22/2024	6:15 PM	0	0	0	0	0	0	0	0	0	0	0	0	0
4/22/2024	6:30 PM	0	0	0	0	0	0	0	0	0	0	0	0	0
4/22/2024	6:45 PM	0	0	0	0	0	0	0	0	0	0	0	0	0
4/22/2024	7:00 PM	0	0	0	0	0	0	0	0	0	0	0	0	0
4/22/2024	7:15 PM	0	0	0	0	0	0	0	0	0	0	0	0	0
4/22/2024	7:30 PM	0	0	0	0	0	0	0	0	0	0	0	0	0
4/22/2024	7:45 PM	0	0	0	0	0	0	0	0	0	0	0	0	0
4/22/2024	8:00 PM	0	0	0	0	0	0	0	0	0	0	0	0	0
4/22/2024	8:15 PM	0	0	0	0	0	0	0	0	0	0	0	0	0
4/22/2024	8:30 PM	0	0	0	0	0	0	0	0	0	0	0	0	0
4/22/2024	8:45 PM	0	0	0	0	0	0	0	0	0	0	0	0	0
4/22/2024	9:00 PM	0	0	0	0	0	0	0	0	0	0	0	0	0
4/22/2024	9:15 PM	0	0	0	0	0	0	0	0	0	0	0	0	0
4/22/2024	9:30 PM	0	0	0	0	0	0	0	0	0	0	0	0	0
4/22/2024	9:45 PM	0	0	0	0	0	0	0	0	0	0	0	0	0
4/22/2024	10:00 PM	0	0	0	0	0	0	0	0	0	0	0	0	0
4/22/2024	10:15 PM	0	0	0	0	0	0	0	0	0	0	0	0	0
4/22/2024	10:30 PM	0	0	0	0	0	0	0	0	0	0	0	0	0
4/22/2024	10:45 PM	0	0	0	0	0	0	0	0	0	0	0	0	0
4/22/2024	11:00 PM	0	0	0	0	0	0	0	0	0	0	0	0	0
4/22/2024	11:15 PM	0	0	0	0	0	0	0	0	0	0	0	0	0
4/22/2024	11:30 PM	0	0	0	0	0	0	0	0	0	0	0	0	0
4/22/2024	11:45 PM	0	0	0	0	0	0	0	0	0	0	0	0	0

4/23/2024	12:00 AM	0	0	0	0	0	0	0	0	0	0	0	0	0
4/23/2024	12:15 AM	0	0	0	0	0	0	0	0	0	0	0	0	0
4/23/2024	12:30 AM	0	0	0	0	0	0	0	0	0	0	0	0	0
4/23/2024	12:45 AM	0	0	0	0	0	0	0	0	0	0	0	0	0
4/23/2024	1:00 AM	0	0	0	0	0	0	0	0	0	0	0	0	0
4/23/2024	1:15 AM	0	0	0	0	0	0	0	0	0	0	0	0	0
4/23/2024	1:30 AM	0	0	0	0	0	0	0	0	0	0	0	0	0
4/23/2024	1:45 AM	0	0	0	0	0	0	0	0	0	0	0	0	0
4/23/2024	2:00 AM	0	0	0	0	0	0	0	0	0	0	0	0	0
4/23/2024	2:15 AM	0	0	0	0	0	0	0	0	0	0	0	0	0
4/23/2024	2:30 AM	0	0	0	0	0	0	0	0	0	0	0	0	0
4/23/2024	2:45 AM	0	0	0	0	0	0	0	0	0	0	0	0	0
4/23/2024	3:00 AM	0	0	0	0	0	0	0	0	0	0	0	0	0
4/23/2024	3:15 AM	0	0	0	0	0	0	0	0	0	0	0	0	0
4/23/2024	3:30 AM	0	0	0	0	0	0	0	0	0	0	0	0	0
4/23/2024	3:45 AM	0	0	0	0	0	0	0	0	0	0	0	0	0
4/23/2024	4:00 AM	0	0	0	0	0	0	0	0	0	0	0	0	0
4/23/2024	4:15 AM	0	0	0	0	0	0	0	0	0	0	0	0	0
4/23/2024	4:30 AM	0	0	0	0	0	0	0	0	0	0	0	0	0
4/23/2024	4:45 AM	0	0	0	0	0	0	0	0	0	0	0	0	0
4/23/2024	5:00 AM	0	0	0	0	0	0	0	0	0	0	0	0	0
4/23/2024	5:15 AM	0	0	0	0	0	0	0	0	0	0	0	0	0
4/23/2024	5:30 AM	0	0	0	0	0	0	0	0	0	0	0	0	0
4/23/2024	5:45 AM	0	0	0	0	0	0	0	0	0	0	0	0	0
4/23/2024	6:00 AM	0	0	0	0	0	0	0	0	0	0	0	0	0
4/23/2024	6:15 AM	0	0	0	0	0	0	0	0	0	0	0	0	0
4/23/2024	6:30 AM	0	0	0	0	0	0	0	0	0	0	0	0	0
4/23/2024	6:45 AM	0	0	0	0	0	0	0	0	0	0	0	0	0
4/23/2024	7:00 AM	0	0	0	0	0	0	0	0	0	0	0	0	0
4/23/2024	7:15 AM	0	0	0	0	0	0	0	0	0	0	0	0	0
4/23/2024	7:30 AM	0	0	0	0	0	0	0	0	0	0	0	0	0
4/23/2024	7:45 AM	0	0	0	0	0	0	0	0	0	0	0	0	0
4/23/2024	8:00 AM	0	0	0	0	0	0	0	0	0	0	0	0	0
4/23/2024	8:15 AM	0	0	0	0	0	0	0	0	0	0	0	0	0
4/23/2024	8:30 AM	0	0	0	0	0	0	0	0	0	0	0	0	0
4/23/2024	8:45 AM	0	0	0	0	0	0	0	0	0	0	0	0	0
4/23/2024	9:00 AM	0	0	0	0	0	0	0	0	0	0	0	0	0
4/23/2024	9:15 AM	0	0	0	0	0	0	0	0	0	0	0	0	0
4/23/2024	9:30 AM	0	0	0	0	0	0	0	0	0	0	0	0	0
4/23/2024	9:45 AM	0	0	0	0	0	0	0	0	0	0	0	0	0
4/23/2024	10:00 AM	0	0	0	0	0	0	0	0	0	0	0	0	0
4/23/2024	10:15 AM	0	0	0	0	0	0	0	0	0	0	0	0	0
4/23/2024	10:30 AM	0	0	0	0	0	0	0	0	0	0	0	0	0
4/23/2024	10:45 AM	0	0	0	0	0	0	0	0	0	0	0	0	0
4/23/2024	11:00 AM	0	0	0	0	0	0	0	0	0	0	0	0	0
4/23/2024	11:15 AM	0	0	0	0	0	0	0	0	0	0	0	0	0
4/23/2024	11:30 AM	0	0	0	0	0	0	0	0	0	0	0	0	0
4/23/2024	11:45 AM	0	0	0	0	0	0	0	0	0	0	0	0	0
4/23/2024	12:00 PM	0	0	0	0	0	0	0	0	0	0	0	0	0
4/23/2024	12:15 PM	0	0	0	0	0	0	0	0	0	0	0	0	0
4/23/2024	12:30 PM	0	0	0	0	0	0	0	0	0	0	0	0	0
4/23/2024	12:45 PM	0	0	0	0	0	0	0	0	0	0	0	0	0
4/23/2024	1:00 PM	0	0	0	0	0	0	0	0	0	0	0	0	0
4/23/2024	1:15 PM	0	0	0	0	0	0	0	0	0	0	0	0	0
4/23/2024	1:30 PM	0	0	0	0	0	0	0	0	0	0	0	0	0
4/23/2024	1:45 PM	0	0	0	0	0	0	0	0	0	0	0	0	0
4/23/2024	2:00 PM	0	0	0	0	0	0	0	0	0	0	0	0	0
4/23/2024	2:15 PM	0	0	0	0	0	0	0	0	0	0	0	0	0
4/23/2024	2:30 PM	0	0	0	0	0	0	0	0	0	0	0	0	0
4/23/2024	2:45 PM	0	0	0	0	0	0	0	0	0	0	0	0	0
4/23/2024	3:00 PM	0	0	0	0	0	0	0	0	0	0	0	0	0
4/23/2024	3:15 PM	0	0	0	0	0	0	0	0	0	0	0	0	0
4/23/2024	3:30 PM	0	0	0	0	0	0	0	0	0	0	0	0	0
4/23/2024	3:45 PM	0	0	0	0	0	0	0	0	0	0	0	0	0
4/23/2024	4:00 PM	0	0	0	0	0	0	0	0	0	0	0	0	0
4/23/2024	4:15 PM	0	0	0	0	0	0	0	0	0	0	0	0	0
4/23/2024	4:30 PM	0	0	0	0	0	0	0	0	0	0	0	0	0
4/23/2024	4:45 PM	0	0	0	0	0	0	0	0	0	0	0	0	0
4/23/2024	5:00 PM	0	0	0	0	0	0	0	0	0	0	0	0	0
4/23/2024	5:15 PM	0	0	0	0	0	0	0	0	0	0	0	0	0
4/23/2024	5:30 PM	0	0	0	0	0	0	0	0	0	0	0	0	0
4/23/2024	5:45 PM	0	0	0	0	0	0	0	0	0	0	0	0	0
4/23/2024	6:00 PM	0	0	0	0	0	0	0	0	0	0	0	0	0
4/23/2024	6:15 PM	0	0	0	0	0	0	0	0	0	0	0	0	0
4/23/2024	6:30 PM	0	0	0	0	0	0	0	0	0	0	0	0	0
4/23/2024	6:45 PM	0	0	0	0	0	0	0	0	0	0	0	0	0
4/23/2024	7:00 PM	0	0	0	0	0	0	0	0	0	0	0	0	0
4/23/2024	7:15 PM	0	0	0	0	0	0	0	0	0	0	0	0	0
4/23/2024	7:30 PM	0	0	0	0	0	0	0	0	0	0	0	0	0
4/23/2024	7:45 PM	0	0	0	0	0	0	0	0	0	0	0	0	0
4/23/2024	8:00 PM	0	0	0	0	0	0	0	0	0	0	0	0	0
4/23/2024	8:15 PM	0	0	0	0	0	0	0	0	0	0	0	0	0
4/23/2024	8:30 PM	0	0	0	0	0	0	0	0	0	0	0	0	0
4/23/2024	8:45 PM	0	0	0	0	0	0	0	0	0	0	0	0	0
4/23/2024	9:00 PM	0	0	0	0	0	0	0	0	0	0	0	0	0
4/23/2024	9:15 PM	0	0	0	0	0	0	0	0	0	0	0	0	0
4/23/2024	9:30 PM	0	0	0	0	0	0	0	0	0	0	0	0	0
4/23/2024	9:45 PM	0	0	0	0	0	0	0	0	0	0	0	0	0
4/23/2024	10:00 PM	0	0	0	0	0	0	0	0	0	0	0	0	0
4/23/2024	10:15 PM	0	0	0	0	0	0	0	0	0	0	0	0	0
4/23/2024	10:30 PM	0	0	0	0	0	0	0	0	0	0	0	0	0
4/23/2024	10:45 PM	0	0	0	0	0	0	0	0	0	0	0	0	0
4/23/2024	11:00 PM	0	0	0	0	0	0	0	0	0	0	0	0	0
4/23/2024	11:15 PM	0	0	0	0	0	0	0	0	0	0	0	0	0
4/23/2024	11:30 PM	0	0	0	0	0	0	0	0	0	0	0	0	0
4/23/2024	11:45 PM	0	0	0	0	0	0	0	0	0	0	0	0	0

4/24/2024	12:00 AM	0	0	0	0	0	0	0	0	0	0	0	0	0
4/24/2024	12:15 AM	0	0	0	0	0	0	0	0	0	0	0	0	0
4/24/2024	12:30 AM	0	0	0	0	0	0	0	0	0	0	0	0	0
4/24/2024	12:45 AM	0	0	0	0	0	0	0	0	0	0	0	0	0
4/24/2024	1:00 AM	0	0	0	0	0	0	0	0	0	0	0	0	0
4/24/2024	1:15 AM	0	0	0	0	0	0	0	0	0	0	0	0	0
4/24/2024	1:30 AM	0	0	0	0	0	0	0	0	0	0	0	0	0
4/24/2024	1:45 AM	0	0	0	0	0	0	0	0	0	0	0	0	0
4/24/2024	2:00 AM	0	0	0	0	0	0	0	0	0	0	0	0	0
4/24/2024	2:15 AM	0	0	0	0	0	0	0	0	0	0	0	0	0
4/24/2024	2:30 AM	0	0	0	0	0	0	0	0	0	0	0	0	0
4/24/2024	2:45 AM	0	0	0	0	0	0	0	0	0	0	0	0	0
4/24/2024	3:00 AM	0	0	0	0	0	0	0	0	0	0	0	0	0
4/24/2024	3:15 AM	0	0	0	0	0	0	0	0	0	0	0	0	0
4/24/2024	3:30 AM	0	0	0	0	0	0	0	0	0	0	0	0	0
4/24/2024	3:45 AM	0	0	0	0	0	0	0	0	0	0	0	0	0
4/24/2024	4:00 AM	0	0	0	0	0	0	0	0	0	0	0	0	0
4/24/2024	4:15 AM	0	0	0	0	0	0	0	0	0	0	0	0	0
4/24/2024	4:30 AM	0	0	0	0	0	0	0	0	0	0	0	0	0
4/24/2024	4:45 AM	0	0	0	0	0	0	0	0	0	0	0	0	0
4/24/2024	5:00 AM	0	0	0	0	0	0	0	0	0	0	0	0	0
4/24/2024	5:15 AM	0	0	0	0	0	0	0	0	0	0	0	0	0
4/24/2024	5:30 AM	0	0	0	0	0	0	0	0	0	0	0	0	0
4/24/2024	5:45 AM	0	0	0	0	0	0	0	0	0	0	0	0	0
4/24/2024	6:00 AM	0	0	0	0	0	0	0	0	0	0	0	0	0
4/24/2024	6:15 AM	0	0	0	0	0	0	0	0	0	0	0	0	0
4/24/2024	6:30 AM	0	0	0	0	0	0	0	0	0	0	0	0	0
4/24/2024	6:45 AM	0	0	0	0	0	0	0	0	0	0	0	0	0
4/24/2024	7:00 AM	0	0	0	0	0	0	0	0	0	0	0	0	0
4/24/2024	7:15 AM	0	0	0	0	0	0	0	0	0	0	0	0	0
4/24/2024	7:30 AM	0	0	0	0	0	0	0	0	0	0	0	0	0
4/24/2024	7:45 AM	0	0	0	0	0	0	0	0	0	0	0	0	0
4/24/2024	8:00 AM	0	0	0	0	0	0	0	0	0	0	0	0	0
4/24/2024	8:15 AM	0	0	0	0	0	0	0	0	0	0	0	0	0
4/24/2024	8:30 AM	0	0	0	0	0	0	0	0	0	0	0	0	0
4/24/2024	8:45 AM	0	0	0	0	0	0	0	0	0	0	0	0	0
4/24/2024	9:00 AM	0	0	0	0	0	0	0	0	0	0	0	0	0
4/24/2024	9:15 AM	0	0	0	0	0	0	0	0	0	0	0	0	0
4/24/2024	9:30 AM	0	0	0	0	0	0	0	0	0	0	0	0	0
4/24/2024	9:45 AM	0	0	0	0	0	0	0	0	0	0	0	0	0
4/24/2024	10:00 AM	0	0	0	0	0	0	0	0	0	0	0	0	0
4/24/2024	10:15 AM	0	0	0	0	0	0	0	0	0	0	0	0	0
4/24/2024	10:30 AM	0	0	0	0	0	0	0	0	0	0	0	0	0
4/24/2024	10:45 AM	0	0	0	0	0	0	0	0	0	0	0	0	0
4/24/2024	11:00 AM	0	0	0	0	0	0	0	0	0	0	0	0	0
4/24/2024	11:15 AM	0	0	0	0	0	0	0	0	0	0	0	0	0
4/24/2024	11:30 AM	0	0	0	0	0	0	0	0	0	0	0	0	0
4/24/2024	11:45 AM	0	0	0	0	0	0	0	0	0	0	0	0	0
4/24/2024	12:00 PM	0	0	0	0	0	0	0	0	0	0	0	0	0
4/24/2024	12:15 PM	0	0	0	0	0	0	0	0	0	0	0	0	0
4/24/2024	12:30 PM	0	0	0	0	0	0	0	0	0	0	0	0	0
4/24/2024	12:45 PM	0	0	0	0	0	0	0	0	0	0	0	0	0
4/24/2024	1:00 PM	0	0	0	0	0	0	0	0	0	0	0	0	0
4/24/2024	1:15 PM	0	0	0	0	0	0	0	0	0	0	0	0	0
4/24/2024	1:30 PM	0	0	0	0	0	0	0	0	0	0	0	0	0
4/24/2024	1:45 PM	0	0	0	0	0	0	0	0	0	0	0	0	0
4/24/2024	2:00 PM	0	0	0	0	0	0	0	0	0	0	0	0	0
4/24/2024	2:15 PM	0	0	0	0	0	0	0	0	0	0	0	0	0
4/24/2024	2:30 PM	0	0	0	0	0	0	0	0	0	0	0	0	0
4/24/2024	2:45 PM	0	0	0	0	0	0	0	0	0	0	0	0	0
4/24/2024	3:00 PM	0	0	0	0	0	0	0	0	0	0	0	0	0
4/24/2024	3:15 PM	0	0	0	0	0	0	0	0	0	0	0	0	0
4/24/2024	3:30 PM	0	0	0	0	0	0	0	0	0	0	0	0	0
4/24/2024	3:45 PM	0	0	0	0	0	0	0	0	0	0	0	0	0
4/24/2024	4:00 PM	0	0	0	0	0	0	0	0	0	0	0	0	0
4/24/2024	4:15 PM	0	0	0	0	0	0	0	0	0	0	0	0	0
4/24/2024	4:30 PM	0	0	0	0	0	0	0	0	0	0	0	0	0
4/24/2024	4:45 PM	0	0	0	0	0	0	0	0	0	0	0	0	0
4/24/2024	5:00 PM	0	0	0	0	0	0	0	0	0	0	0	0	0
4/24/2024	5:15 PM	0	0	0	0	0	0	0	0	0	0	0	0	0
4/24/2024	5:30 PM	0	0	0	0	0	0	0	0	0	0	0	0	0
4/24/2024	5:45 PM	0	0	0	0	0	0	0	0	0	0	0	0	0
4/24/2024	6:00 PM	0	0	0	0	0	0	0	0	0	0	0	0	0
4/24/2024	6:15 PM	0	0	0	0	0	0	0	0	0	0	0	0	0
4/24/2024	6:30 PM	0	0	0	0	0	0	0	0	0	0	0	0	0
4/24/2024	6:45 PM	0	0	0	0	0	0	0	0	0	0	0	0	0
4/24/2024	7:00 PM	0	0	0	0	0	0	0	0	0	0	0	0	0
4/24/2024	7:15 PM	0	0	0	0	0	0	0	0	0	0	0	0	0
4/24/2024	7:30 PM	0	0	0	0	0	0	0	0	0	0	0	0	0
4/24/2024	7:45 PM	0	0	0	0	0	0	0	0	0	0	0	0	0
4/24/2024	8:00 PM	0	0	0	0	0	0	0	0	0	0	0	0	0
4/24/2024	8:15 PM	0	0	0	0	0	0	0	0	0	0	0	0	0
4/24/2024	8:30 PM	0	0	0	0	0	0	0	0	0	0	0	0	0
4/24/2024	8:45 PM	0	0	0	0	0	0	0	0	0	0	0	0	0
4/24/2024	9:00 PM	0	0	0	0	0	0	0	0	0	0	0	0	0
4/24/2024	9:15 PM	0	0	0	0	0	0	0	0	0	0	0	0	0
4/24/2024	9:30 PM	0	0	0	0	0	0	0	0	0	0	0	0	0
4/24/2024	9:45 PM	0	0	0	0	0	0	0	0	0	0	0	0	0
4/24/2024	10:00 PM	0	0	0	0	0	0	0	0	0	0	0	0	0
4/24/2024	10:15 PM	0	0	0	0	0	0	0	0	0	0	0	0	0
4/24/2024	10:30 PM	0	0	0	0	0	0	0	0	0	0	0	0	0
4/24/2024	10:45 PM	0	0	0	0	0	0	0	0	0	0	0	0	0
4/24/2024	11:00 PM	0	0	0	0	0	0	0	0	0	0	0	0	0
4/24/2024	11:15 PM	0	0	0	0	0	0	0	0	0	0	0	0	0
4/24/2024	11:30 PM	0	0	0	0	0	0	0	0	0	0	0	0	0
4/24/2024	11:45 PM	0	0	0	0	0	0	0	0	0	0	0	0	0

4/25/2024	12:00 AM	0	0	0	0	0	0	0	0	0	0	0	0	0
4/25/2024	12:15 AM	0	0	0	0	0	0	0	0	0	0	0	0	0
4/25/2024	12:30 AM	0	0	0	0	0	0	0	0	0	0	0	0	0
4/25/2024	12:45 AM	0	0	0	0	0	0	0	0	0	0	0	0	0
4/25/2024	1:00 AM	0	0	0	0	0	0	0	0	0	0	0	0	0
4/25/2024	1:15 AM	0	0	0	0	0	0	0	0	0	0	0	0	0
4/25/2024	1:30 AM	0	0	0	0	0	0	0	0	0	0	0	0	0
4/25/2024	1:45 AM	0	0	0	0	0	0	0	0	0	0	0	0	0
4/25/2024	2:00 AM	0	0	0	0	0	0	0	0	0	0	0	0	0
4/25/2024	2:15 AM	0	0	0	0	0	0	0	0	0	0	0	0	0
4/25/2024	2:30 AM	0	0	0	0	0	0	0	0	0	0	0	0	0
4/25/2024	2:45 AM	0	0	0	0	0	0	0	0	0	0	0	0	0
4/25/2024	3:00 AM	0	0	0	0	0	0	0	0	0	0	0	0	0
4/25/2024	3:15 AM	0	0	0	0	0	0	0	0	0	0	0	0	0
4/25/2024	3:30 AM	0	0	0	0	0	0	0	0	0	0	0	0	0
4/25/2024	3:45 AM	0	0	0	0	0	0	0	0	0	0	0	0	0
4/25/2024	4:00 AM	0	0	0	0	0	0	0	0	0	0	0	0	0
4/25/2024	4:15 AM	0	0	0	0	0	0	0	0	0	0	0	0	0
4/25/2024	4:30 AM	0	0	0	0	0	0	0	0	0	0	0	0	0
4/25/2024	4:45 AM	0	0	0	0	0	0	0	0	0	0	0	0	0
4/25/2024	5:00 AM	0	0	0	0	0	0	0	0	0	0	0	0	0
4/25/2024	5:15 AM	0	0	0	0	0	0	0	0	0	0	0	0	0
4/25/2024	5:30 AM	0	0	0	0	0	0	0	0	0	0	0	0	0
4/25/2024	5:45 AM	0	0	0	0	0	0	0	0	0	0	0	0	0
4/25/2024	6:00 AM	0	0	0	0	0	0	0	0	0	0	0	0	0
4/25/2024	6:15 AM	0	0	0	0	0	0	0	0	0	0	0	0	0
4/25/2024	6:30 AM	0	0	0	0	0	0	0	0	0	0	0	0	0
4/25/2024	6:45 AM	0	0	0	0	0	0	0	0	0	0	0	0	0
4/25/2024	7:00 AM	0	0	0	0	0	0	0	0	0	0	0	0	0
4/25/2024	7:15 AM	0	0	0	0	0	0	0	0	0	0	0	0	0
4/25/2024	7:30 AM	0	0	0	0	0	0	0	0	0	0	0	0	0
4/25/2024	7:45 AM	0	0	0	0	0	0	0	0	0	0	0	0	0
4/25/2024	8:00 AM	0	0	0	0	0	0	0	0	0	0	0	0	0
4/25/2024	8:15 AM	0	0	0	0	0	0	0	0	0	0	0	0	0
4/25/2024	8:30 AM	0	0	0	0	0	0	0	0	0	0	0	0	0
4/25/2024	8:45 AM	0	0	0	0	0	0	0	0	0	0	0	0	0
4/25/2024	9:00 AM	0	0	0	0	0	0	0	0	0	0	0	0	0
4/25/2024	9:15 AM	0	0	0	0	0	0	0	0	0	0	0	0	0
4/25/2024	9:30 AM	0	0	0	0	0	0	0	0	0	0	0	0	0
4/25/2024	9:45 AM	0	0	0	0	0	0	0	0	0	0	0	0	0
4/25/2024	10:00 AM	0	0	0	0	0	0	0	0	0	0	0	0	0
4/25/2024	10:15 AM	0	0	0	0	0	0	0	0	0	0	0	0	0
4/25/2024	10:30 AM	0	0	0	0	0	0	0	0	0	0	0	0	0
4/25/2024	10:45 AM	0	0	0	0	0	0	0	0	0	0	0	0	0
4/25/2024	11:00 AM	0	0	0	0	0	0	0	0	0	0	0	0	0
4/25/2024	11:15 AM	0	0	0	0	0	0	0	0	0	0	0	0	0
4/25/2024	11:30 AM	0	0	0	0	0	0	0	0	0	0	0	0	0
4/25/2024	11:45 AM	0	0	0	0	0	0	0	0	0	0	0	0	0
4/25/2024	12:00 PM	0	0	0	0	0	0	0	0	0	0	0	0	0
4/25/2024	12:15 PM	0	0	0	0	0	0	0	0	0	0	0	0	0
4/25/2024	12:30 PM	0	0	0	0	0	0	0	0	0	0	0	0	0
4/25/2024	12:45 PM	0	0	0	0	0	0	0	0	0	0	0	0	0
4/25/2024	1:00 PM	0	0	0	0	0	0	0	0	0	0	0	0	0
4/25/2024	1:15 PM	0	0	0	0	0	0	0	0	0	0	0	0	0
4/25/2024	1:30 PM	0	0	0	0	0	0	0	0	0	0	0	0	0
4/25/2024	1:45 PM	0	0	0	0	0	0	0	0	0	0	0	0	0
4/25/2024	2:00 PM	0	0	0	0	0	0	0	0	0	0	0	0	0
4/25/2024	2:15 PM	0	0	0	0	0	0	0	0	0	0	0	0	0
4/25/2024	2:30 PM	0	0	0	0	0	0	0	0	0	0	0	0	0
4/25/2024	2:45 PM	0	0	0	0	0	0	0	0	0	0	0	0	0
4/25/2024	3:00 PM	0	0	0	0	0	0	0	0	0	0	0	0	0
4/25/2024	3:15 PM	0	0	0	0	0	0	0	0	0	0	0	0	0
4/25/2024	3:30 PM	0	0	0	0	0	0	0	0	0	0	0	0	0
4/25/2024	3:45 PM	0	0	0	0	0	0	0	0	0	0	0	0	0
4/25/2024	4:00 PM	0	0	0	0	0	0	0	0	0	0	0	0	0
4/25/2024	4:15 PM	0	0	0	0	0	0	0	0	0	0	0	0	0
4/25/2024	4:30 PM	0	0	0	0	0	0	0	0	0	0	0	0	0
4/25/2024	4:45 PM	0	0	0	0	0	0	0	0	0	0	0	0	0
4/25/2024	5:00 PM	0	0	0	0	0	0	0	0	0	0	0	0	0
4/25/2024	5:15 PM	0	0	0	0	0	0	0	0	0	0	0	0	0
4/25/2024	5:30 PM	0	0	0	0	0	0	0	0	0	0	0	0	0
4/25/2024	5:45 PM	0	0	0	0	0	0	0	0	0	0	0	0	0
4/25/2024	6:00 PM	0	0	0	0	0	0	0	0	0	0	0	0	0
4/25/2024	6:15 PM	0	0	0	0	0	0	0	0	0	0	0	0	0
4/25/2024	6:30 PM	0	0	0	0	0	0	0	0	0	0	0	0	0
4/25/2024	6:45 PM	0	0	0	0	0	0	0	0	0	0	0	0	0
4/25/2024	7:00 PM	0	0	0	0	0	0	0	0	0	0	0	0	0
4/25/2024	7:15 PM	0	0	0	0	0	0	0	0	0	0	0	0	0
4/25/2024	7:30 PM	0	0	0	0	0	0	0	0	0	0	0	0	0
4/25/2024	7:45 PM	0	0	0	0	0	0	0	0	0	0	0	0	0
4/25/2024	8:00 PM	0	0	0	0	0	0	0	0	0	0	0	0	0
4/25/2024	8:15 PM	0	0	0	0	0	0	0	0	0	0	0	0	0
4/25/2024	8:30 PM	0	0	0	0	0	0	0	0	0	0	0	0	0
4/25/2024	8:45 PM	0	0	0	0	0	0	0	0	0	0	0	0	0
4/25/2024	9:00 PM	0	0	0	0	0	0	0	0	0	0	0	0	0
4/25/2024	9:15 PM	0	0	0	0	0	0	0	0	0	0	0	0	0
4/25/2024	9:30 PM	0	0	0	0	0	0	0	0	0	0	0	0	0
4/25/2024	9:45 PM	0	0	0	0	0	0	0	0	0	0	0	0	0
4/25/2024	10:00 PM	0	0	0	0	0	0	0	0	0	0	0	0	0
4/25/2024	10:15 PM	0	0	0	0	0	0	0	0	0	0	0	0	0
4/25/2024	10:30 PM	0	0	0	0	0	0	0	0	0	0	0	0	0
4/25/2024	10:45 PM	0	0	0	0	0	0	0	0	0	0	0	0	0
4/25/2024	11:00 PM	0	0	0	0	0	0	0	0	0	0	0	0	0
4/25/2024	11:15 PM	0	0	0	0	0	0	0	0	0	0	0	0	0
4/25/2024	11:30 PM	0	0	0	0	0	0	0	0	0	0	0	0	0
4/25/2024	11:45 PM	0	0	0	0	0	0	0	0	0	0	0	0	0

4/26/2024	12:00 AM	0	0	0	0	0	0	0	0	0	0	0	0	0
4/26/2024	12:15 AM	0	0	0	0	0	0	0	0	0	0	0	0	0
4/26/2024	12:30 AM	0	0	0	0	0	0	0	0	0	0	0	0	0
4/26/2024	12:45 AM	0	0	0	0	0	0	0	0	0	0	0	0	0
4/26/2024	1:00 AM	0	0	0	0	0	0	0	0	0	0	0	0	0
4/26/2024	1:15 AM	0	0	0	0	0	0	0	0	0	0	0	0	0
4/26/2024	1:30 AM	0	0	0	0	0	0	0	0	0	0	0	0	0
4/26/2024	1:45 AM	0	0	0	0	0	0	0	0	0	0	0	0	0
4/26/2024	2:00 AM	0	0	0	0	0	0	0	0	0	0	0	0	0
4/26/2024	2:15 AM	0	0	0	0	0	0	0	0	0	0	0	0	0
4/26/2024	2:30 AM	0	0	0	0	0	0	0	0	0	0	0	0	0
4/26/2024	2:45 AM	0	0	0	0	0	0	0	0	0	0	0	0	0
4/26/2024	3:00 AM	0	0	0	0	0	0	0	0	0	0	0	0	0
4/26/2024	3:15 AM	0	0	0	0	0	0	0	0	0	0	0	0	0
4/26/2024	3:30 AM	0	0	0	0	0	0	0	0	0	0	0	0	0
4/26/2024	3:45 AM	0	0	0	0	0	0	0	0	0	0	0	0	0
4/26/2024	4:00 AM	0	0	0	0	0	0	0	0	0	0	0	0	0
4/26/2024	4:15 AM	0	0	0	0	0	0	0	0	0	0	0	0	0
4/26/2024	4:30 AM	0	0	0	0	0	0	0	0	0	0	0	0	0
4/26/2024	4:45 AM	0	0	0	0	0	0	0	0	0	0	0	0	0
4/26/2024	5:00 AM	0	0	0	0	0	0	0	0	0	0	0	0	0
4/26/2024	5:15 AM	0	0	0	0	0	0	0	0	0	0	0	0	0
4/26/2024	5:30 AM	0	0	0	0	0	0	0	0	0	0	0	0	0
4/26/2024	5:45 AM	0	0	0	0	0	0	0	0	0	0	0	0	0
4/26/2024	6:00 AM	0	0	0	0	0	0	0	0	0	0	0	0	0
4/26/2024	6:15 AM	0	0	0	0	0	0	0	0	0	0	0	0	0
4/26/2024	6:30 AM	0	0	0	0	0	0	0	0	0	0	0	0	0
4/26/2024	6:45 AM	0	0	0	0	0	0	0	0	0	0	0	0	0
4/26/2024	7:00 AM	0	0	0	0	0	0	0	0	0	0	0	0	0
4/26/2024	7:15 AM	0	0	0	0	0	0	0	0	0	0	0	0	0
4/26/2024	7:30 AM	0	0	0	0	0	0	0	0	0	0	0	0	0
4/26/2024	7:45 AM	0	0	0	0	0	0	0	0	0	0	0	0	0
4/26/2024	8:00 AM	0	0	0	0	0	0	0	0	0	0	0	0	0
4/26/2024	8:15 AM	0	0	0	0	0	0	0	0	0	0	0	0	0
4/26/2024	8:30 AM	0	0	0	0	0	0	0	0	0	0	0	0	0
4/26/2024	8:45 AM	0	0	0	0	0	0	0	0	0	0	0	0	0
4/26/2024	9:00 AM	0	0	0	0	0	0	0	0	0	0	0	0	0
4/26/2024	9:15 AM	0	0	0	0	0	0	0	0	0	0	0	0	0
4/26/2024	9:30 AM	0	0	0	0	0	0	0	0	0	0	0	0	0
4/26/2024	9:45 AM	0	0	0	0	0	0	0	0	0	0	0	0	0
4/26/2024	10:00 AM	0	0	0	0	0	0	0	0	0	0	0	0	0
4/26/2024	10:15 AM	0	0	0	0	0	0	0	0	0	0	0	0	0
4/26/2024	10:30 AM	0	0	0	0	0	0	0	0	0	0	0	0	0
4/26/2024	10:45 AM	0	0	0	0	0	0	0	0	0	0	0	0	0
4/26/2024	11:00 AM	0	0	0	0	0	0	0	0	0	0	0	0	0
4/26/2024	11:15 AM	0	0	0	0	0	0	0	0	0	0	0	0	0
4/26/2024	11:30 AM	0	0	0	0	0	0	0	0	0	0	0	0	0
4/26/2024	11:45 AM	0	0	0	0	0	0	0	0	0	0	0	0	0
4/26/2024	12:00 PM	0	0	0	0	0	0	0	0	0	0	0	0	0
4/26/2024	12:15 PM	0	0	0	0	0	0	0	0	0	0	0	0	0
4/26/2024	12:30 PM	0	0	0	0	0	0	0	0	0	0	0	0	0
4/26/2024	12:45 PM	0	0	0	0	0	0	0	0	0	0	0	0	0
4/26/2024	1:00 PM	0	0	0	0	0	0	0	0	0	0	0	0	0
4/26/2024	1:15 PM	0	0	0	0	0	0	0	0	0	0	0	0	0
4/26/2024	1:30 PM	0	0	0	0	0	0	0	0	0	0	0	0	0
4/26/2024	1:45 PM	0	0	0	0	0	0	0	0	0	0	0	0	0
4/26/2024	2:00 PM	0	0	0	0	0	0	0	0	0	0	0	0	0
4/26/2024	2:15 PM	0	0	0	0	0	0	0	0	0	0	0	0	0
4/26/2024	2:30 PM	0	0	0	0	0	0	0	0	0	0	0	0	0
4/26/2024	2:45 PM	0	0	0	0	0	0	0	0	0	0	0	0	0
4/26/2024	3:00 PM	0	0	0	0	0	0	0	0	0	0	0	0	0
4/26/2024	3:15 PM	0	0	0	0	0	0	0	0	0	0	0	0	0
4/26/2024	3:30 PM	0	0	0	0	0	0	0	0	0	0	0	0	0
4/26/2024	3:45 PM	0	0	0	0	0	0	0	0	0	0	0	0	0
4/26/2024	4:00 PM	0	0	0	0	0	0	0	0	0	0	0	0	0
4/26/2024	4:15 PM	0	0	0	0	0	0	0	0	0	0	0	0	0
4/26/2024	4:30 PM	0	0	0	0	0	0	0	0	0	0	0	0	0
4/26/2024	4:45 PM	0	0	0	0	0	0	0	0	0	0	0	0	0
4/26/2024	5:00 PM	0	0	0	0	0	0	0	0	0	0	0	0	0
4/26/2024	5:15 PM	0	0	0	0	0	0	0	0	0	0	0	0	0
4/26/2024	5:30 PM	0	0	0	0	0	0	0	0	0	0	0	0	0
4/26/2024	5:45 PM	0	0	0	0	0	0	0	0	0	0	0	0	0
4/26/2024	6:00 PM	0	0	0	0	0	0	0	0	0	0	0	0	0
4/26/2024	6:15 PM	0	0	0	0	0	0	0	0	0	0	0	0	0
4/26/2024	6:30 PM	0	0	0	0	0	0	0	0	0	0	0	0	0
4/26/2024	6:45 PM	0	0	0	0	0	0	0	0	0	0	0	0	0
4/26/2024	7:00 PM	0	0	0	0	0	0	0	0	0	0	0	0	0
4/26/2024	7:15 PM	0	0	0	0	0	0	0	0	0	0	0	0	0
4/26/2024	7:30 PM	0	0	0	0	0	0	0	0	0	0	0	0	0
4/26/2024	7:45 PM	0	0	0	0	0	0	0	0	0	0	0	0	0
4/26/2024	8:00 PM	0	0	0	0	0	0	0	0	0	0	0	0	0
4/26/2024	8:15 PM	0	0	0	0	0	0	0	0	0	0	0	0	0
4/26/2024	8:30 PM	0	0	0	0	0	0	0	0	0	0	0	0	0
4/26/2024	8:45 PM	0	0	0	0	0	0	0	0	0	0	0	0	0
4/26/2024	9:00 PM	0	0	0	0	0	0	0	0	0	0	0	0	0
4/26/2024	9:15 PM	0	0	0	0	0	0	0	0	0	0	0	0	0
4/26/2024	9:30 PM	0	0	0	0	0	0	0	0	0	0	0	0	0
4/26/2024	9:45 PM	0	0	0	0	0	0	0	0	0	0	0	0	0
4/26/2024	10:00 PM	0	0	0	0	0	0	0	0	0	0	0	0	0
4/26/2024	10:15 PM	0	0	0	0	0	0	0	0	0	0	0	0	0
4/26/2024	10:30 PM	0	0	0	0	0	0	0	0	0	0	0	0	0
4/26/2024	10:45 PM	0	0	0	0	0	0	0	0	0	0	0	0	0
4/26/2024	11:00 PM	0	0	0	0	0	0	0	0	0	0	0	0	0
4/26/2024	11:15 PM	0	0	0	0	0	0	0	0	0	0	0	0	0
4/26/2024	11:30 PM	0	0	0	0	0	0	0	0	0	0	0	0	0
4/26/2024	11:45 PM	0	0	0	0	0	0	0	0	0	0	0	0	0

4/27/2024	12:00 AM	0	0	0	0	0	0	0	0	0	0	0	0	0
4/27/2024	12:15 AM	0	0	0	0	0	0	0	0	0	0	0	0	0
4/27/2024	12:30 AM	0	0	0	0	0	0	0	0	0	0	0	0	0
4/27/2024	12:45 AM	0	0	0	0	0	0	0	0	0	0	0	0	0
4/27/2024	1:00 AM	0	0	0	0	0	0	0	0	0	0	0	0	0
4/27/2024	1:15 AM	0	0	0	0	0	0	0	0	0	0	0	0	0
4/27/2024	1:30 AM	0	0	0	0	0	0	0	0	0	0	0	0	0
4/27/2024	1:45 AM	0	0	0	0	0	0	0	0	0	0	0	0	0
4/27/2024	2:00 AM	0	0	0	0	0	0	0	0	0	0	0	0	0
4/27/2024	2:15 AM	0	0	0	0	0	0	0	0	0	0	0	0	0
4/27/2024	2:30 AM	0	0	0	0	0	0	0	0	0	0	0	0	0
4/27/2024	2:45 AM	0	0	0	0	0	0	0	0	0	0	0	0	0
4/27/2024	3:00 AM	0	0	0	0	0	0	0	0	0	0	0	0	0
4/27/2024	3:15 AM	0	0	0	0	0	0	0	0	0	0	0	0	0
4/27/2024	3:30 AM	0	0	0	0	0	0	0	0	0	0	0	0	0
4/27/2024	3:45 AM	0	0	0	0	0	0	0	0	0	0	0	0	0
4/27/2024	4:00 AM	0	0	0	0	0	0	0	0	0	0	0	0	0
4/27/2024	4:15 AM	0	0	0	0	0	0	0	0	0	0	0	0	0
4/27/2024	4:30 AM	0	0	0	0	0	0	0	0	0	0	0	0	0
4/27/2024	4:45 AM	0	0	0	0	0	0	0	0	0	0	0	0	0
4/27/2024	5:00 AM	0	0	0	0	0	0	0	0	0	0	0	0	0
4/27/2024	5:15 AM	0	0	0	0	0	0	0	0	0	0	0	0	0
4/27/2024	5:30 AM	0	0	0	0	0	0	0	0	0	0	0	0	0
4/27/2024	5:45 AM	0	0	0	0	0	0	0	0	0	0	0	0	0
4/27/2024	6:00 AM	0	0	0	0	0	0	0	0	0	0	0	0	0
4/27/2024	6:15 AM	0	0	0	0	0	0	0	0	0	0	0	0	0
4/27/2024	6:30 AM	0	0	0	0	0	0	0	0	0	0	0	0	0
4/27/2024	6:45 AM	0	0	0	0	0	0	0	0	0	0	0	0	0
4/27/2024	7:00 AM	0	0	0	0	0	0	0	0	0	0	0	0	0
4/27/2024	7:15 AM	0	0	0	0	0	0	0	0	0	0	0	0	0
4/27/2024	7:30 AM	0	0	0	0	0	0	0	0	0	0	0	0	0
4/27/2024	7:45 AM	0	0	0	0	0	0	0	0	0	0	0	0	0
4/27/2024	8:00 AM	0	0	0	0	0	0	0	0	0	0	0	0	0
4/27/2024	8:15 AM	0	0	0	0	0	0	0	0	0	0	0	0	0
4/27/2024	8:30 AM	0	0	0	0	0	0	0	0	0	0	0	0	0
4/27/2024	8:45 AM	0	0	0	0	0	0	0	0	0	0	0	0	0
4/27/2024	9:00 AM	0	0	0	0	0	0	0	0	0	0	0	0	0
4/27/2024	9:15 AM	0	0	0	0	0	0	0	0	0	0	0	0	0
4/27/2024	9:30 AM	0	0	0	0	0	0	0	0	0	0	0	0	0
4/27/2024	9:45 AM	0	0	0	0	0	0	0	0	0	0	0	0	0
4/27/2024	10:00 AM	0	0	0	0	0	0	0	0	0	0	0	0	0
4/27/2024	10:15 AM	0	0	0	0	0	0	0	0	0	0	0	0	0
4/27/2024	10:30 AM	0	0	0	0	0	0	0	0	0	0	0	0	0
4/27/2024	10:45 AM	0	0	0	0	0	0	0	0	0	0	0	0	0
4/27/2024	11:00 AM	0	0	0	0	0	0	0	0	0	0	0	0	0
4/27/2024	11:15 AM	0	0	0	0	0	0	0	0	0	0	0	0	0
4/27/2024	11:30 AM	0	0	0	0	0	0	0	0	0	0	0	0	0
4/27/2024	11:45 AM	0	0	0	0	0	0	0	0	0	0	0	0	0
4/27/2024	12:00 PM	0	0	0	0	0	0	0	0	0	0	0	0	0
4/27/2024	12:15 PM	0	0	0	0	0	0	0	0	0	0	0	0	0
4/27/2024	12:30 PM	0	0	0	0	0	0	0	0	0	0	0	0	0
4/27/2024	12:45 PM	0	0	0	0	0	0	0	0	0	0	0	0	0
4/27/2024	1:00 PM	0	0	0	0	0	0	0	0	0	0	0	0	0
4/27/2024	1:15 PM	0	0	0	0	0	0	0	0	0	0	0	0	0
4/27/2024	1:30 PM	0	0	0	0	0	0	0	0	0	0	0	0	0
4/27/2024	1:45 PM	0	0	0	0	0	0	0	0	0	0	0	0	0
4/27/2024	2:00 PM	0	0	0	0	0	0	0	0	0	0	0	0	0
4/27/2024	2:15 PM	0	0	0	0	0	0	0	0	0	0	0	0	0
4/27/2024	2:30 PM	0	0	0	0	0	0	0	0	0	0	0	0	0
4/27/2024	2:45 PM	0	0	0	0	0	0	0	0	0	0	0	0	0
4/27/2024	3:00 PM	0	0	0	0	0	0	0	0	0	0	0	0	0
4/27/2024	3:15 PM	0	0	0	0	0	0	0	0	0	0	0	0	0
4/27/2024	3:30 PM	0	0	0	0	0	0	0	0	0	0	0	0	0
4/27/2024	3:45 PM	0	0	0	0	0	0	0	0	0	0	0	0	0
4/27/2024	4:00 PM	0	0	0	0	0	0	0	0	0	0	0	0	0
4/27/2024	4:15 PM	0	0	0	0	0	0	0	0	0	0	0	0	0
4/27/2024	4:30 PM	0	0	0	0	0	0	0	0	0	0	0	0	0
4/27/2024	4:45 PM	0	0	0	0	0	0	0	0	0	0	0	0	0
4/27/2024	5:00 PM	0	0	0	0	0	0	0	0	0	0	0	0	0
4/27/2024	5:15 PM	0	0	0	0	0	0	0	0	0	0	0	0	0
4/27/2024	5:30 PM	0	0	0	0	0	0	0	0	0	0	0	0	0
4/27/2024	5:45 PM	0	0	0	0	0	0	0	0	0	0	0	0	0
4/27/2024	6:00 PM	0	0	0	0	0	0	0	0	0	0	0	0	0
4/27/2024	6:15 PM	0	0	0	0	0	0	0	0	0	0	0	0	0
4/27/2024	6:30 PM	0	0	0	0	0	0	0	0	0	0	0	0	0
4/27/2024	6:45 PM	0	0	0	0	0	0	0	0	0	0	0	0	0
4/27/2024	7:00 PM	0	0	0	0	0	0	0	0	0	0	0	0	0
4/27/2024	7:15 PM	0	0	0	0	0	0	0	0	0	0	0	0	0
4/27/2024	7:30 PM	0	0	0	0	0	0	0	0	0	0	0	0	0
4/27/2024	7:45 PM	0	0	0	0	0	0	0	0	0	0	0	0	0
4/27/2024	8:00 PM	0	0	0	0	0	0	0	0	0	0	0	0	0
4/27/2024	8:15 PM	0	0	0	0	0	0	0	0	0	0	0	0	0
4/27/2024	8:30 PM	0	0	0	0	0	0	0	0	0	0	0	0	0
4/27/2024	8:45 PM	0	0	0	0	0	0	0	0	0	0	0	0	0
4/27/2024	9:00 PM	0	0	0	0	0	0	0	0	0	0	0	0	0
4/27/2024	9:15 PM	0	0	0	0	0	0	0	0	0	0	0	0	0
4/27/2024	9:30 PM	0	0	0	0	0	0	0	0	0	0	0	0	0
4/27/2024	9:45 PM	0	0	0	0	0	0	0	0	0	0	0	0	0
4/27/2024	10:00 PM	0	0	0	0	0	0	0	0	0	0	0	0	0
4/27/2024	10:15 PM	0	0	0	0	0	0	0	0	0	0	0	0	0
4/27/2024	10:30 PM	0	0	0	0	0	0	0	0	0	0	0	0	0
4/27/2024	10:45 PM	0	0	0	0	0	0	0	0	0	0	0	0	0
4/27/2024	11:00 PM	0	0	0	0	0	0	0	0	0	0	0	0	0
4/27/2024	11:15 PM	0	0	0	0	0	0	0	0	0	0	0	0	0
4/27/2024	11:30 PM	0	0	0	0	0	0	0	0	0	0	0	0	0
4/27/2024	11:45 PM	0	0	0	0	0	0	0	0	0	0	0	0	0

SB
File Name:
Start Date: 4/21/2024
Start Time: 0
Site Code: 7
Station ID: 1
Location 1: I-26 S/Bound Off-Ramp, north of I-20
Location 2:

Date	Time	1	2	3	4	5	6	7	8	9	10	11	12	13
4/21/2024	12:00 AM	0	27	5	0	0	0	0	0	0	0	0	0	0
4/21/2024	12:15 AM	0	20	5	0	0	0	0	0	1	0	0	0	0
4/21/2024	12:30 AM	0	19	5	0	0	0	0	0	0	0	0	0	0
4/21/2024	12:45 AM	0	24	7	0	0	0	0	0	0	0	0	0	0
4/21/2024	1:00 AM	0	20	5	0	1	0	0	0	1	0	0	0	0
4/21/2024	1:15 AM	0	14	6	0	0	0	0	0	1	0	0	0	0
4/21/2024	1:30 AM	0	12	3	0	0	0	0	0	0	0	0	0	0
4/21/2024	1:45 AM	0	17	2	0	0	0	0	0	1	0	0	0	0
4/21/2024	2:00 AM	0	8	2	0	0	0	0	0	0	0	0	0	0
4/21/2024	2:15 AM	0	12	3	0	0	0	0	0	1	0	0	0	0
4/21/2024	2:30 AM	0	8	4	0	0	0	0	1	1	0	0	0	0
4/21/2024	2:45 AM	0	7	2	0	1	0	0	0	0	0	0	0	0
4/21/2024	3:00 AM	0	7	2	0	0	0	0	0	1	0	0	0	0
4/21/2024	3:15 AM	0	7	1	0	0	0	0	0	1	0	0	0	0
4/21/2024	3:30 AM	0	6	3	0	0	0	0	0	1	0	0	0	0
4/21/2024	3:45 AM	0	5	3	0	0	0	0	0	0	0	0	0	0
4/21/2024	4:00 AM	0	8	3	0	1	0	0	0	0	0	0	0	0
4/21/2024	4:15 AM	0	4	2	0	0	0	0	0	1	0	0	0	0
4/21/2024	4:30 AM	0	8	2	0	0	0	0	1	0	0	0	0	0
4/21/2024	4:45 AM	0	3	1	0	0	0	0	0	2	0	0	0	0
4/21/2024	5:00 AM	0	3	1	0	0	0	0	0	3	0	0	0	0
4/21/2024	5:15 AM	0	3	1	0	0	0	0	0	0	0	0	0	0
4/21/2024	5:30 AM	0	12	5	0	0	0	0	1	1	0	0	0	0
4/21/2024	5:45 AM	0	8	2	0	0	0	0	0	2	0	0	0	0
4/21/2024	6:00 AM	0	12	4	0	0	0	0	0	1	0	0	0	0
4/21/2024	6:15 AM	0	27	5	0	0	0	0	0	1	0	0	0	0
4/21/2024	6:30 AM	0	20	6	0	0	0	0	0	0	0	0	0	0
4/21/2024	6:45 AM	0	20	2	0	0	0	0	0	0	0	0	0	0
4/21/2024	7:00 AM	0	21	7	0	0	0	0	0	1	0	0	0	0
4/21/2024	7:15 AM	0	23	4	0	0	0	0	0	2	0	0	0	0
4/21/2024	7:30 AM	0	29	9	0	0	0	0	0	1	0	0	0	0
4/21/2024	7:45 AM	0	18	11	0	0	0	0	0	4	0	0	0	0
4/21/2024	8:00 AM	0	28	5	0	0	0	0	0	1	0	0	0	0
4/21/2024	8:15 AM	0	33	9	0	1	1	0	0	3	0	0	0	0
4/21/2024	8:30 AM	0	44	5	0	0	0	0	0	0	0	0	0	0
4/21/2024	8:45 AM	0	45	9	0	0	0	0	0	2	0	0	0	0
4/21/2024	9:00 AM	0	40	10	0	0	0	0	0	2	0	0	0	0
4/21/2024	9:15 AM	0	56	11	0	0	0	0	0	1	0	0	0	0
4/21/2024	9:30 AM	0	56	17	1	0	1	0	0	1	0	0	0	0
4/21/2024	9:45 AM	0	66	13	0	0	0	0	0	0	0	0	0	0
4/21/2024	10:00 AM	0	55	13	0	0	1	0	0	4	0	0	0	0
4/21/2024	10:15 AM	0	81	12	1	0	0	0	0	1	0	0	0	0
4/21/2024	10:30 AM	0	87	23	1	0	0	0	0	2	0	0	0	0
4/21/2024	10:45 AM	0	82	18	0	0	0	0	0	1	0	0	0	0
4/21/2024	11:00 AM	0	73	19	0	2	0	0	0	1	0	0	0	0
4/21/2024	11:15 AM	0	74	26	0	1	0	0	0	0	0	0	0	0
4/21/2024	11:30 AM	0	98	14	0	1	0	0	0	1	0	0	0	0
4/21/2024	11:45 AM	0	119	27	0	1	0	0	0	0	0	0	0	0
4/21/2024	12:00 PM	0	105	21	0	0	0	0	0	2	0	0	0	0
4/21/2024	12:15 PM	0	150	28	0	0	0	0	0	1	0	0	0	0
4/21/2024	12:30 PM	0	112	27	0	0	0	0	0	2	0	0	0	0
4/21/2024	12:45 PM	0	134	23	3	0	0	0	0	2	0	0	0	0
4/21/2024	1:00 PM	0	135	33	0	0	0	1	0	0	0	0	0	0
4/21/2024	1:15 PM	0	128	36	0	1	0	0	0	2	0	0	0	0
4/21/2024	1:30 PM	0	147	32	0	0	0	0	0	3	0	0	0	0
4/21/2024	1:45 PM	0	134	22	0	3	0	0	0	1	0	0	0	0
4/21/2024	2:00 PM	0	99	25	0	0	0	0	1	0	0	0	0	0
4/21/2024	2:15 PM	0	133	26	0	1	0	0	0	0	0	0	0	0
4/21/2024	2:30 PM	0	132	27	0	1	0	0	0	3	0	0	0	0
4/21/2024	2:45 PM	0	129	20	0	0	0	0	0	1	0	0	0	0
4/21/2024	3:00 PM	0	121	21	0	2	0	0	0	1	0	0	0	0
4/21/2024	3:15 PM	0	121	28	0	0	0	0	0	2	0	0	0	0
4/21/2024	3:30 PM	0	107	23	1	0	0	0	1	2	0	0	0	0
4/21/2024	3:45 PM	0	129	16	0	0	0	0	0	0	0	0	0	0
4/21/2024	4:00 PM	0	123	22	0	1	0	0	0	1	0	0	0	0
4/21/2024	4:15 PM	0	112	15	0	2	0	0	1	2	0	0	0	0
4/21/2024	4:30 PM	0	113	29	0	0	0	0	0	0	0	0	0	0
4/21/2024	4:45 PM	0	97	36	0	1	0	0	0	1	0	0	0	0
4/21/2024	5:00 PM	0	109	18	0	0	0	0	0	1	0	0	0	0
4/21/2024	5:15 PM	0	129	13	0	0	0	0	0	0	0	0	0	0
4/21/2024	5:30 PM	0	107	17	0	0	0	0	0	2	0	0	0	0
4/21/2024	5:45 PM	0	112	14	0	1	0	0	0	0	0	0	0	0
4/21/2024	6:00 PM	0	112	23	0	0	0	0	0	2	0	0	0	0
4/21/2024	6:15 PM	0	116	17	0	1	0	0	0	0	0	0	0	0
4/21/2024	6:30 PM	0	101	12	0	0	0	0	0	1	0	0	0	0
4/21/2024	6:45 PM	0	90	15	0	0	0	0	0	1	0	0	0	0
4/21/2024	7:00 PM	0	86	16	0	1	0	0	0	0	0	0	0	0
4/21/2024	7:15 PM	0	65	14	0	0	0	0	1	6	0	0	0	0
4/21/2024	7:30 PM	0	70	19	0	0	0	0	0	0	0	0	0	0
4/21/2024	7:45 PM	0	51	9	0	0	0	0	0	2	0	0	0	0
4/21/2024	8:00 PM	0	54	19	0	0	0	0	2	4	0	0	0	0
4/21/2024	8:15 PM	0	51	10	0	0	0	0	1	3	0	0	0	0
4/21/2024	8:30 PM	0	67	4	0	0	0	0	0	0	0	0	0	0
4/21/2024	8:45 PM	0	55	5	0	1	0	0	2	1	0	0	0	0
4/21/2024	9:00 PM	0	48	8	0	1	0	0	0	3	0	0	0	0
4/21/2024	9:15 PM	0	52	8	0	1	0	0	0	1	0	0	0	0
4/21/2024	9:30 PM	0	42	7	0	0	0	0	2	1	0	0	0	0
4/21/2024	9:45 PM	0	30	7	0	0	0	0	0	6	0	0	0	0
4/21/2024	10:00 PM	0	36	8	0	0	0	0	1	2	0	0	0	0
4/21/2024	10:15 PM	0	28	9	0	1	0	0	0	2	0	0	0	0
4/21/2024	10:30 PM	0	18	6	0	0	0	0	1	1	0	0	0	0
4/21/2024	10:45 PM	0	16	8	0	1	0	0	0	1	0	0	0	0
4/21/2024	11:00 PM	0	21	7	0	0	0	0	0	2	0	0	0	0
4/21/2024	11:15 PM	0	13	2	0	0	0	0	0	0	0	0	0	0
4/21/2024	11:30 PM	0	9	2	0	0	0	0	0	2	0	0	0	0
4/21/2024	11:45 PM	0	9	3	0	0	0	0	0	3	0	0	0	0

4/22/2024	12:00 AM	0	8	2	0	1	0	0	0	0	0	0	0	0
4/22/2024	12:15 AM	0	9	1	0	0	0	0	0	2	0	0	0	0
4/22/2024	12:30 AM	0	6	1	0	0	0	0	0	2	0	0	0	0
4/22/2024	12:45 AM	0	8	2	0	0	0	0	0	1	0	0	0	0
4/22/2024	1:00 AM	0	5	0	0	0	0	0	0	0	0	0	0	0
4/22/2024	1:15 AM	0	4	0	0	0	1	0	0	1	0	0	0	0
4/22/2024	1:30 AM	0	7	2	0	0	0	0	0	0	0	0	0	0
4/22/2024	1:45 AM	0	3	0	0	0	0	0	0	0	0	0	0	0
4/22/2024	2:00 AM	0	7	2	0	0	0	0	0	2	0	0	0	0
4/22/2024	2:15 AM	0	2	0	0	0	0	0	0	1	0	0	0	0
4/22/2024	2:30 AM	0	5	1	0	0	0	0	0	1	0	0	0	0
4/22/2024	2:45 AM	0	9	2	0	0	0	0	0	1	0	0	0	0
4/22/2024	3:00 AM	0	4	0	0	0	1	0	0	1	0	0	0	0
4/22/2024	3:15 AM	0	6	2	0	1	0	0	0	1	0	0	0	0
4/22/2024	3:30 AM	0	7	2	0	1	0	0	0	1	0	0	0	0
4/22/2024	3:45 AM	0	8	2	0	0	0	0	0	2	0	0	0	0
4/22/2024	4:00 AM	0	10	2	0	1	0	0	0	1	0	0	0	0
4/22/2024	4:15 AM	0	11	2	0	0	0	0	0	1	0	0	0	0
4/22/2024	4:30 AM	0	5	1	0	0	0	0	0	1	0	0	0	0
4/22/2024	4:45 AM	0	11	3	0	1	0	0	0	2	0	0	0	0
4/22/2024	5:00 AM	0	15	3	0	0	0	0	1	2	0	0	0	0
4/22/2024	5:15 AM	0	25	4	0	0	0	0	0	3	0	0	0	0
4/22/2024	5:30 AM	0	38	7	0	1	0	0	0	0	0	0	0	0
4/22/2024	5:45 AM	0	42	7	0	1	0	0	0	3	0	0	0	0
4/22/2024	6:00 AM	0	55	8	0	1	0	0	0	2	0	0	0	0
4/22/2024	6:15 AM	0	79	11	0	2	1	0	0	3	0	0	0	0
4/22/2024	6:30 AM	0	110	21	0	1	1	0	0	2	0	0	0	0
4/22/2024	6:45 AM	0	133	23	1	3	0	0	0	1	0	0	0	0
4/22/2024	7:00 AM	0	131	23	1	2	0	0	0	6	0	0	0	0
4/22/2024	7:15 AM	0	148	39	0	0	1	0	0	5	0	0	0	0
4/22/2024	7:30 AM	0	147	32	0	2	0	0	0	2	0	0	0	0
4/22/2024	7:45 AM	0	130	21	0	1	2	0	0	4	0	0	0	0
4/22/2024	8:00 AM	0	108	24	0	1	1	0	0	0	0	0	0	0
4/22/2024	8:15 AM	0	97	14	1	0	1	0	1	3	0	0	0	0
4/22/2024	8:30 AM	0	112	22	0	6	0	0	0	2	0	0	0	0
4/22/2024	8:45 AM	0	89	20	0	6	0	0	0	4	0	0	0	0
4/22/2024	9:00 AM	0	85	11	0	3	1	0	0	4	0	0	0	0
4/22/2024	9:15 AM	0	89	20	0	4	1	0	1	8	0	0	0	0
4/22/2024	9:30 AM	0	84	16	0	3	0	0	0	6	0	0	0	0
4/22/2024	9:45 AM	0	80	17	0	3	1	0	0	3	0	0	0	0
4/22/2024	10:00 AM	0	64	23	0	3	2	0	1	3	0	0	0	0
4/22/2024	10:15 AM	0	66	27	0	3	0	0	0	5	0	0	0	0
4/22/2024	10:30 AM	0	90	14	0	3	0	0	1	7	0	0	0	0
4/22/2024	10:45 AM	0	88	22	1	3	1	0	0	3	0	0	0	0
4/22/2024	11:00 AM	0	96	22	0	3	0	0	1	3	0	0	0	0
4/22/2024	11:15 AM	0	76	18	0	4	0	0	0	2	0	0	0	0
4/22/2024	11:30 AM	1	89	27	0	3	1	0	1	1	0	0	0	0
4/22/2024	11:45 AM	0	95	11	0	2	0	0	0	5	0	0	0	0
4/22/2024	12:00 PM	0	118	20	0	3	0	0	0	6	0	0	0	0
4/22/2024	12:15 PM	0	101	30	0	1	0	0	1	0	0	0	0	0
4/22/2024	12:30 PM	0	117	24	0	0	0	0	1	7	0	0	0	0
4/22/2024	12:45 PM	0	128	24	0	1	3	0	0	1	0	0	0	0
4/22/2024	1:00 PM	0	108	23	0	2	0	0	0	5	0	0	0	0
4/22/2024	1:15 PM	0	102	21	1	4	1	0	1	6	0	0	0	0
4/22/2024	1:30 PM	0	112	33	0	5	0	0	0	7	0	0	0	0
4/22/2024	1:45 PM	0	136	16	0	1	1	0	1	2	0	0	0	0
4/22/2024	2:00 PM	0	125	30	0	2	0	0	0	6	0	0	0	0
4/22/2024	2:15 PM	0	108	23	2	3	1	0	1	6	0	0	0	0
4/22/2024	2:30 PM	0	125	28	0	2	0	0	0	4	0	0	0	0
4/22/2024	2:45 PM	0	117	22	0	4	2	0	0	4	0	0	0	0
4/22/2024	3:00 PM	0	164	25	0	1	0	0	2	2	0	0	0	0
4/22/2024	3:15 PM	0	137	20	0	1	2	0	0	1	0	0	0	0
4/22/2024	3:30 PM	0	145	30	0	4	1	0	0	3	0	0	0	0
4/22/2024	3:45 PM	0	134	26	0	2	0	0	1	3	0	0	0	0
4/22/2024	4:00 PM	0	201	37	1	2	0	0	0	1	0	0	0	0
4/22/2024	4:15 PM	0	135	27	0	2	1	0	0	2	0	0	0	0
4/22/2024	4:30 PM	0	175	30	0	6	1	0	1	4	0	0	0	0
4/22/2024	4:45 PM	0	148	25	0	2	0	0	0	1	0	0	0	0
4/22/2024	5:00 PM	0	190	21	0	1	0	0	0	5	0	0	0	0
4/22/2024	5:15 PM	0	165	22	0	6	1	0	0	7	0	0	0	0
4/22/2024	5:30 PM	0	132	22	0	2	1	0	1	1	0	0	0	0
4/22/2024	5:45 PM	0	119	23	0	1	0	0	0	4	0	0	0	0
4/22/2024	6:00 PM	0	133	19	0	2	0	0	0	2	0	0	0	0
4/22/2024	6:15 PM	0	117	11	0	2	0	0	0	1	0	0	0	0
4/22/2024	6:30 PM	0	112	21	0	2	0	0	0	2	0	0	0	0
4/22/2024	6:45 PM	0	92	13	0	0	0	0	0	0	0	0	0	0
4/22/2024	7:00 PM	0	106	21	0	1	1	0	0	3	0	0	0	0
4/22/2024	7:15 PM	0	75	15	0	1	0	0	0	3	0	0	0	0
4/22/2024	7:30 PM	0	85	15	0	2	0	0	0	2	0	0	0	0
4/22/2024	7:45 PM	0	87	20	0	2	1	0	0	1	0	0	0	0
4/22/2024	8:00 PM	0	75	13	0	2	0	0	0	1	0	0	0	0
4/22/2024	8:15 PM	0	70	18	0	0	0	0	0	1	0	0	0	0
4/22/2024	8:30 PM	0	71	10	0	0	0	0	0	2	0	0	0	0
4/22/2024	8:45 PM	0	69	11	0	0	0	0	0	1	0	0	0	0
4/22/2024	9:00 PM	0	68	7	0	0	0	0	0	1	0	0	0	0
4/22/2024	9:15 PM	0	45	8	0	0	0	0	0	0	0	0	0	0
4/22/2024	9:30 PM	0	55	10	1	0	0	0	0	1	0	0	0	0
4/22/2024	9:45 PM	0	36	8	0	0	0	0	0	1	0	0	0	0
4/22/2024	10:00 PM	0	30	5	0	0	0	0	0	0	0	0	0	0
4/22/2024	10:15 PM	0	28	5	0	0	0	0	0	0	0	0	0	0
4/22/2024	10:30 PM	0	26	6	0	0	0	0	0	2	0	1	0	0
4/22/2024	10:45 PM	0	30	7	0	0	0	0	0	2	0	1	0	0
4/22/2024	11:00 PM	0	26	5	0	1	0	0	0	0	0	0	0	0
4/22/2024	11:15 PM	0	9	1	0	0	0	0	0	0	0	0	0	0
4/22/2024	11:30 PM	0	17	2	0	0	0	0	0	2	0	1	0	0
4/22/2024	11:45 PM	0	8	1	0	0	0	0	0	0	0	0	0	0

4/23/2024	12:00 AM	0	11	3	0	0	0	0	0	0	0	0	0	0
4/23/2024	12:15 AM	0	12	2	0	0	0	0	0	0	0	0	0	0
4/23/2024	12:30 AM	0	9	1	0	0	0	0	0	3	0	0	0	0
4/23/2024	12:45 AM	0	9	5	0	0	0	0	0	2	0	1	0	0
4/23/2024	1:00 AM	0	8	3	0	0	0	0	0	1	0	1	0	0
4/23/2024	1:15 AM	0	3	1	0	0	0	0	0	4	0	0	0	0
4/23/2024	1:30 AM	0	7	2	0	0	0	0	0	0	0	0	0	0
4/23/2024	1:45 AM	0	5	1	0	0	0	0	0	0	0	0	0	0
4/23/2024	2:00 AM	0	3	2	0	0	0	0	0	0	0	2	0	0
4/23/2024	2:15 AM	0	2	0	0	0	0	0	0	2	0	0	0	0
4/23/2024	2:30 AM	0	5	2	0	0	0	0	0	1	0	1	0	0
4/23/2024	2:45 AM	0	4	1	0	1	0	0	0	1	0	1	0	0
4/23/2024	3:00 AM	0	6	1	0	0	0	0	0	1	0	1	0	0
4/23/2024	3:15 AM	0	5	2	0	0	0	0	0	2	0	0	0	0
4/23/2024	3:30 AM	0	9	2	0	0	0	0	0	1	0	0	0	0
4/23/2024	3:45 AM	0	10	3	0	0	0	0	0	0	0	0	0	0
4/23/2024	4:00 AM	0	5	2	0	0	0	0	0	2	0	0	0	0
4/23/2024	4:15 AM	0	9	3	0	0	0	0	0	3	0	0	0	0
4/23/2024	4:30 AM	0	12	5	0	0	0	0	0	2	0	0	0	0
4/23/2024	4:45 AM	0	13	2	0	0	0	0	0	3	0	0	0	0
4/23/2024	5:00 AM	0	18	6	0	0	0	0	0	3	0	0	0	0
4/23/2024	5:15 AM	0	25	6	0	1	0	0	0	4	0	0	0	0
4/23/2024	5:30 AM	0	34	5	0	0	0	0	0	4	0	0	0	0
4/23/2024	5:45 AM	0	33	13	0	0	0	0	0	2	0	0	0	0
4/23/2024	6:00 AM	0	46	16	0	2	0	0	0	1	0	0	0	0
4/23/2024	6:15 AM	0	66	22	0	1	0	0	0	2	0	0	0	0
4/23/2024	6:30 AM	0	107	20	0	2	0	0	0	1	0	0	0	0
4/23/2024	6:45 AM	0	129	35	0	1	0	0	0	5	0	0	0	0
4/23/2024	7:00 AM	0	119	36	0	1	0	0	0	4	0	0	0	0
4/23/2024	7:15 AM	0	150	39	1	0	0	0	0	5	0	0	0	0
4/23/2024	7:30 AM	0	126	28	0	1	2	0	0	1	0	0	0	0
4/23/2024	7:45 AM	0	112	15	1	1	1	0	0	1	1	0	0	0
4/23/2024	8:00 AM	0	107	25	1	2	0	0	1	4	0	0	0	0
4/23/2024	8:15 AM	0	102	18	0	5	0	0	1	3	0	0	0	0
4/23/2024	8:30 AM	0	90	30	0	1	1	0	1	4	0	0	0	0
4/23/2024	8:45 AM	0	109	23	0	3	1	0	1	5	0	0	0	0
4/23/2024	9:00 AM	0	76	25	0	1	0	0	1	3	0	0	0	0
4/23/2024	9:15 AM	0	86	30	0	3	1	0	0	9	0	0	0	0
4/23/2024	9:30 AM	0	81	27	0	2	0	0	0	4	0	0	0	0
4/23/2024	9:45 AM	0	76	23	0	2	0	0	2	6	0	0	0	0
4/23/2024	10:00 AM	0	70	29	0	1	1	0	0	3	0	0	0	0
4/23/2024	10:15 AM	0	94	30	0	0	1	0	3	2	0	0	0	0
4/23/2024	10:30 AM	0	90	12	0	1	0	0	0	2	0	0	0	0
4/23/2024	10:45 AM	0	84	33	0	1	1	0	0	7	0	0	0	0
4/23/2024	11:00 AM	0	76	35	0	4	0	0	0	4	0	0	0	0
4/23/2024	11:15 AM	0	79	29	2	2	0	0	0	0	0	0	0	0
4/23/2024	11:30 AM	1	90	37	0	2	0	0	0	4	0	0	0	0
4/23/2024	11:45 AM	0	115	31	0	2	0	0	1	4	0	0	0	0
4/23/2024	12:00 PM	0	85	23	1	3	0	0	2	4	0	0	0	0
4/23/2024	12:15 PM	0	95	34	0	4	0	0	2	1	0	0	0	0
4/23/2024	12:30 PM	0	110	32	0	3	0	0	1	2	0	0	0	0
4/23/2024	12:45 PM	1	115	31	0	2	0	0	2	6	0	0	0	0
4/23/2024	1:00 PM	0	113	25	0	2	2	0	1	5	0	0	0	0
4/23/2024	1:15 PM	0	114	26	0	4	1	0	0	6	0	0	0	0
4/23/2024	1:30 PM	1	134	20	0	1	1	0	0	7	0	0	0	0
4/23/2024	1:45 PM	0	123	34	0	5	1	0	0	7	0	0	0	0
4/23/2024	2:00 PM	1	113	30	0	4	1	0	3	5	0	0	0	0
4/23/2024	2:15 PM	0	123	38	0	3	0	0	0	2	0	0	0	0
4/23/2024	2:30 PM	0	128	44	0	1	0	0	2	4	0	0	0	0
4/23/2024	2:45 PM	0	118	34	0	3	1	0	1	3	0	0	0	0
4/23/2024	3:00 PM	0	145	41	0	3	3	0	1	2	0	0	0	0
4/23/2024	3:15 PM	0	126	37	0	0	1	0	0	6	0	0	0	0
4/23/2024	3:30 PM	0	125	42	0	4	2	0	0	6	1	0	0	0
4/23/2024	3:45 PM	1	141	37	1	2	0	0	0	3	0	0	0	0
4/23/2024	4:00 PM	0	140	41	1	1	1	0	2	5	0	0	0	0
4/23/2024	4:15 PM	0	172	48	2	2	0	0	0	7	0	0	0	0
4/23/2024	4:30 PM	0	184	42	0	4	1	0	0	5	0	0	0	0
4/23/2024	4:45 PM	0	154	29	0	5	3	0	0	1	0	0	0	0
4/23/2024	5:00 PM	0	188	29	0	7	0	0	2	3	0	0	0	0
4/23/2024	5:15 PM	0	156	33	0	2	0	0	0	1	0	0	0	0
4/23/2024	5:30 PM	0	134	34	1	0	1	0	1	3	0	0	0	0
4/23/2024	5:45 PM	0	167	27	0	6	1	0	0	3	0	0	0	0
4/23/2024	6:00 PM	0	141	22	0	1	0	0	0	2	0	0	0	0
4/23/2024	6:15 PM	0	104	14	0	4	0	0	0	3	0	0	0	0
4/23/2024	6:30 PM	0	116	15	0	0	1	0	0	1	0	0	0	0
4/23/2024	6:45 PM	0	100	10	0	3	0	0	0	3	0	0	0	0
4/23/2024	7:00 PM	0	114	15	0	2	0	0	0	1	0	0	0	0
4/23/2024	7:15 PM	0	96	14	0	1	0	0	1	2	0	0	0	0
4/23/2024	7:30 PM	0	78	13	0	0	1	0	1	3	0	0	0	0
4/23/2024	7:45 PM	0	87	14	1	1	0	0	0	2	0	0	0	0
4/23/2024	8:00 PM	0	80	10	0	2	0	0	0	5	0	0	0	0
4/23/2024	8:15 PM	0	89	11	0	1	0	0	0	3	0	0	0	0
4/23/2024	8:30 PM	0	78	4	0	2	0	0	0	2	0	0	0	0
4/23/2024	8:45 PM	0	70	6	0	0	0	0	0	2	0	0	0	0
4/23/2024	9:00 PM	0	60	3	0	0	0	0	0	1	0	0	0	0
4/23/2024	9:15 PM	0	61	3	0	0	0	0	0	1	0	0	0	0
4/23/2024	9:30 PM	0	57	4	0	0	0	0	0	1	0	0	0	0
4/23/2024	9:45 PM	0	40	5	0	0	0	0	0	3	0	0	0	0
4/23/2024	10:00 PM	0	23	2	0	0	0	0	0	3	0	0	0	0
4/23/2024	10:15 PM	0	35	5	0	0	0	0	0	4	0	0	0	0
4/23/2024	10:30 PM	0	25	4	0	0	0	0	0	2	0	0	0	0
4/23/2024	10:45 PM	0	36	4	0	0	0	0	0	2	0	0	0	0
4/23/2024	11:00 PM	0	40	3	0	0	0	0	0	0	0	0	0	0
4/23/2024	11:15 PM	0	20	2	0	0	0	0	0	0	0	0	0	0
4/23/2024	11:30 PM	0	18	2	0	0	0	0	0	2	0	0	0	0
4/23/2024	11:45 PM	0	8	1	0	0	0	0	0	2	0	0	0	0

4/24/2024	12:00 AM	0	10	2	0	0	0	0	0	1	0	0	0	0
4/24/2024	12:15 AM	0	12	1	0	0	0	0	0	0	0	0	0	0
4/24/2024	12:30 AM	0	13	3	0	1	0	0	0	0	0	0	0	0
4/24/2024	12:45 AM	0	8	1	0	0	0	0	1	4	0	0	0	0
4/24/2024	1:00 AM	0	12	2	0	2	0	0	0	3	0	0	0	0
4/24/2024	1:15 AM	0	10	1	0	0	0	0	0	2	0	0	0	0
4/24/2024	1:30 AM	0	5	1	0	0	0	0	0	3	0	0	0	0
4/24/2024	1:45 AM	0	4	1	0	0	0	0	0	2	0	0	0	0
4/24/2024	2:00 AM	0	9	2	0	0	0	0	0	1	0	0	0	0
4/24/2024	2:15 AM	0	3	1	0	1	0	0	0	5	0	0	0	0
4/24/2024	2:30 AM	0	4	1	0	0	0	0	0	1	0	0	0	0
4/24/2024	2:45 AM	0	1	0	0	0	0	0	0	2	0	0	0	0
4/24/2024	3:00 AM	0	4	1	0	0	0	0	0	0	0	0	0	0
4/24/2024	3:15 AM	0	6	2	0	0	0	0	0	0	0	0	0	0
4/24/2024	3:30 AM	0	4	1	0	0	0	0	0	2	0	0	0	0
4/24/2024	3:45 AM	0	15	3	0	0	0	0	0	0	0	0	0	0
4/24/2024	4:00 AM	0	12	2	0	0	0	0	0	3	0	0	0	0
4/24/2024	4:15 AM	0	10	2	0	0	0	0	0	1	0	0	0	0
4/24/2024	4:30 AM	0	9	3	0	0	0	0	0	2	0	0	0	0
4/24/2024	4:45 AM	0	12	2	0	0	0	0	0	2	0	0	0	0
4/24/2024	5:00 AM	0	20	4	0	1	0	0	0	1	0	0	0	0
4/24/2024	5:15 AM	0	19	4	0	0	0	0	0	4	0	0	0	0
4/24/2024	5:30 AM	0	30	5	0	0	0	0	0	1	0	0	0	0
4/24/2024	5:45 AM	0	44	9	0	2	0	0	0	3	0	0	0	0
4/24/2024	6:00 AM	0	46	10	0	3	0	0	0	4	0	0	0	0
4/24/2024	6:15 AM	0	80	19	0	2	0	0	0	2	0	0	0	0
4/24/2024	6:30 AM	0	96	32	0	0	0	0	0	2	0	0	0	0
4/24/2024	6:45 AM	0	114	26	0	2	0	0	0	3	0	0	0	0
4/24/2024	7:00 AM	0	120	46	0	1	1	0	0	3	0	0	0	0
4/24/2024	7:15 AM	0	162	43	0	1	0	0	0	3	0	0	0	0
4/24/2024	7:30 AM	0	137	36	0	0	0	0	0	0	0	0	0	0
4/24/2024	7:45 AM	0	115	31	0	2	0	0	0	1	0	0	0	0
4/24/2024	8:00 AM	0	108	27	0	1	1	0	0	3	0	0	0	0
4/24/2024	8:15 AM	0	86	34	0	3	1	0	0	4	0	0	0	0
4/24/2024	8:30 AM	0	95	27	0	1	0	0	0	3	0	0	0	0
4/24/2024	8:45 AM	1	87	26	0	2	1	0	0	0	0	0	0	0
4/24/2024	9:00 AM	0	81	17	0	4	2	0	0	5	0	0	0	0
4/24/2024	9:15 AM	0	92	21	0	4	2	0	0	8	0	0	0	0
4/24/2024	9:30 AM	0	81	33	2	2	0	0	0	4	0	0	0	0
4/24/2024	9:45 AM	1	93	23	1	1	1	0	1	4	0	0	0	0
4/24/2024	10:00 AM	0	91	24	0	5	0	0	1	4	0	0	0	0
4/24/2024	10:15 AM	0	88	33	0	1	2	0	0	4	0	0	0	0
4/24/2024	10:30 AM	0	100	25	0	2	1	0	0	2	0	0	0	0
4/24/2024	10:45 AM	0	100	22	0	1	1	0	1	0	0	0	0	0
4/24/2024	11:00 AM	0	89	22	0	4	1	0	0	1	0	0	0	0
4/24/2024	11:15 AM	0	80	25	0	1	1	0	3	3	0	0	0	0
4/24/2024	11:30 AM	0	87	26	0	1	0	0	1	2	0	0	0	0
4/24/2024	11:45 AM	0	74	35	0	3	3	0	0	4	0	0	0	0
4/24/2024	12:00 PM	0	99	20	0	2	1	0	0	2	0	0	0	0
4/24/2024	12:15 PM	1	101	28	0	4	2	0	1	5	0	0	0	0
4/24/2024	12:30 PM	0	113	25	2	5	0	0	0	8	0	0	0	0
4/24/2024	12:45 PM	0	125	34	0	1	1	0	1	3	0	0	0	0
4/24/2024	1:00 PM	0	116	25	0	4	3	0	0	6	0	0	0	0
4/24/2024	1:15 PM	0	115	37	0	1	1	0	1	2	0	0	0	0
4/24/2024	1:30 PM	0	135	20	0	3	1	0	1	6	0	0	0	0
4/24/2024	1:45 PM	0	137	18	5	0	1	0	0	4	0	0	0	0
4/24/2024	2:00 PM	0	117	16	0	3	0	0	0	8	0	0	0	0
4/24/2024	2:15 PM	0	126	29	0	0	0	0	0	2	0	0	0	0
4/24/2024	2:30 PM	0	117	28	0	1	0	0	1	8	0	0	0	0
4/24/2024	2:45 PM	1	123	29	0	2	1	0	0	6	0	0	0	0
4/24/2024	3:00 PM	0	151	43	0	2	1	0	0	3	0	0	0	0
4/24/2024	3:15 PM	1	125	49	0	3	2	0	0	1	0	0	0	0
4/24/2024	3:30 PM	2	122	47	0	2	1	0	2	2	0	0	0	0
4/24/2024	3:45 PM	0	127	46	1	3	0	0	0	5	0	0	0	0
4/24/2024	4:00 PM	1	165	36	0	2	0	0	0	5	0	0	0	0
4/24/2024	4:15 PM	0	158	48	0	5	1	0	0	4	0	0	0	0
4/24/2024	4:30 PM	0	166	42	0	5	2	0	0	7	0	0	0	0
4/24/2024	4:45 PM	0	175	49	0	4	0	0	0	6	0	0	0	0
4/24/2024	5:00 PM	1	192	40	0	5	1	0	0	4	0	0	0	0
4/24/2024	5:15 PM	0	149	35	0	3	0	0	0	1	0	0	0	0
4/24/2024	5:30 PM	0	150	28	0	2	0	0	0	1	0	0	0	0
4/24/2024	5:45 PM	0	129	30	0	2	1	0	1	3	0	0	0	0
4/24/2024	6:00 PM	0	123	27	0	2	0	0	0	3	0	0	0	0
4/24/2024	6:15 PM	0	132	36	0	1	1	0	0	3	0	0	0	0
4/24/2024	6:30 PM	0	93	30	0	1	1	0	0	3	0	0	0	0
4/24/2024	6:45 PM	0	109	20	0	2	0	0	1	3	0	0	0	0
4/24/2024	7:00 PM	0	97	17	0	1	0	0	0	2	0	0	0	0
4/24/2024	7:15 PM	0	101	15	0	0	0	0	0	2	0	0	0	0
4/24/2024	7:30 PM	0	91	14	0	0	2	0	0	1	0	0	0	0
4/24/2024	7:45 PM	0	62	15	0	1	0	0	0	2	0	0	0	0
4/24/2024	8:00 PM	0	76	23	0	0	0	0	0	2	0	0	0	0
4/24/2024	8:15 PM	0	91	15	0	0	0	0	0	1	0	0	0	0
4/24/2024	8:30 PM	0	90	10	0	0	0	0	0	1	0	0	0	0
4/24/2024	8:45 PM	0	87	12	0	0	0	0	0	6	0	0	0	0
4/24/2024	9:00 PM	0	61	13	0	0	0	0	0	2	0	0	0	0
4/24/2024	9:15 PM	0	55	9	0	1	0	0	0	6	0	0	0	0
4/24/2024	9:30 PM	0	45	11	0	0	0	0	0	2	0	0	0	0
4/24/2024	9:45 PM	0	42	10	0	0	0	0	0	1	0	0	0	0
4/24/2024	10:00 PM	0	39	4	0	0	0	0	0	3	0	0	0	0
4/24/2024	10:15 PM	0	34	8	0	0	0	0	0	3	0	0	0	0
4/24/2024	10:30 PM	0	22	9	0	0	0	0	0	3	0	0	0	0
4/24/2024	10:45 PM	0	25	6	0	0	0	0	0	2	0	0	0	0
4/24/2024	11:00 PM	0	27	8	0	0	0	0	0	0	0	0	0	0
4/24/2024	11:15 PM	0	15	4	0	0	0	0	0	3	0	0	0	0
4/24/2024	11:30 PM	0	18	3	0	0	0	0	0	0	0	0	0	0
4/24/2024	11:45 PM	0	11	2	0	0	0	0	0	0	0	0	0	0

4/25/2024	12:00 AM	0	16	2	0	0	0	0	0	2	0	0	1	0
4/25/2024	12:15 AM	0	9	2	0	1	0	0	0	1	0	0	0	0
4/25/2024	12:30 AM	0	6	2	0	0	0	0	0	5	0	0	0	0
4/25/2024	12:45 AM	0	11	0	0	0	0	0	0	1	0	0	1	0
4/25/2024	1:00 AM	0	7	1	0	0	0	0	0	2	0	0	0	0
4/25/2024	1:15 AM	0	11	1	0	0	0	0	0	2	0	0	0	0
4/25/2024	1:30 AM	0	11	0	0	0	0	0	0	3	0	0	0	0
4/25/2024	1:45 AM	0	9	0	0	1	0	0	0	1	0	0	0	0
4/25/2024	2:00 AM	0	6	1	0	1	0	0	0	2	0	0	0	0
4/25/2024	2:15 AM	0	8	2	0	0	0	0	0	1	0	0	0	0
4/25/2024	2:30 AM	0	5	2	0	0	0	0	0	0	0	0	0	0
4/25/2024	2:45 AM	0	4	0	0	0	0	0	0	2	0	0	0	0
4/25/2024	3:00 AM	0	3	0	0	0	0	0	0	1	0	0	0	0
4/25/2024	3:15 AM	0	1	1	0	0	0	0	0	0	0	0	0	0
4/25/2024	3:30 AM	0	10	1	0	0	0	0	0	1	0	0	0	0
4/25/2024	3:45 AM	0	13	1	0	0	0	0	0	2	0	0	0	0
4/25/2024	4:00 AM	0	9	2	0	0	0	0	0	0	0	0	0	0
4/25/2024	4:15 AM	0	8	1	0	1	0	0	0	4	0	0	0	0
4/25/2024	4:30 AM	0	13	1	0	0	0	0	0	2	0	0	0	0
4/25/2024	4:45 AM	0	12	2	0	0	0	0	0	0	0	0	0	0
4/25/2024	5:00 AM	0	15	3	0	0	0	0	0	3	0	0	0	0
4/25/2024	5:15 AM	0	16	3	0	0	0	0	0	3	0	0	0	0
4/25/2024	5:30 AM	0	45	8	0	0	0	0	0	7	0	0	0	0
4/25/2024	5:45 AM	0	43	8	0	0	0	0	0	4	0	0	0	0
4/25/2024	6:00 AM	0	56	11	0	1	0	0	0	2	0	0	0	0
4/25/2024	6:15 AM	0	75	21	0	1	0	0	0	2	0	0	0	0
4/25/2024	6:30 AM	0	108	23	0	0	0	0	0	2	0	0	0	0
4/25/2024	6:45 AM	0	115	30	0	3	1	0	0	5	0	0	0	0
4/25/2024	7:00 AM	1	117	37	0	3	3	0	0	4	0	1	0	0
4/25/2024	7:15 AM	0	144	32	0	4	0	0	0	6	0	0	0	0
4/25/2024	7:30 AM	0	137	28	0	0	0	0	0	4	0	0	0	0
4/25/2024	7:45 AM	0	113	33	0	2	0	0	0	3	0	0	0	0
4/25/2024	8:00 AM	0	91	31	0	1	1	0	0	3	0	0	0	0
4/25/2024	8:15 AM	0	103	34	0	5	0	0	0	6	0	0	0	0
4/25/2024	8:30 AM	0	99	19	0	1	0	0	1	1	0	0	0	0
4/25/2024	8:45 AM	1	91	34	0	3	2	0	0	6	0	0	0	0
4/25/2024	9:00 AM	0	89	23	0	3	0	0	0	8	0	0	0	0
4/25/2024	9:15 AM	0	70	30	0	5	3	0	1	11	0	0	0	0
4/25/2024	9:30 AM	0	86	20	0	2	0	0	0	5	0	0	0	0
4/25/2024	9:45 AM	0	97	23	0	3	2	0	0	1	0	0	0	0
4/25/2024	10:00 AM	0	87	28	0	5	1	0	1	6	0	0	0	0
4/25/2024	10:15 AM	0	86	38	0	2	2	0	2	0	0	0	0	0
4/25/2024	10:30 AM	0	97	24	0	2	0	0	0	5	0	0	0	0
4/25/2024	10:45 AM	0	88	31	0	3	0	0	1	6	0	0	0	0
4/25/2024	11:00 AM	0	83	24	0	1	2	0	1	1	0	0	0	0
4/25/2024	11:15 AM	0	97	39	0	4	1	0	0	7	0	0	0	0
4/25/2024	11:30 AM	1	106	36	0	3	1	0	1	4	0	0	0	0
4/25/2024	11:45 AM	1	91	27	0	6	2	0	0	5	0	0	0	0
4/25/2024	12:00 PM	2	113	41	0	8	0	0	3	2	0	0	0	0
4/25/2024	12:15 PM	0	116	45	0	1	0	0	2	4	0	0	0	0
4/25/2024	12:30 PM	1	89	42	0	2	0	0	0	5	0	0	0	0
4/25/2024	12:45 PM	0	103	17	0	4	0	0	2	4	0	0	0	0
4/25/2024	1:00 PM	1	108	35	0	4	1	0	1	5	0	0	0	0
4/25/2024	1:15 PM	0	121	35	0	2	1	0	3	2	0	0	0	0
4/25/2024	1:30 PM	1	138	33	1	2	0	0	2	3	0	0	0	0
4/25/2024	1:45 PM	0	120	42	0	1	0	0	0	4	0	0	0	0
4/25/2024	2:00 PM	0	135	34	0	4	0	0	0	3	0	0	0	0
4/25/2024	2:15 PM	0	140	14	0	3	0	0	0	8	0	0	0	0
4/25/2024	2:30 PM	0	128	31	0	11	1	0	2	5	0	0	0	0
4/25/2024	2:45 PM	0	106	30	0	4	1	0	4	3	1	0	0	0
4/25/2024	3:00 PM	0	136	39	0	5	0	0	1	3	0	0	0	0
4/25/2024	3:15 PM	0	119	43	0	5	0	0	3	1	0	0	0	0
4/25/2024	3:30 PM	1	121	51	0	10	0	0	1	7	0	0	0	0
4/25/2024	3:45 PM	0	135	51	1	8	0	0	1	3	0	0	0	0
4/25/2024	4:00 PM	0	164	57	0	2	1	0	0	5	0	0	0	0
4/25/2024	4:15 PM	0	170	55	1	3	0	0	0	4	0	0	0	0
4/25/2024	4:30 PM	1	151	41	0	0	0	0	0	4	0	0	0	0
4/25/2024	4:45 PM	0	150	45	0	5	1	0	0	6	0	0	0	0
4/25/2024	5:00 PM	0	180	41	0	4	0	0	1	1	0	0	0	0
4/25/2024	5:15 PM	0	156	34	0	0	0	0	0	2	0	0	0	0
4/25/2024	5:30 PM	2	128	37	0	0	1	0	0	4	0	0	0	0
4/25/2024	5:45 PM	0	141	33	0	1	0	0	0	2	0	0	0	0
4/25/2024	6:00 PM	0	161	34	0	1	0	0	0	0	0	0	0	0
4/25/2024	6:15 PM	1	118	21	0	2	0	0	0	1	0	0	0	0
4/25/2024	6:30 PM	0	116	24	0	4	0	0	0	1	0	0	0	0
4/25/2024	6:45 PM	0	108	25	0	4	0	0	0	1	0	0	0	0
4/25/2024	7:00 PM	2	105	24	0	3	0	0	0	1	0	0	0	0
4/25/2024	7:15 PM	0	110	14	1	0	0	0	0	2	0	0	0	0
4/25/2024	7:30 PM	0	101	17	0	2	0	0	0	4	0	0	0	0
4/25/2024	7:45 PM	0	88	22	0	0	0	0	0	0	0	0	0	0
4/25/2024	8:00 PM	0	81	15	0	0	0	0	0	2	0	0	0	0
4/25/2024	8:15 PM	0	59	17	0	1	1	0	0	0	0	0	0	0
4/25/2024	8:30 PM	0	81	13	0	0	0	0	0	3	0	0	0	0
4/25/2024	8:45 PM	0	77	13	0	1	0	0	0	2	0	0	0	0
4/25/2024	9:00 PM	0	74	13	0	0	0	0	0	0	0	0	0	0
4/25/2024	9:15 PM	1	61	7	0	1	0	0	0	0	0	0	0	0
4/25/2024	9:30 PM	0	47	10	0	0	0	0	0	1	0	0	0	0
4/25/2024	9:45 PM	1	39	8	0	2	0	0	0	2	0	0	0	0
4/25/2024	10:00 PM	0	39	6	0	2	0	0	0	0	0	0	0	0
4/25/2024	10:15 PM	0	46	8	0	0	0	0	0	0	0	0	0	0
4/25/2024	10:30 PM	0	38	5	0	0	0	0	0	2	0	0	0	0
4/25/2024	10:45 PM	0	31	6	1	0	0	0	0	1	0	0	0	0
4/25/2024	11:00 PM	0	27	4	0	0	0	0	0	1	0	0	0	0
4/25/2024	11:15 PM	0	17	4	0	0	0	0	0	0	0	0	0	0
4/25/2024	11:30 PM	0	26	5	0	0	0	0	0	3	0	0	0	0
4/25/2024	11:45 PM	0	23	2	0	0	0	0	0	4	0	0	0	0

4/26/2024	12:00 AM	0	8	3	0	0	1	0	0	1	0	1	0	0
4/26/2024	12:15 AM	0	5	3	0	0	0	0	0	0	0	0	0	0
4/26/2024	12:30 AM	0	12	5	0	0	0	0	0	3	0	0	0	0
4/26/2024	12:45 AM	0	5	2	0	0	0	0	0	1	0	0	0	0
4/26/2024	1:00 AM	0	6	3	0	1	0	0	0	1	0	1	0	0
4/26/2024	1:15 AM	0	5	1	0	0	0	0	0	0	0	0	0	0
4/26/2024	1:30 AM	0	13	4	0	0	0	0	0	1	0	1	0	0
4/26/2024	1:45 AM	0	6	2	0	0	0	0	0	4	0	0	0	0
4/26/2024	2:00 AM	0	6	2	0	0	0	0	0	2	0	0	0	0
4/26/2024	2:15 AM	0	5	3	0	0	0	0	0	2	0	0	0	0
4/26/2024	2:30 AM	0	2	1	0	0	0	0	0	1	0	1	0	0
4/26/2024	2:45 AM	0	3	2	0	0	0	0	0	3	0	0	0	0
4/26/2024	3:00 AM	0	4	2	0	0	0	0	0	1	0	0	0	0
4/26/2024	3:15 AM	0	5	1	0	0	0	0	0	1	0	1	0	0
4/26/2024	3:30 AM	0	2	3	0	0	0	0	0	1	0	0	0	0
4/26/2024	3:45 AM	0	5	4	0	1	2	0	0	1	0	0	0	0
4/26/2024	4:00 AM	0	6	2	3	0	0	0	0	2	0	0	0	0
4/26/2024	4:15 AM	0	10	4	1	0	0	0	0	0	0	0	0	0
4/26/2024	4:30 AM	0	9	6	0	0	0	0	0	3	0	0	0	0
4/26/2024	4:45 AM	0	9	4	0	0	0	0	0	2	0	0	0	0
4/26/2024	5:00 AM	0	11	4	0	1	0	0	0	3	0	0	0	0
4/26/2024	5:15 AM	0	20	7	0	0	0	0	0	2	0	0	0	0
4/26/2024	5:30 AM	0	30	9	1	0	1	0	0	3	0	0	0	0
4/26/2024	5:45 AM	0	40	10	0	2	0	0	0	1	0	0	0	0
4/26/2024	6:00 AM	0	42	11	2	0	0	0	1	3	0	0	0	0
4/26/2024	6:15 AM	0	47	19	0	1	0	0	0	5	0	0	0	0
4/26/2024	6:30 AM	0	95	30	0	0	0	0	0	3	0	0	0	0
4/26/2024	6:45 AM	0	96	22	0	2	0	0	0	4	0	0	0	0
4/26/2024	7:00 AM	0	117	32	0	5	0	0	1	5	0	0	0	0
4/26/2024	7:15 AM	0	126	44	0	3	0	0	0	3	0	0	0	0
4/26/2024	7:30 AM	0	134	32	0	5	0	0	0	2	0	0	0	0
4/26/2024	7:45 AM	1	120	29	0	1	1	0	0	1	0	0	0	0
4/26/2024	8:00 AM	0	89	29	0	0	0	0	0	2	0	0	0	0
4/26/2024	8:15 AM	0	90	23	0	3	0	0	0	1	0	0	0	0
4/26/2024	8:30 AM	0	100	22	0	4	0	0	0	4	0	0	0	0
4/26/2024	8:45 AM	0	100	25	0	5	2	0	1	4	0	0	0	0
4/26/2024	9:00 AM	0	79	28	0	3	1	0	1	6	0	0	0	0
4/26/2024	9:15 AM	0	72	36	0	1	2	0	0	3	0	0	0	0
4/26/2024	9:30 AM	0	89	25	0	5	0	0	1	3	0	0	0	0
4/26/2024	9:45 AM	1	92	22	0	3	0	0	3	3	0	0	0	0
4/26/2024	10:00 AM	0	73	32	0	3	3	0	4	3	0	0	0	0
4/26/2024	10:15 AM	0	78	24	0	4	2	0	1	4	0	0	0	0
4/26/2024	10:30 AM	0	100	30	0	3	0	0	1	5	0	0	0	0
4/26/2024	10:45 AM	0	98	34	3	4	2	0	2	5	0	0	0	0
4/26/2024	11:00 AM	0	99	39	0	1	0	0	1	4	0	0	0	0
4/26/2024	11:15 AM	0	98	42	0	1	1	0	0	9	0	0	0	0
4/26/2024	11:30 AM	0	108	43	0	6	0	0	0	5	0	0	0	0
4/26/2024	11:45 AM	0	113	37	0	4	0	0	0	7	0	0	0	0
4/26/2024	12:00 PM	1	115	45	0	2	1	0	0	9	0	0	0	0
4/26/2024	12:15 PM	0	117	35	0	6	2	0	0	2	0	0	0	0
4/26/2024	12:30 PM	0	122	34	0	4	1	0	1	2	0	0	0	0
4/26/2024	12:45 PM	1	127	41	0	3	1	0	0	4	0	0	0	0
4/26/2024	1:00 PM	0	150	36	1	3	1	0	1	5	0	0	0	0
4/26/2024	1:15 PM	0	120	32	0	2	1	0	0	6	0	0	0	0
4/26/2024	1:30 PM	0	131	38	1	6	0	0	1	4	0	0	0	0
4/26/2024	1:45 PM	3	97	29	1	5	0	0	0	2	0	0	0	0
4/26/2024	2:00 PM	0	90	20	0	3	2	0	0	3	0	0	0	0
4/26/2024	2:15 PM	0	119	25	0	4	3	0	1	6	0	0	0	0
4/26/2024	2:30 PM	0	107	33	0	5	0	0	2	6	0	0	0	0
4/26/2024	2:45 PM	0	118	31	0	4	1	0	1	2	0	0	0	0
4/26/2024	3:00 PM	0	130	24	0	2	1	0	0	5	0	0	0	0
4/26/2024	3:15 PM	0	115	30	0	5	1	0	1	4	0	0	0	0
4/26/2024	3:30 PM	0	114	31	0	5	0	0	2	7	0	0	0	0
4/26/2024	3:45 PM	0	137	33	0	3	0	0	0	5	0	0	0	0
4/26/2024	4:00 PM	0	102	31	1	2	0	0	1	2	0	0	0	0
4/26/2024	4:15 PM	2	124	41	0	2	1	0	0	1	0	0	0	0
4/26/2024	4:30 PM	0	126	28	0	4	0	0	2	0	0	0	0	0
4/26/2024	4:45 PM	1	137	30	0	2	2	0	2	2	0	0	0	0
4/26/2024	5:00 PM	0	159	25	0	2	1	0	0	1	0	0	0	0
4/26/2024	5:15 PM	0	193	37	0	2	0	0	0	2	0	0	0	0
4/26/2024	5:30 PM	0	146	43	0	2	0	0	0	0	0	0	0	0
4/26/2024	5:45 PM	0	130	27	0	4	0	0	1	2	0	0	0	0
4/26/2024	6:00 PM	0	155	25	0	2	0	0	1	2	0	0	0	0
4/26/2024	6:15 PM	0	137	26	0	3	0	0	1	0	0	0	0	0
4/26/2024	6:30 PM	0	129	25	0	2	0	0	0	2	0	0	0	0
4/26/2024	6:45 PM	0	91	17	0	2	0	0	0	4	0	0	0	0
4/26/2024	7:00 PM	0	94	25	0	5	0	0	0	1	0	0	0	0
4/26/2024	7:15 PM	0	96	20	0	0	0	0	0	2	0	0	0	0
4/26/2024	7:30 PM	1	98	15	0	2	0	0	0	0	0	0	0	0
4/26/2024	7:45 PM	0	115	19	0	0	0	0	0	1	0	0	0	0
4/26/2024	8:00 PM	0	100	22	0	0	0	0	0	3	0	0	0	0
4/26/2024	8:15 PM	0	87	20	0	0	1	0	0	1	0	0	0	0
4/26/2024	8:30 PM	0	67	19	0	0	0	0	0	1	0	0	0	0
4/26/2024	8:45 PM	0	48	21	0	0	0	0	0	1	0	0	0	0
4/26/2024	9:00 PM	0	73	11	0	0	0	0	0	0	0	0	0	0
4/26/2024	9:15 PM	0	77	9	2	0	0	0	0	1	0	0	0	0
4/26/2024	9:30 PM	0	69	5	0	1	0	0	0	1	0	0	0	0
4/26/2024	9:45 PM	0	65	4	0	2	0	0	0	1	0	0	0	0
4/26/2024	10:00 PM	0	54	4	0	0	0	0	0	3	0	0	0	0
4/26/2024	10:15 PM	0	65	5	0	0	0	0	0	2	0	0	0	0
4/26/2024	10:30 PM	0	55	3	0	1	0	0	0	2	0	0	0	0
4/26/2024	10:45 PM	0	49	5	0	0	0	0	0	1	0	0	0	0
4/26/2024	11:00 PM	0	46	5	0	1	0	0	1	3	0	0	0	0
4/26/2024	11:15 PM	0	35	2	0	0	0	0	0	1	0	0	0	0
4/26/2024	11:30 PM	0	27	2	0	0	0	0	0	2	0	0	0	0
4/26/2024	11:45 PM	0	28	2	0	1	0	0	0	1	0	0	0	0

4/27/2024	12:00 AM	0	25	2	0	0	0	0	0	2	0	1	0	0
4/27/2024	12:15 AM	0	24	2	0	1	0	0	0	2	0	0	0	0
4/27/2024	12:30 AM	0	10	0	0	0	0	0	0	4	0	0	0	0
4/27/2024	12:45 AM	0	8	0	0	0	0	0	0	1	0	1	0	0
4/27/2024	1:00 AM	0	15	1	0	0	0	0	0	1	0	0	0	0
4/27/2024	1:15 AM	0	19	2	0	0	0	0	0	0	0	0	0	0
4/27/2024	1:30 AM	0	8	0	0	0	0	0	0	0	0	0	0	0
4/27/2024	1:45 AM	0	8	2	0	2	0	0	0	0	0	0	0	0
4/27/2024	2:00 AM	0	10	1	0	0	0	0	0	1	0	1	0	0
4/27/2024	2:15 AM	0	9	1	0	0	0	0	0	0	0	0	0	0
4/27/2024	2:30 AM	0	7	0	0	0	0	0	0	1	0	0	0	0
4/27/2024	2:45 AM	0	6	0	0	0	0	0	0	2	0	0	0	0
4/27/2024	3:00 AM	0	3	0	0	0	0	0	0	0	0	0	0	0
4/27/2024	3:15 AM	0	7	2	0	0	0	0	0	2	0	0	0	0
4/27/2024	3:30 AM	0	4	0	0	0	0	0	0	0	0	0	0	0
4/27/2024	3:45 AM	0	3	0	0	0	0	0	0	1	0	2	0	0
4/27/2024	4:00 AM	0	5	0	0	1	0	0	0	2	0	0	0	0
4/27/2024	4:15 AM	0	7	1	0	0	0	0	0	2	0	0	0	0
4/27/2024	4:30 AM	0	7	0	0	0	0	0	0	4	0	0	0	0
4/27/2024	4:45 AM	0	3	1	0	0	0	0	0	2	0	0	0	0
4/27/2024	5:00 AM	0	9	3	0	0	0	0	0	1	0	0	0	0
4/27/2024	5:15 AM	0	10	3	0	0	0	0	0	1	0	0	0	0
4/27/2024	5:30 AM	0	16	2	0	0	0	0	0	1	0	0	0	0
4/27/2024	5:45 AM	0	15	4	0	1	0	0	0	1	0	1	0	0
4/27/2024	6:00 AM	0	15	3	0	0	0	0	0	4	0	0	0	0
4/27/2024	6:15 AM	0	24	4	0	1	0	0	0	2	0	0	0	0
4/27/2024	6:30 AM	0	29	7	0	0	0	0	0	3	0	0	0	0
4/27/2024	6:45 AM	0	38	5	0	1	0	0	0	3	0	0	0	0
4/27/2024	7:00 AM	0	31	8	0	0	0	0	0	1	0	0	0	0
4/27/2024	7:15 AM	0	49	10	0	1	1	0	0	2	0	0	0	0
4/27/2024	7:30 AM	0	42	13	0	3	0	0	0	0	0	0	0	0
4/27/2024	7:45 AM	0	48	11	0	2	0	0	0	3	0	0	0	0
4/27/2024	8:00 AM	0	58	15	0	0	1	0	0	3	0	0	0	0
4/27/2024	8:15 AM	0	44	15	0	4	0	0	0	1	0	0	0	0
4/27/2024	8:30 AM	0	63	13	0	0	0	0	0	4	0	0	0	0
4/27/2024	8:45 AM	0	68	16	0	0	1	0	1	0	0	0	0	0
4/27/2024	9:00 AM	0	51	19	0	2	0	0	0	0	0	0	0	0
4/27/2024	9:15 AM	1	64	26	0	1	1	0	0	3	0	0	0	0
4/27/2024	9:30 AM	0	85	28	0	1	0	0	0	0	0	0	0	0
4/27/2024	9:45 AM	1	81	21	0	0	1	0	0	3	0	0	0	0
4/27/2024	10:00 AM	1	87	26	0	2	0	0	2	3	0	0	0	0
4/27/2024	10:15 AM	0	77	18	0	0	0	0	0	2	0	0	0	0
4/27/2024	10:30 AM	1	104	29	0	1	0	0	0	3	0	0	0	0
4/27/2024	10:45 AM	1	91	26	0	0	0	0	0	0	0	0	0	0
4/27/2024	11:00 AM	0	97	30	0	1	0	0	0	1	0	0	0	0
4/27/2024	11:15 AM	0	96	23	0	0	0	0	0	2	0	0	0	0
4/27/2024	11:30 AM	1	99	35	0	2	0	0	0	0	0	0	0	0
4/27/2024	11:45 AM	0	115	33	0	0	0	0	0	2	0	0	0	0
4/27/2024	12:00 PM	0	143	25	0	1	0	0	0	3	0	0	0	0
4/27/2024	12:15 PM	0	138	19	0	0	0	0	1	2	0	0	0	0
4/27/2024	12:30 PM	1	108	35	0	2	0	0	0	6	0	0	0	0
4/27/2024	12:45 PM	1	132	30	0	0	0	0	0	1	0	0	0	0
4/27/2024	1:00 PM	1	122	31	0	0	0	0	2	2	0	0	0	0
4/27/2024	1:15 PM	0	135	37	0	2	1	0	0	3	0	0	0	0
4/27/2024	1:30 PM	0	146	27	0	0	0	0	0	1	0	0	0	0
4/27/2024	1:45 PM	0	138	36	0	2	0	0	1	2	0	0	0	0
4/27/2024	2:00 PM	0	135	50	0	1	0	0	2	0	0	0	0	0
4/27/2024	2:15 PM	0	134	33	0	1	0	0	1	2	0	0	0	0
4/27/2024	2:30 PM	0	164	32	0	2	0	0	0	1	0	0	0	0
4/27/2024	2:45 PM	0	147	31	0	1	0	0	0	1	0	0	0	0
4/27/2024	3:00 PM	0	145	39	0	1	0	0	0	0	0	0	0	0
4/27/2024	3:15 PM	0	154	22	0	0	0	0	0	1	0	0	0	0
4/27/2024	3:30 PM	0	163	37	0	2	0	0	0	3	0	0	0	0
4/27/2024	3:45 PM	0	133	42	0	1	0	0	0	1	0	0	0	0
4/27/2024	4:00 PM	0	185	30	0	3	2	0	0	2	0	0	0	0
4/27/2024	4:15 PM	0	139	26	0	0	0	0	0	2	0	0	0	0
4/27/2024	4:30 PM	0	141	19	0	0	0	0	0	2	0	0	0	0
4/27/2024	4:45 PM	0	149	29	0	2	0	0	0	1	0	0	0	0
4/27/2024	5:00 PM	0	143	25	0	2	1	0	0	1	0	0	0	0
4/27/2024	5:15 PM	0	150	15	0	0	0	0	0	3	0	0	0	0
4/27/2024	5:30 PM	0	135	30	0	1	0	0	0	2	0	0	0	0
4/27/2024	5:45 PM	0	131	20	0	0	0	0	1	0	0	0	0	0
4/27/2024	6:00 PM	1	158	23	0	1	0	0	0	0	0	0	0	0
4/27/2024	6:15 PM	2	117	22	0	0	0	0	0	0	0	0	0	0
4/27/2024	6:30 PM	0	127	18	0	0	0	0	0	0	0	0	0	0
4/27/2024	6:45 PM	2	107	26	0	1	0	0	0	0	0	0	0	0
4/27/2024	7:00 PM	0	115	29	0	0	0	0	0	0	0	0	0	0
4/27/2024	7:15 PM	0	119	22	0	1	0	0	0	1	0	0	0	0
4/27/2024	7:30 PM	1	90	21	0	0	0	0	0	0	0	0	0	0
4/27/2024	7:45 PM	1	95	18	0	0	0	0	0	1	0	0	0	0
4/27/2024	8:00 PM	0	95	22	0	0	0	0	1	0	0	0	0	0
4/27/2024	8:15 PM	0	90	15	0	2	0	0	0	3	0	0	0	0
4/27/2024	8:30 PM	0	92	21	0	0	0	0	0	2	0	0	0	0
4/27/2024	8:45 PM	0	97	12	0	0	0	0	0	0	0	0	0	0
4/27/2024	9:00 PM	0	90	22	0	1	0	0	0	2	0	0	0	0
4/27/2024	9:15 PM	0	86	15	0	1	0	0	0	2	0	0	0	0
4/27/2024	9:30 PM	0	87	16	0	0	0	0	0	0	0	0	0	0
4/27/2024	9:45 PM	0	89	21	0	0	0	0	0	0	0	0	0	0
4/27/2024	10:00 PM	0	60	10	0	0	0	0	0	0	0	0	0	0
4/27/2024	10:15 PM	0	65	11	0	1	0	0	0	1	0	0	0	0
4/27/2024	10:30 PM	0	50	7	0	0	0	0	0	0	0	0	0	0
4/27/2024	10:45 PM	0	48	8	0	0	0	0	0	0	0	0	0	0
4/27/2024	11:00 PM	0	36	6	0	0	0	0	0	2	0	0	0	0
4/27/2024	11:15 PM	0	42	8	0	0	0	0	2	1	0	0	0	0
4/27/2024	11:30 PM	0	20	4	0	0	0	0	0	0	0	0	0	0
4/27/2024	11:45 PM	0	21	6	0	0	1	0	0	0	0	0	0	0

NB
File Name:
Start Date: 4/21/2024
Start Time: 0
Site Code: 7
Station ID: 1
Location 1: I-26 S/Bound Off-Ramp, north of I-20
Location 2:

Date	Time	1	2	3	4	5	6	7	8	9	10	11	12	13
4/21/2024	12:00 AM	0	0	0	0	0	0	0	0	0	0	0	0	0
4/21/2024	12:15 AM	0	0	0	0	0	0	0	0	0	0	0	0	0
4/21/2024	12:30 AM	0	0	0	0	0	0	0	0	0	0	0	0	0
4/21/2024	12:45 AM	0	0	0	0	0	0	0	0	0	0	0	0	0
4/21/2024	1:00 AM	0	0	0	0	0	0	0	0	0	0	0	0	0
4/21/2024	1:15 AM	0	0	0	0	0	0	0	0	0	0	0	0	0
4/21/2024	1:30 AM	0	0	0	0	0	0	0	0	0	0	0	0	0
4/21/2024	1:45 AM	0	0	0	0	0	0	0	0	0	0	0	0	0
4/21/2024	2:00 AM	0	0	0	0	0	0	0	0	0	0	0	0	0
4/21/2024	2:15 AM	0	0	0	0	0	0	0	0	0	0	0	0	0
4/21/2024	2:30 AM	0	0	0	0	0	0	0	0	0	0	0	0	0
4/21/2024	2:45 AM	0	0	0	0	0	0	0	0	0	0	0	0	0
4/21/2024	3:00 AM	0	0	0	0	0	0	0	0	0	0	0	0	0
4/21/2024	3:15 AM	0	0	0	0	0	0	0	0	0	0	0	0	0
4/21/2024	3:30 AM	0	0	0	0	0	0	0	0	0	0	0	0	0
4/21/2024	3:45 AM	0	0	0	0	0	0	0	0	0	0	0	0	0
4/21/2024	4:00 AM	0	0	0	0	0	0	0	0	0	0	0	0	0
4/21/2024	4:15 AM	0	0	0	0	0	0	0	0	0	0	0	0	0
4/21/2024	4:30 AM	0	0	0	0	0	0	0	0	0	0	0	0	0
4/21/2024	4:45 AM	0	0	0	0	0	0	0	0	0	0	0	0	0
4/21/2024	5:00 AM	0	0	0	0	0	0	0	0	0	0	0	0	0
4/21/2024	5:15 AM	0	0	0	0	0	0	0	0	0	0	0	0	0
4/21/2024	5:30 AM	0	0	0	0	0	0	0	0	0	0	0	0	0
4/21/2024	5:45 AM	0	0	0	0	0	0	0	0	0	0	0	0	0
4/21/2024	6:00 AM	0	0	0	0	0	0	0	0	0	0	0	0	0
4/21/2024	6:15 AM	0	0	0	0	0	0	0	0	0	0	0	0	0
4/21/2024	6:30 AM	0	0	0	0	0	0	0	0	0	0	0	0	0
4/21/2024	6:45 AM	0	0	0	0	0	0	0	0	0	0	0	0	0
4/21/2024	7:00 AM	0	0	0	0	0	0	0	0	0	0	0	0	0
4/21/2024	7:15 AM	0	0	0	0	0	0	0	0	0	0	0	0	0
4/21/2024	7:30 AM	0	0	0	0	0	0	0	0	0	0	0	0	0
4/21/2024	7:45 AM	0	0	0	0	0	0	0	0	0	0	0	0	0
4/21/2024	8:00 AM	0	0	0	0	0	0	0	0	0	0	0	0	0
4/21/2024	8:15 AM	0	0	0	0	0	0	0	0	0	0	0	0	0
4/21/2024	8:30 AM	0	0	0	0	0	0	0	0	0	0	0	0	0
4/21/2024	8:45 AM	0	0	0	0	0	0	0	0	0	0	0	0	0
4/21/2024	9:00 AM	0	0	0	0	0	0	0	0	0	0	0	0	0
4/21/2024	9:15 AM	0	0	0	0	0	0	0	0	0	0	0	0	0
4/21/2024	9:30 AM	0	0	0	0	0	0	0	0	0	0	0	0	0
4/21/2024	9:45 AM	0	0	0	0	0	0	0	0	0	0	0	0	0
4/21/2024	10:00 AM	0	0	0	0	0	0	0	0	0	0	0	0	0
4/21/2024	10:15 AM	0	0	0	0	0	0	0	0	0	0	0	0	0
4/21/2024	10:30 AM	0	0	0	0	0	0	0	0	0	0	0	0	0
4/21/2024	10:45 AM	0	0	0	0	0	0	0	0	0	0	0	0	0
4/21/2024	11:00 AM	0	0	0	0	0	0	0	0	0	0	0	0	0
4/21/2024	11:15 AM	0	0	0	0	0	0	0	0	0	0	0	0	0
4/21/2024	11:30 AM	0	0	0	0	0	0	0	0	0	0	0	0	0
4/21/2024	11:45 AM	0	0	0	0	0	0	0	0	0	0	0	0	0
4/21/2024	12:00 PM	0	0	0	0	0	0	0	0	0	0	0	0	0
4/21/2024	12:15 PM	0	0	0	0	0	0	0	0	0	0	0	0	0
4/21/2024	12:30 PM	0	0	0	0	0	0	0	0	0	0	0	0	0
4/21/2024	12:45 PM	0	0	0	0	0	0	0	0	0	0	0	0	0
4/21/2024	1:00 PM	0	0	0	0	0	0	0	0	0	0	0	0	0
4/21/2024	1:15 PM	0	0	0	0	0	0	0	0	0	0	0	0	0
4/21/2024	1:30 PM	0	0	0	0	0	0	0	0	0	0	0	0	0
4/21/2024	1:45 PM	0	0	0	0	0	0	0	0	0	0	0	0	0
4/21/2024	2:00 PM	0	0	0	0	0	0	0	0	0	0	0	0	0
4/21/2024	2:15 PM	0	0	0	0	0	0	0	0	0	0	0	0	0
4/21/2024	2:30 PM	0	0	0	0	0	0	0	0	0	0	0	0	0
4/21/2024	2:45 PM	0	0	0	0	0	0	0	0	0	0	0	0	0
4/21/2024	3:00 PM	0	0	0	0	0	0	0	0	0	0	0	0	0
4/21/2024	3:15 PM	0	0	0	0	0	0	0	0	0	0	0	0	0
4/21/2024	3:30 PM	0	0	0	0	0	0	0	0	0	0	0	0	0
4/21/2024	3:45 PM	0	0	0	0	0	0	0	0	0	0	0	0	0
4/21/2024	4:00 PM	0	0	0	0	0	0	0	0	0	0	0	0	0
4/21/2024	4:15 PM	0	0	0	0	0	0	0	0	0	0	0	0	0
4/21/2024	4:30 PM	0	0	0	0	0	0	0	0	0	0	0	0	0
4/21/2024	4:45 PM	0	0	0	0	0	0	0	0	0	0	0	0	0
4/21/2024	5:00 PM	0	0	0	0	0	0	0	0	0	0	0	0	0
4/21/2024	5:15 PM	0	0	0	0	0	0	0	0	0	0	0	0	0
4/21/2024	5:30 PM	0	0	0	0	0	0	0	0	0	0	0	0	0
4/21/2024	5:45 PM	0	0	0	0	0	0	0	0	0	0	0	0	0
4/21/2024	6:00 PM	0	0	0	0	0	0	0	0	0	0	0	0	0
4/21/2024	6:15 PM	0	0	0	0	0	0	0	0	0	0	0	0	0
4/21/2024	6:30 PM	0	0	0	0	0	0	0	0	0	0	0	0	0
4/21/2024	6:45 PM	0	0	0	0	0	0	0	0	0	0	0	0	0
4/21/2024	7:00 PM	0	0	0	0	0	0	0	0	0	0	0	0	0
4/21/2024	7:15 PM	0	0	0	0	0	0	0	0	0	0	0	0	0
4/21/2024	7:30 PM	0	0	0	0	0	0	0	0	0	0	0	0	0
4/21/2024	7:45 PM	0	0	0	0	0	0	0	0	0	0	0	0	0
4/21/2024	8:00 PM	0	0	0	0	0	0	0	0	0	0	0	0	0
4/21/2024	8:15 PM	0	0	0	0	0	0	0	0	0	0	0	0	0
4/21/2024	8:30 PM	0	0	0	0	0	0	0	0	0	0	0	0	0
4/21/2024	8:45 PM	0	0	0	0	0	0	0	0	0	0	0	0	0
4/21/2024	9:00 PM	0	0	0	0	0	0	0	0	0	0	0	0	0
4/21/2024	9:15 PM	0	0	0	0	0	0	0	0	0	0	0	0	0
4/21/2024	9:30 PM	0	0	0	0	0	0	0	0	0	0	0	0	0
4/21/2024	9:45 PM	0	0	0	0	0	0	0	0	0	0	0	0	0
4/21/2024	10:00 PM	0	0	0	0	0	0	0	0	0	0	0	0	0
4/21/2024	10:15 PM	0	0	0	0	0	0	0	0	0	0	0	0	0
4/21/2024	10:30 PM	0	0	0	0	0	0	0	0	0	0	0	0	0
4/21/2024	10:45 PM	0	0	0	0	0	0	0	0	0	0	0	0	0
4/21/2024	11:00 PM	0	0	0	0	0	0	0	0	0	0	0	0	0
4/21/2024	11:15 PM	0	0	0	0	0	0	0	0	0	0	0	0	0
4/21/2024	11:30 PM	0	0	0	0	0	0	0	0	0	0	0	0	0
4/21/2024	11:45 PM	0	0	0	0	0	0	0	0	0	0	0	0	0

4/22/2024	12:00 AM	0	0	0	0	0	0	0	0	0	0	0	0	0
4/22/2024	12:15 AM	0	0	0	0	0	0	0	0	0	0	0	0	0
4/22/2024	12:30 AM	0	0	0	0	0	0	0	0	0	0	0	0	0
4/22/2024	12:45 AM	0	0	0	0	0	0	0	0	0	0	0	0	0
4/22/2024	1:00 AM	0	0	0	0	0	0	0	0	0	0	0	0	0
4/22/2024	1:15 AM	0	0	0	0	0	0	0	0	0	0	0	0	0
4/22/2024	1:30 AM	0	0	0	0	0	0	0	0	0	0	0	0	0
4/22/2024	1:45 AM	0	0	0	0	0	0	0	0	0	0	0	0	0
4/22/2024	2:00 AM	0	0	0	0	0	0	0	0	0	0	0	0	0
4/22/2024	2:15 AM	0	0	0	0	0	0	0	0	0	0	0	0	0
4/22/2024	2:30 AM	0	0	0	0	0	0	0	0	0	0	0	0	0
4/22/2024	2:45 AM	0	0	0	0	0	0	0	0	0	0	0	0	0
4/22/2024	3:00 AM	0	0	0	0	0	0	0	0	0	0	0	0	0
4/22/2024	3:15 AM	0	0	0	0	0	0	0	0	0	0	0	0	0
4/22/2024	3:30 AM	0	0	0	0	0	0	0	0	0	0	0	0	0
4/22/2024	3:45 AM	0	0	0	0	0	0	0	0	0	0	0	0	0
4/22/2024	4:00 AM	0	0	0	0	0	0	0	0	0	0	0	0	0
4/22/2024	4:15 AM	0	0	0	0	0	0	0	0	0	0	0	0	0
4/22/2024	4:30 AM	0	0	0	0	0	0	0	0	0	0	0	0	0
4/22/2024	4:45 AM	0	0	0	0	0	0	0	0	0	0	0	0	0
4/22/2024	5:00 AM	0	0	0	0	0	0	0	0	0	0	0	0	0
4/22/2024	5:15 AM	0	0	0	0	0	0	0	0	0	0	0	0	0
4/22/2024	5:30 AM	0	0	0	0	0	0	0	0	0	0	0	0	0
4/22/2024	5:45 AM	0	0	0	0	0	0	0	0	0	0	0	0	0
4/22/2024	6:00 AM	0	0	0	0	0	0	0	0	0	0	0	0	0
4/22/2024	6:15 AM	0	0	0	0	0	0	0	0	0	0	0	0	0
4/22/2024	6:30 AM	0	0	0	0	0	0	0	0	0	0	0	0	0
4/22/2024	6:45 AM	0	0	0	0	0	0	0	0	0	0	0	0	0
4/22/2024	7:00 AM	0	0	0	0	0	0	0	0	0	0	0	0	0
4/22/2024	7:15 AM	0	0	0	0	0	0	0	0	0	0	0	0	0
4/22/2024	7:30 AM	0	0	0	0	0	0	0	0	0	0	0	0	0
4/22/2024	7:45 AM	0	0	0	0	0	0	0	0	0	0	0	0	0
4/22/2024	8:00 AM	0	0	0	0	0	0	0	0	0	0	0	0	0
4/22/2024	8:15 AM	0	0	0	0	0	0	0	0	0	0	0	0	0
4/22/2024	8:30 AM	0	0	0	0	0	0	0	0	0	0	0	0	0
4/22/2024	8:45 AM	0	0	0	0	0	0	0	0	0	0	0	0	0
4/22/2024	9:00 AM	0	0	0	0	0	0	0	0	0	0	0	0	0
4/22/2024	9:15 AM	0	0	0	0	0	0	0	0	0	0	0	0	0
4/22/2024	9:30 AM	0	0	0	0	0	0	0	0	0	0	0	0	0
4/22/2024	9:45 AM	0	0	0	0	0	0	0	0	0	0	0	0	0
4/22/2024	10:00 AM	0	0	0	0	0	0	0	0	0	0	0	0	0
4/22/2024	10:15 AM	0	0	0	0	0	0	0	0	0	0	0	0	0
4/22/2024	10:30 AM	0	0	0	0	0	0	0	0	0	0	0	0	0
4/22/2024	10:45 AM	0	0	0	0	0	0	0	0	0	0	0	0	0
4/22/2024	11:00 AM	0	0	0	0	0	0	0	0	0	0	0	0	0
4/22/2024	11:15 AM	0	0	0	0	0	0	0	0	0	0	0	0	0
4/22/2024	11:30 AM	0	0	0	0	0	0	0	0	0	0	0	0	0
4/22/2024	11:45 AM	0	0	0	0	0	0	0	0	0	0	0	0	0
4/22/2024	12:00 PM	0	0	0	0	0	0	0	0	0	0	0	0	0
4/22/2024	12:15 PM	0	0	0	0	0	0	0	0	0	0	0	0	0
4/22/2024	12:30 PM	0	0	0	0	0	0	0	0	0	0	0	0	0
4/22/2024	12:45 PM	0	0	0	0	0	0	0	0	0	0	0	0	0
4/22/2024	1:00 PM	0	0	0	0	0	0	0	0	0	0	0	0	0
4/22/2024	1:15 PM	0	0	0	0	0	0	0	0	0	0	0	0	0
4/22/2024	1:30 PM	0	0	0	0	0	0	0	0	0	0	0	0	0
4/22/2024	1:45 PM	0	0	0	0	0	0	0	0	0	0	0	0	0
4/22/2024	2:00 PM	0	0	0	0	0	0	0	0	0	0	0	0	0
4/22/2024	2:15 PM	0	0	0	0	0	0	0	0	0	0	0	0	0
4/22/2024	2:30 PM	0	0	0	0	0	0	0	0	0	0	0	0	0
4/22/2024	2:45 PM	0	0	0	0	0	0	0	0	0	0	0	0	0
4/22/2024	3:00 PM	0	0	0	0	0	0	0	0	0	0	0	0	0
4/22/2024	3:15 PM	0	0	0	0	0	0	0	0	0	0	0	0	0
4/22/2024	3:30 PM	0	0	0	0	0	0	0	0	0	0	0	0	0
4/22/2024	3:45 PM	0	0	0	0	0	0	0	0	0	0	0	0	0
4/22/2024	4:00 PM	0	0	0	0	0	0	0	0	0	0	0	0	0
4/22/2024	4:15 PM	0	0	0	0	0	0	0	0	0	0	0	0	0
4/22/2024	4:30 PM	0	0	0	0	0	0	0	0	0	0	0	0	0
4/22/2024	4:45 PM	0	0	0	0	0	0	0	0	0	0	0	0	0
4/22/2024	5:00 PM	0	0	0	0	0	0	0	0	0	0	0	0	0
4/22/2024	5:15 PM	0	0	0	0	0	0	0	0	0	0	0	0	0
4/22/2024	5:30 PM	0	0	0	0	0	0	0	0	0	0	0	0	0
4/22/2024	5:45 PM	0	0	0	0	0	0	0	0	0	0	0	0	0
4/22/2024	6:00 PM	0	0	0	0	0	0	0	0	0	0	0	0	0
4/22/2024	6:15 PM	0	0	0	0	0	0	0	0	0	0	0	0	0
4/22/2024	6:30 PM	0	0	0	0	0	0	0	0	0	0	0	0	0
4/22/2024	6:45 PM	0	0	0	0	0	0	0	0	0	0	0	0	0
4/22/2024	7:00 PM	0	0	0	0	0	0	0	0	0	0	0	0	0
4/22/2024	7:15 PM	0	0	0	0	0	0	0	0	0	0	0	0	0
4/22/2024	7:30 PM	0	0	0	0	0	0	0	0	0	0	0	0	0
4/22/2024	7:45 PM	0	0	0	0	0	0	0	0	0	0	0	0	0
4/22/2024	8:00 PM	0	0	0	0	0	0	0	0	0	0	0	0	0
4/22/2024	8:15 PM	0	0	0	0	0	0	0	0	0	0	0	0	0
4/22/2024	8:30 PM	0	0	0	0	0	0	0	0	0	0	0	0	0
4/22/2024	8:45 PM	0	0	0	0	0	0	0	0	0	0	0	0	0
4/22/2024	9:00 PM	0	0	0	0	0	0	0	0	0	0	0	0	0
4/22/2024	9:15 PM	0	0	0	0	0	0	0	0	0	0	0	0	0
4/22/2024	9:30 PM	0	0	0	0	0	0	0	0	0	0	0	0	0
4/22/2024	9:45 PM	0	0	0	0	0	0	0	0	0	0	0	0	0
4/22/2024	10:00 PM	0	0	0	0	0	0	0	0	0	0	0	0	0
4/22/2024	10:15 PM	0	0	0	0	0	0	0	0	0	0	0	0	0
4/22/2024	10:30 PM	0	0	0	0	0	0	0	0	0	0	0	0	0
4/22/2024	10:45 PM	0	0	0	0	0	0	0	0	0	0	0	0	0
4/22/2024	11:00 PM	0	0	0	0	0	0	0	0	0	0	0	0	0
4/22/2024	11:15 PM	0	0	0	0	0	0	0	0	0	0	0	0	0
4/22/2024	11:30 PM	0	0	0	0	0	0	0	0	0	0	0	0	0
4/22/2024	11:45 PM	0	0	0	0	0	0	0	0	0	0	0	0	0

4/23/2024	12:00 AM	0	0	0	0	0	0	0	0	0	0	0	0	0
4/23/2024	12:15 AM	0	0	0	0	0	0	0	0	0	0	0	0	0
4/23/2024	12:30 AM	0	0	0	0	0	0	0	0	0	0	0	0	0
4/23/2024	12:45 AM	0	0	0	0	0	0	0	0	0	0	0	0	0
4/23/2024	1:00 AM	0	0	0	0	0	0	0	0	0	0	0	0	0
4/23/2024	1:15 AM	0	0	0	0	0	0	0	0	0	0	0	0	0
4/23/2024	1:30 AM	0	0	0	0	0	0	0	0	0	0	0	0	0
4/23/2024	1:45 AM	0	0	0	0	0	0	0	0	0	0	0	0	0
4/23/2024	2:00 AM	0	0	0	0	0	0	0	0	0	0	0	0	0
4/23/2024	2:15 AM	0	0	0	0	0	0	0	0	0	0	0	0	0
4/23/2024	2:30 AM	0	0	0	0	0	0	0	0	0	0	0	0	0
4/23/2024	2:45 AM	0	0	0	0	0	0	0	0	0	0	0	0	0
4/23/2024	3:00 AM	0	0	0	0	0	0	0	0	0	0	0	0	0
4/23/2024	3:15 AM	0	0	0	0	0	0	0	0	0	0	0	0	0
4/23/2024	3:30 AM	0	0	0	0	0	0	0	0	0	0	0	0	0
4/23/2024	3:45 AM	0	0	0	0	0	0	0	0	0	0	0	0	0
4/23/2024	4:00 AM	0	0	0	0	0	0	0	0	0	0	0	0	0
4/23/2024	4:15 AM	0	0	0	0	0	0	0	0	0	0	0	0	0
4/23/2024	4:30 AM	0	0	0	0	0	0	0	0	0	0	0	0	0
4/23/2024	4:45 AM	0	0	0	0	0	0	0	0	0	0	0	0	0
4/23/2024	5:00 AM	0	0	0	0	0	0	0	0	0	0	0	0	0
4/23/2024	5:15 AM	0	0	0	0	0	0	0	0	0	0	0	0	0
4/23/2024	5:30 AM	0	0	0	0	0	0	0	0	0	0	0	0	0
4/23/2024	5:45 AM	0	0	0	0	0	0	0	0	0	0	0	0	0
4/23/2024	6:00 AM	0	0	0	0	0	0	0	0	0	0	0	0	0
4/23/2024	6:15 AM	0	0	0	0	0	0	0	0	0	0	0	0	0
4/23/2024	6:30 AM	0	0	0	0	0	0	0	0	0	0	0	0	0
4/23/2024	6:45 AM	0	0	0	0	0	0	0	0	0	0	0	0	0
4/23/2024	7:00 AM	0	0	0	0	0	0	0	0	0	0	0	0	0
4/23/2024	7:15 AM	0	0	0	0	0	0	0	0	0	0	0	0	0
4/23/2024	7:30 AM	0	0	0	0	0	0	0	0	0	0	0	0	0
4/23/2024	7:45 AM	0	0	0	0	0	0	0	0	0	0	0	0	0
4/23/2024	8:00 AM	0	0	0	0	0	0	0	0	0	0	0	0	0
4/23/2024	8:15 AM	0	0	0	0	0	0	0	0	0	0	0	0	0
4/23/2024	8:30 AM	0	0	0	0	0	0	0	0	0	0	0	0	0
4/23/2024	8:45 AM	0	0	0	0	0	0	0	0	0	0	0	0	0
4/23/2024	9:00 AM	0	0	0	0	0	0	0	0	0	0	0	0	0
4/23/2024	9:15 AM	0	0	0	0	0	0	0	0	0	0	0	0	0
4/23/2024	9:30 AM	0	0	0	0	0	0	0	0	0	0	0	0	0
4/23/2024	9:45 AM	0	0	0	0	0	0	0	0	0	0	0	0	0
4/23/2024	10:00 AM	0	0	0	0	0	0	0	0	0	0	0	0	0
4/23/2024	10:15 AM	0	0	0	0	0	0	0	0	0	0	0	0	0
4/23/2024	10:30 AM	0	0	0	0	0	0	0	0	0	0	0	0	0
4/23/2024	10:45 AM	0	0	0	0	0	0	0	0	0	0	0	0	0
4/23/2024	11:00 AM	0	0	0	0	0	0	0	0	0	0	0	0	0
4/23/2024	11:15 AM	0	0	0	0	0	0	0	0	0	0	0	0	0
4/23/2024	11:30 AM	0	0	0	0	0	0	0	0	0	0	0	0	0
4/23/2024	11:45 AM	0	0	0	0	0	0	0	0	0	0	0	0	0
4/23/2024	12:00 PM	0	0	0	0	0	0	0	0	0	0	0	0	0
4/23/2024	12:15 PM	0	0	0	0	0	0	0	0	0	0	0	0	0
4/23/2024	12:30 PM	0	0	0	0	0	0	0	0	0	0	0	0	0
4/23/2024	12:45 PM	0	0	0	0	0	0	0	0	0	0	0	0	0
4/23/2024	1:00 PM	0	0	0	0	0	0	0	0	0	0	0	0	0
4/23/2024	1:15 PM	0	0	0	0	0	0	0	0	0	0	0	0	0
4/23/2024	1:30 PM	0	0	0	0	0	0	0	0	0	0	0	0	0
4/23/2024	1:45 PM	0	0	0	0	0	0	0	0	0	0	0	0	0
4/23/2024	2:00 PM	0	0	0	0	0	0	0	0	0	0	0	0	0
4/23/2024	2:15 PM	0	0	0	0	0	0	0	0	0	0	0	0	0
4/23/2024	2:30 PM	0	0	0	0	0	0	0	0	0	0	0	0	0
4/23/2024	2:45 PM	0	0	0	0	0	0	0	0	0	0	0	0	0
4/23/2024	3:00 PM	0	0	0	0	0	0	0	0	0	0	0	0	0
4/23/2024	3:15 PM	0	0	0	0	0	0	0	0	0	0	0	0	0
4/23/2024	3:30 PM	0	0	0	0	0	0	0	0	0	0	0	0	0
4/23/2024	3:45 PM	0	0	0	0	0	0	0	0	0	0	0	0	0
4/23/2024	4:00 PM	0	0	0	0	0	0	0	0	0	0	0	0	0
4/23/2024	4:15 PM	0	0	0	0	0	0	0	0	0	0	0	0	0
4/23/2024	4:30 PM	0	0	0	0	0	0	0	0	0	0	0	0	0
4/23/2024	4:45 PM	0	0	0	0	0	0	0	0	0	0	0	0	0
4/23/2024	5:00 PM	0	0	0	0	0	0	0	0	0	0	0	0	0
4/23/2024	5:15 PM	0	0	0	0	0	0	0	0	0	0	0	0	0
4/23/2024	5:30 PM	0	0	0	0	0	0	0	0	0	0	0	0	0
4/23/2024	5:45 PM	0	0	0	0	0	0	0	0	0	0	0	0	0
4/23/2024	6:00 PM	0	0	0	0	0	0	0	0	0	0	0	0	0
4/23/2024	6:15 PM	0	0	0	0	0	0	0	0	0	0	0	0	0
4/23/2024	6:30 PM	0	0	0	0	0	0	0	0	0	0	0	0	0
4/23/2024	6:45 PM	0	0	0	0	0	0	0	0	0	0	0	0	0
4/23/2024	7:00 PM	0	0	0	0	0	0	0	0	0	0	0	0	0
4/23/2024	7:15 PM	0	0	0	0	0	0	0	0	0	0	0	0	0
4/23/2024	7:30 PM	0	0	0	0	0	0	0	0	0	0	0	0	0
4/23/2024	7:45 PM	0	0	0	0	0	0	0	0	0	0	0	0	0
4/23/2024	8:00 PM	0	0	0	0	0	0	0	0	0	0	0	0	0
4/23/2024	8:15 PM	0	0	0	0	0	0	0	0	0	0	0	0	0
4/23/2024	8:30 PM	0	0	0	0	0	0	0	0	0	0	0	0	0
4/23/2024	8:45 PM	0	0	0	0	0	0	0	0	0	0	0	0	0
4/23/2024	9:00 PM	0	0	0	0	0	0	0	0	0	0	0	0	0
4/23/2024	9:15 PM	0	0	0	0	0	0	0	0	0	0	0	0	0
4/23/2024	9:30 PM	0	0	0	0	0	0	0	0	0	0	0	0	0
4/23/2024	9:45 PM	0	0	0	0	0	0	0	0	0	0	0	0	0
4/23/2024	10:00 PM	0	0	0	0	0	0	0	0	0	0	0	0	0
4/23/2024	10:15 PM	0	0	0	0	0	0	0	0	0	0	0	0	0
4/23/2024	10:30 PM	0	0	0	0	0	0	0	0	0	0	0	0	0
4/23/2024	10:45 PM	0	0	0	0	0	0	0	0	0	0	0	0	0
4/23/2024	11:00 PM	0	0	0	0	0	0	0	0	0	0	0	0	0
4/23/2024	11:15 PM	0	0	0	0	0	0	0	0	0	0	0	0	0
4/23/2024	11:30 PM	0	0	0	0	0	0	0	0	0	0	0	0	0
4/23/2024	11:45 PM	0	0	0	0	0	0	0	0	0	0	0	0	0

4/24/2024	12:00 AM	0	0	0	0	0	0	0	0	0	0	0	0	0
4/24/2024	12:15 AM	0	0	0	0	0	0	0	0	0	0	0	0	0
4/24/2024	12:30 AM	0	0	0	0	0	0	0	0	0	0	0	0	0
4/24/2024	12:45 AM	0	0	0	0	0	0	0	0	0	0	0	0	0
4/24/2024	1:00 AM	0	0	0	0	0	0	0	0	0	0	0	0	0
4/24/2024	1:15 AM	0	0	0	0	0	0	0	0	0	0	0	0	0
4/24/2024	1:30 AM	0	0	0	0	0	0	0	0	0	0	0	0	0
4/24/2024	1:45 AM	0	0	0	0	0	0	0	0	0	0	0	0	0
4/24/2024	2:00 AM	0	0	0	0	0	0	0	0	0	0	0	0	0
4/24/2024	2:15 AM	0	0	0	0	0	0	0	0	0	0	0	0	0
4/24/2024	2:30 AM	0	0	0	0	0	0	0	0	0	0	0	0	0
4/24/2024	2:45 AM	0	0	0	0	0	0	0	0	0	0	0	0	0
4/24/2024	3:00 AM	0	0	0	0	0	0	0	0	0	0	0	0	0
4/24/2024	3:15 AM	0	0	0	0	0	0	0	0	0	0	0	0	0
4/24/2024	3:30 AM	0	0	0	0	0	0	0	0	0	0	0	0	0
4/24/2024	3:45 AM	0	0	0	0	0	0	0	0	0	0	0	0	0
4/24/2024	4:00 AM	0	0	0	0	0	0	0	0	0	0	0	0	0
4/24/2024	4:15 AM	0	0	0	0	0	0	0	0	0	0	0	0	0
4/24/2024	4:30 AM	0	0	0	0	0	0	0	0	0	0	0	0	0
4/24/2024	4:45 AM	0	0	0	0	0	0	0	0	0	0	0	0	0
4/24/2024	5:00 AM	0	0	0	0	0	0	0	0	0	0	0	0	0
4/24/2024	5:15 AM	0	0	0	0	0	0	0	0	0	0	0	0	0
4/24/2024	5:30 AM	0	0	0	0	0	0	0	0	0	0	0	0	0
4/24/2024	5:45 AM	0	0	0	0	0	0	0	0	0	0	0	0	0
4/24/2024	6:00 AM	0	0	0	0	0	0	0	0	0	0	0	0	0
4/24/2024	6:15 AM	0	0	0	0	0	0	0	0	0	0	0	0	0
4/24/2024	6:30 AM	0	0	0	0	0	0	0	0	0	0	0	0	0
4/24/2024	6:45 AM	0	0	0	0	0	0	0	0	0	0	0	0	0
4/24/2024	7:00 AM	0	0	0	0	0	0	0	0	0	0	0	0	0
4/24/2024	7:15 AM	0	0	0	0	0	0	0	0	0	0	0	0	0
4/24/2024	7:30 AM	0	0	0	0	0	0	0	0	0	0	0	0	0
4/24/2024	7:45 AM	0	0	0	0	0	0	0	0	0	0	0	0	0
4/24/2024	8:00 AM	0	0	0	0	0	0	0	0	0	0	0	0	0
4/24/2024	8:15 AM	0	0	0	0	0	0	0	0	0	0	0	0	0
4/24/2024	8:30 AM	0	0	0	0	0	0	0	0	0	0	0	0	0
4/24/2024	8:45 AM	0	0	0	0	0	0	0	0	0	0	0	0	0
4/24/2024	9:00 AM	0	0	0	0	0	0	0	0	0	0	0	0	0
4/24/2024	9:15 AM	0	0	0	0	0	0	0	0	0	0	0	0	0
4/24/2024	9:30 AM	0	0	0	0	0	0	0	0	0	0	0	0	0
4/24/2024	9:45 AM	0	0	0	0	0	0	0	0	0	0	0	0	0
4/24/2024	10:00 AM	0	0	0	0	0	0	0	0	0	0	0	0	0
4/24/2024	10:15 AM	0	0	0	0	0	0	0	0	0	0	0	0	0
4/24/2024	10:30 AM	0	0	0	0	0	0	0	0	0	0	0	0	0
4/24/2024	10:45 AM	0	0	0	0	0	0	0	0	0	0	0	0	0
4/24/2024	11:00 AM	0	0	0	0	0	0	0	0	0	0	0	0	0
4/24/2024	11:15 AM	0	0	0	0	0	0	0	0	0	0	0	0	0
4/24/2024	11:30 AM	0	0	0	0	0	0	0	0	0	0	0	0	0
4/24/2024	11:45 AM	0	0	0	0	0	0	0	0	0	0	0	0	0
4/24/2024	12:00 PM	0	0	0	0	0	0	0	0	0	0	0	0	0
4/24/2024	12:15 PM	0	0	0	0	0	0	0	0	0	0	0	0	0
4/24/2024	12:30 PM	0	0	0	0	0	0	0	0	0	0	0	0	0
4/24/2024	12:45 PM	0	0	0	0	0	0	0	0	0	0	0	0	0
4/24/2024	1:00 PM	0	0	0	0	0	0	0	0	0	0	0	0	0
4/24/2024	1:15 PM	0	0	0	0	0	0	0	0	0	0	0	0	0
4/24/2024	1:30 PM	0	0	0	0	0	0	0	0	0	0	0	0	0
4/24/2024	1:45 PM	0	0	0	0	0	0	0	0	0	0	0	0	0
4/24/2024	2:00 PM	0	0	0	0	0	0	0	0	0	0	0	0	0
4/24/2024	2:15 PM	0	0	0	0	0	0	0	0	0	0	0	0	0
4/24/2024	2:30 PM	0	0	0	0	0	0	0	0	0	0	0	0	0
4/24/2024	2:45 PM	0	0	0	0	0	0	0	0	0	0	0	0	0
4/24/2024	3:00 PM	0	0	0	0	0	0	0	0	0	0	0	0	0
4/24/2024	3:15 PM	0	0	0	0	0	0	0	0	0	0	0	0	0
4/24/2024	3:30 PM	0	0	0	0	0	0	0	0	0	0	0	0	0
4/24/2024	3:45 PM	0	0	0	0	0	0	0	0	0	0	0	0	0
4/24/2024	4:00 PM	0	0	0	0	0	0	0	0	0	0	0	0	0
4/24/2024	4:15 PM	0	0	0	0	0	0	0	0	0	0	0	0	0
4/24/2024	4:30 PM	0	0	0	0	0	0	0	0	0	0	0	0	0
4/24/2024	4:45 PM	0	0	0	0	0	0	0	0	0	0	0	0	0
4/24/2024	5:00 PM	0	0	0	0	0	0	0	0	0	0	0	0	0
4/24/2024	5:15 PM	0	0	0	0	0	0	0	0	0	0	0	0	0
4/24/2024	5:30 PM	0	0	0	0	0	0	0	0	0	0	0	0	0
4/24/2024	5:45 PM	0	0	0	0	0	0	0	0	0	0	0	0	0
4/24/2024	6:00 PM	0	0	0	0	0	0	0	0	0	0	0	0	0
4/24/2024	6:15 PM	0	0	0	0	0	0	0	0	0	0	0	0	0
4/24/2024	6:30 PM	0	0	0	0	0	0	0	0	0	0	0	0	0
4/24/2024	6:45 PM	0	0	0	0	0	0	0	0	0	0	0	0	0
4/24/2024	7:00 PM	0	0	0	0	0	0	0	0	0	0	0	0	0
4/24/2024	7:15 PM	0	0	0	0	0	0	0	0	0	0	0	0	0
4/24/2024	7:30 PM	0	0	0	0	0	0	0	0	0	0	0	0	0
4/24/2024	7:45 PM	0	0	0	0	0	0	0	0	0	0	0	0	0
4/24/2024	8:00 PM	0	0	0	0	0	0	0	0	0	0	0	0	0
4/24/2024	8:15 PM	0	0	0	0	0	0	0	0	0	0	0	0	0
4/24/2024	8:30 PM	0	0	0	0	0	0	0	0	0	0	0	0	0
4/24/2024	8:45 PM	0	0	0	0	0	0	0	0	0	0	0	0	0
4/24/2024	9:00 PM	0	0	0	0	0	0	0	0	0	0	0	0	0
4/24/2024	9:15 PM	0	0	0	0	0	0	0	0	0	0	0	0	0
4/24/2024	9:30 PM	0	0	0	0	0	0	0	0	0	0	0	0	0
4/24/2024	9:45 PM	0	0	0	0	0	0	0	0	0	0	0	0	0
4/24/2024	10:00 PM	0	0	0	0	0	0	0	0	0	0	0	0	0
4/24/2024	10:15 PM	0	0	0	0	0	0	0	0	0	0	0	0	0
4/24/2024	10:30 PM	0	0	0	0	0	0	0	0	0	0	0	0	0
4/24/2024	10:45 PM	0	0	0	0	0	0	0	0	0	0	0	0	0
4/24/2024	11:00 PM	0	0	0	0	0	0	0	0	0	0	0	0	0
4/24/2024	11:15 PM	0	0	0	0	0	0	0	0	0	0	0	0	0
4/24/2024	11:30 PM	0	0	0	0	0	0	0	0	0	0	0	0	0
4/24/2024	11:45 PM	0	0	0	0	0	0	0	0	0	0	0	0	0

4/25/2024	12:00 AM	0	0	0	0	0	0	0	0	0	0	0	0	0
4/25/2024	12:15 AM	0	0	0	0	0	0	0	0	0	0	0	0	0
4/25/2024	12:30 AM	0	0	0	0	0	0	0	0	0	0	0	0	0
4/25/2024	12:45 AM	0	0	0	0	0	0	0	0	0	0	0	0	0
4/25/2024	1:00 AM	0	0	0	0	0	0	0	0	0	0	0	0	0
4/25/2024	1:15 AM	0	0	0	0	0	0	0	0	0	0	0	0	0
4/25/2024	1:30 AM	0	0	0	0	0	0	0	0	0	0	0	0	0
4/25/2024	1:45 AM	0	0	0	0	0	0	0	0	0	0	0	0	0
4/25/2024	2:00 AM	0	0	0	0	0	0	0	0	0	0	0	0	0
4/25/2024	2:15 AM	0	0	0	0	0	0	0	0	0	0	0	0	0
4/25/2024	2:30 AM	0	0	0	0	0	0	0	0	0	0	0	0	0
4/25/2024	2:45 AM	0	0	0	0	0	0	0	0	0	0	0	0	0
4/25/2024	3:00 AM	0	0	0	0	0	0	0	0	0	0	0	0	0
4/25/2024	3:15 AM	0	0	0	0	0	0	0	0	0	0	0	0	0
4/25/2024	3:30 AM	0	0	0	0	0	0	0	0	0	0	0	0	0
4/25/2024	3:45 AM	0	0	0	0	0	0	0	0	0	0	0	0	0
4/25/2024	4:00 AM	0	0	0	0	0	0	0	0	0	0	0	0	0
4/25/2024	4:15 AM	0	0	0	0	0	0	0	0	0	0	0	0	0
4/25/2024	4:30 AM	0	0	0	0	0	0	0	0	0	0	0	0	0
4/25/2024	4:45 AM	0	0	0	0	0	0	0	0	0	0	0	0	0
4/25/2024	5:00 AM	0	0	0	0	0	0	0	0	0	0	0	0	0
4/25/2024	5:15 AM	0	0	0	0	0	0	0	0	0	0	0	0	0
4/25/2024	5:30 AM	0	0	0	0	0	0	0	0	0	0	0	0	0
4/25/2024	5:45 AM	0	0	0	0	0	0	0	0	0	0	0	0	0
4/25/2024	6:00 AM	0	0	0	0	0	0	0	0	0	0	0	0	0
4/25/2024	6:15 AM	0	0	0	0	0	0	0	0	0	0	0	0	0
4/25/2024	6:30 AM	0	0	0	0	0	0	0	0	0	0	0	0	0
4/25/2024	6:45 AM	0	0	0	0	0	0	0	0	0	0	0	0	0
4/25/2024	7:00 AM	0	0	0	0	0	0	0	0	0	0	0	0	0
4/25/2024	7:15 AM	0	0	0	0	0	0	0	0	0	0	0	0	0
4/25/2024	7:30 AM	0	0	0	0	0	0	0	0	0	0	0	0	0
4/25/2024	7:45 AM	0	0	0	0	0	0	0	0	0	0	0	0	0
4/25/2024	8:00 AM	0	0	0	0	0	0	0	0	0	0	0	0	0
4/25/2024	8:15 AM	0	0	0	0	0	0	0	0	0	0	0	0	0
4/25/2024	8:30 AM	0	0	0	0	0	0	0	0	0	0	0	0	0
4/25/2024	8:45 AM	0	0	0	0	0	0	0	0	0	0	0	0	0
4/25/2024	9:00 AM	0	0	0	0	0	0	0	0	0	0	0	0	0
4/25/2024	9:15 AM	0	0	0	0	0	0	0	0	0	0	0	0	0
4/25/2024	9:30 AM	0	0	0	0	0	0	0	0	0	0	0	0	0
4/25/2024	9:45 AM	0	0	0	0	0	0	0	0	0	0	0	0	0
4/25/2024	10:00 AM	0	0	0	0	0	0	0	0	0	0	0	0	0
4/25/2024	10:15 AM	0	0	0	0	0	0	0	0	0	0	0	0	0
4/25/2024	10:30 AM	0	0	0	0	0	0	0	0	0	0	0	0	0
4/25/2024	10:45 AM	0	0	0	0	0	0	0	0	0	0	0	0	0
4/25/2024	11:00 AM	0	0	0	0	0	0	0	0	0	0	0	0	0
4/25/2024	11:15 AM	0	0	0	0	0	0	0	0	0	0	0	0	0
4/25/2024	11:30 AM	0	0	0	0	0	0	0	0	0	0	0	0	0
4/25/2024	11:45 AM	0	0	0	0	0	0	0	0	0	0	0	0	0
4/25/2024	12:00 PM	0	0	0	0	0	0	0	0	0	0	0	0	0
4/25/2024	12:15 PM	0	0	0	0	0	0	0	0	0	0	0	0	0
4/25/2024	12:30 PM	0	0	0	0	0	0	0	0	0	0	0	0	0
4/25/2024	12:45 PM	0	0	0	0	0	0	0	0	0	0	0	0	0
4/25/2024	1:00 PM	0	0	0	0	0	0	0	0	0	0	0	0	0
4/25/2024	1:15 PM	0	0	0	0	0	0	0	0	0	0	0	0	0
4/25/2024	1:30 PM	0	0	0	0	0	0	0	0	0	0	0	0	0
4/25/2024	1:45 PM	0	0	0	0	0	0	0	0	0	0	0	0	0
4/25/2024	2:00 PM	0	0	0	0	0	0	0	0	0	0	0	0	0
4/25/2024	2:15 PM	0	0	0	0	0	0	0	0	0	0	0	0	0
4/25/2024	2:30 PM	0	0	0	0	0	0	0	0	0	0	0	0	0
4/25/2024	2:45 PM	0	0	0	0	0	0	0	0	0	0	0	0	0
4/25/2024	3:00 PM	0	0	0	0	0	0	0	0	0	0	0	0	0
4/25/2024	3:15 PM	0	0	0	0	0	0	0	0	0	0	0	0	0
4/25/2024	3:30 PM	0	0	0	0	0	0	0	0	0	0	0	0	0
4/25/2024	3:45 PM	0	0	0	0	0	0	0	0	0	0	0	0	0
4/25/2024	4:00 PM	0	0	0	0	0	0	0	0	0	0	0	0	0
4/25/2024	4:15 PM	0	0	0	0	0	0	0	0	0	0	0	0	0
4/25/2024	4:30 PM	0	0	0	0	0	0	0	0	0	0	0	0	0
4/25/2024	4:45 PM	0	0	0	0	0	0	0	0	0	0	0	0	0
4/25/2024	5:00 PM	0	0	0	0	0	0	0	0	0	0	0	0	0
4/25/2024	5:15 PM	0	0	0	0	0	0	0	0	0	0	0	0	0
4/25/2024	5:30 PM	0	0	0	0	0	0	0	0	0	0	0	0	0
4/25/2024	5:45 PM	0	0	0	0	0	0	0	0	0	0	0	0	0
4/25/2024	6:00 PM	0	0	0	0	0	0	0	0	0	0	0	0	0
4/25/2024	6:15 PM	0	0	0	0	0	0	0	0	0	0	0	0	0
4/25/2024	6:30 PM	0	0	0	0	0	0	0	0	0	0	0	0	0
4/25/2024	6:45 PM	0	0	0	0	0	0	0	0	0	0	0	0	0
4/25/2024	7:00 PM	0	0	0	0	0	0	0	0	0	0	0	0	0
4/25/2024	7:15 PM	0	0	0	0	0	0	0	0	0	0	0	0	0
4/25/2024	7:30 PM	0	0	0	0	0	0	0	0	0	0	0	0	0
4/25/2024	7:45 PM	0	0	0	0	0	0	0	0	0	0	0	0	0
4/25/2024	8:00 PM	0	0	0	0	0	0	0	0	0	0	0	0	0
4/25/2024	8:15 PM	0	0	0	0	0	0	0	0	0	0	0	0	0
4/25/2024	8:30 PM	0	0	0	0	0	0	0	0	0	0	0	0	0
4/25/2024	8:45 PM	0	0	0	0	0	0	0	0	0	0	0	0	0
4/25/2024	9:00 PM	0	0	0	0	0	0	0	0	0	0	0	0	0
4/25/2024	9:15 PM	0	0	0	0	0	0	0	0	0	0	0	0	0
4/25/2024	9:30 PM	0	0	0	0	0	0	0	0	0	0	0	0	0
4/25/2024	9:45 PM	0	0	0	0	0	0	0	0	0	0	0	0	0
4/25/2024	10:00 PM	0	0	0	0	0	0	0	0	0	0	0	0	0
4/25/2024	10:15 PM	0	0	0	0	0	0	0	0	0	0	0	0	0
4/25/2024	10:30 PM	0	0	0	0	0	0	0	0	0	0	0	0	0
4/25/2024	10:45 PM	0	0	0	0	0	0	0	0	0	0	0	0	0
4/25/2024	11:00 PM	0	0	0	0	0	0	0	0	0	0	0	0	0
4/25/2024	11:15 PM	0	0	0	0	0	0	0	0	0	0	0	0	0
4/25/2024	11:30 PM	0	0	0	0	0	0	0	0	0	0	0	0	0
4/25/2024	11:45 PM	0	0	0	0	0	0	0	0	0	0	0	0	0

4/26/2024	12:00 AM	0	0	0	0	0	0	0	0	0	0	0	0	0
4/26/2024	12:15 AM	0	0	0	0	0	0	0	0	0	0	0	0	0
4/26/2024	12:30 AM	0	0	0	0	0	0	0	0	0	0	0	0	0
4/26/2024	12:45 AM	0	0	0	0	0	0	0	0	0	0	0	0	0
4/26/2024	1:00 AM	0	0	0	0	0	0	0	0	0	0	0	0	0
4/26/2024	1:15 AM	0	0	0	0	0	0	0	0	0	0	0	0	0
4/26/2024	1:30 AM	0	0	0	0	0	0	0	0	0	0	0	0	0
4/26/2024	1:45 AM	0	0	0	0	0	0	0	0	0	0	0	0	0
4/26/2024	2:00 AM	0	0	0	0	0	0	0	0	0	0	0	0	0
4/26/2024	2:15 AM	0	0	0	0	0	0	0	0	0	0	0	0	0
4/26/2024	2:30 AM	0	0	0	0	0	0	0	0	0	0	0	0	0
4/26/2024	2:45 AM	0	0	0	0	0	0	0	0	0	0	0	0	0
4/26/2024	3:00 AM	0	0	0	0	0	0	0	0	0	0	0	0	0
4/26/2024	3:15 AM	0	0	0	0	0	0	0	0	0	0	0	0	0
4/26/2024	3:30 AM	0	0	0	0	0	0	0	0	0	0	0	0	0
4/26/2024	3:45 AM	0	0	0	0	0	0	0	0	0	0	0	0	0
4/26/2024	4:00 AM	0	0	0	0	0	0	0	0	0	0	0	0	0
4/26/2024	4:15 AM	0	0	0	0	0	0	0	0	0	0	0	0	0
4/26/2024	4:30 AM	0	0	0	0	0	0	0	0	0	0	0	0	0
4/26/2024	4:45 AM	0	0	0	0	0	0	0	0	0	0	0	0	0
4/26/2024	5:00 AM	0	0	0	0	0	0	0	0	0	0	0	0	0
4/26/2024	5:15 AM	0	0	0	0	0	0	0	0	0	0	0	0	0
4/26/2024	5:30 AM	0	0	0	0	0	0	0	0	0	0	0	0	0
4/26/2024	5:45 AM	0	0	0	0	0	0	0	0	0	0	0	0	0
4/26/2024	6:00 AM	0	0	0	0	0	0	0	0	0	0	0	0	0
4/26/2024	6:15 AM	0	0	0	0	0	0	0	0	0	0	0	0	0
4/26/2024	6:30 AM	0	0	0	0	0	0	0	0	0	0	0	0	0
4/26/2024	6:45 AM	0	0	0	0	0	0	0	0	0	0	0	0	0
4/26/2024	7:00 AM	0	0	0	0	0	0	0	0	0	0	0	0	0
4/26/2024	7:15 AM	0	0	0	0	0	0	0	0	0	0	0	0	0
4/26/2024	7:30 AM	0	0	0	0	0	0	0	0	0	0	0	0	0
4/26/2024	7:45 AM	0	0	0	0	0	0	0	0	0	0	0	0	0
4/26/2024	8:00 AM	0	0	0	0	0	0	0	0	0	0	0	0	0
4/26/2024	8:15 AM	0	0	0	0	0	0	0	0	0	0	0	0	0
4/26/2024	8:30 AM	0	0	0	0	0	0	0	0	0	0	0	0	0
4/26/2024	8:45 AM	0	0	0	0	0	0	0	0	0	0	0	0	0
4/26/2024	9:00 AM	0	0	0	0	0	0	0	0	0	0	0	0	0
4/26/2024	9:15 AM	0	0	0	0	0	0	0	0	0	0	0	0	0
4/26/2024	9:30 AM	0	0	0	0	0	0	0	0	0	0	0	0	0
4/26/2024	9:45 AM	0	0	0	0	0	0	0	0	0	0	0	0	0
4/26/2024	10:00 AM	0	0	0	0	0	0	0	0	0	0	0	0	0
4/26/2024	10:15 AM	0	0	0	0	0	0	0	0	0	0	0	0	0
4/26/2024	10:30 AM	0	0	0	0	0	0	0	0	0	0	0	0	0
4/26/2024	10:45 AM	0	0	0	0	0	0	0	0	0	0	0	0	0
4/26/2024	11:00 AM	0	0	0	0	0	0	0	0	0	0	0	0	0
4/26/2024	11:15 AM	0	0	0	0	0	0	0	0	0	0	0	0	0
4/26/2024	11:30 AM	0	0	0	0	0	0	0	0	0	0	0	0	0
4/26/2024	11:45 AM	0	0	0	0	0	0	0	0	0	0	0	0	0
4/26/2024	12:00 PM	0	0	0	0	0	0	0	0	0	0	0	0	0
4/26/2024	12:15 PM	0	0	0	0	0	0	0	0	0	0	0	0	0
4/26/2024	12:30 PM	0	0	0	0	0	0	0	0	0	0	0	0	0
4/26/2024	12:45 PM	0	0	0	0	0	0	0	0	0	0	0	0	0
4/26/2024	1:00 PM	0	0	0	0	0	0	0	0	0	0	0	0	0
4/26/2024	1:15 PM	0	0	0	0	0	0	0	0	0	0	0	0	0
4/26/2024	1:30 PM	0	0	0	0	0	0	0	0	0	0	0	0	0
4/26/2024	1:45 PM	0	0	0	0	0	0	0	0	0	0	0	0	0
4/26/2024	2:00 PM	0	0	0	0	0	0	0	0	0	0	0	0	0
4/26/2024	2:15 PM	0	0	0	0	0	0	0	0	0	0	0	0	0
4/26/2024	2:30 PM	0	0	0	0	0	0	0	0	0	0	0	0	0
4/26/2024	2:45 PM	0	0	0	0	0	0	0	0	0	0	0	0	0
4/26/2024	3:00 PM	0	0	0	0	0	0	0	0	0	0	0	0	0
4/26/2024	3:15 PM	0	0	0	0	0	0	0	0	0	0	0	0	0
4/26/2024	3:30 PM	0	0	0	0	0	0	0	0	0	0	0	0	0
4/26/2024	3:45 PM	0	0	0	0	0	0	0	0	0	0	0	0	0
4/26/2024	4:00 PM	0	0	0	0	0	0	0	0	0	0	0	0	0
4/26/2024	4:15 PM	0	0	0	0	0	0	0	0	0	0	0	0	0
4/26/2024	4:30 PM	0	0	0	0	0	0	0	0	0	0	0	0	0
4/26/2024	4:45 PM	0	0	0	0	0	0	0	0	0	0	0	0	0
4/26/2024	5:00 PM	0	0	0	0	0	0	0	0	0	0	0	0	0
4/26/2024	5:15 PM	0	0	0	0	0	0	0	0	0	0	0	0	0
4/26/2024	5:30 PM	0	0	0	0	0	0	0	0	0	0	0	0	0
4/26/2024	5:45 PM	0	0	0	0	0	0	0	0	0	0	0	0	0
4/26/2024	6:00 PM	0	0	0	0	0	0	0	0	0	0	0	0	0
4/26/2024	6:15 PM	0	0	0	0	0	0	0	0	0	0	0	0	0
4/26/2024	6:30 PM	0	0	0	0	0	0	0	0	0	0	0	0	0
4/26/2024	6:45 PM	0	0	0	0	0	0	0	0	0	0	0	0	0
4/26/2024	7:00 PM	0	0	0	0	0	0	0	0	0	0	0	0	0
4/26/2024	7:15 PM	0	0	0	0	0	0	0	0	0	0	0	0	0
4/26/2024	7:30 PM	0	0	0	0	0	0	0	0	0	0	0	0	0
4/26/2024	7:45 PM	0	0	0	0	0	0	0	0	0	0	0	0	0
4/26/2024	8:00 PM	0	0	0	0	0	0	0	0	0	0	0	0	0
4/26/2024	8:15 PM	0	0	0	0	0	0	0	0	0	0	0	0	0
4/26/2024	8:30 PM	0	0	0	0	0	0	0	0	0	0	0	0	0
4/26/2024	8:45 PM	0	0	0	0	0	0	0	0	0	0	0	0	0
4/26/2024	9:00 PM	0	0	0	0	0	0	0	0	0	0	0	0	0
4/26/2024	9:15 PM	0	0	0	0	0	0	0	0	0	0	0	0	0
4/26/2024	9:30 PM	0	0	0	0	0	0	0	0	0	0	0	0	0
4/26/2024	9:45 PM	0	0	0	0	0	0	0	0	0	0	0	0	0
4/26/2024	10:00 PM	0	0	0	0	0	0	0	0	0	0	0	0	0
4/26/2024	10:15 PM	0	0	0	0	0	0	0	0	0	0	0	0	0
4/26/2024	10:30 PM	0	0	0	0	0	0	0	0	0	0	0	0	0
4/26/2024	10:45 PM	0	0	0	0	0	0	0	0	0	0	0	0	0
4/26/2024	11:00 PM	0	0	0	0	0	0	0	0	0	0	0	0	0
4/26/2024	11:15 PM	0	0	0	0	0	0	0	0	0	0	0	0	0
4/26/2024	11:30 PM	0	0	0	0	0	0	0	0	0	0	0	0	0
4/26/2024	11:45 PM	0	0	0	0	0	0	0	0	0	0	0	0	0

4/27/2024	12:00 AM	0	0	0	0	0	0	0	0	0	0	0	0	0
4/27/2024	12:15 AM	0	0	0	0	0	0	0	0	0	0	0	0	0
4/27/2024	12:30 AM	0	0	0	0	0	0	0	0	0	0	0	0	0
4/27/2024	12:45 AM	0	0	0	0	0	0	0	0	0	0	0	0	0
4/27/2024	1:00 AM	0	0	0	0	0	0	0	0	0	0	0	0	0
4/27/2024	1:15 AM	0	0	0	0	0	0	0	0	0	0	0	0	0
4/27/2024	1:30 AM	0	0	0	0	0	0	0	0	0	0	0	0	0
4/27/2024	1:45 AM	0	0	0	0	0	0	0	0	0	0	0	0	0
4/27/2024	2:00 AM	0	0	0	0	0	0	0	0	0	0	0	0	0
4/27/2024	2:15 AM	0	0	0	0	0	0	0	0	0	0	0	0	0
4/27/2024	2:30 AM	0	0	0	0	0	0	0	0	0	0	0	0	0
4/27/2024	2:45 AM	0	0	0	0	0	0	0	0	0	0	0	0	0
4/27/2024	3:00 AM	0	0	0	0	0	0	0	0	0	0	0	0	0
4/27/2024	3:15 AM	0	0	0	0	0	0	0	0	0	0	0	0	0
4/27/2024	3:30 AM	0	0	0	0	0	0	0	0	0	0	0	0	0
4/27/2024	3:45 AM	0	0	0	0	0	0	0	0	0	0	0	0	0
4/27/2024	4:00 AM	0	0	0	0	0	0	0	0	0	0	0	0	0
4/27/2024	4:15 AM	0	0	0	0	0	0	0	0	0	0	0	0	0
4/27/2024	4:30 AM	0	0	0	0	0	0	0	0	0	0	0	0	0
4/27/2024	4:45 AM	0	0	0	0	0	0	0	0	0	0	0	0	0
4/27/2024	5:00 AM	0	0	0	0	0	0	0	0	0	0	0	0	0
4/27/2024	5:15 AM	0	0	0	0	0	0	0	0	0	0	0	0	0
4/27/2024	5:30 AM	0	0	0	0	0	0	0	0	0	0	0	0	0
4/27/2024	5:45 AM	0	0	0	0	0	0	0	0	0	0	0	0	0
4/27/2024	6:00 AM	0	0	0	0	0	0	0	0	0	0	0	0	0
4/27/2024	6:15 AM	0	0	0	0	0	0	0	0	0	0	0	0	0
4/27/2024	6:30 AM	0	0	0	0	0	0	0	0	0	0	0	0	0
4/27/2024	6:45 AM	0	0	0	0	0	0	0	0	0	0	0	0	0
4/27/2024	7:00 AM	0	0	0	0	0	0	0	0	0	0	0	0	0
4/27/2024	7:15 AM	0	0	0	0	0	0	0	0	0	0	0	0	0
4/27/2024	7:30 AM	0	0	0	0	0	0	0	0	0	0	0	0	0
4/27/2024	7:45 AM	0	0	0	0	0	0	0	0	0	0	0	0	0
4/27/2024	8:00 AM	0	0	0	0	0	0	0	0	0	0	0	0	0
4/27/2024	8:15 AM	0	0	0	0	0	0	0	0	0	0	0	0	0
4/27/2024	8:30 AM	0	0	0	0	0	0	0	0	0	0	0	0	0
4/27/2024	8:45 AM	0	0	0	0	0	0	0	0	0	0	0	0	0
4/27/2024	9:00 AM	0	0	0	0	0	0	0	0	0	0	0	0	0
4/27/2024	9:15 AM	0	0	0	0	0	0	0	0	0	0	0	0	0
4/27/2024	9:30 AM	0	0	0	0	0	0	0	0	0	0	0	0	0
4/27/2024	9:45 AM	0	0	0	0	0	0	0	0	0	0	0	0	0
4/27/2024	10:00 AM	0	0	0	0	0	0	0	0	0	0	0	0	0
4/27/2024	10:15 AM	0	0	0	0	0	0	0	0	0	0	0	0	0
4/27/2024	10:30 AM	0	0	0	0	0	0	0	0	0	0	0	0	0
4/27/2024	10:45 AM	0	0	0	0	0	0	0	0	0	0	0	0	0
4/27/2024	11:00 AM	0	0	0	0	0	0	0	0	0	0	0	0	0
4/27/2024	11:15 AM	0	0	0	0	0	0	0	0	0	0	0	0	0
4/27/2024	11:30 AM	0	0	0	0	0	0	0	0	0	0	0	0	0
4/27/2024	11:45 AM	0	0	0	0	0	0	0	0	0	0	0	0	0
4/27/2024	12:00 PM	0	0	0	0	0	0	0	0	0	0	0	0	0
4/27/2024	12:15 PM	0	0	0	0	0	0	0	0	0	0	0	0	0
4/27/2024	12:30 PM	0	0	0	0	0	0	0	0	0	0	0	0	0
4/27/2024	12:45 PM	0	0	0	0	0	0	0	0	0	0	0	0	0
4/27/2024	1:00 PM	0	0	0	0	0	0	0	0	0	0	0	0	0
4/27/2024	1:15 PM	0	0	0	0	0	0	0	0	0	0	0	0	0
4/27/2024	1:30 PM	0	0	0	0	0	0	0	0	0	0	0	0	0
4/27/2024	1:45 PM	0	0	0	0	0	0	0	0	0	0	0	0	0
4/27/2024	2:00 PM	0	0	0	0	0	0	0	0	0	0	0	0	0
4/27/2024	2:15 PM	0	0	0	0	0	0	0	0	0	0	0	0	0
4/27/2024	2:30 PM	0	0	0	0	0	0	0	0	0	0	0	0	0
4/27/2024	2:45 PM	0	0	0	0	0	0	0	0	0	0	0	0	0
4/27/2024	3:00 PM	0	0	0	0	0	0	0	0	0	0	0	0	0
4/27/2024	3:15 PM	0	0	0	0	0	0	0	0	0	0	0	0	0
4/27/2024	3:30 PM	0	0	0	0	0	0	0	0	0	0	0	0	0
4/27/2024	3:45 PM	0	0	0	0	0	0	0	0	0	0	0	0	0
4/27/2024	4:00 PM	0	0	0	0	0	0	0	0	0	0	0	0	0
4/27/2024	4:15 PM	0	0	0	0	0	0	0	0	0	0	0	0	0
4/27/2024	4:30 PM	0	0	0	0	0	0	0	0	0	0	0	0	0
4/27/2024	4:45 PM	0	0	0	0	0	0	0	0	0	0	0	0	0
4/27/2024	5:00 PM	0	0	0	0	0	0	0	0	0	0	0	0	0
4/27/2024	5:15 PM	0	0	0	0	0	0	0	0	0	0	0	0	0
4/27/2024	5:30 PM	0	0	0	0	0	0	0	0	0	0	0	0	0
4/27/2024	5:45 PM	0	0	0	0	0	0	0	0	0	0	0	0	0
4/27/2024	6:00 PM	0	0	0	0	0	0	0	0	0	0	0	0	0
4/27/2024	6:15 PM	0	0	0	0	0	0	0	0	0	0	0	0	0
4/27/2024	6:30 PM	0	0	0	0	0	0	0	0	0	0	0	0	0
4/27/2024	6:45 PM	0	0	0	0	0	0	0	0	0	0	0	0	0
4/27/2024	7:00 PM	0	0	0	0	0	0	0	0	0	0	0	0	0
4/27/2024	7:15 PM	0	0	0	0	0	0	0	0	0	0	0	0	0
4/27/2024	7:30 PM	0	0	0	0	0	0	0	0	0	0	0	0	0
4/27/2024	7:45 PM	0	0	0	0	0	0	0	0	0	0	0	0	0
4/27/2024	8:00 PM	0	0	0	0	0	0	0	0	0	0	0	0	0
4/27/2024	8:15 PM	0	0	0	0	0	0	0	0	0	0	0	0	0
4/27/2024	8:30 PM	0	0	0	0	0	0	0	0	0	0	0	0	0
4/27/2024	8:45 PM	0	0	0	0	0	0	0	0	0	0	0	0	0
4/27/2024	9:00 PM	0	0	0	0	0	0	0	0	0	0	0	0	0
4/27/2024	9:15 PM	0	0	0	0	0	0	0	0	0	0	0	0	0
4/27/2024	9:30 PM	0	0	0	0	0	0	0	0	0	0	0	0	0
4/27/2024	9:45 PM	0	0	0	0	0	0	0	0	0	0	0	0	0
4/27/2024	10:00 PM	0	0	0	0	0	0	0	0	0	0	0	0	0
4/27/2024	10:15 PM	0	0	0	0	0	0	0	0	0	0	0	0	0
4/27/2024	10:30 PM	0	0	0	0	0	0	0	0	0	0	0	0	0
4/27/2024	10:45 PM	0	0	0	0	0	0	0	0	0	0	0	0	0
4/27/2024	11:00 PM	0	0	0	0	0	0	0	0	0	0	0	0	0
4/27/2024	11:15 PM	0	0	0	0	0	0	0	0	0	0	0	0	0
4/27/2024	11:30 PM	0	0	0	0	0	0	0	0	0	0	0	0	0
4/27/2024	11:45 PM	0	0	0	0	0	0	0	0	0	0	0	0	0

SB
File Name:
Start Date: 4/21/2024
Start Time: 0
Site Code: 7
Station ID: 1
Location 1: I-26 S/Bound Off-Ramp, north of I-20
Location 2:

Date	Time	1	2	3	4	5	6	7	8	9	10	11	12	13
4/21/2024	12:00 AM	0	90	22	0	0	0	0	0	1	0	0	0	0
4/21/2024	12:15 AM	0	83	22	0	1	0	0	0	2	0	0	0	0
4/21/2024	12:30 AM	0	77	23	0	1	0	0	0	2	0	0	0	0
4/21/2024	12:45 AM	0	70	21	0	1	0	0	0	2	0	0	0	0
4/21/2024	1:00 AM	0	63	16	0	1	0	0	0	3	0	0	0	0
4/21/2024	1:15 AM	0	51	13	0	0	0	0	0	2	0	0	0	0
4/21/2024	1:30 AM	0	49	10	0	0	0	0	0	2	0	0	0	0
4/21/2024	1:45 AM	0	45	11	0	0	0	0	1	3	0	0	0	0
4/21/2024	2:00 AM	0	35	11	0	1	0	0	1	2	0	0	0	0
4/21/2024	2:15 AM	0	34	11	0	1	0	0	1	3	0	0	0	0
4/21/2024	2:30 AM	0	29	9	0	1	0	0	1	3	0	0	0	0
4/21/2024	2:45 AM	0	27	8	0	1	0	0	0	3	0	0	0	0
4/21/2024	3:00 AM	0	25	9	0	0	0	0	0	3	0	0	0	0
4/21/2024	3:15 AM	0	26	10	0	1	0	0	0	2	0	0	0	0
4/21/2024	3:30 AM	0	23	11	0	1	0	0	0	2	0	0	0	0
4/21/2024	3:45 AM	0	25	10	0	1	0	0	1	1	0	0	0	0
4/21/2024	4:00 AM	0	23	8	0	1	0	0	1	3	0	0	0	0
4/21/2024	4:15 AM	0	18	6	0	0	0	0	1	6	0	0	0	0
4/21/2024	4:30 AM	0	17	5	0	0	0	0	1	5	0	0	0	0
4/21/2024	4:45 AM	0	21	8	0	0	0	0	1	6	0	0	0	0
4/21/2024	5:00 AM	0	26	9	0	0	0	0	1	6	0	0	0	0
4/21/2024	5:15 AM	0	35	12	0	0	0	0	1	4	0	0	0	0
4/21/2024	5:30 AM	0	59	16	0	0	0	0	1	5	0	0	0	0
4/21/2024	5:45 AM	0	67	17	0	0	0	0	0	4	0	0	0	0
4/21/2024	6:00 AM	0	79	17	0	0	0	0	0	2	0	0	0	0
4/21/2024	6:15 AM	0	88	20	0	0	0	0	0	2	0	0	0	0
4/21/2024	6:30 AM	0	84	19	0	0	0	0	0	3	0	0	0	0
4/21/2024	6:45 AM	0	93	22	0	0	0	0	0	4	0	0	0	0
4/21/2024	7:00 AM	0	91	31	0	0	0	0	0	8	0	0	0	0
4/21/2024	7:15 AM	0	98	29	0	0	0	0	0	8	0	0	0	0
4/21/2024	7:30 AM	0	108	34	0	1	1	0	0	9	0	0	0	0
4/21/2024	7:45 AM	0	123	30	0	1	1	0	0	8	0	0	0	0
4/21/2024	8:00 AM	0	150	28	0	1	1	0	0	6	0	0	0	0
4/21/2024	8:15 AM	0	162	33	0	1	1	0	0	7	0	0	0	0
4/21/2024	8:30 AM	0	185	35	0	0	0	0	0	5	0	0	0	0
4/21/2024	8:45 AM	0	197	47	1	0	1	0	0	6	0	0	0	0
4/21/2024	9:00 AM	0	218	51	1	0	1	0	0	4	0	0	0	0
4/21/2024	9:15 AM	0	233	54	1	0	2	0	0	6	0	0	0	0
4/21/2024	9:30 AM	0	258	55	2	0	2	0	0	6	0	0	0	0
4/21/2024	9:45 AM	0	289	61	2	0	1	0	0	7	0	0	0	0
4/21/2024	10:00 AM	0	305	66	2	0	1	0	0	8	0	0	0	0
4/21/2024	10:15 AM	0	323	72	2	2	0	0	0	5	0	0	0	0
4/21/2024	10:30 AM	0	316	86	1	3	0	0	0	4	0	0	0	0
4/21/2024	10:45 AM	0	327	77	0	4	0	0	0	3	0	0	0	0
4/21/2024	11:00 AM	0	364	86	0	5	0	0	0	2	0	0	0	0
4/21/2024	11:15 AM	0	396	88	0	3	0	0	0	3	0	0	0	0
4/21/2024	11:30 AM	0	472	90	0	2	0	0	0	4	0	0	0	0
4/21/2024	11:45 AM	0	486	103	0	1	0	0	0	5	0	0	0	0
4/21/2024	12:00 PM	0	501	99	3	0	0	0	0	7	0	0	0	0
4/21/2024	12:15 PM	0	531	111	3	0	0	1	0	5	0	0	0	0
4/21/2024	12:30 PM	0	509	119	3	1	0	1	0	6	0	0	0	0
4/21/2024	12:45 PM	0	544	124	3	1	0	1	0	7	0	0	0	0
4/21/2024	1:00 PM	0	544	123	0	4	0	1	0	6	0	0	0	0
4/21/2024	1:15 PM	0	508	115	0	4	0	0	1	6	0	0	0	0
4/21/2024	1:30 PM	0	513	105	0	4	0	0	1	4	0	0	0	0
4/21/2024	1:45 PM	0	498	100	0	5	0	0	1	4	0	0	0	0
4/21/2024	2:00 PM	0	493	98	0	2	0	0	1	4	0	0	0	0
4/21/2024	2:15 PM	0	515	94	0	4	0	0	0	5	0	0	0	0
4/21/2024	2:30 PM	0	503	96	0	3	0	0	0	7	0	0	0	0
4/21/2024	2:45 PM	0	478	92	1	2	0	0	1	6	0	0	0	0
4/21/2024	3:00 PM	0	478	88	1	2	0	0	1	5	0	0	0	0
4/21/2024	3:15 PM	0	480	89	1	1	0	0	1	5	0	0	0	0
4/21/2024	3:30 PM	0	471	76	1	3	0	0	2	5	0	0	0	0
4/21/2024	3:45 PM	0	477	82	0	3	0	0	1	3	0	0	0	0
4/21/2024	4:00 PM	0	445	102	0	4	0	0	1	4	0	0	0	0
4/21/2024	4:15 PM	0	431	98	0	3	0	0	1	4	0	0	0	0
4/21/2024	4:30 PM	0	448	96	0	1	0	0	0	2	0	0	0	0
4/21/2024	4:45 PM	0	442	84	0	1	0	0	0	4	0	0	0	0
4/21/2024	5:00 PM	0	457	62	0	1	0	0	0	3	0	0	0	0
4/21/2024	5:15 PM	0	460	67	0	1	0	0	0	4	0	0	0	0
4/21/2024	5:30 PM	0	447	71	0	2	0	0	0	4	0	0	0	0
4/21/2024	5:45 PM	0	441	66	0	2	0	0	0	3	0	0	0	0
4/21/2024	6:00 PM	0	419	67	0	1	0	0	0	4	0	0	0	0
4/21/2024	6:15 PM	0	393	60	0	2	0	0	0	2	0	0	0	0
4/21/2024	6:30 PM	0	342	57	0	1	0	0	1	8	0	0	0	0
4/21/2024	6:45 PM	0	311	64	0	1	0	0	1	7	0	0	0	0
4/21/2024	7:00 PM	0	272	58	0	1	0	0	1	8	0	0	0	0
4/21/2024	7:15 PM	0	240	61	0	0	0	0	3	12	0	0	0	0
4/21/2024	7:30 PM	0	226	57	0	0	0	0	3	9	0	0	0	0
4/21/2024	7:45 PM	0	223	42	0	0	0	0	3	9	0	0	0	0
4/21/2024	8:00 PM	0	227	38	0	1	0	0	5	8	0	0	0	0
4/21/2024	8:15 PM	0	221	27	0	2	0	0	3	7	0	0	0	0
4/21/2024	8:30 PM	0	222	25	0	3	0	0	2	5	0	0	0	0
4/21/2024	8:45 PM	0	197	28	0	3	0	0	4	6	0	0	0	0
4/21/2024	9:00 PM	0	172	30	0	2	0	0	2	11	0	0	0	0
4/21/2024	9:15 PM	0	160	30	0	1	0	0	3	10	0	0	0	0
4/21/2024	9:30 PM	0	136	31	0	1	0	0	3	11	0	0	0	0
4/21/2024	9:45 PM	0	112	30	0	1	0	0	2	11	0	0	0	0
4/21/2024	10:00 PM	0	98	31	0	2	0	0	2	6	0	0	0	0
4/21/2024	10:15 PM	0	83	30	0	2	0	0	1	6	0	0	0	0
4/21/2024	10:30 PM	0	68	23	0	1	0	0	1	4	0	0	0	0
4/21/2024	10:45 PM	0	59	19	0	1	0	0	0	5	0	0	0	0
4/21/2024	11:00 PM	0	52	14	0	0	0	0	0	7	0	0	0	0
4/21/2024	11:15 PM	0	31	7	0	0	0	0	0	5	0	0	0	0
4/21/2024	11:30 PM	0	18	5	0	0	0	0	0	5	0	0	0	0
4/21/2024	11:45 PM	0	9	3	0	0	0	0	0	3	0	0	0	0

4/22/2024	12:00 AM	0	31	6	0	1	0	0	0	5	0	0	0	0
4/22/2024	12:15 AM	0	28	4	0	0	0	0	0	5	0	0	0	0
4/22/2024	12:30 AM	0	23	3	0	0	1	0	0	4	0	0	0	0
4/22/2024	12:45 AM	0	24	4	0	0	1	0	0	2	0	0	0	0
4/22/2024	1:00 AM	0	19	2	0	0	1	0	0	1	0	0	0	0
4/22/2024	1:15 AM	0	21	4	0	0	1	0	0	3	0	0	0	0
4/22/2024	1:30 AM	0	19	4	0	0	0	0	0	3	0	0	0	0
4/22/2024	1:45 AM	0	17	3	0	0	0	0	0	4	0	0	0	0
4/22/2024	2:00 AM	0	23	5	0	0	0	0	0	5	0	0	0	0
4/22/2024	2:15 AM	0	20	3	0	0	1	0	0	4	0	0	0	0
4/22/2024	2:30 AM	0	24	5	0	1	1	0	0	4	0	0	0	0
4/22/2024	2:45 AM	0	26	6	0	2	1	0	0	4	0	0	0	0
4/22/2024	3:00 AM	0	25	6	0	2	1	0	0	5	0	0	0	0
4/22/2024	3:15 AM	0	31	8	0	3	0	0	0	5	0	0	0	0
4/22/2024	3:30 AM	0	36	8	0	2	0	0	0	5	0	0	0	0
4/22/2024	3:45 AM	0	34	7	0	1	0	0	0	5	0	0	0	0
4/22/2024	4:00 AM	0	37	8	0	2	0	0	0	5	0	0	0	0
4/22/2024	4:15 AM	0	42	9	0	1	0	0	1	6	0	0	0	0
4/22/2024	4:30 AM	0	56	11	0	1	0	0	1	8	0	0	0	0
4/22/2024	4:45 AM	0	89	17	0	2	0	0	1	7	0	0	0	0
4/22/2024	5:00 AM	0	120	21	0	2	0	0	1	8	0	0	0	0
4/22/2024	5:15 AM	0	160	26	0	3	0	0	0	8	0	0	0	0
4/22/2024	5:30 AM	0	214	33	0	5	1	0	0	8	0	0	0	0
4/22/2024	5:45 AM	0	286	47	0	5	2	0	0	10	0	0	0	0
4/22/2024	6:00 AM	0	377	63	1	7	2	0	0	8	0	0	0	0
4/22/2024	6:15 AM	0	453	78	2	8	2	0	0	12	0	0	0	0
4/22/2024	6:30 AM	0	522	106	2	6	2	0	0	14	0	0	0	0
4/22/2024	6:45 AM	0	559	117	2	7	1	0	0	14	0	0	0	0
4/22/2024	7:00 AM	0	556	115	1	5	3	0	0	17	0	0	0	0
4/22/2024	7:15 AM	0	533	116	0	4	4	0	0	11	0	0	0	0
4/22/2024	7:30 AM	0	482	91	1	4	4	0	1	9	0	0	0	0
4/22/2024	7:45 AM	0	447	81	1	8	4	0	1	9	0	0	0	0
4/22/2024	8:00 AM	0	406	80	1	13	2	0	1	9	0	0	0	0
4/22/2024	8:15 AM	0	383	67	1	15	2	0	1	13	0	0	0	0
4/22/2024	8:30 AM	0	375	73	0	19	2	0	1	18	0	0	0	0
4/22/2024	8:45 AM	0	347	67	0	16	2	0	1	22	0	0	0	0
4/22/2024	9:00 AM	0	338	64	0	13	3	0	1	21	0	0	0	0
4/22/2024	9:15 AM	0	317	76	0	13	4	0	2	20	0	0	0	0
4/22/2024	9:30 AM	0	294	83	0	12	3	0	1	17	0	0	0	0
4/22/2024	9:45 AM	0	300	81	0	12	3	0	2	18	0	0	0	0
4/22/2024	10:00 AM	0	308	86	1	12	3	0	2	18	0	0	0	0
4/22/2024	10:15 AM	0	340	85	1	12	1	0	2	18	0	0	0	0
4/22/2024	10:30 AM	0	350	76	1	13	1	0	2	15	0	0	0	0
4/22/2024	10:45 AM	1	349	89	1	13	2	0	2	9	0	0	0	0
4/22/2024	11:00 AM	1	356	78	0	12	1	0	2	11	0	0	0	0
4/22/2024	11:15 AM	1	378	76	0	12	1	0	1	14	0	0	0	0
4/22/2024	11:30 AM	1	403	88	0	9	1	0	2	12	0	0	0	0
4/22/2024	11:45 AM	0	431	85	0	6	0	0	2	18	0	0	0	0
4/22/2024	12:00 PM	0	464	98	0	5	3	0	2	14	0	0	0	0
4/22/2024	12:15 PM	0	454	101	0	4	3	0	2	13	0	0	0	0
4/22/2024	12:30 PM	0	455	92	1	7	4	0	2	19	0	0	0	0
4/22/2024	12:45 PM	0	450	101	1	12	4	0	1	19	0	0	0	0
4/22/2024	1:00 PM	0	458	93	1	12	2	0	2	20	0	0	0	0
4/22/2024	1:15 PM	0	475	100	1	12	2	0	2	21	0	0	0	0
4/22/2024	1:30 PM	0	481	102	2	11	2	0	2	21	0	0	0	0
4/22/2024	1:45 PM	0	494	97	2	8	2	0	2	18	0	0	0	0
4/22/2024	2:00 PM	0	475	103	2	11	3	0	1	20	0	0	0	0
4/22/2024	2:15 PM	0	514	98	2	10	3	0	3	16	0	0	0	0
4/22/2024	2:30 PM	0	543	95	0	8	4	0	2	11	0	0	0	0
4/22/2024	2:45 PM	0	563	97	0	10	5	0	2	10	0	0	0	0
4/22/2024	3:00 PM	0	580	101	0	8	3	0	3	9	0	0	0	0
4/22/2024	3:15 PM	0	617	113	1	9	3	0	1	8	0	0	0	0
4/22/2024	3:30 PM	0	615	120	1	10	2	0	1	9	0	0	0	0
4/22/2024	3:45 PM	0	645	120	1	12	2	0	2	10	0	0	0	0
4/22/2024	4:00 PM	0	659	119	1	12	2	0	1	8	0	0	0	0
4/22/2024	4:15 PM	0	648	103	0	11	2	0	1	12	0	0	0	0
4/22/2024	4:30 PM	0	678	98	0	15	2	0	1	17	0	0	0	0
4/22/2024	4:45 PM	0	635	90	0	11	2	0	1	14	0	0	0	0
4/22/2024	5:00 PM	0	606	88	0	10	2	0	1	17	0	0	0	0
4/22/2024	5:15 PM	0	549	86	0	11	2	0	1	14	0	0	0	0
4/22/2024	5:30 PM	0	501	75	0	7	1	0	1	8	0	0	0	0
4/22/2024	5:45 PM	0	481	74	0	7	0	0	0	9	0	0	0	0
4/22/2024	6:00 PM	0	454	64	0	6	0	0	0	5	0	0	0	0
4/22/2024	6:15 PM	0	427	66	0	5	1	0	0	6	0	0	0	0
4/22/2024	6:30 PM	0	385	70	0	4	1	0	0	8	0	0	0	0
4/22/2024	6:45 PM	0	358	64	0	4	1	0	0	8	0	0	0	0
4/22/2024	7:00 PM	0	353	71	0	6	2	0	0	9	0	0	0	0
4/22/2024	7:15 PM	0	322	63	0	7	1	0	0	7	0	0	0	0
4/22/2024	7:30 PM	0	317	66	0	6	1	0	0	5	0	0	0	0
4/22/2024	7:45 PM	0	303	61	0	4	1	0	0	5	0	0	0	0
4/22/2024	8:00 PM	0	285	52	0	2	0	0	0	5	0	0	0	0
4/22/2024	8:15 PM	0	278	46	0	0	0	0	0	5	0	0	0	0
4/22/2024	8:30 PM	0	253	36	0	0	0	0	0	4	0	0	0	0
4/22/2024	8:45 PM	0	237	36	1	0	0	0	0	3	0	0	0	0
4/22/2024	9:00 PM	0	204	33	1	0	0	0	0	3	0	0	0	0
4/22/2024	9:15 PM	0	166	31	1	0	0	0	0	2	0	0	0	0
4/22/2024	9:30 PM	0	149	28	1	0	0	0	0	2	0	0	0	0
4/22/2024	9:45 PM	0	120	24	0	0	0	0	0	3	0	1	0	0
4/22/2024	10:00 PM	0	114	23	0	0	0	0	0	4	0	2	0	0
4/22/2024	10:15 PM	0	110	23	0	1	0	0	0	4	0	2	0	0
4/22/2024	10:30 PM	0	91	19	0	1	0	0	0	4	0	2	0	0
4/22/2024	10:45 PM	0	82	15	0	1	0	0	0	4	0	2	0	0
4/22/2024	11:00 PM	0	60	9	0	1	0	0	0	2	0	1	0	0
4/22/2024	11:15 PM	0	34	4	0	0	0	0	0	2	0	1	0	0
4/22/2024	11:30 PM	0	25	3	0	0	0	0	0	2	0	1	0	0
4/22/2024	11:45 PM	0	8	1	0	0	0	0	0	0	0	0	0	0

4/23/2024	12:00 AM	0	41	11	0	0	0	0	0	5	0	1	0	0
4/23/2024	12:15 AM	0	38	11	0	0	0	0	0	6	0	2	0	0
4/23/2024	12:30 AM	0	29	10	0	0	0	0	0	10	0	2	0	0
4/23/2024	12:45 AM	0	27	11	0	0	0	0	0	7	0	2	0	0
4/23/2024	1:00 AM	0	23	7	0	0	0	0	0	5	0	1	0	0
4/23/2024	1:15 AM	0	18	6	0	0	0	0	0	4	0	2	0	0
4/23/2024	1:30 AM	0	17	5	0	0	0	0	0	2	0	2	0	0
4/23/2024	1:45 AM	0	15	5	0	0	0	0	0	3	0	3	0	0
4/23/2024	2:00 AM	0	14	5	0	1	0	0	0	4	0	4	0	0
4/23/2024	2:15 AM	0	17	4	0	1	0	0	0	5	0	3	0	0
4/23/2024	2:30 AM	0	20	6	0	1	0	0	0	5	0	3	0	0
4/23/2024	2:45 AM	0	24	6	0	1	0	0	0	5	0	2	0	0
4/23/2024	3:00 AM	0	30	8	0	0	0	0	0	4	0	1	0	0
4/23/2024	3:15 AM	0	29	9	0	0	0	0	0	5	0	0	0	0
4/23/2024	3:30 AM	0	33	10	0	0	0	0	0	6	0	0	0	0
4/23/2024	3:45 AM	0	36	13	0	0	0	0	0	7	0	0	0	0
4/23/2024	4:00 AM	0	39	12	0	0	0	0	0	10	0	0	0	0
4/23/2024	4:15 AM	0	52	16	0	0	0	0	0	11	0	0	0	0
4/23/2024	4:30 AM	0	68	19	0	1	0	0	0	12	0	0	0	0
4/23/2024	4:45 AM	0	90	19	0	1	0	0	0	14	0	0	0	0
4/23/2024	5:00 AM	0	110	30	0	1	0	0	0	13	0	0	0	0
4/23/2024	5:15 AM	0	138	40	0	3	0	0	0	11	0	0	0	0
4/23/2024	5:30 AM	0	179	56	0	3	0	0	0	9	0	0	0	0
4/23/2024	5:45 AM	0	252	71	0	5	0	0	0	6	0	0	0	0
4/23/2024	6:00 AM	0	348	93	0	6	0	0	0	9	0	0	0	0
4/23/2024	6:15 AM	0	421	113	0	5	0	0	0	12	0	0	0	0
4/23/2024	6:30 AM	0	505	130	1	4	0	0	0	15	0	0	0	0
4/23/2024	6:45 AM	0	524	138	1	3	2	0	0	15	0	0	0	0
4/23/2024	7:00 AM	0	507	118	2	3	3	0	0	11	1	0	0	0
4/23/2024	7:15 AM	0	495	107	3	4	3	0	1	11	1	0	0	0
4/23/2024	7:30 AM	0	447	86	2	9	3	0	2	9	1	0	0	0
4/23/2024	7:45 AM	0	411	88	2	9	2	0	3	12	1	0	0	0
4/23/2024	8:00 AM	0	408	96	1	11	2	0	4	16	0	0	0	0
4/23/2024	8:15 AM	0	377	96	0	10	2	0	4	15	0	0	0	0
4/23/2024	8:30 AM	0	361	108	0	8	3	0	3	21	0	0	0	0
4/23/2024	8:45 AM	0	352	105	0	9	2	0	2	21	0	0	0	0
4/23/2024	9:00 AM	0	319	105	0	8	1	0	3	22	0	0	0	0
4/23/2024	9:15 AM	0	313	109	0	8	2	0	2	22	0	0	0	0
4/23/2024	9:30 AM	0	321	109	0	5	2	0	5	15	0	0	0	0
4/23/2024	9:45 AM	0	330	94	0	4	2	0	5	13	0	0	0	0
4/23/2024	10:00 AM	0	338	104	0	3	3	0	3	14	0	0	0	0
4/23/2024	10:15 AM	0	344	110	0	6	2	0	3	15	0	0	0	0
4/23/2024	10:30 AM	0	329	109	2	8	1	0	0	13	0	0	0	0
4/23/2024	10:45 AM	1	329	134	2	9	1	0	0	15	0	0	0	0
4/23/2024	11:00 AM	1	360	132	2	10	0	0	1	12	0	0	0	0
4/23/2024	11:15 AM	1	369	120	3	9	0	0	3	12	0	0	0	0
4/23/2024	11:30 AM	1	385	125	1	11	0	0	5	13	0	0	0	0
4/23/2024	11:45 AM	0	405	120	1	12	0	0	6	11	0	0	0	0
4/23/2024	12:00 PM	1	405	120	1	12	0	0	7	13	0	0	0	0
4/23/2024	12:15 PM	1	433	122	0	11	2	0	6	14	0	0	0	0
4/23/2024	12:30 PM	1	452	114	0	11	3	0	4	19	0	0	0	0
4/23/2024	12:45 PM	2	476	102	0	9	4	0	3	24	0	0	0	0
4/23/2024	1:00 PM	1	484	105	0	12	5	0	1	25	0	0	0	0
4/23/2024	1:15 PM	2	484	110	0	14	4	0	3	25	0	0	0	0
4/23/2024	1:30 PM	2	493	122	0	13	3	0	3	21	0	0	0	0
4/23/2024	1:45 PM	1	487	146	0	13	2	0	5	18	0	0	0	0
4/23/2024	2:00 PM	1	482	146	0	11	2	0	6	14	0	0	0	0
4/23/2024	2:15 PM	0	514	157	0	10	4	0	4	11	0	0	0	0
4/23/2024	2:30 PM	0	517	156	0	7	5	0	4	15	0	0	0	0
4/23/2024	2:45 PM	0	514	154	0	10	7	0	2	17	1	0	0	0
4/23/2024	3:00 PM	1	537	157	1	9	6	0	1	17	1	0	0	0
4/23/2024	3:15 PM	1	532	157	2	7	4	0	2	20	1	0	0	0
4/23/2024	3:30 PM	1	578	168	4	9	3	0	2	21	1	0	0	0
4/23/2024	3:45 PM	1	637	168	4	9	2	0	2	20	0	0	0	0
4/23/2024	4:00 PM	0	650	160	3	12	5	0	2	18	0	0	0	0
4/23/2024	4:15 PM	0	698	148	2	18	4	0	2	16	0	0	0	0
4/23/2024	4:30 PM	0	682	133	0	18	4	0	2	10	0	0	0	0
4/23/2024	4:45 PM	0	632	125	1	14	4	0	3	8	0	0	0	0
4/23/2024	5:00 PM	0	645	123	1	15	2	0	3	10	0	0	0	0
4/23/2024	5:15 PM	0	598	116	1	9	2	0	1	9	0	0	0	0
4/23/2024	5:30 PM	0	546	97	1	11	2	0	1	11	0	0	0	0
4/23/2024	5:45 PM	0	528	78	0	11	2	0	0	9	0	0	0	0
4/23/2024	6:00 PM	0	461	61	0	8	1	0	0	9	0	0	0	0
4/23/2024	6:15 PM	0	434	54	0	9	1	0	0	8	0	0	0	0
4/23/2024	6:30 PM	0	426	54	0	6	1	0	1	7	0	0	0	0
4/23/2024	6:45 PM	0	388	52	0	6	1	0	2	9	0	0	0	0
4/23/2024	7:00 PM	0	375	56	1	4	1	0	2	8	0	0	0	0
4/23/2024	7:15 PM	0	341	51	1	4	1	0	2	12	0	0	0	0
4/23/2024	7:30 PM	0	334	48	1	4	1	0	1	13	0	0	0	0
4/23/2024	7:45 PM	0	334	39	1	6	0	0	0	12	0	0	0	0
4/23/2024	8:00 PM	0	317	31	0	5	0	0	0	12	0	0	0	0
4/23/2024	8:15 PM	0	297	24	0	3	0	0	0	8	0	0	0	0
4/23/2024	8:30 PM	0	269	16	0	2	0	0	0	6	0	0	0	0
4/23/2024	8:45 PM	0	248	16	0	0	0	0	0	5	0	0	0	0
4/23/2024	9:00 PM	0	218	15	0	0	0	0	0	6	0	0	0	0
4/23/2024	9:15 PM	0	181	14	0	0	0	0	0	8	0	0	0	0
4/23/2024	9:30 PM	0	155	16	0	0	0	0	0	11	0	0	0	0
4/23/2024	9:45 PM	0	123	16	0	0	0	0	0	12	0	0	0	0
4/23/2024	10:00 PM	0	119	15	0	0	0	0	0	11	0	0	0	0
4/23/2024	10:15 PM	0	136	16	0	0	0	0	0	8	0	0	0	0
4/23/2024	10:30 PM	0	121	13	0	0	0	0	0	4	0	0	0	0
4/23/2024	10:45 PM	0	114	11	0	0	0	0	0	4	0	0	0	0
4/23/2024	11:00 PM	0	86	8	0	0	0	0	0	4	0	0	0	0
4/23/2024	11:15 PM	0	46	5	0	0	0	0	0	4	0	0	0	0
4/23/2024	11:30 PM	0	26	3	0	0	0	0	0	4	0	0	0	0
4/23/2024	11:45 PM	0	8	1	0	0	0	0	0	2	0	0	0	0

4/24/2024	12:00 AM	0	43	7	0	1	0	0	1	5	0	0	0	0
4/24/2024	12:15 AM	0	45	7	0	3	0	0	1	7	0	0	0	0
4/24/2024	12:30 AM	0	43	7	0	3	0	0	1	9	0	0	0	0
4/24/2024	12:45 AM	0	35	5	0	2	0	0	1	12	0	0	0	0
4/24/2024	1:00 AM	0	31	5	0	2	0	0	0	10	0	0	0	0
4/24/2024	1:15 AM	0	28	5	0	0	0	0	0	8	0	0	0	0
4/24/2024	1:30 AM	0	21	5	0	1	0	0	0	11	0	0	0	0
4/24/2024	1:45 AM	0	20	5	0	1	0	0	0	9	0	0	0	0
4/24/2024	2:00 AM	0	17	4	0	1	0	0	0	9	0	0	0	0
4/24/2024	2:15 AM	0	12	3	0	1	0	0	0	8	0	0	0	0
4/24/2024	2:30 AM	0	15	4	0	0	0	0	0	3	0	0	0	0
4/24/2024	2:45 AM	0	15	4	0	0	0	0	0	4	0	0	0	0
4/24/2024	3:00 AM	0	29	7	0	0	0	0	0	2	0	0	0	0
4/24/2024	3:15 AM	0	37	8	0	0	0	0	0	5	0	0	0	0
4/24/2024	3:30 AM	0	41	8	0	0	0	0	0	6	0	0	0	0
4/24/2024	3:45 AM	0	46	10	0	0	0	0	0	6	0	0	0	0
4/24/2024	4:00 AM	0	43	9	0	0	0	0	0	8	0	0	0	0
4/24/2024	4:15 AM	0	51	11	0	1	0	0	0	6	0	0	0	0
4/24/2024	4:30 AM	0	60	13	0	1	0	0	0	9	0	0	0	0
4/24/2024	4:45 AM	0	81	15	0	1	0	0	0	8	0	0	0	0
4/24/2024	5:00 AM	0	113	22	0	3	0	0	0	9	0	0	0	0
4/24/2024	5:15 AM	0	139	28	0	5	0	0	0	12	0	0	0	0
4/24/2024	5:30 AM	0	200	43	0	7	0	0	0	10	0	0	0	0
4/24/2024	5:45 AM	0	266	70	0	7	0	0	0	11	0	0	0	0
4/24/2024	6:00 AM	0	336	87	0	7	0	0	0	11	0	0	0	0
4/24/2024	6:15 AM	0	410	123	0	5	1	0	0	10	0	0	0	0
4/24/2024	6:30 AM	0	492	147	0	4	1	0	0	11	0	0	0	0
4/24/2024	6:45 AM	0	533	151	0	4	1	0	0	9	0	0	0	0
4/24/2024	7:00 AM	0	534	156	0	4	1	0	0	7	0	0	0	0
4/24/2024	7:15 AM	0	522	137	0	4	1	0	0	7	0	0	0	0
4/24/2024	7:30 AM	0	446	128	0	6	2	0	0	8	0	0	0	0
4/24/2024	7:45 AM	0	404	119	0	7	2	0	0	11	0	0	0	0
4/24/2024	8:00 AM	1	376	114	0	7	3	0	0	10	0	0	0	0
4/24/2024	8:15 AM	1	349	104	0	10	4	0	0	12	0	0	0	0
4/24/2024	8:30 AM	1	355	91	0	11	5	0	0	16	0	0	0	0
4/24/2024	8:45 AM	1	341	97	2	12	5	0	0	17	0	0	0	0
4/24/2024	9:00 AM	1	347	94	3	11	5	0	1	21	0	0	0	0
4/24/2024	9:15 AM	1	357	101	3	12	3	0	2	20	0	0	0	0
4/24/2024	9:30 AM	1	353	113	3	9	3	0	2	16	0	0	0	0
4/24/2024	9:45 AM	1	372	105	1	9	4	0	2	14	0	0	0	0
4/24/2024	10:00 AM	0	379	104	0	9	4	0	2	10	0	0	0	0
4/24/2024	10:15 AM	0	377	102	0	8	5	0	1	7	0	0	0	0
4/24/2024	10:30 AM	0	369	94	0	8	4	0	4	6	0	0	0	0
4/24/2024	10:45 AM	0	356	95	0	7	3	0	5	6	0	0	0	0
4/24/2024	11:00 AM	0	330	108	0	9	5	0	4	10	0	0	0	0
4/24/2024	11:15 AM	0	340	106	0	7	5	0	4	11	0	0	0	0
4/24/2024	11:30 AM	1	361	109	0	10	6	0	2	13	0	0	0	0
4/24/2024	11:45 AM	1	387	108	2	14	6	0	1	19	0	0	0	0
4/24/2024	12:00 PM	1	438	107	2	12	4	0	2	18	0	0	0	0
4/24/2024	12:15 PM	1	455	112	2	14	6	0	2	22	0	0	0	0
4/24/2024	12:30 PM	0	469	121	2	11	5	0	2	19	0	0	0	0
4/24/2024	12:45 PM	0	491	116	0	9	6	0	3	17	0	0	0	0
4/24/2024	1:00 PM	0	503	100	5	8	6	0	2	18	0	0	0	0
4/24/2024	1:15 PM	0	504	91	5	7	3	0	2	20	0	0	0	0
4/24/2024	1:30 PM	0	515	83	5	6	2	0	1	20	0	0	0	0
4/24/2024	1:45 PM	0	497	91	5	4	1	0	1	22	0	0	0	0
4/24/2024	2:00 PM	1	483	102	0	6	1	0	1	24	0	0	0	0
4/24/2024	2:15 PM	1	517	129	0	5	2	0	1	19	0	0	0	0
4/24/2024	2:30 PM	2	516	149	0	8	4	0	1	18	0	0	0	0
4/24/2024	2:45 PM	4	521	168	0	9	5	0	2	12	0	0	0	0
4/24/2024	3:00 PM	3	525	185	1	10	4	0	2	11	0	0	0	0
4/24/2024	3:15 PM	4	539	178	1	10	3	0	2	13	0	0	0	0
4/24/2024	3:30 PM	3	572	177	1	12	2	0	2	16	0	0	0	0
4/24/2024	3:45 PM	1	616	172	1	15	3	0	0	21	0	0	0	0
4/24/2024	4:00 PM	1	664	175	0	16	3	0	0	22	0	0	0	0
4/24/2024	4:15 PM	1	691	179	0	19	4	0	0	21	0	0	0	0
4/24/2024	4:30 PM	1	682	166	0	17	3	0	0	18	0	0	0	0
4/24/2024	4:45 PM	1	666	152	0	14	1	0	0	12	0	0	0	0
4/24/2024	5:00 PM	1	620	133	0	12	2	0	1	9	0	0	0	0
4/24/2024	5:15 PM	0	551	120	0	9	1	0	1	8	0	0	0	0
4/24/2024	5:30 PM	0	534	121	0	7	2	0	1	10	0	0	0	0
4/24/2024	5:45 PM	0	477	123	0	6	3	0	1	12	0	0	0	0
4/24/2024	6:00 PM	0	457	113	0	6	2	0	1	12	0	0	0	0
4/24/2024	6:15 PM	0	431	103	0	5	2	0	1	11	0	0	0	0
4/24/2024	6:30 PM	0	400	82	0	4	1	0	1	10	0	0	0	0
4/24/2024	6:45 PM	0	398	66	0	3	2	0	1	8	0	0	0	0
4/24/2024	7:00 PM	0	351	61	0	2	2	0	0	7	0	0	0	0
4/24/2024	7:15 PM	0	330	67	0	1	2	0	0	7	0	0	0	0
4/24/2024	7:30 PM	0	320	67	0	1	2	0	0	6	0	0	0	0
4/24/2024	7:45 PM	0	319	63	0	1	0	0	0	6	0	0	0	0
4/24/2024	8:00 PM	0	344	60	0	0	0	0	0	10	0	0	0	0
4/24/2024	8:15 PM	0	329	50	0	0	0	0	0	10	0	0	0	0
4/24/2024	8:30 PM	0	293	44	0	1	0	0	0	15	0	0	0	0
4/24/2024	8:45 PM	0	248	45	0	1	0	0	0	16	0	0	0	0
4/24/2024	9:00 PM	0	203	43	0	1	0	0	0	11	0	0	0	0
4/24/2024	9:15 PM	0	181	34	0	1	0	0	0	12	0	0	0	0
4/24/2024	9:30 PM	0	160	33	0	0	0	0	0	9	0	0	0	0
4/24/2024	9:45 PM	0	137	31	0	0	0	0	0	10	0	0	0	0
4/24/2024	10:00 PM	0	120	27	0	0	0	0	0	11	0	0	0	0
4/24/2024	10:15 PM	0	108	31	0	0	0	0	0	8	0	0	0	0
4/24/2024	10:30 PM	0	89	27	0	0	0	0	0	8	0	0	0	0
4/24/2024	10:45 PM	0	85	21	0	0	0	0	0	5	0	0	0	0
4/24/2024	11:00 PM	0	71	17	0	0	0	0	0	3	0	0	0	0
4/24/2024	11:15 PM	0	44	9	0	0	0	0	0	3	0	0	0	0
4/24/2024	11:30 PM	0	29	5	0	0	0	0	0	0	0	0	0	0
4/24/2024	11:45 PM	0	11	2	0	0	0	0	0	0	0	0	0	0

4/25/2024	12:00 AM	0	42	6	0	1	0	0	0	9	0	0	2	0
4/25/2024	12:15 AM	0	33	5	0	1	0	0	0	9	0	0	1	0
4/25/2024	12:30 AM	0	35	4	0	0	0	0	0	10	0	0	1	0
4/25/2024	12:45 AM	0	40	2	0	0	0	0	0	8	0	0	1	0
4/25/2024	1:00 AM	0	38	2	0	1	0	0	0	8	0	0	0	0
4/25/2024	1:15 AM	0	37	2	0	2	0	0	0	8	0	0	0	0
4/25/2024	1:30 AM	0	34	3	0	2	0	0	0	7	0	0	0	0
4/25/2024	1:45 AM	0	28	5	0	2	0	0	0	4	0	0	0	0
4/25/2024	2:00 AM	0	23	5	0	1	0	0	0	5	0	0	0	0
4/25/2024	2:15 AM	0	20	4	0	0	0	0	0	4	0	0	0	0
4/25/2024	2:30 AM	0	13	3	0	0	0	0	0	3	0	0	0	0
4/25/2024	2:45 AM	0	18	2	0	0	0	0	0	4	0	0	0	0
4/25/2024	3:00 AM	0	27	3	0	0	0	0	0	4	0	0	0	0
4/25/2024	3:15 AM	0	33	5	0	0	0	0	0	3	0	0	0	0
4/25/2024	3:30 AM	0	40	5	0	1	0	0	0	7	0	0	0	0
4/25/2024	3:45 AM	0	43	5	0	1	0	0	0	8	0	0	0	0
4/25/2024	4:00 AM	0	42	6	0	1	0	0	0	6	0	0	0	0
4/25/2024	4:15 AM	0	48	7	0	1	0	0	0	9	0	0	0	0
4/25/2024	4:30 AM	0	56	9	0	0	0	0	0	8	0	0	0	0
4/25/2024	4:45 AM	0	88	16	0	0	0	0	0	13	0	0	0	0
4/25/2024	5:00 AM	0	119	22	0	0	0	0	0	17	0	0	0	0
4/25/2024	5:15 AM	0	160	30	0	1	0	0	0	16	0	0	0	0
4/25/2024	5:30 AM	0	219	48	0	2	0	0	0	15	0	0	0	0
4/25/2024	5:45 AM	0	282	63	0	2	0	0	0	10	0	0	0	0
4/25/2024	6:00 AM	0	354	85	0	5	1	0	0	11	0	0	0	0
4/25/2024	6:15 AM	1	415	111	0	7	4	0	0	13	0	1	0	0
4/25/2024	6:30 AM	1	484	122	0	10	4	0	0	17	0	1	0	0
4/25/2024	6:45 AM	1	513	127	0	10	4	0	0	19	0	1	0	0
4/25/2024	7:00 AM	1	511	130	0	9	3	0	0	17	0	1	0	0
4/25/2024	7:15 AM	0	485	124	0	7	1	0	0	16	0	0	0	0
4/25/2024	7:30 AM	0	444	126	0	8	1	0	0	16	0	0	0	0
4/25/2024	7:45 AM	0	406	117	0	9	1	0	1	13	0	0	0	0
4/25/2024	8:00 AM	1	384	118	0	10	3	0	1	16	0	0	0	0
4/25/2024	8:15 AM	1	382	110	0	12	2	0	1	21	0	0	0	0
4/25/2024	8:30 AM	1	349	106	0	12	5	0	2	26	0	0	0	0
4/25/2024	8:45 AM	1	336	107	0	13	5	0	1	30	0	0	0	0
4/25/2024	9:00 AM	0	342	96	0	13	5	0	1	25	0	0	0	0
4/25/2024	9:15 AM	0	340	101	0	15	6	0	2	23	0	0	0	0
4/25/2024	9:30 AM	0	356	109	0	12	5	0	3	12	0	0	0	0
4/25/2024	9:45 AM	0	367	113	0	12	5	0	3	12	0	0	0	0
4/25/2024	10:00 AM	0	358	121	0	12	3	0	4	17	0	0	0	0
4/25/2024	10:15 AM	0	354	117	0	8	4	0	4	12	0	0	0	0
4/25/2024	10:30 AM	0	365	118	0	10	3	0	2	19	0	0	0	0
4/25/2024	10:45 AM	1	374	130	0	11	4	0	3	18	0	0	0	0
4/25/2024	11:00 AM	2	377	126	0	14	6	0	2	17	0	0	0	0
4/25/2024	11:15 AM	4	407	143	0	21	4	0	4	18	0	0	0	0
4/25/2024	11:30 AM	4	426	149	0	18	3	0	6	15	0	0	0	0
4/25/2024	11:45 AM	4	409	155	0	17	2	0	5	16	0	0	0	0
4/25/2024	12:00 PM	3	421	145	0	15	0	0	7	15	0	0	0	0
4/25/2024	12:15 PM	2	416	139	0	11	1	0	5	18	0	0	0	0
4/25/2024	12:30 PM	2	421	129	0	12	2	0	6	16	0	0	0	0
4/25/2024	12:45 PM	2	470	120	1	12	2	0	8	14	0	0	0	0
4/25/2024	1:00 PM	2	487	145	1	9	2	0	6	14	0	0	0	0
4/25/2024	1:15 PM	1	514	144	1	9	1	0	5	12	0	0	0	0
4/25/2024	1:30 PM	1	533	123	1	10	0	0	2	18	0	0	0	0
4/25/2024	1:45 PM	0	523	121	0	19	1	0	2	20	0	0	0	0
4/25/2024	2:00 PM	0	509	109	0	22	2	0	6	19	1	0	0	0
4/25/2024	2:15 PM	0	510	114	0	23	2	0	7	19	1	0	0	0
4/25/2024	2:30 PM	0	489	143	0	25	2	0	10	12	1	0	0	0
4/25/2024	2:45 PM	1	482	163	0	24	1	0	9	14	1	0	0	0
4/25/2024	3:00 PM	1	511	184	1	28	0	0	6	14	0	0	0	0
4/25/2024	3:15 PM	1	539	202	1	25	1	0	5	16	0	0	0	0
4/25/2024	3:30 PM	1	590	214	2	23	1	0	2	19	0	0	0	0
4/25/2024	3:45 PM	1	620	204	2	13	1	0	1	16	0	0	0	0
4/25/2024	4:00 PM	1	635	198	1	10	2	0	0	19	0	0	0	0
4/25/2024	4:15 PM	1	651	182	1	12	1	0	1	15	0	0	0	0
4/25/2024	4:30 PM	1	637	161	0	9	1	0	1	13	0	0	0	0
4/25/2024	4:45 PM	2	614	157	0	9	2	0	1	13	0	0	0	0
4/25/2024	5:00 PM	2	605	145	0	5	1	0	1	9	0	0	0	0
4/25/2024	5:15 PM	2	586	138	0	2	1	0	0	8	0	0	0	0
4/25/2024	5:30 PM	3	548	125	0	4	1	0	0	7	0	0	0	0
4/25/2024	5:45 PM	1	536	112	0	8	0	0	0	4	0	0	0	0
4/25/2024	6:00 PM	1	503	104	0	11	0	0	0	3	0	0	0	0
4/25/2024	6:15 PM	3	447	94	0	13	0	0	0	4	0	0	0	0
4/25/2024	6:30 PM	2	439	87	1	11	0	0	0	5	0	0	0	0
4/25/2024	6:45 PM	2	424	80	1	9	0	0	0	8	0	0	0	0
4/25/2024	7:00 PM	2	404	77	1	5	0	0	0	7	0	0	0	0
4/25/2024	7:15 PM	0	380	68	1	2	0	0	0	8	0	0	0	0
4/25/2024	7:30 PM	0	329	71	0	3	1	0	0	6	0	0	0	0
4/25/2024	7:45 PM	0	309	67	0	1	1	0	0	5	0	0	0	0
4/25/2024	8:00 PM	0	298	58	0	2	1	0	0	7	0	0	0	0
4/25/2024	8:15 PM	0	291	56	0	2	1	0	0	5	0	0	0	0
4/25/2024	8:30 PM	1	293	46	0	2	0	0	0	5	0	0	0	0
4/25/2024	8:45 PM	1	259	43	0	2	0	0	0	3	0	0	0	0
4/25/2024	9:00 PM	2	221	38	0	3	0	0	0	3	0	0	0	0
4/25/2024	9:15 PM	2	186	31	0	5	0	0	0	3	0	0	0	0
4/25/2024	9:30 PM	1	171	32	0	4	0	0	0	3	0	0	0	0
4/25/2024	9:45 PM	1	162	27	0	4	0	0	0	4	0	0	0	0
4/25/2024	10:00 PM	0	154	25	1	2	0	0	0	3	0	0	0	0
4/25/2024	10:15 PM	0	142	23	1	0	0	0	0	4	0	0	0	0
4/25/2024	10:30 PM	0	113	19	1	0	0	0	0	4	0	0	0	0
4/25/2024	10:45 PM	0	101	19	1	0	0	0	0	5	0	0	0	0
4/25/2024	11:00 PM	0	93	15	0	0	0	0	0	8	0	0	0	0
4/25/2024	11:15 PM	0	66	11	0	0	0	0	0	7	0	0	0	0
4/25/2024	11:30 PM	0	49	7	0	0	0	0	0	7	0	0	0	0
4/25/2024	11:45 PM	0	23	2	0	0	0	0	0	4	0	0	0	0

4/26/2024	12:00 AM	0	30	13	0	0	1	0	0	5	0	1	0	0
4/26/2024	12:15 AM	0	28	13	0	1	0	0	0	5	0	1	0	0
4/26/2024	12:30 AM	0	28	11	0	1	0	0	0	5	0	1	0	0
4/26/2024	12:45 AM	0	29	10	0	1	0	0	0	3	0	2	0	0
4/26/2024	1:00 AM	0	30	10	0	1	0	0	0	6	0	2	0	0
4/26/2024	1:15 AM	0	30	9	0	0	0	0	0	7	0	1	0	0
4/26/2024	1:30 AM	0	30	11	0	0	0	0	0	9	0	1	0	0
4/26/2024	1:45 AM	0	19	8	0	0	0	0	0	9	0	1	0	0
4/26/2024	2:00 AM	0	16	8	0	0	0	0	0	8	0	1	0	0
4/26/2024	2:15 AM	0	14	8	0	0	0	0	0	7	0	1	0	0
4/26/2024	2:30 AM	0	14	6	0	0	0	0	0	6	0	2	0	0
4/26/2024	2:45 AM	0	14	8	0	0	0	0	0	6	0	1	0	0
4/26/2024	3:00 AM	0	16	10	0	1	2	0	0	4	0	1	0	0
4/26/2024	3:15 AM	0	18	10	3	1	2	0	0	5	0	1	0	0
4/26/2024	3:30 AM	0	23	13	4	1	2	0	0	4	0	0	0	0
4/26/2024	3:45 AM	0	30	16	4	1	2	0	0	6	0	0	0	0
4/26/2024	4:00 AM	0	34	16	4	0	0	0	0	7	0	0	0	0
4/26/2024	4:15 AM	0	39	18	1	1	0	0	0	8	0	0	0	0
4/26/2024	4:30 AM	0	49	21	0	1	0	0	0	10	0	0	0	0
4/26/2024	4:45 AM	0	70	24	1	1	1	0	0	10	0	0	0	0
4/26/2024	5:00 AM	0	101	30	1	3	1	0	0	9	0	0	0	0
4/26/2024	5:15 AM	0	132	37	3	2	1	0	1	9	0	0	0	0
4/26/2024	5:30 AM	0	159	49	3	3	1	0	1	12	0	0	0	0
4/26/2024	5:45 AM	0	224	70	2	3	0	0	1	12	0	0	0	0
4/26/2024	6:00 AM	0	280	82	2	3	0	0	1	15	0	0	0	0
4/26/2024	6:15 AM	0	355	103	0	8	0	0	1	17	0	0	0	0
4/26/2024	6:30 AM	0	434	128	0	10	0	0	1	15	0	0	0	0
4/26/2024	6:45 AM	0	473	130	0	15	0	0	1	14	0	0	0	0
4/26/2024	7:00 AM	1	497	137	0	14	1	0	1	11	0	0	0	0
4/26/2024	7:15 AM	1	469	134	0	9	1	0	0	8	0	0	0	0
4/26/2024	7:30 AM	1	433	113	0	9	1	0	0	6	0	0	0	0
4/26/2024	7:45 AM	1	399	103	0	8	1	0	0	8	0	0	0	0
4/26/2024	8:00 AM	0	379	99	0	12	2	0	1	11	0	0	0	0
4/26/2024	8:15 AM	0	369	98	0	15	3	0	2	15	0	0	0	0
4/26/2024	8:30 AM	0	351	111	0	13	5	0	2	17	0	0	0	0
4/26/2024	8:45 AM	0	340	114	0	14	5	0	3	16	0	0	0	0
4/26/2024	9:00 AM	1	332	111	0	12	3	0	5	15	0	0	0	0
4/26/2024	9:15 AM	1	326	115	0	12	5	0	8	12	0	0	0	0
4/26/2024	9:30 AM	1	332	103	0	15	5	0	9	13	0	0	0	0
4/26/2024	9:45 AM	1	343	108	0	13	5	0	9	15	0	0	0	0
4/26/2024	10:00 AM	0	349	120	3	14	7	0	8	17	0	0	0	0
4/26/2024	10:15 AM	0	375	127	3	12	4	0	5	18	0	0	0	0
4/26/2024	10:30 AM	0	395	145	3	9	3	0	4	23	0	0	0	0
4/26/2024	10:45 AM	0	403	158	3	12	3	0	3	23	0	0	0	0
4/26/2024	11:00 AM	0	418	161	0	12	1	0	1	25	0	0	0	0
4/26/2024	11:15 AM	1	434	167	0	13	2	0	0	30	0	0	0	0
4/26/2024	11:30 AM	1	453	160	0	18	3	0	0	23	0	0	0	0
4/26/2024	11:45 AM	1	467	151	0	16	4	0	1	20	0	0	0	0
4/26/2024	12:00 PM	2	481	155	0	15	5	0	1	17	0	0	0	0
4/26/2024	12:15 PM	1	516	146	1	16	5	0	2	13	0	0	0	0
4/26/2024	12:30 PM	1	519	143	1	12	4	0	2	17	0	0	0	0
4/26/2024	12:45 PM	1	528	147	2	14	3	0	2	19	0	0	0	0
4/26/2024	1:00 PM	3	498	135	3	16	2	0	2	17	0	0	0	0
4/26/2024	1:15 PM	3	438	119	2	16	3	0	1	15	0	0	0	0
4/26/2024	1:30 PM	3	437	112	2	18	5	0	2	15	0	0	0	0
4/26/2024	1:45 PM	3	413	107	1	17	5	0	3	17	0	0	0	0
4/26/2024	2:00 PM	0	434	109	0	16	6	0	4	17	0	0	0	0
4/26/2024	2:15 PM	0	474	113	0	15	5	0	4	19	0	0	0	0
4/26/2024	2:30 PM	0	470	118	0	16	3	0	4	17	0	0	0	0
4/26/2024	2:45 PM	0	477	116	0	16	3	0	4	18	0	0	0	0
4/26/2024	3:00 PM	0	496	118	0	15	2	0	3	21	0	0	0	0
4/26/2024	3:15 PM	0	468	125	1	15	1	0	4	18	0	0	0	0
4/26/2024	3:30 PM	2	477	136	1	12	1	0	3	15	0	0	0	0
4/26/2024	3:45 PM	2	489	133	1	11	1	0	3	8	0	0	0	0
4/26/2024	4:00 PM	3	489	130	1	10	3	0	5	5	0	0	0	0
4/26/2024	4:15 PM	3	546	124	0	10	4	0	4	4	0	0	0	0
4/26/2024	4:30 PM	1	615	120	0	10	3	0	4	5	0	0	0	0
4/26/2024	4:45 PM	1	635	135	0	8	3	0	2	5	0	0	0	0
4/26/2024	5:00 PM	0	628	132	0	10	1	0	1	5	0	0	0	0
4/26/2024	5:15 PM	0	624	132	0	10	0	0	2	6	0	0	0	0
4/26/2024	5:30 PM	0	568	121	0	11	0	0	3	4	0	0	0	0
4/26/2024	5:45 PM	0	551	103	0	11	0	0	3	6	0	0	0	0
4/26/2024	6:00 PM	0	512	93	0	9	0	0	2	8	0	0	0	0
4/26/2024	6:15 PM	0	451	93	0	12	0	0	1	7	0	0	0	0
4/26/2024	6:30 PM	0	410	87	0	9	0	0	0	9	0	0	0	0
4/26/2024	6:45 PM	1	379	77	0	9	0	0	0	7	0	0	0	0
4/26/2024	7:00 PM	1	403	79	0	7	0	0	0	4	0	0	0	0
4/26/2024	7:15 PM	1	409	76	0	2	0	0	0	6	0	0	0	0
4/26/2024	7:30 PM	1	400	76	0	2	1	0	0	5	0	0	0	0
4/26/2024	7:45 PM	0	369	80	0	0	1	0	0	6	0	0	0	0
4/26/2024	8:00 PM	0	302	82	0	0	1	0	0	6	0	0	0	0
4/26/2024	8:15 PM	0	275	71	0	0	1	0	0	3	0	0	0	0
4/26/2024	8:30 PM	0	265	60	2	0	0	0	0	3	0	0	0	0
4/26/2024	8:45 PM	0	267	46	2	1	0	0	0	3	0	0	0	0
4/26/2024	9:00 PM	0	284	29	2	3	0	0	0	3	0	0	0	0
4/26/2024	9:15 PM	0	265	22	2	3	0	0	0	6	0	0	0	0
4/26/2024	9:30 PM	0	253	18	0	3	0	0	0	7	0	0	0	0
4/26/2024	9:45 PM	0	239	16	0	3	0	0	0	8	0	0	0	0
4/26/2024	10:00 PM	0	223	17	0	1	0	0	0	8	0	0	0	0
4/26/2024	10:15 PM	0	215	18	0	2	0	0	1	8	0	0	0	0
4/26/2024	10:30 PM	0	185	15	0	2	0	0	1	7	0	0	0	0
4/26/2024	10:45 PM	0	157	14	0	1	0	0	1	7	0	0	0	0
4/26/2024	11:00 PM	0	136	11	0	2	0	0	1	7	0	0	0	0
4/26/2024	11:15 PM	0	90	6	0	1	0	0	0	4	0	0	0	0
4/26/2024	11:30 PM	0	55	4	0	1	0	0	0	3	0	0	0	0
4/26/2024	11:45 PM	0	28	2	0	1	0	0	0	1	0	0	0	0

4/27/2024	12:00 AM	0	67	4	0	1	0	0	0	9	0	2	0	0
4/27/2024	12:15 AM	0	57	3	0	1	0	0	0	8	0	1	0	0
4/27/2024	12:30 AM	0	52	3	0	0	0	0	0	6	0	1	0	0
4/27/2024	12:45 AM	0	50	3	0	0	0	0	0	2	0	1	0	0
4/27/2024	1:00 AM	0	50	5	0	2	0	0	0	1	0	0	0	0
4/27/2024	1:15 AM	0	45	5	0	2	0	0	0	1	0	1	0	0
4/27/2024	1:30 AM	0	35	4	0	2	0	0	0	1	0	1	0	0
4/27/2024	1:45 AM	0	34	4	0	2	0	0	0	2	0	1	0	0
4/27/2024	2:00 AM	0	32	2	0	0	0	0	0	4	0	1	0	0
4/27/2024	2:15 AM	0	25	1	0	0	0	0	0	3	0	0	0	0
4/27/2024	2:30 AM	0	23	2	0	0	0	0	0	5	0	0	0	0
4/27/2024	2:45 AM	0	20	2	0	0	0	0	0	4	0	0	0	0
4/27/2024	3:00 AM	0	17	2	0	0	0	0	0	3	0	2	0	0
4/27/2024	3:15 AM	0	19	2	0	1	0	0	0	5	0	2	0	0
4/27/2024	3:30 AM	0	19	1	0	1	0	0	0	5	0	2	0	0
4/27/2024	3:45 AM	0	22	1	0	1	0	0	0	9	0	2	0	0
4/27/2024	4:00 AM	0	22	2	0	1	0	0	0	10	0	0	0	0
4/27/2024	4:15 AM	0	26	5	0	0	0	0	0	9	0	0	0	0
4/27/2024	4:30 AM	0	29	7	0	0	0	0	0	8	0	0	0	0
4/27/2024	4:45 AM	0	38	9	0	0	0	0	0	5	0	0	0	0
4/27/2024	5:00 AM	0	50	12	0	1	0	0	0	4	0	1	0	0
4/27/2024	5:15 AM	0	56	12	0	1	0	0	0	7	0	1	0	0
4/27/2024	5:30 AM	0	70	13	0	2	0	0	0	8	0	1	0	0
4/27/2024	5:45 AM	0	83	18	0	2	0	0	0	10	0	1	0	0
4/27/2024	6:00 AM	0	106	19	0	2	0	0	0	12	0	0	0	0
4/27/2024	6:15 AM	0	122	24	0	2	0	0	0	9	0	0	0	0
4/27/2024	6:30 AM	0	147	30	0	2	1	0	0	9	0	0	0	0
4/27/2024	6:45 AM	0	160	36	0	5	1	0	0	6	0	0	0	0
4/27/2024	7:00 AM	0	170	42	0	6	1	0	0	6	0	0	0	0
4/27/2024	7:15 AM	0	197	49	0	6	2	0	0	8	0	0	0	0
4/27/2024	7:30 AM	0	192	54	0	9	1	0	0	7	0	0	0	0
4/27/2024	7:45 AM	0	213	54	0	6	1	0	0	11	0	0	0	0
4/27/2024	8:00 AM	0	233	59	0	4	2	0	1	8	0	0	0	0
4/27/2024	8:15 AM	0	226	63	0	6	1	0	1	5	0	0	0	0
4/27/2024	8:30 AM	1	246	74	0	3	2	0	1	7	0	0	0	0
4/27/2024	8:45 AM	1	268	89	0	4	2	0	1	3	0	0	0	0
4/27/2024	9:00 AM	2	281	94	0	4	2	0	0	6	0	0	0	0
4/27/2024	9:15 AM	3	317	101	0	4	2	0	2	9	0	0	0	0
4/27/2024	9:30 AM	2	330	93	0	3	1	0	2	8	0	0	0	0
4/27/2024	9:45 AM	3	349	94	0	3	1	0	2	11	0	0	0	0
4/27/2024	10:00 AM	3	359	99	0	3	0	0	2	8	0	0	0	0
4/27/2024	10:15 AM	2	369	103	0	2	0	0	0	6	0	0	0	0
4/27/2024	10:30 AM	2	388	108	0	2	0	0	0	6	0	0	0	0
4/27/2024	10:45 AM	2	383	114	0	3	0	0	0	3	0	0	0	0
4/27/2024	11:00 AM	1	407	121	0	3	0	0	0	5	0	0	0	0
4/27/2024	11:15 AM	1	453	116	0	3	0	0	0	7	0	0	0	0
4/27/2024	11:30 AM	1	495	112	0	3	0	0	1	7	0	0	0	0
4/27/2024	11:45 AM	1	504	112	0	3	0	0	1	13	0	0	0	0
4/27/2024	12:00 PM	2	521	109	0	3	0	0	1	12	0	0	0	0
4/27/2024	12:15 PM	3	500	115	0	2	0	0	3	11	0	0	0	0
4/27/2024	12:30 PM	3	497	133	0	4	1	0	2	12	0	0	0	0
4/27/2024	12:45 PM	2	535	125	0	2	1	0	2	7	0	0	0	0
4/27/2024	1:00 PM	1	541	131	0	4	1	0	3	8	0	0	0	0
4/27/2024	1:15 PM	0	554	150	0	5	1	0	3	6	0	0	0	0
4/27/2024	1:30 PM	0	553	146	0	4	0	0	4	5	0	0	0	0
4/27/2024	1:45 PM	0	571	151	0	6	0	0	4	5	0	0	0	0
4/27/2024	2:00 PM	0	580	146	0	5	0	0	3	4	0	0	0	0
4/27/2024	2:15 PM	0	590	135	0	5	0	0	1	4	0	0	0	0
4/27/2024	2:30 PM	0	610	124	0	4	0	0	0	3	0	0	0	0
4/27/2024	2:45 PM	0	609	129	0	4	0	0	0	5	0	0	0	0
4/27/2024	3:00 PM	0	595	140	0	4	0	0	0	5	0	0	0	0
4/27/2024	3:15 PM	0	635	131	0	6	2	0	0	7	0	0	0	0
4/27/2024	3:30 PM	0	620	135	0	6	2	0	0	8	0	0	0	0
4/27/2024	3:45 PM	0	598	117	0	4	2	0	0	7	0	0	0	0
4/27/2024	4:00 PM	0	614	104	0	5	2	0	0	7	0	0	0	0
4/27/2024	4:15 PM	0	572	99	0	4	1	0	0	6	0	0	0	0
4/27/2024	4:30 PM	0	583	88	0	4	1	0	0	7	0	0	0	0
4/27/2024	4:45 PM	0	577	99	0	5	1	0	0	7	0	0	0	0
4/27/2024	5:00 PM	0	559	90	0	3	1	0	1	6	0	0	0	0
4/27/2024	5:15 PM	1	574	88	0	2	0	0	1	5	0	0	0	0
4/27/2024	5:30 PM	3	541	95	0	2	0	0	1	2	0	0	0	0
4/27/2024	5:45 PM	3	533	83	0	1	0	0	1	0	0	0	0	0
4/27/2024	6:00 PM	5	509	89	0	2	0	0	0	0	0	0	0	0
4/27/2024	6:15 PM	4	466	95	0	1	0	0	0	0	0	0	0	0
4/27/2024	6:30 PM	2	468	95	0	2	0	0	0	1	0	0	0	0
4/27/2024	6:45 PM	3	431	98	0	2	0	0	0	1	0	0	0	0
4/27/2024	7:00 PM	2	419	90	0	1	0	0	0	2	0	0	0	0
4/27/2024	7:15 PM	2	399	83	0	1	0	0	1	2	0	0	0	0
4/27/2024	7:30 PM	2	370	76	0	2	0	0	1	4	0	0	0	0
4/27/2024	7:45 PM	1	372	76	0	2	0	0	1	6	0	0	0	0
4/27/2024	8:00 PM	0	374	70	0	2	0	0	1	5	0	0	0	0
4/27/2024	8:15 PM	0	369	70	0	3	0	0	0	7	0	0	0	0
4/27/2024	8:30 PM	0	365	70	0	2	0	0	0	6	0	0	0	0
4/27/2024	8:45 PM	0	360	65	0	2	0	0	0	4	0	0	0	0
4/27/2024	9:00 PM	0	352	74	0	2	0	0	0	4	0	0	0	0
4/27/2024	9:15 PM	0	322	62	0	1	0	0	0	2	0	0	0	0
4/27/2024	9:30 PM	0	301	58	0	1	0	0	0	1	0	0	0	0
4/27/2024	9:45 PM	0	264	49	0	1	0	0	0	1	0	0	0	0
4/27/2024	10:00 PM	0	223	36	0	1	0	0	0	1	0	0	0	0
4/27/2024	10:15 PM	0	199	32	0	1	0	0	0	3	0	0	0	0
4/27/2024	10:30 PM	0	176	29	0	0	0	0	2	3	0	0	0	0
4/27/2024	10:45 PM	0	146	26	0	0	0	0	2	3	0	0	0	0
4/27/2024	11:00 PM	0	119	24	0	0	1	0	2	3	0	0	0	0
4/27/2024	11:15 PM	0	83	18	0	0	1	0	2	1	0	0	0	0
4/27/2024	11:30 PM	0	41	10	0	0	1	0	0	0	0	0	0	0
4/27/2024	11:45 PM	0	21	6	0	0	1	0	0	0	0	0	0	0

Bi-Directional Class Count || NB EB 15min

Columbia, SC

Marr Traffic DATA COLLECTION
www.marrtraffic.com

Site 8
I-26 N/Bound On-Ramp,
north of I-20

Date
Sunday, April 21, 2024

Lat/Long
34.038738°, -81.109720°

Weather
Cloudy
66°F

Click here for Detailed Weather

Click here for Map

0000 - 2400 (Sunday 24h Session) (04-21-2024)
NB EB 15min

	Northbound (Movement 8.1)													15min	60min
Time	1	2	3	4	5	6	7	8	9	10	11	12	13	Total	Total
0000 - 0015	0	65	8	0	0	0	0	0	3	0	0	0	0	**76**	
0015 - 0030	0	51	5	0	2	0	0	0	2	0	0	0	0	**60**	
0030 - 0045	0	60	10	1	2	0	0	0	1	0	0	0	0	**74**	
0045 - 0100	0	39	4	0	0	0	0	0	2	0	0	0	0	**45**	**255**
0100 - 0115	0	52	12	0	0	0	0	0	0	0	0	0	0	**64**	
0115 - 0130	0	28	3	0	0	0	0	0	0	0	0	0	0	**31**	
0130 - 0145	0	36	6	0	0	0	0	0	0	0	0	0	0	**42**	
0145 - 0200	0	22	2	0	1	0	0	0	0	0	0	0	0	**25**	**162**
0200 - 0215	0	28	6	0	1	0	0	0	2	0	0	0	0	**37**	
0215 - 0230	0	35	8	0	0	0	0	0	2	0	0	0	0	**45**	
0230 - 0245	0	16	2	0	0	0	0	0	1	0	0	0	0	**19**	
0245 - 0300	0	32	6	0	0	0	0	0	1	0	0	0	0	**39**	**140**
0300 - 0315	0	20	2	0	0	0	0	0	0	0	0	0	0	**22**	
0315 - 0330	0	19	2	0	0	0	0	0	1	0	0	0	0	**22**	
0330 - 0345	0	18	2	0	0	0	0	0	0	0	0	0	0	**20**	
0345 - 0400	0	21	3	0	1	0	0	0	2	0	0	0	0	**27**	**91**
0400 - 0415	0	22	2	0	0	0	0	0	0	0	0	0	0	**24**	
0415 - 0430	0	20	2	0	1	0	0	0	0	0	0	0	0	**23**	
0430 - 0445	0	10	1	0	1	0	0	0	0	0	0	0	0	**12**	
0445 - 0500	0	24	4	0	0	0	0	0	0	0	0	0	0	**28**	**87**
0500 - 0515	0	25	3	0	1	0	0	0	1	0	0	0	0	**30**	
0515 - 0530	0	26	3	0	0	0	0	0	0	0	0	0	0	**29**	
0530 - 0545	0	23	2	0	0	0	0	0	1	0	0	0	0	**26**	
0545 - 0600	0	24	4	0	0	0	0	0	4	0	0	0	0	**32**	**117**
0600 - 0615	0	20	2	0	0	0	0	0	1	0	0	0	0	**23**	
0615 - 0630	0	33	3	0	0	0	0	0	0	0	0	0	0	**36**	
0630 - 0645	0	49	6	0	1	0	0	1	1	0	0	0	0	**58**	
0645 - 0700	0	50	12	1	0	0	0	0	1	0	0	0	0	**64**	**181**
0700 - 0715	0	35	8	0	0	0	0	0	0	0	0	0	0	**43**	
0715 - 0730	0	40	10	0	1	0	0	0	2	0	0	0	0	**53**	
0730 - 0745	0	61	11	0	0	2	0	0	1	0	0	0	0	**75**	
0745 - 0800	0	63	18	1	0	0	0	0	3	0	0	0	0	**85**	**256**
0800 - 0815	0	68	22	0	0	0	0	0	2	0	0	0	0	**92**	
0815 - 0830	1	82	24	2	0	0	0	0	2	0	0	0	0	**111**	
0830 - 0845	0	88	37	1	1	0	0	0	2	0	0	0	0	**129**	
0845 - 0900	0	97	16	0	0	0	0	0	0	0	0	0	0	**113**	**445**
0900 - 0915	0	79	25	0	0	0	0	0	3	0	0	0	0	**107**	
0915 - 0930	0	134	33	0	0	0	0	1	5	0	0	0	0	**173**	
0930 - 0945	1	121	39	1	1	0	0	0	5	0	0	0	0	**168**	
0945 - 1000	0	145	32	1	3	0	0	1	6	0	0	0	0	**188**	**636**
1000 - 1015	0	160	36	0	1	0	0	0	3	0	0	0	0	**200**	
1015 - 1030	0	196	46	2	1	0	0	0	5	0	0	0	0	**250**	
1030 - 1045	0	210	66	1	4	0	0	0	3	0	0	0	0	**284**	
1045 - 1100	0	216	56	1	1	0	0	0	3	0	0	0	0	**277**	**1011**
1100 - 1115	2	217	58	0	1	0	0	0	1	0	0	0	0	**279**	
1115 - 1130	0	208	64	1	4	0	0	1	8	0	0	0	0	**286**	
1130 - 1145	0	238	73	1	2	1	0	1	3	0	0	0	0	**319**	
1145 - 1200	0	266	56	0	0	0	0	2	7	0	0	0	0	**331**	**1215**
1200 - 1215	0	258	50	0	0	0	0	0	3	0	0	0	0	**311**	
1215 - 1230	1	272	76	0	1	1	0	0	6	0	0	0	0	**357**	
1230 - 1245	0	295	53	1	1	0	0	0	6	0	0	0	0	**356**	
1245 - 1300	1	358	55	1	1	1	0	0	2	0	0	0	0	**419**	**1443**
1300 - 1315	2	355	72	0	0	0	0	1	5	0	0	0	0	**435**	
1315 - 1330	0	325	81	0	1	0	0	1	2	0	0	0	0	**410**	
1330 - 1345	0	289	50	0	2	0	0	0	4	0	0	0	0	**345**	
1345 - 1400	0	307	55	1	0	0	0	2	5	0	0	0	0	**370**	**1560**
1400 - 1415	1	284	67	0	0	0	0	0	9	0	0	0	0	**361**	
1415 - 1430	0	299	70	0	1	0	0	0	3	0	0	0	0	**373**	
1430 - 1445	0	341	67	0	0	0	0	0	7	0	0	0	0	**415**	
1445 - 1500	0	309	48	0	0	0	0	2	3	0	0	0	0	**362**	**1511**
1500 - 1515	0	266	48	0	2	0	0	2	5	0	0	0	0	**323**	
1515 - 1530	0	246	43	1	2	0	0	0	5	0	0	0	0	**297**	
1530 - 1545	0	271	47	0	2	1	0	0	5	0	0	0	0	**326**	
1545 - 1600	0	244	64	0	0	0	0	3	3	0	0	0	0	**314**	**1260**
1600 - 1615	0	276	59	1	1	0	0	0	4	0	0	0	0	**341**	
1615 - 1630	0	241	45	0	3	0	0	0	3	0	0	0	0	**292**	
1630 - 1645	0	258	55	0	1	0	0	0	5	0	0	0	0	**319**	
1645 - 1700	0	255	53	0	2	0	0	1	8	0	0	0	0	**319**	**1271**
1700 - 1715	0	191	40	1	1	0	0	0	5	0	0	0	0	**238**	
1715 - 1730	1	213	48	0	1	0	0	0	5	0	0	0	0	**268**	
1730 - 1745	0	198	44	0	0	0	0	0	6	0	0	0	0	**248**	
1745 - 1800	0	205	42	0	1	0	0	0	3	0	0	0	0	**251**	**1005**
1800 - 1815	0	210	48	1	0	0	0	0	5	1	0	0	0	**265**	
1815 - 1830	0	182	41	0	0	0	0	0	5	0	0	0	0	**228**	
1830 - 1845	0	181	35	0	0	0	0	0	2	0	0	0	0	**218**	
1845 - 1900	0	177	31	0	0	1	0	0	4	0	0	0	0	**213**	**924**
1900 - 1915	0	159	29	0	0	0	0	0	4	0	0	0	0	**192**	
1915 - 1930	0	166	31	0	0	0	0	0	5	0	0	0	0	**202**	
1930 - 1945	1	162	28	0	1	0	0	0	6	0	0	0	0	**198**	
1945 - 2000	0	136	23	0	2	0	0	0	1	0	0	0	0	**162**	**754**
2000 - 2015	0	127	21	0	1	0	0	0	4	0	0	0	0	**153**	
2015 - 2030	0	114	18	0	3	1	0	0	2	0	0	0	0	**138**	
2030 - 2045	0	92	13	0	0	1	0	0	3	0	0	0	0	**109**	
2045 - 2100	0	123	21	0	0	0	0	0	2	0	0	0	0	**146**	**546**
2100 - 2115	0	84	12	0	1	0	0	0	3	0	0	0	0	**100**	
2115 - 2130	0	90	14	0	0	0	0	0	1	0	0	0	0	**105**	
2130 - 2145	0	105	19	0	1	0	0	0	1	0	0	0	0	**126**	
2145 - 2200	0	85	12	0	1	0	0	0	1	0	0	0	0	**99**	**430**
2200 - 2215	0	64	8	0	1	0	0	0	1	0	0	0	0	**74**	
2215 - 2230	0	55	6	0	0	0	0	0	6	0	0	0	0	**67**	
2230 - 2245	0	49	4	0	0	0	0	0	4	0	0	0	0	**57**	
2245 - 2300	0	47	3	0	1	0	0	0	1	0	0	0	0	**52**	**250**
2300 - 2315	0	48	5	0	0	0	0	0	4	0	0	0	0	**57**	
2315 - 2330	0	41	3	0	0	0	0	0	3	0	0	0	0	**47**	
2330 - 2345	0	43	5	0	0	0	0	0	2	0	0	0	0	**50**	
2345 - 0000	0	38	3	0	0	0	0	0	2	0	0	0	0	**43**	**197**

Session Total	11	12726	2620	21	66	9	0	19	274	1	0	0	0	**15747**
Session Average	0.11	132.56	27.29	0.22	0.69	0.09	0.00	0.20	2.85	0.01	0.00	0.00	0.00	**164.03**
Session Percentage	0.07	80.82	16.64	0.13	0.42	0.06	0.00	0.12	1.74	0.01	0.00	0.00	0.00	

AM Peak Hour	0730 - 0830	0945 - 1045	0945 - 1045	0745 - 0845	0945 - 1045	0645 - 0745	-	0900 - 1000	0900 - 1000	-	-	-	-	**0945 - 1045**
AM Peak Volume	1	711	180	4	9	2	0	2	19	0	0	0	0	**922**

Noon Peak Hour	1215 - 1315	1230 - 1330	1230 - 1330	1000 - 1100	1030 - 1130	1130 - 1230	-	1100 - 1200	1345 - 1445	-	-	-	-	**1230 - 1330**
Noon Peak Volume	4	1333	261	4	10	2	0	4	24	0	0	0	0	**1620**

PM Peak Hour	1630 - 1730	1515 - 1615	1545 - 1645	1515 - 1615	1600 - 1700	1945 - 2045	-	1500 - 1600	1645 - 1745	1715 - 1815	-	-	-	**1515 - 1615**
PM Peak Volume	1	1037	223	2	7	2	0	5	24	1	0	0	0	**1278**

Site 8
I-26 N/Bound On-Ramp,
north of I-20

Date
Monday, April 22, 2024

Lat/Long
34.038738°, -81.109720°

Weather
Mostly Cloudy
57°F

Click here for Detailed Weather

0000 - 2400 (Weekday 24h Session) (04-22-2024)
NB EB 15min

	Northbound (Movement 8.1)													15min	60min
Time	1	2	3	4	5	6	7	8	9	10	11	12	13	Total	Total
0000 - 0015	0	29	0	0	0	0	0	0	6	0	0	0	0	**35**	
0015 - 0030	0	26	0	0	0	0	0	0	3	0	0	0	0	**29**	
0030 - 0045	0	25	0	0	0	0	0	0	2	0	0	0	0	**27**	
0045 - 0100	0	18	0	0	0	0	0	0	1	0	0	0	0	**19**	**110**
0100 - 0115	0	20	0	0	0	0	0	0	5	0	0	0	0	**25**	
0115 - 0130	0	21	0	0	0	0	0	0	5	0	0	0	0	**26**	
0130 - 0145	0	18	1	0	0	0	0	0	3	0	0	0	0	**22**	
0145 - 0200	0	11	0	0	1	0	0	0	3	0	0	0	0	**15**	**88**
0200 - 0215	0	13	0	0	0	0	0	0	2	0	0	0	0	**15**	
0215 - 0230	0	16	0	0	1	0	0	0	3	0	0	0	0	**20**	
0230 - 0245	0	17	0	0	0	0	0	0	6	0	0	0	0	**23**	
0245 - 0300	0	12	0	0	2	0	0	0	4	0	0	0	0	**18**	**76**
0300 - 0315	0	16	0	0	0	0	0	0	6	0	0	0	0	**22**	
0315 - 0330	0	24	0	0	1	0	0	0	8	0	0	0	0	**33**	
0330 - 0345	0	20	0	0	3	0	0	0	4	0	0	0	0	**27**	
0345 - 0400	0	27	0	0	1	0	0	0	3	0	0	0	0	**31**	**113**
0400 - 0415	0	23	0	0	0	0	0	0	6	0	0	0	0	**29**	
0415 - 0430	0	19	0	0	1	0	0	0	11	0	0	0	0	**31**	
0430 - 0445	0	37	0	0	2	0	0	0	7	0	0	0	0	**46**	
0445 - 0500	0	34	0	0	3	0	0	0	10	0	0	0	0	**47**	**153**
0500 - 0515	0	46	1	0	3	0	0	0	6	0	0	0	0	**56**	
0515 - 0530	0	73	1	0	2	0	0	0	15	0	0	0	0	**91**	
0530 - 0545	0	80	2	0	4	0	0	0	12	0	0	0	0	**98**	
0545 - 0600	0	95	7	0	3	0	0	2	14	0	0	0	0	**121**	**366**
0600 - 0615	0	61	9	0	5	0	0	0	8	0	0	0	0	**83**	
0615 - 0630	0	136	14	1	4	0	0	2	18	0	0	0	0	**175**	
0630 - 0645	0	134	44	1	5	6	0	1	10	0	0	0	0	**201**	
0645 - 0700	0	162	56	0	3	2	0	0	20	0	0	0	0	**243**	**702**
0700 - 0715	0	160	62	1	11	3	0	1	17	0	0	0	0	**255**	
0715 - 0730	0	207	49	0	5	4	0	0	11	0	0	0	0	**276**	
0730 - 0745	0	254	84	1	5	3	0	1	13	0	0	0	0	**361**	
0745 - 0800	0	280	87	1	4	5	0	0	15	0	0	0	0	**392**	**1284**
0800 - 0815	1	233	76	1	6	1	0	0	12	0	0	0	0	**330**	
0815 - 0830	0	188	68	0	10	2	0	0	16	0	0	0	0	**284**	
0830 - 0845	0	219	59	0	4	0	0	1	12	0	0	0	0	**295**	
0845 - 0900	0	203	57	0	3	1	0	1	17	0	0	0	0	**282**	**1191**
0900 - 0915	1	183	73	2	7	4	1	1	20	0	0	0	0	**292**	
0915 - 0930	3	168	65	1	3	2	3	0	10	0	0	0	0	**255**	
0930 - 0945	0	177	59	0	6	2	0	2	12	2	0	0	0	**260**	
0945 - 1000	0	174	65	0	6	3	1	1	18	0	0	0	0	**268**	**1075**
1000 - 1015	0	180	66	0	3	1	0	1	13	1	0	0	0	**265**	
1015 - 1030	0	142	57	1	0	2	4	1	19	0	0	0	0	**226**	
1030 - 1045	1	166	76	0	2	2	1	0	12	0	0	0	0	**260**	
1045 - 1100	1	157	46	0	4	1	3	0	12	0	0	0	0	**224**	**975**
1100 - 1115	0	179	69	1	4	2	1	2	20	0	0	0	0	**278**	
1115 - 1130	0	186	48	2	4	0	1	1	15	0	0	0	0	**257**	
1130 - 1145	0	180	54	0	3	0	2	2	9	0	0	0	0	**250**	
1145 - 1200	0	165	52	0	1	1	3	1	28	0	0	0	0	**251**	**1036**
1200 - 1215	0	166	50	0	6	1	0	1	10	0	0	0	0	**234**	
1215 - 1230	0	188	69	0	1	1	1	1	18	0	0	0	0	**279**	
1230 - 1245	0	189	39	1	2	2	0	2	19	0	0	0	0	**254**	
1245 - 1300	0	201	69	1	2	1	1	2	17	0	0	0	0	**294**	**1061**
1300 - 1315	0	185	60	0	5	0	2	2	13	0	0	0	0	**267**	
1315 - 1330	0	187	72	0	6	1	1	4	15	0	0	0	0	**286**	
1330 - 1345	0	228	58	0	9	3	0	2	12	0	0	0	0	**312**	
1345 - 1400	0	201	77	0	5	1	0	3	19	0	0	0	0	**306**	**1171**
1400 - 1415	0	207	60	0	3	0	0	1	13	0	0	0	0	**284**	
1415 - 1430	0	202	51	1	1	2	1	2	15	0	0	0	0	**275**	
1430 - 1445	1	226	70	1	2	1	1	1	8	0	0	0	0	**311**	
1445 - 1500	0	244	56	0	4	1	0	0	24	1	0	0	0	**330**	**1200**
1500 - 1515	1	214	68	1	4	0	0	0	9	0	0	0	0	**297**	
1515 - 1530	1	237	72	2	3	2	1	2	12	0	0	0	0	**332**	
1530 - 1545	0	223	53	2	5	0	0	1	12	0	0	0	0	**296**	
1545 - 1600	0	238	66	0	7	1	0	1	19	0	0	0	0	**332**	**1257**
1600 - 1615	0	221	63	1	1	1	0	0	14	0	0	0	0	**301**	
1615 - 1630	0	225	71	0	1	0	0	1	8	0	1	0	0	**307**	
1630 - 1645	0	203	66	2	0	0	0	0	16	0	0	0	0	**287**	
1645 - 1700	1	210	45	1	3	1	0	1	16	0	0	0	0	**278**	**1173**
1700 - 1715	0	209	51	1	4	2	0	0	17	0	0	0	0	**284**	
1715 - 1730	0	232	55	0	2	0	0	1	9	0	0	0	0	**299**	
1730 - 1745	0	213	61	0	3	1	0	0	12	0	1	0	0	**291**	
1745 - 1800	0	220	55	0	6	0	0	0	9	0	0	0	0	**290**	**1164**
1800 - 1815	0	205	36	1	3	0	0	0	12	0	0	0	0	**257**	
1815 - 1830	0	202	45	0	4	0	0	1	4	0	0	0	0	**256**	
1830 - 1845	0	157	48	0	1	0	0	0	9	0	0	0	0	**215**	
1845 - 1900	0	153	37	0	1	0	0	0	9	0	0	0	0	**200**	**928**
1900 - 1915	0	152	29	0	1	2	0	0	6	0	0	0	0	**190**	
1915 - 1930	0	148	37	0	1	0	0	0	8	0	0	0	0	**194**	
1930 - 1945	0	129	25	0	1	0	0	0	8	0	0	0	0	**163**	
1945 - 2000	0	129	32	0	0	1	0	0	10	0	0	0	0	**172**	**719**
2000 - 2015	0	107	36	1	0	0	0	0	5	0	0	0	0	**149**	
2015 - 2030	0	105	24	1	1	0	0	0	3	0	0	0	0	**134**	
2030 - 2045	0	116	29	1	1	0	0	0	8	0	0	0	0	**155**	
2045 - 2100	0	75	25	0	1	0	0	0	3	0	0	0	0	**104**	**542**
2100 - 2115	0	72	22	0	0	0	0	0	8	0	0	0	0	**102**	
2115 - 2130	0	69	24	0	0	0	0	0	5	0	0	0	0	**98**	
2130 - 2145	0	58	21	0	0	0	0	0	5	0	0	0	0	**84**	
2145 - 2200	0	55	22	0	0	0	0	0	6	0	0	0	0	**83**	**367**
2200 - 2215	0	47	18	0	1	0	0	0	2	0	0	0	0	**68**	
2215 - 2230	0	45	22	1	0	0	0	0	5	0	0	0	0	**73**	
2230 - 2245	0	37	15	0	0	0	0	0	4	0	0	0	0	**56**	
2245 - 2300	0	36	19	0	0	0	0	1	8	0	0	0	0	**64**	**261**
2300 - 2315	0	39	20	0	0	0	0	0	5	0	0	0	0	**64**	
2315 - 2330	0	27	17	0	0	0	0	0	3	0	0	0	0	**47**	
2330 - 2345	0	18	10	0	0	0	0	0	4	0	0	0	0	**32**	
2345 - 0000	0	20	18	0	1	0	0	0	3	0	0	0	0	**42**	**185**

Session Total	11	12284	3495	32	237	72	28	51	981	4	2	0	0	**17197**
Session Average	0.11	127.96	36.41	0.33	2.47	0.75	0.29	0.53	10.22	0.04	0.02	0.00	0.00	**179.14**
Session Percentage	0.06	71.43	20.32	0.19	1.38	0.42	0.16	0.30	5.70	0.02	0.01	0.00	0.00	

AM Peak Hour	0830 - 0930	0715 - 0815	0730 - 0830	0615 - 0715	0700 - 0800	0630 - 0730	0945 - 1045	0545 - 0645	0615 - 0715	0915 - 1015	-	-	-	**0730 - 0830**
AM Peak Volume	4	974	315	3	25	15	6	5	65	3	0	0	0	**1367**

Noon Peak Hour	1430 - 1530	1430 - 1530	1300 - 1400	1445 - 1545	1300 - 1400	1015 - 1115	1015 - 1115	1300 - 1400	1145 - 1245	1000 - 1100	-	-	-	**1430 - 1530**
Noon Peak Volume	3	921	267	5	25	7	9	11	75	1	0	0	0	**1270**

PM Peak Hour	1500 - 1600	1515 - 1615	1545 - 1645	1500 - 1600	1500 - 1600	1515 - 1615	1500 - 1600	1500 - 1600	1630 - 1730	-	1530 - 1630	-	-	**1515 - 1615**
PM Peak Volume	2	919	266	5	19	4	1	4	58	0	1	0	0	**1261**

Site 8
I-26 N/Bound On-Ramp,
north of I-20

Date
Tuesday, April 23, 2024

Lat/Long
34.038738°, -81.109720°

Weather
Fair
58°F

Click here for Detailed Weather

0000 - 2400 (Weekday 24h Session) (04-23-2024)
NB EB 15min

	Northbound (Movement 8.1)													15min	60min
TIME	1	2	3	4	5	6	7	8	9	10	11	12	13	Total	Total
0000 - 0015	0	28	16	0	1	0	0	0	3	0	0	0	0	**48**	
0015 - 0030	0	20	8	0	1	0	0	0	5	0	0	0	0	**34**	
0030 - 0045	0	15	4	0	0	0	0	0	6	0	0	0	0	**25**	
0045 - 0100	0	11	3	0	0	0	0	0	4	0	0	0	0	**18**	**125**
0100 - 0115	0	13	5	0	0	0	0	0	1	0	1	0	0	**20**	
0115 - 0130	0	8	3	0	0	0	0	1	1	0	0	0	0	**13**	
0130 - 0145	0	9	2	0	1	0	0	0	4	0	0	0	0	**16**	
0145 - 0200	0	7	3	0	0	0	0	0	6	0	0	0	0	**16**	**65**
0200 - 0215	0	5	2	0	1	0	0	0	2	0	1	0	0	**11**	
0215 - 0230	0	9	6	0	1	0	0	0	9	0	0	0	0	**25**	
0230 - 0245	0	6	3	0	0	0	0	0	1	0	0	0	0	**10**	
0245 - 0300	0	10	4	0	0	0	0	1	6	0	1	0	0	**22**	**68**
0300 - 0315	0	8	6	1	1	1	0	0	7	0	0	0	0	**24**	
0315 - 0330	0	10	5	0	1	0	0	0	4	0	0	0	0	**20**	
0330 - 0345	0	12	8	0	1	0	0	1	8	0	0	0	0	**30**	
0345 - 0400	0	10	9	0	1	0	0	0	6	0	0	0	0	**26**	**100**
0400 - 0415	0	15	7	0	0	0	0	0	3	0	0	0	0	**25**	
0415 - 0430	0	12	3	0	1	1	0	0	8	0	0	0	0	**25**	
0430 - 0445	0	15	9	0	1	0	0	1	12	0	1	0	0	**39**	
0445 - 0500	0	30	14	0	3	1	0	0	9	0	0	0	0	**57**	**146**
0500 - 0515	0	28	13	0	5	0	0	1	9	0	0	0	0	**56**	
0515 - 0530	0	35	18	0	0	0	0	2	17	0	0	0	0	**72**	
0530 - 0545	0	27	19	0	5	3	0	0	2	0	0	0	0	**56**	
0545 - 0600	0	32	15	0	0	0	0	0	6	0	0	0	0	**53**	**237**
0600 - 0615	1	51	30	0	4	3	0	1	11	0	0	0	0	**101**	
0615 - 0630	0	116	52	0	5	4	0	2	20	0	0	0	0	**199**	
0630 - 0645	0	102	39	1	4	4	0	1	17	0	0	0	0	**168**	
0645 - 0700	0	124	83	0	8	6	0	1	16	0	0	0	0	**238**	**706**
0700 - 0715	0	137	61	2	2	2	0	1	22	0	0	0	0	**227**	
0715 - 0730	0	192	90	1	6	5	0	0	14	0	0	0	0	**308**	
0730 - 0745	0	195	99	0	8	0	0	0	15	0	0	0	0	**317**	
0745 - 0800	0	230	67	1	5	1	0	1	8	0	0	0	0	**313**	**1165**
0800 - 0815	1	191	59	1	3	3	0	0	5	0	0	0	0	**263**	
0815 - 0830	1	253	79	1	6	4	0	0	15	0	0	0	0	**359**	
0830 - 0845	0	217	51	0	7	6	0	0	18	0	0	0	0	**299**	
0845 - 0900	0	238	79	3	5	5	0	0	20	0	0	0	0	**350**	**1271**
0900 - 0915	1	230	54	0	7	0	2	1	28	0	0	0	0	**323**	
0915 - 0930	0	214	61	0	4	3	2	1	17	0	0	0	0	**302**	
0930 - 0945	0	187	66	0	0	3	0	1	19	0	0	0	0	**276**	
0945 - 1000	0	182	58	1	8	0	1	4	10	0	0	0	0	**264**	**1165**
1000 - 1015	0	141	59	0	5	1	0	0	14	0	0	0	0	**220**	
1015 - 1030	0	143	65	1	5	0	1	0	15	0	0	0	0	**230**	
1030 - 1045	0	172	65	0	7	3	0	1	14	0	0	0	0	**262**	
1045 - 1100	0	198	66	1	10	6	0	3	20	0	0	0	0	**304**	**1016**
1100 - 1115	0	156	68	0	2	7	0	2	17	0	0	0	0	**252**	
1115 - 1130	0	170	72	1	6	1	0	0	16	0	0	0	0	**266**	
1130 - 1145	0	169	57	2	5	1	0	0	12	0	0	0	0	**246**	
1145 - 1200	0	159	57	0	7	2	0	0	12	0	0	0	0	**237**	**1001**
1200 - 1215	1	164	51	0	3	2	0	0	10	0	0	0	0	**231**	
1215 - 1230	0	202	78	0	3	3	1	2	17	0	0	0	0	**306**	
1230 - 1245	0	175	47	0	2	4	0	1	15	0	0	0	0	**244**	
1245 - 1300	0	172	54	0	4	2	0	0	22	1	0	0	0	**255**	**1036**
1300 - 1315	0	158	63	0	5	0	0	2	17	0	0	0	0	**245**	
1315 - 1330	1	176	57	1	3	2	0	3	10	0	0	0	0	**253**	
1330 - 1345	1	218	62	0	2	4	0	3	10	0	0	0	0	**300**	
1345 - 1400	0	224	71	0	4	1	0	1	24	0	0	0	0	**325**	**1123**
1400 - 1415	0	207	56	0	5	1	0	0	10	0	0	0	0	**279**	
1415 - 1430	0	214	80	1	4	3	0	1	14	0	0	0	0	**317**	
1430 - 1445	2	191	66	0	5	1	0	2	15	1	0	0	0	**283**	
1445 - 1500	0	204	72	1	4	2	2	1	12	0	0	0	0	**298**	**1177**
1500 - 1515	3	207	69	2	4	3	1	2	15	0	0	0	0	**306**	
1515 - 1530	1	222	70	0	4	0	1	0	13	0	0	0	0	**311**	
1530 - 1545	1	223	62	1	7	0	0	1	17	1	0	0	0	**313**	
1545 - 1600	1	245	64	0	5	2	0	1	11	0	0	0	0	**329**	**1259**
1600 - 1615	0	247	46	0	8	4	0	2	15	0	0	0	0	**322**	
1615 - 1630	0	258	74	0	5	1	0	1	10	0	0	0	0	**349**	
1630 - 1645	0	195	60	1	2	3	0	0	15	0	0	0	0	**276**	
1645 - 1700	1	147	35	0	1	1	0	0	6	0	0	0	0	**191**	**1138**
1700 - 1715	0	123	36	0	0	1	0	0	8	0	0	0	0	**168**	
1715 - 1730	1	231	61	3	4	1	0	0	11	0	0	0	0	**312**	
1730 - 1745	0	263	56	0	2	1	0	0	13	0	0	0	0	**335**	
1745 - 1800	0	231	61	1	3	0	0	4	13	0	0	0	0	**313**	**1128**
1800 - 1815	1	250	84	1	1	1	0	2	12	0	0	0	0	**352**	
1815 - 1830	1	174	40	0	2	1	0	1	11	2	0	0	0	**232**	
1830 - 1845	1	185	32	0	2	1	0	1	11	0	0	0	0	**233**	
1845 - 1900	0	153	38	0	2	2	0	0	9	0	0	0	0	**204**	**1021**
1900 - 1915	0	140	43	0	4	1	0	1	8	0	0	0	0	**197**	
1915 - 1930	0	141	33	0	4	0	0	0	8	0	0	0	0	**186**	
1930 - 1945	1	151	45	0	1	0	0	0	5	0	0	0	0	**203**	
1945 - 2000	0	147	26	0	2	1	0	2	8	0	0	0	0	**186**	**772**
2000 - 2015	0	117	23	0	2	0	0	0	7	0	0	0	0	**149**	
2015 - 2030	0	126	41	1	1	0	0	0	3	0	0	0	0	**172**	
2030 - 2045	0	118	33	0	1	1	0	0	4	0	0	0	0	**157**	
2045 - 2100	0	83	19	0	0	0	0	0	10	0	0	0	0	**112**	**590**
2100 - 2115	0	73	22	0	1	0	0	0	3	0	0	0	0	**99**	
2115 - 2130	0	80	27	0	0	0	0	0	5	0	0	0	0	**112**	
2130 - 2145	0	76	23	1	1	0	0	0	5	0	0	0	0	**106**	
2145 - 2200	0	77	20	0	1	0	0	0	7	0	0	0	0	**105**	**422**
2200 - 2215	0	59	16	1	3	0	0	0	5	0	0	0	0	**84**	
2215 - 2230	0	52	15	0	0	0	0	0	4	0	0	0	0	**71**	
2230 - 2245	0	34	13	0	0	0	0	0	4	0	0	0	0	**51**	
2245 - 2300	0	43	12	0	0	0	0	0	4	0	0	0	0	**59**	**265**
2300 - 2315	0	48	14	0	0	0	0	0	3	0	1	0	0	**66**	
2315 - 2330	0	26	9	0	0	0	0	0	4	0	0	0	0	**39**	
2330 - 2345	0	32	10	0	0	1	0	0	6	0	1	0	0	**50**	
2345 - 0000	0	23	11	0	1	0	0	0	6	0	0	0	0	**41**	**196**

Session Total	21	11847	3822	32	271	127	11	61	989	5	6	0	0	**17192**
Session Average	0.22	123.41	39.81	0.33	2.82	1.32	0.11	0.64	10.30	0.05	0.06	0.00	0.00	**179.08**
Session Percentage	0.12	68.91	22.23	0.19	1.58	0.74	0.06	0.35	5.75	0.03	0.03	0.00	0.00	

AM Peak Hour	0730 - 0830	0815 - 0915	0645 - 0745	0800 - 0900	0815 - 0915	0800 - 0900	0900 - 1000	0900 - 1000	0845 - 0945	-	-	-	-	**0815 - 0915**
AM Peak Hour Volume	2	938	333	5	25	18	5	7	84	0	0	0	0	**1331**

Noon Peak Hour	1430 - 1530	1330 - 1430	1415 - 1515	1045 - 1145	1000 - 1100	1030 - 1130	1430 - 1530	1300 - 1400	1215 - 1315	1200 - 1300	-	-	-	**1445 - 1545**
Noon Peak Hour Volume	6	863	287	4	27	17	4	9	71	1	0	0	0	**1228**

PM Peak Hour	1500 - 1600	1715 - 1815	1500 - 1600	1715 - 1815	1530 - 1630	1545 - 1645	1500 - 1600	1745 - 1845	1500 - 1600	1730 - 1830	-	-	-	**1530 - 1630**
PM Peak Hour Volume	6	975	265	5	25	10	2	8	56	2	0	0	0	**1313**

Site 8
I-26 N/Bound On-Ramp,
north of I-20

Date
Wednesday, April 24, 2024

Lat/Long
34.038738°, -81.109720°

Weather
Fair
66°F

Click here for Detailed Weather

0000 - 2400 (Weekday 24h Session) (04-24-2024)
NB EB 15min

	Northbound (Movement 8.1)													15min	60min
TIME	1	2	3	4	5	6	7	8	9	10	11	12	13	Total	Total
0000 - 0015	0	33	8	0	0	0	0	0	3	0	1	0	0	**45**	
0015 - 0030	0	27	5	0	0	1	0	0	2	0	1	0	0	**36**	
0030 - 0045	0	18	2	0	0	1	0	0	3	0	0	0	0	**24**	
0045 - 0100	0	20	3	0	1	0	0	0	3	0	0	0	0	**27**	**132**
0100 - 0115	0	19	2	0	0	0	0	0	2	0	0	0	0	**23**	
0115 - 0130	0	22	5	0	1	0	0	0	4	0	0	0	0	**32**	
0130 - 0145	0	12	3	0	0	0	0	0	6	0	0	0	0	**21**	
0145 - 0200	0	11	2	0	0	0	0	0	3	0	0	0	0	**16**	**92**
0200 - 0215	0	7	1	0	0	0	0	0	0	0	0	0	0	**8**	
0215 - 0230	0	18	5	0	1	1	0	0	7	0	2	0	0	**34**	
0230 - 0245	0	11	2	0	1	0	0	0	5	0	0	0	0	**19**	
0245 - 0300	0	17	3	0	2	0	0	0	4	0	0	0	0	**26**	**87**
0300 - 0315	0	10	1	0	0	0	0	0	2	0	0	0	0	**13**	
0315 - 0330	0	17	2	0	1	1	0	0	3	0	0	0	0	**24**	
0330 - 0345	0	20	4	0	1	0	0	0	6	0	0	0	0	**31**	
0345 - 0400	0	16	2	0	2	1	0	0	7	0	0	0	0	**28**	**96**
0400 - 0415	0	15	2	0	3	0	0	0	14	0	0	0	0	**34**	
0415 - 0430	0	19	3	0	1	1	0	0	11	0	1	0	0	**36**	
0430 - 0445	0	23	5	0	2	1	0	0	13	0	0	0	0	**44**	
0445 - 0500	0	32	9	0	2	1	0	0	14	0	0	0	0	**58**	**172**
0500 - 0515	0	22	6	0	1	1	0	0	11	0	0	0	0	**41**	
0515 - 0530	0	40	13	0	3	2	0	0	10	0	0	0	0	**68**	
0530 - 0545	0	46	15	0	4	0	0	0	12	0	0	0	0	**77**	
0545 - 0600	0	65	22	0	2	0	0	0	13	0	0	0	0	**102**	**288**
0600 - 0615	0	61	20	0	8	0	0	0	12	0	0	0	0	**101**	
0615 - 0630	0	90	30	0	3	0	0	0	10	0	0	0	0	**133**	
0630 - 0645	0	121	52	0	2	2	0	1	17	0	0	0	0	**195**	
0645 - 0700	0	161	61	1	6	3	0	2	10	0	0	0	0	**244**	**673**
0700 - 0715	0	170	51	1	8	3	1	0	14	0	0	0	0	**248**	
0715 - 0730	0	210	58	1	3	1	0	1	12	0	0	0	0	**286**	
0730 - 0745	0	218	70	1	2	2	0	1	14	0	0	0	0	**308**	
0745 - 0800	0	236	60	0	8	1	0	0	13	0	0	0	0	**318**	**1160**
0800 - 0815	5	159	48	1	6	3	0	0	10	0	0	0	0	**232**	
0815 - 0830	0	156	58	0	6	2	1	1	5	1	0	0	0	**230**	
0830 - 0845	1	200	72	0	8	1	0	5	21	0	0	0	0	**308**	
0845 - 0900	1	244	78	0	1	1	0	0	19	1	0	0	0	**345**	**1115**
0900 - 0915	0	150	72	0	6	0	1	0	10	0	0	0	0	**239**	
0915 - 0930	0	132	45	1	6	0	2	1	8	1	0	0	0	**196**	
0930 - 0945	0	166	86	1	7	0	2	0	26	0	0	0	0	**288**	
0945 - 1000	0	227	63	0	4	0	1	1	23	0	0	0	0	**319**	**1042**
1000 - 1015	1	180	72	0	8	2	1	1	19	0	0	0	0	**284**	
1015 - 1030	0	182	70	0	2	1	0	2	23	0	0	0	0	**280**	
1030 - 1045	0	155	68	0	5	2	0	1	16	1	0	0	0	**248**	
1045 - 1100	0	168	70	0	4	0	1	0	13	0	0	0	0	**256**	**1068**
1100 - 1115	0	143	77	0	5	1	0	1	13	0	0	0	0	**240**	
1115 - 1130	1	176	66	0	4	1	0	0	16	0	0	0	0	**264**	
1130 - 1145	1	176	61	0	2	0	0	1	12	0	0	0	0	**253**	
1145 - 1200	1	212	61	1	7	0	0	0	14	0	0	0	0	**296**	**1053**
1200 - 1215	1	170	57	0	6	4	0	2	17	0	0	0	0	**257**	
1215 - 1230	1	183	55	1	9	2	1	0	17	0	0	0	0	**269**	
1230 - 1245	0	170	63	0	6	2	0	1	15	0	0	0	0	**257**	
1245 - 1300	1	204	64	0	3	1	0	0	10	0	0	0	0	**283**	**1066**
1300 - 1315	0	170	62	1	4	1	0	2	18	0	0	0	0	**258**	
1315 - 1330	0	186	66	1	7	1	1	1	23	0	0	0	0	**286**	
1330 - 1345	0	208	45	0	1	1	1	1	15	1	0	0	0	**273**	
1345 - 1400	0	192	56	0	1	0	0	0	13	2	0	0	0	**264**	**1081**
1400 - 1415	0	171	77	1	6	1	0	3	14	1	0	0	0	**274**	
1415 - 1430	0	218	72	2	3	1	0	1	19	0	0	0	0	**316**	
1430 - 1445	0	193	69	1	2	3	0	2	33	0	0	0	0	**303**	
1445 - 1500	1	222	78	0	2	1	0	0	23	1	0	0	0	**328**	**1221**
1500 - 1515	0	206	55	0	4	0	1	1	13	1	0	0	0	**281**	
1515 - 1530	2	242	73	0	9	1	0	1	14	0	0	0	0	**342**	
1530 - 1545	1	250	78	2	2	0	0	0	10	1	0	0	0	**344**	
1545 - 1600	0	251	68	0	3	0	0	0	14	0	0	0	0	**336**	**1303**
1600 - 1615	0	278	81	0	5	2	0	1	16	0	0	0	0	**383**	
1615 - 1630	0	254	69	0	3	0	0	0	9	0	0	0	0	**335**	
1630 - 1645	2	238	67	0	1	0	0	0	13	0	0	0	0	**321**	
1645 - 1700	0	211	71	0	5	1	0	0	14	0	0	0	0	**302**	**1341**
1700 - 1715	0	234	61	0	4	0	0	0	8	0	0	0	0	**307**	
1715 - 1730	0	238	54	1	1	0	0	0	12	0	0	0	0	**306**	
1730 - 1745	1	214	63	0	2	1	0	0	9	0	0	0	0	**290**	
1745 - 1800	1	210	55	0	5	1	0	1	15	0	0	0	0	**288**	**1191**
1800 - 1815	2	185	46	0	1	2	0	0	9	0	0	0	0	**245**	
1815 - 1830	1	217	49	1	6	0	0	0	11	0	0	0	0	**285**	
1830 - 1845	3	192	48	0	1	0	0	0	8	0	0	0	0	**252**	
1845 - 1900	0	164	56	1	0	0	0	0	6	0	0	0	0	**227**	**1009**
1900 - 1915	3	169	42	0	4	3	0	0	16	0	0	0	0	**237**	
1915 - 1930	0	173	56	0	3	1	0	0	8	0	0	0	0	**241**	
1930 - 1945	0	149	34	0	1	0	0	0	5	0	0	0	0	**189**	
1945 - 2000	0	126	23	1	1	1	0	1	5	0	0	0	0	**158**	**825**
2000 - 2015	0	134	22	0	2	0	0	0	6	0	0	0	0	**164**	
2015 - 2030	0	119	21	0	0	0	0	0	14	0	0	0	0	**154**	
2030 - 2045	0	125	26	1	0	2	0	0	7	0	0	0	0	**161**	
2045 - 2100	0	141	24	0	0	0	0	0	4	0	0	0	0	**169**	**648**
2100 - 2115	0	85	16	0	1	1	0	0	6	0	0	0	0	**109**	
2115 - 2130	0	98	19	1	0	0	0	0	4	0	0	0	0	**122**	
2130 - 2145	0	93	12	0	1	0	0	0	4	0	0	0	0	**110**	
2145 - 2200	0	85	15	0	0	0	0	0	5	0	0	0	0	**105**	**446**
2200 - 2215	0	64	11	1	0	0	0	0	2	0	0	0	0	**78**	
2215 - 2230	0	53	13	0	1	0	0	0	7	0	1	0	0	**75**	
2230 - 2245	0	48	12	0	0	0	0	0	2	0	0	0	0	**62**	
2245 - 2300	0	60	14	0	0	0	0	0	7	0	0	0	0	**81**	**296**
2300 - 2315	0	38	11	0	1	1	0	0	4	0	1	0	0	**56**	
2315 - 2330	0	37	9	0	1	0	0	0	5	0	0	0	0	**52**	
2330 - 2345	0	29	7	0	0	0	0	0	4	0	1	0	0	**41**	
2345 - 0000	0	30	8	0	0	1	0	0	2	0	0	0	0	**41**	**190**

Session Total	31	12360	3747	24	267	73	14	37	1023	11	8	0	0	**17595**
Session Average	0.32	128.75	39.03	0.25	2.78	0.76	0.15	0.39	10.66	0.11	0.08	0.00	0.00	**183.28**
Session Percentage	0.18	70.25	21.30	0.14	1.52	0.41	0.08	0.21	5.81	0.06	0.05	0.00	0.00	

AM Peak Hour	0800 - 0900	0700 - 0800	0930 - 1030	0645 - 0745	0745 - 0845	0630 - 0730	0900 - 1000	0745 - 0845	0930 - 1030	0800 - 0900	-	-	-	**0930 - 1030**
AM Peak Hour Volume	7	834	291	4	28	9	6	6	91	2	0	0	0	**1171**

Noon Peak Hour	1115 - 1215	1445 - 1545	1400 - 1500	1345 - 1445	1145 - 1245	1200 - 1300	1000 - 1100	1345 - 1445	1400 - 1500	1315 - 1415	-	-	-	**1445 - 1545**
Noon Peak Hour Volume	4	920	296	4	28	9	2	6	89	4	0	0	0	**1295**

PM Peak Hour	1745 - 1845	1530 - 1630	1515 - 1615	1500 - 1600	1515 - 1615	1900 - 2000	1500 - 1600	1500 - 1600	1515 - 1615	1500 - 1600	-	-	-	**1515 - 1615**
PM Peak Hour Volume	7	1033	300	2	19	5	1	2	54	2	0	0	0	**1405**

Site 8
I-26 N/Bound On-Ramp,
north of I-20

Date
Thursday, April 25, 2024

Lat/Long
34.038738°, -81.109720°

Weather
Fair
67°F

Click here for Detailed Weather

0000 - 2400 (Weekday 24h Session) (04-25-2024)
NB EB 15min

	Northbound (Movement 8.1)													15min	60min
TIME	1	2	3	4	5	6	7	8	9	10	11	12	13	Total	Total
0000 - 0015	0	20	3	0	0	0	0	0	5	0	0	0	0	**28**	
0015 - 0030	0	19	5	0	0	0	0	0	2	0	0	0	0	**26**	
0030 - 0045	0	20	4	0	0	0	0	0	4	0	0	0	0	**28**	
0045 - 0100	0	13	3	0	0	0	0	0	3	0	0	0	0	**19**	**101**
0100 - 0115	0	9	2	0	0	0	0	0	2	0	0	0	0	**13**	
0115 - 0130	0	17	4	0	1	0	0	0	2	0	0	0	0	**24**	
0130 - 0145	0	15	4	0	0	0	0	0	6	0	0	0	0	**25**	
0145 - 0200	0	10	3	0	0	0	0	0	3	0	0	0	0	**16**	**78**
0200 - 0215	0	15	4	0	1	0	0	0	1	0	0	0	0	**21**	
0215 - 0230	0	10	3	0	0	0	0	0	4	0	0	0	0	**17**	
0230 - 0245	0	11	3	0	1	0	0	0	2	0	0	0	0	**17**	
0245 - 0300	0	9	2	0	1	0	0	0	2	0	0	0	0	**14**	**69**
0300 - 0315	0	12	2	0	0	0	0	0	8	0	0	0	0	**22**	
0315 - 0330	0	12	3	0	2	0	0	0	2	0	0	0	0	**19**	
0330 - 0345	0	14	3	0	3	0	0	0	12	0	0	0	0	**32**	
0345 - 0400	0	17	4	0	2	0	0	0	5	0	0	0	0	**28**	**101**
0400 - 0415	0	15	2	0	2	0	0	0	8	0	0	0	0	**27**	
0415 - 0430	0	14	2	0	2	0	0	0	8	0	0	0	0	**26**	
0430 - 0445	0	23	4	0	4	0	0	0	11	0	0	0	0	**42**	
0445 - 0500	0	47	11	0	5	1	0	0	13	0	0	0	0	**77**	**172**
0500 - 0515	0	25	5	0	3	1	0	1	13	0	0	0	0	**48**	
0515 - 0530	0	43	9	0	6	0	0	2	12	0	0	0	0	**72**	
0530 - 0545	0	49	13	0	2	0	0	0	14	0	0	0	0	**78**	
0545 - 0600	0	67	19	0	6	0	0	0	4	0	0	0	0	**96**	**294**
0600 - 0615	0	69	18	0	4	1	0	1	14	0	0	0	0	**107**	
0615 - 0630	0	98	38	0	3	1	0	0	14	0	0	0	0	**154**	
0630 - 0645	0	125	50	1	4	3	0	0	13	0	0	0	0	**196**	
0645 - 0700	0	158	64	1	3	6	0	0	14	0	0	0	0	**246**	**703**
0700 - 0715	0	173	54	0	4	2	0	2	12	0	0	0	0	**247**	
0715 - 0730	0	193	70	1	10	3	3	0	11	0	0	0	0	**291**	
0730 - 0745	0	215	97	0	3	2	1	0	14	0	0	0	0	**332**	
0745 - 0800	0	229	70	0	6	4	1	0	16	0	0	0	0	**326**	**1196**
0800 - 0815	0	210	82	1	9	3	2	1	11	1	0	0	0	**320**	
0815 - 0830	2	218	76	1	4	1	1	1	14	0	0	0	0	**318**	
0830 - 0845	1	240	64	0	2	2	2	1	14	0	0	0	0	**326**	
0845 - 0900	1	218	77	0	5	3	3	2	13	1	0	0	0	**323**	**1287**
0900 - 0915	0	168	64	0	11	0	0	4	16	0	0	0	0	**263**	
0915 - 0930	0	181	65	2	10	2	1	1	8	1	0	0	0	**271**	
0930 - 0945	0	212	74	1	5	4	0	2	18	2	0	0	0	**318**	
0945 - 1000	0	211	70	1	7	3	0	3	15	1	0	0	0	**311**	**1163**
1000 - 1015	1	172	53	1	2	2	0	1	14	1	0	0	0	**247**	
1015 - 1030	0	184	57	3	5	2	0	0	15	1	0	0	0	**267**	
1030 - 1045	1	201	66	2	7	7	0	1	13	1	0	0	0	**299**	
1045 - 1100	0	194	73	0	2	2	0	1	16	2	0	0	0	**290**	**1103**
1100 - 1115	0	209	83	0	5	5	0	0	15	1	0	0	0	**318**	
1115 - 1130	2	213	70	0	6	5	0	3	16	2	0	0	0	**317**	
1130 - 1145	1	250	71	0	5	2	0	2	11	1	0	0	0	**343**	
1145 - 1200	0	216	64	0	6	2	0	4	14	1	0	0	0	**307**	**1285**
1200 - 1215	2	231	62	0	1	3	0	2	12	1	0	0	0	**314**	
1215 - 1230	1	232	64	0	7	4	0	1	12	1	0	0	0	**322**	
1230 - 1245	0	201	63	1	5	5	0	0	15	1	0	0	0	**291**	
1245 - 1300	7	233	70	0	6	1	0	5	19	2	0	0	0	**343**	**1270**
1300 - 1315	3	224	50	0	7	1	0	3	20	1	0	0	0	**309**	
1315 - 1330	0	226	77	0	7	3	0	0	11	0	0	0	0	**324**	
1330 - 1345	0	245	67	0	4	2	0	2	14	1	0	0	0	**335**	
1345 - 1400	0	229	71	0	3	8	0	0	9	0	0	0	0	**320**	**1288**
1400 - 1415	0	208	67	1	4	5	0	2	17	1	0	0	0	**305**	
1415 - 1430	0	233	63	1	4	3	0	0	8	0	0	0	0	**312**	
1430 - 1445	2	205	62	0	5	3	0	4	20	2	0	0	0	**303**	
1445 - 1500	0	253	73	0	5	3	0	3	16	1	0	0	0	**354**	**1274**
1500 - 1515	0	201	76	1	4	3	0	2	14	1	0	0	0	**302**	
1515 - 1530	0	253	84	1	8	2	0	0	12	0	0	0	0	**360**	
1530 - 1545	5	224	70	1	3	6	0	0	9	0	0	0	0	**318**	
1545 - 1600	1	199	63	0	2	1	0	4	9	0	0	0	0	**279**	**1259**
1600 - 1615	0	208	68	0	7	0	3	2	15	0	0	0	0	**303**	
1615 - 1630	0	202	64	0	2	0	0	3	14	0	0	0	0	**285**	
1630 - 1645	0	224	56	1	2	1	0	0	12	0	0	0	0	**296**	
1645 - 1700	0	215	55	0	4	0	0	2	10	0	0	0	0	**286**	**1170**
1700 - 1715	0	210	59	0	1	0	0	1	14	1	0	0	0	**286**	
1715 - 1730	2	208	60	0	1	0	0	0	9	0	0	0	0	**280**	
1730 - 1745	0	214	59	1	4	0	0	3	11	0	0	0	0	**292**	
1745 - 1800	1	209	63	0	0	0	0	2	11	0	0	0	0	**286**	**1144**
1800 - 1815	0	192	57	0	3	2	0	0	12	0	0	0	0	**266**	
1815 - 1830	2	214	64	0	4	0	0	0	3	0	0	0	0	**287**	
1830 - 1845	3	206	47	0	3	2	0	2	4	0	0	0	0	**267**	
1845 - 1900	0	191	39	0	3	0	0	0	7	0	0	0	0	**240**	**1060**
1900 - 1915	1	178	44	0	1	1	0	1	12	0	0	0	0	**238**	
1915 - 1930	0	180	38	0	2	3	0	0	8	0	0	0	0	**231**	
1930 - 1945	1	152	34	0	2	0	0	0	7	0	0	0	0	**196**	
1945 - 2000	0	163	35	0	0	0	0	0	8	0	0	0	0	**206**	**871**
2000 - 2015	2	115	25	0	0	2	0	0	3	0	0	0	0	**147**	
2015 - 2030	1	125	27	0	0	0	0	0	6	0	0	0	0	**159**	
2030 - 2045	0	130	30	0	1	0	0	0	6	0	0	0	0	**167**	
2045 - 2100	0	110	25	0	2	0	0	0	9	0	0	0	0	**146**	**619**
2100 - 2115	0	109	20	0	0	0	0	0	4	0	0	0	0	**133**	
2115 - 2130	0	105	19	0	1	0	0	0	4	0	0	0	0	**129**	
2130 - 2145	0	107	20	0	1	0	0	0	5	0	0	0	0	**133**	
2145 - 2200	0	75	15	0	3	0	0	1	2	0	0	0	0	**96**	**491**
2200 - 2215	0	65	12	1	2	0	0	0	8	0	0	0	0	**88**	
2215 - 2230	0	51	10	0	1	0	0	0	4	0	0	0	0	**66**	
2230 - 2245	0	60	12	0	2	0	0	0	5	0	0	0	0	**79**	
2245 - 2300	0	60	13	0	1	0	0	0	5	0	1	0	0	**80**	**313**
2300 - 2315	0	54	11	0	2	0	0	0	6	0	1	0	0	**74**	
2315 - 2330	0	40	9	0	1	0	0	0	5	0	0	0	0	**55**	
2330 - 2345	0	42	8	0	0	0	0	0	8	0	0	0	0	**58**	
2345 - 0000	0	36	7	0	1	0	0	0	1	0	0	0	0	**45**	**232**

Session Total	43	13110	3874	24	301	133	17	78	932	29	2	0	0	**18543**
Session Average	0.45	136.56	40.35	0.25	3.14	1.39	0.18	0.81	9.71	0.30	0.02	0.00	0.00	**193.16**
Session Percentage	0.23	70.70	20.89	0.13	1.62	0.72	0.09	0.42	5.03	0.16	0.01	0.00	0.00	

AM Peak Hour	0800 - 0900	0745 - 0845	0730 - 0830	0945 - 1045	0900 - 1000	0630 - 0730	0800 - 0900	0900 - 1000	0930 - 1030	0915 - 1015	-	-	-	**0730 - 0830**
AM Peak Hour Volume	4	897	325	7	33	14	8	10	62	5	0	0	0	**1296**

Noon Peak Hour	1215 - 1315	1445 - 1545	1445 - 1545	1000 - 1100	1215 - 1315	1030 - 1130	-	1115 - 1215	1215 - 1315	1030 - 1130	-	-	-	**1445 - 1545**
Noon Peak Hour Volume	11	931	303	6	25	19	0	11	66	6	0	0	0	**1334**

PM Peak Hour	1500 - 1600	1515 - 1615	1500 - 1600	1500 - 1600	1515 - 1615	1500 - 1600	1515 - 1615	1530 - 1630	1600 - 1700	1500 - 1600	-	-	-	**1515 - 1615**
PM Peak Hour Volume	6	884	293	3	20	12	3	9	51	1	0	0	0	**1260**

Site 8
I-26 N/Bound On-Ramp,
north of I-20

Date
Friday, April 26, 2024

Lat/Long
34.038738°, -81.109720°

Weather
Cloudy
69°F

Click here for Detailed Weather

0000 - 2400 (Weekday 24h Session) (04-26-2024)
NB EB 15min

	Northbound (Movement 8.1)													15min	60min
TIME	1	2	3	4	5	6	7	8	9	10	11	12	13	Total	Total
0000 - 0015	0	41	8	0	0	0	0	0	2	0	0	0	0	**51**	
0015 - 0030	0	20	3	0	0	0	0	0	1	0	0	0	0	**24**	
0030 - 0045	0	28	5	0	1	0	0	0	5	0	0	0	0	**39**	
0045 - 0100	0	16	2	0	1	0	0	0	1	0	0	0	0	**20**	**134**
0100 - 0115	0	15	1	0	0	0	0	0	1	0	0	0	0	**17**	
0115 - 0130	0	14	2	0	0	0	0	0	4	0	0	0	0	**20**	
0130 - 0145	0	17	3	0	0	0	0	0	8	0	0	0	0	**28**	
0145 - 0200	0	19	2	0	0	0	0	0	6	0	0	0	0	**27**	**92**
0200 - 0215	0	17	1	0	0	0	0	0	3	0	0	0	0	**21**	
0215 - 0230	0	18	1	0	0	0	0	0	1	0	0	0	0	**20**	
0230 - 0245	0	21	3	0	0	0	0	0	1	0	1	0	0	**26**	
0245 - 0300	0	9	0	0	0	0	0	0	2	0	1	0	0	**12**	**79**
0300 - 0315	0	11	1	0	0	0	0	0	4	0	0	0	0	**16**	
0315 - 0330	0	12	0	0	1	0	0	0	3	0	0	0	0	**16**	
0330 - 0345	0	17	3	0	3	0	0	0	6	0	0	0	0	**29**	
0345 - 0400	0	14	1	0	1	0	0	0	6	0	0	0	0	**22**	**83**
0400 - 0415	0	19	2	0	2	0	0	0	6	0	0	0	0	**29**	
0415 - 0430	0	23	4	0	2	0	0	0	10	0	1	0	0	**40**	
0430 - 0445	0	25	3	0	0	0	0	0	10	0	0	0	0	**38**	
0445 - 0500	0	34	6	0	3	0	0	0	10	0	0	0	0	**53**	**160**
0500 - 0515	0	41	7	0	4	0	0	0	14	0	0	0	0	**66**	
0515 - 0530	0	39	8	0	3	0	0	0	14	0	0	0	0	**64**	
0530 - 0545	0	57	7	0	4	1	0	0	19	0	0	0	0	**88**	
0545 - 0600	0	59	8	0	3	1	0	0	13	0	0	0	0	**84**	**302**
0600 - 0615	0	64	13	0	3	2	0	0	20	0	1	0	0	**103**	
0615 - 0630	0	107	23	0	5	1	0	0	14	0	0	0	0	**150**	
0630 - 0645	0	130	35	0	5	1	0	2	15	0	0	0	0	**188**	
0645 - 0700	0	170	42	0	3	2	2	1	14	0	0	0	0	**234**	**675**
0700 - 0715	0	165	45	1	3	4	2	0	21	0	0	0	0	**241**	
0715 - 0730	0	186	55	2	4	2	5	1	10	0	0	0	0	**265**	
0730 - 0745	0	257	78	1	2	4	4	0	9	0	0	0	0	**355**	
0745 - 0800	0	251	73	0	7	5	1	0	14	0	0	0	0	**351**	**1212**
0800 - 0815	0	246	69	1	10	0	0	0	10	3	0	0	0	**339**	
0815 - 0830	1	195	65	1	5	1	1	0	10	1	0	0	0	**280**	
0830 - 0845	3	202	72	0	4	4	4	1	16	1	0	0	0	**307**	
0845 - 0900	1	212	70	3	7	0	3	0	8	0	0	0	0	**304**	**1230**
0900 - 0915	0	173	68	0	6	2	1	1	16	1	0	0	0	**268**	
0915 - 0930	0	199	72	2	6	1	2	1	12	0	0	0	0	**295**	
0930 - 0945	2	214	68	0	5	0	1	0	5	0	0	0	0	**295**	
0945 - 1000	0	223	64	0	4	3	4	0	10	0	0	0	0	**308**	**1166**
1000 - 1015	0	209	51	0	6	1	4	1	14	0	0	0	0	**286**	
1015 - 1030	0	183	52	1	7	1	2	1	17	1	0	0	0	**265**	
1030 - 1045	1	217	80	1	5	2	1	4	14	0	0	0	0	**325**	
1045 - 1100	1	237	79	0	2	2	1	4	12	0	0	0	0	**338**	**1214**
1100 - 1115	0	218	72	0	3	1	1	4	18	2	0	0	0	**319**	
1115 - 1130	0	229	68	0	10	2	2	4	8	0	0	0	0	**323**	
1130 - 1145	0	220	74	0	9	0	6	1	15	0	0	0	0	**325**	
1145 - 1200	0	274	84	2	5	1	1	4	13	1	0	0	0	**385**	**1352**
1200 - 1215	0	236	78	0	6	1	1	1	9	0	0	0	0	**332**	
1215 - 1230	2	266	78	0	2	1	1	1	13	0	0	0	0	**364**	
1230 - 1245	1	257	74	0	8	1	2	2	11	0	0	0	0	**356**	
1245 - 1300	1	227	60	0	4	2	1	4	8	0	0	0	0	**307**	**1359**
1300 - 1315	1	155	37	0	6	1	4	2	6	0	0	0	0	**212**	
1315 - 1330	1	193	47	1	5	3	3	2	6	0	0	0	0	**261**	
1330 - 1345	0	184	58	3	5	2	2	1	17	1	0	0	0	**273**	
1345 - 1400	0	204	52	0	0	0	1	4	13	0	0	0	0	**274**	**1020**
1400 - 1415	0	186	38	0	4	0	2	3	12	0	0	0	0	**245**	
1415 - 1430	1	225	38	0	2	1	0	3	8	0	0	0	0	**278**	
1430 - 1445	1	210	60	4	4	1	0	0	7	0	0	0	0	**287**	
1445 - 1500	1	214	56	0	6	1	0	1	15	0	0	0	0	**294**	**1104**
1500 - 1515	0	211	51	2	4	0	2	1	9	0	0	0	0	**280**	
1515 - 1530	0	235	59	1	2	1	0	0	7	0	0	0	0	**305**	
1530 - 1545	2	186	55	2	2	0	0	3	10	0	0	0	0	**260**	
1545 - 1600	1	252	59	1	1	0	0	1	4	0	0	0	0	**319**	**1164**
1600 - 1615	0	211	61	1	1	1	0	0	16	0	0	0	0	**291**	
1615 - 1630	0	247	65	2	0	2	0	0	4	0	0	0	0	**320**	
1630 - 1645	1	244	66	1	4	2	0	0	4	0	0	0	0	**322**	
1645 - 1700	1	228	59	0	4	2	0	3	6	1	0	0	0	**304**	**1237**
1700 - 1715	1	251	63	1	2	1	0	1	14	0	0	0	0	**334**	
1715 - 1730	1	278	46	0	2	0	0	0	5	0	0	0	0	**332**	
1730 - 1745	0	259	68	0	2	1	0	0	6	1	0	0	0	**337**	
1745 - 1800	3	226	65	0	4	0	0	0	4	0	0	0	0	**302**	**1305**
1800 - 1815	0	230	57	0	1	0	0	2	9	0	0	0	0	**299**	
1815 - 1830	0	240	48	0	6	1	0	0	6	0	0	0	0	**301**	
1830 - 1845	0	216	52	0	2	0	0	1	9	0	0	0	0	**280**	
1845 - 1900	3	215	44	0	1	0	0	0	9	1	0	0	0	**273**	**1153**
1900 - 1915	0	203	50	0	0	1	0	0	6	0	0	0	0	**260**	
1915 - 1930	2	214	51	0	2	0	0	0	6	0	0	0	0	**275**	
1930 - 1945	0	185	45	0	1	0	0	0	1	0	0	0	0	**232**	
1945 - 2000	1	188	35	0	0	0	0	0	4	0	0	0	0	**228**	**995**
2000 - 2015	0	176	39	0	0	0	0	0	6	0	0	0	0	**221**	
2015 - 2030	1	156	30	1	1	0	0	0	2	0	0	0	0	**191**	
2030 - 2045	0	133	27	0	0	0	0	0	3	0	0	0	0	**163**	
2045 - 2100	0	142	31	0	2	0	0	0	3	0	0	0	0	**178**	**753**
2100 - 2115	0	127	23	0	2	0	0	0	2	0	0	0	0	**154**	
2115 - 2130	0	111	20	0	1	0	0	0	6	0	0	0	0	**138**	
2130 - 2145	0	125	25	0	1	0	0	0	4	0	0	0	0	**155**	
2145 - 2200	0	99	19	0	1	0	0	1	4	0	0	0	0	**124**	**571**
2200 - 2215	0	108	15	0	3	0	0	0	3	0	0	0	0	**129**	
2215 - 2230	0	90	17	0	2	0	0	0	4	0	1	0	0	**114**	
2230 - 2245	0	121	20	0	1	0	0	0	1	0	0	0	0	**143**	
2245 - 2300	0	109	19	0	0	0	0	0	2	0	3	0	0	**133**	**519**
2300 - 2315	0	79	15	0	0	0	0	1	3	0	1	0	0	**99**	
2315 - 2330	0	63	13	0	0	0	0	0	2	0	0	0	0	**78**	
2330 - 2345	0	60	11	0	2	0	0	0	2	0	0	0	0	**75**	
2345 - 0000	0	46	10	0	1	0	0	0	3	0	0	0	0	**60**	**312**

Session Total	35	14188	3662	35	264	70	67	68	779	14	9	0	0	**19191**
Session Average	0.36	147.79	38.15	0.36	2.75	0.73	0.70	0.71	8.11	0.15	0.09	0.00	0.00	**199.91**
Session Percentage	0.18	73.93	19.08	0.18	1.38	0.36	0.35	0.35	4.06	0.07	0.05	0.00	0.00	

AM Peak Hour	0800 - 0900	0730 - 0830	0730 - 0830	0800 - 0900	0745 - 0845	0700 - 0800	0645 - 0745	0945 - 1045	0515 - 0615	0745 - 0845	0515 - 0615	-	-	**0730 - 0830**
AM Peak Hour Volume	5	949	285	5	26	15	13	6	66	5	1	0	0	**1325**

Noon Peak Hour	1215 - 1315	1145 - 1245	1130 - 1230	1430 - 1530	1115 - 1215	1245 - 1345	1045 - 1145	1030 - 1130	1015 - 1115	1015 - 1115	-	-	-	**1145 - 1245**
Noon Peak Hour Volume	5	1033	314	7	30	8	10	16	61	3	0	0	0	**1437**

PM Peak Hour	1700 - 1800	1645 - 1745	1615 - 1715	1500 - 1600	1730 - 1830	1600 - 1700	1500 - 1600	1500 - 1600	1515 - 1615	1645 - 1745	-	-	-	**1645 - 1745**
PM Peak Hour Volume	5	1016	253	6	13	7	2	5	37	2	0	0	0	**1307**

Site 8
I-26 N/Bound On-Ramp,
north of I-20

Date
Saturday, April 27, 2024

Lat/Long
34.038738°, -81.109720°

Weather
Mostly Cloudy
69°F

Click here for Detailed Weather

0000 - 2400 (Saturday 24h Session) (04-27-2024)
NB EB 15min

	Northbound (Movement 8.1)													15min	60min
TIME	1	2	3	4	5	6	7	8	9	10	11	12	13	Total	Total
0000 - 0015	0	42	10	0	0	1	0	0	0	0	0	0	0	**53**	
0015 - 0030	0	36	9	0	0	0	0	1	0	0	0	0	0	**46**	
0030 - 0045	0	38	15	0	1	0	0	0	3	0	0	0	0	**57**	
0045 - 0100	0	36	12	0	0	0	0	0	4	0	0	0	0	**52**	**208**
0100 - 0115	1	21	8	0	1	0	0	0	3	0	0	0	0	**34**	
0115 - 0130	0	26	8	0	0	0	0	0	1	0	0	0	0	**35**	
0130 - 0145	0	18	4	0	0	0	0	0	2	0	0	0	0	**24**	
0145 - 0200	0	23	8	0	1	0	0	0	0	0	0	0	0	**32**	**125**
0200 - 0215	0	15	5	0	0	0	0	0	2	0	0	0	0	**22**	
0215 - 0230	0	14	5	0	0	0	0	0	0	0	0	0	0	**19**	
0230 - 0245	0	13	4	0	0	0	0	0	1	0	0	0	0	**18**	
0245 - 0300	0	19	6	0	1	0	0	0	0	0	0	0	0	**26**	**85**
0300 - 0315	0	18	8	0	1	0	0	0	3	0	0	0	0	**30**	
0315 - 0330	0	17	6	0	1	0	0	0	3	0	0	0	0	**27**	
0330 - 0345	0	11	2	0	2	0	0	0	6	0	0	0	0	**21**	
0345 - 0400	0	18	6	0	1	0	0	0	2	0	0	0	0	**27**	**105**
0400 - 0415	0	18	5	0	0	0	0	0	2	0	0	0	0	**25**	
0415 - 0430	0	19	7	0	2	0	0	0	3	0	0	0	0	**31**	
0430 - 0445	0	14	6	0	1	0	0	0	1	0	1	0	0	**23**	
0445 - 0500	0	16	8	0	3	0	0	0	2	0	0	0	0	**29**	**108**
0500 - 0515	0	22	6	1	2	0	0	0	2	0	0	0	0	**33**	
0515 - 0530	0	12	6	0	1	0	0	0	6	0	0	0	0	**25**	
0530 - 0545	0	19	8	0	1	0	0	0	6	0	0	0	0	**34**	
0545 - 0600	0	30	11	0	1	0	0	0	4	0	0	0	0	**46**	**138**
0600 - 0615	0	37	11	0	1	0	0	0	7	0	0	0	0	**56**	
0615 - 0630	0	42	8	0	0	0	0	1	6	0	0	0	0	**57**	
0630 - 0645	0	73	21	0	1	0	0	0	3	0	0	0	0	**98**	
0645 - 0700	0	85	19	0	2	2	0	0	5	0	0	0	0	**113**	**324**
0700 - 0715	0	100	22	2	0	0	0	0	3	0	1	0	0	**128**	
0715 - 0730	2	104	28	0	1	2	0	0	7	0	0	0	0	**144**	
0730 - 0745	0	125	36	0	1	2	0	2	6	0	0	0	0	**172**	
0745 - 0800	1	169	50	0	1	2	0	3	7	0	1	0	0	**234**	**678**
0800 - 0815	1	145	41	0	2	1	0	2	4	0	0	0	0	**196**	
0815 - 0830	0	174	50	0	1	0	0	0	3	0	0	0	0	**228**	
0830 - 0845	0	178	56	0	4	0	0	0	1	0	0	0	0	**239**	
0845 - 0900	3	205	45	0	5	1	0	1	4	0	0	0	0	**264**	**927**
0900 - 0915	0	162	51	1	4	0	0	0	4	0	0	0	0	**222**	
0915 - 0930	0	236	40	1	1	2	0	1	6	0	0	0	0	**287**	
0930 - 0945	1	264	61	0	3	1	0	0	3	0	0	0	0	**333**	
0945 - 1000	0	289	59	0	4	0	0	1	2	0	0	0	0	**355**	**1197**
1000 - 1015	0	232	48	0	3	0	0	1	7	0	0	0	0	**291**	
1015 - 1030	0	252	49	0	0	0	0	3	2	0	0	0	0	**306**	
1030 - 1045	0	288	67	1	2	0	0	1	5	0	0	0	0	**364**	
1045 - 1100	0	284	61	0	7	1	0	0	3	0	0	0	0	**356**	**1317**
1100 - 1115	6	308	76	0	2	0	0	1	3	0	0	0	0	**396**	
1115 - 1130	1	295	83	1	2	0	0	1	4	0	0	0	0	**387**	
1130 - 1145	3	300	60	1	4	0	0	1	4	0	0	0	0	**373**	
1145 - 1200	4	295	55	0	1	0	0	0	6	0	0	0	0	**361**	**1517**
1200 - 1215	0	306	63	0	5	0	0	0	5	1	0	0	0	**380**	
1215 - 1230	2	300	69	0	3	0	0	0	7	0	0	0	0	**381**	
1230 - 1245	1	340	60	1	4	0	0	0	0	0	0	0	0	**406**	
1245 - 1300	1	293	71	0	1	0	0	0	6	0	0	0	0	**372**	**1539**
1300 - 1315	2	268	65	0	0	0	0	1	3	0	0	0	0	**339**	
1315 - 1330	0	292	64	0	2	2	0	0	3	0	0	0	0	**363**	
1330 - 1345	21	307	61	1	1	0	0	0	4	0	0	0	0	**395**	
1345 - 1400	1	294	41	0	2	0	0	0	3	0	0	0	0	**341**	**1438**
1400 - 1415	1	271	50	0	3	1	0	1	4	0	0	0	0	**331**	
1415 - 1430	0	300	62	0	2	1	0	0	3	0	0	0	0	**368**	
1430 - 1445	0	295	43	1	1	0	0	0	6	0	0	0	0	**346**	
1445 - 1500	2	283	53	0	2	0	0	0	1	0	0	0	0	**341**	**1386**
1500 - 1515	2	285	54	0	4	0	0	2	4	0	0	0	0	**351**	
1515 - 1530	1	273	47	0	3	0	0	0	0	0	0	0	0	**324**	
1530 - 1545	4	284	42	0	0	0	0	1	2	0	0	0	0	**333**	
1545 - 1600	22	279	46	0	0	1	0	0	4	0	0	0	0	**352**	**1360**
1600 - 1615	6	259	49	0	1	0	0	0	0	0	0	0	0	**315**	
1615 - 1630	8	283	63	0	0	0	0	0	2	0	0	0	0	**356**	
1630 - 1645	0	291	51	1	0	0	0	3	3	0	0	0	0	**349**	
1645 - 1700	0	290	48	0	1	0	0	0	2	0	0	0	0	**341**	**1361**
1700 - 1715	7	316	53	1	2	0	0	0	2	0	0	0	0	**381**	
1715 - 1730	0	261	42	0	1	0	0	0	2	0	0	0	0	**306**	
1730 - 1745	3	258	43	0	3	0	0	0	4	0	0	0	0	**311**	
1745 - 1800	5	237	45	0	2	0	0	0	2	0	0	0	0	**291**	**1289**
1800 - 1815	1	220	38	0	0	0	0	1	1	0	0	0	0	**261**	
1815 - 1830	1	213	35	0	0	0	0	0	1	0	0	0	0	**250**	
1830 - 1845	1	240	36	0	0	0	0	0	2	0	0	0	0	**279**	
1845 - 1900	1	220	36	0	0	0	0	0	1	0	0	0	0	**258**	**1048**
1900 - 1915	0	187	30	0	0	0	0	1	2	0	0	0	0	**220**	
1915 - 1930	0	167	27	0	0	0	0	0	1	0	0	0	0	**195**	
1930 - 1945	1	168	36	0	0	0	0	0	0	0	0	0	0	**205**	
1945 - 2000	1	165	30	0	0	0	0	0	4	0	0	0	0	**200**	**820**
2000 - 2015	1	136	23	1	1	0	0	0	2	0	0	0	0	**164**	
2015 - 2030	2	143	22	2	1	0	0	0	2	0	0	0	0	**172**	
2030 - 2045	0	120	19	0	0	0	0	1	2	0	0	0	0	**142**	
2045 - 2100	0	119	20	0	2	0	0	0	0	0	0	0	0	**141**	**619**
2100 - 2115	1	116	19	0	0	0	0	0	0	0	0	0	0	**136**	
2115 - 2130	1	129	22	0	0	0	0	1	1	0	0	0	0	**154**	
2130 - 2145	1	124	23	0	1	0	0	0	1	0	0	0	0	**150**	
2145 - 2200	0	117	20	0	1	0	0	0	1	0	0	0	0	**139**	**579**
2200 - 2215	0	95	16	0	0	0	0	0	1	0	0	0	0	**112**	
2215 - 2230	0	112	19	0	0	0	0	1	1	0	0	0	0	**133**	
2230 - 2245	1	97	14	0	0	0	0	0	1	0	0	0	0	**113**	
2245 - 2300	0	92	15	0	0	0	0	0	3	0	0	0	0	**110**	**468**
2300 - 2315	0	75	13	0	0	0	0	0	0	0	0	0	0	**88**	
2315 - 2330	0	71	15	0	0	0	0	1	2	0	0	0	0	**89**	
2330 - 2345	0	64	11	0	1	0	0	0	2	0	0	0	0	**78**	
2345 - 0000	0	62	14	0	0	0	0	0	1	0	0	0	0	**77**	**332**

Session Total	125	15274	3108	16	122	20	0	34	265	1	3	0	0	**18968**
Session Average	1.30	159.10	32.38	0.17	1.27	0.21	0.00	0.35	2.76	0.01	0.03	0.00	0.00	**197.58**
Session Percentage	0.66	80.53	16.39	0.08	0.64	0.11	0.00	0.18	1.40	0.01	0.02	0.00	0.00	

AM Peak Hour	0715 - 0815	0945 - 1045	0945 - 1045	0615 - 0715	0815 - 0915	0715 - 0815	-	0715 - 0815	0715 - 0815	-	0700 - 0800	-	-	**0945 - 1045**
AM Peak Hour Volume	4	1061	223	2	14	7	0	7	24	0	2	0	0	**1316**

Noon Peak Hour	1245 - 1345	1145 - 1245	1030 - 1130	1030 - 1130	1045 - 1145	1315 - 1415	-	1000 - 1100	1130 - 1230	1115 - 1215	-	-	-	**1200 - 1300**
Noon Peak Hour Volume	24	1241	287	2	15	3	0	5	22	1	0	0	0	**1539**

PM Peak Hour	1530 - 1630	1615 - 1715	1615 - 1715	1930 - 2030	1700 - 1800	1500 - 1600	-	1500 - 1600	1500 - 1600	-	-	-	-	**1615 - 1715**
PM Peak Hour Volume	40	1180	215	3	8	1	0	3	10	0	0	0	0	**1427**

Bi-Directional Class Count || NB EB Average 15min

Columbia, SC

Marr Traffic DATA COLLECTION
www.marrtraffic.com

Site 8
I-26 N/Bound On-Ramp,
north of I-20

Date
Sunday, April 21, 2024

Lat/Long
34.038738°, -81.109720°

Weather
Cloudy
66°F

0000 - 2400 (Weekday 24h Session) (All Dates)
NB EB Average 15min

	NB EB Average 15min													15min	60min
Time	1	2	3	4	5	6	7	8	9	10	11	12	13	Total	Total
0000 - 0015	0	37	8	0	0	0	0	0	3	0	0	0	0	**48**	
0015 - 0030	0	28	5	0	0	0	0	0	2	0	0	0	0	**36**	
0030 - 0045	0	29	6	0	1	0	0	0	3	0	0	0	0	**39**	
0045 - 0100	0	22	4	0	0	0	0	0	3	0	0	0	0	**29**	**152**
0100 - 0115	0	21	4	0	0	0	0	0	2	0	0	0	0	**28**	
0115 - 0130	0	19	4	0	0	0	0	0	2	0	0	0	0	**26**	
0130 - 0145	0	18	3	0	0	0	0	0	4	0	0	0	0	**25**	
0145 - 0200	0	15	3	0	0	0	0	0	3	0	0	0	0	**21**	**100**
0200 - 0215	0	14	3	0	0	0	0	0	2	0	0	0	0	**19**	
0215 - 0230	0	17	4	0	0	0	0	0	4	0	0	0	0	**26**	
0230 - 0245	0	14	2	0	0	0	0	0	2	0	0	0	0	**19**	
0245 - 0300	0	15	3	0	1	0	0	0	3	0	0	0	0	**22**	**86**
0300 - 0315	0	14	3	0	0	0	0	0	4	0	0	0	0	**21**	
0315 - 0330	0	16	3	0	1	0	0	0	3	0	0	0	0	**23**	
0330 - 0345	0	16	3	0	2	0	0	0	6	0	0	0	0	**27**	
0345 - 0400	0	18	4	0	1	0	0	0	4	0	0	0	0	**27**	**98**
0400 - 0415	0	18	3	0	1	0	0	0	6	0	0	0	0	**28**	
0415 - 0430	0	18	3	0	1	0	0	0	7	0	0	0	0	**30**	
0430 - 0445	0	21	4	0	2	0	0	0	8	0	0	0	0	**35**	
0445 - 0500	0	31	7	0	3	0	0	0	8	0	0	0	0	**50**	**143**
0500 - 0515	0	30	6	0	3	0	0	0	8	0	0	0	0	**47**	
0515 - 0530	0	38	8	0	2	0	0	1	11	0	0	0	0	**60**	
0530 - 0545	0	43	9	0	3	1	0	0	9	0	0	0	0	**65**	
0545 - 0600	0	53	12	0	2	0	0	0	8	0	0	0	0	**76**	**249**
0600 - 0615	0	52	15	0	4	1	0	0	10	0	0	0	0	**82**	
0615 - 0630	0	89	24	0	3	1	0	1	12	0	0	0	0	**129**	
0630 - 0645	0	105	35	0	3	2	0	1	11	0	0	0	0	**158**	
0645 - 0700	0	130	48	0	4	3	0	1	11	0	0	0	0	**197**	**566**
0700 - 0715	0	134	43	1	4	2	0	1	13	0	0	0	0	**198**	
0715 - 0730	0	162	51	1	4	2	1	0	10	0	0	0	0	**232**	
0730 - 0745	0	189	68	0	3	2	1	1	10	0	0	0	0	**274**	
0745 - 0800	0	208	61	0	4	3	0	1	11	0	0	0	0	**288**	**993**
0800 - 0815	1	179	57	1	5	2	0	0	8	1	0	0	0	**253**	
0815 - 0830	1	181	60	1	5	1	0	0	9	0	0	0	0	**259**	
0830 - 0845	1	192	59	0	4	2	1	1	12	0	0	0	0	**272**	
0845 - 0900	1	202	60	1	4	2	1	1	12	0	0	0	0	**283**	**1067**
0900 - 0915	0	164	58	0	6	1	1	1	14	0	0	0	0	**245**	
0915 - 0930	0	181	54	1	4	1	1	1	9	0	0	0	0	**254**	
0930 - 0945	1	192	65	0	4	1	0	1	13	1	0	0	0	**277**	
0945 - 1000	0	207	59	0	5	1	1	2	12	0	0	0	0	**288**	**1063**
1000 - 1015	0	182	55	0	4	1	1	1	12	0	0	0	0	**256**	
1015 - 1030	0	183	57	1	3	1	1	1	14	0	0	0	0	**261**	
1030 - 1045	0	201	70	1	5	2	0	1	11	0	0	0	0	**292**	
1045 - 1100	0	208	64	0	4	2	1	1	11	0	0	0	0	**292**	**1101**
1100 - 1115	1	204	72	0	3	2	0	1	12	0	0	0	0	**297**	
1115 - 1130	1	211	67	1	5	1	0	1	12	0	0	0	0	**300**	
1130 - 1145	1	219	64	1	4	1	1	1	9	0	0	0	0	**301**	
1145 - 1200	1	227	61	0	4	1	1	2	13	0	0	0	0	**310**	**1208**
1200 - 1215	1	219	59	0	4	2	0	1	9	0	0	0	0	**294**	
1215 - 1230	1	235	70	0	4	2	1	1	13	0	0	0	0	**325**	
1230 - 1245	0	232	57	1	4	2	0	1	12	0	0	0	0	**309**	
1245 - 1300	2	241	63	0	3	1	0	2	12	0	0	0	0	**325**	**1253**
1300 - 1315	1	216	58	0	4	0	1	2	12	0	0	0	0	**295**	
1315 - 1330	0	226	66	0	4	2	1	2	10	0	0	0	0	**312**	
1330 - 1345	3	240	57	1	3	2	0	1	11	0	0	0	0	**319**	
1345 - 1400	0	236	60	0	2	1	0	1	12	0	0	0	0	**314**	**1240**
1400 - 1415	0	219	59	0	4	1	0	1	11	0	0	0	0	**297**	
1415 - 1430	0	242	62	1	2	2	0	1	10	0	0	0	0	**320**	
1430 - 1445	1	237	62	1	3	1	0	1	14	0	0	0	0	**321**	
1445 - 1500	1	247	62	0	3	1	0	1	13	0	0	0	0	**330**	**1268**
1500 - 1515	1	227	60	1	4	1	1	1	10	0	0	0	0	**306**	
1515 - 1530	1	244	64	1	4	1	0	0	9	0	0	0	0	**324**	
1530 - 1545	2	237	58	1	3	1	0	1	9	0	0	0	0	**313**	
1545 - 1600	4	244	61	0	3	1	0	1	9	0	0	0	0	**323**	**1266**
1600 - 1615	1	243	61	0	3	1	0	1	11	0	0	0	0	**322**	
1615 - 1630	1	244	64	0	2	0	0	1	7	0	0	0	0	**321**	
1630 - 1645	0	236	60	1	1	1	0	0	10	0	0	0	0	**310**	
1645 - 1700	0	222	52	0	3	1	0	1	9	0	0	0	0	**289**	**1242**
1700 - 1715	1	219	52	1	2	1	0	0	10	0	0	0	0	**285**	
1715 - 1730	1	237	52	1	2	0	0	0	8	0	0	0	0	**300**	
1730 - 1745	1	231	56	0	2	1	0	0	9	0	0	0	0	**301**	
1745 - 1800	1	220	55	0	3	0	0	1	8	0	0	0	0	**289**	**1175**
1800 - 1815	1	213	52	0	1	1	0	1	9	0	0	0	0	**278**	
1815 - 1830	1	206	46	0	3	0	0	0	6	0	0	0	0	**263**	
1830 - 1845	1	197	43	0	1	0	0	1	6	0	0	0	0	**249**	
1845 - 1900	1	182	40	0	1	0	0	0	6	0	0	0	0	**231**	**1020**
1900 - 1915	1	170	38	0	1	1	0	0	8	0	0	0	0	**219**	
1915 - 1930	0	170	39	0	2	1	0	0	6	0	0	0	0	**218**	
1930 - 1945	1	157	35	0	1	0	0	0	5	0	0	0	0	**198**	
1945 - 2000	0	151	29	0	1	0	0	0	6	0	0	0	0	**187**	**822**
2000 - 2015	0	130	27	0	1	0	0	0	5	0	0	0	0	**164**	
2015 - 2030	1	127	26	1	1	0	0	0	5	0	0	0	0	**160**	
2030 - 2045	0	119	25	0	0	1	0	0	5	0	0	0	0	**151**	
2045 - 2100	0	113	24	0	1	0	0	0	4	0	0	0	0	**142**	**617**
2100 - 2115	0	95	19	0	1	0	0	0	4	0	0	0	0	**119**	
2115 - 2130	0	97	21	0	0	0	0	0	4	0	0	0	0	**123**	
2130 - 2145	0	98	20	0	1	0	0	0	4	0	0	0	0	**123**	
2145 - 2200	0	85	18	0	1	0	0	0	4	0	0	0	0	**107**	**472**
2200 - 2215	0	72	14	0	1	0	0	0	3	0	0	0	0	**90**	
2215 - 2230	0	65	15	0	1	0	0	0	4	0	0	0	0	**86**	
2230 - 2245	0	64	13	0	0	0	0	0	3	0	0	0	0	**80**	
2245 - 2300	0	64	14	0	0	0	0	0	4	0	1	0	0	**83**	**339**
2300 - 2315	0	54	13	0	0	0	0	0	4	0	1	0	0	**72**	
2315 - 2330	0	44	11	0	0	0	0	0	3	0	0	0	0	**58**	
2330 - 2345	0	41	9	0	0	0	0	0	4	0	0	0	0	**55**	
2345 - 0000	0	36	10	0	1	0	0	0	3	0	0	0	0	**50**	**235**

Session Total	40	13113	3475	26	218	72	20	50	749	9	4	0	0	**17776**
Session Average	0.41	136.59	36.20	0.27	2.27	0.75	0.20	0.52	7.80	0.10	0.04	0.00	0.00	**185.17**
Session Percentage	0.22	73.77	19.55	0.15	1.23	0.41	0.11	0.28	4.21	0.05	0.02	0.00	0.00	

AM Peak Hour	0800 - 0900	0945 - 1045	0730 - 0830	0845 - 0945	0900 - 1000	0630 - 0730	0830 - 0930	0945 - 1045	0930 - 1030	0800 - 0900	0700 - 0800	-	-	**0945 - 1045**
AM Peak Volume	3	774	245	3	19	10	4	4	50	1	0	0	0	**1096**

Noon Peak Hour	1245 - 1345	1430 - 1530	1030 - 1130	1445 - 1545	1030 - 1130	1030 - 1130	1000 - 1100	1245 - 1345	1015 - 1115	1015 - 1115	-	-	-	**1430 - 1530**
Noon Peak Volume	6	955	273	3	17	8	3	6	48	1	0	0	0	**1281**

PM Peak Hour	1530 - 1630	1530 - 1630	1545 - 1645	1500 - 1600	1500 - 1600	1515 - 1615	1500 - 1600	1500 - 1600	1515 - 1615	1500 - 1600	1530 - 1630	-	-	**1515 - 1615**
PM Peak Volume	7	968	247	3	14	4	1	4	39	1	0	0	0	**1283**

Bi-Directional Class Count || Volume Summary 15min

Columbia, SC

Marr Traffic DATA COLLECTION

www.marrtraffic.com

Site 8

I-26 N/Bound On-Ramp,
north of I-20

Date

Sunday, April 21, 2024

Lat/Long

34.038738°, -81.109720°

Weather

Cloudy
66°F

Click here for Detailed Weather

0000 - 2400 (Sunday 24h Session) (04-21-2024)

Volume Summary 15min

	Volume Summary 15min		15min	60min
TIME	NB	SB	Total	Total
0000 - 0015	76	0	**76**	
0015 - 0030	60	0	**60**	
0030 - 0045	74	0	**74**	
0045 - 0100	45	0	**45**	**255**
0100 - 0115	64	0	**64**	
0115 - 0130	31	0	**31**	
0130 - 0145	42	0	**42**	
0145 - 0200	25	0	**25**	**162**
0200 - 0215	37	0	**37**	
0215 - 0230	45	0	**45**	
0230 - 0245	19	0	**19**	
0245 - 0300	39	0	**39**	**140**
0300 - 0315	22	0	**22**	
0315 - 0330	22	0	**22**	
0330 - 0345	20	0	**20**	
0345 - 0400	27	0	**27**	**91**
0400 - 0415	24	0	**24**	
0415 - 0430	23	0	**23**	
0430 - 0445	12	0	**12**	
0445 - 0500	28	0	**28**	**87**
0500 - 0515	30	0	**30**	
0515 - 0530	29	0	**29**	
0530 - 0545	26	0	**26**	
0545 - 0600	32	0	**32**	**117**
0600 - 0615	23	0	**23**	
0615 - 0630	36	0	**36**	
0630 - 0645	58	0	**58**	
0645 - 0700	64	0	**64**	**181**
0700 - 0715	43	0	**43**	
0715 - 0730	53	0	**53**	
0730 - 0745	75	0	**75**	
0745 - 0800	85	0	**85**	**256**
0800 - 0815	92	0	**92**	
0815 - 0830	111	0	**111**	
0830 - 0845	129	0	**129**	
0845 - 0900	113	0	**113**	**445**
0900 - 0915	107	0	**107**	
0915 - 0930	173	0	**173**	
0930 - 0945	168	0	**168**	
0945 - 1000	188	0	**188**	**636**
1000 - 1015	200	0	**200**	
1015 - 1030	250	0	**250**	
1030 - 1045	284	0	**284**	
1045 - 1100	277	0	**277**	**1011**
1100 - 1115	279	0	**279**	
1115 - 1130	286	0	**286**	
1130 - 1145	319	0	**319**	
1145 - 1200	331	0	**331**	**1215**

	Volume Summary 15min		15min	60min
Time	NB	SB	Total	Total
1200 - 1215	311	0	**311**	
1215 - 1230	357	0	**357**	
1230 - 1245	356	0	**356**	
1245 - 1300	419	0	**419**	**1443**
1300 - 1315	435	0	**435**	
1315 - 1330	410	0	**410**	
1330 - 1345	345	0	**345**	
1345 - 1400	370	0	**370**	**1560**
1400 - 1415	361	0	**361**	
1415 - 1430	373	0	**373**	
1430 - 1445	415	0	**415**	
1445 - 1500	362	0	**362**	**1511**
1500 - 1515	323	0	**323**	
1515 - 1530	297	0	**297**	
1530 - 1545	326	0	**326**	
1545 - 1600	314	0	**314**	**1260**
1600 - 1615	341	0	**341**	
1615 - 1630	292	0	**292**	
1630 - 1645	319	0	**319**	
1645 - 1700	319	0	**319**	**1271**
1700 - 1715	238	0	**238**	
1715 - 1730	268	0	**268**	
1730 - 1745	248	0	**248**	
1745 - 1800	251	0	**251**	**1005**
1800 - 1815	265	0	**265**	
1815 - 1830	228	0	**228**	
1830 - 1845	218	0	**218**	
1845 - 1900	213	0	**213**	**924**
1900 - 1915	192	0	**192**	
1915 - 1930	202	0	**202**	
1930 - 1945	198	0	**198**	
1945 - 2000	162	0	**162**	**754**
2000 - 2015	153	0	**153**	
2015 - 2030	138	0	**138**	
2030 - 2045	109	0	**109**	
2045 - 2100	146	0	**146**	**546**
2100 - 2115	100	0	**100**	
2115 - 2130	105	0	**105**	
2130 - 2145	126	0	**126**	
2145 - 2200	99	0	**99**	**430**
2200 - 2215	74	0	**74**	
2215 - 2230	67	0	**67**	
2230 - 2245	57	0	**57**	
2245 - 2300	52	0	**52**	**250**
2300 - 2315	57	0	**57**	
2315 - 2330	47	0	**47**	
2330 - 2345	50	0	**50**	
2345 - 0000	43	0	**43**	**197**

Session Total	15747	0	**15747**
Session Average	164.03	0.00	**164.03**
Session Percentage	100.00	0.00	

Site 8
I-26 N/Bound On-Ramp,
north of I-20

Date
Monday, April 22, 2024

Lat/Long
34.038738°, -81.109720°

Weather
Mostly Cloudy
57°F

Click here for Detailed Weather

0000 - 2400 (Weekday 24h Session) (04-22-2024)
Volume Summary 15min

TIME	Volume Summary 15min NB	SB	15min Total	60min Total
0000 - 0015	35	0	**35**	
0015 - 0030	29	0	**29**	
0030 - 0045	27	0	**27**	
0045 - 0100	19	0	**19**	**110**
0100 - 0115	25	0	**25**	
0115 - 0130	26	0	**26**	
0130 - 0145	22	0	**22**	
0145 - 0200	15	0	**15**	**88**
0200 - 0215	15	0	**15**	
0215 - 0230	20	0	**20**	
0230 - 0245	23	0	**23**	
0245 - 0300	18	0	**18**	**76**
0300 - 0315	22	0	**22**	
0315 - 0330	33	0	**33**	
0330 - 0345	27	0	**27**	
0345 - 0400	31	0	**31**	**113**
0400 - 0415	29	0	**29**	
0415 - 0430	31	0	**31**	
0430 - 0445	46	0	**46**	
0445 - 0500	47	0	**47**	**153**
0500 - 0515	56	0	**56**	
0515 - 0530	91	0	**91**	
0530 - 0545	98	0	**98**	
0545 - 0600	121	0	**121**	**366**
0600 - 0615	83	0	**83**	
0615 - 0630	175	0	**175**	
0630 - 0645	201	0	**201**	
0645 - 0700	243	0	**243**	**702**
0700 - 0715	255	0	**255**	
0715 - 0730	276	0	**276**	
0730 - 0745	361	0	**361**	
0745 - 0800	392	0	**392**	**1284**
0800 - 0815	330	0	**330**	
0815 - 0830	284	0	**284**	
0830 - 0845	295	0	**295**	
0845 - 0900	282	0	**282**	**1191**
0900 - 0915	292	0	**292**	
0915 - 0930	255	0	**255**	
0930 - 0945	260	0	**260**	
0945 - 1000	268	0	**268**	**1075**
1000 - 1015	265	0	**265**	
1015 - 1030	226	0	**226**	
1030 - 1045	260	0	**260**	
1045 - 1100	224	0	**224**	**975**
1100 - 1115	278	0	**278**	
1115 - 1130	257	0	**257**	
1130 - 1145	250	0	**250**	
1145 - 1200	251	0	**251**	**1036**

Time	Volume Summary 15min NB	SB	15min Total	60min Total
1200 - 1215	234	0	**234**	
1215 - 1230	279	0	**279**	
1230 - 1245	254	0	**254**	
1245 - 1300	294	0	**294**	**1061**
1300 - 1315	267	0	**267**	
1315 - 1330	286	0	**286**	
1330 - 1345	312	0	**312**	
1345 - 1400	306	0	**306**	**1171**
1400 - 1415	284	0	**284**	
1415 - 1430	275	0	**275**	
1430 - 1445	311	0	**311**	
1445 - 1500	330	0	**330**	**1200**
1500 - 1515	297	0	**297**	
1515 - 1530	332	0	**332**	
1530 - 1545	296	0	**296**	
1545 - 1600	332	0	**332**	**1257**
1600 - 1615	301	0	**301**	
1615 - 1630	307	0	**307**	
1630 - 1645	287	0	**287**	
1645 - 1700	278	0	**278**	**1173**
1700 - 1715	284	0	**284**	
1715 - 1730	299	0	**299**	
1730 - 1745	291	0	**291**	
1745 - 1800	290	0	**290**	**1164**
1800 - 1815	257	0	**257**	
1815 - 1830	256	0	**256**	
1830 - 1845	215	0	**215**	
1845 - 1900	200	0	**200**	**928**
1900 - 1915	190	0	**190**	
1915 - 1930	194	0	**194**	
1930 - 1945	163	0	**163**	
1945 - 2000	172	0	**172**	**719**
2000 - 2015	149	0	**149**	
2015 - 2030	134	0	**134**	
2030 - 2045	155	0	**155**	
2045 - 2100	104	0	**104**	**542**
2100 - 2115	102	0	**102**	
2115 - 2130	98	0	**98**	
2130 - 2145	84	0	**84**	
2145 - 2200	83	0	**83**	**367**
2200 - 2215	68	0	**68**	
2215 - 2230	73	0	**73**	
2230 - 2245	56	0	**56**	
2245 - 2300	64	0	**64**	**261**
2300 - 2315	64	0	**64**	
2315 - 2330	47	0	**47**	
2330 - 2345	32	0	**32**	
2345 - 0000	42	0	**42**	**185**

Session Total	17197	0	**17197**
Session Average	179.14	0.00	**179.14**
Session Percentage	100.00	0.00	

Site 8
I-26 N/Bound On-Ramp,
north of I-20

Date
Tuesday, April 23, 2024

Lat/Long
34.038738°, -81.109720°

Weather
Fair
58°F

Click here for Detailed Weather

0000 - 2400 (Weekday 24h Session) (04-23-2024)
Volume Summary 15min

TIME	Volume Summary 15min NB	SB	15min Total	60min Total
0000 - 0015	48	0	**48**	
0015 - 0030	34	0	**34**	
0030 - 0045	25	0	**25**	
0045 - 0100	18	0	**18**	**125**
0100 - 0115	20	0	**20**	
0115 - 0130	13	0	**13**	
0130 - 0145	16	0	**16**	
0145 - 0200	16	0	**16**	**65**
0200 - 0215	11	0	**11**	
0215 - 0230	25	0	**25**	
0230 - 0245	10	0	**10**	
0245 - 0300	22	0	**22**	**68**
0300 - 0315	24	0	**24**	
0315 - 0330	20	0	**20**	
0330 - 0345	30	0	**30**	
0345 - 0400	26	0	**26**	**100**
0400 - 0415	25	0	**25**	
0415 - 0430	25	0	**25**	
0430 - 0445	39	0	**39**	
0445 - 0500	57	0	**57**	**146**
0500 - 0515	56	0	**56**	
0515 - 0530	72	0	**72**	
0530 - 0545	56	0	**56**	
0545 - 0600	53	0	**53**	**237**
0600 - 0615	101	0	**101**	
0615 - 0630	199	0	**199**	
0630 - 0645	168	0	**168**	
0645 - 0700	238	0	**238**	**706**
0700 - 0715	227	0	**227**	
0715 - 0730	308	0	**308**	
0730 - 0745	317	0	**317**	
0745 - 0800	313	0	**313**	**1165**
0800 - 0815	263	0	**263**	
0815 - 0830	359	0	**359**	
0830 - 0845	299	0	**299**	
0845 - 0900	350	0	**350**	**1271**
0900 - 0915	323	0	**323**	
0915 - 0930	302	0	**302**	
0930 - 0945	276	0	**276**	
0945 - 1000	264	0	**264**	**1165**
1000 - 1015	220	0	**220**	
1015 - 1030	230	0	**230**	
1030 - 1045	262	0	**262**	
1045 - 1100	304	0	**304**	**1016**
1100 - 1115	252	0	**252**	
1115 - 1130	266	0	**266**	
1130 - 1145	246	0	**246**	
1145 - 1200	237	0	**237**	**1001**

Time	Volume Summary 15min NB	SB	15min Total	60min Total
1200 - 1215	231	0	**231**	
1215 - 1230	306	0	**306**	
1230 - 1245	244	0	**244**	
1245 - 1300	255	0	**255**	**1036**
1300 - 1315	245	0	**245**	
1315 - 1330	253	0	**253**	
1330 - 1345	300	0	**300**	
1345 - 1400	325	0	**325**	**1123**
1400 - 1415	279	0	**279**	
1415 - 1430	317	0	**317**	
1430 - 1445	283	0	**283**	
1445 - 1500	298	0	**298**	**1177**
1500 - 1515	306	0	**306**	
1515 - 1530	311	0	**311**	
1530 - 1545	313	0	**313**	
1545 - 1600	329	0	**329**	**1259**
1600 - 1615	322	0	**322**	
1615 - 1630	349	0	**349**	
1630 - 1645	276	0	**276**	
1645 - 1700	191	0	**191**	**1138**
1700 - 1715	168	0	**168**	
1715 - 1730	312	0	**312**	
1730 - 1745	335	0	**335**	
1745 - 1800	313	0	**313**	**1128**
1800 - 1815	352	0	**352**	
1815 - 1830	232	0	**232**	
1830 - 1845	233	0	**233**	
1845 - 1900	204	0	**204**	**1021**
1900 - 1915	197	0	**197**	
1915 - 1930	186	0	**186**	
1930 - 1945	203	0	**203**	
1945 - 2000	186	0	**186**	**772**
2000 - 2015	149	0	**149**	
2015 - 2030	172	0	**172**	
2030 - 2045	157	0	**157**	
2045 - 2100	112	0	**112**	**590**
2100 - 2115	99	0	**99**	
2115 - 2130	112	0	**112**	
2130 - 2145	106	0	**106**	
2145 - 2200	105	0	**105**	**422**
2200 - 2215	84	0	**84**	
2215 - 2230	71	0	**71**	
2230 - 2245	51	0	**51**	
2245 - 2300	59	0	**59**	**265**
2300 - 2315	66	0	**66**	
2315 - 2330	39	0	**39**	
2330 - 2345	50	0	**50**	
2345 - 0000	41	0	**41**	**196**

Session Total	17192	0	**17192**
Session Average	179.08	0.00	**179.08**
Session Percentage	100.00	0.00	

Site 8
I-26 N/Bound On-Ramp,
north of I-20

Date
Wednesday, April 24, 2024

Lat/Long
34.038738°, -81.109720°

Weather
Fair
66°F

Click here for Detailed Weather

0000 - 2400 (Weekday 24h Session) (04-24-2024)
Volume Summary 15min

TIME	Volume Summary 15min NB	SB	15min Total	60min Total
0000 - 0015	45	0	**45**	
0015 - 0030	36	0	**36**	
0030 - 0045	24	0	**24**	
0045 - 0100	27	0	**27**	**132**
0100 - 0115	23	0	**23**	
0115 - 0130	32	0	**32**	
0130 - 0145	21	0	**21**	
0145 - 0200	16	0	**16**	**92**
0200 - 0215	8	0	**8**	
0215 - 0230	34	0	**34**	
0230 - 0245	19	0	**19**	
0245 - 0300	26	0	**26**	**87**
0300 - 0315	13	0	**13**	
0315 - 0330	24	0	**24**	
0330 - 0345	31	0	**31**	
0345 - 0400	28	0	**28**	**96**
0400 - 0415	34	0	**34**	
0415 - 0430	36	0	**36**	
0430 - 0445	44	0	**44**	
0445 - 0500	58	0	**58**	**172**
0500 - 0515	41	0	**41**	
0515 - 0530	68	0	**68**	
0530 - 0545	77	0	**77**	
0545 - 0600	102	0	**102**	**288**
0600 - 0615	101	0	**101**	
0615 - 0630	133	0	**133**	
0630 - 0645	195	0	**195**	
0645 - 0700	244	0	**244**	**673**
0700 - 0715	248	0	**248**	
0715 - 0730	286	0	**286**	
0730 - 0745	308	0	**308**	
0745 - 0800	318	0	**318**	**1160**
0800 - 0815	232	0	**232**	
0815 - 0830	230	0	**230**	
0830 - 0845	308	0	**308**	
0845 - 0900	345	0	**345**	**1115**
0900 - 0915	239	0	**239**	
0915 - 0930	196	0	**196**	
0930 - 0945	288	0	**288**	
0945 - 1000	319	0	**319**	**1042**
1000 - 1015	284	0	**284**	
1015 - 1030	280	0	**280**	
1030 - 1045	248	0	**248**	
1045 - 1100	256	0	**256**	**1068**
1100 - 1115	240	0	**240**	
1115 - 1130	264	0	**264**	
1130 - 1145	253	0	**253**	
1145 - 1200	296	0	**296**	**1053**

Time	Volume Summary 15min NB	SB	15min Total	60min Total
1200 - 1215	257	0	**257**	
1215 - 1230	269	0	**269**	
1230 - 1245	257	0	**257**	
1245 - 1300	283	0	**283**	**1066**
1300 - 1315	258	0	**258**	
1315 - 1330	286	0	**286**	
1330 - 1345	273	0	**273**	
1345 - 1400	264	0	**264**	**1081**
1400 - 1415	274	0	**274**	
1415 - 1430	316	0	**316**	
1430 - 1445	303	0	**303**	
1445 - 1500	328	0	**328**	**1221**
1500 - 1515	281	0	**281**	
1515 - 1530	342	0	**342**	
1530 - 1545	344	0	**344**	
1545 - 1600	336	0	**336**	**1303**
1600 - 1615	383	0	**383**	
1615 - 1630	335	0	**335**	
1630 - 1645	321	0	**321**	
1645 - 1700	302	0	**302**	**1341**
1700 - 1715	307	0	**307**	
1715 - 1730	306	0	**306**	
1730 - 1745	290	0	**290**	
1745 - 1800	288	0	**288**	**1191**
1800 - 1815	245	0	**245**	
1815 - 1830	285	0	**285**	
1830 - 1845	252	0	**252**	
1845 - 1900	227	0	**227**	**1009**
1900 - 1915	237	0	**237**	
1915 - 1930	241	0	**241**	
1930 - 1945	189	0	**189**	
1945 - 2000	158	0	**158**	**825**
2000 - 2015	164	0	**164**	
2015 - 2030	154	0	**154**	
2030 - 2045	161	0	**161**	
2045 - 2100	169	0	**169**	**648**
2100 - 2115	109	0	**109**	
2115 - 2130	122	0	**122**	
2130 - 2145	110	0	**110**	
2145 - 2200	105	0	**105**	**446**
2200 - 2215	78	0	**78**	
2215 - 2230	75	0	**75**	
2230 - 2245	62	0	**62**	
2245 - 2300	81	0	**81**	**296**
2300 - 2315	56	0	**56**	
2315 - 2330	52	0	**52**	
2330 - 2345	41	0	**41**	
2345 - 0000	41	0	**41**	**190**

Session Total	17595	0	**17595**
Session Average	183.28	0.00	**183.28**
Session Percentage	100.00	0.00	

Site 8
I-26 N/Bound On-Ramp,
north of I-20

Date
Thursday, April 25, 2024

Lat/Long
34.038738°, -81.109720°

Weather
Fair
67°F

Click here for Detailed Weather

0000 - 2400 (Weekday 24h Session) (04-25-2024)

Volume Summary 15min

TIME	Volume Summary 15min NB	SB	15min Total	60min Total
0000 - 0015	28	0	**28**	
0015 - 0030	26	0	**26**	
0030 - 0045	28	0	**28**	
0045 - 0100	19	0	**19**	**101**
0100 - 0115	13	0	**13**	
0115 - 0130	24	0	**24**	
0130 - 0145	25	0	**25**	
0145 - 0200	16	0	**16**	**78**
0200 - 0215	21	0	**21**	
0215 - 0230	17	0	**17**	
0230 - 0245	17	0	**17**	
0245 - 0300	14	0	**14**	**69**
0300 - 0315	22	0	**22**	
0315 - 0330	19	0	**19**	
0330 - 0345	32	0	**32**	
0345 - 0400	28	0	**28**	**101**
0400 - 0415	27	0	**27**	
0415 - 0430	26	0	**26**	
0430 - 0445	42	0	**42**	
0445 - 0500	77	0	**77**	**172**
0500 - 0515	48	0	**48**	
0515 - 0530	72	0	**72**	
0530 - 0545	78	0	**78**	
0545 - 0600	96	0	**96**	**294**
0600 - 0615	107	0	**107**	
0615 - 0630	154	0	**154**	
0630 - 0645	196	0	**196**	
0645 - 0700	246	0	**246**	**703**
0700 - 0715	247	0	**247**	
0715 - 0730	291	0	**291**	
0730 - 0745	332	0	**332**	
0745 - 0800	326	0	**326**	**1196**
0800 - 0815	320	0	**320**	
0815 - 0830	318	0	**318**	
0830 - 0845	326	0	**326**	
0845 - 0900	323	0	**323**	**1287**
0900 - 0915	263	0	**263**	
0915 - 0930	271	0	**271**	
0930 - 0945	318	0	**318**	
0945 - 1000	311	0	**311**	**1163**
1000 - 1015	247	0	**247**	
1015 - 1030	267	0	**267**	
1030 - 1045	299	0	**299**	
1045 - 1100	290	0	**290**	**1103**
1100 - 1115	318	0	**318**	
1115 - 1130	317	0	**317**	
1130 - 1145	343	0	**343**	
1145 - 1200	307	0	**307**	**1285**

Time	Volume Summary 15min NB	SB	15min Total	60min Total
1200 - 1215	314	0	**314**	
1215 - 1230	322	0	**322**	
1230 - 1245	291	0	**291**	
1245 - 1300	343	0	**343**	**1270**
1300 - 1315	309	0	**309**	
1315 - 1330	324	0	**324**	
1330 - 1345	335	0	**335**	
1345 - 1400	320	0	**320**	**1288**
1400 - 1415	305	0	**305**	
1415 - 1430	312	0	**312**	
1430 - 1445	303	0	**303**	
1445 - 1500	354	0	**354**	**1274**
1500 - 1515	302	0	**302**	
1515 - 1530	360	0	**360**	
1530 - 1545	318	0	**318**	
1545 - 1600	279	0	**279**	**1259**
1600 - 1615	303	0	**303**	
1615 - 1630	285	0	**285**	
1630 - 1645	296	0	**296**	
1645 - 1700	286	0	**286**	**1170**
1700 - 1715	286	0	**286**	
1715 - 1730	280	0	**280**	
1730 - 1745	292	0	**292**	
1745 - 1800	286	0	**286**	**1144**
1800 - 1815	266	0	**266**	
1815 - 1830	287	0	**287**	
1830 - 1845	267	0	**267**	
1845 - 1900	240	0	**240**	**1060**
1900 - 1915	238	0	**238**	
1915 - 1930	231	0	**231**	
1930 - 1945	196	0	**196**	
1945 - 2000	206	0	**206**	**871**
2000 - 2015	147	0	**147**	
2015 - 2030	159	0	**159**	
2030 - 2045	167	0	**167**	
2045 - 2100	146	0	**146**	**619**
2100 - 2115	133	0	**133**	
2115 - 2130	129	0	**129**	
2130 - 2145	133	0	**133**	
2145 - 2200	96	0	**96**	**491**
2200 - 2215	88	0	**88**	
2215 - 2230	66	0	**66**	
2230 - 2245	79	0	**79**	
2245 - 2300	80	0	**80**	**313**
2300 - 2315	74	0	**74**	
2315 - 2330	55	0	**55**	
2330 - 2345	58	0	**58**	
2345 - 0000	45	0	**45**	**232**

Session Total	18543	0	**18543**
Session Average	193.16	0.00	**193.16**
Session Percentage	100.00	0.00	

Site 8
I-26 N/Bound On-Ramp,
north of I-20

Date
Friday, April 26, 2024

Lat/Long
34.038738°, -81.109720°

Weather
Cloudy
69°F

Click here for Detailed Weather

0000 - 2400 (Weekday 24h Session) (04-26-2024)
Volume Summary 15min

TIME	Volume Summary 15min NB	SB	15min Total	60min Total
0000 - 0015	51	0	**51**	
0015 - 0030	24	0	**24**	
0030 - 0045	39	0	**39**	
0045 - 0100	20	0	**20**	**134**
0100 - 0115	17	0	**17**	
0115 - 0130	20	0	**20**	
0130 - 0145	28	0	**28**	
0145 - 0200	27	0	**27**	**92**
0200 - 0215	21	0	**21**	
0215 - 0230	20	0	**20**	
0230 - 0245	26	0	**26**	
0245 - 0300	12	0	**12**	**79**
0300 - 0315	16	0	**16**	
0315 - 0330	16	0	**16**	
0330 - 0345	29	0	**29**	
0345 - 0400	22	0	**22**	**83**
0400 - 0415	29	0	**29**	
0415 - 0430	40	0	**40**	
0430 - 0445	38	0	**38**	
0445 - 0500	53	0	**53**	**160**
0500 - 0515	66	0	**66**	
0515 - 0530	64	0	**64**	
0530 - 0545	88	0	**88**	
0545 - 0600	84	0	**84**	**302**
0600 - 0615	103	0	**103**	
0615 - 0630	150	0	**150**	
0630 - 0645	188	0	**188**	
0645 - 0700	234	0	**234**	**675**
0700 - 0715	241	0	**241**	
0715 - 0730	265	0	**265**	
0730 - 0745	355	0	**355**	
0745 - 0800	351	0	**351**	**1212**
0800 - 0815	339	0	**339**	
0815 - 0830	280	0	**280**	
0830 - 0845	307	0	**307**	
0845 - 0900	304	0	**304**	**1230**
0900 - 0915	268	0	**268**	
0915 - 0930	295	0	**295**	
0930 - 0945	295	0	**295**	
0945 - 1000	308	0	**308**	**1166**
1000 - 1015	286	0	**286**	
1015 - 1030	265	0	**265**	
1030 - 1045	325	0	**325**	
1045 - 1100	338	0	**338**	**1214**
1100 - 1115	319	0	**319**	
1115 - 1130	323	0	**323**	
1130 - 1145	325	0	**325**	
1145 - 1200	385	0	**385**	**1352**

Time	Volume Summary 15min NB	SB	15min Total	60min Total
1200 - 1215	332	0	**332**	
1215 - 1230	364	0	**364**	
1230 - 1245	356	0	**356**	
1245 - 1300	307	0	**307**	**1359**
1300 - 1315	212	0	**212**	
1315 - 1330	261	0	**261**	
1330 - 1345	273	0	**273**	
1345 - 1400	274	0	**274**	**1020**
1400 - 1415	245	0	**245**	
1415 - 1430	278	0	**278**	
1430 - 1445	287	0	**287**	
1445 - 1500	294	0	**294**	**1104**
1500 - 1515	280	0	**280**	
1515 - 1530	305	0	**305**	
1530 - 1545	260	0	**260**	
1545 - 1600	319	0	**319**	**1164**
1600 - 1615	291	0	**291**	
1615 - 1630	320	0	**320**	
1630 - 1645	322	0	**322**	
1645 - 1700	304	0	**304**	**1237**
1700 - 1715	334	0	**334**	
1715 - 1730	332	0	**332**	
1730 - 1745	337	0	**337**	
1745 - 1800	302	0	**302**	**1305**
1800 - 1815	299	0	**299**	
1815 - 1830	301	0	**301**	
1830 - 1845	280	0	**280**	
1845 - 1900	273	0	**273**	**1153**
1900 - 1915	260	0	**260**	
1915 - 1930	275	0	**275**	
1930 - 1945	232	0	**232**	
1945 - 2000	228	0	**228**	**995**
2000 - 2015	221	0	**221**	
2015 - 2030	191	0	**191**	
2030 - 2045	163	0	**163**	
2045 - 2100	178	0	**178**	**753**
2100 - 2115	154	0	**154**	
2115 - 2130	138	0	**138**	
2130 - 2145	155	0	**155**	
2145 - 2200	124	0	**124**	**571**
2200 - 2215	129	0	**129**	
2215 - 2230	114	0	**114**	
2230 - 2245	143	0	**143**	
2245 - 2300	133	0	**133**	**519**
2300 - 2315	99	0	**99**	
2315 - 2330	78	0	**78**	
2330 - 2345	75	0	**75**	
2345 - 0000	60	0	**60**	**312**

Session Total	19191	0	**19191**
Session Average	199.91	0.00	**199.91**
Session Percentage	100.00	0.00	

Site 8
I-26 N/Bound On-Ramp,
north of I-20

Date
Saturday, April 27, 2024

Lat/Long
34.038738°, -81.109720°

Weather
Mostly Cloudy
69°F

Click here for Detailed Weather

0000 - 2400 (Saturday 24h Session) (04-27-2024)
Volume Summary 15min

TIME	Volume Summary 15min NB	SB	15min Total	60min Total
0000 - 0015	53	0	**53**	
0015 - 0030	46	0	**46**	
0030 - 0045	57	0	**57**	
0045 - 0100	52	0	**52**	**208**
0100 - 0115	34	0	**34**	
0115 - 0130	35	0	**35**	
0130 - 0145	24	0	**24**	
0145 - 0200	32	0	**32**	**125**
0200 - 0215	22	0	**22**	
0215 - 0230	19	0	**19**	
0230 - 0245	18	0	**18**	
0245 - 0300	26	0	**26**	**85**
0300 - 0315	30	0	**30**	
0315 - 0330	27	0	**27**	
0330 - 0345	21	0	**21**	
0345 - 0400	27	0	**27**	**105**
0400 - 0415	25	0	**25**	
0415 - 0430	31	0	**31**	
0430 - 0445	23	0	**23**	
0445 - 0500	29	0	**29**	**108**
0500 - 0515	33	0	**33**	
0515 - 0530	25	0	**25**	
0530 - 0545	34	0	**34**	
0545 - 0600	46	0	**46**	**138**
0600 - 0615	56	0	**56**	
0615 - 0630	57	0	**57**	
0630 - 0645	98	0	**98**	
0645 - 0700	113	0	**113**	**324**
0700 - 0715	128	0	**128**	
0715 - 0730	144	0	**144**	
0730 - 0745	172	0	**172**	
0745 - 0800	234	0	**234**	**678**
0800 - 0815	196	0	**196**	
0815 - 0830	228	0	**228**	
0830 - 0845	239	0	**239**	
0845 - 0900	264	0	**264**	**927**
0900 - 0915	222	0	**222**	
0915 - 0930	287	0	**287**	
0930 - 0945	333	0	**333**	
0945 - 1000	355	0	**355**	**1197**
1000 - 1015	291	0	**291**	
1015 - 1030	306	0	**306**	
1030 - 1045	364	0	**364**	
1045 - 1100	356	0	**356**	**1317**
1100 - 1115	396	0	**396**	
1115 - 1130	387	0	**387**	
1130 - 1145	373	0	**373**	
1145 - 1200	361	0	**361**	**1517**

Time	Volume Summary 15min NB	SB	15min Total	60min Total
1200 - 1215	380	0	**380**	
1215 - 1230	381	0	**381**	
1230 - 1245	406	0	**406**	
1245 - 1300	372	0	**372**	**1539**
1300 - 1315	339	0	**339**	
1315 - 1330	363	0	**363**	
1330 - 1345	395	0	**395**	
1345 - 1400	341	0	**341**	**1438**
1400 - 1415	331	0	**331**	
1415 - 1430	368	0	**368**	
1430 - 1445	346	0	**346**	
1445 - 1500	341	0	**341**	**1386**
1500 - 1515	351	0	**351**	
1515 - 1530	324	0	**324**	
1530 - 1545	333	0	**333**	
1545 - 1600	352	0	**352**	**1360**
1600 - 1615	315	0	**315**	
1615 - 1630	356	0	**356**	
1630 - 1645	349	0	**349**	
1645 - 1700	341	0	**341**	**1361**
1700 - 1715	381	0	**381**	
1715 - 1730	306	0	**306**	
1730 - 1745	311	0	**311**	
1745 - 1800	291	0	**291**	**1289**
1800 - 1815	261	0	**261**	
1815 - 1830	250	0	**250**	
1830 - 1845	279	0	**279**	
1845 - 1900	258	0	**258**	**1048**
1900 - 1915	220	0	**220**	
1915 - 1930	195	0	**195**	
1930 - 1945	205	0	**205**	
1945 - 2000	200	0	**200**	**820**
2000 - 2015	164	0	**164**	
2015 - 2030	172	0	**172**	
2030 - 2045	142	0	**142**	
2045 - 2100	141	0	**141**	**619**
2100 - 2115	136	0	**136**	
2115 - 2130	154	0	**154**	
2130 - 2145	150	0	**150**	
2145 - 2200	139	0	**139**	**579**
2200 - 2215	112	0	**112**	
2215 - 2230	133	0	**133**	
2230 - 2245	113	0	**113**	
2245 - 2300	110	0	**110**	**468**
2300 - 2315	88	0	**88**	
2315 - 2330	89	0	**89**	
2330 - 2345	78	0	**78**	
2345 - 0000	77	0	**77**	**332**

Session Total	18968	0	**18968**
Session Average	197.58	0.00	**197.58**
Session Percentage	100.00	0.00	

Bi-Directional Class Count || NB EB 60min

Columbia, SC

Marr Traffic DATA COLLECTION

www.marrtraffic.com

Site 8
I-26 N/Bound On-Ramp,
north of I-20

Date
Sunday, April 21, 2024

Lat/Long
34.038738°, -81.109720°

Weather
Cloudy
66°F

Click here for Detailed Weather

0000 - 2400 (Sunday 24h Session) (04-21-2024)
NB EB 60min

	Northbound (Movement 8.1)													
TIME	1	2	3	4	5	6	7	8	9	10	11	12	13	**Total**
0000 - 0100	0	215	27	1	4	0	0	0	8	0	0	0	0	**255**
0100 - 0200	0	138	23	0	1	0	0	0	0	0	0	0	0	**162**
0200 - 0300	0	111	22	0	1	0	0	0	6	0	0	0	0	**140**
0300 - 0400	0	78	9	0	1	0	0	0	3	0	0	0	0	**91**
0400 - 0500	0	76	9	0	2	0	0	0	0	0	0	0	0	**87**
0500 - 0600	0	98	12	0	1	0	0	0	6	0	0	0	0	**117**
0600 - 0700	0	152	23	1	1	0	0	1	3	0	0	0	0	**181**
0700 - 0800	0	199	47	1	1	2	0	0	6	0	0	0	0	**256**
0800 - 0900	1	335	99	3	1	0	0	0	6	0	0	0	0	**445**
0900 - 1000	1	479	129	2	4	0	0	2	19	0	0	0	0	**636**
1000 - 1100	0	782	204	4	7	0	0	0	14	0	0	0	0	**1011**
1100 - 1200	2	929	251	2	7	1	0	4	19	0	0	0	0	**1215**
1200 - 1300	2	1183	234	2	3	2	0	0	17	0	0	0	0	**1443**
1300 - 1400	2	1276	258	1	3	0	0	4	16	0	0	0	0	**1560**
1400 - 1500	1	1233	252	0	1	0	0	2	22	0	0	0	0	**1511**
1500 - 1600	0	1027	202	1	6	1	0	5	18	0	0	0	0	**1260**
1600 - 1700	0	1030	212	1	7	0	0	1	20	0	0	0	0	**1271**
1700 - 1800	1	807	174	1	3	0	0	0	19	0	0	0	0	**1005**
1800 - 1900	0	750	155	1	0	1	0	0	16	1	0	0	0	**924**
1900 - 2000	1	623	111	0	3	0	0	0	16	0	0	0	0	**754**
2000 - 2100	0	456	73	0	4	2	0	0	11	0	0	0	0	**546**
2100 - 2200	0	364	57	0	3	0	0	0	6	0	0	0	0	**430**
2200 - 2300	0	215	21	0	2	0	0	0	12	0	0	0	0	**250**
2300 - 2400	0	170	16	0	0	0	0	0	11	0	0	0	0	**197**

Session Total	11	12726	2620	21	66	9	0	19	274	1	0	0	0	**15747**
Session Average	0.46	530.25	109.17	0.88	2.75	0.38	0.00	0.79	11.42	0.04	0.00	0.00	0.00	**656.13**
Session Percentage	0.07	80.82	16.64	0.13	0.42	0.06	0.00	0.12	1.74	0.01	0.00	0.00	0.00	

AM Peak Hour	0800 - 0900	0900 - 1000	0900 - 1000	0800 - 0900	0900 - 1000	0700 - 0800	-	0900 - 1000	0900 - 1000	-	-	-	-	**0900 - 1000**
AM Peak Volume	1	479	129	3	4	2	0	2	19	0	0	0	0	**636**

Noon Peak Hour	1100 - 1200	1300 - 1400	1300 - 1400	1000 - 1100	1000 - 1100	1200 - 1300	-	1100 - 1200	1400 - 1500	-	-	-	-	**1300 - 1400**
Noon Peak Volume	2	1276	258	4	7	2	0	4	22	0	0	0	0	**1560**

PM Peak Hour	1700 - 1800	1600 - 1700	1600 - 1700	1500 - 1600	1600 - 1700	1500 - 1600	-	1500 - 1600	1600 - 1700	1800 - 1900	-	-	-	**1600 - 1700**
PM Peak Volume	1	1030	212	1	7	1	0	5	20	1	0	0	0	**1271**

Site 8
I-26 N/Bound On-Ramp,
north of I-20

Date
Monday, April 22, 2024

Lat/Long
34.038738°, -81.109720°

Weather
Mostly Cloudy
57°F

Click here for Detailed Weather

0000 - 2400 (Weekday 24h Session) (04-22-2024)
NB EB 60min

	Northbound (Movement 8.1)													
TIME	1	2	3	4	5	6	7	8	9	10	11	12	13	**Total**
0000 - 0100	0	98	0	0	0	0	0	0	12	0	0	0	0	**110**
0100 - 0200	0	70	1	0	1	0	0	0	16	0	0	0	0	**88**
0200 - 0300	0	58	0	0	3	0	0	0	15	0	0	0	0	**76**
0300 - 0400	0	87	0	0	5	0	0	0	21	0	0	0	0	**113**
0400 - 0500	0	113	0	0	6	0	0	0	34	0	0	0	0	**153**
0500 - 0600	0	294	11	0	12	0	0	2	47	0	0	0	0	**366**
0600 - 0700	0	493	123	2	17	8	0	3	56	0	0	0	0	**702**
0700 - 0800	0	901	282	3	25	15	0	2	56	0	0	0	0	**1284**
0800 - 0900	1	843	260	1	23	4	0	2	57	0	0	0	0	**1191**
0900 - 1000	4	702	262	3	22	11	5	4	60	2	0	0	0	**1075**
1000 - 1100	2	645	245	1	9	6	8	2	56	1	0	0	0	**975**
1100 - 1200	0	710	223	3	12	3	7	6	72	0	0	0	0	**1036**
1200 - 1300	0	744	227	2	11	5	2	6	64	0	0	0	0	**1061**
1300 - 1400	0	801	267	0	25	5	3	11	59	0	0	0	0	**1171**
1400 - 1500	1	879	237	2	10	4	2	4	60	1	0	0	0	**1200**
1500 - 1600	2	912	259	5	19	3	1	4	52	0	0	0	0	**1257**
1600 - 1700	1	859	245	4	5	2	0	2	54	0	1	0	0	**1173**
1700 - 1800	0	874	222	1	15	3	0	1	47	0	1	0	0	**1164**
1800 - 1900	0	717	166	1	9	0	0	1	34	0	0	0	0	**928**
1900 - 2000	0	558	123	0	3	3	0	0	32	0	0	0	0	**719**
2000 - 2100	0	403	114	3	3	0	0	0	19	0	0	0	0	**542**
2100 - 2200	0	254	89	0	0	0	0	0	24	0	0	0	0	**367**
2200 - 2300	0	165	74	1	1	0	0	1	19	0	0	0	0	**261**
2300 - 2400	0	104	65	0	1	0	0	0	15	0	0	0	0	**185**

Session Total	11	12284	3495	32	237	72	28	51	981	4	2	0	0	**17197**
Session Average	0.46	511.83	145.63	1.33	9.88	3.00	1.17	2.13	40.88	0.17	0.08	0.00	0.00	**716.54**
Session Percentage	0.06	71.43	20.32	0.19	1.38	0.42	0.16	0.30	5.70	0.02	0.01	0.00	0.00	

AM Peak Hour	0900 - 1000	0700 - 0800	0700 - 0800	0700 - 0800	0700 - 0800	0700 - 0800	0900 - 1000	0900 - 1000	0900 - 1000	0900 - 1000	-	-	-	**0700 - 0800**
AM Peak Volume	4	901	282	3	25	15	5	4	60	2	0	0	0	**1284**

Noon Peak Hour	1000 - 1100	1400 - 1500	1300 - 1400	1100 - 1200	1300 - 1400	1000 - 1100	1000 - 1100	1300 - 1400	1100 - 1200	1000 - 1100	-	-	-	**1400 - 1500**
Noon Peak Volume	2	879	267	3	25	6	8	11	72	1	0	0	0	**1200**

PM Peak Hour	1500 - 1600	1500 - 1600	1500 - 1600	1500 - 1600	1500 - 1600	1500 - 1600	1500 - 1600	1500 - 1600	1600 - 1700	-	1600 - 1700	-	-	**1500 - 1600**
PM Peak Volume	2	912	259	5	19	3	1	4	54	0	1	0	0	**1257**

Site 8
I-26 N/Bound On-Ramp,
north of I-20

Date
Tuesday, April 23, 2024

Lat/Long
34.038738°, -81.109720°

Weather
Fair
58°F

Click here for Detailed Weather

0000 - 2400 (Weekday 24h Session) (04-23-2024)
NB EB 60min

	Northbound (Movement 8.1)													
TIME	1	2	3	4	5	6	7	8	9	10	11	12	13	**Total**
0000 - 0100	0	74	31	0	2	0	0	0	18	0	0	0	0	**125**
0100 - 0200	0	37	13	0	1	0	0	1	12	0	1	0	0	**65**
0200 - 0300	0	30	15	0	2	0	0	1	18	0	2	0	0	**68**
0300 - 0400	0	40	28	1	4	1	0	1	25	0	0	0	0	**100**
0400 - 0500	0	72	33	0	5	2	0	1	32	0	1	0	0	**146**
0500 - 0600	0	122	65	0	10	3	0	3	34	0	0	0	0	**237**
0600 - 0700	1	393	204	1	21	17	0	5	64	0	0	0	0	**706**
0700 - 0800	0	754	317	4	21	8	0	2	59	0	0	0	0	**1165**
0800 - 0900	2	899	268	5	21	18	0	0	58	0	0	0	0	**1271**
0900 - 1000	1	813	239	1	19	6	5	7	74	0	0	0	0	**1165**
1000 - 1100	0	654	255	2	27	10	1	4	63	0	0	0	0	**1016**
1100 - 1200	0	654	254	3	20	11	0	2	57	0	0	0	0	**1001**
1200 - 1300	1	713	230	0	12	11	1	3	64	1	0	0	0	**1036**
1300 - 1400	2	776	253	1	14	7	0	9	61	0	0	0	0	**1123**
1400 - 1500	2	816	274	2	18	7	2	4	51	1	0	0	0	**1177**
1500 - 1600	6	897	265	3	20	5	2	4	56	1	0	0	0	**1259**
1600 - 1700	1	847	215	1	16	9	0	3	46	0	0	0	0	**1138**
1700 - 1800	1	848	214	4	9	3	0	4	45	0	0	0	0	**1128**
1800 - 1900	3	762	194	1	7	5	0	4	43	2	0	0	0	**1021**
1900 - 2000	1	579	147	0	11	2	0	3	29	0	0	0	0	**772**
2000 - 2100	0	444	116	1	4	1	0	0	24	0	0	0	0	**590**
2100 - 2200	0	306	92	1	3	0	0	0	20	0	0	0	0	**422**
2200 - 2300	0	188	56	1	3	0	0	0	17	0	0	0	0	**265**
2300 - 2400	0	129	44	0	1	1	0	0	19	0	2	0	0	**196**

Session Total	21	11847	3822	32	271	127	11	61	989	5	6	0	0	**17192**
Session Average	0.88	493.63	159.25	1.33	11.29	5.29	0.46	2.54	41.21	0.21	0.25	0.00	0.00	**716.33**
Session Percentage	0.12	68.91	22.23	0.19	1.58	0.74	0.06	0.35	5.75	0.03	0.03	0.00	0.00	

AM Peak Hour	0800 - 0900	0800 - 0900	0700 - 0800	0800 - 0900	0600 - 0700	0800 - 0900	0900 - 1000	0900 - 1000	0900 - 1000	-	-	-	-	**0800 - 0900**
AM Peak Hour Volume	2	899	317	5	21	18	5	7	74	0	0	0	0	**1271**

Noon Peak Hour	1300 - 1400	1400 - 1500	1400 - 1500	1100 - 1200	1000 - 1100	1100 - 1200	1400 - 1500	1300 - 1400	1200 - 1300	1200 - 1300	-	-	-	**1400 - 1500**
Noon Peak Hour Volume	2	816	274	3	27	11	2	9	64	1	0	0	0	**1177**

PM Peak Hour	1500 - 1600	1500 - 1600	1500 - 1600	1700 - 1800	1500 - 1600	1600 - 1700	1500 - 1600	1500 - 1600	1500 - 1600	1800 - 1900	-	-	-	**1500 - 1600**
PM Peak Hour Volume	6	897	265	4	20	9	2	4	56	2	0	0	0	**1259**

Site 8
I-26 N/Bound On-Ramp,
north of I-20

Date
Wednesday, April 24, 2024

Weather
Fair
66°F

Lat/Long
34.038738°, -81.109720°

Click here for Detailed Weather

0000 - 2400 (Weekday 24h Session) (04-24-2024)
NB EB 60min

	Northbound (Movement 8.1)													
TIME	1	2	3	4	5	6	7	8	9	10	11	12	13	**Total**
0000 - 0100	0	98	18	0	1	2	0	0	11	0	2	0	0	**132**
0100 - 0200	0	64	12	0	1	0	0	0	15	0	0	0	0	**92**
0200 - 0300	0	53	11	0	4	1	0	0	16	0	2	0	0	**87**
0300 - 0400	0	63	9	0	4	2	0	0	18	0	0	0	0	**96**
0400 - 0500	0	89	19	0	8	3	0	0	52	0	1	0	0	**172**
0500 - 0600	0	173	56	0	10	3	0	0	46	0	0	0	0	**288**
0600 - 0700	0	433	163	1	19	5	0	3	49	0	0	0	0	**673**
0700 - 0800	0	834	239	3	21	7	1	2	53	0	0	0	0	**1160**
0800 - 0900	7	759	256	1	21	7	1	6	55	2	0	0	0	**1115**
0900 - 1000	0	675	266	2	23	0	6	2	67	1	0	0	0	**1042**
1000 - 1100	1	685	280	0	19	5	2	4	71	1	0	0	0	**1068**
1100 - 1200	3	707	265	1	18	2	0	2	55	0	0	0	0	**1053**
1200 - 1300	3	727	239	1	24	9	1	3	59	0	0	0	0	**1066**
1300 - 1400	0	756	229	2	13	3	2	4	69	3	0	0	0	**1081**
1400 - 1500	1	804	296	4	13	6	0	6	89	2	0	0	0	**1221**
1500 - 1600	3	949	274	2	18	1	1	2	51	2	0	0	0	**1303**
1600 - 1700	2	981	288	0	14	3	0	1	52	0	0	0	0	**1341**
1700 - 1800	2	896	233	1	12	2	0	1	44	0	0	0	0	**1191**
1800 - 1900	6	758	199	2	8	2	0	0	34	0	0	0	0	**1009**
1900 - 2000	3	617	155	1	9	5	0	1	34	0	0	0	0	**825**
2000 - 2100	0	519	93	1	2	2	0	0	31	0	0	0	0	**648**
2100 - 2200	0	361	62	1	2	1	0	0	19	0	0	0	0	**446**
2200 - 2300	0	225	50	1	1	0	0	0	18	0	1	0	0	**296**
2300 - 2400	0	134	35	0	2	2	0	0	15	0	2	0	0	**190**

Session Total	31	12360	3747	24	267	73	14	37	1023	11	8	0	0	**17595**
Session Average	1.29	515.00	156.13	1.00	11.13	3.04	0.58	1.54	42.63	0.46	0.33	0.00	0.00	**733.13**
Session Percentage	0.18	70.25	21.30	0.14	1.52	0.41	0.08	0.21	5.81	0.06	0.05	0.00	0.00	

AM Peak Hour	0800 - 0900	0700 - 0800	0900 - 1000	0700 - 0800	0900 - 1000	0700 - 0800	0900 - 1000	0800 - 0900	0900 - 1000	0800 - 0900	-	-	-	**0700 - 0800**
AM Peak Hour Volume	7	834	266	3	23	7	6	6	67	2	0	0	0	**1160**

Noon Peak Hour	1100 - 1200	1400 - 1500	1400 - 1500	1400 - 1500	1200 - 1300	1200 - 1300	1000 - 1100	1400 - 1500	1400 - 1500	1300 - 1400	-	-	-	**1400 - 1500**
Noon Peak Hour Volume	3	804	296	4	24	9	2	6	89	3	0	0	0	**1221**

PM Peak Hour	1800 - 1900	1600 - 1700	1600 - 1700	1500 - 1600	1500 - 1600	1900 - 2000	1500 - 1600	1500 - 1600	1600 - 1700	1500 - 1600	-	-	-	**1600 - 1700**
PM Peak Hour Volume	6	981	288	2	18	5	1	2	52	2	0	0	0	**1341**

Site 8
I-26 N/Bound On-Ramp,
north of I-20

Date
Thursday, April 25, 2024

Lat/Long
34.038738°, -81.109720°

Weather
Fair
67°F

Click here for Detailed Weather

0000 - 2400 (Weekday 24h Session) (04-25-2024)
NB EB 60min

	Northbound (Movement 8.1)													
TIME	1	2	3	4	5	6	7	8	9	10	11	12	13	**Total**
0000 - 0100	0	72	15	0	0	0	0	0	14	0	0	0	0	**101**
0100 - 0200	0	51	13	0	1	0	0	0	13	0	0	0	0	**78**
0200 - 0300	0	45	12	0	3	0	0	0	9	0	0	0	0	**69**
0300 - 0400	0	55	12	0	7	0	0	0	27	0	0	0	0	**101**
0400 - 0500	0	99	19	0	13	1	0	0	40	0	0	0	0	**172**
0500 - 0600	0	184	46	0	17	1	0	3	43	0	0	0	0	**294**
0600 - 0700	0	450	170	2	14	11	0	1	55	0	0	0	0	**703**
0700 - 0800	0	810	291	1	23	11	5	2	53	0	0	0	0	**1196**
0800 - 0900	4	886	299	2	20	9	8	5	52	2	0	0	0	**1287**
0900 - 1000	0	772	273	4	33	9	1	10	57	4	0	0	0	**1163**
1000 - 1100	2	751	249	6	16	13	0	3	58	5	0	0	0	**1103**
1100 - 1200	3	888	288	0	22	14	0	9	56	5	0	0	0	**1285**
1200 - 1300	10	897	259	1	19	13	0	8	58	5	0	0	0	**1270**
1300 - 1400	3	924	265	0	21	14	0	5	54	2	0	0	0	**1288**
1400 - 1500	2	899	265	2	18	14	0	9	61	4	0	0	0	**1274**
1500 - 1600	6	877	293	3	17	12	0	6	44	1	0	0	0	**1259**
1600 - 1700	0	849	243	1	15	1	3	7	51	0	0	0	0	**1170**
1700 - 1800	3	841	241	1	6	0	0	6	45	1	0	0	0	**1144**
1800 - 1900	5	803	207	0	13	4	0	2	26	0	0	0	0	**1060**
1900 - 2000	2	673	151	0	5	4	0	1	35	0	0	0	0	**871**
2000 - 2100	3	480	107	0	3	2	0	0	24	0	0	0	0	**619**
2100 - 2200	0	396	74	0	5	0	0	1	15	0	0	0	0	**491**
2200 - 2300	0	236	47	1	6	0	0	0	22	0	1	0	0	**313**
2300 - 2400	0	172	35	0	4	0	0	0	20	0	1	0	0	**232**

Session Total	43	13110	3874	24	301	133	17	78	932	29	2	0	0	**18543**
Session Average	1.79	546.25	161.42	1.00	12.54	5.54	0.71	3.25	38.83	1.21	0.08	0.00	0.00	**772.63**
Session Percentage	0.23	70.70	20.89	0.13	1.62	0.72	0.09	0.42	5.03	0.16	0.01	0.00	0.00	

AM Peak Hour	0800 - 0900	0800 - 0900	0800 - 0900	0900 - 1000	0900 - 1000	0600 - 0700	0800 - 0900	0900 - 1000	0900 - 1000	0900 - 1000	-	-	-	**0800 - 0900**
AM Peak Hour Volume	4	886	299	4	33	11	8	10	57	4	0	0	0	**1287**

Noon Peak Hour	1200 - 1300	1300 - 1400	1100 - 1200	1000 - 1100	1100 - 1200	1100 - 1200	-	1100 - 1200	1400 - 1500	1000 - 1100	-	-	-	**1300 - 1400**
Noon Peak Hour Volume	10	924	288	6	22	14	0	9	61	5	0	0	0	**1288**

PM Peak Hour	1500 - 1600	1500 - 1600	1500 - 1600	1500 - 1600	1500 - 1600	1500 - 1600	1600 - 1700	1600 - 1700	1600 - 1700	1500 - 1600	-	-	-	**1500 - 1600**
PM Peak Hour Volume	6	877	293	3	17	12	3	7	51	1	0	0	0	**1259**

Site 8
I-26 N/Bound On-Ramp,
north of I-20

Date
Friday, April 26, 2024

Lat/Long
34.038738°, -81.109720°

Weather
Cloudy
69°F

Click here for Detailed Weather

0000 - 2400 (Weekday 24h Session) (04-26-2024)
NB EB 60min

	Northbound (Movement 8.1)													
TIME	1	2	3	4	5	6	7	8	9	10	11	12	13	**Total**
0000 - 0100	0	105	18	0	2	0	0	0	9	0	0	0	0	**134**
0100 - 0200	0	65	8	0	0	0	0	0	19	0	0	0	0	**92**
0200 - 0300	0	65	5	0	0	0	0	0	7	0	2	0	0	**79**
0300 - 0400	0	54	5	0	5	0	0	0	19	0	0	0	0	**83**
0400 - 0500	0	101	15	0	7	0	0	0	36	0	1	0	0	**160**
0500 - 0600	0	196	30	0	14	2	0	0	60	0	0	0	0	**302**
0600 - 0700	0	471	113	0	16	6	2	3	63	0	1	0	0	**675**
0700 - 0800	0	859	251	4	16	15	12	1	54	0	0	0	0	**1212**
0800 - 0900	5	855	276	5	26	5	8	1	44	5	0	0	0	**1230**
0900 - 1000	2	809	272	2	21	6	8	2	43	1	0	0	0	**1166**
1000 - 1100	2	846	262	2	20	6	8	10	57	1	0	0	0	**1214**
1100 - 1200	0	941	298	2	27	4	10	13	54	3	0	0	0	**1352**
1200 - 1300	4	986	290	0	20	5	5	8	41	0	0	0	0	**1359**
1300 - 1400	2	736	194	4	16	6	10	9	42	1	0	0	0	**1020**
1400 - 1500	3	835	192	4	16	3	2	7	42	0	0	0	0	**1104**
1500 - 1600	3	884	224	6	9	1	2	5	30	0	0	0	0	**1164**
1600 - 1700	2	930	251	4	9	7	0	3	30	1	0	0	0	**1237**
1700 - 1800	5	1014	242	1	10	2	0	1	29	1	0	0	0	**1305**
1800 - 1900	3	901	201	0	10	1	0	3	33	1	0	0	0	**1153**
1900 - 2000	3	790	181	0	3	1	0	0	17	0	0	0	0	**995**
2000 - 2100	1	607	127	1	3	0	0	0	14	0	0	0	0	**753**
2100 - 2200	0	462	87	0	5	0	0	1	16	0	0	0	0	**571**
2200 - 2300	0	428	71	0	6	0	0	0	10	0	4	0	0	**519**
2300 - 2400	0	248	49	0	3	0	0	1	10	0	1	0	0	**312**

Session Total	35	14188	3662	35	264	70	67	68	779	14	9	0	0	**19191**
Session Average	1.46	591.17	152.58	1.46	11.00	2.92	2.79	2.83	32.46	0.58	0.38	0.00	0.00	**799.63**
Session Percentage	0.18	73.93	19.08	0.18	1.38	0.36	0.35	0.35	4.06	0.07	0.05	0.00	0.00	

AM Peak Hour	0800 - 0900	0700 - 0800	0800 - 0900	0800 - 0900	0800 - 0900	0700 - 0800	0700 - 0800	0600 - 0700	0600 - 0700	0800 - 0900	0600 - 0700	-	-	**0800 - 0900**
AM Peak Hour Volume	5	859	276	5	26	15	12	3	63	5	1	0	0	**1230**

Noon Peak Hour	1200 - 1300	1200 - 1300	1100 - 1200	1300 - 1400	1100 - 1200	1000 - 1100	1100 - 1200	1100 - 1200	1000 - 1100	1100 - 1200	-	-	-	**1200 - 1300**
Noon Peak Hour Volume	4	986	298	4	27	6	10	13	57	3	0	0	0	**1359**

PM Peak Hour	1700 - 1800	1700 - 1800	1600 - 1700	1500 - 1600	1700 - 1800	1600 - 1700	1500 - 1600	1500 - 1600	1800 - 1900	1600 - 1700	-	-	-	**1700 - 1800**
PM Peak Hour Volume	5	1014	251	6	10	7	2	5	33	1	0	0	0	**1305**

Site 8
I-26 N/Bound On-Ramp,
north of I-20

Date
Saturday, April 27, 2024

Lat/Long
34.038738°, -81.109720°

Weather
Mostly Cloudy
69°F

Click here for Detailed Weather

0000 - 2400 (Saturday 24h Session) (04-27-2024)
NB EB 60min

	Northbound (Movement 8.1)													
TIME	1	2	3	4	5	6	7	8	9	10	11	12	13	**Total**
0000 - 0100	0	152	46	0	1	1	0	1	7	0	0	0	0	**208**
0100 - 0200	1	88	28	0	2	0	0	0	6	0	0	0	0	**125**
0200 - 0300	0	61	20	0	1	0	0	0	3	0	0	0	0	**85**
0300 - 0400	0	64	22	0	5	0	0	0	14	0	0	0	0	**105**
0400 - 0500	0	67	26	0	6	0	0	0	8	0	1	0	0	**108**
0500 - 0600	0	83	31	1	5	0	0	0	18	0	0	0	0	**138**
0600 - 0700	0	237	59	0	4	2	0	1	21	0	0	0	0	**324**
0700 - 0800	3	498	136	2	3	6	0	5	23	0	2	0	0	**678**
0800 - 0900	4	702	192	0	12	2	0	3	12	0	0	0	0	**927**
0900 - 1000	1	951	211	2	12	3	0	2	15	0	0	0	0	**1197**
1000 - 1100	0	1056	225	1	12	1	0	5	17	0	0	0	0	**1317**
1100 - 1200	14	1198	274	2	9	0	0	3	17	0	0	0	0	**1517**
1200 - 1300	4	1239	263	1	13	0	0	0	18	1	0	0	0	**1539**
1300 - 1400	24	1161	231	1	5	2	0	1	13	0	0	0	0	**1438**
1400 - 1500	3	1149	208	1	8	2	0	1	14	0	0	0	0	**1386**
1500 - 1600	29	1121	189	0	7	1	0	3	10	0	0	0	0	**1360**
1600 - 1700	14	1123	211	1	2	0	0	3	7	0	0	0	0	**1361**
1700 - 1800	15	1072	183	1	8	0	0	0	10	0	0	0	0	**1289**
1800 - 1900	4	893	145	0	0	0	0	1	5	0	0	0	0	**1048**
1900 - 2000	2	687	123	0	0	0	0	1	7	0	0	0	0	**820**
2000 - 2100	3	518	84	3	4	0	0	1	6	0	0	0	0	**619**
2100 - 2200	3	486	84	0	2	0	0	1	3	0	0	0	0	**579**
2200 - 2300	1	396	64	0	0	0	0	1	6	0	0	0	0	**468**
2300 - 2400	0	272	53	0	1	0	0	1	5	0	0	0	0	**332**

Session Total	125	15274	3108	16	122	20	0	34	265	1	3	0	0	**18968**
Session Average	5.21	636.42	129.50	0.67	5.08	0.83	0.00	1.42	11.04	0.04	0.13	0.00	0.00	**790.33**
Session Percentage	0.66	80.53	16.39	0.08	0.64	0.11	0.00	0.18	1.40	0.01	0.02	0.00	0.00	

AM Peak Hour	0800 - 0900	0900 - 1000	0900 - 1000	0700 - 0800	0800 - 0900	0700 - 0800	-	0700 - 0800	0700 - 0800	-	0700 - 0800	-	-	**0900 - 1000**
AM Peak Hour Volume	4	951	211	2	12	6	0	5	23	0	2	0	0	**1197**

Noon Peak Hour	1300 - 1400	1200 - 1300	1100 - 1200	1100 - 1200	1200 - 1300	1300 - 1400	-	1000 - 1100	1200 - 1300	1200 - 1300	-	-	-	**1200 - 1300**
Noon Peak Hour Volume	24	1239	274	2	13	2	0	5	18	1	0	0	0	**1539**

PM Peak Hour	1500 - 1600	1600 - 1700	1600 - 1700	1600 - 1700	1700 - 1800	1500 - 1600	-	1500 - 1600	1500 - 1600	-	-	-	-	**1600 - 1700**
PM Peak Hour Volume	29	1123	211	1	8	1	0	3	10	0	0	0	0	**1361**

Bi-Directional Class Count || Volume Summary 60min

Columbia, SC

Marr Traffic DATA COLLECTION

www.marrtraffic.com

Site 8

I-26 N/Bound On-Ramp,
north of I-20

Date

Sunday, April 21, 2024

Lat/Long

34.038738°, -81.109720°

Weather

Cloudy
66°F

Click here for Detailed Weather

0000 - 2400 (Sunday 24h Session) (04-21-2024)

Volume Summary 60min

	Volume Summary 60min		
TIME	NB	SB	**Total**
0000 - 0100	255	0	**255**
0100 - 0200	162	0	**162**
0200 - 0300	140	0	**140**
0300 - 0400	91	0	**91**
0400 - 0500	87	0	**87**
0500 - 0600	117	0	**117**
0600 - 0700	181	0	**181**
0700 - 0800	256	0	**256**
0800 - 0900	445	0	**445**
0900 - 1000	636	0	**636**
1000 - 1100	1011	0	**1011**
1100 - 1200	1215	0	**1215**

	Volume Summary 60min		
Time	NB	SB	**Total**
1200 - 1300	1443	0	**1443**
1300 - 1400	1560	0	**1560**
1400 - 1500	1511	0	**1511**
1500 - 1600	1260	0	**1260**
1600 - 1700	1271	0	**1271**
1700 - 1800	1005	0	**1005**
1800 - 1900	924	0	**924**
1900 - 2000	754	0	**754**
2000 - 2100	546	0	**546**
2100 - 2200	430	0	**430**
2200 - 2300	250	0	**250**
2300 - 2400	197	0	**197**

Session Total	15747	0	**15747**
Session Average	656.13	0.00	**656.13**
Session Percentage	100.00	0.00	

Site 8

I-26 N/Bound On-Ramp,
north of I-20

Date

Monday, April 22, 2024

Lat/Long

34.038738°, -81.109720°

Weather

Mostly Cloudy
57°F

Click here for Detailed Weather

0000 - 2400 (Weekday 24h Session) (04-22-2024)

Volume Summary 60min

	Volume Summary 60min		
TIME	NB	SB	**Total**
0000 - 0100	110	0	**110**
0100 - 0200	88	0	**88**
0200 - 0300	76	0	**76**
0300 - 0400	113	0	**113**
0400 - 0500	153	0	**153**
0500 - 0600	366	0	**366**
0600 - 0700	702	0	**702**
0700 - 0800	1284	0	**1284**
0800 - 0900	1191	0	**1191**
0900 - 1000	1075	0	**1075**
1000 - 1100	975	0	**975**
1100 - 1200	1036	0	**1036**

Session Total	17197	0	**17197**
Session Average	716.54	0.00	**716.54**
Session Percentage	100.00	0.00	

	Volume Summary 60min		
Time	NB	SB	**Total**
1200 - 1300	1061	0	**1061**
1300 - 1400	1171	0	**1171**
1400 - 1500	1200	0	**1200**
1500 - 1600	1257	0	**1257**
1600 - 1700	1173	0	**1173**
1700 - 1800	1164	0	**1164**
1800 - 1900	928	0	**928**
1900 - 2000	719	0	**719**
2000 - 2100	542	0	**542**
2100 - 2200	367	0	**367**
2200 - 2300	261	0	**261**
2300 - 2400	185	0	**185**

Site 8

I-26 N/Bound On-Ramp,
north of I-20

Date

Tuesday, April 23, 2024

Lat/Long

34.038738°, -81.109720°

Weather

Fair
58°F

Click here for Detailed Weather

0000 - 2400 (Weekday 24h Session) (04-23-2024)

Volume Summary 60min

	Volume Summary 60min		
TIME	NB	SB	**Total**
0000 - 0100	125	0	**125**
0100 - 0200	65	0	**65**
0200 - 0300	68	0	**68**
0300 - 0400	100	0	**100**
0400 - 0500	146	0	**146**
0500 - 0600	237	0	**237**
0600 - 0700	706	0	**706**
0700 - 0800	1165	0	**1165**
0800 - 0900	1271	0	**1271**
0900 - 1000	1165	0	**1165**
1000 - 1100	1016	0	**1016**
1100 - 1200	1001	0	**1001**

Session Total	17192	0	**17192**
Session Average	716.33	0.00	**716.33**
Session Percentage	100.00	0.00	

	Volume Summary 60min		
Time	NB	SB	**Total**
1200 - 1300	1036	0	**1036**
1300 - 1400	1123	0	**1123**
1400 - 1500	1177	0	**1177**
1500 - 1600	1259	0	**1259**
1600 - 1700	1138	0	**1138**
1700 - 1800	1128	0	**1128**
1800 - 1900	1021	0	**1021**
1900 - 2000	772	0	**772**
2000 - 2100	590	0	**590**
2100 - 2200	422	0	**422**
2200 - 2300	265	0	**265**
2300 - 2400	196	0	**196**

Site 8

I-26 N/Bound On-Ramp,
north of I-20

Date

Wednesday, April 24, 2024

Lat/Long

34.038738°, -81.109720°

Weather

Fair
66°F

Click here for Detailed Weather

0000 - 2400 (Weekday 24h Session) (04-24-2024)

Volume Summary 60min

	Volume Summary 60min		
TIME	NB	SB	**Total**
0000 - 0100	132	0	**132**
0100 - 0200	92	0	**92**
0200 - 0300	87	0	**87**
0300 - 0400	96	0	**96**
0400 - 0500	172	0	**172**
0500 - 0600	288	0	**288**
0600 - 0700	673	0	**673**
0700 - 0800	1160	0	**1160**
0800 - 0900	1115	0	**1115**
0900 - 1000	1042	0	**1042**
1000 - 1100	1068	0	**1068**
1100 - 1200	1053	0	**1053**

Session Total	17595	0	**17595**
Session Average	733.13	0.00	**733.13**
Session Percentage	100.00	0.00	

	Volume Summary 60min		
Time	NB	SB	**Total**
1200 - 1300	1066	0	**1066**
1300 - 1400	1081	0	**1081**
1400 - 1500	1221	0	**1221**
1500 - 1600	1303	0	**1303**
1600 - 1700	1341	0	**1341**
1700 - 1800	1191	0	**1191**
1800 - 1900	1009	0	**1009**
1900 - 2000	825	0	**825**
2000 - 2100	648	0	**648**
2100 - 2200	446	0	**446**
2200 - 2300	296	0	**296**
2300 - 2400	190	0	**190**

Site 8

I-26 N/Bound On-Ramp,
north of I-20

Date

Thursday, April 25, 2024

Lat/Long

34.038738°, -81.109720°

Weather

Fair
67°F

Click here for Detailed Weather

0000 - 2400 (Weekday 24h Session) (04-25-2024)

Volume Summary 60min

	Volume Summary 60min		
TIME	NB	SB	**Total**
0000 - 0100	101	0	**101**
0100 - 0200	78	0	**78**
0200 - 0300	69	0	**69**
0300 - 0400	101	0	**101**
0400 - 0500	172	0	**172**
0500 - 0600	294	0	**294**
0600 - 0700	703	0	**703**
0700 - 0800	1196	0	**1196**
0800 - 0900	1287	0	**1287**
0900 - 1000	1163	0	**1163**
1000 - 1100	1103	0	**1103**
1100 - 1200	1285	0	**1285**

Session Total	18543	0	**18543**
Session Average	772.63	0.00	**772.63**
Session Percentage	100.00	0.00	

	Volume Summary 60min		
Time	NB	SB	**Total**
1200 - 1300	1270	0	**1270**
1300 - 1400	1288	0	**1288**
1400 - 1500	1274	0	**1274**
1500 - 1600	1259	0	**1259**
1600 - 1700	1170	0	**1170**
1700 - 1800	1144	0	**1144**
1800 - 1900	1060	0	**1060**
1900 - 2000	871	0	**871**
2000 - 2100	619	0	**619**
2100 - 2200	491	0	**491**
2200 - 2300	313	0	**313**
2300 - 2400	232	0	**232**

Site 8

I-26 N/Bound On-Ramp,
north of I-20

Date

Friday, April 26, 2024

Lat/Long

34.038738°, -81.109720°

Weather

Cloudy
69°F

Click here for Detailed Weather

0000 - 2400 (Weekday 24h Session) (04-26-2024)

Volume Summary 60min

	Volume Summary 60min		
TIME	NB	SB	**Total**
0000 - 0100	134	0	**134**
0100 - 0200	92	0	**92**
0200 - 0300	79	0	**79**
0300 - 0400	83	0	**83**
0400 - 0500	160	0	**160**
0500 - 0600	302	0	**302**
0600 - 0700	675	0	**675**
0700 - 0800	1212	0	**1212**
0800 - 0900	1230	0	**1230**
0900 - 1000	1166	0	**1166**
1000 - 1100	1214	0	**1214**
1100 - 1200	1352	0	**1352**
1200 - 1300	1359	0	**1359**
1300 - 1400	1020	0	**1020**
1400 - 1500	1104	0	**1104**
1500 - 1600	1164	0	**1164**
1600 - 1700	1237	0	**1237**
1700 - 1800	1305	0	**1305**
1800 - 1900	1153	0	**1153**
1900 - 2000	995	0	**995**
2000 - 2100	753	0	**753**
2100 - 2200	571	0	**571**
2200 - 2300	519	0	**519**
2300 - 2400	312	0	**312**
Session Total	19191	0	**19191**
Session Average	799.63	0.00	**799.63**
Session Percentage	100.00	0.00	

Site 8

I-26 N/Bound On-Ramp,
north of I-20

Date

Saturday, April 27, 2024

Lat/Long

34.038738°, -81.109720°

Weather

Mostly Cloudy
69°F

Click here for Detailed Weather

0000 - 2400 (Saturday 24h Session) (04-27-2024)

Volume Summary 60min

	Volume Summary 60min		
TIME	NB	SB	**Total**
0000 - 0100	208	0	**208**
0100 - 0200	125	0	**125**
0200 - 0300	85	0	**85**
0300 - 0400	105	0	**105**
0400 - 0500	108	0	**108**
0500 - 0600	138	0	**138**
0600 - 0700	324	0	**324**
0700 - 0800	678	0	**678**
0800 - 0900	927	0	**927**
0900 - 1000	1197	0	**1197**
1000 - 1100	1317	0	**1317**
1100 - 1200	1517	0	**1517**
Session Total	18968	0	**18968**
Session Average	790.33	0.00	**790.33**
Session Percentage	100.00	0.00	

	Volume Summary 60min		
Time	NB	SB	**Total**
1200 - 1300	1539	0	**1539**
1300 - 1400	1438	0	**1438**
1400 - 1500	1386	0	**1386**
1500 - 1600	1360	0	**1360**
1600 - 1700	1361	0	**1361**
1700 - 1800	1289	0	**1289**
1800 - 1900	1048	0	**1048**
1900 - 2000	820	0	**820**
2000 - 2100	619	0	**619**
2100 - 2200	579	0	**579**
2200 - 2300	468	0	**468**
2300 - 2400	332	0	**332**

Bi-Directional Class Count || Graphical Analysis NB EB

Columbia, SC

Marr Traffic DATA COLLECTION

www.marrtraffic.com

Site 8

I-26 N/Bound On-Ramp,
north of I-20

Lat/Long

34.038738°, -81.109720°

0000 - 2400 (Weekday 24h Session)

Graphical Analysis NB EB

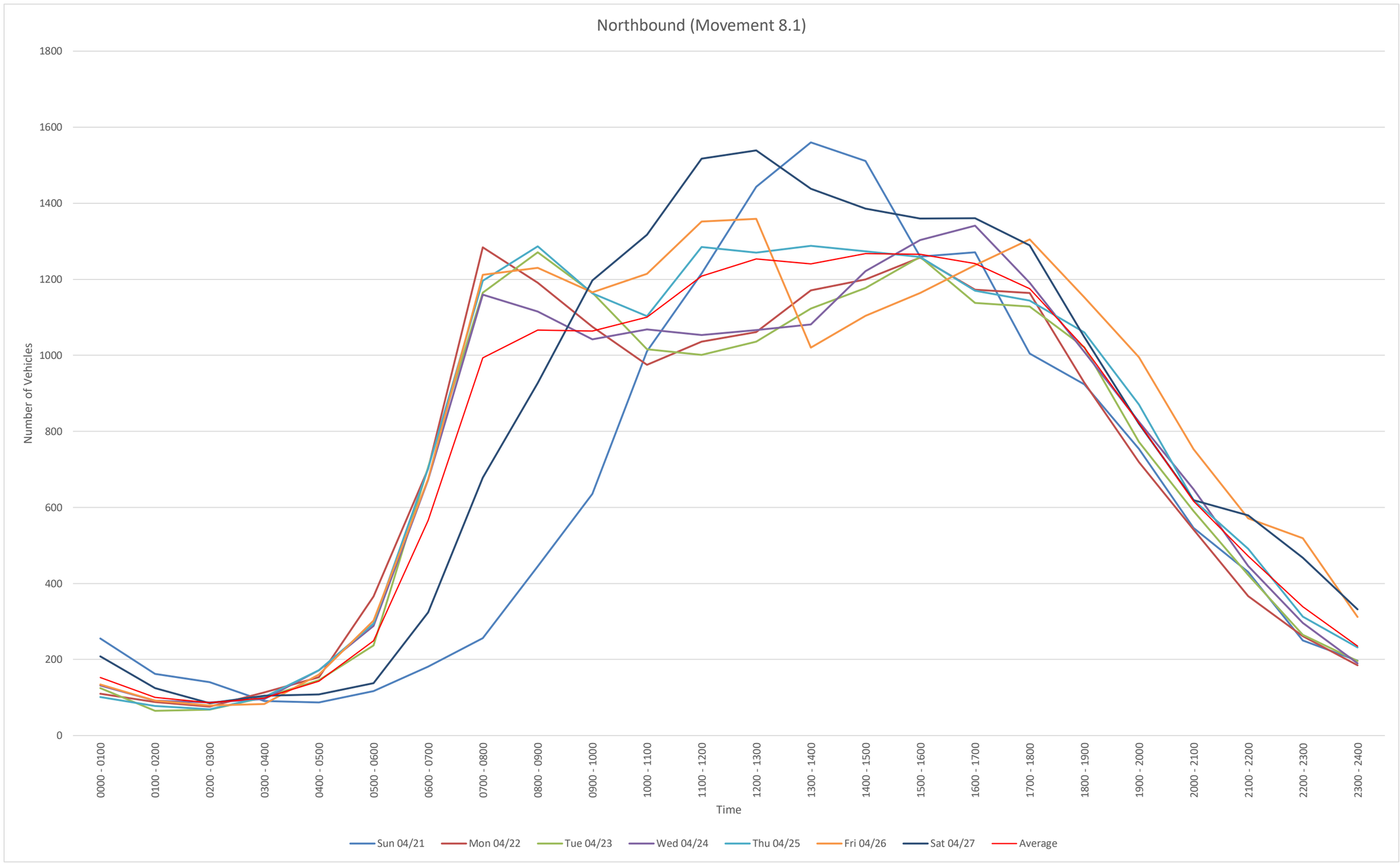

NB
File Name:
Start Date: 4/21/2024
Start Time: 0
Site Code: 8
Station ID: 1
Location 1: I-26 N/Bound On-Ramp, north of I-20
Location 2:

Date	Time	1	2	3	4	5	6	7	8	9	10	11	12	13
4/21/2024	12:00 AM	0	65	8	0	0	0	0	0	3	0	0	0	0
4/21/2024	12:15 AM	0	51	5	0	2	0	0	0	2	0	0	0	0
4/21/2024	12:30 AM	0	60	10	1	2	0	0	0	1	0	0	0	0
4/21/2024	12:45 AM	0	39	4	0	0	0	0	0	2	0	0	0	0
4/21/2024	1:00 AM	0	52	12	0	0	0	0	0	0	0	0	0	0
4/21/2024	1:15 AM	0	28	3	0	0	0	0	0	0	0	0	0	0
4/21/2024	1:30 AM	0	36	6	0	0	0	0	0	0	0	0	0	0
4/21/2024	1:45 AM	0	22	2	0	1	0	0	0	0	0	0	0	0
4/21/2024	2:00 AM	0	28	6	0	1	0	0	0	2	0	0	0	0
4/21/2024	2:15 AM	0	35	8	0	0	0	0	0	2	0	0	0	0
4/21/2024	2:30 AM	0	16	2	0	0	0	0	0	1	0	0	0	0
4/21/2024	2:45 AM	0	32	6	0	0	0	0	0	1	0	0	0	0
4/21/2024	3:00 AM	0	20	2	0	0	0	0	0	0	0	0	0	0
4/21/2024	3:15 AM	0	19	2	0	0	0	0	0	1	0	0	0	0
4/21/2024	3:30 AM	0	18	2	0	0	0	0	0	0	0	0	0	0
4/21/2024	3:45 AM	0	21	3	0	1	0	0	0	2	0	0	0	0
4/21/2024	4:00 AM	0	22	2	0	0	0	0	0	0	0	0	0	0
4/21/2024	4:15 AM	0	20	2	0	1	0	0	0	0	0	0	0	0
4/21/2024	4:30 AM	0	10	1	0	1	0	0	0	0	0	0	0	0
4/21/2024	4:45 AM	0	24	4	0	0	0	0	0	0	0	0	0	0
4/21/2024	5:00 AM	0	25	3	0	1	0	0	0	1	0	0	0	0
4/21/2024	5:15 AM	0	26	3	0	0	0	0	0	0	0	0	0	0
4/21/2024	5:30 AM	0	23	2	0	0	0	0	0	1	0	0	0	0
4/21/2024	5:45 AM	0	24	4	0	0	0	0	0	4	0	0	0	0
4/21/2024	6:00 AM	0	20	2	0	0	0	0	0	1	0	0	0	0
4/21/2024	6:15 AM	0	33	3	0	0	0	0	0	0	0	0	0	0
4/21/2024	6:30 AM	0	49	6	0	1	0	0	1	1	0	0	0	0
4/21/2024	6:45 AM	0	50	12	1	0	0	0	0	1	0	0	0	0
4/21/2024	7:00 AM	0	35	8	0	0	0	0	0	0	0	0	0	0
4/21/2024	7:15 AM	0	40	10	0	1	0	0	0	2	0	0	0	0
4/21/2024	7:30 AM	0	61	11	0	0	2	0	0	1	0	0	0	0
4/21/2024	7:45 AM	0	63	18	1	0	0	0	0	3	0	0	0	0
4/21/2024	8:00 AM	0	68	22	0	0	0	0	0	2	0	0	0	0
4/21/2024	8:15 AM	1	82	24	2	0	0	0	0	2	0	0	0	0
4/21/2024	8:30 AM	0	88	37	1	1	0	0	0	2	0	0	0	0
4/21/2024	8:45 AM	0	97	16	0	0	0	0	0	0	0	0	0	0
4/21/2024	9:00 AM	0	79	25	0	0	0	0	0	3	0	0	0	0
4/21/2024	9:15 AM	0	134	33	0	0	0	0	1	5	0	0	0	0
4/21/2024	9:30 AM	1	121	39	1	1	0	0	0	5	0	0	0	0
4/21/2024	9:45 AM	0	145	32	1	3	0	0	1	6	0	0	0	0
4/21/2024	10:00 AM	0	160	36	0	1	0	0	0	3	0	0	0	0
4/21/2024	10:15 AM	0	196	46	2	1	0	0	0	5	0	0	0	0
4/21/2024	10:30 AM	0	210	66	1	4	0	0	0	3	0	0	0	0
4/21/2024	10:45 AM	0	216	56	1	1	0	0	0	3	0	0	0	0
4/21/2024	11:00 AM	2	217	58	0	1	0	0	0	1	0	0	0	0
4/21/2024	11:15 AM	0	208	64	1	4	0	0	1	8	0	0	0	0
4/21/2024	11:30 AM	0	238	73	1	2	1	0	1	3	0	0	0	0
4/21/2024	11:45 AM	0	266	56	0	0	0	0	2	7	0	0	0	0
4/21/2024	12:00 PM	0	258	50	0	0	0	0	0	3	0	0	0	0
4/21/2024	12:15 PM	1	272	76	0	1	1	0	0	6	0	0	0	0
4/21/2024	12:30 PM	0	295	53	1	1	0	0	0	6	0	0	0	0
4/21/2024	12:45 PM	1	358	55	1	1	1	0	0	2	0	0	0	0
4/21/2024	1:00 PM	2	355	72	0	0	0	0	1	5	0	0	0	0
4/21/2024	1:15 PM	0	325	81	0	1	0	0	1	2	0	0	0	0
4/21/2024	1:30 PM	0	289	50	0	2	0	0	0	4	0	0	0	0
4/21/2024	1:45 PM	0	307	55	1	0	0	0	2	5	0	0	0	0
4/21/2024	2:00 PM	1	284	67	0	0	0	0	0	9	0	0	0	0
4/21/2024	2:15 PM	0	299	70	0	1	0	0	0	3	0	0	0	0
4/21/2024	2:30 PM	0	341	67	0	0	0	0	0	7	0	0	0	0
4/21/2024	2:45 PM	0	309	48	0	0	0	0	2	3	0	0	0	0
4/21/2024	3:00 PM	0	266	48	0	2	0	0	2	5	0	0	0	0
4/21/2024	3:15 PM	0	246	43	1	2	0	0	0	5	0	0	0	0
4/21/2024	3:30 PM	0	271	47	0	2	1	0	0	5	0	0	0	0
4/21/2024	3:45 PM	0	244	64	0	0	0	0	3	3	0	0	0	0
4/21/2024	4:00 PM	0	276	59	1	1	0	0	0	4	0	0	0	0
4/21/2024	4:15 PM	0	241	45	0	3	0	0	0	3	0	0	0	0
4/21/2024	4:30 PM	0	258	55	0	1	0	0	0	5	0	0	0	0
4/21/2024	4:45 PM	0	255	53	0	2	0	0	1	8	0	0	0	0
4/21/2024	5:00 PM	0	191	40	1	1	0	0	0	5	0	0	0	0
4/21/2024	5:15 PM	1	213	48	0	1	0	0	0	5	0	0	0	0
4/21/2024	5:30 PM	0	198	44	0	0	0	0	0	6	0	0	0	0
4/21/2024	5:45 PM	0	205	42	0	1	0	0	0	3	0	0	0	0
4/21/2024	6:00 PM	0	210	48	1	0	0	0	0	5	1	0	0	0
4/21/2024	6:15 PM	0	182	41	0	0	0	0	0	5	0	0	0	0
4/21/2024	6:30 PM	0	181	35	0	0	0	0	0	2	0	0	0	0
4/21/2024	6:45 PM	0	177	31	0	0	1	0	0	4	0	0	0	0
4/21/2024	7:00 PM	0	159	29	0	0	0	0	0	4	0	0	0	0
4/21/2024	7:15 PM	0	166	31	0	0	0	0	0	5	0	0	0	0
4/21/2024	7:30 PM	1	162	28	0	1	0	0	0	6	0	0	0	0
4/21/2024	7:45 PM	0	136	23	0	2	0	0	0	1	0	0	0	0
4/21/2024	8:00 PM	0	127	21	0	1	0	0	0	4	0	0	0	0
4/21/2024	8:15 PM	0	114	18	0	3	1	0	0	2	0	0	0	0
4/21/2024	8:30 PM	0	92	13	0	0	1	0	0	3	0	0	0	0
4/21/2024	8:45 PM	0	123	21	0	0	0	0	0	2	0	0	0	0
4/21/2024	9:00 PM	0	84	12	0	1	0	0	0	3	0	0	0	0
4/21/2024	9:15 PM	0	90	14	0	0	0	0	0	1	0	0	0	0
4/21/2024	9:30 PM	0	105	19	0	1	0	0	0	1	0	0	0	0
4/21/2024	9:45 PM	0	85	12	0	1	0	0	0	1	0	0	0	0
4/21/2024	10:00 PM	0	64	8	0	1	0	0	0	1	0	0	0	0
4/21/2024	10:15 PM	0	55	6	0	0	0	0	0	6	0	0	0	0
4/21/2024	10:30 PM	0	49	4	0	0	0	0	0	4	0	0	0	0
4/21/2024	10:45 PM	0	47	3	0	1	0	0	0	1	0	0	0	0
4/21/2024	11:00 PM	0	48	5	0	0	0	0	0	4	0	0	0	0
4/21/2024	11:15 PM	0	41	3	0	0	0	0	0	3	0	0	0	0
4/21/2024	11:30 PM	0	43	5	0	0	0	0	0	2	0	0	0	0
4/21/2024	11:45 PM	0	38	3	0	0	0	0	0	2	0	0	0	0

4/22/2024	12:00 AM	0	29	0	0	0	0	0	0	6	0	0	0	0
4/22/2024	12:15 AM	0	26	0	0	0	0	0	0	3	0	0	0	0
4/22/2024	12:30 AM	0	25	0	0	0	0	0	0	2	0	0	0	0
4/22/2024	12:45 AM	0	18	0	0	0	0	0	0	1	0	0	0	0
4/22/2024	1:00 AM	0	20	0	0	0	0	0	0	5	0	0	0	0
4/22/2024	1:15 AM	0	21	0	0	0	0	0	0	5	0	0	0	0
4/22/2024	1:30 AM	0	18	1	0	0	0	0	0	3	0	0	0	0
4/22/2024	1:45 AM	0	11	0	0	1	0	0	0	3	0	0	0	0
4/22/2024	2:00 AM	0	13	0	0	0	0	0	0	2	0	0	0	0
4/22/2024	2:15 AM	0	16	0	0	1	0	0	0	3	0	0	0	0
4/22/2024	2:30 AM	0	17	0	0	0	0	0	0	6	0	0	0	0
4/22/2024	2:45 AM	0	12	0	0	2	0	0	0	4	0	0	0	0
4/22/2024	3:00 AM	0	16	0	0	0	0	0	0	6	0	0	0	0
4/22/2024	3:15 AM	0	24	0	0	1	0	0	0	8	0	0	0	0
4/22/2024	3:30 AM	0	20	0	0	3	0	0	0	4	0	0	0	0
4/22/2024	3:45 AM	0	27	0	0	1	0	0	0	3	0	0	0	0
4/22/2024	4:00 AM	0	23	0	0	0	0	0	0	6	0	0	0	0
4/22/2024	4:15 AM	0	19	0	0	1	0	0	0	11	0	0	0	0
4/22/2024	4:30 AM	0	37	0	0	2	0	0	0	7	0	0	0	0
4/22/2024	4:45 AM	0	34	0	0	3	0	0	0	10	0	0	0	0
4/22/2024	5:00 AM	0	46	1	0	3	0	0	0	6	0	0	0	0
4/22/2024	5:15 AM	0	73	1	0	2	0	0	0	15	0	0	0	0
4/22/2024	5:30 AM	0	80	2	0	4	0	0	0	12	0	0	0	0
4/22/2024	5:45 AM	0	95	7	0	3	0	0	2	14	0	0	0	0
4/22/2024	6:00 AM	0	61	9	0	5	0	0	0	8	0	0	0	0
4/22/2024	6:15 AM	0	136	14	1	4	0	0	2	18	0	0	0	0
4/22/2024	6:30 AM	0	134	44	1	5	6	0	1	10	0	0	0	0
4/22/2024	6:45 AM	0	162	56	0	3	2	0	0	20	0	0	0	0
4/22/2024	7:00 AM	0	160	62	1	11	3	0	1	17	0	0	0	0
4/22/2024	7:15 AM	0	207	49	0	5	4	0	0	11	0	0	0	0
4/22/2024	7:30 AM	0	254	84	1	5	3	0	1	13	0	0	0	0
4/22/2024	7:45 AM	0	280	87	1	4	5	0	0	15	0	0	0	0
4/22/2024	8:00 AM	1	233	76	1	6	1	0	0	12	0	0	0	0
4/22/2024	8:15 AM	0	188	68	0	10	2	0	0	16	0	0	0	0
4/22/2024	8:30 AM	0	219	59	0	4	0	0	1	12	0	0	0	0
4/22/2024	8:45 AM	0	203	57	0	3	1	0	1	17	0	0	0	0
4/22/2024	9:00 AM	1	183	73	2	7	4	1	1	20	0	0	0	0
4/22/2024	9:15 AM	3	168	65	1	3	2	3	0	10	0	0	0	0
4/22/2024	9:30 AM	0	177	59	0	6	2	0	2	12	2	0	0	0
4/22/2024	9:45 AM	0	174	65	0	6	3	1	1	18	0	0	0	0
4/22/2024	10:00 AM	0	180	66	0	3	1	0	1	13	1	0	0	0
4/22/2024	10:15 AM	0	142	57	1	0	2	4	1	19	0	0	0	0
4/22/2024	10:30 AM	1	166	76	0	2	2	1	0	12	0	0	0	0
4/22/2024	10:45 AM	1	157	46	0	4	1	3	0	12	0	0	0	0
4/22/2024	11:00 AM	0	179	69	1	4	2	1	2	20	0	0	0	0
4/22/2024	11:15 AM	0	186	48	2	4	0	1	1	15	0	0	0	0
4/22/2024	11:30 AM	0	180	54	0	3	0	2	2	9	0	0	0	0
4/22/2024	11:45 AM	0	165	52	0	1	1	3	1	28	0	0	0	0
4/22/2024	12:00 PM	0	166	50	0	6	1	0	1	10	0	0	0	0
4/22/2024	12:15 PM	0	188	69	0	1	1	1	1	18	0	0	0	0
4/22/2024	12:30 PM	0	189	39	1	2	2	0	2	19	0	0	0	0
4/22/2024	12:45 PM	0	201	69	1	2	1	1	2	17	0	0	0	0
4/22/2024	1:00 PM	0	185	60	0	5	0	2	2	13	0	0	0	0
4/22/2024	1:15 PM	0	187	72	0	6	1	1	4	15	0	0	0	0
4/22/2024	1:30 PM	0	228	58	0	9	3	0	2	12	0	0	0	0
4/22/2024	1:45 PM	0	201	77	0	5	1	0	3	19	0	0	0	0
4/22/2024	2:00 PM	0	207	60	0	3	0	0	1	13	0	0	0	0
4/22/2024	2:15 PM	0	202	51	1	1	2	1	2	15	0	0	0	0
4/22/2024	2:30 PM	1	226	70	1	2	1	1	1	8	0	0	0	0
4/22/2024	2:45 PM	0	244	56	0	4	1	0	0	24	1	0	0	0
4/22/2024	3:00 PM	1	214	68	1	4	0	0	0	9	0	0	0	0
4/22/2024	3:15 PM	1	237	72	2	3	2	1	2	12	0	0	0	0
4/22/2024	3:30 PM	0	223	53	2	5	0	0	1	12	0	0	0	0
4/22/2024	3:45 PM	0	238	66	0	7	1	0	1	19	0	0	0	0
4/22/2024	4:00 PM	0	221	63	1	1	1	0	0	14	0	0	0	0
4/22/2024	4:15 PM	0	225	71	0	1	0	0	1	8	0	1	0	0
4/22/2024	4:30 PM	0	203	66	2	0	0	0	0	16	0	0	0	0
4/22/2024	4:45 PM	1	210	45	1	3	1	0	1	16	0	0	0	0
4/22/2024	5:00 PM	0	209	51	1	4	2	0	0	17	0	0	0	0
4/22/2024	5:15 PM	0	232	55	0	2	0	0	1	9	0	0	0	0
4/22/2024	5:30 PM	0	213	61	0	3	1	0	0	12	0	1	0	0
4/22/2024	5:45 PM	0	220	55	0	6	0	0	0	9	0	0	0	0
4/22/2024	6:00 PM	0	205	36	1	3	0	0	0	12	0	0	0	0
4/22/2024	6:15 PM	0	202	45	0	4	0	0	1	4	0	0	0	0
4/22/2024	6:30 PM	0	157	48	0	1	0	0	0	9	0	0	0	0
4/22/2024	6:45 PM	0	153	37	0	1	0	0	0	9	0	0	0	0
4/22/2024	7:00 PM	0	152	29	0	1	2	0	0	6	0	0	0	0
4/22/2024	7:15 PM	0	148	37	0	1	0	0	0	8	0	0	0	0
4/22/2024	7:30 PM	0	129	25	0	1	0	0	0	8	0	0	0	0
4/22/2024	7:45 PM	0	129	32	0	0	1	0	0	10	0	0	0	0
4/22/2024	8:00 PM	0	107	36	1	0	0	0	0	5	0	0	0	0
4/22/2024	8:15 PM	0	105	24	1	1	0	0	0	3	0	0	0	0
4/22/2024	8:30 PM	0	116	29	1	1	0	0	0	8	0	0	0	0
4/22/2024	8:45 PM	0	75	25	0	1	0	0	0	3	0	0	0	0
4/22/2024	9:00 PM	0	72	22	0	0	0	0	0	8	0	0	0	0
4/22/2024	9:15 PM	0	69	24	0	0	0	0	0	5	0	0	0	0
4/22/2024	9:30 PM	0	58	21	0	0	0	0	0	5	0	0	0	0
4/22/2024	9:45 PM	0	55	22	0	0	0	0	0	6	0	0	0	0
4/22/2024	10:00 PM	0	47	18	0	1	0	0	0	2	0	0	0	0
4/22/2024	10:15 PM	0	45	22	1	0	0	0	0	5	0	0	0	0
4/22/2024	10:30 PM	0	37	15	0	0	0	0	0	4	0	0	0	0
4/22/2024	10:45 PM	0	36	19	0	0	0	0	1	8	0	0	0	0
4/22/2024	11:00 PM	0	39	20	0	0	0	0	0	5	0	0	0	0
4/22/2024	11:15 PM	0	27	17	0	0	0	0	0	3	0	0	0	0
4/22/2024	11:30 PM	0	18	10	0	0	0	0	0	4	0	0	0	0
4/22/2024	11:45 PM	0	20	18	0	1	0	0	0	3	0	0	0	0

4/23/2024	12:00 AM	0	28	16	0	1	0	0	0	3	0	0	0	0
4/23/2024	12:15 AM	0	20	8	0	1	0	0	0	5	0	0	0	0
4/23/2024	12:30 AM	0	15	4	0	0	0	0	0	6	0	0	0	0
4/23/2024	12:45 AM	0	11	3	0	0	0	0	0	4	0	0	0	0
4/23/2024	1:00 AM	0	13	5	0	0	0	0	0	1	0	1	0	0
4/23/2024	1:15 AM	0	8	3	0	0	0	0	1	1	0	0	0	0
4/23/2024	1:30 AM	0	9	2	0	1	0	0	0	4	0	0	0	0
4/23/2024	1:45 AM	0	7	3	0	0	0	0	0	6	0	0	0	0
4/23/2024	2:00 AM	0	5	2	0	1	0	0	0	2	0	1	0	0
4/23/2024	2:15 AM	0	9	6	0	1	0	0	0	9	0	0	0	0
4/23/2024	2:30 AM	0	6	3	0	0	0	0	0	1	0	0	0	0
4/23/2024	2:45 AM	0	10	4	0	0	0	0	1	6	0	1	0	0
4/23/2024	3:00 AM	0	8	6	1	1	1	0	0	7	0	0	0	0
4/23/2024	3:15 AM	0	10	5	0	1	0	0	0	4	0	0	0	0
4/23/2024	3:30 AM	0	12	8	0	1	0	0	1	8	0	0	0	0
4/23/2024	3:45 AM	0	10	9	0	1	0	0	0	6	0	0	0	0
4/23/2024	4:00 AM	0	15	7	0	0	0	0	0	3	0	0	0	0
4/23/2024	4:15 AM	0	12	3	0	1	1	0	0	8	0	0	0	0
4/23/2024	4:30 AM	0	15	9	0	1	0	0	1	12	0	1	0	0
4/23/2024	4:45 AM	0	30	14	0	3	1	0	0	9	0	0	0	0
4/23/2024	5:00 AM	0	28	13	0	5	0	0	1	9	0	0	0	0
4/23/2024	5:15 AM	0	35	18	0	0	0	0	2	17	0	0	0	0
4/23/2024	5:30 AM	0	27	19	0	5	3	0	0	2	0	0	0	0
4/23/2024	5:45 AM	0	32	15	0	0	0	0	0	6	0	0	0	0
4/23/2024	6:00 AM	1	51	30	0	4	3	0	1	11	0	0	0	0
4/23/2024	6:15 AM	0	116	52	0	5	4	0	2	20	0	0	0	0
4/23/2024	6:30 AM	0	102	39	1	4	4	0	1	17	0	0	0	0
4/23/2024	6:45 AM	0	124	83	0	8	6	0	1	16	0	0	0	0
4/23/2024	7:00 AM	0	137	61	2	2	2	0	1	22	0	0	0	0
4/23/2024	7:15 AM	0	192	90	1	6	5	0	0	14	0	0	0	0
4/23/2024	7:30 AM	0	195	99	0	8	0	0	0	15	0	0	0	0
4/23/2024	7:45 AM	0	230	67	1	5	1	0	1	8	0	0	0	0
4/23/2024	8:00 AM	1	191	59	1	3	3	0	0	5	0	0	0	0
4/23/2024	8:15 AM	1	253	79	1	6	4	0	0	15	0	0	0	0
4/23/2024	8:30 AM	0	217	51	0	7	6	0	0	18	0	0	0	0
4/23/2024	8:45 AM	0	238	79	3	5	5	0	0	20	0	0	0	0
4/23/2024	9:00 AM	1	230	54	0	7	0	2	1	28	0	0	0	0
4/23/2024	9:15 AM	0	214	61	0	4	3	2	1	17	0	0	0	0
4/23/2024	9:30 AM	0	187	66	0	0	3	0	1	19	0	0	0	0
4/23/2024	9:45 AM	0	182	58	1	8	0	1	4	10	0	0	0	0
4/23/2024	10:00 AM	0	141	59	0	5	1	0	0	14	0	0	0	0
4/23/2024	10:15 AM	0	143	65	1	5	0	1	0	15	0	0	0	0
4/23/2024	10:30 AM	0	172	65	0	7	3	0	1	14	0	0	0	0
4/23/2024	10:45 AM	0	198	66	1	10	6	0	3	20	0	0	0	0
4/23/2024	11:00 AM	0	156	68	0	2	7	0	2	17	0	0	0	0
4/23/2024	11:15 AM	0	170	72	1	6	1	0	0	16	0	0	0	0
4/23/2024	11:30 AM	0	169	57	2	5	1	0	0	12	0	0	0	0
4/23/2024	11:45 AM	0	159	57	0	7	2	0	0	12	0	0	0	0
4/23/2024	12:00 PM	1	164	51	0	3	2	0	0	10	0	0	0	0
4/23/2024	12:15 PM	0	202	78	0	3	3	1	2	17	0	0	0	0
4/23/2024	12:30 PM	0	175	47	0	2	4	0	1	15	0	0	0	0
4/23/2024	12:45 PM	0	172	54	0	4	2	0	0	22	1	0	0	0
4/23/2024	1:00 PM	0	158	63	0	5	0	0	2	17	0	0	0	0
4/23/2024	1:15 PM	1	176	57	1	3	2	0	3	10	0	0	0	0
4/23/2024	1:30 PM	1	218	62	0	2	4	0	3	10	0	0	0	0
4/23/2024	1:45 PM	0	224	71	0	4	1	0	1	24	0	0	0	0
4/23/2024	2:00 PM	0	207	56	0	5	1	0	0	10	0	0	0	0
4/23/2024	2:15 PM	0	214	80	1	4	3	0	1	14	0	0	0	0
4/23/2024	2:30 PM	2	191	66	0	5	1	0	2	15	1	0	0	0
4/23/2024	2:45 PM	0	204	72	1	4	2	2	1	12	0	0	0	0
4/23/2024	3:00 PM	3	207	69	2	4	3	1	2	15	0	0	0	0
4/23/2024	3:15 PM	1	222	70	0	4	0	1	0	13	0	0	0	0
4/23/2024	3:30 PM	1	223	62	1	7	0	0	1	17	1	0	0	0
4/23/2024	3:45 PM	1	245	64	0	5	2	0	1	11	0	0	0	0
4/23/2024	4:00 PM	0	247	46	0	8	4	0	2	15	0	0	0	0
4/23/2024	4:15 PM	0	258	74	0	5	1	0	1	10	0	0	0	0
4/23/2024	4:30 PM	0	195	60	1	2	3	0	0	15	0	0	0	0
4/23/2024	4:45 PM	1	147	35	0	1	1	0	0	6	0	0	0	0
4/23/2024	5:00 PM	0	123	36	0	0	1	0	0	8	0	0	0	0
4/23/2024	5:15 PM	1	231	61	3	4	1	0	0	11	0	0	0	0
4/23/2024	5:30 PM	0	263	56	0	2	1	0	0	13	0	0	0	0
4/23/2024	5:45 PM	0	231	61	1	3	0	0	4	13	0	0	0	0
4/23/2024	6:00 PM	1	250	84	1	1	1	0	2	12	0	0	0	0
4/23/2024	6:15 PM	1	174	40	0	2	1	0	1	11	2	0	0	0
4/23/2024	6:30 PM	1	185	32	0	2	1	0	1	11	0	0	0	0
4/23/2024	6:45 PM	0	153	38	0	2	2	0	0	9	0	0	0	0
4/23/2024	7:00 PM	0	140	43	0	4	1	0	1	8	0	0	0	0
4/23/2024	7:15 PM	0	141	33	0	4	0	0	0	8	0	0	0	0
4/23/2024	7:30 PM	1	151	45	0	1	0	0	0	5	0	0	0	0
4/23/2024	7:45 PM	0	147	26	0	2	1	0	2	8	0	0	0	0
4/23/2024	8:00 PM	0	117	23	0	2	0	0	0	7	0	0	0	0
4/23/2024	8:15 PM	0	126	41	1	1	0	0	0	3	0	0	0	0
4/23/2024	8:30 PM	0	118	33	0	1	1	0	0	4	0	0	0	0
4/23/2024	8:45 PM	0	83	19	0	0	0	0	0	10	0	0	0	0
4/23/2024	9:00 PM	0	73	22	0	1	0	0	0	3	0	0	0	0
4/23/2024	9:15 PM	0	80	27	0	0	0	0	0	5	0	0	0	0
4/23/2024	9:30 PM	0	76	23	1	1	0	0	0	5	0	0	0	0
4/23/2024	9:45 PM	0	77	20	0	1	0	0	0	7	0	0	0	0
4/23/2024	10:00 PM	0	59	16	1	3	0	0	0	5	0	0	0	0
4/23/2024	10:15 PM	0	52	15	0	0	0	0	0	4	0	0	0	0
4/23/2024	10:30 PM	0	34	13	0	0	0	0	0	4	0	0	0	0
4/23/2024	10:45 PM	0	43	12	0	0	0	0	0	4	0	0	0	0
4/23/2024	11:00 PM	0	48	14	0	0	0	0	0	3	0	1	0	0
4/23/2024	11:15 PM	0	26	9	0	0	0	0	0	4	0	0	0	0
4/23/2024	11:30 PM	0	32	10	0	0	1	0	0	6	0	1	0	0
4/23/2024	11:45 PM	0	23	11	0	1	0	0	0	6	0	0	0	0

4/24/2024	12:00 AM	0	33	8	0	0	0	0	0	3	0	1	0	0
4/24/2024	12:15 AM	0	27	5	0	0	1	0	0	2	0	1	0	0
4/24/2024	12:30 AM	0	18	2	0	0	1	0	0	3	0	0	0	0
4/24/2024	12:45 AM	0	20	3	0	1	0	0	0	3	0	0	0	0
4/24/2024	1:00 AM	0	19	2	0	0	0	0	0	2	0	0	0	0
4/24/2024	1:15 AM	0	22	5	0	1	0	0	0	4	0	0	0	0
4/24/2024	1:30 AM	0	12	3	0	0	0	0	0	6	0	0	0	0
4/24/2024	1:45 AM	0	11	2	0	0	0	0	0	3	0	0	0	0
4/24/2024	2:00 AM	0	7	1	0	0	0	0	0	0	0	0	0	0
4/24/2024	2:15 AM	0	18	5	0	1	1	0	0	7	0	2	0	0
4/24/2024	2:30 AM	0	11	2	0	1	0	0	0	5	0	0	0	0
4/24/2024	2:45 AM	0	17	3	0	2	0	0	0	4	0	0	0	0
4/24/2024	3:00 AM	0	10	1	0	0	0	0	0	2	0	0	0	0
4/24/2024	3:15 AM	0	17	2	0	1	1	0	0	3	0	0	0	0
4/24/2024	3:30 AM	0	20	4	0	1	0	0	0	6	0	0	0	0
4/24/2024	3:45 AM	0	16	2	0	2	1	0	0	7	0	0	0	0
4/24/2024	4:00 AM	0	15	2	0	3	0	0	0	14	0	0	0	0
4/24/2024	4:15 AM	0	19	3	0	1	1	0	0	11	0	1	0	0
4/24/2024	4:30 AM	0	23	5	0	2	1	0	0	13	0	0	0	0
4/24/2024	4:45 AM	0	32	9	0	2	1	0	0	14	0	0	0	0
4/24/2024	5:00 AM	0	22	6	0	1	1	0	0	11	0	0	0	0
4/24/2024	5:15 AM	0	40	13	0	3	2	0	0	10	0	0	0	0
4/24/2024	5:30 AM	0	46	15	0	4	0	0	0	12	0	0	0	0
4/24/2024	5:45 AM	0	65	22	0	2	0	0	0	13	0	0	0	0
4/24/2024	6:00 AM	0	61	20	0	8	0	0	0	12	0	0	0	0
4/24/2024	6:15 AM	0	90	30	0	3	0	0	0	10	0	0	0	0
4/24/2024	6:30 AM	0	121	52	0	2	2	0	1	17	0	0	0	0
4/24/2024	6:45 AM	0	161	61	1	6	3	0	2	10	0	0	0	0
4/24/2024	7:00 AM	0	170	51	1	8	3	1	0	14	0	0	0	0
4/24/2024	7:15 AM	0	210	58	1	3	1	0	1	12	0	0	0	0
4/24/2024	7:30 AM	0	218	70	1	2	2	0	1	14	0	0	0	0
4/24/2024	7:45 AM	0	236	60	0	8	1	0	0	13	0	0	0	0
4/24/2024	8:00 AM	5	159	48	1	6	3	0	0	10	0	0	0	0
4/24/2024	8:15 AM	0	156	58	0	6	2	1	1	5	1	0	0	0
4/24/2024	8:30 AM	1	200	72	0	8	1	0	5	21	0	0	0	0
4/24/2024	8:45 AM	1	244	78	0	1	1	0	0	19	1	0	0	0
4/24/2024	9:00 AM	0	150	72	0	6	0	1	0	10	0	0	0	0
4/24/2024	9:15 AM	0	132	45	1	6	0	2	1	8	1	0	0	0
4/24/2024	9:30 AM	0	166	86	1	7	0	2	0	26	0	0	0	0
4/24/2024	9:45 AM	0	227	63	0	4	0	1	1	23	0	0	0	0
4/24/2024	10:00 AM	1	180	72	0	8	2	1	1	19	0	0	0	0
4/24/2024	10:15 AM	0	182	70	0	2	1	0	2	23	0	0	0	0
4/24/2024	10:30 AM	0	155	68	0	5	2	0	1	16	1	0	0	0
4/24/2024	10:45 AM	0	168	70	0	4	0	1	0	13	0	0	0	0
4/24/2024	11:00 AM	0	143	77	0	5	1	0	1	13	0	0	0	0
4/24/2024	11:15 AM	1	176	66	0	4	1	0	0	16	0	0	0	0
4/24/2024	11:30 AM	1	176	61	0	2	0	0	1	12	0	0	0	0
4/24/2024	11:45 AM	1	212	61	1	7	0	0	0	14	0	0	0	0
4/24/2024	12:00 PM	1	170	57	0	6	4	0	2	17	0	0	0	0
4/24/2024	12:15 PM	1	183	55	1	9	2	1	0	17	0	0	0	0
4/24/2024	12:30 PM	0	170	63	0	6	2	0	1	15	0	0	0	0
4/24/2024	12:45 PM	1	204	64	0	3	1	0	0	10	0	0	0	0
4/24/2024	1:00 PM	0	170	62	1	4	1	0	2	18	0	0	0	0
4/24/2024	1:15 PM	0	186	66	1	7	1	1	1	23	0	0	0	0
4/24/2024	1:30 PM	0	208	45	0	1	1	1	1	15	1	0	0	0
4/24/2024	1:45 PM	0	192	56	0	1	0	0	0	13	2	0	0	0
4/24/2024	2:00 PM	0	171	77	1	6	1	0	3	14	1	0	0	0
4/24/2024	2:15 PM	0	218	72	2	3	1	0	1	19	0	0	0	0
4/24/2024	2:30 PM	0	193	69	1	2	3	0	2	33	0	0	0	0
4/24/2024	2:45 PM	1	222	78	0	2	1	0	0	23	1	0	0	0
4/24/2024	3:00 PM	0	206	55	0	4	0	1	1	13	1	0	0	0
4/24/2024	3:15 PM	2	242	73	0	9	1	0	1	14	0	0	0	0
4/24/2024	3:30 PM	1	250	78	2	2	0	0	0	10	1	0	0	0
4/24/2024	3:45 PM	0	251	68	0	3	0	0	0	14	0	0	0	0
4/24/2024	4:00 PM	0	278	81	0	5	2	0	1	16	0	0	0	0
4/24/2024	4:15 PM	0	254	69	0	3	0	0	0	9	0	0	0	0
4/24/2024	4:30 PM	2	238	67	0	1	0	0	0	13	0	0	0	0
4/24/2024	4:45 PM	0	211	71	0	5	1	0	0	14	0	0	0	0
4/24/2024	5:00 PM	0	234	61	0	4	0	0	0	8	0	0	0	0
4/24/2024	5:15 PM	0	238	54	1	1	0	0	0	12	0	0	0	0
4/24/2024	5:30 PM	1	214	63	0	2	1	0	0	9	0	0	0	0
4/24/2024	5:45 PM	1	210	55	0	5	1	0	1	15	0	0	0	0
4/24/2024	6:00 PM	2	185	46	0	1	2	0	0	9	0	0	0	0
4/24/2024	6:15 PM	1	217	49	1	6	0	0	0	11	0	0	0	0
4/24/2024	6:30 PM	3	192	48	0	1	0	0	0	8	0	0	0	0
4/24/2024	6:45 PM	0	164	56	1	0	0	0	0	6	0	0	0	0
4/24/2024	7:00 PM	3	169	42	0	4	3	0	0	16	0	0	0	0
4/24/2024	7:15 PM	0	173	56	0	3	1	0	0	8	0	0	0	0
4/24/2024	7:30 PM	0	149	34	0	1	0	0	0	5	0	0	0	0
4/24/2024	7:45 PM	0	126	23	1	1	1	0	1	5	0	0	0	0
4/24/2024	8:00 PM	0	134	22	0	2	0	0	0	6	0	0	0	0
4/24/2024	8:15 PM	0	119	21	0	0	0	0	0	14	0	0	0	0
4/24/2024	8:30 PM	0	125	26	1	0	2	0	0	7	0	0	0	0
4/24/2024	8:45 PM	0	141	24	0	0	0	0	0	4	0	0	0	0
4/24/2024	9:00 PM	0	85	16	0	1	1	0	0	6	0	0	0	0
4/24/2024	9:15 PM	0	98	19	1	0	0	0	0	4	0	0	0	0
4/24/2024	9:30 PM	0	93	12	0	1	0	0	0	4	0	0	0	0
4/24/2024	9:45 PM	0	85	15	0	0	0	0	0	5	0	0	0	0
4/24/2024	10:00 PM	0	64	11	1	0	0	0	0	2	0	0	0	0
4/24/2024	10:15 PM	0	53	13	0	1	0	0	0	7	0	1	0	0
4/24/2024	10:30 PM	0	48	12	0	0	0	0	0	2	0	0	0	0
4/24/2024	10:45 PM	0	60	14	0	0	0	0	0	7	0	0	0	0
4/24/2024	11:00 PM	0	38	11	0	1	1	0	0	4	0	1	0	0
4/24/2024	11:15 PM	0	37	9	0	1	0	0	0	5	0	0	0	0
4/24/2024	11:30 PM	0	29	7	0	0	0	0	0	4	0	1	0	0
4/24/2024	11:45 PM	0	30	8	0	0	1	0	0	2	0	0	0	0

4/25/2024	12:00 AM	0	20	3	0	0	0	0	0	5	0	0	0	0
4/25/2024	12:15 AM	0	19	5	0	0	0	0	0	2	0	0	0	0
4/25/2024	12:30 AM	0	20	4	0	0	0	0	0	4	0	0	0	0
4/25/2024	12:45 AM	0	13	3	0	0	0	0	0	3	0	0	0	0
4/25/2024	1:00 AM	0	9	2	0	0	0	0	0	2	0	0	0	0
4/25/2024	1:15 AM	0	17	4	0	1	0	0	0	2	0	0	0	0
4/25/2024	1:30 AM	0	15	4	0	0	0	0	0	6	0	0	0	0
4/25/2024	1:45 AM	0	10	3	0	0	0	0	0	3	0	0	0	0
4/25/2024	2:00 AM	0	15	4	0	1	0	0	0	1	0	0	0	0
4/25/2024	2:15 AM	0	10	3	0	0	0	0	0	4	0	0	0	0
4/25/2024	2:30 AM	0	11	3	0	1	0	0	0	2	0	0	0	0
4/25/2024	2:45 AM	0	9	2	0	1	0	0	0	2	0	0	0	0
4/25/2024	3:00 AM	0	12	2	0	0	0	0	0	8	0	0	0	0
4/25/2024	3:15 AM	0	12	3	0	2	0	0	0	2	0	0	0	0
4/25/2024	3:30 AM	0	14	3	0	3	0	0	0	12	0	0	0	0
4/25/2024	3:45 AM	0	17	4	0	2	0	0	0	5	0	0	0	0
4/25/2024	4:00 AM	0	15	2	0	2	0	0	0	8	0	0	0	0
4/25/2024	4:15 AM	0	14	2	0	2	0	0	0	8	0	0	0	0
4/25/2024	4:30 AM	0	23	4	0	4	0	0	0	11	0	0	0	0
4/25/2024	4:45 AM	0	47	11	0	5	1	0	0	13	0	0	0	0
4/25/2024	5:00 AM	0	25	5	0	3	1	0	1	13	0	0	0	0
4/25/2024	5:15 AM	0	43	9	0	6	0	0	2	12	0	0	0	0
4/25/2024	5:30 AM	0	49	13	0	2	0	0	0	14	0	0	0	0
4/25/2024	5:45 AM	0	67	19	0	6	0	0	0	4	0	0	0	0
4/25/2024	6:00 AM	0	69	18	0	4	1	0	1	14	0	0	0	0
4/25/2024	6:15 AM	0	98	38	0	3	1	0	0	14	0	0	0	0
4/25/2024	6:30 AM	0	125	50	1	4	3	0	0	13	0	0	0	0
4/25/2024	6:45 AM	0	158	64	1	3	6	0	0	14	0	0	0	0
4/25/2024	7:00 AM	0	173	54	0	4	2	0	2	12	0	0	0	0
4/25/2024	7:15 AM	0	193	70	1	10	3	3	0	11	0	0	0	0
4/25/2024	7:30 AM	0	215	97	0	3	2	1	0	14	0	0	0	0
4/25/2024	7:45 AM	0	229	70	0	6	4	1	0	16	0	0	0	0
4/25/2024	8:00 AM	0	210	82	1	9	3	2	1	11	1	0	0	0
4/25/2024	8:15 AM	2	218	76	1	4	1	1	1	14	0	0	0	0
4/25/2024	8:30 AM	1	240	64	0	2	2	2	1	14	0	0	0	0
4/25/2024	8:45 AM	1	218	77	0	5	3	3	2	13	1	0	0	0
4/25/2024	9:00 AM	0	168	64	0	11	0	0	4	16	0	0	0	0
4/25/2024	9:15 AM	0	181	65	2	10	2	1	1	8	1	0	0	0
4/25/2024	9:30 AM	0	212	74	1	5	4	0	2	18	2	0	0	0
4/25/2024	9:45 AM	0	211	70	1	7	3	0	3	15	1	0	0	0
4/25/2024	10:00 AM	1	172	53	1	2	2	0	1	14	1	0	0	0
4/25/2024	10:15 AM	0	184	57	3	5	2	0	0	15	1	0	0	0
4/25/2024	10:30 AM	1	201	66	2	7	7	0	1	13	1	0	0	0
4/25/2024	10:45 AM	0	194	73	0	2	2	0	1	16	2	0	0	0
4/25/2024	11:00 AM	0	209	83	0	5	5	0	0	15	1	0	0	0
4/25/2024	11:15 AM	2	213	70	0	6	5	0	3	16	2	0	0	0
4/25/2024	11:30 AM	1	250	71	0	5	2	0	2	11	1	0	0	0
4/25/2024	11:45 AM	0	216	64	0	6	2	0	4	14	1	0	0	0
4/25/2024	12:00 PM	2	231	62	0	1	3	0	2	12	1	0	0	0
4/25/2024	12:15 PM	1	232	64	0	7	4	0	1	12	1	0	0	0
4/25/2024	12:30 PM	0	201	63	1	5	5	0	0	15	1	0	0	0
4/25/2024	12:45 PM	7	233	70	0	6	1	0	5	19	2	0	0	0
4/25/2024	1:00 PM	3	224	50	0	7	1	0	3	20	1	0	0	0
4/25/2024	1:15 PM	0	226	77	0	7	3	0	0	11	0	0	0	0
4/25/2024	1:30 PM	0	245	67	0	4	2	0	2	14	1	0	0	0
4/25/2024	1:45 PM	0	229	71	0	3	8	0	0	9	0	0	0	0
4/25/2024	2:00 PM	0	208	67	1	4	5	0	2	17	1	0	0	0
4/25/2024	2:15 PM	0	233	63	1	4	3	0	0	8	0	0	0	0
4/25/2024	2:30 PM	2	205	62	0	5	3	0	4	20	2	0	0	0
4/25/2024	2:45 PM	0	253	73	0	5	3	0	3	16	1	0	0	0
4/25/2024	3:00 PM	0	201	76	1	4	3	0	2	14	1	0	0	0
4/25/2024	3:15 PM	0	253	84	1	8	2	0	0	12	0	0	0	0
4/25/2024	3:30 PM	5	224	70	1	3	6	0	0	9	0	0	0	0
4/25/2024	3:45 PM	1	199	63	0	2	1	0	4	9	0	0	0	0
4/25/2024	4:00 PM	0	208	68	0	7	0	3	2	15	0	0	0	0
4/25/2024	4:15 PM	0	202	64	0	2	0	0	3	14	0	0	0	0
4/25/2024	4:30 PM	0	224	56	1	2	1	0	0	12	0	0	0	0
4/25/2024	4:45 PM	0	215	55	0	4	0	0	2	10	0	0	0	0
4/25/2024	5:00 PM	0	210	59	0	1	0	0	1	14	1	0	0	0
4/25/2024	5:15 PM	2	208	60	0	1	0	0	0	9	0	0	0	0
4/25/2024	5:30 PM	0	214	59	1	4	0	0	3	11	0	0	0	0
4/25/2024	5:45 PM	1	209	63	0	0	0	0	2	11	0	0	0	0
4/25/2024	6:00 PM	0	192	57	0	3	2	0	0	12	0	0	0	0
4/25/2024	6:15 PM	2	214	64	0	4	0	0	0	3	0	0	0	0
4/25/2024	6:30 PM	3	206	47	0	3	2	0	2	4	0	0	0	0
4/25/2024	6:45 PM	0	191	39	0	3	0	0	0	7	0	0	0	0
4/25/2024	7:00 PM	1	178	44	0	1	1	0	1	12	0	0	0	0
4/25/2024	7:15 PM	0	180	38	0	2	3	0	0	8	0	0	0	0
4/25/2024	7:30 PM	1	152	34	0	2	0	0	0	7	0	0	0	0
4/25/2024	7:45 PM	0	163	35	0	0	0	0	0	8	0	0	0	0
4/25/2024	8:00 PM	2	115	25	0	0	2	0	0	3	0	0	0	0
4/25/2024	8:15 PM	1	125	27	0	0	0	0	0	6	0	0	0	0
4/25/2024	8:30 PM	0	130	30	0	1	0	0	0	6	0	0	0	0
4/25/2024	8:45 PM	0	110	25	0	2	0	0	0	9	0	0	0	0
4/25/2024	9:00 PM	0	109	20	0	0	0	0	0	4	0	0	0	0
4/25/2024	9:15 PM	0	105	19	0	1	0	0	0	4	0	0	0	0
4/25/2024	9:30 PM	0	107	20	0	1	0	0	0	5	0	0	0	0
4/25/2024	9:45 PM	0	75	15	0	3	0	0	1	2	0	0	0	0
4/25/2024	10:00 PM	0	65	12	1	2	0	0	0	8	0	0	0	0
4/25/2024	10:15 PM	0	51	10	0	1	0	0	0	4	0	0	0	0
4/25/2024	10:30 PM	0	60	12	0	2	0	0	0	5	0	0	0	0
4/25/2024	10:45 PM	0	60	13	0	1	0	0	0	5	0	1	0	0
4/25/2024	11:00 PM	0	54	11	0	2	0	0	0	6	0	1	0	0
4/25/2024	11:15 PM	0	40	9	0	1	0	0	0	5	0	0	0	0
4/25/2024	11:30 PM	0	42	8	0	0	0	0	0	8	0	0	0	0
4/25/2024	11:45 PM	0	36	7	0	1	0	0	0	1	0	0	0	0

4/26/2024	12:00 AM	0	41	8	0	0	0	0	0	2	0	0	0	0
4/26/2024	12:15 AM	0	20	3	0	0	0	0	0	1	0	0	0	0
4/26/2024	12:30 AM	0	28	5	0	1	0	0	0	5	0	0	0	0
4/26/2024	12:45 AM	0	16	2	0	1	0	0	0	1	0	0	0	0
4/26/2024	1:00 AM	0	15	1	0	0	0	0	0	1	0	0	0	0
4/26/2024	1:15 AM	0	14	2	0	0	0	0	0	4	0	0	0	0
4/26/2024	1:30 AM	0	17	3	0	0	0	0	0	8	0	0	0	0
4/26/2024	1:45 AM	0	19	2	0	0	0	0	0	6	0	0	0	0
4/26/2024	2:00 AM	0	17	1	0	0	0	0	0	3	0	0	0	0
4/26/2024	2:15 AM	0	18	1	0	0	0	0	0	1	0	0	0	0
4/26/2024	2:30 AM	0	21	3	0	0	0	0	0	1	0	1	0	0
4/26/2024	2:45 AM	0	9	0	0	0	0	0	0	2	0	1	0	0
4/26/2024	3:00 AM	0	11	1	0	0	0	0	0	4	0	0	0	0
4/26/2024	3:15 AM	0	12	0	0	1	0	0	0	3	0	0	0	0
4/26/2024	3:30 AM	0	17	3	0	3	0	0	0	6	0	0	0	0
4/26/2024	3:45 AM	0	14	1	0	1	0	0	0	6	0	0	0	0
4/26/2024	4:00 AM	0	19	2	0	2	0	0	0	6	0	0	0	0
4/26/2024	4:15 AM	0	23	4	0	2	0	0	0	10	0	1	0	0
4/26/2024	4:30 AM	0	25	3	0	0	0	0	0	10	0	0	0	0
4/26/2024	4:45 AM	0	34	6	0	3	0	0	0	10	0	0	0	0
4/26/2024	5:00 AM	0	41	7	0	4	0	0	0	14	0	0	0	0
4/26/2024	5:15 AM	0	39	8	0	3	0	0	0	14	0	0	0	0
4/26/2024	5:30 AM	0	57	7	0	4	1	0	0	19	0	0	0	0
4/26/2024	5:45 AM	0	59	8	0	3	1	0	0	13	0	0	0	0
4/26/2024	6:00 AM	0	64	13	0	3	2	0	0	20	0	1	0	0
4/26/2024	6:15 AM	0	107	23	0	5	1	0	0	14	0	0	0	0
4/26/2024	6:30 AM	0	130	35	0	5	1	0	2	15	0	0	0	0
4/26/2024	6:45 AM	0	170	42	0	3	2	2	1	14	0	0	0	0
4/26/2024	7:00 AM	0	165	45	1	3	4	2	0	21	0	0	0	0
4/26/2024	7:15 AM	0	186	55	2	4	2	5	1	10	0	0	0	0
4/26/2024	7:30 AM	0	257	78	1	2	4	4	0	9	0	0	0	0
4/26/2024	7:45 AM	0	251	73	0	7	5	1	0	14	0	0	0	0
4/26/2024	8:00 AM	0	246	69	1	10	0	0	0	10	3	0	0	0
4/26/2024	8:15 AM	1	195	65	1	5	1	1	0	10	1	0	0	0
4/26/2024	8:30 AM	3	202	72	0	4	4	4	1	16	1	0	0	0
4/26/2024	8:45 AM	1	212	70	3	7	0	3	0	8	0	0	0	0
4/26/2024	9:00 AM	0	173	68	0	6	2	1	1	16	1	0	0	0
4/26/2024	9:15 AM	0	199	72	2	6	1	2	1	12	0	0	0	0
4/26/2024	9:30 AM	2	214	68	0	5	0	1	0	5	0	0	0	0
4/26/2024	9:45 AM	0	223	64	0	4	3	4	0	10	0	0	0	0
4/26/2024	10:00 AM	0	209	51	0	6	1	4	1	14	0	0	0	0
4/26/2024	10:15 AM	0	183	52	1	7	1	2	1	17	1	0	0	0
4/26/2024	10:30 AM	1	217	80	1	5	2	1	4	14	0	0	0	0
4/26/2024	10:45 AM	1	237	79	0	2	2	1	4	12	0	0	0	0
4/26/2024	11:00 AM	0	218	72	0	3	1	1	4	18	2	0	0	0
4/26/2024	11:15 AM	0	229	68	0	10	2	2	4	8	0	0	0	0
4/26/2024	11:30 AM	0	220	74	0	9	0	6	1	15	0	0	0	0
4/26/2024	11:45 AM	0	274	84	2	5	1	1	4	13	1	0	0	0
4/26/2024	12:00 PM	0	236	78	0	6	1	1	1	9	0	0	0	0
4/26/2024	12:15 PM	2	266	78	0	2	1	1	1	13	0	0	0	0
4/26/2024	12:30 PM	1	257	74	0	8	1	2	2	11	0	0	0	0
4/26/2024	12:45 PM	1	227	60	0	4	2	1	4	8	0	0	0	0
4/26/2024	1:00 PM	1	155	37	0	6	1	4	2	6	0	0	0	0
4/26/2024	1:15 PM	1	193	47	1	5	3	3	2	6	0	0	0	0
4/26/2024	1:30 PM	0	184	58	3	5	2	2	1	17	1	0	0	0
4/26/2024	1:45 PM	0	204	52	0	0	0	1	4	13	0	0	0	0
4/26/2024	2:00 PM	0	186	38	0	4	0	2	3	12	0	0	0	0
4/26/2024	2:15 PM	1	225	38	0	2	1	0	3	8	0	0	0	0
4/26/2024	2:30 PM	1	210	60	4	4	1	0	0	7	0	0	0	0
4/26/2024	2:45 PM	1	214	56	0	6	1	0	1	15	0	0	0	0
4/26/2024	3:00 PM	0	211	51	2	4	0	2	1	9	0	0	0	0
4/26/2024	3:15 PM	0	235	59	1	2	1	0	0	7	0	0	0	0
4/26/2024	3:30 PM	2	186	55	2	2	0	0	3	10	0	0	0	0
4/26/2024	3:45 PM	1	252	59	1	1	0	0	1	4	0	0	0	0
4/26/2024	4:00 PM	0	211	61	1	1	1	0	0	16	0	0	0	0
4/26/2024	4:15 PM	0	247	65	2	0	2	0	0	4	0	0	0	0
4/26/2024	4:30 PM	1	244	66	1	4	2	0	0	4	0	0	0	0
4/26/2024	4:45 PM	1	228	59	0	4	2	0	3	6	1	0	0	0
4/26/2024	5:00 PM	1	251	63	1	2	1	0	1	14	0	0	0	0
4/26/2024	5:15 PM	1	278	46	0	2	0	0	0	5	0	0	0	0
4/26/2024	5:30 PM	0	259	68	0	2	1	0	0	6	1	0	0	0
4/26/2024	5:45 PM	3	226	65	0	4	0	0	0	4	0	0	0	0
4/26/2024	6:00 PM	0	230	57	0	1	0	0	2	9	0	0	0	0
4/26/2024	6:15 PM	0	240	48	0	6	1	0	0	6	0	0	0	0
4/26/2024	6:30 PM	0	216	52	0	2	0	0	1	9	0	0	0	0
4/26/2024	6:45 PM	3	215	44	0	1	0	0	0	9	1	0	0	0
4/26/2024	7:00 PM	0	203	50	0	0	1	0	0	6	0	0	0	0
4/26/2024	7:15 PM	2	214	51	0	2	0	0	0	6	0	0	0	0
4/26/2024	7:30 PM	0	185	45	0	1	0	0	0	1	0	0	0	0
4/26/2024	7:45 PM	1	188	35	0	0	0	0	0	4	0	0	0	0
4/26/2024	8:00 PM	0	176	39	0	0	0	0	0	6	0	0	0	0
4/26/2024	8:15 PM	1	156	30	1	1	0	0	0	2	0	0	0	0
4/26/2024	8:30 PM	0	133	27	0	0	0	0	0	3	0	0	0	0
4/26/2024	8:45 PM	0	142	31	0	2	0	0	0	3	0	0	0	0
4/26/2024	9:00 PM	0	127	23	0	2	0	0	0	2	0	0	0	0
4/26/2024	9:15 PM	0	111	20	0	1	0	0	0	6	0	0	0	0
4/26/2024	9:30 PM	0	125	25	0	1	0	0	0	4	0	0	0	0
4/26/2024	9:45 PM	0	99	19	0	1	0	0	1	4	0	0	0	0
4/26/2024	10:00 PM	0	108	15	0	3	0	0	0	3	0	0	0	0
4/26/2024	10:15 PM	0	90	17	0	2	0	0	0	4	0	1	0	0
4/26/2024	10:30 PM	0	121	20	0	1	0	0	0	1	0	0	0	0
4/26/2024	10:45 PM	0	109	19	0	0	0	0	0	2	0	3	0	0
4/26/2024	11:00 PM	0	79	15	0	0	0	0	1	3	0	1	0	0
4/26/2024	11:15 PM	0	63	13	0	0	0	0	0	2	0	0	0	0
4/26/2024	11:30 PM	0	60	11	0	2	0	0	0	2	0	0	0	0
4/26/2024	11:45 PM	0	46	10	0	1	0	0	0	3	0	0	0	0

4/27/2024	12:00 AM	0	42	10	0	0	1	0	0	0	0	0	0	0
4/27/2024	12:15 AM	0	36	9	0	0	0	0	1	0	0	0	0	0
4/27/2024	12:30 AM	0	38	15	0	1	0	0	0	3	0	0	0	0
4/27/2024	12:45 AM	0	36	12	0	0	0	0	0	4	0	0	0	0
4/27/2024	1:00 AM	1	21	8	0	1	0	0	0	3	0	0	0	0
4/27/2024	1:15 AM	0	26	8	0	0	0	0	0	1	0	0	0	0
4/27/2024	1:30 AM	0	18	4	0	0	0	0	0	2	0	0	0	0
4/27/2024	1:45 AM	0	23	8	0	1	0	0	0	0	0	0	0	0
4/27/2024	2:00 AM	0	15	5	0	0	0	0	0	2	0	0	0	0
4/27/2024	2:15 AM	0	14	5	0	0	0	0	0	0	0	0	0	0
4/27/2024	2:30 AM	0	13	4	0	0	0	0	0	1	0	0	0	0
4/27/2024	2:45 AM	0	19	6	0	1	0	0	0	0	0	0	0	0
4/27/2024	3:00 AM	0	18	8	0	1	0	0	0	3	0	0	0	0
4/27/2024	3:15 AM	0	17	6	0	1	0	0	0	3	0	0	0	0
4/27/2024	3:30 AM	0	11	2	0	2	0	0	0	6	0	0	0	0
4/27/2024	3:45 AM	0	18	6	0	1	0	0	0	2	0	0	0	0
4/27/2024	4:00 AM	0	18	5	0	0	0	0	0	2	0	0	0	0
4/27/2024	4:15 AM	0	19	7	0	2	0	0	0	3	0	0	0	0
4/27/2024	4:30 AM	0	14	6	0	1	0	0	0	1	0	1	0	0
4/27/2024	4:45 AM	0	16	8	0	3	0	0	0	2	0	0	0	0
4/27/2024	5:00 AM	0	22	6	1	2	0	0	0	2	0	0	0	0
4/27/2024	5:15 AM	0	12	6	0	1	0	0	0	6	0	0	0	0
4/27/2024	5:30 AM	0	19	8	0	1	0	0	0	6	0	0	0	0
4/27/2024	5:45 AM	0	30	11	0	1	0	0	0	4	0	0	0	0
4/27/2024	6:00 AM	0	37	11	0	1	0	0	0	7	0	0	0	0
4/27/2024	6:15 AM	0	42	8	0	0	0	0	1	6	0	0	0	0
4/27/2024	6:30 AM	0	73	21	0	1	0	0	0	3	0	0	0	0
4/27/2024	6:45 AM	0	85	19	0	2	2	0	0	5	0	0	0	0
4/27/2024	7:00 AM	0	100	22	2	0	0	0	0	3	0	1	0	0
4/27/2024	7:15 AM	2	104	28	0	1	2	0	0	7	0	0	0	0
4/27/2024	7:30 AM	0	125	36	0	1	2	0	2	6	0	0	0	0
4/27/2024	7:45 AM	1	169	50	0	1	2	0	3	7	0	1	0	0
4/27/2024	8:00 AM	1	145	41	0	2	1	0	2	4	0	0	0	0
4/27/2024	8:15 AM	0	174	50	0	1	0	0	0	3	0	0	0	0
4/27/2024	8:30 AM	0	178	56	0	4	0	0	0	1	0	0	0	0
4/27/2024	8:45 AM	3	205	45	0	5	1	0	1	4	0	0	0	0
4/27/2024	9:00 AM	0	162	51	1	4	0	0	0	4	0	0	0	0
4/27/2024	9:15 AM	0	236	40	1	1	2	0	1	6	0	0	0	0
4/27/2024	9:30 AM	1	264	61	0	3	1	0	0	3	0	0	0	0
4/27/2024	9:45 AM	0	289	59	0	4	0	0	1	2	0	0	0	0
4/27/2024	10:00 AM	0	232	48	0	3	0	0	1	7	0	0	0	0
4/27/2024	10:15 AM	0	252	49	0	0	0	0	3	2	0	0	0	0
4/27/2024	10:30 AM	0	288	67	1	2	0	0	1	5	0	0	0	0
4/27/2024	10:45 AM	0	284	61	0	7	1	0	0	3	0	0	0	0
4/27/2024	11:00 AM	6	308	76	0	2	0	0	1	3	0	0	0	0
4/27/2024	11:15 AM	1	295	83	1	2	0	0	1	4	0	0	0	0
4/27/2024	11:30 AM	3	300	60	1	4	0	0	1	4	0	0	0	0
4/27/2024	11:45 AM	4	295	55	0	1	0	0	0	6	0	0	0	0
4/27/2024	12:00 PM	0	306	63	0	5	0	0	0	5	1	0	0	0
4/27/2024	12:15 PM	2	300	69	0	3	0	0	0	7	0	0	0	0
4/27/2024	12:30 PM	1	340	60	1	4	0	0	0	0	0	0	0	0
4/27/2024	12:45 PM	1	293	71	0	1	0	0	0	6	0	0	0	0
4/27/2024	1:00 PM	2	268	65	0	0	0	0	1	3	0	0	0	0
4/27/2024	1:15 PM	0	292	64	0	2	2	0	0	3	0	0	0	0
4/27/2024	1:30 PM	21	307	61	1	1	0	0	0	4	0	0	0	0
4/27/2024	1:45 PM	1	294	41	0	2	0	0	0	3	0	0	0	0
4/27/2024	2:00 PM	1	271	50	0	3	1	0	1	4	0	0	0	0
4/27/2024	2:15 PM	0	300	62	0	2	1	0	0	3	0	0	0	0
4/27/2024	2:30 PM	0	295	43	1	1	0	0	0	6	0	0	0	0
4/27/2024	2:45 PM	2	283	53	0	2	0	0	0	1	0	0	0	0
4/27/2024	3:00 PM	2	285	54	0	4	0	0	2	4	0	0	0	0
4/27/2024	3:15 PM	1	273	47	0	3	0	0	0	0	0	0	0	0
4/27/2024	3:30 PM	4	284	42	0	0	0	0	1	2	0	0	0	0
4/27/2024	3:45 PM	22	279	46	0	0	1	0	0	4	0	0	0	0
4/27/2024	4:00 PM	6	259	49	0	1	0	0	0	0	0	0	0	0
4/27/2024	4:15 PM	8	283	63	0	0	0	0	0	2	0	0	0	0
4/27/2024	4:30 PM	0	291	51	1	0	0	0	3	3	0	0	0	0
4/27/2024	4:45 PM	0	290	48	0	1	0	0	0	2	0	0	0	0
4/27/2024	5:00 PM	7	316	53	1	2	0	0	0	2	0	0	0	0
4/27/2024	5:15 PM	0	261	42	0	1	0	0	0	2	0	0	0	0
4/27/2024	5:30 PM	3	258	43	0	3	0	0	0	4	0	0	0	0
4/27/2024	5:45 PM	5	237	45	0	2	0	0	0	2	0	0	0	0
4/27/2024	6:00 PM	1	220	38	0	0	0	0	1	1	0	0	0	0
4/27/2024	6:15 PM	1	213	35	0	0	0	0	0	1	0	0	0	0
4/27/2024	6:30 PM	1	240	36	0	0	0	0	0	2	0	0	0	0
4/27/2024	6:45 PM	1	220	36	0	0	0	0	0	1	0	0	0	0
4/27/2024	7:00 PM	0	187	30	0	0	0	0	1	2	0	0	0	0
4/27/2024	7:15 PM	0	167	27	0	0	0	0	0	1	0	0	0	0
4/27/2024	7:30 PM	1	168	36	0	0	0	0	0	0	0	0	0	0
4/27/2024	7:45 PM	1	165	30	0	0	0	0	0	4	0	0	0	0
4/27/2024	8:00 PM	1	136	23	1	1	0	0	0	2	0	0	0	0
4/27/2024	8:15 PM	2	143	22	2	1	0	0	0	2	0	0	0	0
4/27/2024	8:30 PM	0	120	19	0	0	0	0	1	2	0	0	0	0
4/27/2024	8:45 PM	0	119	20	0	2	0	0	0	0	0	0	0	0
4/27/2024	9:00 PM	1	116	19	0	0	0	0	0	0	0	0	0	0
4/27/2024	9:15 PM	1	129	22	0	0	0	0	1	1	0	0	0	0
4/27/2024	9:30 PM	1	124	23	0	1	0	0	0	1	0	0	0	0
4/27/2024	9:45 PM	0	117	20	0	1	0	0	0	1	0	0	0	0
4/27/2024	10:00 PM	0	95	16	0	0	0	0	0	1	0	0	0	0
4/27/2024	10:15 PM	0	112	19	0	0	0	0	1	1	0	0	0	0
4/27/2024	10:30 PM	1	97	14	0	0	0	0	0	1	0	0	0	0
4/27/2024	10:45 PM	0	92	15	0	0	0	0	0	3	0	0	0	0
4/27/2024	11:00 PM	0	75	13	0	0	0	0	0	0	0	0	0	0
4/27/2024	11:15 PM	0	71	15	0	0	0	0	1	2	0	0	0	0
4/27/2024	11:30 PM	0	64	11	0	1	0	0	0	2	0	0	0	0
4/27/2024	11:45 PM	0	62	14	0	0	0	0	0	1	0	0	0	0

SB
File Name:
Start Date: 4/21/2024
Start Time: 0
Site Code: 8
Station ID: 1
Location 1: I-26 N/Bound On-Ramp, north of I-20
Location 2:

Date	Time	1	2	3	4	5	6	7	8	9	10	11	12	13
4/21/2024	12:00 AM	0	0	0	0	0	0	0	0	0	0	0	0	0
4/21/2024	12:15 AM	0	0	0	0	0	0	0	0	0	0	0	0	0
4/21/2024	12:30 AM	0	0	0	0	0	0	0	0	0	0	0	0	0
4/21/2024	12:45 AM	0	0	0	0	0	0	0	0	0	0	0	0	0
4/21/2024	1:00 AM	0	0	0	0	0	0	0	0	0	0	0	0	0
4/21/2024	1:15 AM	0	0	0	0	0	0	0	0	0	0	0	0	0
4/21/2024	1:30 AM	0	0	0	0	0	0	0	0	0	0	0	0	0
4/21/2024	1:45 AM	0	0	0	0	0	0	0	0	0	0	0	0	0
4/21/2024	2:00 AM	0	0	0	0	0	0	0	0	0	0	0	0	0
4/21/2024	2:15 AM	0	0	0	0	0	0	0	0	0	0	0	0	0
4/21/2024	2:30 AM	0	0	0	0	0	0	0	0	0	0	0	0	0
4/21/2024	2:45 AM	0	0	0	0	0	0	0	0	0	0	0	0	0
4/21/2024	3:00 AM	0	0	0	0	0	0	0	0	0	0	0	0	0
4/21/2024	3:15 AM	0	0	0	0	0	0	0	0	0	0	0	0	0
4/21/2024	3:30 AM	0	0	0	0	0	0	0	0	0	0	0	0	0
4/21/2024	3:45 AM	0	0	0	0	0	0	0	0	0	0	0	0	0
4/21/2024	4:00 AM	0	0	0	0	0	0	0	0	0	0	0	0	0
4/21/2024	4:15 AM	0	0	0	0	0	0	0	0	0	0	0	0	0
4/21/2024	4:30 AM	0	0	0	0	0	0	0	0	0	0	0	0	0
4/21/2024	4:45 AM	0	0	0	0	0	0	0	0	0	0	0	0	0
4/21/2024	5:00 AM	0	0	0	0	0	0	0	0	0	0	0	0	0
4/21/2024	5:15 AM	0	0	0	0	0	0	0	0	0	0	0	0	0
4/21/2024	5:30 AM	0	0	0	0	0	0	0	0	0	0	0	0	0
4/21/2024	5:45 AM	0	0	0	0	0	0	0	0	0	0	0	0	0
4/21/2024	6:00 AM	0	0	0	0	0	0	0	0	0	0	0	0	0
4/21/2024	6:15 AM	0	0	0	0	0	0	0	0	0	0	0	0	0
4/21/2024	6:30 AM	0	0	0	0	0	0	0	0	0	0	0	0	0
4/21/2024	6:45 AM	0	0	0	0	0	0	0	0	0	0	0	0	0
4/21/2024	7:00 AM	0	0	0	0	0	0	0	0	0	0	0	0	0
4/21/2024	7:15 AM	0	0	0	0	0	0	0	0	0	0	0	0	0
4/21/2024	7:30 AM	0	0	0	0	0	0	0	0	0	0	0	0	0
4/21/2024	7:45 AM	0	0	0	0	0	0	0	0	0	0	0	0	0
4/21/2024	8:00 AM	0	0	0	0	0	0	0	0	0	0	0	0	0
4/21/2024	8:15 AM	0	0	0	0	0	0	0	0	0	0	0	0	0
4/21/2024	8:30 AM	0	0	0	0	0	0	0	0	0	0	0	0	0
4/21/2024	8:45 AM	0	0	0	0	0	0	0	0	0	0	0	0	0
4/21/2024	9:00 AM	0	0	0	0	0	0	0	0	0	0	0	0	0
4/21/2024	9:15 AM	0	0	0	0	0	0	0	0	0	0	0	0	0
4/21/2024	9:30 AM	0	0	0	0	0	0	0	0	0	0	0	0	0
4/21/2024	9:45 AM	0	0	0	0	0	0	0	0	0	0	0	0	0
4/21/2024	10:00 AM	0	0	0	0	0	0	0	0	0	0	0	0	0
4/21/2024	10:15 AM	0	0	0	0	0	0	0	0	0	0	0	0	0
4/21/2024	10:30 AM	0	0	0	0	0	0	0	0	0	0	0	0	0
4/21/2024	10:45 AM	0	0	0	0	0	0	0	0	0	0	0	0	0
4/21/2024	11:00 AM	0	0	0	0	0	0	0	0	0	0	0	0	0
4/21/2024	11:15 AM	0	0	0	0	0	0	0	0	0	0	0	0	0
4/21/2024	11:30 AM	0	0	0	0	0	0	0	0	0	0	0	0	0
4/21/2024	11:45 AM	0	0	0	0	0	0	0	0	0	0	0	0	0
4/21/2024	12:00 PM	0	0	0	0	0	0	0	0	0	0	0	0	0
4/21/2024	12:15 PM	0	0	0	0	0	0	0	0	0	0	0	0	0
4/21/2024	12:30 PM	0	0	0	0	0	0	0	0	0	0	0	0	0
4/21/2024	12:45 PM	0	0	0	0	0	0	0	0	0	0	0	0	0
4/21/2024	1:00 PM	0	0	0	0	0	0	0	0	0	0	0	0	0
4/21/2024	1:15 PM	0	0	0	0	0	0	0	0	0	0	0	0	0
4/21/2024	1:30 PM	0	0	0	0	0	0	0	0	0	0	0	0	0
4/21/2024	1:45 PM	0	0	0	0	0	0	0	0	0	0	0	0	0
4/21/2024	2:00 PM	0	0	0	0	0	0	0	0	0	0	0	0	0
4/21/2024	2:15 PM	0	0	0	0	0	0	0	0	0	0	0	0	0
4/21/2024	2:30 PM	0	0	0	0	0	0	0	0	0	0	0	0	0
4/21/2024	2:45 PM	0	0	0	0	0	0	0	0	0	0	0	0	0
4/21/2024	3:00 PM	0	0	0	0	0	0	0	0	0	0	0	0	0
4/21/2024	3:15 PM	0	0	0	0	0	0	0	0	0	0	0	0	0
4/21/2024	3:30 PM	0	0	0	0	0	0	0	0	0	0	0	0	0
4/21/2024	3:45 PM	0	0	0	0	0	0	0	0	0	0	0	0	0
4/21/2024	4:00 PM	0	0	0	0	0	0	0	0	0	0	0	0	0
4/21/2024	4:15 PM	0	0	0	0	0	0	0	0	0	0	0	0	0
4/21/2024	4:30 PM	0	0	0	0	0	0	0	0	0	0	0	0	0
4/21/2024	4:45 PM	0	0	0	0	0	0	0	0	0	0	0	0	0
4/21/2024	5:00 PM	0	0	0	0	0	0	0	0	0	0	0	0	0
4/21/2024	5:15 PM	0	0	0	0	0	0	0	0	0	0	0	0	0
4/21/2024	5:30 PM	0	0	0	0	0	0	0	0	0	0	0	0	0
4/21/2024	5:45 PM	0	0	0	0	0	0	0	0	0	0	0	0	0
4/21/2024	6:00 PM	0	0	0	0	0	0	0	0	0	0	0	0	0
4/21/2024	6:15 PM	0	0	0	0	0	0	0	0	0	0	0	0	0
4/21/2024	6:30 PM	0	0	0	0	0	0	0	0	0	0	0	0	0
4/21/2024	6:45 PM	0	0	0	0	0	0	0	0	0	0	0	0	0
4/21/2024	7:00 PM	0	0	0	0	0	0	0	0	0	0	0	0	0
4/21/2024	7:15 PM	0	0	0	0	0	0	0	0	0	0	0	0	0
4/21/2024	7:30 PM	0	0	0	0	0	0	0	0	0	0	0	0	0
4/21/2024	7:45 PM	0	0	0	0	0	0	0	0	0	0	0	0	0
4/21/2024	8:00 PM	0	0	0	0	0	0	0	0	0	0	0	0	0
4/21/2024	8:15 PM	0	0	0	0	0	0	0	0	0	0	0	0	0
4/21/2024	8:30 PM	0	0	0	0	0	0	0	0	0	0	0	0	0
4/21/2024	8:45 PM	0	0	0	0	0	0	0	0	0	0	0	0	0
4/21/2024	9:00 PM	0	0	0	0	0	0	0	0	0	0	0	0	0
4/21/2024	9:15 PM	0	0	0	0	0	0	0	0	0	0	0	0	0
4/21/2024	9:30 PM	0	0	0	0	0	0	0	0	0	0	0	0	0
4/21/2024	9:45 PM	0	0	0	0	0	0	0	0	0	0	0	0	0
4/21/2024	10:00 PM	0	0	0	0	0	0	0	0	0	0	0	0	0
4/21/2024	10:15 PM	0	0	0	0	0	0	0	0	0	0	0	0	0
4/21/2024	10:30 PM	0	0	0	0	0	0	0	0	0	0	0	0	0
4/21/2024	10:45 PM	0	0	0	0	0	0	0	0	0	0	0	0	0
4/21/2024	11:00 PM	0	0	0	0	0	0	0	0	0	0	0	0	0
4/21/2024	11:15 PM	0	0	0	0	0	0	0	0	0	0	0	0	0
4/21/2024	11:30 PM	0	0	0	0	0	0	0	0	0	0	0	0	0
4/21/2024	11:45 PM	0	0	0	0	0	0	0	0	0	0	0	0	0

4/22/2024	12:00 AM	0	0	0	0	0	0	0	0	0	0	0	0	0
4/22/2024	12:15 AM	0	0	0	0	0	0	0	0	0	0	0	0	0
4/22/2024	12:30 AM	0	0	0	0	0	0	0	0	0	0	0	0	0
4/22/2024	12:45 AM	0	0	0	0	0	0	0	0	0	0	0	0	0
4/22/2024	1:00 AM	0	0	0	0	0	0	0	0	0	0	0	0	0
4/22/2024	1:15 AM	0	0	0	0	0	0	0	0	0	0	0	0	0
4/22/2024	1:30 AM	0	0	0	0	0	0	0	0	0	0	0	0	0
4/22/2024	1:45 AM	0	0	0	0	0	0	0	0	0	0	0	0	0
4/22/2024	2:00 AM	0	0	0	0	0	0	0	0	0	0	0	0	0
4/22/2024	2:15 AM	0	0	0	0	0	0	0	0	0	0	0	0	0
4/22/2024	2:30 AM	0	0	0	0	0	0	0	0	0	0	0	0	0
4/22/2024	2:45 AM	0	0	0	0	0	0	0	0	0	0	0	0	0
4/22/2024	3:00 AM	0	0	0	0	0	0	0	0	0	0	0	0	0
4/22/2024	3:15 AM	0	0	0	0	0	0	0	0	0	0	0	0	0
4/22/2024	3:30 AM	0	0	0	0	0	0	0	0	0	0	0	0	0
4/22/2024	3:45 AM	0	0	0	0	0	0	0	0	0	0	0	0	0
4/22/2024	4:00 AM	0	0	0	0	0	0	0	0	0	0	0	0	0
4/22/2024	4:15 AM	0	0	0	0	0	0	0	0	0	0	0	0	0
4/22/2024	4:30 AM	0	0	0	0	0	0	0	0	0	0	0	0	0
4/22/2024	4:45 AM	0	0	0	0	0	0	0	0	0	0	0	0	0
4/22/2024	5:00 AM	0	0	0	0	0	0	0	0	0	0	0	0	0
4/22/2024	5:15 AM	0	0	0	0	0	0	0	0	0	0	0	0	0
4/22/2024	5:30 AM	0	0	0	0	0	0	0	0	0	0	0	0	0
4/22/2024	5:45 AM	0	0	0	0	0	0	0	0	0	0	0	0	0
4/22/2024	6:00 AM	0	0	0	0	0	0	0	0	0	0	0	0	0
4/22/2024	6:15 AM	0	0	0	0	0	0	0	0	0	0	0	0	0
4/22/2024	6:30 AM	0	0	0	0	0	0	0	0	0	0	0	0	0
4/22/2024	6:45 AM	0	0	0	0	0	0	0	0	0	0	0	0	0
4/22/2024	7:00 AM	0	0	0	0	0	0	0	0	0	0	0	0	0
4/22/2024	7:15 AM	0	0	0	0	0	0	0	0	0	0	0	0	0
4/22/2024	7:30 AM	0	0	0	0	0	0	0	0	0	0	0	0	0
4/22/2024	7:45 AM	0	0	0	0	0	0	0	0	0	0	0	0	0
4/22/2024	8:00 AM	0	0	0	0	0	0	0	0	0	0	0	0	0
4/22/2024	8:15 AM	0	0	0	0	0	0	0	0	0	0	0	0	0
4/22/2024	8:30 AM	0	0	0	0	0	0	0	0	0	0	0	0	0
4/22/2024	8:45 AM	0	0	0	0	0	0	0	0	0	0	0	0	0
4/22/2024	9:00 AM	0	0	0	0	0	0	0	0	0	0	0	0	0
4/22/2024	9:15 AM	0	0	0	0	0	0	0	0	0	0	0	0	0
4/22/2024	9:30 AM	0	0	0	0	0	0	0	0	0	0	0	0	0
4/22/2024	9:45 AM	0	0	0	0	0	0	0	0	0	0	0	0	0
4/22/2024	10:00 AM	0	0	0	0	0	0	0	0	0	0	0	0	0
4/22/2024	10:15 AM	0	0	0	0	0	0	0	0	0	0	0	0	0
4/22/2024	10:30 AM	0	0	0	0	0	0	0	0	0	0	0	0	0
4/22/2024	10:45 AM	0	0	0	0	0	0	0	0	0	0	0	0	0
4/22/2024	11:00 AM	0	0	0	0	0	0	0	0	0	0	0	0	0
4/22/2024	11:15 AM	0	0	0	0	0	0	0	0	0	0	0	0	0
4/22/2024	11:30 AM	0	0	0	0	0	0	0	0	0	0	0	0	0
4/22/2024	11:45 AM	0	0	0	0	0	0	0	0	0	0	0	0	0
4/22/2024	12:00 PM	0	0	0	0	0	0	0	0	0	0	0	0	0
4/22/2024	12:15 PM	0	0	0	0	0	0	0	0	0	0	0	0	0
4/22/2024	12:30 PM	0	0	0	0	0	0	0	0	0	0	0	0	0
4/22/2024	12:45 PM	0	0	0	0	0	0	0	0	0	0	0	0	0
4/22/2024	1:00 PM	0	0	0	0	0	0	0	0	0	0	0	0	0
4/22/2024	1:15 PM	0	0	0	0	0	0	0	0	0	0	0	0	0
4/22/2024	1:30 PM	0	0	0	0	0	0	0	0	0	0	0	0	0
4/22/2024	1:45 PM	0	0	0	0	0	0	0	0	0	0	0	0	0
4/22/2024	2:00 PM	0	0	0	0	0	0	0	0	0	0	0	0	0
4/22/2024	2:15 PM	0	0	0	0	0	0	0	0	0	0	0	0	0
4/22/2024	2:30 PM	0	0	0	0	0	0	0	0	0	0	0	0	0
4/22/2024	2:45 PM	0	0	0	0	0	0	0	0	0	0	0	0	0
4/22/2024	3:00 PM	0	0	0	0	0	0	0	0	0	0	0	0	0
4/22/2024	3:15 PM	0	0	0	0	0	0	0	0	0	0	0	0	0
4/22/2024	3:30 PM	0	0	0	0	0	0	0	0	0	0	0	0	0
4/22/2024	3:45 PM	0	0	0	0	0	0	0	0	0	0	0	0	0
4/22/2024	4:00 PM	0	0	0	0	0	0	0	0	0	0	0	0	0
4/22/2024	4:15 PM	0	0	0	0	0	0	0	0	0	0	0	0	0
4/22/2024	4:30 PM	0	0	0	0	0	0	0	0	0	0	0	0	0
4/22/2024	4:45 PM	0	0	0	0	0	0	0	0	0	0	0	0	0
4/22/2024	5:00 PM	0	0	0	0	0	0	0	0	0	0	0	0	0
4/22/2024	5:15 PM	0	0	0	0	0	0	0	0	0	0	0	0	0
4/22/2024	5:30 PM	0	0	0	0	0	0	0	0	0	0	0	0	0
4/22/2024	5:45 PM	0	0	0	0	0	0	0	0	0	0	0	0	0
4/22/2024	6:00 PM	0	0	0	0	0	0	0	0	0	0	0	0	0
4/22/2024	6:15 PM	0	0	0	0	0	0	0	0	0	0	0	0	0
4/22/2024	6:30 PM	0	0	0	0	0	0	0	0	0	0	0	0	0
4/22/2024	6:45 PM	0	0	0	0	0	0	0	0	0	0	0	0	0
4/22/2024	7:00 PM	0	0	0	0	0	0	0	0	0	0	0	0	0
4/22/2024	7:15 PM	0	0	0	0	0	0	0	0	0	0	0	0	0
4/22/2024	7:30 PM	0	0	0	0	0	0	0	0	0	0	0	0	0
4/22/2024	7:45 PM	0	0	0	0	0	0	0	0	0	0	0	0	0
4/22/2024	8:00 PM	0	0	0	0	0	0	0	0	0	0	0	0	0
4/22/2024	8:15 PM	0	0	0	0	0	0	0	0	0	0	0	0	0
4/22/2024	8:30 PM	0	0	0	0	0	0	0	0	0	0	0	0	0
4/22/2024	8:45 PM	0	0	0	0	0	0	0	0	0	0	0	0	0
4/22/2024	9:00 PM	0	0	0	0	0	0	0	0	0	0	0	0	0
4/22/2024	9:15 PM	0	0	0	0	0	0	0	0	0	0	0	0	0
4/22/2024	9:30 PM	0	0	0	0	0	0	0	0	0	0	0	0	0
4/22/2024	9:45 PM	0	0	0	0	0	0	0	0	0	0	0	0	0
4/22/2024	10:00 PM	0	0	0	0	0	0	0	0	0	0	0	0	0
4/22/2024	10:15 PM	0	0	0	0	0	0	0	0	0	0	0	0	0
4/22/2024	10:30 PM	0	0	0	0	0	0	0	0	0	0	0	0	0
4/22/2024	10:45 PM	0	0	0	0	0	0	0	0	0	0	0	0	0
4/22/2024	11:00 PM	0	0	0	0	0	0	0	0	0	0	0	0	0
4/22/2024	11:15 PM	0	0	0	0	0	0	0	0	0	0	0	0	0
4/22/2024	11:30 PM	0	0	0	0	0	0	0	0	0	0	0	0	0
4/22/2024	11:45 PM	0	0	0	0	0	0	0	0	0	0	0	0	0

4/23/2024	12:00 AM	0	0	0	0	0	0	0	0	0	0	0	0	0
4/23/2024	12:15 AM	0	0	0	0	0	0	0	0	0	0	0	0	0
4/23/2024	12:30 AM	0	0	0	0	0	0	0	0	0	0	0	0	0
4/23/2024	12:45 AM	0	0	0	0	0	0	0	0	0	0	0	0	0
4/23/2024	1:00 AM	0	0	0	0	0	0	0	0	0	0	0	0	0
4/23/2024	1:15 AM	0	0	0	0	0	0	0	0	0	0	0	0	0
4/23/2024	1:30 AM	0	0	0	0	0	0	0	0	0	0	0	0	0
4/23/2024	1:45 AM	0	0	0	0	0	0	0	0	0	0	0	0	0
4/23/2024	2:00 AM	0	0	0	0	0	0	0	0	0	0	0	0	0
4/23/2024	2:15 AM	0	0	0	0	0	0	0	0	0	0	0	0	0
4/23/2024	2:30 AM	0	0	0	0	0	0	0	0	0	0	0	0	0
4/23/2024	2:45 AM	0	0	0	0	0	0	0	0	0	0	0	0	0
4/23/2024	3:00 AM	0	0	0	0	0	0	0	0	0	0	0	0	0
4/23/2024	3:15 AM	0	0	0	0	0	0	0	0	0	0	0	0	0
4/23/2024	3:30 AM	0	0	0	0	0	0	0	0	0	0	0	0	0
4/23/2024	3:45 AM	0	0	0	0	0	0	0	0	0	0	0	0	0
4/23/2024	4:00 AM	0	0	0	0	0	0	0	0	0	0	0	0	0
4/23/2024	4:15 AM	0	0	0	0	0	0	0	0	0	0	0	0	0
4/23/2024	4:30 AM	0	0	0	0	0	0	0	0	0	0	0	0	0
4/23/2024	4:45 AM	0	0	0	0	0	0	0	0	0	0	0	0	0
4/23/2024	5:00 AM	0	0	0	0	0	0	0	0	0	0	0	0	0
4/23/2024	5:15 AM	0	0	0	0	0	0	0	0	0	0	0	0	0
4/23/2024	5:30 AM	0	0	0	0	0	0	0	0	0	0	0	0	0
4/23/2024	5:45 AM	0	0	0	0	0	0	0	0	0	0	0	0	0
4/23/2024	6:00 AM	0	0	0	0	0	0	0	0	0	0	0	0	0
4/23/2024	6:15 AM	0	0	0	0	0	0	0	0	0	0	0	0	0
4/23/2024	6:30 AM	0	0	0	0	0	0	0	0	0	0	0	0	0
4/23/2024	6:45 AM	0	0	0	0	0	0	0	0	0	0	0	0	0
4/23/2024	7:00 AM	0	0	0	0	0	0	0	0	0	0	0	0	0
4/23/2024	7:15 AM	0	0	0	0	0	0	0	0	0	0	0	0	0
4/23/2024	7:30 AM	0	0	0	0	0	0	0	0	0	0	0	0	0
4/23/2024	7:45 AM	0	0	0	0	0	0	0	0	0	0	0	0	0
4/23/2024	8:00 AM	0	0	0	0	0	0	0	0	0	0	0	0	0
4/23/2024	8:15 AM	0	0	0	0	0	0	0	0	0	0	0	0	0
4/23/2024	8:30 AM	0	0	0	0	0	0	0	0	0	0	0	0	0
4/23/2024	8:45 AM	0	0	0	0	0	0	0	0	0	0	0	0	0
4/23/2024	9:00 AM	0	0	0	0	0	0	0	0	0	0	0	0	0
4/23/2024	9:15 AM	0	0	0	0	0	0	0	0	0	0	0	0	0
4/23/2024	9:30 AM	0	0	0	0	0	0	0	0	0	0	0	0	0
4/23/2024	9:45 AM	0	0	0	0	0	0	0	0	0	0	0	0	0
4/23/2024	10:00 AM	0	0	0	0	0	0	0	0	0	0	0	0	0
4/23/2024	10:15 AM	0	0	0	0	0	0	0	0	0	0	0	0	0
4/23/2024	10:30 AM	0	0	0	0	0	0	0	0	0	0	0	0	0
4/23/2024	10:45 AM	0	0	0	0	0	0	0	0	0	0	0	0	0
4/23/2024	11:00 AM	0	0	0	0	0	0	0	0	0	0	0	0	0
4/23/2024	11:15 AM	0	0	0	0	0	0	0	0	0	0	0	0	0
4/23/2024	11:30 AM	0	0	0	0	0	0	0	0	0	0	0	0	0
4/23/2024	11:45 AM	0	0	0	0	0	0	0	0	0	0	0	0	0
4/23/2024	12:00 PM	0	0	0	0	0	0	0	0	0	0	0	0	0
4/23/2024	12:15 PM	0	0	0	0	0	0	0	0	0	0	0	0	0
4/23/2024	12:30 PM	0	0	0	0	0	0	0	0	0	0	0	0	0
4/23/2024	12:45 PM	0	0	0	0	0	0	0	0	0	0	0	0	0
4/23/2024	1:00 PM	0	0	0	0	0	0	0	0	0	0	0	0	0
4/23/2024	1:15 PM	0	0	0	0	0	0	0	0	0	0	0	0	0
4/23/2024	1:30 PM	0	0	0	0	0	0	0	0	0	0	0	0	0
4/23/2024	1:45 PM	0	0	0	0	0	0	0	0	0	0	0	0	0
4/23/2024	2:00 PM	0	0	0	0	0	0	0	0	0	0	0	0	0
4/23/2024	2:15 PM	0	0	0	0	0	0	0	0	0	0	0	0	0
4/23/2024	2:30 PM	0	0	0	0	0	0	0	0	0	0	0	0	0
4/23/2024	2:45 PM	0	0	0	0	0	0	0	0	0	0	0	0	0
4/23/2024	3:00 PM	0	0	0	0	0	0	0	0	0	0	0	0	0
4/23/2024	3:15 PM	0	0	0	0	0	0	0	0	0	0	0	0	0
4/23/2024	3:30 PM	0	0	0	0	0	0	0	0	0	0	0	0	0
4/23/2024	3:45 PM	0	0	0	0	0	0	0	0	0	0	0	0	0
4/23/2024	4:00 PM	0	0	0	0	0	0	0	0	0	0	0	0	0
4/23/2024	4:15 PM	0	0	0	0	0	0	0	0	0	0	0	0	0
4/23/2024	4:30 PM	0	0	0	0	0	0	0	0	0	0	0	0	0
4/23/2024	4:45 PM	0	0	0	0	0	0	0	0	0	0	0	0	0
4/23/2024	5:00 PM	0	0	0	0	0	0	0	0	0	0	0	0	0
4/23/2024	5:15 PM	0	0	0	0	0	0	0	0	0	0	0	0	0
4/23/2024	5:30 PM	0	0	0	0	0	0	0	0	0	0	0	0	0
4/23/2024	5:45 PM	0	0	0	0	0	0	0	0	0	0	0	0	0
4/23/2024	6:00 PM	0	0	0	0	0	0	0	0	0	0	0	0	0
4/23/2024	6:15 PM	0	0	0	0	0	0	0	0	0	0	0	0	0
4/23/2024	6:30 PM	0	0	0	0	0	0	0	0	0	0	0	0	0
4/23/2024	6:45 PM	0	0	0	0	0	0	0	0	0	0	0	0	0
4/23/2024	7:00 PM	0	0	0	0	0	0	0	0	0	0	0	0	0
4/23/2024	7:15 PM	0	0	0	0	0	0	0	0	0	0	0	0	0
4/23/2024	7:30 PM	0	0	0	0	0	0	0	0	0	0	0	0	0
4/23/2024	7:45 PM	0	0	0	0	0	0	0	0	0	0	0	0	0
4/23/2024	8:00 PM	0	0	0	0	0	0	0	0	0	0	0	0	0
4/23/2024	8:15 PM	0	0	0	0	0	0	0	0	0	0	0	0	0
4/23/2024	8:30 PM	0	0	0	0	0	0	0	0	0	0	0	0	0
4/23/2024	8:45 PM	0	0	0	0	0	0	0	0	0	0	0	0	0
4/23/2024	9:00 PM	0	0	0	0	0	0	0	0	0	0	0	0	0
4/23/2024	9:15 PM	0	0	0	0	0	0	0	0	0	0	0	0	0
4/23/2024	9:30 PM	0	0	0	0	0	0	0	0	0	0	0	0	0
4/23/2024	9:45 PM	0	0	0	0	0	0	0	0	0	0	0	0	0
4/23/2024	10:00 PM	0	0	0	0	0	0	0	0	0	0	0	0	0
4/23/2024	10:15 PM	0	0	0	0	0	0	0	0	0	0	0	0	0
4/23/2024	10:30 PM	0	0	0	0	0	0	0	0	0	0	0	0	0
4/23/2024	10:45 PM	0	0	0	0	0	0	0	0	0	0	0	0	0
4/23/2024	11:00 PM	0	0	0	0	0	0	0	0	0	0	0	0	0
4/23/2024	11:15 PM	0	0	0	0	0	0	0	0	0	0	0	0	0
4/23/2024	11:30 PM	0	0	0	0	0	0	0	0	0	0	0	0	0
4/23/2024	11:45 PM	0	0	0	0	0	0	0	0	0	0	0	0	0

4/24/2024	12:00 AM	0	0	0	0	0	0	0	0	0	0	0	0	0
4/24/2024	12:15 AM	0	0	0	0	0	0	0	0	0	0	0	0	0
4/24/2024	12:30 AM	0	0	0	0	0	0	0	0	0	0	0	0	0
4/24/2024	12:45 AM	0	0	0	0	0	0	0	0	0	0	0	0	0
4/24/2024	1:00 AM	0	0	0	0	0	0	0	0	0	0	0	0	0
4/24/2024	1:15 AM	0	0	0	0	0	0	0	0	0	0	0	0	0
4/24/2024	1:30 AM	0	0	0	0	0	0	0	0	0	0	0	0	0
4/24/2024	1:45 AM	0	0	0	0	0	0	0	0	0	0	0	0	0
4/24/2024	2:00 AM	0	0	0	0	0	0	0	0	0	0	0	0	0
4/24/2024	2:15 AM	0	0	0	0	0	0	0	0	0	0	0	0	0
4/24/2024	2:30 AM	0	0	0	0	0	0	0	0	0	0	0	0	0
4/24/2024	2:45 AM	0	0	0	0	0	0	0	0	0	0	0	0	0
4/24/2024	3:00 AM	0	0	0	0	0	0	0	0	0	0	0	0	0
4/24/2024	3:15 AM	0	0	0	0	0	0	0	0	0	0	0	0	0
4/24/2024	3:30 AM	0	0	0	0	0	0	0	0	0	0	0	0	0
4/24/2024	3:45 AM	0	0	0	0	0	0	0	0	0	0	0	0	0
4/24/2024	4:00 AM	0	0	0	0	0	0	0	0	0	0	0	0	0
4/24/2024	4:15 AM	0	0	0	0	0	0	0	0	0	0	0	0	0
4/24/2024	4:30 AM	0	0	0	0	0	0	0	0	0	0	0	0	0
4/24/2024	4:45 AM	0	0	0	0	0	0	0	0	0	0	0	0	0
4/24/2024	5:00 AM	0	0	0	0	0	0	0	0	0	0	0	0	0
4/24/2024	5:15 AM	0	0	0	0	0	0	0	0	0	0	0	0	0
4/24/2024	5:30 AM	0	0	0	0	0	0	0	0	0	0	0	0	0
4/24/2024	5:45 AM	0	0	0	0	0	0	0	0	0	0	0	0	0
4/24/2024	6:00 AM	0	0	0	0	0	0	0	0	0	0	0	0	0
4/24/2024	6:15 AM	0	0	0	0	0	0	0	0	0	0	0	0	0
4/24/2024	6:30 AM	0	0	0	0	0	0	0	0	0	0	0	0	0
4/24/2024	6:45 AM	0	0	0	0	0	0	0	0	0	0	0	0	0
4/24/2024	7:00 AM	0	0	0	0	0	0	0	0	0	0	0	0	0
4/24/2024	7:15 AM	0	0	0	0	0	0	0	0	0	0	0	0	0
4/24/2024	7:30 AM	0	0	0	0	0	0	0	0	0	0	0	0	0
4/24/2024	7:45 AM	0	0	0	0	0	0	0	0	0	0	0	0	0
4/24/2024	8:00 AM	0	0	0	0	0	0	0	0	0	0	0	0	0
4/24/2024	8:15 AM	0	0	0	0	0	0	0	0	0	0	0	0	0
4/24/2024	8:30 AM	0	0	0	0	0	0	0	0	0	0	0	0	0
4/24/2024	8:45 AM	0	0	0	0	0	0	0	0	0	0	0	0	0
4/24/2024	9:00 AM	0	0	0	0	0	0	0	0	0	0	0	0	0
4/24/2024	9:15 AM	0	0	0	0	0	0	0	0	0	0	0	0	0
4/24/2024	9:30 AM	0	0	0	0	0	0	0	0	0	0	0	0	0
4/24/2024	9:45 AM	0	0	0	0	0	0	0	0	0	0	0	0	0
4/24/2024	10:00 AM	0	0	0	0	0	0	0	0	0	0	0	0	0
4/24/2024	10:15 AM	0	0	0	0	0	0	0	0	0	0	0	0	0
4/24/2024	10:30 AM	0	0	0	0	0	0	0	0	0	0	0	0	0
4/24/2024	10:45 AM	0	0	0	0	0	0	0	0	0	0	0	0	0
4/24/2024	11:00 AM	0	0	0	0	0	0	0	0	0	0	0	0	0
4/24/2024	11:15 AM	0	0	0	0	0	0	0	0	0	0	0	0	0
4/24/2024	11:30 AM	0	0	0	0	0	0	0	0	0	0	0	0	0
4/24/2024	11:45 AM	0	0	0	0	0	0	0	0	0	0	0	0	0
4/24/2024	12:00 PM	0	0	0	0	0	0	0	0	0	0	0	0	0
4/24/2024	12:15 PM	0	0	0	0	0	0	0	0	0	0	0	0	0
4/24/2024	12:30 PM	0	0	0	0	0	0	0	0	0	0	0	0	0
4/24/2024	12:45 PM	0	0	0	0	0	0	0	0	0	0	0	0	0
4/24/2024	1:00 PM	0	0	0	0	0	0	0	0	0	0	0	0	0
4/24/2024	1:15 PM	0	0	0	0	0	0	0	0	0	0	0	0	0
4/24/2024	1:30 PM	0	0	0	0	0	0	0	0	0	0	0	0	0
4/24/2024	1:45 PM	0	0	0	0	0	0	0	0	0	0	0	0	0
4/24/2024	2:00 PM	0	0	0	0	0	0	0	0	0	0	0	0	0
4/24/2024	2:15 PM	0	0	0	0	0	0	0	0	0	0	0	0	0
4/24/2024	2:30 PM	0	0	0	0	0	0	0	0	0	0	0	0	0
4/24/2024	2:45 PM	0	0	0	0	0	0	0	0	0	0	0	0	0
4/24/2024	3:00 PM	0	0	0	0	0	0	0	0	0	0	0	0	0
4/24/2024	3:15 PM	0	0	0	0	0	0	0	0	0	0	0	0	0
4/24/2024	3:30 PM	0	0	0	0	0	0	0	0	0	0	0	0	0
4/24/2024	3:45 PM	0	0	0	0	0	0	0	0	0	0	0	0	0
4/24/2024	4:00 PM	0	0	0	0	0	0	0	0	0	0	0	0	0
4/24/2024	4:15 PM	0	0	0	0	0	0	0	0	0	0	0	0	0
4/24/2024	4:30 PM	0	0	0	0	0	0	0	0	0	0	0	0	0
4/24/2024	4:45 PM	0	0	0	0	0	0	0	0	0	0	0	0	0
4/24/2024	5:00 PM	0	0	0	0	0	0	0	0	0	0	0	0	0
4/24/2024	5:15 PM	0	0	0	0	0	0	0	0	0	0	0	0	0
4/24/2024	5:30 PM	0	0	0	0	0	0	0	0	0	0	0	0	0
4/24/2024	5:45 PM	0	0	0	0	0	0	0	0	0	0	0	0	0
4/24/2024	6:00 PM	0	0	0	0	0	0	0	0	0	0	0	0	0
4/24/2024	6:15 PM	0	0	0	0	0	0	0	0	0	0	0	0	0
4/24/2024	6:30 PM	0	0	0	0	0	0	0	0	0	0	0	0	0
4/24/2024	6:45 PM	0	0	0	0	0	0	0	0	0	0	0	0	0
4/24/2024	7:00 PM	0	0	0	0	0	0	0	0	0	0	0	0	0
4/24/2024	7:15 PM	0	0	0	0	0	0	0	0	0	0	0	0	0
4/24/2024	7:30 PM	0	0	0	0	0	0	0	0	0	0	0	0	0
4/24/2024	7:45 PM	0	0	0	0	0	0	0	0	0	0	0	0	0
4/24/2024	8:00 PM	0	0	0	0	0	0	0	0	0	0	0	0	0
4/24/2024	8:15 PM	0	0	0	0	0	0	0	0	0	0	0	0	0
4/24/2024	8:30 PM	0	0	0	0	0	0	0	0	0	0	0	0	0
4/24/2024	8:45 PM	0	0	0	0	0	0	0	0	0	0	0	0	0
4/24/2024	9:00 PM	0	0	0	0	0	0	0	0	0	0	0	0	0
4/24/2024	9:15 PM	0	0	0	0	0	0	0	0	0	0	0	0	0
4/24/2024	9:30 PM	0	0	0	0	0	0	0	0	0	0	0	0	0
4/24/2024	9:45 PM	0	0	0	0	0	0	0	0	0	0	0	0	0
4/24/2024	10:00 PM	0	0	0	0	0	0	0	0	0	0	0	0	0
4/24/2024	10:15 PM	0	0	0	0	0	0	0	0	0	0	0	0	0
4/24/2024	10:30 PM	0	0	0	0	0	0	0	0	0	0	0	0	0
4/24/2024	10:45 PM	0	0	0	0	0	0	0	0	0	0	0	0	0
4/24/2024	11:00 PM	0	0	0	0	0	0	0	0	0	0	0	0	0
4/24/2024	11:15 PM	0	0	0	0	0	0	0	0	0	0	0	0	0
4/24/2024	11:30 PM	0	0	0	0	0	0	0	0	0	0	0	0	0
4/24/2024	11:45 PM	0	0	0	0	0	0	0	0	0	0	0	0	0

4/25/2024	12:00 AM	0	0	0	0	0	0	0	0	0	0	0	0	0
4/25/2024	12:15 AM	0	0	0	0	0	0	0	0	0	0	0	0	0
4/25/2024	12:30 AM	0	0	0	0	0	0	0	0	0	0	0	0	0
4/25/2024	12:45 AM	0	0	0	0	0	0	0	0	0	0	0	0	0
4/25/2024	1:00 AM	0	0	0	0	0	0	0	0	0	0	0	0	0
4/25/2024	1:15 AM	0	0	0	0	0	0	0	0	0	0	0	0	0
4/25/2024	1:30 AM	0	0	0	0	0	0	0	0	0	0	0	0	0
4/25/2024	1:45 AM	0	0	0	0	0	0	0	0	0	0	0	0	0
4/25/2024	2:00 AM	0	0	0	0	0	0	0	0	0	0	0	0	0
4/25/2024	2:15 AM	0	0	0	0	0	0	0	0	0	0	0	0	0
4/25/2024	2:30 AM	0	0	0	0	0	0	0	0	0	0	0	0	0
4/25/2024	2:45 AM	0	0	0	0	0	0	0	0	0	0	0	0	0
4/25/2024	3:00 AM	0	0	0	0	0	0	0	0	0	0	0	0	0
4/25/2024	3:15 AM	0	0	0	0	0	0	0	0	0	0	0	0	0
4/25/2024	3:30 AM	0	0	0	0	0	0	0	0	0	0	0	0	0
4/25/2024	3:45 AM	0	0	0	0	0	0	0	0	0	0	0	0	0
4/25/2024	4:00 AM	0	0	0	0	0	0	0	0	0	0	0	0	0
4/25/2024	4:15 AM	0	0	0	0	0	0	0	0	0	0	0	0	0
4/25/2024	4:30 AM	0	0	0	0	0	0	0	0	0	0	0	0	0
4/25/2024	4:45 AM	0	0	0	0	0	0	0	0	0	0	0	0	0
4/25/2024	5:00 AM	0	0	0	0	0	0	0	0	0	0	0	0	0
4/25/2024	5:15 AM	0	0	0	0	0	0	0	0	0	0	0	0	0
4/25/2024	5:30 AM	0	0	0	0	0	0	0	0	0	0	0	0	0
4/25/2024	5:45 AM	0	0	0	0	0	0	0	0	0	0	0	0	0
4/25/2024	6:00 AM	0	0	0	0	0	0	0	0	0	0	0	0	0
4/25/2024	6:15 AM	0	0	0	0	0	0	0	0	0	0	0	0	0
4/25/2024	6:30 AM	0	0	0	0	0	0	0	0	0	0	0	0	0
4/25/2024	6:45 AM	0	0	0	0	0	0	0	0	0	0	0	0	0
4/25/2024	7:00 AM	0	0	0	0	0	0	0	0	0	0	0	0	0
4/25/2024	7:15 AM	0	0	0	0	0	0	0	0	0	0	0	0	0
4/25/2024	7:30 AM	0	0	0	0	0	0	0	0	0	0	0	0	0
4/25/2024	7:45 AM	0	0	0	0	0	0	0	0	0	0	0	0	0
4/25/2024	8:00 AM	0	0	0	0	0	0	0	0	0	0	0	0	0
4/25/2024	8:15 AM	0	0	0	0	0	0	0	0	0	0	0	0	0
4/25/2024	8:30 AM	0	0	0	0	0	0	0	0	0	0	0	0	0
4/25/2024	8:45 AM	0	0	0	0	0	0	0	0	0	0	0	0	0
4/25/2024	9:00 AM	0	0	0	0	0	0	0	0	0	0	0	0	0
4/25/2024	9:15 AM	0	0	0	0	0	0	0	0	0	0	0	0	0
4/25/2024	9:30 AM	0	0	0	0	0	0	0	0	0	0	0	0	0
4/25/2024	9:45 AM	0	0	0	0	0	0	0	0	0	0	0	0	0
4/25/2024	10:00 AM	0	0	0	0	0	0	0	0	0	0	0	0	0
4/25/2024	10:15 AM	0	0	0	0	0	0	0	0	0	0	0	0	0
4/25/2024	10:30 AM	0	0	0	0	0	0	0	0	0	0	0	0	0
4/25/2024	10:45 AM	0	0	0	0	0	0	0	0	0	0	0	0	0
4/25/2024	11:00 AM	0	0	0	0	0	0	0	0	0	0	0	0	0
4/25/2024	11:15 AM	0	0	0	0	0	0	0	0	0	0	0	0	0
4/25/2024	11:30 AM	0	0	0	0	0	0	0	0	0	0	0	0	0
4/25/2024	11:45 AM	0	0	0	0	0	0	0	0	0	0	0	0	0
4/25/2024	12:00 PM	0	0	0	0	0	0	0	0	0	0	0	0	0
4/25/2024	12:15 PM	0	0	0	0	0	0	0	0	0	0	0	0	0
4/25/2024	12:30 PM	0	0	0	0	0	0	0	0	0	0	0	0	0
4/25/2024	12:45 PM	0	0	0	0	0	0	0	0	0	0	0	0	0
4/25/2024	1:00 PM	0	0	0	0	0	0	0	0	0	0	0	0	0
4/25/2024	1:15 PM	0	0	0	0	0	0	0	0	0	0	0	0	0
4/25/2024	1:30 PM	0	0	0	0	0	0	0	0	0	0	0	0	0
4/25/2024	1:45 PM	0	0	0	0	0	0	0	0	0	0	0	0	0
4/25/2024	2:00 PM	0	0	0	0	0	0	0	0	0	0	0	0	0
4/25/2024	2:15 PM	0	0	0	0	0	0	0	0	0	0	0	0	0
4/25/2024	2:30 PM	0	0	0	0	0	0	0	0	0	0	0	0	0
4/25/2024	2:45 PM	0	0	0	0	0	0	0	0	0	0	0	0	0
4/25/2024	3:00 PM	0	0	0	0	0	0	0	0	0	0	0	0	0
4/25/2024	3:15 PM	0	0	0	0	0	0	0	0	0	0	0	0	0
4/25/2024	3:30 PM	0	0	0	0	0	0	0	0	0	0	0	0	0
4/25/2024	3:45 PM	0	0	0	0	0	0	0	0	0	0	0	0	0
4/25/2024	4:00 PM	0	0	0	0	0	0	0	0	0	0	0	0	0
4/25/2024	4:15 PM	0	0	0	0	0	0	0	0	0	0	0	0	0
4/25/2024	4:30 PM	0	0	0	0	0	0	0	0	0	0	0	0	0
4/25/2024	4:45 PM	0	0	0	0	0	0	0	0	0	0	0	0	0
4/25/2024	5:00 PM	0	0	0	0	0	0	0	0	0	0	0	0	0
4/25/2024	5:15 PM	0	0	0	0	0	0	0	0	0	0	0	0	0
4/25/2024	5:30 PM	0	0	0	0	0	0	0	0	0	0	0	0	0
4/25/2024	5:45 PM	0	0	0	0	0	0	0	0	0	0	0	0	0
4/25/2024	6:00 PM	0	0	0	0	0	0	0	0	0	0	0	0	0
4/25/2024	6:15 PM	0	0	0	0	0	0	0	0	0	0	0	0	0
4/25/2024	6:30 PM	0	0	0	0	0	0	0	0	0	0	0	0	0
4/25/2024	6:45 PM	0	0	0	0	0	0	0	0	0	0	0	0	0
4/25/2024	7:00 PM	0	0	0	0	0	0	0	0	0	0	0	0	0
4/25/2024	7:15 PM	0	0	0	0	0	0	0	0	0	0	0	0	0
4/25/2024	7:30 PM	0	0	0	0	0	0	0	0	0	0	0	0	0
4/25/2024	7:45 PM	0	0	0	0	0	0	0	0	0	0	0	0	0
4/25/2024	8:00 PM	0	0	0	0	0	0	0	0	0	0	0	0	0
4/25/2024	8:15 PM	0	0	0	0	0	0	0	0	0	0	0	0	0
4/25/2024	8:30 PM	0	0	0	0	0	0	0	0	0	0	0	0	0
4/25/2024	8:45 PM	0	0	0	0	0	0	0	0	0	0	0	0	0
4/25/2024	9:00 PM	0	0	0	0	0	0	0	0	0	0	0	0	0
4/25/2024	9:15 PM	0	0	0	0	0	0	0	0	0	0	0	0	0
4/25/2024	9:30 PM	0	0	0	0	0	0	0	0	0	0	0	0	0
4/25/2024	9:45 PM	0	0	0	0	0	0	0	0	0	0	0	0	0
4/25/2024	10:00 PM	0	0	0	0	0	0	0	0	0	0	0	0	0
4/25/2024	10:15 PM	0	0	0	0	0	0	0	0	0	0	0	0	0
4/25/2024	10:30 PM	0	0	0	0	0	0	0	0	0	0	0	0	0
4/25/2024	10:45 PM	0	0	0	0	0	0	0	0	0	0	0	0	0
4/25/2024	11:00 PM	0	0	0	0	0	0	0	0	0	0	0	0	0
4/25/2024	11:15 PM	0	0	0	0	0	0	0	0	0	0	0	0	0
4/25/2024	11:30 PM	0	0	0	0	0	0	0	0	0	0	0	0	0
4/25/2024	11:45 PM	0	0	0	0	0	0	0	0	0	0	0	0	0

4/26/2024	12:00 AM	0	0	0	0	0	0	0	0	0	0	0	0	0
4/26/2024	12:15 AM	0	0	0	0	0	0	0	0	0	0	0	0	0
4/26/2024	12:30 AM	0	0	0	0	0	0	0	0	0	0	0	0	0
4/26/2024	12:45 AM	0	0	0	0	0	0	0	0	0	0	0	0	0
4/26/2024	1:00 AM	0	0	0	0	0	0	0	0	0	0	0	0	0
4/26/2024	1:15 AM	0	0	0	0	0	0	0	0	0	0	0	0	0
4/26/2024	1:30 AM	0	0	0	0	0	0	0	0	0	0	0	0	0
4/26/2024	1:45 AM	0	0	0	0	0	0	0	0	0	0	0	0	0
4/26/2024	2:00 AM	0	0	0	0	0	0	0	0	0	0	0	0	0
4/26/2024	2:15 AM	0	0	0	0	0	0	0	0	0	0	0	0	0
4/26/2024	2:30 AM	0	0	0	0	0	0	0	0	0	0	0	0	0
4/26/2024	2:45 AM	0	0	0	0	0	0	0	0	0	0	0	0	0
4/26/2024	3:00 AM	0	0	0	0	0	0	0	0	0	0	0	0	0
4/26/2024	3:15 AM	0	0	0	0	0	0	0	0	0	0	0	0	0
4/26/2024	3:30 AM	0	0	0	0	0	0	0	0	0	0	0	0	0
4/26/2024	3:45 AM	0	0	0	0	0	0	0	0	0	0	0	0	0
4/26/2024	4:00 AM	0	0	0	0	0	0	0	0	0	0	0	0	0
4/26/2024	4:15 AM	0	0	0	0	0	0	0	0	0	0	0	0	0
4/26/2024	4:30 AM	0	0	0	0	0	0	0	0	0	0	0	0	0
4/26/2024	4:45 AM	0	0	0	0	0	0	0	0	0	0	0	0	0
4/26/2024	5:00 AM	0	0	0	0	0	0	0	0	0	0	0	0	0
4/26/2024	5:15 AM	0	0	0	0	0	0	0	0	0	0	0	0	0
4/26/2024	5:30 AM	0	0	0	0	0	0	0	0	0	0	0	0	0
4/26/2024	5:45 AM	0	0	0	0	0	0	0	0	0	0	0	0	0
4/26/2024	6:00 AM	0	0	0	0	0	0	0	0	0	0	0	0	0
4/26/2024	6:15 AM	0	0	0	0	0	0	0	0	0	0	0	0	0
4/26/2024	6:30 AM	0	0	0	0	0	0	0	0	0	0	0	0	0
4/26/2024	6:45 AM	0	0	0	0	0	0	0	0	0	0	0	0	0
4/26/2024	7:00 AM	0	0	0	0	0	0	0	0	0	0	0	0	0
4/26/2024	7:15 AM	0	0	0	0	0	0	0	0	0	0	0	0	0
4/26/2024	7:30 AM	0	0	0	0	0	0	0	0	0	0	0	0	0
4/26/2024	7:45 AM	0	0	0	0	0	0	0	0	0	0	0	0	0
4/26/2024	8:00 AM	0	0	0	0	0	0	0	0	0	0	0	0	0
4/26/2024	8:15 AM	0	0	0	0	0	0	0	0	0	0	0	0	0
4/26/2024	8:30 AM	0	0	0	0	0	0	0	0	0	0	0	0	0
4/26/2024	8:45 AM	0	0	0	0	0	0	0	0	0	0	0	0	0
4/26/2024	9:00 AM	0	0	0	0	0	0	0	0	0	0	0	0	0
4/26/2024	9:15 AM	0	0	0	0	0	0	0	0	0	0	0	0	0
4/26/2024	9:30 AM	0	0	0	0	0	0	0	0	0	0	0	0	0
4/26/2024	9:45 AM	0	0	0	0	0	0	0	0	0	0	0	0	0
4/26/2024	10:00 AM	0	0	0	0	0	0	0	0	0	0	0	0	0
4/26/2024	10:15 AM	0	0	0	0	0	0	0	0	0	0	0	0	0
4/26/2024	10:30 AM	0	0	0	0	0	0	0	0	0	0	0	0	0
4/26/2024	10:45 AM	0	0	0	0	0	0	0	0	0	0	0	0	0
4/26/2024	11:00 AM	0	0	0	0	0	0	0	0	0	0	0	0	0
4/26/2024	11:15 AM	0	0	0	0	0	0	0	0	0	0	0	0	0
4/26/2024	11:30 AM	0	0	0	0	0	0	0	0	0	0	0	0	0
4/26/2024	11:45 AM	0	0	0	0	0	0	0	0	0	0	0	0	0
4/26/2024	12:00 PM	0	0	0	0	0	0	0	0	0	0	0	0	0
4/26/2024	12:15 PM	0	0	0	0	0	0	0	0	0	0	0	0	0
4/26/2024	12:30 PM	0	0	0	0	0	0	0	0	0	0	0	0	0
4/26/2024	12:45 PM	0	0	0	0	0	0	0	0	0	0	0	0	0
4/26/2024	1:00 PM	0	0	0	0	0	0	0	0	0	0	0	0	0
4/26/2024	1:15 PM	0	0	0	0	0	0	0	0	0	0	0	0	0
4/26/2024	1:30 PM	0	0	0	0	0	0	0	0	0	0	0	0	0
4/26/2024	1:45 PM	0	0	0	0	0	0	0	0	0	0	0	0	0
4/26/2024	2:00 PM	0	0	0	0	0	0	0	0	0	0	0	0	0
4/26/2024	2:15 PM	0	0	0	0	0	0	0	0	0	0	0	0	0
4/26/2024	2:30 PM	0	0	0	0	0	0	0	0	0	0	0	0	0
4/26/2024	2:45 PM	0	0	0	0	0	0	0	0	0	0	0	0	0
4/26/2024	3:00 PM	0	0	0	0	0	0	0	0	0	0	0	0	0
4/26/2024	3:15 PM	0	0	0	0	0	0	0	0	0	0	0	0	0
4/26/2024	3:30 PM	0	0	0	0	0	0	0	0	0	0	0	0	0
4/26/2024	3:45 PM	0	0	0	0	0	0	0	0	0	0	0	0	0
4/26/2024	4:00 PM	0	0	0	0	0	0	0	0	0	0	0	0	0
4/26/2024	4:15 PM	0	0	0	0	0	0	0	0	0	0	0	0	0
4/26/2024	4:30 PM	0	0	0	0	0	0	0	0	0	0	0	0	0
4/26/2024	4:45 PM	0	0	0	0	0	0	0	0	0	0	0	0	0
4/26/2024	5:00 PM	0	0	0	0	0	0	0	0	0	0	0	0	0
4/26/2024	5:15 PM	0	0	0	0	0	0	0	0	0	0	0	0	0
4/26/2024	5:30 PM	0	0	0	0	0	0	0	0	0	0	0	0	0
4/26/2024	5:45 PM	0	0	0	0	0	0	0	0	0	0	0	0	0
4/26/2024	6:00 PM	0	0	0	0	0	0	0	0	0	0	0	0	0
4/26/2024	6:15 PM	0	0	0	0	0	0	0	0	0	0	0	0	0
4/26/2024	6:30 PM	0	0	0	0	0	0	0	0	0	0	0	0	0
4/26/2024	6:45 PM	0	0	0	0	0	0	0	0	0	0	0	0	0
4/26/2024	7:00 PM	0	0	0	0	0	0	0	0	0	0	0	0	0
4/26/2024	7:15 PM	0	0	0	0	0	0	0	0	0	0	0	0	0
4/26/2024	7:30 PM	0	0	0	0	0	0	0	0	0	0	0	0	0
4/26/2024	7:45 PM	0	0	0	0	0	0	0	0	0	0	0	0	0
4/26/2024	8:00 PM	0	0	0	0	0	0	0	0	0	0	0	0	0
4/26/2024	8:15 PM	0	0	0	0	0	0	0	0	0	0	0	0	0
4/26/2024	8:30 PM	0	0	0	0	0	0	0	0	0	0	0	0	0
4/26/2024	8:45 PM	0	0	0	0	0	0	0	0	0	0	0	0	0
4/26/2024	9:00 PM	0	0	0	0	0	0	0	0	0	0	0	0	0
4/26/2024	9:15 PM	0	0	0	0	0	0	0	0	0	0	0	0	0
4/26/2024	9:30 PM	0	0	0	0	0	0	0	0	0	0	0	0	0
4/26/2024	9:45 PM	0	0	0	0	0	0	0	0	0	0	0	0	0
4/26/2024	10:00 PM	0	0	0	0	0	0	0	0	0	0	0	0	0
4/26/2024	10:15 PM	0	0	0	0	0	0	0	0	0	0	0	0	0
4/26/2024	10:30 PM	0	0	0	0	0	0	0	0	0	0	0	0	0
4/26/2024	10:45 PM	0	0	0	0	0	0	0	0	0	0	0	0	0
4/26/2024	11:00 PM	0	0	0	0	0	0	0	0	0	0	0	0	0
4/26/2024	11:15 PM	0	0	0	0	0	0	0	0	0	0	0	0	0
4/26/2024	11:30 PM	0	0	0	0	0	0	0	0	0	0	0	0	0
4/26/2024	11:45 PM	0	0	0	0	0	0	0	0	0	0	0	0	0

4/27/2024	12:00 AM	0	0	0	0	0	0	0	0	0	0	0	0	0
4/27/2024	12:15 AM	0	0	0	0	0	0	0	0	0	0	0	0	0
4/27/2024	12:30 AM	0	0	0	0	0	0	0	0	0	0	0	0	0
4/27/2024	12:45 AM	0	0	0	0	0	0	0	0	0	0	0	0	0
4/27/2024	1:00 AM	0	0	0	0	0	0	0	0	0	0	0	0	0
4/27/2024	1:15 AM	0	0	0	0	0	0	0	0	0	0	0	0	0
4/27/2024	1:30 AM	0	0	0	0	0	0	0	0	0	0	0	0	0
4/27/2024	1:45 AM	0	0	0	0	0	0	0	0	0	0	0	0	0
4/27/2024	2:00 AM	0	0	0	0	0	0	0	0	0	0	0	0	0
4/27/2024	2:15 AM	0	0	0	0	0	0	0	0	0	0	0	0	0
4/27/2024	2:30 AM	0	0	0	0	0	0	0	0	0	0	0	0	0
4/27/2024	2:45 AM	0	0	0	0	0	0	0	0	0	0	0	0	0
4/27/2024	3:00 AM	0	0	0	0	0	0	0	0	0	0	0	0	0
4/27/2024	3:15 AM	0	0	0	0	0	0	0	0	0	0	0	0	0
4/27/2024	3:30 AM	0	0	0	0	0	0	0	0	0	0	0	0	0
4/27/2024	3:45 AM	0	0	0	0	0	0	0	0	0	0	0	0	0
4/27/2024	4:00 AM	0	0	0	0	0	0	0	0	0	0	0	0	0
4/27/2024	4:15 AM	0	0	0	0	0	0	0	0	0	0	0	0	0
4/27/2024	4:30 AM	0	0	0	0	0	0	0	0	0	0	0	0	0
4/27/2024	4:45 AM	0	0	0	0	0	0	0	0	0	0	0	0	0
4/27/2024	5:00 AM	0	0	0	0	0	0	0	0	0	0	0	0	0
4/27/2024	5:15 AM	0	0	0	0	0	0	0	0	0	0	0	0	0
4/27/2024	5:30 AM	0	0	0	0	0	0	0	0	0	0	0	0	0
4/27/2024	5:45 AM	0	0	0	0	0	0	0	0	0	0	0	0	0
4/27/2024	6:00 AM	0	0	0	0	0	0	0	0	0	0	0	0	0
4/27/2024	6:15 AM	0	0	0	0	0	0	0	0	0	0	0	0	0
4/27/2024	6:30 AM	0	0	0	0	0	0	0	0	0	0	0	0	0
4/27/2024	6:45 AM	0	0	0	0	0	0	0	0	0	0	0	0	0
4/27/2024	7:00 AM	0	0	0	0	0	0	0	0	0	0	0	0	0
4/27/2024	7:15 AM	0	0	0	0	0	0	0	0	0	0	0	0	0
4/27/2024	7:30 AM	0	0	0	0	0	0	0	0	0	0	0	0	0
4/27/2024	7:45 AM	0	0	0	0	0	0	0	0	0	0	0	0	0
4/27/2024	8:00 AM	0	0	0	0	0	0	0	0	0	0	0	0	0
4/27/2024	8:15 AM	0	0	0	0	0	0	0	0	0	0	0	0	0
4/27/2024	8:30 AM	0	0	0	0	0	0	0	0	0	0	0	0	0
4/27/2024	8:45 AM	0	0	0	0	0	0	0	0	0	0	0	0	0
4/27/2024	9:00 AM	0	0	0	0	0	0	0	0	0	0	0	0	0
4/27/2024	9:15 AM	0	0	0	0	0	0	0	0	0	0	0	0	0
4/27/2024	9:30 AM	0	0	0	0	0	0	0	0	0	0	0	0	0
4/27/2024	9:45 AM	0	0	0	0	0	0	0	0	0	0	0	0	0
4/27/2024	10:00 AM	0	0	0	0	0	0	0	0	0	0	0	0	0
4/27/2024	10:15 AM	0	0	0	0	0	0	0	0	0	0	0	0	0
4/27/2024	10:30 AM	0	0	0	0	0	0	0	0	0	0	0	0	0
4/27/2024	10:45 AM	0	0	0	0	0	0	0	0	0	0	0	0	0
4/27/2024	11:00 AM	0	0	0	0	0	0	0	0	0	0	0	0	0
4/27/2024	11:15 AM	0	0	0	0	0	0	0	0	0	0	0	0	0
4/27/2024	11:30 AM	0	0	0	0	0	0	0	0	0	0	0	0	0
4/27/2024	11:45 AM	0	0	0	0	0	0	0	0	0	0	0	0	0
4/27/2024	12:00 PM	0	0	0	0	0	0	0	0	0	0	0	0	0
4/27/2024	12:15 PM	0	0	0	0	0	0	0	0	0	0	0	0	0
4/27/2024	12:30 PM	0	0	0	0	0	0	0	0	0	0	0	0	0
4/27/2024	12:45 PM	0	0	0	0	0	0	0	0	0	0	0	0	0
4/27/2024	1:00 PM	0	0	0	0	0	0	0	0	0	0	0	0	0
4/27/2024	1:15 PM	0	0	0	0	0	0	0	0	0	0	0	0	0
4/27/2024	1:30 PM	0	0	0	0	0	0	0	0	0	0	0	0	0
4/27/2024	1:45 PM	0	0	0	0	0	0	0	0	0	0	0	0	0
4/27/2024	2:00 PM	0	0	0	0	0	0	0	0	0	0	0	0	0
4/27/2024	2:15 PM	0	0	0	0	0	0	0	0	0	0	0	0	0
4/27/2024	2:30 PM	0	0	0	0	0	0	0	0	0	0	0	0	0
4/27/2024	2:45 PM	0	0	0	0	0	0	0	0	0	0	0	0	0
4/27/2024	3:00 PM	0	0	0	0	0	0	0	0	0	0	0	0	0
4/27/2024	3:15 PM	0	0	0	0	0	0	0	0	0	0	0	0	0
4/27/2024	3:30 PM	0	0	0	0	0	0	0	0	0	0	0	0	0
4/27/2024	3:45 PM	0	0	0	0	0	0	0	0	0	0	0	0	0
4/27/2024	4:00 PM	0	0	0	0	0	0	0	0	0	0	0	0	0
4/27/2024	4:15 PM	0	0	0	0	0	0	0	0	0	0	0	0	0
4/27/2024	4:30 PM	0	0	0	0	0	0	0	0	0	0	0	0	0
4/27/2024	4:45 PM	0	0	0	0	0	0	0	0	0	0	0	0	0
4/27/2024	5:00 PM	0	0	0	0	0	0	0	0	0	0	0	0	0
4/27/2024	5:15 PM	0	0	0	0	0	0	0	0	0	0	0	0	0
4/27/2024	5:30 PM	0	0	0	0	0	0	0	0	0	0	0	0	0
4/27/2024	5:45 PM	0	0	0	0	0	0	0	0	0	0	0	0	0
4/27/2024	6:00 PM	0	0	0	0	0	0	0	0	0	0	0	0	0
4/27/2024	6:15 PM	0	0	0	0	0	0	0	0	0	0	0	0	0
4/27/2024	6:30 PM	0	0	0	0	0	0	0	0	0	0	0	0	0
4/27/2024	6:45 PM	0	0	0	0	0	0	0	0	0	0	0	0	0
4/27/2024	7:00 PM	0	0	0	0	0	0	0	0	0	0	0	0	0
4/27/2024	7:15 PM	0	0	0	0	0	0	0	0	0	0	0	0	0
4/27/2024	7:30 PM	0	0	0	0	0	0	0	0	0	0	0	0	0
4/27/2024	7:45 PM	0	0	0	0	0	0	0	0	0	0	0	0	0
4/27/2024	8:00 PM	0	0	0	0	0	0	0	0	0	0	0	0	0
4/27/2024	8:15 PM	0	0	0	0	0	0	0	0	0	0	0	0	0
4/27/2024	8:30 PM	0	0	0	0	0	0	0	0	0	0	0	0	0
4/27/2024	8:45 PM	0	0	0	0	0	0	0	0	0	0	0	0	0
4/27/2024	9:00 PM	0	0	0	0	0	0	0	0	0	0	0	0	0
4/27/2024	9:15 PM	0	0	0	0	0	0	0	0	0	0	0	0	0
4/27/2024	9:30 PM	0	0	0	0	0	0	0	0	0	0	0	0	0
4/27/2024	9:45 PM	0	0	0	0	0	0	0	0	0	0	0	0	0
4/27/2024	10:00 PM	0	0	0	0	0	0	0	0	0	0	0	0	0
4/27/2024	10:15 PM	0	0	0	0	0	0	0	0	0	0	0	0	0
4/27/2024	10:30 PM	0	0	0	0	0	0	0	0	0	0	0	0	0
4/27/2024	10:45 PM	0	0	0	0	0	0	0	0	0	0	0	0	0
4/27/2024	11:00 PM	0	0	0	0	0	0	0	0	0	0	0	0	0
4/27/2024	11:15 PM	0	0	0	0	0	0	0	0	0	0	0	0	0
4/27/2024	11:30 PM	0	0	0	0	0	0	0	0	0	0	0	0	0
4/27/2024	11:45 PM	0	0	0	0	0	0	0	0	0	0	0	0	0

NB
File Name:
Start Date: 4/21/2024
Start Time: 0
Site Code: 8
Station ID: 1
Location 1: I-26 N/Bound On-Ramp, north of I-20
Location 2:

Date	Time	1	2	3	4	5	6	7	8	9	10	11	12	13
4/21/2024	12:00 AM	0	215	27	1	4	0	0	0	8	0	0	0	0
4/21/2024	12:15 AM	0	202	31	1	4	0	0	0	5	0	0	0	0
4/21/2024	12:30 AM	0	179	29	1	2	0	0	0	3	0	0	0	0
4/21/2024	12:45 AM	0	155	25	0	0	0	0	0	2	0	0	0	0
4/21/2024	1:00 AM	0	138	23	0	1	0	0	0	0	0	0	0	0
4/21/2024	1:15 AM	0	114	17	0	2	0	0	0	2	0	0	0	0
4/21/2024	1:30 AM	0	121	22	0	2	0	0	0	4	0	0	0	0
4/21/2024	1:45 AM	0	101	18	0	2	0	0	0	5	0	0	0	0
4/21/2024	2:00 AM	0	111	22	0	1	0	0	0	6	0	0	0	0
4/21/2024	2:15 AM	0	103	18	0	0	0	0	0	4	0	0	0	0
4/21/2024	2:30 AM	0	87	12	0	0	0	0	0	3	0	0	0	0
4/21/2024	2:45 AM	0	89	12	0	0	0	0	0	2	0	0	0	0
4/21/2024	3:00 AM	0	78	9	0	1	0	0	0	3	0	0	0	0
4/21/2024	3:15 AM	0	80	9	0	1	0	0	0	3	0	0	0	0
4/21/2024	3:30 AM	0	81	9	0	2	0	0	0	2	0	0	0	0
4/21/2024	3:45 AM	0	73	8	0	3	0	0	0	2	0	0	0	0
4/21/2024	4:00 AM	0	76	9	0	2	0	0	0	0	0	0	0	0
4/21/2024	4:15 AM	0	79	10	0	3	0	0	0	1	0	0	0	0
4/21/2024	4:30 AM	0	85	11	0	2	0	0	0	1	0	0	0	0
4/21/2024	4:45 AM	0	98	12	0	1	0	0	0	2	0	0	0	0
4/21/2024	5:00 AM	0	98	12	0	1	0	0	0	6	0	0	0	0
4/21/2024	5:15 AM	0	93	11	0	0	0	0	0	6	0	0	0	0
4/21/2024	5:30 AM	0	100	11	0	0	0	0	0	6	0	0	0	0
4/21/2024	5:45 AM	0	126	15	0	1	0	0	1	6	0	0	0	0
4/21/2024	6:00 AM	0	152	23	1	1	0	0	1	3	0	0	0	0
4/21/2024	6:15 AM	0	167	29	1	1	0	0	1	2	0	0	0	0
4/21/2024	6:30 AM	0	174	36	1	2	0	0	1	4	0	0	0	0
4/21/2024	6:45 AM	0	186	41	1	1	2	0	0	4	0	0	0	0
4/21/2024	7:00 AM	0	199	47	1	1	2	0	0	6	0	0	0	0
4/21/2024	7:15 AM	0	232	61	1	1	2	0	0	8	0	0	0	0
4/21/2024	7:30 AM	1	274	75	3	0	2	0	0	8	0	0	0	0
4/21/2024	7:45 AM	1	301	101	4	1	0	0	0	9	0	0	0	0
4/21/2024	8:00 AM	1	335	99	3	1	0	0	0	6	0	0	0	0
4/21/2024	8:15 AM	1	346	102	3	1	0	0	0	7	0	0	0	0
4/21/2024	8:30 AM	0	398	111	1	1	0	0	1	10	0	0	0	0
4/21/2024	8:45 AM	1	431	113	1	1	0	0	1	13	0	0	0	0
4/21/2024	9:00 AM	1	479	129	2	4	0	0	2	19	0	0	0	0
4/21/2024	9:15 AM	1	560	140	2	5	0	0	2	19	0	0	0	0
4/21/2024	9:30 AM	1	622	153	4	6	0	0	1	19	0	0	0	0
4/21/2024	9:45 AM	0	711	180	4	9	0	0	1	17	0	0	0	0
4/21/2024	10:00 AM	0	782	204	4	7	0	0	0	14	0	0	0	0
4/21/2024	10:15 AM	2	839	226	4	7	0	0	0	12	0	0	0	0
4/21/2024	10:30 AM	2	851	244	3	10	0	0	1	15	0	0	0	0
4/21/2024	10:45 AM	2	879	251	3	8	1	0	2	15	0	0	0	0
4/21/2024	11:00 AM	2	929	251	2	7	1	0	4	19	0	0	0	0
4/21/2024	11:15 AM	0	970	243	2	6	1	0	4	21	0	0	0	0
4/21/2024	11:30 AM	1	1034	255	1	3	2	0	3	19	0	0	0	0
4/21/2024	11:45 AM	1	1091	235	1	2	1	0	2	22	0	0	0	0
4/21/2024	12:00 PM	2	1183	234	2	3	2	0	0	17	0	0	0	0
4/21/2024	12:15 PM	4	1280	256	2	3	2	0	1	19	0	0	0	0
4/21/2024	12:30 PM	3	1333	261	2	3	1	0	2	15	0	0	0	0
4/21/2024	12:45 PM	3	1327	258	1	4	1	0	2	13	0	0	0	0
4/21/2024	1:00 PM	2	1276	258	1	3	0	0	4	16	0	0	0	0
4/21/2024	1:15 PM	1	1205	253	1	3	0	0	3	20	0	0	0	0
4/21/2024	1:30 PM	1	1179	242	1	3	0	0	2	21	0	0	0	0
4/21/2024	1:45 PM	1	1231	259	1	1	0	0	2	24	0	0	0	0
4/21/2024	2:00 PM	1	1233	252	0	1	0	0	2	22	0	0	0	0
4/21/2024	2:15 PM	0	1215	233	0	3	0	0	4	18	0	0	0	0
4/21/2024	2:30 PM	0	1162	206	1	4	0	0	4	20	0	0	0	0
4/21/2024	2:45 PM	0	1092	186	1	6	1	0	4	18	0	0	0	0
4/21/2024	3:00 PM	0	1027	202	1	6	1	0	5	18	0	0	0	0
4/21/2024	3:15 PM	0	1037	213	2	5	1	0	3	17	0	0	0	0
4/21/2024	3:30 PM	0	1032	215	1	6	1	0	3	15	0	0	0	0
4/21/2024	3:45 PM	0	1019	223	1	5	0	0	3	15	0	0	0	0
4/21/2024	4:00 PM	0	1030	212	1	7	0	0	1	20	0	0	0	0
4/21/2024	4:15 PM	0	945	193	1	7	0	0	1	21	0	0	0	0
4/21/2024	4:30 PM	1	917	196	1	5	0	0	1	23	0	0	0	0
4/21/2024	4:45 PM	1	857	185	1	4	0	0	1	24	0	0	0	0
4/21/2024	5:00 PM	1	807	174	1	3	0	0	0	19	0	0	0	0
4/21/2024	5:15 PM	1	826	182	1	2	0	0	0	19	1	0	0	0
4/21/2024	5:30 PM	0	795	175	1	1	0	0	0	19	1	0	0	0
4/21/2024	5:45 PM	0	778	166	1	1	0	0	0	15	1	0	0	0
4/21/2024	6:00 PM	0	750	155	1	0	1	0	0	16	1	0	0	0
4/21/2024	6:15 PM	0	699	136	0	0	1	0	0	15	0	0	0	0
4/21/2024	6:30 PM	0	683	126	0	0	1	0	0	15	0	0	0	0
4/21/2024	6:45 PM	1	664	119	0	1	1	0	0	19	0	0	0	0
4/21/2024	7:00 PM	1	623	111	0	3	0	0	0	16	0	0	0	0
4/21/2024	7:15 PM	1	591	103	0	4	0	0	0	16	0	0	0	0
4/21/2024	7:30 PM	1	539	90	0	7	1	0	0	13	0	0	0	0
4/21/2024	7:45 PM	0	469	75	0	6	2	0	0	10	0	0	0	0
4/21/2024	8:00 PM	0	456	73	0	4	2	0	0	11	0	0	0	0
4/21/2024	8:15 PM	0	413	64	0	4	2	0	0	10	0	0	0	0
4/21/2024	8:30 PM	0	389	60	0	1	1	0	0	9	0	0	0	0
4/21/2024	8:45 PM	0	402	66	0	2	0	0	0	7	0	0	0	0
4/21/2024	9:00 PM	0	364	57	0	3	0	0	0	6	0	0	0	0
4/21/2024	9:15 PM	0	344	53	0	3	0	0	0	4	0	0	0	0
4/21/2024	9:30 PM	0	309	45	0	3	0	0	0	9	0	0	0	0
4/21/2024	9:45 PM	0	253	30	0	2	0	0	0	12	0	0	0	0
4/21/2024	10:00 PM	0	215	21	0	2	0	0	0	12	0	0	0	0
4/21/2024	10:15 PM	0	199	18	0	1	0	0	0	15	0	0	0	0
4/21/2024	10:30 PM	0	185	15	0	1	0	0	0	12	0	0	0	0
4/21/2024	10:45 PM	0	179	16	0	1	0	0	0	10	0	0	0	0
4/21/2024	11:00 PM	0	170	16	0	0	0	0	0	11	0	0	0	0
4/21/2024	11:15 PM	0	151	11	0	0	0	0	0	13	0	0	0	0
4/21/2024	11:30 PM	0	136	8	0	0	0	0	0	13	0	0	0	0
4/21/2024	11:45 PM	0	118	3	0	0	0	0	0	13	0	0	0	0

4/22/2024	12:00 AM	0	98	0	0	0	0	0	0	12	0	0	0	0
4/22/2024	12:15 AM	0	89	0	0	0	0	0	0	11	0	0	0	0
4/22/2024	12:30 AM	0	84	0	0	0	0	0	0	13	0	0	0	0
4/22/2024	12:45 AM	0	77	1	0	0	0	0	0	14	0	0	0	0
4/22/2024	1:00 AM	0	70	1	0	1	0	0	0	16	0	0	0	0
4/22/2024	1:15 AM	0	63	1	0	1	0	0	0	13	0	0	0	0
4/22/2024	1:30 AM	0	58	1	0	2	0	0	0	11	0	0	0	0
4/22/2024	1:45 AM	0	57	0	0	2	0	0	0	14	0	0	0	0
4/22/2024	2:00 AM	0	58	0	0	3	0	0	0	15	0	0	0	0
4/22/2024	2:15 AM	0	61	0	0	3	0	0	0	19	0	0	0	0
4/22/2024	2:30 AM	0	69	0	0	3	0	0	0	24	0	0	0	0
4/22/2024	2:45 AM	0	72	0	0	6	0	0	0	22	0	0	0	0
4/22/2024	3:00 AM	0	87	0	0	5	0	0	0	21	0	0	0	0
4/22/2024	3:15 AM	0	94	0	0	5	0	0	0	21	0	0	0	0
4/22/2024	3:30 AM	0	89	0	0	5	0	0	0	24	0	0	0	0
4/22/2024	3:45 AM	0	106	0	0	4	0	0	0	27	0	0	0	0
4/22/2024	4:00 AM	0	113	0	0	6	0	0	0	34	0	0	0	0
4/22/2024	4:15 AM	0	136	1	0	9	0	0	0	34	0	0	0	0
4/22/2024	4:30 AM	0	190	2	0	10	0	0	0	38	0	0	0	0
4/22/2024	4:45 AM	0	233	4	0	12	0	0	0	43	0	0	0	0
4/22/2024	5:00 AM	0	294	11	0	12	0	0	2	47	0	0	0	0
4/22/2024	5:15 AM	0	309	19	0	14	0	0	2	49	0	0	0	0
4/22/2024	5:30 AM	0	372	32	1	16	0	0	4	52	0	0	0	0
4/22/2024	5:45 AM	0	426	74	2	17	6	0	5	50	0	0	0	0
4/22/2024	6:00 AM	0	493	123	2	17	8	0	3	56	0	0	0	0
4/22/2024	6:15 AM	0	592	176	3	23	11	0	4	65	0	0	0	0
4/22/2024	6:30 AM	0	663	211	2	24	15	0	2	58	0	0	0	0
4/22/2024	6:45 AM	0	783	251	2	24	12	0	2	61	0	0	0	0
4/22/2024	7:00 AM	0	901	282	3	25	15	0	2	56	0	0	0	0
4/22/2024	7:15 AM	1	974	296	3	20	13	0	1	51	0	0	0	0
4/22/2024	7:30 AM	1	955	315	3	25	11	0	1	56	0	0	0	0
4/22/2024	7:45 AM	1	920	290	2	24	8	0	1	55	0	0	0	0
4/22/2024	8:00 AM	1	843	260	1	23	4	0	2	57	0	0	0	0
4/22/2024	8:15 AM	1	793	257	2	24	7	1	3	65	0	0	0	0
4/22/2024	8:30 AM	4	773	254	3	17	7	4	3	59	0	0	0	0
4/22/2024	8:45 AM	4	731	254	3	19	9	4	4	59	2	0	0	0
4/22/2024	9:00 AM	4	702	262	3	22	11	5	4	60	2	0	0	0
4/22/2024	9:15 AM	3	699	255	1	18	8	4	4	53	3	0	0	0
4/22/2024	9:30 AM	0	673	247	1	15	8	5	5	62	3	0	0	0
4/22/2024	9:45 AM	1	662	264	1	11	8	6	3	62	1	0	0	0
4/22/2024	10:00 AM	2	645	245	1	9	6	8	2	56	1	0	0	0
4/22/2024	10:15 AM	2	644	248	2	10	7	9	3	63	0	0	0	0
4/22/2024	10:30 AM	2	688	239	3	14	5	6	3	59	0	0	0	0
4/22/2024	10:45 AM	1	702	217	3	15	3	7	5	56	0	0	0	0
4/22/2024	11:00 AM	0	710	223	3	12	3	7	6	72	0	0	0	0
4/22/2024	11:15 AM	0	697	204	2	14	2	6	5	62	0	0	0	0
4/22/2024	11:30 AM	0	699	225	0	11	3	6	5	65	0	0	0	0
4/22/2024	11:45 AM	0	708	210	1	10	5	4	5	75	0	0	0	0
4/22/2024	12:00 PM	0	744	227	2	11	5	2	6	64	0	0	0	0
4/22/2024	12:15 PM	0	763	237	2	10	4	4	7	67	0	0	0	0
4/22/2024	12:30 PM	0	762	240	2	15	4	4	10	64	0	0	0	0
4/22/2024	12:45 PM	0	801	259	1	22	5	4	10	57	0	0	0	0
4/22/2024	1:00 PM	0	801	267	0	25	5	3	11	59	0	0	0	0
4/22/2024	1:15 PM	0	823	267	0	23	5	1	10	59	0	0	0	0
4/22/2024	1:30 PM	0	838	246	1	18	6	1	8	59	0	0	0	0
4/22/2024	1:45 PM	1	836	258	2	11	4	2	7	55	0	0	0	0
4/22/2024	2:00 PM	1	879	237	2	10	4	2	4	60	1	0	0	0
4/22/2024	2:15 PM	2	886	245	3	11	4	2	3	56	1	0	0	0
4/22/2024	2:30 PM	3	921	266	4	13	4	2	3	53	1	0	0	0
4/22/2024	2:45 PM	2	918	249	5	16	3	1	3	57	1	0	0	0
4/22/2024	3:00 PM	2	912	259	5	19	3	1	4	52	0	0	0	0
4/22/2024	3:15 PM	1	919	254	5	16	4	1	4	57	0	0	0	0
4/22/2024	3:30 PM	0	907	253	3	14	2	0	3	53	0	1	0	0
4/22/2024	3:45 PM	0	887	266	3	9	2	0	2	57	0	1	0	0
4/22/2024	4:00 PM	1	859	245	4	5	2	0	2	54	0	1	0	0
4/22/2024	4:15 PM	1	847	233	4	8	3	0	2	57	0	1	0	0
4/22/2024	4:30 PM	1	854	217	4	9	3	0	2	58	0	0	0	0
4/22/2024	4:45 PM	1	864	212	2	12	4	0	2	54	0	1	0	0
4/22/2024	5:00 PM	0	874	222	1	15	3	0	1	47	0	1	0	0
4/22/2024	5:15 PM	0	870	207	1	14	1	0	1	42	0	1	0	0
4/22/2024	5:30 PM	0	840	197	1	16	1	0	1	37	0	1	0	0
4/22/2024	5:45 PM	0	784	184	1	14	0	0	1	34	0	0	0	0
4/22/2024	6:00 PM	0	717	166	1	9	0	0	1	34	0	0	0	0
4/22/2024	6:15 PM	0	664	159	0	7	2	0	1	28	0	0	0	0
4/22/2024	6:30 PM	0	610	151	0	4	2	0	0	32	0	0	0	0
4/22/2024	6:45 PM	0	582	128	0	4	2	0	0	31	0	0	0	0
4/22/2024	7:00 PM	0	558	123	0	3	3	0	0	32	0	0	0	0
4/22/2024	7:15 PM	0	513	130	1	2	1	0	0	31	0	0	0	0
4/22/2024	7:30 PM	0	470	117	2	2	1	0	0	26	0	0	0	0
4/22/2024	7:45 PM	0	457	121	3	2	1	0	0	26	0	0	0	0
4/22/2024	8:00 PM	0	403	114	3	3	0	0	0	19	0	0	0	0
4/22/2024	8:15 PM	0	368	100	2	3	0	0	0	22	0	0	0	0
4/22/2024	8:30 PM	0	332	100	1	2	0	0	0	24	0	0	0	0
4/22/2024	8:45 PM	0	274	92	0	1	0	0	0	21	0	0	0	0
4/22/2024	9:00 PM	0	254	89	0	0	0	0	0	24	0	0	0	0
4/22/2024	9:15 PM	0	229	85	0	1	0	0	0	18	0	0	0	0
4/22/2024	9:30 PM	0	205	83	1	1	0	0	0	18	0	0	0	0
4/22/2024	9:45 PM	0	184	77	1	1	0	0	0	17	0	0	0	0
4/22/2024	10:00 PM	0	165	74	1	1	0	0	1	19	0	0	0	0
4/22/2024	10:15 PM	0	157	76	1	0	0	0	1	22	0	0	0	0
4/22/2024	10:30 PM	0	139	71	0	0	0	0	1	20	0	0	0	0
4/22/2024	10:45 PM	0	120	66	0	0	0	0	1	20	0	0	0	0
4/22/2024	11:00 PM	0	104	65	0	1	0	0	0	15	0	0	0	0
4/22/2024	11:15 PM	0	93	61	0	2	0	0	0	13	0	0	0	0
4/22/2024	11:30 PM	0	86	52	0	3	0	0	0	15	0	0	0	0
4/22/2024	11:45 PM	0	83	46	0	3	0	0	0	17	0	0	0	0

4/23/2024	12:00 AM	0	74	31	0	2	0	0	0	18	0	0	0	0
4/23/2024	12:15 AM	0	59	20	0	1	0	0	0	16	0	1	0	0
4/23/2024	12:30 AM	0	47	15	0	0	0	0	1	12	0	1	0	0
4/23/2024	12:45 AM	0	41	13	0	1	0	0	1	10	0	1	0	0
4/23/2024	1:00 AM	0	37	13	0	1	0	0	1	12	0	1	0	0
4/23/2024	1:15 AM	0	29	10	0	2	0	0	1	13	0	1	0	0
4/23/2024	1:30 AM	0	30	13	0	3	0	0	0	21	0	1	0	0
4/23/2024	1:45 AM	0	27	14	0	2	0	0	0	18	0	1	0	0
4/23/2024	2:00 AM	0	30	15	0	2	0	0	1	18	0	2	0	0
4/23/2024	2:15 AM	0	33	19	1	2	1	0	1	23	0	1	0	0
4/23/2024	2:30 AM	0	34	18	1	2	1	0	1	18	0	1	0	0
4/23/2024	2:45 AM	0	40	23	1	3	1	0	2	25	0	1	0	0
4/23/2024	3:00 AM	0	40	28	1	4	1	0	1	25	0	0	0	0
4/23/2024	3:15 AM	0	47	29	0	3	0	0	1	21	0	0	0	0
4/23/2024	3:30 AM	0	49	27	0	3	1	0	1	25	0	0	0	0
4/23/2024	3:45 AM	0	52	28	0	3	1	0	1	29	0	1	0	0
4/23/2024	4:00 AM	0	72	33	0	5	2	0	1	32	0	1	0	0
4/23/2024	4:15 AM	0	85	39	0	10	2	0	2	38	0	1	0	0
4/23/2024	4:30 AM	0	108	54	0	9	1	0	4	47	0	1	0	0
4/23/2024	4:45 AM	0	120	64	0	13	4	0	3	37	0	0	0	0
4/23/2024	5:00 AM	0	122	65	0	10	3	0	3	34	0	0	0	0
4/23/2024	5:15 AM	1	145	82	0	9	6	0	3	36	0	0	0	0
4/23/2024	5:30 AM	1	226	116	0	14	10	0	3	39	0	0	0	0
4/23/2024	5:45 AM	1	301	136	1	13	11	0	4	54	0	0	0	0
4/23/2024	6:00 AM	1	393	204	1	21	17	0	5	64	0	0	0	0
4/23/2024	6:15 AM	0	479	235	3	19	16	0	5	75	0	0	0	0
4/23/2024	6:30 AM	0	555	273	4	20	17	0	3	69	0	0	0	0
4/23/2024	6:45 AM	0	648	333	3	24	13	0	2	67	0	0	0	0
4/23/2024	7:00 AM	0	754	317	4	21	8	0	2	59	0	0	0	0
4/23/2024	7:15 AM	1	808	315	3	22	9	0	1	42	0	0	0	0
4/23/2024	7:30 AM	2	869	304	3	22	8	0	1	43	0	0	0	0
4/23/2024	7:45 AM	2	891	256	3	21	14	0	1	46	0	0	0	0
4/23/2024	8:00 AM	2	899	268	5	21	18	0	0	58	0	0	0	0
4/23/2024	8:15 AM	2	938	263	4	25	15	2	1	81	0	0	0	0
4/23/2024	8:30 AM	1	899	245	3	23	14	4	2	83	0	0	0	0
4/23/2024	8:45 AM	1	869	260	3	16	11	4	3	84	0	0	0	0
4/23/2024	9:00 AM	1	813	239	1	19	6	5	7	74	0	0	0	0
4/23/2024	9:15 AM	0	724	244	1	17	7	3	6	60	0	0	0	0
4/23/2024	9:30 AM	0	653	248	2	18	4	2	5	58	0	0	0	0
4/23/2024	9:45 AM	0	638	247	2	25	4	2	5	53	0	0	0	0
4/23/2024	10:00 AM	0	654	255	2	27	10	1	4	63	0	0	0	0
4/23/2024	10:15 AM	0	669	264	2	24	16	1	6	66	0	0	0	0
4/23/2024	10:30 AM	0	696	271	2	25	17	0	6	67	0	0	0	0
4/23/2024	10:45 AM	0	693	263	4	23	15	0	5	65	0	0	0	0
4/23/2024	11:00 AM	0	654	254	3	20	11	0	2	57	0	0	0	0
4/23/2024	11:15 AM	1	662	237	3	21	6	0	0	50	0	0	0	0
4/23/2024	11:30 AM	1	694	243	2	18	8	1	2	51	0	0	0	0
4/23/2024	11:45 AM	1	700	233	0	15	11	1	3	54	0	0	0	0
4/23/2024	12:00 PM	1	713	230	0	12	11	1	3	64	1	0	0	0
4/23/2024	12:15 PM	0	707	242	0	14	9	1	5	71	1	0	0	0
4/23/2024	12:30 PM	1	681	221	1	14	8	0	6	64	1	0	0	0
4/23/2024	12:45 PM	2	724	236	1	14	8	0	8	59	1	0	0	0
4/23/2024	1:00 PM	2	776	253	1	14	7	0	9	61	0	0	0	0
4/23/2024	1:15 PM	2	825	246	1	14	8	0	7	54	0	0	0	0
4/23/2024	1:30 PM	1	863	269	1	15	9	0	5	58	0	0	0	0
4/23/2024	1:45 PM	2	836	273	1	18	6	0	4	63	1	0	0	0
4/23/2024	2:00 PM	2	816	274	2	18	7	2	4	51	1	0	0	0
4/23/2024	2:15 PM	5	816	287	4	17	9	3	6	56	1	0	0	0
4/23/2024	2:30 PM	6	824	277	3	17	6	4	5	55	1	0	0	0
4/23/2024	2:45 PM	5	856	273	4	19	5	4	4	57	1	0	0	0
4/23/2024	3:00 PM	6	897	265	3	20	5	2	4	56	1	0	0	0
4/23/2024	3:15 PM	3	937	242	1	24	6	1	4	56	1	0	0	0
4/23/2024	3:30 PM	2	973	246	1	25	7	0	5	53	1	0	0	0
4/23/2024	3:45 PM	1	945	244	1	20	10	0	4	51	0	0	0	0
4/23/2024	4:00 PM	1	847	215	1	16	9	0	3	46	0	0	0	0
4/23/2024	4:15 PM	1	723	205	1	8	6	0	1	39	0	0	0	0
4/23/2024	4:30 PM	2	696	192	4	7	6	0	0	40	0	0	0	0
4/23/2024	4:45 PM	2	764	188	3	7	4	0	0	38	0	0	0	0
4/23/2024	5:00 PM	1	848	214	4	9	3	0	4	45	0	0	0	0
4/23/2024	5:15 PM	2	975	262	5	10	3	0	6	49	0	0	0	0
4/23/2024	5:30 PM	2	918	241	2	8	3	0	7	49	2	0	0	0
4/23/2024	5:45 PM	3	840	217	2	8	3	0	8	47	2	0	0	0
4/23/2024	6:00 PM	3	762	194	1	7	5	0	4	43	2	0	0	0
4/23/2024	6:15 PM	2	652	153	0	10	5	0	3	39	2	0	0	0
4/23/2024	6:30 PM	1	619	146	0	12	4	0	2	36	0	0	0	0
4/23/2024	6:45 PM	1	585	159	0	11	3	0	1	30	0	0	0	0
4/23/2024	7:00 PM	1	579	147	0	11	2	0	3	29	0	0	0	0
4/23/2024	7:15 PM	1	556	127	0	9	1	0	2	28	0	0	0	0
4/23/2024	7:30 PM	1	541	135	1	6	1	0	2	23	0	0	0	0
4/23/2024	7:45 PM	0	508	123	1	6	2	0	2	22	0	0	0	0
4/23/2024	8:00 PM	0	444	116	1	4	1	0	0	24	0	0	0	0
4/23/2024	8:15 PM	0	400	115	1	3	1	0	0	20	0	0	0	0
4/23/2024	8:30 PM	0	354	101	0	2	1	0	0	22	0	0	0	0
4/23/2024	8:45 PM	0	312	91	1	2	0	0	0	23	0	0	0	0
4/23/2024	9:00 PM	0	306	92	1	3	0	0	0	20	0	0	0	0
4/23/2024	9:15 PM	0	292	86	2	5	0	0	0	22	0	0	0	0
4/23/2024	9:30 PM	0	264	74	2	5	0	0	0	21	0	0	0	0
4/23/2024	9:45 PM	0	222	64	1	4	0	0	0	20	0	0	0	0
4/23/2024	10:00 PM	0	188	56	1	3	0	0	0	17	0	0	0	0
4/23/2024	10:15 PM	0	177	54	0	0	0	0	0	15	0	1	0	0
4/23/2024	10:30 PM	0	151	48	0	0	0	0	0	15	0	1	0	0
4/23/2024	10:45 PM	0	149	45	0	0	1	0	0	17	0	2	0	0
4/23/2024	11:00 PM	0	129	44	0	1	1	0	0	19	0	2	0	0
4/23/2024	11:15 PM	0	114	38	0	1	1	0	0	19	0	2	0	0
4/23/2024	11:30 PM	0	115	34	0	1	2	0	0	17	0	3	0	0
4/23/2024	11:45 PM	0	101	26	0	1	2	0	0	14	0	2	0	0

4/24/2024	12:00 AM	0	98	18	0	1	2	0	0	11	0	2	0	0
4/24/2024	12:15 AM	0	84	12	0	1	2	0	0	10	0	1	0	0
4/24/2024	12:30 AM	0	79	12	0	2	1	0	0	12	0	0	0	0
4/24/2024	12:45 AM	0	73	13	0	2	0	0	0	15	0	0	0	0
4/24/2024	1:00 AM	0	64	12	0	1	0	0	0	15	0	0	0	0
4/24/2024	1:15 AM	0	52	11	0	1	0	0	0	13	0	0	0	0
4/24/2024	1:30 AM	0	48	11	0	1	1	0	0	16	0	2	0	0
4/24/2024	1:45 AM	0	47	10	0	2	1	0	0	15	0	2	0	0
4/24/2024	2:00 AM	0	53	11	0	4	1	0	0	16	0	2	0	0
4/24/2024	2:15 AM	0	56	11	0	4	1	0	0	18	0	2	0	0
4/24/2024	2:30 AM	0	55	8	0	4	1	0	0	14	0	0	0	0
4/24/2024	2:45 AM	0	64	10	0	4	1	0	0	15	0	0	0	0
4/24/2024	3:00 AM	0	63	9	0	4	2	0	0	18	0	0	0	0
4/24/2024	3:15 AM	0	68	10	0	7	2	0	0	30	0	0	0	0
4/24/2024	3:30 AM	0	70	11	0	7	2	0	0	38	0	1	0	0
4/24/2024	3:45 AM	0	73	12	0	8	3	0	0	45	0	1	0	0
4/24/2024	4:00 AM	0	89	19	0	8	3	0	0	52	0	1	0	0
4/24/2024	4:15 AM	0	96	23	0	6	4	0	0	49	0	1	0	0
4/24/2024	4:30 AM	0	117	33	0	8	5	0	0	48	0	0	0	0
4/24/2024	4:45 AM	0	140	43	0	10	4	0	0	47	0	0	0	0
4/24/2024	5:00 AM	0	173	56	0	10	3	0	0	46	0	0	0	0
4/24/2024	5:15 AM	0	212	70	0	17	2	0	0	47	0	0	0	0
4/24/2024	5:30 AM	0	262	87	0	17	0	0	0	47	0	0	0	0
4/24/2024	5:45 AM	0	337	124	0	15	2	0	1	52	0	0	0	0
4/24/2024	6:00 AM	0	433	163	1	19	5	0	3	49	0	0	0	0
4/24/2024	6:15 AM	0	542	194	2	19	8	1	3	51	0	0	0	0
4/24/2024	6:30 AM	0	662	222	3	19	9	1	4	53	0	0	0	0
4/24/2024	6:45 AM	0	759	240	4	19	9	1	4	50	0	0	0	0
4/24/2024	7:00 AM	0	834	239	3	21	7	1	2	53	0	0	0	0
4/24/2024	7:15 AM	5	823	236	3	19	7	0	2	49	0	0	0	0
4/24/2024	7:30 AM	5	769	236	2	22	8	1	2	42	1	0	0	0
4/24/2024	7:45 AM	6	751	238	1	28	7	1	6	49	1	0	0	0
4/24/2024	8:00 AM	7	759	256	1	21	7	1	6	55	2	0	0	0
4/24/2024	8:15 AM	2	750	280	0	21	4	2	6	55	2	0	0	0
4/24/2024	8:30 AM	2	726	267	1	21	2	3	6	58	2	0	0	0
4/24/2024	8:45 AM	1	692	281	2	20	1	5	1	63	2	0	0	0
4/24/2024	9:00 AM	0	675	266	2	23	0	6	2	67	1	0	0	0
4/24/2024	9:15 AM	1	705	266	2	25	2	6	3	76	1	0	0	0
4/24/2024	9:30 AM	1	755	291	1	21	3	4	4	91	0	0	0	0
4/24/2024	9:45 AM	1	744	273	0	19	5	2	5	81	1	0	0	0
4/24/2024	10:00 AM	1	685	280	0	19	5	2	4	71	1	0	0	0
4/24/2024	10:15 AM	0	648	285	0	16	4	1	4	65	1	0	0	0
4/24/2024	10:30 AM	1	642	281	0	18	4	1	2	58	1	0	0	0
4/24/2024	10:45 AM	2	663	274	0	15	2	1	2	54	0	0	0	0
4/24/2024	11:00 AM	3	707	265	1	18	2	0	2	55	0	0	0	0
4/24/2024	11:15 AM	4	734	245	1	19	5	0	3	59	0	0	0	0
4/24/2024	11:30 AM	4	741	234	2	24	6	1	3	60	0	0	0	0
4/24/2024	11:45 AM	3	735	236	2	28	8	1	3	63	0	0	0	0
4/24/2024	12:00 PM	3	727	239	1	24	9	1	3	59	0	0	0	0
4/24/2024	12:15 PM	2	727	244	2	22	6	1	3	60	0	0	0	0
4/24/2024	12:30 PM	1	730	255	2	20	5	1	4	66	0	0	0	0
4/24/2024	12:45 PM	1	768	237	2	15	4	2	4	66	1	0	0	0
4/24/2024	1:00 PM	0	756	229	2	13	3	2	4	69	3	0	0	0
4/24/2024	1:15 PM	0	757	244	2	15	3	2	5	65	4	0	0	0
4/24/2024	1:30 PM	0	789	250	3	11	3	1	5	61	4	0	0	0
4/24/2024	1:45 PM	0	774	274	4	12	5	0	6	79	3	0	0	0
4/24/2024	2:00 PM	1	804	296	4	13	6	0	6	89	2	0	0	0
4/24/2024	2:15 PM	1	839	274	3	11	5	1	4	88	2	0	0	0
4/24/2024	2:30 PM	3	863	275	1	17	5	1	4	83	2	0	0	0
4/24/2024	2:45 PM	4	920	284	2	17	2	1	2	60	3	0	0	0
4/24/2024	3:00 PM	3	949	274	2	18	1	1	2	51	2	0	0	0
4/24/2024	3:15 PM	3	1021	300	2	19	3	0	2	54	1	0	0	0
4/24/2024	3:30 PM	1	1033	296	2	13	2	0	1	49	1	0	0	0
4/24/2024	3:45 PM	2	1021	285	0	12	2	0	1	52	0	0	0	0
4/24/2024	4:00 PM	2	981	288	0	14	3	0	1	52	0	0	0	0
4/24/2024	4:15 PM	2	937	268	0	13	1	0	0	44	0	0	0	0
4/24/2024	4:30 PM	2	921	253	1	11	1	0	0	47	0	0	0	0
4/24/2024	4:45 PM	1	897	249	1	12	2	0	0	43	0	0	0	0
4/24/2024	5:00 PM	2	896	233	1	12	2	0	1	44	0	0	0	0
4/24/2024	5:15 PM	4	847	218	1	9	4	0	1	45	0	0	0	0
4/24/2024	5:30 PM	5	826	213	1	14	4	0	1	44	0	0	0	0
4/24/2024	5:45 PM	7	804	198	1	13	3	0	1	43	0	0	0	0
4/24/2024	6:00 PM	6	758	199	2	8	2	0	0	34	0	0	0	0
4/24/2024	6:15 PM	7	742	195	2	11	3	0	0	41	0	0	0	0
4/24/2024	6:30 PM	6	698	202	1	8	4	0	0	38	0	0	0	0
4/24/2024	6:45 PM	3	655	188	1	8	4	0	0	35	0	0	0	0
4/24/2024	7:00 PM	3	617	155	1	9	5	0	1	34	0	0	0	0
4/24/2024	7:15 PM	0	582	135	1	7	2	0	1	24	0	0	0	0
4/24/2024	7:30 PM	0	528	100	1	4	1	0	1	30	0	0	0	0
4/24/2024	7:45 PM	0	504	92	2	3	3	0	1	32	0	0	0	0
4/24/2024	8:00 PM	0	519	93	1	2	2	0	0	31	0	0	0	0
4/24/2024	8:15 PM	0	470	87	1	1	3	0	0	31	0	0	0	0
4/24/2024	8:30 PM	0	449	85	2	1	3	0	0	21	0	0	0	0
4/24/2024	8:45 PM	0	417	71	1	2	1	0	0	18	0	0	0	0
4/24/2024	9:00 PM	0	361	62	1	2	1	0	0	19	0	0	0	0
4/24/2024	9:15 PM	0	340	57	2	1	0	0	0	15	0	0	0	0
4/24/2024	9:30 PM	0	295	51	1	2	0	0	0	18	0	1	0	0
4/24/2024	9:45 PM	0	250	51	1	1	0	0	0	16	0	1	0	0
4/24/2024	10:00 PM	0	225	50	1	1	0	0	0	18	0	1	0	0
4/24/2024	10:15 PM	0	199	50	0	2	1	0	0	20	0	2	0	0
4/24/2024	10:30 PM	0	183	46	0	2	1	0	0	18	0	1	0	0
4/24/2024	10:45 PM	0	164	41	0	2	1	0	0	20	0	2	0	0
4/24/2024	11:00 PM	0	134	35	0	2	2	0	0	15	0	2	0	0
4/24/2024	11:15 PM	0	116	27	0	1	1	0	0	16	0	1	0	0
4/24/2024	11:30 PM	0	98	23	0	0	1	0	0	13	0	1	0	0
4/24/2024	11:45 PM	0	89	20	0	0	1	0	0	13	0	0	0	0

4/25/2024	12:00 AM	0	72	15	0	0	0	0	0	14	0	0	0	0
4/25/2024	12:15 AM	0	61	14	0	0	0	0	0	11	0	0	0	0
4/25/2024	12:30 AM	0	59	13	0	1	0	0	0	11	0	0	0	0
4/25/2024	12:45 AM	0	54	13	0	1	0	0	0	13	0	0	0	0
4/25/2024	1:00 AM	0	51	13	0	1	0	0	0	13	0	0	0	0
4/25/2024	1:15 AM	0	57	15	0	2	0	0	0	12	0	0	0	0
4/25/2024	1:30 AM	0	50	14	0	1	0	0	0	14	0	0	0	0
4/25/2024	1:45 AM	0	46	13	0	2	0	0	0	10	0	0	0	0
4/25/2024	2:00 AM	0	45	12	0	3	0	0	0	9	0	0	0	0
4/25/2024	2:15 AM	0	42	10	0	2	0	0	0	16	0	0	0	0
4/25/2024	2:30 AM	0	44	10	0	4	0	0	0	14	0	0	0	0
4/25/2024	2:45 AM	0	47	10	0	6	0	0	0	24	0	0	0	0
4/25/2024	3:00 AM	0	55	12	0	7	0	0	0	27	0	0	0	0
4/25/2024	3:15 AM	0	58	12	0	9	0	0	0	27	0	0	0	0
4/25/2024	3:30 AM	0	60	11	0	9	0	0	0	33	0	0	0	0
4/25/2024	3:45 AM	0	69	12	0	10	0	0	0	32	0	0	0	0
4/25/2024	4:00 AM	0	99	19	0	13	1	0	0	40	0	0	0	0
4/25/2024	4:15 AM	0	109	22	0	14	2	0	1	45	0	0	0	0
4/25/2024	4:30 AM	0	138	29	0	18	2	0	3	49	0	0	0	0
4/25/2024	4:45 AM	0	164	38	0	16	2	0	3	52	0	0	0	0
4/25/2024	5:00 AM	0	184	46	0	17	1	0	3	43	0	0	0	0
4/25/2024	5:15 AM	0	228	59	0	18	1	0	3	44	0	0	0	0
4/25/2024	5:30 AM	0	283	88	0	15	2	0	1	46	0	0	0	0
4/25/2024	5:45 AM	0	359	125	1	17	5	0	1	45	0	0	0	0
4/25/2024	6:00 AM	0	450	170	2	14	11	0	1	55	0	0	0	0
4/25/2024	6:15 AM	0	554	206	2	14	12	0	2	53	0	0	0	0
4/25/2024	6:30 AM	0	649	238	3	21	14	3	2	50	0	0	0	0
4/25/2024	6:45 AM	0	739	285	2	20	13	4	2	51	0	0	0	0
4/25/2024	7:00 AM	0	810	291	1	23	11	5	2	53	0	0	0	0
4/25/2024	7:15 AM	0	847	319	2	28	12	7	1	52	1	0	0	0
4/25/2024	7:30 AM	2	872	325	2	22	10	5	2	55	1	0	0	0
4/25/2024	7:45 AM	3	897	292	2	21	10	6	3	55	1	0	0	0
4/25/2024	8:00 AM	4	886	299	2	20	9	8	5	52	2	0	0	0
4/25/2024	8:15 AM	4	844	281	1	22	6	6	8	57	1	0	0	0
4/25/2024	8:30 AM	2	807	270	2	28	7	6	8	51	2	0	0	0
4/25/2024	8:45 AM	1	779	280	3	31	9	4	9	55	4	0	0	0
4/25/2024	9:00 AM	0	772	273	4	33	9	1	10	57	4	0	0	0
4/25/2024	9:15 AM	1	776	262	5	24	11	1	7	55	5	0	0	0
4/25/2024	9:30 AM	1	779	254	6	19	11	0	6	62	5	0	0	0
4/25/2024	9:45 AM	2	768	246	7	21	14	0	5	57	4	0	0	0
4/25/2024	10:00 AM	2	751	249	6	16	13	0	3	58	5	0	0	0
4/25/2024	10:15 AM	1	788	279	5	19	16	0	2	59	5	0	0	0
4/25/2024	10:30 AM	3	817	292	2	20	19	0	5	60	6	0	0	0
4/25/2024	10:45 AM	3	866	297	0	18	14	0	6	58	6	0	0	0
4/25/2024	11:00 AM	3	888	288	0	22	14	0	9	56	5	0	0	0
4/25/2024	11:15 AM	5	910	267	0	18	12	0	11	53	5	0	0	0
4/25/2024	11:30 AM	4	929	261	0	19	11	0	9	49	4	0	0	0
4/25/2024	11:45 AM	3	880	253	1	19	14	0	7	53	4	0	0	0
4/25/2024	12:00 PM	10	897	259	1	19	13	0	8	58	5	0	0	0
4/25/2024	12:15 PM	11	890	247	1	25	11	0	9	66	5	0	0	0
4/25/2024	12:30 PM	10	884	260	1	25	10	0	8	65	4	0	0	0
4/25/2024	12:45 PM	10	928	264	0	24	7	0	10	64	4	0	0	0
4/25/2024	1:00 PM	3	924	265	0	21	14	0	5	54	2	0	0	0
4/25/2024	1:15 PM	0	908	282	1	18	18	0	4	51	2	0	0	0
4/25/2024	1:30 PM	0	915	268	2	15	18	0	4	48	2	0	0	0
4/25/2024	1:45 PM	2	875	263	2	16	19	0	6	54	3	0	0	0
4/25/2024	2:00 PM	2	899	265	2	18	14	0	9	61	4	0	0	0
4/25/2024	2:15 PM	2	892	274	2	18	12	0	9	58	4	0	0	0
4/25/2024	2:30 PM	2	912	295	2	22	11	0	9	62	4	0	0	0
4/25/2024	2:45 PM	5	931	303	3	20	14	0	5	51	2	0	0	0
4/25/2024	3:00 PM	6	877	293	3	17	12	0	6	44	1	0	0	0
4/25/2024	3:15 PM	6	884	285	2	20	9	3	6	45	0	0	0	0
4/25/2024	3:30 PM	6	833	265	1	14	7	3	9	47	0	0	0	0
4/25/2024	3:45 PM	1	833	251	1	13	2	3	9	50	0	0	0	0
4/25/2024	4:00 PM	0	849	243	1	15	1	3	7	51	0	0	0	0
4/25/2024	4:15 PM	0	851	234	1	9	1	0	6	50	1	0	0	0
4/25/2024	4:30 PM	2	857	230	1	8	1	0	3	45	1	0	0	0
4/25/2024	4:45 PM	2	847	233	1	10	0	0	6	44	1	0	0	0
4/25/2024	5:00 PM	3	841	241	1	6	0	0	6	45	1	0	0	0
4/25/2024	5:15 PM	3	823	239	1	8	2	0	5	43	0	0	0	0
4/25/2024	5:30 PM	3	829	243	1	11	2	0	5	37	0	0	0	0
4/25/2024	5:45 PM	6	821	231	0	10	4	0	4	30	0	0	0	0
4/25/2024	6:00 PM	5	803	207	0	13	4	0	2	26	0	0	0	0
4/25/2024	6:15 PM	6	789	194	0	11	3	0	3	26	0	0	0	0
4/25/2024	6:30 PM	4	755	168	0	9	6	0	3	31	0	0	0	0
4/25/2024	6:45 PM	2	701	155	0	8	4	0	1	34	0	0	0	0
4/25/2024	7:00 PM	2	673	151	0	5	4	0	1	35	0	0	0	0
4/25/2024	7:15 PM	3	610	132	0	4	5	0	0	26	0	0	0	0
4/25/2024	7:30 PM	4	555	121	0	2	2	0	0	24	0	0	0	0
4/25/2024	7:45 PM	3	533	117	0	1	2	0	0	23	0	0	0	0
4/25/2024	8:00 PM	3	480	107	0	3	2	0	0	24	0	0	0	0
4/25/2024	8:15 PM	1	474	102	0	3	0	0	0	25	0	0	0	0
4/25/2024	8:30 PM	0	454	94	0	4	0	0	0	23	0	0	0	0
4/25/2024	8:45 PM	0	431	84	0	4	0	0	0	22	0	0	0	0
4/25/2024	9:00 PM	0	396	74	0	5	0	0	1	15	0	0	0	0
4/25/2024	9:15 PM	0	352	66	1	7	0	0	1	19	0	0	0	0
4/25/2024	9:30 PM	0	298	57	1	7	0	0	1	19	0	0	0	0
4/25/2024	9:45 PM	0	251	49	1	8	0	0	1	19	0	0	0	0
4/25/2024	10:00 PM	0	236	47	1	6	0	0	0	22	0	1	0	0
4/25/2024	10:15 PM	0	225	46	0	6	0	0	0	20	0	2	0	0
4/25/2024	10:30 PM	0	214	45	0	6	0	0	0	21	0	2	0	0
4/25/2024	10:45 PM	0	196	41	0	4	0	0	0	24	0	2	0	0
4/25/2024	11:00 PM	0	172	35	0	4	0	0	0	20	0	1	0	0
4/25/2024	11:15 PM	0	118	24	0	2	0	0	0	14	0	0	0	0
4/25/2024	11:30 PM	0	78	15	0	1	0	0	0	9	0	0	0	0
4/25/2024	11:45 PM	0	36	7	0	1	0	0	0	1	0	0	0	0

4/26/2024	12:00 AM	0	105	18	0	2	0	0	0	9	0	0	0	0
4/26/2024	12:15 AM	0	79	11	0	2	0	0	0	8	0	0	0	0
4/26/2024	12:30 AM	0	73	10	0	2	0	0	0	11	0	0	0	0
4/26/2024	12:45 AM	0	62	8	0	1	0	0	0	14	0	0	0	0
4/26/2024	1:00 AM	0	65	8	0	0	0	0	0	19	0	0	0	0
4/26/2024	1:15 AM	0	67	8	0	0	0	0	0	21	0	0	0	0
4/26/2024	1:30 AM	0	71	7	0	0	0	0	0	18	0	0	0	0
4/26/2024	1:45 AM	0	75	7	0	0	0	0	0	11	0	1	0	0
4/26/2024	2:00 AM	0	65	5	0	0	0	0	0	7	0	2	0	0
4/26/2024	2:15 AM	0	59	5	0	0	0	0	0	8	0	2	0	0
4/26/2024	2:30 AM	0	53	4	0	1	0	0	0	10	0	2	0	0
4/26/2024	2:45 AM	0	49	4	0	4	0	0	0	15	0	1	0	0
4/26/2024	3:00 AM	0	54	5	0	5	0	0	0	19	0	0	0	0
4/26/2024	3:15 AM	0	62	6	0	7	0	0	0	21	0	0	0	0
4/26/2024	3:30 AM	0	73	10	0	8	0	0	0	28	0	1	0	0
4/26/2024	3:45 AM	0	81	10	0	5	0	0	0	32	0	1	0	0
4/26/2024	4:00 AM	0	101	15	0	7	0	0	0	36	0	1	0	0
4/26/2024	4:15 AM	0	123	20	0	9	0	0	0	44	0	1	0	0
4/26/2024	4:30 AM	0	139	24	0	10	0	0	0	48	0	0	0	0
4/26/2024	4:45 AM	0	171	28	0	14	1	0	0	57	0	0	0	0
4/26/2024	5:00 AM	0	196	30	0	14	2	0	0	60	0	0	0	0
4/26/2024	5:15 AM	0	219	36	0	13	4	0	0	66	0	1	0	0
4/26/2024	5:30 AM	0	287	51	0	15	5	0	0	66	0	1	0	0
4/26/2024	5:45 AM	0	360	79	0	16	5	0	2	62	0	1	0	0
4/26/2024	6:00 AM	0	471	113	0	16	6	2	3	63	0	1	0	0
4/26/2024	6:15 AM	0	572	145	1	16	8	4	3	64	0	0	0	0
4/26/2024	6:30 AM	0	651	177	3	15	9	9	4	60	0	0	0	0
4/26/2024	6:45 AM	0	778	220	4	12	12	13	2	54	0	0	0	0
4/26/2024	7:00 AM	0	859	251	4	16	15	12	1	54	0	0	0	0
4/26/2024	7:15 AM	0	940	275	4	23	11	10	1	43	3	0	0	0
4/26/2024	7:30 AM	1	949	285	3	24	10	6	0	43	4	0	0	0
4/26/2024	7:45 AM	4	894	279	2	26	10	6	1	50	5	0	0	0
4/26/2024	8:00 AM	5	855	276	5	26	5	8	1	44	5	0	0	0
4/26/2024	8:15 AM	5	782	275	4	22	7	9	2	50	3	0	0	0
4/26/2024	8:30 AM	4	786	282	5	23	7	10	3	52	2	0	0	0
4/26/2024	8:45 AM	3	798	278	5	24	3	7	2	41	1	0	0	0
4/26/2024	9:00 AM	2	809	272	2	21	6	8	2	43	1	0	0	0
4/26/2024	9:15 AM	2	845	255	2	21	5	11	2	41	0	0	0	0
4/26/2024	9:30 AM	2	829	235	1	22	5	11	2	46	1	0	0	0
4/26/2024	9:45 AM	1	832	247	2	22	7	11	6	55	1	0	0	0
4/26/2024	10:00 AM	2	846	262	2	20	6	8	10	57	1	0	0	0
4/26/2024	10:15 AM	2	855	283	2	17	6	5	13	61	3	0	0	0
4/26/2024	10:30 AM	2	901	299	1	20	7	5	16	52	2	0	0	0
4/26/2024	10:45 AM	1	904	293	0	24	5	10	13	53	2	0	0	0
4/26/2024	11:00 AM	0	941	298	2	27	4	10	13	54	3	0	0	0
4/26/2024	11:15 AM	0	959	304	2	30	4	10	10	45	1	0	0	0
4/26/2024	11:30 AM	2	996	314	2	22	3	9	7	50	1	0	0	0
4/26/2024	11:45 AM	3	1033	314	2	21	4	5	8	46	1	0	0	0
4/26/2024	12:00 PM	4	986	290	0	20	5	5	8	41	0	0	0	0
4/26/2024	12:15 PM	5	905	249	0	20	5	8	9	38	0	0	0	0
4/26/2024	12:30 PM	4	832	218	1	23	7	10	10	31	0	0	0	0
4/26/2024	12:45 PM	3	759	202	4	20	8	10	9	37	1	0	0	0
4/26/2024	1:00 PM	2	736	194	4	16	6	10	9	42	1	0	0	0
4/26/2024	1:15 PM	1	767	195	4	14	5	8	10	48	1	0	0	0
4/26/2024	1:30 PM	1	799	186	3	11	3	5	11	50	1	0	0	0
4/26/2024	1:45 PM	2	825	188	4	10	2	3	10	40	0	0	0	0
4/26/2024	2:00 PM	3	835	192	4	16	3	2	7	42	0	0	0	0
4/26/2024	2:15 PM	3	860	205	6	16	3	2	5	39	0	0	0	0
4/26/2024	2:30 PM	2	870	226	7	16	3	2	2	38	0	0	0	0
4/26/2024	2:45 PM	3	846	221	5	14	2	2	5	41	0	0	0	0
4/26/2024	3:00 PM	3	884	224	6	9	1	2	5	30	0	0	0	0
4/26/2024	3:15 PM	3	884	234	5	6	2	0	4	37	0	0	0	0
4/26/2024	3:30 PM	3	896	240	6	4	3	0	4	34	0	0	0	0
4/26/2024	3:45 PM	2	954	251	5	6	5	0	1	28	0	0	0	0
4/26/2024	4:00 PM	2	930	251	4	9	7	0	3	30	1	0	0	0
4/26/2024	4:15 PM	3	970	253	4	10	7	0	4	28	1	0	0	0
4/26/2024	4:30 PM	4	1001	234	2	12	5	0	4	29	1	0	0	0
4/26/2024	4:45 PM	3	1016	236	1	10	4	0	4	31	2	0	0	0
4/26/2024	5:00 PM	5	1014	242	1	10	2	0	1	29	1	0	0	0
4/26/2024	5:15 PM	4	993	236	0	9	1	0	2	24	1	0	0	0
4/26/2024	5:30 PM	3	955	238	0	13	2	0	2	25	1	0	0	0
4/26/2024	5:45 PM	3	912	222	0	13	1	0	3	28	0	0	0	0
4/26/2024	6:00 PM	3	901	201	0	10	1	0	3	33	1	0	0	0
4/26/2024	6:15 PM	3	874	194	0	9	2	0	1	30	1	0	0	0
4/26/2024	6:30 PM	5	848	197	0	5	1	0	1	30	1	0	0	0
4/26/2024	6:45 PM	5	817	190	0	4	1	0	0	22	1	0	0	0
4/26/2024	7:00 PM	3	790	181	0	3	1	0	0	17	0	0	0	0
4/26/2024	7:15 PM	3	763	170	0	3	0	0	0	17	0	0	0	0
4/26/2024	7:30 PM	2	705	149	1	2	0	0	0	13	0	0	0	0
4/26/2024	7:45 PM	2	653	131	1	1	0	0	0	15	0	0	0	0
4/26/2024	8:00 PM	1	607	127	1	3	0	0	0	14	0	0	0	0
4/26/2024	8:15 PM	1	558	111	1	5	0	0	0	10	0	0	0	0
4/26/2024	8:30 PM	0	513	101	0	5	0	0	0	14	0	0	0	0
4/26/2024	8:45 PM	0	505	99	0	6	0	0	0	15	0	0	0	0
4/26/2024	9:00 PM	0	462	87	0	5	0	0	1	16	0	0	0	0
4/26/2024	9:15 PM	0	443	79	0	6	0	0	1	17	0	0	0	0
4/26/2024	9:30 PM	0	422	76	0	7	0	0	1	15	0	1	0	0
4/26/2024	9:45 PM	0	418	71	0	7	0	0	1	12	0	1	0	0
4/26/2024	10:00 PM	0	428	71	0	6	0	0	0	10	0	4	0	0
4/26/2024	10:15 PM	0	399	71	0	3	0	0	1	10	0	5	0	0
4/26/2024	10:30 PM	0	372	67	0	1	0	0	1	8	0	4	0	0
4/26/2024	10:45 PM	0	311	58	0	2	0	0	1	9	0	4	0	0
4/26/2024	11:00 PM	0	248	49	0	3	0	0	1	10	0	1	0	0
4/26/2024	11:15 PM	0	169	34	0	3	0	0	0	7	0	0	0	0
4/26/2024	11:30 PM	0	106	21	0	3	0	0	0	5	0	0	0	0
4/26/2024	11:45 PM	0	46	10	0	1	0	0	0	3	0	0	0	0

4/27/2024	12:00 AM	0	152	46	0	1	1	0	1	7	0	0	0	0
4/27/2024	12:15 AM	1	131	44	0	2	0	0	1	10	0	0	0	0
4/27/2024	12:30 AM	1	121	43	0	2	0	0	0	11	0	0	0	0
4/27/2024	12:45 AM	1	101	32	0	1	0	0	0	10	0	0	0	0
4/27/2024	1:00 AM	1	88	28	0	2	0	0	0	6	0	0	0	0
4/27/2024	1:15 AM	0	82	25	0	1	0	0	0	5	0	0	0	0
4/27/2024	1:30 AM	0	70	22	0	1	0	0	0	4	0	0	0	0
4/27/2024	1:45 AM	0	65	22	0	1	0	0	0	3	0	0	0	0
4/27/2024	2:00 AM	0	61	20	0	1	0	0	0	3	0	0	0	0
4/27/2024	2:15 AM	0	64	23	0	2	0	0	0	4	0	0	0	0
4/27/2024	2:30 AM	0	67	24	0	3	0	0	0	7	0	0	0	0
4/27/2024	2:45 AM	0	65	22	0	5	0	0	0	12	0	0	0	0
4/27/2024	3:00 AM	0	64	22	0	5	0	0	0	14	0	0	0	0
4/27/2024	3:15 AM	0	64	19	0	4	0	0	0	13	0	0	0	0
4/27/2024	3:30 AM	0	66	20	0	5	0	0	0	13	0	0	0	0
4/27/2024	3:45 AM	0	69	24	0	4	0	0	0	8	0	1	0	0
4/27/2024	4:00 AM	0	67	26	0	6	0	0	0	8	0	1	0	0
4/27/2024	4:15 AM	0	71	27	1	8	0	0	0	8	0	1	0	0
4/27/2024	4:30 AM	0	64	26	1	7	0	0	0	11	0	1	0	0
4/27/2024	4:45 AM	0	69	28	1	7	0	0	0	16	0	0	0	0
4/27/2024	5:00 AM	0	83	31	1	5	0	0	0	18	0	0	0	0
4/27/2024	5:15 AM	0	98	36	0	4	0	0	0	23	0	0	0	0
4/27/2024	5:30 AM	0	128	38	0	3	0	0	1	23	0	0	0	0
4/27/2024	5:45 AM	0	182	51	0	3	0	0	1	20	0	0	0	0
4/27/2024	6:00 AM	0	237	59	0	4	2	0	1	21	0	0	0	0
4/27/2024	6:15 AM	0	300	70	2	3	2	0	1	17	0	1	0	0
4/27/2024	6:30 AM	2	362	90	2	4	4	0	0	18	0	1	0	0
4/27/2024	6:45 AM	2	414	105	2	4	6	0	2	21	0	1	0	0
4/27/2024	7:00 AM	3	498	136	2	3	6	0	5	23	0	2	0	0
4/27/2024	7:15 AM	4	543	155	0	5	7	0	7	24	0	1	0	0
4/27/2024	7:30 AM	2	613	177	0	5	5	0	7	20	0	1	0	0
4/27/2024	7:45 AM	2	666	197	0	8	3	0	5	15	0	1	0	0
4/27/2024	8:00 AM	4	702	192	0	12	2	0	3	12	0	0	0	0
4/27/2024	8:15 AM	3	719	202	1	14	1	0	1	12	0	0	0	0
4/27/2024	8:30 AM	3	781	192	2	14	3	0	2	15	0	0	0	0
4/27/2024	8:45 AM	4	867	197	2	13	4	0	2	17	0	0	0	0
4/27/2024	9:00 AM	1	951	211	2	12	3	0	2	15	0	0	0	0
4/27/2024	9:15 AM	1	1021	208	1	11	3	0	3	18	0	0	0	0
4/27/2024	9:30 AM	1	1037	217	0	10	1	0	5	14	0	0	0	0
4/27/2024	9:45 AM	0	1061	223	1	9	0	0	6	16	0	0	0	0
4/27/2024	10:00 AM	0	1056	225	1	12	1	0	5	17	0	0	0	0
4/27/2024	10:15 AM	6	1132	253	1	11	1	0	5	13	0	0	0	0
4/27/2024	10:30 AM	7	1175	287	2	13	1	0	3	15	0	0	0	0
4/27/2024	10:45 AM	10	1187	280	2	15	1	0	3	14	0	0	0	0
4/27/2024	11:00 AM	14	1198	274	2	9	0	0	3	17	0	0	0	0
4/27/2024	11:15 AM	8	1196	261	2	12	0	0	2	19	1	0	0	0
4/27/2024	11:30 AM	9	1201	247	1	13	0	0	1	22	1	0	0	0
4/27/2024	11:45 AM	7	1241	247	1	13	0	0	0	18	1	0	0	0
4/27/2024	12:00 PM	4	1239	263	1	13	0	0	0	18	1	0	0	0
4/27/2024	12:15 PM	6	1201	265	1	8	0	0	1	16	0	0	0	0
4/27/2024	12:30 PM	4	1193	260	1	7	2	0	1	12	0	0	0	0
4/27/2024	12:45 PM	24	1160	261	1	4	2	0	1	16	0	0	0	0
4/27/2024	1:00 PM	24	1161	231	1	5	2	0	1	13	0	0	0	0
4/27/2024	1:15 PM	23	1164	216	1	8	3	0	1	14	0	0	0	0
4/27/2024	1:30 PM	23	1172	214	1	8	2	0	1	14	0	0	0	0
4/27/2024	1:45 PM	2	1160	196	1	8	2	0	1	16	0	0	0	0
4/27/2024	2:00 PM	3	1149	208	1	8	2	0	1	14	0	0	0	0
4/27/2024	2:15 PM	4	1163	212	1	9	1	0	2	14	0	0	0	0
4/27/2024	2:30 PM	5	1136	197	1	10	0	0	2	11	0	0	0	0
4/27/2024	2:45 PM	9	1125	196	0	9	0	0	3	7	0	0	0	0
4/27/2024	3:00 PM	29	1121	189	0	7	1	0	3	10	0	0	0	0
4/27/2024	3:15 PM	33	1095	184	0	4	1	0	1	6	0	0	0	0
4/27/2024	3:30 PM	40	1105	200	0	1	1	0	1	8	0	0	0	0
4/27/2024	3:45 PM	36	1112	209	1	1	1	0	3	9	0	0	0	0
4/27/2024	4:00 PM	14	1123	211	1	2	0	0	3	7	0	0	0	0
4/27/2024	4:15 PM	15	1180	215	2	3	0	0	3	9	0	0	0	0
4/27/2024	4:30 PM	7	1158	194	2	4	0	0	3	9	0	0	0	0
4/27/2024	4:45 PM	10	1125	186	1	7	0	0	0	10	0	0	0	0
4/27/2024	5:00 PM	15	1072	183	1	8	0	0	0	10	0	0	0	0
4/27/2024	5:15 PM	9	976	168	0	6	0	0	1	9	0	0	0	0
4/27/2024	5:30 PM	10	928	161	0	5	0	0	1	8	0	0	0	0
4/27/2024	5:45 PM	8	910	154	0	2	0	0	1	6	0	0	0	0
4/27/2024	6:00 PM	4	893	145	0	0	0	0	1	5	0	0	0	0
4/27/2024	6:15 PM	3	860	137	0	0	0	0	1	6	0	0	0	0
4/27/2024	6:30 PM	2	814	129	0	0	0	0	1	6	0	0	0	0
4/27/2024	6:45 PM	2	742	129	0	0	0	0	1	4	0	0	0	0
4/27/2024	7:00 PM	2	687	123	0	0	0	0	1	7	0	0	0	0
4/27/2024	7:15 PM	3	636	116	1	1	0	0	0	7	0	0	0	0
4/27/2024	7:30 PM	5	612	111	3	2	0	0	0	8	0	0	0	0
4/27/2024	7:45 PM	4	564	94	3	2	0	0	1	10	0	0	0	0
4/27/2024	8:00 PM	3	518	84	3	4	0	0	1	6	0	0	0	0
4/27/2024	8:15 PM	3	498	80	2	3	0	0	1	4	0	0	0	0
4/27/2024	8:30 PM	2	484	80	0	2	0	0	2	3	0	0	0	0
4/27/2024	8:45 PM	3	488	84	0	3	0	0	1	2	0	0	0	0
4/27/2024	9:00 PM	3	486	84	0	2	0	0	1	3	0	0	0	0
4/27/2024	9:15 PM	2	465	81	0	2	0	0	1	4	0	0	0	0
4/27/2024	9:30 PM	1	448	78	0	2	0	0	1	4	0	0	0	0
4/27/2024	9:45 PM	1	421	69	0	1	0	0	1	4	0	0	0	0
4/27/2024	10:00 PM	1	396	64	0	0	0	0	1	6	0	0	0	0
4/27/2024	10:15 PM	1	376	61	0	0	0	0	1	5	0	0	0	0
4/27/2024	10:30 PM	1	335	57	0	0	0	0	1	6	0	0	0	0
4/27/2024	10:45 PM	0	302	54	0	1	0	0	1	7	0	0	0	0
4/27/2024	11:00 PM	0	272	53	0	1	0	0	1	5	0	0	0	0
4/27/2024	11:15 PM	0	197	40	0	1	0	0	1	5	0	0	0	0
4/27/2024	11:30 PM	0	126	25	0	1	0	0	0	3	0	0	0	0
4/27/2024	11:45 PM	0	62	14	0	0	0	0	0	1	0	0	0	0

SB
File Name:
Start Date: 4/21/2024
Start Time: 0
Site Code: 8
Station ID: 1
Location 1: I-26 N/Bound On-Ramp, north of I-20
Location 2:

Date	Time	1	2	3	4	5	6	7	8	9	10	11	12	13
4/21/2024	12:00 AM	0	0	0	0	0	0	0	0	0	0	0	0	0
4/21/2024	12:15 AM	0	0	0	0	0	0	0	0	0	0	0	0	0
4/21/2024	12:30 AM	0	0	0	0	0	0	0	0	0	0	0	0	0
4/21/2024	12:45 AM	0	0	0	0	0	0	0	0	0	0	0	0	0
4/21/2024	1:00 AM	0	0	0	0	0	0	0	0	0	0	0	0	0
4/21/2024	1:15 AM	0	0	0	0	0	0	0	0	0	0	0	0	0
4/21/2024	1:30 AM	0	0	0	0	0	0	0	0	0	0	0	0	0
4/21/2024	1:45 AM	0	0	0	0	0	0	0	0	0	0	0	0	0
4/21/2024	2:00 AM	0	0	0	0	0	0	0	0	0	0	0	0	0
4/21/2024	2:15 AM	0	0	0	0	0	0	0	0	0	0	0	0	0
4/21/2024	2:30 AM	0	0	0	0	0	0	0	0	0	0	0	0	0
4/21/2024	2:45 AM	0	0	0	0	0	0	0	0	0	0	0	0	0
4/21/2024	3:00 AM	0	0	0	0	0	0	0	0	0	0	0	0	0
4/21/2024	3:15 AM	0	0	0	0	0	0	0	0	0	0	0	0	0
4/21/2024	3:30 AM	0	0	0	0	0	0	0	0	0	0	0	0	0
4/21/2024	3:45 AM	0	0	0	0	0	0	0	0	0	0	0	0	0
4/21/2024	4:00 AM	0	0	0	0	0	0	0	0	0	0	0	0	0
4/21/2024	4:15 AM	0	0	0	0	0	0	0	0	0	0	0	0	0
4/21/2024	4:30 AM	0	0	0	0	0	0	0	0	0	0	0	0	0
4/21/2024	4:45 AM	0	0	0	0	0	0	0	0	0	0	0	0	0
4/21/2024	5:00 AM	0	0	0	0	0	0	0	0	0	0	0	0	0
4/21/2024	5:15 AM	0	0	0	0	0	0	0	0	0	0	0	0	0
4/21/2024	5:30 AM	0	0	0	0	0	0	0	0	0	0	0	0	0
4/21/2024	5:45 AM	0	0	0	0	0	0	0	0	0	0	0	0	0
4/21/2024	6:00 AM	0	0	0	0	0	0	0	0	0	0	0	0	0
4/21/2024	6:15 AM	0	0	0	0	0	0	0	0	0	0	0	0	0
4/21/2024	6:30 AM	0	0	0	0	0	0	0	0	0	0	0	0	0
4/21/2024	6:45 AM	0	0	0	0	0	0	0	0	0	0	0	0	0
4/21/2024	7:00 AM	0	0	0	0	0	0	0	0	0	0	0	0	0
4/21/2024	7:15 AM	0	0	0	0	0	0	0	0	0	0	0	0	0
4/21/2024	7:30 AM	0	0	0	0	0	0	0	0	0	0	0	0	0
4/21/2024	7:45 AM	0	0	0	0	0	0	0	0	0	0	0	0	0
4/21/2024	8:00 AM	0	0	0	0	0	0	0	0	0	0	0	0	0
4/21/2024	8:15 AM	0	0	0	0	0	0	0	0	0	0	0	0	0
4/21/2024	8:30 AM	0	0	0	0	0	0	0	0	0	0	0	0	0
4/21/2024	8:45 AM	0	0	0	0	0	0	0	0	0	0	0	0	0
4/21/2024	9:00 AM	0	0	0	0	0	0	0	0	0	0	0	0	0
4/21/2024	9:15 AM	0	0	0	0	0	0	0	0	0	0	0	0	0
4/21/2024	9:30 AM	0	0	0	0	0	0	0	0	0	0	0	0	0
4/21/2024	9:45 AM	0	0	0	0	0	0	0	0	0	0	0	0	0
4/21/2024	10:00 AM	0	0	0	0	0	0	0	0	0	0	0	0	0
4/21/2024	10:15 AM	0	0	0	0	0	0	0	0	0	0	0	0	0
4/21/2024	10:30 AM	0	0	0	0	0	0	0	0	0	0	0	0	0
4/21/2024	10:45 AM	0	0	0	0	0	0	0	0	0	0	0	0	0
4/21/2024	11:00 AM	0	0	0	0	0	0	0	0	0	0	0	0	0
4/21/2024	11:15 AM	0	0	0	0	0	0	0	0	0	0	0	0	0
4/21/2024	11:30 AM	0	0	0	0	0	0	0	0	0	0	0	0	0
4/21/2024	11:45 AM	0	0	0	0	0	0	0	0	0	0	0	0	0
4/21/2024	12:00 PM	0	0	0	0	0	0	0	0	0	0	0	0	0
4/21/2024	12:15 PM	0	0	0	0	0	0	0	0	0	0	0	0	0
4/21/2024	12:30 PM	0	0	0	0	0	0	0	0	0	0	0	0	0
4/21/2024	12:45 PM	0	0	0	0	0	0	0	0	0	0	0	0	0
4/21/2024	1:00 PM	0	0	0	0	0	0	0	0	0	0	0	0	0
4/21/2024	1:15 PM	0	0	0	0	0	0	0	0	0	0	0	0	0
4/21/2024	1:30 PM	0	0	0	0	0	0	0	0	0	0	0	0	0
4/21/2024	1:45 PM	0	0	0	0	0	0	0	0	0	0	0	0	0
4/21/2024	2:00 PM	0	0	0	0	0	0	0	0	0	0	0	0	0
4/21/2024	2:15 PM	0	0	0	0	0	0	0	0	0	0	0	0	0
4/21/2024	2:30 PM	0	0	0	0	0	0	0	0	0	0	0	0	0
4/21/2024	2:45 PM	0	0	0	0	0	0	0	0	0	0	0	0	0
4/21/2024	3:00 PM	0	0	0	0	0	0	0	0	0	0	0	0	0
4/21/2024	3:15 PM	0	0	0	0	0	0	0	0	0	0	0	0	0
4/21/2024	3:30 PM	0	0	0	0	0	0	0	0	0	0	0	0	0
4/21/2024	3:45 PM	0	0	0	0	0	0	0	0	0	0	0	0	0
4/21/2024	4:00 PM	0	0	0	0	0	0	0	0	0	0	0	0	0
4/21/2024	4:15 PM	0	0	0	0	0	0	0	0	0	0	0	0	0
4/21/2024	4:30 PM	0	0	0	0	0	0	0	0	0	0	0	0	0
4/21/2024	4:45 PM	0	0	0	0	0	0	0	0	0	0	0	0	0
4/21/2024	5:00 PM	0	0	0	0	0	0	0	0	0	0	0	0	0
4/21/2024	5:15 PM	0	0	0	0	0	0	0	0	0	0	0	0	0
4/21/2024	5:30 PM	0	0	0	0	0	0	0	0	0	0	0	0	0
4/21/2024	5:45 PM	0	0	0	0	0	0	0	0	0	0	0	0	0
4/21/2024	6:00 PM	0	0	0	0	0	0	0	0	0	0	0	0	0
4/21/2024	6:15 PM	0	0	0	0	0	0	0	0	0	0	0	0	0
4/21/2024	6:30 PM	0	0	0	0	0	0	0	0	0	0	0	0	0
4/21/2024	6:45 PM	0	0	0	0	0	0	0	0	0	0	0	0	0
4/21/2024	7:00 PM	0	0	0	0	0	0	0	0	0	0	0	0	0
4/21/2024	7:15 PM	0	0	0	0	0	0	0	0	0	0	0	0	0
4/21/2024	7:30 PM	0	0	0	0	0	0	0	0	0	0	0	0	0
4/21/2024	7:45 PM	0	0	0	0	0	0	0	0	0	0	0	0	0
4/21/2024	8:00 PM	0	0	0	0	0	0	0	0	0	0	0	0	0
4/21/2024	8:15 PM	0	0	0	0	0	0	0	0	0	0	0	0	0
4/21/2024	8:30 PM	0	0	0	0	0	0	0	0	0	0	0	0	0
4/21/2024	8:45 PM	0	0	0	0	0	0	0	0	0	0	0	0	0
4/21/2024	9:00 PM	0	0	0	0	0	0	0	0	0	0	0	0	0
4/21/2024	9:15 PM	0	0	0	0	0	0	0	0	0	0	0	0	0
4/21/2024	9:30 PM	0	0	0	0	0	0	0	0	0	0	0	0	0
4/21/2024	9:45 PM	0	0	0	0	0	0	0	0	0	0	0	0	0
4/21/2024	10:00 PM	0	0	0	0	0	0	0	0	0	0	0	0	0
4/21/2024	10:15 PM	0	0	0	0	0	0	0	0	0	0	0	0	0
4/21/2024	10:30 PM	0	0	0	0	0	0	0	0	0	0	0	0	0
4/21/2024	10:45 PM	0	0	0	0	0	0	0	0	0	0	0	0	0
4/21/2024	11:00 PM	0	0	0	0	0	0	0	0	0	0	0	0	0
4/21/2024	11:15 PM	0	0	0	0	0	0	0	0	0	0	0	0	0
4/21/2024	11:30 PM	0	0	0	0	0	0	0	0	0	0	0	0	0
4/21/2024	11:45 PM	0	0	0	0	0	0	0	0	0	0	0	0	0

4/22/2024	12:00 AM	0	0	0	0	0	0	0	0	0	0	0	0	0
4/22/2024	12:15 AM	0	0	0	0	0	0	0	0	0	0	0	0	0
4/22/2024	12:30 AM	0	0	0	0	0	0	0	0	0	0	0	0	0
4/22/2024	12:45 AM	0	0	0	0	0	0	0	0	0	0	0	0	0
4/22/2024	1:00 AM	0	0	0	0	0	0	0	0	0	0	0	0	0
4/22/2024	1:15 AM	0	0	0	0	0	0	0	0	0	0	0	0	0
4/22/2024	1:30 AM	0	0	0	0	0	0	0	0	0	0	0	0	0
4/22/2024	1:45 AM	0	0	0	0	0	0	0	0	0	0	0	0	0
4/22/2024	2:00 AM	0	0	0	0	0	0	0	0	0	0	0	0	0
4/22/2024	2:15 AM	0	0	0	0	0	0	0	0	0	0	0	0	0
4/22/2024	2:30 AM	0	0	0	0	0	0	0	0	0	0	0	0	0
4/22/2024	2:45 AM	0	0	0	0	0	0	0	0	0	0	0	0	0
4/22/2024	3:00 AM	0	0	0	0	0	0	0	0	0	0	0	0	0
4/22/2024	3:15 AM	0	0	0	0	0	0	0	0	0	0	0	0	0
4/22/2024	3:30 AM	0	0	0	0	0	0	0	0	0	0	0	0	0
4/22/2024	3:45 AM	0	0	0	0	0	0	0	0	0	0	0	0	0
4/22/2024	4:00 AM	0	0	0	0	0	0	0	0	0	0	0	0	0
4/22/2024	4:15 AM	0	0	0	0	0	0	0	0	0	0	0	0	0
4/22/2024	4:30 AM	0	0	0	0	0	0	0	0	0	0	0	0	0
4/22/2024	4:45 AM	0	0	0	0	0	0	0	0	0	0	0	0	0
4/22/2024	5:00 AM	0	0	0	0	0	0	0	0	0	0	0	0	0
4/22/2024	5:15 AM	0	0	0	0	0	0	0	0	0	0	0	0	0
4/22/2024	5:30 AM	0	0	0	0	0	0	0	0	0	0	0	0	0
4/22/2024	5:45 AM	0	0	0	0	0	0	0	0	0	0	0	0	0
4/22/2024	6:00 AM	0	0	0	0	0	0	0	0	0	0	0	0	0
4/22/2024	6:15 AM	0	0	0	0	0	0	0	0	0	0	0	0	0
4/22/2024	6:30 AM	0	0	0	0	0	0	0	0	0	0	0	0	0
4/22/2024	6:45 AM	0	0	0	0	0	0	0	0	0	0	0	0	0
4/22/2024	7:00 AM	0	0	0	0	0	0	0	0	0	0	0	0	0
4/22/2024	7:15 AM	0	0	0	0	0	0	0	0	0	0	0	0	0
4/22/2024	7:30 AM	0	0	0	0	0	0	0	0	0	0	0	0	0
4/22/2024	7:45 AM	0	0	0	0	0	0	0	0	0	0	0	0	0
4/22/2024	8:00 AM	0	0	0	0	0	0	0	0	0	0	0	0	0
4/22/2024	8:15 AM	0	0	0	0	0	0	0	0	0	0	0	0	0
4/22/2024	8:30 AM	0	0	0	0	0	0	0	0	0	0	0	0	0
4/22/2024	8:45 AM	0	0	0	0	0	0	0	0	0	0	0	0	0
4/22/2024	9:00 AM	0	0	0	0	0	0	0	0	0	0	0	0	0
4/22/2024	9:15 AM	0	0	0	0	0	0	0	0	0	0	0	0	0
4/22/2024	9:30 AM	0	0	0	0	0	0	0	0	0	0	0	0	0
4/22/2024	9:45 AM	0	0	0	0	0	0	0	0	0	0	0	0	0
4/22/2024	10:00 AM	0	0	0	0	0	0	0	0	0	0	0	0	0
4/22/2024	10:15 AM	0	0	0	0	0	0	0	0	0	0	0	0	0
4/22/2024	10:30 AM	0	0	0	0	0	0	0	0	0	0	0	0	0
4/22/2024	10:45 AM	0	0	0	0	0	0	0	0	0	0	0	0	0
4/22/2024	11:00 AM	0	0	0	0	0	0	0	0	0	0	0	0	0
4/22/2024	11:15 AM	0	0	0	0	0	0	0	0	0	0	0	0	0
4/22/2024	11:30 AM	0	0	0	0	0	0	0	0	0	0	0	0	0
4/22/2024	11:45 AM	0	0	0	0	0	0	0	0	0	0	0	0	0
4/22/2024	12:00 PM	0	0	0	0	0	0	0	0	0	0	0	0	0
4/22/2024	12:15 PM	0	0	0	0	0	0	0	0	0	0	0	0	0
4/22/2024	12:30 PM	0	0	0	0	0	0	0	0	0	0	0	0	0
4/22/2024	12:45 PM	0	0	0	0	0	0	0	0	0	0	0	0	0
4/22/2024	1:00 PM	0	0	0	0	0	0	0	0	0	0	0	0	0
4/22/2024	1:15 PM	0	0	0	0	0	0	0	0	0	0	0	0	0
4/22/2024	1:30 PM	0	0	0	0	0	0	0	0	0	0	0	0	0
4/22/2024	1:45 PM	0	0	0	0	0	0	0	0	0	0	0	0	0
4/22/2024	2:00 PM	0	0	0	0	0	0	0	0	0	0	0	0	0
4/22/2024	2:15 PM	0	0	0	0	0	0	0	0	0	0	0	0	0
4/22/2024	2:30 PM	0	0	0	0	0	0	0	0	0	0	0	0	0
4/22/2024	2:45 PM	0	0	0	0	0	0	0	0	0	0	0	0	0
4/22/2024	3:00 PM	0	0	0	0	0	0	0	0	0	0	0	0	0
4/22/2024	3:15 PM	0	0	0	0	0	0	0	0	0	0	0	0	0
4/22/2024	3:30 PM	0	0	0	0	0	0	0	0	0	0	0	0	0
4/22/2024	3:45 PM	0	0	0	0	0	0	0	0	0	0	0	0	0
4/22/2024	4:00 PM	0	0	0	0	0	0	0	0	0	0	0	0	0
4/22/2024	4:15 PM	0	0	0	0	0	0	0	0	0	0	0	0	0
4/22/2024	4:30 PM	0	0	0	0	0	0	0	0	0	0	0	0	0
4/22/2024	4:45 PM	0	0	0	0	0	0	0	0	0	0	0	0	0
4/22/2024	5:00 PM	0	0	0	0	0	0	0	0	0	0	0	0	0
4/22/2024	5:15 PM	0	0	0	0	0	0	0	0	0	0	0	0	0
4/22/2024	5:30 PM	0	0	0	0	0	0	0	0	0	0	0	0	0
4/22/2024	5:45 PM	0	0	0	0	0	0	0	0	0	0	0	0	0
4/22/2024	6:00 PM	0	0	0	0	0	0	0	0	0	0	0	0	0
4/22/2024	6:15 PM	0	0	0	0	0	0	0	0	0	0	0	0	0
4/22/2024	6:30 PM	0	0	0	0	0	0	0	0	0	0	0	0	0
4/22/2024	6:45 PM	0	0	0	0	0	0	0	0	0	0	0	0	0
4/22/2024	7:00 PM	0	0	0	0	0	0	0	0	0	0	0	0	0
4/22/2024	7:15 PM	0	0	0	0	0	0	0	0	0	0	0	0	0
4/22/2024	7:30 PM	0	0	0	0	0	0	0	0	0	0	0	0	0
4/22/2024	7:45 PM	0	0	0	0	0	0	0	0	0	0	0	0	0
4/22/2024	8:00 PM	0	0	0	0	0	0	0	0	0	0	0	0	0
4/22/2024	8:15 PM	0	0	0	0	0	0	0	0	0	0	0	0	0
4/22/2024	8:30 PM	0	0	0	0	0	0	0	0	0	0	0	0	0
4/22/2024	8:45 PM	0	0	0	0	0	0	0	0	0	0	0	0	0
4/22/2024	9:00 PM	0	0	0	0	0	0	0	0	0	0	0	0	0
4/22/2024	9:15 PM	0	0	0	0	0	0	0	0	0	0	0	0	0
4/22/2024	9:30 PM	0	0	0	0	0	0	0	0	0	0	0	0	0
4/22/2024	9:45 PM	0	0	0	0	0	0	0	0	0	0	0	0	0
4/22/2024	10:00 PM	0	0	0	0	0	0	0	0	0	0	0	0	0
4/22/2024	10:15 PM	0	0	0	0	0	0	0	0	0	0	0	0	0
4/22/2024	10:30 PM	0	0	0	0	0	0	0	0	0	0	0	0	0
4/22/2024	10:45 PM	0	0	0	0	0	0	0	0	0	0	0	0	0
4/22/2024	11:00 PM	0	0	0	0	0	0	0	0	0	0	0	0	0
4/22/2024	11:15 PM	0	0	0	0	0	0	0	0	0	0	0	0	0
4/22/2024	11:30 PM	0	0	0	0	0	0	0	0	0	0	0	0	0
4/22/2024	11:45 PM	0	0	0	0	0	0	0	0	0	0	0	0	0

4/23/2024	12:00 AM	0	0	0	0	0	0	0	0	0	0	0	0	0
4/23/2024	12:15 AM	0	0	0	0	0	0	0	0	0	0	0	0	0
4/23/2024	12:30 AM	0	0	0	0	0	0	0	0	0	0	0	0	0
4/23/2024	12:45 AM	0	0	0	0	0	0	0	0	0	0	0	0	0
4/23/2024	1:00 AM	0	0	0	0	0	0	0	0	0	0	0	0	0
4/23/2024	1:15 AM	0	0	0	0	0	0	0	0	0	0	0	0	0
4/23/2024	1:30 AM	0	0	0	0	0	0	0	0	0	0	0	0	0
4/23/2024	1:45 AM	0	0	0	0	0	0	0	0	0	0	0	0	0
4/23/2024	2:00 AM	0	0	0	0	0	0	0	0	0	0	0	0	0
4/23/2024	2:15 AM	0	0	0	0	0	0	0	0	0	0	0	0	0
4/23/2024	2:30 AM	0	0	0	0	0	0	0	0	0	0	0	0	0
4/23/2024	2:45 AM	0	0	0	0	0	0	0	0	0	0	0	0	0
4/23/2024	3:00 AM	0	0	0	0	0	0	0	0	0	0	0	0	0
4/23/2024	3:15 AM	0	0	0	0	0	0	0	0	0	0	0	0	0
4/23/2024	3:30 AM	0	0	0	0	0	0	0	0	0	0	0	0	0
4/23/2024	3:45 AM	0	0	0	0	0	0	0	0	0	0	0	0	0
4/23/2024	4:00 AM	0	0	0	0	0	0	0	0	0	0	0	0	0
4/23/2024	4:15 AM	0	0	0	0	0	0	0	0	0	0	0	0	0
4/23/2024	4:30 AM	0	0	0	0	0	0	0	0	0	0	0	0	0
4/23/2024	4:45 AM	0	0	0	0	0	0	0	0	0	0	0	0	0
4/23/2024	5:00 AM	0	0	0	0	0	0	0	0	0	0	0	0	0
4/23/2024	5:15 AM	0	0	0	0	0	0	0	0	0	0	0	0	0
4/23/2024	5:30 AM	0	0	0	0	0	0	0	0	0	0	0	0	0
4/23/2024	5:45 AM	0	0	0	0	0	0	0	0	0	0	0	0	0
4/23/2024	6:00 AM	0	0	0	0	0	0	0	0	0	0	0	0	0
4/23/2024	6:15 AM	0	0	0	0	0	0	0	0	0	0	0	0	0
4/23/2024	6:30 AM	0	0	0	0	0	0	0	0	0	0	0	0	0
4/23/2024	6:45 AM	0	0	0	0	0	0	0	0	0	0	0	0	0
4/23/2024	7:00 AM	0	0	0	0	0	0	0	0	0	0	0	0	0
4/23/2024	7:15 AM	0	0	0	0	0	0	0	0	0	0	0	0	0
4/23/2024	7:30 AM	0	0	0	0	0	0	0	0	0	0	0	0	0
4/23/2024	7:45 AM	0	0	0	0	0	0	0	0	0	0	0	0	0
4/23/2024	8:00 AM	0	0	0	0	0	0	0	0	0	0	0	0	0
4/23/2024	8:15 AM	0	0	0	0	0	0	0	0	0	0	0	0	0
4/23/2024	8:30 AM	0	0	0	0	0	0	0	0	0	0	0	0	0
4/23/2024	8:45 AM	0	0	0	0	0	0	0	0	0	0	0	0	0
4/23/2024	9:00 AM	0	0	0	0	0	0	0	0	0	0	0	0	0
4/23/2024	9:15 AM	0	0	0	0	0	0	0	0	0	0	0	0	0
4/23/2024	9:30 AM	0	0	0	0	0	0	0	0	0	0	0	0	0
4/23/2024	9:45 AM	0	0	0	0	0	0	0	0	0	0	0	0	0
4/23/2024	10:00 AM	0	0	0	0	0	0	0	0	0	0	0	0	0
4/23/2024	10:15 AM	0	0	0	0	0	0	0	0	0	0	0	0	0
4/23/2024	10:30 AM	0	0	0	0	0	0	0	0	0	0	0	0	0
4/23/2024	10:45 AM	0	0	0	0	0	0	0	0	0	0	0	0	0
4/23/2024	11:00 AM	0	0	0	0	0	0	0	0	0	0	0	0	0
4/23/2024	11:15 AM	0	0	0	0	0	0	0	0	0	0	0	0	0
4/23/2024	11:30 AM	0	0	0	0	0	0	0	0	0	0	0	0	0
4/23/2024	11:45 AM	0	0	0	0	0	0	0	0	0	0	0	0	0
4/23/2024	12:00 PM	0	0	0	0	0	0	0	0	0	0	0	0	0
4/23/2024	12:15 PM	0	0	0	0	0	0	0	0	0	0	0	0	0
4/23/2024	12:30 PM	0	0	0	0	0	0	0	0	0	0	0	0	0
4/23/2024	12:45 PM	0	0	0	0	0	0	0	0	0	0	0	0	0
4/23/2024	1:00 PM	0	0	0	0	0	0	0	0	0	0	0	0	0
4/23/2024	1:15 PM	0	0	0	0	0	0	0	0	0	0	0	0	0
4/23/2024	1:30 PM	0	0	0	0	0	0	0	0	0	0	0	0	0
4/23/2024	1:45 PM	0	0	0	0	0	0	0	0	0	0	0	0	0
4/23/2024	2:00 PM	0	0	0	0	0	0	0	0	0	0	0	0	0
4/23/2024	2:15 PM	0	0	0	0	0	0	0	0	0	0	0	0	0
4/23/2024	2:30 PM	0	0	0	0	0	0	0	0	0	0	0	0	0
4/23/2024	2:45 PM	0	0	0	0	0	0	0	0	0	0	0	0	0
4/23/2024	3:00 PM	0	0	0	0	0	0	0	0	0	0	0	0	0
4/23/2024	3:15 PM	0	0	0	0	0	0	0	0	0	0	0	0	0
4/23/2024	3:30 PM	0	0	0	0	0	0	0	0	0	0	0	0	0
4/23/2024	3:45 PM	0	0	0	0	0	0	0	0	0	0	0	0	0
4/23/2024	4:00 PM	0	0	0	0	0	0	0	0	0	0	0	0	0
4/23/2024	4:15 PM	0	0	0	0	0	0	0	0	0	0	0	0	0
4/23/2024	4:30 PM	0	0	0	0	0	0	0	0	0	0	0	0	0
4/23/2024	4:45 PM	0	0	0	0	0	0	0	0	0	0	0	0	0
4/23/2024	5:00 PM	0	0	0	0	0	0	0	0	0	0	0	0	0
4/23/2024	5:15 PM	0	0	0	0	0	0	0	0	0	0	0	0	0
4/23/2024	5:30 PM	0	0	0	0	0	0	0	0	0	0	0	0	0
4/23/2024	5:45 PM	0	0	0	0	0	0	0	0	0	0	0	0	0
4/23/2024	6:00 PM	0	0	0	0	0	0	0	0	0	0	0	0	0
4/23/2024	6:15 PM	0	0	0	0	0	0	0	0	0	0	0	0	0
4/23/2024	6:30 PM	0	0	0	0	0	0	0	0	0	0	0	0	0
4/23/2024	6:45 PM	0	0	0	0	0	0	0	0	0	0	0	0	0
4/23/2024	7:00 PM	0	0	0	0	0	0	0	0	0	0	0	0	0
4/23/2024	7:15 PM	0	0	0	0	0	0	0	0	0	0	0	0	0
4/23/2024	7:30 PM	0	0	0	0	0	0	0	0	0	0	0	0	0
4/23/2024	7:45 PM	0	0	0	0	0	0	0	0	0	0	0	0	0
4/23/2024	8:00 PM	0	0	0	0	0	0	0	0	0	0	0	0	0
4/23/2024	8:15 PM	0	0	0	0	0	0	0	0	0	0	0	0	0
4/23/2024	8:30 PM	0	0	0	0	0	0	0	0	0	0	0	0	0
4/23/2024	8:45 PM	0	0	0	0	0	0	0	0	0	0	0	0	0
4/23/2024	9:00 PM	0	0	0	0	0	0	0	0	0	0	0	0	0
4/23/2024	9:15 PM	0	0	0	0	0	0	0	0	0	0	0	0	0
4/23/2024	9:30 PM	0	0	0	0	0	0	0	0	0	0	0	0	0
4/23/2024	9:45 PM	0	0	0	0	0	0	0	0	0	0	0	0	0
4/23/2024	10:00 PM	0	0	0	0	0	0	0	0	0	0	0	0	0
4/23/2024	10:15 PM	0	0	0	0	0	0	0	0	0	0	0	0	0
4/23/2024	10:30 PM	0	0	0	0	0	0	0	0	0	0	0	0	0
4/23/2024	10:45 PM	0	0	0	0	0	0	0	0	0	0	0	0	0
4/23/2024	11:00 PM	0	0	0	0	0	0	0	0	0	0	0	0	0
4/23/2024	11:15 PM	0	0	0	0	0	0	0	0	0	0	0	0	0
4/23/2024	11:30 PM	0	0	0	0	0	0	0	0	0	0	0	0	0
4/23/2024	11:45 PM	0	0	0	0	0	0	0	0	0	0	0	0	0

4/24/2024	12:00 AM	0	0	0	0	0	0	0	0	0	0	0	0	0
4/24/2024	12:15 AM	0	0	0	0	0	0	0	0	0	0	0	0	0
4/24/2024	12:30 AM	0	0	0	0	0	0	0	0	0	0	0	0	0
4/24/2024	12:45 AM	0	0	0	0	0	0	0	0	0	0	0	0	0
4/24/2024	1:00 AM	0	0	0	0	0	0	0	0	0	0	0	0	0
4/24/2024	1:15 AM	0	0	0	0	0	0	0	0	0	0	0	0	0
4/24/2024	1:30 AM	0	0	0	0	0	0	0	0	0	0	0	0	0
4/24/2024	1:45 AM	0	0	0	0	0	0	0	0	0	0	0	0	0
4/24/2024	2:00 AM	0	0	0	0	0	0	0	0	0	0	0	0	0
4/24/2024	2:15 AM	0	0	0	0	0	0	0	0	0	0	0	0	0
4/24/2024	2:30 AM	0	0	0	0	0	0	0	0	0	0	0	0	0
4/24/2024	2:45 AM	0	0	0	0	0	0	0	0	0	0	0	0	0
4/24/2024	3:00 AM	0	0	0	0	0	0	0	0	0	0	0	0	0
4/24/2024	3:15 AM	0	0	0	0	0	0	0	0	0	0	0	0	0
4/24/2024	3:30 AM	0	0	0	0	0	0	0	0	0	0	0	0	0
4/24/2024	3:45 AM	0	0	0	0	0	0	0	0	0	0	0	0	0
4/24/2024	4:00 AM	0	0	0	0	0	0	0	0	0	0	0	0	0
4/24/2024	4:15 AM	0	0	0	0	0	0	0	0	0	0	0	0	0
4/24/2024	4:30 AM	0	0	0	0	0	0	0	0	0	0	0	0	0
4/24/2024	4:45 AM	0	0	0	0	0	0	0	0	0	0	0	0	0
4/24/2024	5:00 AM	0	0	0	0	0	0	0	0	0	0	0	0	0
4/24/2024	5:15 AM	0	0	0	0	0	0	0	0	0	0	0	0	0
4/24/2024	5:30 AM	0	0	0	0	0	0	0	0	0	0	0	0	0
4/24/2024	5:45 AM	0	0	0	0	0	0	0	0	0	0	0	0	0
4/24/2024	6:00 AM	0	0	0	0	0	0	0	0	0	0	0	0	0
4/24/2024	6:15 AM	0	0	0	0	0	0	0	0	0	0	0	0	0
4/24/2024	6:30 AM	0	0	0	0	0	0	0	0	0	0	0	0	0
4/24/2024	6:45 AM	0	0	0	0	0	0	0	0	0	0	0	0	0
4/24/2024	7:00 AM	0	0	0	0	0	0	0	0	0	0	0	0	0
4/24/2024	7:15 AM	0	0	0	0	0	0	0	0	0	0	0	0	0
4/24/2024	7:30 AM	0	0	0	0	0	0	0	0	0	0	0	0	0
4/24/2024	7:45 AM	0	0	0	0	0	0	0	0	0	0	0	0	0
4/24/2024	8:00 AM	0	0	0	0	0	0	0	0	0	0	0	0	0
4/24/2024	8:15 AM	0	0	0	0	0	0	0	0	0	0	0	0	0
4/24/2024	8:30 AM	0	0	0	0	0	0	0	0	0	0	0	0	0
4/24/2024	8:45 AM	0	0	0	0	0	0	0	0	0	0	0	0	0
4/24/2024	9:00 AM	0	0	0	0	0	0	0	0	0	0	0	0	0
4/24/2024	9:15 AM	0	0	0	0	0	0	0	0	0	0	0	0	0
4/24/2024	9:30 AM	0	0	0	0	0	0	0	0	0	0	0	0	0
4/24/2024	9:45 AM	0	0	0	0	0	0	0	0	0	0	0	0	0
4/24/2024	10:00 AM	0	0	0	0	0	0	0	0	0	0	0	0	0
4/24/2024	10:15 AM	0	0	0	0	0	0	0	0	0	0	0	0	0
4/24/2024	10:30 AM	0	0	0	0	0	0	0	0	0	0	0	0	0
4/24/2024	10:45 AM	0	0	0	0	0	0	0	0	0	0	0	0	0
4/24/2024	11:00 AM	0	0	0	0	0	0	0	0	0	0	0	0	0
4/24/2024	11:15 AM	0	0	0	0	0	0	0	0	0	0	0	0	0
4/24/2024	11:30 AM	0	0	0	0	0	0	0	0	0	0	0	0	0
4/24/2024	11:45 AM	0	0	0	0	0	0	0	0	0	0	0	0	0
4/24/2024	12:00 PM	0	0	0	0	0	0	0	0	0	0	0	0	0
4/24/2024	12:15 PM	0	0	0	0	0	0	0	0	0	0	0	0	0
4/24/2024	12:30 PM	0	0	0	0	0	0	0	0	0	0	0	0	0
4/24/2024	12:45 PM	0	0	0	0	0	0	0	0	0	0	0	0	0
4/24/2024	1:00 PM	0	0	0	0	0	0	0	0	0	0	0	0	0
4/24/2024	1:15 PM	0	0	0	0	0	0	0	0	0	0	0	0	0
4/24/2024	1:30 PM	0	0	0	0	0	0	0	0	0	0	0	0	0
4/24/2024	1:45 PM	0	0	0	0	0	0	0	0	0	0	0	0	0
4/24/2024	2:00 PM	0	0	0	0	0	0	0	0	0	0	0	0	0
4/24/2024	2:15 PM	0	0	0	0	0	0	0	0	0	0	0	0	0
4/24/2024	2:30 PM	0	0	0	0	0	0	0	0	0	0	0	0	0
4/24/2024	2:45 PM	0	0	0	0	0	0	0	0	0	0	0	0	0
4/24/2024	3:00 PM	0	0	0	0	0	0	0	0	0	0	0	0	0
4/24/2024	3:15 PM	0	0	0	0	0	0	0	0	0	0	0	0	0
4/24/2024	3:30 PM	0	0	0	0	0	0	0	0	0	0	0	0	0
4/24/2024	3:45 PM	0	0	0	0	0	0	0	0	0	0	0	0	0
4/24/2024	4:00 PM	0	0	0	0	0	0	0	0	0	0	0	0	0
4/24/2024	4:15 PM	0	0	0	0	0	0	0	0	0	0	0	0	0
4/24/2024	4:30 PM	0	0	0	0	0	0	0	0	0	0	0	0	0
4/24/2024	4:45 PM	0	0	0	0	0	0	0	0	0	0	0	0	0
4/24/2024	5:00 PM	0	0	0	0	0	0	0	0	0	0	0	0	0
4/24/2024	5:15 PM	0	0	0	0	0	0	0	0	0	0	0	0	0
4/24/2024	5:30 PM	0	0	0	0	0	0	0	0	0	0	0	0	0
4/24/2024	5:45 PM	0	0	0	0	0	0	0	0	0	0	0	0	0
4/24/2024	6:00 PM	0	0	0	0	0	0	0	0	0	0	0	0	0
4/24/2024	6:15 PM	0	0	0	0	0	0	0	0	0	0	0	0	0
4/24/2024	6:30 PM	0	0	0	0	0	0	0	0	0	0	0	0	0
4/24/2024	6:45 PM	0	0	0	0	0	0	0	0	0	0	0	0	0
4/24/2024	7:00 PM	0	0	0	0	0	0	0	0	0	0	0	0	0
4/24/2024	7:15 PM	0	0	0	0	0	0	0	0	0	0	0	0	0
4/24/2024	7:30 PM	0	0	0	0	0	0	0	0	0	0	0	0	0
4/24/2024	7:45 PM	0	0	0	0	0	0	0	0	0	0	0	0	0
4/24/2024	8:00 PM	0	0	0	0	0	0	0	0	0	0	0	0	0
4/24/2024	8:15 PM	0	0	0	0	0	0	0	0	0	0	0	0	0
4/24/2024	8:30 PM	0	0	0	0	0	0	0	0	0	0	0	0	0
4/24/2024	8:45 PM	0	0	0	0	0	0	0	0	0	0	0	0	0
4/24/2024	9:00 PM	0	0	0	0	0	0	0	0	0	0	0	0	0
4/24/2024	9:15 PM	0	0	0	0	0	0	0	0	0	0	0	0	0
4/24/2024	9:30 PM	0	0	0	0	0	0	0	0	0	0	0	0	0
4/24/2024	9:45 PM	0	0	0	0	0	0	0	0	0	0	0	0	0
4/24/2024	10:00 PM	0	0	0	0	0	0	0	0	0	0	0	0	0
4/24/2024	10:15 PM	0	0	0	0	0	0	0	0	0	0	0	0	0
4/24/2024	10:30 PM	0	0	0	0	0	0	0	0	0	0	0	0	0
4/24/2024	10:45 PM	0	0	0	0	0	0	0	0	0	0	0	0	0
4/24/2024	11:00 PM	0	0	0	0	0	0	0	0	0	0	0	0	0
4/24/2024	11:15 PM	0	0	0	0	0	0	0	0	0	0	0	0	0
4/24/2024	11:30 PM	0	0	0	0	0	0	0	0	0	0	0	0	0
4/24/2024	11:45 PM	0	0	0	0	0	0	0	0	0	0	0	0	0

4/25/2024	12:00 AM	0	0	0	0	0	0	0	0	0	0	0	0	0
4/25/2024	12:15 AM	0	0	0	0	0	0	0	0	0	0	0	0	0
4/25/2024	12:30 AM	0	0	0	0	0	0	0	0	0	0	0	0	0
4/25/2024	12:45 AM	0	0	0	0	0	0	0	0	0	0	0	0	0
4/25/2024	1:00 AM	0	0	0	0	0	0	0	0	0	0	0	0	0
4/25/2024	1:15 AM	0	0	0	0	0	0	0	0	0	0	0	0	0
4/25/2024	1:30 AM	0	0	0	0	0	0	0	0	0	0	0	0	0
4/25/2024	1:45 AM	0	0	0	0	0	0	0	0	0	0	0	0	0
4/25/2024	2:00 AM	0	0	0	0	0	0	0	0	0	0	0	0	0
4/25/2024	2:15 AM	0	0	0	0	0	0	0	0	0	0	0	0	0
4/25/2024	2:30 AM	0	0	0	0	0	0	0	0	0	0	0	0	0
4/25/2024	2:45 AM	0	0	0	0	0	0	0	0	0	0	0	0	0
4/25/2024	3:00 AM	0	0	0	0	0	0	0	0	0	0	0	0	0
4/25/2024	3:15 AM	0	0	0	0	0	0	0	0	0	0	0	0	0
4/25/2024	3:30 AM	0	0	0	0	0	0	0	0	0	0	0	0	0
4/25/2024	3:45 AM	0	0	0	0	0	0	0	0	0	0	0	0	0
4/25/2024	4:00 AM	0	0	0	0	0	0	0	0	0	0	0	0	0
4/25/2024	4:15 AM	0	0	0	0	0	0	0	0	0	0	0	0	0
4/25/2024	4:30 AM	0	0	0	0	0	0	0	0	0	0	0	0	0
4/25/2024	4:45 AM	0	0	0	0	0	0	0	0	0	0	0	0	0
4/25/2024	5:00 AM	0	0	0	0	0	0	0	0	0	0	0	0	0
4/25/2024	5:15 AM	0	0	0	0	0	0	0	0	0	0	0	0	0
4/25/2024	5:30 AM	0	0	0	0	0	0	0	0	0	0	0	0	0
4/25/2024	5:45 AM	0	0	0	0	0	0	0	0	0	0	0	0	0
4/25/2024	6:00 AM	0	0	0	0	0	0	0	0	0	0	0	0	0
4/25/2024	6:15 AM	0	0	0	0	0	0	0	0	0	0	0	0	0
4/25/2024	6:30 AM	0	0	0	0	0	0	0	0	0	0	0	0	0
4/25/2024	6:45 AM	0	0	0	0	0	0	0	0	0	0	0	0	0
4/25/2024	7:00 AM	0	0	0	0	0	0	0	0	0	0	0	0	0
4/25/2024	7:15 AM	0	0	0	0	0	0	0	0	0	0	0	0	0
4/25/2024	7:30 AM	0	0	0	0	0	0	0	0	0	0	0	0	0
4/25/2024	7:45 AM	0	0	0	0	0	0	0	0	0	0	0	0	0
4/25/2024	8:00 AM	0	0	0	0	0	0	0	0	0	0	0	0	0
4/25/2024	8:15 AM	0	0	0	0	0	0	0	0	0	0	0	0	0
4/25/2024	8:30 AM	0	0	0	0	0	0	0	0	0	0	0	0	0
4/25/2024	8:45 AM	0	0	0	0	0	0	0	0	0	0	0	0	0
4/25/2024	9:00 AM	0	0	0	0	0	0	0	0	0	0	0	0	0
4/25/2024	9:15 AM	0	0	0	0	0	0	0	0	0	0	0	0	0
4/25/2024	9:30 AM	0	0	0	0	0	0	0	0	0	0	0	0	0
4/25/2024	9:45 AM	0	0	0	0	0	0	0	0	0	0	0	0	0
4/25/2024	10:00 AM	0	0	0	0	0	0	0	0	0	0	0	0	0
4/25/2024	10:15 AM	0	0	0	0	0	0	0	0	0	0	0	0	0
4/25/2024	10:30 AM	0	0	0	0	0	0	0	0	0	0	0	0	0
4/25/2024	10:45 AM	0	0	0	0	0	0	0	0	0	0	0	0	0
4/25/2024	11:00 AM	0	0	0	0	0	0	0	0	0	0	0	0	0
4/25/2024	11:15 AM	0	0	0	0	0	0	0	0	0	0	0	0	0
4/25/2024	11:30 AM	0	0	0	0	0	0	0	0	0	0	0	0	0
4/25/2024	11:45 AM	0	0	0	0	0	0	0	0	0	0	0	0	0
4/25/2024	12:00 PM	0	0	0	0	0	0	0	0	0	0	0	0	0
4/25/2024	12:15 PM	0	0	0	0	0	0	0	0	0	0	0	0	0
4/25/2024	12:30 PM	0	0	0	0	0	0	0	0	0	0	0	0	0
4/25/2024	12:45 PM	0	0	0	0	0	0	0	0	0	0	0	0	0
4/25/2024	1:00 PM	0	0	0	0	0	0	0	0	0	0	0	0	0
4/25/2024	1:15 PM	0	0	0	0	0	0	0	0	0	0	0	0	0
4/25/2024	1:30 PM	0	0	0	0	0	0	0	0	0	0	0	0	0
4/25/2024	1:45 PM	0	0	0	0	0	0	0	0	0	0	0	0	0
4/25/2024	2:00 PM	0	0	0	0	0	0	0	0	0	0	0	0	0
4/25/2024	2:15 PM	0	0	0	0	0	0	0	0	0	0	0	0	0
4/25/2024	2:30 PM	0	0	0	0	0	0	0	0	0	0	0	0	0
4/25/2024	2:45 PM	0	0	0	0	0	0	0	0	0	0	0	0	0
4/25/2024	3:00 PM	0	0	0	0	0	0	0	0	0	0	0	0	0
4/25/2024	3:15 PM	0	0	0	0	0	0	0	0	0	0	0	0	0
4/25/2024	3:30 PM	0	0	0	0	0	0	0	0	0	0	0	0	0
4/25/2024	3:45 PM	0	0	0	0	0	0	0	0	0	0	0	0	0
4/25/2024	4:00 PM	0	0	0	0	0	0	0	0	0	0	0	0	0
4/25/2024	4:15 PM	0	0	0	0	0	0	0	0	0	0	0	0	0
4/25/2024	4:30 PM	0	0	0	0	0	0	0	0	0	0	0	0	0
4/25/2024	4:45 PM	0	0	0	0	0	0	0	0	0	0	0	0	0
4/25/2024	5:00 PM	0	0	0	0	0	0	0	0	0	0	0	0	0
4/25/2024	5:15 PM	0	0	0	0	0	0	0	0	0	0	0	0	0
4/25/2024	5:30 PM	0	0	0	0	0	0	0	0	0	0	0	0	0
4/25/2024	5:45 PM	0	0	0	0	0	0	0	0	0	0	0	0	0
4/25/2024	6:00 PM	0	0	0	0	0	0	0	0	0	0	0	0	0
4/25/2024	6:15 PM	0	0	0	0	0	0	0	0	0	0	0	0	0
4/25/2024	6:30 PM	0	0	0	0	0	0	0	0	0	0	0	0	0
4/25/2024	6:45 PM	0	0	0	0	0	0	0	0	0	0	0	0	0
4/25/2024	7:00 PM	0	0	0	0	0	0	0	0	0	0	0	0	0
4/25/2024	7:15 PM	0	0	0	0	0	0	0	0	0	0	0	0	0
4/25/2024	7:30 PM	0	0	0	0	0	0	0	0	0	0	0	0	0
4/25/2024	7:45 PM	0	0	0	0	0	0	0	0	0	0	0	0	0
4/25/2024	8:00 PM	0	0	0	0	0	0	0	0	0	0	0	0	0
4/25/2024	8:15 PM	0	0	0	0	0	0	0	0	0	0	0	0	0
4/25/2024	8:30 PM	0	0	0	0	0	0	0	0	0	0	0	0	0
4/25/2024	8:45 PM	0	0	0	0	0	0	0	0	0	0	0	0	0
4/25/2024	9:00 PM	0	0	0	0	0	0	0	0	0	0	0	0	0
4/25/2024	9:15 PM	0	0	0	0	0	0	0	0	0	0	0	0	0
4/25/2024	9:30 PM	0	0	0	0	0	0	0	0	0	0	0	0	0
4/25/2024	9:45 PM	0	0	0	0	0	0	0	0	0	0	0	0	0
4/25/2024	10:00 PM	0	0	0	0	0	0	0	0	0	0	0	0	0
4/25/2024	10:15 PM	0	0	0	0	0	0	0	0	0	0	0	0	0
4/25/2024	10:30 PM	0	0	0	0	0	0	0	0	0	0	0	0	0
4/25/2024	10:45 PM	0	0	0	0	0	0	0	0	0	0	0	0	0
4/25/2024	11:00 PM	0	0	0	0	0	0	0	0	0	0	0	0	0
4/25/2024	11:15 PM	0	0	0	0	0	0	0	0	0	0	0	0	0
4/25/2024	11:30 PM	0	0	0	0	0	0	0	0	0	0	0	0	0
4/25/2024	11:45 PM	0	0	0	0	0	0	0	0	0	0	0	0	0

4/26/2024	12:00 AM	0	0	0	0	0	0	0	0	0	0	0	0	0
4/26/2024	12:15 AM	0	0	0	0	0	0	0	0	0	0	0	0	0
4/26/2024	12:30 AM	0	0	0	0	0	0	0	0	0	0	0	0	0
4/26/2024	12:45 AM	0	0	0	0	0	0	0	0	0	0	0	0	0
4/26/2024	1:00 AM	0	0	0	0	0	0	0	0	0	0	0	0	0
4/26/2024	1:15 AM	0	0	0	0	0	0	0	0	0	0	0	0	0
4/26/2024	1:30 AM	0	0	0	0	0	0	0	0	0	0	0	0	0
4/26/2024	1:45 AM	0	0	0	0	0	0	0	0	0	0	0	0	0
4/26/2024	2:00 AM	0	0	0	0	0	0	0	0	0	0	0	0	0
4/26/2024	2:15 AM	0	0	0	0	0	0	0	0	0	0	0	0	0
4/26/2024	2:30 AM	0	0	0	0	0	0	0	0	0	0	0	0	0
4/26/2024	2:45 AM	0	0	0	0	0	0	0	0	0	0	0	0	0
4/26/2024	3:00 AM	0	0	0	0	0	0	0	0	0	0	0	0	0
4/26/2024	3:15 AM	0	0	0	0	0	0	0	0	0	0	0	0	0
4/26/2024	3:30 AM	0	0	0	0	0	0	0	0	0	0	0	0	0
4/26/2024	3:45 AM	0	0	0	0	0	0	0	0	0	0	0	0	0
4/26/2024	4:00 AM	0	0	0	0	0	0	0	0	0	0	0	0	0
4/26/2024	4:15 AM	0	0	0	0	0	0	0	0	0	0	0	0	0
4/26/2024	4:30 AM	0	0	0	0	0	0	0	0	0	0	0	0	0
4/26/2024	4:45 AM	0	0	0	0	0	0	0	0	0	0	0	0	0
4/26/2024	5:00 AM	0	0	0	0	0	0	0	0	0	0	0	0	0
4/26/2024	5:15 AM	0	0	0	0	0	0	0	0	0	0	0	0	0
4/26/2024	5:30 AM	0	0	0	0	0	0	0	0	0	0	0	0	0
4/26/2024	5:45 AM	0	0	0	0	0	0	0	0	0	0	0	0	0
4/26/2024	6:00 AM	0	0	0	0	0	0	0	0	0	0	0	0	0
4/26/2024	6:15 AM	0	0	0	0	0	0	0	0	0	0	0	0	0
4/26/2024	6:30 AM	0	0	0	0	0	0	0	0	0	0	0	0	0
4/26/2024	6:45 AM	0	0	0	0	0	0	0	0	0	0	0	0	0
4/26/2024	7:00 AM	0	0	0	0	0	0	0	0	0	0	0	0	0
4/26/2024	7:15 AM	0	0	0	0	0	0	0	0	0	0	0	0	0
4/26/2024	7:30 AM	0	0	0	0	0	0	0	0	0	0	0	0	0
4/26/2024	7:45 AM	0	0	0	0	0	0	0	0	0	0	0	0	0
4/26/2024	8:00 AM	0	0	0	0	0	0	0	0	0	0	0	0	0
4/26/2024	8:15 AM	0	0	0	0	0	0	0	0	0	0	0	0	0
4/26/2024	8:30 AM	0	0	0	0	0	0	0	0	0	0	0	0	0
4/26/2024	8:45 AM	0	0	0	0	0	0	0	0	0	0	0	0	0
4/26/2024	9:00 AM	0	0	0	0	0	0	0	0	0	0	0	0	0
4/26/2024	9:15 AM	0	0	0	0	0	0	0	0	0	0	0	0	0
4/26/2024	9:30 AM	0	0	0	0	0	0	0	0	0	0	0	0	0
4/26/2024	9:45 AM	0	0	0	0	0	0	0	0	0	0	0	0	0
4/26/2024	10:00 AM	0	0	0	0	0	0	0	0	0	0	0	0	0
4/26/2024	10:15 AM	0	0	0	0	0	0	0	0	0	0	0	0	0
4/26/2024	10:30 AM	0	0	0	0	0	0	0	0	0	0	0	0	0
4/26/2024	10:45 AM	0	0	0	0	0	0	0	0	0	0	0	0	0
4/26/2024	11:00 AM	0	0	0	0	0	0	0	0	0	0	0	0	0
4/26/2024	11:15 AM	0	0	0	0	0	0	0	0	0	0	0	0	0
4/26/2024	11:30 AM	0	0	0	0	0	0	0	0	0	0	0	0	0
4/26/2024	11:45 AM	0	0	0	0	0	0	0	0	0	0	0	0	0
4/26/2024	12:00 PM	0	0	0	0	0	0	0	0	0	0	0	0	0
4/26/2024	12:15 PM	0	0	0	0	0	0	0	0	0	0	0	0	0
4/26/2024	12:30 PM	0	0	0	0	0	0	0	0	0	0	0	0	0
4/26/2024	12:45 PM	0	0	0	0	0	0	0	0	0	0	0	0	0
4/26/2024	1:00 PM	0	0	0	0	0	0	0	0	0	0	0	0	0
4/26/2024	1:15 PM	0	0	0	0	0	0	0	0	0	0	0	0	0
4/26/2024	1:30 PM	0	0	0	0	0	0	0	0	0	0	0	0	0
4/26/2024	1:45 PM	0	0	0	0	0	0	0	0	0	0	0	0	0
4/26/2024	2:00 PM	0	0	0	0	0	0	0	0	0	0	0	0	0
4/26/2024	2:15 PM	0	0	0	0	0	0	0	0	0	0	0	0	0
4/26/2024	2:30 PM	0	0	0	0	0	0	0	0	0	0	0	0	0
4/26/2024	2:45 PM	0	0	0	0	0	0	0	0	0	0	0	0	0
4/26/2024	3:00 PM	0	0	0	0	0	0	0	0	0	0	0	0	0
4/26/2024	3:15 PM	0	0	0	0	0	0	0	0	0	0	0	0	0
4/26/2024	3:30 PM	0	0	0	0	0	0	0	0	0	0	0	0	0
4/26/2024	3:45 PM	0	0	0	0	0	0	0	0	0	0	0	0	0
4/26/2024	4:00 PM	0	0	0	0	0	0	0	0	0	0	0	0	0
4/26/2024	4:15 PM	0	0	0	0	0	0	0	0	0	0	0	0	0
4/26/2024	4:30 PM	0	0	0	0	0	0	0	0	0	0	0	0	0
4/26/2024	4:45 PM	0	0	0	0	0	0	0	0	0	0	0	0	0
4/26/2024	5:00 PM	0	0	0	0	0	0	0	0	0	0	0	0	0
4/26/2024	5:15 PM	0	0	0	0	0	0	0	0	0	0	0	0	0
4/26/2024	5:30 PM	0	0	0	0	0	0	0	0	0	0	0	0	0
4/26/2024	5:45 PM	0	0	0	0	0	0	0	0	0	0	0	0	0
4/26/2024	6:00 PM	0	0	0	0	0	0	0	0	0	0	0	0	0
4/26/2024	6:15 PM	0	0	0	0	0	0	0	0	0	0	0	0	0
4/26/2024	6:30 PM	0	0	0	0	0	0	0	0	0	0	0	0	0
4/26/2024	6:45 PM	0	0	0	0	0	0	0	0	0	0	0	0	0
4/26/2024	7:00 PM	0	0	0	0	0	0	0	0	0	0	0	0	0
4/26/2024	7:15 PM	0	0	0	0	0	0	0	0	0	0	0	0	0
4/26/2024	7:30 PM	0	0	0	0	0	0	0	0	0	0	0	0	0
4/26/2024	7:45 PM	0	0	0	0	0	0	0	0	0	0	0	0	0
4/26/2024	8:00 PM	0	0	0	0	0	0	0	0	0	0	0	0	0
4/26/2024	8:15 PM	0	0	0	0	0	0	0	0	0	0	0	0	0
4/26/2024	8:30 PM	0	0	0	0	0	0	0	0	0	0	0	0	0
4/26/2024	8:45 PM	0	0	0	0	0	0	0	0	0	0	0	0	0
4/26/2024	9:00 PM	0	0	0	0	0	0	0	0	0	0	0	0	0
4/26/2024	9:15 PM	0	0	0	0	0	0	0	0	0	0	0	0	0
4/26/2024	9:30 PM	0	0	0	0	0	0	0	0	0	0	0	0	0
4/26/2024	9:45 PM	0	0	0	0	0	0	0	0	0	0	0	0	0
4/26/2024	10:00 PM	0	0	0	0	0	0	0	0	0	0	0	0	0
4/26/2024	10:15 PM	0	0	0	0	0	0	0	0	0	0	0	0	0
4/26/2024	10:30 PM	0	0	0	0	0	0	0	0	0	0	0	0	0
4/26/2024	10:45 PM	0	0	0	0	0	0	0	0	0	0	0	0	0
4/26/2024	11:00 PM	0	0	0	0	0	0	0	0	0	0	0	0	0
4/26/2024	11:15 PM	0	0	0	0	0	0	0	0	0	0	0	0	0
4/26/2024	11:30 PM	0	0	0	0	0	0	0	0	0	0	0	0	0
4/26/2024	11:45 PM	0	0	0	0	0	0	0	0	0	0	0	0	0

4/27/2024	12:00 AM	0	0	0	0	0	0	0	0	0	0	0	0	0
4/27/2024	12:15 AM	0	0	0	0	0	0	0	0	0	0	0	0	0
4/27/2024	12:30 AM	0	0	0	0	0	0	0	0	0	0	0	0	0
4/27/2024	12:45 AM	0	0	0	0	0	0	0	0	0	0	0	0	0
4/27/2024	1:00 AM	0	0	0	0	0	0	0	0	0	0	0	0	0
4/27/2024	1:15 AM	0	0	0	0	0	0	0	0	0	0	0	0	0
4/27/2024	1:30 AM	0	0	0	0	0	0	0	0	0	0	0	0	0
4/27/2024	1:45 AM	0	0	0	0	0	0	0	0	0	0	0	0	0
4/27/2024	2:00 AM	0	0	0	0	0	0	0	0	0	0	0	0	0
4/27/2024	2:15 AM	0	0	0	0	0	0	0	0	0	0	0	0	0
4/27/2024	2:30 AM	0	0	0	0	0	0	0	0	0	0	0	0	0
4/27/2024	2:45 AM	0	0	0	0	0	0	0	0	0	0	0	0	0
4/27/2024	3:00 AM	0	0	0	0	0	0	0	0	0	0	0	0	0
4/27/2024	3:15 AM	0	0	0	0	0	0	0	0	0	0	0	0	0
4/27/2024	3:30 AM	0	0	0	0	0	0	0	0	0	0	0	0	0
4/27/2024	3:45 AM	0	0	0	0	0	0	0	0	0	0	0	0	0
4/27/2024	4:00 AM	0	0	0	0	0	0	0	0	0	0	0	0	0
4/27/2024	4:15 AM	0	0	0	0	0	0	0	0	0	0	0	0	0
4/27/2024	4:30 AM	0	0	0	0	0	0	0	0	0	0	0	0	0
4/27/2024	4:45 AM	0	0	0	0	0	0	0	0	0	0	0	0	0
4/27/2024	5:00 AM	0	0	0	0	0	0	0	0	0	0	0	0	0
4/27/2024	5:15 AM	0	0	0	0	0	0	0	0	0	0	0	0	0
4/27/2024	5:30 AM	0	0	0	0	0	0	0	0	0	0	0	0	0
4/27/2024	5:45 AM	0	0	0	0	0	0	0	0	0	0	0	0	0
4/27/2024	6:00 AM	0	0	0	0	0	0	0	0	0	0	0	0	0
4/27/2024	6:15 AM	0	0	0	0	0	0	0	0	0	0	0	0	0
4/27/2024	6:30 AM	0	0	0	0	0	0	0	0	0	0	0	0	0
4/27/2024	6:45 AM	0	0	0	0	0	0	0	0	0	0	0	0	0
4/27/2024	7:00 AM	0	0	0	0	0	0	0	0	0	0	0	0	0
4/27/2024	7:15 AM	0	0	0	0	0	0	0	0	0	0	0	0	0
4/27/2024	7:30 AM	0	0	0	0	0	0	0	0	0	0	0	0	0
4/27/2024	7:45 AM	0	0	0	0	0	0	0	0	0	0	0	0	0
4/27/2024	8:00 AM	0	0	0	0	0	0	0	0	0	0	0	0	0
4/27/2024	8:15 AM	0	0	0	0	0	0	0	0	0	0	0	0	0
4/27/2024	8:30 AM	0	0	0	0	0	0	0	0	0	0	0	0	0
4/27/2024	8:45 AM	0	0	0	0	0	0	0	0	0	0	0	0	0
4/27/2024	9:00 AM	0	0	0	0	0	0	0	0	0	0	0	0	0
4/27/2024	9:15 AM	0	0	0	0	0	0	0	0	0	0	0	0	0
4/27/2024	9:30 AM	0	0	0	0	0	0	0	0	0	0	0	0	0
4/27/2024	9:45 AM	0	0	0	0	0	0	0	0	0	0	0	0	0
4/27/2024	10:00 AM	0	0	0	0	0	0	0	0	0	0	0	0	0
4/27/2024	10:15 AM	0	0	0	0	0	0	0	0	0	0	0	0	0
4/27/2024	10:30 AM	0	0	0	0	0	0	0	0	0	0	0	0	0
4/27/2024	10:45 AM	0	0	0	0	0	0	0	0	0	0	0	0	0
4/27/2024	11:00 AM	0	0	0	0	0	0	0	0	0	0	0	0	0
4/27/2024	11:15 AM	0	0	0	0	0	0	0	0	0	0	0	0	0
4/27/2024	11:30 AM	0	0	0	0	0	0	0	0	0	0	0	0	0
4/27/2024	11:45 AM	0	0	0	0	0	0	0	0	0	0	0	0	0
4/27/2024	12:00 PM	0	0	0	0	0	0	0	0	0	0	0	0	0
4/27/2024	12:15 PM	0	0	0	0	0	0	0	0	0	0	0	0	0
4/27/2024	12:30 PM	0	0	0	0	0	0	0	0	0	0	0	0	0
4/27/2024	12:45 PM	0	0	0	0	0	0	0	0	0	0	0	0	0
4/27/2024	1:00 PM	0	0	0	0	0	0	0	0	0	0	0	0	0
4/27/2024	1:15 PM	0	0	0	0	0	0	0	0	0	0	0	0	0
4/27/2024	1:30 PM	0	0	0	0	0	0	0	0	0	0	0	0	0
4/27/2024	1:45 PM	0	0	0	0	0	0	0	0	0	0	0	0	0
4/27/2024	2:00 PM	0	0	0	0	0	0	0	0	0	0	0	0	0
4/27/2024	2:15 PM	0	0	0	0	0	0	0	0	0	0	0	0	0
4/27/2024	2:30 PM	0	0	0	0	0	0	0	0	0	0	0	0	0
4/27/2024	2:45 PM	0	0	0	0	0	0	0	0	0	0	0	0	0
4/27/2024	3:00 PM	0	0	0	0	0	0	0	0	0	0	0	0	0
4/27/2024	3:15 PM	0	0	0	0	0	0	0	0	0	0	0	0	0
4/27/2024	3:30 PM	0	0	0	0	0	0	0	0	0	0	0	0	0
4/27/2024	3:45 PM	0	0	0	0	0	0	0	0	0	0	0	0	0
4/27/2024	4:00 PM	0	0	0	0	0	0	0	0	0	0	0	0	0
4/27/2024	4:15 PM	0	0	0	0	0	0	0	0	0	0	0	0	0
4/27/2024	4:30 PM	0	0	0	0	0	0	0	0	0	0	0	0	0
4/27/2024	4:45 PM	0	0	0	0	0	0	0	0	0	0	0	0	0
4/27/2024	5:00 PM	0	0	0	0	0	0	0	0	0	0	0	0	0
4/27/2024	5:15 PM	0	0	0	0	0	0	0	0	0	0	0	0	0
4/27/2024	5:30 PM	0	0	0	0	0	0	0	0	0	0	0	0	0
4/27/2024	5:45 PM	0	0	0	0	0	0	0	0	0	0	0	0	0
4/27/2024	6:00 PM	0	0	0	0	0	0	0	0	0	0	0	0	0
4/27/2024	6:15 PM	0	0	0	0	0	0	0	0	0	0	0	0	0
4/27/2024	6:30 PM	0	0	0	0	0	0	0	0	0	0	0	0	0
4/27/2024	6:45 PM	0	0	0	0	0	0	0	0	0	0	0	0	0
4/27/2024	7:00 PM	0	0	0	0	0	0	0	0	0	0	0	0	0
4/27/2024	7:15 PM	0	0	0	0	0	0	0	0	0	0	0	0	0
4/27/2024	7:30 PM	0	0	0	0	0	0	0	0	0	0	0	0	0
4/27/2024	7:45 PM	0	0	0	0	0	0	0	0	0	0	0	0	0
4/27/2024	8:00 PM	0	0	0	0	0	0	0	0	0	0	0	0	0
4/27/2024	8:15 PM	0	0	0	0	0	0	0	0	0	0	0	0	0
4/27/2024	8:30 PM	0	0	0	0	0	0	0	0	0	0	0	0	0
4/27/2024	8:45 PM	0	0	0	0	0	0	0	0	0	0	0	0	0
4/27/2024	9:00 PM	0	0	0	0	0	0	0	0	0	0	0	0	0
4/27/2024	9:15 PM	0	0	0	0	0	0	0	0	0	0	0	0	0
4/27/2024	9:30 PM	0	0	0	0	0	0	0	0	0	0	0	0	0
4/27/2024	9:45 PM	0	0	0	0	0	0	0	0	0	0	0	0	0
4/27/2024	10:00 PM	0	0	0	0	0	0	0	0	0	0	0	0	0
4/27/2024	10:15 PM	0	0	0	0	0	0	0	0	0	0	0	0	0
4/27/2024	10:30 PM	0	0	0	0	0	0	0	0	0	0	0	0	0
4/27/2024	10:45 PM	0	0	0	0	0	0	0	0	0	0	0	0	0
4/27/2024	11:00 PM	0	0	0	0	0	0	0	0	0	0	0	0	0
4/27/2024	11:15 PM	0	0	0	0	0	0	0	0	0	0	0	0	0
4/27/2024	11:30 PM	0	0	0	0	0	0	0	0	0	0	0	0	0
4/27/2024	11:45 PM	0	0	0	0	0	0	0	0	0	0	0	0	0

Bi-Directional Class Count || NB EB 15min

Columbia, SC

Marr Traffic DATA COLLECTION
www.marrtraffic.com

Site 9
I-26 N/Bound Off-Ramp,
south of I-20

Date
Sunday, April 21, 2024

Lat/Long
34.035821°, -81.107950°

Weather
Cloudy
66°F

Click here for Detailed Weather

Click here for Map

0000 - 2400 (Sunday 24h Session) (04-21-2024)
NB EB 15min

	Northbound (Movement 9.1)													15min	60min
Time	1	2	3	4	5	6	7	8	9	10	11	12	13	Total	Total
0000 - 0015	0	51	4	0	0	0	0	0	0	0	0	0	0	**55**	
0015 - 0030	0	39	4	0	0	0	0	0	0	0	0	0	0	**43**	
0030 - 0045	0	45	7	0	0	0	0	0	1	0	0	0	0	**53**	
0045 - 0100	0	28	3	0	0	0	0	0	0	0	0	0	0	**31**	**182**
0100 - 0115	0	28	4	0	0	0	0	0	0	0	1	0	0	**33**	
0115 - 0130	0	26	3	0	0	0	0	0	0	0	0	0	0	**29**	
0130 - 0145	0	20	2	0	0	0	0	0	0	0	0	0	0	**22**	
0145 - 0200	0	16	1	0	0	0	0	0	0	0	0	0	0	**17**	**101**
0200 - 0215	0	20	2	0	0	0	0	0	0	0	0	0	0	**22**	
0215 - 0230	0	21	2	0	0	0	0	0	0	0	0	0	0	**23**	
0230 - 0245	0	18	1	0	0	0	0	0	0	0	0	0	0	**19**	
0245 - 0300	0	12	1	0	0	0	0	0	0	0	0	0	0	**13**	**77**
0300 - 0315	0	12	2	0	0	0	0	0	0	0	0	0	0	**14**	
0315 - 0330	0	14	2	0	0	0	0	0	1	0	0	0	0	**17**	
0330 - 0345	0	16	1	0	0	0	0	0	0	0	0	0	0	**17**	
0345 - 0400	0	10	1	0	0	0	0	0	1	0	0	0	0	**12**	**60**
0400 - 0415	0	13	1	0	0	0	0	0	0	0	0	0	0	**14**	
0415 - 0430	0	5	0	0	0	0	0	0	1	0	0	0	0	**6**	
0430 - 0445	0	12	2	0	0	0	0	0	0	0	0	0	0	**14**	
0445 - 0500	0	11	2	0	0	0	0	0	0	0	0	0	0	**13**	**47**
0500 - 0515	0	12	1	0	0	0	0	0	0	0	0	0	0	**13**	
0515 - 0530	0	10	1	0	0	0	0	0	1	0	0	0	0	**12**	
0530 - 0545	0	13	2	0	0	0	0	0	0	0	0	0	0	**15**	
0545 - 0600	0	12	1	0	0	0	0	0	0	0	0	0	0	**13**	**53**
0600 - 0615	0	22	4	0	0	0	0	0	1	0	0	0	0	**27**	
0615 - 0630	0	14	2	0	0	0	0	0	0	0	0	0	0	**16**	
0630 - 0645	0	25	5	0	0	0	0	0	0	0	0	0	0	**30**	
0645 - 0700	0	24	1	0	0	0	0	0	1	0	0	0	0	**26**	**99**
0700 - 0715	0	37	6	0	4	0	0	0	0	0	0	0	0	**47**	
0715 - 0730	0	37	4	0	0	0	0	0	1	0	0	0	0	**42**	
0730 - 0745	0	57	5	0	1	0	0	0	0	0	0	0	0	**63**	
0745 - 0800	0	37	6	0	1	0	0	0	2	0	0	0	0	**46**	**198**
0800 - 0815	0	32	14	0	0	0	0	0	0	0	0	0	0	**46**	
0815 - 0830	0	36	7	0	1	0	0	0	1	0	0	0	0	**45**	
0830 - 0845	0	35	14	0	0	0	0	0	1	0	0	0	0	**50**	
0845 - 0900	0	42	9	0	1	0	0	0	0	0	0	0	0	**52**	**193**
0900 - 0915	0	55	14	0	0	0	0	0	2	0	0	0	0	**71**	
0915 - 0930	0	43	9	0	0	0	0	0	1	0	0	0	0	**53**	
0930 - 0945	0	71	14	0	1	0	0	0	1	0	0	0	0	**87**	
0945 - 1000	0	74	19	1	0	0	0	0	0	0	0	0	0	**94**	**305**
1000 - 1015	0	91	11	0	0	0	0	0	1	0	0	0	0	**103**	
1015 - 1030	0	64	12	0	0	0	0	0	0	0	0	0	0	**76**	
1030 - 1045	0	72	13	0	0	0	0	0	1	0	0	0	0	**86**	
1045 - 1100	0	72	20	0	0	0	0	0	2	0	0	0	0	**94**	**359**
1100 - 1115	0	67	18	0	2	0	0	0	1	0	0	0	0	**88**	
1115 - 1130	0	61	13	1	0	0	0	0	3	0	0	0	0	**78**	
1130 - 1145	0	61	19	0	0	0	0	0	1	0	0	0	0	**81**	
1145 - 1200	0	56	10	0	0	0	0	0	1	0	0	0	0	**67**	**314**
1200 - 1215	0	70	18	0	2	0	0	0	1	0	0	0	0	**91**	
1215 - 1230	0	72	19	0	0	0	0	1	0	0	0	0	0	**92**	
1230 - 1245	0	115	19	0	2	0	0	1	0	0	0	0	0	**137**	
1245 - 1300	0	107	22	0	2	0	0	0	1	0	0	0	0	**132**	**452**
1300 - 1315	0	101	26	1	0	0	0	0	0	0	0	0	0	**128**	
1315 - 1330	0	94	14	0	1	0	0	0	1	0	0	0	0	**110**	
1330 - 1345	0	89	15	0	1	0	0	0	1	0	0	0	0	**106**	
1345 - 1400	0	102	23	0	1	0	0	0	0	0	0	0	0	**126**	**470**
1400 - 1415	0	88	18	0	0	1	0	0	2	0	0	0	0	**109**	
1415 - 1430	0	86	13	0	0	1	0	1	1	0	0	0	0	**102**	
1430 - 1445	0	96	12	0	1	0	0	0	1	0	0	0	0	**110**	
1445 - 1500	0	93	24	0	0	0	0	0	1	0	0	0	0	**118**	**439**
1500 - 1515	0	108	15	0	1	0	0	0	0	0	0	0	0	**124**	
1515 - 1530	0	96	14	2	2	0	0	0	1	0	0	0	0	**115**	
1530 - 1545	0	103	26	0	0	1	0	1	0	0	0	0	0	**131**	
1545 - 1600	0	130	24	0	0	0	0	0	0	0	0	0	0	**154**	**524**
1600 - 1615	0	102	19	0	1	1	0	0	1	0	0	0	0	**124**	
1615 - 1630	0	83	14	0	2	0	0	0	3	0	0	0	0	**102**	
1630 - 1645	0	73	12	0	2	1	0	0	0	0	0	0	0	**88**	
1645 - 1700	0	58	17	0	3	0	0	0	1	0	0	0	0	**79**	**393**
1700 - 1715	0	90	13	1	1	1	0	0	0	0	0	0	0	**106**	
1715 - 1730	0	97	12	0	0	0	0	0	3	0	0	0	0	**112**	
1730 - 1745	0	63	17	0	2	1	0	0	1	0	0	0	0	**84**	
1745 - 1800	0	68	18	0	0	0	0	0	0	0	0	0	0	**86**	**388**
1800 - 1815	0	70	15	0	1	0	0	0	1	0	0	0	0	**87**	
1815 - 1830	0	77	16	0	0	0	0	0	0	0	0	0	0	**93**	
1830 - 1845	0	57	17	0	0	0	0	0	1	0	0	0	0	**75**	
1845 - 1900	0	58	19	0	0	0	0	0	2	0	0	0	0	**79**	**334**
1900 - 1915	0	85	4	0	0	0	0	0	2	0	0	0	0	**91**	
1915 - 1930	0	86	10	0	0	0	0	0	1	0	0	0	0	**97**	
1930 - 1945	0	78	8	0	0	0	0	0	0	0	1	0	0	**87**	
1945 - 2000	0	66	11	0	0	0	0	0	1	0	0	0	0	**78**	**353**
2000 - 2015	0	66	9	0	0	0	0	0	1	0	0	0	0	**76**	
2015 - 2030	0	60	8	0	1	0	0	0	2	0	0	0	0	**71**	
2030 - 2045	0	57	5	0	0	0	0	0	0	0	0	0	0	**62**	
2045 - 2100	0	49	2	1	1	1	0	0	0	0	0	0	0	**54**	**263**
2100 - 2115	0	55	6	0	0	0	0	0	1	0	0	0	0	**62**	
2115 - 2130	0	48	4	0	0	0	0	0	0	0	0	0	0	**52**	
2130 - 2145	0	52	6	0	0	0	0	0	2	0	0	0	0	**60**	
2145 - 2200	0	39	3	0	0	0	0	0	0	0	0	0	0	**42**	**216**
2200 - 2215	0	27	4	0	0	0	0	0	3	0	0	0	0	**34**	
2215 - 2230	0	36	5	0	0	0	0	0	2	0	0	0	0	**43**	
2230 - 2245	0	35	3	0	0	0	0	0	0	0	0	0	0	**38**	
2245 - 2300	0	28	4	0	0	0	0	0	1	0	0	0	0	**33**	**148**
2300 - 2315	0	35	3	0	0	0	0	0	0	0	0	0	0	**38**	
2315 - 2330	0	37	5	0	0	0	0	0	1	0	0	0	0	**43**	
2330 - 2345	0	31	4	0	0	0	0	0	1	0	0	0	0	**36**	
2345 - 0000	0	22	3	0	0	0	0	0	0	0	0	0	0	**25**	**142**

Session Total	0	5087	897	7	38	8	0	4	67	0	2	0	0	**6110**
Session Average	0.00	52.99	9.34	0.07	0.40	0.08	0.00	0.04	0.70	0.00	0.02	0.00	0.00	**63.65**
Session Percentage	0.00	83.26	14.68	0.11	0.62	0.13	0.00	0.07	1.10	0.00	0.03	0.00	0.00	

AM Peak Hour	-	0945 - 1045	0900 - 1000	0900 - 1000	0700 - 0800	-	-	-	0745 - 0845	-	-	-	-	**0930 - 1030**
AM Peak Volume	0	301	56	1	6	0	0	0	4	0	0	0	0	**360**

Noon Peak Hour	-	1230 - 1330	1215 - 1315	1430 - 1530	1200 - 1300	1330 - 1430	-	1145 - 1245	1030 - 1130	-	-	-	-	**1230 - 1330**
Noon Peak Volume	0	417	86	2	6	2	0	2	7	0	0	0	0	**507**

PM Peak Hour	-	1500 - 1600	1515 - 1615	1500 - 1600	1600 - 1700	1515 - 1615	-	1500 - 1600	1830 - 1930	-	1845 - 1945	-	-	**1500 - 1600**
PM Peak Volume	0	437	83	2	8	2	0	1	6	0	1	0	0	**524**

Site 9
I-26 N/Bound Off-Ramp,
south of I-20

Date
Monday, April 22, 2024

Lat/Long
34.035821°, -81.107950°

Weather
Mostly Cloudy
57°F

Click here for Detailed Weather

0000 - 2400 (Weekday 24h Session) (04-22-2024)
NB EB 15min

	Northbound (Movement 9.1)													15min	60min
Time	1	2	3	4	5	6	7	8	9	10	11	12	13	Total	Total
0000 - 0015	0	7	4	0	0	0	0	0	0	0	0	0	0	**11**	
0015 - 0030	0	20	5	0	0	0	0	0	0	0	0	0	0	**25**	
0030 - 0045	0	21	5	0	2	0	0	0	2	0	0	0	0	**30**	
0045 - 0100	0	15	6	0	0	0	0	0	1	0	0	0	0	**22**	**88**
0100 - 0115	0	12	5	0	0	0	0	0	0	0	1	0	0	**18**	
0115 - 0130	0	6	2	0	0	0	0	0	0	0	0	0	0	**8**	
0130 - 0145	0	7	4	0	0	0	0	0	1	0	0	0	0	**12**	
0145 - 0200	0	7	3	0	0	0	0	0	0	0	0	0	0	**10**	**48**
0200 - 0215	0	8	4	0	0	0	0	0	0	0	0	0	0	**12**	
0215 - 0230	0	3	2	0	1	0	0	0	0	0	0	0	0	**6**	
0230 - 0245	0	7	3	0	0	0	0	0	0	0	0	0	0	**10**	
0245 - 0300	0	5	2	0	0	0	0	0	0	0	0	0	0	**7**	**35**
0300 - 0315	0	7	3	0	0	0	0	0	1	0	0	0	0	**11**	
0315 - 0330	0	10	4	0	1	0	0	0	1	0	0	0	0	**16**	
0330 - 0345	0	8	4	0	0	0	0	0	3	0	0	0	0	**15**	
0345 - 0400	0	9	3	0	0	1	0	0	3	0	0	0	0	**16**	**58**
0400 - 0415	0	7	4	0	0	0	0	0	0	0	0	0	0	**11**	
0415 - 0430	0	14	5	0	3	0	0	0	2	0	0	0	0	**24**	
0430 - 0445	0	13	5	0	4	0	0	0	1	0	0	0	0	**23**	
0445 - 0500	0	10	4	0	0	0	0	0	2	0	0	0	0	**16**	**74**
0500 - 0515	0	20	6	0	1	0	0	0	2	0	0	0	0	**29**	
0515 - 0530	0	26	12	0	2	1	0	0	4	0	0	0	0	**45**	
0530 - 0545	0	35	10	0	2	2	0	0	3	0	0	0	0	**52**	
0545 - 0600	0	41	12	0	1	0	0	0	3	0	0	0	0	**57**	**183**
0600 - 0615	0	60	13	0	5	0	0	0	0	0	0	0	0	**78**	
0615 - 0630	0	72	16	0	6	1	0	0	3	0	0	0	0	**98**	
0630 - 0645	0	94	27	0	5	1	0	0	6	0	0	0	0	**133**	
0645 - 0700	0	89	28	0	7	1	0	0	0	0	0	0	0	**125**	**434**
0700 - 0715	1	86	29	1	4	1	0	0	3	0	0	0	0	**125**	
0715 - 0730	0	102	38	0	8	1	0	0	5	0	0	0	0	**154**	
0730 - 0745	0	146	43	0	7	2	0	1	4	0	0	0	0	**203**	
0745 - 0800	0	144	55	0	7	3	0	0	12	0	0	0	0	**221**	**703**
0800 - 0815	0	111	48	0	14	4	0	1	1	0	0	0	0	**179**	
0815 - 0830	0	97	27	0	5	1	0	2	2	0	0	0	0	**134**	
0830 - 0845	0	99	43	0	8	1	0	0	7	0	0	0	0	**158**	
0845 - 0900	0	86	42	1	10	0	0	1	8	0	0	0	0	**148**	**619**
0900 - 0915	0	99	35	1	13	4	0	2	5	0	0	0	0	**159**	
0915 - 0930	0	79	34	1	8	0	0	0	15	0	0	0	0	**137**	
0930 - 0945	0	77	29	0	6	4	0	0	8	0	1	0	0	**125**	
0945 - 1000	0	64	29	1	6	0	0	0	9	0	0	0	0	**109**	**530**
1000 - 1015	0	61	34	2	7	3	0	0	5	0	0	0	0	**112**	
1015 - 1030	0	72	29	0	3	3	0	1	5	0	0	0	0	**113**	
1030 - 1045	0	68	32	0	8	1	0	1	6	0	0	0	0	**116**	
1045 - 1100	0	78	28	2	6	4	0	1	6	0	0	0	0	**125**	**466**
1100 - 1115	0	83	33	0	7	5	0	3	9	0	0	0	0	**140**	
1115 - 1130	0	85	39	1	6	2	0	0	5	0	0	0	0	**138**	
1130 - 1145	0	78	30	0	3	2	0	1	5	0	0	0	0	**119**	
1145 - 1200	1	90	42	0	5	1	0	1	4	0	0	0	0	**144**	**541**
1200 - 1215	0	86	29	0	7	2	0	0	4	0	0	0	0	**128**	
1215 - 1230	0	93	33	0	2	3	0	0	4	0	0	0	0	**135**	
1230 - 1245	0	87	36	0	2	7	0	1	5	0	0	0	0	**138**	
1245 - 1300	1	101	29	1	2	3	0	2	4	0	0	0	0	**143**	**544**
1300 - 1315	0	103	30	0	2	2	0	0	4	0	0	0	0	**141**	
1315 - 1330	0	90	40	0	0	1	0	1	7	0	0	0	0	**139**	
1330 - 1345	0	96	38	0	1	2	0	0	4	0	0	0	0	**141**	
1345 - 1400	1	110	39	0	1	1	0	1	5	1	0	0	0	**159**	**580**
1400 - 1415	0	102	33	0	7	0	0	0	3	0	0	0	0	**145**	
1415 - 1430	0	127	39	0	6	3	0	0	5	0	0	0	0	**180**	
1430 - 1445	0	127	40	0	5	1	0	0	8	0	0	0	0	**181**	
1445 - 1500	0	114	44	1	2	2	0	4	3	0	0	0	0	**170**	**676**
1500 - 1515	0	107	37	2	3	1	0	1	10	0	0	0	0	**161**	
1515 - 1530	0	153	39	1	3	0	0	1	2	0	0	0	0	**199**	
1530 - 1545	0	114	32	0	2	0	0	0	3	0	0	0	0	**151**	
1545 - 1600	0	81	21	0	2	0	0	0	2	0	0	0	0	**106**	**617**
1600 - 1615	0	113	26	1	3	1	0	1	7	0	0	1	0	**153**	
1615 - 1630	0	97	25	0	6	0	0	0	5	1	0	0	0	**134**	
1630 - 1645	0	84	22	0	1	0	0	0	5	0	0	0	0	**112**	
1645 - 1700	2	83	24	1	1	0	0	0	1	0	0	0	0	**112**	**511**
1700 - 1715	0	92	20	0	0	0	0	0	7	0	0	0	0	**119**	
1715 - 1730	0	88	24	0	1	0	0	1	5	0	0	0	0	**119**	
1730 - 1745	0	76	24	0	3	3	0	0	5	0	0	0	0	**111**	
1745 - 1800	0	86	25	0	1	0	0	0	0	0	0	0	0	**112**	**461**
1800 - 1815	0	95	33	0	3	1	0	1	0	0	0	0	0	**133**	
1815 - 1830	0	99	12	0	3	1	0	1	2	0	0	0	0	**118**	
1830 - 1845	1	75	14	0	0	1	0	0	3	0	0	0	0	**94**	
1845 - 1900	0	24	0	2	0	0	0	0	2	0	0	0	0	**28**	**373**
1900 - 1915	0	85	23	0	1	0	0	0	1	0	0	0	0	**110**	
1915 - 1930	0	91	14	0	3	0	0	0	0	0	0	0	0	**108**	
1930 - 1945	0	80	24	0	1	0	0	0	1	0	0	0	0	**106**	
1945 - 2000	0	79	14	0	2	0	0	0	1	0	0	0	0	**96**	**420**
2000 - 2015	0	80	14	0	1	0	0	0	1	0	0	0	0	**96**	
2015 - 2030	0	57	19	0	3	1	0	4	2	0	0	0	0	**86**	
2030 - 2045	0	73	18	0	1	0	0	0	2	0	0	0	0	**94**	
2045 - 2100	0	42	13	0	0	0	0	0	1	0	0	0	0	**56**	**332**
2100 - 2115	0	49	13	0	1	0	0	0	0	0	0	0	0	**63**	
2115 - 2130	0	41	14	0	0	0	0	0	2	0	0	0	0	**57**	
2130 - 2145	0	38	17	0	2	0	0	0	4	0	0	0	0	**61**	
2145 - 2200	0	40	18	0	0	0	0	0	4	0	0	0	0	**62**	**243**
2200 - 2215	0	38	15	1	0	0	0	0	0	0	0	0	0	**54**	
2215 - 2230	0	45	9	0	0	0	0	0	1	0	0	0	0	**55**	
2230 - 2245	0	30	7	0	1	1	0	0	1	0	0	0	0	**40**	
2245 - 2300	0	36	10	0	1	1	0	0	3	0	0	0	0	**51**	**200**
2300 - 2315	0	37	8	0	0	0	0	0	2	0	0	0	0	**47**	
2315 - 2330	0	33	10	0	0	1	0	0	0	0	0	0	0	**44**	
2330 - 2345	0	34	9	0	0	0	0	0	1	0	0	0	0	**44**	
2345 - 0000	0	11	3	0	0	0	0	0	4	0	1	0	0	**19**	**154**

Session Total	7	6160	2000	20	267	88	0	34	308	2	3	1	0	**8890**
Session Average	0.07	64.17	20.83	0.21	2.78	0.92	0.00	0.35	3.21	0.02	0.03	0.01	0.00	**92.60**
Session Percentage	0.08	69.29	22.50	0.22	3.00	0.99	0.00	0.38	3.46	0.02	0.03	0.01	0.00	

AM Peak Hour	0615 - 0715	0715 - 0815	0715 - 0815	0915 - 1015	0830 - 0930	0715 - 0815	-	0815 - 0915	0900 - 1000	-	0845 - 0945	-	-	**0715 - 0815**
AM Peak Volume	1	503	184	4	39	10	0	5	37	0	1	0	0	**757**

Noon Peak Hour	1100 - 1200	1430 - 1530	1415 - 1515	1000 - 1100	1030 - 1130	1200 - 1300	-	1015 - 1115	1015 - 1115	1300 - 1400	-	-	-	**1430 - 1530**
Noon Peak Volume	1	501	160	4	27	15	0	6	26	1	0	0	0	**711**

PM Peak Hour	1600 - 1700	1515 - 1615	1500 - 1600	1500 - 1600	1530 - 1630	1730 - 1830	-	1930 - 2030	1545 - 1645	1530 - 1630	-	1515 - 1615	-	**1500 - 1600**
PM Peak Volume	2	461	129	3	13	5	0	4	19	1	0	1	0	**617**

Site 9
I-26 N/Bound Off-Ramp,
south of I-20

Date
Tuesday, April 23, 2024

Lat/Long
34.035821°, -81.107950°

Weather
Fair
58°F

Click here for Detailed Weather

0000 - 2400 (Weekday 24h Session) (04-23-2024)
NB EB 15min

	Northbound (Movement 9.1)													15min	60min
TIME	1	2	3	4	5	6	7	8	9	10	11	12	13	Total	Total
0000 - 0015	0	32	3	0	0	0	0	0	2	0	0	0	0	**37**	
0015 - 0030	0	30	4	0	1	0	0	0	2	0	0	0	0	**37**	
0030 - 0045	0	25	2	0	0	0	0	0	1	0	0	0	0	**28**	
0045 - 0100	0	12	0	0	0	0	0	0	0	0	0	0	0	**12**	**114**
0100 - 0115	0	15	0	0	0	0	0	0	1	0	0	0	0	**16**	
0115 - 0130	0	13	0	0	1	0	0	0	2	0	0	0	0	**16**	
0130 - 0145	0	12	0	0	0	0	0	0	1	0	1	0	0	**14**	
0145 - 0200	0	8	0	0	0	0	0	0	1	0	0	0	0	**9**	**55**
0200 - 0215	0	8	2	0	0	0	0	0	0	0	0	0	0	**10**	
0215 - 0230	0	9	1	0	0	0	0	0	2	0	0	0	0	**12**	
0230 - 0245	0	10	1	0	1	0	0	0	0	0	0	0	0	**12**	
0245 - 0300	0	6	1	0	1	0	0	0	1	0	3	0	0	**12**	**46**
0300 - 0315	0	8	1	0	1	0	0	0	1	0	0	0	0	**11**	
0315 - 0330	0	8	0	0	1	0	0	0	0	0	0	0	0	**9**	
0330 - 0345	0	9	0	0	0	0	0	0	3	0	0	0	0	**12**	
0345 - 0400	0	10	1	0	0	0	0	0	4	0	1	0	0	**16**	**48**
0400 - 0415	0	11	1	0	0	0	0	0	2	0	0	0	0	**14**	
0415 - 0430	0	17	4	0	4	0	0	0	1	0	0	0	0	**26**	
0430 - 0445	0	18	4	0	2	3	0	0	1	0	0	0	0	**28**	
0445 - 0500	0	26	6	0	3	0	0	0	3	0	1	0	0	**39**	**107**
0500 - 0515	0	14	2	0	2	0	0	0	2	0	2	0	0	**22**	
0515 - 0530	0	24	3	0	1	0	0	0	5	0	0	0	0	**33**	
0530 - 0545	0	52	10	0	4	1	0	0	1	0	0	0	0	**68**	
0545 - 0600	0	42	8	0	5	0	0	0	3	0	0	0	0	**58**	**181**
0600 - 0615	0	51	8	1	7	0	0	0	5	0	0	0	0	**72**	
0615 - 0630	0	60	21	0	4	0	0	0	2	0	0	0	0	**87**	
0630 - 0645	0	91	29	0	1	1	0	1	4	0	0	0	0	**127**	
0645 - 0700	0	87	27	0	7	3	0	1	4	0	0	0	0	**129**	**415**
0700 - 0715	1	89	43	1	3	0	0	0	2	1	0	0	0	**140**	
0715 - 0730	0	136	48	0	2	0	0	2	5	1	1	0	0	**195**	
0730 - 0745	0	111	41	0	1	1	0	2	8	0	0	0	0	**164**	
0745 - 0800	0	130	47	0	8	2	0	0	8	0	0	0	0	**195**	**694**
0800 - 0815	1	88	34	0	5	3	0	0	4	0	0	0	0	**135**	
0815 - 0830	0	103	43	0	6	0	0	0	9	0	0	0	0	**161**	
0830 - 0845	0	107	24	1	2	3	0	0	5	0	0	0	0	**142**	
0845 - 0900	0	102	32	0	7	1	0	0	9	0	0	0	0	**151**	**589**
0900 - 0915	0	77	46	0	1	0	0	2	7	0	0	0	0	**133**	
0915 - 0930	0	81	35	1	19	2	0	0	8	1	1	0	0	**148**	
0930 - 0945	0	95	59	0	7	2	0	1	6	0	1	0	0	**171**	
0945 - 1000	0	82	30	0	5	1	0	2	8	0	0	0	0	**128**	**580**
1000 - 1015	0	86	27	1	1	1	0	1	7	0	0	0	0	**124**	
1015 - 1030	0	79	21	0	8	1	0	1	12	0	0	0	0	**122**	
1030 - 1045	0	94	39	0	3	2	0	1	4	0	0	0	0	**143**	
1045 - 1100	0	82	27	0	4	1	0	1	9	0	0	0	0	**124**	**513**
1100 - 1115	0	83	24	0	5	0	0	0	5	0	0	0	0	**117**	
1115 - 1130	0	84	19	0	3	0	0	0	8	0	0	0	0	**114**	
1130 - 1145	0	75	27	0	5	2	0	2	2	0	0	0	0	**113**	
1145 - 1200	0	90	33	0	4	3	0	1	7	0	0	0	0	**138**	**482**
1200 - 1215	0	90	24	0	7	0	0	0	7	0	0	0	0	**128**	
1215 - 1230	0	97	25	0	6	1	0	0	12	0	0	0	0	**141**	
1230 - 1245	2	84	28	0	5	1	1	0	11	0	0	0	0	**132**	
1245 - 1300	0	94	24	1	2	2	0	0	6	0	0	0	0	**129**	**530**
1300 - 1315	0	92	21	1	3	2	0	0	4	0	0	0	0	**123**	
1315 - 1330	0	103	35	0	4	0	0	0	4	0	0	0	0	**146**	
1330 - 1345	1	95	26	0	7	1	0	1	6	1	0	0	0	**138**	
1345 - 1400	0	108	40	0	4	1	0	0	7	1	0	0	0	**161**	**568**
1400 - 1415	1	117	42	0	2	1	1	2	9	0	0	0	0	**175**	
1415 - 1430	0	113	33	0	3	1	0	1	6	0	0	0	0	**157**	
1430 - 1445	1	114	35	0	2	1	0	0	7	0	0	0	0	**160**	
1445 - 1500	0	133	31	2	6	3	0	1	7	0	0	0	0	**183**	**675**
1500 - 1515	0	129	39	1	2	1	0	2	7	0	0	0	0	**181**	
1515 - 1530	1	168	32	1	4	3	0	1	4	1	0	0	0	**215**	
1530 - 1545	0	158	46	0	4	2	0	0	1	0	0	0	0	**211**	
1545 - 1600	0	141	35	0	3	1	0	1	3	0	0	0	0	**184**	**791**
1600 - 1615	0	132	34	1	5	0	0	3	11	1	0	0	0	**187**	
1615 - 1630	0	138	33	0	0	0	0	2	2	0	0	0	0	**175**	
1630 - 1645	0	117	23	0	0	1	0	0	1	0	1	0	0	**143**	
1645 - 1700	0	84	34	0	1	0	0	0	2	0	0	0	0	**121**	**626**
1700 - 1715	0	101	23	0	0	1	0	1	2	0	0	0	0	**128**	
1715 - 1730	0	84	14	0	3	1	0	1	1	1	0	0	0	**105**	
1730 - 1745	0	91	24	0	2	0	0	0	1	0	0	0	0	**118**	
1745 - 1800	0	91	16	0	0	0	0	0	2	0	0	0	0	**109**	**460**
1800 - 1815	0	75	15	0	4	1	0	2	0	1	0	0	0	**98**	
1815 - 1830	0	90	36	0	0	0	0	0	1	0	0	0	0	**127**	
1830 - 1845	0	90	22	0	1	0	0	0	6	0	0	0	0	**119**	
1845 - 1900	0	84	18	0	0	0	0	0	3	0	0	0	0	**105**	**449**
1900 - 1915	0	89	22	0	1	1	0	0	3	0	0	0	0	**116**	
1915 - 1930	1	84	19	0	1	1	0	0	1	0	0	0	0	**107**	
1930 - 1945	0	96	16	0	0	0	0	0	1	0	0	0	0	**113**	
1945 - 2000	0	93	22	0	0	1	0	0	1	0	0	0	0	**117**	**453**
2000 - 2015	0	72	16	0	0	0	0	0	2	0	0	0	0	**90**	
2015 - 2030	0	85	12	0	0	0	0	1	1	0	0	0	0	**99**	
2030 - 2045	0	81	7	0	2	0	0	0	0	0	0	0	0	**90**	
2045 - 2100	0	68	6	0	0	0	0	0	3	0	1	0	0	**78**	**357**
2100 - 2115	0	81	6	0	2	0	0	0	0	0	0	0	0	**89**	
2115 - 2130	0	74	2	0	0	1	0	0	6	0	0	0	0	**83**	
2130 - 2145	0	55	3	0	1	0	0	1	0	0	2	0	0	**62**	
2145 - 2200	0	62	5	0	1	1	0	0	3	0	0	0	0	**72**	**306**
2200 - 2215	0	41	3	0	0	2	0	0	2	0	0	0	0	**48**	
2215 - 2230	1	50	0	0	0	0	0	0	1	0	1	0	0	**53**	
2230 - 2245	0	42	2	0	0	0	0	0	1	0	1	0	0	**46**	
2245 - 2300	0	39	1	0	0	0	0	0	1	0	1	0	0	**42**	**189**
2300 - 2315	0	40	0	0	0	1	0	0	1	0	0	0	0	**42**	
2315 - 2330	1	37	1	0	1	1	0	0	2	0	0	0	0	**43**	
2330 - 2345	0	31	0	0	0	0	0	0	1	0	0	0	0	**32**	
2345 - 0000	0	32	1	0	1	0	0	0	2	0	0	0	0	**36**	**153**

Session Total	11	6847	1790	12	235	67	2	38	352	9	18	0	0	**9381**
Session Average	0.11	71.32	18.65	0.13	2.45	0.70	0.02	0.40	3.67	0.09	0.19	0.00	0.00	**97.72**
Session Percentage	0.12	72.99	19.08	0.13	2.51	0.71	0.02	0.41	3.75	0.10	0.19	0.00	0.00	

AM Peak Hour	0615 - 0715	0700 - 0800	0700 - 0800	0830 - 0930	0845 - 0945	0745 - 0845	-	0645 - 0745	0930 - 1030	0630 - 0730	0500 - 0600	-	-	**0700 - 0800**
AM Peak Hour Volume	1	466	179	2	34	8	0	5	33	2	2	0	0	**694**

Noon Peak Hour	1145 - 1245	1445 - 1545	1345 - 1445	1430 - 1530	1130 - 1230	1445 - 1545	1145 - 1245	1000 - 1100	1145 - 1245	1300 - 1400	-	-	-	**1445 - 1545**
Noon Peak Hour Volume	2	588	150	4	22	9	1	4	37	2	0	0	0	**790**

PM Peak Hour	1500 - 1600	1515 - 1615	1500 - 1600	1500 - 1600	1515 - 1615	1500 - 1600	-	1530 - 1630	1515 - 1615	1515 - 1615	1545 - 1645	-	-	**1515 - 1615**
PM Peak Hour Volume	1	599	152	2	16	7	0	6	19	2	1	0	0	**797**

Site 9
I-26 N/Bound Off-Ramp,
south of I-20

Date
Wednesday, April 24, 2024

Lat/Long
34.035821°, -81.107950°

Weather
Fair
66°F

Click here for Detailed Weather

0000 - 2400 (Weekday 24h Session) (04-24-2024)
NB EB 15min

	Northbound (Movement 9.1)													15min	60min
TIME	1	2	3	4	5	6	7	8	9	10	11	12	13	Total	Total
0000 - 0015	0	18	4	0	1	0	0	0	2	0	0	0	0	**25**	
0015 - 0030	0	27	4	0	0	1	0	0	4	0	0	0	0	**36**	
0030 - 0045	0	28	7	0	1	0	0	0	4	0	0	0	0	**40**	
0045 - 0100	0	15	3	0	0	0	0	0	1	0	0	0	0	**19**	**120**
0100 - 0115	0	11	3	0	0	0	0	0	0	0	0	0	0	**14**	
0115 - 0130	0	19	3	0	2	0	0	0	1	0	0	0	0	**25**	
0130 - 0145	0	11	2	0	1	0	0	0	1	0	0	0	0	**15**	
0145 - 0200	0	12	2	0	0	0	0	0	1	0	0	0	0	**15**	**69**
0200 - 0215	0	9	1	0	0	0	0	0	0	0	0	0	0	**10**	
0215 - 0230	0	7	1	0	0	0	0	0	2	0	0	0	0	**10**	
0230 - 0245	0	11	3	0	2	0	0	0	5	0	0	0	0	**21**	
0245 - 0300	0	6	1	0	2	1	0	0	1	0	0	0	0	**11**	**52**
0300 - 0315	0	9	2	0	1	0	0	0	2	0	0	0	0	**14**	
0315 - 0330	0	6	2	0	1	0	0	0	0	0	0	0	0	**9**	
0330 - 0345	0	10	3	0	0	0	0	0	1	0	0	0	0	**14**	
0345 - 0400	0	11	2	0	1	0	0	0	4	0	1	0	0	**19**	**56**
0400 - 0415	0	16	3	1	0	2	0	0	2	0	0	0	0	**24**	
0415 - 0430	0	13	5	0	1	0	0	1	6	0	1	0	0	**27**	
0430 - 0445	0	16	4	0	1	0	0	0	4	0	0	0	0	**25**	
0445 - 0500	0	17	6	0	0	0	0	0	4	0	0	0	0	**27**	**103**
0500 - 0515	0	14	4	0	1	0	0	0	2	0	0	0	0	**21**	
0515 - 0530	0	27	8	0	3	2	0	0	4	0	0	0	0	**44**	
0530 - 0545	0	45	10	0	3	0	0	0	6	0	0	0	0	**64**	
0545 - 0600	0	39	11	0	4	1	0	0	6	0	0	0	0	**61**	**190**
0600 - 0615	0	53	13	0	7	1	0	2	5	0	0	0	0	**81**	
0615 - 0630	0	71	18	0	3	1	0	0	6	0	1	0	0	**100**	
0630 - 0645	0	90	28	0	3	1	0	1	4	0	0	0	0	**127**	
0645 - 0700	0	85	28	0	7	2	0	1	3	0	0	0	0	**126**	**434**
0700 - 0715	1	87	43	1	3	0	0	0	1	0	0	0	0	**136**	
0715 - 0730	0	130	47	0	3	1	0	2	5	0	0	0	0	**188**	
0730 - 0745	0	148	45	0	6	3	0	1	11	0	0	0	0	**214**	
0745 - 0800	0	131	61	0	5	0	0	1	9	0	0	0	0	**207**	**745**
0800 - 0815	0	81	36	0	11	1	0	0	1	0	0	0	0	**130**	
0815 - 0830	0	81	38	0	6	3	0	0	6	0	0	0	0	**134**	
0830 - 0845	0	93	33	0	6	1	0	2	6	0	0	0	0	**141**	
0845 - 0900	0	74	43	1	9	0	0	1	11	0	0	0	0	**139**	**544**
0900 - 0915	0	78	39	0	6	0	0	1	7	0	1	0	0	**132**	
0915 - 0930	0	69	48	0	7	0	0	2	7	0	0	0	0	**133**	
0930 - 0945	0	96	49	0	22	5	0	1	12	0	0	0	0	**185**	
0945 - 1000	0	82	46	0	7	4	0	0	7	0	0	0	0	**146**	**596**
1000 - 1015	0	58	30	0	4	2	0	2	5	0	0	0	0	**101**	
1015 - 1030	1	71	33	0	5	1	0	0	2	0	0	0	0	**113**	
1030 - 1045	0	86	42	0	4	4	0	3	7	0	0	0	0	**146**	
1045 - 1100	0	96	49	0	2	1	0	2	11	0	0	0	0	**161**	**521**
1100 - 1115	0	69	42	0	10	2	0	1	4	0	0	0	0	**128**	
1115 - 1130	0	97	31	0	4	0	0	1	4	0	0	0	0	**137**	
1130 - 1145	0	86	39	0	6	2	0	2	10	0	0	0	0	**145**	
1145 - 1200	0	98	32	1	2	1	0	2	5	0	0	0	0	**141**	**551**
1200 - 1215	0	99	27	0	1	0	2	1	4	1	0	0	0	**135**	
1215 - 1230	0	103	37	1	6	1	1	1	2	0	0	0	0	**152**	
1230 - 1245	0	113	28	1	3	3	0	0	7	0	0	0	0	**155**	
1245 - 1300	0	106	34	0	0	0	1	0	2	0	0	0	0	**143**	**585**
1300 - 1315	0	104	30	2	4	2	0	1	10	0	0	0	0	**153**	
1315 - 1330	0	120	44	1	1	2	2	1	5	0	0	0	0	**176**	
1330 - 1345	1	144	33	0	1	0	0	2	5	0	0	0	0	**186**	
1345 - 1400	0	122	36	0	1	1	0	2	8	0	0	0	0	**170**	**685**
1400 - 1415	1	133	36	0	2	1	1	0	7	0	0	0	0	**181**	
1415 - 1430	0	117	47	0	4	2	1	4	4	0	0	0	0	**179**	
1430 - 1445	2	122	35	0	9	1	1	1	9	1	0	0	0	**181**	
1445 - 1500	0	139	32	1	2	2	0	1	6	1	0	0	0	**184**	**725**
1500 - 1515	0	140	31	2	5	1	1	2	8	0	0	0	0	**190**	
1515 - 1530	0	151	47	0	5	1	0	1	4	2	0	0	0	**211**	
1530 - 1545	0	164	37	1	4	0	1	0	6	0	0	0	0	**213**	
1545 - 1600	1	169	37	1	4	1	0	1	2	0	0	0	0	**216**	**830**
1600 - 1615	0	172	28	0	2	0	1	3	8	1	0	0	0	**215**	
1615 - 1630	0	136	26	0	3	1	0	2	3	1	0	0	0	**172**	
1630 - 1645	0	124	29	0	0	2	0	1	3	0	0	0	0	**159**	
1645 - 1700	1	106	14	0	2	2	0	1	3	0	0	0	0	**129**	**675**
1700 - 1715	0	84	16	0	0	1	0	3	4	0	0	0	0	**108**	
1715 - 1730	0	94	17	0	2	0	0	0	3	0	0	0	0	**116**	
1730 - 1745	0	76	16	0	1	0	0	0	2	0	0	0	0	**95**	
1745 - 1800	0	89	12	0	2	0	0	0	5	0	0	0	0	**108**	**427**
1800 - 1815	0	112	16	0	3	1	0	0	2	0	0	0	0	**134**	
1815 - 1830	0	97	14	0	2	1	0	0	3	0	0	0	0	**117**	
1830 - 1845	0	101	26	0	0	1	0	0	5	0	0	0	0	**133**	
1845 - 1900	0	73	18	0	0	0	0	0	3	1	0	0	0	**95**	**479**
1900 - 1915	1	96	16	0	3	2	0	0	3	0	0	0	0	**121**	
1915 - 1930	0	97	17	0	1	0	0	0	1	0	0	0	0	**116**	
1930 - 1945	0	86	19	0	2	0	0	2	2	0	0	0	0	**111**	
1945 - 2000	1	84	11	0	0	1	0	1	0	0	0	0	0	**98**	**446**
2000 - 2015	0	68	10	0	0	0	0	3	2	0	0	0	0	**83**	
2015 - 2030	0	75	12	0	1	0	0	2	1	0	0	0	0	**91**	
2030 - 2045	1	79	13	0	3	1	0	0	2	0	0	0	0	**99**	
2045 - 2100	0	65	10	0	1	2	0	0	2	0	0	0	0	**80**	**353**
2100 - 2115	0	70	11	0	2	0	0	0	1	0	0	0	0	**84**	
2115 - 2130	0	76	13	1	1	0	0	0	2	0	0	0	0	**93**	
2130 - 2145	0	50	9	0	1	1	0	0	3	0	0	0	0	**64**	
2145 - 2200	0	48	11	0	2	0	0	1	3	0	0	0	0	**65**	**306**
2200 - 2215	0	42	8	0	0	1	0	0	2	0	1	0	0	**54**	
2215 - 2230	0	50	10	0	1	0	0	0	1	0	0	0	0	**62**	
2230 - 2245	0	30	4	0	0	0	0	1	0	0	0	0	0	**35**	
2245 - 2300	0	31	6	0	0	0	0	0	2	0	1	0	0	**40**	**191**
2300 - 2315	0	37	6	0	0	1	0	0	3	0	0	0	0	**47**	
2315 - 2330	0	41	8	0	1	0	0	0	2	0	0	0	0	**52**	
2330 - 2345	0	30	3	0	0	0	0	0	0	0	0	0	0	**33**	
2345 - 0000	0	24	4	0	1	0	0	0	1	0	0	0	0	**30**	**162**

Session Total	11	6996	2011	15	262	79	12	67	378	8	6	0	0	**9845**
Session Average	0.11	72.88	20.95	0.16	2.73	0.82	0.13	0.70	3.94	0.08	0.06	0.00	0.00	**102.55**
Session Percentage	0.11	71.06	20.43	0.15	2.66	0.80	0.12	0.68	3.84	0.08	0.06	0.00	0.00	

AM Peak Hour	0615 - 0715	0700 - 0800	0700 - 0800	0615 - 0715	0845 - 0945	0930 - 1030	-	0830 - 0930	0845 - 0945	-	0530 - 0630	-	-	**0700 - 0800**
AM Peak Hour Volume	1	496	196	1	44	12	0	6	37	0	1	0	0	**745**

Noon Peak Hour	1345 - 1445	1445 - 1545	1015 - 1115	1215 - 1315	1045 - 1145	1000 - 1100	1200 - 1300	1330 - 1430	1045 - 1145	1430 - 1530	-	-	-	**1445 - 1545**
Noon Peak Hour Volume	3	594	166	4	22	8	4	8	29	4	0	0	0	**798**

PM Peak Hour	1900 - 2000	1515 - 1615	1500 - 1600	1500 - 1600	1500 - 1600	1615 - 1715	1500 - 1600	1930 - 2030	1500 - 1600	1515 - 1615	-	-	-	**1515 - 1615**
PM Peak Hour Volume	2	656	152	4	18	6	2	8	20	3	0	0	0	**855**

Site 9
I-26 N/Bound Off-Ramp,
south of I-20

Date
Thursday, April 25, 2024

Lat/Long
34.035821°, -81.107950°

Weather
Fair
67°F

Click here for Detailed Weather

0000 - 2400 (Weekday 24h Session) (04-25-2024)
NB EB 15min

	Northbound (Movement 9.1)													15min	60min
TIME	1	2	3	4	5	6	7	8	9	10	11	12	13	Total	Total
0000 - 0015	0	22	4	0	1	0	0	0	0	0	0	0	0	**27**	
0015 - 0030	0	31	6	0	0	0	0	0	1	0	0	0	0	**38**	
0030 - 0045	0	36	7	0	0	0	0	0	0	0	0	0	0	**43**	
0045 - 0100	0	22	3	0	1	0	0	0	4	0	0	0	0	**30**	**138**
0100 - 0115	0	12	3	0	0	0	0	0	2	0	0	0	0	**17**	
0115 - 0130	0	13	2	0	0	0	0	0	2	0	0	0	0	**17**	
0130 - 0145	0	14	4	0	0	0	0	0	0	0	0	0	0	**18**	
0145 - 0200	0	7	1	0	0	0	0	0	4	0	0	0	0	**12**	**64**
0200 - 0215	0	14	2	0	1	0	0	0	2	0	0	0	0	**19**	
0215 - 0230	0	13	3	0	0	0	0	0	0	0	0	0	0	**16**	
0230 - 0245	0	7	2	0	1	0	0	0	1	0	1	0	0	**12**	
0245 - 0300	0	10	3	0	0	0	0	0	0	0	0	0	0	**13**	**60**
0300 - 0315	0	5	1	0	1	0	0	0	0	0	0	0	0	**7**	
0315 - 0330	0	11	3	0	1	0	0	0	2	0	1	0	0	**18**	
0330 - 0345	0	10	2	0	3	0	0	0	3	0	0	0	0	**18**	
0345 - 0400	0	17	4	0	1	0	0	0	2	0	1	0	0	**25**	**68**
0400 - 0415	0	13	1	0	3	1	0	0	0	0	0	0	0	**18**	
0415 - 0430	0	12	4	0	1	0	0	2	4	0	0	0	0	**23**	
0430 - 0445	0	14	3	0	4	1	0	0	2	0	0	0	0	**24**	
0445 - 0500	0	24	8	0	2	0	0	0	4	0	0	0	0	**38**	**103**
0500 - 0515	0	15	4	0	1	0	0	0	3	0	1	0	0	**24**	
0515 - 0530	0	28	9	0	6	1	0	0	2	0	0	0	0	**46**	
0530 - 0545	0	40	6	0	1	0	0	0	2	0	0	0	0	**49**	
0545 - 0600	0	37	8	0	2	1	0	0	3	0	0	0	0	**51**	**170**
0600 - 0615	0	68	16	0	13	1	0	0	4	0	0	0	0	**102**	
0615 - 0630	0	67	22	0	4	3	0	1	4	0	0	0	0	**101**	
0630 - 0645	0	93	42	0	7	1	0	0	2	0	0	0	0	**145**	
0645 - 0700	0	88	30	0	4	2	0	2	3	0	0	0	0	**129**	**477**
0700 - 0715	1	90	36	1	6	3	0	2	5	0	0	0	0	**144**	
0715 - 0730	0	128	49	0	4	3	0	1	3	0	0	0	0	**188**	
0730 - 0745	1	146	55	0	9	2	0	2	10	0	0	0	0	**225**	
0745 - 0800	0	139	60	0	9	2	0	1	8	0	0	0	0	**219**	**776**
0800 - 0815	0	97	41	2	5	1	0	3	2	0	0	0	0	**151**	
0815 - 0830	0	111	35	0	3	1	0	1	8	0	0	0	0	**159**	
0830 - 0845	1	91	44	1	7	1	0	3	6	0	0	0	0	**154**	
0845 - 0900	0	94	52	0	2	1	0	0	3	0	3	0	0	**155**	**619**
0900 - 0915	0	66	43	0	6	0	0	2	14	0	0	0	0	**131**	
0915 - 0930	0	91	37	1	12	3	0	2	9	0	0	0	0	**155**	
0930 - 0945	0	88	39	0	11	3	0	1	11	0	0	0	0	**153**	
0945 - 1000	0	92	46	1	4	0	0	1	8	0	0	0	0	**152**	**591**
1000 - 1015	0	76	42	0	10	1	0	4	8	0	0	0	0	**141**	
1015 - 1030	0	68	37	0	8	0	0	2	5	0	0	0	0	**120**	
1030 - 1045	0	73	36	1	6	2	0	2	7	0	0	0	0	**127**	
1045 - 1100	2	78	41	0	3	3	0	0	5	0	0	0	0	**132**	**520**
1100 - 1115	0	94	24	0	5	0	0	1	12	0	0	0	0	**136**	
1115 - 1130	0	91	41	0	5	0	0	0	4	0	0	0	0	**141**	
1130 - 1145	0	94	27	0	6	1	0	1	9	0	0	0	0	**138**	
1145 - 1200	0	115	38	0	3	4	0	0	9	0	0	0	0	**169**	**584**
1200 - 1215	0	83	24	0	10	0	0	0	3	0	0	0	0	**120**	
1215 - 1230	0	101	32	0	8	1	0	1	6	0	0	0	0	**149**	
1230 - 1245	0	116	34	1	3	1	0	1	5	0	0	0	0	**161**	
1245 - 1300	0	100	32	0	3	1	0	1	5	0	0	0	0	**142**	**572**
1300 - 1315	1	107	24	2	6	1	1	2	7	0	0	0	0	**151**	
1315 - 1330	0	107	27	2	5	1	0	0	4	0	0	0	0	**146**	
1330 - 1345	0	104	33	2	4	0	0	1	7	0	0	0	0	**151**	
1345 - 1400	0	103	43	1	2	3	1	0	5	0	0	0	0	**158**	**606**
1400 - 1415	0	102	32	0	11	1	0	0	4	0	0	0	0	**150**	
1415 - 1430	0	139	50	0	3	1	2	0	3	0	0	0	0	**198**	
1430 - 1445	0	125	41	0	5	2	0	3	4	0	0	0	0	**180**	
1445 - 1500	0	149	26	0	6	2	1	0	2	0	0	0	0	**186**	**714**
1500 - 1515	0	159	40	3	8	2	0	1	2	1	0	0	0	**216**	
1515 - 1530	0	151	31	3	2	2	0	1	3	0	0	0	0	**193**	
1530 - 1545	0	156	30	0	3	2	0	0	3	0	0	0	0	**194**	
1545 - 1600	0	116	34	0	6	1	0	1	2	0	0	0	0	**160**	**763**
1600 - 1615	0	103	29	1	3	2	0	0	1	0	0	0	0	**139**	
1615 - 1630	0	119	29	0	3	1	0	0	2	0	0	0	0	**154**	
1630 - 1645	0	105	21	0	6	1	0	0	3	0	0	0	0	**136**	
1645 - 1700	0	108	26	0	1	0	0	0	1	0	0	0	0	**136**	**565**
1700 - 1715	0	72	16	0	0	1	0	2	0	1	0	0	0	**92**	
1715 - 1730	0	84	10	0	0	1	0	0	2	0	0	0	0	**97**	
1730 - 1745	1	70	9	0	2	0	0	1	3	0	0	0	0	**86**	
1745 - 1800	1	66	19	0	2	0	0	0	4	0	0	0	0	**92**	**367**
1800 - 1815	0	101	22	0	3	0	0	0	1	0	0	0	0	**127**	
1815 - 1830	2	95	23	1	4	0	0	1	4	0	0	0	0	**130**	
1830 - 1845	2	96	23	0	1	0	0	0	0	0	0	0	0	**122**	
1845 - 1900	0	109	16	0	1	0	0	0	3	0	0	0	0	**129**	**508**
1900 - 1915	0	106	16	1	3	2	0	0	2	0	0	0	0	**130**	
1915 - 1930	0	107	27	0	2	1	0	0	0	0	0	0	0	**137**	
1930 - 1945	0	82	15	0	1	0	0	0	3	0	0	0	0	**101**	
1945 - 2000	0	88	26	1	1	0	0	0	0	0	0	0	0	**116**	**484**
2000 - 2015	0	85	18	0	2	0	0	0	1	0	0	0	0	**106**	
2015 - 2030	0	107	15	0	1	0	0	0	1	0	0	0	0	**124**	
2030 - 2045	0	105	17	0	2	0	0	0	2	0	0	0	0	**126**	
2045 - 2100	0	90	12	0	1	0	0	0	3	0	0	0	0	**106**	**462**
2100 - 2115	0	68	13	1	2	0	0	0	1	0	0	0	0	**85**	
2115 - 2130	0	75	11	0	0	0	0	0	2	0	0	0	0	**88**	
2130 - 2145	0	42	9	0	0	0	0	0	0	0	1	0	0	**52**	
2145 - 2200	0	56	10	0	1	0	0	0	2	0	1	0	0	**70**	**295**
2200 - 2215	0	45	15	0	0	0	0	0	2	0	0	0	0	**62**	
2215 - 2230	0	58	20	0	1	0	0	0	0	0	0	0	0	**79**	
2230 - 2245	0	35	10	0	0	0	0	0	0	0	1	0	0	**46**	
2245 - 2300	1	35	11	0	1	0	0	0	0	0	0	0	0	**48**	**235**
2300 - 2315	0	41	14	1	1	0	0	0	1	0	0	0	0	**58**	
2315 - 2330	0	43	13	0	0	0	0	0	2	0	1	0	0	**59**	
2330 - 2345	0	28	12	0	0	0	0	0	3	0	1	0	0	**44**	
2345 - 0000	0	19	7	0	4	0	0	0	2	0	0	0	0	**32**	**193**

Session Total	13	7026	2093	27	316	72	5	50	318	2	12	0	0	**9934**
Session Average	0.14	73.19	21.80	0.28	3.29	0.75	0.05	0.52	3.31	0.02	0.13	0.00	0.00	**103.48**
Session Percentage	0.13	70.73	21.07	0.27	3.18	0.72	0.05	0.50	3.20	0.02	0.12	0.00	0.00	

AM Peak Hour	0645 - 0745	0715 - 0815	0715 - 0815	0745 - 0845	0915 - 1015	0645 - 0745	-	0945 - 1045	0900 - 1000	-	0800 - 0900	-	-	**0715 - 0815**
AM Peak Hour Volume	2	510	205	3	37	10	0	9	42	0	3	0	0	**783**

Noon Peak Hour	1000 - 1100	1445 - 1545	1345 - 1445	1300 - 1400	1000 - 1100	1430 - 1530	1330 - 1430	1000 - 1100	1100 - 1200	1415 - 1515	-	-	-	**1445 - 1545**
Noon Peak Hour Volume	2	615	166	7	27	8	3	8	34	1	0	0	0	**789**

PM Peak Hour	1745 - 1845	1500 - 1600	1500 - 1600	1500 - 1600	1500 - 1600	1500 - 1600	-	1500 - 1600	1730 - 1830	1500 - 1600	-	-	-	**1500 - 1600**
PM Peak Hour Volume	5	582	135	6	19	7	0	3	12	1	0	0	0	**763**

Site 9
I-26 N/Bound Off-Ramp,
south of I-20

Date
Friday, April 26, 2024

Lat/Long
34.035821°, -81.107950°

Weather
Cloudy
69°F

Click here for Detailed Weather

0000 - 2400 (Weekday 24h Session) (04-26-2024)
NB EB 15min

	Northbound (Movement 9.1)													15min	60min
TIME	1	2	3	4	5	6	7	8	9	10	11	12	13	Total	Total
0000 - 0015	0	22	11	0	1	0	0	0	1	0	0	0	0	**35**	
0015 - 0030	0	29	12	0	0	0	0	0	1	0	1	0	0	**43**	
0030 - 0045	0	23	14	0	0	0	0	0	2	0	0	0	0	**39**	
0045 - 0100	0	11	8	0	0	0	0	0	2	0	0	0	0	**21**	**138**
0100 - 0115	0	14	8	0	0	0	0	0	2	0	0	0	0	**24**	
0115 - 0130	0	15	8	0	0	0	0	0	3	0	1	0	0	**27**	
0130 - 0145	0	5	2	0	0	0	0	0	0	0	1	0	0	**8**	
0145 - 0200	0	7	5	0	0	0	0	0	1	0	0	0	0	**13**	**72**
0200 - 0215	0	8	3	0	0	0	0	0	1	0	0	0	0	**12**	
0215 - 0230	0	5	3	0	2	0	0	0	1	0	0	0	0	**11**	
0230 - 0245	0	4	4	0	1	0	0	0	0	0	1	0	0	**10**	
0245 - 0300	0	8	5	0	0	0	0	0	0	0	0	0	0	**13**	**46**
0300 - 0315	0	8	4	0	0	0	0	0	2	0	1	0	0	**15**	
0315 - 0330	0	6	6	0	1	0	0	0	1	0	0	0	0	**14**	
0330 - 0345	0	12	4	0	0	0	0	0	2	0	0	0	0	**18**	
0345 - 0400	0	11	5	0	2	0	0	0	4	0	0	0	0	**22**	**69**
0400 - 0415	0	11	6	0	3	0	0	0	3	0	0	0	0	**23**	
0415 - 0430	0	8	5	0	1	0	0	0	0	0	3	0	0	**17**	
0430 - 0445	0	16	9	0	1	0	0	0	2	0	0	0	0	**28**	
0445 - 0500	0	15	6	0	4	0	0	0	3	0	0	0	0	**28**	**96**
0500 - 0515	0	12	6	0	2	0	0	0	2	0	0	0	0	**22**	
0515 - 0530	0	27	13	0	2	0	0	0	6	0	0	0	0	**48**	
0530 - 0545	0	26	14	0	3	0	0	0	4	0	0	0	0	**47**	
0545 - 0600	0	28	13	0	7	0	0	0	3	0	0	0	0	**51**	**168**
0600 - 0615	0	35	23	0	9	0	0	0	4	0	0	0	0	**71**	
0615 - 0630	0	49	26	0	3	1	0	0	6	0	1	0	0	**86**	
0630 - 0645	0	71	49	0	4	4	0	1	5	0	1	0	0	**135**	
0645 - 0700	0	67	37	0	3	3	0	0	4	0	0	0	0	**114**	**406**
0700 - 0715	0	87	34	1	4	3	1	0	4	0	0	0	0	**134**	
0715 - 0730	1	112	47	0	3	1	0	2	2	2	0	0	0	**170**	
0730 - 0745	0	131	42	0	6	3	0	1	3	0	0	0	0	**186**	
0745 - 0800	0	117	43	0	2	1	0	0	1	0	0	0	0	**164**	**654**
0800 - 0815	0	81	41	0	5	6	2	1	5	0	0	0	0	**141**	
0815 - 0830	0	82	40	0	3	0	1	1	3	0	0	0	0	**130**	
0830 - 0845	0	86	49	4	6	0	1	0	8	0	1	0	0	**155**	
0845 - 0900	0	91	47	0	8	1	1	2	3	0	0	0	0	**153**	**579**
0900 - 0915	0	82	55	0	6	1	2	2	2	0	0	0	0	**150**	
0915 - 0930	0	95	36	1	12	3	2	0	8	0	0	0	0	**157**	
0930 - 0945	0	85	35	0	13	3	0	0	11	1	0	0	0	**148**	
0945 - 1000	0	71	32	0	3	0	1	1	10	0	0	0	0	**118**	**573**
1000 - 1015	0	71	31	0	10	2	0	1	8	0	0	0	0	**123**	
1015 - 1030	0	73	23	0	3	1	1	1	7	0	0	0	0	**109**	
1030 - 1045	0	90	38	0	1	0	0	2	6	0	0	0	0	**137**	
1045 - 1100	0	85	27	1	5	2	0	2	7	0	0	0	0	**129**	**498**
1100 - 1115	0	98	29	0	3	1	0	1	4	0	0	0	0	**136**	
1115 - 1130	0	95	35	2	3	2	0	2	3	0	0	0	0	**142**	
1130 - 1145	0	99	27	0	2	3	2	0	2	0	0	0	0	**135**	
1145 - 1200	0	109	34	0	3	0	0	0	2	0	0	0	0	**148**	**561**
1200 - 1215	0	103	34	0	2	2	0	1	2	0	0	0	0	**144**	
1215 - 1230	0	107	30	0	1	0	1	2	1	0	0	0	0	**142**	
1230 - 1245	0	101	30	1	7	1	0	1	7	0	0	0	0	**148**	
1245 - 1300	0	138	43	2	4	2	0	1	6	0	0	0	0	**196**	**630**
1300 - 1315	0	87	31	1	1	0	0	0	1	0	0	0	0	**121**	
1315 - 1330	0	106	28	1	1	0	0	1	2	0	0	0	0	**139**	
1330 - 1345	0	102	28	1	2	3	0	0	6	0	0	0	0	**142**	
1345 - 1400	0	86	30	0	0	1	0	0	4	0	0	0	0	**121**	**523**
1400 - 1415	0	102	34	0	4	0	0	0	4	0	0	0	0	**144**	
1415 - 1430	1	111	34	0	9	2	0	2	1	0	0	0	0	**160**	
1430 - 1445	0	113	27	1	2	3	0	4	5	0	0	0	0	**155**	
1445 - 1500	1	154	31	0	3	1	0	1	2	0	0	0	0	**193**	**652**
1500 - 1515	0	124	44	0	1	2	0	0	6	0	0	0	0	**177**	
1515 - 1530	0	153	26	1	3	2	0	0	4	0	0	0	0	**189**	
1530 - 1545	1	121	40	0	5	0	0	0	0	0	0	0	0	**167**	
1545 - 1600	1	138	33	1	2	0	0	0	1	0	0	0	0	**176**	**709**
1600 - 1615	0	119	25	0	2	3	0	0	8	0	0	0	0	**157**	
1615 - 1630	0	120	28	0	2	0	0	1	1	0	0	0	0	**152**	
1630 - 1645	0	107	32	0	2	1	0	0	4	0	0	0	0	**146**	
1645 - 1700	0	129	32	0	1	0	0	1	3	0	0	0	0	**166**	**621**
1700 - 1715	0	132	25	0	2	1	0	0	2	0	0	0	0	**162**	
1715 - 1730	0	124	26	0	2	1	0	0	2	0	0	0	0	**155**	
1730 - 1745	1	115	22	0	0	0	0	0	1	0	0	0	0	**139**	
1745 - 1800	0	123	24	1	1	0	0	0	1	0	0	0	0	**150**	**606**
1800 - 1815	0	109	25	0	3	1	0	0	1	0	0	0	0	**139**	
1815 - 1830	0	96	14	0	2	0	0	1	1	0	0	0	0	**114**	
1830 - 1845	0	105	19	0	2	0	0	0	0	0	0	0	0	**126**	
1845 - 1900	0	98	16	0	1	1	0	0	0	0	0	0	0	**116**	**495**
1900 - 1915	0	96	17	0	2	1	0	0	1	0	0	0	0	**117**	
1915 - 1930	3	97	21	0	2	0	0	0	0	0	0	0	0	**123**	
1930 - 1945	0	100	22	0	3	0	0	0	1	0	0	0	0	**126**	
1945 - 2000	1	81	12	0	2	0	0	0	0	0	0	0	0	**96**	**462**
2000 - 2015	0	80	15	0	1	0	0	0	1	0	0	0	0	**97**	
2015 - 2030	0	90	21	0	1	0	0	0	1	0	0	0	0	**113**	
2030 - 2045	0	72	14	0	3	0	0	0	3	0	0	0	0	**92**	
2045 - 2100	0	70	13	1	0	0	0	0	1	0	0	0	0	**85**	**387**
2100 - 2115	0	79	20	0	0	0	0	0	4	0	0	0	0	**103**	
2115 - 2130	0	68	14	0	0	0	0	0	2	0	0	0	0	**84**	
2130 - 2145	0	70	18	0	1	0	0	0	1	0	0	0	0	**90**	
2145 - 2200	0	62	8	0	1	0	0	0	0	0	0	0	0	**71**	**348**
2200 - 2215	0	70	12	0	0	0	0	0	1	0	0	0	0	**83**	
2215 - 2230	0	60	9	0	0	0	0	0	1	0	2	0	0	**72**	
2230 - 2245	0	51	8	0	1	0	0	0	0	0	0	0	0	**60**	
2245 - 2300	0	49	7	0	0	0	0	0	0	0	0	0	0	**56**	**271**
2300 - 2315	0	58	10	0	0	0	0	0	0	0	0	0	0	**68**	
2315 - 2330	0	47	8	0	1	0	0	0	0	0	0	0	0	**56**	
2330 - 2345	0	48	6	0	0	0	0	0	1	0	0	0	0	**55**	
2345 - 0000	0	25	5	0	0	0	0	0	1	0	0	0	0	**31**	**210**

Session Total	10	6989	2125	20	235	69	15	36	259	3	13	0	0	**9774**
Session Average	0.10	72.80	22.14	0.21	2.45	0.72	0.16	0.38	2.70	0.03	0.14	0.00	0.00	**101.81**
Session Percentage	0.10	71.51	21.74	0.20	2.40	0.71	0.15	0.37	2.65	0.03	0.13	0.00	0.00	

AM Peak Hour	0630 - 0730	0700 - 0800	0815 - 0915	0830 - 0930	0845 - 0945	0615 - 0715	0830 - 0930	0815 - 0915	0915 - 1015	0630 - 0730	0545 - 0645	-	-	**0715 - 0815**
AM Peak Hour Volume	1	447	191	5	39	11	6	5	37	2	2	0	0	**661**

Noon Peak Hour	1400 - 1500	1445 - 1545	1445 - 1545	1230 - 1330	1000 - 1100	1045 - 1145	1130 - 1230	1030 - 1130	1000 - 1100	-	-	-	-	**1445 - 1545**
Noon Peak Hour Volume	2	552	141	5	19	8	3	7	28	0	0	0	0	**726**

PM Peak Hour	1900 - 2000	1500 - 1600	1500 - 1600	1500 - 1600	1515 - 1615	1515 - 1615	-	1600 - 1700	1600 - 1700	-	-	-	-	**1500 - 1600**
PM Peak Hour Volume	4	536	143	2	12	5	0	2	16	0	0	0	0	**709**

Site 9
I-26 N/Bound Off-Ramp,
south of I-20

Date
Saturday, April 27, 2024

Lat/Long
34.035821°, -81.107950°

Weather
Mostly Cloudy
69°F

Click here for Detailed Weather

0000 - 2400 (Saturday 24h Session) (04-27-2024)
NB EB 15min

	Northbound (Movement 9.1)													15min	60min
TIME	1	2	3	4	5	6	7	8	9	10	11	12	13	Total	Total
0000 - 0015	0	30	3	0	1	1	0	0	1	0	1	0	0	**37**	
0015 - 0030	0	33	7	0	0	0	0	0	0	0	0	0	0	**40**	
0030 - 0045	0	29	5	0	0	0	0	0	0	0	0	0	0	**34**	
0045 - 0100	0	22	3	0	1	0	0	0	0	0	0	0	0	**26**	**137**
0100 - 0115	0	20	3	0	0	1	0	0	0	0	0	0	0	**24**	
0115 - 0130	0	19	2	0	0	0	0	0	2	0	1	0	0	**24**	
0130 - 0145	0	17	3	0	0	0	0	0	1	0	0	0	0	**21**	
0145 - 0200	0	15	2	0	0	0	0	0	0	0	0	0	0	**17**	**86**
0200 - 0215	0	17	2	0	0	0	0	0	2	0	0	0	0	**21**	
0215 - 0230	0	16	2	0	0	0	0	0	0	0	0	0	0	**18**	
0230 - 0245	0	10	3	0	0	1	0	0	2	0	2	0	0	**18**	
0245 - 0300	0	12	3	0	0	0	0	0	1	0	0	0	0	**16**	**73**
0300 - 0315	0	12	2	0	1	1	0	0	0	0	0	0	0	**16**	
0315 - 0330	0	7	1	0	1	0	0	1	0	0	1	0	0	**11**	
0330 - 0345	0	20	3	0	2	0	0	0	0	0	0	0	0	**25**	
0345 - 0400	0	15	2	0	1	0	0	0	1	0	0	0	0	**19**	**71**
0400 - 0415	0	20	4	0	2	0	0	1	2	0	0	0	0	**29**	
0415 - 0430	0	15	2	0	1	2	0	0	1	0	2	0	0	**23**	
0430 - 0445	0	17	3	0	1	2	0	0	1	0	0	0	0	**24**	
0445 - 0500	0	21	6	0	1	0	0	0	0	0	0	0	0	**28**	**104**
0500 - 0515	0	18	3	0	0	0	0	0	0	0	0	0	0	**21**	
0515 - 0530	0	20	4	0	2	1	0	0	1	0	0	0	0	**28**	
0530 - 0545	0	25	6	0	1	2	0	0	0	0	0	0	0	**34**	
0545 - 0600	0	15	2	0	3	0	0	0	0	0	0	0	0	**20**	**103**
0600 - 0615	0	30	5	0	1	1	0	0	1	0	0	0	0	**38**	
0615 - 0630	0	36	6	0	1	0	0	0	1	0	0	0	0	**44**	
0630 - 0645	0	38	5	0	1	0	0	0	1	0	0	0	0	**45**	
0645 - 0700	0	47	11	0	0	0	0	0	1	0	0	0	0	**59**	**186**
0700 - 0715	0	57	12	1	2	0	0	0	1	0	1	0	0	**74**	
0715 - 0730	0	56	17	1	2	0	0	0	2	0	0	0	0	**78**	
0730 - 0745	0	52	20	0	1	1	0	2	1	0	0	0	0	**77**	
0745 - 0800	0	64	22	0	1	1	0	0	1	0	0	0	0	**89**	**318**
0800 - 0815	0	68	17	0	2	1	1	0	0	0	0	0	0	**89**	
0815 - 0830	0	65	20	0	0	1	0	0	2	0	0	0	0	**88**	
0830 - 0845	0	80	38	0	2	2	0	0	3	0	0	0	0	**125**	
0845 - 0900	0	58	19	0	2	1	0	0	2	0	0	0	0	**82**	**384**
0900 - 0915	1	83	15	0	7	2	0	0	2	0	0	0	0	**110**	
0915 - 0930	0	68	12	0	1	0	0	0	2	0	0	0	0	**83**	
0930 - 0945	0	77	18	0	0	1	0	0	3	0	0	0	0	**99**	
0945 - 1000	0	102	23	0	3	2	0	0	2	0	0	0	0	**132**	**424**
1000 - 1015	0	68	20	1	1	0	0	1	1	0	0	0	0	**92**	
1015 - 1030	0	85	28	0	0	0	0	0	2	0	0	0	0	**115**	
1030 - 1045	0	100	19	0	2	0	0	0	0	0	0	0	0	**121**	
1045 - 1100	0	92	28	0	3	0	0	0	3	0	0	0	0	**126**	**454**
1100 - 1115	2	73	17	0	2	1	0	0	0	0	0	0	0	**95**	
1115 - 1130	0	96	22	0	0	0	0	0	1	0	0	0	0	**119**	
1130 - 1145	0	93	16	0	1	0	0	0	5	0	0	0	0	**115**	
1145 - 1200	1	114	28	0	2	0	0	0	0	0	0	0	0	**145**	**474**
1200 - 1215	0	105	32	0	0	0	0	0	1	0	0	0	0	**138**	
1215 - 1230	0	108	31	1	0	0	1	0	2	0	0	0	0	**143**	
1230 - 1245	0	118	25	1	1	0	0	0	4	0	0	0	0	**149**	
1245 - 1300	0	135	30	0	2	0	0	0	1	0	0	0	0	**168**	**598**
1300 - 1315	0	100	22	0	3	0	0	1	0	0	0	0	0	**126**	
1315 - 1330	2	115	33	0	0	1	0	0	2	0	0	0	0	**153**	
1330 - 1345	3	112	22	0	0	0	0	0	2	0	0	0	0	**139**	
1345 - 1400	1	128	17	1	1	0	0	0	1	0	0	0	0	**149**	**567**
1400 - 1415	0	120	29	0	0	0	0	0	3	0	0	0	0	**152**	
1415 - 1430	0	124	31	0	0	0	0	0	1	0	0	0	0	**156**	
1430 - 1445	0	143	21	0	0	1	0	0	0	0	0	0	0	**165**	
1445 - 1500	0	138	27	0	2	0	0	0	0	0	0	0	0	**167**	**640**
1500 - 1515	0	125	20	1	0	2	0	0	0	0	0	0	0	**148**	
1515 - 1530	0	138	19	0	0	1	0	1	1	0	0	0	0	**160**	
1530 - 1545	0	144	26	0	1	0	0	0	3	0	0	0	0	**174**	
1545 - 1600	0	121	25	0	1	1	0	0	1	0	0	0	0	**149**	**631**
1600 - 1615	0	111	21	0	0	0	0	0	1	0	0	0	0	**133**	
1615 - 1630	0	113	10	0	2	1	0	0	0	0	0	0	0	**126**	
1630 - 1645	1	108	21	0	0	0	0	0	1	1	0	0	0	**132**	
1645 - 1700	0	110	15	0	0	0	0	0	0	0	0	0	0	**125**	**516**
1700 - 1715	2	88	21	1	1	0	0	0	0	0	0	0	0	**113**	
1715 - 1730	1	131	22	0	0	0	0	1	1	0	0	0	0	**156**	
1730 - 1745	0	107	15	1	1	0	0	0	2	0	0	0	0	**126**	
1745 - 1800	0	102	21	0	0	0	0	1	0	0	0	0	0	**124**	**519**
1800 - 1815	0	115	6	0	0	1	0	1	2	0	0	0	0	**125**	
1815 - 1830	0	79	15	0	0	0	0	0	2	0	0	0	0	**96**	
1830 - 1845	0	94	17	0	1	0	0	0	1	0	0	0	0	**113**	
1845 - 1900	1	76	11	0	1	0	0	0	1	0	0	0	0	**90**	**424**
1900 - 1915	1	66	18	1	0	0	0	0	0	0	0	0	0	**86**	
1915 - 1930	1	110	18	1	0	0	0	0	2	0	0	0	0	**132**	
1930 - 1945	0	95	15	0	0	0	0	0	0	0	0	0	0	**110**	
1945 - 2000	3	82	15	0	0	0	0	0	2	0	0	0	0	**102**	**430**
2000 - 2015	1	88	9	0	0	1	0	0	0	0	0	0	0	**99**	
2015 - 2030	0	55	7	0	0	0	0	0	0	0	0	0	0	**62**	
2030 - 2045	0	71	6	0	0	0	0	0	0	0	0	0	0	**77**	
2045 - 2100	0	68	7	1	1	0	0	0	1	0	0	0	0	**78**	**316**
2100 - 2115	0	86	7	0	0	0	0	0	1	0	0	0	0	**94**	
2115 - 2130	0	68	8	0	0	0	0	0	1	0	0	0	0	**77**	
2130 - 2145	0	69	9	0	1	0	0	0	0	0	0	0	0	**79**	
2145 - 2200	0	49	6	0	0	0	0	0	1	0	0	0	0	**56**	**306**
2200 - 2215	0	73	7	0	1	0	0	0	0	0	0	0	0	**81**	
2215 - 2230	0	58	6	0	0	0	0	0	1	0	0	0	0	**65**	
2230 - 2245	0	56	9	0	0	0	0	0	3	0	0	0	0	**68**	
2245 - 2300	0	52	6	1	0	0	0	0	0	0	0	0	0	**59**	**273**
2300 - 2315	0	45	4	1	0	0	0	0	0	0	0	0	0	**50**	
2315 - 2330	0	39	5	0	1	0	0	0	2	0	0	0	0	**47**	
2330 - 2345	0	44	6	0	0	0	0	0	0	0	0	0	0	**50**	
2345 - 0000	0	37	6	0	0	0	0	0	0	0	0	0	0	**43**	**190**

Session Total	21	6666	1293	14	76	34	2	10	99	1	8	0	0	**8224**
Session Average	0.22	69.44	13.47	0.15	0.79	0.35	0.02	0.10	1.03	0.01	0.08	0.00	0.00	**85.67**
Session Percentage	0.26	81.06	15.72	0.17	0.92	0.41	0.02	0.12	1.20	0.01	0.10	0.00	0.00	

AM Peak Hour	0815 - 0915	0945 - 1045	0745 - 0845	0630 - 0730	0830 - 0930	0815 - 0915	0715 - 0815	0645 - 0745	0815 - 0915	-	0615 - 0715	-	-	**0945 - 1045**
AM Peak Hour Volume	1	355	97	2	12	6	1	2	9	0	1	0	0	**460**

Noon Peak Hour	1300 - 1400	1445 - 1545	1200 - 1300	1145 - 1245	1015 - 1115	1430 - 1530	1130 - 1230	1000 - 1100	1045 - 1145	-	-	-	-	**1445 - 1545**
Noon Peak Hour Volume	6	545	118	2	7	4	1	1	9	0	0	0	0	**649**

PM Peak Hour	1900 - 2000	1500 - 1600	1515 - 1615	1645 - 1745	1530 - 1630	1500 - 1600	-	1715 - 1815	1515 - 1615	1545 - 1645	-	-	-	**1500 - 1600**
PM Peak Hour Volume	5	528	91	2	4	4	0	3	6	1	0	0	0	**631**

Bi-Directional Class Count || NB EB Average 15min

Columbia, SC

Marr Traffic DATA COLLECTION
www.marrtraffic.com

Site 9
I-26 N/Bound Off-Ramp,
south of I-20

Date
Sunday, April 21, 2024

Lat/Long
34.035821°, -81.107950°

Weather
Cloudy
66°F

0000 - 2400 (Weekday 24h Session) (All Dates)
NB EB Average 15min

	NB EB Average 15min													15min	60min
Time	1	2	3	4	5	6	7	8	9	10	11	12	13	Total	Total
0000 - 0015	0	26	5	0	1	0	0	0	1	0	0	0	0	**32**	
0015 - 0030	0	30	6	0	0	0	0	0	1	0	0	0	0	**37**	
0030 - 0045	0	30	7	0	0	0	0	0	1	0	0	0	0	**38**	
0045 - 0100	0	18	4	0	0	0	0	0	1	0	0	0	0	**23**	**131**
0100 - 0115	0	16	4	0	0	0	0	0	1	0	0	0	0	**21**	
0115 - 0130	0	16	3	0	0	0	0	0	1	0	0	0	0	**21**	
0130 - 0145	0	12	2	0	0	0	0	0	1	0	0	0	0	**16**	
0145 - 0200	0	10	2	0	0	0	0	0	1	0	0	0	0	**13**	**71**
0200 - 0215	0	12	2	0	0	0	0	0	1	0	0	0	0	**15**	
0215 - 0230	0	11	2	0	0	0	0	0	1	0	0	0	0	**14**	
0230 - 0245	0	10	2	0	1	0	0	0	1	0	1	0	0	**15**	
0245 - 0300	0	8	2	0	0	0	0	0	0	0	0	0	0	**12**	**56**
0300 - 0315	0	9	2	0	1	0	0	0	1	0	0	0	0	**13**	
0315 - 0330	0	9	3	0	1	0	0	0	1	0	0	0	0	**13**	
0330 - 0345	0	12	2	0	1	0	0	0	2	0	0	0	0	**17**	
0345 - 0400	0	12	3	0	1	0	0	0	3	0	0	0	0	**18**	**61**
0400 - 0415	0	13	3	0	1	0	0	0	1	0	0	0	0	**19**	
0415 - 0430	0	12	4	0	2	0	0	0	2	0	1	0	0	**21**	
0430 - 0445	0	15	4	0	2	1	0	0	2	0	0	0	0	**24**	
0445 - 0500	0	18	5	0	1	0	0	0	2	0	0	0	0	**27**	**91**
0500 - 0515	0	15	4	0	1	0	0	0	2	0	0	0	0	**22**	
0515 - 0530	0	23	7	0	2	1	0	0	3	0	0	0	0	**37**	
0530 - 0545	0	34	8	0	2	1	0	0	2	0	0	0	0	**47**	
0545 - 0600	0	31	8	0	3	0	0	0	3	0	0	0	0	**44**	**150**
0600 - 0615	0	46	12	0	6	0	0	0	3	0	0	0	0	**67**	
0615 - 0630	0	53	16	0	3	1	0	0	3	0	0	0	0	**76**	
0630 - 0645	0	72	26	0	3	1	0	0	3	0	0	0	0	**106**	
0645 - 0700	0	70	23	0	4	2	0	1	2	0	0	0	0	**101**	**350**
0700 - 0715	1	76	29	1	4	1	0	0	2	0	0	0	0	**114**	
0715 - 0730	0	100	36	0	3	1	0	1	3	0	0	0	0	**145**	
0730 - 0745	0	113	36	0	4	2	0	1	5	0	0	0	0	**162**	
0745 - 0800	0	109	42	0	5	1	0	0	6	0	0	0	0	**163**	**584**
0800 - 0815	0	80	33	0	6	2	0	1	2	0	0	0	0	**124**	
0815 - 0830	0	82	30	0	3	1	0	1	4	0	0	0	0	**122**	
0830 - 0845	0	84	35	1	4	1	0	1	5	0	0	0	0	**132**	
0845 - 0900	0	78	35	0	6	1	0	1	5	0	0	0	0	**126**	**504**
0900 - 0915	0	77	35	0	6	1	0	1	6	0	0	0	0	**127**	
0915 - 0930	0	75	30	1	8	1	0	1	7	0	0	0	0	**124**	
0930 - 0945	0	84	35	0	9	3	0	0	7	0	0	0	0	**138**	
0945 - 1000	0	81	32	0	4	1	0	1	6	0	0	0	0	**126**	**514**
1000 - 1015	0	73	28	1	5	1	0	1	5	0	0	0	0	**114**	
1015 - 1030	0	73	26	0	4	1	0	1	5	0	0	0	0	**110**	
1030 - 1045	0	83	31	0	3	1	0	1	4	0	0	0	0	**125**	
1045 - 1100	0	83	31	0	3	2	0	1	6	0	0	0	0	**127**	**476**
1100 - 1115	0	81	27	0	5	1	0	1	5	0	0	0	0	**120**	
1115 - 1130	0	87	29	1	3	1	0	0	4	0	0	0	0	**124**	
1130 - 1145	0	84	26	0	3	1	0	1	5	0	0	0	0	**121**	
1145 - 1200	0	96	31	0	3	1	0	1	4	0	0	0	0	**136**	**501**
1200 - 1215	0	91	27	0	4	1	0	0	3	0	0	0	0	**126**	
1215 - 1230	0	97	30	0	3	1	0	1	4	0	0	0	0	**136**	
1230 - 1245	0	105	29	1	3	2	0	1	6	0	0	0	0	**146**	
1245 - 1300	0	112	31	1	2	1	0	1	4	0	0	0	0	**150**	**559**
1300 - 1315	0	99	26	1	3	1	0	1	4	0	0	0	0	**135**	
1315 - 1330	0	105	32	1	2	1	0	0	4	0	0	0	0	**144**	
1330 - 1345	1	106	28	0	2	1	0	1	4	0	0	0	0	**143**	
1345 - 1400	0	108	33	0	1	1	0	0	4	0	0	0	0	**149**	**571**
1400 - 1415	0	109	32	0	4	1	0	0	5	0	0	0	0	**151**	
1415 - 1430	0	117	35	0	4	1	0	1	3	0	0	0	0	**162**	
1430 - 1445	0	120	30	0	3	1	0	1	5	0	0	0	0	**162**	
1445 - 1500	0	131	31	1	3	1	0	1	3	0	0	0	0	**172**	**646**
1500 - 1515	0	127	32	1	3	1	0	1	5	0	0	0	0	**171**	
1515 - 1530	0	144	30	1	3	1	0	1	3	0	0	0	0	**183**	
1530 - 1545	0	137	34	0	3	1	0	0	2	0	0	0	0	**177**	
1545 - 1600	0	128	30	0	3	1	0	0	2	0	0	0	0	**164**	**695**
1600 - 1615	0	122	26	0	2	1	0	1	5	0	0	0	0	**158**	
1615 - 1630	0	115	24	0	3	0	0	1	2	0	0	0	0	**145**	
1630 - 1645	0	103	23	0	2	1	0	0	2	0	0	0	0	**131**	
1645 - 1700	0	97	23	0	1	0	0	0	2	0	0	0	0	**124**	**558**
1700 - 1715	0	94	19	0	1	1	0	1	2	0	0	0	0	**118**	
1715 - 1730	0	100	18	0	1	0	0	0	2	0	0	0	0	**123**	
1730 - 1745	0	85	18	0	2	1	0	0	2	0	0	0	0	**108**	
1745 - 1800	0	89	19	0	1	0	0	0	2	0	0	0	0	**112**	**461**
1800 - 1815	0	97	19	0	2	1	0	1	1	0	0	0	0	**120**	
1815 - 1830	0	90	19	0	2	0	0	0	2	0	0	0	0	**114**	
1830 - 1845	0	88	20	0	1	0	0	0	2	0	0	0	0	**112**	
1845 - 1900	0	75	14	0	0	0	0	0	2	0	0	0	0	**92**	**437**
1900 - 1915	0	89	17	0	1	1	0	0	2	0	0	0	0	**110**	
1915 - 1930	1	96	18	0	1	0	0	0	1	0	0	0	0	**117**	
1930 - 1945	0	88	17	0	1	0	0	0	1	0	0	0	0	**108**	
1945 - 2000	1	82	16	0	1	0	0	0	1	0	0	0	0	**100**	**435**
2000 - 2015	0	77	13	0	1	0	0	0	1	0	0	0	0	**92**	
2015 - 2030	0	76	13	0	1	0	0	1	1	0	0	0	0	**92**	
2030 - 2045	0	77	11	0	2	0	0	0	1	0	0	0	0	**91**	
2045 - 2100	0	65	9	0	1	0	0	0	2	0	0	0	0	**77**	**353**
2100 - 2115	0	70	11	0	1	0	0	0	1	0	0	0	0	**83**	
2115 - 2130	0	64	9	0	0	0	0	0	2	0	0	0	0	**76**	
2130 - 2145	0	54	10	0	1	0	0	0	1	0	0	0	0	**67**	
2145 - 2200	0	51	9	0	1	0	0	0	2	0	0	0	0	**63**	**289**
2200 - 2215	0	48	9	0	0	0	0	0	1	0	0	0	0	**59**	
2215 - 2230	0	51	8	0	0	0	0	0	1	0	0	0	0	**61**	
2230 - 2245	0	40	6	0	0	0	0	0	1	0	0	0	0	**48**	
2245 - 2300	0	39	6	0	0	0	0	0	1	0	0	0	0	**47**	**215**
2300 - 2315	0	42	6	0	0	0	0	0	1	0	0	0	0	**50**	
2315 - 2330	0	40	7	0	1	0	0	0	1	0	0	0	0	**49**	
2330 - 2345	0	35	6	0	0	0	0	0	1	0	0	0	0	**42**	
2345 - 0000	0	24	4	0	1	0	0	0	1	0	0	0	0	**31**	**172**

Session Total	10	6539	1744	16	204	60	5	34	254	4	9	0	0	**8880**
Session Average	0.11	68.11	18.17	0.17	2.13	0.62	0.05	0.36	2.65	0.04	0.09	0.00	0.00	**92.50**
Session Percentage	0.12	73.64	19.64	0.19	2.30	0.67	0.06	0.38	2.87	0.04	0.10	0.00	0.00	

AM Peak Hour	0645 - 0745	0715 - 0815	0715 - 0815	0830 - 0930	0845 - 0945	0715 - 0815	0830 - 0930	0945 - 1045	0900 - 1000	0630 - 0730	0845 - 0945	-	-	**0715 - 0815**
AM Peak Volume	1	402	147	2	28	6	1	4	26	1	1	0	0	**594**

Noon Peak Hour	1315 - 1415	1445 - 1545	1345 - 1445	1430 - 1530	1015 - 1115	1415 - 1515	1130 - 1230	1000 - 1100	1000 - 1100	1430 - 1530	-	-	-	**1445 - 1545**
Noon Peak Volume	2	540	130	3	15	5	1	4	20	1	0	0	0	**703**

PM Peak Hour	1900 - 2000	1500 - 1600	1500 - 1600	1500 - 1600	1500 - 1600	1500 - 1600	1500 - 1600	1515 - 1615	1515 - 1615	1515 - 1615	1545 - 1645	1515 - 1615	-	**1500 - 1600**
PM Peak Volume	2	537	126	3	11	4	0	2	12	1	0	0	0	**695**

Bi-Directional Class Count || Volume Summary 15min

Columbia, SC

Marr Traffic DATA COLLECTION

www.marrtraffic.com

Site 9

I-26 N/Bound Off-Ramp,
south of I-20

Date

Sunday, April 21, 2024

Lat/Long

34.035821°, -81.107950°

Weather

Cloudy
66°F

Click here for Detailed Weather

0000 - 2400 (Sunday 24h Session) (04-21-2024)

Volume Summary 15min

TIME	Volume Summary 15min NB	SB	15min Total	60min Total
0000 - 0015	55	0	**55**	
0015 - 0030	43	0	**43**	
0030 - 0045	53	0	**53**	
0045 - 0100	31	0	**31**	**182**
0100 - 0115	33	0	**33**	
0115 - 0130	29	0	**29**	
0130 - 0145	22	0	**22**	
0145 - 0200	17	0	**17**	**101**
0200 - 0215	22	0	**22**	
0215 - 0230	23	0	**23**	
0230 - 0245	19	0	**19**	
0245 - 0300	13	0	**13**	**77**
0300 - 0315	14	0	**14**	
0315 - 0330	17	0	**17**	
0330 - 0345	17	0	**17**	
0345 - 0400	12	0	**12**	**60**
0400 - 0415	14	0	**14**	
0415 - 0430	6	0	**6**	
0430 - 0445	14	0	**14**	
0445 - 0500	13	0	**13**	**47**
0500 - 0515	13	0	**13**	
0515 - 0530	12	0	**12**	
0530 - 0545	15	0	**15**	
0545 - 0600	13	0	**13**	**53**
0600 - 0615	27	0	**27**	
0615 - 0630	16	0	**16**	
0630 - 0645	30	0	**30**	
0645 - 0700	26	0	**26**	**99**
0700 - 0715	47	0	**47**	
0715 - 0730	42	0	**42**	
0730 - 0745	63	0	**63**	
0745 - 0800	46	0	**46**	**198**
0800 - 0815	46	0	**46**	
0815 - 0830	45	0	**45**	
0830 - 0845	50	0	**50**	
0845 - 0900	52	0	**52**	**193**
0900 - 0915	71	0	**71**	
0915 - 0930	53	0	**53**	
0930 - 0945	87	0	**87**	
0945 - 1000	94	0	**94**	**305**
1000 - 1015	103	0	**103**	
1015 - 1030	76	0	**76**	
1030 - 1045	86	0	**86**	
1045 - 1100	94	0	**94**	**359**
1100 - 1115	88	0	**88**	
1115 - 1130	78	0	**78**	
1130 - 1145	81	0	**81**	
1145 - 1200	67	0	**67**	**314**

Time	Volume Summary 15min NB	SB	15min Total	60min Total
1200 - 1215	91	0	**91**	
1215 - 1230	92	0	**92**	
1230 - 1245	137	0	**137**	
1245 - 1300	132	0	**132**	**452**
1300 - 1315	128	0	**128**	
1315 - 1330	110	0	**110**	
1330 - 1345	106	0	**106**	
1345 - 1400	126	0	**126**	**470**
1400 - 1415	109	0	**109**	
1415 - 1430	102	0	**102**	
1430 - 1445	110	0	**110**	
1445 - 1500	118	0	**118**	**439**
1500 - 1515	124	0	**124**	
1515 - 1530	115	0	**115**	
1530 - 1545	131	0	**131**	
1545 - 1600	154	0	**154**	**524**
1600 - 1615	124	0	**124**	
1615 - 1630	102	0	**102**	
1630 - 1645	88	0	**88**	
1645 - 1700	79	0	**79**	**393**
1700 - 1715	106	0	**106**	
1715 - 1730	112	0	**112**	
1730 - 1745	84	0	**84**	
1745 - 1800	86	0	**86**	**388**
1800 - 1815	87	0	**87**	
1815 - 1830	93	0	**93**	
1830 - 1845	75	0	**75**	
1845 - 1900	79	0	**79**	**334**
1900 - 1915	91	0	**91**	
1915 - 1930	97	0	**97**	
1930 - 1945	87	0	**87**	
1945 - 2000	78	0	**78**	**353**
2000 - 2015	76	0	**76**	
2015 - 2030	71	0	**71**	
2030 - 2045	62	0	**62**	
2045 - 2100	54	0	**54**	**263**
2100 - 2115	62	0	**62**	
2115 - 2130	52	0	**52**	
2130 - 2145	60	0	**60**	
2145 - 2200	42	0	**42**	**216**
2200 - 2215	34	0	**34**	
2215 - 2230	43	0	**43**	
2230 - 2245	38	0	**38**	
2245 - 2300	33	0	**33**	**148**
2300 - 2315	38	0	**38**	
2315 - 2330	43	0	**43**	
2330 - 2345	36	0	**36**	
2345 - 0000	25	0	**25**	**142**

Session Total	6110	0	**6110**
Session Average	63.65	0.00	**63.65**
Session Percentage	100.00	0.00	

Site 9
I-26 N/Bound Off-Ramp,
south of I-20

Date
Monday, April 22, 2024

Lat/Long
34.035821°, -81.107950°

Weather
Mostly Cloudy
57°F

Click here for Detailed Weather

0000 - 2400 (Weekday 24h Session) (04-22-2024)
Volume Summary 15min

TIME	Volume Summary 15min NB	SB	15min Total	60min Total
0000 - 0015	11	0	**11**	
0015 - 0030	25	0	**25**	
0030 - 0045	30	0	**30**	
0045 - 0100	22	0	**22**	**88**
0100 - 0115	18	0	**18**	
0115 - 0130	8	0	**8**	
0130 - 0145	12	0	**12**	
0145 - 0200	10	0	**10**	**48**
0200 - 0215	12	0	**12**	
0215 - 0230	6	0	**6**	
0230 - 0245	10	0	**10**	
0245 - 0300	7	0	**7**	**35**
0300 - 0315	11	0	**11**	
0315 - 0330	16	0	**16**	
0330 - 0345	15	0	**15**	
0345 - 0400	16	0	**16**	**58**
0400 - 0415	11	0	**11**	
0415 - 0430	24	0	**24**	
0430 - 0445	23	0	**23**	
0445 - 0500	16	0	**16**	**74**
0500 - 0515	29	0	**29**	
0515 - 0530	45	0	**45**	
0530 - 0545	52	0	**52**	
0545 - 0600	57	0	**57**	**183**
0600 - 0615	78	0	**78**	
0615 - 0630	98	0	**98**	
0630 - 0645	133	0	**133**	
0645 - 0700	125	0	**125**	**434**
0700 - 0715	125	0	**125**	
0715 - 0730	154	0	**154**	
0730 - 0745	203	0	**203**	
0745 - 0800	221	0	**221**	**703**
0800 - 0815	179	0	**179**	
0815 - 0830	134	0	**134**	
0830 - 0845	158	0	**158**	
0845 - 0900	148	0	**148**	**619**
0900 - 0915	159	0	**159**	
0915 - 0930	137	0	**137**	
0930 - 0945	125	0	**125**	
0945 - 1000	109	0	**109**	**530**
1000 - 1015	112	0	**112**	
1015 - 1030	113	0	**113**	
1030 - 1045	116	0	**116**	
1045 - 1100	125	0	**125**	**466**
1100 - 1115	140	0	**140**	
1115 - 1130	138	0	**138**	
1130 - 1145	119	0	**119**	
1145 - 1200	144	0	**144**	**541**

Time	Volume Summary 15min NB	SB	15min Total	60min Total
1200 - 1215	128	0	**128**	
1215 - 1230	135	0	**135**	
1230 - 1245	138	0	**138**	
1245 - 1300	143	0	**143**	**544**
1300 - 1315	141	0	**141**	
1315 - 1330	139	0	**139**	
1330 - 1345	141	0	**141**	
1345 - 1400	159	0	**159**	**580**
1400 - 1415	145	0	**145**	
1415 - 1430	180	0	**180**	
1430 - 1445	181	0	**181**	
1445 - 1500	170	0	**170**	**676**
1500 - 1515	161	0	**161**	
1515 - 1530	199	0	**199**	
1530 - 1545	151	0	**151**	
1545 - 1600	106	0	**106**	**617**
1600 - 1615	153	0	**153**	
1615 - 1630	134	0	**134**	
1630 - 1645	112	0	**112**	
1645 - 1700	112	0	**112**	**511**
1700 - 1715	119	0	**119**	
1715 - 1730	119	0	**119**	
1730 - 1745	111	0	**111**	
1745 - 1800	112	0	**112**	**461**
1800 - 1815	133	0	**133**	
1815 - 1830	118	0	**118**	
1830 - 1845	94	0	**94**	
1845 - 1900	28	0	**28**	**373**
1900 - 1915	110	0	**110**	
1915 - 1930	108	0	**108**	
1930 - 1945	106	0	**106**	
1945 - 2000	96	0	**96**	**420**
2000 - 2015	96	0	**96**	
2015 - 2030	86	0	**86**	
2030 - 2045	94	0	**94**	
2045 - 2100	56	0	**56**	**332**
2100 - 2115	63	0	**63**	
2115 - 2130	57	0	**57**	
2130 - 2145	61	0	**61**	
2145 - 2200	62	0	**62**	**243**
2200 - 2215	54	0	**54**	
2215 - 2230	55	0	**55**	
2230 - 2245	40	0	**40**	
2245 - 2300	51	0	**51**	**200**
2300 - 2315	47	0	**47**	
2315 - 2330	44	0	**44**	
2330 - 2345	44	0	**44**	
2345 - 0000	19	0	**19**	**154**

Session Total	8890	0	**8890**
Session Average	92.60	0.00	**92.60**
Session Percentage	100.00	0.00	

Site 9
I-26 N/Bound Off-Ramp,
south of I-20

Date
Tuesday, April 23, 2024

Lat/Long
34.035821°, -81.107950°

Weather
Fair
58°F

Click here for Detailed Weather

0000 - 2400 (Weekday 24h Session) (04-23-2024)
Volume Summary 15min

TIME	Volume Summary 15min NB	SB	15min Total	60min Total
0000 - 0015	37	0	**37**	
0015 - 0030	37	0	**37**	
0030 - 0045	28	0	**28**	
0045 - 0100	12	0	**12**	**114**
0100 - 0115	16	0	**16**	
0115 - 0130	16	0	**16**	
0130 - 0145	14	0	**14**	
0145 - 0200	9	0	**9**	**55**
0200 - 0215	10	0	**10**	
0215 - 0230	12	0	**12**	
0230 - 0245	12	0	**12**	
0245 - 0300	12	0	**12**	**46**
0300 - 0315	11	0	**11**	
0315 - 0330	9	0	**9**	
0330 - 0345	12	0	**12**	
0345 - 0400	16	0	**16**	**48**
0400 - 0415	14	0	**14**	
0415 - 0430	26	0	**26**	
0430 - 0445	28	0	**28**	
0445 - 0500	39	0	**39**	**107**
0500 - 0515	22	0	**22**	
0515 - 0530	33	0	**33**	
0530 - 0545	68	0	**68**	
0545 - 0600	58	0	**58**	**181**
0600 - 0615	72	0	**72**	
0615 - 0630	87	0	**87**	
0630 - 0645	127	0	**127**	
0645 - 0700	129	0	**129**	**415**
0700 - 0715	140	0	**140**	
0715 - 0730	195	0	**195**	
0730 - 0745	164	0	**164**	
0745 - 0800	195	0	**195**	**694**
0800 - 0815	135	0	**135**	
0815 - 0830	161	0	**161**	
0830 - 0845	142	0	**142**	
0845 - 0900	151	0	**151**	**589**
0900 - 0915	133	0	**133**	
0915 - 0930	148	0	**148**	
0930 - 0945	171	0	**171**	
0945 - 1000	128	0	**128**	**580**
1000 - 1015	124	0	**124**	
1015 - 1030	122	0	**122**	
1030 - 1045	143	0	**143**	
1045 - 1100	124	0	**124**	**513**
1100 - 1115	117	0	**117**	
1115 - 1130	114	0	**114**	
1130 - 1145	113	0	**113**	
1145 - 1200	138	0	**138**	**482**

Time	Volume Summary 15min NB	SB	15min Total	60min Total
1200 - 1215	128	0	**128**	
1215 - 1230	141	0	**141**	
1230 - 1245	132	0	**132**	
1245 - 1300	129	0	**129**	**530**
1300 - 1315	123	0	**123**	
1315 - 1330	146	0	**146**	
1330 - 1345	138	0	**138**	
1345 - 1400	161	0	**161**	**568**
1400 - 1415	175	0	**175**	
1415 - 1430	157	0	**157**	
1430 - 1445	160	0	**160**	
1445 - 1500	183	0	**183**	**675**
1500 - 1515	181	0	**181**	
1515 - 1530	215	0	**215**	
1530 - 1545	211	0	**211**	
1545 - 1600	184	0	**184**	**791**
1600 - 1615	187	0	**187**	
1615 - 1630	175	0	**175**	
1630 - 1645	143	0	**143**	
1645 - 1700	121	0	**121**	**626**
1700 - 1715	128	0	**128**	
1715 - 1730	105	0	**105**	
1730 - 1745	118	0	**118**	
1745 - 1800	109	0	**109**	**460**
1800 - 1815	98	0	**98**	
1815 - 1830	127	0	**127**	
1830 - 1845	119	0	**119**	
1845 - 1900	105	0	**105**	**449**
1900 - 1915	116	0	**116**	
1915 - 1930	107	0	**107**	
1930 - 1945	113	0	**113**	
1945 - 2000	117	0	**117**	**453**
2000 - 2015	90	0	**90**	
2015 - 2030	99	0	**99**	
2030 - 2045	90	0	**90**	
2045 - 2100	78	0	**78**	**357**
2100 - 2115	89	0	**89**	
2115 - 2130	83	0	**83**	
2130 - 2145	62	0	**62**	
2145 - 2200	72	0	**72**	**306**
2200 - 2215	48	0	**48**	
2215 - 2230	53	0	**53**	
2230 - 2245	46	0	**46**	
2245 - 2300	42	0	**42**	**189**
2300 - 2315	42	0	**42**	
2315 - 2330	43	0	**43**	
2330 - 2345	32	0	**32**	
2345 - 0000	36	0	**36**	**153**

Session Total	9381	0	**9381**
Session Average	97.72	0.00	**97.72**
Session Percentage	100.00	0.00	

Site 9
I-26 N/Bound Off-Ramp,
south of I-20

Date
Wednesday, April 24, 2024

Lat/Long
34.035821°, -81.107950°

Weather
Fair
66°F

Click here for Detailed Weather

0000 - 2400 (Weekday 24h Session) (04-24-2024)
Volume Summary 15min

TIME	Volume Summary 15min NB	SB	15min Total	60min Total
0000 - 0015	25	0	**25**	
0015 - 0030	36	0	**36**	
0030 - 0045	40	0	**40**	
0045 - 0100	19	0	**19**	**120**
0100 - 0115	14	0	**14**	
0115 - 0130	25	0	**25**	
0130 - 0145	15	0	**15**	
0145 - 0200	15	0	**15**	**69**
0200 - 0215	10	0	**10**	
0215 - 0230	10	0	**10**	
0230 - 0245	21	0	**21**	
0245 - 0300	11	0	**11**	**52**
0300 - 0315	14	0	**14**	
0315 - 0330	9	0	**9**	
0330 - 0345	14	0	**14**	
0345 - 0400	19	0	**19**	**56**
0400 - 0415	24	0	**24**	
0415 - 0430	27	0	**27**	
0430 - 0445	25	0	**25**	
0445 - 0500	27	0	**27**	**103**
0500 - 0515	21	0	**21**	
0515 - 0530	44	0	**44**	
0530 - 0545	64	0	**64**	
0545 - 0600	61	0	**61**	**190**
0600 - 0615	81	0	**81**	
0615 - 0630	100	0	**100**	
0630 - 0645	127	0	**127**	
0645 - 0700	126	0	**126**	**434**
0700 - 0715	136	0	**136**	
0715 - 0730	188	0	**188**	
0730 - 0745	214	0	**214**	
0745 - 0800	207	0	**207**	**745**
0800 - 0815	130	0	**130**	
0815 - 0830	134	0	**134**	
0830 - 0845	141	0	**141**	
0845 - 0900	139	0	**139**	**544**
0900 - 0915	132	0	**132**	
0915 - 0930	133	0	**133**	
0930 - 0945	185	0	**185**	
0945 - 1000	146	0	**146**	**596**
1000 - 1015	101	0	**101**	
1015 - 1030	113	0	**113**	
1030 - 1045	146	0	**146**	
1045 - 1100	161	0	**161**	**521**
1100 - 1115	128	0	**128**	
1115 - 1130	137	0	**137**	
1130 - 1145	145	0	**145**	
1145 - 1200	141	0	**141**	**551**

Time	Volume Summary 15min NB	SB	15min Total	60min Total
1200 - 1215	135	0	**135**	
1215 - 1230	152	0	**152**	
1230 - 1245	155	0	**155**	
1245 - 1300	143	0	**143**	**585**
1300 - 1315	153	0	**153**	
1315 - 1330	176	0	**176**	
1330 - 1345	186	0	**186**	
1345 - 1400	170	0	**170**	**685**
1400 - 1415	181	0	**181**	
1415 - 1430	179	0	**179**	
1430 - 1445	181	0	**181**	
1445 - 1500	184	0	**184**	**725**
1500 - 1515	190	0	**190**	
1515 - 1530	211	0	**211**	
1530 - 1545	213	0	**213**	
1545 - 1600	216	0	**216**	**830**
1600 - 1615	215	0	**215**	
1615 - 1630	172	0	**172**	
1630 - 1645	159	0	**159**	
1645 - 1700	129	0	**129**	**675**
1700 - 1715	108	0	**108**	
1715 - 1730	116	0	**116**	
1730 - 1745	95	0	**95**	
1745 - 1800	108	0	**108**	**427**
1800 - 1815	134	0	**134**	
1815 - 1830	117	0	**117**	
1830 - 1845	133	0	**133**	
1845 - 1900	95	0	**95**	**479**
1900 - 1915	121	0	**121**	
1915 - 1930	116	0	**116**	
1930 - 1945	111	0	**111**	
1945 - 2000	98	0	**98**	**446**
2000 - 2015	83	0	**83**	
2015 - 2030	91	0	**91**	
2030 - 2045	99	0	**99**	
2045 - 2100	80	0	**80**	**353**
2100 - 2115	84	0	**84**	
2115 - 2130	93	0	**93**	
2130 - 2145	64	0	**64**	
2145 - 2200	65	0	**65**	**306**
2200 - 2215	54	0	**54**	
2215 - 2230	62	0	**62**	
2230 - 2245	35	0	**35**	
2245 - 2300	40	0	**40**	**191**
2300 - 2315	47	0	**47**	
2315 - 2330	52	0	**52**	
2330 - 2345	33	0	**33**	
2345 - 0000	30	0	**30**	**162**

Session Total	9845	0	**9845**
Session Average	102.55	0.00	**102.55**
Session Percentage	100.00	0.00	

Site 9
I-26 N/Bound Off-Ramp,
south of I-20

Date
Thursday, April 25, 2024

Lat/Long
34.035821°, -81.107950°

Weather
Fair
67°F

Click here for Detailed Weather

0000 - 2400 (Weekday 24h Session) (04-25-2024)
Volume Summary 15min

TIME	Volume Summary 15min NB	SB	15min Total	60min Total
0000 - 0015	27	0	**27**	
0015 - 0030	38	0	**38**	
0030 - 0045	43	0	**43**	
0045 - 0100	30	0	**30**	**138**
0100 - 0115	17	0	**17**	
0115 - 0130	17	0	**17**	
0130 - 0145	18	0	**18**	
0145 - 0200	12	0	**12**	**64**
0200 - 0215	19	0	**19**	
0215 - 0230	16	0	**16**	
0230 - 0245	12	0	**12**	
0245 - 0300	13	0	**13**	**60**
0300 - 0315	7	0	**7**	
0315 - 0330	18	0	**18**	
0330 - 0345	18	0	**18**	
0345 - 0400	25	0	**25**	**68**
0400 - 0415	18	0	**18**	
0415 - 0430	23	0	**23**	
0430 - 0445	24	0	**24**	
0445 - 0500	38	0	**38**	**103**
0500 - 0515	24	0	**24**	
0515 - 0530	46	0	**46**	
0530 - 0545	49	0	**49**	
0545 - 0600	51	0	**51**	**170**
0600 - 0615	102	0	**102**	
0615 - 0630	101	0	**101**	
0630 - 0645	145	0	**145**	
0645 - 0700	129	0	**129**	**477**
0700 - 0715	144	0	**144**	
0715 - 0730	188	0	**188**	
0730 - 0745	225	0	**225**	
0745 - 0800	219	0	**219**	**776**
0800 - 0815	151	0	**151**	
0815 - 0830	159	0	**159**	
0830 - 0845	154	0	**154**	
0845 - 0900	155	0	**155**	**619**
0900 - 0915	131	0	**131**	
0915 - 0930	155	0	**155**	
0930 - 0945	153	0	**153**	
0945 - 1000	152	0	**152**	**591**
1000 - 1015	141	0	**141**	
1015 - 1030	120	0	**120**	
1030 - 1045	127	0	**127**	
1045 - 1100	132	0	**132**	**520**
1100 - 1115	136	0	**136**	
1115 - 1130	141	0	**141**	
1130 - 1145	138	0	**138**	
1145 - 1200	169	0	**169**	**584**

Time	Volume Summary 15min NB	SB	15min Total	60min Total
1200 - 1215	120	0	**120**	
1215 - 1230	149	0	**149**	
1230 - 1245	161	0	**161**	
1245 - 1300	142	0	**142**	**572**
1300 - 1315	151	0	**151**	
1315 - 1330	146	0	**146**	
1330 - 1345	151	0	**151**	
1345 - 1400	158	0	**158**	**606**
1400 - 1415	150	0	**150**	
1415 - 1430	198	0	**198**	
1430 - 1445	180	0	**180**	
1445 - 1500	186	0	**186**	**714**
1500 - 1515	216	0	**216**	
1515 - 1530	193	0	**193**	
1530 - 1545	194	0	**194**	
1545 - 1600	160	0	**160**	**763**
1600 - 1615	139	0	**139**	
1615 - 1630	154	0	**154**	
1630 - 1645	136	0	**136**	
1645 - 1700	136	0	**136**	**565**
1700 - 1715	92	0	**92**	
1715 - 1730	97	0	**97**	
1730 - 1745	86	0	**86**	
1745 - 1800	92	0	**92**	**367**
1800 - 1815	127	0	**127**	
1815 - 1830	130	0	**130**	
1830 - 1845	122	0	**122**	
1845 - 1900	129	0	**129**	**508**
1900 - 1915	130	0	**130**	
1915 - 1930	137	0	**137**	
1930 - 1945	101	0	**101**	
1945 - 2000	116	0	**116**	**484**
2000 - 2015	106	0	**106**	
2015 - 2030	124	0	**124**	
2030 - 2045	126	0	**126**	
2045 - 2100	106	0	**106**	**462**
2100 - 2115	85	0	**85**	
2115 - 2130	88	0	**88**	
2130 - 2145	52	0	**52**	
2145 - 2200	70	0	**70**	**295**
2200 - 2215	62	0	**62**	
2215 - 2230	79	0	**79**	
2230 - 2245	46	0	**46**	
2245 - 2300	48	0	**48**	**235**
2300 - 2315	58	0	**58**	
2315 - 2330	59	0	**59**	
2330 - 2345	44	0	**44**	
2345 - 0000	32	0	**32**	**193**

Session Total	9934	0	**9934**
Session Average	103.48	0.00	**103.48**
Session Percentage	100.00	0.00	

Site 9
I-26 N/Bound Off-Ramp,
south of I-20

Date
Friday, April 26, 2024

Lat/Long
34.035821°, -81.107950°

Weather
Cloudy
69°F

Click here for Detailed Weather

0000 - 2400 (Weekday 24h Session) (04-26-2024)
Volume Summary 15min

TIME	Volume Summary 15min NB	SB	15min Total	60min Total
0000 - 0015	35	0	**35**	
0015 - 0030	43	0	**43**	
0030 - 0045	39	0	**39**	
0045 - 0100	21	0	**21**	**138**
0100 - 0115	24	0	**24**	
0115 - 0130	27	0	**27**	
0130 - 0145	8	0	**8**	
0145 - 0200	13	0	**13**	**72**
0200 - 0215	12	0	**12**	
0215 - 0230	11	0	**11**	
0230 - 0245	10	0	**10**	
0245 - 0300	13	0	**13**	**46**
0300 - 0315	15	0	**15**	
0315 - 0330	14	0	**14**	
0330 - 0345	18	0	**18**	
0345 - 0400	22	0	**22**	**69**
0400 - 0415	23	0	**23**	
0415 - 0430	17	0	**17**	
0430 - 0445	28	0	**28**	
0445 - 0500	28	0	**28**	**96**
0500 - 0515	22	0	**22**	
0515 - 0530	48	0	**48**	
0530 - 0545	47	0	**47**	
0545 - 0600	51	0	**51**	**168**
0600 - 0615	71	0	**71**	
0615 - 0630	86	0	**86**	
0630 - 0645	135	0	**135**	
0645 - 0700	114	0	**114**	**406**
0700 - 0715	134	0	**134**	
0715 - 0730	170	0	**170**	
0730 - 0745	186	0	**186**	
0745 - 0800	164	0	**164**	**654**
0800 - 0815	141	0	**141**	
0815 - 0830	130	0	**130**	
0830 - 0845	155	0	**155**	
0845 - 0900	153	0	**153**	**579**
0900 - 0915	150	0	**150**	
0915 - 0930	157	0	**157**	
0930 - 0945	148	0	**148**	
0945 - 1000	118	0	**118**	**573**
1000 - 1015	123	0	**123**	
1015 - 1030	109	0	**109**	
1030 - 1045	137	0	**137**	
1045 - 1100	129	0	**129**	**498**
1100 - 1115	136	0	**136**	
1115 - 1130	142	0	**142**	
1130 - 1145	135	0	**135**	
1145 - 1200	148	0	**148**	**561**

Time	Volume Summary 15min NB	SB	15min Total	60min Total
1200 - 1215	144	0	**144**	
1215 - 1230	142	0	**142**	
1230 - 1245	148	0	**148**	
1245 - 1300	196	0	**196**	**630**
1300 - 1315	121	0	**121**	
1315 - 1330	139	0	**139**	
1330 - 1345	142	0	**142**	
1345 - 1400	121	0	**121**	**523**
1400 - 1415	144	0	**144**	
1415 - 1430	160	0	**160**	
1430 - 1445	155	0	**155**	
1445 - 1500	193	0	**193**	**652**
1500 - 1515	177	0	**177**	
1515 - 1530	189	0	**189**	
1530 - 1545	167	0	**167**	
1545 - 1600	176	0	**176**	**709**
1600 - 1615	157	0	**157**	
1615 - 1630	152	0	**152**	
1630 - 1645	146	0	**146**	
1645 - 1700	166	0	**166**	**621**
1700 - 1715	162	0	**162**	
1715 - 1730	155	0	**155**	
1730 - 1745	139	0	**139**	
1745 - 1800	150	0	**150**	**606**
1800 - 1815	139	0	**139**	
1815 - 1830	114	0	**114**	
1830 - 1845	126	0	**126**	
1845 - 1900	116	0	**116**	**495**
1900 - 1915	117	0	**117**	
1915 - 1930	123	0	**123**	
1930 - 1945	126	0	**126**	
1945 - 2000	96	0	**96**	**462**
2000 - 2015	97	0	**97**	
2015 - 2030	113	0	**113**	
2030 - 2045	92	0	**92**	
2045 - 2100	85	0	**85**	**387**
2100 - 2115	103	0	**103**	
2115 - 2130	84	0	**84**	
2130 - 2145	90	0	**90**	
2145 - 2200	71	0	**71**	**348**
2200 - 2215	83	0	**83**	
2215 - 2230	72	0	**72**	
2230 - 2245	60	0	**60**	
2245 - 2300	56	0	**56**	**271**
2300 - 2315	68	0	**68**	
2315 - 2330	56	0	**56**	
2330 - 2345	55	0	**55**	
2345 - 0000	31	0	**31**	**210**

Session Total	9774	0	**9774**
Session Average	101.81	0.00	**101.81**
Session Percentage	100.00	0.00	

Site 9
I-26 N/Bound Off-Ramp,
south of I-20

Date
Saturday, April 27, 2024

Lat/Long
34.035821°, -81.107950°

Weather
Mostly Cloudy
69°F

Click here for Detailed Weather

0000 - 2400 (Saturday 24h Session) (04-27-2024)
Volume Summary 15min

TIME	Volume Summary 15min NB	SB	15min Total	60min Total
0000 - 0015	37	0	**37**	
0015 - 0030	40	0	**40**	
0030 - 0045	34	0	**34**	
0045 - 0100	26	0	**26**	**137**
0100 - 0115	24	0	**24**	
0115 - 0130	24	0	**24**	
0130 - 0145	21	0	**21**	
0145 - 0200	17	0	**17**	**86**
0200 - 0215	21	0	**21**	
0215 - 0230	18	0	**18**	
0230 - 0245	18	0	**18**	
0245 - 0300	16	0	**16**	**73**
0300 - 0315	16	0	**16**	
0315 - 0330	11	0	**11**	
0330 - 0345	25	0	**25**	
0345 - 0400	19	0	**19**	**71**
0400 - 0415	29	0	**29**	
0415 - 0430	23	0	**23**	
0430 - 0445	24	0	**24**	
0445 - 0500	28	0	**28**	**104**
0500 - 0515	21	0	**21**	
0515 - 0530	28	0	**28**	
0530 - 0545	34	0	**34**	
0545 - 0600	20	0	**20**	**103**
0600 - 0615	38	0	**38**	
0615 - 0630	44	0	**44**	
0630 - 0645	45	0	**45**	
0645 - 0700	59	0	**59**	**186**
0700 - 0715	74	0	**74**	
0715 - 0730	78	0	**78**	
0730 - 0745	77	0	**77**	
0745 - 0800	89	0	**89**	**318**
0800 - 0815	89	0	**89**	
0815 - 0830	88	0	**88**	
0830 - 0845	125	0	**125**	
0845 - 0900	82	0	**82**	**384**
0900 - 0915	110	0	**110**	
0915 - 0930	83	0	**83**	
0930 - 0945	99	0	**99**	
0945 - 1000	132	0	**132**	**424**
1000 - 1015	92	0	**92**	
1015 - 1030	115	0	**115**	
1030 - 1045	121	0	**121**	
1045 - 1100	126	0	**126**	**454**
1100 - 1115	95	0	**95**	
1115 - 1130	119	0	**119**	
1130 - 1145	115	0	**115**	
1145 - 1200	145	0	**145**	**474**

Time	Volume Summary 15min NB	SB	15min Total	60min Total
1200 - 1215	138	0	**138**	
1215 - 1230	143	0	**143**	
1230 - 1245	149	0	**149**	
1245 - 1300	168	0	**168**	**598**
1300 - 1315	126	0	**126**	
1315 - 1330	153	0	**153**	
1330 - 1345	139	0	**139**	
1345 - 1400	149	0	**149**	**567**
1400 - 1415	152	0	**152**	
1415 - 1430	156	0	**156**	
1430 - 1445	165	0	**165**	
1445 - 1500	167	0	**167**	**640**
1500 - 1515	148	0	**148**	
1515 - 1530	160	0	**160**	
1530 - 1545	174	0	**174**	
1545 - 1600	149	0	**149**	**631**
1600 - 1615	133	0	**133**	
1615 - 1630	126	0	**126**	
1630 - 1645	132	0	**132**	
1645 - 1700	125	0	**125**	**516**
1700 - 1715	113	0	**113**	
1715 - 1730	156	0	**156**	
1730 - 1745	126	0	**126**	
1745 - 1800	124	0	**124**	**519**
1800 - 1815	125	0	**125**	
1815 - 1830	96	0	**96**	
1830 - 1845	113	0	**113**	
1845 - 1900	90	0	**90**	**424**
1900 - 1915	86	0	**86**	
1915 - 1930	132	0	**132**	
1930 - 1945	110	0	**110**	
1945 - 2000	102	0	**102**	**430**
2000 - 2015	99	0	**99**	
2015 - 2030	62	0	**62**	
2030 - 2045	77	0	**77**	
2045 - 2100	78	0	**78**	**316**
2100 - 2115	94	0	**94**	
2115 - 2130	77	0	**77**	
2130 - 2145	79	0	**79**	
2145 - 2200	56	0	**56**	**306**
2200 - 2215	81	0	**81**	
2215 - 2230	65	0	**65**	
2230 - 2245	68	0	**68**	
2245 - 2300	59	0	**59**	**273**
2300 - 2315	50	0	**50**	
2315 - 2330	47	0	**47**	
2330 - 2345	50	0	**50**	
2345 - 0000	43	0	**43**	**190**

Session Total	8224	0	**8224**
Session Average	85.67	0.00	**85.67**
Session Percentage	100.00	0.00	

Bi-Directional Class Count || NB EB 60min

Columbia, SC

Marr Traffic DATA COLLECTION

www.marrtraffic.com

Site 9
I-26 N/Bound Off-Ramp,
south of I-20

Date
Sunday, April 21, 2024

Lat/Long
34.035821°, -81.107950°

Weather
Cloudy
66°F

Click here for Detailed Weather

0000 - 2400 (Sunday 24h Session) (04-21-2024)
NB EB 60min

	Northbound (Movement 9.1)													
TIME	1	2	3	4	5	6	7	8	9	10	11	12	13	**Total**
0000 - 0100	0	163	18	0	0	0	0	0	1	0	0	0	0	**182**
0100 - 0200	0	90	10	0	0	0	0	0	0	0	1	0	0	**101**
0200 - 0300	0	71	6	0	0	0	0	0	0	0	0	0	0	**77**
0300 - 0400	0	52	6	0	0	0	0	0	2	0	0	0	0	**60**
0400 - 0500	0	41	5	0	0	0	0	0	1	0	0	0	0	**47**
0500 - 0600	0	47	5	0	0	0	0	0	1	0	0	0	0	**53**
0600 - 0700	0	85	12	0	0	0	0	0	2	0	0	0	0	**99**
0700 - 0800	0	168	21	0	6	0	0	0	3	0	0	0	0	**198**
0800 - 0900	0	145	44	0	2	0	0	0	2	0	0	0	0	**193**
0900 - 1000	0	243	56	1	1	0	0	0	4	0	0	0	0	**305**
1000 - 1100	0	299	56	0	0	0	0	0	4	0	0	0	0	**359**
1100 - 1200	0	245	60	1	2	0	0	0	6	0	0	0	0	**314**
1200 - 1300	0	364	78	0	6	0	0	2	2	0	0	0	0	**452**
1300 - 1400	0	386	78	1	3	0	0	0	2	0	0	0	0	**470**
1400 - 1500	0	363	67	0	1	2	0	1	5	0	0	0	0	**439**
1500 - 1600	0	437	79	2	3	1	0	1	1	0	0	0	0	**524**
1600 - 1700	0	316	62	0	8	2	0	0	5	0	0	0	0	**393**
1700 - 1800	0	318	60	1	3	2	0	0	4	0	0	0	0	**388**
1800 - 1900	0	262	67	0	1	0	0	0	4	0	0	0	0	**334**
1900 - 2000	0	315	33	0	0	0	0	0	4	0	1	0	0	**353**
2000 - 2100	0	232	24	1	2	1	0	0	3	0	0	0	0	**263**
2100 - 2200	0	194	19	0	0	0	0	0	3	0	0	0	0	**216**
2200 - 2300	0	126	16	0	0	0	0	0	6	0	0	0	0	**148**
2300 - 2400	0	125	15	0	0	0	0	0	2	0	0	0	0	**142**
Session Total	0	5087	897	7	38	8	0	4	67	0	2	0	0	**6110**
Session Average	0.00	211.96	37.38	0.29	1.58	0.33	0.00	0.17	2.79	0.00	0.08	0.00	0.00	**254.58**
Session Percentage	0.00	83.26	14.68	0.11	0.62	0.13	0.00	0.07	1.10	0.00	0.03	0.00	0.00	
AM Peak Hour	-	0900 - 1000	0900 - 1000	0900 - 1000	0700 - 0800	-	-	-	0900 - 1000	-	-	-	-	**0900 - 1000**
AM Peak Volume	0	243	56	1	6	0	0	0	4	0	0	0	0	**305**
Noon Peak Hour	-	1300 - 1400	1200 - 1300	1100 - 1200	1200 - 1300	1400 - 1500	-	1200 - 1300	1100 - 1200	-	-	-	-	**1300 - 1400**
Noon Peak Volume	0	386	78	1	6	2	0	2	6	0	0	0	0	**470**
PM Peak Hour	-	1500 - 1600	1500 - 1600	1500 - 1600	1600 - 1700	1600 - 1700	-	1500 - 1600	1600 - 1700	-	1900 - 2000	-	-	**1500 - 1600**
PM Peak Volume	0	437	79	2	8	2	0	1	5	0	1	0	0	**524**

Site 9
I-26 N/Bound Off-Ramp,
south of I-20

Date
Monday, April 22, 2024

Lat/Long
34.035821°, -81.107950°

Weather
Mostly Cloudy
57°F

Click here for Detailed Weather

0000 - 2400 (Weekday 24h Session) (04-22-2024)
NB EB 60min

	Northbound (Movement 9.1)													
TIME	1	2	3	4	5	6	7	8	9	10	11	12	13	**Total**
0000 - 0100	0	63	20	0	2	0	0	0	3	0	0	0	0	**88**
0100 - 0200	0	32	14	0	0	0	0	0	1	0	1	0	0	**48**
0200 - 0300	0	23	11	0	1	0	0	0	0	0	0	0	0	**35**
0300 - 0400	0	34	14	0	1	1	0	0	8	0	0	0	0	**58**
0400 - 0500	0	44	18	0	7	0	0	0	5	0	0	0	0	**74**
0500 - 0600	0	122	40	0	6	3	0	0	12	0	0	0	0	**183**
0600 - 0700	0	315	84	0	23	3	0	0	9	0	0	0	0	**434**
0700 - 0800	1	478	165	1	26	7	0	1	24	0	0	0	0	**703**
0800 - 0900	0	393	160	1	37	6	0	4	18	0	0	0	0	**619**
0900 - 1000	0	319	127	3	33	8	0	2	37	0	1	0	0	**530**
1000 - 1100	0	279	123	4	24	11	0	3	22	0	0	0	0	**466**
1100 - 1200	1	336	144	1	21	10	0	5	23	0	0	0	0	**541**
1200 - 1300	1	367	127	1	13	15	0	3	17	0	0	0	0	**544**
1300 - 1400	1	399	147	0	4	6	0	2	20	1	0	0	0	**580**
1400 - 1500	0	470	156	1	20	6	0	4	19	0	0	0	0	**676**
1500 - 1600	0	455	129	3	10	1	0	2	17	0	0	0	0	**617**
1600 - 1700	2	377	97	2	11	1	0	1	18	1	0	1	0	**511**
1700 - 1800	0	342	93	0	5	3	0	1	17	0	0	0	0	**461**
1800 - 1900	1	293	59	2	6	3	0	2	7	0	0	0	0	**373**
1900 - 2000	0	335	75	0	7	0	0	0	3	0	0	0	0	**420**
2000 - 2100	0	252	64	0	5	1	0	4	6	0	0	0	0	**332**
2100 - 2200	0	168	62	0	3	0	0	0	10	0	0	0	0	**243**
2200 - 2300	0	149	41	1	2	2	0	0	5	0	0	0	0	**200**
2300 - 2400	0	115	30	0	0	1	0	0	7	0	1	0	0	**154**

Session Total	7	6160	2000	20	267	88	0	34	308	2	3	1	0	**8890**
Session Average	0.29	256.67	83.33	0.83	11.13	3.67	0.00	1.42	12.83	0.08	0.13	0.04	0.00	**370.42**
Session Percentage	0.08	69.29	22.50	0.22	3.00	0.99	0.00	0.38	3.46	0.02	0.03	0.01	0.00	

AM Peak Hour	0700 - 0800	0700 - 0800	0700 - 0800	0900 - 1000	0800 - 0900	0900 - 1000	-	0800 - 0900	0900 - 1000	-	0900 - 1000	-	-	**0700 - 0800**
AM Peak Volume	1	478	165	3	37	8	0	4	37	0	1	0	0	**703**

Noon Peak Hour	1100 - 1200	1400 - 1500	1400 - 1500	1000 - 1100	1000 - 1100	1200 - 1300	-	1100 - 1200	1100 - 1200	1300 - 1400	-	-	-	**1400 - 1500**
Noon Peak Volume	1	470	156	4	24	15	0	5	23	1	0	0	0	**676**

PM Peak Hour	1600 - 1700	1500 - 1600	1500 - 1600	1500 - 1600	1600 - 1700	1700 - 1800	-	1500 - 1600	1600 - 1700	1600 - 1700	-	1600 - 1700	-	**1500 - 1600**
PM Peak Volume	2	455	129	3	11	3	0	2	18	1	0	1	0	**617**

Site 9
I-26 N/Bound Off-Ramp,
south of I-20

Date
Tuesday, April 23, 2024

Weather
Fair
58°F

Lat/Long
34.035821°, -81.107950°

Click here for Detailed Weather

0000 - 2400 (Weekday 24h Session) (04-23-2024)
NB EB 60min

	Northbound (Movement 9.1)													
TIME	1	2	3	4	5	6	7	8	9	10	11	12	13	**Total**
0000 - 0100	0	99	9	0	1	0	0	0	5	0	0	0	0	**114**
0100 - 0200	0	48	0	0	1	0	0	0	5	0	1	0	0	**55**
0200 - 0300	0	33	5	0	2	0	0	0	3	0	3	0	0	**46**
0300 - 0400	0	35	2	0	2	0	0	0	8	0	1	0	0	**48**
0400 - 0500	0	72	15	0	9	3	0	0	7	0	1	0	0	**107**
0500 - 0600	0	132	23	0	12	1	0	0	11	0	2	0	0	**181**
0600 - 0700	0	289	85	1	19	4	0	2	15	0	0	0	0	**415**
0700 - 0800	1	466	179	1	14	3	0	4	23	2	1	0	0	**694**
0800 - 0900	1	400	133	1	20	7	0	0	27	0	0	0	0	**589**
0900 - 1000	0	335	170	1	32	5	0	5	29	1	2	0	0	**580**
1000 - 1100	0	341	114	1	16	5	0	4	32	0	0	0	0	**513**
1100 - 1200	0	332	103	0	17	5	0	3	22	0	0	0	0	**482**
1200 - 1300	2	365	101	1	20	4	1	0	36	0	0	0	0	**530**
1300 - 1400	1	398	122	1	18	4	0	1	21	2	0	0	0	**568**
1400 - 1500	2	477	141	2	13	6	1	4	29	0	0	0	0	**675**
1500 - 1600	1	596	152	2	13	7	0	4	15	1	0	0	0	**791**
1600 - 1700	0	471	124	1	6	1	0	5	16	1	1	0	0	**626**
1700 - 1800	0	367	77	0	5	2	0	2	6	1	0	0	0	**460**
1800 - 1900	0	339	91	0	5	1	0	2	10	1	0	0	0	**449**
1900 - 2000	1	362	79	0	2	3	0	0	6	0	0	0	0	**453**
2000 - 2100	0	306	41	0	2	0	0	1	6	0	1	0	0	**357**
2100 - 2200	0	272	16	0	4	2	0	1	9	0	2	0	0	**306**
2200 - 2300	1	172	6	0	0	2	0	0	5	0	3	0	0	**189**
2300 - 2400	1	140	2	0	2	2	0	0	6	0	0	0	0	**153**

Session Total	11	6847	1790	12	235	67	2	38	352	9	18	0	0	**9381**
Session Average	0.46	285.29	74.58	0.50	9.79	2.79	0.08	1.58	14.67	0.38	0.75	0.00	0.00	**390.88**
Session Percentage	0.12	72.99	19.08	0.13	2.51	0.71	0.02	0.41	3.75	0.10	0.19	0.00	0.00	

AM Peak Hour	0700 - 0800	0700 - 0800	0700 - 0800	0600 - 0700	0900 - 1000	0800 - 0900	-	0900 - 1000	0900 - 1000	0700 - 0800	0500 - 0600	-	-	**0700 - 0800**
AM Peak Hour Volume	1	466	179	1	32	7	0	5	29	2	2	0	0	**694**

Noon Peak Hour	1200 - 1300	1400 - 1500	1400 - 1500	1400 - 1500	1200 - 1300	1400 - 1500	1200 - 1300	1000 - 1100	1200 - 1300	1300 - 1400	-	-	-	**1400 - 1500**
Noon Peak Hour Volume	2	477	141	2	20	6	1	4	36	2	0	0	0	**675**

PM Peak Hour	1500 - 1600	1500 - 1600	1500 - 1600	1500 - 1600	1500 - 1600	1500 - 1600	-	1600 - 1700	1600 - 1700	1500 - 1600	1600 - 1700	-	-	**1500 - 1600**
PM Peak Hour Volume	1	596	152	2	13	7	0	5	16	1	1	0	0	**791**

Site 9
I-26 N/Bound Off-Ramp,
south of I-20

Date
Wednesday, April 24, 2024

Weather
Fair
66°F

Lat/Long
34.035821°, -81.107950°

Click here for Detailed Weather

0000 - 2400 (Weekday 24h Session) (04-24-2024)
NB EB 60min

	Northbound (Movement 9.1)													
TIME	1	2	3	4	5	6	7	8	9	10	11	12	13	**Total**
0000 - 0100	0	88	18	0	2	1	0	0	11	0	0	0	0	**120**
0100 - 0200	0	53	10	0	3	0	0	0	3	0	0	0	0	**69**
0200 - 0300	0	33	6	0	4	1	0	0	8	0	0	0	0	**52**
0300 - 0400	0	36	9	0	3	0	0	0	7	0	1	0	0	**56**
0400 - 0500	0	62	18	1	2	2	0	1	16	0	1	0	0	**103**
0500 - 0600	0	125	33	0	11	3	0	0	18	0	0	0	0	**190**
0600 - 0700	0	299	87	0	20	5	0	4	18	0	1	0	0	**434**
0700 - 0800	1	496	196	1	17	4	0	4	26	0	0	0	0	**745**
0800 - 0900	0	329	150	1	32	5	0	3	24	0	0	0	0	**544**
0900 - 1000	0	325	182	0	42	9	0	4	33	0	1	0	0	**596**
1000 - 1100	1	311	154	0	15	8	0	7	25	0	0	0	0	**521**
1100 - 1200	0	350	144	1	22	5	0	6	23	0	0	0	0	**551**
1200 - 1300	0	421	126	2	10	4	4	2	15	1	0	0	0	**585**
1300 - 1400	1	490	143	3	7	5	2	6	28	0	0	0	0	**685**
1400 - 1500	3	511	150	1	17	6	3	6	26	2	0	0	0	**725**
1500 - 1600	1	624	152	4	18	3	2	4	20	2	0	0	0	**830**
1600 - 1700	1	538	97	0	7	5	1	7	17	2	0	0	0	**675**
1700 - 1800	0	343	61	0	5	1	0	3	14	0	0	0	0	**427**
1800 - 1900	0	383	74	0	5	3	0	0	13	1	0	0	0	**479**
1900 - 2000	2	363	63	0	6	3	0	3	6	0	0	0	0	**446**
2000 - 2100	1	287	45	0	5	3	0	5	7	0	0	0	0	**353**
2100 - 2200	0	244	44	1	6	1	0	1	9	0	0	0	0	**306**
2200 - 2300	0	153	28	0	1	1	0	1	5	0	2	0	0	**191**
2300 - 2400	0	132	21	0	2	1	0	0	6	0	0	0	0	**162**

Session Total	11	6996	2011	15	262	79	12	67	378	8	6	0	0	**9845**
Session Average	0.46	291.50	83.79	0.63	10.92	3.29	0.50	2.79	15.75	0.33	0.25	0.00	0.00	**410.21**
Session Percentage	0.11	71.06	20.43	0.15	2.66	0.80	0.12	0.68	3.84	0.08	0.06	0.00	0.00	

AM Peak Hour	0700 - 0800	0700 - 0800	0700 - 0800	0700 - 0800	0900 - 1000	0900 - 1000	-	0600 - 0700	0900 - 1000	-	0600 - 0700	-	-	**0700 - 0800**
AM Peak Hour Volume	1	496	196	1	42	9	0	4	33	0	1	0	0	**745**

Noon Peak Hour	1400 - 1500	1400 - 1500	1000 - 1100	1300 - 1400	1100 - 1200	1000 - 1100	1200 - 1300	1000 - 1100	1300 - 1400	1400 - 1500	-	-	-	**1400 - 1500**
Noon Peak Hour Volume	3	511	154	3	22	8	4	7	28	2	0	0	0	**725**

PM Peak Hour	1900 - 2000	1500 - 1600	1500 - 1600	1500 - 1600	1500 - 1600	1600 - 1700	1500 - 1600	1600 - 1700	1500 - 1600	1500 - 1600	-	-	-	**1500 - 1600**
PM Peak Hour Volume	2	624	152	4	18	5	2	7	20	2	0	0	0	**830**

Site 9
I-26 N/Bound Off-Ramp,
south of I-20

Date
Thursday, April 25, 2024

Weather
Fair
67°F

Lat/Long
34.035821°, -81.107950°

Click here for Detailed Weather

0000 - 2400 (Weekday 24h Session) (04-25-2024)
NB EB 60min

	Northbound (Movement 9.1)													
TIME	1	2	3	4	5	6	7	8	9	10	11	12	13	**Total**
0000 - 0100	0	111	20	0	2	0	0	0	5	0	0	0	0	**138**
0100 - 0200	0	46	10	0	0	0	0	0	8	0	0	0	0	**64**
0200 - 0300	0	44	10	0	2	0	0	0	3	0	1	0	0	**60**
0300 - 0400	0	43	10	0	6	0	0	0	7	0	2	0	0	**68**
0400 - 0500	0	63	16	0	10	2	0	2	10	0	0	0	0	**103**
0500 - 0600	0	120	27	0	10	2	0	0	10	0	1	0	0	**170**
0600 - 0700	0	316	110	0	28	7	0	3	13	0	0	0	0	**477**
0700 - 0800	2	503	200	1	28	10	0	6	26	0	0	0	0	**776**
0800 - 0900	1	393	172	3	17	4	0	7	19	0	3	0	0	**619**
0900 - 1000	0	337	165	2	33	6	0	6	42	0	0	0	0	**591**
1000 - 1100	2	295	156	1	27	6	0	8	25	0	0	0	0	**520**
1100 - 1200	0	394	130	0	19	5	0	2	34	0	0	0	0	**584**
1200 - 1300	0	400	122	1	24	3	0	3	19	0	0	0	0	**572**
1300 - 1400	1	421	127	7	17	5	2	3	23	0	0	0	0	**606**
1400 - 1500	0	515	149	0	25	6	3	3	13	0	0	0	0	**714**
1500 - 1600	0	582	135	6	19	7	0	3	10	1	0	0	0	**763**
1600 - 1700	0	435	105	1	13	4	0	0	7	0	0	0	0	**565**
1700 - 1800	2	292	54	0	4	2	0	3	9	1	0	0	0	**367**
1800 - 1900	4	401	84	1	9	0	0	1	8	0	0	0	0	**508**
1900 - 2000	0	383	84	2	7	3	0	0	5	0	0	0	0	**484**
2000 - 2100	0	387	62	0	6	0	0	0	7	0	0	0	0	**462**
2100 - 2200	0	241	43	1	3	0	0	0	5	0	2	0	0	**295**
2200 - 2300	1	173	56	0	2	0	0	0	2	0	1	0	0	**235**
2300 - 2400	0	131	46	1	5	0	0	0	8	0	2	0	0	**193**

Session Total	13	7026	2093	27	316	72	5	50	318	2	12	0	0	**9934**
Session Average	0.54	292.75	87.21	1.13	13.17	3.00	0.21	2.08	13.25	0.08	0.50	0.00	0.00	**413.92**
Session Percentage	0.13	70.73	21.07	0.27	3.18	0.72	0.05	0.50	3.20	0.02	0.12	0.00	0.00	

AM Peak Hour	0700 - 0800	0700 - 0800	0700 - 0800	0800 - 0900	0900 - 1000	0700 - 0800	-	0800 - 0900	0900 - 1000	-	0800 - 0900	-	-	**0700 - 0800**
AM Peak Hour Volume	2	503	200	3	33	10	0	7	42	0	3	0	0	**776**

Noon Peak Hour	1000 - 1100	1400 - 1500	1000 - 1100	1300 - 1400	1000 - 1100	1000 - 1100	1400 - 1500	1000 - 1100	1100 - 1200	-	-	-	-	**1400 - 1500**
Noon Peak Hour Volume	2	515	156	7	27	6	3	8	34	0	0	0	0	**714**

PM Peak Hour	1800 - 1900	1500 - 1600	1500 - 1600	1500 - 1600	1500 - 1600	1500 - 1600	-	1500 - 1600	1500 - 1600	1500 - 1600	-	-	-	**1500 - 1600**
PM Peak Hour Volume	4	582	135	6	19	7	0	3	10	1	0	0	0	**763**

Site 9
I-26 N/Bound Off-Ramp,
south of I-20

Date
Friday, April 26, 2024

Weather
Cloudy
69°F

Lat/Long
34.035821°, -81.107950°

Click here for Detailed Weather

0000 - 2400 (Weekday 24h Session) (04-26-2024)
NB EB 60min

	Northbound (Movement 9.1)													
TIME	1	2	3	4	5	6	7	8	9	10	11	12	13	**Total**
0000 - 0100	0	85	45	0	1	0	0	0	6	0	1	0	0	**138**
0100 - 0200	0	41	23	0	0	0	0	0	6	0	2	0	0	**72**
0200 - 0300	0	25	15	0	3	0	0	0	2	0	1	0	0	**46**
0300 - 0400	0	37	19	0	3	0	0	0	9	0	1	0	0	**69**
0400 - 0500	0	50	26	0	9	0	0	0	8	0	3	0	0	**96**
0500 - 0600	0	93	46	0	14	0	0	0	15	0	0	0	0	**168**
0600 - 0700	0	222	135	0	19	8	0	1	19	0	2	0	0	**406**
0700 - 0800	1	447	166	1	15	8	1	3	10	2	0	0	0	**654**
0800 - 0900	0	340	177	4	22	7	5	4	19	0	1	0	0	**579**
0900 - 1000	0	333	158	1	34	7	5	3	31	1	0	0	0	**573**
1000 - 1100	0	319	119	1	19	5	1	6	28	0	0	0	0	**498**
1100 - 1200	0	401	125	2	11	6	2	3	11	0	0	0	0	**561**
1200 - 1300	0	449	137	3	14	5	1	5	16	0	0	0	0	**630**
1300 - 1400	0	381	117	3	4	4	0	1	13	0	0	0	0	**523**
1400 - 1500	2	480	126	1	18	6	0	7	12	0	0	0	0	**652**
1500 - 1600	2	536	143	2	11	4	0	0	11	0	0	0	0	**709**
1600 - 1700	0	475	117	0	7	4	0	2	16	0	0	0	0	**621**
1700 - 1800	1	494	97	1	5	2	0	0	6	0	0	0	0	**606**
1800 - 1900	0	408	74	0	8	2	0	1	2	0	0	0	0	**495**
1900 - 2000	4	374	72	0	9	1	0	0	2	0	0	0	0	**462**
2000 - 2100	0	312	63	1	5	0	0	0	6	0	0	0	0	**387**
2100 - 2200	0	279	60	0	2	0	0	0	7	0	0	0	0	**348**
2200 - 2300	0	230	36	0	1	0	0	0	2	0	2	0	0	**271**
2300 - 2400	0	178	29	0	1	0	0	0	2	0	0	0	0	**210**

Session Total	10	6989	2125	20	235	69	15	36	259	3	13	0	0	**9774**
Session Average	0.42	291.21	88.54	0.83	9.79	2.88	0.63	1.50	10.79	0.13	0.54	0.00	0.00	**407.25**
Session Percentage	0.10	71.51	21.74	0.20	2.40	0.71	0.15	0.37	2.65	0.03	0.13	0.00	0.00	

AM Peak Hour	0700 - 0800	0700 - 0800	0800 - 0900	0800 - 0900	0900 - 1000	0600 - 0700	0800 - 0900	0800 - 0900	0900 - 1000	0700 - 0800	0600 - 0700	-	-	**0700 - 0800**
AM Peak Hour Volume	1	447	177	4	34	8	5	4	31	2	2	0	0	**654**

Noon Peak Hour	1400 - 1500	1400 - 1500	1200 - 1300	1200 - 1300	1000 - 1100	1100 - 1200	1100 - 1200	1400 - 1500	1000 - 1100	-	-	-	-	**1400 - 1500**
Noon Peak Hour Volume	2	480	137	3	19	6	2	7	28	0	0	0	0	**652**

PM Peak Hour	1900 - 2000	1500 - 1600	1500 - 1600	1500 - 1600	1500 - 1600	1500 - 1600	-	1600 - 1700	1600 - 1700	-	-	-	-	**1500 - 1600**
PM Peak Hour Volume	4	536	143	2	11	4	0	2	16	0	0	0	0	**709**

Site 9
I-26 N/Bound Off-Ramp,
south of I-20

Date
Saturday, April 27, 2024

Lat/Long
34.035821°, -81.107950°

Weather
Mostly Cloudy
69°F

Click here for Detailed Weather

0000 - 2400 (Saturday 24h Session) (04-27-2024)
NB EB 60min

	Northbound (Movement 9.1)													
TIME	1	2	3	4	5	6	7	8	9	10	11	12	13	**Total**
0000 - 0100	0	114	18	0	2	1	0	0	1	0	1	0	0	**137**
0100 - 0200	0	71	10	0	0	1	0	0	3	0	1	0	0	**86**
0200 - 0300	0	55	10	0	0	1	0	0	5	0	2	0	0	**73**
0300 - 0400	0	54	8	0	5	1	0	1	1	0	1	0	0	**71**
0400 - 0500	0	73	15	0	5	4	0	1	4	0	2	0	0	**104**
0500 - 0600	0	78	15	0	6	3	0	0	1	0	0	0	0	**103**
0600 - 0700	0	151	27	0	3	1	0	0	4	0	0	0	0	**186**
0700 - 0800	0	229	71	2	6	2	0	2	5	0	1	0	0	**318**
0800 - 0900	0	271	94	0	6	5	1	0	7	0	0	0	0	**384**
0900 - 1000	1	330	68	0	11	5	0	0	9	0	0	0	0	**424**
1000 - 1100	0	345	95	1	6	0	0	1	6	0	0	0	0	**454**
1100 - 1200	3	376	83	0	5	1	0	0	6	0	0	0	0	**474**
1200 - 1300	0	466	118	2	3	0	1	0	8	0	0	0	0	**598**
1300 - 1400	6	455	94	1	4	1	0	1	5	0	0	0	0	**567**
1400 - 1500	0	525	108	0	2	1	0	0	4	0	0	0	0	**640**
1500 - 1600	0	528	90	1	2	4	0	1	5	0	0	0	0	**631**
1600 - 1700	1	442	67	0	2	1	0	0	2	1	0	0	0	**516**
1700 - 1800	3	428	79	2	2	0	0	2	3	0	0	0	0	**519**
1800 - 1900	1	364	49	0	2	1	0	1	6	0	0	0	0	**424**
1900 - 2000	5	353	66	2	0	0	0	0	4	0	0	0	0	**430**
2000 - 2100	1	282	29	1	1	1	0	0	1	0	0	0	0	**316**
2100 - 2200	0	272	30	0	1	0	0	0	3	0	0	0	0	**306**
2200 - 2300	0	239	28	1	1	0	0	0	4	0	0	0	0	**273**
2300 - 2400	0	165	21	1	1	0	0	0	2	0	0	0	0	**190**

Session Total	21	6666	1293	14	76	34	2	10	99	1	8	0	0	**8224**
Session Average	0.88	277.75	53.88	0.58	3.17	1.42	0.08	0.42	4.13	0.04	0.33	0.00	0.00	**342.67**
Session Percentage	0.26	81.06	15.72	0.17	0.92	0.41	0.02	0.12	1.20	0.01	0.10	0.00	0.00	

AM Peak Hour	0900 - 1000	0900 - 1000	0800 - 0900	0700 - 0800	0900 - 1000	0800 - 0900	0800 - 0900	0700 - 0800	0900 - 1000	-	0700 - 0800	-	-	**0900 - 1000**
AM Peak Hour Volume	1	330	94	2	11	5	1	2	9	0	1	0	0	**424**

Noon Peak Hour	1300 - 1400	1400 - 1500	1200 - 1300	1200 - 1300	1000 - 1100	1100 - 1200	1200 - 1300	1000 - 1100	1200 - 1300	-	-	-	-	**1400 - 1500**
Noon Peak Hour Volume	6	525	118	2	6	1	1	1	8	0	0	0	0	**640**

PM Peak Hour	1900 - 2000	1500 - 1600	1500 - 1600	1700 - 1800	1500 - 1600	1500 - 1600	-	1700 - 1800	1800 - 1900	1600 - 1700	-	-	-	**1500 - 1600**
PM Peak Hour Volume	5	528	90	2	2	4	0	2	6	1	0	0	0	**631**

Bi-Directional Class Count || Volume Summary 60min

Columbia, SC

Marr Traffic DATA COLLECTION

www.marrtraffic.com

Site 9

I-26 N/Bound Off-Ramp,
south of I-20

Date

Sunday, April 21, 2024

Lat/Long

34.035821°, -81.107950°

Weather

Cloudy
66°F

Click here for Detailed Weather

0000 - 2400 (Sunday 24h Session) (04-21-2024)

Volume Summary 60min

	Volume Summary 60min		
TIME	NB	SB	**Total**
0000 - 0100	182	0	**182**
0100 - 0200	101	0	**101**
0200 - 0300	77	0	**77**
0300 - 0400	60	0	**60**
0400 - 0500	47	0	**47**
0500 - 0600	53	0	**53**
0600 - 0700	99	0	**99**
0700 - 0800	198	0	**198**
0800 - 0900	193	0	**193**
0900 - 1000	305	0	**305**
1000 - 1100	359	0	**359**
1100 - 1200	314	0	**314**

	Volume Summary 60min		
Time	NB	SB	**Total**
1200 - 1300	452	0	**452**
1300 - 1400	470	0	**470**
1400 - 1500	439	0	**439**
1500 - 1600	524	0	**524**
1600 - 1700	393	0	**393**
1700 - 1800	388	0	**388**
1800 - 1900	334	0	**334**
1900 - 2000	353	0	**353**
2000 - 2100	263	0	**263**
2100 - 2200	216	0	**216**
2200 - 2300	148	0	**148**
2300 - 2400	142	0	**142**

Session Total	6110	0	**6110**
Session Average	254.58	0.00	**254.58**
Session Percentage	100.00	0.00	

Site 9

I-26 N/Bound Off-Ramp,
south of I-20

Date

Monday, April 22, 2024

Lat/Long

34.035821°, -81.107950°

Weather

Mostly Cloudy
57°F

Click here for Detailed Weather

0000 - 2400 (Weekday 24h Session) (04-22-2024)

Volume Summary 60min

	Volume Summary 60min		
TIME	NB	SB	**Total**
0000 - 0100	88	0	**88**
0100 - 0200	48	0	**48**
0200 - 0300	35	0	**35**
0300 - 0400	58	0	**58**
0400 - 0500	74	0	**74**
0500 - 0600	183	0	**183**
0600 - 0700	434	0	**434**
0700 - 0800	703	0	**703**
0800 - 0900	619	0	**619**
0900 - 1000	530	0	**530**
1000 - 1100	466	0	**466**
1100 - 1200	541	0	**541**

	Volume Summary 60min		
Time	NB	SB	**Total**
1200 - 1300	544	0	**544**
1300 - 1400	580	0	**580**
1400 - 1500	676	0	**676**
1500 - 1600	617	0	**617**
1600 - 1700	511	0	**511**
1700 - 1800	461	0	**461**
1800 - 1900	373	0	**373**
1900 - 2000	420	0	**420**
2000 - 2100	332	0	**332**
2100 - 2200	243	0	**243**
2200 - 2300	200	0	**200**
2300 - 2400	154	0	**154**

Session Total	8890	0	**8890**
Session Average	370.42	0.00	**370.42**
Session Percentage	100.00	0.00	

Site 9

I-26 N/Bound Off-Ramp,
south of I-20

Date

Tuesday, April 23, 2024

Lat/Long

34.035821°, -81.107950°

Weather

Fair
58°F

Click here for Detailed Weather

0000 - 2400 (Weekday 24h Session) (04-23-2024)

Volume Summary 60min

	Volume Summary 60min		
TIME	NB	SB	**Total**
0000 - 0100	114	0	**114**
0100 - 0200	55	0	**55**
0200 - 0300	46	0	**46**
0300 - 0400	48	0	**48**
0400 - 0500	107	0	**107**
0500 - 0600	181	0	**181**
0600 - 0700	415	0	**415**
0700 - 0800	694	0	**694**
0800 - 0900	589	0	**589**
0900 - 1000	580	0	**580**
1000 - 1100	513	0	**513**
1100 - 1200	482	0	**482**

	Volume Summary 60min		
Time	NB	SB	**Total**
1200 - 1300	530	0	**530**
1300 - 1400	568	0	**568**
1400 - 1500	675	0	**675**
1500 - 1600	791	0	**791**
1600 - 1700	626	0	**626**
1700 - 1800	460	0	**460**
1800 - 1900	449	0	**449**
1900 - 2000	453	0	**453**
2000 - 2100	357	0	**357**
2100 - 2200	306	0	**306**
2200 - 2300	189	0	**189**
2300 - 2400	153	0	**153**

Session Total	9381	0	**9381**
Session Average	390.88	0.00	**390.88**
Session Percentage	100.00	0.00	

Site 9

I-26 N/Bound Off-Ramp,
south of I-20

Date

Wednesday, April 24, 2024

Lat/Long

34.035821°, -81.107950°

Weather

Fair
66°F

Click here for Detailed Weather

0000 - 2400 (Weekday 24h Session) (04-24-2024)

Volume Summary 60min

	Volume Summary 60min		
TIME	NB	SB	**Total**
0000 - 0100	120	0	**120**
0100 - 0200	69	0	**69**
0200 - 0300	52	0	**52**
0300 - 0400	56	0	**56**
0400 - 0500	103	0	**103**
0500 - 0600	190	0	**190**
0600 - 0700	434	0	**434**
0700 - 0800	745	0	**745**
0800 - 0900	544	0	**544**
0900 - 1000	596	0	**596**
1000 - 1100	521	0	**521**
1100 - 1200	551	0	**551**

	Volume Summary 60min		
Time	NB	SB	**Total**
1200 - 1300	585	0	**585**
1300 - 1400	685	0	**685**
1400 - 1500	725	0	**725**
1500 - 1600	830	0	**830**
1600 - 1700	675	0	**675**
1700 - 1800	427	0	**427**
1800 - 1900	479	0	**479**
1900 - 2000	446	0	**446**
2000 - 2100	353	0	**353**
2100 - 2200	306	0	**306**
2200 - 2300	191	0	**191**
2300 - 2400	162	0	**162**

Session Total	9845	0	**9845**
Session Average	410.21	0.00	**410.21**
Session Percentage	100.00	0.00	

Site 9

I-26 N/Bound Off-Ramp,
south of I-20

Date

Thursday, April 25, 2024

Lat/Long

34.035821°, -81.107950°

Weather

Fair
67°F

Click here for Detailed Weather

0000 - 2400 (Weekday 24h Session) (04-25-2024)

Volume Summary 60min

	Volume Summary 60min		
TIME	NB	SB	**Total**
0000 - 0100	138	0	**138**
0100 - 0200	64	0	**64**
0200 - 0300	60	0	**60**
0300 - 0400	68	0	**68**
0400 - 0500	103	0	**103**
0500 - 0600	170	0	**170**
0600 - 0700	477	0	**477**
0700 - 0800	776	0	**776**
0800 - 0900	619	0	**619**
0900 - 1000	591	0	**591**
1000 - 1100	520	0	**520**
1100 - 1200	584	0	**584**

Session Total	9934	0	**9934**
Session Average	413.92	0.00	**413.92**
Session Percentage	100.00	0.00	

	Volume Summary 60min		
Time	NB	SB	**Total**
1200 - 1300	572	0	**572**
1300 - 1400	606	0	**606**
1400 - 1500	714	0	**714**
1500 - 1600	763	0	**763**
1600 - 1700	565	0	**565**
1700 - 1800	367	0	**367**
1800 - 1900	508	0	**508**
1900 - 2000	484	0	**484**
2000 - 2100	462	0	**462**
2100 - 2200	295	0	**295**
2200 - 2300	235	0	**235**
2300 - 2400	193	0	**193**

Site 9

I-26 N/Bound Off-Ramp,
south of I-20

Date

Friday, April 26, 2024

Lat/Long

34.035821°, -81.107950°

Weather

Cloudy
69°F

Click here for Detailed Weather

0000 - 2400 (Weekday 24h Session) (04-26-2024)

Volume Summary 60min

	Volume Summary 60min		
TIME	NB	SB	**Total**
0000 - 0100	138	0	**138**
0100 - 0200	72	0	**72**
0200 - 0300	46	0	**46**
0300 - 0400	69	0	**69**
0400 - 0500	96	0	**96**
0500 - 0600	168	0	**168**
0600 - 0700	406	0	**406**
0700 - 0800	654	0	**654**
0800 - 0900	579	0	**579**
0900 - 1000	573	0	**573**
1000 - 1100	498	0	**498**
1100 - 1200	561	0	**561**

	Volume Summary 60min		
Time	NB	SB	**Total**
1200 - 1300	630	0	**630**
1300 - 1400	523	0	**523**
1400 - 1500	652	0	**652**
1500 - 1600	709	0	**709**
1600 - 1700	621	0	**621**
1700 - 1800	606	0	**606**
1800 - 1900	495	0	**495**
1900 - 2000	462	0	**462**
2000 - 2100	387	0	**387**
2100 - 2200	348	0	**348**
2200 - 2300	271	0	**271**
2300 - 2400	210	0	**210**

Session Total	9774	0	**9774**
Session Average	407.25	0.00	**407.25**
Session Percentage	100.00	0.00	

Site 9

I-26 N/Bound Off-Ramp,
south of I-20

Date

Saturday, April 27, 2024

Lat/Long

34.035821°, -81.107950°

Weather

Mostly Cloudy
69°F

Click here for Detailed Weather

0000 - 2400 (Saturday 24h Session) (04-27-2024)

Volume Summary 60min

	Volume Summary 60min		
TIME	NB	SB	**Total**
0000 - 0100	137	0	**137**
0100 - 0200	86	0	**86**
0200 - 0300	73	0	**73**
0300 - 0400	71	0	**71**
0400 - 0500	104	0	**104**
0500 - 0600	103	0	**103**
0600 - 0700	186	0	**186**
0700 - 0800	318	0	**318**
0800 - 0900	384	0	**384**
0900 - 1000	424	0	**424**
1000 - 1100	454	0	**454**
1100 - 1200	474	0	**474**

	Volume Summary 60min		
Time	NB	SB	**Total**
1200 - 1300	598	0	**598**
1300 - 1400	567	0	**567**
1400 - 1500	640	0	**640**
1500 - 1600	631	0	**631**
1600 - 1700	516	0	**516**
1700 - 1800	519	0	**519**
1800 - 1900	424	0	**424**
1900 - 2000	430	0	**430**
2000 - 2100	316	0	**316**
2100 - 2200	306	0	**306**
2200 - 2300	273	0	**273**
2300 - 2400	190	0	**190**

Session Total	8224	0	**8224**
Session Average	342.67	0.00	**342.67**
Session Percentage	100.00	0.00	

Bi-Directional Class Count || Graphical Analysis NB EB

Columbia, SC

Marr Traffic DATA COLLECTION

www.marrtraffic.com

Site 9

I-26 N/Bound Off-Ramp,
south of I-20

Lat/Long

34.035821°, -81.107950°

0000 - 2400 (Weekday 24h Session)

Graphical Analysis NB EB

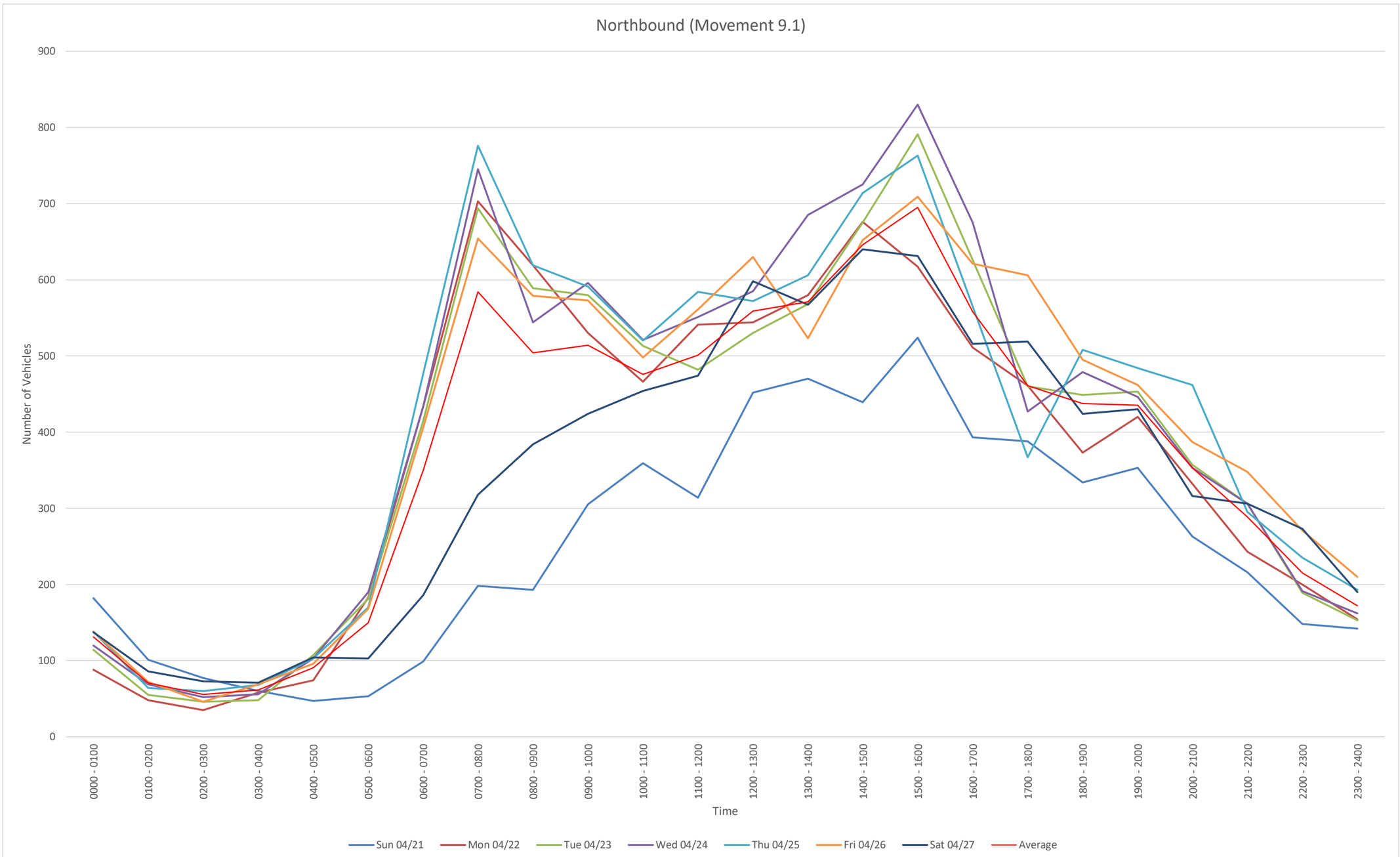

NB
File Name:
Start Date: 4/21/2024
Start Time: 0
Site Code: 9
Station ID: 1
Location 1: I-26 N/Bound Off-Ramp, south of I-20
Location 2:

Date	Time	1	2	3	4	5	6	7	8	9	10	11	12	13
4/21/2024	12:00 AM	0	51	4	0	0	0	0	0	0	0	0	0	0
4/21/2024	12:15 AM	0	39	4	0	0	0	0	0	0	0	0	0	0
4/21/2024	12:30 AM	0	45	7	0	0	0	0	0	1	0	0	0	0
4/21/2024	12:45 AM	0	28	3	0	0	0	0	0	0	0	0	0	0
4/21/2024	1:00 AM	0	28	4	0	0	0	0	0	0	0	1	0	0
4/21/2024	1:15 AM	0	26	3	0	0	0	0	0	0	0	0	0	0
4/21/2024	1:30 AM	0	20	2	0	0	0	0	0	0	0	0	0	0
4/21/2024	1:45 AM	0	16	1	0	0	0	0	0	0	0	0	0	0
4/21/2024	2:00 AM	0	20	2	0	0	0	0	0	0	0	0	0	0
4/21/2024	2:15 AM	0	21	2	0	0	0	0	0	0	0	0	0	0
4/21/2024	2:30 AM	0	18	1	0	0	0	0	0	0	0	0	0	0
4/21/2024	2:45 AM	0	12	1	0	0	0	0	0	0	0	0	0	0
4/21/2024	3:00 AM	0	12	2	0	0	0	0	0	0	0	0	0	0
4/21/2024	3:15 AM	0	14	2	0	0	0	0	0	1	0	0	0	0
4/21/2024	3:30 AM	0	16	1	0	0	0	0	0	0	0	0	0	0
4/21/2024	3:45 AM	0	10	1	0	0	0	0	0	1	0	0	0	0
4/21/2024	4:00 AM	0	13	1	0	0	0	0	0	0	0	0	0	0
4/21/2024	4:15 AM	0	5	0	0	0	0	0	0	1	0	0	0	0
4/21/2024	4:30 AM	0	12	2	0	0	0	0	0	0	0	0	0	0
4/21/2024	4:45 AM	0	11	2	0	0	0	0	0	0	0	0	0	0
4/21/2024	5:00 AM	0	12	1	0	0	0	0	0	0	0	0	0	0
4/21/2024	5:15 AM	0	10	1	0	0	0	0	0	1	0	0	0	0
4/21/2024	5:30 AM	0	13	2	0	0	0	0	0	0	0	0	0	0
4/21/2024	5:45 AM	0	12	1	0	0	0	0	0	0	0	0	0	0
4/21/2024	6:00 AM	0	22	4	0	0	0	0	0	1	0	0	0	0
4/21/2024	6:15 AM	0	14	2	0	0	0	0	0	0	0	0	0	0
4/21/2024	6:30 AM	0	25	5	0	0	0	0	0	0	0	0	0	0
4/21/2024	6:45 AM	0	24	1	0	0	0	0	0	1	0	0	0	0
4/21/2024	7:00 AM	0	37	6	0	4	0	0	0	0	0	0	0	0
4/21/2024	7:15 AM	0	37	4	0	0	0	0	0	1	0	0	0	0
4/21/2024	7:30 AM	0	57	5	0	1	0	0	0	0	0	0	0	0
4/21/2024	7:45 AM	0	37	6	0	1	0	0	0	2	0	0	0	0
4/21/2024	8:00 AM	0	32	14	0	0	0	0	0	0	0	0	0	0
4/21/2024	8:15 AM	0	36	7	0	1	0	0	0	1	0	0	0	0
4/21/2024	8:30 AM	0	35	14	0	0	0	0	0	1	0	0	0	0
4/21/2024	8:45 AM	0	42	9	0	1	0	0	0	0	0	0	0	0
4/21/2024	9:00 AM	0	55	14	0	0	0	0	0	2	0	0	0	0
4/21/2024	9:15 AM	0	43	9	0	0	0	0	0	1	0	0	0	0
4/21/2024	9:30 AM	0	71	14	0	1	0	0	0	1	0	0	0	0
4/21/2024	9:45 AM	0	74	19	1	0	0	0	0	0	0	0	0	0
4/21/2024	10:00 AM	0	91	11	0	0	0	0	0	1	0	0	0	0
4/21/2024	10:15 AM	0	64	12	0	0	0	0	0	0	0	0	0	0
4/21/2024	10:30 AM	0	72	13	0	0	0	0	0	1	0	0	0	0
4/21/2024	10:45 AM	0	72	20	0	0	0	0	0	2	0	0	0	0
4/21/2024	11:00 AM	0	67	18	0	2	0	0	0	1	0	0	0	0
4/21/2024	11:15 AM	0	61	13	1	0	0	0	0	3	0	0	0	0
4/21/2024	11:30 AM	0	61	19	0	0	0	0	0	1	0	0	0	0
4/21/2024	11:45 AM	0	56	10	0	0	0	0	0	1	0	0	0	0
4/21/2024	12:00 PM	0	70	18	0	2	0	0	0	1	0	0	0	0
4/21/2024	12:15 PM	0	72	19	0	0	0	0	1	0	0	0	0	0
4/21/2024	12:30 PM	0	115	19	0	2	0	0	1	0	0	0	0	0
4/21/2024	12:45 PM	0	107	22	0	2	0	0	0	1	0	0	0	0
4/21/2024	1:00 PM	0	101	26	1	0	0	0	0	0	0	0	0	0
4/21/2024	1:15 PM	0	94	14	0	1	0	0	0	1	0	0	0	0
4/21/2024	1:30 PM	0	89	15	0	1	0	0	0	1	0	0	0	0
4/21/2024	1:45 PM	0	102	23	0	1	0	0	0	0	0	0	0	0
4/21/2024	2:00 PM	0	88	18	0	0	1	0	0	2	0	0	0	0
4/21/2024	2:15 PM	0	86	13	0	0	1	0	1	1	0	0	0	0
4/21/2024	2:30 PM	0	96	12	0	1	0	0	0	1	0	0	0	0
4/21/2024	2:45 PM	0	93	24	0	0	0	0	0	1	0	0	0	0
4/21/2024	3:00 PM	0	108	15	0	1	0	0	0	0	0	0	0	0
4/21/2024	3:15 PM	0	96	14	2	2	0	0	0	1	0	0	0	0
4/21/2024	3:30 PM	0	103	26	0	0	1	0	1	0	0	0	0	0
4/21/2024	3:45 PM	0	130	24	0	0	0	0	0	0	0	0	0	0
4/21/2024	4:00 PM	0	102	19	0	1	1	0	0	1	0	0	0	0
4/21/2024	4:15 PM	0	83	14	0	2	0	0	0	3	0	0	0	0
4/21/2024	4:30 PM	0	73	12	0	2	1	0	0	0	0	0	0	0
4/21/2024	4:45 PM	0	58	17	0	3	0	0	0	1	0	0	0	0
4/21/2024	5:00 PM	0	90	13	1	1	1	0	0	0	0	0	0	0
4/21/2024	5:15 PM	0	97	12	0	0	0	0	0	3	0	0	0	0
4/21/2024	5:30 PM	0	63	17	0	2	1	0	0	1	0	0	0	0
4/21/2024	5:45 PM	0	68	18	0	0	0	0	0	0	0	0	0	0
4/21/2024	6:00 PM	0	70	15	0	1	0	0	0	1	0	0	0	0
4/21/2024	6:15 PM	0	77	16	0	0	0	0	0	0	0	0	0	0
4/21/2024	6:30 PM	0	57	17	0	0	0	0	0	1	0	0	0	0
4/21/2024	6:45 PM	0	58	19	0	0	0	0	0	2	0	0	0	0
4/21/2024	7:00 PM	0	85	4	0	0	0	0	0	2	0	0	0	0
4/21/2024	7:15 PM	0	86	10	0	0	0	0	0	1	0	0	0	0
4/21/2024	7:30 PM	0	78	8	0	0	0	0	0	0	0	1	0	0
4/21/2024	7:45 PM	0	66	11	0	0	0	0	0	1	0	0	0	0
4/21/2024	8:00 PM	0	66	9	0	0	0	0	0	1	0	0	0	0
4/21/2024	8:15 PM	0	60	8	0	1	0	0	0	2	0	0	0	0
4/21/2024	8:30 PM	0	57	5	0	0	0	0	0	0	0	0	0	0
4/21/2024	8:45 PM	0	49	2	1	1	1	0	0	0	0	0	0	0
4/21/2024	9:00 PM	0	55	6	0	0	0	0	0	1	0	0	0	0
4/21/2024	9:15 PM	0	48	4	0	0	0	0	0	0	0	0	0	0
4/21/2024	9:30 PM	0	52	6	0	0	0	0	0	2	0	0	0	0
4/21/2024	9:45 PM	0	39	3	0	0	0	0	0	0	0	0	0	0
4/21/2024	10:00 PM	0	27	4	0	0	0	0	0	3	0	0	0	0
4/21/2024	10:15 PM	0	36	5	0	0	0	0	0	2	0	0	0	0
4/21/2024	10:30 PM	0	35	3	0	0	0	0	0	0	0	0	0	0
4/21/2024	10:45 PM	0	28	4	0	0	0	0	0	1	0	0	0	0
4/21/2024	11:00 PM	0	35	3	0	0	0	0	0	0	0	0	0	0
4/21/2024	11:15 PM	0	37	5	0	0	0	0	0	1	0	0	0	0
4/21/2024	11:30 PM	0	31	4	0	0	0	0	0	1	0	0	0	0
4/21/2024	11:45 PM	0	22	3	0	0	0	0	0	0	0	0	0	0

4/22/2024	12:00 AM	0	7	4	0	0	0	0	0	0	0	0	0
4/22/2024	12:15 AM	0	20	5	0	0	0	0	0	0	0	0	0
4/22/2024	12:30 AM	0	21	5	0	2	0	0	0	2	0	0	0
4/22/2024	12:45 AM	0	15	6	0	0	0	0	0	1	0	0	0
4/22/2024	1:00 AM	0	12	5	0	0	0	0	0	0	0	1	0
4/22/2024	1:15 AM	0	6	2	0	0	0	0	0	0	0	0	0
4/22/2024	1:30 AM	0	7	4	0	0	0	0	0	1	0	0	0
4/22/2024	1:45 AM	0	7	3	0	0	0	0	0	0	0	0	0
4/22/2024	2:00 AM	0	8	4	0	0	0	0	0	0	0	0	0
4/22/2024	2:15 AM	0	3	2	0	1	0	0	0	0	0	0	0
4/22/2024	2:30 AM	0	7	3	0	0	0	0	0	0	0	0	0
4/22/2024	2:45 AM	0	5	2	0	0	0	0	0	0	0	0	0
4/22/2024	3:00 AM	0	7	3	0	0	0	0	0	1	0	0	0
4/22/2024	3:15 AM	0	10	4	0	1	0	0	0	1	0	0	0
4/22/2024	3:30 AM	0	8	4	0	0	0	0	0	3	0	0	0
4/22/2024	3:45 AM	0	9	3	0	0	1	0	0	3	0	0	0
4/22/2024	4:00 AM	0	7	4	0	0	0	0	0	0	0	0	0
4/22/2024	4:15 AM	0	14	5	0	3	0	0	0	2	0	0	0
4/22/2024	4:30 AM	0	13	5	0	4	0	0	0	1	0	0	0
4/22/2024	4:45 AM	0	10	4	0	0	0	0	0	2	0	0	0
4/22/2024	5:00 AM	0	20	6	0	1	0	0	0	2	0	0	0
4/22/2024	5:15 AM	0	26	12	0	2	1	0	0	4	0	0	0
4/22/2024	5:30 AM	0	35	10	0	2	2	0	0	3	0	0	0
4/22/2024	5:45 AM	0	41	12	0	1	0	0	0	3	0	0	0
4/22/2024	6:00 AM	0	60	13	0	5	0	0	0	0	0	0	0
4/22/2024	6:15 AM	0	72	16	0	6	1	0	0	3	0	0	0
4/22/2024	6:30 AM	0	94	27	0	5	1	0	0	6	0	0	0
4/22/2024	6:45 AM	0	89	28	0	7	1	0	0	0	0	0	0
4/22/2024	7:00 AM	1	86	29	1	4	1	0	0	3	0	0	0
4/22/2024	7:15 AM	0	102	38	0	8	1	0	0	5	0	0	0
4/22/2024	7:30 AM	0	146	43	0	7	2	0	1	4	0	0	0
4/22/2024	7:45 AM	0	144	55	0	7	3	0	0	12	0	0	0
4/22/2024	8:00 AM	0	111	48	0	14	4	0	1	1	0	0	0
4/22/2024	8:15 AM	0	97	27	0	5	1	0	2	2	0	0	0
4/22/2024	8:30 AM	0	99	43	0	8	1	0	0	7	0	0	0
4/22/2024	8:45 AM	0	86	42	1	10	0	0	1	8	0	0	0
4/22/2024	9:00 AM	0	99	35	1	13	4	0	2	5	0	0	0
4/22/2024	9:15 AM	0	79	34	1	8	0	0	0	15	0	0	0
4/22/2024	9:30 AM	0	77	29	0	6	4	0	0	8	0	1	0
4/22/2024	9:45 AM	0	64	29	1	6	0	0	0	9	0	0	0
4/22/2024	10:00 AM	0	61	34	2	7	3	0	0	5	0	0	0
4/22/2024	10:15 AM	0	72	29	0	3	3	0	1	5	0	0	0
4/22/2024	10:30 AM	0	68	32	0	8	1	0	1	6	0	0	0
4/22/2024	10:45 AM	0	78	28	2	6	4	0	1	6	0	0	0
4/22/2024	11:00 AM	0	83	33	0	7	5	0	3	9	0	0	0
4/22/2024	11:15 AM	0	85	39	1	6	2	0	0	5	0	0	0
4/22/2024	11:30 AM	0	78	30	0	3	2	0	1	5	0	0	0
4/22/2024	11:45 AM	1	90	42	0	5	1	0	1	4	0	0	0
4/22/2024	12:00 PM	0	86	29	0	7	2	0	0	4	0	0	0
4/22/2024	12:15 PM	0	93	33	0	2	3	0	0	4	0	0	0
4/22/2024	12:30 PM	0	87	36	0	2	7	0	1	5	0	0	0
4/22/2024	12:45 PM	1	101	29	1	2	3	0	2	4	0	0	0
4/22/2024	1:00 PM	0	103	30	0	2	2	0	0	4	0	0	0
4/22/2024	1:15 PM	0	90	40	0	0	1	0	1	7	0	0	0
4/22/2024	1:30 PM	0	96	38	0	1	2	0	0	4	0	0	0
4/22/2024	1:45 PM	1	110	39	0	1	1	0	1	5	1	0	0
4/22/2024	2:00 PM	0	102	33	0	7	0	0	0	3	0	0	0
4/22/2024	2:15 PM	0	127	39	0	6	3	0	0	5	0	0	0
4/22/2024	2:30 PM	0	127	40	0	5	1	0	0	8	0	0	0
4/22/2024	2:45 PM	0	114	44	1	2	2	0	4	3	0	0	0
4/22/2024	3:00 PM	0	107	37	2	3	1	0	1	10	0	0	0
4/22/2024	3:15 PM	0	153	39	1	3	0	0	1	2	0	0	0
4/22/2024	3:30 PM	0	114	32	0	2	0	0	0	3	0	0	0
4/22/2024	3:45 PM	0	81	21	0	2	0	0	0	2	0	0	0
4/22/2024	4:00 PM	0	113	26	1	3	1	0	1	7	0	0	1	0
4/22/2024	4:15 PM	0	97	25	0	6	0	0	0	5	1	0	0	0
4/22/2024	4:30 PM	0	84	22	0	1	0	0	0	5	0	0	0	0
4/22/2024	4:45 PM	2	83	24	1	1	0	0	0	1	0	0	0	0
4/22/2024	5:00 PM	0	92	20	0	0	0	0	0	7	0	0	0	0
4/22/2024	5:15 PM	0	88	24	0	1	0	0	1	5	0	0	0	0
4/22/2024	5:30 PM	0	76	24	0	3	3	0	0	5	0	0	0	0
4/22/2024	5:45 PM	0	86	25	0	1	0	0	0	0	0	0	0	0
4/22/2024	6:00 PM	0	95	33	0	3	1	0	1	0	0	0	0	0
4/22/2024	6:15 PM	0	99	12	0	3	1	0	1	2	0	0	0	0
4/22/2024	6:30 PM	1	75	14	0	0	1	0	0	3	0	0	0	0
4/22/2024	6:45 PM	0	24	0	2	0	0	0	0	2	0	0	0	0
4/22/2024	7:00 PM	0	85	23	0	1	0	0	0	1	0	0	0	0
4/22/2024	7:15 PM	0	91	14	0	3	0	0	0	0	0	0	0	0
4/22/2024	7:30 PM	0	80	24	0	1	0	0	0	1	0	0	0	0
4/22/2024	7:45 PM	0	79	14	0	2	0	0	0	1	0	0	0	0
4/22/2024	8:00 PM	0	80	14	0	1	0	0	0	1	0	0	0	0
4/22/2024	8:15 PM	0	57	19	0	3	1	0	4	2	0	0	0	0
4/22/2024	8:30 PM	0	73	18	0	1	0	0	0	2	0	0	0	0
4/22/2024	8:45 PM	0	42	13	0	0	0	0	0	1	0	0	0	0
4/22/2024	9:00 PM	0	49	13	0	1	0	0	0	0	0	0	0	0
4/22/2024	9:15 PM	0	41	14	0	0	0	0	0	2	0	0	0	0
4/22/2024	9:30 PM	0	38	17	0	2	0	0	0	4	0	0	0	0
4/22/2024	9:45 PM	0	40	18	0	0	0	0	0	4	0	0	0	0
4/22/2024	10:00 PM	0	38	15	1	0	0	0	0	0	0	0	0	0
4/22/2024	10:15 PM	0	45	9	0	0	0	0	0	1	0	0	0	0
4/22/2024	10:30 PM	0	30	7	0	1	1	0	0	1	0	0	0	0
4/22/2024	10:45 PM	0	36	10	0	1	1	0	0	3	0	0	0	0
4/22/2024	11:00 PM	0	37	8	0	0	0	0	0	2	0	0	0	0
4/22/2024	11:15 PM	0	33	10	0	0	1	0	0	0	0	0	0	0
4/22/2024	11:30 PM	0	34	9	0	0	0	0	0	1	0	0	0	0
4/22/2024	11:45 PM	0	11	3	0	0	0	0	0	4	0	1	0	0

4/23/2024	12:00 AM	0	32	3	0	0	0	0	0	2	0	0	0	0
4/23/2024	12:15 AM	0	30	4	0	1	0	0	0	2	0	0	0	0
4/23/2024	12:30 AM	0	25	2	0	0	0	0	0	1	0	0	0	0
4/23/2024	12:45 AM	0	12	0	0	0	0	0	0	0	0	0	0	0
4/23/2024	1:00 AM	0	15	0	0	0	0	0	0	1	0	0	0	0
4/23/2024	1:15 AM	0	13	0	0	1	0	0	0	2	0	0	0	0
4/23/2024	1:30 AM	0	12	0	0	0	0	0	0	1	0	1	0	0
4/23/2024	1:45 AM	0	8	0	0	0	0	0	0	1	0	0	0	0
4/23/2024	2:00 AM	0	8	2	0	0	0	0	0	0	0	0	0	0
4/23/2024	2:15 AM	0	9	1	0	0	0	0	0	2	0	0	0	0
4/23/2024	2:30 AM	0	10	1	0	1	0	0	0	0	0	0	0	0
4/23/2024	2:45 AM	0	6	1	0	1	0	0	0	1	0	3	0	0
4/23/2024	3:00 AM	0	8	1	0	1	0	0	0	1	0	0	0	0
4/23/2024	3:15 AM	0	8	0	0	1	0	0	0	0	0	0	0	0
4/23/2024	3:30 AM	0	9	0	0	0	0	0	0	3	0	0	0	0
4/23/2024	3:45 AM	0	10	1	0	0	0	0	0	4	0	1	0	0
4/23/2024	4:00 AM	0	11	1	0	0	0	0	0	2	0	0	0	0
4/23/2024	4:15 AM	0	17	4	0	4	0	0	0	1	0	0	0	0
4/23/2024	4:30 AM	0	18	4	0	2	3	0	0	1	0	0	0	0
4/23/2024	4:45 AM	0	26	6	0	3	0	0	0	3	0	1	0	0
4/23/2024	5:00 AM	0	14	2	0	2	0	0	0	2	0	2	0	0
4/23/2024	5:15 AM	0	24	3	0	1	0	0	0	5	0	0	0	0
4/23/2024	5:30 AM	0	52	10	0	4	1	0	0	1	0	0	0	0
4/23/2024	5:45 AM	0	42	8	0	5	0	0	0	3	0	0	0	0
4/23/2024	6:00 AM	0	51	8	1	7	0	0	0	5	0	0	0	0
4/23/2024	6:15 AM	0	60	21	0	4	0	0	0	2	0	0	0	0
4/23/2024	6:30 AM	0	91	29	0	1	1	0	1	4	0	0	0	0
4/23/2024	6:45 AM	0	87	27	0	7	3	0	1	4	0	0	0	0
4/23/2024	7:00 AM	1	89	43	1	3	0	0	0	2	1	0	0	0
4/23/2024	7:15 AM	0	136	48	0	2	0	0	2	5	1	1	0	0
4/23/2024	7:30 AM	0	111	41	0	1	1	0	2	8	0	0	0	0
4/23/2024	7:45 AM	0	130	47	0	8	2	0	0	8	0	0	0	0
4/23/2024	8:00 AM	1	88	34	0	5	3	0	0	4	0	0	0	0
4/23/2024	8:15 AM	0	103	43	0	6	0	0	0	9	0	0	0	0
4/23/2024	8:30 AM	0	107	24	1	2	3	0	0	5	0	0	0	0
4/23/2024	8:45 AM	0	102	32	0	7	1	0	0	9	0	0	0	0
4/23/2024	9:00 AM	0	77	46	0	1	0	0	2	7	0	0	0	0
4/23/2024	9:15 AM	0	81	35	1	19	2	0	0	8	1	1	0	0
4/23/2024	9:30 AM	0	95	59	0	7	2	0	1	6	0	1	0	0
4/23/2024	9:45 AM	0	82	30	0	5	1	0	2	8	0	0	0	0
4/23/2024	10:00 AM	0	86	27	1	1	1	0	1	7	0	0	0	0
4/23/2024	10:15 AM	0	79	21	0	8	1	0	1	12	0	0	0	0
4/23/2024	10:30 AM	0	94	39	0	3	2	0	1	4	0	0	0	0
4/23/2024	10:45 AM	0	82	27	0	4	1	0	1	9	0	0	0	0
4/23/2024	11:00 AM	0	83	24	0	5	0	0	0	5	0	0	0	0
4/23/2024	11:15 AM	0	84	19	0	3	0	0	0	8	0	0	0	0
4/23/2024	11:30 AM	0	75	27	0	5	2	0	2	2	0	0	0	0
4/23/2024	11:45 AM	0	90	33	0	4	3	0	1	7	0	0	0	0
4/23/2024	12:00 PM	0	90	24	0	7	0	0	0	7	0	0	0	0
4/23/2024	12:15 PM	0	97	25	0	6	1	0	0	12	0	0	0	0
4/23/2024	12:30 PM	2	84	28	0	5	1	1	0	11	0	0	0	0
4/23/2024	12:45 PM	0	94	24	1	2	2	0	0	6	0	0	0	0
4/23/2024	1:00 PM	0	92	21	1	3	2	0	0	4	0	0	0	0
4/23/2024	1:15 PM	0	103	35	0	4	0	0	0	4	0	0	0	0
4/23/2024	1:30 PM	1	95	26	0	7	1	0	1	6	1	0	0	0
4/23/2024	1:45 PM	0	108	40	0	4	1	0	0	7	1	0	0	0
4/23/2024	2:00 PM	1	117	42	0	2	1	1	2	9	0	0	0	0
4/23/2024	2:15 PM	0	113	33	0	3	1	0	1	6	0	0	0	0
4/23/2024	2:30 PM	1	114	35	0	2	1	0	0	7	0	0	0	0
4/23/2024	2:45 PM	0	133	31	2	6	3	0	1	7	0	0	0	0
4/23/2024	3:00 PM	0	129	39	1	2	1	0	2	7	0	0	0	0
4/23/2024	3:15 PM	1	168	32	1	4	3	0	1	4	1	0	0	0
4/23/2024	3:30 PM	0	158	46	0	4	2	0	0	1	0	0	0	0
4/23/2024	3:45 PM	0	141	35	0	3	1	0	1	3	0	0	0	0
4/23/2024	4:00 PM	0	132	34	1	5	0	0	3	11	1	0	0	0
4/23/2024	4:15 PM	0	138	33	0	0	0	0	2	2	0	0	0	0
4/23/2024	4:30 PM	0	117	23	0	0	1	0	0	1	0	1	0	0
4/23/2024	4:45 PM	0	84	34	0	1	0	0	0	2	0	0	0	0
4/23/2024	5:00 PM	0	101	23	0	0	1	0	1	2	0	0	0	0
4/23/2024	5:15 PM	0	84	14	0	3	1	0	1	1	1	0	0	0
4/23/2024	5:30 PM	0	91	24	0	2	0	0	0	1	0	0	0	0
4/23/2024	5:45 PM	0	91	16	0	0	0	0	0	2	0	0	0	0
4/23/2024	6:00 PM	0	75	15	0	4	1	0	2	0	1	0	0	0
4/23/2024	6:15 PM	0	90	36	0	0	0	0	0	1	0	0	0	0
4/23/2024	6:30 PM	0	90	22	0	1	0	0	0	6	0	0	0	0
4/23/2024	6:45 PM	0	84	18	0	0	0	0	0	3	0	0	0	0
4/23/2024	7:00 PM	0	89	22	0	1	1	0	0	3	0	0	0	0
4/23/2024	7:15 PM	1	84	19	0	1	1	0	0	1	0	0	0	0
4/23/2024	7:30 PM	0	96	16	0	0	0	0	0	1	0	0	0	0
4/23/2024	7:45 PM	0	93	22	0	0	1	0	0	1	0	0	0	0
4/23/2024	8:00 PM	0	72	16	0	0	0	0	0	2	0	0	0	0
4/23/2024	8:15 PM	0	85	12	0	0	0	0	1	1	0	0	0	0
4/23/2024	8:30 PM	0	81	7	0	2	0	0	0	0	0	0	0	0
4/23/2024	8:45 PM	0	68	6	0	0	0	0	0	3	0	1	0	0
4/23/2024	9:00 PM	0	81	6	0	2	0	0	0	0	0	0	0	0
4/23/2024	9:15 PM	0	74	2	0	0	1	0	0	6	0	0	0	0
4/23/2024	9:30 PM	0	55	3	0	1	0	0	1	0	0	2	0	0
4/23/2024	9:45 PM	0	62	5	0	1	1	0	0	3	0	0	0	0
4/23/2024	10:00 PM	0	41	3	0	0	2	0	0	2	0	0	0	0
4/23/2024	10:15 PM	1	50	0	0	0	0	0	0	1	0	1	0	0
4/23/2024	10:30 PM	0	42	2	0	0	0	0	0	1	0	1	0	0
4/23/2024	10:45 PM	0	39	1	0	0	0	0	0	1	0	1	0	0
4/23/2024	11:00 PM	0	40	0	0	0	1	0	0	1	0	0	0	0
4/23/2024	11:15 PM	1	37	1	0	1	1	0	0	2	0	0	0	0
4/23/2024	11:30 PM	0	31	0	0	0	0	0	0	1	0	0	0	0
4/23/2024	11:45 PM	0	32	1	0	1	0	0	0	2	0	0	0	0

4/24/2024	12:00 AM	0	18	4	0	1	0	0	0	2	0	0	0	0
4/24/2024	12:15 AM	0	27	4	0	0	1	0	0	4	0	0	0	0
4/24/2024	12:30 AM	0	28	7	0	1	0	0	0	4	0	0	0	0
4/24/2024	12:45 AM	0	15	3	0	0	0	0	0	1	0	0	0	0
4/24/2024	1:00 AM	0	11	3	0	0	0	0	0	0	0	0	0	0
4/24/2024	1:15 AM	0	19	3	0	2	0	0	0	1	0	0	0	0
4/24/2024	1:30 AM	0	11	2	0	1	0	0	0	1	0	0	0	0
4/24/2024	1:45 AM	0	12	2	0	0	0	0	0	1	0	0	0	0
4/24/2024	2:00 AM	0	9	1	0	0	0	0	0	0	0	0	0	0
4/24/2024	2:15 AM	0	7	1	0	0	0	0	0	2	0	0	0	0
4/24/2024	2:30 AM	0	11	3	0	2	0	0	0	5	0	0	0	0
4/24/2024	2:45 AM	0	6	1	0	2	1	0	0	1	0	0	0	0
4/24/2024	3:00 AM	0	9	2	0	1	0	0	0	2	0	0	0	0
4/24/2024	3:15 AM	0	6	2	0	1	0	0	0	0	0	0	0	0
4/24/2024	3:30 AM	0	10	3	0	0	0	0	0	1	0	0	0	0
4/24/2024	3:45 AM	0	11	2	0	1	0	0	0	4	0	1	0	0
4/24/2024	4:00 AM	0	16	3	1	0	2	0	0	2	0	0	0	0
4/24/2024	4:15 AM	0	13	5	0	1	0	0	1	6	0	1	0	0
4/24/2024	4:30 AM	0	16	4	0	1	0	0	0	4	0	0	0	0
4/24/2024	4:45 AM	0	17	6	0	0	0	0	0	4	0	0	0	0
4/24/2024	5:00 AM	0	14	4	0	1	0	0	0	2	0	0	0	0
4/24/2024	5:15 AM	0	27	8	0	3	2	0	0	4	0	0	0	0
4/24/2024	5:30 AM	0	45	10	0	3	0	0	0	6	0	0	0	0
4/24/2024	5:45 AM	0	39	11	0	4	1	0	0	6	0	0	0	0
4/24/2024	6:00 AM	0	53	13	0	7	1	0	2	5	0	0	0	0
4/24/2024	6:15 AM	0	71	18	0	3	1	0	0	6	0	1	0	0
4/24/2024	6:30 AM	0	90	28	0	3	1	0	1	4	0	0	0	0
4/24/2024	6:45 AM	0	85	28	0	7	2	0	1	3	0	0	0	0
4/24/2024	7:00 AM	1	87	43	1	3	0	0	0	1	0	0	0	0
4/24/2024	7:15 AM	0	130	47	0	3	1	0	2	5	0	0	0	0
4/24/2024	7:30 AM	0	148	45	0	6	3	0	1	11	0	0	0	0
4/24/2024	7:45 AM	0	131	61	0	5	0	0	1	9	0	0	0	0
4/24/2024	8:00 AM	0	81	36	0	11	1	0	0	1	0	0	0	0
4/24/2024	8:15 AM	0	81	38	0	6	3	0	0	6	0	0	0	0
4/24/2024	8:30 AM	0	93	33	0	6	1	0	2	6	0	0	0	0
4/24/2024	8:45 AM	0	74	43	1	9	0	0	1	11	0	0	0	0
4/24/2024	9:00 AM	0	78	39	0	6	0	0	1	7	0	1	0	0
4/24/2024	9:15 AM	0	69	48	0	7	0	0	2	7	0	0	0	0
4/24/2024	9:30 AM	0	96	49	0	22	5	0	1	12	0	0	0	0
4/24/2024	9:45 AM	0	82	46	0	7	4	0	0	7	0	0	0	0
4/24/2024	10:00 AM	0	58	30	0	4	2	0	2	5	0	0	0	0
4/24/2024	10:15 AM	1	71	33	0	5	1	0	0	2	0	0	0	0
4/24/2024	10:30 AM	0	86	42	0	4	4	0	3	7	0	0	0	0
4/24/2024	10:45 AM	0	96	49	0	2	1	0	2	11	0	0	0	0
4/24/2024	11:00 AM	0	69	42	0	10	2	0	1	4	0	0	0	0
4/24/2024	11:15 AM	0	97	31	0	4	0	0	1	4	0	0	0	0
4/24/2024	11:30 AM	0	86	39	0	6	2	0	2	10	0	0	0	0
4/24/2024	11:45 AM	0	98	32	1	2	1	0	2	5	0	0	0	0
4/24/2024	12:00 PM	0	99	27	0	1	0	2	1	4	1	0	0	0
4/24/2024	12:15 PM	0	103	37	1	6	1	1	1	2	0	0	0	0
4/24/2024	12:30 PM	0	113	28	1	3	3	0	0	7	0	0	0	0
4/24/2024	12:45 PM	0	106	34	0	0	0	1	0	2	0	0	0	0
4/24/2024	1:00 PM	0	104	30	2	4	2	0	1	10	0	0	0	0
4/24/2024	1:15 PM	0	120	44	1	1	2	2	1	5	0	0	0	0
4/24/2024	1:30 PM	1	144	33	0	1	0	0	2	5	0	0	0	0
4/24/2024	1:45 PM	0	122	36	0	1	1	0	2	8	0	0	0	0
4/24/2024	2:00 PM	1	133	36	0	2	1	1	0	7	0	0	0	0
4/24/2024	2:15 PM	0	117	47	0	4	2	1	4	4	0	0	0	0
4/24/2024	2:30 PM	2	122	35	0	9	1	1	1	9	1	0	0	0
4/24/2024	2:45 PM	0	139	32	1	2	2	0	1	6	1	0	0	0
4/24/2024	3:00 PM	0	140	31	2	5	1	1	2	8	0	0	0	0
4/24/2024	3:15 PM	0	151	47	0	5	1	0	1	4	2	0	0	0
4/24/2024	3:30 PM	0	164	37	1	4	0	1	0	6	0	0	0	0
4/24/2024	3:45 PM	1	169	37	1	4	1	0	1	2	0	0	0	0
4/24/2024	4:00 PM	0	172	28	0	2	0	1	3	8	1	0	0	0
4/24/2024	4:15 PM	0	136	26	0	3	1	0	2	3	1	0	0	0
4/24/2024	4:30 PM	0	124	29	0	0	2	0	1	3	0	0	0	0
4/24/2024	4:45 PM	1	106	14	0	2	2	0	1	3	0	0	0	0
4/24/2024	5:00 PM	0	84	16	0	0	1	0	3	4	0	0	0	0
4/24/2024	5:15 PM	0	94	17	0	2	0	0	0	3	0	0	0	0
4/24/2024	5:30 PM	0	76	16	0	1	0	0	0	2	0	0	0	0
4/24/2024	5:45 PM	0	89	12	0	2	0	0	0	5	0	0	0	0
4/24/2024	6:00 PM	0	112	16	0	3	1	0	0	2	0	0	0	0
4/24/2024	6:15 PM	0	97	14	0	2	1	0	0	3	0	0	0	0
4/24/2024	6:30 PM	0	101	26	0	0	1	0	0	5	0	0	0	0
4/24/2024	6:45 PM	0	73	18	0	0	0	0	0	3	1	0	0	0
4/24/2024	7:00 PM	1	96	16	0	3	2	0	0	3	0	0	0	0
4/24/2024	7:15 PM	0	97	17	0	1	0	0	0	1	0	0	0	0
4/24/2024	7:30 PM	0	86	19	0	2	0	0	2	2	0	0	0	0
4/24/2024	7:45 PM	1	84	11	0	0	1	0	1	0	0	0	0	0
4/24/2024	8:00 PM	0	68	10	0	0	0	0	3	2	0	0	0	0
4/24/2024	8:15 PM	0	75	12	0	1	0	0	2	1	0	0	0	0
4/24/2024	8:30 PM	1	79	13	0	3	1	0	0	2	0	0	0	0
4/24/2024	8:45 PM	0	65	10	0	1	2	0	0	2	0	0	0	0
4/24/2024	9:00 PM	0	70	11	0	2	0	0	0	1	0	0	0	0
4/24/2024	9:15 PM	0	76	13	1	1	0	0	0	2	0	0	0	0
4/24/2024	9:30 PM	0	50	9	0	1	1	0	0	3	0	0	0	0
4/24/2024	9:45 PM	0	48	11	0	2	0	0	1	3	0	0	0	0
4/24/2024	10:00 PM	0	42	8	0	0	1	0	0	2	0	1	0	0
4/24/2024	10:15 PM	0	50	10	0	1	0	0	0	1	0	0	0	0
4/24/2024	10:30 PM	0	30	4	0	0	0	0	1	0	0	0	0	0
4/24/2024	10:45 PM	0	31	6	0	0	0	0	0	2	0	1	0	0
4/24/2024	11:00 PM	0	37	6	0	0	1	0	0	3	0	0	0	0
4/24/2024	11:15 PM	0	41	8	0	1	0	0	0	2	0	0	0	0
4/24/2024	11:30 PM	0	30	3	0	0	0	0	0	0	0	0	0	0
4/24/2024	11:45 PM	0	24	4	0	1	0	0	0	1	0	0	0	0

4/25/2024	12:00 AM	0	22	4	0	1	0	0	0	0	0	0	0
4/25/2024	12:15 AM	0	31	6	0	0	0	0	0	1	0	0	0
4/25/2024	12:30 AM	0	36	7	0	0	0	0	0	0	0	0	0
4/25/2024	12:45 AM	0	22	3	0	1	0	0	0	4	0	0	0
4/25/2024	1:00 AM	0	12	3	0	0	0	0	0	2	0	0	0
4/25/2024	1:15 AM	0	13	2	0	0	0	0	0	2	0	0	0
4/25/2024	1:30 AM	0	14	4	0	0	0	0	0	0	0	0	0
4/25/2024	1:45 AM	0	7	1	0	0	0	0	0	4	0	0	0
4/25/2024	2:00 AM	0	14	2	0	1	0	0	0	2	0	0	0
4/25/2024	2:15 AM	0	13	3	0	0	0	0	0	0	0	0	0
4/25/2024	2:30 AM	0	7	2	0	1	0	0	0	1	0	1	0	0
4/25/2024	2:45 AM	0	10	3	0	0	0	0	0	0	0	0	0	0
4/25/2024	3:00 AM	0	5	1	0	1	0	0	0	0	0	0	0	0
4/25/2024	3:15 AM	0	11	3	0	1	0	0	0	2	0	1	0	0
4/25/2024	3:30 AM	0	10	2	0	3	0	0	0	3	0	0	0	0
4/25/2024	3:45 AM	0	17	4	0	1	0	0	0	2	0	1	0	0
4/25/2024	4:00 AM	0	13	1	0	3	1	0	0	0	0	0	0	0
4/25/2024	4:15 AM	0	12	4	0	1	0	0	2	4	0	0	0	0
4/25/2024	4:30 AM	0	14	3	0	4	1	0	0	2	0	0	0	0
4/25/2024	4:45 AM	0	24	8	0	2	0	0	0	4	0	0	0	0
4/25/2024	5:00 AM	0	15	4	0	1	0	0	0	3	0	1	0	0
4/25/2024	5:15 AM	0	28	9	0	6	1	0	0	2	0	0	0	0
4/25/2024	5:30 AM	0	40	6	0	1	0	0	0	2	0	0	0	0
4/25/2024	5:45 AM	0	37	8	0	2	1	0	0	3	0	0	0	0
4/25/2024	6:00 AM	0	68	16	0	13	1	0	0	4	0	0	0	0
4/25/2024	6:15 AM	0	67	22	0	4	3	0	1	4	0	0	0	0
4/25/2024	6:30 AM	0	93	42	0	7	1	0	0	2	0	0	0	0
4/25/2024	6:45 AM	0	88	30	0	4	2	0	2	3	0	0	0	0
4/25/2024	7:00 AM	1	90	36	1	6	3	0	2	5	0	0	0	0
4/25/2024	7:15 AM	0	128	49	0	4	3	0	1	3	0	0	0	0
4/25/2024	7:30 AM	1	146	55	0	9	2	0	2	10	0	0	0	0
4/25/2024	7:45 AM	0	139	60	0	9	2	0	1	8	0	0	0	0
4/25/2024	8:00 AM	0	97	41	2	5	1	0	3	2	0	0	0	0
4/25/2024	8:15 AM	0	111	35	0	3	1	0	1	8	0	0	0	0
4/25/2024	8:30 AM	1	91	44	1	7	1	0	3	6	0	0	0	0
4/25/2024	8:45 AM	0	94	52	0	2	1	0	0	3	0	3	0	0
4/25/2024	9:00 AM	0	66	43	0	6	0	0	2	14	0	0	0	0
4/25/2024	9:15 AM	0	91	37	1	12	3	0	2	9	0	0	0	0
4/25/2024	9:30 AM	0	88	39	0	11	3	0	1	11	0	0	0	0
4/25/2024	9:45 AM	0	92	46	1	4	0	0	1	8	0	0	0	0
4/25/2024	10:00 AM	0	76	42	0	10	1	0	4	8	0	0	0	0
4/25/2024	10:15 AM	0	68	37	0	8	0	0	2	5	0	0	0	0
4/25/2024	10:30 AM	0	73	36	1	6	2	0	2	7	0	0	0	0
4/25/2024	10:45 AM	2	78	41	0	3	3	0	0	5	0	0	0	0
4/25/2024	11:00 AM	0	94	24	0	5	0	0	1	12	0	0	0	0
4/25/2024	11:15 AM	0	91	41	0	5	0	0	0	4	0	0	0	0
4/25/2024	11:30 AM	0	94	27	0	6	1	0	1	9	0	0	0	0
4/25/2024	11:45 AM	0	115	38	0	3	4	0	0	9	0	0	0	0
4/25/2024	12:00 PM	0	83	24	0	10	0	0	0	3	0	0	0	0
4/25/2024	12:15 PM	0	101	32	0	8	1	0	1	6	0	0	0	0
4/25/2024	12:30 PM	0	116	34	1	3	1	0	1	5	0	0	0	0
4/25/2024	12:45 PM	0	100	32	0	3	1	0	1	5	0	0	0	0
4/25/2024	1:00 PM	1	107	24	2	6	1	1	2	7	0	0	0	0
4/25/2024	1:15 PM	0	107	27	2	5	1	0	0	4	0	0	0	0
4/25/2024	1:30 PM	0	104	33	2	4	0	0	1	7	0	0	0	0
4/25/2024	1:45 PM	0	103	43	1	2	3	1	0	5	0	0	0	0
4/25/2024	2:00 PM	0	102	32	0	11	1	0	0	4	0	0	0	0
4/25/2024	2:15 PM	0	139	50	0	3	1	2	0	3	0	0	0	0
4/25/2024	2:30 PM	0	125	41	0	5	2	0	3	4	0	0	0	0
4/25/2024	2:45 PM	0	149	26	0	6	2	1	0	2	0	0	0	0
4/25/2024	3:00 PM	0	159	40	3	8	2	0	1	2	1	0	0	0
4/25/2024	3:15 PM	0	151	31	3	2	2	0	1	3	0	0	0	0
4/25/2024	3:30 PM	0	156	30	0	3	2	0	0	3	0	0	0	0
4/25/2024	3:45 PM	0	116	34	0	6	1	0	1	2	0	0	0	0
4/25/2024	4:00 PM	0	103	29	1	3	2	0	0	1	0	0	0	0
4/25/2024	4:15 PM	0	119	29	0	3	1	0	0	2	0	0	0	0
4/25/2024	4:30 PM	0	105	21	0	6	1	0	0	3	0	0	0	0
4/25/2024	4:45 PM	0	108	26	0	1	0	0	0	1	0	0	0	0
4/25/2024	5:00 PM	0	72	16	0	0	1	0	2	0	1	0	0	0
4/25/2024	5:15 PM	0	84	10	0	0	1	0	0	2	0	0	0	0
4/25/2024	5:30 PM	1	70	9	0	2	0	0	1	3	0	0	0	0
4/25/2024	5:45 PM	1	66	19	0	2	0	0	0	4	0	0	0	0
4/25/2024	6:00 PM	0	101	22	0	3	0	0	0	1	0	0	0	0
4/25/2024	6:15 PM	2	95	23	1	4	0	0	1	4	0	0	0	0
4/25/2024	6:30 PM	2	96	23	0	1	0	0	0	0	0	0	0	0
4/25/2024	6:45 PM	0	109	16	0	1	0	0	0	3	0	0	0	0
4/25/2024	7:00 PM	0	106	16	1	3	2	0	0	2	0	0	0	0
4/25/2024	7:15 PM	0	107	27	0	2	1	0	0	0	0	0	0	0
4/25/2024	7:30 PM	0	82	15	0	1	0	0	0	3	0	0	0	0
4/25/2024	7:45 PM	0	88	26	1	1	0	0	0	0	0	0	0	0
4/25/2024	8:00 PM	0	85	18	0	2	0	0	0	1	0	0	0	0
4/25/2024	8:15 PM	0	107	15	0	1	0	0	0	1	0	0	0	0
4/25/2024	8:30 PM	0	105	17	0	2	0	0	0	2	0	0	0	0
4/25/2024	8:45 PM	0	90	12	0	1	0	0	0	3	0	0	0	0
4/25/2024	9:00 PM	0	68	13	1	2	0	0	0	1	0	0	0	0
4/25/2024	9:15 PM	0	75	11	0	0	0	0	0	2	0	0	0	0
4/25/2024	9:30 PM	0	42	9	0	0	0	0	0	0	0	1	0	0
4/25/2024	9:45 PM	0	56	10	0	1	0	0	0	2	0	1	0	0
4/25/2024	10:00 PM	0	45	15	0	0	0	0	0	2	0	0	0	0
4/25/2024	10:15 PM	0	58	20	0	1	0	0	0	0	0	0	0	0
4/25/2024	10:30 PM	0	35	10	0	0	0	0	0	0	0	1	0	0
4/25/2024	10:45 PM	1	35	11	0	1	0	0	0	0	0	0	0	0
4/25/2024	11:00 PM	0	41	14	1	1	0	0	0	1	0	0	0	0
4/25/2024	11:15 PM	0	43	13	0	0	0	0	0	2	0	1	0	0
4/25/2024	11:30 PM	0	28	12	0	0	0	0	0	3	0	1	0	0
4/25/2024	11:45 PM	0	19	7	0	4	0	0	0	2	0	0	0	0

4/26/2024	12:00 AM	0	22	11	0	1	0	0	0	1	0	0	0	0
4/26/2024	12:15 AM	0	29	12	0	0	0	0	0	1	0	1	0	0
4/26/2024	12:30 AM	0	23	14	0	0	0	0	0	2	0	0	0	0
4/26/2024	12:45 AM	0	11	8	0	0	0	0	0	2	0	0	0	0
4/26/2024	1:00 AM	0	14	8	0	0	0	0	0	2	0	0	0	0
4/26/2024	1:15 AM	0	15	8	0	0	0	0	0	3	0	1	0	0
4/26/2024	1:30 AM	0	5	2	0	0	0	0	0	0	0	1	0	0
4/26/2024	1:45 AM	0	7	5	0	0	0	0	0	1	0	0	0	0
4/26/2024	2:00 AM	0	8	3	0	0	0	0	0	1	0	0	0	0
4/26/2024	2:15 AM	0	5	3	0	2	0	0	0	1	0	0	0	0
4/26/2024	2:30 AM	0	4	4	0	1	0	0	0	0	0	1	0	0
4/26/2024	2:45 AM	0	8	5	0	0	0	0	0	0	0	0	0	0
4/26/2024	3:00 AM	0	8	4	0	0	0	0	0	2	0	1	0	0
4/26/2024	3:15 AM	0	6	6	0	1	0	0	0	1	0	0	0	0
4/26/2024	3:30 AM	0	12	4	0	0	0	0	0	2	0	0	0	0
4/26/2024	3:45 AM	0	11	5	0	2	0	0	0	4	0	0	0	0
4/26/2024	4:00 AM	0	11	6	0	3	0	0	0	3	0	0	0	0
4/26/2024	4:15 AM	0	8	5	0	1	0	0	0	0	0	3	0	0
4/26/2024	4:30 AM	0	16	9	0	1	0	0	0	2	0	0	0	0
4/26/2024	4:45 AM	0	15	6	0	4	0	0	0	3	0	0	0	0
4/26/2024	5:00 AM	0	12	6	0	2	0	0	0	2	0	0	0	0
4/26/2024	5:15 AM	0	27	13	0	2	0	0	0	6	0	0	0	0
4/26/2024	5:30 AM	0	26	14	0	3	0	0	0	4	0	0	0	0
4/26/2024	5:45 AM	0	28	13	0	7	0	0	0	3	0	0	0	0
4/26/2024	6:00 AM	0	35	23	0	9	0	0	0	4	0	0	0	0
4/26/2024	6:15 AM	0	49	26	0	3	1	0	0	6	0	1	0	0
4/26/2024	6:30 AM	0	71	49	0	4	4	0	1	5	0	1	0	0
4/26/2024	6:45 AM	0	67	37	0	3	3	0	0	4	0	0	0	0
4/26/2024	7:00 AM	0	87	34	1	4	3	1	0	4	0	0	0	0
4/26/2024	7:15 AM	1	112	47	0	3	1	0	2	2	2	0	0	0
4/26/2024	7:30 AM	0	131	42	0	6	3	0	1	3	0	0	0	0
4/26/2024	7:45 AM	0	117	43	0	2	1	0	0	1	0	0	0	0
4/26/2024	8:00 AM	0	81	41	0	5	6	2	1	5	0	0	0	0
4/26/2024	8:15 AM	0	82	40	0	3	0	1	1	3	0	0	0	0
4/26/2024	8:30 AM	0	86	49	4	6	0	1	0	8	0	1	0	0
4/26/2024	8:45 AM	0	91	47	0	8	1	1	2	3	0	0	0	0
4/26/2024	9:00 AM	0	82	55	0	6	1	2	2	2	0	0	0	0
4/26/2024	9:15 AM	0	95	36	1	12	3	2	0	8	0	0	0	0
4/26/2024	9:30 AM	0	85	35	0	13	3	0	0	11	1	0	0	0
4/26/2024	9:45 AM	0	71	32	0	3	0	1	1	10	0	0	0	0
4/26/2024	10:00 AM	0	71	31	0	10	2	0	1	8	0	0	0	0
4/26/2024	10:15 AM	0	73	23	0	3	1	1	1	7	0	0	0	0
4/26/2024	10:30 AM	0	90	38	0	1	0	0	2	6	0	0	0	0
4/26/2024	10:45 AM	0	85	27	1	5	2	0	2	7	0	0	0	0
4/26/2024	11:00 AM	0	98	29	0	3	1	0	1	4	0	0	0	0
4/26/2024	11:15 AM	0	95	35	2	3	2	0	2	3	0	0	0	0
4/26/2024	11:30 AM	0	99	27	0	2	3	2	0	2	0	0	0	0
4/26/2024	11:45 AM	0	109	34	0	3	0	0	0	2	0	0	0	0
4/26/2024	12:00 PM	0	103	34	0	2	2	0	1	2	0	0	0	0
4/26/2024	12:15 PM	0	107	30	0	1	0	1	2	1	0	0	0	0
4/26/2024	12:30 PM	0	101	30	1	7	1	0	1	7	0	0	0	0
4/26/2024	12:45 PM	0	138	43	2	4	2	0	1	6	0	0	0	0
4/26/2024	1:00 PM	0	87	31	1	1	0	0	0	1	0	0	0	0
4/26/2024	1:15 PM	0	106	28	1	1	0	0	1	2	0	0	0	0
4/26/2024	1:30 PM	0	102	28	1	2	3	0	0	6	0	0	0	0
4/26/2024	1:45 PM	0	86	30	0	0	1	0	0	4	0	0	0	0
4/26/2024	2:00 PM	0	102	34	0	4	0	0	0	4	0	0	0	0
4/26/2024	2:15 PM	1	111	34	0	9	2	0	2	1	0	0	0	0
4/26/2024	2:30 PM	0	113	27	1	2	3	0	4	5	0	0	0	0
4/26/2024	2:45 PM	1	154	31	0	3	1	0	1	2	0	0	0	0
4/26/2024	3:00 PM	0	124	44	0	1	2	0	0	6	0	0	0	0
4/26/2024	3:15 PM	0	153	26	1	3	2	0	0	4	0	0	0	0
4/26/2024	3:30 PM	1	121	40	0	5	0	0	0	0	0	0	0	0
4/26/2024	3:45 PM	1	138	33	1	2	0	0	0	1	0	0	0	0
4/26/2024	4:00 PM	0	119	25	0	2	3	0	0	8	0	0	0	0
4/26/2024	4:15 PM	0	120	28	0	2	0	0	1	1	0	0	0	0
4/26/2024	4:30 PM	0	107	32	0	2	1	0	0	4	0	0	0	0
4/26/2024	4:45 PM	0	129	32	0	1	0	0	1	3	0	0	0	0
4/26/2024	5:00 PM	0	132	25	0	2	1	0	0	2	0	0	0	0
4/26/2024	5:15 PM	0	124	26	0	2	1	0	0	2	0	0	0	0
4/26/2024	5:30 PM	1	115	22	0	0	0	0	0	1	0	0	0	0
4/26/2024	5:45 PM	0	123	24	1	1	0	0	0	1	0	0	0	0
4/26/2024	6:00 PM	0	109	25	0	3	1	0	0	1	0	0	0	0
4/26/2024	6:15 PM	0	96	14	0	2	0	0	1	1	0	0	0	0
4/26/2024	6:30 PM	0	105	19	0	2	0	0	0	0	0	0	0	0
4/26/2024	6:45 PM	0	98	16	0	1	1	0	0	0	0	0	0	0
4/26/2024	7:00 PM	0	96	17	0	2	1	0	0	1	0	0	0	0
4/26/2024	7:15 PM	3	97	21	0	2	0	0	0	0	0	0	0	0
4/26/2024	7:30 PM	0	100	22	0	3	0	0	0	1	0	0	0	0
4/26/2024	7:45 PM	1	81	12	0	2	0	0	0	0	0	0	0	0
4/26/2024	8:00 PM	0	80	15	0	1	0	0	0	1	0	0	0	0
4/26/2024	8:15 PM	0	90	21	0	1	0	0	0	1	0	0	0	0
4/26/2024	8:30 PM	0	72	14	0	3	0	0	0	3	0	0	0	0
4/26/2024	8:45 PM	0	70	13	1	0	0	0	0	1	0	0	0	0
4/26/2024	9:00 PM	0	79	20	0	0	0	0	0	4	0	0	0	0
4/26/2024	9:15 PM	0	68	14	0	0	0	0	0	2	0	0	0	0
4/26/2024	9:30 PM	0	70	18	0	1	0	0	0	1	0	0	0	0
4/26/2024	9:45 PM	0	62	8	0	1	0	0	0	0	0	0	0	0
4/26/2024	10:00 PM	0	70	12	0	0	0	0	0	1	0	0	0	0
4/26/2024	10:15 PM	0	60	9	0	0	0	0	0	1	0	2	0	0
4/26/2024	10:30 PM	0	51	8	0	1	0	0	0	0	0	0	0	0
4/26/2024	10:45 PM	0	49	7	0	0	0	0	0	0	0	0	0	0
4/26/2024	11:00 PM	0	58	10	0	0	0	0	0	0	0	0	0	0
4/26/2024	11:15 PM	0	47	8	0	1	0	0	0	0	0	0	0	0
4/26/2024	11:30 PM	0	48	6	0	0	0	0	0	1	0	0	0	0
4/26/2024	11:45 PM	0	25	5	0	0	0	0	0	1	0	0	0	0

4/27/2024	12:00 AM	0	30	3	0	1	1	0	0	1	0	1	0	0
4/27/2024	12:15 AM	0	33	7	0	0	0	0	0	0	0	0	0	0
4/27/2024	12:30 AM	0	29	5	0	0	0	0	0	0	0	0	0	0
4/27/2024	12:45 AM	0	22	3	0	1	0	0	0	0	0	0	0	0
4/27/2024	1:00 AM	0	20	3	0	0	1	0	0	0	0	0	0	0
4/27/2024	1:15 AM	0	19	2	0	0	0	0	0	2	0	1	0	0
4/27/2024	1:30 AM	0	17	3	0	0	0	0	0	1	0	0	0	0
4/27/2024	1:45 AM	0	15	2	0	0	0	0	0	0	0	0	0	0
4/27/2024	2:00 AM	0	17	2	0	0	0	0	0	2	0	0	0	0
4/27/2024	2:15 AM	0	16	2	0	0	0	0	0	0	0	0	0	0
4/27/2024	2:30 AM	0	10	3	0	0	1	0	0	2	0	2	0	0
4/27/2024	2:45 AM	0	12	3	0	0	0	0	0	1	0	0	0	0
4/27/2024	3:00 AM	0	12	2	0	1	1	0	0	0	0	0	0	0
4/27/2024	3:15 AM	0	7	1	0	1	0	0	1	0	0	1	0	0
4/27/2024	3:30 AM	0	20	3	0	2	0	0	0	0	0	0	0	0
4/27/2024	3:45 AM	0	15	2	0	1	0	0	0	1	0	0	0	0
4/27/2024	4:00 AM	0	20	4	0	2	0	0	1	2	0	0	0	0
4/27/2024	4:15 AM	0	15	2	0	1	2	0	0	1	0	2	0	0
4/27/2024	4:30 AM	0	17	3	0	1	2	0	0	1	0	0	0	0
4/27/2024	4:45 AM	0	21	6	0	1	0	0	0	0	0	0	0	0
4/27/2024	5:00 AM	0	18	3	0	0	0	0	0	0	0	0	0	0
4/27/2024	5:15 AM	0	20	4	0	2	1	0	0	1	0	0	0	0
4/27/2024	5:30 AM	0	25	6	0	1	2	0	0	0	0	0	0	0
4/27/2024	5:45 AM	0	15	2	0	3	0	0	0	0	0	0	0	0
4/27/2024	6:00 AM	0	30	5	0	1	1	0	0	1	0	0	0	0
4/27/2024	6:15 AM	0	36	6	0	1	0	0	0	1	0	0	0	0
4/27/2024	6:30 AM	0	38	5	0	1	0	0	0	1	0	0	0	0
4/27/2024	6:45 AM	0	47	11	0	0	0	0	0	1	0	0	0	0
4/27/2024	7:00 AM	0	57	12	1	2	0	0	0	1	0	1	0	0
4/27/2024	7:15 AM	0	56	17	1	2	0	0	0	2	0	0	0	0
4/27/2024	7:30 AM	0	52	20	0	1	1	0	2	1	0	0	0	0
4/27/2024	7:45 AM	0	64	22	0	1	1	0	0	1	0	0	0	0
4/27/2024	8:00 AM	0	68	17	0	2	1	1	0	0	0	0	0	0
4/27/2024	8:15 AM	0	65	20	0	0	1	0	0	2	0	0	0	0
4/27/2024	8:30 AM	0	80	38	0	2	2	0	0	3	0	0	0	0
4/27/2024	8:45 AM	0	58	19	0	2	1	0	0	2	0	0	0	0
4/27/2024	9:00 AM	1	83	15	0	7	2	0	0	2	0	0	0	0
4/27/2024	9:15 AM	0	68	12	0	1	0	0	0	2	0	0	0	0
4/27/2024	9:30 AM	0	77	18	0	0	1	0	0	3	0	0	0	0
4/27/2024	9:45 AM	0	102	23	0	3	2	0	0	2	0	0	0	0
4/27/2024	10:00 AM	0	68	20	1	1	0	0	1	1	0	0	0	0
4/27/2024	10:15 AM	0	85	28	0	0	0	0	0	2	0	0	0	0
4/27/2024	10:30 AM	0	100	19	0	2	0	0	0	0	0	0	0	0
4/27/2024	10:45 AM	0	92	28	0	3	0	0	0	3	0	0	0	0
4/27/2024	11:00 AM	2	73	17	0	2	1	0	0	0	0	0	0	0
4/27/2024	11:15 AM	0	96	22	0	0	0	0	0	1	0	0	0	0
4/27/2024	11:30 AM	0	93	16	0	1	0	0	0	5	0	0	0	0
4/27/2024	11:45 AM	1	114	28	0	2	0	0	0	0	0	0	0	0
4/27/2024	12:00 PM	0	105	32	0	0	0	0	0	1	0	0	0	0
4/27/2024	12:15 PM	0	108	31	1	0	0	1	0	2	0	0	0	0
4/27/2024	12:30 PM	0	118	25	1	1	0	0	0	4	0	0	0	0
4/27/2024	12:45 PM	0	135	30	0	2	0	0	0	1	0	0	0	0
4/27/2024	1:00 PM	0	100	22	0	3	0	0	1	0	0	0	0	0
4/27/2024	1:15 PM	2	115	33	0	0	1	0	0	2	0	0	0	0
4/27/2024	1:30 PM	3	112	22	0	0	0	0	0	2	0	0	0	0
4/27/2024	1:45 PM	1	128	17	1	1	0	0	0	1	0	0	0	0
4/27/2024	2:00 PM	0	120	29	0	0	0	0	0	3	0	0	0	0
4/27/2024	2:15 PM	0	124	31	0	0	0	0	0	1	0	0	0	0
4/27/2024	2:30 PM	0	143	21	0	0	1	0	0	0	0	0	0	0
4/27/2024	2:45 PM	0	138	27	0	2	0	0	0	0	0	0	0	0
4/27/2024	3:00 PM	0	125	20	1	0	2	0	0	0	0	0	0	0
4/27/2024	3:15 PM	0	138	19	0	0	1	0	1	1	0	0	0	0
4/27/2024	3:30 PM	0	144	26	0	1	0	0	0	3	0	0	0	0
4/27/2024	3:45 PM	0	121	25	0	1	1	0	0	1	0	0	0	0
4/27/2024	4:00 PM	0	111	21	0	0	0	0	0	1	0	0	0	0
4/27/2024	4:15 PM	0	113	10	0	2	1	0	0	0	0	0	0	0
4/27/2024	4:30 PM	1	108	21	0	0	0	0	0	1	1	0	0	0
4/27/2024	4:45 PM	0	110	15	0	0	0	0	0	0	0	0	0	0
4/27/2024	5:00 PM	2	88	21	1	1	0	0	0	0	0	0	0	0
4/27/2024	5:15 PM	1	131	22	0	0	0	0	1	1	0	0	0	0
4/27/2024	5:30 PM	0	107	15	1	1	0	0	0	2	0	0	0	0
4/27/2024	5:45 PM	0	102	21	0	0	0	0	1	0	0	0	0	0
4/27/2024	6:00 PM	0	115	6	0	0	1	0	1	2	0	0	0	0
4/27/2024	6:15 PM	0	79	15	0	0	0	0	0	2	0	0	0	0
4/27/2024	6:30 PM	0	94	17	0	1	0	0	0	1	0	0	0	0
4/27/2024	6:45 PM	1	76	11	0	1	0	0	0	1	0	0	0	0
4/27/2024	7:00 PM	1	66	18	1	0	0	0	0	0	0	0	0	0
4/27/2024	7:15 PM	1	110	18	1	0	0	0	0	2	0	0	0	0
4/27/2024	7:30 PM	0	95	15	0	0	0	0	0	0	0	0	0	0
4/27/2024	7:45 PM	3	82	15	0	0	0	0	0	2	0	0	0	0
4/27/2024	8:00 PM	1	88	9	0	0	1	0	0	0	0	0	0	0
4/27/2024	8:15 PM	0	55	7	0	0	0	0	0	0	0	0	0	0
4/27/2024	8:30 PM	0	71	6	0	0	0	0	0	0	0	0	0	0
4/27/2024	8:45 PM	0	68	7	1	1	0	0	0	1	0	0	0	0
4/27/2024	9:00 PM	0	86	7	0	0	0	0	0	1	0	0	0	0
4/27/2024	9:15 PM	0	68	8	0	0	0	0	0	1	0	0	0	0
4/27/2024	9:30 PM	0	69	9	0	1	0	0	0	0	0	0	0	0
4/27/2024	9:45 PM	0	49	6	0	0	0	0	0	1	0	0	0	0
4/27/2024	10:00 PM	0	73	7	0	1	0	0	0	0	0	0	0	0
4/27/2024	10:15 PM	0	58	6	0	0	0	0	0	1	0	0	0	0
4/27/2024	10:30 PM	0	56	9	0	0	0	0	0	3	0	0	0	0
4/27/2024	10:45 PM	0	52	6	1	0	0	0	0	0	0	0	0	0
4/27/2024	11:00 PM	0	45	4	1	0	0	0	0	0	0	0	0	0
4/27/2024	11:15 PM	0	39	5	0	1	0	0	0	2	0	0	0	0
4/27/2024	11:30 PM	0	44	6	0	0	0	0	0	0	0	0	0	0
4/27/2024	11:45 PM	0	37	6	0	0	0	0	0	0	0	0	0	0

SB
File Name:
Start Date: 4/21/2024
Start Time: 0
Site Code: 9
Station ID: 1
Location 1: I-26 N/Bound Off-Ramp, south of I-20
Location 2:

Date	Time	1	2	3	4	5	6	7	8	9	10	11	12	13
4/21/2024	12:00 AM	0	0	0	0	0	0	0	0	0	0	0	0	0
4/21/2024	12:15 AM	0	0	0	0	0	0	0	0	0	0	0	0	0
4/21/2024	12:30 AM	0	0	0	0	0	0	0	0	0	0	0	0	0
4/21/2024	12:45 AM	0	0	0	0	0	0	0	0	0	0	0	0	0
4/21/2024	1:00 AM	0	0	0	0	0	0	0	0	0	0	0	0	0
4/21/2024	1:15 AM	0	0	0	0	0	0	0	0	0	0	0	0	0
4/21/2024	1:30 AM	0	0	0	0	0	0	0	0	0	0	0	0	0
4/21/2024	1:45 AM	0	0	0	0	0	0	0	0	0	0	0	0	0
4/21/2024	2:00 AM	0	0	0	0	0	0	0	0	0	0	0	0	0
4/21/2024	2:15 AM	0	0	0	0	0	0	0	0	0	0	0	0	0
4/21/2024	2:30 AM	0	0	0	0	0	0	0	0	0	0	0	0	0
4/21/2024	2:45 AM	0	0	0	0	0	0	0	0	0	0	0	0	0
4/21/2024	3:00 AM	0	0	0	0	0	0	0	0	0	0	0	0	0
4/21/2024	3:15 AM	0	0	0	0	0	0	0	0	0	0	0	0	0
4/21/2024	3:30 AM	0	0	0	0	0	0	0	0	0	0	0	0	0
4/21/2024	3:45 AM	0	0	0	0	0	0	0	0	0	0	0	0	0
4/21/2024	4:00 AM	0	0	0	0	0	0	0	0	0	0	0	0	0
4/21/2024	4:15 AM	0	0	0	0	0	0	0	0	0	0	0	0	0
4/21/2024	4:30 AM	0	0	0	0	0	0	0	0	0	0	0	0	0
4/21/2024	4:45 AM	0	0	0	0	0	0	0	0	0	0	0	0	0
4/21/2024	5:00 AM	0	0	0	0	0	0	0	0	0	0	0	0	0
4/21/2024	5:15 AM	0	0	0	0	0	0	0	0	0	0	0	0	0
4/21/2024	5:30 AM	0	0	0	0	0	0	0	0	0	0	0	0	0
4/21/2024	5:45 AM	0	0	0	0	0	0	0	0	0	0	0	0	0
4/21/2024	6:00 AM	0	0	0	0	0	0	0	0	0	0	0	0	0
4/21/2024	6:15 AM	0	0	0	0	0	0	0	0	0	0	0	0	0
4/21/2024	6:30 AM	0	0	0	0	0	0	0	0	0	0	0	0	0
4/21/2024	6:45 AM	0	0	0	0	0	0	0	0	0	0	0	0	0
4/21/2024	7:00 AM	0	0	0	0	0	0	0	0	0	0	0	0	0
4/21/2024	7:15 AM	0	0	0	0	0	0	0	0	0	0	0	0	0
4/21/2024	7:30 AM	0	0	0	0	0	0	0	0	0	0	0	0	0
4/21/2024	7:45 AM	0	0	0	0	0	0	0	0	0	0	0	0	0
4/21/2024	8:00 AM	0	0	0	0	0	0	0	0	0	0	0	0	0
4/21/2024	8:15 AM	0	0	0	0	0	0	0	0	0	0	0	0	0
4/21/2024	8:30 AM	0	0	0	0	0	0	0	0	0	0	0	0	0
4/21/2024	8:45 AM	0	0	0	0	0	0	0	0	0	0	0	0	0
4/21/2024	9:00 AM	0	0	0	0	0	0	0	0	0	0	0	0	0
4/21/2024	9:15 AM	0	0	0	0	0	0	0	0	0	0	0	0	0
4/21/2024	9:30 AM	0	0	0	0	0	0	0	0	0	0	0	0	0
4/21/2024	9:45 AM	0	0	0	0	0	0	0	0	0	0	0	0	0
4/21/2024	10:00 AM	0	0	0	0	0	0	0	0	0	0	0	0	0
4/21/2024	10:15 AM	0	0	0	0	0	0	0	0	0	0	0	0	0
4/21/2024	10:30 AM	0	0	0	0	0	0	0	0	0	0	0	0	0
4/21/2024	10:45 AM	0	0	0	0	0	0	0	0	0	0	0	0	0
4/21/2024	11:00 AM	0	0	0	0	0	0	0	0	0	0	0	0	0
4/21/2024	11:15 AM	0	0	0	0	0	0	0	0	0	0	0	0	0
4/21/2024	11:30 AM	0	0	0	0	0	0	0	0	0	0	0	0	0
4/21/2024	11:45 AM	0	0	0	0	0	0	0	0	0	0	0	0	0
4/21/2024	12:00 PM	0	0	0	0	0	0	0	0	0	0	0	0	0
4/21/2024	12:15 PM	0	0	0	0	0	0	0	0	0	0	0	0	0
4/21/2024	12:30 PM	0	0	0	0	0	0	0	0	0	0	0	0	0
4/21/2024	12:45 PM	0	0	0	0	0	0	0	0	0	0	0	0	0
4/21/2024	1:00 PM	0	0	0	0	0	0	0	0	0	0	0	0	0
4/21/2024	1:15 PM	0	0	0	0	0	0	0	0	0	0	0	0	0
4/21/2024	1:30 PM	0	0	0	0	0	0	0	0	0	0	0	0	0
4/21/2024	1:45 PM	0	0	0	0	0	0	0	0	0	0	0	0	0
4/21/2024	2:00 PM	0	0	0	0	0	0	0	0	0	0	0	0	0
4/21/2024	2:15 PM	0	0	0	0	0	0	0	0	0	0	0	0	0
4/21/2024	2:30 PM	0	0	0	0	0	0	0	0	0	0	0	0	0
4/21/2024	2:45 PM	0	0	0	0	0	0	0	0	0	0	0	0	0
4/21/2024	3:00 PM	0	0	0	0	0	0	0	0	0	0	0	0	0
4/21/2024	3:15 PM	0	0	0	0	0	0	0	0	0	0	0	0	0
4/21/2024	3:30 PM	0	0	0	0	0	0	0	0	0	0	0	0	0
4/21/2024	3:45 PM	0	0	0	0	0	0	0	0	0	0	0	0	0
4/21/2024	4:00 PM	0	0	0	0	0	0	0	0	0	0	0	0	0
4/21/2024	4:15 PM	0	0	0	0	0	0	0	0	0	0	0	0	0
4/21/2024	4:30 PM	0	0	0	0	0	0	0	0	0	0	0	0	0
4/21/2024	4:45 PM	0	0	0	0	0	0	0	0	0	0	0	0	0
4/21/2024	5:00 PM	0	0	0	0	0	0	0	0	0	0	0	0	0
4/21/2024	5:15 PM	0	0	0	0	0	0	0	0	0	0	0	0	0
4/21/2024	5:30 PM	0	0	0	0	0	0	0	0	0	0	0	0	0
4/21/2024	5:45 PM	0	0	0	0	0	0	0	0	0	0	0	0	0
4/21/2024	6:00 PM	0	0	0	0	0	0	0	0	0	0	0	0	0
4/21/2024	6:15 PM	0	0	0	0	0	0	0	0	0	0	0	0	0
4/21/2024	6:30 PM	0	0	0	0	0	0	0	0	0	0	0	0	0
4/21/2024	6:45 PM	0	0	0	0	0	0	0	0	0	0	0	0	0
4/21/2024	7:00 PM	0	0	0	0	0	0	0	0	0	0	0	0	0
4/21/2024	7:15 PM	0	0	0	0	0	0	0	0	0	0	0	0	0
4/21/2024	7:30 PM	0	0	0	0	0	0	0	0	0	0	0	0	0
4/21/2024	7:45 PM	0	0	0	0	0	0	0	0	0	0	0	0	0
4/21/2024	8:00 PM	0	0	0	0	0	0	0	0	0	0	0	0	0
4/21/2024	8:15 PM	0	0	0	0	0	0	0	0	0	0	0	0	0
4/21/2024	8:30 PM	0	0	0	0	0	0	0	0	0	0	0	0	0
4/21/2024	8:45 PM	0	0	0	0	0	0	0	0	0	0	0	0	0
4/21/2024	9:00 PM	0	0	0	0	0	0	0	0	0	0	0	0	0
4/21/2024	9:15 PM	0	0	0	0	0	0	0	0	0	0	0	0	0
4/21/2024	9:30 PM	0	0	0	0	0	0	0	0	0	0	0	0	0
4/21/2024	9:45 PM	0	0	0	0	0	0	0	0	0	0	0	0	0
4/21/2024	10:00 PM	0	0	0	0	0	0	0	0	0	0	0	0	0
4/21/2024	10:15 PM	0	0	0	0	0	0	0	0	0	0	0	0	0
4/21/2024	10:30 PM	0	0	0	0	0	0	0	0	0	0	0	0	0
4/21/2024	10:45 PM	0	0	0	0	0	0	0	0	0	0	0	0	0
4/21/2024	11:00 PM	0	0	0	0	0	0	0	0	0	0	0	0	0
4/21/2024	11:15 PM	0	0	0	0	0	0	0	0	0	0	0	0	0
4/21/2024	11:30 PM	0	0	0	0	0	0	0	0	0	0	0	0	0
4/21/2024	11:45 PM	0	0	0	0	0	0	0	0	0	0	0	0	0

4/22/2024	12:00 AM	0	0	0	0	0	0	0	0	0	0	0	0	0
4/22/2024	12:15 AM	0	0	0	0	0	0	0	0	0	0	0	0	0
4/22/2024	12:30 AM	0	0	0	0	0	0	0	0	0	0	0	0	0
4/22/2024	12:45 AM	0	0	0	0	0	0	0	0	0	0	0	0	0
4/22/2024	1:00 AM	0	0	0	0	0	0	0	0	0	0	0	0	0
4/22/2024	1:15 AM	0	0	0	0	0	0	0	0	0	0	0	0	0
4/22/2024	1:30 AM	0	0	0	0	0	0	0	0	0	0	0	0	0
4/22/2024	1:45 AM	0	0	0	0	0	0	0	0	0	0	0	0	0
4/22/2024	2:00 AM	0	0	0	0	0	0	0	0	0	0	0	0	0
4/22/2024	2:15 AM	0	0	0	0	0	0	0	0	0	0	0	0	0
4/22/2024	2:30 AM	0	0	0	0	0	0	0	0	0	0	0	0	0
4/22/2024	2:45 AM	0	0	0	0	0	0	0	0	0	0	0	0	0
4/22/2024	3:00 AM	0	0	0	0	0	0	0	0	0	0	0	0	0
4/22/2024	3:15 AM	0	0	0	0	0	0	0	0	0	0	0	0	0
4/22/2024	3:30 AM	0	0	0	0	0	0	0	0	0	0	0	0	0
4/22/2024	3:45 AM	0	0	0	0	0	0	0	0	0	0	0	0	0
4/22/2024	4:00 AM	0	0	0	0	0	0	0	0	0	0	0	0	0
4/22/2024	4:15 AM	0	0	0	0	0	0	0	0	0	0	0	0	0
4/22/2024	4:30 AM	0	0	0	0	0	0	0	0	0	0	0	0	0
4/22/2024	4:45 AM	0	0	0	0	0	0	0	0	0	0	0	0	0
4/22/2024	5:00 AM	0	0	0	0	0	0	0	0	0	0	0	0	0
4/22/2024	5:15 AM	0	0	0	0	0	0	0	0	0	0	0	0	0
4/22/2024	5:30 AM	0	0	0	0	0	0	0	0	0	0	0	0	0
4/22/2024	5:45 AM	0	0	0	0	0	0	0	0	0	0	0	0	0
4/22/2024	6:00 AM	0	0	0	0	0	0	0	0	0	0	0	0	0
4/22/2024	6:15 AM	0	0	0	0	0	0	0	0	0	0	0	0	0
4/22/2024	6:30 AM	0	0	0	0	0	0	0	0	0	0	0	0	0
4/22/2024	6:45 AM	0	0	0	0	0	0	0	0	0	0	0	0	0
4/22/2024	7:00 AM	0	0	0	0	0	0	0	0	0	0	0	0	0
4/22/2024	7:15 AM	0	0	0	0	0	0	0	0	0	0	0	0	0
4/22/2024	7:30 AM	0	0	0	0	0	0	0	0	0	0	0	0	0
4/22/2024	7:45 AM	0	0	0	0	0	0	0	0	0	0	0	0	0
4/22/2024	8:00 AM	0	0	0	0	0	0	0	0	0	0	0	0	0
4/22/2024	8:15 AM	0	0	0	0	0	0	0	0	0	0	0	0	0
4/22/2024	8:30 AM	0	0	0	0	0	0	0	0	0	0	0	0	0
4/22/2024	8:45 AM	0	0	0	0	0	0	0	0	0	0	0	0	0
4/22/2024	9:00 AM	0	0	0	0	0	0	0	0	0	0	0	0	0
4/22/2024	9:15 AM	0	0	0	0	0	0	0	0	0	0	0	0	0
4/22/2024	9:30 AM	0	0	0	0	0	0	0	0	0	0	0	0	0
4/22/2024	9:45 AM	0	0	0	0	0	0	0	0	0	0	0	0	0
4/22/2024	10:00 AM	0	0	0	0	0	0	0	0	0	0	0	0	0
4/22/2024	10:15 AM	0	0	0	0	0	0	0	0	0	0	0	0	0
4/22/2024	10:30 AM	0	0	0	0	0	0	0	0	0	0	0	0	0
4/22/2024	10:45 AM	0	0	0	0	0	0	0	0	0	0	0	0	0
4/22/2024	11:00 AM	0	0	0	0	0	0	0	0	0	0	0	0	0
4/22/2024	11:15 AM	0	0	0	0	0	0	0	0	0	0	0	0	0
4/22/2024	11:30 AM	0	0	0	0	0	0	0	0	0	0	0	0	0
4/22/2024	11:45 AM	0	0	0	0	0	0	0	0	0	0	0	0	0
4/22/2024	12:00 PM	0	0	0	0	0	0	0	0	0	0	0	0	0
4/22/2024	12:15 PM	0	0	0	0	0	0	0	0	0	0	0	0	0
4/22/2024	12:30 PM	0	0	0	0	0	0	0	0	0	0	0	0	0
4/22/2024	12:45 PM	0	0	0	0	0	0	0	0	0	0	0	0	0
4/22/2024	1:00 PM	0	0	0	0	0	0	0	0	0	0	0	0	0
4/22/2024	1:15 PM	0	0	0	0	0	0	0	0	0	0	0	0	0
4/22/2024	1:30 PM	0	0	0	0	0	0	0	0	0	0	0	0	0
4/22/2024	1:45 PM	0	0	0	0	0	0	0	0	0	0	0	0	0
4/22/2024	2:00 PM	0	0	0	0	0	0	0	0	0	0	0	0	0
4/22/2024	2:15 PM	0	0	0	0	0	0	0	0	0	0	0	0	0
4/22/2024	2:30 PM	0	0	0	0	0	0	0	0	0	0	0	0	0
4/22/2024	2:45 PM	0	0	0	0	0	0	0	0	0	0	0	0	0
4/22/2024	3:00 PM	0	0	0	0	0	0	0	0	0	0	0	0	0
4/22/2024	3:15 PM	0	0	0	0	0	0	0	0	0	0	0	0	0
4/22/2024	3:30 PM	0	0	0	0	0	0	0	0	0	0	0	0	0
4/22/2024	3:45 PM	0	0	0	0	0	0	0	0	0	0	0	0	0
4/22/2024	4:00 PM	0	0	0	0	0	0	0	0	0	0	0	0	0
4/22/2024	4:15 PM	0	0	0	0	0	0	0	0	0	0	0	0	0
4/22/2024	4:30 PM	0	0	0	0	0	0	0	0	0	0	0	0	0
4/22/2024	4:45 PM	0	0	0	0	0	0	0	0	0	0	0	0	0
4/22/2024	5:00 PM	0	0	0	0	0	0	0	0	0	0	0	0	0
4/22/2024	5:15 PM	0	0	0	0	0	0	0	0	0	0	0	0	0
4/22/2024	5:30 PM	0	0	0	0	0	0	0	0	0	0	0	0	0
4/22/2024	5:45 PM	0	0	0	0	0	0	0	0	0	0	0	0	0
4/22/2024	6:00 PM	0	0	0	0	0	0	0	0	0	0	0	0	0
4/22/2024	6:15 PM	0	0	0	0	0	0	0	0	0	0	0	0	0
4/22/2024	6:30 PM	0	0	0	0	0	0	0	0	0	0	0	0	0
4/22/2024	6:45 PM	0	0	0	0	0	0	0	0	0	0	0	0	0
4/22/2024	7:00 PM	0	0	0	0	0	0	0	0	0	0	0	0	0
4/22/2024	7:15 PM	0	0	0	0	0	0	0	0	0	0	0	0	0
4/22/2024	7:30 PM	0	0	0	0	0	0	0	0	0	0	0	0	0
4/22/2024	7:45 PM	0	0	0	0	0	0	0	0	0	0	0	0	0
4/22/2024	8:00 PM	0	0	0	0	0	0	0	0	0	0	0	0	0
4/22/2024	8:15 PM	0	0	0	0	0	0	0	0	0	0	0	0	0
4/22/2024	8:30 PM	0	0	0	0	0	0	0	0	0	0	0	0	0
4/22/2024	8:45 PM	0	0	0	0	0	0	0	0	0	0	0	0	0
4/22/2024	9:00 PM	0	0	0	0	0	0	0	0	0	0	0	0	0
4/22/2024	9:15 PM	0	0	0	0	0	0	0	0	0	0	0	0	0
4/22/2024	9:30 PM	0	0	0	0	0	0	0	0	0	0	0	0	0
4/22/2024	9:45 PM	0	0	0	0	0	0	0	0	0	0	0	0	0
4/22/2024	10:00 PM	0	0	0	0	0	0	0	0	0	0	0	0	0
4/22/2024	10:15 PM	0	0	0	0	0	0	0	0	0	0	0	0	0
4/22/2024	10:30 PM	0	0	0	0	0	0	0	0	0	0	0	0	0
4/22/2024	10:45 PM	0	0	0	0	0	0	0	0	0	0	0	0	0
4/22/2024	11:00 PM	0	0	0	0	0	0	0	0	0	0	0	0	0
4/22/2024	11:15 PM	0	0	0	0	0	0	0	0	0	0	0	0	0
4/22/2024	11:30 PM	0	0	0	0	0	0	0	0	0	0	0	0	0
4/22/2024	11:45 PM	0	0	0	0	0	0	0	0	0	0	0	0	0

4/23/2024	12:00 AM	0	0	0	0	0	0	0	0	0	0	0	0	0
4/23/2024	12:15 AM	0	0	0	0	0	0	0	0	0	0	0	0	0
4/23/2024	12:30 AM	0	0	0	0	0	0	0	0	0	0	0	0	0
4/23/2024	12:45 AM	0	0	0	0	0	0	0	0	0	0	0	0	0
4/23/2024	1:00 AM	0	0	0	0	0	0	0	0	0	0	0	0	0
4/23/2024	1:15 AM	0	0	0	0	0	0	0	0	0	0	0	0	0
4/23/2024	1:30 AM	0	0	0	0	0	0	0	0	0	0	0	0	0
4/23/2024	1:45 AM	0	0	0	0	0	0	0	0	0	0	0	0	0
4/23/2024	2:00 AM	0	0	0	0	0	0	0	0	0	0	0	0	0
4/23/2024	2:15 AM	0	0	0	0	0	0	0	0	0	0	0	0	0
4/23/2024	2:30 AM	0	0	0	0	0	0	0	0	0	0	0	0	0
4/23/2024	2:45 AM	0	0	0	0	0	0	0	0	0	0	0	0	0
4/23/2024	3:00 AM	0	0	0	0	0	0	0	0	0	0	0	0	0
4/23/2024	3:15 AM	0	0	0	0	0	0	0	0	0	0	0	0	0
4/23/2024	3:30 AM	0	0	0	0	0	0	0	0	0	0	0	0	0
4/23/2024	3:45 AM	0	0	0	0	0	0	0	0	0	0	0	0	0
4/23/2024	4:00 AM	0	0	0	0	0	0	0	0	0	0	0	0	0
4/23/2024	4:15 AM	0	0	0	0	0	0	0	0	0	0	0	0	0
4/23/2024	4:30 AM	0	0	0	0	0	0	0	0	0	0	0	0	0
4/23/2024	4:45 AM	0	0	0	0	0	0	0	0	0	0	0	0	0
4/23/2024	5:00 AM	0	0	0	0	0	0	0	0	0	0	0	0	0
4/23/2024	5:15 AM	0	0	0	0	0	0	0	0	0	0	0	0	0
4/23/2024	5:30 AM	0	0	0	0	0	0	0	0	0	0	0	0	0
4/23/2024	5:45 AM	0	0	0	0	0	0	0	0	0	0	0	0	0
4/23/2024	6:00 AM	0	0	0	0	0	0	0	0	0	0	0	0	0
4/23/2024	6:15 AM	0	0	0	0	0	0	0	0	0	0	0	0	0
4/23/2024	6:30 AM	0	0	0	0	0	0	0	0	0	0	0	0	0
4/23/2024	6:45 AM	0	0	0	0	0	0	0	0	0	0	0	0	0
4/23/2024	7:00 AM	0	0	0	0	0	0	0	0	0	0	0	0	0
4/23/2024	7:15 AM	0	0	0	0	0	0	0	0	0	0	0	0	0
4/23/2024	7:30 AM	0	0	0	0	0	0	0	0	0	0	0	0	0
4/23/2024	7:45 AM	0	0	0	0	0	0	0	0	0	0	0	0	0
4/23/2024	8:00 AM	0	0	0	0	0	0	0	0	0	0	0	0	0
4/23/2024	8:15 AM	0	0	0	0	0	0	0	0	0	0	0	0	0
4/23/2024	8:30 AM	0	0	0	0	0	0	0	0	0	0	0	0	0
4/23/2024	8:45 AM	0	0	0	0	0	0	0	0	0	0	0	0	0
4/23/2024	9:00 AM	0	0	0	0	0	0	0	0	0	0	0	0	0
4/23/2024	9:15 AM	0	0	0	0	0	0	0	0	0	0	0	0	0
4/23/2024	9:30 AM	0	0	0	0	0	0	0	0	0	0	0	0	0
4/23/2024	9:45 AM	0	0	0	0	0	0	0	0	0	0	0	0	0
4/23/2024	10:00 AM	0	0	0	0	0	0	0	0	0	0	0	0	0
4/23/2024	10:15 AM	0	0	0	0	0	0	0	0	0	0	0	0	0
4/23/2024	10:30 AM	0	0	0	0	0	0	0	0	0	0	0	0	0
4/23/2024	10:45 AM	0	0	0	0	0	0	0	0	0	0	0	0	0
4/23/2024	11:00 AM	0	0	0	0	0	0	0	0	0	0	0	0	0
4/23/2024	11:15 AM	0	0	0	0	0	0	0	0	0	0	0	0	0
4/23/2024	11:30 AM	0	0	0	0	0	0	0	0	0	0	0	0	0
4/23/2024	11:45 AM	0	0	0	0	0	0	0	0	0	0	0	0	0
4/23/2024	12:00 PM	0	0	0	0	0	0	0	0	0	0	0	0	0
4/23/2024	12:15 PM	0	0	0	0	0	0	0	0	0	0	0	0	0
4/23/2024	12:30 PM	0	0	0	0	0	0	0	0	0	0	0	0	0
4/23/2024	12:45 PM	0	0	0	0	0	0	0	0	0	0	0	0	0
4/23/2024	1:00 PM	0	0	0	0	0	0	0	0	0	0	0	0	0
4/23/2024	1:15 PM	0	0	0	0	0	0	0	0	0	0	0	0	0
4/23/2024	1:30 PM	0	0	0	0	0	0	0	0	0	0	0	0	0
4/23/2024	1:45 PM	0	0	0	0	0	0	0	0	0	0	0	0	0
4/23/2024	2:00 PM	0	0	0	0	0	0	0	0	0	0	0	0	0
4/23/2024	2:15 PM	0	0	0	0	0	0	0	0	0	0	0	0	0
4/23/2024	2:30 PM	0	0	0	0	0	0	0	0	0	0	0	0	0
4/23/2024	2:45 PM	0	0	0	0	0	0	0	0	0	0	0	0	0
4/23/2024	3:00 PM	0	0	0	0	0	0	0	0	0	0	0	0	0
4/23/2024	3:15 PM	0	0	0	0	0	0	0	0	0	0	0	0	0
4/23/2024	3:30 PM	0	0	0	0	0	0	0	0	0	0	0	0	0
4/23/2024	3:45 PM	0	0	0	0	0	0	0	0	0	0	0	0	0
4/23/2024	4:00 PM	0	0	0	0	0	0	0	0	0	0	0	0	0
4/23/2024	4:15 PM	0	0	0	0	0	0	0	0	0	0	0	0	0
4/23/2024	4:30 PM	0	0	0	0	0	0	0	0	0	0	0	0	0
4/23/2024	4:45 PM	0	0	0	0	0	0	0	0	0	0	0	0	0
4/23/2024	5:00 PM	0	0	0	0	0	0	0	0	0	0	0	0	0
4/23/2024	5:15 PM	0	0	0	0	0	0	0	0	0	0	0	0	0
4/23/2024	5:30 PM	0	0	0	0	0	0	0	0	0	0	0	0	0
4/23/2024	5:45 PM	0	0	0	0	0	0	0	0	0	0	0	0	0
4/23/2024	6:00 PM	0	0	0	0	0	0	0	0	0	0	0	0	0
4/23/2024	6:15 PM	0	0	0	0	0	0	0	0	0	0	0	0	0
4/23/2024	6:30 PM	0	0	0	0	0	0	0	0	0	0	0	0	0
4/23/2024	6:45 PM	0	0	0	0	0	0	0	0	0	0	0	0	0
4/23/2024	7:00 PM	0	0	0	0	0	0	0	0	0	0	0	0	0
4/23/2024	7:15 PM	0	0	0	0	0	0	0	0	0	0	0	0	0
4/23/2024	7:30 PM	0	0	0	0	0	0	0	0	0	0	0	0	0
4/23/2024	7:45 PM	0	0	0	0	0	0	0	0	0	0	0	0	0
4/23/2024	8:00 PM	0	0	0	0	0	0	0	0	0	0	0	0	0
4/23/2024	8:15 PM	0	0	0	0	0	0	0	0	0	0	0	0	0
4/23/2024	8:30 PM	0	0	0	0	0	0	0	0	0	0	0	0	0
4/23/2024	8:45 PM	0	0	0	0	0	0	0	0	0	0	0	0	0
4/23/2024	9:00 PM	0	0	0	0	0	0	0	0	0	0	0	0	0
4/23/2024	9:15 PM	0	0	0	0	0	0	0	0	0	0	0	0	0
4/23/2024	9:30 PM	0	0	0	0	0	0	0	0	0	0	0	0	0
4/23/2024	9:45 PM	0	0	0	0	0	0	0	0	0	0	0	0	0
4/23/2024	10:00 PM	0	0	0	0	0	0	0	0	0	0	0	0	0
4/23/2024	10:15 PM	0	0	0	0	0	0	0	0	0	0	0	0	0
4/23/2024	10:30 PM	0	0	0	0	0	0	0	0	0	0	0	0	0
4/23/2024	10:45 PM	0	0	0	0	0	0	0	0	0	0	0	0	0
4/23/2024	11:00 PM	0	0	0	0	0	0	0	0	0	0	0	0	0
4/23/2024	11:15 PM	0	0	0	0	0	0	0	0	0	0	0	0	0
4/23/2024	11:30 PM	0	0	0	0	0	0	0	0	0	0	0	0	0
4/23/2024	11:45 PM	0	0	0	0	0	0	0	0	0	0	0	0	0

4/24/2024	12:00 AM	0	0	0	0	0	0	0	0	0	0	0	0	0
4/24/2024	12:15 AM	0	0	0	0	0	0	0	0	0	0	0	0	0
4/24/2024	12:30 AM	0	0	0	0	0	0	0	0	0	0	0	0	0
4/24/2024	12:45 AM	0	0	0	0	0	0	0	0	0	0	0	0	0
4/24/2024	1:00 AM	0	0	0	0	0	0	0	0	0	0	0	0	0
4/24/2024	1:15 AM	0	0	0	0	0	0	0	0	0	0	0	0	0
4/24/2024	1:30 AM	0	0	0	0	0	0	0	0	0	0	0	0	0
4/24/2024	1:45 AM	0	0	0	0	0	0	0	0	0	0	0	0	0
4/24/2024	2:00 AM	0	0	0	0	0	0	0	0	0	0	0	0	0
4/24/2024	2:15 AM	0	0	0	0	0	0	0	0	0	0	0	0	0
4/24/2024	2:30 AM	0	0	0	0	0	0	0	0	0	0	0	0	0
4/24/2024	2:45 AM	0	0	0	0	0	0	0	0	0	0	0	0	0
4/24/2024	3:00 AM	0	0	0	0	0	0	0	0	0	0	0	0	0
4/24/2024	3:15 AM	0	0	0	0	0	0	0	0	0	0	0	0	0
4/24/2024	3:30 AM	0	0	0	0	0	0	0	0	0	0	0	0	0
4/24/2024	3:45 AM	0	0	0	0	0	0	0	0	0	0	0	0	0
4/24/2024	4:00 AM	0	0	0	0	0	0	0	0	0	0	0	0	0
4/24/2024	4:15 AM	0	0	0	0	0	0	0	0	0	0	0	0	0
4/24/2024	4:30 AM	0	0	0	0	0	0	0	0	0	0	0	0	0
4/24/2024	4:45 AM	0	0	0	0	0	0	0	0	0	0	0	0	0
4/24/2024	5:00 AM	0	0	0	0	0	0	0	0	0	0	0	0	0
4/24/2024	5:15 AM	0	0	0	0	0	0	0	0	0	0	0	0	0
4/24/2024	5:30 AM	0	0	0	0	0	0	0	0	0	0	0	0	0
4/24/2024	5:45 AM	0	0	0	0	0	0	0	0	0	0	0	0	0
4/24/2024	6:00 AM	0	0	0	0	0	0	0	0	0	0	0	0	0
4/24/2024	6:15 AM	0	0	0	0	0	0	0	0	0	0	0	0	0
4/24/2024	6:30 AM	0	0	0	0	0	0	0	0	0	0	0	0	0
4/24/2024	6:45 AM	0	0	0	0	0	0	0	0	0	0	0	0	0
4/24/2024	7:00 AM	0	0	0	0	0	0	0	0	0	0	0	0	0
4/24/2024	7:15 AM	0	0	0	0	0	0	0	0	0	0	0	0	0
4/24/2024	7:30 AM	0	0	0	0	0	0	0	0	0	0	0	0	0
4/24/2024	7:45 AM	0	0	0	0	0	0	0	0	0	0	0	0	0
4/24/2024	8:00 AM	0	0	0	0	0	0	0	0	0	0	0	0	0
4/24/2024	8:15 AM	0	0	0	0	0	0	0	0	0	0	0	0	0
4/24/2024	8:30 AM	0	0	0	0	0	0	0	0	0	0	0	0	0
4/24/2024	8:45 AM	0	0	0	0	0	0	0	0	0	0	0	0	0
4/24/2024	9:00 AM	0	0	0	0	0	0	0	0	0	0	0	0	0
4/24/2024	9:15 AM	0	0	0	0	0	0	0	0	0	0	0	0	0
4/24/2024	9:30 AM	0	0	0	0	0	0	0	0	0	0	0	0	0
4/24/2024	9:45 AM	0	0	0	0	0	0	0	0	0	0	0	0	0
4/24/2024	10:00 AM	0	0	0	0	0	0	0	0	0	0	0	0	0
4/24/2024	10:15 AM	0	0	0	0	0	0	0	0	0	0	0	0	0
4/24/2024	10:30 AM	0	0	0	0	0	0	0	0	0	0	0	0	0
4/24/2024	10:45 AM	0	0	0	0	0	0	0	0	0	0	0	0	0
4/24/2024	11:00 AM	0	0	0	0	0	0	0	0	0	0	0	0	0
4/24/2024	11:15 AM	0	0	0	0	0	0	0	0	0	0	0	0	0
4/24/2024	11:30 AM	0	0	0	0	0	0	0	0	0	0	0	0	0
4/24/2024	11:45 AM	0	0	0	0	0	0	0	0	0	0	0	0	0
4/24/2024	12:00 PM	0	0	0	0	0	0	0	0	0	0	0	0	0
4/24/2024	12:15 PM	0	0	0	0	0	0	0	0	0	0	0	0	0
4/24/2024	12:30 PM	0	0	0	0	0	0	0	0	0	0	0	0	0
4/24/2024	12:45 PM	0	0	0	0	0	0	0	0	0	0	0	0	0
4/24/2024	1:00 PM	0	0	0	0	0	0	0	0	0	0	0	0	0
4/24/2024	1:15 PM	0	0	0	0	0	0	0	0	0	0	0	0	0
4/24/2024	1:30 PM	0	0	0	0	0	0	0	0	0	0	0	0	0
4/24/2024	1:45 PM	0	0	0	0	0	0	0	0	0	0	0	0	0
4/24/2024	2:00 PM	0	0	0	0	0	0	0	0	0	0	0	0	0
4/24/2024	2:15 PM	0	0	0	0	0	0	0	0	0	0	0	0	0
4/24/2024	2:30 PM	0	0	0	0	0	0	0	0	0	0	0	0	0
4/24/2024	2:45 PM	0	0	0	0	0	0	0	0	0	0	0	0	0
4/24/2024	3:00 PM	0	0	0	0	0	0	0	0	0	0	0	0	0
4/24/2024	3:15 PM	0	0	0	0	0	0	0	0	0	0	0	0	0
4/24/2024	3:30 PM	0	0	0	0	0	0	0	0	0	0	0	0	0
4/24/2024	3:45 PM	0	0	0	0	0	0	0	0	0	0	0	0	0
4/24/2024	4:00 PM	0	0	0	0	0	0	0	0	0	0	0	0	0
4/24/2024	4:15 PM	0	0	0	0	0	0	0	0	0	0	0	0	0
4/24/2024	4:30 PM	0	0	0	0	0	0	0	0	0	0	0	0	0
4/24/2024	4:45 PM	0	0	0	0	0	0	0	0	0	0	0	0	0
4/24/2024	5:00 PM	0	0	0	0	0	0	0	0	0	0	0	0	0
4/24/2024	5:15 PM	0	0	0	0	0	0	0	0	0	0	0	0	0
4/24/2024	5:30 PM	0	0	0	0	0	0	0	0	0	0	0	0	0
4/24/2024	5:45 PM	0	0	0	0	0	0	0	0	0	0	0	0	0
4/24/2024	6:00 PM	0	0	0	0	0	0	0	0	0	0	0	0	0
4/24/2024	6:15 PM	0	0	0	0	0	0	0	0	0	0	0	0	0
4/24/2024	6:30 PM	0	0	0	0	0	0	0	0	0	0	0	0	0
4/24/2024	6:45 PM	0	0	0	0	0	0	0	0	0	0	0	0	0
4/24/2024	7:00 PM	0	0	0	0	0	0	0	0	0	0	0	0	0
4/24/2024	7:15 PM	0	0	0	0	0	0	0	0	0	0	0	0	0
4/24/2024	7:30 PM	0	0	0	0	0	0	0	0	0	0	0	0	0
4/24/2024	7:45 PM	0	0	0	0	0	0	0	0	0	0	0	0	0
4/24/2024	8:00 PM	0	0	0	0	0	0	0	0	0	0	0	0	0
4/24/2024	8:15 PM	0	0	0	0	0	0	0	0	0	0	0	0	0
4/24/2024	8:30 PM	0	0	0	0	0	0	0	0	0	0	0	0	0
4/24/2024	8:45 PM	0	0	0	0	0	0	0	0	0	0	0	0	0
4/24/2024	9:00 PM	0	0	0	0	0	0	0	0	0	0	0	0	0
4/24/2024	9:15 PM	0	0	0	0	0	0	0	0	0	0	0	0	0
4/24/2024	9:30 PM	0	0	0	0	0	0	0	0	0	0	0	0	0
4/24/2024	9:45 PM	0	0	0	0	0	0	0	0	0	0	0	0	0
4/24/2024	10:00 PM	0	0	0	0	0	0	0	0	0	0	0	0	0
4/24/2024	10:15 PM	0	0	0	0	0	0	0	0	0	0	0	0	0
4/24/2024	10:30 PM	0	0	0	0	0	0	0	0	0	0	0	0	0
4/24/2024	10:45 PM	0	0	0	0	0	0	0	0	0	0	0	0	0
4/24/2024	11:00 PM	0	0	0	0	0	0	0	0	0	0	0	0	0
4/24/2024	11:15 PM	0	0	0	0	0	0	0	0	0	0	0	0	0
4/24/2024	11:30 PM	0	0	0	0	0	0	0	0	0	0	0	0	0
4/24/2024	11:45 PM	0	0	0	0	0	0	0	0	0	0	0	0	0

4/25/2024	12:00 AM	0	0	0	0	0	0	0	0	0	0	0	0	0
4/25/2024	12:15 AM	0	0	0	0	0	0	0	0	0	0	0	0	0
4/25/2024	12:30 AM	0	0	0	0	0	0	0	0	0	0	0	0	0
4/25/2024	12:45 AM	0	0	0	0	0	0	0	0	0	0	0	0	0
4/25/2024	1:00 AM	0	0	0	0	0	0	0	0	0	0	0	0	0
4/25/2024	1:15 AM	0	0	0	0	0	0	0	0	0	0	0	0	0
4/25/2024	1:30 AM	0	0	0	0	0	0	0	0	0	0	0	0	0
4/25/2024	1:45 AM	0	0	0	0	0	0	0	0	0	0	0	0	0
4/25/2024	2:00 AM	0	0	0	0	0	0	0	0	0	0	0	0	0
4/25/2024	2:15 AM	0	0	0	0	0	0	0	0	0	0	0	0	0
4/25/2024	2:30 AM	0	0	0	0	0	0	0	0	0	0	0	0	0
4/25/2024	2:45 AM	0	0	0	0	0	0	0	0	0	0	0	0	0
4/25/2024	3:00 AM	0	0	0	0	0	0	0	0	0	0	0	0	0
4/25/2024	3:15 AM	0	0	0	0	0	0	0	0	0	0	0	0	0
4/25/2024	3:30 AM	0	0	0	0	0	0	0	0	0	0	0	0	0
4/25/2024	3:45 AM	0	0	0	0	0	0	0	0	0	0	0	0	0
4/25/2024	4:00 AM	0	0	0	0	0	0	0	0	0	0	0	0	0
4/25/2024	4:15 AM	0	0	0	0	0	0	0	0	0	0	0	0	0
4/25/2024	4:30 AM	0	0	0	0	0	0	0	0	0	0	0	0	0
4/25/2024	4:45 AM	0	0	0	0	0	0	0	0	0	0	0	0	0
4/25/2024	5:00 AM	0	0	0	0	0	0	0	0	0	0	0	0	0
4/25/2024	5:15 AM	0	0	0	0	0	0	0	0	0	0	0	0	0
4/25/2024	5:30 AM	0	0	0	0	0	0	0	0	0	0	0	0	0
4/25/2024	5:45 AM	0	0	0	0	0	0	0	0	0	0	0	0	0
4/25/2024	6:00 AM	0	0	0	0	0	0	0	0	0	0	0	0	0
4/25/2024	6:15 AM	0	0	0	0	0	0	0	0	0	0	0	0	0
4/25/2024	6:30 AM	0	0	0	0	0	0	0	0	0	0	0	0	0
4/25/2024	6:45 AM	0	0	0	0	0	0	0	0	0	0	0	0	0
4/25/2024	7:00 AM	0	0	0	0	0	0	0	0	0	0	0	0	0
4/25/2024	7:15 AM	0	0	0	0	0	0	0	0	0	0	0	0	0
4/25/2024	7:30 AM	0	0	0	0	0	0	0	0	0	0	0	0	0
4/25/2024	7:45 AM	0	0	0	0	0	0	0	0	0	0	0	0	0
4/25/2024	8:00 AM	0	0	0	0	0	0	0	0	0	0	0	0	0
4/25/2024	8:15 AM	0	0	0	0	0	0	0	0	0	0	0	0	0
4/25/2024	8:30 AM	0	0	0	0	0	0	0	0	0	0	0	0	0
4/25/2024	8:45 AM	0	0	0	0	0	0	0	0	0	0	0	0	0
4/25/2024	9:00 AM	0	0	0	0	0	0	0	0	0	0	0	0	0
4/25/2024	9:15 AM	0	0	0	0	0	0	0	0	0	0	0	0	0
4/25/2024	9:30 AM	0	0	0	0	0	0	0	0	0	0	0	0	0
4/25/2024	9:45 AM	0	0	0	0	0	0	0	0	0	0	0	0	0
4/25/2024	10:00 AM	0	0	0	0	0	0	0	0	0	0	0	0	0
4/25/2024	10:15 AM	0	0	0	0	0	0	0	0	0	0	0	0	0
4/25/2024	10:30 AM	0	0	0	0	0	0	0	0	0	0	0	0	0
4/25/2024	10:45 AM	0	0	0	0	0	0	0	0	0	0	0	0	0
4/25/2024	11:00 AM	0	0	0	0	0	0	0	0	0	0	0	0	0
4/25/2024	11:15 AM	0	0	0	0	0	0	0	0	0	0	0	0	0
4/25/2024	11:30 AM	0	0	0	0	0	0	0	0	0	0	0	0	0
4/25/2024	11:45 AM	0	0	0	0	0	0	0	0	0	0	0	0	0
4/25/2024	12:00 PM	0	0	0	0	0	0	0	0	0	0	0	0	0
4/25/2024	12:15 PM	0	0	0	0	0	0	0	0	0	0	0	0	0
4/25/2024	12:30 PM	0	0	0	0	0	0	0	0	0	0	0	0	0
4/25/2024	12:45 PM	0	0	0	0	0	0	0	0	0	0	0	0	0
4/25/2024	1:00 PM	0	0	0	0	0	0	0	0	0	0	0	0	0
4/25/2024	1:15 PM	0	0	0	0	0	0	0	0	0	0	0	0	0
4/25/2024	1:30 PM	0	0	0	0	0	0	0	0	0	0	0	0	0
4/25/2024	1:45 PM	0	0	0	0	0	0	0	0	0	0	0	0	0
4/25/2024	2:00 PM	0	0	0	0	0	0	0	0	0	0	0	0	0
4/25/2024	2:15 PM	0	0	0	0	0	0	0	0	0	0	0	0	0
4/25/2024	2:30 PM	0	0	0	0	0	0	0	0	0	0	0	0	0
4/25/2024	2:45 PM	0	0	0	0	0	0	0	0	0	0	0	0	0
4/25/2024	3:00 PM	0	0	0	0	0	0	0	0	0	0	0	0	0
4/25/2024	3:15 PM	0	0	0	0	0	0	0	0	0	0	0	0	0
4/25/2024	3:30 PM	0	0	0	0	0	0	0	0	0	0	0	0	0
4/25/2024	3:45 PM	0	0	0	0	0	0	0	0	0	0	0	0	0
4/25/2024	4:00 PM	0	0	0	0	0	0	0	0	0	0	0	0	0
4/25/2024	4:15 PM	0	0	0	0	0	0	0	0	0	0	0	0	0
4/25/2024	4:30 PM	0	0	0	0	0	0	0	0	0	0	0	0	0
4/25/2024	4:45 PM	0	0	0	0	0	0	0	0	0	0	0	0	0
4/25/2024	5:00 PM	0	0	0	0	0	0	0	0	0	0	0	0	0
4/25/2024	5:15 PM	0	0	0	0	0	0	0	0	0	0	0	0	0
4/25/2024	5:30 PM	0	0	0	0	0	0	0	0	0	0	0	0	0
4/25/2024	5:45 PM	0	0	0	0	0	0	0	0	0	0	0	0	0
4/25/2024	6:00 PM	0	0	0	0	0	0	0	0	0	0	0	0	0
4/25/2024	6:15 PM	0	0	0	0	0	0	0	0	0	0	0	0	0
4/25/2024	6:30 PM	0	0	0	0	0	0	0	0	0	0	0	0	0
4/25/2024	6:45 PM	0	0	0	0	0	0	0	0	0	0	0	0	0
4/25/2024	7:00 PM	0	0	0	0	0	0	0	0	0	0	0	0	0
4/25/2024	7:15 PM	0	0	0	0	0	0	0	0	0	0	0	0	0
4/25/2024	7:30 PM	0	0	0	0	0	0	0	0	0	0	0	0	0
4/25/2024	7:45 PM	0	0	0	0	0	0	0	0	0	0	0	0	0
4/25/2024	8:00 PM	0	0	0	0	0	0	0	0	0	0	0	0	0
4/25/2024	8:15 PM	0	0	0	0	0	0	0	0	0	0	0	0	0
4/25/2024	8:30 PM	0	0	0	0	0	0	0	0	0	0	0	0	0
4/25/2024	8:45 PM	0	0	0	0	0	0	0	0	0	0	0	0	0
4/25/2024	9:00 PM	0	0	0	0	0	0	0	0	0	0	0	0	0
4/25/2024	9:15 PM	0	0	0	0	0	0	0	0	0	0	0	0	0
4/25/2024	9:30 PM	0	0	0	0	0	0	0	0	0	0	0	0	0
4/25/2024	9:45 PM	0	0	0	0	0	0	0	0	0	0	0	0	0
4/25/2024	10:00 PM	0	0	0	0	0	0	0	0	0	0	0	0	0
4/25/2024	10:15 PM	0	0	0	0	0	0	0	0	0	0	0	0	0
4/25/2024	10:30 PM	0	0	0	0	0	0	0	0	0	0	0	0	0
4/25/2024	10:45 PM	0	0	0	0	0	0	0	0	0	0	0	0	0
4/25/2024	11:00 PM	0	0	0	0	0	0	0	0	0	0	0	0	0
4/25/2024	11:15 PM	0	0	0	0	0	0	0	0	0	0	0	0	0
4/25/2024	11:30 PM	0	0	0	0	0	0	0	0	0	0	0	0	0
4/25/2024	11:45 PM	0	0	0	0	0	0	0	0	0	0	0	0	0

4/26/2024	12:00 AM	0	0	0	0	0	0	0	0	0	0	0	0	0
4/26/2024	12:15 AM	0	0	0	0	0	0	0	0	0	0	0	0	0
4/26/2024	12:30 AM	0	0	0	0	0	0	0	0	0	0	0	0	0
4/26/2024	12:45 AM	0	0	0	0	0	0	0	0	0	0	0	0	0
4/26/2024	1:00 AM	0	0	0	0	0	0	0	0	0	0	0	0	0
4/26/2024	1:15 AM	0	0	0	0	0	0	0	0	0	0	0	0	0
4/26/2024	1:30 AM	0	0	0	0	0	0	0	0	0	0	0	0	0
4/26/2024	1:45 AM	0	0	0	0	0	0	0	0	0	0	0	0	0
4/26/2024	2:00 AM	0	0	0	0	0	0	0	0	0	0	0	0	0
4/26/2024	2:15 AM	0	0	0	0	0	0	0	0	0	0	0	0	0
4/26/2024	2:30 AM	0	0	0	0	0	0	0	0	0	0	0	0	0
4/26/2024	2:45 AM	0	0	0	0	0	0	0	0	0	0	0	0	0
4/26/2024	3:00 AM	0	0	0	0	0	0	0	0	0	0	0	0	0
4/26/2024	3:15 AM	0	0	0	0	0	0	0	0	0	0	0	0	0
4/26/2024	3:30 AM	0	0	0	0	0	0	0	0	0	0	0	0	0
4/26/2024	3:45 AM	0	0	0	0	0	0	0	0	0	0	0	0	0
4/26/2024	4:00 AM	0	0	0	0	0	0	0	0	0	0	0	0	0
4/26/2024	4:15 AM	0	0	0	0	0	0	0	0	0	0	0	0	0
4/26/2024	4:30 AM	0	0	0	0	0	0	0	0	0	0	0	0	0
4/26/2024	4:45 AM	0	0	0	0	0	0	0	0	0	0	0	0	0
4/26/2024	5:00 AM	0	0	0	0	0	0	0	0	0	0	0	0	0
4/26/2024	5:15 AM	0	0	0	0	0	0	0	0	0	0	0	0	0
4/26/2024	5:30 AM	0	0	0	0	0	0	0	0	0	0	0	0	0
4/26/2024	5:45 AM	0	0	0	0	0	0	0	0	0	0	0	0	0
4/26/2024	6:00 AM	0	0	0	0	0	0	0	0	0	0	0	0	0
4/26/2024	6:15 AM	0	0	0	0	0	0	0	0	0	0	0	0	0
4/26/2024	6:30 AM	0	0	0	0	0	0	0	0	0	0	0	0	0
4/26/2024	6:45 AM	0	0	0	0	0	0	0	0	0	0	0	0	0
4/26/2024	7:00 AM	0	0	0	0	0	0	0	0	0	0	0	0	0
4/26/2024	7:15 AM	0	0	0	0	0	0	0	0	0	0	0	0	0
4/26/2024	7:30 AM	0	0	0	0	0	0	0	0	0	0	0	0	0
4/26/2024	7:45 AM	0	0	0	0	0	0	0	0	0	0	0	0	0
4/26/2024	8:00 AM	0	0	0	0	0	0	0	0	0	0	0	0	0
4/26/2024	8:15 AM	0	0	0	0	0	0	0	0	0	0	0	0	0
4/26/2024	8:30 AM	0	0	0	0	0	0	0	0	0	0	0	0	0
4/26/2024	8:45 AM	0	0	0	0	0	0	0	0	0	0	0	0	0
4/26/2024	9:00 AM	0	0	0	0	0	0	0	0	0	0	0	0	0
4/26/2024	9:15 AM	0	0	0	0	0	0	0	0	0	0	0	0	0
4/26/2024	9:30 AM	0	0	0	0	0	0	0	0	0	0	0	0	0
4/26/2024	9:45 AM	0	0	0	0	0	0	0	0	0	0	0	0	0
4/26/2024	10:00 AM	0	0	0	0	0	0	0	0	0	0	0	0	0
4/26/2024	10:15 AM	0	0	0	0	0	0	0	0	0	0	0	0	0
4/26/2024	10:30 AM	0	0	0	0	0	0	0	0	0	0	0	0	0
4/26/2024	10:45 AM	0	0	0	0	0	0	0	0	0	0	0	0	0
4/26/2024	11:00 AM	0	0	0	0	0	0	0	0	0	0	0	0	0
4/26/2024	11:15 AM	0	0	0	0	0	0	0	0	0	0	0	0	0
4/26/2024	11:30 AM	0	0	0	0	0	0	0	0	0	0	0	0	0
4/26/2024	11:45 AM	0	0	0	0	0	0	0	0	0	0	0	0	0
4/26/2024	12:00 PM	0	0	0	0	0	0	0	0	0	0	0	0	0
4/26/2024	12:15 PM	0	0	0	0	0	0	0	0	0	0	0	0	0
4/26/2024	12:30 PM	0	0	0	0	0	0	0	0	0	0	0	0	0
4/26/2024	12:45 PM	0	0	0	0	0	0	0	0	0	0	0	0	0
4/26/2024	1:00 PM	0	0	0	0	0	0	0	0	0	0	0	0	0
4/26/2024	1:15 PM	0	0	0	0	0	0	0	0	0	0	0	0	0
4/26/2024	1:30 PM	0	0	0	0	0	0	0	0	0	0	0	0	0
4/26/2024	1:45 PM	0	0	0	0	0	0	0	0	0	0	0	0	0
4/26/2024	2:00 PM	0	0	0	0	0	0	0	0	0	0	0	0	0
4/26/2024	2:15 PM	0	0	0	0	0	0	0	0	0	0	0	0	0
4/26/2024	2:30 PM	0	0	0	0	0	0	0	0	0	0	0	0	0
4/26/2024	2:45 PM	0	0	0	0	0	0	0	0	0	0	0	0	0
4/26/2024	3:00 PM	0	0	0	0	0	0	0	0	0	0	0	0	0
4/26/2024	3:15 PM	0	0	0	0	0	0	0	0	0	0	0	0	0
4/26/2024	3:30 PM	0	0	0	0	0	0	0	0	0	0	0	0	0
4/26/2024	3:45 PM	0	0	0	0	0	0	0	0	0	0	0	0	0
4/26/2024	4:00 PM	0	0	0	0	0	0	0	0	0	0	0	0	0
4/26/2024	4:15 PM	0	0	0	0	0	0	0	0	0	0	0	0	0
4/26/2024	4:30 PM	0	0	0	0	0	0	0	0	0	0	0	0	0
4/26/2024	4:45 PM	0	0	0	0	0	0	0	0	0	0	0	0	0
4/26/2024	5:00 PM	0	0	0	0	0	0	0	0	0	0	0	0	0
4/26/2024	5:15 PM	0	0	0	0	0	0	0	0	0	0	0	0	0
4/26/2024	5:30 PM	0	0	0	0	0	0	0	0	0	0	0	0	0
4/26/2024	5:45 PM	0	0	0	0	0	0	0	0	0	0	0	0	0
4/26/2024	6:00 PM	0	0	0	0	0	0	0	0	0	0	0	0	0
4/26/2024	6:15 PM	0	0	0	0	0	0	0	0	0	0	0	0	0
4/26/2024	6:30 PM	0	0	0	0	0	0	0	0	0	0	0	0	0
4/26/2024	6:45 PM	0	0	0	0	0	0	0	0	0	0	0	0	0
4/26/2024	7:00 PM	0	0	0	0	0	0	0	0	0	0	0	0	0
4/26/2024	7:15 PM	0	0	0	0	0	0	0	0	0	0	0	0	0
4/26/2024	7:30 PM	0	0	0	0	0	0	0	0	0	0	0	0	0
4/26/2024	7:45 PM	0	0	0	0	0	0	0	0	0	0	0	0	0
4/26/2024	8:00 PM	0	0	0	0	0	0	0	0	0	0	0	0	0
4/26/2024	8:15 PM	0	0	0	0	0	0	0	0	0	0	0	0	0
4/26/2024	8:30 PM	0	0	0	0	0	0	0	0	0	0	0	0	0
4/26/2024	8:45 PM	0	0	0	0	0	0	0	0	0	0	0	0	0
4/26/2024	9:00 PM	0	0	0	0	0	0	0	0	0	0	0	0	0
4/26/2024	9:15 PM	0	0	0	0	0	0	0	0	0	0	0	0	0
4/26/2024	9:30 PM	0	0	0	0	0	0	0	0	0	0	0	0	0
4/26/2024	9:45 PM	0	0	0	0	0	0	0	0	0	0	0	0	0
4/26/2024	10:00 PM	0	0	0	0	0	0	0	0	0	0	0	0	0
4/26/2024	10:15 PM	0	0	0	0	0	0	0	0	0	0	0	0	0
4/26/2024	10:30 PM	0	0	0	0	0	0	0	0	0	0	0	0	0
4/26/2024	10:45 PM	0	0	0	0	0	0	0	0	0	0	0	0	0
4/26/2024	11:00 PM	0	0	0	0	0	0	0	0	0	0	0	0	0
4/26/2024	11:15 PM	0	0	0	0	0	0	0	0	0	0	0	0	0
4/26/2024	11:30 PM	0	0	0	0	0	0	0	0	0	0	0	0	0
4/26/2024	11:45 PM	0	0	0	0	0	0	0	0	0	0	0	0	0

4/27/2024	12:00 AM	0	0	0	0	0	0	0	0	0	0	0	0	0
4/27/2024	12:15 AM	0	0	0	0	0	0	0	0	0	0	0	0	0
4/27/2024	12:30 AM	0	0	0	0	0	0	0	0	0	0	0	0	0
4/27/2024	12:45 AM	0	0	0	0	0	0	0	0	0	0	0	0	0
4/27/2024	1:00 AM	0	0	0	0	0	0	0	0	0	0	0	0	0
4/27/2024	1:15 AM	0	0	0	0	0	0	0	0	0	0	0	0	0
4/27/2024	1:30 AM	0	0	0	0	0	0	0	0	0	0	0	0	0
4/27/2024	1:45 AM	0	0	0	0	0	0	0	0	0	0	0	0	0
4/27/2024	2:00 AM	0	0	0	0	0	0	0	0	0	0	0	0	0
4/27/2024	2:15 AM	0	0	0	0	0	0	0	0	0	0	0	0	0
4/27/2024	2:30 AM	0	0	0	0	0	0	0	0	0	0	0	0	0
4/27/2024	2:45 AM	0	0	0	0	0	0	0	0	0	0	0	0	0
4/27/2024	3:00 AM	0	0	0	0	0	0	0	0	0	0	0	0	0
4/27/2024	3:15 AM	0	0	0	0	0	0	0	0	0	0	0	0	0
4/27/2024	3:30 AM	0	0	0	0	0	0	0	0	0	0	0	0	0
4/27/2024	3:45 AM	0	0	0	0	0	0	0	0	0	0	0	0	0
4/27/2024	4:00 AM	0	0	0	0	0	0	0	0	0	0	0	0	0
4/27/2024	4:15 AM	0	0	0	0	0	0	0	0	0	0	0	0	0
4/27/2024	4:30 AM	0	0	0	0	0	0	0	0	0	0	0	0	0
4/27/2024	4:45 AM	0	0	0	0	0	0	0	0	0	0	0	0	0
4/27/2024	5:00 AM	0	0	0	0	0	0	0	0	0	0	0	0	0
4/27/2024	5:15 AM	0	0	0	0	0	0	0	0	0	0	0	0	0
4/27/2024	5:30 AM	0	0	0	0	0	0	0	0	0	0	0	0	0
4/27/2024	5:45 AM	0	0	0	0	0	0	0	0	0	0	0	0	0
4/27/2024	6:00 AM	0	0	0	0	0	0	0	0	0	0	0	0	0
4/27/2024	6:15 AM	0	0	0	0	0	0	0	0	0	0	0	0	0
4/27/2024	6:30 AM	0	0	0	0	0	0	0	0	0	0	0	0	0
4/27/2024	6:45 AM	0	0	0	0	0	0	0	0	0	0	0	0	0
4/27/2024	7:00 AM	0	0	0	0	0	0	0	0	0	0	0	0	0
4/27/2024	7:15 AM	0	0	0	0	0	0	0	0	0	0	0	0	0
4/27/2024	7:30 AM	0	0	0	0	0	0	0	0	0	0	0	0	0
4/27/2024	7:45 AM	0	0	0	0	0	0	0	0	0	0	0	0	0
4/27/2024	8:00 AM	0	0	0	0	0	0	0	0	0	0	0	0	0
4/27/2024	8:15 AM	0	0	0	0	0	0	0	0	0	0	0	0	0
4/27/2024	8:30 AM	0	0	0	0	0	0	0	0	0	0	0	0	0
4/27/2024	8:45 AM	0	0	0	0	0	0	0	0	0	0	0	0	0
4/27/2024	9:00 AM	0	0	0	0	0	0	0	0	0	0	0	0	0
4/27/2024	9:15 AM	0	0	0	0	0	0	0	0	0	0	0	0	0
4/27/2024	9:30 AM	0	0	0	0	0	0	0	0	0	0	0	0	0
4/27/2024	9:45 AM	0	0	0	0	0	0	0	0	0	0	0	0	0
4/27/2024	10:00 AM	0	0	0	0	0	0	0	0	0	0	0	0	0
4/27/2024	10:15 AM	0	0	0	0	0	0	0	0	0	0	0	0	0
4/27/2024	10:30 AM	0	0	0	0	0	0	0	0	0	0	0	0	0
4/27/2024	10:45 AM	0	0	0	0	0	0	0	0	0	0	0	0	0
4/27/2024	11:00 AM	0	0	0	0	0	0	0	0	0	0	0	0	0
4/27/2024	11:15 AM	0	0	0	0	0	0	0	0	0	0	0	0	0
4/27/2024	11:30 AM	0	0	0	0	0	0	0	0	0	0	0	0	0
4/27/2024	11:45 AM	0	0	0	0	0	0	0	0	0	0	0	0	0
4/27/2024	12:00 PM	0	0	0	0	0	0	0	0	0	0	0	0	0
4/27/2024	12:15 PM	0	0	0	0	0	0	0	0	0	0	0	0	0
4/27/2024	12:30 PM	0	0	0	0	0	0	0	0	0	0	0	0	0
4/27/2024	12:45 PM	0	0	0	0	0	0	0	0	0	0	0	0	0
4/27/2024	1:00 PM	0	0	0	0	0	0	0	0	0	0	0	0	0
4/27/2024	1:15 PM	0	0	0	0	0	0	0	0	0	0	0	0	0
4/27/2024	1:30 PM	0	0	0	0	0	0	0	0	0	0	0	0	0
4/27/2024	1:45 PM	0	0	0	0	0	0	0	0	0	0	0	0	0
4/27/2024	2:00 PM	0	0	0	0	0	0	0	0	0	0	0	0	0
4/27/2024	2:15 PM	0	0	0	0	0	0	0	0	0	0	0	0	0
4/27/2024	2:30 PM	0	0	0	0	0	0	0	0	0	0	0	0	0
4/27/2024	2:45 PM	0	0	0	0	0	0	0	0	0	0	0	0	0
4/27/2024	3:00 PM	0	0	0	0	0	0	0	0	0	0	0	0	0
4/27/2024	3:15 PM	0	0	0	0	0	0	0	0	0	0	0	0	0
4/27/2024	3:30 PM	0	0	0	0	0	0	0	0	0	0	0	0	0
4/27/2024	3:45 PM	0	0	0	0	0	0	0	0	0	0	0	0	0
4/27/2024	4:00 PM	0	0	0	0	0	0	0	0	0	0	0	0	0
4/27/2024	4:15 PM	0	0	0	0	0	0	0	0	0	0	0	0	0
4/27/2024	4:30 PM	0	0	0	0	0	0	0	0	0	0	0	0	0
4/27/2024	4:45 PM	0	0	0	0	0	0	0	0	0	0	0	0	0
4/27/2024	5:00 PM	0	0	0	0	0	0	0	0	0	0	0	0	0
4/27/2024	5:15 PM	0	0	0	0	0	0	0	0	0	0	0	0	0
4/27/2024	5:30 PM	0	0	0	0	0	0	0	0	0	0	0	0	0
4/27/2024	5:45 PM	0	0	0	0	0	0	0	0	0	0	0	0	0
4/27/2024	6:00 PM	0	0	0	0	0	0	0	0	0	0	0	0	0
4/27/2024	6:15 PM	0	0	0	0	0	0	0	0	0	0	0	0	0
4/27/2024	6:30 PM	0	0	0	0	0	0	0	0	0	0	0	0	0
4/27/2024	6:45 PM	0	0	0	0	0	0	0	0	0	0	0	0	0
4/27/2024	7:00 PM	0	0	0	0	0	0	0	0	0	0	0	0	0
4/27/2024	7:15 PM	0	0	0	0	0	0	0	0	0	0	0	0	0
4/27/2024	7:30 PM	0	0	0	0	0	0	0	0	0	0	0	0	0
4/27/2024	7:45 PM	0	0	0	0	0	0	0	0	0	0	0	0	0
4/27/2024	8:00 PM	0	0	0	0	0	0	0	0	0	0	0	0	0
4/27/2024	8:15 PM	0	0	0	0	0	0	0	0	0	0	0	0	0
4/27/2024	8:30 PM	0	0	0	0	0	0	0	0	0	0	0	0	0
4/27/2024	8:45 PM	0	0	0	0	0	0	0	0	0	0	0	0	0
4/27/2024	9:00 PM	0	0	0	0	0	0	0	0	0	0	0	0	0
4/27/2024	9:15 PM	0	0	0	0	0	0	0	0	0	0	0	0	0
4/27/2024	9:30 PM	0	0	0	0	0	0	0	0	0	0	0	0	0
4/27/2024	9:45 PM	0	0	0	0	0	0	0	0	0	0	0	0	0
4/27/2024	10:00 PM	0	0	0	0	0	0	0	0	0	0	0	0	0
4/27/2024	10:15 PM	0	0	0	0	0	0	0	0	0	0	0	0	0
4/27/2024	10:30 PM	0	0	0	0	0	0	0	0	0	0	0	0	0
4/27/2024	10:45 PM	0	0	0	0	0	0	0	0	0	0	0	0	0
4/27/2024	11:00 PM	0	0	0	0	0	0	0	0	0	0	0	0	0
4/27/2024	11:15 PM	0	0	0	0	0	0	0	0	0	0	0	0	0
4/27/2024	11:30 PM	0	0	0	0	0	0	0	0	0	0	0	0	0
4/27/2024	11:45 PM	0	0	0	0	0	0	0	0	0	0	0	0	0

NB
File Name:
Start Date: 4/21/2024
Start Time: 0
Site Code: 9
Station ID: 1
Location 1: I-26 N/Bound Off-Ramp, south of I-20
Location 2:

Date	Time	1	2	3	4	5	6	7	8	9	10	11	12	13
4/21/2024	12:00 AM	0	163	18	0	0	0	0	0	1	0	0	0	0
4/21/2024	12:15 AM	0	140	18	0	0	0	0	0	1	0	1	0	0
4/21/2024	12:30 AM	0	127	17	0	0	0	0	0	1	0	1	0	0
4/21/2024	12:45 AM	0	102	12	0	0	0	0	0	0	0	1	0	0
4/21/2024	1:00 AM	0	90	10	0	0	0	0	0	0	0	1	0	0
4/21/2024	1:15 AM	0	82	8	0	0	0	0	0	0	0	0	0	0
4/21/2024	1:30 AM	0	77	7	0	0	0	0	0	0	0	0	0	0
4/21/2024	1:45 AM	0	75	6	0	0	0	0	0	0	0	0	0	0
4/21/2024	2:00 AM	0	71	6	0	0	0	0	0	0	0	0	0	0
4/21/2024	2:15 AM	0	63	6	0	0	0	0	0	0	0	0	0	0
4/21/2024	2:30 AM	0	56	6	0	0	0	0	0	1	0	0	0	0
4/21/2024	2:45 AM	0	54	6	0	0	0	0	0	1	0	0	0	0
4/21/2024	3:00 AM	0	52	6	0	0	0	0	0	2	0	0	0	0
4/21/2024	3:15 AM	0	53	5	0	0	0	0	0	2	0	0	0	0
4/21/2024	3:30 AM	0	44	3	0	0	0	0	0	2	0	0	0	0
4/21/2024	3:45 AM	0	40	4	0	0	0	0	0	2	0	0	0	0
4/21/2024	4:00 AM	0	41	5	0	0	0	0	0	1	0	0	0	0
4/21/2024	4:15 AM	0	40	5	0	0	0	0	0	1	0	0	0	0
4/21/2024	4:30 AM	0	45	6	0	0	0	0	0	1	0	0	0	0
4/21/2024	4:45 AM	0	46	6	0	0	0	0	0	1	0	0	0	0
4/21/2024	5:00 AM	0	47	5	0	0	0	0	0	1	0	0	0	0
4/21/2024	5:15 AM	0	57	8	0	0	0	0	0	2	0	0	0	0
4/21/2024	5:30 AM	0	61	9	0	0	0	0	0	1	0	0	0	0
4/21/2024	5:45 AM	0	73	12	0	0	0	0	0	1	0	0	0	0
4/21/2024	6:00 AM	0	85	12	0	0	0	0	0	2	0	0	0	0
4/21/2024	6:15 AM	0	100	14	0	4	0	0	0	1	0	0	0	0
4/21/2024	6:30 AM	0	123	16	0	4	0	0	0	2	0	0	0	0
4/21/2024	6:45 AM	0	155	16	0	5	0	0	0	2	0	0	0	0
4/21/2024	7:00 AM	0	168	21	0	6	0	0	0	3	0	0	0	0
4/21/2024	7:15 AM	0	163	29	0	2	0	0	0	3	0	0	0	0
4/21/2024	7:30 AM	0	162	32	0	3	0	0	0	3	0	0	0	0
4/21/2024	7:45 AM	0	140	41	0	2	0	0	0	4	0	0	0	0
4/21/2024	8:00 AM	0	145	44	0	2	0	0	0	2	0	0	0	0
4/21/2024	8:15 AM	0	168	44	0	2	0	0	0	4	0	0	0	0
4/21/2024	8:30 AM	0	175	46	0	1	0	0	0	4	0	0	0	0
4/21/2024	8:45 AM	0	211	46	0	2	0	0	0	4	0	0	0	0
4/21/2024	9:00 AM	0	243	56	1	1	0	0	0	4	0	0	0	0
4/21/2024	9:15 AM	0	279	53	1	1	0	0	0	3	0	0	0	0
4/21/2024	9:30 AM	0	300	56	1	1	0	0	0	2	0	0	0	0
4/21/2024	9:45 AM	0	301	55	1	0	0	0	0	2	0	0	0	0
4/21/2024	10:00 AM	0	299	56	0	0	0	0	0	4	0	0	0	0
4/21/2024	10:15 AM	0	275	63	0	2	0	0	0	4	0	0	0	0
4/21/2024	10:30 AM	0	272	64	1	2	0	0	0	7	0	0	0	0
4/21/2024	10:45 AM	0	261	70	1	2	0	0	0	7	0	0	0	0
4/21/2024	11:00 AM	0	245	60	1	2	0	0	0	6	0	0	0	0
4/21/2024	11:15 AM	0	248	60	1	2	0	0	0	6	0	0	0	0
4/21/2024	11:30 AM	0	259	66	0	2	0	0	1	3	0	0	0	0
4/21/2024	11:45 AM	0	313	66	0	4	0	0	2	2	0	0	0	0
4/21/2024	12:00 PM	0	364	78	0	6	0	0	2	2	0	0	0	0
4/21/2024	12:15 PM	0	395	86	1	4	0	0	2	1	0	0	0	0
4/21/2024	12:30 PM	0	417	81	1	5	0	0	1	2	0	0	0	0
4/21/2024	12:45 PM	0	391	77	1	4	0	0	0	3	0	0	0	0
4/21/2024	1:00 PM	0	386	78	1	3	0	0	0	2	0	0	0	0
4/21/2024	1:15 PM	0	373	70	0	3	1	0	0	4	0	0	0	0
4/21/2024	1:30 PM	0	365	69	0	2	2	0	1	4	0	0	0	0
4/21/2024	1:45 PM	0	372	66	0	2	2	0	1	4	0	0	0	0
4/21/2024	2:00 PM	0	363	67	0	1	2	0	1	5	0	0	0	0
4/21/2024	2:15 PM	0	383	64	0	2	1	0	1	3	0	0	0	0
4/21/2024	2:30 PM	0	393	65	2	4	0	0	0	3	0	0	0	0
4/21/2024	2:45 PM	0	400	79	2	3	1	0	1	2	0	0	0	0
4/21/2024	3:00 PM	0	437	79	2	3	1	0	1	1	0	0	0	0
4/21/2024	3:15 PM	0	431	83	2	3	2	0	1	2	0	0	0	0
4/21/2024	3:30 PM	0	418	83	0	3	2	0	1	4	0	0	0	0
4/21/2024	3:45 PM	0	388	69	0	5	2	0	0	4	0	0	0	0
4/21/2024	4:00 PM	0	316	62	0	8	2	0	0	5	0	0	0	0
4/21/2024	4:15 PM	0	304	56	1	8	2	0	0	4	0	0	0	0
4/21/2024	4:30 PM	0	318	54	1	6	2	0	0	4	0	0	0	0
4/21/2024	4:45 PM	0	308	59	1	6	2	0	0	5	0	0	0	0
4/21/2024	5:00 PM	0	318	60	1	3	2	0	0	4	0	0	0	0
4/21/2024	5:15 PM	0	298	62	0	3	1	0	0	5	0	0	0	0
4/21/2024	5:30 PM	0	278	66	0	3	1	0	0	2	0	0	0	0
4/21/2024	5:45 PM	0	272	66	0	1	0	0	0	2	0	0	0	0
4/21/2024	6:00 PM	0	262	67	0	1	0	0	0	4	0	0	0	0
4/21/2024	6:15 PM	0	277	56	0	0	0	0	0	5	0	0	0	0
4/21/2024	6:30 PM	0	286	50	0	0	0	0	0	6	0	0	0	0
4/21/2024	6:45 PM	0	307	41	0	0	0	0	0	5	0	1	0	0
4/21/2024	7:00 PM	0	315	33	0	0	0	0	0	4	0	1	0	0
4/21/2024	7:15 PM	0	296	38	0	0	0	0	0	3	0	1	0	0
4/21/2024	7:30 PM	0	270	36	0	1	0	0	0	4	0	1	0	0
4/21/2024	7:45 PM	0	249	33	0	1	0	0	0	4	0	0	0	0
4/21/2024	8:00 PM	0	232	24	1	2	1	0	0	3	0	0	0	0
4/21/2024	8:15 PM	0	221	21	1	2	1	0	0	3	0	0	0	0
4/21/2024	8:30 PM	0	209	17	1	1	1	0	0	1	0	0	0	0
4/21/2024	8:45 PM	0	204	18	1	1	1	0	0	3	0	0	0	0
4/21/2024	9:00 PM	0	194	19	0	0	0	0	0	3	0	0	0	0
4/21/2024	9:15 PM	0	166	17	0	0	0	0	0	5	0	0	0	0
4/21/2024	9:30 PM	0	154	18	0	0	0	0	0	7	0	0	0	0
4/21/2024	9:45 PM	0	137	15	0	0	0	0	0	5	0	0	0	0
4/21/2024	10:00 PM	0	126	16	0	0	0	0	0	6	0	0	0	0
4/21/2024	10:15 PM	0	134	15	0	0	0	0	0	3	0	0	0	0
4/21/2024	10:30 PM	0	135	15	0	0	0	0	0	2	0	0	0	0
4/21/2024	10:45 PM	0	131	16	0	0	0	0	0	3	0	0	0	0
4/21/2024	11:00 PM	0	125	15	0	0	0	0	0	2	0	0	0	0
4/21/2024	11:15 PM	0	97	16	0	0	0	0	0	2	0	0	0	0
4/21/2024	11:30 PM	0	80	16	0	0	0	0	0	1	0	0	0	0
4/21/2024	11:45 PM	0	70	17	0	2	0	0	0	2	0	0	0	0

4/22/2024	12:00 AM	0	63	20	0	2	0	0	0	3	0	0	0	0
4/22/2024	12:15 AM	0	68	21	0	2	0	0	0	3	0	1	0	0
4/22/2024	12:30 AM	0	54	18	0	2	0	0	0	3	0	1	0	0
4/22/2024	12:45 AM	0	40	17	0	0	0	0	0	2	0	1	0	0
4/22/2024	1:00 AM	0	32	14	0	0	0	0	0	1	0	1	0	0
4/22/2024	1:15 AM	0	28	13	0	0	0	0	0	1	0	0	0	0
4/22/2024	1:30 AM	0	25	13	0	1	0	0	0	1	0	0	0	0
4/22/2024	1:45 AM	0	25	12	0	1	0	0	0	0	0	0	0	0
4/22/2024	2:00 AM	0	23	11	0	1	0	0	0	0	0	0	0	0
4/22/2024	2:15 AM	0	22	10	0	1	0	0	0	1	0	0	0	0
4/22/2024	2:30 AM	0	29	12	0	1	0	0	0	2	0	0	0	0
4/22/2024	2:45 AM	0	30	13	0	1	0	0	0	5	0	0	0	0
4/22/2024	3:00 AM	0	34	14	0	1	1	0	0	8	0	0	0	0
4/22/2024	3:15 AM	0	34	15	0	1	1	0	0	7	0	0	0	0
4/22/2024	3:30 AM	0	38	16	0	3	1	0	0	8	0	0	0	0
4/22/2024	3:45 AM	0	43	17	0	7	1	0	0	6	0	0	0	0
4/22/2024	4:00 AM	0	44	18	0	7	0	0	0	5	0	0	0	0
4/22/2024	4:15 AM	0	57	20	0	8	0	0	0	7	0	0	0	0
4/22/2024	4:30 AM	0	69	27	0	7	1	0	0	9	0	0	0	0
4/22/2024	4:45 AM	0	91	32	0	5	3	0	0	11	0	0	0	0
4/22/2024	5:00 AM	0	122	40	0	6	3	0	0	12	0	0	0	0
4/22/2024	5:15 AM	0	162	47	0	10	3	0	0	10	0	0	0	0
4/22/2024	5:30 AM	0	208	51	0	14	3	0	0	9	0	0	0	0
4/22/2024	5:45 AM	0	267	68	0	17	2	0	0	12	0	0	0	0
4/22/2024	6:00 AM	0	315	84	0	23	3	0	0	9	0	0	0	0
4/22/2024	6:15 AM	1	341	100	1	22	4	0	0	12	0	0	0	0
4/22/2024	6:30 AM	1	371	122	1	24	4	0	0	14	0	0	0	0
4/22/2024	6:45 AM	1	423	138	1	26	5	0	1	12	0	0	0	0
4/22/2024	7:00 AM	1	478	165	1	26	7	0	1	24	0	0	0	0
4/22/2024	7:15 AM	0	503	184	0	36	10	0	2	22	0	0	0	0
4/22/2024	7:30 AM	0	498	173	0	33	10	0	4	19	0	0	0	0
4/22/2024	7:45 AM	0	451	173	0	34	9	0	3	22	0	0	0	0
4/22/2024	8:00 AM	0	393	160	1	37	6	0	4	18	0	0	0	0
4/22/2024	8:15 AM	0	381	147	2	36	6	0	5	22	0	0	0	0
4/22/2024	8:30 AM	0	363	154	3	39	5	0	3	35	0	0	0	0
4/22/2024	8:45 AM	0	341	140	3	37	8	0	3	36	0	1	0	0
4/22/2024	9:00 AM	0	319	127	3	33	8	0	2	37	0	1	0	0
4/22/2024	9:15 AM	0	281	126	4	27	7	0	0	37	0	1	0	0
4/22/2024	9:30 AM	0	274	121	3	22	10	0	1	27	0	1	0	0
4/22/2024	9:45 AM	0	265	124	3	24	7	0	2	25	0	0	0	0
4/22/2024	10:00 AM	0	279	123	4	24	11	0	3	22	0	0	0	0
4/22/2024	10:15 AM	0	301	122	2	24	13	0	6	26	0	0	0	0
4/22/2024	10:30 AM	0	314	132	3	27	12	0	5	26	0	0	0	0
4/22/2024	10:45 AM	0	324	130	3	22	13	0	5	25	0	0	0	0
4/22/2024	11:00 AM	1	336	144	1	21	10	0	5	23	0	0	0	0
4/22/2024	11:15 AM	1	339	140	1	21	7	0	2	18	0	0	0	0
4/22/2024	11:30 AM	1	347	134	0	17	8	0	2	17	0	0	0	0
4/22/2024	11:45 AM	1	356	140	0	16	13	0	2	17	0	0	0	0
4/22/2024	12:00 PM	1	367	127	1	13	15	0	3	17	0	0	0	0
4/22/2024	12:15 PM	1	384	128	1	8	15	0	3	17	0	0	0	0
4/22/2024	12:30 PM	1	381	135	1	6	13	0	4	20	0	0	0	0
4/22/2024	12:45 PM	1	390	137	1	5	8	0	3	19	0	0	0	0
4/22/2024	1:00 PM	1	399	147	0	4	6	0	2	20	1	0	0	0
4/22/2024	1:15 PM	1	398	150	0	9	4	0	2	19	1	0	0	0
4/22/2024	1:30 PM	1	435	149	0	15	6	0	1	17	1	0	0	0
4/22/2024	1:45 PM	1	466	151	0	19	5	0	1	21	1	0	0	0
4/22/2024	2:00 PM	0	470	156	1	20	6	0	4	19	0	0	0	0
4/22/2024	2:15 PM	0	475	160	3	16	7	0	5	26	0	0	0	0
4/22/2024	2:30 PM	0	501	160	4	13	4	0	6	23	0	0	0	0
4/22/2024	2:45 PM	0	488	152	4	10	3	0	6	18	0	0	0	0
4/22/2024	3:00 PM	0	455	129	3	10	1	0	2	17	0	0	0	0
4/22/2024	3:15 PM	0	461	118	2	10	1	0	2	14	0	0	1	0
4/22/2024	3:30 PM	0	405	104	1	13	1	0	1	17	1	0	1	0
4/22/2024	3:45 PM	0	375	94	1	12	1	0	1	19	1	0	1	0
4/22/2024	4:00 PM	2	377	97	2	11	1	0	1	18	1	0	1	0
4/22/2024	4:15 PM	2	356	91	1	8	0	0	0	18	1	0	0	0
4/22/2024	4:30 PM	2	347	90	1	3	0	0	1	18	0	0	0	0
4/22/2024	4:45 PM	2	339	92	1	5	3	0	1	18	0	0	0	0
4/22/2024	5:00 PM	0	342	93	0	5	3	0	1	17	0	0	0	0
4/22/2024	5:15 PM	0	345	106	0	8	4	0	2	10	0	0	0	0
4/22/2024	5:30 PM	0	356	94	0	10	5	0	2	7	0	0	0	0
4/22/2024	5:45 PM	1	355	84	0	7	3	0	2	5	0	0	0	0
4/22/2024	6:00 PM	1	293	59	2	6	3	0	2	7	0	0	0	0
4/22/2024	6:15 PM	1	283	49	2	4	2	0	1	8	0	0	0	0
4/22/2024	6:30 PM	1	275	51	2	4	1	0	0	6	0	0	0	0
4/22/2024	6:45 PM	0	280	61	2	5	0	0	0	4	0	0	0	0
4/22/2024	7:00 PM	0	335	75	0	7	0	0	0	3	0	0	0	0
4/22/2024	7:15 PM	0	330	66	0	7	0	0	0	3	0	0	0	0
4/22/2024	7:30 PM	0	296	71	0	7	1	0	4	5	0	0	0	0
4/22/2024	7:45 PM	0	289	65	0	7	1	0	4	6	0	0	0	0
4/22/2024	8:00 PM	0	252	64	0	5	1	0	4	6	0	0	0	0
4/22/2024	8:15 PM	0	221	63	0	5	1	0	4	5	0	0	0	0
4/22/2024	8:30 PM	0	205	58	0	2	0	0	0	5	0	0	0	0
4/22/2024	8:45 PM	0	170	57	0	3	0	0	0	7	0	0	0	0
4/22/2024	9:00 PM	0	168	62	0	3	0	0	0	10	0	0	0	0
4/22/2024	9:15 PM	0	157	64	1	2	0	0	0	10	0	0	0	0
4/22/2024	9:30 PM	0	161	59	1	2	0	0	0	9	0	0	0	0
4/22/2024	9:45 PM	0	153	49	1	1	1	0	0	6	0	0	0	0
4/22/2024	10:00 PM	0	149	41	1	2	2	0	0	5	0	0	0	0
4/22/2024	10:15 PM	0	148	34	0	2	2	0	0	7	0	0	0	0
4/22/2024	10:30 PM	0	136	35	0	2	3	0	0	6	0	0	0	0
4/22/2024	10:45 PM	0	140	37	0	1	2	0	0	6	0	0	0	0
4/22/2024	11:00 PM	0	115	30	0	0	1	0	0	7	0	1	0	0
4/22/2024	11:15 PM	0	110	25	0	0	1	0	0	7	0	1	0	0
4/22/2024	11:30 PM	0	107	19	0	1	0	0	0	9	0	1	0	0
4/22/2024	11:45 PM	0	98	12	0	1	0	0	0	9	0	1	0	0

4/23/2024	12:00 AM	0	99	9	0	1	0	0	0	5	0	0	0	0
4/23/2024	12:15 AM	0	82	6	0	1	0	0	0	4	0	0	0	0
4/23/2024	12:30 AM	0	65	2	0	1	0	0	0	4	0	0	0	0
4/23/2024	12:45 AM	0	52	0	0	1	0	0	0	4	0	1	0	0
4/23/2024	1:00 AM	0	48	0	0	1	0	0	0	5	0	1	0	0
4/23/2024	1:15 AM	0	41	2	0	1	0	0	0	4	0	1	0	0
4/23/2024	1:30 AM	0	37	3	0	0	0	0	0	4	0	1	0	0
4/23/2024	1:45 AM	0	35	4	0	1	0	0	0	3	0	0	0	0
4/23/2024	2:00 AM	0	33	5	0	2	0	0	0	3	0	3	0	0
4/23/2024	2:15 AM	0	33	4	0	3	0	0	0	4	0	3	0	0
4/23/2024	2:30 AM	0	32	3	0	4	0	0	0	2	0	3	0	0
4/23/2024	2:45 AM	0	31	2	0	3	0	0	0	5	0	3	0	0
4/23/2024	3:00 AM	0	35	2	0	2	0	0	0	8	0	1	0	0
4/23/2024	3:15 AM	0	38	2	0	1	0	0	0	9	0	1	0	0
4/23/2024	3:30 AM	0	47	6	0	4	0	0	0	10	0	1	0	0
4/23/2024	3:45 AM	0	56	10	0	6	3	0	0	8	0	1	0	0
4/23/2024	4:00 AM	0	72	15	0	9	3	0	0	7	0	1	0	0
4/23/2024	4:15 AM	0	75	16	0	11	3	0	0	7	0	3	0	0
4/23/2024	4:30 AM	0	82	15	0	8	3	0	0	11	0	3	0	0
4/23/2024	4:45 AM	0	116	21	0	10	1	0	0	11	0	3	0	0
4/23/2024	5:00 AM	0	132	23	0	12	1	0	0	11	0	2	0	0
4/23/2024	5:15 AM	0	169	29	1	17	1	0	0	14	0	0	0	0
4/23/2024	5:30 AM	0	205	47	1	20	1	0	0	11	0	0	0	0
4/23/2024	5:45 AM	0	244	66	1	17	1	0	1	14	0	0	0	0
4/23/2024	6:00 AM	0	289	85	1	19	4	0	2	15	0	0	0	0
4/23/2024	6:15 AM	1	327	120	1	15	4	0	2	12	1	0	0	0
4/23/2024	6:30 AM	1	403	147	1	13	4	0	4	15	2	1	0	0
4/23/2024	6:45 AM	1	423	159	1	13	4	0	5	19	2	1	0	0
4/23/2024	7:00 AM	1	466	179	1	14	3	0	4	23	2	1	0	0
4/23/2024	7:15 AM	1	465	170	0	16	6	0	4	25	1	1	0	0
4/23/2024	7:30 AM	1	432	165	0	20	6	0	2	29	0	0	0	0
4/23/2024	7:45 AM	1	428	148	1	21	8	0	0	26	0	0	0	0
4/23/2024	8:00 AM	1	400	133	1	20	7	0	0	27	0	0	0	0
4/23/2024	8:15 AM	0	389	145	1	16	4	0	2	30	0	0	0	0
4/23/2024	8:30 AM	0	367	137	2	29	6	0	2	29	1	1	0	0
4/23/2024	8:45 AM	0	355	172	1	34	5	0	3	30	1	2	0	0
4/23/2024	9:00 AM	0	335	170	1	32	5	0	5	29	1	2	0	0
4/23/2024	9:15 AM	0	344	151	2	32	6	0	4	29	1	2	0	0
4/23/2024	9:30 AM	0	342	137	1	21	5	0	5	33	0	1	0	0
4/23/2024	9:45 AM	0	341	117	1	17	5	0	5	31	0	0	0	0
4/23/2024	10:00 AM	0	341	114	1	16	5	0	4	32	0	0	0	0
4/23/2024	10:15 AM	0	338	111	0	20	4	0	3	30	0	0	0	0
4/23/2024	10:30 AM	0	343	109	0	15	3	0	2	26	0	0	0	0
4/23/2024	10:45 AM	0	324	97	0	17	3	0	3	24	0	0	0	0
4/23/2024	11:00 AM	0	332	103	0	17	5	0	3	22	0	0	0	0
4/23/2024	11:15 AM	0	339	103	0	19	5	0	3	24	0	0	0	0
4/23/2024	11:30 AM	0	352	109	0	22	6	0	3	28	0	0	0	0
4/23/2024	11:45 AM	2	361	110	0	22	5	1	1	37	0	0	0	0
4/23/2024	12:00 PM	2	365	101	1	20	4	1	0	36	0	0	0	0
4/23/2024	12:15 PM	2	367	98	2	16	6	1	0	33	0	0	0	0
4/23/2024	12:30 PM	2	373	108	2	14	5	1	0	25	0	0	0	0
4/23/2024	12:45 PM	1	384	106	2	16	5	0	1	20	1	0	0	0
4/23/2024	1:00 PM	1	398	122	1	18	4	0	1	21	2	0	0	0
4/23/2024	1:15 PM	2	423	143	0	17	3	1	3	26	2	0	0	0
4/23/2024	1:30 PM	2	433	141	0	16	4	1	4	28	2	0	0	0
4/23/2024	1:45 PM	2	452	150	0	11	4	1	3	29	1	0	0	0
4/23/2024	2:00 PM	2	477	141	2	13	6	1	4	29	0	0	0	0
4/23/2024	2:15 PM	1	489	138	3	13	6	0	4	27	0	0	0	0
4/23/2024	2:30 PM	2	544	137	4	14	8	0	4	25	1	0	0	0
4/23/2024	2:45 PM	1	588	148	4	16	9	0	4	19	1	0	0	0
4/23/2024	3:00 PM	1	596	152	2	13	7	0	4	15	1	0	0	0
4/23/2024	3:15 PM	1	599	147	2	16	6	0	5	19	2	0	0	0
4/23/2024	3:30 PM	0	569	148	1	12	3	0	6	17	1	0	0	0
4/23/2024	3:45 PM	0	528	125	1	8	2	0	6	17	1	1	0	0
4/23/2024	4:00 PM	0	471	124	1	6	1	0	5	16	1	1	0	0
4/23/2024	4:15 PM	0	440	113	0	1	2	0	3	7	0	1	0	0
4/23/2024	4:30 PM	0	386	94	0	4	3	0	2	6	1	1	0	0
4/23/2024	4:45 PM	0	360	95	0	6	2	0	2	6	1	0	0	0
4/23/2024	5:00 PM	0	367	77	0	5	2	0	2	6	1	0	0	0
4/23/2024	5:15 PM	0	341	69	0	9	2	0	3	4	2	0	0	0
4/23/2024	5:30 PM	0	347	91	0	6	1	0	2	4	1	0	0	0
4/23/2024	5:45 PM	0	346	89	0	5	1	0	2	9	1	0	0	0
4/23/2024	6:00 PM	0	339	91	0	5	1	0	2	10	1	0	0	0
4/23/2024	6:15 PM	0	353	98	0	2	1	0	0	13	0	0	0	0
4/23/2024	6:30 PM	1	347	81	0	3	2	0	0	13	0	0	0	0
4/23/2024	6:45 PM	1	353	75	0	2	2	0	0	8	0	0	0	0
4/23/2024	7:00 PM	1	362	79	0	2	3	0	0	6	0	0	0	0
4/23/2024	7:15 PM	1	345	73	0	1	2	0	0	5	0	0	0	0
4/23/2024	7:30 PM	0	346	66	0	0	1	0	1	5	0	0	0	0
4/23/2024	7:45 PM	0	331	57	0	2	1	0	1	4	0	0	0	0
4/23/2024	8:00 PM	0	306	41	0	2	0	0	1	6	0	1	0	0
4/23/2024	8:15 PM	0	315	31	0	4	0	0	1	4	0	1	0	0
4/23/2024	8:30 PM	0	304	21	0	4	1	0	0	9	0	1	0	0
4/23/2024	8:45 PM	0	278	17	0	3	1	0	1	9	0	3	0	0
4/23/2024	9:00 PM	0	272	16	0	4	2	0	1	9	0	2	0	0
4/23/2024	9:15 PM	0	232	13	0	2	4	0	1	11	0	2	0	0
4/23/2024	9:30 PM	1	208	11	0	2	3	0	1	6	0	3	0	0
4/23/2024	9:45 PM	1	195	10	0	1	3	0	0	7	0	2	0	0
4/23/2024	10:00 PM	1	172	6	0	0	2	0	0	5	0	3	0	0
4/23/2024	10:15 PM	1	171	3	0	0	1	0	0	4	0	3	0	0
4/23/2024	10:30 PM	1	158	4	0	1	2	0	0	5	0	2	0	0
4/23/2024	10:45 PM	1	147	2	0	1	2	0	0	5	0	1	0	0
4/23/2024	11:00 PM	1	140	2	0	2	2	0	0	6	0	0	0	0
4/23/2024	11:15 PM	1	118	6	0	3	1	0	0	7	0	0	0	0
4/23/2024	11:30 PM	0	108	9	0	2	1	0	0	9	0	0	0	0
4/23/2024	11:45 PM	0	105	16	0	3	1	0	0	12	0	0	0	0

4/24/2024	12:00 AM	0	88	18	0	2	1	0	0	11	0	0	0	0
4/24/2024	12:15 AM	0	81	17	0	1	1	0	0	9	0	0	0	0
4/24/2024	12:30 AM	0	73	16	0	3	0	0	0	6	0	0	0	0
4/24/2024	12:45 AM	0	56	11	0	3	0	0	0	3	0	0	0	0
4/24/2024	1:00 AM	0	53	10	0	3	0	0	0	3	0	0	0	0
4/24/2024	1:15 AM	0	51	8	0	3	0	0	0	3	0	0	0	0
4/24/2024	1:30 AM	0	39	6	0	1	0	0	0	4	0	0	0	0
4/24/2024	1:45 AM	0	39	7	0	2	0	0	0	8	0	0	0	0
4/24/2024	2:00 AM	0	33	6	0	4	1	0	0	8	0	0	0	0
4/24/2024	2:15 AM	0	33	7	0	5	1	0	0	10	0	0	0	0
4/24/2024	2:30 AM	0	32	8	0	6	1	0	0	8	0	0	0	0
4/24/2024	2:45 AM	0	31	8	0	4	1	0	0	4	0	0	0	0
4/24/2024	3:00 AM	0	36	9	0	3	0	0	0	7	0	1	0	0
4/24/2024	3:15 AM	0	43	10	1	2	2	0	0	7	0	1	0	0
4/24/2024	3:30 AM	0	50	13	1	2	2	0	1	13	0	2	0	0
4/24/2024	3:45 AM	0	56	14	1	3	2	0	1	16	0	2	0	0
4/24/2024	4:00 AM	0	62	18	1	2	2	0	1	16	0	1	0	0
4/24/2024	4:15 AM	0	60	19	0	3	0	0	1	16	0	1	0	0
4/24/2024	4:30 AM	0	74	22	0	5	2	0	0	14	0	0	0	0
4/24/2024	4:45 AM	0	103	28	0	7	2	0	0	16	0	0	0	0
4/24/2024	5:00 AM	0	125	33	0	11	3	0	0	18	0	0	0	0
4/24/2024	5:15 AM	0	164	42	0	17	4	0	2	21	0	0	0	0
4/24/2024	5:30 AM	0	208	52	0	17	3	0	2	23	0	1	0	0
4/24/2024	5:45 AM	0	253	70	0	17	4	0	3	21	0	1	0	0
4/24/2024	6:00 AM	0	299	87	0	20	5	0	4	18	0	1	0	0
4/24/2024	6:15 AM	1	333	117	1	16	4	0	2	14	0	1	0	0
4/24/2024	6:30 AM	1	392	146	1	16	4	0	4	13	0	0	0	0
4/24/2024	6:45 AM	1	450	163	1	19	6	0	4	20	0	0	0	0
4/24/2024	7:00 AM	1	496	196	1	17	4	0	4	26	0	0	0	0
4/24/2024	7:15 AM	0	490	189	0	25	5	0	4	26	0	0	0	0
4/24/2024	7:30 AM	0	441	180	0	28	7	0	2	27	0	0	0	0
4/24/2024	7:45 AM	0	386	168	0	28	5	0	3	22	0	0	0	0
4/24/2024	8:00 AM	0	329	150	1	32	5	0	3	24	0	0	0	0
4/24/2024	8:15 AM	0	326	153	1	27	4	0	4	30	0	1	0	0
4/24/2024	8:30 AM	0	314	163	1	28	1	0	6	31	0	1	0	0
4/24/2024	8:45 AM	0	317	179	1	44	5	0	5	37	0	1	0	0
4/24/2024	9:00 AM	0	325	182	0	42	9	0	4	33	0	1	0	0
4/24/2024	9:15 AM	0	305	173	0	40	11	0	5	31	0	0	0	0
4/24/2024	9:30 AM	1	307	158	0	38	12	0	3	26	0	0	0	0
4/24/2024	9:45 AM	1	297	151	0	20	11	0	5	21	0	0	0	0
4/24/2024	10:00 AM	1	311	154	0	15	8	0	7	25	0	0	0	0
4/24/2024	10:15 AM	1	322	166	0	21	8	0	6	24	0	0	0	0
4/24/2024	10:30 AM	0	348	164	0	20	7	0	7	26	0	0	0	0
4/24/2024	10:45 AM	0	348	161	0	22	5	0	6	29	0	0	0	0
4/24/2024	11:00 AM	0	350	144	1	22	5	0	6	23	0	0	0	0
4/24/2024	11:15 AM	0	380	129	1	13	3	2	6	23	1	0	0	0
4/24/2024	11:30 AM	0	386	135	2	15	4	3	6	21	1	0	0	0
4/24/2024	11:45 AM	0	413	124	3	12	5	3	4	18	1	0	0	0
4/24/2024	12:00 PM	0	421	126	2	10	4	4	2	15	1	0	0	0
4/24/2024	12:15 PM	0	426	129	4	13	6	2	2	21	0	0	0	0
4/24/2024	12:30 PM	0	443	136	4	8	7	3	2	24	0	0	0	0
4/24/2024	12:45 PM	1	474	141	3	6	4	3	4	22	0	0	0	0
4/24/2024	1:00 PM	1	490	143	3	7	5	2	6	28	0	0	0	0
4/24/2024	1:15 PM	2	519	149	1	5	4	3	5	25	0	0	0	0
4/24/2024	1:30 PM	2	516	152	0	8	4	2	8	24	0	0	0	0
4/24/2024	1:45 PM	3	494	154	0	16	5	3	7	28	1	0	0	0
4/24/2024	2:00 PM	3	511	150	1	17	6	3	6	26	2	0	0	0
4/24/2024	2:15 PM	2	518	145	3	20	6	3	8	27	2	0	0	0
4/24/2024	2:30 PM	2	552	145	3	21	5	2	5	27	4	0	0	0
4/24/2024	2:45 PM	0	594	147	4	16	4	2	4	24	3	0	0	0
4/24/2024	3:00 PM	1	624	152	4	18	3	2	4	20	2	0	0	0
4/24/2024	3:15 PM	1	656	149	2	15	2	2	5	20	3	0	0	0
4/24/2024	3:30 PM	1	641	128	2	13	2	2	6	19	2	0	0	0
4/24/2024	3:45 PM	1	601	120	1	9	4	1	7	16	2	0	0	0
4/24/2024	4:00 PM	1	538	97	0	7	5	1	7	17	2	0	0	0
4/24/2024	4:15 PM	1	450	85	0	5	6	0	7	13	1	0	0	0
4/24/2024	4:30 PM	1	408	76	0	4	5	0	5	13	0	0	0	0
4/24/2024	4:45 PM	1	360	63	0	5	3	0	4	12	0	0	0	0
4/24/2024	5:00 PM	0	343	61	0	5	1	0	3	14	0	0	0	0
4/24/2024	5:15 PM	0	371	61	0	8	1	0	0	12	0	0	0	0
4/24/2024	5:30 PM	0	374	58	0	8	2	0	0	12	0	0	0	0
4/24/2024	5:45 PM	0	399	68	0	7	3	0	0	15	0	0	0	0
4/24/2024	6:00 PM	0	383	74	0	5	3	0	0	13	1	0	0	0
4/24/2024	6:15 PM	1	367	74	0	5	4	0	0	14	1	0	0	0
4/24/2024	6:30 PM	1	367	77	0	4	3	0	0	12	1	0	0	0
4/24/2024	6:45 PM	1	352	70	0	6	2	0	2	9	1	0	0	0
4/24/2024	7:00 PM	2	363	63	0	6	3	0	3	6	0	0	0	0
4/24/2024	7:15 PM	1	335	57	0	3	1	0	6	5	0	0	0	0
4/24/2024	7:30 PM	1	313	52	0	3	1	0	8	5	0	0	0	0
4/24/2024	7:45 PM	2	306	46	0	4	2	0	6	5	0	0	0	0
4/24/2024	8:00 PM	1	287	45	0	5	3	0	5	7	0	0	0	0
4/24/2024	8:15 PM	1	289	46	0	7	3	0	2	6	0	0	0	0
4/24/2024	8:30 PM	1	290	47	1	7	3	0	0	7	0	0	0	0
4/24/2024	8:45 PM	0	261	43	1	5	3	0	0	8	0	0	0	0
4/24/2024	9:00 PM	0	244	44	1	6	1	0	1	9	0	0	0	0
4/24/2024	9:15 PM	0	216	41	1	4	2	0	1	10	0	1	0	0
4/24/2024	9:30 PM	0	190	38	0	4	2	0	1	9	0	1	0	0
4/24/2024	9:45 PM	0	170	33	0	3	1	0	2	6	0	1	0	0
4/24/2024	10:00 PM	0	153	28	0	1	1	0	1	5	0	2	0	0
4/24/2024	10:15 PM	0	148	26	0	1	1	0	1	6	0	1	0	0
4/24/2024	10:30 PM	0	139	24	0	1	1	0	1	7	0	1	0	0
4/24/2024	10:45 PM	0	139	23	0	1	1	0	0	7	0	1	0	0
4/24/2024	11:00 PM	0	132	21	0	2	1	0	0	6	0	0	0	0
4/24/2024	11:15 PM	0	117	19	0	3	0	0	0	3	0	0	0	0
4/24/2024	11:30 PM	0	107	17	0	2	0	0	0	2	0	0	0	0
4/24/2024	11:45 PM	0	113	21	0	2	0	0	0	2	0	0	0	0

4/25/2024	12:00 AM	0	111	20	0	2	0	0	0	5	0	0	0	0
4/25/2024	12:15 AM	0	101	19	0	1	0	0	0	7	0	0	0	0
4/25/2024	12:30 AM	0	83	15	0	1	0	0	0	8	0	0	0	0
4/25/2024	12:45 AM	0	61	12	0	1	0	0	0	8	0	0	0	0
4/25/2024	1:00 AM	0	46	10	0	0	0	0	0	8	0	0	0	0
4/25/2024	1:15 AM	0	48	9	0	1	0	0	0	8	0	0	0	0
4/25/2024	1:30 AM	0	48	10	0	1	0	0	0	6	0	0	0	0
4/25/2024	1:45 AM	0	41	8	0	2	0	0	0	7	0	1	0	0
4/25/2024	2:00 AM	0	44	10	0	2	0	0	0	3	0	1	0	0
4/25/2024	2:15 AM	0	35	9	0	2	0	0	0	1	0	1	0	0
4/25/2024	2:30 AM	0	33	9	0	3	0	0	0	3	0	2	0	0
4/25/2024	2:45 AM	0	36	9	0	5	0	0	0	5	0	1	0	0
4/25/2024	3:00 AM	0	43	10	0	6	0	0	0	7	0	2	0	0
4/25/2024	3:15 AM	0	51	10	0	8	1	0	0	7	0	2	0	0
4/25/2024	3:30 AM	0	52	11	0	8	1	0	2	9	0	1	0	0
4/25/2024	3:45 AM	0	56	12	0	9	2	0	2	8	0	1	0	0
4/25/2024	4:00 AM	0	63	16	0	10	2	0	2	10	0	0	0	0
4/25/2024	4:15 AM	0	65	19	0	8	1	0	2	13	0	1	0	0
4/25/2024	4:30 AM	0	81	24	0	13	2	0	0	11	0	1	0	0
4/25/2024	4:45 AM	0	107	27	0	10	1	0	0	11	0	1	0	0
4/25/2024	5:00 AM	0	120	27	0	10	2	0	0	10	0	1	0	0
4/25/2024	5:15 AM	0	173	39	0	22	3	0	0	11	0	0	0	0
4/25/2024	5:30 AM	0	212	52	0	20	5	0	1	13	0	0	0	0
4/25/2024	5:45 AM	0	265	88	0	26	6	0	1	13	0	0	0	0
4/25/2024	6:00 AM	0	316	110	0	28	7	0	3	13	0	0	0	0
4/25/2024	6:15 AM	1	338	130	1	21	9	0	5	14	0	0	0	0
4/25/2024	6:30 AM	1	399	157	1	21	9	0	5	13	0	0	0	0
4/25/2024	6:45 AM	2	452	170	1	23	10	0	7	21	0	0	0	0
4/25/2024	7:00 AM	2	503	200	1	28	10	0	6	26	0	0	0	0
4/25/2024	7:15 AM	1	510	205	2	27	8	0	7	23	0	0	0	0
4/25/2024	7:30 AM	1	493	191	2	26	6	0	7	28	0	0	0	0
4/25/2024	7:45 AM	1	438	180	3	24	5	0	8	24	0	0	0	0
4/25/2024	8:00 AM	1	393	172	3	17	4	0	7	19	0	3	0	0
4/25/2024	8:15 AM	1	362	174	1	18	3	0	6	31	0	3	0	0
4/25/2024	8:30 AM	1	342	176	2	27	5	0	7	32	0	3	0	0
4/25/2024	8:45 AM	0	339	171	1	31	7	0	5	37	0	3	0	0
4/25/2024	9:00 AM	0	337	165	2	33	6	0	6	42	0	0	0	0
4/25/2024	9:15 AM	0	347	164	2	37	7	0	8	36	0	0	0	0
4/25/2024	9:30 AM	0	324	164	1	33	4	0	8	32	0	0	0	0
4/25/2024	9:45 AM	0	309	161	2	28	3	0	9	28	0	0	0	0
4/25/2024	10:00 AM	2	295	156	1	27	6	0	8	25	0	0	0	0
4/25/2024	10:15 AM	2	313	138	1	22	5	0	5	29	0	0	0	0
4/25/2024	10:30 AM	2	336	142	1	19	5	0	3	28	0	0	0	0
4/25/2024	10:45 AM	2	357	133	0	19	4	0	2	30	0	0	0	0
4/25/2024	11:00 AM	0	394	130	0	19	5	0	2	34	0	0	0	0
4/25/2024	11:15 AM	0	383	130	0	24	5	0	1	25	0	0	0	0
4/25/2024	11:30 AM	0	393	121	0	27	6	0	2	27	0	0	0	0
4/25/2024	11:45 AM	0	415	128	1	24	6	0	2	23	0	0	0	0
4/25/2024	12:00 PM	0	400	122	1	24	3	0	3	19	0	0	0	0
4/25/2024	12:15 PM	1	424	122	3	20	4	1	5	23	0	0	0	0
4/25/2024	12:30 PM	1	430	117	5	17	4	1	4	21	0	0	0	0
4/25/2024	12:45 PM	1	418	116	6	18	3	1	4	23	0	0	0	0
4/25/2024	1:00 PM	1	421	127	7	17	5	2	3	23	0	0	0	0
4/25/2024	1:15 PM	0	416	135	5	22	5	1	1	20	0	0	0	0
4/25/2024	1:30 PM	0	448	158	3	20	5	3	1	19	0	0	0	0
4/25/2024	1:45 PM	0	469	166	1	21	7	3	3	16	0	0	0	0
4/25/2024	2:00 PM	0	515	149	0	25	6	3	3	13	0	0	0	0
4/25/2024	2:15 PM	0	572	157	3	22	7	3	4	11	1	0	0	0
4/25/2024	2:30 PM	0	584	138	6	21	8	1	5	11	1	0	0	0
4/25/2024	2:45 PM	0	615	127	6	19	8	1	2	10	1	0	0	0
4/25/2024	3:00 PM	0	582	135	6	19	7	0	3	10	1	0	0	0
4/25/2024	3:15 PM	0	526	124	4	14	7	0	2	9	0	0	0	0
4/25/2024	3:30 PM	0	494	122	1	15	6	0	1	8	0	0	0	0
4/25/2024	3:45 PM	0	443	113	1	18	5	0	1	8	0	0	0	0
4/25/2024	4:00 PM	0	435	105	1	13	4	0	0	7	0	0	0	0
4/25/2024	4:15 PM	0	404	92	0	10	3	0	2	6	1	0	0	0
4/25/2024	4:30 PM	0	369	73	0	7	3	0	2	6	1	0	0	0
4/25/2024	4:45 PM	1	334	61	0	3	2	0	3	6	1	0	0	0
4/25/2024	5:00 PM	2	292	54	0	4	2	0	3	9	1	0	0	0
4/25/2024	5:15 PM	2	321	60	0	7	1	0	1	10	0	0	0	0
4/25/2024	5:30 PM	4	332	73	1	11	0	0	2	12	0	0	0	0
4/25/2024	5:45 PM	5	358	87	1	10	0	0	1	9	0	0	0	0
4/25/2024	6:00 PM	4	401	84	1	9	0	0	1	8	0	0	0	0
4/25/2024	6:15 PM	4	406	78	2	9	2	0	1	9	0	0	0	0
4/25/2024	6:30 PM	2	418	82	1	7	3	0	0	5	0	0	0	0
4/25/2024	6:45 PM	0	404	74	1	7	3	0	0	8	0	0	0	0
4/25/2024	7:00 PM	0	383	84	2	7	3	0	0	5	0	0	0	0
4/25/2024	7:15 PM	0	362	86	1	6	1	0	0	4	0	0	0	0
4/25/2024	7:30 PM	0	362	74	1	5	0	0	0	5	0	0	0	0
4/25/2024	7:45 PM	0	385	76	1	6	0	0	0	4	0	0	0	0
4/25/2024	8:00 PM	0	387	62	0	6	0	0	0	7	0	0	0	0
4/25/2024	8:15 PM	0	370	57	1	6	0	0	0	7	0	0	0	0
4/25/2024	8:30 PM	0	338	53	1	5	0	0	0	8	0	0	0	0
4/25/2024	8:45 PM	0	275	45	1	3	0	0	0	6	0	1	0	0
4/25/2024	9:00 PM	0	241	43	1	3	0	0	0	5	0	2	0	0
4/25/2024	9:15 PM	0	218	45	0	1	0	0	0	6	0	2	0	0
4/25/2024	9:30 PM	0	201	54	0	2	0	0	0	4	0	2	0	0
4/25/2024	9:45 PM	0	194	55	0	2	0	0	0	4	0	2	0	0
4/25/2024	10:00 PM	1	173	56	0	2	0	0	0	2	0	1	0	0
4/25/2024	10:15 PM	1	169	55	1	3	0	0	0	1	0	1	0	0
4/25/2024	10:30 PM	1	154	48	1	2	0	0	0	3	0	2	0	0
4/25/2024	10:45 PM	1	147	50	1	2	0	0	0	6	0	2	0	0
4/25/2024	11:00 PM	0	131	46	1	5	0	0	0	8	0	2	0	0
4/25/2024	11:15 PM	0	90	32	0	4	0	0	0	7	0	2	0	0
4/25/2024	11:30 PM	0	47	19	0	4	0	0	0	5	0	1	0	0
4/25/2024	11:45 PM	0	19	7	0	4	0	0	0	2	0	0	0	0

4/26/2024	12:00 AM	0	85	45	0	1	0	0	0	6	0	1	0	0
4/26/2024	12:15 AM	0	77	42	0	0	0	0	0	7	0	1	0	0
4/26/2024	12:30 AM	0	63	38	0	0	0	0	0	9	0	1	0	0
4/26/2024	12:45 AM	0	45	26	0	0	0	0	0	7	0	2	0	0
4/26/2024	1:00 AM	0	41	23	0	0	0	0	0	6	0	2	0	0
4/26/2024	1:15 AM	0	35	18	0	0	0	0	0	5	0	2	0	0
4/26/2024	1:30 AM	0	25	13	0	2	0	0	0	3	0	1	0	0
4/26/2024	1:45 AM	0	24	15	0	3	0	0	0	3	0	1	0	0
4/26/2024	2:00 AM	0	25	15	0	3	0	0	0	2	0	1	0	0
4/26/2024	2:15 AM	0	25	16	0	3	0	0	0	3	0	2	0	0
4/26/2024	2:30 AM	0	26	19	0	2	0	0	0	3	0	2	0	0
4/26/2024	2:45 AM	0	34	19	0	1	0	0	0	5	0	1	0	0
4/26/2024	3:00 AM	0	37	19	0	3	0	0	0	9	0	1	0	0
4/26/2024	3:15 AM	0	40	21	0	6	0	0	0	10	0	0	0	0
4/26/2024	3:30 AM	0	42	20	0	6	0	0	0	9	0	3	0	0
4/26/2024	3:45 AM	0	46	25	0	7	0	0	0	9	0	3	0	0
4/26/2024	4:00 AM	0	50	26	0	9	0	0	0	8	0	3	0	0
4/26/2024	4:15 AM	0	51	26	0	8	0	0	0	7	0	3	0	0
4/26/2024	4:30 AM	0	70	34	0	9	0	0	0	13	0	0	0	0
4/26/2024	4:45 AM	0	80	39	0	11	0	0	0	15	0	0	0	0
4/26/2024	5:00 AM	0	93	46	0	14	0	0	0	15	0	0	0	0
4/26/2024	5:15 AM	0	116	63	0	21	0	0	0	17	0	0	0	0
4/26/2024	5:30 AM	0	138	76	0	22	1	0	0	17	0	1	0	0
4/26/2024	5:45 AM	0	183	111	0	23	5	0	1	18	0	2	0	0
4/26/2024	6:00 AM	0	222	135	0	19	8	0	1	19	0	2	0	0
4/26/2024	6:15 AM	0	274	146	1	14	11	1	1	19	0	2	0	0
4/26/2024	6:30 AM	1	337	167	1	14	11	1	3	15	2	1	0	0
4/26/2024	6:45 AM	1	397	160	1	16	10	1	3	13	2	0	0	0
4/26/2024	7:00 AM	1	447	166	1	15	8	1	3	10	2	0	0	0
4/26/2024	7:15 AM	1	441	173	0	16	11	2	4	11	2	0	0	0
4/26/2024	7:30 AM	0	411	166	0	16	10	3	3	12	0	0	0	0
4/26/2024	7:45 AM	0	366	173	4	16	7	4	2	17	0	1	0	0
4/26/2024	8:00 AM	0	340	177	4	22	7	5	4	19	0	1	0	0
4/26/2024	8:15 AM	0	341	191	4	23	2	5	5	16	0	1	0	0
4/26/2024	8:30 AM	0	354	187	5	32	5	6	4	21	0	1	0	0
4/26/2024	8:45 AM	0	353	173	1	39	8	5	4	24	1	0	0	0
4/26/2024	9:00 AM	0	333	158	1	34	7	5	3	31	1	0	0	0
4/26/2024	9:15 AM	0	322	134	1	38	8	3	2	37	1	0	0	0
4/26/2024	9:30 AM	0	300	121	0	29	6	2	3	36	1	0	0	0
4/26/2024	9:45 AM	0	305	124	0	17	3	2	5	31	0	0	0	0
4/26/2024	10:00 AM	0	319	119	1	19	5	1	6	28	0	0	0	0
4/26/2024	10:15 AM	0	346	117	1	12	4	1	6	24	0	0	0	0
4/26/2024	10:30 AM	0	368	129	3	12	5	0	7	20	0	0	0	0
4/26/2024	10:45 AM	0	377	118	3	13	8	2	5	16	0	0	0	0
4/26/2024	11:00 AM	0	401	125	2	11	6	2	3	11	0	0	0	0
4/26/2024	11:15 AM	0	406	130	2	10	7	2	3	9	0	0	0	0
4/26/2024	11:30 AM	0	418	125	0	8	5	3	3	7	0	0	0	0
4/26/2024	11:45 AM	0	420	128	1	13	3	1	4	12	0	0	0	0
4/26/2024	12:00 PM	0	449	137	3	14	5	1	5	16	0	0	0	0
4/26/2024	12:15 PM	0	433	134	4	13	3	1	4	15	0	0	0	0
4/26/2024	12:30 PM	0	432	132	5	13	3	0	3	16	0	0	0	0
4/26/2024	12:45 PM	0	433	130	5	8	5	0	2	15	0	0	0	0
4/26/2024	1:00 PM	0	381	117	3	4	4	0	1	13	0	0	0	0
4/26/2024	1:15 PM	0	396	120	2	7	4	0	1	16	0	0	0	0
4/26/2024	1:30 PM	1	401	126	1	15	6	0	2	15	0	0	0	0
4/26/2024	1:45 PM	1	412	125	1	15	6	0	6	14	0	0	0	0
4/26/2024	2:00 PM	2	480	126	1	18	6	0	7	12	0	0	0	0
4/26/2024	2:15 PM	2	502	136	1	15	8	0	7	14	0	0	0	0
4/26/2024	2:30 PM	1	544	128	2	9	8	0	5	17	0	0	0	0
4/26/2024	2:45 PM	2	552	141	1	12	5	0	1	12	0	0	0	0
4/26/2024	3:00 PM	2	536	143	2	11	4	0	0	11	0	0	0	0
4/26/2024	3:15 PM	2	531	124	2	12	5	0	0	13	0	0	0	0
4/26/2024	3:30 PM	2	498	126	1	11	3	0	1	10	0	0	0	0
4/26/2024	3:45 PM	1	484	118	1	8	4	0	1	14	0	0	0	0
4/26/2024	4:00 PM	0	475	117	0	7	4	0	2	16	0	0	0	0
4/26/2024	4:15 PM	0	488	117	0	7	2	0	2	10	0	0	0	0
4/26/2024	4:30 PM	0	492	115	0	7	3	0	1	11	0	0	0	0
4/26/2024	4:45 PM	1	500	105	0	5	2	0	1	8	0	0	0	0
4/26/2024	5:00 PM	1	494	97	1	5	2	0	0	6	0	0	0	0
4/26/2024	5:15 PM	1	471	97	1	6	2	0	0	5	0	0	0	0
4/26/2024	5:30 PM	1	443	85	1	6	1	0	1	4	0	0	0	0
4/26/2024	5:45 PM	0	433	82	1	8	1	0	1	3	0	0	0	0
4/26/2024	6:00 PM	0	408	74	0	8	2	0	1	2	0	0	0	0
4/26/2024	6:15 PM	0	395	66	0	7	2	0	1	2	0	0	0	0
4/26/2024	6:30 PM	3	396	73	0	7	2	0	0	1	0	0	0	0
4/26/2024	6:45 PM	3	391	76	0	8	2	0	0	2	0	0	0	0
4/26/2024	7:00 PM	4	374	72	0	9	1	0	0	2	0	0	0	0
4/26/2024	7:15 PM	4	358	70	0	8	0	0	0	2	0	0	0	0
4/26/2024	7:30 PM	1	351	70	0	7	0	0	0	3	0	0	0	0
4/26/2024	7:45 PM	1	323	62	0	7	0	0	0	5	0	0	0	0
4/26/2024	8:00 PM	0	312	63	1	5	0	0	0	6	0	0	0	0
4/26/2024	8:15 PM	0	311	68	1	4	0	0	0	9	0	0	0	0
4/26/2024	8:30 PM	0	289	61	1	3	0	0	0	10	0	0	0	0
4/26/2024	8:45 PM	0	287	65	1	1	0	0	0	8	0	0	0	0
4/26/2024	9:00 PM	0	279	60	0	2	0	0	0	7	0	0	0	0
4/26/2024	9:15 PM	0	270	52	0	2	0	0	0	4	0	0	0	0
4/26/2024	9:30 PM	0	262	47	0	2	0	0	0	3	0	2	0	0
4/26/2024	9:45 PM	0	243	37	0	2	0	0	0	2	0	2	0	0
4/26/2024	10:00 PM	0	230	36	0	1	0	0	0	2	0	2	0	0
4/26/2024	10:15 PM	0	218	34	0	1	0	0	0	1	0	2	0	0
4/26/2024	10:30 PM	0	205	33	0	2	0	0	0	0	0	0	0	0
4/26/2024	10:45 PM	0	202	31	0	1	0	0	0	1	0	0	0	0
4/26/2024	11:00 PM	0	178	29	0	1	0	0	0	2	0	0	0	0
4/26/2024	11:15 PM	0	120	19	0	1	0	0	0	2	0	0	0	0
4/26/2024	11:30 PM	0	73	11	0	0	0	0	0	2	0	0	0	0
4/26/2024	11:45 PM	0	25	5	0	0	0	0	0	1	0	0	0	0

4/27/2024	12:00 AM	0	114	18	0	2	1	0	0	1	0	1	0	0
4/27/2024	12:15 AM	0	104	18	0	1	1	0	0	0	0	0	0	0
4/27/2024	12:30 AM	0	90	13	0	1	1	0	0	2	0	1	0	0
4/27/2024	12:45 AM	0	78	11	0	1	1	0	0	3	0	1	0	0
4/27/2024	1:00 AM	0	71	10	0	0	1	0	0	3	0	1	0	0
4/27/2024	1:15 AM	0	68	9	0	0	0	0	0	5	0	1	0	0
4/27/2024	1:30 AM	0	65	9	0	0	0	0	0	3	0	0	0	0
4/27/2024	1:45 AM	0	58	9	0	0	1	0	0	4	0	2	0	0
4/27/2024	2:00 AM	0	55	10	0	0	1	0	0	5	0	2	0	0
4/27/2024	2:15 AM	0	50	10	0	1	2	0	0	3	0	2	0	0
4/27/2024	2:30 AM	0	41	9	0	2	2	0	1	3	0	3	0	0
4/27/2024	2:45 AM	0	51	9	0	4	1	0	1	1	0	1	0	0
4/27/2024	3:00 AM	0	54	8	0	5	1	0	1	1	0	1	0	0
4/27/2024	3:15 AM	0	62	10	0	6	0	0	2	3	0	1	0	0
4/27/2024	3:30 AM	0	70	11	0	6	2	0	1	4	0	2	0	0
4/27/2024	3:45 AM	0	67	11	0	5	4	0	1	5	0	2	0	0
4/27/2024	4:00 AM	0	73	15	0	5	4	0	1	4	0	2	0	0
4/27/2024	4:15 AM	0	71	14	0	3	4	0	0	2	0	2	0	0
4/27/2024	4:30 AM	0	76	16	0	4	3	0	0	2	0	0	0	0
4/27/2024	4:45 AM	0	84	19	0	4	3	0	0	1	0	0	0	0
4/27/2024	5:00 AM	0	78	15	0	6	3	0	0	1	0	0	0	0
4/27/2024	5:15 AM	0	90	17	0	7	4	0	0	2	0	0	0	0
4/27/2024	5:30 AM	0	106	19	0	6	3	0	0	2	0	0	0	0
4/27/2024	5:45 AM	0	119	18	0	6	1	0	0	3	0	0	0	0
4/27/2024	6:00 AM	0	151	27	0	3	1	0	0	4	0	0	0	0
4/27/2024	6:15 AM	0	178	34	1	4	0	0	0	4	0	1	0	0
4/27/2024	6:30 AM	0	198	45	2	5	0	0	0	5	0	1	0	0
4/27/2024	6:45 AM	0	212	60	2	5	1	0	2	5	0	1	0	0
4/27/2024	7:00 AM	0	229	71	2	6	2	0	2	5	0	1	0	0
4/27/2024	7:15 AM	0	240	76	1	6	3	1	2	4	0	0	0	0
4/27/2024	7:30 AM	0	249	79	0	4	4	1	2	4	0	0	0	0
4/27/2024	7:45 AM	0	277	97	0	5	5	1	0	6	0	0	0	0
4/27/2024	8:00 AM	0	271	94	0	6	5	1	0	7	0	0	0	0
4/27/2024	8:15 AM	1	286	92	0	11	6	0	0	9	0	0	0	0
4/27/2024	8:30 AM	1	289	84	0	12	5	0	0	9	0	0	0	0
4/27/2024	8:45 AM	1	286	64	0	10	4	0	0	9	0	0	0	0
4/27/2024	9:00 AM	1	330	68	0	11	5	0	0	9	0	0	0	0
4/27/2024	9:15 AM	0	315	73	1	5	3	0	1	8	0	0	0	0
4/27/2024	9:30 AM	0	332	89	1	4	3	0	1	8	0	0	0	0
4/27/2024	9:45 AM	0	355	90	1	6	2	0	1	5	0	0	0	0
4/27/2024	10:00 AM	0	345	95	1	6	0	0	1	6	0	0	0	0
4/27/2024	10:15 AM	2	350	92	0	7	1	0	0	5	0	0	0	0
4/27/2024	10:30 AM	2	361	86	0	7	1	0	0	4	0	0	0	0
4/27/2024	10:45 AM	2	354	83	0	6	1	0	0	9	0	0	0	0
4/27/2024	11:00 AM	3	376	83	0	5	1	0	0	6	0	0	0	0
4/27/2024	11:15 AM	1	408	98	0	3	0	0	0	7	0	0	0	0
4/27/2024	11:30 AM	1	420	107	1	3	0	1	0	8	0	0	0	0
4/27/2024	11:45 AM	1	445	116	2	3	0	1	0	7	0	0	0	0
4/27/2024	12:00 PM	0	466	118	2	3	0	1	0	8	0	0	0	0
4/27/2024	12:15 PM	0	461	108	2	6	0	1	1	7	0	0	0	0
4/27/2024	12:30 PM	2	468	110	1	6	1	0	1	7	0	0	0	0
4/27/2024	12:45 PM	5	462	107	0	5	1	0	1	5	0	0	0	0
4/27/2024	1:00 PM	6	455	94	1	4	1	0	1	5	0	0	0	0
4/27/2024	1:15 PM	6	475	101	1	1	1	0	0	8	0	0	0	0
4/27/2024	1:30 PM	4	484	99	1	1	0	0	0	7	0	0	0	0
4/27/2024	1:45 PM	1	515	98	1	1	1	0	0	5	0	0	0	0
4/27/2024	2:00 PM	0	525	108	0	2	1	0	0	4	0	0	0	0
4/27/2024	2:15 PM	0	530	99	1	2	3	0	0	1	0	0	0	0
4/27/2024	2:30 PM	0	544	87	1	2	4	0	1	1	0	0	0	0
4/27/2024	2:45 PM	0	545	92	1	3	3	0	1	4	0	0	0	0
4/27/2024	3:00 PM	0	528	90	1	2	4	0	1	5	0	0	0	0
4/27/2024	3:15 PM	0	514	91	0	2	2	0	1	6	0	0	0	0
4/27/2024	3:30 PM	0	489	82	0	4	2	0	0	5	0	0	0	0
4/27/2024	3:45 PM	1	453	77	0	3	2	0	0	3	1	0	0	0
4/27/2024	4:00 PM	1	442	67	0	2	1	0	0	2	1	0	0	0
4/27/2024	4:15 PM	3	419	67	1	3	1	0	0	1	1	0	0	0
4/27/2024	4:30 PM	4	437	79	1	1	0	0	1	2	1	0	0	0
4/27/2024	4:45 PM	3	436	73	2	2	0	0	1	3	0	0	0	0
4/27/2024	5:00 PM	3	428	79	2	2	0	0	2	3	0	0	0	0
4/27/2024	5:15 PM	1	455	64	1	1	1	0	3	5	0	0	0	0
4/27/2024	5:30 PM	0	403	57	1	1	1	0	2	6	0	0	0	0
4/27/2024	5:45 PM	0	390	59	0	1	1	0	2	5	0	0	0	0
4/27/2024	6:00 PM	1	364	49	0	2	1	0	1	6	0	0	0	0
4/27/2024	6:15 PM	2	315	61	1	2	0	0	0	4	0	0	0	0
4/27/2024	6:30 PM	3	346	64	2	2	0	0	0	4	0	0	0	0
4/27/2024	6:45 PM	3	347	62	2	1	0	0	0	3	0	0	0	0
4/27/2024	7:00 PM	5	353	66	2	0	0	0	0	4	0	0	0	0
4/27/2024	7:15 PM	5	375	57	1	0	1	0	0	4	0	0	0	0
4/27/2024	7:30 PM	4	320	46	0	0	1	0	0	2	0	0	0	0
4/27/2024	7:45 PM	4	296	37	0	0	1	0	0	2	0	0	0	0
4/27/2024	8:00 PM	1	282	29	1	1	1	0	0	1	0	0	0	0
4/27/2024	8:15 PM	0	280	27	1	1	0	0	0	2	0	0	0	0
4/27/2024	8:30 PM	0	293	28	1	1	0	0	0	3	0	0	0	0
4/27/2024	8:45 PM	0	291	31	1	2	0	0	0	3	0	0	0	0
4/27/2024	9:00 PM	0	272	30	0	1	0	0	0	3	0	0	0	0
4/27/2024	9:15 PM	0	259	30	0	2	0	0	0	2	0	0	0	0
4/27/2024	9:30 PM	0	249	28	0	2	0	0	0	2	0	0	0	0
4/27/2024	9:45 PM	0	236	28	0	1	0	0	0	5	0	0	0	0
4/27/2024	10:00 PM	0	239	28	1	1	0	0	0	4	0	0	0	0
4/27/2024	10:15 PM	0	211	25	2	0	0	0	0	4	0	0	0	0
4/27/2024	10:30 PM	0	192	24	2	1	0	0	0	5	0	0	0	0
4/27/2024	10:45 PM	0	180	21	2	1	0	0	0	2	0	0	0	0
4/27/2024	11:00 PM	0	165	21	1	1	0	0	0	2	0	0	0	0
4/27/2024	11:15 PM	0	120	17	0	1	0	0	0	2	0	0	0	0
4/27/2024	11:30 PM	0	81	12	0	0	0	0	0	0	0	0	0	0
4/27/2024	11:45 PM	0	37	6	0	0	0	0	0	0	0	0	0	0

SB
File Name:
Start Date: 4/21/2024
Start Time: 0
Site Code: 9
Station ID: 1
Location 1: I-26 N/Bound Off-Ramp, south of I-20
Location 2:

Date	Time	1	2	3	4	5	6	7	8	9	10	11	12	13
4/21/2024	12:00 AM	0	0	0	0	0	0	0	0	0	0	0	0	0
4/21/2024	12:15 AM	0	0	0	0	0	0	0	0	0	0	0	0	0
4/21/2024	12:30 AM	0	0	0	0	0	0	0	0	0	0	0	0	0
4/21/2024	12:45 AM	0	0	0	0	0	0	0	0	0	0	0	0	0
4/21/2024	1:00 AM	0	0	0	0	0	0	0	0	0	0	0	0	0
4/21/2024	1:15 AM	0	0	0	0	0	0	0	0	0	0	0	0	0
4/21/2024	1:30 AM	0	0	0	0	0	0	0	0	0	0	0	0	0
4/21/2024	1:45 AM	0	0	0	0	0	0	0	0	0	0	0	0	0
4/21/2024	2:00 AM	0	0	0	0	0	0	0	0	0	0	0	0	0
4/21/2024	2:15 AM	0	0	0	0	0	0	0	0	0	0	0	0	0
4/21/2024	2:30 AM	0	0	0	0	0	0	0	0	0	0	0	0	0
4/21/2024	2:45 AM	0	0	0	0	0	0	0	0	0	0	0	0	0
4/21/2024	3:00 AM	0	0	0	0	0	0	0	0	0	0	0	0	0
4/21/2024	3:15 AM	0	0	0	0	0	0	0	0	0	0	0	0	0
4/21/2024	3:30 AM	0	0	0	0	0	0	0	0	0	0	0	0	0
4/21/2024	3:45 AM	0	0	0	0	0	0	0	0	0	0	0	0	0
4/21/2024	4:00 AM	0	0	0	0	0	0	0	0	0	0	0	0	0
4/21/2024	4:15 AM	0	0	0	0	0	0	0	0	0	0	0	0	0
4/21/2024	4:30 AM	0	0	0	0	0	0	0	0	0	0	0	0	0
4/21/2024	4:45 AM	0	0	0	0	0	0	0	0	0	0	0	0	0
4/21/2024	5:00 AM	0	0	0	0	0	0	0	0	0	0	0	0	0
4/21/2024	5:15 AM	0	0	0	0	0	0	0	0	0	0	0	0	0
4/21/2024	5:30 AM	0	0	0	0	0	0	0	0	0	0	0	0	0
4/21/2024	5:45 AM	0	0	0	0	0	0	0	0	0	0	0	0	0
4/21/2024	6:00 AM	0	0	0	0	0	0	0	0	0	0	0	0	0
4/21/2024	6:15 AM	0	0	0	0	0	0	0	0	0	0	0	0	0
4/21/2024	6:30 AM	0	0	0	0	0	0	0	0	0	0	0	0	0
4/21/2024	6:45 AM	0	0	0	0	0	0	0	0	0	0	0	0	0
4/21/2024	7:00 AM	0	0	0	0	0	0	0	0	0	0	0	0	0
4/21/2024	7:15 AM	0	0	0	0	0	0	0	0	0	0	0	0	0
4/21/2024	7:30 AM	0	0	0	0	0	0	0	0	0	0	0	0	0
4/21/2024	7:45 AM	0	0	0	0	0	0	0	0	0	0	0	0	0
4/21/2024	8:00 AM	0	0	0	0	0	0	0	0	0	0	0	0	0
4/21/2024	8:15 AM	0	0	0	0	0	0	0	0	0	0	0	0	0
4/21/2024	8:30 AM	0	0	0	0	0	0	0	0	0	0	0	0	0
4/21/2024	8:45 AM	0	0	0	0	0	0	0	0	0	0	0	0	0
4/21/2024	9:00 AM	0	0	0	0	0	0	0	0	0	0	0	0	0
4/21/2024	9:15 AM	0	0	0	0	0	0	0	0	0	0	0	0	0
4/21/2024	9:30 AM	0	0	0	0	0	0	0	0	0	0	0	0	0
4/21/2024	9:45 AM	0	0	0	0	0	0	0	0	0	0	0	0	0
4/21/2024	10:00 AM	0	0	0	0	0	0	0	0	0	0	0	0	0
4/21/2024	10:15 AM	0	0	0	0	0	0	0	0	0	0	0	0	0
4/21/2024	10:30 AM	0	0	0	0	0	0	0	0	0	0	0	0	0
4/21/2024	10:45 AM	0	0	0	0	0	0	0	0	0	0	0	0	0
4/21/2024	11:00 AM	0	0	0	0	0	0	0	0	0	0	0	0	0
4/21/2024	11:15 AM	0	0	0	0	0	0	0	0	0	0	0	0	0
4/21/2024	11:30 AM	0	0	0	0	0	0	0	0	0	0	0	0	0
4/21/2024	11:45 AM	0	0	0	0	0	0	0	0	0	0	0	0	0
4/21/2024	12:00 PM	0	0	0	0	0	0	0	0	0	0	0	0	0
4/21/2024	12:15 PM	0	0	0	0	0	0	0	0	0	0	0	0	0
4/21/2024	12:30 PM	0	0	0	0	0	0	0	0	0	0	0	0	0
4/21/2024	12:45 PM	0	0	0	0	0	0	0	0	0	0	0	0	0
4/21/2024	1:00 PM	0	0	0	0	0	0	0	0	0	0	0	0	0
4/21/2024	1:15 PM	0	0	0	0	0	0	0	0	0	0	0	0	0
4/21/2024	1:30 PM	0	0	0	0	0	0	0	0	0	0	0	0	0
4/21/2024	1:45 PM	0	0	0	0	0	0	0	0	0	0	0	0	0
4/21/2024	2:00 PM	0	0	0	0	0	0	0	0	0	0	0	0	0
4/21/2024	2:15 PM	0	0	0	0	0	0	0	0	0	0	0	0	0
4/21/2024	2:30 PM	0	0	0	0	0	0	0	0	0	0	0	0	0
4/21/2024	2:45 PM	0	0	0	0	0	0	0	0	0	0	0	0	0
4/21/2024	3:00 PM	0	0	0	0	0	0	0	0	0	0	0	0	0
4/21/2024	3:15 PM	0	0	0	0	0	0	0	0	0	0	0	0	0
4/21/2024	3:30 PM	0	0	0	0	0	0	0	0	0	0	0	0	0
4/21/2024	3:45 PM	0	0	0	0	0	0	0	0	0	0	0	0	0
4/21/2024	4:00 PM	0	0	0	0	0	0	0	0	0	0	0	0	0
4/21/2024	4:15 PM	0	0	0	0	0	0	0	0	0	0	0	0	0
4/21/2024	4:30 PM	0	0	0	0	0	0	0	0	0	0	0	0	0
4/21/2024	4:45 PM	0	0	0	0	0	0	0	0	0	0	0	0	0
4/21/2024	5:00 PM	0	0	0	0	0	0	0	0	0	0	0	0	0
4/21/2024	5:15 PM	0	0	0	0	0	0	0	0	0	0	0	0	0
4/21/2024	5:30 PM	0	0	0	0	0	0	0	0	0	0	0	0	0
4/21/2024	5:45 PM	0	0	0	0	0	0	0	0	0	0	0	0	0
4/21/2024	6:00 PM	0	0	0	0	0	0	0	0	0	0	0	0	0
4/21/2024	6:15 PM	0	0	0	0	0	0	0	0	0	0	0	0	0
4/21/2024	6:30 PM	0	0	0	0	0	0	0	0	0	0	0	0	0
4/21/2024	6:45 PM	0	0	0	0	0	0	0	0	0	0	0	0	0
4/21/2024	7:00 PM	0	0	0	0	0	0	0	0	0	0	0	0	0
4/21/2024	7:15 PM	0	0	0	0	0	0	0	0	0	0	0	0	0
4/21/2024	7:30 PM	0	0	0	0	0	0	0	0	0	0	0	0	0
4/21/2024	7:45 PM	0	0	0	0	0	0	0	0	0	0	0	0	0
4/21/2024	8:00 PM	0	0	0	0	0	0	0	0	0	0	0	0	0
4/21/2024	8:15 PM	0	0	0	0	0	0	0	0	0	0	0	0	0
4/21/2024	8:30 PM	0	0	0	0	0	0	0	0	0	0	0	0	0
4/21/2024	8:45 PM	0	0	0	0	0	0	0	0	0	0	0	0	0
4/21/2024	9:00 PM	0	0	0	0	0	0	0	0	0	0	0	0	0
4/21/2024	9:15 PM	0	0	0	0	0	0	0	0	0	0	0	0	0
4/21/2024	9:30 PM	0	0	0	0	0	0	0	0	0	0	0	0	0
4/21/2024	9:45 PM	0	0	0	0	0	0	0	0	0	0	0	0	0
4/21/2024	10:00 PM	0	0	0	0	0	0	0	0	0	0	0	0	0
4/21/2024	10:15 PM	0	0	0	0	0	0	0	0	0	0	0	0	0
4/21/2024	10:30 PM	0	0	0	0	0	0	0	0	0	0	0	0	0
4/21/2024	10:45 PM	0	0	0	0	0	0	0	0	0	0	0	0	0
4/21/2024	11:00 PM	0	0	0	0	0	0	0	0	0	0	0	0	0
4/21/2024	11:15 PM	0	0	0	0	0	0	0	0	0	0	0	0	0
4/21/2024	11:30 PM	0	0	0	0	0	0	0	0	0	0	0	0	0
4/21/2024	11:45 PM	0	0	0	0	0	0	0	0	0	0	0	0	0

4/22/2024	12:00 AM	0	0	0	0	0	0	0	0	0	0	0	0	0
4/22/2024	12:15 AM	0	0	0	0	0	0	0	0	0	0	0	0	0
4/22/2024	12:30 AM	0	0	0	0	0	0	0	0	0	0	0	0	0
4/22/2024	12:45 AM	0	0	0	0	0	0	0	0	0	0	0	0	0
4/22/2024	1:00 AM	0	0	0	0	0	0	0	0	0	0	0	0	0
4/22/2024	1:15 AM	0	0	0	0	0	0	0	0	0	0	0	0	0
4/22/2024	1:30 AM	0	0	0	0	0	0	0	0	0	0	0	0	0
4/22/2024	1:45 AM	0	0	0	0	0	0	0	0	0	0	0	0	0
4/22/2024	2:00 AM	0	0	0	0	0	0	0	0	0	0	0	0	0
4/22/2024	2:15 AM	0	0	0	0	0	0	0	0	0	0	0	0	0
4/22/2024	2:30 AM	0	0	0	0	0	0	0	0	0	0	0	0	0
4/22/2024	2:45 AM	0	0	0	0	0	0	0	0	0	0	0	0	0
4/22/2024	3:00 AM	0	0	0	0	0	0	0	0	0	0	0	0	0
4/22/2024	3:15 AM	0	0	0	0	0	0	0	0	0	0	0	0	0
4/22/2024	3:30 AM	0	0	0	0	0	0	0	0	0	0	0	0	0
4/22/2024	3:45 AM	0	0	0	0	0	0	0	0	0	0	0	0	0
4/22/2024	4:00 AM	0	0	0	0	0	0	0	0	0	0	0	0	0
4/22/2024	4:15 AM	0	0	0	0	0	0	0	0	0	0	0	0	0
4/22/2024	4:30 AM	0	0	0	0	0	0	0	0	0	0	0	0	0
4/22/2024	4:45 AM	0	0	0	0	0	0	0	0	0	0	0	0	0
4/22/2024	5:00 AM	0	0	0	0	0	0	0	0	0	0	0	0	0
4/22/2024	5:15 AM	0	0	0	0	0	0	0	0	0	0	0	0	0
4/22/2024	5:30 AM	0	0	0	0	0	0	0	0	0	0	0	0	0
4/22/2024	5:45 AM	0	0	0	0	0	0	0	0	0	0	0	0	0
4/22/2024	6:00 AM	0	0	0	0	0	0	0	0	0	0	0	0	0
4/22/2024	6:15 AM	0	0	0	0	0	0	0	0	0	0	0	0	0
4/22/2024	6:30 AM	0	0	0	0	0	0	0	0	0	0	0	0	0
4/22/2024	6:45 AM	0	0	0	0	0	0	0	0	0	0	0	0	0
4/22/2024	7:00 AM	0	0	0	0	0	0	0	0	0	0	0	0	0
4/22/2024	7:15 AM	0	0	0	0	0	0	0	0	0	0	0	0	0
4/22/2024	7:30 AM	0	0	0	0	0	0	0	0	0	0	0	0	0
4/22/2024	7:45 AM	0	0	0	0	0	0	0	0	0	0	0	0	0
4/22/2024	8:00 AM	0	0	0	0	0	0	0	0	0	0	0	0	0
4/22/2024	8:15 AM	0	0	0	0	0	0	0	0	0	0	0	0	0
4/22/2024	8:30 AM	0	0	0	0	0	0	0	0	0	0	0	0	0
4/22/2024	8:45 AM	0	0	0	0	0	0	0	0	0	0	0	0	0
4/22/2024	9:00 AM	0	0	0	0	0	0	0	0	0	0	0	0	0
4/22/2024	9:15 AM	0	0	0	0	0	0	0	0	0	0	0	0	0
4/22/2024	9:30 AM	0	0	0	0	0	0	0	0	0	0	0	0	0
4/22/2024	9:45 AM	0	0	0	0	0	0	0	0	0	0	0	0	0
4/22/2024	10:00 AM	0	0	0	0	0	0	0	0	0	0	0	0	0
4/22/2024	10:15 AM	0	0	0	0	0	0	0	0	0	0	0	0	0
4/22/2024	10:30 AM	0	0	0	0	0	0	0	0	0	0	0	0	0
4/22/2024	10:45 AM	0	0	0	0	0	0	0	0	0	0	0	0	0
4/22/2024	11:00 AM	0	0	0	0	0	0	0	0	0	0	0	0	0
4/22/2024	11:15 AM	0	0	0	0	0	0	0	0	0	0	0	0	0
4/22/2024	11:30 AM	0	0	0	0	0	0	0	0	0	0	0	0	0
4/22/2024	11:45 AM	0	0	0	0	0	0	0	0	0	0	0	0	0
4/22/2024	12:00 PM	0	0	0	0	0	0	0	0	0	0	0	0	0
4/22/2024	12:15 PM	0	0	0	0	0	0	0	0	0	0	0	0	0
4/22/2024	12:30 PM	0	0	0	0	0	0	0	0	0	0	0	0	0
4/22/2024	12:45 PM	0	0	0	0	0	0	0	0	0	0	0	0	0
4/22/2024	1:00 PM	0	0	0	0	0	0	0	0	0	0	0	0	0
4/22/2024	1:15 PM	0	0	0	0	0	0	0	0	0	0	0	0	0
4/22/2024	1:30 PM	0	0	0	0	0	0	0	0	0	0	0	0	0
4/22/2024	1:45 PM	0	0	0	0	0	0	0	0	0	0	0	0	0
4/22/2024	2:00 PM	0	0	0	0	0	0	0	0	0	0	0	0	0
4/22/2024	2:15 PM	0	0	0	0	0	0	0	0	0	0	0	0	0
4/22/2024	2:30 PM	0	0	0	0	0	0	0	0	0	0	0	0	0
4/22/2024	2:45 PM	0	0	0	0	0	0	0	0	0	0	0	0	0
4/22/2024	3:00 PM	0	0	0	0	0	0	0	0	0	0	0	0	0
4/22/2024	3:15 PM	0	0	0	0	0	0	0	0	0	0	0	0	0
4/22/2024	3:30 PM	0	0	0	0	0	0	0	0	0	0	0	0	0
4/22/2024	3:45 PM	0	0	0	0	0	0	0	0	0	0	0	0	0
4/22/2024	4:00 PM	0	0	0	0	0	0	0	0	0	0	0	0	0
4/22/2024	4:15 PM	0	0	0	0	0	0	0	0	0	0	0	0	0
4/22/2024	4:30 PM	0	0	0	0	0	0	0	0	0	0	0	0	0
4/22/2024	4:45 PM	0	0	0	0	0	0	0	0	0	0	0	0	0
4/22/2024	5:00 PM	0	0	0	0	0	0	0	0	0	0	0	0	0
4/22/2024	5:15 PM	0	0	0	0	0	0	0	0	0	0	0	0	0
4/22/2024	5:30 PM	0	0	0	0	0	0	0	0	0	0	0	0	0
4/22/2024	5:45 PM	0	0	0	0	0	0	0	0	0	0	0	0	0
4/22/2024	6:00 PM	0	0	0	0	0	0	0	0	0	0	0	0	0
4/22/2024	6:15 PM	0	0	0	0	0	0	0	0	0	0	0	0	0
4/22/2024	6:30 PM	0	0	0	0	0	0	0	0	0	0	0	0	0
4/22/2024	6:45 PM	0	0	0	0	0	0	0	0	0	0	0	0	0
4/22/2024	7:00 PM	0	0	0	0	0	0	0	0	0	0	0	0	0
4/22/2024	7:15 PM	0	0	0	0	0	0	0	0	0	0	0	0	0
4/22/2024	7:30 PM	0	0	0	0	0	0	0	0	0	0	0	0	0
4/22/2024	7:45 PM	0	0	0	0	0	0	0	0	0	0	0	0	0
4/22/2024	8:00 PM	0	0	0	0	0	0	0	0	0	0	0	0	0
4/22/2024	8:15 PM	0	0	0	0	0	0	0	0	0	0	0	0	0
4/22/2024	8:30 PM	0	0	0	0	0	0	0	0	0	0	0	0	0
4/22/2024	8:45 PM	0	0	0	0	0	0	0	0	0	0	0	0	0
4/22/2024	9:00 PM	0	0	0	0	0	0	0	0	0	0	0	0	0
4/22/2024	9:15 PM	0	0	0	0	0	0	0	0	0	0	0	0	0
4/22/2024	9:30 PM	0	0	0	0	0	0	0	0	0	0	0	0	0
4/22/2024	9:45 PM	0	0	0	0	0	0	0	0	0	0	0	0	0
4/22/2024	10:00 PM	0	0	0	0	0	0	0	0	0	0	0	0	0
4/22/2024	10:15 PM	0	0	0	0	0	0	0	0	0	0	0	0	0
4/22/2024	10:30 PM	0	0	0	0	0	0	0	0	0	0	0	0	0
4/22/2024	10:45 PM	0	0	0	0	0	0	0	0	0	0	0	0	0
4/22/2024	11:00 PM	0	0	0	0	0	0	0	0	0	0	0	0	0
4/22/2024	11:15 PM	0	0	0	0	0	0	0	0	0	0	0	0	0
4/22/2024	11:30 PM	0	0	0	0	0	0	0	0	0	0	0	0	0
4/22/2024	11:45 PM	0	0	0	0	0	0	0	0	0	0	0	0	0

4/23/2024	12:00 AM	0	0	0	0	0	0	0	0	0	0	0	0	0
4/23/2024	12:15 AM	0	0	0	0	0	0	0	0	0	0	0	0	0
4/23/2024	12:30 AM	0	0	0	0	0	0	0	0	0	0	0	0	0
4/23/2024	12:45 AM	0	0	0	0	0	0	0	0	0	0	0	0	0
4/23/2024	1:00 AM	0	0	0	0	0	0	0	0	0	0	0	0	0
4/23/2024	1:15 AM	0	0	0	0	0	0	0	0	0	0	0	0	0
4/23/2024	1:30 AM	0	0	0	0	0	0	0	0	0	0	0	0	0
4/23/2024	1:45 AM	0	0	0	0	0	0	0	0	0	0	0	0	0
4/23/2024	2:00 AM	0	0	0	0	0	0	0	0	0	0	0	0	0
4/23/2024	2:15 AM	0	0	0	0	0	0	0	0	0	0	0	0	0
4/23/2024	2:30 AM	0	0	0	0	0	0	0	0	0	0	0	0	0
4/23/2024	2:45 AM	0	0	0	0	0	0	0	0	0	0	0	0	0
4/23/2024	3:00 AM	0	0	0	0	0	0	0	0	0	0	0	0	0
4/23/2024	3:15 AM	0	0	0	0	0	0	0	0	0	0	0	0	0
4/23/2024	3:30 AM	0	0	0	0	0	0	0	0	0	0	0	0	0
4/23/2024	3:45 AM	0	0	0	0	0	0	0	0	0	0	0	0	0
4/23/2024	4:00 AM	0	0	0	0	0	0	0	0	0	0	0	0	0
4/23/2024	4:15 AM	0	0	0	0	0	0	0	0	0	0	0	0	0
4/23/2024	4:30 AM	0	0	0	0	0	0	0	0	0	0	0	0	0
4/23/2024	4:45 AM	0	0	0	0	0	0	0	0	0	0	0	0	0
4/23/2024	5:00 AM	0	0	0	0	0	0	0	0	0	0	0	0	0
4/23/2024	5:15 AM	0	0	0	0	0	0	0	0	0	0	0	0	0
4/23/2024	5:30 AM	0	0	0	0	0	0	0	0	0	0	0	0	0
4/23/2024	5:45 AM	0	0	0	0	0	0	0	0	0	0	0	0	0
4/23/2024	6:00 AM	0	0	0	0	0	0	0	0	0	0	0	0	0
4/23/2024	6:15 AM	0	0	0	0	0	0	0	0	0	0	0	0	0
4/23/2024	6:30 AM	0	0	0	0	0	0	0	0	0	0	0	0	0
4/23/2024	6:45 AM	0	0	0	0	0	0	0	0	0	0	0	0	0
4/23/2024	7:00 AM	0	0	0	0	0	0	0	0	0	0	0	0	0
4/23/2024	7:15 AM	0	0	0	0	0	0	0	0	0	0	0	0	0
4/23/2024	7:30 AM	0	0	0	0	0	0	0	0	0	0	0	0	0
4/23/2024	7:45 AM	0	0	0	0	0	0	0	0	0	0	0	0	0
4/23/2024	8:00 AM	0	0	0	0	0	0	0	0	0	0	0	0	0
4/23/2024	8:15 AM	0	0	0	0	0	0	0	0	0	0	0	0	0
4/23/2024	8:30 AM	0	0	0	0	0	0	0	0	0	0	0	0	0
4/23/2024	8:45 AM	0	0	0	0	0	0	0	0	0	0	0	0	0
4/23/2024	9:00 AM	0	0	0	0	0	0	0	0	0	0	0	0	0
4/23/2024	9:15 AM	0	0	0	0	0	0	0	0	0	0	0	0	0
4/23/2024	9:30 AM	0	0	0	0	0	0	0	0	0	0	0	0	0
4/23/2024	9:45 AM	0	0	0	0	0	0	0	0	0	0	0	0	0
4/23/2024	10:00 AM	0	0	0	0	0	0	0	0	0	0	0	0	0
4/23/2024	10:15 AM	0	0	0	0	0	0	0	0	0	0	0	0	0
4/23/2024	10:30 AM	0	0	0	0	0	0	0	0	0	0	0	0	0
4/23/2024	10:45 AM	0	0	0	0	0	0	0	0	0	0	0	0	0
4/23/2024	11:00 AM	0	0	0	0	0	0	0	0	0	0	0	0	0
4/23/2024	11:15 AM	0	0	0	0	0	0	0	0	0	0	0	0	0
4/23/2024	11:30 AM	0	0	0	0	0	0	0	0	0	0	0	0	0
4/23/2024	11:45 AM	0	0	0	0	0	0	0	0	0	0	0	0	0
4/23/2024	12:00 PM	0	0	0	0	0	0	0	0	0	0	0	0	0
4/23/2024	12:15 PM	0	0	0	0	0	0	0	0	0	0	0	0	0
4/23/2024	12:30 PM	0	0	0	0	0	0	0	0	0	0	0	0	0
4/23/2024	12:45 PM	0	0	0	0	0	0	0	0	0	0	0	0	0
4/23/2024	1:00 PM	0	0	0	0	0	0	0	0	0	0	0	0	0
4/23/2024	1:15 PM	0	0	0	0	0	0	0	0	0	0	0	0	0
4/23/2024	1:30 PM	0	0	0	0	0	0	0	0	0	0	0	0	0
4/23/2024	1:45 PM	0	0	0	0	0	0	0	0	0	0	0	0	0
4/23/2024	2:00 PM	0	0	0	0	0	0	0	0	0	0	0	0	0
4/23/2024	2:15 PM	0	0	0	0	0	0	0	0	0	0	0	0	0
4/23/2024	2:30 PM	0	0	0	0	0	0	0	0	0	0	0	0	0
4/23/2024	2:45 PM	0	0	0	0	0	0	0	0	0	0	0	0	0
4/23/2024	3:00 PM	0	0	0	0	0	0	0	0	0	0	0	0	0
4/23/2024	3:15 PM	0	0	0	0	0	0	0	0	0	0	0	0	0
4/23/2024	3:30 PM	0	0	0	0	0	0	0	0	0	0	0	0	0
4/23/2024	3:45 PM	0	0	0	0	0	0	0	0	0	0	0	0	0
4/23/2024	4:00 PM	0	0	0	0	0	0	0	0	0	0	0	0	0
4/23/2024	4:15 PM	0	0	0	0	0	0	0	0	0	0	0	0	0
4/23/2024	4:30 PM	0	0	0	0	0	0	0	0	0	0	0	0	0
4/23/2024	4:45 PM	0	0	0	0	0	0	0	0	0	0	0	0	0
4/23/2024	5:00 PM	0	0	0	0	0	0	0	0	0	0	0	0	0
4/23/2024	5:15 PM	0	0	0	0	0	0	0	0	0	0	0	0	0
4/23/2024	5:30 PM	0	0	0	0	0	0	0	0	0	0	0	0	0
4/23/2024	5:45 PM	0	0	0	0	0	0	0	0	0	0	0	0	0
4/23/2024	6:00 PM	0	0	0	0	0	0	0	0	0	0	0	0	0
4/23/2024	6:15 PM	0	0	0	0	0	0	0	0	0	0	0	0	0
4/23/2024	6:30 PM	0	0	0	0	0	0	0	0	0	0	0	0	0
4/23/2024	6:45 PM	0	0	0	0	0	0	0	0	0	0	0	0	0
4/23/2024	7:00 PM	0	0	0	0	0	0	0	0	0	0	0	0	0
4/23/2024	7:15 PM	0	0	0	0	0	0	0	0	0	0	0	0	0
4/23/2024	7:30 PM	0	0	0	0	0	0	0	0	0	0	0	0	0
4/23/2024	7:45 PM	0	0	0	0	0	0	0	0	0	0	0	0	0
4/23/2024	8:00 PM	0	0	0	0	0	0	0	0	0	0	0	0	0
4/23/2024	8:15 PM	0	0	0	0	0	0	0	0	0	0	0	0	0
4/23/2024	8:30 PM	0	0	0	0	0	0	0	0	0	0	0	0	0
4/23/2024	8:45 PM	0	0	0	0	0	0	0	0	0	0	0	0	0
4/23/2024	9:00 PM	0	0	0	0	0	0	0	0	0	0	0	0	0
4/23/2024	9:15 PM	0	0	0	0	0	0	0	0	0	0	0	0	0
4/23/2024	9:30 PM	0	0	0	0	0	0	0	0	0	0	0	0	0
4/23/2024	9:45 PM	0	0	0	0	0	0	0	0	0	0	0	0	0
4/23/2024	10:00 PM	0	0	0	0	0	0	0	0	0	0	0	0	0
4/23/2024	10:15 PM	0	0	0	0	0	0	0	0	0	0	0	0	0
4/23/2024	10:30 PM	0	0	0	0	0	0	0	0	0	0	0	0	0
4/23/2024	10:45 PM	0	0	0	0	0	0	0	0	0	0	0	0	0
4/23/2024	11:00 PM	0	0	0	0	0	0	0	0	0	0	0	0	0
4/23/2024	11:15 PM	0	0	0	0	0	0	0	0	0	0	0	0	0
4/23/2024	11:30 PM	0	0	0	0	0	0	0	0	0	0	0	0	0
4/23/2024	11:45 PM	0	0	0	0	0	0	0	0	0	0	0	0	0

4/24/2024	12:00 AM	0	0	0	0	0	0	0	0	0	0	0	0	0
4/24/2024	12:15 AM	0	0	0	0	0	0	0	0	0	0	0	0	0
4/24/2024	12:30 AM	0	0	0	0	0	0	0	0	0	0	0	0	0
4/24/2024	12:45 AM	0	0	0	0	0	0	0	0	0	0	0	0	0
4/24/2024	1:00 AM	0	0	0	0	0	0	0	0	0	0	0	0	0
4/24/2024	1:15 AM	0	0	0	0	0	0	0	0	0	0	0	0	0
4/24/2024	1:30 AM	0	0	0	0	0	0	0	0	0	0	0	0	0
4/24/2024	1:45 AM	0	0	0	0	0	0	0	0	0	0	0	0	0
4/24/2024	2:00 AM	0	0	0	0	0	0	0	0	0	0	0	0	0
4/24/2024	2:15 AM	0	0	0	0	0	0	0	0	0	0	0	0	0
4/24/2024	2:30 AM	0	0	0	0	0	0	0	0	0	0	0	0	0
4/24/2024	2:45 AM	0	0	0	0	0	0	0	0	0	0	0	0	0
4/24/2024	3:00 AM	0	0	0	0	0	0	0	0	0	0	0	0	0
4/24/2024	3:15 AM	0	0	0	0	0	0	0	0	0	0	0	0	0
4/24/2024	3:30 AM	0	0	0	0	0	0	0	0	0	0	0	0	0
4/24/2024	3:45 AM	0	0	0	0	0	0	0	0	0	0	0	0	0
4/24/2024	4:00 AM	0	0	0	0	0	0	0	0	0	0	0	0	0
4/24/2024	4:15 AM	0	0	0	0	0	0	0	0	0	0	0	0	0
4/24/2024	4:30 AM	0	0	0	0	0	0	0	0	0	0	0	0	0
4/24/2024	4:45 AM	0	0	0	0	0	0	0	0	0	0	0	0	0
4/24/2024	5:00 AM	0	0	0	0	0	0	0	0	0	0	0	0	0
4/24/2024	5:15 AM	0	0	0	0	0	0	0	0	0	0	0	0	0
4/24/2024	5:30 AM	0	0	0	0	0	0	0	0	0	0	0	0	0
4/24/2024	5:45 AM	0	0	0	0	0	0	0	0	0	0	0	0	0
4/24/2024	6:00 AM	0	0	0	0	0	0	0	0	0	0	0	0	0
4/24/2024	6:15 AM	0	0	0	0	0	0	0	0	0	0	0	0	0
4/24/2024	6:30 AM	0	0	0	0	0	0	0	0	0	0	0	0	0
4/24/2024	6:45 AM	0	0	0	0	0	0	0	0	0	0	0	0	0
4/24/2024	7:00 AM	0	0	0	0	0	0	0	0	0	0	0	0	0
4/24/2024	7:15 AM	0	0	0	0	0	0	0	0	0	0	0	0	0
4/24/2024	7:30 AM	0	0	0	0	0	0	0	0	0	0	0	0	0
4/24/2024	7:45 AM	0	0	0	0	0	0	0	0	0	0	0	0	0
4/24/2024	8:00 AM	0	0	0	0	0	0	0	0	0	0	0	0	0
4/24/2024	8:15 AM	0	0	0	0	0	0	0	0	0	0	0	0	0
4/24/2024	8:30 AM	0	0	0	0	0	0	0	0	0	0	0	0	0
4/24/2024	8:45 AM	0	0	0	0	0	0	0	0	0	0	0	0	0
4/24/2024	9:00 AM	0	0	0	0	0	0	0	0	0	0	0	0	0
4/24/2024	9:15 AM	0	0	0	0	0	0	0	0	0	0	0	0	0
4/24/2024	9:30 AM	0	0	0	0	0	0	0	0	0	0	0	0	0
4/24/2024	9:45 AM	0	0	0	0	0	0	0	0	0	0	0	0	0
4/24/2024	10:00 AM	0	0	0	0	0	0	0	0	0	0	0	0	0
4/24/2024	10:15 AM	0	0	0	0	0	0	0	0	0	0	0	0	0
4/24/2024	10:30 AM	0	0	0	0	0	0	0	0	0	0	0	0	0
4/24/2024	10:45 AM	0	0	0	0	0	0	0	0	0	0	0	0	0
4/24/2024	11:00 AM	0	0	0	0	0	0	0	0	0	0	0	0	0
4/24/2024	11:15 AM	0	0	0	0	0	0	0	0	0	0	0	0	0
4/24/2024	11:30 AM	0	0	0	0	0	0	0	0	0	0	0	0	0
4/24/2024	11:45 AM	0	0	0	0	0	0	0	0	0	0	0	0	0
4/24/2024	12:00 PM	0	0	0	0	0	0	0	0	0	0	0	0	0
4/24/2024	12:15 PM	0	0	0	0	0	0	0	0	0	0	0	0	0
4/24/2024	12:30 PM	0	0	0	0	0	0	0	0	0	0	0	0	0
4/24/2024	12:45 PM	0	0	0	0	0	0	0	0	0	0	0	0	0
4/24/2024	1:00 PM	0	0	0	0	0	0	0	0	0	0	0	0	0
4/24/2024	1:15 PM	0	0	0	0	0	0	0	0	0	0	0	0	0
4/24/2024	1:30 PM	0	0	0	0	0	0	0	0	0	0	0	0	0
4/24/2024	1:45 PM	0	0	0	0	0	0	0	0	0	0	0	0	0
4/24/2024	2:00 PM	0	0	0	0	0	0	0	0	0	0	0	0	0
4/24/2024	2:15 PM	0	0	0	0	0	0	0	0	0	0	0	0	0
4/24/2024	2:30 PM	0	0	0	0	0	0	0	0	0	0	0	0	0
4/24/2024	2:45 PM	0	0	0	0	0	0	0	0	0	0	0	0	0
4/24/2024	3:00 PM	0	0	0	0	0	0	0	0	0	0	0	0	0
4/24/2024	3:15 PM	0	0	0	0	0	0	0	0	0	0	0	0	0
4/24/2024	3:30 PM	0	0	0	0	0	0	0	0	0	0	0	0	0
4/24/2024	3:45 PM	0	0	0	0	0	0	0	0	0	0	0	0	0
4/24/2024	4:00 PM	0	0	0	0	0	0	0	0	0	0	0	0	0
4/24/2024	4:15 PM	0	0	0	0	0	0	0	0	0	0	0	0	0
4/24/2024	4:30 PM	0	0	0	0	0	0	0	0	0	0	0	0	0
4/24/2024	4:45 PM	0	0	0	0	0	0	0	0	0	0	0	0	0
4/24/2024	5:00 PM	0	0	0	0	0	0	0	0	0	0	0	0	0
4/24/2024	5:15 PM	0	0	0	0	0	0	0	0	0	0	0	0	0
4/24/2024	5:30 PM	0	0	0	0	0	0	0	0	0	0	0	0	0
4/24/2024	5:45 PM	0	0	0	0	0	0	0	0	0	0	0	0	0
4/24/2024	6:00 PM	0	0	0	0	0	0	0	0	0	0	0	0	0
4/24/2024	6:15 PM	0	0	0	0	0	0	0	0	0	0	0	0	0
4/24/2024	6:30 PM	0	0	0	0	0	0	0	0	0	0	0	0	0
4/24/2024	6:45 PM	0	0	0	0	0	0	0	0	0	0	0	0	0
4/24/2024	7:00 PM	0	0	0	0	0	0	0	0	0	0	0	0	0
4/24/2024	7:15 PM	0	0	0	0	0	0	0	0	0	0	0	0	0
4/24/2024	7:30 PM	0	0	0	0	0	0	0	0	0	0	0	0	0
4/24/2024	7:45 PM	0	0	0	0	0	0	0	0	0	0	0	0	0
4/24/2024	8:00 PM	0	0	0	0	0	0	0	0	0	0	0	0	0
4/24/2024	8:15 PM	0	0	0	0	0	0	0	0	0	0	0	0	0
4/24/2024	8:30 PM	0	0	0	0	0	0	0	0	0	0	0	0	0
4/24/2024	8:45 PM	0	0	0	0	0	0	0	0	0	0	0	0	0
4/24/2024	9:00 PM	0	0	0	0	0	0	0	0	0	0	0	0	0
4/24/2024	9:15 PM	0	0	0	0	0	0	0	0	0	0	0	0	0
4/24/2024	9:30 PM	0	0	0	0	0	0	0	0	0	0	0	0	0
4/24/2024	9:45 PM	0	0	0	0	0	0	0	0	0	0	0	0	0
4/24/2024	10:00 PM	0	0	0	0	0	0	0	0	0	0	0	0	0
4/24/2024	10:15 PM	0	0	0	0	0	0	0	0	0	0	0	0	0
4/24/2024	10:30 PM	0	0	0	0	0	0	0	0	0	0	0	0	0
4/24/2024	10:45 PM	0	0	0	0	0	0	0	0	0	0	0	0	0
4/24/2024	11:00 PM	0	0	0	0	0	0	0	0	0	0	0	0	0
4/24/2024	11:15 PM	0	0	0	0	0	0	0	0	0	0	0	0	0
4/24/2024	11:30 PM	0	0	0	0	0	0	0	0	0	0	0	0	0
4/24/2024	11:45 PM	0	0	0	0	0	0	0	0	0	0	0	0	0

4/25/2024	12:00 AM	0	0	0	0	0	0	0	0	0	0	0	0	0
4/25/2024	12:15 AM	0	0	0	0	0	0	0	0	0	0	0	0	0
4/25/2024	12:30 AM	0	0	0	0	0	0	0	0	0	0	0	0	0
4/25/2024	12:45 AM	0	0	0	0	0	0	0	0	0	0	0	0	0
4/25/2024	1:00 AM	0	0	0	0	0	0	0	0	0	0	0	0	0
4/25/2024	1:15 AM	0	0	0	0	0	0	0	0	0	0	0	0	0
4/25/2024	1:30 AM	0	0	0	0	0	0	0	0	0	0	0	0	0
4/25/2024	1:45 AM	0	0	0	0	0	0	0	0	0	0	0	0	0
4/25/2024	2:00 AM	0	0	0	0	0	0	0	0	0	0	0	0	0
4/25/2024	2:15 AM	0	0	0	0	0	0	0	0	0	0	0	0	0
4/25/2024	2:30 AM	0	0	0	0	0	0	0	0	0	0	0	0	0
4/25/2024	2:45 AM	0	0	0	0	0	0	0	0	0	0	0	0	0
4/25/2024	3:00 AM	0	0	0	0	0	0	0	0	0	0	0	0	0
4/25/2024	3:15 AM	0	0	0	0	0	0	0	0	0	0	0	0	0
4/25/2024	3:30 AM	0	0	0	0	0	0	0	0	0	0	0	0	0
4/25/2024	3:45 AM	0	0	0	0	0	0	0	0	0	0	0	0	0
4/25/2024	4:00 AM	0	0	0	0	0	0	0	0	0	0	0	0	0
4/25/2024	4:15 AM	0	0	0	0	0	0	0	0	0	0	0	0	0
4/25/2024	4:30 AM	0	0	0	0	0	0	0	0	0	0	0	0	0
4/25/2024	4:45 AM	0	0	0	0	0	0	0	0	0	0	0	0	0
4/25/2024	5:00 AM	0	0	0	0	0	0	0	0	0	0	0	0	0
4/25/2024	5:15 AM	0	0	0	0	0	0	0	0	0	0	0	0	0
4/25/2024	5:30 AM	0	0	0	0	0	0	0	0	0	0	0	0	0
4/25/2024	5:45 AM	0	0	0	0	0	0	0	0	0	0	0	0	0
4/25/2024	6:00 AM	0	0	0	0	0	0	0	0	0	0	0	0	0
4/25/2024	6:15 AM	0	0	0	0	0	0	0	0	0	0	0	0	0
4/25/2024	6:30 AM	0	0	0	0	0	0	0	0	0	0	0	0	0
4/25/2024	6:45 AM	0	0	0	0	0	0	0	0	0	0	0	0	0
4/25/2024	7:00 AM	0	0	0	0	0	0	0	0	0	0	0	0	0
4/25/2024	7:15 AM	0	0	0	0	0	0	0	0	0	0	0	0	0
4/25/2024	7:30 AM	0	0	0	0	0	0	0	0	0	0	0	0	0
4/25/2024	7:45 AM	0	0	0	0	0	0	0	0	0	0	0	0	0
4/25/2024	8:00 AM	0	0	0	0	0	0	0	0	0	0	0	0	0
4/25/2024	8:15 AM	0	0	0	0	0	0	0	0	0	0	0	0	0
4/25/2024	8:30 AM	0	0	0	0	0	0	0	0	0	0	0	0	0
4/25/2024	8:45 AM	0	0	0	0	0	0	0	0	0	0	0	0	0
4/25/2024	9:00 AM	0	0	0	0	0	0	0	0	0	0	0	0	0
4/25/2024	9:15 AM	0	0	0	0	0	0	0	0	0	0	0	0	0
4/25/2024	9:30 AM	0	0	0	0	0	0	0	0	0	0	0	0	0
4/25/2024	9:45 AM	0	0	0	0	0	0	0	0	0	0	0	0	0
4/25/2024	10:00 AM	0	0	0	0	0	0	0	0	0	0	0	0	0
4/25/2024	10:15 AM	0	0	0	0	0	0	0	0	0	0	0	0	0
4/25/2024	10:30 AM	0	0	0	0	0	0	0	0	0	0	0	0	0
4/25/2024	10:45 AM	0	0	0	0	0	0	0	0	0	0	0	0	0
4/25/2024	11:00 AM	0	0	0	0	0	0	0	0	0	0	0	0	0
4/25/2024	11:15 AM	0	0	0	0	0	0	0	0	0	0	0	0	0
4/25/2024	11:30 AM	0	0	0	0	0	0	0	0	0	0	0	0	0
4/25/2024	11:45 AM	0	0	0	0	0	0	0	0	0	0	0	0	0
4/25/2024	12:00 PM	0	0	0	0	0	0	0	0	0	0	0	0	0
4/25/2024	12:15 PM	0	0	0	0	0	0	0	0	0	0	0	0	0
4/25/2024	12:30 PM	0	0	0	0	0	0	0	0	0	0	0	0	0
4/25/2024	12:45 PM	0	0	0	0	0	0	0	0	0	0	0	0	0
4/25/2024	1:00 PM	0	0	0	0	0	0	0	0	0	0	0	0	0
4/25/2024	1:15 PM	0	0	0	0	0	0	0	0	0	0	0	0	0
4/25/2024	1:30 PM	0	0	0	0	0	0	0	0	0	0	0	0	0
4/25/2024	1:45 PM	0	0	0	0	0	0	0	0	0	0	0	0	0
4/25/2024	2:00 PM	0	0	0	0	0	0	0	0	0	0	0	0	0
4/25/2024	2:15 PM	0	0	0	0	0	0	0	0	0	0	0	0	0
4/25/2024	2:30 PM	0	0	0	0	0	0	0	0	0	0	0	0	0
4/25/2024	2:45 PM	0	0	0	0	0	0	0	0	0	0	0	0	0
4/25/2024	3:00 PM	0	0	0	0	0	0	0	0	0	0	0	0	0
4/25/2024	3:15 PM	0	0	0	0	0	0	0	0	0	0	0	0	0
4/25/2024	3:30 PM	0	0	0	0	0	0	0	0	0	0	0	0	0
4/25/2024	3:45 PM	0	0	0	0	0	0	0	0	0	0	0	0	0
4/25/2024	4:00 PM	0	0	0	0	0	0	0	0	0	0	0	0	0
4/25/2024	4:15 PM	0	0	0	0	0	0	0	0	0	0	0	0	0
4/25/2024	4:30 PM	0	0	0	0	0	0	0	0	0	0	0	0	0
4/25/2024	4:45 PM	0	0	0	0	0	0	0	0	0	0	0	0	0
4/25/2024	5:00 PM	0	0	0	0	0	0	0	0	0	0	0	0	0
4/25/2024	5:15 PM	0	0	0	0	0	0	0	0	0	0	0	0	0
4/25/2024	5:30 PM	0	0	0	0	0	0	0	0	0	0	0	0	0
4/25/2024	5:45 PM	0	0	0	0	0	0	0	0	0	0	0	0	0
4/25/2024	6:00 PM	0	0	0	0	0	0	0	0	0	0	0	0	0
4/25/2024	6:15 PM	0	0	0	0	0	0	0	0	0	0	0	0	0
4/25/2024	6:30 PM	0	0	0	0	0	0	0	0	0	0	0	0	0
4/25/2024	6:45 PM	0	0	0	0	0	0	0	0	0	0	0	0	0
4/25/2024	7:00 PM	0	0	0	0	0	0	0	0	0	0	0	0	0
4/25/2024	7:15 PM	0	0	0	0	0	0	0	0	0	0	0	0	0
4/25/2024	7:30 PM	0	0	0	0	0	0	0	0	0	0	0	0	0
4/25/2024	7:45 PM	0	0	0	0	0	0	0	0	0	0	0	0	0
4/25/2024	8:00 PM	0	0	0	0	0	0	0	0	0	0	0	0	0
4/25/2024	8:15 PM	0	0	0	0	0	0	0	0	0	0	0	0	0
4/25/2024	8:30 PM	0	0	0	0	0	0	0	0	0	0	0	0	0
4/25/2024	8:45 PM	0	0	0	0	0	0	0	0	0	0	0	0	0
4/25/2024	9:00 PM	0	0	0	0	0	0	0	0	0	0	0	0	0
4/25/2024	9:15 PM	0	0	0	0	0	0	0	0	0	0	0	0	0
4/25/2024	9:30 PM	0	0	0	0	0	0	0	0	0	0	0	0	0
4/25/2024	9:45 PM	0	0	0	0	0	0	0	0	0	0	0	0	0
4/25/2024	10:00 PM	0	0	0	0	0	0	0	0	0	0	0	0	0
4/25/2024	10:15 PM	0	0	0	0	0	0	0	0	0	0	0	0	0
4/25/2024	10:30 PM	0	0	0	0	0	0	0	0	0	0	0	0	0
4/25/2024	10:45 PM	0	0	0	0	0	0	0	0	0	0	0	0	0
4/25/2024	11:00 PM	0	0	0	0	0	0	0	0	0	0	0	0	0
4/25/2024	11:15 PM	0	0	0	0	0	0	0	0	0	0	0	0	0
4/25/2024	11:30 PM	0	0	0	0	0	0	0	0	0	0	0	0	0
4/25/2024	11:45 PM	0	0	0	0	0	0	0	0	0	0	0	0	0

4/26/2024	12:00 AM	0	0	0	0	0	0	0	0	0	0	0	0	0
4/26/2024	12:15 AM	0	0	0	0	0	0	0	0	0	0	0	0	0
4/26/2024	12:30 AM	0	0	0	0	0	0	0	0	0	0	0	0	0
4/26/2024	12:45 AM	0	0	0	0	0	0	0	0	0	0	0	0	0
4/26/2024	1:00 AM	0	0	0	0	0	0	0	0	0	0	0	0	0
4/26/2024	1:15 AM	0	0	0	0	0	0	0	0	0	0	0	0	0
4/26/2024	1:30 AM	0	0	0	0	0	0	0	0	0	0	0	0	0
4/26/2024	1:45 AM	0	0	0	0	0	0	0	0	0	0	0	0	0
4/26/2024	2:00 AM	0	0	0	0	0	0	0	0	0	0	0	0	0
4/26/2024	2:15 AM	0	0	0	0	0	0	0	0	0	0	0	0	0
4/26/2024	2:30 AM	0	0	0	0	0	0	0	0	0	0	0	0	0
4/26/2024	2:45 AM	0	0	0	0	0	0	0	0	0	0	0	0	0
4/26/2024	3:00 AM	0	0	0	0	0	0	0	0	0	0	0	0	0
4/26/2024	3:15 AM	0	0	0	0	0	0	0	0	0	0	0	0	0
4/26/2024	3:30 AM	0	0	0	0	0	0	0	0	0	0	0	0	0
4/26/2024	3:45 AM	0	0	0	0	0	0	0	0	0	0	0	0	0
4/26/2024	4:00 AM	0	0	0	0	0	0	0	0	0	0	0	0	0
4/26/2024	4:15 AM	0	0	0	0	0	0	0	0	0	0	0	0	0
4/26/2024	4:30 AM	0	0	0	0	0	0	0	0	0	0	0	0	0
4/26/2024	4:45 AM	0	0	0	0	0	0	0	0	0	0	0	0	0
4/26/2024	5:00 AM	0	0	0	0	0	0	0	0	0	0	0	0	0
4/26/2024	5:15 AM	0	0	0	0	0	0	0	0	0	0	0	0	0
4/26/2024	5:30 AM	0	0	0	0	0	0	0	0	0	0	0	0	0
4/26/2024	5:45 AM	0	0	0	0	0	0	0	0	0	0	0	0	0
4/26/2024	6:00 AM	0	0	0	0	0	0	0	0	0	0	0	0	0
4/26/2024	6:15 AM	0	0	0	0	0	0	0	0	0	0	0	0	0
4/26/2024	6:30 AM	0	0	0	0	0	0	0	0	0	0	0	0	0
4/26/2024	6:45 AM	0	0	0	0	0	0	0	0	0	0	0	0	0
4/26/2024	7:00 AM	0	0	0	0	0	0	0	0	0	0	0	0	0
4/26/2024	7:15 AM	0	0	0	0	0	0	0	0	0	0	0	0	0
4/26/2024	7:30 AM	0	0	0	0	0	0	0	0	0	0	0	0	0
4/26/2024	7:45 AM	0	0	0	0	0	0	0	0	0	0	0	0	0
4/26/2024	8:00 AM	0	0	0	0	0	0	0	0	0	0	0	0	0
4/26/2024	8:15 AM	0	0	0	0	0	0	0	0	0	0	0	0	0
4/26/2024	8:30 AM	0	0	0	0	0	0	0	0	0	0	0	0	0
4/26/2024	8:45 AM	0	0	0	0	0	0	0	0	0	0	0	0	0
4/26/2024	9:00 AM	0	0	0	0	0	0	0	0	0	0	0	0	0
4/26/2024	9:15 AM	0	0	0	0	0	0	0	0	0	0	0	0	0
4/26/2024	9:30 AM	0	0	0	0	0	0	0	0	0	0	0	0	0
4/26/2024	9:45 AM	0	0	0	0	0	0	0	0	0	0	0	0	0
4/26/2024	10:00 AM	0	0	0	0	0	0	0	0	0	0	0	0	0
4/26/2024	10:15 AM	0	0	0	0	0	0	0	0	0	0	0	0	0
4/26/2024	10:30 AM	0	0	0	0	0	0	0	0	0	0	0	0	0
4/26/2024	10:45 AM	0	0	0	0	0	0	0	0	0	0	0	0	0
4/26/2024	11:00 AM	0	0	0	0	0	0	0	0	0	0	0	0	0
4/26/2024	11:15 AM	0	0	0	0	0	0	0	0	0	0	0	0	0
4/26/2024	11:30 AM	0	0	0	0	0	0	0	0	0	0	0	0	0
4/26/2024	11:45 AM	0	0	0	0	0	0	0	0	0	0	0	0	0
4/26/2024	12:00 PM	0	0	0	0	0	0	0	0	0	0	0	0	0
4/26/2024	12:15 PM	0	0	0	0	0	0	0	0	0	0	0	0	0
4/26/2024	12:30 PM	0	0	0	0	0	0	0	0	0	0	0	0	0
4/26/2024	12:45 PM	0	0	0	0	0	0	0	0	0	0	0	0	0
4/26/2024	1:00 PM	0	0	0	0	0	0	0	0	0	0	0	0	0
4/26/2024	1:15 PM	0	0	0	0	0	0	0	0	0	0	0	0	0
4/26/2024	1:30 PM	0	0	0	0	0	0	0	0	0	0	0	0	0
4/26/2024	1:45 PM	0	0	0	0	0	0	0	0	0	0	0	0	0
4/26/2024	2:00 PM	0	0	0	0	0	0	0	0	0	0	0	0	0
4/26/2024	2:15 PM	0	0	0	0	0	0	0	0	0	0	0	0	0
4/26/2024	2:30 PM	0	0	0	0	0	0	0	0	0	0	0	0	0
4/26/2024	2:45 PM	0	0	0	0	0	0	0	0	0	0	0	0	0
4/26/2024	3:00 PM	0	0	0	0	0	0	0	0	0	0	0	0	0
4/26/2024	3:15 PM	0	0	0	0	0	0	0	0	0	0	0	0	0
4/26/2024	3:30 PM	0	0	0	0	0	0	0	0	0	0	0	0	0
4/26/2024	3:45 PM	0	0	0	0	0	0	0	0	0	0	0	0	0
4/26/2024	4:00 PM	0	0	0	0	0	0	0	0	0	0	0	0	0
4/26/2024	4:15 PM	0	0	0	0	0	0	0	0	0	0	0	0	0
4/26/2024	4:30 PM	0	0	0	0	0	0	0	0	0	0	0	0	0
4/26/2024	4:45 PM	0	0	0	0	0	0	0	0	0	0	0	0	0
4/26/2024	5:00 PM	0	0	0	0	0	0	0	0	0	0	0	0	0
4/26/2024	5:15 PM	0	0	0	0	0	0	0	0	0	0	0	0	0
4/26/2024	5:30 PM	0	0	0	0	0	0	0	0	0	0	0	0	0
4/26/2024	5:45 PM	0	0	0	0	0	0	0	0	0	0	0	0	0
4/26/2024	6:00 PM	0	0	0	0	0	0	0	0	0	0	0	0	0
4/26/2024	6:15 PM	0	0	0	0	0	0	0	0	0	0	0	0	0
4/26/2024	6:30 PM	0	0	0	0	0	0	0	0	0	0	0	0	0
4/26/2024	6:45 PM	0	0	0	0	0	0	0	0	0	0	0	0	0
4/26/2024	7:00 PM	0	0	0	0	0	0	0	0	0	0	0	0	0
4/26/2024	7:15 PM	0	0	0	0	0	0	0	0	0	0	0	0	0
4/26/2024	7:30 PM	0	0	0	0	0	0	0	0	0	0	0	0	0
4/26/2024	7:45 PM	0	0	0	0	0	0	0	0	0	0	0	0	0
4/26/2024	8:00 PM	0	0	0	0	0	0	0	0	0	0	0	0	0
4/26/2024	8:15 PM	0	0	0	0	0	0	0	0	0	0	0	0	0
4/26/2024	8:30 PM	0	0	0	0	0	0	0	0	0	0	0	0	0
4/26/2024	8:45 PM	0	0	0	0	0	0	0	0	0	0	0	0	0
4/26/2024	9:00 PM	0	0	0	0	0	0	0	0	0	0	0	0	0
4/26/2024	9:15 PM	0	0	0	0	0	0	0	0	0	0	0	0	0
4/26/2024	9:30 PM	0	0	0	0	0	0	0	0	0	0	0	0	0
4/26/2024	9:45 PM	0	0	0	0	0	0	0	0	0	0	0	0	0
4/26/2024	10:00 PM	0	0	0	0	0	0	0	0	0	0	0	0	0
4/26/2024	10:15 PM	0	0	0	0	0	0	0	0	0	0	0	0	0
4/26/2024	10:30 PM	0	0	0	0	0	0	0	0	0	0	0	0	0
4/26/2024	10:45 PM	0	0	0	0	0	0	0	0	0	0	0	0	0
4/26/2024	11:00 PM	0	0	0	0	0	0	0	0	0	0	0	0	0
4/26/2024	11:15 PM	0	0	0	0	0	0	0	0	0	0	0	0	0
4/26/2024	11:30 PM	0	0	0	0	0	0	0	0	0	0	0	0	0
4/26/2024	11:45 PM	0	0	0	0	0	0	0	0	0	0	0	0	0

4/27/2024	12:00 AM	0	0	0	0	0	0	0	0	0	0	0	0	0
4/27/2024	12:15 AM	0	0	0	0	0	0	0	0	0	0	0	0	0
4/27/2024	12:30 AM	0	0	0	0	0	0	0	0	0	0	0	0	0
4/27/2024	12:45 AM	0	0	0	0	0	0	0	0	0	0	0	0	0
4/27/2024	1:00 AM	0	0	0	0	0	0	0	0	0	0	0	0	0
4/27/2024	1:15 AM	0	0	0	0	0	0	0	0	0	0	0	0	0
4/27/2024	1:30 AM	0	0	0	0	0	0	0	0	0	0	0	0	0
4/27/2024	1:45 AM	0	0	0	0	0	0	0	0	0	0	0	0	0
4/27/2024	2:00 AM	0	0	0	0	0	0	0	0	0	0	0	0	0
4/27/2024	2:15 AM	0	0	0	0	0	0	0	0	0	0	0	0	0
4/27/2024	2:30 AM	0	0	0	0	0	0	0	0	0	0	0	0	0
4/27/2024	2:45 AM	0	0	0	0	0	0	0	0	0	0	0	0	0
4/27/2024	3:00 AM	0	0	0	0	0	0	0	0	0	0	0	0	0
4/27/2024	3:15 AM	0	0	0	0	0	0	0	0	0	0	0	0	0
4/27/2024	3:30 AM	0	0	0	0	0	0	0	0	0	0	0	0	0
4/27/2024	3:45 AM	0	0	0	0	0	0	0	0	0	0	0	0	0
4/27/2024	4:00 AM	0	0	0	0	0	0	0	0	0	0	0	0	0
4/27/2024	4:15 AM	0	0	0	0	0	0	0	0	0	0	0	0	0
4/27/2024	4:30 AM	0	0	0	0	0	0	0	0	0	0	0	0	0
4/27/2024	4:45 AM	0	0	0	0	0	0	0	0	0	0	0	0	0
4/27/2024	5:00 AM	0	0	0	0	0	0	0	0	0	0	0	0	0
4/27/2024	5:15 AM	0	0	0	0	0	0	0	0	0	0	0	0	0
4/27/2024	5:30 AM	0	0	0	0	0	0	0	0	0	0	0	0	0
4/27/2024	5:45 AM	0	0	0	0	0	0	0	0	0	0	0	0	0
4/27/2024	6:00 AM	0	0	0	0	0	0	0	0	0	0	0	0	0
4/27/2024	6:15 AM	0	0	0	0	0	0	0	0	0	0	0	0	0
4/27/2024	6:30 AM	0	0	0	0	0	0	0	0	0	0	0	0	0
4/27/2024	6:45 AM	0	0	0	0	0	0	0	0	0	0	0	0	0
4/27/2024	7:00 AM	0	0	0	0	0	0	0	0	0	0	0	0	0
4/27/2024	7:15 AM	0	0	0	0	0	0	0	0	0	0	0	0	0
4/27/2024	7:30 AM	0	0	0	0	0	0	0	0	0	0	0	0	0
4/27/2024	7:45 AM	0	0	0	0	0	0	0	0	0	0	0	0	0
4/27/2024	8:00 AM	0	0	0	0	0	0	0	0	0	0	0	0	0
4/27/2024	8:15 AM	0	0	0	0	0	0	0	0	0	0	0	0	0
4/27/2024	8:30 AM	0	0	0	0	0	0	0	0	0	0	0	0	0
4/27/2024	8:45 AM	0	0	0	0	0	0	0	0	0	0	0	0	0
4/27/2024	9:00 AM	0	0	0	0	0	0	0	0	0	0	0	0	0
4/27/2024	9:15 AM	0	0	0	0	0	0	0	0	0	0	0	0	0
4/27/2024	9:30 AM	0	0	0	0	0	0	0	0	0	0	0	0	0
4/27/2024	9:45 AM	0	0	0	0	0	0	0	0	0	0	0	0	0
4/27/2024	10:00 AM	0	0	0	0	0	0	0	0	0	0	0	0	0
4/27/2024	10:15 AM	0	0	0	0	0	0	0	0	0	0	0	0	0
4/27/2024	10:30 AM	0	0	0	0	0	0	0	0	0	0	0	0	0
4/27/2024	10:45 AM	0	0	0	0	0	0	0	0	0	0	0	0	0
4/27/2024	11:00 AM	0	0	0	0	0	0	0	0	0	0	0	0	0
4/27/2024	11:15 AM	0	0	0	0	0	0	0	0	0	0	0	0	0
4/27/2024	11:30 AM	0	0	0	0	0	0	0	0	0	0	0	0	0
4/27/2024	11:45 AM	0	0	0	0	0	0	0	0	0	0	0	0	0
4/27/2024	12:00 PM	0	0	0	0	0	0	0	0	0	0	0	0	0
4/27/2024	12:15 PM	0	0	0	0	0	0	0	0	0	0	0	0	0
4/27/2024	12:30 PM	0	0	0	0	0	0	0	0	0	0	0	0	0
4/27/2024	12:45 PM	0	0	0	0	0	0	0	0	0	0	0	0	0
4/27/2024	1:00 PM	0	0	0	0	0	0	0	0	0	0	0	0	0
4/27/2024	1:15 PM	0	0	0	0	0	0	0	0	0	0	0	0	0
4/27/2024	1:30 PM	0	0	0	0	0	0	0	0	0	0	0	0	0
4/27/2024	1:45 PM	0	0	0	0	0	0	0	0	0	0	0	0	0
4/27/2024	2:00 PM	0	0	0	0	0	0	0	0	0	0	0	0	0
4/27/2024	2:15 PM	0	0	0	0	0	0	0	0	0	0	0	0	0
4/27/2024	2:30 PM	0	0	0	0	0	0	0	0	0	0	0	0	0
4/27/2024	2:45 PM	0	0	0	0	0	0	0	0	0	0	0	0	0
4/27/2024	3:00 PM	0	0	0	0	0	0	0	0	0	0	0	0	0
4/27/2024	3:15 PM	0	0	0	0	0	0	0	0	0	0	0	0	0
4/27/2024	3:30 PM	0	0	0	0	0	0	0	0	0	0	0	0	0
4/27/2024	3:45 PM	0	0	0	0	0	0	0	0	0	0	0	0	0
4/27/2024	4:00 PM	0	0	0	0	0	0	0	0	0	0	0	0	0
4/27/2024	4:15 PM	0	0	0	0	0	0	0	0	0	0	0	0	0
4/27/2024	4:30 PM	0	0	0	0	0	0	0	0	0	0	0	0	0
4/27/2024	4:45 PM	0	0	0	0	0	0	0	0	0	0	0	0	0
4/27/2024	5:00 PM	0	0	0	0	0	0	0	0	0	0	0	0	0
4/27/2024	5:15 PM	0	0	0	0	0	0	0	0	0	0	0	0	0
4/27/2024	5:30 PM	0	0	0	0	0	0	0	0	0	0	0	0	0
4/27/2024	5:45 PM	0	0	0	0	0	0	0	0	0	0	0	0	0
4/27/2024	6:00 PM	0	0	0	0	0	0	0	0	0	0	0	0	0
4/27/2024	6:15 PM	0	0	0	0	0	0	0	0	0	0	0	0	0
4/27/2024	6:30 PM	0	0	0	0	0	0	0	0	0	0	0	0	0
4/27/2024	6:45 PM	0	0	0	0	0	0	0	0	0	0	0	0	0
4/27/2024	7:00 PM	0	0	0	0	0	0	0	0	0	0	0	0	0
4/27/2024	7:15 PM	0	0	0	0	0	0	0	0	0	0	0	0	0
4/27/2024	7:30 PM	0	0	0	0	0	0	0	0	0	0	0	0	0
4/27/2024	7:45 PM	0	0	0	0	0	0	0	0	0	0	0	0	0
4/27/2024	8:00 PM	0	0	0	0	0	0	0	0	0	0	0	0	0
4/27/2024	8:15 PM	0	0	0	0	0	0	0	0	0	0	0	0	0
4/27/2024	8:30 PM	0	0	0	0	0	0	0	0	0	0	0	0	0
4/27/2024	8:45 PM	0	0	0	0	0	0	0	0	0	0	0	0	0
4/27/2024	9:00 PM	0	0	0	0	0	0	0	0	0	0	0	0	0
4/27/2024	9:15 PM	0	0	0	0	0	0	0	0	0	0	0	0	0
4/27/2024	9:30 PM	0	0	0	0	0	0	0	0	0	0	0	0	0
4/27/2024	9:45 PM	0	0	0	0	0	0	0	0	0	0	0	0	0
4/27/2024	10:00 PM	0	0	0	0	0	0	0	0	0	0	0	0	0
4/27/2024	10:15 PM	0	0	0	0	0	0	0	0	0	0	0	0	0
4/27/2024	10:30 PM	0	0	0	0	0	0	0	0	0	0	0	0	0
4/27/2024	10:45 PM	0	0	0	0	0	0	0	0	0	0	0	0	0
4/27/2024	11:00 PM	0	0	0	0	0	0	0	0	0	0	0	0	0
4/27/2024	11:15 PM	0	0	0	0	0	0	0	0	0	0	0	0	0
4/27/2024	11:30 PM	0	0	0	0	0	0	0	0	0	0	0	0	0
4/27/2024	11:45 PM	0	0	0	0	0	0	0	0	0	0	0	0	0

Bi-Directional Class Count || SB WB 15min

Columbia, SC

Marr Traffic DATA COLLECTION
www.marrtraffic.com

Site 10
I-26 S/Bound On-Ramp,
south of I-20

Date
Sunday, April 21, 2024

Lat/Long
34.034856°, -81.111503°

Weather
Cloudy
66°F

Click here for Detailed Weather

Click here for Map

0000 - 2400 (Sunday 24h Session) (04-21-2024)
SB WB 15min

	Southbound (Movement 10.1)													15min	60min
Time	1	2	3	4	5	6	7	8	9	10	11	12	13	Total	Total
0000 - 0015	0	22	2	0	0	0	0	0	0	0	0	0	0	**24**	
0015 - 0030	0	19	1	0	0	0	0	0	0	0	0	0	0	**20**	
0030 - 0045	0	19	1	0	0	0	0	0	0	0	0	0	0	**20**	
0045 - 0100	0	13	1	0	0	0	0	0	0	0	0	0	0	**14**	**78**
0100 - 0115	0	12	1	0	0	0	0	0	0	0	0	0	0	**13**	
0115 - 0130	0	11	1	0	0	0	0	0	0	0	0	0	0	**12**	
0130 - 0145	0	12	1	0	0	0	0	0	2	0	0	0	0	**15**	
0145 - 0200	0	9	2	0	0	0	0	0	1	0	0	0	0	**12**	**52**
0200 - 0215	0	6	0	0	0	0	0	0	0	0	0	0	0	**6**	
0215 - 0230	0	7	1	0	0	0	0	0	1	0	0	0	0	**9**	
0230 - 0245	0	3	0	0	0	0	0	0	1	0	0	0	0	**4**	
0245 - 0300	0	4	1	0	0	0	0	0	0	0	0	0	0	**5**	**24**
0300 - 0315	0	6	1	0	0	0	0	0	0	0	0	0	0	**7**	
0315 - 0330	0	5	1	0	0	0	0	0	0	0	0	0	0	**6**	
0330 - 0345	0	5	0	0	0	0	0	1	0	0	0	0	0	**6**	
0345 - 0400	0	7	0	1	0	0	0	0	0	0	0	0	0	**8**	**27**
0400 - 0415	0	5	0	0	0	0	0	0	0	0	0	0	0	**5**	
0415 - 0430	0	5	0	0	0	0	0	0	0	0	0	0	0	**5**	
0430 - 0445	0	6	1	0	0	0	0	0	0	0	0	0	0	**7**	
0445 - 0500	0	7	0	0	0	0	0	0	0	0	0	0	0	**7**	**24**
0500 - 0515	0	6	0	0	0	0	0	0	0	0	0	0	0	**6**	
0515 - 0530	0	10	1	0	0	0	0	0	0	0	0	0	0	**11**	
0530 - 0545	0	13	1	0	0	0	0	0	0	0	0	0	0	**14**	
0545 - 0600	0	12	2	0	0	0	0	0	0	0	0	0	0	**14**	**45**
0600 - 0615	0	11	3	0	0	0	0	0	0	0	0	0	0	**14**	
0615 - 0630	0	23	4	0	0	0	0	0	0	0	0	0	0	**27**	
0630 - 0645	0	45	6	0	0	0	0	0	2	0	0	0	0	**53**	
0645 - 0700	0	30	7	0	0	0	0	0	0	0	0	0	0	**37**	**131**
0700 - 0715	0	23	6	0	0	0	0	0	1	0	0	0	0	**30**	
0715 - 0730	0	31	8	0	0	0	0	0	0	0	0	0	0	**39**	
0730 - 0745	0	33	6	0	0	0	0	0	0	0	0	0	0	**39**	
0745 - 0800	0	46	9	0	0	0	0	0	1	0	0	0	0	**56**	**164**
0800 - 0815	0	49	5	0	1	0	0	0	1	0	0	0	0	**56**	
0815 - 0830	0	41	7	0	0	0	0	0	0	0	0	0	0	**48**	
0830 - 0845	0	51	6	0	0	0	0	0	1	0	0	0	0	**58**	
0845 - 0900	0	80	11	0	0	0	0	0	0	0	0	0	0	**91**	**253**
0900 - 0915	0	70	10	0	0	0	0	0	0	0	0	0	0	**80**	
0915 - 0930	0	60	9	0	0	0	0	0	2	0	0	0	0	**71**	
0930 - 0945	0	71	12	0	1	0	0	0	0	0	0	0	0	**84**	
0945 - 1000	0	73	9	0	1	0	0	0	0	0	0	0	0	**83**	**318**
1000 - 1015	0	90	9	1	0	0	0	0	0	0	0	0	0	**100**	
1015 - 1030	0	84	14	0	0	0	0	0	1	0	0	0	0	**99**	
1030 - 1045	0	89	9	0	1	0	0	0	0	0	0	0	0	**99**	
1045 - 1100	0	102	11	0	0	1	0	0	0	0	0	0	0	**114**	**412**
1100 - 1115	0	59	11	0	1	0	0	0	0	0	0	0	0	**71**	
1115 - 1130	0	71	9	0	1	0	0	0	1	0	0	0	0	**82**	
1130 - 1145	0	64	10	0	0	0	0	0	1	0	0	0	0	**75**	
1145 - 1200	0	82	11	0	0	1	0	0	2	0	0	0	0	**96**	**324**
1200 - 1215	0	92	13	0	0	0	0	0	2	0	0	0	0	**107**	
1215 - 1230	0	98	13	1	0	0	0	1	1	0	0	0	0	**114**	
1230 - 1245	0	105	18	0	0	0	0	0	2	0	0	0	0	**125**	
1245 - 1300	0	99	19	0	1	0	0	0	3	0	0	0	0	**122**	**468**
1300 - 1315	0	84	21	0	2	1	0	0	1	0	0	0	0	**109**	
1315 - 1330	0	96	11	0	0	0	0	0	1	0	0	0	0	**108**	
1330 - 1345	1	103	13	0	2	0	0	0	2	0	0	0	0	**121**	
1345 - 1400	0	106	15	0	2	0	0	0	3	0	0	0	0	**126**	**464**
1400 - 1415	0	87	13	0	0	0	0	0	0	0	0	0	0	**100**	
1415 - 1430	0	91	11	0	2	0	0	0	0	0	0	0	0	**104**	
1430 - 1445	0	102	9	0	0	0	0	1	0	0	0	0	0	**112**	
1445 - 1500	0	105	14	0	1	0	0	1	2	0	0	0	0	**123**	**439**
1500 - 1515	0	96	12	0	0	0	0	0	1	0	0	0	0	**109**	
1515 - 1530	0	80	14	0	0	0	0	0	1	0	0	0	0	**95**	
1530 - 1545	0	88	17	0	0	0	0	0	0	0	0	0	0	**105**	
1545 - 1600	0	90	10	0	0	1	0	0	1	0	0	0	0	**102**	**411**
1600 - 1615	0	80	10	0	0	0	0	0	0	0	0	0	0	**90**	
1615 - 1630	0	67	12	0	1	0	0	1	0	0	0	0	0	**81**	
1630 - 1645	0	85	13	1	0	0	0	0	1	0	0	0	0	**100**	
1645 - 1700	0	84	8	0	2	0	0	0	0	0	0	0	0	**94**	**365**
1700 - 1715	0	91	13	0	1	0	0	0	2	0	0	0	0	**107**	
1715 - 1730	0	97	9	0	0	0	0	0	1	0	0	0	0	**107**	
1730 - 1745	0	88	11	0	2	0	0	0	1	0	0	0	0	**102**	
1745 - 1800	0	71	13	0	0	0	0	0	1	0	0	0	0	**85**	**401**
1800 - 1815	0	68	10	1	1	0	0	0	2	0	0	0	0	**82**	
1815 - 1830	0	91	10	0	2	0	0	0	3	0	0	0	0	**106**	
1830 - 1845	0	90	17	0	0	0	0	0	5	0	0	0	0	**112**	
1845 - 1900	0	55	10	0	0	0	0	1	3	0	0	0	0	**69**	**369**
1900 - 1915	0	54	7	0	0	0	0	0	1	0	0	0	0	**62**	
1915 - 1930	0	56	9	0	0	0	0	0	3	0	0	0	0	**68**	
1930 - 1945	0	74	4	0	0	0	7	0	2	0	0	0	0	**87**	
1945 - 2000	0	65	7	0	3	0	0	0	2	0	0	0	0	**77**	**294**
2000 - 2015	0	57	9	0	0	0	0	0	1	0	0	0	0	**67**	
2015 - 2030	0	53	8	0	0	0	0	0	3	0	0	0	0	**64**	
2030 - 2045	0	57	7	0	0	0	0	0	3	0	0	0	0	**67**	
2045 - 2100	0	50	3	0	0	0	0	0	3	0	0	0	0	**56**	**254**
2100 - 2115	0	57	3	0	1	0	0	0	3	0	0	0	0	**64**	
2115 - 2130	0	43	4	0	0	0	0	0	3	0	0	0	0	**50**	
2130 - 2145	0	29	2	0	0	0	0	0	2	0	0	0	0	**33**	
2145 - 2200	0	32	3	0	2	0	0	0	1	0	0	0	0	**38**	**185**
2200 - 2215	0	35	2	0	0	0	0	0	2	0	0	0	0	**39**	
2215 - 2230	0	21	3	1	0	0	0	0	0	0	0	0	0	**25**	
2230 - 2245	0	27	2	0	0	0	0	0	2	0	0	0	0	**31**	
2245 - 2300	0	21	2	0	1	0	0	0	1	0	0	0	0	**25**	**120**
2300 - 2315	0	19	3	0	1	0	0	0	4	1	0	0	0	**28**	
2315 - 2330	0	20	2	0	1	0	0	0	1	1	0	0	0	**25**	
2330 - 2345	0	11	1	0	0	0	0	0	2	0	0	0	0	**14**	
2345 - 0000	0	12	2	0	0	0	0	0	1	0	0	0	0	**15**	**82**

Session Total	1	4884	663	6	34	4	7	6	97	2	0	0	0	**5704**
Session Average	0.01	50.88	6.91	0.06	0.35	0.04	0.07	0.06	1.01	0.02	0.00	0.00	0.00	**59.42**
Session Percentage	0.02	85.62	11.62	0.11	0.60	0.07	0.12	0.11	1.70	0.04	0.00	0.00	0.00	

AM Peak Hour	-	0945 - 1045	0930 - 1030	0915 - 1015	0900 - 1000	-	-	-	0615 - 0715	-	-	-	-	**0945 - 1045**
AM Peak Volume	0	336	44	1	2	0	0	0	3	0	0	0	0	**381**

Noon Peak Hour	1245 - 1345	1200 - 1300	1215 - 1315	1000 - 1100	1300 - 1400	1000 - 1100	-	1400 - 1500	1200 - 1300	-	-	-	-	**1215 - 1315**
Noon Peak Volume	1	394	71	1	6	1	0	2	8	0	0	0	0	**470**

PM Peak Hour	-	1645 - 1745	1500 - 1600	1545 - 1645	1645 - 1745	1500 - 1600	1845 - 1945	1530 - 1630	1800 - 1900	-	-	-	-	**1500 - 1600**
PM Peak Volume	0	360	53	1	5	1	7	1	13	0	0	0	0	**411**

Site 10
I-26 S/Bound On-Ramp,
south of I-20

Date
Monday, April 22, 2024

Lat/Long
34.034856°, -81.111503°

Weather
Mostly Cloudy
57°F

Click here for Detailed Weather

0000 - 2400 (Weekday 24h Session) (04-22-2024)
SB WB 15min

	Southbound (Movement 10.1)													15min	60min
Time	1	2	3	4	5	6	7	8	9	10	11	12	13	Total	Total
0000 - 0015	0	6	1	0	0	0	0	0	1	0	0	0	0	**8**	
0015 - 0030	0	12	2	0	1	0	0	0	0	0	0	0	0	**15**	
0030 - 0045	0	7	3	0	1	0	0	0	1	0	0	0	0	**12**	
0045 - 0100	0	6	1	0	0	0	0	0	0	0	0	0	0	**7**	**42**
0100 - 0115	0	6	1	0	0	0	0	0	2	0	0	0	0	**9**	
0115 - 0130	0	5	1	0	0	0	0	0	0	0	0	0	0	**6**	
0130 - 0145	0	3	0	0	1	0	0	0	1	0	0	0	0	**5**	
0145 - 0200	0	5	1	0	0	0	0	0	2	0	0	0	0	**8**	**28**
0200 - 0215	0	3	1	0	0	0	0	0	0	0	0	0	0	**4**	
0215 - 0230	0	3	0	0	0	0	0	0	1	0	0	0	0	**4**	
0230 - 0245	0	3	1	0	0	0	0	0	1	0	0	0	0	**5**	
0245 - 0300	0	4	1	0	0	0	0	0	5	0	0	0	0	**10**	**23**
0300 - 0315	0	3	0	0	0	0	0	0	0	0	0	0	0	**3**	
0315 - 0330	0	3	0	0	0	0	0	0	0	0	0	0	0	**3**	
0330 - 0345	0	5	1	1	0	0	0	0	1	0	0	0	0	**8**	
0345 - 0400	0	5	0	0	0	0	0	0	0	0	0	0	0	**5**	**19**
0400 - 0415	0	9	2	0	0	0	0	0	2	0	0	0	0	**13**	
0415 - 0430	0	10	3	0	0	0	0	0	4	0	0	0	0	**17**	
0430 - 0445	0	13	3	0	0	0	0	0	2	0	0	0	0	**18**	
0445 - 0500	0	22	2	0	0	0	0	0	1	0	0	0	0	**25**	**73**
0500 - 0515	0	17	2	0	0	0	0	0	1	0	0	0	0	**20**	
0515 - 0530	0	33	5	1	2	0	0	0	1	0	0	0	0	**42**	
0530 - 0545	0	43	6	0	0	0	0	0	2	0	0	0	0	**51**	
0545 - 0600	0	57	7	0	0	0	0	0	4	0	0	0	0	**68**	**181**
0600 - 0615	0	52	6	0	0	0	0	0	3	0	0	0	0	**61**	
0615 - 0630	0	100	11	0	2	0	0	0	4	0	0	0	0	**117**	
0630 - 0645	0	161	18	0	2	1	0	0	4	0	0	0	0	**186**	
0645 - 0700	0	178	18	0	4	0	0	0	4	0	0	0	0	**204**	**568**
0700 - 0715	0	203	35	0	5	0	0	0	4	0	0	0	0	**247**	
0715 - 0730	0	290	27	0	2	0	0	0	8	0	0	0	0	**327**	
0730 - 0745	0	322	23	0	2	0	0	0	5	0	0	0	0	**352**	
0745 - 0800	0	313	25	0	2	0	0	0	4	0	0	0	0	**344**	**1270**
0800 - 0815	0	325	42	0	3	0	0	0	7	0	0	0	0	**377**	
0815 - 0830	0	301	39	1	5	0	0	1	4	0	0	0	0	**351**	
0830 - 0845	1	263	24	0	3	0	0	0	6	0	0	0	0	**297**	
0845 - 0900	0	236	26	0	1	0	0	3	5	0	0	0	0	**271**	**1296**
0900 - 0915	0	198	25	0	1	1	0	0	3	0	0	0	0	**228**	
0915 - 0930	0	189	22	0	4	0	0	1	6	0	0	0	0	**222**	
0930 - 0945	0	195	33	3	5	0	0	0	4	0	0	0	0	**240**	
0945 - 1000	0	194	20	4	3	0	0	0	6	0	0	0	0	**227**	**917**
1000 - 1015	0	149	15	0	1	2	0	0	9	0	0	0	0	**176**	
1015 - 1030	0	129	16	0	8	1	0	0	3	0	0	0	0	**157**	
1030 - 1045	0	125	18	1	2	0	0	0	5	0	0	0	0	**151**	
1045 - 1100	1	133	18	0	3	1	0	0	7	0	0	0	0	**163**	**647**
1100 - 1115	0	92	9	0	2	1	0	0	3	0	0	0	0	**107**	
1115 - 1130	0	117	10	0	2	0	0	0	12	0	0	0	0	**141**	
1130 - 1145	0	107	9	0	2	0	0	0	3	0	0	0	0	**121**	
1145 - 1200	1	122	15	0	2	0	0	0	9	0	0	0	0	**149**	**518**
1200 - 1215	0	117	14	0	1	0	0	0	6	0	0	0	0	**138**	
1215 - 1230	0	135	13	0	2	0	0	0	7	0	0	0	0	**157**	
1230 - 1245	0	130	15	0	3	0	0	0	12	0	0	0	0	**160**	
1245 - 1300	1	142	18	0	3	0	0	1	2	0	0	0	0	**167**	**622**
1300 - 1315	0	111	15	0	2	1	0	0	2	0	0	0	0	**131**	
1315 - 1330	0	113	19	0	8	1	0	1	2	0	0	0	0	**144**	
1330 - 1345	0	118	18	0	4	1	0	0	1	0	0	0	0	**142**	
1345 - 1400	0	107	11	0	2	1	0	1	1	0	0	0	0	**123**	**540**
1400 - 1415	0	116	18	0	3	0	0	0	4	0	0	0	0	**141**	
1415 - 1430	0	116	8	0	7	0	0	9	11	0	1	0	0	**152**	
1430 - 1445	0	125	12	0	2	0	0	0	5	0	0	0	0	**144**	
1445 - 1500	0	118	16	0	4	0	0	0	6	0	0	0	0	**144**	**581**
1500 - 1515	0	122	12	0	6	0	0	0	6	0	0	0	0	**146**	
1515 - 1530	0	127	22	0	3	0	0	0	5	0	0	0	0	**157**	
1530 - 1545	0	131	23	0	4	0	0	0	2	0	0	0	0	**160**	
1545 - 1600	0	116	15	0	2	0	0	0	4	0	0	0	0	**137**	**600**
1600 - 1615	0	110	21	0	3	1	0	0	5	0	0	0	0	**140**	
1615 - 1630	0	136	30	0	2	0	0	0	4	0	0	0	0	**172**	
1630 - 1645	0	132	19	0	1	0	0	0	3	0	0	0	0	**155**	
1645 - 1700	0	118	20	1	4	0	0	0	6	0	0	0	0	**149**	**616**
1700 - 1715	0	133	14	1	1	0	0	0	2	0	0	0	0	**151**	
1715 - 1730	0	103	21	0	0	0	0	0	3	0	0	0	0	**127**	
1730 - 1745	0	87	11	0	1	0	0	0	2	0	0	0	0	**101**	
1745 - 1800	0	112	17	0	3	0	0	0	3	0	0	0	0	**135**	**514**
1800 - 1815	0	91	12	0	1	0	0	0	1	0	0	0	0	**105**	
1815 - 1830	0	110	16	0	1	0	0	0	0	0	0	0	0	**127**	
1830 - 1845	0	103	7	0	2	1	0	0	5	0	0	0	0	**118**	
1845 - 1900	0	86	1	0	0	0	0	0	3	0	0	0	0	**90**	**440**
1900 - 1915	0	69	3	1	2	0	0	0	0	0	0	0	0	**75**	
1915 - 1930	0	76	3	0	0	0	0	0	0	0	0	0	0	**79**	
1930 - 1945	0	50	4	0	0	0	0	0	1	0	0	0	0	**55**	
1945 - 2000	0	59	2	0	2	0	0	0	2	0	0	0	0	**65**	**274**
2000 - 2015	0	48	2	0	0	0	0	0	4	0	0	0	0	**54**	
2015 - 2030	1	40	2	0	1	0	0	0	1	0	0	0	0	**45**	
2030 - 2045	0	32	3	0	1	1	0	0	1	0	1	0	0	**39**	
2045 - 2100	0	30	3	0	0	0	0	0	3	0	0	0	0	**36**	**174**
2100 - 2115	0	43	3	0	0	0	0	0	2	0	0	0	0	**48**	
2115 - 2130	0	30	3	0	0	0	0	0	6	0	0	0	0	**39**	
2130 - 2145	0	30	2	0	0	0	0	0	0	0	0	0	0	**32**	
2145 - 2200	0	33	3	0	1	0	0	0	1	0	0	0	0	**38**	**157**
2200 - 2215	0	27	2	0	0	0	0	0	2	0	1	0	0	**32**	
2215 - 2230	0	35	3	0	0	1	0	0	1	0	0	0	0	**40**	
2230 - 2245	0	20	1	0	0	0	0	0	3	0	0	0	0	**24**	
2245 - 2300	0	19	1	0	0	0	0	0	2	0	0	0	0	**22**	**118**
2300 - 2315	0	18	1	0	0	0	0	0	3	0	0	0	0	**22**	
2315 - 2330	0	17	2	0	1	0	0	0	1	0	0	0	0	**21**	
2330 - 2345	0	5	0	0	0	0	0	0	3	0	0	0	0	**8**	
2345 - 0000	0	5	1	0	0	0	0	0	1	0	0	0	0	**7**	**58**

Session Total	5	8728	1030	14	154	15	0	17	310	0	3	0	0	**10276**
Session Average	0.05	90.92	10.73	0.15	1.60	0.16	0.00	0.18	3.23	0.00	0.03	0.00	0.00	**107.04**
Session Percentage	0.05	84.94	10.02	0.14	1.50	0.15	0.00	0.17	3.02	0.00	0.03	0.00	0.00	

AM Peak Hour	0745 - 0845	0730 - 0830	0800 - 0900	0900 - 1000	0930 - 1030	0930 - 1030	-	0800 - 0900	0915 - 1015	-	-	-	-	**0730 - 0830**
AM Peak Volume	1	1261	131	7	17	3	0	4	25	0	0	0	0	**1424**

Noon Peak Hour	1000 - 1100	1000 - 1100	1445 - 1545	1000 - 1100	1415 - 1515	1000 - 1100	-	1330 - 1430	1145 - 1245	-	1330 - 1430	-	-	**1000 - 1100**
Noon Peak Volume	1	536	73	1	19	4	0	10	34	0	1	0	0	**647**

PM Peak Hour	1930 - 2030	1615 - 1715	1600 - 1700	1615 - 1715	1500 - 1600	1515 - 1615	-	-	1600 - 1700	-	1945 - 2045	-	-	**1615 - 1715**
PM Peak Volume	1	519	90	2	15	1	0	0	18	0	1	0	0	**627**

Site 10
I-26 S/Bound On-Ramp,
south of I-20

Date
Tuesday, April 23, 2024

Lat/Long
34.034856°, -81.111503°

Weather
Fair
58°F

Click here for Detailed Weather

0000 - 2400 (Weekday 24h Session) (04-23-2024)
SB WB 15min

	Southbound (Movement 10.1)													15min	60min
TIME	1	2	3	4	5	6	7	8	9	10	11	12	13	Total	Total
0000 - 0015	0	5	3	0	0	0	0	0	2	0	0	0	0	**10**	
0015 - 0030	0	8	3	0	0	0	0	0	0	0	0	0	0	**11**	
0030 - 0045	0	6	2	0	0	0	0	0	1	0	0	0	0	**9**	
0045 - 0100	0	5	2	0	0	0	0	0	0	0	0	0	0	**7**	**37**
0100 - 0115	0	4	1	0	0	0	0	0	3	0	0	0	0	**8**	
0115 - 0130	0	5	3	0	0	0	0	0	0	0	1	0	0	**9**	
0130 - 0145	0	4	0	0	0	0	0	0	0	0	0	0	0	**4**	
0145 - 0200	0	4	2	0	0	0	0	0	3	0	0	0	0	**9**	**30**
0200 - 0215	0	3	2	0	0	0	0	0	0	0	0	0	0	**5**	
0215 - 0230	0	3	1	0	0	0	0	0	1	0	0	0	0	**5**	
0230 - 0245	0	2	0	0	0	0	0	0	0	0	0	0	0	**2**	
0245 - 0300	0	1	0	0	0	0	0	0	0	0	0	0	0	**1**	**13**
0300 - 0315	0	7	2	0	0	0	0	0	1	0	0	0	0	**10**	
0315 - 0330	0	3	0	0	0	0	0	0	1	0	0	0	0	**4**	
0330 - 0345	0	8	3	0	0	0	0	0	1	0	0	0	0	**12**	
0345 - 0400	0	6	2	0	0	0	0	0	0	0	0	0	0	**8**	**34**
0400 - 0415	0	4	1	0	0	0	0	0	2	0	0	0	0	**7**	
0415 - 0430	0	10	4	0	0	0	0	0	5	0	0	0	0	**19**	
0430 - 0445	0	9	2	0	1	0	0	0	2	0	0	0	0	**14**	
0445 - 0500	0	16	6	0	1	0	0	0	1	0	0	0	0	**24**	**64**
0500 - 0515	0	13	6	0	1	0	0	0	6	0	0	0	0	**26**	
0515 - 0530	0	23	7	0	1	0	0	0	0	0	0	0	0	**31**	
0530 - 0545	0	41	11	0	1	0	0	0	4	0	0	0	0	**57**	
0545 - 0600	0	50	13	0	1	0	0	0	1	0	0	0	0	**65**	**179**
0600 - 0615	0	65	19	0	1	0	0	0	1	0	0	0	0	**86**	
0615 - 0630	0	110	20	0	0	0	0	0	2	0	0	0	0	**132**	
0630 - 0645	1	154	53	0	2	0	0	0	7	0	1	0	0	**218**	
0645 - 0700	0	199	30	0	4	1	0	1	3	0	0	0	0	**238**	**674**
0700 - 0715	0	227	28	0	4	0	0	0	7	0	1	0	0	**267**	
0715 - 0730	1	230	48	0	3	1	0	0	3	0	0	0	0	**286**	
0730 - 0745	0	267	40	0	3	1	1	0	8	0	0	0	0	**320**	
0745 - 0800	0	242	24	0	1	0	0	0	1	0	1	0	0	**269**	**1142**
0800 - 0815	0	250	19	0	3	0	0	0	3	0	0	0	0	**275**	
0815 - 0830	0	317	30	0	2	0	0	0	4	0	0	0	0	**353**	
0830 - 0845	0	300	30	0	2	0	0	0	9	0	0	0	0	**341**	
0845 - 0900	0	248	30	0	8	3	0	0	9	0	0	0	0	**298**	**1267**
0900 - 0915	0	192	16	3	6	0	0	0	5	0	0	0	0	**222**	
0915 - 0930	0	194	23	1	6	2	0	0	4	0	0	0	0	**230**	
0930 - 0945	0	178	23	0	2	0	0	0	11	0	0	0	0	**214**	
0945 - 1000	1	165	21	4	3	0	0	0	4	0	0	0	0	**198**	**864**
1000 - 1015	0	142	31	2	2	1	0	0	3	2	0	0	0	**183**	
1015 - 1030	0	129	20	0	4	1	0	0	6	0	0	0	0	**160**	
1030 - 1045	0	130	28	2	1	0	1	0	6	0	0	0	0	**168**	
1045 - 1100	0	121	31	0	5	2	1	1	5	0	0	0	0	**166**	**677**
1100 - 1115	0	121	20	0	0	2	0	0	7	0	0	0	0	**150**	
1115 - 1130	0	103	23	0	6	0	0	0	8	0	0	0	0	**140**	
1130 - 1145	0	132	27	0	3	1	0	0	4	0	1	0	0	**168**	
1145 - 1200	0	122	23	0	2	0	0	0	6	0	0	0	0	**153**	**611**
1200 - 1215	0	120	12	0	4	0	0	0	4	0	0	0	0	**140**	
1215 - 1230	0	123	12	0	5	1	0	0	5	0	0	0	0	**146**	
1230 - 1245	0	161	10	0	3	0	0	0	3	0	0	0	0	**177**	
1245 - 1300	0	153	16	0	1	0	0	0	4	0	0	0	0	**174**	**637**
1300 - 1315	0	123	8	0	1	0	0	0	3	0	0	0	0	**135**	
1315 - 1330	0	125	6	0	3	0	1	0	6	0	0	0	0	**141**	
1330 - 1345	0	119	14	0	1	0	0	0	5	0	0	0	0	**139**	
1345 - 1400	0	118	6	0	2	1	0	1	3	0	0	0	0	**131**	**546**
1400 - 1415	0	111	10	0	2	2	0	0	9	0	0	0	0	**134**	
1415 - 1430	0	112	12	0	1	0	0	0	3	0	0	0	0	**128**	
1430 - 1445	0	112	9	0	1	0	0	0	7	0	0	0	0	**129**	
1445 - 1500	0	110	8	0	2	0	0	1	2	0	0	0	0	**123**	**514**
1500 - 1515	0	136	14	0	2	1	0	0	3	0	0	0	0	**156**	
1515 - 1530	0	144	11	0	3	1	0	1	4	0	0	0	0	**164**	
1530 - 1545	0	150	13	0	7	0	0	0	4	0	0	0	0	**174**	
1545 - 1600	0	135	7	1	4	0	0	0	6	0	0	0	0	**153**	**647**
1600 - 1615	0	111	26	0	1	0	0	0	11	0	0	0	0	**149**	
1615 - 1630	0	161	19	1	5	0	0	0	2	0	0	0	0	**188**	
1630 - 1645	0	149	12	0	4	0	0	0	2	0	0	0	0	**167**	
1645 - 1700	0	143	20	0	2	0	0	0	2	0	0	0	0	**167**	**671**
1700 - 1715	0	173	24	0	1	1	0	0	3	0	0	0	0	**202**	
1715 - 1730	0	200	23	0	4	1	0	0	1	0	0	0	0	**229**	
1730 - 1745	0	169	26	0	1	0	0	0	3	0	0	0	0	**199**	
1745 - 1800	0	122	22	0	0	0	0	0	3	0	0	0	0	**147**	**777**
1800 - 1815	0	105	13	0	1	0	0	0	7	0	0	0	0	**126**	
1815 - 1830	0	119	31	0	2	0	0	0	2	0	0	0	0	**154**	
1830 - 1845	0	107	9	0	2	0	0	0	2	0	0	0	0	**120**	
1845 - 1900	0	81	13	0	2	0	0	0	2	0	0	0	0	**98**	**498**
1900 - 1915	0	53	11	0	0	0	0	1	2	0	0	0	0	**67**	
1915 - 1930	0	65	13	0	1	0	0	0	3	0	0	0	0	**82**	
1930 - 1945	0	47	7	0	0	0	0	0	4	0	0	0	0	**58**	
1945 - 2000	0	73	9	0	0	3	0	0	2	0	0	0	0	**87**	**294**
2000 - 2015	0	59	17	0	0	0	0	0	2	0	0	0	0	**78**	
2015 - 2030	1	59	5	1	1	0	0	0	2	0	0	0	0	**69**	
2030 - 2045	0	55	7	0	1	0	0	0	3	0	1	0	0	**67**	
2045 - 2100	0	37	5	0	3	0	0	0	0	0	0	0	0	**45**	**259**
2100 - 2115	0	60	9	0	0	0	0	0	0	0	0	0	0	**69**	
2115 - 2130	0	55	7	0	0	0	0	0	1	0	0	0	0	**63**	
2130 - 2145	0	46	5	0	0	0	0	0	0	0	0	0	0	**51**	
2145 - 2200	0	35	8	0	0	0	0	0	1	0	0	0	0	**44**	**227**
2200 - 2215	0	30	7	0	0	0	0	0	4	0	0	0	0	**41**	
2215 - 2230	0	33	9	0	0	0	0	0	7	0	0	0	0	**49**	
2230 - 2245	0	27	6	0	1	0	0	0	1	0	0	0	0	**35**	
2245 - 2300	0	18	6	0	0	0	0	0	3	0	0	0	0	**27**	**152**
2300 - 2315	0	30	4	0	0	0	0	0	3	0	1	0	0	**38**	
2315 - 2330	0	11	3	0	0	0	0	0	1	0	1	0	0	**16**	
2330 - 2345	0	9	7	0	0	0	0	0	1	0	0	0	0	**17**	
2345 - 0000	0	8	5	0	0	0	0	0	1	0	0	0	0	**14**	**85**

Session Total	4	9080	1289	15	153	26	4	6	312	2	8	0	0	**10899**
Session Average	0.04	94.58	13.43	0.16	1.59	0.27	0.04	0.06	3.25	0.02	0.08	0.00	0.00	**113.53**
Session Percentage	0.04	83.31	11.83	0.14	1.40	0.24	0.04	0.06	2.86	0.02	0.07	0.00	0.00	

AM Peak Hour	0630 - 0730	0800 - 0900	0630 - 0730	0900 - 1000	0830 - 0930	0830 - 0930	0645 - 0745	0600 - 0700	0845 - 0945	0915 - 1015	0615 - 0715	-	-	**0800 - 0900**
AM Peak Hour Volume	2	1115	159	8	22	5	1	1	29	2	2	0	0	**1267**

Noon Peak Hour	-	1230 - 1330	1000 - 1100	1000 - 1100	1115 - 1215	1015 - 1115	1000 - 1100	1430 - 1530	1030 - 1130	1000 - 1100	1045 - 1145	-	-	**1000 - 1100**
Noon Peak Hour Volume	0	562	110	4	15	5	2	2	26	2	1	0	0	**677**

PM Peak Hour	1930 - 2030	1645 - 1745	1700 - 1800	1530 - 1630	1530 - 1630	1900 - 2000	-	1500 - 1600	1515 - 1615	-	1945 - 2045	-	-	**1645 - 1745**
PM Peak Hour Volume	1	685	95	2	17	3	0	1	25	0	1	0	0	**797**

Site 10
I-26 S/Bound On-Ramp,
south of I-20

Date
Wednesday, April 24, 2024

Lat/Long
34.034856°, -81.111503°

Weather
Fair
66°F

Click here for Detailed Weather

0000 - 2400 (Weekday 24h Session) (04-24-2024)
SB WB 15min

	Southbound (Movement 10.1)													15min	60min
TIME	1	2	3	4	5	6	7	8	9	10	11	12	13	Total	Total
0000 - 0015	0	8	1	0	1	0	0	0	1	0	0	0	0	**11**	
0015 - 0030	0	7	2	0	1	0	0	0	0	0	0	0	0	**10**	
0030 - 0045	0	5	1	0	1	0	0	0	1	0	0	0	0	**8**	
0045 - 0100	0	5	1	0	0	0	0	0	2	0	0	0	0	**8**	**37**
0100 - 0115	0	6	2	0	0	0	0	0	0	0	1	0	0	**9**	
0115 - 0130	0	4	0	0	1	0	0	0	0	0	0	0	0	**5**	
0130 - 0145	0	4	1	0	0	0	0	0	1	0	0	0	0	**6**	
0145 - 0200	0	6	1	0	2	0	0	0	3	0	1	0	0	**13**	**33**
0200 - 0215	0	9	2	0	0	0	0	0	2	0	0	0	0	**13**	
0215 - 0230	0	4	0	0	0	0	0	0	1	0	0	0	0	**5**	
0230 - 0245	0	6	2	0	0	0	0	0	2	0	0	0	0	**10**	
0245 - 0300	0	4	1	0	0	0	0	0	0	0	1	0	0	**6**	**34**
0300 - 0315	0	5	1	0	0	0	0	0	2	0	0	0	0	**8**	
0315 - 0330	0	4	2	0	0	0	0	0	1	0	0	0	0	**7**	
0330 - 0345	0	6	1	0	0	0	0	0	3	0	0	0	0	**10**	
0345 - 0400	0	3	0	0	1	0	0	0	0	0	0	0	0	**4**	**29**
0400 - 0415	0	8	3	0	1	0	0	0	3	0	0	0	0	**15**	
0415 - 0430	0	11	4	0	1	0	0	0	2	0	0	0	0	**18**	
0430 - 0445	0	6	1	0	1	0	0	0	1	0	0	0	0	**9**	
0445 - 0500	0	20	6	0	2	0	0	0	2	0	0	0	0	**30**	**72**
0500 - 0515	0	14	4	0	1	0	0	0	0	0	0	0	0	**19**	
0515 - 0530	0	18	4	0	0	2	0	0	2	0	0	0	0	**26**	
0530 - 0545	0	38	9	0	0	3	0	0	3	0	0	0	0	**53**	
0545 - 0600	0	51	12	0	0	2	0	0	2	0	0	0	0	**67**	**165**
0600 - 0615	0	54	8	0	1	0	0	0	3	0	0	0	0	**66**	
0615 - 0630	0	112	6	0	1	1	0	0	4	0	0	0	0	**124**	
0630 - 0645	0	181	22	0	1	2	0	0	3	0	0	0	0	**209**	
0645 - 0700	2	178	40	0	3	0	0	0	5	0	0	0	0	**228**	**627**
0700 - 0715	1	197	38	0	3	0	0	1	3	0	0	0	0	**243**	
0715 - 0730	1	280	35	0	8	0	0	0	5	2	0	0	0	**331**	
0730 - 0745	0	260	25	0	4	0	0	0	6	0	0	0	0	**295**	
0745 - 0800	0	280	27	0	1	2	0	1	7	0	0	0	0	**318**	**1187**
0800 - 0815	0	298	24	1	1	0	0	0	6	0	0	0	0	**330**	
0815 - 0830	1	282	40	0	6	0	0	1	4	0	0	0	0	**334**	
0830 - 0845	0	263	44	0	7	0	0	4	5	0	0	0	0	**323**	
0845 - 0900	1	228	56	0	4	0	0	3	6	0	0	0	0	**298**	**1285**
0900 - 0915	0	174	39	9	7	1	0	2	8	0	0	0	0	**240**	
0915 - 0930	0	153	35	3	1	1	0	1	2	0	0	0	0	**196**	
0930 - 0945	0	161	22	0	3	0	0	0	5	0	0	0	0	**191**	
0945 - 1000	0	147	24	0	6	1	0	4	3	0	0	0	0	**185**	**812**
1000 - 1015	1	130	20	0	3	1	0	0	1	0	0	0	0	**156**	
1015 - 1030	0	135	23	0	1	0	0	2	3	0	0	0	0	**164**	
1030 - 1045	0	125	33	0	7	2	0	0	4	0	0	0	0	**171**	
1045 - 1100	0	129	25	1	6	0	0	1	7	0	0	0	0	**169**	**660**
1100 - 1115	0	108	30	0	4	0	0	0	5	0	0	0	0	**147**	
1115 - 1130	0	130	29	1	5	0	0	1	5	0	0	0	0	**171**	
1130 - 1145	1	112	33	0	8	1	0	1	8	0	0	0	0	**164**	
1145 - 1200	0	101	23	0	3	0	0	0	5	0	0	0	0	**132**	**614**
1200 - 1215	0	89	16	0	6	0	0	0	5	0	0	0	0	**116**	
1215 - 1230	0	116	30	0	7	1	0	1	3	0	0	0	0	**158**	
1230 - 1245	0	110	31	0	3	1	0	0	3	0	0	0	0	**148**	
1245 - 1300	0	124	21	0	4	0	0	0	1	0	0	0	0	**150**	**572**
1300 - 1315	0	108	20	0	3	0	0	0	2	0	0	0	0	**133**	
1315 - 1330	0	102	17	0	0	0	0	1	3	0	0	0	0	**123**	
1330 - 1345	0	102	30	0	7	4	0	0	3	0	0	0	0	**146**	
1345 - 1400	0	113	31	0	1	0	0	0	5	0	0	0	0	**150**	**552**
1400 - 1415	0	103	27	0	4	1	0	0	4	0	0	0	0	**139**	
1415 - 1430	0	124	26	0	2	2	0	0	5	0	0	0	0	**159**	
1430 - 1445	1	109	19	0	1	2	0	0	4	0	0	0	0	**136**	
1445 - 1500	2	115	25	0	3	0	0	0	2	0	0	0	0	**147**	**581**
1500 - 1515	1	109	25	0	3	1	0	0	2	0	0	0	0	**141**	
1515 - 1530	0	130	22	0	5	0	0	0	1	0	0	0	0	**158**	
1530 - 1545	0	119	24	0	4	0	0	0	3	0	0	0	0	**150**	
1545 - 1600	0	122	20	0	2	0	0	0	3	0	0	0	0	**147**	**596**
1600 - 1615	0	129	24	0	1	0	0	1	10	0	0	0	0	**165**	
1615 - 1630	0	144	25	0	2	2	0	0	6	0	0	0	0	**179**	
1630 - 1645	1	153	33	0	1	0	0	1	1	0	0	0	0	**190**	
1645 - 1700	1	169	27	0	0	3	0	0	2	0	0	0	0	**202**	**736**
1700 - 1715	1	179	23	0	1	1	0	0	5	0	0	0	0	**210**	
1715 - 1730	0	169	30	0	1	0	0	0	3	0	0	0	0	**203**	
1730 - 1745	0	137	20	0	1	0	0	0	1	0	0	0	0	**159**	
1745 - 1800	0	128	27	0	1	0	0	0	2	0	0	0	0	**158**	**730**
1800 - 1815	0	132	21	0	2	0	0	0	3	0	0	0	0	**158**	
1815 - 1830	0	120	22	2	0	0	0	1	4	0	0	0	0	**149**	
1830 - 1845	0	126	14	0	1	1	0	1	1	1	0	0	0	**145**	
1845 - 1900	0	101	10	0	0	0	0	0	5	0	0	0	0	**116**	**568**
1900 - 1915	2	63	5	0	1	1	0	0	2	0	0	0	0	**74**	
1915 - 1930	0	91	1	0	1	1	0	0	3	0	0	0	0	**97**	
1930 - 1945	0	74	5	0	2	0	0	0	1	0	0	0	0	**82**	
1945 - 2000	1	58	8	0	0	1	0	0	1	0	0	0	0	**69**	**322**
2000 - 2015	0	72	6	0	2	0	0	0	3	0	0	0	0	**83**	
2015 - 2030	0	65	4	0	2	0	0	0	2	0	0	0	0	**73**	
2030 - 2045	0	49	3	0	2	0	0	0	0	0	0	0	0	**54**	
2045 - 2100	0	38	6	0	1	0	0	0	5	0	0	0	0	**50**	**260**
2100 - 2115	0	49	10	0	2	0	0	1	0	0	0	0	0	**62**	
2115 - 2130	0	44	12	0	2	0	0	0	2	0	0	0	0	**60**	
2130 - 2145	0	28	8	0	1	0	0	0	2	0	0	0	0	**39**	
2145 - 2200	0	30	10	0	0	0	0	0	1	0	0	0	0	**41**	**202**
2200 - 2215	0	19	5	0	1	0	0	0	0	0	0	0	0	**25**	
2215 - 2230	0	26	12	0	1	0	0	0	3	0	0	0	0	**42**	
2230 - 2245	0	28	9	0	0	0	0	0	2	0	0	0	0	**39**	
2245 - 2300	0	12	4	0	0	0	0	0	4	0	0	0	0	**20**	**126**
2300 - 2315	0	10	4	0	0	0	0	0	2	0	0	0	0	**16**	
2315 - 2330	0	12	5	0	1	0	0	0	0	0	1	0	0	**19**	
2330 - 2345	0	15	6	0	0	0	0	0	1	0	1	0	0	**23**	
2345 - 0000	0	17	4	0	1	0	0	0	2	0	0	0	0	**24**	**82**

Session Total	18	8752	1549	17	193	41	0	29	275	3	5	0	0	**10882**
Session Average	0.19	91.17	16.14	0.18	2.01	0.43	0.00	0.30	2.86	0.03	0.05	0.00	0.00	**113.35**
Session Percentage	0.17	80.43	14.23	0.16	1.77	0.38	0.00	0.27	2.53	0.03	0.05	0.00	0.00	

AM Peak Hour	0630 - 0730	0745 - 0845	0815 - 0915	0830 - 0930	0815 - 0915	0500 - 0600	-	0815 - 0915	0715 - 0815	0630 - 0730	-	-	-	**0745 - 0845**
AM Peak Hour Volume	4	1123	179	12	24	7	0	10	24	2	0	0	0	**1305**

Noon Peak Hour	1415 - 1515	1000 - 1100	1030 - 1130	1030 - 1130	1130 - 1230	1330 - 1430	-	1000 - 1100	1045 - 1145	-	-	-	-	**1000 - 1100**
Noon Peak Hour Volume	4	519	117	2	24	7	0	3	25	0	0	0	0	**660**

PM Peak Hour	1615 - 1715	1630 - 1730	1630 - 1730	1730 - 1830	1500 - 1600	1615 - 1715	-	1545 - 1645	1530 - 1630	1745 - 1845	-	-	-	**1630 - 1730**
PM Peak Hour Volume	3	670	113	2	14	6	0	2	22	1	0	0	0	**805**

Site 10
I-26 S/Bound On-Ramp,
south of I-20

Date
Thursday, April 25, 2024

Lat/Long
34.034856°, -81.111503°

Weather
Fair
67°F

Click here for Detailed Weather

0000 - 2400 (Weekday 24h Session) (04-25-2024)
SB WB 15min

	Southbound (Movement 10.1)														
TIME	1	2	3	4	5	6	7	8	9	10	11	12	13	15min Total	60min Total
0000 - 0015	0	9	1	0	0	0	0	0	1	0	0	0	0	**11**	
0015 - 0030	0	3	0	0	1	0	0	0	2	0	0	0	0	**6**	
0030 - 0045	0	5	1	0	1	0	0	0	0	0	0	0	0	**7**	
0045 - 0100	0	5	0	0	0	0	0	0	1	0	1	0	0	**7**	**31**
0100 - 0115	0	6	2	0	0	0	0	0	1	0	0	0	0	**9**	
0115 - 0130	0	4	0	0	0	0	0	0	2	0	0	0	0	**6**	
0130 - 0145	0	5	1	0	0	0	0	0	2	0	0	0	0	**8**	
0145 - 0200	0	4	0	0	1	0	0	0	1	0	0	0	0	**6**	**29**
0200 - 0215	0	6	0	0	0	0	0	0	1	0	0	0	0	**7**	
0215 - 0230	0	2	0	0	0	0	0	0	3	0	0	0	0	**5**	
0230 - 0245	0	7	1	0	0	0	0	0	0	0	0	0	0	**8**	
0245 - 0300	0	6	0	0	1	0	0	0	0	0	0	0	0	**7**	**27**
0300 - 0315	0	7	2	0	1	0	0	0	1	0	0	0	0	**11**	
0315 - 0330	0	6	0	0	0	0	0	0	2	0	0	0	0	**8**	
0330 - 0345	0	6	1	0	1	0	0	0	0	0	0	0	0	**8**	
0345 - 0400	0	8	0	0	1	0	0	0	3	0	0	0	0	**12**	**39**
0400 - 0415	0	6	1	0	0	0	0	0	3	0	0	0	0	**10**	
0415 - 0430	0	8	2	0	0	0	0	0	3	0	0	0	0	**13**	
0430 - 0445	0	11	1	0	1	0	0	0	1	0	0	0	0	**14**	
0445 - 0500	0	19	3	0	2	0	0	0	1	0	1	0	0	**26**	**63**
0500 - 0515	0	15	1	0	3	0	0	0	3	0	0	0	0	**22**	
0515 - 0530	0	21	1	0	4	0	0	0	6	0	0	0	0	**32**	
0530 - 0545	0	47	2	0	1	0	0	0	0	0	0	0	0	**50**	
0545 - 0600	0	58	3	0	4	0	0	0	4	0	0	0	0	**69**	**173**
0600 - 0615	0	59	4	0	0	0	0	0	3	0	0	0	0	**66**	
0615 - 0630	0	119	7	0	1	0	0	0	4	0	0	0	0	**131**	
0630 - 0645	0	164	15	0	3	1	0	0	4	0	0	0	0	**187**	
0645 - 0700	0	160	45	0	1	2	0	0	4	0	1	1	0	**214**	**598**
0700 - 0715	0	190	51	0	7	1	1	0	7	0	0	0	0	**257**	
0715 - 0730	1	232	60	0	2	0	0	0	4	0	0	0	0	**299**	
0730 - 0745	0	264	40	0	7	0	0	1	3	0	0	0	0	**315**	
0745 - 0800	0	281	48	0	6	2	0	2	4	0	0	0	0	**343**	**1214**
0800 - 0815	0	309	52	0	2	0	0	0	2	0	0	0	0	**365**	
0815 - 0830	0	339	54	0	7	1	0	1	4	1	0	0	0	**407**	
0830 - 0845	1	263	47	0	8	0	1	1	1	0	0	0	0	**322**	
0845 - 0900	0	260	47	0	4	2	0	1	2	0	0	0	0	**316**	**1410**
0900 - 0915	0	229	26	0	3	0	0	1	8	0	0	0	0	**267**	
0915 - 0930	1	155	26	0	3	1	0	0	5	0	0	0	0	**191**	
0930 - 0945	0	174	30	6	6	0	0	1	8	0	0	0	0	**225**	
0945 - 1000	0	174	19	1	3	0	0	2	4	0	0	0	0	**203**	**886**
1000 - 1015	0	128	26	1	4	1	0	0	5	0	0	0	0	**165**	
1015 - 1030	0	139	23	4	5	1	0	1	3	0	0	0	0	**176**	
1030 - 1045	0	117	23	0	1	1	0	1	2	1	0	0	0	**146**	
1045 - 1100	1	136	22	0	3	0	0	1	4	0	0	0	0	**167**	**654**
1100 - 1115	0	106	14	0	2	0	0	1	7	0	0	0	0	**130**	
1115 - 1130	0	142	26	0	2	0	0	0	12	0	0	0	0	**182**	
1130 - 1145	0	118	20	0	1	0	0	0	10	1	0	0	0	**150**	
1145 - 1200	0	110	34	0	3	0	0	0	6	0	0	0	0	**153**	**615**
1200 - 1215	0	118	21	0	3	1	0	0	3	0	0	0	0	**146**	
1215 - 1230	0	120	24	0	5	3	0	0	7	0	0	0	0	**159**	
1230 - 1245	1	153	32	0	6	2	0	1	7	1	0	0	0	**203**	
1245 - 1300	0	123	20	1	3	1	0	2	4	0	0	0	0	**154**	**662**
1300 - 1315	0	138	25	0	4	2	0	2	4	0	0	0	0	**175**	
1315 - 1330	0	127	18	0	4	1	0	2	0	0	0	0	0	**152**	
1330 - 1345	0	144	30	1	3	0	1	0	7	0	0	0	0	**186**	
1345 - 1400	0	113	23	0	5	1	0	0	5	0	0	0	0	**147**	**660**
1400 - 1415	0	121	26	0	3	1	0	0	3	1	0	0	0	**155**	
1415 - 1430	0	137	14	0	3	0	0	2	4	0	0	0	0	**160**	
1430 - 1445	0	132	22	0	4	1	0	1	3	0	0	0	0	**163**	
1445 - 1500	0	95	29	0	1	2	0	0	4	0	0	0	0	**131**	**609**
1500 - 1515	0	115	17	0	2	0	0	1	3	0	0	0	0	**138**	
1515 - 1530	0	111	21	0	1	0	0	1	5	0	0	0	0	**139**	
1530 - 1545	0	120	29	0	2	0	0	0	4	0	0	0	0	**155**	
1545 - 1600	0	131	26	0	1	0	0	0	5	0	0	0	0	**163**	**595**
1600 - 1615	1	135	19	0	1	0	0	0	2	0	0	0	0	**158**	
1615 - 1630	1	138	21	0	2	0	0	0	5	0	0	0	0	**167**	
1630 - 1645	3	149	26	0	1	1	0	0	4	0	0	0	0	**184**	
1645 - 1700	0	155	29	0	3	0	0	0	4	0	0	0	0	**191**	**700**
1700 - 1715	1	166	34	0	0	0	0	0	4	0	0	0	0	**205**	
1715 - 1730	2	140	25	0	3	1	0	0	3	0	0	0	0	**174**	
1730 - 1745	0	173	20	0	3	0	0	0	7	0	0	0	0	**203**	
1745 - 1800	0	133	30	0	2	1	0	0	4	0	0	0	0	**170**	**752**
1800 - 1815	1	126	22	0	1	0	0	0	3	0	0	0	0	**153**	
1815 - 1830	0	128	18	0	0	1	0	0	5	0	0	0	0	**152**	
1830 - 1845	0	127	20	0	0	0	0	0	1	1	0	0	0	**149**	
1845 - 1900	0	106	19	0	0	0	0	0	3	0	0	0	0	**128**	**582**
1900 - 1915	1	81	8	0	0	0	0	0	2	0	0	0	0	**92**	
1915 - 1930	2	80	8	0	0	0	0	0	0	0	0	0	0	**90**	
1930 - 1945	0	73	13	0	0	0	0	0	0	0	0	0	0	**86**	
1945 - 2000	0	67	6	0	0	0	0	0	1	0	0	0	0	**74**	**342**
2000 - 2015	0	51	8	0	1	0	0	0	1	0	0	0	0	**61**	
2015 - 2030	0	48	6	0	0	0	0	0	3	0	0	0	0	**57**	
2030 - 2045	0	61	13	0	0	0	0	0	4	0	0	0	0	**78**	
2045 - 2100	0	41	9	0	0	0	0	0	4	0	0	0	0	**54**	**250**
2100 - 2115	0	51	11	0	0	0	0	0	1	0	0	0	0	**63**	
2115 - 2130	0	43	10	0	0	0	0	0	3	0	0	0	0	**56**	
2130 - 2145	0	45	8	0	0	0	0	0	1	0	0	0	0	**54**	
2145 - 2200	0	40	10	0	0	0	0	0	2	0	0	0	0	**52**	**225**
2200 - 2215	0	43	11	0	0	0	0	0	1	0	0	0	0	**55**	
2215 - 2230	0	30	7	0	0	0	0	0	0	0	0	0	0	**37**	
2230 - 2245	0	16	4	0	0	0	0	0	0	0	0	0	0	**20**	
2245 - 2300	0	20	7	0	0	0	0	0	1	0	0	0	0	**28**	**140**
2300 - 2315	0	15	5	0	0	0	0	0	2	0	0	0	0	**22**	
2315 - 2330	0	21	6	0	0	0	0	0	0	0	0	0	0	**27**	
2330 - 2345	0	12	4	0	0	0	0	0	1	0	0	0	0	**17**	
2345 - 0000	0	9	1	0	0	0	0	0	1	0	0	0	0	**11**	**77**

Session Total	17	9163	1597	14	173	32	3	26	298	6	3	1	0	**11333**
Session Average	0.18	95.45	16.64	0.15	1.80	0.33	0.03	0.27	3.10	0.06	0.03	0.01	0.00	**118.05**
Session Percentage	0.15	80.85	14.09	0.12	1.53	0.28	0.03	0.23	2.63	0.05	0.03	0.01	0.00	

AM Peak Hour	0830 - 0930	0730 - 0830	0745 - 0845	0930 - 1030	0745 - 0845	0615 - 0715	0615 - 0715	0730 - 0830	0900 - 1000	0730 - 0830	0600 - 0700	0600 - 0700	-	**0745 - 0845**
AM Peak Hour Volume	2	1193	201	12	23	4	1	4	25	1	1	1	0	**1437**

Noon Peak Hour	1000 - 1100	1230 - 1330	1145 - 1245	1000 - 1100	1215 - 1315	1215 - 1315	1245 - 1345	1230 - 1330	1100 - 1200	1000 - 1100	-	-	-	**1215 - 1315**
Noon Peak Hour Volume	1	541	111	5	18	8	1	7	35	1	0	0	0	**691**

PM Peak Hour	1630 - 1730	1645 - 1745	1630 - 1730	-	1645 - 1745	1630 - 1730	-	1500 - 1600	1730 - 1830	1745 - 1845	-	-	-	**1645 - 1745**
PM Peak Hour Volume	6	634	114	0	9	2	0	2	19	1	0	0	0	**773**

Site 10
I-26 S/Bound On-Ramp,
south of I-20

Date
Friday, April 26, 2024

Lat/Long
34.034856°, -81.111503°

Weather
Cloudy
69°F

Click here for Detailed Weather

0000 - 2400 (Weekday 24h Session) (04-26-2024)
SB WB 15min

	Southbound (Movement 10.1)													15min	60min
TIME	1	2	3	4	5	6	7	8	9	10	11	12	13	Total	Total
0000 - 0015	0	10	2	0	1	1	0	0	2	0	0	0	0	**16**	
0015 - 0030	0	8	1	0	0	0	0	0	3	0	0	0	0	**12**	
0030 - 0045	0	7	2	0	2	0	0	0	0	0	0	0	0	**11**	
0045 - 0100	0	8	1	0	1	1	0	0	0	0	0	0	0	**11**	**50**
0100 - 0115	0	4	0	0	0	0	0	0	3	0	1	0	0	**8**	
0115 - 0130	0	7	1	0	3	0	0	0	1	0	1	0	0	**13**	
0130 - 0145	0	6	2	0	0	1	0	0	0	0	0	0	0	**9**	
0145 - 0200	0	5	1	0	0	0	0	0	1	0	0	0	0	**7**	**37**
0200 - 0215	0	4	0	0	0	0	0	0	1	0	0	0	0	**5**	
0215 - 0230	0	5	1	0	0	0	0	0	0	0	0	0	0	**6**	
0230 - 0245	0	2	0	0	1	0	0	0	1	0	0	0	0	**4**	
0245 - 0300	0	1	0	0	0	0	0	0	3	0	0	0	0	**4**	**19**
0300 - 0315	0	4	0	0	0	0	0	0	2	0	0	0	0	**6**	
0315 - 0330	0	3	1	0	0	0	0	0	2	0	0	0	0	**6**	
0330 - 0345	0	5	1	0	0	1	0	0	3	0	0	0	0	**10**	
0345 - 0400	0	7	2	0	0	0	0	0	1	0	0	0	0	**10**	**32**
0400 - 0415	0	8	1	0	2	0	0	0	1	0	0	0	0	**12**	
0415 - 0430	0	12	3	0	1	0	0	0	0	0	0	0	0	**16**	
0430 - 0445	0	10	1	0	0	0	0	0	0	0	0	0	0	**11**	
0445 - 0500	0	15	3	0	0	0	0	0	0	0	0	0	0	**18**	**57**
0500 - 0515	0	16	2	0	3	2	0	0	1	0	0	0	0	**24**	
0515 - 0530	0	34	3	0	2	0	0	0	3	0	0	0	0	**42**	
0530 - 0545	0	35	3	0	0	1	0	0	2	0	0	0	0	**41**	
0545 - 0600	0	35	5	0	0	1	0	0	1	0	0	0	0	**42**	**149**
0600 - 0615	0	65	2	0	0	0	0	0	2	0	0	0	0	**69**	
0615 - 0630	0	93	3	1	2	0	0	0	6	0	0	0	0	**105**	
0630 - 0645	0	147	5	0	3	0	0	1	2	0	0	0	0	**158**	
0645 - 0700	0	173	19	0	1	0	0	0	10	0	0	0	0	**203**	**535**
0700 - 0715	0	169	34	0	3	0	0	0	6	0	0	0	0	**212**	
0715 - 0730	1	232	45	0	1	2	0	0	2	0	0	0	0	**283**	
0730 - 0745	1	298	30	0	1	0	0	0	7	0	0	0	0	**337**	
0745 - 0800	0	263	36	0	2	1	0	0	2	0	0	0	0	**304**	**1136**
0800 - 0815	0	250	43	0	2	0	0	0	4	0	0	0	0	**299**	
0815 - 0830	0	269	31	1	2	0	0	2	5	0	0	0	0	**310**	
0830 - 0845	0	264	31	3	2	1	0	0	3	0	0	0	0	**304**	
0845 - 0900	0	227	32	4	1	0	0	0	6	0	0	0	0	**270**	**1183**
0900 - 0915	0	189	30	5	2	0	0	0	6	0	0	0	0	**232**	
0915 - 0930	0	157	32	5	3	0	0	2	5	0	0	0	0	**204**	
0930 - 0945	0	176	24	0	3	0	0	0	3	0	0	0	0	**206**	
0945 - 1000	0	159	32	0	2	0	0	2	6	0	0	0	0	**201**	**843**
1000 - 1015	0	147	20	1	3	0	0	2	7	0	0	0	0	**180**	
1015 - 1030	0	137	27	0	6	0	0	1	2	0	0	0	0	**173**	
1030 - 1045	0	142	26	0	3	3	0	0	3	0	0	0	0	**177**	
1045 - 1100	1	143	18	0	6	1	0	3	11	0	0	0	0	**183**	**713**
1100 - 1115	0	134	23	0	1	0	0	0	4	0	0	0	0	**162**	
1115 - 1130	0	130	21	0	4	1	0	2	4	0	0	0	0	**162**	
1130 - 1145	0	157	19	0	1	0	0	0	3	0	0	0	0	**180**	
1145 - 1200	0	123	11	0	4	0	0	0	3	0	0	0	0	**141**	**645**
1200 - 1215	0	132	15	0	1	0	0	2	5	0	0	0	1	**156**	
1215 - 1230	0	120	27	0	5	2	0	0	7	0	0	0	0	**161**	
1230 - 1245	1	153	26	0	5	0	0	1	3	0	0	0	0	**189**	
1245 - 1300	0	110	27	0	2	1	0	1	5	0	0	0	0	**146**	**652**
1300 - 1315	0	109	28	0	3	0	1	0	4	1	0	0	0	**146**	
1315 - 1330	0	120	32	0	2	1	0	0	0	0	0	0	0	**155**	
1330 - 1345	0	138	24	0	3	1	0	1	6	0	0	0	0	**173**	
1345 - 1400	0	117	26	0	5	2	0	0	4	0	0	0	0	**154**	**628**
1400 - 1415	0	116	22	0	4	2	0	1	4	0	0	0	0	**149**	
1415 - 1430	0	99	28	0	1	0	0	0	3	0	0	0	0	**131**	
1430 - 1445	1	117	21	1	1	0	0	0	6	0	0	0	0	**147**	
1445 - 1500	0	96	20	0	1	0	0	0	0	0	0	0	0	**117**	**544**
1500 - 1515	0	111	22	2	1	2	0	0	3	0	0	0	0	**141**	
1515 - 1530	1	119	25	0	1	0	0	0	4	0	0	0	0	**150**	
1530 - 1545	0	138	25	0	9	2	0	0	2	0	0	0	0	**176**	
1545 - 1600	2	141	32	0	2	0	0	0	1	0	0	0	0	**178**	**645**
1600 - 1615	0	120	26	0	3	0	0	0	0	0	0	0	0	**149**	
1615 - 1630	0	126	15	0	2	0	0	0	2	0	0	0	0	**145**	
1630 - 1645	0	136	28	0	4	0	0	1	1	0	0	0	0	**170**	
1645 - 1700	3	150	32	0	2	0	0	0	0	0	0	0	0	**187**	**651**
1700 - 1715	0	163	33	0	4	0	0	1	4	0	0	0	0	**205**	
1715 - 1730	0	165	38	0	1	2	0	0	1	0	0	0	0	**207**	
1730 - 1745	2	132	29	0	1	0	0	0	4	0	0	0	0	**168**	
1745 - 1800	1	164	34	0	2	0	0	0	2	0	0	0	0	**203**	**783**
1800 - 1815	0	155	38	0	2	0	0	1	1	0	0	0	0	**197**	
1815 - 1830	0	177	25	0	2	0	0	0	2	0	0	0	0	**206**	
1830 - 1845	3	149	13	0	3	1	0	0	2	0	0	0	0	**171**	
1845 - 1900	2	113	9	0	2	0	0	0	2	0	0	0	0	**128**	**702**
1900 - 1915	1	84	20	0	0	0	0	0	1	0	0	0	0	**106**	
1915 - 1930	0	91	14	0	1	0	0	0	2	0	0	0	0	**108**	
1930 - 1945	0	73	13	0	0	0	0	0	0	0	0	0	0	**86**	
1945 - 2000	0	68	10	1	1	1	0	0	0	0	0	0	0	**81**	**381**
2000 - 2015	0	68	12	0	1	0	0	0	1	0	0	0	0	**82**	
2015 - 2030	0	50	7	0	2	0	0	0	0	0	0	0	0	**59**	
2030 - 2045	1	63	12	0	0	0	0	0	2	0	0	0	0	**78**	
2045 - 2100	0	64	13	0	0	0	0	0	2	0	0	0	0	**79**	**298**
2100 - 2115	0	60	9	0	0	0	0	0	0	0	0	0	0	**69**	
2115 - 2130	0	59	8	0	1	0	0	0	0	0	0	0	0	**68**	
2130 - 2145	0	42	6	0	0	0	0	0	1	0	0	0	0	**49**	
2145 - 2200	0	40	9	0	0	0	0	0	2	0	0	0	0	**51**	**237**
2200 - 2215	0	38	7	0	1	0	0	0	2	0	0	0	0	**48**	
2215 - 2230	0	42	12	0	0	0	0	0	2	0	0	0	0	**56**	
2230 - 2245	0	35	6	0	0	0	0	0	1	0	0	0	0	**42**	
2245 - 2300	0	39	5	0	1	0	0	0	2	0	0	0	0	**47**	**193**
2300 - 2315	0	31	6	0	1	0	0	0	4	0	0	0	0	**42**	
2315 - 2330	0	25	5	0	0	0	0	0	3	0	0	0	0	**33**	
2330 - 2345	0	19	3	0	1	0	0	0	1	0	0	0	0	**24**	
2345 - 0000	0	18	4	0	0	1	0	0	0	0	0	0	0	**23**	**122**

Session Total	21	9190	1531	24	158	35	1	24	247	1	2	0	1	**11235**
Session Average	0.22	95.73	15.95	0.25	1.65	0.36	0.01	0.25	2.57	0.01	0.02	0.00	0.01	**117.03**
Session Percentage	0.19	81.80	13.63	0.21	1.41	0.31	0.01	0.21	2.20	0.01	0.02	0.00	0.01	

AM Peak Hour	0645 - 0745	0730 - 0830	0715 - 0815	0830 - 0930	0930 - 1030	0500 - 0600	-	0915 - 1015	0645 - 0745	-	-	-	-	**0730 - 0830**
AM Peak Hour Volume	2	1080	154	17	14	4	0	6	25	0	0	0	0	**1250**

Noon Peak Hour	1430 - 1530	1000 - 1100	1230 - 1330	1415 - 1515	1000 - 1100	1315 - 1415	1215 - 1315	1000 - 1100	1000 - 1100	1215 - 1315	-	-	1115 - 1215	**1000 - 1100**
Noon Peak Hour Volume	2	569	113	3	18	6	1	6	23	1	0	0	1	**713**

PM Peak Hour	1815 - 1915	1745 - 1845	1715 - 1815	1500 - 1600	1530 - 1630	1500 - 1600	-	1615 - 1715	1700 - 1800	-	-	-	-	**1700 - 1800**
PM Peak Hour Volume	6	645	139	2	16	4	0	2	11	0	0	0	0	**783**

Site 10
I-26 S/Bound On-Ramp,
south of I-20

Date
Saturday, April 27, 2024

Lat/Long
34.034856°, -81.111503°

Weather
Mostly Cloudy
69°F

Click here for Detailed Weather

0000 - 2400 (Saturday 24h Session) (04-27-2024)
SB WB 15min

	Southbound (Movement 10.1)													15min	60min
TIME	1	2	3	4	5	6	7	8	9	10	11	12	13	Total	Total
0000 - 0015	0	14	4	0	0	0	0	0	0	0	0	0	0	**18**	
0015 - 0030	0	15	6	0	0	0	0	0	1	0	0	0	0	**22**	
0030 - 0045	0	13	0	0	0	0	0	0	0	0	0	0	0	**13**	
0045 - 0100	0	10	5	0	0	0	0	0	2	0	1	0	0	**18**	**71**
0100 - 0115	0	9	4	0	0	0	0	0	1	0	1	0	0	**15**	
0115 - 0130	0	6	2	0	1	0	0	0	2	0	0	0	0	**11**	
0130 - 0145	0	10	5	0	0	0	0	0	1	0	0	0	0	**16**	
0145 - 0200	0	6	0	0	0	0	0	0	0	0	0	0	0	**6**	**48**
0200 - 0215	0	8	2	0	0	0	0	0	1	0	1	0	0	**12**	
0215 - 0230	0	9	3	0	0	0	0	0	1	0	0	0	0	**13**	
0230 - 0245	0	6	2	0	0	0	0	0	0	0	0	0	0	**8**	
0245 - 0300	0	8	1	0	1	0	0	0	1	0	0	0	0	**11**	**44**
0300 - 0315	0	4	1	0	0	0	0	0	0	0	0	0	0	**5**	
0315 - 0330	0	4	0	0	0	0	0	0	0	0	0	0	0	**4**	
0330 - 0345	0	5	0	0	0	0	0	0	2	0	0	0	0	**7**	
0345 - 0400	0	4	0	0	0	0	0	0	0	0	0	0	0	**4**	**20**
0400 - 0415	0	7	2	0	0	0	0	0	1	0	0	0	0	**10**	
0415 - 0430	0	4	0	0	0	0	0	0	1	0	0	0	0	**5**	
0430 - 0445	0	5	1	0	0	0	0	0	0	0	0	0	0	**6**	
0445 - 0500	0	5	0	0	0	0	0	0	0	0	0	0	0	**5**	**26**
0500 - 0515	0	10	7	0	0	0	0	0	0	0	0	0	0	**17**	
0515 - 0530	0	7	2	0	0	0	0	0	0	0	0	0	0	**9**	
0530 - 0545	0	15	6	0	0	0	0	0	1	0	0	0	0	**22**	
0545 - 0600	0	18	4	0	0	0	0	0	2	0	0	0	0	**24**	**72**
0600 - 0615	0	11	8	0	2	0	0	0	0	0	1	0	0	**22**	
0615 - 0630	0	20	8	0	0	0	0	0	2	0	0	0	0	**30**	
0630 - 0645	0	50	18	0	0	0	0	0	0	0	0	0	0	**68**	
0645 - 0700	0	50	7	0	0	0	0	0	3	0	0	0	0	**60**	**180**
0700 - 0715	0	44	8	0	1	0	0	0	3	0	0	0	0	**56**	
0715 - 0730	0	55	14	0	3	0	0	1	0	0	0	0	0	**73**	
0730 - 0745	0	59	13	0	1	0	1	1	1	0	0	0	0	**76**	
0745 - 0800	0	59	15	0	1	0	0	0	1	0	1	0	0	**77**	**282**
0800 - 0815	0	67	11	0	0	1	0	0	2	0	0	0	0	**81**	
0815 - 0830	0	100	17	0	0	0	0	1	2	0	0	0	0	**120**	
0830 - 0845	0	99	15	0	0	0	0	0	3	0	0	0	0	**117**	
0845 - 0900	0	103	20	0	1	0	0	2	1	0	0	0	0	**127**	**445**
0900 - 0915	0	97	17	0	3	0	0	0	0	0	0	0	0	**117**	
0915 - 0930	0	110	17	0	2	0	0	0	1	0	0	0	0	**130**	
0930 - 0945	0	122	31	0	2	0	0	1	1	0	0	0	0	**157**	
0945 - 1000	0	132	31	0	0	0	0	0	1	0	0	0	0	**164**	**568**
1000 - 1015	1	127	16	0	0	0	0	0	1	0	0	0	0	**145**	
1015 - 1030	0	122	18	0	2	0	0	0	1	0	0	0	0	**143**	
1030 - 1045	4	130	27	0	0	1	0	0	1	0	0	0	0	**163**	
1045 - 1100	0	112	30	1	0	0	0	0	3	0	0	0	0	**146**	**597**
1100 - 1115	1	130	23	0	1	0	0	0	1	0	0	0	0	**156**	
1115 - 1130	0	122	22	0	0	0	0	0	5	0	0	0	0	**149**	
1130 - 1145	0	126	21	0	2	0	0	0	2	0	0	0	0	**151**	
1145 - 1200	0	151	17	0	2	0	0	1	0	0	0	0	0	**171**	**627**
1200 - 1215	0	135	12	0	1	0	0	0	3	0	0	0	0	**151**	
1215 - 1230	0	119	23	0	4	0	0	1	0	0	0	0	0	**147**	
1230 - 1245	1	136	22	0	0	0	0	1	2	0	0	0	0	**162**	
1245 - 1300	0	113	20	0	1	0	0	0	2	0	0	0	0	**136**	**596**
1300 - 1315	0	101	16	0	0	1	0	0	1	0	0	0	0	**119**	
1315 - 1330	1	123	16	0	0	0	0	0	1	0	0	0	0	**141**	
1330 - 1345	0	123	8	0	0	0	0	0	0	0	0	0	0	**131**	
1345 - 1400	0	103	14	0	1	1	0	0	2	0	0	0	0	**121**	**512**
1400 - 1415	0	115	21	0	0	0	0	0	0	0	0	0	0	**136**	
1415 - 1430	0	105	18	0	1	0	0	0	2	0	0	0	0	**126**	
1430 - 1445	1	139	18	1	1	0	0	1	0	0	0	0	0	**161**	
1445 - 1500	0	132	9	0	1	0	0	0	3	0	0	0	0	**145**	**568**
1500 - 1515	0	129	20	0	0	0	0	0	0	0	0	0	0	**149**	
1515 - 1530	0	169	17	0	0	0	0	0	1	0	0	0	0	**187**	
1530 - 1545	0	170	23	1	1	0	0	0	1	0	0	0	0	**196**	
1545 - 1600	0	131	12	0	0	0	0	0	2	0	0	0	0	**145**	**677**
1600 - 1615	1	98	10	0	0	0	0	0	0	0	0	0	0	**109**	
1615 - 1630	0	96	18	0	0	0	0	0	0	0	0	0	0	**114**	
1630 - 1645	0	168	20	0	1	0	0	0	1	0	0	0	0	**190**	
1645 - 1700	0	179	23	0	1	0	0	0	2	0	0	0	0	**205**	**618**
1700 - 1715	0	157	12	0	0	0	0	0	1	0	0	0	0	**170**	
1715 - 1730	0	194	14	0	2	0	0	0	2	0	0	0	0	**212**	
1730 - 1745	0	147	17	0	0	0	0	0	1	0	0	0	0	**165**	
1745 - 1800	2	120	15	0	0	0	0	0	1	0	0	0	0	**138**	**685**
1800 - 1815	0	120	28	0	1	0	0	0	1	0	0	0	0	**150**	
1815 - 1830	0	139	15	0	1	0	0	0	0	0	0	0	0	**155**	
1830 - 1845	0	135	17	0	0	0	0	0	0	0	0	0	0	**152**	
1845 - 1900	0	124	16	0	1	0	0	0	1	0	0	0	0	**142**	**599**
1900 - 1915	0	114	10	0	0	0	0	0	0	0	0	0	0	**124**	
1915 - 1930	0	99	7	0	0	0	0	1	3	0	0	0	0	**110**	
1930 - 1945	0	91	12	0	0	0	0	0	0	0	0	0	0	**103**	
1945 - 2000	0	86	6	0	1	0	0	0	0	0	0	0	0	**93**	**430**
2000 - 2015	0	88	4	0	0	0	0	0	0	0	0	0	0	**92**	
2015 - 2030	0	60	5	0	0	0	0	0	0	0	0	0	0	**65**	
2030 - 2045	0	80	5	0	1	0	0	0	1	0	0	0	0	**87**	
2045 - 2100	0	61	6	0	0	0	0	0	0	0	0	0	0	**67**	**311**
2100 - 2115	0	65	7	0	0	0	0	0	0	0	0	0	0	**72**	
2115 - 2130	0	50	5	0	0	0	0	0	0	0	0	0	0	**55**	
2130 - 2145	0	58	6	0	0	0	0	0	0	0	0	0	0	**64**	
2145 - 2200	0	42	8	0	2	0	0	0	0	0	0	0	0	**52**	**243**
2200 - 2215	0	40	7	0	0	0	0	0	0	0	0	0	0	**47**	
2215 - 2230	0	39	5	0	0	0	0	0	1	0	0	0	0	**45**	
2230 - 2245	0	45	6	0	1	0	0	0	0	0	0	0	0	**52**	
2245 - 2300	0	27	4	1	0	0	0	0	0	0	0	0	0	**32**	**176**
2300 - 2315	0	21	11	0	0	0	0	0	0	0	0	0	0	**32**	
2315 - 2330	0	22	10	0	1	0	0	0	0	0	0	0	0	**33**	
2330 - 2345	0	25	10	0	0	0	0	0	0	0	0	0	0	**35**	
2345 - 0000	0	20	6	0	0	0	0	0	2	0	0	0	0	**28**	**128**

Session Total	12	7253	1095	4	49	4	1	11	89	0	5	0	0	**8523**
Session Average	0.13	75.55	11.41	0.04	0.51	0.04	0.01	0.11	0.93	0.00	0.05	0.00	0.00	**88.78**
Session Percentage	0.14	85.10	12.85	0.05	0.57	0.05	0.01	0.13	1.04	0.00	0.06	0.00	0.00	

AM Peak Hour	0945 - 1045	0945 - 1045	0900 - 1000	-	0845 - 0945	0715 - 0815	0645 - 0745	0800 - 0900	0615 - 0715	-	0515 - 0615	-	-	**0945 - 1045**
AM Peak Hour Volume	5	511	96	0	8	1	1	3	8	0	1	0	0	**615**

Noon Peak Hour	1000 - 1100	1445 - 1545	1030 - 1130	1000 - 1100	1130 - 1230	1300 - 1400	-	1145 - 1245	1045 - 1145	-	-	-	-	**1445 - 1545**
Noon Peak Hour Volume	5	600	102	1	9	2	0	3	11	0	0	0	0	**677**

PM Peak Hour	1700 - 1800	1630 - 1730	1800 - 1900	1500 - 1600	1630 - 1730	-	-	1830 - 1930	1630 - 1730	-	-	-	-	**1630 - 1730**
PM Peak Hour Volume	2	698	76	1	4	0	0	1	6	0	0	0	0	**777**

Bi-Directional Class Count || SB WB Average 15min

Columbia, SC

Marr Traffic DATA COLLECTION
www.marrtraffic.com

Site 10
I-26 S/Bound On-Ramp,
south of I-20

Date
Sunday, April 21, 2024

Lat/Long
34.034856°, -81.111503°

Weather
Cloudy
66°F

0000 - 2400 (Weekday 24h Session) (All Dates)
SB WB Average 15min

	SB WB Average 15min													15min	60min
Time	1	2	3	4	5	6	7	8	9	10	11	12	13	Total	Total
0000 - 0015	0	11	2	0	0	0	0	0	1	0	0	0	0	**14**	
0015 - 0030	0	10	2	0	0	0	0	0	1	0	0	0	0	**14**	
0030 - 0045	0	9	1	0	1	0	0	0	0	0	0	0	0	**11**	
0045 - 0100	0	7	2	0	0	0	0	0	1	0	0	0	0	**10**	**49**
0100 - 0115	0	7	2	0	0	0	0	0	1	0	0	0	0	**10**	
0115 - 0130	0	6	1	0	1	0	0	0	1	0	0	0	0	**9**	
0130 - 0145	0	6	1	0	0	0	0	0	1	0	0	0	0	**9**	
0145 - 0200	0	6	1	0	0	0	0	0	2	0	0	0	0	**9**	**37**
0200 - 0215	0	6	1	0	0	0	0	0	1	0	0	0	0	**7**	
0215 - 0230	0	5	1	0	0	0	0	0	1	0	0	0	0	**7**	
0230 - 0245	0	4	1	0	0	0	0	0	1	0	0	0	0	**6**	
0245 - 0300	0	4	1	0	0	0	0	0	1	0	0	0	0	**6**	**26**
0300 - 0315	0	5	1	0	0	0	0	0	1	0	0	0	0	**7**	
0315 - 0330	0	4	1	0	0	0	0	0	1	0	0	0	0	**5**	
0330 - 0345	0	6	1	0	0	0	0	0	1	0	0	0	0	**9**	
0345 - 0400	0	6	1	0	0	0	0	0	1	0	0	0	0	**7**	**29**
0400 - 0415	0	7	1	0	0	0	0	0	2	0	0	0	0	**10**	
0415 - 0430	0	9	2	0	0	0	0	0	2	0	0	0	0	**13**	
0430 - 0445	0	9	1	0	0	0	0	0	1	0	0	0	0	**11**	
0445 - 0500	0	15	3	0	1	0	0	0	1	0	0	0	0	**19**	**54**
0500 - 0515	0	13	3	0	1	0	0	0	2	0	0	0	0	**19**	
0515 - 0530	0	21	3	0	1	0	0	0	2	0	0	0	0	**28**	
0530 - 0545	0	33	5	0	0	1	0	0	2	0	0	0	0	**41**	
0545 - 0600	0	40	7	0	1	0	0	0	2	0	0	0	0	**50**	**138**
0600 - 0615	0	45	7	0	1	0	0	0	2	0	0	0	0	**55**	
0615 - 0630	0	82	8	0	1	0	0	0	3	0	0	0	0	**95**	
0630 - 0645	0	129	20	0	2	1	0	0	3	0	0	0	0	**154**	
0645 - 0700	0	138	24	0	2	0	0	0	4	0	0	0	0	**169**	**473**
0700 - 0715	0	150	29	0	3	0	0	0	4	0	0	0	0	**187**	
0715 - 0730	1	193	34	0	3	0	0	0	3	0	0	0	0	**234**	
0730 - 0745	0	215	25	0	3	0	0	0	4	0	0	0	0	**248**	
0745 - 0800	0	212	26	0	2	1	0	0	3	0	0	0	0	**244**	**914**
0800 - 0815	0	221	28	0	2	0	0	0	4	0	0	0	0	**255**	
0815 - 0830	0	236	31	0	3	0	0	1	3	0	0	0	0	**275**	
0830 - 0845	0	215	28	0	3	0	0	1	4	0	0	0	0	**252**	
0845 - 0900	0	197	32	1	3	1	0	1	4	0	0	0	0	**239**	**1020**
0900 - 0915	0	164	23	2	3	0	0	0	4	0	0	0	0	**198**	
0915 - 0930	0	145	23	1	3	1	0	1	4	0	0	0	0	**178**	
0930 - 0945	0	154	25	1	3	0	0	0	5	0	0	0	0	**188**	
0945 - 1000	0	149	22	1	3	0	0	1	3	0	0	0	0	**180**	**744**
1000 - 1015	0	130	20	1	2	1	0	0	4	0	0	0	0	**158**	
1015 - 1030	0	125	20	1	4	0	0	1	3	0	0	0	0	**153**	
1030 - 1045	1	123	23	0	2	1	0	0	3	0	0	0	0	**154**	
1045 - 1100	0	125	22	0	3	1	0	1	5	0	0	0	0	**158**	**623**
1100 - 1115	0	107	19	0	2	0	0	0	4	0	0	0	0	**132**	
1115 - 1130	0	116	20	0	3	0	0	0	7	0	0	0	0	**147**	
1130 - 1145	0	117	20	0	2	0	0	0	4	0	0	0	0	**144**	
1145 - 1200	0	116	19	0	2	0	0	0	4	0	0	0	0	**142**	**565**
1200 - 1215	0	115	15	0	2	0	0	0	4	0	0	0	0	**136**	
1215 - 1230	0	119	20	0	4	1	0	0	4	0	0	0	0	**149**	
1230 - 1245	0	135	22	0	3	0	0	0	5	0	0	0	0	**166**	
1245 - 1300	0	123	20	0	2	0	0	1	3	0	0	0	0	**150**	**601**
1300 - 1315	0	111	19	0	2	1	0	0	2	0	0	0	0	**135**	
1315 - 1330	0	115	17	0	2	0	0	1	2	0	0	0	0	**138**	
1330 - 1345	0	121	20	0	3	1	0	0	3	0	0	0	0	**148**	
1345 - 1400	0	111	18	0	3	1	0	0	3	0	0	0	0	**136**	**557**
1400 - 1415	0	110	20	0	2	1	0	0	3	0	0	0	0	**136**	
1415 - 1430	0	112	17	0	2	0	0	2	4	0	0	0	0	**137**	
1430 - 1445	0	119	16	0	1	0	0	0	4	0	0	0	0	**142**	
1445 - 1500	0	110	17	0	2	0	0	0	3	0	0	0	0	**133**	**548**
1500 - 1515	0	117	17	0	2	1	0	0	3	0	0	0	0	**140**	
1515 - 1530	0	126	19	0	2	0	0	0	3	0	0	0	0	**150**	
1530 - 1545	0	131	22	0	4	0	0	0	2	0	0	0	0	**159**	
1545 - 1600	0	124	17	0	2	0	0	0	3	0	0	0	0	**146**	**596**
1600 - 1615	0	112	19	0	1	0	0	0	4	0	0	0	0	**137**	
1615 - 1630	0	124	20	0	2	0	0	0	3	0	0	0	0	**149**	
1630 - 1645	1	139	22	0	2	0	0	0	2	0	0	0	0	**165**	
1645 - 1700	1	143	23	0	2	0	0	0	2	0	0	0	0	**171**	**622**
1700 - 1715	0	152	22	0	1	0	0	0	3	0	0	0	0	**179**	
1715 - 1730	0	153	23	0	2	1	0	0	2	0	0	0	0	**180**	
1730 - 1745	0	133	19	0	1	0	0	0	3	0	0	0	0	**157**	
1745 - 1800	0	121	23	0	1	0	0	0	2	0	0	0	0	**148**	**663**
1800 - 1815	0	114	21	0	1	0	0	0	3	0	0	0	0	**139**	
1815 - 1830	0	126	20	0	1	0	0	0	2	0	0	0	0	**150**	
1830 - 1845	0	120	14	0	1	0	0	0	2	0	0	0	0	**138**	
1845 - 1900	0	95	11	0	1	0	0	0	3	0	0	0	0	**110**	**537**
1900 - 1915	1	74	9	0	0	0	0	0	1	0	0	0	0	**86**	
1915 - 1930	0	80	8	0	0	0	0	0	2	0	0	0	0	**91**	
1930 - 1945	0	69	8	0	0	0	1	0	1	0	0	0	0	**80**	
1945 - 2000	0	68	7	0	1	1	0	0	1	0	0	0	0	**78**	**334**
2000 - 2015	0	63	8	0	1	0	0	0	2	0	0	0	0	**74**	
2015 - 2030	0	54	5	0	1	0	0	0	2	0	0	0	0	**62**	
2030 - 2045	0	57	7	0	1	0	0	0	2	0	0	0	0	**67**	
2045 - 2100	0	46	6	0	1	0	0	0	2	0	0	0	0	**55**	**258**
2100 - 2115	0	55	7	0	0	0	0	0	1	0	0	0	0	**64**	
2115 - 2130	0	46	7	0	0	0	0	0	2	0	0	0	0	**56**	
2130 - 2145	0	40	5	0	0	0	0	0	1	0	0	0	0	**46**	
2145 - 2200	0	36	7	0	1	0	0	0	1	0	0	0	0	**45**	**211**
2200 - 2215	0	33	6	0	0	0	0	0	2	0	0	0	0	**41**	
2215 - 2230	0	32	7	0	0	0	0	0	2	0	0	0	0	**42**	
2230 - 2245	0	28	5	0	0	0	0	0	1	0	0	0	0	**35**	
2245 - 2300	0	22	4	0	0	0	0	0	2	0	0	0	0	**29**	**146**
2300 - 2315	0	21	5	0	0	0	0	0	3	0	0	0	0	**29**	
2315 - 2330	0	18	5	0	1	0	0	0	1	0	0	0	0	**25**	
2330 - 2345	0	14	4	0	0	0	0	0	1	0	0	0	0	**20**	
2345 - 0000	0	13	3	0	0	0	0	0	1	0	0	0	0	**17**	**91**

Session Total	11	8150	1251	13	131	22	2	17	233	2	4	0	0	**9836**
Session Average	0.12	84.90	13.03	0.14	1.36	0.23	0.02	0.18	2.42	0.02	0.04	0.00	0.00	**102.46**
Session Percentage	0.11	82.86	12.71	0.14	1.33	0.23	0.02	0.17	2.36	0.02	0.04	0.00	0.00	

AM Peak Hour	0630 - 0730	0730 - 0830	0800 - 0900	0900 - 1000	0815 - 0915	0945 - 1045	0645 - 0745	0815 - 0915	0845 - 0945	0945 - 1045	0600 - 0700	0600 - 0700	-	**0745 - 0845**
AM Peak Volume	1	883	119	6	12	2	0	3	17	0	0	0	0	**1026**

Noon Peak Hour	1000 - 1100	1000 - 1100	1000 - 1100	1000 - 1100	1145 - 1245	1315 - 1415	1245 - 1345	1345 - 1445	1045 - 1145	1000 - 1100	1045 - 1145	-	1115 - 1215	**1000 - 1100**
Noon Peak Volume	1	503	85	2	11	3	0	2	20	0	0	0	0	**623**

PM Peak Hour	1630 - 1730	1630 - 1730	1630 - 1730	1500 - 1600	1500 - 1600	1630 - 1730	1845 - 1945	1545 - 1645	1515 - 1615	1745 - 1845	1945 - 2045	-	-	**1630 - 1730**
PM Peak Volume	2	586	89	1	9	1	1	1	12	0	0	0	0	**694**

Bi-Directional Class Count || Volume Summary 15min

Columbia, SC

Marr Traffic DATA COLLECTION

www.marrtraffic.com

Site 10

I-26 S/Bound On-Ramp,
south of I-20

Date

Sunday, April 21, 2024

Lat/Long

34.034856°, -81.111503°

Weather

Cloudy
66°F

Click here for Detailed Weather

0000 - 2400 (Sunday 24h Session) (04-21-2024)

Volume Summary 15min

TIME	Volume Summary 15min NB	SB	15min Total	60min Total
0000 - 0015	0	24	**24**	
0015 - 0030	0	20	**20**	
0030 - 0045	0	20	**20**	
0045 - 0100	0	14	**14**	**78**
0100 - 0115	0	13	**13**	
0115 - 0130	0	12	**12**	
0130 - 0145	0	15	**15**	
0145 - 0200	0	12	**12**	**52**
0200 - 0215	0	6	**6**	
0215 - 0230	0	9	**9**	
0230 - 0245	0	4	**4**	
0245 - 0300	0	5	**5**	**24**
0300 - 0315	0	7	**7**	
0315 - 0330	0	6	**6**	
0330 - 0345	0	6	**6**	
0345 - 0400	0	8	**8**	**27**
0400 - 0415	0	5	**5**	
0415 - 0430	0	5	**5**	
0430 - 0445	0	7	**7**	
0445 - 0500	0	7	**7**	**24**
0500 - 0515	0	6	**6**	
0515 - 0530	0	11	**11**	
0530 - 0545	0	14	**14**	
0545 - 0600	0	14	**14**	**45**
0600 - 0615	0	14	**14**	
0615 - 0630	0	27	**27**	
0630 - 0645	0	53	**53**	
0645 - 0700	0	37	**37**	**131**
0700 - 0715	0	30	**30**	
0715 - 0730	0	39	**39**	
0730 - 0745	0	39	**39**	
0745 - 0800	0	56	**56**	**164**
0800 - 0815	0	56	**56**	
0815 - 0830	0	48	**48**	
0830 - 0845	0	58	**58**	
0845 - 0900	0	91	**91**	**253**
0900 - 0915	0	80	**80**	
0915 - 0930	0	71	**71**	
0930 - 0945	0	84	**84**	
0945 - 1000	0	83	**83**	**318**
1000 - 1015	0	100	**100**	
1015 - 1030	0	99	**99**	
1030 - 1045	0	99	**99**	
1045 - 1100	0	114	**114**	**412**
1100 - 1115	0	71	**71**	
1115 - 1130	0	82	**82**	
1130 - 1145	0	75	**75**	
1145 - 1200	0	96	**96**	**324**

Time	Volume Summary 15min NB	SB	15min Total	60min Total
1200 - 1215	0	107	**107**	
1215 - 1230	0	114	**114**	
1230 - 1245	0	125	**125**	
1245 - 1300	0	122	**122**	**468**
1300 - 1315	0	109	**109**	
1315 - 1330	0	108	**108**	
1330 - 1345	0	121	**121**	
1345 - 1400	0	126	**126**	**464**
1400 - 1415	0	100	**100**	
1415 - 1430	0	104	**104**	
1430 - 1445	0	112	**112**	
1445 - 1500	0	123	**123**	**439**
1500 - 1515	0	109	**109**	
1515 - 1530	0	95	**95**	
1530 - 1545	0	105	**105**	
1545 - 1600	0	102	**102**	**411**
1600 - 1615	0	90	**90**	
1615 - 1630	0	81	**81**	
1630 - 1645	0	100	**100**	
1645 - 1700	0	94	**94**	**365**
1700 - 1715	0	107	**107**	
1715 - 1730	0	107	**107**	
1730 - 1745	0	102	**102**	
1745 - 1800	0	85	**85**	**401**
1800 - 1815	0	82	**82**	
1815 - 1830	0	106	**106**	
1830 - 1845	0	112	**112**	
1845 - 1900	0	69	**69**	**369**
1900 - 1915	0	62	**62**	
1915 - 1930	0	68	**68**	
1930 - 1945	0	87	**87**	
1945 - 2000	0	77	**77**	**294**
2000 - 2015	0	67	**67**	
2015 - 2030	0	64	**64**	
2030 - 2045	0	67	**67**	
2045 - 2100	0	56	**56**	**254**
2100 - 2115	0	64	**64**	
2115 - 2130	0	50	**50**	
2130 - 2145	0	33	**33**	
2145 - 2200	0	38	**38**	**185**
2200 - 2215	0	39	**39**	
2215 - 2230	0	25	**25**	
2230 - 2245	0	31	**31**	
2245 - 2300	0	25	**25**	**120**
2300 - 2315	0	28	**28**	
2315 - 2330	0	25	**25**	
2330 - 2345	0	14	**14**	
2345 - 0000	0	15	**15**	**82**

Session Total	0	5704	**5704**
Session Average	0.00	59.42	**59.42**
Session Percentage	0.00	100.00	

Site 10
I-26 S/Bound On-Ramp,
south of I-20

Date
Monday, April 22, 2024

Lat/Long
34.034856°, -81.111503°

Weather
Mostly Cloudy
57°F

Click here for Detailed Weather

0000 - 2400 (Weekday 24h Session) (04-22-2024)
Volume Summary 15min

TIME	Volume Summary 15min NB	SB	15min Total	60min Total
0000 - 0015	0	8	**8**	
0015 - 0030	0	15	**15**	
0030 - 0045	0	12	**12**	
0045 - 0100	0	7	**7**	**42**
0100 - 0115	0	9	**9**	
0115 - 0130	0	6	**6**	
0130 - 0145	0	5	**5**	
0145 - 0200	0	8	**8**	**28**
0200 - 0215	0	4	**4**	
0215 - 0230	0	4	**4**	
0230 - 0245	0	5	**5**	
0245 - 0300	0	10	**10**	**23**
0300 - 0315	0	3	**3**	
0315 - 0330	0	3	**3**	
0330 - 0345	0	8	**8**	
0345 - 0400	0	5	**5**	**19**
0400 - 0415	0	13	**13**	
0415 - 0430	0	17	**17**	
0430 - 0445	0	18	**18**	
0445 - 0500	0	25	**25**	**73**
0500 - 0515	0	20	**20**	
0515 - 0530	0	42	**42**	
0530 - 0545	0	51	**51**	
0545 - 0600	0	68	**68**	**181**
0600 - 0615	0	61	**61**	
0615 - 0630	0	117	**117**	
0630 - 0645	0	186	**186**	
0645 - 0700	0	204	**204**	**568**
0700 - 0715	0	247	**247**	
0715 - 0730	0	327	**327**	
0730 - 0745	0	352	**352**	
0745 - 0800	0	344	**344**	**1270**
0800 - 0815	0	377	**377**	
0815 - 0830	0	351	**351**	
0830 - 0845	0	297	**297**	
0845 - 0900	0	271	**271**	**1296**
0900 - 0915	0	228	**228**	
0915 - 0930	0	222	**222**	
0930 - 0945	0	240	**240**	
0945 - 1000	0	227	**227**	**917**
1000 - 1015	0	176	**176**	
1015 - 1030	0	157	**157**	
1030 - 1045	0	151	**151**	
1045 - 1100	0	163	**163**	**647**
1100 - 1115	0	107	**107**	
1115 - 1130	0	141	**141**	
1130 - 1145	0	121	**121**	
1145 - 1200	0	149	**149**	**518**

Time	Volume Summary 15min NB	SB	15min Total	60min Total
1200 - 1215	0	138	**138**	
1215 - 1230	0	157	**157**	
1230 - 1245	0	160	**160**	
1245 - 1300	0	167	**167**	**622**
1300 - 1315	0	131	**131**	
1315 - 1330	0	144	**144**	
1330 - 1345	0	142	**142**	
1345 - 1400	0	123	**123**	**540**
1400 - 1415	0	141	**141**	
1415 - 1430	0	152	**152**	
1430 - 1445	0	144	**144**	
1445 - 1500	0	144	**144**	**581**
1500 - 1515	0	146	**146**	
1515 - 1530	0	157	**157**	
1530 - 1545	0	160	**160**	
1545 - 1600	0	137	**137**	**600**
1600 - 1615	0	140	**140**	
1615 - 1630	0	172	**172**	
1630 - 1645	0	155	**155**	
1645 - 1700	0	149	**149**	**616**
1700 - 1715	0	151	**151**	
1715 - 1730	0	127	**127**	
1730 - 1745	0	101	**101**	
1745 - 1800	0	135	**135**	**514**
1800 - 1815	0	105	**105**	
1815 - 1830	0	127	**127**	
1830 - 1845	0	118	**118**	
1845 - 1900	0	90	**90**	**440**
1900 - 1915	0	75	**75**	
1915 - 1930	0	79	**79**	
1930 - 1945	0	55	**55**	
1945 - 2000	0	65	**65**	**274**
2000 - 2015	0	54	**54**	
2015 - 2030	0	45	**45**	
2030 - 2045	0	39	**39**	
2045 - 2100	0	36	**36**	**174**
2100 - 2115	0	48	**48**	
2115 - 2130	0	39	**39**	
2130 - 2145	0	32	**32**	
2145 - 2200	0	38	**38**	**157**
2200 - 2215	0	32	**32**	
2215 - 2230	0	40	**40**	
2230 - 2245	0	24	**24**	
2245 - 2300	0	22	**22**	**118**
2300 - 2315	0	22	**22**	
2315 - 2330	0	21	**21**	
2330 - 2345	0	8	**8**	
2345 - 0000	0	7	**7**	**58**

Session Total	0	10276	**10276**
Session Average	0.00	107.04	**107.04**
Session Percentage	0.00	100.00	

Site 10
I-26 S/Bound On-Ramp,
south of I-20

Date
Tuesday, April 23, 2024

Lat/Long
34.034856°, -81.111503°

Weather
Fair
58°F

Click here for Detailed Weather

0000 - 2400 (Weekday 24h Session) (04-23-2024)
Volume Summary 15min

TIME	Volume Summary 15min NB	SB	15min Total	60min Total
0000 - 0015	0	10	**10**	
0015 - 0030	0	11	**11**	
0030 - 0045	0	9	**9**	
0045 - 0100	0	7	**7**	**37**
0100 - 0115	0	8	**8**	
0115 - 0130	0	9	**9**	
0130 - 0145	0	4	**4**	
0145 - 0200	0	9	**9**	**30**
0200 - 0215	0	5	**5**	
0215 - 0230	0	5	**5**	
0230 - 0245	0	2	**2**	
0245 - 0300	0	1	**1**	**13**
0300 - 0315	0	10	**10**	
0315 - 0330	0	4	**4**	
0330 - 0345	0	12	**12**	
0345 - 0400	0	8	**8**	**34**
0400 - 0415	0	7	**7**	
0415 - 0430	0	19	**19**	
0430 - 0445	0	14	**14**	
0445 - 0500	0	24	**24**	**64**
0500 - 0515	0	26	**26**	
0515 - 0530	0	31	**31**	
0530 - 0545	0	57	**57**	
0545 - 0600	0	65	**65**	**179**
0600 - 0615	0	86	**86**	
0615 - 0630	0	132	**132**	
0630 - 0645	0	218	**218**	
0645 - 0700	0	238	**238**	**674**
0700 - 0715	0	267	**267**	
0715 - 0730	0	286	**286**	
0730 - 0745	0	320	**320**	
0745 - 0800	0	269	**269**	**1142**
0800 - 0815	0	275	**275**	
0815 - 0830	0	353	**353**	
0830 - 0845	0	341	**341**	
0845 - 0900	0	298	**298**	**1267**
0900 - 0915	0	222	**222**	
0915 - 0930	0	230	**230**	
0930 - 0945	0	214	**214**	
0945 - 1000	0	198	**198**	**864**
1000 - 1015	0	183	**183**	
1015 - 1030	0	160	**160**	
1030 - 1045	0	168	**168**	
1045 - 1100	0	166	**166**	**677**
1100 - 1115	0	150	**150**	
1115 - 1130	0	140	**140**	
1130 - 1145	0	168	**168**	
1145 - 1200	0	153	**153**	**611**

Time	Volume Summary 15min NB	SB	15min Total	60min Total
1200 - 1215	0	140	**140**	
1215 - 1230	0	146	**146**	
1230 - 1245	0	177	**177**	
1245 - 1300	0	174	**174**	**637**
1300 - 1315	0	135	**135**	
1315 - 1330	0	141	**141**	
1330 - 1345	0	139	**139**	
1345 - 1400	0	131	**131**	**546**
1400 - 1415	0	134	**134**	
1415 - 1430	0	128	**128**	
1430 - 1445	0	129	**129**	
1445 - 1500	0	123	**123**	**514**
1500 - 1515	0	156	**156**	
1515 - 1530	0	164	**164**	
1530 - 1545	0	174	**174**	
1545 - 1600	0	153	**153**	**647**
1600 - 1615	0	149	**149**	
1615 - 1630	0	188	**188**	
1630 - 1645	0	167	**167**	
1645 - 1700	0	167	**167**	**671**
1700 - 1715	0	202	**202**	
1715 - 1730	0	229	**229**	
1730 - 1745	0	199	**199**	
1745 - 1800	0	147	**147**	**777**
1800 - 1815	0	126	**126**	
1815 - 1830	0	154	**154**	
1830 - 1845	0	120	**120**	
1845 - 1900	0	98	**98**	**498**
1900 - 1915	0	67	**67**	
1915 - 1930	0	82	**82**	
1930 - 1945	0	58	**58**	
1945 - 2000	0	87	**87**	**294**
2000 - 2015	0	78	**78**	
2015 - 2030	0	69	**69**	
2030 - 2045	0	67	**67**	
2045 - 2100	0	45	**45**	**259**
2100 - 2115	0	69	**69**	
2115 - 2130	0	63	**63**	
2130 - 2145	0	51	**51**	
2145 - 2200	0	44	**44**	**227**
2200 - 2215	0	41	**41**	
2215 - 2230	0	49	**49**	
2230 - 2245	0	35	**35**	
2245 - 2300	0	27	**27**	**152**
2300 - 2315	0	38	**38**	
2315 - 2330	0	16	**16**	
2330 - 2345	0	17	**17**	
2345 - 0000	0	14	**14**	**85**

Session Total	0	10899	**10899**
Session Average	0.00	113.53	**113.53**
Session Percentage	0.00	100.00	

Site 10
I-26 S/Bound On-Ramp,
south of I-20

Date
Wednesday, April 24, 2024

Lat/Long
34.034856°, -81.111503°

Weather
Fair
66°F

Click here for Detailed Weather

0000 - 2400 (Weekday 24h Session) (04-24-2024)
Volume Summary 15min

TIME	Volume Summary 15min NB	SB	15min Total	60min Total
0000 - 0015	0	11	**11**	
0015 - 0030	0	10	**10**	
0030 - 0045	0	8	**8**	
0045 - 0100	0	8	**8**	**37**
0100 - 0115	0	9	**9**	
0115 - 0130	0	5	**5**	
0130 - 0145	0	6	**6**	
0145 - 0200	0	13	**13**	**33**
0200 - 0215	0	13	**13**	
0215 - 0230	0	5	**5**	
0230 - 0245	0	10	**10**	
0245 - 0300	0	6	**6**	**34**
0300 - 0315	0	8	**8**	
0315 - 0330	0	7	**7**	
0330 - 0345	0	10	**10**	
0345 - 0400	0	4	**4**	**29**
0400 - 0415	0	15	**15**	
0415 - 0430	0	18	**18**	
0430 - 0445	0	9	**9**	
0445 - 0500	0	30	**30**	**72**
0500 - 0515	0	19	**19**	
0515 - 0530	0	26	**26**	
0530 - 0545	0	53	**53**	
0545 - 0600	0	67	**67**	**165**
0600 - 0615	0	66	**66**	
0615 - 0630	0	124	**124**	
0630 - 0645	0	209	**209**	
0645 - 0700	0	228	**228**	**627**
0700 - 0715	0	243	**243**	
0715 - 0730	0	331	**331**	
0730 - 0745	0	295	**295**	
0745 - 0800	0	318	**318**	**1187**
0800 - 0815	0	330	**330**	
0815 - 0830	0	334	**334**	
0830 - 0845	0	323	**323**	
0845 - 0900	0	298	**298**	**1285**
0900 - 0915	0	240	**240**	
0915 - 0930	0	196	**196**	
0930 - 0945	0	191	**191**	
0945 - 1000	0	185	**185**	**812**
1000 - 1015	0	156	**156**	
1015 - 1030	0	164	**164**	
1030 - 1045	0	171	**171**	
1045 - 1100	0	169	**169**	**660**
1100 - 1115	0	147	**147**	
1115 - 1130	0	171	**171**	
1130 - 1145	0	164	**164**	
1145 - 1200	0	132	**132**	**614**

Time	Volume Summary 15min NB	SB	15min Total	60min Total
1200 - 1215	0	116	**116**	
1215 - 1230	0	158	**158**	
1230 - 1245	0	148	**148**	
1245 - 1300	0	150	**150**	**572**
1300 - 1315	0	133	**133**	
1315 - 1330	0	123	**123**	
1330 - 1345	0	146	**146**	
1345 - 1400	0	150	**150**	**552**
1400 - 1415	0	139	**139**	
1415 - 1430	0	159	**159**	
1430 - 1445	0	136	**136**	
1445 - 1500	0	147	**147**	**581**
1500 - 1515	0	141	**141**	
1515 - 1530	0	158	**158**	
1530 - 1545	0	150	**150**	
1545 - 1600	0	147	**147**	**596**
1600 - 1615	0	165	**165**	
1615 - 1630	0	179	**179**	
1630 - 1645	0	190	**190**	
1645 - 1700	0	202	**202**	**736**
1700 - 1715	0	210	**210**	
1715 - 1730	0	203	**203**	
1730 - 1745	0	159	**159**	
1745 - 1800	0	158	**158**	**730**
1800 - 1815	0	158	**158**	
1815 - 1830	0	149	**149**	
1830 - 1845	0	145	**145**	
1845 - 1900	0	116	**116**	**568**
1900 - 1915	0	74	**74**	
1915 - 1930	0	97	**97**	
1930 - 1945	0	82	**82**	
1945 - 2000	0	69	**69**	**322**
2000 - 2015	0	83	**83**	
2015 - 2030	0	73	**73**	
2030 - 2045	0	54	**54**	
2045 - 2100	0	50	**50**	**260**
2100 - 2115	0	62	**62**	
2115 - 2130	0	60	**60**	
2130 - 2145	0	39	**39**	
2145 - 2200	0	41	**41**	**202**
2200 - 2215	0	25	**25**	
2215 - 2230	0	42	**42**	
2230 - 2245	0	39	**39**	
2245 - 2300	0	20	**20**	**126**
2300 - 2315	0	16	**16**	
2315 - 2330	0	19	**19**	
2330 - 2345	0	23	**23**	
2345 - 0000	0	24	**24**	**82**

Session Total	0	10882	**10882**
Session Average	0.00	113.35	**113.35**
Session Percentage	0.00	100.00	

Site 10
I-26 S/Bound On-Ramp,
south of I-20

Date
Thursday, April 25, 2024

Lat/Long
34.034856°, -81.111503°

Weather
Fair
67°F

Click here for Detailed Weather

0000 - 2400 (Weekday 24h Session) (04-25-2024)
Volume Summary 15min

TIME	Volume Summary 15min NB	SB	15min Total	60min Total
0000 - 0015	0	11	**11**	
0015 - 0030	0	6	**6**	
0030 - 0045	0	7	**7**	
0045 - 0100	0	7	**7**	**31**
0100 - 0115	0	9	**9**	
0115 - 0130	0	6	**6**	
0130 - 0145	0	8	**8**	
0145 - 0200	0	6	**6**	**29**
0200 - 0215	0	7	**7**	
0215 - 0230	0	5	**5**	
0230 - 0245	0	8	**8**	
0245 - 0300	0	7	**7**	**27**
0300 - 0315	0	11	**11**	
0315 - 0330	0	8	**8**	
0330 - 0345	0	8	**8**	
0345 - 0400	0	12	**12**	**39**
0400 - 0415	0	10	**10**	
0415 - 0430	0	13	**13**	
0430 - 0445	0	14	**14**	
0445 - 0500	0	26	**26**	**63**
0500 - 0515	0	22	**22**	
0515 - 0530	0	32	**32**	
0530 - 0545	0	50	**50**	
0545 - 0600	0	69	**69**	**173**
0600 - 0615	0	66	**66**	
0615 - 0630	0	131	**131**	
0630 - 0645	0	187	**187**	
0645 - 0700	0	214	**214**	**598**
0700 - 0715	0	257	**257**	
0715 - 0730	0	299	**299**	
0730 - 0745	0	315	**315**	
0745 - 0800	0	343	**343**	**1214**
0800 - 0815	0	365	**365**	
0815 - 0830	0	407	**407**	
0830 - 0845	0	322	**322**	
0845 - 0900	0	316	**316**	**1410**
0900 - 0915	0	267	**267**	
0915 - 0930	0	191	**191**	
0930 - 0945	0	225	**225**	
0945 - 1000	0	203	**203**	**886**
1000 - 1015	0	165	**165**	
1015 - 1030	0	176	**176**	
1030 - 1045	0	146	**146**	
1045 - 1100	0	167	**167**	**654**
1100 - 1115	0	130	**130**	
1115 - 1130	0	182	**182**	
1130 - 1145	0	150	**150**	
1145 - 1200	0	153	**153**	**615**

Time	Volume Summary 15min NB	SB	15min Total	60min Total
1200 - 1215	0	146	**146**	
1215 - 1230	0	159	**159**	
1230 - 1245	0	203	**203**	
1245 - 1300	0	154	**154**	**662**
1300 - 1315	0	175	**175**	
1315 - 1330	0	152	**152**	
1330 - 1345	0	186	**186**	
1345 - 1400	0	147	**147**	**660**
1400 - 1415	0	155	**155**	
1415 - 1430	0	160	**160**	
1430 - 1445	0	163	**163**	
1445 - 1500	0	131	**131**	**609**
1500 - 1515	0	138	**138**	
1515 - 1530	0	139	**139**	
1530 - 1545	0	155	**155**	
1545 - 1600	0	163	**163**	**595**
1600 - 1615	0	158	**158**	
1615 - 1630	0	167	**167**	
1630 - 1645	0	184	**184**	
1645 - 1700	0	191	**191**	**700**
1700 - 1715	0	205	**205**	
1715 - 1730	0	174	**174**	
1730 - 1745	0	203	**203**	
1745 - 1800	0	170	**170**	**752**
1800 - 1815	0	153	**153**	
1815 - 1830	0	152	**152**	
1830 - 1845	0	149	**149**	
1845 - 1900	0	128	**128**	**582**
1900 - 1915	0	92	**92**	
1915 - 1930	0	90	**90**	
1930 - 1945	0	86	**86**	
1945 - 2000	0	74	**74**	**342**
2000 - 2015	0	61	**61**	
2015 - 2030	0	57	**57**	
2030 - 2045	0	78	**78**	
2045 - 2100	0	54	**54**	**250**
2100 - 2115	0	63	**63**	
2115 - 2130	0	56	**56**	
2130 - 2145	0	54	**54**	
2145 - 2200	0	52	**52**	**225**
2200 - 2215	0	55	**55**	
2215 - 2230	0	37	**37**	
2230 - 2245	0	20	**20**	
2245 - 2300	0	28	**28**	**140**
2300 - 2315	0	22	**22**	
2315 - 2330	0	27	**27**	
2330 - 2345	0	17	**17**	
2345 - 0000	0	11	**11**	**77**

Session Total	0	11333	**11333**
Session Average	0.00	118.05	**118.05**
Session Percentage	0.00	100.00	

Site 10
I-26 S/Bound On-Ramp,
south of I-20

Date
Friday, April 26, 2024

Lat/Long
34.034856°, -81.111503°

Weather
Cloudy
69°F

Click here for Detailed Weather

0000 - 2400 (Weekday 24h Session) (04-26-2024)
Volume Summary 15min

TIME	Volume Summary 15min NB	SB	15min Total	60min Total
0000 - 0015	0	16	**16**	
0015 - 0030	0	12	**12**	
0030 - 0045	0	11	**11**	
0045 - 0100	0	11	**11**	**50**
0100 - 0115	0	8	**8**	
0115 - 0130	0	13	**13**	
0130 - 0145	0	9	**9**	
0145 - 0200	0	7	**7**	**37**
0200 - 0215	0	5	**5**	
0215 - 0230	0	6	**6**	
0230 - 0245	0	4	**4**	
0245 - 0300	0	4	**4**	**19**
0300 - 0315	0	6	**6**	
0315 - 0330	0	6	**6**	
0330 - 0345	0	10	**10**	
0345 - 0400	0	10	**10**	**32**
0400 - 0415	0	12	**12**	
0415 - 0430	0	16	**16**	
0430 - 0445	0	11	**11**	
0445 - 0500	0	18	**18**	**57**
0500 - 0515	0	24	**24**	
0515 - 0530	0	42	**42**	
0530 - 0545	0	41	**41**	
0545 - 0600	0	42	**42**	**149**
0600 - 0615	0	69	**69**	
0615 - 0630	0	105	**105**	
0630 - 0645	0	158	**158**	
0645 - 0700	0	203	**203**	**535**
0700 - 0715	0	212	**212**	
0715 - 0730	0	283	**283**	
0730 - 0745	0	337	**337**	
0745 - 0800	0	304	**304**	**1136**
0800 - 0815	0	299	**299**	
0815 - 0830	0	310	**310**	
0830 - 0845	0	304	**304**	
0845 - 0900	0	270	**270**	**1183**
0900 - 0915	0	232	**232**	
0915 - 0930	0	204	**204**	
0930 - 0945	0	206	**206**	
0945 - 1000	0	201	**201**	**843**
1000 - 1015	0	180	**180**	
1015 - 1030	0	173	**173**	
1030 - 1045	0	177	**177**	
1045 - 1100	0	183	**183**	**713**
1100 - 1115	0	162	**162**	
1115 - 1130	0	162	**162**	
1130 - 1145	0	180	**180**	
1145 - 1200	0	141	**141**	**645**

Time	Volume Summary 15min NB	SB	15min Total	60min Total
1200 - 1215	0	156	**156**	
1215 - 1230	0	161	**161**	
1230 - 1245	0	189	**189**	
1245 - 1300	0	146	**146**	**652**
1300 - 1315	0	146	**146**	
1315 - 1330	0	155	**155**	
1330 - 1345	0	173	**173**	
1345 - 1400	0	154	**154**	**628**
1400 - 1415	0	149	**149**	
1415 - 1430	0	131	**131**	
1430 - 1445	0	147	**147**	
1445 - 1500	0	117	**117**	**544**
1500 - 1515	0	141	**141**	
1515 - 1530	0	150	**150**	
1530 - 1545	0	176	**176**	
1545 - 1600	0	178	**178**	**645**
1600 - 1615	0	149	**149**	
1615 - 1630	0	145	**145**	
1630 - 1645	0	170	**170**	
1645 - 1700	0	187	**187**	**651**
1700 - 1715	0	205	**205**	
1715 - 1730	0	207	**207**	
1730 - 1745	0	168	**168**	
1745 - 1800	0	203	**203**	**783**
1800 - 1815	0	197	**197**	
1815 - 1830	0	206	**206**	
1830 - 1845	0	171	**171**	
1845 - 1900	0	128	**128**	**702**
1900 - 1915	0	106	**106**	
1915 - 1930	0	108	**108**	
1930 - 1945	0	86	**86**	
1945 - 2000	0	81	**81**	**381**
2000 - 2015	0	82	**82**	
2015 - 2030	0	59	**59**	
2030 - 2045	0	78	**78**	
2045 - 2100	0	79	**79**	**298**
2100 - 2115	0	69	**69**	
2115 - 2130	0	68	**68**	
2130 - 2145	0	49	**49**	
2145 - 2200	0	51	**51**	**237**
2200 - 2215	0	48	**48**	
2215 - 2230	0	56	**56**	
2230 - 2245	0	42	**42**	
2245 - 2300	0	47	**47**	**193**
2300 - 2315	0	42	**42**	
2315 - 2330	0	33	**33**	
2330 - 2345	0	24	**24**	
2345 - 0000	0	23	**23**	**122**

Session Total	0	11235	**11235**
Session Average	0.00	117.03	**117.03**
Session Percentage	0.00	100.00	

Site 10
I-26 S/Bound On-Ramp,
south of I-20

Date
Saturday, April 27, 2024

Lat/Long
34.034856°, -81.111503°

Weather
Mostly Cloudy
69°F

Click here for Detailed Weather

0000 - 2400 (Saturday 24h Session) (04-27-2024)
Volume Summary 15min

TIME	Volume Summary 15min NB	SB	15min Total	60min Total
0000 - 0015	0	18	**18**	
0015 - 0030	0	22	**22**	
0030 - 0045	0	13	**13**	
0045 - 0100	0	18	**18**	**71**
0100 - 0115	0	15	**15**	
0115 - 0130	0	11	**11**	
0130 - 0145	0	16	**16**	
0145 - 0200	0	6	**6**	**48**
0200 - 0215	0	12	**12**	
0215 - 0230	0	13	**13**	
0230 - 0245	0	8	**8**	
0245 - 0300	0	11	**11**	**44**
0300 - 0315	0	5	**5**	
0315 - 0330	0	4	**4**	
0330 - 0345	0	7	**7**	
0345 - 0400	0	4	**4**	**20**
0400 - 0415	0	10	**10**	
0415 - 0430	0	5	**5**	
0430 - 0445	0	6	**6**	
0445 - 0500	0	5	**5**	**26**
0500 - 0515	0	17	**17**	
0515 - 0530	0	9	**9**	
0530 - 0545	0	22	**22**	
0545 - 0600	0	24	**24**	**72**
0600 - 0615	0	22	**22**	
0615 - 0630	0	30	**30**	
0630 - 0645	0	68	**68**	
0645 - 0700	0	60	**60**	**180**
0700 - 0715	0	56	**56**	
0715 - 0730	0	73	**73**	
0730 - 0745	0	76	**76**	
0745 - 0800	0	77	**77**	**282**
0800 - 0815	0	81	**81**	
0815 - 0830	0	120	**120**	
0830 - 0845	0	117	**117**	
0845 - 0900	0	127	**127**	**445**
0900 - 0915	0	117	**117**	
0915 - 0930	0	130	**130**	
0930 - 0945	0	157	**157**	
0945 - 1000	0	164	**164**	**568**
1000 - 1015	0	145	**145**	
1015 - 1030	0	143	**143**	
1030 - 1045	0	163	**163**	
1045 - 1100	0	146	**146**	**597**
1100 - 1115	0	156	**156**	
1115 - 1130	0	149	**149**	
1130 - 1145	0	151	**151**	
1145 - 1200	0	171	**171**	**627**

Time	Volume Summary 15min NB	SB	15min Total	60min Total
1200 - 1215	0	151	**151**	
1215 - 1230	0	147	**147**	
1230 - 1245	0	162	**162**	
1245 - 1300	0	136	**136**	**596**
1300 - 1315	0	119	**119**	
1315 - 1330	0	141	**141**	
1330 - 1345	0	131	**131**	
1345 - 1400	0	121	**121**	**512**
1400 - 1415	0	136	**136**	
1415 - 1430	0	126	**126**	
1430 - 1445	0	161	**161**	
1445 - 1500	0	145	**145**	**568**
1500 - 1515	0	149	**149**	
1515 - 1530	0	187	**187**	
1530 - 1545	0	196	**196**	
1545 - 1600	0	145	**145**	**677**
1600 - 1615	0	109	**109**	
1615 - 1630	0	114	**114**	
1630 - 1645	0	190	**190**	
1645 - 1700	0	205	**205**	**618**
1700 - 1715	0	170	**170**	
1715 - 1730	0	212	**212**	
1730 - 1745	0	165	**165**	
1745 - 1800	0	138	**138**	**685**
1800 - 1815	0	150	**150**	
1815 - 1830	0	155	**155**	
1830 - 1845	0	152	**152**	
1845 - 1900	0	142	**142**	**599**
1900 - 1915	0	124	**124**	
1915 - 1930	0	110	**110**	
1930 - 1945	0	103	**103**	
1945 - 2000	0	93	**93**	**430**
2000 - 2015	0	92	**92**	
2015 - 2030	0	65	**65**	
2030 - 2045	0	87	**87**	
2045 - 2100	0	67	**67**	**311**
2100 - 2115	0	72	**72**	
2115 - 2130	0	55	**55**	
2130 - 2145	0	64	**64**	
2145 - 2200	0	52	**52**	**243**
2200 - 2215	0	47	**47**	
2215 - 2230	0	45	**45**	
2230 - 2245	0	52	**52**	
2245 - 2300	0	32	**32**	**176**
2300 - 2315	0	32	**32**	
2315 - 2330	0	33	**33**	
2330 - 2345	0	35	**35**	
2345 - 0000	0	28	**28**	**128**

Session Total	0	8523	**8523**
Session Average	0.00	88.78	**88.78**
Session Percentage	0.00	100.00	

Bi-Directional Class Count || SB WB 60min

Columbia, SC

Marr Traffic DATA COLLECTION

www.marrtraffic.com

Site 10
I-26 S/Bound On-Ramp,
south of I-20

Date
Sunday, April 21, 2024

Lat/Long
34.034856°, -81.111503°

Weather
Cloudy
66°F

Click here for Detailed Weather

0000 - 2400 (Sunday 24h Session) (04-21-2024)
SB WB 60min

	Southbound (Movement 10.1)													
TIME	1	2	3	4	5	6	7	8	9	10	11	12	13	**Total**
0000 - 0100	0	73	5	0	0	0	0	0	0	0	0	0	0	**78**
0100 - 0200	0	44	5	0	0	0	0	0	3	0	0	0	0	**52**
0200 - 0300	0	20	2	0	0	0	0	0	2	0	0	0	0	**24**
0300 - 0400	0	23	2	1	0	0	0	1	0	0	0	0	0	**27**
0400 - 0500	0	23	1	0	0	0	0	0	0	0	0	0	0	**24**
0500 - 0600	0	41	4	0	0	0	0	0	0	0	0	0	0	**45**
0600 - 0700	0	109	20	0	0	0	0	0	2	0	0	0	0	**131**
0700 - 0800	0	133	29	0	0	0	0	0	2	0	0	0	0	**164**
0800 - 0900	0	221	29	0	1	0	0	0	2	0	0	0	0	**253**
0900 - 1000	0	274	40	0	2	0	0	0	2	0	0	0	0	**318**
1000 - 1100	0	365	43	1	1	1	0	0	1	0	0	0	0	**412**
1100 - 1200	0	276	41	0	2	1	0	0	4	0	0	0	0	**324**
1200 - 1300	0	394	63	1	1	0	0	1	8	0	0	0	0	**468**
1300 - 1400	1	389	60	0	6	1	0	0	7	0	0	0	0	**464**
1400 - 1500	0	385	47	0	3	0	0	2	2	0	0	0	0	**439**
1500 - 1600	0	354	53	0	0	1	0	0	3	0	0	0	0	**411**
1600 - 1700	0	316	43	1	3	0	0	1	1	0	0	0	0	**365**
1700 - 1800	0	347	46	0	3	0	0	0	5	0	0	0	0	**401**
1800 - 1900	0	304	47	1	3	0	0	1	13	0	0	0	0	**369**
1900 - 2000	0	249	27	0	3	0	7	0	8	0	0	0	0	**294**
2000 - 2100	0	217	27	0	0	0	0	0	10	0	0	0	0	**254**
2100 - 2200	0	161	12	0	3	0	0	0	9	0	0	0	0	**185**
2200 - 2300	0	104	9	1	1	0	0	0	5	0	0	0	0	**120**
2300 - 2400	0	62	8	0	2	0	0	0	8	2	0	0	0	**82**

Session Total	1	4884	663	6	34	4	7	6	97	2	0	0	0	**5704**
Session Average	0.04	203.50	27.63	0.25	1.42	0.17	0.29	0.25	4.04	0.08	0.00	0.00	0.00	**237.67**
Session Percentage	0.02	85.62	11.62	0.11	0.60	0.07	0.12	0.11	1.70	0.04	0.00	0.00	0.00	

AM Peak Hour	-	0900 - 1000	0900 - 1000	-	0900 - 1000	-	-	-	0600 - 0700	-	-	-	-	**0900 - 1000**
AM Peak Volume	0	274	40	0	2	0	0	0	2	0	0	0	0	**318**

Noon Peak Hour	1300 - 1400	1200 - 1300	1200 - 1300	1000 - 1100	1300 - 1400	1000 - 1100	-	1400 - 1500	1200 - 1300	-	-	-	-	**1200 - 1300**
Noon Peak Volume	1	394	63	1	6	1	0	2	8	0	0	0	0	**468**

PM Peak Hour	-	1500 - 1600	1500 - 1600	1600 - 1700	1600 - 1700	1500 - 1600	1900 - 2000	1600 - 1700	1800 - 1900	-	-	-	-	**1500 - 1600**
PM Peak Volume	0	354	53	1	3	1	7	1	13	0	0	0	0	**411**

Site 10
I-26 S/Bound On-Ramp,
south of I-20

Date
Monday, April 22, 2024

Lat/Long
34.034856°, -81.111503°

Weather
Mostly Cloudy
57°F

Click here for Detailed Weather

0000 - 2400 (Weekday 24h Session) (04-22-2024)
SB WB 60min

	Southbound (Movement 10.1)													
TIME	1	2	3	4	5	6	7	8	9	10	11	12	13	**Total**
0000 - 0100	0	31	7	0	2	0	0	0	2	0	0	0	0	**42**
0100 - 0200	0	19	3	0	1	0	0	0	5	0	0	0	0	**28**
0200 - 0300	0	13	3	0	0	0	0	0	7	0	0	0	0	**23**
0300 - 0400	0	16	1	1	0	0	0	0	1	0	0	0	0	**19**
0400 - 0500	0	54	10	0	0	0	0	0	9	0	0	0	0	**73**
0500 - 0600	0	150	20	1	2	0	0	0	8	0	0	0	0	**181**
0600 - 0700	0	491	53	0	8	1	0	0	15	0	0	0	0	**568**
0700 - 0800	0	1128	110	0	11	0	0	0	21	0	0	0	0	**1270**
0800 - 0900	1	1125	131	1	12	0	0	4	22	0	0	0	0	**1296**
0900 - 1000	0	776	100	7	13	1	0	1	19	0	0	0	0	**917**
1000 - 1100	1	536	67	1	14	4	0	0	24	0	0	0	0	**647**
1100 - 1200	1	438	43	0	8	1	0	0	27	0	0	0	0	**518**
1200 - 1300	1	524	60	0	9	0	0	1	27	0	0	0	0	**622**
1300 - 1400	0	449	63	0	16	4	0	2	6	0	0	0	0	**540**
1400 - 1500	0	475	54	0	16	0	0	9	26	0	1	0	0	**581**
1500 - 1600	0	496	72	0	15	0	0	0	17	0	0	0	0	**600**
1600 - 1700	0	496	90	1	10	1	0	0	18	0	0	0	0	**616**
1700 - 1800	0	435	63	1	5	0	0	0	10	0	0	0	0	**514**
1800 - 1900	0	390	36	0	4	1	0	0	9	0	0	0	0	**440**
1900 - 2000	0	254	12	1	4	0	0	0	3	0	0	0	0	**274**
2000 - 2100	1	150	10	0	2	1	0	0	9	0	1	0	0	**174**
2100 - 2200	0	136	11	0	1	0	0	0	9	0	0	0	0	**157**
2200 - 2300	0	101	7	0	0	1	0	0	8	0	1	0	0	**118**
2300 - 2400	0	45	4	0	1	0	0	0	8	0	0	0	0	**58**

Session Total	5	8728	1030	14	154	15	0	17	310	0	3	0	0	**10276**
Session Average	0.21	363.67	42.92	0.58	6.42	0.63	0.00	0.71	12.92	0.00	0.13	0.00	0.00	**428.17**
Session Percentage	0.05	84.94	10.02	0.14	1.50	0.15	0.00	0.17	3.02	0.00	0.03	0.00	0.00	

AM Peak Hour	0800 - 0900	0700 - 0800	0800 - 0900	0900 - 1000	0900 - 1000	0600 - 0700	-	0800 - 0900	0800 - 0900	-	-	-	-	**0800 - 0900**
AM Peak Volume	1	1128	131	7	13	1	0	4	22	0	0	0	0	**1296**

Noon Peak Hour	1000 - 1100	1000 - 1100	1000 - 1100	1000 - 1100	1300 - 1400	1000 - 1100	-	1400 - 1500	1100 - 1200	-	1400 - 1500	-	-	**1000 - 1100**
Noon Peak Volume	1	536	67	1	16	4	0	9	27	0	1	0	0	**647**

PM Peak Hour	-	1500 - 1600	1600 - 1700	1600 - 1700	1500 - 1600	1600 - 1700	-	-	1600 - 1700	-	-	-	-	**1600 - 1700**
PM Peak Volume	0	496	90	1	15	1	0	0	18	0	0	0	0	**616**

Site 10
I-26 S/Bound On-Ramp,
south of I-20

Date
Tuesday, April 23, 2024

Lat/Long
34.034856°, -81.111503°

Weather
Fair
58°F

Click here for Detailed Weather

0000 - 2400 (Weekday 24h Session) (04-23-2024)
SB WB 60min

	Southbound (Movement 10.1)													
TIME	1	2	3	4	5	6	7	8	9	10	11	12	13	**Total**
0000 - 0100	0	24	10	0	0	0	0	0	3	0	0	0	0	**37**
0100 - 0200	0	17	6	0	0	0	0	0	6	0	1	0	0	**30**
0200 - 0300	0	9	3	0	0	0	0	0	1	0	0	0	0	**13**
0300 - 0400	0	24	7	0	0	0	0	0	3	0	0	0	0	**34**
0400 - 0500	0	39	13	0	2	0	0	0	10	0	0	0	0	**64**
0500 - 0600	0	127	37	0	4	0	0	0	11	0	0	0	0	**179**
0600 - 0700	1	528	122	0	7	1	0	1	13	0	1	0	0	**674**
0700 - 0800	1	966	140	0	11	2	1	0	19	0	2	0	0	**1142**
0800 - 0900	0	1115	109	0	15	3	0	0	25	0	0	0	0	**1267**
0900 - 1000	1	729	83	8	17	2	0	0	24	0	0	0	0	**864**
1000 - 1100	0	522	110	4	12	4	2	1	20	2	0	0	0	**677**
1100 - 1200	0	478	93	0	11	3	0	0	25	0	1	0	0	**611**
1200 - 1300	0	557	50	0	13	1	0	0	16	0	0	0	0	**637**
1300 - 1400	0	485	34	0	7	1	1	1	17	0	0	0	0	**546**
1400 - 1500	0	445	39	0	6	2	0	1	21	0	0	0	0	**514**
1500 - 1600	0	565	45	1	16	2	0	1	17	0	0	0	0	**647**
1600 - 1700	0	564	77	1	12	0	0	0	17	0	0	0	0	**671**
1700 - 1800	0	664	95	0	6	2	0	0	10	0	0	0	0	**777**
1800 - 1900	0	412	66	0	7	0	0	0	13	0	0	0	0	**498**
1900 - 2000	0	238	40	0	1	3	0	1	11	0	0	0	0	**294**
2000 - 2100	1	210	34	1	5	0	0	0	7	0	1	0	0	**259**
2100 - 2200	0	196	29	0	0	0	0	0	2	0	0	0	0	**227**
2200 - 2300	0	108	28	0	1	0	0	0	15	0	0	0	0	**152**
2300 - 2400	0	58	19	0	0	0	0	0	6	0	2	0	0	**85**

Session Total	4	9080	1289	15	153	26	4	6	312	2	8	0	0	**10899**
Session Average	0.17	378.33	53.71	0.63	6.38	1.08	0.17	0.25	13.00	0.08	0.33	0.00	0.00	**454.13**
Session Percentage	0.04	83.31	11.83	0.14	1.40	0.24	0.04	0.06	2.86	0.02	0.07	0.00	0.00	

AM Peak Hour	0600 - 0700	0800 - 0900	0700 - 0800	0900 - 1000	0900 - 1000	0800 - 0900	0700 - 0800	0600 - 0700	0800 - 0900	-	0700 - 0800	-	-	**0800 - 0900**
AM Peak Hour Volume	1	1115	140	8	17	3	1	1	25	0	2	0	0	**1267**

Noon Peak Hour	-	1200 - 1300	1000 - 1100	1000 - 1100	1200 - 1300	1000 - 1100	1000 - 1100	1000 - 1100	1100 - 1200	1000 - 1100	1100 - 1200	-	-	**1000 - 1100**
Noon Peak Hour Volume	0	557	110	4	13	4	2	1	25	2	1	0	0	**677**

PM Peak Hour	-	1700 - 1800	1700 - 1800	1500 - 1600	1500 - 1600	1900 - 2000	-	1500 - 1600	1500 - 1600	-	-	-	-	**1700 - 1800**
PM Peak Hour Volume	0	664	95	1	16	3	0	1	17	0	0	0	0	**777**

Site 10
I-26 S/Bound On-Ramp,
south of I-20

Date
Wednesday, April 24, 2024

Weather
Fair
66°F

Lat/Long
34.034856°, -81.111503°

Click here for Detailed Weather

0000 - 2400 (Weekday 24h Session) (04-24-2024)
SB WB 60min

	Southbound (Movement 10.1)													
TIME	1	2	3	4	5	6	7	8	9	10	11	12	13	**Total**
0000 - 0100	0	25	5	0	3	0	0	0	4	0	0	0	0	**37**
0100 - 0200	0	20	4	0	3	0	0	0	4	0	2	0	0	**33**
0200 - 0300	0	23	5	0	0	0	0	0	5	0	1	0	0	**34**
0300 - 0400	0	18	4	0	1	0	0	0	6	0	0	0	0	**29**
0400 - 0500	0	45	14	0	5	0	0	0	8	0	0	0	0	**72**
0500 - 0600	0	121	29	0	1	7	0	0	7	0	0	0	0	**165**
0600 - 0700	2	525	76	0	6	3	0	0	15	0	0	0	0	**627**
0700 - 0800	2	1017	125	0	16	2	0	2	21	2	0	0	0	**1187**
0800 - 0900	2	1071	164	1	18	0	0	8	21	0	0	0	0	**1285**
0900 - 1000	0	635	120	12	17	3	0	7	18	0	0	0	0	**812**
1000 - 1100	1	519	101	1	17	3	0	3	15	0	0	0	0	**660**
1100 - 1200	1	451	115	1	20	1	0	2	23	0	0	0	0	**614**
1200 - 1300	0	439	98	0	20	2	0	1	12	0	0	0	0	**572**
1300 - 1400	0	425	98	0	11	4	0	1	13	0	0	0	0	**552**
1400 - 1500	3	451	97	0	10	5	0	0	15	0	0	0	0	**581**
1500 - 1600	1	480	91	0	14	1	0	0	9	0	0	0	0	**596**
1600 - 1700	2	595	109	0	4	5	0	2	19	0	0	0	0	**736**
1700 - 1800	1	613	100	0	4	1	0	0	11	0	0	0	0	**730**
1800 - 1900	0	479	67	2	3	1	0	2	13	1	0	0	0	**568**
1900 - 2000	3	286	19	0	4	3	0	0	7	0	0	0	0	**322**
2000 - 2100	0	224	19	0	7	0	0	0	10	0	0	0	0	**260**
2100 - 2200	0	151	40	0	5	0	0	1	5	0	0	0	0	**202**
2200 - 2300	0	85	30	0	2	0	0	0	9	0	0	0	0	**126**
2300 - 2400	0	54	19	0	2	0	0	0	5	0	2	0	0	**82**

Session Total	18	8752	1549	17	193	41	0	29	275	3	5	0	0	**10882**
Session Average	0.75	364.67	64.54	0.71	8.04	1.71	0.00	1.21	11.46	0.13	0.21	0.00	0.00	**453.42**
Session Percentage	0.17	80.43	14.23	0.16	1.77	0.38	0.00	0.27	2.53	0.03	0.05	0.00	0.00	

AM Peak Hour	0600 - 0700	0800 - 0900	0800 - 0900	0900 - 1000	0800 - 0900	0500 - 0600	-	0800 - 0900	0700 - 0800	0700 - 0800	-	-	-	**0800 - 0900**
AM Peak Hour Volume	2	1071	164	12	18	7	0	8	21	2	0	0	0	**1285**

Noon Peak Hour	1400 - 1500	1000 - 1100	1100 - 1200	1000 - 1100	1100 - 1200	1400 - 1500	-	1000 - 1100	1100 - 1200	-	-	-	-	**1000 - 1100**
Noon Peak Hour Volume	3	519	115	1	20	5	0	3	23	0	0	0	0	**660**

PM Peak Hour	1900 - 2000	1700 - 1800	1600 - 1700	1800 - 1900	1500 - 1600	1600 - 1700	-	1600 - 1700	1600 - 1700	1800 - 1900	-	-	-	**1600 - 1700**
PM Peak Hour Volume	3	613	109	2	14	5	0	2	19	1	0	0	0	**736**

Site 10
I-26 S/Bound On-Ramp,
south of I-20

Date
Thursday, April 25, 2024

Weather
Fair
67°F

Lat/Long
34.034856°, -81.111503°

Click here for Detailed Weather

0000 - 2400 (Weekday 24h Session) (04-25-2024)
SB WB 60min

	Southbound (Movement 10.1)													
TIME	1	2	3	4	5	6	7	8	9	10	11	12	13	**Total**
0000 - 0100	0	22	2	0	2	0	0	0	4	0	1	0	0	**31**
0100 - 0200	0	19	3	0	1	0	0	0	6	0	0	0	0	**29**
0200 - 0300	0	21	1	0	1	0	0	0	4	0	0	0	0	**27**
0300 - 0400	0	27	3	0	3	0	0	0	6	0	0	0	0	**39**
0400 - 0500	0	44	7	0	3	0	0	0	8	0	1	0	0	**63**
0500 - 0600	0	141	7	0	12	0	0	0	13	0	0	0	0	**173**
0600 - 0700	0	502	71	0	5	3	0	0	15	0	1	1	0	**598**
0700 - 0800	1	967	199	0	22	3	1	3	18	0	0	0	0	**1214**
0800 - 0900	1	1171	200	0	21	3	1	3	9	1	0	0	0	**1410**
0900 - 1000	1	732	101	7	15	1	0	4	25	0	0	0	0	**886**
1000 - 1100	1	520	94	5	13	3	0	3	14	1	0	0	0	**654**
1100 - 1200	0	476	94	0	8	0	0	1	35	1	0	0	0	**615**
1200 - 1300	1	514	97	1	17	7	0	3	21	1	0	0	0	**662**
1300 - 1400	0	522	96	1	16	4	1	4	16	0	0	0	0	**660**
1400 - 1500	0	485	91	0	11	4	0	3	14	1	0	0	0	**609**
1500 - 1600	0	477	93	0	6	0	0	2	17	0	0	0	0	**595**
1600 - 1700	5	577	95	0	7	1	0	0	15	0	0	0	0	**700**
1700 - 1800	3	612	109	0	8	2	0	0	18	0	0	0	0	**752**
1800 - 1900	1	487	79	0	1	1	0	0	12	1	0	0	0	**582**
1900 - 2000	3	301	35	0	0	0	0	0	3	0	0	0	0	**342**
2000 - 2100	0	201	36	0	1	0	0	0	12	0	0	0	0	**250**
2100 - 2200	0	179	39	0	0	0	0	0	7	0	0	0	0	**225**
2200 - 2300	0	109	29	0	0	0	0	0	2	0	0	0	0	**140**
2300 - 2400	0	57	16	0	0	0	0	0	4	0	0	0	0	**77**

Session Total	17	9163	1597	14	173	32	3	26	298	6	3	1	0	**11333**
Session Average	0.71	381.79	66.54	0.58	7.21	1.33	0.13	1.08	12.42	0.25	0.13	0.04	0.00	**472.21**
Session Percentage	0.15	80.85	14.09	0.12	1.53	0.28	0.03	0.23	2.63	0.05	0.03	0.01	0.00	

AM Peak Hour	0700 - 0800	0800 - 0900	0800 - 0900	0900 - 1000	0700 - 0800	0600 - 0700	0700 - 0800	0900 - 1000	0900 - 1000	0800 - 0900	0600 - 0700	0600 - 0700	-	**0800 - 0900**
AM Peak Hour Volume	1	1171	200	7	22	3	1	4	25	1	1	1	0	**1410**

Noon Peak Hour	1000 - 1100	1300 - 1400	1200 - 1300	1000 - 1100	1200 - 1300	1200 - 1300	1300 - 1400	1300 - 1400	1100 - 1200	1000 - 1100	-	-	-	**1200 - 1300**
Noon Peak Hour Volume	1	522	97	5	17	7	1	4	35	1	0	0	0	**662**

PM Peak Hour	1600 - 1700	1700 - 1800	1700 - 1800	-	1700 - 1800	1700 - 1800	-	1500 - 1600	1700 - 1800	1800 - 1900	-	-	-	**1700 - 1800**
PM Peak Hour Volume	5	612	109	0	8	2	0	2	18	1	0	0	0	**752**

Site 10
I-26 S/Bound On-Ramp,
south of I-20

Date
Friday, April 26, 2024

Lat/Long
34.034856°, -81.111503°

Weather
Cloudy
69°F

Click here for Detailed Weather

0000 - 2400 (Weekday 24h Session) (04-26-2024)
SB WB 60min

	Southbound (Movement 10.1)													
TIME	1	2	3	4	5	6	7	8	9	10	11	12	13	**Total**
0000 - 0100	0	33	6	0	4	2	0	0	5	0	0	0	0	**50**
0100 - 0200	0	22	4	0	3	1	0	0	5	0	2	0	0	**37**
0200 - 0300	0	12	1	0	1	0	0	0	5	0	0	0	0	**19**
0300 - 0400	0	19	4	0	0	1	0	0	8	0	0	0	0	**32**
0400 - 0500	0	45	8	0	3	0	0	0	1	0	0	0	0	**57**
0500 - 0600	0	120	13	0	5	4	0	0	7	0	0	0	0	**149**
0600 - 0700	0	478	29	1	6	0	0	1	20	0	0	0	0	**535**
0700 - 0800	2	962	145	0	7	3	0	0	17	0	0	0	0	**1136**
0800 - 0900	0	1010	137	8	7	1	0	2	18	0	0	0	0	**1183**
0900 - 1000	0	681	118	10	10	0	0	4	20	0	0	0	0	**843**
1000 - 1100	1	569	91	1	18	4	0	6	23	0	0	0	0	**713**
1100 - 1200	0	544	74	0	10	1	0	2	14	0	0	0	0	**645**
1200 - 1300	1	515	95	0	13	3	0	4	20	0	0	0	1	**652**
1300 - 1400	0	484	110	0	13	4	1	1	14	1	0	0	0	**628**
1400 - 1500	1	428	91	1	7	2	0	1	13	0	0	0	0	**544**
1500 - 1600	3	509	104	2	13	4	0	0	10	0	0	0	0	**645**
1600 - 1700	3	532	101	0	11	0	0	1	3	0	0	0	0	**651**
1700 - 1800	3	624	134	0	8	2	0	1	11	0	0	0	0	**783**
1800 - 1900	5	594	85	0	9	1	0	1	7	0	0	0	0	**702**
1900 - 2000	1	316	57	1	2	1	0	0	3	0	0	0	0	**381**
2000 - 2100	1	245	44	0	3	0	0	0	5	0	0	0	0	**298**
2100 - 2200	0	201	32	0	1	0	0	0	3	0	0	0	0	**237**
2200 - 2300	0	154	30	0	2	0	0	0	7	0	0	0	0	**193**
2300 - 2400	0	93	18	0	2	1	0	0	8	0	0	0	0	**122**

Session Total	21	9190	1531	24	158	35	1	24	247	1	2	0	1	**11235**
Session Average	0.88	382.92	63.79	1.00	6.58	1.46	0.04	1.00	10.29	0.04	0.08	0.00	0.04	**468.13**
Session Percentage	0.19	81.80	13.63	0.21	1.41	0.31	0.01	0.21	2.20	0.01	0.02	0.00	0.01	

AM Peak Hour	0700 - 0800	0800 - 0900	0700 - 0800	0900 - 1000	0900 - 1000	0500 - 0600	-	0900 - 1000	0600 - 0700	-	-	-	-	**0800 - 0900**
AM Peak Hour Volume	2	1010	145	10	10	4	0	4	20	0	0	0	0	**1183**

Noon Peak Hour	1000 - 1100	1000 - 1100	1300 - 1400	1000 - 1100	1000 - 1100	1000 - 1100	1300 - 1400	1000 - 1100	1000 - 1100	1300 - 1400	-	-	1200 - 1300	**1000 - 1100**
Noon Peak Hour Volume	1	569	110	1	18	4	1	6	23	1	0	0	1	**713**

PM Peak Hour	1800 - 1900	1700 - 1800	1700 - 1800	1500 - 1600	1500 - 1600	1500 - 1600	-	1600 - 1700	1700 - 1800	-	-	-	-	**1700 - 1800**
PM Peak Hour Volume	5	624	134	2	13	4	0	1	11	0	0	0	0	**783**

Site 10
I-26 S/Bound On-Ramp,
south of I-20

Date
Saturday, April 27, 2024

Lat/Long
34.034856°, -81.111503°

Weather
Mostly Cloudy
69°F

Click here for Detailed Weather

0000 - 2400 (Saturday 24h Session) (04-27-2024)
SB WB 60min

	Southbound (Movement 10.1)													
TIME	1	2	3	4	5	6	7	8	9	10	11	12	13	**Total**
0000 - 0100	0	52	15	0	0	0	0	0	3	0	1	0	0	**71**
0100 - 0200	0	31	11	0	1	0	0	0	4	0	1	0	0	**48**
0200 - 0300	0	31	8	0	1	0	0	0	3	0	1	0	0	**44**
0300 - 0400	0	17	1	0	0	0	0	0	2	0	0	0	0	**20**
0400 - 0500	0	21	3	0	0	0	0	0	2	0	0	0	0	**26**
0500 - 0600	0	50	19	0	0	0	0	0	3	0	0	0	0	**72**
0600 - 0700	0	131	41	0	2	0	0	0	5	0	1	0	0	**180**
0700 - 0800	0	217	50	0	6	0	1	2	5	0	1	0	0	**282**
0800 - 0900	0	369	63	0	1	1	0	3	8	0	0	0	0	**445**
0900 - 1000	0	461	96	0	7	0	0	1	3	0	0	0	0	**568**
1000 - 1100	5	491	91	1	2	1	0	0	6	0	0	0	0	**597**
1100 - 1200	1	529	83	0	5	0	0	1	8	0	0	0	0	**627**
1200 - 1300	1	503	77	0	6	0	0	2	7	0	0	0	0	**596**
1300 - 1400	1	450	54	0	1	2	0	0	4	0	0	0	0	**512**
1400 - 1500	1	491	66	1	3	0	0	1	5	0	0	0	0	**568**
1500 - 1600	0	599	72	1	1	0	0	0	4	0	0	0	0	**677**
1600 - 1700	1	541	71	0	2	0	0	0	3	0	0	0	0	**618**
1700 - 1800	2	618	58	0	2	0	0	0	5	0	0	0	0	**685**
1800 - 1900	0	518	76	0	3	0	0	0	2	0	0	0	0	**599**
1900 - 2000	0	390	35	0	1	0	0	1	3	0	0	0	0	**430**
2000 - 2100	0	289	20	0	1	0	0	0	1	0	0	0	0	**311**
2100 - 2200	0	215	26	0	2	0	0	0	0	0	0	0	0	**243**
2200 - 2300	0	151	22	1	1	0	0	0	1	0	0	0	0	**176**
2300 - 2400	0	88	37	0	1	0	0	0	2	0	0	0	0	**128**

Session Total	12	7253	1095	4	49	4	1	11	89	0	5	0	0	**8523**
Session Average	0.50	302.21	45.63	0.17	2.04	0.17	0.04	0.46	3.71	0.00	0.21	0.00	0.00	**355.13**
Session Percentage	0.14	85.10	12.85	0.05	0.57	0.05	0.01	0.13	1.04	0.00	0.06	0.00	0.00	

AM Peak Hour	-	0900 - 1000	0900 - 1000	-	0900 - 1000	0800 - 0900	0700 - 0800	0800 - 0900	0800 - 0900	-	0600 - 0700	-	-	**0900 - 1000**
AM Peak Hour Volume	0	461	96	0	7	1	1	3	8	0	1	0	0	**568**

Noon Peak Hour	1000 - 1100	1100 - 1200	1000 - 1100	1000 - 1100	1200 - 1300	1300 - 1400	-	1200 - 1300	1100 - 1200	-	-	-	-	**1100 - 1200**
Noon Peak Hour Volume	5	529	91	1	6	2	0	2	8	0	0	0	0	**627**

PM Peak Hour	1700 - 1800	1700 - 1800	1800 - 1900	1500 - 1600	1800 - 1900	-	-	1900 - 2000	1700 - 1800	-	-	-	-	**1700 - 1800**
PM Peak Hour Volume	2	618	76	1	3	0	0	1	5	0	0	0	0	**685**

Bi-Directional Class Count || Volume Summary 60min

Columbia, SC

Marr Traffic DATA COLLECTION

www.marrtraffic.com

Site 10

I-26 S/Bound On-Ramp,
south of I-20

Date

Sunday, April 21, 2024

Lat/Long

34.034856°, -81.111503°

Weather

Cloudy
66°F

Click here for Detailed Weather

0000 - 2400 (Sunday 24h Session) (04-21-2024)

Volume Summary 60min

	Volume Summary 60min		
TIME	NB	SB	**Total**
0000 - 0100	0	78	**78**
0100 - 0200	0	52	**52**
0200 - 0300	0	24	**24**
0300 - 0400	0	27	**27**
0400 - 0500	0	24	**24**
0500 - 0600	0	45	**45**
0600 - 0700	0	131	**131**
0700 - 0800	0	164	**164**
0800 - 0900	0	253	**253**
0900 - 1000	0	318	**318**
1000 - 1100	0	412	**412**
1100 - 1200	0	324	**324**

	Volume Summary 60min		
Time	NB	SB	**Total**
1200 - 1300	0	468	**468**
1300 - 1400	0	464	**464**
1400 - 1500	0	439	**439**
1500 - 1600	0	411	**411**
1600 - 1700	0	365	**365**
1700 - 1800	0	401	**401**
1800 - 1900	0	369	**369**
1900 - 2000	0	294	**294**
2000 - 2100	0	254	**254**
2100 - 2200	0	185	**185**
2200 - 2300	0	120	**120**
2300 - 2400	0	82	**82**

Session Total	0	5704	**5704**
Session Average	0.00	237.67	**237.67**
Session Percentage	0.00	100.00	

Site 10

I-26 S/Bound On-Ramp,
south of I-20

Date

Monday, April 22, 2024

Lat/Long

34.034856°, -81.111503°

Weather

Mostly Cloudy
57°F

Click here for Detailed Weather

0000 - 2400 (Weekday 24h Session) (04-22-2024)

Volume Summary 60min

	Volume Summary 60min		
TIME	NB	SB	**Total**
0000 - 0100	0	42	**42**
0100 - 0200	0	28	**28**
0200 - 0300	0	23	**23**
0300 - 0400	0	19	**19**
0400 - 0500	0	73	**73**
0500 - 0600	0	181	**181**
0600 - 0700	0	568	**568**
0700 - 0800	0	1270	**1270**
0800 - 0900	0	1296	**1296**
0900 - 1000	0	917	**917**
1000 - 1100	0	647	**647**
1100 - 1200	0	518	**518**

Session Total	0	10276	**10276**
Session Average	0.00	428.17	**428.17**
Session Percentage	0.00	100.00	

	Volume Summary 60min		
Time	NB	SB	**Total**
1200 - 1300	0	622	**622**
1300 - 1400	0	540	**540**
1400 - 1500	0	581	**581**
1500 - 1600	0	600	**600**
1600 - 1700	0	616	**616**
1700 - 1800	0	514	**514**
1800 - 1900	0	440	**440**
1900 - 2000	0	274	**274**
2000 - 2100	0	174	**174**
2100 - 2200	0	157	**157**
2200 - 2300	0	118	**118**
2300 - 2400	0	58	**58**

Site 10

I-26 S/Bound On-Ramp,
south of I-20

Date

Tuesday, April 23, 2024

Lat/Long

34.034856°, -81.111503°

Weather

Fair
58°F

Click here for Detailed Weather

0000 - 2400 (Weekday 24h Session) (04-23-2024)

Volume Summary 60min

	Volume Summary 60min		
TIME	NB	SB	**Total**
0000 - 0100	0	37	**37**
0100 - 0200	0	30	**30**
0200 - 0300	0	13	**13**
0300 - 0400	0	34	**34**
0400 - 0500	0	64	**64**
0500 - 0600	0	179	**179**
0600 - 0700	0	674	**674**
0700 - 0800	0	1142	**1142**
0800 - 0900	0	1267	**1267**
0900 - 1000	0	864	**864**
1000 - 1100	0	677	**677**
1100 - 1200	0	611	**611**

Session Total	0	10899	**10899**
Session Average	0.00	454.13	**454.13**
Session Percentage	0.00	100.00	

	Volume Summary 60min		
Time	NB	SB	**Total**
1200 - 1300	0	637	**637**
1300 - 1400	0	546	**546**
1400 - 1500	0	514	**514**
1500 - 1600	0	647	**647**
1600 - 1700	0	671	**671**
1700 - 1800	0	777	**777**
1800 - 1900	0	498	**498**
1900 - 2000	0	294	**294**
2000 - 2100	0	259	**259**
2100 - 2200	0	227	**227**
2200 - 2300	0	152	**152**
2300 - 2400	0	85	**85**

Site 10

I-26 S/Bound On-Ramp,
south of I-20

Date

Wednesday, April 24, 2024

Lat/Long

34.034856°, -81.111503°

Weather

Fair
66°F

Click here for Detailed Weather

0000 - 2400 (Weekday 24h Session) (04-24-2024)

Volume Summary 60min

	Volume Summary 60min		
TIME	NB	SB	**Total**
0000 - 0100	0	37	**37**
0100 - 0200	0	33	**33**
0200 - 0300	0	34	**34**
0300 - 0400	0	29	**29**
0400 - 0500	0	72	**72**
0500 - 0600	0	165	**165**
0600 - 0700	0	627	**627**
0700 - 0800	0	1187	**1187**
0800 - 0900	0	1285	**1285**
0900 - 1000	0	812	**812**
1000 - 1100	0	660	**660**
1100 - 1200	0	614	**614**

Session Total	0	10882	**10882**
Session Average	0.00	453.42	**453.42**
Session Percentage	0.00	100.00	

	Volume Summary 60min		
Time	NB	SB	**Total**
1200 - 1300	0	572	**572**
1300 - 1400	0	552	**552**
1400 - 1500	0	581	**581**
1500 - 1600	0	596	**596**
1600 - 1700	0	736	**736**
1700 - 1800	0	730	**730**
1800 - 1900	0	568	**568**
1900 - 2000	0	322	**322**
2000 - 2100	0	260	**260**
2100 - 2200	0	202	**202**
2200 - 2300	0	126	**126**
2300 - 2400	0	82	**82**

Site 10

I-26 S/Bound On-Ramp,
south of I-20

Date

Thursday, April 25, 2024

Lat/Long

34.034856°, -81.111503°

Weather

Fair
67°F

Click here for Detailed Weather

0000 - 2400 (Weekday 24h Session) (04-25-2024)

Volume Summary 60min

	Volume Summary 60min		
TIME	NB	SB	**Total**
0000 - 0100	0	31	**31**
0100 - 0200	0	29	**29**
0200 - 0300	0	27	**27**
0300 - 0400	0	39	**39**
0400 - 0500	0	63	**63**
0500 - 0600	0	173	**173**
0600 - 0700	0	598	**598**
0700 - 0800	0	1214	**1214**
0800 - 0900	0	1410	**1410**
0900 - 1000	0	886	**886**
1000 - 1100	0	654	**654**
1100 - 1200	0	615	**615**

Session Total	0	11333	**11333**
Session Average	0.00	472.21	**472.21**
Session Percentage	0.00	100.00	

	Volume Summary 60min		
Time	NB	SB	**Total**
1200 - 1300	0	662	**662**
1300 - 1400	0	660	**660**
1400 - 1500	0	609	**609**
1500 - 1600	0	595	**595**
1600 - 1700	0	700	**700**
1700 - 1800	0	752	**752**
1800 - 1900	0	582	**582**
1900 - 2000	0	342	**342**
2000 - 2100	0	250	**250**
2100 - 2200	0	225	**225**
2200 - 2300	0	140	**140**
2300 - 2400	0	77	**77**

Site 10

I-26 S/Bound On-Ramp,
south of I-20

Date

Friday, April 26, 2024

Lat/Long

34.034856°, -81.111503°

Weather

Cloudy
69°F

Click here for Detailed Weather

0000 - 2400 (Weekday 24h Session) (04-26-2024)

Volume Summary 60min

	Volume Summary 60min		
TIME	NB	SB	**Total**
0000 - 0100	0	50	**50**
0100 - 0200	0	37	**37**
0200 - 0300	0	19	**19**
0300 - 0400	0	32	**32**
0400 - 0500	0	57	**57**
0500 - 0600	0	149	**149**
0600 - 0700	0	535	**535**
0700 - 0800	0	1136	**1136**
0800 - 0900	0	1183	**1183**
0900 - 1000	0	843	**843**
1000 - 1100	0	713	**713**
1100 - 1200	0	645	**645**

	Volume Summary 60min		
Time	NB	SB	**Total**
1200 - 1300	0	652	**652**
1300 - 1400	0	628	**628**
1400 - 1500	0	544	**544**
1500 - 1600	0	645	**645**
1600 - 1700	0	651	**651**
1700 - 1800	0	783	**783**
1800 - 1900	0	702	**702**
1900 - 2000	0	381	**381**
2000 - 2100	0	298	**298**
2100 - 2200	0	237	**237**
2200 - 2300	0	193	**193**
2300 - 2400	0	122	**122**

Session Total	0	11235	**11235**
Session Average	0.00	468.13	**468.13**
Session Percentage	0.00	100.00	

Site 10

I-26 S/Bound On-Ramp,
south of I-20

Date

Saturday, April 27, 2024

Lat/Long

34.034856°, -81.111503°

Weather

Mostly Cloudy
69°F

Click here for Detailed Weather

0000 - 2400 (Saturday 24h Session) (04-27-2024)

Volume Summary 60min

	Volume Summary 60min		
TIME	NB	SB	**Total**
0000 - 0100	0	71	**71**
0100 - 0200	0	48	**48**
0200 - 0300	0	44	**44**
0300 - 0400	0	20	**20**
0400 - 0500	0	26	**26**
0500 - 0600	0	72	**72**
0600 - 0700	0	180	**180**
0700 - 0800	0	282	**282**
0800 - 0900	0	445	**445**
0900 - 1000	0	568	**568**
1000 - 1100	0	597	**597**
1100 - 1200	0	627	**627**

	Volume Summary 60min		
Time	NB	SB	**Total**
1200 - 1300	0	596	**596**
1300 - 1400	0	512	**512**
1400 - 1500	0	568	**568**
1500 - 1600	0	677	**677**
1600 - 1700	0	618	**618**
1700 - 1800	0	685	**685**
1800 - 1900	0	599	**599**
1900 - 2000	0	430	**430**
2000 - 2100	0	311	**311**
2100 - 2200	0	243	**243**
2200 - 2300	0	176	**176**
2300 - 2400	0	128	**128**

Session Total	0	8523	**8523**
Session Average	0.00	355.13	**355.13**
Session Percentage	0.00	100.00	

Bi-Directional Class Count || Graphical Analysis SB WB

Columbia, SC

Marr Traffic DATA COLLECTION

www.marrtraffic.com

Site 10

I-26 S/Bound On-Ramp,
south of I-20

Lat/Long

34.034856°, -81.111503°

0000 - 2400 (Weekday 24h Session)

Graphical Analysis SB WB

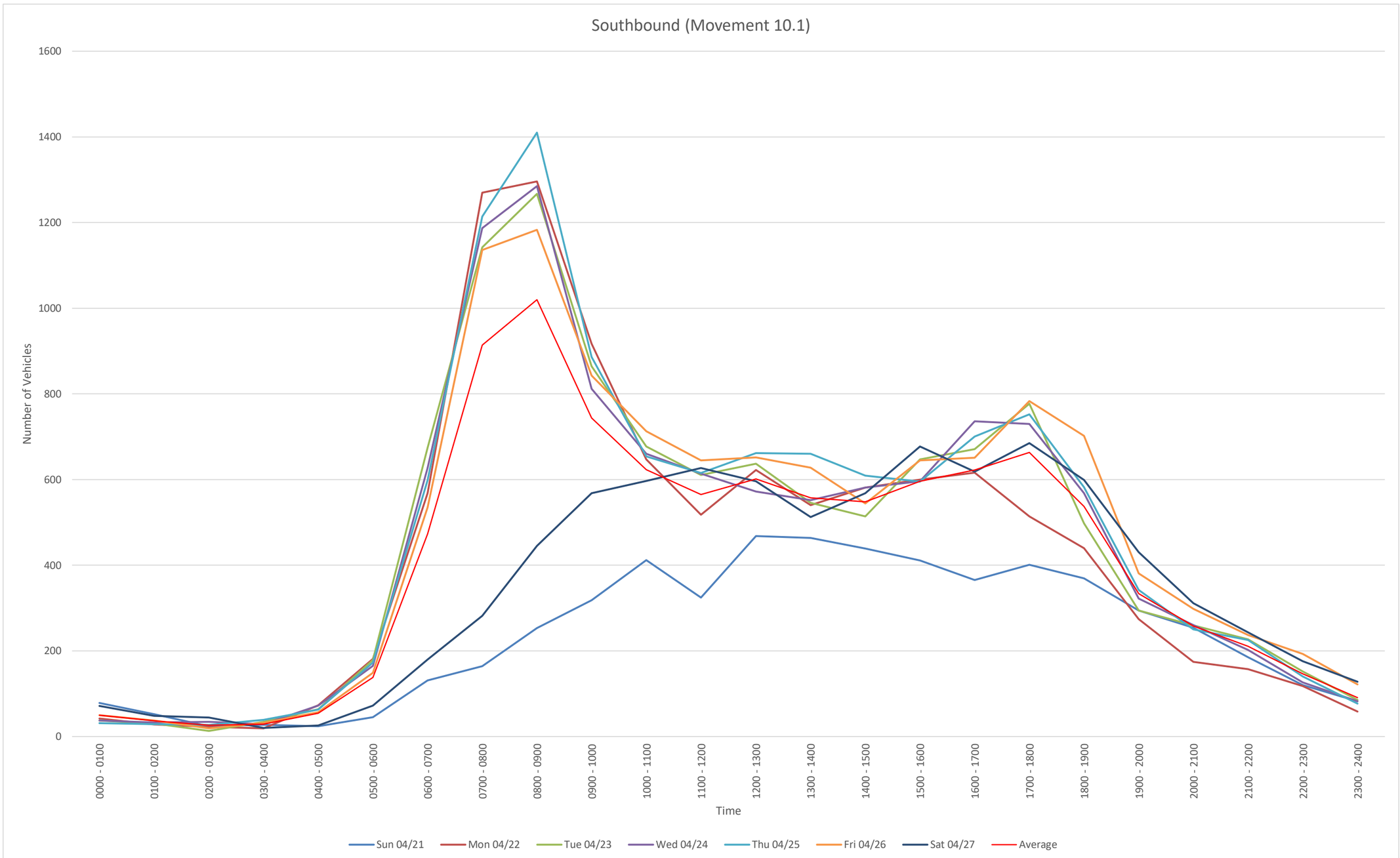

NB
File Name:
Start Date: 4/21/2024
Start Time: 0
Site Code: 10
Station ID: 1
Location 1: I-26 S/Bound On-Ramp, south of I-20
Location 2:

Date	Time	1	2	3	4	5	6	7	8	9	10	11	12	13
4/21/2024	12:00 AM	0	0	0	0	0	0	0	0	0	0	0	0	0
4/21/2024	12:15 AM	0	0	0	0	0	0	0	0	0	0	0	0	0
4/21/2024	12:30 AM	0	0	0	0	0	0	0	0	0	0	0	0	0
4/21/2024	12:45 AM	0	0	0	0	0	0	0	0	0	0	0	0	0
4/21/2024	1:00 AM	0	0	0	0	0	0	0	0	0	0	0	0	0
4/21/2024	1:15 AM	0	0	0	0	0	0	0	0	0	0	0	0	0
4/21/2024	1:30 AM	0	0	0	0	0	0	0	0	0	0	0	0	0
4/21/2024	1:45 AM	0	0	0	0	0	0	0	0	0	0	0	0	0
4/21/2024	2:00 AM	0	0	0	0	0	0	0	0	0	0	0	0	0
4/21/2024	2:15 AM	0	0	0	0	0	0	0	0	0	0	0	0	0
4/21/2024	2:30 AM	0	0	0	0	0	0	0	0	0	0	0	0	0
4/21/2024	2:45 AM	0	0	0	0	0	0	0	0	0	0	0	0	0
4/21/2024	3:00 AM	0	0	0	0	0	0	0	0	0	0	0	0	0
4/21/2024	3:15 AM	0	0	0	0	0	0	0	0	0	0	0	0	0
4/21/2024	3:30 AM	0	0	0	0	0	0	0	0	0	0	0	0	0
4/21/2024	3:45 AM	0	0	0	0	0	0	0	0	0	0	0	0	0
4/21/2024	4:00 AM	0	0	0	0	0	0	0	0	0	0	0	0	0
4/21/2024	4:15 AM	0	0	0	0	0	0	0	0	0	0	0	0	0
4/21/2024	4:30 AM	0	0	0	0	0	0	0	0	0	0	0	0	0
4/21/2024	4:45 AM	0	0	0	0	0	0	0	0	0	0	0	0	0
4/21/2024	5:00 AM	0	0	0	0	0	0	0	0	0	0	0	0	0
4/21/2024	5:15 AM	0	0	0	0	0	0	0	0	0	0	0	0	0
4/21/2024	5:30 AM	0	0	0	0	0	0	0	0	0	0	0	0	0
4/21/2024	5:45 AM	0	0	0	0	0	0	0	0	0	0	0	0	0
4/21/2024	6:00 AM	0	0	0	0	0	0	0	0	0	0	0	0	0
4/21/2024	6:15 AM	0	0	0	0	0	0	0	0	0	0	0	0	0
4/21/2024	6:30 AM	0	0	0	0	0	0	0	0	0	0	0	0	0
4/21/2024	6:45 AM	0	0	0	0	0	0	0	0	0	0	0	0	0
4/21/2024	7:00 AM	0	0	0	0	0	0	0	0	0	0	0	0	0
4/21/2024	7:15 AM	0	0	0	0	0	0	0	0	0	0	0	0	0
4/21/2024	7:30 AM	0	0	0	0	0	0	0	0	0	0	0	0	0
4/21/2024	7:45 AM	0	0	0	0	0	0	0	0	0	0	0	0	0
4/21/2024	8:00 AM	0	0	0	0	0	0	0	0	0	0	0	0	0
4/21/2024	8:15 AM	0	0	0	0	0	0	0	0	0	0	0	0	0
4/21/2024	8:30 AM	0	0	0	0	0	0	0	0	0	0	0	0	0
4/21/2024	8:45 AM	0	0	0	0	0	0	0	0	0	0	0	0	0
4/21/2024	9:00 AM	0	0	0	0	0	0	0	0	0	0	0	0	0
4/21/2024	9:15 AM	0	0	0	0	0	0	0	0	0	0	0	0	0
4/21/2024	9:30 AM	0	0	0	0	0	0	0	0	0	0	0	0	0
4/21/2024	9:45 AM	0	0	0	0	0	0	0	0	0	0	0	0	0
4/21/2024	10:00 AM	0	0	0	0	0	0	0	0	0	0	0	0	0
4/21/2024	10:15 AM	0	0	0	0	0	0	0	0	0	0	0	0	0
4/21/2024	10:30 AM	0	0	0	0	0	0	0	0	0	0	0	0	0
4/21/2024	10:45 AM	0	0	0	0	0	0	0	0	0	0	0	0	0
4/21/2024	11:00 AM	0	0	0	0	0	0	0	0	0	0	0	0	0
4/21/2024	11:15 AM	0	0	0	0	0	0	0	0	0	0	0	0	0
4/21/2024	11:30 AM	0	0	0	0	0	0	0	0	0	0	0	0	0
4/21/2024	11:45 AM	0	0	0	0	0	0	0	0	0	0	0	0	0
4/21/2024	12:00 PM	0	0	0	0	0	0	0	0	0	0	0	0	0
4/21/2024	12:15 PM	0	0	0	0	0	0	0	0	0	0	0	0	0
4/21/2024	12:30 PM	0	0	0	0	0	0	0	0	0	0	0	0	0
4/21/2024	12:45 PM	0	0	0	0	0	0	0	0	0	0	0	0	0
4/21/2024	1:00 PM	0	0	0	0	0	0	0	0	0	0	0	0	0
4/21/2024	1:15 PM	0	0	0	0	0	0	0	0	0	0	0	0	0
4/21/2024	1:30 PM	0	0	0	0	0	0	0	0	0	0	0	0	0
4/21/2024	1:45 PM	0	0	0	0	0	0	0	0	0	0	0	0	0
4/21/2024	2:00 PM	0	0	0	0	0	0	0	0	0	0	0	0	0
4/21/2024	2:15 PM	0	0	0	0	0	0	0	0	0	0	0	0	0
4/21/2024	2:30 PM	0	0	0	0	0	0	0	0	0	0	0	0	0
4/21/2024	2:45 PM	0	0	0	0	0	0	0	0	0	0	0	0	0
4/21/2024	3:00 PM	0	0	0	0	0	0	0	0	0	0	0	0	0
4/21/2024	3:15 PM	0	0	0	0	0	0	0	0	0	0	0	0	0
4/21/2024	3:30 PM	0	0	0	0	0	0	0	0	0	0	0	0	0
4/21/2024	3:45 PM	0	0	0	0	0	0	0	0	0	0	0	0	0
4/21/2024	4:00 PM	0	0	0	0	0	0	0	0	0	0	0	0	0
4/21/2024	4:15 PM	0	0	0	0	0	0	0	0	0	0	0	0	0
4/21/2024	4:30 PM	0	0	0	0	0	0	0	0	0	0	0	0	0
4/21/2024	4:45 PM	0	0	0	0	0	0	0	0	0	0	0	0	0
4/21/2024	5:00 PM	0	0	0	0	0	0	0	0	0	0	0	0	0
4/21/2024	5:15 PM	0	0	0	0	0	0	0	0	0	0	0	0	0
4/21/2024	5:30 PM	0	0	0	0	0	0	0	0	0	0	0	0	0
4/21/2024	5:45 PM	0	0	0	0	0	0	0	0	0	0	0	0	0
4/21/2024	6:00 PM	0	0	0	0	0	0	0	0	0	0	0	0	0
4/21/2024	6:15 PM	0	0	0	0	0	0	0	0	0	0	0	0	0
4/21/2024	6:30 PM	0	0	0	0	0	0	0	0	0	0	0	0	0
4/21/2024	6:45 PM	0	0	0	0	0	0	0	0	0	0	0	0	0
4/21/2024	7:00 PM	0	0	0	0	0	0	0	0	0	0	0	0	0
4/21/2024	7:15 PM	0	0	0	0	0	0	0	0	0	0	0	0	0
4/21/2024	7:30 PM	0	0	0	0	0	0	0	0	0	0	0	0	0
4/21/2024	7:45 PM	0	0	0	0	0	0	0	0	0	0	0	0	0
4/21/2024	8:00 PM	0	0	0	0	0	0	0	0	0	0	0	0	0
4/21/2024	8:15 PM	0	0	0	0	0	0	0	0	0	0	0	0	0
4/21/2024	8:30 PM	0	0	0	0	0	0	0	0	0	0	0	0	0
4/21/2024	8:45 PM	0	0	0	0	0	0	0	0	0	0	0	0	0
4/21/2024	9:00 PM	0	0	0	0	0	0	0	0	0	0	0	0	0
4/21/2024	9:15 PM	0	0	0	0	0	0	0	0	0	0	0	0	0
4/21/2024	9:30 PM	0	0	0	0	0	0	0	0	0	0	0	0	0
4/21/2024	9:45 PM	0	0	0	0	0	0	0	0	0	0	0	0	0
4/21/2024	10:00 PM	0	0	0	0	0	0	0	0	0	0	0	0	0
4/21/2024	10:15 PM	0	0	0	0	0	0	0	0	0	0	0	0	0
4/21/2024	10:30 PM	0	0	0	0	0	0	0	0	0	0	0	0	0
4/21/2024	10:45 PM	0	0	0	0	0	0	0	0	0	0	0	0	0
4/21/2024	11:00 PM	0	0	0	0	0	0	0	0	0	0	0	0	0
4/21/2024	11:15 PM	0	0	0	0	0	0	0	0	0	0	0	0	0
4/21/2024	11:30 PM	0	0	0	0	0	0	0	0	0	0	0	0	0
4/21/2024	11:45 PM	0	0	0	0	0	0	0	0	0	0	0	0	0

4/22/2024	12:00 AM	0	0	0	0	0	0	0	0	0	0	0	0	0
4/22/2024	12:15 AM	0	0	0	0	0	0	0	0	0	0	0	0	0
4/22/2024	12:30 AM	0	0	0	0	0	0	0	0	0	0	0	0	0
4/22/2024	12:45 AM	0	0	0	0	0	0	0	0	0	0	0	0	0
4/22/2024	1:00 AM	0	0	0	0	0	0	0	0	0	0	0	0	0
4/22/2024	1:15 AM	0	0	0	0	0	0	0	0	0	0	0	0	0
4/22/2024	1:30 AM	0	0	0	0	0	0	0	0	0	0	0	0	0
4/22/2024	1:45 AM	0	0	0	0	0	0	0	0	0	0	0	0	0
4/22/2024	2:00 AM	0	0	0	0	0	0	0	0	0	0	0	0	0
4/22/2024	2:15 AM	0	0	0	0	0	0	0	0	0	0	0	0	0
4/22/2024	2:30 AM	0	0	0	0	0	0	0	0	0	0	0	0	0
4/22/2024	2:45 AM	0	0	0	0	0	0	0	0	0	0	0	0	0
4/22/2024	3:00 AM	0	0	0	0	0	0	0	0	0	0	0	0	0
4/22/2024	3:15 AM	0	0	0	0	0	0	0	0	0	0	0	0	0
4/22/2024	3:30 AM	0	0	0	0	0	0	0	0	0	0	0	0	0
4/22/2024	3:45 AM	0	0	0	0	0	0	0	0	0	0	0	0	0
4/22/2024	4:00 AM	0	0	0	0	0	0	0	0	0	0	0	0	0
4/22/2024	4:15 AM	0	0	0	0	0	0	0	0	0	0	0	0	0
4/22/2024	4:30 AM	0	0	0	0	0	0	0	0	0	0	0	0	0
4/22/2024	4:45 AM	0	0	0	0	0	0	0	0	0	0	0	0	0
4/22/2024	5:00 AM	0	0	0	0	0	0	0	0	0	0	0	0	0
4/22/2024	5:15 AM	0	0	0	0	0	0	0	0	0	0	0	0	0
4/22/2024	5:30 AM	0	0	0	0	0	0	0	0	0	0	0	0	0
4/22/2024	5:45 AM	0	0	0	0	0	0	0	0	0	0	0	0	0
4/22/2024	6:00 AM	0	0	0	0	0	0	0	0	0	0	0	0	0
4/22/2024	6:15 AM	0	0	0	0	0	0	0	0	0	0	0	0	0
4/22/2024	6:30 AM	0	0	0	0	0	0	0	0	0	0	0	0	0
4/22/2024	6:45 AM	0	0	0	0	0	0	0	0	0	0	0	0	0
4/22/2024	7:00 AM	0	0	0	0	0	0	0	0	0	0	0	0	0
4/22/2024	7:15 AM	0	0	0	0	0	0	0	0	0	0	0	0	0
4/22/2024	7:30 AM	0	0	0	0	0	0	0	0	0	0	0	0	0
4/22/2024	7:45 AM	0	0	0	0	0	0	0	0	0	0	0	0	0
4/22/2024	8:00 AM	0	0	0	0	0	0	0	0	0	0	0	0	0
4/22/2024	8:15 AM	0	0	0	0	0	0	0	0	0	0	0	0	0
4/22/2024	8:30 AM	0	0	0	0	0	0	0	0	0	0	0	0	0
4/22/2024	8:45 AM	0	0	0	0	0	0	0	0	0	0	0	0	0
4/22/2024	9:00 AM	0	0	0	0	0	0	0	0	0	0	0	0	0
4/22/2024	9:15 AM	0	0	0	0	0	0	0	0	0	0	0	0	0
4/22/2024	9:30 AM	0	0	0	0	0	0	0	0	0	0	0	0	0
4/22/2024	9:45 AM	0	0	0	0	0	0	0	0	0	0	0	0	0
4/22/2024	10:00 AM	0	0	0	0	0	0	0	0	0	0	0	0	0
4/22/2024	10:15 AM	0	0	0	0	0	0	0	0	0	0	0	0	0
4/22/2024	10:30 AM	0	0	0	0	0	0	0	0	0	0	0	0	0
4/22/2024	10:45 AM	0	0	0	0	0	0	0	0	0	0	0	0	0
4/22/2024	11:00 AM	0	0	0	0	0	0	0	0	0	0	0	0	0
4/22/2024	11:15 AM	0	0	0	0	0	0	0	0	0	0	0	0	0
4/22/2024	11:30 AM	0	0	0	0	0	0	0	0	0	0	0	0	0
4/22/2024	11:45 AM	0	0	0	0	0	0	0	0	0	0	0	0	0
4/22/2024	12:00 PM	0	0	0	0	0	0	0	0	0	0	0	0	0
4/22/2024	12:15 PM	0	0	0	0	0	0	0	0	0	0	0	0	0
4/22/2024	12:30 PM	0	0	0	0	0	0	0	0	0	0	0	0	0
4/22/2024	12:45 PM	0	0	0	0	0	0	0	0	0	0	0	0	0
4/22/2024	1:00 PM	0	0	0	0	0	0	0	0	0	0	0	0	0
4/22/2024	1:15 PM	0	0	0	0	0	0	0	0	0	0	0	0	0
4/22/2024	1:30 PM	0	0	0	0	0	0	0	0	0	0	0	0	0
4/22/2024	1:45 PM	0	0	0	0	0	0	0	0	0	0	0	0	0
4/22/2024	2:00 PM	0	0	0	0	0	0	0	0	0	0	0	0	0
4/22/2024	2:15 PM	0	0	0	0	0	0	0	0	0	0	0	0	0
4/22/2024	2:30 PM	0	0	0	0	0	0	0	0	0	0	0	0	0
4/22/2024	2:45 PM	0	0	0	0	0	0	0	0	0	0	0	0	0
4/22/2024	3:00 PM	0	0	0	0	0	0	0	0	0	0	0	0	0
4/22/2024	3:15 PM	0	0	0	0	0	0	0	0	0	0	0	0	0
4/22/2024	3:30 PM	0	0	0	0	0	0	0	0	0	0	0	0	0
4/22/2024	3:45 PM	0	0	0	0	0	0	0	0	0	0	0	0	0
4/22/2024	4:00 PM	0	0	0	0	0	0	0	0	0	0	0	0	0
4/22/2024	4:15 PM	0	0	0	0	0	0	0	0	0	0	0	0	0
4/22/2024	4:30 PM	0	0	0	0	0	0	0	0	0	0	0	0	0
4/22/2024	4:45 PM	0	0	0	0	0	0	0	0	0	0	0	0	0
4/22/2024	5:00 PM	0	0	0	0	0	0	0	0	0	0	0	0	0
4/22/2024	5:15 PM	0	0	0	0	0	0	0	0	0	0	0	0	0
4/22/2024	5:30 PM	0	0	0	0	0	0	0	0	0	0	0	0	0
4/22/2024	5:45 PM	0	0	0	0	0	0	0	0	0	0	0	0	0
4/22/2024	6:00 PM	0	0	0	0	0	0	0	0	0	0	0	0	0
4/22/2024	6:15 PM	0	0	0	0	0	0	0	0	0	0	0	0	0
4/22/2024	6:30 PM	0	0	0	0	0	0	0	0	0	0	0	0	0
4/22/2024	6:45 PM	0	0	0	0	0	0	0	0	0	0	0	0	0
4/22/2024	7:00 PM	0	0	0	0	0	0	0	0	0	0	0	0	0
4/22/2024	7:15 PM	0	0	0	0	0	0	0	0	0	0	0	0	0
4/22/2024	7:30 PM	0	0	0	0	0	0	0	0	0	0	0	0	0
4/22/2024	7:45 PM	0	0	0	0	0	0	0	0	0	0	0	0	0
4/22/2024	8:00 PM	0	0	0	0	0	0	0	0	0	0	0	0	0
4/22/2024	8:15 PM	0	0	0	0	0	0	0	0	0	0	0	0	0
4/22/2024	8:30 PM	0	0	0	0	0	0	0	0	0	0	0	0	0
4/22/2024	8:45 PM	0	0	0	0	0	0	0	0	0	0	0	0	0
4/22/2024	9:00 PM	0	0	0	0	0	0	0	0	0	0	0	0	0
4/22/2024	9:15 PM	0	0	0	0	0	0	0	0	0	0	0	0	0
4/22/2024	9:30 PM	0	0	0	0	0	0	0	0	0	0	0	0	0
4/22/2024	9:45 PM	0	0	0	0	0	0	0	0	0	0	0	0	0
4/22/2024	10:00 PM	0	0	0	0	0	0	0	0	0	0	0	0	0
4/22/2024	10:15 PM	0	0	0	0	0	0	0	0	0	0	0	0	0
4/22/2024	10:30 PM	0	0	0	0	0	0	0	0	0	0	0	0	0
4/22/2024	10:45 PM	0	0	0	0	0	0	0	0	0	0	0	0	0
4/22/2024	11:00 PM	0	0	0	0	0	0	0	0	0	0	0	0	0
4/22/2024	11:15 PM	0	0	0	0	0	0	0	0	0	0	0	0	0
4/22/2024	11:30 PM	0	0	0	0	0	0	0	0	0	0	0	0	0
4/22/2024	11:45 PM	0	0	0	0	0	0	0	0	0	0	0	0	0

4/23/2024	12:00 AM	0	0	0	0	0	0	0	0	0	0	0	0	0
4/23/2024	12:15 AM	0	0	0	0	0	0	0	0	0	0	0	0	0
4/23/2024	12:30 AM	0	0	0	0	0	0	0	0	0	0	0	0	0
4/23/2024	12:45 AM	0	0	0	0	0	0	0	0	0	0	0	0	0
4/23/2024	1:00 AM	0	0	0	0	0	0	0	0	0	0	0	0	0
4/23/2024	1:15 AM	0	0	0	0	0	0	0	0	0	0	0	0	0
4/23/2024	1:30 AM	0	0	0	0	0	0	0	0	0	0	0	0	0
4/23/2024	1:45 AM	0	0	0	0	0	0	0	0	0	0	0	0	0
4/23/2024	2:00 AM	0	0	0	0	0	0	0	0	0	0	0	0	0
4/23/2024	2:15 AM	0	0	0	0	0	0	0	0	0	0	0	0	0
4/23/2024	2:30 AM	0	0	0	0	0	0	0	0	0	0	0	0	0
4/23/2024	2:45 AM	0	0	0	0	0	0	0	0	0	0	0	0	0
4/23/2024	3:00 AM	0	0	0	0	0	0	0	0	0	0	0	0	0
4/23/2024	3:15 AM	0	0	0	0	0	0	0	0	0	0	0	0	0
4/23/2024	3:30 AM	0	0	0	0	0	0	0	0	0	0	0	0	0
4/23/2024	3:45 AM	0	0	0	0	0	0	0	0	0	0	0	0	0
4/23/2024	4:00 AM	0	0	0	0	0	0	0	0	0	0	0	0	0
4/23/2024	4:15 AM	0	0	0	0	0	0	0	0	0	0	0	0	0
4/23/2024	4:30 AM	0	0	0	0	0	0	0	0	0	0	0	0	0
4/23/2024	4:45 AM	0	0	0	0	0	0	0	0	0	0	0	0	0
4/23/2024	5:00 AM	0	0	0	0	0	0	0	0	0	0	0	0	0
4/23/2024	5:15 AM	0	0	0	0	0	0	0	0	0	0	0	0	0
4/23/2024	5:30 AM	0	0	0	0	0	0	0	0	0	0	0	0	0
4/23/2024	5:45 AM	0	0	0	0	0	0	0	0	0	0	0	0	0
4/23/2024	6:00 AM	0	0	0	0	0	0	0	0	0	0	0	0	0
4/23/2024	6:15 AM	0	0	0	0	0	0	0	0	0	0	0	0	0
4/23/2024	6:30 AM	0	0	0	0	0	0	0	0	0	0	0	0	0
4/23/2024	6:45 AM	0	0	0	0	0	0	0	0	0	0	0	0	0
4/23/2024	7:00 AM	0	0	0	0	0	0	0	0	0	0	0	0	0
4/23/2024	7:15 AM	0	0	0	0	0	0	0	0	0	0	0	0	0
4/23/2024	7:30 AM	0	0	0	0	0	0	0	0	0	0	0	0	0
4/23/2024	7:45 AM	0	0	0	0	0	0	0	0	0	0	0	0	0
4/23/2024	8:00 AM	0	0	0	0	0	0	0	0	0	0	0	0	0
4/23/2024	8:15 AM	0	0	0	0	0	0	0	0	0	0	0	0	0
4/23/2024	8:30 AM	0	0	0	0	0	0	0	0	0	0	0	0	0
4/23/2024	8:45 AM	0	0	0	0	0	0	0	0	0	0	0	0	0
4/23/2024	9:00 AM	0	0	0	0	0	0	0	0	0	0	0	0	0
4/23/2024	9:15 AM	0	0	0	0	0	0	0	0	0	0	0	0	0
4/23/2024	9:30 AM	0	0	0	0	0	0	0	0	0	0	0	0	0
4/23/2024	9:45 AM	0	0	0	0	0	0	0	0	0	0	0	0	0
4/23/2024	10:00 AM	0	0	0	0	0	0	0	0	0	0	0	0	0
4/23/2024	10:15 AM	0	0	0	0	0	0	0	0	0	0	0	0	0
4/23/2024	10:30 AM	0	0	0	0	0	0	0	0	0	0	0	0	0
4/23/2024	10:45 AM	0	0	0	0	0	0	0	0	0	0	0	0	0
4/23/2024	11:00 AM	0	0	0	0	0	0	0	0	0	0	0	0	0
4/23/2024	11:15 AM	0	0	0	0	0	0	0	0	0	0	0	0	0
4/23/2024	11:30 AM	0	0	0	0	0	0	0	0	0	0	0	0	0
4/23/2024	11:45 AM	0	0	0	0	0	0	0	0	0	0	0	0	0
4/23/2024	12:00 PM	0	0	0	0	0	0	0	0	0	0	0	0	0
4/23/2024	12:15 PM	0	0	0	0	0	0	0	0	0	0	0	0	0
4/23/2024	12:30 PM	0	0	0	0	0	0	0	0	0	0	0	0	0
4/23/2024	12:45 PM	0	0	0	0	0	0	0	0	0	0	0	0	0
4/23/2024	1:00 PM	0	0	0	0	0	0	0	0	0	0	0	0	0
4/23/2024	1:15 PM	0	0	0	0	0	0	0	0	0	0	0	0	0
4/23/2024	1:30 PM	0	0	0	0	0	0	0	0	0	0	0	0	0
4/23/2024	1:45 PM	0	0	0	0	0	0	0	0	0	0	0	0	0
4/23/2024	2:00 PM	0	0	0	0	0	0	0	0	0	0	0	0	0
4/23/2024	2:15 PM	0	0	0	0	0	0	0	0	0	0	0	0	0
4/23/2024	2:30 PM	0	0	0	0	0	0	0	0	0	0	0	0	0
4/23/2024	2:45 PM	0	0	0	0	0	0	0	0	0	0	0	0	0
4/23/2024	3:00 PM	0	0	0	0	0	0	0	0	0	0	0	0	0
4/23/2024	3:15 PM	0	0	0	0	0	0	0	0	0	0	0	0	0
4/23/2024	3:30 PM	0	0	0	0	0	0	0	0	0	0	0	0	0
4/23/2024	3:45 PM	0	0	0	0	0	0	0	0	0	0	0	0	0
4/23/2024	4:00 PM	0	0	0	0	0	0	0	0	0	0	0	0	0
4/23/2024	4:15 PM	0	0	0	0	0	0	0	0	0	0	0	0	0
4/23/2024	4:30 PM	0	0	0	0	0	0	0	0	0	0	0	0	0
4/23/2024	4:45 PM	0	0	0	0	0	0	0	0	0	0	0	0	0
4/23/2024	5:00 PM	0	0	0	0	0	0	0	0	0	0	0	0	0
4/23/2024	5:15 PM	0	0	0	0	0	0	0	0	0	0	0	0	0
4/23/2024	5:30 PM	0	0	0	0	0	0	0	0	0	0	0	0	0
4/23/2024	5:45 PM	0	0	0	0	0	0	0	0	0	0	0	0	0
4/23/2024	6:00 PM	0	0	0	0	0	0	0	0	0	0	0	0	0
4/23/2024	6:15 PM	0	0	0	0	0	0	0	0	0	0	0	0	0
4/23/2024	6:30 PM	0	0	0	0	0	0	0	0	0	0	0	0	0
4/23/2024	6:45 PM	0	0	0	0	0	0	0	0	0	0	0	0	0
4/23/2024	7:00 PM	0	0	0	0	0	0	0	0	0	0	0	0	0
4/23/2024	7:15 PM	0	0	0	0	0	0	0	0	0	0	0	0	0
4/23/2024	7:30 PM	0	0	0	0	0	0	0	0	0	0	0	0	0
4/23/2024	7:45 PM	0	0	0	0	0	0	0	0	0	0	0	0	0
4/23/2024	8:00 PM	0	0	0	0	0	0	0	0	0	0	0	0	0
4/23/2024	8:15 PM	0	0	0	0	0	0	0	0	0	0	0	0	0
4/23/2024	8:30 PM	0	0	0	0	0	0	0	0	0	0	0	0	0
4/23/2024	8:45 PM	0	0	0	0	0	0	0	0	0	0	0	0	0
4/23/2024	9:00 PM	0	0	0	0	0	0	0	0	0	0	0	0	0
4/23/2024	9:15 PM	0	0	0	0	0	0	0	0	0	0	0	0	0
4/23/2024	9:30 PM	0	0	0	0	0	0	0	0	0	0	0	0	0
4/23/2024	9:45 PM	0	0	0	0	0	0	0	0	0	0	0	0	0
4/23/2024	10:00 PM	0	0	0	0	0	0	0	0	0	0	0	0	0
4/23/2024	10:15 PM	0	0	0	0	0	0	0	0	0	0	0	0	0
4/23/2024	10:30 PM	0	0	0	0	0	0	0	0	0	0	0	0	0
4/23/2024	10:45 PM	0	0	0	0	0	0	0	0	0	0	0	0	0
4/23/2024	11:00 PM	0	0	0	0	0	0	0	0	0	0	0	0	0
4/23/2024	11:15 PM	0	0	0	0	0	0	0	0	0	0	0	0	0
4/23/2024	11:30 PM	0	0	0	0	0	0	0	0	0	0	0	0	0
4/23/2024	11:45 PM	0	0	0	0	0	0	0	0	0	0	0	0	0

4/24/2024	12:00 AM	0	0	0	0	0	0	0	0	0	0	0	0	0
4/24/2024	12:15 AM	0	0	0	0	0	0	0	0	0	0	0	0	0
4/24/2024	12:30 AM	0	0	0	0	0	0	0	0	0	0	0	0	0
4/24/2024	12:45 AM	0	0	0	0	0	0	0	0	0	0	0	0	0
4/24/2024	1:00 AM	0	0	0	0	0	0	0	0	0	0	0	0	0
4/24/2024	1:15 AM	0	0	0	0	0	0	0	0	0	0	0	0	0
4/24/2024	1:30 AM	0	0	0	0	0	0	0	0	0	0	0	0	0
4/24/2024	1:45 AM	0	0	0	0	0	0	0	0	0	0	0	0	0
4/24/2024	2:00 AM	0	0	0	0	0	0	0	0	0	0	0	0	0
4/24/2024	2:15 AM	0	0	0	0	0	0	0	0	0	0	0	0	0
4/24/2024	2:30 AM	0	0	0	0	0	0	0	0	0	0	0	0	0
4/24/2024	2:45 AM	0	0	0	0	0	0	0	0	0	0	0	0	0
4/24/2024	3:00 AM	0	0	0	0	0	0	0	0	0	0	0	0	0
4/24/2024	3:15 AM	0	0	0	0	0	0	0	0	0	0	0	0	0
4/24/2024	3:30 AM	0	0	0	0	0	0	0	0	0	0	0	0	0
4/24/2024	3:45 AM	0	0	0	0	0	0	0	0	0	0	0	0	0
4/24/2024	4:00 AM	0	0	0	0	0	0	0	0	0	0	0	0	0
4/24/2024	4:15 AM	0	0	0	0	0	0	0	0	0	0	0	0	0
4/24/2024	4:30 AM	0	0	0	0	0	0	0	0	0	0	0	0	0
4/24/2024	4:45 AM	0	0	0	0	0	0	0	0	0	0	0	0	0
4/24/2024	5:00 AM	0	0	0	0	0	0	0	0	0	0	0	0	0
4/24/2024	5:15 AM	0	0	0	0	0	0	0	0	0	0	0	0	0
4/24/2024	5:30 AM	0	0	0	0	0	0	0	0	0	0	0	0	0
4/24/2024	5:45 AM	0	0	0	0	0	0	0	0	0	0	0	0	0
4/24/2024	6:00 AM	0	0	0	0	0	0	0	0	0	0	0	0	0
4/24/2024	6:15 AM	0	0	0	0	0	0	0	0	0	0	0	0	0
4/24/2024	6:30 AM	0	0	0	0	0	0	0	0	0	0	0	0	0
4/24/2024	6:45 AM	0	0	0	0	0	0	0	0	0	0	0	0	0
4/24/2024	7:00 AM	0	0	0	0	0	0	0	0	0	0	0	0	0
4/24/2024	7:15 AM	0	0	0	0	0	0	0	0	0	0	0	0	0
4/24/2024	7:30 AM	0	0	0	0	0	0	0	0	0	0	0	0	0
4/24/2024	7:45 AM	0	0	0	0	0	0	0	0	0	0	0	0	0
4/24/2024	8:00 AM	0	0	0	0	0	0	0	0	0	0	0	0	0
4/24/2024	8:15 AM	0	0	0	0	0	0	0	0	0	0	0	0	0
4/24/2024	8:30 AM	0	0	0	0	0	0	0	0	0	0	0	0	0
4/24/2024	8:45 AM	0	0	0	0	0	0	0	0	0	0	0	0	0
4/24/2024	9:00 AM	0	0	0	0	0	0	0	0	0	0	0	0	0
4/24/2024	9:15 AM	0	0	0	0	0	0	0	0	0	0	0	0	0
4/24/2024	9:30 AM	0	0	0	0	0	0	0	0	0	0	0	0	0
4/24/2024	9:45 AM	0	0	0	0	0	0	0	0	0	0	0	0	0
4/24/2024	10:00 AM	0	0	0	0	0	0	0	0	0	0	0	0	0
4/24/2024	10:15 AM	0	0	0	0	0	0	0	0	0	0	0	0	0
4/24/2024	10:30 AM	0	0	0	0	0	0	0	0	0	0	0	0	0
4/24/2024	10:45 AM	0	0	0	0	0	0	0	0	0	0	0	0	0
4/24/2024	11:00 AM	0	0	0	0	0	0	0	0	0	0	0	0	0
4/24/2024	11:15 AM	0	0	0	0	0	0	0	0	0	0	0	0	0
4/24/2024	11:30 AM	0	0	0	0	0	0	0	0	0	0	0	0	0
4/24/2024	11:45 AM	0	0	0	0	0	0	0	0	0	0	0	0	0
4/24/2024	12:00 PM	0	0	0	0	0	0	0	0	0	0	0	0	0
4/24/2024	12:15 PM	0	0	0	0	0	0	0	0	0	0	0	0	0
4/24/2024	12:30 PM	0	0	0	0	0	0	0	0	0	0	0	0	0
4/24/2024	12:45 PM	0	0	0	0	0	0	0	0	0	0	0	0	0
4/24/2024	1:00 PM	0	0	0	0	0	0	0	0	0	0	0	0	0
4/24/2024	1:15 PM	0	0	0	0	0	0	0	0	0	0	0	0	0
4/24/2024	1:30 PM	0	0	0	0	0	0	0	0	0	0	0	0	0
4/24/2024	1:45 PM	0	0	0	0	0	0	0	0	0	0	0	0	0
4/24/2024	2:00 PM	0	0	0	0	0	0	0	0	0	0	0	0	0
4/24/2024	2:15 PM	0	0	0	0	0	0	0	0	0	0	0	0	0
4/24/2024	2:30 PM	0	0	0	0	0	0	0	0	0	0	0	0	0
4/24/2024	2:45 PM	0	0	0	0	0	0	0	0	0	0	0	0	0
4/24/2024	3:00 PM	0	0	0	0	0	0	0	0	0	0	0	0	0
4/24/2024	3:15 PM	0	0	0	0	0	0	0	0	0	0	0	0	0
4/24/2024	3:30 PM	0	0	0	0	0	0	0	0	0	0	0	0	0
4/24/2024	3:45 PM	0	0	0	0	0	0	0	0	0	0	0	0	0
4/24/2024	4:00 PM	0	0	0	0	0	0	0	0	0	0	0	0	0
4/24/2024	4:15 PM	0	0	0	0	0	0	0	0	0	0	0	0	0
4/24/2024	4:30 PM	0	0	0	0	0	0	0	0	0	0	0	0	0
4/24/2024	4:45 PM	0	0	0	0	0	0	0	0	0	0	0	0	0
4/24/2024	5:00 PM	0	0	0	0	0	0	0	0	0	0	0	0	0
4/24/2024	5:15 PM	0	0	0	0	0	0	0	0	0	0	0	0	0
4/24/2024	5:30 PM	0	0	0	0	0	0	0	0	0	0	0	0	0
4/24/2024	5:45 PM	0	0	0	0	0	0	0	0	0	0	0	0	0
4/24/2024	6:00 PM	0	0	0	0	0	0	0	0	0	0	0	0	0
4/24/2024	6:15 PM	0	0	0	0	0	0	0	0	0	0	0	0	0
4/24/2024	6:30 PM	0	0	0	0	0	0	0	0	0	0	0	0	0
4/24/2024	6:45 PM	0	0	0	0	0	0	0	0	0	0	0	0	0
4/24/2024	7:00 PM	0	0	0	0	0	0	0	0	0	0	0	0	0
4/24/2024	7:15 PM	0	0	0	0	0	0	0	0	0	0	0	0	0
4/24/2024	7:30 PM	0	0	0	0	0	0	0	0	0	0	0	0	0
4/24/2024	7:45 PM	0	0	0	0	0	0	0	0	0	0	0	0	0
4/24/2024	8:00 PM	0	0	0	0	0	0	0	0	0	0	0	0	0
4/24/2024	8:15 PM	0	0	0	0	0	0	0	0	0	0	0	0	0
4/24/2024	8:30 PM	0	0	0	0	0	0	0	0	0	0	0	0	0
4/24/2024	8:45 PM	0	0	0	0	0	0	0	0	0	0	0	0	0
4/24/2024	9:00 PM	0	0	0	0	0	0	0	0	0	0	0	0	0
4/24/2024	9:15 PM	0	0	0	0	0	0	0	0	0	0	0	0	0
4/24/2024	9:30 PM	0	0	0	0	0	0	0	0	0	0	0	0	0
4/24/2024	9:45 PM	0	0	0	0	0	0	0	0	0	0	0	0	0
4/24/2024	10:00 PM	0	0	0	0	0	0	0	0	0	0	0	0	0
4/24/2024	10:15 PM	0	0	0	0	0	0	0	0	0	0	0	0	0
4/24/2024	10:30 PM	0	0	0	0	0	0	0	0	0	0	0	0	0
4/24/2024	10:45 PM	0	0	0	0	0	0	0	0	0	0	0	0	0
4/24/2024	11:00 PM	0	0	0	0	0	0	0	0	0	0	0	0	0
4/24/2024	11:15 PM	0	0	0	0	0	0	0	0	0	0	0	0	0
4/24/2024	11:30 PM	0	0	0	0	0	0	0	0	0	0	0	0	0
4/24/2024	11:45 PM	0	0	0	0	0	0	0	0	0	0	0	0	0

4/25/2024	12:00 AM	0	0	0	0	0	0	0	0	0	0	0	0	0
4/25/2024	12:15 AM	0	0	0	0	0	0	0	0	0	0	0	0	0
4/25/2024	12:30 AM	0	0	0	0	0	0	0	0	0	0	0	0	0
4/25/2024	12:45 AM	0	0	0	0	0	0	0	0	0	0	0	0	0
4/25/2024	1:00 AM	0	0	0	0	0	0	0	0	0	0	0	0	0
4/25/2024	1:15 AM	0	0	0	0	0	0	0	0	0	0	0	0	0
4/25/2024	1:30 AM	0	0	0	0	0	0	0	0	0	0	0	0	0
4/25/2024	1:45 AM	0	0	0	0	0	0	0	0	0	0	0	0	0
4/25/2024	2:00 AM	0	0	0	0	0	0	0	0	0	0	0	0	0
4/25/2024	2:15 AM	0	0	0	0	0	0	0	0	0	0	0	0	0
4/25/2024	2:30 AM	0	0	0	0	0	0	0	0	0	0	0	0	0
4/25/2024	2:45 AM	0	0	0	0	0	0	0	0	0	0	0	0	0
4/25/2024	3:00 AM	0	0	0	0	0	0	0	0	0	0	0	0	0
4/25/2024	3:15 AM	0	0	0	0	0	0	0	0	0	0	0	0	0
4/25/2024	3:30 AM	0	0	0	0	0	0	0	0	0	0	0	0	0
4/25/2024	3:45 AM	0	0	0	0	0	0	0	0	0	0	0	0	0
4/25/2024	4:00 AM	0	0	0	0	0	0	0	0	0	0	0	0	0
4/25/2024	4:15 AM	0	0	0	0	0	0	0	0	0	0	0	0	0
4/25/2024	4:30 AM	0	0	0	0	0	0	0	0	0	0	0	0	0
4/25/2024	4:45 AM	0	0	0	0	0	0	0	0	0	0	0	0	0
4/25/2024	5:00 AM	0	0	0	0	0	0	0	0	0	0	0	0	0
4/25/2024	5:15 AM	0	0	0	0	0	0	0	0	0	0	0	0	0
4/25/2024	5:30 AM	0	0	0	0	0	0	0	0	0	0	0	0	0
4/25/2024	5:45 AM	0	0	0	0	0	0	0	0	0	0	0	0	0
4/25/2024	6:00 AM	0	0	0	0	0	0	0	0	0	0	0	0	0
4/25/2024	6:15 AM	0	0	0	0	0	0	0	0	0	0	0	0	0
4/25/2024	6:30 AM	0	0	0	0	0	0	0	0	0	0	0	0	0
4/25/2024	6:45 AM	0	0	0	0	0	0	0	0	0	0	0	0	0
4/25/2024	7:00 AM	0	0	0	0	0	0	0	0	0	0	0	0	0
4/25/2024	7:15 AM	0	0	0	0	0	0	0	0	0	0	0	0	0
4/25/2024	7:30 AM	0	0	0	0	0	0	0	0	0	0	0	0	0
4/25/2024	7:45 AM	0	0	0	0	0	0	0	0	0	0	0	0	0
4/25/2024	8:00 AM	0	0	0	0	0	0	0	0	0	0	0	0	0
4/25/2024	8:15 AM	0	0	0	0	0	0	0	0	0	0	0	0	0
4/25/2024	8:30 AM	0	0	0	0	0	0	0	0	0	0	0	0	0
4/25/2024	8:45 AM	0	0	0	0	0	0	0	0	0	0	0	0	0
4/25/2024	9:00 AM	0	0	0	0	0	0	0	0	0	0	0	0	0
4/25/2024	9:15 AM	0	0	0	0	0	0	0	0	0	0	0	0	0
4/25/2024	9:30 AM	0	0	0	0	0	0	0	0	0	0	0	0	0
4/25/2024	9:45 AM	0	0	0	0	0	0	0	0	0	0	0	0	0
4/25/2024	10:00 AM	0	0	0	0	0	0	0	0	0	0	0	0	0
4/25/2024	10:15 AM	0	0	0	0	0	0	0	0	0	0	0	0	0
4/25/2024	10:30 AM	0	0	0	0	0	0	0	0	0	0	0	0	0
4/25/2024	10:45 AM	0	0	0	0	0	0	0	0	0	0	0	0	0
4/25/2024	11:00 AM	0	0	0	0	0	0	0	0	0	0	0	0	0
4/25/2024	11:15 AM	0	0	0	0	0	0	0	0	0	0	0	0	0
4/25/2024	11:30 AM	0	0	0	0	0	0	0	0	0	0	0	0	0
4/25/2024	11:45 AM	0	0	0	0	0	0	0	0	0	0	0	0	0
4/25/2024	12:00 PM	0	0	0	0	0	0	0	0	0	0	0	0	0
4/25/2024	12:15 PM	0	0	0	0	0	0	0	0	0	0	0	0	0
4/25/2024	12:30 PM	0	0	0	0	0	0	0	0	0	0	0	0	0
4/25/2024	12:45 PM	0	0	0	0	0	0	0	0	0	0	0	0	0
4/25/2024	1:00 PM	0	0	0	0	0	0	0	0	0	0	0	0	0
4/25/2024	1:15 PM	0	0	0	0	0	0	0	0	0	0	0	0	0
4/25/2024	1:30 PM	0	0	0	0	0	0	0	0	0	0	0	0	0
4/25/2024	1:45 PM	0	0	0	0	0	0	0	0	0	0	0	0	0
4/25/2024	2:00 PM	0	0	0	0	0	0	0	0	0	0	0	0	0
4/25/2024	2:15 PM	0	0	0	0	0	0	0	0	0	0	0	0	0
4/25/2024	2:30 PM	0	0	0	0	0	0	0	0	0	0	0	0	0
4/25/2024	2:45 PM	0	0	0	0	0	0	0	0	0	0	0	0	0
4/25/2024	3:00 PM	0	0	0	0	0	0	0	0	0	0	0	0	0
4/25/2024	3:15 PM	0	0	0	0	0	0	0	0	0	0	0	0	0
4/25/2024	3:30 PM	0	0	0	0	0	0	0	0	0	0	0	0	0
4/25/2024	3:45 PM	0	0	0	0	0	0	0	0	0	0	0	0	0
4/25/2024	4:00 PM	0	0	0	0	0	0	0	0	0	0	0	0	0
4/25/2024	4:15 PM	0	0	0	0	0	0	0	0	0	0	0	0	0
4/25/2024	4:30 PM	0	0	0	0	0	0	0	0	0	0	0	0	0
4/25/2024	4:45 PM	0	0	0	0	0	0	0	0	0	0	0	0	0
4/25/2024	5:00 PM	0	0	0	0	0	0	0	0	0	0	0	0	0
4/25/2024	5:15 PM	0	0	0	0	0	0	0	0	0	0	0	0	0
4/25/2024	5:30 PM	0	0	0	0	0	0	0	0	0	0	0	0	0
4/25/2024	5:45 PM	0	0	0	0	0	0	0	0	0	0	0	0	0
4/25/2024	6:00 PM	0	0	0	0	0	0	0	0	0	0	0	0	0
4/25/2024	6:15 PM	0	0	0	0	0	0	0	0	0	0	0	0	0
4/25/2024	6:30 PM	0	0	0	0	0	0	0	0	0	0	0	0	0
4/25/2024	6:45 PM	0	0	0	0	0	0	0	0	0	0	0	0	0
4/25/2024	7:00 PM	0	0	0	0	0	0	0	0	0	0	0	0	0
4/25/2024	7:15 PM	0	0	0	0	0	0	0	0	0	0	0	0	0
4/25/2024	7:30 PM	0	0	0	0	0	0	0	0	0	0	0	0	0
4/25/2024	7:45 PM	0	0	0	0	0	0	0	0	0	0	0	0	0
4/25/2024	8:00 PM	0	0	0	0	0	0	0	0	0	0	0	0	0
4/25/2024	8:15 PM	0	0	0	0	0	0	0	0	0	0	0	0	0
4/25/2024	8:30 PM	0	0	0	0	0	0	0	0	0	0	0	0	0
4/25/2024	8:45 PM	0	0	0	0	0	0	0	0	0	0	0	0	0
4/25/2024	9:00 PM	0	0	0	0	0	0	0	0	0	0	0	0	0
4/25/2024	9:15 PM	0	0	0	0	0	0	0	0	0	0	0	0	0
4/25/2024	9:30 PM	0	0	0	0	0	0	0	0	0	0	0	0	0
4/25/2024	9:45 PM	0	0	0	0	0	0	0	0	0	0	0	0	0
4/25/2024	10:00 PM	0	0	0	0	0	0	0	0	0	0	0	0	0
4/25/2024	10:15 PM	0	0	0	0	0	0	0	0	0	0	0	0	0
4/25/2024	10:30 PM	0	0	0	0	0	0	0	0	0	0	0	0	0
4/25/2024	10:45 PM	0	0	0	0	0	0	0	0	0	0	0	0	0
4/25/2024	11:00 PM	0	0	0	0	0	0	0	0	0	0	0	0	0
4/25/2024	11:15 PM	0	0	0	0	0	0	0	0	0	0	0	0	0
4/25/2024	11:30 PM	0	0	0	0	0	0	0	0	0	0	0	0	0
4/25/2024	11:45 PM	0	0	0	0	0	0	0	0	0	0	0	0	0

4/26/2024	12:00 AM	0	0	0	0	0	0	0	0	0	0	0	0	0
4/26/2024	12:15 AM	0	0	0	0	0	0	0	0	0	0	0	0	0
4/26/2024	12:30 AM	0	0	0	0	0	0	0	0	0	0	0	0	0
4/26/2024	12:45 AM	0	0	0	0	0	0	0	0	0	0	0	0	0
4/26/2024	1:00 AM	0	0	0	0	0	0	0	0	0	0	0	0	0
4/26/2024	1:15 AM	0	0	0	0	0	0	0	0	0	0	0	0	0
4/26/2024	1:30 AM	0	0	0	0	0	0	0	0	0	0	0	0	0
4/26/2024	1:45 AM	0	0	0	0	0	0	0	0	0	0	0	0	0
4/26/2024	2:00 AM	0	0	0	0	0	0	0	0	0	0	0	0	0
4/26/2024	2:15 AM	0	0	0	0	0	0	0	0	0	0	0	0	0
4/26/2024	2:30 AM	0	0	0	0	0	0	0	0	0	0	0	0	0
4/26/2024	2:45 AM	0	0	0	0	0	0	0	0	0	0	0	0	0
4/26/2024	3:00 AM	0	0	0	0	0	0	0	0	0	0	0	0	0
4/26/2024	3:15 AM	0	0	0	0	0	0	0	0	0	0	0	0	0
4/26/2024	3:30 AM	0	0	0	0	0	0	0	0	0	0	0	0	0
4/26/2024	3:45 AM	0	0	0	0	0	0	0	0	0	0	0	0	0
4/26/2024	4:00 AM	0	0	0	0	0	0	0	0	0	0	0	0	0
4/26/2024	4:15 AM	0	0	0	0	0	0	0	0	0	0	0	0	0
4/26/2024	4:30 AM	0	0	0	0	0	0	0	0	0	0	0	0	0
4/26/2024	4:45 AM	0	0	0	0	0	0	0	0	0	0	0	0	0
4/26/2024	5:00 AM	0	0	0	0	0	0	0	0	0	0	0	0	0
4/26/2024	5:15 AM	0	0	0	0	0	0	0	0	0	0	0	0	0
4/26/2024	5:30 AM	0	0	0	0	0	0	0	0	0	0	0	0	0
4/26/2024	5:45 AM	0	0	0	0	0	0	0	0	0	0	0	0	0
4/26/2024	6:00 AM	0	0	0	0	0	0	0	0	0	0	0	0	0
4/26/2024	6:15 AM	0	0	0	0	0	0	0	0	0	0	0	0	0
4/26/2024	6:30 AM	0	0	0	0	0	0	0	0	0	0	0	0	0
4/26/2024	6:45 AM	0	0	0	0	0	0	0	0	0	0	0	0	0
4/26/2024	7:00 AM	0	0	0	0	0	0	0	0	0	0	0	0	0
4/26/2024	7:15 AM	0	0	0	0	0	0	0	0	0	0	0	0	0
4/26/2024	7:30 AM	0	0	0	0	0	0	0	0	0	0	0	0	0
4/26/2024	7:45 AM	0	0	0	0	0	0	0	0	0	0	0	0	0
4/26/2024	8:00 AM	0	0	0	0	0	0	0	0	0	0	0	0	0
4/26/2024	8:15 AM	0	0	0	0	0	0	0	0	0	0	0	0	0
4/26/2024	8:30 AM	0	0	0	0	0	0	0	0	0	0	0	0	0
4/26/2024	8:45 AM	0	0	0	0	0	0	0	0	0	0	0	0	0
4/26/2024	9:00 AM	0	0	0	0	0	0	0	0	0	0	0	0	0
4/26/2024	9:15 AM	0	0	0	0	0	0	0	0	0	0	0	0	0
4/26/2024	9:30 AM	0	0	0	0	0	0	0	0	0	0	0	0	0
4/26/2024	9:45 AM	0	0	0	0	0	0	0	0	0	0	0	0	0
4/26/2024	10:00 AM	0	0	0	0	0	0	0	0	0	0	0	0	0
4/26/2024	10:15 AM	0	0	0	0	0	0	0	0	0	0	0	0	0
4/26/2024	10:30 AM	0	0	0	0	0	0	0	0	0	0	0	0	0
4/26/2024	10:45 AM	0	0	0	0	0	0	0	0	0	0	0	0	0
4/26/2024	11:00 AM	0	0	0	0	0	0	0	0	0	0	0	0	0
4/26/2024	11:15 AM	0	0	0	0	0	0	0	0	0	0	0	0	0
4/26/2024	11:30 AM	0	0	0	0	0	0	0	0	0	0	0	0	0
4/26/2024	11:45 AM	0	0	0	0	0	0	0	0	0	0	0	0	0
4/26/2024	12:00 PM	0	0	0	0	0	0	0	0	0	0	0	0	0
4/26/2024	12:15 PM	0	0	0	0	0	0	0	0	0	0	0	0	0
4/26/2024	12:30 PM	0	0	0	0	0	0	0	0	0	0	0	0	0
4/26/2024	12:45 PM	0	0	0	0	0	0	0	0	0	0	0	0	0
4/26/2024	1:00 PM	0	0	0	0	0	0	0	0	0	0	0	0	0
4/26/2024	1:15 PM	0	0	0	0	0	0	0	0	0	0	0	0	0
4/26/2024	1:30 PM	0	0	0	0	0	0	0	0	0	0	0	0	0
4/26/2024	1:45 PM	0	0	0	0	0	0	0	0	0	0	0	0	0
4/26/2024	2:00 PM	0	0	0	0	0	0	0	0	0	0	0	0	0
4/26/2024	2:15 PM	0	0	0	0	0	0	0	0	0	0	0	0	0
4/26/2024	2:30 PM	0	0	0	0	0	0	0	0	0	0	0	0	0
4/26/2024	2:45 PM	0	0	0	0	0	0	0	0	0	0	0	0	0
4/26/2024	3:00 PM	0	0	0	0	0	0	0	0	0	0	0	0	0
4/26/2024	3:15 PM	0	0	0	0	0	0	0	0	0	0	0	0	0
4/26/2024	3:30 PM	0	0	0	0	0	0	0	0	0	0	0	0	0
4/26/2024	3:45 PM	0	0	0	0	0	0	0	0	0	0	0	0	0
4/26/2024	4:00 PM	0	0	0	0	0	0	0	0	0	0	0	0	0
4/26/2024	4:15 PM	0	0	0	0	0	0	0	0	0	0	0	0	0
4/26/2024	4:30 PM	0	0	0	0	0	0	0	0	0	0	0	0	0
4/26/2024	4:45 PM	0	0	0	0	0	0	0	0	0	0	0	0	0
4/26/2024	5:00 PM	0	0	0	0	0	0	0	0	0	0	0	0	0
4/26/2024	5:15 PM	0	0	0	0	0	0	0	0	0	0	0	0	0
4/26/2024	5:30 PM	0	0	0	0	0	0	0	0	0	0	0	0	0
4/26/2024	5:45 PM	0	0	0	0	0	0	0	0	0	0	0	0	0
4/26/2024	6:00 PM	0	0	0	0	0	0	0	0	0	0	0	0	0
4/26/2024	6:15 PM	0	0	0	0	0	0	0	0	0	0	0	0	0
4/26/2024	6:30 PM	0	0	0	0	0	0	0	0	0	0	0	0	0
4/26/2024	6:45 PM	0	0	0	0	0	0	0	0	0	0	0	0	0
4/26/2024	7:00 PM	0	0	0	0	0	0	0	0	0	0	0	0	0
4/26/2024	7:15 PM	0	0	0	0	0	0	0	0	0	0	0	0	0
4/26/2024	7:30 PM	0	0	0	0	0	0	0	0	0	0	0	0	0
4/26/2024	7:45 PM	0	0	0	0	0	0	0	0	0	0	0	0	0
4/26/2024	8:00 PM	0	0	0	0	0	0	0	0	0	0	0	0	0
4/26/2024	8:15 PM	0	0	0	0	0	0	0	0	0	0	0	0	0
4/26/2024	8:30 PM	0	0	0	0	0	0	0	0	0	0	0	0	0
4/26/2024	8:45 PM	0	0	0	0	0	0	0	0	0	0	0	0	0
4/26/2024	9:00 PM	0	0	0	0	0	0	0	0	0	0	0	0	0
4/26/2024	9:15 PM	0	0	0	0	0	0	0	0	0	0	0	0	0
4/26/2024	9:30 PM	0	0	0	0	0	0	0	0	0	0	0	0	0
4/26/2024	9:45 PM	0	0	0	0	0	0	0	0	0	0	0	0	0
4/26/2024	10:00 PM	0	0	0	0	0	0	0	0	0	0	0	0	0
4/26/2024	10:15 PM	0	0	0	0	0	0	0	0	0	0	0	0	0
4/26/2024	10:30 PM	0	0	0	0	0	0	0	0	0	0	0	0	0
4/26/2024	10:45 PM	0	0	0	0	0	0	0	0	0	0	0	0	0
4/26/2024	11:00 PM	0	0	0	0	0	0	0	0	0	0	0	0	0
4/26/2024	11:15 PM	0	0	0	0	0	0	0	0	0	0	0	0	0
4/26/2024	11:30 PM	0	0	0	0	0	0	0	0	0	0	0	0	0
4/26/2024	11:45 PM	0	0	0	0	0	0	0	0	0	0	0	0	0

4/27/2024	12:00 AM	0	0	0	0	0	0	0	0	0	0	0	0	0
4/27/2024	12:15 AM	0	0	0	0	0	0	0	0	0	0	0	0	0
4/27/2024	12:30 AM	0	0	0	0	0	0	0	0	0	0	0	0	0
4/27/2024	12:45 AM	0	0	0	0	0	0	0	0	0	0	0	0	0
4/27/2024	1:00 AM	0	0	0	0	0	0	0	0	0	0	0	0	0
4/27/2024	1:15 AM	0	0	0	0	0	0	0	0	0	0	0	0	0
4/27/2024	1:30 AM	0	0	0	0	0	0	0	0	0	0	0	0	0
4/27/2024	1:45 AM	0	0	0	0	0	0	0	0	0	0	0	0	0
4/27/2024	2:00 AM	0	0	0	0	0	0	0	0	0	0	0	0	0
4/27/2024	2:15 AM	0	0	0	0	0	0	0	0	0	0	0	0	0
4/27/2024	2:30 AM	0	0	0	0	0	0	0	0	0	0	0	0	0
4/27/2024	2:45 AM	0	0	0	0	0	0	0	0	0	0	0	0	0
4/27/2024	3:00 AM	0	0	0	0	0	0	0	0	0	0	0	0	0
4/27/2024	3:15 AM	0	0	0	0	0	0	0	0	0	0	0	0	0
4/27/2024	3:30 AM	0	0	0	0	0	0	0	0	0	0	0	0	0
4/27/2024	3:45 AM	0	0	0	0	0	0	0	0	0	0	0	0	0
4/27/2024	4:00 AM	0	0	0	0	0	0	0	0	0	0	0	0	0
4/27/2024	4:15 AM	0	0	0	0	0	0	0	0	0	0	0	0	0
4/27/2024	4:30 AM	0	0	0	0	0	0	0	0	0	0	0	0	0
4/27/2024	4:45 AM	0	0	0	0	0	0	0	0	0	0	0	0	0
4/27/2024	5:00 AM	0	0	0	0	0	0	0	0	0	0	0	0	0
4/27/2024	5:15 AM	0	0	0	0	0	0	0	0	0	0	0	0	0
4/27/2024	5:30 AM	0	0	0	0	0	0	0	0	0	0	0	0	0
4/27/2024	5:45 AM	0	0	0	0	0	0	0	0	0	0	0	0	0
4/27/2024	6:00 AM	0	0	0	0	0	0	0	0	0	0	0	0	0
4/27/2024	6:15 AM	0	0	0	0	0	0	0	0	0	0	0	0	0
4/27/2024	6:30 AM	0	0	0	0	0	0	0	0	0	0	0	0	0
4/27/2024	6:45 AM	0	0	0	0	0	0	0	0	0	0	0	0	0
4/27/2024	7:00 AM	0	0	0	0	0	0	0	0	0	0	0	0	0
4/27/2024	7:15 AM	0	0	0	0	0	0	0	0	0	0	0	0	0
4/27/2024	7:30 AM	0	0	0	0	0	0	0	0	0	0	0	0	0
4/27/2024	7:45 AM	0	0	0	0	0	0	0	0	0	0	0	0	0
4/27/2024	8:00 AM	0	0	0	0	0	0	0	0	0	0	0	0	0
4/27/2024	8:15 AM	0	0	0	0	0	0	0	0	0	0	0	0	0
4/27/2024	8:30 AM	0	0	0	0	0	0	0	0	0	0	0	0	0
4/27/2024	8:45 AM	0	0	0	0	0	0	0	0	0	0	0	0	0
4/27/2024	9:00 AM	0	0	0	0	0	0	0	0	0	0	0	0	0
4/27/2024	9:15 AM	0	0	0	0	0	0	0	0	0	0	0	0	0
4/27/2024	9:30 AM	0	0	0	0	0	0	0	0	0	0	0	0	0
4/27/2024	9:45 AM	0	0	0	0	0	0	0	0	0	0	0	0	0
4/27/2024	10:00 AM	0	0	0	0	0	0	0	0	0	0	0	0	0
4/27/2024	10:15 AM	0	0	0	0	0	0	0	0	0	0	0	0	0
4/27/2024	10:30 AM	0	0	0	0	0	0	0	0	0	0	0	0	0
4/27/2024	10:45 AM	0	0	0	0	0	0	0	0	0	0	0	0	0
4/27/2024	11:00 AM	0	0	0	0	0	0	0	0	0	0	0	0	0
4/27/2024	11:15 AM	0	0	0	0	0	0	0	0	0	0	0	0	0
4/27/2024	11:30 AM	0	0	0	0	0	0	0	0	0	0	0	0	0
4/27/2024	11:45 AM	0	0	0	0	0	0	0	0	0	0	0	0	0
4/27/2024	12:00 PM	0	0	0	0	0	0	0	0	0	0	0	0	0
4/27/2024	12:15 PM	0	0	0	0	0	0	0	0	0	0	0	0	0
4/27/2024	12:30 PM	0	0	0	0	0	0	0	0	0	0	0	0	0
4/27/2024	12:45 PM	0	0	0	0	0	0	0	0	0	0	0	0	0
4/27/2024	1:00 PM	0	0	0	0	0	0	0	0	0	0	0	0	0
4/27/2024	1:15 PM	0	0	0	0	0	0	0	0	0	0	0	0	0
4/27/2024	1:30 PM	0	0	0	0	0	0	0	0	0	0	0	0	0
4/27/2024	1:45 PM	0	0	0	0	0	0	0	0	0	0	0	0	0
4/27/2024	2:00 PM	0	0	0	0	0	0	0	0	0	0	0	0	0
4/27/2024	2:15 PM	0	0	0	0	0	0	0	0	0	0	0	0	0
4/27/2024	2:30 PM	0	0	0	0	0	0	0	0	0	0	0	0	0
4/27/2024	2:45 PM	0	0	0	0	0	0	0	0	0	0	0	0	0
4/27/2024	3:00 PM	0	0	0	0	0	0	0	0	0	0	0	0	0
4/27/2024	3:15 PM	0	0	0	0	0	0	0	0	0	0	0	0	0
4/27/2024	3:30 PM	0	0	0	0	0	0	0	0	0	0	0	0	0
4/27/2024	3:45 PM	0	0	0	0	0	0	0	0	0	0	0	0	0
4/27/2024	4:00 PM	0	0	0	0	0	0	0	0	0	0	0	0	0
4/27/2024	4:15 PM	0	0	0	0	0	0	0	0	0	0	0	0	0
4/27/2024	4:30 PM	0	0	0	0	0	0	0	0	0	0	0	0	0
4/27/2024	4:45 PM	0	0	0	0	0	0	0	0	0	0	0	0	0
4/27/2024	5:00 PM	0	0	0	0	0	0	0	0	0	0	0	0	0
4/27/2024	5:15 PM	0	0	0	0	0	0	0	0	0	0	0	0	0
4/27/2024	5:30 PM	0	0	0	0	0	0	0	0	0	0	0	0	0
4/27/2024	5:45 PM	0	0	0	0	0	0	0	0	0	0	0	0	0
4/27/2024	6:00 PM	0	0	0	0	0	0	0	0	0	0	0	0	0
4/27/2024	6:15 PM	0	0	0	0	0	0	0	0	0	0	0	0	0
4/27/2024	6:30 PM	0	0	0	0	0	0	0	0	0	0	0	0	0
4/27/2024	6:45 PM	0	0	0	0	0	0	0	0	0	0	0	0	0
4/27/2024	7:00 PM	0	0	0	0	0	0	0	0	0	0	0	0	0
4/27/2024	7:15 PM	0	0	0	0	0	0	0	0	0	0	0	0	0
4/27/2024	7:30 PM	0	0	0	0	0	0	0	0	0	0	0	0	0
4/27/2024	7:45 PM	0	0	0	0	0	0	0	0	0	0	0	0	0
4/27/2024	8:00 PM	0	0	0	0	0	0	0	0	0	0	0	0	0
4/27/2024	8:15 PM	0	0	0	0	0	0	0	0	0	0	0	0	0
4/27/2024	8:30 PM	0	0	0	0	0	0	0	0	0	0	0	0	0
4/27/2024	8:45 PM	0	0	0	0	0	0	0	0	0	0	0	0	0
4/27/2024	9:00 PM	0	0	0	0	0	0	0	0	0	0	0	0	0
4/27/2024	9:15 PM	0	0	0	0	0	0	0	0	0	0	0	0	0
4/27/2024	9:30 PM	0	0	0	0	0	0	0	0	0	0	0	0	0
4/27/2024	9:45 PM	0	0	0	0	0	0	0	0	0	0	0	0	0
4/27/2024	10:00 PM	0	0	0	0	0	0	0	0	0	0	0	0	0
4/27/2024	10:15 PM	0	0	0	0	0	0	0	0	0	0	0	0	0
4/27/2024	10:30 PM	0	0	0	0	0	0	0	0	0	0	0	0	0
4/27/2024	10:45 PM	0	0	0	0	0	0	0	0	0	0	0	0	0
4/27/2024	11:00 PM	0	0	0	0	0	0	0	0	0	0	0	0	0
4/27/2024	11:15 PM	0	0	0	0	0	0	0	0	0	0	0	0	0
4/27/2024	11:30 PM	0	0	0	0	0	0	0	0	0	0	0	0	0
4/27/2024	11:45 PM	0	0	0	0	0	0	0	0	0	0	0	0	0

SB
File Name:
Start Date: 4/21/2024
Start Time: 0
Site Code: 10
Station ID: 1
Location 1: I-26 S/Bound On-Ramp, south of I-20
Location 2:

Date	Time	1	2	3	4	5	6	7	8	9	10	11	12	13
4/21/2024	12:00 AM	0	22	2	0	0	0	0	0	0	0	0	0	0
4/21/2024	12:15 AM	0	19	1	0	0	0	0	0	0	0	0	0	0
4/21/2024	12:30 AM	0	19	1	0	0	0	0	0	0	0	0	0	0
4/21/2024	12:45 AM	0	13	1	0	0	0	0	0	0	0	0	0	0
4/21/2024	1:00 AM	0	12	1	0	0	0	0	0	0	0	0	0	0
4/21/2024	1:15 AM	0	11	1	0	0	0	0	0	0	0	0	0	0
4/21/2024	1:30 AM	0	12	1	0	0	0	0	0	2	0	0	0	0
4/21/2024	1:45 AM	0	9	2	0	0	0	0	0	1	0	0	0	0
4/21/2024	2:00 AM	0	6	0	0	0	0	0	0	0	0	0	0	0
4/21/2024	2:15 AM	0	7	1	0	0	0	0	0	1	0	0	0	0
4/21/2024	2:30 AM	0	3	0	0	0	0	0	0	1	0	0	0	0
4/21/2024	2:45 AM	0	4	1	0	0	0	0	0	0	0	0	0	0
4/21/2024	3:00 AM	0	6	1	0	0	0	0	0	0	0	0	0	0
4/21/2024	3:15 AM	0	5	1	0	0	0	0	0	0	0	0	0	0
4/21/2024	3:30 AM	0	5	0	0	0	0	0	1	0	0	0	0	0
4/21/2024	3:45 AM	0	7	0	1	0	0	0	0	0	0	0	0	0
4/21/2024	4:00 AM	0	5	0	0	0	0	0	0	0	0	0	0	0
4/21/2024	4:15 AM	0	5	0	0	0	0	0	0	0	0	0	0	0
4/21/2024	4:30 AM	0	6	1	0	0	0	0	0	0	0	0	0	0
4/21/2024	4:45 AM	0	7	0	0	0	0	0	0	0	0	0	0	0
4/21/2024	5:00 AM	0	6	0	0	0	0	0	0	0	0	0	0	0
4/21/2024	5:15 AM	0	10	1	0	0	0	0	0	0	0	0	0	0
4/21/2024	5:30 AM	0	13	1	0	0	0	0	0	0	0	0	0	0
4/21/2024	5:45 AM	0	12	2	0	0	0	0	0	0	0	0	0	0
4/21/2024	6:00 AM	0	11	3	0	0	0	0	0	0	0	0	0	0
4/21/2024	6:15 AM	0	23	4	0	0	0	0	0	0	0	0	0	0
4/21/2024	6:30 AM	0	45	6	0	0	0	0	0	2	0	0	0	0
4/21/2024	6:45 AM	0	30	7	0	0	0	0	0	0	0	0	0	0
4/21/2024	7:00 AM	0	23	6	0	0	0	0	0	1	0	0	0	0
4/21/2024	7:15 AM	0	31	8	0	0	0	0	0	0	0	0	0	0
4/21/2024	7:30 AM	0	33	6	0	0	0	0	0	0	0	0	0	0
4/21/2024	7:45 AM	0	46	9	0	0	0	0	0	1	0	0	0	0
4/21/2024	8:00 AM	0	49	5	0	1	0	0	0	1	0	0	0	0
4/21/2024	8:15 AM	0	41	7	0	0	0	0	0	0	0	0	0	0
4/21/2024	8:30 AM	0	51	6	0	0	0	0	0	1	0	0	0	0
4/21/2024	8:45 AM	0	80	11	0	0	0	0	0	0	0	0	0	0
4/21/2024	9:00 AM	0	70	10	0	0	0	0	0	0	0	0	0	0
4/21/2024	9:15 AM	0	60	9	0	0	0	0	0	2	0	0	0	0
4/21/2024	9:30 AM	0	71	12	0	1	0	0	0	0	0	0	0	0
4/21/2024	9:45 AM	0	73	9	0	1	0	0	0	0	0	0	0	0
4/21/2024	10:00 AM	0	90	9	1	0	0	0	0	0	0	0	0	0
4/21/2024	10:15 AM	0	84	14	0	0	0	0	0	1	0	0	0	0
4/21/2024	10:30 AM	0	89	9	0	1	0	0	0	0	0	0	0	0
4/21/2024	10:45 AM	0	102	11	0	0	1	0	0	0	0	0	0	0
4/21/2024	11:00 AM	0	59	11	0	1	0	0	0	0	0	0	0	0
4/21/2024	11:15 AM	0	71	9	0	1	0	0	0	1	0	0	0	0
4/21/2024	11:30 AM	0	64	10	0	0	0	0	0	1	0	0	0	0
4/21/2024	11:45 AM	0	82	11	0	0	1	0	0	2	0	0	0	0
4/21/2024	12:00 PM	0	92	13	0	0	0	0	0	2	0	0	0	0
4/21/2024	12:15 PM	0	98	13	1	0	0	0	1	1	0	0	0	0
4/21/2024	12:30 PM	0	105	18	0	0	0	0	0	2	0	0	0	0
4/21/2024	12:45 PM	0	99	19	0	1	0	0	0	3	0	0	0	0
4/21/2024	1:00 PM	0	84	21	0	2	1	0	0	1	0	0	0	0
4/21/2024	1:15 PM	0	96	11	0	0	0	0	0	1	0	0	0	0
4/21/2024	1:30 PM	1	103	13	0	2	0	0	0	2	0	0	0	0
4/21/2024	1:45 PM	0	106	15	0	2	0	0	0	3	0	0	0	0
4/21/2024	2:00 PM	0	87	13	0	0	0	0	0	0	0	0	0	0
4/21/2024	2:15 PM	0	91	11	0	2	0	0	0	0	0	0	0	0
4/21/2024	2:30 PM	0	102	9	0	0	0	0	1	0	0	0	0	0
4/21/2024	2:45 PM	0	105	14	0	1	0	0	1	2	0	0	0	0
4/21/2024	3:00 PM	0	96	12	0	0	0	0	0	1	0	0	0	0
4/21/2024	3:15 PM	0	80	14	0	0	0	0	0	1	0	0	0	0
4/21/2024	3:30 PM	0	88	17	0	0	0	0	0	0	0	0	0	0
4/21/2024	3:45 PM	0	90	10	0	0	1	0	0	1	0	0	0	0
4/21/2024	4:00 PM	0	80	10	0	0	0	0	0	0	0	0	0	0
4/21/2024	4:15 PM	0	67	12	0	1	0	0	1	0	0	0	0	0
4/21/2024	4:30 PM	0	85	13	1	0	0	0	0	1	0	0	0	0
4/21/2024	4:45 PM	0	84	8	0	2	0	0	0	0	0	0	0	0
4/21/2024	5:00 PM	0	91	13	0	1	0	0	0	2	0	0	0	0
4/21/2024	5:15 PM	0	97	9	0	0	0	0	0	1	0	0	0	0
4/21/2024	5:30 PM	0	88	11	0	2	0	0	0	1	0	0	0	0
4/21/2024	5:45 PM	0	71	13	0	0	0	0	0	1	0	0	0	0
4/21/2024	6:00 PM	0	68	10	1	1	0	0	0	2	0	0	0	0
4/21/2024	6:15 PM	0	91	10	0	2	0	0	0	3	0	0	0	0
4/21/2024	6:30 PM	0	90	17	0	0	0	0	0	5	0	0	0	0
4/21/2024	6:45 PM	0	55	10	0	0	0	0	1	3	0	0	0	0
4/21/2024	7:00 PM	0	54	7	0	0	0	0	0	1	0	0	0	0
4/21/2024	7:15 PM	0	56	9	0	0	0	0	0	3	0	0	0	0
4/21/2024	7:30 PM	0	74	4	0	0	0	7	0	2	0	0	0	0
4/21/2024	7:45 PM	0	65	7	0	3	0	0	0	2	0	0	0	0
4/21/2024	8:00 PM	0	57	9	0	0	0	0	0	1	0	0	0	0
4/21/2024	8:15 PM	0	53	8	0	0	0	0	0	3	0	0	0	0
4/21/2024	8:30 PM	0	57	7	0	0	0	0	0	3	0	0	0	0
4/21/2024	8:45 PM	0	50	3	0	0	0	0	0	3	0	0	0	0
4/21/2024	9:00 PM	0	57	3	0	1	0	0	0	3	0	0	0	0
4/21/2024	9:15 PM	0	43	4	0	0	0	0	0	3	0	0	0	0
4/21/2024	9:30 PM	0	29	2	0	0	0	0	0	2	0	0	0	0
4/21/2024	9:45 PM	0	32	3	0	2	0	0	0	1	0	0	0	0
4/21/2024	10:00 PM	0	35	2	0	0	0	0	0	2	0	0	0	0
4/21/2024	10:15 PM	0	21	3	1	0	0	0	0	0	0	0	0	0
4/21/2024	10:30 PM	0	27	2	0	0	0	0	0	2	0	0	0	0
4/21/2024	10:45 PM	0	21	2	0	1	0	0	0	1	0	0	0	0
4/21/2024	11:00 PM	0	19	3	0	1	0	0	0	4	1	0	0	0
4/21/2024	11:15 PM	0	20	2	0	1	0	0	0	1	1	0	0	0
4/21/2024	11:30 PM	0	11	1	0	0	0	0	0	2	0	0	0	0
4/21/2024	11:45 PM	0	12	2	0	0	0	0	0	1	0	0	0	0

4/22/2024	12:00 AM	0	6	1	0	0	0	0	0	1	0	0	0	0
4/22/2024	12:15 AM	0	12	2	0	1	0	0	0	0	0	0	0	0
4/22/2024	12:30 AM	0	7	3	0	1	0	0	0	1	0	0	0	0
4/22/2024	12:45 AM	0	6	1	0	0	0	0	0	0	0	0	0	0
4/22/2024	1:00 AM	0	6	1	0	0	0	0	0	2	0	0	0	0
4/22/2024	1:15 AM	0	5	1	0	0	0	0	0	0	0	0	0	0
4/22/2024	1:30 AM	0	3	0	0	1	0	0	0	1	0	0	0	0
4/22/2024	1:45 AM	0	5	1	0	0	0	0	0	2	0	0	0	0
4/22/2024	2:00 AM	0	3	1	0	0	0	0	0	0	0	0	0	0
4/22/2024	2:15 AM	0	3	0	0	0	0	0	0	1	0	0	0	0
4/22/2024	2:30 AM	0	3	1	0	0	0	0	0	1	0	0	0	0
4/22/2024	2:45 AM	0	4	1	0	0	0	0	0	5	0	0	0	0
4/22/2024	3:00 AM	0	3	0	0	0	0	0	0	0	0	0	0	0
4/22/2024	3:15 AM	0	3	0	0	0	0	0	0	0	0	0	0	0
4/22/2024	3:30 AM	0	5	1	1	0	0	0	0	1	0	0	0	0
4/22/2024	3:45 AM	0	5	0	0	0	0	0	0	0	0	0	0	0
4/22/2024	4:00 AM	0	9	2	0	0	0	0	0	2	0	0	0	0
4/22/2024	4:15 AM	0	10	3	0	0	0	0	0	4	0	0	0	0
4/22/2024	4:30 AM	0	13	3	0	0	0	0	0	2	0	0	0	0
4/22/2024	4:45 AM	0	22	2	0	0	0	0	0	1	0	0	0	0
4/22/2024	5:00 AM	0	17	2	0	0	0	0	0	1	0	0	0	0
4/22/2024	5:15 AM	0	33	5	1	2	0	0	0	1	0	0	0	0
4/22/2024	5:30 AM	0	43	6	0	0	0	0	0	2	0	0	0	0
4/22/2024	5:45 AM	0	57	7	0	0	0	0	0	4	0	0	0	0
4/22/2024	6:00 AM	0	52	6	0	0	0	0	0	3	0	0	0	0
4/22/2024	6:15 AM	0	100	11	0	2	0	0	0	4	0	0	0	0
4/22/2024	6:30 AM	0	161	18	0	2	1	0	0	4	0	0	0	0
4/22/2024	6:45 AM	0	178	18	0	4	0	0	0	4	0	0	0	0
4/22/2024	7:00 AM	0	203	35	0	5	0	0	0	4	0	0	0	0
4/22/2024	7:15 AM	0	290	27	0	2	0	0	0	8	0	0	0	0
4/22/2024	7:30 AM	0	322	23	0	2	0	0	0	5	0	0	0	0
4/22/2024	7:45 AM	0	313	25	0	2	0	0	0	4	0	0	0	0
4/22/2024	8:00 AM	0	325	42	0	3	0	0	0	7	0	0	0	0
4/22/2024	8:15 AM	0	301	39	1	5	0	0	1	4	0	0	0	0
4/22/2024	8:30 AM	1	263	24	0	3	0	0	0	6	0	0	0	0
4/22/2024	8:45 AM	0	236	26	0	1	0	0	3	5	0	0	0	0
4/22/2024	9:00 AM	0	198	25	0	1	1	0	0	3	0	0	0	0
4/22/2024	9:15 AM	0	189	22	0	4	0	0	1	6	0	0	0	0
4/22/2024	9:30 AM	0	195	33	3	5	0	0	0	4	0	0	0	0
4/22/2024	9:45 AM	0	194	20	4	3	0	0	0	6	0	0	0	0
4/22/2024	10:00 AM	0	149	15	0	1	2	0	0	9	0	0	0	0
4/22/2024	10:15 AM	0	129	16	0	8	1	0	0	3	0	0	0	0
4/22/2024	10:30 AM	0	125	18	1	2	0	0	0	5	0	0	0	0
4/22/2024	10:45 AM	1	133	18	0	3	1	0	0	7	0	0	0	0
4/22/2024	11:00 AM	0	92	9	0	2	1	0	0	3	0	0	0	0
4/22/2024	11:15 AM	0	117	10	0	2	0	0	0	12	0	0	0	0
4/22/2024	11:30 AM	0	107	9	0	2	0	0	0	3	0	0	0	0
4/22/2024	11:45 AM	1	122	15	0	2	0	0	0	9	0	0	0	0
4/22/2024	12:00 PM	0	117	14	0	1	0	0	0	6	0	0	0	0
4/22/2024	12:15 PM	0	135	13	0	2	0	0	0	7	0	0	0	0
4/22/2024	12:30 PM	0	130	15	0	3	0	0	0	12	0	0	0	0
4/22/2024	12:45 PM	1	142	18	0	3	0	0	1	2	0	0	0	0
4/22/2024	1:00 PM	0	111	15	0	2	1	0	0	2	0	0	0	0
4/22/2024	1:15 PM	0	113	19	0	8	1	0	1	2	0	0	0	0
4/22/2024	1:30 PM	0	118	18	0	4	1	0	0	1	0	0	0	0
4/22/2024	1:45 PM	0	107	11	0	2	1	0	1	1	0	0	0	0
4/22/2024	2:00 PM	0	116	18	0	3	0	0	0	4	0	0	0	0
4/22/2024	2:15 PM	0	116	8	0	7	0	0	9	11	0	1	0	0
4/22/2024	2:30 PM	0	125	12	0	2	0	0	0	5	0	0	0	0
4/22/2024	2:45 PM	0	118	16	0	4	0	0	0	6	0	0	0	0
4/22/2024	3:00 PM	0	122	12	0	6	0	0	0	6	0	0	0	0
4/22/2024	3:15 PM	0	127	22	0	3	0	0	0	5	0	0	0	0
4/22/2024	3:30 PM	0	131	23	0	4	0	0	0	2	0	0	0	0
4/22/2024	3:45 PM	0	116	15	0	2	0	0	0	4	0	0	0	0
4/22/2024	4:00 PM	0	110	21	0	3	1	0	0	5	0	0	0	0
4/22/2024	4:15 PM	0	136	30	0	2	0	0	0	4	0	0	0	0
4/22/2024	4:30 PM	0	132	19	0	1	0	0	0	3	0	0	0	0
4/22/2024	4:45 PM	0	118	20	1	4	0	0	0	6	0	0	0	0
4/22/2024	5:00 PM	0	133	14	1	1	0	0	0	2	0	0	0	0
4/22/2024	5:15 PM	0	103	21	0	0	0	0	0	3	0	0	0	0
4/22/2024	5:30 PM	0	87	11	0	1	0	0	0	2	0	0	0	0
4/22/2024	5:45 PM	0	112	17	0	3	0	0	0	3	0	0	0	0
4/22/2024	6:00 PM	0	91	12	0	1	0	0	0	1	0	0	0	0
4/22/2024	6:15 PM	0	110	16	0	1	0	0	0	0	0	0	0	0
4/22/2024	6:30 PM	0	103	7	0	2	1	0	0	5	0	0	0	0
4/22/2024	6:45 PM	0	86	1	0	0	0	0	0	3	0	0	0	0
4/22/2024	7:00 PM	0	69	3	1	2	0	0	0	0	0	0	0	0
4/22/2024	7:15 PM	0	76	3	0	0	0	0	0	0	0	0	0	0
4/22/2024	7:30 PM	0	50	4	0	0	0	0	0	1	0	0	0	0
4/22/2024	7:45 PM	0	59	2	0	2	0	0	0	2	0	0	0	0
4/22/2024	8:00 PM	0	48	2	0	0	0	0	0	4	0	0	0	0
4/22/2024	8:15 PM	1	40	2	0	1	0	0	0	1	0	0	0	0
4/22/2024	8:30 PM	0	32	3	0	1	1	0	0	1	0	1	0	0
4/22/2024	8:45 PM	0	30	3	0	0	0	0	0	3	0	0	0	0
4/22/2024	9:00 PM	0	43	3	0	0	0	0	0	2	0	0	0	0
4/22/2024	9:15 PM	0	30	3	0	0	0	0	0	6	0	0	0	0
4/22/2024	9:30 PM	0	30	2	0	0	0	0	0	0	0	0	0	0
4/22/2024	9:45 PM	0	33	3	0	1	0	0	0	1	0	0	0	0
4/22/2024	10:00 PM	0	27	2	0	0	0	0	0	2	0	1	0	0
4/22/2024	10:15 PM	0	35	3	0	0	1	0	0	1	0	0	0	0
4/22/2024	10:30 PM	0	20	1	0	0	0	0	0	3	0	0	0	0
4/22/2024	10:45 PM	0	19	1	0	0	0	0	0	2	0	0	0	0
4/22/2024	11:00 PM	0	18	1	0	0	0	0	0	3	0	0	0	0
4/22/2024	11:15 PM	0	17	2	0	1	0	0	0	1	0	0	0	0
4/22/2024	11:30 PM	0	5	0	0	0	0	0	0	3	0	0	0	0
4/22/2024	11:45 PM	0	5	1	0	0	0	0	0	1	0	0	0	0

4/23/2024	12:00 AM	0	5	3	0	0	0	0	0	2	0	0	0	0
4/23/2024	12:15 AM	0	8	3	0	0	0	0	0	0	0	0	0	0
4/23/2024	12:30 AM	0	6	2	0	0	0	0	0	1	0	0	0	0
4/23/2024	12:45 AM	0	5	2	0	0	0	0	0	0	0	0	0	0
4/23/2024	1:00 AM	0	4	1	0	0	0	0	0	3	0	0	0	0
4/23/2024	1:15 AM	0	5	3	0	0	0	0	0	0	0	1	0	0
4/23/2024	1:30 AM	0	4	0	0	0	0	0	0	0	0	0	0	0
4/23/2024	1:45 AM	0	4	2	0	0	0	0	0	3	0	0	0	0
4/23/2024	2:00 AM	0	3	2	0	0	0	0	0	0	0	0	0	0
4/23/2024	2:15 AM	0	3	1	0	0	0	0	0	1	0	0	0	0
4/23/2024	2:30 AM	0	2	0	0	0	0	0	0	0	0	0	0	0
4/23/2024	2:45 AM	0	1	0	0	0	0	0	0	0	0	0	0	0
4/23/2024	3:00 AM	0	7	2	0	0	0	0	0	1	0	0	0	0
4/23/2024	3:15 AM	0	3	0	0	0	0	0	0	1	0	0	0	0
4/23/2024	3:30 AM	0	8	3	0	0	0	0	0	1	0	0	0	0
4/23/2024	3:45 AM	0	6	2	0	0	0	0	0	0	0	0	0	0
4/23/2024	4:00 AM	0	4	1	0	0	0	0	0	2	0	0	0	0
4/23/2024	4:15 AM	0	10	4	0	0	0	0	0	5	0	0	0	0
4/23/2024	4:30 AM	0	9	2	0	1	0	0	0	2	0	0	0	0
4/23/2024	4:45 AM	0	16	6	0	1	0	0	0	1	0	0	0	0
4/23/2024	5:00 AM	0	13	6	0	1	0	0	0	6	0	0	0	0
4/23/2024	5:15 AM	0	23	7	0	1	0	0	0	0	0	0	0	0
4/23/2024	5:30 AM	0	41	11	0	1	0	0	0	4	0	0	0	0
4/23/2024	5:45 AM	0	50	13	0	1	0	0	0	1	0	0	0	0
4/23/2024	6:00 AM	0	65	19	0	1	0	0	0	1	0	0	0	0
4/23/2024	6:15 AM	0	110	20	0	0	0	0	0	2	0	0	0	0
4/23/2024	6:30 AM	1	154	53	0	2	0	0	0	7	0	1	0	0
4/23/2024	6:45 AM	0	199	30	0	4	1	0	1	3	0	0	0	0
4/23/2024	7:00 AM	0	227	28	0	4	0	0	0	7	0	1	0	0
4/23/2024	7:15 AM	1	230	48	0	3	1	0	0	3	0	0	0	0
4/23/2024	7:30 AM	0	267	40	0	3	1	1	0	8	0	0	0	0
4/23/2024	7:45 AM	0	242	24	0	1	0	0	0	1	0	1	0	0
4/23/2024	8:00 AM	0	250	19	0	3	0	0	0	3	0	0	0	0
4/23/2024	8:15 AM	0	317	30	0	2	0	0	0	4	0	0	0	0
4/23/2024	8:30 AM	0	300	30	0	2	0	0	0	9	0	0	0	0
4/23/2024	8:45 AM	0	248	30	0	8	3	0	0	9	0	0	0	0
4/23/2024	9:00 AM	0	192	16	3	6	0	0	0	5	0	0	0	0
4/23/2024	9:15 AM	0	194	23	1	6	2	0	0	4	0	0	0	0
4/23/2024	9:30 AM	0	178	23	0	2	0	0	0	11	0	0	0	0
4/23/2024	9:45 AM	1	165	21	4	3	0	0	0	4	0	0	0	0
4/23/2024	10:00 AM	0	142	31	2	2	1	0	0	3	2	0	0	0
4/23/2024	10:15 AM	0	129	20	0	4	1	0	0	6	0	0	0	0
4/23/2024	10:30 AM	0	130	28	2	1	0	1	0	6	0	0	0	0
4/23/2024	10:45 AM	0	121	31	0	5	2	1	1	5	0	0	0	0
4/23/2024	11:00 AM	0	121	20	0	0	2	0	0	7	0	0	0	0
4/23/2024	11:15 AM	0	103	23	0	6	0	0	0	8	0	0	0	0
4/23/2024	11:30 AM	0	132	27	0	3	1	0	0	4	0	1	0	0
4/23/2024	11:45 AM	0	122	23	0	2	0	0	0	6	0	0	0	0
4/23/2024	12:00 PM	0	120	12	0	4	0	0	0	4	0	0	0	0
4/23/2024	12:15 PM	0	123	12	0	5	1	0	0	5	0	0	0	0
4/23/2024	12:30 PM	0	161	10	0	3	0	0	0	3	0	0	0	0
4/23/2024	12:45 PM	0	153	16	0	1	0	0	0	4	0	0	0	0
4/23/2024	1:00 PM	0	123	8	0	1	0	0	0	3	0	0	0	0
4/23/2024	1:15 PM	0	125	6	0	3	0	1	0	6	0	0	0	0
4/23/2024	1:30 PM	0	119	14	0	1	0	0	0	5	0	0	0	0
4/23/2024	1:45 PM	0	118	6	0	2	1	0	1	3	0	0	0	0
4/23/2024	2:00 PM	0	111	10	0	2	2	0	0	9	0	0	0	0
4/23/2024	2:15 PM	0	112	12	0	1	0	0	0	3	0	0	0	0
4/23/2024	2:30 PM	0	112	9	0	1	0	0	0	7	0	0	0	0
4/23/2024	2:45 PM	0	110	8	0	2	0	0	1	2	0	0	0	0
4/23/2024	3:00 PM	0	136	14	0	2	1	0	0	3	0	0	0	0
4/23/2024	3:15 PM	0	144	11	0	3	1	0	1	4	0	0	0	0
4/23/2024	3:30 PM	0	150	13	0	7	0	0	0	4	0	0	0	0
4/23/2024	3:45 PM	0	135	7	1	4	0	0	0	6	0	0	0	0
4/23/2024	4:00 PM	0	111	26	0	1	0	0	0	11	0	0	0	0
4/23/2024	4:15 PM	0	161	19	1	5	0	0	0	2	0	0	0	0
4/23/2024	4:30 PM	0	149	12	0	4	0	0	0	2	0	0	0	0
4/23/2024	4:45 PM	0	143	20	0	2	0	0	0	2	0	0	0	0
4/23/2024	5:00 PM	0	173	24	0	1	1	0	0	3	0	0	0	0
4/23/2024	5:15 PM	0	200	23	0	4	1	0	0	1	0	0	0	0
4/23/2024	5:30 PM	0	169	26	0	1	0	0	0	3	0	0	0	0
4/23/2024	5:45 PM	0	122	22	0	0	0	0	0	3	0	0	0	0
4/23/2024	6:00 PM	0	105	13	0	1	0	0	0	7	0	0	0	0
4/23/2024	6:15 PM	0	119	31	0	2	0	0	0	2	0	0	0	0
4/23/2024	6:30 PM	0	107	9	0	2	0	0	0	2	0	0	0	0
4/23/2024	6:45 PM	0	81	13	0	2	0	0	0	2	0	0	0	0
4/23/2024	7:00 PM	0	53	11	0	0	0	0	1	2	0	0	0	0
4/23/2024	7:15 PM	0	65	13	0	1	0	0	0	3	0	0	0	0
4/23/2024	7:30 PM	0	47	7	0	0	0	0	0	4	0	0	0	0
4/23/2024	7:45 PM	0	73	9	0	0	3	0	0	2	0	0	0	0
4/23/2024	8:00 PM	0	59	17	0	0	0	0	0	2	0	0	0	0
4/23/2024	8:15 PM	1	59	5	1	1	0	0	0	2	0	0	0	0
4/23/2024	8:30 PM	0	55	7	0	1	0	0	0	3	0	1	0	0
4/23/2024	8:45 PM	0	37	5	0	3	0	0	0	0	0	0	0	0
4/23/2024	9:00 PM	0	60	9	0	0	0	0	0	0	0	0	0	0
4/23/2024	9:15 PM	0	55	7	0	0	0	0	0	1	0	0	0	0
4/23/2024	9:30 PM	0	46	5	0	0	0	0	0	0	0	0	0	0
4/23/2024	9:45 PM	0	35	8	0	0	0	0	0	1	0	0	0	0
4/23/2024	10:00 PM	0	30	7	0	0	0	0	0	4	0	0	0	0
4/23/2024	10:15 PM	0	33	9	0	0	0	0	0	7	0	0	0	0
4/23/2024	10:30 PM	0	27	6	0	1	0	0	0	1	0	0	0	0
4/23/2024	10:45 PM	0	18	6	0	0	0	0	0	3	0	0	0	0
4/23/2024	11:00 PM	0	30	4	0	0	0	0	0	3	0	1	0	0
4/23/2024	11:15 PM	0	11	3	0	0	0	0	0	1	0	1	0	0
4/23/2024	11:30 PM	0	9	7	0	0	0	0	0	1	0	0	0	0
4/23/2024	11:45 PM	0	8	5	0	0	0	0	0	1	0	0	0	0

4/24/2024	12:00 AM	0	8	1	0	1	0	0	0	1	0	0	0	0
4/24/2024	12:15 AM	0	7	2	0	1	0	0	0	0	0	0	0	0
4/24/2024	12:30 AM	0	5	1	0	1	0	0	0	1	0	0	0	0
4/24/2024	12:45 AM	0	5	1	0	0	0	0	0	2	0	0	0	0
4/24/2024	1:00 AM	0	6	2	0	0	0	0	0	0	0	1	0	0
4/24/2024	1:15 AM	0	4	0	0	1	0	0	0	0	0	0	0	0
4/24/2024	1:30 AM	0	4	1	0	0	0	0	0	1	0	0	0	0
4/24/2024	1:45 AM	0	6	1	0	2	0	0	0	3	0	1	0	0
4/24/2024	2:00 AM	0	9	2	0	0	0	0	0	2	0	0	0	0
4/24/2024	2:15 AM	0	4	0	0	0	0	0	0	1	0	0	0	0
4/24/2024	2:30 AM	0	6	2	0	0	0	0	0	2	0	0	0	0
4/24/2024	2:45 AM	0	4	1	0	0	0	0	0	0	0	1	0	0
4/24/2024	3:00 AM	0	5	1	0	0	0	0	0	2	0	0	0	0
4/24/2024	3:15 AM	0	4	2	0	0	0	0	0	1	0	0	0	0
4/24/2024	3:30 AM	0	6	1	0	0	0	0	0	3	0	0	0	0
4/24/2024	3:45 AM	0	3	0	0	1	0	0	0	0	0	0	0	0
4/24/2024	4:00 AM	0	8	3	0	1	0	0	0	3	0	0	0	0
4/24/2024	4:15 AM	0	11	4	0	1	0	0	0	2	0	0	0	0
4/24/2024	4:30 AM	0	6	1	0	1	0	0	0	1	0	0	0	0
4/24/2024	4:45 AM	0	20	6	0	2	0	0	0	2	0	0	0	0
4/24/2024	5:00 AM	0	14	4	0	1	0	0	0	0	0	0	0	0
4/24/2024	5:15 AM	0	18	4	0	0	2	0	0	2	0	0	0	0
4/24/2024	5:30 AM	0	38	9	0	0	3	0	0	3	0	0	0	0
4/24/2024	5:45 AM	0	51	12	0	0	2	0	0	2	0	0	0	0
4/24/2024	6:00 AM	0	54	8	0	1	0	0	0	3	0	0	0	0
4/24/2024	6:15 AM	0	112	6	0	1	1	0	0	4	0	0	0	0
4/24/2024	6:30 AM	0	181	22	0	1	2	0	0	3	0	0	0	0
4/24/2024	6:45 AM	2	178	40	0	3	0	0	0	5	0	0	0	0
4/24/2024	7:00 AM	1	197	38	0	3	0	0	1	3	0	0	0	0
4/24/2024	7:15 AM	1	280	35	0	8	0	0	0	5	2	0	0	0
4/24/2024	7:30 AM	0	260	25	0	4	0	0	0	6	0	0	0	0
4/24/2024	7:45 AM	0	280	27	0	1	2	0	1	7	0	0	0	0
4/24/2024	8:00 AM	0	298	24	1	1	0	0	0	6	0	0	0	0
4/24/2024	8:15 AM	1	282	40	0	6	0	0	1	4	0	0	0	0
4/24/2024	8:30 AM	0	263	44	0	7	0	0	4	5	0	0	0	0
4/24/2024	8:45 AM	1	228	56	0	4	0	0	3	6	0	0	0	0
4/24/2024	9:00 AM	0	174	39	9	7	1	0	2	8	0	0	0	0
4/24/2024	9:15 AM	0	153	35	3	1	1	0	1	2	0	0	0	0
4/24/2024	9:30 AM	0	161	22	0	3	0	0	0	5	0	0	0	0
4/24/2024	9:45 AM	0	147	24	0	6	1	0	4	3	0	0	0	0
4/24/2024	10:00 AM	1	130	20	0	3	1	0	0	1	0	0	0	0
4/24/2024	10:15 AM	0	135	23	0	1	0	0	2	3	0	0	0	0
4/24/2024	10:30 AM	0	125	33	0	7	2	0	0	4	0	0	0	0
4/24/2024	10:45 AM	0	129	25	1	6	0	0	1	7	0	0	0	0
4/24/2024	11:00 AM	0	108	30	0	4	0	0	0	5	0	0	0	0
4/24/2024	11:15 AM	0	130	29	1	5	0	0	1	5	0	0	0	0
4/24/2024	11:30 AM	1	112	33	0	8	1	0	1	8	0	0	0	0
4/24/2024	11:45 AM	0	101	23	0	3	0	0	0	5	0	0	0	0
4/24/2024	12:00 PM	0	89	16	0	6	0	0	0	5	0	0	0	0
4/24/2024	12:15 PM	0	116	30	0	7	1	0	1	3	0	0	0	0
4/24/2024	12:30 PM	0	110	31	0	3	1	0	0	3	0	0	0	0
4/24/2024	12:45 PM	0	124	21	0	4	0	0	0	1	0	0	0	0
4/24/2024	1:00 PM	0	108	20	0	3	0	0	0	2	0	0	0	0
4/24/2024	1:15 PM	0	102	17	0	0	0	0	1	3	0	0	0	0
4/24/2024	1:30 PM	0	102	30	0	7	4	0	0	3	0	0	0	0
4/24/2024	1:45 PM	0	113	31	0	1	0	0	0	5	0	0	0	0
4/24/2024	2:00 PM	0	103	27	0	4	1	0	0	4	0	0	0	0
4/24/2024	2:15 PM	0	124	26	0	2	2	0	0	5	0	0	0	0
4/24/2024	2:30 PM	1	109	19	0	1	2	0	0	4	0	0	0	0
4/24/2024	2:45 PM	2	115	25	0	3	0	0	0	2	0	0	0	0
4/24/2024	3:00 PM	1	109	25	0	3	1	0	0	2	0	0	0	0
4/24/2024	3:15 PM	0	130	22	0	5	0	0	0	1	0	0	0	0
4/24/2024	3:30 PM	0	119	24	0	4	0	0	0	3	0	0	0	0
4/24/2024	3:45 PM	0	122	20	0	2	0	0	0	3	0	0	0	0
4/24/2024	4:00 PM	0	129	24	0	1	0	0	1	10	0	0	0	0
4/24/2024	4:15 PM	0	144	25	0	2	2	0	0	6	0	0	0	0
4/24/2024	4:30 PM	1	153	33	0	1	0	0	1	1	0	0	0	0
4/24/2024	4:45 PM	1	169	27	0	0	3	0	0	2	0	0	0	0
4/24/2024	5:00 PM	1	179	23	0	1	1	0	0	5	0	0	0	0
4/24/2024	5:15 PM	0	169	30	0	1	0	0	0	3	0	0	0	0
4/24/2024	5:30 PM	0	137	20	0	1	0	0	0	1	0	0	0	0
4/24/2024	5:45 PM	0	128	27	0	1	0	0	0	2	0	0	0	0
4/24/2024	6:00 PM	0	132	21	0	2	0	0	0	3	0	0	0	0
4/24/2024	6:15 PM	0	120	22	2	0	0	0	1	4	0	0	0	0
4/24/2024	6:30 PM	0	126	14	0	1	1	0	1	1	1	0	0	0
4/24/2024	6:45 PM	0	101	10	0	0	0	0	0	5	0	0	0	0
4/24/2024	7:00 PM	2	63	5	0	1	1	0	0	2	0	0	0	0
4/24/2024	7:15 PM	0	91	1	0	1	1	0	0	3	0	0	0	0
4/24/2024	7:30 PM	0	74	5	0	2	0	0	0	1	0	0	0	0
4/24/2024	7:45 PM	1	58	8	0	0	1	0	0	1	0	0	0	0
4/24/2024	8:00 PM	0	72	6	0	2	0	0	0	3	0	0	0	0
4/24/2024	8:15 PM	0	65	4	0	2	0	0	0	2	0	0	0	0
4/24/2024	8:30 PM	0	49	3	0	2	0	0	0	0	0	0	0	0
4/24/2024	8:45 PM	0	38	6	0	1	0	0	0	5	0	0	0	0
4/24/2024	9:00 PM	0	49	10	0	2	0	0	1	0	0	0	0	0
4/24/2024	9:15 PM	0	44	12	0	2	0	0	0	2	0	0	0	0
4/24/2024	9:30 PM	0	28	8	0	1	0	0	0	2	0	0	0	0
4/24/2024	9:45 PM	0	30	10	0	0	0	0	0	1	0	0	0	0
4/24/2024	10:00 PM	0	19	5	0	1	0	0	0	0	0	0	0	0
4/24/2024	10:15 PM	0	26	12	0	1	0	0	0	3	0	0	0	0
4/24/2024	10:30 PM	0	28	9	0	0	0	0	0	2	0	0	0	0
4/24/2024	10:45 PM	0	12	4	0	0	0	0	0	4	0	0	0	0
4/24/2024	11:00 PM	0	10	4	0	0	0	0	0	2	0	0	0	0
4/24/2024	11:15 PM	0	12	5	0	1	0	0	0	0	0	1	0	0
4/24/2024	11:30 PM	0	15	6	0	0	0	0	0	1	0	1	0	0
4/24/2024	11:45 PM	0	17	4	0	1	0	0	0	2	0	0	0	0

4/25/2024	12:00 AM	0	9	1	0	0	0	0	0	1	0	0	0	0
4/25/2024	12:15 AM	0	3	0	0	1	0	0	0	2	0	0	0	0
4/25/2024	12:30 AM	0	5	1	0	1	0	0	0	0	0	0	0	0
4/25/2024	12:45 AM	0	5	0	0	0	0	0	0	1	0	1	0	0
4/25/2024	1:00 AM	0	6	2	0	0	0	0	0	1	0	0	0	0
4/25/2024	1:15 AM	0	4	0	0	0	0	0	0	2	0	0	0	0
4/25/2024	1:30 AM	0	5	1	0	0	0	0	0	2	0	0	0	0
4/25/2024	1:45 AM	0	4	0	0	1	0	0	0	1	0	0	0	0
4/25/2024	2:00 AM	0	6	0	0	0	0	0	0	1	0	0	0	0
4/25/2024	2:15 AM	0	2	0	0	0	0	0	0	3	0	0	0	0
4/25/2024	2:30 AM	0	7	1	0	0	0	0	0	0	0	0	0	0
4/25/2024	2:45 AM	0	6	0	0	1	0	0	0	0	0	0	0	0
4/25/2024	3:00 AM	0	7	2	0	1	0	0	0	1	0	0	0	0
4/25/2024	3:15 AM	0	6	0	0	0	0	0	0	2	0	0	0	0
4/25/2024	3:30 AM	0	6	1	0	1	0	0	0	0	0	0	0	0
4/25/2024	3:45 AM	0	8	0	0	1	0	0	0	3	0	0	0	0
4/25/2024	4:00 AM	0	6	1	0	0	0	0	0	3	0	0	0	0
4/25/2024	4:15 AM	0	8	2	0	0	0	0	0	3	0	0	0	0
4/25/2024	4:30 AM	0	11	1	0	1	0	0	0	1	0	0	0	0
4/25/2024	4:45 AM	0	19	3	0	2	0	0	0	1	0	1	0	0
4/25/2024	5:00 AM	0	15	1	0	3	0	0	0	3	0	0	0	0
4/25/2024	5:15 AM	0	21	1	0	4	0	0	0	6	0	0	0	0
4/25/2024	5:30 AM	0	47	2	0	1	0	0	0	0	0	0	0	0
4/25/2024	5:45 AM	0	58	3	0	4	0	0	0	4	0	0	0	0
4/25/2024	6:00 AM	0	59	4	0	0	0	0	0	3	0	0	0	0
4/25/2024	6:15 AM	0	119	7	0	1	0	0	0	4	0	0	0	0
4/25/2024	6:30 AM	0	164	15	0	3	1	0	0	4	0	0	0	0
4/25/2024	6:45 AM	0	160	45	0	1	2	0	0	4	0	1	1	0
4/25/2024	7:00 AM	0	190	51	0	7	1	1	0	7	0	0	0	0
4/25/2024	7:15 AM	1	232	60	0	2	0	0	0	4	0	0	0	0
4/25/2024	7:30 AM	0	264	40	0	7	0	0	1	3	0	0	0	0
4/25/2024	7:45 AM	0	281	48	0	6	2	0	2	4	0	0	0	0
4/25/2024	8:00 AM	0	309	52	0	2	0	0	0	2	0	0	0	0
4/25/2024	8:15 AM	0	339	54	0	7	1	0	1	4	1	0	0	0
4/25/2024	8:30 AM	1	263	47	0	8	0	1	1	1	0	0	0	0
4/25/2024	8:45 AM	0	260	47	0	4	2	0	1	2	0	0	0	0
4/25/2024	9:00 AM	0	229	26	0	3	0	0	1	8	0	0	0	0
4/25/2024	9:15 AM	1	155	26	0	3	1	0	0	5	0	0	0	0
4/25/2024	9:30 AM	0	174	30	6	6	0	0	1	8	0	0	0	0
4/25/2024	9:45 AM	0	174	19	1	3	0	0	2	4	0	0	0	0
4/25/2024	10:00 AM	0	128	26	1	4	1	0	0	5	0	0	0	0
4/25/2024	10:15 AM	0	139	23	4	5	1	0	1	3	0	0	0	0
4/25/2024	10:30 AM	0	117	23	0	1	1	0	1	2	1	0	0	0
4/25/2024	10:45 AM	1	136	22	0	3	0	0	1	4	0	0	0	0
4/25/2024	11:00 AM	0	106	14	0	2	0	0	1	7	0	0	0	0
4/25/2024	11:15 AM	0	142	26	0	2	0	0	0	12	0	0	0	0
4/25/2024	11:30 AM	0	118	20	0	1	0	0	0	10	1	0	0	0
4/25/2024	11:45 AM	0	110	34	0	3	0	0	0	6	0	0	0	0
4/25/2024	12:00 PM	0	118	21	0	3	1	0	0	3	0	0	0	0
4/25/2024	12:15 PM	0	120	24	0	5	3	0	0	7	0	0	0	0
4/25/2024	12:30 PM	1	153	32	0	6	2	0	1	7	1	0	0	0
4/25/2024	12:45 PM	0	123	20	1	3	1	0	2	4	0	0	0	0
4/25/2024	1:00 PM	0	138	25	0	4	2	0	2	4	0	0	0	0
4/25/2024	1:15 PM	0	127	18	0	4	1	0	2	0	0	0	0	0
4/25/2024	1:30 PM	0	144	30	1	3	0	1	0	7	0	0	0	0
4/25/2024	1:45 PM	0	113	23	0	5	1	0	0	5	0	0	0	0
4/25/2024	2:00 PM	0	121	26	0	3	1	0	0	3	1	0	0	0
4/25/2024	2:15 PM	0	137	14	0	3	0	0	2	4	0	0	0	0
4/25/2024	2:30 PM	0	132	22	0	4	1	0	1	3	0	0	0	0
4/25/2024	2:45 PM	0	95	29	0	1	2	0	0	4	0	0	0	0
4/25/2024	3:00 PM	0	115	17	0	2	0	0	1	3	0	0	0	0
4/25/2024	3:15 PM	0	111	21	0	1	0	0	1	5	0	0	0	0
4/25/2024	3:30 PM	0	120	29	0	2	0	0	0	4	0	0	0	0
4/25/2024	3:45 PM	0	131	26	0	1	0	0	0	5	0	0	0	0
4/25/2024	4:00 PM	1	135	19	0	1	0	0	0	2	0	0	0	0
4/25/2024	4:15 PM	1	138	21	0	2	0	0	0	5	0	0	0	0
4/25/2024	4:30 PM	3	149	26	0	1	1	0	0	4	0	0	0	0
4/25/2024	4:45 PM	0	155	29	0	3	0	0	0	4	0	0	0	0
4/25/2024	5:00 PM	1	166	34	0	0	0	0	0	4	0	0	0	0
4/25/2024	5:15 PM	2	140	25	0	3	1	0	0	3	0	0	0	0
4/25/2024	5:30 PM	0	173	20	0	3	0	0	0	7	0	0	0	0
4/25/2024	5:45 PM	0	133	30	0	2	1	0	0	4	0	0	0	0
4/25/2024	6:00 PM	1	126	22	0	1	0	0	0	3	0	0	0	0
4/25/2024	6:15 PM	0	128	18	0	0	1	0	0	5	0	0	0	0
4/25/2024	6:30 PM	0	127	20	0	0	0	0	0	1	1	0	0	0
4/25/2024	6:45 PM	0	106	19	0	0	0	0	0	3	0	0	0	0
4/25/2024	7:00 PM	1	81	8	0	0	0	0	0	2	0	0	0	0
4/25/2024	7:15 PM	2	80	8	0	0	0	0	0	0	0	0	0	0
4/25/2024	7:30 PM	0	73	13	0	0	0	0	0	0	0	0	0	0
4/25/2024	7:45 PM	0	67	6	0	0	0	0	0	1	0	0	0	0
4/25/2024	8:00 PM	0	51	8	0	1	0	0	0	1	0	0	0	0
4/25/2024	8:15 PM	0	48	6	0	0	0	0	0	3	0	0	0	0
4/25/2024	8:30 PM	0	61	13	0	0	0	0	0	4	0	0	0	0
4/25/2024	8:45 PM	0	41	9	0	0	0	0	0	4	0	0	0	0
4/25/2024	9:00 PM	0	51	11	0	0	0	0	0	1	0	0	0	0
4/25/2024	9:15 PM	0	43	10	0	0	0	0	0	3	0	0	0	0
4/25/2024	9:30 PM	0	45	8	0	0	0	0	0	1	0	0	0	0
4/25/2024	9:45 PM	0	40	10	0	0	0	0	0	2	0	0	0	0
4/25/2024	10:00 PM	0	43	11	0	0	0	0	0	1	0	0	0	0
4/25/2024	10:15 PM	0	30	7	0	0	0	0	0	0	0	0	0	0
4/25/2024	10:30 PM	0	16	4	0	0	0	0	0	0	0	0	0	0
4/25/2024	10:45 PM	0	20	7	0	0	0	0	0	1	0	0	0	0
4/25/2024	11:00 PM	0	15	5	0	0	0	0	0	2	0	0	0	0
4/25/2024	11:15 PM	0	21	6	0	0	0	0	0	0	0	0	0	0
4/25/2024	11:30 PM	0	12	4	0	0	0	0	0	1	0	0	0	0
4/25/2024	11:45 PM	0	9	1	0	0	0	0	0	1	0	0	0	0

4/26/2024	12:00 AM	0	10	2	0	1	1	0	0	2	0	0	0	0
4/26/2024	12:15 AM	0	8	1	0	0	0	0	0	3	0	0	0	0
4/26/2024	12:30 AM	0	7	2	0	2	0	0	0	0	0	0	0	0
4/26/2024	12:45 AM	0	8	1	0	1	1	0	0	0	0	0	0	0
4/26/2024	1:00 AM	0	4	0	0	0	0	0	0	3	0	1	0	0
4/26/2024	1:15 AM	0	7	1	0	3	0	0	0	1	0	1	0	0
4/26/2024	1:30 AM	0	6	2	0	0	1	0	0	0	0	0	0	0
4/26/2024	1:45 AM	0	5	1	0	0	0	0	0	1	0	0	0	0
4/26/2024	2:00 AM	0	4	0	0	0	0	0	0	1	0	0	0	0
4/26/2024	2:15 AM	0	5	1	0	0	0	0	0	0	0	0	0	0
4/26/2024	2:30 AM	0	2	0	0	1	0	0	0	1	0	0	0	0
4/26/2024	2:45 AM	0	1	0	0	0	0	0	0	3	0	0	0	0
4/26/2024	3:00 AM	0	4	0	0	0	0	0	0	2	0	0	0	0
4/26/2024	3:15 AM	0	3	1	0	0	0	0	0	2	0	0	0	0
4/26/2024	3:30 AM	0	5	1	0	0	1	0	0	3	0	0	0	0
4/26/2024	3:45 AM	0	7	2	0	0	0	0	0	1	0	0	0	0
4/26/2024	4:00 AM	0	8	1	0	2	0	0	0	1	0	0	0	0
4/26/2024	4:15 AM	0	12	3	0	1	0	0	0	0	0	0	0	0
4/26/2024	4:30 AM	0	10	1	0	0	0	0	0	0	0	0	0	0
4/26/2024	4:45 AM	0	15	3	0	0	0	0	0	0	0	0	0	0
4/26/2024	5:00 AM	0	16	2	0	3	2	0	0	1	0	0	0	0
4/26/2024	5:15 AM	0	34	3	0	2	0	0	0	3	0	0	0	0
4/26/2024	5:30 AM	0	35	3	0	0	1	0	0	2	0	0	0	0
4/26/2024	5:45 AM	0	35	5	0	0	1	0	0	1	0	0	0	0
4/26/2024	6:00 AM	0	65	2	0	0	0	0	0	2	0	0	0	0
4/26/2024	6:15 AM	0	93	3	1	2	0	0	0	6	0	0	0	0
4/26/2024	6:30 AM	0	147	5	0	3	0	0	1	2	0	0	0	0
4/26/2024	6:45 AM	0	173	19	0	1	0	0	0	10	0	0	0	0
4/26/2024	7:00 AM	0	169	34	0	3	0	0	0	6	0	0	0	0
4/26/2024	7:15 AM	1	232	45	0	1	2	0	0	2	0	0	0	0
4/26/2024	7:30 AM	1	298	30	0	1	0	0	0	7	0	0	0	0
4/26/2024	7:45 AM	0	263	36	0	2	1	0	0	2	0	0	0	0
4/26/2024	8:00 AM	0	250	43	0	2	0	0	0	4	0	0	0	0
4/26/2024	8:15 AM	0	269	31	1	2	0	0	2	5	0	0	0	0
4/26/2024	8:30 AM	0	264	31	3	2	1	0	0	3	0	0	0	0
4/26/2024	8:45 AM	0	227	32	4	1	0	0	0	6	0	0	0	0
4/26/2024	9:00 AM	0	189	30	5	2	0	0	0	6	0	0	0	0
4/26/2024	9:15 AM	0	157	32	5	3	0	0	2	5	0	0	0	0
4/26/2024	9:30 AM	0	176	24	0	3	0	0	0	3	0	0	0	0
4/26/2024	9:45 AM	0	159	32	0	2	0	0	2	6	0	0	0	0
4/26/2024	10:00 AM	0	147	20	1	3	0	0	2	7	0	0	0	0
4/26/2024	10:15 AM	0	137	27	0	6	0	0	1	2	0	0	0	0
4/26/2024	10:30 AM	0	142	26	0	3	3	0	0	3	0	0	0	0
4/26/2024	10:45 AM	1	143	18	0	6	1	0	3	11	0	0	0	0
4/26/2024	11:00 AM	0	134	23	0	1	0	0	0	4	0	0	0	0
4/26/2024	11:15 AM	0	130	21	0	4	1	0	2	4	0	0	0	0
4/26/2024	11:30 AM	0	157	19	0	1	0	0	0	3	0	0	0	0
4/26/2024	11:45 AM	0	123	11	0	4	0	0	0	3	0	0	0	0
4/26/2024	12:00 PM	0	132	15	0	1	0	0	2	5	0	0	0	1
4/26/2024	12:15 PM	0	120	27	0	5	2	0	0	7	0	0	0	0
4/26/2024	12:30 PM	1	153	26	0	5	0	0	1	3	0	0	0	0
4/26/2024	12:45 PM	0	110	27	0	2	1	0	1	5	0	0	0	0
4/26/2024	1:00 PM	0	109	28	0	3	0	1	0	4	1	0	0	0
4/26/2024	1:15 PM	0	120	32	0	2	1	0	0	0	0	0	0	0
4/26/2024	1:30 PM	0	138	24	0	3	1	0	1	6	0	0	0	0
4/26/2024	1:45 PM	0	117	26	0	5	2	0	0	4	0	0	0	0
4/26/2024	2:00 PM	0	116	22	0	4	2	0	1	4	0	0	0	0
4/26/2024	2:15 PM	0	99	28	0	1	0	0	0	3	0	0	0	0
4/26/2024	2:30 PM	1	117	21	1	1	0	0	0	6	0	0	0	0
4/26/2024	2:45 PM	0	96	20	0	1	0	0	0	0	0	0	0	0
4/26/2024	3:00 PM	0	111	22	2	1	2	0	0	3	0	0	0	0
4/26/2024	3:15 PM	1	119	25	0	1	0	0	0	4	0	0	0	0
4/26/2024	3:30 PM	0	138	25	0	9	2	0	0	2	0	0	0	0
4/26/2024	3:45 PM	2	141	32	0	2	0	0	0	1	0	0	0	0
4/26/2024	4:00 PM	0	120	26	0	3	0	0	0	0	0	0	0	0
4/26/2024	4:15 PM	0	126	15	0	2	0	0	0	2	0	0	0	0
4/26/2024	4:30 PM	0	136	28	0	4	0	0	1	1	0	0	0	0
4/26/2024	4:45 PM	3	150	32	0	2	0	0	0	0	0	0	0	0
4/26/2024	5:00 PM	0	163	33	0	4	0	0	1	4	0	0	0	0
4/26/2024	5:15 PM	0	165	38	0	1	2	0	0	1	0	0	0	0
4/26/2024	5:30 PM	2	132	29	0	1	0	0	0	4	0	0	0	0
4/26/2024	5:45 PM	1	164	34	0	2	0	0	0	2	0	0	0	0
4/26/2024	6:00 PM	0	155	38	0	2	0	0	1	1	0	0	0	0
4/26/2024	6:15 PM	0	177	25	0	2	0	0	0	2	0	0	0	0
4/26/2024	6:30 PM	3	149	13	0	3	1	0	0	2	0	0	0	0
4/26/2024	6:45 PM	2	113	9	0	2	0	0	0	2	0	0	0	0
4/26/2024	7:00 PM	1	84	20	0	0	0	0	0	1	0	0	0	0
4/26/2024	7:15 PM	0	91	14	0	1	0	0	0	2	0	0	0	0
4/26/2024	7:30 PM	0	73	13	0	0	0	0	0	0	0	0	0	0
4/26/2024	7:45 PM	0	68	10	1	1	1	0	0	0	0	0	0	0
4/26/2024	8:00 PM	0	68	12	0	1	0	0	0	1	0	0	0	0
4/26/2024	8:15 PM	0	50	7	0	2	0	0	0	0	0	0	0	0
4/26/2024	8:30 PM	1	63	12	0	0	0	0	0	2	0	0	0	0
4/26/2024	8:45 PM	0	64	13	0	0	0	0	0	2	0	0	0	0
4/26/2024	9:00 PM	0	60	9	0	0	0	0	0	0	0	0	0	0
4/26/2024	9:15 PM	0	59	8	0	1	0	0	0	0	0	0	0	0
4/26/2024	9:30 PM	0	42	6	0	0	0	0	0	1	0	0	0	0
4/26/2024	9:45 PM	0	40	9	0	0	0	0	0	2	0	0	0	0
4/26/2024	10:00 PM	0	38	7	0	1	0	0	0	2	0	0	0	0
4/26/2024	10:15 PM	0	42	12	0	0	0	0	0	2	0	0	0	0
4/26/2024	10:30 PM	0	35	6	0	0	0	0	0	1	0	0	0	0
4/26/2024	10:45 PM	0	39	5	0	1	0	0	0	2	0	0	0	0
4/26/2024	11:00 PM	0	31	6	0	1	0	0	0	4	0	0	0	0
4/26/2024	11:15 PM	0	25	5	0	0	0	0	0	3	0	0	0	0
4/26/2024	11:30 PM	0	19	3	0	1	0	0	0	1	0	0	0	0
4/26/2024	11:45 PM	0	18	4	0	0	1	0	0	0	0	0	0	0

4/27/2024	12:00 AM	0	14	4	0	0	0	0	0	0	0	0	0
4/27/2024	12:15 AM	0	15	6	0	0	0	0	0	1	0	0	0
4/27/2024	12:30 AM	0	13	0	0	0	0	0	0	0	0	0	0
4/27/2024	12:45 AM	0	10	5	0	0	0	0	0	2	0	1	0
4/27/2024	1:00 AM	0	9	4	0	0	0	0	0	1	0	1	0
4/27/2024	1:15 AM	0	6	2	0	1	0	0	0	2	0	0	0
4/27/2024	1:30 AM	0	10	5	0	0	0	0	0	1	0	0	0
4/27/2024	1:45 AM	0	6	0	0	0	0	0	0	0	0	0	0
4/27/2024	2:00 AM	0	8	2	0	0	0	0	0	1	0	1	0
4/27/2024	2:15 AM	0	9	3	0	0	0	0	0	1	0	0	0
4/27/2024	2:30 AM	0	6	2	0	0	0	0	0	0	0	0	0
4/27/2024	2:45 AM	0	8	1	0	1	0	0	0	1	0	0	0
4/27/2024	3:00 AM	0	4	1	0	0	0	0	0	0	0	0	0
4/27/2024	3:15 AM	0	4	0	0	0	0	0	0	0	0	0	0
4/27/2024	3:30 AM	0	5	0	0	0	0	0	0	2	0	0	0
4/27/2024	3:45 AM	0	4	0	0	0	0	0	0	0	0	0	0
4/27/2024	4:00 AM	0	7	2	0	0	0	0	0	1	0	0	0
4/27/2024	4:15 AM	0	4	0	0	0	0	0	0	1	0	0	0
4/27/2024	4:30 AM	0	5	1	0	0	0	0	0	0	0	0	0
4/27/2024	4:45 AM	0	5	0	0	0	0	0	0	0	0	0	0
4/27/2024	5:00 AM	0	10	7	0	0	0	0	0	0	0	0	0
4/27/2024	5:15 AM	0	7	2	0	0	0	0	0	0	0	0	0
4/27/2024	5:30 AM	0	15	6	0	0	0	0	0	1	0	0	0
4/27/2024	5:45 AM	0	18	4	0	0	0	0	0	2	0	0	0
4/27/2024	6:00 AM	0	11	8	0	2	0	0	0	0	0	1	0
4/27/2024	6:15 AM	0	20	8	0	0	0	0	0	2	0	0	0
4/27/2024	6:30 AM	0	50	18	0	0	0	0	0	0	0	0	0
4/27/2024	6:45 AM	0	50	7	0	0	0	0	0	3	0	0	0
4/27/2024	7:00 AM	0	44	8	0	1	0	0	0	3	0	0	0
4/27/2024	7:15 AM	0	55	14	0	3	0	0	1	0	0	0	0
4/27/2024	7:30 AM	0	59	13	0	1	0	1	1	1	0	0	0
4/27/2024	7:45 AM	0	59	15	0	1	0	0	0	1	0	1	0
4/27/2024	8:00 AM	0	67	11	0	0	1	0	0	2	0	0	0
4/27/2024	8:15 AM	0	100	17	0	0	0	0	1	2	0	0	0
4/27/2024	8:30 AM	0	99	15	0	0	0	0	0	3	0	0	0
4/27/2024	8:45 AM	0	103	20	0	1	0	0	2	1	0	0	0
4/27/2024	9:00 AM	0	97	17	0	3	0	0	0	0	0	0	0
4/27/2024	9:15 AM	0	110	17	0	2	0	0	0	1	0	0	0
4/27/2024	9:30 AM	0	122	31	0	2	0	0	1	1	0	0	0
4/27/2024	9:45 AM	0	132	31	0	0	0	0	0	1	0	0	0
4/27/2024	10:00 AM	1	127	16	0	0	0	0	0	1	0	0	0
4/27/2024	10:15 AM	0	122	18	0	2	0	0	0	1	0	0	0
4/27/2024	10:30 AM	4	130	27	0	0	1	0	0	1	0	0	0
4/27/2024	10:45 AM	0	112	30	1	0	0	0	0	3	0	0	0
4/27/2024	11:00 AM	1	130	23	0	1	0	0	0	1	0	0	0
4/27/2024	11:15 AM	0	122	22	0	0	0	0	0	5	0	0	0
4/27/2024	11:30 AM	0	126	21	0	2	0	0	0	2	0	0	0
4/27/2024	11:45 AM	0	151	17	0	2	0	0	1	0	0	0	0
4/27/2024	12:00 PM	0	135	12	0	1	0	0	0	3	0	0	0
4/27/2024	12:15 PM	0	119	23	0	4	0	0	1	0	0	0	0
4/27/2024	12:30 PM	1	136	22	0	0	0	0	1	2	0	0	0
4/27/2024	12:45 PM	0	113	20	0	1	0	0	0	2	0	0	0
4/27/2024	1:00 PM	0	101	16	0	0	1	0	0	1	0	0	0
4/27/2024	1:15 PM	1	123	16	0	0	0	0	0	1	0	0	0
4/27/2024	1:30 PM	0	123	8	0	0	0	0	0	0	0	0	0
4/27/2024	1:45 PM	0	103	14	0	1	1	0	0	2	0	0	0
4/27/2024	2:00 PM	0	115	21	0	0	0	0	0	0	0	0	0
4/27/2024	2:15 PM	0	105	18	0	1	0	0	0	2	0	0	0
4/27/2024	2:30 PM	1	139	18	1	1	0	0	1	0	0	0	0
4/27/2024	2:45 PM	0	132	9	0	1	0	0	0	3	0	0	0
4/27/2024	3:00 PM	0	129	20	0	0	0	0	0	0	0	0	0
4/27/2024	3:15 PM	0	169	17	0	0	0	0	0	1	0	0	0
4/27/2024	3:30 PM	0	170	23	1	1	0	0	0	1	0	0	0
4/27/2024	3:45 PM	0	131	12	0	0	0	0	0	2	0	0	0
4/27/2024	4:00 PM	1	98	10	0	0	0	0	0	0	0	0	0
4/27/2024	4:15 PM	0	96	18	0	0	0	0	0	0	0	0	0
4/27/2024	4:30 PM	0	168	20	0	1	0	0	0	1	0	0	0
4/27/2024	4:45 PM	0	179	23	0	1	0	0	0	2	0	0	0
4/27/2024	5:00 PM	0	157	12	0	0	0	0	0	1	0	0	0
4/27/2024	5:15 PM	0	194	14	0	2	0	0	0	2	0	0	0
4/27/2024	5:30 PM	0	147	17	0	0	0	0	0	1	0	0	0
4/27/2024	5:45 PM	2	120	15	0	0	0	0	0	1	0	0	0
4/27/2024	6:00 PM	0	120	28	0	1	0	0	0	1	0	0	0
4/27/2024	6:15 PM	0	139	15	0	1	0	0	0	0	0	0	0
4/27/2024	6:30 PM	0	135	17	0	0	0	0	0	0	0	0	0
4/27/2024	6:45 PM	0	124	16	0	1	0	0	0	1	0	0	0
4/27/2024	7:00 PM	0	114	10	0	0	0	0	0	0	0	0	0
4/27/2024	7:15 PM	0	99	7	0	0	0	0	1	3	0	0	0
4/27/2024	7:30 PM	0	91	12	0	0	0	0	0	0	0	0	0
4/27/2024	7:45 PM	0	86	6	0	1	0	0	0	0	0	0	0
4/27/2024	8:00 PM	0	88	4	0	0	0	0	0	0	0	0	0
4/27/2024	8:15 PM	0	60	5	0	0	0	0	0	0	0	0	0
4/27/2024	8:30 PM	0	80	5	0	1	0	0	0	1	0	0	0
4/27/2024	8:45 PM	0	61	6	0	0	0	0	0	0	0	0	0
4/27/2024	9:00 PM	0	65	7	0	0	0	0	0	0	0	0	0
4/27/2024	9:15 PM	0	50	5	0	0	0	0	0	0	0	0	0
4/27/2024	9:30 PM	0	58	6	0	0	0	0	0	0	0	0	0
4/27/2024	9:45 PM	0	42	8	0	2	0	0	0	0	0	0	0
4/27/2024	10:00 PM	0	40	7	0	0	0	0	0	0	0	0	0
4/27/2024	10:15 PM	0	39	5	0	0	0	0	0	1	0	0	0
4/27/2024	10:30 PM	0	45	6	0	1	0	0	0	0	0	0	0
4/27/2024	10:45 PM	0	27	4	1	0	0	0	0	0	0	0	0
4/27/2024	11:00 PM	0	21	11	0	0	0	0	0	0	0	0	0
4/27/2024	11:15 PM	0	22	10	0	1	0	0	0	0	0	0	0
4/27/2024	11:30 PM	0	25	10	0	0	0	0	0	0	0	0	0
4/27/2024	11:45 PM	0	20	6	0	0	0	0	0	2	0	0	0

NB
File Name:
Start Date: 4/21/2024
Start Time: 0
Site Code: 10
Station ID: 1
Location 1: I-26 S/Bound On-Ramp, south of I-20
Location 2:

Date	Time	1	2	3	4	5	6	7	8	9	10	11	12	13
4/21/2024	12:00 AM	0	0	0	0	0	0	0	0	0	0	0	0	0
4/21/2024	12:15 AM	0	0	0	0	0	0	0	0	0	0	0	0	0
4/21/2024	12:30 AM	0	0	0	0	0	0	0	0	0	0	0	0	0
4/21/2024	12:45 AM	0	0	0	0	0	0	0	0	0	0	0	0	0
4/21/2024	1:00 AM	0	0	0	0	0	0	0	0	0	0	0	0	0
4/21/2024	1:15 AM	0	0	0	0	0	0	0	0	0	0	0	0	0
4/21/2024	1:30 AM	0	0	0	0	0	0	0	0	0	0	0	0	0
4/21/2024	1:45 AM	0	0	0	0	0	0	0	0	0	0	0	0	0
4/21/2024	2:00 AM	0	0	0	0	0	0	0	0	0	0	0	0	0
4/21/2024	2:15 AM	0	0	0	0	0	0	0	0	0	0	0	0	0
4/21/2024	2:30 AM	0	0	0	0	0	0	0	0	0	0	0	0	0
4/21/2024	2:45 AM	0	0	0	0	0	0	0	0	0	0	0	0	0
4/21/2024	3:00 AM	0	0	0	0	0	0	0	0	0	0	0	0	0
4/21/2024	3:15 AM	0	0	0	0	0	0	0	0	0	0	0	0	0
4/21/2024	3:30 AM	0	0	0	0	0	0	0	0	0	0	0	0	0
4/21/2024	3:45 AM	0	0	0	0	0	0	0	0	0	0	0	0	0
4/21/2024	4:00 AM	0	0	0	0	0	0	0	0	0	0	0	0	0
4/21/2024	4:15 AM	0	0	0	0	0	0	0	0	0	0	0	0	0
4/21/2024	4:30 AM	0	0	0	0	0	0	0	0	0	0	0	0	0
4/21/2024	4:45 AM	0	0	0	0	0	0	0	0	0	0	0	0	0
4/21/2024	5:00 AM	0	0	0	0	0	0	0	0	0	0	0	0	0
4/21/2024	5:15 AM	0	0	0	0	0	0	0	0	0	0	0	0	0
4/21/2024	5:30 AM	0	0	0	0	0	0	0	0	0	0	0	0	0
4/21/2024	5:45 AM	0	0	0	0	0	0	0	0	0	0	0	0	0
4/21/2024	6:00 AM	0	0	0	0	0	0	0	0	0	0	0	0	0
4/21/2024	6:15 AM	0	0	0	0	0	0	0	0	0	0	0	0	0
4/21/2024	6:30 AM	0	0	0	0	0	0	0	0	0	0	0	0	0
4/21/2024	6:45 AM	0	0	0	0	0	0	0	0	0	0	0	0	0
4/21/2024	7:00 AM	0	0	0	0	0	0	0	0	0	0	0	0	0
4/21/2024	7:15 AM	0	0	0	0	0	0	0	0	0	0	0	0	0
4/21/2024	7:30 AM	0	0	0	0	0	0	0	0	0	0	0	0	0
4/21/2024	7:45 AM	0	0	0	0	0	0	0	0	0	0	0	0	0
4/21/2024	8:00 AM	0	0	0	0	0	0	0	0	0	0	0	0	0
4/21/2024	8:15 AM	0	0	0	0	0	0	0	0	0	0	0	0	0
4/21/2024	8:30 AM	0	0	0	0	0	0	0	0	0	0	0	0	0
4/21/2024	8:45 AM	0	0	0	0	0	0	0	0	0	0	0	0	0
4/21/2024	9:00 AM	0	0	0	0	0	0	0	0	0	0	0	0	0
4/21/2024	9:15 AM	0	0	0	0	0	0	0	0	0	0	0	0	0
4/21/2024	9:30 AM	0	0	0	0	0	0	0	0	0	0	0	0	0
4/21/2024	9:45 AM	0	0	0	0	0	0	0	0	0	0	0	0	0
4/21/2024	10:00 AM	0	0	0	0	0	0	0	0	0	0	0	0	0
4/21/2024	10:15 AM	0	0	0	0	0	0	0	0	0	0	0	0	0
4/21/2024	10:30 AM	0	0	0	0	0	0	0	0	0	0	0	0	0
4/21/2024	10:45 AM	0	0	0	0	0	0	0	0	0	0	0	0	0
4/21/2024	11:00 AM	0	0	0	0	0	0	0	0	0	0	0	0	0
4/21/2024	11:15 AM	0	0	0	0	0	0	0	0	0	0	0	0	0
4/21/2024	11:30 AM	0	0	0	0	0	0	0	0	0	0	0	0	0
4/21/2024	11:45 AM	0	0	0	0	0	0	0	0	0	0	0	0	0
4/21/2024	12:00 PM	0	0	0	0	0	0	0	0	0	0	0	0	0
4/21/2024	12:15 PM	0	0	0	0	0	0	0	0	0	0	0	0	0
4/21/2024	12:30 PM	0	0	0	0	0	0	0	0	0	0	0	0	0
4/21/2024	12:45 PM	0	0	0	0	0	0	0	0	0	0	0	0	0
4/21/2024	1:00 PM	0	0	0	0	0	0	0	0	0	0	0	0	0
4/21/2024	1:15 PM	0	0	0	0	0	0	0	0	0	0	0	0	0
4/21/2024	1:30 PM	0	0	0	0	0	0	0	0	0	0	0	0	0
4/21/2024	1:45 PM	0	0	0	0	0	0	0	0	0	0	0	0	0
4/21/2024	2:00 PM	0	0	0	0	0	0	0	0	0	0	0	0	0
4/21/2024	2:15 PM	0	0	0	0	0	0	0	0	0	0	0	0	0
4/21/2024	2:30 PM	0	0	0	0	0	0	0	0	0	0	0	0	0
4/21/2024	2:45 PM	0	0	0	0	0	0	0	0	0	0	0	0	0
4/21/2024	3:00 PM	0	0	0	0	0	0	0	0	0	0	0	0	0
4/21/2024	3:15 PM	0	0	0	0	0	0	0	0	0	0	0	0	0
4/21/2024	3:30 PM	0	0	0	0	0	0	0	0	0	0	0	0	0
4/21/2024	3:45 PM	0	0	0	0	0	0	0	0	0	0	0	0	0
4/21/2024	4:00 PM	0	0	0	0	0	0	0	0	0	0	0	0	0
4/21/2024	4:15 PM	0	0	0	0	0	0	0	0	0	0	0	0	0
4/21/2024	4:30 PM	0	0	0	0	0	0	0	0	0	0	0	0	0
4/21/2024	4:45 PM	0	0	0	0	0	0	0	0	0	0	0	0	0
4/21/2024	5:00 PM	0	0	0	0	0	0	0	0	0	0	0	0	0
4/21/2024	5:15 PM	0	0	0	0	0	0	0	0	0	0	0	0	0
4/21/2024	5:30 PM	0	0	0	0	0	0	0	0	0	0	0	0	0
4/21/2024	5:45 PM	0	0	0	0	0	0	0	0	0	0	0	0	0
4/21/2024	6:00 PM	0	0	0	0	0	0	0	0	0	0	0	0	0
4/21/2024	6:15 PM	0	0	0	0	0	0	0	0	0	0	0	0	0
4/21/2024	6:30 PM	0	0	0	0	0	0	0	0	0	0	0	0	0
4/21/2024	6:45 PM	0	0	0	0	0	0	0	0	0	0	0	0	0
4/21/2024	7:00 PM	0	0	0	0	0	0	0	0	0	0	0	0	0
4/21/2024	7:15 PM	0	0	0	0	0	0	0	0	0	0	0	0	0
4/21/2024	7:30 PM	0	0	0	0	0	0	0	0	0	0	0	0	0
4/21/2024	7:45 PM	0	0	0	0	0	0	0	0	0	0	0	0	0
4/21/2024	8:00 PM	0	0	0	0	0	0	0	0	0	0	0	0	0
4/21/2024	8:15 PM	0	0	0	0	0	0	0	0	0	0	0	0	0
4/21/2024	8:30 PM	0	0	0	0	0	0	0	0	0	0	0	0	0
4/21/2024	8:45 PM	0	0	0	0	0	0	0	0	0	0	0	0	0
4/21/2024	9:00 PM	0	0	0	0	0	0	0	0	0	0	0	0	0
4/21/2024	9:15 PM	0	0	0	0	0	0	0	0	0	0	0	0	0
4/21/2024	9:30 PM	0	0	0	0	0	0	0	0	0	0	0	0	0
4/21/2024	9:45 PM	0	0	0	0	0	0	0	0	0	0	0	0	0
4/21/2024	10:00 PM	0	0	0	0	0	0	0	0	0	0	0	0	0
4/21/2024	10:15 PM	0	0	0	0	0	0	0	0	0	0	0	0	0
4/21/2024	10:30 PM	0	0	0	0	0	0	0	0	0	0	0	0	0
4/21/2024	10:45 PM	0	0	0	0	0	0	0	0	0	0	0	0	0
4/21/2024	11:00 PM	0	0	0	0	0	0	0	0	0	0	0	0	0
4/21/2024	11:15 PM	0	0	0	0	0	0	0	0	0	0	0	0	0
4/21/2024	11:30 PM	0	0	0	0	0	0	0	0	0	0	0	0	0
4/21/2024	11:45 PM	0	0	0	0	0	0	0	0	0	0	0	0	0

4/22/2024	12:00 AM	0	0	0	0	0	0	0	0	0	0	0	0	0
4/22/2024	12:15 AM	0	0	0	0	0	0	0	0	0	0	0	0	0
4/22/2024	12:30 AM	0	0	0	0	0	0	0	0	0	0	0	0	0
4/22/2024	12:45 AM	0	0	0	0	0	0	0	0	0	0	0	0	0
4/22/2024	1:00 AM	0	0	0	0	0	0	0	0	0	0	0	0	0
4/22/2024	1:15 AM	0	0	0	0	0	0	0	0	0	0	0	0	0
4/22/2024	1:30 AM	0	0	0	0	0	0	0	0	0	0	0	0	0
4/22/2024	1:45 AM	0	0	0	0	0	0	0	0	0	0	0	0	0
4/22/2024	2:00 AM	0	0	0	0	0	0	0	0	0	0	0	0	0
4/22/2024	2:15 AM	0	0	0	0	0	0	0	0	0	0	0	0	0
4/22/2024	2:30 AM	0	0	0	0	0	0	0	0	0	0	0	0	0
4/22/2024	2:45 AM	0	0	0	0	0	0	0	0	0	0	0	0	0
4/22/2024	3:00 AM	0	0	0	0	0	0	0	0	0	0	0	0	0
4/22/2024	3:15 AM	0	0	0	0	0	0	0	0	0	0	0	0	0
4/22/2024	3:30 AM	0	0	0	0	0	0	0	0	0	0	0	0	0
4/22/2024	3:45 AM	0	0	0	0	0	0	0	0	0	0	0	0	0
4/22/2024	4:00 AM	0	0	0	0	0	0	0	0	0	0	0	0	0
4/22/2024	4:15 AM	0	0	0	0	0	0	0	0	0	0	0	0	0
4/22/2024	4:30 AM	0	0	0	0	0	0	0	0	0	0	0	0	0
4/22/2024	4:45 AM	0	0	0	0	0	0	0	0	0	0	0	0	0
4/22/2024	5:00 AM	0	0	0	0	0	0	0	0	0	0	0	0	0
4/22/2024	5:15 AM	0	0	0	0	0	0	0	0	0	0	0	0	0
4/22/2024	5:30 AM	0	0	0	0	0	0	0	0	0	0	0	0	0
4/22/2024	5:45 AM	0	0	0	0	0	0	0	0	0	0	0	0	0
4/22/2024	6:00 AM	0	0	0	0	0	0	0	0	0	0	0	0	0
4/22/2024	6:15 AM	0	0	0	0	0	0	0	0	0	0	0	0	0
4/22/2024	6:30 AM	0	0	0	0	0	0	0	0	0	0	0	0	0
4/22/2024	6:45 AM	0	0	0	0	0	0	0	0	0	0	0	0	0
4/22/2024	7:00 AM	0	0	0	0	0	0	0	0	0	0	0	0	0
4/22/2024	7:15 AM	0	0	0	0	0	0	0	0	0	0	0	0	0
4/22/2024	7:30 AM	0	0	0	0	0	0	0	0	0	0	0	0	0
4/22/2024	7:45 AM	0	0	0	0	0	0	0	0	0	0	0	0	0
4/22/2024	8:00 AM	0	0	0	0	0	0	0	0	0	0	0	0	0
4/22/2024	8:15 AM	0	0	0	0	0	0	0	0	0	0	0	0	0
4/22/2024	8:30 AM	0	0	0	0	0	0	0	0	0	0	0	0	0
4/22/2024	8:45 AM	0	0	0	0	0	0	0	0	0	0	0	0	0
4/22/2024	9:00 AM	0	0	0	0	0	0	0	0	0	0	0	0	0
4/22/2024	9:15 AM	0	0	0	0	0	0	0	0	0	0	0	0	0
4/22/2024	9:30 AM	0	0	0	0	0	0	0	0	0	0	0	0	0
4/22/2024	9:45 AM	0	0	0	0	0	0	0	0	0	0	0	0	0
4/22/2024	10:00 AM	0	0	0	0	0	0	0	0	0	0	0	0	0
4/22/2024	10:15 AM	0	0	0	0	0	0	0	0	0	0	0	0	0
4/22/2024	10:30 AM	0	0	0	0	0	0	0	0	0	0	0	0	0
4/22/2024	10:45 AM	0	0	0	0	0	0	0	0	0	0	0	0	0
4/22/2024	11:00 AM	0	0	0	0	0	0	0	0	0	0	0	0	0
4/22/2024	11:15 AM	0	0	0	0	0	0	0	0	0	0	0	0	0
4/22/2024	11:30 AM	0	0	0	0	0	0	0	0	0	0	0	0	0
4/22/2024	11:45 AM	0	0	0	0	0	0	0	0	0	0	0	0	0
4/22/2024	12:00 PM	0	0	0	0	0	0	0	0	0	0	0	0	0
4/22/2024	12:15 PM	0	0	0	0	0	0	0	0	0	0	0	0	0
4/22/2024	12:30 PM	0	0	0	0	0	0	0	0	0	0	0	0	0
4/22/2024	12:45 PM	0	0	0	0	0	0	0	0	0	0	0	0	0
4/22/2024	1:00 PM	0	0	0	0	0	0	0	0	0	0	0	0	0
4/22/2024	1:15 PM	0	0	0	0	0	0	0	0	0	0	0	0	0
4/22/2024	1:30 PM	0	0	0	0	0	0	0	0	0	0	0	0	0
4/22/2024	1:45 PM	0	0	0	0	0	0	0	0	0	0	0	0	0
4/22/2024	2:00 PM	0	0	0	0	0	0	0	0	0	0	0	0	0
4/22/2024	2:15 PM	0	0	0	0	0	0	0	0	0	0	0	0	0
4/22/2024	2:30 PM	0	0	0	0	0	0	0	0	0	0	0	0	0
4/22/2024	2:45 PM	0	0	0	0	0	0	0	0	0	0	0	0	0
4/22/2024	3:00 PM	0	0	0	0	0	0	0	0	0	0	0	0	0
4/22/2024	3:15 PM	0	0	0	0	0	0	0	0	0	0	0	0	0
4/22/2024	3:30 PM	0	0	0	0	0	0	0	0	0	0	0	0	0
4/22/2024	3:45 PM	0	0	0	0	0	0	0	0	0	0	0	0	0
4/22/2024	4:00 PM	0	0	0	0	0	0	0	0	0	0	0	0	0
4/22/2024	4:15 PM	0	0	0	0	0	0	0	0	0	0	0	0	0
4/22/2024	4:30 PM	0	0	0	0	0	0	0	0	0	0	0	0	0
4/22/2024	4:45 PM	0	0	0	0	0	0	0	0	0	0	0	0	0
4/22/2024	5:00 PM	0	0	0	0	0	0	0	0	0	0	0	0	0
4/22/2024	5:15 PM	0	0	0	0	0	0	0	0	0	0	0	0	0
4/22/2024	5:30 PM	0	0	0	0	0	0	0	0	0	0	0	0	0
4/22/2024	5:45 PM	0	0	0	0	0	0	0	0	0	0	0	0	0
4/22/2024	6:00 PM	0	0	0	0	0	0	0	0	0	0	0	0	0
4/22/2024	6:15 PM	0	0	0	0	0	0	0	0	0	0	0	0	0
4/22/2024	6:30 PM	0	0	0	0	0	0	0	0	0	0	0	0	0
4/22/2024	6:45 PM	0	0	0	0	0	0	0	0	0	0	0	0	0
4/22/2024	7:00 PM	0	0	0	0	0	0	0	0	0	0	0	0	0
4/22/2024	7:15 PM	0	0	0	0	0	0	0	0	0	0	0	0	0
4/22/2024	7:30 PM	0	0	0	0	0	0	0	0	0	0	0	0	0
4/22/2024	7:45 PM	0	0	0	0	0	0	0	0	0	0	0	0	0
4/22/2024	8:00 PM	0	0	0	0	0	0	0	0	0	0	0	0	0
4/22/2024	8:15 PM	0	0	0	0	0	0	0	0	0	0	0	0	0
4/22/2024	8:30 PM	0	0	0	0	0	0	0	0	0	0	0	0	0
4/22/2024	8:45 PM	0	0	0	0	0	0	0	0	0	0	0	0	0
4/22/2024	9:00 PM	0	0	0	0	0	0	0	0	0	0	0	0	0
4/22/2024	9:15 PM	0	0	0	0	0	0	0	0	0	0	0	0	0
4/22/2024	9:30 PM	0	0	0	0	0	0	0	0	0	0	0	0	0
4/22/2024	9:45 PM	0	0	0	0	0	0	0	0	0	0	0	0	0
4/22/2024	10:00 PM	0	0	0	0	0	0	0	0	0	0	0	0	0
4/22/2024	10:15 PM	0	0	0	0	0	0	0	0	0	0	0	0	0
4/22/2024	10:30 PM	0	0	0	0	0	0	0	0	0	0	0	0	0
4/22/2024	10:45 PM	0	0	0	0	0	0	0	0	0	0	0	0	0
4/22/2024	11:00 PM	0	0	0	0	0	0	0	0	0	0	0	0	0
4/22/2024	11:15 PM	0	0	0	0	0	0	0	0	0	0	0	0	0
4/22/2024	11:30 PM	0	0	0	0	0	0	0	0	0	0	0	0	0
4/22/2024	11:45 PM	0	0	0	0	0	0	0	0	0	0	0	0	0

4/23/2024	12:00 AM	0	0	0	0	0	0	0	0	0	0	0	0	0
4/23/2024	12:15 AM	0	0	0	0	0	0	0	0	0	0	0	0	0
4/23/2024	12:30 AM	0	0	0	0	0	0	0	0	0	0	0	0	0
4/23/2024	12:45 AM	0	0	0	0	0	0	0	0	0	0	0	0	0
4/23/2024	1:00 AM	0	0	0	0	0	0	0	0	0	0	0	0	0
4/23/2024	1:15 AM	0	0	0	0	0	0	0	0	0	0	0	0	0
4/23/2024	1:30 AM	0	0	0	0	0	0	0	0	0	0	0	0	0
4/23/2024	1:45 AM	0	0	0	0	0	0	0	0	0	0	0	0	0
4/23/2024	2:00 AM	0	0	0	0	0	0	0	0	0	0	0	0	0
4/23/2024	2:15 AM	0	0	0	0	0	0	0	0	0	0	0	0	0
4/23/2024	2:30 AM	0	0	0	0	0	0	0	0	0	0	0	0	0
4/23/2024	2:45 AM	0	0	0	0	0	0	0	0	0	0	0	0	0
4/23/2024	3:00 AM	0	0	0	0	0	0	0	0	0	0	0	0	0
4/23/2024	3:15 AM	0	0	0	0	0	0	0	0	0	0	0	0	0
4/23/2024	3:30 AM	0	0	0	0	0	0	0	0	0	0	0	0	0
4/23/2024	3:45 AM	0	0	0	0	0	0	0	0	0	0	0	0	0
4/23/2024	4:00 AM	0	0	0	0	0	0	0	0	0	0	0	0	0
4/23/2024	4:15 AM	0	0	0	0	0	0	0	0	0	0	0	0	0
4/23/2024	4:30 AM	0	0	0	0	0	0	0	0	0	0	0	0	0
4/23/2024	4:45 AM	0	0	0	0	0	0	0	0	0	0	0	0	0
4/23/2024	5:00 AM	0	0	0	0	0	0	0	0	0	0	0	0	0
4/23/2024	5:15 AM	0	0	0	0	0	0	0	0	0	0	0	0	0
4/23/2024	5:30 AM	0	0	0	0	0	0	0	0	0	0	0	0	0
4/23/2024	5:45 AM	0	0	0	0	0	0	0	0	0	0	0	0	0
4/23/2024	6:00 AM	0	0	0	0	0	0	0	0	0	0	0	0	0
4/23/2024	6:15 AM	0	0	0	0	0	0	0	0	0	0	0	0	0
4/23/2024	6:30 AM	0	0	0	0	0	0	0	0	0	0	0	0	0
4/23/2024	6:45 AM	0	0	0	0	0	0	0	0	0	0	0	0	0
4/23/2024	7:00 AM	0	0	0	0	0	0	0	0	0	0	0	0	0
4/23/2024	7:15 AM	0	0	0	0	0	0	0	0	0	0	0	0	0
4/23/2024	7:30 AM	0	0	0	0	0	0	0	0	0	0	0	0	0
4/23/2024	7:45 AM	0	0	0	0	0	0	0	0	0	0	0	0	0
4/23/2024	8:00 AM	0	0	0	0	0	0	0	0	0	0	0	0	0
4/23/2024	8:15 AM	0	0	0	0	0	0	0	0	0	0	0	0	0
4/23/2024	8:30 AM	0	0	0	0	0	0	0	0	0	0	0	0	0
4/23/2024	8:45 AM	0	0	0	0	0	0	0	0	0	0	0	0	0
4/23/2024	9:00 AM	0	0	0	0	0	0	0	0	0	0	0	0	0
4/23/2024	9:15 AM	0	0	0	0	0	0	0	0	0	0	0	0	0
4/23/2024	9:30 AM	0	0	0	0	0	0	0	0	0	0	0	0	0
4/23/2024	9:45 AM	0	0	0	0	0	0	0	0	0	0	0	0	0
4/23/2024	10:00 AM	0	0	0	0	0	0	0	0	0	0	0	0	0
4/23/2024	10:15 AM	0	0	0	0	0	0	0	0	0	0	0	0	0
4/23/2024	10:30 AM	0	0	0	0	0	0	0	0	0	0	0	0	0
4/23/2024	10:45 AM	0	0	0	0	0	0	0	0	0	0	0	0	0
4/23/2024	11:00 AM	0	0	0	0	0	0	0	0	0	0	0	0	0
4/23/2024	11:15 AM	0	0	0	0	0	0	0	0	0	0	0	0	0
4/23/2024	11:30 AM	0	0	0	0	0	0	0	0	0	0	0	0	0
4/23/2024	11:45 AM	0	0	0	0	0	0	0	0	0	0	0	0	0
4/23/2024	12:00 PM	0	0	0	0	0	0	0	0	0	0	0	0	0
4/23/2024	12:15 PM	0	0	0	0	0	0	0	0	0	0	0	0	0
4/23/2024	12:30 PM	0	0	0	0	0	0	0	0	0	0	0	0	0
4/23/2024	12:45 PM	0	0	0	0	0	0	0	0	0	0	0	0	0
4/23/2024	1:00 PM	0	0	0	0	0	0	0	0	0	0	0	0	0
4/23/2024	1:15 PM	0	0	0	0	0	0	0	0	0	0	0	0	0
4/23/2024	1:30 PM	0	0	0	0	0	0	0	0	0	0	0	0	0
4/23/2024	1:45 PM	0	0	0	0	0	0	0	0	0	0	0	0	0
4/23/2024	2:00 PM	0	0	0	0	0	0	0	0	0	0	0	0	0
4/23/2024	2:15 PM	0	0	0	0	0	0	0	0	0	0	0	0	0
4/23/2024	2:30 PM	0	0	0	0	0	0	0	0	0	0	0	0	0
4/23/2024	2:45 PM	0	0	0	0	0	0	0	0	0	0	0	0	0
4/23/2024	3:00 PM	0	0	0	0	0	0	0	0	0	0	0	0	0
4/23/2024	3:15 PM	0	0	0	0	0	0	0	0	0	0	0	0	0
4/23/2024	3:30 PM	0	0	0	0	0	0	0	0	0	0	0	0	0
4/23/2024	3:45 PM	0	0	0	0	0	0	0	0	0	0	0	0	0
4/23/2024	4:00 PM	0	0	0	0	0	0	0	0	0	0	0	0	0
4/23/2024	4:15 PM	0	0	0	0	0	0	0	0	0	0	0	0	0
4/23/2024	4:30 PM	0	0	0	0	0	0	0	0	0	0	0	0	0
4/23/2024	4:45 PM	0	0	0	0	0	0	0	0	0	0	0	0	0
4/23/2024	5:00 PM	0	0	0	0	0	0	0	0	0	0	0	0	0
4/23/2024	5:15 PM	0	0	0	0	0	0	0	0	0	0	0	0	0
4/23/2024	5:30 PM	0	0	0	0	0	0	0	0	0	0	0	0	0
4/23/2024	5:45 PM	0	0	0	0	0	0	0	0	0	0	0	0	0
4/23/2024	6:00 PM	0	0	0	0	0	0	0	0	0	0	0	0	0
4/23/2024	6:15 PM	0	0	0	0	0	0	0	0	0	0	0	0	0
4/23/2024	6:30 PM	0	0	0	0	0	0	0	0	0	0	0	0	0
4/23/2024	6:45 PM	0	0	0	0	0	0	0	0	0	0	0	0	0
4/23/2024	7:00 PM	0	0	0	0	0	0	0	0	0	0	0	0	0
4/23/2024	7:15 PM	0	0	0	0	0	0	0	0	0	0	0	0	0
4/23/2024	7:30 PM	0	0	0	0	0	0	0	0	0	0	0	0	0
4/23/2024	7:45 PM	0	0	0	0	0	0	0	0	0	0	0	0	0
4/23/2024	8:00 PM	0	0	0	0	0	0	0	0	0	0	0	0	0
4/23/2024	8:15 PM	0	0	0	0	0	0	0	0	0	0	0	0	0
4/23/2024	8:30 PM	0	0	0	0	0	0	0	0	0	0	0	0	0
4/23/2024	8:45 PM	0	0	0	0	0	0	0	0	0	0	0	0	0
4/23/2024	9:00 PM	0	0	0	0	0	0	0	0	0	0	0	0	0
4/23/2024	9:15 PM	0	0	0	0	0	0	0	0	0	0	0	0	0
4/23/2024	9:30 PM	0	0	0	0	0	0	0	0	0	0	0	0	0
4/23/2024	9:45 PM	0	0	0	0	0	0	0	0	0	0	0	0	0
4/23/2024	10:00 PM	0	0	0	0	0	0	0	0	0	0	0	0	0
4/23/2024	10:15 PM	0	0	0	0	0	0	0	0	0	0	0	0	0
4/23/2024	10:30 PM	0	0	0	0	0	0	0	0	0	0	0	0	0
4/23/2024	10:45 PM	0	0	0	0	0	0	0	0	0	0	0	0	0
4/23/2024	11:00 PM	0	0	0	0	0	0	0	0	0	0	0	0	0
4/23/2024	11:15 PM	0	0	0	0	0	0	0	0	0	0	0	0	0
4/23/2024	11:30 PM	0	0	0	0	0	0	0	0	0	0	0	0	0
4/23/2024	11:45 PM	0	0	0	0	0	0	0	0	0	0	0	0	0

4/24/2024	12:00 AM	0	0	0	0	0	0	0	0	0	0	0	0	0
4/24/2024	12:15 AM	0	0	0	0	0	0	0	0	0	0	0	0	0
4/24/2024	12:30 AM	0	0	0	0	0	0	0	0	0	0	0	0	0
4/24/2024	12:45 AM	0	0	0	0	0	0	0	0	0	0	0	0	0
4/24/2024	1:00 AM	0	0	0	0	0	0	0	0	0	0	0	0	0
4/24/2024	1:15 AM	0	0	0	0	0	0	0	0	0	0	0	0	0
4/24/2024	1:30 AM	0	0	0	0	0	0	0	0	0	0	0	0	0
4/24/2024	1:45 AM	0	0	0	0	0	0	0	0	0	0	0	0	0
4/24/2024	2:00 AM	0	0	0	0	0	0	0	0	0	0	0	0	0
4/24/2024	2:15 AM	0	0	0	0	0	0	0	0	0	0	0	0	0
4/24/2024	2:30 AM	0	0	0	0	0	0	0	0	0	0	0	0	0
4/24/2024	2:45 AM	0	0	0	0	0	0	0	0	0	0	0	0	0
4/24/2024	3:00 AM	0	0	0	0	0	0	0	0	0	0	0	0	0
4/24/2024	3:15 AM	0	0	0	0	0	0	0	0	0	0	0	0	0
4/24/2024	3:30 AM	0	0	0	0	0	0	0	0	0	0	0	0	0
4/24/2024	3:45 AM	0	0	0	0	0	0	0	0	0	0	0	0	0
4/24/2024	4:00 AM	0	0	0	0	0	0	0	0	0	0	0	0	0
4/24/2024	4:15 AM	0	0	0	0	0	0	0	0	0	0	0	0	0
4/24/2024	4:30 AM	0	0	0	0	0	0	0	0	0	0	0	0	0
4/24/2024	4:45 AM	0	0	0	0	0	0	0	0	0	0	0	0	0
4/24/2024	5:00 AM	0	0	0	0	0	0	0	0	0	0	0	0	0
4/24/2024	5:15 AM	0	0	0	0	0	0	0	0	0	0	0	0	0
4/24/2024	5:30 AM	0	0	0	0	0	0	0	0	0	0	0	0	0
4/24/2024	5:45 AM	0	0	0	0	0	0	0	0	0	0	0	0	0
4/24/2024	6:00 AM	0	0	0	0	0	0	0	0	0	0	0	0	0
4/24/2024	6:15 AM	0	0	0	0	0	0	0	0	0	0	0	0	0
4/24/2024	6:30 AM	0	0	0	0	0	0	0	0	0	0	0	0	0
4/24/2024	6:45 AM	0	0	0	0	0	0	0	0	0	0	0	0	0
4/24/2024	7:00 AM	0	0	0	0	0	0	0	0	0	0	0	0	0
4/24/2024	7:15 AM	0	0	0	0	0	0	0	0	0	0	0	0	0
4/24/2024	7:30 AM	0	0	0	0	0	0	0	0	0	0	0	0	0
4/24/2024	7:45 AM	0	0	0	0	0	0	0	0	0	0	0	0	0
4/24/2024	8:00 AM	0	0	0	0	0	0	0	0	0	0	0	0	0
4/24/2024	8:15 AM	0	0	0	0	0	0	0	0	0	0	0	0	0
4/24/2024	8:30 AM	0	0	0	0	0	0	0	0	0	0	0	0	0
4/24/2024	8:45 AM	0	0	0	0	0	0	0	0	0	0	0	0	0
4/24/2024	9:00 AM	0	0	0	0	0	0	0	0	0	0	0	0	0
4/24/2024	9:15 AM	0	0	0	0	0	0	0	0	0	0	0	0	0
4/24/2024	9:30 AM	0	0	0	0	0	0	0	0	0	0	0	0	0
4/24/2024	9:45 AM	0	0	0	0	0	0	0	0	0	0	0	0	0
4/24/2024	10:00 AM	0	0	0	0	0	0	0	0	0	0	0	0	0
4/24/2024	10:15 AM	0	0	0	0	0	0	0	0	0	0	0	0	0
4/24/2024	10:30 AM	0	0	0	0	0	0	0	0	0	0	0	0	0
4/24/2024	10:45 AM	0	0	0	0	0	0	0	0	0	0	0	0	0
4/24/2024	11:00 AM	0	0	0	0	0	0	0	0	0	0	0	0	0
4/24/2024	11:15 AM	0	0	0	0	0	0	0	0	0	0	0	0	0
4/24/2024	11:30 AM	0	0	0	0	0	0	0	0	0	0	0	0	0
4/24/2024	11:45 AM	0	0	0	0	0	0	0	0	0	0	0	0	0
4/24/2024	12:00 PM	0	0	0	0	0	0	0	0	0	0	0	0	0
4/24/2024	12:15 PM	0	0	0	0	0	0	0	0	0	0	0	0	0
4/24/2024	12:30 PM	0	0	0	0	0	0	0	0	0	0	0	0	0
4/24/2024	12:45 PM	0	0	0	0	0	0	0	0	0	0	0	0	0
4/24/2024	1:00 PM	0	0	0	0	0	0	0	0	0	0	0	0	0
4/24/2024	1:15 PM	0	0	0	0	0	0	0	0	0	0	0	0	0
4/24/2024	1:30 PM	0	0	0	0	0	0	0	0	0	0	0	0	0
4/24/2024	1:45 PM	0	0	0	0	0	0	0	0	0	0	0	0	0
4/24/2024	2:00 PM	0	0	0	0	0	0	0	0	0	0	0	0	0
4/24/2024	2:15 PM	0	0	0	0	0	0	0	0	0	0	0	0	0
4/24/2024	2:30 PM	0	0	0	0	0	0	0	0	0	0	0	0	0
4/24/2024	2:45 PM	0	0	0	0	0	0	0	0	0	0	0	0	0
4/24/2024	3:00 PM	0	0	0	0	0	0	0	0	0	0	0	0	0
4/24/2024	3:15 PM	0	0	0	0	0	0	0	0	0	0	0	0	0
4/24/2024	3:30 PM	0	0	0	0	0	0	0	0	0	0	0	0	0
4/24/2024	3:45 PM	0	0	0	0	0	0	0	0	0	0	0	0	0
4/24/2024	4:00 PM	0	0	0	0	0	0	0	0	0	0	0	0	0
4/24/2024	4:15 PM	0	0	0	0	0	0	0	0	0	0	0	0	0
4/24/2024	4:30 PM	0	0	0	0	0	0	0	0	0	0	0	0	0
4/24/2024	4:45 PM	0	0	0	0	0	0	0	0	0	0	0	0	0
4/24/2024	5:00 PM	0	0	0	0	0	0	0	0	0	0	0	0	0
4/24/2024	5:15 PM	0	0	0	0	0	0	0	0	0	0	0	0	0
4/24/2024	5:30 PM	0	0	0	0	0	0	0	0	0	0	0	0	0
4/24/2024	5:45 PM	0	0	0	0	0	0	0	0	0	0	0	0	0
4/24/2024	6:00 PM	0	0	0	0	0	0	0	0	0	0	0	0	0
4/24/2024	6:15 PM	0	0	0	0	0	0	0	0	0	0	0	0	0
4/24/2024	6:30 PM	0	0	0	0	0	0	0	0	0	0	0	0	0
4/24/2024	6:45 PM	0	0	0	0	0	0	0	0	0	0	0	0	0
4/24/2024	7:00 PM	0	0	0	0	0	0	0	0	0	0	0	0	0
4/24/2024	7:15 PM	0	0	0	0	0	0	0	0	0	0	0	0	0
4/24/2024	7:30 PM	0	0	0	0	0	0	0	0	0	0	0	0	0
4/24/2024	7:45 PM	0	0	0	0	0	0	0	0	0	0	0	0	0
4/24/2024	8:00 PM	0	0	0	0	0	0	0	0	0	0	0	0	0
4/24/2024	8:15 PM	0	0	0	0	0	0	0	0	0	0	0	0	0
4/24/2024	8:30 PM	0	0	0	0	0	0	0	0	0	0	0	0	0
4/24/2024	8:45 PM	0	0	0	0	0	0	0	0	0	0	0	0	0
4/24/2024	9:00 PM	0	0	0	0	0	0	0	0	0	0	0	0	0
4/24/2024	9:15 PM	0	0	0	0	0	0	0	0	0	0	0	0	0
4/24/2024	9:30 PM	0	0	0	0	0	0	0	0	0	0	0	0	0
4/24/2024	9:45 PM	0	0	0	0	0	0	0	0	0	0	0	0	0
4/24/2024	10:00 PM	0	0	0	0	0	0	0	0	0	0	0	0	0
4/24/2024	10:15 PM	0	0	0	0	0	0	0	0	0	0	0	0	0
4/24/2024	10:30 PM	0	0	0	0	0	0	0	0	0	0	0	0	0
4/24/2024	10:45 PM	0	0	0	0	0	0	0	0	0	0	0	0	0
4/24/2024	11:00 PM	0	0	0	0	0	0	0	0	0	0	0	0	0
4/24/2024	11:15 PM	0	0	0	0	0	0	0	0	0	0	0	0	0
4/24/2024	11:30 PM	0	0	0	0	0	0	0	0	0	0	0	0	0
4/24/2024	11:45 PM	0	0	0	0	0	0	0	0	0	0	0	0	0

4/25/2024	12:00 AM	0	0	0	0	0	0	0	0	0	0	0	0	0
4/25/2024	12:15 AM	0	0	0	0	0	0	0	0	0	0	0	0	0
4/25/2024	12:30 AM	0	0	0	0	0	0	0	0	0	0	0	0	0
4/25/2024	12:45 AM	0	0	0	0	0	0	0	0	0	0	0	0	0
4/25/2024	1:00 AM	0	0	0	0	0	0	0	0	0	0	0	0	0
4/25/2024	1:15 AM	0	0	0	0	0	0	0	0	0	0	0	0	0
4/25/2024	1:30 AM	0	0	0	0	0	0	0	0	0	0	0	0	0
4/25/2024	1:45 AM	0	0	0	0	0	0	0	0	0	0	0	0	0
4/25/2024	2:00 AM	0	0	0	0	0	0	0	0	0	0	0	0	0
4/25/2024	2:15 AM	0	0	0	0	0	0	0	0	0	0	0	0	0
4/25/2024	2:30 AM	0	0	0	0	0	0	0	0	0	0	0	0	0
4/25/2024	2:45 AM	0	0	0	0	0	0	0	0	0	0	0	0	0
4/25/2024	3:00 AM	0	0	0	0	0	0	0	0	0	0	0	0	0
4/25/2024	3:15 AM	0	0	0	0	0	0	0	0	0	0	0	0	0
4/25/2024	3:30 AM	0	0	0	0	0	0	0	0	0	0	0	0	0
4/25/2024	3:45 AM	0	0	0	0	0	0	0	0	0	0	0	0	0
4/25/2024	4:00 AM	0	0	0	0	0	0	0	0	0	0	0	0	0
4/25/2024	4:15 AM	0	0	0	0	0	0	0	0	0	0	0	0	0
4/25/2024	4:30 AM	0	0	0	0	0	0	0	0	0	0	0	0	0
4/25/2024	4:45 AM	0	0	0	0	0	0	0	0	0	0	0	0	0
4/25/2024	5:00 AM	0	0	0	0	0	0	0	0	0	0	0	0	0
4/25/2024	5:15 AM	0	0	0	0	0	0	0	0	0	0	0	0	0
4/25/2024	5:30 AM	0	0	0	0	0	0	0	0	0	0	0	0	0
4/25/2024	5:45 AM	0	0	0	0	0	0	0	0	0	0	0	0	0
4/25/2024	6:00 AM	0	0	0	0	0	0	0	0	0	0	0	0	0
4/25/2024	6:15 AM	0	0	0	0	0	0	0	0	0	0	0	0	0
4/25/2024	6:30 AM	0	0	0	0	0	0	0	0	0	0	0	0	0
4/25/2024	6:45 AM	0	0	0	0	0	0	0	0	0	0	0	0	0
4/25/2024	7:00 AM	0	0	0	0	0	0	0	0	0	0	0	0	0
4/25/2024	7:15 AM	0	0	0	0	0	0	0	0	0	0	0	0	0
4/25/2024	7:30 AM	0	0	0	0	0	0	0	0	0	0	0	0	0
4/25/2024	7:45 AM	0	0	0	0	0	0	0	0	0	0	0	0	0
4/25/2024	8:00 AM	0	0	0	0	0	0	0	0	0	0	0	0	0
4/25/2024	8:15 AM	0	0	0	0	0	0	0	0	0	0	0	0	0
4/25/2024	8:30 AM	0	0	0	0	0	0	0	0	0	0	0	0	0
4/25/2024	8:45 AM	0	0	0	0	0	0	0	0	0	0	0	0	0
4/25/2024	9:00 AM	0	0	0	0	0	0	0	0	0	0	0	0	0
4/25/2024	9:15 AM	0	0	0	0	0	0	0	0	0	0	0	0	0
4/25/2024	9:30 AM	0	0	0	0	0	0	0	0	0	0	0	0	0
4/25/2024	9:45 AM	0	0	0	0	0	0	0	0	0	0	0	0	0
4/25/2024	10:00 AM	0	0	0	0	0	0	0	0	0	0	0	0	0
4/25/2024	10:15 AM	0	0	0	0	0	0	0	0	0	0	0	0	0
4/25/2024	10:30 AM	0	0	0	0	0	0	0	0	0	0	0	0	0
4/25/2024	10:45 AM	0	0	0	0	0	0	0	0	0	0	0	0	0
4/25/2024	11:00 AM	0	0	0	0	0	0	0	0	0	0	0	0	0
4/25/2024	11:15 AM	0	0	0	0	0	0	0	0	0	0	0	0	0
4/25/2024	11:30 AM	0	0	0	0	0	0	0	0	0	0	0	0	0
4/25/2024	11:45 AM	0	0	0	0	0	0	0	0	0	0	0	0	0
4/25/2024	12:00 PM	0	0	0	0	0	0	0	0	0	0	0	0	0
4/25/2024	12:15 PM	0	0	0	0	0	0	0	0	0	0	0	0	0
4/25/2024	12:30 PM	0	0	0	0	0	0	0	0	0	0	0	0	0
4/25/2024	12:45 PM	0	0	0	0	0	0	0	0	0	0	0	0	0
4/25/2024	1:00 PM	0	0	0	0	0	0	0	0	0	0	0	0	0
4/25/2024	1:15 PM	0	0	0	0	0	0	0	0	0	0	0	0	0
4/25/2024	1:30 PM	0	0	0	0	0	0	0	0	0	0	0	0	0
4/25/2024	1:45 PM	0	0	0	0	0	0	0	0	0	0	0	0	0
4/25/2024	2:00 PM	0	0	0	0	0	0	0	0	0	0	0	0	0
4/25/2024	2:15 PM	0	0	0	0	0	0	0	0	0	0	0	0	0
4/25/2024	2:30 PM	0	0	0	0	0	0	0	0	0	0	0	0	0
4/25/2024	2:45 PM	0	0	0	0	0	0	0	0	0	0	0	0	0
4/25/2024	3:00 PM	0	0	0	0	0	0	0	0	0	0	0	0	0
4/25/2024	3:15 PM	0	0	0	0	0	0	0	0	0	0	0	0	0
4/25/2024	3:30 PM	0	0	0	0	0	0	0	0	0	0	0	0	0
4/25/2024	3:45 PM	0	0	0	0	0	0	0	0	0	0	0	0	0
4/25/2024	4:00 PM	0	0	0	0	0	0	0	0	0	0	0	0	0
4/25/2024	4:15 PM	0	0	0	0	0	0	0	0	0	0	0	0	0
4/25/2024	4:30 PM	0	0	0	0	0	0	0	0	0	0	0	0	0
4/25/2024	4:45 PM	0	0	0	0	0	0	0	0	0	0	0	0	0
4/25/2024	5:00 PM	0	0	0	0	0	0	0	0	0	0	0	0	0
4/25/2024	5:15 PM	0	0	0	0	0	0	0	0	0	0	0	0	0
4/25/2024	5:30 PM	0	0	0	0	0	0	0	0	0	0	0	0	0
4/25/2024	5:45 PM	0	0	0	0	0	0	0	0	0	0	0	0	0
4/25/2024	6:00 PM	0	0	0	0	0	0	0	0	0	0	0	0	0
4/25/2024	6:15 PM	0	0	0	0	0	0	0	0	0	0	0	0	0
4/25/2024	6:30 PM	0	0	0	0	0	0	0	0	0	0	0	0	0
4/25/2024	6:45 PM	0	0	0	0	0	0	0	0	0	0	0	0	0
4/25/2024	7:00 PM	0	0	0	0	0	0	0	0	0	0	0	0	0
4/25/2024	7:15 PM	0	0	0	0	0	0	0	0	0	0	0	0	0
4/25/2024	7:30 PM	0	0	0	0	0	0	0	0	0	0	0	0	0
4/25/2024	7:45 PM	0	0	0	0	0	0	0	0	0	0	0	0	0
4/25/2024	8:00 PM	0	0	0	0	0	0	0	0	0	0	0	0	0
4/25/2024	8:15 PM	0	0	0	0	0	0	0	0	0	0	0	0	0
4/25/2024	8:30 PM	0	0	0	0	0	0	0	0	0	0	0	0	0
4/25/2024	8:45 PM	0	0	0	0	0	0	0	0	0	0	0	0	0
4/25/2024	9:00 PM	0	0	0	0	0	0	0	0	0	0	0	0	0
4/25/2024	9:15 PM	0	0	0	0	0	0	0	0	0	0	0	0	0
4/25/2024	9:30 PM	0	0	0	0	0	0	0	0	0	0	0	0	0
4/25/2024	9:45 PM	0	0	0	0	0	0	0	0	0	0	0	0	0
4/25/2024	10:00 PM	0	0	0	0	0	0	0	0	0	0	0	0	0
4/25/2024	10:15 PM	0	0	0	0	0	0	0	0	0	0	0	0	0
4/25/2024	10:30 PM	0	0	0	0	0	0	0	0	0	0	0	0	0
4/25/2024	10:45 PM	0	0	0	0	0	0	0	0	0	0	0	0	0
4/25/2024	11:00 PM	0	0	0	0	0	0	0	0	0	0	0	0	0
4/25/2024	11:15 PM	0	0	0	0	0	0	0	0	0	0	0	0	0
4/25/2024	11:30 PM	0	0	0	0	0	0	0	0	0	0	0	0	0
4/25/2024	11:45 PM	0	0	0	0	0	0	0	0	0	0	0	0	0

4/26/2024	12:00 AM	0	0	0	0	0	0	0	0	0	0	0	0	0
4/26/2024	12:15 AM	0	0	0	0	0	0	0	0	0	0	0	0	0
4/26/2024	12:30 AM	0	0	0	0	0	0	0	0	0	0	0	0	0
4/26/2024	12:45 AM	0	0	0	0	0	0	0	0	0	0	0	0	0
4/26/2024	1:00 AM	0	0	0	0	0	0	0	0	0	0	0	0	0
4/26/2024	1:15 AM	0	0	0	0	0	0	0	0	0	0	0	0	0
4/26/2024	1:30 AM	0	0	0	0	0	0	0	0	0	0	0	0	0
4/26/2024	1:45 AM	0	0	0	0	0	0	0	0	0	0	0	0	0
4/26/2024	2:00 AM	0	0	0	0	0	0	0	0	0	0	0	0	0
4/26/2024	2:15 AM	0	0	0	0	0	0	0	0	0	0	0	0	0
4/26/2024	2:30 AM	0	0	0	0	0	0	0	0	0	0	0	0	0
4/26/2024	2:45 AM	0	0	0	0	0	0	0	0	0	0	0	0	0
4/26/2024	3:00 AM	0	0	0	0	0	0	0	0	0	0	0	0	0
4/26/2024	3:15 AM	0	0	0	0	0	0	0	0	0	0	0	0	0
4/26/2024	3:30 AM	0	0	0	0	0	0	0	0	0	0	0	0	0
4/26/2024	3:45 AM	0	0	0	0	0	0	0	0	0	0	0	0	0
4/26/2024	4:00 AM	0	0	0	0	0	0	0	0	0	0	0	0	0
4/26/2024	4:15 AM	0	0	0	0	0	0	0	0	0	0	0	0	0
4/26/2024	4:30 AM	0	0	0	0	0	0	0	0	0	0	0	0	0
4/26/2024	4:45 AM	0	0	0	0	0	0	0	0	0	0	0	0	0
4/26/2024	5:00 AM	0	0	0	0	0	0	0	0	0	0	0	0	0
4/26/2024	5:15 AM	0	0	0	0	0	0	0	0	0	0	0	0	0
4/26/2024	5:30 AM	0	0	0	0	0	0	0	0	0	0	0	0	0
4/26/2024	5:45 AM	0	0	0	0	0	0	0	0	0	0	0	0	0
4/26/2024	6:00 AM	0	0	0	0	0	0	0	0	0	0	0	0	0
4/26/2024	6:15 AM	0	0	0	0	0	0	0	0	0	0	0	0	0
4/26/2024	6:30 AM	0	0	0	0	0	0	0	0	0	0	0	0	0
4/26/2024	6:45 AM	0	0	0	0	0	0	0	0	0	0	0	0	0
4/26/2024	7:00 AM	0	0	0	0	0	0	0	0	0	0	0	0	0
4/26/2024	7:15 AM	0	0	0	0	0	0	0	0	0	0	0	0	0
4/26/2024	7:30 AM	0	0	0	0	0	0	0	0	0	0	0	0	0
4/26/2024	7:45 AM	0	0	0	0	0	0	0	0	0	0	0	0	0
4/26/2024	8:00 AM	0	0	0	0	0	0	0	0	0	0	0	0	0
4/26/2024	8:15 AM	0	0	0	0	0	0	0	0	0	0	0	0	0
4/26/2024	8:30 AM	0	0	0	0	0	0	0	0	0	0	0	0	0
4/26/2024	8:45 AM	0	0	0	0	0	0	0	0	0	0	0	0	0
4/26/2024	9:00 AM	0	0	0	0	0	0	0	0	0	0	0	0	0
4/26/2024	9:15 AM	0	0	0	0	0	0	0	0	0	0	0	0	0
4/26/2024	9:30 AM	0	0	0	0	0	0	0	0	0	0	0	0	0
4/26/2024	9:45 AM	0	0	0	0	0	0	0	0	0	0	0	0	0
4/26/2024	10:00 AM	0	0	0	0	0	0	0	0	0	0	0	0	0
4/26/2024	10:15 AM	0	0	0	0	0	0	0	0	0	0	0	0	0
4/26/2024	10:30 AM	0	0	0	0	0	0	0	0	0	0	0	0	0
4/26/2024	10:45 AM	0	0	0	0	0	0	0	0	0	0	0	0	0
4/26/2024	11:00 AM	0	0	0	0	0	0	0	0	0	0	0	0	0
4/26/2024	11:15 AM	0	0	0	0	0	0	0	0	0	0	0	0	0
4/26/2024	11:30 AM	0	0	0	0	0	0	0	0	0	0	0	0	0
4/26/2024	11:45 AM	0	0	0	0	0	0	0	0	0	0	0	0	0
4/26/2024	12:00 PM	0	0	0	0	0	0	0	0	0	0	0	0	0
4/26/2024	12:15 PM	0	0	0	0	0	0	0	0	0	0	0	0	0
4/26/2024	12:30 PM	0	0	0	0	0	0	0	0	0	0	0	0	0
4/26/2024	12:45 PM	0	0	0	0	0	0	0	0	0	0	0	0	0
4/26/2024	1:00 PM	0	0	0	0	0	0	0	0	0	0	0	0	0
4/26/2024	1:15 PM	0	0	0	0	0	0	0	0	0	0	0	0	0
4/26/2024	1:30 PM	0	0	0	0	0	0	0	0	0	0	0	0	0
4/26/2024	1:45 PM	0	0	0	0	0	0	0	0	0	0	0	0	0
4/26/2024	2:00 PM	0	0	0	0	0	0	0	0	0	0	0	0	0
4/26/2024	2:15 PM	0	0	0	0	0	0	0	0	0	0	0	0	0
4/26/2024	2:30 PM	0	0	0	0	0	0	0	0	0	0	0	0	0
4/26/2024	2:45 PM	0	0	0	0	0	0	0	0	0	0	0	0	0
4/26/2024	3:00 PM	0	0	0	0	0	0	0	0	0	0	0	0	0
4/26/2024	3:15 PM	0	0	0	0	0	0	0	0	0	0	0	0	0
4/26/2024	3:30 PM	0	0	0	0	0	0	0	0	0	0	0	0	0
4/26/2024	3:45 PM	0	0	0	0	0	0	0	0	0	0	0	0	0
4/26/2024	4:00 PM	0	0	0	0	0	0	0	0	0	0	0	0	0
4/26/2024	4:15 PM	0	0	0	0	0	0	0	0	0	0	0	0	0
4/26/2024	4:30 PM	0	0	0	0	0	0	0	0	0	0	0	0	0
4/26/2024	4:45 PM	0	0	0	0	0	0	0	0	0	0	0	0	0
4/26/2024	5:00 PM	0	0	0	0	0	0	0	0	0	0	0	0	0
4/26/2024	5:15 PM	0	0	0	0	0	0	0	0	0	0	0	0	0
4/26/2024	5:30 PM	0	0	0	0	0	0	0	0	0	0	0	0	0
4/26/2024	5:45 PM	0	0	0	0	0	0	0	0	0	0	0	0	0
4/26/2024	6:00 PM	0	0	0	0	0	0	0	0	0	0	0	0	0
4/26/2024	6:15 PM	0	0	0	0	0	0	0	0	0	0	0	0	0
4/26/2024	6:30 PM	0	0	0	0	0	0	0	0	0	0	0	0	0
4/26/2024	6:45 PM	0	0	0	0	0	0	0	0	0	0	0	0	0
4/26/2024	7:00 PM	0	0	0	0	0	0	0	0	0	0	0	0	0
4/26/2024	7:15 PM	0	0	0	0	0	0	0	0	0	0	0	0	0
4/26/2024	7:30 PM	0	0	0	0	0	0	0	0	0	0	0	0	0
4/26/2024	7:45 PM	0	0	0	0	0	0	0	0	0	0	0	0	0
4/26/2024	8:00 PM	0	0	0	0	0	0	0	0	0	0	0	0	0
4/26/2024	8:15 PM	0	0	0	0	0	0	0	0	0	0	0	0	0
4/26/2024	8:30 PM	0	0	0	0	0	0	0	0	0	0	0	0	0
4/26/2024	8:45 PM	0	0	0	0	0	0	0	0	0	0	0	0	0
4/26/2024	9:00 PM	0	0	0	0	0	0	0	0	0	0	0	0	0
4/26/2024	9:15 PM	0	0	0	0	0	0	0	0	0	0	0	0	0
4/26/2024	9:30 PM	0	0	0	0	0	0	0	0	0	0	0	0	0
4/26/2024	9:45 PM	0	0	0	0	0	0	0	0	0	0	0	0	0
4/26/2024	10:00 PM	0	0	0	0	0	0	0	0	0	0	0	0	0
4/26/2024	10:15 PM	0	0	0	0	0	0	0	0	0	0	0	0	0
4/26/2024	10:30 PM	0	0	0	0	0	0	0	0	0	0	0	0	0
4/26/2024	10:45 PM	0	0	0	0	0	0	0	0	0	0	0	0	0
4/26/2024	11:00 PM	0	0	0	0	0	0	0	0	0	0	0	0	0
4/26/2024	11:15 PM	0	0	0	0	0	0	0	0	0	0	0	0	0
4/26/2024	11:30 PM	0	0	0	0	0	0	0	0	0	0	0	0	0
4/26/2024	11:45 PM	0	0	0	0	0	0	0	0	0	0	0	0	0

4/27/2024	12:00 AM	0	0	0	0	0	0	0	0	0	0	0	0	0
4/27/2024	12:15 AM	0	0	0	0	0	0	0	0	0	0	0	0	0
4/27/2024	12:30 AM	0	0	0	0	0	0	0	0	0	0	0	0	0
4/27/2024	12:45 AM	0	0	0	0	0	0	0	0	0	0	0	0	0
4/27/2024	1:00 AM	0	0	0	0	0	0	0	0	0	0	0	0	0
4/27/2024	1:15 AM	0	0	0	0	0	0	0	0	0	0	0	0	0
4/27/2024	1:30 AM	0	0	0	0	0	0	0	0	0	0	0	0	0
4/27/2024	1:45 AM	0	0	0	0	0	0	0	0	0	0	0	0	0
4/27/2024	2:00 AM	0	0	0	0	0	0	0	0	0	0	0	0	0
4/27/2024	2:15 AM	0	0	0	0	0	0	0	0	0	0	0	0	0
4/27/2024	2:30 AM	0	0	0	0	0	0	0	0	0	0	0	0	0
4/27/2024	2:45 AM	0	0	0	0	0	0	0	0	0	0	0	0	0
4/27/2024	3:00 AM	0	0	0	0	0	0	0	0	0	0	0	0	0
4/27/2024	3:15 AM	0	0	0	0	0	0	0	0	0	0	0	0	0
4/27/2024	3:30 AM	0	0	0	0	0	0	0	0	0	0	0	0	0
4/27/2024	3:45 AM	0	0	0	0	0	0	0	0	0	0	0	0	0
4/27/2024	4:00 AM	0	0	0	0	0	0	0	0	0	0	0	0	0
4/27/2024	4:15 AM	0	0	0	0	0	0	0	0	0	0	0	0	0
4/27/2024	4:30 AM	0	0	0	0	0	0	0	0	0	0	0	0	0
4/27/2024	4:45 AM	0	0	0	0	0	0	0	0	0	0	0	0	0
4/27/2024	5:00 AM	0	0	0	0	0	0	0	0	0	0	0	0	0
4/27/2024	5:15 AM	0	0	0	0	0	0	0	0	0	0	0	0	0
4/27/2024	5:30 AM	0	0	0	0	0	0	0	0	0	0	0	0	0
4/27/2024	5:45 AM	0	0	0	0	0	0	0	0	0	0	0	0	0
4/27/2024	6:00 AM	0	0	0	0	0	0	0	0	0	0	0	0	0
4/27/2024	6:15 AM	0	0	0	0	0	0	0	0	0	0	0	0	0
4/27/2024	6:30 AM	0	0	0	0	0	0	0	0	0	0	0	0	0
4/27/2024	6:45 AM	0	0	0	0	0	0	0	0	0	0	0	0	0
4/27/2024	7:00 AM	0	0	0	0	0	0	0	0	0	0	0	0	0
4/27/2024	7:15 AM	0	0	0	0	0	0	0	0	0	0	0	0	0
4/27/2024	7:30 AM	0	0	0	0	0	0	0	0	0	0	0	0	0
4/27/2024	7:45 AM	0	0	0	0	0	0	0	0	0	0	0	0	0
4/27/2024	8:00 AM	0	0	0	0	0	0	0	0	0	0	0	0	0
4/27/2024	8:15 AM	0	0	0	0	0	0	0	0	0	0	0	0	0
4/27/2024	8:30 AM	0	0	0	0	0	0	0	0	0	0	0	0	0
4/27/2024	8:45 AM	0	0	0	0	0	0	0	0	0	0	0	0	0
4/27/2024	9:00 AM	0	0	0	0	0	0	0	0	0	0	0	0	0
4/27/2024	9:15 AM	0	0	0	0	0	0	0	0	0	0	0	0	0
4/27/2024	9:30 AM	0	0	0	0	0	0	0	0	0	0	0	0	0
4/27/2024	9:45 AM	0	0	0	0	0	0	0	0	0	0	0	0	0
4/27/2024	10:00 AM	0	0	0	0	0	0	0	0	0	0	0	0	0
4/27/2024	10:15 AM	0	0	0	0	0	0	0	0	0	0	0	0	0
4/27/2024	10:30 AM	0	0	0	0	0	0	0	0	0	0	0	0	0
4/27/2024	10:45 AM	0	0	0	0	0	0	0	0	0	0	0	0	0
4/27/2024	11:00 AM	0	0	0	0	0	0	0	0	0	0	0	0	0
4/27/2024	11:15 AM	0	0	0	0	0	0	0	0	0	0	0	0	0
4/27/2024	11:30 AM	0	0	0	0	0	0	0	0	0	0	0	0	0
4/27/2024	11:45 AM	0	0	0	0	0	0	0	0	0	0	0	0	0
4/27/2024	12:00 PM	0	0	0	0	0	0	0	0	0	0	0	0	0
4/27/2024	12:15 PM	0	0	0	0	0	0	0	0	0	0	0	0	0
4/27/2024	12:30 PM	0	0	0	0	0	0	0	0	0	0	0	0	0
4/27/2024	12:45 PM	0	0	0	0	0	0	0	0	0	0	0	0	0
4/27/2024	1:00 PM	0	0	0	0	0	0	0	0	0	0	0	0	0
4/27/2024	1:15 PM	0	0	0	0	0	0	0	0	0	0	0	0	0
4/27/2024	1:30 PM	0	0	0	0	0	0	0	0	0	0	0	0	0
4/27/2024	1:45 PM	0	0	0	0	0	0	0	0	0	0	0	0	0
4/27/2024	2:00 PM	0	0	0	0	0	0	0	0	0	0	0	0	0
4/27/2024	2:15 PM	0	0	0	0	0	0	0	0	0	0	0	0	0
4/27/2024	2:30 PM	0	0	0	0	0	0	0	0	0	0	0	0	0
4/27/2024	2:45 PM	0	0	0	0	0	0	0	0	0	0	0	0	0
4/27/2024	3:00 PM	0	0	0	0	0	0	0	0	0	0	0	0	0
4/27/2024	3:15 PM	0	0	0	0	0	0	0	0	0	0	0	0	0
4/27/2024	3:30 PM	0	0	0	0	0	0	0	0	0	0	0	0	0
4/27/2024	3:45 PM	0	0	0	0	0	0	0	0	0	0	0	0	0
4/27/2024	4:00 PM	0	0	0	0	0	0	0	0	0	0	0	0	0
4/27/2024	4:15 PM	0	0	0	0	0	0	0	0	0	0	0	0	0
4/27/2024	4:30 PM	0	0	0	0	0	0	0	0	0	0	0	0	0
4/27/2024	4:45 PM	0	0	0	0	0	0	0	0	0	0	0	0	0
4/27/2024	5:00 PM	0	0	0	0	0	0	0	0	0	0	0	0	0
4/27/2024	5:15 PM	0	0	0	0	0	0	0	0	0	0	0	0	0
4/27/2024	5:30 PM	0	0	0	0	0	0	0	0	0	0	0	0	0
4/27/2024	5:45 PM	0	0	0	0	0	0	0	0	0	0	0	0	0
4/27/2024	6:00 PM	0	0	0	0	0	0	0	0	0	0	0	0	0
4/27/2024	6:15 PM	0	0	0	0	0	0	0	0	0	0	0	0	0
4/27/2024	6:30 PM	0	0	0	0	0	0	0	0	0	0	0	0	0
4/27/2024	6:45 PM	0	0	0	0	0	0	0	0	0	0	0	0	0
4/27/2024	7:00 PM	0	0	0	0	0	0	0	0	0	0	0	0	0
4/27/2024	7:15 PM	0	0	0	0	0	0	0	0	0	0	0	0	0
4/27/2024	7:30 PM	0	0	0	0	0	0	0	0	0	0	0	0	0
4/27/2024	7:45 PM	0	0	0	0	0	0	0	0	0	0	0	0	0
4/27/2024	8:00 PM	0	0	0	0	0	0	0	0	0	0	0	0	0
4/27/2024	8:15 PM	0	0	0	0	0	0	0	0	0	0	0	0	0
4/27/2024	8:30 PM	0	0	0	0	0	0	0	0	0	0	0	0	0
4/27/2024	8:45 PM	0	0	0	0	0	0	0	0	0	0	0	0	0
4/27/2024	9:00 PM	0	0	0	0	0	0	0	0	0	0	0	0	0
4/27/2024	9:15 PM	0	0	0	0	0	0	0	0	0	0	0	0	0
4/27/2024	9:30 PM	0	0	0	0	0	0	0	0	0	0	0	0	0
4/27/2024	9:45 PM	0	0	0	0	0	0	0	0	0	0	0	0	0
4/27/2024	10:00 PM	0	0	0	0	0	0	0	0	0	0	0	0	0
4/27/2024	10:15 PM	0	0	0	0	0	0	0	0	0	0	0	0	0
4/27/2024	10:30 PM	0	0	0	0	0	0	0	0	0	0	0	0	0
4/27/2024	10:45 PM	0	0	0	0	0	0	0	0	0	0	0	0	0
4/27/2024	11:00 PM	0	0	0	0	0	0	0	0	0	0	0	0	0
4/27/2024	11:15 PM	0	0	0	0	0	0	0	0	0	0	0	0	0
4/27/2024	11:30 PM	0	0	0	0	0	0	0	0	0	0	0	0	0
4/27/2024	11:45 PM	0	0	0	0	0	0	0	0	0	0	0	0	0

SB
File Name:
Start Date: 4/21/2024
Start Time: 0
Site Code: 10
Station ID: 1
Location 1: I-26 S/Bound On-Ramp, south of I-20
Location 2:

Date	Time	1	2	3	4	5	6	7	8	9	10	11	12	13
4/21/2024	12:00 AM	0	73	5	0	0	0	0	0	0	0	0	0	0
4/21/2024	12:15 AM	0	63	4	0	0	0	0	0	0	0	0	0	0
4/21/2024	12:30 AM	0	55	4	0	0	0	0	0	0	0	0	0	0
4/21/2024	12:45 AM	0	48	4	0	0	0	0	0	2	0	0	0	0
4/21/2024	1:00 AM	0	44	5	0	0	0	0	0	3	0	0	0	0
4/21/2024	1:15 AM	0	38	4	0	0	0	0	0	3	0	0	0	0
4/21/2024	1:30 AM	0	34	4	0	0	0	0	0	4	0	0	0	0
4/21/2024	1:45 AM	0	25	3	0	0	0	0	0	3	0	0	0	0
4/21/2024	2:00 AM	0	20	2	0	0	0	0	0	2	0	0	0	0
4/21/2024	2:15 AM	0	20	3	0	0	0	0	0	2	0	0	0	0
4/21/2024	2:30 AM	0	18	3	0	0	0	0	0	1	0	0	0	0
4/21/2024	2:45 AM	0	20	3	0	0	0	0	1	0	0	0	0	0
4/21/2024	3:00 AM	0	23	2	1	0	0	0	1	0	0	0	0	0
4/21/2024	3:15 AM	0	22	1	1	0	0	0	1	0	0	0	0	0
4/21/2024	3:30 AM	0	22	0	1	0	0	0	1	0	0	0	0	0
4/21/2024	3:45 AM	0	23	1	1	0	0	0	0	0	0	0	0	0
4/21/2024	4:00 AM	0	23	1	0	0	0	0	0	0	0	0	0	0
4/21/2024	4:15 AM	0	24	1	0	0	0	0	0	0	0	0	0	0
4/21/2024	4:30 AM	0	29	2	0	0	0	0	0	0	0	0	0	0
4/21/2024	4:45 AM	0	36	2	0	0	0	0	0	0	0	0	0	0
4/21/2024	5:00 AM	0	41	4	0	0	0	0	0	0	0	0	0	0
4/21/2024	5:15 AM	0	46	7	0	0	0	0	0	0	0	0	0	0
4/21/2024	5:30 AM	0	59	10	0	0	0	0	0	0	0	0	0	0
4/21/2024	5:45 AM	0	91	15	0	0	0	0	0	2	0	0	0	0
4/21/2024	6:00 AM	0	109	20	0	0	0	0	0	2	0	0	0	0
4/21/2024	6:15 AM	0	121	23	0	0	0	0	0	3	0	0	0	0
4/21/2024	6:30 AM	0	129	27	0	0	0	0	0	3	0	0	0	0
4/21/2024	6:45 AM	0	117	27	0	0	0	0	0	1	0	0	0	0
4/21/2024	7:00 AM	0	133	29	0	0	0	0	0	2	0	0	0	0
4/21/2024	7:15 AM	0	159	28	0	1	0	0	0	2	0	0	0	0
4/21/2024	7:30 AM	0	169	27	0	1	0	0	0	2	0	0	0	0
4/21/2024	7:45 AM	0	187	27	0	1	0	0	0	3	0	0	0	0
4/21/2024	8:00 AM	0	221	29	0	1	0	0	0	2	0	0	0	0
4/21/2024	8:15 AM	0	242	34	0	0	0	0	0	1	0	0	0	0
4/21/2024	8:30 AM	0	261	36	0	0	0	0	0	3	0	0	0	0
4/21/2024	8:45 AM	0	281	42	0	1	0	0	0	2	0	0	0	0
4/21/2024	9:00 AM	0	274	40	0	2	0	0	0	2	0	0	0	0
4/21/2024	9:15 AM	0	294	39	1	2	0	0	0	2	0	0	0	0
4/21/2024	9:30 AM	0	318	44	1	2	0	0	0	1	0	0	0	0
4/21/2024	9:45 AM	0	336	41	1	2	0	0	0	1	0	0	0	0
4/21/2024	10:00 AM	0	365	43	1	1	1	0	0	1	0	0	0	0
4/21/2024	10:15 AM	0	334	45	0	2	1	0	0	1	0	0	0	0
4/21/2024	10:30 AM	0	321	40	0	3	1	0	0	1	0	0	0	0
4/21/2024	10:45 AM	0	296	41	0	2	1	0	0	2	0	0	0	0
4/21/2024	11:00 AM	0	276	41	0	2	1	0	0	4	0	0	0	0
4/21/2024	11:15 AM	0	309	43	0	1	1	0	0	6	0	0	0	0
4/21/2024	11:30 AM	0	336	47	1	0	1	0	1	6	0	0	0	0
4/21/2024	11:45 AM	0	377	55	1	0	1	0	1	7	0	0	0	0
4/21/2024	12:00 PM	0	394	63	1	1	0	0	1	8	0	0	0	0
4/21/2024	12:15 PM	0	386	71	1	3	1	0	1	7	0	0	0	0
4/21/2024	12:30 PM	0	384	69	0	3	1	0	0	7	0	0	0	0
4/21/2024	12:45 PM	1	382	64	0	5	1	0	0	7	0	0	0	0
4/21/2024	1:00 PM	1	389	60	0	6	1	0	0	7	0	0	0	0
4/21/2024	1:15 PM	1	392	52	0	4	0	0	0	6	0	0	0	0
4/21/2024	1:30 PM	1	387	52	0	6	0	0	0	5	0	0	0	0
4/21/2024	1:45 PM	0	386	48	0	4	0	0	1	3	0	0	0	0
4/21/2024	2:00 PM	0	385	47	0	3	0	0	2	2	0	0	0	0
4/21/2024	2:15 PM	0	394	46	0	3	0	0	2	3	0	0	0	0
4/21/2024	2:30 PM	0	383	49	0	1	0	0	2	4	0	0	0	0
4/21/2024	2:45 PM	0	369	57	0	1	0	0	1	4	0	0	0	0
4/21/2024	3:00 PM	0	354	53	0	0	1	0	0	3	0	0	0	0
4/21/2024	3:15 PM	0	338	51	0	0	1	0	0	2	0	0	0	0
4/21/2024	3:30 PM	0	325	49	0	1	1	0	1	1	0	0	0	0
4/21/2024	3:45 PM	0	322	45	1	1	1	0	1	2	0	0	0	0
4/21/2024	4:00 PM	0	316	43	1	3	0	0	1	1	0	0	0	0
4/21/2024	4:15 PM	0	327	46	1	4	0	0	1	3	0	0	0	0
4/21/2024	4:30 PM	0	357	43	1	3	0	0	0	4	0	0	0	0
4/21/2024	4:45 PM	0	360	41	0	5	0	0	0	4	0	0	0	0
4/21/2024	5:00 PM	0	347	46	0	3	0	0	0	5	0	0	0	0
4/21/2024	5:15 PM	0	324	43	1	3	0	0	0	5	0	0	0	0
4/21/2024	5:30 PM	0	318	44	1	5	0	0	0	7	0	0	0	0
4/21/2024	5:45 PM	0	320	50	1	3	0	0	0	11	0	0	0	0
4/21/2024	6:00 PM	0	304	47	1	3	0	0	1	13	0	0	0	0
4/21/2024	6:15 PM	0	290	44	0	2	0	0	1	12	0	0	0	0
4/21/2024	6:30 PM	0	255	43	0	0	0	0	1	12	0	0	0	0
4/21/2024	6:45 PM	0	239	30	0	0	0	7	1	9	0	0	0	0
4/21/2024	7:00 PM	0	249	27	0	3	0	7	0	8	0	0	0	0
4/21/2024	7:15 PM	0	252	29	0	3	0	7	0	8	0	0	0	0
4/21/2024	7:30 PM	0	249	28	0	3	0	7	0	8	0	0	0	0
4/21/2024	7:45 PM	0	232	31	0	3	0	0	0	9	0	0	0	0
4/21/2024	8:00 PM	0	217	27	0	0	0	0	0	10	0	0	0	0
4/21/2024	8:15 PM	0	217	21	0	1	0	0	0	12	0	0	0	0
4/21/2024	8:30 PM	0	207	17	0	1	0	0	0	12	0	0	0	0
4/21/2024	8:45 PM	0	179	12	0	1	0	0	0	11	0	0	0	0
4/21/2024	9:00 PM	0	161	12	0	3	0	0	0	9	0	0	0	0
4/21/2024	9:15 PM	0	139	11	0	2	0	0	0	8	0	0	0	0
4/21/2024	9:30 PM	0	117	10	1	2	0	0	0	5	0	0	0	0
4/21/2024	9:45 PM	0	115	10	1	2	0	0	0	5	0	0	0	0
4/21/2024	10:00 PM	0	104	9	1	1	0	0	0	5	0	0	0	0
4/21/2024	10:15 PM	0	88	10	1	2	0	0	0	7	1	0	0	0
4/21/2024	10:30 PM	0	87	9	0	3	0	0	0	8	2	0	0	0
4/21/2024	10:45 PM	0	71	8	0	3	0	0	0	8	2	0	0	0
4/21/2024	11:00 PM	0	62	8	0	2	0	0	0	8	2	0	0	0
4/21/2024	11:15 PM	0	43	5	0	1	0	0	0	4	1	0	0	0
4/21/2024	11:30 PM	0	23	3	0	0	0	0	0	3	0	0	0	0
4/21/2024	11:45 PM	0	12	2	0	0	0	0	0	1	0	0	0	0

4/22/2024	12:00 AM	0	31	7	0	2	0	0	0	2	0	0	0	0
4/22/2024	12:15 AM	0	31	7	0	2	0	0	0	3	0	0	0	0
4/22/2024	12:30 AM	0	24	6	0	1	0	0	0	3	0	0	0	0
4/22/2024	12:45 AM	0	20	3	0	1	0	0	0	3	0	0	0	0
4/22/2024	1:00 AM	0	19	3	0	1	0	0	0	5	0	0	0	0
4/22/2024	1:15 AM	0	16	3	0	1	0	0	0	3	0	0	0	0
4/22/2024	1:30 AM	0	14	2	0	1	0	0	0	4	0	0	0	0
4/22/2024	1:45 AM	0	14	3	0	0	0	0	0	4	0	0	0	0
4/22/2024	2:00 AM	0	13	3	0	0	0	0	0	7	0	0	0	0
4/22/2024	2:15 AM	0	13	2	0	0	0	0	0	7	0	0	0	0
4/22/2024	2:30 AM	0	13	2	0	0	0	0	0	6	0	0	0	0
4/22/2024	2:45 AM	0	15	2	1	0	0	0	0	6	0	0	0	0
4/22/2024	3:00 AM	0	16	1	1	0	0	0	0	1	0	0	0	0
4/22/2024	3:15 AM	0	22	3	1	0	0	0	0	3	0	0	0	0
4/22/2024	3:30 AM	0	29	6	1	0	0	0	0	7	0	0	0	0
4/22/2024	3:45 AM	0	37	8	0	0	0	0	0	8	0	0	0	0
4/22/2024	4:00 AM	0	54	10	0	0	0	0	0	9	0	0	0	0
4/22/2024	4:15 AM	0	62	10	0	0	0	0	0	8	0	0	0	0
4/22/2024	4:30 AM	0	85	12	1	2	0	0	0	5	0	0	0	0
4/22/2024	4:45 AM	0	115	15	1	2	0	0	0	5	0	0	0	0
4/22/2024	5:00 AM	0	150	20	1	2	0	0	0	8	0	0	0	0
4/22/2024	5:15 AM	0	185	24	1	2	0	0	0	10	0	0	0	0
4/22/2024	5:30 AM	0	252	30	0	2	0	0	0	13	0	0	0	0
4/22/2024	5:45 AM	0	370	42	0	4	1	0	0	15	0	0	0	0
4/22/2024	6:00 AM	0	491	53	0	8	1	0	0	15	0	0	0	0
4/22/2024	6:15 AM	0	642	82	0	13	1	0	0	16	0	0	0	0
4/22/2024	6:30 AM	0	832	98	0	13	1	0	0	20	0	0	0	0
4/22/2024	6:45 AM	0	993	103	0	13	0	0	0	21	0	0	0	0
4/22/2024	7:00 AM	0	1128	110	0	11	0	0	0	21	0	0	0	0
4/22/2024	7:15 AM	0	1250	117	0	9	0	0	0	24	0	0	0	0
4/22/2024	7:30 AM	0	1261	129	1	12	0	0	1	20	0	0	0	0
4/22/2024	7:45 AM	1	1202	130	1	13	0	0	1	21	0	0	0	0
4/22/2024	8:00 AM	1	1125	131	1	12	0	0	4	22	0	0	0	0
4/22/2024	8:15 AM	1	998	114	1	10	1	0	4	18	0	0	0	0
4/22/2024	8:30 AM	1	886	97	0	9	1	0	4	20	0	0	0	0
4/22/2024	8:45 AM	0	818	106	3	11	1	0	4	18	0	0	0	0
4/22/2024	9:00 AM	0	776	100	7	13	1	0	1	19	0	0	0	0
4/22/2024	9:15 AM	0	727	90	7	13	2	0	1	25	0	0	0	0
4/22/2024	9:30 AM	0	667	84	7	17	3	0	0	22	0	0	0	0
4/22/2024	9:45 AM	0	597	69	5	14	3	0	0	23	0	0	0	0
4/22/2024	10:00 AM	1	536	67	1	14	4	0	0	24	0	0	0	0
4/22/2024	10:15 AM	1	479	61	1	15	3	0	0	18	0	0	0	0
4/22/2024	10:30 AM	1	467	55	1	9	2	0	0	27	0	0	0	0
4/22/2024	10:45 AM	1	449	46	0	9	2	0	0	25	0	0	0	0
4/22/2024	11:00 AM	1	438	43	0	8	1	0	0	27	0	0	0	0
4/22/2024	11:15 AM	1	463	48	0	7	0	0	0	30	0	0	0	0
4/22/2024	11:30 AM	1	481	51	0	7	0	0	0	25	0	0	0	0
4/22/2024	11:45 AM	1	504	57	0	8	0	0	0	34	0	0	0	0
4/22/2024	12:00 PM	1	524	60	0	9	0	0	1	27	0	0	0	0
4/22/2024	12:15 PM	1	518	61	0	10	1	0	1	23	0	0	0	0
4/22/2024	12:30 PM	1	496	67	0	16	2	0	2	18	0	0	0	0
4/22/2024	12:45 PM	1	484	70	0	17	3	0	2	7	0	0	0	0
4/22/2024	1:00 PM	0	449	63	0	16	4	0	2	6	0	0	0	0
4/22/2024	1:15 PM	0	454	66	0	17	3	0	2	8	0	0	0	0
4/22/2024	1:30 PM	0	457	55	0	16	2	0	10	17	0	1	0	0
4/22/2024	1:45 PM	0	464	49	0	14	1	0	10	21	0	1	0	0
4/22/2024	2:00 PM	0	475	54	0	16	0	0	9	26	0	1	0	0
4/22/2024	2:15 PM	0	481	48	0	19	0	0	9	28	0	1	0	0
4/22/2024	2:30 PM	0	492	62	0	15	0	0	0	22	0	0	0	0
4/22/2024	2:45 PM	0	498	73	0	17	0	0	0	19	0	0	0	0
4/22/2024	3:00 PM	0	496	72	0	15	0	0	0	17	0	0	0	0
4/22/2024	3:15 PM	0	484	81	0	12	1	0	0	16	0	0	0	0
4/22/2024	3:30 PM	0	493	89	0	11	1	0	0	15	0	0	0	0
4/22/2024	3:45 PM	0	494	85	0	8	1	0	0	16	0	0	0	0
4/22/2024	4:00 PM	0	496	90	1	10	1	0	0	18	0	0	0	0
4/22/2024	4:15 PM	0	519	83	2	8	0	0	0	15	0	0	0	0
4/22/2024	4:30 PM	0	486	74	2	6	0	0	0	14	0	0	0	0
4/22/2024	4:45 PM	0	441	66	2	6	0	0	0	13	0	0	0	0
4/22/2024	5:00 PM	0	435	63	1	5	0	0	0	10	0	0	0	0
4/22/2024	5:15 PM	0	393	61	0	5	0	0	0	9	0	0	0	0
4/22/2024	5:30 PM	0	400	56	0	6	0	0	0	6	0	0	0	0
4/22/2024	5:45 PM	0	416	52	0	7	1	0	0	9	0	0	0	0
4/22/2024	6:00 PM	0	390	36	0	4	1	0	0	9	0	0	0	0
4/22/2024	6:15 PM	0	368	27	1	5	1	0	0	8	0	0	0	0
4/22/2024	6:30 PM	0	334	14	1	4	1	0	0	8	0	0	0	0
4/22/2024	6:45 PM	0	281	11	1	2	0	0	0	4	0	0	0	0
4/22/2024	7:00 PM	0	254	12	1	4	0	0	0	3	0	0	0	0
4/22/2024	7:15 PM	0	233	11	0	2	0	0	0	7	0	0	0	0
4/22/2024	7:30 PM	1	197	10	0	3	0	0	0	8	0	0	0	0
4/22/2024	7:45 PM	1	179	9	0	4	1	0	0	8	0	1	0	0
4/22/2024	8:00 PM	1	150	10	0	2	1	0	0	9	0	1	0	0
4/22/2024	8:15 PM	1	145	11	0	2	1	0	0	7	0	1	0	0
4/22/2024	8:30 PM	0	135	12	0	1	1	0	0	12	0	1	0	0
4/22/2024	8:45 PM	0	133	11	0	0	0	0	0	11	0	0	0	0
4/22/2024	9:00 PM	0	136	11	0	1	0	0	0	9	0	0	0	0
4/22/2024	9:15 PM	0	120	10	0	1	0	0	0	9	0	1	0	0
4/22/2024	9:30 PM	0	125	10	0	1	1	0	0	4	0	1	0	0
4/22/2024	9:45 PM	0	115	9	0	1	1	0	0	7	0	1	0	0
4/22/2024	10:00 PM	0	101	7	0	0	1	0	0	8	0	1	0	0
4/22/2024	10:15 PM	0	92	6	0	0	1	0	0	9	0	0	0	0
4/22/2024	10:30 PM	0	74	5	0	1	0	0	0	9	0	0	0	0
4/22/2024	10:45 PM	0	59	4	0	1	0	0	0	9	0	0	0	0
4/22/2024	11:00 PM	0	45	4	0	1	0	0	0	8	0	0	0	0
4/22/2024	11:15 PM	0	27	3	0	1	0	0	0	5	0	0	0	0
4/22/2024	11:30 PM	0	10	1	0	0	0	0	0	4	0	0	0	0
4/22/2024	11:45 PM	0	5	1	0	0	0	0	0	1	0	0	0	0

4/23/2024	12:00 AM	0	24	10	0	0	0	0	0	3	0	0	0	0
4/23/2024	12:15 AM	0	23	8	0	0	0	0	0	4	0	0	0	0
4/23/2024	12:30 AM	0	20	8	0	0	0	0	0	4	0	1	0	0
4/23/2024	12:45 AM	0	18	6	0	0	0	0	0	3	0	1	0	0
4/23/2024	1:00 AM	0	17	6	0	0	0	0	0	6	0	1	0	0
4/23/2024	1:15 AM	0	16	7	0	0	0	0	0	3	0	1	0	0
4/23/2024	1:30 AM	0	14	5	0	0	0	0	0	4	0	0	0	0
4/23/2024	1:45 AM	0	12	5	0	0	0	0	0	4	0	0	0	0
4/23/2024	2:00 AM	0	9	3	0	0	0	0	0	1	0	0	0	0
4/23/2024	2:15 AM	0	13	3	0	0	0	0	0	2	0	0	0	0
4/23/2024	2:30 AM	0	13	2	0	0	0	0	0	2	0	0	0	0
4/23/2024	2:45 AM	0	19	5	0	0	0	0	0	3	0	0	0	0
4/23/2024	3:00 AM	0	24	7	0	0	0	0	0	3	0	0	0	0
4/23/2024	3:15 AM	0	21	6	0	0	0	0	0	4	0	0	0	0
4/23/2024	3:30 AM	0	28	10	0	0	0	0	0	8	0	0	0	0
4/23/2024	3:45 AM	0	29	9	0	1	0	0	0	9	0	0	0	0
4/23/2024	4:00 AM	0	39	13	0	2	0	0	0	10	0	0	0	0
4/23/2024	4:15 AM	0	48	18	0	3	0	0	0	14	0	0	0	0
4/23/2024	4:30 AM	0	61	21	0	4	0	0	0	9	0	0	0	0
4/23/2024	4:45 AM	0	93	30	0	4	0	0	0	11	0	0	0	0
4/23/2024	5:00 AM	0	127	37	0	4	0	0	0	11	0	0	0	0
4/23/2024	5:15 AM	0	179	50	0	4	0	0	0	6	0	0	0	0
4/23/2024	5:30 AM	0	266	63	0	3	0	0	0	8	0	0	0	0
4/23/2024	5:45 AM	1	379	105	0	4	0	0	0	11	0	1	0	0
4/23/2024	6:00 AM	1	528	122	0	7	1	0	1	13	0	1	0	0
4/23/2024	6:15 AM	1	690	131	0	10	1	0	1	19	0	2	0	0
4/23/2024	6:30 AM	2	810	159	0	13	2	0	1	20	0	2	0	0
4/23/2024	6:45 AM	1	923	146	0	14	3	1	1	21	0	1	0	0
4/23/2024	7:00 AM	1	966	140	0	11	2	1	0	19	0	2	0	0
4/23/2024	7:15 AM	1	989	131	0	10	2	1	0	15	0	1	0	0
4/23/2024	7:30 AM	0	1076	113	0	9	1	1	0	16	0	1	0	0
4/23/2024	7:45 AM	0	1109	103	0	8	0	0	0	17	0	1	0	0
4/23/2024	8:00 AM	0	1115	109	0	15	3	0	0	25	0	0	0	0
4/23/2024	8:15 AM	0	1057	106	3	18	3	0	0	27	0	0	0	0
4/23/2024	8:30 AM	0	934	99	4	22	5	0	0	27	0	0	0	0
4/23/2024	8:45 AM	0	812	92	4	22	5	0	0	29	0	0	0	0
4/23/2024	9:00 AM	1	729	83	8	17	2	0	0	24	0	0	0	0
4/23/2024	9:15 AM	1	679	98	7	13	3	0	0	22	2	0	0	0
4/23/2024	9:30 AM	1	614	95	6	11	2	0	0	24	2	0	0	0
4/23/2024	9:45 AM	1	566	100	8	10	2	1	0	19	2	0	0	0
4/23/2024	10:00 AM	0	522	110	4	12	4	2	1	20	2	0	0	0
4/23/2024	10:15 AM	0	501	99	2	10	5	2	1	24	0	0	0	0
4/23/2024	10:30 AM	0	475	102	2	12	4	2	1	26	0	0	0	0
4/23/2024	10:45 AM	0	477	101	0	14	5	1	1	24	0	1	0	0
4/23/2024	11:00 AM	0	478	93	0	11	3	0	0	25	0	1	0	0
4/23/2024	11:15 AM	0	477	85	0	15	1	0	0	22	0	1	0	0
4/23/2024	11:30 AM	0	497	74	0	14	2	0	0	19	0	1	0	0
4/23/2024	11:45 AM	0	526	57	0	14	1	0	0	18	0	0	0	0
4/23/2024	12:00 PM	0	557	50	0	13	1	0	0	16	0	0	0	0
4/23/2024	12:15 PM	0	560	46	0	10	1	0	0	15	0	0	0	0
4/23/2024	12:30 PM	0	562	40	0	8	0	1	0	16	0	0	0	0
4/23/2024	12:45 PM	0	520	44	0	6	0	1	0	18	0	0	0	0
4/23/2024	1:00 PM	0	485	34	0	7	1	1	1	17	0	0	0	0
4/23/2024	1:15 PM	0	473	36	0	8	3	1	1	23	0	0	0	0
4/23/2024	1:30 PM	0	460	42	0	6	3	0	1	20	0	0	0	0
4/23/2024	1:45 PM	0	453	37	0	6	3	0	1	22	0	0	0	0
4/23/2024	2:00 PM	0	445	39	0	6	2	0	1	21	0	0	0	0
4/23/2024	2:15 PM	0	470	43	0	6	1	0	1	15	0	0	0	0
4/23/2024	2:30 PM	0	502	42	0	8	2	0	2	16	0	0	0	0
4/23/2024	2:45 PM	0	540	46	0	14	2	0	2	13	0	0	0	0
4/23/2024	3:00 PM	0	565	45	1	16	2	0	1	17	0	0	0	0
4/23/2024	3:15 PM	0	540	57	1	15	1	0	1	25	0	0	0	0
4/23/2024	3:30 PM	0	557	65	2	17	0	0	0	23	0	0	0	0
4/23/2024	3:45 PM	0	556	64	2	14	0	0	0	21	0	0	0	0
4/23/2024	4:00 PM	0	564	77	1	12	0	0	0	17	0	0	0	0
4/23/2024	4:15 PM	0	626	75	1	12	1	0	0	9	0	0	0	0
4/23/2024	4:30 PM	0	665	79	0	11	2	0	0	8	0	0	0	0
4/23/2024	4:45 PM	0	685	93	0	8	2	0	0	9	0	0	0	0
4/23/2024	5:00 PM	0	664	95	0	6	2	0	0	10	0	0	0	0
4/23/2024	5:15 PM	0	596	84	0	6	1	0	0	14	0	0	0	0
4/23/2024	5:30 PM	0	515	92	0	4	0	0	0	15	0	0	0	0
4/23/2024	5:45 PM	0	453	75	0	5	0	0	0	14	0	0	0	0
4/23/2024	6:00 PM	0	412	66	0	7	0	0	0	13	0	0	0	0
4/23/2024	6:15 PM	0	360	64	0	6	0	0	1	8	0	0	0	0
4/23/2024	6:30 PM	0	306	46	0	5	0	0	1	9	0	0	0	0
4/23/2024	6:45 PM	0	246	44	0	3	0	0	1	11	0	0	0	0
4/23/2024	7:00 PM	0	238	40	0	1	3	0	1	11	0	0	0	0
4/23/2024	7:15 PM	0	244	46	0	1	3	0	0	11	0	0	0	0
4/23/2024	7:30 PM	1	238	38	1	1	3	0	0	10	0	0	0	0
4/23/2024	7:45 PM	1	246	38	1	2	3	0	0	9	0	1	0	0
4/23/2024	8:00 PM	1	210	34	1	5	0	0	0	7	0	1	0	0
4/23/2024	8:15 PM	1	211	26	1	5	0	0	0	5	0	1	0	0
4/23/2024	8:30 PM	0	207	28	0	4	0	0	0	4	0	1	0	0
4/23/2024	8:45 PM	0	198	26	0	3	0	0	0	1	0	0	0	0
4/23/2024	9:00 PM	0	196	29	0	0	0	0	0	2	0	0	0	0
4/23/2024	9:15 PM	0	166	27	0	0	0	0	0	6	0	0	0	0
4/23/2024	9:30 PM	0	144	29	0	0	0	0	0	12	0	0	0	0
4/23/2024	9:45 PM	0	125	30	0	1	0	0	0	13	0	0	0	0
4/23/2024	10:00 PM	0	108	28	0	1	0	0	0	15	0	0	0	0
4/23/2024	10:15 PM	0	108	25	0	1	0	0	0	14	0	1	0	0
4/23/2024	10:30 PM	0	86	19	0	1	0	0	0	8	0	2	0	0
4/23/2024	10:45 PM	0	68	20	0	0	0	0	0	8	0	2	0	0
4/23/2024	11:00 PM	0	58	19	0	0	0	0	0	6	0	2	0	0
4/23/2024	11:15 PM	0	28	15	0	0	0	0	0	3	0	1	0	0
4/23/2024	11:30 PM	0	17	12	0	0	0	0	0	2	0	0	0	0
4/23/2024	11:45 PM	0	8	5	0	0	0	0	0	1	0	0	0	0

4/24/2024	12:00 AM	0	25	5	0	3	0	0	0	4	0	0	0	0
4/24/2024	12:15 AM	0	23	6	0	2	0	0	0	3	0	1	0	0
4/24/2024	12:30 AM	0	20	4	0	2	0	0	0	3	0	1	0	0
4/24/2024	12:45 AM	0	19	4	0	1	0	0	0	3	0	1	0	0
4/24/2024	1:00 AM	0	20	4	0	3	0	0	0	4	0	2	0	0
4/24/2024	1:15 AM	0	23	4	0	3	0	0	0	6	0	1	0	0
4/24/2024	1:30 AM	0	23	4	0	2	0	0	0	7	0	1	0	0
4/24/2024	1:45 AM	0	25	5	0	2	0	0	0	8	0	1	0	0
4/24/2024	2:00 AM	0	23	5	0	0	0	0	0	5	0	1	0	0
4/24/2024	2:15 AM	0	19	4	0	0	0	0	0	5	0	1	0	0
4/24/2024	2:30 AM	0	19	6	0	0	0	0	0	5	0	1	0	0
4/24/2024	2:45 AM	0	19	5	0	0	0	0	0	6	0	1	0	0
4/24/2024	3:00 AM	0	18	4	0	1	0	0	0	6	0	0	0	0
4/24/2024	3:15 AM	0	21	6	0	2	0	0	0	7	0	0	0	0
4/24/2024	3:30 AM	0	28	8	0	3	0	0	0	8	0	0	0	0
4/24/2024	3:45 AM	0	28	8	0	4	0	0	0	6	0	0	0	0
4/24/2024	4:00 AM	0	45	14	0	5	0	0	0	8	0	0	0	0
4/24/2024	4:15 AM	0	51	15	0	5	0	0	0	5	0	0	0	0
4/24/2024	4:30 AM	0	58	15	0	4	2	0	0	5	0	0	0	0
4/24/2024	4:45 AM	0	90	23	0	3	5	0	0	7	0	0	0	0
4/24/2024	5:00 AM	0	121	29	0	1	7	0	0	7	0	0	0	0
4/24/2024	5:15 AM	0	161	33	0	1	7	0	0	10	0	0	0	0
4/24/2024	5:30 AM	0	255	35	0	2	6	0	0	12	0	0	0	0
4/24/2024	5:45 AM	0	398	48	0	3	5	0	0	12	0	0	0	0
4/24/2024	6:00 AM	2	525	76	0	6	3	0	0	15	0	0	0	0
4/24/2024	6:15 AM	3	668	106	0	8	3	0	1	15	0	0	0	0
4/24/2024	6:30 AM	4	836	135	0	15	2	0	1	16	2	0	0	0
4/24/2024	6:45 AM	4	915	138	0	18	0	0	1	19	2	0	0	0
4/24/2024	7:00 AM	2	1017	125	0	16	2	0	2	21	2	0	0	0
4/24/2024	7:15 AM	1	1118	111	1	14	2	0	1	24	2	0	0	0
4/24/2024	7:30 AM	1	1120	116	1	12	2	0	2	23	0	0	0	0
4/24/2024	7:45 AM	1	1123	135	1	15	2	0	6	22	0	0	0	0
4/24/2024	8:00 AM	2	1071	164	1	18	0	0	8	21	0	0	0	0
4/24/2024	8:15 AM	2	947	179	9	24	1	0	10	23	0	0	0	0
4/24/2024	8:30 AM	1	818	174	12	19	2	0	10	21	0	0	0	0
4/24/2024	8:45 AM	1	716	152	12	15	2	0	6	21	0	0	0	0
4/24/2024	9:00 AM	0	635	120	12	17	3	0	7	18	0	0	0	0
4/24/2024	9:15 AM	1	591	101	3	13	3	0	5	11	0	0	0	0
4/24/2024	9:30 AM	1	573	89	0	13	2	0	6	12	0	0	0	0
4/24/2024	9:45 AM	1	537	100	0	17	4	0	6	11	0	0	0	0
4/24/2024	10:00 AM	1	519	101	1	17	3	0	3	15	0	0	0	0
4/24/2024	10:15 AM	0	497	111	1	18	2	0	3	19	0	0	0	0
4/24/2024	10:30 AM	0	492	117	2	22	2	0	2	21	0	0	0	0
4/24/2024	10:45 AM	1	479	117	2	23	1	0	3	25	0	0	0	0
4/24/2024	11:00 AM	1	451	115	1	20	1	0	2	23	0	0	0	0
4/24/2024	11:15 AM	1	432	101	1	22	1	0	2	23	0	0	0	0
4/24/2024	11:30 AM	1	418	102	0	24	2	0	2	21	0	0	0	0
4/24/2024	11:45 AM	0	416	100	0	19	2	0	1	16	0	0	0	0
4/24/2024	12:00 PM	0	439	98	0	20	2	0	1	12	0	0	0	0
4/24/2024	12:15 PM	0	458	102	0	17	2	0	1	9	0	0	0	0
4/24/2024	12:30 PM	0	444	89	0	10	1	0	1	9	0	0	0	0
4/24/2024	12:45 PM	0	436	88	0	14	4	0	1	9	0	0	0	0
4/24/2024	1:00 PM	0	425	98	0	11	4	0	1	13	0	0	0	0
4/24/2024	1:15 PM	0	420	105	0	12	5	0	1	15	0	0	0	0
4/24/2024	1:30 PM	0	442	114	0	14	7	0	0	17	0	0	0	0
4/24/2024	1:45 PM	1	449	103	0	8	5	0	0	18	0	0	0	0
4/24/2024	2:00 PM	3	451	97	0	10	5	0	0	15	0	0	0	0
4/24/2024	2:15 PM	4	457	95	0	9	5	0	0	13	0	0	0	0
4/24/2024	2:30 PM	4	463	91	0	12	3	0	0	9	0	0	0	0
4/24/2024	2:45 PM	3	473	96	0	15	1	0	0	8	0	0	0	0
4/24/2024	3:00 PM	1	480	91	0	14	1	0	0	9	0	0	0	0
4/24/2024	3:15 PM	0	500	90	0	12	0	0	1	17	0	0	0	0
4/24/2024	3:30 PM	0	514	93	0	9	2	0	1	22	0	0	0	0
4/24/2024	3:45 PM	1	548	102	0	6	2	0	2	20	0	0	0	0
4/24/2024	4:00 PM	2	595	109	0	4	5	0	2	19	0	0	0	0
4/24/2024	4:15 PM	3	645	108	0	4	6	0	1	14	0	0	0	0
4/24/2024	4:30 PM	3	670	113	0	3	4	0	1	11	0	0	0	0
4/24/2024	4:45 PM	2	654	100	0	3	4	0	0	11	0	0	0	0
4/24/2024	5:00 PM	1	613	100	0	4	1	0	0	11	0	0	0	0
4/24/2024	5:15 PM	0	566	98	0	5	0	0	0	9	0	0	0	0
4/24/2024	5:30 PM	0	517	90	2	4	0	0	1	10	0	0	0	0
4/24/2024	5:45 PM	0	506	84	2	4	1	0	2	10	1	0	0	0
4/24/2024	6:00 PM	0	479	67	2	3	1	0	2	13	1	0	0	0
4/24/2024	6:15 PM	2	410	51	2	2	2	0	2	12	1	0	0	0
4/24/2024	6:30 PM	2	381	30	0	3	3	0	1	11	1	0	0	0
4/24/2024	6:45 PM	2	329	21	0	4	2	0	0	11	0	0	0	0
4/24/2024	7:00 PM	3	286	19	0	4	3	0	0	7	0	0	0	0
4/24/2024	7:15 PM	1	295	20	0	5	2	0	0	8	0	0	0	0
4/24/2024	7:30 PM	1	269	23	0	6	1	0	0	7	0	0	0	0
4/24/2024	7:45 PM	1	244	21	0	6	1	0	0	6	0	0	0	0
4/24/2024	8:00 PM	0	224	19	0	7	0	0	0	10	0	0	0	0
4/24/2024	8:15 PM	0	201	23	0	7	0	0	1	7	0	0	0	0
4/24/2024	8:30 PM	0	180	31	0	7	0	0	1	7	0	0	0	0
4/24/2024	8:45 PM	0	159	36	0	6	0	0	1	9	0	0	0	0
4/24/2024	9:00 PM	0	151	40	0	5	0	0	1	5	0	0	0	0
4/24/2024	9:15 PM	0	121	35	0	4	0	0	0	5	0	0	0	0
4/24/2024	9:30 PM	0	103	35	0	3	0	0	0	6	0	0	0	0
4/24/2024	9:45 PM	0	103	36	0	2	0	0	0	6	0	0	0	0
4/24/2024	10:00 PM	0	85	30	0	2	0	0	0	9	0	0	0	0
4/24/2024	10:15 PM	0	76	29	0	1	0	0	0	11	0	0	0	0
4/24/2024	10:30 PM	0	62	22	0	1	0	0	0	8	0	1	0	0
4/24/2024	10:45 PM	0	49	19	0	1	0	0	0	7	0	2	0	0
4/24/2024	11:00 PM	0	54	19	0	2	0	0	0	5	0	2	0	0
4/24/2024	11:15 PM	0	44	15	0	2	0	0	0	3	0	2	0	0
4/24/2024	11:30 PM	0	32	10	0	1	0	0	0	3	0	1	0	0
4/24/2024	11:45 PM	0	17	4	0	1	0	0	0	2	0	0	0	0

4/25/2024	12:00 AM	0	22	2	0	2	0	0	0	4	0	1	0	0
4/25/2024	12:15 AM	0	19	3	0	2	0	0	0	4	0	1	0	0
4/25/2024	12:30 AM	0	20	3	0	1	0	0	0	4	0	1	0	0
4/25/2024	12:45 AM	0	20	3	0	0	0	0	0	6	0	1	0	0
4/25/2024	1:00 AM	0	19	3	0	1	0	0	0	6	0	0	0	0
4/25/2024	1:15 AM	0	19	1	0	1	0	0	0	6	0	0	0	0
4/25/2024	1:30 AM	0	17	1	0	1	0	0	0	7	0	0	0	0
4/25/2024	1:45 AM	0	19	1	0	1	0	0	0	5	0	0	0	0
4/25/2024	2:00 AM	0	21	1	0	1	0	0	0	4	0	0	0	0
4/25/2024	2:15 AM	0	22	3	0	2	0	0	0	4	0	0	0	0
4/25/2024	2:30 AM	0	26	3	0	2	0	0	0	3	0	0	0	0
4/25/2024	2:45 AM	0	25	3	0	3	0	0	0	3	0	0	0	0
4/25/2024	3:00 AM	0	27	3	0	3	0	0	0	6	0	0	0	0
4/25/2024	3:15 AM	0	26	2	0	2	0	0	0	8	0	0	0	0
4/25/2024	3:30 AM	0	28	4	0	2	0	0	0	9	0	0	0	0
4/25/2024	3:45 AM	0	33	4	0	2	0	0	0	10	0	0	0	0
4/25/2024	4:00 AM	0	44	7	0	3	0	0	0	8	0	1	0	0
4/25/2024	4:15 AM	0	53	7	0	6	0	0	0	8	0	1	0	0
4/25/2024	4:30 AM	0	66	6	0	10	0	0	0	11	0	1	0	0
4/25/2024	4:45 AM	0	102	7	0	10	0	0	0	10	0	1	0	0
4/25/2024	5:00 AM	0	141	7	0	12	0	0	0	13	0	0	0	0
4/25/2024	5:15 AM	0	185	10	0	9	0	0	0	13	0	0	0	0
4/25/2024	5:30 AM	0	283	16	0	6	0	0	0	11	0	0	0	0
4/25/2024	5:45 AM	0	400	29	0	8	1	0	0	15	0	0	0	0
4/25/2024	6:00 AM	0	502	71	0	5	3	0	0	15	0	1	1	0
4/25/2024	6:15 AM	0	633	118	0	12	4	1	0	19	0	1	1	0
4/25/2024	6:30 AM	1	746	171	0	13	4	1	0	19	0	1	1	0
4/25/2024	6:45 AM	1	846	196	0	17	3	1	1	18	0	1	1	0
4/25/2024	7:00 AM	1	967	199	0	22	3	1	3	18	0	0	0	0
4/25/2024	7:15 AM	1	1086	200	0	17	2	0	3	13	0	0	0	0
4/25/2024	7:30 AM	0	1193	194	0	22	3	0	4	13	1	0	0	0
4/25/2024	7:45 AM	1	1192	201	0	23	3	1	4	11	1	0	0	0
4/25/2024	8:00 AM	1	1171	200	0	21	3	1	3	9	1	0	0	0
4/25/2024	8:15 AM	1	1091	174	0	22	3	1	4	15	1	0	0	0
4/25/2024	8:30 AM	2	907	146	0	18	3	1	3	16	0	0	0	0
4/25/2024	8:45 AM	1	818	129	6	16	3	0	3	23	0	0	0	0
4/25/2024	9:00 AM	1	732	101	7	15	1	0	4	25	0	0	0	0
4/25/2024	9:15 AM	1	631	101	8	16	2	0	3	22	0	0	0	0
4/25/2024	9:30 AM	0	615	98	12	18	2	0	4	20	0	0	0	0
4/25/2024	9:45 AM	0	558	91	6	13	3	0	4	14	1	0	0	0
4/25/2024	10:00 AM	1	520	94	5	13	3	0	3	14	1	0	0	0
4/25/2024	10:15 AM	1	498	82	4	11	2	0	4	16	1	0	0	0
4/25/2024	10:30 AM	1	501	85	0	8	1	0	3	25	1	0	0	0
4/25/2024	10:45 AM	1	502	82	0	8	0	0	2	33	1	0	0	0
4/25/2024	11:00 AM	0	476	94	0	8	0	0	1	35	1	0	0	0
4/25/2024	11:15 AM	0	488	101	0	9	1	0	0	31	1	0	0	0
4/25/2024	11:30 AM	0	466	99	0	12	4	0	0	26	1	0	0	0
4/25/2024	11:45 AM	1	501	111	0	17	6	0	1	23	1	0	0	0
4/25/2024	12:00 PM	1	514	97	1	17	7	0	3	21	1	0	0	0
4/25/2024	12:15 PM	1	534	101	1	18	8	0	5	22	1	0	0	0
4/25/2024	12:30 PM	1	541	95	1	17	6	0	7	15	1	0	0	0
4/25/2024	12:45 PM	0	532	93	2	14	4	1	6	15	0	0	0	0
4/25/2024	1:00 PM	0	522	96	1	16	4	1	4	16	0	0	0	0
4/25/2024	1:15 PM	0	505	97	1	15	3	1	2	15	1	0	0	0
4/25/2024	1:30 PM	0	515	93	1	14	2	1	2	19	1	0	0	0
4/25/2024	1:45 PM	0	503	85	0	15	3	0	3	15	1	0	0	0
4/25/2024	2:00 PM	0	485	91	0	11	4	0	3	14	1	0	0	0
4/25/2024	2:15 PM	0	479	82	0	10	3	0	4	14	0	0	0	0
4/25/2024	2:30 PM	0	453	89	0	8	3	0	3	15	0	0	0	0
4/25/2024	2:45 PM	0	441	96	0	6	2	0	2	16	0	0	0	0
4/25/2024	3:00 PM	0	477	93	0	6	0	0	2	17	0	0	0	0
4/25/2024	3:15 PM	1	497	95	0	5	0	0	1	16	0	0	0	0
4/25/2024	3:30 PM	2	524	95	0	6	0	0	0	16	0	0	0	0
4/25/2024	3:45 PM	5	553	92	0	5	1	0	0	16	0	0	0	0
4/25/2024	4:00 PM	5	577	95	0	7	1	0	0	15	0	0	0	0
4/25/2024	4:15 PM	5	608	110	0	6	1	0	0	17	0	0	0	0
4/25/2024	4:30 PM	6	610	114	0	7	2	0	0	15	0	0	0	0
4/25/2024	4:45 PM	3	634	108	0	9	1	0	0	18	0	0	0	0
4/25/2024	5:00 PM	3	612	109	0	8	2	0	0	18	0	0	0	0
4/25/2024	5:15 PM	3	572	97	0	9	2	0	0	17	0	0	0	0
4/25/2024	5:30 PM	1	560	90	0	6	2	0	0	19	0	0	0	0
4/25/2024	5:45 PM	1	514	90	0	3	2	0	0	13	1	0	0	0
4/25/2024	6:00 PM	1	487	79	0	1	1	0	0	12	1	0	0	0
4/25/2024	6:15 PM	1	442	65	0	0	1	0	0	11	1	0	0	0
4/25/2024	6:30 PM	3	394	55	0	0	0	0	0	6	1	0	0	0
4/25/2024	6:45 PM	3	340	48	0	0	0	0	0	5	0	0	0	0
4/25/2024	7:00 PM	3	301	35	0	0	0	0	0	3	0	0	0	0
4/25/2024	7:15 PM	2	271	35	0	1	0	0	0	2	0	0	0	0
4/25/2024	7:30 PM	0	239	33	0	1	0	0	0	5	0	0	0	0
4/25/2024	7:45 PM	0	227	33	0	1	0	0	0	9	0	0	0	0
4/25/2024	8:00 PM	0	201	36	0	1	0	0	0	12	0	0	0	0
4/25/2024	8:15 PM	0	201	39	0	0	0	0	0	12	0	0	0	0
4/25/2024	8:30 PM	0	196	43	0	0	0	0	0	12	0	0	0	0
4/25/2024	8:45 PM	0	180	38	0	0	0	0	0	9	0	0	0	0
4/25/2024	9:00 PM	0	179	39	0	0	0	0	0	7	0	0	0	0
4/25/2024	9:15 PM	0	171	39	0	0	0	0	0	7	0	0	0	0
4/25/2024	9:30 PM	0	158	36	0	0	0	0	0	4	0	0	0	0
4/25/2024	9:45 PM	0	129	32	0	0	0	0	0	3	0	0	0	0
4/25/2024	10:00 PM	0	109	29	0	0	0	0	0	2	0	0	0	0
4/25/2024	10:15 PM	0	81	23	0	0	0	0	0	3	0	0	0	0
4/25/2024	10:30 PM	0	72	22	0	0	0	0	0	3	0	0	0	0
4/25/2024	10:45 PM	0	68	22	0	0	0	0	0	4	0	0	0	0
4/25/2024	11:00 PM	0	57	16	0	0	0	0	0	4	0	0	0	0
4/25/2024	11:15 PM	0	42	11	0	0	0	0	0	2	0	0	0	0
4/25/2024	11:30 PM	0	21	5	0	0	0	0	0	2	0	0	0	0
4/25/2024	11:45 PM	0	9	1	0	0	0	0	0	1	0	0	0	0

4/26/2024	12:00 AM	0	33	6	0	4	2	0	0	5	0	0	0	0
4/26/2024	12:15 AM	0	27	4	0	3	1	0	0	6	0	1	0	0
4/26/2024	12:30 AM	0	26	4	0	6	1	0	0	4	0	2	0	0
4/26/2024	12:45 AM	0	25	4	0	4	2	0	0	4	0	2	0	0
4/26/2024	1:00 AM	0	22	4	0	3	1	0	0	5	0	2	0	0
4/26/2024	1:15 AM	0	22	4	0	3	1	0	0	3	0	1	0	0
4/26/2024	1:30 AM	0	20	4	0	0	1	0	0	2	0	0	0	0
4/26/2024	1:45 AM	0	16	2	0	1	0	0	0	3	0	0	0	0
4/26/2024	2:00 AM	0	12	1	0	1	0	0	0	5	0	0	0	0
4/26/2024	2:15 AM	0	12	1	0	1	0	0	0	6	0	0	0	0
4/26/2024	2:30 AM	0	10	1	0	1	0	0	0	8	0	0	0	0
4/26/2024	2:45 AM	0	13	2	0	0	1	0	0	10	0	0	0	0
4/26/2024	3:00 AM	0	19	4	0	0	1	0	0	8	0	0	0	0
4/26/2024	3:15 AM	0	23	5	0	2	1	0	0	7	0	0	0	0
4/26/2024	3:30 AM	0	32	7	0	3	1	0	0	5	0	0	0	0
4/26/2024	3:45 AM	0	37	7	0	3	0	0	0	2	0	0	0	0
4/26/2024	4:00 AM	0	45	8	0	3	0	0	0	1	0	0	0	0
4/26/2024	4:15 AM	0	53	9	0	4	2	0	0	1	0	0	0	0
4/26/2024	4:30 AM	0	75	9	0	5	2	0	0	4	0	0	0	0
4/26/2024	4:45 AM	0	100	11	0	5	3	0	0	6	0	0	0	0
4/26/2024	5:00 AM	0	120	13	0	5	4	0	0	7	0	0	0	0
4/26/2024	5:15 AM	0	169	13	0	2	2	0	0	8	0	0	0	0
4/26/2024	5:30 AM	0	228	13	1	2	2	0	0	11	0	0	0	0
4/26/2024	5:45 AM	0	340	15	1	5	1	0	1	11	0	0	0	0
4/26/2024	6:00 AM	0	478	29	1	6	0	0	1	20	0	0	0	0
4/26/2024	6:15 AM	0	582	61	1	9	0	0	1	24	0	0	0	0
4/26/2024	6:30 AM	1	721	103	0	8	2	0	1	20	0	0	0	0
4/26/2024	6:45 AM	2	872	128	0	6	2	0	0	25	0	0	0	0
4/26/2024	7:00 AM	2	962	145	0	7	3	0	0	17	0	0	0	0
4/26/2024	7:15 AM	2	1043	154	0	6	3	0	0	15	0	0	0	0
4/26/2024	7:30 AM	1	1080	140	1	7	1	0	2	18	0	0	0	0
4/26/2024	7:45 AM	0	1046	141	4	8	2	0	2	14	0	0	0	0
4/26/2024	8:00 AM	0	1010	137	8	7	1	0	2	18	0	0	0	0
4/26/2024	8:15 AM	0	949	124	13	7	1	0	2	20	0	0	0	0
4/26/2024	8:30 AM	0	837	125	17	8	1	0	2	20	0	0	0	0
4/26/2024	8:45 AM	0	749	118	14	9	0	0	2	20	0	0	0	0
4/26/2024	9:00 AM	0	681	118	10	10	0	0	4	20	0	0	0	0
4/26/2024	9:15 AM	0	639	108	6	11	0	0	6	21	0	0	0	0
4/26/2024	9:30 AM	0	619	103	1	14	0	0	5	18	0	0	0	0
4/26/2024	9:45 AM	0	585	105	1	14	3	0	5	18	0	0	0	0
4/26/2024	10:00 AM	1	569	91	1	18	4	0	6	23	0	0	0	0
4/26/2024	10:15 AM	1	556	94	0	16	4	0	4	20	0	0	0	0
4/26/2024	10:30 AM	1	549	88	0	14	5	0	5	22	0	0	0	0
4/26/2024	10:45 AM	1	564	81	0	12	2	0	5	22	0	0	0	0
4/26/2024	11:00 AM	0	544	74	0	10	1	0	2	14	0	0	0	0
4/26/2024	11:15 AM	0	542	66	0	10	1	0	4	15	0	0	0	1
4/26/2024	11:30 AM	0	532	72	0	11	2	0	2	18	0	0	0	1
4/26/2024	11:45 AM	1	528	79	0	15	2	0	3	18	0	0	0	1
4/26/2024	12:00 PM	1	515	95	0	13	3	0	4	20	0	0	0	1
4/26/2024	12:15 PM	1	492	108	0	15	3	1	2	19	1	0	0	0
4/26/2024	12:30 PM	1	492	113	0	12	2	1	2	12	1	0	0	0
4/26/2024	12:45 PM	0	477	111	0	10	3	1	2	15	1	0	0	0
4/26/2024	1:00 PM	0	484	110	0	13	4	1	1	14	1	0	0	0
4/26/2024	1:15 PM	0	491	104	0	14	6	0	2	14	0	0	0	0
4/26/2024	1:30 PM	0	470	100	0	13	5	0	2	17	0	0	0	0
4/26/2024	1:45 PM	1	449	97	1	11	4	0	1	17	0	0	0	0
4/26/2024	2:00 PM	1	428	91	1	7	2	0	1	13	0	0	0	0
4/26/2024	2:15 PM	1	423	91	3	4	2	0	0	12	0	0	0	0
4/26/2024	2:30 PM	2	443	88	3	4	2	0	0	13	0	0	0	0
4/26/2024	2:45 PM	1	464	92	2	12	4	0	0	9	0	0	0	0
4/26/2024	3:00 PM	3	509	104	2	13	4	0	0	10	0	0	0	0
4/26/2024	3:15 PM	3	518	108	0	15	2	0	0	7	0	0	0	0
4/26/2024	3:30 PM	2	525	98	0	16	2	0	0	5	0	0	0	0
4/26/2024	3:45 PM	2	523	101	0	11	0	0	1	4	0	0	0	0
4/26/2024	4:00 PM	3	532	101	0	11	0	0	1	3	0	0	0	0
4/26/2024	4:15 PM	3	575	108	0	12	0	0	2	7	0	0	0	0
4/26/2024	4:30 PM	3	614	131	0	11	2	0	2	6	0	0	0	0
4/26/2024	4:45 PM	5	610	132	0	8	2	0	1	9	0	0	0	0
4/26/2024	5:00 PM	3	624	134	0	8	2	0	1	11	0	0	0	0
4/26/2024	5:15 PM	3	616	139	0	6	2	0	1	8	0	0	0	0
4/26/2024	5:30 PM	3	628	126	0	7	0	0	1	9	0	0	0	0
4/26/2024	5:45 PM	4	645	110	0	9	1	0	1	7	0	0	0	0
4/26/2024	6:00 PM	5	594	85	0	9	1	0	1	7	0	0	0	0
4/26/2024	6:15 PM	6	523	67	0	7	1	0	0	7	0	0	0	0
4/26/2024	6:30 PM	6	437	56	0	6	1	0	0	7	0	0	0	0
4/26/2024	6:45 PM	3	361	56	0	3	0	0	0	5	0	0	0	0
4/26/2024	7:00 PM	1	316	57	1	2	1	0	0	3	0	0	0	0
4/26/2024	7:15 PM	0	300	49	1	3	1	0	0	3	0	0	0	0
4/26/2024	7:30 PM	0	259	42	1	4	1	0	0	1	0	0	0	0
4/26/2024	7:45 PM	1	249	41	1	4	1	0	0	3	0	0	0	0
4/26/2024	8:00 PM	1	245	44	0	3	0	0	0	5	0	0	0	0
4/26/2024	8:15 PM	1	237	41	0	2	0	0	0	4	0	0	0	0
4/26/2024	8:30 PM	1	246	42	0	1	0	0	0	4	0	0	0	0
4/26/2024	8:45 PM	0	225	36	0	1	0	0	0	3	0	0	0	0
4/26/2024	9:00 PM	0	201	32	0	1	0	0	0	3	0	0	0	0
4/26/2024	9:15 PM	0	179	30	0	2	0	0	0	5	0	0	0	0
4/26/2024	9:30 PM	0	162	34	0	1	0	0	0	7	0	0	0	0
4/26/2024	9:45 PM	0	155	34	0	1	0	0	0	7	0	0	0	0
4/26/2024	10:00 PM	0	154	30	0	2	0	0	0	7	0	0	0	0
4/26/2024	10:15 PM	0	147	29	0	2	0	0	0	9	0	0	0	0
4/26/2024	10:30 PM	0	130	22	0	2	0	0	0	10	0	0	0	0
4/26/2024	10:45 PM	0	114	19	0	3	0	0	0	10	0	0	0	0
4/26/2024	11:00 PM	0	93	18	0	2	1	0	0	8	0	0	0	0
4/26/2024	11:15 PM	0	62	12	0	1	1	0	0	4	0	0	0	0
4/26/2024	11:30 PM	0	37	7	0	1	1	0	0	1	0	0	0	0
4/26/2024	11:45 PM	0	18	4	0	0	1	0	0	0	0	0	0	0

4/27/2024	12:00 AM	0	52	15	0	0	0	0	0	3	0	1	0	0
4/27/2024	12:15 AM	0	47	15	0	0	0	0	0	4	0	2	0	0
4/27/2024	12:30 AM	0	38	11	0	1	0	0	0	5	0	2	0	0
4/27/2024	12:45 AM	0	35	16	0	1	0	0	0	6	0	2	0	0
4/27/2024	1:00 AM	0	31	11	0	1	0	0	0	4	0	1	0	0
4/27/2024	1:15 AM	0	30	9	0	1	0	0	0	4	0	1	0	0
4/27/2024	1:30 AM	0	33	10	0	0	0	0	0	3	0	1	0	0
4/27/2024	1:45 AM	0	29	7	0	0	0	0	0	2	0	1	0	0
4/27/2024	2:00 AM	0	31	8	0	1	0	0	0	3	0	1	0	0
4/27/2024	2:15 AM	0	27	7	0	1	0	0	0	2	0	0	0	0
4/27/2024	2:30 AM	0	22	4	0	1	0	0	0	1	0	0	0	0
4/27/2024	2:45 AM	0	21	2	0	1	0	0	0	3	0	0	0	0
4/27/2024	3:00 AM	0	17	1	0	0	0	0	0	2	0	0	0	0
4/27/2024	3:15 AM	0	20	2	0	0	0	0	0	3	0	0	0	0
4/27/2024	3:30 AM	0	20	2	0	0	0	0	0	4	0	0	0	0
4/27/2024	3:45 AM	0	20	3	0	0	0	0	0	2	0	0	0	0
4/27/2024	4:00 AM	0	21	3	0	0	0	0	0	2	0	0	0	0
4/27/2024	4:15 AM	0	24	8	0	0	0	0	0	1	0	0	0	0
4/27/2024	4:30 AM	0	27	10	0	0	0	0	0	0	0	0	0	0
4/27/2024	4:45 AM	0	37	15	0	0	0	0	0	1	0	0	0	0
4/27/2024	5:00 AM	0	50	19	0	0	0	0	0	3	0	0	0	0
4/27/2024	5:15 AM	0	51	20	0	2	0	0	0	3	0	1	0	0
4/27/2024	5:30 AM	0	64	26	0	2	0	0	0	5	0	1	0	0
4/27/2024	5:45 AM	0	99	38	0	2	0	0	0	4	0	1	0	0
4/27/2024	6:00 AM	0	131	41	0	2	0	0	0	5	0	1	0	0
4/27/2024	6:15 AM	0	164	41	0	1	0	0	0	8	0	0	0	0
4/27/2024	6:30 AM	0	199	47	0	4	0	0	1	6	0	0	0	0
4/27/2024	6:45 AM	0	208	42	0	5	0	1	2	7	0	0	0	0
4/27/2024	7:00 AM	0	217	50	0	6	0	1	2	5	0	1	0	0
4/27/2024	7:15 AM	0	240	53	0	5	1	1	2	4	0	1	0	0
4/27/2024	7:30 AM	0	285	56	0	2	1	1	2	6	0	1	0	0
4/27/2024	7:45 AM	0	325	58	0	1	1	0	1	8	0	1	0	0
4/27/2024	8:00 AM	0	369	63	0	1	1	0	3	8	0	0	0	0
4/27/2024	8:15 AM	0	399	69	0	4	0	0	3	6	0	0	0	0
4/27/2024	8:30 AM	0	409	69	0	6	0	0	2	5	0	0	0	0
4/27/2024	8:45 AM	0	432	85	0	8	0	0	3	3	0	0	0	0
4/27/2024	9:00 AM	0	461	96	0	7	0	0	1	3	0	0	0	0
4/27/2024	9:15 AM	1	491	95	0	4	0	0	1	4	0	0	0	0
4/27/2024	9:30 AM	1	503	96	0	4	0	0	1	4	0	0	0	0
4/27/2024	9:45 AM	5	511	92	0	2	1	0	0	4	0	0	0	0
4/27/2024	10:00 AM	5	491	91	1	2	1	0	0	6	0	0	0	0
4/27/2024	10:15 AM	5	494	98	1	3	1	0	0	6	0	0	0	0
4/27/2024	10:30 AM	5	494	102	1	1	1	0	0	10	0	0	0	0
4/27/2024	10:45 AM	1	490	96	1	3	0	0	0	11	0	0	0	0
4/27/2024	11:00 AM	1	529	83	0	5	0	0	1	8	0	0	0	0
4/27/2024	11:15 AM	0	534	72	0	5	0	0	1	10	0	0	0	0
4/27/2024	11:30 AM	0	531	73	0	9	0	0	2	5	0	0	0	0
4/27/2024	11:45 AM	1	541	74	0	7	0	0	3	5	0	0	0	0
4/27/2024	12:00 PM	1	503	77	0	6	0	0	2	7	0	0	0	0
4/27/2024	12:15 PM	1	469	81	0	5	1	0	2	5	0	0	0	0
4/27/2024	12:30 PM	2	473	74	0	1	1	0	1	6	0	0	0	0
4/27/2024	12:45 PM	1	460	60	0	1	1	0	0	4	0	0	0	0
4/27/2024	1:00 PM	1	450	54	0	1	2	0	0	4	0	0	0	0
4/27/2024	1:15 PM	1	464	59	0	1	1	0	0	3	0	0	0	0
4/27/2024	1:30 PM	0	446	61	0	2	1	0	0	4	0	0	0	0
4/27/2024	1:45 PM	1	462	71	1	3	1	0	1	4	0	0	0	0
4/27/2024	2:00 PM	1	491	66	1	3	0	0	1	5	0	0	0	0
4/27/2024	2:15 PM	1	505	65	1	3	0	0	1	5	0	0	0	0
4/27/2024	2:30 PM	1	569	64	1	2	0	0	1	4	0	0	0	0
4/27/2024	2:45 PM	0	600	69	1	2	0	0	0	5	0	0	0	0
4/27/2024	3:00 PM	0	599	72	1	1	0	0	0	4	0	0	0	0
4/27/2024	3:15 PM	1	568	62	1	1	0	0	0	4	0	0	0	0
4/27/2024	3:30 PM	1	495	63	1	1	0	0	0	3	0	0	0	0
4/27/2024	3:45 PM	1	493	60	0	1	0	0	0	3	0	0	0	0
4/27/2024	4:00 PM	1	541	71	0	2	0	0	0	3	0	0	0	0
4/27/2024	4:15 PM	0	600	73	0	2	0	0	0	4	0	0	0	0
4/27/2024	4:30 PM	0	698	69	0	4	0	0	0	6	0	0	0	0
4/27/2024	4:45 PM	0	677	66	0	3	0	0	0	6	0	0	0	0
4/27/2024	5:00 PM	2	618	58	0	2	0	0	0	5	0	0	0	0
4/27/2024	5:15 PM	2	581	74	0	3	0	0	0	5	0	0	0	0
4/27/2024	5:30 PM	2	526	75	0	2	0	0	0	3	0	0	0	0
4/27/2024	5:45 PM	2	514	75	0	2	0	0	0	2	0	0	0	0
4/27/2024	6:00 PM	0	518	76	0	3	0	0	0	2	0	0	0	0
4/27/2024	6:15 PM	0	512	58	0	2	0	0	0	1	0	0	0	0
4/27/2024	6:30 PM	0	472	50	0	1	0	0	1	4	0	0	0	0
4/27/2024	6:45 PM	0	428	45	0	1	0	0	1	4	0	0	0	0
4/27/2024	7:00 PM	0	390	35	0	1	0	0	1	3	0	0	0	0
4/27/2024	7:15 PM	0	364	29	0	1	0	0	1	3	0	0	0	0
4/27/2024	7:30 PM	0	325	27	0	1	0	0	0	0	0	0	0	0
4/27/2024	7:45 PM	0	314	20	0	2	0	0	0	1	0	0	0	0
4/27/2024	8:00 PM	0	289	20	0	1	0	0	0	1	0	0	0	0
4/27/2024	8:15 PM	0	266	23	0	1	0	0	0	1	0	0	0	0
4/27/2024	8:30 PM	0	256	23	0	1	0	0	0	1	0	0	0	0
4/27/2024	8:45 PM	0	234	24	0	0	0	0	0	0	0	0	0	0
4/27/2024	9:00 PM	0	215	26	0	2	0	0	0	0	0	0	0	0
4/27/2024	9:15 PM	0	190	26	0	2	0	0	0	0	0	0	0	0
4/27/2024	9:30 PM	0	179	26	0	2	0	0	0	1	0	0	0	0
4/27/2024	9:45 PM	0	166	26	0	3	0	0	0	1	0	0	0	0
4/27/2024	10:00 PM	0	151	22	1	1	0	0	0	1	0	0	0	0
4/27/2024	10:15 PM	0	132	26	1	1	0	0	0	1	0	0	0	0
4/27/2024	10:30 PM	0	115	31	1	2	0	0	0	0	0	0	0	0
4/27/2024	10:45 PM	0	95	35	1	1	0	0	0	0	0	0	0	0
4/27/2024	11:00 PM	0	88	37	0	1	0	0	0	2	0	0	0	0
4/27/2024	11:15 PM	0	67	26	0	1	0	0	0	2	0	0	0	0
4/27/2024	11:30 PM	0	45	16	0	0	0	0	0	2	0	0	0	0
4/27/2024	11:45 PM	0	20	6	0	0	0	0	0	2	0	0	0	0

Bi-Directional Class Count || NB EB 15min

Columbia, SC

Marr Traffic DATA COLLECTION
www.marrtraffic.com

Site 11
I-26 N/Bound On-Ramp,
north of I-20

Date
Sunday, April 21, 2024

Lat/Long
34.037213°, -81.113157°

Weather
Cloudy
66°F

Click here for Detailed Weather

Click here for Map

0000 - 2400 (Sunday 24h Session) (04-21-2024)
NB EB 15min

	Northbound (Movement 11.1)													15min	60min
Time	1	2	3	4	5	6	7	8	9	10	11	12	13	Total	Total
0000 - 0015	0	27	5	0	0	0	0	0	0	0	0	0	0	**32**	
0015 - 0030	0	38	8	0	0	0	0	0	0	0	0	0	0	**46**	
0030 - 0045	0	25	5	0	0	0	0	0	0	0	0	0	0	**30**	
0045 - 0100	0	20	4	0	0	0	0	0	0	0	0	0	0	**24**	**132**
0100 - 0115	0	24	3	0	0	0	0	0	0	0	0	0	0	**27**	
0115 - 0130	0	9	2	0	0	0	0	0	0	0	0	0	0	**11**	
0130 - 0145	0	19	2	0	0	0	0	0	0	0	0	0	0	**21**	
0145 - 0200	0	10	3	0	0	0	0	0	0	0	0	0	0	**13**	**72**
0200 - 0215	0	20	2	1	0	0	0	0	0	0	0	0	0	**23**	
0215 - 0230	0	12	2	0	0	0	0	0	0	0	0	0	0	**14**	
0230 - 0245	0	14	3	0	0	0	0	0	0	0	0	0	0	**17**	
0245 - 0300	0	26	2	0	1	0	0	0	1	0	0	0	0	**30**	**84**
0300 - 0315	0	11	1	0	0	0	0	0	0	0	0	0	0	**12**	
0315 - 0330	0	14	3	0	0	0	0	0	0	0	0	0	0	**17**	
0330 - 0345	0	16	2	0	0	0	0	0	0	0	0	0	0	**18**	
0345 - 0400	0	9	1	0	0	0	0	0	0	0	0	0	0	**10**	**57**
0400 - 0415	0	13	2	0	1	0	0	0	0	0	0	0	0	**16**	
0415 - 0430	0	15	4	0	0	0	0	0	0	0	0	0	0	**19**	
0430 - 0445	0	18	5	0	0	0	0	0	0	0	0	0	0	**23**	
0445 - 0500	0	28	3	0	0	0	0	0	1	0	0	0	0	**32**	**90**
0500 - 0515	0	15	4	0	0	0	0	0	1	0	0	0	0	**20**	
0515 - 0530	0	20	6	0	0	0	0	1	0	0	0	0	0	**27**	
0530 - 0545	0	29	6	0	0	0	0	0	0	0	0	0	0	**35**	
0545 - 0600	0	25	6	0	1	0	0	0	0	0	0	0	0	**32**	**114**
0600 - 0615	0	28	4	0	0	0	0	0	0	0	0	0	0	**32**	
0615 - 0630	0	43	5	0	0	0	0	0	0	0	0	0	0	**48**	
0630 - 0645	0	51	4	0	0	0	0	0	1	0	0	0	0	**56**	
0645 - 0700	0	55	5	0	0	0	0	0	2	0	0	0	0	**62**	**198**
0700 - 0715	0	39	4	0	0	1	0	2	0	0	0	0	0	**46**	
0715 - 0730	0	27	7	0	0	0	0	0	0	0	0	0	0	**34**	
0730 - 0745	0	29	6	1	0	0	0	0	0	0	0	0	0	**36**	
0745 - 0800	0	35	6	0	0	0	0	0	0	0	0	0	0	**41**	**157**
0800 - 0815	0	40	3	0	1	0	0	0	0	0	0	0	0	**44**	
0815 - 0830	0	36	6	1	1	0	0	0	1	0	0	0	0	**45**	
0830 - 0845	0	44	9	0	0	0	0	0	0	0	0	0	0	**53**	
0845 - 0900	0	67	15	0	0	0	0	0	2	0	0	0	0	**84**	**226**
0900 - 0915	0	60	11	0	0	1	0	0	0	0	0	0	0	**72**	
0915 - 0930	1	59	12	0	2	0	0	0	2	0	0	0	0	**76**	
0930 - 0945	0	55	14	0	0	0	0	0	0	0	0	0	0	**69**	
0945 - 1000	0	61	15	0	1	0	0	0	0	0	0	0	0	**77**	**294**
1000 - 1015	0	64	14	0	0	0	0	0	0	0	0	0	0	**78**	
1015 - 1030	0	76	16	1	0	0	0	0	2	0	0	0	0	**95**	
1030 - 1045	0	73	17	0	1	0	0	0	1	0	0	0	0	**92**	
1045 - 1100	0	95	16	0	1	0	0	0	0	0	0	0	0	**112**	**377**
1100 - 1115	0	62	18	0	1	0	0	0	2	0	0	0	0	**83**	
1115 - 1130	0	83	19	0	0	0	0	0	0	0	0	0	0	**102**	
1130 - 1145	0	79	14	0	3	0	0	0	1	0	0	0	0	**97**	
1145 - 1200	0	80	16	0	3	0	0	0	2	0	0	0	0	**101**	**383**
1200 - 1215	0	86	16	0	0	1	0	0	1	0	0	0	0	**104**	
1215 - 1230	0	73	23	0	0	0	0	0	1	0	0	0	0	**97**	
1230 - 1245	0	93	15	0	0	2	0	0	0	0	0	0	0	**110**	
1245 - 1300	0	106	21	0	2	0	0	0	0	0	0	0	0	**129**	**440**
1300 - 1315	0	109	19	0	1	0	0	1	1	0	0	0	0	**131**	
1315 - 1330	0	80	14	0	0	0	0	1	0	1	0	0	0	**96**	
1330 - 1345	0	86	14	0	0	0	0	0	1	0	0	0	0	**101**	
1345 - 1400	0	83	11	0	0	0	0	0	0	0	0	0	0	**94**	**422**
1400 - 1415	0	74	18	1	2	0	0	0	0	0	0	0	0	**95**	
1415 - 1430	0	102	17	0	0	0	0	0	2	0	0	0	0	**121**	
1430 - 1445	1	96	20	0	0	0	0	0	0	0	0	0	0	**117**	
1445 - 1500	0	82	18	0	0	0	0	0	1	0	0	0	0	**101**	**434**
1500 - 1515	0	81	14	0	0	0	0	0	1	0	0	0	0	**96**	
1515 - 1530	0	59	15	0	1	0	0	0	1	0	0	0	0	**76**	
1530 - 1545	0	84	17	0	0	0	0	1	1	0	0	0	0	**103**	
1545 - 1600	0	70	13	0	0	0	0	1	3	0	0	0	0	**87**	**362**
1600 - 1615	0	69	14	1	0	0	0	0	1	0	0	0	0	**85**	
1615 - 1630	0	68	19	0	0	1	0	1	0	0	0	0	0	**89**	
1630 - 1645	0	72	16	1	2	0	0	0	1	0	0	0	0	**92**	
1645 - 1700	0	73	16	0	0	0	0	0	0	0	0	0	0	**89**	**355**
1700 - 1715	1	71	11	0	0	1	0	0	1	0	0	0	0	**85**	
1715 - 1730	0	56	9	0	1	1	0	0	1	0	0	0	0	**68**	
1730 - 1745	0	84	14	0	2	0	0	0	1	0	0	0	0	**101**	
1745 - 1800	0	63	9	2	2	0	0	0	1	0	0	0	0	**77**	**331**
1800 - 1815	0	62	8	0	1	0	0	0	1	0	0	0	0	**72**	
1815 - 1830	0	70	14	0	1	0	0	0	1	0	0	0	0	**86**	
1830 - 1845	0	69	8	0	0	0	0	0	0	0	0	0	0	**77**	
1845 - 1900	0	70	12	1	1	0	0	0	0	0	0	0	0	**84**	**319**
1900 - 1915	0	65	13	0	1	0	0	0	0	0	0	0	0	**79**	
1915 - 1930	0	62	12	0	0	0	0	0	0	0	0	0	0	**74**	
1930 - 1945	0	44	8	1	0	0	0	0	0	0	0	0	0	**53**	
1945 - 2000	0	52	11	0	1	0	0	0	3	0	0	0	0	**67**	**273**
2000 - 2015	0	53	9	0	1	0	0	0	1	0	0	0	0	**64**	
2015 - 2030	0	50	8	0	2	1	0	0	0	0	0	0	0	**61**	
2030 - 2045	0	37	7	0	0	0	0	0	1	0	0	0	0	**45**	
2045 - 2100	0	36	8	0	1	0	0	0	1	0	0	0	0	**46**	**216**
2100 - 2115	0	48	9	0	0	0	0	0	2	0	0	0	0	**59**	
2115 - 2130	0	41	12	0	2	0	0	0	0	0	0	0	0	**55**	
2130 - 2145	0	36	7	0	0	0	0	0	0	0	0	0	0	**43**	
2145 - 2200	0	21	6	0	2	0	0	1	1	0	0	0	0	**31**	**188**
2200 - 2215	0	32	9	0	0	1	0	1	0	0	1	0	0	**44**	
2215 - 2230	0	36	7	0	0	0	0	1	2	0	0	0	0	**46**	
2230 - 2245	0	37	6	0	1	0	0	0	1	0	0	0	0	**45**	
2245 - 2300	0	30	4	0	0	0	0	0	0	0	0	0	0	**34**	**169**
2300 - 2315	0	13	4	0	0	0	0	0	0	0	0	0	0	**17**	
2315 - 2330	0	18	3	0	0	0	0	0	1	0	0	0	0	**22**	
2330 - 2345	0	24	5	0	0	0	0	0	0	0	0	0	0	**29**	
2345 - 0000	0	19	3	0	0	0	0	0	0	0	0	0	0	**22**	**90**

Session Total	3	4743	906	11	44	10	0	11	53	1	1	0	0	**5783**
Session Average	0.03	49.41	9.44	0.11	0.46	0.10	0.00	0.11	0.55	0.01	0.01	0.00	0.00	**60.24**
Session Percentage	0.05	82.02	15.67	0.19	0.76	0.17	0.00	0.19	0.92	0.02	0.02	0.00	0.00	

AM Peak Hour	0830 - 0930	0945 - 1045	0945 - 1045	0730 - 0830	0900 - 1000	0615 - 0715	-	0615 - 0715	0830 - 0930	-	-	-	-	**0945 - 1045**
AM Peak Volume	1	274	62	2	3	1	0	2	4	0	0	0	0	**342**

Noon Peak Hour	1345 - 1445	1230 - 1330	1215 - 1315	1000 - 1100	1100 - 1200	1145 - 1245	-	1230 - 1330	1015 - 1115	1230 - 1330	-	-	-	**1215 - 1315**
Noon Peak Volume	1	388	78	1	7	3	0	2	5	1	0	0	0	**467**

PM Peak Hour	1615 - 1715	1500 - 1600	1600 - 1700	1545 - 1645	1715 - 1815	1615 - 1715	-	1530 - 1630	1500 - 1600	-	-	-	-	**1530 - 1630**
PM Peak Volume	1	294	65	2	6	2	0	3	6	0	0	0	0	**364**

Site 11
I-26 N/Bound On-Ramp,
north of I-20

Date
Monday, April 22, 2024

Lat/Long
34.037213°, -81.113157°

Weather
Mostly Cloudy
57°F

Click here for Detailed Weather

0000 - 2400 (Weekday 24h Session) (04-22-2024)
NB EB 15min

	Northbound (Movement 11.1)													15min	60min
Time	1	2	3	4	5	6	7	8	9	10	11	12	13	Total	Total
0000 - 0015	0	13	2	0	1	0	0	0	0	0	0	0	0	**16**	
0015 - 0030	0	17	1	0	0	0	0	0	0	0	0	0	0	**18**	
0030 - 0045	0	10	0	0	0	0	0	0	0	0	0	0	0	**10**	
0045 - 0100	0	7	2	0	0	0	0	0	1	0	0	0	0	**10**	**54**
0100 - 0115	0	9	2	0	0	0	0	0	3	0	0	0	0	**14**	
0115 - 0130	0	8	1	0	0	0	0	0	0	0	0	0	0	**9**	
0130 - 0145	0	11	0	0	0	0	0	0	1	0	0	0	0	**12**	
0145 - 0200	0	8	0	0	0	0	0	0	2	0	0	0	0	**10**	**45**
0200 - 0215	0	4	0	0	1	1	0	0	2	0	0	0	0	**8**	
0215 - 0230	0	7	1	0	0	0	0	0	1	0	0	0	0	**9**	
0230 - 0245	0	7	2	0	0	0	0	0	2	0	0	0	0	**11**	
0245 - 0300	0	14	4	0	1	0	0	0	2	0	0	0	0	**21**	**49**
0300 - 0315	0	9	4	0	0	1	0	0	1	0	0	0	0	**15**	
0315 - 0330	0	12	1	0	1	1	0	0	3	0	0	0	0	**18**	
0330 - 0345	0	22	5	0	0	0	0	0	0	0	0	0	0	**27**	
0345 - 0400	0	17	7	0	0	0	0	0	1	0	0	0	0	**25**	**85**
0400 - 0415	0	24	4	0	1	1	0	0	4	0	0	0	0	**34**	
0415 - 0430	0	22	4	0	0	0	0	0	3	0	0	0	0	**29**	
0430 - 0445	0	31	2	0	0	3	0	0	3	0	0	0	0	**39**	
0445 - 0500	0	50	8	0	1	0	0	1	3	0	0	0	0	**63**	**165**
0500 - 0515	0	44	12	0	2	0	0	1	5	0	0	0	0	**64**	
0515 - 0530	0	46	11	0	0	0	0	0	10	0	0	0	0	**67**	
0530 - 0545	0	88	17	0	2	0	0	0	4	0	0	0	0	**111**	
0545 - 0600	0	80	18	0	0	0	0	0	3	0	0	0	0	**101**	**343**
0600 - 0615	0	66	18	0	1	2	0	0	2	0	0	0	0	**89**	
0615 - 0630	1	92	17	0	2	0	0	0	6	0	0	0	0	**118**	
0630 - 0645	1	142	25	0	2	3	0	0	9	0	0	0	0	**182**	
0645 - 0700	0	155	37	0	1	1	0	1	10	0	0	0	0	**205**	**594**
0700 - 0715	0	139	30	0	3	2	0	0	3	0	0	0	0	**177**	
0715 - 0730	0	138	31	0	5	2	0	0	3	0	0	0	0	**179**	
0730 - 0745	0	170	52	1	3	2	0	2	6	0	0	0	0	**236**	
0745 - 0800	0	137	44	0	2	1	1	2	1	0	0	0	0	**188**	**780**
0800 - 0815	0	127	46	0	0	2	0	0	4	0	0	0	0	**179**	
0815 - 0830	0	111	34	0	4	0	0	2	7	0	0	0	0	**158**	
0830 - 0845	0	121	42	2	7	1	0	1	5	0	0	0	0	**179**	
0845 - 0900	0	127	34	0	6	3	0	0	6	0	0	0	0	**176**	**692**
0900 - 0915	0	97	27	1	7	1	0	0	6	0	0	0	0	**139**	
0915 - 0930	0	96	24	0	4	3	1	2	9	0	0	0	0	**139**	
0930 - 0945	0	112	37	0	0	1	0	0	7	0	0	0	0	**157**	
0945 - 1000	0	82	24	0	4	2	0	1	7	0	0	0	0	**120**	**555**
1000 - 1015	0	68	23	0	3	0	0	0	11	0	0	0	0	**105**	
1015 - 1030	0	75	38	0	6	2	0	0	10	0	0	0	0	**131**	
1030 - 1045	0	79	34	1	1	1	0	2	8	1	0	0	0	**127**	
1045 - 1100	0	75	24	0	4	1	1	2	8	1	0	0	0	**116**	**479**
1100 - 1115	0	75	24	0	4	3	0	0	12	0	0	0	0	**118**	
1115 - 1130	0	78	30	1	7	0	0	0	6	0	0	0	0	**122**	
1130 - 1145	1	74	40	1	5	0	0	1	9	2	0	0	0	**133**	
1145 - 1200	0	69	31	0	2	1	0	0	4	0	0	0	0	**107**	**480**
1200 - 1215	0	70	21	1	2	3	1	0	2	1	0	0	0	**101**	
1215 - 1230	0	100	25	0	0	2	1	0	12	0	0	0	0	**140**	
1230 - 1245	0	84	35	0	3	1	0	1	7	0	0	0	0	**131**	
1245 - 1300	0	70	27	0	3	1	0	0	4	0	0	0	0	**105**	**477**
1300 - 1315	1	79	23	0	4	2	0	0	6	1	0	0	0	**116**	
1315 - 1330	0	91	28	0	3	1	1	2	7	1	0	0	0	**134**	
1330 - 1345	0	92	34	0	2	1	0	0	3	0	0	0	0	**132**	
1345 - 1400	1	83	30	0	6	1	0	1	9	0	0	0	0	**131**	**513**
1400 - 1415	1	89	34	1	6	1	2	1	9	1	0	0	0	**145**	
1415 - 1430	0	83	22	0	2	2	0	0	5	0	0	0	0	**114**	
1430 - 1445	0	95	31	0	5	1	1	1	9	0	0	0	0	**143**	
1445 - 1500	0	102	38	0	6	1	0	0	6	0	0	0	0	**153**	**555**
1500 - 1515	0	88	30	0	5	0	0	0	6	0	0	0	0	**129**	
1515 - 1530	0	97	31	0	7	2	0	0	5	0	0	0	0	**142**	
1530 - 1545	0	95	36	0	10	2	1	1	4	0	0	0	0	**149**	
1545 - 1600	0	98	31	0	4	0	0	0	6	0	0	0	0	**139**	**559**
1600 - 1615	0	80	34	2	3	0	0	0	5	0	0	0	0	**124**	
1615 - 1630	0	89	27	0	4	0	0	1	7	0	0	0	0	**128**	
1630 - 1645	0	69	30	0	4	1	0	0	8	1	0	0	0	**113**	
1645 - 1700	0	63	23	0	6	3	0	0	2	0	0	0	0	**97**	**462**
1700 - 1715	1	63	29	0	3	2	0	0	4	0	0	0	0	**102**	
1715 - 1730	1	86	27	0	4	0	0	1	3	0	0	0	0	**122**	
1730 - 1745	0	88	32	0	2	0	0	2	4	0	0	0	0	**128**	
1745 - 1800	1	94	38	0	3	0	0	1	2	0	0	0	0	**139**	**491**
1800 - 1815	0	96	28	0	2	0	0	0	4	0	0	0	0	**130**	
1815 - 1830	0	102	24	0	5	0	0	1	0	0	0	0	0	**132**	
1830 - 1845	0	94	26	0	1	0	0	0	3	1	0	0	0	**125**	
1845 - 1900	0	79	24	0	4	0	0	0	0	0	0	0	0	**107**	**494**
1900 - 1915	0	53	17	0	3	0	0	1	3	0	0	0	0	**77**	
1915 - 1930	0	48	19	0	2	0	0	0	1	0	0	0	0	**70**	
1930 - 1945	0	41	7	0	6	0	0	0	2	0	0	0	0	**56**	
1945 - 2000	0	56	21	0	0	0	0	0	2	0	0	0	0	**79**	**282**
2000 - 2015	0	45	15	0	3	0	0	0	1	0	0	0	0	**64**	
2015 - 2030	0	37	14	0	1	0	0	0	2	0	0	0	0	**54**	
2030 - 2045	0	41	5	0	1	0	0	0	0	1	0	0	0	**48**	
2045 - 2100	1	54	12	0	2	0	0	0	1	0	1	0	0	**71**	**237**
2100 - 2115	0	37	7	0	1	0	0	0	1	0	1	0	0	**47**	
2115 - 2130	0	41	9	0	0	2	0	0	2	0	1	0	0	**55**	
2130 - 2145	0	26	9	0	1	1	0	0	1	0	0	0	0	**38**	
2145 - 2200	0	32	5	0	0	0	0	1	2	0	0	0	0	**40**	**180**
2200 - 2215	0	32	4	0	2	0	0	0	2	0	0	0	0	**40**	
2215 - 2230	0	25	7	0	0	1	0	0	0	0	0	0	0	**33**	
2230 - 2245	0	39	10	0	1	0	0	0	2	0	0	0	0	**52**	
2245 - 2300	0	31	2	0	0	0	0	0	1	0	0	0	0	**34**	**159**
2300 - 2315	0	17	3	0	0	0	0	0	2	0	0	0	0	**22**	
2315 - 2330	0	11	2	0	0	0	0	0	0	0	0	0	0	**13**	
2330 - 2345	0	17	2	0	1	0	0	0	0	0	0	0	0	**20**	
2345 - 0000	0	16	1	0	0	1	0	0	0	0	1	0	0	**19**	**74**

Session Total	10	6183	1863	11	226	73	10	33	380	11	4	0	0	**8804**
Session Average	0.10	64.41	19.41	0.11	2.35	0.76	0.10	0.34	3.96	0.11	0.04	0.00	0.00	**91.71**
Session Percentage	0.11	70.23	21.16	0.12	2.57	0.83	0.11	0.37	4.32	0.12	0.05	0.00	0.00	

AM Peak Hour	0545 - 0645	0645 - 0745	0730 - 0830	0815 - 0915	0815 - 0915	0630 - 0730	0700 - 0800	0730 - 0830	0945 - 1045	0945 - 1045	-	-	-	**0645 - 0745**
AM Peak Volume	2	602	176	3	24	8	1	6	36	1	0	0	0	**797**

Noon Peak Hour	1300 - 1400	1430 - 1530	1445 - 1545	1115 - 1215	1445 - 1545	1015 - 1115	1315 - 1415	1000 - 1100	1015 - 1115	1045 - 1145	-	-	-	**1445 - 1545**
Noon Peak Volume	2	382	135	3	28	7	3	4	38	3	0	0	0	**573**

PM Peak Hour	1700 - 1800	1745 - 1845	1515 - 1615	1515 - 1615	1500 - 1600	1615 - 1715	1500 - 1600	1700 - 1800	1545 - 1645	1545 - 1645	-	-	-	**1500 - 1600**
PM Peak Volume	3	386	132	2	26	6	1	4	26	1	0	0	0	**559**

Site 11
I-26 N/Bound On-Ramp,
north of I-20

Date
Tuesday, April 23, 2024

Lat/Long
34.037213°, -81.113157°

Weather
Fair
58°F

Click here for Detailed Weather

0000 - 2400 (Weekday 24h Session) (04-23-2024)
NB EB 15min

	Northbound (Movement 11.1)													15min	60min
TIME	1	2	3	4	5	6	7	8	9	10	11	12	13	Total	Total
0000 - 0015	0	20	3	0	1	0	0	0	0	0	0	0	0	**24**	
0015 - 0030	0	14	3	0	0	0	0	1	2	0	0	0	0	**20**	
0030 - 0045	0	9	1	0	0	0	0	1	1	0	1	0	0	**13**	
0045 - 0100	0	10	0	0	0	0	0	0	0	0	0	0	0	**10**	**67**
0100 - 0115	0	10	1	0	0	0	0	0	2	0	0	0	0	**13**	
0115 - 0130	0	8	0	0	1	0	0	0	1	0	0	0	0	**10**	
0130 - 0145	0	8	0	0	0	0	0	0	1	0	0	0	0	**9**	
0145 - 0200	0	7	0	0	2	0	0	0	0	0	0	1	0	**10**	**42**
0200 - 0215	0	10	1	0	0	0	0	0	5	0	0	0	0	**16**	
0215 - 0230	0	11	2	0	0	0	0	0	2	0	0	1	0	**16**	
0230 - 0245	0	10	1	0	0	0	0	1	3	0	0	1	0	**16**	
0245 - 0300	0	16	0	0	0	0	0	1	5	0	0	0	0	**22**	**70**
0300 - 0315	0	21	0	0	1	0	0	0	1	0	0	0	0	**23**	
0315 - 0330	0	12	4	0	2	1	0	0	3	0	0	0	0	**22**	
0330 - 0345	0	23	1	0	0	1	0	1	5	0	0	0	0	**31**	
0345 - 0400	0	20	0	0	0	0	0	0	3	0	0	0	0	**23**	**99**
0400 - 0415	0	27	1	0	1	0	0	0	6	0	0	0	0	**35**	
0415 - 0430	0	28	4	0	1	0	0	0	5	0	0	0	0	**38**	
0430 - 0445	0	33	6	0	1	0	0	0	5	0	0	1	0	**46**	
0445 - 0500	0	36	8	0	1	2	0	0	4	0	0	0	0	**51**	**170**
0500 - 0515	0	46	7	0	1	3	0	0	0	0	0	1	0	**58**	
0515 - 0530	0	53	6	0	2	0	0	0	10	0	1	1	0	**73**	
0530 - 0545	0	67	16	0	1	1	0	1	7	0	0	0	0	**93**	
0545 - 0600	0	67	11	0	1	0	0	0	4	0	0	1	0	**84**	**308**
0600 - 0615	0	55	9	0	2	1	0	0	5	0	0	0	0	**72**	
0615 - 0630	0	91	13	0	2	1	0	0	8	0	0	0	0	**115**	
0630 - 0645	0	138	23	0	2	0	0	0	10	0	0	0	0	**173**	
0645 - 0700	1	168	37	0	2	2	0	1	5	0	0	0	0	**216**	**576**
0700 - 0715	0	133	39	0	3	6	0	0	2	0	0	0	0	**183**	
0715 - 0730	0	142	26	0	6	2	0	1	3	0	0	0	0	**180**	
0730 - 0745	0	132	40	1	8	1	0	0	4	0	0	0	0	**186**	
0745 - 0800	0	131	32	0	3	1	0	0	5	0	0	0	0	**172**	**721**
0800 - 0815	0	126	47	0	8	0	0	0	4	0	0	0	0	**185**	
0815 - 0830	0	113	26	1	3	4	0	1	0	0	0	0	0	**148**	
0830 - 0845	1	118	39	0	7	1	0	0	7	0	0	0	0	**173**	
0845 - 0900	1	109	32	0	9	1	0	1	11	0	0	0	0	**164**	**670**
0900 - 0915	0	71	43	1	7	0	0	0	5	0	0	0	0	**127**	
0915 - 0930	0	86	22	0	6	0	0	2	13	0	0	1	0	**130**	
0930 - 0945	0	104	35	1	3	0	0	0	9	0	0	0	0	**152**	
0945 - 1000	0	107	26	1	6	0	0	0	9	0	0	0	0	**149**	**558**
1000 - 1015	0	67	23	0	15	1	0	1	7	0	0	0	0	**114**	
1015 - 1030	0	85	26	0	3	0	0	0	12	0	0	0	0	**126**	
1030 - 1045	1	87	27	0	5	0	0	0	10	0	0	0	0	**130**	
1045 - 1100	0	100	28	0	7	1	0	0	4	0	0	0	0	**140**	**510**
1100 - 1115	0	84	23	0	6	2	0	0	5	0	0	0	0	**120**	
1115 - 1130	1	89	26	1	6	2	0	2	9	0	0	0	0	**136**	
1130 - 1145	0	92	31	0	5	2	0	2	17	0	0	0	0	**149**	
1145 - 1200	0	78	34	0	6	0	0	1	9	0	0	0	0	**128**	**533**
1200 - 1215	0	84	27	0	4	1	0	0	6	0	0	0	0	**122**	
1215 - 1230	0	86	34	0	4	1	0	0	8	0	0	0	0	**133**	
1230 - 1245	0	100	21	0	5	3	0	1	5	0	0	0	0	**135**	
1245 - 1300	0	83	23	0	4	1	0	1	8	0	0	0	0	**120**	**510**
1300 - 1315	1	72	19	0	6	0	0	0	9	0	0	0	0	**107**	
1315 - 1330	0	81	21	0	6	1	0	0	8	0	0	0	0	**117**	
1330 - 1345	1	96	27	0	2	0	0	0	9	0	0	0	0	**135**	
1345 - 1400	0	76	36	0	7	1	0	0	8	0	0	0	0	**128**	**487**
1400 - 1415	0	89	33	1	2	0	0	1	5	0	0	0	0	**131**	
1415 - 1430	0	79	28	0	8	3	0	2	4	0	0	0	0	**124**	
1430 - 1445	0	102	24	0	5	0	0	0	6	0	0	0	0	**137**	
1445 - 1500	0	101	26	0	3	3	0	0	6	0	0	0	0	**139**	**531**
1500 - 1515	0	87	28	1	8	3	0	1	5	0	0	0	0	**133**	
1515 - 1530	0	92	33	0	4	0	0	3	7	0	0	0	0	**139**	
1530 - 1545	0	113	30	0	5	0	0	0	7	0	0	0	0	**155**	
1545 - 1600	0	99	40	0	3	1	0	1	7	0	0	0	0	**151**	**578**
1600 - 1615	0	105	35	1	1	4	0	2	7	0	0	0	0	**155**	
1615 - 1630	0	97	38	0	3	1	0	2	7	0	0	0	0	**148**	
1630 - 1645	1	94	44	0	4	4	0	1	7	0	0	0	0	**155**	
1645 - 1700	1	66	20	0	2	1	0	0	2	0	0	0	0	**92**	**550**
1700 - 1715	0	60	19	0	2	1	0	1	2	0	0	0	0	**85**	
1715 - 1730	0	93	22	0	4	0	0	1	3	0	0	0	0	**123**	
1730 - 1745	0	79	14	1	5	0	0	1	4	0	0	0	0	**104**	
1745 - 1800	0	78	23	0	2	0	0	0	0	0	0	0	0	**103**	**415**
1800 - 1815	1	90	30	1	4	0	0	0	2	0	0	0	0	**128**	
1815 - 1830	0	71	27	1	5	1	0	1	5	0	0	0	0	**111**	
1830 - 1845	0	92	31	0	5	0	0	4	3	0	0	0	0	**135**	
1845 - 1900	0	70	28	0	1	0	0	1	4	0	0	0	0	**104**	**478**
1900 - 1915	0	72	23	0	5	0	0	0	2	0	0	0	0	**102**	
1915 - 1930	0	52	20	0	3	0	0	0	1	0	1	1	0	**78**	
1930 - 1945	0	63	12	0	1	1	0	0	8	0	0	0	0	**85**	
1945 - 2000	0	62	14	0	1	0	0	0	1	0	0	0	0	**78**	**343**
2000 - 2015	0	42	15	0	2	0	0	0	2	0	0	0	0	**61**	
2015 - 2030	0	46	10	0	0	0	0	0	1	0	0	0	0	**57**	
2030 - 2045	0	46	16	0	1	0	0	0	2	0	0	0	0	**65**	
2045 - 2100	0	48	16	0	1	0	0	0	1	0	0	1	0	**67**	**250**
2100 - 2115	0	40	15	0	0	0	0	0	3	0	0	1	0	**59**	
2115 - 2130	0	38	14	0	0	0	0	1	0	0	1	1	0	**55**	
2130 - 2145	0	39	13	0	0	0	0	0	0	0	0	1	0	**53**	
2145 - 2200	0	30	9	0	0	0	0	0	2	0	0	0	0	**41**	**208**
2200 - 2215	0	26	7	0	0	1	0	0	1	0	0	0	0	**35**	
2215 - 2230	0	35	10	0	0	0	0	0	1	0	0	0	0	**46**	
2230 - 2245	0	25	4	0	2	0	0	0	1	0	0	0	0	**32**	
2245 - 2300	0	29	8	0	3	0	0	0	4	0	0	0	0	**44**	**157**
2300 - 2315	0	18	7	0	2	0	0	1	0	0	1	1	0	**30**	
2315 - 2330	0	16	6	0	2	0	0	0	1	0	1	0	0	**26**	
2330 - 2345	0	10	6	0	1	0	0	1	3	0	0	0	0	**21**	
2345 - 0000	0	23	5	0	0	0	0	0	3	0	0	0	0	**31**	**108**

Session Total	10	6267	1794	12	284	68	0	45	439	0	6	14	0	**8939**
Session Average	0.10	65.28	18.69	0.13	2.96	0.71	0.00	0.47	4.57	0.00	0.06	0.15	0.00	**93.11**
Session Percentage	0.11	70.11	20.07	0.13	3.18	0.76	0.00	0.50	4.91	0.00	0.07	0.16	0.00	

AM Peak Hour	0800 - 0900	0630 - 0730	0715 - 0815	0900 - 1000	0915 - 1015	0645 - 0745	-	0830 - 0930	0845 - 0945	-	0500 - 0600	0500 - 0600	-	**0645 - 0745**
AM Peak Hour Volume	2	581	145	3	30	11	0	3	38	0	1	3	0	**765**

Noon Peak Hour	1030 - 1130	1445 - 1545	1130 - 1230	1030 - 1130	1000 - 1100	1415 - 1515	-	1100 - 1200	1115 - 1215	-	-	-	-	**1445 - 1545**
Noon Peak Hour Volume	2	393	126	1	30	9	0	5	41	0	0	0	0	**566**

PM Peak Hour	1600 - 1700	1530 - 1630	1545 - 1645	1730 - 1830	1500 - 1600	1545 - 1645	-	1515 - 1615	1515 - 1615	-	1830 - 1930	1830 - 1930	-	**1530 - 1630**
PM Peak Hour Volume	2	414	157	3	20	10	0	6	28	0	1	1	0	**609**

Site 11
I-26 N/Bound On-Ramp,
north of I-20

Date
Wednesday, April 24, 2024

Lat/Long
34.037213°, -81.113157°

Weather
Fair
66°F

Click here for Detailed Weather

0000 - 2400 (Weekday 24h Session) (04-24-2024)
NB EB 15min

	Northbound (Movement 11.1)													15min	60min
TIME	1	2	3	4	5	6	7	8	9	10	11	12	13	Total	Total
0000 - 0015	0	15	6	0	0	0	0	0	0	0	1	0	0	**22**	
0015 - 0030	0	14	6	0	1	0	0	0	4	0	1	0	0	**26**	
0030 - 0045	0	10	5	0	0	0	0	0	3	0	0	0	0	**18**	
0045 - 0100	0	12	5	0	2	0	0	0	0	0	0	0	0	**19**	**85**
0100 - 0115	0	10	3	0	1	0	0	0	1	0	1	0	0	**16**	
0115 - 0130	0	14	0	0	0	0	0	0	2	0	0	0	0	**16**	
0130 - 0145	0	9	2	0	1	0	0	0	3	0	1	0	0	**16**	
0145 - 0200	0	4	1	0	1	0	0	0	1	0	0	0	0	**7**	**55**
0200 - 0215	0	6	2	0	0	0	0	0	1	0	2	0	0	**11**	
0215 - 0230	0	6	5	0	0	0	0	0	1	0	0	0	0	**12**	
0230 - 0245	0	6	2	0	1	0	0	0	2	0	0	0	0	**11**	
0245 - 0300	0	15	3	0	2	0	0	1	3	0	1	0	0	**25**	**59**
0300 - 0315	0	19	6	0	0	0	0	0	2	0	0	0	0	**27**	
0315 - 0330	0	14	5	0	1	2	0	0	3	0	0	0	0	**25**	
0330 - 0345	0	20	9	0	1	1	0	0	3	0	0	0	0	**34**	
0345 - 0400	0	20	13	0	0	0	0	0	6	0	0	0	0	**39**	**125**
0400 - 0415	0	22	9	0	1	1	0	1	4	0	0	0	0	**38**	
0415 - 0430	0	18	9	0	1	1	0	0	5	0	0	0	0	**34**	
0430 - 0445	0	33	14	0	1	0	0	0	2	0	0	0	0	**50**	
0445 - 0500	0	32	17	0	5	0	0	0	3	0	0	0	0	**57**	**179**
0500 - 0515	0	29	16	0	1	0	0	0	4	0	0	0	0	**50**	
0515 - 0530	0	41	31	0	3	0	0	0	7	0	0	0	0	**82**	
0530 - 0545	0	71	23	0	2	0	0	0	4	0	3	0	0	**103**	
0545 - 0600	1	76	31	0	1	1	0	1	5	0	0	0	0	**116**	**351**
0600 - 0615	1	72	16	0	3	0	0	0	6	0	0	0	0	**98**	
0615 - 0630	0	77	40	0	6	1	0	3	8	0	0	0	0	**135**	
0630 - 0645	0	141	33	0	4	1	0	0	9	0	0	0	0	**188**	
0645 - 0700	2	158	31	0	5	2	0	0	10	0	0	0	0	**208**	**629**
0700 - 0715	0	153	45	0	2	0	0	0	4	0	0	0	0	**204**	
0715 - 0730	0	134	36	0	3	2	0	2	6	0	0	0	0	**183**	
0730 - 0745	0	159	39	1	5	1	0	1	3	0	0	0	0	**209**	
0745 - 0800	0	169	45	0	4	1	0	2	6	1	0	0	0	**228**	**824**
0800 - 0815	0	107	25	0	4	2	0	0	2	0	0	0	0	**140**	
0815 - 0830	0	94	31	0	4	2	0	0	3	0	0	0	0	**134**	
0830 - 0845	0	77	32	2	4	1	0	1	10	0	0	0	0	**127**	
0845 - 0900	0	110	23	0	4	2	0	1	5	0	0	0	0	**145**	**546**
0900 - 0915	0	96	32	0	4	3	0	2	11	1	0	0	0	**149**	
0915 - 0930	0	83	27	0	4	1	0	0	5	0	0	0	0	**120**	
0930 - 0945	1	90	37	0	5	1	0	0	15	0	0	0	0	**149**	
0945 - 1000	0	101	27	0	4	1	0	1	4	0	0	0	0	**138**	**556**
1000 - 1015	0	85	40	0	7	0	0	2	11	0	0	0	0	**145**	
1015 - 1030	0	86	27	0	5	2	0	1	4	0	0	0	0	**125**	
1030 - 1045	0	108	40	3	5	1	0	2	11	0	0	0	0	**170**	
1045 - 1100	0	93	32	0	3	0	0	0	12	0	0	0	0	**140**	**580**
1100 - 1115	0	81	41	0	4	4	0	1	10	0	0	0	0	**141**	
1115 - 1130	0	89	33	0	3	2	0	3	10	0	0	0	0	**140**	
1130 - 1145	0	85	29	0	5	4	0	0	4	1	0	0	0	**128**	
1145 - 1200	0	87	36	0	4	0	0	0	5	0	0	0	0	**132**	**541**
1200 - 1215	0	94	35	0	2	0	0	1	6	1	0	0	0	**139**	
1215 - 1230	0	92	20	0	3	1	0	0	5	0	0	0	0	**121**	
1230 - 1245	0	92	35	0	2	3	0	0	3	0	0	0	0	**135**	
1245 - 1300	0	71	29	0	2	1	0	0	6	0	0	0	0	**109**	**504**
1300 - 1315	0	98	35	0	2	1	0	1	7	1	0	0	0	**145**	
1315 - 1330	0	85	32	0	9	0	0	0	4	0	0	0	0	**130**	
1330 - 1345	1	98	25	0	7	1	0	2	3	0	0	0	0	**137**	
1345 - 1400	0	93	33	0	5	1	0	3	8	0	0	0	0	**143**	**555**
1400 - 1415	0	79	38	1	7	0	0	1	4	1	0	0	0	**131**	
1415 - 1430	0	92	28	2	5	0	0	4	7	0	0	0	0	**138**	
1430 - 1445	0	101	40	2	8	1	0	1	5	0	0	0	0	**158**	
1445 - 1500	1	91	45	0	9	1	0	3	8	0	0	0	0	**158**	**585**
1500 - 1515	0	75	33	0	2	3	0	0	9	0	0	0	0	**122**	
1515 - 1530	0	85	29	0	1	1	0	1	7	0	0	0	0	**124**	
1530 - 1545	0	119	35	0	4	0	0	1	8	0	0	0	0	**167**	
1545 - 1600	0	113	32	0	3	2	0	4	5	1	0	0	0	**160**	**573**
1600 - 1615	0	93	36	1	4	3	0	0	2	0	0	0	0	**139**	
1615 - 1630	0	107	41	0	6	1	0	1	5	0	0	0	0	**161**	
1630 - 1645	0	89	19	0	1	1	0	0	3	0	0	0	0	**113**	
1645 - 1700	0	88	23	0	4	1	0	0	7	0	0	0	0	**123**	**536**
1700 - 1715	0	89	32	0	3	1	0	0	6	0	0	0	0	**131**	
1715 - 1730	0	78	24	0	4	1	0	1	5	0	0	0	0	**113**	
1730 - 1745	0	77	21	0	1	0	0	0	0	0	0	0	0	**99**	
1745 - 1800	0	100	24	0	3	1	0	2	2	0	0	0	0	**132**	**475**
1800 - 1815	1	87	25	0	2	1	0	0	5	0	0	0	0	**121**	
1815 - 1830	0	97	31	0	2	0	0	0	3	0	0	0	0	**133**	
1830 - 1845	0	83	26	0	1	0	0	2	2	0	0	0	0	**114**	
1845 - 1900	0	84	16	0	3	0	0	0	4	0	0	0	0	**107**	**475**
1900 - 1915	0	69	19	0	2	0	0	1	1	0	0	0	0	**92**	
1915 - 1930	0	68	15	0	3	0	0	0	0	0	0	0	0	**86**	
1930 - 1945	0	44	18	0	4	0	0	0	3	0	0	0	0	**69**	
1945 - 2000	0	55	15	0	1	2	0	1	0	0	0	0	0	**74**	**321**
2000 - 2015	0	65	21	0	2	2	0	2	1	0	0	0	0	**93**	
2015 - 2030	0	55	15	0	3	0	0	0	0	0	0	0	0	**73**	
2030 - 2045	0	50	16	0	2	0	0	0	3	0	0	0	0	**71**	
2045 - 2100	0	39	16	0	2	0	0	1	3	0	1	0	0	**62**	**299**
2100 - 2115	0	24	21	0	2	0	0	2	0	1	1	0	0	**51**	
2115 - 2130	0	26	17	0	0	0	0	1	1	0	1	0	0	**46**	
2130 - 2145	0	28	18	0	3	0	0	0	0	0	0	0	0	**49**	
2145 - 2200	2	29	9	0	1	0	0	0	2	0	0	0	0	**43**	**189**
2200 - 2215	0	33	12	0	0	0	0	0	2	0	0	0	0	**47**	
2215 - 2230	0	25	16	0	3	0	0	2	0	0	0	0	0	**46**	
2230 - 2245	0	37	18	0	1	0	0	0	1	0	1	0	0	**58**	
2245 - 2300	0	24	12	0	0	0	0	2	2	0	2	0	0	**42**	**193**
2300 - 2315	0	25	6	0	2	0	0	0	0	0	0	0	0	**33**	
2315 - 2330	0	21	7	0	1	0	0	1	0	0	0	0	0	**30**	
2330 - 2345	0	26	12	0	2	0	0	0	3	0	1	0	0	**44**	
2345 - 0000	0	16	10	0	1	0	0	1	1	0	1	0	0	**30**	**137**

Session Total	10	6360	2155	12	267	70	0	67	405	8	18	0	0	**9372**
Session Average	0.10	66.25	22.45	0.13	2.78	0.73	0.00	0.70	4.22	0.08	0.19	0.00	0.00	**97.63**
Session Percentage	0.11	67.86	22.99	0.13	2.85	0.75	0.00	0.71	4.32	0.09	0.19	0.00	0.00	

AM Peak Hour	0600 - 0700	0700 - 0800	0700 - 0800	0945 - 1045	0930 - 1030	0815 - 0915	-	0945 - 1045	0845 - 0945	0700 - 0800	0500 - 0600	-	-	**0700 - 0800**
AM Peak Hour Volume	3	615	165	3	21	8	0	6	36	1	3	0	0	**824**

Noon Peak Hour	1245 - 1345	1300 - 1400	1400 - 1500	1345 - 1445	1400 - 1500	1045 - 1145	-	1330 - 1430	1030 - 1130	1115 - 1215	-	-	-	**1030 - 1130**
Noon Peak Hour Volume	1	374	151	5	29	10	0	10	43	2	0	0	0	**591**

PM Peak Hour	1715 - 1815	1530 - 1630	1530 - 1630	1515 - 1615	1530 - 1630	1545 - 1645	-	1500 - 1600	1500 - 1600	1500 - 1600	-	-	-	**1530 - 1630**
PM Peak Hour Volume	1	432	144	1	17	7	0	6	29	1	0	0	0	**627**

Site 11
I-26 N/Bound On-Ramp,
north of I-20

Date
Thursday, April 25, 2024

Lat/Long
34.037213°, -81.113157°

Weather
Fair
67°F

Click here for Detailed Weather

0000 - 2400 (Weekday 24h Session) (04-25-2024)
NB EB 15min

	Northbound (Movement 11.1)													15min	60min
TIME	1	2	3	4	5	6	7	8	9	10	11	12	13	Total	Total
0000 - 0015	0	18	2	0	1	2	0	0	2	0	0	0	0	**25**	
0015 - 0030	0	7	2	0	0	1	0	0	2	0	0	0	0	**12**	
0030 - 0045	0	13	4	0	0	1	0	0	1	0	0	0	0	**19**	
0045 - 0100	0	17	3	0	1	0	0	0	2	0	1	0	0	**24**	**80**
0100 - 0115	0	18	4	0	0	0	0	0	2	0	1	0	0	**25**	
0115 - 0130	0	9	1	0	0	1	0	0	1	0	0	0	0	**12**	
0130 - 0145	0	10	1	0	0	0	0	0	1	0	0	0	0	**12**	
0145 - 0200	0	6	1	0	1	0	0	0	0	0	1	0	0	**9**	**58**
0200 - 0215	0	8	1	0	1	0	0	0	5	0	2	0	0	**17**	
0215 - 0230	0	5	0	0	1	0	0	0	3	0	0	0	0	**9**	
0230 - 0245	0	7	1	0	1	0	0	0	1	0	0	0	0	**10**	
0245 - 0300	0	17	2	0	2	0	0	0	4	0	0	0	0	**25**	**61**
0300 - 0315	0	22	6	0	0	0	0	0	4	0	0	0	0	**32**	
0315 - 0330	0	15	2	0	0	0	0	0	1	0	0	0	0	**18**	
0330 - 0345	0	30	4	0	0	0	0	0	0	0	0	0	0	**34**	
0345 - 0400	0	32	5	0	0	1	0	0	9	0	0	0	0	**47**	**131**
0400 - 0415	0	24	4	0	1	2	0	0	3	0	0	0	0	**34**	
0415 - 0430	0	26	6	0	1	0	0	0	5	0	0	0	0	**38**	
0430 - 0445	0	40	8	0	2	1	0	0	4	0	0	0	0	**55**	
0445 - 0500	0	39	9	0	3	0	0	0	4	0	0	0	0	**55**	**182**
0500 - 0515	0	45	8	0	2	0	0	0	2	0	0	0	0	**57**	
0515 - 0530	0	47	9	1	0	1	0	0	2	0	1	0	0	**61**	
0530 - 0545	0	85	13	0	2	0	0	0	6	0	1	0	0	**107**	
0545 - 0600	0	88	11	0	1	0	0	0	3	0	0	0	0	**103**	**328**
0600 - 0615	0	80	15	0	2	1	0	0	7	0	0	0	0	**105**	
0615 - 0630	1	92	15	0	0	1	0	0	4	0	0	0	0	**113**	
0630 - 0645	0	130	24	0	3	3	0	0	8	0	0	0	0	**168**	
0645 - 0700	1	163	39	0	3	2	0	1	4	0	0	0	0	**213**	**599**
0700 - 0715	1	128	35	0	2	3	0	2	3	0	0	0	0	**174**	
0715 - 0730	0	161	30	0	5	1	0	2	1	0	0	0	0	**200**	
0730 - 0745	0	148	32	1	3	2	0	0	7	0	0	0	0	**193**	
0745 - 0800	0	126	41	1	4	2	0	1	5	0	0	0	0	**180**	**747**
0800 - 0815	0	135	41	1	3	2	0	2	3	0	0	0	0	**187**	
0815 - 0830	0	120	35	1	5	1	0	0	5	0	0	0	0	**167**	
0830 - 0845	0	114	29	0	4	2	0	0	4	0	0	0	0	**153**	
0845 - 0900	0	101	34	1	4	1	0	0	0	0	0	0	0	**141**	**648**
0900 - 0915	0	100	24	2	3	5	0	1	7	0	0	0	0	**142**	
0915 - 0930	0	90	18	2	6	0	0	0	10	0	0	0	0	**126**	
0930 - 0945	0	83	29	1	3	3	0	2	6	0	1	0	0	**128**	
0945 - 1000	0	98	35	1	2	2	0	0	10	0	0	0	0	**148**	**544**
1000 - 1015	0	84	23	0	4	2	0	0	6	0	0	0	0	**119**	
1015 - 1030	0	80	25	1	4	1	0	2	11	0	0	0	0	**124**	
1030 - 1045	0	95	36	0	4	1	0	1	7	0	0	0	0	**144**	
1045 - 1100	0	79	26	0	2	0	0	2	10	0	0	0	0	**119**	**506**
1100 - 1115	0	104	41	1	6	1	0	1	4	0	0	0	0	**158**	
1115 - 1130	0	84	34	1	2	1	0	1	6	0	0	0	0	**129**	
1130 - 1145	0	92	29	0	4	2	0	2	5	0	0	0	0	**134**	
1145 - 1200	0	93	40	0	0	2	0	0	7	0	0	0	0	**142**	**563**
1200 - 1215	1	86	30	0	3	0	0	0	7	0	0	0	0	**127**	
1215 - 1230	0	72	25	0	5	0	0	0	5	0	0	0	0	**107**	
1230 - 1245	0	73	28	0	5	2	0	0	1	0	0	0	0	**109**	
1245 - 1300	1	88	28	0	2	1	0	3	11	1	0	0	0	**135**	**478**
1300 - 1315	0	96	31	0	2	0	0	0	8	0	0	0	0	**137**	
1315 - 1330	0	100	38	1	3	0	0	1	3	0	0	0	0	**146**	
1330 - 1345	0	111	22	0	6	1	0	1	6	0	0	0	0	**147**	
1345 - 1400	0	97	27	1	5	2	0	0	4	0	0	0	0	**136**	**566**
1400 - 1415	0	81	20	0	9	0	0	0	5	0	0	0	0	**115**	
1415 - 1430	0	102	41	2	4	0	0	3	6	0	0	0	0	**158**	
1430 - 1445	0	112	30	0	5	1	0	1	9	0	0	0	0	**158**	
1445 - 1500	0	110	25	0	4	4	0	0	5	0	0	0	0	**148**	**579**
1500 - 1515	1	89	30	1	4	3	0	1	5	0	0	0	0	**134**	
1515 - 1530	0	99	30	0	5	1	0	0	8	0	0	0	0	**143**	
1530 - 1545	1	113	34	1	2	5	0	1	4	0	0	0	0	**161**	
1545 - 1600	0	100	28	0	7	0	0	2	5	0	0	0	0	**142**	**580**
1600 - 1615	0	98	35	2	4	0	0	0	4	0	0	0	0	**143**	
1615 - 1630	0	91	26	0	5	0	0	0	5	1	0	0	0	**128**	
1630 - 1645	0	98	41	0	2	0	0	0	9	1	0	0	0	**151**	
1645 - 1700	0	68	25	0	5	0	0	1	3	0	0	0	0	**102**	**524**
1700 - 1715	0	82	23	1	3	0	0	0	0	0	0	0	0	**109**	
1715 - 1730	0	75	27	0	2	0	0	2	3	0	0	0	0	**109**	
1730 - 1745	0	61	23	0	6	0	0	1	4	0	0	0	0	**95**	
1745 - 1800	0	90	21	0	4	0	0	0	3	0	0	0	0	**118**	**431**
1800 - 1815	0	103	42	1	1	0	0	0	3	0	0	0	0	**150**	
1815 - 1830	0	102	30	0	4	0	0	0	2	0	0	0	0	**138**	
1830 - 1845	0	82	20	0	5	1	0	0	4	0	0	0	0	**112**	
1845 - 1900	0	92	20	1	4	2	0	0	8	0	0	0	0	**127**	**527**
1900 - 1915	0	75	20	0	4	0	0	1	1	0	0	0	0	**101**	
1915 - 1930	0	67	17	0	2	0	0	0	2	0	0	0	0	**88**	
1930 - 1945	0	71	21	0	4	0	0	2	1	0	0	0	0	**99**	
1945 - 2000	1	60	14	0	0	2	0	1	1	0	0	0	0	**79**	**367**
2000 - 2015	0	52	12	0	0	0	0	0	0	0	0	0	0	**64**	
2015 - 2030	0	42	16	0	2	0	0	0	2	0	1	0	0	**63**	
2030 - 2045	0	52	12	0	1	0	0	0	1	0	0	0	0	**66**	
2045 - 2100	0	39	12	0	1	0	0	0	2	0	0	0	0	**54**	**247**
2100 - 2115	0	43	14	1	0	0	0	0	1	0	0	0	0	**59**	
2115 - 2130	0	61	8	0	0	0	0	0	0	0	1	0	0	**70**	
2130 - 2145	0	37	16	0	1	0	0	0	0	0	0	0	0	**54**	
2145 - 2200	1	33	7	0	0	0	0	1	2	0	0	0	0	**44**	**227**
2200 - 2215	0	34	11	0	2	0	0	2	1	0	0	0	0	**50**	
2215 - 2230	0	31	10	0	2	0	0	2	1	0	0	0	0	**46**	
2230 - 2245	0	46	5	0	0	0	0	0	1	0	0	0	0	**52**	
2245 - 2300	0	27	9	0	2	0	0	0	1	0	2	0	0	**41**	**189**
2300 - 2315	0	23	4	0	1	0	0	0	2	0	2	0	0	**32**	
2315 - 2330	0	25	2	0	1	0	0	0	1	0	0	0	0	**29**	
2330 - 2345	0	28	4	0	1	0	0	0	0	0	0	0	0	**33**	
2345 - 0000	0	15	4	0	0	0	0	1	0	0	0	0	0	**20**	**114**

Session Total	9	6640	1855	27	238	76	0	47	367	3	14	0	0	**9276**
Session Average	0.09	69.17	19.32	0.28	2.48	0.79	0.00	0.49	3.82	0.03	0.15	0.00	0.00	**96.63**
Session Percentage	0.10	71.58	20.00	0.29	2.57	0.82	0.00	0.51	3.96	0.03	0.15	0.00	0.00	

AM Peak Hour	0615 - 0715	0645 - 0745	0730 - 0830	0845 - 0945	0830 - 0930	0900 - 1000	-	0630 - 0730	0945 - 1045	-	0500 - 0600	-	-	**0645 - 0745**
AM Peak Hour Volume	3	600	149	6	17	10	0	5	34	0	2	0	0	**780**

Noon Peak Hour	1200 - 1300	1415 - 1515	1100 - 1200	1330 - 1430	1330 - 1430	1445 - 1545	-	1015 - 1115	1000 - 1100	1200 - 1300	-	-	-	**1415 - 1515**
Noon Peak Hour Volume	2	413	144	3	24	13	0	6	34	1	0	0	0	**598**

PM Peak Hour	1500 - 1600	1515 - 1615	1545 - 1645	1515 - 1615	1500 - 1600	1500 - 1600	-	1500 - 1600	1545 - 1645	1545 - 1645	1930 - 2030	-	-	**1515 - 1615**
PM Peak Hour Volume	2	410	130	3	18	9	0	4	23	2	1	0	0	**589**

Site 11
I-26 N/Bound On-Ramp,
north of I-20

Date
Friday, April 26, 2024

Lat/Long
34.037213°, -81.113157°

Weather
Cloudy
69°F

Click here for Detailed Weather

0000 - 2400 (Weekday 24h Session) (04-26-2024)
NB EB 15min

	Northbound (Movement 11.1)													15min	60min
TIME	1	2	3	4	5	6	7	8	9	10	11	12	13	Total	Total
0000 - 0015	0	14	1	0	1	0	0	0	0	0	0	0	0	**16**	
0015 - 0030	0	20	1	0	1	0	0	0	1	0	0	0	0	**23**	
0030 - 0045	0	15	0	0	3	0	0	0	4	0	0	0	0	**22**	
0045 - 0100	0	14	0	0	0	0	0	0	2	0	0	0	0	**16**	**77**
0100 - 0115	0	10	0	0	1	0	0	0	2	0	0	0	0	**13**	
0115 - 0130	0	11	1	0	0	0	0	0	0	0	0	0	0	**12**	
0130 - 0145	0	11	1	0	0	3	0	0	3	0	0	0	0	**18**	
0145 - 0200	0	16	0	0	0	3	0	0	2	0	0	0	0	**21**	**64**
0200 - 0215	0	7	0	0	1	0	0	0	0	0	2	0	0	**10**	
0215 - 0230	0	11	0	0	1	0	0	0	2	0	1	0	0	**15**	
0230 - 0245	0	13	0	0	4	0	0	0	1	0	1	0	0	**19**	
0245 - 0300	0	17	0	0	1	0	0	0	1	0	0	0	0	**19**	**63**
0300 - 0315	0	20	1	0	0	0	0	0	5	0	0	0	0	**26**	
0315 - 0330	0	17	0	0	1	1	0	0	4	0	0	0	0	**23**	
0330 - 0345	0	28	0	0	1	0	0	0	4	0	1	0	0	**34**	
0345 - 0400	0	30	0	0	1	0	0	0	5	0	0	0	0	**36**	**119**
0400 - 0415	0	31	0	0	0	0	0	1	7	0	0	0	0	**39**	
0415 - 0430	0	31	0	0	0	0	0	0	9	0	0	0	0	**40**	
0430 - 0445	0	40	2	0	0	3	0	0	4	0	0	0	0	**49**	
0445 - 0500	0	60	2	0	0	0	0	0	6	0	0	0	0	**68**	**196**
0500 - 0515	0	60	5	0	2	0	0	0	2	0	1	0	0	**70**	
0515 - 0530	0	46	9	0	3	0	0	0	3	0	0	0	0	**61**	
0530 - 0545	0	68	9	0	3	0	0	0	9	0	0	0	0	**89**	
0545 - 0600	0	82	10	0	2	0	0	0	4	0	0	0	0	**98**	**318**
0600 - 0615	1	79	7	0	2	1	0	0	6	0	1	0	0	**97**	
0615 - 0630	0	87	11	0	2	0	0	0	6	0	1	0	0	**107**	
0630 - 0645	0	138	27	0	0	2	0	0	6	0	0	0	0	**173**	
0645 - 0700	1	128	35	0	2	3	1	0	2	0	0	0	0	**172**	**549**
0700 - 0715	0	118	29	0	1	2	1	0	3	0	0	0	0	**154**	
0715 - 0730	0	127	30	0	4	5	0	2	4	0	0	0	0	**172**	
0730 - 0745	0	144	32	1	2	0	0	1	5	1	0	0	0	**186**	
0745 - 0800	1	132	33	1	5	0	0	1	5	0	0	0	0	**178**	**690**
0800 - 0815	0	102	23	0	3	0	0	0	4	2	0	0	0	**134**	
0815 - 0830	0	112	37	0	6	1	0	2	4	0	0	0	0	**162**	
0830 - 0845	0	134	26	1	5	1	2	0	6	0	0	0	0	**175**	
0845 - 0900	0	102	34	1	1	3	2	1	5	0	0	0	0	**149**	**620**
0900 - 0915	0	68	28	1	4	0	0	2	3	0	0	0	0	**106**	
0915 - 0930	0	101	42	2	1	2	0	1	4	0	0	0	0	**153**	
0930 - 0945	0	90	23	0	2	1	0	0	8	0	0	0	0	**124**	
0945 - 1000	0	114	28	0	3	1	0	1	3	0	0	0	0	**150**	**533**
1000 - 1015	1	79	26	1	3	0	0	3	6	0	0	0	0	**119**	
1015 - 1030	0	96	37	0	10	3	0	0	7	1	0	0	0	**154**	
1030 - 1045	0	92	29	0	8	3	0	2	6	0	0	0	0	**140**	
1045 - 1100	0	90	30	0	1	1	0	3	4	0	0	0	0	**129**	**542**
1100 - 1115	0	81	25	0	5	3	0	1	7	0	0	0	0	**122**	
1115 - 1130	0	90	23	0	3	0	0	2	6	0	0	0	0	**124**	
1130 - 1145	0	80	36	0	6	1	1	2	6	1	0	0	0	**133**	
1145 - 1200	0	83	33	1	6	8	0	0	8	0	0	0	0	**139**	**518**
1200 - 1215	0	99	28	0	2	0	0	0	4	0	0	0	0	**133**	
1215 - 1230	0	98	35	0	3	1	0	3	3	0	0	0	0	**143**	
1230 - 1245	1	88	36	0	1	1	0	0	7	1	0	0	0	**135**	
1245 - 1300	0	83	26	0	4	1	0	0	4	0	0	0	0	**118**	**529**
1300 - 1315	0	96	33	5	3	0	0	0	4	0	0	0	0	**141**	
1315 - 1330	0	111	24	0	6	1	0	1	3	0	0	0	0	**146**	
1330 - 1345	0	94	30	0	1	1	0	0	9	0	0	0	0	**135**	
1345 - 1400	0	90	26	0	4	0	0	1	4	0	0	0	0	**125**	**547**
1400 - 1415	0	72	30	0	7	1	0	0	2	0	0	0	0	**112**	
1415 - 1430	0	119	43	1	8	0	0	1	4	0	0	0	0	**176**	
1430 - 1445	0	110	37	0	1	0	0	0	9	0	0	0	0	**157**	
1445 - 1500	0	93	34	0	3	1	0	0	5	0	0	0	0	**136**	**581**
1500 - 1515	1	93	26	0	5	1	0	1	0	0	0	0	0	**127**	
1515 - 1530	0	79	29	0	7	0	1	0	4	1	0	0	0	**121**	
1530 - 1545	0	109	35	1	2	1	0	1	3	0	0	0	0	**152**	
1545 - 1600	1	85	31	0	4	2	0	0	2	0	0	0	0	**125**	**525**
1600 - 1615	0	81	22	1	3	0	0	0	8	0	0	0	0	**115**	
1615 - 1630	0	87	32	0	5	0	0	0	5	0	0	0	0	**129**	
1630 - 1645	2	101	41	0	3	1	0	0	4	0	0	0	0	**152**	
1645 - 1700	0	80	19	0	2	0	0	1	3	0	0	0	0	**105**	**501**
1700 - 1715	0	82	21	1	4	0	0	0	3	0	0	0	0	**111**	
1715 - 1730	0	102	25	1	3	0	0	0	4	1	0	0	0	**136**	
1730 - 1745	0	90	21	0	6	1	0	0	2	0	0	0	0	**120**	
1745 - 1800	0	103	33	0	3	0	0	0	2	0	0	0	0	**141**	**508**
1800 - 1815	0	96	17	0	1	1	0	1	4	0	0	0	0	**120**	
1815 - 1830	0	108	28	1	6	0	0	0	0	0	0	0	0	**143**	
1830 - 1845	0	108	30	0	2	0	0	0	3	0	0	0	0	**143**	
1845 - 1900	0	111	11	0	6	1	0	0	1	0	0	0	0	**130**	**536**
1900 - 1915	0	82	35	0	2	0	0	0	2	0	0	0	0	**121**	
1915 - 1930	0	72	22	0	2	0	0	0	2	0	0	0	0	**98**	
1930 - 1945	0	63	22	0	4	0	0	0	2	0	0	0	0	**91**	
1945 - 2000	0	71	14	3	2	0	0	0	1	0	0	0	0	**91**	**401**
2000 - 2015	0	67	18	0	0	0	0	0	0	0	0	0	0	**85**	
2015 - 2030	0	54	13	0	4	0	0	0	0	0	0	0	0	**71**	
2030 - 2045	0	57	17	0	1	0	0	0	4	0	0	0	0	**79**	
2045 - 2100	0	53	11	0	0	0	0	0	2	0	0	0	0	**66**	**301**
2100 - 2115	0	51	9	0	1	0	0	0	2	0	0	0	0	**63**	
2115 - 2130	0	42	12	0	1	0	0	0	1	0	2	0	0	**58**	
2130 - 2145	0	52	12	0	1	0	0	0	3	0	0	0	0	**68**	
2145 - 2200	0	51	11	0	1	0	0	0	1	0	0	0	0	**64**	**253**
2200 - 2215	0	58	8	0	1	0	0	0	0	0	0	0	0	**67**	
2215 - 2230	0	51	12	0	0	0	0	0	0	0	0	0	0	**63**	
2230 - 2245	0	48	9	0	1	0	0	0	1	0	0	0	0	**59**	
2245 - 2300	0	32	10	0	0	0	0	0	0	0	0	0	0	**42**	**231**
2300 - 2315	0	38	7	0	0	0	0	0	3	0	0	0	0	**48**	
2315 - 2330	0	23	5	0	0	0	0	0	0	0	0	0	0	**28**	
2330 - 2345	1	29	6	0	0	0	0	0	0	0	0	0	0	**36**	
2345 - 0000	0	34	6	0	1	1	0	0	1	0	0	0	0	**43**	**155**

Session Total	10	6835	1788	23	238	67	8	35	335	8	10	0	0	**9357**
Session Average	0.10	71.20	18.63	0.24	2.48	0.70	0.08	0.36	3.49	0.08	0.10	0.00	0.00	**97.47**
Session Percentage	0.11	73.05	19.11	0.25	2.54	0.72	0.09	0.37	3.58	0.09	0.11	0.00	0.00	

AM Peak Hour	0600 - 0700	0700 - 0800	0830 - 0930	0830 - 0930	0945 - 1045	0630 - 0730	0800 - 0900	0945 - 1045	0530 - 0630	0715 - 0815	0530 - 0630	-	-	**0700 - 0800**
AM Peak Hour Volume	2	521	130	5	24	12	4	6	25	3	2	0	0	**690**

Noon Peak Hour	1000 - 1100	1415 - 1515	1400 - 1500	1215 - 1315	1015 - 1115	1100 - 1200	1045 - 1145	1000 - 1100	1100 - 1200	1000 - 1100	-	-	-	**1415 - 1515**
Noon Peak Hour Volume	1	415	144	5	24	12	1	8	27	1	0	0	0	**596**

PM Peak Hour	1545 - 1645	1800 - 1900	1545 - 1645	1900 - 2000	1500 - 1600	1500 - 1600	1500 - 1600	1500 - 1600	1600 - 1700	1500 - 1600	-	-	-	**1745 - 1845**
PM Peak Hour Volume	3	423	126	3	18	4	1	2	20	1	0	0	0	**547**

Site 11
I-26 N/Bound On-Ramp,
north of I-20

Date
Saturday, April 27, 2024

Lat/Long
34.037213°, -81.113157°

Weather
Mostly Cloudy
69°F

Click here for Detailed Weather

0000 - 2400 (Saturday 24h Session) (04-27-2024)
NB EB 15min

	Northbound (Movement 11.1)													15min	60min
TIME	1	2	3	4	5	6	7	8	9	10	11	12	13	Total	Total
0000 - 0015	0	25	2	0	0	0	0	0	1	0	2	0	0	**30**	
0015 - 0030	0	37	1	0	0	0	0	0	0	0	1	0	0	**39**	
0030 - 0045	0	22	2	0	0	0	0	0	0	0	1	0	0	**25**	
0045 - 0100	0	13	1	0	0	0	0	0	1	0	0	0	0	**15**	**109**
0100 - 0115	0	15	0	0	0	1	0	0	1	0	0	0	0	**17**	
0115 - 0130	0	15	1	0	0	1	0	0	0	0	0	0	0	**17**	
0130 - 0145	0	12	0	0	0	1	0	0	0	0	0	0	0	**13**	
0145 - 0200	0	14	1	0	2	0	0	0	0	0	1	0	0	**18**	**65**
0200 - 0215	0	22	0	0	1	0	0	0	1	0	2	0	0	**26**	
0215 - 0230	0	18	0	0	0	0	0	0	1	0	0	0	0	**19**	
0230 - 0245	0	13	1	0	0	0	0	0	0	0	0	0	0	**14**	
0245 - 0300	0	23	0	0	0	0	0	0	0	0	0	0	0	**23**	**82**
0300 - 0315	0	17	1	0	0	0	0	0	0	0	1	0	0	**19**	
0315 - 0330	0	29	0	0	0	0	0	0	0	1	0	0	0	**30**	
0330 - 0345	0	23	2	0	0	1	0	0	0	0	0	0	0	**26**	
0345 - 0400	0	29	1	0	0	0	0	0	1	0	0	0	0	**31**	**106**
0400 - 0415	0	20	1	0	0	0	0	0	3	1	0	0	0	**25**	
0415 - 0430	0	25	0	0	0	0	0	0	1	1	0	0	0	**27**	
0430 - 0445	0	38	3	0	0	0	0	0	2	0	0	0	0	**43**	
0445 - 0500	0	38	3	0	0	0	0	0	1	0	0	0	0	**42**	**137**
0500 - 0515	0	23	3	0	0	0	0	0	1	0	0	0	0	**27**	
0515 - 0530	1	33	6	0	0	0	0	0	0	0	0	0	0	**40**	
0530 - 0545	0	37	3	0	1	0	0	0	3	0	0	0	0	**44**	
0545 - 0600	0	51	3	0	0	0	0	0	2	0	0	0	0	**56**	**167**
0600 - 0615	0	30	5	0	1	0	0	1	2	0	0	0	0	**39**	
0615 - 0630	1	49	13	0	0	0	0	0	1	0	0	0	0	**64**	
0630 - 0645	0	59	14	0	1	0	0	0	2	0	0	0	0	**76**	
0645 - 0700	0	63	11	1	0	0	0	1	1	0	0	0	0	**77**	**256**
0700 - 0715	0	51	11	0	0	0	0	1	1	0	0	0	0	**64**	
0715 - 0730	0	54	14	0	1	1	0	1	2	0	0	1	0	**74**	
0730 - 0745	0	72	26	0	1	1	0	0	2	0	0	0	0	**102**	
0745 - 0800	0	81	21	1	1	2	0	0	1	0	0	0	0	**107**	**347**
0800 - 0815	0	64	26	0	1	0	0	1	0	0	0	0	0	**92**	
0815 - 0830	1	81	15	1	2	0	0	0	3	0	0	0	0	**103**	
0830 - 0845	0	90	22	1	0	0	0	0	4	0	0	0	0	**117**	
0845 - 0900	0	82	23	0	1	0	0	1	1	0	0	0	0	**108**	**420**
0900 - 0915	1	71	14	0	0	0	0	0	2	0	0	1	0	**89**	
0915 - 0930	0	90	23	0	1	1	0	0	1	0	0	0	0	**116**	
0930 - 0945	0	113	21	0	3	1	0	0	1	0	0	0	0	**139**	
0945 - 1000	0	94	26	0	3	1	0	0	2	0	0	0	0	**126**	**470**
1000 - 1015	0	98	16	0	1	0	0	1	2	0	0	0	0	**118**	
1015 - 1030	2	94	21	0	1	0	0	0	3	0	0	0	0	**121**	
1030 - 1045	1	91	20	0	1	0	0	0	0	0	0	0	0	**113**	
1045 - 1100	0	98	27	0	3	0	0	0	1	0	0	0	0	**129**	**481**
1100 - 1115	0	90	26	0	0	1	0	1	0	0	0	0	0	**118**	
1115 - 1130	0	119	19	0	2	0	0	0	1	0	0	0	0	**141**	
1130 - 1145	0	110	20	0	1	1	0	0	0	0	0	0	0	**132**	
1145 - 1200	0	112	25	1	1	1	0	1	1	0	0	0	0	**142**	**533**
1200 - 1215	0	115	26	0	1	0	0	0	1	0	0	0	0	**143**	
1215 - 1230	4	99	21	0	0	0	0	0	1	0	0	0	0	**125**	
1230 - 1245	0	85	25	0	0	0	0	0	1	0	0	0	0	**111**	
1245 - 1300	1	100	26	0	4	1	0	0	2	0	0	0	0	**134**	**513**
1300 - 1315	1	98	20	0	3	0	0	0	2	0	0	0	0	**124**	
1315 - 1330	0	106	24	0	1	2	0	0	1	0	0	0	0	**134**	
1330 - 1345	0	109	19	1	2	0	0	0	2	0	0	0	0	**133**	
1345 - 1400	0	92	32	0	1	1	0	0	2	0	0	0	0	**128**	**519**
1400 - 1415	1	86	27	0	0	0	0	0	1	0	0	0	0	**115**	
1415 - 1430	0	97	23	1	0	0	0	0	0	0	0	0	0	**121**	
1430 - 1445	0	113	24	0	2	1	0	1	0	0	0	0	0	**141**	
1445 - 1500	0	101	30	0	2	1	0	0	2	0	0	0	0	**136**	**513**
1500 - 1515	0	95	20	0	3	0	0	0	0	0	0	0	0	**118**	
1515 - 1530	0	98	36	0	1	0	0	0	0	0	0	0	0	**135**	
1530 - 1545	0	104	26	0	1	0	0	0	1	0	0	0	0	**132**	
1545 - 1600	0	85	20	0	2	0	0	0	1	0	0	0	0	**108**	**493**
1600 - 1615	1	74	22	0	1	0	0	0	1	0	0	0	0	**99**	
1615 - 1630	1	75	17	1	0	0	0	0	1	0	0	0	0	**95**	
1630 - 1645	0	68	17	0	2	0	0	0	1	0	0	0	0	**88**	
1645 - 1700	0	71	24	0	0	0	0	1	0	0	0	0	0	**96**	**378**
1700 - 1715	0	92	29	0	0	0	0	0	2	0	0	0	0	**123**	
1715 - 1730	0	79	17	0	2	0	0	0	2	0	0	0	0	**100**	
1730 - 1745	0	68	21	0	0	0	0	0	0	0	0	0	0	**89**	
1745 - 1800	0	74	18	0	0	0	0	0	1	0	0	0	0	**93**	**405**
1800 - 1815	0	90	21	0	0	0	0	0	1	0	0	0	0	**112**	
1815 - 1830	0	74	12	0	1	0	0	0	0	0	0	0	0	**87**	
1830 - 1845	0	97	18	0	1	0	0	0	1	0	0	0	0	**117**	
1845 - 1900	0	77	18	0	4	0	0	0	1	0	0	0	0	**100**	**416**
1900 - 1915	0	53	7	0	0	0	0	0	0	0	0	0	0	**60**	
1915 - 1930	1	77	7	0	3	0	0	0	1	0	0	0	0	**89**	
1930 - 1945	1	68	14	0	0	0	0	0	1	0	0	0	0	**84**	
1945 - 2000	1	55	13	0	0	0	0	0	0	0	0	0	0	**69**	**302**
2000 - 2015	0	57	15	0	0	0	0	0	0	0	0	0	0	**72**	
2015 - 2030	0	53	11	0	0	1	0	0	0	0	0	0	0	**65**	
2030 - 2045	1	54	6	0	1	0	0	0	0	0	0	0	0	**62**	
2045 - 2100	0	48	4	0	0	0	0	1	0	0	0	0	0	**53**	**252**
2100 - 2115	0	51	11	0	0	0	0	0	0	0	0	0	0	**62**	
2115 - 2130	0	55	7	0	0	0	0	0	0	0	0	0	0	**62**	
2130 - 2145	0	46	10	0	0	0	0	0	0	0	0	0	0	**56**	
2145 - 2200	0	42	4	0	0	0	0	0	0	0	0	0	0	**46**	**226**
2200 - 2215	0	51	7	0	0	0	0	0	0	0	0	0	0	**58**	
2215 - 2230	0	37	5	0	0	0	0	0	1	0	0	0	0	**43**	
2230 - 2245	0	52	3	0	0	0	0	0	1	0	0	0	0	**56**	
2245 - 2300	0	44	4	0	0	0	0	0	0	0	0	0	0	**48**	**205**
2300 - 2315	0	54	3	0	0	0	0	0	0	0	0	0	0	**57**	
2315 - 2330	0	30	2	0	0	0	0	0	0	0	0	0	0	**32**	
2330 - 2345	0	27	2	0	0	0	0	0	1	0	0	0	0	**30**	
2345 - 0000	0	29	4	0	0	0	0	0	1	0	0	0	0	**34**	**153**

Session Total	20	6053	1266	8	68	21	0	12	87	3	8	2	0	**7548**
Session Average	0.21	63.05	13.19	0.08	0.71	0.22	0.00	0.13	0.91	0.03	0.08	0.02	0.00	**78.63**
Session Percentage	0.26	80.19	16.77	0.11	0.90	0.28	0.00	0.16	1.15	0.04	0.11	0.03	0.00	

AM Peak Hour	0945 - 1045	0930 - 1030	0730 - 0830	0745 - 0845	0915 - 1015	0700 - 0800	-	0630 - 0730	0815 - 0915	-	-	0630 - 0730	-	**0930 - 1030**
AM Peak Hour Volume	3	399	88	3	8	4	0	3	10	0	0	1	0	**504**

Noon Peak Hour	1215 - 1315	1115 - 1215	1445 - 1545	1330 - 1430	1245 - 1345	1100 - 1200	-	1100 - 1200	1245 - 1345	-	-	-	-	**1115 - 1215**
Noon Peak Hour Volume	6	456	112	2	10	3	0	2	7	0	0	0	0	**558**

PM Peak Hour	1900 - 2000	1500 - 1600	1515 - 1615	1530 - 1630	1830 - 1930	1930 - 2030	-	1600 - 1700	1630 - 1730	-	-	-	-	**1500 - 1600**
PM Peak Hour Volume	3	382	104	1	8	1	0	1	5	0	0	0	0	**493**

Bi-Directional Class Count || NB EB Average 15min

Columbia, SC

Marr Traffic DATA COLLECTION
www.marrtraffic.com

Site 11
I-26 N/Bound On-Ramp,
north of I-20

Date
Sunday, April 21, 2024

Weather
Cloudy
66°F

Lat/Long
34.037213°, -81.113157°

0000 - 2400 (Weekday 24h Session) (All Dates)
NB EB Average 15min

	NB EB Average 15min													15min	60min
Time	1	2	3	4	5	6	7	8	9	10	11	12	13	Total	Total
0000 - 0015	0	19	3	0	1	0	0	0	0	0	0	0	0	**24**	
0015 - 0030	0	21	3	0	0	0	0	0	1	0	0	0	0	**26**	
0030 - 0045	0	15	2	0	0	0	0	0	1	0	0	0	0	**20**	
0045 - 0100	0	13	2	0	0	0	0	0	1	0	0	0	0	**17**	**86**
0100 - 0115	0	14	2	0	0	0	0	0	2	0	0	0	0	**18**	
0115 - 0130	0	11	1	0	0	0	0	0	1	0	0	0	0	**12**	
0130 - 0145	0	11	1	0	0	1	0	0	1	0	0	0	0	**14**	
0145 - 0200	0	9	1	0	1	0	0	0	1	0	0	0	0	**13**	**57**
0200 - 0215	0	11	1	0	1	0	0	0	2	0	1	0	0	**16**	
0215 - 0230	0	10	1	0	0	0	0	0	1	0	0	0	0	**13**	
0230 - 0245	0	10	1	0	1	0	0	0	1	0	0	0	0	**14**	
0245 - 0300	0	18	2	0	1	0	0	0	2	0	0	0	0	**24**	**67**
0300 - 0315	0	17	3	0	0	0	0	0	2	0	0	0	0	**22**	
0315 - 0330	0	16	2	0	1	1	0	0	2	0	0	0	0	**22**	
0330 - 0345	0	23	3	0	0	0	0	0	2	0	0	0	0	**29**	
0345 - 0400	0	22	4	0	0	0	0	0	4	0	0	0	0	**30**	**103**
0400 - 0415	0	23	3	0	1	1	0	0	4	0	0	0	0	**32**	
0415 - 0430	0	24	4	0	0	0	0	0	4	0	0	0	0	**32**	
0430 - 0445	0	33	6	0	1	1	0	0	3	0	0	0	0	**44**	
0445 - 0500	0	40	7	0	1	0	0	0	3	0	0	0	0	**53**	**160**
0500 - 0515	0	37	8	0	1	0	0	0	2	0	0	0	0	**49**	
0515 - 0530	0	41	11	0	1	0	0	0	5	0	0	0	0	**59**	
0530 - 0545	0	64	12	0	2	0	0	0	5	0	1	0	0	**83**	
0545 - 0600	0	67	13	0	1	0	0	0	3	0	0	0	0	**84**	**276**
0600 - 0615	0	59	11	0	2	1	0	0	4	0	0	0	0	**76**	
0615 - 0630	0	76	16	0	2	0	0	0	5	0	0	0	0	**100**	
0630 - 0645	0	114	21	0	2	1	0	0	6	0	0	0	0	**145**	
0645 - 0700	1	127	28	0	2	1	0	1	5	0	0	0	0	**165**	**486**
0700 - 0715	0	109	28	0	2	2	0	1	2	0	0	0	0	**143**	
0715 - 0730	0	112	25	0	3	2	0	1	3	0	0	0	0	**146**	
0730 - 0745	0	122	32	1	3	1	0	1	4	0	0	0	0	**164**	
0745 - 0800	0	116	32	0	3	1	0	1	3	0	0	0	0	**156**	**609**
0800 - 0815	0	100	30	0	3	1	0	0	2	0	0	0	0	**137**	
0815 - 0830	0	95	26	1	4	1	0	1	3	0	0	0	0	**131**	
0830 - 0845	0	100	28	1	4	1	0	0	5	0	0	0	0	**140**	
0845 - 0900	0	100	28	0	4	1	0	1	4	0	0	0	0	**138**	**546**
0900 - 0915	0	80	26	1	4	1	0	1	5	0	0	0	0	**118**	
0915 - 0930	0	86	24	1	3	1	0	1	6	0	0	0	0	**123**	
0930 - 0945	0	92	28	0	2	1	0	0	7	0	0	0	0	**131**	
0945 - 1000	0	94	26	0	3	1	0	0	5	0	0	0	0	**130**	**501**
1000 - 1015	0	78	24	0	5	0	0	1	6	0	0	0	0	**114**	
1015 - 1030	0	85	27	0	4	1	0	0	7	0	0	0	0	**125**	
1030 - 1045	0	89	29	1	4	1	0	1	6	0	0	0	0	**131**	
1045 - 1100	0	90	26	0	3	0	0	1	6	0	0	0	0	**126**	**496**
1100 - 1115	0	82	28	0	4	2	0	1	6	0	0	0	0	**123**	
1115 - 1130	0	90	26	0	3	1	0	1	5	0	0	0	0	**128**	
1130 - 1145	0	87	28	0	4	1	0	1	6	1	0	0	0	**129**	
1145 - 1200	0	86	31	0	3	2	0	0	5	0	0	0	0	**127**	**507**
1200 - 1215	0	91	26	0	2	1	0	0	4	0	0	0	0	**124**	
1215 - 1230	1	89	26	0	2	1	0	0	5	0	0	0	0	**124**	
1230 - 1245	0	88	28	0	2	2	0	0	3	0	0	0	0	**124**	
1245 - 1300	0	86	26	0	3	1	0	1	5	0	0	0	0	**121**	**493**
1300 - 1315	0	93	26	1	3	0	0	0	5	0	0	0	0	**129**	
1315 - 1330	0	93	26	0	4	1	0	1	4	0	0	0	0	**129**	
1330 - 1345	0	98	24	0	3	1	0	0	5	0	0	0	0	**131**	
1345 - 1400	0	88	28	0	4	1	0	1	5	0	0	0	0	**126**	**516**
1400 - 1415	0	81	29	1	5	0	0	0	4	0	0	0	0	**121**	
1415 - 1430	0	96	29	1	4	1	0	1	4	0	0	0	0	**136**	
1430 - 1445	0	104	29	0	4	1	0	1	5	0	0	0	0	**144**	
1445 - 1500	0	97	31	0	4	2	0	0	5	0	0	0	0	**139**	**540**
1500 - 1515	0	87	26	0	4	1	0	0	4	0	0	0	0	**123**	
1515 - 1530	0	87	29	0	4	1	0	1	5	0	0	0	0	**126**	
1530 - 1545	0	105	30	0	3	1	0	1	4	0	0	0	0	**146**	
1545 - 1600	0	93	28	0	3	1	0	1	4	0	0	0	0	**130**	**524**
1600 - 1615	0	86	28	1	2	1	0	0	4	0	0	0	0	**123**	
1615 - 1630	0	88	29	0	3	0	0	1	4	0	0	0	0	**125**	
1630 - 1645	0	84	30	0	3	1	0	0	5	0	0	0	0	**123**	
1645 - 1700	0	73	21	0	3	1	0	0	2	0	0	0	0	**101**	**472**
1700 - 1715	0	77	23	0	2	1	0	0	3	0	0	0	0	**107**	
1715 - 1730	0	81	22	0	3	0	0	1	3	0	0	0	0	**110**	
1730 - 1745	0	78	21	0	3	0	0	1	2	0	0	0	0	**105**	
1745 - 1800	0	86	24	0	2	0	0	0	2	0	0	0	0	**115**	**437**
1800 - 1815	0	89	24	0	2	0	0	0	3	0	0	0	0	**119**	
1815 - 1830	0	89	24	0	3	0	0	0	2	0	0	0	0	**119**	
1830 - 1845	0	89	23	0	2	0	0	1	2	0	0	0	0	**118**	
1845 - 1900	0	83	18	0	3	0	0	0	3	0	0	0	0	**108**	**464**
1900 - 1915	0	67	19	0	2	0	0	0	1	0	0	0	0	**90**	
1915 - 1930	0	64	16	0	2	0	0	0	1	0	0	0	0	**83**	
1930 - 1945	0	56	15	0	3	0	0	0	2	0	0	0	0	**77**	
1945 - 2000	0	59	15	0	1	1	0	0	1	0	0	0	0	**77**	**327**
2000 - 2015	0	54	15	0	1	0	0	0	1	0	0	0	0	**72**	
2015 - 2030	0	48	12	0	2	0	0	0	1	0	0	0	0	**63**	
2030 - 2045	0	48	11	0	1	0	0	0	2	0	0	0	0	**62**	
2045 - 2100	0	45	11	0	1	0	0	0	1	0	0	0	0	**60**	**257**
2100 - 2115	0	42	12	0	1	0	0	0	1	0	0	0	0	**57**	
2115 - 2130	0	43	11	0	0	0	0	0	1	0	1	0	0	**57**	
2130 - 2145	0	38	12	0	1	0	0	0	1	0	0	0	0	**52**	
2145 - 2200	0	34	7	0	1	0	0	0	1	0	0	0	0	**44**	**210**
2200 - 2215	0	38	8	0	1	0	0	0	1	0	0	0	0	**49**	
2215 - 2230	0	34	10	0	1	0	0	1	1	0	0	0	0	**46**	
2230 - 2245	0	41	8	0	1	0	0	0	1	0	0	0	0	**51**	
2245 - 2300	0	31	7	0	1	0	0	0	1	0	1	0	0	**41**	**186**
2300 - 2315	0	27	5	0	1	0	0	0	1	0	0	0	0	**34**	
2315 - 2330	0	21	4	0	1	0	0	0	0	0	0	0	0	**26**	
2330 - 2345	0	23	5	0	1	0	0	0	1	0	0	0	0	**30**	
2345 - 0000	0	22	5	0	0	0	0	0	1	0	0	0	0	**28**	**119**

Session Total	10	6154	1661	15	195	55	3	36	295	5	9	2	0	**8440**
Session Average	0.11	64.11	17.30	0.15	2.03	0.57	0.03	0.37	3.07	0.05	0.09	0.02	0.00	**87.92**
Session Percentage	0.12	72.92	19.68	0.18	2.31	0.65	0.03	0.42	3.50	0.06	0.10	0.03	0.00	

AM Peak Hour	0600 - 0700	0645 - 0745	0730 - 0830	0830 - 0930	0945 - 1045	0630 - 0730	0830 - 0930	0700 - 0800	0930 - 1030	0715 - 0815	0500 - 0600	0500 - 0600	-	**0645 - 0745**
AM Peak Volume	2	470	121	2	16	7	1	3	25	1	1	0	0	**618**

Noon Peak Hour	1215 - 1315	1415 - 1515	1400 - 1500	1345 - 1445	1345 - 1445	1100 - 1200	1130 - 1230	1045 - 1145	1000 - 1100	1115 - 1215	-	-	-	**1415 - 1515**
Noon Peak Volume	1	384	118	2	16	6	0	4	25	1	0	0	0	**542**

PM Peak Hour	1630 - 1730	1500 - 1600	1515 - 1615	1530 - 1630	1500 - 1600	1500 - 1600	1500 - 1600	1500 - 1600	1545 - 1645	1545 - 1645	1830 - 1930	1830 - 1930	-	**1515 - 1615**
PM Peak Volume	1	372	116	2	14	4	0	3	17	1	0	0	0	**524**

Bi-Directional Class Count || Volume Summary 15min

Columbia, SC

Marr Traffic DATA COLLECTION

www.marrtraffic.com

Site 11

I-26 N/Bound On-Ramp,
north of I-20

Date

Sunday, April 21, 2024

Lat/Long

34.037213°, -81.113157°

Weather

Cloudy
66°F

Click here for Detailed Weather

0000 - 2400 (Sunday 24h Session) (04-21-2024)

Volume Summary 15min

	Volume Summary 15min		15min	60min
TIME	NB	SB	Total	Total
0000 - 0015	32	0	**32**	
0015 - 0030	46	0	**46**	
0030 - 0045	30	0	**30**	
0045 - 0100	24	0	**24**	**132**
0100 - 0115	27	0	**27**	
0115 - 0130	11	0	**11**	
0130 - 0145	21	0	**21**	
0145 - 0200	13	0	**13**	**72**
0200 - 0215	23	0	**23**	
0215 - 0230	14	0	**14**	
0230 - 0245	17	0	**17**	
0245 - 0300	30	0	**30**	**84**
0300 - 0315	12	0	**12**	
0315 - 0330	17	0	**17**	
0330 - 0345	18	0	**18**	
0345 - 0400	10	0	**10**	**57**
0400 - 0415	16	0	**16**	
0415 - 0430	19	0	**19**	
0430 - 0445	23	0	**23**	
0445 - 0500	32	0	**32**	**90**
0500 - 0515	20	0	**20**	
0515 - 0530	27	0	**27**	
0530 - 0545	35	0	**35**	
0545 - 0600	32	0	**32**	**114**
0600 - 0615	32	0	**32**	
0615 - 0630	48	0	**48**	
0630 - 0645	56	0	**56**	
0645 - 0700	62	0	**62**	**198**
0700 - 0715	46	0	**46**	
0715 - 0730	34	0	**34**	
0730 - 0745	36	0	**36**	
0745 - 0800	41	0	**41**	**157**
0800 - 0815	44	0	**44**	
0815 - 0830	45	0	**45**	
0830 - 0845	53	0	**53**	
0845 - 0900	84	0	**84**	**226**
0900 - 0915	72	0	**72**	
0915 - 0930	76	0	**76**	
0930 - 0945	69	0	**69**	
0945 - 1000	77	0	**77**	**294**
1000 - 1015	78	0	**78**	
1015 - 1030	95	0	**95**	
1030 - 1045	92	0	**92**	
1045 - 1100	112	0	**112**	**377**
1100 - 1115	83	0	**83**	
1115 - 1130	102	0	**102**	
1130 - 1145	97	0	**97**	
1145 - 1200	101	0	**101**	**383**

	Volume Summary 15min		15min	60min
Time	NB	SB	Total	Total
1200 - 1215	104	0	**104**	
1215 - 1230	97	0	**97**	
1230 - 1245	110	0	**110**	
1245 - 1300	129	0	**129**	**440**
1300 - 1315	131	0	**131**	
1315 - 1330	96	0	**96**	
1330 - 1345	101	0	**101**	
1345 - 1400	94	0	**94**	**422**
1400 - 1415	95	0	**95**	
1415 - 1430	121	0	**121**	
1430 - 1445	117	0	**117**	
1445 - 1500	101	0	**101**	**434**
1500 - 1515	96	0	**96**	
1515 - 1530	76	0	**76**	
1530 - 1545	103	0	**103**	
1545 - 1600	87	0	**87**	**362**
1600 - 1615	85	0	**85**	
1615 - 1630	89	0	**89**	
1630 - 1645	92	0	**92**	
1645 - 1700	89	0	**89**	**355**
1700 - 1715	85	0	**85**	
1715 - 1730	68	0	**68**	
1730 - 1745	101	0	**101**	
1745 - 1800	77	0	**77**	**331**
1800 - 1815	72	0	**72**	
1815 - 1830	86	0	**86**	
1830 - 1845	77	0	**77**	
1845 - 1900	84	0	**84**	**319**
1900 - 1915	79	0	**79**	
1915 - 1930	74	0	**74**	
1930 - 1945	53	0	**53**	
1945 - 2000	67	0	**67**	**273**
2000 - 2015	64	0	**64**	
2015 - 2030	61	0	**61**	
2030 - 2045	45	0	**45**	
2045 - 2100	46	0	**46**	**216**
2100 - 2115	59	0	**59**	
2115 - 2130	55	0	**55**	
2130 - 2145	43	0	**43**	
2145 - 2200	31	0	**31**	**188**
2200 - 2215	44	0	**44**	
2215 - 2230	46	0	**46**	
2230 - 2245	45	0	**45**	
2245 - 2300	34	0	**34**	**169**
2300 - 2315	17	0	**17**	
2315 - 2330	22	0	**22**	
2330 - 2345	29	0	**29**	
2345 - 0000	22	0	**22**	**90**

Session Total	5783	0	**5783**
Session Average	60.24	0.00	**60.24**
Session Percentage	100.00	0.00	

Site 11
I-26 N/Bound On-Ramp,
north of I-20

Date
Monday, April 22, 2024

Lat/Long
34.037213°, -81.113157°

Weather
Mostly Cloudy
57°F

Click here for Detailed Weather

0000 - 2400 (Weekday 24h Session) (04-22-2024)
Volume Summary 15min

TIME	Volume Summary 15min NB	SB	15min Total	60min Total
0000 - 0015	16	0	**16**	
0015 - 0030	18	0	**18**	
0030 - 0045	10	0	**10**	
0045 - 0100	10	0	**10**	**54**
0100 - 0115	14	0	**14**	
0115 - 0130	9	0	**9**	
0130 - 0145	12	0	**12**	
0145 - 0200	10	0	**10**	**45**
0200 - 0215	8	0	**8**	
0215 - 0230	9	0	**9**	
0230 - 0245	11	0	**11**	
0245 - 0300	21	0	**21**	**49**
0300 - 0315	15	0	**15**	
0315 - 0330	18	0	**18**	
0330 - 0345	27	0	**27**	
0345 - 0400	25	0	**25**	**85**
0400 - 0415	34	0	**34**	
0415 - 0430	29	0	**29**	
0430 - 0445	39	0	**39**	
0445 - 0500	63	0	**63**	**165**
0500 - 0515	64	0	**64**	
0515 - 0530	67	0	**67**	
0530 - 0545	111	0	**111**	
0545 - 0600	101	0	**101**	**343**
0600 - 0615	89	0	**89**	
0615 - 0630	118	0	**118**	
0630 - 0645	182	0	**182**	
0645 - 0700	205	0	**205**	**594**
0700 - 0715	177	0	**177**	
0715 - 0730	179	0	**179**	
0730 - 0745	236	0	**236**	
0745 - 0800	188	0	**188**	**780**
0800 - 0815	179	0	**179**	
0815 - 0830	158	0	**158**	
0830 - 0845	179	0	**179**	
0845 - 0900	176	0	**176**	**692**
0900 - 0915	139	0	**139**	
0915 - 0930	139	0	**139**	
0930 - 0945	157	0	**157**	
0945 - 1000	120	0	**120**	**555**
1000 - 1015	105	0	**105**	
1015 - 1030	131	0	**131**	
1030 - 1045	127	0	**127**	
1045 - 1100	116	0	**116**	**479**
1100 - 1115	118	0	**118**	
1115 - 1130	122	0	**122**	
1130 - 1145	133	0	**133**	
1145 - 1200	107	0	**107**	**480**

Time	Volume Summary 15min NB	SB	15min Total	60min Total
1200 - 1215	101	0	**101**	
1215 - 1230	140	0	**140**	
1230 - 1245	131	0	**131**	
1245 - 1300	105	0	**105**	**477**
1300 - 1315	116	0	**116**	
1315 - 1330	134	0	**134**	
1330 - 1345	132	0	**132**	
1345 - 1400	131	0	**131**	**513**
1400 - 1415	145	0	**145**	
1415 - 1430	114	0	**114**	
1430 - 1445	143	0	**143**	
1445 - 1500	153	0	**153**	**555**
1500 - 1515	129	0	**129**	
1515 - 1530	142	0	**142**	
1530 - 1545	149	0	**149**	
1545 - 1600	139	0	**139**	**559**
1600 - 1615	124	0	**124**	
1615 - 1630	128	0	**128**	
1630 - 1645	113	0	**113**	
1645 - 1700	97	0	**97**	**462**
1700 - 1715	102	0	**102**	
1715 - 1730	122	0	**122**	
1730 - 1745	128	0	**128**	
1745 - 1800	139	0	**139**	**491**
1800 - 1815	130	0	**130**	
1815 - 1830	132	0	**132**	
1830 - 1845	125	0	**125**	
1845 - 1900	107	0	**107**	**494**
1900 - 1915	77	0	**77**	
1915 - 1930	70	0	**70**	
1930 - 1945	56	0	**56**	
1945 - 2000	79	0	**79**	**282**
2000 - 2015	64	0	**64**	
2015 - 2030	54	0	**54**	
2030 - 2045	48	0	**48**	
2045 - 2100	71	0	**71**	**237**
2100 - 2115	47	0	**47**	
2115 - 2130	55	0	**55**	
2130 - 2145	38	0	**38**	
2145 - 2200	40	0	**40**	**180**
2200 - 2215	40	0	**40**	
2215 - 2230	33	0	**33**	
2230 - 2245	52	0	**52**	
2245 - 2300	34	0	**34**	**159**
2300 - 2315	22	0	**22**	
2315 - 2330	13	0	**13**	
2330 - 2345	20	0	**20**	
2345 - 0000	19	0	**19**	**74**

Session Total	8804	0	**8804**
Session Average	91.71	0.00	**91.71**
Session Percentage	100.00	0.00	

Site 11
I-26 N/Bound On-Ramp,
north of I-20

Date
Tuesday, April 23, 2024

Lat/Long
34.037213°, -81.113157°

Weather
Fair
58°F

Click here for Detailed Weather

0000 - 2400 (Weekday 24h Session) (04-23-2024)
Volume Summary 15min

TIME	Volume Summary 15min NB	SB	15min Total	60min Total
0000 - 0015	24	0	**24**	
0015 - 0030	20	0	**20**	
0030 - 0045	13	0	**13**	
0045 - 0100	10	0	**10**	**67**
0100 - 0115	13	0	**13**	
0115 - 0130	10	0	**10**	
0130 - 0145	9	0	**9**	
0145 - 0200	10	0	**10**	**42**
0200 - 0215	16	0	**16**	
0215 - 0230	16	0	**16**	
0230 - 0245	16	0	**16**	
0245 - 0300	22	0	**22**	**70**
0300 - 0315	23	0	**23**	
0315 - 0330	22	0	**22**	
0330 - 0345	31	0	**31**	
0345 - 0400	23	0	**23**	**99**
0400 - 0415	35	0	**35**	
0415 - 0430	38	0	**38**	
0430 - 0445	46	0	**46**	
0445 - 0500	51	0	**51**	**170**
0500 - 0515	58	0	**58**	
0515 - 0530	73	0	**73**	
0530 - 0545	93	0	**93**	
0545 - 0600	84	0	**84**	**308**
0600 - 0615	72	0	**72**	
0615 - 0630	115	0	**115**	
0630 - 0645	173	0	**173**	
0645 - 0700	216	0	**216**	**576**
0700 - 0715	183	0	**183**	
0715 - 0730	180	0	**180**	
0730 - 0745	186	0	**186**	
0745 - 0800	172	0	**172**	**721**
0800 - 0815	185	0	**185**	
0815 - 0830	148	0	**148**	
0830 - 0845	173	0	**173**	
0845 - 0900	164	0	**164**	**670**
0900 - 0915	127	0	**127**	
0915 - 0930	130	0	**130**	
0930 - 0945	152	0	**152**	
0945 - 1000	149	0	**149**	**558**
1000 - 1015	114	0	**114**	
1015 - 1030	126	0	**126**	
1030 - 1045	130	0	**130**	
1045 - 1100	140	0	**140**	**510**
1100 - 1115	120	0	**120**	
1115 - 1130	136	0	**136**	
1130 - 1145	149	0	**149**	
1145 - 1200	128	0	**128**	**533**

Time	Volume Summary 15min NB	SB	15min Total	60min Total
1200 - 1215	122	0	**122**	
1215 - 1230	133	0	**133**	
1230 - 1245	135	0	**135**	
1245 - 1300	120	0	**120**	**510**
1300 - 1315	107	0	**107**	
1315 - 1330	117	0	**117**	
1330 - 1345	135	0	**135**	
1345 - 1400	128	0	**128**	**487**
1400 - 1415	131	0	**131**	
1415 - 1430	124	0	**124**	
1430 - 1445	137	0	**137**	
1445 - 1500	139	0	**139**	**531**
1500 - 1515	133	0	**133**	
1515 - 1530	139	0	**139**	
1530 - 1545	155	0	**155**	
1545 - 1600	151	0	**151**	**578**
1600 - 1615	155	0	**155**	
1615 - 1630	148	0	**148**	
1630 - 1645	155	0	**155**	
1645 - 1700	92	0	**92**	**550**
1700 - 1715	85	0	**85**	
1715 - 1730	123	0	**123**	
1730 - 1745	104	0	**104**	
1745 - 1800	103	0	**103**	**415**
1800 - 1815	128	0	**128**	
1815 - 1830	111	0	**111**	
1830 - 1845	135	0	**135**	
1845 - 1900	104	0	**104**	**478**
1900 - 1915	102	0	**102**	
1915 - 1930	78	0	**78**	
1930 - 1945	85	0	**85**	
1945 - 2000	78	0	**78**	**343**
2000 - 2015	61	0	**61**	
2015 - 2030	57	0	**57**	
2030 - 2045	65	0	**65**	
2045 - 2100	67	0	**67**	**250**
2100 - 2115	59	0	**59**	
2115 - 2130	55	0	**55**	
2130 - 2145	53	0	**53**	
2145 - 2200	41	0	**41**	**208**
2200 - 2215	35	0	**35**	
2215 - 2230	46	0	**46**	
2230 - 2245	32	0	**32**	
2245 - 2300	44	0	**44**	**157**
2300 - 2315	30	0	**30**	
2315 - 2330	26	0	**26**	
2330 - 2345	21	0	**21**	
2345 - 0000	31	0	**31**	**108**

Session Total	8939	0	**8939**
Session Average	93.11	0.00	**93.11**
Session Percentage	100.00	0.00	

Site 11
I-26 N/Bound On-Ramp,
north of I-20

Date
Wednesday, April 24, 2024

Lat/Long
34.037213°, -81.113157°

Weather
Fair
66°F

Click here for Detailed Weather

0000 - 2400 (Weekday 24h Session) (04-24-2024)
Volume Summary 15min

TIME	Volume Summary 15min NB	SB	15min Total	60min Total
0000 - 0015	22	0	**22**	
0015 - 0030	26	0	**26**	
0030 - 0045	18	0	**18**	
0045 - 0100	19	0	**19**	**85**
0100 - 0115	16	0	**16**	
0115 - 0130	16	0	**16**	
0130 - 0145	16	0	**16**	
0145 - 0200	7	0	**7**	**55**
0200 - 0215	11	0	**11**	
0215 - 0230	12	0	**12**	
0230 - 0245	11	0	**11**	
0245 - 0300	25	0	**25**	**59**
0300 - 0315	27	0	**27**	
0315 - 0330	25	0	**25**	
0330 - 0345	34	0	**34**	
0345 - 0400	39	0	**39**	**125**
0400 - 0415	38	0	**38**	
0415 - 0430	34	0	**34**	
0430 - 0445	50	0	**50**	
0445 - 0500	57	0	**57**	**179**
0500 - 0515	50	0	**50**	
0515 - 0530	82	0	**82**	
0530 - 0545	103	0	**103**	
0545 - 0600	116	0	**116**	**351**
0600 - 0615	98	0	**98**	
0615 - 0630	135	0	**135**	
0630 - 0645	188	0	**188**	
0645 - 0700	208	0	**208**	**629**
0700 - 0715	204	0	**204**	
0715 - 0730	183	0	**183**	
0730 - 0745	209	0	**209**	
0745 - 0800	228	0	**228**	**824**
0800 - 0815	140	0	**140**	
0815 - 0830	134	0	**134**	
0830 - 0845	127	0	**127**	
0845 - 0900	145	0	**145**	**546**
0900 - 0915	149	0	**149**	
0915 - 0930	120	0	**120**	
0930 - 0945	149	0	**149**	
0945 - 1000	138	0	**138**	**556**
1000 - 1015	145	0	**145**	
1015 - 1030	125	0	**125**	
1030 - 1045	170	0	**170**	
1045 - 1100	140	0	**140**	**580**
1100 - 1115	141	0	**141**	
1115 - 1130	140	0	**140**	
1130 - 1145	128	0	**128**	
1145 - 1200	132	0	**132**	**541**

Time	Volume Summary 15min NB	SB	15min Total	60min Total
1200 - 1215	139	0	**139**	
1215 - 1230	121	0	**121**	
1230 - 1245	135	0	**135**	
1245 - 1300	109	0	**109**	**504**
1300 - 1315	145	0	**145**	
1315 - 1330	130	0	**130**	
1330 - 1345	137	0	**137**	
1345 - 1400	143	0	**143**	**555**
1400 - 1415	131	0	**131**	
1415 - 1430	138	0	**138**	
1430 - 1445	158	0	**158**	
1445 - 1500	158	0	**158**	**585**
1500 - 1515	122	0	**122**	
1515 - 1530	124	0	**124**	
1530 - 1545	167	0	**167**	
1545 - 1600	160	0	**160**	**573**
1600 - 1615	139	0	**139**	
1615 - 1630	161	0	**161**	
1630 - 1645	113	0	**113**	
1645 - 1700	123	0	**123**	**536**
1700 - 1715	131	0	**131**	
1715 - 1730	113	0	**113**	
1730 - 1745	99	0	**99**	
1745 - 1800	132	0	**132**	**475**
1800 - 1815	121	0	**121**	
1815 - 1830	133	0	**133**	
1830 - 1845	114	0	**114**	
1845 - 1900	107	0	**107**	**475**
1900 - 1915	92	0	**92**	
1915 - 1930	86	0	**86**	
1930 - 1945	69	0	**69**	
1945 - 2000	74	0	**74**	**321**
2000 - 2015	93	0	**93**	
2015 - 2030	73	0	**73**	
2030 - 2045	71	0	**71**	
2045 - 2100	62	0	**62**	**299**
2100 - 2115	51	0	**51**	
2115 - 2130	46	0	**46**	
2130 - 2145	49	0	**49**	
2145 - 2200	43	0	**43**	**189**
2200 - 2215	47	0	**47**	
2215 - 2230	46	0	**46**	
2230 - 2245	58	0	**58**	
2245 - 2300	42	0	**42**	**193**
2300 - 2315	33	0	**33**	
2315 - 2330	30	0	**30**	
2330 - 2345	44	0	**44**	
2345 - 0000	30	0	**30**	**137**

Session Total	9372	0	**9372**
Session Average	97.63	0.00	**97.63**
Session Percentage	100.00	0.00	

Site 11
I-26 N/Bound On-Ramp,
north of I-20

Date
Thursday, April 25, 2024

Lat/Long
34.037213°, -81.113157°

Weather
Fair
67°F

Click here for Detailed Weather

0000 - 2400 (Weekday 24h Session) (04-25-2024)
Volume Summary 15min

TIME	Volume Summary 15min NB	SB	15min Total	60min Total
0000 - 0015	25	0	**25**	
0015 - 0030	12	0	**12**	
0030 - 0045	19	0	**19**	
0045 - 0100	24	0	**24**	**80**
0100 - 0115	25	0	**25**	
0115 - 0130	12	0	**12**	
0130 - 0145	12	0	**12**	
0145 - 0200	9	0	**9**	**58**
0200 - 0215	17	0	**17**	
0215 - 0230	9	0	**9**	
0230 - 0245	10	0	**10**	
0245 - 0300	25	0	**25**	**61**
0300 - 0315	32	0	**32**	
0315 - 0330	18	0	**18**	
0330 - 0345	34	0	**34**	
0345 - 0400	47	0	**47**	**131**
0400 - 0415	34	0	**34**	
0415 - 0430	38	0	**38**	
0430 - 0445	55	0	**55**	
0445 - 0500	55	0	**55**	**182**
0500 - 0515	57	0	**57**	
0515 - 0530	61	0	**61**	
0530 - 0545	107	0	**107**	
0545 - 0600	103	0	**103**	**328**
0600 - 0615	105	0	**105**	
0615 - 0630	113	0	**113**	
0630 - 0645	168	0	**168**	
0645 - 0700	213	0	**213**	**599**
0700 - 0715	174	0	**174**	
0715 - 0730	200	0	**200**	
0730 - 0745	193	0	**193**	
0745 - 0800	180	0	**180**	**747**
0800 - 0815	187	0	**187**	
0815 - 0830	167	0	**167**	
0830 - 0845	153	0	**153**	
0845 - 0900	141	0	**141**	**648**
0900 - 0915	142	0	**142**	
0915 - 0930	126	0	**126**	
0930 - 0945	128	0	**128**	
0945 - 1000	148	0	**148**	**544**
1000 - 1015	119	0	**119**	
1015 - 1030	124	0	**124**	
1030 - 1045	144	0	**144**	
1045 - 1100	119	0	**119**	**506**
1100 - 1115	158	0	**158**	
1115 - 1130	129	0	**129**	
1130 - 1145	134	0	**134**	
1145 - 1200	142	0	**142**	**563**

Time	Volume Summary 15min NB	SB	15min Total	60min Total
1200 - 1215	127	0	**127**	
1215 - 1230	107	0	**107**	
1230 - 1245	109	0	**109**	
1245 - 1300	135	0	**135**	**478**
1300 - 1315	137	0	**137**	
1315 - 1330	146	0	**146**	
1330 - 1345	147	0	**147**	
1345 - 1400	136	0	**136**	**566**
1400 - 1415	115	0	**115**	
1415 - 1430	158	0	**158**	
1430 - 1445	158	0	**158**	
1445 - 1500	148	0	**148**	**579**
1500 - 1515	134	0	**134**	
1515 - 1530	143	0	**143**	
1530 - 1545	161	0	**161**	
1545 - 1600	142	0	**142**	**580**
1600 - 1615	143	0	**143**	
1615 - 1630	128	0	**128**	
1630 - 1645	151	0	**151**	
1645 - 1700	102	0	**102**	**524**
1700 - 1715	109	0	**109**	
1715 - 1730	109	0	**109**	
1730 - 1745	95	0	**95**	
1745 - 1800	118	0	**118**	**431**
1800 - 1815	150	0	**150**	
1815 - 1830	138	0	**138**	
1830 - 1845	112	0	**112**	
1845 - 1900	127	0	**127**	**527**
1900 - 1915	101	0	**101**	
1915 - 1930	88	0	**88**	
1930 - 1945	99	0	**99**	
1945 - 2000	79	0	**79**	**367**
2000 - 2015	64	0	**64**	
2015 - 2030	63	0	**63**	
2030 - 2045	66	0	**66**	
2045 - 2100	54	0	**54**	**247**
2100 - 2115	59	0	**59**	
2115 - 2130	70	0	**70**	
2130 - 2145	54	0	**54**	
2145 - 2200	44	0	**44**	**227**
2200 - 2215	50	0	**50**	
2215 - 2230	46	0	**46**	
2230 - 2245	52	0	**52**	
2245 - 2300	41	0	**41**	**189**
2300 - 2315	32	0	**32**	
2315 - 2330	29	0	**29**	
2330 - 2345	33	0	**33**	
2345 - 0000	20	0	**20**	**114**

Session Total	9276	0	**9276**
Session Average	96.63	0.00	**96.63**
Session Percentage	100.00	0.00	

Site 11
I-26 N/Bound On-Ramp,
north of I-20

Date
Friday, April 26, 2024

Lat/Long
34.037213°, -81.113157°

Weather
Cloudy
69°F

Click here for Detailed Weather

0000 - 2400 (Weekday 24h Session) (04-26-2024)
Volume Summary 15min

TIME	Volume Summary 15min NB	SB	15min Total	60min Total
0000 - 0015	16	0	**16**	
0015 - 0030	23	0	**23**	
0030 - 0045	22	0	**22**	
0045 - 0100	16	0	**16**	**77**
0100 - 0115	13	0	**13**	
0115 - 0130	12	0	**12**	
0130 - 0145	18	0	**18**	
0145 - 0200	21	0	**21**	**64**
0200 - 0215	10	0	**10**	
0215 - 0230	15	0	**15**	
0230 - 0245	19	0	**19**	
0245 - 0300	19	0	**19**	**63**
0300 - 0315	26	0	**26**	
0315 - 0330	23	0	**23**	
0330 - 0345	34	0	**34**	
0345 - 0400	36	0	**36**	**119**
0400 - 0415	39	0	**39**	
0415 - 0430	40	0	**40**	
0430 - 0445	49	0	**49**	
0445 - 0500	68	0	**68**	**196**
0500 - 0515	70	0	**70**	
0515 - 0530	61	0	**61**	
0530 - 0545	89	0	**89**	
0545 - 0600	98	0	**98**	**318**
0600 - 0615	97	0	**97**	
0615 - 0630	107	0	**107**	
0630 - 0645	173	0	**173**	
0645 - 0700	172	0	**172**	**549**
0700 - 0715	154	0	**154**	
0715 - 0730	172	0	**172**	
0730 - 0745	186	0	**186**	
0745 - 0800	178	0	**178**	**690**
0800 - 0815	134	0	**134**	
0815 - 0830	162	0	**162**	
0830 - 0845	175	0	**175**	
0845 - 0900	149	0	**149**	**620**
0900 - 0915	106	0	**106**	
0915 - 0930	153	0	**153**	
0930 - 0945	124	0	**124**	
0945 - 1000	150	0	**150**	**533**
1000 - 1015	119	0	**119**	
1015 - 1030	154	0	**154**	
1030 - 1045	140	0	**140**	
1045 - 1100	129	0	**129**	**542**
1100 - 1115	122	0	**122**	
1115 - 1130	124	0	**124**	
1130 - 1145	133	0	**133**	
1145 - 1200	139	0	**139**	**518**

Time	Volume Summary 15min NB	SB	15min Total	60min Total
1200 - 1215	133	0	**133**	
1215 - 1230	143	0	**143**	
1230 - 1245	135	0	**135**	
1245 - 1300	118	0	**118**	**529**
1300 - 1315	141	0	**141**	
1315 - 1330	146	0	**146**	
1330 - 1345	135	0	**135**	
1345 - 1400	125	0	**125**	**547**
1400 - 1415	112	0	**112**	
1415 - 1430	176	0	**176**	
1430 - 1445	157	0	**157**	
1445 - 1500	136	0	**136**	**581**
1500 - 1515	127	0	**127**	
1515 - 1530	121	0	**121**	
1530 - 1545	152	0	**152**	
1545 - 1600	125	0	**125**	**525**
1600 - 1615	115	0	**115**	
1615 - 1630	129	0	**129**	
1630 - 1645	152	0	**152**	
1645 - 1700	105	0	**105**	**501**
1700 - 1715	111	0	**111**	
1715 - 1730	136	0	**136**	
1730 - 1745	120	0	**120**	
1745 - 1800	141	0	**141**	**508**
1800 - 1815	120	0	**120**	
1815 - 1830	143	0	**143**	
1830 - 1845	143	0	**143**	
1845 - 1900	130	0	**130**	**536**
1900 - 1915	121	0	**121**	
1915 - 1930	98	0	**98**	
1930 - 1945	91	0	**91**	
1945 - 2000	91	0	**91**	**401**
2000 - 2015	85	0	**85**	
2015 - 2030	71	0	**71**	
2030 - 2045	79	0	**79**	
2045 - 2100	66	0	**66**	**301**
2100 - 2115	63	0	**63**	
2115 - 2130	58	0	**58**	
2130 - 2145	68	0	**68**	
2145 - 2200	64	0	**64**	**253**
2200 - 2215	67	0	**67**	
2215 - 2230	63	0	**63**	
2230 - 2245	59	0	**59**	
2245 - 2300	42	0	**42**	**231**
2300 - 2315	48	0	**48**	
2315 - 2330	28	0	**28**	
2330 - 2345	36	0	**36**	
2345 - 0000	43	0	**43**	**155**

Session Total	9357	0	**9357**
Session Average	97.47	0.00	**97.47**
Session Percentage	100.00	0.00	

Site 11
I-26 N/Bound On-Ramp,
north of I-20

Date
Saturday, April 27, 2024

Lat/Long
34.037213°, -81.113157°

Weather
Mostly Cloudy
69°F

Click here for Detailed Weather

0000 - 2400 (Saturday 24h Session) (04-27-2024)
Volume Summary 15min

TIME	Volume Summary 15min NB	SB	15min Total	60min Total
0000 - 0015	30	0	**30**	
0015 - 0030	39	0	**39**	
0030 - 0045	25	0	**25**	
0045 - 0100	15	0	**15**	**109**
0100 - 0115	17	0	**17**	
0115 - 0130	17	0	**17**	
0130 - 0145	13	0	**13**	
0145 - 0200	18	0	**18**	**65**
0200 - 0215	26	0	**26**	
0215 - 0230	19	0	**19**	
0230 - 0245	14	0	**14**	
0245 - 0300	23	0	**23**	**82**
0300 - 0315	19	0	**19**	
0315 - 0330	30	0	**30**	
0330 - 0345	26	0	**26**	
0345 - 0400	31	0	**31**	**106**
0400 - 0415	25	0	**25**	
0415 - 0430	27	0	**27**	
0430 - 0445	43	0	**43**	
0445 - 0500	42	0	**42**	**137**
0500 - 0515	27	0	**27**	
0515 - 0530	40	0	**40**	
0530 - 0545	44	0	**44**	
0545 - 0600	56	0	**56**	**167**
0600 - 0615	39	0	**39**	
0615 - 0630	64	0	**64**	
0630 - 0645	76	0	**76**	
0645 - 0700	77	0	**77**	**256**
0700 - 0715	64	0	**64**	
0715 - 0730	74	0	**74**	
0730 - 0745	102	0	**102**	
0745 - 0800	107	0	**107**	**347**
0800 - 0815	92	0	**92**	
0815 - 0830	103	0	**103**	
0830 - 0845	117	0	**117**	
0845 - 0900	108	0	**108**	**420**
0900 - 0915	89	0	**89**	
0915 - 0930	116	0	**116**	
0930 - 0945	139	0	**139**	
0945 - 1000	126	0	**126**	**470**
1000 - 1015	118	0	**118**	
1015 - 1030	121	0	**121**	
1030 - 1045	113	0	**113**	
1045 - 1100	129	0	**129**	**481**
1100 - 1115	118	0	**118**	
1115 - 1130	141	0	**141**	
1130 - 1145	132	0	**132**	
1145 - 1200	142	0	**142**	**533**

Time	Volume Summary 15min NB	SB	15min Total	60min Total
1200 - 1215	143	0	**143**	
1215 - 1230	125	0	**125**	
1230 - 1245	111	0	**111**	
1245 - 1300	134	0	**134**	**513**
1300 - 1315	124	0	**124**	
1315 - 1330	134	0	**134**	
1330 - 1345	133	0	**133**	
1345 - 1400	128	0	**128**	**519**
1400 - 1415	115	0	**115**	
1415 - 1430	121	0	**121**	
1430 - 1445	141	0	**141**	
1445 - 1500	136	0	**136**	**513**
1500 - 1515	118	0	**118**	
1515 - 1530	135	0	**135**	
1530 - 1545	132	0	**132**	
1545 - 1600	108	0	**108**	**493**
1600 - 1615	99	0	**99**	
1615 - 1630	95	0	**95**	
1630 - 1645	88	0	**88**	
1645 - 1700	96	0	**96**	**378**
1700 - 1715	123	0	**123**	
1715 - 1730	100	0	**100**	
1730 - 1745	89	0	**89**	
1745 - 1800	93	0	**93**	**405**
1800 - 1815	112	0	**112**	
1815 - 1830	87	0	**87**	
1830 - 1845	117	0	**117**	
1845 - 1900	100	0	**100**	**416**
1900 - 1915	60	0	**60**	
1915 - 1930	89	0	**89**	
1930 - 1945	84	0	**84**	
1945 - 2000	69	0	**69**	**302**
2000 - 2015	72	0	**72**	
2015 - 2030	65	0	**65**	
2030 - 2045	62	0	**62**	
2045 - 2100	53	0	**53**	**252**
2100 - 2115	62	0	**62**	
2115 - 2130	62	0	**62**	
2130 - 2145	56	0	**56**	
2145 - 2200	46	0	**46**	**226**
2200 - 2215	58	0	**58**	
2215 - 2230	43	0	**43**	
2230 - 2245	56	0	**56**	
2245 - 2300	48	0	**48**	**205**
2300 - 2315	57	0	**57**	
2315 - 2330	32	0	**32**	
2330 - 2345	30	0	**30**	
2345 - 0000	34	0	**34**	**153**

Session Total	7548	0	**7548**
Session Average	78.63	0.00	**78.63**
Session Percentage	100.00	0.00	

Bi-Directional Class Count || NB EB 60min

Columbia, SC

Marr Traffic DATA COLLECTION

www.marrtraffic.com

Site 11
I-26 N/Bound On-Ramp,
north of I-20

Date
Sunday, April 21, 2024

Lat/Long
34.037213°, -81.113157°

Weather
Cloudy
66°F

Click here for Detailed Weather

0000 - 2400 (Sunday 24h Session) (04-21-2024)
NB EB 60min

	Northbound (Movement 11.1)													
TIME	1	2	3	4	5	6	7	8	9	10	11	12	13	**Total**
0000 - 0100	0	110	22	0	0	0	0	0	0	0	0	0	0	**132**
0100 - 0200	0	62	10	0	0	0	0	0	0	0	0	0	0	**72**
0200 - 0300	0	72	9	1	1	0	0	0	1	0	0	0	0	**84**
0300 - 0400	0	50	7	0	0	0	0	0	0	0	0	0	0	**57**
0400 - 0500	0	74	14	0	1	0	0	0	1	0	0	0	0	**90**
0500 - 0600	0	89	22	0	1	0	0	1	1	0	0	0	0	**114**
0600 - 0700	0	177	18	0	0	0	0	0	3	0	0	0	0	**198**
0700 - 0800	0	130	23	1	0	1	0	2	0	0	0	0	0	**157**
0800 - 0900	0	187	33	1	2	0	0	0	3	0	0	0	0	**226**
0900 - 1000	1	235	52	0	3	1	0	0	2	0	0	0	0	**294**
1000 - 1100	0	308	63	1	2	0	0	0	3	0	0	0	0	**377**
1100 - 1200	0	304	67	0	7	0	0	0	5	0	0	0	0	**383**
1200 - 1300	0	358	75	0	2	3	0	0	2	0	0	0	0	**440**
1300 - 1400	0	358	58	0	1	0	0	2	2	1	0	0	0	**422**
1400 - 1500	1	354	73	1	2	0	0	0	3	0	0	0	0	**434**
1500 - 1600	0	294	59	0	1	0	0	2	6	0	0	0	0	**362**
1600 - 1700	0	282	65	2	2	1	0	1	2	0	0	0	0	**355**
1700 - 1800	1	274	43	2	5	2	0	0	4	0	0	0	0	**331**
1800 - 1900	0	271	42	1	3	0	0	0	2	0	0	0	0	**319**
1900 - 2000	0	223	44	1	2	0	0	0	3	0	0	0	0	**273**
2000 - 2100	0	176	32	0	4	1	0	0	3	0	0	0	0	**216**
2100 - 2200	0	146	34	0	4	0	0	1	3	0	0	0	0	**188**
2200 - 2300	0	135	26	0	1	1	0	2	3	0	1	0	0	**169**
2300 - 2400	0	74	15	0	0	0	0	0	1	0	0	0	0	**90**

Session Total	3	4743	906	11	44	10	0	11	53	1	1	0	0	**5783**
Session Average	0.13	197.63	37.75	0.46	1.83	0.42	0.00	0.46	2.21	0.04	0.04	0.00	0.00	**240.96**
Session Percentage	0.05	82.02	15.67	0.19	0.76	0.17	0.00	0.19	0.92	0.02	0.02	0.00	0.00	

AM Peak Hour	0900 - 1000	0900 - 1000	0900 - 1000	0700 - 0800	0900 - 1000	0700 - 0800	-	0700 - 0800	0600 - 0700	-	-	-	-	**0900 - 1000**
AM Peak Volume	1	235	52	1	3	1	0	2	3	0	0	0	0	**294**

Noon Peak Hour	1400 - 1500	1200 - 1300	1200 - 1300	1000 - 1100	1100 - 1200	1200 - 1300	-	1300 - 1400	1100 - 1200	1300 - 1400	-	-	-	**1200 - 1300**
Noon Peak Volume	1	358	75	1	7	3	0	2	5	1	0	0	0	**440**

PM Peak Hour	1700 - 1800	1500 - 1600	1600 - 1700	1600 - 1700	1700 - 1800	1700 - 1800	-	1500 - 1600	1500 - 1600	-	-	-	-	**1500 - 1600**
PM Peak Volume	1	294	65	2	5	2	0	2	6	0	0	0	0	**362**

Site 11
I-26 N/Bound On-Ramp,
north of I-20

Date
Monday, April 22, 2024

Lat/Long
34.037213°, -81.113157°

Weather
Mostly Cloudy
57°F

Click here for Detailed Weather

0000 - 2400 (Weekday 24h Session) (04-22-2024)
NB EB 60min

	Northbound (Movement 11.1)													
TIME	1	2	3	4	5	6	7	8	9	10	11	12	13	**Total**
0000 - 0100	0	47	5	0	1	0	0	0	1	0	0	0	0	**54**
0100 - 0200	0	36	3	0	0	0	0	0	6	0	0	0	0	**45**
0200 - 0300	0	32	7	0	2	1	0	0	7	0	0	0	0	**49**
0300 - 0400	0	60	17	0	1	2	0	0	5	0	0	0	0	**85**
0400 - 0500	0	127	18	0	2	4	0	1	13	0	0	0	0	**165**
0500 - 0600	0	258	58	0	4	0	0	1	22	0	0	0	0	**343**
0600 - 0700	2	455	97	0	6	6	0	1	27	0	0	0	0	**594**
0700 - 0800	0	584	157	1	13	7	1	4	13	0	0	0	0	**780**
0800 - 0900	0	486	156	2	17	6	0	3	22	0	0	0	0	**692**
0900 - 1000	0	387	112	1	15	7	1	3	29	0	0	0	0	**555**
1000 - 1100	0	297	119	1	14	4	1	4	37	2	0	0	0	**479**
1100 - 1200	1	296	125	2	18	4	0	1	31	2	0	0	0	**480**
1200 - 1300	0	324	108	1	8	7	2	1	25	1	0	0	0	**477**
1300 - 1400	2	345	115	0	15	5	1	3	25	2	0	0	0	**513**
1400 - 1500	1	369	125	1	19	5	3	2	29	1	0	0	0	**555**
1500 - 1600	0	378	128	0	26	4	1	1	21	0	0	0	0	**559**
1600 - 1700	0	301	114	2	17	4	0	1	22	1	0	0	0	**462**
1700 - 1800	3	331	126	0	12	2	0	4	13	0	0	0	0	**491**
1800 - 1900	0	371	102	0	12	0	0	1	7	1	0	0	0	**494**
1900 - 2000	0	198	64	0	11	0	0	1	8	0	0	0	0	**282**
2000 - 2100	1	177	46	0	7	0	0	0	4	1	1	0	0	**237**
2100 - 2200	0	136	30	0	2	3	0	1	6	0	2	0	0	**180**
2200 - 2300	0	127	23	0	3	1	0	0	5	0	0	0	0	**159**
2300 - 2400	0	61	8	0	1	1	0	0	2	0	1	0	0	**74**

Session Total	10	6183	1863	11	226	73	10	33	380	11	4	0	0	**8804**
Session Average	0.42	257.63	77.63	0.46	9.42	3.04	0.42	1.38	15.83	0.46	0.17	0.00	0.00	**366.83**
Session Percentage	0.11	70.23	21.16	0.12	2.57	0.83	0.11	0.37	4.32	0.12	0.05	0.00	0.00	

AM Peak Hour	0600 - 0700	0700 - 0800	0700 - 0800	0800 - 0900	0800 - 0900	0700 - 0800	0700 - 0800	0700 - 0800	0900 - 1000	-	-	-	-	**0700 - 0800**
AM Peak Volume	2	584	157	2	17	7	1	4	29	0	0	0	0	**780**

Noon Peak Hour	1300 - 1400	1400 - 1500	1100 - 1200	1100 - 1200	1400 - 1500	1200 - 1300	1400 - 1500	1000 - 1100	1000 - 1100	1000 - 1100	-	-	-	**1400 - 1500**
Noon Peak Volume	2	369	125	2	19	7	3	4	37	2	0	0	0	**555**

PM Peak Hour	1700 - 1800	1500 - 1600	1500 - 1600	1600 - 1700	1500 - 1600	1500 - 1600	1500 - 1600	1700 - 1800	1600 - 1700	1600 - 1700	-	-	-	**1500 - 1600**
PM Peak Volume	3	378	128	2	26	4	1	4	22	1	0	0	0	**559**

Site 11
I-26 N/Bound On-Ramp,
north of I-20

Date
Tuesday, April 23, 2024

Lat/Long
34.037213°, -81.113157°

Weather
Fair
58°F

Click here for Detailed Weather

0000 - 2400 (Weekday 24h Session) (04-23-2024)
NB EB 60min

	Northbound (Movement 11.1)													
TIME	1	2	3	4	5	6	7	8	9	10	11	12	13	**Total**
0000 - 0100	0	53	7	0	1	0	0	2	3	0	1	0	0	**67**
0100 - 0200	0	33	1	0	3	0	0	0	4	0	0	1	0	**42**
0200 - 0300	0	47	4	0	0	0	0	2	15	0	0	2	0	**70**
0300 - 0400	0	76	5	0	3	2	0	1	12	0	0	0	0	**99**
0400 - 0500	0	124	19	0	4	2	0	0	20	0	0	1	0	**170**
0500 - 0600	0	233	40	0	5	4	0	1	21	0	1	3	0	**308**
0600 - 0700	1	452	82	0	8	4	0	1	28	0	0	0	0	**576**
0700 - 0800	0	538	137	1	20	10	0	1	14	0	0	0	0	**721**
0800 - 0900	2	466	144	1	27	6	0	2	22	0	0	0	0	**670**
0900 - 1000	0	368	126	3	22	0	0	2	36	0	0	1	0	**558**
1000 - 1100	1	339	104	0	30	2	0	1	33	0	0	0	0	**510**
1100 - 1200	1	343	114	1	23	6	0	5	40	0	0	0	0	**533**
1200 - 1300	0	353	105	0	17	6	0	2	27	0	0	0	0	**510**
1300 - 1400	2	325	103	0	21	2	0	0	34	0	0	0	0	**487**
1400 - 1500	0	371	111	1	18	6	0	3	21	0	0	0	0	**531**
1500 - 1600	0	391	131	1	20	4	0	5	26	0	0	0	0	**578**
1600 - 1700	2	362	137	1	10	10	0	5	23	0	0	0	0	**550**
1700 - 1800	0	310	78	1	13	1	0	3	9	0	0	0	0	**415**
1800 - 1900	1	323	116	2	15	1	0	6	14	0	0	0	0	**478**
1900 - 2000	0	249	69	0	10	1	0	0	12	0	1	1	0	**343**
2000 - 2100	0	182	57	0	4	0	0	0	6	0	0	1	0	**250**
2100 - 2200	0	147	51	0	0	0	0	1	5	0	1	3	0	**208**
2200 - 2300	0	115	29	0	5	1	0	0	7	0	0	0	0	**157**
2300 - 2400	0	67	24	0	5	0	0	2	7	0	2	1	0	**108**

Session Total	10	6267	1794	12	284	68	0	45	439	0	6	14	0	**8939**
Session Average	0.42	261.13	74.75	0.50	11.83	2.83	0.00	1.88	18.29	0.00	0.25	0.58	0.00	**372.46**
Session Percentage	0.11	70.11	20.07	0.13	3.18	0.76	0.00	0.50	4.91	0.00	0.07	0.16	0.00	

AM Peak Hour	0800 - 0900	0700 - 0800	0800 - 0900	0900 - 1000	0800 - 0900	0700 - 0800	-	0800 - 0900	0900 - 1000	-	0500 - 0600	0500 - 0600	-	**0700 - 0800**
AM Peak Hour Volume	2	538	144	3	27	10	0	2	36	0	1	3	0	**721**

Noon Peak Hour	1300 - 1400	1400 - 1500	1100 - 1200	1100 - 1200	1000 - 1100	1100 - 1200	-	1100 - 1200	1100 - 1200	-	-	-	-	**1100 - 1200**
Noon Peak Hour Volume	2	371	114	1	30	6	0	5	40	0	0	0	0	**533**

PM Peak Hour	1600 - 1700	1500 - 1600	1600 - 1700	1800 - 1900	1500 - 1600	1600 - 1700	-	1800 - 1900	1500 - 1600	-	1900 - 2000	1900 - 2000	-	**1500 - 1600**
PM Peak Hour Volume	2	391	137	2	20	10	0	6	26	0	1	1	0	**578**

Site 11
I-26 N/Bound On-Ramp,
north of I-20

Date
Wednesday, April 24, 2024

Lat/Long
34.037213°, -81.113157°

Weather
Fair
66°F

Click here for Detailed Weather

0000 - 2400 (Weekday 24h Session) (04-24-2024)
NB EB 60min

	Northbound (Movement 11.1)													
TIME	1	2	3	4	5	6	7	8	9	10	11	12	13	**Total**
0000 - 0100	0	51	22	0	3	0	0	0	7	0	2	0	0	**85**
0100 - 0200	0	37	6	0	3	0	0	0	7	0	2	0	0	**55**
0200 - 0300	0	33	12	0	3	0	0	1	7	0	3	0	0	**59**
0300 - 0400	0	73	33	0	2	3	0	0	14	0	0	0	0	**125**
0400 - 0500	0	105	49	0	8	2	0	1	14	0	0	0	0	**179**
0500 - 0600	1	217	101	0	7	1	0	1	20	0	3	0	0	**351**
0600 - 0700	3	448	120	0	18	4	0	3	33	0	0	0	0	**629**
0700 - 0800	0	615	165	1	14	4	0	5	19	1	0	0	0	**824**
0800 - 0900	0	388	111	2	16	7	0	2	20	0	0	0	0	**546**
0900 - 1000	1	370	123	0	17	6	0	3	35	1	0	0	0	**556**
1000 - 1100	0	372	139	3	20	3	0	5	38	0	0	0	0	**580**
1100 - 1200	0	342	139	0	16	10	0	4	29	1	0	0	0	**541**
1200 - 1300	0	349	119	0	9	5	0	1	20	1	0	0	0	**504**
1300 - 1400	1	374	125	0	23	3	0	6	22	1	0	0	0	**555**
1400 - 1500	1	363	151	5	29	2	0	9	24	1	0	0	0	**585**
1500 - 1600	0	392	129	0	10	6	0	6	29	1	0	0	0	**573**
1600 - 1700	0	377	119	1	15	6	0	1	17	0	0	0	0	**536**
1700 - 1800	0	344	101	0	11	3	0	3	13	0	0	0	0	**475**
1800 - 1900	1	351	98	0	8	1	0	2	14	0	0	0	0	**475**
1900 - 2000	0	236	67	0	10	2	0	2	4	0	0	0	0	**321**
2000 - 2100	0	209	68	0	9	2	0	3	7	0	1	0	0	**299**
2100 - 2200	2	107	65	0	6	0	0	3	3	1	2	0	0	**189**
2200 - 2300	0	119	58	0	4	0	0	4	5	0	3	0	0	**193**
2300 - 2400	0	88	35	0	6	0	0	2	4	0	2	0	0	**137**

Session Total	10	6360	2155	12	267	70	0	67	405	8	18	0	0	**9372**
Session Average	0.42	265.00	89.79	0.50	11.13	2.92	0.00	2.79	16.88	0.33	0.75	0.00	0.00	**390.50**
Session Percentage	0.11	67.86	22.99	0.13	2.85	0.75	0.00	0.71	4.32	0.09	0.19	0.00	0.00	

AM Peak Hour	0600 - 0700	0700 - 0800	0700 - 0800	0800 - 0900	0600 - 0700	0800 - 0900	-	0700 - 0800	0900 - 1000	0700 - 0800	0500 - 0600	-	-	**0700 - 0800**
AM Peak Hour Volume	3	615	165	2	18	7	0	5	35	1	3	0	0	**824**

Noon Peak Hour	1300 - 1400	1300 - 1400	1400 - 1500	1400 - 1500	1400 - 1500	1100 - 1200	-	1400 - 1500	1000 - 1100	1100 - 1200	-	-	-	**1400 - 1500**
Noon Peak Hour Volume	1	374	151	5	29	10	0	9	38	1	0	0	0	**585**

PM Peak Hour	1800 - 1900	1500 - 1600	1500 - 1600	1600 - 1700	1600 - 1700	1500 - 1600	-	1500 - 1600	1500 - 1600	1500 - 1600	-	-	-	**1500 - 1600**
PM Peak Hour Volume	1	392	129	1	15	6	0	6	29	1	0	0	0	**573**

Site 11
I-26 N/Bound On-Ramp,
north of I-20

Date
Thursday, April 25, 2024

Lat/Long
34.037213°, -81.113157°

Weather
Fair
67°F

Click here for Detailed Weather

0000 - 2400 (Weekday 24h Session) (04-25-2024)
NB EB 60min

	Northbound (Movement 11.1)													
TIME	1	2	3	4	5	6	7	8	9	10	11	12	13	**Total**
0000 - 0100	0	55	11	0	2	4	0	0	7	0	1	0	0	**80**
0100 - 0200	0	43	7	0	1	1	0	0	4	0	2	0	0	**58**
0200 - 0300	0	37	4	0	5	0	0	0	13	0	2	0	0	**61**
0300 - 0400	0	99	17	0	0	1	0	0	14	0	0	0	0	**131**
0400 - 0500	0	129	27	0	7	3	0	0	16	0	0	0	0	**182**
0500 - 0600	0	265	41	1	5	1	0	0	13	0	2	0	0	**328**
0600 - 0700	2	465	93	0	8	7	0	1	23	0	0	0	0	**599**
0700 - 0800	1	563	138	2	14	8	0	5	16	0	0	0	0	**747**
0800 - 0900	0	470	139	3	16	6	0	2	12	0	0	0	0	**648**
0900 - 1000	0	371	106	6	14	10	0	3	33	0	1	0	0	**544**
1000 - 1100	0	338	110	1	14	4	0	5	34	0	0	0	0	**506**
1100 - 1200	0	373	144	2	12	6	0	4	22	0	0	0	0	**563**
1200 - 1300	2	319	111	0	15	3	0	3	24	1	0	0	0	**478**
1300 - 1400	0	404	118	2	16	3	0	2	21	0	0	0	0	**566**
1400 - 1500	0	405	116	2	22	5	0	4	25	0	0	0	0	**579**
1500 - 1600	2	401	122	2	18	9	0	4	22	0	0	0	0	**580**
1600 - 1700	0	355	127	2	16	0	0	1	21	2	0	0	0	**524**
1700 - 1800	0	308	94	1	15	0	0	3	10	0	0	0	0	**431**
1800 - 1900	0	379	112	2	14	3	0	0	17	0	0	0	0	**527**
1900 - 2000	1	273	72	0	10	2	0	4	5	0	0	0	0	**367**
2000 - 2100	0	185	52	0	4	0	0	0	5	0	1	0	0	**247**
2100 - 2200	1	174	45	1	1	0	0	1	3	0	1	0	0	**227**
2200 - 2300	0	138	35	0	6	0	0	4	4	0	2	0	0	**189**
2300 - 2400	0	91	14	0	3	0	0	1	3	0	2	0	0	**114**

Session Total	9	6640	1855	27	238	76	0	47	367	3	14	0	0	**9276**
Session Average	0.38	276.67	77.29	1.13	9.92	3.17	0.00	1.96	15.29	0.13	0.58	0.00	0.00	**386.50**
Session Percentage	0.10	71.58	20.00	0.29	2.57	0.82	0.00	0.51	3.96	0.03	0.15	0.00	0.00	

AM Peak Hour	0600 - 0700	0700 - 0800	0800 - 0900	0900 - 1000	0800 - 0900	0900 - 1000	-	0700 - 0800	0900 - 1000	-	0500 - 0600	-	-	**0700 - 0800**
AM Peak Hour Volume	2	563	139	6	16	10	0	5	33	0	2	0	0	**747**

Noon Peak Hour	1200 - 1300	1400 - 1500	1100 - 1200	1100 - 1200	1400 - 1500	1100 - 1200	-	1000 - 1100	1000 - 1100	1200 - 1300	-	-	-	**1400 - 1500**
Noon Peak Hour Volume	2	405	144	2	22	6	0	5	34	1	0	0	0	**579**

PM Peak Hour	1500 - 1600	1500 - 1600	1600 - 1700	1500 - 1600	1500 - 1600	1500 - 1600	-	1500 - 1600	1500 - 1600	1600 - 1700	-	-	-	**1500 - 1600**
PM Peak Hour Volume	2	401	127	2	18	9	0	4	22	2	0	0	0	**580**

Site 11
I-26 N/Bound On-Ramp,
north of I-20

Date
Friday, April 26, 2024

Lat/Long
34.037213°, -81.113157°

Weather
Cloudy
69°F

Click here for Detailed Weather

0000 - 2400 (Weekday 24h Session) (04-26-2024)
NB EB 60min

	Northbound (Movement 11.1)													
TIME	1	2	3	4	5	6	7	8	9	10	11	12	13	**Total**
0000 - 0100	0	63	2	0	5	0	0	0	7	0	0	0	0	**77**
0100 - 0200	0	48	2	0	1	6	0	0	7	0	0	0	0	**64**
0200 - 0300	0	48	0	0	7	0	0	0	4	0	4	0	0	**63**
0300 - 0400	0	95	1	0	3	1	0	0	18	0	1	0	0	**119**
0400 - 0500	0	162	4	0	0	3	0	1	26	0	0	0	0	**196**
0500 - 0600	0	256	33	0	10	0	0	0	18	0	1	0	0	**318**
0600 - 0700	2	432	80	0	6	6	1	0	20	0	2	0	0	**549**
0700 - 0800	1	521	124	2	12	7	1	4	17	1	0	0	0	**690**
0800 - 0900	0	450	120	2	15	5	4	3	19	2	0	0	0	**620**
0900 - 1000	0	373	121	3	10	4	0	4	18	0	0	0	0	**533**
1000 - 1100	1	357	122	1	22	7	0	8	23	1	0	0	0	**542**
1100 - 1200	0	334	117	1	20	12	1	5	27	1	0	0	0	**518**
1200 - 1300	1	368	125	0	10	3	0	3	18	1	0	0	0	**529**
1300 - 1400	0	391	113	5	14	2	0	2	20	0	0	0	0	**547**
1400 - 1500	0	394	144	1	19	2	0	1	20	0	0	0	0	**581**
1500 - 1600	2	366	121	1	18	4	1	2	9	1	0	0	0	**525**
1600 - 1700	2	349	114	1	13	1	0	1	20	0	0	0	0	**501**
1700 - 1800	0	377	100	2	16	1	0	0	11	1	0	0	0	**508**
1800 - 1900	0	423	86	1	15	2	0	1	8	0	0	0	0	**536**
1900 - 2000	0	288	93	3	10	0	0	0	7	0	0	0	0	**401**
2000 - 2100	0	231	59	0	5	0	0	0	6	0	0	0	0	**301**
2100 - 2200	0	196	44	0	4	0	0	0	7	0	2	0	0	**253**
2200 - 2300	0	189	39	0	2	0	0	0	1	0	0	0	0	**231**
2300 - 2400	1	124	24	0	1	1	0	0	4	0	0	0	0	**155**

Session Total	10	6835	1788	23	238	67	8	35	335	8	10	0	0	**9357**
Session Average	0.42	284.79	74.50	0.96	9.92	2.79	0.33	1.46	13.96	0.33	0.42	0.00	0.00	**389.88**
Session Percentage	0.11	73.05	19.11	0.25	2.54	0.72	0.09	0.37	3.58	0.09	0.11	0.00	0.00	

AM Peak Hour	0600 - 0700	0700 - 0800	0700 - 0800	0900 - 1000	0800 - 0900	0700 - 0800	0800 - 0900	0700 - 0800	0600 - 0700	0800 - 0900	0600 - 0700	-	-	**0700 - 0800**
AM Peak Hour Volume	2	521	124	3	15	7	4	4	20	2	2	0	0	**690**

Noon Peak Hour	1000 - 1100	1400 - 1500	1400 - 1500	1300 - 1400	1000 - 1100	1100 - 1200	1100 - 1200	1000 - 1100	1100 - 1200	1000 - 1100	-	-	-	**1400 - 1500**
Noon Peak Hour Volume	1	394	144	5	22	12	1	8	27	1	0	0	0	**581**

PM Peak Hour	1500 - 1600	1800 - 1900	1500 - 1600	1900 - 2000	1500 - 1600	1500 - 1600	1500 - 1600	1500 - 1600	1600 - 1700	1500 - 1600	-	-	-	**1800 - 1900**
PM Peak Hour Volume	2	423	121	3	18	4	1	2	20	1	0	0	0	**536**

Site 11
I-26 N/Bound On-Ramp,
north of I-20

Date
Saturday, April 27, 2024

Lat/Long
34.037213°, -81.113157°

Weather
Mostly Cloudy
69°F

Click here for Detailed Weather

0000 - 2400 (Saturday 24h Session) (04-27-2024)
NB EB 60min

	Northbound (Movement 11.1)													
TIME	1	2	3	4	5	6	7	8	9	10	11	12	13	**Total**
0000 - 0100	0	97	6	0	0	0	0	0	2	0	4	0	0	**109**
0100 - 0200	0	56	2	0	2	3	0	0	1	0	1	0	0	**65**
0200 - 0300	0	76	1	0	1	0	0	0	2	0	2	0	0	**82**
0300 - 0400	0	98	4	0	0	1	0	0	1	1	1	0	0	**106**
0400 - 0500	0	121	7	0	0	0	0	0	7	2	0	0	0	**137**
0500 - 0600	1	144	15	0	1	0	0	0	6	0	0	0	0	**167**
0600 - 0700	1	201	43	1	2	0	0	2	6	0	0	0	0	**256**
0700 - 0800	0	258	72	1	3	4	0	2	6	0	0	1	0	**347**
0800 - 0900	1	317	86	2	4	0	0	2	8	0	0	0	0	**420**
0900 - 1000	1	368	84	0	7	3	0	0	6	0	0	1	0	**470**
1000 - 1100	3	381	84	0	6	0	0	1	6	0	0	0	0	**481**
1100 - 1200	0	431	90	1	4	3	0	2	2	0	0	0	0	**533**
1200 - 1300	5	399	98	0	5	1	0	0	5	0	0	0	0	**513**
1300 - 1400	1	405	95	1	7	3	0	0	7	0	0	0	0	**519**
1400 - 1500	1	397	104	1	4	2	0	1	3	0	0	0	0	**513**
1500 - 1600	0	382	102	0	7	0	0	0	2	0	0	0	0	**493**
1600 - 1700	2	288	80	1	3	0	0	1	3	0	0	0	0	**378**
1700 - 1800	0	313	85	0	2	0	0	0	5	0	0	0	0	**405**
1800 - 1900	0	338	69	0	6	0	0	0	3	0	0	0	0	**416**
1900 - 2000	3	253	41	0	3	0	0	0	2	0	0	0	0	**302**
2000 - 2100	1	212	36	0	1	1	0	1	0	0	0	0	0	**252**
2100 - 2200	0	194	32	0	0	0	0	0	0	0	0	0	0	**226**
2200 - 2300	0	184	19	0	0	0	0	0	2	0	0	0	0	**205**
2300 - 2400	0	140	11	0	0	0	0	0	2	0	0	0	0	**153**

Session Total	20	6053	1266	8	68	21	0	12	87	3	8	2	0	**7548**
Session Average	0.83	252.21	52.75	0.33	2.83	0.88	0.00	0.50	3.63	0.13	0.33	0.08	0.00	**314.50**
Session Percentage	0.26	80.19	16.77	0.11	0.90	0.28	0.00	0.16	1.15	0.04	0.11	0.03	0.00	

AM Peak Hour	0500 - 0600	0900 - 1000	0800 - 0900	0800 - 0900	0900 - 1000	0700 - 0800	-	0600 - 0700	0800 - 0900	-	-	0700 - 0800	-	**0900 - 1000**
AM Peak Hour Volume	1	368	86	2	7	4	0	2	8	0	0	1	0	**470**

Noon Peak Hour	1200 - 1300	1100 - 1200	1400 - 1500	1100 - 1200	1300 - 1400	1100 - 1200	-	1100 - 1200	1300 - 1400	-	-	-	-	**1100 - 1200**
Noon Peak Hour Volume	5	431	104	1	7	3	0	2	7	0	0	0	0	**533**

PM Peak Hour	1900 - 2000	1500 - 1600	1500 - 1600	1600 - 1700	1500 - 1600	-	-	1600 - 1700	1700 - 1800	-	-	-	-	**1500 - 1600**
PM Peak Hour Volume	3	382	102	1	7	0	0	1	5	0	0	0	0	**493**

Bi-Directional Class Count || Volume Summary 60min

Columbia, SC

Marr Traffic DATA COLLECTION

www.marrtraffic.com

Site 11

I-26 N/Bound On-Ramp,
north of I-20

Date

Sunday, April 21, 2024

Lat/Long

34.037213°, -81.113157°

Weather

Cloudy
66°F

Click here for Detailed Weather

0000 - 2400 (Sunday 24h Session) (04-21-2024)

Volume Summary 60min

	Volume Summary 60min		
TIME	NB	SB	**Total**
0000 - 0100	132	0	**132**
0100 - 0200	72	0	**72**
0200 - 0300	84	0	**84**
0300 - 0400	57	0	**57**
0400 - 0500	90	0	**90**
0500 - 0600	114	0	**114**
0600 - 0700	198	0	**198**
0700 - 0800	157	0	**157**
0800 - 0900	226	0	**226**
0900 - 1000	294	0	**294**
1000 - 1100	377	0	**377**
1100 - 1200	383	0	**383**

	Volume Summary 60min		
Time	NB	SB	**Total**
1200 - 1300	440	0	**440**
1300 - 1400	422	0	**422**
1400 - 1500	434	0	**434**
1500 - 1600	362	0	**362**
1600 - 1700	355	0	**355**
1700 - 1800	331	0	**331**
1800 - 1900	319	0	**319**
1900 - 2000	273	0	**273**
2000 - 2100	216	0	**216**
2100 - 2200	188	0	**188**
2200 - 2300	169	0	**169**
2300 - 2400	90	0	**90**

Session Total	5783	0	**5783**
Session Average	240.96	0.00	**240.96**
Session Percentage	100.00	0.00	

Site 11

I-26 N/Bound On-Ramp,
north of I-20

Date

Monday, April 22, 2024

Lat/Long

34.037213°, -81.113157°

Weather

Mostly Cloudy
57°F

Click here for Detailed Weather

0000 - 2400 (Weekday 24h Session) (04-22-2024)

Volume Summary 60min

	Volume Summary 60min		
TIME	NB	SB	**Total**
0000 - 0100	54	0	**54**
0100 - 0200	45	0	**45**
0200 - 0300	49	0	**49**
0300 - 0400	85	0	**85**
0400 - 0500	165	0	**165**
0500 - 0600	343	0	**343**
0600 - 0700	594	0	**594**
0700 - 0800	780	0	**780**
0800 - 0900	692	0	**692**
0900 - 1000	555	0	**555**
1000 - 1100	479	0	**479**
1100 - 1200	480	0	**480**

Session Total	8804	0	**8804**
Session Average	366.83	0.00	**366.83**
Session Percentage	100.00	0.00	

	Volume Summary 60min		
Time	NB	SB	**Total**
1200 - 1300	477	0	**477**
1300 - 1400	513	0	**513**
1400 - 1500	555	0	**555**
1500 - 1600	559	0	**559**
1600 - 1700	462	0	**462**
1700 - 1800	491	0	**491**
1800 - 1900	494	0	**494**
1900 - 2000	282	0	**282**
2000 - 2100	237	0	**237**
2100 - 2200	180	0	**180**
2200 - 2300	159	0	**159**
2300 - 2400	74	0	**74**

Site 11

I-26 N/Bound On-Ramp,
north of I-20

Date

Tuesday, April 23, 2024

Lat/Long

34.037213°, -81.113157°

Weather

Fair
58°F

Click here for Detailed Weather

0000 - 2400 (Weekday 24h Session) (04-23-2024)

Volume Summary 60min

	Volume Summary 60min		
TIME	NB	SB	**Total**
0000 - 0100	67	0	**67**
0100 - 0200	42	0	**42**
0200 - 0300	70	0	**70**
0300 - 0400	99	0	**99**
0400 - 0500	170	0	**170**
0500 - 0600	308	0	**308**
0600 - 0700	576	0	**576**
0700 - 0800	721	0	**721**
0800 - 0900	670	0	**670**
0900 - 1000	558	0	**558**
1000 - 1100	510	0	**510**
1100 - 1200	533	0	**533**

	Volume Summary 60min		
Time	NB	SB	**Total**
1200 - 1300	510	0	**510**
1300 - 1400	487	0	**487**
1400 - 1500	531	0	**531**
1500 - 1600	578	0	**578**
1600 - 1700	550	0	**550**
1700 - 1800	415	0	**415**
1800 - 1900	478	0	**478**
1900 - 2000	343	0	**343**
2000 - 2100	250	0	**250**
2100 - 2200	208	0	**208**
2200 - 2300	157	0	**157**
2300 - 2400	108	0	**108**

Session Total	8939	0	**8939**
Session Average	372.46	0.00	**372.46**
Session Percentage	100.00	0.00	

Site 11

I-26 N/Bound On-Ramp,
north of I-20

Date

Wednesday, April 24, 2024

Lat/Long

34.037213°, -81.113157°

Weather

Fair
66°F

Click here for Detailed Weather

0000 - 2400 (Weekday 24h Session) (04-24-2024)

Volume Summary 60min

	Volume Summary 60min		
TIME	NB	SB	**Total**
0000 - 0100	85	0	**85**
0100 - 0200	55	0	**55**
0200 - 0300	59	0	**59**
0300 - 0400	125	0	**125**
0400 - 0500	179	0	**179**
0500 - 0600	351	0	**351**
0600 - 0700	629	0	**629**
0700 - 0800	824	0	**824**
0800 - 0900	546	0	**546**
0900 - 1000	556	0	**556**
1000 - 1100	580	0	**580**
1100 - 1200	541	0	**541**

	Volume Summary 60min		
Time	NB	SB	**Total**
1200 - 1300	504	0	**504**
1300 - 1400	555	0	**555**
1400 - 1500	585	0	**585**
1500 - 1600	573	0	**573**
1600 - 1700	536	0	**536**
1700 - 1800	475	0	**475**
1800 - 1900	475	0	**475**
1900 - 2000	321	0	**321**
2000 - 2100	299	0	**299**
2100 - 2200	189	0	**189**
2200 - 2300	193	0	**193**
2300 - 2400	137	0	**137**

Session Total	9372	0	**9372**
Session Average	390.50	0.00	**390.50**
Session Percentage	100.00	0.00	

Site 11

I-26 N/Bound On-Ramp,
north of I-20

Date

Thursday, April 25, 2024

Lat/Long

34.037213°, -81.113157°

Weather

Fair
67°F

Click here for Detailed Weather

0000 - 2400 (Weekday 24h Session) (04-25-2024)

Volume Summary 60min

	Volume Summary 60min		
TIME	NB	SB	**Total**
0000 - 0100	80	0	**80**
0100 - 0200	58	0	**58**
0200 - 0300	61	0	**61**
0300 - 0400	131	0	**131**
0400 - 0500	182	0	**182**
0500 - 0600	328	0	**328**
0600 - 0700	599	0	**599**
0700 - 0800	747	0	**747**
0800 - 0900	648	0	**648**
0900 - 1000	544	0	**544**
1000 - 1100	506	0	**506**
1100 - 1200	563	0	**563**

Session Total	9276	0	**9276**
Session Average	386.50	0.00	**386.50**
Session Percentage	100.00	0.00	

	Volume Summary 60min		
Time	NB	SB	**Total**
1200 - 1300	478	0	**478**
1300 - 1400	566	0	**566**
1400 - 1500	579	0	**579**
1500 - 1600	580	0	**580**
1600 - 1700	524	0	**524**
1700 - 1800	431	0	**431**
1800 - 1900	527	0	**527**
1900 - 2000	367	0	**367**
2000 - 2100	247	0	**247**
2100 - 2200	227	0	**227**
2200 - 2300	189	0	**189**
2300 - 2400	114	0	**114**

Site 11

I-26 N/Bound On-Ramp,
north of I-20

Date

Friday, April 26, 2024

Lat/Long

34.037213°, -81.113157°

Weather

Cloudy
69°F

Click here for Detailed Weather

0000 - 2400 (Weekday 24h Session) (04-26-2024)

Volume Summary 60min

	Volume Summary 60min		
TIME	NB	SB	**Total**
0000 - 0100	77	0	**77**
0100 - 0200	64	0	**64**
0200 - 0300	63	0	**63**
0300 - 0400	119	0	**119**
0400 - 0500	196	0	**196**
0500 - 0600	318	0	**318**
0600 - 0700	549	0	**549**
0700 - 0800	690	0	**690**
0800 - 0900	620	0	**620**
0900 - 1000	533	0	**533**
1000 - 1100	542	0	**542**
1100 - 1200	518	0	**518**
Session Total	9357	0	**9357**
Session Average	389.88	0.00	**389.88**
Session Percentage	100.00	0.00	

	Volume Summary 60min		
Time	NB	SB	**Total**
1200 - 1300	529	0	**529**
1300 - 1400	547	0	**547**
1400 - 1500	581	0	**581**
1500 - 1600	525	0	**525**
1600 - 1700	501	0	**501**
1700 - 1800	508	0	**508**
1800 - 1900	536	0	**536**
1900 - 2000	401	0	**401**
2000 - 2100	301	0	**301**
2100 - 2200	253	0	**253**
2200 - 2300	231	0	**231**
2300 - 2400	155	0	**155**

Site 11

I-26 N/Bound On-Ramp,
north of I-20

Date

Saturday, April 27, 2024

Lat/Long

34.037213°, -81.113157°

Weather

Mostly Cloudy
69°F

Click here for Detailed Weather

0000 - 2400 (Saturday 24h Session) (04-27-2024)

Volume Summary 60min

	Volume Summary 60min		
TIME	NB	SB	**Total**
0000 - 0100	109	0	**109**
0100 - 0200	65	0	**65**
0200 - 0300	82	0	**82**
0300 - 0400	106	0	**106**
0400 - 0500	137	0	**137**
0500 - 0600	167	0	**167**
0600 - 0700	256	0	**256**
0700 - 0800	347	0	**347**
0800 - 0900	420	0	**420**
0900 - 1000	470	0	**470**
1000 - 1100	481	0	**481**
1100 - 1200	533	0	**533**
Session Total	7548	0	**7548**
Session Average	314.50	0.00	**314.50**
Session Percentage	100.00	0.00	

	Volume Summary 60min		
Time	NB	SB	**Total**
1200 - 1300	513	0	**513**
1300 - 1400	519	0	**519**
1400 - 1500	513	0	**513**
1500 - 1600	493	0	**493**
1600 - 1700	378	0	**378**
1700 - 1800	405	0	**405**
1800 - 1900	416	0	**416**
1900 - 2000	302	0	**302**
2000 - 2100	252	0	**252**
2100 - 2200	226	0	**226**
2200 - 2300	205	0	**205**
2300 - 2400	153	0	**153**

Bi-Directional Class Count || Graphical Analysis NB EB

Columbia, SC

Marr Traffic DATA COLLECTION

www.marrtraffic.com

Site 11

I-26 N/Bound On-Ramp,
north of I-20

Lat/Long

34.037213°, -81.113157°

0000 - 2400 (Weekday 24h Session)

Graphical Analysis NB EB

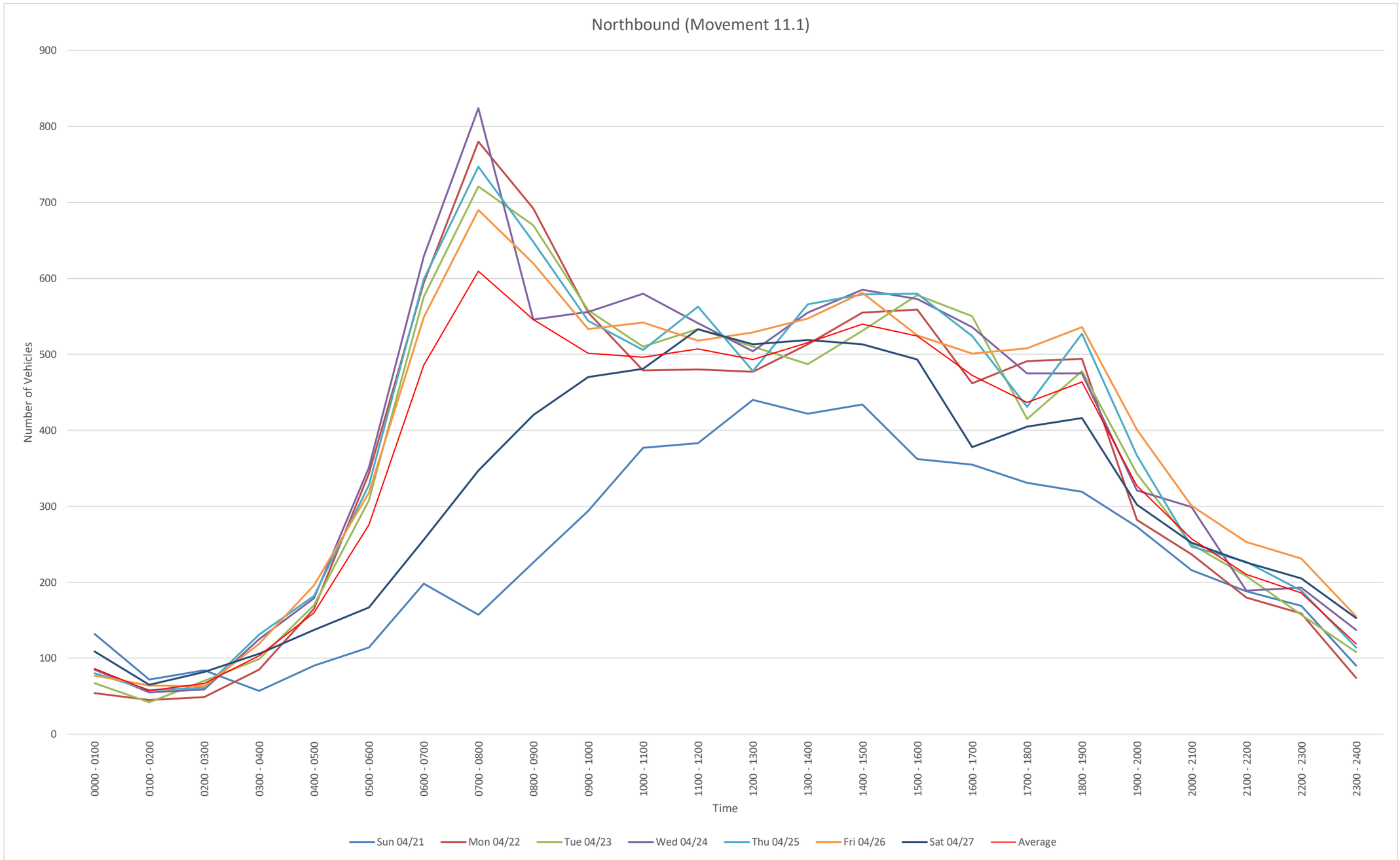

NB
File Name:
Start Date: 4/21/2024
Start Time: 0
Site Code: 11
Station ID: 1
Location 1: I-26 N/Bound On-Ramp, north of I-20
Location 2:

Date	Time	1	2	3	4	5	6	7	8	9	10	11	12	13
4/21/2024	12:00 AM	0	27	5	0	0	0	0	0	0	0	0	0	0
4/21/2024	12:15 AM	0	38	8	0	0	0	0	0	0	0	0	0	0
4/21/2024	12:30 AM	0	25	5	0	0	0	0	0	0	0	0	0	0
4/21/2024	12:45 AM	0	20	4	0	0	0	0	0	0	0	0	0	0
4/21/2024	1:00 AM	0	24	3	0	0	0	0	0	0	0	0	0	0
4/21/2024	1:15 AM	0	9	2	0	0	0	0	0	0	0	0	0	0
4/21/2024	1:30 AM	0	19	2	0	0	0	0	0	0	0	0	0	0
4/21/2024	1:45 AM	0	10	3	0	0	0	0	0	0	0	0	0	0
4/21/2024	2:00 AM	0	20	2	1	0	0	0	0	0	0	0	0	0
4/21/2024	2:15 AM	0	12	2	0	0	0	0	0	0	0	0	0	0
4/21/2024	2:30 AM	0	14	3	0	0	0	0	0	0	0	0	0	0
4/21/2024	2:45 AM	0	26	2	0	1	0	0	0	1	0	0	0	0
4/21/2024	3:00 AM	0	11	1	0	0	0	0	0	0	0	0	0	0
4/21/2024	3:15 AM	0	14	3	0	0	0	0	0	0	0	0	0	0
4/21/2024	3:30 AM	0	16	2	0	0	0	0	0	0	0	0	0	0
4/21/2024	3:45 AM	0	9	1	0	0	0	0	0	0	0	0	0	0
4/21/2024	4:00 AM	0	13	2	0	1	0	0	0	0	0	0	0	0
4/21/2024	4:15 AM	0	15	4	0	0	0	0	0	0	0	0	0	0
4/21/2024	4:30 AM	0	18	5	0	0	0	0	0	0	0	0	0	0
4/21/2024	4:45 AM	0	28	3	0	0	0	0	0	1	0	0	0	0
4/21/2024	5:00 AM	0	15	4	0	0	0	0	0	1	0	0	0	0
4/21/2024	5:15 AM	0	20	6	0	0	0	0	1	0	0	0	0	0
4/21/2024	5:30 AM	0	29	6	0	0	0	0	0	0	0	0	0	0
4/21/2024	5:45 AM	0	25	6	0	1	0	0	0	0	0	0	0	0
4/21/2024	6:00 AM	0	28	4	0	0	0	0	0	0	0	0	0	0
4/21/2024	6:15 AM	0	43	5	0	0	0	0	0	0	0	0	0	0
4/21/2024	6:30 AM	0	51	4	0	0	0	0	0	1	0	0	0	0
4/21/2024	6:45 AM	0	55	5	0	0	0	0	0	2	0	0	0	0
4/21/2024	7:00 AM	0	39	4	0	0	1	0	2	0	0	0	0	0
4/21/2024	7:15 AM	0	27	7	0	0	0	0	0	0	0	0	0	0
4/21/2024	7:30 AM	0	29	6	1	0	0	0	0	0	0	0	0	0
4/21/2024	7:45 AM	0	35	6	0	0	0	0	0	0	0	0	0	0
4/21/2024	8:00 AM	0	40	3	0	1	0	0	0	0	0	0	0	0
4/21/2024	8:15 AM	0	36	6	1	1	0	0	0	1	0	0	0	0
4/21/2024	8:30 AM	0	44	9	0	0	0	0	0	0	0	0	0	0
4/21/2024	8:45 AM	0	67	15	0	0	0	0	0	2	0	0	0	0
4/21/2024	9:00 AM	0	60	11	0	0	1	0	0	0	0	0	0	0
4/21/2024	9:15 AM	1	59	12	0	2	0	0	0	2	0	0	0	0
4/21/2024	9:30 AM	0	55	14	0	0	0	0	0	0	0	0	0	0
4/21/2024	9:45 AM	0	61	15	0	1	0	0	0	0	0	0	0	0
4/21/2024	10:00 AM	0	64	14	0	0	0	0	0	0	0	0	0	0
4/21/2024	10:15 AM	0	76	16	1	0	0	0	0	2	0	0	0	0
4/21/2024	10:30 AM	0	73	17	0	1	0	0	0	1	0	0	0	0
4/21/2024	10:45 AM	0	95	16	0	1	0	0	0	0	0	0	0	0
4/21/2024	11:00 AM	0	62	18	0	1	0	0	0	2	0	0	0	0
4/21/2024	11:15 AM	0	83	19	0	0	0	0	0	0	0	0	0	0
4/21/2024	11:30 AM	0	79	14	0	3	0	0	0	1	0	0	0	0
4/21/2024	11:45 AM	0	80	16	0	3	0	0	0	2	0	0	0	0
4/21/2024	12:00 PM	0	86	16	0	0	1	0	0	1	0	0	0	0
4/21/2024	12:15 PM	0	73	23	0	0	0	0	0	1	0	0	0	0
4/21/2024	12:30 PM	0	93	15	0	0	2	0	0	0	0	0	0	0
4/21/2024	12:45 PM	0	106	21	0	2	0	0	0	0	0	0	0	0
4/21/2024	1:00 PM	0	109	19	0	1	0	0	1	1	0	0	0	0
4/21/2024	1:15 PM	0	80	14	0	0	0	0	1	0	1	0	0	0
4/21/2024	1:30 PM	0	86	14	0	0	0	0	0	1	0	0	0	0
4/21/2024	1:45 PM	0	83	11	0	0	0	0	0	0	0	0	0	0
4/21/2024	2:00 PM	0	74	18	1	2	0	0	0	0	0	0	0	0
4/21/2024	2:15 PM	0	102	17	0	0	0	0	0	2	0	0	0	0
4/21/2024	2:30 PM	1	96	20	0	0	0	0	0	0	0	0	0	0
4/21/2024	2:45 PM	0	82	18	0	0	0	0	0	1	0	0	0	0
4/21/2024	3:00 PM	0	81	14	0	0	0	0	0	1	0	0	0	0
4/21/2024	3:15 PM	0	59	15	0	1	0	0	0	1	0	0	0	0
4/21/2024	3:30 PM	0	84	17	0	0	0	0	1	1	0	0	0	0
4/21/2024	3:45 PM	0	70	13	0	0	0	0	1	3	0	0	0	0
4/21/2024	4:00 PM	0	69	14	1	0	0	0	0	1	0	0	0	0
4/21/2024	4:15 PM	0	68	19	0	0	1	0	1	0	0	0	0	0
4/21/2024	4:30 PM	0	72	16	1	2	0	0	0	1	0	0	0	0
4/21/2024	4:45 PM	0	73	16	0	0	0	0	0	0	0	0	0	0
4/21/2024	5:00 PM	1	71	11	0	0	1	0	0	1	0	0	0	0
4/21/2024	5:15 PM	0	56	9	0	1	1	0	0	1	0	0	0	0
4/21/2024	5:30 PM	0	84	14	0	2	0	0	0	1	0	0	0	0
4/21/2024	5:45 PM	0	63	9	2	2	0	0	0	1	0	0	0	0
4/21/2024	6:00 PM	0	62	8	0	1	0	0	0	1	0	0	0	0
4/21/2024	6:15 PM	0	70	14	0	1	0	0	0	1	0	0	0	0
4/21/2024	6:30 PM	0	69	8	0	0	0	0	0	0	0	0	0	0
4/21/2024	6:45 PM	0	70	12	1	1	0	0	0	0	0	0	0	0
4/21/2024	7:00 PM	0	65	13	0	1	0	0	0	0	0	0	0	0
4/21/2024	7:15 PM	0	62	12	0	0	0	0	0	0	0	0	0	0
4/21/2024	7:30 PM	0	44	8	1	0	0	0	0	0	0	0	0	0
4/21/2024	7:45 PM	0	52	11	0	1	0	0	0	3	0	0	0	0
4/21/2024	8:00 PM	0	53	9	0	1	0	0	0	1	0	0	0	0
4/21/2024	8:15 PM	0	50	8	0	2	1	0	0	0	0	0	0	0
4/21/2024	8:30 PM	0	37	7	0	0	0	0	0	1	0	0	0	0
4/21/2024	8:45 PM	0	36	8	0	1	0	0	0	1	0	0	0	0
4/21/2024	9:00 PM	0	48	9	0	0	0	0	0	2	0	0	0	0
4/21/2024	9:15 PM	0	41	12	0	2	0	0	0	0	0	0	0	0
4/21/2024	9:30 PM	0	36	7	0	0	0	0	0	0	0	0	0	0
4/21/2024	9:45 PM	0	21	6	0	2	0	0	1	1	0	0	0	0
4/21/2024	10:00 PM	0	32	9	0	0	1	0	1	0	0	1	0	0
4/21/2024	10:15 PM	0	36	7	0	0	0	0	1	2	0	0	0	0
4/21/2024	10:30 PM	0	37	6	0	1	0	0	0	1	0	0	0	0
4/21/2024	10:45 PM	0	30	4	0	0	0	0	0	0	0	0	0	0
4/21/2024	11:00 PM	0	13	4	0	0	0	0	0	0	0	0	0	0
4/21/2024	11:15 PM	0	18	3	0	0	0	0	0	1	0	0	0	0
4/21/2024	11:30 PM	0	24	5	0	0	0	0	0	0	0	0	0	0
4/21/2024	11:45 PM	0	19	3	0	0	0	0	0	0	0	0	0	0

4/22/2024	12:00 AM	0	13	2	0	1	0	0	0	0	0	0	0
4/22/2024	12:15 AM	0	17	1	0	0	0	0	0	0	0	0	0
4/22/2024	12:30 AM	0	10	0	0	0	0	0	0	0	0	0	0
4/22/2024	12:45 AM	0	7	2	0	0	0	0	0	1	0	0	0	0
4/22/2024	1:00 AM	0	9	2	0	0	0	0	0	3	0	0	0	0
4/22/2024	1:15 AM	0	8	1	0	0	0	0	0	0	0	0	0	0
4/22/2024	1:30 AM	0	11	0	0	0	0	0	0	1	0	0	0	0
4/22/2024	1:45 AM	0	8	0	0	0	0	0	0	2	0	0	0	0
4/22/2024	2:00 AM	0	4	0	0	1	1	0	0	2	0	0	0	0
4/22/2024	2:15 AM	0	7	1	0	0	0	0	0	1	0	0	0	0
4/22/2024	2:30 AM	0	7	2	0	0	0	0	0	2	0	0	0	0
4/22/2024	2:45 AM	0	14	4	0	1	0	0	0	2	0	0	0	0
4/22/2024	3:00 AM	0	9	4	0	0	1	0	0	1	0	0	0	0
4/22/2024	3:15 AM	0	12	1	0	1	1	0	0	3	0	0	0	0
4/22/2024	3:30 AM	0	22	5	0	0	0	0	0	0	0	0	0	0
4/22/2024	3:45 AM	0	17	7	0	0	0	0	0	1	0	0	0	0
4/22/2024	4:00 AM	0	24	4	0	1	1	0	0	4	0	0	0	0
4/22/2024	4:15 AM	0	22	4	0	0	0	0	0	3	0	0	0	0
4/22/2024	4:30 AM	0	31	2	0	0	3	0	0	3	0	0	0	0
4/22/2024	4:45 AM	0	50	8	0	1	0	0	1	3	0	0	0	0
4/22/2024	5:00 AM	0	44	12	0	2	0	0	1	5	0	0	0	0
4/22/2024	5:15 AM	0	46	11	0	0	0	0	0	10	0	0	0	0
4/22/2024	5:30 AM	0	88	17	0	2	0	0	0	4	0	0	0	0
4/22/2024	5:45 AM	0	80	18	0	0	0	0	0	3	0	0	0	0
4/22/2024	6:00 AM	0	66	18	0	1	2	0	0	2	0	0	0	0
4/22/2024	6:15 AM	1	92	17	0	2	0	0	0	6	0	0	0	0
4/22/2024	6:30 AM	1	142	25	0	2	3	0	0	9	0	0	0	0
4/22/2024	6:45 AM	0	155	37	0	1	1	0	1	10	0	0	0	0
4/22/2024	7:00 AM	0	139	30	0	3	2	0	0	3	0	0	0	0
4/22/2024	7:15 AM	0	138	31	0	5	2	0	0	3	0	0	0	0
4/22/2024	7:30 AM	0	170	52	1	3	2	0	2	6	0	0	0	0
4/22/2024	7:45 AM	0	137	44	0	2	1	1	2	1	0	0	0	0
4/22/2024	8:00 AM	0	127	46	0	0	2	0	0	4	0	0	0	0
4/22/2024	8:15 AM	0	111	34	0	4	0	0	2	7	0	0	0	0
4/22/2024	8:30 AM	0	121	42	2	7	1	0	1	5	0	0	0	0
4/22/2024	8:45 AM	0	127	34	0	6	3	0	0	6	0	0	0	0
4/22/2024	9:00 AM	0	97	27	1	7	1	0	0	6	0	0	0	0
4/22/2024	9:15 AM	0	96	24	0	4	3	1	2	9	0	0	0	0
4/22/2024	9:30 AM	0	112	37	0	0	1	0	0	7	0	0	0	0
4/22/2024	9:45 AM	0	82	24	0	4	2	0	1	7	0	0	0	0
4/22/2024	10:00 AM	0	68	23	0	3	0	0	0	11	0	0	0	0
4/22/2024	10:15 AM	0	75	38	0	6	2	0	0	10	0	0	0	0
4/22/2024	10:30 AM	0	79	34	1	1	1	0	2	8	1	0	0	0
4/22/2024	10:45 AM	0	75	24	0	4	1	1	2	8	1	0	0	0
4/22/2024	11:00 AM	0	75	24	0	4	3	0	0	12	0	0	0	0
4/22/2024	11:15 AM	0	78	30	1	7	0	0	0	6	0	0	0	0
4/22/2024	11:30 AM	1	74	40	1	5	0	0	1	9	2	0	0	0
4/22/2024	11:45 AM	0	69	31	0	2	1	0	0	4	0	0	0	0
4/22/2024	12:00 PM	0	70	21	1	2	3	1	0	2	1	0	0	0
4/22/2024	12:15 PM	0	100	25	0	0	2	1	0	12	0	0	0	0
4/22/2024	12:30 PM	0	84	35	0	3	1	0	1	7	0	0	0	0
4/22/2024	12:45 PM	0	70	27	0	3	1	0	0	4	0	0	0	0
4/22/2024	1:00 PM	1	79	23	0	4	2	0	0	6	1	0	0	0
4/22/2024	1:15 PM	0	91	28	0	3	1	1	2	7	1	0	0	0
4/22/2024	1:30 PM	0	92	34	0	2	1	0	0	3	0	0	0	0
4/22/2024	1:45 PM	1	83	30	0	6	1	0	1	9	0	0	0	0
4/22/2024	2:00 PM	1	89	34	1	6	1	2	1	9	1	0	0	0
4/22/2024	2:15 PM	0	83	22	0	2	2	0	0	5	0	0	0	0
4/22/2024	2:30 PM	0	95	31	0	5	1	1	1	9	0	0	0	0
4/22/2024	2:45 PM	0	102	38	0	6	1	0	0	6	0	0	0	0
4/22/2024	3:00 PM	0	88	30	0	5	0	0	0	6	0	0	0	0
4/22/2024	3:15 PM	0	97	31	0	7	2	0	0	5	0	0	0	0
4/22/2024	3:30 PM	0	95	36	0	10	2	1	1	4	0	0	0	0
4/22/2024	3:45 PM	0	98	31	0	4	0	0	0	6	0	0	0	0
4/22/2024	4:00 PM	0	80	34	2	3	0	0	0	5	0	0	0	0
4/22/2024	4:15 PM	0	89	27	0	4	0	0	1	7	0	0	0	0
4/22/2024	4:30 PM	0	69	30	0	4	1	0	0	8	1	0	0	0
4/22/2024	4:45 PM	0	63	23	0	6	3	0	0	2	0	0	0	0
4/22/2024	5:00 PM	1	63	29	0	3	2	0	0	4	0	0	0	0
4/22/2024	5:15 PM	1	86	27	0	4	0	0	1	3	0	0	0	0
4/22/2024	5:30 PM	0	88	32	0	2	0	0	2	4	0	0	0	0
4/22/2024	5:45 PM	1	94	38	0	3	0	0	1	2	0	0	0	0
4/22/2024	6:00 PM	0	96	28	0	2	0	0	0	4	0	0	0	0
4/22/2024	6:15 PM	0	102	24	0	5	0	0	1	0	0	0	0	0
4/22/2024	6:30 PM	0	94	26	0	1	0	0	0	3	1	0	0	0
4/22/2024	6:45 PM	0	79	24	0	4	0	0	0	0	0	0	0	0
4/22/2024	7:00 PM	0	53	17	0	3	0	0	1	3	0	0	0	0
4/22/2024	7:15 PM	0	48	19	0	2	0	0	0	1	0	0	0	0
4/22/2024	7:30 PM	0	41	7	0	6	0	0	0	2	0	0	0	0
4/22/2024	7:45 PM	0	56	21	0	0	0	0	0	2	0	0	0	0
4/22/2024	8:00 PM	0	45	15	0	3	0	0	0	1	0	0	0	0
4/22/2024	8:15 PM	0	37	14	0	1	0	0	0	2	0	0	0	0
4/22/2024	8:30 PM	0	41	5	0	1	0	0	0	0	1	0	0	0
4/22/2024	8:45 PM	1	54	12	0	2	0	0	0	1	0	1	0	0
4/22/2024	9:00 PM	0	37	7	0	1	0	0	0	1	0	1	0	0
4/22/2024	9:15 PM	0	41	9	0	0	2	0	0	2	0	1	0	0
4/22/2024	9:30 PM	0	26	9	0	1	1	0	0	1	0	0	0	0
4/22/2024	9:45 PM	0	32	5	0	0	0	0	1	2	0	0	0	0
4/22/2024	10:00 PM	0	32	4	0	2	0	0	0	2	0	0	0	0
4/22/2024	10:15 PM	0	25	7	0	0	1	0	0	0	0	0	0	0
4/22/2024	10:30 PM	0	39	10	0	1	0	0	0	2	0	0	0	0
4/22/2024	10:45 PM	0	31	2	0	0	0	0	0	1	0	0	0	0
4/22/2024	11:00 PM	0	17	3	0	0	0	0	0	2	0	0	0	0
4/22/2024	11:15 PM	0	11	2	0	0	0	0	0	0	0	0	0	0
4/22/2024	11:30 PM	0	17	2	0	1	0	0	0	0	0	0	0	0
4/22/2024	11:45 PM	0	16	1	0	0	1	0	0	0	0	1	0	0

4/23/2024	12:00 AM	0	20	3	0	1	0	0	0	0	0	0	0
4/23/2024	12:15 AM	0	14	3	0	0	0	0	1	2	0	0	0	0
4/23/2024	12:30 AM	0	9	1	0	0	0	0	1	1	0	1	0	0
4/23/2024	12:45 AM	0	10	0	0	0	0	0	0	0	0	0	0	0
4/23/2024	1:00 AM	0	10	1	0	0	0	0	0	2	0	0	0	0
4/23/2024	1:15 AM	0	8	0	0	1	0	0	0	1	0	0	0	0
4/23/2024	1:30 AM	0	8	0	0	0	0	0	0	1	0	0	0	0
4/23/2024	1:45 AM	0	7	0	0	2	0	0	0	0	0	0	1	0
4/23/2024	2:00 AM	0	10	1	0	0	0	0	0	5	0	0	0	0
4/23/2024	2:15 AM	0	11	2	0	0	0	0	0	2	0	0	1	0
4/23/2024	2:30 AM	0	10	1	0	0	0	0	1	3	0	0	1	0
4/23/2024	2:45 AM	0	16	0	0	0	0	0	1	5	0	0	0	0
4/23/2024	3:00 AM	0	21	0	0	1	0	0	0	1	0	0	0	0
4/23/2024	3:15 AM	0	12	4	0	2	1	0	0	3	0	0	0	0
4/23/2024	3:30 AM	0	23	1	0	0	1	0	1	5	0	0	0	0
4/23/2024	3:45 AM	0	20	0	0	0	0	0	0	3	0	0	0	0
4/23/2024	4:00 AM	0	27	1	0	1	0	0	0	6	0	0	0	0
4/23/2024	4:15 AM	0	28	4	0	1	0	0	0	5	0	0	0	0
4/23/2024	4:30 AM	0	33	6	0	1	0	0	0	5	0	0	1	0
4/23/2024	4:45 AM	0	36	8	0	1	2	0	0	4	0	0	0	0
4/23/2024	5:00 AM	0	46	7	0	1	3	0	0	0	0	0	1	0
4/23/2024	5:15 AM	0	53	6	0	2	0	0	0	10	0	1	1	0
4/23/2024	5:30 AM	0	67	16	0	1	1	0	1	7	0	0	0	0
4/23/2024	5:45 AM	0	67	11	0	1	0	0	0	4	0	0	1	0
4/23/2024	6:00 AM	0	55	9	0	2	1	0	0	5	0	0	0	0
4/23/2024	6:15 AM	0	91	13	0	2	1	0	0	8	0	0	0	0
4/23/2024	6:30 AM	0	138	23	0	2	0	0	0	10	0	0	0	0
4/23/2024	6:45 AM	1	168	37	0	2	2	0	1	5	0	0	0	0
4/23/2024	7:00 AM	0	133	39	0	3	6	0	0	2	0	0	0	0
4/23/2024	7:15 AM	0	142	26	0	6	2	0	1	3	0	0	0	0
4/23/2024	7:30 AM	0	132	40	1	8	1	0	0	4	0	0	0	0
4/23/2024	7:45 AM	0	131	32	0	3	1	0	0	5	0	0	0	0
4/23/2024	8:00 AM	0	126	47	0	8	0	0	0	4	0	0	0	0
4/23/2024	8:15 AM	0	113	26	1	3	4	0	1	0	0	0	0	0
4/23/2024	8:30 AM	1	118	39	0	7	1	0	0	7	0	0	0	0
4/23/2024	8:45 AM	1	109	32	0	9	1	0	1	11	0	0	0	0
4/23/2024	9:00 AM	0	71	43	1	7	0	0	0	5	0	0	0	0
4/23/2024	9:15 AM	0	86	22	0	6	0	0	2	13	0	0	1	0
4/23/2024	9:30 AM	0	104	35	1	3	0	0	0	9	0	0	0	0
4/23/2024	9:45 AM	0	107	26	1	6	0	0	0	9	0	0	0	0
4/23/2024	10:00 AM	0	67	23	0	15	1	0	1	7	0	0	0	0
4/23/2024	10:15 AM	0	85	26	0	3	0	0	0	12	0	0	0	0
4/23/2024	10:30 AM	1	87	27	0	5	0	0	0	10	0	0	0	0
4/23/2024	10:45 AM	0	100	28	0	7	1	0	0	4	0	0	0	0
4/23/2024	11:00 AM	0	84	23	0	6	2	0	0	5	0	0	0	0
4/23/2024	11:15 AM	1	89	26	1	6	2	0	2	9	0	0	0	0
4/23/2024	11:30 AM	0	92	31	0	5	2	0	2	17	0	0	0	0
4/23/2024	11:45 AM	0	78	34	0	6	0	0	1	9	0	0	0	0
4/23/2024	12:00 PM	0	84	27	0	4	1	0	0	6	0	0	0	0
4/23/2024	12:15 PM	0	86	34	0	4	1	0	0	8	0	0	0	0
4/23/2024	12:30 PM	0	100	21	0	5	3	0	1	5	0	0	0	0
4/23/2024	12:45 PM	0	83	23	0	4	1	0	1	8	0	0	0	0
4/23/2024	1:00 PM	1	72	19	0	6	0	0	0	9	0	0	0	0
4/23/2024	1:15 PM	0	81	21	0	6	1	0	0	8	0	0	0	0
4/23/2024	1:30 PM	1	96	27	0	2	0	0	0	9	0	0	0	0
4/23/2024	1:45 PM	0	76	36	0	7	1	0	0	8	0	0	0	0
4/23/2024	2:00 PM	0	89	33	1	2	0	0	1	5	0	0	0	0
4/23/2024	2:15 PM	0	79	28	0	8	3	0	2	4	0	0	0	0
4/23/2024	2:30 PM	0	102	24	0	5	0	0	0	6	0	0	0	0
4/23/2024	2:45 PM	0	101	26	0	3	3	0	0	6	0	0	0	0
4/23/2024	3:00 PM	0	87	28	1	8	3	0	1	5	0	0	0	0
4/23/2024	3:15 PM	0	92	33	0	4	0	0	3	7	0	0	0	0
4/23/2024	3:30 PM	0	113	30	0	5	0	0	0	7	0	0	0	0
4/23/2024	3:45 PM	0	99	40	0	3	1	0	1	7	0	0	0	0
4/23/2024	4:00 PM	0	105	35	1	1	4	0	2	7	0	0	0	0
4/23/2024	4:15 PM	0	97	38	0	3	1	0	2	7	0	0	0	0
4/23/2024	4:30 PM	1	94	44	0	4	4	0	1	7	0	0	0	0
4/23/2024	4:45 PM	1	66	20	0	2	1	0	0	2	0	0	0	0
4/23/2024	5:00 PM	0	60	19	0	2	1	0	1	2	0	0	0	0
4/23/2024	5:15 PM	0	93	22	0	4	0	0	1	3	0	0	0	0
4/23/2024	5:30 PM	0	79	14	1	5	0	0	1	4	0	0	0	0
4/23/2024	5:45 PM	0	78	23	0	2	0	0	0	0	0	0	0	0
4/23/2024	6:00 PM	1	90	30	1	4	0	0	0	2	0	0	0	0
4/23/2024	6:15 PM	0	71	27	1	5	1	0	1	5	0	0	0	0
4/23/2024	6:30 PM	0	92	31	0	5	0	0	4	3	0	0	0	0
4/23/2024	6:45 PM	0	70	28	0	1	0	0	1	4	0	0	0	0
4/23/2024	7:00 PM	0	72	23	0	5	0	0	0	2	0	0	0	0
4/23/2024	7:15 PM	0	52	20	0	3	0	0	0	1	0	1	1	0
4/23/2024	7:30 PM	0	63	12	0	1	1	0	0	8	0	0	0	0
4/23/2024	7:45 PM	0	62	14	0	1	0	0	0	1	0	0	0	0
4/23/2024	8:00 PM	0	42	15	0	2	0	0	0	2	0	0	0	0
4/23/2024	8:15 PM	0	46	10	0	0	0	0	0	1	0	0	0	0
4/23/2024	8:30 PM	0	46	16	0	1	0	0	0	2	0	0	0	0
4/23/2024	8:45 PM	0	48	16	0	1	0	0	0	1	0	0	1	0
4/23/2024	9:00 PM	0	40	15	0	0	0	0	0	3	0	0	1	0
4/23/2024	9:15 PM	0	38	14	0	0	0	0	1	0	0	1	1	0
4/23/2024	9:30 PM	0	39	13	0	0	0	0	0	0	0	0	1	0
4/23/2024	9:45 PM	0	30	9	0	0	0	0	0	2	0	0	0	0
4/23/2024	10:00 PM	0	26	7	0	0	1	0	0	1	0	0	0	0
4/23/2024	10:15 PM	0	35	10	0	0	0	0	0	1	0	0	0	0
4/23/2024	10:30 PM	0	25	4	0	2	0	0	0	1	0	0	0	0
4/23/2024	10:45 PM	0	29	8	0	3	0	0	0	4	0	0	0	0
4/23/2024	11:00 PM	0	18	7	0	2	0	0	1	0	0	1	1	0
4/23/2024	11:15 PM	0	16	6	0	2	0	0	0	1	0	1	0	0
4/23/2024	11:30 PM	0	10	6	0	1	0	0	1	3	0	0	0	0
4/23/2024	11:45 PM	0	23	5	0	0	0	0	0	3	0	0	0	0

4/24/2024	12:00 AM	0	15	6	0	0	0	0	0	0	0	1	0	0
4/24/2024	12:15 AM	0	14	6	0	1	0	0	0	4	0	1	0	0
4/24/2024	12:30 AM	0	10	5	0	0	0	0	0	3	0	0	0	0
4/24/2024	12:45 AM	0	12	5	0	2	0	0	0	0	0	0	0	0
4/24/2024	1:00 AM	0	10	3	0	1	0	0	0	1	0	1	0	0
4/24/2024	1:15 AM	0	14	0	0	0	0	0	0	2	0	0	0	0
4/24/2024	1:30 AM	0	9	2	0	1	0	0	0	3	0	1	0	0
4/24/2024	1:45 AM	0	4	1	0	1	0	0	0	1	0	0	0	0
4/24/2024	2:00 AM	0	6	2	0	0	0	0	0	1	0	2	0	0
4/24/2024	2:15 AM	0	6	5	0	0	0	0	0	1	0	0	0	0
4/24/2024	2:30 AM	0	6	2	0	1	0	0	0	2	0	0	0	0
4/24/2024	2:45 AM	0	15	3	0	2	0	0	1	3	0	1	0	0
4/24/2024	3:00 AM	0	19	6	0	0	0	0	0	2	0	0	0	0
4/24/2024	3:15 AM	0	14	5	0	1	2	0	0	3	0	0	0	0
4/24/2024	3:30 AM	0	20	9	0	1	1	0	0	3	0	0	0	0
4/24/2024	3:45 AM	0	20	13	0	0	0	0	0	6	0	0	0	0
4/24/2024	4:00 AM	0	22	9	0	1	1	0	1	4	0	0	0	0
4/24/2024	4:15 AM	0	18	9	0	1	1	0	0	5	0	0	0	0
4/24/2024	4:30 AM	0	33	14	0	1	0	0	0	2	0	0	0	0
4/24/2024	4:45 AM	0	32	17	0	5	0	0	0	3	0	0	0	0
4/24/2024	5:00 AM	0	29	16	0	1	0	0	0	4	0	0	0	0
4/24/2024	5:15 AM	0	41	31	0	3	0	0	0	7	0	0	0	0
4/24/2024	5:30 AM	0	71	23	0	2	0	0	0	4	0	3	0	0
4/24/2024	5:45 AM	1	76	31	0	1	1	0	1	5	0	0	0	0
4/24/2024	6:00 AM	1	72	16	0	3	0	0	0	6	0	0	0	0
4/24/2024	6:15 AM	0	77	40	0	6	1	0	3	8	0	0	0	0
4/24/2024	6:30 AM	0	141	33	0	4	1	0	0	9	0	0	0	0
4/24/2024	6:45 AM	2	158	31	0	5	2	0	0	10	0	0	0	0
4/24/2024	7:00 AM	0	153	45	0	2	0	0	0	4	0	0	0	0
4/24/2024	7:15 AM	0	134	36	0	3	2	0	2	6	0	0	0	0
4/24/2024	7:30 AM	0	159	39	1	5	1	0	1	3	0	0	0	0
4/24/2024	7:45 AM	0	169	45	0	4	1	0	2	6	1	0	0	0
4/24/2024	8:00 AM	0	107	25	0	4	2	0	0	2	0	0	0	0
4/24/2024	8:15 AM	0	94	31	0	4	2	0	0	3	0	0	0	0
4/24/2024	8:30 AM	0	77	32	2	4	1	0	1	10	0	0	0	0
4/24/2024	8:45 AM	0	110	23	0	4	2	0	1	5	0	0	0	0
4/24/2024	9:00 AM	0	96	32	0	4	3	0	2	11	1	0	0	0
4/24/2024	9:15 AM	0	83	27	0	4	1	0	0	5	0	0	0	0
4/24/2024	9:30 AM	1	90	37	0	5	1	0	0	15	0	0	0	0
4/24/2024	9:45 AM	0	101	27	0	4	1	0	1	4	0	0	0	0
4/24/2024	10:00 AM	0	85	40	0	7	0	0	2	11	0	0	0	0
4/24/2024	10:15 AM	0	86	27	0	5	2	0	1	4	0	0	0	0
4/24/2024	10:30 AM	0	108	40	3	5	1	0	2	11	0	0	0	0
4/24/2024	10:45 AM	0	93	32	0	3	0	0	0	12	0	0	0	0
4/24/2024	11:00 AM	0	81	41	0	4	4	0	1	10	0	0	0	0
4/24/2024	11:15 AM	0	89	33	0	3	2	0	3	10	0	0	0	0
4/24/2024	11:30 AM	0	85	29	0	5	4	0	0	4	1	0	0	0
4/24/2024	11:45 AM	0	87	36	0	4	0	0	0	5	0	0	0	0
4/24/2024	12:00 PM	0	94	35	0	2	0	0	1	6	1	0	0	0
4/24/2024	12:15 PM	0	92	20	0	3	1	0	0	5	0	0	0	0
4/24/2024	12:30 PM	0	92	35	0	2	3	0	0	3	0	0	0	0
4/24/2024	12:45 PM	0	71	29	0	2	1	0	0	6	0	0	0	0
4/24/2024	1:00 PM	0	98	35	0	2	1	0	1	7	1	0	0	0
4/24/2024	1:15 PM	0	85	32	0	9	0	0	0	4	0	0	0	0
4/24/2024	1:30 PM	1	98	25	0	7	1	0	2	3	0	0	0	0
4/24/2024	1:45 PM	0	93	33	0	5	1	0	3	8	0	0	0	0
4/24/2024	2:00 PM	0	79	38	1	7	0	0	1	4	1	0	0	0
4/24/2024	2:15 PM	0	92	28	2	5	0	0	4	7	0	0	0	0
4/24/2024	2:30 PM	0	101	40	2	8	1	0	1	5	0	0	0	0
4/24/2024	2:45 PM	1	91	45	0	9	1	0	3	8	0	0	0	0
4/24/2024	3:00 PM	0	75	33	0	2	3	0	0	9	0	0	0	0
4/24/2024	3:15 PM	0	85	29	0	1	1	0	1	7	0	0	0	0
4/24/2024	3:30 PM	0	119	35	0	4	0	0	1	8	0	0	0	0
4/24/2024	3:45 PM	0	113	32	0	3	2	0	4	5	1	0	0	0
4/24/2024	4:00 PM	0	93	36	1	4	3	0	0	2	0	0	0	0
4/24/2024	4:15 PM	0	107	41	0	6	1	0	1	5	0	0	0	0
4/24/2024	4:30 PM	0	89	19	0	1	1	0	0	3	0	0	0	0
4/24/2024	4:45 PM	0	88	23	0	4	1	0	0	7	0	0	0	0
4/24/2024	5:00 PM	0	89	32	0	3	1	0	0	6	0	0	0	0
4/24/2024	5:15 PM	0	78	24	0	4	1	0	1	5	0	0	0	0
4/24/2024	5:30 PM	0	77	21	0	1	0	0	0	0	0	0	0	0
4/24/2024	5:45 PM	0	100	24	0	3	1	0	2	2	0	0	0	0
4/24/2024	6:00 PM	1	87	25	0	2	1	0	0	5	0	0	0	0
4/24/2024	6:15 PM	0	97	31	0	2	0	0	0	3	0	0	0	0
4/24/2024	6:30 PM	0	83	26	0	1	0	0	2	2	0	0	0	0
4/24/2024	6:45 PM	0	84	16	0	3	0	0	0	4	0	0	0	0
4/24/2024	7:00 PM	0	69	19	0	2	0	0	1	1	0	0	0	0
4/24/2024	7:15 PM	0	68	15	0	3	0	0	0	0	0	0	0	0
4/24/2024	7:30 PM	0	44	18	0	4	0	0	0	3	0	0	0	0
4/24/2024	7:45 PM	0	55	15	0	1	2	0	1	0	0	0	0	0
4/24/2024	8:00 PM	0	65	21	0	2	2	0	2	1	0	0	0	0
4/24/2024	8:15 PM	0	55	15	0	3	0	0	0	0	0	0	0	0
4/24/2024	8:30 PM	0	50	16	0	2	0	0	0	3	0	0	0	0
4/24/2024	8:45 PM	0	39	16	0	2	0	0	1	3	0	1	0	0
4/24/2024	9:00 PM	0	24	21	0	2	0	0	2	0	1	1	0	0
4/24/2024	9:15 PM	0	26	17	0	0	0	0	1	1	0	1	0	0
4/24/2024	9:30 PM	0	28	18	0	3	0	0	0	0	0	0	0	0
4/24/2024	9:45 PM	2	29	9	0	1	0	0	0	2	0	0	0	0
4/24/2024	10:00 PM	0	33	12	0	0	0	0	0	2	0	0	0	0
4/24/2024	10:15 PM	0	25	16	0	3	0	0	2	0	0	0	0	0
4/24/2024	10:30 PM	0	37	18	0	1	0	0	0	1	0	1	0	0
4/24/2024	10:45 PM	0	24	12	0	0	0	0	2	2	0	2	0	0
4/24/2024	11:00 PM	0	25	6	0	2	0	0	0	0	0	0	0	0
4/24/2024	11:15 PM	0	21	7	0	1	0	0	1	0	0	0	0	0
4/24/2024	11:30 PM	0	26	12	0	2	0	0	0	3	0	1	0	0
4/24/2024	11:45 PM	0	16	10	0	1	0	0	1	1	0	1	0	0

4/25/2024	12:00 AM	0	18	2	0	1	2	0	0	2	0	0	0	0
4/25/2024	12:15 AM	0	7	2	0	0	1	0	0	2	0	0	0	0
4/25/2024	12:30 AM	0	13	4	0	0	1	0	0	1	0	0	0	0
4/25/2024	12:45 AM	0	17	3	0	1	0	0	0	2	0	1	0	0
4/25/2024	1:00 AM	0	18	4	0	0	0	0	0	2	0	1	0	0
4/25/2024	1:15 AM	0	9	1	0	0	1	0	0	1	0	0	0	0
4/25/2024	1:30 AM	0	10	1	0	0	0	0	0	1	0	0	0	0
4/25/2024	1:45 AM	0	6	1	0	1	0	0	0	0	0	1	0	0
4/25/2024	2:00 AM	0	8	1	0	1	0	0	0	5	0	2	0	0
4/25/2024	2:15 AM	0	5	0	0	1	0	0	0	3	0	0	0	0
4/25/2024	2:30 AM	0	7	1	0	1	0	0	0	1	0	0	0	0
4/25/2024	2:45 AM	0	17	2	0	2	0	0	0	4	0	0	0	0
4/25/2024	3:00 AM	0	22	6	0	0	0	0	0	4	0	0	0	0
4/25/2024	3:15 AM	0	15	2	0	0	0	0	0	1	0	0	0	0
4/25/2024	3:30 AM	0	30	4	0	0	0	0	0	0	0	0	0	0
4/25/2024	3:45 AM	0	32	5	0	0	1	0	0	9	0	0	0	0
4/25/2024	4:00 AM	0	24	4	0	1	2	0	0	3	0	0	0	0
4/25/2024	4:15 AM	0	26	6	0	1	0	0	0	5	0	0	0	0
4/25/2024	4:30 AM	0	40	8	0	2	1	0	0	4	0	0	0	0
4/25/2024	4:45 AM	0	39	9	0	3	0	0	0	4	0	0	0	0
4/25/2024	5:00 AM	0	45	8	0	2	0	0	0	2	0	0	0	0
4/25/2024	5:15 AM	0	47	9	1	0	1	0	0	2	0	1	0	0
4/25/2024	5:30 AM	0	85	13	0	2	0	0	0	6	0	1	0	0
4/25/2024	5:45 AM	0	88	11	0	1	0	0	0	3	0	0	0	0
4/25/2024	6:00 AM	0	80	15	0	2	1	0	0	7	0	0	0	0
4/25/2024	6:15 AM	1	92	15	0	0	1	0	0	4	0	0	0	0
4/25/2024	6:30 AM	0	130	24	0	3	3	0	0	8	0	0	0	0
4/25/2024	6:45 AM	1	163	39	0	3	2	0	1	4	0	0	0	0
4/25/2024	7:00 AM	1	128	35	0	2	3	0	2	3	0	0	0	0
4/25/2024	7:15 AM	0	161	30	0	5	1	0	2	1	0	0	0	0
4/25/2024	7:30 AM	0	148	32	1	3	2	0	0	7	0	0	0	0
4/25/2024	7:45 AM	0	126	41	1	4	2	0	1	5	0	0	0	0
4/25/2024	8:00 AM	0	135	41	1	3	2	0	2	3	0	0	0	0
4/25/2024	8:15 AM	0	120	35	1	5	1	0	0	5	0	0	0	0
4/25/2024	8:30 AM	0	114	29	0	4	2	0	0	4	0	0	0	0
4/25/2024	8:45 AM	0	101	34	1	4	1	0	0	0	0	0	0	0
4/25/2024	9:00 AM	0	100	24	2	3	5	0	1	7	0	0	0	0
4/25/2024	9:15 AM	0	90	18	2	6	0	0	0	10	0	0	0	0
4/25/2024	9:30 AM	0	83	29	1	3	3	0	2	6	0	1	0	0
4/25/2024	9:45 AM	0	98	35	1	2	2	0	0	10	0	0	0	0
4/25/2024	10:00 AM	0	84	23	0	4	2	0	0	6	0	0	0	0
4/25/2024	10:15 AM	0	80	25	1	4	1	0	2	11	0	0	0	0
4/25/2024	10:30 AM	0	95	36	0	4	1	0	1	7	0	0	0	0
4/25/2024	10:45 AM	0	79	26	0	2	0	0	2	10	0	0	0	0
4/25/2024	11:00 AM	0	104	41	1	6	1	0	1	4	0	0	0	0
4/25/2024	11:15 AM	0	84	34	1	2	1	0	1	6	0	0	0	0
4/25/2024	11:30 AM	0	92	29	0	4	2	0	2	5	0	0	0	0
4/25/2024	11:45 AM	0	93	40	0	0	2	0	0	7	0	0	0	0
4/25/2024	12:00 PM	1	86	30	0	3	0	0	0	7	0	0	0	0
4/25/2024	12:15 PM	0	72	25	0	5	0	0	0	5	0	0	0	0
4/25/2024	12:30 PM	0	73	28	0	5	2	0	0	1	0	0	0	0
4/25/2024	12:45 PM	1	88	28	0	2	1	0	3	11	1	0	0	0
4/25/2024	1:00 PM	0	96	31	0	2	0	0	0	8	0	0	0	0
4/25/2024	1:15 PM	0	100	38	1	3	0	0	1	3	0	0	0	0
4/25/2024	1:30 PM	0	111	22	0	6	1	0	1	6	0	0	0	0
4/25/2024	1:45 PM	0	97	27	1	5	2	0	0	4	0	0	0	0
4/25/2024	2:00 PM	0	81	20	0	9	0	0	0	5	0	0	0	0
4/25/2024	2:15 PM	0	102	41	2	4	0	0	3	6	0	0	0	0
4/25/2024	2:30 PM	0	112	30	0	5	1	0	1	9	0	0	0	0
4/25/2024	2:45 PM	0	110	25	0	4	4	0	0	5	0	0	0	0
4/25/2024	3:00 PM	1	89	30	1	4	3	0	1	5	0	0	0	0
4/25/2024	3:15 PM	0	99	30	0	5	1	0	0	8	0	0	0	0
4/25/2024	3:30 PM	1	113	34	1	2	5	0	1	4	0	0	0	0
4/25/2024	3:45 PM	0	100	28	0	7	0	0	2	5	0	0	0	0
4/25/2024	4:00 PM	0	98	35	2	4	0	0	0	4	0	0	0	0
4/25/2024	4:15 PM	0	91	26	0	5	0	0	0	5	1	0	0	0
4/25/2024	4:30 PM	0	98	41	0	2	0	0	0	9	1	0	0	0
4/25/2024	4:45 PM	0	68	25	0	5	0	0	1	3	0	0	0	0
4/25/2024	5:00 PM	0	82	23	1	3	0	0	0	0	0	0	0	0
4/25/2024	5:15 PM	0	75	27	0	2	0	0	2	3	0	0	0	0
4/25/2024	5:30 PM	0	61	23	0	6	0	0	1	4	0	0	0	0
4/25/2024	5:45 PM	0	90	21	0	4	0	0	0	3	0	0	0	0
4/25/2024	6:00 PM	0	103	42	1	1	0	0	0	3	0	0	0	0
4/25/2024	6:15 PM	0	102	30	0	4	0	0	0	2	0	0	0	0
4/25/2024	6:30 PM	0	82	20	0	5	1	0	0	4	0	0	0	0
4/25/2024	6:45 PM	0	92	20	1	4	2	0	0	8	0	0	0	0
4/25/2024	7:00 PM	0	75	20	0	4	0	0	1	1	0	0	0	0
4/25/2024	7:15 PM	0	67	17	0	2	0	0	0	2	0	0	0	0
4/25/2024	7:30 PM	0	71	21	0	4	0	0	2	1	0	0	0	0
4/25/2024	7:45 PM	1	60	14	0	0	2	0	1	1	0	0	0	0
4/25/2024	8:00 PM	0	52	12	0	0	0	0	0	0	0	0	0	0
4/25/2024	8:15 PM	0	42	16	0	2	0	0	0	2	0	1	0	0
4/25/2024	8:30 PM	0	52	12	0	1	0	0	0	1	0	0	0	0
4/25/2024	8:45 PM	0	39	12	0	1	0	0	0	2	0	0	0	0
4/25/2024	9:00 PM	0	43	14	1	0	0	0	0	1	0	0	0	0
4/25/2024	9:15 PM	0	61	8	0	0	0	0	0	0	0	1	0	0
4/25/2024	9:30 PM	0	37	16	0	1	0	0	0	0	0	0	0	0
4/25/2024	9:45 PM	1	33	7	0	0	0	0	1	2	0	0	0	0
4/25/2024	10:00 PM	0	34	11	0	2	0	0	2	1	0	0	0	0
4/25/2024	10:15 PM	0	31	10	0	2	0	0	2	1	0	0	0	0
4/25/2024	10:30 PM	0	46	5	0	0	0	0	0	1	0	0	0	0
4/25/2024	10:45 PM	0	27	9	0	2	0	0	0	1	0	2	0	0
4/25/2024	11:00 PM	0	23	4	0	1	0	0	0	2	0	2	0	0
4/25/2024	11:15 PM	0	25	2	0	1	0	0	0	1	0	0	0	0
4/25/2024	11:30 PM	0	28	4	0	1	0	0	0	0	0	0	0	0
4/25/2024	11:45 PM	0	15	4	0	0	0	0	1	0	0	0	0	0

4/26/2024	12:00 AM	0	14	1	0	1	0	0	0	0	0	0	0
4/26/2024	12:15 AM	0	20	1	0	1	0	0	0	1	0	0	0
4/26/2024	12:30 AM	0	15	0	0	3	0	0	0	4	0	0	0
4/26/2024	12:45 AM	0	14	0	0	0	0	0	0	2	0	0	0
4/26/2024	1:00 AM	0	10	0	0	1	0	0	0	2	0	0	0
4/26/2024	1:15 AM	0	11	1	0	0	0	0	0	0	0	0	0
4/26/2024	1:30 AM	0	11	1	0	0	3	0	0	3	0	0	0
4/26/2024	1:45 AM	0	16	0	0	0	3	0	0	2	0	0	0
4/26/2024	2:00 AM	0	7	0	0	1	0	0	0	0	0	2	0
4/26/2024	2:15 AM	0	11	0	0	1	0	0	0	2	0	1	0
4/26/2024	2:30 AM	0	13	0	0	4	0	0	0	1	0	1	0
4/26/2024	2:45 AM	0	17	0	0	1	0	0	0	1	0	0	0
4/26/2024	3:00 AM	0	20	1	0	0	0	0	0	5	0	0	0
4/26/2024	3:15 AM	0	17	0	0	1	1	0	0	4	0	0	0
4/26/2024	3:30 AM	0	28	0	0	1	0	0	0	4	0	1	0
4/26/2024	3:45 AM	0	30	0	0	1	0	0	0	5	0	0	0
4/26/2024	4:00 AM	0	31	0	0	0	0	0	1	7	0	0	0
4/26/2024	4:15 AM	0	31	0	0	0	0	0	0	9	0	0	0
4/26/2024	4:30 AM	0	40	2	0	0	3	0	0	4	0	0	0
4/26/2024	4:45 AM	0	60	2	0	0	0	0	0	6	0	0	0
4/26/2024	5:00 AM	0	60	5	0	2	0	0	0	2	0	1	0
4/26/2024	5:15 AM	0	46	9	0	3	0	0	0	3	0	0	0
4/26/2024	5:30 AM	0	68	9	0	3	0	0	0	9	0	0	0
4/26/2024	5:45 AM	0	82	10	0	2	0	0	0	4	0	0	0
4/26/2024	6:00 AM	1	79	7	0	2	1	0	0	6	0	1	0
4/26/2024	6:15 AM	0	87	11	0	2	0	0	0	6	0	1	0
4/26/2024	6:30 AM	0	138	27	0	0	2	0	0	6	0	0	0
4/26/2024	6:45 AM	1	128	35	0	2	3	1	0	2	0	0	0
4/26/2024	7:00 AM	0	118	29	0	1	2	1	0	3	0	0	0
4/26/2024	7:15 AM	0	127	30	0	4	5	0	2	4	0	0	0
4/26/2024	7:30 AM	0	144	32	1	2	0	0	1	5	1	0	0
4/26/2024	7:45 AM	1	132	33	1	5	0	0	1	5	0	0	0
4/26/2024	8:00 AM	0	102	23	0	3	0	0	0	4	2	0	0
4/26/2024	8:15 AM	0	112	37	0	6	1	0	2	4	0	0	0
4/26/2024	8:30 AM	0	134	26	1	5	1	2	0	6	0	0	0
4/26/2024	8:45 AM	0	102	34	1	1	3	2	1	5	0	0	0
4/26/2024	9:00 AM	0	68	28	1	4	0	0	2	3	0	0	0
4/26/2024	9:15 AM	0	101	42	2	1	2	0	1	4	0	0	0
4/26/2024	9:30 AM	0	90	23	0	2	1	0	0	8	0	0	0
4/26/2024	9:45 AM	0	114	28	0	3	1	0	1	3	0	0	0
4/26/2024	10:00 AM	1	79	26	1	3	0	0	3	6	0	0	0
4/26/2024	10:15 AM	0	96	37	0	10	3	0	0	7	1	0	0
4/26/2024	10:30 AM	0	92	29	0	8	3	0	2	6	0	0	0
4/26/2024	10:45 AM	0	90	30	0	1	1	0	3	4	0	0	0
4/26/2024	11:00 AM	0	81	25	0	5	3	0	1	7	0	0	0
4/26/2024	11:15 AM	0	90	23	0	3	0	0	2	6	0	0	0
4/26/2024	11:30 AM	0	80	36	0	6	1	1	2	6	1	0	0
4/26/2024	11:45 AM	0	83	33	1	6	8	0	0	8	0	0	0
4/26/2024	12:00 PM	0	99	28	0	2	0	0	0	4	0	0	0
4/26/2024	12:15 PM	0	98	35	0	3	1	0	3	3	0	0	0
4/26/2024	12:30 PM	1	88	36	0	1	1	0	0	7	1	0	0
4/26/2024	12:45 PM	0	83	26	0	4	1	0	0	4	0	0	0
4/26/2024	1:00 PM	0	96	33	5	3	0	0	0	4	0	0	0
4/26/2024	1:15 PM	0	111	24	0	6	1	0	1	3	0	0	0
4/26/2024	1:30 PM	0	94	30	0	1	1	0	0	9	0	0	0
4/26/2024	1:45 PM	0	90	26	0	4	0	0	1	4	0	0	0
4/26/2024	2:00 PM	0	72	30	0	7	1	0	0	2	0	0	0
4/26/2024	2:15 PM	0	119	43	1	8	0	0	1	4	0	0	0
4/26/2024	2:30 PM	0	110	37	0	1	0	0	0	9	0	0	0
4/26/2024	2:45 PM	0	93	34	0	3	1	0	0	5	0	0	0
4/26/2024	3:00 PM	1	93	26	0	5	1	0	1	0	0	0	0
4/26/2024	3:15 PM	0	79	29	0	7	0	1	0	4	1	0	0
4/26/2024	3:30 PM	0	109	35	1	2	1	0	1	3	0	0	0
4/26/2024	3:45 PM	1	85	31	0	4	2	0	0	2	0	0	0
4/26/2024	4:00 PM	0	81	22	1	3	0	0	0	8	0	0	0
4/26/2024	4:15 PM	0	87	32	0	5	0	0	0	5	0	0	0
4/26/2024	4:30 PM	2	101	41	0	3	1	0	0	4	0	0	0
4/26/2024	4:45 PM	0	80	19	0	2	0	0	1	3	0	0	0
4/26/2024	5:00 PM	0	82	21	1	4	0	0	0	3	0	0	0
4/26/2024	5:15 PM	0	102	25	1	3	0	0	0	4	1	0	0
4/26/2024	5:30 PM	0	90	21	0	6	1	0	0	2	0	0	0
4/26/2024	5:45 PM	0	103	33	0	3	0	0	0	2	0	0	0
4/26/2024	6:00 PM	0	96	17	0	1	1	0	1	4	0	0	0
4/26/2024	6:15 PM	0	108	28	1	6	0	0	0	0	0	0	0
4/26/2024	6:30 PM	0	108	30	0	2	0	0	0	3	0	0	0
4/26/2024	6:45 PM	0	111	11	0	6	1	0	0	1	0	0	0
4/26/2024	7:00 PM	0	82	35	0	2	0	0	0	2	0	0	0
4/26/2024	7:15 PM	0	72	22	0	2	0	0	0	2	0	0	0
4/26/2024	7:30 PM	0	63	22	0	4	0	0	0	2	0	0	0
4/26/2024	7:45 PM	0	71	14	3	2	0	0	0	1	0	0	0
4/26/2024	8:00 PM	0	67	18	0	0	0	0	0	0	0	0	0
4/26/2024	8:15 PM	0	54	13	0	4	0	0	0	0	0	0	0
4/26/2024	8:30 PM	0	57	17	0	1	0	0	0	4	0	0	0
4/26/2024	8:45 PM	0	53	11	0	0	0	0	0	2	0	0	0
4/26/2024	9:00 PM	0	51	9	0	1	0	0	0	2	0	0	0
4/26/2024	9:15 PM	0	42	12	0	1	0	0	0	1	0	2	0
4/26/2024	9:30 PM	0	52	12	0	1	0	0	0	3	0	0	0
4/26/2024	9:45 PM	0	51	11	0	1	0	0	0	1	0	0	0
4/26/2024	10:00 PM	0	58	8	0	1	0	0	0	0	0	0	0
4/26/2024	10:15 PM	0	51	12	0	0	0	0	0	0	0	0	0
4/26/2024	10:30 PM	0	48	9	0	1	0	0	0	1	0	0	0
4/26/2024	10:45 PM	0	32	10	0	0	0	0	0	0	0	0	0
4/26/2024	11:00 PM	0	38	7	0	0	0	0	0	3	0	0	0
4/26/2024	11:15 PM	0	23	5	0	0	0	0	0	0	0	0	0
4/26/2024	11:30 PM	1	29	6	0	0	0	0	0	0	0	0	0
4/26/2024	11:45 PM	0	34	6	0	1	1	0	0	1	0	0	0

4/27/2024	12:00 AM	0	25	2	0	0	0	0	0	1	0	2	0	0
4/27/2024	12:15 AM	0	37	1	0	0	0	0	0	0	0	1	0	0
4/27/2024	12:30 AM	0	22	2	0	0	0	0	0	0	0	1	0	0
4/27/2024	12:45 AM	0	13	1	0	0	0	0	0	1	0	0	0	0
4/27/2024	1:00 AM	0	15	0	0	0	1	0	0	1	0	0	0	0
4/27/2024	1:15 AM	0	15	1	0	0	1	0	0	0	0	0	0	0
4/27/2024	1:30 AM	0	12	0	0	0	1	0	0	0	0	0	0	0
4/27/2024	1:45 AM	0	14	1	0	2	0	0	0	0	0	1	0	0
4/27/2024	2:00 AM	0	22	0	0	1	0	0	0	1	0	2	0	0
4/27/2024	2:15 AM	0	18	0	0	0	0	0	0	1	0	0	0	0
4/27/2024	2:30 AM	0	13	1	0	0	0	0	0	0	0	0	0	0
4/27/2024	2:45 AM	0	23	0	0	0	0	0	0	0	0	0	0	0
4/27/2024	3:00 AM	0	17	1	0	0	0	0	0	0	0	1	0	0
4/27/2024	3:15 AM	0	29	0	0	0	0	0	0	0	1	0	0	0
4/27/2024	3:30 AM	0	23	2	0	0	1	0	0	0	0	0	0	0
4/27/2024	3:45 AM	0	29	1	0	0	0	0	0	1	0	0	0	0
4/27/2024	4:00 AM	0	20	1	0	0	0	0	0	3	1	0	0	0
4/27/2024	4:15 AM	0	25	0	0	0	0	0	0	1	1	0	0	0
4/27/2024	4:30 AM	0	38	3	0	0	0	0	0	2	0	0	0	0
4/27/2024	4:45 AM	0	38	3	0	0	0	0	0	1	0	0	0	0
4/27/2024	5:00 AM	0	23	3	0	0	0	0	0	1	0	0	0	0
4/27/2024	5:15 AM	1	33	6	0	0	0	0	0	0	0	0	0	0
4/27/2024	5:30 AM	0	37	3	0	1	0	0	0	3	0	0	0	0
4/27/2024	5:45 AM	0	51	3	0	0	0	0	0	2	0	0	0	0
4/27/2024	6:00 AM	0	30	5	0	1	0	0	1	2	0	0	0	0
4/27/2024	6:15 AM	1	49	13	0	0	0	0	0	1	0	0	0	0
4/27/2024	6:30 AM	0	59	14	0	1	0	0	0	2	0	0	0	0
4/27/2024	6:45 AM	0	63	11	1	0	0	0	1	1	0	0	0	0
4/27/2024	7:00 AM	0	51	11	0	0	0	0	1	1	0	0	0	0
4/27/2024	7:15 AM	0	54	14	0	1	1	0	1	2	0	0	1	0
4/27/2024	7:30 AM	0	72	26	0	1	1	0	0	2	0	0	0	0
4/27/2024	7:45 AM	0	81	21	1	1	2	0	0	1	0	0	0	0
4/27/2024	8:00 AM	0	64	26	0	1	0	0	1	0	0	0	0	0
4/27/2024	8:15 AM	1	81	15	1	2	0	0	0	3	0	0	0	0
4/27/2024	8:30 AM	0	90	22	1	0	0	0	0	4	0	0	0	0
4/27/2024	8:45 AM	0	82	23	0	1	0	0	1	1	0	0	0	0
4/27/2024	9:00 AM	1	71	14	0	0	0	0	0	2	0	0	1	0
4/27/2024	9:15 AM	0	90	23	0	1	1	0	0	1	0	0	0	0
4/27/2024	9:30 AM	0	113	21	0	3	1	0	0	1	0	0	0	0
4/27/2024	9:45 AM	0	94	26	0	3	1	0	0	2	0	0	0	0
4/27/2024	10:00 AM	0	98	16	0	1	0	0	1	2	0	0	0	0
4/27/2024	10:15 AM	2	94	21	0	1	0	0	0	3	0	0	0	0
4/27/2024	10:30 AM	1	91	20	0	1	0	0	0	0	0	0	0	0
4/27/2024	10:45 AM	0	98	27	0	3	0	0	0	1	0	0	0	0
4/27/2024	11:00 AM	0	90	26	0	0	1	0	1	0	0	0	0	0
4/27/2024	11:15 AM	0	119	19	0	2	0	0	0	1	0	0	0	0
4/27/2024	11:30 AM	0	110	20	0	1	1	0	0	0	0	0	0	0
4/27/2024	11:45 AM	0	112	25	1	1	1	0	1	1	0	0	0	0
4/27/2024	12:00 PM	0	115	26	0	1	0	0	0	1	0	0	0	0
4/27/2024	12:15 PM	4	99	21	0	0	0	0	0	1	0	0	0	0
4/27/2024	12:30 PM	0	85	25	0	0	0	0	0	1	0	0	0	0
4/27/2024	12:45 PM	1	100	26	0	4	1	0	0	2	0	0	0	0
4/27/2024	1:00 PM	1	98	20	0	3	0	0	0	2	0	0	0	0
4/27/2024	1:15 PM	0	106	24	0	1	2	0	0	1	0	0	0	0
4/27/2024	1:30 PM	0	109	19	1	2	0	0	0	2	0	0	0	0
4/27/2024	1:45 PM	0	92	32	0	1	1	0	0	2	0	0	0	0
4/27/2024	2:00 PM	1	86	27	0	0	0	0	0	1	0	0	0	0
4/27/2024	2:15 PM	0	97	23	1	0	0	0	0	0	0	0	0	0
4/27/2024	2:30 PM	0	113	24	0	2	1	0	1	0	0	0	0	0
4/27/2024	2:45 PM	0	101	30	0	2	1	0	0	2	0	0	0	0
4/27/2024	3:00 PM	0	95	20	0	3	0	0	0	0	0	0	0	0
4/27/2024	3:15 PM	0	98	36	0	1	0	0	0	0	0	0	0	0
4/27/2024	3:30 PM	0	104	26	0	1	0	0	0	1	0	0	0	0
4/27/2024	3:45 PM	0	85	20	0	2	0	0	0	1	0	0	0	0
4/27/2024	4:00 PM	1	74	22	0	1	0	0	0	1	0	0	0	0
4/27/2024	4:15 PM	1	75	17	1	0	0	0	0	1	0	0	0	0
4/27/2024	4:30 PM	0	68	17	0	2	0	0	0	1	0	0	0	0
4/27/2024	4:45 PM	0	71	24	0	0	0	0	1	0	0	0	0	0
4/27/2024	5:00 PM	0	92	29	0	0	0	0	0	2	0	0	0	0
4/27/2024	5:15 PM	0	79	17	0	2	0	0	0	2	0	0	0	0
4/27/2024	5:30 PM	0	68	21	0	0	0	0	0	0	0	0	0	0
4/27/2024	5:45 PM	0	74	18	0	0	0	0	0	1	0	0	0	0
4/27/2024	6:00 PM	0	90	21	0	0	0	0	0	1	0	0	0	0
4/27/2024	6:15 PM	0	74	12	0	1	0	0	0	0	0	0	0	0
4/27/2024	6:30 PM	0	97	18	0	1	0	0	0	1	0	0	0	0
4/27/2024	6:45 PM	0	77	18	0	4	0	0	0	1	0	0	0	0
4/27/2024	7:00 PM	0	53	7	0	0	0	0	0	0	0	0	0	0
4/27/2024	7:15 PM	1	77	7	0	3	0	0	0	1	0	0	0	0
4/27/2024	7:30 PM	1	68	14	0	0	0	0	0	1	0	0	0	0
4/27/2024	7:45 PM	1	55	13	0	0	0	0	0	0	0	0	0	0
4/27/2024	8:00 PM	0	57	15	0	0	0	0	0	0	0	0	0	0
4/27/2024	8:15 PM	0	53	11	0	0	1	0	0	0	0	0	0	0
4/27/2024	8:30 PM	1	54	6	0	1	0	0	0	0	0	0	0	0
4/27/2024	8:45 PM	0	48	4	0	0	0	0	1	0	0	0	0	0
4/27/2024	9:00 PM	0	51	11	0	0	0	0	0	0	0	0	0	0
4/27/2024	9:15 PM	0	55	7	0	0	0	0	0	0	0	0	0	0
4/27/2024	9:30 PM	0	46	10	0	0	0	0	0	0	0	0	0	0
4/27/2024	9:45 PM	0	42	4	0	0	0	0	0	0	0	0	0	0
4/27/2024	10:00 PM	0	51	7	0	0	0	0	0	0	0	0	0	0
4/27/2024	10:15 PM	0	37	5	0	0	0	0	0	1	0	0	0	0
4/27/2024	10:30 PM	0	52	3	0	0	0	0	0	1	0	0	0	0
4/27/2024	10:45 PM	0	44	4	0	0	0	0	0	0	0	0	0	0
4/27/2024	11:00 PM	0	54	3	0	0	0	0	0	0	0	0	0	0
4/27/2024	11:15 PM	0	30	2	0	0	0	0	0	0	0	0	0	0
4/27/2024	11:30 PM	0	27	2	0	0	0	0	0	1	0	0	0	0
4/27/2024	11:45 PM	0	29	4	0	0	0	0	0	1	0	0	0	0

SB
File Name:
Start Date: 4/21/2024
Start Time: 0
Site Code: 11
Station ID: 1
Location 1: I-26 N/Bound On-Ramp, north of I-20
Location 2:

Date	Time	1	2	3	4	5	6	7	8	9	10	11	12	13
4/21/2024	12:00 AM	0	0	0	0	0	0	0	0	0	0	0	0	0
4/21/2024	12:15 AM	0	0	0	0	0	0	0	0	0	0	0	0	0
4/21/2024	12:30 AM	0	0	0	0	0	0	0	0	0	0	0	0	0
4/21/2024	12:45 AM	0	0	0	0	0	0	0	0	0	0	0	0	0
4/21/2024	1:00 AM	0	0	0	0	0	0	0	0	0	0	0	0	0
4/21/2024	1:15 AM	0	0	0	0	0	0	0	0	0	0	0	0	0
4/21/2024	1:30 AM	0	0	0	0	0	0	0	0	0	0	0	0	0
4/21/2024	1:45 AM	0	0	0	0	0	0	0	0	0	0	0	0	0
4/21/2024	2:00 AM	0	0	0	0	0	0	0	0	0	0	0	0	0
4/21/2024	2:15 AM	0	0	0	0	0	0	0	0	0	0	0	0	0
4/21/2024	2:30 AM	0	0	0	0	0	0	0	0	0	0	0	0	0
4/21/2024	2:45 AM	0	0	0	0	0	0	0	0	0	0	0	0	0
4/21/2024	3:00 AM	0	0	0	0	0	0	0	0	0	0	0	0	0
4/21/2024	3:15 AM	0	0	0	0	0	0	0	0	0	0	0	0	0
4/21/2024	3:30 AM	0	0	0	0	0	0	0	0	0	0	0	0	0
4/21/2024	3:45 AM	0	0	0	0	0	0	0	0	0	0	0	0	0
4/21/2024	4:00 AM	0	0	0	0	0	0	0	0	0	0	0	0	0
4/21/2024	4:15 AM	0	0	0	0	0	0	0	0	0	0	0	0	0
4/21/2024	4:30 AM	0	0	0	0	0	0	0	0	0	0	0	0	0
4/21/2024	4:45 AM	0	0	0	0	0	0	0	0	0	0	0	0	0
4/21/2024	5:00 AM	0	0	0	0	0	0	0	0	0	0	0	0	0
4/21/2024	5:15 AM	0	0	0	0	0	0	0	0	0	0	0	0	0
4/21/2024	5:30 AM	0	0	0	0	0	0	0	0	0	0	0	0	0
4/21/2024	5:45 AM	0	0	0	0	0	0	0	0	0	0	0	0	0
4/21/2024	6:00 AM	0	0	0	0	0	0	0	0	0	0	0	0	0
4/21/2024	6:15 AM	0	0	0	0	0	0	0	0	0	0	0	0	0
4/21/2024	6:30 AM	0	0	0	0	0	0	0	0	0	0	0	0	0
4/21/2024	6:45 AM	0	0	0	0	0	0	0	0	0	0	0	0	0
4/21/2024	7:00 AM	0	0	0	0	0	0	0	0	0	0	0	0	0
4/21/2024	7:15 AM	0	0	0	0	0	0	0	0	0	0	0	0	0
4/21/2024	7:30 AM	0	0	0	0	0	0	0	0	0	0	0	0	0
4/21/2024	7:45 AM	0	0	0	0	0	0	0	0	0	0	0	0	0
4/21/2024	8:00 AM	0	0	0	0	0	0	0	0	0	0	0	0	0
4/21/2024	8:15 AM	0	0	0	0	0	0	0	0	0	0	0	0	0
4/21/2024	8:30 AM	0	0	0	0	0	0	0	0	0	0	0	0	0
4/21/2024	8:45 AM	0	0	0	0	0	0	0	0	0	0	0	0	0
4/21/2024	9:00 AM	0	0	0	0	0	0	0	0	0	0	0	0	0
4/21/2024	9:15 AM	0	0	0	0	0	0	0	0	0	0	0	0	0
4/21/2024	9:30 AM	0	0	0	0	0	0	0	0	0	0	0	0	0
4/21/2024	9:45 AM	0	0	0	0	0	0	0	0	0	0	0	0	0
4/21/2024	10:00 AM	0	0	0	0	0	0	0	0	0	0	0	0	0
4/21/2024	10:15 AM	0	0	0	0	0	0	0	0	0	0	0	0	0
4/21/2024	10:30 AM	0	0	0	0	0	0	0	0	0	0	0	0	0
4/21/2024	10:45 AM	0	0	0	0	0	0	0	0	0	0	0	0	0
4/21/2024	11:00 AM	0	0	0	0	0	0	0	0	0	0	0	0	0
4/21/2024	11:15 AM	0	0	0	0	0	0	0	0	0	0	0	0	0
4/21/2024	11:30 AM	0	0	0	0	0	0	0	0	0	0	0	0	0
4/21/2024	11:45 AM	0	0	0	0	0	0	0	0	0	0	0	0	0
4/21/2024	12:00 PM	0	0	0	0	0	0	0	0	0	0	0	0	0
4/21/2024	12:15 PM	0	0	0	0	0	0	0	0	0	0	0	0	0
4/21/2024	12:30 PM	0	0	0	0	0	0	0	0	0	0	0	0	0
4/21/2024	12:45 PM	0	0	0	0	0	0	0	0	0	0	0	0	0
4/21/2024	1:00 PM	0	0	0	0	0	0	0	0	0	0	0	0	0
4/21/2024	1:15 PM	0	0	0	0	0	0	0	0	0	0	0	0	0
4/21/2024	1:30 PM	0	0	0	0	0	0	0	0	0	0	0	0	0
4/21/2024	1:45 PM	0	0	0	0	0	0	0	0	0	0	0	0	0
4/21/2024	2:00 PM	0	0	0	0	0	0	0	0	0	0	0	0	0
4/21/2024	2:15 PM	0	0	0	0	0	0	0	0	0	0	0	0	0
4/21/2024	2:30 PM	0	0	0	0	0	0	0	0	0	0	0	0	0
4/21/2024	2:45 PM	0	0	0	0	0	0	0	0	0	0	0	0	0
4/21/2024	3:00 PM	0	0	0	0	0	0	0	0	0	0	0	0	0
4/21/2024	3:15 PM	0	0	0	0	0	0	0	0	0	0	0	0	0
4/21/2024	3:30 PM	0	0	0	0	0	0	0	0	0	0	0	0	0
4/21/2024	3:45 PM	0	0	0	0	0	0	0	0	0	0	0	0	0
4/21/2024	4:00 PM	0	0	0	0	0	0	0	0	0	0	0	0	0
4/21/2024	4:15 PM	0	0	0	0	0	0	0	0	0	0	0	0	0
4/21/2024	4:30 PM	0	0	0	0	0	0	0	0	0	0	0	0	0
4/21/2024	4:45 PM	0	0	0	0	0	0	0	0	0	0	0	0	0
4/21/2024	5:00 PM	0	0	0	0	0	0	0	0	0	0	0	0	0
4/21/2024	5:15 PM	0	0	0	0	0	0	0	0	0	0	0	0	0
4/21/2024	5:30 PM	0	0	0	0	0	0	0	0	0	0	0	0	0
4/21/2024	5:45 PM	0	0	0	0	0	0	0	0	0	0	0	0	0
4/21/2024	6:00 PM	0	0	0	0	0	0	0	0	0	0	0	0	0
4/21/2024	6:15 PM	0	0	0	0	0	0	0	0	0	0	0	0	0
4/21/2024	6:30 PM	0	0	0	0	0	0	0	0	0	0	0	0	0
4/21/2024	6:45 PM	0	0	0	0	0	0	0	0	0	0	0	0	0
4/21/2024	7:00 PM	0	0	0	0	0	0	0	0	0	0	0	0	0
4/21/2024	7:15 PM	0	0	0	0	0	0	0	0	0	0	0	0	0
4/21/2024	7:30 PM	0	0	0	0	0	0	0	0	0	0	0	0	0
4/21/2024	7:45 PM	0	0	0	0	0	0	0	0	0	0	0	0	0
4/21/2024	8:00 PM	0	0	0	0	0	0	0	0	0	0	0	0	0
4/21/2024	8:15 PM	0	0	0	0	0	0	0	0	0	0	0	0	0
4/21/2024	8:30 PM	0	0	0	0	0	0	0	0	0	0	0	0	0
4/21/2024	8:45 PM	0	0	0	0	0	0	0	0	0	0	0	0	0
4/21/2024	9:00 PM	0	0	0	0	0	0	0	0	0	0	0	0	0
4/21/2024	9:15 PM	0	0	0	0	0	0	0	0	0	0	0	0	0
4/21/2024	9:30 PM	0	0	0	0	0	0	0	0	0	0	0	0	0
4/21/2024	9:45 PM	0	0	0	0	0	0	0	0	0	0	0	0	0
4/21/2024	10:00 PM	0	0	0	0	0	0	0	0	0	0	0	0	0
4/21/2024	10:15 PM	0	0	0	0	0	0	0	0	0	0	0	0	0
4/21/2024	10:30 PM	0	0	0	0	0	0	0	0	0	0	0	0	0
4/21/2024	10:45 PM	0	0	0	0	0	0	0	0	0	0	0	0	0
4/21/2024	11:00 PM	0	0	0	0	0	0	0	0	0	0	0	0	0
4/21/2024	11:15 PM	0	0	0	0	0	0	0	0	0	0	0	0	0
4/21/2024	11:30 PM	0	0	0	0	0	0	0	0	0	0	0	0	0
4/21/2024	11:45 PM	0	0	0	0	0	0	0	0	0	0	0	0	0

4/22/2024	12:00 AM	0	0	0	0	0	0	0	0	0	0	0	0	0
4/22/2024	12:15 AM	0	0	0	0	0	0	0	0	0	0	0	0	0
4/22/2024	12:30 AM	0	0	0	0	0	0	0	0	0	0	0	0	0
4/22/2024	12:45 AM	0	0	0	0	0	0	0	0	0	0	0	0	0
4/22/2024	1:00 AM	0	0	0	0	0	0	0	0	0	0	0	0	0
4/22/2024	1:15 AM	0	0	0	0	0	0	0	0	0	0	0	0	0
4/22/2024	1:30 AM	0	0	0	0	0	0	0	0	0	0	0	0	0
4/22/2024	1:45 AM	0	0	0	0	0	0	0	0	0	0	0	0	0
4/22/2024	2:00 AM	0	0	0	0	0	0	0	0	0	0	0	0	0
4/22/2024	2:15 AM	0	0	0	0	0	0	0	0	0	0	0	0	0
4/22/2024	2:30 AM	0	0	0	0	0	0	0	0	0	0	0	0	0
4/22/2024	2:45 AM	0	0	0	0	0	0	0	0	0	0	0	0	0
4/22/2024	3:00 AM	0	0	0	0	0	0	0	0	0	0	0	0	0
4/22/2024	3:15 AM	0	0	0	0	0	0	0	0	0	0	0	0	0
4/22/2024	3:30 AM	0	0	0	0	0	0	0	0	0	0	0	0	0
4/22/2024	3:45 AM	0	0	0	0	0	0	0	0	0	0	0	0	0
4/22/2024	4:00 AM	0	0	0	0	0	0	0	0	0	0	0	0	0
4/22/2024	4:15 AM	0	0	0	0	0	0	0	0	0	0	0	0	0
4/22/2024	4:30 AM	0	0	0	0	0	0	0	0	0	0	0	0	0
4/22/2024	4:45 AM	0	0	0	0	0	0	0	0	0	0	0	0	0
4/22/2024	5:00 AM	0	0	0	0	0	0	0	0	0	0	0	0	0
4/22/2024	5:15 AM	0	0	0	0	0	0	0	0	0	0	0	0	0
4/22/2024	5:30 AM	0	0	0	0	0	0	0	0	0	0	0	0	0
4/22/2024	5:45 AM	0	0	0	0	0	0	0	0	0	0	0	0	0
4/22/2024	6:00 AM	0	0	0	0	0	0	0	0	0	0	0	0	0
4/22/2024	6:15 AM	0	0	0	0	0	0	0	0	0	0	0	0	0
4/22/2024	6:30 AM	0	0	0	0	0	0	0	0	0	0	0	0	0
4/22/2024	6:45 AM	0	0	0	0	0	0	0	0	0	0	0	0	0
4/22/2024	7:00 AM	0	0	0	0	0	0	0	0	0	0	0	0	0
4/22/2024	7:15 AM	0	0	0	0	0	0	0	0	0	0	0	0	0
4/22/2024	7:30 AM	0	0	0	0	0	0	0	0	0	0	0	0	0
4/22/2024	7:45 AM	0	0	0	0	0	0	0	0	0	0	0	0	0
4/22/2024	8:00 AM	0	0	0	0	0	0	0	0	0	0	0	0	0
4/22/2024	8:15 AM	0	0	0	0	0	0	0	0	0	0	0	0	0
4/22/2024	8:30 AM	0	0	0	0	0	0	0	0	0	0	0	0	0
4/22/2024	8:45 AM	0	0	0	0	0	0	0	0	0	0	0	0	0
4/22/2024	9:00 AM	0	0	0	0	0	0	0	0	0	0	0	0	0
4/22/2024	9:15 AM	0	0	0	0	0	0	0	0	0	0	0	0	0
4/22/2024	9:30 AM	0	0	0	0	0	0	0	0	0	0	0	0	0
4/22/2024	9:45 AM	0	0	0	0	0	0	0	0	0	0	0	0	0
4/22/2024	10:00 AM	0	0	0	0	0	0	0	0	0	0	0	0	0
4/22/2024	10:15 AM	0	0	0	0	0	0	0	0	0	0	0	0	0
4/22/2024	10:30 AM	0	0	0	0	0	0	0	0	0	0	0	0	0
4/22/2024	10:45 AM	0	0	0	0	0	0	0	0	0	0	0	0	0
4/22/2024	11:00 AM	0	0	0	0	0	0	0	0	0	0	0	0	0
4/22/2024	11:15 AM	0	0	0	0	0	0	0	0	0	0	0	0	0
4/22/2024	11:30 AM	0	0	0	0	0	0	0	0	0	0	0	0	0
4/22/2024	11:45 AM	0	0	0	0	0	0	0	0	0	0	0	0	0
4/22/2024	12:00 PM	0	0	0	0	0	0	0	0	0	0	0	0	0
4/22/2024	12:15 PM	0	0	0	0	0	0	0	0	0	0	0	0	0
4/22/2024	12:30 PM	0	0	0	0	0	0	0	0	0	0	0	0	0
4/22/2024	12:45 PM	0	0	0	0	0	0	0	0	0	0	0	0	0
4/22/2024	1:00 PM	0	0	0	0	0	0	0	0	0	0	0	0	0
4/22/2024	1:15 PM	0	0	0	0	0	0	0	0	0	0	0	0	0
4/22/2024	1:30 PM	0	0	0	0	0	0	0	0	0	0	0	0	0
4/22/2024	1:45 PM	0	0	0	0	0	0	0	0	0	0	0	0	0
4/22/2024	2:00 PM	0	0	0	0	0	0	0	0	0	0	0	0	0
4/22/2024	2:15 PM	0	0	0	0	0	0	0	0	0	0	0	0	0
4/22/2024	2:30 PM	0	0	0	0	0	0	0	0	0	0	0	0	0
4/22/2024	2:45 PM	0	0	0	0	0	0	0	0	0	0	0	0	0
4/22/2024	3:00 PM	0	0	0	0	0	0	0	0	0	0	0	0	0
4/22/2024	3:15 PM	0	0	0	0	0	0	0	0	0	0	0	0	0
4/22/2024	3:30 PM	0	0	0	0	0	0	0	0	0	0	0	0	0
4/22/2024	3:45 PM	0	0	0	0	0	0	0	0	0	0	0	0	0
4/22/2024	4:00 PM	0	0	0	0	0	0	0	0	0	0	0	0	0
4/22/2024	4:15 PM	0	0	0	0	0	0	0	0	0	0	0	0	0
4/22/2024	4:30 PM	0	0	0	0	0	0	0	0	0	0	0	0	0
4/22/2024	4:45 PM	0	0	0	0	0	0	0	0	0	0	0	0	0
4/22/2024	5:00 PM	0	0	0	0	0	0	0	0	0	0	0	0	0
4/22/2024	5:15 PM	0	0	0	0	0	0	0	0	0	0	0	0	0
4/22/2024	5:30 PM	0	0	0	0	0	0	0	0	0	0	0	0	0
4/22/2024	5:45 PM	0	0	0	0	0	0	0	0	0	0	0	0	0
4/22/2024	6:00 PM	0	0	0	0	0	0	0	0	0	0	0	0	0
4/22/2024	6:15 PM	0	0	0	0	0	0	0	0	0	0	0	0	0
4/22/2024	6:30 PM	0	0	0	0	0	0	0	0	0	0	0	0	0
4/22/2024	6:45 PM	0	0	0	0	0	0	0	0	0	0	0	0	0
4/22/2024	7:00 PM	0	0	0	0	0	0	0	0	0	0	0	0	0
4/22/2024	7:15 PM	0	0	0	0	0	0	0	0	0	0	0	0	0
4/22/2024	7:30 PM	0	0	0	0	0	0	0	0	0	0	0	0	0
4/22/2024	7:45 PM	0	0	0	0	0	0	0	0	0	0	0	0	0
4/22/2024	8:00 PM	0	0	0	0	0	0	0	0	0	0	0	0	0
4/22/2024	8:15 PM	0	0	0	0	0	0	0	0	0	0	0	0	0
4/22/2024	8:30 PM	0	0	0	0	0	0	0	0	0	0	0	0	0
4/22/2024	8:45 PM	0	0	0	0	0	0	0	0	0	0	0	0	0
4/22/2024	9:00 PM	0	0	0	0	0	0	0	0	0	0	0	0	0
4/22/2024	9:15 PM	0	0	0	0	0	0	0	0	0	0	0	0	0
4/22/2024	9:30 PM	0	0	0	0	0	0	0	0	0	0	0	0	0
4/22/2024	9:45 PM	0	0	0	0	0	0	0	0	0	0	0	0	0
4/22/2024	10:00 PM	0	0	0	0	0	0	0	0	0	0	0	0	0
4/22/2024	10:15 PM	0	0	0	0	0	0	0	0	0	0	0	0	0
4/22/2024	10:30 PM	0	0	0	0	0	0	0	0	0	0	0	0	0
4/22/2024	10:45 PM	0	0	0	0	0	0	0	0	0	0	0	0	0
4/22/2024	11:00 PM	0	0	0	0	0	0	0	0	0	0	0	0	0
4/22/2024	11:15 PM	0	0	0	0	0	0	0	0	0	0	0	0	0
4/22/2024	11:30 PM	0	0	0	0	0	0	0	0	0	0	0	0	0
4/22/2024	11:45 PM	0	0	0	0	0	0	0	0	0	0	0	0	0

4/23/2024	12:00 AM	0	0	0	0	0	0	0	0	0	0	0	0	0
4/23/2024	12:15 AM	0	0	0	0	0	0	0	0	0	0	0	0	0
4/23/2024	12:30 AM	0	0	0	0	0	0	0	0	0	0	0	0	0
4/23/2024	12:45 AM	0	0	0	0	0	0	0	0	0	0	0	0	0
4/23/2024	1:00 AM	0	0	0	0	0	0	0	0	0	0	0	0	0
4/23/2024	1:15 AM	0	0	0	0	0	0	0	0	0	0	0	0	0
4/23/2024	1:30 AM	0	0	0	0	0	0	0	0	0	0	0	0	0
4/23/2024	1:45 AM	0	0	0	0	0	0	0	0	0	0	0	0	0
4/23/2024	2:00 AM	0	0	0	0	0	0	0	0	0	0	0	0	0
4/23/2024	2:15 AM	0	0	0	0	0	0	0	0	0	0	0	0	0
4/23/2024	2:30 AM	0	0	0	0	0	0	0	0	0	0	0	0	0
4/23/2024	2:45 AM	0	0	0	0	0	0	0	0	0	0	0	0	0
4/23/2024	3:00 AM	0	0	0	0	0	0	0	0	0	0	0	0	0
4/23/2024	3:15 AM	0	0	0	0	0	0	0	0	0	0	0	0	0
4/23/2024	3:30 AM	0	0	0	0	0	0	0	0	0	0	0	0	0
4/23/2024	3:45 AM	0	0	0	0	0	0	0	0	0	0	0	0	0
4/23/2024	4:00 AM	0	0	0	0	0	0	0	0	0	0	0	0	0
4/23/2024	4:15 AM	0	0	0	0	0	0	0	0	0	0	0	0	0
4/23/2024	4:30 AM	0	0	0	0	0	0	0	0	0	0	0	0	0
4/23/2024	4:45 AM	0	0	0	0	0	0	0	0	0	0	0	0	0
4/23/2024	5:00 AM	0	0	0	0	0	0	0	0	0	0	0	0	0
4/23/2024	5:15 AM	0	0	0	0	0	0	0	0	0	0	0	0	0
4/23/2024	5:30 AM	0	0	0	0	0	0	0	0	0	0	0	0	0
4/23/2024	5:45 AM	0	0	0	0	0	0	0	0	0	0	0	0	0
4/23/2024	6:00 AM	0	0	0	0	0	0	0	0	0	0	0	0	0
4/23/2024	6:15 AM	0	0	0	0	0	0	0	0	0	0	0	0	0
4/23/2024	6:30 AM	0	0	0	0	0	0	0	0	0	0	0	0	0
4/23/2024	6:45 AM	0	0	0	0	0	0	0	0	0	0	0	0	0
4/23/2024	7:00 AM	0	0	0	0	0	0	0	0	0	0	0	0	0
4/23/2024	7:15 AM	0	0	0	0	0	0	0	0	0	0	0	0	0
4/23/2024	7:30 AM	0	0	0	0	0	0	0	0	0	0	0	0	0
4/23/2024	7:45 AM	0	0	0	0	0	0	0	0	0	0	0	0	0
4/23/2024	8:00 AM	0	0	0	0	0	0	0	0	0	0	0	0	0
4/23/2024	8:15 AM	0	0	0	0	0	0	0	0	0	0	0	0	0
4/23/2024	8:30 AM	0	0	0	0	0	0	0	0	0	0	0	0	0
4/23/2024	8:45 AM	0	0	0	0	0	0	0	0	0	0	0	0	0
4/23/2024	9:00 AM	0	0	0	0	0	0	0	0	0	0	0	0	0
4/23/2024	9:15 AM	0	0	0	0	0	0	0	0	0	0	0	0	0
4/23/2024	9:30 AM	0	0	0	0	0	0	0	0	0	0	0	0	0
4/23/2024	9:45 AM	0	0	0	0	0	0	0	0	0	0	0	0	0
4/23/2024	10:00 AM	0	0	0	0	0	0	0	0	0	0	0	0	0
4/23/2024	10:15 AM	0	0	0	0	0	0	0	0	0	0	0	0	0
4/23/2024	10:30 AM	0	0	0	0	0	0	0	0	0	0	0	0	0
4/23/2024	10:45 AM	0	0	0	0	0	0	0	0	0	0	0	0	0
4/23/2024	11:00 AM	0	0	0	0	0	0	0	0	0	0	0	0	0
4/23/2024	11:15 AM	0	0	0	0	0	0	0	0	0	0	0	0	0
4/23/2024	11:30 AM	0	0	0	0	0	0	0	0	0	0	0	0	0
4/23/2024	11:45 AM	0	0	0	0	0	0	0	0	0	0	0	0	0
4/23/2024	12:00 PM	0	0	0	0	0	0	0	0	0	0	0	0	0
4/23/2024	12:15 PM	0	0	0	0	0	0	0	0	0	0	0	0	0
4/23/2024	12:30 PM	0	0	0	0	0	0	0	0	0	0	0	0	0
4/23/2024	12:45 PM	0	0	0	0	0	0	0	0	0	0	0	0	0
4/23/2024	1:00 PM	0	0	0	0	0	0	0	0	0	0	0	0	0
4/23/2024	1:15 PM	0	0	0	0	0	0	0	0	0	0	0	0	0
4/23/2024	1:30 PM	0	0	0	0	0	0	0	0	0	0	0	0	0
4/23/2024	1:45 PM	0	0	0	0	0	0	0	0	0	0	0	0	0
4/23/2024	2:00 PM	0	0	0	0	0	0	0	0	0	0	0	0	0
4/23/2024	2:15 PM	0	0	0	0	0	0	0	0	0	0	0	0	0
4/23/2024	2:30 PM	0	0	0	0	0	0	0	0	0	0	0	0	0
4/23/2024	2:45 PM	0	0	0	0	0	0	0	0	0	0	0	0	0
4/23/2024	3:00 PM	0	0	0	0	0	0	0	0	0	0	0	0	0
4/23/2024	3:15 PM	0	0	0	0	0	0	0	0	0	0	0	0	0
4/23/2024	3:30 PM	0	0	0	0	0	0	0	0	0	0	0	0	0
4/23/2024	3:45 PM	0	0	0	0	0	0	0	0	0	0	0	0	0
4/23/2024	4:00 PM	0	0	0	0	0	0	0	0	0	0	0	0	0
4/23/2024	4:15 PM	0	0	0	0	0	0	0	0	0	0	0	0	0
4/23/2024	4:30 PM	0	0	0	0	0	0	0	0	0	0	0	0	0
4/23/2024	4:45 PM	0	0	0	0	0	0	0	0	0	0	0	0	0
4/23/2024	5:00 PM	0	0	0	0	0	0	0	0	0	0	0	0	0
4/23/2024	5:15 PM	0	0	0	0	0	0	0	0	0	0	0	0	0
4/23/2024	5:30 PM	0	0	0	0	0	0	0	0	0	0	0	0	0
4/23/2024	5:45 PM	0	0	0	0	0	0	0	0	0	0	0	0	0
4/23/2024	6:00 PM	0	0	0	0	0	0	0	0	0	0	0	0	0
4/23/2024	6:15 PM	0	0	0	0	0	0	0	0	0	0	0	0	0
4/23/2024	6:30 PM	0	0	0	0	0	0	0	0	0	0	0	0	0
4/23/2024	6:45 PM	0	0	0	0	0	0	0	0	0	0	0	0	0
4/23/2024	7:00 PM	0	0	0	0	0	0	0	0	0	0	0	0	0
4/23/2024	7:15 PM	0	0	0	0	0	0	0	0	0	0	0	0	0
4/23/2024	7:30 PM	0	0	0	0	0	0	0	0	0	0	0	0	0
4/23/2024	7:45 PM	0	0	0	0	0	0	0	0	0	0	0	0	0
4/23/2024	8:00 PM	0	0	0	0	0	0	0	0	0	0	0	0	0
4/23/2024	8:15 PM	0	0	0	0	0	0	0	0	0	0	0	0	0
4/23/2024	8:30 PM	0	0	0	0	0	0	0	0	0	0	0	0	0
4/23/2024	8:45 PM	0	0	0	0	0	0	0	0	0	0	0	0	0
4/23/2024	9:00 PM	0	0	0	0	0	0	0	0	0	0	0	0	0
4/23/2024	9:15 PM	0	0	0	0	0	0	0	0	0	0	0	0	0
4/23/2024	9:30 PM	0	0	0	0	0	0	0	0	0	0	0	0	0
4/23/2024	9:45 PM	0	0	0	0	0	0	0	0	0	0	0	0	0
4/23/2024	10:00 PM	0	0	0	0	0	0	0	0	0	0	0	0	0
4/23/2024	10:15 PM	0	0	0	0	0	0	0	0	0	0	0	0	0
4/23/2024	10:30 PM	0	0	0	0	0	0	0	0	0	0	0	0	0
4/23/2024	10:45 PM	0	0	0	0	0	0	0	0	0	0	0	0	0
4/23/2024	11:00 PM	0	0	0	0	0	0	0	0	0	0	0	0	0
4/23/2024	11:15 PM	0	0	0	0	0	0	0	0	0	0	0	0	0
4/23/2024	11:30 PM	0	0	0	0	0	0	0	0	0	0	0	0	0
4/23/2024	11:45 PM	0	0	0	0	0	0	0	0	0	0	0	0	0

4/24/2024	12:00 AM	0	0	0	0	0	0	0	0	0	0	0	0	0
4/24/2024	12:15 AM	0	0	0	0	0	0	0	0	0	0	0	0	0
4/24/2024	12:30 AM	0	0	0	0	0	0	0	0	0	0	0	0	0
4/24/2024	12:45 AM	0	0	0	0	0	0	0	0	0	0	0	0	0
4/24/2024	1:00 AM	0	0	0	0	0	0	0	0	0	0	0	0	0
4/24/2024	1:15 AM	0	0	0	0	0	0	0	0	0	0	0	0	0
4/24/2024	1:30 AM	0	0	0	0	0	0	0	0	0	0	0	0	0
4/24/2024	1:45 AM	0	0	0	0	0	0	0	0	0	0	0	0	0
4/24/2024	2:00 AM	0	0	0	0	0	0	0	0	0	0	0	0	0
4/24/2024	2:15 AM	0	0	0	0	0	0	0	0	0	0	0	0	0
4/24/2024	2:30 AM	0	0	0	0	0	0	0	0	0	0	0	0	0
4/24/2024	2:45 AM	0	0	0	0	0	0	0	0	0	0	0	0	0
4/24/2024	3:00 AM	0	0	0	0	0	0	0	0	0	0	0	0	0
4/24/2024	3:15 AM	0	0	0	0	0	0	0	0	0	0	0	0	0
4/24/2024	3:30 AM	0	0	0	0	0	0	0	0	0	0	0	0	0
4/24/2024	3:45 AM	0	0	0	0	0	0	0	0	0	0	0	0	0
4/24/2024	4:00 AM	0	0	0	0	0	0	0	0	0	0	0	0	0
4/24/2024	4:15 AM	0	0	0	0	0	0	0	0	0	0	0	0	0
4/24/2024	4:30 AM	0	0	0	0	0	0	0	0	0	0	0	0	0
4/24/2024	4:45 AM	0	0	0	0	0	0	0	0	0	0	0	0	0
4/24/2024	5:00 AM	0	0	0	0	0	0	0	0	0	0	0	0	0
4/24/2024	5:15 AM	0	0	0	0	0	0	0	0	0	0	0	0	0
4/24/2024	5:30 AM	0	0	0	0	0	0	0	0	0	0	0	0	0
4/24/2024	5:45 AM	0	0	0	0	0	0	0	0	0	0	0	0	0
4/24/2024	6:00 AM	0	0	0	0	0	0	0	0	0	0	0	0	0
4/24/2024	6:15 AM	0	0	0	0	0	0	0	0	0	0	0	0	0
4/24/2024	6:30 AM	0	0	0	0	0	0	0	0	0	0	0	0	0
4/24/2024	6:45 AM	0	0	0	0	0	0	0	0	0	0	0	0	0
4/24/2024	7:00 AM	0	0	0	0	0	0	0	0	0	0	0	0	0
4/24/2024	7:15 AM	0	0	0	0	0	0	0	0	0	0	0	0	0
4/24/2024	7:30 AM	0	0	0	0	0	0	0	0	0	0	0	0	0
4/24/2024	7:45 AM	0	0	0	0	0	0	0	0	0	0	0	0	0
4/24/2024	8:00 AM	0	0	0	0	0	0	0	0	0	0	0	0	0
4/24/2024	8:15 AM	0	0	0	0	0	0	0	0	0	0	0	0	0
4/24/2024	8:30 AM	0	0	0	0	0	0	0	0	0	0	0	0	0
4/24/2024	8:45 AM	0	0	0	0	0	0	0	0	0	0	0	0	0
4/24/2024	9:00 AM	0	0	0	0	0	0	0	0	0	0	0	0	0
4/24/2024	9:15 AM	0	0	0	0	0	0	0	0	0	0	0	0	0
4/24/2024	9:30 AM	0	0	0	0	0	0	0	0	0	0	0	0	0
4/24/2024	9:45 AM	0	0	0	0	0	0	0	0	0	0	0	0	0
4/24/2024	10:00 AM	0	0	0	0	0	0	0	0	0	0	0	0	0
4/24/2024	10:15 AM	0	0	0	0	0	0	0	0	0	0	0	0	0
4/24/2024	10:30 AM	0	0	0	0	0	0	0	0	0	0	0	0	0
4/24/2024	10:45 AM	0	0	0	0	0	0	0	0	0	0	0	0	0
4/24/2024	11:00 AM	0	0	0	0	0	0	0	0	0	0	0	0	0
4/24/2024	11:15 AM	0	0	0	0	0	0	0	0	0	0	0	0	0
4/24/2024	11:30 AM	0	0	0	0	0	0	0	0	0	0	0	0	0
4/24/2024	11:45 AM	0	0	0	0	0	0	0	0	0	0	0	0	0
4/24/2024	12:00 PM	0	0	0	0	0	0	0	0	0	0	0	0	0
4/24/2024	12:15 PM	0	0	0	0	0	0	0	0	0	0	0	0	0
4/24/2024	12:30 PM	0	0	0	0	0	0	0	0	0	0	0	0	0
4/24/2024	12:45 PM	0	0	0	0	0	0	0	0	0	0	0	0	0
4/24/2024	1:00 PM	0	0	0	0	0	0	0	0	0	0	0	0	0
4/24/2024	1:15 PM	0	0	0	0	0	0	0	0	0	0	0	0	0
4/24/2024	1:30 PM	0	0	0	0	0	0	0	0	0	0	0	0	0
4/24/2024	1:45 PM	0	0	0	0	0	0	0	0	0	0	0	0	0
4/24/2024	2:00 PM	0	0	0	0	0	0	0	0	0	0	0	0	0
4/24/2024	2:15 PM	0	0	0	0	0	0	0	0	0	0	0	0	0
4/24/2024	2:30 PM	0	0	0	0	0	0	0	0	0	0	0	0	0
4/24/2024	2:45 PM	0	0	0	0	0	0	0	0	0	0	0	0	0
4/24/2024	3:00 PM	0	0	0	0	0	0	0	0	0	0	0	0	0
4/24/2024	3:15 PM	0	0	0	0	0	0	0	0	0	0	0	0	0
4/24/2024	3:30 PM	0	0	0	0	0	0	0	0	0	0	0	0	0
4/24/2024	3:45 PM	0	0	0	0	0	0	0	0	0	0	0	0	0
4/24/2024	4:00 PM	0	0	0	0	0	0	0	0	0	0	0	0	0
4/24/2024	4:15 PM	0	0	0	0	0	0	0	0	0	0	0	0	0
4/24/2024	4:30 PM	0	0	0	0	0	0	0	0	0	0	0	0	0
4/24/2024	4:45 PM	0	0	0	0	0	0	0	0	0	0	0	0	0
4/24/2024	5:00 PM	0	0	0	0	0	0	0	0	0	0	0	0	0
4/24/2024	5:15 PM	0	0	0	0	0	0	0	0	0	0	0	0	0
4/24/2024	5:30 PM	0	0	0	0	0	0	0	0	0	0	0	0	0
4/24/2024	5:45 PM	0	0	0	0	0	0	0	0	0	0	0	0	0
4/24/2024	6:00 PM	0	0	0	0	0	0	0	0	0	0	0	0	0
4/24/2024	6:15 PM	0	0	0	0	0	0	0	0	0	0	0	0	0
4/24/2024	6:30 PM	0	0	0	0	0	0	0	0	0	0	0	0	0
4/24/2024	6:45 PM	0	0	0	0	0	0	0	0	0	0	0	0	0
4/24/2024	7:00 PM	0	0	0	0	0	0	0	0	0	0	0	0	0
4/24/2024	7:15 PM	0	0	0	0	0	0	0	0	0	0	0	0	0
4/24/2024	7:30 PM	0	0	0	0	0	0	0	0	0	0	0	0	0
4/24/2024	7:45 PM	0	0	0	0	0	0	0	0	0	0	0	0	0
4/24/2024	8:00 PM	0	0	0	0	0	0	0	0	0	0	0	0	0
4/24/2024	8:15 PM	0	0	0	0	0	0	0	0	0	0	0	0	0
4/24/2024	8:30 PM	0	0	0	0	0	0	0	0	0	0	0	0	0
4/24/2024	8:45 PM	0	0	0	0	0	0	0	0	0	0	0	0	0
4/24/2024	9:00 PM	0	0	0	0	0	0	0	0	0	0	0	0	0
4/24/2024	9:15 PM	0	0	0	0	0	0	0	0	0	0	0	0	0
4/24/2024	9:30 PM	0	0	0	0	0	0	0	0	0	0	0	0	0
4/24/2024	9:45 PM	0	0	0	0	0	0	0	0	0	0	0	0	0
4/24/2024	10:00 PM	0	0	0	0	0	0	0	0	0	0	0	0	0
4/24/2024	10:15 PM	0	0	0	0	0	0	0	0	0	0	0	0	0
4/24/2024	10:30 PM	0	0	0	0	0	0	0	0	0	0	0	0	0
4/24/2024	10:45 PM	0	0	0	0	0	0	0	0	0	0	0	0	0
4/24/2024	11:00 PM	0	0	0	0	0	0	0	0	0	0	0	0	0
4/24/2024	11:15 PM	0	0	0	0	0	0	0	0	0	0	0	0	0
4/24/2024	11:30 PM	0	0	0	0	0	0	0	0	0	0	0	0	0
4/24/2024	11:45 PM	0	0	0	0	0	0	0	0	0	0	0	0	0

4/25/2024	12:00 AM	0	0	0	0	0	0	0	0	0	0	0	0	0
4/25/2024	12:15 AM	0	0	0	0	0	0	0	0	0	0	0	0	0
4/25/2024	12:30 AM	0	0	0	0	0	0	0	0	0	0	0	0	0
4/25/2024	12:45 AM	0	0	0	0	0	0	0	0	0	0	0	0	0
4/25/2024	1:00 AM	0	0	0	0	0	0	0	0	0	0	0	0	0
4/25/2024	1:15 AM	0	0	0	0	0	0	0	0	0	0	0	0	0
4/25/2024	1:30 AM	0	0	0	0	0	0	0	0	0	0	0	0	0
4/25/2024	1:45 AM	0	0	0	0	0	0	0	0	0	0	0	0	0
4/25/2024	2:00 AM	0	0	0	0	0	0	0	0	0	0	0	0	0
4/25/2024	2:15 AM	0	0	0	0	0	0	0	0	0	0	0	0	0
4/25/2024	2:30 AM	0	0	0	0	0	0	0	0	0	0	0	0	0
4/25/2024	2:45 AM	0	0	0	0	0	0	0	0	0	0	0	0	0
4/25/2024	3:00 AM	0	0	0	0	0	0	0	0	0	0	0	0	0
4/25/2024	3:15 AM	0	0	0	0	0	0	0	0	0	0	0	0	0
4/25/2024	3:30 AM	0	0	0	0	0	0	0	0	0	0	0	0	0
4/25/2024	3:45 AM	0	0	0	0	0	0	0	0	0	0	0	0	0
4/25/2024	4:00 AM	0	0	0	0	0	0	0	0	0	0	0	0	0
4/25/2024	4:15 AM	0	0	0	0	0	0	0	0	0	0	0	0	0
4/25/2024	4:30 AM	0	0	0	0	0	0	0	0	0	0	0	0	0
4/25/2024	4:45 AM	0	0	0	0	0	0	0	0	0	0	0	0	0
4/25/2024	5:00 AM	0	0	0	0	0	0	0	0	0	0	0	0	0
4/25/2024	5:15 AM	0	0	0	0	0	0	0	0	0	0	0	0	0
4/25/2024	5:30 AM	0	0	0	0	0	0	0	0	0	0	0	0	0
4/25/2024	5:45 AM	0	0	0	0	0	0	0	0	0	0	0	0	0
4/25/2024	6:00 AM	0	0	0	0	0	0	0	0	0	0	0	0	0
4/25/2024	6:15 AM	0	0	0	0	0	0	0	0	0	0	0	0	0
4/25/2024	6:30 AM	0	0	0	0	0	0	0	0	0	0	0	0	0
4/25/2024	6:45 AM	0	0	0	0	0	0	0	0	0	0	0	0	0
4/25/2024	7:00 AM	0	0	0	0	0	0	0	0	0	0	0	0	0
4/25/2024	7:15 AM	0	0	0	0	0	0	0	0	0	0	0	0	0
4/25/2024	7:30 AM	0	0	0	0	0	0	0	0	0	0	0	0	0
4/25/2024	7:45 AM	0	0	0	0	0	0	0	0	0	0	0	0	0
4/25/2024	8:00 AM	0	0	0	0	0	0	0	0	0	0	0	0	0
4/25/2024	8:15 AM	0	0	0	0	0	0	0	0	0	0	0	0	0
4/25/2024	8:30 AM	0	0	0	0	0	0	0	0	0	0	0	0	0
4/25/2024	8:45 AM	0	0	0	0	0	0	0	0	0	0	0	0	0
4/25/2024	9:00 AM	0	0	0	0	0	0	0	0	0	0	0	0	0
4/25/2024	9:15 AM	0	0	0	0	0	0	0	0	0	0	0	0	0
4/25/2024	9:30 AM	0	0	0	0	0	0	0	0	0	0	0	0	0
4/25/2024	9:45 AM	0	0	0	0	0	0	0	0	0	0	0	0	0
4/25/2024	10:00 AM	0	0	0	0	0	0	0	0	0	0	0	0	0
4/25/2024	10:15 AM	0	0	0	0	0	0	0	0	0	0	0	0	0
4/25/2024	10:30 AM	0	0	0	0	0	0	0	0	0	0	0	0	0
4/25/2024	10:45 AM	0	0	0	0	0	0	0	0	0	0	0	0	0
4/25/2024	11:00 AM	0	0	0	0	0	0	0	0	0	0	0	0	0
4/25/2024	11:15 AM	0	0	0	0	0	0	0	0	0	0	0	0	0
4/25/2024	11:30 AM	0	0	0	0	0	0	0	0	0	0	0	0	0
4/25/2024	11:45 AM	0	0	0	0	0	0	0	0	0	0	0	0	0
4/25/2024	12:00 PM	0	0	0	0	0	0	0	0	0	0	0	0	0
4/25/2024	12:15 PM	0	0	0	0	0	0	0	0	0	0	0	0	0
4/25/2024	12:30 PM	0	0	0	0	0	0	0	0	0	0	0	0	0
4/25/2024	12:45 PM	0	0	0	0	0	0	0	0	0	0	0	0	0
4/25/2024	1:00 PM	0	0	0	0	0	0	0	0	0	0	0	0	0
4/25/2024	1:15 PM	0	0	0	0	0	0	0	0	0	0	0	0	0
4/25/2024	1:30 PM	0	0	0	0	0	0	0	0	0	0	0	0	0
4/25/2024	1:45 PM	0	0	0	0	0	0	0	0	0	0	0	0	0
4/25/2024	2:00 PM	0	0	0	0	0	0	0	0	0	0	0	0	0
4/25/2024	2:15 PM	0	0	0	0	0	0	0	0	0	0	0	0	0
4/25/2024	2:30 PM	0	0	0	0	0	0	0	0	0	0	0	0	0
4/25/2024	2:45 PM	0	0	0	0	0	0	0	0	0	0	0	0	0
4/25/2024	3:00 PM	0	0	0	0	0	0	0	0	0	0	0	0	0
4/25/2024	3:15 PM	0	0	0	0	0	0	0	0	0	0	0	0	0
4/25/2024	3:30 PM	0	0	0	0	0	0	0	0	0	0	0	0	0
4/25/2024	3:45 PM	0	0	0	0	0	0	0	0	0	0	0	0	0
4/25/2024	4:00 PM	0	0	0	0	0	0	0	0	0	0	0	0	0
4/25/2024	4:15 PM	0	0	0	0	0	0	0	0	0	0	0	0	0
4/25/2024	4:30 PM	0	0	0	0	0	0	0	0	0	0	0	0	0
4/25/2024	4:45 PM	0	0	0	0	0	0	0	0	0	0	0	0	0
4/25/2024	5:00 PM	0	0	0	0	0	0	0	0	0	0	0	0	0
4/25/2024	5:15 PM	0	0	0	0	0	0	0	0	0	0	0	0	0
4/25/2024	5:30 PM	0	0	0	0	0	0	0	0	0	0	0	0	0
4/25/2024	5:45 PM	0	0	0	0	0	0	0	0	0	0	0	0	0
4/25/2024	6:00 PM	0	0	0	0	0	0	0	0	0	0	0	0	0
4/25/2024	6:15 PM	0	0	0	0	0	0	0	0	0	0	0	0	0
4/25/2024	6:30 PM	0	0	0	0	0	0	0	0	0	0	0	0	0
4/25/2024	6:45 PM	0	0	0	0	0	0	0	0	0	0	0	0	0
4/25/2024	7:00 PM	0	0	0	0	0	0	0	0	0	0	0	0	0
4/25/2024	7:15 PM	0	0	0	0	0	0	0	0	0	0	0	0	0
4/25/2024	7:30 PM	0	0	0	0	0	0	0	0	0	0	0	0	0
4/25/2024	7:45 PM	0	0	0	0	0	0	0	0	0	0	0	0	0
4/25/2024	8:00 PM	0	0	0	0	0	0	0	0	0	0	0	0	0
4/25/2024	8:15 PM	0	0	0	0	0	0	0	0	0	0	0	0	0
4/25/2024	8:30 PM	0	0	0	0	0	0	0	0	0	0	0	0	0
4/25/2024	8:45 PM	0	0	0	0	0	0	0	0	0	0	0	0	0
4/25/2024	9:00 PM	0	0	0	0	0	0	0	0	0	0	0	0	0
4/25/2024	9:15 PM	0	0	0	0	0	0	0	0	0	0	0	0	0
4/25/2024	9:30 PM	0	0	0	0	0	0	0	0	0	0	0	0	0
4/25/2024	9:45 PM	0	0	0	0	0	0	0	0	0	0	0	0	0
4/25/2024	10:00 PM	0	0	0	0	0	0	0	0	0	0	0	0	0
4/25/2024	10:15 PM	0	0	0	0	0	0	0	0	0	0	0	0	0
4/25/2024	10:30 PM	0	0	0	0	0	0	0	0	0	0	0	0	0
4/25/2024	10:45 PM	0	0	0	0	0	0	0	0	0	0	0	0	0
4/25/2024	11:00 PM	0	0	0	0	0	0	0	0	0	0	0	0	0
4/25/2024	11:15 PM	0	0	0	0	0	0	0	0	0	0	0	0	0
4/25/2024	11:30 PM	0	0	0	0	0	0	0	0	0	0	0	0	0
4/25/2024	11:45 PM	0	0	0	0	0	0	0	0	0	0	0	0	0

4/26/2024	12:00 AM	0	0	0	0	0	0	0	0	0	0	0	0	0
4/26/2024	12:15 AM	0	0	0	0	0	0	0	0	0	0	0	0	0
4/26/2024	12:30 AM	0	0	0	0	0	0	0	0	0	0	0	0	0
4/26/2024	12:45 AM	0	0	0	0	0	0	0	0	0	0	0	0	0
4/26/2024	1:00 AM	0	0	0	0	0	0	0	0	0	0	0	0	0
4/26/2024	1:15 AM	0	0	0	0	0	0	0	0	0	0	0	0	0
4/26/2024	1:30 AM	0	0	0	0	0	0	0	0	0	0	0	0	0
4/26/2024	1:45 AM	0	0	0	0	0	0	0	0	0	0	0	0	0
4/26/2024	2:00 AM	0	0	0	0	0	0	0	0	0	0	0	0	0
4/26/2024	2:15 AM	0	0	0	0	0	0	0	0	0	0	0	0	0
4/26/2024	2:30 AM	0	0	0	0	0	0	0	0	0	0	0	0	0
4/26/2024	2:45 AM	0	0	0	0	0	0	0	0	0	0	0	0	0
4/26/2024	3:00 AM	0	0	0	0	0	0	0	0	0	0	0	0	0
4/26/2024	3:15 AM	0	0	0	0	0	0	0	0	0	0	0	0	0
4/26/2024	3:30 AM	0	0	0	0	0	0	0	0	0	0	0	0	0
4/26/2024	3:45 AM	0	0	0	0	0	0	0	0	0	0	0	0	0
4/26/2024	4:00 AM	0	0	0	0	0	0	0	0	0	0	0	0	0
4/26/2024	4:15 AM	0	0	0	0	0	0	0	0	0	0	0	0	0
4/26/2024	4:30 AM	0	0	0	0	0	0	0	0	0	0	0	0	0
4/26/2024	4:45 AM	0	0	0	0	0	0	0	0	0	0	0	0	0
4/26/2024	5:00 AM	0	0	0	0	0	0	0	0	0	0	0	0	0
4/26/2024	5:15 AM	0	0	0	0	0	0	0	0	0	0	0	0	0
4/26/2024	5:30 AM	0	0	0	0	0	0	0	0	0	0	0	0	0
4/26/2024	5:45 AM	0	0	0	0	0	0	0	0	0	0	0	0	0
4/26/2024	6:00 AM	0	0	0	0	0	0	0	0	0	0	0	0	0
4/26/2024	6:15 AM	0	0	0	0	0	0	0	0	0	0	0	0	0
4/26/2024	6:30 AM	0	0	0	0	0	0	0	0	0	0	0	0	0
4/26/2024	6:45 AM	0	0	0	0	0	0	0	0	0	0	0	0	0
4/26/2024	7:00 AM	0	0	0	0	0	0	0	0	0	0	0	0	0
4/26/2024	7:15 AM	0	0	0	0	0	0	0	0	0	0	0	0	0
4/26/2024	7:30 AM	0	0	0	0	0	0	0	0	0	0	0	0	0
4/26/2024	7:45 AM	0	0	0	0	0	0	0	0	0	0	0	0	0
4/26/2024	8:00 AM	0	0	0	0	0	0	0	0	0	0	0	0	0
4/26/2024	8:15 AM	0	0	0	0	0	0	0	0	0	0	0	0	0
4/26/2024	8:30 AM	0	0	0	0	0	0	0	0	0	0	0	0	0
4/26/2024	8:45 AM	0	0	0	0	0	0	0	0	0	0	0	0	0
4/26/2024	9:00 AM	0	0	0	0	0	0	0	0	0	0	0	0	0
4/26/2024	9:15 AM	0	0	0	0	0	0	0	0	0	0	0	0	0
4/26/2024	9:30 AM	0	0	0	0	0	0	0	0	0	0	0	0	0
4/26/2024	9:45 AM	0	0	0	0	0	0	0	0	0	0	0	0	0
4/26/2024	10:00 AM	0	0	0	0	0	0	0	0	0	0	0	0	0
4/26/2024	10:15 AM	0	0	0	0	0	0	0	0	0	0	0	0	0
4/26/2024	10:30 AM	0	0	0	0	0	0	0	0	0	0	0	0	0
4/26/2024	10:45 AM	0	0	0	0	0	0	0	0	0	0	0	0	0
4/26/2024	11:00 AM	0	0	0	0	0	0	0	0	0	0	0	0	0
4/26/2024	11:15 AM	0	0	0	0	0	0	0	0	0	0	0	0	0
4/26/2024	11:30 AM	0	0	0	0	0	0	0	0	0	0	0	0	0
4/26/2024	11:45 AM	0	0	0	0	0	0	0	0	0	0	0	0	0
4/26/2024	12:00 PM	0	0	0	0	0	0	0	0	0	0	0	0	0
4/26/2024	12:15 PM	0	0	0	0	0	0	0	0	0	0	0	0	0
4/26/2024	12:30 PM	0	0	0	0	0	0	0	0	0	0	0	0	0
4/26/2024	12:45 PM	0	0	0	0	0	0	0	0	0	0	0	0	0
4/26/2024	1:00 PM	0	0	0	0	0	0	0	0	0	0	0	0	0
4/26/2024	1:15 PM	0	0	0	0	0	0	0	0	0	0	0	0	0
4/26/2024	1:30 PM	0	0	0	0	0	0	0	0	0	0	0	0	0
4/26/2024	1:45 PM	0	0	0	0	0	0	0	0	0	0	0	0	0
4/26/2024	2:00 PM	0	0	0	0	0	0	0	0	0	0	0	0	0
4/26/2024	2:15 PM	0	0	0	0	0	0	0	0	0	0	0	0	0
4/26/2024	2:30 PM	0	0	0	0	0	0	0	0	0	0	0	0	0
4/26/2024	2:45 PM	0	0	0	0	0	0	0	0	0	0	0	0	0
4/26/2024	3:00 PM	0	0	0	0	0	0	0	0	0	0	0	0	0
4/26/2024	3:15 PM	0	0	0	0	0	0	0	0	0	0	0	0	0
4/26/2024	3:30 PM	0	0	0	0	0	0	0	0	0	0	0	0	0
4/26/2024	3:45 PM	0	0	0	0	0	0	0	0	0	0	0	0	0
4/26/2024	4:00 PM	0	0	0	0	0	0	0	0	0	0	0	0	0
4/26/2024	4:15 PM	0	0	0	0	0	0	0	0	0	0	0	0	0
4/26/2024	4:30 PM	0	0	0	0	0	0	0	0	0	0	0	0	0
4/26/2024	4:45 PM	0	0	0	0	0	0	0	0	0	0	0	0	0
4/26/2024	5:00 PM	0	0	0	0	0	0	0	0	0	0	0	0	0
4/26/2024	5:15 PM	0	0	0	0	0	0	0	0	0	0	0	0	0
4/26/2024	5:30 PM	0	0	0	0	0	0	0	0	0	0	0	0	0
4/26/2024	5:45 PM	0	0	0	0	0	0	0	0	0	0	0	0	0
4/26/2024	6:00 PM	0	0	0	0	0	0	0	0	0	0	0	0	0
4/26/2024	6:15 PM	0	0	0	0	0	0	0	0	0	0	0	0	0
4/26/2024	6:30 PM	0	0	0	0	0	0	0	0	0	0	0	0	0
4/26/2024	6:45 PM	0	0	0	0	0	0	0	0	0	0	0	0	0
4/26/2024	7:00 PM	0	0	0	0	0	0	0	0	0	0	0	0	0
4/26/2024	7:15 PM	0	0	0	0	0	0	0	0	0	0	0	0	0
4/26/2024	7:30 PM	0	0	0	0	0	0	0	0	0	0	0	0	0
4/26/2024	7:45 PM	0	0	0	0	0	0	0	0	0	0	0	0	0
4/26/2024	8:00 PM	0	0	0	0	0	0	0	0	0	0	0	0	0
4/26/2024	8:15 PM	0	0	0	0	0	0	0	0	0	0	0	0	0
4/26/2024	8:30 PM	0	0	0	0	0	0	0	0	0	0	0	0	0
4/26/2024	8:45 PM	0	0	0	0	0	0	0	0	0	0	0	0	0
4/26/2024	9:00 PM	0	0	0	0	0	0	0	0	0	0	0	0	0
4/26/2024	9:15 PM	0	0	0	0	0	0	0	0	0	0	0	0	0
4/26/2024	9:30 PM	0	0	0	0	0	0	0	0	0	0	0	0	0
4/26/2024	9:45 PM	0	0	0	0	0	0	0	0	0	0	0	0	0
4/26/2024	10:00 PM	0	0	0	0	0	0	0	0	0	0	0	0	0
4/26/2024	10:15 PM	0	0	0	0	0	0	0	0	0	0	0	0	0
4/26/2024	10:30 PM	0	0	0	0	0	0	0	0	0	0	0	0	0
4/26/2024	10:45 PM	0	0	0	0	0	0	0	0	0	0	0	0	0
4/26/2024	11:00 PM	0	0	0	0	0	0	0	0	0	0	0	0	0
4/26/2024	11:15 PM	0	0	0	0	0	0	0	0	0	0	0	0	0
4/26/2024	11:30 PM	0	0	0	0	0	0	0	0	0	0	0	0	0
4/26/2024	11:45 PM	0	0	0	0	0	0	0	0	0	0	0	0	0

4/27/2024	12:00 AM	0	0	0	0	0	0	0	0	0	0	0	0	0
4/27/2024	12:15 AM	0	0	0	0	0	0	0	0	0	0	0	0	0
4/27/2024	12:30 AM	0	0	0	0	0	0	0	0	0	0	0	0	0
4/27/2024	12:45 AM	0	0	0	0	0	0	0	0	0	0	0	0	0
4/27/2024	1:00 AM	0	0	0	0	0	0	0	0	0	0	0	0	0
4/27/2024	1:15 AM	0	0	0	0	0	0	0	0	0	0	0	0	0
4/27/2024	1:30 AM	0	0	0	0	0	0	0	0	0	0	0	0	0
4/27/2024	1:45 AM	0	0	0	0	0	0	0	0	0	0	0	0	0
4/27/2024	2:00 AM	0	0	0	0	0	0	0	0	0	0	0	0	0
4/27/2024	2:15 AM	0	0	0	0	0	0	0	0	0	0	0	0	0
4/27/2024	2:30 AM	0	0	0	0	0	0	0	0	0	0	0	0	0
4/27/2024	2:45 AM	0	0	0	0	0	0	0	0	0	0	0	0	0
4/27/2024	3:00 AM	0	0	0	0	0	0	0	0	0	0	0	0	0
4/27/2024	3:15 AM	0	0	0	0	0	0	0	0	0	0	0	0	0
4/27/2024	3:30 AM	0	0	0	0	0	0	0	0	0	0	0	0	0
4/27/2024	3:45 AM	0	0	0	0	0	0	0	0	0	0	0	0	0
4/27/2024	4:00 AM	0	0	0	0	0	0	0	0	0	0	0	0	0
4/27/2024	4:15 AM	0	0	0	0	0	0	0	0	0	0	0	0	0
4/27/2024	4:30 AM	0	0	0	0	0	0	0	0	0	0	0	0	0
4/27/2024	4:45 AM	0	0	0	0	0	0	0	0	0	0	0	0	0
4/27/2024	5:00 AM	0	0	0	0	0	0	0	0	0	0	0	0	0
4/27/2024	5:15 AM	0	0	0	0	0	0	0	0	0	0	0	0	0
4/27/2024	5:30 AM	0	0	0	0	0	0	0	0	0	0	0	0	0
4/27/2024	5:45 AM	0	0	0	0	0	0	0	0	0	0	0	0	0
4/27/2024	6:00 AM	0	0	0	0	0	0	0	0	0	0	0	0	0
4/27/2024	6:15 AM	0	0	0	0	0	0	0	0	0	0	0	0	0
4/27/2024	6:30 AM	0	0	0	0	0	0	0	0	0	0	0	0	0
4/27/2024	6:45 AM	0	0	0	0	0	0	0	0	0	0	0	0	0
4/27/2024	7:00 AM	0	0	0	0	0	0	0	0	0	0	0	0	0
4/27/2024	7:15 AM	0	0	0	0	0	0	0	0	0	0	0	0	0
4/27/2024	7:30 AM	0	0	0	0	0	0	0	0	0	0	0	0	0
4/27/2024	7:45 AM	0	0	0	0	0	0	0	0	0	0	0	0	0
4/27/2024	8:00 AM	0	0	0	0	0	0	0	0	0	0	0	0	0
4/27/2024	8:15 AM	0	0	0	0	0	0	0	0	0	0	0	0	0
4/27/2024	8:30 AM	0	0	0	0	0	0	0	0	0	0	0	0	0
4/27/2024	8:45 AM	0	0	0	0	0	0	0	0	0	0	0	0	0
4/27/2024	9:00 AM	0	0	0	0	0	0	0	0	0	0	0	0	0
4/27/2024	9:15 AM	0	0	0	0	0	0	0	0	0	0	0	0	0
4/27/2024	9:30 AM	0	0	0	0	0	0	0	0	0	0	0	0	0
4/27/2024	9:45 AM	0	0	0	0	0	0	0	0	0	0	0	0	0
4/27/2024	10:00 AM	0	0	0	0	0	0	0	0	0	0	0	0	0
4/27/2024	10:15 AM	0	0	0	0	0	0	0	0	0	0	0	0	0
4/27/2024	10:30 AM	0	0	0	0	0	0	0	0	0	0	0	0	0
4/27/2024	10:45 AM	0	0	0	0	0	0	0	0	0	0	0	0	0
4/27/2024	11:00 AM	0	0	0	0	0	0	0	0	0	0	0	0	0
4/27/2024	11:15 AM	0	0	0	0	0	0	0	0	0	0	0	0	0
4/27/2024	11:30 AM	0	0	0	0	0	0	0	0	0	0	0	0	0
4/27/2024	11:45 AM	0	0	0	0	0	0	0	0	0	0	0	0	0
4/27/2024	12:00 PM	0	0	0	0	0	0	0	0	0	0	0	0	0
4/27/2024	12:15 PM	0	0	0	0	0	0	0	0	0	0	0	0	0
4/27/2024	12:30 PM	0	0	0	0	0	0	0	0	0	0	0	0	0
4/27/2024	12:45 PM	0	0	0	0	0	0	0	0	0	0	0	0	0
4/27/2024	1:00 PM	0	0	0	0	0	0	0	0	0	0	0	0	0
4/27/2024	1:15 PM	0	0	0	0	0	0	0	0	0	0	0	0	0
4/27/2024	1:30 PM	0	0	0	0	0	0	0	0	0	0	0	0	0
4/27/2024	1:45 PM	0	0	0	0	0	0	0	0	0	0	0	0	0
4/27/2024	2:00 PM	0	0	0	0	0	0	0	0	0	0	0	0	0
4/27/2024	2:15 PM	0	0	0	0	0	0	0	0	0	0	0	0	0
4/27/2024	2:30 PM	0	0	0	0	0	0	0	0	0	0	0	0	0
4/27/2024	2:45 PM	0	0	0	0	0	0	0	0	0	0	0	0	0
4/27/2024	3:00 PM	0	0	0	0	0	0	0	0	0	0	0	0	0
4/27/2024	3:15 PM	0	0	0	0	0	0	0	0	0	0	0	0	0
4/27/2024	3:30 PM	0	0	0	0	0	0	0	0	0	0	0	0	0
4/27/2024	3:45 PM	0	0	0	0	0	0	0	0	0	0	0	0	0
4/27/2024	4:00 PM	0	0	0	0	0	0	0	0	0	0	0	0	0
4/27/2024	4:15 PM	0	0	0	0	0	0	0	0	0	0	0	0	0
4/27/2024	4:30 PM	0	0	0	0	0	0	0	0	0	0	0	0	0
4/27/2024	4:45 PM	0	0	0	0	0	0	0	0	0	0	0	0	0
4/27/2024	5:00 PM	0	0	0	0	0	0	0	0	0	0	0	0	0
4/27/2024	5:15 PM	0	0	0	0	0	0	0	0	0	0	0	0	0
4/27/2024	5:30 PM	0	0	0	0	0	0	0	0	0	0	0	0	0
4/27/2024	5:45 PM	0	0	0	0	0	0	0	0	0	0	0	0	0
4/27/2024	6:00 PM	0	0	0	0	0	0	0	0	0	0	0	0	0
4/27/2024	6:15 PM	0	0	0	0	0	0	0	0	0	0	0	0	0
4/27/2024	6:30 PM	0	0	0	0	0	0	0	0	0	0	0	0	0
4/27/2024	6:45 PM	0	0	0	0	0	0	0	0	0	0	0	0	0
4/27/2024	7:00 PM	0	0	0	0	0	0	0	0	0	0	0	0	0
4/27/2024	7:15 PM	0	0	0	0	0	0	0	0	0	0	0	0	0
4/27/2024	7:30 PM	0	0	0	0	0	0	0	0	0	0	0	0	0
4/27/2024	7:45 PM	0	0	0	0	0	0	0	0	0	0	0	0	0
4/27/2024	8:00 PM	0	0	0	0	0	0	0	0	0	0	0	0	0
4/27/2024	8:15 PM	0	0	0	0	0	0	0	0	0	0	0	0	0
4/27/2024	8:30 PM	0	0	0	0	0	0	0	0	0	0	0	0	0
4/27/2024	8:45 PM	0	0	0	0	0	0	0	0	0	0	0	0	0
4/27/2024	9:00 PM	0	0	0	0	0	0	0	0	0	0	0	0	0
4/27/2024	9:15 PM	0	0	0	0	0	0	0	0	0	0	0	0	0
4/27/2024	9:30 PM	0	0	0	0	0	0	0	0	0	0	0	0	0
4/27/2024	9:45 PM	0	0	0	0	0	0	0	0	0	0	0	0	0
4/27/2024	10:00 PM	0	0	0	0	0	0	0	0	0	0	0	0	0
4/27/2024	10:15 PM	0	0	0	0	0	0	0	0	0	0	0	0	0
4/27/2024	10:30 PM	0	0	0	0	0	0	0	0	0	0	0	0	0
4/27/2024	10:45 PM	0	0	0	0	0	0	0	0	0	0	0	0	0
4/27/2024	11:00 PM	0	0	0	0	0	0	0	0	0	0	0	0	0
4/27/2024	11:15 PM	0	0	0	0	0	0	0	0	0	0	0	0	0
4/27/2024	11:30 PM	0	0	0	0	0	0	0	0	0	0	0	0	0
4/27/2024	11:45 PM	0	0	0	0	0	0	0	0	0	0	0	0	0

NB
File Name:
Start Date: 4/21/2024
Start Time: 0
Site Code: 11
Station ID: 1
Location 1: I-26 N/Bound On-Ramp, north of I-20
Location 2:

Date	Time	1	2	3	4	5	6	7	8	9	10	11	12	13
4/21/2024	12:00 AM	0	110	22	0	0	0	0	0	0	0	0	0	0
4/21/2024	12:15 AM	0	107	20	0	0	0	0	0	0	0	0	0	0
4/21/2024	12:30 AM	0	78	14	0	0	0	0	0	0	0	0	0	0
4/21/2024	12:45 AM	0	72	11	0	0	0	0	0	0	0	0	0	0
4/21/2024	1:00 AM	0	62	10	0	0	0	0	0	0	0	0	0	0
4/21/2024	1:15 AM	0	58	9	1	0	0	0	0	0	0	0	0	0
4/21/2024	1:30 AM	0	61	9	1	0	0	0	0	0	0	0	0	0
4/21/2024	1:45 AM	0	56	10	1	0	0	0	0	0	0	0	0	0
4/21/2024	2:00 AM	0	72	9	1	1	0	0	0	1	0	0	0	0
4/21/2024	2:15 AM	0	63	8	0	1	0	0	0	1	0	0	0	0
4/21/2024	2:30 AM	0	65	9	0	1	0	0	0	1	0	0	0	0
4/21/2024	2:45 AM	0	67	8	0	1	0	0	0	1	0	0	0	0
4/21/2024	3:00 AM	0	50	7	0	0	0	0	0	0	0	0	0	0
4/21/2024	3:15 AM	0	52	8	0	1	0	0	0	0	0	0	0	0
4/21/2024	3:30 AM	0	53	9	0	1	0	0	0	0	0	0	0	0
4/21/2024	3:45 AM	0	55	12	0	1	0	0	0	0	0	0	0	0
4/21/2024	4:00 AM	0	74	14	0	1	0	0	0	1	0	0	0	0
4/21/2024	4:15 AM	0	76	16	0	0	0	0	0	2	0	0	0	0
4/21/2024	4:30 AM	0	81	18	0	0	0	0	1	2	0	0	0	0
4/21/2024	4:45 AM	0	92	19	0	0	0	0	1	2	0	0	0	0
4/21/2024	5:00 AM	0	89	22	0	1	0	0	1	1	0	0	0	0
4/21/2024	5:15 AM	0	102	22	0	1	0	0	1	0	0	0	0	0
4/21/2024	5:30 AM	0	125	21	0	1	0	0	0	0	0	0	0	0
4/21/2024	5:45 AM	0	147	19	0	1	0	0	0	1	0	0	0	0
4/21/2024	6:00 AM	0	177	18	0	0	0	0	0	3	0	0	0	0
4/21/2024	6:15 AM	0	188	18	0	0	1	0	2	3	0	0	0	0
4/21/2024	6:30 AM	0	172	20	0	0	1	0	2	3	0	0	0	0
4/21/2024	6:45 AM	0	150	22	1	0	1	0	2	2	0	0	0	0
4/21/2024	7:00 AM	0	130	23	1	0	1	0	2	0	0	0	0	0
4/21/2024	7:15 AM	0	131	22	1	1	0	0	0	0	0	0	0	0
4/21/2024	7:30 AM	0	140	21	2	2	0	0	0	1	0	0	0	0
4/21/2024	7:45 AM	0	155	24	1	2	0	0	0	1	0	0	0	0
4/21/2024	8:00 AM	0	187	33	1	2	0	0	0	3	0	0	0	0
4/21/2024	8:15 AM	0	207	41	1	1	1	0	0	3	0	0	0	0
4/21/2024	8:30 AM	1	230	47	0	2	1	0	0	4	0	0	0	0
4/21/2024	8:45 AM	1	241	52	0	2	1	0	0	4	0	0	0	0
4/21/2024	9:00 AM	1	235	52	0	3	1	0	0	2	0	0	0	0
4/21/2024	9:15 AM	1	239	55	0	3	0	0	0	2	0	0	0	0
4/21/2024	9:30 AM	0	256	59	1	1	0	0	0	2	0	0	0	0
4/21/2024	9:45 AM	0	274	62	1	2	0	0	0	3	0	0	0	0
4/21/2024	10:00 AM	0	308	63	1	2	0	0	0	3	0	0	0	0
4/21/2024	10:15 AM	0	306	67	1	3	0	0	0	5	0	0	0	0
4/21/2024	10:30 AM	0	313	70	0	3	0	0	0	3	0	0	0	0
4/21/2024	10:45 AM	0	319	67	0	5	0	0	0	3	0	0	0	0
4/21/2024	11:00 AM	0	304	67	0	7	0	0	0	5	0	0	0	0
4/21/2024	11:15 AM	0	328	65	0	6	1	0	0	4	0	0	0	0
4/21/2024	11:30 AM	0	318	69	0	6	1	0	0	5	0	0	0	0
4/21/2024	11:45 AM	0	332	70	0	3	3	0	0	4	0	0	0	0
4/21/2024	12:00 PM	0	358	75	0	2	3	0	0	2	0	0	0	0
4/21/2024	12:15 PM	0	381	78	0	3	2	0	1	2	0	0	0	0
4/21/2024	12:30 PM	0	388	69	0	3	2	0	2	1	1	0	0	0
4/21/2024	12:45 PM	0	381	68	0	3	0	0	2	2	1	0	0	0
4/21/2024	1:00 PM	0	358	58	0	1	0	0	2	2	1	0	0	0
4/21/2024	1:15 PM	0	323	57	1	2	0	0	1	1	1	0	0	0
4/21/2024	1:30 PM	0	345	60	1	2	0	0	0	3	0	0	0	0
4/21/2024	1:45 PM	1	355	66	1	2	0	0	0	2	0	0	0	0
4/21/2024	2:00 PM	1	354	73	1	2	0	0	0	3	0	0	0	0
4/21/2024	2:15 PM	1	361	69	0	0	0	0	0	4	0	0	0	0
4/21/2024	2:30 PM	1	318	67	0	1	0	0	0	3	0	0	0	0
4/21/2024	2:45 PM	0	306	64	0	1	0	0	1	4	0	0	0	0
4/21/2024	3:00 PM	0	294	59	0	1	0	0	2	6	0	0	0	0
4/21/2024	3:15 PM	0	282	59	1	1	0	0	2	6	0	0	0	0
4/21/2024	3:30 PM	0	291	63	1	0	1	0	3	5	0	0	0	0
4/21/2024	3:45 PM	0	279	62	2	2	1	0	2	5	0	0	0	0
4/21/2024	4:00 PM	0	282	65	2	2	1	0	1	2	0	0	0	0
4/21/2024	4:15 PM	1	284	62	1	2	2	0	1	2	0	0	0	0
4/21/2024	4:30 PM	1	272	52	1	3	2	0	0	3	0	0	0	0
4/21/2024	4:45 PM	1	284	50	0	3	2	0	0	3	0	0	0	0
4/21/2024	5:00 PM	1	274	43	2	5	2	0	0	4	0	0	0	0
4/21/2024	5:15 PM	0	265	40	2	6	1	0	0	4	0	0	0	0
4/21/2024	5:30 PM	0	279	45	2	6	0	0	0	4	0	0	0	0
4/21/2024	5:45 PM	0	264	39	2	4	0	0	0	3	0	0	0	0
4/21/2024	6:00 PM	0	271	42	1	3	0	0	0	2	0	0	0	0
4/21/2024	6:15 PM	0	274	47	1	3	0	0	0	1	0	0	0	0
4/21/2024	6:30 PM	0	266	45	1	2	0	0	0	0	0	0	0	0
4/21/2024	6:45 PM	0	241	45	2	2	0	0	0	0	0	0	0	0
4/21/2024	7:00 PM	0	223	44	1	2	0	0	0	3	0	0	0	0
4/21/2024	7:15 PM	0	211	40	1	2	0	0	0	4	0	0	0	0
4/21/2024	7:30 PM	0	199	36	1	4	1	0	0	4	0	0	0	0
4/21/2024	7:45 PM	0	192	35	0	4	1	0	0	5	0	0	0	0
4/21/2024	8:00 PM	0	176	32	0	4	1	0	0	3	0	0	0	0
4/21/2024	8:15 PM	0	171	32	0	3	1	0	0	4	0	0	0	0
4/21/2024	8:30 PM	0	162	36	0	3	0	0	0	4	0	0	0	0
4/21/2024	8:45 PM	0	161	36	0	3	0	0	0	3	0	0	0	0
4/21/2024	9:00 PM	0	146	34	0	4	0	0	1	3	0	0	0	0
4/21/2024	9:15 PM	0	130	34	0	4	1	0	2	1	0	1	0	0
4/21/2024	9:30 PM	0	125	29	0	2	1	0	3	3	0	1	0	0
4/21/2024	9:45 PM	0	126	28	0	3	1	0	3	4	0	1	0	0
4/21/2024	10:00 PM	0	135	26	0	1	1	0	2	3	0	1	0	0
4/21/2024	10:15 PM	0	116	21	0	1	0	0	1	3	0	0	0	0
4/21/2024	10:30 PM	0	98	17	0	1	0	0	0	2	0	0	0	0
4/21/2024	10:45 PM	0	85	16	0	0	0	0	0	1	0	0	0	0
4/21/2024	11:00 PM	0	74	15	0	0	0	0	0	1	0	0	0	0
4/21/2024	11:15 PM	0	74	13	0	1	0	0	0	1	0	0	0	0
4/21/2024	11:30 PM	0	73	11	0	1	0	0	0	0	0	0	0	0
4/21/2024	11:45 PM	0	59	6	0	1	0	0	0	0	0	0	0	0

4/22/2024	12:00 AM	0	47	5	0	1	0	0	0	1	0	0	0	0
4/22/2024	12:15 AM	0	43	5	0	0	0	0	0	4	0	0	0	0
4/22/2024	12:30 AM	0	34	5	0	0	0	0	0	4	0	0	0	0
4/22/2024	12:45 AM	0	35	5	0	0	0	0	0	5	0	0	0	0
4/22/2024	1:00 AM	0	36	3	0	0	0	0	0	6	0	0	0	0
4/22/2024	1:15 AM	0	31	1	0	1	1	0	0	5	0	0	0	0
4/22/2024	1:30 AM	0	30	1	0	1	1	0	0	6	0	0	0	0
4/22/2024	1:45 AM	0	26	3	0	1	1	0	0	7	0	0	0	0
4/22/2024	2:00 AM	0	32	7	0	2	1	0	0	7	0	0	0	0
4/22/2024	2:15 AM	0	37	11	0	1	1	0	0	6	0	0	0	0
4/22/2024	2:30 AM	0	42	11	0	2	2	0	0	8	0	0	0	0
4/22/2024	2:45 AM	0	57	14	0	2	2	0	0	6	0	0	0	0
4/22/2024	3:00 AM	0	60	17	0	1	2	0	0	5	0	0	0	0
4/22/2024	3:15 AM	0	75	17	0	2	2	0	0	8	0	0	0	0
4/22/2024	3:30 AM	0	85	20	0	1	1	0	0	8	0	0	0	0
4/22/2024	3:45 AM	0	94	17	0	1	4	0	0	11	0	0	0	0
4/22/2024	4:00 AM	0	127	18	0	2	4	0	1	13	0	0	0	0
4/22/2024	4:15 AM	0	147	26	0	3	3	0	2	14	0	0	0	0
4/22/2024	4:30 AM	0	171	33	0	3	3	0	2	21	0	0	0	0
4/22/2024	4:45 AM	0	228	48	0	5	0	0	2	22	0	0	0	0
4/22/2024	5:00 AM	0	258	58	0	4	0	0	1	22	0	0	0	0
4/22/2024	5:15 AM	0	280	64	0	3	2	0	0	19	0	0	0	0
4/22/2024	5:30 AM	1	326	70	0	5	2	0	0	15	0	0	0	0
4/22/2024	5:45 AM	2	380	78	0	5	5	0	0	20	0	0	0	0
4/22/2024	6:00 AM	2	455	97	0	6	6	0	1	27	0	0	0	0
4/22/2024	6:15 AM	2	528	109	0	8	6	0	1	28	0	0	0	0
4/22/2024	6:30 AM	1	574	123	0	11	8	0	1	25	0	0	0	0
4/22/2024	6:45 AM	0	602	150	1	12	7	0	3	22	0	0	0	0
4/22/2024	7:00 AM	0	584	157	1	13	7	1	4	13	0	0	0	0
4/22/2024	7:15 AM	0	572	173	1	10	7	1	4	14	0	0	0	0
4/22/2024	7:30 AM	0	545	176	1	9	5	1	6	18	0	0	0	0
4/22/2024	7:45 AM	0	496	166	2	13	4	1	5	17	0	0	0	0
4/22/2024	8:00 AM	0	486	156	2	17	6	0	3	22	0	0	0	0
4/22/2024	8:15 AM	0	456	137	3	24	5	0	3	24	0	0	0	0
4/22/2024	8:30 AM	0	441	127	3	24	8	1	3	26	0	0	0	0
4/22/2024	8:45 AM	0	432	122	1	17	8	1	2	28	0	0	0	0
4/22/2024	9:00 AM	0	387	112	1	15	7	1	3	29	0	0	0	0
4/22/2024	9:15 AM	0	358	108	0	11	6	1	3	34	0	0	0	0
4/22/2024	9:30 AM	0	337	122	0	13	5	0	1	35	0	0	0	0
4/22/2024	9:45 AM	0	304	119	1	14	5	0	3	36	1	0	0	0
4/22/2024	10:00 AM	0	297	119	1	14	4	1	4	37	2	0	0	0
4/22/2024	10:15 AM	0	304	120	1	15	7	1	4	38	2	0	0	0
4/22/2024	10:30 AM	0	307	112	2	16	5	1	4	34	2	0	0	0
4/22/2024	10:45 AM	1	302	118	2	20	4	1	3	35	3	0	0	0
4/22/2024	11:00 AM	1	296	125	2	18	4	0	1	31	2	0	0	0
4/22/2024	11:15 AM	1	291	122	3	16	4	1	1	21	3	0	0	0
4/22/2024	11:30 AM	1	313	117	2	9	6	2	1	27	3	0	0	0
4/22/2024	11:45 AM	0	323	112	1	7	7	2	1	25	1	0	0	0
4/22/2024	12:00 PM	0	324	108	1	8	7	2	1	25	1	0	0	0
4/22/2024	12:15 PM	1	333	110	0	10	6	1	1	29	1	0	0	0
4/22/2024	12:30 PM	1	324	113	0	13	5	1	3	24	2	0	0	0
4/22/2024	12:45 PM	1	332	112	0	12	5	1	2	20	2	0	0	0
4/22/2024	1:00 PM	2	345	115	0	15	5	1	3	25	2	0	0	0
4/22/2024	1:15 PM	2	355	126	1	17	4	3	4	28	2	0	0	0
4/22/2024	1:30 PM	2	347	120	1	16	5	2	2	26	1	0	0	0
4/22/2024	1:45 PM	2	350	117	1	19	5	3	3	32	1	0	0	0
4/22/2024	2:00 PM	1	369	125	1	19	5	3	2	29	1	0	0	0
4/22/2024	2:15 PM	0	368	121	0	18	4	1	1	26	0	0	0	0
4/22/2024	2:30 PM	0	382	130	0	23	4	1	1	26	0	0	0	0
4/22/2024	2:45 PM	0	382	135	0	28	5	1	1	21	0	0	0	0
4/22/2024	3:00 PM	0	378	128	0	26	4	1	1	21	0	0	0	0
4/22/2024	3:15 PM	0	370	132	2	24	4	1	1	20	0	0	0	0
4/22/2024	3:30 PM	0	362	128	2	21	2	1	2	22	0	0	0	0
4/22/2024	3:45 PM	0	336	122	2	15	1	0	1	26	1	0	0	0
4/22/2024	4:00 PM	0	301	114	2	17	4	0	1	22	1	0	0	0
4/22/2024	4:15 PM	1	284	109	0	17	6	0	1	21	1	0	0	0
4/22/2024	4:30 PM	2	281	109	0	17	6	0	1	17	1	0	0	0
4/22/2024	4:45 PM	2	300	111	0	15	5	0	3	13	0	0	0	0
4/22/2024	5:00 PM	3	331	126	0	12	2	0	4	13	0	0	0	0
4/22/2024	5:15 PM	2	364	125	0	11	0	0	4	13	0	0	0	0
4/22/2024	5:30 PM	1	380	122	0	12	0	0	4	10	0	0	0	0
4/22/2024	5:45 PM	1	386	116	0	11	0	0	2	9	1	0	0	0
4/22/2024	6:00 PM	0	371	102	0	12	0	0	1	7	1	0	0	0
4/22/2024	6:15 PM	0	328	91	0	13	0	0	2	6	1	0	0	0
4/22/2024	6:30 PM	0	274	86	0	10	0	0	1	7	1	0	0	0
4/22/2024	6:45 PM	0	221	67	0	15	0	0	1	6	0	0	0	0
4/22/2024	7:00 PM	0	198	64	0	11	0	0	1	8	0	0	0	0
4/22/2024	7:15 PM	0	190	62	0	11	0	0	0	6	0	0	0	0
4/22/2024	7:30 PM	0	179	57	0	10	0	0	0	7	0	0	0	0
4/22/2024	7:45 PM	0	179	55	0	5	0	0	0	5	1	0	0	0
4/22/2024	8:00 PM	1	177	46	0	7	0	0	0	4	1	1	0	0
4/22/2024	8:15 PM	1	169	38	0	5	0	0	0	4	1	2	0	0
4/22/2024	8:30 PM	1	173	33	0	4	2	0	0	4	1	3	0	0
4/22/2024	8:45 PM	1	158	37	0	4	3	0	0	5	0	3	0	0
4/22/2024	9:00 PM	0	136	30	0	2	3	0	1	6	0	2	0	0
4/22/2024	9:15 PM	0	131	27	0	3	3	0	1	7	0	1	0	0
4/22/2024	9:30 PM	0	115	25	0	3	2	0	1	5	0	0	0	0
4/22/2024	9:45 PM	0	128	26	0	3	1	0	1	6	0	0	0	0
4/22/2024	10:00 PM	0	127	23	0	3	1	0	0	5	0	0	0	0
4/22/2024	10:15 PM	0	112	22	0	1	1	0	0	5	0	0	0	0
4/22/2024	10:30 PM	0	98	17	0	1	0	0	0	5	0	0	0	0
4/22/2024	10:45 PM	0	76	9	0	1	0	0	0	3	0	0	0	0
4/22/2024	11:00 PM	0	61	8	0	1	1	0	0	2	0	1	0	0
4/22/2024	11:15 PM	0	64	8	0	2	1	0	0	0	0	1	0	0
4/22/2024	11:30 PM	0	67	9	0	2	1	0	1	2	0	1	0	0
4/22/2024	11:45 PM	0	59	8	0	1	1	0	2	3	0	2	0	0

4/23/2024	12:00 AM	0	53	7	0	1	0	0	2	3	0	1	0	0
4/23/2024	12:15 AM	0	43	5	0	0	0	0	2	5	0	1	0	0
4/23/2024	12:30 AM	0	37	2	0	1	0	0	1	4	0	1	0	0
4/23/2024	12:45 AM	0	36	1	0	1	0	0	0	4	0	0	0	0
4/23/2024	1:00 AM	0	33	1	0	3	0	0	0	4	0	0	1	0
4/23/2024	1:15 AM	0	33	1	0	3	0	0	0	7	0	0	1	0
4/23/2024	1:30 AM	0	36	3	0	2	0	0	0	8	0	0	2	0
4/23/2024	1:45 AM	0	38	4	0	2	0	0	1	10	0	0	3	0
4/23/2024	2:00 AM	0	47	4	0	0	0	0	2	15	0	0	2	0
4/23/2024	2:15 AM	0	58	3	0	1	0	0	2	11	0	0	2	0
4/23/2024	2:30 AM	0	59	5	0	3	1	0	2	12	0	0	1	0
4/23/2024	2:45 AM	0	72	5	0	3	2	0	2	14	0	0	0	0
4/23/2024	3:00 AM	0	76	5	0	3	2	0	1	12	0	0	0	0
4/23/2024	3:15 AM	0	82	6	0	3	2	0	1	17	0	0	0	0
4/23/2024	3:30 AM	0	98	6	0	2	1	0	1	19	0	0	0	0
4/23/2024	3:45 AM	0	108	11	0	3	0	0	0	19	0	0	1	0
4/23/2024	4:00 AM	0	124	19	0	4	2	0	0	20	0	0	1	0
4/23/2024	4:15 AM	0	143	25	0	4	5	0	0	14	0	0	2	0
4/23/2024	4:30 AM	0	168	27	0	5	5	0	0	19	0	1	3	0
4/23/2024	4:45 AM	0	202	37	0	5	6	0	1	21	0	1	2	0
4/23/2024	5:00 AM	0	233	40	0	5	4	0	1	21	0	1	3	0
4/23/2024	5:15 AM	0	242	42	0	6	2	0	1	26	0	1	2	0
4/23/2024	5:30 AM	0	280	49	0	6	3	0	1	24	0	0	1	0
4/23/2024	5:45 AM	0	351	56	0	7	2	0	0	27	0	0	1	0
4/23/2024	6:00 AM	1	452	82	0	8	4	0	1	28	0	0	0	0
4/23/2024	6:15 AM	1	530	112	0	9	9	0	1	25	0	0	0	0
4/23/2024	6:30 AM	1	581	125	0	13	10	0	2	20	0	0	0	0
4/23/2024	6:45 AM	1	575	142	1	19	11	0	2	14	0	0	0	0
4/23/2024	7:00 AM	0	538	137	1	20	10	0	1	14	0	0	0	0
4/23/2024	7:15 AM	0	531	145	1	25	4	0	1	16	0	0	0	0
4/23/2024	7:30 AM	0	502	145	2	22	6	0	1	13	0	0	0	0
4/23/2024	7:45 AM	1	488	144	1	21	6	0	1	16	0	0	0	0
4/23/2024	8:00 AM	2	466	144	1	27	6	0	2	22	0	0	0	0
4/23/2024	8:15 AM	2	411	140	2	26	6	0	2	23	0	0	0	0
4/23/2024	8:30 AM	2	384	136	1	29	2	0	3	36	0	0	1	0
4/23/2024	8:45 AM	1	370	132	2	25	1	0	3	38	0	0	1	0
4/23/2024	9:00 AM	0	368	126	3	22	0	0	2	36	0	0	1	0
4/23/2024	9:15 AM	0	364	106	2	30	1	0	3	38	0	0	1	0
4/23/2024	9:30 AM	0	363	110	2	27	1	0	1	37	0	0	0	0
4/23/2024	9:45 AM	1	346	102	1	29	1	0	1	38	0	0	0	0
4/23/2024	10:00 AM	1	339	104	0	30	2	0	1	33	0	0	0	0
4/23/2024	10:15 AM	1	356	104	0	21	3	0	0	31	0	0	0	0
4/23/2024	10:30 AM	2	360	104	1	24	5	0	2	28	0	0	0	0
4/23/2024	10:45 AM	1	365	108	1	24	7	0	4	35	0	0	0	0
4/23/2024	11:00 AM	1	343	114	1	23	6	0	5	40	0	0	0	0
4/23/2024	11:15 AM	1	343	118	1	21	5	0	5	41	0	0	0	0
4/23/2024	11:30 AM	0	340	126	0	19	4	0	3	40	0	0	0	0
4/23/2024	11:45 AM	0	348	116	0	19	5	0	2	28	0	0	0	0
4/23/2024	12:00 PM	0	353	105	0	17	6	0	2	27	0	0	0	0
4/23/2024	12:15 PM	1	341	97	0	19	5	0	2	30	0	0	0	0
4/23/2024	12:30 PM	1	336	84	0	21	5	0	2	30	0	0	0	0
4/23/2024	12:45 PM	2	332	90	0	18	2	0	1	34	0	0	0	0
4/23/2024	1:00 PM	2	325	103	0	21	2	0	0	34	0	0	0	0
4/23/2024	1:15 PM	1	342	117	1	17	2	0	1	30	0	0	0	0
4/23/2024	1:30 PM	1	340	124	1	19	4	0	3	26	0	0	0	0
4/23/2024	1:45 PM	0	346	121	1	22	4	0	3	23	0	0	0	0
4/23/2024	2:00 PM	0	371	111	1	18	6	0	3	21	0	0	0	0
4/23/2024	2:15 PM	0	369	106	1	24	9	0	3	21	0	0	0	0
4/23/2024	2:30 PM	0	382	111	1	20	6	0	4	24	0	0	0	0
4/23/2024	2:45 PM	0	393	117	1	20	6	0	4	25	0	0	0	0
4/23/2024	3:00 PM	0	391	131	1	20	4	0	5	26	0	0	0	0
4/23/2024	3:15 PM	0	409	138	1	13	5	0	6	28	0	0	0	0
4/23/2024	3:30 PM	0	414	143	1	12	6	0	5	28	0	0	0	0
4/23/2024	3:45 PM	1	395	157	1	11	10	0	6	28	0	0	0	0
4/23/2024	4:00 PM	2	362	137	1	10	10	0	5	23	0	0	0	0
4/23/2024	4:15 PM	2	317	121	0	11	7	0	4	18	0	0	0	0
4/23/2024	4:30 PM	2	313	105	0	12	6	0	3	14	0	0	0	0
4/23/2024	4:45 PM	1	298	75	1	13	2	0	3	11	0	0	0	0
4/23/2024	5:00 PM	0	310	78	1	13	1	0	3	9	0	0	0	0
4/23/2024	5:15 PM	1	340	89	2	15	0	0	2	9	0	0	0	0
4/23/2024	5:30 PM	1	318	94	3	16	1	0	2	11	0	0	0	0
4/23/2024	5:45 PM	1	331	111	2	16	1	0	5	10	0	0	0	0
4/23/2024	6:00 PM	1	323	116	2	15	1	0	6	14	0	0	0	0
4/23/2024	6:15 PM	0	305	109	1	16	1	0	6	14	0	0	0	0
4/23/2024	6:30 PM	0	286	102	0	14	0	0	5	10	0	1	1	0
4/23/2024	6:45 PM	0	257	83	0	10	1	0	1	15	0	1	1	0
4/23/2024	7:00 PM	0	249	69	0	10	1	0	0	12	0	1	1	0
4/23/2024	7:15 PM	0	219	61	0	7	1	0	0	12	0	1	1	0
4/23/2024	7:30 PM	0	213	51	0	4	1	0	0	12	0	0	0	0
4/23/2024	7:45 PM	0	196	55	0	4	0	0	0	6	0	0	0	0
4/23/2024	8:00 PM	0	182	57	0	4	0	0	0	6	0	0	1	0
4/23/2024	8:15 PM	0	180	57	0	2	0	0	0	7	0	0	2	0
4/23/2024	8:30 PM	0	172	61	0	2	0	0	1	6	0	1	3	0
4/23/2024	8:45 PM	0	165	58	0	1	0	0	1	4	0	1	4	0
4/23/2024	9:00 PM	0	147	51	0	0	0	0	1	5	0	1	3	0
4/23/2024	9:15 PM	0	133	43	0	0	1	0	1	3	0	1	2	0
4/23/2024	9:30 PM	0	130	39	0	0	1	0	0	4	0	0	1	0
4/23/2024	9:45 PM	0	116	30	0	2	1	0	0	5	0	0	0	0
4/23/2024	10:00 PM	0	115	29	0	5	1	0	0	7	0	0	0	0
4/23/2024	10:15 PM	0	107	29	0	7	0	0	1	6	0	1	1	0
4/23/2024	10:30 PM	0	88	25	0	9	0	0	1	6	0	2	1	0
4/23/2024	10:45 PM	0	73	27	0	8	0	0	2	8	0	2	1	0
4/23/2024	11:00 PM	0	67	24	0	5	0	0	2	7	0	2	1	0
4/23/2024	11:15 PM	0	64	23	0	3	0	0	1	7	0	2	0	0
4/23/2024	11:30 PM	0	62	23	0	2	0	0	1	10	0	2	0	0
4/23/2024	11:45 PM	0	62	22	0	1	0	0	0	10	0	2	0	0

4/24/2024	12:00 AM	0	51	22	0	3	0	0	0	7	0	2	0	0
4/24/2024	12:15 AM	0	46	19	0	4	0	0	0	8	0	2	0	0
4/24/2024	12:30 AM	0	46	13	0	3	0	0	0	6	0	1	0	0
4/24/2024	12:45 AM	0	45	10	0	4	0	0	0	6	0	2	0	0
4/24/2024	1:00 AM	0	37	6	0	3	0	0	0	7	0	2	0	0
4/24/2024	1:15 AM	0	33	5	0	2	0	0	0	7	0	3	0	0
4/24/2024	1:30 AM	0	25	10	0	2	0	0	0	6	0	3	0	0
4/24/2024	1:45 AM	0	22	10	0	2	0	0	0	5	0	2	0	0
4/24/2024	2:00 AM	0	33	12	0	3	0	0	1	7	0	3	0	0
4/24/2024	2:15 AM	0	46	16	0	3	0	0	1	8	0	1	0	0
4/24/2024	2:30 AM	0	54	16	0	4	2	0	1	10	0	1	0	0
4/24/2024	2:45 AM	0	68	23	0	4	3	0	1	11	0	1	0	0
4/24/2024	3:00 AM	0	73	33	0	2	3	0	0	14	0	0	0	0
4/24/2024	3:15 AM	0	76	36	0	3	4	0	1	16	0	0	0	0
4/24/2024	3:30 AM	0	80	40	0	3	3	0	1	18	0	0	0	0
4/24/2024	3:45 AM	0	93	45	0	3	2	0	1	17	0	0	0	0
4/24/2024	4:00 AM	0	105	49	0	8	2	0	1	14	0	0	0	0
4/24/2024	4:15 AM	0	112	56	0	8	1	0	0	14	0	0	0	0
4/24/2024	4:30 AM	0	135	78	0	10	0	0	0	16	0	0	0	0
4/24/2024	4:45 AM	0	173	87	0	11	0	0	0	18	0	3	0	0
4/24/2024	5:00 AM	1	217	101	0	7	1	0	1	20	0	3	0	0
4/24/2024	5:15 AM	2	260	101	0	9	1	0	1	22	0	3	0	0
4/24/2024	5:30 AM	2	296	110	0	12	2	0	4	23	0	3	0	0
4/24/2024	5:45 AM	2	366	120	0	14	3	0	4	28	0	0	0	0
4/24/2024	6:00 AM	3	448	120	0	18	4	0	3	33	0	0	0	0
4/24/2024	6:15 AM	2	529	149	0	17	4	0	3	31	0	0	0	0
4/24/2024	6:30 AM	2	586	145	0	14	5	0	2	29	0	0	0	0
4/24/2024	6:45 AM	2	604	151	1	15	5	0	3	23	0	0	0	0
4/24/2024	7:00 AM	0	615	165	1	14	4	0	5	19	1	0	0	0
4/24/2024	7:15 AM	0	569	145	1	16	6	0	5	17	1	0	0	0
4/24/2024	7:30 AM	0	529	140	1	17	6	0	3	14	1	0	0	0
4/24/2024	7:45 AM	0	447	133	2	16	6	0	3	21	1	0	0	0
4/24/2024	8:00 AM	0	388	111	2	16	7	0	2	20	0	0	0	0
4/24/2024	8:15 AM	0	377	118	2	16	8	0	4	29	1	0	0	0
4/24/2024	8:30 AM	0	366	114	2	16	7	0	4	31	1	0	0	0
4/24/2024	8:45 AM	1	379	119	0	17	7	0	3	36	1	0	0	0
4/24/2024	9:00 AM	1	370	123	0	17	6	0	3	35	1	0	0	0
4/24/2024	9:15 AM	1	359	131	0	20	3	0	3	35	0	0	0	0
4/24/2024	9:30 AM	1	362	131	0	21	4	0	4	34	0	0	0	0
4/24/2024	9:45 AM	0	380	134	3	21	4	0	6	30	0	0	0	0
4/24/2024	10:00 AM	0	372	139	3	20	3	0	5	38	0	0	0	0
4/24/2024	10:15 AM	0	368	140	3	17	7	0	4	37	0	0	0	0
4/24/2024	10:30 AM	0	371	146	3	15	7	0	6	43	0	0	0	0
4/24/2024	10:45 AM	0	348	135	0	15	10	0	4	36	1	0	0	0
4/24/2024	11:00 AM	0	342	139	0	16	10	0	4	29	1	0	0	0
4/24/2024	11:15 AM	0	355	133	0	14	6	0	4	25	2	0	0	0
4/24/2024	11:30 AM	0	358	120	0	14	5	0	1	20	2	0	0	0
4/24/2024	11:45 AM	0	365	126	0	11	4	0	1	19	1	0	0	0
4/24/2024	12:00 PM	0	349	119	0	9	5	0	1	20	1	0	0	0
4/24/2024	12:15 PM	0	353	119	0	9	6	0	1	21	1	0	0	0
4/24/2024	12:30 PM	0	346	131	0	15	5	0	1	20	1	0	0	0
4/24/2024	12:45 PM	1	352	121	0	20	3	0	3	20	1	0	0	0
4/24/2024	1:00 PM	1	374	125	0	23	3	0	6	22	1	0	0	0
4/24/2024	1:15 PM	1	355	128	1	28	2	0	6	19	1	0	0	0
4/24/2024	1:30 PM	1	362	124	3	24	2	0	10	22	1	0	0	0
4/24/2024	1:45 PM	0	365	139	5	25	2	0	9	24	1	0	0	0
4/24/2024	2:00 PM	1	363	151	5	29	2	0	9	24	1	0	0	0
4/24/2024	2:15 PM	1	359	146	4	24	5	0	8	29	0	0	0	0
4/24/2024	2:30 PM	1	352	147	2	20	6	0	5	29	0	0	0	0
4/24/2024	2:45 PM	1	370	142	0	16	5	0	5	32	0	0	0	0
4/24/2024	3:00 PM	0	392	129	0	10	6	0	6	29	1	0	0	0
4/24/2024	3:15 PM	0	410	132	1	12	6	0	6	22	1	0	0	0
4/24/2024	3:30 PM	0	432	144	1	17	6	0	6	20	1	0	0	0
4/24/2024	3:45 PM	0	402	128	1	14	7	0	5	15	1	0	0	0
4/24/2024	4:00 PM	0	377	119	1	15	6	0	1	17	0	0	0	0
4/24/2024	4:15 PM	0	373	115	0	14	4	0	1	21	0	0	0	0
4/24/2024	4:30 PM	0	344	98	0	12	4	0	1	21	0	0	0	0
4/24/2024	4:45 PM	0	332	100	0	12	3	0	1	18	0	0	0	0
4/24/2024	5:00 PM	0	344	101	0	11	3	0	3	13	0	0	0	0
4/24/2024	5:15 PM	1	342	94	0	10	3	0	3	12	0	0	0	0
4/24/2024	5:30 PM	1	361	101	0	8	2	0	2	10	0	0	0	0
4/24/2024	5:45 PM	1	367	106	0	8	2	0	4	12	0	0	0	0
4/24/2024	6:00 PM	1	351	98	0	8	1	0	2	14	0	0	0	0
4/24/2024	6:15 PM	0	333	92	0	8	0	0	3	10	0	0	0	0
4/24/2024	6:30 PM	0	304	76	0	9	0	0	3	7	0	0	0	0
4/24/2024	6:45 PM	0	265	68	0	12	0	0	1	8	0	0	0	0
4/24/2024	7:00 PM	0	236	67	0	10	2	0	2	4	0	0	0	0
4/24/2024	7:15 PM	0	232	69	0	10	4	0	3	4	0	0	0	0
4/24/2024	7:30 PM	0	219	69	0	10	4	0	3	4	0	0	0	0
4/24/2024	7:45 PM	0	225	67	0	8	4	0	3	4	0	0	0	0
4/24/2024	8:00 PM	0	209	68	0	9	2	0	3	7	0	1	0	0
4/24/2024	8:15 PM	0	168	68	0	9	0	0	3	6	1	2	0	0
4/24/2024	8:30 PM	0	139	70	0	6	0	0	4	7	1	3	0	0
4/24/2024	8:45 PM	0	117	72	0	7	0	0	4	4	1	3	0	0
4/24/2024	9:00 PM	2	107	65	0	6	0	0	3	3	1	2	0	0
4/24/2024	9:15 PM	2	116	56	0	4	0	0	1	5	0	1	0	0
4/24/2024	9:30 PM	2	115	55	0	7	0	0	2	4	0	0	0	0
4/24/2024	9:45 PM	2	124	55	0	5	0	0	2	5	0	1	0	0
4/24/2024	10:00 PM	0	119	58	0	4	0	0	4	5	0	3	0	0
4/24/2024	10:15 PM	0	111	52	0	6	0	0	4	3	0	3	0	0
4/24/2024	10:30 PM	0	107	43	0	4	0	0	3	3	0	3	0	0
4/24/2024	10:45 PM	0	96	37	0	5	0	0	3	5	0	3	0	0
4/24/2024	11:00 PM	0	88	35	0	6	0	0	2	4	0	2	0	0
4/24/2024	11:15 PM	0	81	31	0	5	2	0	2	6	0	2	0	0
4/24/2024	11:30 PM	0	67	26	0	4	3	0	1	8	0	2	0	0
4/24/2024	11:45 PM	0	54	18	0	2	4	0	1	6	0	1	0	0

4/25/2024	12:00 AM	0	55	11	0	2	4	0	0	7	0	1	0	0
4/25/2024	12:15 AM	0	55	13	0	1	2	0	0	7	0	2	0	0
4/25/2024	12:30 AM	0	57	12	0	1	2	0	0	6	0	2	0	0
4/25/2024	12:45 AM	0	54	9	0	1	1	0	0	6	0	2	0	0
4/25/2024	1:00 AM	0	43	7	0	1	1	0	0	4	0	2	0	0
4/25/2024	1:15 AM	0	33	4	0	2	1	0	0	7	0	3	0	0
4/25/2024	1:30 AM	0	29	3	0	3	0	0	0	9	0	3	0	0
4/25/2024	1:45 AM	0	26	3	0	4	0	0	0	9	0	3	0	0
4/25/2024	2:00 AM	0	37	4	0	5	0	0	0	13	0	2	0	0
4/25/2024	2:15 AM	0	51	9	0	4	0	0	0	12	0	0	0	0
4/25/2024	2:30 AM	0	61	11	0	3	0	0	0	10	0	0	0	0
4/25/2024	2:45 AM	0	84	14	0	2	0	0	0	9	0	0	0	0
4/25/2024	3:00 AM	0	99	17	0	0	1	0	0	14	0	0	0	0
4/25/2024	3:15 AM	0	101	15	0	1	3	0	0	13	0	0	0	0
4/25/2024	3:30 AM	0	112	19	0	2	3	0	0	17	0	0	0	0
4/25/2024	3:45 AM	0	122	23	0	4	4	0	0	21	0	0	0	0
4/25/2024	4:00 AM	0	129	27	0	7	3	0	0	16	0	0	0	0
4/25/2024	4:15 AM	0	150	31	0	8	1	0	0	15	0	0	0	0
4/25/2024	4:30 AM	0	171	34	1	7	2	0	0	12	0	1	0	0
4/25/2024	4:45 AM	0	216	39	1	7	1	0	0	14	0	2	0	0
4/25/2024	5:00 AM	0	265	41	1	5	1	0	0	13	0	2	0	0
4/25/2024	5:15 AM	0	300	48	1	5	2	0	0	18	0	2	0	0
4/25/2024	5:30 AM	1	345	54	0	5	2	0	0	20	0	1	0	0
4/25/2024	5:45 AM	1	390	65	0	6	5	0	0	22	0	0	0	0
4/25/2024	6:00 AM	2	465	93	0	8	7	0	1	23	0	0	0	0
4/25/2024	6:15 AM	3	513	113	0	8	9	0	3	19	0	0	0	0
4/25/2024	6:30 AM	2	582	128	0	13	9	0	5	16	0	0	0	0
4/25/2024	6:45 AM	2	600	136	1	13	8	0	5	15	0	0	0	0
4/25/2024	7:00 AM	1	563	138	2	14	8	0	5	16	0	0	0	0
4/25/2024	7:15 AM	0	570	144	3	15	7	0	5	16	0	0	0	0
4/25/2024	7:30 AM	0	529	149	4	15	7	0	3	20	0	0	0	0
4/25/2024	7:45 AM	0	495	146	3	16	7	0	3	17	0	0	0	0
4/25/2024	8:00 AM	0	470	139	3	16	6	0	2	12	0	0	0	0
4/25/2024	8:15 AM	0	435	122	4	16	9	0	1	16	0	0	0	0
4/25/2024	8:30 AM	0	405	105	5	17	8	0	1	21	0	0	0	0
4/25/2024	8:45 AM	0	374	105	6	16	9	0	3	23	0	1	0	0
4/25/2024	9:00 AM	0	371	106	6	14	10	0	3	33	0	1	0	0
4/25/2024	9:15 AM	0	355	105	4	15	7	0	2	32	0	1	0	0
4/25/2024	9:30 AM	0	345	112	3	13	8	0	4	33	0	1	0	0
4/25/2024	9:45 AM	0	357	119	2	14	6	0	3	34	0	0	0	0
4/25/2024	10:00 AM	0	338	110	1	14	4	0	5	34	0	0	0	0
4/25/2024	10:15 AM	0	358	128	2	16	3	0	6	32	0	0	0	0
4/25/2024	10:30 AM	0	362	137	2	14	3	0	5	27	0	0	0	0
4/25/2024	10:45 AM	0	359	130	2	14	4	0	6	25	0	0	0	0
4/25/2024	11:00 AM	0	373	144	2	12	6	0	4	22	0	0	0	0
4/25/2024	11:15 AM	1	355	133	1	9	5	0	3	25	0	0	0	0
4/25/2024	11:30 AM	1	343	124	0	12	4	0	2	24	0	0	0	0
4/25/2024	11:45 AM	1	324	123	0	13	4	0	0	20	0	0	0	0
4/25/2024	12:00 PM	2	319	111	0	15	3	0	3	24	1	0	0	0
4/25/2024	12:15 PM	1	329	112	0	14	3	0	3	25	1	0	0	0
4/25/2024	12:30 PM	1	357	125	1	12	3	0	4	23	1	0	0	0
4/25/2024	12:45 PM	1	395	119	1	13	2	0	5	28	1	0	0	0
4/25/2024	1:00 PM	0	404	118	2	16	3	0	2	21	0	0	0	0
4/25/2024	1:15 PM	0	389	107	2	23	3	0	2	18	0	0	0	0
4/25/2024	1:30 PM	0	391	110	3	24	3	0	4	21	0	0	0	0
4/25/2024	1:45 PM	0	392	118	3	23	3	0	4	24	0	0	0	0
4/25/2024	2:00 PM	0	405	116	2	22	5	0	4	25	0	0	0	0
4/25/2024	2:15 PM	1	413	126	3	17	8	0	5	25	0	0	0	0
4/25/2024	2:30 PM	1	410	115	1	18	9	0	2	27	0	0	0	0
4/25/2024	2:45 PM	2	411	119	2	15	13	0	2	22	0	0	0	0
4/25/2024	3:00 PM	2	401	122	2	18	9	0	4	22	0	0	0	0
4/25/2024	3:15 PM	1	410	127	3	18	6	0	3	21	0	0	0	0
4/25/2024	3:30 PM	1	402	123	3	18	5	0	3	18	1	0	0	0
4/25/2024	3:45 PM	0	387	130	2	18	0	0	2	23	2	0	0	0
4/25/2024	4:00 PM	0	355	127	2	16	0	0	1	21	2	0	0	0
4/25/2024	4:15 PM	0	339	115	1	15	0	0	1	17	2	0	0	0
4/25/2024	4:30 PM	0	323	116	1	12	0	0	3	15	1	0	0	0
4/25/2024	4:45 PM	0	286	98	1	16	0	0	4	10	0	0	0	0
4/25/2024	5:00 PM	0	308	94	1	15	0	0	3	10	0	0	0	0
4/25/2024	5:15 PM	0	329	113	1	13	0	0	3	13	0	0	0	0
4/25/2024	5:30 PM	0	356	116	1	15	0	0	1	12	0	0	0	0
4/25/2024	5:45 PM	0	377	113	1	14	1	0	0	12	0	0	0	0
4/25/2024	6:00 PM	0	379	112	2	14	3	0	0	17	0	0	0	0
4/25/2024	6:15 PM	0	351	90	1	17	3	0	1	15	0	0	0	0
4/25/2024	6:30 PM	0	316	77	1	15	3	0	1	15	0	0	0	0
4/25/2024	6:45 PM	0	305	78	1	14	2	0	3	12	0	0	0	0
4/25/2024	7:00 PM	1	273	72	0	10	2	0	4	5	0	0	0	0
4/25/2024	7:15 PM	1	250	64	0	6	2	0	3	4	0	0	0	0
4/25/2024	7:30 PM	1	225	63	0	6	2	0	3	4	0	1	0	0
4/25/2024	7:45 PM	1	206	54	0	3	2	0	1	4	0	1	0	0
4/25/2024	8:00 PM	0	185	52	0	4	0	0	0	5	0	1	0	0
4/25/2024	8:15 PM	0	176	54	1	4	0	0	0	6	0	1	0	0
4/25/2024	8:30 PM	0	195	46	1	2	0	0	0	4	0	1	0	0
4/25/2024	8:45 PM	0	180	50	1	2	0	0	0	3	0	1	0	0
4/25/2024	9:00 PM	1	174	45	1	1	0	0	1	3	0	1	0	0
4/25/2024	9:15 PM	1	165	42	0	3	0	0	3	3	0	1	0	0
4/25/2024	9:30 PM	1	135	44	0	5	0	0	5	4	0	0	0	0
4/25/2024	9:45 PM	1	144	33	0	4	0	0	5	5	0	0	0	0
4/25/2024	10:00 PM	0	138	35	0	6	0	0	4	4	0	2	0	0
4/25/2024	10:15 PM	0	127	28	0	5	0	0	2	5	0	4	0	0
4/25/2024	10:30 PM	0	121	20	0	4	0	0	0	5	0	4	0	0
4/25/2024	10:45 PM	0	103	19	0	5	0	0	0	4	0	4	0	0
4/25/2024	11:00 PM	0	91	14	0	3	0	0	1	3	0	2	0	0
4/25/2024	11:15 PM	0	68	10	0	2	0	0	1	1	0	0	0	0
4/25/2024	11:30 PM	0	43	8	0	1	0	0	1	0	0	0	0	0
4/25/2024	11:45 PM	0	15	4	0	0	0	0	1	0	0	0	0	0

4/26/2024	12:00 AM	0	63	2	0	5	0	0	0	7	0	0	0	0
4/26/2024	12:15 AM	0	59	1	0	5	0	0	0	9	0	0	0	0
4/26/2024	12:30 AM	0	50	1	0	4	0	0	0	8	0	0	0	0
4/26/2024	12:45 AM	0	46	2	0	1	3	0	0	7	0	0	0	0
4/26/2024	1:00 AM	0	48	2	0	1	6	0	0	7	0	0	0	0
4/26/2024	1:15 AM	0	45	2	0	1	6	0	0	5	0	2	0	0
4/26/2024	1:30 AM	0	45	1	0	2	6	0	0	7	0	3	0	0
4/26/2024	1:45 AM	0	47	0	0	6	3	0	0	5	0	4	0	0
4/26/2024	2:00 AM	0	48	0	0	7	0	0	0	4	0	4	0	0
4/26/2024	2:15 AM	0	61	1	0	6	0	0	0	9	0	2	0	0
4/26/2024	2:30 AM	0	67	1	0	6	1	0	0	11	0	1	0	0
4/26/2024	2:45 AM	0	82	1	0	3	1	0	0	14	0	1	0	0
4/26/2024	3:00 AM	0	95	1	0	3	1	0	0	18	0	1	0	0
4/26/2024	3:15 AM	0	106	0	0	3	1	0	1	20	0	1	0	0
4/26/2024	3:30 AM	0	120	0	0	2	0	0	1	25	0	1	0	0
4/26/2024	3:45 AM	0	132	2	0	1	3	0	1	25	0	0	0	0
4/26/2024	4:00 AM	0	162	4	0	0	3	0	1	26	0	0	0	0
4/26/2024	4:15 AM	0	191	9	0	2	3	0	0	21	0	1	0	0
4/26/2024	4:30 AM	0	206	18	0	5	3	0	0	15	0	1	0	0
4/26/2024	4:45 AM	0	234	25	0	8	0	0	0	20	0	1	0	0
4/26/2024	5:00 AM	0	256	33	0	10	0	0	0	18	0	1	0	0
4/26/2024	5:15 AM	1	275	35	0	10	1	0	0	22	0	1	0	0
4/26/2024	5:30 AM	1	316	37	0	9	1	0	0	25	0	2	0	0
4/26/2024	5:45 AM	1	386	55	0	6	3	0	0	22	0	2	0	0
4/26/2024	6:00 AM	2	432	80	0	6	6	1	0	20	0	2	0	0
4/26/2024	6:15 AM	1	471	102	0	5	7	2	0	17	0	1	0	0
4/26/2024	6:30 AM	1	511	121	0	7	12	2	2	15	0	0	0	0
4/26/2024	6:45 AM	1	517	126	1	9	10	2	3	14	1	0	0	0
4/26/2024	7:00 AM	1	521	124	2	12	7	1	4	17	1	0	0	0
4/26/2024	7:15 AM	1	505	118	2	14	5	0	4	18	3	0	0	0
4/26/2024	7:30 AM	1	490	125	2	16	1	0	4	18	3	0	0	0
4/26/2024	7:45 AM	1	480	119	2	19	2	2	3	19	2	0	0	0
4/26/2024	8:00 AM	0	450	120	2	15	5	4	3	19	2	0	0	0
4/26/2024	8:15 AM	0	416	125	3	16	5	4	5	18	0	0	0	0
4/26/2024	8:30 AM	0	405	130	5	11	6	4	4	18	0	0	0	0
4/26/2024	8:45 AM	0	361	127	4	8	6	2	4	20	0	0	0	0
4/26/2024	9:00 AM	0	373	121	3	10	4	0	4	18	0	0	0	0
4/26/2024	9:15 AM	1	384	119	3	9	4	0	5	21	0	0	0	0
4/26/2024	9:30 AM	1	379	114	1	18	5	0	4	24	1	0	0	0
4/26/2024	9:45 AM	1	381	120	1	24	7	0	6	22	1	0	0	0
4/26/2024	10:00 AM	1	357	122	1	22	7	0	8	23	1	0	0	0
4/26/2024	10:15 AM	0	359	121	0	24	10	0	6	24	1	0	0	0
4/26/2024	10:30 AM	0	353	107	0	17	7	0	8	23	0	0	0	0
4/26/2024	10:45 AM	0	341	114	0	15	5	1	8	23	1	0	0	0
4/26/2024	11:00 AM	0	334	117	1	20	12	1	5	27	1	0	0	0
4/26/2024	11:15 AM	0	352	120	1	17	9	1	4	24	1	0	0	0
4/26/2024	11:30 AM	0	360	132	1	17	10	1	5	21	1	0	0	0
4/26/2024	11:45 AM	1	368	132	1	12	10	0	3	22	1	0	0	0
4/26/2024	12:00 PM	1	368	125	0	10	3	0	3	18	1	0	0	0
4/26/2024	12:15 PM	1	365	130	5	11	3	0	3	18	1	0	0	0
4/26/2024	12:30 PM	1	378	119	5	14	3	0	1	18	1	0	0	0
4/26/2024	12:45 PM	0	384	113	5	14	3	0	1	20	0	0	0	0
4/26/2024	1:00 PM	0	391	113	5	14	2	0	2	20	0	0	0	0
4/26/2024	1:15 PM	0	367	110	0	18	3	0	2	18	0	0	0	0
4/26/2024	1:30 PM	0	375	129	1	20	2	0	2	19	0	0	0	0
4/26/2024	1:45 PM	0	391	136	1	20	1	0	2	19	0	0	0	0
4/26/2024	2:00 PM	0	394	144	1	19	2	0	1	20	0	0	0	0
4/26/2024	2:15 PM	1	415	140	1	17	2	0	2	18	0	0	0	0
4/26/2024	2:30 PM	1	375	126	0	16	2	1	1	18	1	0	0	0
4/26/2024	2:45 PM	1	374	124	1	17	3	1	2	12	1	0	0	0
4/26/2024	3:00 PM	2	366	121	1	18	4	1	2	9	1	0	0	0
4/26/2024	3:15 PM	1	354	117	2	16	3	1	1	17	1	0	0	0
4/26/2024	3:30 PM	1	362	120	2	14	3	0	1	18	0	0	0	0
4/26/2024	3:45 PM	3	354	126	1	15	3	0	0	19	0	0	0	0
4/26/2024	4:00 PM	2	349	114	1	13	1	0	1	20	0	0	0	0
4/26/2024	4:15 PM	2	350	113	1	14	1	0	1	15	0	0	0	0
4/26/2024	4:30 PM	2	365	106	2	12	1	0	1	14	1	0	0	0
4/26/2024	4:45 PM	0	354	86	2	15	1	0	1	12	1	0	0	0
4/26/2024	5:00 PM	0	377	100	2	16	1	0	0	11	1	0	0	0
4/26/2024	5:15 PM	0	391	96	1	13	2	0	1	12	1	0	0	0
4/26/2024	5:30 PM	0	397	99	1	16	2	0	1	8	0	0	0	0
4/26/2024	5:45 PM	0	415	108	1	12	1	0	1	9	0	0	0	0
4/26/2024	6:00 PM	0	423	86	1	15	2	0	1	8	0	0	0	0
4/26/2024	6:15 PM	0	409	104	1	16	1	0	0	6	0	0	0	0
4/26/2024	6:30 PM	0	373	98	0	12	1	0	0	8	0	0	0	0
4/26/2024	6:45 PM	0	328	90	0	14	1	0	0	7	0	0	0	0
4/26/2024	7:00 PM	0	288	93	3	10	0	0	0	7	0	0	0	0
4/26/2024	7:15 PM	0	273	76	3	8	0	0	0	5	0	0	0	0
4/26/2024	7:30 PM	0	255	67	3	10	0	0	0	3	0	0	0	0
4/26/2024	7:45 PM	0	249	62	3	7	0	0	0	5	0	0	0	0
4/26/2024	8:00 PM	0	231	59	0	5	0	0	0	6	0	0	0	0
4/26/2024	8:15 PM	0	215	50	0	6	0	0	0	8	0	0	0	0
4/26/2024	8:30 PM	0	203	49	0	3	0	0	0	9	0	2	0	0
4/26/2024	8:45 PM	0	198	44	0	3	0	0	0	8	0	2	0	0
4/26/2024	9:00 PM	0	196	44	0	4	0	0	0	7	0	2	0	0
4/26/2024	9:15 PM	0	203	43	0	4	0	0	0	5	0	2	0	0
4/26/2024	9:30 PM	0	212	43	0	3	0	0	0	4	0	0	0	0
4/26/2024	9:45 PM	0	208	40	0	3	0	0	0	2	0	0	0	0
4/26/2024	10:00 PM	0	189	39	0	2	0	0	0	1	0	0	0	0
4/26/2024	10:15 PM	0	169	38	0	1	0	0	0	4	0	0	0	0
4/26/2024	10:30 PM	0	141	31	0	1	0	0	0	4	0	0	0	0
4/26/2024	10:45 PM	1	122	28	0	0	0	0	0	3	0	0	0	0
4/26/2024	11:00 PM	1	124	24	0	1	1	0	0	4	0	0	0	0
4/26/2024	11:15 PM	1	86	17	0	1	1	0	0	1	0	0	0	0
4/26/2024	11:30 PM	1	63	12	0	1	1	0	0	1	0	0	0	0
4/26/2024	11:45 PM	0	34	6	0	1	1	0	0	1	0	0	0	0

4/27/2024	12:00 AM	0	97	6	0	0	0	0	0	2	0	4	0	0
4/27/2024	12:15 AM	0	87	4	0	0	1	0	0	2	0	2	0	0
4/27/2024	12:30 AM	0	65	4	0	0	2	0	0	2	0	1	0	0
4/27/2024	12:45 AM	0	55	2	0	0	3	0	0	2	0	0	0	0
4/27/2024	1:00 AM	0	56	2	0	2	3	0	0	1	0	1	0	0
4/27/2024	1:15 AM	0	63	2	0	3	2	0	0	1	0	3	0	0
4/27/2024	1:30 AM	0	66	1	0	3	1	0	0	2	0	3	0	0
4/27/2024	1:45 AM	0	67	2	0	3	0	0	0	2	0	3	0	0
4/27/2024	2:00 AM	0	76	1	0	1	0	0	0	2	0	2	0	0
4/27/2024	2:15 AM	0	71	2	0	0	0	0	0	1	0	1	0	0
4/27/2024	2:30 AM	0	82	2	0	0	0	0	0	0	1	1	0	0
4/27/2024	2:45 AM	0	92	3	0	0	1	0	0	0	1	1	0	0
4/27/2024	3:00 AM	0	98	4	0	0	1	0	0	1	1	1	0	0
4/27/2024	3:15 AM	0	101	4	0	0	1	0	0	4	2	0	0	0
4/27/2024	3:30 AM	0	97	4	0	0	1	0	0	5	2	0	0	0
4/27/2024	3:45 AM	0	112	5	0	0	0	0	0	7	2	0	0	0
4/27/2024	4:00 AM	0	121	7	0	0	0	0	0	7	2	0	0	0
4/27/2024	4:15 AM	0	124	9	0	0	0	0	0	5	1	0	0	0
4/27/2024	4:30 AM	1	132	15	0	0	0	0	0	4	0	0	0	0
4/27/2024	4:45 AM	1	131	15	0	1	0	0	0	5	0	0	0	0
4/27/2024	5:00 AM	1	144	15	0	1	0	0	0	6	0	0	0	0
4/27/2024	5:15 AM	1	151	17	0	2	0	0	1	7	0	0	0	0
4/27/2024	5:30 AM	1	167	24	0	2	0	0	1	8	0	0	0	0
4/27/2024	5:45 AM	1	189	35	0	2	0	0	1	7	0	0	0	0
4/27/2024	6:00 AM	1	201	43	1	2	0	0	2	6	0	0	0	0
4/27/2024	6:15 AM	1	222	49	1	1	0	0	2	5	0	0	0	0
4/27/2024	6:30 AM	0	227	50	1	2	1	0	3	6	0	0	1	0
4/27/2024	6:45 AM	0	240	62	1	2	2	0	3	6	0	0	1	0
4/27/2024	7:00 AM	0	258	72	1	3	4	0	2	6	0	0	1	0
4/27/2024	7:15 AM	0	271	87	1	4	4	0	2	5	0	0	1	0
4/27/2024	7:30 AM	1	298	88	2	5	3	0	1	6	0	0	0	0
4/27/2024	7:45 AM	1	316	84	3	4	2	0	1	8	0	0	0	0
4/27/2024	8:00 AM	1	317	86	2	4	0	0	2	8	0	0	0	0
4/27/2024	8:15 AM	2	324	74	2	3	0	0	1	10	0	0	1	0
4/27/2024	8:30 AM	1	333	82	1	2	1	0	1	8	0	0	1	0
4/27/2024	8:45 AM	1	356	81	0	5	2	0	1	5	0	0	1	0
4/27/2024	9:00 AM	1	368	84	0	7	3	0	0	6	0	0	1	0
4/27/2024	9:15 AM	0	395	86	0	8	3	0	1	6	0	0	0	0
4/27/2024	9:30 AM	2	399	84	0	8	2	0	1	8	0	0	0	0
4/27/2024	9:45 AM	3	377	83	0	6	1	0	1	7	0	0	0	0
4/27/2024	10:00 AM	3	381	84	0	6	0	0	1	6	0	0	0	0
4/27/2024	10:15 AM	3	373	94	0	5	1	0	1	4	0	0	0	0
4/27/2024	10:30 AM	1	398	92	0	6	1	0	1	2	0	0	0	0
4/27/2024	10:45 AM	0	417	92	0	6	2	0	1	2	0	0	0	0
4/27/2024	11:00 AM	0	431	90	1	4	3	0	2	2	0	0	0	0
4/27/2024	11:15 AM	0	456	90	1	5	2	0	1	3	0	0	0	0
4/27/2024	11:30 AM	4	436	92	1	3	2	0	1	3	0	0	0	0
4/27/2024	11:45 AM	4	411	97	1	2	1	0	1	4	0	0	0	0
4/27/2024	12:00 PM	5	399	98	0	5	1	0	0	5	0	0	0	0
4/27/2024	12:15 PM	6	382	92	0	7	1	0	0	6	0	0	0	0
4/27/2024	12:30 PM	2	389	95	0	8	3	0	0	6	0	0	0	0
4/27/2024	12:45 PM	2	413	89	1	10	3	0	0	7	0	0	0	0
4/27/2024	1:00 PM	1	405	95	1	7	3	0	0	7	0	0	0	0
4/27/2024	1:15 PM	1	393	102	1	4	3	0	0	6	0	0	0	0
4/27/2024	1:30 PM	1	384	101	2	3	1	0	0	5	0	0	0	0
4/27/2024	1:45 PM	1	388	106	1	3	2	0	1	3	0	0	0	0
4/27/2024	2:00 PM	1	397	104	1	4	2	0	1	3	0	0	0	0
4/27/2024	2:15 PM	0	406	97	1	7	2	0	1	2	0	0	0	0
4/27/2024	2:30 PM	0	407	110	0	8	2	0	1	2	0	0	0	0
4/27/2024	2:45 PM	0	398	112	0	7	1	0	0	3	0	0	0	0
4/27/2024	3:00 PM	0	382	102	0	7	0	0	0	2	0	0	0	0
4/27/2024	3:15 PM	1	361	104	0	5	0	0	0	3	0	0	0	0
4/27/2024	3:30 PM	2	338	85	1	4	0	0	0	4	0	0	0	0
4/27/2024	3:45 PM	2	302	76	1	5	0	0	0	4	0	0	0	0
4/27/2024	4:00 PM	2	288	80	1	3	0	0	1	3	0	0	0	0
4/27/2024	4:15 PM	1	306	87	1	2	0	0	1	4	0	0	0	0
4/27/2024	4:30 PM	0	310	87	0	4	0	0	1	5	0	0	0	0
4/27/2024	4:45 PM	0	310	91	0	2	0	0	1	4	0	0	0	0
4/27/2024	5:00 PM	0	313	85	0	2	0	0	0	5	0	0	0	0
4/27/2024	5:15 PM	0	311	77	0	2	0	0	0	4	0	0	0	0
4/27/2024	5:30 PM	0	306	72	0	1	0	0	0	2	0	0	0	0
4/27/2024	5:45 PM	0	335	69	0	2	0	0	0	3	0	0	0	0
4/27/2024	6:00 PM	0	338	69	0	6	0	0	0	3	0	0	0	0
4/27/2024	6:15 PM	0	301	55	0	6	0	0	0	2	0	0	0	0
4/27/2024	6:30 PM	1	304	50	0	8	0	0	0	3	0	0	0	0
4/27/2024	6:45 PM	2	275	46	0	7	0	0	0	3	0	0	0	0
4/27/2024	7:00 PM	3	253	41	0	3	0	0	0	2	0	0	0	0
4/27/2024	7:15 PM	3	257	49	0	3	0	0	0	2	0	0	0	0
4/27/2024	7:30 PM	2	233	53	0	0	1	0	0	1	0	0	0	0
4/27/2024	7:45 PM	2	219	45	0	1	1	0	0	0	0	0	0	0
4/27/2024	8:00 PM	1	212	36	0	1	1	0	1	0	0	0	0	0
4/27/2024	8:15 PM	1	206	32	0	1	1	0	1	0	0	0	0	0
4/27/2024	8:30 PM	1	208	28	0	1	0	0	1	0	0	0	0	0
4/27/2024	8:45 PM	0	200	32	0	0	0	0	1	0	0	0	0	0
4/27/2024	9:00 PM	0	194	32	0	0	0	0	0	0	0	0	0	0
4/27/2024	9:15 PM	0	194	28	0	0	0	0	0	0	0	0	0	0
4/27/2024	9:30 PM	0	176	26	0	0	0	0	0	1	0	0	0	0
4/27/2024	9:45 PM	0	182	19	0	0	0	0	0	2	0	0	0	0
4/27/2024	10:00 PM	0	184	19	0	0	0	0	0	2	0	0	0	0
4/27/2024	10:15 PM	0	187	15	0	0	0	0	0	2	0	0	0	0
4/27/2024	10:30 PM	0	180	12	0	0	0	0	0	1	0	0	0	0
4/27/2024	10:45 PM	0	155	11	0	0	0	0	0	1	0	0	0	0
4/27/2024	11:00 PM	0	140	11	0	0	0	0	0	2	0	0	0	0
4/27/2024	11:15 PM	0	86	8	0	0	0	0	0	2	0	0	0	0
4/27/2024	11:30 PM	0	56	6	0	0	0	0	0	2	0	0	0	0
4/27/2024	11:45 PM	0	29	4	0	0	0	0	0	1	0	0	0	0

SB
File Name:
Start Date: 4/21/2024
Start Time: 0
Site Code: 11
Station ID: 1
Location 1: I-26 N/Bound On-Ramp, north of I-20
Location 2:

Date	Time	1	2	3	4	5	6	7	8	9	10	11	12	13
4/21/2024	12:00 AM	0	0	0	0	0	0	0	0	0	0	0	0	0
4/21/2024	12:15 AM	0	0	0	0	0	0	0	0	0	0	0	0	0
4/21/2024	12:30 AM	0	0	0	0	0	0	0	0	0	0	0	0	0
4/21/2024	12:45 AM	0	0	0	0	0	0	0	0	0	0	0	0	0
4/21/2024	1:00 AM	0	0	0	0	0	0	0	0	0	0	0	0	0
4/21/2024	1:15 AM	0	0	0	0	0	0	0	0	0	0	0	0	0
4/21/2024	1:30 AM	0	0	0	0	0	0	0	0	0	0	0	0	0
4/21/2024	1:45 AM	0	0	0	0	0	0	0	0	0	0	0	0	0
4/21/2024	2:00 AM	0	0	0	0	0	0	0	0	0	0	0	0	0
4/21/2024	2:15 AM	0	0	0	0	0	0	0	0	0	0	0	0	0
4/21/2024	2:30 AM	0	0	0	0	0	0	0	0	0	0	0	0	0
4/21/2024	2:45 AM	0	0	0	0	0	0	0	0	0	0	0	0	0
4/21/2024	3:00 AM	0	0	0	0	0	0	0	0	0	0	0	0	0
4/21/2024	3:15 AM	0	0	0	0	0	0	0	0	0	0	0	0	0
4/21/2024	3:30 AM	0	0	0	0	0	0	0	0	0	0	0	0	0
4/21/2024	3:45 AM	0	0	0	0	0	0	0	0	0	0	0	0	0
4/21/2024	4:00 AM	0	0	0	0	0	0	0	0	0	0	0	0	0
4/21/2024	4:15 AM	0	0	0	0	0	0	0	0	0	0	0	0	0
4/21/2024	4:30 AM	0	0	0	0	0	0	0	0	0	0	0	0	0
4/21/2024	4:45 AM	0	0	0	0	0	0	0	0	0	0	0	0	0
4/21/2024	5:00 AM	0	0	0	0	0	0	0	0	0	0	0	0	0
4/21/2024	5:15 AM	0	0	0	0	0	0	0	0	0	0	0	0	0
4/21/2024	5:30 AM	0	0	0	0	0	0	0	0	0	0	0	0	0
4/21/2024	5:45 AM	0	0	0	0	0	0	0	0	0	0	0	0	0
4/21/2024	6:00 AM	0	0	0	0	0	0	0	0	0	0	0	0	0
4/21/2024	6:15 AM	0	0	0	0	0	0	0	0	0	0	0	0	0
4/21/2024	6:30 AM	0	0	0	0	0	0	0	0	0	0	0	0	0
4/21/2024	6:45 AM	0	0	0	0	0	0	0	0	0	0	0	0	0
4/21/2024	7:00 AM	0	0	0	0	0	0	0	0	0	0	0	0	0
4/21/2024	7:15 AM	0	0	0	0	0	0	0	0	0	0	0	0	0
4/21/2024	7:30 AM	0	0	0	0	0	0	0	0	0	0	0	0	0
4/21/2024	7:45 AM	0	0	0	0	0	0	0	0	0	0	0	0	0
4/21/2024	8:00 AM	0	0	0	0	0	0	0	0	0	0	0	0	0
4/21/2024	8:15 AM	0	0	0	0	0	0	0	0	0	0	0	0	0
4/21/2024	8:30 AM	0	0	0	0	0	0	0	0	0	0	0	0	0
4/21/2024	8:45 AM	0	0	0	0	0	0	0	0	0	0	0	0	0
4/21/2024	9:00 AM	0	0	0	0	0	0	0	0	0	0	0	0	0
4/21/2024	9:15 AM	0	0	0	0	0	0	0	0	0	0	0	0	0
4/21/2024	9:30 AM	0	0	0	0	0	0	0	0	0	0	0	0	0
4/21/2024	9:45 AM	0	0	0	0	0	0	0	0	0	0	0	0	0
4/21/2024	10:00 AM	0	0	0	0	0	0	0	0	0	0	0	0	0
4/21/2024	10:15 AM	0	0	0	0	0	0	0	0	0	0	0	0	0
4/21/2024	10:30 AM	0	0	0	0	0	0	0	0	0	0	0	0	0
4/21/2024	10:45 AM	0	0	0	0	0	0	0	0	0	0	0	0	0
4/21/2024	11:00 AM	0	0	0	0	0	0	0	0	0	0	0	0	0
4/21/2024	11:15 AM	0	0	0	0	0	0	0	0	0	0	0	0	0
4/21/2024	11:30 AM	0	0	0	0	0	0	0	0	0	0	0	0	0
4/21/2024	11:45 AM	0	0	0	0	0	0	0	0	0	0	0	0	0
4/21/2024	12:00 PM	0	0	0	0	0	0	0	0	0	0	0	0	0
4/21/2024	12:15 PM	0	0	0	0	0	0	0	0	0	0	0	0	0
4/21/2024	12:30 PM	0	0	0	0	0	0	0	0	0	0	0	0	0
4/21/2024	12:45 PM	0	0	0	0	0	0	0	0	0	0	0	0	0
4/21/2024	1:00 PM	0	0	0	0	0	0	0	0	0	0	0	0	0
4/21/2024	1:15 PM	0	0	0	0	0	0	0	0	0	0	0	0	0
4/21/2024	1:30 PM	0	0	0	0	0	0	0	0	0	0	0	0	0
4/21/2024	1:45 PM	0	0	0	0	0	0	0	0	0	0	0	0	0
4/21/2024	2:00 PM	0	0	0	0	0	0	0	0	0	0	0	0	0
4/21/2024	2:15 PM	0	0	0	0	0	0	0	0	0	0	0	0	0
4/21/2024	2:30 PM	0	0	0	0	0	0	0	0	0	0	0	0	0
4/21/2024	2:45 PM	0	0	0	0	0	0	0	0	0	0	0	0	0
4/21/2024	3:00 PM	0	0	0	0	0	0	0	0	0	0	0	0	0
4/21/2024	3:15 PM	0	0	0	0	0	0	0	0	0	0	0	0	0
4/21/2024	3:30 PM	0	0	0	0	0	0	0	0	0	0	0	0	0
4/21/2024	3:45 PM	0	0	0	0	0	0	0	0	0	0	0	0	0
4/21/2024	4:00 PM	0	0	0	0	0	0	0	0	0	0	0	0	0
4/21/2024	4:15 PM	0	0	0	0	0	0	0	0	0	0	0	0	0
4/21/2024	4:30 PM	0	0	0	0	0	0	0	0	0	0	0	0	0
4/21/2024	4:45 PM	0	0	0	0	0	0	0	0	0	0	0	0	0
4/21/2024	5:00 PM	0	0	0	0	0	0	0	0	0	0	0	0	0
4/21/2024	5:15 PM	0	0	0	0	0	0	0	0	0	0	0	0	0
4/21/2024	5:30 PM	0	0	0	0	0	0	0	0	0	0	0	0	0
4/21/2024	5:45 PM	0	0	0	0	0	0	0	0	0	0	0	0	0
4/21/2024	6:00 PM	0	0	0	0	0	0	0	0	0	0	0	0	0
4/21/2024	6:15 PM	0	0	0	0	0	0	0	0	0	0	0	0	0
4/21/2024	6:30 PM	0	0	0	0	0	0	0	0	0	0	0	0	0
4/21/2024	6:45 PM	0	0	0	0	0	0	0	0	0	0	0	0	0
4/21/2024	7:00 PM	0	0	0	0	0	0	0	0	0	0	0	0	0
4/21/2024	7:15 PM	0	0	0	0	0	0	0	0	0	0	0	0	0
4/21/2024	7:30 PM	0	0	0	0	0	0	0	0	0	0	0	0	0
4/21/2024	7:45 PM	0	0	0	0	0	0	0	0	0	0	0	0	0
4/21/2024	8:00 PM	0	0	0	0	0	0	0	0	0	0	0	0	0
4/21/2024	8:15 PM	0	0	0	0	0	0	0	0	0	0	0	0	0
4/21/2024	8:30 PM	0	0	0	0	0	0	0	0	0	0	0	0	0
4/21/2024	8:45 PM	0	0	0	0	0	0	0	0	0	0	0	0	0
4/21/2024	9:00 PM	0	0	0	0	0	0	0	0	0	0	0	0	0
4/21/2024	9:15 PM	0	0	0	0	0	0	0	0	0	0	0	0	0
4/21/2024	9:30 PM	0	0	0	0	0	0	0	0	0	0	0	0	0
4/21/2024	9:45 PM	0	0	0	0	0	0	0	0	0	0	0	0	0
4/21/2024	10:00 PM	0	0	0	0	0	0	0	0	0	0	0	0	0
4/21/2024	10:15 PM	0	0	0	0	0	0	0	0	0	0	0	0	0
4/21/2024	10:30 PM	0	0	0	0	0	0	0	0	0	0	0	0	0
4/21/2024	10:45 PM	0	0	0	0	0	0	0	0	0	0	0	0	0
4/21/2024	11:00 PM	0	0	0	0	0	0	0	0	0	0	0	0	0
4/21/2024	11:15 PM	0	0	0	0	0	0	0	0	0	0	0	0	0
4/21/2024	11:30 PM	0	0	0	0	0	0	0	0	0	0	0	0	0
4/21/2024	11:45 PM	0	0	0	0	0	0	0	0	0	0	0	0	0

4/22/2024	12:00 AM	0	0	0	0	0	0	0	0	0	0	0	0	0
4/22/2024	12:15 AM	0	0	0	0	0	0	0	0	0	0	0	0	0
4/22/2024	12:30 AM	0	0	0	0	0	0	0	0	0	0	0	0	0
4/22/2024	12:45 AM	0	0	0	0	0	0	0	0	0	0	0	0	0
4/22/2024	1:00 AM	0	0	0	0	0	0	0	0	0	0	0	0	0
4/22/2024	1:15 AM	0	0	0	0	0	0	0	0	0	0	0	0	0
4/22/2024	1:30 AM	0	0	0	0	0	0	0	0	0	0	0	0	0
4/22/2024	1:45 AM	0	0	0	0	0	0	0	0	0	0	0	0	0
4/22/2024	2:00 AM	0	0	0	0	0	0	0	0	0	0	0	0	0
4/22/2024	2:15 AM	0	0	0	0	0	0	0	0	0	0	0	0	0
4/22/2024	2:30 AM	0	0	0	0	0	0	0	0	0	0	0	0	0
4/22/2024	2:45 AM	0	0	0	0	0	0	0	0	0	0	0	0	0
4/22/2024	3:00 AM	0	0	0	0	0	0	0	0	0	0	0	0	0
4/22/2024	3:15 AM	0	0	0	0	0	0	0	0	0	0	0	0	0
4/22/2024	3:30 AM	0	0	0	0	0	0	0	0	0	0	0	0	0
4/22/2024	3:45 AM	0	0	0	0	0	0	0	0	0	0	0	0	0
4/22/2024	4:00 AM	0	0	0	0	0	0	0	0	0	0	0	0	0
4/22/2024	4:15 AM	0	0	0	0	0	0	0	0	0	0	0	0	0
4/22/2024	4:30 AM	0	0	0	0	0	0	0	0	0	0	0	0	0
4/22/2024	4:45 AM	0	0	0	0	0	0	0	0	0	0	0	0	0
4/22/2024	5:00 AM	0	0	0	0	0	0	0	0	0	0	0	0	0
4/22/2024	5:15 AM	0	0	0	0	0	0	0	0	0	0	0	0	0
4/22/2024	5:30 AM	0	0	0	0	0	0	0	0	0	0	0	0	0
4/22/2024	5:45 AM	0	0	0	0	0	0	0	0	0	0	0	0	0
4/22/2024	6:00 AM	0	0	0	0	0	0	0	0	0	0	0	0	0
4/22/2024	6:15 AM	0	0	0	0	0	0	0	0	0	0	0	0	0
4/22/2024	6:30 AM	0	0	0	0	0	0	0	0	0	0	0	0	0
4/22/2024	6:45 AM	0	0	0	0	0	0	0	0	0	0	0	0	0
4/22/2024	7:00 AM	0	0	0	0	0	0	0	0	0	0	0	0	0
4/22/2024	7:15 AM	0	0	0	0	0	0	0	0	0	0	0	0	0
4/22/2024	7:30 AM	0	0	0	0	0	0	0	0	0	0	0	0	0
4/22/2024	7:45 AM	0	0	0	0	0	0	0	0	0	0	0	0	0
4/22/2024	8:00 AM	0	0	0	0	0	0	0	0	0	0	0	0	0
4/22/2024	8:15 AM	0	0	0	0	0	0	0	0	0	0	0	0	0
4/22/2024	8:30 AM	0	0	0	0	0	0	0	0	0	0	0	0	0
4/22/2024	8:45 AM	0	0	0	0	0	0	0	0	0	0	0	0	0
4/22/2024	9:00 AM	0	0	0	0	0	0	0	0	0	0	0	0	0
4/22/2024	9:15 AM	0	0	0	0	0	0	0	0	0	0	0	0	0
4/22/2024	9:30 AM	0	0	0	0	0	0	0	0	0	0	0	0	0
4/22/2024	9:45 AM	0	0	0	0	0	0	0	0	0	0	0	0	0
4/22/2024	10:00 AM	0	0	0	0	0	0	0	0	0	0	0	0	0
4/22/2024	10:15 AM	0	0	0	0	0	0	0	0	0	0	0	0	0
4/22/2024	10:30 AM	0	0	0	0	0	0	0	0	0	0	0	0	0
4/22/2024	10:45 AM	0	0	0	0	0	0	0	0	0	0	0	0	0
4/22/2024	11:00 AM	0	0	0	0	0	0	0	0	0	0	0	0	0
4/22/2024	11:15 AM	0	0	0	0	0	0	0	0	0	0	0	0	0
4/22/2024	11:30 AM	0	0	0	0	0	0	0	0	0	0	0	0	0
4/22/2024	11:45 AM	0	0	0	0	0	0	0	0	0	0	0	0	0
4/22/2024	12:00 PM	0	0	0	0	0	0	0	0	0	0	0	0	0
4/22/2024	12:15 PM	0	0	0	0	0	0	0	0	0	0	0	0	0
4/22/2024	12:30 PM	0	0	0	0	0	0	0	0	0	0	0	0	0
4/22/2024	12:45 PM	0	0	0	0	0	0	0	0	0	0	0	0	0
4/22/2024	1:00 PM	0	0	0	0	0	0	0	0	0	0	0	0	0
4/22/2024	1:15 PM	0	0	0	0	0	0	0	0	0	0	0	0	0
4/22/2024	1:30 PM	0	0	0	0	0	0	0	0	0	0	0	0	0
4/22/2024	1:45 PM	0	0	0	0	0	0	0	0	0	0	0	0	0
4/22/2024	2:00 PM	0	0	0	0	0	0	0	0	0	0	0	0	0
4/22/2024	2:15 PM	0	0	0	0	0	0	0	0	0	0	0	0	0
4/22/2024	2:30 PM	0	0	0	0	0	0	0	0	0	0	0	0	0
4/22/2024	2:45 PM	0	0	0	0	0	0	0	0	0	0	0	0	0
4/22/2024	3:00 PM	0	0	0	0	0	0	0	0	0	0	0	0	0
4/22/2024	3:15 PM	0	0	0	0	0	0	0	0	0	0	0	0	0
4/22/2024	3:30 PM	0	0	0	0	0	0	0	0	0	0	0	0	0
4/22/2024	3:45 PM	0	0	0	0	0	0	0	0	0	0	0	0	0
4/22/2024	4:00 PM	0	0	0	0	0	0	0	0	0	0	0	0	0
4/22/2024	4:15 PM	0	0	0	0	0	0	0	0	0	0	0	0	0
4/22/2024	4:30 PM	0	0	0	0	0	0	0	0	0	0	0	0	0
4/22/2024	4:45 PM	0	0	0	0	0	0	0	0	0	0	0	0	0
4/22/2024	5:00 PM	0	0	0	0	0	0	0	0	0	0	0	0	0
4/22/2024	5:15 PM	0	0	0	0	0	0	0	0	0	0	0	0	0
4/22/2024	5:30 PM	0	0	0	0	0	0	0	0	0	0	0	0	0
4/22/2024	5:45 PM	0	0	0	0	0	0	0	0	0	0	0	0	0
4/22/2024	6:00 PM	0	0	0	0	0	0	0	0	0	0	0	0	0
4/22/2024	6:15 PM	0	0	0	0	0	0	0	0	0	0	0	0	0
4/22/2024	6:30 PM	0	0	0	0	0	0	0	0	0	0	0	0	0
4/22/2024	6:45 PM	0	0	0	0	0	0	0	0	0	0	0	0	0
4/22/2024	7:00 PM	0	0	0	0	0	0	0	0	0	0	0	0	0
4/22/2024	7:15 PM	0	0	0	0	0	0	0	0	0	0	0	0	0
4/22/2024	7:30 PM	0	0	0	0	0	0	0	0	0	0	0	0	0
4/22/2024	7:45 PM	0	0	0	0	0	0	0	0	0	0	0	0	0
4/22/2024	8:00 PM	0	0	0	0	0	0	0	0	0	0	0	0	0
4/22/2024	8:15 PM	0	0	0	0	0	0	0	0	0	0	0	0	0
4/22/2024	8:30 PM	0	0	0	0	0	0	0	0	0	0	0	0	0
4/22/2024	8:45 PM	0	0	0	0	0	0	0	0	0	0	0	0	0
4/22/2024	9:00 PM	0	0	0	0	0	0	0	0	0	0	0	0	0
4/22/2024	9:15 PM	0	0	0	0	0	0	0	0	0	0	0	0	0
4/22/2024	9:30 PM	0	0	0	0	0	0	0	0	0	0	0	0	0
4/22/2024	9:45 PM	0	0	0	0	0	0	0	0	0	0	0	0	0
4/22/2024	10:00 PM	0	0	0	0	0	0	0	0	0	0	0	0	0
4/22/2024	10:15 PM	0	0	0	0	0	0	0	0	0	0	0	0	0
4/22/2024	10:30 PM	0	0	0	0	0	0	0	0	0	0	0	0	0
4/22/2024	10:45 PM	0	0	0	0	0	0	0	0	0	0	0	0	0
4/22/2024	11:00 PM	0	0	0	0	0	0	0	0	0	0	0	0	0
4/22/2024	11:15 PM	0	0	0	0	0	0	0	0	0	0	0	0	0
4/22/2024	11:30 PM	0	0	0	0	0	0	0	0	0	0	0	0	0
4/22/2024	11:45 PM	0	0	0	0	0	0	0	0	0	0	0	0	0

4/23/2024	12:00 AM	0	0	0	0	0	0	0	0	0	0	0	0	0
4/23/2024	12:15 AM	0	0	0	0	0	0	0	0	0	0	0	0	0
4/23/2024	12:30 AM	0	0	0	0	0	0	0	0	0	0	0	0	0
4/23/2024	12:45 AM	0	0	0	0	0	0	0	0	0	0	0	0	0
4/23/2024	1:00 AM	0	0	0	0	0	0	0	0	0	0	0	0	0
4/23/2024	1:15 AM	0	0	0	0	0	0	0	0	0	0	0	0	0
4/23/2024	1:30 AM	0	0	0	0	0	0	0	0	0	0	0	0	0
4/23/2024	1:45 AM	0	0	0	0	0	0	0	0	0	0	0	0	0
4/23/2024	2:00 AM	0	0	0	0	0	0	0	0	0	0	0	0	0
4/23/2024	2:15 AM	0	0	0	0	0	0	0	0	0	0	0	0	0
4/23/2024	2:30 AM	0	0	0	0	0	0	0	0	0	0	0	0	0
4/23/2024	2:45 AM	0	0	0	0	0	0	0	0	0	0	0	0	0
4/23/2024	3:00 AM	0	0	0	0	0	0	0	0	0	0	0	0	0
4/23/2024	3:15 AM	0	0	0	0	0	0	0	0	0	0	0	0	0
4/23/2024	3:30 AM	0	0	0	0	0	0	0	0	0	0	0	0	0
4/23/2024	3:45 AM	0	0	0	0	0	0	0	0	0	0	0	0	0
4/23/2024	4:00 AM	0	0	0	0	0	0	0	0	0	0	0	0	0
4/23/2024	4:15 AM	0	0	0	0	0	0	0	0	0	0	0	0	0
4/23/2024	4:30 AM	0	0	0	0	0	0	0	0	0	0	0	0	0
4/23/2024	4:45 AM	0	0	0	0	0	0	0	0	0	0	0	0	0
4/23/2024	5:00 AM	0	0	0	0	0	0	0	0	0	0	0	0	0
4/23/2024	5:15 AM	0	0	0	0	0	0	0	0	0	0	0	0	0
4/23/2024	5:30 AM	0	0	0	0	0	0	0	0	0	0	0	0	0
4/23/2024	5:45 AM	0	0	0	0	0	0	0	0	0	0	0	0	0
4/23/2024	6:00 AM	0	0	0	0	0	0	0	0	0	0	0	0	0
4/23/2024	6:15 AM	0	0	0	0	0	0	0	0	0	0	0	0	0
4/23/2024	6:30 AM	0	0	0	0	0	0	0	0	0	0	0	0	0
4/23/2024	6:45 AM	0	0	0	0	0	0	0	0	0	0	0	0	0
4/23/2024	7:00 AM	0	0	0	0	0	0	0	0	0	0	0	0	0
4/23/2024	7:15 AM	0	0	0	0	0	0	0	0	0	0	0	0	0
4/23/2024	7:30 AM	0	0	0	0	0	0	0	0	0	0	0	0	0
4/23/2024	7:45 AM	0	0	0	0	0	0	0	0	0	0	0	0	0
4/23/2024	8:00 AM	0	0	0	0	0	0	0	0	0	0	0	0	0
4/23/2024	8:15 AM	0	0	0	0	0	0	0	0	0	0	0	0	0
4/23/2024	8:30 AM	0	0	0	0	0	0	0	0	0	0	0	0	0
4/23/2024	8:45 AM	0	0	0	0	0	0	0	0	0	0	0	0	0
4/23/2024	9:00 AM	0	0	0	0	0	0	0	0	0	0	0	0	0
4/23/2024	9:15 AM	0	0	0	0	0	0	0	0	0	0	0	0	0
4/23/2024	9:30 AM	0	0	0	0	0	0	0	0	0	0	0	0	0
4/23/2024	9:45 AM	0	0	0	0	0	0	0	0	0	0	0	0	0
4/23/2024	10:00 AM	0	0	0	0	0	0	0	0	0	0	0	0	0
4/23/2024	10:15 AM	0	0	0	0	0	0	0	0	0	0	0	0	0
4/23/2024	10:30 AM	0	0	0	0	0	0	0	0	0	0	0	0	0
4/23/2024	10:45 AM	0	0	0	0	0	0	0	0	0	0	0	0	0
4/23/2024	11:00 AM	0	0	0	0	0	0	0	0	0	0	0	0	0
4/23/2024	11:15 AM	0	0	0	0	0	0	0	0	0	0	0	0	0
4/23/2024	11:30 AM	0	0	0	0	0	0	0	0	0	0	0	0	0
4/23/2024	11:45 AM	0	0	0	0	0	0	0	0	0	0	0	0	0
4/23/2024	12:00 PM	0	0	0	0	0	0	0	0	0	0	0	0	0
4/23/2024	12:15 PM	0	0	0	0	0	0	0	0	0	0	0	0	0
4/23/2024	12:30 PM	0	0	0	0	0	0	0	0	0	0	0	0	0
4/23/2024	12:45 PM	0	0	0	0	0	0	0	0	0	0	0	0	0
4/23/2024	1:00 PM	0	0	0	0	0	0	0	0	0	0	0	0	0
4/23/2024	1:15 PM	0	0	0	0	0	0	0	0	0	0	0	0	0
4/23/2024	1:30 PM	0	0	0	0	0	0	0	0	0	0	0	0	0
4/23/2024	1:45 PM	0	0	0	0	0	0	0	0	0	0	0	0	0
4/23/2024	2:00 PM	0	0	0	0	0	0	0	0	0	0	0	0	0
4/23/2024	2:15 PM	0	0	0	0	0	0	0	0	0	0	0	0	0
4/23/2024	2:30 PM	0	0	0	0	0	0	0	0	0	0	0	0	0
4/23/2024	2:45 PM	0	0	0	0	0	0	0	0	0	0	0	0	0
4/23/2024	3:00 PM	0	0	0	0	0	0	0	0	0	0	0	0	0
4/23/2024	3:15 PM	0	0	0	0	0	0	0	0	0	0	0	0	0
4/23/2024	3:30 PM	0	0	0	0	0	0	0	0	0	0	0	0	0
4/23/2024	3:45 PM	0	0	0	0	0	0	0	0	0	0	0	0	0
4/23/2024	4:00 PM	0	0	0	0	0	0	0	0	0	0	0	0	0
4/23/2024	4:15 PM	0	0	0	0	0	0	0	0	0	0	0	0	0
4/23/2024	4:30 PM	0	0	0	0	0	0	0	0	0	0	0	0	0
4/23/2024	4:45 PM	0	0	0	0	0	0	0	0	0	0	0	0	0
4/23/2024	5:00 PM	0	0	0	0	0	0	0	0	0	0	0	0	0
4/23/2024	5:15 PM	0	0	0	0	0	0	0	0	0	0	0	0	0
4/23/2024	5:30 PM	0	0	0	0	0	0	0	0	0	0	0	0	0
4/23/2024	5:45 PM	0	0	0	0	0	0	0	0	0	0	0	0	0
4/23/2024	6:00 PM	0	0	0	0	0	0	0	0	0	0	0	0	0
4/23/2024	6:15 PM	0	0	0	0	0	0	0	0	0	0	0	0	0
4/23/2024	6:30 PM	0	0	0	0	0	0	0	0	0	0	0	0	0
4/23/2024	6:45 PM	0	0	0	0	0	0	0	0	0	0	0	0	0
4/23/2024	7:00 PM	0	0	0	0	0	0	0	0	0	0	0	0	0
4/23/2024	7:15 PM	0	0	0	0	0	0	0	0	0	0	0	0	0
4/23/2024	7:30 PM	0	0	0	0	0	0	0	0	0	0	0	0	0
4/23/2024	7:45 PM	0	0	0	0	0	0	0	0	0	0	0	0	0
4/23/2024	8:00 PM	0	0	0	0	0	0	0	0	0	0	0	0	0
4/23/2024	8:15 PM	0	0	0	0	0	0	0	0	0	0	0	0	0
4/23/2024	8:30 PM	0	0	0	0	0	0	0	0	0	0	0	0	0
4/23/2024	8:45 PM	0	0	0	0	0	0	0	0	0	0	0	0	0
4/23/2024	9:00 PM	0	0	0	0	0	0	0	0	0	0	0	0	0
4/23/2024	9:15 PM	0	0	0	0	0	0	0	0	0	0	0	0	0
4/23/2024	9:30 PM	0	0	0	0	0	0	0	0	0	0	0	0	0
4/23/2024	9:45 PM	0	0	0	0	0	0	0	0	0	0	0	0	0
4/23/2024	10:00 PM	0	0	0	0	0	0	0	0	0	0	0	0	0
4/23/2024	10:15 PM	0	0	0	0	0	0	0	0	0	0	0	0	0
4/23/2024	10:30 PM	0	0	0	0	0	0	0	0	0	0	0	0	0
4/23/2024	10:45 PM	0	0	0	0	0	0	0	0	0	0	0	0	0
4/23/2024	11:00 PM	0	0	0	0	0	0	0	0	0	0	0	0	0
4/23/2024	11:15 PM	0	0	0	0	0	0	0	0	0	0	0	0	0
4/23/2024	11:30 PM	0	0	0	0	0	0	0	0	0	0	0	0	0
4/23/2024	11:45 PM	0	0	0	0	0	0	0	0	0	0	0	0	0

4/24/2024	12:00 AM	0	0	0	0	0	0	0	0	0	0	0	0	0
4/24/2024	12:15 AM	0	0	0	0	0	0	0	0	0	0	0	0	0
4/24/2024	12:30 AM	0	0	0	0	0	0	0	0	0	0	0	0	0
4/24/2024	12:45 AM	0	0	0	0	0	0	0	0	0	0	0	0	0
4/24/2024	1:00 AM	0	0	0	0	0	0	0	0	0	0	0	0	0
4/24/2024	1:15 AM	0	0	0	0	0	0	0	0	0	0	0	0	0
4/24/2024	1:30 AM	0	0	0	0	0	0	0	0	0	0	0	0	0
4/24/2024	1:45 AM	0	0	0	0	0	0	0	0	0	0	0	0	0
4/24/2024	2:00 AM	0	0	0	0	0	0	0	0	0	0	0	0	0
4/24/2024	2:15 AM	0	0	0	0	0	0	0	0	0	0	0	0	0
4/24/2024	2:30 AM	0	0	0	0	0	0	0	0	0	0	0	0	0
4/24/2024	2:45 AM	0	0	0	0	0	0	0	0	0	0	0	0	0
4/24/2024	3:00 AM	0	0	0	0	0	0	0	0	0	0	0	0	0
4/24/2024	3:15 AM	0	0	0	0	0	0	0	0	0	0	0	0	0
4/24/2024	3:30 AM	0	0	0	0	0	0	0	0	0	0	0	0	0
4/24/2024	3:45 AM	0	0	0	0	0	0	0	0	0	0	0	0	0
4/24/2024	4:00 AM	0	0	0	0	0	0	0	0	0	0	0	0	0
4/24/2024	4:15 AM	0	0	0	0	0	0	0	0	0	0	0	0	0
4/24/2024	4:30 AM	0	0	0	0	0	0	0	0	0	0	0	0	0
4/24/2024	4:45 AM	0	0	0	0	0	0	0	0	0	0	0	0	0
4/24/2024	5:00 AM	0	0	0	0	0	0	0	0	0	0	0	0	0
4/24/2024	5:15 AM	0	0	0	0	0	0	0	0	0	0	0	0	0
4/24/2024	5:30 AM	0	0	0	0	0	0	0	0	0	0	0	0	0
4/24/2024	5:45 AM	0	0	0	0	0	0	0	0	0	0	0	0	0
4/24/2024	6:00 AM	0	0	0	0	0	0	0	0	0	0	0	0	0
4/24/2024	6:15 AM	0	0	0	0	0	0	0	0	0	0	0	0	0
4/24/2024	6:30 AM	0	0	0	0	0	0	0	0	0	0	0	0	0
4/24/2024	6:45 AM	0	0	0	0	0	0	0	0	0	0	0	0	0
4/24/2024	7:00 AM	0	0	0	0	0	0	0	0	0	0	0	0	0
4/24/2024	7:15 AM	0	0	0	0	0	0	0	0	0	0	0	0	0
4/24/2024	7:30 AM	0	0	0	0	0	0	0	0	0	0	0	0	0
4/24/2024	7:45 AM	0	0	0	0	0	0	0	0	0	0	0	0	0
4/24/2024	8:00 AM	0	0	0	0	0	0	0	0	0	0	0	0	0
4/24/2024	8:15 AM	0	0	0	0	0	0	0	0	0	0	0	0	0
4/24/2024	8:30 AM	0	0	0	0	0	0	0	0	0	0	0	0	0
4/24/2024	8:45 AM	0	0	0	0	0	0	0	0	0	0	0	0	0
4/24/2024	9:00 AM	0	0	0	0	0	0	0	0	0	0	0	0	0
4/24/2024	9:15 AM	0	0	0	0	0	0	0	0	0	0	0	0	0
4/24/2024	9:30 AM	0	0	0	0	0	0	0	0	0	0	0	0	0
4/24/2024	9:45 AM	0	0	0	0	0	0	0	0	0	0	0	0	0
4/24/2024	10:00 AM	0	0	0	0	0	0	0	0	0	0	0	0	0
4/24/2024	10:15 AM	0	0	0	0	0	0	0	0	0	0	0	0	0
4/24/2024	10:30 AM	0	0	0	0	0	0	0	0	0	0	0	0	0
4/24/2024	10:45 AM	0	0	0	0	0	0	0	0	0	0	0	0	0
4/24/2024	11:00 AM	0	0	0	0	0	0	0	0	0	0	0	0	0
4/24/2024	11:15 AM	0	0	0	0	0	0	0	0	0	0	0	0	0
4/24/2024	11:30 AM	0	0	0	0	0	0	0	0	0	0	0	0	0
4/24/2024	11:45 AM	0	0	0	0	0	0	0	0	0	0	0	0	0
4/24/2024	12:00 PM	0	0	0	0	0	0	0	0	0	0	0	0	0
4/24/2024	12:15 PM	0	0	0	0	0	0	0	0	0	0	0	0	0
4/24/2024	12:30 PM	0	0	0	0	0	0	0	0	0	0	0	0	0
4/24/2024	12:45 PM	0	0	0	0	0	0	0	0	0	0	0	0	0
4/24/2024	1:00 PM	0	0	0	0	0	0	0	0	0	0	0	0	0
4/24/2024	1:15 PM	0	0	0	0	0	0	0	0	0	0	0	0	0
4/24/2024	1:30 PM	0	0	0	0	0	0	0	0	0	0	0	0	0
4/24/2024	1:45 PM	0	0	0	0	0	0	0	0	0	0	0	0	0
4/24/2024	2:00 PM	0	0	0	0	0	0	0	0	0	0	0	0	0
4/24/2024	2:15 PM	0	0	0	0	0	0	0	0	0	0	0	0	0
4/24/2024	2:30 PM	0	0	0	0	0	0	0	0	0	0	0	0	0
4/24/2024	2:45 PM	0	0	0	0	0	0	0	0	0	0	0	0	0
4/24/2024	3:00 PM	0	0	0	0	0	0	0	0	0	0	0	0	0
4/24/2024	3:15 PM	0	0	0	0	0	0	0	0	0	0	0	0	0
4/24/2024	3:30 PM	0	0	0	0	0	0	0	0	0	0	0	0	0
4/24/2024	3:45 PM	0	0	0	0	0	0	0	0	0	0	0	0	0
4/24/2024	4:00 PM	0	0	0	0	0	0	0	0	0	0	0	0	0
4/24/2024	4:15 PM	0	0	0	0	0	0	0	0	0	0	0	0	0
4/24/2024	4:30 PM	0	0	0	0	0	0	0	0	0	0	0	0	0
4/24/2024	4:45 PM	0	0	0	0	0	0	0	0	0	0	0	0	0
4/24/2024	5:00 PM	0	0	0	0	0	0	0	0	0	0	0	0	0
4/24/2024	5:15 PM	0	0	0	0	0	0	0	0	0	0	0	0	0
4/24/2024	5:30 PM	0	0	0	0	0	0	0	0	0	0	0	0	0
4/24/2024	5:45 PM	0	0	0	0	0	0	0	0	0	0	0	0	0
4/24/2024	6:00 PM	0	0	0	0	0	0	0	0	0	0	0	0	0
4/24/2024	6:15 PM	0	0	0	0	0	0	0	0	0	0	0	0	0
4/24/2024	6:30 PM	0	0	0	0	0	0	0	0	0	0	0	0	0
4/24/2024	6:45 PM	0	0	0	0	0	0	0	0	0	0	0	0	0
4/24/2024	7:00 PM	0	0	0	0	0	0	0	0	0	0	0	0	0
4/24/2024	7:15 PM	0	0	0	0	0	0	0	0	0	0	0	0	0
4/24/2024	7:30 PM	0	0	0	0	0	0	0	0	0	0	0	0	0
4/24/2024	7:45 PM	0	0	0	0	0	0	0	0	0	0	0	0	0
4/24/2024	8:00 PM	0	0	0	0	0	0	0	0	0	0	0	0	0
4/24/2024	8:15 PM	0	0	0	0	0	0	0	0	0	0	0	0	0
4/24/2024	8:30 PM	0	0	0	0	0	0	0	0	0	0	0	0	0
4/24/2024	8:45 PM	0	0	0	0	0	0	0	0	0	0	0	0	0
4/24/2024	9:00 PM	0	0	0	0	0	0	0	0	0	0	0	0	0
4/24/2024	9:15 PM	0	0	0	0	0	0	0	0	0	0	0	0	0
4/24/2024	9:30 PM	0	0	0	0	0	0	0	0	0	0	0	0	0
4/24/2024	9:45 PM	0	0	0	0	0	0	0	0	0	0	0	0	0
4/24/2024	10:00 PM	0	0	0	0	0	0	0	0	0	0	0	0	0
4/24/2024	10:15 PM	0	0	0	0	0	0	0	0	0	0	0	0	0
4/24/2024	10:30 PM	0	0	0	0	0	0	0	0	0	0	0	0	0
4/24/2024	10:45 PM	0	0	0	0	0	0	0	0	0	0	0	0	0
4/24/2024	11:00 PM	0	0	0	0	0	0	0	0	0	0	0	0	0
4/24/2024	11:15 PM	0	0	0	0	0	0	0	0	0	0	0	0	0
4/24/2024	11:30 PM	0	0	0	0	0	0	0	0	0	0	0	0	0
4/24/2024	11:45 PM	0	0	0	0	0	0	0	0	0	0	0	0	0

4/25/2024	12:00 AM	0	0	0	0	0	0	0	0	0	0	0	0	0
4/25/2024	12:15 AM	0	0	0	0	0	0	0	0	0	0	0	0	0
4/25/2024	12:30 AM	0	0	0	0	0	0	0	0	0	0	0	0	0
4/25/2024	12:45 AM	0	0	0	0	0	0	0	0	0	0	0	0	0
4/25/2024	1:00 AM	0	0	0	0	0	0	0	0	0	0	0	0	0
4/25/2024	1:15 AM	0	0	0	0	0	0	0	0	0	0	0	0	0
4/25/2024	1:30 AM	0	0	0	0	0	0	0	0	0	0	0	0	0
4/25/2024	1:45 AM	0	0	0	0	0	0	0	0	0	0	0	0	0
4/25/2024	2:00 AM	0	0	0	0	0	0	0	0	0	0	0	0	0
4/25/2024	2:15 AM	0	0	0	0	0	0	0	0	0	0	0	0	0
4/25/2024	2:30 AM	0	0	0	0	0	0	0	0	0	0	0	0	0
4/25/2024	2:45 AM	0	0	0	0	0	0	0	0	0	0	0	0	0
4/25/2024	3:00 AM	0	0	0	0	0	0	0	0	0	0	0	0	0
4/25/2024	3:15 AM	0	0	0	0	0	0	0	0	0	0	0	0	0
4/25/2024	3:30 AM	0	0	0	0	0	0	0	0	0	0	0	0	0
4/25/2024	3:45 AM	0	0	0	0	0	0	0	0	0	0	0	0	0
4/25/2024	4:00 AM	0	0	0	0	0	0	0	0	0	0	0	0	0
4/25/2024	4:15 AM	0	0	0	0	0	0	0	0	0	0	0	0	0
4/25/2024	4:30 AM	0	0	0	0	0	0	0	0	0	0	0	0	0
4/25/2024	4:45 AM	0	0	0	0	0	0	0	0	0	0	0	0	0
4/25/2024	5:00 AM	0	0	0	0	0	0	0	0	0	0	0	0	0
4/25/2024	5:15 AM	0	0	0	0	0	0	0	0	0	0	0	0	0
4/25/2024	5:30 AM	0	0	0	0	0	0	0	0	0	0	0	0	0
4/25/2024	5:45 AM	0	0	0	0	0	0	0	0	0	0	0	0	0
4/25/2024	6:00 AM	0	0	0	0	0	0	0	0	0	0	0	0	0
4/25/2024	6:15 AM	0	0	0	0	0	0	0	0	0	0	0	0	0
4/25/2024	6:30 AM	0	0	0	0	0	0	0	0	0	0	0	0	0
4/25/2024	6:45 AM	0	0	0	0	0	0	0	0	0	0	0	0	0
4/25/2024	7:00 AM	0	0	0	0	0	0	0	0	0	0	0	0	0
4/25/2024	7:15 AM	0	0	0	0	0	0	0	0	0	0	0	0	0
4/25/2024	7:30 AM	0	0	0	0	0	0	0	0	0	0	0	0	0
4/25/2024	7:45 AM	0	0	0	0	0	0	0	0	0	0	0	0	0
4/25/2024	8:00 AM	0	0	0	0	0	0	0	0	0	0	0	0	0
4/25/2024	8:15 AM	0	0	0	0	0	0	0	0	0	0	0	0	0
4/25/2024	8:30 AM	0	0	0	0	0	0	0	0	0	0	0	0	0
4/25/2024	8:45 AM	0	0	0	0	0	0	0	0	0	0	0	0	0
4/25/2024	9:00 AM	0	0	0	0	0	0	0	0	0	0	0	0	0
4/25/2024	9:15 AM	0	0	0	0	0	0	0	0	0	0	0	0	0
4/25/2024	9:30 AM	0	0	0	0	0	0	0	0	0	0	0	0	0
4/25/2024	9:45 AM	0	0	0	0	0	0	0	0	0	0	0	0	0
4/25/2024	10:00 AM	0	0	0	0	0	0	0	0	0	0	0	0	0
4/25/2024	10:15 AM	0	0	0	0	0	0	0	0	0	0	0	0	0
4/25/2024	10:30 AM	0	0	0	0	0	0	0	0	0	0	0	0	0
4/25/2024	10:45 AM	0	0	0	0	0	0	0	0	0	0	0	0	0
4/25/2024	11:00 AM	0	0	0	0	0	0	0	0	0	0	0	0	0
4/25/2024	11:15 AM	0	0	0	0	0	0	0	0	0	0	0	0	0
4/25/2024	11:30 AM	0	0	0	0	0	0	0	0	0	0	0	0	0
4/25/2024	11:45 AM	0	0	0	0	0	0	0	0	0	0	0	0	0
4/25/2024	12:00 PM	0	0	0	0	0	0	0	0	0	0	0	0	0
4/25/2024	12:15 PM	0	0	0	0	0	0	0	0	0	0	0	0	0
4/25/2024	12:30 PM	0	0	0	0	0	0	0	0	0	0	0	0	0
4/25/2024	12:45 PM	0	0	0	0	0	0	0	0	0	0	0	0	0
4/25/2024	1:00 PM	0	0	0	0	0	0	0	0	0	0	0	0	0
4/25/2024	1:15 PM	0	0	0	0	0	0	0	0	0	0	0	0	0
4/25/2024	1:30 PM	0	0	0	0	0	0	0	0	0	0	0	0	0
4/25/2024	1:45 PM	0	0	0	0	0	0	0	0	0	0	0	0	0
4/25/2024	2:00 PM	0	0	0	0	0	0	0	0	0	0	0	0	0
4/25/2024	2:15 PM	0	0	0	0	0	0	0	0	0	0	0	0	0
4/25/2024	2:30 PM	0	0	0	0	0	0	0	0	0	0	0	0	0
4/25/2024	2:45 PM	0	0	0	0	0	0	0	0	0	0	0	0	0
4/25/2024	3:00 PM	0	0	0	0	0	0	0	0	0	0	0	0	0
4/25/2024	3:15 PM	0	0	0	0	0	0	0	0	0	0	0	0	0
4/25/2024	3:30 PM	0	0	0	0	0	0	0	0	0	0	0	0	0
4/25/2024	3:45 PM	0	0	0	0	0	0	0	0	0	0	0	0	0
4/25/2024	4:00 PM	0	0	0	0	0	0	0	0	0	0	0	0	0
4/25/2024	4:15 PM	0	0	0	0	0	0	0	0	0	0	0	0	0
4/25/2024	4:30 PM	0	0	0	0	0	0	0	0	0	0	0	0	0
4/25/2024	4:45 PM	0	0	0	0	0	0	0	0	0	0	0	0	0
4/25/2024	5:00 PM	0	0	0	0	0	0	0	0	0	0	0	0	0
4/25/2024	5:15 PM	0	0	0	0	0	0	0	0	0	0	0	0	0
4/25/2024	5:30 PM	0	0	0	0	0	0	0	0	0	0	0	0	0
4/25/2024	5:45 PM	0	0	0	0	0	0	0	0	0	0	0	0	0
4/25/2024	6:00 PM	0	0	0	0	0	0	0	0	0	0	0	0	0
4/25/2024	6:15 PM	0	0	0	0	0	0	0	0	0	0	0	0	0
4/25/2024	6:30 PM	0	0	0	0	0	0	0	0	0	0	0	0	0
4/25/2024	6:45 PM	0	0	0	0	0	0	0	0	0	0	0	0	0
4/25/2024	7:00 PM	0	0	0	0	0	0	0	0	0	0	0	0	0
4/25/2024	7:15 PM	0	0	0	0	0	0	0	0	0	0	0	0	0
4/25/2024	7:30 PM	0	0	0	0	0	0	0	0	0	0	0	0	0
4/25/2024	7:45 PM	0	0	0	0	0	0	0	0	0	0	0	0	0
4/25/2024	8:00 PM	0	0	0	0	0	0	0	0	0	0	0	0	0
4/25/2024	8:15 PM	0	0	0	0	0	0	0	0	0	0	0	0	0
4/25/2024	8:30 PM	0	0	0	0	0	0	0	0	0	0	0	0	0
4/25/2024	8:45 PM	0	0	0	0	0	0	0	0	0	0	0	0	0
4/25/2024	9:00 PM	0	0	0	0	0	0	0	0	0	0	0	0	0
4/25/2024	9:15 PM	0	0	0	0	0	0	0	0	0	0	0	0	0
4/25/2024	9:30 PM	0	0	0	0	0	0	0	0	0	0	0	0	0
4/25/2024	9:45 PM	0	0	0	0	0	0	0	0	0	0	0	0	0
4/25/2024	10:00 PM	0	0	0	0	0	0	0	0	0	0	0	0	0
4/25/2024	10:15 PM	0	0	0	0	0	0	0	0	0	0	0	0	0
4/25/2024	10:30 PM	0	0	0	0	0	0	0	0	0	0	0	0	0
4/25/2024	10:45 PM	0	0	0	0	0	0	0	0	0	0	0	0	0
4/25/2024	11:00 PM	0	0	0	0	0	0	0	0	0	0	0	0	0
4/25/2024	11:15 PM	0	0	0	0	0	0	0	0	0	0	0	0	0
4/25/2024	11:30 PM	0	0	0	0	0	0	0	0	0	0	0	0	0
4/25/2024	11:45 PM	0	0	0	0	0	0	0	0	0	0	0	0	0

4/26/2024	12:00 AM	0	0	0	0	0	0	0	0	0	0	0	0	0
4/26/2024	12:15 AM	0	0	0	0	0	0	0	0	0	0	0	0	0
4/26/2024	12:30 AM	0	0	0	0	0	0	0	0	0	0	0	0	0
4/26/2024	12:45 AM	0	0	0	0	0	0	0	0	0	0	0	0	0
4/26/2024	1:00 AM	0	0	0	0	0	0	0	0	0	0	0	0	0
4/26/2024	1:15 AM	0	0	0	0	0	0	0	0	0	0	0	0	0
4/26/2024	1:30 AM	0	0	0	0	0	0	0	0	0	0	0	0	0
4/26/2024	1:45 AM	0	0	0	0	0	0	0	0	0	0	0	0	0
4/26/2024	2:00 AM	0	0	0	0	0	0	0	0	0	0	0	0	0
4/26/2024	2:15 AM	0	0	0	0	0	0	0	0	0	0	0	0	0
4/26/2024	2:30 AM	0	0	0	0	0	0	0	0	0	0	0	0	0
4/26/2024	2:45 AM	0	0	0	0	0	0	0	0	0	0	0	0	0
4/26/2024	3:00 AM	0	0	0	0	0	0	0	0	0	0	0	0	0
4/26/2024	3:15 AM	0	0	0	0	0	0	0	0	0	0	0	0	0
4/26/2024	3:30 AM	0	0	0	0	0	0	0	0	0	0	0	0	0
4/26/2024	3:45 AM	0	0	0	0	0	0	0	0	0	0	0	0	0
4/26/2024	4:00 AM	0	0	0	0	0	0	0	0	0	0	0	0	0
4/26/2024	4:15 AM	0	0	0	0	0	0	0	0	0	0	0	0	0
4/26/2024	4:30 AM	0	0	0	0	0	0	0	0	0	0	0	0	0
4/26/2024	4:45 AM	0	0	0	0	0	0	0	0	0	0	0	0	0
4/26/2024	5:00 AM	0	0	0	0	0	0	0	0	0	0	0	0	0
4/26/2024	5:15 AM	0	0	0	0	0	0	0	0	0	0	0	0	0
4/26/2024	5:30 AM	0	0	0	0	0	0	0	0	0	0	0	0	0
4/26/2024	5:45 AM	0	0	0	0	0	0	0	0	0	0	0	0	0
4/26/2024	6:00 AM	0	0	0	0	0	0	0	0	0	0	0	0	0
4/26/2024	6:15 AM	0	0	0	0	0	0	0	0	0	0	0	0	0
4/26/2024	6:30 AM	0	0	0	0	0	0	0	0	0	0	0	0	0
4/26/2024	6:45 AM	0	0	0	0	0	0	0	0	0	0	0	0	0
4/26/2024	7:00 AM	0	0	0	0	0	0	0	0	0	0	0	0	0
4/26/2024	7:15 AM	0	0	0	0	0	0	0	0	0	0	0	0	0
4/26/2024	7:30 AM	0	0	0	0	0	0	0	0	0	0	0	0	0
4/26/2024	7:45 AM	0	0	0	0	0	0	0	0	0	0	0	0	0
4/26/2024	8:00 AM	0	0	0	0	0	0	0	0	0	0	0	0	0
4/26/2024	8:15 AM	0	0	0	0	0	0	0	0	0	0	0	0	0
4/26/2024	8:30 AM	0	0	0	0	0	0	0	0	0	0	0	0	0
4/26/2024	8:45 AM	0	0	0	0	0	0	0	0	0	0	0	0	0
4/26/2024	9:00 AM	0	0	0	0	0	0	0	0	0	0	0	0	0
4/26/2024	9:15 AM	0	0	0	0	0	0	0	0	0	0	0	0	0
4/26/2024	9:30 AM	0	0	0	0	0	0	0	0	0	0	0	0	0
4/26/2024	9:45 AM	0	0	0	0	0	0	0	0	0	0	0	0	0
4/26/2024	10:00 AM	0	0	0	0	0	0	0	0	0	0	0	0	0
4/26/2024	10:15 AM	0	0	0	0	0	0	0	0	0	0	0	0	0
4/26/2024	10:30 AM	0	0	0	0	0	0	0	0	0	0	0	0	0
4/26/2024	10:45 AM	0	0	0	0	0	0	0	0	0	0	0	0	0
4/26/2024	11:00 AM	0	0	0	0	0	0	0	0	0	0	0	0	0
4/26/2024	11:15 AM	0	0	0	0	0	0	0	0	0	0	0	0	0
4/26/2024	11:30 AM	0	0	0	0	0	0	0	0	0	0	0	0	0
4/26/2024	11:45 AM	0	0	0	0	0	0	0	0	0	0	0	0	0
4/26/2024	12:00 PM	0	0	0	0	0	0	0	0	0	0	0	0	0
4/26/2024	12:15 PM	0	0	0	0	0	0	0	0	0	0	0	0	0
4/26/2024	12:30 PM	0	0	0	0	0	0	0	0	0	0	0	0	0
4/26/2024	12:45 PM	0	0	0	0	0	0	0	0	0	0	0	0	0
4/26/2024	1:00 PM	0	0	0	0	0	0	0	0	0	0	0	0	0
4/26/2024	1:15 PM	0	0	0	0	0	0	0	0	0	0	0	0	0
4/26/2024	1:30 PM	0	0	0	0	0	0	0	0	0	0	0	0	0
4/26/2024	1:45 PM	0	0	0	0	0	0	0	0	0	0	0	0	0
4/26/2024	2:00 PM	0	0	0	0	0	0	0	0	0	0	0	0	0
4/26/2024	2:15 PM	0	0	0	0	0	0	0	0	0	0	0	0	0
4/26/2024	2:30 PM	0	0	0	0	0	0	0	0	0	0	0	0	0
4/26/2024	2:45 PM	0	0	0	0	0	0	0	0	0	0	0	0	0
4/26/2024	3:00 PM	0	0	0	0	0	0	0	0	0	0	0	0	0
4/26/2024	3:15 PM	0	0	0	0	0	0	0	0	0	0	0	0	0
4/26/2024	3:30 PM	0	0	0	0	0	0	0	0	0	0	0	0	0
4/26/2024	3:45 PM	0	0	0	0	0	0	0	0	0	0	0	0	0
4/26/2024	4:00 PM	0	0	0	0	0	0	0	0	0	0	0	0	0
4/26/2024	4:15 PM	0	0	0	0	0	0	0	0	0	0	0	0	0
4/26/2024	4:30 PM	0	0	0	0	0	0	0	0	0	0	0	0	0
4/26/2024	4:45 PM	0	0	0	0	0	0	0	0	0	0	0	0	0
4/26/2024	5:00 PM	0	0	0	0	0	0	0	0	0	0	0	0	0
4/26/2024	5:15 PM	0	0	0	0	0	0	0	0	0	0	0	0	0
4/26/2024	5:30 PM	0	0	0	0	0	0	0	0	0	0	0	0	0
4/26/2024	5:45 PM	0	0	0	0	0	0	0	0	0	0	0	0	0
4/26/2024	6:00 PM	0	0	0	0	0	0	0	0	0	0	0	0	0
4/26/2024	6:15 PM	0	0	0	0	0	0	0	0	0	0	0	0	0
4/26/2024	6:30 PM	0	0	0	0	0	0	0	0	0	0	0	0	0
4/26/2024	6:45 PM	0	0	0	0	0	0	0	0	0	0	0	0	0
4/26/2024	7:00 PM	0	0	0	0	0	0	0	0	0	0	0	0	0
4/26/2024	7:15 PM	0	0	0	0	0	0	0	0	0	0	0	0	0
4/26/2024	7:30 PM	0	0	0	0	0	0	0	0	0	0	0	0	0
4/26/2024	7:45 PM	0	0	0	0	0	0	0	0	0	0	0	0	0
4/26/2024	8:00 PM	0	0	0	0	0	0	0	0	0	0	0	0	0
4/26/2024	8:15 PM	0	0	0	0	0	0	0	0	0	0	0	0	0
4/26/2024	8:30 PM	0	0	0	0	0	0	0	0	0	0	0	0	0
4/26/2024	8:45 PM	0	0	0	0	0	0	0	0	0	0	0	0	0
4/26/2024	9:00 PM	0	0	0	0	0	0	0	0	0	0	0	0	0
4/26/2024	9:15 PM	0	0	0	0	0	0	0	0	0	0	0	0	0
4/26/2024	9:30 PM	0	0	0	0	0	0	0	0	0	0	0	0	0
4/26/2024	9:45 PM	0	0	0	0	0	0	0	0	0	0	0	0	0
4/26/2024	10:00 PM	0	0	0	0	0	0	0	0	0	0	0	0	0
4/26/2024	10:15 PM	0	0	0	0	0	0	0	0	0	0	0	0	0
4/26/2024	10:30 PM	0	0	0	0	0	0	0	0	0	0	0	0	0
4/26/2024	10:45 PM	0	0	0	0	0	0	0	0	0	0	0	0	0
4/26/2024	11:00 PM	0	0	0	0	0	0	0	0	0	0	0	0	0
4/26/2024	11:15 PM	0	0	0	0	0	0	0	0	0	0	0	0	0
4/26/2024	11:30 PM	0	0	0	0	0	0	0	0	0	0	0	0	0
4/26/2024	11:45 PM	0	0	0	0	0	0	0	0	0	0	0	0	0

4/27/2024	12:00 AM	0	0	0	0	0	0	0	0	0	0	0	0	0
4/27/2024	12:15 AM	0	0	0	0	0	0	0	0	0	0	0	0	0
4/27/2024	12:30 AM	0	0	0	0	0	0	0	0	0	0	0	0	0
4/27/2024	12:45 AM	0	0	0	0	0	0	0	0	0	0	0	0	0
4/27/2024	1:00 AM	0	0	0	0	0	0	0	0	0	0	0	0	0
4/27/2024	1:15 AM	0	0	0	0	0	0	0	0	0	0	0	0	0
4/27/2024	1:30 AM	0	0	0	0	0	0	0	0	0	0	0	0	0
4/27/2024	1:45 AM	0	0	0	0	0	0	0	0	0	0	0	0	0
4/27/2024	2:00 AM	0	0	0	0	0	0	0	0	0	0	0	0	0
4/27/2024	2:15 AM	0	0	0	0	0	0	0	0	0	0	0	0	0
4/27/2024	2:30 AM	0	0	0	0	0	0	0	0	0	0	0	0	0
4/27/2024	2:45 AM	0	0	0	0	0	0	0	0	0	0	0	0	0
4/27/2024	3:00 AM	0	0	0	0	0	0	0	0	0	0	0	0	0
4/27/2024	3:15 AM	0	0	0	0	0	0	0	0	0	0	0	0	0
4/27/2024	3:30 AM	0	0	0	0	0	0	0	0	0	0	0	0	0
4/27/2024	3:45 AM	0	0	0	0	0	0	0	0	0	0	0	0	0
4/27/2024	4:00 AM	0	0	0	0	0	0	0	0	0	0	0	0	0
4/27/2024	4:15 AM	0	0	0	0	0	0	0	0	0	0	0	0	0
4/27/2024	4:30 AM	0	0	0	0	0	0	0	0	0	0	0	0	0
4/27/2024	4:45 AM	0	0	0	0	0	0	0	0	0	0	0	0	0
4/27/2024	5:00 AM	0	0	0	0	0	0	0	0	0	0	0	0	0
4/27/2024	5:15 AM	0	0	0	0	0	0	0	0	0	0	0	0	0
4/27/2024	5:30 AM	0	0	0	0	0	0	0	0	0	0	0	0	0
4/27/2024	5:45 AM	0	0	0	0	0	0	0	0	0	0	0	0	0
4/27/2024	6:00 AM	0	0	0	0	0	0	0	0	0	0	0	0	0
4/27/2024	6:15 AM	0	0	0	0	0	0	0	0	0	0	0	0	0
4/27/2024	6:30 AM	0	0	0	0	0	0	0	0	0	0	0	0	0
4/27/2024	6:45 AM	0	0	0	0	0	0	0	0	0	0	0	0	0
4/27/2024	7:00 AM	0	0	0	0	0	0	0	0	0	0	0	0	0
4/27/2024	7:15 AM	0	0	0	0	0	0	0	0	0	0	0	0	0
4/27/2024	7:30 AM	0	0	0	0	0	0	0	0	0	0	0	0	0
4/27/2024	7:45 AM	0	0	0	0	0	0	0	0	0	0	0	0	0
4/27/2024	8:00 AM	0	0	0	0	0	0	0	0	0	0	0	0	0
4/27/2024	8:15 AM	0	0	0	0	0	0	0	0	0	0	0	0	0
4/27/2024	8:30 AM	0	0	0	0	0	0	0	0	0	0	0	0	0
4/27/2024	8:45 AM	0	0	0	0	0	0	0	0	0	0	0	0	0
4/27/2024	9:00 AM	0	0	0	0	0	0	0	0	0	0	0	0	0
4/27/2024	9:15 AM	0	0	0	0	0	0	0	0	0	0	0	0	0
4/27/2024	9:30 AM	0	0	0	0	0	0	0	0	0	0	0	0	0
4/27/2024	9:45 AM	0	0	0	0	0	0	0	0	0	0	0	0	0
4/27/2024	10:00 AM	0	0	0	0	0	0	0	0	0	0	0	0	0
4/27/2024	10:15 AM	0	0	0	0	0	0	0	0	0	0	0	0	0
4/27/2024	10:30 AM	0	0	0	0	0	0	0	0	0	0	0	0	0
4/27/2024	10:45 AM	0	0	0	0	0	0	0	0	0	0	0	0	0
4/27/2024	11:00 AM	0	0	0	0	0	0	0	0	0	0	0	0	0
4/27/2024	11:15 AM	0	0	0	0	0	0	0	0	0	0	0	0	0
4/27/2024	11:30 AM	0	0	0	0	0	0	0	0	0	0	0	0	0
4/27/2024	11:45 AM	0	0	0	0	0	0	0	0	0	0	0	0	0
4/27/2024	12:00 PM	0	0	0	0	0	0	0	0	0	0	0	0	0
4/27/2024	12:15 PM	0	0	0	0	0	0	0	0	0	0	0	0	0
4/27/2024	12:30 PM	0	0	0	0	0	0	0	0	0	0	0	0	0
4/27/2024	12:45 PM	0	0	0	0	0	0	0	0	0	0	0	0	0
4/27/2024	1:00 PM	0	0	0	0	0	0	0	0	0	0	0	0	0
4/27/2024	1:15 PM	0	0	0	0	0	0	0	0	0	0	0	0	0
4/27/2024	1:30 PM	0	0	0	0	0	0	0	0	0	0	0	0	0
4/27/2024	1:45 PM	0	0	0	0	0	0	0	0	0	0	0	0	0
4/27/2024	2:00 PM	0	0	0	0	0	0	0	0	0	0	0	0	0
4/27/2024	2:15 PM	0	0	0	0	0	0	0	0	0	0	0	0	0
4/27/2024	2:30 PM	0	0	0	0	0	0	0	0	0	0	0	0	0
4/27/2024	2:45 PM	0	0	0	0	0	0	0	0	0	0	0	0	0
4/27/2024	3:00 PM	0	0	0	0	0	0	0	0	0	0	0	0	0
4/27/2024	3:15 PM	0	0	0	0	0	0	0	0	0	0	0	0	0
4/27/2024	3:30 PM	0	0	0	0	0	0	0	0	0	0	0	0	0
4/27/2024	3:45 PM	0	0	0	0	0	0	0	0	0	0	0	0	0
4/27/2024	4:00 PM	0	0	0	0	0	0	0	0	0	0	0	0	0
4/27/2024	4:15 PM	0	0	0	0	0	0	0	0	0	0	0	0	0
4/27/2024	4:30 PM	0	0	0	0	0	0	0	0	0	0	0	0	0
4/27/2024	4:45 PM	0	0	0	0	0	0	0	0	0	0	0	0	0
4/27/2024	5:00 PM	0	0	0	0	0	0	0	0	0	0	0	0	0
4/27/2024	5:15 PM	0	0	0	0	0	0	0	0	0	0	0	0	0
4/27/2024	5:30 PM	0	0	0	0	0	0	0	0	0	0	0	0	0
4/27/2024	5:45 PM	0	0	0	0	0	0	0	0	0	0	0	0	0
4/27/2024	6:00 PM	0	0	0	0	0	0	0	0	0	0	0	0	0
4/27/2024	6:15 PM	0	0	0	0	0	0	0	0	0	0	0	0	0
4/27/2024	6:30 PM	0	0	0	0	0	0	0	0	0	0	0	0	0
4/27/2024	6:45 PM	0	0	0	0	0	0	0	0	0	0	0	0	0
4/27/2024	7:00 PM	0	0	0	0	0	0	0	0	0	0	0	0	0
4/27/2024	7:15 PM	0	0	0	0	0	0	0	0	0	0	0	0	0
4/27/2024	7:30 PM	0	0	0	0	0	0	0	0	0	0	0	0	0
4/27/2024	7:45 PM	0	0	0	0	0	0	0	0	0	0	0	0	0
4/27/2024	8:00 PM	0	0	0	0	0	0	0	0	0	0	0	0	0
4/27/2024	8:15 PM	0	0	0	0	0	0	0	0	0	0	0	0	0
4/27/2024	8:30 PM	0	0	0	0	0	0	0	0	0	0	0	0	0
4/27/2024	8:45 PM	0	0	0	0	0	0	0	0	0	0	0	0	0
4/27/2024	9:00 PM	0	0	0	0	0	0	0	0	0	0	0	0	0
4/27/2024	9:15 PM	0	0	0	0	0	0	0	0	0	0	0	0	0
4/27/2024	9:30 PM	0	0	0	0	0	0	0	0	0	0	0	0	0
4/27/2024	9:45 PM	0	0	0	0	0	0	0	0	0	0	0	0	0
4/27/2024	10:00 PM	0	0	0	0	0	0	0	0	0	0	0	0	0
4/27/2024	10:15 PM	0	0	0	0	0	0	0	0	0	0	0	0	0
4/27/2024	10:30 PM	0	0	0	0	0	0	0	0	0	0	0	0	0
4/27/2024	10:45 PM	0	0	0	0	0	0	0	0	0	0	0	0	0
4/27/2024	11:00 PM	0	0	0	0	0	0	0	0	0	0	0	0	0
4/27/2024	11:15 PM	0	0	0	0	0	0	0	0	0	0	0	0	0
4/27/2024	11:30 PM	0	0	0	0	0	0	0	0	0	0	0	0	0
4/27/2024	11:45 PM	0	0	0	0	0	0	0	0	0	0	0	0	0

Bi-Directional Class Count || SB WB 15min

Columbia, SC

Marr Traffic DATA COLLECTION
www.marrtraffic.com

Site 12
I-26 S/Bound Off-Ramp,
north of I-20

Date
Sunday, April 21, 2024

Lat/Long
34.038500°, -81.109979°

Weather
Cloudy
66°F

Click here for Detailed Weather

Click here for Map

0000 - 2400 (Sunday 24h Session) (04-21-2024)
SB WB 15min

	Southbound (Movement 12.1)													15min	60min
Time	1	2	3	4	5	6	7	8	9	10	11	12	13	Total	Total
0000 - 0015	0	53	8	0	0	0	0	0	0	0	0	0	0	**61**	
0015 - 0030	0	31	5	0	0	0	0	1	1	0	0	0	0	**38**	
0030 - 0045	0	27	5	1	1	0	0	0	2	0	0	0	0	**36**	
0045 - 0100	0	32	2	0	0	0	0	0	1	0	0	0	0	**35**	**170**
0100 - 0115	0	23	2	0	0	0	0	0	0	0	0	0	0	**25**	
0115 - 0130	0	28	4	0	1	0	0	0	1	0	0	0	0	**34**	
0130 - 0145	0	11	4	0	0	0	0	0	0	0	0	0	0	**15**	
0145 - 0200	0	22	6	0	0	0	0	0	1	0	0	0	0	**29**	**103**
0200 - 0215	0	22	2	0	0	0	0	0	0	0	0	0	0	**24**	
0215 - 0230	0	16	1	0	0	0	0	0	0	0	0	0	0	**17**	
0230 - 0245	0	19	1	0	1	0	0	0	0	0	0	0	0	**21**	
0245 - 0300	0	11	0	0	1	0	0	0	1	0	0	0	0	**13**	**75**
0300 - 0315	0	10	0	0	0	0	0	0	0	0	0	0	0	**10**	
0315 - 0330	0	9	0	0	0	0	0	0	0	0	0	0	0	**9**	
0330 - 0345	0	12	3	0	0	0	0	0	0	0	0	0	0	**15**	
0345 - 0400	0	5	1	0	0	0	0	0	1	0	0	0	0	**7**	**41**
0400 - 0415	1	5	1	0	1	0	0	0	0	0	0	0	0	**8**	
0415 - 0430	0	7	1	0	0	1	0	0	1	0	0	0	0	**10**	
0430 - 0445	0	7	1	0	1	0	0	0	0	0	0	1	0	**10**	
0445 - 0500	0	13	1	0	0	0	0	0	0	0	0	0	0	**14**	**42**
0500 - 0515	0	5	1	0	0	0	0	0	0	0	0	0	0	**6**	
0515 - 0530	0	6	1	0	0	0	0	0	0	0	0	0	0	**7**	
0530 - 0545	0	4	5	0	0	0	0	0	0	0	0	0	0	**9**	
0545 - 0600	0	11	4	0	0	0	0	0	2	0	0	0	0	**17**	**39**
0600 - 0615	0	14	1	0	0	0	0	0	0	0	0	0	0	**15**	
0615 - 0630	0	19	1	0	0	0	0	0	0	0	0	0	0	**20**	
0630 - 0645	1	17	2	0	0	0	0	0	1	0	0	0	0	**21**	
0645 - 0700	0	13	6	0	0	0	0	0	0	0	0	0	0	**19**	**75**
0700 - 0715	0	25	0	0	0	0	0	0	1	0	0	0	0	**26**	
0715 - 0730	0	35	6	0	0	0	0	0	1	0	0	0	0	**42**	
0730 - 0745	0	40	4	0	0	0	0	0	2	0	0	0	0	**46**	
0745 - 0800	0	41	4	0	1	0	0	0	1	0	1	0	0	**48**	**162**
0800 - 0815	0	23	3	0	0	0	0	0	1	0	0	0	0	**27**	
0815 - 0830	0	36	7	0	2	0	0	0	2	0	0	0	0	**47**	
0830 - 0845	0	37	9	0	0	0	0	0	0	0	0	0	0	**46**	
0845 - 0900	0	44	7	0	0	0	0	0	0	0	0	0	0	**51**	**171**
0900 - 0915	0	42	7	0	1	0	0	0	0	0	0	1	0	**51**	
0915 - 0930	0	62	7	0	0	0	0	0	2	0	0	0	0	**71**	
0930 - 0945	0	70	7	0	1	0	0	0	0	0	0	0	0	**78**	
0945 - 1000	0	77	11	1	1	0	0	0	1	0	0	0	0	**91**	**291**
1000 - 1015	0	79	11	0	1	0	0	0	0	0	0	0	0	**91**	
1015 - 1030	0	73	13	0	0	0	0	0	2	0	0	0	0	**88**	
1030 - 1045	0	86	11	0	0	0	0	0	2	0	0	0	0	**99**	
1045 - 1100	0	83	11	0	0	0	0	0	0	0	0	0	0	**94**	**372**
1100 - 1115	0	85	18	0	0	0	0	0	1	0	0	0	0	**104**	
1115 - 1130	0	84	14	0	0	0	0	0	3	0	0	0	0	**101**	
1130 - 1145	0	104	16	0	0	1	0	1	1	0	0	1	0	**124**	
1145 - 1200	0	127	29	0	1	0	0	0	4	0	0	0	0	**161**	**490**
1200 - 1215	0	114	11	0	1	0	0	0	1	0	0	0	0	**127**	
1215 - 1230	0	88	13	0	0	0	0	1	1	0	0	0	0	**103**	
1230 - 1245	0	113	18	0	1	0	0	0	1	0	0	0	0	**133**	
1245 - 1300	0	119	20	0	0	0	0	0	3	0	0	0	0	**142**	**505**
1300 - 1315	0	116	11	0	0	0	0	0	3	0	0	0	0	**130**	
1315 - 1330	0	88	19	0	1	0	0	0	0	0	0	0	0	**108**	
1330 - 1345	0	96	25	0	0	0	0	0	3	0	0	0	0	**124**	
1345 - 1400	0	109	19	0	0	0	0	0	1	0	0	0	0	**129**	**491**
1400 - 1415	0	121	16	0	2	0	0	0	0	0	0	0	0	**139**	
1415 - 1430	0	124	17	0	0	0	0	0	2	0	0	0	0	**143**	
1430 - 1445	1	96	17	0	1	0	0	0	0	0	0	0	0	**115**	
1445 - 1500	0	102	13	0	1	0	0	0	0	0	0	0	0	**116**	**513**
1500 - 1515	0	97	16	1	1	0	0	0	1	0	0	0	0	**116**	
1515 - 1530	0	70	18	0	0	0	0	0	0	0	0	0	0	**88**	
1530 - 1545	0	83	16	0	0	0	0	1	0	0	0	0	0	**100**	
1545 - 1600	0	101	16	0	0	0	0	0	0	0	0	0	0	**117**	**421**
1600 - 1615	0	73	13	0	0	0	0	0	0	0	0	0	0	**86**	
1615 - 1630	0	96	12	0	0	0	0	0	0	0	0	0	0	**108**	
1630 - 1645	0	87	8	0	1	0	0	0	1	1	0	0	0	**98**	
1645 - 1700	0	74	13	0	0	0	0	0	1	0	0	0	0	**88**	**380**
1700 - 1715	0	63	11	0	0	0	0	0	1	0	0	0	0	**75**	
1715 - 1730	0	83	9	0	0	0	0	0	1	0	0	0	0	**93**	
1730 - 1745	0	84	11	0	1	0	0	0	3	0	0	0	0	**99**	
1745 - 1800	0	75	9	0	0	0	0	0	2	0	0	0	0	**86**	**353**
1800 - 1815	0	86	9	0	0	0	0	0	1	0	0	0	0	**96**	
1815 - 1830	0	90	16	0	0	0	0	0	1	0	0	0	0	**107**	
1830 - 1845	0	67	8	0	0	0	0	0	1	0	0	0	0	**76**	
1845 - 1900	0	68	8	0	0	0	0	0	1	0	0	0	0	**77**	**356**
1900 - 1915	0	72	8	0	0	0	0	0	2	0	0	0	0	**82**	
1915 - 1930	0	67	15	0	2	1	0	0	1	0	0	0	0	**86**	
1930 - 1945	0	102	11	0	1	0	0	0	2	0	0	0	0	**116**	
1945 - 2000	0	52	13	0	0	0	0	1	2	0	0	0	0	**68**	**352**
2000 - 2015	0	53	7	0	1	0	0	0	1	0	0	0	0	**62**	
2015 - 2030	0	42	12	0	0	0	0	0	1	0	0	0	0	**55**	
2030 - 2045	0	52	8	0	0	0	0	0	2	0	0	0	0	**62**	
2045 - 2100	0	47	5	0	0	0	0	0	2	0	0	0	0	**54**	**233**
2100 - 2115	0	40	5	0	0	0	0	0	2	0	0	0	0	**47**	
2115 - 2130	0	34	3	0	0	0	0	0	1	0	0	0	0	**38**	
2130 - 2145	0	27	6	0	0	0	0	0	0	0	0	0	0	**33**	
2145 - 2200	0	32	6	0	0	0	0	1	1	0	0	0	0	**40**	**158**
2200 - 2215	0	22	3	0	0	0	0	0	4	0	0	0	0	**29**	
2215 - 2230	0	20	2	0	1	0	0	0	3	0	0	0	0	**26**	
2230 - 2245	0	18	3	0	0	0	0	0	3	0	0	0	0	**24**	
2245 - 2300	0	15	2	0	0	0	0	0	1	0	0	0	0	**18**	**97**
2300 - 2315	0	14	2	0	1	0	0	0	0	0	0	0	0	**17**	
2315 - 2330	0	11	3	0	0	0	0	0	1	0	0	0	0	**15**	
2330 - 2345	0	23	3	0	0	0	0	0	0	0	0	0	0	**26**	
2345 - 0000	0	12	2	0	0	0	0	0	1	0	0	0	0	**15**	**73**

Session Total	3	5043	775	3	30	3	0	6	95	1	1	3	0	**5963**
Session Average	0.03	52.53	8.07	0.03	0.31	0.03	0.00	0.06	0.99	0.01	0.01	0.03	0.00	**62.11**
Session Percentage	0.05	84.57	13.00	0.05	0.50	0.05	0.00	0.10	1.59	0.02	0.02	0.05	0.00	

AM Peak Hour	0545 - 0645	0945 - 1045	0945 - 1045	0900 - 1000	0730 - 0830	-	-	-	0730 - 0830	-	0700 - 0800	0815 - 0915	-	**0945 - 1045**
AM Peak Volume	1	315	46	1	3	0	0	0	6	0	1	1	0	**369**

Noon Peak Hour	1345 - 1445	1330 - 1430	1315 - 1415	1415 - 1515	1400 - 1500	1045 - 1145	-	1130 - 1230	1100 - 1200	-	-	1045 - 1145	-	**1330 - 1430**
Noon Peak Volume	1	450	79	1	4	1	0	2	9	0	0	1	0	**535**

PM Peak Hour	-	1545 - 1645	1500 - 1600	1500 - 1600	1915 - 2015	1830 - 1930	-	1500 - 1600	1700 - 1800	1545 - 1645	-	-	-	**1500 - 1600**
PM Peak Volume	0	357	66	1	4	1	0	1	7	1	0	0	0	**421**

Site 12
I-26 S/Bound Off-Ramp,
north of I-20

Date
Monday, April 22, 2024

Lat/Long
34.038500°, -81.109979°

Weather
Mostly Cloudy
57°F

Click here for Detailed Weather

0000 - 2400 (Weekday 24h Session) (04-22-2024)
SB WB 15min

	Southbound (Movement 12.1)													15min	60min
Time	1	2	3	4	5	6	7	8	9	10	11	12	13	Total	Total
0000 - 0015	0	3	2	0	0	0	0	0	1	0	0	0	0	**6**	
0015 - 0030	0	11	1	0	1	0	0	0	2	0	0	0	0	**15**	
0030 - 0045	0	11	0	0	0	0	0	0	0	0	0	0	0	**11**	
0045 - 0100	0	3	0	0	0	0	0	0	1	0	0	0	0	**4**	**36**
0100 - 0115	0	8	1	0	0	0	0	0	0	0	0	0	0	**9**	
0115 - 0130	0	3	2	0	0	0	0	0	0	0	0	0	0	**5**	
0130 - 0145	0	9	0	0	0	0	0	0	2	0	0	0	0	**11**	
0145 - 0200	0	4	1	1	0	0	0	0	1	0	0	0	0	**7**	**32**
0200 - 0215	0	8	1	0	1	0	0	0	1	0	0	0	0	**11**	
0215 - 0230	0	4	1	0	1	0	0	0	1	0	0	0	0	**7**	
0230 - 0245	0	3	1	0	0	0	0	0	1	0	0	0	0	**5**	
0245 - 0300	0	4	3	0	1	0	0	0	1	0	0	0	0	**9**	**32**
0300 - 0315	0	9	1	0	0	0	0	0	2	0	0	0	0	**12**	
0315 - 0330	0	2	0	0	0	0	0	0	1	0	1	0	0	**4**	
0330 - 0345	0	6	2	0	0	0	0	0	3	0	0	0	0	**11**	
0345 - 0400	0	3	0	0	0	0	0	0	0	0	0	0	0	**3**	**30**
0400 - 0415	0	8	1	0	0	0	0	0	0	0	0	0	0	**9**	
0415 - 0430	0	9	1	0	1	0	0	0	0	0	0	0	0	**11**	
0430 - 0445	0	5	0	0	1	0	0	1	0	0	0	0	0	**7**	
0445 - 0500	0	9	1	0	0	0	0	0	5	0	0	0	0	**15**	**42**
0500 - 0515	0	13	2	0	0	0	0	0	0	0	0	0	0	**15**	
0515 - 0530	0	12	3	0	1	0	0	0	3	0	0	0	0	**19**	
0530 - 0545	0	23	3	0	0	0	0	0	3	0	0	0	0	**29**	
0545 - 0600	0	23	6	0	1	0	0	0	4	0	0	0	0	**34**	**97**
0600 - 0615	0	25	5	0	2	1	0	0	2	0	1	0	0	**36**	
0615 - 0630	0	43	14	0	0	1	0	0	1	0	0	0	0	**59**	
0630 - 0645	0	65	17	0	0	0	0	0	5	1	0	0	0	**88**	
0645 - 0700	0	64	15	0	5	0	0	1	1	0	0	0	0	**86**	**269**
0700 - 0715	0	75	15	0	3	0	0	0	10	0	0	0	0	**103**	
0715 - 0730	0	116	28	0	7	2	0	1	1	1	0	0	0	**156**	
0730 - 0745	0	119	34	0	4	0	0	0	4	0	0	0	0	**161**	
0745 - 0800	0	131	30	0	3	0	0	0	6	1	0	1	0	**172**	**592**
0800 - 0815	0	116	26	0	2	0	0	2	6	0	0	0	0	**152**	
0815 - 0830	0	115	32	0	4	1	0	0	3	0	0	0	0	**155**	
0830 - 0845	0	114	19	0	3	0	0	1	3	0	0	0	0	**140**	
0845 - 0900	0	107	25	0	6	1	0	1	3	0	0	0	0	**143**	**590**
0900 - 0915	0	73	32	0	7	0	0	3	3	1	0	0	0	**119**	
0915 - 0930	0	78	24	0	2	1	0	1	6	0	0	1	0	**113**	
0930 - 0945	0	92	27	1	8	0	0	0	10	0	0	0	0	**138**	
0945 - 1000	0	98	20	0	3	1	0	0	7	0	0	0	0	**129**	**499**
1000 - 1015	0	111	33	0	4	0	0	1	9	0	0	0	0	**158**	
1015 - 1030	0	88	36	0	6	1	0	0	9	0	0	0	0	**140**	
1030 - 1045	0	92	25	0	1	0	0	0	11	0	0	0	0	**129**	
1045 - 1100	0	80	31	0	3	0	0	0	5	0	0	0	0	**119**	**546**
1100 - 1115	0	111	29	0	1	3	0	1	13	0	0	0	0	**158**	
1115 - 1130	0	106	44	0	1	0	0	0	7	0	0	0	0	**158**	
1130 - 1145	0	108	38	0	4	0	0	1	10	0	1	0	0	**162**	
1145 - 1200	0	113	31	0	0	1	0	1	7	0	0	0	0	**153**	**631**
1200 - 1215	0	108	34	0	2	2	0	0	6	0	0	0	0	**152**	
1215 - 1230	0	128	40	0	5	0	0	1	4	0	0	0	0	**178**	
1230 - 1245	0	128	43	0	3	1	0	2	8	0	0	0	0	**185**	
1245 - 1300	0	108	25	0	3	1	0	1	9	0	0	0	0	**147**	**662**
1300 - 1315	0	128	23	0	1	0	0	0	7	0	0	0	0	**159**	
1315 - 1330	0	136	35	0	3	0	0	1	6	0	0	0	0	**181**	
1330 - 1345	0	135	35	3	3	0	0	2	11	2	0	0	0	**191**	
1345 - 1400	0	127	22	0	0	2	0	0	11	0	0	0	0	**162**	**693**
1400 - 1415	0	133	29	0	3	1	0	0	9	0	0	0	0	**175**	
1415 - 1430	0	170	35	2	5	0	0	0	10	0	0	0	0	**222**	
1430 - 1445	0	142	42	3	3	1	0	3	11	0	0	0	0	**205**	
1445 - 1500	0	154	33	0	4	0	0	2	7	0	0	0	0	**200**	**802**
1500 - 1515	1	168	47	1	4	0	0	1	12	0	0	0	0	**234**	
1515 - 1530	0	189	33	0	3	1	1	2	9	0	0	0	0	**238**	
1530 - 1545	0	202	51	0	4	1	0	0	6	0	0	0	0	**264**	
1545 - 1600	0	192	58	1	3	5	0	0	5	0	0	0	0	**264**	**1000**
1600 - 1615	0	209	46	0	8	0	0	0	8	0	0	0	0	**271**	
1615 - 1630	0	205	41	0	3	0	0	0	7	0	0	0	0	**256**	
1630 - 1645	1	215	42	0	2	0	0	1	6	0	0	0	0	**267**	
1645 - 1700	0	230	35	1	0	0	0	0	9	0	0	0	0	**275**	**1069**
1700 - 1715	0	219	41	0	2	0	0	0	6	0	0	0	0	**268**	
1715 - 1730	0	233	29	0	1	0	0	0	6	0	0	0	0	**269**	
1730 - 1745	0	223	44	0	1	0	0	0	5	1	0	0	0	**274**	
1745 - 1800	0	197	49	0	0	0	0	0	8	0	0	0	0	**254**	**1065**
1800 - 1815	0	146	39	0	1	0	0	0	6	0	0	0	0	**192**	
1815 - 1830	0	145	36	0	2	0	0	0	6	1	0	0	0	**190**	
1830 - 1845	0	112	22	0	0	1	0	0	5	1	0	0	0	**141**	
1845 - 1900	0	114	17	0	0	0	0	0	4	0	0	0	0	**135**	**658**
1900 - 1915	0	92	23	0	0	0	0	0	2	0	0	0	0	**117**	
1915 - 1930	0	84	15	0	0	0	0	0	6	1	0	0	0	**106**	
1930 - 1945	0	62	9	0	0	3	0	0	4	0	0	0	0	**78**	
1945 - 2000	0	109	12	0	0	0	0	0	5	0	0	0	0	**126**	**427**
2000 - 2015	0	69	11	0	0	0	0	0	4	0	0	0	0	**84**	
2015 - 2030	0	53	5	0	1	0	0	0	4	0	0	0	0	**63**	
2030 - 2045	0	60	6	0	0	0	0	0	3	0	0	0	0	**69**	
2045 - 2100	1	57	5	0	0	0	0	0	4	0	0	0	0	**67**	**283**
2100 - 2115	0	46	4	0	2	2	0	0	1	0	1	0	0	**56**	
2115 - 2130	0	44	4	0	1	1	0	0	4	0	0	0	0	**54**	
2130 - 2145	0	38	4	0	0	1	0	0	2	0	1	0	0	**46**	
2145 - 2200	0	39	4	0	0	1	0	0	0	0	0	0	0	**44**	**200**
2200 - 2215	0	28	3	0	1	0	0	0	3	1	0	0	0	**36**	
2215 - 2230	0	32	3	0	1	0	0	0	2	0	0	0	0	**38**	
2230 - 2245	0	34	4	0	1	1	0	0	1	0	1	0	0	**42**	
2245 - 2300	0	30	3	0	1	1	0	0	3	0	1	0	0	**39**	**155**
2300 - 2315	0	25	2	0	0	0	0	0	1	0	0	0	0	**28**	
2315 - 2330	0	26	2	0	1	2	0	0	1	0	0	0	0	**32**	
2330 - 2345	0	22	3	1	0	1	0	0	1	0	0	0	0	**28**	
2345 - 0000	0	20	2	0	0	0	0	0	2	0	0	0	0	**24**	**112**

Session Total	3	7999	1813	14	165	42	1	31	434	11	7	2	0	**10522**
Session Average	0.03	83.32	18.89	0.15	1.72	0.44	0.01	0.32	4.52	0.11	0.07	0.02	0.00	**109.60**
Session Percentage	0.03	76.02	17.23	0.13	1.57	0.40	0.01	0.29	4.12	0.10	0.07	0.02	0.00	

AM Peak Hour	-	0715 - 0815	0730 - 0830	0845 - 0945	0845 - 0945	0530 - 0630	-	0830 - 0930	0945 - 1045	0630 - 0730	0515 - 0615	0700 - 0800	-	**0715 - 0815**
AM Peak Volume	0	482	122	1	23	2	0	6	36	2	1	1	0	**641**

Noon Peak Hour	1415 - 1515	1445 - 1545	1445 - 1545	1415 - 1515	1415 - 1515	1015 - 1115	1430 - 1530	1430 - 1530	1330 - 1430	1245 - 1345	1045 - 1145	-	-	**1445 - 1545**
Noon Peak Volume	1	713	164	6	16	4	1	8	41	2	1	0	0	**936**

PM Peak Hour	1500 - 1600	1645 - 1745	1530 - 1630	1500 - 1600	1515 - 1615	1500 - 1600	1500 - 1600	1500 - 1600	1500 - 1600	1730 - 1830	-	-	-	**1645 - 1745**
PM Peak Volume	1	905	196	2	18	7	1	3	32	2	0	0	0	**1086**

Site 12
I-26 S/Bound Off-Ramp,
north of I-20

Date
Tuesday, April 23, 2024

Lat/Long
34.038500°, -81.109979°

Weather
Fair
58°F

Click here for Detailed Weather

0000 - 2400 (Weekday 24h Session) (04-23-2024)
SB WB 15min

	Southbound (Movement 12.1)													15min	60min
TIME	1	2	3	4	5	6	7	8	9	10	11	12	13	Total	Total
0000 - 0015	0	13	1	0	1	0	0	0	0	0	0	0	0	**15**	
0015 - 0030	0	11	0	0	0	1	0	0	1	0	0	0	0	**13**	
0030 - 0045	0	4	0	0	0	0	0	0	1	0	0	0	0	**5**	
0045 - 0100	0	4	3	0	1	0	0	0	0	0	0	0	0	**8**	**41**
0100 - 0115	0	7	1	0	0	0	0	0	0	0	0	0	0	**8**	
0115 - 0130	0	10	1	0	0	0	0	0	1	0	0	0	0	**12**	
0130 - 0145	0	2	2	0	0	0	0	0	0	0	0	0	0	**4**	
0145 - 0200	0	8	1	0	2	0	0	1	1	0	1	0	0	**14**	**38**
0200 - 0215	0	4	0	0	0	0	0	0	2	0	0	0	0	**6**	
0215 - 0230	0	8	2	0	0	0	0	0	1	1	1	0	0	**13**	
0230 - 0245	0	6	2	0	0	0	0	1	2	0	0	0	0	**11**	
0245 - 0300	0	7	1	0	2	0	0	0	2	0	0	1	0	**13**	**43**
0300 - 0315	0	2	0	0	0	0	0	0	3	0	0	0	0	**5**	
0315 - 0330	0	3	1	0	1	0	0	0	0	0	0	0	0	**5**	
0330 - 0345	0	7	4	0	0	0	0	0	3	0	0	0	0	**14**	
0345 - 0400	0	4	0	0	0	0	0	0	4	0	0	0	0	**8**	**32**
0400 - 0415	0	11	2	0	0	0	0	0	2	0	0	0	0	**15**	
0415 - 0430	0	2	0	0	0	0	0	0	3	0	1	0	0	**6**	
0430 - 0445	0	13	1	0	1	0	0	0	4	0	0	0	0	**19**	
0445 - 0500	0	6	1	0	1	1	0	1	5	0	0	0	0	**15**	**55**
0500 - 0515	0	7	1	0	2	0	0	0	0	0	0	0	0	**10**	
0515 - 0530	0	12	4	0	4	0	0	0	4	0	0	0	0	**24**	
0530 - 0545	0	15	2	0	1	0	0	0	2	0	0	0	0	**20**	
0545 - 0600	0	20	5	0	0	0	0	0	3	0	0	0	0	**28**	**82**
0600 - 0615	0	33	5	0	0	1	0	0	5	0	0	0	0	**44**	
0615 - 0630	0	45	13	0	1	0	0	0	3	0	0	0	0	**62**	
0630 - 0645	0	58	13	0	3	0	0	0	4	0	0	0	0	**78**	
0645 - 0700	0	64	9	0	3	0	1	0	2	3	0	0	0	**82**	**266**
0700 - 0715	0	67	20	0	2	0	0	0	6	0	0	0	0	**95**	
0715 - 0730	0	111	23	0	6	0	1	1	2	2	0	0	0	**146**	
0730 - 0745	0	147	22	0	4	0	0	1	4	1	0	0	0	**179**	
0745 - 0800	0	166	21	0	6	1	0	1	5	0	0	0	0	**200**	**620**
0800 - 0815	0	105	27	0	6	1	0	0	7	1	0	0	0	**147**	
0815 - 0830	0	127	23	0	4	0	0	0	7	0	0	0	0	**161**	
0830 - 0845	0	111	21	0	7	0	0	0	5	0	0	0	0	**144**	
0845 - 0900	0	111	23	0	10	0	0	1	6	1	0	0	0	**152**	**604**
0900 - 0915	0	88	31	0	3	3	0	0	7	0	1	0	0	**133**	
0915 - 0930	0	91	13	0	3	1	0	0	10	4	0	0	0	**122**	
0930 - 0945	0	105	21	0	3	1	0	2	9	0	0	0	0	**141**	
0945 - 1000	0	95	19	0	4	1	0	0	11	1	0	0	0	**131**	**527**
1000 - 1015	0	101	14	1	3	0	0	0	13	0	0	0	0	**132**	
1015 - 1030	0	90	27	0	10	2	0	2	9	0	0	0	0	**140**	
1030 - 1045	0	101	31	0	1	0	0	1	8	1	0	0	0	**143**	
1045 - 1100	1	90	28	0	4	2	0	0	13	0	0	0	0	**138**	**553**
1100 - 1115	0	110	24	0	1	0	0	0	5	0	0	0	0	**140**	
1115 - 1130	0	117	29	0	1	0	0	2	6	0	0	0	0	**155**	
1130 - 1145	0	124	34	0	4	1	0	2	12	0	0	0	0	**177**	
1145 - 1200	0	118	30	0	2	2	0	0	14	0	0	0	0	**166**	**638**
1200 - 1215	0	113	41	0	3	1	0	0	9	0	0	0	0	**167**	
1215 - 1230	0	102	29	0	4	1	0	1	12	0	0	0	0	**149**	
1230 - 1245	0	148	27	0	2	1	0	0	11	0	0	0	0	**189**	
1245 - 1300	0	100	35	1	3	0	0	0	12	0	0	0	0	**151**	**656**
1300 - 1315	0	127	36	3	3	2	0	3	15	0	0	0	0	**189**	
1315 - 1330	0	144	34	2	0	1	0	1	6	0	0	0	0	**188**	
1330 - 1345	1	141	28	2	3	0	0	0	13	0	0	0	0	**188**	
1345 - 1400	0	130	45	0	2	0	0	0	13	0	0	0	0	**190**	**755**
1400 - 1415	1	133	33	4	2	0	0	1	9	0	0	0	0	**183**	
1415 - 1430	1	157	32	0	4	0	0	0	4	0	0	0	0	**198**	
1430 - 1445	0	170	38	1	4	1	0	1	10	0	0	0	0	**225**	
1445 - 1500	1	153	50	0	3	0	0	1	11	0	0	0	0	**219**	**825**
1500 - 1515	0	181	42	0	5	0	0	5	9	0	0	0	0	**242**	
1515 - 1530	0	182	49	0	5	0	0	1	8	0	0	0	0	**245**	
1530 - 1545	1	210	49	1	2	0	0	1	12	0	0	0	0	**276**	
1545 - 1600	0	202	66	0	4	1	0	1	5	0	0	0	0	**279**	**1042**
1600 - 1615	0	225	67	0	0	0	0	1	5	1	1	0	0	**300**	
1615 - 1630	0	273	55	0	2	0	0	0	5	0	0	0	0	**335**	
1630 - 1645	0	272	51	0	4	0	0	1	7	0	0	0	0	**335**	
1645 - 1700	0	245	45	0	3	1	0	0	3	0	0	0	0	**297**	**1267**
1700 - 1715	0	253	56	0	1	2	0	0	6	0	0	0	0	**318**	
1715 - 1730	0	290	43	0	3	0	0	0	9	0	0	0	0	**345**	
1730 - 1745	1	245	62	0	0	0	0	0	7	0	0	0	0	**315**	
1745 - 1800	0	197	55	0	2	0	0	0	6	0	0	0	0	**260**	**1238**
1800 - 1815	0	173	41	0	0	1	0	0	5	0	0	0	0	**220**	
1815 - 1830	0	130	25	0	1	0	0	1	7	0	0	0	0	**164**	
1830 - 1845	1	133	27	0	2	2	0	0	1	0	0	0	0	**166**	
1845 - 1900	0	99	22	0	1	0	0	1	3	0	0	0	0	**126**	**676**
1900 - 1915	2	99	25	0	0	0	0	0	3	0	0	0	0	**129**	
1915 - 1930	0	108	18	0	0	0	0	0	4	0	0	0	0	**130**	
1930 - 1945	0	99	23	0	0	0	0	0	4	0	0	0	0	**126**	
1945 - 2000	0	95	17	0	1	1	0	1	1	0	0	0	0	**116**	**501**
2000 - 2015	0	80	18	0	0	1	0	0	4	0	0	0	0	**103**	
2015 - 2030	0	86	14	0	1	0	0	0	3	0	1	1	0	**106**	
2030 - 2045	0	64	20	0	0	0	0	0	2	0	0	0	0	**86**	
2045 - 2100	0	47	7	0	1	0	0	0	5	0	0	0	0	**60**	**355**
2100 - 2115	0	58	11	0	2	0	0	0	5	0	0	0	0	**76**	
2115 - 2130	2	43	10	0	1	2	0	0	4	0	1	0	0	**63**	
2130 - 2145	0	54	11	0	2	1	0	0	4	0	0	0	0	**72**	
2145 - 2200	0	31	6	0	2	0	0	0	3	0	0	0	0	**42**	**253**
2200 - 2215	0	29	8	0	2	1	0	0	3	0	0	0	0	**43**	
2215 - 2230	0	65	9	0	2	0	0	0	3	0	0	0	0	**79**	
2230 - 2245	0	53	11	0	0	0	0	0	0	0	0	0	0	**64**	
2245 - 2300	0	22	9	0	0	1	0	0	3	0	0	0	0	**35**	**221**
2300 - 2315	0	21	6	0	0	0	0	0	0	0	0	0	0	**27**	
2315 - 2330	0	20	3	0	1	3	0	0	1	0	0	0	0	**28**	
2330 - 2345	0	10	3	0	0	2	0	0	2	0	0	0	0	**17**	
2345 - 0000	0	11	4	0	1	0	0	0	4	0	0	0	0	**20**	**92**

Session Total	12	8584	1972	15	191	44	2	37	498	16	7	2	0	**11380**
Session Average	0.13	89.42	20.54	0.16	1.99	0.46	0.02	0.39	5.19	0.17	0.07	0.02	0.00	**118.54**
Session Percentage	0.11	75.43	17.33	0.13	1.68	0.39	0.02	0.33	4.38	0.14	0.06	0.02	0.00	

AM Peak Hour	-	0730 - 0830	0815 - 0915	0915 - 1015	0800 - 0900	0900 - 1000	0630 - 0730	0930 - 1030	0915 - 1015	0645 - 0745	0815 - 0915	-	-	**0730 - 0830**
AM Peak Hour Volume	0	545	98	1	27	6	2	4	43	6	1	0	0	**687**

Noon Peak Hour	1330 - 1430	1445 - 1545	1445 - 1545	1245 - 1345	1000 - 1100	1130 - 1230	-	1430 - 1530	1215 - 1315	1000 - 1100	-	-	-	**1445 - 1545**
Noon Peak Hour Volume	3	726	190	8	18	5	0	8	50	1	0	0	0	**982**

PM Peak Hour	1815 - 1915	1630 - 1730	1545 - 1645	1500 - 1600	1500 - 1600	1615 - 1715	-	1500 - 1600	1500 - 1600	1515 - 1615	1515 - 1615	1930 - 2030	-	**1630 - 1730**
PM Peak Hour Volume	3	1060	239	1	16	3	0	8	34	1	1	1	0	**1295**

Site 12
I-26 S/Bound Off-Ramp,
north of I-20

Date
Wednesday, April 24, 2024

Lat/Long
34.038500°, -81.109979°

Weather
Fair
66°F

Click here for Detailed Weather

0000 - 2400 (Weekday 24h Session) (04-24-2024)
SB WB 15min

	Southbound (Movement 12.1)													15min	60min
TIME	1	2	3	4	5	6	7	8	9	10	11	12	13	Total	Total
0000 - 0015	0	15	5	0	0	1	0	0	5	0	1	0	0	**27**	
0015 - 0030	0	14	4	0	1	2	0	0	3	0	0	0	0	**24**	
0030 - 0045	0	15	3	0	0	0	0	0	1	0	0	0	0	**19**	
0045 - 0100	0	11	2	0	0	5	0	0	1	0	0	0	0	**19**	**89**
0100 - 0115	0	7	2	0	0	4	0	0	2	0	0	0	0	**15**	
0115 - 0130	0	11	2	0	0	1	0	0	2	0	0	0	0	**16**	
0130 - 0145	0	7	1	0	0	1	0	0	2	0	0	0	0	**11**	
0145 - 0200	0	6	2	0	0	0	0	0	0	0	0	0	0	**8**	**50**
0200 - 0215	0	8	3	0	0	0	0	0	4	0	2	0	0	**17**	
0215 - 0230	0	9	3	0	0	1	0	0	4	0	0	0	0	**17**	
0230 - 0245	0	2	1	0	0	1	0	0	2	0	1	0	0	**7**	
0245 - 0300	0	3	1	0	0	2	0	0	2	0	0	0	0	**8**	**49**
0300 - 0315	0	11	3	0	1	0	0	0	0	0	0	0	0	**15**	
0315 - 0330	0	5	1	0	1	1	0	0	0	0	0	0	0	**8**	
0330 - 0345	0	6	2	0	1	0	0	0	5	0	0	0	0	**14**	
0345 - 0400	0	5	1	0	0	1	0	0	1	0	0	0	0	**8**	**45**
0400 - 0415	0	4	2	0	0	0	0	0	3	0	0	0	0	**9**	
0415 - 0430	0	5	2	0	0	0	0	0	1	0	0	0	0	**8**	
0430 - 0445	0	12	3	0	1	0	0	0	1	0	0	0	0	**17**	
0445 - 0500	0	6	2	0	0	0	0	0	3	0	0	0	0	**11**	**45**
0500 - 0515	0	7	3	0	0	2	0	0	7	0	0	0	0	**19**	
0515 - 0530	0	12	3	0	0	1	0	0	6	0	0	0	0	**22**	
0530 - 0545	0	20	4	0	1	1	0	0	6	0	0	0	0	**32**	
0545 - 0600	0	16	5	0	1	0	0	0	5	0	0	0	0	**27**	**100**
0600 - 0615	0	34	8	0	2	0	0	0	4	0	0	0	0	**48**	
0615 - 0630	0	41	7	0	1	2	0	0	2	0	0	0	0	**53**	
0630 - 0645	0	65	13	0	1	1	0	1	5	0	0	0	0	**86**	
0645 - 0700	0	69	13	0	3	1	0	1	8	0	0	0	0	**95**	**282**
0700 - 0715	0	71	24	0	4	0	0	1	7	0	0	0	0	**107**	
0715 - 0730	0	118	29	0	7	3	0	1	2	0	1	0	0	**161**	
0730 - 0745	0	142	32	1	6	3	0	0	5	0	0	0	0	**189**	
0745 - 0800	1	157	42	0	9	1	0	1	8	0	1	0	0	**220**	**677**
0800 - 0815	0	124	30	0	6	0	0	0	4	0	0	0	0	**164**	
0815 - 0830	0	153	35	0	9	1	0	0	8	0	0	0	0	**206**	
0830 - 0845	0	108	32	0	4	1	0	2	8	0	1	0	0	**156**	
0845 - 0900	0	112	26	0	3	1	0	0	12	0	0	0	0	**154**	**680**
0900 - 0915	0	79	27	0	5	1	0	1	13	0	0	0	0	**126**	
0915 - 0930	1	78	23	1	6	0	0	2	11	0	0	0	0	**122**	
0930 - 0945	0	92	27	0	3	0	0	0	6	0	0	0	0	**128**	
0945 - 1000	0	96	36	0	5	0	0	1	6	0	0	0	0	**144**	**520**
1000 - 1015	0	94	28	1	3	0	0	1	10	0	0	0	0	**137**	
1015 - 1030	0	88	26	0	7	1	0	0	11	1	0	0	0	**134**	
1030 - 1045	0	109	40	0	3	2	0	1	7	0	0	0	0	**162**	
1045 - 1100	0	106	45	0	3	0	0	0	4	0	0	0	0	**158**	**591**
1100 - 1115	0	84	31	0	7	0	0	0	8	0	0	0	0	**130**	
1115 - 1130	0	89	29	0	3	0	0	0	7	0	0	0	0	**128**	
1130 - 1145	0	123	33	0	6	0	0	0	13	0	0	0	0	**175**	
1145 - 1200	0	126	33	1	1	1	0	0	11	0	0	0	0	**173**	**606**
1200 - 1215	0	95	32	0	4	0	0	0	8	0	0	0	0	**139**	
1215 - 1230	0	115	32	1	1	1	0	0	13	0	0	0	0	**163**	
1230 - 1245	0	125	33	0	4	0	0	0	7	0	0	0	0	**169**	
1245 - 1300	0	151	27	0	5	2	0	1	10	2	0	0	0	**198**	**669**
1300 - 1315	0	148	34	0	1	1	0	0	8	1	0	0	0	**193**	
1315 - 1330	0	131	40	0	4	0	0	0	11	0	0	0	0	**186**	
1330 - 1345	0	147	33	0	3	0	0	0	6	2	0	0	0	**191**	
1345 - 1400	0	160	39	0	4	0	0	2	8	0	0	0	0	**213**	**783**
1400 - 1415	0	154	47	0	2	2	0	0	9	1	0	0	0	**215**	
1415 - 1430	0	174	36	0	2	0	0	0	21	0	0	0	0	**233**	
1430 - 1445	0	166	41	3	3	0	0	2	6	0	0	0	0	**221**	
1445 - 1500	0	153	39	3	4	1	0	1	14	0	0	0	0	**215**	**884**
1500 - 1515	2	206	42	0	3	0	0	1	15	2	0	0	0	**271**	
1515 - 1530	0	199	45	0	2	0	0	0	8	0	0	0	0	**254**	
1530 - 1545	0	194	49	2	5	2	0	0	8	1	0	0	0	**261**	
1545 - 1600	0	210	61	0	7	1	0	0	12	1	0	0	0	**292**	**1078**
1600 - 1615	0	224	64	0	4	0	0	0	8	0	0	0	0	**300**	
1615 - 1630	1	243	53	1	9	0	0	0	3	0	0	0	0	**310**	
1630 - 1645	0	230	53	1	3	0	0	1	5	0	0	0	0	**293**	
1645 - 1700	0	265	35	0	2	0	0	0	6	0	0	0	0	**308**	**1211**
1700 - 1715	0	232	53	0	0	0	0	0	3	2	0	0	0	**290**	
1715 - 1730	0	219	37	0	1	0	2	0	6	0	0	0	0	**265**	
1730 - 1745	0	218	45	0	1	0	0	0	0	0	0	0	0	**264**	
1745 - 1800	0	196	44	0	1	0	0	0	2	0	0	0	0	**243**	**1062**
1800 - 1815	0	145	33	0	1	0	0	0	6	0	0	0	0	**185**	
1815 - 1830	0	138	36	0	2	0	0	0	4	0	0	0	0	**180**	
1830 - 1845	1	120	21	0	3	0	0	1	7	0	0	0	0	**153**	
1845 - 1900	0	99	24	0	1	1	0	0	4	0	0	0	0	**129**	**647**
1900 - 1915	0	73	19	0	1	0	0	0	2	0	0	0	0	**95**	
1915 - 1930	1	107	28	0	2	1	0	0	4	0	1	0	0	**144**	
1930 - 1945	0	87	23	0	0	0	0	1	3	0	0	0	0	**114**	
1945 - 2000	1	121	13	0	0	0	0	0	5	0	0	0	0	**140**	**493**
2000 - 2015	0	90	9	0	0	0	0	1	3	0	0	0	0	**103**	
2015 - 2030	0	91	11	0	1	1	0	0	3	0	0	0	0	**107**	
2030 - 2045	1	86	21	0	1	0	0	0	8	0	0	0	0	**117**	
2045 - 2100	0	61	19	0	1	0	0	0	2	0	0	0	0	**83**	**410**
2100 - 2115	0	47	13	0	0	0	0	2	2	0	1	0	0	**65**	
2115 - 2130	0	48	12	0	0	0	0	0	5	0	0	0	0	**65**	
2130 - 2145	0	38	11	0	0	0	0	0	2	0	0	0	0	**51**	
2145 - 2200	0	48	11	0	0	0	0	0	5	0	0	0	0	**64**	**245**
2200 - 2215	1	45	12	0	1	0	0	0	2	0	0	0	0	**61**	
2215 - 2230	0	47	16	0	1	0	0	0	6	0	0	0	0	**70**	
2230 - 2245	0	75	16	0	0	0	0	0	2	0	0	0	0	**93**	
2245 - 2300	0	25	8	0	0	0	0	0	0	0	0	0	0	**33**	**257**
2300 - 2315	0	37	9	0	0	0	0	0	3	0	0	0	0	**49**	
2315 - 2330	0	23	9	0	0	0	0	0	1	0	0	0	0	**33**	
2330 - 2345	0	21	10	0	0	0	0	0	2	0	0	0	0	**33**	
2345 - 0000	0	15	6	0	2	0	0	0	0	0	0	0	0	**23**	**138**

Session Total	10	8617	2133	15	206	56	2	26	524	13	9	0	0	**11611**
Session Average	0.10	89.76	22.22	0.16	2.15	0.58	0.02	0.27	5.46	0.14	0.09	0.00	0.00	**120.95**
Session Percentage	0.09	74.21	18.37	0.13	1.77	0.48	0.02	0.22	4.51	0.11	0.08	0.00	0.00	

AM Peak Hour	0700 - 0800	0730 - 0830	0730 - 0830	0915 - 1015	0730 - 0830	0645 - 0745	-	0830 - 0930	0830 - 0930	0930 - 1030	0700 - 0800	-	-	**0730 - 0830**
AM Peak Hour Volume	1	576	139	2	30	7	0	5	44	1	2	0	0	**779**

Noon Peak Hour	1415 - 1515	1445 - 1545	1445 - 1545	1400 - 1500	1015 - 1115	1215 - 1315	-	1345 - 1445	1415 - 1515	1245 - 1345	-	-	-	**1445 - 1545**
Noon Peak Hour Volume	2	752	175	6	20	4	0	4	56	5	0	0	0	**1001**

PM Peak Hour	1500 - 1600	1615 - 1715	1545 - 1645	1530 - 1630	1530 - 1630	1500 - 1600	1630 - 1730	1915 - 2015	1500 - 1600	1500 - 1600	1830 - 1930	-	-	**1600 - 1700**
PM Peak Hour Volume	2	970	231	3	25	3	2	2	43	4	1	0	0	**1211**

Site 12
I-26 S/Bound Off-Ramp,
north of I-20

Date
Thursday, April 25, 2024

Lat/Long
34.038500°, -81.109979°

Weather
Fair
67°F

Click here for Detailed Weather

0000 - 2400 (Weekday 24h Session) (04-25-2024)
SB WB 15min

	Southbound (Movement 12.1)													15min	60min
TIME	1	2	3	4	5	6	7	8	9	10	11	12	13	Total	Total
0000 - 0015	0	9	4	0	2	1	0	0	4	0	1	0	0	**21**	
0015 - 0030	0	10	7	0	1	0	0	0	1	0	0	0	0	**19**	
0030 - 0045	0	9	4	0	1	2	0	0	1	0	0	0	0	**17**	
0045 - 0100	0	5	2	0	2	1	0	0	0	0	0	0	0	**10**	**67**
0100 - 0115	0	5	4	0	0	0	0	0	2	0	0	0	0	**11**	
0115 - 0130	0	4	3	0	0	0	0	0	0	0	0	0	0	**7**	
0130 - 0145	0	7	2	0	2	2	0	0	2	0	0	0	0	**15**	
0145 - 0200	0	5	3	0	0	0	0	0	0	0	0	0	0	**8**	**41**
0200 - 0215	0	5	2	0	3	0	0	0	2	0	1	0	0	**13**	
0215 - 0230	0	6	1	0	2	2	0	0	1	0	0	0	0	**12**	
0230 - 0245	0	3	2	0	1	1	0	0	4	0	0	0	0	**11**	
0245 - 0300	0	3	1	0	1	0	0	0	5	0	0	0	0	**10**	**46**
0300 - 0315	0	2	1	0	2	1	0	0	1	0	0	0	0	**7**	
0315 - 0330	0	5	3	0	1	0	0	0	3	0	2	0	0	**14**	
0330 - 0345	0	1	3	0	0	0	0	0	0	0	0	0	0	**4**	
0345 - 0400	0	6	3	0	1	0	0	0	3	0	0	0	0	**13**	**38**
0400 - 0415	0	4	3	0	0	0	0	0	2	0	0	0	0	**9**	
0415 - 0430	0	6	3	0	2	0	0	0	3	0	0	0	0	**14**	
0430 - 0445	0	9	5	0	0	0	0	0	3	0	0	0	0	**17**	
0445 - 0500	0	8	4	0	0	1	0	0	2	0	0	0	0	**15**	**55**
0500 - 0515	0	8	4	0	0	0	0	0	4	0	0	0	0	**16**	
0515 - 0530	0	5	3	0	0	0	0	0	4	0	0	0	0	**12**	
0530 - 0545	0	17	8	1	1	0	0	0	2	0	0	0	0	**29**	
0545 - 0600	0	21	12	0	1	0	0	0	3	0	0	0	0	**37**	**94**
0600 - 0615	0	24	10	0	1	0	0	0	11	0	0	0	0	**46**	
0615 - 0630	0	41	12	0	2	0	0	0	5	0	0	0	0	**60**	
0630 - 0645	0	61	10	0	4	0	0	0	7	0	0	0	0	**82**	
0645 - 0700	0	59	20	0	2	0	0	0	4	0	0	0	0	**85**	**273**
0700 - 0715	0	71	17	0	5	3	0	0	4	0	0	0	0	**100**	
0715 - 0730	0	108	20	1	4	1	0	0	13	0	0	0	0	**147**	
0730 - 0745	0	113	25	0	5	0	0	0	9	0	0	0	0	**152**	
0745 - 0800	0	151	27	0	2	1	0	0	6	0	0	0	0	**187**	**586**
0800 - 0815	0	129	34	0	3	1	0	1	10	0	0	0	0	**178**	
0815 - 0830	1	114	42	0	2	0	0	0	6	1	0	0	0	**166**	
0830 - 0845	0	118	38	0	8	0	0	0	2	1	0	0	0	**167**	
0845 - 0900	0	105	36	0	3	0	0	1	11	0	0	0	0	**156**	**667**
0900 - 0915	0	79	36	0	6	0	0	0	11	0	0	0	0	**132**	
0915 - 0930	0	88	29	0	3	0	0	0	6	1	0	0	0	**127**	
0930 - 0945	1	96	33	0	3	1	0	0	9	0	0	0	0	**143**	
0945 - 1000	0	103	31	0	3	0	0	1	5	0	0	0	0	**143**	**545**
1000 - 1015	0	114	41	0	1	1	0	0	2	0	0	0	0	**159**	
1015 - 1030	0	102	29	0	4	0	0	0	17	0	0	0	0	**152**	
1030 - 1045	0	103	29	0	3	0	0	0	10	0	0	0	0	**145**	
1045 - 1100	0	94	34	0	5	0	0	0	13	0	0	0	0	**146**	**602**
1100 - 1115	1	87	36	1	3	3	0	0	8	0	0	0	0	**139**	
1115 - 1130	0	116	37	1	7	0	0	0	12	0	0	0	0	**173**	
1130 - 1145	0	117	41	1	1	0	0	0	11	0	0	0	0	**171**	
1145 - 1200	0	105	31	1	4	0	0	0	11	0	0	0	0	**152**	**635**
1200 - 1215	1	111	38	0	3	0	0	0	5	0	0	0	0	**158**	
1215 - 1230	0	115	51	0	1	0	0	0	8	0	0	0	0	**175**	
1230 - 1245	0	144	37	0	1	1	0	0	15	0	0	0	0	**198**	
1245 - 1300	0	161	44	4	4	0	0	0	16	0	0	0	0	**229**	**760**
1300 - 1315	0	115	52	0	3	1	0	1	8	0	0	0	0	**180**	
1315 - 1330	0	131	41	2	3	1	0	1	16	0	0	0	0	**195**	
1330 - 1345	0	142	40	0	1	0	0	2	9	0	0	0	0	**194**	
1345 - 1400	0	129	25	0	1	0	0	1	13	0	1	0	0	**170**	**739**
1400 - 1415	0	155	41	0	5	0	0	3	10	0	0	0	0	**214**	
1415 - 1430	0	162	34	1	3	3	0	0	8	0	0	0	0	**211**	
1430 - 1445	0	137	48	2	1	0	0	2	13	0	0	0	0	**203**	
1445 - 1500	0	169	62	0	3	0	0	1	7	0	0	0	0	**242**	**870**
1500 - 1515	1	210	43	1	9	0	0	1	9	0	0	0	0	**274**	
1515 - 1530	1	222	54	2	6	1	0	0	5	0	0	0	0	**291**	
1530 - 1545	0	201	48	1	1	0	0	0	6	0	0	0	0	**257**	
1545 - 1600	0	202	55	0	6	0	0	1	4	0	0	0	0	**268**	**1090**
1600 - 1615	1	236	41	1	3	1	0	2	10	0	0	0	0	**295**	
1615 - 1630	0	229	63	0	3	0	0	0	5	0	0	0	0	**300**	
1630 - 1645	1	238	55	0	3	0	0	0	2	0	0	0	0	**299**	
1645 - 1700	0	240	41	0	0	0	0	0	3	0	0	0	0	**284**	**1178**
1700 - 1715	1	224	48	0	3	2	0	0	8	0	0	0	0	**286**	
1715 - 1730	1	231	22	0	2	0	0	0	7	0	0	0	0	**263**	
1730 - 1745	0	194	33	0	2	1	0	0	3	1	0	0	0	**234**	
1745 - 1800	1	168	41	0	0	0	0	0	11	0	0	0	0	**221**	**1004**
1800 - 1815	1	163	46	0	1	1	0	1	10	0	0	0	0	**223**	
1815 - 1830	1	160	34	0	3	0	0	1	2	0	0	0	0	**201**	
1830 - 1845	0	109	32	0	1	0	0	0	2	0	0	0	0	**144**	
1845 - 1900	0	120	20	3	1	0	0	0	3	0	0	0	0	**147**	**715**
1900 - 1915	1	108	17	0	1	0	0	0	5	0	0	0	0	**132**	
1915 - 1930	0	96	27	0	1	0	0	0	3	0	0	0	0	**127**	
1930 - 1945	1	132	13	0	4	0	0	0	5	0	0	0	0	**155**	
1945 - 2000	0	124	13	0	1	0	0	0	3	0	0	0	0	**141**	**555**
2000 - 2015	0	90	12	0	0	0	0	0	3	0	0	0	0	**105**	
2015 - 2030	0	84	14	0	1	0	0	0	0	0	0	0	0	**99**	
2030 - 2045	0	85	10	0	0	0	0	0	5	0	0	1	0	**101**	
2045 - 2100	0	79	10	0	0	0	0	0	2	0	0	0	0	**91**	**396**
2100 - 2115	0	84	11	0	1	0	0	0	6	0	0	1	0	**103**	
2115 - 2130	0	70	8	0	0	0	0	0	3	0	0	1	0	**82**	
2130 - 2145	0	53	9	0	1	0	0	0	5	0	0	0	0	**68**	
2145 - 2200	0	86	12	0	1	0	0	0	5	0	0	1	0	**105**	**358**
2200 - 2215	0	46	8	0	1	0	0	0	4	0	0	0	0	**59**	
2215 - 2230	0	106	8	0	0	0	0	0	3	0	0	0	0	**117**	
2230 - 2245	0	67	8	0	0	0	0	0	2	0	0	0	0	**77**	
2245 - 2300	0	23	8	0	0	0	0	0	2	0	0	0	0	**33**	**286**
2300 - 2315	0	37	10	0	0	0	0	0	0	0	0	0	0	**47**	
2315 - 2330	0	21	8	0	3	1	0	0	4	0	0	0	0	**37**	
2330 - 2345	0	30	7	0	1	0	0	0	0	0	0	0	0	**38**	
2345 - 0000	0	16	8	0	0	0	0	0	1	0	0	0	0	**25**	**147**

Session Total	15	8716	2195	23	196	35	0	20	534	4	5	4	0	**11747**
Session Average	0.16	90.79	22.86	0.24	2.04	0.36	0.00	0.21	5.56	0.04	0.05	0.04	0.00	**122.36**
Session Percentage	0.13	74.20	18.69	0.20	1.67	0.30	0.00	0.17	4.55	0.03	0.04	0.03	0.00	

AM Peak Hour	0730 - 0830	0745 - 0845	0815 - 0915	0500 - 0600	0830 - 0930	0700 - 0800	-	0800 - 0900	0715 - 0815	0745 - 0845	-	-	-	**0745 - 0845**
AM Peak Hour Volume	1	512	152	1	20	5	0	2	38	2	0	0	0	**698**

Noon Peak Hour	1430 - 1530	1445 - 1545	1430 - 1530	1230 - 1330	1430 - 1530	1015 - 1115	-	1315 - 1415	1230 - 1330	-	1300 - 1400	-	-	**1445 - 1545**
Noon Peak Hour Volume	2	802	207	6	19	3	0	7	55	0	1	0	0	**1064**

PM Peak Hour	1630 - 1730	1600 - 1700	1545 - 1645	1500 - 1600	1500 - 1600	1645 - 1745	-	1515 - 1615	1715 - 1815	1645 - 1745	-	1945 - 2045	-	**1600 - 1700**
PM Peak Hour Volume	3	943	214	4	22	3	0	3	31	1	0	1	0	**1178**

Site 12
I-26 S/Bound Off-Ramp,
north of I-20

Date
Friday, April 26, 2024

Lat/Long
34.038500°, -81.109979°

Weather
Cloudy
69°F

Click here for Detailed Weather

0000 - 2400 (Weekday 24h Session) (04-26-2024)
SB WB 15min

	Southbound (Movement 12.1)													15min	60min
TIME	1	2	3	4	5	6	7	8	9	10	11	12	13	Total	Total
0000 - 0015	0	18	4	0	1	3	0	0	2	0	0	0	0	**28**	
0015 - 0030	0	15	2	0	0	1	0	0	0	0	0	0	0	**18**	
0030 - 0045	0	13	1	0	1	1	0	0	2	0	0	0	0	**18**	
0045 - 0100	0	12	2	0	0	1	0	0	2	0	0	0	0	**17**	**81**
0100 - 0115	0	7	1	0	2	2	0	0	2	0	0	0	0	**14**	
0115 - 0130	0	10	2	0	2	1	0	0	2	0	0	0	0	**17**	
0130 - 0145	0	9	2	0	1	1	0	0	1	0	0	0	0	**14**	
0145 - 0200	0	11	1	0	1	1	0	0	1	0	0	0	0	**15**	**60**
0200 - 0215	0	9	2	0	2	0	0	0	1	0	0	0	0	**14**	
0215 - 0230	0	3	1	0	1	2	0	0	1	0	0	0	0	**8**	
0230 - 0245	0	5	1	0	1	2	0	0	0	0	0	0	0	**9**	
0245 - 0300	0	5	2	0	1	1	0	0	1	0	0	0	0	**10**	**41**
0300 - 0315	0	6	1	0	2	1	0	0	1	0	0	0	0	**11**	
0315 - 0330	0	4	1	0	0	0	0	0	2	0	1	0	0	**8**	
0330 - 0345	0	9	2	0	0	0	0	0	2	0	0	0	0	**13**	
0345 - 0400	0	4	1	0	2	1	0	0	1	0	2	0	0	**11**	**43**
0400 - 0415	0	10	2	0	1	1	0	0	2	0	0	0	0	**16**	
0415 - 0430	0	13	2	0	0	2	0	0	3	1	0	0	0	**21**	
0430 - 0445	0	11	3	0	0	0	0	0	1	0	0	0	0	**15**	
0445 - 0500	0	16	4	0	0	0	0	0	1	0	0	0	0	**21**	**73**
0500 - 0515	0	17	3	0	1	0	0	0	2	0	0	0	0	**23**	
0515 - 0530	0	11	2	0	0	1	0	0	2	0	0	0	0	**16**	
0530 - 0545	0	18	2	0	1	0	0	0	1	0	0	0	0	**22**	
0545 - 0600	0	16	3	0	1	2	0	0	0	0	0	0	0	**22**	**83**
0600 - 0615	0	27	6	0	1	0	0	0	3	0	0	0	0	**37**	
0615 - 0630	0	46	7	0	0	0	0	0	1	0	1	0	0	**55**	
0630 - 0645	0	40	10	0	3	0	0	2	2	0	0	0	0	**57**	
0645 - 0700	0	60	17	0	1	1	0	1	6	0	0	0	0	**86**	**235**
0700 - 0715	0	72	15	1	4	0	0	0	1	0	0	0	0	**93**	
0715 - 0730	0	112	19	0	2	2	0	1	5	1	0	0	0	**142**	
0730 - 0745	2	115	17	0	8	0	0	0	6	0	0	0	0	**148**	
0745 - 0800	1	131	30	0	1	0	0	0	9	0	0	0	0	**172**	**555**
0800 - 0815	0	114	26	0	5	1	0	0	4	0	0	0	0	**150**	
0815 - 0830	0	112	34	0	3	0	0	0	11	0	0	0	0	**160**	
0830 - 0845	0	110	33	0	4	0	0	1	3	0	0	1	0	**152**	
0845 - 0900	0	93	32	2	4	1	0	1	8	0	0	0	0	**141**	**603**
0900 - 0915	1	81	28	0	4	1	0	0	2	0	0	1	0	**118**	
0915 - 0930	0	83	32	0	5	1	0	0	5	0	0	0	0	**126**	
0930 - 0945	0	106	28	0	3	1	0	0	7	1	0	0	0	**146**	
0945 - 1000	0	82	26	0	4	1	0	1	6	1	0	0	0	**121**	**511**
1000 - 1015	0	101	41	0	5	0	0	0	7	0	0	0	0	**154**	
1015 - 1030	0	102	22	0	1	1	0	0	3	0	0	0	0	**129**	
1030 - 1045	0	103	19	0	3	0	0	0	5	0	0	0	0	**130**	
1045 - 1100	0	110	31	0	5	0	0	0	13	0	0	0	0	**159**	**572**
1100 - 1115	0	134	33	2	6	0	0	1	6	0	0	0	0	**182**	
1115 - 1130	0	127	42	0	3	0	0	1	6	0	0	0	0	**179**	
1130 - 1145	0	124	57	1	3	2	0	0	7	0	0	0	0	**194**	
1145 - 1200	0	127	28	1	3	0	0	0	15	0	0	0	0	**174**	**729**
1200 - 1215	0	144	43	0	5	0	0	1	6	1	0	0	0	**200**	
1215 - 1230	0	167	41	5	1	0	0	1	8	0	0	0	0	**223**	
1230 - 1245	1	171	47	5	1	1	0	0	7	0	0	0	0	**233**	
1245 - 1300	0	159	45	0	6	0	0	0	7	0	0	0	0	**217**	**873**
1300 - 1315	0	133	31	2	2	0	0	1	3	0	1	0	0	**173**	
1315 - 1330	0	169	40	0	1	1	0	0	8	0	0	0	0	**219**	
1330 - 1345	0	146	32	4	0	0	0	0	3	1	0	0	0	**186**	
1345 - 1400	1	164	39	0	0	0	0	0	6	0	0	0	0	**210**	**788**
1400 - 1415	0	127	34	0	1	0	0	0	9	0	0	0	0	**171**	
1415 - 1430	0	161	37	1	2	1	0	2	8	0	0	0	0	**212**	
1430 - 1445	0	170	38	0	4	2	0	0	8	0	0	0	0	**222**	
1445 - 1500	0	189	32	0	2	0	0	0	20	0	0	0	0	**243**	**848**
1500 - 1515	0	145	46	0	0	0	0	0	3	0	0	0	0	**194**	
1515 - 1530	1	161	39	1	2	0	0	1	6	0	0	0	0	**211**	
1530 - 1545	0	187	38	0	0	0	0	2	7	0	0	0	0	**234**	
1545 - 1600	1	186	51	1	1	0	0	0	6	1	0	0	0	**247**	**886**
1600 - 1615	0	153	44	0	3	0	0	1	7	0	0	0	0	**208**	
1615 - 1630	0	242	47	0	3	1	0	0	7	0	0	0	0	**300**	
1630 - 1645	0	207	43	0	0	0	0	0	2	0	0	0	0	**252**	
1645 - 1700	2	211	33	0	0	0	0	0	7	0	0	0	0	**253**	**1013**
1700 - 1715	1	240	50	0	2	0	0	0	5	0	0	0	0	**298**	
1715 - 1730	0	205	48	0	1	0	0	1	8	0	0	0	0	**263**	
1730 - 1745	0	161	33	0	1	0	0	0	7	0	0	0	0	**202**	
1745 - 1800	0	154	37	0	4	1	0	1	4	0	0	0	0	**201**	**964**
1800 - 1815	1	145	30	0	2	0	0	0	4	0	0	0	0	**182**	
1815 - 1830	0	155	32	0	2	0	0	1	6	0	0	0	0	**196**	
1830 - 1845	1	115	23	0	1	0	0	0	5	0	0	0	0	**145**	
1845 - 1900	2	109	19	0	1	0	0	0	4	0	0	0	0	**135**	**658**
1900 - 1915	2	96	16	0	2	0	0	0	2	0	0	0	0	**118**	
1915 - 1930	0	107	24	0	1	1	0	0	3	0	0	0	0	**136**	
1930 - 1945	1	91	7	0	1	0	0	0	4	0	0	0	0	**104**	
1945 - 2000	0	88	16	0	2	0	0	0	3	0	0	0	0	**109**	**467**
2000 - 2015	0	95	14	0	0	0	0	0	2	0	0	0	0	**111**	
2015 - 2030	0	71	12	0	1	1	0	0	4	0	0	0	0	**89**	
2030 - 2045	0	72	12	0	0	0	0	0	1	0	0	0	0	**85**	
2045 - 2100	0	76	14	0	1	0	0	0	5	0	0	0	0	**96**	**381**
2100 - 2115	0	84	13	0	1	0	0	0	3	0	0	0	0	**101**	
2115 - 2130	0	89	13	0	0	0	0	0	1	0	0	0	0	**103**	
2130 - 2145	0	74	14	0	1	0	0	0	2	0	0	2	0	**93**	
2145 - 2200	0	95	15	0	0	0	0	0	1	0	0	1	0	**112**	**409**
2200 - 2215	0	85	15	0	0	0	0	0	1	0	0	0	0	**101**	
2215 - 2230	0	70	9	0	1	0	0	0	2	0	0	1	0	**83**	
2230 - 2245	0	85	11	0	0	0	0	0	2	0	0	0	0	**98**	
2245 - 2300	0	135	16	0	0	0	0	0	5	0	0	0	0	**156**	**438**
2300 - 2315	0	109	12	0	0	0	0	0	0	0	0	1	0	**122**	
2315 - 2330	0	56	7	0	0	0	0	0	1	0	0	0	0	**64**	
2330 - 2345	0	28	4	0	0	0	0	0	3	0	0	0	0	**35**	
2345 - 0000	0	36	5	0	1	0	0	0	2	0	0	0	0	**44**	**265**

Session Total	18	8882	2001	26	162	45	0	21	402	7	5	7	0	**11576**
Session Average	0.19	92.52	20.84	0.27	1.69	0.47	0.00	0.22	4.19	0.07	0.05	0.07	0.00	**120.58**
Session Percentage	0.16	76.73	17.29	0.22	1.40	0.39	0.00	0.18	3.47	0.06	0.04	0.06	0.00	

AM Peak Hour	0700 - 0800	0715 - 0815	0815 - 0915	0800 - 0900	0730 - 0830	0845 - 0945	-	0630 - 0730	0730 - 0830	0900 - 1000	0530 - 0630	0815 - 0915	-	**0745 - 0845**
AM Peak Hour Volume	3	472	127	2	17	4	0	4	30	2	1	2	0	**634**

Noon Peak Hour	1145 - 1245	1445 - 1545	1200 - 1300	1215 - 1315	1030 - 1130	1345 - 1445	-	1445 - 1545	1400 - 1500	1115 - 1215	1215 - 1315	-	-	**1445 - 1545**
Noon Peak Hour Volume	1	682	176	12	17	3	0	3	45	1	1	0	0	**882**

PM Peak Hour	1815 - 1915	1615 - 1715	1545 - 1645	1500 - 1600	1730 - 1830	1530 - 1630	-	1515 - 1615	1530 - 1630	1500 - 1600	-	-	-	**1615 - 1715**
PM Peak Hour Volume	5	900	185	2	9	1	0	4	27	1	0	0	0	**1103**

Site 12
I-26 S/Bound Off-Ramp,
north of I-20

Date
Saturday, April 27, 2024

Lat/Long
34.038500°, -81.109979°

Weather
Mostly Cloudy
69°F

Click here for Detailed Weather

0000 - 2400 (Saturday 24h Session) (04-27-2024)
SB WB 15min

	Southbound (Movement 12.1)													15min	60min
TIME	1	2	3	4	5	6	7	8	9	10	11	12	13	Total	Total
0000 - 0015	0	28	2	0	0	0	0	0	1	0	0	0	0	**31**	
0015 - 0030	0	28	1	0	1	0	0	0	1	0	0	0	0	**31**	
0030 - 0045	1	25	1	0	1	0	0	0	0	0	0	0	0	**28**	
0045 - 0100	0	27	1	0	1	0	0	0	1	0	0	0	0	**30**	**120**
0100 - 0115	0	22	2	0	0	0	0	0	4	0	0	0	0	**28**	
0115 - 0130	1	13	1	0	0	0	0	0	1	0	0	0	0	**16**	
0130 - 0145	0	24	2	0	0	0	0	0	0	0	0	0	0	**26**	
0145 - 0200	0	15	1	0	0	0	0	0	0	0	0	0	0	**16**	**86**
0200 - 0215	0	18	2	0	1	0	0	0	0	0	0	0	0	**21**	
0215 - 0230	0	15	1	0	2	0	0	0	1	0	0	0	0	**19**	
0230 - 0245	0	14	2	0	1	0	0	0	1	0	0	0	0	**18**	
0245 - 0300	0	21	2	0	1	0	0	0	2	0	0	0	0	**26**	**84**
0300 - 0315	0	11	1	0	0	0	0	0	0	0	1	0	0	**13**	
0315 - 0330	0	10	2	0	1	0	0	0	0	0	0	0	0	**13**	
0330 - 0345	0	7	0	0	0	0	0	0	0	0	0	0	0	**7**	
0345 - 0400	0	7	0	0	1	1	0	0	1	0	0	0	0	**10**	**43**
0400 - 0415	0	5	0	0	0	0	0	0	3	0	1	0	0	**9**	
0415 - 0430	0	9	1	0	0	0	0	0	1	0	0	0	0	**11**	
0430 - 0445	0	5	1	0	0	0	0	0	0	0	0	0	0	**6**	
0445 - 0500	0	8	2	0	1	0	0	0	2	0	0	0	0	**13**	**39**
0500 - 0515	0	10	2	0	0	0	0	0	1	0	0	0	0	**13**	
0515 - 0530	0	11	3	0	0	0	0	0	1	0	0	0	0	**15**	
0530 - 0545	0	14	2	0	0	0	0	0	1	0	0	0	0	**17**	
0545 - 0600	0	16	1	0	0	0	0	0	3	0	0	0	0	**20**	**65**
0600 - 0615	0	14	4	0	0	0	0	0	2	0	0	0	0	**20**	
0615 - 0630	0	15	8	0	0	0	0	0	3	0	0	0	0	**26**	
0630 - 0645	0	27	6	0	1	0	0	0	2	0	0	0	0	**36**	
0645 - 0700	0	21	3	0	1	1	0	1	0	0	0	0	0	**27**	**109**
0700 - 0715	0	33	2	0	0	0	0	1	3	0	0	0	0	**39**	
0715 - 0730	0	51	6	0	0	0	0	0	2	0	0	0	0	**59**	
0730 - 0745	0	44	6	0	1	0	0	0	3	0	0	0	0	**54**	
0745 - 0800	0	45	12	1	1	1	0	0	3	0	0	0	0	**63**	**215**
0800 - 0815	0	52	8	0	5	0	0	0	3	0	0	0	0	**68**	
0815 - 0830	0	42	10	0	2	0	0	0	3	0	0	0	0	**57**	
0830 - 0845	0	64	7	0	0	0	0	0	7	0	0	0	0	**78**	
0845 - 0900	0	67	11	0	1	0	0	0	2	0	0	0	0	**81**	**284**
0900 - 0915	0	61	15	0	0	0	0	0	4	0	1	0	0	**81**	
0915 - 0930	1	72	12	0	1	0	0	0	8	0	0	0	0	**94**	
0930 - 0945	0	94	13	0	2	0	0	0	4	0	0	0	0	**113**	
0945 - 1000	0	88	17	0	2	0	0	1	3	0	0	0	0	**111**	**399**
1000 - 1015	0	81	13	0	1	0	0	2	3	0	0	0	0	**100**	
1015 - 1030	0	76	12	2	2	0	0	0	8	0	0	0	0	**100**	
1030 - 1045	1	105	16	0	0	1	0	0	2	0	0	0	0	**125**	
1045 - 1100	0	110	28	0	2	1	0	0	2	0	0	0	0	**143**	**468**
1100 - 1115	1	109	10	0	1	1	0	0	4	0	0	0	0	**126**	
1115 - 1130	0	96	21	0	0	1	0	0	3	0	0	0	0	**121**	
1130 - 1145	1	107	23	0	0	0	0	0	1	2	0	0	0	**134**	
1145 - 1200	0	118	29	0	0	0	0	0	5	0	0	0	0	**152**	**533**
1200 - 1215	0	118	20	0	1	1	0	0	1	0	0	0	0	**141**	
1215 - 1230	0	113	23	0	1	0	0	0	5	0	0	0	0	**142**	
1230 - 1245	0	120	16	0	0	0	0	1	2	0	0	0	0	**139**	
1245 - 1300	0	100	21	0	2	0	0	0	2	0	0	0	0	**125**	**547**
1300 - 1315	0	112	26	1	3	0	0	0	2	0	0	0	0	**144**	
1315 - 1330	0	150	29	0	2	0	0	0	4	0	0	0	0	**185**	
1330 - 1345	1	132	24	0	1	0	0	0	3	0	0	0	0	**161**	
1345 - 1400	0	133	29	0	4	0	0	0	4	0	0	0	0	**170**	**660**
1400 - 1415	0	126	26	0	0	1	0	0	4	0	0	0	0	**157**	
1415 - 1430	1	134	36	0	1	0	0	3	1	0	0	0	0	**176**	
1430 - 1445	0	95	22	0	1	0	0	0	2	0	0	0	0	**120**	
1445 - 1500	0	119	14	0	0	0	0	0	3	0	0	0	0	**136**	**589**
1500 - 1515	0	105	28	0	4	0	0	0	1	0	0	0	0	**138**	
1515 - 1530	1	114	22	0	0	0	0	0	2	0	0	0	0	**139**	
1530 - 1545	3	135	16	0	0	1	0	0	1	0	0	0	0	**156**	
1545 - 1600	0	145	25	0	1	0	0	0	2	1	0	0	0	**174**	**607**
1600 - 1615	0	115	24	0	1	0	0	0	2	0	0	0	0	**142**	
1615 - 1630	0	104	21	0	1	0	0	0	3	0	0	0	0	**129**	
1630 - 1645	0	105	14	0	1	0	0	0	1	0	0	0	0	**121**	
1645 - 1700	0	104	17	0	1	0	0	0	5	0	0	0	0	**127**	**519**
1700 - 1715	0	103	19	0	0	1	0	0	5	0	0	0	0	**128**	
1715 - 1730	0	117	12	0	2	0	0	0	1	0	0	0	0	**132**	
1730 - 1745	0	88	17	0	2	0	0	0	1	0	0	0	0	**108**	
1745 - 1800	0	77	19	0	0	0	0	0	0	0	0	0	0	**96**	**464**
1800 - 1815	0	111	21	0	2	0	0	0	2	0	0	0	0	**136**	
1815 - 1830	0	121	17	0	0	0	0	0	1	0	0	0	0	**139**	
1830 - 1845	1	83	12	1	0	0	0	0	2	0	0	0	0	**99**	
1845 - 1900	0	82	15	0	2	0	0	0	2	0	0	0	0	**101**	**475**
1900 - 1915	0	90	14	0	1	0	0	0	0	0	0	0	0	**105**	
1915 - 1930	0	99	7	0	2	0	0	0	1	0	0	0	0	**109**	
1930 - 1945	0	113	18	0	2	0	0	0	2	0	0	0	0	**135**	
1945 - 2000	0	121	15	0	0	0	0	0	1	0	0	0	0	**137**	**486**
2000 - 2015	0	91	18	0	0	0	0	0	5	0	0	0	0	**114**	
2015 - 2030	0	63	12	0	0	1	0	0	0	0	0	0	0	**76**	
2030 - 2045	0	70	14	0	0	0	0	0	3	0	0	0	0	**87**	
2045 - 2100	0	73	13	0	1	0	0	0	0	0	0	0	0	**87**	**364**
2100 - 2115	1	78	10	0	1	0	0	0	0	0	0	0	0	**90**	
2115 - 2130	0	124	13	0	0	0	0	0	0	0	0	0	0	**137**	
2130 - 2145	0	133	16	0	4	0	0	0	0	0	0	0	0	**153**	
2145 - 2200	0	88	11	0	0	0	0	0	1	0	0	0	0	**100**	**480**
2200 - 2215	0	74	9	1	1	0	0	0	0	0	0	0	0	**85**	
2215 - 2230	0	103	16	0	0	0	0	0	1	0	0	0	0	**120**	
2230 - 2245	0	72	13	0	1	0	0	0	1	0	0	0	0	**87**	
2245 - 2300	0	42	6	0	0	0	0	0	0	0	0	0	0	**48**	**340**
2300 - 2315	0	34	6	0	0	0	0	0	1	0	0	0	0	**41**	
2315 - 2330	0	34	5	0	0	0	0	0	2	0	0	0	0	**41**	
2330 - 2345	0	32	6	0	0	0	0	0	2	0	0	0	0	**40**	
2345 - 0000	0	40	7	1	0	1	0	0	0	0	0	0	0	**49**	**171**

Session Total	14	6690	1139	7	80	13	0	9	189	3	3	0	0	**8147**
Session Average	0.15	69.69	11.86	0.07	0.83	0.14	0.00	0.09	1.97	0.03	0.03	0.00	0.00	**84.86**
Session Percentage	0.17	82.12	13.98	0.09	0.98	0.16	0.00	0.11	2.32	0.04	0.04	0.00	0.00	

AM Peak Hour	0830 - 0930	0945 - 1045	0945 - 1045	0930 - 1030	0730 - 0830	0600 - 0700	-	0915 - 1015	0830 - 0930	-	0815 - 0915	-	-	**0945 - 1045**
AM Peak Hour Volume	1	350	58	2	9	1	0	3	21	0	1	0	0	**436**

Noon Peak Hour	1445 - 1545	1315 - 1415	1330 - 1430	1000 - 1100	1300 - 1400	1030 - 1130	-	1330 - 1430	1015 - 1115	1045 - 1145	-	-	-	**1315 - 1415**
Noon Peak Hour Volume	4	541	115	2	10	4	0	3	16	2	0	0	0	**673**

PM Peak Hour	1500 - 1600	1515 - 1615	1500 - 1600	1745 - 1845	1845 - 1945	1500 - 1600	-	-	1615 - 1715	1500 - 1600	-	-	-	**1515 - 1615**
PM Peak Hour Volume	4	509	91	1	7	1	0	0	14	1	0	0	0	**611**

Bi-Directional Class Count || SB WB Average 15min

Columbia, SC

Marr Traffic DATA COLLECTION
www.marrtraffic.com

Site 12
I-26 S/Bound Off-Ramp,
north of I-20

Date
Sunday, April 21, 2024

Lat/Long
34.038500°, -81.109979°

Weather
Cloudy
66°F

0000 - 2400 (Weekday 24h Session) (All Dates)
SB WB Average 15min

	SB WB Average 15min													15min	60min
Time	1	2	3	4	5	6	7	8	9	10	11	12	13	Total	Total
0000 - 0015	0	20	4	0	1	1	0	0	2	0	0	0	0	**27**	
0015 - 0030	0	17	3	0	1	1	0	0	1	0	0	0	0	**23**	
0030 - 0045	0	15	2	0	1	0	0	0	1	0	0	0	0	**19**	
0045 - 0100	0	13	2	0	1	1	0	0	1	0	0	0	0	**18**	**86**
0100 - 0115	0	11	2	0	0	1	0	0	1	0	0	0	0	**16**	
0115 - 0130	0	11	2	0	0	0	0	0	1	0	0	0	0	**15**	
0130 - 0145	0	10	2	0	0	1	0	0	1	0	0	0	0	**14**	
0145 - 0200	0	10	2	0	0	0	0	0	1	0	0	0	0	**14**	**59**
0200 - 0215	0	11	2	0	1	0	0	0	1	0	0	0	0	**15**	
0215 - 0230	0	9	1	0	1	1	0	0	1	0	0	0	0	**13**	
0230 - 0245	0	7	1	0	1	1	0	0	1	0	0	0	0	**12**	
0245 - 0300	0	8	1	0	1	0	0	0	2	0	0	0	0	**13**	**53**
0300 - 0315	0	7	1	0	1	0	0	0	1	0	0	0	0	**10**	
0315 - 0330	0	5	1	0	1	0	0	0	1	0	1	0	0	**9**	
0330 - 0345	0	7	2	0	0	0	0	0	2	0	0	0	0	**11**	
0345 - 0400	0	5	1	0	1	0	0	0	2	0	0	0	0	**9**	**39**
0400 - 0415	0	7	2	0	0	0	0	0	2	0	0	0	0	**11**	
0415 - 0430	0	7	1	0	0	0	0	0	2	0	0	0	0	**12**	
0430 - 0445	0	9	2	0	1	0	0	0	1	0	0	0	0	**13**	
0445 - 0500	0	9	2	0	0	0	0	0	3	0	0	0	0	**15**	**50**
0500 - 0515	0	10	2	0	0	0	0	0	2	0	0	0	0	**15**	
0515 - 0530	0	10	3	0	1	0	0	0	3	0	0	0	0	**16**	
0530 - 0545	0	16	4	0	1	0	0	0	2	0	0	0	0	**23**	
0545 - 0600	0	18	5	0	1	0	0	0	3	0	0	0	0	**26**	**80**
0600 - 0615	0	24	6	0	1	0	0	0	4	0	0	0	0	**35**	
0615 - 0630	0	36	9	0	1	0	0	0	2	0	0	0	0	**48**	
0630 - 0645	0	48	10	0	2	0	0	0	4	0	0	0	0	**64**	
0645 - 0700	0	50	12	0	2	0	0	1	3	0	0	0	0	**69**	**216**
0700 - 0715	0	59	13	0	3	0	0	0	5	0	0	0	0	**80**	
0715 - 0730	0	93	19	0	4	1	0	1	4	1	0	0	0	**122**	
0730 - 0745	0	103	20	0	4	0	0	0	5	0	0	0	0	**133**	
0745 - 0800	0	117	24	0	3	1	0	0	5	0	0	0	0	**152**	**487**
0800 - 0815	0	95	22	0	4	0	0	0	5	0	0	0	0	**127**	
0815 - 0830	0	100	26	0	4	0	0	0	6	0	0	0	0	**136**	
0830 - 0845	0	95	23	0	4	0	0	1	4	0	0	0	0	**126**	
0845 - 0900	0	91	23	0	4	0	0	1	6	0	0	0	0	**125**	**514**
0900 - 0915	0	72	25	0	4	1	0	1	6	0	0	0	0	**109**	
0915 - 0930	0	79	20	0	3	0	0	0	7	1	0	0	0	**111**	
0930 - 0945	0	94	22	0	3	0	0	0	6	0	0	0	0	**127**	
0945 - 1000	0	91	23	0	3	0	0	1	6	0	0	0	0	**124**	**470**
1000 - 1015	0	97	26	0	3	0	0	1	6	0	0	0	0	**133**	
1015 - 1030	0	88	24	0	4	1	0	0	8	0	0	0	0	**126**	
1030 - 1045	0	100	24	0	2	0	0	0	6	0	0	0	0	**133**	
1045 - 1100	0	96	30	0	3	0	0	0	7	0	0	0	0	**137**	**529**
1100 - 1115	0	103	26	0	3	1	0	0	6	0	0	0	0	**140**	
1115 - 1130	0	105	31	0	2	0	0	0	6	0	0	0	0	**145**	
1130 - 1145	0	115	35	0	3	1	0	1	8	0	0	0	0	**162**	
1145 - 1200	0	119	30	0	2	1	0	0	10	0	0	0	0	**162**	**609**
1200 - 1215	0	115	31	0	3	1	0	0	5	0	0	0	0	**155**	
1215 - 1230	0	118	33	1	2	0	0	1	7	0	0	0	0	**162**	
1230 - 1245	0	136	32	1	2	1	0	0	7	0	0	0	0	**178**	
1245 - 1300	0	128	31	1	3	0	0	0	8	0	0	0	0	**173**	**667**
1300 - 1315	0	126	30	1	2	1	0	1	7	0	0	0	0	**167**	
1315 - 1330	0	136	34	1	2	0	0	0	7	0	0	0	0	**180**	
1330 - 1345	0	134	31	1	2	0	0	1	7	1	0	0	0	**176**	
1345 - 1400	0	136	31	0	2	0	0	0	8	0	0	0	0	**178**	**701**
1400 - 1415	0	136	32	1	2	1	0	1	7	0	0	0	0	**179**	
1415 - 1430	0	155	32	1	2	1	0	1	8	0	0	0	0	**199**	
1430 - 1445	0	139	35	1	2	1	0	1	7	0	0	0	0	**187**	
1445 - 1500	0	148	35	0	2	0	0	1	9	0	0	0	0	**196**	**762**
1500 - 1515	1	159	38	0	4	0	0	1	7	0	0	0	0	**210**	
1515 - 1530	0	162	37	0	3	0	0	1	5	0	0	0	0	**209**	
1530 - 1545	1	173	38	1	2	1	0	1	6	0	0	0	0	**221**	
1545 - 1600	0	177	47	0	3	1	0	0	5	0	0	0	0	**234**	**875**
1600 - 1615	0	176	43	0	3	0	0	1	6	0	0	0	0	**229**	
1615 - 1630	0	199	42	0	3	0	0	0	4	0	0	0	0	**248**	
1630 - 1645	0	193	38	0	2	0	0	0	3	0	0	0	0	**238**	
1645 - 1700	0	196	31	0	1	0	0	0	5	0	0	0	0	**233**	**948**
1700 - 1715	0	191	40	0	1	1	0	0	5	0	0	0	0	**238**	
1715 - 1730	0	197	29	0	1	0	0	0	5	0	0	0	0	**233**	
1730 - 1745	0	173	35	0	1	0	0	0	4	0	0	0	0	**214**	
1745 - 1800	0	152	36	0	1	0	0	0	5	0	0	0	0	**194**	**879**
1800 - 1815	0	138	31	0	1	0	0	0	5	0	0	0	0	**176**	
1815 - 1830	0	134	28	0	1	0	0	0	4	0	0	0	0	**168**	
1830 - 1845	1	106	21	0	1	0	0	0	3	0	0	0	0	**132**	
1845 - 1900	0	99	18	0	1	0	0	0	3	0	0	0	0	**121**	**598**
1900 - 1915	1	90	17	0	1	0	0	0	2	0	0	0	0	**111**	
1915 - 1930	0	95	19	0	1	0	0	0	3	0	0	0	0	**120**	
1930 - 1945	0	98	15	0	1	0	0	0	3	0	0	0	0	**118**	
1945 - 2000	0	101	14	0	1	0	0	0	3	0	0	0	0	**120**	**469**
2000 - 2015	0	81	13	0	0	0	0	0	3	0	0	0	0	**97**	
2015 - 2030	0	70	11	0	1	0	0	0	2	0	0	0	0	**85**	
2030 - 2045	0	70	13	0	0	0	0	0	3	0	0	0	0	**87**	
2045 - 2100	0	63	10	0	1	0	0	0	3	0	0	0	0	**77**	**346**
2100 - 2115	0	62	10	0	1	0	0	0	3	0	0	0	0	**77**	
2115 - 2130	0	65	9	0	0	0	0	0	3	0	0	0	0	**77**	
2130 - 2145	0	60	10	0	1	0	0	0	2	0	0	0	0	**74**	
2145 - 2200	0	60	9	0	0	0	0	0	2	0	0	0	0	**72**	**300**
2200 - 2215	0	47	8	0	1	0	0	0	2	0	0	0	0	**59**	
2215 - 2230	0	63	9	0	1	0	0	0	3	0	0	0	0	**76**	
2230 - 2245	0	58	9	0	0	0	0	0	2	0	0	0	0	**69**	
2245 - 2300	0	42	7	0	0	0	0	0	2	0	0	0	0	**52**	**256**
2300 - 2315	0	40	7	0	0	0	0	0	1	0	0	0	0	**47**	
2315 - 2330	0	27	5	0	1	1	0	0	2	0	0	0	0	**36**	
2330 - 2345	0	24	5	0	0	0	0	0	1	0	0	0	0	**31**	
2345 - 0000	0	21	5	0	1	0	0	0	1	0	0	0	0	**29**	**143**

Session Total	11	7790	1718	15	147	34	1	21	382	8	5	3	0	**10135**
Session Average	0.11	81.15	17.90	0.15	1.53	0.35	0.01	0.22	3.98	0.08	0.06	0.03	0.00	**105.57**
Session Percentage	0.11	76.86	16.95	0.15	1.45	0.34	0.01	0.21	3.77	0.08	0.05	0.03	0.00	

AM Peak Hour	0730 - 0830	0730 - 0830	0815 - 0915	0930 - 1030	0800 - 0900	0700 - 0800	0630 - 0730	0830 - 0930	0930 - 1030	0900 - 1000	0700 - 0800	0830 - 0930	-	**0730 - 0830**
AM Peak Volume	1	415	97	1	15	3	0	2	27	1	0	1	0	**547**

Noon Peak Hour	1445 - 1545	1445 - 1545	1445 - 1545	1245 - 1345	1015 - 1115	1015 - 1115	1430 - 1530	1415 - 1515	1400 - 1500	1245 - 1345	1300 - 1400	1045 - 1145	-	**1445 - 1545**
Noon Peak Volume	2	643	148	3	12	3	0	4	31	1	0	0	0	**836**

PM Peak Hour	1500 - 1600	1615 - 1715	1530 - 1630	1500 - 1600	1500 - 1600	1515 - 1615	1630 - 1730	1500 - 1600	1500 - 1600	1500 - 1600	1515 - 1615	1945 - 2045	-	**1615 - 1715**
PM Peak Volume	2	778	170	2	11	2	0	3	23	1	0	0	0	**957**

Bi-Directional Class Count || Volume Summary 15min

Columbia, SC

Marr Traffic DATA COLLECTION

www.marrtraffic.com

Site 12

I-26 S/Bound Off-Ramp,
north of I-20

Date

Sunday, April 21, 2024

Lat/Long

34.038500°, -81.109979°

Weather

Cloudy
66°F

Click here for Detailed Weather

0000 - 2400 (Sunday 24h Session) (04-21-2024)

Volume Summary 15min

TIME	Volume Summary 15min NB	SB	15min Total	60min Total
0000 - 0015	0	61	**61**	
0015 - 0030	0	38	**38**	
0030 - 0045	0	36	**36**	
0045 - 0100	0	35	**35**	**170**
0100 - 0115	0	25	**25**	
0115 - 0130	0	34	**34**	
0130 - 0145	0	15	**15**	
0145 - 0200	0	29	**29**	**103**
0200 - 0215	0	24	**24**	
0215 - 0230	0	17	**17**	
0230 - 0245	0	21	**21**	
0245 - 0300	0	13	**13**	**75**
0300 - 0315	0	10	**10**	
0315 - 0330	0	9	**9**	
0330 - 0345	0	15	**15**	
0345 - 0400	0	7	**7**	**41**
0400 - 0415	0	8	**8**	
0415 - 0430	0	10	**10**	
0430 - 0445	0	10	**10**	
0445 - 0500	0	14	**14**	**42**
0500 - 0515	0	6	**6**	
0515 - 0530	0	7	**7**	
0530 - 0545	0	9	**9**	
0545 - 0600	0	17	**17**	**39**
0600 - 0615	0	15	**15**	
0615 - 0630	0	20	**20**	
0630 - 0645	0	21	**21**	
0645 - 0700	0	19	**19**	**75**
0700 - 0715	0	26	**26**	
0715 - 0730	0	42	**42**	
0730 - 0745	0	46	**46**	
0745 - 0800	0	48	**48**	**162**
0800 - 0815	0	27	**27**	
0815 - 0830	0	47	**47**	
0830 - 0845	0	46	**46**	
0845 - 0900	0	51	**51**	**171**
0900 - 0915	0	51	**51**	
0915 - 0930	0	71	**71**	
0930 - 0945	0	78	**78**	
0945 - 1000	0	91	**91**	**291**
1000 - 1015	0	91	**91**	
1015 - 1030	0	88	**88**	
1030 - 1045	0	99	**99**	
1045 - 1100	0	94	**94**	**372**
1100 - 1115	0	104	**104**	
1115 - 1130	0	101	**101**	
1130 - 1145	0	124	**124**	
1145 - 1200	0	161	**161**	**490**

Time	Volume Summary 15min NB	SB	15min Total	60min Total
1200 - 1215	0	127	**127**	
1215 - 1230	0	103	**103**	
1230 - 1245	0	133	**133**	
1245 - 1300	0	142	**142**	**505**
1300 - 1315	0	130	**130**	
1315 - 1330	0	108	**108**	
1330 - 1345	0	124	**124**	
1345 - 1400	0	129	**129**	**491**
1400 - 1415	0	139	**139**	
1415 - 1430	0	143	**143**	
1430 - 1445	0	115	**115**	
1445 - 1500	0	116	**116**	**513**
1500 - 1515	0	116	**116**	
1515 - 1530	0	88	**88**	
1530 - 1545	0	100	**100**	
1545 - 1600	0	117	**117**	**421**
1600 - 1615	0	86	**86**	
1615 - 1630	0	108	**108**	
1630 - 1645	0	98	**98**	
1645 - 1700	0	88	**88**	**380**
1700 - 1715	0	75	**75**	
1715 - 1730	0	93	**93**	
1730 - 1745	0	99	**99**	
1745 - 1800	0	86	**86**	**353**
1800 - 1815	0	96	**96**	
1815 - 1830	0	107	**107**	
1830 - 1845	0	76	**76**	
1845 - 1900	0	77	**77**	**356**
1900 - 1915	0	82	**82**	
1915 - 1930	0	86	**86**	
1930 - 1945	0	116	**116**	
1945 - 2000	0	68	**68**	**352**
2000 - 2015	0	62	**62**	
2015 - 2030	0	55	**55**	
2030 - 2045	0	62	**62**	
2045 - 2100	0	54	**54**	**233**
2100 - 2115	0	47	**47**	
2115 - 2130	0	38	**38**	
2130 - 2145	0	33	**33**	
2145 - 2200	0	40	**40**	**158**
2200 - 2215	0	29	**29**	
2215 - 2230	0	26	**26**	
2230 - 2245	0	24	**24**	
2245 - 2300	0	18	**18**	**97**
2300 - 2315	0	17	**17**	
2315 - 2330	0	15	**15**	
2330 - 2345	0	26	**26**	
2345 - 0000	0	15	**15**	**73**

Session Total	0	5963	**5963**
Session Average	0.00	62.11	**62.11**
Session Percentage	0.00	100.00	

Site 12
I-26 S/Bound Off-Ramp,
north of I-20

Date
Monday, April 22, 2024

Lat/Long
34.038500°, -81.109979°

Weather
Mostly Cloudy
57°F

Click here for Detailed Weather

0000 - 2400 (Weekday 24h Session) (04-22-2024)

Volume Summary 15min

TIME	Volume Summary 15min NB	SB	15min Total	60min Total
0000 - 0015	0	6	**6**	
0015 - 0030	0	15	**15**	
0030 - 0045	0	11	**11**	
0045 - 0100	0	4	**4**	**36**
0100 - 0115	0	9	**9**	
0115 - 0130	0	5	**5**	
0130 - 0145	0	11	**11**	
0145 - 0200	0	7	**7**	**32**
0200 - 0215	0	11	**11**	
0215 - 0230	0	7	**7**	
0230 - 0245	0	5	**5**	
0245 - 0300	0	9	**9**	**32**
0300 - 0315	0	12	**12**	
0315 - 0330	0	4	**4**	
0330 - 0345	0	11	**11**	
0345 - 0400	0	3	**3**	**30**
0400 - 0415	0	9	**9**	
0415 - 0430	0	11	**11**	
0430 - 0445	0	7	**7**	
0445 - 0500	0	15	**15**	**42**
0500 - 0515	0	15	**15**	
0515 - 0530	0	19	**19**	
0530 - 0545	0	29	**29**	
0545 - 0600	0	34	**34**	**97**
0600 - 0615	0	36	**36**	
0615 - 0630	0	59	**59**	
0630 - 0645	0	88	**88**	
0645 - 0700	0	86	**86**	**269**
0700 - 0715	0	103	**103**	
0715 - 0730	0	156	**156**	
0730 - 0745	0	161	**161**	
0745 - 0800	0	172	**172**	**592**
0800 - 0815	0	152	**152**	
0815 - 0830	0	155	**155**	
0830 - 0845	0	140	**140**	
0845 - 0900	0	143	**143**	**590**
0900 - 0915	0	119	**119**	
0915 - 0930	0	113	**113**	
0930 - 0945	0	138	**138**	
0945 - 1000	0	129	**129**	**499**
1000 - 1015	0	158	**158**	
1015 - 1030	0	140	**140**	
1030 - 1045	0	129	**129**	
1045 - 1100	0	119	**119**	**546**
1100 - 1115	0	158	**158**	
1115 - 1130	0	158	**158**	
1130 - 1145	0	162	**162**	
1145 - 1200	0	153	**153**	**631**

Time	Volume Summary 15min NB	SB	15min Total	60min Total
1200 - 1215	0	152	**152**	
1215 - 1230	0	178	**178**	
1230 - 1245	0	185	**185**	
1245 - 1300	0	147	**147**	**662**
1300 - 1315	0	159	**159**	
1315 - 1330	0	181	**181**	
1330 - 1345	0	191	**191**	
1345 - 1400	0	162	**162**	**693**
1400 - 1415	0	175	**175**	
1415 - 1430	0	222	**222**	
1430 - 1445	0	205	**205**	
1445 - 1500	0	200	**200**	**802**
1500 - 1515	0	234	**234**	
1515 - 1530	0	238	**238**	
1530 - 1545	0	264	**264**	
1545 - 1600	0	264	**264**	**1000**
1600 - 1615	0	271	**271**	
1615 - 1630	0	256	**256**	
1630 - 1645	0	267	**267**	
1645 - 1700	0	275	**275**	**1069**
1700 - 1715	0	268	**268**	
1715 - 1730	0	269	**269**	
1730 - 1745	0	274	**274**	
1745 - 1800	0	254	**254**	**1065**
1800 - 1815	0	192	**192**	
1815 - 1830	0	190	**190**	
1830 - 1845	0	141	**141**	
1845 - 1900	0	135	**135**	**658**
1900 - 1915	0	117	**117**	
1915 - 1930	0	106	**106**	
1930 - 1945	0	78	**78**	
1945 - 2000	0	126	**126**	**427**
2000 - 2015	0	84	**84**	
2015 - 2030	0	63	**63**	
2030 - 2045	0	69	**69**	
2045 - 2100	0	67	**67**	**283**
2100 - 2115	0	56	**56**	
2115 - 2130	0	54	**54**	
2130 - 2145	0	46	**46**	
2145 - 2200	0	44	**44**	**200**
2200 - 2215	0	36	**36**	
2215 - 2230	0	38	**38**	
2230 - 2245	0	42	**42**	
2245 - 2300	0	39	**39**	**155**
2300 - 2315	0	28	**28**	
2315 - 2330	0	32	**32**	
2330 - 2345	0	28	**28**	
2345 - 0000	0	24	**24**	**112**

Session Total	0	10522	**10522**
Session Average	0.00	109.60	**109.60**
Session Percentage	0.00	100.00	

Site 12
I-26 S/Bound Off-Ramp,
north of I-20

Date
Tuesday, April 23, 2024

Lat/Long
34.038500°, -81.109979°

Weather
Fair
58°F

Click here for Detailed Weather

0000 - 2400 (Weekday 24h Session) (04-23-2024)
Volume Summary 15min

TIME	Volume Summary 15min NB	Volume Summary 15min SB	15min Total	60min Total
0000 - 0015	0	15	**15**	
0015 - 0030	0	13	**13**	
0030 - 0045	0	5	**5**	
0045 - 0100	0	8	**8**	**41**
0100 - 0115	0	8	**8**	
0115 - 0130	0	12	**12**	
0130 - 0145	0	4	**4**	
0145 - 0200	0	14	**14**	**38**
0200 - 0215	0	6	**6**	
0215 - 0230	0	13	**13**	
0230 - 0245	0	11	**11**	
0245 - 0300	0	13	**13**	**43**
0300 - 0315	0	5	**5**	
0315 - 0330	0	5	**5**	
0330 - 0345	0	14	**14**	
0345 - 0400	0	8	**8**	**32**
0400 - 0415	0	15	**15**	
0415 - 0430	0	6	**6**	
0430 - 0445	0	19	**19**	
0445 - 0500	0	15	**15**	**55**
0500 - 0515	0	10	**10**	
0515 - 0530	0	24	**24**	
0530 - 0545	0	20	**20**	
0545 - 0600	0	28	**28**	**82**
0600 - 0615	0	44	**44**	
0615 - 0630	0	62	**62**	
0630 - 0645	0	78	**78**	
0645 - 0700	0	82	**82**	**266**
0700 - 0715	0	95	**95**	
0715 - 0730	0	146	**146**	
0730 - 0745	0	179	**179**	
0745 - 0800	0	200	**200**	**620**
0800 - 0815	0	147	**147**	
0815 - 0830	0	161	**161**	
0830 - 0845	0	144	**144**	
0845 - 0900	0	152	**152**	**604**
0900 - 0915	0	133	**133**	
0915 - 0930	0	122	**122**	
0930 - 0945	0	141	**141**	
0945 - 1000	0	131	**131**	**527**
1000 - 1015	0	132	**132**	
1015 - 1030	0	140	**140**	
1030 - 1045	0	143	**143**	
1045 - 1100	0	138	**138**	**553**
1100 - 1115	0	140	**140**	
1115 - 1130	0	155	**155**	
1130 - 1145	0	177	**177**	
1145 - 1200	0	166	**166**	**638**

Time	Volume Summary 15min NB	Volume Summary 15min SB	15min Total	60min Total
1200 - 1215	0	167	**167**	
1215 - 1230	0	149	**149**	
1230 - 1245	0	189	**189**	
1245 - 1300	0	151	**151**	**656**
1300 - 1315	0	189	**189**	
1315 - 1330	0	188	**188**	
1330 - 1345	0	188	**188**	
1345 - 1400	0	190	**190**	**755**
1400 - 1415	0	183	**183**	
1415 - 1430	0	198	**198**	
1430 - 1445	0	225	**225**	
1445 - 1500	0	219	**219**	**825**
1500 - 1515	0	242	**242**	
1515 - 1530	0	245	**245**	
1530 - 1545	0	276	**276**	
1545 - 1600	0	279	**279**	**1042**
1600 - 1615	0	300	**300**	
1615 - 1630	0	335	**335**	
1630 - 1645	0	335	**335**	
1645 - 1700	0	297	**297**	**1267**
1700 - 1715	0	318	**318**	
1715 - 1730	0	345	**345**	
1730 - 1745	0	315	**315**	
1745 - 1800	0	260	**260**	**1238**
1800 - 1815	0	220	**220**	
1815 - 1830	0	164	**164**	
1830 - 1845	0	166	**166**	
1845 - 1900	0	126	**126**	**676**
1900 - 1915	0	129	**129**	
1915 - 1930	0	130	**130**	
1930 - 1945	0	126	**126**	
1945 - 2000	0	116	**116**	**501**
2000 - 2015	0	103	**103**	
2015 - 2030	0	106	**106**	
2030 - 2045	0	86	**86**	
2045 - 2100	0	60	**60**	**355**
2100 - 2115	0	76	**76**	
2115 - 2130	0	63	**63**	
2130 - 2145	0	72	**72**	
2145 - 2200	0	42	**42**	**253**
2200 - 2215	0	43	**43**	
2215 - 2230	0	79	**79**	
2230 - 2245	0	64	**64**	
2245 - 2300	0	35	**35**	**221**
2300 - 2315	0	27	**27**	
2315 - 2330	0	28	**28**	
2330 - 2345	0	17	**17**	
2345 - 0000	0	20	**20**	**92**

Session Total	0	11380	**11380**
Session Average	0.00	118.54	**118.54**
Session Percentage	0.00	100.00	

Site 12
I-26 S/Bound Off-Ramp,
north of I-20

Date
Wednesday, April 24, 2024

Lat/Long
34.038500°, -81.109979°

Weather
Fair
66°F

Click here for Detailed Weather

0000 - 2400 (Weekday 24h Session) (04-24-2024)

Volume Summary 15min

TIME	Volume Summary 15min NB	SB	15min Total	60min Total
0000 - 0015	0	27	**27**	
0015 - 0030	0	24	**24**	
0030 - 0045	0	19	**19**	
0045 - 0100	0	19	**19**	**89**
0100 - 0115	0	15	**15**	
0115 - 0130	0	16	**16**	
0130 - 0145	0	11	**11**	
0145 - 0200	0	8	**8**	**50**
0200 - 0215	0	17	**17**	
0215 - 0230	0	17	**17**	
0230 - 0245	0	7	**7**	
0245 - 0300	0	8	**8**	**49**
0300 - 0315	0	15	**15**	
0315 - 0330	0	8	**8**	
0330 - 0345	0	14	**14**	
0345 - 0400	0	8	**8**	**45**
0400 - 0415	0	9	**9**	
0415 - 0430	0	8	**8**	
0430 - 0445	0	17	**17**	
0445 - 0500	0	11	**11**	**45**
0500 - 0515	0	19	**19**	
0515 - 0530	0	22	**22**	
0530 - 0545	0	32	**32**	
0545 - 0600	0	27	**27**	**100**
0600 - 0615	0	48	**48**	
0615 - 0630	0	53	**53**	
0630 - 0645	0	86	**86**	
0645 - 0700	0	95	**95**	**282**
0700 - 0715	0	107	**107**	
0715 - 0730	0	161	**161**	
0730 - 0745	0	189	**189**	
0745 - 0800	0	220	**220**	**677**
0800 - 0815	0	164	**164**	
0815 - 0830	0	206	**206**	
0830 - 0845	0	156	**156**	
0845 - 0900	0	154	**154**	**680**
0900 - 0915	0	126	**126**	
0915 - 0930	0	122	**122**	
0930 - 0945	0	128	**128**	
0945 - 1000	0	144	**144**	**520**
1000 - 1015	0	137	**137**	
1015 - 1030	0	134	**134**	
1030 - 1045	0	162	**162**	
1045 - 1100	0	158	**158**	**591**
1100 - 1115	0	130	**130**	
1115 - 1130	0	128	**128**	
1130 - 1145	0	175	**175**	
1145 - 1200	0	173	**173**	**606**

Time	Volume Summary 15min NB	SB	15min Total	60min Total
1200 - 1215	0	139	**139**	
1215 - 1230	0	163	**163**	
1230 - 1245	0	169	**169**	
1245 - 1300	0	198	**198**	**669**
1300 - 1315	0	193	**193**	
1315 - 1330	0	186	**186**	
1330 - 1345	0	191	**191**	
1345 - 1400	0	213	**213**	**783**
1400 - 1415	0	215	**215**	
1415 - 1430	0	233	**233**	
1430 - 1445	0	221	**221**	
1445 - 1500	0	215	**215**	**884**
1500 - 1515	0	271	**271**	
1515 - 1530	0	254	**254**	
1530 - 1545	0	261	**261**	
1545 - 1600	0	292	**292**	**1078**
1600 - 1615	0	300	**300**	
1615 - 1630	0	310	**310**	
1630 - 1645	0	293	**293**	
1645 - 1700	0	308	**308**	**1211**
1700 - 1715	0	290	**290**	
1715 - 1730	0	265	**265**	
1730 - 1745	0	264	**264**	
1745 - 1800	0	243	**243**	**1062**
1800 - 1815	0	185	**185**	
1815 - 1830	0	180	**180**	
1830 - 1845	0	153	**153**	
1845 - 1900	0	129	**129**	**647**
1900 - 1915	0	95	**95**	
1915 - 1930	0	144	**144**	
1930 - 1945	0	114	**114**	
1945 - 2000	0	140	**140**	**493**
2000 - 2015	0	103	**103**	
2015 - 2030	0	107	**107**	
2030 - 2045	0	117	**117**	
2045 - 2100	0	83	**83**	**410**
2100 - 2115	0	65	**65**	
2115 - 2130	0	65	**65**	
2130 - 2145	0	51	**51**	
2145 - 2200	0	64	**64**	**245**
2200 - 2215	0	61	**61**	
2215 - 2230	0	70	**70**	
2230 - 2245	0	93	**93**	
2245 - 2300	0	33	**33**	**257**
2300 - 2315	0	49	**49**	
2315 - 2330	0	33	**33**	
2330 - 2345	0	33	**33**	
2345 - 0000	0	23	**23**	**138**

Session Total	0	11611	**11611**
Session Average	0.00	120.95	**120.95**
Session Percentage	0.00	100.00	

Site 12
I-26 S/Bound Off-Ramp,
north of I-20

Date
Thursday, April 25, 2024

Lat/Long
34.038500°, -81.109979°

Weather
Fair
67°F

Click here for Detailed Weather

0000 - 2400 (Weekday 24h Session) (04-25-2024)
Volume Summary 15min

TIME	Volume Summary 15min NB	SB	15min Total	60min Total
0000 - 0015	0	21	**21**	
0015 - 0030	0	19	**19**	
0030 - 0045	0	17	**17**	
0045 - 0100	0	10	**10**	**67**
0100 - 0115	0	11	**11**	
0115 - 0130	0	7	**7**	
0130 - 0145	0	15	**15**	
0145 - 0200	0	8	**8**	**41**
0200 - 0215	0	13	**13**	
0215 - 0230	0	12	**12**	
0230 - 0245	0	11	**11**	
0245 - 0300	0	10	**10**	**46**
0300 - 0315	0	7	**7**	
0315 - 0330	0	14	**14**	
0330 - 0345	0	4	**4**	
0345 - 0400	0	13	**13**	**38**
0400 - 0415	0	9	**9**	
0415 - 0430	0	14	**14**	
0430 - 0445	0	17	**17**	
0445 - 0500	0	15	**15**	**55**
0500 - 0515	0	16	**16**	
0515 - 0530	0	12	**12**	
0530 - 0545	0	29	**29**	
0545 - 0600	0	37	**37**	**94**
0600 - 0615	0	46	**46**	
0615 - 0630	0	60	**60**	
0630 - 0645	0	82	**82**	
0645 - 0700	0	85	**85**	**273**
0700 - 0715	0	100	**100**	
0715 - 0730	0	147	**147**	
0730 - 0745	0	152	**152**	
0745 - 0800	0	187	**187**	**586**
0800 - 0815	0	178	**178**	
0815 - 0830	0	166	**166**	
0830 - 0845	0	167	**167**	
0845 - 0900	0	156	**156**	**667**
0900 - 0915	0	132	**132**	
0915 - 0930	0	127	**127**	
0930 - 0945	0	143	**143**	
0945 - 1000	0	143	**143**	**545**
1000 - 1015	0	159	**159**	
1015 - 1030	0	152	**152**	
1030 - 1045	0	145	**145**	
1045 - 1100	0	146	**146**	**602**
1100 - 1115	0	139	**139**	
1115 - 1130	0	173	**173**	
1130 - 1145	0	171	**171**	
1145 - 1200	0	152	**152**	**635**

Time	Volume Summary 15min NB	SB	15min Total	60min Total
1200 - 1215	0	158	**158**	
1215 - 1230	0	175	**175**	
1230 - 1245	0	198	**198**	
1245 - 1300	0	229	**229**	**760**
1300 - 1315	0	180	**180**	
1315 - 1330	0	195	**195**	
1330 - 1345	0	194	**194**	
1345 - 1400	0	170	**170**	**739**
1400 - 1415	0	214	**214**	
1415 - 1430	0	211	**211**	
1430 - 1445	0	203	**203**	
1445 - 1500	0	242	**242**	**870**
1500 - 1515	0	274	**274**	
1515 - 1530	0	291	**291**	
1530 - 1545	0	257	**257**	
1545 - 1600	0	268	**268**	**1090**
1600 - 1615	0	295	**295**	
1615 - 1630	0	300	**300**	
1630 - 1645	0	299	**299**	
1645 - 1700	0	284	**284**	**1178**
1700 - 1715	0	286	**286**	
1715 - 1730	0	263	**263**	
1730 - 1745	0	234	**234**	
1745 - 1800	0	221	**221**	**1004**
1800 - 1815	0	223	**223**	
1815 - 1830	0	201	**201**	
1830 - 1845	0	144	**144**	
1845 - 1900	0	147	**147**	**715**
1900 - 1915	0	132	**132**	
1915 - 1930	0	127	**127**	
1930 - 1945	0	155	**155**	
1945 - 2000	0	141	**141**	**555**
2000 - 2015	0	105	**105**	
2015 - 2030	0	99	**99**	
2030 - 2045	0	101	**101**	
2045 - 2100	0	91	**91**	**396**
2100 - 2115	0	103	**103**	
2115 - 2130	0	82	**82**	
2130 - 2145	0	68	**68**	
2145 - 2200	0	105	**105**	**358**
2200 - 2215	0	59	**59**	
2215 - 2230	0	117	**117**	
2230 - 2245	0	77	**77**	
2245 - 2300	0	33	**33**	**286**
2300 - 2315	0	47	**47**	
2315 - 2330	0	37	**37**	
2330 - 2345	0	38	**38**	
2345 - 0000	0	25	**25**	**147**

Session Total	0	11747	**11747**
Session Average	0.00	122.36	**122.36**
Session Percentage	0.00	100.00	

Site 12
I-26 S/Bound Off-Ramp,
north of I-20

Date
Friday, April 26, 2024

Lat/Long
34.038500°, -81.109979°

Weather
Cloudy
69°F

Click here for Detailed Weather

0000 - 2400 (Weekday 24h Session) (04-26-2024)

Volume Summary 15min

TIME	Volume Summary 15min NB	Volume Summary 15min SB	15min Total	60min Total
0000 - 0015	0	28	**28**	
0015 - 0030	0	18	**18**	
0030 - 0045	0	18	**18**	
0045 - 0100	0	17	**17**	**81**
0100 - 0115	0	14	**14**	
0115 - 0130	0	17	**17**	
0130 - 0145	0	14	**14**	
0145 - 0200	0	15	**15**	**60**
0200 - 0215	0	14	**14**	
0215 - 0230	0	8	**8**	
0230 - 0245	0	9	**9**	
0245 - 0300	0	10	**10**	**41**
0300 - 0315	0	11	**11**	
0315 - 0330	0	8	**8**	
0330 - 0345	0	13	**13**	
0345 - 0400	0	11	**11**	**43**
0400 - 0415	0	16	**16**	
0415 - 0430	0	21	**21**	
0430 - 0445	0	15	**15**	
0445 - 0500	0	21	**21**	**73**
0500 - 0515	0	23	**23**	
0515 - 0530	0	16	**16**	
0530 - 0545	0	22	**22**	
0545 - 0600	0	22	**22**	**83**
0600 - 0615	0	37	**37**	
0615 - 0630	0	55	**55**	
0630 - 0645	0	57	**57**	
0645 - 0700	0	86	**86**	**235**
0700 - 0715	0	93	**93**	
0715 - 0730	0	142	**142**	
0730 - 0745	0	148	**148**	
0745 - 0800	0	172	**172**	**555**
0800 - 0815	0	150	**150**	
0815 - 0830	0	160	**160**	
0830 - 0845	0	152	**152**	
0845 - 0900	0	141	**141**	**603**
0900 - 0915	0	118	**118**	
0915 - 0930	0	126	**126**	
0930 - 0945	0	146	**146**	
0945 - 1000	0	121	**121**	**511**
1000 - 1015	0	154	**154**	
1015 - 1030	0	129	**129**	
1030 - 1045	0	130	**130**	
1045 - 1100	0	159	**159**	**572**
1100 - 1115	0	182	**182**	
1115 - 1130	0	179	**179**	
1130 - 1145	0	194	**194**	
1145 - 1200	0	174	**174**	**729**

Time	Volume Summary 15min NB	Volume Summary 15min SB	15min Total	60min Total
1200 - 1215	0	200	**200**	
1215 - 1230	0	223	**223**	
1230 - 1245	0	233	**233**	
1245 - 1300	0	217	**217**	**873**
1300 - 1315	0	173	**173**	
1315 - 1330	0	219	**219**	
1330 - 1345	0	186	**186**	
1345 - 1400	0	210	**210**	**788**
1400 - 1415	0	171	**171**	
1415 - 1430	0	212	**212**	
1430 - 1445	0	222	**222**	
1445 - 1500	0	243	**243**	**848**
1500 - 1515	0	194	**194**	
1515 - 1530	0	211	**211**	
1530 - 1545	0	234	**234**	
1545 - 1600	0	247	**247**	**886**
1600 - 1615	0	208	**208**	
1615 - 1630	0	300	**300**	
1630 - 1645	0	252	**252**	
1645 - 1700	0	253	**253**	**1013**
1700 - 1715	0	298	**298**	
1715 - 1730	0	263	**263**	
1730 - 1745	0	202	**202**	
1745 - 1800	0	201	**201**	**964**
1800 - 1815	0	182	**182**	
1815 - 1830	0	196	**196**	
1830 - 1845	0	145	**145**	
1845 - 1900	0	135	**135**	**658**
1900 - 1915	0	118	**118**	
1915 - 1930	0	136	**136**	
1930 - 1945	0	104	**104**	
1945 - 2000	0	109	**109**	**467**
2000 - 2015	0	111	**111**	
2015 - 2030	0	89	**89**	
2030 - 2045	0	85	**85**	
2045 - 2100	0	96	**96**	**381**
2100 - 2115	0	101	**101**	
2115 - 2130	0	103	**103**	
2130 - 2145	0	93	**93**	
2145 - 2200	0	112	**112**	**409**
2200 - 2215	0	101	**101**	
2215 - 2230	0	83	**83**	
2230 - 2245	0	98	**98**	
2245 - 2300	0	156	**156**	**438**
2300 - 2315	0	122	**122**	
2315 - 2330	0	64	**64**	
2330 - 2345	0	35	**35**	
2345 - 0000	0	44	**44**	**265**

Session Total	0	11576	**11576**
Session Average	0.00	120.58	**120.58**
Session Percentage	0.00	100.00	

Site 12
I-26 S/Bound Off-Ramp,
north of I-20

Date
Saturday, April 27, 2024

Lat/Long
34.038500°, -81.109979°

Weather
Mostly Cloudy
69°F

Click here for Detailed Weather

0000 - 2400 (Saturday 24h Session) (04-27-2024)
Volume Summary 15min

TIME	Volume Summary 15min NB	SB	15min Total	60min Total
0000 - 0015	0	31	**31**	
0015 - 0030	0	31	**31**	
0030 - 0045	0	28	**28**	
0045 - 0100	0	30	**30**	**120**
0100 - 0115	0	28	**28**	
0115 - 0130	0	16	**16**	
0130 - 0145	0	26	**26**	
0145 - 0200	0	16	**16**	**86**
0200 - 0215	0	21	**21**	
0215 - 0230	0	19	**19**	
0230 - 0245	0	18	**18**	
0245 - 0300	0	26	**26**	**84**
0300 - 0315	0	13	**13**	
0315 - 0330	0	13	**13**	
0330 - 0345	0	7	**7**	
0345 - 0400	0	10	**10**	**43**
0400 - 0415	0	9	**9**	
0415 - 0430	0	11	**11**	
0430 - 0445	0	6	**6**	
0445 - 0500	0	13	**13**	**39**
0500 - 0515	0	13	**13**	
0515 - 0530	0	15	**15**	
0530 - 0545	0	17	**17**	
0545 - 0600	0	20	**20**	**65**
0600 - 0615	0	20	**20**	
0615 - 0630	0	26	**26**	
0630 - 0645	0	36	**36**	
0645 - 0700	0	27	**27**	**109**
0700 - 0715	0	39	**39**	
0715 - 0730	0	59	**59**	
0730 - 0745	0	54	**54**	
0745 - 0800	0	63	**63**	**215**
0800 - 0815	0	68	**68**	
0815 - 0830	0	57	**57**	
0830 - 0845	0	78	**78**	
0845 - 0900	0	81	**81**	**284**
0900 - 0915	0	81	**81**	
0915 - 0930	0	94	**94**	
0930 - 0945	0	113	**113**	
0945 - 1000	0	111	**111**	**399**
1000 - 1015	0	100	**100**	
1015 - 1030	0	100	**100**	
1030 - 1045	0	125	**125**	
1045 - 1100	0	143	**143**	**468**
1100 - 1115	0	126	**126**	
1115 - 1130	0	121	**121**	
1130 - 1145	0	134	**134**	
1145 - 1200	0	152	**152**	**533**

Time	Volume Summary 15min NB	SB	15min Total	60min Total
1200 - 1215	0	141	**141**	
1215 - 1230	0	142	**142**	
1230 - 1245	0	139	**139**	
1245 - 1300	0	125	**125**	**547**
1300 - 1315	0	144	**144**	
1315 - 1330	0	185	**185**	
1330 - 1345	0	161	**161**	
1345 - 1400	0	170	**170**	**660**
1400 - 1415	0	157	**157**	
1415 - 1430	0	176	**176**	
1430 - 1445	0	120	**120**	
1445 - 1500	0	136	**136**	**589**
1500 - 1515	0	138	**138**	
1515 - 1530	0	139	**139**	
1530 - 1545	0	156	**156**	
1545 - 1600	0	174	**174**	**607**
1600 - 1615	0	142	**142**	
1615 - 1630	0	129	**129**	
1630 - 1645	0	121	**121**	
1645 - 1700	0	127	**127**	**519**
1700 - 1715	0	128	**128**	
1715 - 1730	0	132	**132**	
1730 - 1745	0	108	**108**	
1745 - 1800	0	96	**96**	**464**
1800 - 1815	0	136	**136**	
1815 - 1830	0	139	**139**	
1830 - 1845	0	99	**99**	
1845 - 1900	0	101	**101**	**475**
1900 - 1915	0	105	**105**	
1915 - 1930	0	109	**109**	
1930 - 1945	0	135	**135**	
1945 - 2000	0	137	**137**	**486**
2000 - 2015	0	114	**114**	
2015 - 2030	0	76	**76**	
2030 - 2045	0	87	**87**	
2045 - 2100	0	87	**87**	**364**
2100 - 2115	0	90	**90**	
2115 - 2130	0	137	**137**	
2130 - 2145	0	153	**153**	
2145 - 2200	0	100	**100**	**480**
2200 - 2215	0	85	**85**	
2215 - 2230	0	120	**120**	
2230 - 2245	0	87	**87**	
2245 - 2300	0	48	**48**	**340**
2300 - 2315	0	41	**41**	
2315 - 2330	0	41	**41**	
2330 - 2345	0	40	**40**	
2345 - 0000	0	49	**49**	**171**

Session Total	0	8147	**8147**
Session Average	0.00	84.86	**84.86**
Session Percentage	0.00	100.00	

Bi-Directional Class Count || SB WB 60min

Columbia, SC

Marr Traffic DATA COLLECTION

www.marrtraffic.com

Site 12
I-26 S/Bound Off-Ramp,
north of I-20

Date
Sunday, April 21, 2024

Lat/Long
34.038500°, -81.109979°

Weather
Cloudy
66°F

Click here for Detailed Weather

0000 - 2400 (Sunday 24h Session) (04-21-2024)
SB WB 60min

	Southbound (Movement 12.1)													
TIME	1	2	3	4	5	6	7	8	9	10	11	12	13	**Total**
0000 - 0100	0	143	20	1	1	0	0	1	4	0	0	0	0	**170**
0100 - 0200	0	84	16	0	1	0	0	0	2	0	0	0	0	**103**
0200 - 0300	0	68	4	0	2	0	0	0	1	0	0	0	0	**75**
0300 - 0400	0	36	4	0	0	0	0	0	1	0	0	0	0	**41**
0400 - 0500	1	32	4	0	2	1	0	0	1	0	0	1	0	**42**
0500 - 0600	0	26	11	0	0	0	0	0	2	0	0	0	0	**39**
0600 - 0700	1	63	10	0	0	0	0	0	1	0	0	0	0	**75**
0700 - 0800	0	141	14	0	1	0	0	0	5	0	1	0	0	**162**
0800 - 0900	0	140	26	0	2	0	0	0	3	0	0	0	0	**171**
0900 - 1000	0	251	32	1	3	0	0	0	3	0	0	1	0	**291**
1000 - 1100	0	321	46	0	1	0	0	0	4	0	0	0	0	**372**
1100 - 1200	0	400	77	0	1	1	0	1	9	0	0	1	0	**490**
1200 - 1300	0	434	62	0	2	0	0	1	6	0	0	0	0	**505**
1300 - 1400	0	409	74	0	1	0	0	0	7	0	0	0	0	**491**
1400 - 1500	1	443	63	0	4	0	0	0	2	0	0	0	0	**513**
1500 - 1600	0	351	66	1	1	0	0	1	1	0	0	0	0	**421**
1600 - 1700	0	330	46	0	1	0	0	0	2	1	0	0	0	**380**
1700 - 1800	0	305	40	0	1	0	0	0	7	0	0	0	0	**353**
1800 - 1900	0	311	41	0	0	0	0	0	4	0	0	0	0	**356**
1900 - 2000	0	293	47	0	3	1	0	1	7	0	0	0	0	**352**
2000 - 2100	0	194	32	0	1	0	0	0	6	0	0	0	0	**233**
2100 - 2200	0	133	20	0	0	0	0	1	4	0	0	0	0	**158**
2200 - 2300	0	75	10	0	1	0	0	0	11	0	0	0	0	**97**
2300 - 2400	0	60	10	0	1	0	0	0	2	0	0	0	0	**73**

Session Total	3	5043	775	3	30	3	0	6	95	1	1	3	0	**5963**
Session Average	0.13	210.13	32.29	0.13	1.25	0.13	0.00	0.25	3.96	0.04	0.04	0.13	0.00	**248.46**
Session Percentage	0.05	84.57	13.00	0.05	0.50	0.05	0.00	0.10	1.59	0.02	0.02	0.05	0.00	

AM Peak Hour	0600 - 0700	0900 - 1000	0900 - 1000	0900 - 1000	0900 - 1000	-	-	-	0700 - 0800	-	0700 - 0800	0900 - 1000	-	**0900 - 1000**
AM Peak Volume	1	251	32	1	3	0	0	0	5	0	1	1	0	**291**

Noon Peak Hour	1400 - 1500	1400 - 1500	1100 - 1200	-	1400 - 1500	1100 - 1200	-	1100 - 1200	1100 - 1200	-	-	1100 - 1200	-	**1400 - 1500**
Noon Peak Volume	1	443	77	0	4	1	0	1	9	0	0	1	0	**513**

PM Peak Hour	-	1500 - 1600	1500 - 1600	1500 - 1600	1900 - 2000	1900 - 2000	-	1500 - 1600	1700 - 1800	1600 - 1700	-	-	-	**1500 - 1600**
PM Peak Volume	0	351	66	1	3	1	0	1	7	1	0	0	0	**421**

Site 12
I-26 S/Bound Off-Ramp,
north of I-20

Date
Monday, April 22, 2024

Lat/Long
34.038500°, -81.109979°

Weather
Mostly Cloudy
57°F

Click here for Detailed Weather

0000 - 2400 (Weekday 24h Session) (04-22-2024)
SB WB 60min

	Southbound (Movement 12.1)													
TIME	1	2	3	4	5	6	7	8	9	10	11	12	13	**Total**
0000 - 0100	0	28	3	0	1	0	0	0	4	0	0	0	0	**36**
0100 - 0200	0	24	4	1	0	0	0	0	3	0	0	0	0	**32**
0200 - 0300	0	19	6	0	3	0	0	0	4	0	0	0	0	**32**
0300 - 0400	0	20	3	0	0	0	0	0	6	0	1	0	0	**30**
0400 - 0500	0	31	3	0	2	0	0	1	5	0	0	0	0	**42**
0500 - 0600	0	71	14	0	2	0	0	0	10	0	0	0	0	**97**
0600 - 0700	0	197	51	0	7	2	0	1	9	1	1	0	0	**269**
0700 - 0800	0	441	107	0	17	2	0	1	21	2	0	1	0	**592**
0800 - 0900	0	452	102	0	15	2	0	4	15	0	0	0	0	**590**
0900 - 1000	0	341	103	1	20	2	0	4	26	1	0	1	0	**499**
1000 - 1100	0	371	125	0	14	1	0	1	34	0	0	0	0	**546**
1100 - 1200	0	438	142	0	6	4	0	3	37	0	1	0	0	**631**
1200 - 1300	0	472	142	0	13	4	0	4	27	0	0	0	0	**662**
1300 - 1400	0	526	115	3	7	2	0	3	35	2	0	0	0	**693**
1400 - 1500	0	599	139	5	15	2	0	5	37	0	0	0	0	**802**
1500 - 1600	1	751	189	2	14	7	1	3	32	0	0	0	0	**1000**
1600 - 1700	1	859	164	1	13	0	0	1	30	0	0	0	0	**1069**
1700 - 1800	0	872	163	0	4	0	0	0	25	1	0	0	0	**1065**
1800 - 1900	0	517	114	0	3	1	0	0	21	2	0	0	0	**658**
1900 - 2000	0	347	59	0	0	3	0	0	17	1	0	0	0	**427**
2000 - 2100	1	239	27	0	1	0	0	0	15	0	0	0	0	**283**
2100 - 2200	0	167	16	0	3	5	0	0	7	0	2	0	0	**200**
2200 - 2300	0	124	13	0	4	2	0	0	9	1	2	0	0	**155**
2300 - 2400	0	93	9	1	1	3	0	0	5	0	0	0	0	**112**

Session Total	3	7999	1813	14	165	42	1	31	434	11	7	2	0	**10522**
Session Average	0.13	333.29	75.54	0.58	6.88	1.75	0.04	1.29	18.08	0.46	0.29	0.08	0.00	**438.42**
Session Percentage	0.03	76.02	17.23	0.13	1.57	0.40	0.01	0.29	4.12	0.10	0.07	0.02	0.00	

AM Peak Hour	-	0800 - 0900	0700 - 0800	0900 - 1000	0900 - 1000	0600 - 0700	-	0800 - 0900	0900 - 1000	0700 - 0800	0600 - 0700	0700 - 0800	-	**0700 - 0800**
AM Peak Volume	0	452	107	1	20	2	0	4	26	2	1	1	0	**592**

Noon Peak Hour	-	1400 - 1500	1100 - 1200	1400 - 1500	1400 - 1500	1100 - 1200	-	1400 - 1500	1100 - 1200	1300 - 1400	1100 - 1200	-	-	**1400 - 1500**
Noon Peak Volume	0	599	142	5	15	4	0	5	37	2	1	0	0	**802**

PM Peak Hour	1500 - 1600	1700 - 1800	1500 - 1600	1500 - 1600	1500 - 1600	1500 - 1600	1500 - 1600	1500 - 1600	1500 - 1600	1800 - 1900	-	-	-	**1600 - 1700**
PM Peak Volume	1	872	189	2	14	7	1	3	32	2	0	0	0	**1069**

Site 12
I-26 S/Bound Off-Ramp,
north of I-20

Date
Tuesday, April 23, 2024

Weather
Fair
58°F

Lat/Long
34.038500°, -81.109979°

Click here for Detailed Weather

0000 - 2400 (Weekday 24h Session) (04-23-2024)
SB WB 60min

	Southbound (Movement 12.1)													
TIME	1	2	3	4	5	6	7	8	9	10	11	12	13	**Total**
0000 - 0100	0	32	4	0	2	1	0	0	2	0	0	0	0	**41**
0100 - 0200	0	27	5	0	2	0	0	1	2	0	1	0	0	**38**
0200 - 0300	0	25	5	0	2	0	0	1	7	1	1	1	0	**43**
0300 - 0400	0	16	5	0	1	0	0	0	10	0	0	0	0	**32**
0400 - 0500	0	32	4	0	2	1	0	1	14	0	1	0	0	**55**
0500 - 0600	0	54	12	0	7	0	0	0	9	0	0	0	0	**82**
0600 - 0700	0	200	40	0	7	1	1	0	14	3	0	0	0	**266**
0700 - 0800	0	491	86	0	18	1	1	3	17	3	0	0	0	**620**
0800 - 0900	0	454	94	0	27	1	0	1	25	2	0	0	0	**604**
0900 - 1000	0	379	84	0	13	6	0	2	37	5	1	0	0	**527**
1000 - 1100	1	382	100	1	18	4	0	3	43	1	0	0	0	**553**
1100 - 1200	0	469	117	0	8	3	0	4	37	0	0	0	0	**638**
1200 - 1300	0	463	132	1	12	3	0	1	44	0	0	0	0	**656**
1300 - 1400	1	542	143	7	8	3	0	4	47	0	0	0	0	**755**
1400 - 1500	3	613	153	5	13	1	0	3	34	0	0	0	0	**825**
1500 - 1600	1	775	206	1	16	1	0	8	34	0	0	0	0	**1042**
1600 - 1700	0	1015	218	0	9	1	0	2	20	1	1	0	0	**1267**
1700 - 1800	1	985	216	0	6	2	0	0	28	0	0	0	0	**1238**
1800 - 1900	1	535	115	0	4	3	0	2	16	0	0	0	0	**676**
1900 - 2000	2	401	83	0	1	1	0	1	12	0	0	0	0	**501**
2000 - 2100	0	277	59	0	2	1	0	0	14	0	1	1	0	**355**
2100 - 2200	2	186	38	0	7	3	0	0	16	0	1	0	0	**253**
2200 - 2300	0	169	37	0	4	2	0	0	9	0	0	0	0	**221**
2300 - 2400	0	62	16	0	2	5	0	0	7	0	0	0	0	**92**

Session Total	12	8584	1972	15	191	44	2	37	498	16	7	2	0	**11380**
Session Average	0.50	357.67	82.17	0.63	7.96	1.83	0.08	1.54	20.75	0.67	0.29	0.08	0.00	**474.17**
Session Percentage	0.11	75.43	17.33	0.13	1.68	0.39	0.02	0.33	4.38	0.14	0.06	0.02	0.00	

AM Peak Hour	-	0700 - 0800	0800 - 0900	-	0800 - 0900	0900 - 1000	0600 - 0700	0700 - 0800	0900 - 1000	0900 - 1000	0900 - 1000	-	-	**0700 - 0800**
AM Peak Hour Volume	0	491	94	0	27	6	1	3	37	5	1	0	0	**620**

Noon Peak Hour	1400 - 1500	1400 - 1500	1400 - 1500	1300 - 1400	1000 - 1100	1000 - 1100	-	1100 - 1200	1300 - 1400	1000 - 1100	-	-	-	**1400 - 1500**
Noon Peak Hour Volume	3	613	153	7	18	4	0	4	47	1	0	0	0	**825**

PM Peak Hour	1900 - 2000	1600 - 1700	1600 - 1700	1500 - 1600	1500 - 1600	1800 - 1900	-	1500 - 1600	1500 - 1600	1600 - 1700	1600 - 1700	-	-	**1600 - 1700**
PM Peak Hour Volume	2	1015	218	1	16	3	0	8	34	1	1	0	0	**1267**

Site 12
I-26 S/Bound Off-Ramp,
north of I-20

Date
Wednesday, April 24, 2024

Weather
Fair
66°F

Lat/Long
34.038500°, -81.109979°

Click here for Detailed Weather

0000 - 2400 (Weekday 24h Session) (04-24-2024)
SB WB 60min

	Southbound (Movement 12.1)													
TIME	1	2	3	4	5	6	7	8	9	10	11	12	13	**Total**
0000 - 0100	0	55	14	0	1	8	0	0	10	0	1	0	0	**89**
0100 - 0200	0	31	7	0	0	6	0	0	6	0	0	0	0	**50**
0200 - 0300	0	22	8	0	0	4	0	0	12	0	3	0	0	**49**
0300 - 0400	0	27	7	0	3	2	0	0	6	0	0	0	0	**45**
0400 - 0500	0	27	9	0	1	0	0	0	8	0	0	0	0	**45**
0500 - 0600	0	55	15	0	2	4	0	0	24	0	0	0	0	**100**
0600 - 0700	0	209	41	0	7	4	0	2	19	0	0	0	0	**282**
0700 - 0800	1	488	127	1	26	7	0	3	22	0	2	0	0	**677**
0800 - 0900	0	497	123	0	22	3	0	2	32	0	1	0	0	**680**
0900 - 1000	1	345	113	1	19	1	0	4	36	0	0	0	0	**520**
1000 - 1100	0	397	139	1	16	3	0	2	32	1	0	0	0	**591**
1100 - 1200	0	422	126	1	17	1	0	0	39	0	0	0	0	**606**
1200 - 1300	0	486	124	1	14	3	0	1	38	2	0	0	0	**669**
1300 - 1400	0	586	146	0	12	1	0	2	33	3	0	0	0	**783**
1400 - 1500	0	647	163	6	11	3	0	3	50	1	0	0	0	**884**
1500 - 1600	2	809	197	2	17	3	0	1	43	4	0	0	0	**1078**
1600 - 1700	1	962	205	2	18	0	0	1	22	0	0	0	0	**1211**
1700 - 1800	0	865	179	0	3	0	2	0	11	2	0	0	0	**1062**
1800 - 1900	1	502	114	0	7	1	0	1	21	0	0	0	0	**647**
1900 - 2000	2	388	83	0	3	1	0	1	14	0	1	0	0	**493**
2000 - 2100	1	328	60	0	3	1	0	1	16	0	0	0	0	**410**
2100 - 2200	0	181	47	0	0	0	0	2	14	0	1	0	0	**245**
2200 - 2300	1	192	52	0	2	0	0	0	10	0	0	0	0	**257**
2300 - 2400	0	96	34	0	2	0	0	0	6	0	0	0	0	**138**

Session Total	10	8617	2133	15	206	56	2	26	524	13	9	0	0	**11611**
Session Average	0.42	359.04	88.88	0.63	8.58	2.33	0.08	1.08	21.83	0.54	0.38	0.00	0.00	**483.79**
Session Percentage	0.09	74.21	18.37	0.13	1.77	0.48	0.02	0.22	4.51	0.11	0.08	0.00	0.00	

AM Peak Hour	0700 - 0800	0800 - 0900	0700 - 0800	0700 - 0800	0700 - 0800	0700 - 0800	-	0900 - 1000	0900 - 1000	-	0700 - 0800	-	-	**0800 - 0900**
AM Peak Hour Volume	1	497	127	1	26	7	0	4	36	0	2	0	0	**680**

Noon Peak Hour	-	1400 - 1500	1400 - 1500	1400 - 1500	1100 - 1200	1000 - 1100	-	1400 - 1500	1400 - 1500	1300 - 1400	-	-	-	**1400 - 1500**
Noon Peak Hour Volume	0	647	163	6	17	3	0	3	50	3	0	0	0	**884**

PM Peak Hour	1500 - 1600	1600 - 1700	1600 - 1700	1500 - 1600	1600 - 1700	1500 - 1600	1700 - 1800	1500 - 1600	1500 - 1600	1500 - 1600	1900 - 2000	-	-	**1600 - 1700**
PM Peak Hour Volume	2	962	205	2	18	3	2	1	43	4	1	0	0	**1211**

Site 12
I-26 S/Bound Off-Ramp,
north of I-20

Date
Thursday, April 25, 2024

Lat/Long
34.038500°, -81.109979°

Weather
Fair
67°F

Click here for Detailed Weather

0000 - 2400 (Weekday 24h Session) (04-25-2024)
SB WB 60min

	Southbound (Movement 12.1)													
TIME	1	2	3	4	5	6	7	8	9	10	11	12	13	**Total**
0000 - 0100	0	33	17	0	6	4	0	0	6	0	1	0	0	**67**
0100 - 0200	0	21	12	0	2	2	0	0	4	0	0	0	0	**41**
0200 - 0300	0	17	6	0	7	3	0	0	12	0	1	0	0	**46**
0300 - 0400	0	14	10	0	4	1	0	0	7	0	2	0	0	**38**
0400 - 0500	0	27	15	0	2	1	0	0	10	0	0	0	0	**55**
0500 - 0600	0	51	27	1	2	0	0	0	13	0	0	0	0	**94**
0600 - 0700	0	185	52	0	9	0	0	0	27	0	0	0	0	**273**
0700 - 0800	0	443	89	1	16	5	0	0	32	0	0	0	0	**586**
0800 - 0900	1	466	150	0	16	1	0	2	29	2	0	0	0	**667**
0900 - 1000	1	366	129	0	15	1	0	1	31	1	0	0	0	**545**
1000 - 1100	0	413	133	0	13	1	0	0	42	0	0	0	0	**602**
1100 - 1200	1	425	145	4	15	3	0	0	42	0	0	0	0	**635**
1200 - 1300	1	531	170	4	9	1	0	0	44	0	0	0	0	**760**
1300 - 1400	0	517	158	2	8	2	0	5	46	0	1	0	0	**739**
1400 - 1500	0	623	185	3	12	3	0	6	38	0	0	0	0	**870**
1500 - 1600	2	835	200	4	22	1	0	2	24	0	0	0	0	**1090**
1600 - 1700	2	943	200	1	9	1	0	2	20	0	0	0	0	**1178**
1700 - 1800	3	817	144	0	7	3	0	0	29	1	0	0	0	**1004**
1800 - 1900	2	552	132	3	6	1	0	2	17	0	0	0	0	**715**
1900 - 2000	2	460	70	0	7	0	0	0	16	0	0	0	0	**555**
2000 - 2100	0	338	46	0	1	0	0	0	10	0	0	1	0	**396**
2100 - 2200	0	293	40	0	3	0	0	0	19	0	0	3	0	**358**
2200 - 2300	0	242	32	0	1	0	0	0	11	0	0	0	0	**286**
2300 - 2400	0	104	33	0	4	1	0	0	5	0	0	0	0	**147**

Session Total	15	8716	2195	23	196	35	0	20	534	4	5	4	0	**11747**
Session Average	0.63	363.17	91.46	0.96	8.17	1.46	0.00	0.83	22.25	0.17	0.21	0.17	0.00	**489.46**
Session Percentage	0.13	74.20	18.69	0.20	1.67	0.30	0.00	0.17	4.55	0.03	0.04	0.03	0.00	

AM Peak Hour	0800 - 0900	0800 - 0900	0800 - 0900	0500 - 0600	0700 - 0800	0700 - 0800	-	0800 - 0900	0700 - 0800	0800 - 0900	-	-	-	**0800 - 0900**
AM Peak Hour Volume	1	466	150	1	16	5	0	2	32	2	0	0	0	**667**

Noon Peak Hour	1100 - 1200	1400 - 1500	1400 - 1500	1100 - 1200	1100 - 1200	1100 - 1200	-	1400 - 1500	1300 - 1400	-	1300 - 1400	-	-	**1400 - 1500**
Noon Peak Hour Volume	1	623	185	4	15	3	0	6	46	0	1	0	0	**870**

PM Peak Hour	1700 - 1800	1600 - 1700	1500 - 1600	1500 - 1600	1500 - 1600	1700 - 1800	-	1500 - 1600	1700 - 1800	1700 - 1800	-	-	-	**1600 - 1700**
PM Peak Hour Volume	3	943	200	4	22	3	0	2	29	1	0	0	0	**1178**

Site 12
I-26 S/Bound Off-Ramp,
north of I-20

Date
Friday, April 26, 2024

Lat/Long
34.038500°, -81.109979°

Weather
Cloudy
69°F

Click here for Detailed Weather

0000 - 2400 (Weekday 24h Session) (04-26-2024)
SB WB 60min

	Southbound (Movement 12.1)													
TIME	1	2	3	4	5	6	7	8	9	10	11	12	13	**Total**
0000 - 0100	0	58	9	0	2	6	0	0	6	0	0	0	0	**81**
0100 - 0200	0	37	6	0	6	5	0	0	6	0	0	0	0	**60**
0200 - 0300	0	22	6	0	5	5	0	0	3	0	0	0	0	**41**
0300 - 0400	0	23	5	0	4	2	0	0	6	0	3	0	0	**43**
0400 - 0500	0	50	11	0	1	3	0	0	7	1	0	0	0	**73**
0500 - 0600	0	62	10	0	3	3	0	0	5	0	0	0	0	**83**
0600 - 0700	0	173	40	0	5	1	0	3	12	0	1	0	0	**235**
0700 - 0800	3	430	81	1	15	2	0	1	21	1	0	0	0	**555**
0800 - 0900	0	429	125	2	16	2	0	2	26	0	0	1	0	**603**
0900 - 1000	1	352	114	0	16	4	0	1	20	2	0	1	0	**511**
1000 - 1100	0	416	113	0	14	1	0	0	28	0	0	0	0	**572**
1100 - 1200	0	512	160	4	15	2	0	2	34	0	0	0	0	**729**
1200 - 1300	1	641	176	10	13	1	0	2	28	1	0	0	0	**873**
1300 - 1400	1	612	142	6	3	1	0	1	20	1	1	0	0	**788**
1400 - 1500	0	647	141	1	9	3	0	2	45	0	0	0	0	**848**
1500 - 1600	2	679	174	2	3	0	0	3	22	1	0	0	0	**886**
1600 - 1700	2	813	167	0	6	1	0	1	23	0	0	0	0	**1013**
1700 - 1800	1	760	168	0	8	1	0	2	24	0	0	0	0	**964**
1800 - 1900	4	524	104	0	6	0	0	1	19	0	0	0	0	**658**
1900 - 2000	3	382	63	0	6	1	0	0	12	0	0	0	0	**467**
2000 - 2100	0	314	52	0	2	1	0	0	12	0	0	0	0	**381**
2100 - 2200	0	342	55	0	2	0	0	0	7	0	0	3	0	**409**
2200 - 2300	0	375	51	0	1	0	0	0	10	0	0	1	0	**438**
2300 - 2400	0	229	28	0	1	0	0	0	6	0	0	1	0	**265**

Session Total	18	8882	2001	26	162	45	0	21	402	7	5	7	0	**11576**
Session Average	0.75	370.08	83.38	1.08	6.75	1.88	0.00	0.88	16.75	0.29	0.21	0.29	0.00	**482.33**
Session Percentage	0.16	76.73	17.29	0.22	1.40	0.39	0.00	0.18	3.47	0.06	0.04	0.06	0.00	

AM Peak Hour	0700 - 0800	0700 - 0800	0800 - 0900	0800 - 0900	0800 - 0900	0900 - 1000	-	0600 - 0700	0800 - 0900	0900 - 1000	0600 - 0700	0800 - 0900	-	**0800 - 0900**
AM Peak Hour Volume	3	430	125	2	16	4	0	3	26	2	1	1	0	**603**

Noon Peak Hour	1200 - 1300	1400 - 1500	1200 - 1300	1200 - 1300	1100 - 1200	1400 - 1500	-	1100 - 1200	1400 - 1500	1200 - 1300	1300 - 1400	-	-	**1200 - 1300**
Noon Peak Hour Volume	1	647	176	10	15	3	0	2	45	1	1	0	0	**873**

PM Peak Hour	1800 - 1900	1600 - 1700	1500 - 1600	1500 - 1600	1700 - 1800	1600 - 1700	-	1500 - 1600	1700 - 1800	1500 - 1600	-	-	-	**1600 - 1700**
PM Peak Hour Volume	4	813	174	2	8	1	0	3	24	1	0	0	0	**1013**

Site 12
I-26 S/Bound Off-Ramp,
north of I-20

Date
Saturday, April 27, 2024

Lat/Long
34.038500°, -81.109979°

Weather
Mostly Cloudy
69°F

Click here for Detailed Weather

0000 - 2400 (Saturday 24h Session) (04-27-2024)
SB WB 60min

	Southbound (Movement 12.1)													
TIME	1	2	3	4	5	6	7	8	9	10	11	12	13	**Total**
0000 - 0100	1	108	5	0	3	0	0	0	3	0	0	0	0	**120**
0100 - 0200	1	74	6	0	0	0	0	0	5	0	0	0	0	**86**
0200 - 0300	0	68	7	0	5	0	0	0	4	0	0	0	0	**84**
0300 - 0400	0	35	3	0	2	1	0	0	1	0	1	0	0	**43**
0400 - 0500	0	27	4	0	1	0	0	0	6	0	1	0	0	**39**
0500 - 0600	0	51	8	0	0	0	0	0	6	0	0	0	0	**65**
0600 - 0700	0	77	21	0	2	1	0	1	7	0	0	0	0	**109**
0700 - 0800	0	173	26	1	2	1	0	1	11	0	0	0	0	**215**
0800 - 0900	0	225	36	0	8	0	0	0	15	0	0	0	0	**284**
0900 - 1000	1	315	57	0	5	0	0	1	19	0	1	0	0	**399**
1000 - 1100	1	372	69	2	5	2	0	2	15	0	0	0	0	**468**
1100 - 1200	2	430	83	0	1	2	0	0	13	2	0	0	0	**533**
1200 - 1300	0	451	80	0	4	1	0	1	10	0	0	0	0	**547**
1300 - 1400	1	527	108	1	10	0	0	0	13	0	0	0	0	**660**
1400 - 1500	1	474	98	0	2	1	0	3	10	0	0	0	0	**589**
1500 - 1600	4	499	91	0	5	1	0	0	6	1	0	0	0	**607**
1600 - 1700	0	428	76	0	4	0	0	0	11	0	0	0	0	**519**
1700 - 1800	0	385	67	0	4	1	0	0	7	0	0	0	0	**464**
1800 - 1900	1	397	65	1	4	0	0	0	7	0	0	0	0	**475**
1900 - 2000	0	423	54	0	5	0	0	0	4	0	0	0	0	**486**
2000 - 2100	0	297	57	0	1	1	0	0	8	0	0	0	0	**364**
2100 - 2200	1	423	50	0	5	0	0	0	1	0	0	0	0	**480**
2200 - 2300	0	291	44	1	2	0	0	0	2	0	0	0	0	**340**
2300 - 2400	0	140	24	1	0	1	0	0	5	0	0	0	0	**171**

Session Total	14	6690	1139	7	80	13	0	9	189	3	3	0	0	**8147**
Session Average	0.58	278.75	47.46	0.29	3.33	0.54	0.00	0.38	7.88	0.13	0.13	0.00	0.00	**339.46**
Session Percentage	0.17	82.12	13.98	0.09	0.98	0.16	0.00	0.11	2.32	0.04	0.04	0.00	0.00	

AM Peak Hour	0900 - 1000	0900 - 1000	0900 - 1000	0700 - 0800	0800 - 0900	0600 - 0700	-	0600 - 0700	0900 - 1000	-	0900 - 1000	-	-	**0900 - 1000**
AM Peak Hour Volume	1	315	57	1	8	1	0	1	19	0	1	0	0	**399**

Noon Peak Hour	1100 - 1200	1300 - 1400	1300 - 1400	1000 - 1100	1300 - 1400	1000 - 1100	-	1400 - 1500	1000 - 1100	1100 - 1200	-	-	-	**1300 - 1400**
Noon Peak Hour Volume	2	527	108	2	10	2	0	3	15	2	0	0	0	**660**

PM Peak Hour	1500 - 1600	1500 - 1600	1500 - 1600	1800 - 1900	1500 - 1600	1500 - 1600	-	-	1600 - 1700	1500 - 1600	-	-	-	**1500 - 1600**
PM Peak Hour Volume	4	499	91	1	5	1	0	0	11	1	0	0	0	**607**

Bi-Directional Class Count || Volume Summary 60min

Columbia, SC

Marr Traffic DATA COLLECTION

www.marrtraffic.com

Site 12

I-26 S/Bound Off-Ramp,
north of I-20

Date

Sunday, April 21, 2024

Lat/Long

34.038500°, -81.109979°

Weather

Cloudy
66°F

Click here for Detailed Weather

0000 - 2400 (Sunday 24h Session) (04-21-2024)

Volume Summary 60min

	Volume Summary 60min		
TIME	NB	SB	**Total**
0000 - 0100	0	170	**170**
0100 - 0200	0	103	**103**
0200 - 0300	0	75	**75**
0300 - 0400	0	41	**41**
0400 - 0500	0	42	**42**
0500 - 0600	0	39	**39**
0600 - 0700	0	75	**75**
0700 - 0800	0	162	**162**
0800 - 0900	0	171	**171**
0900 - 1000	0	291	**291**
1000 - 1100	0	372	**372**
1100 - 1200	0	490	**490**

	Volume Summary 60min		
Time	NB	SB	**Total**
1200 - 1300	0	505	**505**
1300 - 1400	0	491	**491**
1400 - 1500	0	513	**513**
1500 - 1600	0	421	**421**
1600 - 1700	0	380	**380**
1700 - 1800	0	353	**353**
1800 - 1900	0	356	**356**
1900 - 2000	0	352	**352**
2000 - 2100	0	233	**233**
2100 - 2200	0	158	**158**
2200 - 2300	0	97	**97**
2300 - 2400	0	73	**73**

Session Total	0	5963	**5963**
Session Average	0.00	248.46	**248.46**
Session Percentage	0.00	100.00	

Site 12

I-26 S/Bound Off-Ramp,
north of I-20

Date

Monday, April 22, 2024

Lat/Long

34.038500°, -81.109979°

Weather

Mostly Cloudy
57°F

Click here for Detailed Weather

0000 - 2400 (Weekday 24h Session) (04-22-2024)

Volume Summary 60min

	Volume Summary 60min		
TIME	NB	SB	**Total**
0000 - 0100	0	36	**36**
0100 - 0200	0	32	**32**
0200 - 0300	0	32	**32**
0300 - 0400	0	30	**30**
0400 - 0500	0	42	**42**
0500 - 0600	0	97	**97**
0600 - 0700	0	269	**269**
0700 - 0800	0	592	**592**
0800 - 0900	0	590	**590**
0900 - 1000	0	499	**499**
1000 - 1100	0	546	**546**
1100 - 1200	0	631	**631**

Session Total	0	10522	**10522**
Session Average	0.00	438.42	**438.42**
Session Percentage	0.00	100.00	

	Volume Summary 60min		
Time	NB	SB	**Total**
1200 - 1300	0	662	**662**
1300 - 1400	0	693	**693**
1400 - 1500	0	802	**802**
1500 - 1600	0	1000	**1000**
1600 - 1700	0	1069	**1069**
1700 - 1800	0	1065	**1065**
1800 - 1900	0	658	**658**
1900 - 2000	0	427	**427**
2000 - 2100	0	283	**283**
2100 - 2200	0	200	**200**
2200 - 2300	0	155	**155**
2300 - 2400	0	112	**112**

Site 12

I-26 S/Bound Off-Ramp,
north of I-20

Date

Tuesday, April 23, 2024

Lat/Long

34.038500°, -81.109979°

Weather

Fair
58°F

Click here for Detailed Weather

0000 - 2400 (Weekday 24h Session) (04-23-2024)

Volume Summary 60min

	Volume Summary 60min		
TIME	NB	SB	**Total**
0000 - 0100	0	41	**41**
0100 - 0200	0	38	**38**
0200 - 0300	0	43	**43**
0300 - 0400	0	32	**32**
0400 - 0500	0	55	**55**
0500 - 0600	0	82	**82**
0600 - 0700	0	266	**266**
0700 - 0800	0	620	**620**
0800 - 0900	0	604	**604**
0900 - 1000	0	527	**527**
1000 - 1100	0	553	**553**
1100 - 1200	0	638	**638**

Session Total	0	11380	**11380**
Session Average	0.00	474.17	**474.17**
Session Percentage	0.00	100.00	

	Volume Summary 60min		
Time	NB	SB	**Total**
1200 - 1300	0	656	**656**
1300 - 1400	0	755	**755**
1400 - 1500	0	825	**825**
1500 - 1600	0	1042	**1042**
1600 - 1700	0	1267	**1267**
1700 - 1800	0	1238	**1238**
1800 - 1900	0	676	**676**
1900 - 2000	0	501	**501**
2000 - 2100	0	355	**355**
2100 - 2200	0	253	**253**
2200 - 2300	0	221	**221**
2300 - 2400	0	92	**92**

Site 12

I-26 S/Bound Off-Ramp,
north of I-20

Date

Wednesday, April 24, 2024

Lat/Long

34.038500°, -81.109979°

Weather

Fair
66°F

Click here for Detailed Weather

0000 - 2400 (Weekday 24h Session) (04-24-2024)

Volume Summary 60min

	Volume Summary 60min		
TIME	NB	SB	**Total**
0000 - 0100	0	89	**89**
0100 - 0200	0	50	**50**
0200 - 0300	0	49	**49**
0300 - 0400	0	45	**45**
0400 - 0500	0	45	**45**
0500 - 0600	0	100	**100**
0600 - 0700	0	282	**282**
0700 - 0800	0	677	**677**
0800 - 0900	0	680	**680**
0900 - 1000	0	520	**520**
1000 - 1100	0	591	**591**
1100 - 1200	0	606	**606**

Session Total	0	11611	**11611**
Session Average	0.00	483.79	**483.79**
Session Percentage	0.00	100.00	

	Volume Summary 60min		
Time	NB	SB	**Total**
1200 - 1300	0	669	**669**
1300 - 1400	0	783	**783**
1400 - 1500	0	884	**884**
1500 - 1600	0	1078	**1078**
1600 - 1700	0	1211	**1211**
1700 - 1800	0	1062	**1062**
1800 - 1900	0	647	**647**
1900 - 2000	0	493	**493**
2000 - 2100	0	410	**410**
2100 - 2200	0	245	**245**
2200 - 2300	0	257	**257**
2300 - 2400	0	138	**138**

Site 12

I-26 S/Bound Off-Ramp,
north of I-20

Date

Thursday, April 25, 2024

Lat/Long

34.038500°, -81.109979°

Weather

Fair
67°F

Click here for Detailed Weather

0000 - 2400 (Weekday 24h Session) (04-25-2024)

Volume Summary 60min

	Volume Summary 60min		
TIME	NB	SB	**Total**
0000 - 0100	0	67	**67**
0100 - 0200	0	41	**41**
0200 - 0300	0	46	**46**
0300 - 0400	0	38	**38**
0400 - 0500	0	55	**55**
0500 - 0600	0	94	**94**
0600 - 0700	0	273	**273**
0700 - 0800	0	586	**586**
0800 - 0900	0	667	**667**
0900 - 1000	0	545	**545**
1000 - 1100	0	602	**602**
1100 - 1200	0	635	**635**

Session Total	0	11747	**11747**
Session Average	0.00	489.46	**489.46**
Session Percentage	0.00	100.00	

	Volume Summary 60min		
Time	NB	SB	**Total**
1200 - 1300	0	760	**760**
1300 - 1400	0	739	**739**
1400 - 1500	0	870	**870**
1500 - 1600	0	1090	**1090**
1600 - 1700	0	1178	**1178**
1700 - 1800	0	1004	**1004**
1800 - 1900	0	715	**715**
1900 - 2000	0	555	**555**
2000 - 2100	0	396	**396**
2100 - 2200	0	358	**358**
2200 - 2300	0	286	**286**
2300 - 2400	0	147	**147**

Site 12
I-26 S/Bound Off-Ramp,
north of I-20

Date
Friday, April 26, 2024

Lat/Long
34.038500°, -81.109979°

Weather
Cloudy
69°F

Click here for Detailed Weather

0000 - 2400 (Weekday 24h Session) (04-26-2024)
Volume Summary 60min

	Volume Summary 60min		
TIME	NB	SB	**Total**
0000 - 0100	0	81	**81**
0100 - 0200	0	60	**60**
0200 - 0300	0	41	**41**
0300 - 0400	0	43	**43**
0400 - 0500	0	73	**73**
0500 - 0600	0	83	**83**
0600 - 0700	0	235	**235**
0700 - 0800	0	555	**555**
0800 - 0900	0	603	**603**
0900 - 1000	0	511	**511**
1000 - 1100	0	572	**572**
1100 - 1200	0	729	**729**

	Volume Summary 60min		
Time	NB	SB	**Total**
1200 - 1300	0	873	**873**
1300 - 1400	0	788	**788**
1400 - 1500	0	848	**848**
1500 - 1600	0	886	**886**
1600 - 1700	0	1013	**1013**
1700 - 1800	0	964	**964**
1800 - 1900	0	658	**658**
1900 - 2000	0	467	**467**
2000 - 2100	0	381	**381**
2100 - 2200	0	409	**409**
2200 - 2300	0	438	**438**
2300 - 2400	0	265	**265**

Session Total	0	11576	**11576**
Session Average	0.00	482.33	**482.33**
Session Percentage	0.00	100.00	

Site 12

I-26 S/Bound Off-Ramp,
north of I-20

Date

Saturday, April 27, 2024

Lat/Long

34.038500°, -81.109979°

Weather

Mostly Cloudy
69°F

Click here for Detailed Weather

0000 - 2400 (Saturday 24h Session) (04-27-2024)

Volume Summary 60min

	Volume Summary 60min		
TIME	NB	SB	**Total**
0000 - 0100	0	120	**120**
0100 - 0200	0	86	**86**
0200 - 0300	0	84	**84**
0300 - 0400	0	43	**43**
0400 - 0500	0	39	**39**
0500 - 0600	0	65	**65**
0600 - 0700	0	109	**109**
0700 - 0800	0	215	**215**
0800 - 0900	0	284	**284**
0900 - 1000	0	399	**399**
1000 - 1100	0	468	**468**
1100 - 1200	0	533	**533**
1200 - 1300	0	547	**547**
1300 - 1400	0	660	**660**
1400 - 1500	0	589	**589**
1500 - 1600	0	607	**607**
1600 - 1700	0	519	**519**
1700 - 1800	0	464	**464**
1800 - 1900	0	475	**475**
1900 - 2000	0	486	**486**
2000 - 2100	0	364	**364**
2100 - 2200	0	480	**480**
2200 - 2300	0	340	**340**
2300 - 2400	0	171	**171**
Session Total	0	8147	**8147**
Session Average	0.00	339.46	**339.46**
Session Percentage	0.00	100.00	

Bi-Directional Class Count || Graphical Analysis SB WB

Columbia, SC

Marr Traffic DATA COLLECTION

www.marrtraffic.com

Site 12

I-26 S/Bound Off-Ramp,
north of I-20

Lat/Long

34.038500°, -81.109979°

0000 - 2400 (Weekday 24h Session)

Graphical Analysis SB WB

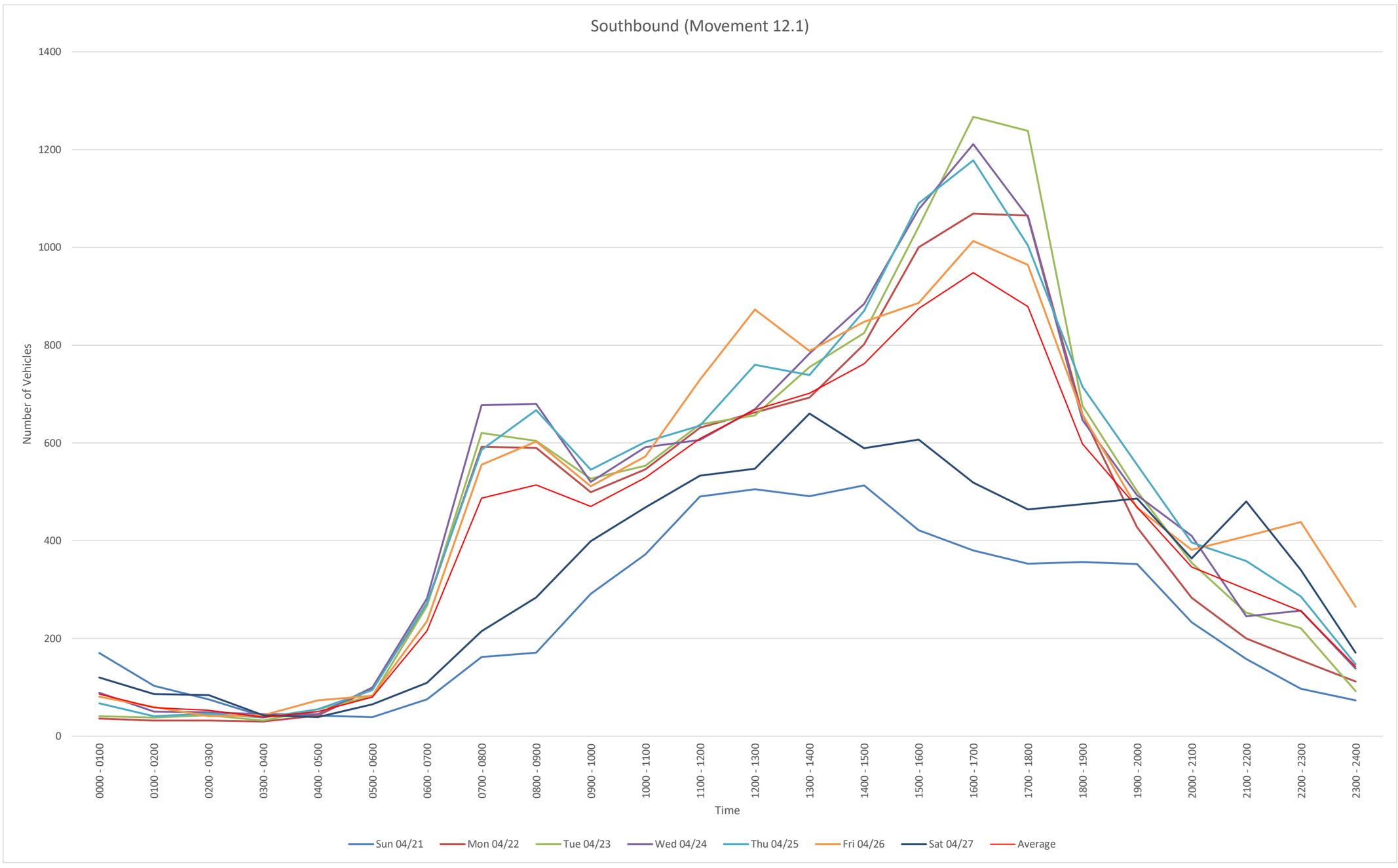

NB
File Name:
Start Date: 4/21/2024
Start Time: 0
Site Code: 12
Station ID: 1
Location 1: I-26 S/Bound Off-Ramp, north of I-20
Location 2:

Date	Time	1	2	3	4	5	6	7	8	9	10	11	12	13
4/21/2024	12:00 AM	0	0	0	0	0	0	0	0	0	0	0	0	0
4/21/2024	12:15 AM	0	0	0	0	0	0	0	0	0	0	0	0	0
4/21/2024	12:30 AM	0	0	0	0	0	0	0	0	0	0	0	0	0
4/21/2024	12:45 AM	0	0	0	0	0	0	0	0	0	0	0	0	0
4/21/2024	1:00 AM	0	0	0	0	0	0	0	0	0	0	0	0	0
4/21/2024	1:15 AM	0	0	0	0	0	0	0	0	0	0	0	0	0
4/21/2024	1:30 AM	0	0	0	0	0	0	0	0	0	0	0	0	0
4/21/2024	1:45 AM	0	0	0	0	0	0	0	0	0	0	0	0	0
4/21/2024	2:00 AM	0	0	0	0	0	0	0	0	0	0	0	0	0
4/21/2024	2:15 AM	0	0	0	0	0	0	0	0	0	0	0	0	0
4/21/2024	2:30 AM	0	0	0	0	0	0	0	0	0	0	0	0	0
4/21/2024	2:45 AM	0	0	0	0	0	0	0	0	0	0	0	0	0
4/21/2024	3:00 AM	0	0	0	0	0	0	0	0	0	0	0	0	0
4/21/2024	3:15 AM	0	0	0	0	0	0	0	0	0	0	0	0	0
4/21/2024	3:30 AM	0	0	0	0	0	0	0	0	0	0	0	0	0
4/21/2024	3:45 AM	0	0	0	0	0	0	0	0	0	0	0	0	0
4/21/2024	4:00 AM	0	0	0	0	0	0	0	0	0	0	0	0	0
4/21/2024	4:15 AM	0	0	0	0	0	0	0	0	0	0	0	0	0
4/21/2024	4:30 AM	0	0	0	0	0	0	0	0	0	0	0	0	0
4/21/2024	4:45 AM	0	0	0	0	0	0	0	0	0	0	0	0	0
4/21/2024	5:00 AM	0	0	0	0	0	0	0	0	0	0	0	0	0
4/21/2024	5:15 AM	0	0	0	0	0	0	0	0	0	0	0	0	0
4/21/2024	5:30 AM	0	0	0	0	0	0	0	0	0	0	0	0	0
4/21/2024	5:45 AM	0	0	0	0	0	0	0	0	0	0	0	0	0
4/21/2024	6:00 AM	0	0	0	0	0	0	0	0	0	0	0	0	0
4/21/2024	6:15 AM	0	0	0	0	0	0	0	0	0	0	0	0	0
4/21/2024	6:30 AM	0	0	0	0	0	0	0	0	0	0	0	0	0
4/21/2024	6:45 AM	0	0	0	0	0	0	0	0	0	0	0	0	0
4/21/2024	7:00 AM	0	0	0	0	0	0	0	0	0	0	0	0	0
4/21/2024	7:15 AM	0	0	0	0	0	0	0	0	0	0	0	0	0
4/21/2024	7:30 AM	0	0	0	0	0	0	0	0	0	0	0	0	0
4/21/2024	7:45 AM	0	0	0	0	0	0	0	0	0	0	0	0	0
4/21/2024	8:00 AM	0	0	0	0	0	0	0	0	0	0	0	0	0
4/21/2024	8:15 AM	0	0	0	0	0	0	0	0	0	0	0	0	0
4/21/2024	8:30 AM	0	0	0	0	0	0	0	0	0	0	0	0	0
4/21/2024	8:45 AM	0	0	0	0	0	0	0	0	0	0	0	0	0
4/21/2024	9:00 AM	0	0	0	0	0	0	0	0	0	0	0	0	0
4/21/2024	9:15 AM	0	0	0	0	0	0	0	0	0	0	0	0	0
4/21/2024	9:30 AM	0	0	0	0	0	0	0	0	0	0	0	0	0
4/21/2024	9:45 AM	0	0	0	0	0	0	0	0	0	0	0	0	0
4/21/2024	10:00 AM	0	0	0	0	0	0	0	0	0	0	0	0	0
4/21/2024	10:15 AM	0	0	0	0	0	0	0	0	0	0	0	0	0
4/21/2024	10:30 AM	0	0	0	0	0	0	0	0	0	0	0	0	0
4/21/2024	10:45 AM	0	0	0	0	0	0	0	0	0	0	0	0	0
4/21/2024	11:00 AM	0	0	0	0	0	0	0	0	0	0	0	0	0
4/21/2024	11:15 AM	0	0	0	0	0	0	0	0	0	0	0	0	0
4/21/2024	11:30 AM	0	0	0	0	0	0	0	0	0	0	0	0	0
4/21/2024	11:45 AM	0	0	0	0	0	0	0	0	0	0	0	0	0
4/21/2024	12:00 PM	0	0	0	0	0	0	0	0	0	0	0	0	0
4/21/2024	12:15 PM	0	0	0	0	0	0	0	0	0	0	0	0	0
4/21/2024	12:30 PM	0	0	0	0	0	0	0	0	0	0	0	0	0
4/21/2024	12:45 PM	0	0	0	0	0	0	0	0	0	0	0	0	0
4/21/2024	1:00 PM	0	0	0	0	0	0	0	0	0	0	0	0	0
4/21/2024	1:15 PM	0	0	0	0	0	0	0	0	0	0	0	0	0
4/21/2024	1:30 PM	0	0	0	0	0	0	0	0	0	0	0	0	0
4/21/2024	1:45 PM	0	0	0	0	0	0	0	0	0	0	0	0	0
4/21/2024	2:00 PM	0	0	0	0	0	0	0	0	0	0	0	0	0
4/21/2024	2:15 PM	0	0	0	0	0	0	0	0	0	0	0	0	0
4/21/2024	2:30 PM	0	0	0	0	0	0	0	0	0	0	0	0	0
4/21/2024	2:45 PM	0	0	0	0	0	0	0	0	0	0	0	0	0
4/21/2024	3:00 PM	0	0	0	0	0	0	0	0	0	0	0	0	0
4/21/2024	3:15 PM	0	0	0	0	0	0	0	0	0	0	0	0	0
4/21/2024	3:30 PM	0	0	0	0	0	0	0	0	0	0	0	0	0
4/21/2024	3:45 PM	0	0	0	0	0	0	0	0	0	0	0	0	0
4/21/2024	4:00 PM	0	0	0	0	0	0	0	0	0	0	0	0	0
4/21/2024	4:15 PM	0	0	0	0	0	0	0	0	0	0	0	0	0
4/21/2024	4:30 PM	0	0	0	0	0	0	0	0	0	0	0	0	0
4/21/2024	4:45 PM	0	0	0	0	0	0	0	0	0	0	0	0	0
4/21/2024	5:00 PM	0	0	0	0	0	0	0	0	0	0	0	0	0
4/21/2024	5:15 PM	0	0	0	0	0	0	0	0	0	0	0	0	0
4/21/2024	5:30 PM	0	0	0	0	0	0	0	0	0	0	0	0	0
4/21/2024	5:45 PM	0	0	0	0	0	0	0	0	0	0	0	0	0
4/21/2024	6:00 PM	0	0	0	0	0	0	0	0	0	0	0	0	0
4/21/2024	6:15 PM	0	0	0	0	0	0	0	0	0	0	0	0	0
4/21/2024	6:30 PM	0	0	0	0	0	0	0	0	0	0	0	0	0
4/21/2024	6:45 PM	0	0	0	0	0	0	0	0	0	0	0	0	0
4/21/2024	7:00 PM	0	0	0	0	0	0	0	0	0	0	0	0	0
4/21/2024	7:15 PM	0	0	0	0	0	0	0	0	0	0	0	0	0
4/21/2024	7:30 PM	0	0	0	0	0	0	0	0	0	0	0	0	0
4/21/2024	7:45 PM	0	0	0	0	0	0	0	0	0	0	0	0	0
4/21/2024	8:00 PM	0	0	0	0	0	0	0	0	0	0	0	0	0
4/21/2024	8:15 PM	0	0	0	0	0	0	0	0	0	0	0	0	0
4/21/2024	8:30 PM	0	0	0	0	0	0	0	0	0	0	0	0	0
4/21/2024	8:45 PM	0	0	0	0	0	0	0	0	0	0	0	0	0
4/21/2024	9:00 PM	0	0	0	0	0	0	0	0	0	0	0	0	0
4/21/2024	9:15 PM	0	0	0	0	0	0	0	0	0	0	0	0	0
4/21/2024	9:30 PM	0	0	0	0	0	0	0	0	0	0	0	0	0
4/21/2024	9:45 PM	0	0	0	0	0	0	0	0	0	0	0	0	0
4/21/2024	10:00 PM	0	0	0	0	0	0	0	0	0	0	0	0	0
4/21/2024	10:15 PM	0	0	0	0	0	0	0	0	0	0	0	0	0
4/21/2024	10:30 PM	0	0	0	0	0	0	0	0	0	0	0	0	0
4/21/2024	10:45 PM	0	0	0	0	0	0	0	0	0	0	0	0	0
4/21/2024	11:00 PM	0	0	0	0	0	0	0	0	0	0	0	0	0
4/21/2024	11:15 PM	0	0	0	0	0	0	0	0	0	0	0	0	0
4/21/2024	11:30 PM	0	0	0	0	0	0	0	0	0	0	0	0	0
4/21/2024	11:45 PM	0	0	0	0	0	0	0	0	0	0	0	0	0

4/22/2024	12:00 AM	0	0	0	0	0	0	0	0	0	0	0	0	0
4/22/2024	12:15 AM	0	0	0	0	0	0	0	0	0	0	0	0	0
4/22/2024	12:30 AM	0	0	0	0	0	0	0	0	0	0	0	0	0
4/22/2024	12:45 AM	0	0	0	0	0	0	0	0	0	0	0	0	0
4/22/2024	1:00 AM	0	0	0	0	0	0	0	0	0	0	0	0	0
4/22/2024	1:15 AM	0	0	0	0	0	0	0	0	0	0	0	0	0
4/22/2024	1:30 AM	0	0	0	0	0	0	0	0	0	0	0	0	0
4/22/2024	1:45 AM	0	0	0	0	0	0	0	0	0	0	0	0	0
4/22/2024	2:00 AM	0	0	0	0	0	0	0	0	0	0	0	0	0
4/22/2024	2:15 AM	0	0	0	0	0	0	0	0	0	0	0	0	0
4/22/2024	2:30 AM	0	0	0	0	0	0	0	0	0	0	0	0	0
4/22/2024	2:45 AM	0	0	0	0	0	0	0	0	0	0	0	0	0
4/22/2024	3:00 AM	0	0	0	0	0	0	0	0	0	0	0	0	0
4/22/2024	3:15 AM	0	0	0	0	0	0	0	0	0	0	0	0	0
4/22/2024	3:30 AM	0	0	0	0	0	0	0	0	0	0	0	0	0
4/22/2024	3:45 AM	0	0	0	0	0	0	0	0	0	0	0	0	0
4/22/2024	4:00 AM	0	0	0	0	0	0	0	0	0	0	0	0	0
4/22/2024	4:15 AM	0	0	0	0	0	0	0	0	0	0	0	0	0
4/22/2024	4:30 AM	0	0	0	0	0	0	0	0	0	0	0	0	0
4/22/2024	4:45 AM	0	0	0	0	0	0	0	0	0	0	0	0	0
4/22/2024	5:00 AM	0	0	0	0	0	0	0	0	0	0	0	0	0
4/22/2024	5:15 AM	0	0	0	0	0	0	0	0	0	0	0	0	0
4/22/2024	5:30 AM	0	0	0	0	0	0	0	0	0	0	0	0	0
4/22/2024	5:45 AM	0	0	0	0	0	0	0	0	0	0	0	0	0
4/22/2024	6:00 AM	0	0	0	0	0	0	0	0	0	0	0	0	0
4/22/2024	6:15 AM	0	0	0	0	0	0	0	0	0	0	0	0	0
4/22/2024	6:30 AM	0	0	0	0	0	0	0	0	0	0	0	0	0
4/22/2024	6:45 AM	0	0	0	0	0	0	0	0	0	0	0	0	0
4/22/2024	7:00 AM	0	0	0	0	0	0	0	0	0	0	0	0	0
4/22/2024	7:15 AM	0	0	0	0	0	0	0	0	0	0	0	0	0
4/22/2024	7:30 AM	0	0	0	0	0	0	0	0	0	0	0	0	0
4/22/2024	7:45 AM	0	0	0	0	0	0	0	0	0	0	0	0	0
4/22/2024	8:00 AM	0	0	0	0	0	0	0	0	0	0	0	0	0
4/22/2024	8:15 AM	0	0	0	0	0	0	0	0	0	0	0	0	0
4/22/2024	8:30 AM	0	0	0	0	0	0	0	0	0	0	0	0	0
4/22/2024	8:45 AM	0	0	0	0	0	0	0	0	0	0	0	0	0
4/22/2024	9:00 AM	0	0	0	0	0	0	0	0	0	0	0	0	0
4/22/2024	9:15 AM	0	0	0	0	0	0	0	0	0	0	0	0	0
4/22/2024	9:30 AM	0	0	0	0	0	0	0	0	0	0	0	0	0
4/22/2024	9:45 AM	0	0	0	0	0	0	0	0	0	0	0	0	0
4/22/2024	10:00 AM	0	0	0	0	0	0	0	0	0	0	0	0	0
4/22/2024	10:15 AM	0	0	0	0	0	0	0	0	0	0	0	0	0
4/22/2024	10:30 AM	0	0	0	0	0	0	0	0	0	0	0	0	0
4/22/2024	10:45 AM	0	0	0	0	0	0	0	0	0	0	0	0	0
4/22/2024	11:00 AM	0	0	0	0	0	0	0	0	0	0	0	0	0
4/22/2024	11:15 AM	0	0	0	0	0	0	0	0	0	0	0	0	0
4/22/2024	11:30 AM	0	0	0	0	0	0	0	0	0	0	0	0	0
4/22/2024	11:45 AM	0	0	0	0	0	0	0	0	0	0	0	0	0
4/22/2024	12:00 PM	0	0	0	0	0	0	0	0	0	0	0	0	0
4/22/2024	12:15 PM	0	0	0	0	0	0	0	0	0	0	0	0	0
4/22/2024	12:30 PM	0	0	0	0	0	0	0	0	0	0	0	0	0
4/22/2024	12:45 PM	0	0	0	0	0	0	0	0	0	0	0	0	0
4/22/2024	1:00 PM	0	0	0	0	0	0	0	0	0	0	0	0	0
4/22/2024	1:15 PM	0	0	0	0	0	0	0	0	0	0	0	0	0
4/22/2024	1:30 PM	0	0	0	0	0	0	0	0	0	0	0	0	0
4/22/2024	1:45 PM	0	0	0	0	0	0	0	0	0	0	0	0	0
4/22/2024	2:00 PM	0	0	0	0	0	0	0	0	0	0	0	0	0
4/22/2024	2:15 PM	0	0	0	0	0	0	0	0	0	0	0	0	0
4/22/2024	2:30 PM	0	0	0	0	0	0	0	0	0	0	0	0	0
4/22/2024	2:45 PM	0	0	0	0	0	0	0	0	0	0	0	0	0
4/22/2024	3:00 PM	0	0	0	0	0	0	0	0	0	0	0	0	0
4/22/2024	3:15 PM	0	0	0	0	0	0	0	0	0	0	0	0	0
4/22/2024	3:30 PM	0	0	0	0	0	0	0	0	0	0	0	0	0
4/22/2024	3:45 PM	0	0	0	0	0	0	0	0	0	0	0	0	0
4/22/2024	4:00 PM	0	0	0	0	0	0	0	0	0	0	0	0	0
4/22/2024	4:15 PM	0	0	0	0	0	0	0	0	0	0	0	0	0
4/22/2024	4:30 PM	0	0	0	0	0	0	0	0	0	0	0	0	0
4/22/2024	4:45 PM	0	0	0	0	0	0	0	0	0	0	0	0	0
4/22/2024	5:00 PM	0	0	0	0	0	0	0	0	0	0	0	0	0
4/22/2024	5:15 PM	0	0	0	0	0	0	0	0	0	0	0	0	0
4/22/2024	5:30 PM	0	0	0	0	0	0	0	0	0	0	0	0	0
4/22/2024	5:45 PM	0	0	0	0	0	0	0	0	0	0	0	0	0
4/22/2024	6:00 PM	0	0	0	0	0	0	0	0	0	0	0	0	0
4/22/2024	6:15 PM	0	0	0	0	0	0	0	0	0	0	0	0	0
4/22/2024	6:30 PM	0	0	0	0	0	0	0	0	0	0	0	0	0
4/22/2024	6:45 PM	0	0	0	0	0	0	0	0	0	0	0	0	0
4/22/2024	7:00 PM	0	0	0	0	0	0	0	0	0	0	0	0	0
4/22/2024	7:15 PM	0	0	0	0	0	0	0	0	0	0	0	0	0
4/22/2024	7:30 PM	0	0	0	0	0	0	0	0	0	0	0	0	0
4/22/2024	7:45 PM	0	0	0	0	0	0	0	0	0	0	0	0	0
4/22/2024	8:00 PM	0	0	0	0	0	0	0	0	0	0	0	0	0
4/22/2024	8:15 PM	0	0	0	0	0	0	0	0	0	0	0	0	0
4/22/2024	8:30 PM	0	0	0	0	0	0	0	0	0	0	0	0	0
4/22/2024	8:45 PM	0	0	0	0	0	0	0	0	0	0	0	0	0
4/22/2024	9:00 PM	0	0	0	0	0	0	0	0	0	0	0	0	0
4/22/2024	9:15 PM	0	0	0	0	0	0	0	0	0	0	0	0	0
4/22/2024	9:30 PM	0	0	0	0	0	0	0	0	0	0	0	0	0
4/22/2024	9:45 PM	0	0	0	0	0	0	0	0	0	0	0	0	0
4/22/2024	10:00 PM	0	0	0	0	0	0	0	0	0	0	0	0	0
4/22/2024	10:15 PM	0	0	0	0	0	0	0	0	0	0	0	0	0
4/22/2024	10:30 PM	0	0	0	0	0	0	0	0	0	0	0	0	0
4/22/2024	10:45 PM	0	0	0	0	0	0	0	0	0	0	0	0	0
4/22/2024	11:00 PM	0	0	0	0	0	0	0	0	0	0	0	0	0
4/22/2024	11:15 PM	0	0	0	0	0	0	0	0	0	0	0	0	0
4/22/2024	11:30 PM	0	0	0	0	0	0	0	0	0	0	0	0	0
4/22/2024	11:45 PM	0	0	0	0	0	0	0	0	0	0	0	0	0

4/23/2024	12:00 AM	0	0	0	0	0	0	0	0	0	0	0	0	0
4/23/2024	12:15 AM	0	0	0	0	0	0	0	0	0	0	0	0	0
4/23/2024	12:30 AM	0	0	0	0	0	0	0	0	0	0	0	0	0
4/23/2024	12:45 AM	0	0	0	0	0	0	0	0	0	0	0	0	0
4/23/2024	1:00 AM	0	0	0	0	0	0	0	0	0	0	0	0	0
4/23/2024	1:15 AM	0	0	0	0	0	0	0	0	0	0	0	0	0
4/23/2024	1:30 AM	0	0	0	0	0	0	0	0	0	0	0	0	0
4/23/2024	1:45 AM	0	0	0	0	0	0	0	0	0	0	0	0	0
4/23/2024	2:00 AM	0	0	0	0	0	0	0	0	0	0	0	0	0
4/23/2024	2:15 AM	0	0	0	0	0	0	0	0	0	0	0	0	0
4/23/2024	2:30 AM	0	0	0	0	0	0	0	0	0	0	0	0	0
4/23/2024	2:45 AM	0	0	0	0	0	0	0	0	0	0	0	0	0
4/23/2024	3:00 AM	0	0	0	0	0	0	0	0	0	0	0	0	0
4/23/2024	3:15 AM	0	0	0	0	0	0	0	0	0	0	0	0	0
4/23/2024	3:30 AM	0	0	0	0	0	0	0	0	0	0	0	0	0
4/23/2024	3:45 AM	0	0	0	0	0	0	0	0	0	0	0	0	0
4/23/2024	4:00 AM	0	0	0	0	0	0	0	0	0	0	0	0	0
4/23/2024	4:15 AM	0	0	0	0	0	0	0	0	0	0	0	0	0
4/23/2024	4:30 AM	0	0	0	0	0	0	0	0	0	0	0	0	0
4/23/2024	4:45 AM	0	0	0	0	0	0	0	0	0	0	0	0	0
4/23/2024	5:00 AM	0	0	0	0	0	0	0	0	0	0	0	0	0
4/23/2024	5:15 AM	0	0	0	0	0	0	0	0	0	0	0	0	0
4/23/2024	5:30 AM	0	0	0	0	0	0	0	0	0	0	0	0	0
4/23/2024	5:45 AM	0	0	0	0	0	0	0	0	0	0	0	0	0
4/23/2024	6:00 AM	0	0	0	0	0	0	0	0	0	0	0	0	0
4/23/2024	6:15 AM	0	0	0	0	0	0	0	0	0	0	0	0	0
4/23/2024	6:30 AM	0	0	0	0	0	0	0	0	0	0	0	0	0
4/23/2024	6:45 AM	0	0	0	0	0	0	0	0	0	0	0	0	0
4/23/2024	7:00 AM	0	0	0	0	0	0	0	0	0	0	0	0	0
4/23/2024	7:15 AM	0	0	0	0	0	0	0	0	0	0	0	0	0
4/23/2024	7:30 AM	0	0	0	0	0	0	0	0	0	0	0	0	0
4/23/2024	7:45 AM	0	0	0	0	0	0	0	0	0	0	0	0	0
4/23/2024	8:00 AM	0	0	0	0	0	0	0	0	0	0	0	0	0
4/23/2024	8:15 AM	0	0	0	0	0	0	0	0	0	0	0	0	0
4/23/2024	8:30 AM	0	0	0	0	0	0	0	0	0	0	0	0	0
4/23/2024	8:45 AM	0	0	0	0	0	0	0	0	0	0	0	0	0
4/23/2024	9:00 AM	0	0	0	0	0	0	0	0	0	0	0	0	0
4/23/2024	9:15 AM	0	0	0	0	0	0	0	0	0	0	0	0	0
4/23/2024	9:30 AM	0	0	0	0	0	0	0	0	0	0	0	0	0
4/23/2024	9:45 AM	0	0	0	0	0	0	0	0	0	0	0	0	0
4/23/2024	10:00 AM	0	0	0	0	0	0	0	0	0	0	0	0	0
4/23/2024	10:15 AM	0	0	0	0	0	0	0	0	0	0	0	0	0
4/23/2024	10:30 AM	0	0	0	0	0	0	0	0	0	0	0	0	0
4/23/2024	10:45 AM	0	0	0	0	0	0	0	0	0	0	0	0	0
4/23/2024	11:00 AM	0	0	0	0	0	0	0	0	0	0	0	0	0
4/23/2024	11:15 AM	0	0	0	0	0	0	0	0	0	0	0	0	0
4/23/2024	11:30 AM	0	0	0	0	0	0	0	0	0	0	0	0	0
4/23/2024	11:45 AM	0	0	0	0	0	0	0	0	0	0	0	0	0
4/23/2024	12:00 PM	0	0	0	0	0	0	0	0	0	0	0	0	0
4/23/2024	12:15 PM	0	0	0	0	0	0	0	0	0	0	0	0	0
4/23/2024	12:30 PM	0	0	0	0	0	0	0	0	0	0	0	0	0
4/23/2024	12:45 PM	0	0	0	0	0	0	0	0	0	0	0	0	0
4/23/2024	1:00 PM	0	0	0	0	0	0	0	0	0	0	0	0	0
4/23/2024	1:15 PM	0	0	0	0	0	0	0	0	0	0	0	0	0
4/23/2024	1:30 PM	0	0	0	0	0	0	0	0	0	0	0	0	0
4/23/2024	1:45 PM	0	0	0	0	0	0	0	0	0	0	0	0	0
4/23/2024	2:00 PM	0	0	0	0	0	0	0	0	0	0	0	0	0
4/23/2024	2:15 PM	0	0	0	0	0	0	0	0	0	0	0	0	0
4/23/2024	2:30 PM	0	0	0	0	0	0	0	0	0	0	0	0	0
4/23/2024	2:45 PM	0	0	0	0	0	0	0	0	0	0	0	0	0
4/23/2024	3:00 PM	0	0	0	0	0	0	0	0	0	0	0	0	0
4/23/2024	3:15 PM	0	0	0	0	0	0	0	0	0	0	0	0	0
4/23/2024	3:30 PM	0	0	0	0	0	0	0	0	0	0	0	0	0
4/23/2024	3:45 PM	0	0	0	0	0	0	0	0	0	0	0	0	0
4/23/2024	4:00 PM	0	0	0	0	0	0	0	0	0	0	0	0	0
4/23/2024	4:15 PM	0	0	0	0	0	0	0	0	0	0	0	0	0
4/23/2024	4:30 PM	0	0	0	0	0	0	0	0	0	0	0	0	0
4/23/2024	4:45 PM	0	0	0	0	0	0	0	0	0	0	0	0	0
4/23/2024	5:00 PM	0	0	0	0	0	0	0	0	0	0	0	0	0
4/23/2024	5:15 PM	0	0	0	0	0	0	0	0	0	0	0	0	0
4/23/2024	5:30 PM	0	0	0	0	0	0	0	0	0	0	0	0	0
4/23/2024	5:45 PM	0	0	0	0	0	0	0	0	0	0	0	0	0
4/23/2024	6:00 PM	0	0	0	0	0	0	0	0	0	0	0	0	0
4/23/2024	6:15 PM	0	0	0	0	0	0	0	0	0	0	0	0	0
4/23/2024	6:30 PM	0	0	0	0	0	0	0	0	0	0	0	0	0
4/23/2024	6:45 PM	0	0	0	0	0	0	0	0	0	0	0	0	0
4/23/2024	7:00 PM	0	0	0	0	0	0	0	0	0	0	0	0	0
4/23/2024	7:15 PM	0	0	0	0	0	0	0	0	0	0	0	0	0
4/23/2024	7:30 PM	0	0	0	0	0	0	0	0	0	0	0	0	0
4/23/2024	7:45 PM	0	0	0	0	0	0	0	0	0	0	0	0	0
4/23/2024	8:00 PM	0	0	0	0	0	0	0	0	0	0	0	0	0
4/23/2024	8:15 PM	0	0	0	0	0	0	0	0	0	0	0	0	0
4/23/2024	8:30 PM	0	0	0	0	0	0	0	0	0	0	0	0	0
4/23/2024	8:45 PM	0	0	0	0	0	0	0	0	0	0	0	0	0
4/23/2024	9:00 PM	0	0	0	0	0	0	0	0	0	0	0	0	0
4/23/2024	9:15 PM	0	0	0	0	0	0	0	0	0	0	0	0	0
4/23/2024	9:30 PM	0	0	0	0	0	0	0	0	0	0	0	0	0
4/23/2024	9:45 PM	0	0	0	0	0	0	0	0	0	0	0	0	0
4/23/2024	10:00 PM	0	0	0	0	0	0	0	0	0	0	0	0	0
4/23/2024	10:15 PM	0	0	0	0	0	0	0	0	0	0	0	0	0
4/23/2024	10:30 PM	0	0	0	0	0	0	0	0	0	0	0	0	0
4/23/2024	10:45 PM	0	0	0	0	0	0	0	0	0	0	0	0	0
4/23/2024	11:00 PM	0	0	0	0	0	0	0	0	0	0	0	0	0
4/23/2024	11:15 PM	0	0	0	0	0	0	0	0	0	0	0	0	0
4/23/2024	11:30 PM	0	0	0	0	0	0	0	0	0	0	0	0	0
4/23/2024	11:45 PM	0	0	0	0	0	0	0	0	0	0	0	0	0

4/24/2024	12:00 AM	0	0	0	0	0	0	0	0	0	0	0	0	0
4/24/2024	12:15 AM	0	0	0	0	0	0	0	0	0	0	0	0	0
4/24/2024	12:30 AM	0	0	0	0	0	0	0	0	0	0	0	0	0
4/24/2024	12:45 AM	0	0	0	0	0	0	0	0	0	0	0	0	0
4/24/2024	1:00 AM	0	0	0	0	0	0	0	0	0	0	0	0	0
4/24/2024	1:15 AM	0	0	0	0	0	0	0	0	0	0	0	0	0
4/24/2024	1:30 AM	0	0	0	0	0	0	0	0	0	0	0	0	0
4/24/2024	1:45 AM	0	0	0	0	0	0	0	0	0	0	0	0	0
4/24/2024	2:00 AM	0	0	0	0	0	0	0	0	0	0	0	0	0
4/24/2024	2:15 AM	0	0	0	0	0	0	0	0	0	0	0	0	0
4/24/2024	2:30 AM	0	0	0	0	0	0	0	0	0	0	0	0	0
4/24/2024	2:45 AM	0	0	0	0	0	0	0	0	0	0	0	0	0
4/24/2024	3:00 AM	0	0	0	0	0	0	0	0	0	0	0	0	0
4/24/2024	3:15 AM	0	0	0	0	0	0	0	0	0	0	0	0	0
4/24/2024	3:30 AM	0	0	0	0	0	0	0	0	0	0	0	0	0
4/24/2024	3:45 AM	0	0	0	0	0	0	0	0	0	0	0	0	0
4/24/2024	4:00 AM	0	0	0	0	0	0	0	0	0	0	0	0	0
4/24/2024	4:15 AM	0	0	0	0	0	0	0	0	0	0	0	0	0
4/24/2024	4:30 AM	0	0	0	0	0	0	0	0	0	0	0	0	0
4/24/2024	4:45 AM	0	0	0	0	0	0	0	0	0	0	0	0	0
4/24/2024	5:00 AM	0	0	0	0	0	0	0	0	0	0	0	0	0
4/24/2024	5:15 AM	0	0	0	0	0	0	0	0	0	0	0	0	0
4/24/2024	5:30 AM	0	0	0	0	0	0	0	0	0	0	0	0	0
4/24/2024	5:45 AM	0	0	0	0	0	0	0	0	0	0	0	0	0
4/24/2024	6:00 AM	0	0	0	0	0	0	0	0	0	0	0	0	0
4/24/2024	6:15 AM	0	0	0	0	0	0	0	0	0	0	0	0	0
4/24/2024	6:30 AM	0	0	0	0	0	0	0	0	0	0	0	0	0
4/24/2024	6:45 AM	0	0	0	0	0	0	0	0	0	0	0	0	0
4/24/2024	7:00 AM	0	0	0	0	0	0	0	0	0	0	0	0	0
4/24/2024	7:15 AM	0	0	0	0	0	0	0	0	0	0	0	0	0
4/24/2024	7:30 AM	0	0	0	0	0	0	0	0	0	0	0	0	0
4/24/2024	7:45 AM	0	0	0	0	0	0	0	0	0	0	0	0	0
4/24/2024	8:00 AM	0	0	0	0	0	0	0	0	0	0	0	0	0
4/24/2024	8:15 AM	0	0	0	0	0	0	0	0	0	0	0	0	0
4/24/2024	8:30 AM	0	0	0	0	0	0	0	0	0	0	0	0	0
4/24/2024	8:45 AM	0	0	0	0	0	0	0	0	0	0	0	0	0
4/24/2024	9:00 AM	0	0	0	0	0	0	0	0	0	0	0	0	0
4/24/2024	9:15 AM	0	0	0	0	0	0	0	0	0	0	0	0	0
4/24/2024	9:30 AM	0	0	0	0	0	0	0	0	0	0	0	0	0
4/24/2024	9:45 AM	0	0	0	0	0	0	0	0	0	0	0	0	0
4/24/2024	10:00 AM	0	0	0	0	0	0	0	0	0	0	0	0	0
4/24/2024	10:15 AM	0	0	0	0	0	0	0	0	0	0	0	0	0
4/24/2024	10:30 AM	0	0	0	0	0	0	0	0	0	0	0	0	0
4/24/2024	10:45 AM	0	0	0	0	0	0	0	0	0	0	0	0	0
4/24/2024	11:00 AM	0	0	0	0	0	0	0	0	0	0	0	0	0
4/24/2024	11:15 AM	0	0	0	0	0	0	0	0	0	0	0	0	0
4/24/2024	11:30 AM	0	0	0	0	0	0	0	0	0	0	0	0	0
4/24/2024	11:45 AM	0	0	0	0	0	0	0	0	0	0	0	0	0
4/24/2024	12:00 PM	0	0	0	0	0	0	0	0	0	0	0	0	0
4/24/2024	12:15 PM	0	0	0	0	0	0	0	0	0	0	0	0	0
4/24/2024	12:30 PM	0	0	0	0	0	0	0	0	0	0	0	0	0
4/24/2024	12:45 PM	0	0	0	0	0	0	0	0	0	0	0	0	0
4/24/2024	1:00 PM	0	0	0	0	0	0	0	0	0	0	0	0	0
4/24/2024	1:15 PM	0	0	0	0	0	0	0	0	0	0	0	0	0
4/24/2024	1:30 PM	0	0	0	0	0	0	0	0	0	0	0	0	0
4/24/2024	1:45 PM	0	0	0	0	0	0	0	0	0	0	0	0	0
4/24/2024	2:00 PM	0	0	0	0	0	0	0	0	0	0	0	0	0
4/24/2024	2:15 PM	0	0	0	0	0	0	0	0	0	0	0	0	0
4/24/2024	2:30 PM	0	0	0	0	0	0	0	0	0	0	0	0	0
4/24/2024	2:45 PM	0	0	0	0	0	0	0	0	0	0	0	0	0
4/24/2024	3:00 PM	0	0	0	0	0	0	0	0	0	0	0	0	0
4/24/2024	3:15 PM	0	0	0	0	0	0	0	0	0	0	0	0	0
4/24/2024	3:30 PM	0	0	0	0	0	0	0	0	0	0	0	0	0
4/24/2024	3:45 PM	0	0	0	0	0	0	0	0	0	0	0	0	0
4/24/2024	4:00 PM	0	0	0	0	0	0	0	0	0	0	0	0	0
4/24/2024	4:15 PM	0	0	0	0	0	0	0	0	0	0	0	0	0
4/24/2024	4:30 PM	0	0	0	0	0	0	0	0	0	0	0	0	0
4/24/2024	4:45 PM	0	0	0	0	0	0	0	0	0	0	0	0	0
4/24/2024	5:00 PM	0	0	0	0	0	0	0	0	0	0	0	0	0
4/24/2024	5:15 PM	0	0	0	0	0	0	0	0	0	0	0	0	0
4/24/2024	5:30 PM	0	0	0	0	0	0	0	0	0	0	0	0	0
4/24/2024	5:45 PM	0	0	0	0	0	0	0	0	0	0	0	0	0
4/24/2024	6:00 PM	0	0	0	0	0	0	0	0	0	0	0	0	0
4/24/2024	6:15 PM	0	0	0	0	0	0	0	0	0	0	0	0	0
4/24/2024	6:30 PM	0	0	0	0	0	0	0	0	0	0	0	0	0
4/24/2024	6:45 PM	0	0	0	0	0	0	0	0	0	0	0	0	0
4/24/2024	7:00 PM	0	0	0	0	0	0	0	0	0	0	0	0	0
4/24/2024	7:15 PM	0	0	0	0	0	0	0	0	0	0	0	0	0
4/24/2024	7:30 PM	0	0	0	0	0	0	0	0	0	0	0	0	0
4/24/2024	7:45 PM	0	0	0	0	0	0	0	0	0	0	0	0	0
4/24/2024	8:00 PM	0	0	0	0	0	0	0	0	0	0	0	0	0
4/24/2024	8:15 PM	0	0	0	0	0	0	0	0	0	0	0	0	0
4/24/2024	8:30 PM	0	0	0	0	0	0	0	0	0	0	0	0	0
4/24/2024	8:45 PM	0	0	0	0	0	0	0	0	0	0	0	0	0
4/24/2024	9:00 PM	0	0	0	0	0	0	0	0	0	0	0	0	0
4/24/2024	9:15 PM	0	0	0	0	0	0	0	0	0	0	0	0	0
4/24/2024	9:30 PM	0	0	0	0	0	0	0	0	0	0	0	0	0
4/24/2024	9:45 PM	0	0	0	0	0	0	0	0	0	0	0	0	0
4/24/2024	10:00 PM	0	0	0	0	0	0	0	0	0	0	0	0	0
4/24/2024	10:15 PM	0	0	0	0	0	0	0	0	0	0	0	0	0
4/24/2024	10:30 PM	0	0	0	0	0	0	0	0	0	0	0	0	0
4/24/2024	10:45 PM	0	0	0	0	0	0	0	0	0	0	0	0	0
4/24/2024	11:00 PM	0	0	0	0	0	0	0	0	0	0	0	0	0
4/24/2024	11:15 PM	0	0	0	0	0	0	0	0	0	0	0	0	0
4/24/2024	11:30 PM	0	0	0	0	0	0	0	0	0	0	0	0	0
4/24/2024	11:45 PM	0	0	0	0	0	0	0	0	0	0	0	0	0

4/25/2024	12:00 AM	0	0	0	0	0	0	0	0	0	0	0	0	0
4/25/2024	12:15 AM	0	0	0	0	0	0	0	0	0	0	0	0	0
4/25/2024	12:30 AM	0	0	0	0	0	0	0	0	0	0	0	0	0
4/25/2024	12:45 AM	0	0	0	0	0	0	0	0	0	0	0	0	0
4/25/2024	1:00 AM	0	0	0	0	0	0	0	0	0	0	0	0	0
4/25/2024	1:15 AM	0	0	0	0	0	0	0	0	0	0	0	0	0
4/25/2024	1:30 AM	0	0	0	0	0	0	0	0	0	0	0	0	0
4/25/2024	1:45 AM	0	0	0	0	0	0	0	0	0	0	0	0	0
4/25/2024	2:00 AM	0	0	0	0	0	0	0	0	0	0	0	0	0
4/25/2024	2:15 AM	0	0	0	0	0	0	0	0	0	0	0	0	0
4/25/2024	2:30 AM	0	0	0	0	0	0	0	0	0	0	0	0	0
4/25/2024	2:45 AM	0	0	0	0	0	0	0	0	0	0	0	0	0
4/25/2024	3:00 AM	0	0	0	0	0	0	0	0	0	0	0	0	0
4/25/2024	3:15 AM	0	0	0	0	0	0	0	0	0	0	0	0	0
4/25/2024	3:30 AM	0	0	0	0	0	0	0	0	0	0	0	0	0
4/25/2024	3:45 AM	0	0	0	0	0	0	0	0	0	0	0	0	0
4/25/2024	4:00 AM	0	0	0	0	0	0	0	0	0	0	0	0	0
4/25/2024	4:15 AM	0	0	0	0	0	0	0	0	0	0	0	0	0
4/25/2024	4:30 AM	0	0	0	0	0	0	0	0	0	0	0	0	0
4/25/2024	4:45 AM	0	0	0	0	0	0	0	0	0	0	0	0	0
4/25/2024	5:00 AM	0	0	0	0	0	0	0	0	0	0	0	0	0
4/25/2024	5:15 AM	0	0	0	0	0	0	0	0	0	0	0	0	0
4/25/2024	5:30 AM	0	0	0	0	0	0	0	0	0	0	0	0	0
4/25/2024	5:45 AM	0	0	0	0	0	0	0	0	0	0	0	0	0
4/25/2024	6:00 AM	0	0	0	0	0	0	0	0	0	0	0	0	0
4/25/2024	6:15 AM	0	0	0	0	0	0	0	0	0	0	0	0	0
4/25/2024	6:30 AM	0	0	0	0	0	0	0	0	0	0	0	0	0
4/25/2024	6:45 AM	0	0	0	0	0	0	0	0	0	0	0	0	0
4/25/2024	7:00 AM	0	0	0	0	0	0	0	0	0	0	0	0	0
4/25/2024	7:15 AM	0	0	0	0	0	0	0	0	0	0	0	0	0
4/25/2024	7:30 AM	0	0	0	0	0	0	0	0	0	0	0	0	0
4/25/2024	7:45 AM	0	0	0	0	0	0	0	0	0	0	0	0	0
4/25/2024	8:00 AM	0	0	0	0	0	0	0	0	0	0	0	0	0
4/25/2024	8:15 AM	0	0	0	0	0	0	0	0	0	0	0	0	0
4/25/2024	8:30 AM	0	0	0	0	0	0	0	0	0	0	0	0	0
4/25/2024	8:45 AM	0	0	0	0	0	0	0	0	0	0	0	0	0
4/25/2024	9:00 AM	0	0	0	0	0	0	0	0	0	0	0	0	0
4/25/2024	9:15 AM	0	0	0	0	0	0	0	0	0	0	0	0	0
4/25/2024	9:30 AM	0	0	0	0	0	0	0	0	0	0	0	0	0
4/25/2024	9:45 AM	0	0	0	0	0	0	0	0	0	0	0	0	0
4/25/2024	10:00 AM	0	0	0	0	0	0	0	0	0	0	0	0	0
4/25/2024	10:15 AM	0	0	0	0	0	0	0	0	0	0	0	0	0
4/25/2024	10:30 AM	0	0	0	0	0	0	0	0	0	0	0	0	0
4/25/2024	10:45 AM	0	0	0	0	0	0	0	0	0	0	0	0	0
4/25/2024	11:00 AM	0	0	0	0	0	0	0	0	0	0	0	0	0
4/25/2024	11:15 AM	0	0	0	0	0	0	0	0	0	0	0	0	0
4/25/2024	11:30 AM	0	0	0	0	0	0	0	0	0	0	0	0	0
4/25/2024	11:45 AM	0	0	0	0	0	0	0	0	0	0	0	0	0
4/25/2024	12:00 PM	0	0	0	0	0	0	0	0	0	0	0	0	0
4/25/2024	12:15 PM	0	0	0	0	0	0	0	0	0	0	0	0	0
4/25/2024	12:30 PM	0	0	0	0	0	0	0	0	0	0	0	0	0
4/25/2024	12:45 PM	0	0	0	0	0	0	0	0	0	0	0	0	0
4/25/2024	1:00 PM	0	0	0	0	0	0	0	0	0	0	0	0	0
4/25/2024	1:15 PM	0	0	0	0	0	0	0	0	0	0	0	0	0
4/25/2024	1:30 PM	0	0	0	0	0	0	0	0	0	0	0	0	0
4/25/2024	1:45 PM	0	0	0	0	0	0	0	0	0	0	0	0	0
4/25/2024	2:00 PM	0	0	0	0	0	0	0	0	0	0	0	0	0
4/25/2024	2:15 PM	0	0	0	0	0	0	0	0	0	0	0	0	0
4/25/2024	2:30 PM	0	0	0	0	0	0	0	0	0	0	0	0	0
4/25/2024	2:45 PM	0	0	0	0	0	0	0	0	0	0	0	0	0
4/25/2024	3:00 PM	0	0	0	0	0	0	0	0	0	0	0	0	0
4/25/2024	3:15 PM	0	0	0	0	0	0	0	0	0	0	0	0	0
4/25/2024	3:30 PM	0	0	0	0	0	0	0	0	0	0	0	0	0
4/25/2024	3:45 PM	0	0	0	0	0	0	0	0	0	0	0	0	0
4/25/2024	4:00 PM	0	0	0	0	0	0	0	0	0	0	0	0	0
4/25/2024	4:15 PM	0	0	0	0	0	0	0	0	0	0	0	0	0
4/25/2024	4:30 PM	0	0	0	0	0	0	0	0	0	0	0	0	0
4/25/2024	4:45 PM	0	0	0	0	0	0	0	0	0	0	0	0	0
4/25/2024	5:00 PM	0	0	0	0	0	0	0	0	0	0	0	0	0
4/25/2024	5:15 PM	0	0	0	0	0	0	0	0	0	0	0	0	0
4/25/2024	5:30 PM	0	0	0	0	0	0	0	0	0	0	0	0	0
4/25/2024	5:45 PM	0	0	0	0	0	0	0	0	0	0	0	0	0
4/25/2024	6:00 PM	0	0	0	0	0	0	0	0	0	0	0	0	0
4/25/2024	6:15 PM	0	0	0	0	0	0	0	0	0	0	0	0	0
4/25/2024	6:30 PM	0	0	0	0	0	0	0	0	0	0	0	0	0
4/25/2024	6:45 PM	0	0	0	0	0	0	0	0	0	0	0	0	0
4/25/2024	7:00 PM	0	0	0	0	0	0	0	0	0	0	0	0	0
4/25/2024	7:15 PM	0	0	0	0	0	0	0	0	0	0	0	0	0
4/25/2024	7:30 PM	0	0	0	0	0	0	0	0	0	0	0	0	0
4/25/2024	7:45 PM	0	0	0	0	0	0	0	0	0	0	0	0	0
4/25/2024	8:00 PM	0	0	0	0	0	0	0	0	0	0	0	0	0
4/25/2024	8:15 PM	0	0	0	0	0	0	0	0	0	0	0	0	0
4/25/2024	8:30 PM	0	0	0	0	0	0	0	0	0	0	0	0	0
4/25/2024	8:45 PM	0	0	0	0	0	0	0	0	0	0	0	0	0
4/25/2024	9:00 PM	0	0	0	0	0	0	0	0	0	0	0	0	0
4/25/2024	9:15 PM	0	0	0	0	0	0	0	0	0	0	0	0	0
4/25/2024	9:30 PM	0	0	0	0	0	0	0	0	0	0	0	0	0
4/25/2024	9:45 PM	0	0	0	0	0	0	0	0	0	0	0	0	0
4/25/2024	10:00 PM	0	0	0	0	0	0	0	0	0	0	0	0	0
4/25/2024	10:15 PM	0	0	0	0	0	0	0	0	0	0	0	0	0
4/25/2024	10:30 PM	0	0	0	0	0	0	0	0	0	0	0	0	0
4/25/2024	10:45 PM	0	0	0	0	0	0	0	0	0	0	0	0	0
4/25/2024	11:00 PM	0	0	0	0	0	0	0	0	0	0	0	0	0
4/25/2024	11:15 PM	0	0	0	0	0	0	0	0	0	0	0	0	0
4/25/2024	11:30 PM	0	0	0	0	0	0	0	0	0	0	0	0	0
4/25/2024	11:45 PM	0	0	0	0	0	0	0	0	0	0	0	0	0

4/26/2024	12:00 AM	0	0	0	0	0	0	0	0	0	0	0	0	0
4/26/2024	12:15 AM	0	0	0	0	0	0	0	0	0	0	0	0	0
4/26/2024	12:30 AM	0	0	0	0	0	0	0	0	0	0	0	0	0
4/26/2024	12:45 AM	0	0	0	0	0	0	0	0	0	0	0	0	0
4/26/2024	1:00 AM	0	0	0	0	0	0	0	0	0	0	0	0	0
4/26/2024	1:15 AM	0	0	0	0	0	0	0	0	0	0	0	0	0
4/26/2024	1:30 AM	0	0	0	0	0	0	0	0	0	0	0	0	0
4/26/2024	1:45 AM	0	0	0	0	0	0	0	0	0	0	0	0	0
4/26/2024	2:00 AM	0	0	0	0	0	0	0	0	0	0	0	0	0
4/26/2024	2:15 AM	0	0	0	0	0	0	0	0	0	0	0	0	0
4/26/2024	2:30 AM	0	0	0	0	0	0	0	0	0	0	0	0	0
4/26/2024	2:45 AM	0	0	0	0	0	0	0	0	0	0	0	0	0
4/26/2024	3:00 AM	0	0	0	0	0	0	0	0	0	0	0	0	0
4/26/2024	3:15 AM	0	0	0	0	0	0	0	0	0	0	0	0	0
4/26/2024	3:30 AM	0	0	0	0	0	0	0	0	0	0	0	0	0
4/26/2024	3:45 AM	0	0	0	0	0	0	0	0	0	0	0	0	0
4/26/2024	4:00 AM	0	0	0	0	0	0	0	0	0	0	0	0	0
4/26/2024	4:15 AM	0	0	0	0	0	0	0	0	0	0	0	0	0
4/26/2024	4:30 AM	0	0	0	0	0	0	0	0	0	0	0	0	0
4/26/2024	4:45 AM	0	0	0	0	0	0	0	0	0	0	0	0	0
4/26/2024	5:00 AM	0	0	0	0	0	0	0	0	0	0	0	0	0
4/26/2024	5:15 AM	0	0	0	0	0	0	0	0	0	0	0	0	0
4/26/2024	5:30 AM	0	0	0	0	0	0	0	0	0	0	0	0	0
4/26/2024	5:45 AM	0	0	0	0	0	0	0	0	0	0	0	0	0
4/26/2024	6:00 AM	0	0	0	0	0	0	0	0	0	0	0	0	0
4/26/2024	6:15 AM	0	0	0	0	0	0	0	0	0	0	0	0	0
4/26/2024	6:30 AM	0	0	0	0	0	0	0	0	0	0	0	0	0
4/26/2024	6:45 AM	0	0	0	0	0	0	0	0	0	0	0	0	0
4/26/2024	7:00 AM	0	0	0	0	0	0	0	0	0	0	0	0	0
4/26/2024	7:15 AM	0	0	0	0	0	0	0	0	0	0	0	0	0
4/26/2024	7:30 AM	0	0	0	0	0	0	0	0	0	0	0	0	0
4/26/2024	7:45 AM	0	0	0	0	0	0	0	0	0	0	0	0	0
4/26/2024	8:00 AM	0	0	0	0	0	0	0	0	0	0	0	0	0
4/26/2024	8:15 AM	0	0	0	0	0	0	0	0	0	0	0	0	0
4/26/2024	8:30 AM	0	0	0	0	0	0	0	0	0	0	0	0	0
4/26/2024	8:45 AM	0	0	0	0	0	0	0	0	0	0	0	0	0
4/26/2024	9:00 AM	0	0	0	0	0	0	0	0	0	0	0	0	0
4/26/2024	9:15 AM	0	0	0	0	0	0	0	0	0	0	0	0	0
4/26/2024	9:30 AM	0	0	0	0	0	0	0	0	0	0	0	0	0
4/26/2024	9:45 AM	0	0	0	0	0	0	0	0	0	0	0	0	0
4/26/2024	10:00 AM	0	0	0	0	0	0	0	0	0	0	0	0	0
4/26/2024	10:15 AM	0	0	0	0	0	0	0	0	0	0	0	0	0
4/26/2024	10:30 AM	0	0	0	0	0	0	0	0	0	0	0	0	0
4/26/2024	10:45 AM	0	0	0	0	0	0	0	0	0	0	0	0	0
4/26/2024	11:00 AM	0	0	0	0	0	0	0	0	0	0	0	0	0
4/26/2024	11:15 AM	0	0	0	0	0	0	0	0	0	0	0	0	0
4/26/2024	11:30 AM	0	0	0	0	0	0	0	0	0	0	0	0	0
4/26/2024	11:45 AM	0	0	0	0	0	0	0	0	0	0	0	0	0
4/26/2024	12:00 PM	0	0	0	0	0	0	0	0	0	0	0	0	0
4/26/2024	12:15 PM	0	0	0	0	0	0	0	0	0	0	0	0	0
4/26/2024	12:30 PM	0	0	0	0	0	0	0	0	0	0	0	0	0
4/26/2024	12:45 PM	0	0	0	0	0	0	0	0	0	0	0	0	0
4/26/2024	1:00 PM	0	0	0	0	0	0	0	0	0	0	0	0	0
4/26/2024	1:15 PM	0	0	0	0	0	0	0	0	0	0	0	0	0
4/26/2024	1:30 PM	0	0	0	0	0	0	0	0	0	0	0	0	0
4/26/2024	1:45 PM	0	0	0	0	0	0	0	0	0	0	0	0	0
4/26/2024	2:00 PM	0	0	0	0	0	0	0	0	0	0	0	0	0
4/26/2024	2:15 PM	0	0	0	0	0	0	0	0	0	0	0	0	0
4/26/2024	2:30 PM	0	0	0	0	0	0	0	0	0	0	0	0	0
4/26/2024	2:45 PM	0	0	0	0	0	0	0	0	0	0	0	0	0
4/26/2024	3:00 PM	0	0	0	0	0	0	0	0	0	0	0	0	0
4/26/2024	3:15 PM	0	0	0	0	0	0	0	0	0	0	0	0	0
4/26/2024	3:30 PM	0	0	0	0	0	0	0	0	0	0	0	0	0
4/26/2024	3:45 PM	0	0	0	0	0	0	0	0	0	0	0	0	0
4/26/2024	4:00 PM	0	0	0	0	0	0	0	0	0	0	0	0	0
4/26/2024	4:15 PM	0	0	0	0	0	0	0	0	0	0	0	0	0
4/26/2024	4:30 PM	0	0	0	0	0	0	0	0	0	0	0	0	0
4/26/2024	4:45 PM	0	0	0	0	0	0	0	0	0	0	0	0	0
4/26/2024	5:00 PM	0	0	0	0	0	0	0	0	0	0	0	0	0
4/26/2024	5:15 PM	0	0	0	0	0	0	0	0	0	0	0	0	0
4/26/2024	5:30 PM	0	0	0	0	0	0	0	0	0	0	0	0	0
4/26/2024	5:45 PM	0	0	0	0	0	0	0	0	0	0	0	0	0
4/26/2024	6:00 PM	0	0	0	0	0	0	0	0	0	0	0	0	0
4/26/2024	6:15 PM	0	0	0	0	0	0	0	0	0	0	0	0	0
4/26/2024	6:30 PM	0	0	0	0	0	0	0	0	0	0	0	0	0
4/26/2024	6:45 PM	0	0	0	0	0	0	0	0	0	0	0	0	0
4/26/2024	7:00 PM	0	0	0	0	0	0	0	0	0	0	0	0	0
4/26/2024	7:15 PM	0	0	0	0	0	0	0	0	0	0	0	0	0
4/26/2024	7:30 PM	0	0	0	0	0	0	0	0	0	0	0	0	0
4/26/2024	7:45 PM	0	0	0	0	0	0	0	0	0	0	0	0	0
4/26/2024	8:00 PM	0	0	0	0	0	0	0	0	0	0	0	0	0
4/26/2024	8:15 PM	0	0	0	0	0	0	0	0	0	0	0	0	0
4/26/2024	8:30 PM	0	0	0	0	0	0	0	0	0	0	0	0	0
4/26/2024	8:45 PM	0	0	0	0	0	0	0	0	0	0	0	0	0
4/26/2024	9:00 PM	0	0	0	0	0	0	0	0	0	0	0	0	0
4/26/2024	9:15 PM	0	0	0	0	0	0	0	0	0	0	0	0	0
4/26/2024	9:30 PM	0	0	0	0	0	0	0	0	0	0	0	0	0
4/26/2024	9:45 PM	0	0	0	0	0	0	0	0	0	0	0	0	0
4/26/2024	10:00 PM	0	0	0	0	0	0	0	0	0	0	0	0	0
4/26/2024	10:15 PM	0	0	0	0	0	0	0	0	0	0	0	0	0
4/26/2024	10:30 PM	0	0	0	0	0	0	0	0	0	0	0	0	0
4/26/2024	10:45 PM	0	0	0	0	0	0	0	0	0	0	0	0	0
4/26/2024	11:00 PM	0	0	0	0	0	0	0	0	0	0	0	0	0
4/26/2024	11:15 PM	0	0	0	0	0	0	0	0	0	0	0	0	0
4/26/2024	11:30 PM	0	0	0	0	0	0	0	0	0	0	0	0	0
4/26/2024	11:45 PM	0	0	0	0	0	0	0	0	0	0	0	0	0

4/27/2024	12:00 AM	0	0	0	0	0	0	0	0	0	0	0	0	0
4/27/2024	12:15 AM	0	0	0	0	0	0	0	0	0	0	0	0	0
4/27/2024	12:30 AM	0	0	0	0	0	0	0	0	0	0	0	0	0
4/27/2024	12:45 AM	0	0	0	0	0	0	0	0	0	0	0	0	0
4/27/2024	1:00 AM	0	0	0	0	0	0	0	0	0	0	0	0	0
4/27/2024	1:15 AM	0	0	0	0	0	0	0	0	0	0	0	0	0
4/27/2024	1:30 AM	0	0	0	0	0	0	0	0	0	0	0	0	0
4/27/2024	1:45 AM	0	0	0	0	0	0	0	0	0	0	0	0	0
4/27/2024	2:00 AM	0	0	0	0	0	0	0	0	0	0	0	0	0
4/27/2024	2:15 AM	0	0	0	0	0	0	0	0	0	0	0	0	0
4/27/2024	2:30 AM	0	0	0	0	0	0	0	0	0	0	0	0	0
4/27/2024	2:45 AM	0	0	0	0	0	0	0	0	0	0	0	0	0
4/27/2024	3:00 AM	0	0	0	0	0	0	0	0	0	0	0	0	0
4/27/2024	3:15 AM	0	0	0	0	0	0	0	0	0	0	0	0	0
4/27/2024	3:30 AM	0	0	0	0	0	0	0	0	0	0	0	0	0
4/27/2024	3:45 AM	0	0	0	0	0	0	0	0	0	0	0	0	0
4/27/2024	4:00 AM	0	0	0	0	0	0	0	0	0	0	0	0	0
4/27/2024	4:15 AM	0	0	0	0	0	0	0	0	0	0	0	0	0
4/27/2024	4:30 AM	0	0	0	0	0	0	0	0	0	0	0	0	0
4/27/2024	4:45 AM	0	0	0	0	0	0	0	0	0	0	0	0	0
4/27/2024	5:00 AM	0	0	0	0	0	0	0	0	0	0	0	0	0
4/27/2024	5:15 AM	0	0	0	0	0	0	0	0	0	0	0	0	0
4/27/2024	5:30 AM	0	0	0	0	0	0	0	0	0	0	0	0	0
4/27/2024	5:45 AM	0	0	0	0	0	0	0	0	0	0	0	0	0
4/27/2024	6:00 AM	0	0	0	0	0	0	0	0	0	0	0	0	0
4/27/2024	6:15 AM	0	0	0	0	0	0	0	0	0	0	0	0	0
4/27/2024	6:30 AM	0	0	0	0	0	0	0	0	0	0	0	0	0
4/27/2024	6:45 AM	0	0	0	0	0	0	0	0	0	0	0	0	0
4/27/2024	7:00 AM	0	0	0	0	0	0	0	0	0	0	0	0	0
4/27/2024	7:15 AM	0	0	0	0	0	0	0	0	0	0	0	0	0
4/27/2024	7:30 AM	0	0	0	0	0	0	0	0	0	0	0	0	0
4/27/2024	7:45 AM	0	0	0	0	0	0	0	0	0	0	0	0	0
4/27/2024	8:00 AM	0	0	0	0	0	0	0	0	0	0	0	0	0
4/27/2024	8:15 AM	0	0	0	0	0	0	0	0	0	0	0	0	0
4/27/2024	8:30 AM	0	0	0	0	0	0	0	0	0	0	0	0	0
4/27/2024	8:45 AM	0	0	0	0	0	0	0	0	0	0	0	0	0
4/27/2024	9:00 AM	0	0	0	0	0	0	0	0	0	0	0	0	0
4/27/2024	9:15 AM	0	0	0	0	0	0	0	0	0	0	0	0	0
4/27/2024	9:30 AM	0	0	0	0	0	0	0	0	0	0	0	0	0
4/27/2024	9:45 AM	0	0	0	0	0	0	0	0	0	0	0	0	0
4/27/2024	10:00 AM	0	0	0	0	0	0	0	0	0	0	0	0	0
4/27/2024	10:15 AM	0	0	0	0	0	0	0	0	0	0	0	0	0
4/27/2024	10:30 AM	0	0	0	0	0	0	0	0	0	0	0	0	0
4/27/2024	10:45 AM	0	0	0	0	0	0	0	0	0	0	0	0	0
4/27/2024	11:00 AM	0	0	0	0	0	0	0	0	0	0	0	0	0
4/27/2024	11:15 AM	0	0	0	0	0	0	0	0	0	0	0	0	0
4/27/2024	11:30 AM	0	0	0	0	0	0	0	0	0	0	0	0	0
4/27/2024	11:45 AM	0	0	0	0	0	0	0	0	0	0	0	0	0
4/27/2024	12:00 PM	0	0	0	0	0	0	0	0	0	0	0	0	0
4/27/2024	12:15 PM	0	0	0	0	0	0	0	0	0	0	0	0	0
4/27/2024	12:30 PM	0	0	0	0	0	0	0	0	0	0	0	0	0
4/27/2024	12:45 PM	0	0	0	0	0	0	0	0	0	0	0	0	0
4/27/2024	1:00 PM	0	0	0	0	0	0	0	0	0	0	0	0	0
4/27/2024	1:15 PM	0	0	0	0	0	0	0	0	0	0	0	0	0
4/27/2024	1:30 PM	0	0	0	0	0	0	0	0	0	0	0	0	0
4/27/2024	1:45 PM	0	0	0	0	0	0	0	0	0	0	0	0	0
4/27/2024	2:00 PM	0	0	0	0	0	0	0	0	0	0	0	0	0
4/27/2024	2:15 PM	0	0	0	0	0	0	0	0	0	0	0	0	0
4/27/2024	2:30 PM	0	0	0	0	0	0	0	0	0	0	0	0	0
4/27/2024	2:45 PM	0	0	0	0	0	0	0	0	0	0	0	0	0
4/27/2024	3:00 PM	0	0	0	0	0	0	0	0	0	0	0	0	0
4/27/2024	3:15 PM	0	0	0	0	0	0	0	0	0	0	0	0	0
4/27/2024	3:30 PM	0	0	0	0	0	0	0	0	0	0	0	0	0
4/27/2024	3:45 PM	0	0	0	0	0	0	0	0	0	0	0	0	0
4/27/2024	4:00 PM	0	0	0	0	0	0	0	0	0	0	0	0	0
4/27/2024	4:15 PM	0	0	0	0	0	0	0	0	0	0	0	0	0
4/27/2024	4:30 PM	0	0	0	0	0	0	0	0	0	0	0	0	0
4/27/2024	4:45 PM	0	0	0	0	0	0	0	0	0	0	0	0	0
4/27/2024	5:00 PM	0	0	0	0	0	0	0	0	0	0	0	0	0
4/27/2024	5:15 PM	0	0	0	0	0	0	0	0	0	0	0	0	0
4/27/2024	5:30 PM	0	0	0	0	0	0	0	0	0	0	0	0	0
4/27/2024	5:45 PM	0	0	0	0	0	0	0	0	0	0	0	0	0
4/27/2024	6:00 PM	0	0	0	0	0	0	0	0	0	0	0	0	0
4/27/2024	6:15 PM	0	0	0	0	0	0	0	0	0	0	0	0	0
4/27/2024	6:30 PM	0	0	0	0	0	0	0	0	0	0	0	0	0
4/27/2024	6:45 PM	0	0	0	0	0	0	0	0	0	0	0	0	0
4/27/2024	7:00 PM	0	0	0	0	0	0	0	0	0	0	0	0	0
4/27/2024	7:15 PM	0	0	0	0	0	0	0	0	0	0	0	0	0
4/27/2024	7:30 PM	0	0	0	0	0	0	0	0	0	0	0	0	0
4/27/2024	7:45 PM	0	0	0	0	0	0	0	0	0	0	0	0	0
4/27/2024	8:00 PM	0	0	0	0	0	0	0	0	0	0	0	0	0
4/27/2024	8:15 PM	0	0	0	0	0	0	0	0	0	0	0	0	0
4/27/2024	8:30 PM	0	0	0	0	0	0	0	0	0	0	0	0	0
4/27/2024	8:45 PM	0	0	0	0	0	0	0	0	0	0	0	0	0
4/27/2024	9:00 PM	0	0	0	0	0	0	0	0	0	0	0	0	0
4/27/2024	9:15 PM	0	0	0	0	0	0	0	0	0	0	0	0	0
4/27/2024	9:30 PM	0	0	0	0	0	0	0	0	0	0	0	0	0
4/27/2024	9:45 PM	0	0	0	0	0	0	0	0	0	0	0	0	0
4/27/2024	10:00 PM	0	0	0	0	0	0	0	0	0	0	0	0	0
4/27/2024	10:15 PM	0	0	0	0	0	0	0	0	0	0	0	0	0
4/27/2024	10:30 PM	0	0	0	0	0	0	0	0	0	0	0	0	0
4/27/2024	10:45 PM	0	0	0	0	0	0	0	0	0	0	0	0	0
4/27/2024	11:00 PM	0	0	0	0	0	0	0	0	0	0	0	0	0
4/27/2024	11:15 PM	0	0	0	0	0	0	0	0	0	0	0	0	0
4/27/2024	11:30 PM	0	0	0	0	0	0	0	0	0	0	0	0	0
4/27/2024	11:45 PM	0	0	0	0	0	0	0	0	0	0	0	0	0

SB
File Name:
Start Date: 4/21/2024
Start Time: 0
Site Code: 12
Station ID: 1
Location 1: I-26 S/Bound Off-Ramp, north of I-20
Location 2:

Date	Time	1	2	3	4	5	6	7	8	9	10	11	12	13
4/21/2024	12:00 AM	0	53	8	0	0	0	0	0	0	0	0	0	0
4/21/2024	12:15 AM	0	31	5	0	0	0	0	1	1	0	0	0	0
4/21/2024	12:30 AM	0	27	5	1	1	0	0	0	2	0	0	0	0
4/21/2024	12:45 AM	0	32	2	0	0	0	0	0	1	0	0	0	0
4/21/2024	1:00 AM	0	23	2	0	0	0	0	0	0	0	0	0	0
4/21/2024	1:15 AM	0	28	4	0	1	0	0	0	1	0	0	0	0
4/21/2024	1:30 AM	0	11	4	0	0	0	0	0	0	0	0	0	0
4/21/2024	1:45 AM	0	22	6	0	0	0	0	0	1	0	0	0	0
4/21/2024	2:00 AM	0	22	2	0	0	0	0	0	0	0	0	0	0
4/21/2024	2:15 AM	0	16	1	0	0	0	0	0	0	0	0	0	0
4/21/2024	2:30 AM	0	19	1	0	1	0	0	0	0	0	0	0	0
4/21/2024	2:45 AM	0	11	0	0	1	0	0	0	1	0	0	0	0
4/21/2024	3:00 AM	0	10	0	0	0	0	0	0	0	0	0	0	0
4/21/2024	3:15 AM	0	9	0	0	0	0	0	0	0	0	0	0	0
4/21/2024	3:30 AM	0	12	3	0	0	0	0	0	0	0	0	0	0
4/21/2024	3:45 AM	0	5	1	0	0	0	0	0	1	0	0	0	0
4/21/2024	4:00 AM	1	5	1	0	1	0	0	0	0	0	0	0	0
4/21/2024	4:15 AM	0	7	1	0	0	1	0	0	1	0	0	0	0
4/21/2024	4:30 AM	0	7	1	0	1	0	0	0	0	0	0	1	0
4/21/2024	4:45 AM	0	13	1	0	0	0	0	0	0	0	0	0	0
4/21/2024	5:00 AM	0	5	1	0	0	0	0	0	0	0	0	0	0
4/21/2024	5:15 AM	0	6	1	0	0	0	0	0	0	0	0	0	0
4/21/2024	5:30 AM	0	4	5	0	0	0	0	0	0	0	0	0	0
4/21/2024	5:45 AM	0	11	4	0	0	0	0	0	2	0	0	0	0
4/21/2024	6:00 AM	0	14	1	0	0	0	0	0	0	0	0	0	0
4/21/2024	6:15 AM	0	19	1	0	0	0	0	0	0	0	0	0	0
4/21/2024	6:30 AM	1	17	2	0	0	0	0	0	1	0	0	0	0
4/21/2024	6:45 AM	0	13	6	0	0	0	0	0	0	0	0	0	0
4/21/2024	7:00 AM	0	25	0	0	0	0	0	0	1	0	0	0	0
4/21/2024	7:15 AM	0	35	6	0	0	0	0	0	1	0	0	0	0
4/21/2024	7:30 AM	0	40	4	0	0	0	0	0	2	0	0	0	0
4/21/2024	7:45 AM	0	41	4	0	1	0	0	0	1	0	1	0	0
4/21/2024	8:00 AM	0	23	3	0	0	0	0	0	1	0	0	0	0
4/21/2024	8:15 AM	0	36	7	0	2	0	0	0	2	0	0	0	0
4/21/2024	8:30 AM	0	37	9	0	0	0	0	0	0	0	0	0	0
4/21/2024	8:45 AM	0	44	7	0	0	0	0	0	0	0	0	0	0
4/21/2024	9:00 AM	0	42	7	0	1	0	0	0	0	0	0	1	0
4/21/2024	9:15 AM	0	62	7	0	0	0	0	0	2	0	0	0	0
4/21/2024	9:30 AM	0	70	7	0	1	0	0	0	0	0	0	0	0
4/21/2024	9:45 AM	0	77	11	1	1	0	0	0	1	0	0	0	0
4/21/2024	10:00 AM	0	79	11	0	1	0	0	0	0	0	0	0	0
4/21/2024	10:15 AM	0	73	13	0	0	0	0	0	2	0	0	0	0
4/21/2024	10:30 AM	0	86	11	0	0	0	0	0	2	0	0	0	0
4/21/2024	10:45 AM	0	83	11	0	0	0	0	0	0	0	0	0	0
4/21/2024	11:00 AM	0	85	18	0	0	0	0	0	1	0	0	0	0
4/21/2024	11:15 AM	0	84	14	0	0	0	0	0	3	0	0	0	0
4/21/2024	11:30 AM	0	104	16	0	0	1	0	1	1	0	0	1	0
4/21/2024	11:45 AM	0	127	29	0	1	0	0	0	4	0	0	0	0
4/21/2024	12:00 PM	0	114	11	0	1	0	0	0	1	0	0	0	0
4/21/2024	12:15 PM	0	88	13	0	0	0	0	1	1	0	0	0	0
4/21/2024	12:30 PM	0	113	18	0	1	0	0	0	1	0	0	0	0
4/21/2024	12:45 PM	0	119	20	0	0	0	0	0	3	0	0	0	0
4/21/2024	1:00 PM	0	116	11	0	0	0	0	0	3	0	0	0	0
4/21/2024	1:15 PM	0	88	19	0	1	0	0	0	0	0	0	0	0
4/21/2024	1:30 PM	0	96	25	0	0	0	0	0	3	0	0	0	0
4/21/2024	1:45 PM	0	109	19	0	0	0	0	0	1	0	0	0	0
4/21/2024	2:00 PM	0	121	16	0	2	0	0	0	0	0	0	0	0
4/21/2024	2:15 PM	0	124	17	0	0	0	0	0	2	0	0	0	0
4/21/2024	2:30 PM	1	96	17	0	1	0	0	0	0	0	0	0	0
4/21/2024	2:45 PM	0	102	13	0	1	0	0	0	0	0	0	0	0
4/21/2024	3:00 PM	0	97	16	1	1	0	0	0	1	0	0	0	0
4/21/2024	3:15 PM	0	70	18	0	0	0	0	0	0	0	0	0	0
4/21/2024	3:30 PM	0	83	16	0	0	0	0	1	0	0	0	0	0
4/21/2024	3:45 PM	0	101	16	0	0	0	0	0	0	0	0	0	0
4/21/2024	4:00 PM	0	73	13	0	0	0	0	0	0	0	0	0	0
4/21/2024	4:15 PM	0	96	12	0	0	0	0	0	0	0	0	0	0
4/21/2024	4:30 PM	0	87	8	0	1	0	0	0	1	1	0	0	0
4/21/2024	4:45 PM	0	74	13	0	0	0	0	0	1	0	0	0	0
4/21/2024	5:00 PM	0	63	11	0	0	0	0	0	1	0	0	0	0
4/21/2024	5:15 PM	0	83	9	0	0	0	0	0	1	0	0	0	0
4/21/2024	5:30 PM	0	84	11	0	1	0	0	0	3	0	0	0	0
4/21/2024	5:45 PM	0	75	9	0	0	0	0	0	2	0	0	0	0
4/21/2024	6:00 PM	0	86	9	0	0	0	0	0	1	0	0	0	0
4/21/2024	6:15 PM	0	90	16	0	0	0	0	0	1	0	0	0	0
4/21/2024	6:30 PM	0	67	8	0	0	0	0	0	1	0	0	0	0
4/21/2024	6:45 PM	0	68	8	0	0	0	0	0	1	0	0	0	0
4/21/2024	7:00 PM	0	72	8	0	0	0	0	0	2	0	0	0	0
4/21/2024	7:15 PM	0	67	15	0	2	1	0	0	1	0	0	0	0
4/21/2024	7:30 PM	0	102	11	0	1	0	0	0	2	0	0	0	0
4/21/2024	7:45 PM	0	52	13	0	0	0	0	1	2	0	0	0	0
4/21/2024	8:00 PM	0	53	7	0	1	0	0	0	1	0	0	0	0
4/21/2024	8:15 PM	0	42	12	0	0	0	0	0	1	0	0	0	0
4/21/2024	8:30 PM	0	52	8	0	0	0	0	0	2	0	0	0	0
4/21/2024	8:45 PM	0	47	5	0	0	0	0	0	2	0	0	0	0
4/21/2024	9:00 PM	0	40	5	0	0	0	0	0	2	0	0	0	0
4/21/2024	9:15 PM	0	34	3	0	0	0	0	0	1	0	0	0	0
4/21/2024	9:30 PM	0	27	6	0	0	0	0	0	0	0	0	0	0
4/21/2024	9:45 PM	0	32	6	0	0	0	0	1	1	0	0	0	0
4/21/2024	10:00 PM	0	22	3	0	0	0	0	0	4	0	0	0	0
4/21/2024	10:15 PM	0	20	2	0	1	0	0	0	3	0	0	0	0
4/21/2024	10:30 PM	0	18	3	0	0	0	0	0	3	0	0	0	0
4/21/2024	10:45 PM	0	15	2	0	0	0	0	0	1	0	0	0	0
4/21/2024	11:00 PM	0	14	2	0	1	0	0	0	0	0	0	0	0
4/21/2024	11:15 PM	0	11	3	0	0	0	0	0	1	0	0	0	0
4/21/2024	11:30 PM	0	23	3	0	0	0	0	0	0	0	0	0	0
4/21/2024	11:45 PM	0	12	2	0	0	0	0	0	1	0	0	0	0

4/22/2024	12:00 AM	0	3	2	0	0	0	0	0	1	0	0	0	0
4/22/2024	12:15 AM	0	11	1	0	1	0	0	0	2	0	0	0	0
4/22/2024	12:30 AM	0	11	0	0	0	0	0	0	0	0	0	0	0
4/22/2024	12:45 AM	0	3	0	0	0	0	0	0	1	0	0	0	0
4/22/2024	1:00 AM	0	8	1	0	0	0	0	0	0	0	0	0	0
4/22/2024	1:15 AM	0	3	2	0	0	0	0	0	0	0	0	0	0
4/22/2024	1:30 AM	0	9	0	0	0	0	0	0	2	0	0	0	0
4/22/2024	1:45 AM	0	4	1	1	0	0	0	0	1	0	0	0	0
4/22/2024	2:00 AM	0	8	1	0	1	0	0	0	1	0	0	0	0
4/22/2024	2:15 AM	0	4	1	0	1	0	0	0	1	0	0	0	0
4/22/2024	2:30 AM	0	3	1	0	0	0	0	0	1	0	0	0	0
4/22/2024	2:45 AM	0	4	3	0	1	0	0	0	1	0	0	0	0
4/22/2024	3:00 AM	0	9	1	0	0	0	0	0	2	0	0	0	0
4/22/2024	3:15 AM	0	2	0	0	0	0	0	0	1	0	1	0	0
4/22/2024	3:30 AM	0	6	2	0	0	0	0	0	3	0	0	0	0
4/22/2024	3:45 AM	0	3	0	0	0	0	0	0	0	0	0	0	0
4/22/2024	4:00 AM	0	8	1	0	0	0	0	0	0	0	0	0	0
4/22/2024	4:15 AM	0	9	1	0	1	0	0	0	0	0	0	0	0
4/22/2024	4:30 AM	0	5	0	0	1	0	0	1	0	0	0	0	0
4/22/2024	4:45 AM	0	9	1	0	0	0	0	0	5	0	0	0	0
4/22/2024	5:00 AM	0	13	2	0	0	0	0	0	0	0	0	0	0
4/22/2024	5:15 AM	0	12	3	0	1	0	0	0	3	0	0	0	0
4/22/2024	5:30 AM	0	23	3	0	0	0	0	0	3	0	0	0	0
4/22/2024	5:45 AM	0	23	6	0	1	0	0	0	4	0	0	0	0
4/22/2024	6:00 AM	0	25	5	0	2	1	0	0	2	0	1	0	0
4/22/2024	6:15 AM	0	43	14	0	0	1	0	0	1	0	0	0	0
4/22/2024	6:30 AM	0	65	17	0	0	0	0	0	5	1	0	0	0
4/22/2024	6:45 AM	0	64	15	0	5	0	0	1	1	0	0	0	0
4/22/2024	7:00 AM	0	75	15	0	3	0	0	0	10	0	0	0	0
4/22/2024	7:15 AM	0	116	28	0	7	2	0	1	1	1	0	0	0
4/22/2024	7:30 AM	0	119	34	0	4	0	0	0	4	0	0	0	0
4/22/2024	7:45 AM	0	131	30	0	3	0	0	0	6	1	0	1	0
4/22/2024	8:00 AM	0	116	26	0	2	0	0	2	6	0	0	0	0
4/22/2024	8:15 AM	0	115	32	0	4	1	0	0	3	0	0	0	0
4/22/2024	8:30 AM	0	114	19	0	3	0	0	1	3	0	0	0	0
4/22/2024	8:45 AM	0	107	25	0	6	1	0	1	3	0	0	0	0
4/22/2024	9:00 AM	0	73	32	0	7	0	0	3	3	1	0	0	0
4/22/2024	9:15 AM	0	78	24	0	2	1	0	1	6	0	0	1	0
4/22/2024	9:30 AM	0	92	27	1	8	0	0	0	10	0	0	0	0
4/22/2024	9:45 AM	0	98	20	0	3	1	0	0	7	0	0	0	0
4/22/2024	10:00 AM	0	111	33	0	4	0	0	1	9	0	0	0	0
4/22/2024	10:15 AM	0	88	36	0	6	1	0	0	9	0	0	0	0
4/22/2024	10:30 AM	0	92	25	0	1	0	0	0	11	0	0	0	0
4/22/2024	10:45 AM	0	80	31	0	3	0	0	0	5	0	0	0	0
4/22/2024	11:00 AM	0	111	29	0	1	3	0	1	13	0	0	0	0
4/22/2024	11:15 AM	0	106	44	0	1	0	0	0	7	0	0	0	0
4/22/2024	11:30 AM	0	108	38	0	4	0	0	1	10	0	1	0	0
4/22/2024	11:45 AM	0	113	31	0	0	1	0	1	7	0	0	0	0
4/22/2024	12:00 PM	0	108	34	0	2	2	0	0	6	0	0	0	0
4/22/2024	12:15 PM	0	128	40	0	5	0	0	1	4	0	0	0	0
4/22/2024	12:30 PM	0	128	43	0	3	1	0	2	8	0	0	0	0
4/22/2024	12:45 PM	0	108	25	0	3	1	0	1	9	0	0	0	0
4/22/2024	1:00 PM	0	128	23	0	1	0	0	0	7	0	0	0	0
4/22/2024	1:15 PM	0	136	35	0	3	0	0	1	6	0	0	0	0
4/22/2024	1:30 PM	0	135	35	3	3	0	0	2	11	2	0	0	0
4/22/2024	1:45 PM	0	127	22	0	0	2	0	0	11	0	0	0	0
4/22/2024	2:00 PM	0	133	29	0	3	1	0	0	9	0	0	0	0
4/22/2024	2:15 PM	0	170	35	2	5	0	0	0	10	0	0	0	0
4/22/2024	2:30 PM	0	142	42	3	3	1	0	3	11	0	0	0	0
4/22/2024	2:45 PM	0	154	33	0	4	0	0	2	7	0	0	0	0
4/22/2024	3:00 PM	1	168	47	1	4	0	0	1	12	0	0	0	0
4/22/2024	3:15 PM	0	189	33	0	3	1	1	2	9	0	0	0	0
4/22/2024	3:30 PM	0	202	51	0	4	1	0	0	6	0	0	0	0
4/22/2024	3:45 PM	0	192	58	1	3	5	0	0	5	0	0	0	0
4/22/2024	4:00 PM	0	209	46	0	8	0	0	0	8	0	0	0	0
4/22/2024	4:15 PM	0	205	41	0	3	0	0	0	7	0	0	0	0
4/22/2024	4:30 PM	1	215	42	0	2	0	0	1	6	0	0	0	0
4/22/2024	4:45 PM	0	230	35	1	0	0	0	0	9	0	0	0	0
4/22/2024	5:00 PM	0	219	41	0	2	0	0	0	6	0	0	0	0
4/22/2024	5:15 PM	0	233	29	0	1	0	0	0	6	0	0	0	0
4/22/2024	5:30 PM	0	223	44	0	1	0	0	0	5	1	0	0	0
4/22/2024	5:45 PM	0	197	49	0	0	0	0	0	8	0	0	0	0
4/22/2024	6:00 PM	0	146	39	0	1	0	0	0	6	0	0	0	0
4/22/2024	6:15 PM	0	145	36	0	2	0	0	0	6	1	0	0	0
4/22/2024	6:30 PM	0	112	22	0	0	1	0	0	5	1	0	0	0
4/22/2024	6:45 PM	0	114	17	0	0	0	0	0	4	0	0	0	0
4/22/2024	7:00 PM	0	92	23	0	0	0	0	0	2	0	0	0	0
4/22/2024	7:15 PM	0	84	15	0	0	0	0	0	6	1	0	0	0
4/22/2024	7:30 PM	0	62	9	0	0	3	0	0	4	0	0	0	0
4/22/2024	7:45 PM	0	109	12	0	0	0	0	0	5	0	0	0	0
4/22/2024	8:00 PM	0	69	11	0	0	0	0	0	4	0	0	0	0
4/22/2024	8:15 PM	0	53	5	0	1	0	0	0	4	0	0	0	0
4/22/2024	8:30 PM	0	60	6	0	0	0	0	0	3	0	0	0	0
4/22/2024	8:45 PM	1	57	5	0	0	0	0	0	4	0	0	0	0
4/22/2024	9:00 PM	0	46	4	0	2	2	0	0	1	0	1	0	0
4/22/2024	9:15 PM	0	44	4	0	1	1	0	0	4	0	0	0	0
4/22/2024	9:30 PM	0	38	4	0	0	1	0	0	2	0	1	0	0
4/22/2024	9:45 PM	0	39	4	0	0	1	0	0	0	0	0	0	0
4/22/2024	10:00 PM	0	28	3	0	1	0	0	0	3	1	0	0	0
4/22/2024	10:15 PM	0	32	3	0	1	0	0	0	2	0	0	0	0
4/22/2024	10:30 PM	0	34	4	0	1	1	0	0	1	0	1	0	0
4/22/2024	10:45 PM	0	30	3	0	1	1	0	0	3	0	1	0	0
4/22/2024	11:00 PM	0	25	2	0	0	0	0	0	1	0	0	0	0
4/22/2024	11:15 PM	0	26	2	0	1	2	0	0	1	0	0	0	0
4/22/2024	11:30 PM	0	22	3	1	0	1	0	0	1	0	0	0	0
4/22/2024	11:45 PM	0	20	2	0	0	0	0	0	2	0	0	0	0

4/23/2024	12:00 AM	0	13	1	0	1	0	0	0	0	0	0	0	0
4/23/2024	12:15 AM	0	11	0	0	0	1	0	0	1	0	0	0	0
4/23/2024	12:30 AM	0	4	0	0	0	0	0	0	1	0	0	0	0
4/23/2024	12:45 AM	0	4	3	0	1	0	0	0	0	0	0	0	0
4/23/2024	1:00 AM	0	7	1	0	0	0	0	0	0	0	0	0	0
4/23/2024	1:15 AM	0	10	1	0	0	0	0	0	1	0	0	0	0
4/23/2024	1:30 AM	0	2	2	0	0	0	0	0	0	0	0	0	0
4/23/2024	1:45 AM	0	8	1	0	2	0	0	1	1	0	1	0	0
4/23/2024	2:00 AM	0	4	0	0	0	0	0	0	2	0	0	0	0
4/23/2024	2:15 AM	0	8	2	0	0	0	0	0	1	1	1	0	0
4/23/2024	2:30 AM	0	6	2	0	0	0	0	1	2	0	0	0	0
4/23/2024	2:45 AM	0	7	1	0	2	0	0	0	2	0	0	1	0
4/23/2024	3:00 AM	0	2	0	0	0	0	0	0	3	0	0	0	0
4/23/2024	3:15 AM	0	3	1	0	1	0	0	0	0	0	0	0	0
4/23/2024	3:30 AM	0	7	4	0	0	0	0	0	3	0	0	0	0
4/23/2024	3:45 AM	0	4	0	0	0	0	0	0	4	0	0	0	0
4/23/2024	4:00 AM	0	11	2	0	0	0	0	0	2	0	0	0	0
4/23/2024	4:15 AM	0	2	0	0	0	0	0	0	3	0	1	0	0
4/23/2024	4:30 AM	0	13	1	0	1	0	0	0	4	0	0	0	0
4/23/2024	4:45 AM	0	6	1	0	1	1	0	1	5	0	0	0	0
4/23/2024	5:00 AM	0	7	1	0	2	0	0	0	0	0	0	0	0
4/23/2024	5:15 AM	0	12	4	0	4	0	0	0	4	0	0	0	0
4/23/2024	5:30 AM	0	15	2	0	1	0	0	0	2	0	0	0	0
4/23/2024	5:45 AM	0	20	5	0	0	0	0	0	3	0	0	0	0
4/23/2024	6:00 AM	0	33	5	0	0	1	0	0	5	0	0	0	0
4/23/2024	6:15 AM	0	45	13	0	1	0	0	0	3	0	0	0	0
4/23/2024	6:30 AM	0	58	13	0	3	0	0	0	4	0	0	0	0
4/23/2024	6:45 AM	0	64	9	0	3	0	1	0	2	3	0	0	0
4/23/2024	7:00 AM	0	67	20	0	2	0	0	0	6	0	0	0	0
4/23/2024	7:15 AM	0	111	23	0	6	0	1	1	2	2	0	0	0
4/23/2024	7:30 AM	0	147	22	0	4	0	0	1	4	1	0	0	0
4/23/2024	7:45 AM	0	166	21	0	6	1	0	1	5	0	0	0	0
4/23/2024	8:00 AM	0	105	27	0	6	1	0	0	7	1	0	0	0
4/23/2024	8:15 AM	0	127	23	0	4	0	0	0	7	0	0	0	0
4/23/2024	8:30 AM	0	111	21	0	7	0	0	0	5	0	0	0	0
4/23/2024	8:45 AM	0	111	23	0	10	0	0	1	6	1	0	0	0
4/23/2024	9:00 AM	0	88	31	0	3	3	0	0	7	0	1	0	0
4/23/2024	9:15 AM	0	91	13	0	3	1	0	0	10	4	0	0	0
4/23/2024	9:30 AM	0	105	21	0	3	1	0	2	9	0	0	0	0
4/23/2024	9:45 AM	0	95	19	0	4	1	0	0	11	1	0	0	0
4/23/2024	10:00 AM	0	101	14	1	3	0	0	0	13	0	0	0	0
4/23/2024	10:15 AM	0	90	27	0	10	2	0	2	9	0	0	0	0
4/23/2024	10:30 AM	0	101	31	0	1	0	0	1	8	1	0	0	0
4/23/2024	10:45 AM	1	90	28	0	4	2	0	0	13	0	0	0	0
4/23/2024	11:00 AM	0	110	24	0	1	0	0	0	5	0	0	0	0
4/23/2024	11:15 AM	0	117	29	0	1	0	0	2	6	0	0	0	0
4/23/2024	11:30 AM	0	124	34	0	4	1	0	2	12	0	0	0	0
4/23/2024	11:45 AM	0	118	30	0	2	2	0	0	14	0	0	0	0
4/23/2024	12:00 PM	0	113	41	0	3	1	0	0	9	0	0	0	0
4/23/2024	12:15 PM	0	102	29	0	4	1	0	1	12	0	0	0	0
4/23/2024	12:30 PM	0	148	27	0	2	1	0	0	11	0	0	0	0
4/23/2024	12:45 PM	0	100	35	1	3	0	0	0	12	0	0	0	0
4/23/2024	1:00 PM	0	127	36	3	3	2	0	3	15	0	0	0	0
4/23/2024	1:15 PM	0	144	34	2	0	1	0	1	6	0	0	0	0
4/23/2024	1:30 PM	1	141	28	2	3	0	0	0	13	0	0	0	0
4/23/2024	1:45 PM	0	130	45	0	2	0	0	0	13	0	0	0	0
4/23/2024	2:00 PM	1	133	33	4	2	0	0	1	9	0	0	0	0
4/23/2024	2:15 PM	1	157	32	0	4	0	0	0	4	0	0	0	0
4/23/2024	2:30 PM	0	170	38	1	4	1	0	1	10	0	0	0	0
4/23/2024	2:45 PM	1	153	50	0	3	0	0	1	11	0	0	0	0
4/23/2024	3:00 PM	0	181	42	0	5	0	0	5	9	0	0	0	0
4/23/2024	3:15 PM	0	182	49	0	5	0	0	1	8	0	0	0	0
4/23/2024	3:30 PM	1	210	49	1	2	0	0	1	12	0	0	0	0
4/23/2024	3:45 PM	0	202	66	0	4	1	0	1	5	0	0	0	0
4/23/2024	4:00 PM	0	225	67	0	0	0	0	1	5	1	1	0	0
4/23/2024	4:15 PM	0	273	55	0	2	0	0	0	5	0	0	0	0
4/23/2024	4:30 PM	0	272	51	0	4	0	0	1	7	0	0	0	0
4/23/2024	4:45 PM	0	245	45	0	3	1	0	0	3	0	0	0	0
4/23/2024	5:00 PM	0	253	56	0	1	2	0	0	6	0	0	0	0
4/23/2024	5:15 PM	0	290	43	0	3	0	0	0	9	0	0	0	0
4/23/2024	5:30 PM	1	245	62	0	0	0	0	0	7	0	0	0	0
4/23/2024	5:45 PM	0	197	55	0	2	0	0	0	6	0	0	0	0
4/23/2024	6:00 PM	0	173	41	0	0	1	0	0	5	0	0	0	0
4/23/2024	6:15 PM	0	130	25	0	1	0	0	1	7	0	0	0	0
4/23/2024	6:30 PM	1	133	27	0	2	2	0	0	1	0	0	0	0
4/23/2024	6:45 PM	0	99	22	0	1	0	0	1	3	0	0	0	0
4/23/2024	7:00 PM	2	99	25	0	0	0	0	0	3	0	0	0	0
4/23/2024	7:15 PM	0	108	18	0	0	0	0	0	4	0	0	0	0
4/23/2024	7:30 PM	0	99	23	0	0	0	0	0	4	0	0	0	0
4/23/2024	7:45 PM	0	95	17	0	1	1	0	1	1	0	0	0	0
4/23/2024	8:00 PM	0	80	18	0	0	1	0	0	4	0	0	0	0
4/23/2024	8:15 PM	0	86	14	0	1	0	0	0	3	0	1	1	0
4/23/2024	8:30 PM	0	64	20	0	0	0	0	0	2	0	0	0	0
4/23/2024	8:45 PM	0	47	7	0	1	0	0	0	5	0	0	0	0
4/23/2024	9:00 PM	0	58	11	0	2	0	0	0	5	0	0	0	0
4/23/2024	9:15 PM	2	43	10	0	1	2	0	0	4	0	1	0	0
4/23/2024	9:30 PM	0	54	11	0	2	1	0	0	4	0	0	0	0
4/23/2024	9:45 PM	0	31	6	0	2	0	0	0	3	0	0	0	0
4/23/2024	10:00 PM	0	29	8	0	2	1	0	0	3	0	0	0	0
4/23/2024	10:15 PM	0	65	9	0	2	0	0	0	3	0	0	0	0
4/23/2024	10:30 PM	0	53	11	0	0	0	0	0	0	0	0	0	0
4/23/2024	10:45 PM	0	22	9	0	0	1	0	0	3	0	0	0	0
4/23/2024	11:00 PM	0	21	6	0	0	0	0	0	0	0	0	0	0
4/23/2024	11:15 PM	0	20	3	0	1	3	0	0	1	0	0	0	0
4/23/2024	11:30 PM	0	10	3	0	0	2	0	0	2	0	0	0	0
4/23/2024	11:45 PM	0	11	4	0	1	0	0	0	4	0	0	0	0

4/24/2024	12:00 AM	0	15	5	0	0	1	0	0	5	0	1	0	0
4/24/2024	12:15 AM	0	14	4	0	1	2	0	0	3	0	0	0	0
4/24/2024	12:30 AM	0	15	3	0	0	0	0	0	1	0	0	0	0
4/24/2024	12:45 AM	0	11	2	0	0	5	0	0	1	0	0	0	0
4/24/2024	1:00 AM	0	7	2	0	0	4	0	0	2	0	0	0	0
4/24/2024	1:15 AM	0	11	2	0	0	1	0	0	2	0	0	0	0
4/24/2024	1:30 AM	0	7	1	0	0	1	0	0	2	0	0	0	0
4/24/2024	1:45 AM	0	6	2	0	0	0	0	0	0	0	0	0	0
4/24/2024	2:00 AM	0	8	3	0	0	0	0	0	4	0	2	0	0
4/24/2024	2:15 AM	0	9	3	0	0	1	0	0	4	0	0	0	0
4/24/2024	2:30 AM	0	2	1	0	0	1	0	0	2	0	1	0	0
4/24/2024	2:45 AM	0	3	1	0	0	2	0	0	2	0	0	0	0
4/24/2024	3:00 AM	0	11	3	0	1	0	0	0	0	0	0	0	0
4/24/2024	3:15 AM	0	5	1	0	1	1	0	0	0	0	0	0	0
4/24/2024	3:30 AM	0	6	2	0	1	0	0	0	5	0	0	0	0
4/24/2024	3:45 AM	0	5	1	0	0	1	0	0	1	0	0	0	0
4/24/2024	4:00 AM	0	4	2	0	0	0	0	0	3	0	0	0	0
4/24/2024	4:15 AM	0	5	2	0	0	0	0	0	1	0	0	0	0
4/24/2024	4:30 AM	0	12	3	0	1	0	0	0	1	0	0	0	0
4/24/2024	4:45 AM	0	6	2	0	0	0	0	0	3	0	0	0	0
4/24/2024	5:00 AM	0	7	3	0	0	2	0	0	7	0	0	0	0
4/24/2024	5:15 AM	0	12	3	0	0	1	0	0	6	0	0	0	0
4/24/2024	5:30 AM	0	20	4	0	1	1	0	0	6	0	0	0	0
4/24/2024	5:45 AM	0	16	5	0	1	0	0	0	5	0	0	0	0
4/24/2024	6:00 AM	0	34	8	0	2	0	0	0	4	0	0	0	0
4/24/2024	6:15 AM	0	41	7	0	1	2	0	0	2	0	0	0	0
4/24/2024	6:30 AM	0	65	13	0	1	1	0	1	5	0	0	0	0
4/24/2024	6:45 AM	0	69	13	0	3	1	0	1	8	0	0	0	0
4/24/2024	7:00 AM	0	71	24	0	4	0	0	1	7	0	0	0	0
4/24/2024	7:15 AM	0	118	29	0	7	3	0	1	2	0	1	0	0
4/24/2024	7:30 AM	0	142	32	1	6	3	0	0	5	0	0	0	0
4/24/2024	7:45 AM	1	157	42	0	9	1	0	1	8	0	1	0	0
4/24/2024	8:00 AM	0	124	30	0	6	0	0	0	4	0	0	0	0
4/24/2024	8:15 AM	0	153	35	0	9	1	0	0	8	0	0	0	0
4/24/2024	8:30 AM	0	108	32	0	4	1	0	2	8	0	1	0	0
4/24/2024	8:45 AM	0	112	26	0	3	1	0	0	12	0	0	0	0
4/24/2024	9:00 AM	0	79	27	0	5	1	0	1	13	0	0	0	0
4/24/2024	9:15 AM	1	78	23	1	6	0	0	2	11	0	0	0	0
4/24/2024	9:30 AM	0	92	27	0	3	0	0	0	6	0	0	0	0
4/24/2024	9:45 AM	0	96	36	0	5	0	0	1	6	0	0	0	0
4/24/2024	10:00 AM	0	94	28	1	3	0	0	1	10	0	0	0	0
4/24/2024	10:15 AM	0	88	26	0	7	1	0	0	11	1	0	0	0
4/24/2024	10:30 AM	0	109	40	0	3	2	0	1	7	0	0	0	0
4/24/2024	10:45 AM	0	106	45	0	3	0	0	0	4	0	0	0	0
4/24/2024	11:00 AM	0	84	31	0	7	0	0	0	8	0	0	0	0
4/24/2024	11:15 AM	0	89	29	0	3	0	0	0	7	0	0	0	0
4/24/2024	11:30 AM	0	123	33	0	6	0	0	0	13	0	0	0	0
4/24/2024	11:45 AM	0	126	33	1	1	1	0	0	11	0	0	0	0
4/24/2024	12:00 PM	0	95	32	0	4	0	0	0	8	0	0	0	0
4/24/2024	12:15 PM	0	115	32	1	1	1	0	0	13	0	0	0	0
4/24/2024	12:30 PM	0	125	33	0	4	0	0	0	7	0	0	0	0
4/24/2024	12:45 PM	0	151	27	0	5	2	0	1	10	2	0	0	0
4/24/2024	1:00 PM	0	148	34	0	1	1	0	0	8	1	0	0	0
4/24/2024	1:15 PM	0	131	40	0	4	0	0	0	11	0	0	0	0
4/24/2024	1:30 PM	0	147	33	0	3	0	0	0	6	2	0	0	0
4/24/2024	1:45 PM	0	160	39	0	4	0	0	2	8	0	0	0	0
4/24/2024	2:00 PM	0	154	47	0	2	2	0	0	9	1	0	0	0
4/24/2024	2:15 PM	0	174	36	0	2	0	0	0	21	0	0	0	0
4/24/2024	2:30 PM	0	166	41	3	3	0	0	2	6	0	0	0	0
4/24/2024	2:45 PM	0	153	39	3	4	1	0	1	14	0	0	0	0
4/24/2024	3:00 PM	2	206	42	0	3	0	0	1	15	2	0	0	0
4/24/2024	3:15 PM	0	199	45	0	2	0	0	0	8	0	0	0	0
4/24/2024	3:30 PM	0	194	49	2	5	2	0	0	8	1	0	0	0
4/24/2024	3:45 PM	0	210	61	0	7	1	0	0	12	1	0	0	0
4/24/2024	4:00 PM	0	224	64	0	4	0	0	0	8	0	0	0	0
4/24/2024	4:15 PM	1	243	53	1	9	0	0	0	3	0	0	0	0
4/24/2024	4:30 PM	0	230	53	1	3	0	0	1	5	0	0	0	0
4/24/2024	4:45 PM	0	265	35	0	2	0	0	0	6	0	0	0	0
4/24/2024	5:00 PM	0	232	53	0	0	0	0	0	3	2	0	0	0
4/24/2024	5:15 PM	0	219	37	0	1	0	2	0	6	0	0	0	0
4/24/2024	5:30 PM	0	218	45	0	1	0	0	0	0	0	0	0	0
4/24/2024	5:45 PM	0	196	44	0	1	0	0	0	2	0	0	0	0
4/24/2024	6:00 PM	0	145	33	0	1	0	0	0	6	0	0	0	0
4/24/2024	6:15 PM	0	138	36	0	2	0	0	0	4	0	0	0	0
4/24/2024	6:30 PM	1	120	21	0	3	0	0	1	7	0	0	0	0
4/24/2024	6:45 PM	0	99	24	0	1	1	0	0	4	0	0	0	0
4/24/2024	7:00 PM	0	73	19	0	1	0	0	0	2	0	0	0	0
4/24/2024	7:15 PM	1	107	28	0	2	1	0	0	4	0	1	0	0
4/24/2024	7:30 PM	0	87	23	0	0	0	0	1	3	0	0	0	0
4/24/2024	7:45 PM	1	121	13	0	0	0	0	0	5	0	0	0	0
4/24/2024	8:00 PM	0	90	9	0	0	0	0	1	3	0	0	0	0
4/24/2024	8:15 PM	0	91	11	0	1	1	0	0	3	0	0	0	0
4/24/2024	8:30 PM	1	86	21	0	1	0	0	0	8	0	0	0	0
4/24/2024	8:45 PM	0	61	19	0	1	0	0	0	2	0	0	0	0
4/24/2024	9:00 PM	0	47	13	0	0	0	0	2	2	0	1	0	0
4/24/2024	9:15 PM	0	48	12	0	0	0	0	0	5	0	0	0	0
4/24/2024	9:30 PM	0	38	11	0	0	0	0	0	2	0	0	0	0
4/24/2024	9:45 PM	0	48	11	0	0	0	0	0	5	0	0	0	0
4/24/2024	10:00 PM	1	45	12	0	1	0	0	0	2	0	0	0	0
4/24/2024	10:15 PM	0	47	16	0	1	0	0	0	6	0	0	0	0
4/24/2024	10:30 PM	0	75	16	0	0	0	0	0	2	0	0	0	0
4/24/2024	10:45 PM	0	25	8	0	0	0	0	0	0	0	0	0	0
4/24/2024	11:00 PM	0	37	9	0	0	0	0	0	3	0	0	0	0
4/24/2024	11:15 PM	0	23	9	0	0	0	0	0	1	0	0	0	0
4/24/2024	11:30 PM	0	21	10	0	0	0	0	0	2	0	0	0	0
4/24/2024	11:45 PM	0	15	6	0	2	0	0	0	0	0	0	0	0

4/25/2024	12:00 AM	0	9	4	0	2	1	0	0	4	0	1	0	0
4/25/2024	12:15 AM	0	10	7	0	1	0	0	0	1	0	0	0	0
4/25/2024	12:30 AM	0	9	4	0	1	2	0	0	1	0	0	0	0
4/25/2024	12:45 AM	0	5	2	0	2	1	0	0	0	0	0	0	0
4/25/2024	1:00 AM	0	5	4	0	0	0	0	0	2	0	0	0	0
4/25/2024	1:15 AM	0	4	3	0	0	0	0	0	0	0	0	0	0
4/25/2024	1:30 AM	0	7	2	0	2	2	0	0	2	0	0	0	0
4/25/2024	1:45 AM	0	5	3	0	0	0	0	0	0	0	0	0	0
4/25/2024	2:00 AM	0	5	2	0	3	0	0	0	2	0	1	0	0
4/25/2024	2:15 AM	0	6	1	0	2	2	0	0	1	0	0	0	0
4/25/2024	2:30 AM	0	3	2	0	1	1	0	0	4	0	0	0	0
4/25/2024	2:45 AM	0	3	1	0	1	0	0	0	5	0	0	0	0
4/25/2024	3:00 AM	0	2	1	0	2	1	0	0	1	0	0	0	0
4/25/2024	3:15 AM	0	5	3	0	1	0	0	0	3	0	2	0	0
4/25/2024	3:30 AM	0	1	3	0	0	0	0	0	0	0	0	0	0
4/25/2024	3:45 AM	0	6	3	0	1	0	0	0	3	0	0	0	0
4/25/2024	4:00 AM	0	4	3	0	0	0	0	0	2	0	0	0	0
4/25/2024	4:15 AM	0	6	3	0	2	0	0	0	3	0	0	0	0
4/25/2024	4:30 AM	0	9	5	0	0	0	0	0	3	0	0	0	0
4/25/2024	4:45 AM	0	8	4	0	0	1	0	0	2	0	0	0	0
4/25/2024	5:00 AM	0	8	4	0	0	0	0	0	4	0	0	0	0
4/25/2024	5:15 AM	0	5	3	0	0	0	0	0	4	0	0	0	0
4/25/2024	5:30 AM	0	17	8	1	1	0	0	0	2	0	0	0	0
4/25/2024	5:45 AM	0	21	12	0	1	0	0	0	3	0	0	0	0
4/25/2024	6:00 AM	0	24	10	0	1	0	0	0	11	0	0	0	0
4/25/2024	6:15 AM	0	41	12	0	2	0	0	0	5	0	0	0	0
4/25/2024	6:30 AM	0	61	10	0	4	0	0	0	7	0	0	0	0
4/25/2024	6:45 AM	0	59	20	0	2	0	0	0	4	0	0	0	0
4/25/2024	7:00 AM	0	71	17	0	5	3	0	0	4	0	0	0	0
4/25/2024	7:15 AM	0	108	20	1	4	1	0	0	13	0	0	0	0
4/25/2024	7:30 AM	0	113	25	0	5	0	0	0	9	0	0	0	0
4/25/2024	7:45 AM	0	151	27	0	2	1	0	0	6	0	0	0	0
4/25/2024	8:00 AM	0	129	34	0	3	1	0	1	10	0	0	0	0
4/25/2024	8:15 AM	1	114	42	0	2	0	0	0	6	1	0	0	0
4/25/2024	8:30 AM	0	118	38	0	8	0	0	0	2	1	0	0	0
4/25/2024	8:45 AM	0	105	36	0	3	0	0	1	11	0	0	0	0
4/25/2024	9:00 AM	0	79	36	0	6	0	0	0	11	0	0	0	0
4/25/2024	9:15 AM	0	88	29	0	3	0	0	0	6	1	0	0	0
4/25/2024	9:30 AM	1	96	33	0	3	1	0	0	9	0	0	0	0
4/25/2024	9:45 AM	0	103	31	0	3	0	0	1	5	0	0	0	0
4/25/2024	10:00 AM	0	114	41	0	1	1	0	0	2	0	0	0	0
4/25/2024	10:15 AM	0	102	29	0	4	0	0	0	17	0	0	0	0
4/25/2024	10:30 AM	0	103	29	0	3	0	0	0	10	0	0	0	0
4/25/2024	10:45 AM	0	94	34	0	5	0	0	0	13	0	0	0	0
4/25/2024	11:00 AM	1	87	36	1	3	3	0	0	8	0	0	0	0
4/25/2024	11:15 AM	0	116	37	1	7	0	0	0	12	0	0	0	0
4/25/2024	11:30 AM	0	117	41	1	1	0	0	0	11	0	0	0	0
4/25/2024	11:45 AM	0	105	31	1	4	0	0	0	11	0	0	0	0
4/25/2024	12:00 PM	1	111	38	0	3	0	0	0	5	0	0	0	0
4/25/2024	12:15 PM	0	115	51	0	1	0	0	0	8	0	0	0	0
4/25/2024	12:30 PM	0	144	37	0	1	1	0	0	15	0	0	0	0
4/25/2024	12:45 PM	0	161	44	4	4	0	0	0	16	0	0	0	0
4/25/2024	1:00 PM	0	115	52	0	3	1	0	1	8	0	0	0	0
4/25/2024	1:15 PM	0	131	41	2	3	1	0	1	16	0	0	0	0
4/25/2024	1:30 PM	0	142	40	0	1	0	0	2	9	0	0	0	0
4/25/2024	1:45 PM	0	129	25	0	1	0	0	1	13	0	1	0	0
4/25/2024	2:00 PM	0	155	41	0	5	0	0	3	10	0	0	0	0
4/25/2024	2:15 PM	0	162	34	1	3	3	0	0	8	0	0	0	0
4/25/2024	2:30 PM	0	137	48	2	1	0	0	2	13	0	0	0	0
4/25/2024	2:45 PM	0	169	62	0	3	0	0	1	7	0	0	0	0
4/25/2024	3:00 PM	1	210	43	1	9	0	0	1	9	0	0	0	0
4/25/2024	3:15 PM	1	222	54	2	6	1	0	0	5	0	0	0	0
4/25/2024	3:30 PM	0	201	48	1	1	0	0	0	6	0	0	0	0
4/25/2024	3:45 PM	0	202	55	0	6	0	0	1	4	0	0	0	0
4/25/2024	4:00 PM	1	236	41	1	3	1	0	2	10	0	0	0	0
4/25/2024	4:15 PM	0	229	63	0	3	0	0	0	5	0	0	0	0
4/25/2024	4:30 PM	1	238	55	0	3	0	0	0	2	0	0	0	0
4/25/2024	4:45 PM	0	240	41	0	0	0	0	0	3	0	0	0	0
4/25/2024	5:00 PM	1	224	48	0	3	2	0	0	8	0	0	0	0
4/25/2024	5:15 PM	1	231	22	0	2	0	0	0	7	0	0	0	0
4/25/2024	5:30 PM	0	194	33	0	2	1	0	0	3	1	0	0	0
4/25/2024	5:45 PM	1	168	41	0	0	0	0	0	11	0	0	0	0
4/25/2024	6:00 PM	1	163	46	0	1	1	0	1	10	0	0	0	0
4/25/2024	6:15 PM	1	160	34	0	3	0	0	1	2	0	0	0	0
4/25/2024	6:30 PM	0	109	32	0	1	0	0	0	2	0	0	0	0
4/25/2024	6:45 PM	0	120	20	3	1	0	0	0	3	0	0	0	0
4/25/2024	7:00 PM	1	108	17	0	1	0	0	0	5	0	0	0	0
4/25/2024	7:15 PM	0	96	27	0	1	0	0	0	3	0	0	0	0
4/25/2024	7:30 PM	1	132	13	0	4	0	0	0	5	0	0	0	0
4/25/2024	7:45 PM	0	124	13	0	1	0	0	0	3	0	0	0	0
4/25/2024	8:00 PM	0	90	12	0	0	0	0	0	3	0	0	0	0
4/25/2024	8:15 PM	0	84	14	0	1	0	0	0	0	0	0	0	0
4/25/2024	8:30 PM	0	85	10	0	0	0	0	0	5	0	0	1	0
4/25/2024	8:45 PM	0	79	10	0	0	0	0	0	2	0	0	0	0
4/25/2024	9:00 PM	0	84	11	0	1	0	0	0	6	0	0	1	0
4/25/2024	9:15 PM	0	70	8	0	0	0	0	0	3	0	0	1	0
4/25/2024	9:30 PM	0	53	9	0	1	0	0	0	5	0	0	0	0
4/25/2024	9:45 PM	0	86	12	0	1	0	0	0	5	0	0	1	0
4/25/2024	10:00 PM	0	46	8	0	1	0	0	0	4	0	0	0	0
4/25/2024	10:15 PM	0	106	8	0	0	0	0	0	3	0	0	0	0
4/25/2024	10:30 PM	0	67	8	0	0	0	0	0	2	0	0	0	0
4/25/2024	10:45 PM	0	23	8	0	0	0	0	0	2	0	0	0	0
4/25/2024	11:00 PM	0	37	10	0	0	0	0	0	0	0	0	0	0
4/25/2024	11:15 PM	0	21	8	0	3	1	0	0	4	0	0	0	0
4/25/2024	11:30 PM	0	30	7	0	1	0	0	0	0	0	0	0	0
4/25/2024	11:45 PM	0	16	8	0	0	0	0	0	1	0	0	0	0

4/26/2024	12:00 AM	0	18	4	0	1	3	0	0	2	0	0	0	0
4/26/2024	12:15 AM	0	15	2	0	0	1	0	0	0	0	0	0	0
4/26/2024	12:30 AM	0	13	1	0	1	1	0	0	2	0	0	0	0
4/26/2024	12:45 AM	0	12	2	0	0	1	0	0	2	0	0	0	0
4/26/2024	1:00 AM	0	7	1	0	2	2	0	0	2	0	0	0	0
4/26/2024	1:15 AM	0	10	2	0	2	1	0	0	2	0	0	0	0
4/26/2024	1:30 AM	0	9	2	0	1	1	0	0	1	0	0	0	0
4/26/2024	1:45 AM	0	11	1	0	1	1	0	0	1	0	0	0	0
4/26/2024	2:00 AM	0	9	2	0	2	0	0	0	1	0	0	0	0
4/26/2024	2:15 AM	0	3	1	0	1	2	0	0	1	0	0	0	0
4/26/2024	2:30 AM	0	5	1	0	1	2	0	0	0	0	0	0	0
4/26/2024	2:45 AM	0	5	2	0	1	1	0	0	1	0	0	0	0
4/26/2024	3:00 AM	0	6	1	0	2	1	0	0	1	0	0	0	0
4/26/2024	3:15 AM	0	4	1	0	0	0	0	0	2	0	1	0	0
4/26/2024	3:30 AM	0	9	2	0	0	0	0	0	2	0	0	0	0
4/26/2024	3:45 AM	0	4	1	0	2	1	0	0	1	0	2	0	0
4/26/2024	4:00 AM	0	10	2	0	1	1	0	0	2	0	0	0	0
4/26/2024	4:15 AM	0	13	2	0	0	2	0	0	3	1	0	0	0
4/26/2024	4:30 AM	0	11	3	0	0	0	0	0	1	0	0	0	0
4/26/2024	4:45 AM	0	16	4	0	0	0	0	0	1	0	0	0	0
4/26/2024	5:00 AM	0	17	3	0	1	0	0	0	2	0	0	0	0
4/26/2024	5:15 AM	0	11	2	0	0	1	0	0	2	0	0	0	0
4/26/2024	5:30 AM	0	18	2	0	1	0	0	0	1	0	0	0	0
4/26/2024	5:45 AM	0	16	3	0	1	2	0	0	0	0	0	0	0
4/26/2024	6:00 AM	0	27	6	0	1	0	0	0	3	0	0	0	0
4/26/2024	6:15 AM	0	46	7	0	0	0	0	0	1	0	1	0	0
4/26/2024	6:30 AM	0	40	10	0	3	0	0	2	2	0	0	0	0
4/26/2024	6:45 AM	0	60	17	0	1	1	0	1	6	0	0	0	0
4/26/2024	7:00 AM	0	72	15	1	4	0	0	0	1	0	0	0	0
4/26/2024	7:15 AM	0	112	19	0	2	2	0	1	5	1	0	0	0
4/26/2024	7:30 AM	2	115	17	0	8	0	0	0	6	0	0	0	0
4/26/2024	7:45 AM	1	131	30	0	1	0	0	0	9	0	0	0	0
4/26/2024	8:00 AM	0	114	26	0	5	1	0	0	4	0	0	0	0
4/26/2024	8:15 AM	0	112	34	0	3	0	0	0	11	0	0	0	0
4/26/2024	8:30 AM	0	110	33	0	4	0	0	1	3	0	0	1	0
4/26/2024	8:45 AM	0	93	32	2	4	1	0	1	8	0	0	0	0
4/26/2024	9:00 AM	1	81	28	0	4	1	0	0	2	0	0	1	0
4/26/2024	9:15 AM	0	83	32	0	5	1	0	0	5	0	0	0	0
4/26/2024	9:30 AM	0	106	28	0	3	1	0	0	7	1	0	0	0
4/26/2024	9:45 AM	0	82	26	0	4	1	0	1	6	1	0	0	0
4/26/2024	10:00 AM	0	101	41	0	5	0	0	0	7	0	0	0	0
4/26/2024	10:15 AM	0	102	22	0	1	1	0	0	3	0	0	0	0
4/26/2024	10:30 AM	0	103	19	0	3	0	0	0	5	0	0	0	0
4/26/2024	10:45 AM	0	110	31	0	5	0	0	0	13	0	0	0	0
4/26/2024	11:00 AM	0	134	33	2	6	0	0	1	6	0	0	0	0
4/26/2024	11:15 AM	0	127	42	0	3	0	0	1	6	0	0	0	0
4/26/2024	11:30 AM	0	124	57	1	3	2	0	0	7	0	0	0	0
4/26/2024	11:45 AM	0	127	28	1	3	0	0	0	15	0	0	0	0
4/26/2024	12:00 PM	0	144	43	0	5	0	0	1	6	1	0	0	0
4/26/2024	12:15 PM	0	167	41	5	1	0	0	1	8	0	0	0	0
4/26/2024	12:30 PM	1	171	47	5	1	1	0	0	7	0	0	0	0
4/26/2024	12:45 PM	0	159	45	0	6	0	0	0	7	0	0	0	0
4/26/2024	1:00 PM	0	133	31	2	2	0	0	1	3	0	1	0	0
4/26/2024	1:15 PM	0	169	40	0	1	1	0	0	8	0	0	0	0
4/26/2024	1:30 PM	0	146	32	4	0	0	0	0	3	1	0	0	0
4/26/2024	1:45 PM	1	164	39	0	0	0	0	0	6	0	0	0	0
4/26/2024	2:00 PM	0	127	34	0	1	0	0	0	9	0	0	0	0
4/26/2024	2:15 PM	0	161	37	1	2	1	0	2	8	0	0	0	0
4/26/2024	2:30 PM	0	170	38	0	4	2	0	0	8	0	0	0	0
4/26/2024	2:45 PM	0	189	32	0	2	0	0	0	20	0	0	0	0
4/26/2024	3:00 PM	0	145	46	0	0	0	0	0	3	0	0	0	0
4/26/2024	3:15 PM	1	161	39	1	2	0	0	1	6	0	0	0	0
4/26/2024	3:30 PM	0	187	38	0	0	0	0	2	7	0	0	0	0
4/26/2024	3:45 PM	1	186	51	1	1	0	0	0	6	1	0	0	0
4/26/2024	4:00 PM	0	153	44	0	3	0	0	1	7	0	0	0	0
4/26/2024	4:15 PM	0	242	47	0	3	1	0	0	7	0	0	0	0
4/26/2024	4:30 PM	0	207	43	0	0	0	0	0	2	0	0	0	0
4/26/2024	4:45 PM	2	211	33	0	0	0	0	0	7	0	0	0	0
4/26/2024	5:00 PM	1	240	50	0	2	0	0	0	5	0	0	0	0
4/26/2024	5:15 PM	0	205	48	0	1	0	0	1	8	0	0	0	0
4/26/2024	5:30 PM	0	161	33	0	1	0	0	0	7	0	0	0	0
4/26/2024	5:45 PM	0	154	37	0	4	1	0	1	4	0	0	0	0
4/26/2024	6:00 PM	1	145	30	0	2	0	0	0	4	0	0	0	0
4/26/2024	6:15 PM	0	155	32	0	2	0	0	1	6	0	0	0	0
4/26/2024	6:30 PM	1	115	23	0	1	0	0	0	5	0	0	0	0
4/26/2024	6:45 PM	2	109	19	0	1	0	0	0	4	0	0	0	0
4/26/2024	7:00 PM	2	96	16	0	2	0	0	0	2	0	0	0	0
4/26/2024	7:15 PM	0	107	24	0	1	1	0	0	3	0	0	0	0
4/26/2024	7:30 PM	1	91	7	0	1	0	0	0	4	0	0	0	0
4/26/2024	7:45 PM	0	88	16	0	2	0	0	0	3	0	0	0	0
4/26/2024	8:00 PM	0	95	14	0	0	0	0	0	2	0	0	0	0
4/26/2024	8:15 PM	0	71	12	0	1	1	0	0	4	0	0	0	0
4/26/2024	8:30 PM	0	72	12	0	0	0	0	0	1	0	0	0	0
4/26/2024	8:45 PM	0	76	14	0	1	0	0	0	5	0	0	0	0
4/26/2024	9:00 PM	0	84	13	0	1	0	0	0	3	0	0	0	0
4/26/2024	9:15 PM	0	89	13	0	0	0	0	0	1	0	0	0	0
4/26/2024	9:30 PM	0	74	14	0	1	0	0	0	2	0	0	2	0
4/26/2024	9:45 PM	0	95	15	0	0	0	0	0	1	0	0	1	0
4/26/2024	10:00 PM	0	85	15	0	0	0	0	0	1	0	0	0	0
4/26/2024	10:15 PM	0	70	9	0	1	0	0	0	2	0	0	1	0
4/26/2024	10:30 PM	0	85	11	0	0	0	0	0	2	0	0	0	0
4/26/2024	10:45 PM	0	135	16	0	0	0	0	0	5	0	0	0	0
4/26/2024	11:00 PM	0	109	12	0	0	0	0	0	0	0	0	1	0
4/26/2024	11:15 PM	0	56	7	0	0	0	0	0	1	0	0	0	0
4/26/2024	11:30 PM	0	28	4	0	0	0	0	0	3	0	0	0	0
4/26/2024	11:45 PM	0	36	5	0	1	0	0	0	2	0	0	0	0

4/27/2024	12:00 AM	0	28	2	0	0	0	0	0	1	0	0	0	0
4/27/2024	12:15 AM	0	28	1	0	1	0	0	0	1	0	0	0	0
4/27/2024	12:30 AM	1	25	1	0	1	0	0	0	0	0	0	0	0
4/27/2024	12:45 AM	0	27	1	0	1	0	0	0	1	0	0	0	0
4/27/2024	1:00 AM	0	22	2	0	0	0	0	0	4	0	0	0	0
4/27/2024	1:15 AM	1	13	1	0	0	0	0	0	1	0	0	0	0
4/27/2024	1:30 AM	0	24	2	0	0	0	0	0	0	0	0	0	0
4/27/2024	1:45 AM	0	15	1	0	0	0	0	0	0	0	0	0	0
4/27/2024	2:00 AM	0	18	2	0	1	0	0	0	0	0	0	0	0
4/27/2024	2:15 AM	0	15	1	0	2	0	0	0	1	0	0	0	0
4/27/2024	2:30 AM	0	14	2	0	1	0	0	0	1	0	0	0	0
4/27/2024	2:45 AM	0	21	2	0	1	0	0	0	2	0	0	0	0
4/27/2024	3:00 AM	0	11	1	0	0	0	0	0	0	0	1	0	0
4/27/2024	3:15 AM	0	10	2	0	1	0	0	0	0	0	0	0	0
4/27/2024	3:30 AM	0	7	0	0	0	0	0	0	0	0	0	0	0
4/27/2024	3:45 AM	0	7	0	0	1	1	0	0	1	0	0	0	0
4/27/2024	4:00 AM	0	5	0	0	0	0	0	0	3	0	1	0	0
4/27/2024	4:15 AM	0	9	1	0	0	0	0	0	1	0	0	0	0
4/27/2024	4:30 AM	0	5	1	0	0	0	0	0	0	0	0	0	0
4/27/2024	4:45 AM	0	8	2	0	1	0	0	0	2	0	0	0	0
4/27/2024	5:00 AM	0	10	2	0	0	0	0	0	1	0	0	0	0
4/27/2024	5:15 AM	0	11	3	0	0	0	0	0	1	0	0	0	0
4/27/2024	5:30 AM	0	14	2	0	0	0	0	0	1	0	0	0	0
4/27/2024	5:45 AM	0	16	1	0	0	0	0	0	3	0	0	0	0
4/27/2024	6:00 AM	0	14	4	0	0	0	0	0	2	0	0	0	0
4/27/2024	6:15 AM	0	15	8	0	0	0	0	0	3	0	0	0	0
4/27/2024	6:30 AM	0	27	6	0	1	0	0	0	2	0	0	0	0
4/27/2024	6:45 AM	0	21	3	0	1	1	0	1	0	0	0	0	0
4/27/2024	7:00 AM	0	33	2	0	0	0	0	1	3	0	0	0	0
4/27/2024	7:15 AM	0	51	6	0	0	0	0	0	2	0	0	0	0
4/27/2024	7:30 AM	0	44	6	0	1	0	0	0	3	0	0	0	0
4/27/2024	7:45 AM	0	45	12	1	1	1	0	0	3	0	0	0	0
4/27/2024	8:00 AM	0	52	8	0	5	0	0	0	3	0	0	0	0
4/27/2024	8:15 AM	0	42	10	0	2	0	0	0	3	0	0	0	0
4/27/2024	8:30 AM	0	64	7	0	0	0	0	0	7	0	0	0	0
4/27/2024	8:45 AM	0	67	11	0	1	0	0	0	2	0	0	0	0
4/27/2024	9:00 AM	0	61	15	0	0	0	0	0	4	0	1	0	0
4/27/2024	9:15 AM	1	72	12	0	1	0	0	0	8	0	0	0	0
4/27/2024	9:30 AM	0	94	13	0	2	0	0	0	4	0	0	0	0
4/27/2024	9:45 AM	0	88	17	0	2	0	0	1	3	0	0	0	0
4/27/2024	10:00 AM	0	81	13	0	1	0	0	2	3	0	0	0	0
4/27/2024	10:15 AM	0	76	12	2	2	0	0	0	8	0	0	0	0
4/27/2024	10:30 AM	1	105	16	0	0	1	0	0	2	0	0	0	0
4/27/2024	10:45 AM	0	110	28	0	2	1	0	0	2	0	0	0	0
4/27/2024	11:00 AM	1	109	10	0	1	1	0	0	4	0	0	0	0
4/27/2024	11:15 AM	0	96	21	0	0	1	0	0	3	0	0	0	0
4/27/2024	11:30 AM	1	107	23	0	0	0	0	0	1	2	0	0	0
4/27/2024	11:45 AM	0	118	29	0	0	0	0	0	5	0	0	0	0
4/27/2024	12:00 PM	0	118	20	0	1	1	0	0	1	0	0	0	0
4/27/2024	12:15 PM	0	113	23	0	1	0	0	0	5	0	0	0	0
4/27/2024	12:30 PM	0	120	16	0	0	0	0	1	2	0	0	0	0
4/27/2024	12:45 PM	0	100	21	0	2	0	0	0	2	0	0	0	0
4/27/2024	1:00 PM	0	112	26	1	3	0	0	0	2	0	0	0	0
4/27/2024	1:15 PM	0	150	29	0	2	0	0	0	4	0	0	0	0
4/27/2024	1:30 PM	1	132	24	0	1	0	0	0	3	0	0	0	0
4/27/2024	1:45 PM	0	133	29	0	4	0	0	0	4	0	0	0	0
4/27/2024	2:00 PM	0	126	26	0	0	1	0	0	4	0	0	0	0
4/27/2024	2:15 PM	1	134	36	0	1	0	0	3	1	0	0	0	0
4/27/2024	2:30 PM	0	95	22	0	1	0	0	0	2	0	0	0	0
4/27/2024	2:45 PM	0	119	14	0	0	0	0	0	3	0	0	0	0
4/27/2024	3:00 PM	0	105	28	0	4	0	0	0	1	0	0	0	0
4/27/2024	3:15 PM	1	114	22	0	0	0	0	0	2	0	0	0	0
4/27/2024	3:30 PM	3	135	16	0	0	1	0	0	1	0	0	0	0
4/27/2024	3:45 PM	0	145	25	0	1	0	0	0	2	1	0	0	0
4/27/2024	4:00 PM	0	115	24	0	1	0	0	0	2	0	0	0	0
4/27/2024	4:15 PM	0	104	21	0	1	0	0	0	3	0	0	0	0
4/27/2024	4:30 PM	0	105	14	0	1	0	0	0	1	0	0	0	0
4/27/2024	4:45 PM	0	104	17	0	1	0	0	0	5	0	0	0	0
4/27/2024	5:00 PM	0	103	19	0	0	1	0	0	5	0	0	0	0
4/27/2024	5:15 PM	0	117	12	0	2	0	0	0	1	0	0	0	0
4/27/2024	5:30 PM	0	88	17	0	2	0	0	0	1	0	0	0	0
4/27/2024	5:45 PM	0	77	19	0	0	0	0	0	0	0	0	0	0
4/27/2024	6:00 PM	0	111	21	0	2	0	0	0	2	0	0	0	0
4/27/2024	6:15 PM	0	121	17	0	0	0	0	0	1	0	0	0	0
4/27/2024	6:30 PM	1	83	12	1	0	0	0	0	2	0	0	0	0
4/27/2024	6:45 PM	0	82	15	0	2	0	0	0	2	0	0	0	0
4/27/2024	7:00 PM	0	90	14	0	1	0	0	0	0	0	0	0	0
4/27/2024	7:15 PM	0	99	7	0	2	0	0	0	1	0	0	0	0
4/27/2024	7:30 PM	0	113	18	0	2	0	0	0	2	0	0	0	0
4/27/2024	7:45 PM	0	121	15	0	0	0	0	0	1	0	0	0	0
4/27/2024	8:00 PM	0	91	18	0	0	0	0	0	5	0	0	0	0
4/27/2024	8:15 PM	0	63	12	0	0	1	0	0	0	0	0	0	0
4/27/2024	8:30 PM	0	70	14	0	0	0	0	0	3	0	0	0	0
4/27/2024	8:45 PM	0	73	13	0	1	0	0	0	0	0	0	0	0
4/27/2024	9:00 PM	1	78	10	0	1	0	0	0	0	0	0	0	0
4/27/2024	9:15 PM	0	124	13	0	0	0	0	0	0	0	0	0	0
4/27/2024	9:30 PM	0	133	16	0	4	0	0	0	0	0	0	0	0
4/27/2024	9:45 PM	0	88	11	0	0	0	0	0	1	0	0	0	0
4/27/2024	10:00 PM	0	74	9	1	1	0	0	0	0	0	0	0	0
4/27/2024	10:15 PM	0	103	16	0	0	0	0	0	1	0	0	0	0
4/27/2024	10:30 PM	0	72	13	0	1	0	0	0	1	0	0	0	0
4/27/2024	10:45 PM	0	42	6	0	0	0	0	0	0	0	0	0	0
4/27/2024	11:00 PM	0	34	6	0	0	0	0	0	1	0	0	0	0
4/27/2024	11:15 PM	0	34	5	0	0	0	0	0	2	0	0	0	0
4/27/2024	11:30 PM	0	32	6	0	0	0	0	0	2	0	0	0	0
4/27/2024	11:45 PM	0	40	7	1	0	1	0	0	0	0	0	0	0

NB
File Name:
Start Date: 4/21/2024
Start Time: 0
Site Code: 12
Station ID: 1
Location 1: I-26 S/Bound Off-Ramp, north of I-20
Location 2:

Date	Time	1	2	3	4	5	6	7	8	9	10	11	12	13
4/21/2024	12:00 AM	0	0	0	0	0	0	0	0	0	0	0	0	0
4/21/2024	12:15 AM	0	0	0	0	0	0	0	0	0	0	0	0	0
4/21/2024	12:30 AM	0	0	0	0	0	0	0	0	0	0	0	0	0
4/21/2024	12:45 AM	0	0	0	0	0	0	0	0	0	0	0	0	0
4/21/2024	1:00 AM	0	0	0	0	0	0	0	0	0	0	0	0	0
4/21/2024	1:15 AM	0	0	0	0	0	0	0	0	0	0	0	0	0
4/21/2024	1:30 AM	0	0	0	0	0	0	0	0	0	0	0	0	0
4/21/2024	1:45 AM	0	0	0	0	0	0	0	0	0	0	0	0	0
4/21/2024	2:00 AM	0	0	0	0	0	0	0	0	0	0	0	0	0
4/21/2024	2:15 AM	0	0	0	0	0	0	0	0	0	0	0	0	0
4/21/2024	2:30 AM	0	0	0	0	0	0	0	0	0	0	0	0	0
4/21/2024	2:45 AM	0	0	0	0	0	0	0	0	0	0	0	0	0
4/21/2024	3:00 AM	0	0	0	0	0	0	0	0	0	0	0	0	0
4/21/2024	3:15 AM	0	0	0	0	0	0	0	0	0	0	0	0	0
4/21/2024	3:30 AM	0	0	0	0	0	0	0	0	0	0	0	0	0
4/21/2024	3:45 AM	0	0	0	0	0	0	0	0	0	0	0	0	0
4/21/2024	4:00 AM	0	0	0	0	0	0	0	0	0	0	0	0	0
4/21/2024	4:15 AM	0	0	0	0	0	0	0	0	0	0	0	0	0
4/21/2024	4:30 AM	0	0	0	0	0	0	0	0	0	0	0	0	0
4/21/2024	4:45 AM	0	0	0	0	0	0	0	0	0	0	0	0	0
4/21/2024	5:00 AM	0	0	0	0	0	0	0	0	0	0	0	0	0
4/21/2024	5:15 AM	0	0	0	0	0	0	0	0	0	0	0	0	0
4/21/2024	5:30 AM	0	0	0	0	0	0	0	0	0	0	0	0	0
4/21/2024	5:45 AM	0	0	0	0	0	0	0	0	0	0	0	0	0
4/21/2024	6:00 AM	0	0	0	0	0	0	0	0	0	0	0	0	0
4/21/2024	6:15 AM	0	0	0	0	0	0	0	0	0	0	0	0	0
4/21/2024	6:30 AM	0	0	0	0	0	0	0	0	0	0	0	0	0
4/21/2024	6:45 AM	0	0	0	0	0	0	0	0	0	0	0	0	0
4/21/2024	7:00 AM	0	0	0	0	0	0	0	0	0	0	0	0	0
4/21/2024	7:15 AM	0	0	0	0	0	0	0	0	0	0	0	0	0
4/21/2024	7:30 AM	0	0	0	0	0	0	0	0	0	0	0	0	0
4/21/2024	7:45 AM	0	0	0	0	0	0	0	0	0	0	0	0	0
4/21/2024	8:00 AM	0	0	0	0	0	0	0	0	0	0	0	0	0
4/21/2024	8:15 AM	0	0	0	0	0	0	0	0	0	0	0	0	0
4/21/2024	8:30 AM	0	0	0	0	0	0	0	0	0	0	0	0	0
4/21/2024	8:45 AM	0	0	0	0	0	0	0	0	0	0	0	0	0
4/21/2024	9:00 AM	0	0	0	0	0	0	0	0	0	0	0	0	0
4/21/2024	9:15 AM	0	0	0	0	0	0	0	0	0	0	0	0	0
4/21/2024	9:30 AM	0	0	0	0	0	0	0	0	0	0	0	0	0
4/21/2024	9:45 AM	0	0	0	0	0	0	0	0	0	0	0	0	0
4/21/2024	10:00 AM	0	0	0	0	0	0	0	0	0	0	0	0	0
4/21/2024	10:15 AM	0	0	0	0	0	0	0	0	0	0	0	0	0
4/21/2024	10:30 AM	0	0	0	0	0	0	0	0	0	0	0	0	0
4/21/2024	10:45 AM	0	0	0	0	0	0	0	0	0	0	0	0	0
4/21/2024	11:00 AM	0	0	0	0	0	0	0	0	0	0	0	0	0
4/21/2024	11:15 AM	0	0	0	0	0	0	0	0	0	0	0	0	0
4/21/2024	11:30 AM	0	0	0	0	0	0	0	0	0	0	0	0	0
4/21/2024	11:45 AM	0	0	0	0	0	0	0	0	0	0	0	0	0
4/21/2024	12:00 PM	0	0	0	0	0	0	0	0	0	0	0	0	0
4/21/2024	12:15 PM	0	0	0	0	0	0	0	0	0	0	0	0	0
4/21/2024	12:30 PM	0	0	0	0	0	0	0	0	0	0	0	0	0
4/21/2024	12:45 PM	0	0	0	0	0	0	0	0	0	0	0	0	0
4/21/2024	1:00 PM	0	0	0	0	0	0	0	0	0	0	0	0	0
4/21/2024	1:15 PM	0	0	0	0	0	0	0	0	0	0	0	0	0
4/21/2024	1:30 PM	0	0	0	0	0	0	0	0	0	0	0	0	0
4/21/2024	1:45 PM	0	0	0	0	0	0	0	0	0	0	0	0	0
4/21/2024	2:00 PM	0	0	0	0	0	0	0	0	0	0	0	0	0
4/21/2024	2:15 PM	0	0	0	0	0	0	0	0	0	0	0	0	0
4/21/2024	2:30 PM	0	0	0	0	0	0	0	0	0	0	0	0	0
4/21/2024	2:45 PM	0	0	0	0	0	0	0	0	0	0	0	0	0
4/21/2024	3:00 PM	0	0	0	0	0	0	0	0	0	0	0	0	0
4/21/2024	3:15 PM	0	0	0	0	0	0	0	0	0	0	0	0	0
4/21/2024	3:30 PM	0	0	0	0	0	0	0	0	0	0	0	0	0
4/21/2024	3:45 PM	0	0	0	0	0	0	0	0	0	0	0	0	0
4/21/2024	4:00 PM	0	0	0	0	0	0	0	0	0	0	0	0	0
4/21/2024	4:15 PM	0	0	0	0	0	0	0	0	0	0	0	0	0
4/21/2024	4:30 PM	0	0	0	0	0	0	0	0	0	0	0	0	0
4/21/2024	4:45 PM	0	0	0	0	0	0	0	0	0	0	0	0	0
4/21/2024	5:00 PM	0	0	0	0	0	0	0	0	0	0	0	0	0
4/21/2024	5:15 PM	0	0	0	0	0	0	0	0	0	0	0	0	0
4/21/2024	5:30 PM	0	0	0	0	0	0	0	0	0	0	0	0	0
4/21/2024	5:45 PM	0	0	0	0	0	0	0	0	0	0	0	0	0
4/21/2024	6:00 PM	0	0	0	0	0	0	0	0	0	0	0	0	0
4/21/2024	6:15 PM	0	0	0	0	0	0	0	0	0	0	0	0	0
4/21/2024	6:30 PM	0	0	0	0	0	0	0	0	0	0	0	0	0
4/21/2024	6:45 PM	0	0	0	0	0	0	0	0	0	0	0	0	0
4/21/2024	7:00 PM	0	0	0	0	0	0	0	0	0	0	0	0	0
4/21/2024	7:15 PM	0	0	0	0	0	0	0	0	0	0	0	0	0
4/21/2024	7:30 PM	0	0	0	0	0	0	0	0	0	0	0	0	0
4/21/2024	7:45 PM	0	0	0	0	0	0	0	0	0	0	0	0	0
4/21/2024	8:00 PM	0	0	0	0	0	0	0	0	0	0	0	0	0
4/21/2024	8:15 PM	0	0	0	0	0	0	0	0	0	0	0	0	0
4/21/2024	8:30 PM	0	0	0	0	0	0	0	0	0	0	0	0	0
4/21/2024	8:45 PM	0	0	0	0	0	0	0	0	0	0	0	0	0
4/21/2024	9:00 PM	0	0	0	0	0	0	0	0	0	0	0	0	0
4/21/2024	9:15 PM	0	0	0	0	0	0	0	0	0	0	0	0	0
4/21/2024	9:30 PM	0	0	0	0	0	0	0	0	0	0	0	0	0
4/21/2024	9:45 PM	0	0	0	0	0	0	0	0	0	0	0	0	0
4/21/2024	10:00 PM	0	0	0	0	0	0	0	0	0	0	0	0	0
4/21/2024	10:15 PM	0	0	0	0	0	0	0	0	0	0	0	0	0
4/21/2024	10:30 PM	0	0	0	0	0	0	0	0	0	0	0	0	0
4/21/2024	10:45 PM	0	0	0	0	0	0	0	0	0	0	0	0	0
4/21/2024	11:00 PM	0	0	0	0	0	0	0	0	0	0	0	0	0
4/21/2024	11:15 PM	0	0	0	0	0	0	0	0	0	0	0	0	0
4/21/2024	11:30 PM	0	0	0	0	0	0	0	0	0	0	0	0	0
4/21/2024	11:45 PM	0	0	0	0	0	0	0	0	0	0	0	0	0

4/22/2024	12:00 AM	0	0	0	0	0	0	0	0	0	0	0	0	0
4/22/2024	12:15 AM	0	0	0	0	0	0	0	0	0	0	0	0	0
4/22/2024	12:30 AM	0	0	0	0	0	0	0	0	0	0	0	0	0
4/22/2024	12:45 AM	0	0	0	0	0	0	0	0	0	0	0	0	0
4/22/2024	1:00 AM	0	0	0	0	0	0	0	0	0	0	0	0	0
4/22/2024	1:15 AM	0	0	0	0	0	0	0	0	0	0	0	0	0
4/22/2024	1:30 AM	0	0	0	0	0	0	0	0	0	0	0	0	0
4/22/2024	1:45 AM	0	0	0	0	0	0	0	0	0	0	0	0	0
4/22/2024	2:00 AM	0	0	0	0	0	0	0	0	0	0	0	0	0
4/22/2024	2:15 AM	0	0	0	0	0	0	0	0	0	0	0	0	0
4/22/2024	2:30 AM	0	0	0	0	0	0	0	0	0	0	0	0	0
4/22/2024	2:45 AM	0	0	0	0	0	0	0	0	0	0	0	0	0
4/22/2024	3:00 AM	0	0	0	0	0	0	0	0	0	0	0	0	0
4/22/2024	3:15 AM	0	0	0	0	0	0	0	0	0	0	0	0	0
4/22/2024	3:30 AM	0	0	0	0	0	0	0	0	0	0	0	0	0
4/22/2024	3:45 AM	0	0	0	0	0	0	0	0	0	0	0	0	0
4/22/2024	4:00 AM	0	0	0	0	0	0	0	0	0	0	0	0	0
4/22/2024	4:15 AM	0	0	0	0	0	0	0	0	0	0	0	0	0
4/22/2024	4:30 AM	0	0	0	0	0	0	0	0	0	0	0	0	0
4/22/2024	4:45 AM	0	0	0	0	0	0	0	0	0	0	0	0	0
4/22/2024	5:00 AM	0	0	0	0	0	0	0	0	0	0	0	0	0
4/22/2024	5:15 AM	0	0	0	0	0	0	0	0	0	0	0	0	0
4/22/2024	5:30 AM	0	0	0	0	0	0	0	0	0	0	0	0	0
4/22/2024	5:45 AM	0	0	0	0	0	0	0	0	0	0	0	0	0
4/22/2024	6:00 AM	0	0	0	0	0	0	0	0	0	0	0	0	0
4/22/2024	6:15 AM	0	0	0	0	0	0	0	0	0	0	0	0	0
4/22/2024	6:30 AM	0	0	0	0	0	0	0	0	0	0	0	0	0
4/22/2024	6:45 AM	0	0	0	0	0	0	0	0	0	0	0	0	0
4/22/2024	7:00 AM	0	0	0	0	0	0	0	0	0	0	0	0	0
4/22/2024	7:15 AM	0	0	0	0	0	0	0	0	0	0	0	0	0
4/22/2024	7:30 AM	0	0	0	0	0	0	0	0	0	0	0	0	0
4/22/2024	7:45 AM	0	0	0	0	0	0	0	0	0	0	0	0	0
4/22/2024	8:00 AM	0	0	0	0	0	0	0	0	0	0	0	0	0
4/22/2024	8:15 AM	0	0	0	0	0	0	0	0	0	0	0	0	0
4/22/2024	8:30 AM	0	0	0	0	0	0	0	0	0	0	0	0	0
4/22/2024	8:45 AM	0	0	0	0	0	0	0	0	0	0	0	0	0
4/22/2024	9:00 AM	0	0	0	0	0	0	0	0	0	0	0	0	0
4/22/2024	9:15 AM	0	0	0	0	0	0	0	0	0	0	0	0	0
4/22/2024	9:30 AM	0	0	0	0	0	0	0	0	0	0	0	0	0
4/22/2024	9:45 AM	0	0	0	0	0	0	0	0	0	0	0	0	0
4/22/2024	10:00 AM	0	0	0	0	0	0	0	0	0	0	0	0	0
4/22/2024	10:15 AM	0	0	0	0	0	0	0	0	0	0	0	0	0
4/22/2024	10:30 AM	0	0	0	0	0	0	0	0	0	0	0	0	0
4/22/2024	10:45 AM	0	0	0	0	0	0	0	0	0	0	0	0	0
4/22/2024	11:00 AM	0	0	0	0	0	0	0	0	0	0	0	0	0
4/22/2024	11:15 AM	0	0	0	0	0	0	0	0	0	0	0	0	0
4/22/2024	11:30 AM	0	0	0	0	0	0	0	0	0	0	0	0	0
4/22/2024	11:45 AM	0	0	0	0	0	0	0	0	0	0	0	0	0
4/22/2024	12:00 PM	0	0	0	0	0	0	0	0	0	0	0	0	0
4/22/2024	12:15 PM	0	0	0	0	0	0	0	0	0	0	0	0	0
4/22/2024	12:30 PM	0	0	0	0	0	0	0	0	0	0	0	0	0
4/22/2024	12:45 PM	0	0	0	0	0	0	0	0	0	0	0	0	0
4/22/2024	1:00 PM	0	0	0	0	0	0	0	0	0	0	0	0	0
4/22/2024	1:15 PM	0	0	0	0	0	0	0	0	0	0	0	0	0
4/22/2024	1:30 PM	0	0	0	0	0	0	0	0	0	0	0	0	0
4/22/2024	1:45 PM	0	0	0	0	0	0	0	0	0	0	0	0	0
4/22/2024	2:00 PM	0	0	0	0	0	0	0	0	0	0	0	0	0
4/22/2024	2:15 PM	0	0	0	0	0	0	0	0	0	0	0	0	0
4/22/2024	2:30 PM	0	0	0	0	0	0	0	0	0	0	0	0	0
4/22/2024	2:45 PM	0	0	0	0	0	0	0	0	0	0	0	0	0
4/22/2024	3:00 PM	0	0	0	0	0	0	0	0	0	0	0	0	0
4/22/2024	3:15 PM	0	0	0	0	0	0	0	0	0	0	0	0	0
4/22/2024	3:30 PM	0	0	0	0	0	0	0	0	0	0	0	0	0
4/22/2024	3:45 PM	0	0	0	0	0	0	0	0	0	0	0	0	0
4/22/2024	4:00 PM	0	0	0	0	0	0	0	0	0	0	0	0	0
4/22/2024	4:15 PM	0	0	0	0	0	0	0	0	0	0	0	0	0
4/22/2024	4:30 PM	0	0	0	0	0	0	0	0	0	0	0	0	0
4/22/2024	4:45 PM	0	0	0	0	0	0	0	0	0	0	0	0	0
4/22/2024	5:00 PM	0	0	0	0	0	0	0	0	0	0	0	0	0
4/22/2024	5:15 PM	0	0	0	0	0	0	0	0	0	0	0	0	0
4/22/2024	5:30 PM	0	0	0	0	0	0	0	0	0	0	0	0	0
4/22/2024	5:45 PM	0	0	0	0	0	0	0	0	0	0	0	0	0
4/22/2024	6:00 PM	0	0	0	0	0	0	0	0	0	0	0	0	0
4/22/2024	6:15 PM	0	0	0	0	0	0	0	0	0	0	0	0	0
4/22/2024	6:30 PM	0	0	0	0	0	0	0	0	0	0	0	0	0
4/22/2024	6:45 PM	0	0	0	0	0	0	0	0	0	0	0	0	0
4/22/2024	7:00 PM	0	0	0	0	0	0	0	0	0	0	0	0	0
4/22/2024	7:15 PM	0	0	0	0	0	0	0	0	0	0	0	0	0
4/22/2024	7:30 PM	0	0	0	0	0	0	0	0	0	0	0	0	0
4/22/2024	7:45 PM	0	0	0	0	0	0	0	0	0	0	0	0	0
4/22/2024	8:00 PM	0	0	0	0	0	0	0	0	0	0	0	0	0
4/22/2024	8:15 PM	0	0	0	0	0	0	0	0	0	0	0	0	0
4/22/2024	8:30 PM	0	0	0	0	0	0	0	0	0	0	0	0	0
4/22/2024	8:45 PM	0	0	0	0	0	0	0	0	0	0	0	0	0
4/22/2024	9:00 PM	0	0	0	0	0	0	0	0	0	0	0	0	0
4/22/2024	9:15 PM	0	0	0	0	0	0	0	0	0	0	0	0	0
4/22/2024	9:30 PM	0	0	0	0	0	0	0	0	0	0	0	0	0
4/22/2024	9:45 PM	0	0	0	0	0	0	0	0	0	0	0	0	0
4/22/2024	10:00 PM	0	0	0	0	0	0	0	0	0	0	0	0	0
4/22/2024	10:15 PM	0	0	0	0	0	0	0	0	0	0	0	0	0
4/22/2024	10:30 PM	0	0	0	0	0	0	0	0	0	0	0	0	0
4/22/2024	10:45 PM	0	0	0	0	0	0	0	0	0	0	0	0	0
4/22/2024	11:00 PM	0	0	0	0	0	0	0	0	0	0	0	0	0
4/22/2024	11:15 PM	0	0	0	0	0	0	0	0	0	0	0	0	0
4/22/2024	11:30 PM	0	0	0	0	0	0	0	0	0	0	0	0	0
4/22/2024	11:45 PM	0	0	0	0	0	0	0	0	0	0	0	0	0

4/23/2024	12:00 AM	0	0	0	0	0	0	0	0	0	0	0	0	0
4/23/2024	12:15 AM	0	0	0	0	0	0	0	0	0	0	0	0	0
4/23/2024	12:30 AM	0	0	0	0	0	0	0	0	0	0	0	0	0
4/23/2024	12:45 AM	0	0	0	0	0	0	0	0	0	0	0	0	0
4/23/2024	1:00 AM	0	0	0	0	0	0	0	0	0	0	0	0	0
4/23/2024	1:15 AM	0	0	0	0	0	0	0	0	0	0	0	0	0
4/23/2024	1:30 AM	0	0	0	0	0	0	0	0	0	0	0	0	0
4/23/2024	1:45 AM	0	0	0	0	0	0	0	0	0	0	0	0	0
4/23/2024	2:00 AM	0	0	0	0	0	0	0	0	0	0	0	0	0
4/23/2024	2:15 AM	0	0	0	0	0	0	0	0	0	0	0	0	0
4/23/2024	2:30 AM	0	0	0	0	0	0	0	0	0	0	0	0	0
4/23/2024	2:45 AM	0	0	0	0	0	0	0	0	0	0	0	0	0
4/23/2024	3:00 AM	0	0	0	0	0	0	0	0	0	0	0	0	0
4/23/2024	3:15 AM	0	0	0	0	0	0	0	0	0	0	0	0	0
4/23/2024	3:30 AM	0	0	0	0	0	0	0	0	0	0	0	0	0
4/23/2024	3:45 AM	0	0	0	0	0	0	0	0	0	0	0	0	0
4/23/2024	4:00 AM	0	0	0	0	0	0	0	0	0	0	0	0	0
4/23/2024	4:15 AM	0	0	0	0	0	0	0	0	0	0	0	0	0
4/23/2024	4:30 AM	0	0	0	0	0	0	0	0	0	0	0	0	0
4/23/2024	4:45 AM	0	0	0	0	0	0	0	0	0	0	0	0	0
4/23/2024	5:00 AM	0	0	0	0	0	0	0	0	0	0	0	0	0
4/23/2024	5:15 AM	0	0	0	0	0	0	0	0	0	0	0	0	0
4/23/2024	5:30 AM	0	0	0	0	0	0	0	0	0	0	0	0	0
4/23/2024	5:45 AM	0	0	0	0	0	0	0	0	0	0	0	0	0
4/23/2024	6:00 AM	0	0	0	0	0	0	0	0	0	0	0	0	0
4/23/2024	6:15 AM	0	0	0	0	0	0	0	0	0	0	0	0	0
4/23/2024	6:30 AM	0	0	0	0	0	0	0	0	0	0	0	0	0
4/23/2024	6:45 AM	0	0	0	0	0	0	0	0	0	0	0	0	0
4/23/2024	7:00 AM	0	0	0	0	0	0	0	0	0	0	0	0	0
4/23/2024	7:15 AM	0	0	0	0	0	0	0	0	0	0	0	0	0
4/23/2024	7:30 AM	0	0	0	0	0	0	0	0	0	0	0	0	0
4/23/2024	7:45 AM	0	0	0	0	0	0	0	0	0	0	0	0	0
4/23/2024	8:00 AM	0	0	0	0	0	0	0	0	0	0	0	0	0
4/23/2024	8:15 AM	0	0	0	0	0	0	0	0	0	0	0	0	0
4/23/2024	8:30 AM	0	0	0	0	0	0	0	0	0	0	0	0	0
4/23/2024	8:45 AM	0	0	0	0	0	0	0	0	0	0	0	0	0
4/23/2024	9:00 AM	0	0	0	0	0	0	0	0	0	0	0	0	0
4/23/2024	9:15 AM	0	0	0	0	0	0	0	0	0	0	0	0	0
4/23/2024	9:30 AM	0	0	0	0	0	0	0	0	0	0	0	0	0
4/23/2024	9:45 AM	0	0	0	0	0	0	0	0	0	0	0	0	0
4/23/2024	10:00 AM	0	0	0	0	0	0	0	0	0	0	0	0	0
4/23/2024	10:15 AM	0	0	0	0	0	0	0	0	0	0	0	0	0
4/23/2024	10:30 AM	0	0	0	0	0	0	0	0	0	0	0	0	0
4/23/2024	10:45 AM	0	0	0	0	0	0	0	0	0	0	0	0	0
4/23/2024	11:00 AM	0	0	0	0	0	0	0	0	0	0	0	0	0
4/23/2024	11:15 AM	0	0	0	0	0	0	0	0	0	0	0	0	0
4/23/2024	11:30 AM	0	0	0	0	0	0	0	0	0	0	0	0	0
4/23/2024	11:45 AM	0	0	0	0	0	0	0	0	0	0	0	0	0
4/23/2024	12:00 PM	0	0	0	0	0	0	0	0	0	0	0	0	0
4/23/2024	12:15 PM	0	0	0	0	0	0	0	0	0	0	0	0	0
4/23/2024	12:30 PM	0	0	0	0	0	0	0	0	0	0	0	0	0
4/23/2024	12:45 PM	0	0	0	0	0	0	0	0	0	0	0	0	0
4/23/2024	1:00 PM	0	0	0	0	0	0	0	0	0	0	0	0	0
4/23/2024	1:15 PM	0	0	0	0	0	0	0	0	0	0	0	0	0
4/23/2024	1:30 PM	0	0	0	0	0	0	0	0	0	0	0	0	0
4/23/2024	1:45 PM	0	0	0	0	0	0	0	0	0	0	0	0	0
4/23/2024	2:00 PM	0	0	0	0	0	0	0	0	0	0	0	0	0
4/23/2024	2:15 PM	0	0	0	0	0	0	0	0	0	0	0	0	0
4/23/2024	2:30 PM	0	0	0	0	0	0	0	0	0	0	0	0	0
4/23/2024	2:45 PM	0	0	0	0	0	0	0	0	0	0	0	0	0
4/23/2024	3:00 PM	0	0	0	0	0	0	0	0	0	0	0	0	0
4/23/2024	3:15 PM	0	0	0	0	0	0	0	0	0	0	0	0	0
4/23/2024	3:30 PM	0	0	0	0	0	0	0	0	0	0	0	0	0
4/23/2024	3:45 PM	0	0	0	0	0	0	0	0	0	0	0	0	0
4/23/2024	4:00 PM	0	0	0	0	0	0	0	0	0	0	0	0	0
4/23/2024	4:15 PM	0	0	0	0	0	0	0	0	0	0	0	0	0
4/23/2024	4:30 PM	0	0	0	0	0	0	0	0	0	0	0	0	0
4/23/2024	4:45 PM	0	0	0	0	0	0	0	0	0	0	0	0	0
4/23/2024	5:00 PM	0	0	0	0	0	0	0	0	0	0	0	0	0
4/23/2024	5:15 PM	0	0	0	0	0	0	0	0	0	0	0	0	0
4/23/2024	5:30 PM	0	0	0	0	0	0	0	0	0	0	0	0	0
4/23/2024	5:45 PM	0	0	0	0	0	0	0	0	0	0	0	0	0
4/23/2024	6:00 PM	0	0	0	0	0	0	0	0	0	0	0	0	0
4/23/2024	6:15 PM	0	0	0	0	0	0	0	0	0	0	0	0	0
4/23/2024	6:30 PM	0	0	0	0	0	0	0	0	0	0	0	0	0
4/23/2024	6:45 PM	0	0	0	0	0	0	0	0	0	0	0	0	0
4/23/2024	7:00 PM	0	0	0	0	0	0	0	0	0	0	0	0	0
4/23/2024	7:15 PM	0	0	0	0	0	0	0	0	0	0	0	0	0
4/23/2024	7:30 PM	0	0	0	0	0	0	0	0	0	0	0	0	0
4/23/2024	7:45 PM	0	0	0	0	0	0	0	0	0	0	0	0	0
4/23/2024	8:00 PM	0	0	0	0	0	0	0	0	0	0	0	0	0
4/23/2024	8:15 PM	0	0	0	0	0	0	0	0	0	0	0	0	0
4/23/2024	8:30 PM	0	0	0	0	0	0	0	0	0	0	0	0	0
4/23/2024	8:45 PM	0	0	0	0	0	0	0	0	0	0	0	0	0
4/23/2024	9:00 PM	0	0	0	0	0	0	0	0	0	0	0	0	0
4/23/2024	9:15 PM	0	0	0	0	0	0	0	0	0	0	0	0	0
4/23/2024	9:30 PM	0	0	0	0	0	0	0	0	0	0	0	0	0
4/23/2024	9:45 PM	0	0	0	0	0	0	0	0	0	0	0	0	0
4/23/2024	10:00 PM	0	0	0	0	0	0	0	0	0	0	0	0	0
4/23/2024	10:15 PM	0	0	0	0	0	0	0	0	0	0	0	0	0
4/23/2024	10:30 PM	0	0	0	0	0	0	0	0	0	0	0	0	0
4/23/2024	10:45 PM	0	0	0	0	0	0	0	0	0	0	0	0	0
4/23/2024	11:00 PM	0	0	0	0	0	0	0	0	0	0	0	0	0
4/23/2024	11:15 PM	0	0	0	0	0	0	0	0	0	0	0	0	0
4/23/2024	11:30 PM	0	0	0	0	0	0	0	0	0	0	0	0	0
4/23/2024	11:45 PM	0	0	0	0	0	0	0	0	0	0	0	0	0

4/24/2024	12:00 AM	0	0	0	0	0	0	0	0	0	0	0	0	0
4/24/2024	12:15 AM	0	0	0	0	0	0	0	0	0	0	0	0	0
4/24/2024	12:30 AM	0	0	0	0	0	0	0	0	0	0	0	0	0
4/24/2024	12:45 AM	0	0	0	0	0	0	0	0	0	0	0	0	0
4/24/2024	1:00 AM	0	0	0	0	0	0	0	0	0	0	0	0	0
4/24/2024	1:15 AM	0	0	0	0	0	0	0	0	0	0	0	0	0
4/24/2024	1:30 AM	0	0	0	0	0	0	0	0	0	0	0	0	0
4/24/2024	1:45 AM	0	0	0	0	0	0	0	0	0	0	0	0	0
4/24/2024	2:00 AM	0	0	0	0	0	0	0	0	0	0	0	0	0
4/24/2024	2:15 AM	0	0	0	0	0	0	0	0	0	0	0	0	0
4/24/2024	2:30 AM	0	0	0	0	0	0	0	0	0	0	0	0	0
4/24/2024	2:45 AM	0	0	0	0	0	0	0	0	0	0	0	0	0
4/24/2024	3:00 AM	0	0	0	0	0	0	0	0	0	0	0	0	0
4/24/2024	3:15 AM	0	0	0	0	0	0	0	0	0	0	0	0	0
4/24/2024	3:30 AM	0	0	0	0	0	0	0	0	0	0	0	0	0
4/24/2024	3:45 AM	0	0	0	0	0	0	0	0	0	0	0	0	0
4/24/2024	4:00 AM	0	0	0	0	0	0	0	0	0	0	0	0	0
4/24/2024	4:15 AM	0	0	0	0	0	0	0	0	0	0	0	0	0
4/24/2024	4:30 AM	0	0	0	0	0	0	0	0	0	0	0	0	0
4/24/2024	4:45 AM	0	0	0	0	0	0	0	0	0	0	0	0	0
4/24/2024	5:00 AM	0	0	0	0	0	0	0	0	0	0	0	0	0
4/24/2024	5:15 AM	0	0	0	0	0	0	0	0	0	0	0	0	0
4/24/2024	5:30 AM	0	0	0	0	0	0	0	0	0	0	0	0	0
4/24/2024	5:45 AM	0	0	0	0	0	0	0	0	0	0	0	0	0
4/24/2024	6:00 AM	0	0	0	0	0	0	0	0	0	0	0	0	0
4/24/2024	6:15 AM	0	0	0	0	0	0	0	0	0	0	0	0	0
4/24/2024	6:30 AM	0	0	0	0	0	0	0	0	0	0	0	0	0
4/24/2024	6:45 AM	0	0	0	0	0	0	0	0	0	0	0	0	0
4/24/2024	7:00 AM	0	0	0	0	0	0	0	0	0	0	0	0	0
4/24/2024	7:15 AM	0	0	0	0	0	0	0	0	0	0	0	0	0
4/24/2024	7:30 AM	0	0	0	0	0	0	0	0	0	0	0	0	0
4/24/2024	7:45 AM	0	0	0	0	0	0	0	0	0	0	0	0	0
4/24/2024	8:00 AM	0	0	0	0	0	0	0	0	0	0	0	0	0
4/24/2024	8:15 AM	0	0	0	0	0	0	0	0	0	0	0	0	0
4/24/2024	8:30 AM	0	0	0	0	0	0	0	0	0	0	0	0	0
4/24/2024	8:45 AM	0	0	0	0	0	0	0	0	0	0	0	0	0
4/24/2024	9:00 AM	0	0	0	0	0	0	0	0	0	0	0	0	0
4/24/2024	9:15 AM	0	0	0	0	0	0	0	0	0	0	0	0	0
4/24/2024	9:30 AM	0	0	0	0	0	0	0	0	0	0	0	0	0
4/24/2024	9:45 AM	0	0	0	0	0	0	0	0	0	0	0	0	0
4/24/2024	10:00 AM	0	0	0	0	0	0	0	0	0	0	0	0	0
4/24/2024	10:15 AM	0	0	0	0	0	0	0	0	0	0	0	0	0
4/24/2024	10:30 AM	0	0	0	0	0	0	0	0	0	0	0	0	0
4/24/2024	10:45 AM	0	0	0	0	0	0	0	0	0	0	0	0	0
4/24/2024	11:00 AM	0	0	0	0	0	0	0	0	0	0	0	0	0
4/24/2024	11:15 AM	0	0	0	0	0	0	0	0	0	0	0	0	0
4/24/2024	11:30 AM	0	0	0	0	0	0	0	0	0	0	0	0	0
4/24/2024	11:45 AM	0	0	0	0	0	0	0	0	0	0	0	0	0
4/24/2024	12:00 PM	0	0	0	0	0	0	0	0	0	0	0	0	0
4/24/2024	12:15 PM	0	0	0	0	0	0	0	0	0	0	0	0	0
4/24/2024	12:30 PM	0	0	0	0	0	0	0	0	0	0	0	0	0
4/24/2024	12:45 PM	0	0	0	0	0	0	0	0	0	0	0	0	0
4/24/2024	1:00 PM	0	0	0	0	0	0	0	0	0	0	0	0	0
4/24/2024	1:15 PM	0	0	0	0	0	0	0	0	0	0	0	0	0
4/24/2024	1:30 PM	0	0	0	0	0	0	0	0	0	0	0	0	0
4/24/2024	1:45 PM	0	0	0	0	0	0	0	0	0	0	0	0	0
4/24/2024	2:00 PM	0	0	0	0	0	0	0	0	0	0	0	0	0
4/24/2024	2:15 PM	0	0	0	0	0	0	0	0	0	0	0	0	0
4/24/2024	2:30 PM	0	0	0	0	0	0	0	0	0	0	0	0	0
4/24/2024	2:45 PM	0	0	0	0	0	0	0	0	0	0	0	0	0
4/24/2024	3:00 PM	0	0	0	0	0	0	0	0	0	0	0	0	0
4/24/2024	3:15 PM	0	0	0	0	0	0	0	0	0	0	0	0	0
4/24/2024	3:30 PM	0	0	0	0	0	0	0	0	0	0	0	0	0
4/24/2024	3:45 PM	0	0	0	0	0	0	0	0	0	0	0	0	0
4/24/2024	4:00 PM	0	0	0	0	0	0	0	0	0	0	0	0	0
4/24/2024	4:15 PM	0	0	0	0	0	0	0	0	0	0	0	0	0
4/24/2024	4:30 PM	0	0	0	0	0	0	0	0	0	0	0	0	0
4/24/2024	4:45 PM	0	0	0	0	0	0	0	0	0	0	0	0	0
4/24/2024	5:00 PM	0	0	0	0	0	0	0	0	0	0	0	0	0
4/24/2024	5:15 PM	0	0	0	0	0	0	0	0	0	0	0	0	0
4/24/2024	5:30 PM	0	0	0	0	0	0	0	0	0	0	0	0	0
4/24/2024	5:45 PM	0	0	0	0	0	0	0	0	0	0	0	0	0
4/24/2024	6:00 PM	0	0	0	0	0	0	0	0	0	0	0	0	0
4/24/2024	6:15 PM	0	0	0	0	0	0	0	0	0	0	0	0	0
4/24/2024	6:30 PM	0	0	0	0	0	0	0	0	0	0	0	0	0
4/24/2024	6:45 PM	0	0	0	0	0	0	0	0	0	0	0	0	0
4/24/2024	7:00 PM	0	0	0	0	0	0	0	0	0	0	0	0	0
4/24/2024	7:15 PM	0	0	0	0	0	0	0	0	0	0	0	0	0
4/24/2024	7:30 PM	0	0	0	0	0	0	0	0	0	0	0	0	0
4/24/2024	7:45 PM	0	0	0	0	0	0	0	0	0	0	0	0	0
4/24/2024	8:00 PM	0	0	0	0	0	0	0	0	0	0	0	0	0
4/24/2024	8:15 PM	0	0	0	0	0	0	0	0	0	0	0	0	0
4/24/2024	8:30 PM	0	0	0	0	0	0	0	0	0	0	0	0	0
4/24/2024	8:45 PM	0	0	0	0	0	0	0	0	0	0	0	0	0
4/24/2024	9:00 PM	0	0	0	0	0	0	0	0	0	0	0	0	0
4/24/2024	9:15 PM	0	0	0	0	0	0	0	0	0	0	0	0	0
4/24/2024	9:30 PM	0	0	0	0	0	0	0	0	0	0	0	0	0
4/24/2024	9:45 PM	0	0	0	0	0	0	0	0	0	0	0	0	0
4/24/2024	10:00 PM	0	0	0	0	0	0	0	0	0	0	0	0	0
4/24/2024	10:15 PM	0	0	0	0	0	0	0	0	0	0	0	0	0
4/24/2024	10:30 PM	0	0	0	0	0	0	0	0	0	0	0	0	0
4/24/2024	10:45 PM	0	0	0	0	0	0	0	0	0	0	0	0	0
4/24/2024	11:00 PM	0	0	0	0	0	0	0	0	0	0	0	0	0
4/24/2024	11:15 PM	0	0	0	0	0	0	0	0	0	0	0	0	0
4/24/2024	11:30 PM	0	0	0	0	0	0	0	0	0	0	0	0	0
4/24/2024	11:45 PM	0	0	0	0	0	0	0	0	0	0	0	0	0

4/25/2024	12:00 AM	0	0	0	0	0	0	0	0	0	0	0	0	0
4/25/2024	12:15 AM	0	0	0	0	0	0	0	0	0	0	0	0	0
4/25/2024	12:30 AM	0	0	0	0	0	0	0	0	0	0	0	0	0
4/25/2024	12:45 AM	0	0	0	0	0	0	0	0	0	0	0	0	0
4/25/2024	1:00 AM	0	0	0	0	0	0	0	0	0	0	0	0	0
4/25/2024	1:15 AM	0	0	0	0	0	0	0	0	0	0	0	0	0
4/25/2024	1:30 AM	0	0	0	0	0	0	0	0	0	0	0	0	0
4/25/2024	1:45 AM	0	0	0	0	0	0	0	0	0	0	0	0	0
4/25/2024	2:00 AM	0	0	0	0	0	0	0	0	0	0	0	0	0
4/25/2024	2:15 AM	0	0	0	0	0	0	0	0	0	0	0	0	0
4/25/2024	2:30 AM	0	0	0	0	0	0	0	0	0	0	0	0	0
4/25/2024	2:45 AM	0	0	0	0	0	0	0	0	0	0	0	0	0
4/25/2024	3:00 AM	0	0	0	0	0	0	0	0	0	0	0	0	0
4/25/2024	3:15 AM	0	0	0	0	0	0	0	0	0	0	0	0	0
4/25/2024	3:30 AM	0	0	0	0	0	0	0	0	0	0	0	0	0
4/25/2024	3:45 AM	0	0	0	0	0	0	0	0	0	0	0	0	0
4/25/2024	4:00 AM	0	0	0	0	0	0	0	0	0	0	0	0	0
4/25/2024	4:15 AM	0	0	0	0	0	0	0	0	0	0	0	0	0
4/25/2024	4:30 AM	0	0	0	0	0	0	0	0	0	0	0	0	0
4/25/2024	4:45 AM	0	0	0	0	0	0	0	0	0	0	0	0	0
4/25/2024	5:00 AM	0	0	0	0	0	0	0	0	0	0	0	0	0
4/25/2024	5:15 AM	0	0	0	0	0	0	0	0	0	0	0	0	0
4/25/2024	5:30 AM	0	0	0	0	0	0	0	0	0	0	0	0	0
4/25/2024	5:45 AM	0	0	0	0	0	0	0	0	0	0	0	0	0
4/25/2024	6:00 AM	0	0	0	0	0	0	0	0	0	0	0	0	0
4/25/2024	6:15 AM	0	0	0	0	0	0	0	0	0	0	0	0	0
4/25/2024	6:30 AM	0	0	0	0	0	0	0	0	0	0	0	0	0
4/25/2024	6:45 AM	0	0	0	0	0	0	0	0	0	0	0	0	0
4/25/2024	7:00 AM	0	0	0	0	0	0	0	0	0	0	0	0	0
4/25/2024	7:15 AM	0	0	0	0	0	0	0	0	0	0	0	0	0
4/25/2024	7:30 AM	0	0	0	0	0	0	0	0	0	0	0	0	0
4/25/2024	7:45 AM	0	0	0	0	0	0	0	0	0	0	0	0	0
4/25/2024	8:00 AM	0	0	0	0	0	0	0	0	0	0	0	0	0
4/25/2024	8:15 AM	0	0	0	0	0	0	0	0	0	0	0	0	0
4/25/2024	8:30 AM	0	0	0	0	0	0	0	0	0	0	0	0	0
4/25/2024	8:45 AM	0	0	0	0	0	0	0	0	0	0	0	0	0
4/25/2024	9:00 AM	0	0	0	0	0	0	0	0	0	0	0	0	0
4/25/2024	9:15 AM	0	0	0	0	0	0	0	0	0	0	0	0	0
4/25/2024	9:30 AM	0	0	0	0	0	0	0	0	0	0	0	0	0
4/25/2024	9:45 AM	0	0	0	0	0	0	0	0	0	0	0	0	0
4/25/2024	10:00 AM	0	0	0	0	0	0	0	0	0	0	0	0	0
4/25/2024	10:15 AM	0	0	0	0	0	0	0	0	0	0	0	0	0
4/25/2024	10:30 AM	0	0	0	0	0	0	0	0	0	0	0	0	0
4/25/2024	10:45 AM	0	0	0	0	0	0	0	0	0	0	0	0	0
4/25/2024	11:00 AM	0	0	0	0	0	0	0	0	0	0	0	0	0
4/25/2024	11:15 AM	0	0	0	0	0	0	0	0	0	0	0	0	0
4/25/2024	11:30 AM	0	0	0	0	0	0	0	0	0	0	0	0	0
4/25/2024	11:45 AM	0	0	0	0	0	0	0	0	0	0	0	0	0
4/25/2024	12:00 PM	0	0	0	0	0	0	0	0	0	0	0	0	0
4/25/2024	12:15 PM	0	0	0	0	0	0	0	0	0	0	0	0	0
4/25/2024	12:30 PM	0	0	0	0	0	0	0	0	0	0	0	0	0
4/25/2024	12:45 PM	0	0	0	0	0	0	0	0	0	0	0	0	0
4/25/2024	1:00 PM	0	0	0	0	0	0	0	0	0	0	0	0	0
4/25/2024	1:15 PM	0	0	0	0	0	0	0	0	0	0	0	0	0
4/25/2024	1:30 PM	0	0	0	0	0	0	0	0	0	0	0	0	0
4/25/2024	1:45 PM	0	0	0	0	0	0	0	0	0	0	0	0	0
4/25/2024	2:00 PM	0	0	0	0	0	0	0	0	0	0	0	0	0
4/25/2024	2:15 PM	0	0	0	0	0	0	0	0	0	0	0	0	0
4/25/2024	2:30 PM	0	0	0	0	0	0	0	0	0	0	0	0	0
4/25/2024	2:45 PM	0	0	0	0	0	0	0	0	0	0	0	0	0
4/25/2024	3:00 PM	0	0	0	0	0	0	0	0	0	0	0	0	0
4/25/2024	3:15 PM	0	0	0	0	0	0	0	0	0	0	0	0	0
4/25/2024	3:30 PM	0	0	0	0	0	0	0	0	0	0	0	0	0
4/25/2024	3:45 PM	0	0	0	0	0	0	0	0	0	0	0	0	0
4/25/2024	4:00 PM	0	0	0	0	0	0	0	0	0	0	0	0	0
4/25/2024	4:15 PM	0	0	0	0	0	0	0	0	0	0	0	0	0
4/25/2024	4:30 PM	0	0	0	0	0	0	0	0	0	0	0	0	0
4/25/2024	4:45 PM	0	0	0	0	0	0	0	0	0	0	0	0	0
4/25/2024	5:00 PM	0	0	0	0	0	0	0	0	0	0	0	0	0
4/25/2024	5:15 PM	0	0	0	0	0	0	0	0	0	0	0	0	0
4/25/2024	5:30 PM	0	0	0	0	0	0	0	0	0	0	0	0	0
4/25/2024	5:45 PM	0	0	0	0	0	0	0	0	0	0	0	0	0
4/25/2024	6:00 PM	0	0	0	0	0	0	0	0	0	0	0	0	0
4/25/2024	6:15 PM	0	0	0	0	0	0	0	0	0	0	0	0	0
4/25/2024	6:30 PM	0	0	0	0	0	0	0	0	0	0	0	0	0
4/25/2024	6:45 PM	0	0	0	0	0	0	0	0	0	0	0	0	0
4/25/2024	7:00 PM	0	0	0	0	0	0	0	0	0	0	0	0	0
4/25/2024	7:15 PM	0	0	0	0	0	0	0	0	0	0	0	0	0
4/25/2024	7:30 PM	0	0	0	0	0	0	0	0	0	0	0	0	0
4/25/2024	7:45 PM	0	0	0	0	0	0	0	0	0	0	0	0	0
4/25/2024	8:00 PM	0	0	0	0	0	0	0	0	0	0	0	0	0
4/25/2024	8:15 PM	0	0	0	0	0	0	0	0	0	0	0	0	0
4/25/2024	8:30 PM	0	0	0	0	0	0	0	0	0	0	0	0	0
4/25/2024	8:45 PM	0	0	0	0	0	0	0	0	0	0	0	0	0
4/25/2024	9:00 PM	0	0	0	0	0	0	0	0	0	0	0	0	0
4/25/2024	9:15 PM	0	0	0	0	0	0	0	0	0	0	0	0	0
4/25/2024	9:30 PM	0	0	0	0	0	0	0	0	0	0	0	0	0
4/25/2024	9:45 PM	0	0	0	0	0	0	0	0	0	0	0	0	0
4/25/2024	10:00 PM	0	0	0	0	0	0	0	0	0	0	0	0	0
4/25/2024	10:15 PM	0	0	0	0	0	0	0	0	0	0	0	0	0
4/25/2024	10:30 PM	0	0	0	0	0	0	0	0	0	0	0	0	0
4/25/2024	10:45 PM	0	0	0	0	0	0	0	0	0	0	0	0	0
4/25/2024	11:00 PM	0	0	0	0	0	0	0	0	0	0	0	0	0
4/25/2024	11:15 PM	0	0	0	0	0	0	0	0	0	0	0	0	0
4/25/2024	11:30 PM	0	0	0	0	0	0	0	0	0	0	0	0	0
4/25/2024	11:45 PM	0	0	0	0	0	0	0	0	0	0	0	0	0

4/26/2024	12:00 AM	0	0	0	0	0	0	0	0	0	0	0	0	0
4/26/2024	12:15 AM	0	0	0	0	0	0	0	0	0	0	0	0	0
4/26/2024	12:30 AM	0	0	0	0	0	0	0	0	0	0	0	0	0
4/26/2024	12:45 AM	0	0	0	0	0	0	0	0	0	0	0	0	0
4/26/2024	1:00 AM	0	0	0	0	0	0	0	0	0	0	0	0	0
4/26/2024	1:15 AM	0	0	0	0	0	0	0	0	0	0	0	0	0
4/26/2024	1:30 AM	0	0	0	0	0	0	0	0	0	0	0	0	0
4/26/2024	1:45 AM	0	0	0	0	0	0	0	0	0	0	0	0	0
4/26/2024	2:00 AM	0	0	0	0	0	0	0	0	0	0	0	0	0
4/26/2024	2:15 AM	0	0	0	0	0	0	0	0	0	0	0	0	0
4/26/2024	2:30 AM	0	0	0	0	0	0	0	0	0	0	0	0	0
4/26/2024	2:45 AM	0	0	0	0	0	0	0	0	0	0	0	0	0
4/26/2024	3:00 AM	0	0	0	0	0	0	0	0	0	0	0	0	0
4/26/2024	3:15 AM	0	0	0	0	0	0	0	0	0	0	0	0	0
4/26/2024	3:30 AM	0	0	0	0	0	0	0	0	0	0	0	0	0
4/26/2024	3:45 AM	0	0	0	0	0	0	0	0	0	0	0	0	0
4/26/2024	4:00 AM	0	0	0	0	0	0	0	0	0	0	0	0	0
4/26/2024	4:15 AM	0	0	0	0	0	0	0	0	0	0	0	0	0
4/26/2024	4:30 AM	0	0	0	0	0	0	0	0	0	0	0	0	0
4/26/2024	4:45 AM	0	0	0	0	0	0	0	0	0	0	0	0	0
4/26/2024	5:00 AM	0	0	0	0	0	0	0	0	0	0	0	0	0
4/26/2024	5:15 AM	0	0	0	0	0	0	0	0	0	0	0	0	0
4/26/2024	5:30 AM	0	0	0	0	0	0	0	0	0	0	0	0	0
4/26/2024	5:45 AM	0	0	0	0	0	0	0	0	0	0	0	0	0
4/26/2024	6:00 AM	0	0	0	0	0	0	0	0	0	0	0	0	0
4/26/2024	6:15 AM	0	0	0	0	0	0	0	0	0	0	0	0	0
4/26/2024	6:30 AM	0	0	0	0	0	0	0	0	0	0	0	0	0
4/26/2024	6:45 AM	0	0	0	0	0	0	0	0	0	0	0	0	0
4/26/2024	7:00 AM	0	0	0	0	0	0	0	0	0	0	0	0	0
4/26/2024	7:15 AM	0	0	0	0	0	0	0	0	0	0	0	0	0
4/26/2024	7:30 AM	0	0	0	0	0	0	0	0	0	0	0	0	0
4/26/2024	7:45 AM	0	0	0	0	0	0	0	0	0	0	0	0	0
4/26/2024	8:00 AM	0	0	0	0	0	0	0	0	0	0	0	0	0
4/26/2024	8:15 AM	0	0	0	0	0	0	0	0	0	0	0	0	0
4/26/2024	8:30 AM	0	0	0	0	0	0	0	0	0	0	0	0	0
4/26/2024	8:45 AM	0	0	0	0	0	0	0	0	0	0	0	0	0
4/26/2024	9:00 AM	0	0	0	0	0	0	0	0	0	0	0	0	0
4/26/2024	9:15 AM	0	0	0	0	0	0	0	0	0	0	0	0	0
4/26/2024	9:30 AM	0	0	0	0	0	0	0	0	0	0	0	0	0
4/26/2024	9:45 AM	0	0	0	0	0	0	0	0	0	0	0	0	0
4/26/2024	10:00 AM	0	0	0	0	0	0	0	0	0	0	0	0	0
4/26/2024	10:15 AM	0	0	0	0	0	0	0	0	0	0	0	0	0
4/26/2024	10:30 AM	0	0	0	0	0	0	0	0	0	0	0	0	0
4/26/2024	10:45 AM	0	0	0	0	0	0	0	0	0	0	0	0	0
4/26/2024	11:00 AM	0	0	0	0	0	0	0	0	0	0	0	0	0
4/26/2024	11:15 AM	0	0	0	0	0	0	0	0	0	0	0	0	0
4/26/2024	11:30 AM	0	0	0	0	0	0	0	0	0	0	0	0	0
4/26/2024	11:45 AM	0	0	0	0	0	0	0	0	0	0	0	0	0
4/26/2024	12:00 PM	0	0	0	0	0	0	0	0	0	0	0	0	0
4/26/2024	12:15 PM	0	0	0	0	0	0	0	0	0	0	0	0	0
4/26/2024	12:30 PM	0	0	0	0	0	0	0	0	0	0	0	0	0
4/26/2024	12:45 PM	0	0	0	0	0	0	0	0	0	0	0	0	0
4/26/2024	1:00 PM	0	0	0	0	0	0	0	0	0	0	0	0	0
4/26/2024	1:15 PM	0	0	0	0	0	0	0	0	0	0	0	0	0
4/26/2024	1:30 PM	0	0	0	0	0	0	0	0	0	0	0	0	0
4/26/2024	1:45 PM	0	0	0	0	0	0	0	0	0	0	0	0	0
4/26/2024	2:00 PM	0	0	0	0	0	0	0	0	0	0	0	0	0
4/26/2024	2:15 PM	0	0	0	0	0	0	0	0	0	0	0	0	0
4/26/2024	2:30 PM	0	0	0	0	0	0	0	0	0	0	0	0	0
4/26/2024	2:45 PM	0	0	0	0	0	0	0	0	0	0	0	0	0
4/26/2024	3:00 PM	0	0	0	0	0	0	0	0	0	0	0	0	0
4/26/2024	3:15 PM	0	0	0	0	0	0	0	0	0	0	0	0	0
4/26/2024	3:30 PM	0	0	0	0	0	0	0	0	0	0	0	0	0
4/26/2024	3:45 PM	0	0	0	0	0	0	0	0	0	0	0	0	0
4/26/2024	4:00 PM	0	0	0	0	0	0	0	0	0	0	0	0	0
4/26/2024	4:15 PM	0	0	0	0	0	0	0	0	0	0	0	0	0
4/26/2024	4:30 PM	0	0	0	0	0	0	0	0	0	0	0	0	0
4/26/2024	4:45 PM	0	0	0	0	0	0	0	0	0	0	0	0	0
4/26/2024	5:00 PM	0	0	0	0	0	0	0	0	0	0	0	0	0
4/26/2024	5:15 PM	0	0	0	0	0	0	0	0	0	0	0	0	0
4/26/2024	5:30 PM	0	0	0	0	0	0	0	0	0	0	0	0	0
4/26/2024	5:45 PM	0	0	0	0	0	0	0	0	0	0	0	0	0
4/26/2024	6:00 PM	0	0	0	0	0	0	0	0	0	0	0	0	0
4/26/2024	6:15 PM	0	0	0	0	0	0	0	0	0	0	0	0	0
4/26/2024	6:30 PM	0	0	0	0	0	0	0	0	0	0	0	0	0
4/26/2024	6:45 PM	0	0	0	0	0	0	0	0	0	0	0	0	0
4/26/2024	7:00 PM	0	0	0	0	0	0	0	0	0	0	0	0	0
4/26/2024	7:15 PM	0	0	0	0	0	0	0	0	0	0	0	0	0
4/26/2024	7:30 PM	0	0	0	0	0	0	0	0	0	0	0	0	0
4/26/2024	7:45 PM	0	0	0	0	0	0	0	0	0	0	0	0	0
4/26/2024	8:00 PM	0	0	0	0	0	0	0	0	0	0	0	0	0
4/26/2024	8:15 PM	0	0	0	0	0	0	0	0	0	0	0	0	0
4/26/2024	8:30 PM	0	0	0	0	0	0	0	0	0	0	0	0	0
4/26/2024	8:45 PM	0	0	0	0	0	0	0	0	0	0	0	0	0
4/26/2024	9:00 PM	0	0	0	0	0	0	0	0	0	0	0	0	0
4/26/2024	9:15 PM	0	0	0	0	0	0	0	0	0	0	0	0	0
4/26/2024	9:30 PM	0	0	0	0	0	0	0	0	0	0	0	0	0
4/26/2024	9:45 PM	0	0	0	0	0	0	0	0	0	0	0	0	0
4/26/2024	10:00 PM	0	0	0	0	0	0	0	0	0	0	0	0	0
4/26/2024	10:15 PM	0	0	0	0	0	0	0	0	0	0	0	0	0
4/26/2024	10:30 PM	0	0	0	0	0	0	0	0	0	0	0	0	0
4/26/2024	10:45 PM	0	0	0	0	0	0	0	0	0	0	0	0	0
4/26/2024	11:00 PM	0	0	0	0	0	0	0	0	0	0	0	0	0
4/26/2024	11:15 PM	0	0	0	0	0	0	0	0	0	0	0	0	0
4/26/2024	11:30 PM	0	0	0	0	0	0	0	0	0	0	0	0	0
4/26/2024	11:45 PM	0	0	0	0	0	0	0	0	0	0	0	0	0

4/27/2024	12:00 AM	0	0	0	0	0	0	0	0	0	0	0	0	0
4/27/2024	12:15 AM	0	0	0	0	0	0	0	0	0	0	0	0	0
4/27/2024	12:30 AM	0	0	0	0	0	0	0	0	0	0	0	0	0
4/27/2024	12:45 AM	0	0	0	0	0	0	0	0	0	0	0	0	0
4/27/2024	1:00 AM	0	0	0	0	0	0	0	0	0	0	0	0	0
4/27/2024	1:15 AM	0	0	0	0	0	0	0	0	0	0	0	0	0
4/27/2024	1:30 AM	0	0	0	0	0	0	0	0	0	0	0	0	0
4/27/2024	1:45 AM	0	0	0	0	0	0	0	0	0	0	0	0	0
4/27/2024	2:00 AM	0	0	0	0	0	0	0	0	0	0	0	0	0
4/27/2024	2:15 AM	0	0	0	0	0	0	0	0	0	0	0	0	0
4/27/2024	2:30 AM	0	0	0	0	0	0	0	0	0	0	0	0	0
4/27/2024	2:45 AM	0	0	0	0	0	0	0	0	0	0	0	0	0
4/27/2024	3:00 AM	0	0	0	0	0	0	0	0	0	0	0	0	0
4/27/2024	3:15 AM	0	0	0	0	0	0	0	0	0	0	0	0	0
4/27/2024	3:30 AM	0	0	0	0	0	0	0	0	0	0	0	0	0
4/27/2024	3:45 AM	0	0	0	0	0	0	0	0	0	0	0	0	0
4/27/2024	4:00 AM	0	0	0	0	0	0	0	0	0	0	0	0	0
4/27/2024	4:15 AM	0	0	0	0	0	0	0	0	0	0	0	0	0
4/27/2024	4:30 AM	0	0	0	0	0	0	0	0	0	0	0	0	0
4/27/2024	4:45 AM	0	0	0	0	0	0	0	0	0	0	0	0	0
4/27/2024	5:00 AM	0	0	0	0	0	0	0	0	0	0	0	0	0
4/27/2024	5:15 AM	0	0	0	0	0	0	0	0	0	0	0	0	0
4/27/2024	5:30 AM	0	0	0	0	0	0	0	0	0	0	0	0	0
4/27/2024	5:45 AM	0	0	0	0	0	0	0	0	0	0	0	0	0
4/27/2024	6:00 AM	0	0	0	0	0	0	0	0	0	0	0	0	0
4/27/2024	6:15 AM	0	0	0	0	0	0	0	0	0	0	0	0	0
4/27/2024	6:30 AM	0	0	0	0	0	0	0	0	0	0	0	0	0
4/27/2024	6:45 AM	0	0	0	0	0	0	0	0	0	0	0	0	0
4/27/2024	7:00 AM	0	0	0	0	0	0	0	0	0	0	0	0	0
4/27/2024	7:15 AM	0	0	0	0	0	0	0	0	0	0	0	0	0
4/27/2024	7:30 AM	0	0	0	0	0	0	0	0	0	0	0	0	0
4/27/2024	7:45 AM	0	0	0	0	0	0	0	0	0	0	0	0	0
4/27/2024	8:00 AM	0	0	0	0	0	0	0	0	0	0	0	0	0
4/27/2024	8:15 AM	0	0	0	0	0	0	0	0	0	0	0	0	0
4/27/2024	8:30 AM	0	0	0	0	0	0	0	0	0	0	0	0	0
4/27/2024	8:45 AM	0	0	0	0	0	0	0	0	0	0	0	0	0
4/27/2024	9:00 AM	0	0	0	0	0	0	0	0	0	0	0	0	0
4/27/2024	9:15 AM	0	0	0	0	0	0	0	0	0	0	0	0	0
4/27/2024	9:30 AM	0	0	0	0	0	0	0	0	0	0	0	0	0
4/27/2024	9:45 AM	0	0	0	0	0	0	0	0	0	0	0	0	0
4/27/2024	10:00 AM	0	0	0	0	0	0	0	0	0	0	0	0	0
4/27/2024	10:15 AM	0	0	0	0	0	0	0	0	0	0	0	0	0
4/27/2024	10:30 AM	0	0	0	0	0	0	0	0	0	0	0	0	0
4/27/2024	10:45 AM	0	0	0	0	0	0	0	0	0	0	0	0	0
4/27/2024	11:00 AM	0	0	0	0	0	0	0	0	0	0	0	0	0
4/27/2024	11:15 AM	0	0	0	0	0	0	0	0	0	0	0	0	0
4/27/2024	11:30 AM	0	0	0	0	0	0	0	0	0	0	0	0	0
4/27/2024	11:45 AM	0	0	0	0	0	0	0	0	0	0	0	0	0
4/27/2024	12:00 PM	0	0	0	0	0	0	0	0	0	0	0	0	0
4/27/2024	12:15 PM	0	0	0	0	0	0	0	0	0	0	0	0	0
4/27/2024	12:30 PM	0	0	0	0	0	0	0	0	0	0	0	0	0
4/27/2024	12:45 PM	0	0	0	0	0	0	0	0	0	0	0	0	0
4/27/2024	1:00 PM	0	0	0	0	0	0	0	0	0	0	0	0	0
4/27/2024	1:15 PM	0	0	0	0	0	0	0	0	0	0	0	0	0
4/27/2024	1:30 PM	0	0	0	0	0	0	0	0	0	0	0	0	0
4/27/2024	1:45 PM	0	0	0	0	0	0	0	0	0	0	0	0	0
4/27/2024	2:00 PM	0	0	0	0	0	0	0	0	0	0	0	0	0
4/27/2024	2:15 PM	0	0	0	0	0	0	0	0	0	0	0	0	0
4/27/2024	2:30 PM	0	0	0	0	0	0	0	0	0	0	0	0	0
4/27/2024	2:45 PM	0	0	0	0	0	0	0	0	0	0	0	0	0
4/27/2024	3:00 PM	0	0	0	0	0	0	0	0	0	0	0	0	0
4/27/2024	3:15 PM	0	0	0	0	0	0	0	0	0	0	0	0	0
4/27/2024	3:30 PM	0	0	0	0	0	0	0	0	0	0	0	0	0
4/27/2024	3:45 PM	0	0	0	0	0	0	0	0	0	0	0	0	0
4/27/2024	4:00 PM	0	0	0	0	0	0	0	0	0	0	0	0	0
4/27/2024	4:15 PM	0	0	0	0	0	0	0	0	0	0	0	0	0
4/27/2024	4:30 PM	0	0	0	0	0	0	0	0	0	0	0	0	0
4/27/2024	4:45 PM	0	0	0	0	0	0	0	0	0	0	0	0	0
4/27/2024	5:00 PM	0	0	0	0	0	0	0	0	0	0	0	0	0
4/27/2024	5:15 PM	0	0	0	0	0	0	0	0	0	0	0	0	0
4/27/2024	5:30 PM	0	0	0	0	0	0	0	0	0	0	0	0	0
4/27/2024	5:45 PM	0	0	0	0	0	0	0	0	0	0	0	0	0
4/27/2024	6:00 PM	0	0	0	0	0	0	0	0	0	0	0	0	0
4/27/2024	6:15 PM	0	0	0	0	0	0	0	0	0	0	0	0	0
4/27/2024	6:30 PM	0	0	0	0	0	0	0	0	0	0	0	0	0
4/27/2024	6:45 PM	0	0	0	0	0	0	0	0	0	0	0	0	0
4/27/2024	7:00 PM	0	0	0	0	0	0	0	0	0	0	0	0	0
4/27/2024	7:15 PM	0	0	0	0	0	0	0	0	0	0	0	0	0
4/27/2024	7:30 PM	0	0	0	0	0	0	0	0	0	0	0	0	0
4/27/2024	7:45 PM	0	0	0	0	0	0	0	0	0	0	0	0	0
4/27/2024	8:00 PM	0	0	0	0	0	0	0	0	0	0	0	0	0
4/27/2024	8:15 PM	0	0	0	0	0	0	0	0	0	0	0	0	0
4/27/2024	8:30 PM	0	0	0	0	0	0	0	0	0	0	0	0	0
4/27/2024	8:45 PM	0	0	0	0	0	0	0	0	0	0	0	0	0
4/27/2024	9:00 PM	0	0	0	0	0	0	0	0	0	0	0	0	0
4/27/2024	9:15 PM	0	0	0	0	0	0	0	0	0	0	0	0	0
4/27/2024	9:30 PM	0	0	0	0	0	0	0	0	0	0	0	0	0
4/27/2024	9:45 PM	0	0	0	0	0	0	0	0	0	0	0	0	0
4/27/2024	10:00 PM	0	0	0	0	0	0	0	0	0	0	0	0	0
4/27/2024	10:15 PM	0	0	0	0	0	0	0	0	0	0	0	0	0
4/27/2024	10:30 PM	0	0	0	0	0	0	0	0	0	0	0	0	0
4/27/2024	10:45 PM	0	0	0	0	0	0	0	0	0	0	0	0	0
4/27/2024	11:00 PM	0	0	0	0	0	0	0	0	0	0	0	0	0
4/27/2024	11:15 PM	0	0	0	0	0	0	0	0	0	0	0	0	0
4/27/2024	11:30 PM	0	0	0	0	0	0	0	0	0	0	0	0	0
4/27/2024	11:45 PM	0	0	0	0	0	0	0	0	0	0	0	0	0

SB
File Name:
Start Date: 4/21/2024
Start Time: 0
Site Code: 12
Station ID: 1
Location 1: I-26 S/Bound Off-Ramp, north of I-20
Location 2:

Date	Time	1	2	3	4	5	6	7	8	9	10	11	12	13
4/21/2024	12:00 AM	0	143	20	1	1	0	0	1	4	0	0	0	0
4/21/2024	12:15 AM	0	113	14	1	1	0	0	1	4	0	0	0	0
4/21/2024	12:30 AM	0	110	13	1	2	0	0	0	4	0	0	0	0
4/21/2024	12:45 AM	0	94	12	0	1	0	0	0	2	0	0	0	0
4/21/2024	1:00 AM	0	84	16	0	1	0	0	0	2	0	0	0	0
4/21/2024	1:15 AM	0	83	16	0	1	0	0	0	2	0	0	0	0
4/21/2024	1:30 AM	0	71	13	0	0	0	0	0	1	0	0	0	0
4/21/2024	1:45 AM	0	79	10	0	1	0	0	0	1	0	0	0	0
4/21/2024	2:00 AM	0	68	4	0	2	0	0	0	1	0	0	0	0
4/21/2024	2:15 AM	0	56	2	0	2	0	0	0	1	0	0	0	0
4/21/2024	2:30 AM	0	49	1	0	2	0	0	0	1	0	0	0	0
4/21/2024	2:45 AM	0	42	3	0	1	0	0	0	1	0	0	0	0
4/21/2024	3:00 AM	0	36	4	0	0	0	0	0	1	0	0	0	0
4/21/2024	3:15 AM	1	31	5	0	1	0	0	0	1	0	0	0	0
4/21/2024	3:30 AM	1	29	6	0	1	1	0	0	2	0	0	0	0
4/21/2024	3:45 AM	1	24	4	0	2	1	0	0	2	0	0	1	0
4/21/2024	4:00 AM	1	32	4	0	2	1	0	0	1	0	0	1	0
4/21/2024	4:15 AM	0	32	4	0	1	1	0	0	1	0	0	1	0
4/21/2024	4:30 AM	0	31	4	0	1	0	0	0	0	0	0	1	0
4/21/2024	4:45 AM	0	28	8	0	0	0	0	0	0	0	0	0	0
4/21/2024	5:00 AM	0	26	11	0	0	0	0	0	2	0	0	0	0
4/21/2024	5:15 AM	0	35	11	0	0	0	0	0	2	0	0	0	0
4/21/2024	5:30 AM	0	48	11	0	0	0	0	0	2	0	0	0	0
4/21/2024	5:45 AM	1	61	8	0	0	0	0	0	3	0	0	0	0
4/21/2024	6:00 AM	1	63	10	0	0	0	0	0	1	0	0	0	0
4/21/2024	6:15 AM	1	74	9	0	0	0	0	0	2	0	0	0	0
4/21/2024	6:30 AM	1	90	14	0	0	0	0	0	3	0	0	0	0
4/21/2024	6:45 AM	0	113	16	0	0	0	0	0	4	0	0	0	0
4/21/2024	7:00 AM	0	141	14	0	1	0	0	0	5	0	1	0	0
4/21/2024	7:15 AM	0	139	17	0	1	0	0	0	5	0	1	0	0
4/21/2024	7:30 AM	0	140	18	0	3	0	0	0	6	0	1	0	0
4/21/2024	7:45 AM	0	137	23	0	3	0	0	0	4	0	1	0	0
4/21/2024	8:00 AM	0	140	26	0	2	0	0	0	3	0	0	0	0
4/21/2024	8:15 AM	0	159	30	0	3	0	0	0	2	0	0	1	0
4/21/2024	8:30 AM	0	185	30	0	1	0	0	0	2	0	0	1	0
4/21/2024	8:45 AM	0	218	28	0	2	0	0	0	2	0	0	1	0
4/21/2024	9:00 AM	0	251	32	1	3	0	0	0	3	0	0	1	0
4/21/2024	9:15 AM	0	288	36	1	3	0	0	0	3	0	0	0	0
4/21/2024	9:30 AM	0	299	42	1	3	0	0	0	3	0	0	0	0
4/21/2024	9:45 AM	0	315	46	1	2	0	0	0	5	0	0	0	0
4/21/2024	10:00 AM	0	321	46	0	1	0	0	0	4	0	0	0	0
4/21/2024	10:15 AM	0	327	53	0	0	0	0	0	5	0	0	0	0
4/21/2024	10:30 AM	0	338	54	0	0	0	0	0	6	0	0	0	0
4/21/2024	10:45 AM	0	356	59	0	0	1	0	1	5	0	0	1	0
4/21/2024	11:00 AM	0	400	77	0	1	1	0	1	9	0	0	1	0
4/21/2024	11:15 AM	0	429	70	0	2	1	0	1	9	0	0	1	0
4/21/2024	11:30 AM	0	433	69	0	2	1	0	2	7	0	0	1	0
4/21/2024	11:45 AM	0	442	71	0	3	0	0	1	7	0	0	0	0
4/21/2024	12:00 PM	0	434	62	0	2	0	0	1	6	0	0	0	0
4/21/2024	12:15 PM	0	436	62	0	1	0	0	1	8	0	0	0	0
4/21/2024	12:30 PM	0	436	68	0	2	0	0	0	7	0	0	0	0
4/21/2024	12:45 PM	0	419	75	0	1	0	0	0	9	0	0	0	0
4/21/2024	1:00 PM	0	409	74	0	1	0	0	0	7	0	0	0	0
4/21/2024	1:15 PM	0	414	79	0	3	0	0	0	4	0	0	0	0
4/21/2024	1:30 PM	0	450	77	0	2	0	0	0	6	0	0	0	0
4/21/2024	1:45 PM	1	450	69	0	3	0	0	0	3	0	0	0	0
4/21/2024	2:00 PM	1	443	63	0	4	0	0	0	2	0	0	0	0
4/21/2024	2:15 PM	1	419	63	1	3	0	0	0	3	0	0	0	0
4/21/2024	2:30 PM	1	365	64	1	3	0	0	0	1	0	0	0	0
4/21/2024	2:45 PM	0	352	63	1	2	0	0	1	1	0	0	0	0
4/21/2024	3:00 PM	0	351	66	1	1	0	0	1	1	0	0	0	0
4/21/2024	3:15 PM	0	327	63	0	0	0	0	1	0	0	0	0	0
4/21/2024	3:30 PM	0	353	57	0	0	0	0	1	0	0	0	0	0
4/21/2024	3:45 PM	0	357	49	0	1	0	0	0	1	1	0	0	0
4/21/2024	4:00 PM	0	330	46	0	1	0	0	0	2	1	0	0	0
4/21/2024	4:15 PM	0	320	44	0	1	0	0	0	3	1	0	0	0
4/21/2024	4:30 PM	0	307	41	0	1	0	0	0	4	1	0	0	0
4/21/2024	4:45 PM	0	304	44	0	1	0	0	0	6	0	0	0	0
4/21/2024	5:00 PM	0	305	40	0	1	0	0	0	7	0	0	0	0
4/21/2024	5:15 PM	0	328	38	0	1	0	0	0	7	0	0	0	0
4/21/2024	5:30 PM	0	335	45	0	1	0	0	0	7	0	0	0	0
4/21/2024	5:45 PM	0	318	42	0	0	0	0	0	5	0	0	0	0
4/21/2024	6:00 PM	0	311	41	0	0	0	0	0	4	0	0	0	0
4/21/2024	6:15 PM	0	297	40	0	0	0	0	0	5	0	0	0	0
4/21/2024	6:30 PM	0	274	39	0	2	1	0	0	5	0	0	0	0
4/21/2024	6:45 PM	0	309	42	0	3	1	0	0	6	0	0	0	0
4/21/2024	7:00 PM	0	293	47	0	3	1	0	1	7	0	0	0	0
4/21/2024	7:15 PM	0	274	46	0	4	1	0	1	6	0	0	0	0
4/21/2024	7:30 PM	0	249	43	0	2	0	0	1	6	0	0	0	0
4/21/2024	7:45 PM	0	199	40	0	1	0	0	1	6	0	0	0	0
4/21/2024	8:00 PM	0	194	32	0	1	0	0	0	6	0	0	0	0
4/21/2024	8:15 PM	0	181	30	0	0	0	0	0	7	0	0	0	0
4/21/2024	8:30 PM	0	173	21	0	0	0	0	0	7	0	0	0	0
4/21/2024	8:45 PM	0	148	19	0	0	0	0	0	5	0	0	0	0
4/21/2024	9:00 PM	0	133	20	0	0	0	0	1	4	0	0	0	0
4/21/2024	9:15 PM	0	115	18	0	0	0	0	1	6	0	0	0	0
4/21/2024	9:30 PM	0	101	17	0	1	0	0	1	8	0	0	0	0
4/21/2024	9:45 PM	0	92	14	0	1	0	0	1	11	0	0	0	0
4/21/2024	10:00 PM	0	75	10	0	1	0	0	0	11	0	0	0	0
4/21/2024	10:15 PM	0	67	9	0	2	0	0	0	7	0	0	0	0
4/21/2024	10:30 PM	0	58	10	0	1	0	0	0	5	0	0	0	0
4/21/2024	10:45 PM	0	63	10	0	1	0	0	0	2	0	0	0	0
4/21/2024	11:00 PM	0	60	10	0	1	0	0	0	2	0	0	0	0
4/21/2024	11:15 PM	0	46	8	0	0	0	0	0	2	0	0	0	0
4/21/2024	11:30 PM	0	35	5	0	0	0	0	0	1	0	0	0	0
4/21/2024	11:45 PM	0	12	2	0	0	0	0	0	1	0	0	0	0

4/22/2024	12:00 AM	0	28	3	0	1	0	0	0	4	0	0	0	0
4/22/2024	12:15 AM	0	33	2	0	1	0	0	0	3	0	0	0	0
4/22/2024	12:30 AM	0	25	3	0	0	0	0	0	1	0	0	0	0
4/22/2024	12:45 AM	0	23	3	0	0	0	0	0	3	0	0	0	0
4/22/2024	1:00 AM	0	24	4	1	0	0	0	0	3	0	0	0	0
4/22/2024	1:15 AM	0	24	4	1	1	0	0	0	4	0	0	0	0
4/22/2024	1:30 AM	0	25	3	1	2	0	0	0	5	0	0	0	0
4/22/2024	1:45 AM	0	19	4	1	2	0	0	0	4	0	0	0	0
4/22/2024	2:00 AM	0	19	6	0	3	0	0	0	4	0	0	0	0
4/22/2024	2:15 AM	0	20	6	0	2	0	0	0	5	0	0	0	0
4/22/2024	2:30 AM	0	18	5	0	1	0	0	0	5	0	1	0	0
4/22/2024	2:45 AM	0	21	6	0	1	0	0	0	7	0	1	0	0
4/22/2024	3:00 AM	0	20	3	0	0	0	0	0	6	0	1	0	0
4/22/2024	3:15 AM	0	19	3	0	0	0	0	0	4	0	1	0	0
4/22/2024	3:30 AM	0	26	4	0	1	0	0	0	3	0	0	0	0
4/22/2024	3:45 AM	0	25	2	0	2	0	0	1	0	0	0	0	0
4/22/2024	4:00 AM	0	31	3	0	2	0	0	1	5	0	0	0	0
4/22/2024	4:15 AM	0	36	4	0	2	0	0	1	5	0	0	0	0
4/22/2024	4:30 AM	0	39	6	0	2	0	0	1	8	0	0	0	0
4/22/2024	4:45 AM	0	57	9	0	1	0	0	0	11	0	0	0	0
4/22/2024	5:00 AM	0	71	14	0	2	0	0	0	10	0	0	0	0
4/22/2024	5:15 AM	0	83	17	0	4	1	0	0	12	0	1	0	0
4/22/2024	5:30 AM	0	114	28	0	3	2	0	0	10	0	1	0	0
4/22/2024	5:45 AM	0	156	42	0	3	2	0	0	12	1	1	0	0
4/22/2024	6:00 AM	0	197	51	0	7	2	0	1	9	1	1	0	0
4/22/2024	6:15 AM	0	247	61	0	8	1	0	1	17	1	0	0	0
4/22/2024	6:30 AM	0	320	75	0	15	2	0	2	17	2	0	0	0
4/22/2024	6:45 AM	0	374	92	0	19	2	0	2	16	1	0	0	0
4/22/2024	7:00 AM	0	441	107	0	17	2	0	1	21	2	0	1	0
4/22/2024	7:15 AM	0	482	118	0	16	2	0	3	17	2	0	1	0
4/22/2024	7:30 AM	0	481	122	0	13	1	0	2	19	1	0	1	0
4/22/2024	7:45 AM	0	476	107	0	12	1	0	3	18	1	0	1	0
4/22/2024	8:00 AM	0	452	102	0	15	2	0	4	15	0	0	0	0
4/22/2024	8:15 AM	0	409	108	0	20	2	0	5	12	1	0	0	0
4/22/2024	8:30 AM	0	372	100	0	18	2	0	6	15	1	0	1	0
4/22/2024	8:45 AM	0	350	108	1	23	2	0	5	22	1	0	1	0
4/22/2024	9:00 AM	0	341	103	1	20	2	0	4	26	1	0	1	0
4/22/2024	9:15 AM	0	379	104	1	17	2	0	2	32	0	0	1	0
4/22/2024	9:30 AM	0	389	116	1	21	2	0	1	35	0	0	0	0
4/22/2024	9:45 AM	0	389	114	0	14	2	0	1	36	0	0	0	0
4/22/2024	10:00 AM	0	371	125	0	14	1	0	1	34	0	0	0	0
4/22/2024	10:15 AM	0	371	121	0	11	4	0	1	38	0	0	0	0
4/22/2024	10:30 AM	0	389	129	0	6	3	0	1	36	0	0	0	0
4/22/2024	10:45 AM	0	405	142	0	9	3	0	2	35	0	1	0	0
4/22/2024	11:00 AM	0	438	142	0	6	4	0	3	37	0	1	0	0
4/22/2024	11:15 AM	0	435	147	0	7	3	0	2	30	0	1	0	0
4/22/2024	11:30 AM	0	457	143	0	11	3	0	3	27	0	1	0	0
4/22/2024	11:45 AM	0	477	148	0	10	4	0	4	25	0	0	0	0
4/22/2024	12:00 PM	0	472	142	0	13	4	0	4	27	0	0	0	0
4/22/2024	12:15 PM	0	492	131	0	12	2	0	4	28	0	0	0	0
4/22/2024	12:30 PM	0	500	126	0	10	2	0	4	30	0	0	0	0
4/22/2024	12:45 PM	0	507	118	3	10	1	0	4	33	2	0	0	0
4/22/2024	1:00 PM	0	526	115	3	7	2	0	3	35	2	0	0	0
4/22/2024	1:15 PM	0	531	121	3	9	3	0	3	37	2	0	0	0
4/22/2024	1:30 PM	0	565	121	5	11	3	0	2	41	2	0	0	0
4/22/2024	1:45 PM	0	572	128	5	11	4	0	3	41	0	0	0	0
4/22/2024	2:00 PM	0	599	139	5	15	2	0	5	37	0	0	0	0
4/22/2024	2:15 PM	1	634	157	6	16	1	0	6	40	0	0	0	0
4/22/2024	2:30 PM	1	653	155	4	14	2	1	8	39	0	0	0	0
4/22/2024	2:45 PM	1	713	164	1	15	2	1	5	34	0	0	0	0
4/22/2024	3:00 PM	1	751	189	2	14	7	1	3	32	0	0	0	0
4/22/2024	3:15 PM	0	792	188	1	18	7	1	2	28	0	0	0	0
4/22/2024	3:30 PM	0	808	196	1	18	6	0	0	26	0	0	0	0
4/22/2024	3:45 PM	1	821	187	1	16	5	0	1	26	0	0	0	0
4/22/2024	4:00 PM	1	859	164	1	13	0	0	1	30	0	0	0	0
4/22/2024	4:15 PM	1	869	159	1	7	0	0	1	28	0	0	0	0
4/22/2024	4:30 PM	1	897	147	1	5	0	0	1	27	0	0	0	0
4/22/2024	4:45 PM	0	905	149	1	4	0	0	0	26	1	0	0	0
4/22/2024	5:00 PM	0	872	163	0	4	0	0	0	25	1	0	0	0
4/22/2024	5:15 PM	0	799	161	0	3	0	0	0	25	1	0	0	0
4/22/2024	5:30 PM	0	711	168	0	4	0	0	0	25	2	0	0	0
4/22/2024	5:45 PM	0	600	146	0	3	1	0	0	25	2	0	0	0
4/22/2024	6:00 PM	0	517	114	0	3	1	0	0	21	2	0	0	0
4/22/2024	6:15 PM	0	463	98	0	2	1	0	0	17	2	0	0	0
4/22/2024	6:30 PM	0	402	77	0	0	1	0	0	17	2	0	0	0
4/22/2024	6:45 PM	0	352	64	0	0	3	0	0	16	1	0	0	0
4/22/2024	7:00 PM	0	347	59	0	0	3	0	0	17	1	0	0	0
4/22/2024	7:15 PM	0	324	47	0	0	3	0	0	19	1	0	0	0
4/22/2024	7:30 PM	0	293	37	0	1	3	0	0	17	0	0	0	0
4/22/2024	7:45 PM	0	291	34	0	1	0	0	0	16	0	0	0	0
4/22/2024	8:00 PM	1	239	27	0	1	0	0	0	15	0	0	0	0
4/22/2024	8:15 PM	1	216	20	0	3	2	0	0	12	0	1	0	0
4/22/2024	8:30 PM	1	207	19	0	3	3	0	0	12	0	1	0	0
4/22/2024	8:45 PM	1	185	17	0	3	4	0	0	11	0	2	0	0
4/22/2024	9:00 PM	0	167	16	0	3	5	0	0	7	0	2	0	0
4/22/2024	9:15 PM	0	149	15	0	2	3	0	0	9	1	1	0	0
4/22/2024	9:30 PM	0	137	14	0	2	2	0	0	7	1	1	0	0
4/22/2024	9:45 PM	0	133	14	0	3	2	0	0	6	1	1	0	0
4/22/2024	10:00 PM	0	124	13	0	4	2	0	0	9	1	2	0	0
4/22/2024	10:15 PM	0	121	12	0	3	2	0	0	7	0	2	0	0
4/22/2024	10:30 PM	0	115	11	0	3	4	0	0	6	0	2	0	0
4/22/2024	10:45 PM	0	103	10	1	2	4	0	0	6	0	1	0	0
4/22/2024	11:00 PM	0	93	9	1	1	3	0	0	5	0	0	0	0
4/22/2024	11:15 PM	0	68	7	1	1	3	0	0	4	0	0	0	0
4/22/2024	11:30 PM	0	42	5	1	0	1	0	0	3	0	0	0	0
4/22/2024	11:45 PM	0	20	2	0	0	0	0	0	2	0	0	0	0

4/23/2024	12:00 AM	0	32	4	0	2	1	0	0	2	0	0	0	0
4/23/2024	12:15 AM	0	26	4	0	1	1	0	0	2	0	0	0	0
4/23/2024	12:30 AM	0	25	5	0	1	0	0	0	2	0	0	0	0
4/23/2024	12:45 AM	0	23	7	0	1	0	0	0	1	0	0	0	0
4/23/2024	1:00 AM	0	27	5	0	2	0	0	1	2	0	1	0	0
4/23/2024	1:15 AM	0	24	4	0	2	0	0	1	4	0	1	0	0
4/23/2024	1:30 AM	0	22	5	0	2	0	0	1	4	1	2	0	0
4/23/2024	1:45 AM	0	26	5	0	2	0	0	2	6	1	2	0	0
4/23/2024	2:00 AM	0	25	5	0	2	0	0	1	7	1	1	1	0
4/23/2024	2:15 AM	0	23	5	0	2	0	0	1	8	1	1	1	0
4/23/2024	2:30 AM	0	18	4	0	3	0	0	1	7	0	0	1	0
4/23/2024	2:45 AM	0	19	6	0	3	0	0	0	8	0	0	1	0
4/23/2024	3:00 AM	0	16	5	0	1	0	0	0	10	0	0	0	0
4/23/2024	3:15 AM	0	25	7	0	1	0	0	0	9	0	0	0	0
4/23/2024	3:30 AM	0	24	6	0	0	0	0	0	12	0	1	0	0
4/23/2024	3:45 AM	0	30	3	0	1	0	0	0	13	0	1	0	0
4/23/2024	4:00 AM	0	32	4	0	2	1	0	1	14	0	1	0	0
4/23/2024	4:15 AM	0	28	3	0	4	1	0	1	12	0	1	0	0
4/23/2024	4:30 AM	0	38	7	0	8	1	0	1	13	0	0	0	0
4/23/2024	4:45 AM	0	40	8	0	8	1	0	1	11	0	0	0	0
4/23/2024	5:00 AM	0	54	12	0	7	0	0	0	9	0	0	0	0
4/23/2024	5:15 AM	0	80	16	0	5	1	0	0	14	0	0	0	0
4/23/2024	5:30 AM	0	113	25	0	2	1	0	0	13	0	0	0	0
4/23/2024	5:45 AM	0	156	36	0	4	1	0	0	15	0	0	0	0
4/23/2024	6:00 AM	0	200	40	0	7	1	1	0	14	3	0	0	0
4/23/2024	6:15 AM	0	234	55	0	9	0	1	0	15	3	0	0	0
4/23/2024	6:30 AM	0	300	65	0	14	0	2	1	14	5	0	0	0
4/23/2024	6:45 AM	0	389	74	0	15	0	2	2	14	6	0	0	0
4/23/2024	7:00 AM	0	491	86	0	18	1	1	3	17	3	0	0	0
4/23/2024	7:15 AM	0	529	93	0	22	2	1	3	18	4	0	0	0
4/23/2024	7:30 AM	0	545	93	0	20	2	0	2	23	2	0	0	0
4/23/2024	7:45 AM	0	509	92	0	23	2	0	1	24	1	0	0	0
4/23/2024	8:00 AM	0	454	94	0	27	1	0	1	25	2	0	0	0
4/23/2024	8:15 AM	0	437	98	0	24	3	0	1	25	1	1	0	0
4/23/2024	8:30 AM	0	401	88	0	23	4	0	1	28	5	1	0	0
4/23/2024	8:45 AM	0	395	88	0	19	5	0	3	32	5	1	0	0
4/23/2024	9:00 AM	0	379	84	0	13	6	0	2	37	5	1	0	0
4/23/2024	9:15 AM	0	392	67	1	13	3	0	2	43	5	0	0	0
4/23/2024	9:30 AM	0	391	81	1	20	4	0	4	42	1	0	0	0
4/23/2024	9:45 AM	0	387	91	1	18	3	0	3	41	2	0	0	0
4/23/2024	10:00 AM	1	382	100	1	18	4	0	3	43	1	0	0	0
4/23/2024	10:15 AM	1	391	110	0	16	4	0	3	35	1	0	0	0
4/23/2024	10:30 AM	1	418	112	0	7	2	0	3	32	1	0	0	0
4/23/2024	10:45 AM	1	441	115	0	10	3	0	4	36	0	0	0	0
4/23/2024	11:00 AM	0	469	117	0	8	3	0	4	37	0	0	0	0
4/23/2024	11:15 AM	0	472	134	0	10	4	0	4	41	0	0	0	0
4/23/2024	11:30 AM	0	457	134	0	13	5	0	3	47	0	0	0	0
4/23/2024	11:45 AM	0	481	127	0	11	5	0	1	46	0	0	0	0
4/23/2024	12:00 PM	0	463	132	1	12	3	0	1	44	0	0	0	0
4/23/2024	12:15 PM	0	477	127	4	12	4	0	4	50	0	0	0	0
4/23/2024	12:30 PM	0	519	132	6	8	4	0	4	44	0	0	0	0
4/23/2024	12:45 PM	1	512	133	8	9	3	0	4	46	0	0	0	0
4/23/2024	1:00 PM	1	542	143	7	8	3	0	4	47	0	0	0	0
4/23/2024	1:15 PM	2	548	140	8	7	1	0	2	41	0	0	0	0
4/23/2024	1:30 PM	3	561	138	6	11	0	0	1	39	0	0	0	0
4/23/2024	1:45 PM	2	590	148	5	12	1	0	2	36	0	0	0	0
4/23/2024	2:00 PM	3	613	153	5	13	1	0	3	34	0	0	0	0
4/23/2024	2:15 PM	2	661	162	1	16	1	0	7	34	0	0	0	0
4/23/2024	2:30 PM	1	686	179	1	17	1	0	8	38	0	0	0	0
4/23/2024	2:45 PM	2	726	190	1	15	0	0	8	40	0	0	0	0
4/23/2024	3:00 PM	1	775	206	1	16	1	0	8	34	0	0	0	0
4/23/2024	3:15 PM	1	819	231	1	11	1	0	4	30	1	1	0	0
4/23/2024	3:30 PM	1	910	237	1	8	1	0	3	27	1	1	0	0
4/23/2024	3:45 PM	0	972	239	0	10	1	0	3	22	1	1	0	0
4/23/2024	4:00 PM	0	1015	218	0	9	1	0	2	20	1	1	0	0
4/23/2024	4:15 PM	0	1043	207	0	10	3	0	1	21	0	0	0	0
4/23/2024	4:30 PM	0	1060	195	0	11	3	0	1	25	0	0	0	0
4/23/2024	4:45 PM	1	1033	206	0	7	3	0	0	25	0	0	0	0
4/23/2024	5:00 PM	1	985	216	0	6	2	0	0	28	0	0	0	0
4/23/2024	5:15 PM	1	905	201	0	5	1	0	0	27	0	0	0	0
4/23/2024	5:30 PM	1	745	183	0	3	1	0	1	25	0	0	0	0
4/23/2024	5:45 PM	1	633	148	0	5	3	0	1	19	0	0	0	0
4/23/2024	6:00 PM	1	535	115	0	4	3	0	2	16	0	0	0	0
4/23/2024	6:15 PM	3	461	99	0	4	2	0	2	14	0	0	0	0
4/23/2024	6:30 PM	3	439	92	0	3	2	0	1	11	0	0	0	0
4/23/2024	6:45 PM	2	405	88	0	1	0	0	1	14	0	0	0	0
4/23/2024	7:00 PM	2	401	83	0	1	1	0	1	12	0	0	0	0
4/23/2024	7:15 PM	0	382	76	0	1	2	0	1	13	0	0	0	0
4/23/2024	7:30 PM	0	360	72	0	2	2	0	1	12	0	1	1	0
4/23/2024	7:45 PM	0	325	69	0	2	2	0	1	10	0	1	1	0
4/23/2024	8:00 PM	0	277	59	0	2	1	0	0	14	0	1	1	0
4/23/2024	8:15 PM	0	255	52	0	4	0	0	0	15	0	1	1	0
4/23/2024	8:30 PM	2	212	48	0	4	2	0	0	16	0	1	0	0
4/23/2024	8:45 PM	2	202	39	0	6	3	0	0	18	0	1	0	0
4/23/2024	9:00 PM	2	186	38	0	7	3	0	0	16	0	1	0	0
4/23/2024	9:15 PM	2	157	35	0	7	4	0	0	14	0	1	0	0
4/23/2024	9:30 PM	0	179	34	0	8	2	0	0	13	0	0	0	0
4/23/2024	9:45 PM	0	178	34	0	6	1	0	0	9	0	0	0	0
4/23/2024	10:00 PM	0	169	37	0	4	2	0	0	9	0	0	0	0
4/23/2024	10:15 PM	0	161	35	0	2	1	0	0	6	0	0	0	0
4/23/2024	10:30 PM	0	116	29	0	1	4	0	0	4	0	0	0	0
4/23/2024	10:45 PM	0	73	21	0	1	6	0	0	6	0	0	0	0
4/23/2024	11:00 PM	0	62	16	0	2	5	0	0	7	0	0	0	0
4/23/2024	11:15 PM	0	41	10	0	2	5	0	0	7	0	0	0	0
4/23/2024	11:30 PM	0	21	7	0	1	2	0	0	6	0	0	0	0
4/23/2024	11:45 PM	0	11	4	0	1	0	0	0	4	0	0	0	0

4/24/2024	12:00 AM	0	55	14	0	1	8	0	0	10	0	1	0	0
4/24/2024	12:15 AM	0	47	11	0	1	11	0	0	7	0	0	0	0
4/24/2024	12:30 AM	0	44	9	0	0	10	0	0	6	0	0	0	0
4/24/2024	12:45 AM	0	36	7	0	0	11	0	0	7	0	0	0	0
4/24/2024	1:00 AM	0	31	7	0	0	6	0	0	6	0	0	0	0
4/24/2024	1:15 AM	0	32	8	0	0	2	0	0	8	0	2	0	0
4/24/2024	1:30 AM	0	30	9	0	0	2	0	0	10	0	2	0	0
4/24/2024	1:45 AM	0	25	9	0	0	2	0	0	10	0	3	0	0
4/24/2024	2:00 AM	0	22	8	0	0	4	0	0	12	0	3	0	0
4/24/2024	2:15 AM	0	25	8	0	1	4	0	0	8	0	1	0	0
4/24/2024	2:30 AM	0	21	6	0	2	4	0	0	4	0	1	0	0
4/24/2024	2:45 AM	0	25	7	0	3	3	0	0	7	0	0	0	0
4/24/2024	3:00 AM	0	27	7	0	3	2	0	0	6	0	0	0	0
4/24/2024	3:15 AM	0	20	6	0	2	2	0	0	9	0	0	0	0
4/24/2024	3:30 AM	0	20	7	0	1	1	0	0	10	0	0	0	0
4/24/2024	3:45 AM	0	26	8	0	1	1	0	0	6	0	0	0	0
4/24/2024	4:00 AM	0	27	9	0	1	0	0	0	8	0	0	0	0
4/24/2024	4:15 AM	0	30	10	0	1	2	0	0	12	0	0	0	0
4/24/2024	4:30 AM	0	37	11	0	1	3	0	0	17	0	0	0	0
4/24/2024	4:45 AM	0	45	12	0	1	4	0	0	22	0	0	0	0
4/24/2024	5:00 AM	0	55	15	0	2	4	0	0	24	0	0	0	0
4/24/2024	5:15 AM	0	82	20	0	4	2	0	0	21	0	0	0	0
4/24/2024	5:30 AM	0	111	24	0	5	3	0	0	17	0	0	0	0
4/24/2024	5:45 AM	0	156	33	0	5	3	0	1	16	0	0	0	0
4/24/2024	6:00 AM	0	209	41	0	7	4	0	2	19	0	0	0	0
4/24/2024	6:15 AM	0	246	57	0	9	4	0	3	22	0	0	0	0
4/24/2024	6:30 AM	0	323	79	0	15	5	0	4	22	0	1	0	0
4/24/2024	6:45 AM	0	400	98	1	20	7	0	3	22	0	1	0	0
4/24/2024	7:00 AM	1	488	127	1	26	7	0	3	22	0	2	0	0
4/24/2024	7:15 AM	1	541	133	1	28	7	0	2	19	0	2	0	0
4/24/2024	7:30 AM	1	576	139	1	30	5	0	1	25	0	1	0	0
4/24/2024	7:45 AM	1	542	139	0	28	3	0	3	28	0	2	0	0
4/24/2024	8:00 AM	0	497	123	0	22	3	0	2	32	0	1	0	0
4/24/2024	8:15 AM	0	452	120	0	21	4	0	3	41	0	1	0	0
4/24/2024	8:30 AM	1	377	108	1	18	3	0	5	44	0	1	0	0
4/24/2024	8:45 AM	1	361	103	1	17	2	0	3	42	0	0	0	0
4/24/2024	9:00 AM	1	345	113	1	19	1	0	4	36	0	0	0	0
4/24/2024	9:15 AM	1	360	114	2	17	0	0	4	33	0	0	0	0
4/24/2024	9:30 AM	0	370	117	1	18	1	0	2	33	1	0	0	0
4/24/2024	9:45 AM	0	387	130	1	18	3	0	3	34	1	0	0	0
4/24/2024	10:00 AM	0	397	139	1	16	3	0	2	32	1	0	0	0
4/24/2024	10:15 AM	0	387	142	0	20	3	0	1	30	1	0	0	0
4/24/2024	10:30 AM	0	388	145	0	16	2	0	1	26	0	0	0	0
4/24/2024	10:45 AM	0	402	138	0	19	0	0	0	32	0	0	0	0
4/24/2024	11:00 AM	0	422	126	1	17	1	0	0	39	0	0	0	0
4/24/2024	11:15 AM	0	433	127	1	14	1	0	0	39	0	0	0	0
4/24/2024	11:30 AM	0	459	130	2	12	2	0	0	45	0	0	0	0
4/24/2024	11:45 AM	0	461	130	2	10	2	0	0	39	0	0	0	0
4/24/2024	12:00 PM	0	486	124	1	14	3	0	1	38	2	0	0	0
4/24/2024	12:15 PM	0	539	126	1	11	4	0	1	38	3	0	0	0
4/24/2024	12:30 PM	0	555	134	0	14	3	0	1	36	3	0	0	0
4/24/2024	12:45 PM	0	577	134	0	13	3	0	1	35	5	0	0	0
4/24/2024	1:00 PM	0	586	146	0	12	1	0	2	33	3	0	0	0
4/24/2024	1:15 PM	0	592	159	0	13	2	0	2	34	3	0	0	0
4/24/2024	1:30 PM	0	635	155	0	11	2	0	2	44	3	0	0	0
4/24/2024	1:45 PM	0	654	163	3	11	2	0	4	44	1	0	0	0
4/24/2024	2:00 PM	0	647	163	6	11	3	0	3	50	1	0	0	0
4/24/2024	2:15 PM	2	699	158	6	12	1	0	4	56	2	0	0	0
4/24/2024	2:30 PM	2	724	167	6	12	1	0	4	43	2	0	0	0
4/24/2024	2:45 PM	2	752	175	5	14	3	0	2	45	3	0	0	0
4/24/2024	3:00 PM	2	809	197	2	17	3	0	1	43	4	0	0	0
4/24/2024	3:15 PM	0	827	219	2	18	3	0	0	36	2	0	0	0
4/24/2024	3:30 PM	1	871	227	3	25	3	0	0	31	2	0	0	0
4/24/2024	3:45 PM	1	907	231	2	23	1	0	1	28	1	0	0	0
4/24/2024	4:00 PM	1	962	205	2	18	0	0	1	22	0	0	0	0
4/24/2024	4:15 PM	1	970	194	2	14	0	0	1	17	2	0	0	0
4/24/2024	4:30 PM	0	946	178	1	6	0	2	1	20	2	0	0	0
4/24/2024	4:45 PM	0	934	170	0	4	0	2	0	15	2	0	0	0
4/24/2024	5:00 PM	0	865	179	0	3	0	2	0	11	2	0	0	0
4/24/2024	5:15 PM	0	778	159	0	4	0	2	0	14	0	0	0	0
4/24/2024	5:30 PM	0	697	158	0	5	0	0	0	12	0	0	0	0
4/24/2024	5:45 PM	1	599	134	0	7	0	0	1	19	0	0	0	0
4/24/2024	6:00 PM	1	502	114	0	7	1	0	1	21	0	0	0	0
4/24/2024	6:15 PM	1	430	100	0	7	1	0	1	17	0	0	0	0
4/24/2024	6:30 PM	2	399	92	0	7	2	0	1	17	0	1	0	0
4/24/2024	6:45 PM	1	366	94	0	4	2	0	1	13	0	1	0	0
4/24/2024	7:00 PM	2	388	83	0	3	1	0	1	14	0	1	0	0
4/24/2024	7:15 PM	2	405	73	0	2	1	0	2	15	0	1	0	0
4/24/2024	7:30 PM	1	389	56	0	1	1	0	2	14	0	0	0	0
4/24/2024	7:45 PM	2	388	54	0	2	1	0	1	19	0	0	0	0
4/24/2024	8:00 PM	1	328	60	0	3	1	0	1	16	0	0	0	0
4/24/2024	8:15 PM	1	285	64	0	3	1	0	2	15	0	1	0	0
4/24/2024	8:30 PM	1	242	65	0	2	0	0	2	17	0	1	0	0
4/24/2024	8:45 PM	0	194	55	0	1	0	0	2	11	0	1	0	0
4/24/2024	9:00 PM	0	181	47	0	0	0	0	2	14	0	1	0	0
4/24/2024	9:15 PM	1	179	46	0	1	0	0	0	14	0	0	0	0
4/24/2024	9:30 PM	1	178	50	0	2	0	0	0	15	0	0	0	0
4/24/2024	9:45 PM	1	215	55	0	2	0	0	0	15	0	0	0	0
4/24/2024	10:00 PM	1	192	52	0	2	0	0	0	10	0	0	0	0
4/24/2024	10:15 PM	0	184	49	0	1	0	0	0	11	0	0	0	0
4/24/2024	10:30 PM	0	160	42	0	0	0	0	0	6	0	0	0	0
4/24/2024	10:45 PM	0	106	36	0	0	0	0	0	6	0	0	0	0
4/24/2024	11:00 PM	0	96	34	0	2	0	0	0	6	0	0	0	0
4/24/2024	11:15 PM	0	59	25	0	2	0	0	0	3	0	0	0	0
4/24/2024	11:30 PM	0	36	16	0	2	0	0	0	2	0	0	0	0
4/24/2024	11:45 PM	0	15	6	0	2	0	0	0	0	0	0	0	0

4/25/2024	12:00 AM	0	33	17	0	6	4	0	0	6	0	1	0	0
4/25/2024	12:15 AM	0	29	17	0	4	3	0	0	4	0	0	0	0
4/25/2024	12:30 AM	0	23	13	0	3	3	0	0	3	0	0	0	0
4/25/2024	12:45 AM	0	21	11	0	4	3	0	0	4	0	0	0	0
4/25/2024	1:00 AM	0	21	12	0	2	2	0	0	4	0	0	0	0
4/25/2024	1:15 AM	0	21	10	0	5	2	0	0	4	0	1	0	0
4/25/2024	1:30 AM	0	23	8	0	7	4	0	0	5	0	1	0	0
4/25/2024	1:45 AM	0	19	8	0	6	3	0	0	7	0	1	0	0
4/25/2024	2:00 AM	0	17	6	0	7	3	0	0	12	0	1	0	0
4/25/2024	2:15 AM	0	14	5	0	6	4	0	0	11	0	0	0	0
4/25/2024	2:30 AM	0	13	7	0	5	2	0	0	13	0	2	0	0
4/25/2024	2:45 AM	0	11	8	0	4	1	0	0	9	0	2	0	0
4/25/2024	3:00 AM	0	14	10	0	4	1	0	0	7	0	2	0	0
4/25/2024	3:15 AM	0	16	12	0	2	0	0	0	8	0	2	0	0
4/25/2024	3:30 AM	0	17	12	0	3	0	0	0	8	0	0	0	0
4/25/2024	3:45 AM	0	25	14	0	3	0	0	0	11	0	0	0	0
4/25/2024	4:00 AM	0	27	15	0	2	1	0	0	10	0	0	0	0
4/25/2024	4:15 AM	0	31	16	0	2	1	0	0	12	0	0	0	0
4/25/2024	4:30 AM	0	30	16	0	0	1	0	0	13	0	0	0	0
4/25/2024	4:45 AM	0	38	19	1	1	1	0	0	12	0	0	0	0
4/25/2024	5:00 AM	0	51	27	1	2	0	0	0	13	0	0	0	0
4/25/2024	5:15 AM	0	67	33	1	3	0	0	0	20	0	0	0	0
4/25/2024	5:30 AM	0	103	42	1	5	0	0	0	21	0	0	0	0
4/25/2024	5:45 AM	0	147	44	0	8	0	0	0	26	0	0	0	0
4/25/2024	6:00 AM	0	185	52	0	9	0	0	0	27	0	0	0	0
4/25/2024	6:15 AM	0	232	59	0	13	3	0	0	20	0	0	0	0
4/25/2024	6:30 AM	0	299	67	1	15	4	0	0	28	0	0	0	0
4/25/2024	6:45 AM	0	351	82	1	16	4	0	0	30	0	0	0	0
4/25/2024	7:00 AM	0	443	89	1	16	5	0	0	32	0	0	0	0
4/25/2024	7:15 AM	0	501	106	1	14	3	0	1	38	0	0	0	0
4/25/2024	7:30 AM	1	507	128	0	12	2	0	1	31	1	0	0	0
4/25/2024	7:45 AM	1	512	141	0	15	2	0	1	24	2	0	0	0
4/25/2024	8:00 AM	1	466	150	0	16	1	0	2	29	2	0	0	0
4/25/2024	8:15 AM	1	416	152	0	19	0	0	1	30	2	0	0	0
4/25/2024	8:30 AM	0	390	139	0	20	0	0	1	30	2	0	0	0
4/25/2024	8:45 AM	1	368	134	0	15	1	0	1	37	1	0	0	0
4/25/2024	9:00 AM	1	366	129	0	15	1	0	1	31	1	0	0	0
4/25/2024	9:15 AM	1	401	134	0	10	2	0	1	22	1	0	0	0
4/25/2024	9:30 AM	1	415	134	0	11	2	0	1	33	0	0	0	0
4/25/2024	9:45 AM	0	422	130	0	11	1	0	1	34	0	0	0	0
4/25/2024	10:00 AM	0	413	133	0	13	1	0	0	42	0	0	0	0
4/25/2024	10:15 AM	1	386	128	1	15	3	0	0	48	0	0	0	0
4/25/2024	10:30 AM	1	400	136	2	18	3	0	0	43	0	0	0	0
4/25/2024	10:45 AM	1	414	148	3	16	3	0	0	44	0	0	0	0
4/25/2024	11:00 AM	1	425	145	4	15	3	0	0	42	0	0	0	0
4/25/2024	11:15 AM	1	449	147	3	15	0	0	0	39	0	0	0	0
4/25/2024	11:30 AM	1	448	161	2	9	0	0	0	35	0	0	0	0
4/25/2024	11:45 AM	1	475	157	1	9	1	0	0	39	0	0	0	0
4/25/2024	12:00 PM	1	531	170	4	9	1	0	0	44	0	0	0	0
4/25/2024	12:15 PM	0	535	184	4	9	2	0	1	47	0	0	0	0
4/25/2024	12:30 PM	0	551	174	6	11	3	0	2	55	0	0	0	0
4/25/2024	12:45 PM	0	549	177	6	11	2	0	4	49	0	0	0	0
4/25/2024	1:00 PM	0	517	158	2	8	2	0	5	46	0	1	0	0
4/25/2024	1:15 PM	0	557	147	2	10	1	0	7	48	0	1	0	0
4/25/2024	1:30 PM	0	588	140	1	10	3	0	6	40	0	1	0	0
4/25/2024	1:45 PM	0	583	148	3	10	3	0	6	44	0	1	0	0
4/25/2024	2:00 PM	0	623	185	3	12	3	0	6	38	0	0	0	0
4/25/2024	2:15 PM	1	678	187	4	16	3	0	4	37	0	0	0	0
4/25/2024	2:30 PM	2	738	207	5	19	1	0	4	34	0	0	0	0
4/25/2024	2:45 PM	2	802	207	4	19	1	0	2	27	0	0	0	0
4/25/2024	3:00 PM	2	835	200	4	22	1	0	2	24	0	0	0	0
4/25/2024	3:15 PM	2	861	198	4	16	2	0	3	25	0	0	0	0
4/25/2024	3:30 PM	1	868	207	2	13	1	0	3	25	0	0	0	0
4/25/2024	3:45 PM	2	905	214	1	15	1	0	3	21	0	0	0	0
4/25/2024	4:00 PM	2	943	200	1	9	1	0	2	20	0	0	0	0
4/25/2024	4:15 PM	2	931	207	0	9	2	0	0	18	0	0	0	0
4/25/2024	4:30 PM	3	933	166	0	8	2	0	0	20	0	0	0	0
4/25/2024	4:45 PM	2	889	144	0	7	3	0	0	21	1	0	0	0
4/25/2024	5:00 PM	3	817	144	0	7	3	0	0	29	1	0	0	0
4/25/2024	5:15 PM	3	756	142	0	5	2	0	1	31	1	0	0	0
4/25/2024	5:30 PM	3	685	154	0	6	2	0	2	26	1	0	0	0
4/25/2024	5:45 PM	3	600	153	0	5	1	0	2	25	0	0	0	0
4/25/2024	6:00 PM	2	552	132	3	6	1	0	2	17	0	0	0	0
4/25/2024	6:15 PM	2	497	103	3	6	0	0	1	12	0	0	0	0
4/25/2024	6:30 PM	1	433	96	3	4	0	0	0	13	0	0	0	0
4/25/2024	6:45 PM	2	456	77	3	7	0	0	0	16	0	0	0	0
4/25/2024	7:00 PM	2	460	70	0	7	0	0	0	16	0	0	0	0
4/25/2024	7:15 PM	1	442	65	0	6	0	0	0	14	0	0	0	0
4/25/2024	7:30 PM	1	430	52	0	6	0	0	0	11	0	0	0	0
4/25/2024	7:45 PM	0	383	49	0	2	0	0	0	11	0	0	1	0
4/25/2024	8:00 PM	0	338	46	0	1	0	0	0	10	0	0	1	0
4/25/2024	8:15 PM	0	332	45	0	2	0	0	0	13	0	0	2	0
4/25/2024	8:30 PM	0	318	39	0	1	0	0	0	16	0	0	3	0
4/25/2024	8:45 PM	0	286	38	0	2	0	0	0	16	0	0	2	0
4/25/2024	9:00 PM	0	293	40	0	3	0	0	0	19	0	0	3	0
4/25/2024	9:15 PM	0	255	37	0	3	0	0	0	17	0	0	2	0
4/25/2024	9:30 PM	0	291	37	0	3	0	0	0	17	0	0	1	0
4/25/2024	9:45 PM	0	305	36	0	2	0	0	0	14	0	0	1	0
4/25/2024	10:00 PM	0	242	32	0	1	0	0	0	11	0	0	0	0
4/25/2024	10:15 PM	0	233	34	0	0	0	0	0	7	0	0	0	0
4/25/2024	10:30 PM	0	148	34	0	3	1	0	0	8	0	0	0	0
4/25/2024	10:45 PM	0	111	33	0	4	1	0	0	6	0	0	0	0
4/25/2024	11:00 PM	0	104	33	0	4	1	0	0	5	0	0	0	0
4/25/2024	11:15 PM	0	67	23	0	4	1	0	0	5	0	0	0	0
4/25/2024	11:30 PM	0	46	15	0	1	0	0	0	1	0	0	0	0
4/25/2024	11:45 PM	0	16	8	0	0	0	0	0	1	0	0	0	0

4/26/2024	12:00 AM	0	58	9	0	2	6	0	0	6	0	0	0	0
4/26/2024	12:15 AM	0	47	6	0	3	5	0	0	6	0	0	0	0
4/26/2024	12:30 AM	0	42	6	0	5	5	0	0	8	0	0	0	0
4/26/2024	12:45 AM	0	38	7	0	5	5	0	0	7	0	0	0	0
4/26/2024	1:00 AM	0	37	6	0	6	5	0	0	6	0	0	0	0
4/26/2024	1:15 AM	0	39	7	0	6	3	0	0	5	0	0	0	0
4/26/2024	1:30 AM	0	32	6	0	5	4	0	0	4	0	0	0	0
4/26/2024	1:45 AM	0	28	5	0	5	5	0	0	3	0	0	0	0
4/26/2024	2:00 AM	0	22	6	0	5	5	0	0	3	0	0	0	0
4/26/2024	2:15 AM	0	19	5	0	5	6	0	0	3	0	0	0	0
4/26/2024	2:30 AM	0	20	5	0	4	4	0	0	4	0	1	0	0
4/26/2024	2:45 AM	0	24	6	0	3	2	0	0	6	0	1	0	0
4/26/2024	3:00 AM	0	23	5	0	4	2	0	0	6	0	3	0	0
4/26/2024	3:15 AM	0	27	6	0	3	2	0	0	7	0	3	0	0
4/26/2024	3:30 AM	0	36	7	0	3	4	0	0	8	1	2	0	0
4/26/2024	3:45 AM	0	38	8	0	3	4	0	0	7	1	2	0	0
4/26/2024	4:00 AM	0	50	11	0	1	3	0	0	7	1	0	0	0
4/26/2024	4:15 AM	0	57	12	0	1	2	0	0	7	1	0	0	0
4/26/2024	4:30 AM	0	55	12	0	1	1	0	0	6	0	0	0	0
4/26/2024	4:45 AM	0	62	11	0	2	1	0	0	6	0	0	0	0
4/26/2024	5:00 AM	0	62	10	0	3	3	0	0	5	0	0	0	0
4/26/2024	5:15 AM	0	72	13	0	3	3	0	0	6	0	0	0	0
4/26/2024	5:30 AM	0	107	18	0	3	2	0	0	5	0	1	0	0
4/26/2024	5:45 AM	0	129	26	0	5	2	0	2	6	0	1	0	0
4/26/2024	6:00 AM	0	173	40	0	5	1	0	3	12	0	1	0	0
4/26/2024	6:15 AM	0	218	49	1	8	1	0	3	10	0	1	0	0
4/26/2024	6:30 AM	0	284	61	1	10	3	0	4	14	1	0	0	0
4/26/2024	6:45 AM	2	359	68	1	15	3	0	2	18	1	0	0	0
4/26/2024	7:00 AM	3	430	81	1	15	2	0	1	21	1	0	0	0
4/26/2024	7:15 AM	3	472	92	0	16	3	0	1	24	1	0	0	0
4/26/2024	7:30 AM	3	472	107	0	17	1	0	0	30	0	0	0	0
4/26/2024	7:45 AM	1	467	123	0	13	1	0	1	27	0	0	1	0
4/26/2024	8:00 AM	0	429	125	2	16	2	0	2	26	0	0	1	0
4/26/2024	8:15 AM	1	396	127	2	15	2	0	2	24	0	0	2	0
4/26/2024	8:30 AM	1	367	125	2	17	3	0	2	18	0	0	2	0
4/26/2024	8:45 AM	1	363	120	2	16	4	0	1	22	1	0	1	0
4/26/2024	9:00 AM	1	352	114	0	16	4	0	1	20	2	0	1	0
4/26/2024	9:15 AM	0	372	127	0	17	3	0	1	25	2	0	0	0
4/26/2024	9:30 AM	0	391	117	0	13	3	0	1	23	2	0	0	0
4/26/2024	9:45 AM	0	388	108	0	13	2	0	1	21	1	0	0	0
4/26/2024	10:00 AM	0	416	113	0	14	1	0	0	28	0	0	0	0
4/26/2024	10:15 AM	0	449	105	2	15	1	0	1	27	0	0	0	0
4/26/2024	10:30 AM	0	474	125	2	17	0	0	2	30	0	0	0	0
4/26/2024	10:45 AM	0	495	163	3	17	2	0	2	32	0	0	0	0
4/26/2024	11:00 AM	0	512	160	4	15	2	0	2	34	0	0	0	0
4/26/2024	11:15 AM	0	522	170	2	14	2	0	2	34	1	0	0	0
4/26/2024	11:30 AM	0	562	169	7	12	2	0	2	36	1	0	0	0
4/26/2024	11:45 AM	1	609	159	11	10	1	0	2	36	1	0	0	0
4/26/2024	12:00 PM	1	641	176	10	13	1	0	2	28	1	0	0	0
4/26/2024	12:15 PM	1	630	164	12	10	1	0	2	25	0	1	0	0
4/26/2024	12:30 PM	1	632	163	7	10	2	0	1	25	0	1	0	0
4/26/2024	12:45 PM	0	607	148	6	9	1	0	1	21	1	1	0	0
4/26/2024	1:00 PM	1	612	142	6	3	1	0	1	20	1	1	0	0
4/26/2024	1:15 PM	1	606	145	4	2	1	0	0	26	1	0	0	0
4/26/2024	1:30 PM	1	598	142	5	3	1	0	2	26	1	0	0	0
4/26/2024	1:45 PM	1	622	148	1	7	3	0	2	31	0	0	0	0
4/26/2024	2:00 PM	0	647	141	1	9	3	0	2	45	0	0	0	0
4/26/2024	2:15 PM	0	665	153	1	8	3	0	2	39	0	0	0	0
4/26/2024	2:30 PM	1	665	155	1	8	2	0	1	37	0	0	0	0
4/26/2024	2:45 PM	1	682	155	1	4	0	0	3	36	0	0	0	0
4/26/2024	3:00 PM	2	679	174	2	3	0	0	3	22	1	0	0	0
4/26/2024	3:15 PM	2	687	172	2	6	0	0	4	26	1	0	0	0
4/26/2024	3:30 PM	1	768	180	1	7	1	0	3	27	1	0	0	0
4/26/2024	3:45 PM	1	788	185	1	7	1	0	1	22	1	0	0	0
4/26/2024	4:00 PM	2	813	167	0	6	1	0	1	23	0	0	0	0
4/26/2024	4:15 PM	3	900	173	0	5	1	0	0	21	0	0	0	0
4/26/2024	4:30 PM	3	863	174	0	3	0	0	1	22	0	0	0	0
4/26/2024	4:45 PM	3	817	164	0	4	0	0	1	27	0	0	0	0
4/26/2024	5:00 PM	1	760	168	0	8	1	0	2	24	0	0	0	0
4/26/2024	5:15 PM	1	665	148	0	8	1	0	2	23	0	0	0	0
4/26/2024	5:30 PM	1	615	132	0	9	1	0	2	21	0	0	0	0
4/26/2024	5:45 PM	2	569	122	0	9	1	0	2	19	0	0	0	0
4/26/2024	6:00 PM	4	524	104	0	6	0	0	1	19	0	0	0	0
4/26/2024	6:15 PM	5	475	90	0	6	0	0	1	17	0	0	0	0
4/26/2024	6:30 PM	5	427	82	0	5	1	0	0	14	0	0	0	0
4/26/2024	6:45 PM	5	403	66	0	5	1	0	0	13	0	0	0	0
4/26/2024	7:00 PM	3	382	63	0	6	1	0	0	12	0	0	0	0
4/26/2024	7:15 PM	1	381	61	0	4	1	0	0	12	0	0	0	0
4/26/2024	7:30 PM	1	345	49	0	4	1	0	0	13	0	0	0	0
4/26/2024	7:45 PM	0	326	54	0	3	1	0	0	10	0	0	0	0
4/26/2024	8:00 PM	0	314	52	0	2	1	0	0	12	0	0	0	0
4/26/2024	8:15 PM	0	303	51	0	3	1	0	0	13	0	0	0	0
4/26/2024	8:30 PM	0	321	52	0	2	0	0	0	10	0	0	0	0
4/26/2024	8:45 PM	0	323	54	0	3	0	0	0	11	0	0	2	0
4/26/2024	9:00 PM	0	342	55	0	2	0	0	0	7	0	0	3	0
4/26/2024	9:15 PM	0	343	57	0	1	0	0	0	5	0	0	3	0
4/26/2024	9:30 PM	0	324	53	0	2	0	0	0	6	0	0	4	0
4/26/2024	9:45 PM	0	335	50	0	1	0	0	0	6	0	0	2	0
4/26/2024	10:00 PM	0	375	51	0	1	0	0	0	10	0	0	1	0
4/26/2024	10:15 PM	0	399	48	0	1	0	0	0	9	0	0	2	0
4/26/2024	10:30 PM	0	385	46	0	0	0	0	0	8	0	0	1	0
4/26/2024	10:45 PM	0	328	39	0	0	0	0	0	9	0	0	1	0
4/26/2024	11:00 PM	0	229	28	0	1	0	0	0	6	0	0	1	0
4/26/2024	11:15 PM	0	120	16	0	1	0	0	0	6	0	0	0	0
4/26/2024	11:30 PM	0	64	9	0	1	0	0	0	5	0	0	0	0
4/26/2024	11:45 PM	0	36	5	0	1	0	0	0	2	0	0	0	0

4/27/2024	12:00 AM	1	108	5	0	3	0	0	0	3	0	0	0	0
4/27/2024	12:15 AM	1	102	5	0	3	0	0	0	6	0	0	0	0
4/27/2024	12:30 AM	2	87	5	0	2	0	0	0	6	0	0	0	0
4/27/2024	12:45 AM	1	86	6	0	1	0	0	0	6	0	0	0	0
4/27/2024	1:00 AM	1	74	6	0	0	0	0	0	5	0	0	0	0
4/27/2024	1:15 AM	1	70	6	0	1	0	0	0	1	0	0	0	0
4/27/2024	1:30 AM	0	72	6	0	3	0	0	0	1	0	0	0	0
4/27/2024	1:45 AM	0	62	6	0	4	0	0	0	2	0	0	0	0
4/27/2024	2:00 AM	0	68	7	0	5	0	0	0	4	0	0	0	0
4/27/2024	2:15 AM	0	61	6	0	4	0	0	0	4	0	1	0	0
4/27/2024	2:30 AM	0	56	7	0	3	0	0	0	3	0	1	0	0
4/27/2024	2:45 AM	0	49	5	0	2	0	0	0	2	0	1	0	0
4/27/2024	3:00 AM	0	35	3	0	2	1	0	0	1	0	1	0	0
4/27/2024	3:15 AM	0	29	2	0	2	1	0	0	4	0	1	0	0
4/27/2024	3:30 AM	0	28	1	0	1	1	0	0	5	0	1	0	0
4/27/2024	3:45 AM	0	26	2	0	1	1	0	0	5	0	1	0	0
4/27/2024	4:00 AM	0	27	4	0	1	0	0	0	6	0	1	0	0
4/27/2024	4:15 AM	0	32	6	0	1	0	0	0	4	0	0	0	0
4/27/2024	4:30 AM	0	34	8	0	1	0	0	0	4	0	0	0	0
4/27/2024	4:45 AM	0	43	9	0	1	0	0	0	5	0	0	0	0
4/27/2024	5:00 AM	0	51	8	0	0	0	0	0	6	0	0	0	0
4/27/2024	5:15 AM	0	55	10	0	0	0	0	0	7	0	0	0	0
4/27/2024	5:30 AM	0	59	15	0	0	0	0	0	9	0	0	0	0
4/27/2024	5:45 AM	0	72	19	0	1	0	0	0	10	0	0	0	0
4/27/2024	6:00 AM	0	77	21	0	2	1	0	1	7	0	0	0	0
4/27/2024	6:15 AM	0	96	19	0	2	1	0	2	8	0	0	0	0
4/27/2024	6:30 AM	0	132	17	0	2	1	0	2	7	0	0	0	0
4/27/2024	6:45 AM	0	149	17	0	2	1	0	2	8	0	0	0	0
4/27/2024	7:00 AM	0	173	26	1	2	1	0	1	11	0	0	0	0
4/27/2024	7:15 AM	0	192	32	1	7	1	0	0	11	0	0	0	0
4/27/2024	7:30 AM	0	183	36	1	9	1	0	0	12	0	0	0	0
4/27/2024	7:45 AM	0	203	37	1	8	1	0	0	16	0	0	0	0
4/27/2024	8:00 AM	0	225	36	0	8	0	0	0	15	0	0	0	0
4/27/2024	8:15 AM	0	234	43	0	3	0	0	0	16	0	1	0	0
4/27/2024	8:30 AM	1	264	45	0	2	0	0	0	21	0	1	0	0
4/27/2024	8:45 AM	1	294	51	0	4	0	0	0	18	0	1	0	0
4/27/2024	9:00 AM	1	315	57	0	5	0	0	1	19	0	1	0	0
4/27/2024	9:15 AM	1	335	55	0	6	0	0	3	18	0	0	0	0
4/27/2024	9:30 AM	0	339	55	2	7	0	0	3	18	0	0	0	0
4/27/2024	9:45 AM	1	350	58	2	5	1	0	3	16	0	0	0	0
4/27/2024	10:00 AM	1	372	69	2	5	2	0	2	15	0	0	0	0
4/27/2024	10:15 AM	2	400	66	2	5	3	0	0	16	0	0	0	0
4/27/2024	10:30 AM	2	420	75	0	3	4	0	0	11	0	0	0	0
4/27/2024	10:45 AM	2	422	82	0	3	3	0	0	10	2	0	0	0
4/27/2024	11:00 AM	2	430	83	0	1	2	0	0	13	2	0	0	0
4/27/2024	11:15 AM	1	439	93	0	1	2	0	0	10	2	0	0	0
4/27/2024	11:30 AM	1	456	95	0	2	1	0	0	12	2	0	0	0
4/27/2024	11:45 AM	0	469	88	0	2	1	0	1	13	0	0	0	0
4/27/2024	12:00 PM	0	451	80	0	4	1	0	1	10	0	0	0	0
4/27/2024	12:15 PM	0	445	86	1	6	0	0	1	11	0	0	0	0
4/27/2024	12:30 PM	0	482	92	1	7	0	0	1	10	0	0	0	0
4/27/2024	12:45 PM	1	494	100	1	8	0	0	0	11	0	0	0	0
4/27/2024	1:00 PM	1	527	108	1	10	0	0	0	13	0	0	0	0
4/27/2024	1:15 PM	1	541	108	0	7	1	0	0	15	0	0	0	0
4/27/2024	1:30 PM	2	525	115	0	6	1	0	3	12	0	0	0	0
4/27/2024	1:45 PM	1	488	113	0	6	1	0	3	11	0	0	0	0
4/27/2024	2:00 PM	1	474	98	0	2	1	0	3	10	0	0	0	0
4/27/2024	2:15 PM	1	453	100	0	6	0	0	3	7	0	0	0	0
4/27/2024	2:30 PM	1	433	86	0	5	0	0	0	8	0	0	0	0
4/27/2024	2:45 PM	4	473	80	0	4	1	0	0	7	0	0	0	0
4/27/2024	3:00 PM	4	499	91	0	5	1	0	0	6	1	0	0	0
4/27/2024	3:15 PM	4	509	87	0	2	1	0	0	7	1	0	0	0
4/27/2024	3:30 PM	3	499	86	0	3	1	0	0	8	1	0	0	0
4/27/2024	3:45 PM	0	469	84	0	4	0	0	0	8	1	0	0	0
4/27/2024	4:00 PM	0	428	76	0	4	0	0	0	11	0	0	0	0
4/27/2024	4:15 PM	0	416	71	0	3	1	0	0	14	0	0	0	0
4/27/2024	4:30 PM	0	429	62	0	4	1	0	0	12	0	0	0	0
4/27/2024	4:45 PM	0	412	65	0	5	1	0	0	12	0	0	0	0
4/27/2024	5:00 PM	0	385	67	0	4	1	0	0	7	0	0	0	0
4/27/2024	5:15 PM	0	393	69	0	6	0	0	0	4	0	0	0	0
4/27/2024	5:30 PM	0	397	74	0	4	0	0	0	4	0	0	0	0
4/27/2024	5:45 PM	1	392	69	1	2	0	0	0	5	0	0	0	0
4/27/2024	6:00 PM	1	397	65	1	4	0	0	0	7	0	0	0	0
4/27/2024	6:15 PM	1	376	58	1	3	0	0	0	5	0	0	0	0
4/27/2024	6:30 PM	1	354	48	1	5	0	0	0	5	0	0	0	0
4/27/2024	6:45 PM	0	384	54	0	7	0	0	0	5	0	0	0	0
4/27/2024	7:00 PM	0	423	54	0	5	0	0	0	4	0	0	0	0
4/27/2024	7:15 PM	0	424	58	0	4	0	0	0	9	0	0	0	0
4/27/2024	7:30 PM	0	388	63	0	2	1	0	0	8	0	0	0	0
4/27/2024	7:45 PM	0	345	59	0	0	1	0	0	9	0	0	0	0
4/27/2024	8:00 PM	0	297	57	0	1	1	0	0	8	0	0	0	0
4/27/2024	8:15 PM	1	284	49	0	2	1	0	0	3	0	0	0	0
4/27/2024	8:30 PM	1	345	50	0	2	0	0	0	3	0	0	0	0
4/27/2024	8:45 PM	1	408	52	0	6	0	0	0	0	0	0	0	0
4/27/2024	9:00 PM	1	423	50	0	5	0	0	0	1	0	0	0	0
4/27/2024	9:15 PM	0	419	49	1	5	0	0	0	1	0	0	0	0
4/27/2024	9:30 PM	0	398	52	1	5	0	0	0	2	0	0	0	0
4/27/2024	9:45 PM	0	337	49	1	2	0	0	0	3	0	0	0	0
4/27/2024	10:00 PM	0	291	44	1	2	0	0	0	2	0	0	0	0
4/27/2024	10:15 PM	0	251	41	0	1	0	0	0	3	0	0	0	0
4/27/2024	10:30 PM	0	182	30	0	1	0	0	0	4	0	0	0	0
4/27/2024	10:45 PM	0	142	23	0	0	0	0	0	5	0	0	0	0
4/27/2024	11:00 PM	0	140	24	1	0	1	0	0	5	0	0	0	0
4/27/2024	11:15 PM	0	106	18	1	0	1	0	0	4	0	0	0	0
4/27/2024	11:30 PM	0	72	13	1	0	1	0	0	2	0	0	0	0
4/27/2024	11:45 PM	0	40	7	1	0	1	0	0	0	0	0	0	0

Bi-Directional Class Count || SB WB 15min

Columbia, SC

Marr Traffic DATA COLLECTION
www.marrtraffic.com

Site 13
I-26 S/Bound On-Ramp,
south of I-20

Date
Sunday, April 21, 2024

Lat/Long
34.036148°, -81.108200°

Click here for Map

Weather
Cloudy
66°F

Click here for Detailed Weather

0000 - 2400 (Sunday 24h Session) (04-21-2024)
SB WB 15min

	Southbound (Movement 13.1)													15min	60min
Time	1	2	3	4	5	6	7	8	9	10	11	12	13	Total	Total
0000 - 0015	1	18	3	0	0	0	0	0	1	0	0	0	0	**23**	
0015 - 0030	0	21	5	0	0	0	0	0	3	0	0	0	0	**29**	
0030 - 0045	0	15	4	0	0	0	0	0	2	0	0	0	0	**21**	
0045 - 0100	1	22	6	0	0	0	0	0	3	0	0	0	0	**32**	**105**
0100 - 0115	0	17	4	0	0	0	0	0	0	0	0	0	0	**21**	
0115 - 0130	0	12	2	0	0	0	0	0	1	0	0	0	0	**15**	
0130 - 0145	0	12	5	0	0	0	0	0	0	0	0	0	0	**17**	
0145 - 0200	0	6	1	0	0	0	0	0	2	0	0	0	0	**9**	**62**
0200 - 0215	0	14	1	1	0	0	0	0	1	0	0	0	0	**17**	
0215 - 0230	0	8	3	0	0	0	0	0	1	0	0	0	0	**12**	
0230 - 0245	0	9	1	0	0	0	0	0	1	0	0	0	0	**11**	
0245 - 0300	0	7	1	0	0	0	0	0	1	0	0	0	0	**9**	**49**
0300 - 0315	0	5	1	0	0	0	0	0	0	0	0	0	0	**6**	
0315 - 0330	0	8	1	0	1	0	0	0	3	0	0	0	0	**13**	
0330 - 0345	0	5	2	0	0	0	0	0	1	0	0	0	0	**8**	
0345 - 0400	0	8	1	0	0	0	0	0	1	0	0	0	0	**10**	**37**
0400 - 0415	0	1	0	0	0	0	0	0	2	0	0	0	0	**3**	
0415 - 0430	0	6	2	0	0	0	0	0	1	0	0	0	0	**9**	
0430 - 0445	0	7	1	0	0	0	0	0	2	0	0	0	0	**10**	
0445 - 0500	0	8	3	0	0	0	0	0	0	0	0	0	0	**11**	**33**
0500 - 0515	0	3	1	0	0	0	0	0	0	0	0	0	0	**4**	
0515 - 0530	0	6	0	0	0	0	0	0	0	0	0	0	0	**6**	
0530 - 0545	0	8	4	0	0	0	0	0	0	0	0	0	0	**12**	
0545 - 0600	0	10	1	0	0	0	0	0	1	0	0	0	0	**12**	**34**
0600 - 0615	0	11	5	0	0	0	0	0	3	0	0	0	0	**19**	
0615 - 0630	0	12	3	0	0	0	0	1	0	0	0	0	0	**16**	
0630 - 0645	0	19	3	0	0	0	0	0	1	0	0	0	0	**23**	
0645 - 0700	0	16	5	0	0	0	0	0	3	0	0	0	0	**24**	**82**
0700 - 0715	0	21	5	0	0	0	0	0	1	0	0	0	0	**27**	
0715 - 0730	0	33	8	0	0	0	0	0	3	0	0	0	0	**44**	
0730 - 0745	0	24	10	0	0	0	0	0	1	0	0	0	0	**35**	
0745 - 0800	0	47	5	0	0	0	0	0	2	0	0	0	0	**54**	**160**
0800 - 0815	0	29	6	0	0	0	0	0	1	0	0	0	0	**36**	
0815 - 0830	1	36	8	0	0	0	0	0	0	0	0	0	0	**45**	
0830 - 0845	0	34	13	0	0	0	0	0	5	0	0	0	0	**52**	
0845 - 0900	0	60	14	0	1	0	0	0	0	0	0	0	0	**75**	**208**
0900 - 0915	0	62	21	0	0	0	0	0	3	0	0	0	0	**86**	
0915 - 0930	0	52	16	0	1	0	0	0	1	0	0	0	0	**70**	
0930 - 0945	0	52	22	0	0	0	0	0	4	0	0	0	0	**78**	
0945 - 1000	0	77	23	0	0	1	0	0	0	0	0	0	0	**101**	**335**
1000 - 1015	0	64	20	0	0	0	0	0	1	0	0	0	0	**85**	
1015 - 1030	0	82	23	1	0	0	0	0	3	0	1	0	0	**110**	
1030 - 1045	0	101	22	0	1	0	0	0	3	0	0	0	0	**127**	
1045 - 1100	0	107	22	0	1	0	0	0	0	0	0	0	0	**130**	**452**
1100 - 1115	0	84	21	0	0	0	0	0	4	0	0	0	0	**109**	
1115 - 1130	0	87	27	0	0	0	0	1	5	0	0	0	0	**120**	
1130 - 1145	0	104	29	0	0	0	0	0	0	0	0	0	0	**133**	
1145 - 1200	0	127	25	0	0	0	0	0	2	0	0	0	0	**154**	**516**
1200 - 1215	0	149	40	0	0	0	0	0	2	0	0	0	0	**191**	
1215 - 1230	0	121	45	0	0	0	0	0	3	0	0	0	0	**169**	
1230 - 1245	0	109	37	0	1	0	0	0	2	0	0	0	0	**149**	
1245 - 1300	0	104	28	2	1	0	0	0	0	0	0	0	0	**135**	**644**
1300 - 1315	0	117	30	0	0	0	0	0	1	0	0	0	0	**148**	
1315 - 1330	0	131	38	0	0	0	0	0	3	0	0	0	0	**172**	
1330 - 1345	0	129	32	0	0	0	0	0	6	0	0	0	0	**167**	
1345 - 1400	0	131	33	0	0	0	0	0	1	0	0	0	0	**165**	**652**
1400 - 1415	0	110	24	0	0	0	0	0	1	0	0	0	0	**135**	
1415 - 1430	0	104	30	0	0	0	0	0	1	0	0	0	0	**135**	
1430 - 1445	0	111	35	0	1	0	0	0	0	0	0	0	0	**147**	
1445 - 1500	0	118	31	0	0	0	0	0	2	0	0	0	0	**151**	**568**
1500 - 1515	0	91	31	0	0	0	0	0	2	0	0	0	0	**124**	
1515 - 1530	0	82	26	0	0	0	0	0	0	0	0	0	0	**108**	
1530 - 1545	0	104	35	0	1	0	0	0	2	0	0	0	0	**142**	
1545 - 1600	0	99	28	0	1	0	0	0	2	0	0	0	0	**130**	**504**
1600 - 1615	0	100	25	0	0	0	0	0	2	0	0	0	0	**127**	
1615 - 1630	0	102	22	0	1	0	0	0	1	0	0	0	0	**126**	
1630 - 1645	0	87	18	0	3	0	0	0	0	0	0	0	0	**108**	
1645 - 1700	0	98	22	0	2	0	0	0	2	0	0	0	0	**124**	**485**
1700 - 1715	0	102	20	0	1	1	0	0	2	0	0	0	0	**126**	
1715 - 1730	0	91	22	0	0	0	0	0	1	0	0	0	0	**114**	
1730 - 1745	0	84	19	0	0	0	0	0	0	0	0	0	0	**103**	
1745 - 1800	0	80	13	0	0	0	0	0	1	0	0	0	0	**94**	**437**
1800 - 1815	0	90	28	0	0	1	0	0	0	0	0	0	0	**119**	
1815 - 1830	0	72	17	0	0	0	0	0	0	0	0	0	0	**89**	
1830 - 1845	0	73	15	0	0	0	0	0	0	0	0	0	0	**88**	
1845 - 1900	1	59	12	0	1	0	0	0	1	0	0	0	0	**74**	**370**
1900 - 1915	0	52	11	0	2	0	0	1	1	0	0	0	0	**67**	
1915 - 1930	0	68	18	0	0	0	0	0	0	0	0	0	0	**86**	
1930 - 1945	0	48	12	0	0	0	0	0	0	0	0	0	0	**60**	
1945 - 2000	0	76	21	0	0	0	0	0	0	0	0	0	0	**97**	**310**
2000 - 2015	0	51	14	0	0	0	0	0	1	0	0	0	0	**66**	
2015 - 2030	0	34	11	0	1	0	0	0	1	0	0	0	0	**47**	
2030 - 2045	0	25	6	0	1	0	0	0	0	0	0	0	0	**32**	
2045 - 2100	0	41	12	0	1	0	0	0	1	0	0	0	0	**55**	**200**
2100 - 2115	0	34	8	0	1	0	0	0	2	0	0	0	0	**45**	
2115 - 2130	0	24	5	0	0	0	0	0	5	0	0	0	0	**34**	
2130 - 2145	0	27	7	0	1	0	0	0	1	0	0	0	0	**36**	
2145 - 2200	0	28	8	0	0	0	0	0	3	0	0	0	0	**39**	**154**
2200 - 2215	0	28	7	0	0	1	0	0	4	0	1	0	0	**41**	
2215 - 2230	0	18	5	0	0	0	0	0	1	0	0	0	0	**24**	
2230 - 2245	0	14	3	0	0	0	0	0	0	0	0	0	0	**17**	
2245 - 2300	0	15	4	0	0	0	0	0	3	0	0	0	0	**22**	**104**
2300 - 2315	0	14	3	0	0	0	0	0	1	0	0	0	0	**18**	
2315 - 2330	0	17	2	0	0	0	0	0	3	0	0	0	0	**22**	
2330 - 2345	0	15	2	0	0	0	0	0	2	0	0	0	0	**19**	
2345 - 0000	0	11	1	0	0	0	0	0	0	0	0	0	0	**12**	**71**

Session Total	4	5065	1325	4	25	4	0	3	140	0	2	0	0	**6572**
Session Average	0.04	52.76	13.80	0.04	0.26	0.04	0.00	0.03	1.46	0.00	0.02	0.00	0.00	**68.46**
Session Percentage	0.06	77.07	20.16	0.06	0.38	0.06	0.00	0.05	2.13	0.00	0.03	0.00	0.00	

AM Peak Hour	0730 - 0830	0945 - 1045	0930 - 1030	0930 - 1030	0830 - 0930	0900 - 1000	-	0530 - 0630	0830 - 0930	-	0930 - 1030	-	-	**0945 - 1045**
AM Peak Volume	1	324	88	1	2	1	0	1	9	0	1	0	0	**423**

Noon Peak Hour	-	1300 - 1400	1200 - 1300	1200 - 1300	1000 - 1100	-	-	1030 - 1130	1030 - 1130	-	1000 - 1100	-	-	**1145 - 1245**
Noon Peak Volume	0	508	150	2	2	0	0	1	12	0	1	0	0	**663**

PM Peak Hour	1800 - 1900	1530 - 1630	1500 - 1600	-	1615 - 1715	1615 - 1715	-	1815 - 1915	1530 - 1630	-	-	-	-	**1530 - 1630**
PM Peak Volume	1	405	120	0	7	1	0	1	7	0	0	0	0	**525**

Site 13
I-26 S/Bound On-Ramp,
south of I-20

Date
Monday, April 22, 2024

Lat/Long
34.036148°, -81.108200°

Weather
Mostly Cloudy
57°F

Click here for Detailed Weather

0000 - 2400 (Weekday 24h Session) (04-22-2024)
SB WB 15min

	Southbound (Movement 13.1)													15min	60min
Time	1	2	3	4	5	6	7	8	9	10	11	12	13	Total	Total
0000 - 0015	0	14	2	0	0	0	0	0	1	0	0	0	0	**17**	
0015 - 0030	0	16	3	0	0	0	0	0	0	0	0	0	0	**19**	
0030 - 0045	0	7	0	0	0	1	0	0	4	0	0	0	0	**12**	
0045 - 0100	0	6	0	0	0	0	0	0	2	0	0	0	0	**8**	**56**
0100 - 0115	0	4	1	0	0	0	0	0	3	0	0	0	0	**8**	
0115 - 0130	0	5	0	0	0	0	0	0	0	0	0	0	0	**5**	
0130 - 0145	0	4	0	0	0	0	0	0	1	0	0	0	0	**5**	
0145 - 0200	0	2	0	0	0	0	0	0	0	0	0	0	0	**2**	**20**
0200 - 0215	0	4	0	0	0	0	0	0	0	0	0	0	0	**4**	
0215 - 0230	0	3	0	0	0	2	0	0	0	0	0	0	0	**5**	
0230 - 0245	0	4	0	0	1	0	0	1	0	0	0	0	0	**6**	
0245 - 0300	0	3	0	0	3	1	0	1	1	0	0	0	0	**9**	**24**
0300 - 0315	1	4	1	0	0	0	0	0	1	0	0	0	0	**7**	
0315 - 0330	0	5	1	0	0	0	0	0	5	0	0	0	0	**11**	
0330 - 0345	0	11	3	0	0	0	0	0	2	0	0	0	0	**16**	
0345 - 0400	0	7	1	0	1	0	0	0	1	0	0	0	0	**10**	**44**
0400 - 0415	0	4	0	0	0	0	0	0	0	0	0	0	0	**4**	
0415 - 0430	0	9	2	0	0	0	0	0	4	0	0	0	0	**15**	
0430 - 0445	0	12	3	0	0	0	0	0	3	0	0	0	0	**18**	
0445 - 0500	0	18	4	0	0	1	0	0	3	0	0	0	0	**26**	**63**
0500 - 0515	0	19	4	0	0	0	0	0	3	0	0	0	0	**26**	
0515 - 0530	0	21	3	0	0	0	0	0	0	0	0	0	0	**24**	
0530 - 0545	0	31	5	0	1	0	0	0	3	0	0	0	0	**40**	
0545 - 0600	0	39	7	0	0	1	0	0	5	0	0	0	0	**52**	**142**
0600 - 0615	0	37	8	0	0	1	0	0	2	0	0	0	0	**48**	
0615 - 0630	0	60	12	0	0	0	0	0	1	0	0	0	0	**73**	
0630 - 0645	0	73	36	0	5	0	0	1	8	0	0	0	0	**123**	
0645 - 0700	0	80	30	1	1	0	0	0	2	0	0	0	0	**114**	**358**
0700 - 0715	0	102	32	0	3	1	0	1	5	0	0	0	0	**144**	
0715 - 0730	0	152	36	0	4	2	0	0	1	0	0	0	0	**195**	
0730 - 0745	0	143	39	0	3	1	0	1	3	0	0	0	0	**190**	
0745 - 0800	0	151	53	0	3	0	0	0	1	0	0	0	0	**208**	**737**
0800 - 0815	0	143	44	0	6	0	0	0	2	0	0	0	0	**195**	
0815 - 0830	1	120	49	0	1	0	0	0	3	0	0	0	0	**174**	
0830 - 0845	0	85	45	1	5	2	1	0	9	0	0	0	0	**148**	
0845 - 0900	0	109	46	0	6	1	0	0	5	0	0	0	0	**167**	**684**
0900 - 0915	0	67	32	0	3	0	0	1	4	0	0	0	0	**107**	
0915 - 0930	1	92	32	0	10	0	0	1	2	0	0	0	0	**138**	
0930 - 0945	0	72	34	0	5	1	0	2	4	0	0	0	0	**118**	
0945 - 1000	0	92	36	0	6	0	0	0	4	0	0	0	0	**138**	**501**
1000 - 1015	0	84	23	0	2	0	0	2	6	0	0	0	0	**117**	
1015 - 1030	0	89	25	0	2	0	1	2	2	0	0	0	0	**121**	
1030 - 1045	0	80	22	0	3	1	0	1	9	0	0	0	0	**116**	
1045 - 1100	0	104	37	0	2	1	0	2	8	0	0	0	0	**154**	**508**
1100 - 1115	0	85	31	0	4	0	0	0	4	0	0	0	0	**124**	
1115 - 1130	0	88	35	0	6	0	0	0	10	0	0	0	0	**139**	
1130 - 1145	0	73	27	0	3	0	0	0	5	0	0	0	0	**108**	
1145 - 1200	0	83	30	0	3	0	0	0	6	0	0	0	0	**122**	**493**
1200 - 1215	0	97	40	0	5	0	0	0	7	1	0	0	0	**150**	
1215 - 1230	0	83	31	0	5	0	0	0	2	0	0	0	0	**121**	
1230 - 1245	0	99	32	0	2	0	0	1	5	1	0	0	0	**140**	
1245 - 1300	0	92	26	0	4	0	0	1	4	0	0	0	0	**127**	**538**
1300 - 1315	0	81	23	1	3	3	0	2	4	0	0	0	0	**117**	
1315 - 1330	0	96	27	0	1	1	0	0	3	0	0	0	0	**128**	
1330 - 1345	0	97	23	0	2	2	0	0	8	0	0	0	0	**132**	
1345 - 1400	0	86	28	1	2	0	0	0	4	0	0	0	0	**121**	**498**
1400 - 1415	0	75	26	0	3	0	0	0	7	0	0	0	0	**111**	
1415 - 1430	0	85	30	0	1	1	0	0	2	0	0	0	0	**119**	
1430 - 1445	0	96	41	0	5	0	0	1	3	1	0	0	0	**147**	
1445 - 1500	0	124	26	0	2	0	0	0	4	0	0	0	0	**156**	**533**
1500 - 1515	1	98	30	0	2	1	0	0	6	0	0	0	0	**138**	
1515 - 1530	0	110	33	0	3	1	0	1	2	1	0	0	0	**151**	
1530 - 1545	1	125	22	0	0	0	0	0	2	0	0	0	0	**150**	
1545 - 1600	0	129	30	0	2	1	0	2	4	0	0	0	0	**168**	**607**
1600 - 1615	0	163	45	0	3	0	0	3	3	0	0	0	0	**217**	
1615 - 1630	0	174	53	0	2	2	0	0	7	1	0	0	0	**239**	
1630 - 1645	0	133	48	0	3	2	0	0	7	0	0	0	0	**193**	
1645 - 1700	0	127	32	0	3	0	0	0	8	0	0	0	0	**170**	**819**
1700 - 1715	0	111	40	0	3	0	0	1	1	0	1	0	0	**157**	
1715 - 1730	0	118	36	0	1	0	0	0	1	0	0	0	0	**156**	
1730 - 1745	0	124	30	0	1	0	0	0	2	0	0	0	0	**157**	
1745 - 1800	2	122	39	0	2	0	0	1	9	0	0	0	0	**175**	**645**
1800 - 1815	0	102	24	0	0	0	0	0	3	0	0	0	0	**129**	
1815 - 1830	0	93	25	0	0	0	0	0	2	0	0	0	0	**120**	
1830 - 1845	0	90	14	0	1	1	0	0	1	0	0	0	0	**107**	
1845 - 1900	0	78	17	0	1	0	0	0	1	0	0	0	0	**97**	**453**
1900 - 1915	1	68	17	0	0	0	0	0	4	0	0	0	0	**90**	
1915 - 1930	0	81	14	0	2	0	0	0	1	0	0	0	0	**98**	
1930 - 1945	2	67	10	0	0	1	0	0	2	0	1	0	0	**83**	
1945 - 2000	0	58	14	0	2	0	0	0	1	0	0	0	0	**75**	**346**
2000 - 2015	0	55	12	0	1	0	0	0	2	0	0	0	0	**70**	
2015 - 2030	0	42	6	0	0	0	0	0	1	0	0	0	0	**49**	
2030 - 2045	0	48	2	0	0	0	0	0	3	0	0	0	0	**53**	
2045 - 2100	0	57	3	0	0	0	0	0	3	0	0	0	0	**63**	**235**
2100 - 2115	0	52	1	0	0	0	0	0	0	0	0	0	0	**53**	
2115 - 2130	0	43	1	0	0	0	0	0	4	0	0	0	0	**48**	
2130 - 2145	0	35	2	0	0	0	0	0	1	0	0	0	0	**38**	
2145 - 2200	0	29	2	0	0	0	0	0	1	0	0	0	0	**32**	**171**
2200 - 2215	0	27	1	0	0	0	0	0	0	0	1	0	0	**29**	
2215 - 2230	0	18	1	0	1	0	0	0	0	0	2	0	0	**22**	
2230 - 2245	0	20	0	0	0	0	0	0	0	0	0	0	0	**20**	
2245 - 2300	0	28	1	0	1	0	0	0	1	0	0	0	0	**31**	**102**
2300 - 2315	0	26	0	0	0	0	0	0	1	0	0	0	0	**27**	
2315 - 2330	0	21	0	0	0	0	0	0	1	0	0	0	0	**22**	
2330 - 2345	0	9	0	0	1	0	0	0	0	0	0	0	0	**10**	
2345 - 0000	0	9	1	0	0	0	0	0	2	0	0	0	0	**12**	**71**

Session Total	10	6317	1793	4	162	33	2	29	288	5	5	0	0	**8648**
Session Average	0.10	65.80	18.68	0.04	1.69	0.34	0.02	0.30	3.00	0.05	0.05	0.00	0.00	**90.08**
Session Percentage	0.12	73.05	20.73	0.05	1.87	0.38	0.02	0.34	3.33	0.06	0.06	0.00	0.00	

AM Peak Hour	0730 - 0830	0715 - 0815	0745 - 0845	0600 - 0700	0830 - 0930	0645 - 0745	0745 - 0845	0930 - 1030	0815 - 0915	-	-	-	-	**0715 - 0815**
AM Peak Volume	1	589	191	1	24	4	1	6	21	0	0	0	0	**788**

Noon Peak Hour	1445 - 1545	1445 - 1545	1145 - 1245	1300 - 1400	1115 - 1215	1245 - 1345	1000 - 1100	1000 - 1100	1030 - 1130	1145 - 1245	-	-	-	**1445 - 1545**
Noon Peak Volume	2	457	133	2	17	6	1	7	31	2	0	0	0	**595**

PM Peak Hour	1845 - 1945	1545 - 1645	1600 - 1700	-	1600 - 1700	1545 - 1645	-	1515 - 1615	1600 - 1700	1500 - 1600	1615 - 1715	-	-	**1600 - 1700**
PM Peak Volume	3	599	178	0	11	5	0	6	25	1	1	0	0	**819**

Site 13
I-26 S/Bound On-Ramp,
south of I-20

Date
Tuesday, April 23, 2024

Lat/Long
34.036148°, -81.108200°

Weather
Fair
58°F

Click here for Detailed Weather

0000 - 2400 (Weekday 24h Session) (04-23-2024)
SB WB 15min

	Southbound (Movement 13.1)													15min	60min
TIME	1	2	3	4	5	6	7	8	9	10	11	12	13	Total	Total
0000 - 0015	0	7	1	0	0	0	0	0	1	0	0	0	0	**9**	
0015 - 0030	0	9	1	0	0	0	0	0	3	0	1	0	0	**14**	
0030 - 0045	0	5	1	0	0	0	0	0	1	0	0	0	0	**7**	
0045 - 0100	0	8	1	0	0	0	0	0	1	0	0	0	0	**10**	**40**
0100 - 0115	0	5	1	0	1	0	0	0	1	0	0	0	0	**8**	
0115 - 0130	0	4	1	0	0	0	0	0	2	0	0	0	0	**7**	
0130 - 0145	0	6	2	0	0	0	0	0	1	0	1	0	0	**10**	
0145 - 0200	0	2	1	0	0	0	0	0	4	0	0	0	0	**7**	**32**
0200 - 0215	0	5	0	0	0	0	0	0	4	0	0	0	0	**9**	
0215 - 0230	0	3	1	0	1	0	0	0	3	0	0	0	0	**8**	
0230 - 0245	0	4	1	0	0	0	0	0	1	0	0	0	0	**6**	
0245 - 0300	0	5	1	0	0	0	0	0	2	0	0	0	0	**8**	**31**
0300 - 0315	0	5	1	0	0	0	0	0	0	0	0	0	0	**6**	
0315 - 0330	0	4	2	0	0	0	0	0	3	0	0	0	0	**9**	
0330 - 0345	0	8	3	0	0	0	0	0	3	0	1	0	0	**15**	
0345 - 0400	0	13	2	0	0	0	0	0	1	0	0	0	0	**16**	**46**
0400 - 0415	0	11	2	0	0	0	0	0	1	0	0	0	0	**14**	
0415 - 0430	0	7	2	0	0	0	0	0	1	0	0	0	0	**10**	
0430 - 0445	0	11	3	0	1	0	0	0	4	0	0	0	0	**19**	
0445 - 0500	0	16	4	0	0	0	0	0	2	0	0	0	0	**22**	**65**
0500 - 0515	0	12	5	0	1	0	0	1	4	0	0	0	0	**23**	
0515 - 0530	0	15	4	0	0	0	0	1	4	0	0	0	0	**24**	
0530 - 0545	0	29	10	0	2	0	0	2	3	0	0	0	0	**46**	
0545 - 0600	0	31	8	0	0	0	0	1	1	0	0	0	0	**41**	**134**
0600 - 0615	0	32	19	0	0	0	0	0	3	0	0	0	0	**54**	
0615 - 0630	0	44	21	0	2	0	0	1	3	0	0	0	0	**71**	
0630 - 0645	0	77	32	0	4	1	0	0	8	0	0	0	0	**122**	
0645 - 0700	0	75	29	1	2	2	0	0	6	0	0	0	0	**115**	**362**
0700 - 0715	0	95	28	0	4	1	0	0	3	0	0	0	0	**131**	
0715 - 0730	0	153	45	0	1	1	0	0	2	0	0	0	0	**202**	
0730 - 0745	0	92	26	0	1	0	0	0	2	0	0	0	0	**121**	
0745 - 0800	0	136	32	1	2	0	0	0	4	0	0	0	0	**175**	**629**
0800 - 0815	0	141	34	0	2	0	0	0	6	0	0	0	0	**183**	
0815 - 0830	1	130	28	0	3	0	0	1	9	0	0	0	0	**172**	
0830 - 0845	1	128	32	0	2	2	0	0	3	0	0	0	0	**168**	
0845 - 0900	0	131	34	0	7	3	0	0	5	0	0	0	0	**180**	**703**
0900 - 0915	0	77	35	0	4	0	0	3	6	0	0	0	0	**125**	
0915 - 0930	0	91	32	0	11	0	0	1	9	0	0	0	0	**144**	
0930 - 0945	0	88	25	0	2	3	0	0	3	0	1	0	0	**122**	
0945 - 1000	2	95	32	0	7	0	0	0	5	0	0	0	0	**141**	**532**
1000 - 1015	0	76	34	0	2	3	0	0	8	0	0	0	0	**123**	
1015 - 1030	0	82	29	0	4	1	0	0	7	0	0	0	0	**123**	
1030 - 1045	0	83	30	0	1	2	0	0	4	0	0	0	0	**120**	
1045 - 1100	0	90	40	0	3	1	0	0	6	0	0	0	0	**140**	**506**
1100 - 1115	0	77	29	0	1	0	0	2	9	0	0	0	0	**118**	
1115 - 1130	1	79	34	1	6	0	0	0	5	0	0	0	0	**126**	
1130 - 1145	0	93	22	0	5	0	0	0	6	0	0	0	0	**126**	
1145 - 1200	0	94	35	0	0	1	0	0	4	0	0	0	0	**134**	**504**
1200 - 1215	1	96	30	0	3	0	0	0	9	0	0	0	0	**139**	
1215 - 1230	0	99	35	0	4	1	0	0	5	0	0	0	0	**144**	
1230 - 1245	1	88	21	0	1	3	0	0	5	0	0	0	0	**119**	
1245 - 1300	0	87	27	0	3	1	0	1	6	0	0	0	0	**125**	**527**
1300 - 1315	1	95	25	0	2	2	0	1	4	0	0	0	0	**130**	
1315 - 1330	0	101	34	0	4	0	0	0	7	0	0	0	0	**146**	
1330 - 1345	0	95	30	0	0	0	0	0	5	0	0	0	0	**130**	
1345 - 1400	0	85	26	0	4	1	0	0	6	0	0	0	0	**122**	**528**
1400 - 1415	1	87	38	0	5	0	0	0	7	0	0	0	0	**138**	
1415 - 1430	0	95	31	1	3	1	0	0	7	1	0	0	0	**139**	
1430 - 1445	0	99	22	0	2	1	0	0	6	0	0	0	0	**130**	
1445 - 1500	0	138	46	0	4	0	0	0	6	0	0	0	0	**194**	**601**
1500 - 1515	1	122	28	0	3	0	0	0	5	1	0	0	0	**160**	
1515 - 1530	0	110	48	0	5	0	0	0	5	0	0	0	0	**168**	
1530 - 1545	1	116	21	0	3	2	0	2	3	0	0	0	0	**148**	
1545 - 1600	0	124	24	0	3	2	0	1	4	0	0	0	0	**158**	**634**
1600 - 1615	0	129	40	0	1	0	0	0	3	0	0	0	0	**173**	
1615 - 1630	0	117	39	0	2	0	0	1	7	1	0	0	0	**167**	
1630 - 1645	0	146	32	0	1	0	0	0	2	0	0	0	0	**181**	
1645 - 1700	0	125	30	0	1	0	0	0	4	0	0	0	0	**160**	**681**
1700 - 1715	0	125	45	0	3	0	0	0	2	0	0	0	0	**175**	
1715 - 1730	0	143	34	0	1	0	0	0	1	0	0	0	0	**179**	
1730 - 1745	0	128	45	0	2	0	0	0	5	0	0	0	0	**180**	
1745 - 1800	0	119	30	0	3	1	0	0	2	0	0	0	0	**155**	**689**
1800 - 1815	0	95	33	0	1	0	0	0	4	0	0	0	0	**133**	
1815 - 1830	0	99	28	0	3	0	0	1	2	0	0	0	0	**133**	
1830 - 1845	0	78	17	0	1	0	0	0	3	0	0	0	0	**99**	
1845 - 1900	0	82	21	0	0	0	0	1	3	0	0	0	0	**107**	**472**
1900 - 1915	0	85	15	1	0	1	0	0	6	0	0	0	0	**108**	
1915 - 1930	1	76	17	0	1	0	0	0	0	0	0	0	0	**95**	
1930 - 1945	0	66	24	0	2	0	0	0	0	0	0	0	0	**92**	
1945 - 2000	0	71	14	0	1	0	0	0	4	0	1	0	0	**91**	**386**
2000 - 2015	0	43	12	1	1	0	0	0	2	0	0	0	0	**59**	
2015 - 2030	0	48	11	0	1	0	0	0	3	0	0	0	0	**63**	
2030 - 2045	0	49	11	0	1	0	0	0	1	0	0	0	0	**62**	
2045 - 2100	0	39	9	0	0	0	0	0	1	0	0	0	0	**49**	**233**
2100 - 2115	1	52	11	0	0	0	0	0	0	0	0	0	0	**64**	
2115 - 2130	0	42	9	1	1	0	0	0	0	0	0	0	0	**53**	
2130 - 2145	0	42	10	0	0	0	0	0	0	0	0	0	0	**52**	
2145 - 2200	0	27	7	1	0	0	0	0	2	0	0	0	0	**37**	**206**
2200 - 2215	0	31	7	0	1	0	0	0	1	0	0	0	0	**40**	
2215 - 2230	0	30	4	0	1	0	0	0	3	0	1	0	0	**39**	
2230 - 2245	0	21	3	0	1	0	0	0	0	0	0	0	0	**25**	
2245 - 2300	0	21	4	0	0	0	0	0	0	0	0	0	0	**25**	**129**
2300 - 2315	0	20	5	0	0	0	0	0	3	0	0	0	0	**28**	
2315 - 2330	0	19	3	0	0	0	0	0	1	0	0	0	0	**23**	
2330 - 2345	0	8	1	0	0	1	0	0	4	0	0	0	0	**14**	
2345 - 0000	0	7	1	0	0	0	0	0	1	0	0	0	0	**9**	**74**

Session Total	13	6304	1853	8	161	38	0	21	337	3	6	0	0	**8744**
Session Average	0.14	65.67	19.30	0.08	1.68	0.40	0.00	0.22	3.51	0.03	0.06	0.00	0.00	**91.08**
Session Percentage	0.15	72.10	21.19	0.09	1.84	0.43	0.00	0.24	3.85	0.03	0.07	0.00	0.00	

AM Peak Hour	0745 - 0845	0745 - 0845	0715 - 0815	0600 - 0700	0830 - 0930	0930 - 1030	-	0500 - 0600	0915 - 1015	-	0845 - 0945	-	-	**0800 - 0900**
AM Peak Hour Volume	2	535	137	1	24	7	0	5	25	0	1	0	0	**703**

Noon Peak Hour	1115 - 1215	1445 - 1545	1430 - 1530	1030 - 1130	1045 - 1145	1000 - 1100	-	1015 - 1115	1015 - 1115	1415 - 1515	-	-	-	**1445 - 1545**
Noon Peak Hour Volume	2	486	144	1	15	7	0	2	26	2	0	0	0	**670**

PM Peak Hour	1500 - 1600	1630 - 1730	1645 - 1745	1815 - 1915	1500 - 1600	1500 - 1600	-	1530 - 1630	1500 - 1600	1500 - 1600	1900 - 2000	-	-	**1630 - 1730**
PM Peak Hour Volume	2	539	154	1	14	4	0	4	17	1	1	0	0	**695**

Site 13
I-26 S/Bound On-Ramp,
south of I-20

Date
Wednesday, April 24, 2024

Lat/Long
34.036148°, -81.108200°

Weather
Fair
66°F

Click here for Detailed Weather

0000 - 2400 (Weekday 24h Session) (04-24-2024)
SB WB 15min

	Southbound (Movement 13.1)													15min	60min
TIME	1	2	3	4	5	6	7	8	9	10	11	12	13	Total	Total
0000 - 0015	0	9	0	0	0	0	0	0	8	0	0	0	0	**17**	
0015 - 0030	0	6	3	0	0	0	0	0	3	0	0	0	0	**12**	
0030 - 0045	0	8	1	0	0	0	0	0	0	0	0	0	0	**9**	
0045 - 0100	0	4	2	0	0	0	0	0	3	0	0	0	0	**9**	**47**
0100 - 0115	0	3	0	0	0	0	0	0	1	0	0	0	0	**4**	
0115 - 0130	0	3	1	0	0	0	0	0	3	0	1	0	0	**8**	
0130 - 0145	0	3	1	0	1	0	0	0	2	0	0	0	0	**7**	
0145 - 0200	0	7	0	0	0	0	0	0	0	0	0	0	0	**7**	**26**
0200 - 0215	0	2	1	0	0	0	0	0	4	0	0	0	0	**7**	
0215 - 0230	0	6	1	0	0	0	0	0	0	0	0	0	0	**7**	
0230 - 0245	0	5	0	0	0	0	0	0	1	0	1	0	0	**7**	
0245 - 0300	0	2	0	0	0	0	0	0	4	0	0	0	0	**6**	**27**
0300 - 0315	1	5	0	0	0	0	0	0	1	0	0	0	0	**7**	
0315 - 0330	0	4	1	0	0	0	0	0	4	0	0	0	0	**9**	
0330 - 0345	0	5	1	0	0	0	0	0	1	0	1	0	0	**8**	
0345 - 0400	0	14	2	0	0	0	0	0	2	0	0	0	0	**18**	**42**
0400 - 0415	0	9	1	0	0	0	0	0	3	0	0	0	0	**13**	
0415 - 0430	0	8	1	0	0	0	0	0	1	0	0	0	0	**10**	
0430 - 0445	0	8	6	0	1	0	0	0	1	0	1	0	0	**17**	
0445 - 0500	0	14	7	0	0	0	0	0	5	0	0	0	0	**26**	**66**
0500 - 0515	0	10	10	0	2	0	0	0	3	0	0	0	0	**25**	
0515 - 0530	0	20	9	0	2	0	0	0	4	0	0	0	0	**35**	
0530 - 0545	0	31	9	0	1	0	0	0	4	0	0	0	0	**45**	
0545 - 0600	0	35	11	0	3	0	0	0	4	0	0	0	0	**53**	**158**
0600 - 0615	0	30	16	0	0	0	0	0	3	0	0	0	0	**49**	
0615 - 0630	0	42	24	0	0	0	0	0	6	0	0	0	0	**72**	
0630 - 0645	0	75	24	0	2	4	0	1	1	0	0	0	0	**107**	
0645 - 0700	0	81	43	1	2	2	0	0	5	0	0	0	0	**134**	**362**
0700 - 0715	0	110	38	0	2	2	0	0	3	0	0	0	0	**155**	
0715 - 0730	1	117	48	0	3	2	0	1	4	0	0	0	0	**176**	
0730 - 0745	0	149	51	0	4	0	0	1	4	0	0	0	0	**209**	
0745 - 0800	0	158	46	0	3	2	0	0	4	0	0	0	0	**213**	**753**
0800 - 0815	0	134	44	0	6	4	0	0	1	1	0	0	0	**190**	
0815 - 0830	0	105	40	2	4	0	0	1	3	0	0	0	0	**155**	
0830 - 0845	0	110	46	0	4	1	0	1	5	0	0	0	0	**167**	
0845 - 0900	1	102	51	0	8	1	0	0	6	0	0	0	0	**169**	**681**
0900 - 0915	0	89	36	0	7	2	0	0	3	0	0	0	0	**137**	
0915 - 0930	1	91	35	0	7	0	0	1	0	0	0	0	0	**135**	
0930 - 0945	0	97	35	0	1	1	0	0	3	0	0	0	0	**137**	
0945 - 1000	0	115	31	0	5	1	0	1	8	0	0	0	0	**161**	**570**
1000 - 1015	0	85	26	0	2	0	0	1	7	0	0	0	0	**121**	
1015 - 1030	1	93	34	0	6	1	0	0	5	0	0	0	0	**140**	
1030 - 1045	0	100	36	0	3	1	0	1	3	0	0	0	0	**144**	
1045 - 1100	0	103	29	0	3	1	0	0	3	0	0	0	0	**139**	**544**
1100 - 1115	0	90	24	0	2	2	0	1	6	0	0	0	0	**125**	
1115 - 1130	0	113	35	0	3	0	0	1	5	0	0	0	0	**157**	
1130 - 1145	0	70	39	0	3	0	0	2	8	1	0	0	0	**123**	
1145 - 1200	0	101	34	0	2	0	0	2	1	0	0	0	0	**140**	**545**
1200 - 1215	0	92	37	0	4	0	0	0	1	0	0	0	0	**134**	
1215 - 1230	0	110	26	0	3	1	0	1	6	0	0	0	0	**147**	
1230 - 1245	0	96	26	0	3	1	0	1	3	0	0	0	0	**130**	
1245 - 1300	2	112	30	0	1	0	0	1	6	0	0	0	0	**152**	**563**
1300 - 1315	0	85	27	3	2	1	0	0	11	0	0	0	0	**129**	
1315 - 1330	0	97	31	0	5	0	0	1	5	0	0	0	0	**139**	
1330 - 1345	2	106	24	0	3	1	0	1	6	0	0	0	0	**143**	
1345 - 1400	0	103	35	0	5	1	0	0	5	1	0	0	0	**150**	**561**
1400 - 1415	0	88	27	1	1	0	0	0	4	0	0	0	0	**121**	
1415 - 1430	0	95	18	0	4	0	0	0	6	0	0	0	0	**123**	
1430 - 1445	0	108	28	0	1	0	0	0	1	0	0	0	0	**138**	
1445 - 1500	0	98	24	0	0	0	0	0	3	0	0	0	0	**125**	**507**
1500 - 1515	0	104	33	0	0	2	0	0	5	0	0	0	0	**144**	
1515 - 1530	0	117	35	0	3	1	0	1	4	0	0	0	0	**161**	
1530 - 1545	1	141	34	0	2	1	0	0	5	1	0	0	0	**185**	
1545 - 1600	0	131	30	1	3	0	0	1	3	0	0	0	0	**169**	**659**
1600 - 1615	0	144	45	0	1	0	0	0	3	0	0	0	0	**193**	
1615 - 1630	0	126	36	0	1	0	0	1	3	0	0	0	0	**167**	
1630 - 1645	0	122	35	0	3	0	0	0	2	0	0	0	0	**162**	
1645 - 1700	0	145	37	0	0	0	0	0	3	0	0	0	0	**185**	**707**
1700 - 1715	0	142	43	0	2	1	0	0	3	0	0	0	0	**191**	
1715 - 1730	0	157	40	0	3	3	2	1	3	0	0	0	0	**209**	
1730 - 1745	1	133	37	0	3	0	0	0	3	0	0	0	0	**177**	
1745 - 1800	0	125	22	0	2	0	0	0	1	0	0	0	0	**150**	**727**
1800 - 1815	1	114	27	0	1	1	0	0	0	1	0	0	0	**145**	
1815 - 1830	0	100	25	0	1	0	0	1	5	0	0	0	0	**132**	
1830 - 1845	0	106	18	0	3	0	0	0	4	1	0	0	0	**132**	
1845 - 1900	1	94	23	0	1	1	0	0	2	0	0	0	0	**122**	**531**
1900 - 1915	0	81	12	0	0	0	0	0	2	0	0	0	0	**95**	
1915 - 1930	1	82	18	0	1	0	0	0	2	0	0	0	0	**104**	
1930 - 1945	0	65	15	0	3	0	0	0	3	0	1	0	0	**87**	
1945 - 2000	0	74	12	1	1	0	0	0	2	0	0	0	0	**90**	**376**
2000 - 2015	2	60	15	0	0	1	0	0	2	0	0	1	0	**81**	
2015 - 2030	0	64	15	0	0	0	0	0	0	0	0	0	0	**79**	
2030 - 2045	0	58	13	0	0	0	0	0	3	0	0	0	0	**74**	
2045 - 2100	0	40	10	0	0	0	0	0	2	0	0	0	0	**52**	**286**
2100 - 2115	0	37	8	0	0	0	0	0	2	0	0	0	0	**47**	
2115 - 2130	0	33	7	0	0	0	0	0	0	0	1	0	0	**41**	
2130 - 2145	0	32	6	0	2	0	0	0	6	0	0	0	0	**46**	
2145 - 2200	0	20	3	0	0	0	0	0	1	0	0	0	0	**24**	**158**
2200 - 2215	0	32	8	0	0	0	0	0	1	0	1	0	0	**42**	
2215 - 2230	0	25	6	0	0	0	0	0	0	0	1	0	0	**32**	
2230 - 2245	0	24	6	0	0	0	0	0	3	0	2	0	0	**35**	
2245 - 2300	0	20	5	1	0	0	0	0	1	0	1	0	0	**28**	**137**
2300 - 2315	0	17	2	0	1	0	0	0	1	0	0	0	0	**21**	
2315 - 2330	0	19	3	0	0	0	0	0	1	0	0	0	0	**23**	
2330 - 2345	0	14	1	0	0	0	0	0	1	0	0	0	0	**16**	
2345 - 0000	0	15	1	0	0	0	0	0	0	0	1	0	0	**17**	**77**

Session Total	16	6584	1952	10	161	43	2	25	298	6	12	1	0	**9110**
Session Average	0.17	68.58	20.33	0.10	1.68	0.45	0.02	0.26	3.10	0.06	0.13	0.01	0.00	**94.90**
Session Percentage	0.18	72.27	21.43	0.11	1.77	0.47	0.02	0.27	3.27	0.07	0.13	0.01	0.00	

AM Peak Hour	0830 - 0930	0715 - 0815	0715 - 0815	0730 - 0830	0830 - 0930	0630 - 0730	-	0915 - 1015	0930 - 1030	0715 - 0815	-	-	-	**0715 - 0815**
AM Peak Hour Volume	2	558	189	2	26	10	0	3	23	1	0	0	0	**788**

Noon Peak Hour	1245 - 1345	1445 - 1545	1115 - 1215	1215 - 1315	1300 - 1400	1015 - 1115	-	1100 - 1200	1245 - 1345	1045 - 1145	-	-	-	**1445 - 1545**
Noon Peak Hour Volume	4	460	145	3	15	5	0	6	28	1	0	0	0	**615**

PM Peak Hour	1915 - 2015	1645 - 1745	1645 - 1745	1500 - 1600	1700 - 1800	1500 - 1600	1630 - 1730	1500 - 1600	1500 - 1600	1745 - 1845	1845 - 1945	1915 - 2015	-	**1645 - 1745**
PM Peak Hour Volume	3	577	157	1	10	4	2	2	17	2	1	1	0	**762**

Site 13
I-26 S/Bound On-Ramp,
south of I-20

Date
Thursday, April 25, 2024

Lat/Long
34.036148°, -81.108200°

Weather
Fair
67°F

Click here for Detailed Weather

0000 - 2400 (Weekday 24h Session) (04-25-2024)
SB WB 15min

	Southbound (Movement 13.1)													15min	60min
TIME	1	2	3	4	5	6	7	8	9	10	11	12	13	Total	Total
0000 - 0015	0	7	0	0	0	0	0	1	1	0	0	0	0	**9**	
0015 - 0030	0	7	1	0	0	0	0	0	3	0	0	0	0	**11**	
0030 - 0045	0	6	0	0	0	0	0	0	1	0	0	0	0	**7**	
0045 - 0100	0	8	3	0	0	0	0	0	3	0	0	0	0	**14**	**41**
0100 - 0115	0	9	3	0	0	0	0	0	3	0	1	0	0	**16**	
0115 - 0130	0	7	0	0	0	0	0	0	1	0	0	0	0	**8**	
0130 - 0145	0	5	0	0	0	0	0	0	3	0	2	0	0	**10**	
0145 - 0200	0	6	1	0	0	0	0	0	0	0	0	0	0	**7**	**41**
0200 - 0215	0	7	1	0	0	0	0	0	1	0	0	0	0	**9**	
0215 - 0230	0	4	1	0	0	0	0	0	3	0	0	0	0	**8**	
0230 - 0245	0	5	3	0	0	0	0	0	1	0	1	0	0	**10**	
0245 - 0300	0	1	1	0	0	0	0	0	1	0	0	0	0	**3**	**30**
0300 - 0315	1	8	2	0	0	0	0	0	6	0	0	0	0	**17**	
0315 - 0330	0	5	1	0	1	1	0	0	1	0	0	0	0	**9**	
0330 - 0345	0	7	5	0	1	0	0	0	3	0	1	0	0	**17**	
0345 - 0400	0	11	3	0	0	0	0	0	4	0	0	0	0	**18**	**61**
0400 - 0415	0	9	1	0	0	0	0	0	3	0	0	0	0	**13**	
0415 - 0430	0	7	5	0	1	0	0	0	2	0	0	0	0	**15**	
0430 - 0445	0	12	4	0	0	0	0	0	1	0	0	0	0	**17**	
0445 - 0500	0	17	4	0	0	0	0	0	2	0	0	0	0	**23**	**68**
0500 - 0515	0	9	11	0	0	1	0	0	1	0	0	0	0	**22**	
0515 - 0530	0	21	14	0	0	1	0	0	4	0	0	0	0	**40**	
0530 - 0545	0	28	9	0	1	0	0	0	2	0	0	0	0	**40**	
0545 - 0600	0	29	15	0	1	0	0	0	5	0	0	0	0	**50**	**152**
0600 - 0615	1	31	23	0	2	0	0	0	1	0	0	0	0	**58**	
0615 - 0630	0	50	31	0	0	0	0	1	10	0	0	0	0	**92**	
0630 - 0645	0	77	16	0	1	0	1	0	4	0	0	0	0	**99**	
0645 - 0700	0	89	31	1	2	1	0	0	5	0	0	0	0	**129**	**378**
0700 - 0715	0	94	37	0	3	0	1	0	1	0	0	0	0	**136**	
0715 - 0730	2	141	40	0	2	0	0	1	5	0	0	0	0	**191**	
0730 - 0745	0	147	37	1	6	0	0	0	6	1	0	0	0	**198**	
0745 - 0800	0	137	48	0	1	0	0	0	3	0	0	0	0	**189**	**714**
0800 - 0815	1	154	39	0	1	0	0	1	3	0	0	0	0	**199**	
0815 - 0830	1	133	41	0	3	1	0	1	5	0	0	0	0	**185**	
0830 - 0845	0	109	51	0	5	1	0	0	1	0	0	0	0	**167**	
0845 - 0900	3	116	52	0	10	1	0	2	2	0	0	0	0	**186**	**737**
0900 - 0915	0	96	40	0	10	0	0	1	5	0	0	0	0	**152**	
0915 - 0930	0	91	39	0	2	1	0	1	8	0	0	0	0	**142**	
0930 - 0945	0	107	29	0	2	0	0	0	6	0	0	0	0	**144**	
0945 - 1000	0	88	26	0	1	1	0	0	9	0	0	0	0	**125**	**563**
1000 - 1015	0	82	33	0	2	1	0	1	7	0	0	0	0	**126**	
1015 - 1030	1	92	31	0	2	0	0	1	11	0	0	0	0	**138**	
1030 - 1045	0	119	41	0	3	2	1	1	16	0	0	0	0	**183**	
1045 - 1100	0	94	36	0	0	1	0	1	5	0	0	0	0	**137**	**584**
1100 - 1115	0	96	22	0	2	1	0	0	3	0	0	0	0	**124**	
1115 - 1130	2	110	33	0	4	0	0	0	6	1	0	0	0	**156**	
1130 - 1145	1	81	34	0	2	1	0	0	7	0	0	0	0	**126**	
1145 - 1200	0	96	38	0	3	0	0	1	2	0	0	0	0	**140**	**546**
1200 - 1215	0	92	28	0	2	0	0	2	7	0	0	0	0	**131**	
1215 - 1230	0	88	37	0	3	0	1	0	5	0	0	0	0	**134**	
1230 - 1245	0	113	37	0	2	0	0	2	4	0	0	0	0	**158**	
1245 - 1300	0	100	36	0	7	1	0	1	4	0	0	0	0	**149**	**572**
1300 - 1315	0	94	40	0	4	0	0	1	4	0	0	0	0	**143**	
1315 - 1330	0	104	14	0	7	0	0	0	5	0	0	0	0	**130**	
1330 - 1345	1	93	24	0	3	2	0	1	8	0	0	0	0	**132**	
1345 - 1400	0	110	29	0	3	1	0	0	5	0	0	0	0	**148**	**553**
1400 - 1415	0	104	24	1	3	0	0	0	2	0	0	0	0	**134**	
1415 - 1430	0	121	35	0	2	0	0	1	6	0	0	0	0	**165**	
1430 - 1445	0	107	29	0	2	1	0	1	3	0	0	0	0	**143**	
1445 - 1500	1	106	34	1	4	1	0	0	1	0	0	0	0	**148**	**590**
1500 - 1515	0	109	26	0	0	1	0	1	4	0	0	0	0	**141**	
1515 - 1530	0	96	39	0	2	0	0	1	1	0	0	0	0	**139**	
1530 - 1545	0	135	29	0	2	0	0	1	6	0	0	0	0	**173**	
1545 - 1600	0	131	43	0	0	0	0	0	4	0	0	0	0	**178**	**631**
1600 - 1615	0	121	44	0	4	0	0	0	7	0	0	0	0	**176**	
1615 - 1630	0	131	39	1	0	0	0	1	3	0	0	0	0	**175**	
1630 - 1645	0	154	29	0	1	1	0	0	3	0	0	0	0	**188**	
1645 - 1700	1	131	34	0	4	0	0	0	2	0	0	0	0	**172**	**711**
1700 - 1715	0	139	37	0	4	0	0	0	1	0	0	0	0	**181**	
1715 - 1730	0	178	39	0	2	0	0	0	4	0	0	0	0	**223**	
1730 - 1745	1	116	41	0	3	0	0	0	2	0	0	0	0	**163**	
1745 - 1800	0	112	34	0	1	0	0	0	4	0	0	0	0	**151**	**718**
1800 - 1815	0	126	32	0	3	0	0	0	4	0	0	0	0	**165**	
1815 - 1830	1	109	28	0	1	0	0	2	2	0	0	0	0	**143**	
1830 - 1845	0	102	27	0	1	1	0	0	3	0	0	0	0	**134**	
1845 - 1900	0	88	11	0	2	0	0	0	2	0	0	0	0	**103**	**545**
1900 - 1915	0	82	17	0	2	0	0	0	1	0	0	0	0	**102**	
1915 - 1930	0	90	17	0	1	0	0	0	2	0	0	0	0	**110**	
1930 - 1945	1	89	18	0	2	0	0	0	2	0	1	0	0	**113**	
1945 - 2000	0	56	13	0	4	0	0	1	1	0	0	0	0	**75**	**400**
2000 - 2015	0	63	12	0	1	0	0	0	2	0	0	0	0	**78**	
2015 - 2030	0	66	11	0	0	0	0	0	1	0	0	0	0	**78**	
2030 - 2045	0	58	19	0	0	0	0	0	1	0	0	0	0	**78**	
2045 - 2100	0	29	12	0	0	0	0	0	1	0	0	0	0	**42**	**276**
2100 - 2115	0	40	13	0	0	0	0	0	2	0	0	0	0	**55**	
2115 - 2130	0	36	12	0	0	0	0	0	1	0	1	0	0	**50**	
2130 - 2145	0	31	12	0	0	0	0	0	1	0	0	0	0	**44**	
2145 - 2200	0	35	13	0	0	0	0	1	2	0	0	0	0	**51**	**200**
2200 - 2215	0	30	11	0	1	0	0	0	2	0	0	0	0	**44**	
2215 - 2230	0	32	7	0	0	0	0	0	2	0	3	0	0	**44**	
2230 - 2245	0	26	5	0	0	0	0	0	1	0	0	0	0	**32**	
2245 - 2300	0	19	5	0	0	0	0	0	2	0	1	0	0	**27**	**147**
2300 - 2315	0	18	5	0	0	2	0	0	2	0	0	0	0	**27**	
2315 - 2330	0	20	3	0	0	0	0	0	0	0	1	0	0	**24**	
2330 - 2345	0	15	1	0	0	0	0	0	1	0	0	0	0	**17**	
2345 - 0000	0	10	2	0	0	0	0	0	0	0	0	0	0	**12**	**80**

Session Total	19	6720	2043	5	157	26	4	31	319	2	12	0	0	**9338**
Session Average	0.20	70.00	21.28	0.05	1.64	0.27	0.04	0.32	3.32	0.02	0.13	0.00	0.00	**97.27**
Session Percentage	0.20	71.96	21.88	0.05	1.68	0.28	0.04	0.33	3.42	0.02	0.13	0.00	0.00	

AM Peak Hour	0800 - 0900	0715 - 0815	0815 - 0915	0645 - 0745	0815 - 0915	0945 - 1045	0615 - 0715	0800 - 0900	0945 - 1045	0645 - 0745	-	-	-	**0715 - 0815**
AM Peak Hour Volume	5	579	184	2	28	4	2	4	43	1	0	0	0	**777**

Noon Peak Hour	1045 - 1145	1445 - 1545	1215 - 1315	1400 - 1500	1245 - 1345	1000 - 1100	1000 - 1100	1145 - 1245	1000 - 1100	1030 - 1130	-	-	-	**1445 - 1545**
Noon Peak Hour Volume	3	446	150	2	21	4	1	5	39	1	0	0	0	**601**

PM Peak Hour	1645 - 1745	1630 - 1730	1515 - 1615	1530 - 1630	1645 - 1745	1500 - 1600	-	1500 - 1600	1530 - 1630	-	1845 - 1945	-	-	**1630 - 1730**
PM Peak Hour Volume	2	602	155	1	13	1	0	3	20	0	1	0	0	**764**

Site 13
I-26 S/Bound On-Ramp,
south of I-20

Date
Friday, April 26, 2024

Lat/Long
34.036148°, -81.108200°

Weather
Cloudy
69°F

Click here for Detailed Weather

0000 - 2400 (Weekday 24h Session) (04-26-2024)
SB WB 15min

	Southbound (Movement 13.1)													15min	60min
TIME	1	2	3	4	5	6	7	8	9	10	11	12	13	Total	Total
0000 - 0015	0	8	1	0	0	0	0	0	2	0	0	0	0	**11**	
0015 - 0030	0	7	2	0	0	0	0	0	0	0	0	0	0	**9**	
0030 - 0045	0	10	2	0	0	0	0	0	2	0	0	0	0	**14**	
0045 - 0100	0	5	1	0	0	0	0	0	2	0	0	0	0	**8**	**42**
0100 - 0115	0	4	0	0	0	1	0	0	1	0	0	0	0	**6**	
0115 - 0130	0	9	1	0	0	0	0	0	4	0	0	0	0	**14**	
0130 - 0145	0	4	1	0	2	0	0	0	2	0	1	0	0	**10**	
0145 - 0200	0	7	2	0	0	0	0	0	3	0	0	0	0	**12**	**42**
0200 - 0215	0	6	1	0	0	0	0	0	2	0	0	0	0	**9**	
0215 - 0230	0	6	1	0	0	0	0	0	3	0	0	0	0	**10**	
0230 - 0245	0	5	1	0	0	1	0	0	2	0	1	0	0	**10**	
0245 - 0300	1	6	0	0	1	2	0	0	2	0	0	0	0	**12**	**41**
0300 - 0315	0	5	0	0	1	1	0	0	3	0	0	0	0	**10**	
0315 - 0330	0	7	1	0	0	0	0	1	2	0	0	0	0	**11**	
0330 - 0345	0	7	2	0	0	0	0	0	3	0	0	0	0	**12**	
0345 - 0400	0	6	2	0	0	0	0	0	5	0	0	0	0	**13**	**46**
0400 - 0415	0	6	1	0	0	0	0	0	3	0	1	0	0	**11**	
0415 - 0430	0	8	1	0	1	1	0	0	4	0	0	0	0	**15**	
0430 - 0445	0	14	2	0	1	1	0	1	5	0	0	0	0	**24**	
0445 - 0500	0	17	3	0	0	1	0	2	2	0	0	0	0	**25**	**75**
0500 - 0515	0	9	2	1	0	0	0	0	0	0	0	0	0	**12**	
0515 - 0530	0	17	3	0	0	1	0	2	2	0	0	0	0	**25**	
0530 - 0545	0	38	7	0	0	1	0	2	1	0	0	0	0	**49**	
0545 - 0600	0	43	10	0	1	0	0	0	3	0	0	0	0	**57**	**143**
0600 - 0615	0	42	8	0	2	0	0	0	1	0	0	0	0	**53**	
0615 - 0630	0	51	15	0	2	1	0	0	2	0	2	0	0	**73**	
0630 - 0645	0	66	20	0	2	1	0	0	5	0	0	0	0	**94**	
0645 - 0700	0	81	28	1	3	0	0	0	5	0	0	0	0	**118**	**338**
0700 - 0715	0	75	32	0	1	0	0	0	4	0	0	0	0	**112**	
0715 - 0730	0	133	39	0	5	1	0	0	3	0	0	0	0	**181**	
0730 - 0745	0	136	36	0	1	1	0	0	5	0	0	0	0	**179**	
0745 - 0800	0	176	44	0	2	2	0	1	3	0	0	0	0	**228**	**700**
0800 - 0815	0	136	44	0	4	0	0	0	1	0	0	0	0	**185**	
0815 - 0830	1	123	47	0	6	0	0	3	7	0	0	0	0	**187**	
0830 - 0845	0	101	45	0	3	1	0	1	4	0	0	0	0	**155**	
0845 - 0900	0	100	39	3	11	1	0	1	10	1	0	0	0	**166**	**693**
0900 - 0915	0	96	39	0	7	3	0	2	2	0	0	0	0	**149**	
0915 - 0930	0	103	21	0	4	1	0	1	3	0	0	0	0	**133**	
0930 - 0945	0	115	41	0	1	0	0	3	6	0	0	0	0	**166**	
0945 - 1000	0	104	31	0	6	0	0	0	3	0	0	0	0	**144**	**592**
1000 - 1015	0	93	26	0	3	1	0	0	8	1	0	0	0	**132**	
1015 - 1030	0	109	31	0	5	1	0	0	6	0	0	0	0	**152**	
1030 - 1045	0	125	30	0	1	0	0	2	8	0	0	0	0	**166**	
1045 - 1100	0	122	45	1	2	1	0	0	3	2	0	0	0	**176**	**626**
1100 - 1115	0	101	20	0	3	3	0	2	4	0	0	0	0	**133**	
1115 - 1130	1	110	31	1	2	1	0	3	7	1	0	0	0	**157**	
1130 - 1145	0	94	29	0	1	0	0	0	4	0	0	0	0	**128**	
1145 - 1200	0	126	32	0	0	3	0	0	7	0	0	0	0	**168**	**586**
1200 - 1215	0	122	33	0	3	0	0	0	6	0	0	0	0	**164**	
1215 - 1230	0	117	38	0	1	0	0	0	7	0	0	0	0	**163**	
1230 - 1245	0	121	40	0	0	0	0	0	9	0	0	0	0	**170**	
1245 - 1300	0	110	24	0	2	0	0	0	5	0	0	0	0	**141**	**638**
1300 - 1315	0	104	20	0	0	0	0	0	2	0	0	0	0	**126**	
1315 - 1330	0	103	22	0	3	0	0	0	3	0	0	0	0	**131**	
1330 - 1345	1	124	38	2	1	0	0	0	2	0	0	0	0	**168**	
1345 - 1400	0	133	40	0	6	1	0	0	4	0	0	0	0	**184**	**609**
1400 - 1415	0	120	32	1	6	0	0	0	4	0	0	0	0	**163**	
1415 - 1430	0	118	31	0	3	2	0	0	2	0	0	0	0	**156**	
1430 - 1445	0	124	29	0	1	1	0	0	5	0	0	0	0	**160**	
1445 - 1500	0	128	31	1	5	0	0	1	2	0	0	0	0	**168**	**647**
1500 - 1515	0	120	26	0	4	1	0	0	3	0	0	0	0	**154**	
1515 - 1530	0	123	27	0	1	0	0	0	2	0	0	0	0	**153**	
1530 - 1545	0	122	31	1	4	0	0	0	2	0	0	0	0	**160**	
1545 - 1600	1	132	42	1	2	0	0	0	5	0	0	0	0	**183**	**650**
1600 - 1615	1	142	46	0	2	1	0	0	5	0	0	0	0	**197**	
1615 - 1630	0	126	30	0	1	1	0	0	7	0	0	0	0	**165**	
1630 - 1645	0	130	31	0	1	0	0	0	2	0	0	0	0	**164**	
1645 - 1700	0	135	37	0	4	0	0	0	4	0	0	0	0	**180**	**706**
1700 - 1715	0	113	22	0	1	0	0	0	2	0	0	0	0	**138**	
1715 - 1730	0	134	33	0	1	0	0	0	3	0	0	0	0	**171**	
1730 - 1745	0	121	30	0	0	0	0	0	1	0	0	0	0	**152**	
1745 - 1800	0	125	21	0	0	0	0	0	0	0	0	0	0	**146**	**607**
1800 - 1815	0	122	27	0	1	1	0	0	1	0	0	0	0	**152**	
1815 - 1830	1	119	24	0	1	0	0	0	1	0	0	0	0	**146**	
1830 - 1845	0	120	22	0	1	1	0	0	3	0	0	0	0	**147**	
1845 - 1900	0	121	19	0	2	0	0	0	3	0	0	0	0	**145**	**590**
1900 - 1915	0	80	22	0	0	0	0	0	2	0	0	0	0	**104**	
1915 - 1930	0	102	16	0	1	2	0	0	5	0	0	0	0	**126**	
1930 - 1945	2	80	15	0	1	0	0	0	0	0	0	0	0	**98**	
1945 - 2000	0	81	17	0	1	0	0	0	2	0	1	0	0	**102**	**430**
2000 - 2015	0	63	16	0	0	0	0	0	2	0	0	0	0	**81**	
2015 - 2030	0	59	13	0	1	1	0	0	3	0	1	0	0	**78**	
2030 - 2045	0	55	15	0	1	0	0	0	0	0	0	0	0	**71**	
2045 - 2100	0	36	13	0	0	0	0	0	0	0	0	0	0	**49**	**279**
2100 - 2115	0	59	16	0	1	0	0	0	1	0	1	0	0	**78**	
2115 - 2130	0	50	14	0	1	0	0	0	0	0	2	0	0	**67**	
2130 - 2145	0	35	12	0	0	0	0	0	0	0	0	0	0	**47**	
2145 - 2200	0	47	15	0	0	0	0	0	3	0	0	0	0	**65**	**257**
2200 - 2215	0	43	14	0	0	0	0	0	1	0	1	0	0	**59**	
2215 - 2230	0	37	12	0	0	0	0	0	1	0	2	0	0	**52**	
2230 - 2245	0	28	9	0	0	0	0	0	0	0	0	0	0	**37**	
2245 - 2300	0	19	6	0	0	0	0	0	2	0	0	0	0	**27**	**175**
2300 - 2315	0	21	9	0	0	0	0	0	2	0	1	0	0	**33**	
2315 - 2330	0	29	11	0	0	0	0	0	3	0	1	0	0	**44**	
2330 - 2345	1	20	8	0	0	0	0	0	2	0	0	0	0	**31**	
2345 - 0000	0	18	8	0	0	0	0	0	1	0	0	0	0	**27**	**135**

Session Total	10	7163	1927	13	148	44	0	28	294	5	15	0	0	**9647**
Session Average	0.10	74.61	20.07	0.14	1.54	0.46	0.00	0.29	3.06	0.05	0.16	0.00	0.00	**100.49**
Session Percentage	0.10	74.25	19.98	0.13	1.53	0.46	0.00	0.29	3.05	0.05	0.16	0.00	0.00	

AM Peak Hour	0730 - 0830	0715 - 0815	0745 - 0845	0800 - 0900	0815 - 0915	0830 - 0930	-	0815 - 0915	0945 - 1045	0800 - 0900	0530 - 0630	-	-	**0730 - 0830**
AM Peak Hour Volume	1	581	180	3	27	6	0	7	25	1	2	0	0	**779**

Noon Peak Hour	1030 - 1130	1330 - 1430	1145 - 1245	1315 - 1415	1315 - 1415	1100 - 1200	-	1030 - 1130	1145 - 1245	1000 - 1100	-	-	-	**1330 - 1430**
Noon Peak Hour Volume	1	495	143	3	16	7	0	7	29	3	0	0	0	**671**

PM Peak Hour	1515 - 1615	1600 - 1700	1530 - 1630	1500 - 1600	1500 - 1600	1830 - 1930	-	-	1530 - 1630	-	1930 - 2030	-	-	**1545 - 1645**
PM Peak Hour Volume	2	533	149	2	11	3	0	0	19	0	2	0	0	**709**

Site 13
I-26 S/Bound On-Ramp,
south of I-20

Date
Saturday, April 27, 2024

Lat/Long
34.036148°, -81.108200°

Weather
Mostly Cloudy
69°F

Click here for Detailed Weather

0000 - 2400 (Saturday 24h Session) (04-27-2024)
SB WB 15min

	Southbound (Movement 13.1)													15min	60min
TIME	1	2	3	4	5	6	7	8	9	10	11	12	13	Total	Total
0000 - 0015	0	10	1	0	0	0	0	0	0	0	0	0	0	**11**	
0015 - 0030	0	14	2	0	0	0	0	0	0	0	0	0	0	**16**	
0030 - 0045	0	18	4	0	1	0	0	0	0	0	0	0	0	**23**	
0045 - 0100	0	11	2	0	0	0	0	0	1	0	0	0	0	**14**	**64**
0100 - 0115	0	11	2	0	0	1	0	0	0	0	0	1	0	**15**	
0115 - 0130	0	8	1	0	1	1	0	0	1	0	0	0	0	**12**	
0130 - 0145	0	11	1	0	0	0	0	0	0	0	0	0	0	**12**	
0145 - 0200	0	3	0	0	0	0	0	0	4	0	0	0	0	**7**	**46**
0200 - 0215	0	6	0	0	1	0	0	0	0	0	0	0	0	**7**	
0215 - 0230	0	10	1	0	0	0	0	0	3	0	0	0	0	**14**	
0230 - 0245	0	3	2	0	0	0	0	0	0	0	0	1	0	**6**	
0245 - 0300	0	7	2	0	0	0	0	0	1	0	0	0	0	**10**	**37**
0300 - 0315	0	4	1	0	1	0	0	0	3	0	0	0	0	**9**	
0315 - 0330	0	5	2	0	0	0	0	0	1	0	0	0	0	**8**	
0330 - 0345	0	6	1	0	0	0	0	0	1	0	0	0	0	**8**	
0345 - 0400	0	5	4	0	2	0	0	0	0	0	0	0	0	**11**	**36**
0400 - 0415	1	3	0	0	0	0	0	0	2	0	0	0	0	**6**	
0415 - 0430	0	6	1	0	0	0	0	0	1	0	0	0	0	**8**	
0430 - 0445	0	1	3	0	0	0	0	0	0	0	0	2	0	**6**	
0445 - 0500	0	12	2	0	0	0	0	0	0	0	0	0	0	**14**	**34**
0500 - 0515	0	9	3	0	0	0	0	0	1	0	0	1	0	**14**	
0515 - 0530	0	4	4	0	0	1	0	0	2	0	0	0	0	**11**	
0530 - 0545	0	9	6	0	0	0	0	0	0	0	0	0	0	**15**	
0545 - 0600	0	12	2	0	1	0	0	0	1	0	0	1	0	**17**	**57**
0600 - 0615	0	16	7	0	1	0	0	0	0	0	0	0	0	**24**	
0615 - 0630	0	30	9	0	0	0	0	0	0	0	0	0	0	**39**	
0630 - 0645	0	19	13	0	0	0	0	0	1	0	0	0	0	**33**	
0645 - 0700	1	33	12	0	0	0	0	0	3	1	0	0	0	**50**	**146**
0700 - 0715	0	28	15	0	0	0	0	0	4	0	0	0	0	**47**	
0715 - 0730	0	50	8	0	0	0	0	0	1	0	0	0	0	**59**	
0730 - 0745	0	37	22	0	2	0	0	0	0	0	0	0	0	**61**	
0745 - 0800	0	56	26	0	1	1	0	1	0	0	0	0	0	**85**	**252**
0800 - 0815	1	64	14	0	0	0	0	0	2	0	0	0	0	**81**	
0815 - 0830	0	69	18	0	0	0	0	0	1	0	0	0	0	**88**	
0830 - 0845	0	70	18	0	0	0	0	0	1	0	0	0	0	**89**	
0845 - 0900	1	96	27	0	1	0	0	0	2	0	0	0	0	**127**	**385**
0900 - 0915	0	88	20	0	5	0	0	0	3	0	0	0	0	**116**	
0915 - 0930	0	93	32	0	9	0	0	0	3	0	0	0	0	**137**	
0930 - 0945	1	101	39	0	0	0	0	0	2	0	0	0	0	**143**	
0945 - 1000	1	123	38	0	1	0	0	1	6	0	0	0	0	**170**	**566**
1000 - 1015	0	106	22	0	2	0	0	0	3	0	0	0	0	**133**	
1015 - 1030	0	112	38	0	0	0	0	0	2	0	0	0	0	**152**	
1030 - 1045	3	127	32	0	1	0	0	1	1	0	0	0	0	**165**	
1045 - 1100	0	139	34	0	0	0	0	1	0	0	0	0	0	**174**	**624**
1100 - 1115	1	145	40	0	0	0	0	0	3	0	0	0	0	**189**	
1115 - 1130	1	126	30	0	1	0	0	0	3	0	0	0	0	**161**	
1130 - 1145	1	155	29	0	1	0	0	0	3	0	0	0	0	**189**	
1145 - 1200	2	149	35	0	1	0	0	0	4	0	0	0	0	**191**	**730**
1200 - 1215	0	126	36	0	0	0	0	1	2	0	0	0	0	**165**	
1215 - 1230	0	157	34	0	0	0	0	0	1	0	0	0	0	**192**	
1230 - 1245	0	136	20	0	0	1	0	0	2	0	0	0	0	**159**	
1245 - 1300	0	125	34	0	1	0	0	0	3	0	0	0	0	**163**	**679**
1300 - 1315	0	166	26	0	0	0	0	1	1	0	0	0	0	**194**	
1315 - 1330	2	125	29	0	3	0	0	1	3	0	0	0	0	**163**	
1330 - 1345	1	140	33	0	0	0	0	1	3	0	0	0	0	**178**	
1345 - 1400	1	126	24	0	1	0	0	0	3	0	0	0	0	**155**	**690**
1400 - 1415	0	128	29	0	0	0	0	0	0	0	0	0	0	**157**	
1415 - 1430	1	148	30	0	1	0	0	0	0	0	0	0	0	**180**	
1430 - 1445	0	124	24	0	1	0	0	0	2	0	0	0	0	**151**	
1445 - 1500	0	130	20	0	2	0	0	0	2	0	0	0	0	**154**	**642**
1500 - 1515	0	118	29	0	2	0	0	0	0	0	0	0	0	**149**	
1515 - 1530	2	114	23	0	0	0	0	0	2	0	0	0	0	**141**	
1530 - 1545	1	127	32	0	0	0	0	0	2	1	0	0	0	**163**	
1545 - 1600	0	141	26	0	1	0	0	0	0	0	0	0	0	**168**	**621**
1600 - 1615	0	118	22	0	1	0	0	1	0	0	0	0	0	**142**	
1615 - 1630	2	128	22	0	0	0	0	0	2	0	0	0	0	**154**	
1630 - 1645	0	122	24	0	0	0	0	1	3	0	0	0	0	**150**	
1645 - 1700	1	130	24	0	1	0	0	0	1	0	0	0	0	**157**	**603**
1700 - 1715	1	102	21	0	1	0	0	0	2	0	0	0	0	**127**	
1715 - 1730	0	107	27	0	0	1	0	0	1	0	0	0	0	**136**	
1730 - 1745	1	116	20	0	3	0	0	0	2	0	0	0	0	**142**	
1745 - 1800	0	94	28	0	1	0	0	1	0	0	0	0	0	**124**	**529**
1800 - 1815	0	92	15	0	0	0	0	1	0	0	0	0	0	**108**	
1815 - 1830	2	98	15	0	2	0	0	0	0	0	0	0	0	**117**	
1830 - 1845	0	113	19	0	0	0	0	0	2	0	0	0	0	**134**	
1845 - 1900	0	93	18	0	1	0	0	0	2	0	0	0	0	**114**	**473**
1900 - 1915	0	102	19	0	2	0	0	0	1	0	0	0	0	**124**	
1915 - 1930	1	93	13	0	3	0	0	0	2	0	0	0	0	**112**	
1930 - 1945	0	72	15	0	0	0	0	0	0	0	0	0	0	**87**	
1945 - 2000	0	70	10	0	1	0	0	0	0	0	0	0	0	**81**	**404**
2000 - 2015	0	77	17	0	0	0	0	0	2	0	0	0	0	**96**	
2015 - 2030	0	61	10	0	0	0	0	0	1	0	0	0	0	**72**	
2030 - 2045	0	58	8	0	0	0	0	0	2	0	0	0	0	**68**	
2045 - 2100	0	59	10	0	4	0	0	0	1	0	0	0	0	**74**	**310**
2100 - 2115	0	54	7	0	0	0	0	0	0	0	0	0	0	**61**	
2115 - 2130	0	48	9	0	0	0	0	0	1	0	0	0	0	**58**	
2130 - 2145	0	50	12	0	0	0	0	0	1	0	0	0	0	**63**	
2145 - 2200	0	32	4	0	0	0	0	1	1	0	0	0	0	**38**	**220**
2200 - 2215	0	36	9	0	0	0	0	0	3	0	0	0	0	**48**	
2215 - 2230	0	40	10	0	0	0	0	0	2	0	0	0	0	**52**	
2230 - 2245	0	38	9	0	0	0	0	1	1	0	0	0	0	**49**	
2245 - 2300	0	27	5	0	0	0	0	0	0	0	0	0	0	**32**	**181**
2300 - 2315	0	25	7	0	0	0	0	0	0	0	0	0	0	**32**	
2315 - 2330	0	22	3	0	0	0	0	0	0	0	0	0	0	**25**	
2330 - 2345	0	20	9	0	1	0	0	0	0	0	0	0	0	**30**	
2345 - 0000	0	18	2	0	0	0	0	0	0	0	0	0	0	**20**	**107**

Session Total	30	6666	1517	0	66	6	0	14	129	2	0	6	0	**8436**
Session Average	0.31	69.44	15.80	0.00	0.69	0.06	0.00	0.15	1.34	0.02	0.00	0.06	0.00	**87.88**
Session Percentage	0.36	79.02	17.98	0.00	0.78	0.07	0.00	0.17	1.53	0.02	0.00	0.07	0.00	

AM Peak Hour	0945 - 1045	0945 - 1045	0930 - 1030	-	0830 - 0930	0500 - 0600	-	0945 - 1045	0900 - 1000	0600 - 0700	-	0500 - 0600	-	**0945 - 1045**
AM Peak Hour Volume	4	468	137	0	15	1	0	2	14	1	0	2	0	**620**

Noon Peak Hour	1030 - 1130	1130 - 1230	1015 - 1115	-	1415 - 1515	1145 - 1245	-	1245 - 1345	1100 - 1200	1445 - 1545	-	-	-	**1130 - 1230**
Noon Peak Hour Volume	5	587	144	0	6	1	0	3	13	1	0	0	0	**737**

PM Peak Hour	1615 - 1715	1530 - 1630	1500 - 1600	-	1730 - 1830	1630 - 1730	-	1545 - 1645	1615 - 1715	1500 - 1600	-	-	-	**1530 - 1630**
PM Peak Hour Volume	4	514	110	0	6	1	0	2	8	1	0	0	0	**627**

Bi-Directional Class Count || SB WB Average 15min

Columbia, SC

Marr Traffic DATA COLLECTION
www.marrtraffic.com

Site 13
I-26 S/Bound On-Ramp,
south of I-20

Date
Sunday, April 21, 2024

Lat/Long
34.036148°, -81.108200°

Weather
Cloudy
66°F

0000 - 2400 (Weekday 24h Session) (All Dates)
SB WB Average 15min

	SB WB Average 15min													15min	60min
Time	1	2	3	4	5	6	7	8	9	10	11	12	13	Total	Total
0000 - 0015	0	10	1	0	0	0	0	0	2	0	0	0	0	**14**	
0015 - 0030	0	11	2	0	0	0	0	0	2	0	0	0	0	**16**	
0030 - 0045	0	10	2	0	0	0	0	0	1	0	0	0	0	**13**	
0045 - 0100	0	9	2	0	0	0	0	0	2	0	0	0	0	**14**	**56**
0100 - 0115	0	8	2	0	0	0	0	0	1	0	0	0	0	**11**	
0115 - 0130	0	7	1	0	0	0	0	0	2	0	0	0	0	**10**	
0130 - 0145	0	6	1	0	0	0	0	0	1	0	1	0	0	**10**	
0145 - 0200	0	5	1	0	0	0	0	0	2	0	0	0	0	**7**	**38**
0200 - 0215	0	6	1	0	0	0	0	0	2	0	0	0	0	**9**	
0215 - 0230	0	6	1	0	0	0	0	0	2	0	0	0	0	**9**	
0230 - 0245	0	5	1	0	0	0	0	0	1	0	0	0	0	**8**	
0245 - 0300	0	4	1	0	1	0	0	0	2	0	0	0	0	**8**	**34**
0300 - 0315	0	5	1	0	0	0	0	0	2	0	0	0	0	**9**	
0315 - 0330	0	5	1	0	0	0	0	0	3	0	0	0	0	**10**	
0330 - 0345	0	7	2	0	0	0	0	0	2	0	0	0	0	**12**	
0345 - 0400	0	9	2	0	0	0	0	0	2	0	0	0	0	**14**	**45**
0400 - 0415	0	6	1	0	0	0	0	0	2	0	0	0	0	**9**	
0415 - 0430	0	7	2	0	0	0	0	0	2	0	0	0	0	**12**	
0430 - 0445	0	9	3	0	0	0	0	0	2	0	0	0	0	**16**	
0445 - 0500	0	15	4	0	0	0	0	0	2	0	0	0	0	**21**	**58**
0500 - 0515	0	10	5	0	0	0	0	0	2	0	0	0	0	**18**	
0515 - 0530	0	15	5	0	0	0	0	0	2	0	0	0	0	**24**	
0530 - 0545	0	25	7	0	1	0	0	1	2	0	0	0	0	**35**	
0545 - 0600	0	28	8	0	1	0	0	0	3	0	0	0	0	**40**	**117**
0600 - 0615	0	28	12	0	1	0	0	0	2	0	0	0	0	**44**	
0615 - 0630	0	41	16	0	1	0	0	0	3	0	0	0	0	**62**	
0630 - 0645	0	58	21	0	2	1	0	0	4	0	0	0	0	**86**	
0645 - 0700	0	65	25	1	1	1	0	0	4	0	0	0	0	**98**	**289**
0700 - 0715	0	75	27	0	2	1	0	0	3	0	0	0	0	**107**	
0715 - 0730	0	111	32	0	2	1	0	0	3	0	0	0	0	**150**	
0730 - 0745	0	104	32	0	2	0	0	0	3	0	0	0	0	**142**	
0745 - 0800	0	123	36	0	2	1	0	0	2	0	0	0	0	**165**	**564**
0800 - 0815	0	114	32	0	3	1	0	0	2	0	0	0	0	**153**	
0815 - 0830	1	102	33	0	2	0	0	1	4	0	0	0	0	**144**	
0830 - 0845	0	91	36	0	3	1	0	0	4	0	0	0	0	**135**	
0845 - 0900	1	102	38	0	6	1	0	0	4	0	0	0	0	**153**	**584**
0900 - 0915	0	82	32	0	5	1	0	1	4	0	0	0	0	**125**	
0915 - 0930	0	88	30	0	6	0	0	1	4	0	0	0	0	**128**	
0930 - 0945	0	90	32	0	2	1	0	1	4	0	0	0	0	**130**	
0945 - 1000	0	99	31	0	4	0	0	0	5	0	0	0	0	**140**	**523**
1000 - 1015	0	84	26	0	2	1	0	1	6	0	0	0	0	**120**	
1015 - 1030	0	94	30	0	3	0	0	0	5	0	0	0	0	**134**	
1030 - 1045	0	105	30	0	2	1	0	1	6	0	0	0	0	**146**	
1045 - 1100	0	108	35	0	2	1	0	1	4	0	0	0	0	**150**	**549**
1100 - 1115	0	97	27	0	2	1	0	1	5	0	0	0	0	**132**	
1115 - 1130	1	102	32	0	3	0	0	1	6	0	0	0	0	**145**	
1130 - 1145	0	96	30	0	2	0	0	0	5	0	0	0	0	**133**	
1145 - 1200	0	111	33	0	1	1	0	0	4	0	0	0	0	**150**	**560**
1200 - 1215	0	111	35	0	2	0	0	0	5	0	0	0	0	**153**	
1215 - 1230	0	111	35	0	2	0	0	0	4	0	0	0	0	**153**	
1230 - 1245	0	109	30	0	1	1	0	1	4	0	0	0	0	**146**	
1245 - 1300	0	104	29	0	3	0	0	1	4	0	0	0	0	**142**	**594**
1300 - 1315	0	106	27	1	2	1	0	1	4	0	0	0	0	**141**	
1315 - 1330	0	108	28	0	3	0	0	0	4	0	0	0	0	**144**	
1330 - 1345	1	112	29	0	1	1	0	0	5	0	0	0	0	**150**	
1345 - 1400	0	111	31	0	3	1	0	0	4	0	0	0	0	**149**	**584**
1400 - 1415	0	102	29	0	3	0	0	0	4	0	0	0	0	**137**	
1415 - 1430	0	109	29	0	2	1	0	0	3	0	0	0	0	**145**	
1430 - 1445	0	110	30	0	2	0	0	0	3	0	0	0	0	**145**	
1445 - 1500	0	120	30	0	2	0	0	0	3	0	0	0	0	**157**	**584**
1500 - 1515	0	109	29	0	2	1	0	0	4	0	0	0	0	**144**	
1515 - 1530	0	107	33	0	2	0	0	0	2	0	0	0	0	**146**	
1530 - 1545	1	124	29	0	2	0	0	0	3	0	0	0	0	**160**	
1545 - 1600	0	127	32	0	2	0	0	1	3	0	0	0	0	**165**	**615**
1600 - 1615	0	131	38	0	2	0	0	1	3	0	0	0	0	**175**	
1615 - 1630	0	129	34	0	1	0	0	0	4	0	0	0	0	**170**	
1630 - 1645	0	128	31	0	2	0	0	0	3	0	0	0	0	**164**	
1645 - 1700	0	127	31	0	2	0	0	0	3	0	0	0	0	**164**	**673**
1700 - 1715	0	119	33	0	2	0	0	0	2	0	0	0	0	**156**	
1715 - 1730	0	133	33	0	1	1	0	0	2	0	0	0	0	**170**	
1730 - 1745	0	117	32	0	2	0	0	0	2	0	0	0	0	**153**	
1745 - 1800	0	111	27	0	1	0	0	0	2	0	0	0	0	**142**	**622**
1800 - 1815	0	106	27	0	1	0	0	0	2	0	0	0	0	**136**	
1815 - 1830	1	99	23	0	1	0	0	1	2	0	0	0	0	**126**	
1830 - 1845	0	97	19	0	1	0	0	0	2	0	0	0	0	**120**	
1845 - 1900	0	88	17	0	1	0	0	0	2	0	0	0	0	**109**	**491**
1900 - 1915	0	79	16	0	1	0	0	0	2	0	0	0	0	**99**	
1915 - 1930	0	85	16	0	1	0	0	0	2	0	0	0	0	**104**	
1930 - 1945	1	70	16	0	1	0	0	0	1	0	0	0	0	**89**	
1945 - 2000	0	69	14	0	1	0	0	0	1	0	0	0	0	**87**	**379**
2000 - 2015	0	59	14	0	0	0	0	0	2	0	0	0	0	**76**	
2015 - 2030	0	53	11	0	0	0	0	0	1	0	0	0	0	**67**	
2030 - 2045	0	50	11	0	0	0	0	0	1	0	0	0	0	**63**	
2045 - 2100	0	43	10	0	1	0	0	0	1	0	0	0	0	**55**	**260**
2100 - 2115	0	47	9	0	0	0	0	0	1	0	0	0	0	**58**	
2115 - 2130	0	39	8	0	0	0	0	0	2	0	1	0	0	**50**	
2130 - 2145	0	36	9	0	0	0	0	0	1	0	0	0	0	**47**	
2145 - 2200	0	31	7	0	0	0	0	0	2	0	0	0	0	**41**	**195**
2200 - 2215	0	32	8	0	0	0	0	0	2	0	1	0	0	**43**	
2215 - 2230	0	29	6	0	0	0	0	0	1	0	1	0	0	**38**	
2230 - 2245	0	24	5	0	0	0	0	0	1	0	0	0	0	**31**	
2245 - 2300	0	21	4	0	0	0	0	0	1	0	0	0	0	**27**	**139**
2300 - 2315	0	20	4	0	0	0	0	0	1	0	0	0	0	**27**	
2315 - 2330	0	21	4	0	0	0	0	0	1	0	0	0	0	**26**	
2330 - 2345	0	14	3	0	0	0	0	0	1	0	0	0	0	**20**	
2345 - 0000	0	13	2	0	0	0	0	0	1	0	0	0	0	**16**	**88**

Session Total	15	6403	1773	6	126	28	1	22	258	3	7	1	0	**8642**
Session Average	0.15	66.69	18.47	0.07	1.31	0.29	0.01	0.22	2.69	0.03	0.08	0.01	0.00	**90.02**
Session Percentage	0.17	74.09	20.51	0.07	1.45	0.32	0.01	0.25	2.98	0.04	0.09	0.01	0.00	

AM Peak Hour	0800 - 0900	0715 - 0815	0800 - 0900	0645 - 0745	0830 - 0930	0630 - 0730	0615 - 0715	0845 - 0945	0945 - 1045	0645 - 0745	0530 - 0630	0500 - 0600	-	**0715 - 0815**
AM Peak Volume	2	453	138	1	20	3	0	3	22	0	0	0	0	**609**

Noon Peak Hour	1100 - 1200	1445 - 1545	1145 - 1245	1245 - 1345	1315 - 1415	1015 - 1115	1000 - 1100	1030 - 1130	1000 - 1100	1045 - 1145	1000 - 1100	-	-	**1445 - 1545**
Noon Peak Volume	1	461	133	1	10	3	0	3	21	1	0	0	0	**607**

PM Peak Hour	1845 - 1945	1600 - 1700	1545 - 1645	1530 - 1630	1515 - 1615	1500 - 1600	1630 - 1730	1530 - 1630	1530 - 1630	1500 - 1600	1930 - 2030	1915 - 2015	-	**1545 - 1645**
PM Peak Volume	2	515	135	1	7	2	0	2	14	1	1	0	0	**674**

Bi-Directional Class Count || Volume Summary 15min

Columbia, SC

Marr Traffic DATA COLLECTION
www.marrtraffic.com

Site 13
I-26 S/Bound On-Ramp,
south of I-20

Date
Sunday, April 21, 2024

Lat/Long
34.036148°, -81.108200°

Weather
Cloudy
66°F

Click here for Detailed Weather

0000 - 2400 (Sunday 24h Session) (04-21-2024)

Volume Summary 15min

TIME	Volume Summary 15min NB	SB	15min Total	60min Total
0000 - 0015	0	23	**23**	
0015 - 0030	0	29	**29**	
0030 - 0045	0	21	**21**	
0045 - 0100	0	32	**32**	**105**
0100 - 0115	0	21	**21**	
0115 - 0130	0	15	**15**	
0130 - 0145	0	17	**17**	
0145 - 0200	0	9	**9**	**62**
0200 - 0215	0	17	**17**	
0215 - 0230	0	12	**12**	
0230 - 0245	0	11	**11**	
0245 - 0300	0	9	**9**	**49**
0300 - 0315	0	6	**6**	
0315 - 0330	0	13	**13**	
0330 - 0345	0	8	**8**	
0345 - 0400	0	10	**10**	**37**
0400 - 0415	0	3	**3**	
0415 - 0430	0	9	**9**	
0430 - 0445	0	10	**10**	
0445 - 0500	0	11	**11**	**33**
0500 - 0515	0	4	**4**	
0515 - 0530	0	6	**6**	
0530 - 0545	0	12	**12**	
0545 - 0600	0	12	**12**	**34**
0600 - 0615	0	19	**19**	
0615 - 0630	0	16	**16**	
0630 - 0645	0	23	**23**	
0645 - 0700	0	24	**24**	**82**
0700 - 0715	0	27	**27**	
0715 - 0730	0	44	**44**	
0730 - 0745	0	35	**35**	
0745 - 0800	0	54	**54**	**160**
0800 - 0815	0	36	**36**	
0815 - 0830	0	45	**45**	
0830 - 0845	0	52	**52**	
0845 - 0900	0	75	**75**	**208**
0900 - 0915	0	86	**86**	
0915 - 0930	0	70	**70**	
0930 - 0945	0	78	**78**	
0945 - 1000	0	101	**101**	**335**
1000 - 1015	0	85	**85**	
1015 - 1030	0	110	**110**	
1030 - 1045	0	127	**127**	
1045 - 1100	0	130	**130**	**452**
1100 - 1115	0	109	**109**	
1115 - 1130	0	120	**120**	
1130 - 1145	0	133	**133**	
1145 - 1200	0	154	**154**	**516**

Time	Volume Summary 15min NB	SB	15min Total	60min Total
1200 - 1215	0	191	**191**	
1215 - 1230	0	169	**169**	
1230 - 1245	0	149	**149**	
1245 - 1300	0	135	**135**	**644**
1300 - 1315	0	148	**148**	
1315 - 1330	0	172	**172**	
1330 - 1345	0	167	**167**	
1345 - 1400	0	165	**165**	**652**
1400 - 1415	0	135	**135**	
1415 - 1430	0	135	**135**	
1430 - 1445	0	147	**147**	
1445 - 1500	0	151	**151**	**568**
1500 - 1515	0	124	**124**	
1515 - 1530	0	108	**108**	
1530 - 1545	0	142	**142**	
1545 - 1600	0	130	**130**	**504**
1600 - 1615	0	127	**127**	
1615 - 1630	0	126	**126**	
1630 - 1645	0	108	**108**	
1645 - 1700	0	124	**124**	**485**
1700 - 1715	0	126	**126**	
1715 - 1730	0	114	**114**	
1730 - 1745	0	103	**103**	
1745 - 1800	0	94	**94**	**437**
1800 - 1815	0	119	**119**	
1815 - 1830	0	89	**89**	
1830 - 1845	0	88	**88**	
1845 - 1900	0	74	**74**	**370**
1900 - 1915	0	67	**67**	
1915 - 1930	0	86	**86**	
1930 - 1945	0	60	**60**	
1945 - 2000	0	97	**97**	**310**
2000 - 2015	0	66	**66**	
2015 - 2030	0	47	**47**	
2030 - 2045	0	32	**32**	
2045 - 2100	0	55	**55**	**200**
2100 - 2115	0	45	**45**	
2115 - 2130	0	34	**34**	
2130 - 2145	0	36	**36**	
2145 - 2200	0	39	**39**	**154**
2200 - 2215	0	41	**41**	
2215 - 2230	0	24	**24**	
2230 - 2245	0	17	**17**	
2245 - 2300	0	22	**22**	**104**
2300 - 2315	0	18	**18**	
2315 - 2330	0	22	**22**	
2330 - 2345	0	19	**19**	
2345 - 0000	0	12	**12**	**71**

Session Total	0	6572	**6572**
Session Average	0.00	68.46	**68.46**
Session Percentage	0.00	100.00	

Site 13
I-26 S/Bound On-Ramp,
south of I-20

Date
Monday, April 22, 2024

Lat/Long
34.036148°, -81.108200°

Weather
Mostly Cloudy
57°F

Click here for Detailed Weather

0000 - 2400 (Weekday 24h Session) (04-22-2024)
Volume Summary 15min

TIME	Volume Summary 15min NB	SB	15min Total	60min Total
0000 - 0015	0	17	**17**	
0015 - 0030	0	19	**19**	
0030 - 0045	0	12	**12**	
0045 - 0100	0	8	**8**	**56**
0100 - 0115	0	8	**8**	
0115 - 0130	0	5	**5**	
0130 - 0145	0	5	**5**	
0145 - 0200	0	2	**2**	**20**
0200 - 0215	0	4	**4**	
0215 - 0230	0	5	**5**	
0230 - 0245	0	6	**6**	
0245 - 0300	0	9	**9**	**24**
0300 - 0315	0	7	**7**	
0315 - 0330	0	11	**11**	
0330 - 0345	0	16	**16**	
0345 - 0400	0	10	**10**	**44**
0400 - 0415	0	4	**4**	
0415 - 0430	0	15	**15**	
0430 - 0445	0	18	**18**	
0445 - 0500	0	26	**26**	**63**
0500 - 0515	0	26	**26**	
0515 - 0530	0	24	**24**	
0530 - 0545	0	40	**40**	
0545 - 0600	0	52	**52**	**142**
0600 - 0615	0	48	**48**	
0615 - 0630	0	73	**73**	
0630 - 0645	0	123	**123**	
0645 - 0700	0	114	**114**	**358**
0700 - 0715	0	144	**144**	
0715 - 0730	0	195	**195**	
0730 - 0745	0	190	**190**	
0745 - 0800	0	208	**208**	**737**
0800 - 0815	0	195	**195**	
0815 - 0830	0	174	**174**	
0830 - 0845	0	148	**148**	
0845 - 0900	0	167	**167**	**684**
0900 - 0915	0	107	**107**	
0915 - 0930	0	138	**138**	
0930 - 0945	0	118	**118**	
0945 - 1000	0	138	**138**	**501**
1000 - 1015	0	117	**117**	
1015 - 1030	0	121	**121**	
1030 - 1045	0	116	**116**	
1045 - 1100	0	154	**154**	**508**
1100 - 1115	0	124	**124**	
1115 - 1130	0	139	**139**	
1130 - 1145	0	108	**108**	
1145 - 1200	0	122	**122**	**493**

Time	Volume Summary 15min NB	SB	15min Total	60min Total
1200 - 1215	0	150	**150**	
1215 - 1230	0	121	**121**	
1230 - 1245	0	140	**140**	
1245 - 1300	0	127	**127**	**538**
1300 - 1315	0	117	**117**	
1315 - 1330	0	128	**128**	
1330 - 1345	0	132	**132**	
1345 - 1400	0	121	**121**	**498**
1400 - 1415	0	111	**111**	
1415 - 1430	0	119	**119**	
1430 - 1445	0	147	**147**	
1445 - 1500	0	156	**156**	**533**
1500 - 1515	0	138	**138**	
1515 - 1530	0	151	**151**	
1530 - 1545	0	150	**150**	
1545 - 1600	0	168	**168**	**607**
1600 - 1615	0	217	**217**	
1615 - 1630	0	239	**239**	
1630 - 1645	0	193	**193**	
1645 - 1700	0	170	**170**	**819**
1700 - 1715	0	157	**157**	
1715 - 1730	0	156	**156**	
1730 - 1745	0	157	**157**	
1745 - 1800	0	175	**175**	**645**
1800 - 1815	0	129	**129**	
1815 - 1830	0	120	**120**	
1830 - 1845	0	107	**107**	
1845 - 1900	0	97	**97**	**453**
1900 - 1915	0	90	**90**	
1915 - 1930	0	98	**98**	
1930 - 1945	0	83	**83**	
1945 - 2000	0	75	**75**	**346**
2000 - 2015	0	70	**70**	
2015 - 2030	0	49	**49**	
2030 - 2045	0	53	**53**	
2045 - 2100	0	63	**63**	**235**
2100 - 2115	0	53	**53**	
2115 - 2130	0	48	**48**	
2130 - 2145	0	38	**38**	
2145 - 2200	0	32	**32**	**171**
2200 - 2215	0	29	**29**	
2215 - 2230	0	22	**22**	
2230 - 2245	0	20	**20**	
2245 - 2300	0	31	**31**	**102**
2300 - 2315	0	27	**27**	
2315 - 2330	0	22	**22**	
2330 - 2345	0	10	**10**	
2345 - 0000	0	12	**12**	**71**

Session Total	0	8648	**8648**
Session Average	0.00	90.08	**90.08**
Session Percentage	0.00	100.00	

Site 13
I-26 S/Bound On-Ramp,
south of I-20

Date
Tuesday, April 23, 2024

Lat/Long
34.036148°, -81.108200°

Weather
Fair
58°F

Click here for Detailed Weather

0000 - 2400 (Weekday 24h Session) (04-23-2024)
Volume Summary 15min

TIME	Volume Summary 15min NB	SB	15min Total	60min Total
0000 - 0015	0	9	**9**	
0015 - 0030	0	14	**14**	
0030 - 0045	0	7	**7**	
0045 - 0100	0	10	**10**	**40**
0100 - 0115	0	8	**8**	
0115 - 0130	0	7	**7**	
0130 - 0145	0	10	**10**	
0145 - 0200	0	7	**7**	**32**
0200 - 0215	0	9	**9**	
0215 - 0230	0	8	**8**	
0230 - 0245	0	6	**6**	
0245 - 0300	0	8	**8**	**31**
0300 - 0315	0	6	**6**	
0315 - 0330	0	9	**9**	
0330 - 0345	0	15	**15**	
0345 - 0400	0	16	**16**	**46**
0400 - 0415	0	14	**14**	
0415 - 0430	0	10	**10**	
0430 - 0445	0	19	**19**	
0445 - 0500	0	22	**22**	**65**
0500 - 0515	0	23	**23**	
0515 - 0530	0	24	**24**	
0530 - 0545	0	46	**46**	
0545 - 0600	0	41	**41**	**134**
0600 - 0615	0	54	**54**	
0615 - 0630	0	71	**71**	
0630 - 0645	0	122	**122**	
0645 - 0700	0	115	**115**	**362**
0700 - 0715	0	131	**131**	
0715 - 0730	0	202	**202**	
0730 - 0745	0	121	**121**	
0745 - 0800	0	175	**175**	**629**
0800 - 0815	0	183	**183**	
0815 - 0830	0	172	**172**	
0830 - 0845	0	168	**168**	
0845 - 0900	0	180	**180**	**703**
0900 - 0915	0	125	**125**	
0915 - 0930	0	144	**144**	
0930 - 0945	0	122	**122**	
0945 - 1000	0	141	**141**	**532**
1000 - 1015	0	123	**123**	
1015 - 1030	0	123	**123**	
1030 - 1045	0	120	**120**	
1045 - 1100	0	140	**140**	**506**
1100 - 1115	0	118	**118**	
1115 - 1130	0	126	**126**	
1130 - 1145	0	126	**126**	
1145 - 1200	0	134	**134**	**504**

Time	Volume Summary 15min NB	SB	15min Total	60min Total
1200 - 1215	0	139	**139**	
1215 - 1230	0	144	**144**	
1230 - 1245	0	119	**119**	
1245 - 1300	0	125	**125**	**527**
1300 - 1315	0	130	**130**	
1315 - 1330	0	146	**146**	
1330 - 1345	0	130	**130**	
1345 - 1400	0	122	**122**	**528**
1400 - 1415	0	138	**138**	
1415 - 1430	0	139	**139**	
1430 - 1445	0	130	**130**	
1445 - 1500	0	194	**194**	**601**
1500 - 1515	0	160	**160**	
1515 - 1530	0	168	**168**	
1530 - 1545	0	148	**148**	
1545 - 1600	0	158	**158**	**634**
1600 - 1615	0	173	**173**	
1615 - 1630	0	167	**167**	
1630 - 1645	0	181	**181**	
1645 - 1700	0	160	**160**	**681**
1700 - 1715	0	175	**175**	
1715 - 1730	0	179	**179**	
1730 - 1745	0	180	**180**	
1745 - 1800	0	155	**155**	**689**
1800 - 1815	0	133	**133**	
1815 - 1830	0	133	**133**	
1830 - 1845	0	99	**99**	
1845 - 1900	0	107	**107**	**472**
1900 - 1915	0	108	**108**	
1915 - 1930	0	95	**95**	
1930 - 1945	0	92	**92**	
1945 - 2000	0	91	**91**	**386**
2000 - 2015	0	59	**59**	
2015 - 2030	0	63	**63**	
2030 - 2045	0	62	**62**	
2045 - 2100	0	49	**49**	**233**
2100 - 2115	0	64	**64**	
2115 - 2130	0	53	**53**	
2130 - 2145	0	52	**52**	
2145 - 2200	0	37	**37**	**206**
2200 - 2215	0	40	**40**	
2215 - 2230	0	39	**39**	
2230 - 2245	0	25	**25**	
2245 - 2300	0	25	**25**	**129**
2300 - 2315	0	28	**28**	
2315 - 2330	0	23	**23**	
2330 - 2345	0	14	**14**	
2345 - 0000	0	9	**9**	**74**

Session Total	0	8744	**8744**
Session Average	0.00	91.08	**91.08**
Session Percentage	0.00	100.00	

Site 13

I-26 S/Bound On-Ramp,
south of I-20

Date

Wednesday, April 24, 2024

Lat/Long

34.036148°, -81.108200°

Weather

Fair
66°F

Click here for Detailed Weather

0000 - 2400 (Weekday 24h Session) (04-24-2024)

Volume Summary 15min

TIME	Volume Summary 15min NB	Volume Summary 15min SB	15min Total	60min Total
0000 - 0015	0	17	**17**	
0015 - 0030	0	12	**12**	
0030 - 0045	0	9	**9**	
0045 - 0100	0	9	**9**	**47**
0100 - 0115	0	4	**4**	
0115 - 0130	0	8	**8**	
0130 - 0145	0	7	**7**	
0145 - 0200	0	7	**7**	**26**
0200 - 0215	0	7	**7**	
0215 - 0230	0	7	**7**	
0230 - 0245	0	7	**7**	
0245 - 0300	0	6	**6**	**27**
0300 - 0315	0	7	**7**	
0315 - 0330	0	9	**9**	
0330 - 0345	0	8	**8**	
0345 - 0400	0	18	**18**	**42**
0400 - 0415	0	13	**13**	
0415 - 0430	0	10	**10**	
0430 - 0445	0	17	**17**	
0445 - 0500	0	26	**26**	**66**
0500 - 0515	0	25	**25**	
0515 - 0530	0	35	**35**	
0530 - 0545	0	45	**45**	
0545 - 0600	0	53	**53**	**158**
0600 - 0615	0	49	**49**	
0615 - 0630	0	72	**72**	
0630 - 0645	0	107	**107**	
0645 - 0700	0	134	**134**	**362**
0700 - 0715	0	155	**155**	
0715 - 0730	0	176	**176**	
0730 - 0745	0	209	**209**	
0745 - 0800	0	213	**213**	**753**
0800 - 0815	0	190	**190**	
0815 - 0830	0	155	**155**	
0830 - 0845	0	167	**167**	
0845 - 0900	0	169	**169**	**681**
0900 - 0915	0	137	**137**	
0915 - 0930	0	135	**135**	
0930 - 0945	0	137	**137**	
0945 - 1000	0	161	**161**	**570**
1000 - 1015	0	121	**121**	
1015 - 1030	0	140	**140**	
1030 - 1045	0	144	**144**	
1045 - 1100	0	139	**139**	**544**
1100 - 1115	0	125	**125**	
1115 - 1130	0	157	**157**	
1130 - 1145	0	123	**123**	
1145 - 1200	0	140	**140**	**545**

Time	Volume Summary 15min NB	Volume Summary 15min SB	15min Total	60min Total
1200 - 1215	0	134	**134**	
1215 - 1230	0	147	**147**	
1230 - 1245	0	130	**130**	
1245 - 1300	0	152	**152**	**563**
1300 - 1315	0	129	**129**	
1315 - 1330	0	139	**139**	
1330 - 1345	0	143	**143**	
1345 - 1400	0	150	**150**	**561**
1400 - 1415	0	121	**121**	
1415 - 1430	0	123	**123**	
1430 - 1445	0	138	**138**	
1445 - 1500	0	125	**125**	**507**
1500 - 1515	0	144	**144**	
1515 - 1530	0	161	**161**	
1530 - 1545	0	185	**185**	
1545 - 1600	0	169	**169**	**659**
1600 - 1615	0	193	**193**	
1615 - 1630	0	167	**167**	
1630 - 1645	0	162	**162**	
1645 - 1700	0	185	**185**	**707**
1700 - 1715	0	191	**191**	
1715 - 1730	0	209	**209**	
1730 - 1745	0	177	**177**	
1745 - 1800	0	150	**150**	**727**
1800 - 1815	0	145	**145**	
1815 - 1830	0	132	**132**	
1830 - 1845	0	132	**132**	
1845 - 1900	0	122	**122**	**531**
1900 - 1915	0	95	**95**	
1915 - 1930	0	104	**104**	
1930 - 1945	0	87	**87**	
1945 - 2000	0	90	**90**	**376**
2000 - 2015	0	81	**81**	
2015 - 2030	0	79	**79**	
2030 - 2045	0	74	**74**	
2045 - 2100	0	52	**52**	**286**
2100 - 2115	0	47	**47**	
2115 - 2130	0	41	**41**	
2130 - 2145	0	46	**46**	
2145 - 2200	0	24	**24**	**158**
2200 - 2215	0	42	**42**	
2215 - 2230	0	32	**32**	
2230 - 2245	0	35	**35**	
2245 - 2300	0	28	**28**	**137**
2300 - 2315	0	21	**21**	
2315 - 2330	0	23	**23**	
2330 - 2345	0	16	**16**	
2345 - 0000	0	17	**17**	**77**

Session Total	0	9110	**9110**
Session Average	0.00	94.90	**94.90**
Session Percentage	0.00	100.00	

Site 13
I-26 S/Bound On-Ramp,
south of I-20

Date
Thursday, April 25, 2024

Lat/Long
34.036148°, -81.108200°

Weather
Fair
67°F

Click here for Detailed Weather

0000 - 2400 (Weekday 24h Session) (04-25-2024)
Volume Summary 15min

TIME	Volume Summary 15min NB	SB	15min Total	60min Total
0000 - 0015	0	9	**9**	
0015 - 0030	0	11	**11**	
0030 - 0045	0	7	**7**	
0045 - 0100	0	14	**14**	**41**
0100 - 0115	0	16	**16**	
0115 - 0130	0	8	**8**	
0130 - 0145	0	10	**10**	
0145 - 0200	0	7	**7**	**41**
0200 - 0215	0	9	**9**	
0215 - 0230	0	8	**8**	
0230 - 0245	0	10	**10**	
0245 - 0300	0	3	**3**	**30**
0300 - 0315	0	17	**17**	
0315 - 0330	0	9	**9**	
0330 - 0345	0	17	**17**	
0345 - 0400	0	18	**18**	**61**
0400 - 0415	0	13	**13**	
0415 - 0430	0	15	**15**	
0430 - 0445	0	17	**17**	
0445 - 0500	0	23	**23**	**68**
0500 - 0515	0	22	**22**	
0515 - 0530	0	40	**40**	
0530 - 0545	0	40	**40**	
0545 - 0600	0	50	**50**	**152**
0600 - 0615	0	58	**58**	
0615 - 0630	0	92	**92**	
0630 - 0645	0	99	**99**	
0645 - 0700	0	129	**129**	**378**
0700 - 0715	0	136	**136**	
0715 - 0730	0	191	**191**	
0730 - 0745	0	198	**198**	
0745 - 0800	0	189	**189**	**714**
0800 - 0815	0	199	**199**	
0815 - 0830	0	185	**185**	
0830 - 0845	0	167	**167**	
0845 - 0900	0	186	**186**	**737**
0900 - 0915	0	152	**152**	
0915 - 0930	0	142	**142**	
0930 - 0945	0	144	**144**	
0945 - 1000	0	125	**125**	**563**
1000 - 1015	0	126	**126**	
1015 - 1030	0	138	**138**	
1030 - 1045	0	183	**183**	
1045 - 1100	0	137	**137**	**584**
1100 - 1115	0	124	**124**	
1115 - 1130	0	156	**156**	
1130 - 1145	0	126	**126**	
1145 - 1200	0	140	**140**	**546**

Time	Volume Summary 15min NB	SB	15min Total	60min Total
1200 - 1215	0	131	**131**	
1215 - 1230	0	134	**134**	
1230 - 1245	0	158	**158**	
1245 - 1300	0	149	**149**	**572**
1300 - 1315	0	143	**143**	
1315 - 1330	0	130	**130**	
1330 - 1345	0	132	**132**	
1345 - 1400	0	148	**148**	**553**
1400 - 1415	0	134	**134**	
1415 - 1430	0	165	**165**	
1430 - 1445	0	143	**143**	
1445 - 1500	0	148	**148**	**590**
1500 - 1515	0	141	**141**	
1515 - 1530	0	139	**139**	
1530 - 1545	0	173	**173**	
1545 - 1600	0	178	**178**	**631**
1600 - 1615	0	176	**176**	
1615 - 1630	0	175	**175**	
1630 - 1645	0	188	**188**	
1645 - 1700	0	172	**172**	**711**
1700 - 1715	0	181	**181**	
1715 - 1730	0	223	**223**	
1730 - 1745	0	163	**163**	
1745 - 1800	0	151	**151**	**718**
1800 - 1815	0	165	**165**	
1815 - 1830	0	143	**143**	
1830 - 1845	0	134	**134**	
1845 - 1900	0	103	**103**	**545**
1900 - 1915	0	102	**102**	
1915 - 1930	0	110	**110**	
1930 - 1945	0	113	**113**	
1945 - 2000	0	75	**75**	**400**
2000 - 2015	0	78	**78**	
2015 - 2030	0	78	**78**	
2030 - 2045	0	78	**78**	
2045 - 2100	0	42	**42**	**276**
2100 - 2115	0	55	**55**	
2115 - 2130	0	50	**50**	
2130 - 2145	0	44	**44**	
2145 - 2200	0	51	**51**	**200**
2200 - 2215	0	44	**44**	
2215 - 2230	0	44	**44**	
2230 - 2245	0	32	**32**	
2245 - 2300	0	27	**27**	**147**
2300 - 2315	0	27	**27**	
2315 - 2330	0	24	**24**	
2330 - 2345	0	17	**17**	
2345 - 0000	0	12	**12**	**80**

Session Total	0	9338	**9338**
Session Average	0.00	97.27	**97.27**
Session Percentage	0.00	100.00	

Site 13
I-26 S/Bound On-Ramp,
south of I-20

Date
Friday, April 26, 2024

Lat/Long
34.036148°, -81.108200°

Weather
Cloudy
69°F

Click here for Detailed Weather

0000 - 2400 (Weekday 24h Session) (04-26-2024)
Volume Summary 15min

TIME	Volume Summary 15min NB	SB	15min Total	60min Total
0000 - 0015	0	11	**11**	
0015 - 0030	0	9	**9**	
0030 - 0045	0	14	**14**	
0045 - 0100	0	8	**8**	**42**
0100 - 0115	0	6	**6**	
0115 - 0130	0	14	**14**	
0130 - 0145	0	10	**10**	
0145 - 0200	0	12	**12**	**42**
0200 - 0215	0	9	**9**	
0215 - 0230	0	10	**10**	
0230 - 0245	0	10	**10**	
0245 - 0300	0	12	**12**	**41**
0300 - 0315	0	10	**10**	
0315 - 0330	0	11	**11**	
0330 - 0345	0	12	**12**	
0345 - 0400	0	13	**13**	**46**
0400 - 0415	0	11	**11**	
0415 - 0430	0	15	**15**	
0430 - 0445	0	24	**24**	
0445 - 0500	0	25	**25**	**75**
0500 - 0515	0	12	**12**	
0515 - 0530	0	25	**25**	
0530 - 0545	0	49	**49**	
0545 - 0600	0	57	**57**	**143**
0600 - 0615	0	53	**53**	
0615 - 0630	0	73	**73**	
0630 - 0645	0	94	**94**	
0645 - 0700	0	118	**118**	**338**
0700 - 0715	0	112	**112**	
0715 - 0730	0	181	**181**	
0730 - 0745	0	179	**179**	
0745 - 0800	0	228	**228**	**700**
0800 - 0815	0	185	**185**	
0815 - 0830	0	187	**187**	
0830 - 0845	0	155	**155**	
0845 - 0900	0	166	**166**	**693**
0900 - 0915	0	149	**149**	
0915 - 0930	0	133	**133**	
0930 - 0945	0	166	**166**	
0945 - 1000	0	144	**144**	**592**
1000 - 1015	0	132	**132**	
1015 - 1030	0	152	**152**	
1030 - 1045	0	166	**166**	
1045 - 1100	0	176	**176**	**626**
1100 - 1115	0	133	**133**	
1115 - 1130	0	157	**157**	
1130 - 1145	0	128	**128**	
1145 - 1200	0	168	**168**	**586**

Time	Volume Summary 15min NB	SB	15min Total	60min Total
1200 - 1215	0	164	**164**	
1215 - 1230	0	163	**163**	
1230 - 1245	0	170	**170**	
1245 - 1300	0	141	**141**	**638**
1300 - 1315	0	126	**126**	
1315 - 1330	0	131	**131**	
1330 - 1345	0	168	**168**	
1345 - 1400	0	184	**184**	**609**
1400 - 1415	0	163	**163**	
1415 - 1430	0	156	**156**	
1430 - 1445	0	160	**160**	
1445 - 1500	0	168	**168**	**647**
1500 - 1515	0	154	**154**	
1515 - 1530	0	153	**153**	
1530 - 1545	0	160	**160**	
1545 - 1600	0	183	**183**	**650**
1600 - 1615	0	197	**197**	
1615 - 1630	0	165	**165**	
1630 - 1645	0	164	**164**	
1645 - 1700	0	180	**180**	**706**
1700 - 1715	0	138	**138**	
1715 - 1730	0	171	**171**	
1730 - 1745	0	152	**152**	
1745 - 1800	0	146	**146**	**607**
1800 - 1815	0	152	**152**	
1815 - 1830	0	146	**146**	
1830 - 1845	0	147	**147**	
1845 - 1900	0	145	**145**	**590**
1900 - 1915	0	104	**104**	
1915 - 1930	0	126	**126**	
1930 - 1945	0	98	**98**	
1945 - 2000	0	102	**102**	**430**
2000 - 2015	0	81	**81**	
2015 - 2030	0	78	**78**	
2030 - 2045	0	71	**71**	
2045 - 2100	0	49	**49**	**279**
2100 - 2115	0	78	**78**	
2115 - 2130	0	67	**67**	
2130 - 2145	0	47	**47**	
2145 - 2200	0	65	**65**	**257**
2200 - 2215	0	59	**59**	
2215 - 2230	0	52	**52**	
2230 - 2245	0	37	**37**	
2245 - 2300	0	27	**27**	**175**
2300 - 2315	0	33	**33**	
2315 - 2330	0	44	**44**	
2330 - 2345	0	31	**31**	
2345 - 0000	0	27	**27**	**135**

Session Total	0	9647	**9647**
Session Average	0.00	100.49	**100.49**
Session Percentage	0.00	100.00	

Site 13
I-26 S/Bound On-Ramp,
south of I-20

Date
Saturday, April 27, 2024

Lat/Long
34.036148°, -81.108200°

Weather
Mostly Cloudy
69°F

Click here for Detailed Weather

0000 - 2400 (Saturday 24h Session) (04-27-2024)
Volume Summary 15min

TIME	Volume Summary 15min NB	SB	15min Total	60min Total
0000 - 0015	0	11	**11**	
0015 - 0030	0	16	**16**	
0030 - 0045	0	23	**23**	
0045 - 0100	0	14	**14**	**64**
0100 - 0115	0	15	**15**	
0115 - 0130	0	12	**12**	
0130 - 0145	0	12	**12**	
0145 - 0200	0	7	**7**	**46**
0200 - 0215	0	7	**7**	
0215 - 0230	0	14	**14**	
0230 - 0245	0	6	**6**	
0245 - 0300	0	10	**10**	**37**
0300 - 0315	0	9	**9**	
0315 - 0330	0	8	**8**	
0330 - 0345	0	8	**8**	
0345 - 0400	0	11	**11**	**36**
0400 - 0415	0	6	**6**	
0415 - 0430	0	8	**8**	
0430 - 0445	0	6	**6**	
0445 - 0500	0	14	**14**	**34**
0500 - 0515	0	14	**14**	
0515 - 0530	0	11	**11**	
0530 - 0545	0	15	**15**	
0545 - 0600	0	17	**17**	**57**
0600 - 0615	0	24	**24**	
0615 - 0630	0	39	**39**	
0630 - 0645	0	33	**33**	
0645 - 0700	0	50	**50**	**146**
0700 - 0715	0	47	**47**	
0715 - 0730	0	59	**59**	
0730 - 0745	0	61	**61**	
0745 - 0800	0	85	**85**	**252**
0800 - 0815	0	81	**81**	
0815 - 0830	0	88	**88**	
0830 - 0845	0	89	**89**	
0845 - 0900	0	127	**127**	**385**
0900 - 0915	0	116	**116**	
0915 - 0930	0	137	**137**	
0930 - 0945	0	143	**143**	
0945 - 1000	0	170	**170**	**566**
1000 - 1015	0	133	**133**	
1015 - 1030	0	152	**152**	
1030 - 1045	0	165	**165**	
1045 - 1100	0	174	**174**	**624**
1100 - 1115	0	189	**189**	
1115 - 1130	0	161	**161**	
1130 - 1145	0	189	**189**	
1145 - 1200	0	191	**191**	**730**

Time	Volume Summary 15min NB	SB	15min Total	60min Total
1200 - 1215	0	165	**165**	
1215 - 1230	0	192	**192**	
1230 - 1245	0	159	**159**	
1245 - 1300	0	163	**163**	**679**
1300 - 1315	0	194	**194**	
1315 - 1330	0	163	**163**	
1330 - 1345	0	178	**178**	
1345 - 1400	0	155	**155**	**690**
1400 - 1415	0	157	**157**	
1415 - 1430	0	180	**180**	
1430 - 1445	0	151	**151**	
1445 - 1500	0	154	**154**	**642**
1500 - 1515	0	149	**149**	
1515 - 1530	0	141	**141**	
1530 - 1545	0	163	**163**	
1545 - 1600	0	168	**168**	**621**
1600 - 1615	0	142	**142**	
1615 - 1630	0	154	**154**	
1630 - 1645	0	150	**150**	
1645 - 1700	0	157	**157**	**603**
1700 - 1715	0	127	**127**	
1715 - 1730	0	136	**136**	
1730 - 1745	0	142	**142**	
1745 - 1800	0	124	**124**	**529**
1800 - 1815	0	108	**108**	
1815 - 1830	0	117	**117**	
1830 - 1845	0	134	**134**	
1845 - 1900	0	114	**114**	**473**
1900 - 1915	0	124	**124**	
1915 - 1930	0	112	**112**	
1930 - 1945	0	87	**87**	
1945 - 2000	0	81	**81**	**404**
2000 - 2015	0	96	**96**	
2015 - 2030	0	72	**72**	
2030 - 2045	0	68	**68**	
2045 - 2100	0	74	**74**	**310**
2100 - 2115	0	61	**61**	
2115 - 2130	0	58	**58**	
2130 - 2145	0	63	**63**	
2145 - 2200	0	38	**38**	**220**
2200 - 2215	0	48	**48**	
2215 - 2230	0	52	**52**	
2230 - 2245	0	49	**49**	
2245 - 2300	0	32	**32**	**181**
2300 - 2315	0	32	**32**	
2315 - 2330	0	25	**25**	
2330 - 2345	0	30	**30**	
2345 - 0000	0	20	**20**	**107**

Session Total	0	8436	**8436**
Session Average	0.00	87.88	**87.88**
Session Percentage	0.00	100.00	

Bi-Directional Class Count || SB WB 60min

Columbia, SC

Marr Traffic DATA COLLECTION

www.marrtraffic.com

Site 13
I-26 S/Bound On-Ramp,
south of I-20

Date
Sunday, April 21, 2024

Lat/Long
34.036148°, -81.108200°

Weather
Cloudy
66°F

Click here for Detailed Weather

0000 - 2400 (Sunday 24h Session) (04-21-2024)
SB WB 60min

	Southbound (Movement 13.1)													
TIME	1	2	3	4	5	6	7	8	9	10	11	12	13	**Total**
0000 - 0100	2	76	18	0	0	0	0	0	9	0	0	0	0	**105**
0100 - 0200	0	47	12	0	0	0	0	0	3	0	0	0	0	**62**
0200 - 0300	0	38	6	1	0	0	0	0	4	0	0	0	0	**49**
0300 - 0400	0	26	5	0	1	0	0	0	5	0	0	0	0	**37**
0400 - 0500	0	22	6	0	0	0	0	0	5	0	0	0	0	**33**
0500 - 0600	0	27	6	0	0	0	0	0	1	0	0	0	0	**34**
0600 - 0700	0	58	16	0	0	0	0	1	7	0	0	0	0	**82**
0700 - 0800	0	125	28	0	0	0	0	0	7	0	0	0	0	**160**
0800 - 0900	1	159	41	0	1	0	0	0	6	0	0	0	0	**208**
0900 - 1000	0	243	82	0	1	1	0	0	8	0	0	0	0	**335**
1000 - 1100	0	354	87	1	2	0	0	0	7	0	1	0	0	**452**
1100 - 1200	0	402	102	0	0	0	0	1	11	0	0	0	0	**516**
1200 - 1300	0	483	150	2	2	0	0	0	7	0	0	0	0	**644**
1300 - 1400	0	508	133	0	0	0	0	0	11	0	0	0	0	**652**
1400 - 1500	0	443	120	0	1	0	0	0	4	0	0	0	0	**568**
1500 - 1600	0	376	120	0	2	0	0	0	6	0	0	0	0	**504**
1600 - 1700	0	387	87	0	6	0	0	0	5	0	0	0	0	**485**
1700 - 1800	0	357	74	0	1	1	0	0	4	0	0	0	0	**437**
1800 - 1900	1	294	72	0	1	1	0	0	1	0	0	0	0	**370**
1900 - 2000	0	244	62	0	2	0	0	1	1	0	0	0	0	**310**
2000 - 2100	0	151	43	0	3	0	0	0	3	0	0	0	0	**200**
2100 - 2200	0	113	28	0	2	0	0	0	11	0	0	0	0	**154**
2200 - 2300	0	75	19	0	0	1	0	0	8	0	1	0	0	**104**
2300 - 2400	0	57	8	0	0	0	0	0	6	0	0	0	0	**71**

Session Total	4	5065	1325	4	25	4	0	3	140	0	2	0	0	**6572**
Session Average	0.17	211.04	55.21	0.17	1.04	0.17	0.00	0.13	5.83	0.00	0.08	0.00	0.00	**273.83**
Session Percentage	0.06	77.07	20.16	0.06	0.38	0.06	0.00	0.05	2.13	0.00	0.03	0.00	0.00	

AM Peak Hour	0800 - 0900	0900 - 1000	0900 - 1000	-	0800 - 0900	0900 - 1000	-	0600 - 0700	0900 - 1000	-	-	-	-	**0900 - 1000**
AM Peak Volume	1	243	82	0	1	1	0	1	8	0	0	0	0	**335**

Noon Peak Hour	-	1300 - 1400	1200 - 1300	1200 - 1300	1000 - 1100	-	-	1100 - 1200	1100 - 1200	-	1000 - 1100	-	-	**1300 - 1400**
Noon Peak Volume	0	508	150	2	2	0	0	1	11	0	1	0	0	**652**

PM Peak Hour	1800 - 1900	1600 - 1700	1500 - 1600	-	1600 - 1700	1700 - 1800	-	1900 - 2000	1500 - 1600	-	-	-	-	**1500 - 1600**
PM Peak Volume	1	387	120	0	6	1	0	1	6	0	0	0	0	**504**

Site 13
I-26 S/Bound On-Ramp,
south of I-20

Date
Monday, April 22, 2024

Lat/Long
34.036148°, -81.108200°

Weather
Mostly Cloudy
57°F

Click here for Detailed Weather

0000 - 2400 (Weekday 24h Session) (04-22-2024)
SB WB 60min

	Southbound (Movement 13.1)													
TIME	1	2	3	4	5	6	7	8	9	10	11	12	13	**Total**
0000 - 0100	0	43	5	0	0	1	0	0	7	0	0	0	0	**56**
0100 - 0200	0	15	1	0	0	0	0	0	4	0	0	0	0	**20**
0200 - 0300	0	14	0	0	4	3	0	2	1	0	0	0	0	**24**
0300 - 0400	1	27	6	0	1	0	0	0	9	0	0	0	0	**44**
0400 - 0500	0	43	9	0	0	1	0	0	10	0	0	0	0	**63**
0500 - 0600	0	110	19	0	1	1	0	0	11	0	0	0	0	**142**
0600 - 0700	0	250	86	1	6	1	0	1	13	0	0	0	0	**358**
0700 - 0800	0	548	160	0	13	4	0	2	10	0	0	0	0	**737**
0800 - 0900	1	457	184	1	18	3	1	0	19	0	0	0	0	**684**
0900 - 1000	1	323	134	0	24	1	0	4	14	0	0	0	0	**501**
1000 - 1100	0	357	107	0	9	2	1	7	25	0	0	0	0	**508**
1100 - 1200	0	329	123	0	16	0	0	0	25	0	0	0	0	**493**
1200 - 1300	0	371	129	0	16	0	0	2	18	2	0	0	0	**538**
1300 - 1400	0	360	101	2	8	6	0	2	19	0	0	0	0	**498**
1400 - 1500	0	380	123	0	11	1	0	1	16	1	0	0	0	**533**
1500 - 1600	2	462	115	0	7	3	0	3	14	1	0	0	0	**607**
1600 - 1700	0	597	178	0	11	4	0	3	25	1	0	0	0	**819**
1700 - 1800	2	475	145	0	7	0	0	2	13	0	1	0	0	**645**
1800 - 1900	0	363	80	0	2	1	0	0	7	0	0	0	0	**453**
1900 - 2000	3	274	55	0	4	1	0	0	8	0	1	0	0	**346**
2000 - 2100	0	202	23	0	1	0	0	0	9	0	0	0	0	**235**
2100 - 2200	0	159	6	0	0	0	0	0	6	0	0	0	0	**171**
2200 - 2300	0	93	3	0	2	0	0	0	1	0	3	0	0	**102**
2300 - 2400	0	65	1	0	1	0	0	0	4	0	0	0	0	**71**

Session Total	10	6317	1793	4	162	33	2	29	288	5	5	0	0	**8648**
Session Average	0.42	263.21	74.71	0.17	6.75	1.38	0.08	1.21	12.00	0.21	0.21	0.00	0.00	**360.33**
Session Percentage	0.12	73.05	20.73	0.05	1.87	0.38	0.02	0.34	3.33	0.06	0.06	0.00	0.00	

AM Peak Hour	0800 - 0900	0700 - 0800	0800 - 0900	0600 - 0700	0900 - 1000	0700 - 0800	0800 - 0900	0900 - 1000	0800 - 0900	-	-	-	-	**0700 - 0800**
AM Peak Volume	1	548	184	1	24	4	1	4	19	0	0	0	0	**737**

Noon Peak Hour	-	1400 - 1500	1200 - 1300	1300 - 1400	1100 - 1200	1300 - 1400	1000 - 1100	1000 - 1100	1000 - 1100	1200 - 1300	-	-	-	**1200 - 1300**
Noon Peak Volume	0	380	129	2	16	6	1	7	25	2	0	0	0	**538**

PM Peak Hour	1900 - 2000	1600 - 1700	1600 - 1700	-	1600 - 1700	1600 - 1700	-	1500 - 1600	1600 - 1700	1500 - 1600	1700 - 1800	-	-	**1600 - 1700**
PM Peak Volume	3	597	178	0	11	4	0	3	25	1	1	0	0	**819**

Site 13
I-26 S/Bound On-Ramp,
south of I-20

Date
Tuesday, April 23, 2024

Weather
Fair
58°F

Lat/Long
34.036148°, -81.108200°

Click here for Detailed Weather

0000 - 2400 (Weekday 24h Session) (04-23-2024)
SB WB 60min

	Southbound (Movement 13.1)													
TIME	1	2	3	4	5	6	7	8	9	10	11	12	13	**Total**
0000 - 0100	0	29	4	0	0	0	0	0	6	0	1	0	0	**40**
0100 - 0200	0	17	5	0	1	0	0	0	8	0	1	0	0	**32**
0200 - 0300	0	17	3	0	1	0	0	0	10	0	0	0	0	**31**
0300 - 0400	0	30	8	0	0	0	0	0	7	0	1	0	0	**46**
0400 - 0500	0	45	11	0	1	0	0	0	8	0	0	0	0	**65**
0500 - 0600	0	87	27	0	3	0	0	5	12	0	0	0	0	**134**
0600 - 0700	0	228	101	1	8	3	0	1	20	0	0	0	0	**362**
0700 - 0800	0	476	131	1	8	2	0	0	11	0	0	0	0	**629**
0800 - 0900	2	530	128	0	14	5	0	1	23	0	0	0	0	**703**
0900 - 1000	2	351	124	0	24	3	0	4	23	0	1	0	0	**532**
1000 - 1100	0	331	133	0	10	7	0	0	25	0	0	0	0	**506**
1100 - 1200	1	343	120	1	12	1	0	2	24	0	0	0	0	**504**
1200 - 1300	2	370	113	0	11	5	0	1	25	0	0	0	0	**527**
1300 - 1400	1	376	115	0	10	3	0	1	22	0	0	0	0	**528**
1400 - 1500	1	419	137	1	14	2	0	0	26	1	0	0	0	**601**
1500 - 1600	2	472	121	0	14	4	0	3	17	1	0	0	0	**634**
1600 - 1700	0	517	141	0	5	0	0	1	16	1	0	0	0	**681**
1700 - 1800	0	515	154	0	9	1	0	0	10	0	0	0	0	**689**
1800 - 1900	0	354	99	0	5	0	0	2	12	0	0	0	0	**472**
1900 - 2000	1	298	70	1	4	1	0	0	10	0	1	0	0	**386**
2000 - 2100	0	179	43	1	3	0	0	0	7	0	0	0	0	**233**
2100 - 2200	1	163	37	2	1	0	0	0	2	0	0	0	0	**206**
2200 - 2300	0	103	18	0	3	0	0	0	4	0	1	0	0	**129**
2300 - 2400	0	54	10	0	0	1	0	0	9	0	0	0	0	**74**

Session Total	13	6304	1853	8	161	38	0	21	337	3	6	0	0	**8744**
Session Average	0.54	262.67	77.21	0.33	6.71	1.58	0.00	0.88	14.04	0.13	0.25	0.00	0.00	**364.33**
Session Percentage	0.15	72.10	21.19	0.09	1.84	0.43	0.00	0.24	3.85	0.03	0.07	0.00	0.00	

AM Peak Hour	0800 - 0900	0800 - 0900	0700 - 0800	0600 - 0700	0900 - 1000	0800 - 0900	-	0500 - 0600	0800 - 0900	-	0900 - 1000	-	-	**0800 - 0900**
AM Peak Hour Volume	2	530	131	1	24	5	0	5	23	0	1	0	0	**703**

Noon Peak Hour	1200 - 1300	1400 - 1500	1400 - 1500	1100 - 1200	1400 - 1500	1000 - 1100	-	1100 - 1200	1400 - 1500	1400 - 1500	-	-	-	**1400 - 1500**
Noon Peak Hour Volume	2	419	137	1	14	7	0	2	26	1	0	0	0	**601**

PM Peak Hour	1500 - 1600	1600 - 1700	1700 - 1800	1900 - 2000	1500 - 1600	1500 - 1600	-	1500 - 1600	1500 - 1600	1500 - 1600	1900 - 2000	-	-	**1700 - 1800**
PM Peak Hour Volume	2	517	154	1	14	4	0	3	17	1	1	0	0	**689**

Site 13
I-26 S/Bound On-Ramp,
south of I-20

Date
Wednesday, April 24, 2024

Weather
Fair
66°F

Lat/Long
34.036148°, -81.108200°

Click here for Detailed Weather

0000 - 2400 (Weekday 24h Session) (04-24-2024)
SB WB 60min

	Southbound (Movement 13.1)													
TIME	1	2	3	4	5	6	7	8	9	10	11	12	13	**Total**
0000 - 0100	0	27	6	0	0	0	0	0	14	0	0	0	0	**47**
0100 - 0200	0	16	2	0	1	0	0	0	6	0	1	0	0	**26**
0200 - 0300	0	15	2	0	0	0	0	0	9	0	1	0	0	**27**
0300 - 0400	1	28	4	0	0	0	0	0	8	0	1	0	0	**42**
0400 - 0500	0	39	15	0	1	0	0	0	10	0	1	0	0	**66**
0500 - 0600	0	96	39	0	8	0	0	0	15	0	0	0	0	**158**
0600 - 0700	0	228	107	1	4	6	0	1	15	0	0	0	0	**362**
0700 - 0800	1	534	183	0	12	6	0	2	15	0	0	0	0	**753**
0800 - 0900	1	451	181	2	22	6	0	2	15	1	0	0	0	**681**
0900 - 1000	1	392	137	0	20	4	0	2	14	0	0	0	0	**570**
1000 - 1100	1	381	125	0	14	3	0	2	18	0	0	0	0	**544**
1100 - 1200	0	374	132	0	10	2	0	6	20	1	0	0	0	**545**
1200 - 1300	2	410	119	0	11	2	0	3	16	0	0	0	0	**563**
1300 - 1400	2	391	117	3	15	3	0	2	27	1	0	0	0	**561**
1400 - 1500	0	389	97	1	6	0	0	0	14	0	0	0	0	**507**
1500 - 1600	1	493	132	1	8	4	0	2	17	1	0	0	0	**659**
1600 - 1700	0	537	153	0	5	0	0	1	11	0	0	0	0	**707**
1700 - 1800	1	557	142	0	10	4	2	1	10	0	0	0	0	**727**
1800 - 1900	2	414	93	0	6	2	0	1	11	2	0	0	0	**531**
1900 - 2000	1	302	57	1	5	0	0	0	9	0	1	0	0	**376**
2000 - 2100	2	222	53	0	0	1	0	0	7	0	0	1	0	**286**
2100 - 2200	0	122	24	0	2	0	0	0	9	0	1	0	0	**158**
2200 - 2300	0	101	25	1	0	0	0	0	5	0	5	0	0	**137**
2300 - 2400	0	65	7	0	1	0	0	0	3	0	1	0	0	**77**

Session Total	16	6584	1952	10	161	43	2	25	298	6	12	1	0	**9110**
Session Average	0.67	274.33	81.33	0.42	6.71	1.79	0.08	1.04	12.42	0.25	0.50	0.04	0.00	**379.58**
Session Percentage	0.18	72.27	21.43	0.11	1.77	0.47	0.02	0.27	3.27	0.07	0.13	0.01	0.00	

AM Peak Hour	0700 - 0800	0700 - 0800	0700 - 0800	0800 - 0900	0800 - 0900	0600 - 0700	-	0700 - 0800	0500 - 0600	0800 - 0900	-	-	-	**0700 - 0800**
AM Peak Hour Volume	1	534	183	2	22	6	0	2	15	1	0	0	0	**753**

Noon Peak Hour	1200 - 1300	1200 - 1300	1100 - 1200	1300 - 1400	1300 - 1400	1000 - 1100	-	1100 - 1200	1300 - 1400	1100 - 1200	-	-	-	**1200 - 1300**
Noon Peak Hour Volume	2	410	132	3	15	3	0	6	27	1	0	0	0	**563**

PM Peak Hour	1800 - 1900	1700 - 1800	1600 - 1700	1500 - 1600	1700 - 1800	1500 - 1600	1700 - 1800	1500 - 1600	1500 - 1600	1800 - 1900	1900 - 2000	-	-	**1700 - 1800**
PM Peak Hour Volume	2	557	153	1	10	4	2	2	17	2	1	0	0	**727**

Site 13
I-26 S/Bound On-Ramp,
south of I-20

Date
Thursday, April 25, 2024

Weather
Fair
67°F

Lat/Long
34.036148°, -81.108200°

Click here for Detailed Weather

0000 - 2400 (Weekday 24h Session) (04-25-2024)
SB WB 60min

	Southbound (Movement 13.1)													
TIME	1	2	3	4	5	6	7	8	9	10	11	12	13	**Total**
0000 - 0100	0	28	4	0	0	0	0	1	8	0	0	0	0	**41**
0100 - 0200	0	27	4	0	0	0	0	0	7	0	3	0	0	**41**
0200 - 0300	0	17	6	0	0	0	0	0	6	0	1	0	0	**30**
0300 - 0400	1	31	11	0	2	1	0	0	14	0	1	0	0	**61**
0400 - 0500	0	45	14	0	1	0	0	0	8	0	0	0	0	**68**
0500 - 0600	0	87	49	0	2	2	0	0	12	0	0	0	0	**152**
0600 - 0700	1	247	101	1	5	1	1	1	20	0	0	0	0	**378**
0700 - 0800	2	519	162	1	12	0	1	1	15	1	0	0	0	**714**
0800 - 0900	5	512	183	0	19	3	0	4	11	0	0	0	0	**737**
0900 - 1000	0	382	134	0	15	2	0	2	28	0	0	0	0	**563**
1000 - 1100	1	387	141	0	7	4	1	4	39	0	0	0	0	**584**
1100 - 1200	3	383	127	0	11	2	0	1	18	1	0	0	0	**546**
1200 - 1300	0	393	138	0	14	1	1	5	20	0	0	0	0	**572**
1300 - 1400	1	401	107	0	17	3	0	2	22	0	0	0	0	**553**
1400 - 1500	1	438	122	2	11	2	0	2	12	0	0	0	0	**590**
1500 - 1600	0	471	137	0	4	1	0	3	15	0	0	0	0	**631**
1600 - 1700	1	537	146	1	9	1	0	1	15	0	0	0	0	**711**
1700 - 1800	1	545	151	0	10	0	0	0	11	0	0	0	0	**718**
1800 - 1900	1	425	98	0	7	1	0	2	11	0	0	0	0	**545**
1900 - 2000	1	317	65	0	9	0	0	1	6	0	1	0	0	**400**
2000 - 2100	0	216	54	0	1	0	0	0	5	0	0	0	0	**276**
2100 - 2200	0	142	50	0	0	0	0	1	6	0	1	0	0	**200**
2200 - 2300	0	107	28	0	1	0	0	0	7	0	4	0	0	**147**
2300 - 2400	0	63	11	0	0	2	0	0	3	0	1	0	0	**80**

Session Total	19	6720	2043	5	157	26	4	31	319	2	12	0	0	**9338**
Session Average	0.79	280.00	85.13	0.21	6.54	1.08	0.17	1.29	13.29	0.08	0.50	0.00	0.00	**389.08**
Session Percentage	0.20	71.96	21.88	0.05	1.68	0.28	0.04	0.33	3.42	0.02	0.13	0.00	0.00	

AM Peak Hour	0800 - 0900	0700 - 0800	0800 - 0900	0600 - 0700	0800 - 0900	0800 - 0900	0600 - 0700	0800 - 0900	0900 - 1000	0700 - 0800	-	-	-	**0800 - 0900**
AM Peak Hour Volume	5	519	183	1	19	3	1	4	28	1	0	0	0	**737**

Noon Peak Hour	1100 - 1200	1400 - 1500	1000 - 1100	1400 - 1500	1300 - 1400	1000 - 1100	1000 - 1100	1200 - 1300	1000 - 1100	1100 - 1200	-	-	-	**1400 - 1500**
Noon Peak Hour Volume	3	438	141	2	17	4	1	5	39	1	0	0	0	**590**

PM Peak Hour	1600 - 1700	1700 - 1800	1700 - 1800	1600 - 1700	1700 - 1800	1500 - 1600	-	1500 - 1600	1500 - 1600	-	1900 - 2000	-	-	**1700 - 1800**
PM Peak Hour Volume	1	545	151	1	10	1	0	3	15	0	1	0	0	**718**

Site 13
I-26 S/Bound On-Ramp,
south of I-20

Date
Friday, April 26, 2024

Lat/Long
34.036148°, -81.108200°

Weather
Cloudy
69°F

Click here for Detailed Weather

0000 - 2400 (Weekday 24h Session) (04-26-2024)
SB WB 60min

	Southbound (Movement 13.1)													
TIME	1	2	3	4	5	6	7	8	9	10	11	12	13	**Total**
0000 - 0100	0	30	6	0	0	0	0	0	6	0	0	0	0	**42**
0100 - 0200	0	24	4	0	2	1	0	0	10	0	1	0	0	**42**
0200 - 0300	1	23	3	0	1	3	0	0	9	0	1	0	0	**41**
0300 - 0400	0	25	5	0	1	1	0	1	13	0	0	0	0	**46**
0400 - 0500	0	45	7	0	2	3	0	3	14	0	1	0	0	**75**
0500 - 0600	0	107	22	1	1	2	0	4	6	0	0	0	0	**143**
0600 - 0700	0	240	71	1	9	2	0	0	13	0	2	0	0	**338**
0700 - 0800	0	520	151	0	9	4	0	1	15	0	0	0	0	**700**
0800 - 0900	1	460	175	3	24	2	0	5	22	1	0	0	0	**693**
0900 - 1000	0	418	132	0	18	4	0	6	14	0	0	0	0	**592**
1000 - 1100	0	449	132	1	11	3	0	2	25	3	0	0	0	**626**
1100 - 1200	1	431	112	1	6	7	0	5	22	1	0	0	0	**586**
1200 - 1300	0	470	135	0	6	0	0	0	27	0	0	0	0	**638**
1300 - 1400	1	464	120	2	10	1	0	0	11	0	0	0	0	**609**
1400 - 1500	0	490	123	2	15	3	0	1	13	0	0	0	0	**647**
1500 - 1600	1	497	126	2	11	1	0	0	12	0	0	0	0	**650**
1600 - 1700	1	533	144	0	8	2	0	0	18	0	0	0	0	**706**
1700 - 1800	0	493	106	0	2	0	0	0	6	0	0	0	0	**607**
1800 - 1900	1	482	92	0	5	2	0	0	8	0	0	0	0	**590**
1900 - 2000	2	343	70	0	3	2	0	0	9	0	1	0	0	**430**
2000 - 2100	0	213	57	0	2	1	0	0	5	0	1	0	0	**279**
2100 - 2200	0	191	57	0	2	0	0	0	4	0	3	0	0	**257**
2200 - 2300	0	127	41	0	0	0	0	0	4	0	3	0	0	**175**
2300 - 2400	1	88	36	0	0	0	0	0	8	0	2	0	0	**135**

Session Total	10	7163	1927	13	148	44	0	28	294	5	15	0	0	**9647**
Session Average	0.42	298.46	80.29	0.54	6.17	1.83	0.00	1.17	12.25	0.21	0.63	0.00	0.00	**401.96**
Session Percentage	0.10	74.25	19.98	0.13	1.53	0.46	0.00	0.29	3.05	0.05	0.16	0.00	0.00	

AM Peak Hour	0800 - 0900	0700 - 0800	0800 - 0900	0800 - 0900	0800 - 0900	0700 - 0800	-	0900 - 1000	0800 - 0900	0800 - 0900	0600 - 0700	-	-	**0700 - 0800**
AM Peak Hour Volume	1	520	175	3	24	4	0	6	22	1	2	0	0	**700**

Noon Peak Hour	1100 - 1200	1400 - 1500	1200 - 1300	1300 - 1400	1400 - 1500	1100 - 1200	-	1100 - 1200	1200 - 1300	1000 - 1100	-	-	-	**1400 - 1500**
Noon Peak Hour Volume	1	490	135	2	15	7	0	5	27	3	0	0	0	**647**

PM Peak Hour	1900 - 2000	1600 - 1700	1600 - 1700	1500 - 1600	1500 - 1600	1600 - 1700	-	-	1600 - 1700	-	1900 - 2000	-	-	**1600 - 1700**
PM Peak Hour Volume	2	533	144	2	11	2	0	0	18	0	1	0	0	**706**

Site 13
I-26 S/Bound On-Ramp,
south of I-20

Date
Saturday, April 27, 2024

Lat/Long
34.036148°, -81.108200°

Weather
Mostly Cloudy
69°F

Click here for Detailed Weather

0000 - 2400 (Saturday 24h Session) (04-27-2024)
SB WB 60min

	Southbound (Movement 13.1)													
TIME	1	2	3	4	5	6	7	8	9	10	11	12	13	**Total**
0000 - 0100	0	53	9	0	1	0	0	0	1	0	0	0	0	**64**
0100 - 0200	0	33	4	0	1	2	0	0	5	0	0	1	0	**46**
0200 - 0300	0	26	5	0	1	0	0	0	4	0	0	1	0	**37**
0300 - 0400	0	20	8	0	3	0	0	0	5	0	0	0	0	**36**
0400 - 0500	1	22	6	0	0	0	0	0	3	0	0	2	0	**34**
0500 - 0600	0	34	15	0	1	1	0	0	4	0	0	2	0	**57**
0600 - 0700	1	98	41	0	1	0	0	0	4	1	0	0	0	**146**
0700 - 0800	0	171	71	0	3	1	0	1	5	0	0	0	0	**252**
0800 - 0900	2	299	77	0	1	0	0	0	6	0	0	0	0	**385**
0900 - 1000	2	405	129	0	15	0	0	1	14	0	0	0	0	**566**
1000 - 1100	3	484	126	0	3	0	0	2	6	0	0	0	0	**624**
1100 - 1200	5	575	134	0	3	0	0	0	13	0	0	0	0	**730**
1200 - 1300	0	544	124	0	1	1	0	1	8	0	0	0	0	**679**
1300 - 1400	4	557	112	0	4	0	0	3	10	0	0	0	0	**690**
1400 - 1500	1	530	103	0	4	0	0	0	4	0	0	0	0	**642**
1500 - 1600	3	500	110	0	3	0	0	0	4	1	0	0	0	**621**
1600 - 1700	3	498	92	0	2	0	0	2	6	0	0	0	0	**603**
1700 - 1800	2	419	96	0	5	1	0	1	5	0	0	0	0	**529**
1800 - 1900	2	396	67	0	3	0	0	1	4	0	0	0	0	**473**
1900 - 2000	1	337	57	0	6	0	0	0	3	0	0	0	0	**404**
2000 - 2100	0	255	45	0	4	0	0	0	6	0	0	0	0	**310**
2100 - 2200	0	184	32	0	0	0	0	1	3	0	0	0	0	**220**
2200 - 2300	0	141	33	0	0	0	0	1	6	0	0	0	0	**181**
2300 - 2400	0	85	21	0	1	0	0	0	0	0	0	0	0	**107**
Session Total	30	6666	1517	0	66	6	0	14	129	2	0	6	0	**8436**
Session Average	1.25	277.75	63.21	0.00	2.75	0.25	0.00	0.58	5.38	0.08	0.00	0.25	0.00	**351.50**
Session Percentage	0.36	79.02	17.98	0.00	0.78	0.07	0.00	0.17	1.53	0.02	0.00	0.07	0.00	
AM Peak Hour	0800 - 0900	0900 - 1000	0900 - 1000	-	0900 - 1000	0500 - 0600	-	0700 - 0800	0900 - 1000	0600 - 0700	-	0500 - 0600	-	**0900 - 1000**
AM Peak Hour Volume	2	405	129	0	15	1	0	1	14	1	0	2	0	**566**
Noon Peak Hour	1100 - 1200	1100 - 1200	1100 - 1200	-	1300 - 1400	1200 - 1300	-	1300 - 1400	1100 - 1200	-	-	-	-	**1100 - 1200**
Noon Peak Hour Volume	5	575	134	0	4	1	0	3	13	0	0	0	0	**730**
PM Peak Hour	1500 - 1600	1500 - 1600	1500 - 1600	-	1900 - 2000	1700 - 1800	-	1600 - 1700	1600 - 1700	1500 - 1600	-	-	-	**1500 - 1600**
PM Peak Hour Volume	3	500	110	0	6	1	0	2	6	1	0	0	0	**621**

Bi-Directional Class Count || Volume Summary 60min

Columbia, SC

Marr Traffic DATA COLLECTION

www.marrtraffic.com

Site 13

I-26 S/Bound On-Ramp,
south of I-20

Date

Sunday, April 21, 2024

Lat/Long

34.036148°, -81.108200°

Weather

Cloudy
66°F

Click here for Detailed Weather

0000 - 2400 (Sunday 24h Session) (04-21-2024)

Volume Summary 60min

	Volume Summary 60min		
TIME	NB	SB	**Total**
0000 - 0100	0	105	**105**
0100 - 0200	0	62	**62**
0200 - 0300	0	49	**49**
0300 - 0400	0	37	**37**
0400 - 0500	0	33	**33**
0500 - 0600	0	34	**34**
0600 - 0700	0	82	**82**
0700 - 0800	0	160	**160**
0800 - 0900	0	208	**208**
0900 - 1000	0	335	**335**
1000 - 1100	0	452	**452**
1100 - 1200	0	516	**516**

	Volume Summary 60min		
Time	NB	SB	**Total**
1200 - 1300	0	644	**644**
1300 - 1400	0	652	**652**
1400 - 1500	0	568	**568**
1500 - 1600	0	504	**504**
1600 - 1700	0	485	**485**
1700 - 1800	0	437	**437**
1800 - 1900	0	370	**370**
1900 - 2000	0	310	**310**
2000 - 2100	0	200	**200**
2100 - 2200	0	154	**154**
2200 - 2300	0	104	**104**
2300 - 2400	0	71	**71**

Session Total	0	6572	**6572**
Session Average	0.00	273.83	**273.83**
Session Percentage	0.00	100.00	

Site 13

I-26 S/Bound On-Ramp,
south of I-20

Date

Monday, April 22, 2024

Lat/Long

34.036148°, -81.108200°

Weather

Mostly Cloudy
57°F

Click here for Detailed Weather

0000 - 2400 (Weekday 24h Session) (04-22-2024)

Volume Summary 60min

	Volume Summary 60min		
TIME	NB	SB	**Total**
0000 - 0100	0	56	**56**
0100 - 0200	0	20	**20**
0200 - 0300	0	24	**24**
0300 - 0400	0	44	**44**
0400 - 0500	0	63	**63**
0500 - 0600	0	142	**142**
0600 - 0700	0	358	**358**
0700 - 0800	0	737	**737**
0800 - 0900	0	684	**684**
0900 - 1000	0	501	**501**
1000 - 1100	0	508	**508**
1100 - 1200	0	493	**493**

Session Total	0	8648	**8648**
Session Average	0.00	360.33	**360.33**
Session Percentage	0.00	100.00	

	Volume Summary 60min		
Time	NB	SB	**Total**
1200 - 1300	0	538	**538**
1300 - 1400	0	498	**498**
1400 - 1500	0	533	**533**
1500 - 1600	0	607	**607**
1600 - 1700	0	819	**819**
1700 - 1800	0	645	**645**
1800 - 1900	0	453	**453**
1900 - 2000	0	346	**346**
2000 - 2100	0	235	**235**
2100 - 2200	0	171	**171**
2200 - 2300	0	102	**102**
2300 - 2400	0	71	**71**

Site 13

I-26 S/Bound On-Ramp,
south of I-20

Date

Tuesday, April 23, 2024

Lat/Long

34.036148°, -81.108200°

Weather

Fair
58°F

Click here for Detailed Weather

0000 - 2400 (Weekday 24h Session) (04-23-2024)

Volume Summary 60min

	Volume Summary 60min		
TIME	NB	SB	**Total**
0000 - 0100	0	40	**40**
0100 - 0200	0	32	**32**
0200 - 0300	0	31	**31**
0300 - 0400	0	46	**46**
0400 - 0500	0	65	**65**
0500 - 0600	0	134	**134**
0600 - 0700	0	362	**362**
0700 - 0800	0	629	**629**
0800 - 0900	0	703	**703**
0900 - 1000	0	532	**532**
1000 - 1100	0	506	**506**
1100 - 1200	0	504	**504**

Session Total	0	8744	**8744**
Session Average	0.00	364.33	**364.33**
Session Percentage	0.00	100.00	

	Volume Summary 60min		
Time	NB	SB	**Total**
1200 - 1300	0	527	**527**
1300 - 1400	0	528	**528**
1400 - 1500	0	601	**601**
1500 - 1600	0	634	**634**
1600 - 1700	0	681	**681**
1700 - 1800	0	689	**689**
1800 - 1900	0	472	**472**
1900 - 2000	0	386	**386**
2000 - 2100	0	233	**233**
2100 - 2200	0	206	**206**
2200 - 2300	0	129	**129**
2300 - 2400	0	74	**74**

Site 13

I-26 S/Bound On-Ramp,
south of I-20

Date

Wednesday, April 24, 2024

Lat/Long

34.036148°, -81.108200°

Weather

Fair
66°F

Click here for Detailed Weather

0000 - 2400 (Weekday 24h Session) (04-24-2024)

Volume Summary 60min

	Volume Summary 60min		
TIME	NB	SB	**Total**
0000 - 0100	0	47	**47**
0100 - 0200	0	26	**26**
0200 - 0300	0	27	**27**
0300 - 0400	0	42	**42**
0400 - 0500	0	66	**66**
0500 - 0600	0	158	**158**
0600 - 0700	0	362	**362**
0700 - 0800	0	753	**753**
0800 - 0900	0	681	**681**
0900 - 1000	0	570	**570**
1000 - 1100	0	544	**544**
1100 - 1200	0	545	**545**

Session Total	0	9110	**9110**
Session Average	0.00	379.58	**379.58**
Session Percentage	0.00	100.00	

	Volume Summary 60min		
Time	NB	SB	**Total**
1200 - 1300	0	563	**563**
1300 - 1400	0	561	**561**
1400 - 1500	0	507	**507**
1500 - 1600	0	659	**659**
1600 - 1700	0	707	**707**
1700 - 1800	0	727	**727**
1800 - 1900	0	531	**531**
1900 - 2000	0	376	**376**
2000 - 2100	0	286	**286**
2100 - 2200	0	158	**158**
2200 - 2300	0	137	**137**
2300 - 2400	0	77	**77**

Site 13

I-26 S/Bound On-Ramp,
south of I-20

Date

Thursday, April 25, 2024

Lat/Long

34.036148°, -81.108200°

Weather

Fair
67°F

Click here for Detailed Weather

0000 - 2400 (Weekday 24h Session) (04-25-2024)

Volume Summary 60min

	Volume Summary 60min		
TIME	NB	SB	**Total**
0000 - 0100	0	41	**41**
0100 - 0200	0	41	**41**
0200 - 0300	0	30	**30**
0300 - 0400	0	61	**61**
0400 - 0500	0	68	**68**
0500 - 0600	0	152	**152**
0600 - 0700	0	378	**378**
0700 - 0800	0	714	**714**
0800 - 0900	0	737	**737**
0900 - 1000	0	563	**563**
1000 - 1100	0	584	**584**
1100 - 1200	0	546	**546**

Session Total	0	9338	**9338**
Session Average	0.00	389.08	**389.08**
Session Percentage	0.00	100.00	

	Volume Summary 60min		
Time	NB	SB	**Total**
1200 - 1300	0	572	**572**
1300 - 1400	0	553	**553**
1400 - 1500	0	590	**590**
1500 - 1600	0	631	**631**
1600 - 1700	0	711	**711**
1700 - 1800	0	718	**718**
1800 - 1900	0	545	**545**
1900 - 2000	0	400	**400**
2000 - 2100	0	276	**276**
2100 - 2200	0	200	**200**
2200 - 2300	0	147	**147**
2300 - 2400	0	80	**80**

Site 13

I-26 S/Bound On-Ramp,
south of I-20

Date

Friday, April 26, 2024

Lat/Long

34.036148°, -81.108200°

Weather

Cloudy
69°F

Click here for Detailed Weather

0000 - 2400 (Weekday 24h Session) (04-26-2024)

Volume Summary 60min

	Volume Summary 60min		
TIME	NB	SB	**Total**
0000 - 0100	0	42	**42**
0100 - 0200	0	42	**42**
0200 - 0300	0	41	**41**
0300 - 0400	0	46	**46**
0400 - 0500	0	75	**75**
0500 - 0600	0	143	**143**
0600 - 0700	0	338	**338**
0700 - 0800	0	700	**700**
0800 - 0900	0	693	**693**
0900 - 1000	0	592	**592**
1000 - 1100	0	626	**626**
1100 - 1200	0	586	**586**

	Volume Summary 60min		
Time	NB	SB	**Total**
1200 - 1300	0	638	**638**
1300 - 1400	0	609	**609**
1400 - 1500	0	647	**647**
1500 - 1600	0	650	**650**
1600 - 1700	0	706	**706**
1700 - 1800	0	607	**607**
1800 - 1900	0	590	**590**
1900 - 2000	0	430	**430**
2000 - 2100	0	279	**279**
2100 - 2200	0	257	**257**
2200 - 2300	0	175	**175**
2300 - 2400	0	135	**135**

Session Total	0	9647	**9647**
Session Average	0.00	401.96	**401.96**
Session Percentage	0.00	100.00	

Site 13

I-26 S/Bound On-Ramp,
south of I-20

Date

Saturday, April 27, 2024

Lat/Long

34.036148°, -81.108200°

Weather

Mostly Cloudy
69°F

Click here for Detailed Weather

0000 - 2400 (Saturday 24h Session) (04-27-2024)

Volume Summary 60min

	Volume Summary 60min		
TIME	NB	SB	**Total**
0000 - 0100	0	64	**64**
0100 - 0200	0	46	**46**
0200 - 0300	0	37	**37**
0300 - 0400	0	36	**36**
0400 - 0500	0	34	**34**
0500 - 0600	0	57	**57**
0600 - 0700	0	146	**146**
0700 - 0800	0	252	**252**
0800 - 0900	0	385	**385**
0900 - 1000	0	566	**566**
1000 - 1100	0	624	**624**
1100 - 1200	0	730	**730**
Session Total	0	8436	**8436**
Session Average	0.00	351.50	**351.50**
Session Percentage	0.00	100.00	

	Volume Summary 60min		
Time	NB	SB	**Total**
1200 - 1300	0	679	**679**
1300 - 1400	0	690	**690**
1400 - 1500	0	642	**642**
1500 - 1600	0	621	**621**
1600 - 1700	0	603	**603**
1700 - 1800	0	529	**529**
1800 - 1900	0	473	**473**
1900 - 2000	0	404	**404**
2000 - 2100	0	310	**310**
2100 - 2200	0	220	**220**
2200 - 2300	0	181	**181**
2300 - 2400	0	107	**107**

Bi-Directional Class Count || Graphical Analysis SB WB

Columbia, SC

Marr Traffic DATA COLLECTION

www.marrtraffic.com

Site 13

I-26 S/Bound On-Ramp,
south of I-20

Lat/Long

34.036148°, -81.108200°

0000 - 2400 (Weekday 24h Session)

Graphical Analysis SB WB

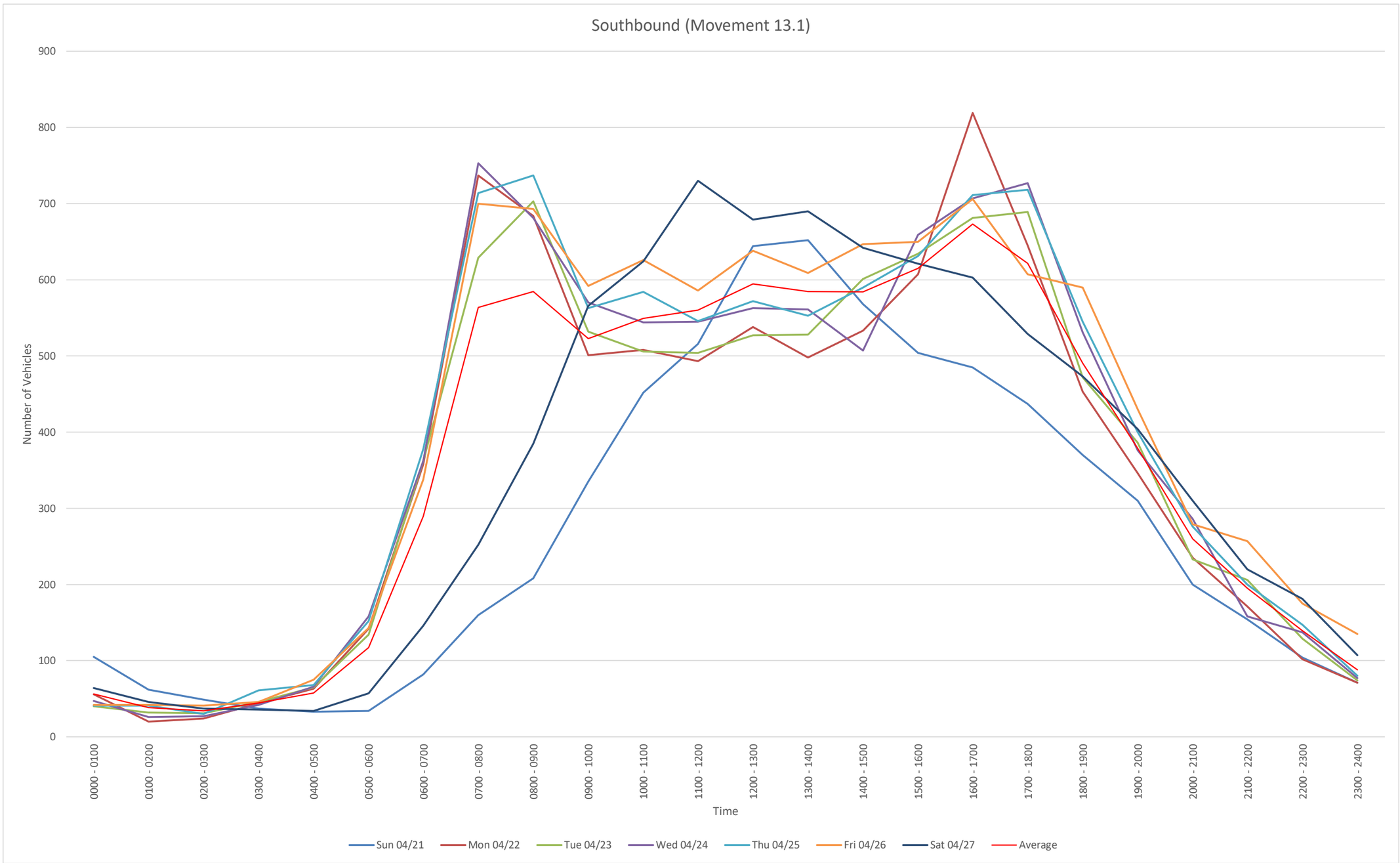

NB
File Name:
Start Date: 4/21/2024
Start Time: 0
Site Code: 13
Station ID: 1
Location 1: I-26 S/Bound On-Ramp, south of I-20
Location 2:

Date	Time	1	2	3	4	5	6	7	8	9	10	11	12	13
4/21/2024	12:00 AM	0	0	0	0	0	0	0	0	0	0	0	0	0
4/21/2024	12:15 AM	0	0	0	0	0	0	0	0	0	0	0	0	0
4/21/2024	12:30 AM	0	0	0	0	0	0	0	0	0	0	0	0	0
4/21/2024	12:45 AM	0	0	0	0	0	0	0	0	0	0	0	0	0
4/21/2024	1:00 AM	0	0	0	0	0	0	0	0	0	0	0	0	0
4/21/2024	1:15 AM	0	0	0	0	0	0	0	0	0	0	0	0	0
4/21/2024	1:30 AM	0	0	0	0	0	0	0	0	0	0	0	0	0
4/21/2024	1:45 AM	0	0	0	0	0	0	0	0	0	0	0	0	0
4/21/2024	2:00 AM	0	0	0	0	0	0	0	0	0	0	0	0	0
4/21/2024	2:15 AM	0	0	0	0	0	0	0	0	0	0	0	0	0
4/21/2024	2:30 AM	0	0	0	0	0	0	0	0	0	0	0	0	0
4/21/2024	2:45 AM	0	0	0	0	0	0	0	0	0	0	0	0	0
4/21/2024	3:00 AM	0	0	0	0	0	0	0	0	0	0	0	0	0
4/21/2024	3:15 AM	0	0	0	0	0	0	0	0	0	0	0	0	0
4/21/2024	3:30 AM	0	0	0	0	0	0	0	0	0	0	0	0	0
4/21/2024	3:45 AM	0	0	0	0	0	0	0	0	0	0	0	0	0
4/21/2024	4:00 AM	0	0	0	0	0	0	0	0	0	0	0	0	0
4/21/2024	4:15 AM	0	0	0	0	0	0	0	0	0	0	0	0	0
4/21/2024	4:30 AM	0	0	0	0	0	0	0	0	0	0	0	0	0
4/21/2024	4:45 AM	0	0	0	0	0	0	0	0	0	0	0	0	0
4/21/2024	5:00 AM	0	0	0	0	0	0	0	0	0	0	0	0	0
4/21/2024	5:15 AM	0	0	0	0	0	0	0	0	0	0	0	0	0
4/21/2024	5:30 AM	0	0	0	0	0	0	0	0	0	0	0	0	0
4/21/2024	5:45 AM	0	0	0	0	0	0	0	0	0	0	0	0	0
4/21/2024	6:00 AM	0	0	0	0	0	0	0	0	0	0	0	0	0
4/21/2024	6:15 AM	0	0	0	0	0	0	0	0	0	0	0	0	0
4/21/2024	6:30 AM	0	0	0	0	0	0	0	0	0	0	0	0	0
4/21/2024	6:45 AM	0	0	0	0	0	0	0	0	0	0	0	0	0
4/21/2024	7:00 AM	0	0	0	0	0	0	0	0	0	0	0	0	0
4/21/2024	7:15 AM	0	0	0	0	0	0	0	0	0	0	0	0	0
4/21/2024	7:30 AM	0	0	0	0	0	0	0	0	0	0	0	0	0
4/21/2024	7:45 AM	0	0	0	0	0	0	0	0	0	0	0	0	0
4/21/2024	8:00 AM	0	0	0	0	0	0	0	0	0	0	0	0	0
4/21/2024	8:15 AM	0	0	0	0	0	0	0	0	0	0	0	0	0
4/21/2024	8:30 AM	0	0	0	0	0	0	0	0	0	0	0	0	0
4/21/2024	8:45 AM	0	0	0	0	0	0	0	0	0	0	0	0	0
4/21/2024	9:00 AM	0	0	0	0	0	0	0	0	0	0	0	0	0
4/21/2024	9:15 AM	0	0	0	0	0	0	0	0	0	0	0	0	0
4/21/2024	9:30 AM	0	0	0	0	0	0	0	0	0	0	0	0	0
4/21/2024	9:45 AM	0	0	0	0	0	0	0	0	0	0	0	0	0
4/21/2024	10:00 AM	0	0	0	0	0	0	0	0	0	0	0	0	0
4/21/2024	10:15 AM	0	0	0	0	0	0	0	0	0	0	0	0	0
4/21/2024	10:30 AM	0	0	0	0	0	0	0	0	0	0	0	0	0
4/21/2024	10:45 AM	0	0	0	0	0	0	0	0	0	0	0	0	0
4/21/2024	11:00 AM	0	0	0	0	0	0	0	0	0	0	0	0	0
4/21/2024	11:15 AM	0	0	0	0	0	0	0	0	0	0	0	0	0
4/21/2024	11:30 AM	0	0	0	0	0	0	0	0	0	0	0	0	0
4/21/2024	11:45 AM	0	0	0	0	0	0	0	0	0	0	0	0	0
4/21/2024	12:00 PM	0	0	0	0	0	0	0	0	0	0	0	0	0
4/21/2024	12:15 PM	0	0	0	0	0	0	0	0	0	0	0	0	0
4/21/2024	12:30 PM	0	0	0	0	0	0	0	0	0	0	0	0	0
4/21/2024	12:45 PM	0	0	0	0	0	0	0	0	0	0	0	0	0
4/21/2024	1:00 PM	0	0	0	0	0	0	0	0	0	0	0	0	0
4/21/2024	1:15 PM	0	0	0	0	0	0	0	0	0	0	0	0	0
4/21/2024	1:30 PM	0	0	0	0	0	0	0	0	0	0	0	0	0
4/21/2024	1:45 PM	0	0	0	0	0	0	0	0	0	0	0	0	0
4/21/2024	2:00 PM	0	0	0	0	0	0	0	0	0	0	0	0	0
4/21/2024	2:15 PM	0	0	0	0	0	0	0	0	0	0	0	0	0
4/21/2024	2:30 PM	0	0	0	0	0	0	0	0	0	0	0	0	0
4/21/2024	2:45 PM	0	0	0	0	0	0	0	0	0	0	0	0	0
4/21/2024	3:00 PM	0	0	0	0	0	0	0	0	0	0	0	0	0
4/21/2024	3:15 PM	0	0	0	0	0	0	0	0	0	0	0	0	0
4/21/2024	3:30 PM	0	0	0	0	0	0	0	0	0	0	0	0	0
4/21/2024	3:45 PM	0	0	0	0	0	0	0	0	0	0	0	0	0
4/21/2024	4:00 PM	0	0	0	0	0	0	0	0	0	0	0	0	0
4/21/2024	4:15 PM	0	0	0	0	0	0	0	0	0	0	0	0	0
4/21/2024	4:30 PM	0	0	0	0	0	0	0	0	0	0	0	0	0
4/21/2024	4:45 PM	0	0	0	0	0	0	0	0	0	0	0	0	0
4/21/2024	5:00 PM	0	0	0	0	0	0	0	0	0	0	0	0	0
4/21/2024	5:15 PM	0	0	0	0	0	0	0	0	0	0	0	0	0
4/21/2024	5:30 PM	0	0	0	0	0	0	0	0	0	0	0	0	0
4/21/2024	5:45 PM	0	0	0	0	0	0	0	0	0	0	0	0	0
4/21/2024	6:00 PM	0	0	0	0	0	0	0	0	0	0	0	0	0
4/21/2024	6:15 PM	0	0	0	0	0	0	0	0	0	0	0	0	0
4/21/2024	6:30 PM	0	0	0	0	0	0	0	0	0	0	0	0	0
4/21/2024	6:45 PM	0	0	0	0	0	0	0	0	0	0	0	0	0
4/21/2024	7:00 PM	0	0	0	0	0	0	0	0	0	0	0	0	0
4/21/2024	7:15 PM	0	0	0	0	0	0	0	0	0	0	0	0	0
4/21/2024	7:30 PM	0	0	0	0	0	0	0	0	0	0	0	0	0
4/21/2024	7:45 PM	0	0	0	0	0	0	0	0	0	0	0	0	0
4/21/2024	8:00 PM	0	0	0	0	0	0	0	0	0	0	0	0	0
4/21/2024	8:15 PM	0	0	0	0	0	0	0	0	0	0	0	0	0
4/21/2024	8:30 PM	0	0	0	0	0	0	0	0	0	0	0	0	0
4/21/2024	8:45 PM	0	0	0	0	0	0	0	0	0	0	0	0	0
4/21/2024	9:00 PM	0	0	0	0	0	0	0	0	0	0	0	0	0
4/21/2024	9:15 PM	0	0	0	0	0	0	0	0	0	0	0	0	0
4/21/2024	9:30 PM	0	0	0	0	0	0	0	0	0	0	0	0	0
4/21/2024	9:45 PM	0	0	0	0	0	0	0	0	0	0	0	0	0
4/21/2024	10:00 PM	0	0	0	0	0	0	0	0	0	0	0	0	0
4/21/2024	10:15 PM	0	0	0	0	0	0	0	0	0	0	0	0	0
4/21/2024	10:30 PM	0	0	0	0	0	0	0	0	0	0	0	0	0
4/21/2024	10:45 PM	0	0	0	0	0	0	0	0	0	0	0	0	0
4/21/2024	11:00 PM	0	0	0	0	0	0	0	0	0	0	0	0	0
4/21/2024	11:15 PM	0	0	0	0	0	0	0	0	0	0	0	0	0
4/21/2024	11:30 PM	0	0	0	0	0	0	0	0	0	0	0	0	0
4/21/2024	11:45 PM	0	0	0	0	0	0	0	0	0	0	0	0	0

4/22/2024	12:00 AM	0	0	0	0	0	0	0	0	0	0	0	0	0
4/22/2024	12:15 AM	0	0	0	0	0	0	0	0	0	0	0	0	0
4/22/2024	12:30 AM	0	0	0	0	0	0	0	0	0	0	0	0	0
4/22/2024	12:45 AM	0	0	0	0	0	0	0	0	0	0	0	0	0
4/22/2024	1:00 AM	0	0	0	0	0	0	0	0	0	0	0	0	0
4/22/2024	1:15 AM	0	0	0	0	0	0	0	0	0	0	0	0	0
4/22/2024	1:30 AM	0	0	0	0	0	0	0	0	0	0	0	0	0
4/22/2024	1:45 AM	0	0	0	0	0	0	0	0	0	0	0	0	0
4/22/2024	2:00 AM	0	0	0	0	0	0	0	0	0	0	0	0	0
4/22/2024	2:15 AM	0	0	0	0	0	0	0	0	0	0	0	0	0
4/22/2024	2:30 AM	0	0	0	0	0	0	0	0	0	0	0	0	0
4/22/2024	2:45 AM	0	0	0	0	0	0	0	0	0	0	0	0	0
4/22/2024	3:00 AM	0	0	0	0	0	0	0	0	0	0	0	0	0
4/22/2024	3:15 AM	0	0	0	0	0	0	0	0	0	0	0	0	0
4/22/2024	3:30 AM	0	0	0	0	0	0	0	0	0	0	0	0	0
4/22/2024	3:45 AM	0	0	0	0	0	0	0	0	0	0	0	0	0
4/22/2024	4:00 AM	0	0	0	0	0	0	0	0	0	0	0	0	0
4/22/2024	4:15 AM	0	0	0	0	0	0	0	0	0	0	0	0	0
4/22/2024	4:30 AM	0	0	0	0	0	0	0	0	0	0	0	0	0
4/22/2024	4:45 AM	0	0	0	0	0	0	0	0	0	0	0	0	0
4/22/2024	5:00 AM	0	0	0	0	0	0	0	0	0	0	0	0	0
4/22/2024	5:15 AM	0	0	0	0	0	0	0	0	0	0	0	0	0
4/22/2024	5:30 AM	0	0	0	0	0	0	0	0	0	0	0	0	0
4/22/2024	5:45 AM	0	0	0	0	0	0	0	0	0	0	0	0	0
4/22/2024	6:00 AM	0	0	0	0	0	0	0	0	0	0	0	0	0
4/22/2024	6:15 AM	0	0	0	0	0	0	0	0	0	0	0	0	0
4/22/2024	6:30 AM	0	0	0	0	0	0	0	0	0	0	0	0	0
4/22/2024	6:45 AM	0	0	0	0	0	0	0	0	0	0	0	0	0
4/22/2024	7:00 AM	0	0	0	0	0	0	0	0	0	0	0	0	0
4/22/2024	7:15 AM	0	0	0	0	0	0	0	0	0	0	0	0	0
4/22/2024	7:30 AM	0	0	0	0	0	0	0	0	0	0	0	0	0
4/22/2024	7:45 AM	0	0	0	0	0	0	0	0	0	0	0	0	0
4/22/2024	8:00 AM	0	0	0	0	0	0	0	0	0	0	0	0	0
4/22/2024	8:15 AM	0	0	0	0	0	0	0	0	0	0	0	0	0
4/22/2024	8:30 AM	0	0	0	0	0	0	0	0	0	0	0	0	0
4/22/2024	8:45 AM	0	0	0	0	0	0	0	0	0	0	0	0	0
4/22/2024	9:00 AM	0	0	0	0	0	0	0	0	0	0	0	0	0
4/22/2024	9:15 AM	0	0	0	0	0	0	0	0	0	0	0	0	0
4/22/2024	9:30 AM	0	0	0	0	0	0	0	0	0	0	0	0	0
4/22/2024	9:45 AM	0	0	0	0	0	0	0	0	0	0	0	0	0
4/22/2024	10:00 AM	0	0	0	0	0	0	0	0	0	0	0	0	0
4/22/2024	10:15 AM	0	0	0	0	0	0	0	0	0	0	0	0	0
4/22/2024	10:30 AM	0	0	0	0	0	0	0	0	0	0	0	0	0
4/22/2024	10:45 AM	0	0	0	0	0	0	0	0	0	0	0	0	0
4/22/2024	11:00 AM	0	0	0	0	0	0	0	0	0	0	0	0	0
4/22/2024	11:15 AM	0	0	0	0	0	0	0	0	0	0	0	0	0
4/22/2024	11:30 AM	0	0	0	0	0	0	0	0	0	0	0	0	0
4/22/2024	11:45 AM	0	0	0	0	0	0	0	0	0	0	0	0	0
4/22/2024	12:00 PM	0	0	0	0	0	0	0	0	0	0	0	0	0
4/22/2024	12:15 PM	0	0	0	0	0	0	0	0	0	0	0	0	0
4/22/2024	12:30 PM	0	0	0	0	0	0	0	0	0	0	0	0	0
4/22/2024	12:45 PM	0	0	0	0	0	0	0	0	0	0	0	0	0
4/22/2024	1:00 PM	0	0	0	0	0	0	0	0	0	0	0	0	0
4/22/2024	1:15 PM	0	0	0	0	0	0	0	0	0	0	0	0	0
4/22/2024	1:30 PM	0	0	0	0	0	0	0	0	0	0	0	0	0
4/22/2024	1:45 PM	0	0	0	0	0	0	0	0	0	0	0	0	0
4/22/2024	2:00 PM	0	0	0	0	0	0	0	0	0	0	0	0	0
4/22/2024	2:15 PM	0	0	0	0	0	0	0	0	0	0	0	0	0
4/22/2024	2:30 PM	0	0	0	0	0	0	0	0	0	0	0	0	0
4/22/2024	2:45 PM	0	0	0	0	0	0	0	0	0	0	0	0	0
4/22/2024	3:00 PM	0	0	0	0	0	0	0	0	0	0	0	0	0
4/22/2024	3:15 PM	0	0	0	0	0	0	0	0	0	0	0	0	0
4/22/2024	3:30 PM	0	0	0	0	0	0	0	0	0	0	0	0	0
4/22/2024	3:45 PM	0	0	0	0	0	0	0	0	0	0	0	0	0
4/22/2024	4:00 PM	0	0	0	0	0	0	0	0	0	0	0	0	0
4/22/2024	4:15 PM	0	0	0	0	0	0	0	0	0	0	0	0	0
4/22/2024	4:30 PM	0	0	0	0	0	0	0	0	0	0	0	0	0
4/22/2024	4:45 PM	0	0	0	0	0	0	0	0	0	0	0	0	0
4/22/2024	5:00 PM	0	0	0	0	0	0	0	0	0	0	0	0	0
4/22/2024	5:15 PM	0	0	0	0	0	0	0	0	0	0	0	0	0
4/22/2024	5:30 PM	0	0	0	0	0	0	0	0	0	0	0	0	0
4/22/2024	5:45 PM	0	0	0	0	0	0	0	0	0	0	0	0	0
4/22/2024	6:00 PM	0	0	0	0	0	0	0	0	0	0	0	0	0
4/22/2024	6:15 PM	0	0	0	0	0	0	0	0	0	0	0	0	0
4/22/2024	6:30 PM	0	0	0	0	0	0	0	0	0	0	0	0	0
4/22/2024	6:45 PM	0	0	0	0	0	0	0	0	0	0	0	0	0
4/22/2024	7:00 PM	0	0	0	0	0	0	0	0	0	0	0	0	0
4/22/2024	7:15 PM	0	0	0	0	0	0	0	0	0	0	0	0	0
4/22/2024	7:30 PM	0	0	0	0	0	0	0	0	0	0	0	0	0
4/22/2024	7:45 PM	0	0	0	0	0	0	0	0	0	0	0	0	0
4/22/2024	8:00 PM	0	0	0	0	0	0	0	0	0	0	0	0	0
4/22/2024	8:15 PM	0	0	0	0	0	0	0	0	0	0	0	0	0
4/22/2024	8:30 PM	0	0	0	0	0	0	0	0	0	0	0	0	0
4/22/2024	8:45 PM	0	0	0	0	0	0	0	0	0	0	0	0	0
4/22/2024	9:00 PM	0	0	0	0	0	0	0	0	0	0	0	0	0
4/22/2024	9:15 PM	0	0	0	0	0	0	0	0	0	0	0	0	0
4/22/2024	9:30 PM	0	0	0	0	0	0	0	0	0	0	0	0	0
4/22/2024	9:45 PM	0	0	0	0	0	0	0	0	0	0	0	0	0
4/22/2024	10:00 PM	0	0	0	0	0	0	0	0	0	0	0	0	0
4/22/2024	10:15 PM	0	0	0	0	0	0	0	0	0	0	0	0	0
4/22/2024	10:30 PM	0	0	0	0	0	0	0	0	0	0	0	0	0
4/22/2024	10:45 PM	0	0	0	0	0	0	0	0	0	0	0	0	0
4/22/2024	11:00 PM	0	0	0	0	0	0	0	0	0	0	0	0	0
4/22/2024	11:15 PM	0	0	0	0	0	0	0	0	0	0	0	0	0
4/22/2024	11:30 PM	0	0	0	0	0	0	0	0	0	0	0	0	0
4/22/2024	11:45 PM	0	0	0	0	0	0	0	0	0	0	0	0	0

4/23/2024	12:00 AM	0	0	0	0	0	0	0	0	0	0	0	0	0
4/23/2024	12:15 AM	0	0	0	0	0	0	0	0	0	0	0	0	0
4/23/2024	12:30 AM	0	0	0	0	0	0	0	0	0	0	0	0	0
4/23/2024	12:45 AM	0	0	0	0	0	0	0	0	0	0	0	0	0
4/23/2024	1:00 AM	0	0	0	0	0	0	0	0	0	0	0	0	0
4/23/2024	1:15 AM	0	0	0	0	0	0	0	0	0	0	0	0	0
4/23/2024	1:30 AM	0	0	0	0	0	0	0	0	0	0	0	0	0
4/23/2024	1:45 AM	0	0	0	0	0	0	0	0	0	0	0	0	0
4/23/2024	2:00 AM	0	0	0	0	0	0	0	0	0	0	0	0	0
4/23/2024	2:15 AM	0	0	0	0	0	0	0	0	0	0	0	0	0
4/23/2024	2:30 AM	0	0	0	0	0	0	0	0	0	0	0	0	0
4/23/2024	2:45 AM	0	0	0	0	0	0	0	0	0	0	0	0	0
4/23/2024	3:00 AM	0	0	0	0	0	0	0	0	0	0	0	0	0
4/23/2024	3:15 AM	0	0	0	0	0	0	0	0	0	0	0	0	0
4/23/2024	3:30 AM	0	0	0	0	0	0	0	0	0	0	0	0	0
4/23/2024	3:45 AM	0	0	0	0	0	0	0	0	0	0	0	0	0
4/23/2024	4:00 AM	0	0	0	0	0	0	0	0	0	0	0	0	0
4/23/2024	4:15 AM	0	0	0	0	0	0	0	0	0	0	0	0	0
4/23/2024	4:30 AM	0	0	0	0	0	0	0	0	0	0	0	0	0
4/23/2024	4:45 AM	0	0	0	0	0	0	0	0	0	0	0	0	0
4/23/2024	5:00 AM	0	0	0	0	0	0	0	0	0	0	0	0	0
4/23/2024	5:15 AM	0	0	0	0	0	0	0	0	0	0	0	0	0
4/23/2024	5:30 AM	0	0	0	0	0	0	0	0	0	0	0	0	0
4/23/2024	5:45 AM	0	0	0	0	0	0	0	0	0	0	0	0	0
4/23/2024	6:00 AM	0	0	0	0	0	0	0	0	0	0	0	0	0
4/23/2024	6:15 AM	0	0	0	0	0	0	0	0	0	0	0	0	0
4/23/2024	6:30 AM	0	0	0	0	0	0	0	0	0	0	0	0	0
4/23/2024	6:45 AM	0	0	0	0	0	0	0	0	0	0	0	0	0
4/23/2024	7:00 AM	0	0	0	0	0	0	0	0	0	0	0	0	0
4/23/2024	7:15 AM	0	0	0	0	0	0	0	0	0	0	0	0	0
4/23/2024	7:30 AM	0	0	0	0	0	0	0	0	0	0	0	0	0
4/23/2024	7:45 AM	0	0	0	0	0	0	0	0	0	0	0	0	0
4/23/2024	8:00 AM	0	0	0	0	0	0	0	0	0	0	0	0	0
4/23/2024	8:15 AM	0	0	0	0	0	0	0	0	0	0	0	0	0
4/23/2024	8:30 AM	0	0	0	0	0	0	0	0	0	0	0	0	0
4/23/2024	8:45 AM	0	0	0	0	0	0	0	0	0	0	0	0	0
4/23/2024	9:00 AM	0	0	0	0	0	0	0	0	0	0	0	0	0
4/23/2024	9:15 AM	0	0	0	0	0	0	0	0	0	0	0	0	0
4/23/2024	9:30 AM	0	0	0	0	0	0	0	0	0	0	0	0	0
4/23/2024	9:45 AM	0	0	0	0	0	0	0	0	0	0	0	0	0
4/23/2024	10:00 AM	0	0	0	0	0	0	0	0	0	0	0	0	0
4/23/2024	10:15 AM	0	0	0	0	0	0	0	0	0	0	0	0	0
4/23/2024	10:30 AM	0	0	0	0	0	0	0	0	0	0	0	0	0
4/23/2024	10:45 AM	0	0	0	0	0	0	0	0	0	0	0	0	0
4/23/2024	11:00 AM	0	0	0	0	0	0	0	0	0	0	0	0	0
4/23/2024	11:15 AM	0	0	0	0	0	0	0	0	0	0	0	0	0
4/23/2024	11:30 AM	0	0	0	0	0	0	0	0	0	0	0	0	0
4/23/2024	11:45 AM	0	0	0	0	0	0	0	0	0	0	0	0	0
4/23/2024	12:00 PM	0	0	0	0	0	0	0	0	0	0	0	0	0
4/23/2024	12:15 PM	0	0	0	0	0	0	0	0	0	0	0	0	0
4/23/2024	12:30 PM	0	0	0	0	0	0	0	0	0	0	0	0	0
4/23/2024	12:45 PM	0	0	0	0	0	0	0	0	0	0	0	0	0
4/23/2024	1:00 PM	0	0	0	0	0	0	0	0	0	0	0	0	0
4/23/2024	1:15 PM	0	0	0	0	0	0	0	0	0	0	0	0	0
4/23/2024	1:30 PM	0	0	0	0	0	0	0	0	0	0	0	0	0
4/23/2024	1:45 PM	0	0	0	0	0	0	0	0	0	0	0	0	0
4/23/2024	2:00 PM	0	0	0	0	0	0	0	0	0	0	0	0	0
4/23/2024	2:15 PM	0	0	0	0	0	0	0	0	0	0	0	0	0
4/23/2024	2:30 PM	0	0	0	0	0	0	0	0	0	0	0	0	0
4/23/2024	2:45 PM	0	0	0	0	0	0	0	0	0	0	0	0	0
4/23/2024	3:00 PM	0	0	0	0	0	0	0	0	0	0	0	0	0
4/23/2024	3:15 PM	0	0	0	0	0	0	0	0	0	0	0	0	0
4/23/2024	3:30 PM	0	0	0	0	0	0	0	0	0	0	0	0	0
4/23/2024	3:45 PM	0	0	0	0	0	0	0	0	0	0	0	0	0
4/23/2024	4:00 PM	0	0	0	0	0	0	0	0	0	0	0	0	0
4/23/2024	4:15 PM	0	0	0	0	0	0	0	0	0	0	0	0	0
4/23/2024	4:30 PM	0	0	0	0	0	0	0	0	0	0	0	0	0
4/23/2024	4:45 PM	0	0	0	0	0	0	0	0	0	0	0	0	0
4/23/2024	5:00 PM	0	0	0	0	0	0	0	0	0	0	0	0	0
4/23/2024	5:15 PM	0	0	0	0	0	0	0	0	0	0	0	0	0
4/23/2024	5:30 PM	0	0	0	0	0	0	0	0	0	0	0	0	0
4/23/2024	5:45 PM	0	0	0	0	0	0	0	0	0	0	0	0	0
4/23/2024	6:00 PM	0	0	0	0	0	0	0	0	0	0	0	0	0
4/23/2024	6:15 PM	0	0	0	0	0	0	0	0	0	0	0	0	0
4/23/2024	6:30 PM	0	0	0	0	0	0	0	0	0	0	0	0	0
4/23/2024	6:45 PM	0	0	0	0	0	0	0	0	0	0	0	0	0
4/23/2024	7:00 PM	0	0	0	0	0	0	0	0	0	0	0	0	0
4/23/2024	7:15 PM	0	0	0	0	0	0	0	0	0	0	0	0	0
4/23/2024	7:30 PM	0	0	0	0	0	0	0	0	0	0	0	0	0
4/23/2024	7:45 PM	0	0	0	0	0	0	0	0	0	0	0	0	0
4/23/2024	8:00 PM	0	0	0	0	0	0	0	0	0	0	0	0	0
4/23/2024	8:15 PM	0	0	0	0	0	0	0	0	0	0	0	0	0
4/23/2024	8:30 PM	0	0	0	0	0	0	0	0	0	0	0	0	0
4/23/2024	8:45 PM	0	0	0	0	0	0	0	0	0	0	0	0	0
4/23/2024	9:00 PM	0	0	0	0	0	0	0	0	0	0	0	0	0
4/23/2024	9:15 PM	0	0	0	0	0	0	0	0	0	0	0	0	0
4/23/2024	9:30 PM	0	0	0	0	0	0	0	0	0	0	0	0	0
4/23/2024	9:45 PM	0	0	0	0	0	0	0	0	0	0	0	0	0
4/23/2024	10:00 PM	0	0	0	0	0	0	0	0	0	0	0	0	0
4/23/2024	10:15 PM	0	0	0	0	0	0	0	0	0	0	0	0	0
4/23/2024	10:30 PM	0	0	0	0	0	0	0	0	0	0	0	0	0
4/23/2024	10:45 PM	0	0	0	0	0	0	0	0	0	0	0	0	0
4/23/2024	11:00 PM	0	0	0	0	0	0	0	0	0	0	0	0	0
4/23/2024	11:15 PM	0	0	0	0	0	0	0	0	0	0	0	0	0
4/23/2024	11:30 PM	0	0	0	0	0	0	0	0	0	0	0	0	0
4/23/2024	11:45 PM	0	0	0	0	0	0	0	0	0	0	0	0	0

4/24/2024	12:00 AM	0	0	0	0	0	0	0	0	0	0	0	0	0
4/24/2024	12:15 AM	0	0	0	0	0	0	0	0	0	0	0	0	0
4/24/2024	12:30 AM	0	0	0	0	0	0	0	0	0	0	0	0	0
4/24/2024	12:45 AM	0	0	0	0	0	0	0	0	0	0	0	0	0
4/24/2024	1:00 AM	0	0	0	0	0	0	0	0	0	0	0	0	0
4/24/2024	1:15 AM	0	0	0	0	0	0	0	0	0	0	0	0	0
4/24/2024	1:30 AM	0	0	0	0	0	0	0	0	0	0	0	0	0
4/24/2024	1:45 AM	0	0	0	0	0	0	0	0	0	0	0	0	0
4/24/2024	2:00 AM	0	0	0	0	0	0	0	0	0	0	0	0	0
4/24/2024	2:15 AM	0	0	0	0	0	0	0	0	0	0	0	0	0
4/24/2024	2:30 AM	0	0	0	0	0	0	0	0	0	0	0	0	0
4/24/2024	2:45 AM	0	0	0	0	0	0	0	0	0	0	0	0	0
4/24/2024	3:00 AM	0	0	0	0	0	0	0	0	0	0	0	0	0
4/24/2024	3:15 AM	0	0	0	0	0	0	0	0	0	0	0	0	0
4/24/2024	3:30 AM	0	0	0	0	0	0	0	0	0	0	0	0	0
4/24/2024	3:45 AM	0	0	0	0	0	0	0	0	0	0	0	0	0
4/24/2024	4:00 AM	0	0	0	0	0	0	0	0	0	0	0	0	0
4/24/2024	4:15 AM	0	0	0	0	0	0	0	0	0	0	0	0	0
4/24/2024	4:30 AM	0	0	0	0	0	0	0	0	0	0	0	0	0
4/24/2024	4:45 AM	0	0	0	0	0	0	0	0	0	0	0	0	0
4/24/2024	5:00 AM	0	0	0	0	0	0	0	0	0	0	0	0	0
4/24/2024	5:15 AM	0	0	0	0	0	0	0	0	0	0	0	0	0
4/24/2024	5:30 AM	0	0	0	0	0	0	0	0	0	0	0	0	0
4/24/2024	5:45 AM	0	0	0	0	0	0	0	0	0	0	0	0	0
4/24/2024	6:00 AM	0	0	0	0	0	0	0	0	0	0	0	0	0
4/24/2024	6:15 AM	0	0	0	0	0	0	0	0	0	0	0	0	0
4/24/2024	6:30 AM	0	0	0	0	0	0	0	0	0	0	0	0	0
4/24/2024	6:45 AM	0	0	0	0	0	0	0	0	0	0	0	0	0
4/24/2024	7:00 AM	0	0	0	0	0	0	0	0	0	0	0	0	0
4/24/2024	7:15 AM	0	0	0	0	0	0	0	0	0	0	0	0	0
4/24/2024	7:30 AM	0	0	0	0	0	0	0	0	0	0	0	0	0
4/24/2024	7:45 AM	0	0	0	0	0	0	0	0	0	0	0	0	0
4/24/2024	8:00 AM	0	0	0	0	0	0	0	0	0	0	0	0	0
4/24/2024	8:15 AM	0	0	0	0	0	0	0	0	0	0	0	0	0
4/24/2024	8:30 AM	0	0	0	0	0	0	0	0	0	0	0	0	0
4/24/2024	8:45 AM	0	0	0	0	0	0	0	0	0	0	0	0	0
4/24/2024	9:00 AM	0	0	0	0	0	0	0	0	0	0	0	0	0
4/24/2024	9:15 AM	0	0	0	0	0	0	0	0	0	0	0	0	0
4/24/2024	9:30 AM	0	0	0	0	0	0	0	0	0	0	0	0	0
4/24/2024	9:45 AM	0	0	0	0	0	0	0	0	0	0	0	0	0
4/24/2024	10:00 AM	0	0	0	0	0	0	0	0	0	0	0	0	0
4/24/2024	10:15 AM	0	0	0	0	0	0	0	0	0	0	0	0	0
4/24/2024	10:30 AM	0	0	0	0	0	0	0	0	0	0	0	0	0
4/24/2024	10:45 AM	0	0	0	0	0	0	0	0	0	0	0	0	0
4/24/2024	11:00 AM	0	0	0	0	0	0	0	0	0	0	0	0	0
4/24/2024	11:15 AM	0	0	0	0	0	0	0	0	0	0	0	0	0
4/24/2024	11:30 AM	0	0	0	0	0	0	0	0	0	0	0	0	0
4/24/2024	11:45 AM	0	0	0	0	0	0	0	0	0	0	0	0	0
4/24/2024	12:00 PM	0	0	0	0	0	0	0	0	0	0	0	0	0
4/24/2024	12:15 PM	0	0	0	0	0	0	0	0	0	0	0	0	0
4/24/2024	12:30 PM	0	0	0	0	0	0	0	0	0	0	0	0	0
4/24/2024	12:45 PM	0	0	0	0	0	0	0	0	0	0	0	0	0
4/24/2024	1:00 PM	0	0	0	0	0	0	0	0	0	0	0	0	0
4/24/2024	1:15 PM	0	0	0	0	0	0	0	0	0	0	0	0	0
4/24/2024	1:30 PM	0	0	0	0	0	0	0	0	0	0	0	0	0
4/24/2024	1:45 PM	0	0	0	0	0	0	0	0	0	0	0	0	0
4/24/2024	2:00 PM	0	0	0	0	0	0	0	0	0	0	0	0	0
4/24/2024	2:15 PM	0	0	0	0	0	0	0	0	0	0	0	0	0
4/24/2024	2:30 PM	0	0	0	0	0	0	0	0	0	0	0	0	0
4/24/2024	2:45 PM	0	0	0	0	0	0	0	0	0	0	0	0	0
4/24/2024	3:00 PM	0	0	0	0	0	0	0	0	0	0	0	0	0
4/24/2024	3:15 PM	0	0	0	0	0	0	0	0	0	0	0	0	0
4/24/2024	3:30 PM	0	0	0	0	0	0	0	0	0	0	0	0	0
4/24/2024	3:45 PM	0	0	0	0	0	0	0	0	0	0	0	0	0
4/24/2024	4:00 PM	0	0	0	0	0	0	0	0	0	0	0	0	0
4/24/2024	4:15 PM	0	0	0	0	0	0	0	0	0	0	0	0	0
4/24/2024	4:30 PM	0	0	0	0	0	0	0	0	0	0	0	0	0
4/24/2024	4:45 PM	0	0	0	0	0	0	0	0	0	0	0	0	0
4/24/2024	5:00 PM	0	0	0	0	0	0	0	0	0	0	0	0	0
4/24/2024	5:15 PM	0	0	0	0	0	0	0	0	0	0	0	0	0
4/24/2024	5:30 PM	0	0	0	0	0	0	0	0	0	0	0	0	0
4/24/2024	5:45 PM	0	0	0	0	0	0	0	0	0	0	0	0	0
4/24/2024	6:00 PM	0	0	0	0	0	0	0	0	0	0	0	0	0
4/24/2024	6:15 PM	0	0	0	0	0	0	0	0	0	0	0	0	0
4/24/2024	6:30 PM	0	0	0	0	0	0	0	0	0	0	0	0	0
4/24/2024	6:45 PM	0	0	0	0	0	0	0	0	0	0	0	0	0
4/24/2024	7:00 PM	0	0	0	0	0	0	0	0	0	0	0	0	0
4/24/2024	7:15 PM	0	0	0	0	0	0	0	0	0	0	0	0	0
4/24/2024	7:30 PM	0	0	0	0	0	0	0	0	0	0	0	0	0
4/24/2024	7:45 PM	0	0	0	0	0	0	0	0	0	0	0	0	0
4/24/2024	8:00 PM	0	0	0	0	0	0	0	0	0	0	0	0	0
4/24/2024	8:15 PM	0	0	0	0	0	0	0	0	0	0	0	0	0
4/24/2024	8:30 PM	0	0	0	0	0	0	0	0	0	0	0	0	0
4/24/2024	8:45 PM	0	0	0	0	0	0	0	0	0	0	0	0	0
4/24/2024	9:00 PM	0	0	0	0	0	0	0	0	0	0	0	0	0
4/24/2024	9:15 PM	0	0	0	0	0	0	0	0	0	0	0	0	0
4/24/2024	9:30 PM	0	0	0	0	0	0	0	0	0	0	0	0	0
4/24/2024	9:45 PM	0	0	0	0	0	0	0	0	0	0	0	0	0
4/24/2024	10:00 PM	0	0	0	0	0	0	0	0	0	0	0	0	0
4/24/2024	10:15 PM	0	0	0	0	0	0	0	0	0	0	0	0	0
4/24/2024	10:30 PM	0	0	0	0	0	0	0	0	0	0	0	0	0
4/24/2024	10:45 PM	0	0	0	0	0	0	0	0	0	0	0	0	0
4/24/2024	11:00 PM	0	0	0	0	0	0	0	0	0	0	0	0	0
4/24/2024	11:15 PM	0	0	0	0	0	0	0	0	0	0	0	0	0
4/24/2024	11:30 PM	0	0	0	0	0	0	0	0	0	0	0	0	0
4/24/2024	11:45 PM	0	0	0	0	0	0	0	0	0	0	0	0	0

4/25/2024	12:00 AM	0	0	0	0	0	0	0	0	0	0	0	0	0
4/25/2024	12:15 AM	0	0	0	0	0	0	0	0	0	0	0	0	0
4/25/2024	12:30 AM	0	0	0	0	0	0	0	0	0	0	0	0	0
4/25/2024	12:45 AM	0	0	0	0	0	0	0	0	0	0	0	0	0
4/25/2024	1:00 AM	0	0	0	0	0	0	0	0	0	0	0	0	0
4/25/2024	1:15 AM	0	0	0	0	0	0	0	0	0	0	0	0	0
4/25/2024	1:30 AM	0	0	0	0	0	0	0	0	0	0	0	0	0
4/25/2024	1:45 AM	0	0	0	0	0	0	0	0	0	0	0	0	0
4/25/2024	2:00 AM	0	0	0	0	0	0	0	0	0	0	0	0	0
4/25/2024	2:15 AM	0	0	0	0	0	0	0	0	0	0	0	0	0
4/25/2024	2:30 AM	0	0	0	0	0	0	0	0	0	0	0	0	0
4/25/2024	2:45 AM	0	0	0	0	0	0	0	0	0	0	0	0	0
4/25/2024	3:00 AM	0	0	0	0	0	0	0	0	0	0	0	0	0
4/25/2024	3:15 AM	0	0	0	0	0	0	0	0	0	0	0	0	0
4/25/2024	3:30 AM	0	0	0	0	0	0	0	0	0	0	0	0	0
4/25/2024	3:45 AM	0	0	0	0	0	0	0	0	0	0	0	0	0
4/25/2024	4:00 AM	0	0	0	0	0	0	0	0	0	0	0	0	0
4/25/2024	4:15 AM	0	0	0	0	0	0	0	0	0	0	0	0	0
4/25/2024	4:30 AM	0	0	0	0	0	0	0	0	0	0	0	0	0
4/25/2024	4:45 AM	0	0	0	0	0	0	0	0	0	0	0	0	0
4/25/2024	5:00 AM	0	0	0	0	0	0	0	0	0	0	0	0	0
4/25/2024	5:15 AM	0	0	0	0	0	0	0	0	0	0	0	0	0
4/25/2024	5:30 AM	0	0	0	0	0	0	0	0	0	0	0	0	0
4/25/2024	5:45 AM	0	0	0	0	0	0	0	0	0	0	0	0	0
4/25/2024	6:00 AM	0	0	0	0	0	0	0	0	0	0	0	0	0
4/25/2024	6:15 AM	0	0	0	0	0	0	0	0	0	0	0	0	0
4/25/2024	6:30 AM	0	0	0	0	0	0	0	0	0	0	0	0	0
4/25/2024	6:45 AM	0	0	0	0	0	0	0	0	0	0	0	0	0
4/25/2024	7:00 AM	0	0	0	0	0	0	0	0	0	0	0	0	0
4/25/2024	7:15 AM	0	0	0	0	0	0	0	0	0	0	0	0	0
4/25/2024	7:30 AM	0	0	0	0	0	0	0	0	0	0	0	0	0
4/25/2024	7:45 AM	0	0	0	0	0	0	0	0	0	0	0	0	0
4/25/2024	8:00 AM	0	0	0	0	0	0	0	0	0	0	0	0	0
4/25/2024	8:15 AM	0	0	0	0	0	0	0	0	0	0	0	0	0
4/25/2024	8:30 AM	0	0	0	0	0	0	0	0	0	0	0	0	0
4/25/2024	8:45 AM	0	0	0	0	0	0	0	0	0	0	0	0	0
4/25/2024	9:00 AM	0	0	0	0	0	0	0	0	0	0	0	0	0
4/25/2024	9:15 AM	0	0	0	0	0	0	0	0	0	0	0	0	0
4/25/2024	9:30 AM	0	0	0	0	0	0	0	0	0	0	0	0	0
4/25/2024	9:45 AM	0	0	0	0	0	0	0	0	0	0	0	0	0
4/25/2024	10:00 AM	0	0	0	0	0	0	0	0	0	0	0	0	0
4/25/2024	10:15 AM	0	0	0	0	0	0	0	0	0	0	0	0	0
4/25/2024	10:30 AM	0	0	0	0	0	0	0	0	0	0	0	0	0
4/25/2024	10:45 AM	0	0	0	0	0	0	0	0	0	0	0	0	0
4/25/2024	11:00 AM	0	0	0	0	0	0	0	0	0	0	0	0	0
4/25/2024	11:15 AM	0	0	0	0	0	0	0	0	0	0	0	0	0
4/25/2024	11:30 AM	0	0	0	0	0	0	0	0	0	0	0	0	0
4/25/2024	11:45 AM	0	0	0	0	0	0	0	0	0	0	0	0	0
4/25/2024	12:00 PM	0	0	0	0	0	0	0	0	0	0	0	0	0
4/25/2024	12:15 PM	0	0	0	0	0	0	0	0	0	0	0	0	0
4/25/2024	12:30 PM	0	0	0	0	0	0	0	0	0	0	0	0	0
4/25/2024	12:45 PM	0	0	0	0	0	0	0	0	0	0	0	0	0
4/25/2024	1:00 PM	0	0	0	0	0	0	0	0	0	0	0	0	0
4/25/2024	1:15 PM	0	0	0	0	0	0	0	0	0	0	0	0	0
4/25/2024	1:30 PM	0	0	0	0	0	0	0	0	0	0	0	0	0
4/25/2024	1:45 PM	0	0	0	0	0	0	0	0	0	0	0	0	0
4/25/2024	2:00 PM	0	0	0	0	0	0	0	0	0	0	0	0	0
4/25/2024	2:15 PM	0	0	0	0	0	0	0	0	0	0	0	0	0
4/25/2024	2:30 PM	0	0	0	0	0	0	0	0	0	0	0	0	0
4/25/2024	2:45 PM	0	0	0	0	0	0	0	0	0	0	0	0	0
4/25/2024	3:00 PM	0	0	0	0	0	0	0	0	0	0	0	0	0
4/25/2024	3:15 PM	0	0	0	0	0	0	0	0	0	0	0	0	0
4/25/2024	3:30 PM	0	0	0	0	0	0	0	0	0	0	0	0	0
4/25/2024	3:45 PM	0	0	0	0	0	0	0	0	0	0	0	0	0
4/25/2024	4:00 PM	0	0	0	0	0	0	0	0	0	0	0	0	0
4/25/2024	4:15 PM	0	0	0	0	0	0	0	0	0	0	0	0	0
4/25/2024	4:30 PM	0	0	0	0	0	0	0	0	0	0	0	0	0
4/25/2024	4:45 PM	0	0	0	0	0	0	0	0	0	0	0	0	0
4/25/2024	5:00 PM	0	0	0	0	0	0	0	0	0	0	0	0	0
4/25/2024	5:15 PM	0	0	0	0	0	0	0	0	0	0	0	0	0
4/25/2024	5:30 PM	0	0	0	0	0	0	0	0	0	0	0	0	0
4/25/2024	5:45 PM	0	0	0	0	0	0	0	0	0	0	0	0	0
4/25/2024	6:00 PM	0	0	0	0	0	0	0	0	0	0	0	0	0
4/25/2024	6:15 PM	0	0	0	0	0	0	0	0	0	0	0	0	0
4/25/2024	6:30 PM	0	0	0	0	0	0	0	0	0	0	0	0	0
4/25/2024	6:45 PM	0	0	0	0	0	0	0	0	0	0	0	0	0
4/25/2024	7:00 PM	0	0	0	0	0	0	0	0	0	0	0	0	0
4/25/2024	7:15 PM	0	0	0	0	0	0	0	0	0	0	0	0	0
4/25/2024	7:30 PM	0	0	0	0	0	0	0	0	0	0	0	0	0
4/25/2024	7:45 PM	0	0	0	0	0	0	0	0	0	0	0	0	0
4/25/2024	8:00 PM	0	0	0	0	0	0	0	0	0	0	0	0	0
4/25/2024	8:15 PM	0	0	0	0	0	0	0	0	0	0	0	0	0
4/25/2024	8:30 PM	0	0	0	0	0	0	0	0	0	0	0	0	0
4/25/2024	8:45 PM	0	0	0	0	0	0	0	0	0	0	0	0	0
4/25/2024	9:00 PM	0	0	0	0	0	0	0	0	0	0	0	0	0
4/25/2024	9:15 PM	0	0	0	0	0	0	0	0	0	0	0	0	0
4/25/2024	9:30 PM	0	0	0	0	0	0	0	0	0	0	0	0	0
4/25/2024	9:45 PM	0	0	0	0	0	0	0	0	0	0	0	0	0
4/25/2024	10:00 PM	0	0	0	0	0	0	0	0	0	0	0	0	0
4/25/2024	10:15 PM	0	0	0	0	0	0	0	0	0	0	0	0	0
4/25/2024	10:30 PM	0	0	0	0	0	0	0	0	0	0	0	0	0
4/25/2024	10:45 PM	0	0	0	0	0	0	0	0	0	0	0	0	0
4/25/2024	11:00 PM	0	0	0	0	0	0	0	0	0	0	0	0	0
4/25/2024	11:15 PM	0	0	0	0	0	0	0	0	0	0	0	0	0
4/25/2024	11:30 PM	0	0	0	0	0	0	0	0	0	0	0	0	0
4/25/2024	11:45 PM	0	0	0	0	0	0	0	0	0	0	0	0	0

4/26/2024	12:00 AM	0	0	0	0	0	0	0	0	0	0	0	0	0
4/26/2024	12:15 AM	0	0	0	0	0	0	0	0	0	0	0	0	0
4/26/2024	12:30 AM	0	0	0	0	0	0	0	0	0	0	0	0	0
4/26/2024	12:45 AM	0	0	0	0	0	0	0	0	0	0	0	0	0
4/26/2024	1:00 AM	0	0	0	0	0	0	0	0	0	0	0	0	0
4/26/2024	1:15 AM	0	0	0	0	0	0	0	0	0	0	0	0	0
4/26/2024	1:30 AM	0	0	0	0	0	0	0	0	0	0	0	0	0
4/26/2024	1:45 AM	0	0	0	0	0	0	0	0	0	0	0	0	0
4/26/2024	2:00 AM	0	0	0	0	0	0	0	0	0	0	0	0	0
4/26/2024	2:15 AM	0	0	0	0	0	0	0	0	0	0	0	0	0
4/26/2024	2:30 AM	0	0	0	0	0	0	0	0	0	0	0	0	0
4/26/2024	2:45 AM	0	0	0	0	0	0	0	0	0	0	0	0	0
4/26/2024	3:00 AM	0	0	0	0	0	0	0	0	0	0	0	0	0
4/26/2024	3:15 AM	0	0	0	0	0	0	0	0	0	0	0	0	0
4/26/2024	3:30 AM	0	0	0	0	0	0	0	0	0	0	0	0	0
4/26/2024	3:45 AM	0	0	0	0	0	0	0	0	0	0	0	0	0
4/26/2024	4:00 AM	0	0	0	0	0	0	0	0	0	0	0	0	0
4/26/2024	4:15 AM	0	0	0	0	0	0	0	0	0	0	0	0	0
4/26/2024	4:30 AM	0	0	0	0	0	0	0	0	0	0	0	0	0
4/26/2024	4:45 AM	0	0	0	0	0	0	0	0	0	0	0	0	0
4/26/2024	5:00 AM	0	0	0	0	0	0	0	0	0	0	0	0	0
4/26/2024	5:15 AM	0	0	0	0	0	0	0	0	0	0	0	0	0
4/26/2024	5:30 AM	0	0	0	0	0	0	0	0	0	0	0	0	0
4/26/2024	5:45 AM	0	0	0	0	0	0	0	0	0	0	0	0	0
4/26/2024	6:00 AM	0	0	0	0	0	0	0	0	0	0	0	0	0
4/26/2024	6:15 AM	0	0	0	0	0	0	0	0	0	0	0	0	0
4/26/2024	6:30 AM	0	0	0	0	0	0	0	0	0	0	0	0	0
4/26/2024	6:45 AM	0	0	0	0	0	0	0	0	0	0	0	0	0
4/26/2024	7:00 AM	0	0	0	0	0	0	0	0	0	0	0	0	0
4/26/2024	7:15 AM	0	0	0	0	0	0	0	0	0	0	0	0	0
4/26/2024	7:30 AM	0	0	0	0	0	0	0	0	0	0	0	0	0
4/26/2024	7:45 AM	0	0	0	0	0	0	0	0	0	0	0	0	0
4/26/2024	8:00 AM	0	0	0	0	0	0	0	0	0	0	0	0	0
4/26/2024	8:15 AM	0	0	0	0	0	0	0	0	0	0	0	0	0
4/26/2024	8:30 AM	0	0	0	0	0	0	0	0	0	0	0	0	0
4/26/2024	8:45 AM	0	0	0	0	0	0	0	0	0	0	0	0	0
4/26/2024	9:00 AM	0	0	0	0	0	0	0	0	0	0	0	0	0
4/26/2024	9:15 AM	0	0	0	0	0	0	0	0	0	0	0	0	0
4/26/2024	9:30 AM	0	0	0	0	0	0	0	0	0	0	0	0	0
4/26/2024	9:45 AM	0	0	0	0	0	0	0	0	0	0	0	0	0
4/26/2024	10:00 AM	0	0	0	0	0	0	0	0	0	0	0	0	0
4/26/2024	10:15 AM	0	0	0	0	0	0	0	0	0	0	0	0	0
4/26/2024	10:30 AM	0	0	0	0	0	0	0	0	0	0	0	0	0
4/26/2024	10:45 AM	0	0	0	0	0	0	0	0	0	0	0	0	0
4/26/2024	11:00 AM	0	0	0	0	0	0	0	0	0	0	0	0	0
4/26/2024	11:15 AM	0	0	0	0	0	0	0	0	0	0	0	0	0
4/26/2024	11:30 AM	0	0	0	0	0	0	0	0	0	0	0	0	0
4/26/2024	11:45 AM	0	0	0	0	0	0	0	0	0	0	0	0	0
4/26/2024	12:00 PM	0	0	0	0	0	0	0	0	0	0	0	0	0
4/26/2024	12:15 PM	0	0	0	0	0	0	0	0	0	0	0	0	0
4/26/2024	12:30 PM	0	0	0	0	0	0	0	0	0	0	0	0	0
4/26/2024	12:45 PM	0	0	0	0	0	0	0	0	0	0	0	0	0
4/26/2024	1:00 PM	0	0	0	0	0	0	0	0	0	0	0	0	0
4/26/2024	1:15 PM	0	0	0	0	0	0	0	0	0	0	0	0	0
4/26/2024	1:30 PM	0	0	0	0	0	0	0	0	0	0	0	0	0
4/26/2024	1:45 PM	0	0	0	0	0	0	0	0	0	0	0	0	0
4/26/2024	2:00 PM	0	0	0	0	0	0	0	0	0	0	0	0	0
4/26/2024	2:15 PM	0	0	0	0	0	0	0	0	0	0	0	0	0
4/26/2024	2:30 PM	0	0	0	0	0	0	0	0	0	0	0	0	0
4/26/2024	2:45 PM	0	0	0	0	0	0	0	0	0	0	0	0	0
4/26/2024	3:00 PM	0	0	0	0	0	0	0	0	0	0	0	0	0
4/26/2024	3:15 PM	0	0	0	0	0	0	0	0	0	0	0	0	0
4/26/2024	3:30 PM	0	0	0	0	0	0	0	0	0	0	0	0	0
4/26/2024	3:45 PM	0	0	0	0	0	0	0	0	0	0	0	0	0
4/26/2024	4:00 PM	0	0	0	0	0	0	0	0	0	0	0	0	0
4/26/2024	4:15 PM	0	0	0	0	0	0	0	0	0	0	0	0	0
4/26/2024	4:30 PM	0	0	0	0	0	0	0	0	0	0	0	0	0
4/26/2024	4:45 PM	0	0	0	0	0	0	0	0	0	0	0	0	0
4/26/2024	5:00 PM	0	0	0	0	0	0	0	0	0	0	0	0	0
4/26/2024	5:15 PM	0	0	0	0	0	0	0	0	0	0	0	0	0
4/26/2024	5:30 PM	0	0	0	0	0	0	0	0	0	0	0	0	0
4/26/2024	5:45 PM	0	0	0	0	0	0	0	0	0	0	0	0	0
4/26/2024	6:00 PM	0	0	0	0	0	0	0	0	0	0	0	0	0
4/26/2024	6:15 PM	0	0	0	0	0	0	0	0	0	0	0	0	0
4/26/2024	6:30 PM	0	0	0	0	0	0	0	0	0	0	0	0	0
4/26/2024	6:45 PM	0	0	0	0	0	0	0	0	0	0	0	0	0
4/26/2024	7:00 PM	0	0	0	0	0	0	0	0	0	0	0	0	0
4/26/2024	7:15 PM	0	0	0	0	0	0	0	0	0	0	0	0	0
4/26/2024	7:30 PM	0	0	0	0	0	0	0	0	0	0	0	0	0
4/26/2024	7:45 PM	0	0	0	0	0	0	0	0	0	0	0	0	0
4/26/2024	8:00 PM	0	0	0	0	0	0	0	0	0	0	0	0	0
4/26/2024	8:15 PM	0	0	0	0	0	0	0	0	0	0	0	0	0
4/26/2024	8:30 PM	0	0	0	0	0	0	0	0	0	0	0	0	0
4/26/2024	8:45 PM	0	0	0	0	0	0	0	0	0	0	0	0	0
4/26/2024	9:00 PM	0	0	0	0	0	0	0	0	0	0	0	0	0
4/26/2024	9:15 PM	0	0	0	0	0	0	0	0	0	0	0	0	0
4/26/2024	9:30 PM	0	0	0	0	0	0	0	0	0	0	0	0	0
4/26/2024	9:45 PM	0	0	0	0	0	0	0	0	0	0	0	0	0
4/26/2024	10:00 PM	0	0	0	0	0	0	0	0	0	0	0	0	0
4/26/2024	10:15 PM	0	0	0	0	0	0	0	0	0	0	0	0	0
4/26/2024	10:30 PM	0	0	0	0	0	0	0	0	0	0	0	0	0
4/26/2024	10:45 PM	0	0	0	0	0	0	0	0	0	0	0	0	0
4/26/2024	11:00 PM	0	0	0	0	0	0	0	0	0	0	0	0	0
4/26/2024	11:15 PM	0	0	0	0	0	0	0	0	0	0	0	0	0
4/26/2024	11:30 PM	0	0	0	0	0	0	0	0	0	0	0	0	0
4/26/2024	11:45 PM	0	0	0	0	0	0	0	0	0	0	0	0	0

4/27/2024	12:00 AM	0	0	0	0	0	0	0	0	0	0	0	0	0
4/27/2024	12:15 AM	0	0	0	0	0	0	0	0	0	0	0	0	0
4/27/2024	12:30 AM	0	0	0	0	0	0	0	0	0	0	0	0	0
4/27/2024	12:45 AM	0	0	0	0	0	0	0	0	0	0	0	0	0
4/27/2024	1:00 AM	0	0	0	0	0	0	0	0	0	0	0	0	0
4/27/2024	1:15 AM	0	0	0	0	0	0	0	0	0	0	0	0	0
4/27/2024	1:30 AM	0	0	0	0	0	0	0	0	0	0	0	0	0
4/27/2024	1:45 AM	0	0	0	0	0	0	0	0	0	0	0	0	0
4/27/2024	2:00 AM	0	0	0	0	0	0	0	0	0	0	0	0	0
4/27/2024	2:15 AM	0	0	0	0	0	0	0	0	0	0	0	0	0
4/27/2024	2:30 AM	0	0	0	0	0	0	0	0	0	0	0	0	0
4/27/2024	2:45 AM	0	0	0	0	0	0	0	0	0	0	0	0	0
4/27/2024	3:00 AM	0	0	0	0	0	0	0	0	0	0	0	0	0
4/27/2024	3:15 AM	0	0	0	0	0	0	0	0	0	0	0	0	0
4/27/2024	3:30 AM	0	0	0	0	0	0	0	0	0	0	0	0	0
4/27/2024	3:45 AM	0	0	0	0	0	0	0	0	0	0	0	0	0
4/27/2024	4:00 AM	0	0	0	0	0	0	0	0	0	0	0	0	0
4/27/2024	4:15 AM	0	0	0	0	0	0	0	0	0	0	0	0	0
4/27/2024	4:30 AM	0	0	0	0	0	0	0	0	0	0	0	0	0
4/27/2024	4:45 AM	0	0	0	0	0	0	0	0	0	0	0	0	0
4/27/2024	5:00 AM	0	0	0	0	0	0	0	0	0	0	0	0	0
4/27/2024	5:15 AM	0	0	0	0	0	0	0	0	0	0	0	0	0
4/27/2024	5:30 AM	0	0	0	0	0	0	0	0	0	0	0	0	0
4/27/2024	5:45 AM	0	0	0	0	0	0	0	0	0	0	0	0	0
4/27/2024	6:00 AM	0	0	0	0	0	0	0	0	0	0	0	0	0
4/27/2024	6:15 AM	0	0	0	0	0	0	0	0	0	0	0	0	0
4/27/2024	6:30 AM	0	0	0	0	0	0	0	0	0	0	0	0	0
4/27/2024	6:45 AM	0	0	0	0	0	0	0	0	0	0	0	0	0
4/27/2024	7:00 AM	0	0	0	0	0	0	0	0	0	0	0	0	0
4/27/2024	7:15 AM	0	0	0	0	0	0	0	0	0	0	0	0	0
4/27/2024	7:30 AM	0	0	0	0	0	0	0	0	0	0	0	0	0
4/27/2024	7:45 AM	0	0	0	0	0	0	0	0	0	0	0	0	0
4/27/2024	8:00 AM	0	0	0	0	0	0	0	0	0	0	0	0	0
4/27/2024	8:15 AM	0	0	0	0	0	0	0	0	0	0	0	0	0
4/27/2024	8:30 AM	0	0	0	0	0	0	0	0	0	0	0	0	0
4/27/2024	8:45 AM	0	0	0	0	0	0	0	0	0	0	0	0	0
4/27/2024	9:00 AM	0	0	0	0	0	0	0	0	0	0	0	0	0
4/27/2024	9:15 AM	0	0	0	0	0	0	0	0	0	0	0	0	0
4/27/2024	9:30 AM	0	0	0	0	0	0	0	0	0	0	0	0	0
4/27/2024	9:45 AM	0	0	0	0	0	0	0	0	0	0	0	0	0
4/27/2024	10:00 AM	0	0	0	0	0	0	0	0	0	0	0	0	0
4/27/2024	10:15 AM	0	0	0	0	0	0	0	0	0	0	0	0	0
4/27/2024	10:30 AM	0	0	0	0	0	0	0	0	0	0	0	0	0
4/27/2024	10:45 AM	0	0	0	0	0	0	0	0	0	0	0	0	0
4/27/2024	11:00 AM	0	0	0	0	0	0	0	0	0	0	0	0	0
4/27/2024	11:15 AM	0	0	0	0	0	0	0	0	0	0	0	0	0
4/27/2024	11:30 AM	0	0	0	0	0	0	0	0	0	0	0	0	0
4/27/2024	11:45 AM	0	0	0	0	0	0	0	0	0	0	0	0	0
4/27/2024	12:00 PM	0	0	0	0	0	0	0	0	0	0	0	0	0
4/27/2024	12:15 PM	0	0	0	0	0	0	0	0	0	0	0	0	0
4/27/2024	12:30 PM	0	0	0	0	0	0	0	0	0	0	0	0	0
4/27/2024	12:45 PM	0	0	0	0	0	0	0	0	0	0	0	0	0
4/27/2024	1:00 PM	0	0	0	0	0	0	0	0	0	0	0	0	0
4/27/2024	1:15 PM	0	0	0	0	0	0	0	0	0	0	0	0	0
4/27/2024	1:30 PM	0	0	0	0	0	0	0	0	0	0	0	0	0
4/27/2024	1:45 PM	0	0	0	0	0	0	0	0	0	0	0	0	0
4/27/2024	2:00 PM	0	0	0	0	0	0	0	0	0	0	0	0	0
4/27/2024	2:15 PM	0	0	0	0	0	0	0	0	0	0	0	0	0
4/27/2024	2:30 PM	0	0	0	0	0	0	0	0	0	0	0	0	0
4/27/2024	2:45 PM	0	0	0	0	0	0	0	0	0	0	0	0	0
4/27/2024	3:00 PM	0	0	0	0	0	0	0	0	0	0	0	0	0
4/27/2024	3:15 PM	0	0	0	0	0	0	0	0	0	0	0	0	0
4/27/2024	3:30 PM	0	0	0	0	0	0	0	0	0	0	0	0	0
4/27/2024	3:45 PM	0	0	0	0	0	0	0	0	0	0	0	0	0
4/27/2024	4:00 PM	0	0	0	0	0	0	0	0	0	0	0	0	0
4/27/2024	4:15 PM	0	0	0	0	0	0	0	0	0	0	0	0	0
4/27/2024	4:30 PM	0	0	0	0	0	0	0	0	0	0	0	0	0
4/27/2024	4:45 PM	0	0	0	0	0	0	0	0	0	0	0	0	0
4/27/2024	5:00 PM	0	0	0	0	0	0	0	0	0	0	0	0	0
4/27/2024	5:15 PM	0	0	0	0	0	0	0	0	0	0	0	0	0
4/27/2024	5:30 PM	0	0	0	0	0	0	0	0	0	0	0	0	0
4/27/2024	5:45 PM	0	0	0	0	0	0	0	0	0	0	0	0	0
4/27/2024	6:00 PM	0	0	0	0	0	0	0	0	0	0	0	0	0
4/27/2024	6:15 PM	0	0	0	0	0	0	0	0	0	0	0	0	0
4/27/2024	6:30 PM	0	0	0	0	0	0	0	0	0	0	0	0	0
4/27/2024	6:45 PM	0	0	0	0	0	0	0	0	0	0	0	0	0
4/27/2024	7:00 PM	0	0	0	0	0	0	0	0	0	0	0	0	0
4/27/2024	7:15 PM	0	0	0	0	0	0	0	0	0	0	0	0	0
4/27/2024	7:30 PM	0	0	0	0	0	0	0	0	0	0	0	0	0
4/27/2024	7:45 PM	0	0	0	0	0	0	0	0	0	0	0	0	0
4/27/2024	8:00 PM	0	0	0	0	0	0	0	0	0	0	0	0	0
4/27/2024	8:15 PM	0	0	0	0	0	0	0	0	0	0	0	0	0
4/27/2024	8:30 PM	0	0	0	0	0	0	0	0	0	0	0	0	0
4/27/2024	8:45 PM	0	0	0	0	0	0	0	0	0	0	0	0	0
4/27/2024	9:00 PM	0	0	0	0	0	0	0	0	0	0	0	0	0
4/27/2024	9:15 PM	0	0	0	0	0	0	0	0	0	0	0	0	0
4/27/2024	9:30 PM	0	0	0	0	0	0	0	0	0	0	0	0	0
4/27/2024	9:45 PM	0	0	0	0	0	0	0	0	0	0	0	0	0
4/27/2024	10:00 PM	0	0	0	0	0	0	0	0	0	0	0	0	0
4/27/2024	10:15 PM	0	0	0	0	0	0	0	0	0	0	0	0	0
4/27/2024	10:30 PM	0	0	0	0	0	0	0	0	0	0	0	0	0
4/27/2024	10:45 PM	0	0	0	0	0	0	0	0	0	0	0	0	0
4/27/2024	11:00 PM	0	0	0	0	0	0	0	0	0	0	0	0	0
4/27/2024	11:15 PM	0	0	0	0	0	0	0	0	0	0	0	0	0
4/27/2024	11:30 PM	0	0	0	0	0	0	0	0	0	0	0	0	0
4/27/2024	11:45 PM	0	0	0	0	0	0	0	0	0	0	0	0	0

SB
File Name:
Start Date: 4/21/2024
Start Time: 0
Site Code: 13
Station ID: 1
Location 1: I-26 S/Bound On-Ramp, south of I-20
Location 2:

Date	Time	1	2	3	4	5	6	7	8	9	10	11	12	13
4/21/2024	12:00 AM	1	18	3	0	0	0	0	0	1	0	0	0	0
4/21/2024	12:15 AM	0	21	5	0	0	0	0	0	3	0	0	0	0
4/21/2024	12:30 AM	0	15	4	0	0	0	0	0	2	0	0	0	0
4/21/2024	12:45 AM	1	22	6	0	0	0	0	0	3	0	0	0	0
4/21/2024	1:00 AM	0	17	4	0	0	0	0	0	0	0	0	0	0
4/21/2024	1:15 AM	0	12	2	0	0	0	0	0	1	0	0	0	0
4/21/2024	1:30 AM	0	12	5	0	0	0	0	0	0	0	0	0	0
4/21/2024	1:45 AM	0	6	1	0	0	0	0	0	2	0	0	0	0
4/21/2024	2:00 AM	0	14	1	1	0	0	0	0	1	0	0	0	0
4/21/2024	2:15 AM	0	8	3	0	0	0	0	0	1	0	0	0	0
4/21/2024	2:30 AM	0	9	1	0	0	0	0	0	1	0	0	0	0
4/21/2024	2:45 AM	0	7	1	0	0	0	0	0	1	0	0	0	0
4/21/2024	3:00 AM	0	5	1	0	0	0	0	0	0	0	0	0	0
4/21/2024	3:15 AM	0	8	1	0	1	0	0	0	3	0	0	0	0
4/21/2024	3:30 AM	0	5	2	0	0	0	0	0	1	0	0	0	0
4/21/2024	3:45 AM	0	8	1	0	0	0	0	0	1	0	0	0	0
4/21/2024	4:00 AM	0	1	0	0	0	0	0	0	2	0	0	0	0
4/21/2024	4:15 AM	0	6	2	0	0	0	0	0	1	0	0	0	0
4/21/2024	4:30 AM	0	7	1	0	0	0	0	0	2	0	0	0	0
4/21/2024	4:45 AM	0	8	3	0	0	0	0	0	0	0	0	0	0
4/21/2024	5:00 AM	0	3	1	0	0	0	0	0	0	0	0	0	0
4/21/2024	5:15 AM	0	6	0	0	0	0	0	0	0	0	0	0	0
4/21/2024	5:30 AM	0	8	4	0	0	0	0	0	0	0	0	0	0
4/21/2024	5:45 AM	0	10	1	0	0	0	0	0	1	0	0	0	0
4/21/2024	6:00 AM	0	11	5	0	0	0	0	0	3	0	0	0	0
4/21/2024	6:15 AM	0	12	3	0	0	0	0	1	0	0	0	0	0
4/21/2024	6:30 AM	0	19	3	0	0	0	0	0	1	0	0	0	0
4/21/2024	6:45 AM	0	16	5	0	0	0	0	0	3	0	0	0	0
4/21/2024	7:00 AM	0	21	5	0	0	0	0	0	1	0	0	0	0
4/21/2024	7:15 AM	0	33	8	0	0	0	0	0	3	0	0	0	0
4/21/2024	7:30 AM	0	24	10	0	0	0	0	0	1	0	0	0	0
4/21/2024	7:45 AM	0	47	5	0	0	0	0	0	2	0	0	0	0
4/21/2024	8:00 AM	0	29	6	0	0	0	0	0	1	0	0	0	0
4/21/2024	8:15 AM	1	36	8	0	0	0	0	0	0	0	0	0	0
4/21/2024	8:30 AM	0	34	13	0	0	0	0	0	5	0	0	0	0
4/21/2024	8:45 AM	0	60	14	0	1	0	0	0	0	0	0	0	0
4/21/2024	9:00 AM	0	62	21	0	0	0	0	0	3	0	0	0	0
4/21/2024	9:15 AM	0	52	16	0	1	0	0	0	1	0	0	0	0
4/21/2024	9:30 AM	0	52	22	0	0	0	0	0	4	0	0	0	0
4/21/2024	9:45 AM	0	77	23	0	0	1	0	0	0	0	0	0	0
4/21/2024	10:00 AM	0	64	20	0	0	0	0	0	1	0	0	0	0
4/21/2024	10:15 AM	0	82	23	1	0	0	0	0	3	0	1	0	0
4/21/2024	10:30 AM	0	101	22	0	1	0	0	0	3	0	0	0	0
4/21/2024	10:45 AM	0	107	22	0	1	0	0	0	0	0	0	0	0
4/21/2024	11:00 AM	0	84	21	0	0	0	0	0	4	0	0	0	0
4/21/2024	11:15 AM	0	87	27	0	0	0	0	1	5	0	0	0	0
4/21/2024	11:30 AM	0	104	29	0	0	0	0	0	0	0	0	0	0
4/21/2024	11:45 AM	0	127	25	0	0	0	0	0	2	0	0	0	0
4/21/2024	12:00 PM	0	149	40	0	0	0	0	0	2	0	0	0	0
4/21/2024	12:15 PM	0	121	45	0	0	0	0	0	3	0	0	0	0
4/21/2024	12:30 PM	0	109	37	0	1	0	0	0	2	0	0	0	0
4/21/2024	12:45 PM	0	104	28	2	1	0	0	0	0	0	0	0	0
4/21/2024	1:00 PM	0	117	30	0	0	0	0	0	1	0	0	0	0
4/21/2024	1:15 PM	0	131	38	0	0	0	0	0	3	0	0	0	0
4/21/2024	1:30 PM	0	129	32	0	0	0	0	0	6	0	0	0	0
4/21/2024	1:45 PM	0	131	33	0	0	0	0	0	1	0	0	0	0
4/21/2024	2:00 PM	0	110	24	0	0	0	0	0	1	0	0	0	0
4/21/2024	2:15 PM	0	104	30	0	0	0	0	0	1	0	0	0	0
4/21/2024	2:30 PM	0	111	35	0	1	0	0	0	0	0	0	0	0
4/21/2024	2:45 PM	0	118	31	0	0	0	0	0	2	0	0	0	0
4/21/2024	3:00 PM	0	91	31	0	0	0	0	0	2	0	0	0	0
4/21/2024	3:15 PM	0	82	26	0	0	0	0	0	0	0	0	0	0
4/21/2024	3:30 PM	0	104	35	0	1	0	0	0	2	0	0	0	0
4/21/2024	3:45 PM	0	99	28	0	1	0	0	0	2	0	0	0	0
4/21/2024	4:00 PM	0	100	25	0	0	0	0	0	2	0	0	0	0
4/21/2024	4:15 PM	0	102	22	0	1	0	0	0	1	0	0	0	0
4/21/2024	4:30 PM	0	87	18	0	3	0	0	0	0	0	0	0	0
4/21/2024	4:45 PM	0	98	22	0	2	0	0	0	2	0	0	0	0
4/21/2024	5:00 PM	0	102	20	0	1	1	0	0	2	0	0	0	0
4/21/2024	5:15 PM	0	91	22	0	0	0	0	0	1	0	0	0	0
4/21/2024	5:30 PM	0	84	19	0	0	0	0	0	0	0	0	0	0
4/21/2024	5:45 PM	0	80	13	0	0	0	0	0	1	0	0	0	0
4/21/2024	6:00 PM	0	90	28	0	0	1	0	0	0	0	0	0	0
4/21/2024	6:15 PM	0	72	17	0	0	0	0	0	0	0	0	0	0
4/21/2024	6:30 PM	0	73	15	0	0	0	0	0	0	0	0	0	0
4/21/2024	6:45 PM	1	59	12	0	1	0	0	0	1	0	0	0	0
4/21/2024	7:00 PM	0	52	11	0	2	0	0	1	1	0	0	0	0
4/21/2024	7:15 PM	0	68	18	0	0	0	0	0	0	0	0	0	0
4/21/2024	7:30 PM	0	48	12	0	0	0	0	0	0	0	0	0	0
4/21/2024	7:45 PM	0	76	21	0	0	0	0	0	0	0	0	0	0
4/21/2024	8:00 PM	0	51	14	0	0	0	0	0	1	0	0	0	0
4/21/2024	8:15 PM	0	34	11	0	1	0	0	0	1	0	0	0	0
4/21/2024	8:30 PM	0	25	6	0	1	0	0	0	0	0	0	0	0
4/21/2024	8:45 PM	0	41	12	0	1	0	0	0	1	0	0	0	0
4/21/2024	9:00 PM	0	34	8	0	1	0	0	0	2	0	0	0	0
4/21/2024	9:15 PM	0	24	5	0	0	0	0	0	5	0	0	0	0
4/21/2024	9:30 PM	0	27	7	0	1	0	0	0	1	0	0	0	0
4/21/2024	9:45 PM	0	28	8	0	0	0	0	0	3	0	0	0	0
4/21/2024	10:00 PM	0	28	7	0	0	1	0	0	4	0	1	0	0
4/21/2024	10:15 PM	0	18	5	0	0	0	0	0	1	0	0	0	0
4/21/2024	10:30 PM	0	14	3	0	0	0	0	0	0	0	0	0	0
4/21/2024	10:45 PM	0	15	4	0	0	0	0	0	3	0	0	0	0
4/21/2024	11:00 PM	0	14	3	0	0	0	0	0	1	0	0	0	0
4/21/2024	11:15 PM	0	17	2	0	0	0	0	0	3	0	0	0	0
4/21/2024	11:30 PM	0	15	2	0	0	0	0	0	2	0	0	0	0
4/21/2024	11:45 PM	0	11	1	0	0	0	0	0	0	0	0	0	0

4/22/2024	12:00 AM	0	14	2	0	0	0	0	0	1	0	0	0	0
4/22/2024	12:15 AM	0	16	3	0	0	0	0	0	0	0	0	0	0
4/22/2024	12:30 AM	0	7	0	0	0	1	0	0	4	0	0	0	0
4/22/2024	12:45 AM	0	6	0	0	0	0	0	0	2	0	0	0	0
4/22/2024	1:00 AM	0	4	1	0	0	0	0	0	3	0	0	0	0
4/22/2024	1:15 AM	0	5	0	0	0	0	0	0	0	0	0	0	0
4/22/2024	1:30 AM	0	4	0	0	0	0	0	0	1	0	0	0	0
4/22/2024	1:45 AM	0	2	0	0	0	0	0	0	0	0	0	0	0
4/22/2024	2:00 AM	0	4	0	0	0	0	0	0	0	0	0	0	0
4/22/2024	2:15 AM	0	3	0	0	0	2	0	0	0	0	0	0	0
4/22/2024	2:30 AM	0	4	0	0	1	0	0	1	0	0	0	0	0
4/22/2024	2:45 AM	0	3	0	0	3	1	0	1	1	0	0	0	0
4/22/2024	3:00 AM	1	4	1	0	0	0	0	0	1	0	0	0	0
4/22/2024	3:15 AM	0	5	1	0	0	0	0	0	5	0	0	0	0
4/22/2024	3:30 AM	0	11	3	0	0	0	0	0	2	0	0	0	0
4/22/2024	3:45 AM	0	7	1	0	1	0	0	0	1	0	0	0	0
4/22/2024	4:00 AM	0	4	0	0	0	0	0	0	0	0	0	0	0
4/22/2024	4:15 AM	0	9	2	0	0	0	0	0	4	0	0	0	0
4/22/2024	4:30 AM	0	12	3	0	0	0	0	0	3	0	0	0	0
4/22/2024	4:45 AM	0	18	4	0	0	1	0	0	3	0	0	0	0
4/22/2024	5:00 AM	0	19	4	0	0	0	0	0	3	0	0	0	0
4/22/2024	5:15 AM	0	21	3	0	0	0	0	0	0	0	0	0	0
4/22/2024	5:30 AM	0	31	5	0	1	0	0	0	3	0	0	0	0
4/22/2024	5:45 AM	0	39	7	0	0	1	0	0	5	0	0	0	0
4/22/2024	6:00 AM	0	37	8	0	0	1	0	0	2	0	0	0	0
4/22/2024	6:15 AM	0	60	12	0	0	0	0	0	1	0	0	0	0
4/22/2024	6:30 AM	0	73	36	0	5	0	0	1	8	0	0	0	0
4/22/2024	6:45 AM	0	80	30	1	1	0	0	0	2	0	0	0	0
4/22/2024	7:00 AM	0	102	32	0	3	1	0	1	5	0	0	0	0
4/22/2024	7:15 AM	0	152	36	0	4	2	0	0	1	0	0	0	0
4/22/2024	7:30 AM	0	143	39	0	3	1	0	1	3	0	0	0	0
4/22/2024	7:45 AM	0	151	53	0	3	0	0	0	1	0	0	0	0
4/22/2024	8:00 AM	0	143	44	0	6	0	0	0	2	0	0	0	0
4/22/2024	8:15 AM	1	120	49	0	1	0	0	0	3	0	0	0	0
4/22/2024	8:30 AM	0	85	45	1	5	2	1	0	9	0	0	0	0
4/22/2024	8:45 AM	0	109	46	0	6	1	0	0	5	0	0	0	0
4/22/2024	9:00 AM	0	67	32	0	3	0	0	1	4	0	0	0	0
4/22/2024	9:15 AM	1	92	32	0	10	0	0	1	2	0	0	0	0
4/22/2024	9:30 AM	0	72	34	0	5	1	0	2	4	0	0	0	0
4/22/2024	9:45 AM	0	92	36	0	6	0	0	0	4	0	0	0	0
4/22/2024	10:00 AM	0	84	23	0	2	0	0	2	6	0	0	0	0
4/22/2024	10:15 AM	0	89	25	0	2	0	1	2	2	0	0	0	0
4/22/2024	10:30 AM	0	80	22	0	3	1	0	1	9	0	0	0	0
4/22/2024	10:45 AM	0	104	37	0	2	1	0	2	8	0	0	0	0
4/22/2024	11:00 AM	0	85	31	0	4	0	0	0	4	0	0	0	0
4/22/2024	11:15 AM	0	88	35	0	6	0	0	0	10	0	0	0	0
4/22/2024	11:30 AM	0	73	27	0	3	0	0	0	5	0	0	0	0
4/22/2024	11:45 AM	0	83	30	0	3	0	0	0	6	0	0	0	0
4/22/2024	12:00 PM	0	97	40	0	5	0	0	0	7	1	0	0	0
4/22/2024	12:15 PM	0	83	31	0	5	0	0	0	2	0	0	0	0
4/22/2024	12:30 PM	0	99	32	0	2	0	0	1	5	1	0	0	0
4/22/2024	12:45 PM	0	92	26	0	4	0	0	1	4	0	0	0	0
4/22/2024	1:00 PM	0	81	23	1	3	3	0	2	4	0	0	0	0
4/22/2024	1:15 PM	0	96	27	0	1	1	0	0	3	0	0	0	0
4/22/2024	1:30 PM	0	97	23	0	2	2	0	0	8	0	0	0	0
4/22/2024	1:45 PM	0	86	28	1	2	0	0	0	4	0	0	0	0
4/22/2024	2:00 PM	0	75	26	0	3	0	0	0	7	0	0	0	0
4/22/2024	2:15 PM	0	85	30	0	1	1	0	0	2	0	0	0	0
4/22/2024	2:30 PM	0	96	41	0	5	0	0	1	3	1	0	0	0
4/22/2024	2:45 PM	0	124	26	0	2	0	0	0	4	0	0	0	0
4/22/2024	3:00 PM	1	98	30	0	2	1	0	0	6	0	0	0	0
4/22/2024	3:15 PM	0	110	33	0	3	1	0	1	2	1	0	0	0
4/22/2024	3:30 PM	1	125	22	0	0	0	0	0	2	0	0	0	0
4/22/2024	3:45 PM	0	129	30	0	2	1	0	2	4	0	0	0	0
4/22/2024	4:00 PM	0	163	45	0	3	0	0	3	3	0	0	0	0
4/22/2024	4:15 PM	0	174	53	0	2	2	0	0	7	1	0	0	0
4/22/2024	4:30 PM	0	133	48	0	3	2	0	0	7	0	0	0	0
4/22/2024	4:45 PM	0	127	32	0	3	0	0	0	8	0	0	0	0
4/22/2024	5:00 PM	0	111	40	0	3	0	0	1	1	0	1	0	0
4/22/2024	5:15 PM	0	118	36	0	1	0	0	0	1	0	0	0	0
4/22/2024	5:30 PM	0	124	30	0	1	0	0	0	2	0	0	0	0
4/22/2024	5:45 PM	2	122	39	0	2	0	0	1	9	0	0	0	0
4/22/2024	6:00 PM	0	102	24	0	0	0	0	0	3	0	0	0	0
4/22/2024	6:15 PM	0	93	25	0	0	0	0	0	2	0	0	0	0
4/22/2024	6:30 PM	0	90	14	0	1	1	0	0	1	0	0	0	0
4/22/2024	6:45 PM	0	78	17	0	1	0	0	0	1	0	0	0	0
4/22/2024	7:00 PM	1	68	17	0	0	0	0	0	4	0	0	0	0
4/22/2024	7:15 PM	0	81	14	0	2	0	0	0	1	0	0	0	0
4/22/2024	7:30 PM	2	67	10	0	0	1	0	0	2	0	1	0	0
4/22/2024	7:45 PM	0	58	14	0	2	0	0	0	1	0	0	0	0
4/22/2024	8:00 PM	0	55	12	0	1	0	0	0	2	0	0	0	0
4/22/2024	8:15 PM	0	42	6	0	0	0	0	0	1	0	0	0	0
4/22/2024	8:30 PM	0	48	2	0	0	0	0	0	3	0	0	0	0
4/22/2024	8:45 PM	0	57	3	0	0	0	0	0	3	0	0	0	0
4/22/2024	9:00 PM	0	52	1	0	0	0	0	0	0	0	0	0	0
4/22/2024	9:15 PM	0	43	1	0	0	0	0	0	4	0	0	0	0
4/22/2024	9:30 PM	0	35	2	0	0	0	0	0	1	0	0	0	0
4/22/2024	9:45 PM	0	29	2	0	0	0	0	0	1	0	0	0	0
4/22/2024	10:00 PM	0	27	1	0	0	0	0	0	0	0	1	0	0
4/22/2024	10:15 PM	0	18	1	0	1	0	0	0	0	0	2	0	0
4/22/2024	10:30 PM	0	20	0	0	0	0	0	0	0	0	0	0	0
4/22/2024	10:45 PM	0	28	1	0	1	0	0	0	1	0	0	0	0
4/22/2024	11:00 PM	0	26	0	0	0	0	0	0	1	0	0	0	0
4/22/2024	11:15 PM	0	21	0	0	0	0	0	0	1	0	0	0	0
4/22/2024	11:30 PM	0	9	0	0	1	0	0	0	0	0	0	0	0
4/22/2024	11:45 PM	0	9	1	0	0	0	0	0	2	0	0	0	0

4/23/2024	12:00 AM	0	7	1	0	0	0	0	0	1	0	0	0	0
4/23/2024	12:15 AM	0	9	1	0	0	0	0	0	3	0	1	0	0
4/23/2024	12:30 AM	0	5	1	0	0	0	0	0	1	0	0	0	0
4/23/2024	12:45 AM	0	8	1	0	0	0	0	0	1	0	0	0	0
4/23/2024	1:00 AM	0	5	1	0	1	0	0	0	1	0	0	0	0
4/23/2024	1:15 AM	0	4	1	0	0	0	0	0	2	0	0	0	0
4/23/2024	1:30 AM	0	6	2	0	0	0	0	0	1	0	1	0	0
4/23/2024	1:45 AM	0	2	1	0	0	0	0	0	4	0	0	0	0
4/23/2024	2:00 AM	0	5	0	0	0	0	0	0	4	0	0	0	0
4/23/2024	2:15 AM	0	3	1	0	1	0	0	0	3	0	0	0	0
4/23/2024	2:30 AM	0	4	1	0	0	0	0	0	1	0	0	0	0
4/23/2024	2:45 AM	0	5	1	0	0	0	0	0	2	0	0	0	0
4/23/2024	3:00 AM	0	5	1	0	0	0	0	0	0	0	0	0	0
4/23/2024	3:15 AM	0	4	2	0	0	0	0	0	3	0	0	0	0
4/23/2024	3:30 AM	0	8	3	0	0	0	0	0	3	0	1	0	0
4/23/2024	3:45 AM	0	13	2	0	0	0	0	0	1	0	0	0	0
4/23/2024	4:00 AM	0	11	2	0	0	0	0	0	1	0	0	0	0
4/23/2024	4:15 AM	0	7	2	0	0	0	0	0	1	0	0	0	0
4/23/2024	4:30 AM	0	11	3	0	1	0	0	0	4	0	0	0	0
4/23/2024	4:45 AM	0	16	4	0	0	0	0	0	2	0	0	0	0
4/23/2024	5:00 AM	0	12	5	0	1	0	0	1	4	0	0	0	0
4/23/2024	5:15 AM	0	15	4	0	0	0	0	1	4	0	0	0	0
4/23/2024	5:30 AM	0	29	10	0	2	0	0	2	3	0	0	0	0
4/23/2024	5:45 AM	0	31	8	0	0	0	0	1	1	0	0	0	0
4/23/2024	6:00 AM	0	32	19	0	0	0	0	0	3	0	0	0	0
4/23/2024	6:15 AM	0	44	21	0	2	0	0	1	3	0	0	0	0
4/23/2024	6:30 AM	0	77	32	0	4	1	0	0	8	0	0	0	0
4/23/2024	6:45 AM	0	75	29	1	2	2	0	0	6	0	0	0	0
4/23/2024	7:00 AM	0	95	28	0	4	1	0	0	3	0	0	0	0
4/23/2024	7:15 AM	0	153	45	0	1	1	0	0	2	0	0	0	0
4/23/2024	7:30 AM	0	92	26	0	1	0	0	0	2	0	0	0	0
4/23/2024	7:45 AM	0	136	32	1	2	0	0	0	4	0	0	0	0
4/23/2024	8:00 AM	0	141	34	0	2	0	0	0	6	0	0	0	0
4/23/2024	8:15 AM	1	130	28	0	3	0	0	1	9	0	0	0	0
4/23/2024	8:30 AM	1	128	32	0	2	2	0	0	3	0	0	0	0
4/23/2024	8:45 AM	0	131	34	0	7	3	0	0	5	0	0	0	0
4/23/2024	9:00 AM	0	77	35	0	4	0	0	3	6	0	0	0	0
4/23/2024	9:15 AM	0	91	32	0	11	0	0	1	9	0	0	0	0
4/23/2024	9:30 AM	0	88	25	0	2	3	0	0	3	0	1	0	0
4/23/2024	9:45 AM	2	95	32	0	7	0	0	0	5	0	0	0	0
4/23/2024	10:00 AM	0	76	34	0	2	3	0	0	8	0	0	0	0
4/23/2024	10:15 AM	0	82	29	0	4	1	0	0	7	0	0	0	0
4/23/2024	10:30 AM	0	83	30	0	1	2	0	0	4	0	0	0	0
4/23/2024	10:45 AM	0	90	40	0	3	1	0	0	6	0	0	0	0
4/23/2024	11:00 AM	0	77	29	0	1	0	0	2	9	0	0	0	0
4/23/2024	11:15 AM	1	79	34	1	6	0	0	0	5	0	0	0	0
4/23/2024	11:30 AM	0	93	22	0	5	0	0	0	6	0	0	0	0
4/23/2024	11:45 AM	0	94	35	0	0	1	0	0	4	0	0	0	0
4/23/2024	12:00 PM	1	96	30	0	3	0	0	0	9	0	0	0	0
4/23/2024	12:15 PM	0	99	35	0	4	1	0	0	5	0	0	0	0
4/23/2024	12:30 PM	1	88	21	0	1	3	0	0	5	0	0	0	0
4/23/2024	12:45 PM	0	87	27	0	3	1	0	1	6	0	0	0	0
4/23/2024	1:00 PM	1	95	25	0	2	2	0	1	4	0	0	0	0
4/23/2024	1:15 PM	0	101	34	0	4	0	0	0	7	0	0	0	0
4/23/2024	1:30 PM	0	95	30	0	0	0	0	0	5	0	0	0	0
4/23/2024	1:45 PM	0	85	26	0	4	1	0	0	6	0	0	0	0
4/23/2024	2:00 PM	1	87	38	0	5	0	0	0	7	0	0	0	0
4/23/2024	2:15 PM	0	95	31	1	3	1	0	0	7	1	0	0	0
4/23/2024	2:30 PM	0	99	22	0	2	1	0	0	6	0	0	0	0
4/23/2024	2:45 PM	0	138	46	0	4	0	0	0	6	0	0	0	0
4/23/2024	3:00 PM	1	122	28	0	3	0	0	0	5	1	0	0	0
4/23/2024	3:15 PM	0	110	48	0	5	0	0	0	5	0	0	0	0
4/23/2024	3:30 PM	1	116	21	0	3	2	0	2	3	0	0	0	0
4/23/2024	3:45 PM	0	124	24	0	3	2	0	1	4	0	0	0	0
4/23/2024	4:00 PM	0	129	40	0	1	0	0	0	3	0	0	0	0
4/23/2024	4:15 PM	0	117	39	0	2	0	0	1	7	1	0	0	0
4/23/2024	4:30 PM	0	146	32	0	1	0	0	0	2	0	0	0	0
4/23/2024	4:45 PM	0	125	30	0	1	0	0	0	4	0	0	0	0
4/23/2024	5:00 PM	0	125	45	0	3	0	0	0	2	0	0	0	0
4/23/2024	5:15 PM	0	143	34	0	1	0	0	0	1	0	0	0	0
4/23/2024	5:30 PM	0	128	45	0	2	0	0	0	5	0	0	0	0
4/23/2024	5:45 PM	0	119	30	0	3	1	0	0	2	0	0	0	0
4/23/2024	6:00 PM	0	95	33	0	1	0	0	0	4	0	0	0	0
4/23/2024	6:15 PM	0	99	28	0	3	0	0	1	2	0	0	0	0
4/23/2024	6:30 PM	0	78	17	0	1	0	0	0	3	0	0	0	0
4/23/2024	6:45 PM	0	82	21	0	0	0	0	1	3	0	0	0	0
4/23/2024	7:00 PM	0	85	15	1	0	1	0	0	6	0	0	0	0
4/23/2024	7:15 PM	1	76	17	0	1	0	0	0	0	0	0	0	0
4/23/2024	7:30 PM	0	66	24	0	2	0	0	0	0	0	0	0	0
4/23/2024	7:45 PM	0	71	14	0	1	0	0	0	4	0	1	0	0
4/23/2024	8:00 PM	0	43	12	1	1	0	0	0	2	0	0	0	0
4/23/2024	8:15 PM	0	48	11	0	1	0	0	0	3	0	0	0	0
4/23/2024	8:30 PM	0	49	11	0	1	0	0	0	1	0	0	0	0
4/23/2024	8:45 PM	0	39	9	0	0	0	0	0	1	0	0	0	0
4/23/2024	9:00 PM	1	52	11	0	0	0	0	0	0	0	0	0	0
4/23/2024	9:15 PM	0	42	9	1	1	0	0	0	0	0	0	0	0
4/23/2024	9:30 PM	0	42	10	0	0	0	0	0	0	0	0	0	0
4/23/2024	9:45 PM	0	27	7	1	0	0	0	0	2	0	0	0	0
4/23/2024	10:00 PM	0	31	7	0	1	0	0	0	1	0	0	0	0
4/23/2024	10:15 PM	0	30	4	0	1	0	0	0	3	0	1	0	0
4/23/2024	10:30 PM	0	21	3	0	1	0	0	0	0	0	0	0	0
4/23/2024	10:45 PM	0	21	4	0	0	0	0	0	0	0	0	0	0
4/23/2024	11:00 PM	0	20	5	0	0	0	0	0	3	0	0	0	0
4/23/2024	11:15 PM	0	19	3	0	0	0	0	0	1	0	0	0	0
4/23/2024	11:30 PM	0	8	1	0	0	1	0	0	4	0	0	0	0
4/23/2024	11:45 PM	0	7	1	0	0	0	0	0	1	0	0	0	0

4/24/2024	12:00 AM	0	9	0	0	0	0	0	0	8	0	0	0	0
4/24/2024	12:15 AM	0	6	3	0	0	0	0	0	3	0	0	0	0
4/24/2024	12:30 AM	0	8	1	0	0	0	0	0	0	0	0	0	0
4/24/2024	12:45 AM	0	4	2	0	0	0	0	0	3	0	0	0	0
4/24/2024	1:00 AM	0	3	0	0	0	0	0	0	1	0	0	0	0
4/24/2024	1:15 AM	0	3	1	0	0	0	0	0	3	0	1	0	0
4/24/2024	1:30 AM	0	3	1	0	1	0	0	0	2	0	0	0	0
4/24/2024	1:45 AM	0	7	0	0	0	0	0	0	0	0	0	0	0
4/24/2024	2:00 AM	0	2	1	0	0	0	0	0	4	0	0	0	0
4/24/2024	2:15 AM	0	6	1	0	0	0	0	0	0	0	0	0	0
4/24/2024	2:30 AM	0	5	0	0	0	0	0	0	1	0	1	0	0
4/24/2024	2:45 AM	0	2	0	0	0	0	0	0	4	0	0	0	0
4/24/2024	3:00 AM	1	5	0	0	0	0	0	0	1	0	0	0	0
4/24/2024	3:15 AM	0	4	1	0	0	0	0	0	4	0	0	0	0
4/24/2024	3:30 AM	0	5	1	0	0	0	0	0	1	0	1	0	0
4/24/2024	3:45 AM	0	14	2	0	0	0	0	0	2	0	0	0	0
4/24/2024	4:00 AM	0	9	1	0	0	0	0	0	3	0	0	0	0
4/24/2024	4:15 AM	0	8	1	0	0	0	0	0	1	0	0	0	0
4/24/2024	4:30 AM	0	8	6	0	1	0	0	0	1	0	1	0	0
4/24/2024	4:45 AM	0	14	7	0	0	0	0	0	5	0	0	0	0
4/24/2024	5:00 AM	0	10	10	0	2	0	0	0	3	0	0	0	0
4/24/2024	5:15 AM	0	20	9	0	2	0	0	0	4	0	0	0	0
4/24/2024	5:30 AM	0	31	9	0	1	0	0	0	4	0	0	0	0
4/24/2024	5:45 AM	0	35	11	0	3	0	0	0	4	0	0	0	0
4/24/2024	6:00 AM	0	30	16	0	0	0	0	0	3	0	0	0	0
4/24/2024	6:15 AM	0	42	24	0	0	0	0	0	6	0	0	0	0
4/24/2024	6:30 AM	0	75	24	0	2	4	0	1	1	0	0	0	0
4/24/2024	6:45 AM	0	81	43	1	2	2	0	0	5	0	0	0	0
4/24/2024	7:00 AM	0	110	38	0	2	2	0	0	3	0	0	0	0
4/24/2024	7:15 AM	1	117	48	0	3	2	0	1	4	0	0	0	0
4/24/2024	7:30 AM	0	149	51	0	4	0	0	1	4	0	0	0	0
4/24/2024	7:45 AM	0	158	46	0	3	2	0	0	4	0	0	0	0
4/24/2024	8:00 AM	0	134	44	0	6	4	0	0	1	1	0	0	0
4/24/2024	8:15 AM	0	105	40	2	4	0	0	1	3	0	0	0	0
4/24/2024	8:30 AM	0	110	46	0	4	1	0	1	5	0	0	0	0
4/24/2024	8:45 AM	1	102	51	0	8	1	0	0	6	0	0	0	0
4/24/2024	9:00 AM	0	89	36	0	7	2	0	0	3	0	0	0	0
4/24/2024	9:15 AM	1	91	35	0	7	0	0	1	0	0	0	0	0
4/24/2024	9:30 AM	0	97	35	0	1	1	0	0	3	0	0	0	0
4/24/2024	9:45 AM	0	115	31	0	5	1	0	1	8	0	0	0	0
4/24/2024	10:00 AM	0	85	26	0	2	0	0	1	7	0	0	0	0
4/24/2024	10:15 AM	1	93	34	0	6	1	0	0	5	0	0	0	0
4/24/2024	10:30 AM	0	100	36	0	3	1	0	1	3	0	0	0	0
4/24/2024	10:45 AM	0	103	29	0	3	1	0	0	3	0	0	0	0
4/24/2024	11:00 AM	0	90	24	0	2	2	0	1	6	0	0	0	0
4/24/2024	11:15 AM	0	113	35	0	3	0	0	1	5	0	0	0	0
4/24/2024	11:30 AM	0	70	39	0	3	0	0	2	8	1	0	0	0
4/24/2024	11:45 AM	0	101	34	0	2	0	0	2	1	0	0	0	0
4/24/2024	12:00 PM	0	92	37	0	4	0	0	0	1	0	0	0	0
4/24/2024	12:15 PM	0	110	26	0	3	1	0	1	6	0	0	0	0
4/24/2024	12:30 PM	0	96	26	0	3	1	0	1	3	0	0	0	0
4/24/2024	12:45 PM	2	112	30	0	1	0	0	1	6	0	0	0	0
4/24/2024	1:00 PM	0	85	27	3	2	1	0	0	11	0	0	0	0
4/24/2024	1:15 PM	0	97	31	0	5	0	0	1	5	0	0	0	0
4/24/2024	1:30 PM	2	106	24	0	3	1	0	1	6	0	0	0	0
4/24/2024	1:45 PM	0	103	35	0	5	1	0	0	5	1	0	0	0
4/24/2024	2:00 PM	0	88	27	1	1	0	0	0	4	0	0	0	0
4/24/2024	2:15 PM	0	95	18	0	4	0	0	0	6	0	0	0	0
4/24/2024	2:30 PM	0	108	28	0	1	0	0	0	1	0	0	0	0
4/24/2024	2:45 PM	0	98	24	0	0	0	0	0	3	0	0	0	0
4/24/2024	3:00 PM	0	104	33	0	0	2	0	0	5	0	0	0	0
4/24/2024	3:15 PM	0	117	35	0	3	1	0	1	4	0	0	0	0
4/24/2024	3:30 PM	1	141	34	0	2	1	0	0	5	1	0	0	0
4/24/2024	3:45 PM	0	131	30	1	3	0	0	1	3	0	0	0	0
4/24/2024	4:00 PM	0	144	45	0	1	0	0	0	3	0	0	0	0
4/24/2024	4:15 PM	0	126	36	0	1	0	0	1	3	0	0	0	0
4/24/2024	4:30 PM	0	122	35	0	3	0	0	0	2	0	0	0	0
4/24/2024	4:45 PM	0	145	37	0	0	0	0	0	3	0	0	0	0
4/24/2024	5:00 PM	0	142	43	0	2	1	0	0	3	0	0	0	0
4/24/2024	5:15 PM	0	157	40	0	3	3	2	1	3	0	0	0	0
4/24/2024	5:30 PM	1	133	37	0	3	0	0	0	3	0	0	0	0
4/24/2024	5:45 PM	0	125	22	0	2	0	0	0	1	0	0	0	0
4/24/2024	6:00 PM	1	114	27	0	1	1	0	0	0	1	0	0	0
4/24/2024	6:15 PM	0	100	25	0	1	0	0	1	5	0	0	0	0
4/24/2024	6:30 PM	0	106	18	0	3	0	0	0	4	1	0	0	0
4/24/2024	6:45 PM	1	94	23	0	1	1	0	0	2	0	0	0	0
4/24/2024	7:00 PM	0	81	12	0	0	0	0	0	2	0	0	0	0
4/24/2024	7:15 PM	1	82	18	0	1	0	0	0	2	0	0	0	0
4/24/2024	7:30 PM	0	65	15	0	3	0	0	0	3	0	1	0	0
4/24/2024	7:45 PM	0	74	12	1	1	0	0	0	2	0	0	0	0
4/24/2024	8:00 PM	2	60	15	0	0	1	0	0	2	0	0	1	0
4/24/2024	8:15 PM	0	64	15	0	0	0	0	0	0	0	0	0	0
4/24/2024	8:30 PM	0	58	13	0	0	0	0	0	3	0	0	0	0
4/24/2024	8:45 PM	0	40	10	0	0	0	0	0	2	0	0	0	0
4/24/2024	9:00 PM	0	37	8	0	0	0	0	0	2	0	0	0	0
4/24/2024	9:15 PM	0	33	7	0	0	0	0	0	0	0	1	0	0
4/24/2024	9:30 PM	0	32	6	0	2	0	0	0	6	0	0	0	0
4/24/2024	9:45 PM	0	20	3	0	0	0	0	0	1	0	0	0	0
4/24/2024	10:00 PM	0	32	8	0	0	0	0	0	1	0	1	0	0
4/24/2024	10:15 PM	0	25	6	0	0	0	0	0	0	0	1	0	0
4/24/2024	10:30 PM	0	24	6	0	0	0	0	0	3	0	2	0	0
4/24/2024	10:45 PM	0	20	5	1	0	0	0	0	1	0	1	0	0
4/24/2024	11:00 PM	0	17	2	0	1	0	0	0	1	0	0	0	0
4/24/2024	11:15 PM	0	19	3	0	0	0	0	0	1	0	0	0	0
4/24/2024	11:30 PM	0	14	1	0	0	0	0	0	1	0	0	0	0
4/24/2024	11:45 PM	0	15	1	0	0	0	0	0	0	0	1	0	0

4/25/2024	12:00 AM	0	7	0	0	0	0	0	1	1	0	0	0	0
4/25/2024	12:15 AM	0	7	1	0	0	0	0	0	3	0	0	0	0
4/25/2024	12:30 AM	0	6	0	0	0	0	0	0	1	0	0	0	0
4/25/2024	12:45 AM	0	8	3	0	0	0	0	0	3	0	0	0	0
4/25/2024	1:00 AM	0	9	3	0	0	0	0	0	3	0	1	0	0
4/25/2024	1:15 AM	0	7	0	0	0	0	0	0	1	0	0	0	0
4/25/2024	1:30 AM	0	5	0	0	0	0	0	0	3	0	2	0	0
4/25/2024	1:45 AM	0	6	1	0	0	0	0	0	0	0	0	0	0
4/25/2024	2:00 AM	0	7	1	0	0	0	0	0	1	0	0	0	0
4/25/2024	2:15 AM	0	4	1	0	0	0	0	0	3	0	0	0	0
4/25/2024	2:30 AM	0	5	3	0	0	0	0	0	1	0	1	0	0
4/25/2024	2:45 AM	0	1	1	0	0	0	0	0	1	0	0	0	0
4/25/2024	3:00 AM	1	8	2	0	0	0	0	0	6	0	0	0	0
4/25/2024	3:15 AM	0	5	1	0	1	1	0	0	1	0	0	0	0
4/25/2024	3:30 AM	0	7	5	0	1	0	0	0	3	0	1	0	0
4/25/2024	3:45 AM	0	11	3	0	0	0	0	0	4	0	0	0	0
4/25/2024	4:00 AM	0	9	1	0	0	0	0	0	3	0	0	0	0
4/25/2024	4:15 AM	0	7	5	0	1	0	0	0	2	0	0	0	0
4/25/2024	4:30 AM	0	12	4	0	0	0	0	0	1	0	0	0	0
4/25/2024	4:45 AM	0	17	4	0	0	0	0	0	2	0	0	0	0
4/25/2024	5:00 AM	0	9	11	0	0	1	0	0	1	0	0	0	0
4/25/2024	5:15 AM	0	21	14	0	0	1	0	0	4	0	0	0	0
4/25/2024	5:30 AM	0	28	9	0	1	0	0	0	2	0	0	0	0
4/25/2024	5:45 AM	0	29	15	0	1	0	0	0	5	0	0	0	0
4/25/2024	6:00 AM	1	31	23	0	2	0	0	0	1	0	0	0	0
4/25/2024	6:15 AM	0	50	31	0	0	0	0	1	10	0	0	0	0
4/25/2024	6:30 AM	0	77	16	0	1	0	1	0	4	0	0	0	0
4/25/2024	6:45 AM	0	89	31	1	2	1	0	0	5	0	0	0	0
4/25/2024	7:00 AM	0	94	37	0	3	0	1	0	1	0	0	0	0
4/25/2024	7:15 AM	2	141	40	0	2	0	0	1	5	0	0	0	0
4/25/2024	7:30 AM	0	147	37	1	6	0	0	0	6	1	0	0	0
4/25/2024	7:45 AM	0	137	48	0	1	0	0	0	3	0	0	0	0
4/25/2024	8:00 AM	1	154	39	0	1	0	0	1	3	0	0	0	0
4/25/2024	8:15 AM	1	133	41	0	3	1	0	1	5	0	0	0	0
4/25/2024	8:30 AM	0	109	51	0	5	1	0	0	1	0	0	0	0
4/25/2024	8:45 AM	3	116	52	0	10	1	0	2	2	0	0	0	0
4/25/2024	9:00 AM	0	96	40	0	10	0	0	1	5	0	0	0	0
4/25/2024	9:15 AM	0	91	39	0	2	1	0	1	8	0	0	0	0
4/25/2024	9:30 AM	0	107	29	0	2	0	0	0	6	0	0	0	0
4/25/2024	9:45 AM	0	88	26	0	1	1	0	0	9	0	0	0	0
4/25/2024	10:00 AM	0	82	33	0	2	1	0	1	7	0	0	0	0
4/25/2024	10:15 AM	1	92	31	0	2	0	0	1	11	0	0	0	0
4/25/2024	10:30 AM	0	119	41	0	3	2	1	1	16	0	0	0	0
4/25/2024	10:45 AM	0	94	36	0	0	1	0	1	5	0	0	0	0
4/25/2024	11:00 AM	0	96	22	0	2	1	0	0	3	0	0	0	0
4/25/2024	11:15 AM	2	110	33	0	4	0	0	0	6	1	0	0	0
4/25/2024	11:30 AM	1	81	34	0	2	1	0	0	7	0	0	0	0
4/25/2024	11:45 AM	0	96	38	0	3	0	0	1	2	0	0	0	0
4/25/2024	12:00 PM	0	92	28	0	2	0	0	2	7	0	0	0	0
4/25/2024	12:15 PM	0	88	37	0	3	0	1	0	5	0	0	0	0
4/25/2024	12:30 PM	0	113	37	0	2	0	0	2	4	0	0	0	0
4/25/2024	12:45 PM	0	100	36	0	7	1	0	1	4	0	0	0	0
4/25/2024	1:00 PM	0	94	40	0	4	0	0	1	4	0	0	0	0
4/25/2024	1:15 PM	0	104	14	0	7	0	0	0	5	0	0	0	0
4/25/2024	1:30 PM	1	93	24	0	3	2	0	1	8	0	0	0	0
4/25/2024	1:45 PM	0	110	29	0	3	1	0	0	5	0	0	0	0
4/25/2024	2:00 PM	0	104	24	1	3	0	0	0	2	0	0	0	0
4/25/2024	2:15 PM	0	121	35	0	2	0	0	1	6	0	0	0	0
4/25/2024	2:30 PM	0	107	29	0	2	1	0	1	3	0	0	0	0
4/25/2024	2:45 PM	1	106	34	1	4	1	0	0	1	0	0	0	0
4/25/2024	3:00 PM	0	109	26	0	0	1	0	1	4	0	0	0	0
4/25/2024	3:15 PM	0	96	39	0	2	0	0	1	1	0	0	0	0
4/25/2024	3:30 PM	0	135	29	0	2	0	0	1	6	0	0	0	0
4/25/2024	3:45 PM	0	131	43	0	0	0	0	0	4	0	0	0	0
4/25/2024	4:00 PM	0	121	44	0	4	0	0	0	7	0	0	0	0
4/25/2024	4:15 PM	0	131	39	1	0	0	0	1	3	0	0	0	0
4/25/2024	4:30 PM	0	154	29	0	1	1	0	0	3	0	0	0	0
4/25/2024	4:45 PM	1	131	34	0	4	0	0	0	2	0	0	0	0
4/25/2024	5:00 PM	0	139	37	0	4	0	0	0	1	0	0	0	0
4/25/2024	5:15 PM	0	178	39	0	2	0	0	0	4	0	0	0	0
4/25/2024	5:30 PM	1	116	41	0	3	0	0	0	2	0	0	0	0
4/25/2024	5:45 PM	0	112	34	0	1	0	0	0	4	0	0	0	0
4/25/2024	6:00 PM	0	126	32	0	3	0	0	0	4	0	0	0	0
4/25/2024	6:15 PM	1	109	28	0	1	0	0	2	2	0	0	0	0
4/25/2024	6:30 PM	0	102	27	0	1	1	0	0	3	0	0	0	0
4/25/2024	6:45 PM	0	88	11	0	2	0	0	0	2	0	0	0	0
4/25/2024	7:00 PM	0	82	17	0	2	0	0	0	1	0	0	0	0
4/25/2024	7:15 PM	0	90	17	0	1	0	0	0	2	0	0	0	0
4/25/2024	7:30 PM	1	89	18	0	2	0	0	0	2	0	1	0	0
4/25/2024	7:45 PM	0	56	13	0	4	0	0	1	1	0	0	0	0
4/25/2024	8:00 PM	0	63	12	0	1	0	0	0	2	0	0	0	0
4/25/2024	8:15 PM	0	66	11	0	0	0	0	0	1	0	0	0	0
4/25/2024	8:30 PM	0	58	19	0	0	0	0	0	1	0	0	0	0
4/25/2024	8:45 PM	0	29	12	0	0	0	0	0	1	0	0	0	0
4/25/2024	9:00 PM	0	40	13	0	0	0	0	0	2	0	0	0	0
4/25/2024	9:15 PM	0	36	12	0	0	0	0	0	1	0	1	0	0
4/25/2024	9:30 PM	0	31	12	0	0	0	0	0	1	0	0	0	0
4/25/2024	9:45 PM	0	35	13	0	0	0	0	1	2	0	0	0	0
4/25/2024	10:00 PM	0	30	11	0	1	0	0	0	2	0	0	0	0
4/25/2024	10:15 PM	0	32	7	0	0	0	0	0	2	0	3	0	0
4/25/2024	10:30 PM	0	26	5	0	0	0	0	0	1	0	0	0	0
4/25/2024	10:45 PM	0	19	5	0	0	0	0	0	2	0	1	0	0
4/25/2024	11:00 PM	0	18	5	0	0	2	0	0	2	0	0	0	0
4/25/2024	11:15 PM	0	20	3	0	0	0	0	0	0	0	1	0	0
4/25/2024	11:30 PM	0	15	1	0	0	0	0	0	1	0	0	0	0
4/25/2024	11:45 PM	0	10	2	0	0	0	0	0	0	0	0	0	0

4/26/2024	12:00 AM	0	8	1	0	0	0	0	0	2	0	0	0	0
4/26/2024	12:15 AM	0	7	2	0	0	0	0	0	0	0	0	0	0
4/26/2024	12:30 AM	0	10	2	0	0	0	0	0	2	0	0	0	0
4/26/2024	12:45 AM	0	5	1	0	0	0	0	0	2	0	0	0	0
4/26/2024	1:00 AM	0	4	0	0	0	1	0	0	1	0	0	0	0
4/26/2024	1:15 AM	0	9	1	0	0	0	0	0	4	0	0	0	0
4/26/2024	1:30 AM	0	4	1	0	2	0	0	0	2	0	1	0	0
4/26/2024	1:45 AM	0	7	2	0	0	0	0	0	3	0	0	0	0
4/26/2024	2:00 AM	0	6	1	0	0	0	0	0	2	0	0	0	0
4/26/2024	2:15 AM	0	6	1	0	0	0	0	0	3	0	0	0	0
4/26/2024	2:30 AM	0	5	1	0	0	1	0	0	2	0	1	0	0
4/26/2024	2:45 AM	1	6	0	0	1	2	0	0	2	0	0	0	0
4/26/2024	3:00 AM	0	5	0	0	1	1	0	0	3	0	0	0	0
4/26/2024	3:15 AM	0	7	1	0	0	0	0	1	2	0	0	0	0
4/26/2024	3:30 AM	0	7	2	0	0	0	0	0	3	0	0	0	0
4/26/2024	3:45 AM	0	6	2	0	0	0	0	0	5	0	0	0	0
4/26/2024	4:00 AM	0	6	1	0	0	0	0	0	3	0	1	0	0
4/26/2024	4:15 AM	0	8	1	0	1	1	0	0	4	0	0	0	0
4/26/2024	4:30 AM	0	14	2	0	1	1	0	1	5	0	0	0	0
4/26/2024	4:45 AM	0	17	3	0	0	1	0	2	2	0	0	0	0
4/26/2024	5:00 AM	0	9	2	1	0	0	0	0	0	0	0	0	0
4/26/2024	5:15 AM	0	17	3	0	0	1	0	2	2	0	0	0	0
4/26/2024	5:30 AM	0	38	7	0	0	1	0	2	1	0	0	0	0
4/26/2024	5:45 AM	0	43	10	0	1	0	0	0	3	0	0	0	0
4/26/2024	6:00 AM	0	42	8	0	2	0	0	0	1	0	0	0	0
4/26/2024	6:15 AM	0	51	15	0	2	1	0	0	2	0	2	0	0
4/26/2024	6:30 AM	0	66	20	0	2	1	0	0	5	0	0	0	0
4/26/2024	6:45 AM	0	81	28	1	3	0	0	0	5	0	0	0	0
4/26/2024	7:00 AM	0	75	32	0	1	0	0	0	4	0	0	0	0
4/26/2024	7:15 AM	0	133	39	0	5	1	0	0	3	0	0	0	0
4/26/2024	7:30 AM	0	136	36	0	1	1	0	0	5	0	0	0	0
4/26/2024	7:45 AM	0	176	44	0	2	2	0	1	3	0	0	0	0
4/26/2024	8:00 AM	0	136	44	0	4	0	0	0	1	0	0	0	0
4/26/2024	8:15 AM	1	123	47	0	6	0	0	3	7	0	0	0	0
4/26/2024	8:30 AM	0	101	45	0	3	1	0	1	4	0	0	0	0
4/26/2024	8:45 AM	0	100	39	3	11	1	0	1	10	1	0	0	0
4/26/2024	9:00 AM	0	96	39	0	7	3	0	2	2	0	0	0	0
4/26/2024	9:15 AM	0	103	21	0	4	1	0	1	3	0	0	0	0
4/26/2024	9:30 AM	0	115	41	0	1	0	0	3	6	0	0	0	0
4/26/2024	9:45 AM	0	104	31	0	6	0	0	0	3	0	0	0	0
4/26/2024	10:00 AM	0	93	26	0	3	1	0	0	8	1	0	0	0
4/26/2024	10:15 AM	0	109	31	0	5	1	0	0	6	0	0	0	0
4/26/2024	10:30 AM	0	125	30	0	1	0	0	2	8	0	0	0	0
4/26/2024	10:45 AM	0	122	45	1	2	1	0	0	3	2	0	0	0
4/26/2024	11:00 AM	0	101	20	0	3	3	0	2	4	0	0	0	0
4/26/2024	11:15 AM	1	110	31	1	2	1	0	3	7	1	0	0	0
4/26/2024	11:30 AM	0	94	29	0	1	0	0	0	4	0	0	0	0
4/26/2024	11:45 AM	0	126	32	0	0	3	0	0	7	0	0	0	0
4/26/2024	12:00 PM	0	122	33	0	3	0	0	0	6	0	0	0	0
4/26/2024	12:15 PM	0	117	38	0	1	0	0	0	7	0	0	0	0
4/26/2024	12:30 PM	0	121	40	0	0	0	0	0	9	0	0	0	0
4/26/2024	12:45 PM	0	110	24	0	2	0	0	0	5	0	0	0	0
4/26/2024	1:00 PM	0	104	20	0	0	0	0	0	2	0	0	0	0
4/26/2024	1:15 PM	0	103	22	0	3	0	0	0	3	0	0	0	0
4/26/2024	1:30 PM	1	124	38	2	1	0	0	0	2	0	0	0	0
4/26/2024	1:45 PM	0	133	40	0	6	1	0	0	4	0	0	0	0
4/26/2024	2:00 PM	0	120	32	1	6	0	0	0	4	0	0	0	0
4/26/2024	2:15 PM	0	118	31	0	3	2	0	0	2	0	0	0	0
4/26/2024	2:30 PM	0	124	29	0	1	1	0	0	5	0	0	0	0
4/26/2024	2:45 PM	0	128	31	1	5	0	0	1	2	0	0	0	0
4/26/2024	3:00 PM	0	120	26	0	4	1	0	0	3	0	0	0	0
4/26/2024	3:15 PM	0	123	27	0	1	0	0	0	2	0	0	0	0
4/26/2024	3:30 PM	0	122	31	1	4	0	0	0	2	0	0	0	0
4/26/2024	3:45 PM	1	132	42	1	2	0	0	0	5	0	0	0	0
4/26/2024	4:00 PM	1	142	46	0	2	1	0	0	5	0	0	0	0
4/26/2024	4:15 PM	0	126	30	0	1	1	0	0	7	0	0	0	0
4/26/2024	4:30 PM	0	130	31	0	1	0	0	0	2	0	0	0	0
4/26/2024	4:45 PM	0	135	37	0	4	0	0	0	4	0	0	0	0
4/26/2024	5:00 PM	0	113	22	0	1	0	0	0	2	0	0	0	0
4/26/2024	5:15 PM	0	134	33	0	1	0	0	0	3	0	0	0	0
4/26/2024	5:30 PM	0	121	30	0	0	0	0	0	1	0	0	0	0
4/26/2024	5:45 PM	0	125	21	0	0	0	0	0	0	0	0	0	0
4/26/2024	6:00 PM	0	122	27	0	1	1	0	0	1	0	0	0	0
4/26/2024	6:15 PM	1	119	24	0	1	0	0	0	1	0	0	0	0
4/26/2024	6:30 PM	0	120	22	0	1	1	0	0	3	0	0	0	0
4/26/2024	6:45 PM	0	121	19	0	2	0	0	0	3	0	0	0	0
4/26/2024	7:00 PM	0	80	22	0	0	0	0	0	2	0	0	0	0
4/26/2024	7:15 PM	0	102	16	0	1	2	0	0	5	0	0	0	0
4/26/2024	7:30 PM	2	80	15	0	1	0	0	0	0	0	0	0	0
4/26/2024	7:45 PM	0	81	17	0	1	0	0	0	2	0	1	0	0
4/26/2024	8:00 PM	0	63	16	0	0	0	0	0	2	0	0	0	0
4/26/2024	8:15 PM	0	59	13	0	1	1	0	0	3	0	1	0	0
4/26/2024	8:30 PM	0	55	15	0	1	0	0	0	0	0	0	0	0
4/26/2024	8:45 PM	0	36	13	0	0	0	0	0	0	0	0	0	0
4/26/2024	9:00 PM	0	59	16	0	1	0	0	0	1	0	1	0	0
4/26/2024	9:15 PM	0	50	14	0	1	0	0	0	0	0	2	0	0
4/26/2024	9:30 PM	0	35	12	0	0	0	0	0	0	0	0	0	0
4/26/2024	9:45 PM	0	47	15	0	0	0	0	0	3	0	0	0	0
4/26/2024	10:00 PM	0	43	14	0	0	0	0	0	1	0	1	0	0
4/26/2024	10:15 PM	0	37	12	0	0	0	0	0	1	0	2	0	0
4/26/2024	10:30 PM	0	28	9	0	0	0	0	0	0	0	0	0	0
4/26/2024	10:45 PM	0	19	6	0	0	0	0	0	2	0	0	0	0
4/26/2024	11:00 PM	0	21	9	0	0	0	0	0	2	0	1	0	0
4/26/2024	11:15 PM	0	29	11	0	0	0	0	0	3	0	1	0	0
4/26/2024	11:30 PM	1	20	8	0	0	0	0	0	2	0	0	0	0
4/26/2024	11:45 PM	0	18	8	0	0	0	0	0	1	0	0	0	0

4/27/2024	12:00 AM	0	10	1	0	0	0	0	0	0	0	0	0
4/27/2024	12:15 AM	0	14	2	0	0	0	0	0	0	0	0	0
4/27/2024	12:30 AM	0	18	4	0	1	0	0	0	0	0	0	0
4/27/2024	12:45 AM	0	11	2	0	0	0	0	0	1	0	0	0
4/27/2024	1:00 AM	0	11	2	0	0	1	0	0	0	0	1	0
4/27/2024	1:15 AM	0	8	1	0	1	1	0	0	1	0	0	0
4/27/2024	1:30 AM	0	11	1	0	0	0	0	0	0	0	0	0
4/27/2024	1:45 AM	0	3	0	0	0	0	0	0	4	0	0	0
4/27/2024	2:00 AM	0	6	0	0	1	0	0	0	0	0	0	0
4/27/2024	2:15 AM	0	10	1	0	0	0	0	0	3	0	0	0
4/27/2024	2:30 AM	0	3	2	0	0	0	0	0	0	0	1	0
4/27/2024	2:45 AM	0	7	2	0	0	0	0	0	1	0	0	0
4/27/2024	3:00 AM	0	4	1	0	1	0	0	0	3	0	0	0
4/27/2024	3:15 AM	0	5	2	0	0	0	0	0	1	0	0	0
4/27/2024	3:30 AM	0	6	1	0	0	0	0	0	1	0	0	0
4/27/2024	3:45 AM	0	5	4	0	2	0	0	0	0	0	0	0
4/27/2024	4:00 AM	1	3	0	0	0	0	0	0	2	0	0	0
4/27/2024	4:15 AM	0	6	1	0	0	0	0	0	1	0	0	0
4/27/2024	4:30 AM	0	1	3	0	0	0	0	0	0	0	2	0
4/27/2024	4:45 AM	0	12	2	0	0	0	0	0	0	0	0	0
4/27/2024	5:00 AM	0	9	3	0	0	0	0	0	1	0	1	0
4/27/2024	5:15 AM	0	4	4	0	0	1	0	0	2	0	0	0
4/27/2024	5:30 AM	0	9	6	0	0	0	0	0	0	0	0	0
4/27/2024	5:45 AM	0	12	2	0	1	0	0	0	1	0	1	0
4/27/2024	6:00 AM	0	16	7	0	1	0	0	0	0	0	0	0
4/27/2024	6:15 AM	0	30	9	0	0	0	0	0	0	0	0	0
4/27/2024	6:30 AM	0	19	13	0	0	0	0	0	1	0	0	0
4/27/2024	6:45 AM	1	33	12	0	0	0	0	0	3	1	0	0
4/27/2024	7:00 AM	0	28	15	0	0	0	0	0	4	0	0	0
4/27/2024	7:15 AM	0	50	8	0	0	0	0	0	1	0	0	0
4/27/2024	7:30 AM	0	37	22	0	2	0	0	0	0	0	0	0
4/27/2024	7:45 AM	0	56	26	0	1	1	0	1	0	0	0	0
4/27/2024	8:00 AM	1	64	14	0	0	0	0	0	2	0	0	0
4/27/2024	8:15 AM	0	69	18	0	0	0	0	0	1	0	0	0
4/27/2024	8:30 AM	0	70	18	0	0	0	0	0	1	0	0	0
4/27/2024	8:45 AM	1	96	27	0	1	0	0	0	2	0	0	0
4/27/2024	9:00 AM	0	88	20	0	5	0	0	0	3	0	0	0
4/27/2024	9:15 AM	0	93	32	0	9	0	0	0	3	0	0	0
4/27/2024	9:30 AM	1	101	39	0	0	0	0	0	2	0	0	0
4/27/2024	9:45 AM	1	123	38	0	1	0	0	1	6	0	0	0
4/27/2024	10:00 AM	0	106	22	0	2	0	0	0	3	0	0	0
4/27/2024	10:15 AM	0	112	38	0	0	0	0	0	2	0	0	0
4/27/2024	10:30 AM	3	127	32	0	1	0	0	1	1	0	0	0
4/27/2024	10:45 AM	0	139	34	0	0	0	0	1	0	0	0	0
4/27/2024	11:00 AM	1	145	40	0	0	0	0	0	3	0	0	0
4/27/2024	11:15 AM	1	126	30	0	1	0	0	0	3	0	0	0
4/27/2024	11:30 AM	1	155	29	0	1	0	0	0	3	0	0	0
4/27/2024	11:45 AM	2	149	35	0	1	0	0	0	4	0	0	0
4/27/2024	12:00 PM	0	126	36	0	0	0	0	1	2	0	0	0
4/27/2024	12:15 PM	0	157	34	0	0	0	0	0	1	0	0	0
4/27/2024	12:30 PM	0	136	20	0	0	1	0	0	2	0	0	0
4/27/2024	12:45 PM	0	125	34	0	1	0	0	0	3	0	0	0
4/27/2024	1:00 PM	0	166	26	0	0	0	0	1	1	0	0	0
4/27/2024	1:15 PM	2	125	29	0	3	0	0	1	3	0	0	0
4/27/2024	1:30 PM	1	140	33	0	0	0	0	1	3	0	0	0
4/27/2024	1:45 PM	1	126	24	0	1	0	0	0	3	0	0	0
4/27/2024	2:00 PM	0	128	29	0	0	0	0	0	0	0	0	0
4/27/2024	2:15 PM	1	148	30	0	1	0	0	0	0	0	0	0
4/27/2024	2:30 PM	0	124	24	0	1	0	0	0	2	0	0	0
4/27/2024	2:45 PM	0	130	20	0	2	0	0	0	2	0	0	0
4/27/2024	3:00 PM	0	118	29	0	2	0	0	0	0	0	0	0
4/27/2024	3:15 PM	2	114	23	0	0	0	0	0	2	0	0	0
4/27/2024	3:30 PM	1	127	32	0	0	0	0	0	2	1	0	0
4/27/2024	3:45 PM	0	141	26	0	1	0	0	0	0	0	0	0
4/27/2024	4:00 PM	0	118	22	0	1	0	0	1	0	0	0	0
4/27/2024	4:15 PM	2	128	22	0	0	0	0	0	2	0	0	0
4/27/2024	4:30 PM	0	122	24	0	0	0	0	1	3	0	0	0
4/27/2024	4:45 PM	1	130	24	0	1	0	0	0	1	0	0	0
4/27/2024	5:00 PM	1	102	21	0	1	0	0	0	2	0	0	0
4/27/2024	5:15 PM	0	107	27	0	0	1	0	0	1	0	0	0
4/27/2024	5:30 PM	1	116	20	0	3	0	0	0	2	0	0	0
4/27/2024	5:45 PM	0	94	28	0	1	0	0	1	0	0	0	0
4/27/2024	6:00 PM	0	92	15	0	0	0	0	1	0	0	0	0
4/27/2024	6:15 PM	2	98	15	0	2	0	0	0	0	0	0	0
4/27/2024	6:30 PM	0	113	19	0	0	0	0	0	2	0	0	0
4/27/2024	6:45 PM	0	93	18	0	1	0	0	0	2	0	0	0
4/27/2024	7:00 PM	0	102	19	0	2	0	0	0	1	0	0	0
4/27/2024	7:15 PM	1	93	13	0	3	0	0	0	2	0	0	0
4/27/2024	7:30 PM	0	72	15	0	0	0	0	0	0	0	0	0
4/27/2024	7:45 PM	0	70	10	0	1	0	0	0	0	0	0	0
4/27/2024	8:00 PM	0	77	17	0	0	0	0	0	2	0	0	0
4/27/2024	8:15 PM	0	61	10	0	0	0	0	0	1	0	0	0
4/27/2024	8:30 PM	0	58	8	0	0	0	0	0	2	0	0	0
4/27/2024	8:45 PM	0	59	10	0	4	0	0	0	1	0	0	0
4/27/2024	9:00 PM	0	54	7	0	0	0	0	0	0	0	0	0
4/27/2024	9:15 PM	0	48	9	0	0	0	0	0	1	0	0	0
4/27/2024	9:30 PM	0	50	12	0	0	0	0	0	1	0	0	0
4/27/2024	9:45 PM	0	32	4	0	0	0	0	1	1	0	0	0
4/27/2024	10:00 PM	0	36	9	0	0	0	0	0	3	0	0	0
4/27/2024	10:15 PM	0	40	10	0	0	0	0	0	2	0	0	0
4/27/2024	10:30 PM	0	38	9	0	0	0	0	1	1	0	0	0
4/27/2024	10:45 PM	0	27	5	0	0	0	0	0	0	0	0	0
4/27/2024	11:00 PM	0	25	7	0	0	0	0	0	0	0	0	0
4/27/2024	11:15 PM	0	22	3	0	0	0	0	0	0	0	0	0
4/27/2024	11:30 PM	0	20	9	0	1	0	0	0	0	0	0	0
4/27/2024	11:45 PM	0	18	2	0	0	0	0	0	0	0	0	0

NB
File Name:
Start Date: 4/21/2024
Start Time: 0
Site Code: 13
Station ID: 1
Location 1: I-26 S/Bound On-Ramp, south of I-20
Location 2:

Date	Time	1	2	3	4	5	6	7	8	9	10	11	12	13
4/21/2024	12:00 AM	0	0	0	0	0	0	0	0	0	0	0	0	0
4/21/2024	12:15 AM	0	0	0	0	0	0	0	0	0	0	0	0	0
4/21/2024	12:30 AM	0	0	0	0	0	0	0	0	0	0	0	0	0
4/21/2024	12:45 AM	0	0	0	0	0	0	0	0	0	0	0	0	0
4/21/2024	1:00 AM	0	0	0	0	0	0	0	0	0	0	0	0	0
4/21/2024	1:15 AM	0	0	0	0	0	0	0	0	0	0	0	0	0
4/21/2024	1:30 AM	0	0	0	0	0	0	0	0	0	0	0	0	0
4/21/2024	1:45 AM	0	0	0	0	0	0	0	0	0	0	0	0	0
4/21/2024	2:00 AM	0	0	0	0	0	0	0	0	0	0	0	0	0
4/21/2024	2:15 AM	0	0	0	0	0	0	0	0	0	0	0	0	0
4/21/2024	2:30 AM	0	0	0	0	0	0	0	0	0	0	0	0	0
4/21/2024	2:45 AM	0	0	0	0	0	0	0	0	0	0	0	0	0
4/21/2024	3:00 AM	0	0	0	0	0	0	0	0	0	0	0	0	0
4/21/2024	3:15 AM	0	0	0	0	0	0	0	0	0	0	0	0	0
4/21/2024	3:30 AM	0	0	0	0	0	0	0	0	0	0	0	0	0
4/21/2024	3:45 AM	0	0	0	0	0	0	0	0	0	0	0	0	0
4/21/2024	4:00 AM	0	0	0	0	0	0	0	0	0	0	0	0	0
4/21/2024	4:15 AM	0	0	0	0	0	0	0	0	0	0	0	0	0
4/21/2024	4:30 AM	0	0	0	0	0	0	0	0	0	0	0	0	0
4/21/2024	4:45 AM	0	0	0	0	0	0	0	0	0	0	0	0	0
4/21/2024	5:00 AM	0	0	0	0	0	0	0	0	0	0	0	0	0
4/21/2024	5:15 AM	0	0	0	0	0	0	0	0	0	0	0	0	0
4/21/2024	5:30 AM	0	0	0	0	0	0	0	0	0	0	0	0	0
4/21/2024	5:45 AM	0	0	0	0	0	0	0	0	0	0	0	0	0
4/21/2024	6:00 AM	0	0	0	0	0	0	0	0	0	0	0	0	0
4/21/2024	6:15 AM	0	0	0	0	0	0	0	0	0	0	0	0	0
4/21/2024	6:30 AM	0	0	0	0	0	0	0	0	0	0	0	0	0
4/21/2024	6:45 AM	0	0	0	0	0	0	0	0	0	0	0	0	0
4/21/2024	7:00 AM	0	0	0	0	0	0	0	0	0	0	0	0	0
4/21/2024	7:15 AM	0	0	0	0	0	0	0	0	0	0	0	0	0
4/21/2024	7:30 AM	0	0	0	0	0	0	0	0	0	0	0	0	0
4/21/2024	7:45 AM	0	0	0	0	0	0	0	0	0	0	0	0	0
4/21/2024	8:00 AM	0	0	0	0	0	0	0	0	0	0	0	0	0
4/21/2024	8:15 AM	0	0	0	0	0	0	0	0	0	0	0	0	0
4/21/2024	8:30 AM	0	0	0	0	0	0	0	0	0	0	0	0	0
4/21/2024	8:45 AM	0	0	0	0	0	0	0	0	0	0	0	0	0
4/21/2024	9:00 AM	0	0	0	0	0	0	0	0	0	0	0	0	0
4/21/2024	9:15 AM	0	0	0	0	0	0	0	0	0	0	0	0	0
4/21/2024	9:30 AM	0	0	0	0	0	0	0	0	0	0	0	0	0
4/21/2024	9:45 AM	0	0	0	0	0	0	0	0	0	0	0	0	0
4/21/2024	10:00 AM	0	0	0	0	0	0	0	0	0	0	0	0	0
4/21/2024	10:15 AM	0	0	0	0	0	0	0	0	0	0	0	0	0
4/21/2024	10:30 AM	0	0	0	0	0	0	0	0	0	0	0	0	0
4/21/2024	10:45 AM	0	0	0	0	0	0	0	0	0	0	0	0	0
4/21/2024	11:00 AM	0	0	0	0	0	0	0	0	0	0	0	0	0
4/21/2024	11:15 AM	0	0	0	0	0	0	0	0	0	0	0	0	0
4/21/2024	11:30 AM	0	0	0	0	0	0	0	0	0	0	0	0	0
4/21/2024	11:45 AM	0	0	0	0	0	0	0	0	0	0	0	0	0
4/21/2024	12:00 PM	0	0	0	0	0	0	0	0	0	0	0	0	0
4/21/2024	12:15 PM	0	0	0	0	0	0	0	0	0	0	0	0	0
4/21/2024	12:30 PM	0	0	0	0	0	0	0	0	0	0	0	0	0
4/21/2024	12:45 PM	0	0	0	0	0	0	0	0	0	0	0	0	0
4/21/2024	1:00 PM	0	0	0	0	0	0	0	0	0	0	0	0	0
4/21/2024	1:15 PM	0	0	0	0	0	0	0	0	0	0	0	0	0
4/21/2024	1:30 PM	0	0	0	0	0	0	0	0	0	0	0	0	0
4/21/2024	1:45 PM	0	0	0	0	0	0	0	0	0	0	0	0	0
4/21/2024	2:00 PM	0	0	0	0	0	0	0	0	0	0	0	0	0
4/21/2024	2:15 PM	0	0	0	0	0	0	0	0	0	0	0	0	0
4/21/2024	2:30 PM	0	0	0	0	0	0	0	0	0	0	0	0	0
4/21/2024	2:45 PM	0	0	0	0	0	0	0	0	0	0	0	0	0
4/21/2024	3:00 PM	0	0	0	0	0	0	0	0	0	0	0	0	0
4/21/2024	3:15 PM	0	0	0	0	0	0	0	0	0	0	0	0	0
4/21/2024	3:30 PM	0	0	0	0	0	0	0	0	0	0	0	0	0
4/21/2024	3:45 PM	0	0	0	0	0	0	0	0	0	0	0	0	0
4/21/2024	4:00 PM	0	0	0	0	0	0	0	0	0	0	0	0	0
4/21/2024	4:15 PM	0	0	0	0	0	0	0	0	0	0	0	0	0
4/21/2024	4:30 PM	0	0	0	0	0	0	0	0	0	0	0	0	0
4/21/2024	4:45 PM	0	0	0	0	0	0	0	0	0	0	0	0	0
4/21/2024	5:00 PM	0	0	0	0	0	0	0	0	0	0	0	0	0
4/21/2024	5:15 PM	0	0	0	0	0	0	0	0	0	0	0	0	0
4/21/2024	5:30 PM	0	0	0	0	0	0	0	0	0	0	0	0	0
4/21/2024	5:45 PM	0	0	0	0	0	0	0	0	0	0	0	0	0
4/21/2024	6:00 PM	0	0	0	0	0	0	0	0	0	0	0	0	0
4/21/2024	6:15 PM	0	0	0	0	0	0	0	0	0	0	0	0	0
4/21/2024	6:30 PM	0	0	0	0	0	0	0	0	0	0	0	0	0
4/21/2024	6:45 PM	0	0	0	0	0	0	0	0	0	0	0	0	0
4/21/2024	7:00 PM	0	0	0	0	0	0	0	0	0	0	0	0	0
4/21/2024	7:15 PM	0	0	0	0	0	0	0	0	0	0	0	0	0
4/21/2024	7:30 PM	0	0	0	0	0	0	0	0	0	0	0	0	0
4/21/2024	7:45 PM	0	0	0	0	0	0	0	0	0	0	0	0	0
4/21/2024	8:00 PM	0	0	0	0	0	0	0	0	0	0	0	0	0
4/21/2024	8:15 PM	0	0	0	0	0	0	0	0	0	0	0	0	0
4/21/2024	8:30 PM	0	0	0	0	0	0	0	0	0	0	0	0	0
4/21/2024	8:45 PM	0	0	0	0	0	0	0	0	0	0	0	0	0
4/21/2024	9:00 PM	0	0	0	0	0	0	0	0	0	0	0	0	0
4/21/2024	9:15 PM	0	0	0	0	0	0	0	0	0	0	0	0	0
4/21/2024	9:30 PM	0	0	0	0	0	0	0	0	0	0	0	0	0
4/21/2024	9:45 PM	0	0	0	0	0	0	0	0	0	0	0	0	0
4/21/2024	10:00 PM	0	0	0	0	0	0	0	0	0	0	0	0	0
4/21/2024	10:15 PM	0	0	0	0	0	0	0	0	0	0	0	0	0
4/21/2024	10:30 PM	0	0	0	0	0	0	0	0	0	0	0	0	0
4/21/2024	10:45 PM	0	0	0	0	0	0	0	0	0	0	0	0	0
4/21/2024	11:00 PM	0	0	0	0	0	0	0	0	0	0	0	0	0
4/21/2024	11:15 PM	0	0	0	0	0	0	0	0	0	0	0	0	0
4/21/2024	11:30 PM	0	0	0	0	0	0	0	0	0	0	0	0	0
4/21/2024	11:45 PM	0	0	0	0	0	0	0	0	0	0	0	0	0

4/22/2024	12:00 AM	0	0	0	0	0	0	0	0	0	0	0	0	0
4/22/2024	12:15 AM	0	0	0	0	0	0	0	0	0	0	0	0	0
4/22/2024	12:30 AM	0	0	0	0	0	0	0	0	0	0	0	0	0
4/22/2024	12:45 AM	0	0	0	0	0	0	0	0	0	0	0	0	0
4/22/2024	1:00 AM	0	0	0	0	0	0	0	0	0	0	0	0	0
4/22/2024	1:15 AM	0	0	0	0	0	0	0	0	0	0	0	0	0
4/22/2024	1:30 AM	0	0	0	0	0	0	0	0	0	0	0	0	0
4/22/2024	1:45 AM	0	0	0	0	0	0	0	0	0	0	0	0	0
4/22/2024	2:00 AM	0	0	0	0	0	0	0	0	0	0	0	0	0
4/22/2024	2:15 AM	0	0	0	0	0	0	0	0	0	0	0	0	0
4/22/2024	2:30 AM	0	0	0	0	0	0	0	0	0	0	0	0	0
4/22/2024	2:45 AM	0	0	0	0	0	0	0	0	0	0	0	0	0
4/22/2024	3:00 AM	0	0	0	0	0	0	0	0	0	0	0	0	0
4/22/2024	3:15 AM	0	0	0	0	0	0	0	0	0	0	0	0	0
4/22/2024	3:30 AM	0	0	0	0	0	0	0	0	0	0	0	0	0
4/22/2024	3:45 AM	0	0	0	0	0	0	0	0	0	0	0	0	0
4/22/2024	4:00 AM	0	0	0	0	0	0	0	0	0	0	0	0	0
4/22/2024	4:15 AM	0	0	0	0	0	0	0	0	0	0	0	0	0
4/22/2024	4:30 AM	0	0	0	0	0	0	0	0	0	0	0	0	0
4/22/2024	4:45 AM	0	0	0	0	0	0	0	0	0	0	0	0	0
4/22/2024	5:00 AM	0	0	0	0	0	0	0	0	0	0	0	0	0
4/22/2024	5:15 AM	0	0	0	0	0	0	0	0	0	0	0	0	0
4/22/2024	5:30 AM	0	0	0	0	0	0	0	0	0	0	0	0	0
4/22/2024	5:45 AM	0	0	0	0	0	0	0	0	0	0	0	0	0
4/22/2024	6:00 AM	0	0	0	0	0	0	0	0	0	0	0	0	0
4/22/2024	6:15 AM	0	0	0	0	0	0	0	0	0	0	0	0	0
4/22/2024	6:30 AM	0	0	0	0	0	0	0	0	0	0	0	0	0
4/22/2024	6:45 AM	0	0	0	0	0	0	0	0	0	0	0	0	0
4/22/2024	7:00 AM	0	0	0	0	0	0	0	0	0	0	0	0	0
4/22/2024	7:15 AM	0	0	0	0	0	0	0	0	0	0	0	0	0
4/22/2024	7:30 AM	0	0	0	0	0	0	0	0	0	0	0	0	0
4/22/2024	7:45 AM	0	0	0	0	0	0	0	0	0	0	0	0	0
4/22/2024	8:00 AM	0	0	0	0	0	0	0	0	0	0	0	0	0
4/22/2024	8:15 AM	0	0	0	0	0	0	0	0	0	0	0	0	0
4/22/2024	8:30 AM	0	0	0	0	0	0	0	0	0	0	0	0	0
4/22/2024	8:45 AM	0	0	0	0	0	0	0	0	0	0	0	0	0
4/22/2024	9:00 AM	0	0	0	0	0	0	0	0	0	0	0	0	0
4/22/2024	9:15 AM	0	0	0	0	0	0	0	0	0	0	0	0	0
4/22/2024	9:30 AM	0	0	0	0	0	0	0	0	0	0	0	0	0
4/22/2024	9:45 AM	0	0	0	0	0	0	0	0	0	0	0	0	0
4/22/2024	10:00 AM	0	0	0	0	0	0	0	0	0	0	0	0	0
4/22/2024	10:15 AM	0	0	0	0	0	0	0	0	0	0	0	0	0
4/22/2024	10:30 AM	0	0	0	0	0	0	0	0	0	0	0	0	0
4/22/2024	10:45 AM	0	0	0	0	0	0	0	0	0	0	0	0	0
4/22/2024	11:00 AM	0	0	0	0	0	0	0	0	0	0	0	0	0
4/22/2024	11:15 AM	0	0	0	0	0	0	0	0	0	0	0	0	0
4/22/2024	11:30 AM	0	0	0	0	0	0	0	0	0	0	0	0	0
4/22/2024	11:45 AM	0	0	0	0	0	0	0	0	0	0	0	0	0
4/22/2024	12:00 PM	0	0	0	0	0	0	0	0	0	0	0	0	0
4/22/2024	12:15 PM	0	0	0	0	0	0	0	0	0	0	0	0	0
4/22/2024	12:30 PM	0	0	0	0	0	0	0	0	0	0	0	0	0
4/22/2024	12:45 PM	0	0	0	0	0	0	0	0	0	0	0	0	0
4/22/2024	1:00 PM	0	0	0	0	0	0	0	0	0	0	0	0	0
4/22/2024	1:15 PM	0	0	0	0	0	0	0	0	0	0	0	0	0
4/22/2024	1:30 PM	0	0	0	0	0	0	0	0	0	0	0	0	0
4/22/2024	1:45 PM	0	0	0	0	0	0	0	0	0	0	0	0	0
4/22/2024	2:00 PM	0	0	0	0	0	0	0	0	0	0	0	0	0
4/22/2024	2:15 PM	0	0	0	0	0	0	0	0	0	0	0	0	0
4/22/2024	2:30 PM	0	0	0	0	0	0	0	0	0	0	0	0	0
4/22/2024	2:45 PM	0	0	0	0	0	0	0	0	0	0	0	0	0
4/22/2024	3:00 PM	0	0	0	0	0	0	0	0	0	0	0	0	0
4/22/2024	3:15 PM	0	0	0	0	0	0	0	0	0	0	0	0	0
4/22/2024	3:30 PM	0	0	0	0	0	0	0	0	0	0	0	0	0
4/22/2024	3:45 PM	0	0	0	0	0	0	0	0	0	0	0	0	0
4/22/2024	4:00 PM	0	0	0	0	0	0	0	0	0	0	0	0	0
4/22/2024	4:15 PM	0	0	0	0	0	0	0	0	0	0	0	0	0
4/22/2024	4:30 PM	0	0	0	0	0	0	0	0	0	0	0	0	0
4/22/2024	4:45 PM	0	0	0	0	0	0	0	0	0	0	0	0	0
4/22/2024	5:00 PM	0	0	0	0	0	0	0	0	0	0	0	0	0
4/22/2024	5:15 PM	0	0	0	0	0	0	0	0	0	0	0	0	0
4/22/2024	5:30 PM	0	0	0	0	0	0	0	0	0	0	0	0	0
4/22/2024	5:45 PM	0	0	0	0	0	0	0	0	0	0	0	0	0
4/22/2024	6:00 PM	0	0	0	0	0	0	0	0	0	0	0	0	0
4/22/2024	6:15 PM	0	0	0	0	0	0	0	0	0	0	0	0	0
4/22/2024	6:30 PM	0	0	0	0	0	0	0	0	0	0	0	0	0
4/22/2024	6:45 PM	0	0	0	0	0	0	0	0	0	0	0	0	0
4/22/2024	7:00 PM	0	0	0	0	0	0	0	0	0	0	0	0	0
4/22/2024	7:15 PM	0	0	0	0	0	0	0	0	0	0	0	0	0
4/22/2024	7:30 PM	0	0	0	0	0	0	0	0	0	0	0	0	0
4/22/2024	7:45 PM	0	0	0	0	0	0	0	0	0	0	0	0	0
4/22/2024	8:00 PM	0	0	0	0	0	0	0	0	0	0	0	0	0
4/22/2024	8:15 PM	0	0	0	0	0	0	0	0	0	0	0	0	0
4/22/2024	8:30 PM	0	0	0	0	0	0	0	0	0	0	0	0	0
4/22/2024	8:45 PM	0	0	0	0	0	0	0	0	0	0	0	0	0
4/22/2024	9:00 PM	0	0	0	0	0	0	0	0	0	0	0	0	0
4/22/2024	9:15 PM	0	0	0	0	0	0	0	0	0	0	0	0	0
4/22/2024	9:30 PM	0	0	0	0	0	0	0	0	0	0	0	0	0
4/22/2024	9:45 PM	0	0	0	0	0	0	0	0	0	0	0	0	0
4/22/2024	10:00 PM	0	0	0	0	0	0	0	0	0	0	0	0	0
4/22/2024	10:15 PM	0	0	0	0	0	0	0	0	0	0	0	0	0
4/22/2024	10:30 PM	0	0	0	0	0	0	0	0	0	0	0	0	0
4/22/2024	10:45 PM	0	0	0	0	0	0	0	0	0	0	0	0	0
4/22/2024	11:00 PM	0	0	0	0	0	0	0	0	0	0	0	0	0
4/22/2024	11:15 PM	0	0	0	0	0	0	0	0	0	0	0	0	0
4/22/2024	11:30 PM	0	0	0	0	0	0	0	0	0	0	0	0	0
4/22/2024	11:45 PM	0	0	0	0	0	0	0	0	0	0	0	0	0

4/23/2024	12:00 AM	0	0	0	0	0	0	0	0	0	0	0	0	0
4/23/2024	12:15 AM	0	0	0	0	0	0	0	0	0	0	0	0	0
4/23/2024	12:30 AM	0	0	0	0	0	0	0	0	0	0	0	0	0
4/23/2024	12:45 AM	0	0	0	0	0	0	0	0	0	0	0	0	0
4/23/2024	1:00 AM	0	0	0	0	0	0	0	0	0	0	0	0	0
4/23/2024	1:15 AM	0	0	0	0	0	0	0	0	0	0	0	0	0
4/23/2024	1:30 AM	0	0	0	0	0	0	0	0	0	0	0	0	0
4/23/2024	1:45 AM	0	0	0	0	0	0	0	0	0	0	0	0	0
4/23/2024	2:00 AM	0	0	0	0	0	0	0	0	0	0	0	0	0
4/23/2024	2:15 AM	0	0	0	0	0	0	0	0	0	0	0	0	0
4/23/2024	2:30 AM	0	0	0	0	0	0	0	0	0	0	0	0	0
4/23/2024	2:45 AM	0	0	0	0	0	0	0	0	0	0	0	0	0
4/23/2024	3:00 AM	0	0	0	0	0	0	0	0	0	0	0	0	0
4/23/2024	3:15 AM	0	0	0	0	0	0	0	0	0	0	0	0	0
4/23/2024	3:30 AM	0	0	0	0	0	0	0	0	0	0	0	0	0
4/23/2024	3:45 AM	0	0	0	0	0	0	0	0	0	0	0	0	0
4/23/2024	4:00 AM	0	0	0	0	0	0	0	0	0	0	0	0	0
4/23/2024	4:15 AM	0	0	0	0	0	0	0	0	0	0	0	0	0
4/23/2024	4:30 AM	0	0	0	0	0	0	0	0	0	0	0	0	0
4/23/2024	4:45 AM	0	0	0	0	0	0	0	0	0	0	0	0	0
4/23/2024	5:00 AM	0	0	0	0	0	0	0	0	0	0	0	0	0
4/23/2024	5:15 AM	0	0	0	0	0	0	0	0	0	0	0	0	0
4/23/2024	5:30 AM	0	0	0	0	0	0	0	0	0	0	0	0	0
4/23/2024	5:45 AM	0	0	0	0	0	0	0	0	0	0	0	0	0
4/23/2024	6:00 AM	0	0	0	0	0	0	0	0	0	0	0	0	0
4/23/2024	6:15 AM	0	0	0	0	0	0	0	0	0	0	0	0	0
4/23/2024	6:30 AM	0	0	0	0	0	0	0	0	0	0	0	0	0
4/23/2024	6:45 AM	0	0	0	0	0	0	0	0	0	0	0	0	0
4/23/2024	7:00 AM	0	0	0	0	0	0	0	0	0	0	0	0	0
4/23/2024	7:15 AM	0	0	0	0	0	0	0	0	0	0	0	0	0
4/23/2024	7:30 AM	0	0	0	0	0	0	0	0	0	0	0	0	0
4/23/2024	7:45 AM	0	0	0	0	0	0	0	0	0	0	0	0	0
4/23/2024	8:00 AM	0	0	0	0	0	0	0	0	0	0	0	0	0
4/23/2024	8:15 AM	0	0	0	0	0	0	0	0	0	0	0	0	0
4/23/2024	8:30 AM	0	0	0	0	0	0	0	0	0	0	0	0	0
4/23/2024	8:45 AM	0	0	0	0	0	0	0	0	0	0	0	0	0
4/23/2024	9:00 AM	0	0	0	0	0	0	0	0	0	0	0	0	0
4/23/2024	9:15 AM	0	0	0	0	0	0	0	0	0	0	0	0	0
4/23/2024	9:30 AM	0	0	0	0	0	0	0	0	0	0	0	0	0
4/23/2024	9:45 AM	0	0	0	0	0	0	0	0	0	0	0	0	0
4/23/2024	10:00 AM	0	0	0	0	0	0	0	0	0	0	0	0	0
4/23/2024	10:15 AM	0	0	0	0	0	0	0	0	0	0	0	0	0
4/23/2024	10:30 AM	0	0	0	0	0	0	0	0	0	0	0	0	0
4/23/2024	10:45 AM	0	0	0	0	0	0	0	0	0	0	0	0	0
4/23/2024	11:00 AM	0	0	0	0	0	0	0	0	0	0	0	0	0
4/23/2024	11:15 AM	0	0	0	0	0	0	0	0	0	0	0	0	0
4/23/2024	11:30 AM	0	0	0	0	0	0	0	0	0	0	0	0	0
4/23/2024	11:45 AM	0	0	0	0	0	0	0	0	0	0	0	0	0
4/23/2024	12:00 PM	0	0	0	0	0	0	0	0	0	0	0	0	0
4/23/2024	12:15 PM	0	0	0	0	0	0	0	0	0	0	0	0	0
4/23/2024	12:30 PM	0	0	0	0	0	0	0	0	0	0	0	0	0
4/23/2024	12:45 PM	0	0	0	0	0	0	0	0	0	0	0	0	0
4/23/2024	1:00 PM	0	0	0	0	0	0	0	0	0	0	0	0	0
4/23/2024	1:15 PM	0	0	0	0	0	0	0	0	0	0	0	0	0
4/23/2024	1:30 PM	0	0	0	0	0	0	0	0	0	0	0	0	0
4/23/2024	1:45 PM	0	0	0	0	0	0	0	0	0	0	0	0	0
4/23/2024	2:00 PM	0	0	0	0	0	0	0	0	0	0	0	0	0
4/23/2024	2:15 PM	0	0	0	0	0	0	0	0	0	0	0	0	0
4/23/2024	2:30 PM	0	0	0	0	0	0	0	0	0	0	0	0	0
4/23/2024	2:45 PM	0	0	0	0	0	0	0	0	0	0	0	0	0
4/23/2024	3:00 PM	0	0	0	0	0	0	0	0	0	0	0	0	0
4/23/2024	3:15 PM	0	0	0	0	0	0	0	0	0	0	0	0	0
4/23/2024	3:30 PM	0	0	0	0	0	0	0	0	0	0	0	0	0
4/23/2024	3:45 PM	0	0	0	0	0	0	0	0	0	0	0	0	0
4/23/2024	4:00 PM	0	0	0	0	0	0	0	0	0	0	0	0	0
4/23/2024	4:15 PM	0	0	0	0	0	0	0	0	0	0	0	0	0
4/23/2024	4:30 PM	0	0	0	0	0	0	0	0	0	0	0	0	0
4/23/2024	4:45 PM	0	0	0	0	0	0	0	0	0	0	0	0	0
4/23/2024	5:00 PM	0	0	0	0	0	0	0	0	0	0	0	0	0
4/23/2024	5:15 PM	0	0	0	0	0	0	0	0	0	0	0	0	0
4/23/2024	5:30 PM	0	0	0	0	0	0	0	0	0	0	0	0	0
4/23/2024	5:45 PM	0	0	0	0	0	0	0	0	0	0	0	0	0
4/23/2024	6:00 PM	0	0	0	0	0	0	0	0	0	0	0	0	0
4/23/2024	6:15 PM	0	0	0	0	0	0	0	0	0	0	0	0	0
4/23/2024	6:30 PM	0	0	0	0	0	0	0	0	0	0	0	0	0
4/23/2024	6:45 PM	0	0	0	0	0	0	0	0	0	0	0	0	0
4/23/2024	7:00 PM	0	0	0	0	0	0	0	0	0	0	0	0	0
4/23/2024	7:15 PM	0	0	0	0	0	0	0	0	0	0	0	0	0
4/23/2024	7:30 PM	0	0	0	0	0	0	0	0	0	0	0	0	0
4/23/2024	7:45 PM	0	0	0	0	0	0	0	0	0	0	0	0	0
4/23/2024	8:00 PM	0	0	0	0	0	0	0	0	0	0	0	0	0
4/23/2024	8:15 PM	0	0	0	0	0	0	0	0	0	0	0	0	0
4/23/2024	8:30 PM	0	0	0	0	0	0	0	0	0	0	0	0	0
4/23/2024	8:45 PM	0	0	0	0	0	0	0	0	0	0	0	0	0
4/23/2024	9:00 PM	0	0	0	0	0	0	0	0	0	0	0	0	0
4/23/2024	9:15 PM	0	0	0	0	0	0	0	0	0	0	0	0	0
4/23/2024	9:30 PM	0	0	0	0	0	0	0	0	0	0	0	0	0
4/23/2024	9:45 PM	0	0	0	0	0	0	0	0	0	0	0	0	0
4/23/2024	10:00 PM	0	0	0	0	0	0	0	0	0	0	0	0	0
4/23/2024	10:15 PM	0	0	0	0	0	0	0	0	0	0	0	0	0
4/23/2024	10:30 PM	0	0	0	0	0	0	0	0	0	0	0	0	0
4/23/2024	10:45 PM	0	0	0	0	0	0	0	0	0	0	0	0	0
4/23/2024	11:00 PM	0	0	0	0	0	0	0	0	0	0	0	0	0
4/23/2024	11:15 PM	0	0	0	0	0	0	0	0	0	0	0	0	0
4/23/2024	11:30 PM	0	0	0	0	0	0	0	0	0	0	0	0	0
4/23/2024	11:45 PM	0	0	0	0	0	0	0	0	0	0	0	0	0

4/24/2024	12:00 AM	0	0	0	0	0	0	0	0	0	0	0	0	0
4/24/2024	12:15 AM	0	0	0	0	0	0	0	0	0	0	0	0	0
4/24/2024	12:30 AM	0	0	0	0	0	0	0	0	0	0	0	0	0
4/24/2024	12:45 AM	0	0	0	0	0	0	0	0	0	0	0	0	0
4/24/2024	1:00 AM	0	0	0	0	0	0	0	0	0	0	0	0	0
4/24/2024	1:15 AM	0	0	0	0	0	0	0	0	0	0	0	0	0
4/24/2024	1:30 AM	0	0	0	0	0	0	0	0	0	0	0	0	0
4/24/2024	1:45 AM	0	0	0	0	0	0	0	0	0	0	0	0	0
4/24/2024	2:00 AM	0	0	0	0	0	0	0	0	0	0	0	0	0
4/24/2024	2:15 AM	0	0	0	0	0	0	0	0	0	0	0	0	0
4/24/2024	2:30 AM	0	0	0	0	0	0	0	0	0	0	0	0	0
4/24/2024	2:45 AM	0	0	0	0	0	0	0	0	0	0	0	0	0
4/24/2024	3:00 AM	0	0	0	0	0	0	0	0	0	0	0	0	0
4/24/2024	3:15 AM	0	0	0	0	0	0	0	0	0	0	0	0	0
4/24/2024	3:30 AM	0	0	0	0	0	0	0	0	0	0	0	0	0
4/24/2024	3:45 AM	0	0	0	0	0	0	0	0	0	0	0	0	0
4/24/2024	4:00 AM	0	0	0	0	0	0	0	0	0	0	0	0	0
4/24/2024	4:15 AM	0	0	0	0	0	0	0	0	0	0	0	0	0
4/24/2024	4:30 AM	0	0	0	0	0	0	0	0	0	0	0	0	0
4/24/2024	4:45 AM	0	0	0	0	0	0	0	0	0	0	0	0	0
4/24/2024	5:00 AM	0	0	0	0	0	0	0	0	0	0	0	0	0
4/24/2024	5:15 AM	0	0	0	0	0	0	0	0	0	0	0	0	0
4/24/2024	5:30 AM	0	0	0	0	0	0	0	0	0	0	0	0	0
4/24/2024	5:45 AM	0	0	0	0	0	0	0	0	0	0	0	0	0
4/24/2024	6:00 AM	0	0	0	0	0	0	0	0	0	0	0	0	0
4/24/2024	6:15 AM	0	0	0	0	0	0	0	0	0	0	0	0	0
4/24/2024	6:30 AM	0	0	0	0	0	0	0	0	0	0	0	0	0
4/24/2024	6:45 AM	0	0	0	0	0	0	0	0	0	0	0	0	0
4/24/2024	7:00 AM	0	0	0	0	0	0	0	0	0	0	0	0	0
4/24/2024	7:15 AM	0	0	0	0	0	0	0	0	0	0	0	0	0
4/24/2024	7:30 AM	0	0	0	0	0	0	0	0	0	0	0	0	0
4/24/2024	7:45 AM	0	0	0	0	0	0	0	0	0	0	0	0	0
4/24/2024	8:00 AM	0	0	0	0	0	0	0	0	0	0	0	0	0
4/24/2024	8:15 AM	0	0	0	0	0	0	0	0	0	0	0	0	0
4/24/2024	8:30 AM	0	0	0	0	0	0	0	0	0	0	0	0	0
4/24/2024	8:45 AM	0	0	0	0	0	0	0	0	0	0	0	0	0
4/24/2024	9:00 AM	0	0	0	0	0	0	0	0	0	0	0	0	0
4/24/2024	9:15 AM	0	0	0	0	0	0	0	0	0	0	0	0	0
4/24/2024	9:30 AM	0	0	0	0	0	0	0	0	0	0	0	0	0
4/24/2024	9:45 AM	0	0	0	0	0	0	0	0	0	0	0	0	0
4/24/2024	10:00 AM	0	0	0	0	0	0	0	0	0	0	0	0	0
4/24/2024	10:15 AM	0	0	0	0	0	0	0	0	0	0	0	0	0
4/24/2024	10:30 AM	0	0	0	0	0	0	0	0	0	0	0	0	0
4/24/2024	10:45 AM	0	0	0	0	0	0	0	0	0	0	0	0	0
4/24/2024	11:00 AM	0	0	0	0	0	0	0	0	0	0	0	0	0
4/24/2024	11:15 AM	0	0	0	0	0	0	0	0	0	0	0	0	0
4/24/2024	11:30 AM	0	0	0	0	0	0	0	0	0	0	0	0	0
4/24/2024	11:45 AM	0	0	0	0	0	0	0	0	0	0	0	0	0
4/24/2024	12:00 PM	0	0	0	0	0	0	0	0	0	0	0	0	0
4/24/2024	12:15 PM	0	0	0	0	0	0	0	0	0	0	0	0	0
4/24/2024	12:30 PM	0	0	0	0	0	0	0	0	0	0	0	0	0
4/24/2024	12:45 PM	0	0	0	0	0	0	0	0	0	0	0	0	0
4/24/2024	1:00 PM	0	0	0	0	0	0	0	0	0	0	0	0	0
4/24/2024	1:15 PM	0	0	0	0	0	0	0	0	0	0	0	0	0
4/24/2024	1:30 PM	0	0	0	0	0	0	0	0	0	0	0	0	0
4/24/2024	1:45 PM	0	0	0	0	0	0	0	0	0	0	0	0	0
4/24/2024	2:00 PM	0	0	0	0	0	0	0	0	0	0	0	0	0
4/24/2024	2:15 PM	0	0	0	0	0	0	0	0	0	0	0	0	0
4/24/2024	2:30 PM	0	0	0	0	0	0	0	0	0	0	0	0	0
4/24/2024	2:45 PM	0	0	0	0	0	0	0	0	0	0	0	0	0
4/24/2024	3:00 PM	0	0	0	0	0	0	0	0	0	0	0	0	0
4/24/2024	3:15 PM	0	0	0	0	0	0	0	0	0	0	0	0	0
4/24/2024	3:30 PM	0	0	0	0	0	0	0	0	0	0	0	0	0
4/24/2024	3:45 PM	0	0	0	0	0	0	0	0	0	0	0	0	0
4/24/2024	4:00 PM	0	0	0	0	0	0	0	0	0	0	0	0	0
4/24/2024	4:15 PM	0	0	0	0	0	0	0	0	0	0	0	0	0
4/24/2024	4:30 PM	0	0	0	0	0	0	0	0	0	0	0	0	0
4/24/2024	4:45 PM	0	0	0	0	0	0	0	0	0	0	0	0	0
4/24/2024	5:00 PM	0	0	0	0	0	0	0	0	0	0	0	0	0
4/24/2024	5:15 PM	0	0	0	0	0	0	0	0	0	0	0	0	0
4/24/2024	5:30 PM	0	0	0	0	0	0	0	0	0	0	0	0	0
4/24/2024	5:45 PM	0	0	0	0	0	0	0	0	0	0	0	0	0
4/24/2024	6:00 PM	0	0	0	0	0	0	0	0	0	0	0	0	0
4/24/2024	6:15 PM	0	0	0	0	0	0	0	0	0	0	0	0	0
4/24/2024	6:30 PM	0	0	0	0	0	0	0	0	0	0	0	0	0
4/24/2024	6:45 PM	0	0	0	0	0	0	0	0	0	0	0	0	0
4/24/2024	7:00 PM	0	0	0	0	0	0	0	0	0	0	0	0	0
4/24/2024	7:15 PM	0	0	0	0	0	0	0	0	0	0	0	0	0
4/24/2024	7:30 PM	0	0	0	0	0	0	0	0	0	0	0	0	0
4/24/2024	7:45 PM	0	0	0	0	0	0	0	0	0	0	0	0	0
4/24/2024	8:00 PM	0	0	0	0	0	0	0	0	0	0	0	0	0
4/24/2024	8:15 PM	0	0	0	0	0	0	0	0	0	0	0	0	0
4/24/2024	8:30 PM	0	0	0	0	0	0	0	0	0	0	0	0	0
4/24/2024	8:45 PM	0	0	0	0	0	0	0	0	0	0	0	0	0
4/24/2024	9:00 PM	0	0	0	0	0	0	0	0	0	0	0	0	0
4/24/2024	9:15 PM	0	0	0	0	0	0	0	0	0	0	0	0	0
4/24/2024	9:30 PM	0	0	0	0	0	0	0	0	0	0	0	0	0
4/24/2024	9:45 PM	0	0	0	0	0	0	0	0	0	0	0	0	0
4/24/2024	10:00 PM	0	0	0	0	0	0	0	0	0	0	0	0	0
4/24/2024	10:15 PM	0	0	0	0	0	0	0	0	0	0	0	0	0
4/24/2024	10:30 PM	0	0	0	0	0	0	0	0	0	0	0	0	0
4/24/2024	10:45 PM	0	0	0	0	0	0	0	0	0	0	0	0	0
4/24/2024	11:00 PM	0	0	0	0	0	0	0	0	0	0	0	0	0
4/24/2024	11:15 PM	0	0	0	0	0	0	0	0	0	0	0	0	0
4/24/2024	11:30 PM	0	0	0	0	0	0	0	0	0	0	0	0	0
4/24/2024	11:45 PM	0	0	0	0	0	0	0	0	0	0	0	0	0

4/25/2024	12:00 AM	0	0	0	0	0	0	0	0	0	0	0	0	0
4/25/2024	12:15 AM	0	0	0	0	0	0	0	0	0	0	0	0	0
4/25/2024	12:30 AM	0	0	0	0	0	0	0	0	0	0	0	0	0
4/25/2024	12:45 AM	0	0	0	0	0	0	0	0	0	0	0	0	0
4/25/2024	1:00 AM	0	0	0	0	0	0	0	0	0	0	0	0	0
4/25/2024	1:15 AM	0	0	0	0	0	0	0	0	0	0	0	0	0
4/25/2024	1:30 AM	0	0	0	0	0	0	0	0	0	0	0	0	0
4/25/2024	1:45 AM	0	0	0	0	0	0	0	0	0	0	0	0	0
4/25/2024	2:00 AM	0	0	0	0	0	0	0	0	0	0	0	0	0
4/25/2024	2:15 AM	0	0	0	0	0	0	0	0	0	0	0	0	0
4/25/2024	2:30 AM	0	0	0	0	0	0	0	0	0	0	0	0	0
4/25/2024	2:45 AM	0	0	0	0	0	0	0	0	0	0	0	0	0
4/25/2024	3:00 AM	0	0	0	0	0	0	0	0	0	0	0	0	0
4/25/2024	3:15 AM	0	0	0	0	0	0	0	0	0	0	0	0	0
4/25/2024	3:30 AM	0	0	0	0	0	0	0	0	0	0	0	0	0
4/25/2024	3:45 AM	0	0	0	0	0	0	0	0	0	0	0	0	0
4/25/2024	4:00 AM	0	0	0	0	0	0	0	0	0	0	0	0	0
4/25/2024	4:15 AM	0	0	0	0	0	0	0	0	0	0	0	0	0
4/25/2024	4:30 AM	0	0	0	0	0	0	0	0	0	0	0	0	0
4/25/2024	4:45 AM	0	0	0	0	0	0	0	0	0	0	0	0	0
4/25/2024	5:00 AM	0	0	0	0	0	0	0	0	0	0	0	0	0
4/25/2024	5:15 AM	0	0	0	0	0	0	0	0	0	0	0	0	0
4/25/2024	5:30 AM	0	0	0	0	0	0	0	0	0	0	0	0	0
4/25/2024	5:45 AM	0	0	0	0	0	0	0	0	0	0	0	0	0
4/25/2024	6:00 AM	0	0	0	0	0	0	0	0	0	0	0	0	0
4/25/2024	6:15 AM	0	0	0	0	0	0	0	0	0	0	0	0	0
4/25/2024	6:30 AM	0	0	0	0	0	0	0	0	0	0	0	0	0
4/25/2024	6:45 AM	0	0	0	0	0	0	0	0	0	0	0	0	0
4/25/2024	7:00 AM	0	0	0	0	0	0	0	0	0	0	0	0	0
4/25/2024	7:15 AM	0	0	0	0	0	0	0	0	0	0	0	0	0
4/25/2024	7:30 AM	0	0	0	0	0	0	0	0	0	0	0	0	0
4/25/2024	7:45 AM	0	0	0	0	0	0	0	0	0	0	0	0	0
4/25/2024	8:00 AM	0	0	0	0	0	0	0	0	0	0	0	0	0
4/25/2024	8:15 AM	0	0	0	0	0	0	0	0	0	0	0	0	0
4/25/2024	8:30 AM	0	0	0	0	0	0	0	0	0	0	0	0	0
4/25/2024	8:45 AM	0	0	0	0	0	0	0	0	0	0	0	0	0
4/25/2024	9:00 AM	0	0	0	0	0	0	0	0	0	0	0	0	0
4/25/2024	9:15 AM	0	0	0	0	0	0	0	0	0	0	0	0	0
4/25/2024	9:30 AM	0	0	0	0	0	0	0	0	0	0	0	0	0
4/25/2024	9:45 AM	0	0	0	0	0	0	0	0	0	0	0	0	0
4/25/2024	10:00 AM	0	0	0	0	0	0	0	0	0	0	0	0	0
4/25/2024	10:15 AM	0	0	0	0	0	0	0	0	0	0	0	0	0
4/25/2024	10:30 AM	0	0	0	0	0	0	0	0	0	0	0	0	0
4/25/2024	10:45 AM	0	0	0	0	0	0	0	0	0	0	0	0	0
4/25/2024	11:00 AM	0	0	0	0	0	0	0	0	0	0	0	0	0
4/25/2024	11:15 AM	0	0	0	0	0	0	0	0	0	0	0	0	0
4/25/2024	11:30 AM	0	0	0	0	0	0	0	0	0	0	0	0	0
4/25/2024	11:45 AM	0	0	0	0	0	0	0	0	0	0	0	0	0
4/25/2024	12:00 PM	0	0	0	0	0	0	0	0	0	0	0	0	0
4/25/2024	12:15 PM	0	0	0	0	0	0	0	0	0	0	0	0	0
4/25/2024	12:30 PM	0	0	0	0	0	0	0	0	0	0	0	0	0
4/25/2024	12:45 PM	0	0	0	0	0	0	0	0	0	0	0	0	0
4/25/2024	1:00 PM	0	0	0	0	0	0	0	0	0	0	0	0	0
4/25/2024	1:15 PM	0	0	0	0	0	0	0	0	0	0	0	0	0
4/25/2024	1:30 PM	0	0	0	0	0	0	0	0	0	0	0	0	0
4/25/2024	1:45 PM	0	0	0	0	0	0	0	0	0	0	0	0	0
4/25/2024	2:00 PM	0	0	0	0	0	0	0	0	0	0	0	0	0
4/25/2024	2:15 PM	0	0	0	0	0	0	0	0	0	0	0	0	0
4/25/2024	2:30 PM	0	0	0	0	0	0	0	0	0	0	0	0	0
4/25/2024	2:45 PM	0	0	0	0	0	0	0	0	0	0	0	0	0
4/25/2024	3:00 PM	0	0	0	0	0	0	0	0	0	0	0	0	0
4/25/2024	3:15 PM	0	0	0	0	0	0	0	0	0	0	0	0	0
4/25/2024	3:30 PM	0	0	0	0	0	0	0	0	0	0	0	0	0
4/25/2024	3:45 PM	0	0	0	0	0	0	0	0	0	0	0	0	0
4/25/2024	4:00 PM	0	0	0	0	0	0	0	0	0	0	0	0	0
4/25/2024	4:15 PM	0	0	0	0	0	0	0	0	0	0	0	0	0
4/25/2024	4:30 PM	0	0	0	0	0	0	0	0	0	0	0	0	0
4/25/2024	4:45 PM	0	0	0	0	0	0	0	0	0	0	0	0	0
4/25/2024	5:00 PM	0	0	0	0	0	0	0	0	0	0	0	0	0
4/25/2024	5:15 PM	0	0	0	0	0	0	0	0	0	0	0	0	0
4/25/2024	5:30 PM	0	0	0	0	0	0	0	0	0	0	0	0	0
4/25/2024	5:45 PM	0	0	0	0	0	0	0	0	0	0	0	0	0
4/25/2024	6:00 PM	0	0	0	0	0	0	0	0	0	0	0	0	0
4/25/2024	6:15 PM	0	0	0	0	0	0	0	0	0	0	0	0	0
4/25/2024	6:30 PM	0	0	0	0	0	0	0	0	0	0	0	0	0
4/25/2024	6:45 PM	0	0	0	0	0	0	0	0	0	0	0	0	0
4/25/2024	7:00 PM	0	0	0	0	0	0	0	0	0	0	0	0	0
4/25/2024	7:15 PM	0	0	0	0	0	0	0	0	0	0	0	0	0
4/25/2024	7:30 PM	0	0	0	0	0	0	0	0	0	0	0	0	0
4/25/2024	7:45 PM	0	0	0	0	0	0	0	0	0	0	0	0	0
4/25/2024	8:00 PM	0	0	0	0	0	0	0	0	0	0	0	0	0
4/25/2024	8:15 PM	0	0	0	0	0	0	0	0	0	0	0	0	0
4/25/2024	8:30 PM	0	0	0	0	0	0	0	0	0	0	0	0	0
4/25/2024	8:45 PM	0	0	0	0	0	0	0	0	0	0	0	0	0
4/25/2024	9:00 PM	0	0	0	0	0	0	0	0	0	0	0	0	0
4/25/2024	9:15 PM	0	0	0	0	0	0	0	0	0	0	0	0	0
4/25/2024	9:30 PM	0	0	0	0	0	0	0	0	0	0	0	0	0
4/25/2024	9:45 PM	0	0	0	0	0	0	0	0	0	0	0	0	0
4/25/2024	10:00 PM	0	0	0	0	0	0	0	0	0	0	0	0	0
4/25/2024	10:15 PM	0	0	0	0	0	0	0	0	0	0	0	0	0
4/25/2024	10:30 PM	0	0	0	0	0	0	0	0	0	0	0	0	0
4/25/2024	10:45 PM	0	0	0	0	0	0	0	0	0	0	0	0	0
4/25/2024	11:00 PM	0	0	0	0	0	0	0	0	0	0	0	0	0
4/25/2024	11:15 PM	0	0	0	0	0	0	0	0	0	0	0	0	0
4/25/2024	11:30 PM	0	0	0	0	0	0	0	0	0	0	0	0	0
4/25/2024	11:45 PM	0	0	0	0	0	0	0	0	0	0	0	0	0

4/26/2024	12:00 AM	0	0	0	0	0	0	0	0	0	0	0	0	0
4/26/2024	12:15 AM	0	0	0	0	0	0	0	0	0	0	0	0	0
4/26/2024	12:30 AM	0	0	0	0	0	0	0	0	0	0	0	0	0
4/26/2024	12:45 AM	0	0	0	0	0	0	0	0	0	0	0	0	0
4/26/2024	1:00 AM	0	0	0	0	0	0	0	0	0	0	0	0	0
4/26/2024	1:15 AM	0	0	0	0	0	0	0	0	0	0	0	0	0
4/26/2024	1:30 AM	0	0	0	0	0	0	0	0	0	0	0	0	0
4/26/2024	1:45 AM	0	0	0	0	0	0	0	0	0	0	0	0	0
4/26/2024	2:00 AM	0	0	0	0	0	0	0	0	0	0	0	0	0
4/26/2024	2:15 AM	0	0	0	0	0	0	0	0	0	0	0	0	0
4/26/2024	2:30 AM	0	0	0	0	0	0	0	0	0	0	0	0	0
4/26/2024	2:45 AM	0	0	0	0	0	0	0	0	0	0	0	0	0
4/26/2024	3:00 AM	0	0	0	0	0	0	0	0	0	0	0	0	0
4/26/2024	3:15 AM	0	0	0	0	0	0	0	0	0	0	0	0	0
4/26/2024	3:30 AM	0	0	0	0	0	0	0	0	0	0	0	0	0
4/26/2024	3:45 AM	0	0	0	0	0	0	0	0	0	0	0	0	0
4/26/2024	4:00 AM	0	0	0	0	0	0	0	0	0	0	0	0	0
4/26/2024	4:15 AM	0	0	0	0	0	0	0	0	0	0	0	0	0
4/26/2024	4:30 AM	0	0	0	0	0	0	0	0	0	0	0	0	0
4/26/2024	4:45 AM	0	0	0	0	0	0	0	0	0	0	0	0	0
4/26/2024	5:00 AM	0	0	0	0	0	0	0	0	0	0	0	0	0
4/26/2024	5:15 AM	0	0	0	0	0	0	0	0	0	0	0	0	0
4/26/2024	5:30 AM	0	0	0	0	0	0	0	0	0	0	0	0	0
4/26/2024	5:45 AM	0	0	0	0	0	0	0	0	0	0	0	0	0
4/26/2024	6:00 AM	0	0	0	0	0	0	0	0	0	0	0	0	0
4/26/2024	6:15 AM	0	0	0	0	0	0	0	0	0	0	0	0	0
4/26/2024	6:30 AM	0	0	0	0	0	0	0	0	0	0	0	0	0
4/26/2024	6:45 AM	0	0	0	0	0	0	0	0	0	0	0	0	0
4/26/2024	7:00 AM	0	0	0	0	0	0	0	0	0	0	0	0	0
4/26/2024	7:15 AM	0	0	0	0	0	0	0	0	0	0	0	0	0
4/26/2024	7:30 AM	0	0	0	0	0	0	0	0	0	0	0	0	0
4/26/2024	7:45 AM	0	0	0	0	0	0	0	0	0	0	0	0	0
4/26/2024	8:00 AM	0	0	0	0	0	0	0	0	0	0	0	0	0
4/26/2024	8:15 AM	0	0	0	0	0	0	0	0	0	0	0	0	0
4/26/2024	8:30 AM	0	0	0	0	0	0	0	0	0	0	0	0	0
4/26/2024	8:45 AM	0	0	0	0	0	0	0	0	0	0	0	0	0
4/26/2024	9:00 AM	0	0	0	0	0	0	0	0	0	0	0	0	0
4/26/2024	9:15 AM	0	0	0	0	0	0	0	0	0	0	0	0	0
4/26/2024	9:30 AM	0	0	0	0	0	0	0	0	0	0	0	0	0
4/26/2024	9:45 AM	0	0	0	0	0	0	0	0	0	0	0	0	0
4/26/2024	10:00 AM	0	0	0	0	0	0	0	0	0	0	0	0	0
4/26/2024	10:15 AM	0	0	0	0	0	0	0	0	0	0	0	0	0
4/26/2024	10:30 AM	0	0	0	0	0	0	0	0	0	0	0	0	0
4/26/2024	10:45 AM	0	0	0	0	0	0	0	0	0	0	0	0	0
4/26/2024	11:00 AM	0	0	0	0	0	0	0	0	0	0	0	0	0
4/26/2024	11:15 AM	0	0	0	0	0	0	0	0	0	0	0	0	0
4/26/2024	11:30 AM	0	0	0	0	0	0	0	0	0	0	0	0	0
4/26/2024	11:45 AM	0	0	0	0	0	0	0	0	0	0	0	0	0
4/26/2024	12:00 PM	0	0	0	0	0	0	0	0	0	0	0	0	0
4/26/2024	12:15 PM	0	0	0	0	0	0	0	0	0	0	0	0	0
4/26/2024	12:30 PM	0	0	0	0	0	0	0	0	0	0	0	0	0
4/26/2024	12:45 PM	0	0	0	0	0	0	0	0	0	0	0	0	0
4/26/2024	1:00 PM	0	0	0	0	0	0	0	0	0	0	0	0	0
4/26/2024	1:15 PM	0	0	0	0	0	0	0	0	0	0	0	0	0
4/26/2024	1:30 PM	0	0	0	0	0	0	0	0	0	0	0	0	0
4/26/2024	1:45 PM	0	0	0	0	0	0	0	0	0	0	0	0	0
4/26/2024	2:00 PM	0	0	0	0	0	0	0	0	0	0	0	0	0
4/26/2024	2:15 PM	0	0	0	0	0	0	0	0	0	0	0	0	0
4/26/2024	2:30 PM	0	0	0	0	0	0	0	0	0	0	0	0	0
4/26/2024	2:45 PM	0	0	0	0	0	0	0	0	0	0	0	0	0
4/26/2024	3:00 PM	0	0	0	0	0	0	0	0	0	0	0	0	0
4/26/2024	3:15 PM	0	0	0	0	0	0	0	0	0	0	0	0	0
4/26/2024	3:30 PM	0	0	0	0	0	0	0	0	0	0	0	0	0
4/26/2024	3:45 PM	0	0	0	0	0	0	0	0	0	0	0	0	0
4/26/2024	4:00 PM	0	0	0	0	0	0	0	0	0	0	0	0	0
4/26/2024	4:15 PM	0	0	0	0	0	0	0	0	0	0	0	0	0
4/26/2024	4:30 PM	0	0	0	0	0	0	0	0	0	0	0	0	0
4/26/2024	4:45 PM	0	0	0	0	0	0	0	0	0	0	0	0	0
4/26/2024	5:00 PM	0	0	0	0	0	0	0	0	0	0	0	0	0
4/26/2024	5:15 PM	0	0	0	0	0	0	0	0	0	0	0	0	0
4/26/2024	5:30 PM	0	0	0	0	0	0	0	0	0	0	0	0	0
4/26/2024	5:45 PM	0	0	0	0	0	0	0	0	0	0	0	0	0
4/26/2024	6:00 PM	0	0	0	0	0	0	0	0	0	0	0	0	0
4/26/2024	6:15 PM	0	0	0	0	0	0	0	0	0	0	0	0	0
4/26/2024	6:30 PM	0	0	0	0	0	0	0	0	0	0	0	0	0
4/26/2024	6:45 PM	0	0	0	0	0	0	0	0	0	0	0	0	0
4/26/2024	7:00 PM	0	0	0	0	0	0	0	0	0	0	0	0	0
4/26/2024	7:15 PM	0	0	0	0	0	0	0	0	0	0	0	0	0
4/26/2024	7:30 PM	0	0	0	0	0	0	0	0	0	0	0	0	0
4/26/2024	7:45 PM	0	0	0	0	0	0	0	0	0	0	0	0	0
4/26/2024	8:00 PM	0	0	0	0	0	0	0	0	0	0	0	0	0
4/26/2024	8:15 PM	0	0	0	0	0	0	0	0	0	0	0	0	0
4/26/2024	8:30 PM	0	0	0	0	0	0	0	0	0	0	0	0	0
4/26/2024	8:45 PM	0	0	0	0	0	0	0	0	0	0	0	0	0
4/26/2024	9:00 PM	0	0	0	0	0	0	0	0	0	0	0	0	0
4/26/2024	9:15 PM	0	0	0	0	0	0	0	0	0	0	0	0	0
4/26/2024	9:30 PM	0	0	0	0	0	0	0	0	0	0	0	0	0
4/26/2024	9:45 PM	0	0	0	0	0	0	0	0	0	0	0	0	0
4/26/2024	10:00 PM	0	0	0	0	0	0	0	0	0	0	0	0	0
4/26/2024	10:15 PM	0	0	0	0	0	0	0	0	0	0	0	0	0
4/26/2024	10:30 PM	0	0	0	0	0	0	0	0	0	0	0	0	0
4/26/2024	10:45 PM	0	0	0	0	0	0	0	0	0	0	0	0	0
4/26/2024	11:00 PM	0	0	0	0	0	0	0	0	0	0	0	0	0
4/26/2024	11:15 PM	0	0	0	0	0	0	0	0	0	0	0	0	0
4/26/2024	11:30 PM	0	0	0	0	0	0	0	0	0	0	0	0	0
4/26/2024	11:45 PM	0	0	0	0	0	0	0	0	0	0	0	0	0

4/27/2024	12:00 AM	0	0	0	0	0	0	0	0	0	0	0	0	0
4/27/2024	12:15 AM	0	0	0	0	0	0	0	0	0	0	0	0	0
4/27/2024	12:30 AM	0	0	0	0	0	0	0	0	0	0	0	0	0
4/27/2024	12:45 AM	0	0	0	0	0	0	0	0	0	0	0	0	0
4/27/2024	1:00 AM	0	0	0	0	0	0	0	0	0	0	0	0	0
4/27/2024	1:15 AM	0	0	0	0	0	0	0	0	0	0	0	0	0
4/27/2024	1:30 AM	0	0	0	0	0	0	0	0	0	0	0	0	0
4/27/2024	1:45 AM	0	0	0	0	0	0	0	0	0	0	0	0	0
4/27/2024	2:00 AM	0	0	0	0	0	0	0	0	0	0	0	0	0
4/27/2024	2:15 AM	0	0	0	0	0	0	0	0	0	0	0	0	0
4/27/2024	2:30 AM	0	0	0	0	0	0	0	0	0	0	0	0	0
4/27/2024	2:45 AM	0	0	0	0	0	0	0	0	0	0	0	0	0
4/27/2024	3:00 AM	0	0	0	0	0	0	0	0	0	0	0	0	0
4/27/2024	3:15 AM	0	0	0	0	0	0	0	0	0	0	0	0	0
4/27/2024	3:30 AM	0	0	0	0	0	0	0	0	0	0	0	0	0
4/27/2024	3:45 AM	0	0	0	0	0	0	0	0	0	0	0	0	0
4/27/2024	4:00 AM	0	0	0	0	0	0	0	0	0	0	0	0	0
4/27/2024	4:15 AM	0	0	0	0	0	0	0	0	0	0	0	0	0
4/27/2024	4:30 AM	0	0	0	0	0	0	0	0	0	0	0	0	0
4/27/2024	4:45 AM	0	0	0	0	0	0	0	0	0	0	0	0	0
4/27/2024	5:00 AM	0	0	0	0	0	0	0	0	0	0	0	0	0
4/27/2024	5:15 AM	0	0	0	0	0	0	0	0	0	0	0	0	0
4/27/2024	5:30 AM	0	0	0	0	0	0	0	0	0	0	0	0	0
4/27/2024	5:45 AM	0	0	0	0	0	0	0	0	0	0	0	0	0
4/27/2024	6:00 AM	0	0	0	0	0	0	0	0	0	0	0	0	0
4/27/2024	6:15 AM	0	0	0	0	0	0	0	0	0	0	0	0	0
4/27/2024	6:30 AM	0	0	0	0	0	0	0	0	0	0	0	0	0
4/27/2024	6:45 AM	0	0	0	0	0	0	0	0	0	0	0	0	0
4/27/2024	7:00 AM	0	0	0	0	0	0	0	0	0	0	0	0	0
4/27/2024	7:15 AM	0	0	0	0	0	0	0	0	0	0	0	0	0
4/27/2024	7:30 AM	0	0	0	0	0	0	0	0	0	0	0	0	0
4/27/2024	7:45 AM	0	0	0	0	0	0	0	0	0	0	0	0	0
4/27/2024	8:00 AM	0	0	0	0	0	0	0	0	0	0	0	0	0
4/27/2024	8:15 AM	0	0	0	0	0	0	0	0	0	0	0	0	0
4/27/2024	8:30 AM	0	0	0	0	0	0	0	0	0	0	0	0	0
4/27/2024	8:45 AM	0	0	0	0	0	0	0	0	0	0	0	0	0
4/27/2024	9:00 AM	0	0	0	0	0	0	0	0	0	0	0	0	0
4/27/2024	9:15 AM	0	0	0	0	0	0	0	0	0	0	0	0	0
4/27/2024	9:30 AM	0	0	0	0	0	0	0	0	0	0	0	0	0
4/27/2024	9:45 AM	0	0	0	0	0	0	0	0	0	0	0	0	0
4/27/2024	10:00 AM	0	0	0	0	0	0	0	0	0	0	0	0	0
4/27/2024	10:15 AM	0	0	0	0	0	0	0	0	0	0	0	0	0
4/27/2024	10:30 AM	0	0	0	0	0	0	0	0	0	0	0	0	0
4/27/2024	10:45 AM	0	0	0	0	0	0	0	0	0	0	0	0	0
4/27/2024	11:00 AM	0	0	0	0	0	0	0	0	0	0	0	0	0
4/27/2024	11:15 AM	0	0	0	0	0	0	0	0	0	0	0	0	0
4/27/2024	11:30 AM	0	0	0	0	0	0	0	0	0	0	0	0	0
4/27/2024	11:45 AM	0	0	0	0	0	0	0	0	0	0	0	0	0
4/27/2024	12:00 PM	0	0	0	0	0	0	0	0	0	0	0	0	0
4/27/2024	12:15 PM	0	0	0	0	0	0	0	0	0	0	0	0	0
4/27/2024	12:30 PM	0	0	0	0	0	0	0	0	0	0	0	0	0
4/27/2024	12:45 PM	0	0	0	0	0	0	0	0	0	0	0	0	0
4/27/2024	1:00 PM	0	0	0	0	0	0	0	0	0	0	0	0	0
4/27/2024	1:15 PM	0	0	0	0	0	0	0	0	0	0	0	0	0
4/27/2024	1:30 PM	0	0	0	0	0	0	0	0	0	0	0	0	0
4/27/2024	1:45 PM	0	0	0	0	0	0	0	0	0	0	0	0	0
4/27/2024	2:00 PM	0	0	0	0	0	0	0	0	0	0	0	0	0
4/27/2024	2:15 PM	0	0	0	0	0	0	0	0	0	0	0	0	0
4/27/2024	2:30 PM	0	0	0	0	0	0	0	0	0	0	0	0	0
4/27/2024	2:45 PM	0	0	0	0	0	0	0	0	0	0	0	0	0
4/27/2024	3:00 PM	0	0	0	0	0	0	0	0	0	0	0	0	0
4/27/2024	3:15 PM	0	0	0	0	0	0	0	0	0	0	0	0	0
4/27/2024	3:30 PM	0	0	0	0	0	0	0	0	0	0	0	0	0
4/27/2024	3:45 PM	0	0	0	0	0	0	0	0	0	0	0	0	0
4/27/2024	4:00 PM	0	0	0	0	0	0	0	0	0	0	0	0	0
4/27/2024	4:15 PM	0	0	0	0	0	0	0	0	0	0	0	0	0
4/27/2024	4:30 PM	0	0	0	0	0	0	0	0	0	0	0	0	0
4/27/2024	4:45 PM	0	0	0	0	0	0	0	0	0	0	0	0	0
4/27/2024	5:00 PM	0	0	0	0	0	0	0	0	0	0	0	0	0
4/27/2024	5:15 PM	0	0	0	0	0	0	0	0	0	0	0	0	0
4/27/2024	5:30 PM	0	0	0	0	0	0	0	0	0	0	0	0	0
4/27/2024	5:45 PM	0	0	0	0	0	0	0	0	0	0	0	0	0
4/27/2024	6:00 PM	0	0	0	0	0	0	0	0	0	0	0	0	0
4/27/2024	6:15 PM	0	0	0	0	0	0	0	0	0	0	0	0	0
4/27/2024	6:30 PM	0	0	0	0	0	0	0	0	0	0	0	0	0
4/27/2024	6:45 PM	0	0	0	0	0	0	0	0	0	0	0	0	0
4/27/2024	7:00 PM	0	0	0	0	0	0	0	0	0	0	0	0	0
4/27/2024	7:15 PM	0	0	0	0	0	0	0	0	0	0	0	0	0
4/27/2024	7:30 PM	0	0	0	0	0	0	0	0	0	0	0	0	0
4/27/2024	7:45 PM	0	0	0	0	0	0	0	0	0	0	0	0	0
4/27/2024	8:00 PM	0	0	0	0	0	0	0	0	0	0	0	0	0
4/27/2024	8:15 PM	0	0	0	0	0	0	0	0	0	0	0	0	0
4/27/2024	8:30 PM	0	0	0	0	0	0	0	0	0	0	0	0	0
4/27/2024	8:45 PM	0	0	0	0	0	0	0	0	0	0	0	0	0
4/27/2024	9:00 PM	0	0	0	0	0	0	0	0	0	0	0	0	0
4/27/2024	9:15 PM	0	0	0	0	0	0	0	0	0	0	0	0	0
4/27/2024	9:30 PM	0	0	0	0	0	0	0	0	0	0	0	0	0
4/27/2024	9:45 PM	0	0	0	0	0	0	0	0	0	0	0	0	0
4/27/2024	10:00 PM	0	0	0	0	0	0	0	0	0	0	0	0	0
4/27/2024	10:15 PM	0	0	0	0	0	0	0	0	0	0	0	0	0
4/27/2024	10:30 PM	0	0	0	0	0	0	0	0	0	0	0	0	0
4/27/2024	10:45 PM	0	0	0	0	0	0	0	0	0	0	0	0	0
4/27/2024	11:00 PM	0	0	0	0	0	0	0	0	0	0	0	0	0
4/27/2024	11:15 PM	0	0	0	0	0	0	0	0	0	0	0	0	0
4/27/2024	11:30 PM	0	0	0	0	0	0	0	0	0	0	0	0	0
4/27/2024	11:45 PM	0	0	0	0	0	0	0	0	0	0	0	0	0

SB
File Name:
Start Date: 4/21/2024
Start Time: 0
Site Code: 13
Station ID: 1
Location 1: I-26 S/Bound On-Ramp, south of I-20
Location 2:

Date	Time	1	2	3	4	5	6	7	8	9	10	11	12	13
4/21/2024	12:00 AM	2	76	18	0	0	0	0	0	9	0	0	0	0
4/21/2024	12:15 AM	1	75	19	0	0	0	0	0	8	0	0	0	0
4/21/2024	12:30 AM	1	66	16	0	0	0	0	0	6	0	0	0	0
4/21/2024	12:45 AM	1	63	17	0	0	0	0	0	4	0	0	0	0
4/21/2024	1:00 AM	0	47	12	0	0	0	0	0	3	0	0	0	0
4/21/2024	1:15 AM	0	44	9	1	0	0	0	0	4	0	0	0	0
4/21/2024	1:30 AM	0	40	10	1	0	0	0	0	4	0	0	0	0
4/21/2024	1:45 AM	0	37	6	1	0	0	0	0	5	0	0	0	0
4/21/2024	2:00 AM	0	38	6	1	0	0	0	0	4	0	0	0	0
4/21/2024	2:15 AM	0	29	6	0	0	0	0	0	3	0	0	0	0
4/21/2024	2:30 AM	0	29	4	0	1	0	0	0	5	0	0	0	0
4/21/2024	2:45 AM	0	25	5	0	1	0	0	0	5	0	0	0	0
4/21/2024	3:00 AM	0	26	5	0	1	0	0	0	5	0	0	0	0
4/21/2024	3:15 AM	0	22	4	0	1	0	0	0	7	0	0	0	0
4/21/2024	3:30 AM	0	20	5	0	0	0	0	0	5	0	0	0	0
4/21/2024	3:45 AM	0	22	4	0	0	0	0	0	6	0	0	0	0
4/21/2024	4:00 AM	0	22	6	0	0	0	0	0	5	0	0	0	0
4/21/2024	4:15 AM	0	24	7	0	0	0	0	0	3	0	0	0	0
4/21/2024	4:30 AM	0	24	5	0	0	0	0	0	2	0	0	0	0
4/21/2024	4:45 AM	0	25	8	0	0	0	0	0	0	0	0	0	0
4/21/2024	5:00 AM	0	27	6	0	0	0	0	0	1	0	0	0	0
4/21/2024	5:15 AM	0	35	10	0	0	0	0	0	4	0	0	0	0
4/21/2024	5:30 AM	0	41	13	0	0	0	0	1	4	0	0	0	0
4/21/2024	5:45 AM	0	52	12	0	0	0	0	1	5	0	0	0	0
4/21/2024	6:00 AM	0	58	16	0	0	0	0	1	7	0	0	0	0
4/21/2024	6:15 AM	0	68	16	0	0	0	0	1	5	0	0	0	0
4/21/2024	6:30 AM	0	89	21	0	0	0	0	0	8	0	0	0	0
4/21/2024	6:45 AM	0	94	28	0	0	0	0	0	8	0	0	0	0
4/21/2024	7:00 AM	0	125	28	0	0	0	0	0	7	0	0	0	0
4/21/2024	7:15 AM	0	133	29	0	0	0	0	0	7	0	0	0	0
4/21/2024	7:30 AM	1	136	29	0	0	0	0	0	4	0	0	0	0
4/21/2024	7:45 AM	1	146	32	0	0	0	0	0	8	0	0	0	0
4/21/2024	8:00 AM	1	159	41	0	1	0	0	0	6	0	0	0	0
4/21/2024	8:15 AM	1	192	56	0	1	0	0	0	8	0	0	0	0
4/21/2024	8:30 AM	0	208	64	0	2	0	0	0	9	0	0	0	0
4/21/2024	8:45 AM	0	226	73	0	2	0	0	0	8	0	0	0	0
4/21/2024	9:00 AM	0	243	82	0	1	1	0	0	8	0	0	0	0
4/21/2024	9:15 AM	0	245	81	0	1	1	0	0	6	0	0	0	0
4/21/2024	9:30 AM	0	275	88	1	0	1	0	0	8	0	1	0	0
4/21/2024	9:45 AM	0	324	88	1	1	1	0	0	7	0	1	0	0
4/21/2024	10:00 AM	0	354	87	1	2	0	0	0	7	0	1	0	0
4/21/2024	10:15 AM	0	374	88	1	2	0	0	0	10	0	1	0	0
4/21/2024	10:30 AM	0	379	92	0	2	0	0	1	12	0	0	0	0
4/21/2024	10:45 AM	0	382	99	0	1	0	0	1	9	0	0	0	0
4/21/2024	11:00 AM	0	402	102	0	0	0	0	1	11	0	0	0	0
4/21/2024	11:15 AM	0	467	121	0	0	0	0	1	9	0	0	0	0
4/21/2024	11:30 AM	0	501	139	0	0	0	0	0	7	0	0	0	0
4/21/2024	11:45 AM	0	506	147	0	1	0	0	0	9	0	0	0	0
4/21/2024	12:00 PM	0	483	150	2	2	0	0	0	7	0	0	0	0
4/21/2024	12:15 PM	0	451	140	2	2	0	0	0	6	0	0	0	0
4/21/2024	12:30 PM	0	461	133	2	2	0	0	0	6	0	0	0	0
4/21/2024	12:45 PM	0	481	128	2	1	0	0	0	10	0	0	0	0
4/21/2024	1:00 PM	0	508	133	0	0	0	0	0	11	0	0	0	0
4/21/2024	1:15 PM	0	501	127	0	0	0	0	0	11	0	0	0	0
4/21/2024	1:30 PM	0	474	119	0	0	0	0	0	9	0	0	0	0
4/21/2024	1:45 PM	0	456	122	0	1	0	0	0	3	0	0	0	0
4/21/2024	2:00 PM	0	443	120	0	1	0	0	0	4	0	0	0	0
4/21/2024	2:15 PM	0	424	127	0	1	0	0	0	5	0	0	0	0
4/21/2024	2:30 PM	0	402	123	0	1	0	0	0	4	0	0	0	0
4/21/2024	2:45 PM	0	395	123	0	1	0	0	0	6	0	0	0	0
4/21/2024	3:00 PM	0	376	120	0	2	0	0	0	6	0	0	0	0
4/21/2024	3:15 PM	0	385	114	0	2	0	0	0	6	0	0	0	0
4/21/2024	3:30 PM	0	405	110	0	3	0	0	0	7	0	0	0	0
4/21/2024	3:45 PM	0	388	93	0	5	0	0	0	5	0	0	0	0
4/21/2024	4:00 PM	0	387	87	0	6	0	0	0	5	0	0	0	0
4/21/2024	4:15 PM	0	389	82	0	7	1	0	0	5	0	0	0	0
4/21/2024	4:30 PM	0	378	82	0	6	1	0	0	5	0	0	0	0
4/21/2024	4:45 PM	0	375	83	0	3	1	0	0	5	0	0	0	0
4/21/2024	5:00 PM	0	357	74	0	1	1	0	0	4	0	0	0	0
4/21/2024	5:15 PM	0	345	82	0	0	1	0	0	2	0	0	0	0
4/21/2024	5:30 PM	0	326	77	0	0	1	0	0	1	0	0	0	0
4/21/2024	5:45 PM	0	315	73	0	0	1	0	0	1	0	0	0	0
4/21/2024	6:00 PM	1	294	72	0	1	1	0	0	1	0	0	0	0
4/21/2024	6:15 PM	1	256	55	0	3	0	0	1	2	0	0	0	0
4/21/2024	6:30 PM	1	252	56	0	3	0	0	1	2	0	0	0	0
4/21/2024	6:45 PM	1	227	53	0	3	0	0	1	2	0	0	0	0
4/21/2024	7:00 PM	0	244	62	0	2	0	0	1	1	0	0	0	0
4/21/2024	7:15 PM	0	243	65	0	0	0	0	0	1	0	0	0	0
4/21/2024	7:30 PM	0	209	58	0	1	0	0	0	2	0	0	0	0
4/21/2024	7:45 PM	0	186	52	0	2	0	0	0	2	0	0	0	0
4/21/2024	8:00 PM	0	151	43	0	3	0	0	0	3	0	0	0	0
4/21/2024	8:15 PM	0	134	37	0	4	0	0	0	4	0	0	0	0
4/21/2024	8:30 PM	0	124	31	0	3	0	0	0	8	0	0	0	0
4/21/2024	8:45 PM	0	126	32	0	3	0	0	0	9	0	0	0	0
4/21/2024	9:00 PM	0	113	28	0	2	0	0	0	11	0	0	0	0
4/21/2024	9:15 PM	0	107	27	0	1	1	0	0	13	0	1	0	0
4/21/2024	9:30 PM	0	101	27	0	1	1	0	0	9	0	1	0	0
4/21/2024	9:45 PM	0	88	23	0	0	1	0	0	8	0	1	0	0
4/21/2024	10:00 PM	0	75	19	0	0	1	0	0	8	0	1	0	0
4/21/2024	10:15 PM	0	61	15	0	0	0	0	0	5	0	0	0	0
4/21/2024	10:30 PM	0	60	12	0	0	0	0	0	7	0	0	0	0
4/21/2024	10:45 PM	0	61	11	0	0	0	0	0	9	0	0	0	0
4/21/2024	11:00 PM	0	57	8	0	0	0	0	0	6	0	0	0	0
4/21/2024	11:15 PM	0	43	5	0	0	0	0	0	5	0	0	0	0
4/21/2024	11:30 PM	0	26	3	0	0	0	0	0	2	0	0	0	0
4/21/2024	11:45 PM	0	11	1	0	0	0	0	0	0	0	0	0	0

4/22/2024	12:00 AM	0	43	5	0	0	1	0	0	7	0	0	0	0
4/22/2024	12:15 AM	0	33	4	0	0	1	0	0	9	0	0	0	0
4/22/2024	12:30 AM	0	22	1	0	0	1	0	0	9	0	0	0	0
4/22/2024	12:45 AM	0	19	1	0	0	0	0	0	6	0	0	0	0
4/22/2024	1:00 AM	0	15	1	0	0	0	0	0	4	0	0	0	0
4/22/2024	1:15 AM	0	15	0	0	0	0	0	0	1	0	0	0	0
4/22/2024	1:30 AM	0	13	0	0	0	2	0	0	1	0	0	0	0
4/22/2024	1:45 AM	0	13	0	0	1	2	0	1	0	0	0	0	0
4/22/2024	2:00 AM	0	14	0	0	4	3	0	2	1	0	0	0	0
4/22/2024	2:15 AM	1	14	1	0	4	3	0	2	2	0	0	0	0
4/22/2024	2:30 AM	1	16	2	0	4	1	0	2	7	0	0	0	0
4/22/2024	2:45 AM	1	23	5	0	3	1	0	1	9	0	0	0	0
4/22/2024	3:00 AM	1	27	6	0	1	0	0	0	9	0	0	0	0
4/22/2024	3:15 AM	0	27	5	0	1	0	0	0	8	0	0	0	0
4/22/2024	3:30 AM	0	31	6	0	1	0	0	0	7	0	0	0	0
4/22/2024	3:45 AM	0	32	6	0	1	0	0	0	8	0	0	0	0
4/22/2024	4:00 AM	0	43	9	0	0	1	0	0	10	0	0	0	0
4/22/2024	4:15 AM	0	58	13	0	0	1	0	0	13	0	0	0	0
4/22/2024	4:30 AM	0	70	14	0	0	1	0	0	9	0	0	0	0
4/22/2024	4:45 AM	0	89	16	0	1	1	0	0	9	0	0	0	0
4/22/2024	5:00 AM	0	110	19	0	1	1	0	0	11	0	0	0	0
4/22/2024	5:15 AM	0	128	23	0	1	2	0	0	10	0	0	0	0
4/22/2024	5:30 AM	0	167	32	0	1	2	0	0	11	0	0	0	0
4/22/2024	5:45 AM	0	209	63	0	5	2	0	1	16	0	0	0	0
4/22/2024	6:00 AM	0	250	86	1	6	1	0	1	13	0	0	0	0
4/22/2024	6:15 AM	0	315	110	1	9	1	0	2	16	0	0	0	0
4/22/2024	6:30 AM	0	407	134	1	13	3	0	2	16	0	0	0	0
4/22/2024	6:45 AM	0	477	137	1	11	4	0	2	11	0	0	0	0
4/22/2024	7:00 AM	0	548	160	0	13	4	0	2	10	0	0	0	0
4/22/2024	7:15 AM	0	589	172	0	16	3	0	1	7	0	0	0	0
4/22/2024	7:30 AM	1	557	185	0	13	1	0	1	9	0	0	0	0
4/22/2024	7:45 AM	1	499	191	1	15	2	1	0	15	0	0	0	0
4/22/2024	8:00 AM	1	457	184	1	18	3	1	0	19	0	0	0	0
4/22/2024	8:15 AM	1	381	172	1	15	3	1	1	21	0	0	0	0
4/22/2024	8:30 AM	1	353	155	1	24	3	1	2	20	0	0	0	0
4/22/2024	8:45 AM	1	340	144	0	24	2	0	4	15	0	0	0	0
4/22/2024	9:00 AM	1	323	134	0	24	1	0	4	14	0	0	0	0
4/22/2024	9:15 AM	1	340	125	0	23	1	0	5	16	0	0	0	0
4/22/2024	9:30 AM	0	337	118	0	15	1	1	6	16	0	0	0	0
4/22/2024	9:45 AM	0	345	106	0	13	1	1	5	21	0	0	0	0
4/22/2024	10:00 AM	0	357	107	0	9	2	1	7	25	0	0	0	0
4/22/2024	10:15 AM	0	358	115	0	11	2	1	5	23	0	0	0	0
4/22/2024	10:30 AM	0	357	125	0	15	2	0	3	31	0	0	0	0
4/22/2024	10:45 AM	0	350	130	0	15	1	0	2	27	0	0	0	0
4/22/2024	11:00 AM	0	329	123	0	16	0	0	0	25	0	0	0	0
4/22/2024	11:15 AM	0	341	132	0	17	0	0	0	28	1	0	0	0
4/22/2024	11:30 AM	0	336	128	0	16	0	0	0	20	1	0	0	0
4/22/2024	11:45 AM	0	362	133	0	15	0	0	1	20	2	0	0	0
4/22/2024	12:00 PM	0	371	129	0	16	0	0	2	18	2	0	0	0
4/22/2024	12:15 PM	0	355	112	1	14	3	0	4	15	1	0	0	0
4/22/2024	12:30 PM	0	368	108	1	10	4	0	4	16	1	0	0	0
4/22/2024	12:45 PM	0	366	99	1	10	6	0	3	19	0	0	0	0
4/22/2024	1:00 PM	0	360	101	2	8	6	0	2	19	0	0	0	0
4/22/2024	1:15 PM	0	354	104	1	8	3	0	0	22	0	0	0	0
4/22/2024	1:30 PM	0	343	107	1	8	3	0	0	21	0	0	0	0
4/22/2024	1:45 PM	0	342	125	1	11	1	0	1	16	1	0	0	0
4/22/2024	2:00 PM	0	380	123	0	11	1	0	1	16	1	0	0	0
4/22/2024	2:15 PM	1	403	127	0	10	2	0	1	15	1	0	0	0
4/22/2024	2:30 PM	1	428	130	0	12	2	0	2	15	2	0	0	0
4/22/2024	2:45 PM	2	457	111	0	7	2	0	1	14	1	0	0	0
4/22/2024	3:00 PM	2	462	115	0	7	3	0	3	14	1	0	0	0
4/22/2024	3:15 PM	1	527	130	0	8	2	0	6	11	1	0	0	0
4/22/2024	3:30 PM	1	591	150	0	7	3	0	5	16	1	0	0	0
4/22/2024	3:45 PM	0	599	176	0	10	5	0	5	21	1	0	0	0
4/22/2024	4:00 PM	0	597	178	0	11	4	0	3	25	1	0	0	0
4/22/2024	4:15 PM	0	545	173	0	11	4	0	1	23	1	1	0	0
4/22/2024	4:30 PM	0	489	156	0	10	2	0	1	17	0	1	0	0
4/22/2024	4:45 PM	0	480	138	0	8	0	0	1	12	0	1	0	0
4/22/2024	5:00 PM	2	475	145	0	7	0	0	2	13	0	1	0	0
4/22/2024	5:15 PM	2	466	129	0	4	0	0	1	15	0	0	0	0
4/22/2024	5:30 PM	2	441	118	0	3	0	0	1	16	0	0	0	0
4/22/2024	5:45 PM	2	407	102	0	3	1	0	1	15	0	0	0	0
4/22/2024	6:00 PM	0	363	80	0	2	1	0	0	7	0	0	0	0
4/22/2024	6:15 PM	1	329	73	0	2	1	0	0	8	0	0	0	0
4/22/2024	6:30 PM	1	317	62	0	4	1	0	0	7	0	0	0	0
4/22/2024	6:45 PM	3	294	58	0	3	1	0	0	8	0	1	0	0
4/22/2024	7:00 PM	3	274	55	0	4	1	0	0	8	0	1	0	0
4/22/2024	7:15 PM	2	261	50	0	5	1	0	0	6	0	1	0	0
4/22/2024	7:30 PM	2	222	42	0	3	1	0	0	6	0	1	0	0
4/22/2024	7:45 PM	0	203	34	0	3	0	0	0	7	0	0	0	0
4/22/2024	8:00 PM	0	202	23	0	1	0	0	0	9	0	0	0	0
4/22/2024	8:15 PM	0	199	12	0	0	0	0	0	7	0	0	0	0
4/22/2024	8:30 PM	0	200	7	0	0	0	0	0	10	0	0	0	0
4/22/2024	8:45 PM	0	187	7	0	0	0	0	0	8	0	0	0	0
4/22/2024	9:00 PM	0	159	6	0	0	0	0	0	6	0	0	0	0
4/22/2024	9:15 PM	0	134	6	0	0	0	0	0	6	0	1	0	0
4/22/2024	9:30 PM	0	109	6	0	1	0	0	0	2	0	3	0	0
4/22/2024	9:45 PM	0	94	4	0	1	0	0	0	1	0	3	0	0
4/22/2024	10:00 PM	0	93	3	0	2	0	0	0	1	0	3	0	0
4/22/2024	10:15 PM	0	92	2	0	2	0	0	0	2	0	2	0	0
4/22/2024	10:30 PM	0	95	1	0	1	0	0	0	3	0	0	0	0
4/22/2024	10:45 PM	0	84	1	0	2	0	0	0	3	0	0	0	0
4/22/2024	11:00 PM	0	65	1	0	1	0	0	0	4	0	0	0	0
4/22/2024	11:15 PM	0	39	1	0	1	0	0	0	3	0	0	0	0
4/22/2024	11:30 PM	0	18	1	0	1	0	0	0	2	0	0	0	0
4/22/2024	11:45 PM	0	9	1	0	0	0	0	0	2	0	0	0	0

4/23/2024	12:00 AM	0	29	4	0	0	0	0	0	6	0	1	0	0
4/23/2024	12:15 AM	0	27	4	0	1	0	0	0	6	0	1	0	0
4/23/2024	12:30 AM	0	22	4	0	1	0	0	0	5	0	0	0	0
4/23/2024	12:45 AM	0	23	5	0	1	0	0	0	5	0	1	0	0
4/23/2024	1:00 AM	0	17	5	0	1	0	0	0	8	0	1	0	0
4/23/2024	1:15 AM	0	17	4	0	0	0	0	0	11	0	1	0	0
4/23/2024	1:30 AM	0	16	4	0	1	0	0	0	12	0	1	0	0
4/23/2024	1:45 AM	0	14	3	0	1	0	0	0	12	0	0	0	0
4/23/2024	2:00 AM	0	17	3	0	1	0	0	0	10	0	0	0	0
4/23/2024	2:15 AM	0	17	4	0	1	0	0	0	6	0	0	0	0
4/23/2024	2:30 AM	0	18	5	0	0	0	0	0	6	0	0	0	0
4/23/2024	2:45 AM	0	22	7	0	0	0	0	0	8	0	1	0	0
4/23/2024	3:00 AM	0	30	8	0	0	0	0	0	7	0	1	0	0
4/23/2024	3:15 AM	0	36	9	0	0	0	0	0	8	0	1	0	0
4/23/2024	3:30 AM	0	39	9	0	0	0	0	0	6	0	1	0	0
4/23/2024	3:45 AM	0	42	9	0	1	0	0	0	7	0	0	0	0
4/23/2024	4:00 AM	0	45	11	0	1	0	0	0	8	0	0	0	0
4/23/2024	4:15 AM	0	46	14	0	2	0	0	1	11	0	0	0	0
4/23/2024	4:30 AM	0	54	16	0	2	0	0	2	14	0	0	0	0
4/23/2024	4:45 AM	0	72	23	0	3	0	0	4	13	0	0	0	0
4/23/2024	5:00 AM	0	87	27	0	3	0	0	5	12	0	0	0	0
4/23/2024	5:15 AM	0	107	41	0	2	0	0	4	11	0	0	0	0
4/23/2024	5:30 AM	0	136	58	0	4	0	0	4	10	0	0	0	0
4/23/2024	5:45 AM	0	184	80	0	6	1	0	2	15	0	0	0	0
4/23/2024	6:00 AM	0	228	101	1	8	3	0	1	20	0	0	0	0
4/23/2024	6:15 AM	0	291	110	1	12	4	0	1	20	0	0	0	0
4/23/2024	6:30 AM	0	400	134	1	11	5	0	0	19	0	0	0	0
4/23/2024	6:45 AM	0	415	128	1	8	4	0	0	13	0	0	0	0
4/23/2024	7:00 AM	0	476	131	1	8	2	0	0	11	0	0	0	0
4/23/2024	7:15 AM	0	522	137	1	6	1	0	0	14	0	0	0	0
4/23/2024	7:30 AM	1	499	120	1	8	0	0	1	21	0	0	0	0
4/23/2024	7:45 AM	2	535	126	1	9	2	0	1	22	0	0	0	0
4/23/2024	8:00 AM	2	530	128	0	14	5	0	1	23	0	0	0	0
4/23/2024	8:15 AM	2	466	129	0	16	5	0	4	23	0	0	0	0
4/23/2024	8:30 AM	1	427	133	0	24	5	0	4	23	0	0	0	0
4/23/2024	8:45 AM	0	387	126	0	24	6	0	4	23	0	1	0	0
4/23/2024	9:00 AM	2	351	124	0	24	3	0	4	23	0	1	0	0
4/23/2024	9:15 AM	2	350	123	0	22	6	0	1	25	0	1	0	0
4/23/2024	9:30 AM	2	341	120	0	15	7	0	0	23	0	1	0	0
4/23/2024	9:45 AM	2	336	125	0	14	6	0	0	24	0	0	0	0
4/23/2024	10:00 AM	0	331	133	0	10	7	0	0	25	0	0	0	0
4/23/2024	10:15 AM	0	332	128	0	9	4	0	2	26	0	0	0	0
4/23/2024	10:30 AM	1	329	133	1	11	3	0	2	24	0	0	0	0
4/23/2024	10:45 AM	1	339	125	1	15	1	0	2	26	0	0	0	0
4/23/2024	11:00 AM	1	343	120	1	12	1	0	2	24	0	0	0	0
4/23/2024	11:15 AM	2	362	121	1	14	1	0	0	24	0	0	0	0
4/23/2024	11:30 AM	1	382	122	0	12	2	0	0	24	0	0	0	0
4/23/2024	11:45 AM	2	377	121	0	8	5	0	0	23	0	0	0	0
4/23/2024	12:00 PM	2	370	113	0	11	5	0	1	25	0	0	0	0
4/23/2024	12:15 PM	2	369	108	0	10	7	0	2	20	0	0	0	0
4/23/2024	12:30 PM	2	371	107	0	10	6	0	2	22	0	0	0	0
4/23/2024	12:45 PM	1	378	116	0	9	3	0	2	22	0	0	0	0
4/23/2024	1:00 PM	1	376	115	0	10	3	0	1	22	0	0	0	0
4/23/2024	1:15 PM	1	368	128	0	13	1	0	0	25	0	0	0	0
4/23/2024	1:30 PM	1	362	125	1	12	2	0	0	25	1	0	0	0
4/23/2024	1:45 PM	1	366	117	1	14	3	0	0	26	1	0	0	0
4/23/2024	2:00 PM	1	419	137	1	14	2	0	0	26	1	0	0	0
4/23/2024	2:15 PM	1	454	127	1	12	2	0	0	24	2	0	0	0
4/23/2024	2:30 PM	1	469	144	0	14	1	0	0	22	1	0	0	0
4/23/2024	2:45 PM	2	486	143	0	15	2	0	2	19	1	0	0	0
4/23/2024	3:00 PM	2	472	121	0	14	4	0	3	17	1	0	0	0
4/23/2024	3:15 PM	1	479	133	0	12	4	0	3	15	0	0	0	0
4/23/2024	3:30 PM	1	486	124	0	9	4	0	4	17	1	0	0	0
4/23/2024	3:45 PM	0	516	135	0	7	2	0	2	16	1	0	0	0
4/23/2024	4:00 PM	0	517	141	0	5	0	0	1	16	1	0	0	0
4/23/2024	4:15 PM	0	513	146	0	7	0	0	1	15	1	0	0	0
4/23/2024	4:30 PM	0	539	141	0	6	0	0	0	9	0	0	0	0
4/23/2024	4:45 PM	0	521	154	0	7	0	0	0	12	0	0	0	0
4/23/2024	5:00 PM	0	515	154	0	9	1	0	0	10	0	0	0	0
4/23/2024	5:15 PM	0	485	142	0	7	1	0	0	12	0	0	0	0
4/23/2024	5:30 PM	0	441	136	0	9	1	0	1	13	0	0	0	0
4/23/2024	5:45 PM	0	391	108	0	8	1	0	1	11	0	0	0	0
4/23/2024	6:00 PM	0	354	99	0	5	0	0	2	12	0	0	0	0
4/23/2024	6:15 PM	0	344	81	1	4	1	0	2	14	0	0	0	0
4/23/2024	6:30 PM	1	321	70	1	2	1	0	1	12	0	0	0	0
4/23/2024	6:45 PM	1	309	77	1	3	1	0	1	9	0	0	0	0
4/23/2024	7:00 PM	1	298	70	1	4	1	0	0	10	0	1	0	0
4/23/2024	7:15 PM	1	256	67	1	5	0	0	0	6	0	1	0	0
4/23/2024	7:30 PM	0	228	61	1	5	0	0	0	9	0	1	0	0
4/23/2024	7:45 PM	0	211	48	1	4	0	0	0	10	0	1	0	0
4/23/2024	8:00 PM	0	179	43	1	3	0	0	0	7	0	0	0	0
4/23/2024	8:15 PM	1	188	42	0	2	0	0	0	5	0	0	0	0
4/23/2024	8:30 PM	1	182	40	1	2	0	0	0	2	0	0	0	0
4/23/2024	8:45 PM	1	175	39	1	1	0	0	0	1	0	0	0	0
4/23/2024	9:00 PM	1	163	37	2	1	0	0	0	2	0	0	0	0
4/23/2024	9:15 PM	0	142	33	2	2	0	0	0	3	0	0	0	0
4/23/2024	9:30 PM	0	130	28	1	2	0	0	0	6	0	1	0	0
4/23/2024	9:45 PM	0	109	21	1	3	0	0	0	6	0	1	0	0
4/23/2024	10:00 PM	0	103	18	0	3	0	0	0	4	0	1	0	0
4/23/2024	10:15 PM	0	92	16	0	2	0	0	0	6	0	1	0	0
4/23/2024	10:30 PM	0	81	15	0	1	0	0	0	4	0	0	0	0
4/23/2024	10:45 PM	0	68	13	0	0	1	0	0	8	0	0	0	0
4/23/2024	11:00 PM	0	54	10	0	0	1	0	0	9	0	0	0	0
4/23/2024	11:15 PM	0	34	5	0	0	1	0	0	6	0	0	0	0
4/23/2024	11:30 PM	0	15	2	0	0	1	0	0	5	0	0	0	0
4/23/2024	11:45 PM	0	7	1	0	0	0	0	0	1	0	0	0	0

4/24/2024	12:00 AM	0	27	6	0	0	0	0	0	14	0	0	0	0
4/24/2024	12:15 AM	0	21	6	0	0	0	0	0	7	0	0	0	0
4/24/2024	12:30 AM	0	18	4	0	0	0	0	0	7	0	1	0	0
4/24/2024	12:45 AM	0	13	4	0	1	0	0	0	9	0	1	0	0
4/24/2024	1:00 AM	0	16	2	0	1	0	0	0	6	0	1	0	0
4/24/2024	1:15 AM	0	15	3	0	1	0	0	0	9	0	1	0	0
4/24/2024	1:30 AM	0	18	3	0	1	0	0	0	6	0	0	0	0
4/24/2024	1:45 AM	0	20	2	0	0	0	0	0	5	0	1	0	0
4/24/2024	2:00 AM	0	15	2	0	0	0	0	0	9	0	1	0	0
4/24/2024	2:15 AM	1	18	1	0	0	0	0	0	6	0	1	0	0
4/24/2024	2:30 AM	1	16	1	0	0	0	0	0	10	0	1	0	0
4/24/2024	2:45 AM	1	16	2	0	0	0	0	0	10	0	1	0	0
4/24/2024	3:00 AM	1	28	4	0	0	0	0	0	8	0	1	0	0
4/24/2024	3:15 AM	0	32	5	0	0	0	0	0	10	0	1	0	0
4/24/2024	3:30 AM	0	36	5	0	0	0	0	0	7	0	1	0	0
4/24/2024	3:45 AM	0	39	10	0	1	0	0	0	7	0	1	0	0
4/24/2024	4:00 AM	0	39	15	0	1	0	0	0	10	0	1	0	0
4/24/2024	4:15 AM	0	40	24	0	3	0	0	0	10	0	1	0	0
4/24/2024	4:30 AM	0	52	32	0	5	0	0	0	13	0	1	0	0
4/24/2024	4:45 AM	0	75	35	0	5	0	0	0	16	0	0	0	0
4/24/2024	5:00 AM	0	96	39	0	8	0	0	0	15	0	0	0	0
4/24/2024	5:15 AM	0	116	45	0	6	0	0	0	15	0	0	0	0
4/24/2024	5:30 AM	0	138	60	0	4	0	0	0	17	0	0	0	0
4/24/2024	5:45 AM	0	182	75	0	5	4	0	1	14	0	0	0	0
4/24/2024	6:00 AM	0	228	107	1	4	6	0	1	15	0	0	0	0
4/24/2024	6:15 AM	0	308	129	1	6	8	0	1	15	0	0	0	0
4/24/2024	6:30 AM	1	383	153	1	9	10	0	2	13	0	0	0	0
4/24/2024	6:45 AM	1	457	180	1	11	6	0	2	16	0	0	0	0
4/24/2024	7:00 AM	1	534	183	0	12	6	0	2	15	0	0	0	0
4/24/2024	7:15 AM	1	558	189	0	16	8	0	2	13	1	0	0	0
4/24/2024	7:30 AM	0	546	181	2	17	6	0	2	12	1	0	0	0
4/24/2024	7:45 AM	0	507	176	2	17	7	0	2	13	1	0	0	0
4/24/2024	8:00 AM	1	451	181	2	22	6	0	2	15	1	0	0	0
4/24/2024	8:15 AM	1	406	173	2	23	4	0	2	17	0	0	0	0
4/24/2024	8:30 AM	2	392	168	0	26	4	0	2	14	0	0	0	0
4/24/2024	8:45 AM	2	379	157	0	23	4	0	1	12	0	0	0	0
4/24/2024	9:00 AM	1	392	137	0	20	4	0	2	14	0	0	0	0
4/24/2024	9:15 AM	1	388	127	0	15	2	0	3	18	0	0	0	0
4/24/2024	9:30 AM	1	390	126	0	14	3	0	2	23	0	0	0	0
4/24/2024	9:45 AM	1	393	127	0	16	3	0	3	23	0	0	0	0
4/24/2024	10:00 AM	1	381	125	0	14	3	0	2	18	0	0	0	0
4/24/2024	10:15 AM	1	386	123	0	14	5	0	2	17	0	0	0	0
4/24/2024	10:30 AM	0	406	124	0	11	4	0	3	17	0	0	0	0
4/24/2024	10:45 AM	0	376	127	0	11	3	0	4	22	1	0	0	0
4/24/2024	11:00 AM	0	374	132	0	10	2	0	6	20	1	0	0	0
4/24/2024	11:15 AM	0	376	145	0	12	0	0	5	15	1	0	0	0
4/24/2024	11:30 AM	0	373	136	0	12	1	0	5	16	1	0	0	0
4/24/2024	11:45 AM	0	399	123	0	12	2	0	4	11	0	0	0	0
4/24/2024	12:00 PM	2	410	119	0	11	2	0	3	16	0	0	0	0
4/24/2024	12:15 PM	2	403	109	3	9	3	0	3	26	0	0	0	0
4/24/2024	12:30 PM	2	390	114	3	11	2	0	3	25	0	0	0	0
4/24/2024	12:45 PM	4	400	112	3	11	2	0	3	28	0	0	0	0
4/24/2024	1:00 PM	2	391	117	3	15	3	0	2	27	1	0	0	0
4/24/2024	1:15 PM	2	394	117	1	14	2	0	2	20	1	0	0	0
4/24/2024	1:30 PM	2	392	104	1	13	2	0	1	21	1	0	0	0
4/24/2024	1:45 PM	0	394	108	1	11	1	0	0	16	1	0	0	0
4/24/2024	2:00 PM	0	389	97	1	6	0	0	0	14	0	0	0	0
4/24/2024	2:15 PM	0	405	103	0	5	2	0	0	15	0	0	0	0
4/24/2024	2:30 PM	0	427	120	0	4	3	0	1	13	0	0	0	0
4/24/2024	2:45 PM	1	460	126	0	5	4	0	1	17	1	0	0	0
4/24/2024	3:00 PM	1	493	132	1	8	4	0	2	17	1	0	0	0
4/24/2024	3:15 PM	1	533	144	1	9	2	0	2	15	1	0	0	0
4/24/2024	3:30 PM	1	542	145	1	7	1	0	2	14	1	0	0	0
4/24/2024	3:45 PM	0	523	146	1	8	0	0	2	11	0	0	0	0
4/24/2024	4:00 PM	0	537	153	0	5	0	0	1	11	0	0	0	0
4/24/2024	4:15 PM	0	535	151	0	6	1	0	1	11	0	0	0	0
4/24/2024	4:30 PM	0	566	155	0	8	4	2	1	11	0	0	0	0
4/24/2024	4:45 PM	1	577	157	0	8	4	2	1	12	0	0	0	0
4/24/2024	5:00 PM	1	557	142	0	10	4	2	1	10	0	0	0	0
4/24/2024	5:15 PM	2	529	126	0	9	4	2	1	7	1	0	0	0
4/24/2024	5:30 PM	2	472	111	0	7	1	0	1	9	1	0	0	0
4/24/2024	5:45 PM	1	445	92	0	7	1	0	1	10	2	0	0	0
4/24/2024	6:00 PM	2	414	93	0	6	2	0	1	11	2	0	0	0
4/24/2024	6:15 PM	1	381	78	0	5	1	0	1	13	1	0	0	0
4/24/2024	6:30 PM	2	363	71	0	5	1	0	0	10	1	0	0	0
4/24/2024	6:45 PM	2	322	68	0	5	1	0	0	9	0	1	0	0
4/24/2024	7:00 PM	1	302	57	1	5	0	0	0	9	0	1	0	0
4/24/2024	7:15 PM	3	281	60	1	5	1	0	0	9	0	1	1	0
4/24/2024	7:30 PM	2	263	57	1	4	1	0	0	7	0	1	1	0
4/24/2024	7:45 PM	2	256	55	1	1	1	0	0	7	0	0	1	0
4/24/2024	8:00 PM	2	222	53	0	0	1	0	0	7	0	0	1	0
4/24/2024	8:15 PM	0	199	46	0	0	0	0	0	7	0	0	0	0
4/24/2024	8:30 PM	0	168	38	0	0	0	0	0	7	0	1	0	0
4/24/2024	8:45 PM	0	142	31	0	2	0	0	0	10	0	1	0	0
4/24/2024	9:00 PM	0	122	24	0	2	0	0	0	9	0	1	0	0
4/24/2024	9:15 PM	0	117	24	0	2	0	0	0	8	0	2	0	0
4/24/2024	9:30 PM	0	109	23	0	2	0	0	0	8	0	2	0	0
4/24/2024	9:45 PM	0	101	23	0	0	0	0	0	5	0	4	0	0
4/24/2024	10:00 PM	0	101	25	1	0	0	0	0	5	0	5	0	0
4/24/2024	10:15 PM	0	86	19	1	1	0	0	0	5	0	4	0	0
4/24/2024	10:30 PM	0	80	16	1	1	0	0	0	6	0	3	0	0
4/24/2024	10:45 PM	0	70	11	1	1	0	0	0	4	0	1	0	0
4/24/2024	11:00 PM	0	65	7	0	1	0	0	0	3	0	1	0	0
4/24/2024	11:15 PM	0	48	5	0	0	0	0	0	2	0	1	0	0
4/24/2024	11:30 PM	0	29	2	0	0	0	0	0	1	0	1	0	0
4/24/2024	11:45 PM	0	15	1	0	0	0	0	0	0	0	1	0	0

4/25/2024	12:00 AM	0	28	4	0	0	0	0	1	8	0	0	0	0
4/25/2024	12:15 AM	0	30	7	0	0	0	0	0	10	0	1	0	0
4/25/2024	12:30 AM	0	30	6	0	0	0	0	0	8	0	1	0	0
4/25/2024	12:45 AM	0	29	6	0	0	0	0	0	10	0	3	0	0
4/25/2024	1:00 AM	0	27	4	0	0	0	0	0	7	0	3	0	0
4/25/2024	1:15 AM	0	25	2	0	0	0	0	0	5	0	2	0	0
4/25/2024	1:30 AM	0	22	3	0	0	0	0	0	7	0	2	0	0
4/25/2024	1:45 AM	0	22	6	0	0	0	0	0	5	0	1	0	0
4/25/2024	2:00 AM	0	17	6	0	0	0	0	0	6	0	1	0	0
4/25/2024	2:15 AM	1	18	7	0	0	0	0	0	11	0	1	0	0
4/25/2024	2:30 AM	1	19	7	0	1	1	0	0	9	0	1	0	0
4/25/2024	2:45 AM	1	21	9	0	2	1	0	0	11	0	1	0	0
4/25/2024	3:00 AM	1	31	11	0	2	1	0	0	14	0	1	0	0
4/25/2024	3:15 AM	0	32	10	0	2	1	0	0	11	0	1	0	0
4/25/2024	3:30 AM	0	34	14	0	2	0	0	0	12	0	1	0	0
4/25/2024	3:45 AM	0	39	13	0	1	0	0	0	10	0	0	0	0
4/25/2024	4:00 AM	0	45	14	0	1	0	0	0	8	0	0	0	0
4/25/2024	4:15 AM	0	45	24	0	1	1	0	0	6	0	0	0	0
4/25/2024	4:30 AM	0	59	33	0	0	2	0	0	8	0	0	0	0
4/25/2024	4:45 AM	0	75	38	0	1	2	0	0	9	0	0	0	0
4/25/2024	5:00 AM	0	87	49	0	2	2	0	0	12	0	0	0	0
4/25/2024	5:15 AM	1	109	61	0	4	1	0	0	12	0	0	0	0
4/25/2024	5:30 AM	1	138	78	0	4	0	0	1	18	0	0	0	0
4/25/2024	5:45 AM	1	187	85	0	4	0	1	1	20	0	0	0	0
4/25/2024	6:00 AM	1	247	101	1	5	1	1	1	20	0	0	0	0
4/25/2024	6:15 AM	0	310	115	1	6	1	2	1	20	0	0	0	0
4/25/2024	6:30 AM	2	401	124	1	8	1	2	1	15	0	0	0	0
4/25/2024	6:45 AM	2	471	145	2	13	1	1	1	17	1	0	0	0
4/25/2024	7:00 AM	2	519	162	1	12	0	1	1	15	1	0	0	0
4/25/2024	7:15 AM	3	579	164	1	10	0	0	2	17	1	0	0	0
4/25/2024	7:30 AM	2	571	165	1	11	1	0	2	17	1	0	0	0
4/25/2024	7:45 AM	2	533	179	0	10	2	0	2	12	0	0	0	0
4/25/2024	8:00 AM	5	512	183	0	19	3	0	4	11	0	0	0	0
4/25/2024	8:15 AM	4	454	184	0	28	3	0	4	13	0	0	0	0
4/25/2024	8:30 AM	3	412	182	0	27	3	0	4	16	0	0	0	0
4/25/2024	8:45 AM	3	410	160	0	24	2	0	4	21	0	0	0	0
4/25/2024	9:00 AM	0	382	134	0	15	2	0	2	28	0	0	0	0
4/25/2024	9:15 AM	0	368	127	0	7	3	0	2	30	0	0	0	0
4/25/2024	9:30 AM	1	369	119	0	7	2	0	2	33	0	0	0	0
4/25/2024	9:45 AM	1	381	131	0	8	4	1	3	43	0	0	0	0
4/25/2024	10:00 AM	1	387	141	0	7	4	1	4	39	0	0	0	0
4/25/2024	10:15 AM	1	401	130	0	7	4	1	3	35	0	0	0	0
4/25/2024	10:30 AM	2	419	132	0	9	4	1	2	30	1	0	0	0
4/25/2024	10:45 AM	3	381	125	0	8	3	0	1	21	1	0	0	0
4/25/2024	11:00 AM	3	383	127	0	11	2	0	1	18	1	0	0	0
4/25/2024	11:15 AM	3	379	133	0	11	1	0	3	22	1	0	0	0
4/25/2024	11:30 AM	1	357	137	0	10	1	1	3	21	0	0	0	0
4/25/2024	11:45 AM	0	389	140	0	10	0	1	5	18	0	0	0	0
4/25/2024	12:00 PM	0	393	138	0	14	1	1	5	20	0	0	0	0
4/25/2024	12:15 PM	0	395	150	0	16	1	1	4	17	0	0	0	0
4/25/2024	12:30 PM	0	411	127	0	20	1	0	4	17	0	0	0	0
4/25/2024	12:45 PM	1	391	114	0	21	3	0	3	21	0	0	0	0
4/25/2024	1:00 PM	1	401	107	0	17	3	0	2	22	0	0	0	0
4/25/2024	1:15 PM	1	411	91	1	16	3	0	1	20	0	0	0	0
4/25/2024	1:30 PM	1	428	112	1	11	3	0	2	21	0	0	0	0
4/25/2024	1:45 PM	0	442	117	1	10	2	0	2	16	0	0	0	0
4/25/2024	2:00 PM	1	438	122	2	11	2	0	2	12	0	0	0	0
4/25/2024	2:15 PM	1	443	124	1	8	3	0	3	14	0	0	0	0
4/25/2024	2:30 PM	1	418	128	1	8	3	0	3	9	0	0	0	0
4/25/2024	2:45 PM	1	446	128	1	8	2	0	3	12	0	0	0	0
4/25/2024	3:00 PM	0	471	137	0	4	1	0	3	15	0	0	0	0
4/25/2024	3:15 PM	0	483	155	0	8	0	0	2	18	0	0	0	0
4/25/2024	3:30 PM	0	518	155	1	6	0	0	2	20	0	0	0	0
4/25/2024	3:45 PM	0	537	155	1	5	1	0	1	17	0	0	0	0
4/25/2024	4:00 PM	1	537	146	1	9	1	0	1	15	0	0	0	0
4/25/2024	4:15 PM	1	555	139	1	9	1	0	1	9	0	0	0	0
4/25/2024	4:30 PM	1	602	139	0	11	1	0	0	10	0	0	0	0
4/25/2024	4:45 PM	2	564	151	0	13	0	0	0	9	0	0	0	0
4/25/2024	5:00 PM	1	545	151	0	10	0	0	0	11	0	0	0	0
4/25/2024	5:15 PM	1	532	146	0	9	0	0	0	14	0	0	0	0
4/25/2024	5:30 PM	2	463	135	0	8	0	0	2	12	0	0	0	0
4/25/2024	5:45 PM	1	449	121	0	6	1	0	2	13	0	0	0	0
4/25/2024	6:00 PM	1	425	98	0	7	1	0	2	11	0	0	0	0
4/25/2024	6:15 PM	1	381	83	0	6	1	0	2	8	0	0	0	0
4/25/2024	6:30 PM	0	362	72	0	6	1	0	0	8	0	0	0	0
4/25/2024	6:45 PM	1	349	63	0	7	0	0	0	7	0	1	0	0
4/25/2024	7:00 PM	1	317	65	0	9	0	0	1	6	0	1	0	0
4/25/2024	7:15 PM	1	298	60	0	8	0	0	1	7	0	1	0	0
4/25/2024	7:30 PM	1	274	54	0	7	0	0	1	6	0	1	0	0
4/25/2024	7:45 PM	0	243	55	0	5	0	0	1	5	0	0	0	0
4/25/2024	8:00 PM	0	216	54	0	1	0	0	0	5	0	0	0	0
4/25/2024	8:15 PM	0	193	55	0	0	0	0	0	5	0	0	0	0
4/25/2024	8:30 PM	0	163	56	0	0	0	0	0	5	0	1	0	0
4/25/2024	8:45 PM	0	136	49	0	0	0	0	0	5	0	1	0	0
4/25/2024	9:00 PM	0	142	50	0	0	0	0	1	6	0	1	0	0
4/25/2024	9:15 PM	0	132	48	0	1	0	0	1	6	0	1	0	0
4/25/2024	9:30 PM	0	128	43	0	1	0	0	1	7	0	3	0	0
4/25/2024	9:45 PM	0	123	36	0	1	0	0	1	7	0	3	0	0
4/25/2024	10:00 PM	0	107	28	0	1	0	0	0	7	0	4	0	0
4/25/2024	10:15 PM	0	95	22	0	0	2	0	0	7	0	4	0	0
4/25/2024	10:30 PM	0	83	18	0	0	2	0	0	5	0	2	0	0
4/25/2024	10:45 PM	0	72	14	0	0	2	0	0	5	0	2	0	0
4/25/2024	11:00 PM	0	63	11	0	0	2	0	0	3	0	1	0	0
4/25/2024	11:15 PM	0	45	6	0	0	0	0	0	1	0	1	0	0
4/25/2024	11:30 PM	0	25	3	0	0	0	0	0	1	0	0	0	0
4/25/2024	11:45 PM	0	10	2	0	0	0	0	0	0	0	0	0	0

4/26/2024	12:00 AM	0	30	6	0	0	0	0	0	6	0	0	0	0
4/26/2024	12:15 AM	0	26	5	0	0	1	0	0	5	0	0	0	0
4/26/2024	12:30 AM	0	28	4	0	0	1	0	0	9	0	0	0	0
4/26/2024	12:45 AM	0	22	3	0	2	1	0	0	9	0	1	0	0
4/26/2024	1:00 AM	0	24	4	0	2	1	0	0	10	0	1	0	0
4/26/2024	1:15 AM	0	26	5	0	2	0	0	0	11	0	1	0	0
4/26/2024	1:30 AM	0	23	5	0	2	0	0	0	10	0	1	0	0
4/26/2024	1:45 AM	0	24	5	0	0	1	0	0	10	0	1	0	0
4/26/2024	2:00 AM	1	23	3	0	1	3	0	0	9	0	1	0	0
4/26/2024	2:15 AM	1	22	2	0	2	4	0	0	10	0	1	0	0
4/26/2024	2:30 AM	1	23	2	0	2	4	0	1	9	0	1	0	0
4/26/2024	2:45 AM	1	25	3	0	2	3	0	1	10	0	0	0	0
4/26/2024	3:00 AM	0	25	5	0	1	1	0	1	13	0	0	0	0
4/26/2024	3:15 AM	0	26	6	0	0	0	0	1	13	0	1	0	0
4/26/2024	3:30 AM	0	27	6	0	1	1	0	0	15	0	1	0	0
4/26/2024	3:45 AM	0	34	6	0	2	2	0	1	17	0	1	0	0
4/26/2024	4:00 AM	0	45	7	0	2	3	0	3	14	0	1	0	0
4/26/2024	4:15 AM	0	48	8	1	2	3	0	3	11	0	0	0	0
4/26/2024	4:30 AM	0	57	10	1	1	3	0	5	9	0	0	0	0
4/26/2024	4:45 AM	0	81	15	1	0	3	0	6	5	0	0	0	0
4/26/2024	5:00 AM	0	107	22	1	1	2	0	4	6	0	0	0	0
4/26/2024	5:15 AM	0	140	28	0	3	2	0	4	7	0	0	0	0
4/26/2024	5:30 AM	0	174	40	0	5	2	0	2	7	0	2	0	0
4/26/2024	5:45 AM	0	202	53	0	7	2	0	0	11	0	2	0	0
4/26/2024	6:00 AM	0	240	71	1	9	2	0	0	13	0	2	0	0
4/26/2024	6:15 AM	0	273	95	1	8	2	0	0	16	0	2	0	0
4/26/2024	6:30 AM	0	355	119	1	11	2	0	0	17	0	0	0	0
4/26/2024	6:45 AM	0	425	135	1	10	2	0	0	17	0	0	0	0
4/26/2024	7:00 AM	0	520	151	0	9	4	0	1	15	0	0	0	0
4/26/2024	7:15 AM	0	581	163	0	12	4	0	1	12	0	0	0	0
4/26/2024	7:30 AM	1	571	171	0	13	3	0	4	16	0	0	0	0
4/26/2024	7:45 AM	1	536	180	0	15	3	0	5	15	0	0	0	0
4/26/2024	8:00 AM	1	460	175	3	24	2	0	5	22	1	0	0	0
4/26/2024	8:15 AM	1	420	170	3	27	5	0	7	23	1	0	0	0
4/26/2024	8:30 AM	0	400	144	3	25	6	0	5	19	1	0	0	0
4/26/2024	8:45 AM	0	414	140	3	23	5	0	7	21	1	0	0	0
4/26/2024	9:00 AM	0	418	132	0	18	4	0	6	14	0	0	0	0
4/26/2024	9:15 AM	0	415	119	0	14	2	0	4	20	1	0	0	0
4/26/2024	9:30 AM	0	421	129	0	15	2	0	3	23	1	0	0	0
4/26/2024	9:45 AM	0	431	118	0	15	2	0	2	25	1	0	0	0
4/26/2024	10:00 AM	0	449	132	1	11	3	0	2	25	3	0	0	0
4/26/2024	10:15 AM	0	457	126	1	11	5	0	4	21	2	0	0	0
4/26/2024	10:30 AM	1	458	126	2	8	5	0	7	22	3	0	0	0
4/26/2024	10:45 AM	1	427	125	2	8	5	0	5	18	3	0	0	0
4/26/2024	11:00 AM	1	431	112	1	6	7	0	5	22	1	0	0	0
4/26/2024	11:15 AM	1	452	125	1	6	4	0	3	24	1	0	0	0
4/26/2024	11:30 AM	0	459	132	0	5	3	0	0	24	0	0	0	0
4/26/2024	11:45 AM	0	486	143	0	4	3	0	0	29	0	0	0	0
4/26/2024	12:00 PM	0	470	135	0	6	0	0	0	27	0	0	0	0
4/26/2024	12:15 PM	0	452	122	0	3	0	0	0	23	0	0	0	0
4/26/2024	12:30 PM	0	438	106	0	5	0	0	0	19	0	0	0	0
4/26/2024	12:45 PM	1	441	104	2	6	0	0	0	12	0	0	0	0
4/26/2024	1:00 PM	1	464	120	2	10	1	0	0	11	0	0	0	0
4/26/2024	1:15 PM	1	480	132	3	16	1	0	0	13	0	0	0	0
4/26/2024	1:30 PM	1	495	141	3	16	3	0	0	12	0	0	0	0
4/26/2024	1:45 PM	0	495	132	1	16	4	0	0	15	0	0	0	0
4/26/2024	2:00 PM	0	490	123	2	15	3	0	1	13	0	0	0	0
4/26/2024	2:15 PM	0	490	117	1	13	4	0	1	12	0	0	0	0
4/26/2024	2:30 PM	0	495	113	1	11	2	0	1	12	0	0	0	0
4/26/2024	2:45 PM	0	493	115	2	14	1	0	1	9	0	0	0	0
4/26/2024	3:00 PM	1	497	126	2	11	1	0	0	12	0	0	0	0
4/26/2024	3:15 PM	2	519	146	2	9	1	0	0	14	0	0	0	0
4/26/2024	3:30 PM	2	522	149	2	9	2	0	0	19	0	0	0	0
4/26/2024	3:45 PM	2	530	149	1	6	2	0	0	19	0	0	0	0
4/26/2024	4:00 PM	1	533	144	0	8	2	0	0	18	0	0	0	0
4/26/2024	4:15 PM	0	504	120	0	7	1	0	0	15	0	0	0	0
4/26/2024	4:30 PM	0	512	123	0	7	0	0	0	11	0	0	0	0
4/26/2024	4:45 PM	0	503	122	0	6	0	0	0	10	0	0	0	0
4/26/2024	5:00 PM	0	493	106	0	2	0	0	0	6	0	0	0	0
4/26/2024	5:15 PM	0	502	111	0	2	1	0	0	5	0	0	0	0
4/26/2024	5:30 PM	1	487	102	0	2	1	0	0	3	0	0	0	0
4/26/2024	5:45 PM	1	486	94	0	3	2	0	0	5	0	0	0	0
4/26/2024	6:00 PM	1	482	92	0	5	2	0	0	8	0	0	0	0
4/26/2024	6:15 PM	1	440	87	0	4	1	0	0	9	0	0	0	0
4/26/2024	6:30 PM	0	423	79	0	4	3	0	0	13	0	0	0	0
4/26/2024	6:45 PM	2	383	72	0	4	2	0	0	10	0	0	0	0
4/26/2024	7:00 PM	2	343	70	0	3	2	0	0	9	0	1	0	0
4/26/2024	7:15 PM	2	326	64	0	3	2	0	0	9	0	1	0	0
4/26/2024	7:30 PM	2	283	61	0	3	1	0	0	7	0	2	0	0
4/26/2024	7:45 PM	0	258	61	0	3	1	0	0	7	0	2	0	0
4/26/2024	8:00 PM	0	213	57	0	2	1	0	0	5	0	1	0	0
4/26/2024	8:15 PM	0	209	57	0	3	1	0	0	4	0	2	0	0
4/26/2024	8:30 PM	0	200	58	0	3	0	0	0	1	0	3	0	0
4/26/2024	8:45 PM	0	180	55	0	2	0	0	0	1	0	3	0	0
4/26/2024	9:00 PM	0	191	57	0	2	0	0	0	4	0	3	0	0
4/26/2024	9:15 PM	0	175	55	0	1	0	0	0	4	0	3	0	0
4/26/2024	9:30 PM	0	162	53	0	0	0	0	0	5	0	3	0	0
4/26/2024	9:45 PM	0	155	50	0	0	0	0	0	5	0	3	0	0
4/26/2024	10:00 PM	0	127	41	0	0	0	0	0	4	0	3	0	0
4/26/2024	10:15 PM	0	105	36	0	0	0	0	0	5	0	3	0	0
4/26/2024	10:30 PM	0	97	35	0	0	0	0	0	7	0	2	0	0
4/26/2024	10:45 PM	1	89	34	0	0	0	0	0	9	0	2	0	0
4/26/2024	11:00 PM	1	88	36	0	0	0	0	0	8	0	2	0	0
4/26/2024	11:15 PM	1	67	27	0	0	0	0	0	6	0	1	0	0
4/26/2024	11:30 PM	1	38	16	0	0	0	0	0	3	0	0	0	0
4/26/2024	11:45 PM	0	18	8	0	0	0	0	0	1	0	0	0	0

4/27/2024	12:00 AM	0	53	9	0	1	0	0	0	1	0	0	0	0
4/27/2024	12:15 AM	0	54	10	0	1	1	0	0	1	0	0	1	0
4/27/2024	12:30 AM	0	48	9	0	2	2	0	0	2	0	0	1	0
4/27/2024	12:45 AM	0	41	6	0	1	2	0	0	2	0	0	1	0
4/27/2024	1:00 AM	0	33	4	0	1	2	0	0	5	0	0	1	0
4/27/2024	1:15 AM	0	28	2	0	2	1	0	0	5	0	0	0	0
4/27/2024	1:30 AM	0	30	2	0	1	0	0	0	7	0	0	0	0
4/27/2024	1:45 AM	0	22	3	0	1	0	0	0	7	0	0	1	0
4/27/2024	2:00 AM	0	26	5	0	1	0	0	0	4	0	0	1	0
4/27/2024	2:15 AM	0	24	6	0	1	0	0	0	7	0	0	1	0
4/27/2024	2:30 AM	0	19	7	0	1	0	0	0	5	0	0	1	0
4/27/2024	2:45 AM	0	22	6	0	1	0	0	0	6	0	0	0	0
4/27/2024	3:00 AM	0	20	8	0	3	0	0	0	5	0	0	0	0
4/27/2024	3:15 AM	1	19	7	0	2	0	0	0	4	0	0	0	0
4/27/2024	3:30 AM	1	20	6	0	2	0	0	0	4	0	0	0	0
4/27/2024	3:45 AM	1	15	8	0	2	0	0	0	3	0	0	2	0
4/27/2024	4:00 AM	1	22	6	0	0	0	0	0	3	0	0	2	0
4/27/2024	4:15 AM	0	28	9	0	0	0	0	0	2	0	0	3	0
4/27/2024	4:30 AM	0	26	12	0	0	1	0	0	3	0	0	3	0
4/27/2024	4:45 AM	0	34	15	0	0	1	0	0	3	0	0	1	0
4/27/2024	5:00 AM	0	34	15	0	1	1	0	0	4	0	0	2	0
4/27/2024	5:15 AM	0	41	19	0	2	1	0	0	3	0	0	1	0
4/27/2024	5:30 AM	0	67	24	0	2	0	0	0	1	0	0	1	0
4/27/2024	5:45 AM	0	77	31	0	2	0	0	0	2	0	0	1	0
4/27/2024	6:00 AM	1	98	41	0	1	0	0	0	4	1	0	0	0
4/27/2024	6:15 AM	1	110	49	0	0	0	0	0	8	1	0	0	0
4/27/2024	6:30 AM	1	130	48	0	0	0	0	0	9	1	0	0	0
4/27/2024	6:45 AM	1	148	57	0	2	0	0	0	8	1	0	0	0
4/27/2024	7:00 AM	0	171	71	0	3	1	0	1	5	0	0	0	0
4/27/2024	7:15 AM	1	207	70	0	3	1	0	1	3	0	0	0	0
4/27/2024	7:30 AM	1	226	80	0	3	1	0	1	3	0	0	0	0
4/27/2024	7:45 AM	1	259	76	0	1	1	0	1	4	0	0	0	0
4/27/2024	8:00 AM	2	299	77	0	1	0	0	0	6	0	0	0	0
4/27/2024	8:15 AM	1	323	83	0	6	0	0	0	7	0	0	0	0
4/27/2024	8:30 AM	1	347	97	0	15	0	0	0	9	0	0	0	0
4/27/2024	8:45 AM	2	378	118	0	15	0	0	0	10	0	0	0	0
4/27/2024	9:00 AM	2	405	129	0	15	0	0	1	14	0	0	0	0
4/27/2024	9:15 AM	2	423	131	0	12	0	0	1	14	0	0	0	0
4/27/2024	9:30 AM	2	442	137	0	3	0	0	1	13	0	0	0	0
4/27/2024	9:45 AM	4	468	130	0	4	0	0	2	12	0	0	0	0
4/27/2024	10:00 AM	3	484	126	0	3	0	0	2	6	0	0	0	0
4/27/2024	10:15 AM	4	523	144	0	1	0	0	2	6	0	0	0	0
4/27/2024	10:30 AM	5	537	136	0	2	0	0	2	7	0	0	0	0
4/27/2024	10:45 AM	3	565	133	0	2	0	0	1	9	0	0	0	0
4/27/2024	11:00 AM	5	575	134	0	3	0	0	0	13	0	0	0	0
4/27/2024	11:15 AM	4	556	130	0	3	0	0	1	12	0	0	0	0
4/27/2024	11:30 AM	3	587	134	0	2	0	0	1	10	0	0	0	0
4/27/2024	11:45 AM	2	568	125	0	1	1	0	1	9	0	0	0	0
4/27/2024	12:00 PM	0	544	124	0	1	1	0	1	8	0	0	0	0
4/27/2024	12:15 PM	0	584	114	0	1	1	0	1	7	0	0	0	0
4/27/2024	12:30 PM	2	552	109	0	4	1	0	2	9	0	0	0	0
4/27/2024	12:45 PM	3	556	122	0	4	0	0	3	10	0	0	0	0
4/27/2024	1:00 PM	4	557	112	0	4	0	0	3	10	0	0	0	0
4/27/2024	1:15 PM	4	519	115	0	4	0	0	2	9	0	0	0	0
4/27/2024	1:30 PM	3	542	116	0	2	0	0	1	6	0	0	0	0
4/27/2024	1:45 PM	2	526	107	0	3	0	0	0	5	0	0	0	0
4/27/2024	2:00 PM	1	530	103	0	4	0	0	0	4	0	0	0	0
4/27/2024	2:15 PM	1	520	103	0	6	0	0	0	4	0	0	0	0
4/27/2024	2:30 PM	2	486	96	0	5	0	0	0	6	0	0	0	0
4/27/2024	2:45 PM	3	489	104	0	4	0	0	0	6	1	0	0	0
4/27/2024	3:00 PM	3	500	110	0	3	0	0	0	4	1	0	0	0
4/27/2024	3:15 PM	3	500	103	0	2	0	0	1	4	1	0	0	0
4/27/2024	3:30 PM	3	514	102	0	2	0	0	1	4	1	0	0	0
4/27/2024	3:45 PM	2	509	94	0	2	0	0	2	5	0	0	0	0
4/27/2024	4:00 PM	3	498	92	0	2	0	0	2	6	0	0	0	0
4/27/2024	4:15 PM	4	482	91	0	2	0	0	1	8	0	0	0	0
4/27/2024	4:30 PM	2	461	96	0	2	1	0	1	7	0	0	0	0
4/27/2024	4:45 PM	3	455	92	0	5	1	0	0	6	0	0	0	0
4/27/2024	5:00 PM	2	419	96	0	5	1	0	1	5	0	0	0	0
4/27/2024	5:15 PM	1	409	90	0	4	1	0	2	3	0	0	0	0
4/27/2024	5:30 PM	3	400	78	0	6	0	0	2	2	0	0	0	0
4/27/2024	5:45 PM	2	397	77	0	3	0	0	2	2	0	0	0	0
4/27/2024	6:00 PM	2	396	67	0	3	0	0	1	4	0	0	0	0
4/27/2024	6:15 PM	2	406	71	0	5	0	0	0	5	0	0	0	0
4/27/2024	6:30 PM	1	401	69	0	6	0	0	0	7	0	0	0	0
4/27/2024	6:45 PM	1	360	65	0	6	0	0	0	5	0	0	0	0
4/27/2024	7:00 PM	1	337	57	0	6	0	0	0	3	0	0	0	0
4/27/2024	7:15 PM	1	312	55	0	4	0	0	0	4	0	0	0	0
4/27/2024	7:30 PM	0	280	52	0	1	0	0	0	3	0	0	0	0
4/27/2024	7:45 PM	0	266	45	0	1	0	0	0	5	0	0	0	0
4/27/2024	8:00 PM	0	255	45	0	4	0	0	0	6	0	0	0	0
4/27/2024	8:15 PM	0	232	35	0	4	0	0	0	4	0	0	0	0
4/27/2024	8:30 PM	0	219	34	0	4	0	0	0	4	0	0	0	0
4/27/2024	8:45 PM	0	211	38	0	4	0	0	0	3	0	0	0	0
4/27/2024	9:00 PM	0	184	32	0	0	0	0	1	3	0	0	0	0
4/27/2024	9:15 PM	0	166	34	0	0	0	0	1	6	0	0	0	0
4/27/2024	9:30 PM	0	158	35	0	0	0	0	1	7	0	0	0	0
4/27/2024	9:45 PM	0	146	32	0	0	0	0	2	7	0	0	0	0
4/27/2024	10:00 PM	0	141	33	0	0	0	0	1	6	0	0	0	0
4/27/2024	10:15 PM	0	130	31	0	0	0	0	1	3	0	0	0	0
4/27/2024	10:30 PM	0	112	24	0	0	0	0	1	1	0	0	0	0
4/27/2024	10:45 PM	0	94	24	0	1	0	0	0	0	0	0	0	0
4/27/2024	11:00 PM	0	85	21	0	1	0	0	0	0	0	0	0	0
4/27/2024	11:15 PM	0	60	14	0	1	0	0	0	0	0	0	0	0
4/27/2024	11:30 PM	0	38	11	0	1	0	0	0	0	0	0	0	0
4/27/2024	11:45 PM	0	18	2	0	0	0	0	0	0	0	0	0	0

Bi-Directional Class Count || NB EB 15min

Columbia, SC

Marr Traffic DATA COLLECTION
www.marrtraffic.com

Site 14
I-26 N/Bound Off-Ramp,
south of I-20

Date
Sunday, April 21, 2024

Lat/Long
34.035060°, -81.111476°

Weather
Cloudy
66°F

Click here for Detailed Weather

Click here for Map

0000 - 2400 (Sunday 24h Session) (04-21-2024)
NB EB 15min

	Northbound (Movement 14.1)													15min	60min
Time	1	2	3	4	5	6	7	8	9	10	11	12	13	Total	Total
0000 - 0015	0	70	14	0	1	0	0	0	1	0	0	0	0	**86**	
0015 - 0030	0	52	14	0	2	0	0	0	1	0	0	0	0	**69**	
0030 - 0045	0	50	13	0	0	0	0	0	0	0	0	0	0	**63**	
0045 - 0100	0	50	24	0	0	0	0	0	1	0	0	0	0	**75**	**293**
0100 - 0115	0	59	12	0	1	0	0	0	1	0	0	0	0	**73**	
0115 - 0130	0	47	10	0	0	0	0	0	0	0	0	0	0	**57**	
0130 - 0145	0	51	11	0	0	0	0	0	0	0	0	0	0	**62**	
0145 - 0200	0	40	8	0	0	0	0	1	0	0	0	0	0	**49**	**241**
0200 - 0215	0	50	10	1	0	0	0	0	0	0	0	0	0	**61**	
0215 - 0230	0	30	5	0	0	0	0	0	0	0	0	0	0	**35**	
0230 - 0245	0	22	8	0	0	0	0	0	1	0	0	0	0	**31**	
0245 - 0300	0	28	7	0	0	0	0	0	1	0	0	0	0	**36**	**163**
0300 - 0315	0	20	4	1	1	0	0	0	1	0	0	0	0	**27**	
0315 - 0330	0	14	2	0	0	0	0	0	0	0	0	0	0	**16**	
0330 - 0345	0	10	2	0	0	0	0	0	0	0	0	0	0	**12**	
0345 - 0400	0	14	2	0	0	0	0	0	1	0	0	0	0	**17**	**72**
0400 - 0415	0	15	5	0	1	0	0	0	2	0	0	0	0	**23**	
0415 - 0430	0	10	2	0	0	0	0	0	0	0	0	0	0	**12**	
0430 - 0445	0	10	3	0	0	0	0	0	2	0	0	0	0	**15**	
0445 - 0500	0	17	5	0	0	0	0	0	3	0	0	0	0	**25**	**75**
0500 - 0515	0	20	6	0	0	0	0	0	1	0	0	0	0	**27**	
0515 - 0530	0	12	2	0	0	0	0	0	1	0	0	0	0	**15**	
0530 - 0545	0	15	4	0	0	0	0	0	0	0	0	0	0	**19**	
0545 - 0600	0	19	3	0	0	0	0	0	1	0	0	0	0	**23**	**84**
0600 - 0615	0	25	6	0	0	0	0	0	2	0	0	0	0	**33**	
0615 - 0630	0	35	6	0	1	0	0	0	2	0	0	0	0	**44**	
0630 - 0645	0	43	13	0	0	0	0	0	2	0	0	0	0	**58**	
0645 - 0700	0	33	11	0	0	0	0	0	1	0	0	0	0	**45**	**180**
0700 - 0715	0	52	13	1	1	0	0	1	3	0	0	0	0	**71**	
0715 - 0730	0	69	19	0	1	0	0	0	1	0	0	0	0	**90**	
0730 - 0745	0	63	17	0	2	0	0	0	2	0	0	0	0	**84**	
0745 - 0800	0	78	16	0	1	2	0	0	1	0	0	0	0	**98**	**343**
0800 - 0815	0	80	12	0	0	0	0	0	0	0	0	0	0	**92**	
0815 - 0830	0	80	20	0	1	0	0	1	1	0	0	0	0	**103**	
0830 - 0845	0	80	15	0	3	0	0	0	1	0	0	0	0	**99**	
0845 - 0900	0	129	16	0	1	0	0	3	2	0	0	0	0	**151**	**445**
0900 - 0915	0	115	15	0	0	0	0	0	3	0	0	0	0	**133**	
0915 - 0930	0	130	17	0	0	0	0	0	1	0	0	0	0	**148**	
0930 - 0945	0	147	26	0	1	0	0	1	3	0	0	0	0	**178**	
0945 - 1000	0	154	32	0	1	0	0	0	0	0	0	0	0	**187**	**646**
1000 - 1015	0	151	24	0	0	0	0	3	4	0	0	0	0	**182**	
1015 - 1030	0	198	28	1	0	0	0	1	1	0	0	0	0	**229**	
1030 - 1045	1	167	21	0	0	0	0	2	0	0	0	0	0	**191**	
1045 - 1100	7	149	31	0	1	0	0	0	6	0	0	0	0	**194**	**796**
1100 - 1115	0	175	30	1	2	0	0	0	1	0	0	0	0	**209**	
1115 - 1130	0	157	26	0	0	0	0	1	3	0	0	0	0	**187**	
1130 - 1145	0	178	35	0	3	0	0	1	4	0	0	0	0	**221**	
1145 - 1200	0	180	39	0	3	0	0	3	1	0	0	0	0	**226**	**843**
1200 - 1215	0	213	32	0	2	0	1	4	1	0	0	0	0	**253**	
1215 - 1230	0	233	38	0	0	0	0	1	1	0	0	0	0	**273**	
1230 - 1245	1	249	42	0	0	0	0	2	2	0	0	0	0	**296**	
1245 - 1300	0	244	31	0	3	0	0	0	3	0	0	0	0	**281**	**1103**
1300 - 1315	0	218	39	0	2	0	0	1	2	0	0	0	0	**262**	
1315 - 1330	0	240	43	1	3	1	0	2	1	1	0	0	0	**292**	
1330 - 1345	1	263	60	0	1	0	0	4	4	0	0	0	0	**333**	
1345 - 1400	0	232	44	0	2	0	0	2	3	0	0	0	0	**283**	**1170**
1400 - 1415	0	196	33	0	0	0	0	0	1	0	0	0	0	**230**	
1415 - 1430	0	228	41	0	3	0	0	0	1	0	0	0	0	**273**	
1430 - 1445	6	254	35	0	2	0	0	1	1	0	0	0	0	**299**	
1445 - 1500	0	259	45	1	2	0	0	3	6	0	0	0	0	**316**	**1118**
1500 - 1515	0	238	43	2	1	0	0	1	5	0	0	0	0	**290**	
1515 - 1530	1	248	57	0	1	0	0	1	2	0	0	0	0	**310**	
1530 - 1545	0	278	32	0	0	0	0	2	4	0	0	0	0	**316**	
1545 - 1600	0	280	60	1	1	1	0	1	2	0	0	0	0	**346**	**1262**
1600 - 1615	1	247	40	1	1	1	0	0	3	0	0	0	0	**294**	
1615 - 1630	1	252	33	2	0	0	0	0	3	0	0	0	0	**291**	
1630 - 1645	0	236	42	0	3	0	0	0	1	0	0	0	0	**282**	
1645 - 1700	0	241	61	0	2	0	0	0	4	0	0	0	0	**308**	**1175**
1700 - 1715	0	269	41	0	5	1	0	0	2	0	0	0	0	**318**	
1715 - 1730	0	235	27	0	1	0	0	1	4	0	0	0	0	**268**	
1730 - 1745	0	259	41	2	1	0	0	1	4	0	0	0	0	**308**	
1745 - 1800	0	253	21	0	2	0	0	1	4	0	0	0	0	**281**	**1175**
1800 - 1815	1	276	45	1	1	0	0	0	4	0	0	0	0	**328**	
1815 - 1830	0	242	44	1	1	1	0	0	2	0	0	0	0	**291**	
1830 - 1845	0	222	40	0	1	0	0	3	5	0	0	0	0	**271**	
1845 - 1900	0	191	26	4	1	1	0	2	7	0	0	0	0	**232**	**1122**
1900 - 1915	0	213	35	0	1	0	0	0	5	0	0	0	0	**254**	
1915 - 1930	1	178	15	0	1	0	0	0	5	0	0	0	0	**200**	
1930 - 1945	0	190	19	0	0	0	0	0	10	0	0	0	0	**219**	
1945 - 2000	0	165	21	2	1	0	0	0	4	0	0	0	0	**193**	**866**
2000 - 2015	0	158	22	0	1	0	0	0	3	0	0	0	0	**184**	
2015 - 2030	0	147	18	0	1	1	0	0	2	0	0	0	0	**169**	
2030 - 2045	0	108	20	0	2	1	0	0	5	0	0	0	0	**136**	
2045 - 2100	0	120	16	0	2	0	0	1	2	0	0	0	0	**141**	**630**
2100 - 2115	0	120	9	0	0	0	0	0	2	0	0	0	0	**131**	
2115 - 2130	0	111	10	0	0	0	0	1	1	0	0	0	0	**123**	
2130 - 2145	0	99	10	0	0	0	0	0	3	0	0	0	0	**112**	
2145 - 2200	0	120	16	0	0	0	0	2	5	0	0	0	0	**143**	**509**
2200 - 2215	0	90	15	0	0	0	0	1	2	0	0	0	0	**108**	
2215 - 2230	0	99	10	0	1	0	0	0	2	0	0	0	0	**112**	
2230 - 2245	0	70	5	0	0	0	0	1	1	0	0	0	0	**77**	
2245 - 2300	0	80	10	0	0	0	0	0	0	0	0	0	0	**90**	**387**
2300 - 2315	0	66	6	0	0	0	0	1	3	0	0	0	0	**76**	
2315 - 2330	0	60	4	0	0	0	0	1	1	0	0	0	0	**66**	
2330 - 2345	0	58	3	0	0	0	0	0	1	0	0	0	0	**62**	
2345 - 0000	0	36	2	0	0	0	0	0	0	0	0	0	0	**38**	**242**

Session Total	21	12477	2066	23	80	10	1	59	202	1	0	0	0	**14940**
Session Average	0.22	129.97	21.52	0.24	0.83	0.10	0.01	0.61	2.10	0.01	0.00	0.00	0.00	**155.63**
Session Percentage	0.14	83.51	13.83	0.15	0.54	0.07	0.01	0.39	1.35	0.01	0.00	0.00	0.00	

AM Peak Hour	0945 - 1045	0945 - 1045	0930 - 1030	0615 - 0715	0700 - 0800	0700 - 0800	-	0945 - 1045	0845 - 0945	-	-	-	-	**0945 - 1045**
AM Peak Volume	1	670	110	1	5	2	0	6	9	0	0	0	0	**789**

Noon Peak Hour	1000 - 1100	1445 - 1545	1300 - 1400	1415 - 1515	1245 - 1345	1230 - 1330	1115 - 1215	1145 - 1245	1445 - 1545	1230 - 1330	-	-	-	**1445 - 1545**
Noon Peak Volume	8	1023	186	3	9	1	1	10	17	1	0	0	0	**1232**

PM Peak Hour	1515 - 1615	1530 - 1630	1500 - 1600	1800 - 1900	1630 - 1730	1515 - 1615	-	1500 - 1600	1845 - 1945	-	-	-	-	**1515 - 1615**
PM Peak Volume	2	1057	192	6	11	2	0	5	27	0	0	0	0	**1266**

Site 14
I-26 N/Bound Off-Ramp,
south of I-20

Date
Monday, April 22, 2024

Lat/Long
34.035060°, -81.111476°

Weather
Mostly Cloudy
57°F

Click here for Detailed Weather

0000 - 2400 (Weekday 24h Session) (04-22-2024)
NB EB 15min

	Northbound (Movement 14.1)													15min	60min
Time	1	2	3	4	5	6	7	8	9	10	11	12	13	Total	Total
0000 - 0015	0	34	0	0	2	0	0	0	4	0	0	0	0	**40**	
0015 - 0030	0	36	0	0	0	1	0	0	2	0	0	0	0	**39**	
0030 - 0045	0	26	0	0	0	0	0	0	3	0	0	0	0	**29**	
0045 - 0100	0	20	0	0	2	0	0	0	4	0	0	0	0	**26**	**134**
0100 - 0115	1	19	0	0	0	0	0	1	3	0	0	0	0	**24**	
0115 - 0130	0	21	0	0	0	0	0	0	3	0	0	0	0	**24**	
0130 - 0145	0	17	0	0	0	0	0	0	1	0	0	0	0	**18**	
0145 - 0200	0	12	0	0	1	0	0	0	2	0	0	0	0	**15**	**81**
0200 - 0215	0	17	0	0	0	1	0	0	3	0	0	0	0	**21**	
0215 - 0230	0	8	0	0	0	0	0	0	2	0	0	0	0	**10**	
0230 - 0245	0	18	0	0	1	1	0	0	2	0	0	0	0	**22**	
0245 - 0300	0	19	0	0	2	0	0	0	5	0	0	0	0	**26**	**79**
0300 - 0315	0	9	0	0	0	0	0	3	3	0	0	0	0	**15**	
0315 - 0330	0	19	0	0	1	0	0	1	4	0	0	0	0	**25**	
0330 - 0345	0	32	0	0	2	0	0	2	2	0	0	0	0	**38**	
0345 - 0400	0	21	0	0	2	0	0	0	3	0	0	0	0	**26**	**104**
0400 - 0415	0	30	0	0	0	0	0	1	3	0	0	0	0	**34**	
0415 - 0430	0	31	0	0	0	0	0	1	6	0	0	0	0	**38**	
0430 - 0445	0	37	0	0	0	0	0	1	6	0	0	0	0	**44**	
0445 - 0500	0	53	0	0	0	0	0	0	4	0	0	0	0	**57**	**173**
0500 - 0515	0	51	0	1	1	0	0	0	4	0	0	0	0	**57**	
0515 - 0530	0	83	0	0	1	0	0	2	11	0	0	0	0	**97**	
0530 - 0545	0	101	0	0	6	1	0	0	6	0	0	0	0	**114**	
0545 - 0600	0	102	0	0	2	0	0	2	12	0	0	0	0	**118**	**386**
0600 - 0615	0	111	7	0	3	1	0	2	9	0	0	0	0	**133**	
0615 - 0630	1	168	29	0	5	2	0	4	12	0	0	0	0	**221**	
0630 - 0645	1	163	65	0	4	2	1	3	9	0	0	0	0	**248**	
0645 - 0700	0	180	39	0	8	7	1	0	9	0	0	0	0	**244**	**846**
0700 - 0715	1	218	56	0	4	0	0	3	10	0	0	0	0	**292**	
0715 - 0730	0	255	58	0	3	0	1	1	13	0	0	0	0	**331**	
0730 - 0745	0	252	71	0	3	3	0	3	11	0	0	0	0	**343**	
0745 - 0800	0	229	59	0	9	3	0	0	11	0	0	0	0	**311**	**1277**
0800 - 0815	0	240	57	0	6	2	1	5	6	0	0	0	0	**317**	
0815 - 0830	0	228	63	0	12	3	0	1	12	0	0	0	0	**319**	
0830 - 0845	0	253	66	0	10	4	1	1	11	1	0	0	0	**347**	
0845 - 0900	0	173	55	0	2	5	1	1	16	1	0	0	0	**254**	**1237**
0900 - 0915	0	155	57	0	3	4	0	2	11	1	0	0	0	**233**	
0915 - 0930	0	148	53	0	7	1	0	1	6	0	0	0	0	**216**	
0930 - 0945	0	160	57	0	7	4	0	1	12	0	0	0	0	**241**	
0945 - 1000	1	173	42	0	4	4	0	1	10	0	0	0	0	**235**	**925**
1000 - 1015	0	149	40	0	11	3	1	1	6	0	0	0	0	**211**	
1015 - 1030	0	134	45	0	7	0	0	2	7	0	0	0	0	**195**	
1030 - 1045	0	176	51	0	11	4	0	9	13	0	0	0	0	**264**	
1045 - 1100	0	168	49	0	11	2	1	3	10	2	0	0	0	**246**	**916**
1100 - 1115	0	131	52	0	5	2	2	1	13	1	0	0	0	**207**	
1115 - 1130	0	177	58	0	7	5	0	0	12	0	0	0	0	**259**	
1130 - 1145	0	156	59	0	7	6	1	1	13	0	0	0	0	**243**	
1145 - 1200	0	170	55	0	6	0	0	1	12	0	0	0	0	**244**	**953**
1200 - 1215	3	169	45	1	7	3	0	5	15	3	0	0	0	**251**	
1215 - 1230	0	182	54	0	3	4	0	2	11	0	0	0	0	**256**	
1230 - 1245	0	156	56	0	5	1	0	3	15	1	0	0	0	**237**	
1245 - 1300	0	205	47	0	5	2	0	2	25	0	0	0	0	**286**	**1030**
1300 - 1315	0	167	65	0	4	4	0	1	20	0	0	0	0	**261**	
1315 - 1330	0	184	61	0	10	1	0	1	13	0	0	0	0	**270**	
1330 - 1345	0	178	53	1	7	2	0	0	22	0	0	0	0	**263**	
1345 - 1400	0	215	47	0	5	3	0	0	16	0	0	0	0	**286**	**1080**
1400 - 1415	0	165	49	0	9	0	0	0	16	0	0	0	0	**239**	
1415 - 1430	0	183	53	0	7	2	0	0	13	0	0	0	0	**258**	
1430 - 1445	0	214	73	0	3	1	0	0	12	0	0	0	0	**303**	
1445 - 1500	0	197	67	0	6	0	0	2	11	0	0	0	0	**283**	**1083**
1500 - 1515	1	228	42	2	5	5	0	0	15	0	0	0	0	**298**	
1515 - 1530	1	227	48	0	5	0	0	1	10	0	0	0	0	**292**	
1530 - 1545	0	236	54	2	6	2	0	0	14	0	0	0	0	**314**	
1545 - 1600	0	243	63	3	5	0	0	1	10	0	0	0	0	**325**	**1229**
1600 - 1615	0	265	52	1	7	5	0	0	8	0	0	0	0	**338**	
1615 - 1630	0	263	54	0	5	2	1	2	14	0	0	0	0	**341**	
1630 - 1645	0	255	73	3	3	3	0	0	15	0	0	0	0	**352**	
1645 - 1700	1	271	55	0	6	3	0	2	11	0	0	0	0	**349**	**1380**
1700 - 1715	0	286	61	0	6	2	0	2	8	0	0	0	0	**365**	
1715 - 1730	0	307	55	0	3	3	0	2	13	0	0	0	0	**383**	
1730 - 1745	1	282	63	0	5	1	0	1	15	0	0	0	0	**368**	
1745 - 1800	2	214	49	0	4	1	0	1	11	0	0	0	0	**282**	**1398**
1800 - 1815	0	227	63	1	3	1	0	3	12	0	0	0	0	**310**	
1815 - 1830	1	218	34	0	4	1	0	1	13	0	0	0	0	**272**	
1830 - 1845	0	164	41	1	0	5	0	1	11	0	0	0	0	**223**	
1845 - 1900	0	167	43	0	4	1	0	1	8	0	0	0	0	**224**	**1029**
1900 - 1915	1	170	62	0	4	0	0	0	8	0	0	0	0	**245**	
1915 - 1930	0	175	32	0	2	0	0	1	8	0	0	0	0	**218**	
1930 - 1945	1	155	24	1	4	1	0	0	8	0	0	0	0	**194**	
1945 - 2000	1	136	24	0	3	0	0	2	8	0	0	0	0	**174**	**831**
2000 - 2015	0	142	27	0	1	0	0	0	4	0	0	0	0	**174**	
2015 - 2030	0	156	23	0	0	0	0	0	3	0	0	0	0	**182**	
2030 - 2045	0	112	18	0	1	0	0	2	2	0	0	0	0	**135**	
2045 - 2100	0	114	15	0	1	1	0	1	6	0	0	0	0	**138**	**629**
2100 - 2115	0	106	9	0	0	0	0	0	4	0	0	0	0	**119**	
2115 - 2130	0	104	11	0	1	0	0	0	9	0	0	0	0	**125**	
2130 - 2145	0	105	10	0	0	0	0	0	4	0	0	0	0	**119**	
2145 - 2200	0	87	8	0	0	0	0	0	6	0	0	0	0	**101**	**464**
2200 - 2215	0	86	6	0	1	0	0	0	4	0	0	0	0	**97**	
2215 - 2230	0	82	2	0	0	0	0	0	7	0	0	0	0	**91**	
2230 - 2245	0	71	1	0	0	0	0	0	1	0	1	0	0	**74**	
2245 - 2300	0	46	2	0	1	0	0	0	4	0	0	0	0	**53**	**315**
2300 - 2315	0	47	3	0	1	0	0	1	4	0	1	0	0	**57**	
2315 - 2330	0	39	2	0	0	0	0	0	6	0	0	0	0	**47**	
2330 - 2345	0	38	2	0	1	0	0	0	2	0	0	0	0	**43**	
2345 - 0000	0	30	1	0	0	0	0	0	3	0	0	0	0	**34**	**181**

Session Total	18	13252	3045	17	341	131	12	102	830	10	2	0	0	**17760**
Session Average	0.19	138.04	31.72	0.18	3.55	1.36	0.13	1.06	8.65	0.10	0.02	0.00	0.00	**185.00**
Session Percentage	0.10	74.62	17.15	0.10	1.92	0.74	0.07	0.57	4.67	0.06	0.01	0.00	0.00	

AM Peak Hour	0615 - 0715	0715 - 0815	0730 - 0830	0500 - 0600	0745 - 0845	0815 - 0915	0630 - 0730	0945 - 1045	0815 - 0915	0815 - 0915	-	-	-	**0715 - 0815**
AM Peak Volume	3	976	250	1	37	16	3	13	50	3	0	0	0	**1302**

Noon Peak Hour	1115 - 1215	1445 - 1545	1400 - 1500	1445 - 1545	1000 - 1100	1045 - 1145	1045 - 1145	1000 - 1100	1245 - 1345	1145 - 1245	-	-	-	**1445 - 1545**
Noon Peak Volume	3	888	242	4	40	15	4	15	80	4	0	0	0	**1187**

PM Peak Hour	1730 - 1830	1645 - 1745	1630 - 1730	1500 - 1600	1515 - 1615	1600 - 1700	1530 - 1630	1645 - 1745	1715 - 1815	-	-	-	-	**1645 - 1745**
PM Peak Volume	4	1146	244	7	23	13	1	7	51	0	0	0	0	**1465**

Site 14
I-26 N/Bound Off-Ramp,
south of I-20

Date
Tuesday, April 23, 2024

Lat/Long
34.035060°, -81.111476°

Weather
Fair
58°F

Click here for Detailed Weather

0000 - 2400 (Weekday 24h Session) (04-23-2024)
NB EB 15min

	Northbound (Movement 14.1)													15min	60min
TIME	1	2	3	4	5	6	7	8	9	10	11	12	13	Total	Total
0000 - 0015	0	15	8	0	1	0	0	0	6	0	0	0	0	**30**	
0015 - 0030	0	23	9	0	1	0	0	0	2	0	0	0	0	**35**	
0030 - 0045	1	22	6	0	0	0	0	0	5	0	0	0	0	**34**	
0045 - 0100	0	17	3	0	0	0	0	0	2	0	1	0	0	**23**	**122**
0100 - 0115	0	16	6	0	0	0	0	0	3	0	0	0	0	**25**	
0115 - 0130	0	18	6	0	0	0	0	0	7	0	2	0	0	**33**	
0130 - 0145	0	13	6	0	0	0	0	0	2	0	0	0	0	**21**	
0145 - 0200	0	11	3	0	0	0	0	0	3	0	0	0	0	**17**	**96**
0200 - 0215	0	9	3	0	0	0	0	0	0	0	0	0	0	**12**	
0215 - 0230	0	17	5	0	0	0	0	0	1	0	0	0	0	**23**	
0230 - 0245	0	13	4	0	0	0	0	0	3	0	0	0	0	**20**	
0245 - 0300	0	9	2	0	1	0	0	0	3	0	0	0	0	**15**	**70**
0300 - 0315	0	7	1	0	0	0	0	0	1	0	1	0	0	**10**	
0315 - 0330	0	11	4	0	1	0	0	0	9	0	0	0	0	**25**	
0330 - 0345	0	13	4	0	1	0	0	0	7	0	0	0	0	**25**	
0345 - 0400	0	14	4	0	0	0	0	0	3	0	1	0	0	**22**	**82**
0400 - 0415	0	18	5	0	0	0	0	0	4	0	0	0	0	**27**	
0415 - 0430	0	21	7	0	0	0	0	0	6	0	0	0	0	**34**	
0430 - 0445	0	42	14	0	0	0	0	0	9	0	1	0	0	**66**	
0445 - 0500	0	29	8	0	1	1	0	0	5	0	0	0	0	**44**	**171**
0500 - 0515	0	32	13	0	1	0	0	0	8	0	1	0	0	**55**	
0515 - 0530	0	56	17	0	1	0	0	0	7	0	0	0	0	**81**	
0530 - 0545	0	74	12	0	4	0	0	0	12	0	0	0	0	**102**	
0545 - 0600	0	71	20	0	1	0	0	0	14	0	0	0	0	**106**	**344**
0600 - 0615	0	90	21	0	1	0	0	0	9	0	0	0	0	**121**	
0615 - 0630	1	109	49	0	2	5	0	0	10	0	0	0	0	**176**	
0630 - 0645	1	154	53	0	2	0	0	2	7	0	1	0	0	**220**	
0645 - 0700	0	199	61	0	1	3	0	0	13	0	0	0	0	**277**	**794**
0700 - 0715	0	212	76	0	1	1	0	0	11	0	0	0	0	**301**	
0715 - 0730	0	259	76	0	0	1	0	1	6	0	0	0	0	**343**	
0730 - 0745	0	126	40	0	2	0	0	0	6	0	0	0	0	**174**	
0745 - 0800	1	172	63	0	6	0	0	1	8	0	0	0	0	**251**	**1069**
0800 - 0815	4	198	61	0	3	4	0	0	10	0	0	0	0	**280**	
0815 - 0830	0	179	67	0	5	3	0	1	5	1	0	0	0	**261**	
0830 - 0845	0	219	89	2	6	0	0	2	9	0	0	0	0	**327**	
0845 - 0900	0	169	63	0	4	1	0	1	11	0	0	0	0	**249**	**1117**
0900 - 0915	0	141	52	0	2	3	0	3	10	0	0	0	0	**211**	
0915 - 0930	0	154	54	0	5	2	1	0	10	0	0	0	0	**226**	
0930 - 0945	0	145	50	0	4	2	0	0	9	0	0	0	0	**210**	
0945 - 1000	0	140	47	0	10	2	0	0	15	0	0	0	0	**214**	**861**
1000 - 1015	0	139	62	0	2	0	0	0	21	0	0	0	0	**224**	
1015 - 1030	0	151	60	0	4	0	0	2	18	0	0	0	0	**235**	
1030 - 1045	0	166	53	0	7	1	0	0	13	0	0	0	0	**240**	
1045 - 1100	0	173	58	0	8	4	0	1	20	0	0	0	0	**264**	**963**
1100 - 1115	0	155	61	0	5	1	1	3	15	0	0	0	0	**241**	
1115 - 1130	0	177	53	0	4	2	0	1	11	0	0	0	0	**248**	
1130 - 1145	0	167	62	0	2	4	0	1	8	0	0	0	0	**244**	
1145 - 1200	0	157	61	0	4	5	0	1	14	0	0	0	0	**242**	**975**
1200 - 1215	0	161	61	0	5	5	0	1	23	0	0	0	0	**256**	
1215 - 1230	0	193	41	0	5	1	0	1	14	0	0	0	0	**255**	
1230 - 1245	0	193	48	3	7	0	0	3	12	0	0	0	0	**266**	
1245 - 1300	0	190	54	0	5	1	0	3	21	0	0	0	0	**274**	**1051**
1300 - 1315	1	197	41	1	4	4	0	3	7	0	0	0	0	**258**	
1315 - 1330	1	220	50	3	7	3	0	1	15	1	0	0	0	**301**	
1330 - 1345	0	191	45	0	8	5	0	1	16	0	0	0	0	**266**	
1345 - 1400	0	180	36	0	7	8	1	0	19	0	0	0	0	**251**	**1076**
1400 - 1415	1	194	42	0	9	5	0	1	18	0	0	0	0	**270**	
1415 - 1430	1	227	50	0	8	2	0	0	19	0	0	0	0	**307**	
1430 - 1445	0	205	42	0	3	7	0	0	15	0	0	0	0	**272**	
1445 - 1500	0	216	50	0	6	0	0	0	16	0	0	0	0	**288**	**1137**
1500 - 1515	0	202	43	1	5	4	0	0	10	0	0	0	0	**265**	
1515 - 1530	0	241	46	1	7	6	0	0	10	0	0	0	0	**311**	
1530 - 1545	1	223	61	0	7	7	3	1	18	0	0	0	0	**321**	
1545 - 1600	2	292	54	1	6	4	1	0	9	0	0	0	0	**369**	**1266**
1600 - 1615	0	207	74	2	9	1	0	1	16	0	0	0	0	**310**	
1615 - 1630	1	272	67	2	2	1	1	0	13	0	0	0	0	**359**	
1630 - 1645	1	263	69	1	4	3	0	0	15	0	0	0	0	**356**	
1645 - 1700	1	281	69	0	2	0	0	0	15	0	0	0	0	**368**	**1393**
1700 - 1715	1	228	44	1	3	0	0	0	16	0	0	0	0	**293**	
1715 - 1730	0	189	33	0	3	3	0	1	6	0	0	0	0	**235**	
1730 - 1745	0	248	69	0	1	4	0	1	17	0	0	0	0	**340**	
1745 - 1800	0	264	59	1	7	1	0	1	8	0	0	0	0	**341**	**1209**
1800 - 1815	0	186	43	1	2	0	0	0	12	0	0	0	0	**244**	
1815 - 1830	1	184	45	0	2	4	0	0	8	0	0	0	0	**244**	
1830 - 1845	0	164	48	0	3	0	0	0	11	0	0	0	0	**226**	
1845 - 1900	0	126	44	0	3	2	0	0	6	0	0	0	0	**181**	**895**
1900 - 1915	2	182	47	0	2	1	0	0	10	0	0	0	0	**244**	
1915 - 1930	1	180	36	0	0	1	0	1	8	0	0	0	0	**227**	
1930 - 1945	0	167	31	0	0	1	0	0	12	0	0	0	0	**211**	
1945 - 2000	3	156	32	0	2	2	0	0	8	0	0	0	0	**203**	**885**
2000 - 2015	0	134	36	0	0	0	0	0	5	0	0	0	0	**175**	
2015 - 2030	0	148	27	0	0	1	0	0	4	0	0	0	0	**180**	
2030 - 2045	0	145	15	0	1	1	0	0	6	0	0	0	0	**168**	
2045 - 2100	1	130	14	0	3	0	0	0	8	0	0	0	0	**156**	**679**
2100 - 2115	0	100	10	0	0	0	0	0	8	0	0	0	0	**118**	
2115 - 2130	0	110	12	0	0	0	0	0	5	0	0	0	0	**127**	
2130 - 2145	0	95	5	0	1	0	0	0	6	0	0	0	0	**107**	
2145 - 2200	0	94	6	1	0	0	0	0	4	0	0	0	0	**105**	**457**
2200 - 2215	0	84	6	0	2	0	0	0	6	0	0	0	0	**98**	
2215 - 2230	0	72	2	0	1	0	0	0	5	0	0	0	0	**80**	
2230 - 2245	0	71	7	1	0	0	0	0	1	0	1	0	0	**81**	
2245 - 2300	0	53	5	1	3	0	0	0	3	0	0	0	0	**65**	**324**
2300 - 2315	0	40	8	1	0	0	0	0	2	0	1	0	0	**52**	
2315 - 2330	0	42	7	0	0	0	0	0	3	0	0	0	0	**52**	
2330 - 2345	0	35	4	0	0	0	0	0	4	0	0	0	0	**43**	
2345 - 0000	0	31	3	0	0	0	0	0	4	0	0	0	0	**38**	**185**

Session Total	27	12528	3303	24	258	133	8	40	888	2	10	0	0	**17221**
Session Average	0.28	130.50	34.41	0.25	2.69	1.39	0.08	0.42	9.25	0.02	0.10	0.00	0.00	**179.39**
Session Percentage	0.16	72.75	19.18	0.14	1.50	0.77	0.05	0.23	5.16	0.01	0.06	0.00	0.00	

AM Peak Hour	0715 - 0815	0630 - 0730	0745 - 0845	0745 - 0845	0945 - 1045	0615 - 0715	0830 - 0930	0815 - 0915	0945 - 1045	0730 - 0830	0500 - 0600	-	-	**0630 - 0730**
AM Peak Hour Volume	5	824	280	2	23	9	1	7	67	1	1	0	0	**1141**

Noon Peak Hour	1230 - 1330	1445 - 1545	1100 - 1200	1230 - 1330	1330 - 1430	1345 - 1445	1445 - 1545	1215 - 1315	1000 - 1100	1230 - 1330	-	-	-	**1445 - 1545**
Noon Peak Hour Volume	2	882	237	7	32	22	3	10	72	1	0	0	0	**1185**

PM Peak Hour	1900 - 2000	1615 - 1715	1600 - 1700	1545 - 1645	1515 - 1615	1500 - 1600	1530 - 1630	1700 - 1800	1600 - 1700	-	-	-	-	**1545 - 1645**
PM Peak Hour Volume	6	1044	279	6	29	21	5	3	59	0	0	0	0	**1394**

Site 14
I-26 N/Bound Off-Ramp,
south of I-20

Date
Wednesday, April 24, 2024

Lat/Long
34.035060°, -81.111476°

Weather
Fair
66°F

Click here for Detailed Weather

0000 - 2400 (Weekday 24h Session) (04-24-2024)
NB EB 15min

	Northbound (Movement 14.1)													15min	60min
TIME	1	2	3	4	5	6	7	8	9	10	11	12	13	Total	Total
0000 - 0015	0	34	10	0	2	0	0	0	3	0	0	0	0	**49**	
0015 - 0030	0	24	8	0	0	0	0	0	3	0	0	0	0	**35**	
0030 - 0045	0	21	4	0	1	0	0	0	2	0	0	0	0	**28**	
0045 - 0100	0	25	4	0	0	0	0	0	5	0	0	0	0	**34**	**146**
0100 - 0115	0	12	3	0	0	0	0	0	3	0	0	0	0	**18**	
0115 - 0130	0	12	4	0	2	0	0	0	3	0	0	0	0	**21**	
0130 - 0145	0	10	3	0	2	0	0	0	7	0	0	0	0	**22**	
0145 - 0200	0	10	4	0	0	0	0	0	3	0	0	0	0	**17**	**78**
0200 - 0215	0	12	2	0	0	0	0	0	3	0	0	0	0	**17**	
0215 - 0230	0	10	3	0	0	0	0	0	5	0	0	0	0	**18**	
0230 - 0245	0	7	1	0	0	0	0	0	2	0	0	0	0	**10**	
0245 - 0300	0	10	2	0	0	0	0	0	4	0	0	0	0	**16**	**61**
0300 - 0315	0	9	2	0	0	0	0	0	6	0	0	0	0	**17**	
0315 - 0330	0	10	5	0	2	0	0	0	5	0	0	0	0	**22**	
0330 - 0345	0	11	3	0	0	0	0	0	4	0	0	0	0	**18**	
0345 - 0400	0	9	3	0	1	0	0	0	5	0	0	0	0	**18**	**75**
0400 - 0415	0	25	4	0	1	0	0	0	5	0	2	0	0	**37**	
0415 - 0430	0	18	3	0	0	0	0	0	3	0	0	0	0	**24**	
0430 - 0445	0	30	8	0	2	0	0	0	6	0	1	0	0	**47**	
0445 - 0500	0	40	12	0	6	0	0	0	6	0	0	0	0	**64**	**172**
0500 - 0515	0	35	6	1	2	0	0	0	2	0	0	0	0	**46**	
0515 - 0530	0	60	13	0	3	0	0	0	4	0	0	0	0	**80**	
0530 - 0545	0	73	10	0	3	0	0	0	7	0	1	0	0	**94**	
0545 - 0600	0	98	12	0	6	0	0	0	8	0	0	0	0	**124**	**344**
0600 - 0615	0	101	7	0	4	0	0	0	4	0	0	0	0	**116**	
0615 - 0630	0	152	33	2	4	3	0	0	8	0	0	0	0	**202**	
0630 - 0645	1	187	45	0	6	0	0	1	12	0	0	0	0	**252**	
0645 - 0700	0	198	52	0	4	0	0	0	8	0	0	0	0	**262**	**832**
0700 - 0715	0	206	68	0	9	1	0	0	9	0	0	0	0	**293**	
0715 - 0730	0	283	64	0	3	1	1	3	8	0	0	0	0	**363**	
0730 - 0745	1	258	67	1	6	0	1	2	3	0	1	0	0	**340**	
0745 - 0800	0	251	60	0	6	2	0	0	8	0	0	0	0	**327**	**1323**
0800 - 0815	0	204	59	0	6	0	0	2	12	0	0	0	0	**283**	
0815 - 0830	0	198	74	1	13	0	0	1	13	0	0	0	0	**300**	
0830 - 0845	2	227	54	0	11	2	0	3	14	0	0	0	0	**313**	
0845 - 0900	2	171	56	0	9	2	0	0	11	0	0	0	0	**251**	**1147**
0900 - 0915	0	148	52	0	11	2	1	2	16	0	0	0	0	**232**	
0915 - 0930	1	178	55	0	5	3	0	2	13	0	0	0	0	**257**	
0930 - 0945	0	142	52	0	10	0	0	1	7	0	0	0	0	**212**	
0945 - 1000	0	142	51	1	8	6	0	1	15	0	0	0	0	**224**	**925**
1000 - 1015	0	162	42	0	11	3	0	3	17	0	0	0	0	**238**	
1015 - 1030	1	158	46	0	9	7	0	2	16	0	0	0	0	**239**	
1030 - 1045	0	142	42	0	5	2	1	2	6	0	0	0	0	**200**	
1045 - 1100	0	148	40	0	4	3	0	1	6	0	0	0	0	**202**	**879**
1100 - 1115	0	142	59	0	3	6	0	1	6	0	0	0	0	**217**	
1115 - 1130	0	140	51	0	4	1	0	1	12	0	0	0	0	**209**	
1130 - 1145	1	149	40	0	8	1	0	1	10	0	0	0	0	**210**	
1145 - 1200	0	176	53	0	5	5	0	1	23	0	0	0	0	**263**	**899**
1200 - 1215	1	184	54	1	7	2	0	5	19	0	0	0	0	**273**	
1215 - 1230	0	182	56	1	6	6	0	0	22	0	0	0	0	**273**	
1230 - 1245	0	204	62	0	3	5	0	1	26	0	0	0	0	**301**	
1245 - 1300	1	198	64	1	9	3	0	1	13	0	0	0	0	**290**	**1137**
1300 - 1315	1	178	69	0	9	1	0	2	16	0	0	0	0	**276**	
1315 - 1330	2	210	56	0	13	2	1	2	5	0	0	0	0	**291**	
1330 - 1345	1	206	67	1	7	2	0	0	11	0	0	0	0	**295**	
1345 - 1400	0	196	53	0	6	2	0	1	12	0	0	0	0	**270**	**1132**
1400 - 1415	0	212	48	1	3	1	0	0	11	0	0	0	0	**276**	
1415 - 1430	1	189	46	0	8	4	0	0	14	0	0	0	0	**262**	
1430 - 1445	0	206	55	0	6	4	1	1	8	0	0	0	0	**281**	
1445 - 1500	0	217	60	1	7	2	0	1	13	0	0	0	0	**301**	**1120**
1500 - 1515	0	232	72	2	7	4	0	1	12	0	0	0	0	**330**	
1515 - 1530	0	246	70	1	6	0	0	2	13	0	0	0	0	**338**	
1530 - 1545	0	248	48	2	7	1	0	0	11	0	0	0	0	**317**	
1545 - 1600	2	233	60	2	4	4	0	1	18	0	0	0	0	**324**	**1309**
1600 - 1615	0	243	65	0	6	1	0	3	4	0	0	0	0	**322**	
1615 - 1630	2	264	60	1	2	4	0	1	9	0	0	0	0	**343**	
1630 - 1645	0	289	66	0	8	1	0	2	17	0	0	0	0	**383**	
1645 - 1700	0	274	68	1	11	4	0	0	13	0	0	0	0	**371**	**1419**
1700 - 1715	0	291	65	1	5	0	0	0	11	0	0	0	0	**373**	
1715 - 1730	0	261	74	0	5	2	1	3	11	1	0	0	0	**358**	
1730 - 1745	0	255	62	0	4	0	0	2	9	0	0	0	0	**332**	
1745 - 1800	1	211	52	1	11	0	0	3	7	0	0	0	0	**286**	**1349**
1800 - 1815	1	242	58	0	2	2	0	1	5	0	0	0	0	**311**	
1815 - 1830	3	213	60	1	3	3	0	2	8	0	0	0	0	**293**	
1830 - 1845	1	184	55	0	3	1	0	2	6	0	0	0	0	**252**	
1845 - 1900	0	179	49	0	6	2	0	2	6	0	0	0	0	**244**	**1100**
1900 - 1915	0	210	47	0	5	1	0	1	9	0	0	0	0	**273**	
1915 - 1930	3	165	44	0	2	1	0	0	7	0	0	0	0	**222**	
1930 - 1945	0	156	38	0	5	0	0	0	7	0	0	0	0	**206**	
1945 - 2000	0	158	28	0	3	0	0	0	3	0	0	0	0	**192**	**893**
2000 - 2015	1	192	28	0	1	0	0	2	13	0	0	0	0	**237**	
2015 - 2030	0	174	20	0	2	0	0	0	6	0	1	0	0	**203**	
2030 - 2045	0	162	18	0	1	0	0	0	5	0	0	0	0	**186**	
2045 - 2100	0	139	16	1	1	0	0	0	7	0	0	0	0	**164**	**790**
2100 - 2115	0	118	24	0	2	0	0	0	7	0	0	0	0	**151**	
2115 - 2130	0	114	22	0	2	0	0	1	3	0	0	0	0	**142**	
2130 - 2145	0	86	15	0	1	0	0	0	0	0	0	0	0	**102**	
2145 - 2200	0	104	18	0	1	1	0	0	1	0	0	0	0	**125**	**520**
2200 - 2215	0	77	10	0	3	0	0	0	7	0	0	0	0	**97**	
2215 - 2230	0	84	12	0	0	0	0	0	2	0	2	0	0	**100**	
2230 - 2245	0	56	10	0	2	0	0	0	5	0	0	0	0	**73**	
2245 - 2300	0	51	8	0	1	1	0	0	2	0	0	0	0	**63**	**333**
2300 - 2315	0	49	6	0	2	0	0	0	2	0	0	0	0	**59**	
2315 - 2330	0	52	8	0	1	0	0	0	5	0	0	0	0	**66**	
2330 - 2345	0	32	6	0	1	1	0	0	3	0	0	0	0	**43**	
2345 - 0000	0	26	9	0	1	0	0	0	5	0	0	0	0	**41**	**209**

Session Total	30	13320	3412	25	408	118	7	73	790	1	8	0	0	**18192**
Session Average	0.31	138.75	35.54	0.26	4.25	1.23	0.07	0.76	8.23	0.01	0.08	0.00	0.00	**189.50**
Session Percentage	0.16	73.22	18.76	0.14	2.24	0.65	0.04	0.40	4.34	0.01	0.04	0.00	0.00	

AM Peak Hour	0830 - 0930	0700 - 0800	0730 - 0830	0530 - 0630	0815 - 0915	0945 - 1045	0645 - 0745	0945 - 1045	0930 - 1030	-	0500 - 0600	-	-	**0700 - 0800**
AM Peak Hour Volume	5	998	260	2	44	18	2	8	55	0	1	0	0	**1323**

Noon Peak Hour	1245 - 1345	1445 - 1545	1430 - 1530	1445 - 1545	1245 - 1345	1015 - 1115	1000 - 1100	1000 - 1100	1145 - 1245	-	-	-	-	**1445 - 1545**
Noon Peak Hour Volume	5	943	257	6	38	18	1	8	90	0	0	0	0	**1286**

PM Peak Hour	1745 - 1845	1615 - 1715	1630 - 1730	1500 - 1600	1630 - 1730	1530 - 1630	1630 - 1730	1715 - 1815	1500 - 1600	1630 - 1730	1930 - 2030	-	-	**1630 - 1730**
PM Peak Hour Volume	6	1118	273	7	29	10	1	9	54	1	1	0	0	**1485**

Site 14
I-26 N/Bound Off-Ramp,
south of I-20

Date
Thursday, April 25, 2024

Lat/Long
34.035060°, -81.111476°

Weather
Fair
67°F

Click here for Detailed Weather

0000 - 2400 (Weekday 24h Session) (04-25-2024)
NB EB 15min

	Northbound (Movement 14.1)													15min	60min
TIME	1	2	3	4	5	6	7	8	9	10	11	12	13	Total	Total
0000 - 0015	1	42	7	0	0	0	0	0	11	0	0	0	0	**61**	
0015 - 0030	0	23	3	0	0	0	0	0	7	0	0	0	0	**33**	
0030 - 0045	0	27	2	0	0	0	0	0	3	0	0	0	0	**32**	
0045 - 0100	0	14	2	0	0	1	0	0	3	0	0	0	0	**20**	**146**
0100 - 0115	0	18	3	0	0	1	0	0	2	0	0	0	0	**24**	
0115 - 0130	0	20	4	0	0	0	0	0	5	0	0	0	0	**29**	
0130 - 0145	0	15	2	0	0	0	0	0	4	0	0	0	0	**21**	
0145 - 0200	0	15	1	0	0	0	0	0	3	0	1	0	0	**20**	**94**
0200 - 0215	0	13	1	0	0	0	0	0	2	0	0	0	0	**16**	
0215 - 0230	0	14	2	0	0	0	0	0	4	0	0	0	0	**20**	
0230 - 0245	0	13	2	0	0	0	0	0	4	0	0	0	0	**19**	
0245 - 0300	0	12	1	0	0	0	0	0	1	0	1	0	0	**15**	**70**
0300 - 0315	0	15	1	0	2	0	0	0	4	0	0	0	0	**22**	
0315 - 0330	0	22	4	0	3	0	0	0	6	0	0	0	0	**35**	
0330 - 0345	0	15	2	0	2	0	0	0	3	0	1	0	0	**23**	
0345 - 0400	0	19	3	0	0	0	0	0	5	0	0	0	0	**27**	**107**
0400 - 0415	0	26	4	0	2	1	0	0	6	0	1	0	0	**40**	
0415 - 0430	0	24	3	0	2	0	0	0	3	0	0	0	0	**32**	
0430 - 0445	0	41	5	0	1	0	0	0	6	0	0	0	0	**53**	
0445 - 0500	0	39	6	0	3	0	0	0	4	0	1	0	0	**53**	**178**
0500 - 0515	0	41	9	1	3	0	0	0	5	0	0	0	0	**59**	
0515 - 0530	0	57	12	0	3	0	0	0	4	0	0	0	0	**76**	
0530 - 0545	0	62	15	0	2	0	0	0	8	0	0	0	0	**87**	
0545 - 0600	0	78	29	0	0	2	0	0	10	0	0	0	0	**119**	**341**
0600 - 0615	1	77	32	0	3	1	0	0	11	0	0	0	0	**125**	
0615 - 0630	0	98	44	0	4	5	0	0	18	0	0	0	0	**169**	
0630 - 0645	1	156	57	0	4	0	3	1	5	0	0	0	0	**227**	
0645 - 0700	0	198	63	0	7	0	0	1	16	0	1	0	0	**286**	**807**
0700 - 0715	0	205	54	0	4	2	0	2	12	1	0	0	0	**280**	
0715 - 0730	1	239	62	0	10	1	0	1	14	0	0	0	0	**328**	
0730 - 0745	0	270	56	1	3	0	0	0	8	0	0	0	0	**338**	
0745 - 0800	1	210	52	0	9	1	0	0	12	1	0	0	0	**286**	**1232**
0800 - 0815	0	202	64	0	6	1	0	0	14	0	0	0	0	**287**	
0815 - 0830	1	245	85	0	11	1	1	2	8	0	0	0	0	**354**	
0830 - 0845	2	233	64	0	10	4	0	2	12	0	0	0	0	**327**	
0845 - 0900	0	200	75	0	3	2	0	7	19	0	0	0	0	**306**	**1274**
0900 - 0915	0	163	58	0	6	4	0	5	12	0	0	0	0	**248**	
0915 - 0930	1	146	61	1	6	2	0	1	14	0	0	0	0	**232**	
0930 - 0945	0	171	47	1	10	8	0	0	13	0	0	0	0	**250**	
0945 - 1000	1	158	75	1	7	0	0	0	7	0	0	0	0	**249**	**979**
1000 - 1015	0	155	64	0	3	3	0	0	19	0	0	0	0	**244**	
1015 - 1030	2	162	44	0	10	4	0	4	12	0	0	0	0	**238**	
1030 - 1045	0	169	48	0	3	4	0	1	11	0	0	0	0	**236**	
1045 - 1100	0	156	59	1	5	0	0	2	10	0	0	0	0	**233**	**951**
1100 - 1115	0	138	55	0	4	2	0	3	11	0	0	0	0	**213**	
1115 - 1130	14	165	62	1	8	10	0	1	13	2	0	0	0	**276**	
1130 - 1145	0	172	54	2	6	0	0	2	16	0	0	0	0	**252**	
1145 - 1200	0	167	53	0	10	3	0	0	11	0	0	0	0	**244**	**985**
1200 - 1215	1	216	64	0	10	4	0	8	20	0	0	0	0	**323**	
1215 - 1230	0	229	66	1	7	2	1	1	13	0	0	0	0	**320**	
1230 - 1245	0	227	64	0	4	6	0	1	14	0	0	0	0	**316**	
1245 - 1300	0	228	58	1	6	1	0	4	10	0	0	0	0	**308**	**1267**
1300 - 1315	1	212	64	1	6	3	0	3	13	0	0	0	0	**303**	
1315 - 1330	0	263	62	0	11	3	0	2	14	0	0	0	0	**355**	
1330 - 1345	0	210	53	1	5	1	0	2	15	0	0	0	0	**287**	
1345 - 1400	1	231	73	1	3	3	0	2	9	0	0	0	0	**323**	**1268**
1400 - 1415	0	219	63	0	6	4	0	3	12	1	0	0	0	**308**	
1415 - 1430	0	210	65	1	7	3	0	3	16	0	0	0	0	**305**	
1430 - 1445	0	237	60	0	8	5	0	1	16	0	0	0	0	**327**	
1445 - 1500	0	271	70	1	5	5	1	1	11	2	0	0	0	**367**	**1307**
1500 - 1515	0	262	79	1	7	3	0	1	11	0	0	0	0	**364**	
1515 - 1530	1	247	73	1	9	4	1	1	9	0	0	0	0	**346**	
1530 - 1545	1	274	62	0	10	2	0	0	10	1	0	0	0	**360**	
1545 - 1600	1	269	70	3	6	5	0	2	9	0	0	0	0	**365**	**1435**
1600 - 1615	1	286	77	0	2	0	0	0	6	1	0	0	0	**373**	
1615 - 1630	0	292	75	0	6	1	0	1	13	0	0	0	0	**388**	
1630 - 1645	1	280	63	0	2	0	0	2	10	0	0	0	0	**358**	
1645 - 1700	1	308	85	0	8	0	0	3	6	0	0	0	0	**411**	**1530**
1700 - 1715	2	274	83	1	6	1	0	0	9	0	0	0	0	**376**	
1715 - 1730	0	271	59	0	2	2	0	1	10	0	0	0	0	**345**	
1730 - 1745	0	267	67	1	3	2	0	1	8	0	0	0	0	**349**	
1745 - 1800	0	268	67	0	5	0	0	0	13	0	0	0	0	**353**	**1423**
1800 - 1815	1	235	59	0	2	0	0	2	10	0	0	0	0	**309**	
1815 - 1830	0	238	51	0	4	1	0	1	5	0	0	0	0	**300**	
1830 - 1845	3	238	51	0	5	0	0	0	8	0	0	0	0	**305**	
1845 - 1900	0	211	51	0	4	0	0	1	12	0	0	0	0	**279**	**1193**
1900 - 1915	0	230	45	1	0	0	0	1	7	0	0	0	0	**284**	
1915 - 1930	1	219	45	0	0	1	0	0	14	0	0	0	0	**280**	
1930 - 1945	2	203	34	0	0	1	0	0	10	0	0	0	0	**250**	
1945 - 2000	1	183	39	0	1	0	0	0	4	0	0	0	0	**228**	**1042**
2000 - 2015	0	201	31	1	0	0	0	2	3	0	0	0	0	**238**	
2015 - 2030	1	204	24	0	1	0	0	0	7	0	0	0	0	**237**	
2030 - 2045	0	137	22	0	1	1	0	0	5	0	0	0	0	**166**	
2045 - 2100	0	161	25	0	1	0	0	0	6	0	0	0	0	**193**	**834**
2100 - 2115	0	172	23	0	2	0	0	0	7	0	0	0	0	**204**	
2115 - 2130	0	136	20	0	1	0	0	0	3	0	0	0	0	**160**	
2130 - 2145	0	101	17	0	1	0	0	0	10	0	0	0	0	**129**	
2145 - 2200	0	118	19	0	0	0	0	0	2	0	0	0	0	**139**	**632**
2200 - 2215	0	91	14	0	0	0	0	0	2	0	0	0	0	**107**	
2215 - 2230	0	84	10	0	0	0	0	0	3	0	0	0	0	**97**	
2230 - 2245	0	101	29	1	0	1	0	0	5	0	0	0	0	**137**	
2245 - 2300	0	71	10	0	3	0	0	0	4	0	0	0	0	**88**	**429**
2300 - 2315	0	38	7	0	0	0	0	0	1	0	0	0	0	**46**	
2315 - 2330	0	39	10	0	0	0	0	0	0	0	0	0	0	**49**	
2330 - 2345	0	64	13	0	1	0	0	0	7	0	0	0	0	**85**	
2345 - 0000	1	52	10	0	1	0	0	0	11	0	0	0	0	**75**	**255**

Session Total	47	14498	3792	26	347	128	7	85	834	9	6	0	0	**19779**
Session Average	0.49	151.02	39.50	0.27	3.61	1.33	0.07	0.89	8.69	0.09	0.06	0.00	0.00	**206.03**
Session Percentage	0.24	73.30	19.17	0.13	1.75	0.65	0.04	0.43	4.22	0.05	0.03	0.00	0.00	

AM Peak Hour	0745 - 0845	0730 - 0830	0800 - 0900	0900 - 1000	0745 - 0845	0845 - 0945	0545 - 0645	0815 - 0915	0845 - 0945	0700 - 0800	0600 - 0700	-	-	**0800 - 0900**
AM Peak Hour Volume	4	927	288	3	36	16	3	16	58	2	1	0	0	**1274**

Noon Peak Hour	1115 - 1215	1445 - 1545	1445 - 1545	1045 - 1145	1115 - 1215	1115 - 1215	1430 - 1530	1200 - 1300	1115 - 1215	1400 - 1500	-	-	-	**1445 - 1545**
Noon Peak Hour Volume	15	1054	284	4	34	17	2	14	60	3	0	0	0	**1437**

PM Peak Hour	1515 - 1615	1600 - 1700	1615 - 1715	1500 - 1600	1500 - 1600	1500 - 1600	1500 - 1600	1600 - 1700	1845 - 1945	1515 - 1615	-	-	-	**1615 - 1715**
PM Peak Hour Volume	4	1166	306	5	32	14	1	6	43	2	0	0	0	**1533**

Site 14
I-26 N/Bound Off-Ramp,
south of I-20

Date
Friday, April 26, 2024

Lat/Long
34.035060°, -81.111476°

Weather
Cloudy
69°F

Click here for Detailed Weather

0000 - 2400 (Weekday 24h Session) (04-26-2024)
NB EB 15min

	Northbound (Movement 14.1)													15min	60min
TIME	1	2	3	4	5	6	7	8	9	10	11	12	13	Total	Total
0000 - 0015	0	50	5	0	1	1	0	2	6	0	0	0	0	**65**	
0015 - 0030	0	36	4	0	0	0	0	0	0	0	0	0	0	**40**	
0030 - 0045	0	35	5	0	1	0	0	1	8	0	0	0	0	**50**	
0045 - 0100	0	23	3	0	0	0	0	0	5	0	0	0	0	**31**	**186**
0100 - 0115	0	22	3	0	2	0	0	0	3	0	2	0	0	**32**	
0115 - 0130	0	16	4	0	2	0	0	0	1	0	0	0	0	**23**	
0130 - 0145	0	12	3	0	0	0	0	1	4	0	0	0	0	**20**	
0145 - 0200	0	15	3	0	0	0	0	0	2	0	0	0	0	**20**	**95**
0200 - 0215	1	12	2	0	0	0	0	0	5	0	0	0	0	**20**	
0215 - 0230	0	15	3	0	1	0	0	0	3	0	0	0	0	**22**	
0230 - 0245	0	21	3	0	1	0	0	0	4	0	1	0	0	**30**	
0245 - 0300	0	15	3	0	1	0	0	0	3	0	0	0	0	**22**	**94**
0300 - 0315	0	15	2	0	0	1	0	0	6	0	0	0	0	**24**	
0315 - 0330	0	13	2	0	0	1	0	0	4	0	0	0	0	**20**	
0330 - 0345	0	15	3	0	2	0	0	0	8	0	1	0	0	**29**	
0345 - 0400	0	20	3	0	1	1	0	0	9	0	0	0	0	**34**	**107**
0400 - 0415	0	19	4	0	2	1	0	0	2	0	0	0	0	**28**	
0415 - 0430	0	21	4	0	0	0	0	0	1	0	0	0	0	**26**	
0430 - 0445	0	30	3	0	2	2	0	0	8	0	0	0	0	**45**	
0445 - 0500	0	29	4	0	0	0	0	0	11	0	2	0	0	**46**	**145**
0500 - 0515	0	40	3	1	2	0	0	0	6	0	0	0	0	**52**	
0515 - 0530	0	71	8	0	3	1	0	0	9	0	1	0	0	**93**	
0530 - 0545	1	60	8	0	2	0	0	1	4	0	0	0	0	**76**	
0545 - 0600	0	70	4	0	0	2	0	1	5	0	0	0	0	**82**	**303**
0600 - 0615	2	93	8	0	2	1	0	1	8	0	0	0	0	**115**	
0615 - 0630	0	116	21	1	5	3	0	1	10	0	0	0	0	**157**	
0630 - 0645	1	140	26	1	4	1	0	3	8	0	0	0	0	**184**	
0645 - 0700	0	137	46	0	3	2	0	1	9	0	0	0	0	**198**	**654**
0700 - 0715	0	196	48	0	3	0	0	1	10	0	0	0	0	**258**	
0715 - 0730	1	224	58	0	1	1	0	2	4	0	0	0	0	**291**	
0730 - 0745	0	270	64	1	3	0	0	2	9	0	1	0	0	**350**	
0745 - 0800	0	238	59	0	7	5	0	3	13	0	0	0	0	**325**	**1224**
0800 - 0815	0	238	65	0	5	2	0	2	17	0	0	0	0	**329**	
0815 - 0830	2	242	49	3	4	3	0	4	12	0	0	0	0	**319**	
0830 - 0845	0	259	60	1	6	1	0	2	11	0	0	0	0	**340**	
0845 - 0900	0	159	42	1	6	0	0	1	16	0	0	0	0	**225**	**1213**
0900 - 0915	0	171	48	1	6	6	0	0	18	0	0	0	0	**250**	
0915 - 0930	0	188	49	1	6	3	0	2	12	0	0	0	0	**261**	
0930 - 0945	1	178	48	0	10	4	0	2	14	0	0	0	0	**257**	
0945 - 1000	0	183	57	0	5	3	0	2	14	0	0	0	0	**264**	**1032**
1000 - 1015	0	185	56	0	3	3	0	5	17	0	0	0	0	**269**	
1015 - 1030	0	214	40	0	3	3	0	4	19	0	0	0	0	**283**	
1030 - 1045	0	204	49	1	10	5	0	1	16	0	0	0	0	**286**	
1045 - 1100	0	201	43	1	10	7	0	5	14	0	0	0	0	**281**	**1119**
1100 - 1115	1	213	43	0	4	3	0	4	17	0	0	0	0	**285**	
1115 - 1130	0	224	61	1	6	1	0	3	15	0	0	0	0	**311**	
1130 - 1145	0	251	62	0	3	3	0	3	12	1	0	0	0	**335**	
1145 - 1200	1	271	47	1	5	4	0	4	17	0	0	0	0	**350**	**1281**
1200 - 1215	0	228	82	0	7	5	0	2	16	0	0	0	0	**340**	
1215 - 1230	0	273	56	3	9	5	0	4	14	0	0	0	0	**364**	
1230 - 1245	0	265	68	1	6	6	0	5	11	0	0	0	0	**362**	
1245 - 1300	0	261	77	1	9	1	0	1	19	0	0	0	0	**369**	**1435**
1300 - 1315	1	281	56	2	6	2	0	2	9	0	0	0	0	**359**	
1315 - 1330	1	268	55	0	10	4	0	2	13	0	0	0	0	**353**	
1330 - 1345	3	276	77	0	10	0	0	3	11	0	0	0	0	**380**	
1345 - 1400	3	231	80	0	6	8	0	0	12	0	0	0	0	**340**	**1432**
1400 - 1415	2	212	41	0	5	2	0	2	7	0	0	0	0	**271**	
1415 - 1430	0	255	63	1	8	4	0	1	9	0	0	0	0	**341**	
1430 - 1445	0	283	72	0	3	0	0	0	12	0	0	0	0	**370**	
1445 - 1500	3	279	57	1	4	5	0	3	11	0	0	0	0	**363**	**1345**
1500 - 1515	0	284	76	1	5	1	0	1	12	0	0	0	0	**380**	
1515 - 1530	1	279	73	3	4	2	0	0	9	0	0	0	0	**371**	
1530 - 1545	0	281	72	2	4	2	0	2	7	0	0	0	0	**370**	
1545 - 1600	1	301	64	1	5	3	0	4	9	0	0	0	0	**388**	**1509**
1600 - 1615	0	298	68	1	5	1	0	1	10	0	0	0	0	**384**	
1615 - 1630	0	307	55	0	5	0	0	4	11	0	0	0	0	**382**	
1630 - 1645	0	307	72	0	7	2	0	2	6	0	0	0	0	**396**	
1645 - 1700	0	292	62	0	3	3	0	2	13	0	0	0	0	**375**	**1537**
1700 - 1715	0	340	70	0	5	0	0	0	12	0	0	0	0	**427**	
1715 - 1730	2	312	66	0	4	2	0	2	10	0	0	0	0	**398**	
1730 - 1745	2	326	66	0	4	0	0	4	6	0	0	0	0	**408**	
1745 - 1800	0	264	60	3	2	1	0	2	5	0	0	0	0	**337**	**1570**
1800 - 1815	0	285	62	1	4	1	0	2	10	0	0	0	0	**365**	
1815 - 1830	1	343	60	0	3	3	0	0	8	0	0	0	0	**418**	
1830 - 1845	4	284	61	0	8	0	0	1	2	0	0	0	0	**360**	
1845 - 1900	0	240	55	0	2	0	0	2	5	0	0	0	0	**304**	**1447**
1900 - 1915	0	191	60	0	1	0	0	0	5	0	0	0	0	**257**	
1915 - 1930	0	223	38	0	3	1	0	0	4	0	0	0	0	**269**	
1930 - 1945	1	203	36	0	0	3	0	0	5	0	0	0	0	**248**	
1945 - 2000	6	219	40	0	1	0	0	0	4	0	0	0	0	**270**	**1044**
2000 - 2015	4	217	32	0	0	0	0	0	2	0	0	0	0	**255**	
2015 - 2030	0	201	27	0	1	0	0	0	4	0	0	0	0	**233**	
2030 - 2045	0	190	20	0	1	0	0	0	5	0	0	0	0	**216**	
2045 - 2100	3	175	15	0	1	0	0	0	4	0	0	0	0	**198**	**902**
2100 - 2115	0	167	13	1	3	0	0	1	2	0	0	0	0	**187**	
2115 - 2130	4	165	11	1	1	0	0	0	1	0	0	0	0	**183**	
2130 - 2145	2	190	21	2	4	0	0	1	4	0	0	0	0	**224**	
2145 - 2200	0	160	11	0	0	0	0	0	1	0	0	0	0	**172**	**766**
2200 - 2215	0	130	12	0	2	0	0	0	2	0	0	0	0	**146**	
2215 - 2230	2	110	9	0	3	1	0	0	4	0	0	0	0	**129**	
2230 - 2245	0	130	14	0	1	0	0	0	1	0	1	0	0	**147**	
2245 - 2300	0	104	10	0	2	0	0	0	1	0	0	0	0	**117**	**539**
2300 - 2315	0	80	6	0	0	1	0	0	4	0	0	0	0	**91**	
2315 - 2330	0	90	7	0	1	1	0	0	3	0	0	0	0	**102**	
2330 - 2345	0	75	6	0	2	0	0	0	2	0	0	0	0	**85**	
2345 - 0000	2	62	6	0	1	0	0	0	2	0	0	0	0	**73**	**351**

Session Total	59	16407	3458	40	324	144	0	120	768	1	9	0	0	**21330**
Session Average	0.61	170.91	36.02	0.42	3.38	1.50	0.00	1.25	8.00	0.01	0.09	0.00	0.00	**222.19**
Session Percentage	0.28	76.92	16.21	0.19	1.52	0.68	0.00	0.56	3.60	0.00	0.04	0.00	0.00	

AM Peak Hour	0515 - 0615	0730 - 0830	0715 - 0815	0815 - 0915	0845 - 0945	0900 - 1000	-	0930 - 1030	0945 - 1045	-	0500 - 0600	-	-	**0730 - 0830**
AM Peak Hour Volume	3	988	246	6	28	16	0	13	66	0	1	0	0	**1323**

Noon Peak Hour	1315 - 1415	1430 - 1530	1200 - 1300	1215 - 1315	1245 - 1345	1145 - 1245	-	1000 - 1100	1000 - 1100	1045 - 1145	-	-	-	**1430 - 1530**
Noon Peak Hour Volume	9	1125	283	7	35	20	0	15	66	1	0	0	0	**1484**

PM Peak Hour	1915 - 2015	1645 - 1745	1500 - 1600	1500 - 1600	1545 - 1645	1500 - 1600	-	1530 - 1630	1615 - 1715	-	-	-	-	**1645 - 1745**
PM Peak Hour Volume	11	1270	285	7	22	8	0	11	42	0	0	0	0	**1608**

Site 14
I-26 N/Bound Off-Ramp,
south of I-20

Date
Saturday, April 27, 2024

Lat/Long
34.035060°, -81.111476°

Weather
Mostly Cloudy
69°F

Click here for Detailed Weather

0000 - 2400 (Saturday 24h Session) (04-27-2024)
NB EB 15min

	Northbound (Movement 14.1)													15min	60min
TIME	1	2	3	4	5	6	7	8	9	10	11	12	13	Total	Total
0000 - 0015	0	67	12	0	0	0	0	0	3	0	0	0	0	**82**	
0015 - 0030	0	40	12	0	0	0	0	0	5	0	0	0	0	**57**	
0030 - 0045	0	49	10	0	2	0	0	0	3	0	0	0	0	**64**	
0045 - 0100	0	25	9	0	2	0	0	0	2	0	1	0	0	**39**	**242**
0100 - 0115	0	25	10	0	1	1	0	0	1	0	0	0	0	**38**	
0115 - 0130	0	29	5	0	0	0	0	0	3	0	0	0	0	**37**	
0130 - 0145	0	26	7	0	0	0	0	0	1	0	0	0	0	**34**	
0145 - 0200	0	19	4	0	1	0	0	0	1	0	0	0	0	**25**	**134**
0200 - 0215	0	17	5	0	2	0	0	0	4	0	0	0	0	**28**	
0215 - 0230	0	14	6	0	0	0	0	2	3	0	0	0	0	**25**	
0230 - 0245	0	18	5	0	1	0	0	0	0	0	0	0	0	**24**	
0245 - 0300	0	20	8	0	0	0	0	0	2	0	1	0	0	**31**	**108**
0300 - 0315	0	19	5	1	0	0	0	0	3	0	0	0	0	**28**	
0315 - 0330	0	10	5	1	1	0	0	0	2	0	0	0	0	**19**	
0330 - 0345	0	20	6	2	2	1	0	0	1	0	0	0	0	**32**	
0345 - 0400	0	15	5	0	1	0	0	0	1	0	1	0	0	**23**	**102**
0400 - 0415	0	8	2	0	0	0	0	0	3	0	0	0	0	**13**	
0415 - 0430	0	20	7	0	0	0	0	0	3	0	0	0	0	**30**	
0430 - 0445	0	19	4	0	0	0	0	0	3	0	0	0	0	**26**	
0445 - 0500	0	21	11	1	0	0	0	0	2	0	0	0	0	**35**	**104**
0500 - 0515	0	20	9	1	5	0	0	0	1	0	0	0	0	**36**	
0515 - 0530	0	30	8	0	1	0	0	0	2	0	0	0	0	**41**	
0530 - 0545	0	41	12	0	0	1	0	0	1	0	0	0	0	**55**	
0545 - 0600	0	29	7	0	1	0	0	0	4	0	0	0	0	**41**	**173**
0600 - 0615	0	44	13	0	0	0	0	0	7	0	0	0	0	**64**	
0615 - 0630	0	50	17	0	1	0	0	0	2	0	0	0	0	**70**	
0630 - 0645	0	62	22	0	1	0	0	0	1	0	0	0	0	**86**	
0645 - 0700	0	81	23	0	1	0	0	0	6	0	0	0	0	**111**	**331**
0700 - 0715	1	86	26	0	1	1	0	0	1	0	0	0	0	**116**	
0715 - 0730	0	110	27	0	0	0	0	0	3	0	0	0	0	**140**	
0730 - 0745	0	130	30	0	0	1	0	0	3	0	0	0	0	**164**	
0745 - 0800	0	137	42	0	3	0	0	3	4	0	0	0	0	**189**	**609**
0800 - 0815	0	136	39	1	0	0	0	2	5	0	0	0	0	**183**	
0815 - 0830	3	164	40	0	4	0	0	1	2	0	0	0	0	**214**	
0830 - 0845	1	180	55	0	1	1	0	1	4	0	0	0	0	**243**	
0845 - 0900	0	169	31	0	1	0	0	1	2	0	0	0	0	**204**	**844**
0900 - 0915	0	174	37	1	0	0	0	4	6	0	0	0	0	**222**	
0915 - 0930	1	190	46	0	2	0	0	0	5	0	0	0	0	**244**	
0930 - 0945	0	211	52	1	3	1	0	1	2	0	0	0	0	**271**	
0945 - 1000	1	212	39	0	2	0	0	1	7	0	0	0	0	**262**	**999**
1000 - 1015	4	242	58	0	2	1	0	3	2	0	0	0	0	**312**	
1015 - 1030	1	208	59	0	5	0	0	0	4	1	0	0	0	**278**	
1030 - 1045	1	225	63	0	5	0	0	1	4	0	0	0	0	**299**	
1045 - 1100	1	183	36	0	1	1	0	0	1	0	0	0	0	**223**	**1112**
1100 - 1115	1	198	37	0	4	0	0	0	1	0	0	0	0	**241**	
1115 - 1130	1	228	42	0	3	0	0	0	0	1	0	0	0	**275**	
1130 - 1145	1	255	60	1	3	1	0	2	3	0	0	0	0	**326**	
1145 - 1200	24	289	66	0	2	0	0	2	5	0	0	0	0	**388**	**1230**
1200 - 1215	2	309	49	0	5	0	0	1	8	0	0	0	0	**374**	
1215 - 1230	13	333	55	1	3	3	0	0	8	0	0	0	0	**416**	
1230 - 1245	1	282	55	1	1	0	0	1	3	0	0	0	0	**344**	
1245 - 1300	8	277	39	0	3	2	0	2	2	0	0	0	0	**333**	**1467**
1300 - 1315	7	292	46	0	2	0	0	3	7	0	0	0	0	**357**	
1315 - 1330	1	274	55	0	1	2	0	0	3	0	0	0	0	**336**	
1330 - 1345	1	281	38	0	4	2	0	3	7	0	0	0	0	**336**	
1345 - 1400	2	317	65	1	0	0	0	0	5	0	0	0	0	**390**	**1419**
1400 - 1415	5	297	52	0	0	1	0	0	3	0	0	0	0	**358**	
1415 - 1430	1	288	52	0	5	0	0	1	2	0	0	0	0	**349**	
1430 - 1445	5	314	47	0	5	0	0	1	3	0	0	0	0	**375**	
1445 - 1500	4	309	41	0	4	0	0	3	3	1	0	0	0	**365**	**1447**
1500 - 1515	5	281	61	0	4	0	0	2	4	0	0	0	0	**357**	
1515 - 1530	2	328	43	0	1	0	0	0	8	0	1	0	0	**383**	
1530 - 1545	3	335	69	0	1	0	0	0	7	0	0	0	0	**415**	
1545 - 1600	0	337	53	1	3	0	0	0	2	0	0	0	0	**396**	**1551**
1600 - 1615	1	300	52	0	3	1	0	0	6	0	0	0	0	**363**	
1615 - 1630	1	291	56	0	0	0	0	0	0	0	0	0	0	**348**	
1630 - 1645	1	319	73	0	3	1	0	0	2	0	0	0	0	**399**	
1645 - 1700	17	259	55	0	1	1	0	0	1	0	0	0	0	**334**	**1444**
1700 - 1715	2	288	68	0	1	2	0	0	5	0	0	0	0	**366**	
1715 - 1730	1	283	42	0	1	0	0	0	0	0	0	0	0	**327**	
1730 - 1745	1	242	42	0	3	0	0	0	0	0	0	0	0	**288**	
1745 - 1800	0	243	39	0	1	1	0	0	0	0	0	0	0	**284**	**1265**
1800 - 1815	1	239	35	0	2	1	0	0	1	0	0	0	0	**279**	
1815 - 1830	1	238	42	0	0	0	0	0	3	0	0	0	0	**284**	
1830 - 1845	0	272	49	0	1	0	0	1	4	0	0	0	0	**327**	
1845 - 1900	0	245	40	0	2	0	0	0	4	0	0	0	0	**291**	**1181**
1900 - 1915	0	260	35	0	2	0	0	0	2	0	0	0	0	**299**	
1915 - 1930	4	265	39	0	3	0	0	0	3	0	0	0	0	**314**	
1930 - 1945	1	230	37	0	2	1	0	0	1	0	1	0	0	**273**	
1945 - 2000	1	211	47	0	0	0	0	0	4	0	0	0	0	**263**	**1149**
2000 - 2015	5	232	30	0	0	0	0	0	4	0	0	0	0	**271**	
2015 - 2030	0	215	33	0	0	0	0	0	0	0	0	0	0	**248**	
2030 - 2045	0	201	14	0	0	0	0	0	0	0	0	0	0	**215**	
2045 - 2100	0	190	13	0	2	0	0	0	5	0	0	0	0	**210**	**944**
2100 - 2115	0	203	18	0	1	0	0	0	1	0	0	0	0	**223**	
2115 - 2130	3	181	16	0	1	0	0	0	3	0	0	0	0	**204**	
2130 - 2145	0	184	11	0	2	2	0	0	0	0	0	0	0	**199**	
2145 - 2200	0	175	10	0	2	0	0	0	1	0	0	0	0	**188**	**814**
2200 - 2215	0	142	11	0	1	0	0	0	0	0	0	0	0	**154**	
2215 - 2230	1	175	15	0	2	0	0	0	0	0	0	0	0	**193**	
2230 - 2245	0	152	13	0	1	0	0	0	2	0	0	0	0	**168**	
2245 - 2300	0	142	12	0	0	1	0	0	0	0	0	0	0	**155**	**670**
2300 - 2315	0	101	10	0	2	0	0	0	1	0	0	0	0	**114**	
2315 - 2330	1	103	12	0	1	0	0	0	1	0	0	0	0	**118**	
2330 - 2345	0	80	9	0	1	1	0	0	3	0	0	0	0	**94**	
2345 - 0000	0	75	11	0	0	0	0	0	0	0	0	0	0	**86**	**412**

Session Total	143	16155	2943	14	148	32	0	42	266	3	5	0	0	**19751**
Session Average	1.49	168.28	30.66	0.15	1.54	0.33	0.00	0.44	2.77	0.03	0.05	0.00	0.00	**205.74**
Session Percentage	0.72	81.79	14.90	0.07	0.75	0.16	0.00	0.21	1.35	0.02	0.03	0.00	0.00	

AM Peak Hour	0945 - 1045	0945 - 1045	0945 - 1045	0845 - 0945	0945 - 1045	0645 - 0745	-	0745 - 0845	0900 - 1000	0930 - 1030	-	-	-	**0945 - 1045**
AM Peak Hour Volume	7	887	219	2	14	2	0	7	20	1	0	0	0	**1151**

Noon Peak Hour	1130 - 1230	1445 - 1545	1130 - 1230	1130 - 1230	1415 - 1515	1245 - 1345	-	1245 - 1345	1130 - 1230	1000 - 1100	1430 - 1530	-	-	**1145 - 1245**
Noon Peak Hour Volume	40	1253	230	2	18	6	0	8	24	1	1	0	0	**1522**

PM Peak Hour	1615 - 1715	1515 - 1615	1615 - 1715	1500 - 1600	1500 - 1600	1615 - 1715	-	1500 - 1600	1515 - 1615	-	1500 - 1600	-	-	**1515 - 1615**
PM Peak Hour Volume	21	1300	252	1	9	4	0	2	23	0	1	0	0	**1557**

Bi-Directional Class Count || NB EB Average 15min

Columbia, SC

Marr Traffic DATA COLLECTION
www.marrtraffic.com

Site 14
I-26 N/Bound Off-Ramp,
south of I-20

Date
Sunday, April 21, 2024

Lat/Long
34.035060°, -81.111476°

Weather
Cloudy
66°F

0000 - 2400 (Weekday 24h Session) (All Dates)
NB EB Average 15min

	NB EB Average 15min													15min	60min
Time	1	2	3	4	5	6	7	8	9	10	11	12	13	Total	Total
0000 - 0015	0	45	8	0	1	0	0	0	5	0	0	0	0	**59**	
0015 - 0030	0	33	7	0	0	0	0	0	3	0	0	0	0	**44**	
0030 - 0045	0	33	6	0	1	0	0	0	3	0	0	0	0	**43**	
0045 - 0100	0	25	6	0	1	0	0	0	3	0	0	0	0	**35**	**181**
0100 - 0115	0	24	5	0	1	0	0	0	2	0	0	0	0	**33**	
0115 - 0130	0	23	5	0	1	0	0	0	3	0	0	0	0	**32**	
0130 - 0145	0	21	5	0	0	0	0	0	3	0	0	0	0	**28**	
0145 - 0200	0	17	3	0	0	0	0	0	2	0	0	0	0	**23**	**117**
0200 - 0215	0	19	3	0	0	0	0	0	2	0	0	0	0	**25**	
0215 - 0230	0	15	3	0	0	0	0	0	3	0	0	0	0	**22**	
0230 - 0245	0	16	3	0	0	0	0	0	2	0	0	0	0	**22**	
0245 - 0300	0	16	3	0	1	0	0	0	3	0	0	0	0	**23**	**92**
0300 - 0315	0	13	2	0	0	0	0	0	3	0	0	0	0	**20**	
0315 - 0330	0	14	3	0	1	0	0	0	4	0	0	0	0	**23**	
0330 - 0345	0	17	3	0	1	0	0	0	4	0	0	0	0	**25**	
0345 - 0400	0	16	3	0	1	0	0	0	4	0	0	0	0	**24**	**93**
0400 - 0415	0	20	3	0	1	0	0	0	4	0	0	0	0	**29**	
0415 - 0430	0	21	4	0	0	0	0	0	3	0	0	0	0	**28**	
0430 - 0445	0	30	5	0	1	0	0	0	6	0	0	0	0	**42**	
0445 - 0500	0	33	7	0	1	0	0	0	5	0	0	0	0	**46**	**145**
0500 - 0515	0	34	7	1	2	0	0	0	4	0	0	0	0	**47**	
0515 - 0530	0	53	9	0	2	0	0	0	5	0	0	0	0	**69**	
0530 - 0545	0	61	9	0	2	0	0	0	5	0	0	0	0	**78**	
0545 - 0600	0	67	11	0	1	1	0	0	8	0	0	0	0	**88**	**282**
0600 - 0615	0	77	13	0	2	0	0	0	7	0	0	0	0	**101**	
0615 - 0630	0	104	28	0	3	3	0	1	9	0	0	0	0	**148**	
0630 - 0645	1	129	40	0	3	0	1	1	6	0	0	0	0	**182**	
0645 - 0700	0	147	42	0	3	2	0	0	9	0	0	0	0	**203**	**635**
0700 - 0715	0	168	49	0	3	1	0	1	8	0	0	0	0	**230**	
0715 - 0730	0	206	52	0	3	1	0	1	7	0	0	0	0	**269**	
0730 - 0745	0	196	49	0	3	1	0	1	6	0	0	0	0	**256**	
0745 - 0800	0	188	50	0	6	2	0	1	8	0	0	0	0	**255**	**1011**
0800 - 0815	1	185	51	0	4	1	0	2	9	0	0	0	0	**253**	
0815 - 0830	1	191	57	1	7	1	0	2	8	0	0	0	0	**267**	
0830 - 0845	1	207	58	0	7	2	0	2	9	0	0	0	0	**285**	
0845 - 0900	0	167	48	0	4	1	0	2	11	0	0	0	0	**234**	**1040**
0900 - 0915	0	152	46	0	4	3	0	2	11	0	0	0	0	**218**	
0915 - 0930	0	162	48	0	4	2	0	1	9	0	0	0	0	**226**	
0930 - 0945	0	165	47	0	6	3	0	1	9	0	0	0	0	**231**	
0945 - 1000	0	166	49	0	5	2	0	1	10	0	0	0	0	**234**	**910**
1000 - 1015	1	169	49	0	5	2	0	2	12	0	0	0	0	**240**	
1015 - 1030	1	175	46	0	5	2	0	2	11	0	0	0	0	**242**	
1030 - 1045	0	178	47	0	6	2	0	2	9	0	0	0	0	**245**	
1045 - 1100	1	168	45	0	6	2	0	2	10	0	0	0	0	**235**	**962**
1100 - 1115	0	165	48	0	4	2	0	2	9	0	0	0	0	**230**	
1115 - 1130	2	181	50	0	5	3	0	1	9	0	0	0	0	**252**	
1130 - 1145	0	190	53	0	5	2	0	2	9	0	0	0	0	**262**	
1145 - 1200	4	201	53	0	5	2	0	2	12	0	0	0	0	**280**	**1024**
1200 - 1215	1	211	55	0	6	3	0	4	15	0	0	0	0	**296**	
1215 - 1230	2	232	52	1	5	3	0	1	12	0	0	0	0	**308**	
1230 - 1245	0	225	56	1	4	3	0	2	12	0	0	0	0	**303**	
1245 - 1300	1	229	53	0	6	1	0	2	13	0	0	0	0	**306**	**1213**
1300 - 1315	2	221	54	1	5	2	0	2	11	0	0	0	0	**297**	
1315 - 1330	1	237	55	1	8	2	0	1	9	0	0	0	0	**314**	
1330 - 1345	1	229	56	0	6	2	0	2	12	0	0	0	0	**309**	
1345 - 1400	1	229	57	0	4	3	0	1	11	0	0	0	0	**306**	**1225**
1400 - 1415	1	214	47	0	5	2	0	1	10	0	0	0	0	**279**	
1415 - 1430	0	226	53	0	7	2	0	1	11	0	0	0	0	**299**	
1430 - 1445	2	245	55	0	4	2	0	1	10	0	0	0	0	**318**	
1445 - 1500	1	250	56	1	5	2	0	2	10	0	0	0	0	**326**	**1222**
1500 - 1515	1	247	59	1	5	2	0	1	10	0	0	0	0	**326**	
1515 - 1530	1	259	59	1	5	2	0	1	9	0	0	0	0	**336**	
1530 - 1545	1	268	57	1	5	2	0	1	10	0	0	0	0	**345**	
1545 - 1600	1	279	61	2	4	2	0	1	8	0	0	0	0	**359**	**1366**
1600 - 1615	0	264	61	1	5	1	0	1	8	0	0	0	0	**341**	
1615 - 1630	1	277	57	1	3	1	0	1	9	0	0	0	0	**350**	
1630 - 1645	0	278	65	1	4	1	0	1	9	0	0	0	0	**361**	
1645 - 1700	3	275	65	0	5	2	0	1	9	0	0	0	0	**359**	**1411**
1700 - 1715	1	282	62	0	4	1	0	0	9	0	0	0	0	**360**	
1715 - 1730	0	265	51	0	3	2	0	1	8	0	0	0	0	**331**	
1730 - 1745	1	268	59	0	3	1	0	1	8	0	0	0	0	**342**	
1745 - 1800	0	245	50	1	5	1	0	1	7	0	0	0	0	**309**	**1341**
1800 - 1815	1	241	52	1	2	1	0	1	8	0	0	0	0	**307**	
1815 - 1830	1	239	48	0	2	2	0	1	7	0	0	0	0	**300**	
1830 - 1845	1	218	49	0	3	1	0	1	7	0	0	0	0	**281**	
1845 - 1900	0	194	44	1	3	1	0	1	7	0	0	0	0	**251**	**1138**
1900 - 1915	0	208	47	0	2	0	0	0	7	0	0	0	0	**265**	
1915 - 1930	1	201	36	0	2	1	0	0	7	0	0	0	0	**247**	
1930 - 1945	1	186	31	0	2	1	0	0	8	0	0	0	0	**229**	
1945 - 2000	2	175	33	0	2	0	0	0	5	0	0	0	0	**218**	**959**
2000 - 2015	1	182	29	0	0	0	0	1	5	0	0	0	0	**219**	
2015 - 2030	0	178	25	0	1	0	0	0	4	0	0	0	0	**207**	
2030 - 2045	0	151	18	0	1	0	0	0	4	0	0	0	0	**175**	
2045 - 2100	1	147	16	0	2	0	0	0	5	0	0	0	0	**171**	**773**
2100 - 2115	0	141	15	0	1	0	0	0	4	0	0	0	0	**162**	
2115 - 2130	1	132	15	0	1	0	0	0	4	0	0	0	0	**152**	
2130 - 2145	0	123	13	0	1	0	0	0	4	0	0	0	0	**142**	
2145 - 2200	0	123	13	0	0	0	0	0	3	0	0	0	0	**139**	**595**
2200 - 2215	0	100	11	0	1	0	0	0	3	0	0	0	0	**115**	
2215 - 2230	0	101	9	0	1	0	0	0	3	0	0	0	0	**115**	
2230 - 2245	0	93	11	0	1	0	0	0	2	0	0	0	0	**108**	
2245 - 2300	0	78	8	0	1	0	0	0	2	0	0	0	0	**90**	**428**
2300 - 2315	0	60	7	0	1	0	0	0	2	0	0	0	0	**71**	
2315 - 2330	0	61	7	0	0	0	0	0	3	0	0	0	0	**71**	
2330 - 2345	0	55	6	0	1	0	0	0	3	0	0	0	0	**65**	
2345 - 0000	0	45	6	0	0	0	0	0	4	0	0	0	0	**55**	**262**

Session Total	49	14091	3146	24	272	99	5	74	654	4	6	0	0	**18425**
Session Average	0.51	146.78	32.77	0.25	2.84	1.04	0.05	0.78	6.81	0.04	0.06	0.00	0.00	**191.92**
Session Percentage	0.27	76.48	17.07	0.13	1.48	0.54	0.03	0.40	3.55	0.02	0.03	0.00	0.00	

AM Peak Hour	0745 - 0845	0715 - 0815	0745 - 0845	0815 - 0915	0745 - 0845	0900 - 1000	0630 - 0730	0815 - 0915	0945 - 1045	0815 - 0915	0500 - 0600	-	-	**0745 - 0845**
AM Peak Volume	2	774	216	1	23	9	1	7	42	1	0	0	0	**1061**

Noon Peak Hour	1115 - 1215	1445 - 1545	1445 - 1545	1445 - 1545	1245 - 1345	1145 - 1245	1015 - 1115	1200 - 1300	1200 - 1300	1045 - 1145	1430 - 1530	-	-	**1445 - 1545**
Noon Peak Volume	7	1024	231	4	24	11	1	9	52	1	0	0	0	**1333**

PM Peak Hour	1915 - 2015	1615 - 1715	1615 - 1715	1500 - 1600	1500 - 1600	1500 - 1600	1530 - 1630	1715 - 1815	1500 - 1600	1515 - 1615	1930 - 2030	-	-	**1615 - 1715**
PM Peak Volume	5	1113	249	5	19	9	1	5	37	0	0	0	0	**1430**

Bi-Directional Class Count || Volume Summary 15min

Columbia, SC

Marr Traffic DATA COLLECTION

www.marrtraffic.com

Site 14

I-26 N/Bound Off-Ramp,
south of I-20

Date

Sunday, April 21, 2024

Lat/Long

34.035060°, -81.111476°

Weather

Cloudy
66°F

Click here for Detailed Weather

0000 - 2400 (Sunday 24h Session) (04-21-2024)

Volume Summary 15min

TIME	Volume Summary 15min NB	SB	15min Total	60min Total
0000 - 0015	86	0	**86**	
0015 - 0030	69	0	**69**	
0030 - 0045	63	0	**63**	
0045 - 0100	75	0	**75**	**293**
0100 - 0115	73	0	**73**	
0115 - 0130	57	0	**57**	
0130 - 0145	62	0	**62**	
0145 - 0200	49	0	**49**	**241**
0200 - 0215	61	0	**61**	
0215 - 0230	35	0	**35**	
0230 - 0245	31	0	**31**	
0245 - 0300	36	0	**36**	**163**
0300 - 0315	27	0	**27**	
0315 - 0330	16	0	**16**	
0330 - 0345	12	0	**12**	
0345 - 0400	17	0	**17**	**72**
0400 - 0415	23	0	**23**	
0415 - 0430	12	0	**12**	
0430 - 0445	15	0	**15**	
0445 - 0500	25	0	**25**	**75**
0500 - 0515	27	0	**27**	
0515 - 0530	15	0	**15**	
0530 - 0545	19	0	**19**	
0545 - 0600	23	0	**23**	**84**
0600 - 0615	33	0	**33**	
0615 - 0630	44	0	**44**	
0630 - 0645	58	0	**58**	
0645 - 0700	45	0	**45**	**180**
0700 - 0715	71	0	**71**	
0715 - 0730	90	0	**90**	
0730 - 0745	84	0	**84**	
0745 - 0800	98	0	**98**	**343**
0800 - 0815	92	0	**92**	
0815 - 0830	103	0	**103**	
0830 - 0845	99	0	**99**	
0845 - 0900	151	0	**151**	**445**
0900 - 0915	133	0	**133**	
0915 - 0930	148	0	**148**	
0930 - 0945	178	0	**178**	
0945 - 1000	187	0	**187**	**646**
1000 - 1015	182	0	**182**	
1015 - 1030	229	0	**229**	
1030 - 1045	191	0	**191**	
1045 - 1100	194	0	**194**	**796**
1100 - 1115	209	0	**209**	
1115 - 1130	187	0	**187**	
1130 - 1145	221	0	**221**	
1145 - 1200	226	0	**226**	**843**

Time	Volume Summary 15min NB	SB	15min Total	60min Total
1200 - 1215	253	0	**253**	
1215 - 1230	273	0	**273**	
1230 - 1245	296	0	**296**	
1245 - 1300	281	0	**281**	**1103**
1300 - 1315	262	0	**262**	
1315 - 1330	292	0	**292**	
1330 - 1345	333	0	**333**	
1345 - 1400	283	0	**283**	**1170**
1400 - 1415	230	0	**230**	
1415 - 1430	273	0	**273**	
1430 - 1445	299	0	**299**	
1445 - 1500	316	0	**316**	**1118**
1500 - 1515	290	0	**290**	
1515 - 1530	310	0	**310**	
1530 - 1545	316	0	**316**	
1545 - 1600	346	0	**346**	**1262**
1600 - 1615	294	0	**294**	
1615 - 1630	291	0	**291**	
1630 - 1645	282	0	**282**	
1645 - 1700	308	0	**308**	**1175**
1700 - 1715	318	0	**318**	
1715 - 1730	268	0	**268**	
1730 - 1745	308	0	**308**	
1745 - 1800	281	0	**281**	**1175**
1800 - 1815	328	0	**328**	
1815 - 1830	291	0	**291**	
1830 - 1845	271	0	**271**	
1845 - 1900	232	0	**232**	**1122**
1900 - 1915	254	0	**254**	
1915 - 1930	200	0	**200**	
1930 - 1945	219	0	**219**	
1945 - 2000	193	0	**193**	**866**
2000 - 2015	184	0	**184**	
2015 - 2030	169	0	**169**	
2030 - 2045	136	0	**136**	
2045 - 2100	141	0	**141**	**630**
2100 - 2115	131	0	**131**	
2115 - 2130	123	0	**123**	
2130 - 2145	112	0	**112**	
2145 - 2200	143	0	**143**	**509**
2200 - 2215	108	0	**108**	
2215 - 2230	112	0	**112**	
2230 - 2245	77	0	**77**	
2245 - 2300	90	0	**90**	**387**
2300 - 2315	76	0	**76**	
2315 - 2330	66	0	**66**	
2330 - 2345	62	0	**62**	
2345 - 0000	38	0	**38**	**242**

Session Total	14940	0	**14940**
Session Average	155.63	0.00	**155.63**
Session Percentage	100.00	0.00	

Site 14
I-26 N/Bound Off-Ramp,
south of I-20

Date
Monday, April 22, 2024

Lat/Long
34.035060°, -81.111476°

Weather
Mostly Cloudy
57°F

Click here for Detailed Weather

0000 - 2400 (Weekday 24h Session) (04-22-2024)
Volume Summary 15min

TIME	Volume Summary 15min NB	SB	15min Total	60min Total
0000 - 0015	40	0	**40**	
0015 - 0030	39	0	**39**	
0030 - 0045	29	0	**29**	
0045 - 0100	26	0	**26**	**134**
0100 - 0115	24	0	**24**	
0115 - 0130	24	0	**24**	
0130 - 0145	18	0	**18**	
0145 - 0200	15	0	**15**	**81**
0200 - 0215	21	0	**21**	
0215 - 0230	10	0	**10**	
0230 - 0245	22	0	**22**	
0245 - 0300	26	0	**26**	**79**
0300 - 0315	15	0	**15**	
0315 - 0330	25	0	**25**	
0330 - 0345	38	0	**38**	
0345 - 0400	26	0	**26**	**104**
0400 - 0415	34	0	**34**	
0415 - 0430	38	0	**38**	
0430 - 0445	44	0	**44**	
0445 - 0500	57	0	**57**	**173**
0500 - 0515	57	0	**57**	
0515 - 0530	97	0	**97**	
0530 - 0545	114	0	**114**	
0545 - 0600	118	0	**118**	**386**
0600 - 0615	133	0	**133**	
0615 - 0630	221	0	**221**	
0630 - 0645	248	0	**248**	
0645 - 0700	244	0	**244**	**846**
0700 - 0715	292	0	**292**	
0715 - 0730	331	0	**331**	
0730 - 0745	343	0	**343**	
0745 - 0800	311	0	**311**	**1277**
0800 - 0815	317	0	**317**	
0815 - 0830	319	0	**319**	
0830 - 0845	347	0	**347**	
0845 - 0900	254	0	**254**	**1237**
0900 - 0915	233	0	**233**	
0915 - 0930	216	0	**216**	
0930 - 0945	241	0	**241**	
0945 - 1000	235	0	**235**	**925**
1000 - 1015	211	0	**211**	
1015 - 1030	195	0	**195**	
1030 - 1045	264	0	**264**	
1045 - 1100	246	0	**246**	**916**
1100 - 1115	207	0	**207**	
1115 - 1130	259	0	**259**	
1130 - 1145	243	0	**243**	
1145 - 1200	244	0	**244**	**953**

Time	Volume Summary 15min NB	SB	15min Total	60min Total
1200 - 1215	251	0	**251**	
1215 - 1230	256	0	**256**	
1230 - 1245	237	0	**237**	
1245 - 1300	286	0	**286**	**1030**
1300 - 1315	261	0	**261**	
1315 - 1330	270	0	**270**	
1330 - 1345	263	0	**263**	
1345 - 1400	286	0	**286**	**1080**
1400 - 1415	239	0	**239**	
1415 - 1430	258	0	**258**	
1430 - 1445	303	0	**303**	
1445 - 1500	283	0	**283**	**1083**
1500 - 1515	298	0	**298**	
1515 - 1530	292	0	**292**	
1530 - 1545	314	0	**314**	
1545 - 1600	325	0	**325**	**1229**
1600 - 1615	338	0	**338**	
1615 - 1630	341	0	**341**	
1630 - 1645	352	0	**352**	
1645 - 1700	349	0	**349**	**1380**
1700 - 1715	365	0	**365**	
1715 - 1730	383	0	**383**	
1730 - 1745	368	0	**368**	
1745 - 1800	282	0	**282**	**1398**
1800 - 1815	310	0	**310**	
1815 - 1830	272	0	**272**	
1830 - 1845	223	0	**223**	
1845 - 1900	224	0	**224**	**1029**
1900 - 1915	245	0	**245**	
1915 - 1930	218	0	**218**	
1930 - 1945	194	0	**194**	
1945 - 2000	174	0	**174**	**831**
2000 - 2015	174	0	**174**	
2015 - 2030	182	0	**182**	
2030 - 2045	135	0	**135**	
2045 - 2100	138	0	**138**	**629**
2100 - 2115	119	0	**119**	
2115 - 2130	125	0	**125**	
2130 - 2145	119	0	**119**	
2145 - 2200	101	0	**101**	**464**
2200 - 2215	97	0	**97**	
2215 - 2230	91	0	**91**	
2230 - 2245	74	0	**74**	
2245 - 2300	53	0	**53**	**315**
2300 - 2315	57	0	**57**	
2315 - 2330	47	0	**47**	
2330 - 2345	43	0	**43**	
2345 - 0000	34	0	**34**	**181**

Session Total	17760	0	**17760**
Session Average	185.00	0.00	**185.00**
Session Percentage	100.00	0.00	

Site 14
I-26 N/Bound Off-Ramp,
south of I-20

Date
Tuesday, April 23, 2024

Lat/Long
34.035060°, -81.111476°

Weather
Fair
58°F

Click here for Detailed Weather

0000 - 2400 (Weekday 24h Session) (04-23-2024)

Volume Summary 15min

TIME	Volume Summary 15min NB	SB	15min Total	60min Total
0000 - 0015	30	0	**30**	
0015 - 0030	35	0	**35**	
0030 - 0045	34	0	**34**	
0045 - 0100	23	0	**23**	**122**
0100 - 0115	25	0	**25**	
0115 - 0130	33	0	**33**	
0130 - 0145	21	0	**21**	
0145 - 0200	17	0	**17**	**96**
0200 - 0215	12	0	**12**	
0215 - 0230	23	0	**23**	
0230 - 0245	20	0	**20**	
0245 - 0300	15	0	**15**	**70**
0300 - 0315	10	0	**10**	
0315 - 0330	25	0	**25**	
0330 - 0345	25	0	**25**	
0345 - 0400	22	0	**22**	**82**
0400 - 0415	27	0	**27**	
0415 - 0430	34	0	**34**	
0430 - 0445	66	0	**66**	
0445 - 0500	44	0	**44**	**171**
0500 - 0515	55	0	**55**	
0515 - 0530	81	0	**81**	
0530 - 0545	102	0	**102**	
0545 - 0600	106	0	**106**	**344**
0600 - 0615	121	0	**121**	
0615 - 0630	176	0	**176**	
0630 - 0645	220	0	**220**	
0645 - 0700	277	0	**277**	**794**
0700 - 0715	301	0	**301**	
0715 - 0730	343	0	**343**	
0730 - 0745	174	0	**174**	
0745 - 0800	251	0	**251**	**1069**
0800 - 0815	280	0	**280**	
0815 - 0830	261	0	**261**	
0830 - 0845	327	0	**327**	
0845 - 0900	249	0	**249**	**1117**
0900 - 0915	211	0	**211**	
0915 - 0930	226	0	**226**	
0930 - 0945	210	0	**210**	
0945 - 1000	214	0	**214**	**861**
1000 - 1015	224	0	**224**	
1015 - 1030	235	0	**235**	
1030 - 1045	240	0	**240**	
1045 - 1100	264	0	**264**	**963**
1100 - 1115	241	0	**241**	
1115 - 1130	248	0	**248**	
1130 - 1145	244	0	**244**	
1145 - 1200	242	0	**242**	**975**

Time	Volume Summary 15min NB	SB	15min Total	60min Total
1200 - 1215	256	0	**256**	
1215 - 1230	255	0	**255**	
1230 - 1245	266	0	**266**	
1245 - 1300	274	0	**274**	**1051**
1300 - 1315	258	0	**258**	
1315 - 1330	301	0	**301**	
1330 - 1345	266	0	**266**	
1345 - 1400	251	0	**251**	**1076**
1400 - 1415	270	0	**270**	
1415 - 1430	307	0	**307**	
1430 - 1445	272	0	**272**	
1445 - 1500	288	0	**288**	**1137**
1500 - 1515	265	0	**265**	
1515 - 1530	311	0	**311**	
1530 - 1545	321	0	**321**	
1545 - 1600	369	0	**369**	**1266**
1600 - 1615	310	0	**310**	
1615 - 1630	359	0	**359**	
1630 - 1645	356	0	**356**	
1645 - 1700	368	0	**368**	**1393**
1700 - 1715	293	0	**293**	
1715 - 1730	235	0	**235**	
1730 - 1745	340	0	**340**	
1745 - 1800	341	0	**341**	**1209**
1800 - 1815	244	0	**244**	
1815 - 1830	244	0	**244**	
1830 - 1845	226	0	**226**	
1845 - 1900	181	0	**181**	**895**
1900 - 1915	244	0	**244**	
1915 - 1930	227	0	**227**	
1930 - 1945	211	0	**211**	
1945 - 2000	203	0	**203**	**885**
2000 - 2015	175	0	**175**	
2015 - 2030	180	0	**180**	
2030 - 2045	168	0	**168**	
2045 - 2100	156	0	**156**	**679**
2100 - 2115	118	0	**118**	
2115 - 2130	127	0	**127**	
2130 - 2145	107	0	**107**	
2145 - 2200	105	0	**105**	**457**
2200 - 2215	98	0	**98**	
2215 - 2230	80	0	**80**	
2230 - 2245	81	0	**81**	
2245 - 2300	65	0	**65**	**324**
2300 - 2315	52	0	**52**	
2315 - 2330	52	0	**52**	
2330 - 2345	43	0	**43**	
2345 - 0000	38	0	**38**	**185**

Session Total	17221	0	**17221**
Session Average	179.39	0.00	**179.39**
Session Percentage	100.00	0.00	

Site 14
I-26 N/Bound Off-Ramp,
south of I-20

Date
Wednesday, April 24, 2024

Lat/Long
34.035060°, -81.111476°

Weather
Fair
66°F

Click here for Detailed Weather

0000 - 2400 (Weekday 24h Session) (04-24-2024)

Volume Summary 15min

TIME	Volume Summary 15min NB	SB	15min Total	60min Total
0000 - 0015	49	0	**49**	
0015 - 0030	35	0	**35**	
0030 - 0045	28	0	**28**	
0045 - 0100	34	0	**34**	**146**
0100 - 0115	18	0	**18**	
0115 - 0130	21	0	**21**	
0130 - 0145	22	0	**22**	
0145 - 0200	17	0	**17**	**78**
0200 - 0215	17	0	**17**	
0215 - 0230	18	0	**18**	
0230 - 0245	10	0	**10**	
0245 - 0300	16	0	**16**	**61**
0300 - 0315	17	0	**17**	
0315 - 0330	22	0	**22**	
0330 - 0345	18	0	**18**	
0345 - 0400	18	0	**18**	**75**
0400 - 0415	37	0	**37**	
0415 - 0430	24	0	**24**	
0430 - 0445	47	0	**47**	
0445 - 0500	64	0	**64**	**172**
0500 - 0515	46	0	**46**	
0515 - 0530	80	0	**80**	
0530 - 0545	94	0	**94**	
0545 - 0600	124	0	**124**	**344**
0600 - 0615	116	0	**116**	
0615 - 0630	202	0	**202**	
0630 - 0645	252	0	**252**	
0645 - 0700	262	0	**262**	**832**
0700 - 0715	293	0	**293**	
0715 - 0730	363	0	**363**	
0730 - 0745	340	0	**340**	
0745 - 0800	327	0	**327**	**1323**
0800 - 0815	283	0	**283**	
0815 - 0830	300	0	**300**	
0830 - 0845	313	0	**313**	
0845 - 0900	251	0	**251**	**1147**
0900 - 0915	232	0	**232**	
0915 - 0930	257	0	**257**	
0930 - 0945	212	0	**212**	
0945 - 1000	224	0	**224**	**925**
1000 - 1015	238	0	**238**	
1015 - 1030	239	0	**239**	
1030 - 1045	200	0	**200**	
1045 - 1100	202	0	**202**	**879**
1100 - 1115	217	0	**217**	
1115 - 1130	209	0	**209**	
1130 - 1145	210	0	**210**	
1145 - 1200	263	0	**263**	**899**

Time	Volume Summary 15min NB	SB	15min Total	60min Total
1200 - 1215	273	0	**273**	
1215 - 1230	273	0	**273**	
1230 - 1245	301	0	**301**	
1245 - 1300	290	0	**290**	**1137**
1300 - 1315	276	0	**276**	
1315 - 1330	291	0	**291**	
1330 - 1345	295	0	**295**	
1345 - 1400	270	0	**270**	**1132**
1400 - 1415	276	0	**276**	
1415 - 1430	262	0	**262**	
1430 - 1445	281	0	**281**	
1445 - 1500	301	0	**301**	**1120**
1500 - 1515	330	0	**330**	
1515 - 1530	338	0	**338**	
1530 - 1545	317	0	**317**	
1545 - 1600	324	0	**324**	**1309**
1600 - 1615	322	0	**322**	
1615 - 1630	343	0	**343**	
1630 - 1645	383	0	**383**	
1645 - 1700	371	0	**371**	**1419**
1700 - 1715	373	0	**373**	
1715 - 1730	358	0	**358**	
1730 - 1745	332	0	**332**	
1745 - 1800	286	0	**286**	**1349**
1800 - 1815	311	0	**311**	
1815 - 1830	293	0	**293**	
1830 - 1845	252	0	**252**	
1845 - 1900	244	0	**244**	**1100**
1900 - 1915	273	0	**273**	
1915 - 1930	222	0	**222**	
1930 - 1945	206	0	**206**	
1945 - 2000	192	0	**192**	**893**
2000 - 2015	237	0	**237**	
2015 - 2030	203	0	**203**	
2030 - 2045	186	0	**186**	
2045 - 2100	164	0	**164**	**790**
2100 - 2115	151	0	**151**	
2115 - 2130	142	0	**142**	
2130 - 2145	102	0	**102**	
2145 - 2200	125	0	**125**	**520**
2200 - 2215	97	0	**97**	
2215 - 2230	100	0	**100**	
2230 - 2245	73	0	**73**	
2245 - 2300	63	0	**63**	**333**
2300 - 2315	59	0	**59**	
2315 - 2330	66	0	**66**	
2330 - 2345	43	0	**43**	
2345 - 0000	41	0	**41**	**209**

Session Total	18192	0	**18192**
Session Average	189.50	0.00	**189.50**
Session Percentage	100.00	0.00	

Site 14
I-26 N/Bound Off-Ramp,
south of I-20

Date
Thursday, April 25, 2024

Lat/Long
34.035060°, -81.111476°

Weather
Fair
67°F

Click here for Detailed Weather

0000 - 2400 (Weekday 24h Session) (04-25-2024)
Volume Summary 15min

TIME	Volume Summary 15min NB	SB	15min Total	60min Total
0000 - 0015	61	0	**61**	
0015 - 0030	33	0	**33**	
0030 - 0045	32	0	**32**	
0045 - 0100	20	0	**20**	**146**
0100 - 0115	24	0	**24**	
0115 - 0130	29	0	**29**	
0130 - 0145	21	0	**21**	
0145 - 0200	20	0	**20**	**94**
0200 - 0215	16	0	**16**	
0215 - 0230	20	0	**20**	
0230 - 0245	19	0	**19**	
0245 - 0300	15	0	**15**	**70**
0300 - 0315	22	0	**22**	
0315 - 0330	35	0	**35**	
0330 - 0345	23	0	**23**	
0345 - 0400	27	0	**27**	**107**
0400 - 0415	40	0	**40**	
0415 - 0430	32	0	**32**	
0430 - 0445	53	0	**53**	
0445 - 0500	53	0	**53**	**178**
0500 - 0515	59	0	**59**	
0515 - 0530	76	0	**76**	
0530 - 0545	87	0	**87**	
0545 - 0600	119	0	**119**	**341**
0600 - 0615	125	0	**125**	
0615 - 0630	169	0	**169**	
0630 - 0645	227	0	**227**	
0645 - 0700	286	0	**286**	**807**
0700 - 0715	280	0	**280**	
0715 - 0730	328	0	**328**	
0730 - 0745	338	0	**338**	
0745 - 0800	286	0	**286**	**1232**
0800 - 0815	287	0	**287**	
0815 - 0830	354	0	**354**	
0830 - 0845	327	0	**327**	
0845 - 0900	306	0	**306**	**1274**
0900 - 0915	248	0	**248**	
0915 - 0930	232	0	**232**	
0930 - 0945	250	0	**250**	
0945 - 1000	249	0	**249**	**979**
1000 - 1015	244	0	**244**	
1015 - 1030	238	0	**238**	
1030 - 1045	236	0	**236**	
1045 - 1100	233	0	**233**	**951**
1100 - 1115	213	0	**213**	
1115 - 1130	276	0	**276**	
1130 - 1145	252	0	**252**	
1145 - 1200	244	0	**244**	**985**

Time	Volume Summary 15min NB	SB	15min Total	60min Total
1200 - 1215	323	0	**323**	
1215 - 1230	320	0	**320**	
1230 - 1245	316	0	**316**	
1245 - 1300	308	0	**308**	**1267**
1300 - 1315	303	0	**303**	
1315 - 1330	355	0	**355**	
1330 - 1345	287	0	**287**	
1345 - 1400	323	0	**323**	**1268**
1400 - 1415	308	0	**308**	
1415 - 1430	305	0	**305**	
1430 - 1445	327	0	**327**	
1445 - 1500	367	0	**367**	**1307**
1500 - 1515	364	0	**364**	
1515 - 1530	346	0	**346**	
1530 - 1545	360	0	**360**	
1545 - 1600	365	0	**365**	**1435**
1600 - 1615	373	0	**373**	
1615 - 1630	388	0	**388**	
1630 - 1645	358	0	**358**	
1645 - 1700	411	0	**411**	**1530**
1700 - 1715	376	0	**376**	
1715 - 1730	345	0	**345**	
1730 - 1745	349	0	**349**	
1745 - 1800	353	0	**353**	**1423**
1800 - 1815	309	0	**309**	
1815 - 1830	300	0	**300**	
1830 - 1845	305	0	**305**	
1845 - 1900	279	0	**279**	**1193**
1900 - 1915	284	0	**284**	
1915 - 1930	280	0	**280**	
1930 - 1945	250	0	**250**	
1945 - 2000	228	0	**228**	**1042**
2000 - 2015	238	0	**238**	
2015 - 2030	237	0	**237**	
2030 - 2045	166	0	**166**	
2045 - 2100	193	0	**193**	**834**
2100 - 2115	204	0	**204**	
2115 - 2130	160	0	**160**	
2130 - 2145	129	0	**129**	
2145 - 2200	139	0	**139**	**632**
2200 - 2215	107	0	**107**	
2215 - 2230	97	0	**97**	
2230 - 2245	137	0	**137**	
2245 - 2300	88	0	**88**	**429**
2300 - 2315	46	0	**46**	
2315 - 2330	49	0	**49**	
2330 - 2345	85	0	**85**	
2345 - 0000	75	0	**75**	**255**

Session Total	19779	0	**19779**
Session Average	206.03	0.00	**206.03**
Session Percentage	100.00	0.00	

Site 14
I-26 N/Bound Off-Ramp,
south of I-20

Date
Friday, April 26, 2024

Lat/Long
34.035060°, -81.111476°

Weather
Cloudy
69°F

Click here for Detailed Weather

0000 - 2400 (Weekday 24h Session) (04-26-2024)
Volume Summary 15min

TIME	Volume Summary 15min NB	SB	15min Total	60min Total
0000 - 0015	65	0	**65**	
0015 - 0030	40	0	**40**	
0030 - 0045	50	0	**50**	
0045 - 0100	31	0	**31**	**186**
0100 - 0115	32	0	**32**	
0115 - 0130	23	0	**23**	
0130 - 0145	20	0	**20**	
0145 - 0200	20	0	**20**	**95**
0200 - 0215	20	0	**20**	
0215 - 0230	22	0	**22**	
0230 - 0245	30	0	**30**	
0245 - 0300	22	0	**22**	**94**
0300 - 0315	24	0	**24**	
0315 - 0330	20	0	**20**	
0330 - 0345	29	0	**29**	
0345 - 0400	34	0	**34**	**107**
0400 - 0415	28	0	**28**	
0415 - 0430	26	0	**26**	
0430 - 0445	45	0	**45**	
0445 - 0500	46	0	**46**	**145**
0500 - 0515	52	0	**52**	
0515 - 0530	93	0	**93**	
0530 - 0545	76	0	**76**	
0545 - 0600	82	0	**82**	**303**
0600 - 0615	115	0	**115**	
0615 - 0630	157	0	**157**	
0630 - 0645	184	0	**184**	
0645 - 0700	198	0	**198**	**654**
0700 - 0715	258	0	**258**	
0715 - 0730	291	0	**291**	
0730 - 0745	350	0	**350**	
0745 - 0800	325	0	**325**	**1224**
0800 - 0815	329	0	**329**	
0815 - 0830	319	0	**319**	
0830 - 0845	340	0	**340**	
0845 - 0900	225	0	**225**	**1213**
0900 - 0915	250	0	**250**	
0915 - 0930	261	0	**261**	
0930 - 0945	257	0	**257**	
0945 - 1000	264	0	**264**	**1032**
1000 - 1015	269	0	**269**	
1015 - 1030	283	0	**283**	
1030 - 1045	286	0	**286**	
1045 - 1100	281	0	**281**	**1119**
1100 - 1115	285	0	**285**	
1115 - 1130	311	0	**311**	
1130 - 1145	335	0	**335**	
1145 - 1200	350	0	**350**	**1281**

Time	Volume Summary 15min NB	SB	15min Total	60min Total
1200 - 1215	340	0	**340**	
1215 - 1230	364	0	**364**	
1230 - 1245	362	0	**362**	
1245 - 1300	369	0	**369**	**1435**
1300 - 1315	359	0	**359**	
1315 - 1330	353	0	**353**	
1330 - 1345	380	0	**380**	
1345 - 1400	340	0	**340**	**1432**
1400 - 1415	271	0	**271**	
1415 - 1430	341	0	**341**	
1430 - 1445	370	0	**370**	
1445 - 1500	363	0	**363**	**1345**
1500 - 1515	380	0	**380**	
1515 - 1530	371	0	**371**	
1530 - 1545	370	0	**370**	
1545 - 1600	388	0	**388**	**1509**
1600 - 1615	384	0	**384**	
1615 - 1630	382	0	**382**	
1630 - 1645	396	0	**396**	
1645 - 1700	375	0	**375**	**1537**
1700 - 1715	427	0	**427**	
1715 - 1730	398	0	**398**	
1730 - 1745	408	0	**408**	
1745 - 1800	337	0	**337**	**1570**
1800 - 1815	365	0	**365**	
1815 - 1830	418	0	**418**	
1830 - 1845	360	0	**360**	
1845 - 1900	304	0	**304**	**1447**
1900 - 1915	257	0	**257**	
1915 - 1930	269	0	**269**	
1930 - 1945	248	0	**248**	
1945 - 2000	270	0	**270**	**1044**
2000 - 2015	255	0	**255**	
2015 - 2030	233	0	**233**	
2030 - 2045	216	0	**216**	
2045 - 2100	198	0	**198**	**902**
2100 - 2115	187	0	**187**	
2115 - 2130	183	0	**183**	
2130 - 2145	224	0	**224**	
2145 - 2200	172	0	**172**	**766**
2200 - 2215	146	0	**146**	
2215 - 2230	129	0	**129**	
2230 - 2245	147	0	**147**	
2245 - 2300	117	0	**117**	**539**
2300 - 2315	91	0	**91**	
2315 - 2330	102	0	**102**	
2330 - 2345	85	0	**85**	
2345 - 0000	73	0	**73**	**351**

Session Total	21330	0	**21330**
Session Average	222.19	0.00	**222.19**
Session Percentage	100.00	0.00	

Site 14
I-26 N/Bound Off-Ramp,
south of I-20

Date
Saturday, April 27, 2024

Lat/Long
34.035060°, -81.111476°

Weather
Mostly Cloudy
69°F

Click here for Detailed Weather

0000 - 2400 (Saturday 24h Session) (04-27-2024)
Volume Summary 15min

TIME	Volume Summary 15min NB	SB	15min Total	60min Total
0000 - 0015	82	0	**82**	
0015 - 0030	57	0	**57**	
0030 - 0045	64	0	**64**	
0045 - 0100	39	0	**39**	**242**
0100 - 0115	38	0	**38**	
0115 - 0130	37	0	**37**	
0130 - 0145	34	0	**34**	
0145 - 0200	25	0	**25**	**134**
0200 - 0215	28	0	**28**	
0215 - 0230	25	0	**25**	
0230 - 0245	24	0	**24**	
0245 - 0300	31	0	**31**	**108**
0300 - 0315	28	0	**28**	
0315 - 0330	19	0	**19**	
0330 - 0345	32	0	**32**	
0345 - 0400	23	0	**23**	**102**
0400 - 0415	13	0	**13**	
0415 - 0430	30	0	**30**	
0430 - 0445	26	0	**26**	
0445 - 0500	35	0	**35**	**104**
0500 - 0515	36	0	**36**	
0515 - 0530	41	0	**41**	
0530 - 0545	55	0	**55**	
0545 - 0600	41	0	**41**	**173**
0600 - 0615	64	0	**64**	
0615 - 0630	70	0	**70**	
0630 - 0645	86	0	**86**	
0645 - 0700	111	0	**111**	**331**
0700 - 0715	116	0	**116**	
0715 - 0730	140	0	**140**	
0730 - 0745	164	0	**164**	
0745 - 0800	189	0	**189**	**609**
0800 - 0815	183	0	**183**	
0815 - 0830	214	0	**214**	
0830 - 0845	243	0	**243**	
0845 - 0900	204	0	**204**	**844**
0900 - 0915	222	0	**222**	
0915 - 0930	244	0	**244**	
0930 - 0945	271	0	**271**	
0945 - 1000	262	0	**262**	**999**
1000 - 1015	312	0	**312**	
1015 - 1030	278	0	**278**	
1030 - 1045	299	0	**299**	
1045 - 1100	223	0	**223**	**1112**
1100 - 1115	241	0	**241**	
1115 - 1130	275	0	**275**	
1130 - 1145	326	0	**326**	
1145 - 1200	388	0	**388**	**1230**

Time	Volume Summary 15min NB	SB	15min Total	60min Total
1200 - 1215	374	0	**374**	
1215 - 1230	416	0	**416**	
1230 - 1245	344	0	**344**	
1245 - 1300	333	0	**333**	**1467**
1300 - 1315	357	0	**357**	
1315 - 1330	336	0	**336**	
1330 - 1345	336	0	**336**	
1345 - 1400	390	0	**390**	**1419**
1400 - 1415	358	0	**358**	
1415 - 1430	349	0	**349**	
1430 - 1445	375	0	**375**	
1445 - 1500	365	0	**365**	**1447**
1500 - 1515	357	0	**357**	
1515 - 1530	383	0	**383**	
1530 - 1545	415	0	**415**	
1545 - 1600	396	0	**396**	**1551**
1600 - 1615	363	0	**363**	
1615 - 1630	348	0	**348**	
1630 - 1645	399	0	**399**	
1645 - 1700	334	0	**334**	**1444**
1700 - 1715	366	0	**366**	
1715 - 1730	327	0	**327**	
1730 - 1745	288	0	**288**	
1745 - 1800	284	0	**284**	**1265**
1800 - 1815	279	0	**279**	
1815 - 1830	284	0	**284**	
1830 - 1845	327	0	**327**	
1845 - 1900	291	0	**291**	**1181**
1900 - 1915	299	0	**299**	
1915 - 1930	314	0	**314**	
1930 - 1945	273	0	**273**	
1945 - 2000	263	0	**263**	**1149**
2000 - 2015	271	0	**271**	
2015 - 2030	248	0	**248**	
2030 - 2045	215	0	**215**	
2045 - 2100	210	0	**210**	**944**
2100 - 2115	223	0	**223**	
2115 - 2130	204	0	**204**	
2130 - 2145	199	0	**199**	
2145 - 2200	188	0	**188**	**814**
2200 - 2215	154	0	**154**	
2215 - 2230	193	0	**193**	
2230 - 2245	168	0	**168**	
2245 - 2300	155	0	**155**	**670**
2300 - 2315	114	0	**114**	
2315 - 2330	118	0	**118**	
2330 - 2345	94	0	**94**	
2345 - 0000	86	0	**86**	**412**

Session Total	19751	0	**19751**
Session Average	205.74	0.00	**205.74**
Session Percentage	100.00	0.00	

Bi-Directional Class Count || NB EB 60min

Columbia, SC

Marr Traffic DATA COLLECTION

www.marrtraffic.com

Site 14
I-26 N/Bound Off-Ramp,
south of I-20

Date
Sunday, April 21, 2024

Lat/Long
34.035060°, -81.111476°

Weather
Cloudy
66°F

Click here for Detailed Weather

0000 - 2400 (Sunday 24h Session) (04-21-2024)
NB EB 60min

	Northbound (Movement 14.1)													
TIME	1	2	3	4	5	6	7	8	9	10	11	12	13	**Total**
0000 - 0100	0	222	65	0	3	0	0	0	3	0	0	0	0	**293**
0100 - 0200	0	197	41	0	1	0	0	1	1	0	0	0	0	**241**
0200 - 0300	0	130	30	1	0	0	0	0	2	0	0	0	0	**163**
0300 - 0400	0	58	10	1	1	0	0	0	2	0	0	0	0	**72**
0400 - 0500	0	52	15	0	1	0	0	0	7	0	0	0	0	**75**
0500 - 0600	0	66	15	0	0	0	0	0	3	0	0	0	0	**84**
0600 - 0700	0	136	36	0	1	0	0	0	7	0	0	0	0	**180**
0700 - 0800	0	262	65	1	5	2	0	1	7	0	0	0	0	**343**
0800 - 0900	0	369	63	0	5	0	0	4	4	0	0	0	0	**445**
0900 - 1000	0	546	90	0	2	0	0	1	7	0	0	0	0	**646**
1000 - 1100	8	665	104	1	1	0	0	6	11	0	0	0	0	**796**
1100 - 1200	0	690	130	1	8	0	0	5	9	0	0	0	0	**843**
1200 - 1300	1	939	143	0	5	0	1	7	7	0	0	0	0	**1103**
1300 - 1400	1	953	186	1	8	1	0	9	10	1	0	0	0	**1170**
1400 - 1500	6	937	154	1	7	0	0	4	9	0	0	0	0	**1118**
1500 - 1600	1	1044	192	3	3	1	0	5	13	0	0	0	0	**1262**
1600 - 1700	2	976	176	3	6	1	0	0	11	0	0	0	0	**1175**
1700 - 1800	0	1016	130	2	9	1	0	3	14	0	0	0	0	**1175**
1800 - 1900	1	931	155	6	4	2	0	5	18	0	0	0	0	**1122**
1900 - 2000	1	746	90	2	3	0	0	0	24	0	0	0	0	**866**
2000 - 2100	0	533	76	0	6	2	0	1	12	0	0	0	0	**630**
2100 - 2200	0	450	45	0	0	0	0	3	11	0	0	0	0	**509**
2200 - 2300	0	339	40	0	1	0	0	2	5	0	0	0	0	**387**
2300 - 2400	0	220	15	0	0	0	0	2	5	0	0	0	0	**242**
Session Total	21	12477	2066	23	80	10	1	59	202	1	0	0	0	**14940**
Session Average	0.88	519.88	86.08	0.96	3.33	0.42	0.04	2.46	8.42	0.04	0.00	0.00	0.00	**622.50**
Session Percentage	0.14	83.51	13.83	0.15	0.54	0.07	0.01	0.39	1.35	0.01	0.00	0.00	0.00	
AM Peak Hour	-	0900 - 1000	0900 - 1000	0700 - 0800	0700 - 0800	0700 - 0800	-	0800 - 0900	0600 - 0700	-	-	-	-	**0900 - 1000**
AM Peak Volume	0	546	90	1	5	2	0	4	7	0	0	0	0	**646**
Noon Peak Hour	1000 - 1100	1300 - 1400	1300 - 1400	1000 - 1100	1100 - 1200	1300 - 1400	1200 - 1300	1300 - 1400	1000 - 1100	1300 - 1400	-	-	-	**1300 - 1400**
Noon Peak Volume	8	953	186	1	8	1	1	9	11	1	0	0	0	**1170**
PM Peak Hour	1600 - 1700	1500 - 1600	1500 - 1600	1800 - 1900	1700 - 1800	1800 - 1900	-	1500 - 1600	1900 - 2000	-	-	-	-	**1500 - 1600**
PM Peak Volume	2	1044	192	6	9	2	0	5	24	0	0	0	0	**1262**

Site 14
I-26 N/Bound Off-Ramp,
south of I-20

Date
Monday, April 22, 2024

Weather
Mostly Cloudy
57°F

Lat/Long
34.035060°, -81.111476°

Click here for Detailed Weather

0000 - 2400 (Weekday 24h Session) (04-22-2024)
NB EB 60min

	Northbound (Movement 14.1)													
TIME	1	2	3	4	5	6	7	8	9	10	11	12	13	**Total**
0000 - 0100	0	116	0	0	4	1	0	0	13	0	0	0	0	**134**
0100 - 0200	1	69	0	0	1	0	0	1	9	0	0	0	0	**81**
0200 - 0300	0	62	0	0	3	2	0	0	12	0	0	0	0	**79**
0300 - 0400	0	81	0	0	5	0	0	6	12	0	0	0	0	**104**
0400 - 0500	0	151	0	0	0	0	0	3	19	0	0	0	0	**173**
0500 - 0600	0	337	0	1	10	1	0	4	33	0	0	0	0	**386**
0600 - 0700	2	622	140	0	20	12	2	9	39	0	0	0	0	**846**
0700 - 0800	1	954	244	0	19	6	1	7	45	0	0	0	0	**1277**
0800 - 0900	0	894	241	0	30	14	3	8	45	2	0	0	0	**1237**
0900 - 1000	1	636	209	0	21	13	0	5	39	1	0	0	0	**925**
1000 - 1100	0	627	185	0	40	9	2	15	36	2	0	0	0	**916**
1100 - 1200	0	634	224	0	25	13	3	3	50	1	0	0	0	**953**
1200 - 1300	3	712	202	1	20	10	0	12	66	4	0	0	0	**1030**
1300 - 1400	0	744	226	1	26	10	0	2	71	0	0	0	0	**1080**
1400 - 1500	0	759	242	0	25	3	0	2	52	0	0	0	0	**1083**
1500 - 1600	2	934	207	7	21	7	0	2	49	0	0	0	0	**1229**
1600 - 1700	1	1054	234	4	21	13	1	4	48	0	0	0	0	**1380**
1700 - 1800	3	1089	228	0	18	7	0	6	47	0	0	0	0	**1398**
1800 - 1900	1	776	181	2	11	8	0	6	44	0	0	0	0	**1029**
1900 - 2000	3	636	142	1	13	1	0	3	32	0	0	0	0	**831**
2000 - 2100	0	524	83	0	3	1	0	3	15	0	0	0	0	**629**
2100 - 2200	0	402	38	0	1	0	0	0	23	0	0	0	0	**464**
2200 - 2300	0	285	11	0	2	0	0	0	16	0	1	0	0	**315**
2300 - 2400	0	154	8	0	2	0	0	1	15	0	1	0	0	**181**

Session Total	18	13252	3045	17	341	131	12	102	830	10	2	0	0	**17760**
Session Average	0.75	552.17	126.88	0.71	14.21	5.46	0.50	4.25	34.58	0.42	0.08	0.00	0.00	**740.00**
Session Percentage	0.10	74.62	17.15	0.10	1.92	0.74	0.07	0.57	4.67	0.06	0.01	0.00	0.00	

AM Peak Hour	0600 - 0700	0700 - 0800	0700 - 0800	0500 - 0600	0800 - 0900	0800 - 0900	0800 - 0900	0600 - 0700	0700 - 0800	0800 - 0900	-	-	-	**0700 - 0800**
AM Peak Volume	2	954	244	1	30	14	3	9	45	2	0	0	0	**1277**

Noon Peak Hour	1200 - 1300	1400 - 1500	1400 - 1500	1200 - 1300	1000 - 1100	1100 - 1200	1100 - 1200	1000 - 1100	1300 - 1400	1200 - 1300	-	-	-	**1400 - 1500**
Noon Peak Volume	3	759	242	1	40	13	3	15	71	4	0	0	0	**1083**

PM Peak Hour	1700 - 1800	1700 - 1800	1600 - 1700	1500 - 1600	1500 - 1600	1600 - 1700	1600 - 1700	1700 - 1800	1500 - 1600	-	-	-	-	**1700 - 1800**
PM Peak Volume	3	1089	234	7	21	13	1	6	49	0	0	0	0	**1398**

Site 14
I-26 N/Bound Off-Ramp,
south of I-20

Date
Tuesday, April 23, 2024

Weather
Fair
58°F

Lat/Long
34.035060°, -81.111476°

Click here for Detailed Weather

0000 - 2400 (Weekday 24h Session) (04-23-2024)
NB EB 60min

	Northbound (Movement 14.1)													
TIME	1	2	3	4	5	6	7	8	9	10	11	12	13	**Total**
0000 - 0100	1	77	26	0	2	0	0	0	15	0	1	0	0	**122**
0100 - 0200	0	58	21	0	0	0	0	0	15	0	2	0	0	**96**
0200 - 0300	0	48	14	0	1	0	0	0	7	0	0	0	0	**70**
0300 - 0400	0	45	13	0	2	0	0	0	20	0	2	0	0	**82**
0400 - 0500	0	110	34	0	1	1	0	0	24	0	1	0	0	**171**
0500 - 0600	0	233	62	0	7	0	0	0	41	0	1	0	0	**344**
0600 - 0700	2	552	184	0	6	8	0	2	39	0	1	0	0	**794**
0700 - 0800	1	769	255	0	9	2	0	2	31	0	0	0	0	**1069**
0800 - 0900	4	765	280	2	18	8	0	4	35	1	0	0	0	**1117**
0900 - 1000	0	580	203	0	21	9	1	3	44	0	0	0	0	**861**
1000 - 1100	0	629	233	0	21	5	0	3	72	0	0	0	0	**963**
1100 - 1200	0	656	237	0	15	12	1	6	48	0	0	0	0	**975**
1200 - 1300	0	737	204	3	22	7	0	8	70	0	0	0	0	**1051**
1300 - 1400	2	788	172	4	26	20	1	5	57	1	0	0	0	**1076**
1400 - 1500	2	842	184	0	26	14	0	1	68	0	0	0	0	**1137**
1500 - 1600	3	958	204	3	25	21	4	1	47	0	0	0	0	**1266**
1600 - 1700	3	1023	279	5	17	5	1	1	59	0	0	0	0	**1393**
1700 - 1800	1	929	205	2	14	8	0	3	47	0	0	0	0	**1209**
1800 - 1900	1	660	180	1	10	6	0	0	37	0	0	0	0	**895**
1900 - 2000	6	685	146	0	4	5	0	1	38	0	0	0	0	**885**
2000 - 2100	1	557	92	0	4	2	0	0	23	0	0	0	0	**679**
2100 - 2200	0	399	33	1	1	0	0	0	23	0	0	0	0	**457**
2200 - 2300	0	280	20	2	6	0	0	0	15	0	1	0	0	**324**
2300 - 2400	0	148	22	1	0	0	0	0	13	0	1	0	0	**185**

Session Total	27	12528	3303	24	258	133	8	40	888	2	10	0	0	**17221**
Session Average	1.13	522.00	137.63	1.00	10.75	5.54	0.33	1.67	37.00	0.08	0.42	0.00	0.00	**717.54**
Session Percentage	0.16	72.75	19.18	0.14	1.50	0.77	0.05	0.23	5.16	0.01	0.06	0.00	0.00	

AM Peak Hour	0800 - 0900	0700 - 0800	0800 - 0900	0800 - 0900	0900 - 1000	0900 - 1000	0900 - 1000	0800 - 0900	0900 - 1000	0800 - 0900	0500 - 0600	-	-	**0800 - 0900**
AM Peak Hour Volume	4	769	280	2	21	9	1	4	44	1	1	0	0	**1117**

Noon Peak Hour	1300 - 1400	1400 - 1500	1100 - 1200	1300 - 1400	1300 - 1400	1300 - 1400	1100 - 1200	1200 - 1300	1000 - 1100	1300 - 1400	-	-	-	**1400 - 1500**
Noon Peak Hour Volume	2	842	237	4	26	20	1	8	72	1	0	0	0	**1137**

PM Peak Hour	1900 - 2000	1600 - 1700	1600 - 1700	1600 - 1700	1500 - 1600	1500 - 1600	1500 - 1600	1700 - 1800	1600 - 1700	-	-	-	-	**1600 - 1700**
PM Peak Hour Volume	6	1023	279	5	25	21	4	3	59	0	0	0	0	**1393**

Site 14
I-26 N/Bound Off-Ramp,
south of I-20

Date
Wednesday, April 24, 2024

Weather
Fair
66°F

Lat/Long
34.035060°, -81.111476°

Click here for Detailed Weather

0000 - 2400 (Weekday 24h Session) (04-24-2024)
NB EB 60min

	Northbound (Movement 14.1)													
TIME	1	2	3	4	5	6	7	8	9	10	11	12	13	**Total**
0000 - 0100	0	104	26	0	3	0	0	0	13	0	0	0	0	**146**
0100 - 0200	0	44	14	0	4	0	0	0	16	0	0	0	0	**78**
0200 - 0300	0	39	8	0	0	0	0	0	14	0	0	0	0	**61**
0300 - 0400	0	39	13	0	3	0	0	0	20	0	0	0	0	**75**
0400 - 0500	0	113	27	0	9	0	0	0	20	0	3	0	0	**172**
0500 - 0600	0	266	41	1	14	0	0	0	21	0	1	0	0	**344**
0600 - 0700	1	638	137	2	18	3	0	1	32	0	0	0	0	**832**
0700 - 0800	1	998	259	1	24	4	2	5	28	0	1	0	0	**1323**
0800 - 0900	4	800	243	1	39	4	0	6	50	0	0	0	0	**1147**
0900 - 1000	1	610	210	1	34	11	1	6	51	0	0	0	0	**925**
1000 - 1100	1	610	170	0	29	15	1	8	45	0	0	0	0	**879**
1100 - 1200	1	607	203	0	20	13	0	4	51	0	0	0	0	**899**
1200 - 1300	2	768	236	3	25	16	0	7	80	0	0	0	0	**1137**
1300 - 1400	4	790	245	1	35	7	1	5	44	0	0	0	0	**1132**
1400 - 1500	1	824	209	2	24	11	1	2	46	0	0	0	0	**1120**
1500 - 1600	2	959	250	7	24	9	0	4	54	0	0	0	0	**1309**
1600 - 1700	2	1070	259	2	27	10	0	6	43	0	0	0	0	**1419**
1700 - 1800	1	1018	253	2	25	2	1	8	38	1	0	0	0	**1349**
1800 - 1900	5	818	222	1	14	8	0	7	25	0	0	0	0	**1100**
1900 - 2000	3	689	157	0	15	2	0	1	26	0	0	0	0	**893**
2000 - 2100	1	667	82	1	5	0	0	2	31	0	1	0	0	**790**
2100 - 2200	0	422	79	0	6	1	0	1	11	0	0	0	0	**520**
2200 - 2300	0	268	40	0	6	1	0	0	16	0	2	0	0	**333**
2300 - 2400	0	159	29	0	5	1	0	0	15	0	0	0	0	**209**

Session Total	30	13320	3412	25	408	118	7	73	790	1	8	0	0	**18192**
Session Average	1.25	555.00	142.17	1.04	17.00	4.92	0.29	3.04	32.92	0.04	0.33	0.00	0.00	**758.00**
Session Percentage	0.16	73.22	18.76	0.14	2.24	0.65	0.04	0.40	4.34	0.01	0.04	0.00	0.00	

AM Peak Hour	0800 - 0900	0700 - 0800	0700 - 0800	0600 - 0700	0800 - 0900	0900 - 1000	0700 - 0800	0800 - 0900	0900 - 1000	-	0500 - 0600	-	-	**0700 - 0800**
AM Peak Hour Volume	4	998	259	2	39	11	2	6	51	0	1	0	0	**1323**

Noon Peak Hour	1300 - 1400	1400 - 1500	1300 - 1400	1200 - 1300	1300 - 1400	1200 - 1300	1000 - 1100	1000 - 1100	1200 - 1300	-	-	-	-	**1200 - 1300**
Noon Peak Hour Volume	4	824	245	3	35	16	1	8	80	0	0	0	0	**1137**

PM Peak Hour	1800 - 1900	1600 - 1700	1600 - 1700	1500 - 1600	1600 - 1700	1600 - 1700	1700 - 1800	1700 - 1800	1500 - 1600	1700 - 1800	-	-	-	**1600 - 1700**
PM Peak Hour Volume	5	1070	259	7	27	10	1	8	54	1	0	0	0	**1419**

Site 14
I-26 N/Bound Off-Ramp,
south of I-20

Date
Thursday, April 25, 2024

Lat/Long
34.035060°, -81.111476°

Weather
Fair
67°F

Click here for Detailed Weather

0000 - 2400 (Weekday 24h Session) (04-25-2024)
NB EB 60min

	Northbound (Movement 14.1)													
TIME	1	2	3	4	5	6	7	8	9	10	11	12	13	**Total**
0000 - 0100	1	106	14	0	0	1	0	0	24	0	0	0	0	**146**
0100 - 0200	0	68	10	0	0	1	0	0	14	0	1	0	0	**94**
0200 - 0300	0	52	6	0	0	0	0	0	11	0	1	0	0	**70**
0300 - 0400	0	71	10	0	7	0	0	0	18	0	1	0	0	**107**
0400 - 0500	0	130	18	0	8	1	0	0	19	0	2	0	0	**178**
0500 - 0600	0	238	65	1	8	2	0	0	27	0	0	0	0	**341**
0600 - 0700	2	529	196	0	18	6	3	2	50	0	1	0	0	**807**
0700 - 0800	2	924	224	1	26	4	0	3	46	2	0	0	0	**1232**
0800 - 0900	3	880	288	0	30	8	1	11	53	0	0	0	0	**1274**
0900 - 1000	2	638	241	3	29	14	0	6	46	0	0	0	0	**979**
1000 - 1100	2	642	215	1	21	11	0	7	52	0	0	0	0	**951**
1100 - 1200	14	642	224	3	28	15	0	6	51	2	0	0	0	**985**
1200 - 1300	1	900	252	2	27	13	1	14	57	0	0	0	0	**1267**
1300 - 1400	2	916	252	3	25	10	0	9	51	0	0	0	0	**1268**
1400 - 1500	0	937	258	2	26	17	1	8	55	3	0	0	0	**1307**
1500 - 1600	3	1052	284	5	32	14	1	4	39	1	0	0	0	**1435**
1600 - 1700	3	1166	300	0	18	1	0	6	35	1	0	0	0	**1530**
1700 - 1800	2	1080	276	2	16	5	0	2	40	0	0	0	0	**1423**
1800 - 1900	4	922	212	0	15	1	0	4	35	0	0	0	0	**1193**
1900 - 2000	4	835	163	1	1	2	0	1	35	0	0	0	0	**1042**
2000 - 2100	1	703	102	1	3	1	0	2	21	0	0	0	0	**834**
2100 - 2200	0	527	79	0	4	0	0	0	22	0	0	0	0	**632**
2200 - 2300	0	347	63	1	3	1	0	0	14	0	0	0	0	**429**
2300 - 2400	1	193	40	0	2	0	0	0	19	0	0	0	0	**255**

Session Total	47	14498	3792	26	347	128	7	85	834	9	6	0	0	**19779**
Session Average	1.96	604.08	158.00	1.08	14.46	5.33	0.29	3.54	34.75	0.38	0.25	0.00	0.00	**824.13**
Session Percentage	0.24	73.30	19.17	0.13	1.75	0.65	0.04	0.43	4.22	0.05	0.03	0.00	0.00	

AM Peak Hour	0800 - 0900	0700 - 0800	0800 - 0900	0900 - 1000	0800 - 0900	0900 - 1000	0600 - 0700	0800 - 0900	0800 - 0900	0700 - 0800	0600 - 0700	-	-	**0800 - 0900**
AM Peak Hour Volume	3	924	288	3	30	14	3	11	53	2	1	0	0	**1274**

Noon Peak Hour	1100 - 1200	1400 - 1500	1400 - 1500	1100 - 1200	1100 - 1200	1400 - 1500	1200 - 1300	1200 - 1300	1200 - 1300	1400 - 1500	-	-	-	**1400 - 1500**
Noon Peak Hour Volume	14	937	258	3	28	17	1	14	57	3	0	0	0	**1307**

PM Peak Hour	1800 - 1900	1600 - 1700	1600 - 1700	1500 - 1600	1500 - 1600	1500 - 1600	1500 - 1600	1600 - 1700	1700 - 1800	1500 - 1600	-	-	-	**1600 - 1700**
PM Peak Hour Volume	4	1166	300	5	32	14	1	6	40	1	0	0	0	**1530**

Site 14
I-26 N/Bound Off-Ramp,
south of I-20

Date
Friday, April 26, 2024

Lat/Long
34.035060°, -81.111476°

Weather
Cloudy
69°F

Click here for Detailed Weather

0000 - 2400 (Weekday 24h Session) (04-26-2024)
NB EB 60min

	Northbound (Movement 14.1)													
TIME	1	2	3	4	5	6	7	8	9	10	11	12	13	**Total**
0000 - 0100	0	144	17	0	2	1	0	3	19	0	0	0	0	**186**
0100 - 0200	0	65	13	0	4	0	0	1	10	0	2	0	0	**95**
0200 - 0300	1	63	11	0	3	0	0	0	15	0	1	0	0	**94**
0300 - 0400	0	63	10	0	3	3	0	0	27	0	1	0	0	**107**
0400 - 0500	0	99	15	0	4	3	0	0	22	0	2	0	0	**145**
0500 - 0600	1	241	23	1	7	3	0	2	24	0	1	0	0	**303**
0600 - 0700	3	486	101	2	14	7	0	6	35	0	0	0	0	**654**
0700 - 0800	1	928	229	1	14	6	0	8	36	0	1	0	0	**1224**
0800 - 0900	2	898	216	5	21	6	0	9	56	0	0	0	0	**1213**
0900 - 1000	1	720	202	2	27	16	0	6	58	0	0	0	0	**1032**
1000 - 1100	0	804	188	2	26	18	0	15	66	0	0	0	0	**1119**
1100 - 1200	2	959	213	2	18	11	0	14	61	1	0	0	0	**1281**
1200 - 1300	0	1027	283	5	31	17	0	12	60	0	0	0	0	**1435**
1300 - 1400	8	1056	268	2	32	14	0	7	45	0	0	0	0	**1432**
1400 - 1500	5	1029	233	2	20	11	0	6	39	0	0	0	0	**1345**
1500 - 1600	2	1145	285	7	18	8	0	7	37	0	0	0	0	**1509**
1600 - 1700	0	1204	257	1	20	6	0	9	40	0	0	0	0	**1537**
1700 - 1800	4	1242	262	3	15	3	0	8	33	0	0	0	0	**1570**
1800 - 1900	5	1152	238	1	17	4	0	5	25	0	0	0	0	**1447**
1900 - 2000	7	836	174	0	5	4	0	0	18	0	0	0	0	**1044**
2000 - 2100	7	783	94	0	3	0	0	0	15	0	0	0	0	**902**
2100 - 2200	6	682	56	4	8	0	0	2	8	0	0	0	0	**766**
2200 - 2300	2	474	45	0	8	1	0	0	8	0	1	0	0	**539**
2300 - 2400	2	307	25	0	4	2	0	0	11	0	0	0	0	**351**

Session Total	59	16407	3458	40	324	144	0	120	768	1	9	0	0	**21330**
Session Average	2.46	683.63	144.08	1.67	13.50	6.00	0.00	5.00	32.00	0.04	0.38	0.00	0.00	**888.75**
Session Percentage	0.28	76.92	16.21	0.19	1.52	0.68	0.00	0.56	3.60	0.00	0.04	0.00	0.00	

AM Peak Hour	0600 - 0700	0700 - 0800	0700 - 0800	0800 - 0900	0900 - 1000	0900 - 1000	-	0800 - 0900	0900 - 1000	-	0500 - 0600	-	-	**0700 - 0800**
AM Peak Hour Volume	3	928	229	5	27	16	0	9	58	0	1	0	0	**1224**

Noon Peak Hour	1300 - 1400	1300 - 1400	1200 - 1300	1200 - 1300	1300 - 1400	1000 - 1100	-	1000 - 1100	1000 - 1100	1100 - 1200	-	-	-	**1200 - 1300**
Noon Peak Hour Volume	8	1056	283	5	32	18	0	15	66	1	0	0	0	**1435**

PM Peak Hour	1900 - 2000	1700 - 1800	1500 - 1600	1500 - 1600	1600 - 1700	1500 - 1600	-	1600 - 1700	1600 - 1700	-	-	-	-	**1700 - 1800**
PM Peak Hour Volume	7	1242	285	7	20	8	0	9	40	0	0	0	0	**1570**

Site 14
I-26 N/Bound Off-Ramp,
south of I-20

Date
Saturday, April 27, 2024

Lat/Long
34.035060°, -81.111476°

Weather
Mostly Cloudy
69°F

Click here for Detailed Weather

0000 - 2400 (Saturday 24h Session) (04-27-2024)
NB EB 60min

	Northbound (Movement 14.1)													
TIME	1	2	3	4	5	6	7	8	9	10	11	12	13	**Total**
0000 - 0100	0	181	43	0	4	0	0	0	13	0	1	0	0	**242**
0100 - 0200	0	99	26	0	2	1	0	0	6	0	0	0	0	**134**
0200 - 0300	0	69	24	0	3	0	0	2	9	0	1	0	0	**108**
0300 - 0400	0	64	21	4	4	1	0	0	7	0	1	0	0	**102**
0400 - 0500	0	68	24	1	0	0	0	0	11	0	0	0	0	**104**
0500 - 0600	0	120	36	1	7	1	0	0	8	0	0	0	0	**173**
0600 - 0700	0	237	75	0	3	0	0	0	16	0	0	0	0	**331**
0700 - 0800	1	463	125	0	4	2	0	3	11	0	0	0	0	**609**
0800 - 0900	4	649	165	1	6	1	0	5	13	0	0	0	0	**844**
0900 - 1000	2	787	174	2	7	1	0	6	20	0	0	0	0	**999**
1000 - 1100	7	858	216	0	13	2	0	4	11	1	0	0	0	**1112**
1100 - 1200	27	970	205	1	12	1	0	4	9	1	0	0	0	**1230**
1200 - 1300	24	1201	198	2	12	5	0	4	21	0	0	0	0	**1467**
1300 - 1400	11	1164	204	1	7	4	0	6	22	0	0	0	0	**1419**
1400 - 1500	15	1208	192	0	14	1	0	5	11	1	0	0	0	**1447**
1500 - 1600	10	1281	226	1	9	0	0	2	21	0	1	0	0	**1551**
1600 - 1700	20	1169	236	0	7	3	0	0	9	0	0	0	0	**1444**
1700 - 1800	4	1056	191	0	6	3	0	0	5	0	0	0	0	**1265**
1800 - 1900	2	994	166	0	5	1	0	1	12	0	0	0	0	**1181**
1900 - 2000	6	966	158	0	7	1	0	0	10	0	1	0	0	**1149**
2000 - 2100	5	838	90	0	2	0	0	0	9	0	0	0	0	**944**
2100 - 2200	3	743	55	0	6	2	0	0	5	0	0	0	0	**814**
2200 - 2300	1	611	51	0	4	1	0	0	2	0	0	0	0	**670**
2300 - 2400	1	359	42	0	4	1	0	0	5	0	0	0	0	**412**

Session Total	143	16155	2943	14	148	32	0	42	266	3	5	0	0	**19751**
Session Average	5.96	673.13	122.63	0.58	6.17	1.33	0.00	1.75	11.08	0.13	0.21	0.00	0.00	**822.96**
Session Percentage	0.72	81.79	14.90	0.07	0.75	0.16	0.00	0.21	1.35	0.02	0.03	0.00	0.00	

AM Peak Hour	0800 - 0900	0900 - 1000	0900 - 1000	0900 - 1000	0500 - 0600	0700 - 0800	-	0900 - 1000	0900 - 1000	-	-	-	-	**0900 - 1000**
AM Peak Hour Volume	4	787	174	2	7	2	0	6	20	0	0	0	0	**999**

Noon Peak Hour	1100 - 1200	1400 - 1500	1000 - 1100	1200 - 1300	1400 - 1500	1200 - 1300	-	1300 - 1400	1300 - 1400	1000 - 1100	-	-	-	**1200 - 1300**
Noon Peak Hour Volume	27	1208	216	2	14	5	0	6	22	1	0	0	0	**1467**

PM Peak Hour	1600 - 1700	1500 - 1600	1600 - 1700	1500 - 1600	1500 - 1600	1600 - 1700	-	1500 - 1600	1500 - 1600	-	1500 - 1600	-	-	**1500 - 1600**
PM Peak Hour Volume	20	1281	236	1	9	3	0	2	21	0	1	0	0	**1551**

Bi-Directional Class Count || Volume Summary 60min

Columbia, SC

Marr Traffic DATA COLLECTION

www.marrtraffic.com

Site 14

I-26 N/Bound Off-Ramp,
south of I-20

Date

Sunday, April 21, 2024

Lat/Long

34.035060°, -81.111476°

Weather

Cloudy
66°F

Click here for Detailed Weather

0000 - 2400 (Sunday 24h Session) (04-21-2024)

Volume Summary 60min

	Volume Summary 60min		
TIME	NB	SB	**Total**
0000 - 0100	293	0	**293**
0100 - 0200	241	0	**241**
0200 - 0300	163	0	**163**
0300 - 0400	72	0	**72**
0400 - 0500	75	0	**75**
0500 - 0600	84	0	**84**
0600 - 0700	180	0	**180**
0700 - 0800	343	0	**343**
0800 - 0900	445	0	**445**
0900 - 1000	646	0	**646**
1000 - 1100	796	0	**796**
1100 - 1200	843	0	**843**

	Volume Summary 60min		
Time	NB	SB	**Total**
1200 - 1300	1103	0	**1103**
1300 - 1400	1170	0	**1170**
1400 - 1500	1118	0	**1118**
1500 - 1600	1262	0	**1262**
1600 - 1700	1175	0	**1175**
1700 - 1800	1175	0	**1175**
1800 - 1900	1122	0	**1122**
1900 - 2000	866	0	**866**
2000 - 2100	630	0	**630**
2100 - 2200	509	0	**509**
2200 - 2300	387	0	**387**
2300 - 2400	242	0	**242**

Session Total	14940	0	**14940**
Session Average	622.50	0.00	**622.50**
Session Percentage	100.00	0.00	

Site 14

I-26 N/Bound Off-Ramp,
south of I-20

Date

Monday, April 22, 2024

Lat/Long

34.035060°, -81.111476°

Weather

Mostly Cloudy
57°F

Click here for Detailed Weather

0000 - 2400 (Weekday 24h Session) (04-22-2024)

Volume Summary 60min

	Volume Summary 60min		
TIME	NB	SB	**Total**
0000 - 0100	134	0	**134**
0100 - 0200	81	0	**81**
0200 - 0300	79	0	**79**
0300 - 0400	104	0	**104**
0400 - 0500	173	0	**173**
0500 - 0600	386	0	**386**
0600 - 0700	846	0	**846**
0700 - 0800	1277	0	**1277**
0800 - 0900	1237	0	**1237**
0900 - 1000	925	0	**925**
1000 - 1100	916	0	**916**
1100 - 1200	953	0	**953**

	Volume Summary 60min		
Time	NB	SB	**Total**
1200 - 1300	1030	0	**1030**
1300 - 1400	1080	0	**1080**
1400 - 1500	1083	0	**1083**
1500 - 1600	1229	0	**1229**
1600 - 1700	1380	0	**1380**
1700 - 1800	1398	0	**1398**
1800 - 1900	1029	0	**1029**
1900 - 2000	831	0	**831**
2000 - 2100	629	0	**629**
2100 - 2200	464	0	**464**
2200 - 2300	315	0	**315**
2300 - 2400	181	0	**181**

Session Total	17760	0	**17760**
Session Average	740.00	0.00	**740.00**
Session Percentage	100.00	0.00	

Site 14

I-26 N/Bound Off-Ramp,
south of I-20

Date

Tuesday, April 23, 2024

Lat/Long

34.035060°, -81.111476°

Weather

Fair
58°F

Click here for Detailed Weather

0000 - 2400 (Weekday 24h Session) (04-23-2024)

Volume Summary 60min

	Volume Summary 60min		
TIME	NB	SB	**Total**
0000 - 0100	122	0	**122**
0100 - 0200	96	0	**96**
0200 - 0300	70	0	**70**
0300 - 0400	82	0	**82**
0400 - 0500	171	0	**171**
0500 - 0600	344	0	**344**
0600 - 0700	794	0	**794**
0700 - 0800	1069	0	**1069**
0800 - 0900	1117	0	**1117**
0900 - 1000	861	0	**861**
1000 - 1100	963	0	**963**
1100 - 1200	975	0	**975**

Session Total	17221	0	**17221**
Session Average	717.54	0.00	**717.54**
Session Percentage	100.00	0.00	

	Volume Summary 60min		
Time	NB	SB	**Total**
1200 - 1300	1051	0	**1051**
1300 - 1400	1076	0	**1076**
1400 - 1500	1137	0	**1137**
1500 - 1600	1266	0	**1266**
1600 - 1700	1393	0	**1393**
1700 - 1800	1209	0	**1209**
1800 - 1900	895	0	**895**
1900 - 2000	885	0	**885**
2000 - 2100	679	0	**679**
2100 - 2200	457	0	**457**
2200 - 2300	324	0	**324**
2300 - 2400	185	0	**185**

Site 14

I-26 N/Bound Off-Ramp,
south of I-20

Date

Wednesday, April 24, 2024

Lat/Long

34.035060°, -81.111476°

Weather

Fair
66°F

Click here for Detailed Weather

0000 - 2400 (Weekday 24h Session) (04-24-2024)

Volume Summary 60min

	Volume Summary 60min		
TIME	NB	SB	**Total**
0000 - 0100	146	0	**146**
0100 - 0200	78	0	**78**
0200 - 0300	61	0	**61**
0300 - 0400	75	0	**75**
0400 - 0500	172	0	**172**
0500 - 0600	344	0	**344**
0600 - 0700	832	0	**832**
0700 - 0800	1323	0	**1323**
0800 - 0900	1147	0	**1147**
0900 - 1000	925	0	**925**
1000 - 1100	879	0	**879**
1100 - 1200	899	0	**899**

Session Total	18192	0	**18192**
Session Average	758.00	0.00	**758.00**
Session Percentage	100.00	0.00	

	Volume Summary 60min		
Time	NB	SB	**Total**
1200 - 1300	1137	0	**1137**
1300 - 1400	1132	0	**1132**
1400 - 1500	1120	0	**1120**
1500 - 1600	1309	0	**1309**
1600 - 1700	1419	0	**1419**
1700 - 1800	1349	0	**1349**
1800 - 1900	1100	0	**1100**
1900 - 2000	893	0	**893**
2000 - 2100	790	0	**790**
2100 - 2200	520	0	**520**
2200 - 2300	333	0	**333**
2300 - 2400	209	0	**209**

Site 14
I-26 N/Bound Off-Ramp,
south of I-20

Date
Thursday, April 25, 2024

Lat/Long
34.035060°, -81.111476°

Weather
Fair
67°F

Click here for Detailed Weather

0000 - 2400 (Weekday 24h Session) (04-25-2024)
Volume Summary 60min

	Volume Summary 60min		
TIME	NB	SB	**Total**
0000 - 0100	146	0	**146**
0100 - 0200	94	0	**94**
0200 - 0300	70	0	**70**
0300 - 0400	107	0	**107**
0400 - 0500	178	0	**178**
0500 - 0600	341	0	**341**
0600 - 0700	807	0	**807**
0700 - 0800	1232	0	**1232**
0800 - 0900	1274	0	**1274**
0900 - 1000	979	0	**979**
1000 - 1100	951	0	**951**
1100 - 1200	985	0	**985**

Session Total	19779	0	**19779**
Session Average	824.13	0.00	**824.13**
Session Percentage	100.00	0.00	

	Volume Summary 60min		
Time	NB	SB	**Total**
1200 - 1300	1267	0	**1267**
1300 - 1400	1268	0	**1268**
1400 - 1500	1307	0	**1307**
1500 - 1600	1435	0	**1435**
1600 - 1700	1530	0	**1530**
1700 - 1800	1423	0	**1423**
1800 - 1900	1193	0	**1193**
1900 - 2000	1042	0	**1042**
2000 - 2100	834	0	**834**
2100 - 2200	632	0	**632**
2200 - 2300	429	0	**429**
2300 - 2400	255	0	**255**

Site 14

I-26 N/Bound Off-Ramp,
south of I-20

Date

Friday, April 26, 2024

Lat/Long

34.035060°, -81.111476°

Weather

Cloudy
69°F

Click here for Detailed Weather

0000 - 2400 (Weekday 24h Session) (04-26-2024)

Volume Summary 60min

	Volume Summary 60min		
TIME	NB	SB	**Total**
0000 - 0100	186	0	**186**
0100 - 0200	95	0	**95**
0200 - 0300	94	0	**94**
0300 - 0400	107	0	**107**
0400 - 0500	145	0	**145**
0500 - 0600	303	0	**303**
0600 - 0700	654	0	**654**
0700 - 0800	1224	0	**1224**
0800 - 0900	1213	0	**1213**
0900 - 1000	1032	0	**1032**
1000 - 1100	1119	0	**1119**
1100 - 1200	1281	0	**1281**
1200 - 1300	1435	0	**1435**
1300 - 1400	1432	0	**1432**
1400 - 1500	1345	0	**1345**
1500 - 1600	1509	0	**1509**
1600 - 1700	1537	0	**1537**
1700 - 1800	1570	0	**1570**
1800 - 1900	1447	0	**1447**
1900 - 2000	1044	0	**1044**
2000 - 2100	902	0	**902**
2100 - 2200	766	0	**766**
2200 - 2300	539	0	**539**
2300 - 2400	351	0	**351**
Session Total	21330	0	**21330**
Session Average	888.75	0.00	**888.75**
Session Percentage	100.00	0.00	

Site 14

I-26 N/Bound Off-Ramp,
south of I-20

Date

Saturday, April 27, 2024

Lat/Long

34.035060°, -81.111476°

Weather

Mostly Cloudy
69°F

Click here for Detailed Weather

0000 - 2400 (Saturday 24h Session) (04-27-2024)

Volume Summary 60min

	Volume Summary 60min		
TIME	NB	SB	**Total**
0000 - 0100	242	0	**242**
0100 - 0200	134	0	**134**
0200 - 0300	108	0	**108**
0300 - 0400	102	0	**102**
0400 - 0500	104	0	**104**
0500 - 0600	173	0	**173**
0600 - 0700	331	0	**331**
0700 - 0800	609	0	**609**
0800 - 0900	844	0	**844**
0900 - 1000	999	0	**999**
1000 - 1100	1112	0	**1112**
1100 - 1200	1230	0	**1230**
Session Total	19751	0	**19751**
Session Average	822.96	0.00	**822.96**
Session Percentage	100.00	0.00	

	Volume Summary 60min		
Time	NB	SB	**Total**
1200 - 1300	1467	0	**1467**
1300 - 1400	1419	0	**1419**
1400 - 1500	1447	0	**1447**
1500 - 1600	1551	0	**1551**
1600 - 1700	1444	0	**1444**
1700 - 1800	1265	0	**1265**
1800 - 1900	1181	0	**1181**
1900 - 2000	1149	0	**1149**
2000 - 2100	944	0	**944**
2100 - 2200	814	0	**814**
2200 - 2300	670	0	**670**
2300 - 2400	412	0	**412**

Bi-Directional Class Count || Graphical Analysis NB EB

Columbia, SC

Marr Traffic DATA COLLECTION

www.marrtraffic.com

Site 14

I-26 N/Bound Off-Ramp,
south of I-20

Lat/Long

34.035060°, -81.111476°

0000 - 2400 (Weekday 24h Session)

Graphical Analysis NB EB

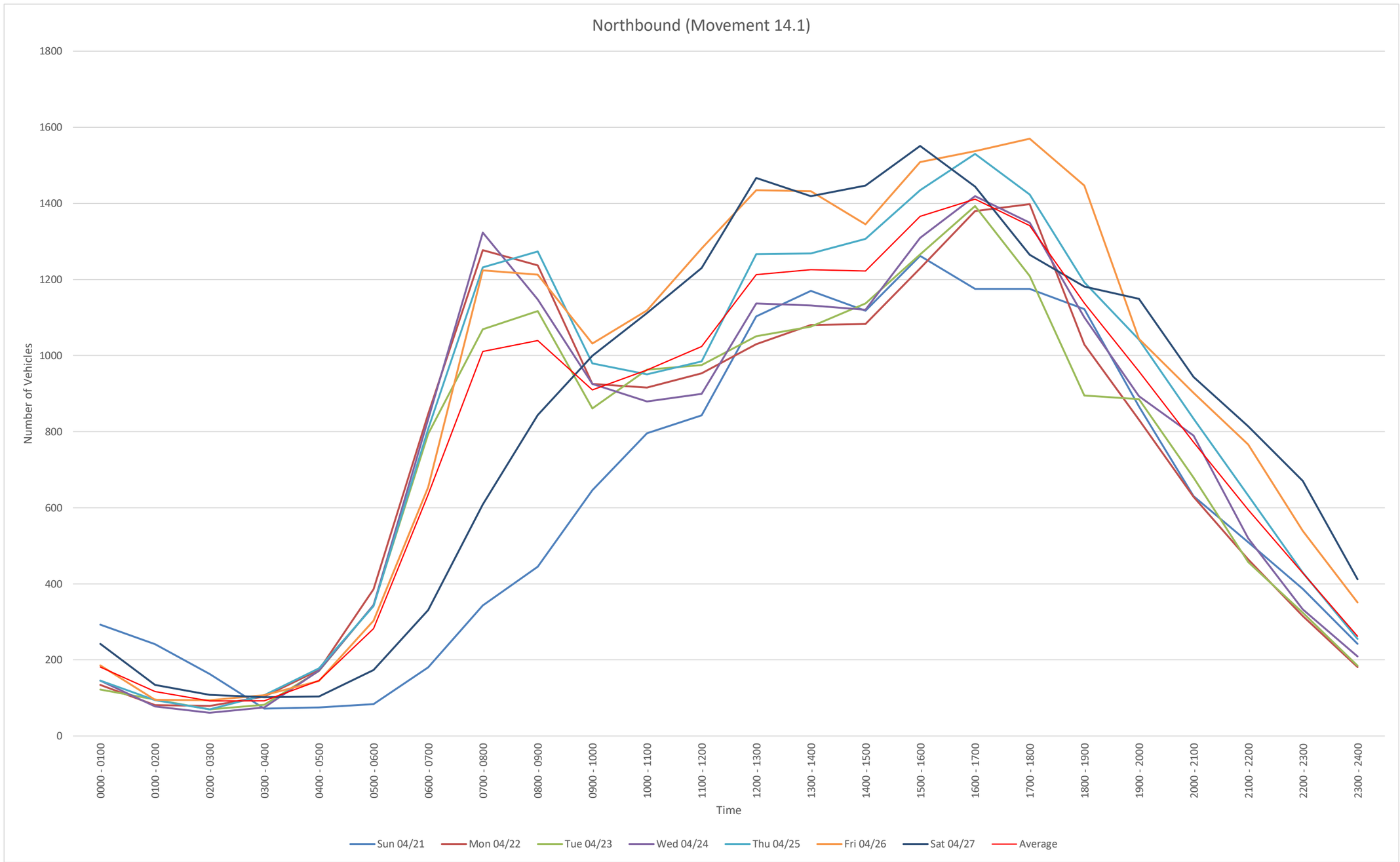

NB
File Name:
Start Date: 4/21/2024
Start Time: 0
Site Code: 14
Station ID: 1
Location 1: I-26 N/Bound Off-Ramp, south of I-20
Location 2:

Date	Time	1	2	3	4	5	6	7	8	9	10	11	12	13
4/21/2024	12:00 AM	0	70	14	0	1	0	0	0	1	0	0	0	0
4/21/2024	12:15 AM	0	52	14	0	2	0	0	0	1	0	0	0	0
4/21/2024	12:30 AM	0	50	13	0	0	0	0	0	0	0	0	0	0
4/21/2024	12:45 AM	0	50	24	0	0	0	0	0	1	0	0	0	0
4/21/2024	1:00 AM	0	59	12	0	1	0	0	0	1	0	0	0	0
4/21/2024	1:15 AM	0	47	10	0	0	0	0	0	0	0	0	0	0
4/21/2024	1:30 AM	0	51	11	0	0	0	0	0	0	0	0	0	0
4/21/2024	1:45 AM	0	40	8	0	0	0	0	1	0	0	0	0	0
4/21/2024	2:00 AM	0	50	10	1	0	0	0	0	0	0	0	0	0
4/21/2024	2:15 AM	0	30	5	0	0	0	0	0	0	0	0	0	0
4/21/2024	2:30 AM	0	22	8	0	0	0	0	0	1	0	0	0	0
4/21/2024	2:45 AM	0	28	7	0	0	0	0	0	1	0	0	0	0
4/21/2024	3:00 AM	0	20	4	1	1	0	0	0	1	0	0	0	0
4/21/2024	3:15 AM	0	14	2	0	0	0	0	0	0	0	0	0	0
4/21/2024	3:30 AM	0	10	2	0	0	0	0	0	0	0	0	0	0
4/21/2024	3:45 AM	0	14	2	0	0	0	0	0	1	0	0	0	0
4/21/2024	4:00 AM	0	15	5	0	1	0	0	0	2	0	0	0	0
4/21/2024	4:15 AM	0	10	2	0	0	0	0	0	0	0	0	0	0
4/21/2024	4:30 AM	0	10	3	0	0	0	0	0	2	0	0	0	0
4/21/2024	4:45 AM	0	17	5	0	0	0	0	0	3	0	0	0	0
4/21/2024	5:00 AM	0	20	6	0	0	0	0	0	1	0	0	0	0
4/21/2024	5:15 AM	0	12	2	0	0	0	0	0	1	0	0	0	0
4/21/2024	5:30 AM	0	15	4	0	0	0	0	0	0	0	0	0	0
4/21/2024	5:45 AM	0	19	3	0	0	0	0	0	1	0	0	0	0
4/21/2024	6:00 AM	0	25	6	0	0	0	0	0	2	0	0	0	0
4/21/2024	6:15 AM	0	35	6	0	1	0	0	0	2	0	0	0	0
4/21/2024	6:30 AM	0	43	13	0	0	0	0	0	2	0	0	0	0
4/21/2024	6:45 AM	0	33	11	0	0	0	0	0	1	0	0	0	0
4/21/2024	7:00 AM	0	52	13	1	1	0	0	1	3	0	0	0	0
4/21/2024	7:15 AM	0	69	19	0	1	0	0	0	1	0	0	0	0
4/21/2024	7:30 AM	0	63	17	0	2	0	0	0	2	0	0	0	0
4/21/2024	7:45 AM	0	78	16	0	1	2	0	0	1	0	0	0	0
4/21/2024	8:00 AM	0	80	12	0	0	0	0	0	0	0	0	0	0
4/21/2024	8:15 AM	0	80	20	0	1	0	0	1	1	0	0	0	0
4/21/2024	8:30 AM	0	80	15	0	3	0	0	0	1	0	0	0	0
4/21/2024	8:45 AM	0	129	16	0	1	0	0	3	2	0	0	0	0
4/21/2024	9:00 AM	0	115	15	0	0	0	0	0	3	0	0	0	0
4/21/2024	9:15 AM	0	130	17	0	0	0	0	0	1	0	0	0	0
4/21/2024	9:30 AM	0	147	26	0	1	0	0	1	3	0	0	0	0
4/21/2024	9:45 AM	0	154	32	0	1	0	0	0	0	0	0	0	0
4/21/2024	10:00 AM	0	151	24	0	0	0	0	3	4	0	0	0	0
4/21/2024	10:15 AM	0	198	28	1	0	0	0	1	1	0	0	0	0
4/21/2024	10:30 AM	1	167	21	0	0	0	0	2	0	0	0	0	0
4/21/2024	10:45 AM	7	149	31	0	1	0	0	0	6	0	0	0	0
4/21/2024	11:00 AM	0	175	30	1	2	0	0	0	1	0	0	0	0
4/21/2024	11:15 AM	0	157	26	0	0	0	0	1	3	0	0	0	0
4/21/2024	11:30 AM	0	178	35	0	3	0	0	1	4	0	0	0	0
4/21/2024	11:45 AM	0	180	39	0	3	0	0	3	1	0	0	0	0
4/21/2024	12:00 PM	0	213	32	0	2	0	1	4	1	0	0	0	0
4/21/2024	12:15 PM	0	233	38	0	0	0	0	1	1	0	0	0	0
4/21/2024	12:30 PM	1	249	42	0	0	0	0	2	2	0	0	0	0
4/21/2024	12:45 PM	0	244	31	0	3	0	0	0	3	0	0	0	0
4/21/2024	1:00 PM	0	218	39	0	2	0	0	1	2	0	0	0	0
4/21/2024	1:15 PM	0	240	43	1	3	1	0	2	1	1	0	0	0
4/21/2024	1:30 PM	1	263	60	0	1	0	0	4	4	0	0	0	0
4/21/2024	1:45 PM	0	232	44	0	2	0	0	2	3	0	0	0	0
4/21/2024	2:00 PM	0	196	33	0	0	0	0	0	1	0	0	0	0
4/21/2024	2:15 PM	0	228	41	0	3	0	0	0	1	0	0	0	0
4/21/2024	2:30 PM	6	254	35	0	2	0	0	1	1	0	0	0	0
4/21/2024	2:45 PM	0	259	45	1	2	0	0	3	6	0	0	0	0
4/21/2024	3:00 PM	0	238	43	2	1	0	0	1	5	0	0	0	0
4/21/2024	3:15 PM	1	248	57	0	1	0	0	1	2	0	0	0	0
4/21/2024	3:30 PM	0	278	32	0	0	0	0	2	4	0	0	0	0
4/21/2024	3:45 PM	0	280	60	1	1	1	0	1	2	0	0	0	0
4/21/2024	4:00 PM	1	247	40	1	1	1	0	0	3	0	0	0	0
4/21/2024	4:15 PM	1	252	33	2	0	0	0	0	3	0	0	0	0
4/21/2024	4:30 PM	0	236	42	0	3	0	0	0	1	0	0	0	0
4/21/2024	4:45 PM	0	241	61	0	2	0	0	0	4	0	0	0	0
4/21/2024	5:00 PM	0	269	41	0	5	1	0	0	2	0	0	0	0
4/21/2024	5:15 PM	0	235	27	0	1	0	0	1	4	0	0	0	0
4/21/2024	5:30 PM	0	259	41	2	1	0	0	1	4	0	0	0	0
4/21/2024	5:45 PM	0	253	21	0	2	0	0	1	4	0	0	0	0
4/21/2024	6:00 PM	1	276	45	1	1	0	0	0	4	0	0	0	0
4/21/2024	6:15 PM	0	242	44	1	1	1	0	0	2	0	0	0	0
4/21/2024	6:30 PM	0	222	40	0	1	0	0	3	5	0	0	0	0
4/21/2024	6:45 PM	0	191	26	4	1	1	0	2	7	0	0	0	0
4/21/2024	7:00 PM	0	213	35	0	1	0	0	0	5	0	0	0	0
4/21/2024	7:15 PM	1	178	15	0	1	0	0	0	5	0	0	0	0
4/21/2024	7:30 PM	0	190	19	0	0	0	0	0	10	0	0	0	0
4/21/2024	7:45 PM	0	165	21	2	1	0	0	0	4	0	0	0	0
4/21/2024	8:00 PM	0	158	22	0	1	0	0	0	3	0	0	0	0
4/21/2024	8:15 PM	0	147	18	0	1	1	0	0	2	0	0	0	0
4/21/2024	8:30 PM	0	108	20	0	2	1	0	0	5	0	0	0	0
4/21/2024	8:45 PM	0	120	16	0	2	0	0	1	2	0	0	0	0
4/21/2024	9:00 PM	0	120	9	0	0	0	0	0	2	0	0	0	0
4/21/2024	9:15 PM	0	111	10	0	0	0	0	1	1	0	0	0	0
4/21/2024	9:30 PM	0	99	10	0	0	0	0	0	3	0	0	0	0
4/21/2024	9:45 PM	0	120	16	0	0	0	0	2	5	0	0	0	0
4/21/2024	10:00 PM	0	90	15	0	0	0	0	1	2	0	0	0	0
4/21/2024	10:15 PM	0	99	10	0	1	0	0	0	2	0	0	0	0
4/21/2024	10:30 PM	0	70	5	0	0	0	0	1	1	0	0	0	0
4/21/2024	10:45 PM	0	80	10	0	0	0	0	0	0	0	0	0	0
4/21/2024	11:00 PM	0	66	6	0	0	0	0	1	3	0	0	0	0
4/21/2024	11:15 PM	0	60	4	0	0	0	0	1	1	0	0	0	0
4/21/2024	11:30 PM	0	58	3	0	0	0	0	0	1	0	0	0	0
4/21/2024	11:45 PM	0	36	2	0	0	0	0	0	0	0	0	0	0

4/22/2024	12:00 AM	0	34	0	0	2	0	0	0	4	0	0	0	0
4/22/2024	12:15 AM	0	36	0	0	0	1	0	0	2	0	0	0	0
4/22/2024	12:30 AM	0	26	0	0	0	0	0	0	3	0	0	0	0
4/22/2024	12:45 AM	0	20	0	0	2	0	0	0	4	0	0	0	0
4/22/2024	1:00 AM	1	19	0	0	0	0	0	1	3	0	0	0	0
4/22/2024	1:15 AM	0	21	0	0	0	0	0	0	3	0	0	0	0
4/22/2024	1:30 AM	0	17	0	0	0	0	0	0	1	0	0	0	0
4/22/2024	1:45 AM	0	12	0	0	1	0	0	0	2	0	0	0	0
4/22/2024	2:00 AM	0	17	0	0	0	1	0	0	3	0	0	0	0
4/22/2024	2:15 AM	0	8	0	0	0	0	0	0	2	0	0	0	0
4/22/2024	2:30 AM	0	18	0	0	1	1	0	0	2	0	0	0	0
4/22/2024	2:45 AM	0	19	0	0	2	0	0	0	5	0	0	0	0
4/22/2024	3:00 AM	0	9	0	0	0	0	0	3	3	0	0	0	0
4/22/2024	3:15 AM	0	19	0	0	1	0	0	1	4	0	0	0	0
4/22/2024	3:30 AM	0	32	0	0	2	0	0	2	2	0	0	0	0
4/22/2024	3:45 AM	0	21	0	0	2	0	0	0	3	0	0	0	0
4/22/2024	4:00 AM	0	30	0	0	0	0	0	1	3	0	0	0	0
4/22/2024	4:15 AM	0	31	0	0	0	0	0	1	6	0	0	0	0
4/22/2024	4:30 AM	0	37	0	0	0	0	0	1	6	0	0	0	0
4/22/2024	4:45 AM	0	53	0	0	0	0	0	0	4	0	0	0	0
4/22/2024	5:00 AM	0	51	0	1	1	0	0	0	4	0	0	0	0
4/22/2024	5:15 AM	0	83	0	0	1	0	0	2	11	0	0	0	0
4/22/2024	5:30 AM	0	101	0	0	6	1	0	0	6	0	0	0	0
4/22/2024	5:45 AM	0	102	0	0	2	0	0	2	12	0	0	0	0
4/22/2024	6:00 AM	0	111	7	0	3	1	0	2	9	0	0	0	0
4/22/2024	6:15 AM	1	168	29	0	5	2	0	4	12	0	0	0	0
4/22/2024	6:30 AM	1	163	65	0	4	2	1	3	9	0	0	0	0
4/22/2024	6:45 AM	0	180	39	0	8	7	1	0	9	0	0	0	0
4/22/2024	7:00 AM	1	218	56	0	4	0	0	3	10	0	0	0	0
4/22/2024	7:15 AM	0	255	58	0	3	0	1	1	13	0	0	0	0
4/22/2024	7:30 AM	0	252	71	0	3	3	0	3	11	0	0	0	0
4/22/2024	7:45 AM	0	229	59	0	9	3	0	0	11	0	0	0	0
4/22/2024	8:00 AM	0	240	57	0	6	2	1	5	6	0	0	0	0
4/22/2024	8:15 AM	0	228	63	0	12	3	0	1	12	0	0	0	0
4/22/2024	8:30 AM	0	253	66	0	10	4	1	1	11	1	0	0	0
4/22/2024	8:45 AM	0	173	55	0	2	5	1	1	16	1	0	0	0
4/22/2024	9:00 AM	0	155	57	0	3	4	0	2	11	1	0	0	0
4/22/2024	9:15 AM	0	148	53	0	7	1	0	1	6	0	0	0	0
4/22/2024	9:30 AM	0	160	57	0	7	4	0	1	12	0	0	0	0
4/22/2024	9:45 AM	1	173	42	0	4	4	0	1	10	0	0	0	0
4/22/2024	10:00 AM	0	149	40	0	11	3	1	1	6	0	0	0	0
4/22/2024	10:15 AM	0	134	45	0	7	0	0	2	7	0	0	0	0
4/22/2024	10:30 AM	0	176	51	0	11	4	0	9	13	0	0	0	0
4/22/2024	10:45 AM	0	168	49	0	11	2	1	3	10	2	0	0	0
4/22/2024	11:00 AM	0	131	52	0	5	2	2	1	13	1	0	0	0
4/22/2024	11:15 AM	0	177	58	0	7	5	0	0	12	0	0	0	0
4/22/2024	11:30 AM	0	156	59	0	7	6	1	1	13	0	0	0	0
4/22/2024	11:45 AM	0	170	55	0	6	0	0	1	12	0	0	0	0
4/22/2024	12:00 PM	3	169	45	1	7	3	0	5	15	3	0	0	0
4/22/2024	12:15 PM	0	182	54	0	3	4	0	2	11	0	0	0	0
4/22/2024	12:30 PM	0	156	56	0	5	1	0	3	15	1	0	0	0
4/22/2024	12:45 PM	0	205	47	0	5	2	0	2	25	0	0	0	0
4/22/2024	1:00 PM	0	167	65	0	4	4	0	1	20	0	0	0	0
4/22/2024	1:15 PM	0	184	61	0	10	1	0	1	13	0	0	0	0
4/22/2024	1:30 PM	0	178	53	1	7	2	0	0	22	0	0	0	0
4/22/2024	1:45 PM	0	215	47	0	5	3	0	0	16	0	0	0	0
4/22/2024	2:00 PM	0	165	49	0	9	0	0	0	16	0	0	0	0
4/22/2024	2:15 PM	0	183	53	0	7	2	0	0	13	0	0	0	0
4/22/2024	2:30 PM	0	214	73	0	3	1	0	0	12	0	0	0	0
4/22/2024	2:45 PM	0	197	67	0	6	0	0	2	11	0	0	0	0
4/22/2024	3:00 PM	1	228	42	2	5	5	0	0	15	0	0	0	0
4/22/2024	3:15 PM	1	227	48	0	5	0	0	1	10	0	0	0	0
4/22/2024	3:30 PM	0	236	54	2	6	2	0	0	14	0	0	0	0
4/22/2024	3:45 PM	0	243	63	3	5	0	0	1	10	0	0	0	0
4/22/2024	4:00 PM	0	265	52	1	7	5	0	0	8	0	0	0	0
4/22/2024	4:15 PM	0	263	54	0	5	2	1	2	14	0	0	0	0
4/22/2024	4:30 PM	0	255	73	3	3	3	0	0	15	0	0	0	0
4/22/2024	4:45 PM	1	271	55	0	6	3	0	2	11	0	0	0	0
4/22/2024	5:00 PM	0	286	61	0	6	2	0	2	8	0	0	0	0
4/22/2024	5:15 PM	0	307	55	0	3	3	0	2	13	0	0	0	0
4/22/2024	5:30 PM	1	282	63	0	5	1	0	1	15	0	0	0	0
4/22/2024	5:45 PM	2	214	49	0	4	1	0	1	11	0	0	0	0
4/22/2024	6:00 PM	0	227	63	1	3	1	0	3	12	0	0	0	0
4/22/2024	6:15 PM	1	218	34	0	4	1	0	1	13	0	0	0	0
4/22/2024	6:30 PM	0	164	41	1	0	5	0	1	11	0	0	0	0
4/22/2024	6:45 PM	0	167	43	0	4	1	0	1	8	0	0	0	0
4/22/2024	7:00 PM	1	170	62	0	4	0	0	0	8	0	0	0	0
4/22/2024	7:15 PM	0	175	32	0	2	0	0	1	8	0	0	0	0
4/22/2024	7:30 PM	1	155	24	1	4	1	0	0	8	0	0	0	0
4/22/2024	7:45 PM	1	136	24	0	3	0	0	2	8	0	0	0	0
4/22/2024	8:00 PM	0	142	27	0	1	0	0	0	4	0	0	0	0
4/22/2024	8:15 PM	0	156	23	0	0	0	0	0	3	0	0	0	0
4/22/2024	8:30 PM	0	112	18	0	1	0	0	2	2	0	0	0	0
4/22/2024	8:45 PM	0	114	15	0	1	1	0	1	6	0	0	0	0
4/22/2024	9:00 PM	0	106	9	0	0	0	0	0	4	0	0	0	0
4/22/2024	9:15 PM	0	104	11	0	1	0	0	0	9	0	0	0	0
4/22/2024	9:30 PM	0	105	10	0	0	0	0	0	4	0	0	0	0
4/22/2024	9:45 PM	0	87	8	0	0	0	0	0	6	0	0	0	0
4/22/2024	10:00 PM	0	86	6	0	1	0	0	0	4	0	0	0	0
4/22/2024	10:15 PM	0	82	2	0	0	0	0	0	7	0	0	0	0
4/22/2024	10:30 PM	0	71	1	0	0	0	0	0	1	0	1	0	0
4/22/2024	10:45 PM	0	46	2	0	1	0	0	0	4	0	0	0	0
4/22/2024	11:00 PM	0	47	3	0	1	0	0	1	4	0	1	0	0
4/22/2024	11:15 PM	0	39	2	0	0	0	0	0	6	0	0	0	0
4/22/2024	11:30 PM	0	38	2	0	1	0	0	0	2	0	0	0	0
4/22/2024	11:45 PM	0	30	1	0	0	0	0	0	3	0	0	0	0

4/23/2024	12:00 AM	0	15	8	0	1	0	0	0	6	0	0	0	0
4/23/2024	12:15 AM	0	23	9	0	1	0	0	0	2	0	0	0	0
4/23/2024	12:30 AM	1	22	6	0	0	0	0	0	5	0	0	0	0
4/23/2024	12:45 AM	0	17	3	0	0	0	0	0	2	0	1	0	0
4/23/2024	1:00 AM	0	16	6	0	0	0	0	0	3	0	0	0	0
4/23/2024	1:15 AM	0	18	6	0	0	0	0	0	7	0	2	0	0
4/23/2024	1:30 AM	0	13	6	0	0	0	0	0	2	0	0	0	0
4/23/2024	1:45 AM	0	11	3	0	0	0	0	0	3	0	0	0	0
4/23/2024	2:00 AM	0	9	3	0	0	0	0	0	0	0	0	0	0
4/23/2024	2:15 AM	0	17	5	0	0	0	0	0	1	0	0	0	0
4/23/2024	2:30 AM	0	13	4	0	0	0	0	0	3	0	0	0	0
4/23/2024	2:45 AM	0	9	2	0	1	0	0	0	3	0	0	0	0
4/23/2024	3:00 AM	0	7	1	0	0	0	0	0	1	0	1	0	0
4/23/2024	3:15 AM	0	11	4	0	1	0	0	0	9	0	0	0	0
4/23/2024	3:30 AM	0	13	4	0	1	0	0	0	7	0	0	0	0
4/23/2024	3:45 AM	0	14	4	0	0	0	0	0	3	0	1	0	0
4/23/2024	4:00 AM	0	18	5	0	0	0	0	0	4	0	0	0	0
4/23/2024	4:15 AM	0	21	7	0	0	0	0	0	6	0	0	0	0
4/23/2024	4:30 AM	0	42	14	0	0	0	0	0	9	0	1	0	0
4/23/2024	4:45 AM	0	29	8	0	1	1	0	0	5	0	0	0	0
4/23/2024	5:00 AM	0	32	13	0	1	0	0	0	8	0	1	0	0
4/23/2024	5:15 AM	0	56	17	0	1	0	0	0	7	0	0	0	0
4/23/2024	5:30 AM	0	74	12	0	4	0	0	0	12	0	0	0	0
4/23/2024	5:45 AM	0	71	20	0	1	0	0	0	14	0	0	0	0
4/23/2024	6:00 AM	0	90	21	0	1	0	0	0	9	0	0	0	0
4/23/2024	6:15 AM	1	109	49	0	2	5	0	0	10	0	0	0	0
4/23/2024	6:30 AM	1	154	53	0	2	0	0	2	7	0	1	0	0
4/23/2024	6:45 AM	0	199	61	0	1	3	0	0	13	0	0	0	0
4/23/2024	7:00 AM	0	212	76	0	1	1	0	0	11	0	0	0	0
4/23/2024	7:15 AM	0	259	76	0	0	1	0	1	6	0	0	0	0
4/23/2024	7:30 AM	0	126	40	0	2	0	0	0	6	0	0	0	0
4/23/2024	7:45 AM	1	172	63	0	6	0	0	1	8	0	0	0	0
4/23/2024	8:00 AM	4	198	61	0	3	4	0	0	10	0	0	0	0
4/23/2024	8:15 AM	0	179	67	0	5	3	0	1	5	1	0	0	0
4/23/2024	8:30 AM	0	219	89	2	6	0	0	2	9	0	0	0	0
4/23/2024	8:45 AM	0	169	63	0	4	1	0	1	11	0	0	0	0
4/23/2024	9:00 AM	0	141	52	0	2	3	0	3	10	0	0	0	0
4/23/2024	9:15 AM	0	154	54	0	5	2	1	0	10	0	0	0	0
4/23/2024	9:30 AM	0	145	50	0	4	2	0	0	9	0	0	0	0
4/23/2024	9:45 AM	0	140	47	0	10	2	0	0	15	0	0	0	0
4/23/2024	10:00 AM	0	139	62	0	2	0	0	0	21	0	0	0	0
4/23/2024	10:15 AM	0	151	60	0	4	0	0	2	18	0	0	0	0
4/23/2024	10:30 AM	0	166	53	0	7	1	0	0	13	0	0	0	0
4/23/2024	10:45 AM	0	173	58	0	8	4	0	1	20	0	0	0	0
4/23/2024	11:00 AM	0	155	61	0	5	1	1	3	15	0	0	0	0
4/23/2024	11:15 AM	0	177	53	0	4	2	0	1	11	0	0	0	0
4/23/2024	11:30 AM	0	167	62	0	2	4	0	1	8	0	0	0	0
4/23/2024	11:45 AM	0	157	61	0	4	5	0	1	14	0	0	0	0
4/23/2024	12:00 PM	0	161	61	0	5	5	0	1	23	0	0	0	0
4/23/2024	12:15 PM	0	193	41	0	5	1	0	1	14	0	0	0	0
4/23/2024	12:30 PM	0	193	48	3	7	0	0	3	12	0	0	0	0
4/23/2024	12:45 PM	0	190	54	0	5	1	0	3	21	0	0	0	0
4/23/2024	1:00 PM	1	197	41	1	4	4	0	3	7	0	0	0	0
4/23/2024	1:15 PM	1	220	50	3	7	3	0	1	15	1	0	0	0
4/23/2024	1:30 PM	0	191	45	0	8	5	0	1	16	0	0	0	0
4/23/2024	1:45 PM	0	180	36	0	7	8	1	0	19	0	0	0	0
4/23/2024	2:00 PM	1	194	42	0	9	5	0	1	18	0	0	0	0
4/23/2024	2:15 PM	1	227	50	0	8	2	0	0	19	0	0	0	0
4/23/2024	2:30 PM	0	205	42	0	3	7	0	0	15	0	0	0	0
4/23/2024	2:45 PM	0	216	50	0	6	0	0	0	16	0	0	0	0
4/23/2024	3:00 PM	0	202	43	1	5	4	0	0	10	0	0	0	0
4/23/2024	3:15 PM	0	241	46	1	7	6	0	0	10	0	0	0	0
4/23/2024	3:30 PM	1	223	61	0	7	7	3	1	18	0	0	0	0
4/23/2024	3:45 PM	2	292	54	1	6	4	1	0	9	0	0	0	0
4/23/2024	4:00 PM	0	207	74	2	9	1	0	1	16	0	0	0	0
4/23/2024	4:15 PM	1	272	67	2	2	1	1	0	13	0	0	0	0
4/23/2024	4:30 PM	1	263	69	1	4	3	0	0	15	0	0	0	0
4/23/2024	4:45 PM	1	281	69	0	2	0	0	0	15	0	0	0	0
4/23/2024	5:00 PM	1	228	44	1	3	0	0	0	16	0	0	0	0
4/23/2024	5:15 PM	0	189	33	0	3	3	0	1	6	0	0	0	0
4/23/2024	5:30 PM	0	248	69	0	1	4	0	1	17	0	0	0	0
4/23/2024	5:45 PM	0	264	59	1	7	1	0	1	8	0	0	0	0
4/23/2024	6:00 PM	0	186	43	1	2	0	0	0	12	0	0	0	0
4/23/2024	6:15 PM	1	184	45	0	2	4	0	0	8	0	0	0	0
4/23/2024	6:30 PM	0	164	48	0	3	0	0	0	11	0	0	0	0
4/23/2024	6:45 PM	0	126	44	0	3	2	0	0	6	0	0	0	0
4/23/2024	7:00 PM	2	182	47	0	2	1	0	0	10	0	0	0	0
4/23/2024	7:15 PM	1	180	36	0	0	1	0	1	8	0	0	0	0
4/23/2024	7:30 PM	0	167	31	0	0	1	0	0	12	0	0	0	0
4/23/2024	7:45 PM	3	156	32	0	2	2	0	0	8	0	0	0	0
4/23/2024	8:00 PM	0	134	36	0	0	0	0	0	5	0	0	0	0
4/23/2024	8:15 PM	0	148	27	0	0	1	0	0	4	0	0	0	0
4/23/2024	8:30 PM	0	145	15	0	1	1	0	0	6	0	0	0	0
4/23/2024	8:45 PM	1	130	14	0	3	0	0	0	8	0	0	0	0
4/23/2024	9:00 PM	0	100	10	0	0	0	0	0	8	0	0	0	0
4/23/2024	9:15 PM	0	110	12	0	0	0	0	0	5	0	0	0	0
4/23/2024	9:30 PM	0	95	5	0	1	0	0	0	6	0	0	0	0
4/23/2024	9:45 PM	0	94	6	1	0	0	0	0	4	0	0	0	0
4/23/2024	10:00 PM	0	84	6	0	2	0	0	0	6	0	0	0	0
4/23/2024	10:15 PM	0	72	2	0	1	0	0	0	5	0	0	0	0
4/23/2024	10:30 PM	0	71	7	1	0	0	0	0	1	0	1	0	0
4/23/2024	10:45 PM	0	53	5	1	3	0	0	0	3	0	0	0	0
4/23/2024	11:00 PM	0	40	8	1	0	0	0	0	2	0	1	0	0
4/23/2024	11:15 PM	0	42	7	0	0	0	0	0	3	0	0	0	0
4/23/2024	11:30 PM	0	35	4	0	0	0	0	0	4	0	0	0	0
4/23/2024	11:45 PM	0	31	3	0	0	0	0	0	4	0	0	0	0

4/24/2024	12:00 AM	0	34	10	0	2	0	0	0	3	0	0	0	0
4/24/2024	12:15 AM	0	24	8	0	0	0	0	0	3	0	0	0	0
4/24/2024	12:30 AM	0	21	4	0	1	0	0	0	2	0	0	0	0
4/24/2024	12:45 AM	0	25	4	0	0	0	0	0	5	0	0	0	0
4/24/2024	1:00 AM	0	12	3	0	0	0	0	0	3	0	0	0	0
4/24/2024	1:15 AM	0	12	4	0	2	0	0	0	3	0	0	0	0
4/24/2024	1:30 AM	0	10	3	0	2	0	0	0	7	0	0	0	0
4/24/2024	1:45 AM	0	10	4	0	0	0	0	0	3	0	0	0	0
4/24/2024	2:00 AM	0	12	2	0	0	0	0	0	3	0	0	0	0
4/24/2024	2:15 AM	0	10	3	0	0	0	0	0	5	0	0	0	0
4/24/2024	2:30 AM	0	7	1	0	0	0	0	0	2	0	0	0	0
4/24/2024	2:45 AM	0	10	2	0	0	0	0	0	4	0	0	0	0
4/24/2024	3:00 AM	0	9	2	0	0	0	0	0	6	0	0	0	0
4/24/2024	3:15 AM	0	10	5	0	2	0	0	0	5	0	0	0	0
4/24/2024	3:30 AM	0	11	3	0	0	0	0	0	4	0	0	0	0
4/24/2024	3:45 AM	0	9	3	0	1	0	0	0	5	0	0	0	0
4/24/2024	4:00 AM	0	25	4	0	1	0	0	0	5	0	2	0	0
4/24/2024	4:15 AM	0	18	3	0	0	0	0	0	3	0	0	0	0
4/24/2024	4:30 AM	0	30	8	0	2	0	0	0	6	0	1	0	0
4/24/2024	4:45 AM	0	40	12	0	6	0	0	0	6	0	0	0	0
4/24/2024	5:00 AM	0	35	6	1	2	0	0	0	2	0	0	0	0
4/24/2024	5:15 AM	0	60	13	0	3	0	0	0	4	0	0	0	0
4/24/2024	5:30 AM	0	73	10	0	3	0	0	0	7	0	1	0	0
4/24/2024	5:45 AM	0	98	12	0	6	0	0	0	8	0	0	0	0
4/24/2024	6:00 AM	0	101	7	0	4	0	0	0	4	0	0	0	0
4/24/2024	6:15 AM	0	152	33	2	4	3	0	0	8	0	0	0	0
4/24/2024	6:30 AM	1	187	45	0	6	0	0	1	12	0	0	0	0
4/24/2024	6:45 AM	0	198	52	0	4	0	0	0	8	0	0	0	0
4/24/2024	7:00 AM	0	206	68	0	9	1	0	0	9	0	0	0	0
4/24/2024	7:15 AM	0	283	64	0	3	1	1	3	8	0	0	0	0
4/24/2024	7:30 AM	1	258	67	1	6	0	1	2	3	0	1	0	0
4/24/2024	7:45 AM	0	251	60	0	6	2	0	0	8	0	0	0	0
4/24/2024	8:00 AM	0	204	59	0	6	0	0	2	12	0	0	0	0
4/24/2024	8:15 AM	0	198	74	1	13	0	0	1	13	0	0	0	0
4/24/2024	8:30 AM	2	227	54	0	11	2	0	3	14	0	0	0	0
4/24/2024	8:45 AM	2	171	56	0	9	2	0	0	11	0	0	0	0
4/24/2024	9:00 AM	0	148	52	0	11	2	1	2	16	0	0	0	0
4/24/2024	9:15 AM	1	178	55	0	5	3	0	2	13	0	0	0	0
4/24/2024	9:30 AM	0	142	52	0	10	0	0	1	7	0	0	0	0
4/24/2024	9:45 AM	0	142	51	1	8	6	0	1	15	0	0	0	0
4/24/2024	10:00 AM	0	162	42	0	11	3	0	3	17	0	0	0	0
4/24/2024	10:15 AM	1	158	46	0	9	7	0	2	16	0	0	0	0
4/24/2024	10:30 AM	0	142	42	0	5	2	1	2	6	0	0	0	0
4/24/2024	10:45 AM	0	148	40	0	4	3	0	1	6	0	0	0	0
4/24/2024	11:00 AM	0	142	59	0	3	6	0	1	6	0	0	0	0
4/24/2024	11:15 AM	0	140	51	0	4	1	0	1	12	0	0	0	0
4/24/2024	11:30 AM	1	149	40	0	8	1	0	1	10	0	0	0	0
4/24/2024	11:45 AM	0	176	53	0	5	5	0	1	23	0	0	0	0
4/24/2024	12:00 PM	1	184	54	1	7	2	0	5	19	0	0	0	0
4/24/2024	12:15 PM	0	182	56	1	6	6	0	0	22	0	0	0	0
4/24/2024	12:30 PM	0	204	62	0	3	5	0	1	26	0	0	0	0
4/24/2024	12:45 PM	1	198	64	1	9	3	0	1	13	0	0	0	0
4/24/2024	1:00 PM	1	178	69	0	9	1	0	2	16	0	0	0	0
4/24/2024	1:15 PM	2	210	56	0	13	2	1	2	5	0	0	0	0
4/24/2024	1:30 PM	1	206	67	1	7	2	0	0	11	0	0	0	0
4/24/2024	1:45 PM	0	196	53	0	6	2	0	1	12	0	0	0	0
4/24/2024	2:00 PM	0	212	48	1	3	1	0	0	11	0	0	0	0
4/24/2024	2:15 PM	1	189	46	0	8	4	0	0	14	0	0	0	0
4/24/2024	2:30 PM	0	206	55	0	6	4	1	1	8	0	0	0	0
4/24/2024	2:45 PM	0	217	60	1	7	2	0	1	13	0	0	0	0
4/24/2024	3:00 PM	0	232	72	2	7	4	0	1	12	0	0	0	0
4/24/2024	3:15 PM	0	246	70	1	6	0	0	2	13	0	0	0	0
4/24/2024	3:30 PM	0	248	48	2	7	1	0	0	11	0	0	0	0
4/24/2024	3:45 PM	2	233	60	2	4	4	0	1	18	0	0	0	0
4/24/2024	4:00 PM	0	243	65	0	6	1	0	3	4	0	0	0	0
4/24/2024	4:15 PM	2	264	60	1	2	4	0	1	9	0	0	0	0
4/24/2024	4:30 PM	0	289	66	0	8	1	0	2	17	0	0	0	0
4/24/2024	4:45 PM	0	274	68	1	11	4	0	0	13	0	0	0	0
4/24/2024	5:00 PM	0	291	65	1	5	0	0	0	11	0	0	0	0
4/24/2024	5:15 PM	0	261	74	0	5	2	1	3	11	1	0	0	0
4/24/2024	5:30 PM	0	255	62	0	4	0	0	2	9	0	0	0	0
4/24/2024	5:45 PM	1	211	52	1	11	0	0	3	7	0	0	0	0
4/24/2024	6:00 PM	1	242	58	0	2	2	0	1	5	0	0	0	0
4/24/2024	6:15 PM	3	213	60	1	3	3	0	2	8	0	0	0	0
4/24/2024	6:30 PM	1	184	55	0	3	1	0	2	6	0	0	0	0
4/24/2024	6:45 PM	0	179	49	0	6	2	0	2	6	0	0	0	0
4/24/2024	7:00 PM	0	210	47	0	5	1	0	1	9	0	0	0	0
4/24/2024	7:15 PM	3	165	44	0	2	1	0	0	7	0	0	0	0
4/24/2024	7:30 PM	0	156	38	0	5	0	0	0	7	0	0	0	0
4/24/2024	7:45 PM	0	158	28	0	3	0	0	0	3	0	0	0	0
4/24/2024	8:00 PM	1	192	28	0	1	0	0	2	13	0	0	0	0
4/24/2024	8:15 PM	0	174	20	0	2	0	0	0	6	0	1	0	0
4/24/2024	8:30 PM	0	162	18	0	1	0	0	0	5	0	0	0	0
4/24/2024	8:45 PM	0	139	16	1	1	0	0	0	7	0	0	0	0
4/24/2024	9:00 PM	0	118	24	0	2	0	0	0	7	0	0	0	0
4/24/2024	9:15 PM	0	114	22	0	2	0	0	1	3	0	0	0	0
4/24/2024	9:30 PM	0	86	15	0	1	0	0	0	0	0	0	0	0
4/24/2024	9:45 PM	0	104	18	0	1	1	0	0	1	0	0	0	0
4/24/2024	10:00 PM	0	77	10	0	3	0	0	0	7	0	0	0	0
4/24/2024	10:15 PM	0	84	12	0	0	0	0	0	2	0	2	0	0
4/24/2024	10:30 PM	0	56	10	0	2	0	0	0	5	0	0	0	0
4/24/2024	10:45 PM	0	51	8	0	1	1	0	0	2	0	0	0	0
4/24/2024	11:00 PM	0	49	6	0	2	0	0	0	2	0	0	0	0
4/24/2024	11:15 PM	0	52	8	0	1	0	0	0	5	0	0	0	0
4/24/2024	11:30 PM	0	32	6	0	1	1	0	0	3	0	0	0	0
4/24/2024	11:45 PM	0	26	9	0	1	0	0	0	5	0	0	0	0

4/25/2024	12:00 AM	1	42	7	0	0	0	0	0	11	0	0	0	0
4/25/2024	12:15 AM	0	23	3	0	0	0	0	0	7	0	0	0	0
4/25/2024	12:30 AM	0	27	2	0	0	0	0	0	3	0	0	0	0
4/25/2024	12:45 AM	0	14	2	0	0	1	0	0	3	0	0	0	0
4/25/2024	1:00 AM	0	18	3	0	0	1	0	0	2	0	0	0	0
4/25/2024	1:15 AM	0	20	4	0	0	0	0	0	5	0	0	0	0
4/25/2024	1:30 AM	0	15	2	0	0	0	0	0	4	0	0	0	0
4/25/2024	1:45 AM	0	15	1	0	0	0	0	0	3	0	1	0	0
4/25/2024	2:00 AM	0	13	1	0	0	0	0	0	2	0	0	0	0
4/25/2024	2:15 AM	0	14	2	0	0	0	0	0	4	0	0	0	0
4/25/2024	2:30 AM	0	13	2	0	0	0	0	0	4	0	0	0	0
4/25/2024	2:45 AM	0	12	1	0	0	0	0	0	1	0	1	0	0
4/25/2024	3:00 AM	0	15	1	0	2	0	0	0	4	0	0	0	0
4/25/2024	3:15 AM	0	22	4	0	3	0	0	0	6	0	0	0	0
4/25/2024	3:30 AM	0	15	2	0	2	0	0	0	3	0	1	0	0
4/25/2024	3:45 AM	0	19	3	0	0	0	0	0	5	0	0	0	0
4/25/2024	4:00 AM	0	26	4	0	2	1	0	0	6	0	1	0	0
4/25/2024	4:15 AM	0	24	3	0	2	0	0	0	3	0	0	0	0
4/25/2024	4:30 AM	0	41	5	0	1	0	0	0	6	0	0	0	0
4/25/2024	4:45 AM	0	39	6	0	3	0	0	0	4	0	1	0	0
4/25/2024	5:00 AM	0	41	9	1	3	0	0	0	5	0	0	0	0
4/25/2024	5:15 AM	0	57	12	0	3	0	0	0	4	0	0	0	0
4/25/2024	5:30 AM	0	62	15	0	2	0	0	0	8	0	0	0	0
4/25/2024	5:45 AM	0	78	29	0	0	2	0	0	10	0	0	0	0
4/25/2024	6:00 AM	1	77	32	0	3	1	0	0	11	0	0	0	0
4/25/2024	6:15 AM	0	98	44	0	4	5	0	0	18	0	0	0	0
4/25/2024	6:30 AM	1	156	57	0	4	0	3	1	5	0	0	0	0
4/25/2024	6:45 AM	0	198	63	0	7	0	0	1	16	0	1	0	0
4/25/2024	7:00 AM	0	205	54	0	4	2	0	2	12	1	0	0	0
4/25/2024	7:15 AM	1	239	62	0	10	1	0	1	14	0	0	0	0
4/25/2024	7:30 AM	0	270	56	1	3	0	0	0	8	0	0	0	0
4/25/2024	7:45 AM	1	210	52	0	9	1	0	0	12	1	0	0	0
4/25/2024	8:00 AM	0	202	64	0	6	1	0	0	14	0	0	0	0
4/25/2024	8:15 AM	1	245	85	0	11	1	1	2	8	0	0	0	0
4/25/2024	8:30 AM	2	233	64	0	10	4	0	2	12	0	0	0	0
4/25/2024	8:45 AM	0	200	75	0	3	2	0	7	19	0	0	0	0
4/25/2024	9:00 AM	0	163	58	0	6	4	0	5	12	0	0	0	0
4/25/2024	9:15 AM	1	146	61	1	6	2	0	1	14	0	0	0	0
4/25/2024	9:30 AM	0	171	47	1	10	8	0	0	13	0	0	0	0
4/25/2024	9:45 AM	1	158	75	1	7	0	0	0	7	0	0	0	0
4/25/2024	10:00 AM	0	155	64	0	3	3	0	0	19	0	0	0	0
4/25/2024	10:15 AM	2	162	44	0	10	4	0	4	12	0	0	0	0
4/25/2024	10:30 AM	0	169	48	0	3	4	0	1	11	0	0	0	0
4/25/2024	10:45 AM	0	156	59	1	5	0	0	2	10	0	0	0	0
4/25/2024	11:00 AM	0	138	55	0	4	2	0	3	11	0	0	0	0
4/25/2024	11:15 AM	14	165	62	1	8	10	0	1	13	2	0	0	0
4/25/2024	11:30 AM	0	172	54	2	6	0	0	2	16	0	0	0	0
4/25/2024	11:45 AM	0	167	53	0	10	3	0	0	11	0	0	0	0
4/25/2024	12:00 PM	1	216	64	0	10	4	0	8	20	0	0	0	0
4/25/2024	12:15 PM	0	229	66	1	7	2	1	1	13	0	0	0	0
4/25/2024	12:30 PM	0	227	64	0	4	6	0	1	14	0	0	0	0
4/25/2024	12:45 PM	0	228	58	1	6	1	0	4	10	0	0	0	0
4/25/2024	1:00 PM	1	212	64	1	6	3	0	3	13	0	0	0	0
4/25/2024	1:15 PM	0	263	62	0	11	3	0	2	14	0	0	0	0
4/25/2024	1:30 PM	0	210	53	1	5	1	0	2	15	0	0	0	0
4/25/2024	1:45 PM	1	231	73	1	3	3	0	2	9	0	0	0	0
4/25/2024	2:00 PM	0	219	63	0	6	4	0	3	12	1	0	0	0
4/25/2024	2:15 PM	0	210	65	1	7	3	0	3	16	0	0	0	0
4/25/2024	2:30 PM	0	237	60	0	8	5	0	1	16	0	0	0	0
4/25/2024	2:45 PM	0	271	70	1	5	5	1	1	11	2	0	0	0
4/25/2024	3:00 PM	0	262	79	1	7	3	0	1	11	0	0	0	0
4/25/2024	3:15 PM	1	247	73	1	9	4	1	1	9	0	0	0	0
4/25/2024	3:30 PM	1	274	62	0	10	2	0	0	10	1	0	0	0
4/25/2024	3:45 PM	1	269	70	3	6	5	0	2	9	0	0	0	0
4/25/2024	4:00 PM	1	286	77	0	2	0	0	0	6	1	0	0	0
4/25/2024	4:15 PM	0	292	75	0	6	1	0	1	13	0	0	0	0
4/25/2024	4:30 PM	1	280	63	0	2	0	0	2	10	0	0	0	0
4/25/2024	4:45 PM	1	308	85	0	8	0	0	3	6	0	0	0	0
4/25/2024	5:00 PM	2	274	83	1	6	1	0	0	9	0	0	0	0
4/25/2024	5:15 PM	0	271	59	0	2	2	0	1	10	0	0	0	0
4/25/2024	5:30 PM	0	267	67	1	3	2	0	1	8	0	0	0	0
4/25/2024	5:45 PM	0	268	67	0	5	0	0	0	13	0	0	0	0
4/25/2024	6:00 PM	1	235	59	0	2	0	0	2	10	0	0	0	0
4/25/2024	6:15 PM	0	238	51	0	4	1	0	1	5	0	0	0	0
4/25/2024	6:30 PM	3	238	51	0	5	0	0	0	8	0	0	0	0
4/25/2024	6:45 PM	0	211	51	0	4	0	0	1	12	0	0	0	0
4/25/2024	7:00 PM	0	230	45	1	0	0	0	1	7	0	0	0	0
4/25/2024	7:15 PM	1	219	45	0	0	1	0	0	14	0	0	0	0
4/25/2024	7:30 PM	2	203	34	0	0	1	0	0	10	0	0	0	0
4/25/2024	7:45 PM	1	183	39	0	1	0	0	0	4	0	0	0	0
4/25/2024	8:00 PM	0	201	31	1	0	0	0	2	3	0	0	0	0
4/25/2024	8:15 PM	1	204	24	0	1	0	0	0	7	0	0	0	0
4/25/2024	8:30 PM	0	137	22	0	1	1	0	0	5	0	0	0	0
4/25/2024	8:45 PM	0	161	25	0	1	0	0	0	6	0	0	0	0
4/25/2024	9:00 PM	0	172	23	0	2	0	0	0	7	0	0	0	0
4/25/2024	9:15 PM	0	136	20	0	1	0	0	0	3	0	0	0	0
4/25/2024	9:30 PM	0	101	17	0	1	0	0	0	10	0	0	0	0
4/25/2024	9:45 PM	0	118	19	0	0	0	0	0	2	0	0	0	0
4/25/2024	10:00 PM	0	91	14	0	0	0	0	0	2	0	0	0	0
4/25/2024	10:15 PM	0	84	10	0	0	0	0	0	3	0	0	0	0
4/25/2024	10:30 PM	0	101	29	1	0	1	0	0	5	0	0	0	0
4/25/2024	10:45 PM	0	71	10	0	3	0	0	0	4	0	0	0	0
4/25/2024	11:00 PM	0	38	7	0	0	0	0	0	1	0	0	0	0
4/25/2024	11:15 PM	0	39	10	0	0	0	0	0	0	0	0	0	0
4/25/2024	11:30 PM	0	64	13	0	1	0	0	0	7	0	0	0	0
4/25/2024	11:45 PM	1	52	10	0	1	0	0	0	11	0	0	0	0

4/26/2024	12:00 AM	0	50	5	0	1	1	0	2	6	0	0	0	0
4/26/2024	12:15 AM	0	36	4	0	0	0	0	0	0	0	0	0	0
4/26/2024	12:30 AM	0	35	5	0	1	0	0	1	8	0	0	0	0
4/26/2024	12:45 AM	0	23	3	0	0	0	0	0	5	0	0	0	0
4/26/2024	1:00 AM	0	22	3	0	2	0	0	0	3	0	2	0	0
4/26/2024	1:15 AM	0	16	4	0	2	0	0	0	1	0	0	0	0
4/26/2024	1:30 AM	0	12	3	0	0	0	0	1	4	0	0	0	0
4/26/2024	1:45 AM	0	15	3	0	0	0	0	0	2	0	0	0	0
4/26/2024	2:00 AM	1	12	2	0	0	0	0	0	5	0	0	0	0
4/26/2024	2:15 AM	0	15	3	0	1	0	0	0	3	0	0	0	0
4/26/2024	2:30 AM	0	21	3	0	1	0	0	0	4	0	1	0	0
4/26/2024	2:45 AM	0	15	3	0	1	0	0	0	3	0	0	0	0
4/26/2024	3:00 AM	0	15	2	0	0	1	0	0	6	0	0	0	0
4/26/2024	3:15 AM	0	13	2	0	0	1	0	0	4	0	0	0	0
4/26/2024	3:30 AM	0	15	3	0	2	0	0	0	8	0	1	0	0
4/26/2024	3:45 AM	0	20	3	0	1	1	0	0	9	0	0	0	0
4/26/2024	4:00 AM	0	19	4	0	2	1	0	0	2	0	0	0	0
4/26/2024	4:15 AM	0	21	4	0	0	0	0	0	1	0	0	0	0
4/26/2024	4:30 AM	0	30	3	0	2	2	0	0	8	0	0	0	0
4/26/2024	4:45 AM	0	29	4	0	0	0	0	0	11	0	2	0	0
4/26/2024	5:00 AM	0	40	3	1	2	0	0	0	6	0	0	0	0
4/26/2024	5:15 AM	0	71	8	0	3	1	0	0	9	0	1	0	0
4/26/2024	5:30 AM	1	60	8	0	2	0	0	1	4	0	0	0	0
4/26/2024	5:45 AM	0	70	4	0	0	2	0	1	5	0	0	0	0
4/26/2024	6:00 AM	2	93	8	0	2	1	0	1	8	0	0	0	0
4/26/2024	6:15 AM	0	116	21	1	5	3	0	1	10	0	0	0	0
4/26/2024	6:30 AM	1	140	26	1	4	1	0	3	8	0	0	0	0
4/26/2024	6:45 AM	0	137	46	0	3	2	0	1	9	0	0	0	0
4/26/2024	7:00 AM	0	196	48	0	3	0	0	1	10	0	0	0	0
4/26/2024	7:15 AM	1	224	58	0	1	1	0	2	4	0	0	0	0
4/26/2024	7:30 AM	0	270	64	1	3	0	0	2	9	0	1	0	0
4/26/2024	7:45 AM	0	238	59	0	7	5	0	3	13	0	0	0	0
4/26/2024	8:00 AM	0	238	65	0	5	2	0	2	17	0	0	0	0
4/26/2024	8:15 AM	2	242	49	3	4	3	0	4	12	0	0	0	0
4/26/2024	8:30 AM	0	259	60	1	6	1	0	2	11	0	0	0	0
4/26/2024	8:45 AM	0	159	42	1	6	0	0	1	16	0	0	0	0
4/26/2024	9:00 AM	0	171	48	1	6	6	0	0	18	0	0	0	0
4/26/2024	9:15 AM	0	188	49	1	6	3	0	2	12	0	0	0	0
4/26/2024	9:30 AM	1	178	48	0	10	4	0	2	14	0	0	0	0
4/26/2024	9:45 AM	0	183	57	0	5	3	0	2	14	0	0	0	0
4/26/2024	10:00 AM	0	185	56	0	3	3	0	5	17	0	0	0	0
4/26/2024	10:15 AM	0	214	40	0	3	3	0	4	19	0	0	0	0
4/26/2024	10:30 AM	0	204	49	1	10	5	0	1	16	0	0	0	0
4/26/2024	10:45 AM	0	201	43	1	10	7	0	5	14	0	0	0	0
4/26/2024	11:00 AM	1	213	43	0	4	3	0	4	17	0	0	0	0
4/26/2024	11:15 AM	0	224	61	1	6	1	0	3	15	0	0	0	0
4/26/2024	11:30 AM	0	251	62	0	3	3	0	3	12	1	0	0	0
4/26/2024	11:45 AM	1	271	47	1	5	4	0	4	17	0	0	0	0
4/26/2024	12:00 PM	0	228	82	0	7	5	0	2	16	0	0	0	0
4/26/2024	12:15 PM	0	273	56	3	9	5	0	4	14	0	0	0	0
4/26/2024	12:30 PM	0	265	68	1	6	6	0	5	11	0	0	0	0
4/26/2024	12:45 PM	0	261	77	1	9	1	0	1	19	0	0	0	0
4/26/2024	1:00 PM	1	281	56	2	6	2	0	2	9	0	0	0	0
4/26/2024	1:15 PM	1	268	55	0	10	4	0	2	13	0	0	0	0
4/26/2024	1:30 PM	3	276	77	0	10	0	0	3	11	0	0	0	0
4/26/2024	1:45 PM	3	231	80	0	6	8	0	0	12	0	0	0	0
4/26/2024	2:00 PM	2	212	41	0	5	2	0	2	7	0	0	0	0
4/26/2024	2:15 PM	0	255	63	1	8	4	0	1	9	0	0	0	0
4/26/2024	2:30 PM	0	283	72	0	3	0	0	0	12	0	0	0	0
4/26/2024	2:45 PM	3	279	57	1	4	5	0	3	11	0	0	0	0
4/26/2024	3:00 PM	0	284	76	1	5	1	0	1	12	0	0	0	0
4/26/2024	3:15 PM	1	279	73	3	4	2	0	0	9	0	0	0	0
4/26/2024	3:30 PM	0	281	72	2	4	2	0	2	7	0	0	0	0
4/26/2024	3:45 PM	1	301	64	1	5	3	0	4	9	0	0	0	0
4/26/2024	4:00 PM	0	298	68	1	5	1	0	1	10	0	0	0	0
4/26/2024	4:15 PM	0	307	55	0	5	0	0	4	11	0	0	0	0
4/26/2024	4:30 PM	0	307	72	0	7	2	0	2	6	0	0	0	0
4/26/2024	4:45 PM	0	292	62	0	3	3	0	2	13	0	0	0	0
4/26/2024	5:00 PM	0	340	70	0	5	0	0	0	12	0	0	0	0
4/26/2024	5:15 PM	2	312	66	0	4	2	0	2	10	0	0	0	0
4/26/2024	5:30 PM	2	326	66	0	4	0	0	4	6	0	0	0	0
4/26/2024	5:45 PM	0	264	60	3	2	1	0	2	5	0	0	0	0
4/26/2024	6:00 PM	0	285	62	1	4	1	0	2	10	0	0	0	0
4/26/2024	6:15 PM	1	343	60	0	3	3	0	0	8	0	0	0	0
4/26/2024	6:30 PM	4	284	61	0	8	0	0	1	2	0	0	0	0
4/26/2024	6:45 PM	0	240	55	0	2	0	0	2	5	0	0	0	0
4/26/2024	7:00 PM	0	191	60	0	1	0	0	0	5	0	0	0	0
4/26/2024	7:15 PM	0	223	38	0	3	1	0	0	4	0	0	0	0
4/26/2024	7:30 PM	1	203	36	0	0	3	0	0	5	0	0	0	0
4/26/2024	7:45 PM	6	219	40	0	1	0	0	0	4	0	0	0	0
4/26/2024	8:00 PM	4	217	32	0	0	0	0	0	2	0	0	0	0
4/26/2024	8:15 PM	0	201	27	0	1	0	0	0	4	0	0	0	0
4/26/2024	8:30 PM	0	190	20	0	1	0	0	0	5	0	0	0	0
4/26/2024	8:45 PM	3	175	15	0	1	0	0	0	4	0	0	0	0
4/26/2024	9:00 PM	0	167	13	1	3	0	0	1	2	0	0	0	0
4/26/2024	9:15 PM	4	165	11	1	1	0	0	0	1	0	0	0	0
4/26/2024	9:30 PM	2	190	21	2	4	0	0	1	4	0	0	0	0
4/26/2024	9:45 PM	0	160	11	0	0	0	0	0	1	0	0	0	0
4/26/2024	10:00 PM	0	130	12	0	2	0	0	0	2	0	0	0	0
4/26/2024	10:15 PM	2	110	9	0	3	1	0	0	4	0	0	0	0
4/26/2024	10:30 PM	0	130	14	0	1	0	0	0	1	0	1	0	0
4/26/2024	10:45 PM	0	104	10	0	2	0	0	0	1	0	0	0	0
4/26/2024	11:00 PM	0	80	6	0	0	1	0	0	4	0	0	0	0
4/26/2024	11:15 PM	0	90	7	0	1	1	0	0	3	0	0	0	0
4/26/2024	11:30 PM	0	75	6	0	2	0	0	0	2	0	0	0	0
4/26/2024	11:45 PM	2	62	6	0	1	0	0	0	2	0	0	0	0

4/27/2024	12:00 AM	0	67	12	0	0	0	0	0	3	0	0	0	0
4/27/2024	12:15 AM	0	40	12	0	0	0	0	0	5	0	0	0	0
4/27/2024	12:30 AM	0	49	10	0	2	0	0	0	3	0	0	0	0
4/27/2024	12:45 AM	0	25	9	0	2	0	0	0	2	0	1	0	0
4/27/2024	1:00 AM	0	25	10	0	1	1	0	0	1	0	0	0	0
4/27/2024	1:15 AM	0	29	5	0	0	0	0	0	3	0	0	0	0
4/27/2024	1:30 AM	0	26	7	0	0	0	0	0	1	0	0	0	0
4/27/2024	1:45 AM	0	19	4	0	1	0	0	0	1	0	0	0	0
4/27/2024	2:00 AM	0	17	5	0	2	0	0	0	4	0	0	0	0
4/27/2024	2:15 AM	0	14	6	0	0	0	0	2	3	0	0	0	0
4/27/2024	2:30 AM	0	18	5	0	1	0	0	0	0	0	0	0	0
4/27/2024	2:45 AM	0	20	8	0	0	0	0	0	2	0	1	0	0
4/27/2024	3:00 AM	0	19	5	1	0	0	0	0	3	0	0	0	0
4/27/2024	3:15 AM	0	10	5	1	1	0	0	0	2	0	0	0	0
4/27/2024	3:30 AM	0	20	6	2	2	1	0	0	1	0	0	0	0
4/27/2024	3:45 AM	0	15	5	0	1	0	0	0	1	0	1	0	0
4/27/2024	4:00 AM	0	8	2	0	0	0	0	0	3	0	0	0	0
4/27/2024	4:15 AM	0	20	7	0	0	0	0	0	3	0	0	0	0
4/27/2024	4:30 AM	0	19	4	0	0	0	0	0	3	0	0	0	0
4/27/2024	4:45 AM	0	21	11	1	0	0	0	0	2	0	0	0	0
4/27/2024	5:00 AM	0	20	9	1	5	0	0	0	1	0	0	0	0
4/27/2024	5:15 AM	0	30	8	0	1	0	0	0	2	0	0	0	0
4/27/2024	5:30 AM	0	41	12	0	0	1	0	0	1	0	0	0	0
4/27/2024	5:45 AM	0	29	7	0	1	0	0	0	4	0	0	0	0
4/27/2024	6:00 AM	0	44	13	0	0	0	0	0	7	0	0	0	0
4/27/2024	6:15 AM	0	50	17	0	1	0	0	0	2	0	0	0	0
4/27/2024	6:30 AM	0	62	22	0	1	0	0	0	1	0	0	0	0
4/27/2024	6:45 AM	0	81	23	0	1	0	0	0	6	0	0	0	0
4/27/2024	7:00 AM	1	86	26	0	1	1	0	0	1	0	0	0	0
4/27/2024	7:15 AM	0	110	27	0	0	0	0	0	3	0	0	0	0
4/27/2024	7:30 AM	0	130	30	0	0	1	0	0	3	0	0	0	0
4/27/2024	7:45 AM	0	137	42	0	3	0	0	3	4	0	0	0	0
4/27/2024	8:00 AM	0	136	39	1	0	0	0	2	5	0	0	0	0
4/27/2024	8:15 AM	3	164	40	0	4	0	0	1	2	0	0	0	0
4/27/2024	8:30 AM	1	180	55	0	1	1	0	1	4	0	0	0	0
4/27/2024	8:45 AM	0	169	31	0	1	0	0	1	2	0	0	0	0
4/27/2024	9:00 AM	0	174	37	1	0	0	0	4	6	0	0	0	0
4/27/2024	9:15 AM	1	190	46	0	2	0	0	0	5	0	0	0	0
4/27/2024	9:30 AM	0	211	52	1	3	1	0	1	2	0	0	0	0
4/27/2024	9:45 AM	1	212	39	0	2	0	0	1	7	0	0	0	0
4/27/2024	10:00 AM	4	242	58	0	2	1	0	3	2	0	0	0	0
4/27/2024	10:15 AM	1	208	59	0	5	0	0	0	4	1	0	0	0
4/27/2024	10:30 AM	1	225	63	0	5	0	0	1	4	0	0	0	0
4/27/2024	10:45 AM	1	183	36	0	1	1	0	0	1	0	0	0	0
4/27/2024	11:00 AM	1	198	37	0	4	0	0	0	1	0	0	0	0
4/27/2024	11:15 AM	1	228	42	0	3	0	0	0	0	1	0	0	0
4/27/2024	11:30 AM	1	255	60	1	3	1	0	2	3	0	0	0	0
4/27/2024	11:45 AM	24	289	66	0	2	0	0	2	5	0	0	0	0
4/27/2024	12:00 PM	2	309	49	0	5	0	0	1	8	0	0	0	0
4/27/2024	12:15 PM	13	333	55	1	3	3	0	0	8	0	0	0	0
4/27/2024	12:30 PM	1	282	55	1	1	0	0	1	3	0	0	0	0
4/27/2024	12:45 PM	8	277	39	0	3	2	0	2	2	0	0	0	0
4/27/2024	1:00 PM	7	292	46	0	2	0	0	3	7	0	0	0	0
4/27/2024	1:15 PM	1	274	55	0	1	2	0	0	3	0	0	0	0
4/27/2024	1:30 PM	1	281	38	0	4	2	0	3	7	0	0	0	0
4/27/2024	1:45 PM	2	317	65	1	0	0	0	0	5	0	0	0	0
4/27/2024	2:00 PM	5	297	52	0	0	1	0	0	3	0	0	0	0
4/27/2024	2:15 PM	1	288	52	0	5	0	0	1	2	0	0	0	0
4/27/2024	2:30 PM	5	314	47	0	5	0	0	1	3	0	0	0	0
4/27/2024	2:45 PM	4	309	41	0	4	0	0	3	3	1	0	0	0
4/27/2024	3:00 PM	5	281	61	0	4	0	0	2	4	0	0	0	0
4/27/2024	3:15 PM	2	328	43	0	1	0	0	0	8	0	1	0	0
4/27/2024	3:30 PM	3	335	69	0	1	0	0	0	7	0	0	0	0
4/27/2024	3:45 PM	0	337	53	1	3	0	0	0	2	0	0	0	0
4/27/2024	4:00 PM	1	300	52	0	3	1	0	0	6	0	0	0	0
4/27/2024	4:15 PM	1	291	56	0	0	0	0	0	0	0	0	0	0
4/27/2024	4:30 PM	1	319	73	0	3	1	0	0	2	0	0	0	0
4/27/2024	4:45 PM	17	259	55	0	1	1	0	0	1	0	0	0	0
4/27/2024	5:00 PM	2	288	68	0	1	2	0	0	5	0	0	0	0
4/27/2024	5:15 PM	1	283	42	0	1	0	0	0	0	0	0	0	0
4/27/2024	5:30 PM	1	242	42	0	3	0	0	0	0	0	0	0	0
4/27/2024	5:45 PM	0	243	39	0	1	1	0	0	0	0	0	0	0
4/27/2024	6:00 PM	1	239	35	0	2	1	0	0	1	0	0	0	0
4/27/2024	6:15 PM	1	238	42	0	0	0	0	0	3	0	0	0	0
4/27/2024	6:30 PM	0	272	49	0	1	0	0	1	4	0	0	0	0
4/27/2024	6:45 PM	0	245	40	0	2	0	0	0	4	0	0	0	0
4/27/2024	7:00 PM	0	260	35	0	2	0	0	0	2	0	0	0	0
4/27/2024	7:15 PM	4	265	39	0	3	0	0	0	3	0	0	0	0
4/27/2024	7:30 PM	1	230	37	0	2	1	0	0	1	0	1	0	0
4/27/2024	7:45 PM	1	211	47	0	0	0	0	0	4	0	0	0	0
4/27/2024	8:00 PM	5	232	30	0	0	0	0	0	4	0	0	0	0
4/27/2024	8:15 PM	0	215	33	0	0	0	0	0	0	0	0	0	0
4/27/2024	8:30 PM	0	201	14	0	0	0	0	0	0	0	0	0	0
4/27/2024	8:45 PM	0	190	13	0	2	0	0	0	5	0	0	0	0
4/27/2024	9:00 PM	0	203	18	0	1	0	0	0	1	0	0	0	0
4/27/2024	9:15 PM	3	181	16	0	1	0	0	0	3	0	0	0	0
4/27/2024	9:30 PM	0	184	11	0	2	2	0	0	0	0	0	0	0
4/27/2024	9:45 PM	0	175	10	0	2	0	0	0	1	0	0	0	0
4/27/2024	10:00 PM	0	142	11	0	1	0	0	0	0	0	0	0	0
4/27/2024	10:15 PM	1	175	15	0	2	0	0	0	0	0	0	0	0
4/27/2024	10:30 PM	0	152	13	0	1	0	0	0	2	0	0	0	0
4/27/2024	10:45 PM	0	142	12	0	0	1	0	0	0	0	0	0	0
4/27/2024	11:00 PM	0	101	10	0	2	0	0	0	1	0	0	0	0
4/27/2024	11:15 PM	1	103	12	0	1	0	0	0	1	0	0	0	0
4/27/2024	11:30 PM	0	80	9	0	1	1	0	0	3	0	0	0	0
4/27/2024	11:45 PM	0	75	11	0	0	0	0	0	0	0	0	0	0

SB
File Name:
Start Date: 4/21/2024
Start Time: 0
Site Code: 14
Station ID: 1
Location 1: I-26 N/Bound Off-Ramp, south of I-20
Location 2:

Date	Time	1	2	3	4	5	6	7	8	9	10	11	12	13
4/21/2024	12:00 AM	0	0	0	0	0	0	0	0	0	0	0	0	0
4/21/2024	12:15 AM	0	0	0	0	0	0	0	0	0	0	0	0	0
4/21/2024	12:30 AM	0	0	0	0	0	0	0	0	0	0	0	0	0
4/21/2024	12:45 AM	0	0	0	0	0	0	0	0	0	0	0	0	0
4/21/2024	1:00 AM	0	0	0	0	0	0	0	0	0	0	0	0	0
4/21/2024	1:15 AM	0	0	0	0	0	0	0	0	0	0	0	0	0
4/21/2024	1:30 AM	0	0	0	0	0	0	0	0	0	0	0	0	0
4/21/2024	1:45 AM	0	0	0	0	0	0	0	0	0	0	0	0	0
4/21/2024	2:00 AM	0	0	0	0	0	0	0	0	0	0	0	0	0
4/21/2024	2:15 AM	0	0	0	0	0	0	0	0	0	0	0	0	0
4/21/2024	2:30 AM	0	0	0	0	0	0	0	0	0	0	0	0	0
4/21/2024	2:45 AM	0	0	0	0	0	0	0	0	0	0	0	0	0
4/21/2024	3:00 AM	0	0	0	0	0	0	0	0	0	0	0	0	0
4/21/2024	3:15 AM	0	0	0	0	0	0	0	0	0	0	0	0	0
4/21/2024	3:30 AM	0	0	0	0	0	0	0	0	0	0	0	0	0
4/21/2024	3:45 AM	0	0	0	0	0	0	0	0	0	0	0	0	0
4/21/2024	4:00 AM	0	0	0	0	0	0	0	0	0	0	0	0	0
4/21/2024	4:15 AM	0	0	0	0	0	0	0	0	0	0	0	0	0
4/21/2024	4:30 AM	0	0	0	0	0	0	0	0	0	0	0	0	0
4/21/2024	4:45 AM	0	0	0	0	0	0	0	0	0	0	0	0	0
4/21/2024	5:00 AM	0	0	0	0	0	0	0	0	0	0	0	0	0
4/21/2024	5:15 AM	0	0	0	0	0	0	0	0	0	0	0	0	0
4/21/2024	5:30 AM	0	0	0	0	0	0	0	0	0	0	0	0	0
4/21/2024	5:45 AM	0	0	0	0	0	0	0	0	0	0	0	0	0
4/21/2024	6:00 AM	0	0	0	0	0	0	0	0	0	0	0	0	0
4/21/2024	6:15 AM	0	0	0	0	0	0	0	0	0	0	0	0	0
4/21/2024	6:30 AM	0	0	0	0	0	0	0	0	0	0	0	0	0
4/21/2024	6:45 AM	0	0	0	0	0	0	0	0	0	0	0	0	0
4/21/2024	7:00 AM	0	0	0	0	0	0	0	0	0	0	0	0	0
4/21/2024	7:15 AM	0	0	0	0	0	0	0	0	0	0	0	0	0
4/21/2024	7:30 AM	0	0	0	0	0	0	0	0	0	0	0	0	0
4/21/2024	7:45 AM	0	0	0	0	0	0	0	0	0	0	0	0	0
4/21/2024	8:00 AM	0	0	0	0	0	0	0	0	0	0	0	0	0
4/21/2024	8:15 AM	0	0	0	0	0	0	0	0	0	0	0	0	0
4/21/2024	8:30 AM	0	0	0	0	0	0	0	0	0	0	0	0	0
4/21/2024	8:45 AM	0	0	0	0	0	0	0	0	0	0	0	0	0
4/21/2024	9:00 AM	0	0	0	0	0	0	0	0	0	0	0	0	0
4/21/2024	9:15 AM	0	0	0	0	0	0	0	0	0	0	0	0	0
4/21/2024	9:30 AM	0	0	0	0	0	0	0	0	0	0	0	0	0
4/21/2024	9:45 AM	0	0	0	0	0	0	0	0	0	0	0	0	0
4/21/2024	10:00 AM	0	0	0	0	0	0	0	0	0	0	0	0	0
4/21/2024	10:15 AM	0	0	0	0	0	0	0	0	0	0	0	0	0
4/21/2024	10:30 AM	0	0	0	0	0	0	0	0	0	0	0	0	0
4/21/2024	10:45 AM	0	0	0	0	0	0	0	0	0	0	0	0	0
4/21/2024	11:00 AM	0	0	0	0	0	0	0	0	0	0	0	0	0
4/21/2024	11:15 AM	0	0	0	0	0	0	0	0	0	0	0	0	0
4/21/2024	11:30 AM	0	0	0	0	0	0	0	0	0	0	0	0	0
4/21/2024	11:45 AM	0	0	0	0	0	0	0	0	0	0	0	0	0
4/21/2024	12:00 PM	0	0	0	0	0	0	0	0	0	0	0	0	0
4/21/2024	12:15 PM	0	0	0	0	0	0	0	0	0	0	0	0	0
4/21/2024	12:30 PM	0	0	0	0	0	0	0	0	0	0	0	0	0
4/21/2024	12:45 PM	0	0	0	0	0	0	0	0	0	0	0	0	0
4/21/2024	1:00 PM	0	0	0	0	0	0	0	0	0	0	0	0	0
4/21/2024	1:15 PM	0	0	0	0	0	0	0	0	0	0	0	0	0
4/21/2024	1:30 PM	0	0	0	0	0	0	0	0	0	0	0	0	0
4/21/2024	1:45 PM	0	0	0	0	0	0	0	0	0	0	0	0	0
4/21/2024	2:00 PM	0	0	0	0	0	0	0	0	0	0	0	0	0
4/21/2024	2:15 PM	0	0	0	0	0	0	0	0	0	0	0	0	0
4/21/2024	2:30 PM	0	0	0	0	0	0	0	0	0	0	0	0	0
4/21/2024	2:45 PM	0	0	0	0	0	0	0	0	0	0	0	0	0
4/21/2024	3:00 PM	0	0	0	0	0	0	0	0	0	0	0	0	0
4/21/2024	3:15 PM	0	0	0	0	0	0	0	0	0	0	0	0	0
4/21/2024	3:30 PM	0	0	0	0	0	0	0	0	0	0	0	0	0
4/21/2024	3:45 PM	0	0	0	0	0	0	0	0	0	0	0	0	0
4/21/2024	4:00 PM	0	0	0	0	0	0	0	0	0	0	0	0	0
4/21/2024	4:15 PM	0	0	0	0	0	0	0	0	0	0	0	0	0
4/21/2024	4:30 PM	0	0	0	0	0	0	0	0	0	0	0	0	0
4/21/2024	4:45 PM	0	0	0	0	0	0	0	0	0	0	0	0	0
4/21/2024	5:00 PM	0	0	0	0	0	0	0	0	0	0	0	0	0
4/21/2024	5:15 PM	0	0	0	0	0	0	0	0	0	0	0	0	0
4/21/2024	5:30 PM	0	0	0	0	0	0	0	0	0	0	0	0	0
4/21/2024	5:45 PM	0	0	0	0	0	0	0	0	0	0	0	0	0
4/21/2024	6:00 PM	0	0	0	0	0	0	0	0	0	0	0	0	0
4/21/2024	6:15 PM	0	0	0	0	0	0	0	0	0	0	0	0	0
4/21/2024	6:30 PM	0	0	0	0	0	0	0	0	0	0	0	0	0
4/21/2024	6:45 PM	0	0	0	0	0	0	0	0	0	0	0	0	0
4/21/2024	7:00 PM	0	0	0	0	0	0	0	0	0	0	0	0	0
4/21/2024	7:15 PM	0	0	0	0	0	0	0	0	0	0	0	0	0
4/21/2024	7:30 PM	0	0	0	0	0	0	0	0	0	0	0	0	0
4/21/2024	7:45 PM	0	0	0	0	0	0	0	0	0	0	0	0	0
4/21/2024	8:00 PM	0	0	0	0	0	0	0	0	0	0	0	0	0
4/21/2024	8:15 PM	0	0	0	0	0	0	0	0	0	0	0	0	0
4/21/2024	8:30 PM	0	0	0	0	0	0	0	0	0	0	0	0	0
4/21/2024	8:45 PM	0	0	0	0	0	0	0	0	0	0	0	0	0
4/21/2024	9:00 PM	0	0	0	0	0	0	0	0	0	0	0	0	0
4/21/2024	9:15 PM	0	0	0	0	0	0	0	0	0	0	0	0	0
4/21/2024	9:30 PM	0	0	0	0	0	0	0	0	0	0	0	0	0
4/21/2024	9:45 PM	0	0	0	0	0	0	0	0	0	0	0	0	0
4/21/2024	10:00 PM	0	0	0	0	0	0	0	0	0	0	0	0	0
4/21/2024	10:15 PM	0	0	0	0	0	0	0	0	0	0	0	0	0
4/21/2024	10:30 PM	0	0	0	0	0	0	0	0	0	0	0	0	0
4/21/2024	10:45 PM	0	0	0	0	0	0	0	0	0	0	0	0	0
4/21/2024	11:00 PM	0	0	0	0	0	0	0	0	0	0	0	0	0
4/21/2024	11:15 PM	0	0	0	0	0	0	0	0	0	0	0	0	0
4/21/2024	11:30 PM	0	0	0	0	0	0	0	0	0	0	0	0	0
4/21/2024	11:45 PM	0	0	0	0	0	0	0	0	0	0	0	0	0

4/22/2024	12:00 AM	0	0	0	0	0	0	0	0	0	0	0	0	0
4/22/2024	12:15 AM	0	0	0	0	0	0	0	0	0	0	0	0	0
4/22/2024	12:30 AM	0	0	0	0	0	0	0	0	0	0	0	0	0
4/22/2024	12:45 AM	0	0	0	0	0	0	0	0	0	0	0	0	0
4/22/2024	1:00 AM	0	0	0	0	0	0	0	0	0	0	0	0	0
4/22/2024	1:15 AM	0	0	0	0	0	0	0	0	0	0	0	0	0
4/22/2024	1:30 AM	0	0	0	0	0	0	0	0	0	0	0	0	0
4/22/2024	1:45 AM	0	0	0	0	0	0	0	0	0	0	0	0	0
4/22/2024	2:00 AM	0	0	0	0	0	0	0	0	0	0	0	0	0
4/22/2024	2:15 AM	0	0	0	0	0	0	0	0	0	0	0	0	0
4/22/2024	2:30 AM	0	0	0	0	0	0	0	0	0	0	0	0	0
4/22/2024	2:45 AM	0	0	0	0	0	0	0	0	0	0	0	0	0
4/22/2024	3:00 AM	0	0	0	0	0	0	0	0	0	0	0	0	0
4/22/2024	3:15 AM	0	0	0	0	0	0	0	0	0	0	0	0	0
4/22/2024	3:30 AM	0	0	0	0	0	0	0	0	0	0	0	0	0
4/22/2024	3:45 AM	0	0	0	0	0	0	0	0	0	0	0	0	0
4/22/2024	4:00 AM	0	0	0	0	0	0	0	0	0	0	0	0	0
4/22/2024	4:15 AM	0	0	0	0	0	0	0	0	0	0	0	0	0
4/22/2024	4:30 AM	0	0	0	0	0	0	0	0	0	0	0	0	0
4/22/2024	4:45 AM	0	0	0	0	0	0	0	0	0	0	0	0	0
4/22/2024	5:00 AM	0	0	0	0	0	0	0	0	0	0	0	0	0
4/22/2024	5:15 AM	0	0	0	0	0	0	0	0	0	0	0	0	0
4/22/2024	5:30 AM	0	0	0	0	0	0	0	0	0	0	0	0	0
4/22/2024	5:45 AM	0	0	0	0	0	0	0	0	0	0	0	0	0
4/22/2024	6:00 AM	0	0	0	0	0	0	0	0	0	0	0	0	0
4/22/2024	6:15 AM	0	0	0	0	0	0	0	0	0	0	0	0	0
4/22/2024	6:30 AM	0	0	0	0	0	0	0	0	0	0	0	0	0
4/22/2024	6:45 AM	0	0	0	0	0	0	0	0	0	0	0	0	0
4/22/2024	7:00 AM	0	0	0	0	0	0	0	0	0	0	0	0	0
4/22/2024	7:15 AM	0	0	0	0	0	0	0	0	0	0	0	0	0
4/22/2024	7:30 AM	0	0	0	0	0	0	0	0	0	0	0	0	0
4/22/2024	7:45 AM	0	0	0	0	0	0	0	0	0	0	0	0	0
4/22/2024	8:00 AM	0	0	0	0	0	0	0	0	0	0	0	0	0
4/22/2024	8:15 AM	0	0	0	0	0	0	0	0	0	0	0	0	0
4/22/2024	8:30 AM	0	0	0	0	0	0	0	0	0	0	0	0	0
4/22/2024	8:45 AM	0	0	0	0	0	0	0	0	0	0	0	0	0
4/22/2024	9:00 AM	0	0	0	0	0	0	0	0	0	0	0	0	0
4/22/2024	9:15 AM	0	0	0	0	0	0	0	0	0	0	0	0	0
4/22/2024	9:30 AM	0	0	0	0	0	0	0	0	0	0	0	0	0
4/22/2024	9:45 AM	0	0	0	0	0	0	0	0	0	0	0	0	0
4/22/2024	10:00 AM	0	0	0	0	0	0	0	0	0	0	0	0	0
4/22/2024	10:15 AM	0	0	0	0	0	0	0	0	0	0	0	0	0
4/22/2024	10:30 AM	0	0	0	0	0	0	0	0	0	0	0	0	0
4/22/2024	10:45 AM	0	0	0	0	0	0	0	0	0	0	0	0	0
4/22/2024	11:00 AM	0	0	0	0	0	0	0	0	0	0	0	0	0
4/22/2024	11:15 AM	0	0	0	0	0	0	0	0	0	0	0	0	0
4/22/2024	11:30 AM	0	0	0	0	0	0	0	0	0	0	0	0	0
4/22/2024	11:45 AM	0	0	0	0	0	0	0	0	0	0	0	0	0
4/22/2024	12:00 PM	0	0	0	0	0	0	0	0	0	0	0	0	0
4/22/2024	12:15 PM	0	0	0	0	0	0	0	0	0	0	0	0	0
4/22/2024	12:30 PM	0	0	0	0	0	0	0	0	0	0	0	0	0
4/22/2024	12:45 PM	0	0	0	0	0	0	0	0	0	0	0	0	0
4/22/2024	1:00 PM	0	0	0	0	0	0	0	0	0	0	0	0	0
4/22/2024	1:15 PM	0	0	0	0	0	0	0	0	0	0	0	0	0
4/22/2024	1:30 PM	0	0	0	0	0	0	0	0	0	0	0	0	0
4/22/2024	1:45 PM	0	0	0	0	0	0	0	0	0	0	0	0	0
4/22/2024	2:00 PM	0	0	0	0	0	0	0	0	0	0	0	0	0
4/22/2024	2:15 PM	0	0	0	0	0	0	0	0	0	0	0	0	0
4/22/2024	2:30 PM	0	0	0	0	0	0	0	0	0	0	0	0	0
4/22/2024	2:45 PM	0	0	0	0	0	0	0	0	0	0	0	0	0
4/22/2024	3:00 PM	0	0	0	0	0	0	0	0	0	0	0	0	0
4/22/2024	3:15 PM	0	0	0	0	0	0	0	0	0	0	0	0	0
4/22/2024	3:30 PM	0	0	0	0	0	0	0	0	0	0	0	0	0
4/22/2024	3:45 PM	0	0	0	0	0	0	0	0	0	0	0	0	0
4/22/2024	4:00 PM	0	0	0	0	0	0	0	0	0	0	0	0	0
4/22/2024	4:15 PM	0	0	0	0	0	0	0	0	0	0	0	0	0
4/22/2024	4:30 PM	0	0	0	0	0	0	0	0	0	0	0	0	0
4/22/2024	4:45 PM	0	0	0	0	0	0	0	0	0	0	0	0	0
4/22/2024	5:00 PM	0	0	0	0	0	0	0	0	0	0	0	0	0
4/22/2024	5:15 PM	0	0	0	0	0	0	0	0	0	0	0	0	0
4/22/2024	5:30 PM	0	0	0	0	0	0	0	0	0	0	0	0	0
4/22/2024	5:45 PM	0	0	0	0	0	0	0	0	0	0	0	0	0
4/22/2024	6:00 PM	0	0	0	0	0	0	0	0	0	0	0	0	0
4/22/2024	6:15 PM	0	0	0	0	0	0	0	0	0	0	0	0	0
4/22/2024	6:30 PM	0	0	0	0	0	0	0	0	0	0	0	0	0
4/22/2024	6:45 PM	0	0	0	0	0	0	0	0	0	0	0	0	0
4/22/2024	7:00 PM	0	0	0	0	0	0	0	0	0	0	0	0	0
4/22/2024	7:15 PM	0	0	0	0	0	0	0	0	0	0	0	0	0
4/22/2024	7:30 PM	0	0	0	0	0	0	0	0	0	0	0	0	0
4/22/2024	7:45 PM	0	0	0	0	0	0	0	0	0	0	0	0	0
4/22/2024	8:00 PM	0	0	0	0	0	0	0	0	0	0	0	0	0
4/22/2024	8:15 PM	0	0	0	0	0	0	0	0	0	0	0	0	0
4/22/2024	8:30 PM	0	0	0	0	0	0	0	0	0	0	0	0	0
4/22/2024	8:45 PM	0	0	0	0	0	0	0	0	0	0	0	0	0
4/22/2024	9:00 PM	0	0	0	0	0	0	0	0	0	0	0	0	0
4/22/2024	9:15 PM	0	0	0	0	0	0	0	0	0	0	0	0	0
4/22/2024	9:30 PM	0	0	0	0	0	0	0	0	0	0	0	0	0
4/22/2024	9:45 PM	0	0	0	0	0	0	0	0	0	0	0	0	0
4/22/2024	10:00 PM	0	0	0	0	0	0	0	0	0	0	0	0	0
4/22/2024	10:15 PM	0	0	0	0	0	0	0	0	0	0	0	0	0
4/22/2024	10:30 PM	0	0	0	0	0	0	0	0	0	0	0	0	0
4/22/2024	10:45 PM	0	0	0	0	0	0	0	0	0	0	0	0	0
4/22/2024	11:00 PM	0	0	0	0	0	0	0	0	0	0	0	0	0
4/22/2024	11:15 PM	0	0	0	0	0	0	0	0	0	0	0	0	0
4/22/2024	11:30 PM	0	0	0	0	0	0	0	0	0	0	0	0	0
4/22/2024	11:45 PM	0	0	0	0	0	0	0	0	0	0	0	0	0

4/23/2024	12:00 AM	0	0	0	0	0	0	0	0	0	0	0	0	0
4/23/2024	12:15 AM	0	0	0	0	0	0	0	0	0	0	0	0	0
4/23/2024	12:30 AM	0	0	0	0	0	0	0	0	0	0	0	0	0
4/23/2024	12:45 AM	0	0	0	0	0	0	0	0	0	0	0	0	0
4/23/2024	1:00 AM	0	0	0	0	0	0	0	0	0	0	0	0	0
4/23/2024	1:15 AM	0	0	0	0	0	0	0	0	0	0	0	0	0
4/23/2024	1:30 AM	0	0	0	0	0	0	0	0	0	0	0	0	0
4/23/2024	1:45 AM	0	0	0	0	0	0	0	0	0	0	0	0	0
4/23/2024	2:00 AM	0	0	0	0	0	0	0	0	0	0	0	0	0
4/23/2024	2:15 AM	0	0	0	0	0	0	0	0	0	0	0	0	0
4/23/2024	2:30 AM	0	0	0	0	0	0	0	0	0	0	0	0	0
4/23/2024	2:45 AM	0	0	0	0	0	0	0	0	0	0	0	0	0
4/23/2024	3:00 AM	0	0	0	0	0	0	0	0	0	0	0	0	0
4/23/2024	3:15 AM	0	0	0	0	0	0	0	0	0	0	0	0	0
4/23/2024	3:30 AM	0	0	0	0	0	0	0	0	0	0	0	0	0
4/23/2024	3:45 AM	0	0	0	0	0	0	0	0	0	0	0	0	0
4/23/2024	4:00 AM	0	0	0	0	0	0	0	0	0	0	0	0	0
4/23/2024	4:15 AM	0	0	0	0	0	0	0	0	0	0	0	0	0
4/23/2024	4:30 AM	0	0	0	0	0	0	0	0	0	0	0	0	0
4/23/2024	4:45 AM	0	0	0	0	0	0	0	0	0	0	0	0	0
4/23/2024	5:00 AM	0	0	0	0	0	0	0	0	0	0	0	0	0
4/23/2024	5:15 AM	0	0	0	0	0	0	0	0	0	0	0	0	0
4/23/2024	5:30 AM	0	0	0	0	0	0	0	0	0	0	0	0	0
4/23/2024	5:45 AM	0	0	0	0	0	0	0	0	0	0	0	0	0
4/23/2024	6:00 AM	0	0	0	0	0	0	0	0	0	0	0	0	0
4/23/2024	6:15 AM	0	0	0	0	0	0	0	0	0	0	0	0	0
4/23/2024	6:30 AM	0	0	0	0	0	0	0	0	0	0	0	0	0
4/23/2024	6:45 AM	0	0	0	0	0	0	0	0	0	0	0	0	0
4/23/2024	7:00 AM	0	0	0	0	0	0	0	0	0	0	0	0	0
4/23/2024	7:15 AM	0	0	0	0	0	0	0	0	0	0	0	0	0
4/23/2024	7:30 AM	0	0	0	0	0	0	0	0	0	0	0	0	0
4/23/2024	7:45 AM	0	0	0	0	0	0	0	0	0	0	0	0	0
4/23/2024	8:00 AM	0	0	0	0	0	0	0	0	0	0	0	0	0
4/23/2024	8:15 AM	0	0	0	0	0	0	0	0	0	0	0	0	0
4/23/2024	8:30 AM	0	0	0	0	0	0	0	0	0	0	0	0	0
4/23/2024	8:45 AM	0	0	0	0	0	0	0	0	0	0	0	0	0
4/23/2024	9:00 AM	0	0	0	0	0	0	0	0	0	0	0	0	0
4/23/2024	9:15 AM	0	0	0	0	0	0	0	0	0	0	0	0	0
4/23/2024	9:30 AM	0	0	0	0	0	0	0	0	0	0	0	0	0
4/23/2024	9:45 AM	0	0	0	0	0	0	0	0	0	0	0	0	0
4/23/2024	10:00 AM	0	0	0	0	0	0	0	0	0	0	0	0	0
4/23/2024	10:15 AM	0	0	0	0	0	0	0	0	0	0	0	0	0
4/23/2024	10:30 AM	0	0	0	0	0	0	0	0	0	0	0	0	0
4/23/2024	10:45 AM	0	0	0	0	0	0	0	0	0	0	0	0	0
4/23/2024	11:00 AM	0	0	0	0	0	0	0	0	0	0	0	0	0
4/23/2024	11:15 AM	0	0	0	0	0	0	0	0	0	0	0	0	0
4/23/2024	11:30 AM	0	0	0	0	0	0	0	0	0	0	0	0	0
4/23/2024	11:45 AM	0	0	0	0	0	0	0	0	0	0	0	0	0
4/23/2024	12:00 PM	0	0	0	0	0	0	0	0	0	0	0	0	0
4/23/2024	12:15 PM	0	0	0	0	0	0	0	0	0	0	0	0	0
4/23/2024	12:30 PM	0	0	0	0	0	0	0	0	0	0	0	0	0
4/23/2024	12:45 PM	0	0	0	0	0	0	0	0	0	0	0	0	0
4/23/2024	1:00 PM	0	0	0	0	0	0	0	0	0	0	0	0	0
4/23/2024	1:15 PM	0	0	0	0	0	0	0	0	0	0	0	0	0
4/23/2024	1:30 PM	0	0	0	0	0	0	0	0	0	0	0	0	0
4/23/2024	1:45 PM	0	0	0	0	0	0	0	0	0	0	0	0	0
4/23/2024	2:00 PM	0	0	0	0	0	0	0	0	0	0	0	0	0
4/23/2024	2:15 PM	0	0	0	0	0	0	0	0	0	0	0	0	0
4/23/2024	2:30 PM	0	0	0	0	0	0	0	0	0	0	0	0	0
4/23/2024	2:45 PM	0	0	0	0	0	0	0	0	0	0	0	0	0
4/23/2024	3:00 PM	0	0	0	0	0	0	0	0	0	0	0	0	0
4/23/2024	3:15 PM	0	0	0	0	0	0	0	0	0	0	0	0	0
4/23/2024	3:30 PM	0	0	0	0	0	0	0	0	0	0	0	0	0
4/23/2024	3:45 PM	0	0	0	0	0	0	0	0	0	0	0	0	0
4/23/2024	4:00 PM	0	0	0	0	0	0	0	0	0	0	0	0	0
4/23/2024	4:15 PM	0	0	0	0	0	0	0	0	0	0	0	0	0
4/23/2024	4:30 PM	0	0	0	0	0	0	0	0	0	0	0	0	0
4/23/2024	4:45 PM	0	0	0	0	0	0	0	0	0	0	0	0	0
4/23/2024	5:00 PM	0	0	0	0	0	0	0	0	0	0	0	0	0
4/23/2024	5:15 PM	0	0	0	0	0	0	0	0	0	0	0	0	0
4/23/2024	5:30 PM	0	0	0	0	0	0	0	0	0	0	0	0	0
4/23/2024	5:45 PM	0	0	0	0	0	0	0	0	0	0	0	0	0
4/23/2024	6:00 PM	0	0	0	0	0	0	0	0	0	0	0	0	0
4/23/2024	6:15 PM	0	0	0	0	0	0	0	0	0	0	0	0	0
4/23/2024	6:30 PM	0	0	0	0	0	0	0	0	0	0	0	0	0
4/23/2024	6:45 PM	0	0	0	0	0	0	0	0	0	0	0	0	0
4/23/2024	7:00 PM	0	0	0	0	0	0	0	0	0	0	0	0	0
4/23/2024	7:15 PM	0	0	0	0	0	0	0	0	0	0	0	0	0
4/23/2024	7:30 PM	0	0	0	0	0	0	0	0	0	0	0	0	0
4/23/2024	7:45 PM	0	0	0	0	0	0	0	0	0	0	0	0	0
4/23/2024	8:00 PM	0	0	0	0	0	0	0	0	0	0	0	0	0
4/23/2024	8:15 PM	0	0	0	0	0	0	0	0	0	0	0	0	0
4/23/2024	8:30 PM	0	0	0	0	0	0	0	0	0	0	0	0	0
4/23/2024	8:45 PM	0	0	0	0	0	0	0	0	0	0	0	0	0
4/23/2024	9:00 PM	0	0	0	0	0	0	0	0	0	0	0	0	0
4/23/2024	9:15 PM	0	0	0	0	0	0	0	0	0	0	0	0	0
4/23/2024	9:30 PM	0	0	0	0	0	0	0	0	0	0	0	0	0
4/23/2024	9:45 PM	0	0	0	0	0	0	0	0	0	0	0	0	0
4/23/2024	10:00 PM	0	0	0	0	0	0	0	0	0	0	0	0	0
4/23/2024	10:15 PM	0	0	0	0	0	0	0	0	0	0	0	0	0
4/23/2024	10:30 PM	0	0	0	0	0	0	0	0	0	0	0	0	0
4/23/2024	10:45 PM	0	0	0	0	0	0	0	0	0	0	0	0	0
4/23/2024	11:00 PM	0	0	0	0	0	0	0	0	0	0	0	0	0
4/23/2024	11:15 PM	0	0	0	0	0	0	0	0	0	0	0	0	0
4/23/2024	11:30 PM	0	0	0	0	0	0	0	0	0	0	0	0	0
4/23/2024	11:45 PM	0	0	0	0	0	0	0	0	0	0	0	0	0

4/24/2024	12:00 AM	0	0	0	0	0	0	0	0	0	0	0	0	0
4/24/2024	12:15 AM	0	0	0	0	0	0	0	0	0	0	0	0	0
4/24/2024	12:30 AM	0	0	0	0	0	0	0	0	0	0	0	0	0
4/24/2024	12:45 AM	0	0	0	0	0	0	0	0	0	0	0	0	0
4/24/2024	1:00 AM	0	0	0	0	0	0	0	0	0	0	0	0	0
4/24/2024	1:15 AM	0	0	0	0	0	0	0	0	0	0	0	0	0
4/24/2024	1:30 AM	0	0	0	0	0	0	0	0	0	0	0	0	0
4/24/2024	1:45 AM	0	0	0	0	0	0	0	0	0	0	0	0	0
4/24/2024	2:00 AM	0	0	0	0	0	0	0	0	0	0	0	0	0
4/24/2024	2:15 AM	0	0	0	0	0	0	0	0	0	0	0	0	0
4/24/2024	2:30 AM	0	0	0	0	0	0	0	0	0	0	0	0	0
4/24/2024	2:45 AM	0	0	0	0	0	0	0	0	0	0	0	0	0
4/24/2024	3:00 AM	0	0	0	0	0	0	0	0	0	0	0	0	0
4/24/2024	3:15 AM	0	0	0	0	0	0	0	0	0	0	0	0	0
4/24/2024	3:30 AM	0	0	0	0	0	0	0	0	0	0	0	0	0
4/24/2024	3:45 AM	0	0	0	0	0	0	0	0	0	0	0	0	0
4/24/2024	4:00 AM	0	0	0	0	0	0	0	0	0	0	0	0	0
4/24/2024	4:15 AM	0	0	0	0	0	0	0	0	0	0	0	0	0
4/24/2024	4:30 AM	0	0	0	0	0	0	0	0	0	0	0	0	0
4/24/2024	4:45 AM	0	0	0	0	0	0	0	0	0	0	0	0	0
4/24/2024	5:00 AM	0	0	0	0	0	0	0	0	0	0	0	0	0
4/24/2024	5:15 AM	0	0	0	0	0	0	0	0	0	0	0	0	0
4/24/2024	5:30 AM	0	0	0	0	0	0	0	0	0	0	0	0	0
4/24/2024	5:45 AM	0	0	0	0	0	0	0	0	0	0	0	0	0
4/24/2024	6:00 AM	0	0	0	0	0	0	0	0	0	0	0	0	0
4/24/2024	6:15 AM	0	0	0	0	0	0	0	0	0	0	0	0	0
4/24/2024	6:30 AM	0	0	0	0	0	0	0	0	0	0	0	0	0
4/24/2024	6:45 AM	0	0	0	0	0	0	0	0	0	0	0	0	0
4/24/2024	7:00 AM	0	0	0	0	0	0	0	0	0	0	0	0	0
4/24/2024	7:15 AM	0	0	0	0	0	0	0	0	0	0	0	0	0
4/24/2024	7:30 AM	0	0	0	0	0	0	0	0	0	0	0	0	0
4/24/2024	7:45 AM	0	0	0	0	0	0	0	0	0	0	0	0	0
4/24/2024	8:00 AM	0	0	0	0	0	0	0	0	0	0	0	0	0
4/24/2024	8:15 AM	0	0	0	0	0	0	0	0	0	0	0	0	0
4/24/2024	8:30 AM	0	0	0	0	0	0	0	0	0	0	0	0	0
4/24/2024	8:45 AM	0	0	0	0	0	0	0	0	0	0	0	0	0
4/24/2024	9:00 AM	0	0	0	0	0	0	0	0	0	0	0	0	0
4/24/2024	9:15 AM	0	0	0	0	0	0	0	0	0	0	0	0	0
4/24/2024	9:30 AM	0	0	0	0	0	0	0	0	0	0	0	0	0
4/24/2024	9:45 AM	0	0	0	0	0	0	0	0	0	0	0	0	0
4/24/2024	10:00 AM	0	0	0	0	0	0	0	0	0	0	0	0	0
4/24/2024	10:15 AM	0	0	0	0	0	0	0	0	0	0	0	0	0
4/24/2024	10:30 AM	0	0	0	0	0	0	0	0	0	0	0	0	0
4/24/2024	10:45 AM	0	0	0	0	0	0	0	0	0	0	0	0	0
4/24/2024	11:00 AM	0	0	0	0	0	0	0	0	0	0	0	0	0
4/24/2024	11:15 AM	0	0	0	0	0	0	0	0	0	0	0	0	0
4/24/2024	11:30 AM	0	0	0	0	0	0	0	0	0	0	0	0	0
4/24/2024	11:45 AM	0	0	0	0	0	0	0	0	0	0	0	0	0
4/24/2024	12:00 PM	0	0	0	0	0	0	0	0	0	0	0	0	0
4/24/2024	12:15 PM	0	0	0	0	0	0	0	0	0	0	0	0	0
4/24/2024	12:30 PM	0	0	0	0	0	0	0	0	0	0	0	0	0
4/24/2024	12:45 PM	0	0	0	0	0	0	0	0	0	0	0	0	0
4/24/2024	1:00 PM	0	0	0	0	0	0	0	0	0	0	0	0	0
4/24/2024	1:15 PM	0	0	0	0	0	0	0	0	0	0	0	0	0
4/24/2024	1:30 PM	0	0	0	0	0	0	0	0	0	0	0	0	0
4/24/2024	1:45 PM	0	0	0	0	0	0	0	0	0	0	0	0	0
4/24/2024	2:00 PM	0	0	0	0	0	0	0	0	0	0	0	0	0
4/24/2024	2:15 PM	0	0	0	0	0	0	0	0	0	0	0	0	0
4/24/2024	2:30 PM	0	0	0	0	0	0	0	0	0	0	0	0	0
4/24/2024	2:45 PM	0	0	0	0	0	0	0	0	0	0	0	0	0
4/24/2024	3:00 PM	0	0	0	0	0	0	0	0	0	0	0	0	0
4/24/2024	3:15 PM	0	0	0	0	0	0	0	0	0	0	0	0	0
4/24/2024	3:30 PM	0	0	0	0	0	0	0	0	0	0	0	0	0
4/24/2024	3:45 PM	0	0	0	0	0	0	0	0	0	0	0	0	0
4/24/2024	4:00 PM	0	0	0	0	0	0	0	0	0	0	0	0	0
4/24/2024	4:15 PM	0	0	0	0	0	0	0	0	0	0	0	0	0
4/24/2024	4:30 PM	0	0	0	0	0	0	0	0	0	0	0	0	0
4/24/2024	4:45 PM	0	0	0	0	0	0	0	0	0	0	0	0	0
4/24/2024	5:00 PM	0	0	0	0	0	0	0	0	0	0	0	0	0
4/24/2024	5:15 PM	0	0	0	0	0	0	0	0	0	0	0	0	0
4/24/2024	5:30 PM	0	0	0	0	0	0	0	0	0	0	0	0	0
4/24/2024	5:45 PM	0	0	0	0	0	0	0	0	0	0	0	0	0
4/24/2024	6:00 PM	0	0	0	0	0	0	0	0	0	0	0	0	0
4/24/2024	6:15 PM	0	0	0	0	0	0	0	0	0	0	0	0	0
4/24/2024	6:30 PM	0	0	0	0	0	0	0	0	0	0	0	0	0
4/24/2024	6:45 PM	0	0	0	0	0	0	0	0	0	0	0	0	0
4/24/2024	7:00 PM	0	0	0	0	0	0	0	0	0	0	0	0	0
4/24/2024	7:15 PM	0	0	0	0	0	0	0	0	0	0	0	0	0
4/24/2024	7:30 PM	0	0	0	0	0	0	0	0	0	0	0	0	0
4/24/2024	7:45 PM	0	0	0	0	0	0	0	0	0	0	0	0	0
4/24/2024	8:00 PM	0	0	0	0	0	0	0	0	0	0	0	0	0
4/24/2024	8:15 PM	0	0	0	0	0	0	0	0	0	0	0	0	0
4/24/2024	8:30 PM	0	0	0	0	0	0	0	0	0	0	0	0	0
4/24/2024	8:45 PM	0	0	0	0	0	0	0	0	0	0	0	0	0
4/24/2024	9:00 PM	0	0	0	0	0	0	0	0	0	0	0	0	0
4/24/2024	9:15 PM	0	0	0	0	0	0	0	0	0	0	0	0	0
4/24/2024	9:30 PM	0	0	0	0	0	0	0	0	0	0	0	0	0
4/24/2024	9:45 PM	0	0	0	0	0	0	0	0	0	0	0	0	0
4/24/2024	10:00 PM	0	0	0	0	0	0	0	0	0	0	0	0	0
4/24/2024	10:15 PM	0	0	0	0	0	0	0	0	0	0	0	0	0
4/24/2024	10:30 PM	0	0	0	0	0	0	0	0	0	0	0	0	0
4/24/2024	10:45 PM	0	0	0	0	0	0	0	0	0	0	0	0	0
4/24/2024	11:00 PM	0	0	0	0	0	0	0	0	0	0	0	0	0
4/24/2024	11:15 PM	0	0	0	0	0	0	0	0	0	0	0	0	0
4/24/2024	11:30 PM	0	0	0	0	0	0	0	0	0	0	0	0	0
4/24/2024	11:45 PM	0	0	0	0	0	0	0	0	0	0	0	0	0

4/25/2024	12:00 AM	0	0	0	0	0	0	0	0	0	0	0	0	0
4/25/2024	12:15 AM	0	0	0	0	0	0	0	0	0	0	0	0	0
4/25/2024	12:30 AM	0	0	0	0	0	0	0	0	0	0	0	0	0
4/25/2024	12:45 AM	0	0	0	0	0	0	0	0	0	0	0	0	0
4/25/2024	1:00 AM	0	0	0	0	0	0	0	0	0	0	0	0	0
4/25/2024	1:15 AM	0	0	0	0	0	0	0	0	0	0	0	0	0
4/25/2024	1:30 AM	0	0	0	0	0	0	0	0	0	0	0	0	0
4/25/2024	1:45 AM	0	0	0	0	0	0	0	0	0	0	0	0	0
4/25/2024	2:00 AM	0	0	0	0	0	0	0	0	0	0	0	0	0
4/25/2024	2:15 AM	0	0	0	0	0	0	0	0	0	0	0	0	0
4/25/2024	2:30 AM	0	0	0	0	0	0	0	0	0	0	0	0	0
4/25/2024	2:45 AM	0	0	0	0	0	0	0	0	0	0	0	0	0
4/25/2024	3:00 AM	0	0	0	0	0	0	0	0	0	0	0	0	0
4/25/2024	3:15 AM	0	0	0	0	0	0	0	0	0	0	0	0	0
4/25/2024	3:30 AM	0	0	0	0	0	0	0	0	0	0	0	0	0
4/25/2024	3:45 AM	0	0	0	0	0	0	0	0	0	0	0	0	0
4/25/2024	4:00 AM	0	0	0	0	0	0	0	0	0	0	0	0	0
4/25/2024	4:15 AM	0	0	0	0	0	0	0	0	0	0	0	0	0
4/25/2024	4:30 AM	0	0	0	0	0	0	0	0	0	0	0	0	0
4/25/2024	4:45 AM	0	0	0	0	0	0	0	0	0	0	0	0	0
4/25/2024	5:00 AM	0	0	0	0	0	0	0	0	0	0	0	0	0
4/25/2024	5:15 AM	0	0	0	0	0	0	0	0	0	0	0	0	0
4/25/2024	5:30 AM	0	0	0	0	0	0	0	0	0	0	0	0	0
4/25/2024	5:45 AM	0	0	0	0	0	0	0	0	0	0	0	0	0
4/25/2024	6:00 AM	0	0	0	0	0	0	0	0	0	0	0	0	0
4/25/2024	6:15 AM	0	0	0	0	0	0	0	0	0	0	0	0	0
4/25/2024	6:30 AM	0	0	0	0	0	0	0	0	0	0	0	0	0
4/25/2024	6:45 AM	0	0	0	0	0	0	0	0	0	0	0	0	0
4/25/2024	7:00 AM	0	0	0	0	0	0	0	0	0	0	0	0	0
4/25/2024	7:15 AM	0	0	0	0	0	0	0	0	0	0	0	0	0
4/25/2024	7:30 AM	0	0	0	0	0	0	0	0	0	0	0	0	0
4/25/2024	7:45 AM	0	0	0	0	0	0	0	0	0	0	0	0	0
4/25/2024	8:00 AM	0	0	0	0	0	0	0	0	0	0	0	0	0
4/25/2024	8:15 AM	0	0	0	0	0	0	0	0	0	0	0	0	0
4/25/2024	8:30 AM	0	0	0	0	0	0	0	0	0	0	0	0	0
4/25/2024	8:45 AM	0	0	0	0	0	0	0	0	0	0	0	0	0
4/25/2024	9:00 AM	0	0	0	0	0	0	0	0	0	0	0	0	0
4/25/2024	9:15 AM	0	0	0	0	0	0	0	0	0	0	0	0	0
4/25/2024	9:30 AM	0	0	0	0	0	0	0	0	0	0	0	0	0
4/25/2024	9:45 AM	0	0	0	0	0	0	0	0	0	0	0	0	0
4/25/2024	10:00 AM	0	0	0	0	0	0	0	0	0	0	0	0	0
4/25/2024	10:15 AM	0	0	0	0	0	0	0	0	0	0	0	0	0
4/25/2024	10:30 AM	0	0	0	0	0	0	0	0	0	0	0	0	0
4/25/2024	10:45 AM	0	0	0	0	0	0	0	0	0	0	0	0	0
4/25/2024	11:00 AM	0	0	0	0	0	0	0	0	0	0	0	0	0
4/25/2024	11:15 AM	0	0	0	0	0	0	0	0	0	0	0	0	0
4/25/2024	11:30 AM	0	0	0	0	0	0	0	0	0	0	0	0	0
4/25/2024	11:45 AM	0	0	0	0	0	0	0	0	0	0	0	0	0
4/25/2024	12:00 PM	0	0	0	0	0	0	0	0	0	0	0	0	0
4/25/2024	12:15 PM	0	0	0	0	0	0	0	0	0	0	0	0	0
4/25/2024	12:30 PM	0	0	0	0	0	0	0	0	0	0	0	0	0
4/25/2024	12:45 PM	0	0	0	0	0	0	0	0	0	0	0	0	0
4/25/2024	1:00 PM	0	0	0	0	0	0	0	0	0	0	0	0	0
4/25/2024	1:15 PM	0	0	0	0	0	0	0	0	0	0	0	0	0
4/25/2024	1:30 PM	0	0	0	0	0	0	0	0	0	0	0	0	0
4/25/2024	1:45 PM	0	0	0	0	0	0	0	0	0	0	0	0	0
4/25/2024	2:00 PM	0	0	0	0	0	0	0	0	0	0	0	0	0
4/25/2024	2:15 PM	0	0	0	0	0	0	0	0	0	0	0	0	0
4/25/2024	2:30 PM	0	0	0	0	0	0	0	0	0	0	0	0	0
4/25/2024	2:45 PM	0	0	0	0	0	0	0	0	0	0	0	0	0
4/25/2024	3:00 PM	0	0	0	0	0	0	0	0	0	0	0	0	0
4/25/2024	3:15 PM	0	0	0	0	0	0	0	0	0	0	0	0	0
4/25/2024	3:30 PM	0	0	0	0	0	0	0	0	0	0	0	0	0
4/25/2024	3:45 PM	0	0	0	0	0	0	0	0	0	0	0	0	0
4/25/2024	4:00 PM	0	0	0	0	0	0	0	0	0	0	0	0	0
4/25/2024	4:15 PM	0	0	0	0	0	0	0	0	0	0	0	0	0
4/25/2024	4:30 PM	0	0	0	0	0	0	0	0	0	0	0	0	0
4/25/2024	4:45 PM	0	0	0	0	0	0	0	0	0	0	0	0	0
4/25/2024	5:00 PM	0	0	0	0	0	0	0	0	0	0	0	0	0
4/25/2024	5:15 PM	0	0	0	0	0	0	0	0	0	0	0	0	0
4/25/2024	5:30 PM	0	0	0	0	0	0	0	0	0	0	0	0	0
4/25/2024	5:45 PM	0	0	0	0	0	0	0	0	0	0	0	0	0
4/25/2024	6:00 PM	0	0	0	0	0	0	0	0	0	0	0	0	0
4/25/2024	6:15 PM	0	0	0	0	0	0	0	0	0	0	0	0	0
4/25/2024	6:30 PM	0	0	0	0	0	0	0	0	0	0	0	0	0
4/25/2024	6:45 PM	0	0	0	0	0	0	0	0	0	0	0	0	0
4/25/2024	7:00 PM	0	0	0	0	0	0	0	0	0	0	0	0	0
4/25/2024	7:15 PM	0	0	0	0	0	0	0	0	0	0	0	0	0
4/25/2024	7:30 PM	0	0	0	0	0	0	0	0	0	0	0	0	0
4/25/2024	7:45 PM	0	0	0	0	0	0	0	0	0	0	0	0	0
4/25/2024	8:00 PM	0	0	0	0	0	0	0	0	0	0	0	0	0
4/25/2024	8:15 PM	0	0	0	0	0	0	0	0	0	0	0	0	0
4/25/2024	8:30 PM	0	0	0	0	0	0	0	0	0	0	0	0	0
4/25/2024	8:45 PM	0	0	0	0	0	0	0	0	0	0	0	0	0
4/25/2024	9:00 PM	0	0	0	0	0	0	0	0	0	0	0	0	0
4/25/2024	9:15 PM	0	0	0	0	0	0	0	0	0	0	0	0	0
4/25/2024	9:30 PM	0	0	0	0	0	0	0	0	0	0	0	0	0
4/25/2024	9:45 PM	0	0	0	0	0	0	0	0	0	0	0	0	0
4/25/2024	10:00 PM	0	0	0	0	0	0	0	0	0	0	0	0	0
4/25/2024	10:15 PM	0	0	0	0	0	0	0	0	0	0	0	0	0
4/25/2024	10:30 PM	0	0	0	0	0	0	0	0	0	0	0	0	0
4/25/2024	10:45 PM	0	0	0	0	0	0	0	0	0	0	0	0	0
4/25/2024	11:00 PM	0	0	0	0	0	0	0	0	0	0	0	0	0
4/25/2024	11:15 PM	0	0	0	0	0	0	0	0	0	0	0	0	0
4/25/2024	11:30 PM	0	0	0	0	0	0	0	0	0	0	0	0	0
4/25/2024	11:45 PM	0	0	0	0	0	0	0	0	0	0	0	0	0

4/26/2024	12:00 AM	0	0	0	0	0	0	0	0	0	0	0	0	0
4/26/2024	12:15 AM	0	0	0	0	0	0	0	0	0	0	0	0	0
4/26/2024	12:30 AM	0	0	0	0	0	0	0	0	0	0	0	0	0
4/26/2024	12:45 AM	0	0	0	0	0	0	0	0	0	0	0	0	0
4/26/2024	1:00 AM	0	0	0	0	0	0	0	0	0	0	0	0	0
4/26/2024	1:15 AM	0	0	0	0	0	0	0	0	0	0	0	0	0
4/26/2024	1:30 AM	0	0	0	0	0	0	0	0	0	0	0	0	0
4/26/2024	1:45 AM	0	0	0	0	0	0	0	0	0	0	0	0	0
4/26/2024	2:00 AM	0	0	0	0	0	0	0	0	0	0	0	0	0
4/26/2024	2:15 AM	0	0	0	0	0	0	0	0	0	0	0	0	0
4/26/2024	2:30 AM	0	0	0	0	0	0	0	0	0	0	0	0	0
4/26/2024	2:45 AM	0	0	0	0	0	0	0	0	0	0	0	0	0
4/26/2024	3:00 AM	0	0	0	0	0	0	0	0	0	0	0	0	0
4/26/2024	3:15 AM	0	0	0	0	0	0	0	0	0	0	0	0	0
4/26/2024	3:30 AM	0	0	0	0	0	0	0	0	0	0	0	0	0
4/26/2024	3:45 AM	0	0	0	0	0	0	0	0	0	0	0	0	0
4/26/2024	4:00 AM	0	0	0	0	0	0	0	0	0	0	0	0	0
4/26/2024	4:15 AM	0	0	0	0	0	0	0	0	0	0	0	0	0
4/26/2024	4:30 AM	0	0	0	0	0	0	0	0	0	0	0	0	0
4/26/2024	4:45 AM	0	0	0	0	0	0	0	0	0	0	0	0	0
4/26/2024	5:00 AM	0	0	0	0	0	0	0	0	0	0	0	0	0
4/26/2024	5:15 AM	0	0	0	0	0	0	0	0	0	0	0	0	0
4/26/2024	5:30 AM	0	0	0	0	0	0	0	0	0	0	0	0	0
4/26/2024	5:45 AM	0	0	0	0	0	0	0	0	0	0	0	0	0
4/26/2024	6:00 AM	0	0	0	0	0	0	0	0	0	0	0	0	0
4/26/2024	6:15 AM	0	0	0	0	0	0	0	0	0	0	0	0	0
4/26/2024	6:30 AM	0	0	0	0	0	0	0	0	0	0	0	0	0
4/26/2024	6:45 AM	0	0	0	0	0	0	0	0	0	0	0	0	0
4/26/2024	7:00 AM	0	0	0	0	0	0	0	0	0	0	0	0	0
4/26/2024	7:15 AM	0	0	0	0	0	0	0	0	0	0	0	0	0
4/26/2024	7:30 AM	0	0	0	0	0	0	0	0	0	0	0	0	0
4/26/2024	7:45 AM	0	0	0	0	0	0	0	0	0	0	0	0	0
4/26/2024	8:00 AM	0	0	0	0	0	0	0	0	0	0	0	0	0
4/26/2024	8:15 AM	0	0	0	0	0	0	0	0	0	0	0	0	0
4/26/2024	8:30 AM	0	0	0	0	0	0	0	0	0	0	0	0	0
4/26/2024	8:45 AM	0	0	0	0	0	0	0	0	0	0	0	0	0
4/26/2024	9:00 AM	0	0	0	0	0	0	0	0	0	0	0	0	0
4/26/2024	9:15 AM	0	0	0	0	0	0	0	0	0	0	0	0	0
4/26/2024	9:30 AM	0	0	0	0	0	0	0	0	0	0	0	0	0
4/26/2024	9:45 AM	0	0	0	0	0	0	0	0	0	0	0	0	0
4/26/2024	10:00 AM	0	0	0	0	0	0	0	0	0	0	0	0	0
4/26/2024	10:15 AM	0	0	0	0	0	0	0	0	0	0	0	0	0
4/26/2024	10:30 AM	0	0	0	0	0	0	0	0	0	0	0	0	0
4/26/2024	10:45 AM	0	0	0	0	0	0	0	0	0	0	0	0	0
4/26/2024	11:00 AM	0	0	0	0	0	0	0	0	0	0	0	0	0
4/26/2024	11:15 AM	0	0	0	0	0	0	0	0	0	0	0	0	0
4/26/2024	11:30 AM	0	0	0	0	0	0	0	0	0	0	0	0	0
4/26/2024	11:45 AM	0	0	0	0	0	0	0	0	0	0	0	0	0
4/26/2024	12:00 PM	0	0	0	0	0	0	0	0	0	0	0	0	0
4/26/2024	12:15 PM	0	0	0	0	0	0	0	0	0	0	0	0	0
4/26/2024	12:30 PM	0	0	0	0	0	0	0	0	0	0	0	0	0
4/26/2024	12:45 PM	0	0	0	0	0	0	0	0	0	0	0	0	0
4/26/2024	1:00 PM	0	0	0	0	0	0	0	0	0	0	0	0	0
4/26/2024	1:15 PM	0	0	0	0	0	0	0	0	0	0	0	0	0
4/26/2024	1:30 PM	0	0	0	0	0	0	0	0	0	0	0	0	0
4/26/2024	1:45 PM	0	0	0	0	0	0	0	0	0	0	0	0	0
4/26/2024	2:00 PM	0	0	0	0	0	0	0	0	0	0	0	0	0
4/26/2024	2:15 PM	0	0	0	0	0	0	0	0	0	0	0	0	0
4/26/2024	2:30 PM	0	0	0	0	0	0	0	0	0	0	0	0	0
4/26/2024	2:45 PM	0	0	0	0	0	0	0	0	0	0	0	0	0
4/26/2024	3:00 PM	0	0	0	0	0	0	0	0	0	0	0	0	0
4/26/2024	3:15 PM	0	0	0	0	0	0	0	0	0	0	0	0	0
4/26/2024	3:30 PM	0	0	0	0	0	0	0	0	0	0	0	0	0
4/26/2024	3:45 PM	0	0	0	0	0	0	0	0	0	0	0	0	0
4/26/2024	4:00 PM	0	0	0	0	0	0	0	0	0	0	0	0	0
4/26/2024	4:15 PM	0	0	0	0	0	0	0	0	0	0	0	0	0
4/26/2024	4:30 PM	0	0	0	0	0	0	0	0	0	0	0	0	0
4/26/2024	4:45 PM	0	0	0	0	0	0	0	0	0	0	0	0	0
4/26/2024	5:00 PM	0	0	0	0	0	0	0	0	0	0	0	0	0
4/26/2024	5:15 PM	0	0	0	0	0	0	0	0	0	0	0	0	0
4/26/2024	5:30 PM	0	0	0	0	0	0	0	0	0	0	0	0	0
4/26/2024	5:45 PM	0	0	0	0	0	0	0	0	0	0	0	0	0
4/26/2024	6:00 PM	0	0	0	0	0	0	0	0	0	0	0	0	0
4/26/2024	6:15 PM	0	0	0	0	0	0	0	0	0	0	0	0	0
4/26/2024	6:30 PM	0	0	0	0	0	0	0	0	0	0	0	0	0
4/26/2024	6:45 PM	0	0	0	0	0	0	0	0	0	0	0	0	0
4/26/2024	7:00 PM	0	0	0	0	0	0	0	0	0	0	0	0	0
4/26/2024	7:15 PM	0	0	0	0	0	0	0	0	0	0	0	0	0
4/26/2024	7:30 PM	0	0	0	0	0	0	0	0	0	0	0	0	0
4/26/2024	7:45 PM	0	0	0	0	0	0	0	0	0	0	0	0	0
4/26/2024	8:00 PM	0	0	0	0	0	0	0	0	0	0	0	0	0
4/26/2024	8:15 PM	0	0	0	0	0	0	0	0	0	0	0	0	0
4/26/2024	8:30 PM	0	0	0	0	0	0	0	0	0	0	0	0	0
4/26/2024	8:45 PM	0	0	0	0	0	0	0	0	0	0	0	0	0
4/26/2024	9:00 PM	0	0	0	0	0	0	0	0	0	0	0	0	0
4/26/2024	9:15 PM	0	0	0	0	0	0	0	0	0	0	0	0	0
4/26/2024	9:30 PM	0	0	0	0	0	0	0	0	0	0	0	0	0
4/26/2024	9:45 PM	0	0	0	0	0	0	0	0	0	0	0	0	0
4/26/2024	10:00 PM	0	0	0	0	0	0	0	0	0	0	0	0	0
4/26/2024	10:15 PM	0	0	0	0	0	0	0	0	0	0	0	0	0
4/26/2024	10:30 PM	0	0	0	0	0	0	0	0	0	0	0	0	0
4/26/2024	10:45 PM	0	0	0	0	0	0	0	0	0	0	0	0	0
4/26/2024	11:00 PM	0	0	0	0	0	0	0	0	0	0	0	0	0
4/26/2024	11:15 PM	0	0	0	0	0	0	0	0	0	0	0	0	0
4/26/2024	11:30 PM	0	0	0	0	0	0	0	0	0	0	0	0	0
4/26/2024	11:45 PM	0	0	0	0	0	0	0	0	0	0	0	0	0

4/27/2024	12:00 AM	0	0	0	0	0	0	0	0	0	0	0	0	0
4/27/2024	12:15 AM	0	0	0	0	0	0	0	0	0	0	0	0	0
4/27/2024	12:30 AM	0	0	0	0	0	0	0	0	0	0	0	0	0
4/27/2024	12:45 AM	0	0	0	0	0	0	0	0	0	0	0	0	0
4/27/2024	1:00 AM	0	0	0	0	0	0	0	0	0	0	0	0	0
4/27/2024	1:15 AM	0	0	0	0	0	0	0	0	0	0	0	0	0
4/27/2024	1:30 AM	0	0	0	0	0	0	0	0	0	0	0	0	0
4/27/2024	1:45 AM	0	0	0	0	0	0	0	0	0	0	0	0	0
4/27/2024	2:00 AM	0	0	0	0	0	0	0	0	0	0	0	0	0
4/27/2024	2:15 AM	0	0	0	0	0	0	0	0	0	0	0	0	0
4/27/2024	2:30 AM	0	0	0	0	0	0	0	0	0	0	0	0	0
4/27/2024	2:45 AM	0	0	0	0	0	0	0	0	0	0	0	0	0
4/27/2024	3:00 AM	0	0	0	0	0	0	0	0	0	0	0	0	0
4/27/2024	3:15 AM	0	0	0	0	0	0	0	0	0	0	0	0	0
4/27/2024	3:30 AM	0	0	0	0	0	0	0	0	0	0	0	0	0
4/27/2024	3:45 AM	0	0	0	0	0	0	0	0	0	0	0	0	0
4/27/2024	4:00 AM	0	0	0	0	0	0	0	0	0	0	0	0	0
4/27/2024	4:15 AM	0	0	0	0	0	0	0	0	0	0	0	0	0
4/27/2024	4:30 AM	0	0	0	0	0	0	0	0	0	0	0	0	0
4/27/2024	4:45 AM	0	0	0	0	0	0	0	0	0	0	0	0	0
4/27/2024	5:00 AM	0	0	0	0	0	0	0	0	0	0	0	0	0
4/27/2024	5:15 AM	0	0	0	0	0	0	0	0	0	0	0	0	0
4/27/2024	5:30 AM	0	0	0	0	0	0	0	0	0	0	0	0	0
4/27/2024	5:45 AM	0	0	0	0	0	0	0	0	0	0	0	0	0
4/27/2024	6:00 AM	0	0	0	0	0	0	0	0	0	0	0	0	0
4/27/2024	6:15 AM	0	0	0	0	0	0	0	0	0	0	0	0	0
4/27/2024	6:30 AM	0	0	0	0	0	0	0	0	0	0	0	0	0
4/27/2024	6:45 AM	0	0	0	0	0	0	0	0	0	0	0	0	0
4/27/2024	7:00 AM	0	0	0	0	0	0	0	0	0	0	0	0	0
4/27/2024	7:15 AM	0	0	0	0	0	0	0	0	0	0	0	0	0
4/27/2024	7:30 AM	0	0	0	0	0	0	0	0	0	0	0	0	0
4/27/2024	7:45 AM	0	0	0	0	0	0	0	0	0	0	0	0	0
4/27/2024	8:00 AM	0	0	0	0	0	0	0	0	0	0	0	0	0
4/27/2024	8:15 AM	0	0	0	0	0	0	0	0	0	0	0	0	0
4/27/2024	8:30 AM	0	0	0	0	0	0	0	0	0	0	0	0	0
4/27/2024	8:45 AM	0	0	0	0	0	0	0	0	0	0	0	0	0
4/27/2024	9:00 AM	0	0	0	0	0	0	0	0	0	0	0	0	0
4/27/2024	9:15 AM	0	0	0	0	0	0	0	0	0	0	0	0	0
4/27/2024	9:30 AM	0	0	0	0	0	0	0	0	0	0	0	0	0
4/27/2024	9:45 AM	0	0	0	0	0	0	0	0	0	0	0	0	0
4/27/2024	10:00 AM	0	0	0	0	0	0	0	0	0	0	0	0	0
4/27/2024	10:15 AM	0	0	0	0	0	0	0	0	0	0	0	0	0
4/27/2024	10:30 AM	0	0	0	0	0	0	0	0	0	0	0	0	0
4/27/2024	10:45 AM	0	0	0	0	0	0	0	0	0	0	0	0	0
4/27/2024	11:00 AM	0	0	0	0	0	0	0	0	0	0	0	0	0
4/27/2024	11:15 AM	0	0	0	0	0	0	0	0	0	0	0	0	0
4/27/2024	11:30 AM	0	0	0	0	0	0	0	0	0	0	0	0	0
4/27/2024	11:45 AM	0	0	0	0	0	0	0	0	0	0	0	0	0
4/27/2024	12:00 PM	0	0	0	0	0	0	0	0	0	0	0	0	0
4/27/2024	12:15 PM	0	0	0	0	0	0	0	0	0	0	0	0	0
4/27/2024	12:30 PM	0	0	0	0	0	0	0	0	0	0	0	0	0
4/27/2024	12:45 PM	0	0	0	0	0	0	0	0	0	0	0	0	0
4/27/2024	1:00 PM	0	0	0	0	0	0	0	0	0	0	0	0	0
4/27/2024	1:15 PM	0	0	0	0	0	0	0	0	0	0	0	0	0
4/27/2024	1:30 PM	0	0	0	0	0	0	0	0	0	0	0	0	0
4/27/2024	1:45 PM	0	0	0	0	0	0	0	0	0	0	0	0	0
4/27/2024	2:00 PM	0	0	0	0	0	0	0	0	0	0	0	0	0
4/27/2024	2:15 PM	0	0	0	0	0	0	0	0	0	0	0	0	0
4/27/2024	2:30 PM	0	0	0	0	0	0	0	0	0	0	0	0	0
4/27/2024	2:45 PM	0	0	0	0	0	0	0	0	0	0	0	0	0
4/27/2024	3:00 PM	0	0	0	0	0	0	0	0	0	0	0	0	0
4/27/2024	3:15 PM	0	0	0	0	0	0	0	0	0	0	0	0	0
4/27/2024	3:30 PM	0	0	0	0	0	0	0	0	0	0	0	0	0
4/27/2024	3:45 PM	0	0	0	0	0	0	0	0	0	0	0	0	0
4/27/2024	4:00 PM	0	0	0	0	0	0	0	0	0	0	0	0	0
4/27/2024	4:15 PM	0	0	0	0	0	0	0	0	0	0	0	0	0
4/27/2024	4:30 PM	0	0	0	0	0	0	0	0	0	0	0	0	0
4/27/2024	4:45 PM	0	0	0	0	0	0	0	0	0	0	0	0	0
4/27/2024	5:00 PM	0	0	0	0	0	0	0	0	0	0	0	0	0
4/27/2024	5:15 PM	0	0	0	0	0	0	0	0	0	0	0	0	0
4/27/2024	5:30 PM	0	0	0	0	0	0	0	0	0	0	0	0	0
4/27/2024	5:45 PM	0	0	0	0	0	0	0	0	0	0	0	0	0
4/27/2024	6:00 PM	0	0	0	0	0	0	0	0	0	0	0	0	0
4/27/2024	6:15 PM	0	0	0	0	0	0	0	0	0	0	0	0	0
4/27/2024	6:30 PM	0	0	0	0	0	0	0	0	0	0	0	0	0
4/27/2024	6:45 PM	0	0	0	0	0	0	0	0	0	0	0	0	0
4/27/2024	7:00 PM	0	0	0	0	0	0	0	0	0	0	0	0	0
4/27/2024	7:15 PM	0	0	0	0	0	0	0	0	0	0	0	0	0
4/27/2024	7:30 PM	0	0	0	0	0	0	0	0	0	0	0	0	0
4/27/2024	7:45 PM	0	0	0	0	0	0	0	0	0	0	0	0	0
4/27/2024	8:00 PM	0	0	0	0	0	0	0	0	0	0	0	0	0
4/27/2024	8:15 PM	0	0	0	0	0	0	0	0	0	0	0	0	0
4/27/2024	8:30 PM	0	0	0	0	0	0	0	0	0	0	0	0	0
4/27/2024	8:45 PM	0	0	0	0	0	0	0	0	0	0	0	0	0
4/27/2024	9:00 PM	0	0	0	0	0	0	0	0	0	0	0	0	0
4/27/2024	9:15 PM	0	0	0	0	0	0	0	0	0	0	0	0	0
4/27/2024	9:30 PM	0	0	0	0	0	0	0	0	0	0	0	0	0
4/27/2024	9:45 PM	0	0	0	0	0	0	0	0	0	0	0	0	0
4/27/2024	10:00 PM	0	0	0	0	0	0	0	0	0	0	0	0	0
4/27/2024	10:15 PM	0	0	0	0	0	0	0	0	0	0	0	0	0
4/27/2024	10:30 PM	0	0	0	0	0	0	0	0	0	0	0	0	0
4/27/2024	10:45 PM	0	0	0	0	0	0	0	0	0	0	0	0	0
4/27/2024	11:00 PM	0	0	0	0	0	0	0	0	0	0	0	0	0
4/27/2024	11:15 PM	0	0	0	0	0	0	0	0	0	0	0	0	0
4/27/2024	11:30 PM	0	0	0	0	0	0	0	0	0	0	0	0	0
4/27/2024	11:45 PM	0	0	0	0	0	0	0	0	0	0	0	0	0

NB
File Name:
Start Date: 4/21/2024
Start Time: 0
Site Code: 14
Station ID: 1
Location 1: I-26 N/Bound Off-Ramp, south of I-20
Location 2:

Date	Time	1	2	3	4	5	6	7	8	9	10	11	12	13
4/21/2024	12:00 AM	0	222	65	0	3	0	0	0	3	0	0	0	0
4/21/2024	12:15 AM	0	211	63	0	3	0	0	0	3	0	0	0	0
4/21/2024	12:30 AM	0	206	59	0	1	0	0	0	2	0	0	0	0
4/21/2024	12:45 AM	0	207	57	0	1	0	0	0	2	0	0	0	0
4/21/2024	1:00 AM	0	197	41	0	1	0	0	1	1	0	0	0	0
4/21/2024	1:15 AM	0	188	39	1	0	0	0	1	0	0	0	0	0
4/21/2024	1:30 AM	0	171	34	1	0	0	0	1	0	0	0	0	0
4/21/2024	1:45 AM	0	142	31	1	0	0	0	1	1	0	0	0	0
4/21/2024	2:00 AM	0	130	30	1	0	0	0	0	2	0	0	0	0
4/21/2024	2:15 AM	0	100	24	1	1	0	0	0	3	0	0	0	0
4/21/2024	2:30 AM	0	84	21	1	1	0	0	0	3	0	0	0	0
4/21/2024	2:45 AM	0	72	15	1	1	0	0	0	2	0	0	0	0
4/21/2024	3:00 AM	0	58	10	1	1	0	0	0	2	0	0	0	0
4/21/2024	3:15 AM	0	53	11	0	1	0	0	0	3	0	0	0	0
4/21/2024	3:30 AM	0	49	11	0	1	0	0	0	3	0	0	0	0
4/21/2024	3:45 AM	0	49	12	0	1	0	0	0	5	0	0	0	0
4/21/2024	4:00 AM	0	52	15	0	1	0	0	0	7	0	0	0	0
4/21/2024	4:15 AM	0	57	16	0	0	0	0	0	6	0	0	0	0
4/21/2024	4:30 AM	0	59	16	0	0	0	0	0	7	0	0	0	0
4/21/2024	4:45 AM	0	64	17	0	0	0	0	0	5	0	0	0	0
4/21/2024	5:00 AM	0	66	15	0	0	0	0	0	3	0	0	0	0
4/21/2024	5:15 AM	0	71	15	0	0	0	0	0	4	0	0	0	0
4/21/2024	5:30 AM	0	94	19	0	1	0	0	0	5	0	0	0	0
4/21/2024	5:45 AM	0	122	28	0	1	0	0	0	7	0	0	0	0
4/21/2024	6:00 AM	0	136	36	0	1	0	0	0	7	0	0	0	0
4/21/2024	6:15 AM	0	163	43	1	2	0	0	1	8	0	0	0	0
4/21/2024	6:30 AM	0	197	56	1	2	0	0	1	7	0	0	0	0
4/21/2024	6:45 AM	0	217	60	1	4	0	0	1	7	0	0	0	0
4/21/2024	7:00 AM	0	262	65	1	5	2	0	1	7	0	0	0	0
4/21/2024	7:15 AM	0	290	64	0	4	2	0	0	4	0	0	0	0
4/21/2024	7:30 AM	0	301	65	0	4	2	0	1	4	0	0	0	0
4/21/2024	7:45 AM	0	318	63	0	5	2	0	1	3	0	0	0	0
4/21/2024	8:00 AM	0	369	63	0	5	0	0	4	4	0	0	0	0
4/21/2024	8:15 AM	0	404	66	0	5	0	0	4	7	0	0	0	0
4/21/2024	8:30 AM	0	454	63	0	4	0	0	3	7	0	0	0	0
4/21/2024	8:45 AM	0	521	74	0	2	0	0	4	9	0	0	0	0
4/21/2024	9:00 AM	0	546	90	0	2	0	0	1	7	0	0	0	0
4/21/2024	9:15 AM	0	582	99	0	2	0	0	4	8	0	0	0	0
4/21/2024	9:30 AM	0	650	110	1	2	0	0	5	8	0	0	0	0
4/21/2024	9:45 AM	1	670	105	1	1	0	0	6	5	0	0	0	0
4/21/2024	10:00 AM	8	665	104	1	1	0	0	6	11	0	0	0	0
4/21/2024	10:15 AM	8	689	110	2	3	0	0	3	8	0	0	0	0
4/21/2024	10:30 AM	8	648	108	1	3	0	0	3	10	0	0	0	0
4/21/2024	10:45 AM	7	659	122	1	6	0	0	2	14	0	0	0	0
4/21/2024	11:00 AM	0	690	130	1	8	0	0	5	9	0	0	0	0
4/21/2024	11:15 AM	0	728	132	0	8	0	1	9	9	0	0	0	0
4/21/2024	11:30 AM	0	804	144	0	8	0	1	9	7	0	0	0	0
4/21/2024	11:45 AM	1	875	151	0	5	0	1	10	5	0	0	0	0
4/21/2024	12:00 PM	1	939	143	0	5	0	1	7	7	0	0	0	0
4/21/2024	12:15 PM	1	944	150	0	5	0	0	4	8	0	0	0	0
4/21/2024	12:30 PM	1	951	155	1	8	1	0	5	8	1	0	0	0
4/21/2024	12:45 PM	1	965	173	1	9	1	0	7	10	1	0	0	0
4/21/2024	1:00 PM	1	953	186	1	8	1	0	9	10	1	0	0	0
4/21/2024	1:15 PM	1	931	180	1	6	1	0	8	9	1	0	0	0
4/21/2024	1:30 PM	1	919	178	0	6	0	0	6	9	0	0	0	0
4/21/2024	1:45 PM	6	910	153	0	7	0	0	3	6	0	0	0	0
4/21/2024	2:00 PM	6	937	154	1	7	0	0	4	9	0	0	0	0
4/21/2024	2:15 PM	6	979	164	3	8	0	0	5	13	0	0	0	0
4/21/2024	2:30 PM	7	999	180	3	6	0	0	6	14	0	0	0	0
4/21/2024	2:45 PM	1	1023	177	3	4	0	0	7	17	0	0	0	0
4/21/2024	3:00 PM	1	1044	192	3	3	1	0	5	13	0	0	0	0
4/21/2024	3:15 PM	2	1053	189	2	3	2	0	4	11	0	0	0	0
4/21/2024	3:30 PM	2	1057	165	4	2	2	0	3	12	0	0	0	0
4/21/2024	3:45 PM	2	1015	175	4	5	2	0	1	9	0	0	0	0
4/21/2024	4:00 PM	2	976	176	3	6	1	0	0	11	0	0	0	0
4/21/2024	4:15 PM	1	998	177	2	10	1	0	0	10	0	0	0	0
4/21/2024	4:30 PM	0	981	171	0	11	1	0	1	11	0	0	0	0
4/21/2024	4:45 PM	0	1004	170	2	9	1	0	2	14	0	0	0	0
4/21/2024	5:00 PM	0	1016	130	2	9	1	0	3	14	0	0	0	0
4/21/2024	5:15 PM	1	1023	134	3	5	0	0	3	16	0	0	0	0
4/21/2024	5:30 PM	1	1030	151	4	5	1	0	2	14	0	0	0	0
4/21/2024	5:45 PM	1	993	150	2	5	1	0	4	15	0	0	0	0
4/21/2024	6:00 PM	1	931	155	6	4	2	0	5	18	0	0	0	0
4/21/2024	6:15 PM	0	868	145	5	4	2	0	5	19	0	0	0	0
4/21/2024	6:30 PM	1	804	116	4	4	1	0	5	22	0	0	0	0
4/21/2024	6:45 PM	1	772	95	4	3	1	0	2	27	0	0	0	0
4/21/2024	7:00 PM	1	746	90	2	3	0	0	0	24	0	0	0	0
4/21/2024	7:15 PM	1	691	77	2	3	0	0	0	22	0	0	0	0
4/21/2024	7:30 PM	0	660	80	2	3	1	0	0	19	0	0	0	0
4/21/2024	7:45 PM	0	578	81	2	5	2	0	0	14	0	0	0	0
4/21/2024	8:00 PM	0	533	76	0	6	2	0	1	12	0	0	0	0
4/21/2024	8:15 PM	0	495	63	0	5	2	0	1	11	0	0	0	0
4/21/2024	8:30 PM	0	459	55	0	4	1	0	2	10	0	0	0	0
4/21/2024	8:45 PM	0	450	45	0	2	0	0	2	8	0	0	0	0
4/21/2024	9:00 PM	0	450	45	0	0	0	0	3	11	0	0	0	0
4/21/2024	9:15 PM	0	420	51	0	0	0	0	4	11	0	0	0	0
4/21/2024	9:30 PM	0	408	51	0	1	0	0	3	12	0	0	0	0
4/21/2024	9:45 PM	0	379	46	0	1	0	0	4	10	0	0	0	0
4/21/2024	10:00 PM	0	339	40	0	1	0	0	2	5	0	0	0	0
4/21/2024	10:15 PM	0	315	31	0	1	0	0	2	6	0	0	0	0
4/21/2024	10:30 PM	0	276	25	0	0	0	0	3	5	0	0	0	0
4/21/2024	10:45 PM	0	264	23	0	0	0	0	2	5	0	0	0	0
4/21/2024	11:00 PM	0	220	15	0	0	0	0	2	5	0	0	0	0
4/21/2024	11:15 PM	0	188	9	0	2	0	0	1	6	0	0	0	0
4/21/2024	11:30 PM	0	164	5	0	2	1	0	0	7	0	0	0	0
4/21/2024	11:45 PM	0	132	2	0	2	1	0	0	9	0	0	0	0

4/22/2024	12:00 AM	0	116	0	0	4	1	0	0	13	0	0	0	0
4/22/2024	12:15 AM	1	101	0	0	2	1	0	1	12	0	0	0	0
4/22/2024	12:30 AM	1	86	0	0	2	0	0	1	13	0	0	0	0
4/22/2024	12:45 AM	1	77	0	0	2	0	0	1	11	0	0	0	0
4/22/2024	1:00 AM	1	69	0	0	1	0	0	1	9	0	0	0	0
4/22/2024	1:15 AM	0	67	0	0	1	1	0	0	9	0	0	0	0
4/22/2024	1:30 AM	0	54	0	0	1	1	0	0	8	0	0	0	0
4/22/2024	1:45 AM	0	55	0	0	2	2	0	0	9	0	0	0	0
4/22/2024	2:00 AM	0	62	0	0	3	2	0	0	12	0	0	0	0
4/22/2024	2:15 AM	0	54	0	0	3	1	0	3	12	0	0	0	0
4/22/2024	2:30 AM	0	65	0	0	4	1	0	4	14	0	0	0	0
4/22/2024	2:45 AM	0	79	0	0	5	0	0	6	14	0	0	0	0
4/22/2024	3:00 AM	0	81	0	0	5	0	0	6	12	0	0	0	0
4/22/2024	3:15 AM	0	102	0	0	5	0	0	4	12	0	0	0	0
4/22/2024	3:30 AM	0	114	0	0	4	0	0	4	14	0	0	0	0
4/22/2024	3:45 AM	0	119	0	0	2	0	0	3	18	0	0	0	0
4/22/2024	4:00 AM	0	151	0	0	0	0	0	3	19	0	0	0	0
4/22/2024	4:15 AM	0	172	0	1	1	0	0	2	20	0	0	0	0
4/22/2024	4:30 AM	0	224	0	1	2	0	0	3	25	0	0	0	0
4/22/2024	4:45 AM	0	288	0	1	8	1	0	2	25	0	0	0	0
4/22/2024	5:00 AM	0	337	0	1	10	1	0	4	33	0	0	0	0
4/22/2024	5:15 AM	0	397	7	0	12	2	0	6	38	0	0	0	0
4/22/2024	5:30 AM	1	482	36	0	16	4	0	8	39	0	0	0	0
4/22/2024	5:45 AM	2	544	101	0	14	5	1	11	42	0	0	0	0
4/22/2024	6:00 AM	2	622	140	0	20	12	2	9	39	0	0	0	0
4/22/2024	6:15 AM	3	729	189	0	21	11	2	10	40	0	0	0	0
4/22/2024	6:30 AM	2	816	218	0	19	9	3	7	41	0	0	0	0
4/22/2024	6:45 AM	1	905	224	0	18	10	2	7	43	0	0	0	0
4/22/2024	7:00 AM	1	954	244	0	19	6	1	7	45	0	0	0	0
4/22/2024	7:15 AM	0	976	245	0	21	8	2	9	41	0	0	0	0
4/22/2024	7:30 AM	0	949	250	0	30	11	1	9	40	0	0	0	0
4/22/2024	7:45 AM	0	950	245	0	37	12	2	7	40	1	0	0	0
4/22/2024	8:00 AM	0	894	241	0	30	14	3	8	45	2	0	0	0
4/22/2024	8:15 AM	0	809	241	0	27	16	2	5	50	3	0	0	0
4/22/2024	8:30 AM	0	729	231	0	22	14	2	5	44	3	0	0	0
4/22/2024	8:45 AM	0	636	222	0	19	14	1	5	45	2	0	0	0
4/22/2024	9:00 AM	1	636	209	0	21	13	0	5	39	1	0	0	0
4/22/2024	9:15 AM	1	630	192	0	29	12	1	4	34	0	0	0	0
4/22/2024	9:30 AM	1	616	184	0	29	11	1	5	35	0	0	0	0
4/22/2024	9:45 AM	1	632	178	0	33	11	1	13	36	0	0	0	0
4/22/2024	10:00 AM	0	627	185	0	40	9	2	15	36	2	0	0	0
4/22/2024	10:15 AM	0	609	197	0	34	8	3	15	43	3	0	0	0
4/22/2024	10:30 AM	0	652	210	0	34	13	3	13	48	3	0	0	0
4/22/2024	10:45 AM	0	632	218	0	30	15	4	5	48	3	0	0	0
4/22/2024	11:00 AM	0	634	224	0	25	13	3	3	50	1	0	0	0
4/22/2024	11:15 AM	3	672	217	1	27	14	1	7	52	3	0	0	0
4/22/2024	11:30 AM	3	677	213	1	23	13	1	9	51	3	0	0	0
4/22/2024	11:45 AM	3	677	210	1	21	8	0	11	53	4	0	0	0
4/22/2024	12:00 PM	3	712	202	1	20	10	0	12	66	4	0	0	0
4/22/2024	12:15 PM	0	710	222	0	17	11	0	8	71	1	0	0	0
4/22/2024	12:30 PM	0	712	229	0	24	8	0	7	73	1	0	0	0
4/22/2024	12:45 PM	0	734	226	1	26	9	0	4	80	0	0	0	0
4/22/2024	1:00 PM	0	744	226	1	26	10	0	2	71	0	0	0	0
4/22/2024	1:15 PM	0	742	210	1	31	6	0	1	67	0	0	0	0
4/22/2024	1:30 PM	0	741	202	1	28	7	0	0	67	0	0	0	0
4/22/2024	1:45 PM	0	777	222	0	24	6	0	0	57	0	0	0	0
4/22/2024	2:00 PM	0	759	242	0	25	3	0	2	52	0	0	0	0
4/22/2024	2:15 PM	1	822	235	2	21	8	0	2	51	0	0	0	0
4/22/2024	2:30 PM	2	866	230	2	19	6	0	3	48	0	0	0	0
4/22/2024	2:45 PM	2	888	211	4	22	7	0	3	50	0	0	0	0
4/22/2024	3:00 PM	2	934	207	7	21	7	0	2	49	0	0	0	0
4/22/2024	3:15 PM	1	971	217	6	23	7	0	2	42	0	0	0	0
4/22/2024	3:30 PM	0	1007	223	6	23	9	1	3	46	0	0	0	0
4/22/2024	3:45 PM	0	1026	242	7	20	10	1	3	47	0	0	0	0
4/22/2024	4:00 PM	1	1054	234	4	21	13	1	4	48	0	0	0	0
4/22/2024	4:15 PM	1	1075	243	3	20	10	1	6	48	0	0	0	0
4/22/2024	4:30 PM	1	1119	244	3	18	11	0	6	47	0	0	0	0
4/22/2024	4:45 PM	2	1146	234	0	20	9	0	7	47	0	0	0	0
4/22/2024	5:00 PM	3	1089	228	0	18	7	0	6	47	0	0	0	0
4/22/2024	5:15 PM	3	1030	230	1	15	6	0	7	51	0	0	0	0
4/22/2024	5:30 PM	4	941	209	1	16	4	0	6	51	0	0	0	0
4/22/2024	5:45 PM	3	823	187	2	11	8	0	6	47	0	0	0	0
4/22/2024	6:00 PM	1	776	181	2	11	8	0	6	44	0	0	0	0
4/22/2024	6:15 PM	2	719	180	1	12	7	0	3	40	0	0	0	0
4/22/2024	6:30 PM	1	676	178	1	10	6	0	3	35	0	0	0	0
4/22/2024	6:45 PM	2	667	161	1	14	2	0	2	32	0	0	0	0
4/22/2024	7:00 PM	3	636	142	1	13	1	0	3	32	0	0	0	0
4/22/2024	7:15 PM	2	608	107	1	10	1	0	3	28	0	0	0	0
4/22/2024	7:30 PM	2	589	98	1	8	1	0	2	23	0	0	0	0
4/22/2024	7:45 PM	1	546	92	0	5	0	0	4	17	0	0	0	0
4/22/2024	8:00 PM	0	524	83	0	3	1	0	3	15	0	0	0	0
4/22/2024	8:15 PM	0	488	65	0	2	1	0	3	15	0	0	0	0
4/22/2024	8:30 PM	0	436	53	0	3	1	0	3	21	0	0	0	0
4/22/2024	8:45 PM	0	429	45	0	2	1	0	1	23	0	0	0	0
4/22/2024	9:00 PM	0	402	38	0	1	0	0	0	23	0	0	0	0
4/22/2024	9:15 PM	0	382	35	0	2	0	0	0	23	0	0	0	0
4/22/2024	9:30 PM	0	360	26	0	1	0	0	0	21	0	0	0	0
4/22/2024	9:45 PM	0	326	17	0	1	0	0	0	18	0	1	0	0
4/22/2024	10:00 PM	0	285	11	0	2	0	0	0	16	0	1	0	0
4/22/2024	10:15 PM	0	246	8	0	2	0	0	1	16	0	2	0	0
4/22/2024	10:30 PM	0	203	8	0	2	0	0	1	15	0	2	0	0
4/22/2024	10:45 PM	0	170	9	0	3	0	0	1	16	0	1	0	0
4/22/2024	11:00 PM	0	154	8	0	2	0	0	1	15	0	1	0	0
4/22/2024	11:15 PM	0	122	13	0	2	0	0	0	17	0	0	0	0
4/22/2024	11:30 PM	0	106	20	0	3	0	0	0	13	0	0	0	0
4/22/2024	11:45 PM	1	90	24	0	2	0	0	0	16	0	0	0	0

4/23/2024	12:00 AM	1	77	26	0	2	0	0	0	15	0	1	0	0
4/23/2024	12:15 AM	1	78	24	0	1	0	0	0	12	0	1	0	0
4/23/2024	12:30 AM	1	73	21	0	0	0	0	0	17	0	3	0	0
4/23/2024	12:45 AM	0	64	21	0	0	0	0	0	14	0	3	0	0
4/23/2024	1:00 AM	0	58	21	0	0	0	0	0	15	0	2	0	0
4/23/2024	1:15 AM	0	51	18	0	0	0	0	0	12	0	2	0	0
4/23/2024	1:30 AM	0	50	17	0	0	0	0	0	6	0	0	0	0
4/23/2024	1:45 AM	0	50	15	0	0	0	0	0	7	0	0	0	0
4/23/2024	2:00 AM	0	48	14	0	1	0	0	0	7	0	0	0	0
4/23/2024	2:15 AM	0	46	12	0	1	0	0	0	8	0	1	0	0
4/23/2024	2:30 AM	0	40	11	0	2	0	0	0	16	0	1	0	0
4/23/2024	2:45 AM	0	40	11	0	3	0	0	0	20	0	1	0	0
4/23/2024	3:00 AM	0	45	13	0	2	0	0	0	20	0	2	0	0
4/23/2024	3:15 AM	0	56	17	0	2	0	0	0	23	0	1	0	0
4/23/2024	3:30 AM	0	66	20	0	1	0	0	0	20	0	1	0	0
4/23/2024	3:45 AM	0	95	30	0	0	0	0	0	22	0	2	0	0
4/23/2024	4:00 AM	0	110	34	0	1	1	0	0	24	0	1	0	0
4/23/2024	4:15 AM	0	124	42	0	2	1	0	0	28	0	2	0	0
4/23/2024	4:30 AM	0	159	52	0	3	1	0	0	29	0	2	0	0
4/23/2024	4:45 AM	0	191	50	0	7	1	0	0	32	0	1	0	0
4/23/2024	5:00 AM	0	233	62	0	7	0	0	0	41	0	1	0	0
4/23/2024	5:15 AM	0	291	70	0	7	0	0	0	42	0	0	0	0
4/23/2024	5:30 AM	1	344	102	0	8	5	0	0	45	0	0	0	0
4/23/2024	5:45 AM	2	424	143	0	6	5	0	2	40	0	1	0	0
4/23/2024	6:00 AM	2	552	184	0	6	8	0	2	39	0	1	0	0
4/23/2024	6:15 AM	2	674	239	0	6	9	0	2	41	0	1	0	0
4/23/2024	6:30 AM	1	824	266	0	4	5	0	3	37	0	1	0	0
4/23/2024	6:45 AM	0	796	253	0	4	5	0	1	36	0	0	0	0
4/23/2024	7:00 AM	1	769	255	0	9	2	0	2	31	0	0	0	0
4/23/2024	7:15 AM	5	755	240	0	11	5	0	2	30	0	0	0	0
4/23/2024	7:30 AM	5	675	231	0	16	7	0	2	29	1	0	0	0
4/23/2024	7:45 AM	5	768	280	2	20	7	0	4	32	1	0	0	0
4/23/2024	8:00 AM	4	765	280	2	18	8	0	4	35	1	0	0	0
4/23/2024	8:15 AM	0	708	271	2	17	7	0	7	35	1	0	0	0
4/23/2024	8:30 AM	0	683	258	2	17	6	1	6	40	0	0	0	0
4/23/2024	8:45 AM	0	609	219	0	15	8	1	4	40	0	0	0	0
4/23/2024	9:00 AM	0	580	203	0	21	9	1	3	44	0	0	0	0
4/23/2024	9:15 AM	0	578	213	0	21	6	1	0	55	0	0	0	0
4/23/2024	9:30 AM	0	575	219	0	20	4	0	2	63	0	0	0	0
4/23/2024	9:45 AM	0	596	222	0	23	3	0	2	67	0	0	0	0
4/23/2024	10:00 AM	0	629	233	0	21	5	0	3	72	0	0	0	0
4/23/2024	10:15 AM	0	645	232	0	24	6	1	6	66	0	0	0	0
4/23/2024	10:30 AM	0	671	225	0	24	8	1	5	59	0	0	0	0
4/23/2024	10:45 AM	0	672	234	0	19	11	1	6	54	0	0	0	0
4/23/2024	11:00 AM	0	656	237	0	15	12	1	6	48	0	0	0	0
4/23/2024	11:15 AM	0	662	237	0	15	16	0	4	56	0	0	0	0
4/23/2024	11:30 AM	0	678	225	0	16	15	0	4	59	0	0	0	0
4/23/2024	11:45 AM	0	704	211	3	21	11	0	6	63	0	0	0	0
4/23/2024	12:00 PM	0	737	204	3	22	7	0	8	70	0	0	0	0
4/23/2024	12:15 PM	1	773	184	4	21	6	0	10	54	0	0	0	0
4/23/2024	12:30 PM	2	800	193	7	23	8	0	10	55	1	0	0	0
4/23/2024	12:45 PM	2	798	190	4	24	13	0	8	59	1	0	0	0
4/23/2024	1:00 PM	2	788	172	4	26	20	1	5	57	1	0	0	0
4/23/2024	1:15 PM	2	785	173	3	31	21	1	3	68	1	0	0	0
4/23/2024	1:30 PM	2	792	173	0	32	20	1	2	72	0	0	0	0
4/23/2024	1:45 PM	2	806	170	0	27	22	1	1	71	0	0	0	0
4/23/2024	2:00 PM	2	842	184	0	26	14	0	1	68	0	0	0	0
4/23/2024	2:15 PM	1	850	185	1	22	13	0	0	60	0	0	0	0
4/23/2024	2:30 PM	0	864	181	2	21	17	0	0	51	0	0	0	0
4/23/2024	2:45 PM	1	882	200	2	25	17	3	1	54	0	0	0	0
4/23/2024	3:00 PM	3	958	204	3	25	21	4	1	47	0	0	0	0
4/23/2024	3:15 PM	3	963	235	4	29	18	4	2	53	0	0	0	0
4/23/2024	3:30 PM	4	994	256	5	24	13	5	2	56	0	0	0	0
4/23/2024	3:45 PM	4	1034	264	6	21	9	2	1	53	0	0	0	0
4/23/2024	4:00 PM	3	1023	279	5	17	5	1	1	59	0	0	0	0
4/23/2024	4:15 PM	4	1044	249	4	11	4	1	0	59	0	0	0	0
4/23/2024	4:30 PM	3	961	215	2	12	6	0	1	52	0	0	0	0
4/23/2024	4:45 PM	2	946	215	1	9	7	0	2	54	0	0	0	0
4/23/2024	5:00 PM	1	929	205	2	14	8	0	3	47	0	0	0	0
4/23/2024	5:15 PM	0	887	204	2	13	8	0	3	43	0	0	0	0
4/23/2024	5:30 PM	1	882	216	2	12	9	0	2	45	0	0	0	0
4/23/2024	5:45 PM	1	798	195	2	14	5	0	1	39	0	0	0	0
4/23/2024	6:00 PM	1	660	180	1	10	6	0	0	37	0	0	0	0
4/23/2024	6:15 PM	3	656	184	0	10	7	0	0	35	0	0	0	0
4/23/2024	6:30 PM	3	652	175	0	8	4	0	1	35	0	0	0	0
4/23/2024	6:45 PM	3	655	158	0	5	5	0	1	36	0	0	0	0
4/23/2024	7:00 PM	6	685	146	0	4	5	0	1	38	0	0	0	0
4/23/2024	7:15 PM	4	637	135	0	2	4	0	1	33	0	0	0	0
4/23/2024	7:30 PM	3	605	126	0	2	4	0	0	29	0	0	0	0
4/23/2024	7:45 PM	3	583	110	0	3	4	0	0	23	0	0	0	0
4/23/2024	8:00 PM	1	557	92	0	4	2	0	0	23	0	0	0	0
4/23/2024	8:15 PM	1	523	66	0	4	2	0	0	26	0	0	0	0
4/23/2024	8:30 PM	1	485	51	0	4	1	0	0	27	0	0	0	0
4/23/2024	8:45 PM	1	435	41	0	4	0	0	0	27	0	0	0	0
4/23/2024	9:00 PM	0	399	33	1	1	0	0	0	23	0	0	0	0
4/23/2024	9:15 PM	0	383	29	1	3	0	0	0	21	0	0	0	0
4/23/2024	9:30 PM	0	345	19	1	4	0	0	0	21	0	0	0	0
4/23/2024	9:45 PM	0	321	21	2	3	0	0	0	16	0	1	0	0
4/23/2024	10:00 PM	0	280	20	2	6	0	0	0	15	0	1	0	0
4/23/2024	10:15 PM	0	236	22	3	4	0	0	0	11	0	2	0	0
4/23/2024	10:30 PM	0	206	27	3	3	0	0	0	9	0	2	0	0
4/23/2024	10:45 PM	0	170	24	2	3	0	0	0	12	0	1	0	0
4/23/2024	11:00 PM	0	148	22	1	0	0	0	0	13	0	1	0	0
4/23/2024	11:15 PM	0	142	24	0	2	0	0	0	14	0	0	0	0
4/23/2024	11:30 PM	0	124	25	0	2	0	0	0	14	0	0	0	0
4/23/2024	11:45 PM	0	110	25	0	3	0	0	0	12	0	0	0	0

4/24/2024	12:00 AM	0	104	26	0	3	0	0	0	13	0	0	0	0
4/24/2024	12:15 AM	0	82	19	0	1	0	0	0	13	0	0	0	0
4/24/2024	12:30 AM	0	70	15	0	3	0	0	0	13	0	0	0	0
4/24/2024	12:45 AM	0	59	14	0	4	0	0	0	18	0	0	0	0
4/24/2024	1:00 AM	0	44	14	0	4	0	0	0	16	0	0	0	0
4/24/2024	1:15 AM	0	44	13	0	4	0	0	0	16	0	0	0	0
4/24/2024	1:30 AM	0	42	12	0	2	0	0	0	18	0	0	0	0
4/24/2024	1:45 AM	0	39	10	0	0	0	0	0	13	0	0	0	0
4/24/2024	2:00 AM	0	39	8	0	0	0	0	0	14	0	0	0	0
4/24/2024	2:15 AM	0	36	8	0	0	0	0	0	17	0	0	0	0
4/24/2024	2:30 AM	0	36	10	0	2	0	0	0	17	0	0	0	0
4/24/2024	2:45 AM	0	40	12	0	2	0	0	0	19	0	0	0	0
4/24/2024	3:00 AM	0	39	13	0	3	0	0	0	20	0	0	0	0
4/24/2024	3:15 AM	0	55	15	0	4	0	0	0	19	0	2	0	0
4/24/2024	3:30 AM	0	63	13	0	2	0	0	0	17	0	2	0	0
4/24/2024	3:45 AM	0	82	18	0	4	0	0	0	19	0	3	0	0
4/24/2024	4:00 AM	0	113	27	0	9	0	0	0	20	0	3	0	0
4/24/2024	4:15 AM	0	123	29	1	10	0	0	0	17	0	1	0	0
4/24/2024	4:30 AM	0	165	39	1	13	0	0	0	18	0	1	0	0
4/24/2024	4:45 AM	0	208	41	1	14	0	0	0	19	0	1	0	0
4/24/2024	5:00 AM	0	266	41	1	14	0	0	0	21	0	1	0	0
4/24/2024	5:15 AM	0	332	42	0	16	0	0	0	23	0	1	0	0
4/24/2024	5:30 AM	0	424	62	2	17	3	0	0	27	0	1	0	0
4/24/2024	5:45 AM	1	538	97	2	20	3	0	1	32	0	0	0	0
4/24/2024	6:00 AM	1	638	137	2	18	3	0	1	32	0	0	0	0
4/24/2024	6:15 AM	1	743	198	2	23	4	0	1	37	0	0	0	0
4/24/2024	6:30 AM	1	874	229	0	22	2	1	4	37	0	0	0	0
4/24/2024	6:45 AM	1	945	251	1	22	2	2	5	28	0	1	0	0
4/24/2024	7:00 AM	1	998	259	1	24	4	2	5	28	0	1	0	0
4/24/2024	7:15 AM	1	996	250	1	21	3	2	7	31	0	1	0	0
4/24/2024	7:30 AM	1	911	260	2	31	2	1	5	36	0	1	0	0
4/24/2024	7:45 AM	2	880	247	1	36	4	0	6	47	0	0	0	0
4/24/2024	8:00 AM	4	800	243	1	39	4	0	6	50	0	0	0	0
4/24/2024	8:15 AM	4	744	236	1	44	6	1	6	54	0	0	0	0
4/24/2024	8:30 AM	5	724	217	0	36	9	1	7	54	0	0	0	0
4/24/2024	8:45 AM	3	639	215	0	35	7	1	5	47	0	0	0	0
4/24/2024	9:00 AM	1	610	210	1	34	11	1	6	51	0	0	0	0
4/24/2024	9:15 AM	1	624	200	1	34	12	0	7	52	0	0	0	0
4/24/2024	9:30 AM	1	604	191	1	38	16	0	7	55	0	0	0	0
4/24/2024	9:45 AM	1	604	181	1	33	18	1	8	54	0	0	0	0
4/24/2024	10:00 AM	1	610	170	0	29	15	1	8	45	0	0	0	0
4/24/2024	10:15 AM	1	590	187	0	21	18	1	6	34	0	0	0	0
4/24/2024	10:30 AM	0	572	192	0	16	12	1	5	30	0	0	0	0
4/24/2024	10:45 AM	1	579	190	0	19	11	0	4	34	0	0	0	0
4/24/2024	11:00 AM	1	607	203	0	20	13	0	4	51	0	0	0	0
4/24/2024	11:15 AM	2	649	198	1	24	9	0	8	64	0	0	0	0
4/24/2024	11:30 AM	2	691	203	2	26	14	0	7	74	0	0	0	0
4/24/2024	11:45 AM	1	746	225	2	21	18	0	7	90	0	0	0	0
4/24/2024	12:00 PM	2	768	236	3	25	16	0	7	80	0	0	0	0
4/24/2024	12:15 PM	2	762	251	2	27	15	0	4	77	0	0	0	0
4/24/2024	12:30 PM	4	790	251	1	34	11	1	6	60	0	0	0	0
4/24/2024	12:45 PM	5	792	256	2	38	8	1	5	45	0	0	0	0
4/24/2024	1:00 PM	4	790	245	1	35	7	1	5	44	0	0	0	0
4/24/2024	1:15 PM	3	824	224	2	29	7	1	3	39	0	0	0	0
4/24/2024	1:30 PM	2	803	214	2	24	9	0	1	48	0	0	0	0
4/24/2024	1:45 PM	1	803	202	1	23	11	1	2	45	0	0	0	0
4/24/2024	2:00 PM	1	824	209	2	24	11	1	2	46	0	0	0	0
4/24/2024	2:15 PM	1	844	233	3	28	14	1	3	47	0	0	0	0
4/24/2024	2:30 PM	0	901	257	4	26	10	1	5	46	0	0	0	0
4/24/2024	2:45 PM	0	943	250	6	27	7	0	4	49	0	0	0	0
4/24/2024	3:00 PM	2	959	250	7	24	9	0	4	54	0	0	0	0
4/24/2024	3:15 PM	2	970	243	5	23	6	0	6	46	0	0	0	0
4/24/2024	3:30 PM	4	988	233	5	19	10	0	5	42	0	0	0	0
4/24/2024	3:45 PM	4	1029	251	3	20	10	0	7	48	0	0	0	0
4/24/2024	4:00 PM	2	1070	259	2	27	10	0	6	43	0	0	0	0
4/24/2024	4:15 PM	2	1118	259	3	26	9	0	3	50	0	0	0	0
4/24/2024	4:30 PM	0	1115	273	2	29	7	1	5	52	1	0	0	0
4/24/2024	4:45 PM	0	1081	269	2	25	6	1	5	44	1	0	0	0
4/24/2024	5:00 PM	1	1018	253	2	25	2	1	8	38	1	0	0	0
4/24/2024	5:15 PM	2	969	246	1	22	4	1	9	32	1	0	0	0
4/24/2024	5:30 PM	5	921	232	2	20	5	0	8	29	0	0	0	0
4/24/2024	5:45 PM	6	850	225	2	19	6	0	8	26	0	0	0	0
4/24/2024	6:00 PM	5	818	222	1	14	8	0	7	25	0	0	0	0
4/24/2024	6:15 PM	4	786	211	1	17	7	0	7	29	0	0	0	0
4/24/2024	6:30 PM	4	738	195	0	16	5	0	5	28	0	0	0	0
4/24/2024	6:45 PM	3	710	178	0	18	4	0	3	29	0	0	0	0
4/24/2024	7:00 PM	3	689	157	0	15	2	0	1	26	0	0	0	0
4/24/2024	7:15 PM	4	671	138	0	11	1	0	2	30	0	0	0	0
4/24/2024	7:30 PM	1	680	114	0	11	0	0	2	29	0	1	0	0
4/24/2024	7:45 PM	1	686	94	0	7	0	0	2	27	0	1	0	0
4/24/2024	8:00 PM	1	667	82	1	5	0	0	2	31	0	1	0	0
4/24/2024	8:15 PM	0	593	78	1	6	0	0	0	25	0	1	0	0
4/24/2024	8:30 PM	0	533	80	1	6	0	0	1	22	0	0	0	0
4/24/2024	8:45 PM	0	457	77	1	6	0	0	1	17	0	0	0	0
4/24/2024	9:00 PM	0	422	79	0	6	1	0	1	11	0	0	0	0
4/24/2024	9:15 PM	0	381	65	0	7	1	0	1	11	0	0	0	0
4/24/2024	9:30 PM	0	351	55	0	5	1	0	0	10	0	2	0	0
4/24/2024	9:45 PM	0	321	50	0	6	1	0	0	15	0	2	0	0
4/24/2024	10:00 PM	0	268	40	0	6	1	0	0	16	0	2	0	0
4/24/2024	10:15 PM	0	240	36	0	5	1	0	0	11	0	2	0	0
4/24/2024	10:30 PM	0	208	32	0	6	1	0	0	14	0	0	0	0
4/24/2024	10:45 PM	0	184	28	0	5	2	0	0	12	0	0	0	0
4/24/2024	11:00 PM	0	159	29	0	5	1	0	0	15	0	0	0	0
4/24/2024	11:15 PM	1	152	30	0	3	1	0	0	24	0	0	0	0
4/24/2024	11:30 PM	1	123	25	0	2	1	0	0	26	0	0	0	0
4/24/2024	11:45 PM	1	118	21	0	1	0	0	0	26	0	0	0	0

4/25/2024	12:00 AM	1	106	14	0	0	1	0	0	24	0	0	0	0
4/25/2024	12:15 AM	0	82	10	0	0	2	0	0	15	0	0	0	0
4/25/2024	12:30 AM	0	79	11	0	0	2	0	0	13	0	0	0	0
4/25/2024	12:45 AM	0	67	11	0	0	2	0	0	14	0	0	0	0
4/25/2024	1:00 AM	0	68	10	0	0	1	0	0	14	0	1	0	0
4/25/2024	1:15 AM	0	63	8	0	0	0	0	0	14	0	1	0	0
4/25/2024	1:30 AM	0	57	6	0	0	0	0	0	13	0	1	0	0
4/25/2024	1:45 AM	0	55	6	0	0	0	0	0	13	0	1	0	0
4/25/2024	2:00 AM	0	52	6	0	0	0	0	0	11	0	1	0	0
4/25/2024	2:15 AM	0	54	6	0	2	0	0	0	13	0	1	0	0
4/25/2024	2:30 AM	0	62	8	0	5	0	0	0	15	0	1	0	0
4/25/2024	2:45 AM	0	64	8	0	7	0	0	0	14	0	2	0	0
4/25/2024	3:00 AM	0	71	10	0	7	0	0	0	18	0	1	0	0
4/25/2024	3:15 AM	0	82	13	0	7	1	0	0	20	0	2	0	0
4/25/2024	3:30 AM	0	84	12	0	6	1	0	0	17	0	2	0	0
4/25/2024	3:45 AM	0	110	15	0	5	1	0	0	20	0	1	0	0
4/25/2024	4:00 AM	0	130	18	0	8	1	0	0	19	0	2	0	0
4/25/2024	4:15 AM	0	145	23	1	9	0	0	0	18	0	1	0	0
4/25/2024	4:30 AM	0	178	32	1	10	0	0	0	19	0	1	0	0
4/25/2024	4:45 AM	0	199	42	1	11	0	0	0	21	0	1	0	0
4/25/2024	5:00 AM	0	238	65	1	8	2	0	0	27	0	0	0	0
4/25/2024	5:15 AM	1	274	88	0	8	3	0	0	33	0	0	0	0
4/25/2024	5:30 AM	1	315	120	0	9	8	0	0	47	0	0	0	0
4/25/2024	5:45 AM	2	409	162	0	11	8	3	1	44	0	0	0	0
4/25/2024	6:00 AM	2	529	196	0	18	6	3	2	50	0	1	0	0
4/25/2024	6:15 AM	1	657	218	0	19	7	3	4	51	1	1	0	0
4/25/2024	6:30 AM	2	798	236	0	25	3	3	5	47	1	1	0	0
4/25/2024	6:45 AM	1	912	235	1	24	3	0	4	50	1	1	0	0
4/25/2024	7:00 AM	2	924	224	1	26	4	0	3	46	2	0	0	0
4/25/2024	7:15 AM	2	921	234	1	28	3	0	1	48	1	0	0	0
4/25/2024	7:30 AM	2	927	257	1	29	3	1	2	42	1	0	0	0
4/25/2024	7:45 AM	4	890	265	0	36	7	1	4	46	1	0	0	0
4/25/2024	8:00 AM	3	880	288	0	30	8	1	11	53	0	0	0	0
4/25/2024	8:15 AM	3	841	282	0	30	11	1	16	51	0	0	0	0
4/25/2024	8:30 AM	3	742	258	1	25	12	0	15	57	0	0	0	0
4/25/2024	8:45 AM	1	680	241	2	25	16	0	13	58	0	0	0	0
4/25/2024	9:00 AM	2	638	241	3	29	14	0	6	46	0	0	0	0
4/25/2024	9:15 AM	2	630	247	3	26	13	0	1	53	0	0	0	0
4/25/2024	9:30 AM	3	646	230	2	30	15	0	4	51	0	0	0	0
4/25/2024	9:45 AM	3	644	231	1	23	11	0	5	49	0	0	0	0
4/25/2024	10:00 AM	2	642	215	1	21	11	0	7	52	0	0	0	0
4/25/2024	10:15 AM	2	625	206	1	22	10	0	10	44	0	0	0	0
4/25/2024	10:30 AM	14	628	224	2	20	16	0	7	45	2	0	0	0
4/25/2024	10:45 AM	14	631	230	4	23	12	0	8	50	2	0	0	0
4/25/2024	11:00 AM	14	642	224	3	28	15	0	6	51	2	0	0	0
4/25/2024	11:15 AM	15	720	233	3	34	17	0	11	60	2	0	0	0
4/25/2024	11:30 AM	1	784	237	3	33	9	1	11	60	0	0	0	0
4/25/2024	11:45 AM	1	839	247	1	31	15	1	10	58	0	0	0	0
4/25/2024	12:00 PM	1	900	252	2	27	13	1	14	57	0	0	0	0
4/25/2024	12:15 PM	1	896	252	3	23	12	1	9	50	0	0	0	0
4/25/2024	12:30 PM	1	930	248	2	27	13	0	10	51	0	0	0	0
4/25/2024	12:45 PM	1	913	237	3	28	8	0	11	52	0	0	0	0
4/25/2024	1:00 PM	2	916	252	3	25	10	0	9	51	0	0	0	0
4/25/2024	1:15 PM	1	923	251	2	25	11	0	9	50	1	0	0	0
4/25/2024	1:30 PM	1	870	254	3	21	11	0	10	52	1	0	0	0
4/25/2024	1:45 PM	1	897	261	2	24	15	0	9	53	1	0	0	0
4/25/2024	2:00 PM	0	937	258	2	26	17	1	8	55	3	0	0	0
4/25/2024	2:15 PM	0	980	274	3	27	16	1	6	54	2	0	0	0
4/25/2024	2:30 PM	1	1017	282	3	29	17	2	4	47	2	0	0	0
4/25/2024	2:45 PM	2	1054	284	3	31	14	2	3	41	3	0	0	0
4/25/2024	3:00 PM	3	1052	284	5	32	14	1	4	39	1	0	0	0
4/25/2024	3:15 PM	4	1076	282	4	27	11	1	3	34	2	0	0	0
4/25/2024	3:30 PM	3	1121	284	3	24	8	0	3	38	2	0	0	0
4/25/2024	3:45 PM	3	1127	285	3	16	6	0	5	38	1	0	0	0
4/25/2024	4:00 PM	3	1166	300	0	18	1	0	6	35	1	0	0	0
4/25/2024	4:15 PM	4	1154	306	1	22	2	0	6	38	0	0	0	0
4/25/2024	4:30 PM	4	1133	290	1	18	3	0	6	35	0	0	0	0
4/25/2024	4:45 PM	3	1120	294	2	19	5	0	5	33	0	0	0	0
4/25/2024	5:00 PM	2	1080	276	2	16	5	0	2	40	0	0	0	0
4/25/2024	5:15 PM	1	1041	252	1	12	4	0	4	41	0	0	0	0
4/25/2024	5:30 PM	1	1008	244	1	14	3	0	4	36	0	0	0	0
4/25/2024	5:45 PM	4	979	228	0	16	1	0	3	36	0	0	0	0
4/25/2024	6:00 PM	4	922	212	0	15	1	0	4	35	0	0	0	0
4/25/2024	6:15 PM	3	917	198	1	13	1	0	3	32	0	0	0	0
4/25/2024	6:30 PM	4	898	192	1	9	1	0	2	41	0	0	0	0
4/25/2024	6:45 PM	3	863	175	1	4	2	0	2	43	0	0	0	0
4/25/2024	7:00 PM	4	835	163	1	1	2	0	1	35	0	0	0	0
4/25/2024	7:15 PM	4	806	149	1	1	2	0	2	31	0	0	0	0
4/25/2024	7:30 PM	4	791	128	1	2	1	0	2	24	0	0	0	0
4/25/2024	7:45 PM	2	725	116	1	3	1	0	2	19	0	0	0	0
4/25/2024	8:00 PM	1	703	102	1	3	1	0	2	21	0	0	0	0
4/25/2024	8:15 PM	1	674	94	0	5	1	0	0	25	0	0	0	0
4/25/2024	8:30 PM	0	606	90	0	5	1	0	0	21	0	0	0	0
4/25/2024	8:45 PM	0	570	85	0	5	0	0	0	26	0	0	0	0
4/25/2024	9:00 PM	0	527	79	0	4	0	0	0	22	0	0	0	0
4/25/2024	9:15 PM	0	446	70	0	2	0	0	0	17	0	0	0	0
4/25/2024	9:30 PM	0	394	60	0	1	0	0	0	17	0	0	0	0
4/25/2024	9:45 PM	0	394	72	1	0	1	0	0	12	0	0	0	0
4/25/2024	10:00 PM	0	347	63	1	3	1	0	0	14	0	0	0	0
4/25/2024	10:15 PM	0	294	56	1	3	1	0	0	13	0	0	0	0
4/25/2024	10:30 PM	0	249	56	1	3	1	0	0	10	0	0	0	0
4/25/2024	10:45 PM	0	212	40	0	4	0	0	0	12	0	0	0	0
4/25/2024	11:00 PM	1	193	40	0	2	0	0	0	19	0	0	0	0
4/25/2024	11:15 PM	1	155	33	0	2	0	0	0	18	0	0	0	0
4/25/2024	11:30 PM	1	116	23	0	2	0	0	0	18	0	0	0	0
4/25/2024	11:45 PM	1	52	10	0	1	0	0	0	11	0	0	0	0

4/26/2024	12:00 AM	0	144	17	0	2	1	0	3	19	0	0	0	0
4/26/2024	12:15 AM	0	116	15	0	3	0	0	1	16	0	2	0	0
4/26/2024	12:30 AM	0	96	15	0	5	0	0	1	17	0	2	0	0
4/26/2024	12:45 AM	0	73	13	0	4	0	0	1	13	0	2	0	0
4/26/2024	1:00 AM	0	65	13	0	4	0	0	1	10	0	2	0	0
4/26/2024	1:15 AM	1	55	12	0	2	0	0	1	12	0	0	0	0
4/26/2024	1:30 AM	1	54	11	0	1	0	0	1	14	0	0	0	0
4/26/2024	1:45 AM	1	63	11	0	2	0	0	0	14	0	1	0	0
4/26/2024	2:00 AM	1	63	11	0	3	0	0	0	15	0	1	0	0
4/26/2024	2:15 AM	0	66	11	0	3	1	0	0	16	0	1	0	0
4/26/2024	2:30 AM	0	64	10	0	2	2	0	0	17	0	1	0	0
4/26/2024	2:45 AM	0	58	10	0	3	2	0	0	21	0	1	0	0
4/26/2024	3:00 AM	0	63	10	0	3	3	0	0	27	0	1	0	0
4/26/2024	3:15 AM	0	67	12	0	5	3	0	0	23	0	1	0	0
4/26/2024	3:30 AM	0	75	14	0	5	2	0	0	20	0	1	0	0
4/26/2024	3:45 AM	0	90	14	0	5	4	0	0	20	0	0	0	0
4/26/2024	4:00 AM	0	99	15	0	4	3	0	0	22	0	2	0	0
4/26/2024	4:15 AM	0	120	14	1	4	2	0	0	26	0	2	0	0
4/26/2024	4:30 AM	0	170	18	1	7	3	0	0	34	0	3	0	0
4/26/2024	4:45 AM	1	200	23	1	7	1	0	1	30	0	3	0	0
4/26/2024	5:00 AM	1	241	23	1	7	3	0	2	24	0	1	0	0
4/26/2024	5:15 AM	3	294	28	0	7	4	0	3	26	0	1	0	0
4/26/2024	5:30 AM	3	339	41	1	9	6	0	4	27	0	0	0	0
4/26/2024	5:45 AM	3	419	59	2	11	7	0	6	31	0	0	0	0
4/26/2024	6:00 AM	3	486	101	2	14	7	0	6	35	0	0	0	0
4/26/2024	6:15 AM	1	589	141	2	15	6	0	6	37	0	0	0	0
4/26/2024	6:30 AM	2	697	178	1	11	4	0	7	31	0	0	0	0
4/26/2024	6:45 AM	1	827	216	1	10	3	0	6	32	0	1	0	0
4/26/2024	7:00 AM	1	928	229	1	14	6	0	8	36	0	1	0	0
4/26/2024	7:15 AM	1	970	246	1	16	8	0	9	43	0	1	0	0
4/26/2024	7:30 AM	2	988	237	4	19	10	0	11	51	0	1	0	0
4/26/2024	7:45 AM	2	977	233	4	22	11	0	11	53	0	0	0	0
4/26/2024	8:00 AM	2	898	216	5	21	6	0	9	56	0	0	0	0
4/26/2024	8:15 AM	2	831	199	6	22	10	0	7	57	0	0	0	0
4/26/2024	8:30 AM	0	777	199	4	24	10	0	5	57	0	0	0	0
4/26/2024	8:45 AM	1	696	187	3	28	13	0	5	60	0	0	0	0
4/26/2024	9:00 AM	1	720	202	2	27	16	0	6	58	0	0	0	0
4/26/2024	9:15 AM	1	734	210	1	24	13	0	11	57	0	0	0	0
4/26/2024	9:30 AM	1	760	201	0	21	13	0	13	64	0	0	0	0
4/26/2024	9:45 AM	0	786	202	1	21	14	0	12	66	0	0	0	0
4/26/2024	10:00 AM	0	804	188	2	26	18	0	15	66	0	0	0	0
4/26/2024	10:15 AM	1	832	175	2	27	18	0	14	66	0	0	0	0
4/26/2024	10:30 AM	1	842	196	3	30	16	0	13	62	0	0	0	0
4/26/2024	10:45 AM	1	889	209	2	23	14	0	15	58	1	0	0	0
4/26/2024	11:00 AM	2	959	213	2	18	11	0	14	61	1	0	0	0
4/26/2024	11:15 AM	1	974	252	2	21	13	0	12	60	1	0	0	0
4/26/2024	11:30 AM	1	1023	247	4	24	17	0	13	59	1	0	0	0
4/26/2024	11:45 AM	1	1037	253	5	27	20	0	15	58	0	0	0	0
4/26/2024	12:00 PM	0	1027	283	5	31	17	0	12	60	0	0	0	0
4/26/2024	12:15 PM	1	1080	257	7	30	14	0	12	53	0	0	0	0
4/26/2024	12:30 PM	2	1075	256	4	31	13	0	10	52	0	0	0	0
4/26/2024	12:45 PM	5	1086	265	3	35	7	0	8	52	0	0	0	0
4/26/2024	1:00 PM	8	1056	268	2	32	14	0	7	45	0	0	0	0
4/26/2024	1:15 PM	9	987	253	0	31	14	0	7	43	0	0	0	0
4/26/2024	1:30 PM	8	974	261	1	29	14	0	6	39	0	0	0	0
4/26/2024	1:45 PM	5	981	256	1	22	14	0	3	40	0	0	0	0
4/26/2024	2:00 PM	5	1029	233	2	20	11	0	6	39	0	0	0	0
4/26/2024	2:15 PM	3	1101	268	3	20	10	0	5	44	0	0	0	0
4/26/2024	2:30 PM	4	1125	278	5	16	8	0	4	44	0	0	0	0
4/26/2024	2:45 PM	4	1123	278	7	17	10	0	6	39	0	0	0	0
4/26/2024	3:00 PM	2	1145	285	7	18	8	0	7	37	0	0	0	0
4/26/2024	3:15 PM	2	1159	277	7	18	8	0	7	35	0	0	0	0
4/26/2024	3:30 PM	1	1187	259	4	19	6	0	11	37	0	0	0	0
4/26/2024	3:45 PM	1	1213	259	2	22	6	0	11	36	0	0	0	0
4/26/2024	4:00 PM	0	1204	257	1	20	6	0	9	40	0	0	0	0
4/26/2024	4:15 PM	0	1246	259	0	20	5	0	8	42	0	0	0	0
4/26/2024	4:30 PM	2	1251	270	0	19	7	0	6	41	0	0	0	0
4/26/2024	4:45 PM	4	1270	264	0	16	5	0	8	41	0	0	0	0
4/26/2024	5:00 PM	4	1242	262	3	15	3	0	8	33	0	0	0	0
4/26/2024	5:15 PM	4	1187	254	4	14	4	0	10	31	0	0	0	0
4/26/2024	5:30 PM	3	1218	248	4	13	5	0	8	29	0	0	0	0
4/26/2024	5:45 PM	5	1176	243	4	17	5	0	5	25	0	0	0	0
4/26/2024	6:00 PM	5	1152	238	1	17	4	0	5	25	0	0	0	0
4/26/2024	6:15 PM	5	1058	236	0	14	3	0	3	20	0	0	0	0
4/26/2024	6:30 PM	4	938	214	0	14	1	0	3	16	0	0	0	0
4/26/2024	6:45 PM	1	857	189	0	6	4	0	2	19	0	0	0	0
4/26/2024	7:00 PM	7	836	174	0	5	4	0	0	18	0	0	0	0
4/26/2024	7:15 PM	11	862	146	0	4	4	0	0	15	0	0	0	0
4/26/2024	7:30 PM	11	840	135	0	2	3	0	0	15	0	0	0	0
4/26/2024	7:45 PM	10	827	119	0	3	0	0	0	15	0	0	0	0
4/26/2024	8:00 PM	7	783	94	0	3	0	0	0	15	0	0	0	0
4/26/2024	8:15 PM	3	733	75	1	6	0	0	1	15	0	0	0	0
4/26/2024	8:30 PM	7	697	59	2	6	0	0	1	12	0	0	0	0
4/26/2024	8:45 PM	9	697	60	4	9	0	0	2	11	0	0	0	0
4/26/2024	9:00 PM	6	682	56	4	8	0	0	2	8	0	0	0	0
4/26/2024	9:15 PM	6	645	55	3	7	0	0	1	8	0	0	0	0
4/26/2024	9:30 PM	4	590	53	2	9	1	0	1	11	0	0	0	0
4/26/2024	9:45 PM	2	530	46	0	6	1	0	0	8	0	1	0	0
4/26/2024	10:00 PM	2	474	45	0	8	1	0	0	8	0	1	0	0
4/26/2024	10:15 PM	2	424	39	0	6	2	0	0	10	0	1	0	0
4/26/2024	10:30 PM	0	404	37	0	4	2	0	0	9	0	1	0	0
4/26/2024	10:45 PM	0	349	29	0	5	2	0	0	10	0	0	0	0
4/26/2024	11:00 PM	2	307	25	0	4	2	0	0	11	0	0	0	0
4/26/2024	11:15 PM	2	227	19	0	4	1	0	0	7	0	0	0	0
4/26/2024	11:30 PM	2	137	12	0	3	0	0	0	4	0	0	0	0
4/26/2024	11:45 PM	2	62	6	0	1	0	0	0	2	0	0	0	0

4/27/2024	12:00 AM	0	181	43	0	4	0	0	0	13	0	1	0	0
4/27/2024	12:15 AM	0	139	41	0	5	1	0	0	11	0	1	0	0
4/27/2024	12:30 AM	0	128	34	0	5	1	0	0	9	0	1	0	0
4/27/2024	12:45 AM	0	105	31	0	3	1	0	0	7	0	1	0	0
4/27/2024	1:00 AM	0	99	26	0	2	1	0	0	6	0	0	0	0
4/27/2024	1:15 AM	0	91	21	0	3	0	0	0	9	0	0	0	0
4/27/2024	1:30 AM	0	76	22	0	3	0	0	2	9	0	0	0	0
4/27/2024	1:45 AM	0	68	20	0	4	0	0	2	8	0	0	0	0
4/27/2024	2:00 AM	0	69	24	0	3	0	0	2	9	0	1	0	0
4/27/2024	2:15 AM	0	71	24	1	1	0	0	2	8	0	1	0	0
4/27/2024	2:30 AM	0	67	23	2	2	0	0	0	7	0	1	0	0
4/27/2024	2:45 AM	0	69	24	4	3	1	0	0	8	0	1	0	0
4/27/2024	3:00 AM	0	64	21	4	4	1	0	0	7	0	1	0	0
4/27/2024	3:15 AM	0	53	18	3	4	1	0	0	7	0	1	0	0
4/27/2024	3:30 AM	0	63	20	2	3	1	0	0	8	0	1	0	0
4/27/2024	3:45 AM	0	62	18	0	1	0	0	0	10	0	1	0	0
4/27/2024	4:00 AM	0	68	24	1	0	0	0	0	11	0	0	0	0
4/27/2024	4:15 AM	0	80	31	2	5	0	0	0	9	0	0	0	0
4/27/2024	4:30 AM	0	90	32	2	6	0	0	0	8	0	0	0	0
4/27/2024	4:45 AM	0	112	40	2	6	1	0	0	6	0	0	0	0
4/27/2024	5:00 AM	0	120	36	1	7	1	0	0	8	0	0	0	0
4/27/2024	5:15 AM	0	144	40	0	2	1	0	0	14	0	0	0	0
4/27/2024	5:30 AM	0	164	49	0	2	1	0	0	14	0	0	0	0
4/27/2024	5:45 AM	0	185	59	0	3	0	0	0	14	0	0	0	0
4/27/2024	6:00 AM	0	237	75	0	3	0	0	0	16	0	0	0	0
4/27/2024	6:15 AM	1	279	88	0	4	1	0	0	10	0	0	0	0
4/27/2024	6:30 AM	1	339	98	0	3	1	0	0	11	0	0	0	0
4/27/2024	6:45 AM	1	407	106	0	2	2	0	0	13	0	0	0	0
4/27/2024	7:00 AM	1	463	125	0	4	2	0	3	11	0	0	0	0
4/27/2024	7:15 AM	0	513	138	1	3	1	0	5	15	0	0	0	0
4/27/2024	7:30 AM	3	567	151	1	7	1	0	6	14	0	0	0	0
4/27/2024	7:45 AM	4	617	176	1	8	1	0	7	15	0	0	0	0
4/27/2024	8:00 AM	4	649	165	1	6	1	0	5	13	0	0	0	0
4/27/2024	8:15 AM	4	687	163	1	6	1	0	7	14	0	0	0	0
4/27/2024	8:30 AM	2	713	169	1	4	1	0	6	17	0	0	0	0
4/27/2024	8:45 AM	1	744	166	2	6	1	0	6	15	0	0	0	0
4/27/2024	9:00 AM	2	787	174	2	7	1	0	6	20	0	0	0	0
4/27/2024	9:15 AM	6	855	195	1	9	2	0	5	16	0	0	0	0
4/27/2024	9:30 AM	6	873	208	1	12	2	0	5	15	1	0	0	0
4/27/2024	9:45 AM	7	887	219	0	14	1	0	5	17	1	0	0	0
4/27/2024	10:00 AM	7	858	216	0	13	2	0	4	11	1	0	0	0
4/27/2024	10:15 AM	4	814	195	0	15	1	0	1	10	1	0	0	0
4/27/2024	10:30 AM	4	834	178	0	13	1	0	1	6	1	0	0	0
4/27/2024	10:45 AM	4	864	175	1	11	2	0	2	5	1	0	0	0
4/27/2024	11:00 AM	27	970	205	1	12	1	0	4	9	1	0	0	0
4/27/2024	11:15 AM	28	1081	217	1	13	1	0	5	16	1	0	0	0
4/27/2024	11:30 AM	40	1186	230	2	13	4	0	5	24	0	0	0	0
4/27/2024	11:45 AM	40	1213	225	2	11	3	0	4	24	0	0	0	0
4/27/2024	12:00 PM	24	1201	198	2	12	5	0	4	21	0	0	0	0
4/27/2024	12:15 PM	29	1184	195	2	9	5	0	6	20	0	0	0	0
4/27/2024	12:30 PM	17	1125	195	1	7	4	0	6	15	0	0	0	0
4/27/2024	12:45 PM	17	1124	178	0	10	6	0	8	19	0	0	0	0
4/27/2024	1:00 PM	11	1164	204	1	7	4	0	6	22	0	0	0	0
4/27/2024	1:15 PM	9	1169	210	1	5	5	0	3	18	0	0	0	0
4/27/2024	1:30 PM	9	1183	207	1	9	3	0	4	17	0	0	0	0
4/27/2024	1:45 PM	13	1216	216	1	10	1	0	2	13	0	0	0	0
4/27/2024	2:00 PM	15	1208	192	0	14	1	0	5	11	1	0	0	0
4/27/2024	2:15 PM	15	1192	201	0	18	0	0	7	12	1	0	0	0
4/27/2024	2:30 PM	16	1232	192	0	14	0	0	6	18	1	1	0	0
4/27/2024	2:45 PM	14	1253	214	0	10	0	0	5	22	1	1	0	0
4/27/2024	3:00 PM	10	1281	226	1	9	0	0	2	21	0	1	0	0
4/27/2024	3:15 PM	6	1300	217	1	8	1	0	0	23	0	1	0	0
4/27/2024	3:30 PM	5	1263	230	1	7	1	0	0	15	0	0	0	0
4/27/2024	3:45 PM	3	1247	234	1	9	2	0	0	10	0	0	0	0
4/27/2024	4:00 PM	20	1169	236	0	7	3	0	0	9	0	0	0	0
4/27/2024	4:15 PM	21	1157	252	0	5	4	0	0	8	0	0	0	0
4/27/2024	4:30 PM	21	1149	238	0	6	4	0	0	8	0	0	0	0
4/27/2024	4:45 PM	21	1072	207	0	6	3	0	0	6	0	0	0	0
4/27/2024	5:00 PM	4	1056	191	0	6	3	0	0	5	0	0	0	0
4/27/2024	5:15 PM	3	1007	158	0	7	2	0	0	1	0	0	0	0
4/27/2024	5:30 PM	3	962	158	0	6	2	0	0	4	0	0	0	0
4/27/2024	5:45 PM	2	992	165	0	4	2	0	1	8	0	0	0	0
4/27/2024	6:00 PM	2	994	166	0	5	1	0	1	12	0	0	0	0
4/27/2024	6:15 PM	1	1015	166	0	5	0	0	1	13	0	0	0	0
4/27/2024	6:30 PM	4	1042	163	0	8	0	0	1	13	0	0	0	0
4/27/2024	6:45 PM	5	1000	151	0	9	1	0	0	10	0	1	0	0
4/27/2024	7:00 PM	6	966	158	0	7	1	0	0	10	0	1	0	0
4/27/2024	7:15 PM	11	938	153	0	5	1	0	0	12	0	1	0	0
4/27/2024	7:30 PM	7	888	147	0	2	1	0	0	9	0	1	0	0
4/27/2024	7:45 PM	6	859	124	0	0	0	0	0	8	0	0	0	0
4/27/2024	8:00 PM	5	838	90	0	2	0	0	0	9	0	0	0	0
4/27/2024	8:15 PM	0	809	78	0	3	0	0	0	6	0	0	0	0
4/27/2024	8:30 PM	3	775	61	0	4	0	0	0	9	0	0	0	0
4/27/2024	8:45 PM	3	758	58	0	6	2	0	0	9	0	0	0	0
4/27/2024	9:00 PM	3	743	55	0	6	2	0	0	5	0	0	0	0
4/27/2024	9:15 PM	3	682	48	0	6	2	0	0	4	0	0	0	0
4/27/2024	9:30 PM	1	676	47	0	7	2	0	0	1	0	0	0	0
4/27/2024	9:45 PM	1	644	49	0	6	0	0	0	3	0	0	0	0
4/27/2024	10:00 PM	1	611	51	0	4	1	0	0	2	0	0	0	0
4/27/2024	10:15 PM	1	570	50	0	5	1	0	0	3	0	0	0	0
4/27/2024	10:30 PM	1	498	47	0	4	1	0	0	4	0	0	0	0
4/27/2024	10:45 PM	1	426	43	0	4	2	0	0	5	0	0	0	0
4/27/2024	11:00 PM	1	359	42	0	4	1	0	0	5	0	0	0	0
4/27/2024	11:15 PM	1	258	32	0	2	1	0	0	4	0	0	0	0
4/27/2024	11:30 PM	0	155	20	0	1	1	0	0	3	0	0	0	0
4/27/2024	11:45 PM	0	75	11	0	0	0	0	0	0	0	0	0	0

SB
File Name:
Start Date: 4/21/2024
Start Time: 0
Site Code: 14
Station ID: 1
Location 1: I-26 N/Bound Off-Ramp, south of I-20
Location 2:

Date	Time	1	2	3	4	5	6	7	8	9	10	11	12	13
4/21/2024	12:00 AM	0	0	0	0	0	0	0	0	0	0	0	0	0
4/21/2024	12:15 AM	0	0	0	0	0	0	0	0	0	0	0	0	0
4/21/2024	12:30 AM	0	0	0	0	0	0	0	0	0	0	0	0	0
4/21/2024	12:45 AM	0	0	0	0	0	0	0	0	0	0	0	0	0
4/21/2024	1:00 AM	0	0	0	0	0	0	0	0	0	0	0	0	0
4/21/2024	1:15 AM	0	0	0	0	0	0	0	0	0	0	0	0	0
4/21/2024	1:30 AM	0	0	0	0	0	0	0	0	0	0	0	0	0
4/21/2024	1:45 AM	0	0	0	0	0	0	0	0	0	0	0	0	0
4/21/2024	2:00 AM	0	0	0	0	0	0	0	0	0	0	0	0	0
4/21/2024	2:15 AM	0	0	0	0	0	0	0	0	0	0	0	0	0
4/21/2024	2:30 AM	0	0	0	0	0	0	0	0	0	0	0	0	0
4/21/2024	2:45 AM	0	0	0	0	0	0	0	0	0	0	0	0	0
4/21/2024	3:00 AM	0	0	0	0	0	0	0	0	0	0	0	0	0
4/21/2024	3:15 AM	0	0	0	0	0	0	0	0	0	0	0	0	0
4/21/2024	3:30 AM	0	0	0	0	0	0	0	0	0	0	0	0	0
4/21/2024	3:45 AM	0	0	0	0	0	0	0	0	0	0	0	0	0
4/21/2024	4:00 AM	0	0	0	0	0	0	0	0	0	0	0	0	0
4/21/2024	4:15 AM	0	0	0	0	0	0	0	0	0	0	0	0	0
4/21/2024	4:30 AM	0	0	0	0	0	0	0	0	0	0	0	0	0
4/21/2024	4:45 AM	0	0	0	0	0	0	0	0	0	0	0	0	0
4/21/2024	5:00 AM	0	0	0	0	0	0	0	0	0	0	0	0	0
4/21/2024	5:15 AM	0	0	0	0	0	0	0	0	0	0	0	0	0
4/21/2024	5:30 AM	0	0	0	0	0	0	0	0	0	0	0	0	0
4/21/2024	5:45 AM	0	0	0	0	0	0	0	0	0	0	0	0	0
4/21/2024	6:00 AM	0	0	0	0	0	0	0	0	0	0	0	0	0
4/21/2024	6:15 AM	0	0	0	0	0	0	0	0	0	0	0	0	0
4/21/2024	6:30 AM	0	0	0	0	0	0	0	0	0	0	0	0	0
4/21/2024	6:45 AM	0	0	0	0	0	0	0	0	0	0	0	0	0
4/21/2024	7:00 AM	0	0	0	0	0	0	0	0	0	0	0	0	0
4/21/2024	7:15 AM	0	0	0	0	0	0	0	0	0	0	0	0	0
4/21/2024	7:30 AM	0	0	0	0	0	0	0	0	0	0	0	0	0
4/21/2024	7:45 AM	0	0	0	0	0	0	0	0	0	0	0	0	0
4/21/2024	8:00 AM	0	0	0	0	0	0	0	0	0	0	0	0	0
4/21/2024	8:15 AM	0	0	0	0	0	0	0	0	0	0	0	0	0
4/21/2024	8:30 AM	0	0	0	0	0	0	0	0	0	0	0	0	0
4/21/2024	8:45 AM	0	0	0	0	0	0	0	0	0	0	0	0	0
4/21/2024	9:00 AM	0	0	0	0	0	0	0	0	0	0	0	0	0
4/21/2024	9:15 AM	0	0	0	0	0	0	0	0	0	0	0	0	0
4/21/2024	9:30 AM	0	0	0	0	0	0	0	0	0	0	0	0	0
4/21/2024	9:45 AM	0	0	0	0	0	0	0	0	0	0	0	0	0
4/21/2024	10:00 AM	0	0	0	0	0	0	0	0	0	0	0	0	0
4/21/2024	10:15 AM	0	0	0	0	0	0	0	0	0	0	0	0	0
4/21/2024	10:30 AM	0	0	0	0	0	0	0	0	0	0	0	0	0
4/21/2024	10:45 AM	0	0	0	0	0	0	0	0	0	0	0	0	0
4/21/2024	11:00 AM	0	0	0	0	0	0	0	0	0	0	0	0	0
4/21/2024	11:15 AM	0	0	0	0	0	0	0	0	0	0	0	0	0
4/21/2024	11:30 AM	0	0	0	0	0	0	0	0	0	0	0	0	0
4/21/2024	11:45 AM	0	0	0	0	0	0	0	0	0	0	0	0	0
4/21/2024	12:00 PM	0	0	0	0	0	0	0	0	0	0	0	0	0
4/21/2024	12:15 PM	0	0	0	0	0	0	0	0	0	0	0	0	0
4/21/2024	12:30 PM	0	0	0	0	0	0	0	0	0	0	0	0	0
4/21/2024	12:45 PM	0	0	0	0	0	0	0	0	0	0	0	0	0
4/21/2024	1:00 PM	0	0	0	0	0	0	0	0	0	0	0	0	0
4/21/2024	1:15 PM	0	0	0	0	0	0	0	0	0	0	0	0	0
4/21/2024	1:30 PM	0	0	0	0	0	0	0	0	0	0	0	0	0
4/21/2024	1:45 PM	0	0	0	0	0	0	0	0	0	0	0	0	0
4/21/2024	2:00 PM	0	0	0	0	0	0	0	0	0	0	0	0	0
4/21/2024	2:15 PM	0	0	0	0	0	0	0	0	0	0	0	0	0
4/21/2024	2:30 PM	0	0	0	0	0	0	0	0	0	0	0	0	0
4/21/2024	2:45 PM	0	0	0	0	0	0	0	0	0	0	0	0	0
4/21/2024	3:00 PM	0	0	0	0	0	0	0	0	0	0	0	0	0
4/21/2024	3:15 PM	0	0	0	0	0	0	0	0	0	0	0	0	0
4/21/2024	3:30 PM	0	0	0	0	0	0	0	0	0	0	0	0	0
4/21/2024	3:45 PM	0	0	0	0	0	0	0	0	0	0	0	0	0
4/21/2024	4:00 PM	0	0	0	0	0	0	0	0	0	0	0	0	0
4/21/2024	4:15 PM	0	0	0	0	0	0	0	0	0	0	0	0	0
4/21/2024	4:30 PM	0	0	0	0	0	0	0	0	0	0	0	0	0
4/21/2024	4:45 PM	0	0	0	0	0	0	0	0	0	0	0	0	0
4/21/2024	5:00 PM	0	0	0	0	0	0	0	0	0	0	0	0	0
4/21/2024	5:15 PM	0	0	0	0	0	0	0	0	0	0	0	0	0
4/21/2024	5:30 PM	0	0	0	0	0	0	0	0	0	0	0	0	0
4/21/2024	5:45 PM	0	0	0	0	0	0	0	0	0	0	0	0	0
4/21/2024	6:00 PM	0	0	0	0	0	0	0	0	0	0	0	0	0
4/21/2024	6:15 PM	0	0	0	0	0	0	0	0	0	0	0	0	0
4/21/2024	6:30 PM	0	0	0	0	0	0	0	0	0	0	0	0	0
4/21/2024	6:45 PM	0	0	0	0	0	0	0	0	0	0	0	0	0
4/21/2024	7:00 PM	0	0	0	0	0	0	0	0	0	0	0	0	0
4/21/2024	7:15 PM	0	0	0	0	0	0	0	0	0	0	0	0	0
4/21/2024	7:30 PM	0	0	0	0	0	0	0	0	0	0	0	0	0
4/21/2024	7:45 PM	0	0	0	0	0	0	0	0	0	0	0	0	0
4/21/2024	8:00 PM	0	0	0	0	0	0	0	0	0	0	0	0	0
4/21/2024	8:15 PM	0	0	0	0	0	0	0	0	0	0	0	0	0
4/21/2024	8:30 PM	0	0	0	0	0	0	0	0	0	0	0	0	0
4/21/2024	8:45 PM	0	0	0	0	0	0	0	0	0	0	0	0	0
4/21/2024	9:00 PM	0	0	0	0	0	0	0	0	0	0	0	0	0
4/21/2024	9:15 PM	0	0	0	0	0	0	0	0	0	0	0	0	0
4/21/2024	9:30 PM	0	0	0	0	0	0	0	0	0	0	0	0	0
4/21/2024	9:45 PM	0	0	0	0	0	0	0	0	0	0	0	0	0
4/21/2024	10:00 PM	0	0	0	0	0	0	0	0	0	0	0	0	0
4/21/2024	10:15 PM	0	0	0	0	0	0	0	0	0	0	0	0	0
4/21/2024	10:30 PM	0	0	0	0	0	0	0	0	0	0	0	0	0
4/21/2024	10:45 PM	0	0	0	0	0	0	0	0	0	0	0	0	0
4/21/2024	11:00 PM	0	0	0	0	0	0	0	0	0	0	0	0	0
4/21/2024	11:15 PM	0	0	0	0	0	0	0	0	0	0	0	0	0
4/21/2024	11:30 PM	0	0	0	0	0	0	0	0	0	0	0	0	0
4/21/2024	11:45 PM	0	0	0	0	0	0	0	0	0	0	0	0	0

4/22/2024	12:00 AM	0	0	0	0	0	0	0	0	0	0	0	0	0
4/22/2024	12:15 AM	0	0	0	0	0	0	0	0	0	0	0	0	0
4/22/2024	12:30 AM	0	0	0	0	0	0	0	0	0	0	0	0	0
4/22/2024	12:45 AM	0	0	0	0	0	0	0	0	0	0	0	0	0
4/22/2024	1:00 AM	0	0	0	0	0	0	0	0	0	0	0	0	0
4/22/2024	1:15 AM	0	0	0	0	0	0	0	0	0	0	0	0	0
4/22/2024	1:30 AM	0	0	0	0	0	0	0	0	0	0	0	0	0
4/22/2024	1:45 AM	0	0	0	0	0	0	0	0	0	0	0	0	0
4/22/2024	2:00 AM	0	0	0	0	0	0	0	0	0	0	0	0	0
4/22/2024	2:15 AM	0	0	0	0	0	0	0	0	0	0	0	0	0
4/22/2024	2:30 AM	0	0	0	0	0	0	0	0	0	0	0	0	0
4/22/2024	2:45 AM	0	0	0	0	0	0	0	0	0	0	0	0	0
4/22/2024	3:00 AM	0	0	0	0	0	0	0	0	0	0	0	0	0
4/22/2024	3:15 AM	0	0	0	0	0	0	0	0	0	0	0	0	0
4/22/2024	3:30 AM	0	0	0	0	0	0	0	0	0	0	0	0	0
4/22/2024	3:45 AM	0	0	0	0	0	0	0	0	0	0	0	0	0
4/22/2024	4:00 AM	0	0	0	0	0	0	0	0	0	0	0	0	0
4/22/2024	4:15 AM	0	0	0	0	0	0	0	0	0	0	0	0	0
4/22/2024	4:30 AM	0	0	0	0	0	0	0	0	0	0	0	0	0
4/22/2024	4:45 AM	0	0	0	0	0	0	0	0	0	0	0	0	0
4/22/2024	5:00 AM	0	0	0	0	0	0	0	0	0	0	0	0	0
4/22/2024	5:15 AM	0	0	0	0	0	0	0	0	0	0	0	0	0
4/22/2024	5:30 AM	0	0	0	0	0	0	0	0	0	0	0	0	0
4/22/2024	5:45 AM	0	0	0	0	0	0	0	0	0	0	0	0	0
4/22/2024	6:00 AM	0	0	0	0	0	0	0	0	0	0	0	0	0
4/22/2024	6:15 AM	0	0	0	0	0	0	0	0	0	0	0	0	0
4/22/2024	6:30 AM	0	0	0	0	0	0	0	0	0	0	0	0	0
4/22/2024	6:45 AM	0	0	0	0	0	0	0	0	0	0	0	0	0
4/22/2024	7:00 AM	0	0	0	0	0	0	0	0	0	0	0	0	0
4/22/2024	7:15 AM	0	0	0	0	0	0	0	0	0	0	0	0	0
4/22/2024	7:30 AM	0	0	0	0	0	0	0	0	0	0	0	0	0
4/22/2024	7:45 AM	0	0	0	0	0	0	0	0	0	0	0	0	0
4/22/2024	8:00 AM	0	0	0	0	0	0	0	0	0	0	0	0	0
4/22/2024	8:15 AM	0	0	0	0	0	0	0	0	0	0	0	0	0
4/22/2024	8:30 AM	0	0	0	0	0	0	0	0	0	0	0	0	0
4/22/2024	8:45 AM	0	0	0	0	0	0	0	0	0	0	0	0	0
4/22/2024	9:00 AM	0	0	0	0	0	0	0	0	0	0	0	0	0
4/22/2024	9:15 AM	0	0	0	0	0	0	0	0	0	0	0	0	0
4/22/2024	9:30 AM	0	0	0	0	0	0	0	0	0	0	0	0	0
4/22/2024	9:45 AM	0	0	0	0	0	0	0	0	0	0	0	0	0
4/22/2024	10:00 AM	0	0	0	0	0	0	0	0	0	0	0	0	0
4/22/2024	10:15 AM	0	0	0	0	0	0	0	0	0	0	0	0	0
4/22/2024	10:30 AM	0	0	0	0	0	0	0	0	0	0	0	0	0
4/22/2024	10:45 AM	0	0	0	0	0	0	0	0	0	0	0	0	0
4/22/2024	11:00 AM	0	0	0	0	0	0	0	0	0	0	0	0	0
4/22/2024	11:15 AM	0	0	0	0	0	0	0	0	0	0	0	0	0
4/22/2024	11:30 AM	0	0	0	0	0	0	0	0	0	0	0	0	0
4/22/2024	11:45 AM	0	0	0	0	0	0	0	0	0	0	0	0	0
4/22/2024	12:00 PM	0	0	0	0	0	0	0	0	0	0	0	0	0
4/22/2024	12:15 PM	0	0	0	0	0	0	0	0	0	0	0	0	0
4/22/2024	12:30 PM	0	0	0	0	0	0	0	0	0	0	0	0	0
4/22/2024	12:45 PM	0	0	0	0	0	0	0	0	0	0	0	0	0
4/22/2024	1:00 PM	0	0	0	0	0	0	0	0	0	0	0	0	0
4/22/2024	1:15 PM	0	0	0	0	0	0	0	0	0	0	0	0	0
4/22/2024	1:30 PM	0	0	0	0	0	0	0	0	0	0	0	0	0
4/22/2024	1:45 PM	0	0	0	0	0	0	0	0	0	0	0	0	0
4/22/2024	2:00 PM	0	0	0	0	0	0	0	0	0	0	0	0	0
4/22/2024	2:15 PM	0	0	0	0	0	0	0	0	0	0	0	0	0
4/22/2024	2:30 PM	0	0	0	0	0	0	0	0	0	0	0	0	0
4/22/2024	2:45 PM	0	0	0	0	0	0	0	0	0	0	0	0	0
4/22/2024	3:00 PM	0	0	0	0	0	0	0	0	0	0	0	0	0
4/22/2024	3:15 PM	0	0	0	0	0	0	0	0	0	0	0	0	0
4/22/2024	3:30 PM	0	0	0	0	0	0	0	0	0	0	0	0	0
4/22/2024	3:45 PM	0	0	0	0	0	0	0	0	0	0	0	0	0
4/22/2024	4:00 PM	0	0	0	0	0	0	0	0	0	0	0	0	0
4/22/2024	4:15 PM	0	0	0	0	0	0	0	0	0	0	0	0	0
4/22/2024	4:30 PM	0	0	0	0	0	0	0	0	0	0	0	0	0
4/22/2024	4:45 PM	0	0	0	0	0	0	0	0	0	0	0	0	0
4/22/2024	5:00 PM	0	0	0	0	0	0	0	0	0	0	0	0	0
4/22/2024	5:15 PM	0	0	0	0	0	0	0	0	0	0	0	0	0
4/22/2024	5:30 PM	0	0	0	0	0	0	0	0	0	0	0	0	0
4/22/2024	5:45 PM	0	0	0	0	0	0	0	0	0	0	0	0	0
4/22/2024	6:00 PM	0	0	0	0	0	0	0	0	0	0	0	0	0
4/22/2024	6:15 PM	0	0	0	0	0	0	0	0	0	0	0	0	0
4/22/2024	6:30 PM	0	0	0	0	0	0	0	0	0	0	0	0	0
4/22/2024	6:45 PM	0	0	0	0	0	0	0	0	0	0	0	0	0
4/22/2024	7:00 PM	0	0	0	0	0	0	0	0	0	0	0	0	0
4/22/2024	7:15 PM	0	0	0	0	0	0	0	0	0	0	0	0	0
4/22/2024	7:30 PM	0	0	0	0	0	0	0	0	0	0	0	0	0
4/22/2024	7:45 PM	0	0	0	0	0	0	0	0	0	0	0	0	0
4/22/2024	8:00 PM	0	0	0	0	0	0	0	0	0	0	0	0	0
4/22/2024	8:15 PM	0	0	0	0	0	0	0	0	0	0	0	0	0
4/22/2024	8:30 PM	0	0	0	0	0	0	0	0	0	0	0	0	0
4/22/2024	8:45 PM	0	0	0	0	0	0	0	0	0	0	0	0	0
4/22/2024	9:00 PM	0	0	0	0	0	0	0	0	0	0	0	0	0
4/22/2024	9:15 PM	0	0	0	0	0	0	0	0	0	0	0	0	0
4/22/2024	9:30 PM	0	0	0	0	0	0	0	0	0	0	0	0	0
4/22/2024	9:45 PM	0	0	0	0	0	0	0	0	0	0	0	0	0
4/22/2024	10:00 PM	0	0	0	0	0	0	0	0	0	0	0	0	0
4/22/2024	10:15 PM	0	0	0	0	0	0	0	0	0	0	0	0	0
4/22/2024	10:30 PM	0	0	0	0	0	0	0	0	0	0	0	0	0
4/22/2024	10:45 PM	0	0	0	0	0	0	0	0	0	0	0	0	0
4/22/2024	11:00 PM	0	0	0	0	0	0	0	0	0	0	0	0	0
4/22/2024	11:15 PM	0	0	0	0	0	0	0	0	0	0	0	0	0
4/22/2024	11:30 PM	0	0	0	0	0	0	0	0	0	0	0	0	0
4/22/2024	11:45 PM	0	0	0	0	0	0	0	0	0	0	0	0	0

4/23/2024	12:00 AM	0	0	0	0	0	0	0	0	0	0	0	0	0
4/23/2024	12:15 AM	0	0	0	0	0	0	0	0	0	0	0	0	0
4/23/2024	12:30 AM	0	0	0	0	0	0	0	0	0	0	0	0	0
4/23/2024	12:45 AM	0	0	0	0	0	0	0	0	0	0	0	0	0
4/23/2024	1:00 AM	0	0	0	0	0	0	0	0	0	0	0	0	0
4/23/2024	1:15 AM	0	0	0	0	0	0	0	0	0	0	0	0	0
4/23/2024	1:30 AM	0	0	0	0	0	0	0	0	0	0	0	0	0
4/23/2024	1:45 AM	0	0	0	0	0	0	0	0	0	0	0	0	0
4/23/2024	2:00 AM	0	0	0	0	0	0	0	0	0	0	0	0	0
4/23/2024	2:15 AM	0	0	0	0	0	0	0	0	0	0	0	0	0
4/23/2024	2:30 AM	0	0	0	0	0	0	0	0	0	0	0	0	0
4/23/2024	2:45 AM	0	0	0	0	0	0	0	0	0	0	0	0	0
4/23/2024	3:00 AM	0	0	0	0	0	0	0	0	0	0	0	0	0
4/23/2024	3:15 AM	0	0	0	0	0	0	0	0	0	0	0	0	0
4/23/2024	3:30 AM	0	0	0	0	0	0	0	0	0	0	0	0	0
4/23/2024	3:45 AM	0	0	0	0	0	0	0	0	0	0	0	0	0
4/23/2024	4:00 AM	0	0	0	0	0	0	0	0	0	0	0	0	0
4/23/2024	4:15 AM	0	0	0	0	0	0	0	0	0	0	0	0	0
4/23/2024	4:30 AM	0	0	0	0	0	0	0	0	0	0	0	0	0
4/23/2024	4:45 AM	0	0	0	0	0	0	0	0	0	0	0	0	0
4/23/2024	5:00 AM	0	0	0	0	0	0	0	0	0	0	0	0	0
4/23/2024	5:15 AM	0	0	0	0	0	0	0	0	0	0	0	0	0
4/23/2024	5:30 AM	0	0	0	0	0	0	0	0	0	0	0	0	0
4/23/2024	5:45 AM	0	0	0	0	0	0	0	0	0	0	0	0	0
4/23/2024	6:00 AM	0	0	0	0	0	0	0	0	0	0	0	0	0
4/23/2024	6:15 AM	0	0	0	0	0	0	0	0	0	0	0	0	0
4/23/2024	6:30 AM	0	0	0	0	0	0	0	0	0	0	0	0	0
4/23/2024	6:45 AM	0	0	0	0	0	0	0	0	0	0	0	0	0
4/23/2024	7:00 AM	0	0	0	0	0	0	0	0	0	0	0	0	0
4/23/2024	7:15 AM	0	0	0	0	0	0	0	0	0	0	0	0	0
4/23/2024	7:30 AM	0	0	0	0	0	0	0	0	0	0	0	0	0
4/23/2024	7:45 AM	0	0	0	0	0	0	0	0	0	0	0	0	0
4/23/2024	8:00 AM	0	0	0	0	0	0	0	0	0	0	0	0	0
4/23/2024	8:15 AM	0	0	0	0	0	0	0	0	0	0	0	0	0
4/23/2024	8:30 AM	0	0	0	0	0	0	0	0	0	0	0	0	0
4/23/2024	8:45 AM	0	0	0	0	0	0	0	0	0	0	0	0	0
4/23/2024	9:00 AM	0	0	0	0	0	0	0	0	0	0	0	0	0
4/23/2024	9:15 AM	0	0	0	0	0	0	0	0	0	0	0	0	0
4/23/2024	9:30 AM	0	0	0	0	0	0	0	0	0	0	0	0	0
4/23/2024	9:45 AM	0	0	0	0	0	0	0	0	0	0	0	0	0
4/23/2024	10:00 AM	0	0	0	0	0	0	0	0	0	0	0	0	0
4/23/2024	10:15 AM	0	0	0	0	0	0	0	0	0	0	0	0	0
4/23/2024	10:30 AM	0	0	0	0	0	0	0	0	0	0	0	0	0
4/23/2024	10:45 AM	0	0	0	0	0	0	0	0	0	0	0	0	0
4/23/2024	11:00 AM	0	0	0	0	0	0	0	0	0	0	0	0	0
4/23/2024	11:15 AM	0	0	0	0	0	0	0	0	0	0	0	0	0
4/23/2024	11:30 AM	0	0	0	0	0	0	0	0	0	0	0	0	0
4/23/2024	11:45 AM	0	0	0	0	0	0	0	0	0	0	0	0	0
4/23/2024	12:00 PM	0	0	0	0	0	0	0	0	0	0	0	0	0
4/23/2024	12:15 PM	0	0	0	0	0	0	0	0	0	0	0	0	0
4/23/2024	12:30 PM	0	0	0	0	0	0	0	0	0	0	0	0	0
4/23/2024	12:45 PM	0	0	0	0	0	0	0	0	0	0	0	0	0
4/23/2024	1:00 PM	0	0	0	0	0	0	0	0	0	0	0	0	0
4/23/2024	1:15 PM	0	0	0	0	0	0	0	0	0	0	0	0	0
4/23/2024	1:30 PM	0	0	0	0	0	0	0	0	0	0	0	0	0
4/23/2024	1:45 PM	0	0	0	0	0	0	0	0	0	0	0	0	0
4/23/2024	2:00 PM	0	0	0	0	0	0	0	0	0	0	0	0	0
4/23/2024	2:15 PM	0	0	0	0	0	0	0	0	0	0	0	0	0
4/23/2024	2:30 PM	0	0	0	0	0	0	0	0	0	0	0	0	0
4/23/2024	2:45 PM	0	0	0	0	0	0	0	0	0	0	0	0	0
4/23/2024	3:00 PM	0	0	0	0	0	0	0	0	0	0	0	0	0
4/23/2024	3:15 PM	0	0	0	0	0	0	0	0	0	0	0	0	0
4/23/2024	3:30 PM	0	0	0	0	0	0	0	0	0	0	0	0	0
4/23/2024	3:45 PM	0	0	0	0	0	0	0	0	0	0	0	0	0
4/23/2024	4:00 PM	0	0	0	0	0	0	0	0	0	0	0	0	0
4/23/2024	4:15 PM	0	0	0	0	0	0	0	0	0	0	0	0	0
4/23/2024	4:30 PM	0	0	0	0	0	0	0	0	0	0	0	0	0
4/23/2024	4:45 PM	0	0	0	0	0	0	0	0	0	0	0	0	0
4/23/2024	5:00 PM	0	0	0	0	0	0	0	0	0	0	0	0	0
4/23/2024	5:15 PM	0	0	0	0	0	0	0	0	0	0	0	0	0
4/23/2024	5:30 PM	0	0	0	0	0	0	0	0	0	0	0	0	0
4/23/2024	5:45 PM	0	0	0	0	0	0	0	0	0	0	0	0	0
4/23/2024	6:00 PM	0	0	0	0	0	0	0	0	0	0	0	0	0
4/23/2024	6:15 PM	0	0	0	0	0	0	0	0	0	0	0	0	0
4/23/2024	6:30 PM	0	0	0	0	0	0	0	0	0	0	0	0	0
4/23/2024	6:45 PM	0	0	0	0	0	0	0	0	0	0	0	0	0
4/23/2024	7:00 PM	0	0	0	0	0	0	0	0	0	0	0	0	0
4/23/2024	7:15 PM	0	0	0	0	0	0	0	0	0	0	0	0	0
4/23/2024	7:30 PM	0	0	0	0	0	0	0	0	0	0	0	0	0
4/23/2024	7:45 PM	0	0	0	0	0	0	0	0	0	0	0	0	0
4/23/2024	8:00 PM	0	0	0	0	0	0	0	0	0	0	0	0	0
4/23/2024	8:15 PM	0	0	0	0	0	0	0	0	0	0	0	0	0
4/23/2024	8:30 PM	0	0	0	0	0	0	0	0	0	0	0	0	0
4/23/2024	8:45 PM	0	0	0	0	0	0	0	0	0	0	0	0	0
4/23/2024	9:00 PM	0	0	0	0	0	0	0	0	0	0	0	0	0
4/23/2024	9:15 PM	0	0	0	0	0	0	0	0	0	0	0	0	0
4/23/2024	9:30 PM	0	0	0	0	0	0	0	0	0	0	0	0	0
4/23/2024	9:45 PM	0	0	0	0	0	0	0	0	0	0	0	0	0
4/23/2024	10:00 PM	0	0	0	0	0	0	0	0	0	0	0	0	0
4/23/2024	10:15 PM	0	0	0	0	0	0	0	0	0	0	0	0	0
4/23/2024	10:30 PM	0	0	0	0	0	0	0	0	0	0	0	0	0
4/23/2024	10:45 PM	0	0	0	0	0	0	0	0	0	0	0	0	0
4/23/2024	11:00 PM	0	0	0	0	0	0	0	0	0	0	0	0	0
4/23/2024	11:15 PM	0	0	0	0	0	0	0	0	0	0	0	0	0
4/23/2024	11:30 PM	0	0	0	0	0	0	0	0	0	0	0	0	0
4/23/2024	11:45 PM	0	0	0	0	0	0	0	0	0	0	0	0	0

4/24/2024	12:00 AM	0	0	0	0	0	0	0	0	0	0	0	0	0
4/24/2024	12:15 AM	0	0	0	0	0	0	0	0	0	0	0	0	0
4/24/2024	12:30 AM	0	0	0	0	0	0	0	0	0	0	0	0	0
4/24/2024	12:45 AM	0	0	0	0	0	0	0	0	0	0	0	0	0
4/24/2024	1:00 AM	0	0	0	0	0	0	0	0	0	0	0	0	0
4/24/2024	1:15 AM	0	0	0	0	0	0	0	0	0	0	0	0	0
4/24/2024	1:30 AM	0	0	0	0	0	0	0	0	0	0	0	0	0
4/24/2024	1:45 AM	0	0	0	0	0	0	0	0	0	0	0	0	0
4/24/2024	2:00 AM	0	0	0	0	0	0	0	0	0	0	0	0	0
4/24/2024	2:15 AM	0	0	0	0	0	0	0	0	0	0	0	0	0
4/24/2024	2:30 AM	0	0	0	0	0	0	0	0	0	0	0	0	0
4/24/2024	2:45 AM	0	0	0	0	0	0	0	0	0	0	0	0	0
4/24/2024	3:00 AM	0	0	0	0	0	0	0	0	0	0	0	0	0
4/24/2024	3:15 AM	0	0	0	0	0	0	0	0	0	0	0	0	0
4/24/2024	3:30 AM	0	0	0	0	0	0	0	0	0	0	0	0	0
4/24/2024	3:45 AM	0	0	0	0	0	0	0	0	0	0	0	0	0
4/24/2024	4:00 AM	0	0	0	0	0	0	0	0	0	0	0	0	0
4/24/2024	4:15 AM	0	0	0	0	0	0	0	0	0	0	0	0	0
4/24/2024	4:30 AM	0	0	0	0	0	0	0	0	0	0	0	0	0
4/24/2024	4:45 AM	0	0	0	0	0	0	0	0	0	0	0	0	0
4/24/2024	5:00 AM	0	0	0	0	0	0	0	0	0	0	0	0	0
4/24/2024	5:15 AM	0	0	0	0	0	0	0	0	0	0	0	0	0
4/24/2024	5:30 AM	0	0	0	0	0	0	0	0	0	0	0	0	0
4/24/2024	5:45 AM	0	0	0	0	0	0	0	0	0	0	0	0	0
4/24/2024	6:00 AM	0	0	0	0	0	0	0	0	0	0	0	0	0
4/24/2024	6:15 AM	0	0	0	0	0	0	0	0	0	0	0	0	0
4/24/2024	6:30 AM	0	0	0	0	0	0	0	0	0	0	0	0	0
4/24/2024	6:45 AM	0	0	0	0	0	0	0	0	0	0	0	0	0
4/24/2024	7:00 AM	0	0	0	0	0	0	0	0	0	0	0	0	0
4/24/2024	7:15 AM	0	0	0	0	0	0	0	0	0	0	0	0	0
4/24/2024	7:30 AM	0	0	0	0	0	0	0	0	0	0	0	0	0
4/24/2024	7:45 AM	0	0	0	0	0	0	0	0	0	0	0	0	0
4/24/2024	8:00 AM	0	0	0	0	0	0	0	0	0	0	0	0	0
4/24/2024	8:15 AM	0	0	0	0	0	0	0	0	0	0	0	0	0
4/24/2024	8:30 AM	0	0	0	0	0	0	0	0	0	0	0	0	0
4/24/2024	8:45 AM	0	0	0	0	0	0	0	0	0	0	0	0	0
4/24/2024	9:00 AM	0	0	0	0	0	0	0	0	0	0	0	0	0
4/24/2024	9:15 AM	0	0	0	0	0	0	0	0	0	0	0	0	0
4/24/2024	9:30 AM	0	0	0	0	0	0	0	0	0	0	0	0	0
4/24/2024	9:45 AM	0	0	0	0	0	0	0	0	0	0	0	0	0
4/24/2024	10:00 AM	0	0	0	0	0	0	0	0	0	0	0	0	0
4/24/2024	10:15 AM	0	0	0	0	0	0	0	0	0	0	0	0	0
4/24/2024	10:30 AM	0	0	0	0	0	0	0	0	0	0	0	0	0
4/24/2024	10:45 AM	0	0	0	0	0	0	0	0	0	0	0	0	0
4/24/2024	11:00 AM	0	0	0	0	0	0	0	0	0	0	0	0	0
4/24/2024	11:15 AM	0	0	0	0	0	0	0	0	0	0	0	0	0
4/24/2024	11:30 AM	0	0	0	0	0	0	0	0	0	0	0	0	0
4/24/2024	11:45 AM	0	0	0	0	0	0	0	0	0	0	0	0	0
4/24/2024	12:00 PM	0	0	0	0	0	0	0	0	0	0	0	0	0
4/24/2024	12:15 PM	0	0	0	0	0	0	0	0	0	0	0	0	0
4/24/2024	12:30 PM	0	0	0	0	0	0	0	0	0	0	0	0	0
4/24/2024	12:45 PM	0	0	0	0	0	0	0	0	0	0	0	0	0
4/24/2024	1:00 PM	0	0	0	0	0	0	0	0	0	0	0	0	0
4/24/2024	1:15 PM	0	0	0	0	0	0	0	0	0	0	0	0	0
4/24/2024	1:30 PM	0	0	0	0	0	0	0	0	0	0	0	0	0
4/24/2024	1:45 PM	0	0	0	0	0	0	0	0	0	0	0	0	0
4/24/2024	2:00 PM	0	0	0	0	0	0	0	0	0	0	0	0	0
4/24/2024	2:15 PM	0	0	0	0	0	0	0	0	0	0	0	0	0
4/24/2024	2:30 PM	0	0	0	0	0	0	0	0	0	0	0	0	0
4/24/2024	2:45 PM	0	0	0	0	0	0	0	0	0	0	0	0	0
4/24/2024	3:00 PM	0	0	0	0	0	0	0	0	0	0	0	0	0
4/24/2024	3:15 PM	0	0	0	0	0	0	0	0	0	0	0	0	0
4/24/2024	3:30 PM	0	0	0	0	0	0	0	0	0	0	0	0	0
4/24/2024	3:45 PM	0	0	0	0	0	0	0	0	0	0	0	0	0
4/24/2024	4:00 PM	0	0	0	0	0	0	0	0	0	0	0	0	0
4/24/2024	4:15 PM	0	0	0	0	0	0	0	0	0	0	0	0	0
4/24/2024	4:30 PM	0	0	0	0	0	0	0	0	0	0	0	0	0
4/24/2024	4:45 PM	0	0	0	0	0	0	0	0	0	0	0	0	0
4/24/2024	5:00 PM	0	0	0	0	0	0	0	0	0	0	0	0	0
4/24/2024	5:15 PM	0	0	0	0	0	0	0	0	0	0	0	0	0
4/24/2024	5:30 PM	0	0	0	0	0	0	0	0	0	0	0	0	0
4/24/2024	5:45 PM	0	0	0	0	0	0	0	0	0	0	0	0	0
4/24/2024	6:00 PM	0	0	0	0	0	0	0	0	0	0	0	0	0
4/24/2024	6:15 PM	0	0	0	0	0	0	0	0	0	0	0	0	0
4/24/2024	6:30 PM	0	0	0	0	0	0	0	0	0	0	0	0	0
4/24/2024	6:45 PM	0	0	0	0	0	0	0	0	0	0	0	0	0
4/24/2024	7:00 PM	0	0	0	0	0	0	0	0	0	0	0	0	0
4/24/2024	7:15 PM	0	0	0	0	0	0	0	0	0	0	0	0	0
4/24/2024	7:30 PM	0	0	0	0	0	0	0	0	0	0	0	0	0
4/24/2024	7:45 PM	0	0	0	0	0	0	0	0	0	0	0	0	0
4/24/2024	8:00 PM	0	0	0	0	0	0	0	0	0	0	0	0	0
4/24/2024	8:15 PM	0	0	0	0	0	0	0	0	0	0	0	0	0
4/24/2024	8:30 PM	0	0	0	0	0	0	0	0	0	0	0	0	0
4/24/2024	8:45 PM	0	0	0	0	0	0	0	0	0	0	0	0	0
4/24/2024	9:00 PM	0	0	0	0	0	0	0	0	0	0	0	0	0
4/24/2024	9:15 PM	0	0	0	0	0	0	0	0	0	0	0	0	0
4/24/2024	9:30 PM	0	0	0	0	0	0	0	0	0	0	0	0	0
4/24/2024	9:45 PM	0	0	0	0	0	0	0	0	0	0	0	0	0
4/24/2024	10:00 PM	0	0	0	0	0	0	0	0	0	0	0	0	0
4/24/2024	10:15 PM	0	0	0	0	0	0	0	0	0	0	0	0	0
4/24/2024	10:30 PM	0	0	0	0	0	0	0	0	0	0	0	0	0
4/24/2024	10:45 PM	0	0	0	0	0	0	0	0	0	0	0	0	0
4/24/2024	11:00 PM	0	0	0	0	0	0	0	0	0	0	0	0	0
4/24/2024	11:15 PM	0	0	0	0	0	0	0	0	0	0	0	0	0
4/24/2024	11:30 PM	0	0	0	0	0	0	0	0	0	0	0	0	0
4/24/2024	11:45 PM	0	0	0	0	0	0	0	0	0	0	0	0	0

4/25/2024	12:00 AM	0	0	0	0	0	0	0	0	0	0	0	0	0
4/25/2024	12:15 AM	0	0	0	0	0	0	0	0	0	0	0	0	0
4/25/2024	12:30 AM	0	0	0	0	0	0	0	0	0	0	0	0	0
4/25/2024	12:45 AM	0	0	0	0	0	0	0	0	0	0	0	0	0
4/25/2024	1:00 AM	0	0	0	0	0	0	0	0	0	0	0	0	0
4/25/2024	1:15 AM	0	0	0	0	0	0	0	0	0	0	0	0	0
4/25/2024	1:30 AM	0	0	0	0	0	0	0	0	0	0	0	0	0
4/25/2024	1:45 AM	0	0	0	0	0	0	0	0	0	0	0	0	0
4/25/2024	2:00 AM	0	0	0	0	0	0	0	0	0	0	0	0	0
4/25/2024	2:15 AM	0	0	0	0	0	0	0	0	0	0	0	0	0
4/25/2024	2:30 AM	0	0	0	0	0	0	0	0	0	0	0	0	0
4/25/2024	2:45 AM	0	0	0	0	0	0	0	0	0	0	0	0	0
4/25/2024	3:00 AM	0	0	0	0	0	0	0	0	0	0	0	0	0
4/25/2024	3:15 AM	0	0	0	0	0	0	0	0	0	0	0	0	0
4/25/2024	3:30 AM	0	0	0	0	0	0	0	0	0	0	0	0	0
4/25/2024	3:45 AM	0	0	0	0	0	0	0	0	0	0	0	0	0
4/25/2024	4:00 AM	0	0	0	0	0	0	0	0	0	0	0	0	0
4/25/2024	4:15 AM	0	0	0	0	0	0	0	0	0	0	0	0	0
4/25/2024	4:30 AM	0	0	0	0	0	0	0	0	0	0	0	0	0
4/25/2024	4:45 AM	0	0	0	0	0	0	0	0	0	0	0	0	0
4/25/2024	5:00 AM	0	0	0	0	0	0	0	0	0	0	0	0	0
4/25/2024	5:15 AM	0	0	0	0	0	0	0	0	0	0	0	0	0
4/25/2024	5:30 AM	0	0	0	0	0	0	0	0	0	0	0	0	0
4/25/2024	5:45 AM	0	0	0	0	0	0	0	0	0	0	0	0	0
4/25/2024	6:00 AM	0	0	0	0	0	0	0	0	0	0	0	0	0
4/25/2024	6:15 AM	0	0	0	0	0	0	0	0	0	0	0	0	0
4/25/2024	6:30 AM	0	0	0	0	0	0	0	0	0	0	0	0	0
4/25/2024	6:45 AM	0	0	0	0	0	0	0	0	0	0	0	0	0
4/25/2024	7:00 AM	0	0	0	0	0	0	0	0	0	0	0	0	0
4/25/2024	7:15 AM	0	0	0	0	0	0	0	0	0	0	0	0	0
4/25/2024	7:30 AM	0	0	0	0	0	0	0	0	0	0	0	0	0
4/25/2024	7:45 AM	0	0	0	0	0	0	0	0	0	0	0	0	0
4/25/2024	8:00 AM	0	0	0	0	0	0	0	0	0	0	0	0	0
4/25/2024	8:15 AM	0	0	0	0	0	0	0	0	0	0	0	0	0
4/25/2024	8:30 AM	0	0	0	0	0	0	0	0	0	0	0	0	0
4/25/2024	8:45 AM	0	0	0	0	0	0	0	0	0	0	0	0	0
4/25/2024	9:00 AM	0	0	0	0	0	0	0	0	0	0	0	0	0
4/25/2024	9:15 AM	0	0	0	0	0	0	0	0	0	0	0	0	0
4/25/2024	9:30 AM	0	0	0	0	0	0	0	0	0	0	0	0	0
4/25/2024	9:45 AM	0	0	0	0	0	0	0	0	0	0	0	0	0
4/25/2024	10:00 AM	0	0	0	0	0	0	0	0	0	0	0	0	0
4/25/2024	10:15 AM	0	0	0	0	0	0	0	0	0	0	0	0	0
4/25/2024	10:30 AM	0	0	0	0	0	0	0	0	0	0	0	0	0
4/25/2024	10:45 AM	0	0	0	0	0	0	0	0	0	0	0	0	0
4/25/2024	11:00 AM	0	0	0	0	0	0	0	0	0	0	0	0	0
4/25/2024	11:15 AM	0	0	0	0	0	0	0	0	0	0	0	0	0
4/25/2024	11:30 AM	0	0	0	0	0	0	0	0	0	0	0	0	0
4/25/2024	11:45 AM	0	0	0	0	0	0	0	0	0	0	0	0	0
4/25/2024	12:00 PM	0	0	0	0	0	0	0	0	0	0	0	0	0
4/25/2024	12:15 PM	0	0	0	0	0	0	0	0	0	0	0	0	0
4/25/2024	12:30 PM	0	0	0	0	0	0	0	0	0	0	0	0	0
4/25/2024	12:45 PM	0	0	0	0	0	0	0	0	0	0	0	0	0
4/25/2024	1:00 PM	0	0	0	0	0	0	0	0	0	0	0	0	0
4/25/2024	1:15 PM	0	0	0	0	0	0	0	0	0	0	0	0	0
4/25/2024	1:30 PM	0	0	0	0	0	0	0	0	0	0	0	0	0
4/25/2024	1:45 PM	0	0	0	0	0	0	0	0	0	0	0	0	0
4/25/2024	2:00 PM	0	0	0	0	0	0	0	0	0	0	0	0	0
4/25/2024	2:15 PM	0	0	0	0	0	0	0	0	0	0	0	0	0
4/25/2024	2:30 PM	0	0	0	0	0	0	0	0	0	0	0	0	0
4/25/2024	2:45 PM	0	0	0	0	0	0	0	0	0	0	0	0	0
4/25/2024	3:00 PM	0	0	0	0	0	0	0	0	0	0	0	0	0
4/25/2024	3:15 PM	0	0	0	0	0	0	0	0	0	0	0	0	0
4/25/2024	3:30 PM	0	0	0	0	0	0	0	0	0	0	0	0	0
4/25/2024	3:45 PM	0	0	0	0	0	0	0	0	0	0	0	0	0
4/25/2024	4:00 PM	0	0	0	0	0	0	0	0	0	0	0	0	0
4/25/2024	4:15 PM	0	0	0	0	0	0	0	0	0	0	0	0	0
4/25/2024	4:30 PM	0	0	0	0	0	0	0	0	0	0	0	0	0
4/25/2024	4:45 PM	0	0	0	0	0	0	0	0	0	0	0	0	0
4/25/2024	5:00 PM	0	0	0	0	0	0	0	0	0	0	0	0	0
4/25/2024	5:15 PM	0	0	0	0	0	0	0	0	0	0	0	0	0
4/25/2024	5:30 PM	0	0	0	0	0	0	0	0	0	0	0	0	0
4/25/2024	5:45 PM	0	0	0	0	0	0	0	0	0	0	0	0	0
4/25/2024	6:00 PM	0	0	0	0	0	0	0	0	0	0	0	0	0
4/25/2024	6:15 PM	0	0	0	0	0	0	0	0	0	0	0	0	0
4/25/2024	6:30 PM	0	0	0	0	0	0	0	0	0	0	0	0	0
4/25/2024	6:45 PM	0	0	0	0	0	0	0	0	0	0	0	0	0
4/25/2024	7:00 PM	0	0	0	0	0	0	0	0	0	0	0	0	0
4/25/2024	7:15 PM	0	0	0	0	0	0	0	0	0	0	0	0	0
4/25/2024	7:30 PM	0	0	0	0	0	0	0	0	0	0	0	0	0
4/25/2024	7:45 PM	0	0	0	0	0	0	0	0	0	0	0	0	0
4/25/2024	8:00 PM	0	0	0	0	0	0	0	0	0	0	0	0	0
4/25/2024	8:15 PM	0	0	0	0	0	0	0	0	0	0	0	0	0
4/25/2024	8:30 PM	0	0	0	0	0	0	0	0	0	0	0	0	0
4/25/2024	8:45 PM	0	0	0	0	0	0	0	0	0	0	0	0	0
4/25/2024	9:00 PM	0	0	0	0	0	0	0	0	0	0	0	0	0
4/25/2024	9:15 PM	0	0	0	0	0	0	0	0	0	0	0	0	0
4/25/2024	9:30 PM	0	0	0	0	0	0	0	0	0	0	0	0	0
4/25/2024	9:45 PM	0	0	0	0	0	0	0	0	0	0	0	0	0
4/25/2024	10:00 PM	0	0	0	0	0	0	0	0	0	0	0	0	0
4/25/2024	10:15 PM	0	0	0	0	0	0	0	0	0	0	0	0	0
4/25/2024	10:30 PM	0	0	0	0	0	0	0	0	0	0	0	0	0
4/25/2024	10:45 PM	0	0	0	0	0	0	0	0	0	0	0	0	0
4/25/2024	11:00 PM	0	0	0	0	0	0	0	0	0	0	0	0	0
4/25/2024	11:15 PM	0	0	0	0	0	0	0	0	0	0	0	0	0
4/25/2024	11:30 PM	0	0	0	0	0	0	0	0	0	0	0	0	0
4/25/2024	11:45 PM	0	0	0	0	0	0	0	0	0	0	0	0	0

4/26/2024	12:00 AM	0	0	0	0	0	0	0	0	0	0	0	0	0
4/26/2024	12:15 AM	0	0	0	0	0	0	0	0	0	0	0	0	0
4/26/2024	12:30 AM	0	0	0	0	0	0	0	0	0	0	0	0	0
4/26/2024	12:45 AM	0	0	0	0	0	0	0	0	0	0	0	0	0
4/26/2024	1:00 AM	0	0	0	0	0	0	0	0	0	0	0	0	0
4/26/2024	1:15 AM	0	0	0	0	0	0	0	0	0	0	0	0	0
4/26/2024	1:30 AM	0	0	0	0	0	0	0	0	0	0	0	0	0
4/26/2024	1:45 AM	0	0	0	0	0	0	0	0	0	0	0	0	0
4/26/2024	2:00 AM	0	0	0	0	0	0	0	0	0	0	0	0	0
4/26/2024	2:15 AM	0	0	0	0	0	0	0	0	0	0	0	0	0
4/26/2024	2:30 AM	0	0	0	0	0	0	0	0	0	0	0	0	0
4/26/2024	2:45 AM	0	0	0	0	0	0	0	0	0	0	0	0	0
4/26/2024	3:00 AM	0	0	0	0	0	0	0	0	0	0	0	0	0
4/26/2024	3:15 AM	0	0	0	0	0	0	0	0	0	0	0	0	0
4/26/2024	3:30 AM	0	0	0	0	0	0	0	0	0	0	0	0	0
4/26/2024	3:45 AM	0	0	0	0	0	0	0	0	0	0	0	0	0
4/26/2024	4:00 AM	0	0	0	0	0	0	0	0	0	0	0	0	0
4/26/2024	4:15 AM	0	0	0	0	0	0	0	0	0	0	0	0	0
4/26/2024	4:30 AM	0	0	0	0	0	0	0	0	0	0	0	0	0
4/26/2024	4:45 AM	0	0	0	0	0	0	0	0	0	0	0	0	0
4/26/2024	5:00 AM	0	0	0	0	0	0	0	0	0	0	0	0	0
4/26/2024	5:15 AM	0	0	0	0	0	0	0	0	0	0	0	0	0
4/26/2024	5:30 AM	0	0	0	0	0	0	0	0	0	0	0	0	0
4/26/2024	5:45 AM	0	0	0	0	0	0	0	0	0	0	0	0	0
4/26/2024	6:00 AM	0	0	0	0	0	0	0	0	0	0	0	0	0
4/26/2024	6:15 AM	0	0	0	0	0	0	0	0	0	0	0	0	0
4/26/2024	6:30 AM	0	0	0	0	0	0	0	0	0	0	0	0	0
4/26/2024	6:45 AM	0	0	0	0	0	0	0	0	0	0	0	0	0
4/26/2024	7:00 AM	0	0	0	0	0	0	0	0	0	0	0	0	0
4/26/2024	7:15 AM	0	0	0	0	0	0	0	0	0	0	0	0	0
4/26/2024	7:30 AM	0	0	0	0	0	0	0	0	0	0	0	0	0
4/26/2024	7:45 AM	0	0	0	0	0	0	0	0	0	0	0	0	0
4/26/2024	8:00 AM	0	0	0	0	0	0	0	0	0	0	0	0	0
4/26/2024	8:15 AM	0	0	0	0	0	0	0	0	0	0	0	0	0
4/26/2024	8:30 AM	0	0	0	0	0	0	0	0	0	0	0	0	0
4/26/2024	8:45 AM	0	0	0	0	0	0	0	0	0	0	0	0	0
4/26/2024	9:00 AM	0	0	0	0	0	0	0	0	0	0	0	0	0
4/26/2024	9:15 AM	0	0	0	0	0	0	0	0	0	0	0	0	0
4/26/2024	9:30 AM	0	0	0	0	0	0	0	0	0	0	0	0	0
4/26/2024	9:45 AM	0	0	0	0	0	0	0	0	0	0	0	0	0
4/26/2024	10:00 AM	0	0	0	0	0	0	0	0	0	0	0	0	0
4/26/2024	10:15 AM	0	0	0	0	0	0	0	0	0	0	0	0	0
4/26/2024	10:30 AM	0	0	0	0	0	0	0	0	0	0	0	0	0
4/26/2024	10:45 AM	0	0	0	0	0	0	0	0	0	0	0	0	0
4/26/2024	11:00 AM	0	0	0	0	0	0	0	0	0	0	0	0	0
4/26/2024	11:15 AM	0	0	0	0	0	0	0	0	0	0	0	0	0
4/26/2024	11:30 AM	0	0	0	0	0	0	0	0	0	0	0	0	0
4/26/2024	11:45 AM	0	0	0	0	0	0	0	0	0	0	0	0	0
4/26/2024	12:00 PM	0	0	0	0	0	0	0	0	0	0	0	0	0
4/26/2024	12:15 PM	0	0	0	0	0	0	0	0	0	0	0	0	0
4/26/2024	12:30 PM	0	0	0	0	0	0	0	0	0	0	0	0	0
4/26/2024	12:45 PM	0	0	0	0	0	0	0	0	0	0	0	0	0
4/26/2024	1:00 PM	0	0	0	0	0	0	0	0	0	0	0	0	0
4/26/2024	1:15 PM	0	0	0	0	0	0	0	0	0	0	0	0	0
4/26/2024	1:30 PM	0	0	0	0	0	0	0	0	0	0	0	0	0
4/26/2024	1:45 PM	0	0	0	0	0	0	0	0	0	0	0	0	0
4/26/2024	2:00 PM	0	0	0	0	0	0	0	0	0	0	0	0	0
4/26/2024	2:15 PM	0	0	0	0	0	0	0	0	0	0	0	0	0
4/26/2024	2:30 PM	0	0	0	0	0	0	0	0	0	0	0	0	0
4/26/2024	2:45 PM	0	0	0	0	0	0	0	0	0	0	0	0	0
4/26/2024	3:00 PM	0	0	0	0	0	0	0	0	0	0	0	0	0
4/26/2024	3:15 PM	0	0	0	0	0	0	0	0	0	0	0	0	0
4/26/2024	3:30 PM	0	0	0	0	0	0	0	0	0	0	0	0	0
4/26/2024	3:45 PM	0	0	0	0	0	0	0	0	0	0	0	0	0
4/26/2024	4:00 PM	0	0	0	0	0	0	0	0	0	0	0	0	0
4/26/2024	4:15 PM	0	0	0	0	0	0	0	0	0	0	0	0	0
4/26/2024	4:30 PM	0	0	0	0	0	0	0	0	0	0	0	0	0
4/26/2024	4:45 PM	0	0	0	0	0	0	0	0	0	0	0	0	0
4/26/2024	5:00 PM	0	0	0	0	0	0	0	0	0	0	0	0	0
4/26/2024	5:15 PM	0	0	0	0	0	0	0	0	0	0	0	0	0
4/26/2024	5:30 PM	0	0	0	0	0	0	0	0	0	0	0	0	0
4/26/2024	5:45 PM	0	0	0	0	0	0	0	0	0	0	0	0	0
4/26/2024	6:00 PM	0	0	0	0	0	0	0	0	0	0	0	0	0
4/26/2024	6:15 PM	0	0	0	0	0	0	0	0	0	0	0	0	0
4/26/2024	6:30 PM	0	0	0	0	0	0	0	0	0	0	0	0	0
4/26/2024	6:45 PM	0	0	0	0	0	0	0	0	0	0	0	0	0
4/26/2024	7:00 PM	0	0	0	0	0	0	0	0	0	0	0	0	0
4/26/2024	7:15 PM	0	0	0	0	0	0	0	0	0	0	0	0	0
4/26/2024	7:30 PM	0	0	0	0	0	0	0	0	0	0	0	0	0
4/26/2024	7:45 PM	0	0	0	0	0	0	0	0	0	0	0	0	0
4/26/2024	8:00 PM	0	0	0	0	0	0	0	0	0	0	0	0	0
4/26/2024	8:15 PM	0	0	0	0	0	0	0	0	0	0	0	0	0
4/26/2024	8:30 PM	0	0	0	0	0	0	0	0	0	0	0	0	0
4/26/2024	8:45 PM	0	0	0	0	0	0	0	0	0	0	0	0	0
4/26/2024	9:00 PM	0	0	0	0	0	0	0	0	0	0	0	0	0
4/26/2024	9:15 PM	0	0	0	0	0	0	0	0	0	0	0	0	0
4/26/2024	9:30 PM	0	0	0	0	0	0	0	0	0	0	0	0	0
4/26/2024	9:45 PM	0	0	0	0	0	0	0	0	0	0	0	0	0
4/26/2024	10:00 PM	0	0	0	0	0	0	0	0	0	0	0	0	0
4/26/2024	10:15 PM	0	0	0	0	0	0	0	0	0	0	0	0	0
4/26/2024	10:30 PM	0	0	0	0	0	0	0	0	0	0	0	0	0
4/26/2024	10:45 PM	0	0	0	0	0	0	0	0	0	0	0	0	0
4/26/2024	11:00 PM	0	0	0	0	0	0	0	0	0	0	0	0	0
4/26/2024	11:15 PM	0	0	0	0	0	0	0	0	0	0	0	0	0
4/26/2024	11:30 PM	0	0	0	0	0	0	0	0	0	0	0	0	0
4/26/2024	11:45 PM	0	0	0	0	0	0	0	0	0	0	0	0	0

4/27/2024	12:00 AM	0	0	0	0	0	0	0	0	0	0	0	0	0
4/27/2024	12:15 AM	0	0	0	0	0	0	0	0	0	0	0	0	0
4/27/2024	12:30 AM	0	0	0	0	0	0	0	0	0	0	0	0	0
4/27/2024	12:45 AM	0	0	0	0	0	0	0	0	0	0	0	0	0
4/27/2024	1:00 AM	0	0	0	0	0	0	0	0	0	0	0	0	0
4/27/2024	1:15 AM	0	0	0	0	0	0	0	0	0	0	0	0	0
4/27/2024	1:30 AM	0	0	0	0	0	0	0	0	0	0	0	0	0
4/27/2024	1:45 AM	0	0	0	0	0	0	0	0	0	0	0	0	0
4/27/2024	2:00 AM	0	0	0	0	0	0	0	0	0	0	0	0	0
4/27/2024	2:15 AM	0	0	0	0	0	0	0	0	0	0	0	0	0
4/27/2024	2:30 AM	0	0	0	0	0	0	0	0	0	0	0	0	0
4/27/2024	2:45 AM	0	0	0	0	0	0	0	0	0	0	0	0	0
4/27/2024	3:00 AM	0	0	0	0	0	0	0	0	0	0	0	0	0
4/27/2024	3:15 AM	0	0	0	0	0	0	0	0	0	0	0	0	0
4/27/2024	3:30 AM	0	0	0	0	0	0	0	0	0	0	0	0	0
4/27/2024	3:45 AM	0	0	0	0	0	0	0	0	0	0	0	0	0
4/27/2024	4:00 AM	0	0	0	0	0	0	0	0	0	0	0	0	0
4/27/2024	4:15 AM	0	0	0	0	0	0	0	0	0	0	0	0	0
4/27/2024	4:30 AM	0	0	0	0	0	0	0	0	0	0	0	0	0
4/27/2024	4:45 AM	0	0	0	0	0	0	0	0	0	0	0	0	0
4/27/2024	5:00 AM	0	0	0	0	0	0	0	0	0	0	0	0	0
4/27/2024	5:15 AM	0	0	0	0	0	0	0	0	0	0	0	0	0
4/27/2024	5:30 AM	0	0	0	0	0	0	0	0	0	0	0	0	0
4/27/2024	5:45 AM	0	0	0	0	0	0	0	0	0	0	0	0	0
4/27/2024	6:00 AM	0	0	0	0	0	0	0	0	0	0	0	0	0
4/27/2024	6:15 AM	0	0	0	0	0	0	0	0	0	0	0	0	0
4/27/2024	6:30 AM	0	0	0	0	0	0	0	0	0	0	0	0	0
4/27/2024	6:45 AM	0	0	0	0	0	0	0	0	0	0	0	0	0
4/27/2024	7:00 AM	0	0	0	0	0	0	0	0	0	0	0	0	0
4/27/2024	7:15 AM	0	0	0	0	0	0	0	0	0	0	0	0	0
4/27/2024	7:30 AM	0	0	0	0	0	0	0	0	0	0	0	0	0
4/27/2024	7:45 AM	0	0	0	0	0	0	0	0	0	0	0	0	0
4/27/2024	8:00 AM	0	0	0	0	0	0	0	0	0	0	0	0	0
4/27/2024	8:15 AM	0	0	0	0	0	0	0	0	0	0	0	0	0
4/27/2024	8:30 AM	0	0	0	0	0	0	0	0	0	0	0	0	0
4/27/2024	8:45 AM	0	0	0	0	0	0	0	0	0	0	0	0	0
4/27/2024	9:00 AM	0	0	0	0	0	0	0	0	0	0	0	0	0
4/27/2024	9:15 AM	0	0	0	0	0	0	0	0	0	0	0	0	0
4/27/2024	9:30 AM	0	0	0	0	0	0	0	0	0	0	0	0	0
4/27/2024	9:45 AM	0	0	0	0	0	0	0	0	0	0	0	0	0
4/27/2024	10:00 AM	0	0	0	0	0	0	0	0	0	0	0	0	0
4/27/2024	10:15 AM	0	0	0	0	0	0	0	0	0	0	0	0	0
4/27/2024	10:30 AM	0	0	0	0	0	0	0	0	0	0	0	0	0
4/27/2024	10:45 AM	0	0	0	0	0	0	0	0	0	0	0	0	0
4/27/2024	11:00 AM	0	0	0	0	0	0	0	0	0	0	0	0	0
4/27/2024	11:15 AM	0	0	0	0	0	0	0	0	0	0	0	0	0
4/27/2024	11:30 AM	0	0	0	0	0	0	0	0	0	0	0	0	0
4/27/2024	11:45 AM	0	0	0	0	0	0	0	0	0	0	0	0	0
4/27/2024	12:00 PM	0	0	0	0	0	0	0	0	0	0	0	0	0
4/27/2024	12:15 PM	0	0	0	0	0	0	0	0	0	0	0	0	0
4/27/2024	12:30 PM	0	0	0	0	0	0	0	0	0	0	0	0	0
4/27/2024	12:45 PM	0	0	0	0	0	0	0	0	0	0	0	0	0
4/27/2024	1:00 PM	0	0	0	0	0	0	0	0	0	0	0	0	0
4/27/2024	1:15 PM	0	0	0	0	0	0	0	0	0	0	0	0	0
4/27/2024	1:30 PM	0	0	0	0	0	0	0	0	0	0	0	0	0
4/27/2024	1:45 PM	0	0	0	0	0	0	0	0	0	0	0	0	0
4/27/2024	2:00 PM	0	0	0	0	0	0	0	0	0	0	0	0	0
4/27/2024	2:15 PM	0	0	0	0	0	0	0	0	0	0	0	0	0
4/27/2024	2:30 PM	0	0	0	0	0	0	0	0	0	0	0	0	0
4/27/2024	2:45 PM	0	0	0	0	0	0	0	0	0	0	0	0	0
4/27/2024	3:00 PM	0	0	0	0	0	0	0	0	0	0	0	0	0
4/27/2024	3:15 PM	0	0	0	0	0	0	0	0	0	0	0	0	0
4/27/2024	3:30 PM	0	0	0	0	0	0	0	0	0	0	0	0	0
4/27/2024	3:45 PM	0	0	0	0	0	0	0	0	0	0	0	0	0
4/27/2024	4:00 PM	0	0	0	0	0	0	0	0	0	0	0	0	0
4/27/2024	4:15 PM	0	0	0	0	0	0	0	0	0	0	0	0	0
4/27/2024	4:30 PM	0	0	0	0	0	0	0	0	0	0	0	0	0
4/27/2024	4:45 PM	0	0	0	0	0	0	0	0	0	0	0	0	0
4/27/2024	5:00 PM	0	0	0	0	0	0	0	0	0	0	0	0	0
4/27/2024	5:15 PM	0	0	0	0	0	0	0	0	0	0	0	0	0
4/27/2024	5:30 PM	0	0	0	0	0	0	0	0	0	0	0	0	0
4/27/2024	5:45 PM	0	0	0	0	0	0	0	0	0	0	0	0	0
4/27/2024	6:00 PM	0	0	0	0	0	0	0	0	0	0	0	0	0
4/27/2024	6:15 PM	0	0	0	0	0	0	0	0	0	0	0	0	0
4/27/2024	6:30 PM	0	0	0	0	0	0	0	0	0	0	0	0	0
4/27/2024	6:45 PM	0	0	0	0	0	0	0	0	0	0	0	0	0
4/27/2024	7:00 PM	0	0	0	0	0	0	0	0	0	0	0	0	0
4/27/2024	7:15 PM	0	0	0	0	0	0	0	0	0	0	0	0	0
4/27/2024	7:30 PM	0	0	0	0	0	0	0	0	0	0	0	0	0
4/27/2024	7:45 PM	0	0	0	0	0	0	0	0	0	0	0	0	0
4/27/2024	8:00 PM	0	0	0	0	0	0	0	0	0	0	0	0	0
4/27/2024	8:15 PM	0	0	0	0	0	0	0	0	0	0	0	0	0
4/27/2024	8:30 PM	0	0	0	0	0	0	0	0	0	0	0	0	0
4/27/2024	8:45 PM	0	0	0	0	0	0	0	0	0	0	0	0	0
4/27/2024	9:00 PM	0	0	0	0	0	0	0	0	0	0	0	0	0
4/27/2024	9:15 PM	0	0	0	0	0	0	0	0	0	0	0	0	0
4/27/2024	9:30 PM	0	0	0	0	0	0	0	0	0	0	0	0	0
4/27/2024	9:45 PM	0	0	0	0	0	0	0	0	0	0	0	0	0
4/27/2024	10:00 PM	0	0	0	0	0	0	0	0	0	0	0	0	0
4/27/2024	10:15 PM	0	0	0	0	0	0	0	0	0	0	0	0	0
4/27/2024	10:30 PM	0	0	0	0	0	0	0	0	0	0	0	0	0
4/27/2024	10:45 PM	0	0	0	0	0	0	0	0	0	0	0	0	0
4/27/2024	11:00 PM	0	0	0	0	0	0	0	0	0	0	0	0	0
4/27/2024	11:15 PM	0	0	0	0	0	0	0	0	0	0	0	0	0
4/27/2024	11:30 PM	0	0	0	0	0	0	0	0	0	0	0	0	0
4/27/2024	11:45 PM	0	0	0	0	0	0	0	0	0	0	0	0	0

Bi-Directional Class Count || NB EB 15min

Columbia, SC

Marr Traffic DATA COLLECTION
www.marrtraffic.com

Site 15
I-26 James F. Byrnes N/Bound Off-Ramp,
south of US-176 Broad River Rd

Date
Tuesday, April 23, 2024

Lat/Long
34.097905°, -81.172883°

Weather
Fair
58°F

Click here for Detailed Weather

Click here for Map

0000 - 2400 (Weekday 24h Session) (04-23-2024)
NB EB 15min

	Northbound (Movement 15.1)													15min	60min
Time	1	2	3	4	5	6	7	8	9	10	11	12	13	Total	Total
0000 - 0015	0	0	0	0	0	0	0	0	0	0	0	0	0	**0**	
0015 - 0030	0	0	0	0	0	0	0	0	0	0	0	0	0	**0**	
0030 - 0045	0	0	0	0	0	0	0	0	0	0	0	0	0	**0**	
0045 - 0100	0	0	0	0	0	0	0	0	0	0	0	0	0	**0**	**0**
0100 - 0115	0	0	0	0	0	0	0	0	0	0	0	0	0	**0**	
0115 - 0130	0	0	0	0	0	0	0	0	0	0	0	0	0	**0**	
0130 - 0145	0	0	0	0	0	0	0	0	0	0	0	0	0	**0**	
0145 - 0200	0	0	0	0	0	0	0	0	0	0	0	0	0	**0**	**0**
0200 - 0215	0	0	0	0	0	0	0	0	0	0	0	0	0	**0**	
0215 - 0230	0	0	0	0	0	0	0	0	0	0	0	0	0	**0**	
0230 - 0245	0	0	0	0	0	0	0	0	0	0	0	0	0	**0**	
0245 - 0300	0	0	0	0	0	0	0	0	0	0	0	0	0	**0**	**0**
0300 - 0315	0	0	0	0	0	0	0	0	0	0	0	0	0	**0**	
0315 - 0330	0	0	0	0	0	0	0	0	0	0	0	0	0	**0**	
0330 - 0345	0	0	0	0	0	0	0	0	0	0	0	0	0	**0**	
0345 - 0400	0	0	0	0	0	0	0	0	0	0	0	0	0	**0**	**0**
0400 - 0415	0	0	0	0	0	0	0	0	0	0	0	0	0	**0**	
0415 - 0430	0	0	0	0	0	0	0	0	0	0	0	0	0	**0**	
0430 - 0445	0	0	0	0	0	0	0	0	0	0	0	0	0	**0**	
0445 - 0500	0	0	0	0	0	0	0	0	0	0	0	0	0	**0**	**0**
0500 - 0515	0	0	0	0	0	0	0	0	0	0	0	0	0	**0**	
0515 - 0530	0	0	0	0	0	0	0	0	0	0	0	0	0	**0**	
0530 - 0545	0	0	0	0	0	0	0	0	0	0	0	0	0	**0**	
0545 - 0600	0	0	0	0	0	0	0	0	0	0	0	0	0	**0**	**0**
0600 - 0615	0	0	0	0	0	0	0	0	0	0	0	0	0	**0**	
0615 - 0630	0	0	0	0	0	0	0	0	0	0	0	0	0	**0**	
0630 - 0645	0	0	0	0	0	0	0	0	0	0	0	0	0	**0**	
0645 - 0700	0	0	0	0	0	0	0	0	0	0	0	0	0	**0**	**0**
0700 - 0715	0	0	0	0	0	0	0	0	0	0	0	0	0	**0**	
0715 - 0730	0	0	0	0	0	0	0	0	0	0	0	0	0	**0**	
0730 - 0745	0	0	0	0	0	0	0	0	0	0	0	0	0	**0**	
0745 - 0800	0	0	0	0	0	0	0	0	0	0	0	0	0	**0**	**0**
0800 - 0815	0	0	0	0	0	0	0	0	0	0	0	0	0	**0**	
0815 - 0830	0	0	0	0	0	0	0	0	0	0	0	0	0	**0**	
0830 - 0845	0	0	0	0	0	0	0	0	0	0	0	0	0	**0**	
0845 - 0900	0	0	0	0	0	0	0	0	0	0	0	0	0	**0**	**0**
0900 - 0915	0	0	0	0	0	0	0	0	0	0	0	0	0	**0**	
0915 - 0930	0	0	0	0	0	0	0	0	0	0	0	0	0	**0**	
0930 - 0945	0	0	0	0	0	0	0	0	0	0	0	0	0	**0**	
0945 - 1000	0	0	0	0	0	0	0	0	0	0	0	0	0	**0**	**0**
1000 - 1015	0	0	0	0	0	0	0	0	0	0	0	0	0	**0**	
1015 - 1030	0	0	0	0	0	0	0	0	0	0	0	0	0	**0**	
1030 - 1045	0	0	0	0	0	0	0	0	0	0	0	0	0	**0**	
1045 - 1100	0	0	0	0	0	0	0	0	0	0	0	0	0	**0**	**0**
1100 - 1115	0	0	0	0	0	0	0	0	0	0	0	0	0	**0**	
1115 - 1130	0	0	0	0	0	0	0	0	0	0	0	0	0	**0**	
1130 - 1145	0	0	0	0	0	0	0	0	0	0	0	0	0	**0**	
1145 - 1200	0	0	0	0	0	0	0	0	0	0	0	0	0	**0**	**0**
1200 - 1215	0	0	0	0	0	0	0	0	0	0	0	0	0	**0**	
1215 - 1230	0	0	0	0	0	0	0	0	0	0	0	0	0	**0**	
1230 - 1245	0	0	0	0	0	0	0	0	0	0	0	0	0	**0**	
1245 - 1300	0	0	0	0	0	0	0	0	0	0	0	0	0	**0**	**0**
1300 - 1315	0	0	0	0	0	0	0	0	0	0	0	0	0	**0**	
1315 - 1330	0	0	0	0	0	0	0	0	0	0	0	0	0	**0**	
1330 - 1345	0	0	0	0	0	0	0	0	0	0	0	0	0	**0**	
1345 - 1400	0	0	0	0	0	0	0	0	0	0	0	0	0	**0**	**0**
1400 - 1415	0	0	0	0	0	0	0	0	0	0	0	0	0	**0**	
1415 - 1430	0	0	0	0	0	0	0	0	0	0	0	0	0	**0**	
1430 - 1445	0	0	0	0	0	0	0	0	0	0	0	0	0	**0**	
1445 - 1500	0	0	0	0	0	0	0	0	0	0	0	0	0	**0**	**0**
1500 - 1515	0	0	0	0	0	0	0	0	0	0	0	0	0	**0**	
1515 - 1530	0	0	0	0	0	0	0	0	0	0	0	0	0	**0**	
1530 - 1545	0	0	0	0	0	0	0	0	0	0	0	0	0	**0**	
1545 - 1600	0	0	0	0	0	0	0	0	0	0	0	0	0	**0**	**0**
1600 - 1615	0	0	0	0	0	0	0	0	0	0	0	0	0	**0**	
1615 - 1630	0	0	0	0	0	0	0	0	0	0	0	0	0	**0**	
1630 - 1645	0	0	0	0	0	0	0	0	0	0	0	0	0	**0**	
1645 - 1700	0	0	0	0	0	0	0	0	0	0	0	0	0	**0**	**0**
1700 - 1715	0	0	0	0	0	0	0	0	0	0	0	0	0	**0**	
1715 - 1730	0	0	0	0	0	0	0	0	0	0	0	0	0	**0**	
1730 - 1745	0	0	0	0	0	0	0	0	0	0	0	0	0	**0**	
1745 - 1800	0	0	0	0	0	0	0	0	0	0	0	0	0	**0**	**0**
1800 - 1815	0	0	0	0	0	0	0	0	0	0	0	0	0	**0**	
1815 - 1830	0	0	0	0	0	0	0	0	0	0	0	0	0	**0**	
1830 - 1845	0	0	0	0	0	0	0	0	0	0	0	0	0	**0**	
1845 - 1900	0	0	0	0	0	0	0	0	0	0	0	0	0	**0**	**0**
1900 - 1915	0	35	8	0	1	0	0	0	0	0	0	0	0	**44**	
1915 - 1930	0	56	14	0	0	0	0	0	0	0	0	0	0	**70**	
1930 - 1945	0	61	16	0	1	0	0	0	1	0	0	0	0	**79**	
1945 - 2000	0	47	12	0	0	0	0	0	1	0	0	0	0	**60**	**253**
2000 - 2015	0	41	7	1	0	0	0	0	0	0	0	0	0	**49**	
2015 - 2030	0	25	5	0	1	0	0	1	0	0	0	0	0	**32**	
2030 - 2045	0	28	5	0	0	0	0	0	0	0	0	0	0	**33**	
2045 - 2100	0	15	2	0	1	0	0	0	0	0	0	0	0	**18**	**132**
2100 - 2115	0	34	1	0	0	0	0	0	0	0	0	0	0	**35**	
2115 - 2130	0	28	1	0	0	0	0	0	0	0	0	0	0	**29**	
2130 - 2145	0	15	2	0	0	0	0	0	0	0	0	0	0	**17**	
2145 - 2200	0	17	1	0	0	0	0	0	0	0	0	0	0	**18**	**99**
2200 - 2215	0	13	0	0	0	0	0	0	0	0	0	0	0	**13**	
2215 - 2230	0	10	0	0	0	0	0	0	0	0	0	0	0	**10**	
2230 - 2245	0	16	1	0	0	0	0	0	1	0	0	0	0	**18**	
2245 - 2300	0	7	0	0	0	0	0	0	0	0	0	0	0	**7**	**48**
2300 - 2315	0	12	1	0	0	0	0	0	1	0	0	0	0	**14**	
2315 - 2330	0	12	0	0	0	0	0	0	0	0	0	0	0	**12**	
2330 - 2345	0	4	0	0	0	0	0	0	0	0	0	0	0	**4**	
2345 - 0000	0	9	0	0	0	0	0	0	0	0	0	0	0	**9**	**39**

Session Total	0	485	76	1	4	0	0	1	4	0	0	0	0	**571**
Session Average	0.00	5.05	0.79	0.01	0.04	0.00	0.00	0.01	0.04	0.00	0.00	0.00	0.00	**5.95**
Session Percentage	0.00	84.94	13.31	0.18	0.70	0.00	0.00	0.18	0.70	0.00	0.00	0.00	0.00	

AM Peak Hour	-	-	-	-	-	-	-	-	-	-	-	-	-	**-**
AM Peak Volume	0	0	0	0	0	0	0	0	0	0	0	0	0	**0**

Noon Peak Hour	-	-	-	-	-	-	-	-	-	-	-	-	-	**-**
Noon Peak Volume	0	0	0	0	0	0	0	0	0	0	0	0	0	**0**

PM Peak Hour	-	1915 - 2015	1900 - 2000	1915 - 2015	1845 - 1945	-	-	1930 - 2030	1900 - 2000	-	-	-	-	**1915 - 2015**
PM Peak Volume	0	205	50	1	2	0	0	1	2	0	0	0	0	**258**

Site 15
I-26 James F. Byrnes N/Bound Off-Ramp,
south of US-176 Broad River Rd

Date
Wednesday, April 24, 2024

Lat/Long
34.097905°, -81.172883°

Weather
Fair
66°F

Click here for Detailed Weather

0000 - 2400 (Weekday 24h Session) (04-24-2024)
NB EB 15min

	Northbound (Movement 15.1)													15min	60min
Time	1	2	3	4	5	6	7	8	9	10	11	12	13	Total	Total
0000 - 0015	0	6	0	0	0	0	0	0	0	0	0	0	0	**6**	
0015 - 0030	0	11	1	0	0	0	0	0	0	0	0	0	0	**12**	
0030 - 0045	0	2	1	0	0	0	0	0	0	0	0	0	0	**3**	
0045 - 0100	0	2	0	0	0	0	0	0	0	0	0	0	0	**2**	**23**
0100 - 0115	0	3	0	0	0	0	0	0	0	0	0	0	0	**3**	
0115 - 0130	0	5	0	0	0	0	0	0	0	0	0	0	0	**5**	
0130 - 0145	0	3	1	0	0	0	0	0	0	0	0	0	0	**4**	
0145 - 0200	0	1	0	0	0	0	0	0	0	0	0	0	0	**1**	**13**
0200 - 0215	0	0	0	0	0	0	0	0	0	0	0	0	0	**0**	
0215 - 0230	0	4	1	0	0	0	0	0	0	0	0	0	0	**5**	
0230 - 0245	0	1	1	0	0	0	0	0	0	0	0	0	0	**2**	
0245 - 0300	0	2	1	0	0	0	0	0	0	0	0	0	0	**3**	**10**
0300 - 0315	0	1	1	0	0	0	0	0	0	0	0	0	0	**2**	
0315 - 0330	0	4	2	0	0	0	0	0	0	0	0	0	0	**6**	
0330 - 0345	0	12	2	0	0	0	0	0	0	0	0	0	0	**14**	
0345 - 0400	0	28	3	0	0	0	0	0	0	0	0	0	0	**31**	**53**
0400 - 0415	0	0	0	0	1	0	0	0	0	0	0	0	0	**1**	
0415 - 0430	0	1	0	0	0	0	0	0	0	0	0	0	0	**1**	
0430 - 0445	0	2	1	0	0	0	0	0	0	0	0	0	0	**3**	
0445 - 0500	0	6	0	0	0	0	0	0	0	0	0	0	0	**6**	**11**
0500 - 0515	0	6	0	0	0	0	0	0	0	0	0	0	0	**6**	
0515 - 0530	0	3	1	0	0	0	0	0	0	0	0	0	0	**4**	
0530 - 0545	0	8	2	0	1	0	0	0	0	0	0	0	0	**11**	
0545 - 0600	0	10	3	0	2	0	0	0	1	0	0	0	0	**16**	**37**
0600 - 0615	0	13	4	0	1	0	0	0	0	0	0	0	0	**18**	
0615 - 0630	0	8	6	0	0	0	0	1	0	0	0	0	0	**15**	
0630 - 0645	0	16	3	0	1	0	0	0	0	0	0	0	0	**20**	
0645 - 0700	0	25	18	0	0	1	1	0	1	0	0	0	0	**46**	**99**
0700 - 0715	0	28	10	0	1	0	0	0	3	0	0	0	0	**42**	
0715 - 0730	0	46	19	0	2	0	0	0	0	0	0	0	0	**67**	
0730 - 0745	0	44	11	0	0	0	0	0	2	0	1	0	0	**58**	
0745 - 0800	0	70	12	0	2	2	0	0	0	0	0	0	0	**86**	**253**
0800 - 0815	0	45	10	0	0	0	0	0	0	0	1	0	0	**56**	
0815 - 0830	0	40	12	0	3	0	0	0	1	0	0	0	0	**56**	
0830 - 0845	0	26	9	0	0	0	1	0	1	0	1	0	0	**38**	
0845 - 0900	1	42	13	0	1	1	0	0	0	0	0	0	0	**58**	**208**
0900 - 0915	0	39	10	0	1	0	1	0	5	0	0	0	0	**56**	
0915 - 0930	0	21	7	0	2	0	0	1	0	0	0	0	0	**31**	
0930 - 0945	0	34	10	0	3	0	1	0	1	0	0	0	0	**49**	
0945 - 1000	0	38	10	0	3	0	0	1	1	0	0	0	0	**53**	**189**
1000 - 1015	0	27	5	0	1	0	0	0	0	0	0	0	0	**33**	
1015 - 1030	0	24	7	1	2	0	1	0	1	0	0	0	0	**36**	
1030 - 1045	0	19	13	0	1	1	0	2	1	0	0	0	0	**37**	
1045 - 1100	1	33	6	0	1	0	0	1	0	0	0	0	0	**42**	**148**
1100 - 1115	0	27	9	0	2	0	1	0	0	0	0	0	0	**39**	
1115 - 1130	0	35	7	0	0	0	1	1	0	0	0	0	0	**44**	
1130 - 1145	0	29	11	0	1	0	0	0	1	0	0	0	0	**42**	
1145 - 1200	0	35	10	0	1	0	0	0	1	0	0	0	0	**47**	**172**
1200 - 1215	1	28	11	0	2	1	0	0	2	0	0	0	0	**45**	
1215 - 1230	0	27	12	0	3	1	0	2	0	0	0	0	0	**45**	
1230 - 1245	0	30	11	2	0	0	1	0	1	0	0	0	0	**45**	
1245 - 1300	2	29	13	0	1	0	0	0	1	0	0	0	0	**46**	**181**
1300 - 1315	0	25	11	0	1	1	1	1	1	0	0	0	0	**41**	
1315 - 1330	0	32	16	0	3	0	0	0	1	0	0	0	0	**52**	
1330 - 1345	0	33	11	0	2	0	0	0	4	0	0	0	0	**50**	
1345 - 1400	0	37	10	0	3	1	0	0	2	0	0	0	0	**53**	**196**
1400 - 1415	1	56	32	0	5	0	1	0	0	0	0	0	0	**95**	
1415 - 1430	0	58	25	0	2	1	0	0	2	0	0	0	0	**88**	
1430 - 1445	0	62	24	0	1	0	0	0	0	0	0	0	0	**87**	
1445 - 1500	1	76	22	0	4	1	3	0	2	0	0	0	0	**109**	**379**
1500 - 1515	0	64	18	0	1	0	0	0	0	0	0	0	0	**83**	
1515 - 1530	0	64	18	1	1	1	0	1	0	0	0	0	0	**86**	
1530 - 1545	1	59	20	0	2	1	0	0	1	0	0	0	0	**84**	
1545 - 1600	0	70	13	0	0	0	0	0	1	0	1	0	0	**85**	**338**
1600 - 1615	0	59	17	0	1	1	0	0	1	0	0	0	0	**79**	
1615 - 1630	0	74	13	0	3	1	0	0	1	0	0	0	0	**92**	
1630 - 1645	1	72	18	0	0	1	2	0	1	0	0	0	0	**95**	
1645 - 1700	0	85	14	0	2	1	0	0	0	0	0	0	0	**102**	**368**
1700 - 1715	0	85	21	0	1	1	0	0	0	0	0	0	0	**108**	
1715 - 1730	0	93	26	0	0	0	0	0	0	0	0	0	0	**119**	
1730 - 1745	0	85	20	0	0	0	0	0	0	0	0	0	0	**105**	
1745 - 1800	0	78	21	0	1	0	0	0	1	0	0	0	0	**101**	**433**
1800 - 1815	0	62	15	0	0	0	0	0	2	0	0	0	0	**79**	
1815 - 1830	0	62	9	0	2	0	0	0	0	0	0	0	0	**73**	
1830 - 1845	0	57	9	0	0	0	0	0	0	0	0	0	0	**66**	
1845 - 1900	0	63	14	0	0	0	0	0	1	0	0	0	0	**78**	**296**
1900 - 1915	0	38	8	0	1	0	0	0	0	0	0	0	0	**47**	
1915 - 1930	0	41	7	0	0	0	0	0	0	0	0	0	0	**48**	
1930 - 1945	0	28	5	0	0	0	0	0	0	0	0	0	0	**33**	
1945 - 2000	0	26	6	0	0	0	0	0	0	0	0	0	0	**32**	**160**
2000 - 2015	0	44	5	0	0	0	0	0	0	0	0	0	0	**49**	
2015 - 2030	0	27	4	0	0	0	0	0	0	0	0	0	0	**31**	
2030 - 2045	0	28	3	0	0	0	0	0	0	0	0	0	0	**31**	
2045 - 2100	0	44	3	0	0	0	0	0	0	0	0	0	0	**47**	**158**
2100 - 2115	0	25	2	0	0	1	0	0	0	0	0	0	0	**28**	
2115 - 2130	0	19	2	1	0	0	0	0	0	0	0	0	0	**22**	
2130 - 2145	0	18	1	0	0	0	0	0	0	0	0	0	0	**19**	
2145 - 2200	0	14	1	0	0	0	0	0	0	0	0	0	0	**15**	**84**
2200 - 2215	0	15	0	0	0	0	0	0	0	0	0	0	0	**15**	
2215 - 2230	0	16	1	0	0	1	0	0	0	0	0	0	0	**18**	
2230 - 2245	0	15	0	0	1	0	0	0	0	0	0	0	0	**16**	
2245 - 2300	0	10	1	0	0	0	0	0	0	0	0	0	0	**11**	**60**
2300 - 2315	0	14	1	0	0	0	0	0	0	0	0	0	0	**15**	
2315 - 2330	0	12	0	0	0	0	0	0	0	0	0	0	0	**12**	
2330 - 2345	0	7	0	0	0	0	0	0	0	0	0	0	0	**7**	
2345 - 0000	0	2	0	0	0	0	0	0	0	0	0	0	0	**2**	**36**

Session Total	9	2953	767	5	76	20	15	11	45	0	4	0	0	**3905**
Session Average	0.09	30.76	7.99	0.05	0.79	0.21	0.16	0.11	0.47	0.00	0.04	0.00	0.00	**40.68**
Session Percentage	0.23	75.62	19.64	0.13	1.95	0.51	0.38	0.28	1.15	0.00	0.10	0.00	0.00	

AM Peak Hour	0800 - 0900	0715 - 0815	0645 - 0745	0930 - 1030	0900 - 1000	0700 - 0800	0815 - 0915	0945 - 1045	0815 - 0915	-	0715 - 0815	-	-	**0715 - 0815**
AM Peak Volume	1	205	58	1	9	2	2	3	7	0	2	0	0	**267**

Noon Peak Hour	1200 - 1300	1430 - 1530	1400 - 1500	1145 - 1245	1315 - 1415	1445 - 1545	1400 - 1500	1030 - 1130	1300 - 1400	-	-	-	-	**1400 - 1500**
Noon Peak Volume	3	266	103	2	13	3	4	4	8	0	0	0	0	**379**

PM Peak Hour	1500 - 1600	1645 - 1745	1700 - 1800	1500 - 1600	1530 - 1630	1600 - 1700	1545 - 1645	1500 - 1600	1530 - 1630	-	1500 - 1600	-	-	**1645 - 1745**
PM Peak Volume	1	348	88	1	6	4	2	1	4	0	1	0	0	**434**

Site 15
I-26 James F. Byrnes N/Bound Off-Ramp,
south of US-176 Broad River Rd

Date
Thursday, April 25, 2024

Lat/Long
34.097905°, -81.172883°

Weather
Fair
67°F

Click here for Detailed Weather

0000 - 2400 (Weekday 24h Session) (04-25-2024)
NB EB 15min

	Northbound (Movement 15.1)													15min	60min
TIME	1	2	3	4	5	6	7	8	9	10	11	12	13	Total	Total
0000 - 0015	0	5	0	0	0	0	0	0	0	0	0	0	0	**5**	
0015 - 0030	0	10	0	0	0	0	0	0	0	0	0	0	0	**10**	
0030 - 0045	0	10	0	0	0	0	0	0	0	0	0	0	0	**10**	
0045 - 0100	0	3	1	0	0	0	0	0	0	0	0	0	0	**4**	**29**
0100 - 0115	0	0	0	0	0	0	0	0	0	0	0	0	0	**0**	
0115 - 0130	0	2	1	0	0	0	0	0	0	0	0	0	0	**3**	
0130 - 0145	0	4	0	0	0	0	0	0	0	0	0	0	0	**4**	
0145 - 0200	0	3	0	0	0	0	0	0	0	0	0	0	0	**3**	**10**
0200 - 0215	0	6	0	0	0	0	0	0	0	0	0	0	0	**6**	
0215 - 0230	0	1	0	0	0	0	0	0	0	0	0	0	0	**1**	
0230 - 0245	0	0	0	0	0	0	0	0	0	0	0	0	0	**0**	
0245 - 0300	0	1	1	0	0	0	0	0	0	0	0	0	0	**2**	**9**
0300 - 0315	0	3	0	0	0	0	0	0	0	0	0	0	0	**3**	
0315 - 0330	0	6	1	0	0	0	0	0	0	0	0	0	0	**7**	
0330 - 0345	0	7	1	0	0	0	0	0	0	0	0	0	0	**8**	
0345 - 0400	0	29	2	0	0	0	0	0	1	0	0	0	0	**32**	**50**
0400 - 0415	0	1	0	0	0	1	0	0	0	0	0	0	0	**2**	
0415 - 0430	0	2	0	0	0	0	0	0	0	0	0	0	0	**2**	
0430 - 0445	0	4	0	0	0	0	0	0	0	0	0	0	0	**4**	
0445 - 0500	0	3	0	0	0	0	0	0	0	0	0	0	0	**3**	**11**
0500 - 0515	0	5	1	0	0	0	0	0	0	0	0	0	0	**6**	
0515 - 0530	0	4	0	0	1	0	0	0	0	0	0	0	0	**5**	
0530 - 0545	0	7	0	0	0	0	0	0	0	0	0	0	0	**7**	
0545 - 0600	0	14	2	0	1	0	0	0	1	0	0	0	0	**18**	**36**
0600 - 0615	0	10	4	0	1	0	0	0	1	0	0	0	0	**16**	
0615 - 0630	0	16	2	0	2	0	0	0	1	0	0	0	0	**21**	
0630 - 0645	0	18	8	0	0	0	0	0	0	0	0	0	0	**26**	
0645 - 0700	0	43	8	0	0	0	0	0	3	0	1	0	0	**55**	**118**
0700 - 0715	0	25	21	0	0	1	0	1	0	0	0	0	0	**48**	
0715 - 0730	0	54	15	1	0	1	0	0	0	0	0	0	0	**71**	
0730 - 0745	2	63	12	0	3	0	1	0	2	0	0	0	0	**83**	
0745 - 0800	0	59	18	0	0	1	1	0	2	0	0	0	0	**81**	**283**
0800 - 0815	0	62	19	0	1	0	0	2	0	0	0	0	0	**84**	
0815 - 0830	0	39	13	0	1	2	0	1	0	0	0	0	0	**56**	
0830 - 0845	0	30	14	0	3	0	0	0	1	0	0	0	0	**48**	
0845 - 0900	0	39	17	0	1	0	1	0	2	0	0	0	0	**60**	**248**
0900 - 0915	0	31	8	0	2	0	0	0	1	0	0	0	0	**42**	
0915 - 0930	0	34	12	0	2	1	0	0	0	0	0	0	0	**49**	
0930 - 0945	0	26	16	0	1	0	0	1	1	0	0	0	0	**45**	
0945 - 1000	0	31	7	0	3	1	0	1	1	0	0	0	0	**44**	**180**
1000 - 1015	0	31	6	0	0	1	0	0	1	0	0	0	0	**39**	
1015 - 1030	0	32	12	0	4	1	0	2	1	0	0	0	0	**52**	
1030 - 1045	1	25	7	0	1	2	0	0	0	0	0	0	0	**36**	
1045 - 1100	0	21	12	0	1	1	0	0	1	0	0	0	0	**36**	**163**
1100 - 1115	0	35	9	0	2	0	0	2	0	0	0	0	0	**48**	
1115 - 1130	0	32	10	0	2	1	2	0	0	0	0	0	0	**47**	
1130 - 1145	1	44	12	0	1	0	0	4	1	0	0	0	0	**63**	
1145 - 1200	0	38	9	0	1	0	1	1	0	0	0	0	0	**50**	**208**
1200 - 1215	0	38	10	0	1	0	0	0	1	0	0	0	0	**50**	
1215 - 1230	3	32	9	0	1	0	0	0	0	0	0	0	0	**45**	
1230 - 1245	1	37	14	1	3	0	0	1	0	0	0	0	0	**57**	
1245 - 1300	0	50	12	0	2	0	0	1	0	0	0	0	0	**65**	**217**
1300 - 1315	0	35	9	0	0	0	0	0	0	0	0	0	0	**44**	
1315 - 1330	0	49	15	2	0	0	0	1	1	0	0	0	0	**68**	
1330 - 1345	0	40	8	0	2	1	0	0	0	0	0	0	0	**51**	
1345 - 1400	0	43	21	1	2	1	0	0	0	0	0	0	0	**68**	**231**
1400 - 1415	0	40	6	0	0	0	0	0	1	0	0	0	0	**47**	
1415 - 1430	0	49	14	0	3	1	0	0	0	0	0	0	0	**67**	
1430 - 1445	2	55	19	0	1	0	0	0	1	0	0	0	0	**78**	
1445 - 1500	0	58	17	0	1	0	0	0	1	0	0	0	0	**77**	**269**
1500 - 1515	0	50	10	0	2	0	0	1	0	0	0	0	0	**63**	
1515 - 1530	0	53	20	0	2	0	0	0	0	0	0	0	0	**75**	
1530 - 1545	0	47	22	0	1	0	0	0	1	0	0	0	0	**71**	
1545 - 1600	0	55	15	0	2	0	0	0	0	0	0	0	0	**72**	**281**
1600 - 1615	0	58	20	0	1	0	0	1	2	0	0	0	0	**82**	
1615 - 1630	0	73	22	0	0	0	0	0	0	0	0	0	0	**95**	
1630 - 1645	0	67	13	0	2	0	0	0	1	0	0	0	0	**83**	
1645 - 1700	1	90	29	0	0	1	0	0	2	0	0	0	0	**123**	**383**
1700 - 1715	0	83	10	0	1	1	0	0	0	0	0	0	0	**95**	
1715 - 1730	0	97	16	0	1	0	0	0	0	0	0	0	0	**114**	
1730 - 1745	0	74	26	0	1	0	0	0	0	0	0	0	0	**101**	
1745 - 1800	1	77	12	0	2	0	0	0	1	0	0	0	0	**93**	**403**
1800 - 1815	0	57	16	0	0	0	0	0	0	0	0	0	0	**73**	
1815 - 1830	0	57	16	0	1	0	0	0	0	0	0	0	0	**74**	
1830 - 1845	1	44	6	0	2	0	0	0	0	0	0	0	0	**53**	
1845 - 1900	1	59	7	0	1	0	0	1	0	0	0	0	0	**69**	**269**
1900 - 1915	0	0	0	0	0	0	0	0	0	0	0	0	0	**0**	
1915 - 1930	0	0	0	0	0	0	0	0	0	0	0	0	0	**0**	
1930 - 1945	0	0	0	0	0	0	0	0	0	0	0	0	0	**0**	
1945 - 2000	0	0	0	0	0	0	0	0	0	0	0	0	0	**0**	**0**
2000 - 2015	0	0	0	0	0	0	0	0	0	0	0	0	0	**0**	
2015 - 2030	0	0	0	0	0	0	0	0	0	0	0	0	0	**0**	
2030 - 2045	0	0	0	0	0	0	0	0	0	0	0	0	0	**0**	
2045 - 2100	0	0	0	0	0	0	0	0	0	0	0	0	0	**0**	**0**
2100 - 2115	0	0	0	0	0	0	0	0	0	0	0	0	0	**0**	
2115 - 2130	0	0	0	0	0	0	0	0	0	0	0	0	0	**0**	
2130 - 2145	0	0	0	0	0	0	0	0	0	0	0	0	0	**0**	
2145 - 2200	0	0	0	0	0	0	0	0	0	0	0	0	0	**0**	**0**
2200 - 2215	0	0	0	0	0	0	0	0	0	0	0	0	0	**0**	
2215 - 2230	0	0	0	0	0	0	0	0	0	0	0	0	0	**0**	
2230 - 2245	0	0	0	0	0	0	0	0	0	0	0	0	0	**0**	
2245 - 2300	0	0	0	0	0	0	0	0	0	0	0	0	0	**0**	**0**
2300 - 2315	0	0	0	0	0	0	0	0	0	0	0	0	0	**0**	
2315 - 2330	0	0	0	0	0	0	0	0	0	0	0	0	0	**0**	
2330 - 2345	0	0	0	0	0	0	0	0	0	0	0	0	0	**0**	
2345 - 0000	0	0	0	0	0	0	0	0	0	0	0	0	0	**0**	**0**

Session Total	14	2535	695	5	69	19	6	21	33	0	1	0	0	**3398**
Session Average	0.15	26.41	7.24	0.05	0.72	0.20	0.06	0.22	0.34	0.00	0.01	0.00	0.00	**35.40**
Session Percentage	0.41	74.60	20.45	0.15	2.03	0.56	0.18	0.62	0.97	0.00	0.03	0.00	0.00	

AM Peak Hour	0645 - 0745	0715 - 0815	0700 - 0800	0630 - 0730	0830 - 0930	0945 - 1045	0700 - 0800	0930 - 1030	0600 - 0700	-	0600 - 0700	-	-	**0715 - 0815**
AM Peak Hour Volume	2	238	66	1	8	5	2	4	5	0	1	0	0	**319**

Noon Peak Hour	1130 - 1230	1430 - 1530	1445 - 1545	1230 - 1330	1015 - 1115	1000 - 1100	1100 - 1200	1100 - 1200	1000 - 1100	-	-	-	-	**1430 - 1530**
Noon Peak Hour Volume	4	216	69	3	8	5	3	7	3	0	0	0	0	**293**

PM Peak Hour	1745 - 1845	1645 - 1745	1600 - 1700	-	1500 - 1600	1615 - 1715	-	1500 - 1600	1600 - 1700	-	-	-	-	**1645 - 1745**
PM Peak Hour Volume	2	344	84	0	7	2	0	1	5	0	0	0	0	**433**

Bi-Directional Class Count || NB EB Average 15min

Columbia, SC

Marr Traffic DATA COLLECTION
www.marrtraffic.com

Site 15
I-26 James F. Byrnes N/Bound Off-Ramp,
south of US-176 Broad River Rd

Date
Tuesday, April 23, 2024

Lat/Long
34.097905°, -81.172883°

Weather
Fair
58°F

0000 - 2400 (Weekday 24h Session) (All Dates)
NB EB Average 15min

	NB EB Average 15min													15min	60min
Time	1	2	3	4	5	6	7	8	9	10	11	12	13	Total	Total
0000 - 0015	0	4	0	0	0	0	0	0	0	0	0	0	0	**4**	
0015 - 0030	0	7	0	0	0	0	0	0	0	0	0	0	0	**7**	
0030 - 0045	0	4	0	0	0	0	0	0	0	0	0	0	0	**4**	
0045 - 0100	0	2	0	0	0	0	0	0	0	0	0	0	0	**2**	**17**
0100 - 0115	0	1	0	0	0	0	0	0	0	0	0	0	0	**1**	
0115 - 0130	0	2	0	0	0	0	0	0	0	0	0	0	0	**3**	
0130 - 0145	0	2	0	0	0	0	0	0	0	0	0	0	0	**3**	
0145 - 0200	0	1	0	0	0	0	0	0	0	0	0	0	0	**1**	**8**
0200 - 0215	0	2	0	0	0	0	0	0	0	0	0	0	0	**2**	
0215 - 0230	0	2	0	0	0	0	0	0	0	0	0	0	0	**2**	
0230 - 0245	0	0	0	0	0	0	0	0	0	0	0	0	0	**1**	
0245 - 0300	0	1	1	0	0	0	0	0	0	0	0	0	0	**2**	**6**
0300 - 0315	0	1	0	0	0	0	0	0	0	0	0	0	0	**2**	
0315 - 0330	0	3	1	0	0	0	0	0	0	0	0	0	0	**4**	
0330 - 0345	0	6	1	0	0	0	0	0	0	0	0	0	0	**7**	
0345 - 0400	0	19	2	0	0	0	0	0	0	0	0	0	0	**21**	**34**
0400 - 0415	0	0	0	0	0	0	0	0	0	0	0	0	0	**1**	
0415 - 0430	0	1	0	0	0	0	0	0	0	0	0	0	0	**1**	
0430 - 0445	0	2	0	0	0	0	0	0	0	0	0	0	0	**2**	
0445 - 0500	0	3	0	0	0	0	0	0	0	0	0	0	0	**3**	**7**
0500 - 0515	0	4	0	0	0	0	0	0	0	0	0	0	0	**4**	
0515 - 0530	0	2	0	0	0	0	0	0	0	0	0	0	0	**3**	
0530 - 0545	0	5	1	0	0	0	0	0	0	0	0	0	0	**6**	
0545 - 0600	0	8	2	0	1	0	0	0	1	0	0	0	0	**11**	**24**
0600 - 0615	0	8	3	0	1	0	0	0	0	0	0	0	0	**11**	
0615 - 0630	0	8	3	0	1	0	0	0	0	0	0	0	0	**12**	
0630 - 0645	0	11	4	0	0	0	0	0	0	0	0	0	0	**15**	
0645 - 0700	0	23	9	0	0	0	0	0	1	0	0	0	0	**34**	**72**
0700 - 0715	0	18	10	0	0	0	0	0	1	0	0	0	0	**30**	
0715 - 0730	0	33	11	0	1	0	0	0	0	0	0	0	0	**46**	
0730 - 0745	1	36	8	0	1	0	0	0	1	0	0	0	0	**47**	
0745 - 0800	0	43	10	0	1	1	0	0	1	0	0	0	0	**56**	**179**
0800 - 0815	0	36	10	0	0	0	0	1	0	0	0	0	0	**47**	
0815 - 0830	0	26	8	0	1	1	0	0	0	0	0	0	0	**37**	
0830 - 0845	0	19	8	0	1	0	0	0	1	0	0	0	0	**29**	
0845 - 0900	0	27	10	0	1	0	0	0	1	0	0	0	0	**39**	**152**
0900 - 0915	0	23	6	0	1	0	0	0	2	0	0	0	0	**33**	
0915 - 0930	0	18	6	0	1	0	0	0	0	0	0	0	0	**27**	
0930 - 0945	0	20	9	0	1	0	0	0	1	0	0	0	0	**31**	
0945 - 1000	0	23	6	0	2	0	0	1	1	0	0	0	0	**32**	**123**
1000 - 1015	0	19	4	0	0	0	0	0	0	0	0	0	0	**24**	
1015 - 1030	0	19	6	0	2	0	0	1	1	0	0	0	0	**29**	
1030 - 1045	0	15	7	0	1	1	0	1	0	0	0	0	0	**24**	
1045 - 1100	0	18	6	0	1	0	0	0	0	0	0	0	0	**26**	**104**
1100 - 1115	0	21	6	0	1	0	0	1	0	0	0	0	0	**29**	
1115 - 1130	0	22	6	0	1	0	1	0	0	0	0	0	0	**30**	
1130 - 1145	0	24	8	0	1	0	0	1	1	0	0	0	0	**35**	
1145 - 1200	0	24	6	0	1	0	0	0	0	0	0	0	0	**32**	**127**
1200 - 1215	0	22	7	0	1	0	0	0	1	0	0	0	0	**32**	
1215 - 1230	1	20	7	0	1	0	0	1	0	0	0	0	0	**30**	
1230 - 1245	0	22	8	1	1	0	0	0	0	0	0	0	0	**34**	
1245 - 1300	1	26	8	0	1	0	0	0	0	0	0	0	0	**37**	**133**
1300 - 1315	0	20	7	0	0	0	0	0	0	0	0	0	0	**28**	
1315 - 1330	0	27	10	1	1	0	0	0	1	0	0	0	0	**40**	
1330 - 1345	0	24	6	0	1	0	0	0	1	0	0	0	0	**34**	
1345 - 1400	0	27	10	0	2	1	0	0	1	0	0	0	0	**40**	**142**
1400 - 1415	0	32	13	0	2	0	0	0	0	0	0	0	0	**47**	
1415 - 1430	0	36	13	0	2	1	0	0	1	0	0	0	0	**52**	
1430 - 1445	1	39	14	0	1	0	0	0	0	0	0	0	0	**55**	
1445 - 1500	0	45	13	0	2	0	1	0	1	0	0	0	0	**62**	**216**
1500 - 1515	0	38	9	0	1	0	0	0	0	0	0	0	0	**49**	
1515 - 1530	0	39	13	0	1	0	0	0	0	0	0	0	0	**54**	
1530 - 1545	0	35	14	0	1	0	0	0	1	0	0	0	0	**52**	
1545 - 1600	0	42	9	0	1	0	0	0	0	0	0	0	0	**52**	**206**
1600 - 1615	0	39	12	0	1	0	0	0	1	0	0	0	0	**54**	
1615 - 1630	0	49	12	0	1	0	0	0	0	0	0	0	0	**62**	
1630 - 1645	0	46	10	0	1	0	1	0	1	0	0	0	0	**59**	
1645 - 1700	0	58	14	0	1	1	0	0	1	0	0	0	0	**75**	**250**
1700 - 1715	0	56	10	0	1	1	0	0	0	0	0	0	0	**68**	
1715 - 1730	0	63	14	0	0	0	0	0	0	0	0	0	0	**78**	
1730 - 1745	0	53	15	0	0	0	0	0	0	0	0	0	0	**69**	
1745 - 1800	0	52	11	0	1	0	0	0	1	0	0	0	0	**65**	**279**
1800 - 1815	0	40	10	0	0	0	0	0	1	0	0	0	0	**51**	
1815 - 1830	0	40	8	0	1	0	0	0	0	0	0	0	0	**49**	
1830 - 1845	0	34	5	0	1	0	0	0	0	0	0	0	0	**40**	
1845 - 1900	0	41	7	0	0	0	0	0	0	0	0	0	0	**49**	**188**
1900 - 1915	0	24	5	0	1	0	0	0	0	0	0	0	0	**30**	
1915 - 1930	0	32	7	0	0	0	0	0	0	0	0	0	0	**39**	
1930 - 1945	0	30	7	0	0	0	0	0	0	0	0	0	0	**37**	
1945 - 2000	0	24	6	0	0	0	0	0	0	0	0	0	0	**31**	**138**
2000 - 2015	0	28	4	0	0	0	0	0	0	0	0	0	0	**33**	
2015 - 2030	0	17	3	0	0	0	0	0	0	0	0	0	0	**21**	
2030 - 2045	0	19	3	0	0	0	0	0	0	0	0	0	0	**21**	
2045 - 2100	0	20	2	0	0	0	0	0	0	0	0	0	0	**22**	**97**
2100 - 2115	0	20	1	0	0	0	0	0	0	0	0	0	0	**21**	
2115 - 2130	0	16	1	0	0	0	0	0	0	0	0	0	0	**17**	
2130 - 2145	0	11	1	0	0	0	0	0	0	0	0	0	0	**12**	
2145 - 2200	0	10	1	0	0	0	0	0	0	0	0	0	0	**11**	**61**
2200 - 2215	0	9	0	0	0	0	0	0	0	0	0	0	0	**9**	
2215 - 2230	0	9	0	0	0	0	0	0	0	0	0	0	0	**9**	
2230 - 2245	0	10	0	0	0	0	0	0	0	0	0	0	0	**11**	
2245 - 2300	0	6	0	0	0	0	0	0	0	0	0	0	0	**6**	**36**
2300 - 2315	0	9	1	0	0	0	0	0	0	0	0	0	0	**10**	
2315 - 2330	0	8	0	0	0	0	0	0	0	0	0	0	0	**8**	
2330 - 2345	0	4	0	0	0	0	0	0	0	0	0	0	0	**4**	
2345 - 0000	0	4	0	0	0	0	0	0	0	0	0	0	0	**4**	**25**

Session Total	8	1991	513	4	50	13	7	11	27	0	2	0	0	**2625**
Session Average	0.08	20.74	5.34	0.04	0.52	0.14	0.07	0.11	0.28	0.00	0.02	0.00	0.00	**27.34**
Session Percentage	0.29	75.86	19.53	0.14	1.89	0.50	0.27	0.42	1.04	0.00	0.06	0.00	0.00	

AM Peak Hour	0645 - 0745	0715 - 0815	0700 - 0800	0630 - 0730	0900 - 1000	0945 - 1045	0815 - 0915	0945 - 1045	0815 - 0915	-	0645 - 0745	-	-	**0715 - 0815**
AM Peak Volume	1	148	39	0	6	2	1	2	4	0	1	0	0	**195**

Noon Peak Hour	1200 - 1300	1430 - 1530	1400 - 1500	1230 - 1330	1330 - 1430	1000 - 1100	1100 - 1200	1045 - 1145	1315 - 1415	-	-	-	-	**1430 - 1530**
Noon Peak Volume	2	161	53	2	6	2	2	3	3	0	0	0	0	**219**

PM Peak Hour	1600 - 1700	1645 - 1745	1645 - 1745	1500 - 1600	1500 - 1600	1615 - 1715	1545 - 1645	1500 - 1600	1600 - 1700	-	1500 - 1600	-	-	**1645 - 1745**
PM Peak Volume	1	231	54	0	4	2	1	1	3	0	0	0	0	**289**

Bi-Directional Class Count || Volume Summary 15min

Columbia, SC

Marr Traffic DATA COLLECTION
www.marrtraffic.com

Site 15
I-26 James F. Byrnes N/Bound Off-Ramp,
south of US-176 Broad River Rd

Date
Tuesday, April 23, 2024

Lat/Long
34.097905°, -81.172883°

Weather
Fair
58°F

Click here for Detailed Weather

0000 - 2400 (Weekday 24h Session) (04-23-2024)

Volume Summary 15min

TIME	Volume Summary 15min NB	SB	15min Total	60min Total
0000 - 0015	0	0	**0**	
0015 - 0030	0	0	**0**	
0030 - 0045	0	0	**0**	
0045 - 0100	0	0	**0**	**0**
0100 - 0115	0	0	**0**	
0115 - 0130	0	0	**0**	
0130 - 0145	0	0	**0**	
0145 - 0200	0	0	**0**	**0**
0200 - 0215	0	0	**0**	
0215 - 0230	0	0	**0**	
0230 - 0245	0	0	**0**	
0245 - 0300	0	0	**0**	**0**
0300 - 0315	0	0	**0**	
0315 - 0330	0	0	**0**	
0330 - 0345	0	0	**0**	
0345 - 0400	0	0	**0**	**0**
0400 - 0415	0	0	**0**	
0415 - 0430	0	0	**0**	
0430 - 0445	0	0	**0**	
0445 - 0500	0	0	**0**	**0**
0500 - 0515	0	0	**0**	
0515 - 0530	0	0	**0**	
0530 - 0545	0	0	**0**	
0545 - 0600	0	0	**0**	**0**
0600 - 0615	0	0	**0**	
0615 - 0630	0	0	**0**	
0630 - 0645	0	0	**0**	
0645 - 0700	0	0	**0**	**0**
0700 - 0715	0	0	**0**	
0715 - 0730	0	0	**0**	
0730 - 0745	0	0	**0**	
0745 - 0800	0	0	**0**	**0**
0800 - 0815	0	0	**0**	
0815 - 0830	0	0	**0**	
0830 - 0845	0	0	**0**	
0845 - 0900	0	0	**0**	**0**
0900 - 0915	0	0	**0**	
0915 - 0930	0	0	**0**	
0930 - 0945	0	0	**0**	
0945 - 1000	0	0	**0**	**0**
1000 - 1015	0	0	**0**	
1015 - 1030	0	0	**0**	
1030 - 1045	0	0	**0**	
1045 - 1100	0	0	**0**	**0**
1100 - 1115	0	0	**0**	
1115 - 1130	0	0	**0**	
1130 - 1145	0	0	**0**	
1145 - 1200	0	0	**0**	**0**

Time	Volume Summary 15min NB	SB	15min Total	60min Total
1200 - 1215	0	0	**0**	
1215 - 1230	0	0	**0**	
1230 - 1245	0	0	**0**	
1245 - 1300	0	0	**0**	**0**
1300 - 1315	0	0	**0**	
1315 - 1330	0	0	**0**	
1330 - 1345	0	0	**0**	
1345 - 1400	0	0	**0**	**0**
1400 - 1415	0	0	**0**	
1415 - 1430	0	0	**0**	
1430 - 1445	0	0	**0**	
1445 - 1500	0	0	**0**	**0**
1500 - 1515	0	0	**0**	
1515 - 1530	0	0	**0**	
1530 - 1545	0	0	**0**	
1545 - 1600	0	0	**0**	**0**
1600 - 1615	0	0	**0**	
1615 - 1630	0	0	**0**	
1630 - 1645	0	0	**0**	
1645 - 1700	0	0	**0**	**0**
1700 - 1715	0	0	**0**	
1715 - 1730	0	0	**0**	
1730 - 1745	0	0	**0**	
1745 - 1800	0	0	**0**	**0**
1800 - 1815	0	0	**0**	
1815 - 1830	0	0	**0**	
1830 - 1845	0	0	**0**	
1845 - 1900	0	0	**0**	**0**
1900 - 1915	44	0	**44**	
1915 - 1930	70	0	**70**	
1930 - 1945	79	0	**79**	
1945 - 2000	60	0	**60**	**253**
2000 - 2015	49	0	**49**	
2015 - 2030	32	0	**32**	
2030 - 2045	33	0	**33**	
2045 - 2100	18	0	**18**	**132**
2100 - 2115	35	0	**35**	
2115 - 2130	29	0	**29**	
2130 - 2145	17	0	**17**	
2145 - 2200	18	0	**18**	**99**
2200 - 2215	13	0	**13**	
2215 - 2230	10	0	**10**	
2230 - 2245	18	0	**18**	
2245 - 2300	7	0	**7**	**48**
2300 - 2315	14	0	**14**	
2315 - 2330	12	0	**12**	
2330 - 2345	4	0	**4**	
2345 - 0000	9	0	**9**	**39**

Session Total	571	0	**571**
Session Average	5.95	0.00	**5.95**
Session Percentage	100.00	0.00	

Site 15

I-26 James F. Byrnes N/Bound Off-Ramp,
south of US-176 Broad River Rd

Date

Wednesday, April 24, 2024

Lat/Long

34.097905°, -81.172883°

Weather

Fair
66°F

Click here for Detailed Weather

0000 - 2400 (Weekday 24h Session) (04-24-2024)

Volume Summary 15min

TIME	Volume Summary 15min NB	SB	15min Total	60min Total
0000 - 0015	6	0	**6**	
0015 - 0030	12	0	**12**	
0030 - 0045	3	0	**3**	
0045 - 0100	2	0	**2**	**23**
0100 - 0115	3	0	**3**	
0115 - 0130	5	0	**5**	
0130 - 0145	4	0	**4**	
0145 - 0200	1	0	**1**	**13**
0200 - 0215	0	0	**0**	
0215 - 0230	5	0	**5**	
0230 - 0245	2	0	**2**	
0245 - 0300	3	0	**3**	**10**
0300 - 0315	2	0	**2**	
0315 - 0330	6	0	**6**	
0330 - 0345	14	0	**14**	
0345 - 0400	31	0	**31**	**53**
0400 - 0415	1	0	**1**	
0415 - 0430	1	0	**1**	
0430 - 0445	3	0	**3**	
0445 - 0500	6	0	**6**	**11**
0500 - 0515	6	0	**6**	
0515 - 0530	4	0	**4**	
0530 - 0545	11	0	**11**	
0545 - 0600	16	0	**16**	**37**
0600 - 0615	18	0	**18**	
0615 - 0630	15	0	**15**	
0630 - 0645	20	0	**20**	
0645 - 0700	46	0	**46**	**99**
0700 - 0715	42	0	**42**	
0715 - 0730	67	0	**67**	
0730 - 0745	58	0	**58**	
0745 - 0800	86	0	**86**	**253**
0800 - 0815	56	0	**56**	
0815 - 0830	56	0	**56**	
0830 - 0845	38	0	**38**	
0845 - 0900	58	0	**58**	**208**
0900 - 0915	56	0	**56**	
0915 - 0930	31	0	**31**	
0930 - 0945	49	0	**49**	
0945 - 1000	53	0	**53**	**189**
1000 - 1015	33	0	**33**	
1015 - 1030	36	0	**36**	
1030 - 1045	37	0	**37**	
1045 - 1100	42	0	**42**	**148**
1100 - 1115	39	0	**39**	
1115 - 1130	44	0	**44**	
1130 - 1145	42	0	**42**	
1145 - 1200	47	0	**47**	**172**

Time	Volume Summary 15min NB	SB	15min Total	60min Total
1200 - 1215	45	0	**45**	
1215 - 1230	45	0	**45**	
1230 - 1245	45	0	**45**	
1245 - 1300	46	0	**46**	**181**
1300 - 1315	41	0	**41**	
1315 - 1330	52	0	**52**	
1330 - 1345	50	0	**50**	
1345 - 1400	53	0	**53**	**196**
1400 - 1415	95	0	**95**	
1415 - 1430	88	0	**88**	
1430 - 1445	87	0	**87**	
1445 - 1500	109	0	**109**	**379**
1500 - 1515	83	0	**83**	
1515 - 1530	86	0	**86**	
1530 - 1545	84	0	**84**	
1545 - 1600	85	0	**85**	**338**
1600 - 1615	79	0	**79**	
1615 - 1630	92	0	**92**	
1630 - 1645	95	0	**95**	
1645 - 1700	102	0	**102**	**368**
1700 - 1715	108	0	**108**	
1715 - 1730	119	0	**119**	
1730 - 1745	105	0	**105**	
1745 - 1800	101	0	**101**	**433**
1800 - 1815	79	0	**79**	
1815 - 1830	73	0	**73**	
1830 - 1845	66	0	**66**	
1845 - 1900	78	0	**78**	**296**
1900 - 1915	47	0	**47**	
1915 - 1930	48	0	**48**	
1930 - 1945	33	0	**33**	
1945 - 2000	32	0	**32**	**160**
2000 - 2015	49	0	**49**	
2015 - 2030	31	0	**31**	
2030 - 2045	31	0	**31**	
2045 - 2100	47	0	**47**	**158**
2100 - 2115	28	0	**28**	
2115 - 2130	22	0	**22**	
2130 - 2145	19	0	**19**	
2145 - 2200	15	0	**15**	**84**
2200 - 2215	15	0	**15**	
2215 - 2230	18	0	**18**	
2230 - 2245	16	0	**16**	
2245 - 2300	11	0	**11**	**60**
2300 - 2315	15	0	**15**	
2315 - 2330	12	0	**12**	
2330 - 2345	7	0	**7**	
2345 - 0000	2	0	**2**	**36**

Session Total	3905	0	**3905**
Session Average	40.68	0.00	**40.68**
Session Percentage	100.00	0.00	

Site 15

I-26 James F. Byrnes N/Bound Off-Ramp,
south of US-176 Broad River Rd

Date

Thursday, April 25, 2024

Lat/Long

34.097905°, -81.172883°

Weather

Fair
67°F

Click here for Detailed Weather

0000 - 2400 (Weekday 24h Session) (04-25-2024)

Volume Summary 15min

TIME	Volume Summary 15min NB	SB	15min Total	60min Total
0000 - 0015	5	0	**5**	
0015 - 0030	10	0	**10**	
0030 - 0045	10	0	**10**	
0045 - 0100	4	0	**4**	**29**
0100 - 0115	0	0	**0**	
0115 - 0130	3	0	**3**	
0130 - 0145	4	0	**4**	
0145 - 0200	3	0	**3**	**10**
0200 - 0215	6	0	**6**	
0215 - 0230	1	0	**1**	
0230 - 0245	0	0	**0**	
0245 - 0300	2	0	**2**	**9**
0300 - 0315	3	0	**3**	
0315 - 0330	7	0	**7**	
0330 - 0345	8	0	**8**	
0345 - 0400	32	0	**32**	**50**
0400 - 0415	2	0	**2**	
0415 - 0430	2	0	**2**	
0430 - 0445	4	0	**4**	
0445 - 0500	3	0	**3**	**11**
0500 - 0515	6	0	**6**	
0515 - 0530	5	0	**5**	
0530 - 0545	7	0	**7**	
0545 - 0600	18	0	**18**	**36**
0600 - 0615	16	0	**16**	
0615 - 0630	21	0	**21**	
0630 - 0645	26	0	**26**	
0645 - 0700	55	0	**55**	**118**
0700 - 0715	48	0	**48**	
0715 - 0730	71	0	**71**	
0730 - 0745	83	0	**83**	
0745 - 0800	81	0	**81**	**283**
0800 - 0815	84	0	**84**	
0815 - 0830	56	0	**56**	
0830 - 0845	48	0	**48**	
0845 - 0900	60	0	**60**	**248**
0900 - 0915	42	0	**42**	
0915 - 0930	49	0	**49**	
0930 - 0945	45	0	**45**	
0945 - 1000	44	0	**44**	**180**
1000 - 1015	39	0	**39**	
1015 - 1030	52	0	**52**	
1030 - 1045	36	0	**36**	
1045 - 1100	36	0	**36**	**163**
1100 - 1115	48	0	**48**	
1115 - 1130	47	0	**47**	
1130 - 1145	63	0	**63**	
1145 - 1200	50	0	**50**	**208**

Time	Volume Summary 15min NB	SB	15min Total	60min Total
1200 - 1215	50	0	**50**	
1215 - 1230	45	0	**45**	
1230 - 1245	57	0	**57**	
1245 - 1300	65	0	**65**	**217**
1300 - 1315	44	0	**44**	
1315 - 1330	68	0	**68**	
1330 - 1345	51	0	**51**	
1345 - 1400	68	0	**68**	**231**
1400 - 1415	47	0	**47**	
1415 - 1430	67	0	**67**	
1430 - 1445	78	0	**78**	
1445 - 1500	77	0	**77**	**269**
1500 - 1515	63	0	**63**	
1515 - 1530	75	0	**75**	
1530 - 1545	71	0	**71**	
1545 - 1600	72	0	**72**	**281**
1600 - 1615	82	0	**82**	
1615 - 1630	95	0	**95**	
1630 - 1645	83	0	**83**	
1645 - 1700	123	0	**123**	**383**
1700 - 1715	95	0	**95**	
1715 - 1730	114	0	**114**	
1730 - 1745	101	0	**101**	
1745 - 1800	93	0	**93**	**403**
1800 - 1815	73	0	**73**	
1815 - 1830	74	0	**74**	
1830 - 1845	53	0	**53**	
1845 - 1900	69	0	**69**	**269**
1900 - 1915	0	0	**0**	
1915 - 1930	0	0	**0**	
1930 - 1945	0	0	**0**	
1945 - 2000	0	0	**0**	**0**
2000 - 2015	0	0	**0**	
2015 - 2030	0	0	**0**	
2030 - 2045	0	0	**0**	
2045 - 2100	0	0	**0**	**0**
2100 - 2115	0	0	**0**	
2115 - 2130	0	0	**0**	
2130 - 2145	0	0	**0**	
2145 - 2200	0	0	**0**	**0**
2200 - 2215	0	0	**0**	
2215 - 2230	0	0	**0**	
2230 - 2245	0	0	**0**	
2245 - 2300	0	0	**0**	**0**
2300 - 2315	0	0	**0**	
2315 - 2330	0	0	**0**	
2330 - 2345	0	0	**0**	
2345 - 0000	0	0	**0**	**0**

Session Total	3398	0	**3398**
Session Average	35.40	0.00	**35.40**
Session Percentage	100.00	0.00	

Bi-Directional Class Count || NB EB 60min

Columbia, SC

Marr Traffic DATA COLLECTION

www.marrtraffic.com

Site 15
I-26 James F. Byrnes N/Bound Off-Ramp,
south of US-176 Broad River Rd

Date
Tuesday, April 23, 2024

Lat/Long
34.097905°, -81.172883°

Weather
Fair
58°F

Click here for Detailed Weather

0000 - 2400 (Weekday 24h Session) (04-23-2024)
NB EB 60min

	Northbound (Movement 15.1)													
TIME	1	2	3	4	5	6	7	8	9	10	11	12	13	**Total**
0000 - 0100	0	0	0	0	0	0	0	0	0	0	0	0	0	**0**
0100 - 0200	0	0	0	0	0	0	0	0	0	0	0	0	0	**0**
0200 - 0300	0	0	0	0	0	0	0	0	0	0	0	0	0	**0**
0300 - 0400	0	0	0	0	0	0	0	0	0	0	0	0	0	**0**
0400 - 0500	0	0	0	0	0	0	0	0	0	0	0	0	0	**0**
0500 - 0600	0	0	0	0	0	0	0	0	0	0	0	0	0	**0**
0600 - 0700	0	0	0	0	0	0	0	0	0	0	0	0	0	**0**
0700 - 0800	0	0	0	0	0	0	0	0	0	0	0	0	0	**0**
0800 - 0900	0	0	0	0	0	0	0	0	0	0	0	0	0	**0**
0900 - 1000	0	0	0	0	0	0	0	0	0	0	0	0	0	**0**
1000 - 1100	0	0	0	0	0	0	0	0	0	0	0	0	0	**0**
1100 - 1200	0	0	0	0	0	0	0	0	0	0	0	0	0	**0**
1200 - 1300	0	0	0	0	0	0	0	0	0	0	0	0	0	**0**
1300 - 1400	0	0	0	0	0	0	0	0	0	0	0	0	0	**0**
1400 - 1500	0	0	0	0	0	0	0	0	0	0	0	0	0	**0**
1500 - 1600	0	0	0	0	0	0	0	0	0	0	0	0	0	**0**
1600 - 1700	0	0	0	0	0	0	0	0	0	0	0	0	0	**0**
1700 - 1800	0	0	0	0	0	0	0	0	0	0	0	0	0	**0**
1800 - 1900	0	0	0	0	0	0	0	0	0	0	0	0	0	**0**
1900 - 2000	0	199	50	0	2	0	0	0	2	0	0	0	0	**253**
2000 - 2100	0	109	19	1	2	0	0	1	0	0	0	0	0	**132**
2100 - 2200	0	94	5	0	0	0	0	0	0	0	0	0	0	**99**
2200 - 2300	0	46	1	0	0	0	0	0	1	0	0	0	0	**48**
2300 - 2400	0	37	1	0	0	0	0	0	1	0	0	0	0	**39**
Session Total	0	485	76	1	4	0	0	1	4	0	0	0	0	**571**
Session Average	0.00	20.21	3.17	0.04	0.17	0.00	0.00	0.04	0.17	0.00	0.00	0.00	0.00	**23.79**
Session Percentage	0.00	84.94	13.31	0.18	0.70	0.00	0.00	0.18	0.70	0.00	0.00	0.00	0.00	
AM Peak Hour	-	-	-	-	-	-	-	-	-	-	-	-	-	**-**
AM Peak Volume	0	0	0	0	0	0	0	0	0	0	0	0	0	**0**
Noon Peak Hour	-	-	-	-	-	-	-	-	-	-	-	-	-	**-**
Noon Peak Volume	0	0	0	0	0	0	0	0	0	0	0	0	0	**0**
PM Peak Hour	-	1900 - 2000	1900 - 2000	-	1900 - 2000	-	-	-	1900 - 2000	-	-	-	-	**1900 - 2000**
PM Peak Volume	0	199	50	0	2	0	0	0	2	0	0	0	0	**253**

Site 15
I-26 James F. Byrnes N/Bound Off-Ramp,
south of US-176 Broad River Rd

Date
Wednesday, April 24, 2024

Lat/Long
34.097905°, -81.172883°

Weather
Fair
66°F

Click here for Detailed Weather

0000 - 2400 (Weekday 24h Session) (04-24-2024)
NB EB 60min

	Northbound (Movement 15.1)													
TIME	1	2	3	4	5	6	7	8	9	10	11	12	13	**Total**
0000 - 0100	0	21	2	0	0	0	0	0	0	0	0	0	0	**23**
0100 - 0200	0	12	1	0	0	0	0	0	0	0	0	0	0	**13**
0200 - 0300	0	7	3	0	0	0	0	0	0	0	0	0	0	**10**
0300 - 0400	0	45	8	0	0	0	0	0	0	0	0	0	0	**53**
0400 - 0500	0	9	1	0	1	0	0	0	0	0	0	0	0	**11**
0500 - 0600	0	27	6	0	3	0	0	0	1	0	0	0	0	**37**
0600 - 0700	0	62	31	0	2	1	1	1	1	0	0	0	0	**99**
0700 - 0800	0	188	52	0	5	2	0	0	5	0	1	0	0	**253**
0800 - 0900	1	153	44	0	4	1	1	0	2	0	2	0	0	**208**
0900 - 1000	0	132	37	0	9	0	2	2	7	0	0	0	0	**189**
1000 - 1100	1	103	31	1	5	1	1	3	2	0	0	0	0	**148**
1100 - 1200	0	126	37	0	4	0	2	1	2	0	0	0	0	**172**
1200 - 1300	3	114	47	2	6	2	1	2	4	0	0	0	0	**181**
1300 - 1400	0	127	48	0	9	2	1	1	8	0	0	0	0	**196**
1400 - 1500	2	252	103	0	12	2	4	0	4	0	0	0	0	**379**
1500 - 1600	1	257	69	1	4	2	0	1	2	0	1	0	0	**338**
1600 - 1700	1	290	62	0	6	4	2	0	3	0	0	0	0	**368**
1700 - 1800	0	341	88	0	2	1	0	0	1	0	0	0	0	**433**
1800 - 1900	0	244	47	0	2	0	0	0	3	0	0	0	0	**296**
1900 - 2000	0	133	26	0	1	0	0	0	0	0	0	0	0	**160**
2000 - 2100	0	143	15	0	0	0	0	0	0	0	0	0	0	**158**
2100 - 2200	0	76	6	1	0	1	0	0	0	0	0	0	0	**84**
2200 - 2300	0	56	2	0	1	1	0	0	0	0	0	0	0	**60**
2300 - 2400	0	35	1	0	0	0	0	0	0	0	0	0	0	**36**

Session Total	9	2953	767	5	76	20	15	11	45	0	4	0	0	**3905**
Session Average	0.38	123.04	31.96	0.21	3.17	0.83	0.63	0.46	1.88	0.00	0.17	0.00	0.00	**162.71**
Session Percentage	0.23	75.62	19.64	0.13	1.95	0.51	0.38	0.28	1.15	0.00	0.10	0.00	0.00	

AM Peak Hour	0800 - 0900	0700 - 0800	0700 - 0800	-	0900 - 1000	0700 - 0800	0900 - 1000	0900 - 1000	0900 - 1000	-	0800 - 0900	-	-	**0700 - 0800**
AM Peak Volume	1	188	52	0	9	2	2	2	7	0	2	0	0	**253**

Noon Peak Hour	1200 - 1300	1400 - 1500	1400 - 1500	1200 - 1300	1400 - 1500	1200 - 1300	1400 - 1500	1000 - 1100	1300 - 1400	-	-	-	-	**1400 - 1500**
Noon Peak Volume	3	252	103	2	12	2	4	3	8	0	0	0	0	**379**

PM Peak Hour	1500 - 1600	1700 - 1800	1700 - 1800	1500 - 1600	1600 - 1700	1600 - 1700	1600 - 1700	1500 - 1600	1600 - 1700	-	1500 - 1600	-	-	**1700 - 1800**
PM Peak Volume	1	341	88	1	6	4	2	1	3	0	1	0	0	**433**

Site 15
I-26 James F. Byrnes N/Bound Off-Ramp,
south of US-176 Broad River Rd

Date
Thursday, April 25, 2024

Lat/Long
34.097905°, -81.172883°

Weather
Fair
67°F

Click here for Detailed Weather

0000 - 2400 (Weekday 24h Session) (04-25-2024)
NB EB 60min

	Northbound (Movement 15.1)													
TIME	1	2	3	4	5	6	7	8	9	10	11	12	13	**Total**
0000 - 0100	0	28	1	0	0	0	0	0	0	0	0	0	0	**29**
0100 - 0200	0	9	1	0	0	0	0	0	0	0	0	0	0	**10**
0200 - 0300	0	8	1	0	0	0	0	0	0	0	0	0	0	**9**
0300 - 0400	0	45	4	0	0	0	0	0	1	0	0	0	0	**50**
0400 - 0500	0	10	0	0	0	1	0	0	0	0	0	0	0	**11**
0500 - 0600	0	30	3	0	2	0	0	0	1	0	0	0	0	**36**
0600 - 0700	0	87	22	0	3	0	0	0	5	0	1	0	0	**118**
0700 - 0800	2	201	66	1	3	3	2	1	4	0	0	0	0	**283**
0800 - 0900	0	170	63	0	6	2	1	3	3	0	0	0	0	**248**
0900 - 1000	0	122	43	0	8	2	0	2	3	0	0	0	0	**180**
1000 - 1100	1	109	37	0	6	5	0	2	3	0	0	0	0	**163**
1100 - 1200	1	149	40	0	6	1	3	7	1	0	0	0	0	**208**
1200 - 1300	4	157	45	1	7	0	0	2	1	0	0	0	0	**217**
1300 - 1400	0	167	53	3	4	2	0	1	1	0	0	0	0	**231**
1400 - 1500	2	202	56	0	5	1	0	0	3	0	0	0	0	**269**
1500 - 1600	0	205	67	0	7	0	0	1	1	0	0	0	0	**281**
1600 - 1700	1	288	84	0	3	1	0	1	5	0	0	0	0	**383**
1700 - 1800	1	331	64	0	5	1	0	0	1	0	0	0	0	**403**
1800 - 1900	2	217	45	0	4	0	0	1	0	0	0	0	0	**269**
1900 - 2000	0	0	0	0	0	0	0	0	0	0	0	0	0	**0**
2000 - 2100	0	0	0	0	0	0	0	0	0	0	0	0	0	**0**
2100 - 2200	0	0	0	0	0	0	0	0	0	0	0	0	0	**0**
2200 - 2300	0	0	0	0	0	0	0	0	0	0	0	0	0	**0**
2300 - 2400	0	0	0	0	0	0	0	0	0	0	0	0	0	**0**

Session Total	14	2535	695	5	69	19	6	21	33	0	1	0	0	**3398**
Session Average	0.58	105.63	28.96	0.21	2.88	0.79	0.25	0.88	1.38	0.00	0.04	0.00	0.00	**141.58**
Session Percentage	0.41	74.60	20.45	0.15	2.03	0.56	0.18	0.62	0.97	0.00	0.03	0.00	0.00	

AM Peak Hour	0700 - 0800	0700 - 0800	0700 - 0800	0700 - 0800	0900 - 1000	0700 - 0800	0700 - 0800	0800 - 0900	0600 - 0700	-	0600 - 0700	-	-	**0700 - 0800**
AM Peak Hour Volume	2	201	66	1	8	3	2	3	5	0	1	0	0	**283**

Noon Peak Hour	1200 - 1300	1400 - 1500	1400 - 1500	1300 - 1400	1200 - 1300	1000 - 1100	1100 - 1200	1100 - 1200	1000 - 1100	-	-	-	-	**1400 - 1500**
Noon Peak Hour Volume	4	202	56	3	7	5	3	7	3	0	0	0	0	**269**

PM Peak Hour	1800 - 1900	1700 - 1800	1600 - 1700	-	1500 - 1600	1600 - 1700	-	1500 - 1600	1600 - 1700	-	-	-	-	**1700 - 1800**
PM Peak Hour Volume	2	331	84	0	7	1	0	1	5	0	0	0	0	**403**

Bi-Directional Class Count || Volume Summary 60min

Columbia, SC

Marr Traffic DATA COLLECTION

www.marrtraffic.com

Site 15

I-26 James F. Byrnes N/Bound Off-Ramp,
south of US-176 Broad River Rd

Date

Tuesday, April 23, 2024

Lat/Long

34.097905°, -81.172883°

Weather

Fair
58°F

Click here for Detailed Weather

0000 - 2400 (Weekday 24h Session) (04-23-2024)

Volume Summary 60min

	Volume Summary 60min		
TIME	NB	SB	**Total**
0000 - 0100	0	0	**0**
0100 - 0200	0	0	**0**
0200 - 0300	0	0	**0**
0300 - 0400	0	0	**0**
0400 - 0500	0	0	**0**
0500 - 0600	0	0	**0**
0600 - 0700	0	0	**0**
0700 - 0800	0	0	**0**
0800 - 0900	0	0	**0**
0900 - 1000	0	0	**0**
1000 - 1100	0	0	**0**
1100 - 1200	0	0	**0**

	Volume Summary 60min		
Time	NB	SB	**Total**
1200 - 1300	0	0	**0**
1300 - 1400	0	0	**0**
1400 - 1500	0	0	**0**
1500 - 1600	0	0	**0**
1600 - 1700	0	0	**0**
1700 - 1800	0	0	**0**
1800 - 1900	0	0	**0**
1900 - 2000	253	0	**253**
2000 - 2100	132	0	**132**
2100 - 2200	99	0	**99**
2200 - 2300	48	0	**48**
2300 - 2400	39	0	**39**

Session Total	571	0	**571**
Session Average	23.79	0.00	**23.79**
Session Percentage	100.00	0.00	

Site 15

I-26 James F. Byrnes N/Bound Off-Ramp,
south of US-176 Broad River Rd

Date

Wednesday, April 24, 2024

Lat/Long

34.097905°, -81.172883°

Weather

Fair
66°F

Click here for Detailed Weather

0000 - 2400 (Weekday 24h Session) (04-24-2024)

Volume Summary 60min

	Volume Summary 60min		
TIME	NB	SB	**Total**
0000 - 0100	23	0	**23**
0100 - 0200	13	0	**13**
0200 - 0300	10	0	**10**
0300 - 0400	53	0	**53**
0400 - 0500	11	0	**11**
0500 - 0600	37	0	**37**
0600 - 0700	99	0	**99**
0700 - 0800	253	0	**253**
0800 - 0900	208	0	**208**
0900 - 1000	189	0	**189**
1000 - 1100	148	0	**148**
1100 - 1200	172	0	**172**

Session Total	3905	0	**3905**
Session Average	162.71	0.00	**162.71**
Session Percentage	100.00	0.00	

	Volume Summary 60min		
Time	NB	SB	**Total**
1200 - 1300	181	0	**181**
1300 - 1400	196	0	**196**
1400 - 1500	379	0	**379**
1500 - 1600	338	0	**338**
1600 - 1700	368	0	**368**
1700 - 1800	433	0	**433**
1800 - 1900	296	0	**296**
1900 - 2000	160	0	**160**
2000 - 2100	158	0	**158**
2100 - 2200	84	0	**84**
2200 - 2300	60	0	**60**
2300 - 2400	36	0	**36**

Site 15

I-26 James F. Byrnes N/Bound Off-Ramp,
south of US-176 Broad River Rd

Date

Thursday, April 25, 2024

Lat/Long

34.097905°, -81.172883°

Weather

Fair
67°F

Click here for Detailed Weather

0000 - 2400 (Weekday 24h Session) (04-25-2024)

Volume Summary 60min

	Volume Summary 60min		
TIME	NB	SB	**Total**
0000 - 0100	29	0	**29**
0100 - 0200	10	0	**10**
0200 - 0300	9	0	**9**
0300 - 0400	50	0	**50**
0400 - 0500	11	0	**11**
0500 - 0600	36	0	**36**
0600 - 0700	118	0	**118**
0700 - 0800	283	0	**283**
0800 - 0900	248	0	**248**
0900 - 1000	180	0	**180**
1000 - 1100	163	0	**163**
1100 - 1200	208	0	**208**

	Volume Summary 60min		
Time	NB	SB	**Total**
1200 - 1300	217	0	**217**
1300 - 1400	231	0	**231**
1400 - 1500	269	0	**269**
1500 - 1600	281	0	**281**
1600 - 1700	383	0	**383**
1700 - 1800	403	0	**403**
1800 - 1900	269	0	**269**
1900 - 2000	0	0	**0**
2000 - 2100	0	0	**0**
2100 - 2200	0	0	**0**
2200 - 2300	0	0	**0**
2300 - 2400	0	0	**0**

Session Total	3398	0	**3398**
Session Average	141.58	0.00	**141.58**
Session Percentage	100.00	0.00	

Bi-Directional Class Count || Graphical Analysis NB EB

Columbia, SC

Marr Traffic DATA COLLECTION

www.marrtraffic.com

Site 15

I-26 James F. Byrnes N/Bound Off-Ramp,
south of US-176 Broad River Rd

Lat/Long

34.097905°, -81.172883°

0000 - 2400 (Weekday 24h Session)

Graphical Analysis NB EB

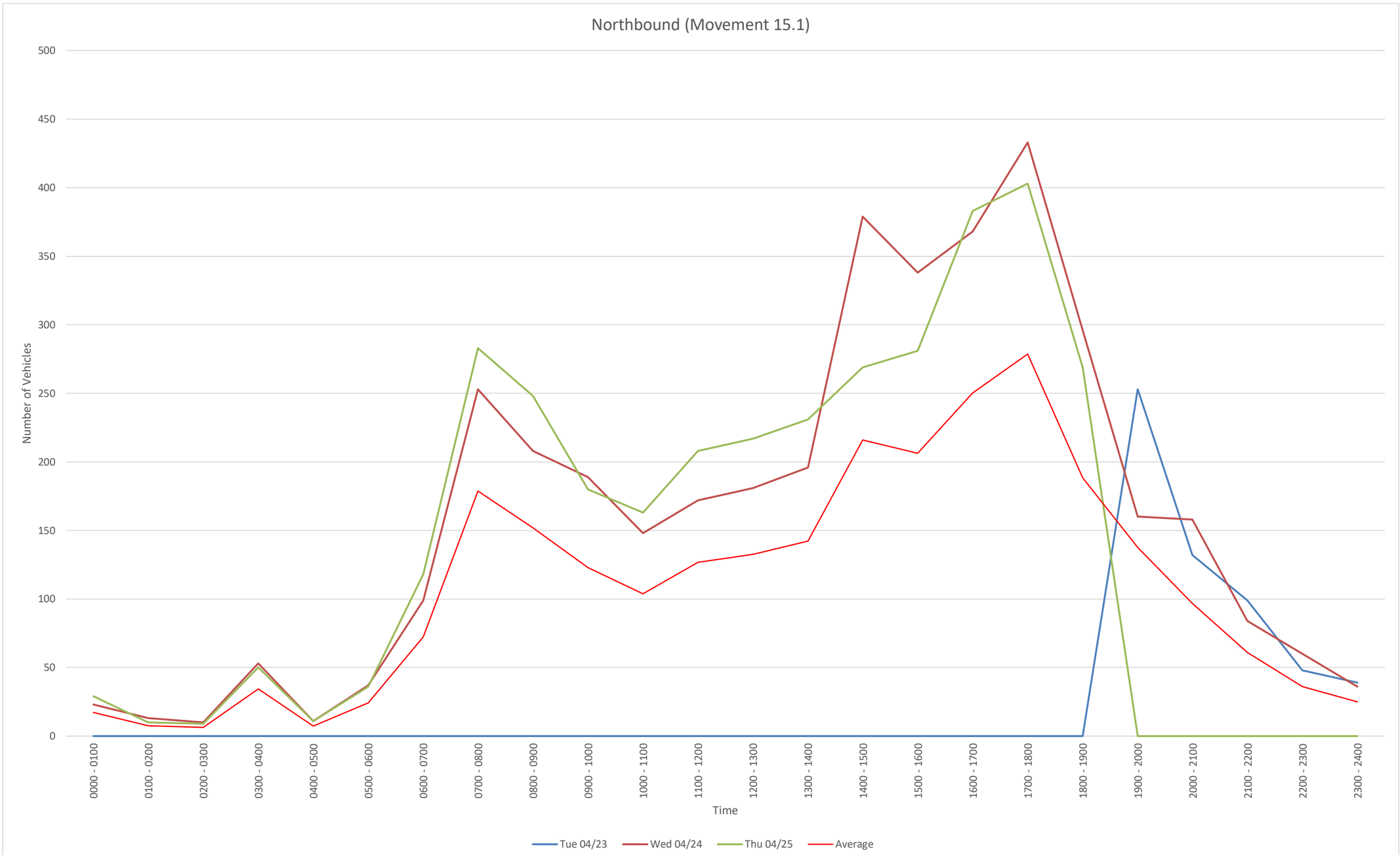

Time	Tue 04/23	Wed 04/24	Thu 04/25				
0000 - 0100	0	23	29				
0100 - 0200	0	13	10				
0200 - 0300	0	10	9				
0300 - 0400	0	53	50				
0400 - 0500	0	11	11				
0500 - 0600	0	37	36				
0600 - 0700	0	99	118				
0700 - 0800	0	253	283				
0800 - 0900	0	208	248				
0900 - 1000	0	189	180				
1000 - 1100	0	148	163				
1100 - 1200	0	172	208				
1200 - 1300	0	181	217				
1300 - 1400	0	196	231				
1400 - 1500	0	379	269				
1500 - 1600	0	338	281				
1600 - 1700	0	368	383				
1700 - 1800	0	433	403				
1800 - 1900	0	296	269				
1900 - 2000	253	160	0				
2000 - 2100	132	158	0				
2100 - 2200	99	84	0				
2200 - 2300	48	60	0				
2300 - 2400	39	36	0				
Daily Total	571	3905	3398				

NB
File Name:
Start Date: 4/23/2024
Start Time: 0
Site Code: 15
Station ID: 1
Location 1: I-26 James F. Byrnes N/Bound Off-Ramp, south of US-176 Broad River Rd
Location 2:

Date	Time	1	2	3	4	5	6	7	8	9	10	11	12	13
4/23/2024	12:00 AM	0	0	0	0	0	0	0	0	0	0	0	0	0
4/23/2024	12:15 AM	0	0	0	0	0	0	0	0	0	0	0	0	0
4/23/2024	12:30 AM	0	0	0	0	0	0	0	0	0	0	0	0	0
4/23/2024	12:45 AM	0	0	0	0	0	0	0	0	0	0	0	0	0
4/23/2024	1:00 AM	0	0	0	0	0	0	0	0	0	0	0	0	0
4/23/2024	1:15 AM	0	0	0	0	0	0	0	0	0	0	0	0	0
4/23/2024	1:30 AM	0	0	0	0	0	0	0	0	0	0	0	0	0
4/23/2024	1:45 AM	0	0	0	0	0	0	0	0	0	0	0	0	0
4/23/2024	2:00 AM	0	0	0	0	0	0	0	0	0	0	0	0	0
4/23/2024	2:15 AM	0	0	0	0	0	0	0	0	0	0	0	0	0
4/23/2024	2:30 AM	0	0	0	0	0	0	0	0	0	0	0	0	0
4/23/2024	2:45 AM	0	0	0	0	0	0	0	0	0	0	0	0	0
4/23/2024	3:00 AM	0	0	0	0	0	0	0	0	0	0	0	0	0
4/23/2024	3:15 AM	0	0	0	0	0	0	0	0	0	0	0	0	0
4/23/2024	3:30 AM	0	0	0	0	0	0	0	0	0	0	0	0	0
4/23/2024	3:45 AM	0	0	0	0	0	0	0	0	0	0	0	0	0
4/23/2024	4:00 AM	0	0	0	0	0	0	0	0	0	0	0	0	0
4/23/2024	4:15 AM	0	0	0	0	0	0	0	0	0	0	0	0	0
4/23/2024	4:30 AM	0	0	0	0	0	0	0	0	0	0	0	0	0
4/23/2024	4:45 AM	0	0	0	0	0	0	0	0	0	0	0	0	0
4/23/2024	5:00 AM	0	0	0	0	0	0	0	0	0	0	0	0	0
4/23/2024	5:15 AM	0	0	0	0	0	0	0	0	0	0	0	0	0
4/23/2024	5:30 AM	0	0	0	0	0	0	0	0	0	0	0	0	0
4/23/2024	5:45 AM	0	0	0	0	0	0	0	0	0	0	0	0	0
4/23/2024	6:00 AM	0	0	0	0	0	0	0	0	0	0	0	0	0
4/23/2024	6:15 AM	0	0	0	0	0	0	0	0	0	0	0	0	0
4/23/2024	6:30 AM	0	0	0	0	0	0	0	0	0	0	0	0	0
4/23/2024	6:45 AM	0	0	0	0	0	0	0	0	0	0	0	0	0
4/23/2024	7:00 AM	0	0	0	0	0	0	0	0	0	0	0	0	0
4/23/2024	7:15 AM	0	0	0	0	0	0	0	0	0	0	0	0	0
4/23/2024	7:30 AM	0	0	0	0	0	0	0	0	0	0	0	0	0
4/23/2024	7:45 AM	0	0	0	0	0	0	0	0	0	0	0	0	0
4/23/2024	8:00 AM	0	0	0	0	0	0	0	0	0	0	0	0	0
4/23/2024	8:15 AM	0	0	0	0	0	0	0	0	0	0	0	0	0
4/23/2024	8:30 AM	0	0	0	0	0	0	0	0	0	0	0	0	0
4/23/2024	8:45 AM	0	0	0	0	0	0	0	0	0	0	0	0	0
4/23/2024	9:00 AM	0	0	0	0	0	0	0	0	0	0	0	0	0
4/23/2024	9:15 AM	0	0	0	0	0	0	0	0	0	0	0	0	0
4/23/2024	9:30 AM	0	0	0	0	0	0	0	0	0	0	0	0	0
4/23/2024	9:45 AM	0	0	0	0	0	0	0	0	0	0	0	0	0
4/23/2024	10:00 AM	0	0	0	0	0	0	0	0	0	0	0	0	0
4/23/2024	10:15 AM	0	0	0	0	0	0	0	0	0	0	0	0	0
4/23/2024	10:30 AM	0	0	0	0	0	0	0	0	0	0	0	0	0
4/23/2024	10:45 AM	0	0	0	0	0	0	0	0	0	0	0	0	0
4/23/2024	11:00 AM	0	0	0	0	0	0	0	0	0	0	0	0	0
4/23/2024	11:15 AM	0	0	0	0	0	0	0	0	0	0	0	0	0
4/23/2024	11:30 AM	0	0	0	0	0	0	0	0	0	0	0	0	0
4/23/2024	11:45 AM	0	0	0	0	0	0	0	0	0	0	0	0	0
4/23/2024	12:00 PM	0	0	0	0	0	0	0	0	0	0	0	0	0
4/23/2024	12:15 PM	0	0	0	0	0	0	0	0	0	0	0	0	0
4/23/2024	12:30 PM	0	0	0	0	0	0	0	0	0	0	0	0	0
4/23/2024	12:45 PM	0	0	0	0	0	0	0	0	0	0	0	0	0
4/23/2024	1:00 PM	0	0	0	0	0	0	0	0	0	0	0	0	0
4/23/2024	1:15 PM	0	0	0	0	0	0	0	0	0	0	0	0	0
4/23/2024	1:30 PM	0	0	0	0	0	0	0	0	0	0	0	0	0
4/23/2024	1:45 PM	0	0	0	0	0	0	0	0	0	0	0	0	0
4/23/2024	2:00 PM	0	0	0	0	0	0	0	0	0	0	0	0	0
4/23/2024	2:15 PM	0	0	0	0	0	0	0	0	0	0	0	0	0
4/23/2024	2:30 PM	0	0	0	0	0	0	0	0	0	0	0	0	0
4/23/2024	2:45 PM	0	0	0	0	0	0	0	0	0	0	0	0	0
4/23/2024	3:00 PM	0	0	0	0	0	0	0	0	0	0	0	0	0
4/23/2024	3:15 PM	0	0	0	0	0	0	0	0	0	0	0	0	0
4/23/2024	3:30 PM	0	0	0	0	0	0	0	0	0	0	0	0	0
4/23/2024	3:45 PM	0	0	0	0	0	0	0	0	0	0	0	0	0
4/23/2024	4:00 PM	0	0	0	0	0	0	0	0	0	0	0	0	0
4/23/2024	4:15 PM	0	0	0	0	0	0	0	0	0	0	0	0	0
4/23/2024	4:30 PM	0	0	0	0	0	0	0	0	0	0	0	0	0
4/23/2024	4:45 PM	0	0	0	0	0	0	0	0	0	0	0	0	0
4/23/2024	5:00 PM	0	0	0	0	0	0	0	0	0	0	0	0	0
4/23/2024	5:15 PM	0	0	0	0	0	0	0	0	0	0	0	0	0
4/23/2024	5:30 PM	0	0	0	0	0	0	0	0	0	0	0	0	0
4/23/2024	5:45 PM	0	0	0	0	0	0	0	0	0	0	0	0	0
4/23/2024	6:00 PM	0	0	0	0	0	0	0	0	0	0	0	0	0
4/23/2024	6:15 PM	0	0	0	0	0	0	0	0	0	0	0	0	0
4/23/2024	6:30 PM	0	0	0	0	0	0	0	0	0	0	0	0	0
4/23/2024	6:45 PM	0	0	0	0	0	0	0	0	0	0	0	0	0
4/23/2024	7:00 PM	0	35	8	0	1	0	0	0	0	0	0	0	0
4/23/2024	7:15 PM	0	56	14	0	0	0	0	0	0	0	0	0	0
4/23/2024	7:30 PM	0	61	16	0	1	0	0	0	1	0	0	0	0
4/23/2024	7:45 PM	0	47	12	0	0	0	0	0	1	0	0	0	0
4/23/2024	8:00 PM	0	41	7	1	0	0	0	0	0	0	0	0	0
4/23/2024	8:15 PM	0	25	5	0	1	0	0	1	0	0	0	0	0
4/23/2024	8:30 PM	0	28	5	0	0	0	0	0	0	0	0	0	0
4/23/2024	8:45 PM	0	15	2	0	1	0	0	0	0	0	0	0	0
4/23/2024	9:00 PM	0	34	1	0	0	0	0	0	0	0	0	0	0
4/23/2024	9:15 PM	0	28	1	0	0	0	0	0	0	0	0	0	0
4/23/2024	9:30 PM	0	15	2	0	0	0	0	0	0	0	0	0	0
4/23/2024	9:45 PM	0	17	1	0	0	0	0	0	0	0	0	0	0
4/23/2024	10:00 PM	0	13	0	0	0	0	0	0	0	0	0	0	0
4/23/2024	10:15 PM	0	10	0	0	0	0	0	0	0	0	0	0	0
4/23/2024	10:30 PM	0	16	1	0	0	0	0	0	1	0	0	0	0
4/23/2024	10:45 PM	0	7	0	0	0	0	0	0	0	0	0	0	0
4/23/2024	11:00 PM	0	12	1	0	0	0	0	0	1	0	0	0	0
4/23/2024	11:15 PM	0	12	0	0	0	0	0	0	0	0	0	0	0
4/23/2024	11:30 PM	0	4	0	0	0	0	0	0	0	0	0	0	0
4/23/2024	11:45 PM	0	9	0	0	0	0	0	0	0	0	0	0	0

4/24/2024	12:00 AM	0	6	0	0	0	0	0	0	0	0	0	0
4/24/2024	12:15 AM	0	11	1	0	0	0	0	0	0	0	0	0
4/24/2024	12:30 AM	0	2	1	0	0	0	0	0	0	0	0	0
4/24/2024	12:45 AM	0	2	0	0	0	0	0	0	0	0	0	0
4/24/2024	1:00 AM	0	3	0	0	0	0	0	0	0	0	0	0
4/24/2024	1:15 AM	0	5	0	0	0	0	0	0	0	0	0	0
4/24/2024	1:30 AM	0	3	1	0	0	0	0	0	0	0	0	0
4/24/2024	1:45 AM	0	1	0	0	0	0	0	0	0	0	0	0
4/24/2024	2:00 AM	0	0	0	0	0	0	0	0	0	0	0	0
4/24/2024	2:15 AM	0	4	1	0	0	0	0	0	0	0	0	0
4/24/2024	2:30 AM	0	1	1	0	0	0	0	0	0	0	0	0
4/24/2024	2:45 AM	0	2	1	0	0	0	0	0	0	0	0	0
4/24/2024	3:00 AM	0	1	1	0	0	0	0	0	0	0	0	0
4/24/2024	3:15 AM	0	4	2	0	0	0	0	0	0	0	0	0
4/24/2024	3:30 AM	0	12	2	0	0	0	0	0	0	0	0	0
4/24/2024	3:45 AM	0	28	3	0	0	0	0	0	0	0	0	0
4/24/2024	4:00 AM	0	0	0	0	1	0	0	0	0	0	0	0
4/24/2024	4:15 AM	0	1	0	0	0	0	0	0	0	0	0	0
4/24/2024	4:30 AM	0	2	1	0	0	0	0	0	0	0	0	0
4/24/2024	4:45 AM	0	6	0	0	0	0	0	0	0	0	0	0
4/24/2024	5:00 AM	0	6	0	0	0	0	0	0	0	0	0	0
4/24/2024	5:15 AM	0	3	1	0	0	0	0	0	0	0	0	0
4/24/2024	5:30 AM	0	8	2	0	1	0	0	0	0	0	0	0
4/24/2024	5:45 AM	0	10	3	0	2	0	0	0	1	0	0	0
4/24/2024	6:00 AM	0	13	4	0	1	0	0	0	0	0	0	0
4/24/2024	6:15 AM	0	8	6	0	0	0	0	1	0	0	0	0
4/24/2024	6:30 AM	0	16	3	0	1	0	0	0	0	0	0	0
4/24/2024	6:45 AM	0	25	18	0	0	1	1	0	1	0	0	0
4/24/2024	7:00 AM	0	28	10	0	1	0	0	0	3	0	0	0
4/24/2024	7:15 AM	0	46	19	0	2	0	0	0	0	0	0	0
4/24/2024	7:30 AM	0	44	11	0	0	0	0	0	2	0	1	0
4/24/2024	7:45 AM	0	70	12	0	2	2	0	0	0	0	0	0
4/24/2024	8:00 AM	0	45	10	0	0	0	0	0	0	0	1	0
4/24/2024	8:15 AM	0	40	12	0	3	0	0	0	1	0	0	0
4/24/2024	8:30 AM	0	26	9	0	0	0	1	0	1	0	1	0
4/24/2024	8:45 AM	1	42	13	0	1	1	0	0	0	0	0	0
4/24/2024	9:00 AM	0	39	10	0	1	0	1	0	5	0	0	0
4/24/2024	9:15 AM	0	21	7	0	2	0	0	1	0	0	0	0
4/24/2024	9:30 AM	0	34	10	0	3	0	1	0	1	0	0	0
4/24/2024	9:45 AM	0	38	10	0	3	0	0	1	1	0	0	0
4/24/2024	10:00 AM	0	27	5	0	1	0	0	0	0	0	0	0
4/24/2024	10:15 AM	0	24	7	1	2	0	1	0	1	0	0	0
4/24/2024	10:30 AM	0	19	13	0	1	1	0	2	1	0	0	0
4/24/2024	10:45 AM	1	33	6	0	1	0	0	1	0	0	0	0
4/24/2024	11:00 AM	0	27	9	0	2	0	1	0	0	0	0	0
4/24/2024	11:15 AM	0	35	7	0	0	0	1	1	0	0	0	0
4/24/2024	11:30 AM	0	29	11	0	1	0	0	0	1	0	0	0
4/24/2024	11:45 AM	0	35	10	0	1	0	0	0	1	0	0	0
4/24/2024	12:00 PM	1	28	11	0	2	1	0	0	2	0	0	0
4/24/2024	12:15 PM	0	27	12	0	3	1	0	2	0	0	0	0
4/24/2024	12:30 PM	0	30	11	2	0	0	1	0	1	0	0	0
4/24/2024	12:45 PM	2	29	13	0	1	0	0	0	1	0	0	0
4/24/2024	1:00 PM	0	25	11	0	1	1	1	1	1	0	0	0
4/24/2024	1:15 PM	0	32	16	0	3	0	0	0	1	0	0	0
4/24/2024	1:30 PM	0	33	11	0	2	0	0	0	4	0	0	0
4/24/2024	1:45 PM	0	37	10	0	3	1	0	0	2	0	0	0
4/24/2024	2:00 PM	1	56	32	0	5	0	1	0	0	0	0	0
4/24/2024	2:15 PM	0	58	25	0	2	1	0	0	2	0	0	0
4/24/2024	2:30 PM	0	62	24	0	1	0	0	0	0	0	0	0
4/24/2024	2:45 PM	1	76	22	0	4	1	3	0	2	0	0	0
4/24/2024	3:00 PM	0	64	18	0	1	0	0	0	0	0	0	0
4/24/2024	3:15 PM	0	64	18	1	1	1	0	1	0	0	0	0
4/24/2024	3:30 PM	1	59	20	0	2	1	0	0	1	0	0	0
4/24/2024	3:45 PM	0	70	13	0	0	0	0	0	1	0	1	0
4/24/2024	4:00 PM	0	59	17	0	1	1	0	0	1	0	0	0
4/24/2024	4:15 PM	0	74	13	0	3	1	0	0	1	0	0	0
4/24/2024	4:30 PM	1	72	18	0	0	1	2	0	1	0	0	0
4/24/2024	4:45 PM	0	85	14	0	2	1	0	0	0	0	0	0
4/24/2024	5:00 PM	0	85	21	0	1	1	0	0	0	0	0	0
4/24/2024	5:15 PM	0	93	26	0	0	0	0	0	0	0	0	0
4/24/2024	5:30 PM	0	85	20	0	0	0	0	0	0	0	0	0
4/24/2024	5:45 PM	0	78	21	0	1	0	0	0	1	0	0	0
4/24/2024	6:00 PM	0	62	15	0	0	0	0	0	2	0	0	0
4/24/2024	6:15 PM	0	62	9	0	2	0	0	0	0	0	0	0
4/24/2024	6:30 PM	0	57	9	0	0	0	0	0	0	0	0	0
4/24/2024	6:45 PM	0	63	14	0	0	0	0	0	1	0	0	0
4/24/2024	7:00 PM	0	38	8	0	1	0	0	0	0	0	0	0
4/24/2024	7:15 PM	0	41	7	0	0	0	0	0	0	0	0	0
4/24/2024	7:30 PM	0	28	5	0	0	0	0	0	0	0	0	0
4/24/2024	7:45 PM	0	26	6	0	0	0	0	0	0	0	0	0
4/24/2024	8:00 PM	0	44	5	0	0	0	0	0	0	0	0	0
4/24/2024	8:15 PM	0	27	4	0	0	0	0	0	0	0	0	0
4/24/2024	8:30 PM	0	28	3	0	0	0	0	0	0	0	0	0
4/24/2024	8:45 PM	0	44	3	0	0	0	0	0	0	0	0	0
4/24/2024	9:00 PM	0	25	2	0	0	1	0	0	0	0	0	0
4/24/2024	9:15 PM	0	19	2	1	0	0	0	0	0	0	0	0
4/24/2024	9:30 PM	0	18	1	0	0	0	0	0	0	0	0	0
4/24/2024	9:45 PM	0	14	1	0	0	0	0	0	0	0	0	0
4/24/2024	10:00 PM	0	15	0	0	0	0	0	0	0	0	0	0
4/24/2024	10:15 PM	0	16	1	0	0	1	0	0	0	0	0	0
4/24/2024	10:30 PM	0	15	0	0	1	0	0	0	0	0	0	0
4/24/2024	10:45 PM	0	10	1	0	0	0	0	0	0	0	0	0
4/24/2024	11:00 PM	0	14	1	0	0	0	0	0	0	0	0	0
4/24/2024	11:15 PM	0	12	0	0	0	0	0	0	0	0	0	0
4/24/2024	11:30 PM	0	7	0	0	0	0	0	0	0	0	0	0
4/24/2024	11:45 PM	0	2	0	0	0	0	0	0	0	0	0	0

4/25/2024	12:00 AM	0	5	0	0	0	0	0	0	0	0	0	0
4/25/2024	12:15 AM	0	10	0	0	0	0	0	0	0	0	0	0
4/25/2024	12:30 AM	0	10	0	0	0	0	0	0	0	0	0	0
4/25/2024	12:45 AM	0	3	1	0	0	0	0	0	0	0	0	0
4/25/2024	1:00 AM	0	0	0	0	0	0	0	0	0	0	0	0
4/25/2024	1:15 AM	0	2	1	0	0	0	0	0	0	0	0	0
4/25/2024	1:30 AM	0	4	0	0	0	0	0	0	0	0	0	0
4/25/2024	1:45 AM	0	3	0	0	0	0	0	0	0	0	0	0
4/25/2024	2:00 AM	0	6	0	0	0	0	0	0	0	0	0	0
4/25/2024	2:15 AM	0	1	0	0	0	0	0	0	0	0	0	0
4/25/2024	2:30 AM	0	0	0	0	0	0	0	0	0	0	0	0
4/25/2024	2:45 AM	0	1	1	0	0	0	0	0	0	0	0	0
4/25/2024	3:00 AM	0	3	0	0	0	0	0	0	0	0	0	0
4/25/2024	3:15 AM	0	6	1	0	0	0	0	0	0	0	0	0
4/25/2024	3:30 AM	0	7	1	0	0	0	0	0	0	0	0	0
4/25/2024	3:45 AM	0	29	2	0	0	0	0	1	0	0	0	0
4/25/2024	4:00 AM	0	1	0	0	0	1	0	0	0	0	0	0
4/25/2024	4:15 AM	0	2	0	0	0	0	0	0	0	0	0	0
4/25/2024	4:30 AM	0	4	0	0	0	0	0	0	0	0	0	0
4/25/2024	4:45 AM	0	3	0	0	0	0	0	0	0	0	0	0
4/25/2024	5:00 AM	0	5	1	0	0	0	0	0	0	0	0	0
4/25/2024	5:15 AM	0	4	0	0	1	0	0	0	0	0	0	0
4/25/2024	5:30 AM	0	7	0	0	0	0	0	0	0	0	0	0
4/25/2024	5:45 AM	0	14	2	0	1	0	0	0	1	0	0	0	0
4/25/2024	6:00 AM	0	10	4	0	1	0	0	0	1	0	0	0	0
4/25/2024	6:15 AM	0	16	2	0	2	0	0	0	1	0	0	0	0
4/25/2024	6:30 AM	0	18	8	0	0	0	0	0	0	0	0	0	0
4/25/2024	6:45 AM	0	43	8	0	0	0	0	0	3	0	1	0	0
4/25/2024	7:00 AM	0	25	21	0	0	1	0	1	0	0	0	0	0
4/25/2024	7:15 AM	0	54	15	1	0	1	0	0	0	0	0	0	0
4/25/2024	7:30 AM	2	63	12	0	3	0	1	0	2	0	0	0	0
4/25/2024	7:45 AM	0	59	18	0	0	1	1	0	2	0	0	0	0
4/25/2024	8:00 AM	0	62	19	0	1	0	0	2	0	0	0	0	0
4/25/2024	8:15 AM	0	39	13	0	1	2	0	1	0	0	0	0	0
4/25/2024	8:30 AM	0	30	14	0	3	0	0	0	1	0	0	0	0
4/25/2024	8:45 AM	0	39	17	0	1	0	1	0	2	0	0	0	0
4/25/2024	9:00 AM	0	31	8	0	2	0	0	0	1	0	0	0	0
4/25/2024	9:15 AM	0	34	12	0	2	1	0	0	0	0	0	0	0
4/25/2024	9:30 AM	0	26	16	0	1	0	0	1	1	0	0	0	0
4/25/2024	9:45 AM	0	31	7	0	3	1	0	1	1	0	0	0	0
4/25/2024	10:00 AM	0	31	6	0	0	1	0	0	1	0	0	0	0
4/25/2024	10:15 AM	0	32	12	0	4	1	0	2	1	0	0	0	0
4/25/2024	10:30 AM	1	25	7	0	1	2	0	0	0	0	0	0	0
4/25/2024	10:45 AM	0	21	12	0	1	1	0	0	1	0	0	0	0
4/25/2024	11:00 AM	0	35	9	0	2	0	0	2	0	0	0	0	0
4/25/2024	11:15 AM	0	32	10	0	2	1	2	0	0	0	0	0	0
4/25/2024	11:30 AM	1	44	12	0	1	0	0	4	1	0	0	0	0
4/25/2024	11:45 AM	0	38	9	0	1	0	1	1	0	0	0	0	0
4/25/2024	12:00 PM	0	38	10	0	1	0	0	0	1	0	0	0	0
4/25/2024	12:15 PM	3	32	9	0	1	0	0	0	0	0	0	0	0
4/25/2024	12:30 PM	1	37	14	1	3	0	0	1	0	0	0	0	0
4/25/2024	12:45 PM	0	50	12	0	2	0	0	1	0	0	0	0	0
4/25/2024	1:00 PM	0	35	9	0	0	0	0	0	0	0	0	0	0
4/25/2024	1:15 PM	0	49	15	2	0	0	0	1	1	0	0	0	0
4/25/2024	1:30 PM	0	40	8	0	2	1	0	0	0	0	0	0	0
4/25/2024	1:45 PM	0	43	21	1	2	1	0	0	0	0	0	0	0
4/25/2024	2:00 PM	0	40	6	0	0	0	0	0	1	0	0	0	0
4/25/2024	2:15 PM	0	49	14	0	3	1	0	0	0	0	0	0	0
4/25/2024	2:30 PM	2	55	19	0	1	0	0	0	1	0	0	0	0
4/25/2024	2:45 PM	0	58	17	0	1	0	0	0	1	0	0	0	0
4/25/2024	3:00 PM	0	50	10	0	2	0	0	1	0	0	0	0	0
4/25/2024	3:15 PM	0	53	20	0	2	0	0	0	0	0	0	0	0
4/25/2024	3:30 PM	0	47	22	0	1	0	0	0	1	0	0	0	0
4/25/2024	3:45 PM	0	55	15	0	2	0	0	0	0	0	0	0	0
4/25/2024	4:00 PM	0	58	20	0	1	0	0	1	2	0	0	0	0
4/25/2024	4:15 PM	0	73	22	0	0	0	0	0	0	0	0	0	0
4/25/2024	4:30 PM	0	67	13	0	2	0	0	0	1	0	0	0	0
4/25/2024	4:45 PM	1	90	29	0	0	1	0	0	2	0	0	0	0
4/25/2024	5:00 PM	0	83	10	0	1	1	0	0	0	0	0	0	0
4/25/2024	5:15 PM	0	97	16	0	1	0	0	0	0	0	0	0	0
4/25/2024	5:30 PM	0	74	26	0	1	0	0	0	0	0	0	0	0
4/25/2024	5:45 PM	1	77	12	0	2	0	0	0	1	0	0	0	0
4/25/2024	6:00 PM	0	57	16	0	0	0	0	0	0	0	0	0	0
4/25/2024	6:15 PM	0	57	16	0	1	0	0	0	0	0	0	0	0
4/25/2024	6:30 PM	1	44	6	0	2	0	0	0	0	0	0	0	0
4/25/2024	6:45 PM	1	59	7	0	1	0	0	1	0	0	0	0	0
4/25/2024	7:00 PM	0	0	0	0	0	0	0	0	0	0	0	0	0
4/25/2024	7:15 PM	0	0	0	0	0	0	0	0	0	0	0	0	0
4/25/2024	7:30 PM	0	0	0	0	0	0	0	0	0	0	0	0	0
4/25/2024	7:45 PM	0	0	0	0	0	0	0	0	0	0	0	0	0
4/25/2024	8:00 PM	0	0	0	0	0	0	0	0	0	0	0	0	0
4/25/2024	8:15 PM	0	0	0	0	0	0	0	0	0	0	0	0	0
4/25/2024	8:30 PM	0	0	0	0	0	0	0	0	0	0	0	0	0
4/25/2024	8:45 PM	0	0	0	0	0	0	0	0	0	0	0	0	0
4/25/2024	9:00 PM	0	0	0	0	0	0	0	0	0	0	0	0	0
4/25/2024	9:15 PM	0	0	0	0	0	0	0	0	0	0	0	0	0
4/25/2024	9:30 PM	0	0	0	0	0	0	0	0	0	0	0	0	0
4/25/2024	9:45 PM	0	0	0	0	0	0	0	0	0	0	0	0	0
4/25/2024	10:00 PM	0	0	0	0	0	0	0	0	0	0	0	0	0
4/25/2024	10:15 PM	0	0	0	0	0	0	0	0	0	0	0	0	0
4/25/2024	10:30 PM	0	0	0	0	0	0	0	0	0	0	0	0	0
4/25/2024	10:45 PM	0	0	0	0	0	0	0	0	0	0	0	0	0
4/25/2024	11:00 PM	0	0	0	0	0	0	0	0	0	0	0	0	0
4/25/2024	11:15 PM	0	0	0	0	0	0	0	0	0	0	0	0	0
4/25/2024	11:30 PM	0	0	0	0	0	0	0	0	0	0	0	0	0
4/25/2024	11:45 PM	0	0	0	0	0	0	0	0	0	0	0	0	0

SB
File Name:
Start Date: 4/23/2024
Start Time: 0
Site Code: 15
Station ID: 1
Location 1: I-26 James F. Byrnes N/Bound Off-Ramp, south of US-176 Broad River Rd
Location 2:

Date	Time	1	2	3	4	5	6	7	8	9	10	11	12	13
4/23/2024	12:00 AM	0	0	0	0	0	0	0	0	0	0	0	0	0
4/23/2024	12:15 AM	0	0	0	0	0	0	0	0	0	0	0	0	0
4/23/2024	12:30 AM	0	0	0	0	0	0	0	0	0	0	0	0	0
4/23/2024	12:45 AM	0	0	0	0	0	0	0	0	0	0	0	0	0
4/23/2024	1:00 AM	0	0	0	0	0	0	0	0	0	0	0	0	0
4/23/2024	1:15 AM	0	0	0	0	0	0	0	0	0	0	0	0	0
4/23/2024	1:30 AM	0	0	0	0	0	0	0	0	0	0	0	0	0
4/23/2024	1:45 AM	0	0	0	0	0	0	0	0	0	0	0	0	0
4/23/2024	2:00 AM	0	0	0	0	0	0	0	0	0	0	0	0	0
4/23/2024	2:15 AM	0	0	0	0	0	0	0	0	0	0	0	0	0
4/23/2024	2:30 AM	0	0	0	0	0	0	0	0	0	0	0	0	0
4/23/2024	2:45 AM	0	0	0	0	0	0	0	0	0	0	0	0	0
4/23/2024	3:00 AM	0	0	0	0	0	0	0	0	0	0	0	0	0
4/23/2024	3:15 AM	0	0	0	0	0	0	0	0	0	0	0	0	0
4/23/2024	3:30 AM	0	0	0	0	0	0	0	0	0	0	0	0	0
4/23/2024	3:45 AM	0	0	0	0	0	0	0	0	0	0	0	0	0
4/23/2024	4:00 AM	0	0	0	0	0	0	0	0	0	0	0	0	0
4/23/2024	4:15 AM	0	0	0	0	0	0	0	0	0	0	0	0	0
4/23/2024	4:30 AM	0	0	0	0	0	0	0	0	0	0	0	0	0
4/23/2024	4:45 AM	0	0	0	0	0	0	0	0	0	0	0	0	0
4/23/2024	5:00 AM	0	0	0	0	0	0	0	0	0	0	0	0	0
4/23/2024	5:15 AM	0	0	0	0	0	0	0	0	0	0	0	0	0
4/23/2024	5:30 AM	0	0	0	0	0	0	0	0	0	0	0	0	0
4/23/2024	5:45 AM	0	0	0	0	0	0	0	0	0	0	0	0	0
4/23/2024	6:00 AM	0	0	0	0	0	0	0	0	0	0	0	0	0
4/23/2024	6:15 AM	0	0	0	0	0	0	0	0	0	0	0	0	0
4/23/2024	6:30 AM	0	0	0	0	0	0	0	0	0	0	0	0	0
4/23/2024	6:45 AM	0	0	0	0	0	0	0	0	0	0	0	0	0
4/23/2024	7:00 AM	0	0	0	0	0	0	0	0	0	0	0	0	0
4/23/2024	7:15 AM	0	0	0	0	0	0	0	0	0	0	0	0	0
4/23/2024	7:30 AM	0	0	0	0	0	0	0	0	0	0	0	0	0
4/23/2024	7:45 AM	0	0	0	0	0	0	0	0	0	0	0	0	0
4/23/2024	8:00 AM	0	0	0	0	0	0	0	0	0	0	0	0	0
4/23/2024	8:15 AM	0	0	0	0	0	0	0	0	0	0	0	0	0
4/23/2024	8:30 AM	0	0	0	0	0	0	0	0	0	0	0	0	0
4/23/2024	8:45 AM	0	0	0	0	0	0	0	0	0	0	0	0	0
4/23/2024	9:00 AM	0	0	0	0	0	0	0	0	0	0	0	0	0
4/23/2024	9:15 AM	0	0	0	0	0	0	0	0	0	0	0	0	0
4/23/2024	9:30 AM	0	0	0	0	0	0	0	0	0	0	0	0	0
4/23/2024	9:45 AM	0	0	0	0	0	0	0	0	0	0	0	0	0
4/23/2024	10:00 AM	0	0	0	0	0	0	0	0	0	0	0	0	0
4/23/2024	10:15 AM	0	0	0	0	0	0	0	0	0	0	0	0	0
4/23/2024	10:30 AM	0	0	0	0	0	0	0	0	0	0	0	0	0
4/23/2024	10:45 AM	0	0	0	0	0	0	0	0	0	0	0	0	0
4/23/2024	11:00 AM	0	0	0	0	0	0	0	0	0	0	0	0	0
4/23/2024	11:15 AM	0	0	0	0	0	0	0	0	0	0	0	0	0
4/23/2024	11:30 AM	0	0	0	0	0	0	0	0	0	0	0	0	0
4/23/2024	11:45 AM	0	0	0	0	0	0	0	0	0	0	0	0	0
4/23/2024	12:00 PM	0	0	0	0	0	0	0	0	0	0	0	0	0
4/23/2024	12:15 PM	0	0	0	0	0	0	0	0	0	0	0	0	0
4/23/2024	12:30 PM	0	0	0	0	0	0	0	0	0	0	0	0	0
4/23/2024	12:45 PM	0	0	0	0	0	0	0	0	0	0	0	0	0
4/23/2024	1:00 PM	0	0	0	0	0	0	0	0	0	0	0	0	0
4/23/2024	1:15 PM	0	0	0	0	0	0	0	0	0	0	0	0	0
4/23/2024	1:30 PM	0	0	0	0	0	0	0	0	0	0	0	0	0
4/23/2024	1:45 PM	0	0	0	0	0	0	0	0	0	0	0	0	0
4/23/2024	2:00 PM	0	0	0	0	0	0	0	0	0	0	0	0	0
4/23/2024	2:15 PM	0	0	0	0	0	0	0	0	0	0	0	0	0
4/23/2024	2:30 PM	0	0	0	0	0	0	0	0	0	0	0	0	0
4/23/2024	2:45 PM	0	0	0	0	0	0	0	0	0	0	0	0	0
4/23/2024	3:00 PM	0	0	0	0	0	0	0	0	0	0	0	0	0
4/23/2024	3:15 PM	0	0	0	0	0	0	0	0	0	0	0	0	0
4/23/2024	3:30 PM	0	0	0	0	0	0	0	0	0	0	0	0	0
4/23/2024	3:45 PM	0	0	0	0	0	0	0	0	0	0	0	0	0
4/23/2024	4:00 PM	0	0	0	0	0	0	0	0	0	0	0	0	0
4/23/2024	4:15 PM	0	0	0	0	0	0	0	0	0	0	0	0	0
4/23/2024	4:30 PM	0	0	0	0	0	0	0	0	0	0	0	0	0
4/23/2024	4:45 PM	0	0	0	0	0	0	0	0	0	0	0	0	0
4/23/2024	5:00 PM	0	0	0	0	0	0	0	0	0	0	0	0	0
4/23/2024	5:15 PM	0	0	0	0	0	0	0	0	0	0	0	0	0
4/23/2024	5:30 PM	0	0	0	0	0	0	0	0	0	0	0	0	0
4/23/2024	5:45 PM	0	0	0	0	0	0	0	0	0	0	0	0	0
4/23/2024	6:00 PM	0	0	0	0	0	0	0	0	0	0	0	0	0
4/23/2024	6:15 PM	0	0	0	0	0	0	0	0	0	0	0	0	0
4/23/2024	6:30 PM	0	0	0	0	0	0	0	0	0	0	0	0	0
4/23/2024	6:45 PM	0	0	0	0	0	0	0	0	0	0	0	0	0
4/23/2024	7:00 PM	0	0	0	0	0	0	0	0	0	0	0	0	0
4/23/2024	7:15 PM	0	0	0	0	0	0	0	0	0	0	0	0	0
4/23/2024	7:30 PM	0	0	0	0	0	0	0	0	0	0	0	0	0
4/23/2024	7:45 PM	0	0	0	0	0	0	0	0	0	0	0	0	0
4/23/2024	8:00 PM	0	0	0	0	0	0	0	0	0	0	0	0	0
4/23/2024	8:15 PM	0	0	0	0	0	0	0	0	0	0	0	0	0
4/23/2024	8:30 PM	0	0	0	0	0	0	0	0	0	0	0	0	0
4/23/2024	8:45 PM	0	0	0	0	0	0	0	0	0	0	0	0	0
4/23/2024	9:00 PM	0	0	0	0	0	0	0	0	0	0	0	0	0
4/23/2024	9:15 PM	0	0	0	0	0	0	0	0	0	0	0	0	0
4/23/2024	9:30 PM	0	0	0	0	0	0	0	0	0	0	0	0	0
4/23/2024	9:45 PM	0	0	0	0	0	0	0	0	0	0	0	0	0
4/23/2024	10:00 PM	0	0	0	0	0	0	0	0	0	0	0	0	0
4/23/2024	10:15 PM	0	0	0	0	0	0	0	0	0	0	0	0	0
4/23/2024	10:30 PM	0	0	0	0	0	0	0	0	0	0	0	0	0
4/23/2024	10:45 PM	0	0	0	0	0	0	0	0	0	0	0	0	0
4/23/2024	11:00 PM	0	0	0	0	0	0	0	0	0	0	0	0	0
4/23/2024	11:15 PM	0	0	0	0	0	0	0	0	0	0	0	0	0
4/23/2024	11:30 PM	0	0	0	0	0	0	0	0	0	0	0	0	0
4/23/2024	11:45 PM	0	0	0	0	0	0	0	0	0	0	0	0	0

4/24/2024	12:00 AM	0	0	0	0	0	0	0	0	0	0	0	0	0
4/24/2024	12:15 AM	0	0	0	0	0	0	0	0	0	0	0	0	0
4/24/2024	12:30 AM	0	0	0	0	0	0	0	0	0	0	0	0	0
4/24/2024	12:45 AM	0	0	0	0	0	0	0	0	0	0	0	0	0
4/24/2024	1:00 AM	0	0	0	0	0	0	0	0	0	0	0	0	0
4/24/2024	1:15 AM	0	0	0	0	0	0	0	0	0	0	0	0	0
4/24/2024	1:30 AM	0	0	0	0	0	0	0	0	0	0	0	0	0
4/24/2024	1:45 AM	0	0	0	0	0	0	0	0	0	0	0	0	0
4/24/2024	2:00 AM	0	0	0	0	0	0	0	0	0	0	0	0	0
4/24/2024	2:15 AM	0	0	0	0	0	0	0	0	0	0	0	0	0
4/24/2024	2:30 AM	0	0	0	0	0	0	0	0	0	0	0	0	0
4/24/2024	2:45 AM	0	0	0	0	0	0	0	0	0	0	0	0	0
4/24/2024	3:00 AM	0	0	0	0	0	0	0	0	0	0	0	0	0
4/24/2024	3:15 AM	0	0	0	0	0	0	0	0	0	0	0	0	0
4/24/2024	3:30 AM	0	0	0	0	0	0	0	0	0	0	0	0	0
4/24/2024	3:45 AM	0	0	0	0	0	0	0	0	0	0	0	0	0
4/24/2024	4:00 AM	0	0	0	0	0	0	0	0	0	0	0	0	0
4/24/2024	4:15 AM	0	0	0	0	0	0	0	0	0	0	0	0	0
4/24/2024	4:30 AM	0	0	0	0	0	0	0	0	0	0	0	0	0
4/24/2024	4:45 AM	0	0	0	0	0	0	0	0	0	0	0	0	0
4/24/2024	5:00 AM	0	0	0	0	0	0	0	0	0	0	0	0	0
4/24/2024	5:15 AM	0	0	0	0	0	0	0	0	0	0	0	0	0
4/24/2024	5:30 AM	0	0	0	0	0	0	0	0	0	0	0	0	0
4/24/2024	5:45 AM	0	0	0	0	0	0	0	0	0	0	0	0	0
4/24/2024	6:00 AM	0	0	0	0	0	0	0	0	0	0	0	0	0
4/24/2024	6:15 AM	0	0	0	0	0	0	0	0	0	0	0	0	0
4/24/2024	6:30 AM	0	0	0	0	0	0	0	0	0	0	0	0	0
4/24/2024	6:45 AM	0	0	0	0	0	0	0	0	0	0	0	0	0
4/24/2024	7:00 AM	0	0	0	0	0	0	0	0	0	0	0	0	0
4/24/2024	7:15 AM	0	0	0	0	0	0	0	0	0	0	0	0	0
4/24/2024	7:30 AM	0	0	0	0	0	0	0	0	0	0	0	0	0
4/24/2024	7:45 AM	0	0	0	0	0	0	0	0	0	0	0	0	0
4/24/2024	8:00 AM	0	0	0	0	0	0	0	0	0	0	0	0	0
4/24/2024	8:15 AM	0	0	0	0	0	0	0	0	0	0	0	0	0
4/24/2024	8:30 AM	0	0	0	0	0	0	0	0	0	0	0	0	0
4/24/2024	8:45 AM	0	0	0	0	0	0	0	0	0	0	0	0	0
4/24/2024	9:00 AM	0	0	0	0	0	0	0	0	0	0	0	0	0
4/24/2024	9:15 AM	0	0	0	0	0	0	0	0	0	0	0	0	0
4/24/2024	9:30 AM	0	0	0	0	0	0	0	0	0	0	0	0	0
4/24/2024	9:45 AM	0	0	0	0	0	0	0	0	0	0	0	0	0
4/24/2024	10:00 AM	0	0	0	0	0	0	0	0	0	0	0	0	0
4/24/2024	10:15 AM	0	0	0	0	0	0	0	0	0	0	0	0	0
4/24/2024	10:30 AM	0	0	0	0	0	0	0	0	0	0	0	0	0
4/24/2024	10:45 AM	0	0	0	0	0	0	0	0	0	0	0	0	0
4/24/2024	11:00 AM	0	0	0	0	0	0	0	0	0	0	0	0	0
4/24/2024	11:15 AM	0	0	0	0	0	0	0	0	0	0	0	0	0
4/24/2024	11:30 AM	0	0	0	0	0	0	0	0	0	0	0	0	0
4/24/2024	11:45 AM	0	0	0	0	0	0	0	0	0	0	0	0	0
4/24/2024	12:00 PM	0	0	0	0	0	0	0	0	0	0	0	0	0
4/24/2024	12:15 PM	0	0	0	0	0	0	0	0	0	0	0	0	0
4/24/2024	12:30 PM	0	0	0	0	0	0	0	0	0	0	0	0	0
4/24/2024	12:45 PM	0	0	0	0	0	0	0	0	0	0	0	0	0
4/24/2024	1:00 PM	0	0	0	0	0	0	0	0	0	0	0	0	0
4/24/2024	1:15 PM	0	0	0	0	0	0	0	0	0	0	0	0	0
4/24/2024	1:30 PM	0	0	0	0	0	0	0	0	0	0	0	0	0
4/24/2024	1:45 PM	0	0	0	0	0	0	0	0	0	0	0	0	0
4/24/2024	2:00 PM	0	0	0	0	0	0	0	0	0	0	0	0	0
4/24/2024	2:15 PM	0	0	0	0	0	0	0	0	0	0	0	0	0
4/24/2024	2:30 PM	0	0	0	0	0	0	0	0	0	0	0	0	0
4/24/2024	2:45 PM	0	0	0	0	0	0	0	0	0	0	0	0	0
4/24/2024	3:00 PM	0	0	0	0	0	0	0	0	0	0	0	0	0
4/24/2024	3:15 PM	0	0	0	0	0	0	0	0	0	0	0	0	0
4/24/2024	3:30 PM	0	0	0	0	0	0	0	0	0	0	0	0	0
4/24/2024	3:45 PM	0	0	0	0	0	0	0	0	0	0	0	0	0
4/24/2024	4:00 PM	0	0	0	0	0	0	0	0	0	0	0	0	0
4/24/2024	4:15 PM	0	0	0	0	0	0	0	0	0	0	0	0	0
4/24/2024	4:30 PM	0	0	0	0	0	0	0	0	0	0	0	0	0
4/24/2024	4:45 PM	0	0	0	0	0	0	0	0	0	0	0	0	0
4/24/2024	5:00 PM	0	0	0	0	0	0	0	0	0	0	0	0	0
4/24/2024	5:15 PM	0	0	0	0	0	0	0	0	0	0	0	0	0
4/24/2024	5:30 PM	0	0	0	0	0	0	0	0	0	0	0	0	0
4/24/2024	5:45 PM	0	0	0	0	0	0	0	0	0	0	0	0	0
4/24/2024	6:00 PM	0	0	0	0	0	0	0	0	0	0	0	0	0
4/24/2024	6:15 PM	0	0	0	0	0	0	0	0	0	0	0	0	0
4/24/2024	6:30 PM	0	0	0	0	0	0	0	0	0	0	0	0	0
4/24/2024	6:45 PM	0	0	0	0	0	0	0	0	0	0	0	0	0
4/24/2024	7:00 PM	0	0	0	0	0	0	0	0	0	0	0	0	0
4/24/2024	7:15 PM	0	0	0	0	0	0	0	0	0	0	0	0	0
4/24/2024	7:30 PM	0	0	0	0	0	0	0	0	0	0	0	0	0
4/24/2024	7:45 PM	0	0	0	0	0	0	0	0	0	0	0	0	0
4/24/2024	8:00 PM	0	0	0	0	0	0	0	0	0	0	0	0	0
4/24/2024	8:15 PM	0	0	0	0	0	0	0	0	0	0	0	0	0
4/24/2024	8:30 PM	0	0	0	0	0	0	0	0	0	0	0	0	0
4/24/2024	8:45 PM	0	0	0	0	0	0	0	0	0	0	0	0	0
4/24/2024	9:00 PM	0	0	0	0	0	0	0	0	0	0	0	0	0
4/24/2024	9:15 PM	0	0	0	0	0	0	0	0	0	0	0	0	0
4/24/2024	9:30 PM	0	0	0	0	0	0	0	0	0	0	0	0	0
4/24/2024	9:45 PM	0	0	0	0	0	0	0	0	0	0	0	0	0
4/24/2024	10:00 PM	0	0	0	0	0	0	0	0	0	0	0	0	0
4/24/2024	10:15 PM	0	0	0	0	0	0	0	0	0	0	0	0	0
4/24/2024	10:30 PM	0	0	0	0	0	0	0	0	0	0	0	0	0
4/24/2024	10:45 PM	0	0	0	0	0	0	0	0	0	0	0	0	0
4/24/2024	11:00 PM	0	0	0	0	0	0	0	0	0	0	0	0	0
4/24/2024	11:15 PM	0	0	0	0	0	0	0	0	0	0	0	0	0
4/24/2024	11:30 PM	0	0	0	0	0	0	0	0	0	0	0	0	0
4/24/2024	11:45 PM	0	0	0	0	0	0	0	0	0	0	0	0	0

4/25/2024	12:00 AM	0	0	0	0	0	0	0	0	0	0	0	0	0
4/25/2024	12:15 AM	0	0	0	0	0	0	0	0	0	0	0	0	0
4/25/2024	12:30 AM	0	0	0	0	0	0	0	0	0	0	0	0	0
4/25/2024	12:45 AM	0	0	0	0	0	0	0	0	0	0	0	0	0
4/25/2024	1:00 AM	0	0	0	0	0	0	0	0	0	0	0	0	0
4/25/2024	1:15 AM	0	0	0	0	0	0	0	0	0	0	0	0	0
4/25/2024	1:30 AM	0	0	0	0	0	0	0	0	0	0	0	0	0
4/25/2024	1:45 AM	0	0	0	0	0	0	0	0	0	0	0	0	0
4/25/2024	2:00 AM	0	0	0	0	0	0	0	0	0	0	0	0	0
4/25/2024	2:15 AM	0	0	0	0	0	0	0	0	0	0	0	0	0
4/25/2024	2:30 AM	0	0	0	0	0	0	0	0	0	0	0	0	0
4/25/2024	2:45 AM	0	0	0	0	0	0	0	0	0	0	0	0	0
4/25/2024	3:00 AM	0	0	0	0	0	0	0	0	0	0	0	0	0
4/25/2024	3:15 AM	0	0	0	0	0	0	0	0	0	0	0	0	0
4/25/2024	3:30 AM	0	0	0	0	0	0	0	0	0	0	0	0	0
4/25/2024	3:45 AM	0	0	0	0	0	0	0	0	0	0	0	0	0
4/25/2024	4:00 AM	0	0	0	0	0	0	0	0	0	0	0	0	0
4/25/2024	4:15 AM	0	0	0	0	0	0	0	0	0	0	0	0	0
4/25/2024	4:30 AM	0	0	0	0	0	0	0	0	0	0	0	0	0
4/25/2024	4:45 AM	0	0	0	0	0	0	0	0	0	0	0	0	0
4/25/2024	5:00 AM	0	0	0	0	0	0	0	0	0	0	0	0	0
4/25/2024	5:15 AM	0	0	0	0	0	0	0	0	0	0	0	0	0
4/25/2024	5:30 AM	0	0	0	0	0	0	0	0	0	0	0	0	0
4/25/2024	5:45 AM	0	0	0	0	0	0	0	0	0	0	0	0	0
4/25/2024	6:00 AM	0	0	0	0	0	0	0	0	0	0	0	0	0
4/25/2024	6:15 AM	0	0	0	0	0	0	0	0	0	0	0	0	0
4/25/2024	6:30 AM	0	0	0	0	0	0	0	0	0	0	0	0	0
4/25/2024	6:45 AM	0	0	0	0	0	0	0	0	0	0	0	0	0
4/25/2024	7:00 AM	0	0	0	0	0	0	0	0	0	0	0	0	0
4/25/2024	7:15 AM	0	0	0	0	0	0	0	0	0	0	0	0	0
4/25/2024	7:30 AM	0	0	0	0	0	0	0	0	0	0	0	0	0
4/25/2024	7:45 AM	0	0	0	0	0	0	0	0	0	0	0	0	0
4/25/2024	8:00 AM	0	0	0	0	0	0	0	0	0	0	0	0	0
4/25/2024	8:15 AM	0	0	0	0	0	0	0	0	0	0	0	0	0
4/25/2024	8:30 AM	0	0	0	0	0	0	0	0	0	0	0	0	0
4/25/2024	8:45 AM	0	0	0	0	0	0	0	0	0	0	0	0	0
4/25/2024	9:00 AM	0	0	0	0	0	0	0	0	0	0	0	0	0
4/25/2024	9:15 AM	0	0	0	0	0	0	0	0	0	0	0	0	0
4/25/2024	9:30 AM	0	0	0	0	0	0	0	0	0	0	0	0	0
4/25/2024	9:45 AM	0	0	0	0	0	0	0	0	0	0	0	0	0
4/25/2024	10:00 AM	0	0	0	0	0	0	0	0	0	0	0	0	0
4/25/2024	10:15 AM	0	0	0	0	0	0	0	0	0	0	0	0	0
4/25/2024	10:30 AM	0	0	0	0	0	0	0	0	0	0	0	0	0
4/25/2024	10:45 AM	0	0	0	0	0	0	0	0	0	0	0	0	0
4/25/2024	11:00 AM	0	0	0	0	0	0	0	0	0	0	0	0	0
4/25/2024	11:15 AM	0	0	0	0	0	0	0	0	0	0	0	0	0
4/25/2024	11:30 AM	0	0	0	0	0	0	0	0	0	0	0	0	0
4/25/2024	11:45 AM	0	0	0	0	0	0	0	0	0	0	0	0	0
4/25/2024	12:00 PM	0	0	0	0	0	0	0	0	0	0	0	0	0
4/25/2024	12:15 PM	0	0	0	0	0	0	0	0	0	0	0	0	0
4/25/2024	12:30 PM	0	0	0	0	0	0	0	0	0	0	0	0	0
4/25/2024	12:45 PM	0	0	0	0	0	0	0	0	0	0	0	0	0
4/25/2024	1:00 PM	0	0	0	0	0	0	0	0	0	0	0	0	0
4/25/2024	1:15 PM	0	0	0	0	0	0	0	0	0	0	0	0	0
4/25/2024	1:30 PM	0	0	0	0	0	0	0	0	0	0	0	0	0
4/25/2024	1:45 PM	0	0	0	0	0	0	0	0	0	0	0	0	0
4/25/2024	2:00 PM	0	0	0	0	0	0	0	0	0	0	0	0	0
4/25/2024	2:15 PM	0	0	0	0	0	0	0	0	0	0	0	0	0
4/25/2024	2:30 PM	0	0	0	0	0	0	0	0	0	0	0	0	0
4/25/2024	2:45 PM	0	0	0	0	0	0	0	0	0	0	0	0	0
4/25/2024	3:00 PM	0	0	0	0	0	0	0	0	0	0	0	0	0
4/25/2024	3:15 PM	0	0	0	0	0	0	0	0	0	0	0	0	0
4/25/2024	3:30 PM	0	0	0	0	0	0	0	0	0	0	0	0	0
4/25/2024	3:45 PM	0	0	0	0	0	0	0	0	0	0	0	0	0
4/25/2024	4:00 PM	0	0	0	0	0	0	0	0	0	0	0	0	0
4/25/2024	4:15 PM	0	0	0	0	0	0	0	0	0	0	0	0	0
4/25/2024	4:30 PM	0	0	0	0	0	0	0	0	0	0	0	0	0
4/25/2024	4:45 PM	0	0	0	0	0	0	0	0	0	0	0	0	0
4/25/2024	5:00 PM	0	0	0	0	0	0	0	0	0	0	0	0	0
4/25/2024	5:15 PM	0	0	0	0	0	0	0	0	0	0	0	0	0
4/25/2024	5:30 PM	0	0	0	0	0	0	0	0	0	0	0	0	0
4/25/2024	5:45 PM	0	0	0	0	0	0	0	0	0	0	0	0	0
4/25/2024	6:00 PM	0	0	0	0	0	0	0	0	0	0	0	0	0
4/25/2024	6:15 PM	0	0	0	0	0	0	0	0	0	0	0	0	0
4/25/2024	6:30 PM	0	0	0	0	0	0	0	0	0	0	0	0	0
4/25/2024	6:45 PM	0	0	0	0	0	0	0	0	0	0	0	0	0
4/25/2024	7:00 PM	0	0	0	0	0	0	0	0	0	0	0	0	0
4/25/2024	7:15 PM	0	0	0	0	0	0	0	0	0	0	0	0	0
4/25/2024	7:30 PM	0	0	0	0	0	0	0	0	0	0	0	0	0
4/25/2024	7:45 PM	0	0	0	0	0	0	0	0	0	0	0	0	0
4/25/2024	8:00 PM	0	0	0	0	0	0	0	0	0	0	0	0	0
4/25/2024	8:15 PM	0	0	0	0	0	0	0	0	0	0	0	0	0
4/25/2024	8:30 PM	0	0	0	0	0	0	0	0	0	0	0	0	0
4/25/2024	8:45 PM	0	0	0	0	0	0	0	0	0	0	0	0	0
4/25/2024	9:00 PM	0	0	0	0	0	0	0	0	0	0	0	0	0
4/25/2024	9:15 PM	0	0	0	0	0	0	0	0	0	0	0	0	0
4/25/2024	9:30 PM	0	0	0	0	0	0	0	0	0	0	0	0	0
4/25/2024	9:45 PM	0	0	0	0	0	0	0	0	0	0	0	0	0
4/25/2024	10:00 PM	0	0	0	0	0	0	0	0	0	0	0	0	0
4/25/2024	10:15 PM	0	0	0	0	0	0	0	0	0	0	0	0	0
4/25/2024	10:30 PM	0	0	0	0	0	0	0	0	0	0	0	0	0
4/25/2024	10:45 PM	0	0	0	0	0	0	0	0	0	0	0	0	0
4/25/2024	11:00 PM	0	0	0	0	0	0	0	0	0	0	0	0	0
4/25/2024	11:15 PM	0	0	0	0	0	0	0	0	0	0	0	0	0
4/25/2024	11:30 PM	0	0	0	0	0	0	0	0	0	0	0	0	0
4/25/2024	11:45 PM	0	0	0	0	0	0	0	0	0	0	0	0	0

NB
File Name:
Start Date: 4/23/2024
Start Time: 0
Site Code: 15
Station ID: 1
Location 1: I-26 James F. Byrnes N/Bound Off-Ramp, south of US-176 Broad River Rd
Location 2:

Date	Time	1	2	3	4	5	6	7	8	9	10	11	12	13
4/23/2024	12:00 AM	0	0	0	0	0	0	0	0	0	0	0	0	0
4/23/2024	12:15 AM	0	0	0	0	0	0	0	0	0	0	0	0	0
4/23/2024	12:30 AM	0	0	0	0	0	0	0	0	0	0	0	0	0
4/23/2024	12:45 AM	0	0	0	0	0	0	0	0	0	0	0	0	0
4/23/2024	1:00 AM	0	0	0	0	0	0	0	0	0	0	0	0	0
4/23/2024	1:15 AM	0	0	0	0	0	0	0	0	0	0	0	0	0
4/23/2024	1:30 AM	0	0	0	0	0	0	0	0	0	0	0	0	0
4/23/2024	1:45 AM	0	0	0	0	0	0	0	0	0	0	0	0	0
4/23/2024	2:00 AM	0	0	0	0	0	0	0	0	0	0	0	0	0
4/23/2024	2:15 AM	0	0	0	0	0	0	0	0	0	0	0	0	0
4/23/2024	2:30 AM	0	0	0	0	0	0	0	0	0	0	0	0	0
4/23/2024	2:45 AM	0	0	0	0	0	0	0	0	0	0	0	0	0
4/23/2024	3:00 AM	0	0	0	0	0	0	0	0	0	0	0	0	0
4/23/2024	3:15 AM	0	0	0	0	0	0	0	0	0	0	0	0	0
4/23/2024	3:30 AM	0	0	0	0	0	0	0	0	0	0	0	0	0
4/23/2024	3:45 AM	0	0	0	0	0	0	0	0	0	0	0	0	0
4/23/2024	4:00 AM	0	0	0	0	0	0	0	0	0	0	0	0	0
4/23/2024	4:15 AM	0	0	0	0	0	0	0	0	0	0	0	0	0
4/23/2024	4:30 AM	0	0	0	0	0	0	0	0	0	0	0	0	0
4/23/2024	4:45 AM	0	0	0	0	0	0	0	0	0	0	0	0	0
4/23/2024	5:00 AM	0	0	0	0	0	0	0	0	0	0	0	0	0
4/23/2024	5:15 AM	0	0	0	0	0	0	0	0	0	0	0	0	0
4/23/2024	5:30 AM	0	0	0	0	0	0	0	0	0	0	0	0	0
4/23/2024	5:45 AM	0	0	0	0	0	0	0	0	0	0	0	0	0
4/23/2024	6:00 AM	0	0	0	0	0	0	0	0	0	0	0	0	0
4/23/2024	6:15 AM	0	0	0	0	0	0	0	0	0	0	0	0	0
4/23/2024	6:30 AM	0	0	0	0	0	0	0	0	0	0	0	0	0
4/23/2024	6:45 AM	0	0	0	0	0	0	0	0	0	0	0	0	0
4/23/2024	7:00 AM	0	0	0	0	0	0	0	0	0	0	0	0	0
4/23/2024	7:15 AM	0	0	0	0	0	0	0	0	0	0	0	0	0
4/23/2024	7:30 AM	0	0	0	0	0	0	0	0	0	0	0	0	0
4/23/2024	7:45 AM	0	0	0	0	0	0	0	0	0	0	0	0	0
4/23/2024	8:00 AM	0	0	0	0	0	0	0	0	0	0	0	0	0
4/23/2024	8:15 AM	0	0	0	0	0	0	0	0	0	0	0	0	0
4/23/2024	8:30 AM	0	0	0	0	0	0	0	0	0	0	0	0	0
4/23/2024	8:45 AM	0	0	0	0	0	0	0	0	0	0	0	0	0
4/23/2024	9:00 AM	0	0	0	0	0	0	0	0	0	0	0	0	0
4/23/2024	9:15 AM	0	0	0	0	0	0	0	0	0	0	0	0	0
4/23/2024	9:30 AM	0	0	0	0	0	0	0	0	0	0	0	0	0
4/23/2024	9:45 AM	0	0	0	0	0	0	0	0	0	0	0	0	0
4/23/2024	10:00 AM	0	0	0	0	0	0	0	0	0	0	0	0	0
4/23/2024	10:15 AM	0	0	0	0	0	0	0	0	0	0	0	0	0
4/23/2024	10:30 AM	0	0	0	0	0	0	0	0	0	0	0	0	0
4/23/2024	10:45 AM	0	0	0	0	0	0	0	0	0	0	0	0	0
4/23/2024	11:00 AM	0	0	0	0	0	0	0	0	0	0	0	0	0
4/23/2024	11:15 AM	0	0	0	0	0	0	0	0	0	0	0	0	0
4/23/2024	11:30 AM	0	0	0	0	0	0	0	0	0	0	0	0	0
4/23/2024	11:45 AM	0	0	0	0	0	0	0	0	0	0	0	0	0
4/23/2024	12:00 PM	0	0	0	0	0	0	0	0	0	0	0	0	0
4/23/2024	12:15 PM	0	0	0	0	0	0	0	0	0	0	0	0	0
4/23/2024	12:30 PM	0	0	0	0	0	0	0	0	0	0	0	0	0
4/23/2024	12:45 PM	0	0	0	0	0	0	0	0	0	0	0	0	0
4/23/2024	1:00 PM	0	0	0	0	0	0	0	0	0	0	0	0	0
4/23/2024	1:15 PM	0	0	0	0	0	0	0	0	0	0	0	0	0
4/23/2024	1:30 PM	0	0	0	0	0	0	0	0	0	0	0	0	0
4/23/2024	1:45 PM	0	0	0	0	0	0	0	0	0	0	0	0	0
4/23/2024	2:00 PM	0	0	0	0	0	0	0	0	0	0	0	0	0
4/23/2024	2:15 PM	0	0	0	0	0	0	0	0	0	0	0	0	0
4/23/2024	2:30 PM	0	0	0	0	0	0	0	0	0	0	0	0	0
4/23/2024	2:45 PM	0	0	0	0	0	0	0	0	0	0	0	0	0
4/23/2024	3:00 PM	0	0	0	0	0	0	0	0	0	0	0	0	0
4/23/2024	3:15 PM	0	0	0	0	0	0	0	0	0	0	0	0	0
4/23/2024	3:30 PM	0	0	0	0	0	0	0	0	0	0	0	0	0
4/23/2024	3:45 PM	0	0	0	0	0	0	0	0	0	0	0	0	0
4/23/2024	4:00 PM	0	0	0	0	0	0	0	0	0	0	0	0	0
4/23/2024	4:15 PM	0	0	0	0	0	0	0	0	0	0	0	0	0
4/23/2024	4:30 PM	0	0	0	0	0	0	0	0	0	0	0	0	0
4/23/2024	4:45 PM	0	0	0	0	0	0	0	0	0	0	0	0	0
4/23/2024	5:00 PM	0	0	0	0	0	0	0	0	0	0	0	0	0
4/23/2024	5:15 PM	0	0	0	0	0	0	0	0	0	0	0	0	0
4/23/2024	5:30 PM	0	0	0	0	0	0	0	0	0	0	0	0	0
4/23/2024	5:45 PM	0	0	0	0	0	0	0	0	0	0	0	0	0
4/23/2024	6:00 PM	0	0	0	0	0	0	0	0	0	0	0	0	0
4/23/2024	6:15 PM	0	35	8	0	1	0	0	0	0	0	0	0	0
4/23/2024	6:30 PM	0	91	22	0	1	0	0	0	0	0	0	0	0
4/23/2024	6:45 PM	0	152	38	0	2	0	0	0	1	0	0	0	0
4/23/2024	7:00 PM	0	199	50	0	2	0	0	0	2	0	0	0	0
4/23/2024	7:15 PM	0	205	49	1	1	0	0	0	2	0	0	0	0
4/23/2024	7:30 PM	0	174	40	1	2	0	0	1	2	0	0	0	0
4/23/2024	7:45 PM	0	141	29	1	1	0	0	1	1	0	0	0	0
4/23/2024	8:00 PM	0	109	19	1	2	0	0	1	0	0	0	0	0
4/23/2024	8:15 PM	0	102	13	0	2	0	0	1	0	0	0	0	0
4/23/2024	8:30 PM	0	105	9	0	1	0	0	0	0	0	0	0	0
4/23/2024	8:45 PM	0	92	6	0	1	0	0	0	0	0	0	0	0
4/23/2024	9:00 PM	0	94	5	0	0	0	0	0	0	0	0	0	0
4/23/2024	9:15 PM	0	73	4	0	0	0	0	0	0	0	0	0	0
4/23/2024	9:30 PM	0	55	3	0	0	0	0	0	0	0	0	0	0
4/23/2024	9:45 PM	0	56	2	0	0	0	0	0	1	0	0	0	0
4/23/2024	10:00 PM	0	46	1	0	0	0	0	0	1	0	0	0	0
4/23/2024	10:15 PM	0	45	2	0	0	0	0	0	2	0	0	0	0
4/23/2024	10:30 PM	0	47	2	0	0	0	0	0	2	0	0	0	0
4/23/2024	10:45 PM	0	35	1	0	0	0	0	0	1	0	0	0	0
4/23/2024	11:00 PM	0	37	1	0	0	0	0	0	1	0	0	0	0
4/23/2024	11:15 PM	0	31	0	0	0	0	0	0	0	0	0	0	0
4/23/2024	11:30 PM	0	30	1	0	0	0	0	0	0	0	0	0	0
4/23/2024	11:45 PM	0	28	2	0	0	0	0	0	0	0	0	0	0

4/24/2024	12:00 AM	0	21	2	0	0	0	0	0	0	0	0	0
4/24/2024	12:15 AM	0	18	2	0	0	0	0	0	0	0	0	0
4/24/2024	12:30 AM	0	12	1	0	0	0	0	0	0	0	0	0
4/24/2024	12:45 AM	0	13	1	0	0	0	0	0	0	0	0	0
4/24/2024	1:00 AM	0	12	1	0	0	0	0	0	0	0	0	0
4/24/2024	1:15 AM	0	9	1	0	0	0	0	0	0	0	0	0
4/24/2024	1:30 AM	0	8	2	0	0	0	0	0	0	0	0	0
4/24/2024	1:45 AM	0	6	2	0	0	0	0	0	0	0	0	0
4/24/2024	2:00 AM	0	7	3	0	0	0	0	0	0	0	0	0
4/24/2024	2:15 AM	0	8	4	0	0	0	0	0	0	0	0	0
4/24/2024	2:30 AM	0	8	5	0	0	0	0	0	0	0	0	0
4/24/2024	2:45 AM	0	19	6	0	0	0	0	0	0	0	0	0
4/24/2024	3:00 AM	0	45	8	0	0	0	0	0	0	0	0	0
4/24/2024	3:15 AM	0	44	7	0	1	0	0	0	0	0	0	0
4/24/2024	3:30 AM	0	41	5	0	1	0	0	0	0	0	0	0
4/24/2024	3:45 AM	0	31	4	0	1	0	0	0	0	0	0	0
4/24/2024	4:00 AM	0	9	1	0	1	0	0	0	0	0	0	0
4/24/2024	4:15 AM	0	15	1	0	0	0	0	0	0	0	0	0
4/24/2024	4:30 AM	0	17	2	0	0	0	0	0	0	0	0	0
4/24/2024	4:45 AM	0	23	3	0	1	0	0	0	0	0	0	0
4/24/2024	5:00 AM	0	27	6	0	3	0	0	0	1	0	0	0
4/24/2024	5:15 AM	0	34	10	0	4	0	0	0	1	0	0	0
4/24/2024	5:30 AM	0	39	15	0	4	0	0	1	1	0	0	0
4/24/2024	5:45 AM	0	47	16	0	4	0	0	1	1	0	0	0
4/24/2024	6:00 AM	0	62	31	0	2	1	1	1	1	0	0	0
4/24/2024	6:15 AM	0	77	37	0	2	1	1	1	4	0	0	0
4/24/2024	6:30 AM	0	115	50	0	4	1	1	0	4	0	0	0
4/24/2024	6:45 AM	0	143	58	0	3	1	1	0	6	0	1	0
4/24/2024	7:00 AM	0	188	52	0	5	2	0	0	5	0	1	0
4/24/2024	7:15 AM	0	205	52	0	4	2	0	0	2	0	2	0
4/24/2024	7:30 AM	0	199	45	0	5	2	0	0	3	0	2	0
4/24/2024	7:45 AM	0	181	43	0	5	2	1	0	2	0	2	0
4/24/2024	8:00 AM	1	153	44	0	4	1	1	0	2	0	2	0
4/24/2024	8:15 AM	1	147	44	0	5	1	2	0	7	0	1	0
4/24/2024	8:30 AM	1	128	39	0	4	1	2	1	6	0	1	0
4/24/2024	8:45 AM	1	136	40	0	7	1	2	1	6	0	0	0
4/24/2024	9:00 AM	0	132	37	0	9	0	2	2	7	0	0	0
4/24/2024	9:15 AM	0	120	32	0	9	0	1	2	2	0	0	0
4/24/2024	9:30 AM	0	123	32	1	9	0	2	1	3	0	0	0
4/24/2024	9:45 AM	0	108	35	1	7	1	1	3	3	0	0	0
4/24/2024	10:00 AM	1	103	31	1	5	1	1	3	2	0	0	0
4/24/2024	10:15 AM	1	103	35	1	6	1	2	3	2	0	0	0
4/24/2024	10:30 AM	1	114	35	0	4	1	2	4	1	0	0	0
4/24/2024	10:45 AM	1	124	33	0	4	0	2	2	1	0	0	0
4/24/2024	11:00 AM	0	126	37	0	4	0	2	1	2	0	0	0
4/24/2024	11:15 AM	1	127	39	0	4	1	1	1	4	0	0	0
4/24/2024	11:30 AM	1	119	44	0	7	2	0	2	4	0	0	0
4/24/2024	11:45 AM	1	120	44	2	6	2	1	2	4	0	0	0
4/24/2024	12:00 PM	3	114	47	2	6	2	1	2	4	0	0	0
4/24/2024	12:15 PM	2	111	47	2	5	2	2	3	3	0	0	0
4/24/2024	12:30 PM	2	116	51	2	5	1	2	1	4	0	0	0
4/24/2024	12:45 PM	2	119	51	0	7	1	1	1	7	0	0	0
4/24/2024	1:00 PM	0	127	48	0	9	2	1	1	8	0	0	0
4/24/2024	1:15 PM	1	158	69	0	13	1	1	0	7	0	0	0
4/24/2024	1:30 PM	1	184	78	0	12	2	1	0	8	0	0	0
4/24/2024	1:45 PM	1	213	91	0	11	2	1	0	4	0	0	0
4/24/2024	2:00 PM	2	252	103	0	12	2	4	0	4	0	0	0
4/24/2024	2:15 PM	1	260	89	0	8	2	3	0	4	0	0	0
4/24/2024	2:30 PM	1	266	82	1	7	2	3	1	2	0	0	0
4/24/2024	2:45 PM	2	263	78	1	8	3	3	1	3	0	0	0
4/24/2024	3:00 PM	1	257	69	1	4	2	0	1	2	0	1	0
4/24/2024	3:15 PM	1	252	68	1	4	3	0	1	3	0	1	0
4/24/2024	3:30 PM	1	262	63	0	6	3	0	0	4	0	1	0
4/24/2024	3:45 PM	1	275	61	0	4	3	2	0	4	0	1	0
4/24/2024	4:00 PM	1	290	62	0	6	4	2	0	3	0	0	0
4/24/2024	4:15 PM	1	316	66	0	6	4	2	0	2	0	0	0
4/24/2024	4:30 PM	1	335	79	0	3	3	2	0	1	0	0	0
4/24/2024	4:45 PM	0	348	81	0	3	2	0	0	0	0	0	0
4/24/2024	5:00 PM	0	341	88	0	2	1	0	0	1	0	0	0
4/24/2024	5:15 PM	0	318	82	0	1	0	0	0	3	0	0	0
4/24/2024	5:30 PM	0	287	65	0	3	0	0	0	3	0	0	0
4/24/2024	5:45 PM	0	259	54	0	3	0	0	0	3	0	0	0
4/24/2024	6:00 PM	0	244	47	0	2	0	0	0	3	0	0	0
4/24/2024	6:15 PM	0	220	40	0	3	0	0	0	1	0	0	0
4/24/2024	6:30 PM	0	199	38	0	1	0	0	0	1	0	0	0
4/24/2024	6:45 PM	0	170	34	0	1	0	0	0	1	0	0	0
4/24/2024	7:00 PM	0	133	26	0	1	0	0	0	0	0	0	0
4/24/2024	7:15 PM	0	139	23	0	0	0	0	0	0	0	0	0
4/24/2024	7:30 PM	0	125	20	0	0	0	0	0	0	0	0	0
4/24/2024	7:45 PM	0	125	18	0	0	0	0	0	0	0	0	0
4/24/2024	8:00 PM	0	143	15	0	0	0	0	0	0	0	0	0
4/24/2024	8:15 PM	0	124	12	0	0	1	0	0	0	0	0	0
4/24/2024	8:30 PM	0	116	10	1	0	1	0	0	0	0	0	0
4/24/2024	8:45 PM	0	106	8	1	0	1	0	0	0	0	0	0
4/24/2024	9:00 PM	0	76	6	1	0	1	0	0	0	0	0	0
4/24/2024	9:15 PM	0	66	4	1	0	0	0	0	0	0	0	0
4/24/2024	9:30 PM	0	63	3	0	0	1	0	0	0	0	0	0
4/24/2024	9:45 PM	0	60	2	0	1	1	0	0	0	0	0	0
4/24/2024	10:00 PM	0	56	2	0	1	1	0	0	0	0	0	0
4/24/2024	10:15 PM	0	55	3	0	1	1	0	0	0	0	0	0
4/24/2024	10:30 PM	0	51	2	0	1	0	0	0	0	0	0	0
4/24/2024	10:45 PM	0	43	2	0	0	0	0	0	0	0	0	0
4/24/2024	11:00 PM	0	35	1	0	0	0	0	0	0	0	0	0
4/24/2024	11:15 PM	0	26	0	0	0	0	0	0	0	0	0	0
4/24/2024	11:30 PM	0	24	0	0	0	0	0	0	0	0	0	0
4/24/2024	11:45 PM	0	27	0	0	0	0	0	0	0	0	0	0

4/25/2024	12:00 AM	0	28	1	0	0	0	0	0	0	0	0	0
4/25/2024	12:15 AM	0	23	1	0	0	0	0	0	0	0	0	0
4/25/2024	12:30 AM	0	15	2	0	0	0	0	0	0	0	0	0
4/25/2024	12:45 AM	0	9	2	0	0	0	0	0	0	0	0	0
4/25/2024	1:00 AM	0	9	1	0	0	0	0	0	0	0	0	0
4/25/2024	1:15 AM	0	15	1	0	0	0	0	0	0	0	0	0
4/25/2024	1:30 AM	0	14	0	0	0	0	0	0	0	0	0	0
4/25/2024	1:45 AM	0	10	0	0	0	0	0	0	0	0	0	0
4/25/2024	2:00 AM	0	8	1	0	0	0	0	0	0	0	0	0
4/25/2024	2:15 AM	0	5	1	0	0	0	0	0	0	0	0	0
4/25/2024	2:30 AM	0	10	2	0	0	0	0	0	0	0	0	0
4/25/2024	2:45 AM	0	17	3	0	0	0	0	0	0	0	0	0
4/25/2024	3:00 AM	0	45	4	0	0	0	0	0	1	0	0	0
4/25/2024	3:15 AM	0	43	4	0	0	1	0	0	1	0	0	0
4/25/2024	3:30 AM	0	39	3	0	0	1	0	0	1	0	0	0
4/25/2024	3:45 AM	0	36	2	0	0	1	0	0	1	0	0	0
4/25/2024	4:00 AM	0	10	0	0	0	1	0	0	0	0	0	0
4/25/2024	4:15 AM	0	14	1	0	0	0	0	0	0	0	0	0
4/25/2024	4:30 AM	0	16	1	0	1	0	0	0	0	0	0	0
4/25/2024	4:45 AM	0	19	1	0	1	0	0	0	0	0	0	0
4/25/2024	5:00 AM	0	30	3	0	2	0	0	0	1	0	0	0
4/25/2024	5:15 AM	0	35	6	0	3	0	0	0	2	0	0	0
4/25/2024	5:30 AM	0	47	8	0	4	0	0	0	3	0	0	0
4/25/2024	5:45 AM	0	58	16	0	4	0	0	0	3	0	0	0
4/25/2024	6:00 AM	0	87	22	0	3	0	0	0	5	0	1	0
4/25/2024	6:15 AM	0	102	39	0	2	1	0	1	4	0	1	0
4/25/2024	6:30 AM	0	140	52	1	0	2	0	1	3	0	1	0
4/25/2024	6:45 AM	2	185	56	1	3	2	1	1	5	0	1	0
4/25/2024	7:00 AM	2	201	66	1	3	3	2	1	4	0	0	0
4/25/2024	7:15 AM	2	238	64	1	4	2	2	2	4	0	0	0
4/25/2024	7:30 AM	2	223	62	0	5	3	2	3	4	0	0	0
4/25/2024	7:45 AM	0	190	64	0	5	3	1	3	3	0	0	0
4/25/2024	8:00 AM	0	170	63	0	6	2	1	3	3	0	0	0
4/25/2024	8:15 AM	0	139	52	0	7	2	1	1	4	0	0	0	0
4/25/2024	8:30 AM	0	134	51	0	8	1	1	0	4	0	0	0	0
4/25/2024	8:45 AM	0	130	53	0	6	1	1	1	4	0	0	0	0
4/25/2024	9:00 AM	0	122	43	0	8	2	0	2	3	0	0	0	0
4/25/2024	9:15 AM	0	122	41	0	6	3	0	2	3	0	0	0	0
4/25/2024	9:30 AM	0	120	41	0	8	3	0	4	4	0	0	0	0
4/25/2024	9:45 AM	1	119	32	0	8	5	0	3	3	0	0	0	0
4/25/2024	10:00 AM	1	109	37	0	6	5	0	2	3	0	0	0	0
4/25/2024	10:15 AM	1	113	40	0	8	4	0	4	2	0	0	0	0
4/25/2024	10:30 AM	1	113	38	0	6	4	2	2	1	0	0	0	0
4/25/2024	10:45 AM	1	132	43	0	6	2	2	6	2	0	0	0	0
4/25/2024	11:00 AM	1	149	40	0	6	1	3	7	1	0	0	0	0
4/25/2024	11:15 AM	1	152	41	0	5	1	3	5	2	0	0	0	0
4/25/2024	11:30 AM	4	152	40	0	4	0	1	5	2	0	0	0	0
4/25/2024	11:45 AM	4	145	42	1	6	0	1	2	1	0	0	0	0
4/25/2024	12:00 PM	4	157	45	1	7	0	0	2	1	0	0	0	0
4/25/2024	12:15 PM	4	154	44	1	6	0	0	2	0	0	0	0	0
4/25/2024	12:30 PM	1	171	50	3	5	0	0	3	1	0	0	0	0
4/25/2024	12:45 PM	0	174	44	2	4	1	0	2	1	0	0	0	0
4/25/2024	1:00 PM	0	167	53	3	4	2	0	1	1	0	0	0	0
4/25/2024	1:15 PM	0	172	50	3	4	2	0	1	2	0	0	0	0
4/25/2024	1:30 PM	0	172	49	1	7	3	0	0	1	0	0	0	0
4/25/2024	1:45 PM	2	187	60	1	6	2	0	0	2	0	0	0	0
4/25/2024	2:00 PM	2	202	56	0	5	1	0	0	3	0	0	0	0
4/25/2024	2:15 PM	2	212	60	0	7	1	0	1	2	0	0	0	0
4/25/2024	2:30 PM	2	216	66	0	6	0	0	1	2	0	0	0	0
4/25/2024	2:45 PM	0	208	69	0	6	0	0	1	2	0	0	0	0
4/25/2024	3:00 PM	0	205	67	0	7	0	0	1	1	0	0	0	0
4/25/2024	3:15 PM	0	213	77	0	6	0	0	1	3	0	0	0	0
4/25/2024	3:30 PM	0	233	79	0	4	0	0	1	3	0	0	0	0
4/25/2024	3:45 PM	0	253	70	0	5	0	0	1	3	0	0	0	0
4/25/2024	4:00 PM	1	288	84	0	3	1	0	1	5	0	0	0	0
4/25/2024	4:15 PM	1	313	74	0	3	2	0	0	3	0	0	0	0
4/25/2024	4:30 PM	1	337	68	0	4	2	0	0	3	0	0	0	0
4/25/2024	4:45 PM	1	344	81	0	3	2	0	0	2	0	0	0	0
4/25/2024	5:00 PM	1	331	64	0	5	1	0	0	1	0	0	0	0
4/25/2024	5:15 PM	1	305	70	0	4	0	0	0	1	0	0	0	0
4/25/2024	5:30 PM	1	265	70	0	4	0	0	0	1	0	0	0	0
4/25/2024	5:45 PM	2	235	50	0	5	0	0	0	1	0	0	0	0
4/25/2024	6:00 PM	2	217	45	0	4	0	0	1	0	0	0	0	0
4/25/2024	6:15 PM	2	160	29	0	4	0	0	1	0	0	0	0	0
4/25/2024	6:30 PM	2	103	13	0	3	0	0	1	0	0	0	0	0
4/25/2024	6:45 PM	1	59	7	0	1	0	0	1	0	0	0	0	0
4/25/2024	7:00 PM	0	0	0	0	0	0	0	0	0	0	0	0	0
4/25/2024	7:15 PM	0	0	0	0	0	0	0	0	0	0	0	0	0
4/25/2024	7:30 PM	0	0	0	0	0	0	0	0	0	0	0	0	0
4/25/2024	7:45 PM	0	0	0	0	0	0	0	0	0	0	0	0	0
4/25/2024	8:00 PM	0	0	0	0	0	0	0	0	0	0	0	0	0
4/25/2024	8:15 PM	0	0	0	0	0	0	0	0	0	0	0	0	0
4/25/2024	8:30 PM	0	0	0	0	0	0	0	0	0	0	0	0	0
4/25/2024	8:45 PM	0	0	0	0	0	0	0	0	0	0	0	0	0
4/25/2024	9:00 PM	0	0	0	0	0	0	0	0	0	0	0	0	0
4/25/2024	9:15 PM	0	0	0	0	0	0	0	0	0	0	0	0	0
4/25/2024	9:30 PM	0	0	0	0	0	0	0	0	0	0	0	0	0
4/25/2024	9:45 PM	0	0	0	0	0	0	0	0	0	0	0	0	0
4/25/2024	10:00 PM	0	0	0	0	0	0	0	0	0	0	0	0	0
4/25/2024	10:15 PM	0	0	0	0	0	0	0	0	0	0	0	0	0
4/25/2024	10:30 PM	0	0	0	0	0	0	0	0	0	0	0	0	0
4/25/2024	10:45 PM	0	0	0	0	0	0	0	0	0	0	0	0	0
4/25/2024	11:00 PM	0	0	0	0	0	0	0	0	0	0	0	0	0
4/25/2024	11:15 PM	0	0	0	0	0	0	0	0	0	0	0	0	0
4/25/2024	11:30 PM	0	0	0	0	0	0	0	0	0	0	0	0	0
4/25/2024	11:45 PM	0	0	0	0	0	0	0	0	0	0	0	0	0

SB
File Name:
Start Date: 4/23/2024
Start Time: 0
Site Code: 15
Station ID: 1
Location 1: I-26 James F. Byrnes N/Bound Off-Ramp, south of US-176 Broad River Rd
Location 2:

Date	Time	1	2	3	4	5	6	7	8	9	10	11	12	13
4/23/2024	12:00 AM	0	0	0	0	0	0	0	0	0	0	0	0	0
4/23/2024	12:15 AM	0	0	0	0	0	0	0	0	0	0	0	0	0
4/23/2024	12:30 AM	0	0	0	0	0	0	0	0	0	0	0	0	0
4/23/2024	12:45 AM	0	0	0	0	0	0	0	0	0	0	0	0	0
4/23/2024	1:00 AM	0	0	0	0	0	0	0	0	0	0	0	0	0
4/23/2024	1:15 AM	0	0	0	0	0	0	0	0	0	0	0	0	0
4/23/2024	1:30 AM	0	0	0	0	0	0	0	0	0	0	0	0	0
4/23/2024	1:45 AM	0	0	0	0	0	0	0	0	0	0	0	0	0
4/23/2024	2:00 AM	0	0	0	0	0	0	0	0	0	0	0	0	0
4/23/2024	2:15 AM	0	0	0	0	0	0	0	0	0	0	0	0	0
4/23/2024	2:30 AM	0	0	0	0	0	0	0	0	0	0	0	0	0
4/23/2024	2:45 AM	0	0	0	0	0	0	0	0	0	0	0	0	0
4/23/2024	3:00 AM	0	0	0	0	0	0	0	0	0	0	0	0	0
4/23/2024	3:15 AM	0	0	0	0	0	0	0	0	0	0	0	0	0
4/23/2024	3:30 AM	0	0	0	0	0	0	0	0	0	0	0	0	0
4/23/2024	3:45 AM	0	0	0	0	0	0	0	0	0	0	0	0	0
4/23/2024	4:00 AM	0	0	0	0	0	0	0	0	0	0	0	0	0
4/23/2024	4:15 AM	0	0	0	0	0	0	0	0	0	0	0	0	0
4/23/2024	4:30 AM	0	0	0	0	0	0	0	0	0	0	0	0	0
4/23/2024	4:45 AM	0	0	0	0	0	0	0	0	0	0	0	0	0
4/23/2024	5:00 AM	0	0	0	0	0	0	0	0	0	0	0	0	0
4/23/2024	5:15 AM	0	0	0	0	0	0	0	0	0	0	0	0	0
4/23/2024	5:30 AM	0	0	0	0	0	0	0	0	0	0	0	0	0
4/23/2024	5:45 AM	0	0	0	0	0	0	0	0	0	0	0	0	0
4/23/2024	6:00 AM	0	0	0	0	0	0	0	0	0	0	0	0	0
4/23/2024	6:15 AM	0	0	0	0	0	0	0	0	0	0	0	0	0
4/23/2024	6:30 AM	0	0	0	0	0	0	0	0	0	0	0	0	0
4/23/2024	6:45 AM	0	0	0	0	0	0	0	0	0	0	0	0	0
4/23/2024	7:00 AM	0	0	0	0	0	0	0	0	0	0	0	0	0
4/23/2024	7:15 AM	0	0	0	0	0	0	0	0	0	0	0	0	0
4/23/2024	7:30 AM	0	0	0	0	0	0	0	0	0	0	0	0	0
4/23/2024	7:45 AM	0	0	0	0	0	0	0	0	0	0	0	0	0
4/23/2024	8:00 AM	0	0	0	0	0	0	0	0	0	0	0	0	0
4/23/2024	8:15 AM	0	0	0	0	0	0	0	0	0	0	0	0	0
4/23/2024	8:30 AM	0	0	0	0	0	0	0	0	0	0	0	0	0
4/23/2024	8:45 AM	0	0	0	0	0	0	0	0	0	0	0	0	0
4/23/2024	9:00 AM	0	0	0	0	0	0	0	0	0	0	0	0	0
4/23/2024	9:15 AM	0	0	0	0	0	0	0	0	0	0	0	0	0
4/23/2024	9:30 AM	0	0	0	0	0	0	0	0	0	0	0	0	0
4/23/2024	9:45 AM	0	0	0	0	0	0	0	0	0	0	0	0	0
4/23/2024	10:00 AM	0	0	0	0	0	0	0	0	0	0	0	0	0
4/23/2024	10:15 AM	0	0	0	0	0	0	0	0	0	0	0	0	0
4/23/2024	10:30 AM	0	0	0	0	0	0	0	0	0	0	0	0	0
4/23/2024	10:45 AM	0	0	0	0	0	0	0	0	0	0	0	0	0
4/23/2024	11:00 AM	0	0	0	0	0	0	0	0	0	0	0	0	0
4/23/2024	11:15 AM	0	0	0	0	0	0	0	0	0	0	0	0	0
4/23/2024	11:30 AM	0	0	0	0	0	0	0	0	0	0	0	0	0
4/23/2024	11:45 AM	0	0	0	0	0	0	0	0	0	0	0	0	0
4/23/2024	12:00 PM	0	0	0	0	0	0	0	0	0	0	0	0	0
4/23/2024	12:15 PM	0	0	0	0	0	0	0	0	0	0	0	0	0
4/23/2024	12:30 PM	0	0	0	0	0	0	0	0	0	0	0	0	0
4/23/2024	12:45 PM	0	0	0	0	0	0	0	0	0	0	0	0	0
4/23/2024	1:00 PM	0	0	0	0	0	0	0	0	0	0	0	0	0
4/23/2024	1:15 PM	0	0	0	0	0	0	0	0	0	0	0	0	0
4/23/2024	1:30 PM	0	0	0	0	0	0	0	0	0	0	0	0	0
4/23/2024	1:45 PM	0	0	0	0	0	0	0	0	0	0	0	0	0
4/23/2024	2:00 PM	0	0	0	0	0	0	0	0	0	0	0	0	0
4/23/2024	2:15 PM	0	0	0	0	0	0	0	0	0	0	0	0	0
4/23/2024	2:30 PM	0	0	0	0	0	0	0	0	0	0	0	0	0
4/23/2024	2:45 PM	0	0	0	0	0	0	0	0	0	0	0	0	0
4/23/2024	3:00 PM	0	0	0	0	0	0	0	0	0	0	0	0	0
4/23/2024	3:15 PM	0	0	0	0	0	0	0	0	0	0	0	0	0
4/23/2024	3:30 PM	0	0	0	0	0	0	0	0	0	0	0	0	0
4/23/2024	3:45 PM	0	0	0	0	0	0	0	0	0	0	0	0	0
4/23/2024	4:00 PM	0	0	0	0	0	0	0	0	0	0	0	0	0
4/23/2024	4:15 PM	0	0	0	0	0	0	0	0	0	0	0	0	0
4/23/2024	4:30 PM	0	0	0	0	0	0	0	0	0	0	0	0	0
4/23/2024	4:45 PM	0	0	0	0	0	0	0	0	0	0	0	0	0
4/23/2024	5:00 PM	0	0	0	0	0	0	0	0	0	0	0	0	0
4/23/2024	5:15 PM	0	0	0	0	0	0	0	0	0	0	0	0	0
4/23/2024	5:30 PM	0	0	0	0	0	0	0	0	0	0	0	0	0
4/23/2024	5:45 PM	0	0	0	0	0	0	0	0	0	0	0	0	0
4/23/2024	6:00 PM	0	0	0	0	0	0	0	0	0	0	0	0	0
4/23/2024	6:15 PM	0	0	0	0	0	0	0	0	0	0	0	0	0
4/23/2024	6:30 PM	0	0	0	0	0	0	0	0	0	0	0	0	0
4/23/2024	6:45 PM	0	0	0	0	0	0	0	0	0	0	0	0	0
4/23/2024	7:00 PM	0	0	0	0	0	0	0	0	0	0	0	0	0
4/23/2024	7:15 PM	0	0	0	0	0	0	0	0	0	0	0	0	0
4/23/2024	7:30 PM	0	0	0	0	0	0	0	0	0	0	0	0	0
4/23/2024	7:45 PM	0	0	0	0	0	0	0	0	0	0	0	0	0
4/23/2024	8:00 PM	0	0	0	0	0	0	0	0	0	0	0	0	0
4/23/2024	8:15 PM	0	0	0	0	0	0	0	0	0	0	0	0	0
4/23/2024	8:30 PM	0	0	0	0	0	0	0	0	0	0	0	0	0
4/23/2024	8:45 PM	0	0	0	0	0	0	0	0	0	0	0	0	0
4/23/2024	9:00 PM	0	0	0	0	0	0	0	0	0	0	0	0	0
4/23/2024	9:15 PM	0	0	0	0	0	0	0	0	0	0	0	0	0
4/23/2024	9:30 PM	0	0	0	0	0	0	0	0	0	0	0	0	0
4/23/2024	9:45 PM	0	0	0	0	0	0	0	0	0	0	0	0	0
4/23/2024	10:00 PM	0	0	0	0	0	0	0	0	0	0	0	0	0
4/23/2024	10:15 PM	0	0	0	0	0	0	0	0	0	0	0	0	0
4/23/2024	10:30 PM	0	0	0	0	0	0	0	0	0	0	0	0	0
4/23/2024	10:45 PM	0	0	0	0	0	0	0	0	0	0	0	0	0
4/23/2024	11:00 PM	0	0	0	0	0	0	0	0	0	0	0	0	0
4/23/2024	11:15 PM	0	0	0	0	0	0	0	0	0	0	0	0	0
4/23/2024	11:30 PM	0	0	0	0	0	0	0	0	0	0	0	0	0
4/23/2024	11:45 PM	0	0	0	0	0	0	0	0	0	0	0	0	0

4/24/2024	12:00 AM	0	0	0	0	0	0	0	0	0	0	0	0	0
4/24/2024	12:15 AM	0	0	0	0	0	0	0	0	0	0	0	0	0
4/24/2024	12:30 AM	0	0	0	0	0	0	0	0	0	0	0	0	0
4/24/2024	12:45 AM	0	0	0	0	0	0	0	0	0	0	0	0	0
4/24/2024	1:00 AM	0	0	0	0	0	0	0	0	0	0	0	0	0
4/24/2024	1:15 AM	0	0	0	0	0	0	0	0	0	0	0	0	0
4/24/2024	1:30 AM	0	0	0	0	0	0	0	0	0	0	0	0	0
4/24/2024	1:45 AM	0	0	0	0	0	0	0	0	0	0	0	0	0
4/24/2024	2:00 AM	0	0	0	0	0	0	0	0	0	0	0	0	0
4/24/2024	2:15 AM	0	0	0	0	0	0	0	0	0	0	0	0	0
4/24/2024	2:30 AM	0	0	0	0	0	0	0	0	0	0	0	0	0
4/24/2024	2:45 AM	0	0	0	0	0	0	0	0	0	0	0	0	0
4/24/2024	3:00 AM	0	0	0	0	0	0	0	0	0	0	0	0	0
4/24/2024	3:15 AM	0	0	0	0	0	0	0	0	0	0	0	0	0
4/24/2024	3:30 AM	0	0	0	0	0	0	0	0	0	0	0	0	0
4/24/2024	3:45 AM	0	0	0	0	0	0	0	0	0	0	0	0	0
4/24/2024	4:00 AM	0	0	0	0	0	0	0	0	0	0	0	0	0
4/24/2024	4:15 AM	0	0	0	0	0	0	0	0	0	0	0	0	0
4/24/2024	4:30 AM	0	0	0	0	0	0	0	0	0	0	0	0	0
4/24/2024	4:45 AM	0	0	0	0	0	0	0	0	0	0	0	0	0
4/24/2024	5:00 AM	0	0	0	0	0	0	0	0	0	0	0	0	0
4/24/2024	5:15 AM	0	0	0	0	0	0	0	0	0	0	0	0	0
4/24/2024	5:30 AM	0	0	0	0	0	0	0	0	0	0	0	0	0
4/24/2024	5:45 AM	0	0	0	0	0	0	0	0	0	0	0	0	0
4/24/2024	6:00 AM	0	0	0	0	0	0	0	0	0	0	0	0	0
4/24/2024	6:15 AM	0	0	0	0	0	0	0	0	0	0	0	0	0
4/24/2024	6:30 AM	0	0	0	0	0	0	0	0	0	0	0	0	0
4/24/2024	6:45 AM	0	0	0	0	0	0	0	0	0	0	0	0	0
4/24/2024	7:00 AM	0	0	0	0	0	0	0	0	0	0	0	0	0
4/24/2024	7:15 AM	0	0	0	0	0	0	0	0	0	0	0	0	0
4/24/2024	7:30 AM	0	0	0	0	0	0	0	0	0	0	0	0	0
4/24/2024	7:45 AM	0	0	0	0	0	0	0	0	0	0	0	0	0
4/24/2024	8:00 AM	0	0	0	0	0	0	0	0	0	0	0	0	0
4/24/2024	8:15 AM	0	0	0	0	0	0	0	0	0	0	0	0	0
4/24/2024	8:30 AM	0	0	0	0	0	0	0	0	0	0	0	0	0
4/24/2024	8:45 AM	0	0	0	0	0	0	0	0	0	0	0	0	0
4/24/2024	9:00 AM	0	0	0	0	0	0	0	0	0	0	0	0	0
4/24/2024	9:15 AM	0	0	0	0	0	0	0	0	0	0	0	0	0
4/24/2024	9:30 AM	0	0	0	0	0	0	0	0	0	0	0	0	0
4/24/2024	9:45 AM	0	0	0	0	0	0	0	0	0	0	0	0	0
4/24/2024	10:00 AM	0	0	0	0	0	0	0	0	0	0	0	0	0
4/24/2024	10:15 AM	0	0	0	0	0	0	0	0	0	0	0	0	0
4/24/2024	10:30 AM	0	0	0	0	0	0	0	0	0	0	0	0	0
4/24/2024	10:45 AM	0	0	0	0	0	0	0	0	0	0	0	0	0
4/24/2024	11:00 AM	0	0	0	0	0	0	0	0	0	0	0	0	0
4/24/2024	11:15 AM	0	0	0	0	0	0	0	0	0	0	0	0	0
4/24/2024	11:30 AM	0	0	0	0	0	0	0	0	0	0	0	0	0
4/24/2024	11:45 AM	0	0	0	0	0	0	0	0	0	0	0	0	0
4/24/2024	12:00 PM	0	0	0	0	0	0	0	0	0	0	0	0	0
4/24/2024	12:15 PM	0	0	0	0	0	0	0	0	0	0	0	0	0
4/24/2024	12:30 PM	0	0	0	0	0	0	0	0	0	0	0	0	0
4/24/2024	12:45 PM	0	0	0	0	0	0	0	0	0	0	0	0	0
4/24/2024	1:00 PM	0	0	0	0	0	0	0	0	0	0	0	0	0
4/24/2024	1:15 PM	0	0	0	0	0	0	0	0	0	0	0	0	0
4/24/2024	1:30 PM	0	0	0	0	0	0	0	0	0	0	0	0	0
4/24/2024	1:45 PM	0	0	0	0	0	0	0	0	0	0	0	0	0
4/24/2024	2:00 PM	0	0	0	0	0	0	0	0	0	0	0	0	0
4/24/2024	2:15 PM	0	0	0	0	0	0	0	0	0	0	0	0	0
4/24/2024	2:30 PM	0	0	0	0	0	0	0	0	0	0	0	0	0
4/24/2024	2:45 PM	0	0	0	0	0	0	0	0	0	0	0	0	0
4/24/2024	3:00 PM	0	0	0	0	0	0	0	0	0	0	0	0	0
4/24/2024	3:15 PM	0	0	0	0	0	0	0	0	0	0	0	0	0
4/24/2024	3:30 PM	0	0	0	0	0	0	0	0	0	0	0	0	0
4/24/2024	3:45 PM	0	0	0	0	0	0	0	0	0	0	0	0	0
4/24/2024	4:00 PM	0	0	0	0	0	0	0	0	0	0	0	0	0
4/24/2024	4:15 PM	0	0	0	0	0	0	0	0	0	0	0	0	0
4/24/2024	4:30 PM	0	0	0	0	0	0	0	0	0	0	0	0	0
4/24/2024	4:45 PM	0	0	0	0	0	0	0	0	0	0	0	0	0
4/24/2024	5:00 PM	0	0	0	0	0	0	0	0	0	0	0	0	0
4/24/2024	5:15 PM	0	0	0	0	0	0	0	0	0	0	0	0	0
4/24/2024	5:30 PM	0	0	0	0	0	0	0	0	0	0	0	0	0
4/24/2024	5:45 PM	0	0	0	0	0	0	0	0	0	0	0	0	0
4/24/2024	6:00 PM	0	0	0	0	0	0	0	0	0	0	0	0	0
4/24/2024	6:15 PM	0	0	0	0	0	0	0	0	0	0	0	0	0
4/24/2024	6:30 PM	0	0	0	0	0	0	0	0	0	0	0	0	0
4/24/2024	6:45 PM	0	0	0	0	0	0	0	0	0	0	0	0	0
4/24/2024	7:00 PM	0	0	0	0	0	0	0	0	0	0	0	0	0
4/24/2024	7:15 PM	0	0	0	0	0	0	0	0	0	0	0	0	0
4/24/2024	7:30 PM	0	0	0	0	0	0	0	0	0	0	0	0	0
4/24/2024	7:45 PM	0	0	0	0	0	0	0	0	0	0	0	0	0
4/24/2024	8:00 PM	0	0	0	0	0	0	0	0	0	0	0	0	0
4/24/2024	8:15 PM	0	0	0	0	0	0	0	0	0	0	0	0	0
4/24/2024	8:30 PM	0	0	0	0	0	0	0	0	0	0	0	0	0
4/24/2024	8:45 PM	0	0	0	0	0	0	0	0	0	0	0	0	0
4/24/2024	9:00 PM	0	0	0	0	0	0	0	0	0	0	0	0	0
4/24/2024	9:15 PM	0	0	0	0	0	0	0	0	0	0	0	0	0
4/24/2024	9:30 PM	0	0	0	0	0	0	0	0	0	0	0	0	0
4/24/2024	9:45 PM	0	0	0	0	0	0	0	0	0	0	0	0	0
4/24/2024	10:00 PM	0	0	0	0	0	0	0	0	0	0	0	0	0
4/24/2024	10:15 PM	0	0	0	0	0	0	0	0	0	0	0	0	0
4/24/2024	10:30 PM	0	0	0	0	0	0	0	0	0	0	0	0	0
4/24/2024	10:45 PM	0	0	0	0	0	0	0	0	0	0	0	0	0
4/24/2024	11:00 PM	0	0	0	0	0	0	0	0	0	0	0	0	0
4/24/2024	11:15 PM	0	0	0	0	0	0	0	0	0	0	0	0	0
4/24/2024	11:30 PM	0	0	0	0	0	0	0	0	0	0	0	0	0
4/24/2024	11:45 PM	0	0	0	0	0	0	0	0	0	0	0	0	0

4/25/2024	12:00 AM	0	0	0	0	0	0	0	0	0	0	0	0	0
4/25/2024	12:15 AM	0	0	0	0	0	0	0	0	0	0	0	0	0
4/25/2024	12:30 AM	0	0	0	0	0	0	0	0	0	0	0	0	0
4/25/2024	12:45 AM	0	0	0	0	0	0	0	0	0	0	0	0	0
4/25/2024	1:00 AM	0	0	0	0	0	0	0	0	0	0	0	0	0
4/25/2024	1:15 AM	0	0	0	0	0	0	0	0	0	0	0	0	0
4/25/2024	1:30 AM	0	0	0	0	0	0	0	0	0	0	0	0	0
4/25/2024	1:45 AM	0	0	0	0	0	0	0	0	0	0	0	0	0
4/25/2024	2:00 AM	0	0	0	0	0	0	0	0	0	0	0	0	0
4/25/2024	2:15 AM	0	0	0	0	0	0	0	0	0	0	0	0	0
4/25/2024	2:30 AM	0	0	0	0	0	0	0	0	0	0	0	0	0
4/25/2024	2:45 AM	0	0	0	0	0	0	0	0	0	0	0	0	0
4/25/2024	3:00 AM	0	0	0	0	0	0	0	0	0	0	0	0	0
4/25/2024	3:15 AM	0	0	0	0	0	0	0	0	0	0	0	0	0
4/25/2024	3:30 AM	0	0	0	0	0	0	0	0	0	0	0	0	0
4/25/2024	3:45 AM	0	0	0	0	0	0	0	0	0	0	0	0	0
4/25/2024	4:00 AM	0	0	0	0	0	0	0	0	0	0	0	0	0
4/25/2024	4:15 AM	0	0	0	0	0	0	0	0	0	0	0	0	0
4/25/2024	4:30 AM	0	0	0	0	0	0	0	0	0	0	0	0	0
4/25/2024	4:45 AM	0	0	0	0	0	0	0	0	0	0	0	0	0
4/25/2024	5:00 AM	0	0	0	0	0	0	0	0	0	0	0	0	0
4/25/2024	5:15 AM	0	0	0	0	0	0	0	0	0	0	0	0	0
4/25/2024	5:30 AM	0	0	0	0	0	0	0	0	0	0	0	0	0
4/25/2024	5:45 AM	0	0	0	0	0	0	0	0	0	0	0	0	0
4/25/2024	6:00 AM	0	0	0	0	0	0	0	0	0	0	0	0	0
4/25/2024	6:15 AM	0	0	0	0	0	0	0	0	0	0	0	0	0
4/25/2024	6:30 AM	0	0	0	0	0	0	0	0	0	0	0	0	0
4/25/2024	6:45 AM	0	0	0	0	0	0	0	0	0	0	0	0	0
4/25/2024	7:00 AM	0	0	0	0	0	0	0	0	0	0	0	0	0
4/25/2024	7:15 AM	0	0	0	0	0	0	0	0	0	0	0	0	0
4/25/2024	7:30 AM	0	0	0	0	0	0	0	0	0	0	0	0	0
4/25/2024	7:45 AM	0	0	0	0	0	0	0	0	0	0	0	0	0
4/25/2024	8:00 AM	0	0	0	0	0	0	0	0	0	0	0	0	0
4/25/2024	8:15 AM	0	0	0	0	0	0	0	0	0	0	0	0	0
4/25/2024	8:30 AM	0	0	0	0	0	0	0	0	0	0	0	0	0
4/25/2024	8:45 AM	0	0	0	0	0	0	0	0	0	0	0	0	0
4/25/2024	9:00 AM	0	0	0	0	0	0	0	0	0	0	0	0	0
4/25/2024	9:15 AM	0	0	0	0	0	0	0	0	0	0	0	0	0
4/25/2024	9:30 AM	0	0	0	0	0	0	0	0	0	0	0	0	0
4/25/2024	9:45 AM	0	0	0	0	0	0	0	0	0	0	0	0	0
4/25/2024	10:00 AM	0	0	0	0	0	0	0	0	0	0	0	0	0
4/25/2024	10:15 AM	0	0	0	0	0	0	0	0	0	0	0	0	0
4/25/2024	10:30 AM	0	0	0	0	0	0	0	0	0	0	0	0	0
4/25/2024	10:45 AM	0	0	0	0	0	0	0	0	0	0	0	0	0
4/25/2024	11:00 AM	0	0	0	0	0	0	0	0	0	0	0	0	0
4/25/2024	11:15 AM	0	0	0	0	0	0	0	0	0	0	0	0	0
4/25/2024	11:30 AM	0	0	0	0	0	0	0	0	0	0	0	0	0
4/25/2024	11:45 AM	0	0	0	0	0	0	0	0	0	0	0	0	0
4/25/2024	12:00 PM	0	0	0	0	0	0	0	0	0	0	0	0	0
4/25/2024	12:15 PM	0	0	0	0	0	0	0	0	0	0	0	0	0
4/25/2024	12:30 PM	0	0	0	0	0	0	0	0	0	0	0	0	0
4/25/2024	12:45 PM	0	0	0	0	0	0	0	0	0	0	0	0	0
4/25/2024	1:00 PM	0	0	0	0	0	0	0	0	0	0	0	0	0
4/25/2024	1:15 PM	0	0	0	0	0	0	0	0	0	0	0	0	0
4/25/2024	1:30 PM	0	0	0	0	0	0	0	0	0	0	0	0	0
4/25/2024	1:45 PM	0	0	0	0	0	0	0	0	0	0	0	0	0
4/25/2024	2:00 PM	0	0	0	0	0	0	0	0	0	0	0	0	0
4/25/2024	2:15 PM	0	0	0	0	0	0	0	0	0	0	0	0	0
4/25/2024	2:30 PM	0	0	0	0	0	0	0	0	0	0	0	0	0
4/25/2024	2:45 PM	0	0	0	0	0	0	0	0	0	0	0	0	0
4/25/2024	3:00 PM	0	0	0	0	0	0	0	0	0	0	0	0	0
4/25/2024	3:15 PM	0	0	0	0	0	0	0	0	0	0	0	0	0
4/25/2024	3:30 PM	0	0	0	0	0	0	0	0	0	0	0	0	0
4/25/2024	3:45 PM	0	0	0	0	0	0	0	0	0	0	0	0	0
4/25/2024	4:00 PM	0	0	0	0	0	0	0	0	0	0	0	0	0
4/25/2024	4:15 PM	0	0	0	0	0	0	0	0	0	0	0	0	0
4/25/2024	4:30 PM	0	0	0	0	0	0	0	0	0	0	0	0	0
4/25/2024	4:45 PM	0	0	0	0	0	0	0	0	0	0	0	0	0
4/25/2024	5:00 PM	0	0	0	0	0	0	0	0	0	0	0	0	0
4/25/2024	5:15 PM	0	0	0	0	0	0	0	0	0	0	0	0	0
4/25/2024	5:30 PM	0	0	0	0	0	0	0	0	0	0	0	0	0
4/25/2024	5:45 PM	0	0	0	0	0	0	0	0	0	0	0	0	0
4/25/2024	6:00 PM	0	0	0	0	0	0	0	0	0	0	0	0	0
4/25/2024	6:15 PM	0	0	0	0	0	0	0	0	0	0	0	0	0
4/25/2024	6:30 PM	0	0	0	0	0	0	0	0	0	0	0	0	0
4/25/2024	6:45 PM	0	0	0	0	0	0	0	0	0	0	0	0	0
4/25/2024	7:00 PM	0	0	0	0	0	0	0	0	0	0	0	0	0
4/25/2024	7:15 PM	0	0	0	0	0	0	0	0	0	0	0	0	0
4/25/2024	7:30 PM	0	0	0	0	0	0	0	0	0	0	0	0	0
4/25/2024	7:45 PM	0	0	0	0	0	0	0	0	0	0	0	0	0
4/25/2024	8:00 PM	0	0	0	0	0	0	0	0	0	0	0	0	0
4/25/2024	8:15 PM	0	0	0	0	0	0	0	0	0	0	0	0	0
4/25/2024	8:30 PM	0	0	0	0	0	0	0	0	0	0	0	0	0
4/25/2024	8:45 PM	0	0	0	0	0	0	0	0	0	0	0	0	0
4/25/2024	9:00 PM	0	0	0	0	0	0	0	0	0	0	0	0	0
4/25/2024	9:15 PM	0	0	0	0	0	0	0	0	0	0	0	0	0
4/25/2024	9:30 PM	0	0	0	0	0	0	0	0	0	0	0	0	0
4/25/2024	9:45 PM	0	0	0	0	0	0	0	0	0	0	0	0	0
4/25/2024	10:00 PM	0	0	0	0	0	0	0	0	0	0	0	0	0
4/25/2024	10:15 PM	0	0	0	0	0	0	0	0	0	0	0	0	0
4/25/2024	10:30 PM	0	0	0	0	0	0	0	0	0	0	0	0	0
4/25/2024	10:45 PM	0	0	0	0	0	0	0	0	0	0	0	0	0
4/25/2024	11:00 PM	0	0	0	0	0	0	0	0	0	0	0	0	0
4/25/2024	11:15 PM	0	0	0	0	0	0	0	0	0	0	0	0	0
4/25/2024	11:30 PM	0	0	0	0	0	0	0	0	0	0	0	0	0
4/25/2024	11:45 PM	0	0	0	0	0	0	0	0	0	0	0	0	0

Bi-Directional Class Count || SB WB 15min

Columbia, SC

Marr Traffic DATA COLLECTION
www.marrtraffic.com

Site 16
I-26 James F. Byrnes Expy On/Off-Ramp,
north of US-176 Broad River Rd

Date
Tuesday, April 23, 2024

Lat/Long
34.100034°, -81.175045°

Weather
Fair
58°F

Click here for Detailed Weather

Click here for Map

0000 - 2400 (Weekday 24h Session) (04-23-2024)
SB WB 15min

	Southbound (Movement 16.1)													15min	60min
Time	1	2	3	4	5	6	7	8	9	10	11	12	13	Total	Total
0000 - 0015	0	0	0	0	0	0	0	0	0	0	0	0	0	**0**	
0015 - 0030	0	0	0	0	0	0	0	0	0	0	0	0	0	**0**	
0030 - 0045	0	0	0	0	0	0	0	0	0	0	0	0	0	**0**	
0045 - 0100	0	0	0	0	0	0	0	0	0	0	0	0	0	**0**	**0**
0100 - 0115	0	0	0	0	0	0	0	0	0	0	0	0	0	**0**	
0115 - 0130	0	0	0	0	0	0	0	0	0	0	0	0	0	**0**	
0130 - 0145	0	0	0	0	0	0	0	0	0	0	0	0	0	**0**	
0145 - 0200	0	0	0	0	0	0	0	0	0	0	0	0	0	**0**	**0**
0200 - 0215	0	0	0	0	0	0	0	0	0	0	0	0	0	**0**	
0215 - 0230	0	0	0	0	0	0	0	0	0	0	0	0	0	**0**	
0230 - 0245	0	0	0	0	0	0	0	0	0	0	0	0	0	**0**	
0245 - 0300	0	0	0	0	0	0	0	0	0	0	0	0	0	**0**	**0**
0300 - 0315	0	0	0	0	0	0	0	0	0	0	0	0	0	**0**	
0315 - 0330	0	0	0	0	0	0	0	0	0	0	0	0	0	**0**	
0330 - 0345	0	0	0	0	0	0	0	0	0	0	0	0	0	**0**	
0345 - 0400	0	0	0	0	0	0	0	0	0	0	0	0	0	**0**	**0**
0400 - 0415	0	0	0	0	0	0	0	0	0	0	0	0	0	**0**	
0415 - 0430	0	0	0	0	0	0	0	0	0	0	0	0	0	**0**	
0430 - 0445	0	0	0	0	0	0	0	0	0	0	0	0	0	**0**	
0445 - 0500	0	0	0	0	0	0	0	0	0	0	0	0	0	**0**	**0**
0500 - 0515	0	0	0	0	0	0	0	0	0	0	0	0	0	**0**	
0515 - 0530	0	0	0	0	0	0	0	0	0	0	0	0	0	**0**	
0530 - 0545	0	0	0	0	0	0	0	0	0	0	0	0	0	**0**	
0545 - 0600	0	0	0	0	0	0	0	0	0	0	0	0	0	**0**	**0**
0600 - 0615	0	0	0	0	0	0	0	0	0	0	0	0	0	**0**	
0615 - 0630	0	0	0	0	0	0	0	0	0	0	0	0	0	**0**	
0630 - 0645	0	0	0	0	0	0	0	0	0	0	0	0	0	**0**	
0645 - 0700	0	0	0	0	0	0	0	0	0	0	0	0	0	**0**	**0**
0700 - 0715	0	0	0	0	0	0	0	0	0	0	0	0	0	**0**	
0715 - 0730	0	0	0	0	0	0	0	0	0	0	0	0	0	**0**	
0730 - 0745	0	0	0	0	0	0	0	0	0	0	0	0	0	**0**	
0745 - 0800	0	0	0	0	0	0	0	0	0	0	0	0	0	**0**	**0**
0800 - 0815	0	0	0	0	0	0	0	0	0	0	0	0	0	**0**	
0815 - 0830	0	0	0	0	0	0	0	0	0	0	0	0	0	**0**	
0830 - 0845	0	0	0	0	0	0	0	0	0	0	0	0	0	**0**	
0845 - 0900	0	0	0	0	0	0	0	0	0	0	0	0	0	**0**	**0**
0900 - 0915	0	0	0	0	0	0	0	0	0	0	0	0	0	**0**	
0915 - 0930	0	0	0	0	0	0	0	0	0	0	0	0	0	**0**	
0930 - 0945	0	0	0	0	0	0	0	0	0	0	0	0	0	**0**	
0945 - 1000	0	0	0	0	0	0	0	0	0	0	0	0	0	**0**	**0**
1000 - 1015	0	0	0	0	0	0	0	0	0	0	0	0	0	**0**	
1015 - 1030	0	0	0	0	0	0	0	0	0	0	0	0	0	**0**	
1030 - 1045	0	0	0	0	0	0	0	0	0	0	0	0	0	**0**	
1045 - 1100	0	0	0	0	0	0	0	0	0	0	0	0	0	**0**	**0**
1100 - 1115	0	0	0	0	0	0	0	0	0	0	0	0	0	**0**	
1115 - 1130	0	0	0	0	0	0	0	0	0	0	0	0	0	**0**	
1130 - 1145	0	0	0	0	0	0	0	0	0	0	0	0	0	**0**	
1145 - 1200	0	0	0	0	0	0	0	0	0	0	0	0	0	**0**	**0**
1200 - 1215	0	0	0	0	0	0	0	0	0	0	0	0	0	**0**	
1215 - 1230	0	0	0	0	0	0	0	0	0	0	0	0	0	**0**	
1230 - 1245	0	0	0	0	0	0	0	0	0	0	0	0	0	**0**	
1245 - 1300	0	0	0	0	0	0	0	0	0	0	0	0	0	**0**	**0**
1300 - 1315	0	0	0	0	0	0	0	0	0	0	0	0	0	**0**	
1315 - 1330	0	0	0	0	0	0	0	0	0	0	0	0	0	**0**	
1330 - 1345	0	0	0	0	0	0	0	0	0	0	0	0	0	**0**	
1345 - 1400	0	0	0	0	0	0	0	0	0	0	0	0	0	**0**	**0**
1400 - 1415	0	0	0	0	0	0	0	0	0	0	0	0	0	**0**	
1415 - 1430	0	0	0	0	0	0	0	0	0	0	0	0	0	**0**	
1430 - 1445	0	0	0	0	0	0	0	0	0	0	0	0	0	**0**	
1445 - 1500	0	0	0	0	0	0	0	0	0	0	0	0	0	**0**	**0**
1500 - 1515	0	0	0	0	0	0	0	0	0	0	0	0	0	**0**	
1515 - 1530	0	0	0	0	0	0	0	0	0	0	0	0	0	**0**	
1530 - 1545	0	0	0	0	0	0	0	0	0	0	0	0	0	**0**	
1545 - 1600	0	0	0	0	0	0	0	0	0	0	0	0	0	**0**	**0**
1600 - 1615	0	0	0	0	0	0	0	0	0	0	0	0	0	**0**	
1615 - 1630	0	0	0	0	0	0	0	0	0	0	0	0	0	**0**	
1630 - 1645	0	0	0	0	0	0	0	0	0	0	0	0	0	**0**	
1645 - 1700	0	0	0	0	0	0	0	0	0	0	0	0	0	**0**	**0**
1700 - 1715	0	0	0	0	0	0	0	0	0	0	0	0	0	**0**	
1715 - 1730	0	0	0	0	0	0	0	0	0	0	0	0	0	**0**	
1730 - 1745	0	0	0	0	0	0	0	0	0	0	0	0	0	**0**	
1745 - 1800	0	0	0	0	0	0	0	0	0	0	0	0	0	**0**	**0**
1800 - 1815	0	0	0	0	0	0	0	0	0	0	0	0	0	**0**	
1815 - 1830	0	0	0	0	0	0	0	0	0	0	0	0	0	**0**	
1830 - 1845	0	0	0	0	0	0	0	0	0	0	0	0	0	**0**	
1845 - 1900	0	0	0	0	0	0	0	0	0	0	0	0	0	**0**	**0**
1900 - 1915	2	110	26	1	1	0	0	0	4	0	0	0	0	**144**	
1915 - 1930	0	206	48	0	0	2	0	0	8	0	0	0	0	**264**	
1930 - 1945	1	118	31	0	2	1	0	0	0	0	0	0	0	**153**	
1945 - 2000	0	71	9	0	1	0	0	0	0	0	1	0	0	**82**	**643**
2000 - 2015	0	68	17	0	0	0	0	0	0	0	0	0	0	**85**	
2015 - 2030	0	76	22	0	0	0	0	0	0	0	0	0	0	**98**	
2030 - 2045	0	71	12	0	1	0	0	0	0	0	0	0	0	**84**	
2045 - 2100	0	66	7	0	0	0	0	0	0	0	0	0	0	**73**	**340**
2100 - 2115	0	59	4	0	0	1	0	0	0	0	0	0	0	**64**	
2115 - 2130	0	64	5	0	1	0	0	0	0	0	0	0	0	**70**	
2130 - 2145	0	48	3	0	1	0	0	0	1	0	0	0	0	**53**	
2145 - 2200	1	54	3	0	0	0	0	0	0	0	0	0	0	**58**	**245**
2200 - 2215	0	48	2	0	0	0	0	0	1	0	0	0	0	**51**	
2215 - 2230	0	42	2	0	1	0	0	0	0	0	0	0	0	**45**	
2230 - 2245	0	49	1	0	0	0	0	0	0	0	0	0	0	**50**	
2245 - 2300	0	26	1	0	0	0	0	0	0	0	0	0	0	**27**	**173**
2300 - 2315	0	32	1	0	1	0	0	0	0	0	0	0	0	**34**	
2315 - 2330	0	27	1	1	0	0	0	0	0	0	0	0	0	**29**	
2330 - 2345	0	19	1	0	0	0	0	0	0	0	0	0	0	**20**	
2345 - 0000	0	18	1	0	0	0	0	0	1	0	0	0	0	**20**	**103**

Session Total	4	1272	197	2	9	4	0	0	15	0	1	0	0	**1504**
Session Average	0.04	13.25	2.05	0.02	0.09	0.04	0.00	0.00	0.16	0.00	0.01	0.00	0.00	**15.67**
Session Percentage	0.27	84.57	13.10	0.13	0.60	0.27	0.00	0.00	1.00	0.00	0.07	0.00	0.00	

AM Peak Hour	-	-	-	-	-	-	-	-	-	-	-	-	-	**-**
AM Peak Volume	0	0	0	0	0	0	0	0	0	0	0	0	0	**0**

Noon Peak Hour	-	-	-	-	-	-	-	-	-	-	-	-	-	**-**
Noon Peak Volume	0	0	0	0	0	0	0	0	0	0	0	0	0	**0**

PM Peak Hour	1845 - 1945	1900 - 2000	1900 - 2000	1815 - 1915	1900 - 2000	1845 - 1945	-	-	1830 - 1930	-	1900 - 2000	-	-	**1900 - 2000**
PM Peak Volume	3	505	114	1	4	3	0	0	12	0	1	0	0	**643**

Site 16
I-26 James F. Byrnes Expy On/Off-Ramp,
north of US-176 Broad River Rd

Date
Wednesday, April 24, 2024

Lat/Long
34.100034°, -81.175045°

Weather
Fair
66°F

Click here for Detailed Weather

0000 - 2400 (Weekday 24h Session) (04-24-2024)
SB WB 15min

	Southbound (Movement 16.1)													15min	60min
Time	1	2	3	4	5	6	7	8	9	10	11	12	13	Total	Total
0000 - 0015	0	19	1	0	1	0	0	0	0	0	0	0	0	**21**	
0015 - 0030	0	14	1	0	0	0	0	0	2	0	0	0	0	**17**	
0030 - 0045	0	10	0	0	0	0	0	0	0	0	0	0	0	**10**	
0045 - 0100	0	8	2	0	0	0	0	0	1	0	0	0	0	**11**	**59**
0100 - 0115	0	14	0	0	0	0	0	0	0	0	0	0	0	**14**	
0115 - 0130	0	11	0	0	0	0	0	0	0	0	0	0	0	**11**	
0130 - 0145	0	2	0	0	0	0	0	0	0	0	0	0	0	**2**	
0145 - 0200	0	10	0	0	0	0	0	0	0	0	0	0	0	**10**	**37**
0200 - 0215	0	6	0	0	0	0	0	0	0	0	0	0	0	**6**	
0215 - 0230	0	9	1	0	0	0	0	0	0	0	0	0	0	**10**	
0230 - 0245	0	4	0	0	0	1	0	0	0	0	0	0	0	**5**	
0245 - 0300	0	5	0	0	0	0	0	0	0	0	0	0	0	**5**	**26**
0300 - 0315	0	3	1	0	0	0	0	0	0	0	0	0	0	**4**	
0315 - 0330	0	5	0	0	1	0	0	0	0	0	0	0	0	**6**	
0330 - 0345	0	7	0	0	0	0	0	0	0	0	0	0	0	**7**	
0345 - 0400	0	7	0	0	0	0	0	0	0	0	0	0	0	**7**	**24**
0400 - 0415	0	5	0	0	1	0	0	0	0	0	0	0	0	**6**	
0415 - 0430	0	7	2	0	0	0	0	0	0	0	0	0	0	**9**	
0430 - 0445	0	5	0	0	0	0	0	0	0	0	0	0	0	**5**	
0445 - 0500	0	12	0	0	0	0	0	0	0	0	0	0	0	**12**	**32**
0500 - 0515	0	9	0	0	1	0	0	0	0	0	0	0	0	**10**	
0515 - 0530	0	8	0	0	0	0	0	0	1	0	0	0	0	**9**	
0530 - 0545	0	19	2	1	4	0	0	0	1	0	0	0	0	**27**	
0545 - 0600	0	26	2	0	0	1	0	0	0	0	0	0	0	**29**	**75**
0600 - 0615	0	11	7	0	1	1	0	0	0	0	0	0	0	**20**	
0615 - 0630	1	29	9	0	1	1	0	1	0	0	0	0	0	**42**	
0630 - 0645	0	45	25	0	2	0	0	0	0	1	0	0	0	**73**	
0645 - 0700	0	67	25	0	5	1	0	0	0	0	0	0	0	**98**	**233**
0700 - 0715	0	74	17	0	0	0	0	0	0	0	0	0	0	**91**	
0715 - 0730	0	83	28	0	3	0	0	0	0	0	0	0	0	**114**	
0730 - 0745	0	101	33	0	3	1	0	0	2	0	0	0	0	**140**	
0745 - 0800	0	114	32	0	2	1	0	0	0	0	0	0	0	**149**	**494**
0800 - 0815	0	82	27	0	4	2	1	0	2	0	0	0	0	**118**	
0815 - 0830	0	67	21	0	4	0	0	0	1	0	0	0	0	**93**	
0830 - 0845	0	59	28	0	2	1	1	1	0	0	0	0	0	**92**	
0845 - 0900	0	69	25	0	4	0	2	0	0	2	0	0	0	**102**	**405**
0900 - 0915	0	55	31	0	3	0	1	1	2	0	0	0	0	**93**	
0915 - 0930	0	48	20	0	1	0	1	0	1	0	0	0	0	**71**	
0930 - 0945	0	65	27	1	2	0	2	0	0	1	0	0	0	**98**	
0945 - 1000	0	61	21	0	2	1	1	0	1	0	0	0	0	**87**	**349**
1000 - 1015	0	48	18	0	0	0	0	1	0	1	0	0	0	**68**	
1015 - 1030	0	49	24	0	1	0	1	0	1	0	0	0	0	**76**	
1030 - 1045	0	62	22	0	1	0	1	0	1	1	0	0	0	**88**	
1045 - 1100	0	81	20	0	2	1	0	0	0	1	0	0	0	**105**	**337**
1100 - 1115	0	69	21	0	1	0	0	0	3	0	0	0	0	**94**	
1115 - 1130	0	64	23	0	0	0	1	0	0	0	0	0	0	**88**	
1130 - 1145	1	68	23	0	3	0	0	0	3	0	0	0	0	**98**	
1145 - 1200	0	67	19	0	2	0	0	0	0	0	0	0	0	**88**	**368**
1200 - 1215	0	80	13	1	1	0	2	0	1	0	0	0	0	**98**	
1215 - 1230	0	78	25	0	1	1	1	2	1	0	0	0	0	**109**	
1230 - 1245	0	83	21	0	3	0	2	0	1	0	0	0	0	**110**	
1245 - 1300	1	77	14	0	1	1	0	0	0	0	0	0	0	**94**	**411**
1300 - 1315	0	91	26	0	1	0	0	0	0	0	0	0	0	**118**	
1315 - 1330	0	79	34	1	3	1	0	0	0	0	0	0	0	**118**	
1330 - 1345	0	80	15	0	2	1	2	1	0	0	0	0	0	**101**	
1345 - 1400	2	80	23	0	1	0	0	0	0	1	0	0	0	**107**	**444**
1400 - 1415	1	156	58	2	2	1	1	2	4	2	0	0	0	**229**	
1415 - 1430	0	150	42	0	3	0	1	1	1	0	0	0	0	**198**	
1430 - 1445	1	114	48	0	4	1	1	0	1	0	0	0	0	**170**	
1445 - 1500	0	151	47	0	2	0	2	0	2	0	0	0	0	**204**	**801**
1500 - 1515	0	160	39	1	1	0	1	1	2	0	0	0	0	**205**	
1515 - 1530	0	112	25	0	5	2	1	0	1	1	0	0	0	**147**	
1530 - 1545	1	94	24	0	2	0	1	0	0	0	0	0	0	**122**	
1545 - 1600	0	124	20	0	0	0	1	0	0	0	0	0	0	**145**	**619**
1600 - 1615	0	138	36	0	2	0	0	0	0	0	0	0	0	**176**	
1615 - 1630	0	121	28	0	1	0	0	0	1	0	0	0	0	**151**	
1630 - 1645	0	128	32	0	3	0	0	0	0	0	0	0	0	**163**	
1645 - 1700	1	118	25	0	1	0	0	0	1	1	0	0	0	**147**	**637**
1700 - 1715	0	112	24	0	1	0	1	0	1	0	0	0	0	**139**	
1715 - 1730	0	129	43	0	0	0	0	0	0	0	0	0	0	**172**	
1730 - 1745	0	128	29	0	3	0	1	0	0	0	0	0	0	**161**	
1745 - 1800	1	107	24	0	3	0	1	0	0	0	0	0	0	**136**	**608**
1800 - 1815	1	120	26	0	3	0	0	0	0	0	0	0	0	**150**	
1815 - 1830	0	91	32	0	1	1	0	0	0	0	0	0	0	**125**	
1830 - 1845	2	78	20	0	1	0	0	0	0	0	0	0	0	**101**	
1845 - 1900	0	97	16	0	2	0	0	0	0	0	0	0	0	**115**	**491**
1900 - 1915	0	86	19	0	0	0	0	0	0	0	0	0	0	**105**	
1915 - 1930	0	83	25	0	1	1	0	0	0	0	0	0	0	**110**	
1930 - 1945	0	100	19	0	2	0	0	0	0	0	0	0	0	**121**	
1945 - 2000	0	70	10	0	1	0	0	0	0	0	0	0	0	**81**	**417**
2000 - 2015	0	74	14	0	0	0	0	0	0	0	0	0	0	**88**	
2015 - 2030	1	87	14	0	1	0	0	0	1	0	0	0	0	**104**	
2030 - 2045	1	59	12	0	0	0	0	1	1	0	0	0	0	**74**	
2045 - 2100	0	75	1	1	0	0	0	0	0	0	0	0	0	**77**	**343**
2100 - 2115	0	79	0	0	1	0	0	0	0	0	0	0	0	**80**	
2115 - 2130	0	59	0	0	0	0	0	0	0	0	0	0	0	**59**	
2130 - 2145	0	57	0	0	0	0	0	0	0	0	0	0	0	**57**	
2145 - 2200	0	56	0	0	0	0	0	0	0	0	0	0	0	**56**	**252**
2200 - 2215	0	36	0	0	0	0	0	0	0	0	0	0	0	**36**	
2215 - 2230	0	32	0	0	0	0	0	0	0	0	0	0	0	**32**	
2230 - 2245	0	28	0	0	1	0	0	0	0	0	0	0	0	**29**	
2245 - 2300	0	24	1	0	0	0	0	0	0	0	0	0	0	**25**	**122**
2300 - 2315	0	42	0	0	0	0	0	0	0	0	0	0	0	**42**	
2315 - 2330	0	28	0	0	1	0	0	0	2	0	0	0	0	**31**	
2330 - 2345	0	20	0	0	0	0	0	0	1	0	0	0	0	**21**	
2345 - 0000	0	20	0	0	0	0	0	0	0	0	0	0	0	**20**	**114**

Session Total	15	5954	1482	8	118	22	31	12	44	12	0	0	0	**7698**
Session Average	0.16	62.02	15.44	0.08	1.23	0.23	0.32	0.13	0.46	0.13	0.00	0.00	0.00	**80.19**
Session Percentage	0.19	77.34	19.25	0.10	1.53	0.29	0.40	0.16	0.57	0.16	0.00	0.00	0.00	

AM Peak Hour	0530 - 0630	0715 - 0815	0715 - 0815	0500 - 0600	0800 - 0900	0715 - 0815	0845 - 0945	0815 - 0915	0730 - 0830	0845 - 0945	-	-	-	**0715 - 0815**
AM Peak Volume	1	380	120	1	14	4	6	2	5	3	0	0	0	**521**

Noon Peak Hour	1345 - 1445	1415 - 1515	1400 - 1500	1315 - 1415	1430 - 1530	1245 - 1345	1145 - 1245	1330 - 1430	1400 - 1500	1000 - 1100	-	-	-	**1400 - 1500**
Noon Peak Volume	4	575	195	3	12	3	5	4	8	3	0	0	0	**801**

PM Peak Hour	1745 - 1845	1545 - 1645	1630 - 1730	1500 - 1600	1730 - 1830	1500 - 1600	1500 - 1600	1500 - 1600	1500 - 1600	1500 - 1600	-	-	-	**1600 - 1700**
PM Peak Volume	4	511	124	1	10	2	4	1	3	1	0	0	0	**637**

Site 16
I-26 James F. Byrnes Expy On/Off-Ramp,
north of US-176 Broad River Rd

Date
Thursday, April 25, 2024

Lat/Long
34.100034°, -81.175045°

Weather
Fair
67°F

Click here for Detailed Weather

0000 - 2400 (Weekday 24h Session) (04-25-2024)
SB WB 15min

	Southbound (Movement 16.1)													15min	60min
TIME	1	2	3	4	5	6	7	8	9	10	11	12	13	Total	Total
0000 - 0015	0	19	0	0	0	0	0	0	0	0	0	0	0	**19**	
0015 - 0030	0	13	0	0	0	0	0	0	1	0	0	0	0	**14**	
0030 - 0045	0	11	0	0	0	0	0	1	0	0	0	0	0	**12**	
0045 - 0100	0	18	0	0	0	0	0	0	1	0	0	0	0	**19**	**64**
0100 - 0115	0	9	0	0	0	0	0	0	0	0	0	0	0	**9**	
0115 - 0130	0	15	0	0	0	0	0	0	0	0	0	0	0	**15**	
0130 - 0145	0	7	0	0	0	0	0	0	1	0	0	0	0	**8**	
0145 - 0200	0	9	0	0	1	0	0	0	0	0	0	0	0	**10**	**42**
0200 - 0215	0	7	0	0	0	0	0	0	0	0	0	0	0	**7**	
0215 - 0230	0	7	0	0	0	0	0	0	0	0	0	0	0	**7**	
0230 - 0245	0	5	0	0	1	0	0	0	0	0	0	0	0	**6**	
0245 - 0300	0	5	0	0	0	0	0	0	0	0	0	0	0	**5**	**25**
0300 - 0315	0	3	0	0	0	0	0	0	0	0	0	0	0	**3**	
0315 - 0330	0	4	0	0	0	0	0	0	1	0	0	0	0	**5**	
0330 - 0345	0	5	0	0	1	0	0	0	1	0	0	0	0	**7**	
0345 - 0400	0	3	0	0	0	0	0	0	0	0	0	0	0	**3**	**18**
0400 - 0415	0	5	0	0	0	0	0	0	0	0	0	0	0	**5**	
0415 - 0430	0	9	0	0	0	0	0	0	0	0	0	0	0	**9**	
0430 - 0445	0	10	0	0	0	0	0	0	1	0	0	0	0	**11**	
0445 - 0500	0	12	0	0	0	0	0	0	0	0	0	0	0	**12**	**37**
0500 - 0515	0	8	0	1	0	0	0	1	0	0	0	0	0	**10**	
0515 - 0530	0	10	0	0	0	0	0	0	4	0	0	0	0	**14**	
0530 - 0545	0	14	0	0	1	0	0	0	0	0	0	0	0	**15**	
0545 - 0600	0	28	1	0	1	0	0	0	0	0	0	0	0	**30**	**69**
0600 - 0615	0	24	8	0	3	0	1	0	1	0	0	0	0	**37**	
0615 - 0630	0	24	10	0	0	0	0	0	0	0	0	0	0	**34**	
0630 - 0645	0	49	25	0	3	0	0	0	1	0	0	0	0	**78**	
0645 - 0700	0	53	28	0	2	0	0	0	3	0	0	0	0	**86**	**235**
0700 - 0715	0	92	24	0	1	3	0	2	0	0	0	0	0	**122**	
0715 - 0730	1	87	30	0	2	1	0	0	4	0	0	0	0	**125**	
0730 - 0745	0	100	41	0	3	5	0	0	1	0	0	0	0	**150**	
0745 - 0800	0	96	36	0	4	0	0	0	0	0	0	0	0	**136**	**533**
0800 - 0815	0	79	25	0	0	1	0	0	1	0	0	0	0	**106**	
0815 - 0830	0	62	29	0	0	0	0	0	0	0	0	0	0	**91**	
0830 - 0845	0	72	21	0	2	1	0	0	1	0	0	0	0	**97**	
0845 - 0900	0	79	24	0	2	1	0	0	1	0	0	0	0	**107**	**401**
0900 - 0915	0	41	27	0	7	1	0	0	0	0	0	0	0	**76**	
0915 - 0930	0	54	25	0	5	0	0	2	0	0	0	0	0	**86**	
0930 - 0945	0	62	24	0	2	0	0	0	0	0	0	0	0	**88**	
0945 - 1000	0	71	18	0	3	1	0	0	0	0	0	0	0	**93**	**343**
1000 - 1015	0	50	22	0	2	0	0	0	1	0	0	0	0	**75**	
1015 - 1030	0	59	28	0	0	2	0	0	1	0	0	0	0	**90**	
1030 - 1045	0	75	21	0	1	2	0	2	1	0	0	0	0	**102**	
1045 - 1100	0	68	35	0	2	2	0	1	0	0	0	0	0	**108**	**375**
1100 - 1115	0	66	29	0	0	1	0	1	0	0	0	0	0	**97**	
1115 - 1130	0	79	25	1	5	3	0	0	1	0	0	0	0	**114**	
1130 - 1145	0	68	16	0	1	0	0	0	0	0	0	0	0	**85**	
1145 - 1200	0	82	20	0	0	1	0	2	1	0	0	0	0	**106**	**402**
1200 - 1215	0	81	17	0	2	2	0	0	1	0	0	0	0	**103**	
1215 - 1230	0	90	28	1	2	4	0	0	0	0	0	0	0	**125**	
1230 - 1245	0	61	24	0	3	0	0	0	0	0	0	0	0	**88**	
1245 - 1300	0	78	19	1	1	2	0	0	1	0	0	0	0	**102**	**418**
1300 - 1315	0	61	18	0	7	0	0	0	1	0	0	0	0	**87**	
1315 - 1330	0	64	33	1	1	2	0	1	0	0	0	0	0	**102**	
1330 - 1345	0	71	21	0	3	1	0	0	0	0	0	0	0	**96**	
1345 - 1400	0	90	23	0	0	3	0	0	0	0	0	0	0	**116**	**401**
1400 - 1415	1	89	28	0	0	1	0	0	1	0	0	0	0	**120**	
1415 - 1430	0	102	22	0	0	0	0	0	0	0	0	0	0	**124**	
1430 - 1445	0	93	23	0	3	1	0	0	0	2	0	0	0	**122**	
1445 - 1500	0	107	27	0	3	0	0	0	1	0	0	0	0	**138**	**504**
1500 - 1515	0	97	27	0	2	0	0	1	1	0	0	0	0	**128**	
1515 - 1530	2	121	25	0	1	1	0	0	0	0	0	0	0	**150**	
1530 - 1545	1	100	28	0	0	0	0	0	1	0	0	0	0	**130**	
1545 - 1600	1	119	33	0	1	2	0	3	0	0	0	0	0	**159**	**567**
1600 - 1615	1	112	25	0	0	1	0	1	0	0	0	0	0	**140**	
1615 - 1630	0	116	29	0	1	0	0	0	0	0	0	0	0	**146**	
1630 - 1645	0	127	29	0	0	0	0	0	0	0	0	0	0	**156**	
1645 - 1700	0	127	34	0	0	0	0	0	0	0	0	0	0	**161**	**603**
1700 - 1715	2	117	22	0	0	0	0	0	0	0	0	0	0	**141**	
1715 - 1730	0	135	27	0	0	0	0	0	1	1	0	0	0	**164**	
1730 - 1745	0	112	26	0	0	0	0	0	0	1	0	0	0	**139**	
1745 - 1800	0	118	28	0	1	0	0	0	1	1	0	0	0	**149**	**593**
1800 - 1815	1	110	26	0	3	0	0	0	1	0	0	0	0	**141**	
1815 - 1830	0	94	27	0	2	0	0	0	0	0	0	0	0	**123**	
1830 - 1845	0	89	23	0	0	0	0	0	0	0	0	0	0	**112**	
1845 - 1900	0	85	15	0	0	0	0	0	1	0	0	0	0	**101**	**477**
1900 - 1915	0	0	0	0	0	0	0	0	0	0	0	0	0	**0**	
1915 - 1930	0	0	0	0	0	0	0	0	0	0	0	0	0	**0**	
1930 - 1945	0	0	0	0	0	0	0	0	0	0	0	0	0	**0**	
1945 - 2000	0	0	0	0	0	0	0	0	0	0	0	0	0	**0**	**0**
2000 - 2015	0	0	0	0	0	0	0	0	0	0	0	0	0	**0**	
2015 - 2030	0	0	0	0	0	0	0	0	0	0	0	0	0	**0**	
2030 - 2045	0	0	0	0	0	0	0	0	0	0	0	0	0	**0**	
2045 - 2100	0	0	0	0	0	0	0	0	0	0	0	0	0	**0**	**0**
2100 - 2115	0	0	0	0	0	0	0	0	0	0	0	0	0	**0**	
2115 - 2130	0	0	0	0	0	0	0	0	0	0	0	0	0	**0**	
2130 - 2145	0	0	0	0	0	0	0	0	0	0	0	0	0	**0**	
2145 - 2200	0	0	0	0	0	0	0	0	0	0	0	0	0	**0**	**0**
2200 - 2215	0	0	0	0	0	0	0	0	0	0	0	0	0	**0**	
2215 - 2230	0	0	0	0	0	0	0	0	0	0	0	0	0	**0**	
2230 - 2245	0	0	0	0	0	0	0	0	0	0	0	0	0	**0**	
2245 - 2300	0	0	0	0	0	0	0	0	0	0	0	0	0	**0**	**0**
2300 - 2315	0	0	0	0	0	0	0	0	0	0	0	0	0	**0**	
2315 - 2330	0	0	0	0	0	0	0	0	0	0	0	0	0	**0**	
2330 - 2345	0	0	0	0	0	0	0	0	0	0	0	0	0	**0**	
2345 - 0000	0	0	0	0	0	0	0	0	0	0	0	0	0	**0**	**0**

Session Total	10	4594	1299	5	91	45	1	18	39	5	0	0	0	**6107**
Session Average	0.10	47.85	13.53	0.05	0.95	0.47	0.01	0.19	0.41	0.05	0.00	0.00	0.00	**63.61**
Session Percentage	0.16	75.23	21.27	0.08	1.49	0.74	0.02	0.29	0.64	0.08	0.00	0.00	0.00	

AM Peak Hour	0630 - 0730	0700 - 0800	0715 - 0815	0500 - 0600	0900 - 1000	0645 - 0745	0515 - 0615	0615 - 0715	0630 - 0730	-	-	-	-	**0700 - 0800**
AM Peak Hour Volume	1	375	132	1	17	9	1	2	8	0	0	0	0	**533**

Noon Peak Hour	1445 - 1545	1445 - 1545	1015 - 1115	1200 - 1300	1215 - 1315	1030 - 1130	-	1015 - 1115	1000 - 1100	1345 - 1445	-	-	-	**1445 - 1545**
Noon Peak Hour Volume	3	425	113	2	13	8	0	4	3	2	0	0	0	**546**

PM Peak Hour	1515 - 1615	1630 - 1730	1600 - 1700	-	1730 - 1830	1515 - 1615	-	1500 - 1600	1715 - 1815	1700 - 1800	-	-	-	**1630 - 1730**
PM Peak Hour Volume	5	506	117	0	6	4	0	4	3	3	0	0	0	**622**

Bi-Directional Class Count || SB WB Average 15min

Columbia, SC

Marr Traffic DATA COLLECTION
www.marrtraffic.com

Site 16
I-26 James F. Byrnes Expy On/Off-Ramp,
north of US-176 Broad River Rd

Date
Tuesday, April 23, 2024

Lat/Long
34.100034°, -81.175045°

Weather
Fair
58°F

0000 - 2400 (Weekday 24h Session) (All Dates)
SB WB Average 15min

	SB WB Average 15min													15min	60min
Time	1	2	3	4	5	6	7	8	9	10	11	12	13	Total	Total
0000 - 0015	0	13	0	0	0	0	0	0	0	0	0	0	0	**13**	
0015 - 0030	0	9	0	0	0	0	0	0	1	0	0	0	0	**10**	
0030 - 0045	0	7	0	0	0	0	0	0	0	0	0	0	0	**7**	
0045 - 0100	0	9	1	0	0	0	0	0	1	0	0	0	0	**10**	**41**
0100 - 0115	0	8	0	0	0	0	0	0	0	0	0	0	0	**8**	
0115 - 0130	0	9	0	0	0	0	0	0	0	0	0	0	0	**9**	
0130 - 0145	0	3	0	0	0	0	0	0	0	0	0	0	0	**3**	
0145 - 0200	0	6	0	0	0	0	0	0	0	0	0	0	0	**7**	**26**
0200 - 0215	0	4	0	0	0	0	0	0	0	0	0	0	0	**4**	
0215 - 0230	0	5	0	0	0	0	0	0	0	0	0	0	0	**6**	
0230 - 0245	0	3	0	0	0	0	0	0	0	0	0	0	0	**4**	
0245 - 0300	0	3	0	0	0	0	0	0	0	0	0	0	0	**3**	**17**
0300 - 0315	0	2	0	0	0	0	0	0	0	0	0	0	0	**2**	
0315 - 0330	0	3	0	0	0	0	0	0	0	0	0	0	0	**4**	
0330 - 0345	0	4	0	0	0	0	0	0	0	0	0	0	0	**5**	
0345 - 0400	0	3	0	0	0	0	0	0	0	0	0	0	0	**3**	**14**
0400 - 0415	0	3	0	0	0	0	0	0	0	0	0	0	0	**4**	
0415 - 0430	0	5	1	0	0	0	0	0	0	0	0	0	0	**6**	
0430 - 0445	0	5	0	0	0	0	0	0	0	0	0	0	0	**5**	
0445 - 0500	0	8	0	0	0	0	0	0	0	0	0	0	0	**8**	**23**
0500 - 0515	0	6	0	0	0	0	0	0	0	0	0	0	0	**7**	
0515 - 0530	0	6	0	0	0	0	0	0	2	0	0	0	0	**8**	
0530 - 0545	0	11	1	0	2	0	0	0	0	0	0	0	0	**14**	
0545 - 0600	0	18	1	0	0	0	0	0	0	0	0	0	0	**20**	**48**
0600 - 0615	0	12	5	0	1	0	0	0	0	0	0	0	0	**19**	
0615 - 0630	0	18	6	0	0	0	0	0	0	0	0	0	0	**25**	
0630 - 0645	0	31	17	0	2	0	0	0	0	0	0	0	0	**50**	
0645 - 0700	0	40	18	0	2	0	0	0	1	0	0	0	0	**61**	**156**
0700 - 0715	0	55	14	0	0	1	0	1	0	0	0	0	0	**71**	
0715 - 0730	0	57	19	0	2	0	0	0	1	0	0	0	0	**80**	
0730 - 0745	0	67	25	0	2	2	0	0	1	0	0	0	0	**97**	
0745 - 0800	0	70	23	0	2	0	0	0	0	0	0	0	0	**95**	**342**
0800 - 0815	0	54	17	0	1	1	0	0	1	0	0	0	0	**75**	
0815 - 0830	0	43	17	0	1	0	0	0	0	0	0	0	0	**61**	
0830 - 0845	0	44	16	0	1	1	0	0	0	0	0	0	0	**63**	
0845 - 0900	0	49	16	0	2	0	1	0	0	1	0	0	0	**70**	**269**
0900 - 0915	0	32	19	0	3	0	0	0	1	0	0	0	0	**56**	
0915 - 0930	0	34	15	0	2	0	0	1	0	0	0	0	0	**52**	
0930 - 0945	0	42	17	0	1	0	1	0	0	0	0	0	0	**62**	
0945 - 1000	0	44	13	0	2	1	0	0	0	0	0	0	0	**60**	**231**
1000 - 1015	0	33	13	0	1	0	0	0	0	0	0	0	0	**48**	
1015 - 1030	0	36	17	0	0	1	0	0	1	0	0	0	0	**55**	
1030 - 1045	0	46	14	0	1	1	0	1	1	0	0	0	0	**63**	
1045 - 1100	0	50	18	0	1	1	0	0	0	0	0	0	0	**71**	**237**
1100 - 1115	0	45	17	0	0	0	0	0	1	0	0	0	0	**64**	
1115 - 1130	0	48	16	0	2	1	0	0	0	0	0	0	0	**67**	
1130 - 1145	0	45	13	0	1	0	0	0	1	0	0	0	0	**61**	
1145 - 1200	0	50	13	0	1	0	0	1	0	0	0	0	0	**65**	**257**
1200 - 1215	0	54	10	0	1	1	1	0	1	0	0	0	0	**67**	
1215 - 1230	0	56	18	0	1	2	0	1	0	0	0	0	0	**78**	
1230 - 1245	0	48	15	0	2	0	1	0	0	0	0	0	0	**66**	
1245 - 1300	0	52	11	0	1	1	0	0	0	0	0	0	0	**65**	**276**
1300 - 1315	0	51	15	0	3	0	0	0	0	0	0	0	0	**68**	
1315 - 1330	0	48	22	1	1	1	0	0	0	0	0	0	0	**73**	
1330 - 1345	0	50	12	0	2	1	1	0	0	0	0	0	0	**66**	
1345 - 1400	1	57	15	0	0	1	0	0	0	0	0	0	0	**74**	**282**
1400 - 1415	1	82	29	1	1	1	0	1	2	1	0	0	0	**116**	
1415 - 1430	0	84	21	0	1	0	0	0	0	0	0	0	0	**107**	
1430 - 1445	0	69	24	0	2	1	0	0	0	1	0	0	0	**97**	
1445 - 1500	0	86	25	0	2	0	1	0	1	0	0	0	0	**114**	**435**
1500 - 1515	0	86	22	0	1	0	0	1	1	0	0	0	0	**111**	
1515 - 1530	1	78	17	0	2	1	0	0	0	0	0	0	0	**99**	
1530 - 1545	1	65	17	0	1	0	0	0	0	0	0	0	0	**84**	
1545 - 1600	0	81	18	0	0	1	0	1	0	0	0	0	0	**101**	**395**
1600 - 1615	0	83	20	0	1	0	0	0	0	0	0	0	0	**105**	
1615 - 1630	0	79	19	0	1	0	0	0	0	0	0	0	0	**99**	
1630 - 1645	0	85	20	0	1	0	0	0	0	0	0	0	0	**106**	
1645 - 1700	0	82	20	0	0	0	0	0	0	0	0	0	0	**103**	**413**
1700 - 1715	1	76	15	0	0	0	0	0	0	0	0	0	0	**93**	
1715 - 1730	0	88	23	0	0	0	0	0	0	0	0	0	0	**112**	
1730 - 1745	0	80	18	0	1	0	0	0	0	0	0	0	0	**100**	
1745 - 1800	0	75	17	0	1	0	0	0	0	0	0	0	0	**95**	**400**
1800 - 1815	1	77	17	0	2	0	0	0	0	0	0	0	0	**97**	
1815 - 1830	0	62	20	0	1	0	0	0	0	0	0	0	0	**83**	
1830 - 1845	1	56	14	0	0	0	0	0	0	0	0	0	0	**71**	
1845 - 1900	0	61	10	0	1	0	0	0	0	0	0	0	0	**72**	**323**
1900 - 1915	1	65	15	0	0	0	0	0	1	0	0	0	0	**83**	
1915 - 1930	0	96	24	0	0	1	0	0	3	0	0	0	0	**125**	
1930 - 1945	0	73	17	0	1	0	0	0	0	0	0	0	0	**91**	
1945 - 2000	0	47	6	0	1	0	0	0	0	0	0	0	0	**54**	**353**
2000 - 2015	0	47	10	0	0	0	0	0	0	0	0	0	0	**58**	
2015 - 2030	0	54	12	0	0	0	0	0	0	0	0	0	0	**67**	
2030 - 2045	0	43	8	0	0	0	0	0	0	0	0	0	0	**53**	
2045 - 2100	0	47	3	0	0	0	0	0	0	0	0	0	0	**50**	**228**
2100 - 2115	0	46	1	0	0	0	0	0	0	0	0	0	0	**48**	
2115 - 2130	0	41	2	0	0	0	0	0	0	0	0	0	0	**43**	
2130 - 2145	0	35	1	0	0	0	0	0	0	0	0	0	0	**37**	
2145 - 2200	0	37	1	0	0	0	0	0	0	0	0	0	0	**38**	**166**
2200 - 2215	0	28	1	0	0	0	0	0	0	0	0	0	0	**29**	
2215 - 2230	0	25	1	0	0	0	0	0	0	0	0	0	0	**26**	
2230 - 2245	0	26	0	0	0	0	0	0	0	0	0	0	0	**26**	
2245 - 2300	0	17	1	0	0	0	0	0	0	0	0	0	0	**17**	**98**
2300 - 2315	0	25	0	0	0	0	0	0	0	0	0	0	0	**25**	
2315 - 2330	0	18	0	0	0	0	0	0	1	0	0	0	0	**20**	
2330 - 2345	0	13	0	0	0	0	0	0	0	0	0	0	0	**14**	
2345 - 0000	0	13	0	0	0	0	0	0	0	0	0	0	0	**13**	**72**

Session Total	10	3940	993	5	73	24	11	10	33	6	0	0	0	**5103**
Session Average	0.10	41.04	10.34	0.05	0.76	0.25	0.11	0.10	0.34	0.06	0.00	0.00	0.00	**53.16**
Session Percentage	0.19	77.21	19.45	0.10	1.42	0.46	0.21	0.20	0.64	0.11	0.01	0.00	0.00	

AM Peak Hour	0530 - 0630	0700 - 0800	0715 - 0815	0500 - 0600	0845 - 0945	0715 - 0815	0845 - 0945	0830 - 0930	0645 - 0745	0845 - 0945	-	-	-	**0715 - 0815**
AM Peak Volume	0	249	84	1	9	4	2	1	3	1	0	0	0	**346**

Noon Peak Hour	1345 - 1445	1415 - 1515	1400 - 1500	1315 - 1415	1430 - 1530	1200 - 1300	1145 - 1245	1000 - 1100	1400 - 1500	1345 - 1445	-	-	-	**1400 - 1500**
Noon Peak Volume	2	325	98	1	7	3	2	1	3	2	0	0	0	**435**

PM Peak Hour	1515 - 1615	1630 - 1730	1600 - 1700	1500 - 1600	1730 - 1830	1515 - 1615	1500 - 1600	1500 - 1600	1830 - 1930	1645 - 1745	1900 - 2000	-	-	**1630 - 1730**
PM Peak Volume	2	331	79	0	5	2	1	2	4	1	0	0	0	**414**

Bi-Directional Class Count || Volume Summary 15min

Columbia, SC

Marr Traffic DATA COLLECTION
www.marrtraffic.com

Site 16
I-26 James F. Byrnes Expy On/Off-Ramp,
north of US-176 Broad River Rd

Date
Tuesday, April 23, 2024

Lat/Long
34.100034°, -81.175045°

Weather
Fair
58°F

Click here for Detailed Weather

0000 - 2400 (Weekday 24h Session) (04-23-2024)

Volume Summary 15min

TIME	Volume Summary 15min NB	SB	15min Total	60min Total
0000 - 0015	0	0	**0**	
0015 - 0030	0	0	**0**	
0030 - 0045	0	0	**0**	
0045 - 0100	0	0	**0**	**0**
0100 - 0115	0	0	**0**	
0115 - 0130	0	0	**0**	
0130 - 0145	0	0	**0**	
0145 - 0200	0	0	**0**	**0**
0200 - 0215	0	0	**0**	
0215 - 0230	0	0	**0**	
0230 - 0245	0	0	**0**	
0245 - 0300	0	0	**0**	**0**
0300 - 0315	0	0	**0**	
0315 - 0330	0	0	**0**	
0330 - 0345	0	0	**0**	
0345 - 0400	0	0	**0**	**0**
0400 - 0415	0	0	**0**	
0415 - 0430	0	0	**0**	
0430 - 0445	0	0	**0**	
0445 - 0500	0	0	**0**	**0**
0500 - 0515	0	0	**0**	
0515 - 0530	0	0	**0**	
0530 - 0545	0	0	**0**	
0545 - 0600	0	0	**0**	**0**
0600 - 0615	0	0	**0**	
0615 - 0630	0	0	**0**	
0630 - 0645	0	0	**0**	
0645 - 0700	0	0	**0**	**0**
0700 - 0715	0	0	**0**	
0715 - 0730	0	0	**0**	
0730 - 0745	0	0	**0**	
0745 - 0800	0	0	**0**	**0**
0800 - 0815	0	0	**0**	
0815 - 0830	0	0	**0**	
0830 - 0845	0	0	**0**	
0845 - 0900	0	0	**0**	**0**
0900 - 0915	0	0	**0**	
0915 - 0930	0	0	**0**	
0930 - 0945	0	0	**0**	
0945 - 1000	0	0	**0**	**0**
1000 - 1015	0	0	**0**	
1015 - 1030	0	0	**0**	
1030 - 1045	0	0	**0**	
1045 - 1100	0	0	**0**	**0**
1100 - 1115	0	0	**0**	
1115 - 1130	0	0	**0**	
1130 - 1145	0	0	**0**	
1145 - 1200	0	0	**0**	**0**

Time	Volume Summary 15min NB	SB	15min Total	60min Total
1200 - 1215	0	0	**0**	
1215 - 1230	0	0	**0**	
1230 - 1245	0	0	**0**	
1245 - 1300	0	0	**0**	**0**
1300 - 1315	0	0	**0**	
1315 - 1330	0	0	**0**	
1330 - 1345	0	0	**0**	
1345 - 1400	0	0	**0**	**0**
1400 - 1415	0	0	**0**	
1415 - 1430	0	0	**0**	
1430 - 1445	0	0	**0**	
1445 - 1500	0	0	**0**	**0**
1500 - 1515	0	0	**0**	
1515 - 1530	0	0	**0**	
1530 - 1545	0	0	**0**	
1545 - 1600	0	0	**0**	**0**
1600 - 1615	0	0	**0**	
1615 - 1630	0	0	**0**	
1630 - 1645	0	0	**0**	
1645 - 1700	0	0	**0**	**0**
1700 - 1715	0	0	**0**	
1715 - 1730	0	0	**0**	
1730 - 1745	0	0	**0**	
1745 - 1800	0	0	**0**	**0**
1800 - 1815	0	0	**0**	
1815 - 1830	0	0	**0**	
1830 - 1845	0	0	**0**	
1845 - 1900	0	0	**0**	**0**
1900 - 1915	0	144	**144**	
1915 - 1930	0	264	**264**	
1930 - 1945	0	153	**153**	
1945 - 2000	0	82	**82**	**643**
2000 - 2015	0	85	**85**	
2015 - 2030	0	98	**98**	
2030 - 2045	0	84	**84**	
2045 - 2100	0	73	**73**	**340**
2100 - 2115	0	64	**64**	
2115 - 2130	0	70	**70**	
2130 - 2145	0	53	**53**	
2145 - 2200	0	58	**58**	**245**
2200 - 2215	0	51	**51**	
2215 - 2230	0	45	**45**	
2230 - 2245	0	50	**50**	
2245 - 2300	0	27	**27**	**173**
2300 - 2315	0	34	**34**	
2315 - 2330	0	29	**29**	
2330 - 2345	0	20	**20**	
2345 - 0000	0	20	**20**	**103**

Session Total	0	1504	**1504**
Session Average	0.00	15.67	**15.67**
Session Percentage	0.00	100.00	

Site 16

I-26 James F. Byrnes Expy On/Off-Ramp,
north of US-176 Broad River Rd

Date

Wednesday, April 24, 2024

Lat/Long

34.100034°, -81.175045°

Weather

Fair
66°F

Click here for Detailed Weather

0000 - 2400 (Weekday 24h Session) (04-24-2024)

Volume Summary 15min

TIME	Volume Summary 15min NB	SB	15min Total	60min Total
0000 - 0015	0	21	**21**	
0015 - 0030	0	17	**17**	
0030 - 0045	0	10	**10**	
0045 - 0100	0	11	**11**	**59**
0100 - 0115	0	14	**14**	
0115 - 0130	0	11	**11**	
0130 - 0145	0	2	**2**	
0145 - 0200	0	10	**10**	**37**
0200 - 0215	0	6	**6**	
0215 - 0230	0	10	**10**	
0230 - 0245	0	5	**5**	
0245 - 0300	0	5	**5**	**26**
0300 - 0315	0	4	**4**	
0315 - 0330	0	6	**6**	
0330 - 0345	0	7	**7**	
0345 - 0400	0	7	**7**	**24**
0400 - 0415	0	6	**6**	
0415 - 0430	0	9	**9**	
0430 - 0445	0	5	**5**	
0445 - 0500	0	12	**12**	**32**
0500 - 0515	0	10	**10**	
0515 - 0530	0	9	**9**	
0530 - 0545	0	27	**27**	
0545 - 0600	0	29	**29**	**75**
0600 - 0615	0	20	**20**	
0615 - 0630	0	42	**42**	
0630 - 0645	0	73	**73**	
0645 - 0700	0	98	**98**	**233**
0700 - 0715	0	91	**91**	
0715 - 0730	0	114	**114**	
0730 - 0745	0	140	**140**	
0745 - 0800	0	149	**149**	**494**
0800 - 0815	0	118	**118**	
0815 - 0830	0	93	**93**	
0830 - 0845	0	92	**92**	
0845 - 0900	0	102	**102**	**405**
0900 - 0915	0	93	**93**	
0915 - 0930	0	71	**71**	
0930 - 0945	0	98	**98**	
0945 - 1000	0	87	**87**	**349**
1000 - 1015	0	68	**68**	
1015 - 1030	0	76	**76**	
1030 - 1045	0	88	**88**	
1045 - 1100	0	105	**105**	**337**
1100 - 1115	0	94	**94**	
1115 - 1130	0	88	**88**	
1130 - 1145	0	98	**98**	
1145 - 1200	0	88	**88**	**368**

Time	Volume Summary 15min NB	SB	15min Total	60min Total
1200 - 1215	0	98	**98**	
1215 - 1230	0	109	**109**	
1230 - 1245	0	110	**110**	
1245 - 1300	0	94	**94**	**411**
1300 - 1315	0	118	**118**	
1315 - 1330	0	118	**118**	
1330 - 1345	0	101	**101**	
1345 - 1400	0	107	**107**	**444**
1400 - 1415	0	229	**229**	
1415 - 1430	0	198	**198**	
1430 - 1445	0	170	**170**	
1445 - 1500	0	204	**204**	**801**
1500 - 1515	0	205	**205**	
1515 - 1530	0	147	**147**	
1530 - 1545	0	122	**122**	
1545 - 1600	0	145	**145**	**619**
1600 - 1615	0	176	**176**	
1615 - 1630	0	151	**151**	
1630 - 1645	0	163	**163**	
1645 - 1700	0	147	**147**	**637**
1700 - 1715	0	139	**139**	
1715 - 1730	0	172	**172**	
1730 - 1745	0	161	**161**	
1745 - 1800	0	136	**136**	**608**
1800 - 1815	0	150	**150**	
1815 - 1830	0	125	**125**	
1830 - 1845	0	101	**101**	
1845 - 1900	0	115	**115**	**491**
1900 - 1915	0	105	**105**	
1915 - 1930	0	110	**110**	
1930 - 1945	0	121	**121**	
1945 - 2000	0	81	**81**	**417**
2000 - 2015	0	88	**88**	
2015 - 2030	0	104	**104**	
2030 - 2045	0	74	**74**	
2045 - 2100	0	77	**77**	**343**
2100 - 2115	0	80	**80**	
2115 - 2130	0	59	**59**	
2130 - 2145	0	57	**57**	
2145 - 2200	0	56	**56**	**252**
2200 - 2215	0	36	**36**	
2215 - 2230	0	32	**32**	
2230 - 2245	0	29	**29**	
2245 - 2300	0	25	**25**	**122**
2300 - 2315	0	42	**42**	
2315 - 2330	0	31	**31**	
2330 - 2345	0	21	**21**	
2345 - 0000	0	20	**20**	**114**

Session Total	0	7698	**7698**
Session Average	0.00	80.19	**80.19**
Session Percentage	0.00	100.00	

Site 16

I-26 James F. Byrnes Expy On/Off-Ramp,
north of US-176 Broad River Rd

Date

Thursday, April 25, 2024

Lat/Long

34.100034°, -81.175045°

Weather

Fair
67°F

Click here for Detailed Weather

0000 - 2400 (Weekday 24h Session) (04-25-2024)

Volume Summary 15min

TIME	Volume Summary 15min NB	SB	15min Total	60min Total
0000 - 0015	0	19	**19**	
0015 - 0030	0	14	**14**	
0030 - 0045	0	12	**12**	
0045 - 0100	0	19	**19**	**64**
0100 - 0115	0	9	**9**	
0115 - 0130	0	15	**15**	
0130 - 0145	0	8	**8**	
0145 - 0200	0	10	**10**	**42**
0200 - 0215	0	7	**7**	
0215 - 0230	0	7	**7**	
0230 - 0245	0	6	**6**	
0245 - 0300	0	5	**5**	**25**
0300 - 0315	0	3	**3**	
0315 - 0330	0	5	**5**	
0330 - 0345	0	7	**7**	
0345 - 0400	0	3	**3**	**18**
0400 - 0415	0	5	**5**	
0415 - 0430	0	9	**9**	
0430 - 0445	0	11	**11**	
0445 - 0500	0	12	**12**	**37**
0500 - 0515	0	10	**10**	
0515 - 0530	0	14	**14**	
0530 - 0545	0	15	**15**	
0545 - 0600	0	30	**30**	**69**
0600 - 0615	0	37	**37**	
0615 - 0630	0	34	**34**	
0630 - 0645	0	78	**78**	
0645 - 0700	0	86	**86**	**235**
0700 - 0715	0	122	**122**	
0715 - 0730	0	125	**125**	
0730 - 0745	0	150	**150**	
0745 - 0800	0	136	**136**	**533**
0800 - 0815	0	106	**106**	
0815 - 0830	0	91	**91**	
0830 - 0845	0	97	**97**	
0845 - 0900	0	107	**107**	**401**
0900 - 0915	0	76	**76**	
0915 - 0930	0	86	**86**	
0930 - 0945	0	88	**88**	
0945 - 1000	0	93	**93**	**343**
1000 - 1015	0	75	**75**	
1015 - 1030	0	90	**90**	
1030 - 1045	0	102	**102**	
1045 - 1100	0	108	**108**	**375**
1100 - 1115	0	97	**97**	
1115 - 1130	0	114	**114**	
1130 - 1145	0	85	**85**	
1145 - 1200	0	106	**106**	**402**

Time	Volume Summary 15min NB	SB	15min Total	60min Total
1200 - 1215	0	103	**103**	
1215 - 1230	0	125	**125**	
1230 - 1245	0	88	**88**	
1245 - 1300	0	102	**102**	**418**
1300 - 1315	0	87	**87**	
1315 - 1330	0	102	**102**	
1330 - 1345	0	96	**96**	
1345 - 1400	0	116	**116**	**401**
1400 - 1415	0	120	**120**	
1415 - 1430	0	124	**124**	
1430 - 1445	0	122	**122**	
1445 - 1500	0	138	**138**	**504**
1500 - 1515	0	128	**128**	
1515 - 1530	0	150	**150**	
1530 - 1545	0	130	**130**	
1545 - 1600	0	159	**159**	**567**
1600 - 1615	0	140	**140**	
1615 - 1630	0	146	**146**	
1630 - 1645	0	156	**156**	
1645 - 1700	0	161	**161**	**603**
1700 - 1715	0	141	**141**	
1715 - 1730	0	164	**164**	
1730 - 1745	0	139	**139**	
1745 - 1800	0	149	**149**	**593**
1800 - 1815	0	141	**141**	
1815 - 1830	0	123	**123**	
1830 - 1845	0	112	**112**	
1845 - 1900	0	101	**101**	**477**
1900 - 1915	0	0	**0**	
1915 - 1930	0	0	**0**	
1930 - 1945	0	0	**0**	
1945 - 2000	0	0	**0**	**0**
2000 - 2015	0	0	**0**	
2015 - 2030	0	0	**0**	
2030 - 2045	0	0	**0**	
2045 - 2100	0	0	**0**	**0**
2100 - 2115	0	0	**0**	
2115 - 2130	0	0	**0**	
2130 - 2145	0	0	**0**	
2145 - 2200	0	0	**0**	**0**
2200 - 2215	0	0	**0**	
2215 - 2230	0	0	**0**	
2230 - 2245	0	0	**0**	
2245 - 2300	0	0	**0**	**0**
2300 - 2315	0	0	**0**	
2315 - 2330	0	0	**0**	
2330 - 2345	0	0	**0**	
2345 - 0000	0	0	**0**	**0**

Session Total	0	6107	**6107**
Session Average	0.00	63.61	**63.61**
Session Percentage	0.00	100.00	

Bi-Directional Class Count || SB WB 60min

Columbia, SC

Marr Traffic DATA COLLECTION

www.marrtraffic.com

Site 16
I-26 James F. Byrnes Expy On/Off-Ramp,
north of US-176 Broad River Rd

Date
Tuesday, April 23, 2024

Lat/Long
34.100034°, -81.175045°

Weather
Fair
58°F

Click here for Detailed Weather

0000 - 2400 (Weekday 24h Session) (04-23-2024)
SB WB 60min

	Southbound (Movement 16.1)													
TIME	1	2	3	4	5	6	7	8	9	10	11	12	13	**Total**
0000 - 0100	0	0	0	0	0	0	0	0	0	0	0	0	0	**0**
0100 - 0200	0	0	0	0	0	0	0	0	0	0	0	0	0	**0**
0200 - 0300	0	0	0	0	0	0	0	0	0	0	0	0	0	**0**
0300 - 0400	0	0	0	0	0	0	0	0	0	0	0	0	0	**0**
0400 - 0500	0	0	0	0	0	0	0	0	0	0	0	0	0	**0**
0500 - 0600	0	0	0	0	0	0	0	0	0	0	0	0	0	**0**
0600 - 0700	0	0	0	0	0	0	0	0	0	0	0	0	0	**0**
0700 - 0800	0	0	0	0	0	0	0	0	0	0	0	0	0	**0**
0800 - 0900	0	0	0	0	0	0	0	0	0	0	0	0	0	**0**
0900 - 1000	0	0	0	0	0	0	0	0	0	0	0	0	0	**0**
1000 - 1100	0	0	0	0	0	0	0	0	0	0	0	0	0	**0**
1100 - 1200	0	0	0	0	0	0	0	0	0	0	0	0	0	**0**
1200 - 1300	0	0	0	0	0	0	0	0	0	0	0	0	0	**0**
1300 - 1400	0	0	0	0	0	0	0	0	0	0	0	0	0	**0**
1400 - 1500	0	0	0	0	0	0	0	0	0	0	0	0	0	**0**
1500 - 1600	0	0	0	0	0	0	0	0	0	0	0	0	0	**0**
1600 - 1700	0	0	0	0	0	0	0	0	0	0	0	0	0	**0**
1700 - 1800	0	0	0	0	0	0	0	0	0	0	0	0	0	**0**
1800 - 1900	0	0	0	0	0	0	0	0	0	0	0	0	0	**0**
1900 - 2000	3	505	114	1	4	3	0	0	12	0	1	0	0	**643**
2000 - 2100	0	281	58	0	1	0	0	0	0	0	0	0	0	**340**
2100 - 2200	1	225	15	0	2	1	0	0	1	0	0	0	0	**245**
2200 - 2300	0	165	6	0	1	0	0	0	1	0	0	0	0	**173**
2300 - 2400	0	96	4	1	1	0	0	0	1	0	0	0	0	**103**
Session Total	4	1272	197	2	9	4	0	0	15	0	1	0	0	**1504**
Session Average	0.17	53.00	8.21	0.08	0.38	0.17	0.00	0.00	0.63	0.00	0.04	0.00	0.00	**62.67**
Session Percentage	0.27	84.57	13.10	0.13	0.60	0.27	0.00	0.00	1.00	0.00	0.07	0.00	0.00	
AM Peak Hour	-	-	-	-	-	-	-	-	-	-	-	-	-	**-**
AM Peak Volume	0	0	0	0	0	0	0	0	0	0	0	0	0	**0**
Noon Peak Hour	-	-	-	-	-	-	-	-	-	-	-	-	-	**-**
Noon Peak Volume	0	0	0	0	0	0	0	0	0	0	0	0	0	**0**
PM Peak Hour	1900 - 2000	1900 - 2000	1900 - 2000	1900 - 2000	1900 - 2000	1900 - 2000	-	-	1900 - 2000	-	1900 - 2000	-	-	**1900 - 2000**
PM Peak Volume	3	505	114	1	4	3	0	0	12	0	1	0	0	**643**

Site 16
I-26 James F. Byrnes Expy On/Off-Ramp,
north of US-176 Broad River Rd

Date
Wednesday, April 24, 2024

Lat/Long
34.100034°, -81.175045°

Weather
Fair
66°F

Click here for Detailed Weather

0000 - 2400 (Weekday 24h Session) (04-24-2024)
SB WB 60min

	Southbound (Movement 16.1)													
TIME	1	2	3	4	5	6	7	8	9	10	11	12	13	**Total**
0000 - 0100	0	51	4	0	1	0	0	0	3	0	0	0	0	**59**
0100 - 0200	0	37	0	0	0	0	0	0	0	0	0	0	0	**37**
0200 - 0300	0	24	1	0	0	1	0	0	0	0	0	0	0	**26**
0300 - 0400	0	22	1	0	1	0	0	0	0	0	0	0	0	**24**
0400 - 0500	0	29	2	0	1	0	0	0	0	0	0	0	0	**32**
0500 - 0600	0	62	4	1	5	1	0	0	2	0	0	0	0	**75**
0600 - 0700	1	152	66	0	9	3	0	1	0	1	0	0	0	**233**
0700 - 0800	0	372	110	0	8	2	0	0	2	0	0	0	0	**494**
0800 - 0900	0	277	101	0	14	3	4	1	3	2	0	0	0	**405**
0900 - 1000	0	229	99	1	8	1	5	1	4	1	0	0	0	**349**
1000 - 1100	0	240	84	0	4	1	2	1	2	3	0	0	0	**337**
1100 - 1200	1	268	86	0	6	0	1	0	6	0	0	0	0	**368**
1200 - 1300	1	318	73	1	6	2	5	2	3	0	0	0	0	**411**
1300 - 1400	2	330	98	1	7	2	2	1	0	1	0	0	0	**444**
1400 - 1500	2	571	195	2	11	2	5	3	8	2	0	0	0	**801**
1500 - 1600	1	490	108	1	8	2	4	1	3	1	0	0	0	**619**
1600 - 1700	1	505	121	0	7	0	0	0	2	1	0	0	0	**637**
1700 - 1800	1	476	120	0	7	0	3	0	1	0	0	0	0	**608**
1800 - 1900	3	386	94	0	7	1	0	0	0	0	0	0	0	**491**
1900 - 2000	0	339	73	0	4	1	0	0	0	0	0	0	0	**417**
2000 - 2100	2	295	41	1	1	0	0	1	2	0	0	0	0	**343**
2100 - 2200	0	251	0	0	1	0	0	0	0	0	0	0	0	**252**
2200 - 2300	0	120	1	0	1	0	0	0	0	0	0	0	0	**122**
2300 - 2400	0	110	0	0	1	0	0	0	3	0	0	0	0	**114**

Session Total	15	5954	1482	8	118	22	31	12	44	12	0	0	0	**7698**
Session Average	0.63	248.08	61.75	0.33	4.92	0.92	1.29	0.50	1.83	0.50	0.00	0.00	0.00	**320.75**
Session Percentage	0.19	77.34	19.25	0.10	1.53	0.29	0.40	0.16	0.57	0.16	0.00	0.00	0.00	

AM Peak Hour	0600 - 0700	0700 - 0800	0700 - 0800	0500 - 0600	0800 - 0900	0600 - 0700	0900 - 1000	0600 - 0700	0900 - 1000	0800 - 0900	-	-	-	**0700 - 0800**
AM Peak Volume	1	372	110	1	14	3	5	1	4	2	0	0	0	**494**

Noon Peak Hour	1300 - 1400	1400 - 1500	1400 - 1500	1400 - 1500	1400 - 1500	1200 - 1300	1200 - 1300	1400 - 1500	1400 - 1500	1000 - 1100	-	-	-	**1400 - 1500**
Noon Peak Volume	2	571	195	2	11	2	5	3	8	3	0	0	0	**801**

PM Peak Hour	1800 - 1900	1600 - 1700	1600 - 1700	1500 - 1600	1500 - 1600	1500 - 1600	1500 - 1600	1500 - 1600	1500 - 1600	1500 - 1600	-	-	-	**1600 - 1700**
PM Peak Volume	3	505	121	1	8	2	4	1	3	1	0	0	0	**637**

Site 16
I-26 James F. Byrnes Expy On/Off-Ramp,
north of US-176 Broad River Rd

Date
Thursday, April 25, 2024

Lat/Long
34.100034°, -81.175045°

Weather
Fair
67°F

Click here for Detailed Weather

0000 - 2400 (Weekday 24h Session) (04-25-2024)
SB WB 60min

	Southbound (Movement 16.1)													
TIME	1	2	3	4	5	6	7	8	9	10	11	12	13	**Total**
0000 - 0100	0	61	0	0	0	0	0	1	2	0	0	0	0	**64**
0100 - 0200	0	40	0	0	1	0	0	0	1	0	0	0	0	**42**
0200 - 0300	0	24	0	0	1	0	0	0	0	0	0	0	0	**25**
0300 - 0400	0	15	0	0	1	0	0	0	2	0	0	0	0	**18**
0400 - 0500	0	36	0	0	0	0	0	0	1	0	0	0	0	**37**
0500 - 0600	0	60	1	1	2	0	0	1	4	0	0	0	0	**69**
0600 - 0700	0	150	71	0	8	0	1	0	5	0	0	0	0	**235**
0700 - 0800	1	375	131	0	10	9	0	2	5	0	0	0	0	**533**
0800 - 0900	0	292	99	0	4	3	0	0	3	0	0	0	0	**401**
0900 - 1000	0	228	94	0	17	2	0	2	0	0	0	0	0	**343**
1000 - 1100	0	252	106	0	5	6	0	3	3	0	0	0	0	**375**
1100 - 1200	0	295	90	1	6	5	0	3	2	0	0	0	0	**402**
1200 - 1300	0	310	88	2	8	8	0	0	2	0	0	0	0	**418**
1300 - 1400	0	286	95	1	11	6	0	1	1	0	0	0	0	**401**
1400 - 1500	1	391	100	0	6	2	0	0	2	2	0	0	0	**504**
1500 - 1600	4	437	113	0	4	3	0	4	2	0	0	0	0	**567**
1600 - 1700	1	482	117	0	1	1	0	1	0	0	0	0	0	**603**
1700 - 1800	2	482	103	0	1	0	0	0	2	3	0	0	0	**593**
1800 - 1900	1	378	91	0	5	0	0	0	2	0	0	0	0	**477**
1900 - 2000	0	0	0	0	0	0	0	0	0	0	0	0	0	**0**
2000 - 2100	0	0	0	0	0	0	0	0	0	0	0	0	0	**0**
2100 - 2200	0	0	0	0	0	0	0	0	0	0	0	0	0	**0**
2200 - 2300	0	0	0	0	0	0	0	0	0	0	0	0	0	**0**
2300 - 2400	0	0	0	0	0	0	0	0	0	0	0	0	0	**0**

Session Total	10	4594	1299	5	91	45	1	18	39	5	0	0	0	**6107**
Session Average	0.42	191.42	54.13	0.21	3.79	1.88	0.04	0.75	1.63	0.21	0.00	0.00	0.00	**254.46**
Session Percentage	0.16	75.23	21.27	0.08	1.49	0.74	0.02	0.29	0.64	0.08	0.00	0.00	0.00	

AM Peak Hour	0700 - 0800	0700 - 0800	0700 - 0800	0500 - 0600	0900 - 1000	0700 - 0800	0600 - 0700	0700 - 0800	0600 - 0700	-	-	-	-	**0700 - 0800**
AM Peak Hour Volume	1	375	131	1	17	9	1	2	5	0	0	0	0	**533**

Noon Peak Hour	1400 - 1500	1400 - 1500	1000 - 1100	1200 - 1300	1300 - 1400	1200 - 1300	-	1000 - 1100	1000 - 1100	1400 - 1500	-	-	-	**1400 - 1500**
Noon Peak Hour Volume	1	391	106	2	11	8	0	3	3	2	0	0	0	**504**

PM Peak Hour	1500 - 1600	1600 - 1700	1600 - 1700	-	1800 - 1900	1500 - 1600	-	1500 - 1600	1500 - 1600	1700 - 1800	-	-	-	**1600 - 1700**
PM Peak Hour Volume	4	482	117	0	5	3	0	4	2	3	0	0	0	**603**

Bi-Directional Class Count || Volume Summary 60min

Columbia, SC

Marr Traffic DATA COLLECTION

www.marrtraffic.com

Site 16

I-26 James F. Byrnes Expy On/Off-Ramp,
north of US-176 Broad River Rd

Date

Tuesday, April 23, 2024

Lat/Long

34.100034°, -81.175045°

Weather

Fair
58°F

Click here for Detailed Weather

0000 - 2400 (Weekday 24h Session) (04-23-2024)

Volume Summary 60min

	Volume Summary 60min		
TIME	NB	SB	**Total**
0000 - 0100	0	0	**0**
0100 - 0200	0	0	**0**
0200 - 0300	0	0	**0**
0300 - 0400	0	0	**0**
0400 - 0500	0	0	**0**
0500 - 0600	0	0	**0**
0600 - 0700	0	0	**0**
0700 - 0800	0	0	**0**
0800 - 0900	0	0	**0**
0900 - 1000	0	0	**0**
1000 - 1100	0	0	**0**
1100 - 1200	0	0	**0**

	Volume Summary 60min		
Time	NB	SB	**Total**
1200 - 1300	0	0	**0**
1300 - 1400	0	0	**0**
1400 - 1500	0	0	**0**
1500 - 1600	0	0	**0**
1600 - 1700	0	0	**0**
1700 - 1800	0	0	**0**
1800 - 1900	0	0	**0**
1900 - 2000	0	643	**643**
2000 - 2100	0	340	**340**
2100 - 2200	0	245	**245**
2200 - 2300	0	173	**173**
2300 - 2400	0	103	**103**

Session Total	0	1504	**1504**
Session Average	0.00	62.67	**62.67**
Session Percentage	0.00	100.00	

Site 16

I-26 James F. Byrnes Expy On/Off-Ramp,
north of US-176 Broad River Rd

Date

Wednesday, April 24, 2024

Lat/Long

34.100034°, -81.175045°

Weather

Fair
66°F

Click here for Detailed Weather

0000 - 2400 (Weekday 24h Session) (04-24-2024)

Volume Summary 60min

	Volume Summary 60min		
TIME	NB	SB	**Total**
0000 - 0100	0	59	**59**
0100 - 0200	0	37	**37**
0200 - 0300	0	26	**26**
0300 - 0400	0	24	**24**
0400 - 0500	0	32	**32**
0500 - 0600	0	75	**75**
0600 - 0700	0	233	**233**
0700 - 0800	0	494	**494**
0800 - 0900	0	405	**405**
0900 - 1000	0	349	**349**
1000 - 1100	0	337	**337**
1100 - 1200	0	368	**368**

Session Total	0	7698	**7698**
Session Average	0.00	320.75	**320.75**
Session Percentage	0.00	100.00	

	Volume Summary 60min		
Time	NB	SB	**Total**
1200 - 1300	0	411	**411**
1300 - 1400	0	444	**444**
1400 - 1500	0	801	**801**
1500 - 1600	0	619	**619**
1600 - 1700	0	637	**637**
1700 - 1800	0	608	**608**
1800 - 1900	0	491	**491**
1900 - 2000	0	417	**417**
2000 - 2100	0	343	**343**
2100 - 2200	0	252	**252**
2200 - 2300	0	122	**122**
2300 - 2400	0	114	**114**

Site 16

I-26 James F. Byrnes Expy On/Off-Ramp,
north of US-176 Broad River Rd

Date

Thursday, April 25, 2024

Lat/Long

34.100034°, -81.175045°

Weather

Fair
67°F

Click here for Detailed Weather

0000 - 2400 (Weekday 24h Session) (04-25-2024)

Volume Summary 60min

	Volume Summary 60min		
TIME	NB	SB	**Total**
0000 - 0100	0	64	**64**
0100 - 0200	0	42	**42**
0200 - 0300	0	25	**25**
0300 - 0400	0	18	**18**
0400 - 0500	0	37	**37**
0500 - 0600	0	69	**69**
0600 - 0700	0	235	**235**
0700 - 0800	0	533	**533**
0800 - 0900	0	401	**401**
0900 - 1000	0	343	**343**
1000 - 1100	0	375	**375**
1100 - 1200	0	402	**402**

Session Total	0	6107	**6107**
Session Average	0.00	254.46	**254.46**
Session Percentage	0.00	100.00	

	Volume Summary 60min		
Time	NB	SB	**Total**
1200 - 1300	0	418	**418**
1300 - 1400	0	401	**401**
1400 - 1500	0	504	**504**
1500 - 1600	0	567	**567**
1600 - 1700	0	603	**603**
1700 - 1800	0	593	**593**
1800 - 1900	0	477	**477**
1900 - 2000	0	0	**0**
2000 - 2100	0	0	**0**
2100 - 2200	0	0	**0**
2200 - 2300	0	0	**0**
2300 - 2400	0	0	**0**

Bi-Directional Class Count || Graphical Analysis SB WB

Columbia, SC

Marr Traffic DATA COLLECTION

www.marrtraffic.com

Site 16

I-26 James F. Byrnes Expy On/Off-Ramp,
north of US-176 Broad River Rd

Lat/Long

34.100034°, -81.175045°

0000 - 2400 (Weekday 24h Session)

Graphical Analysis SB WB

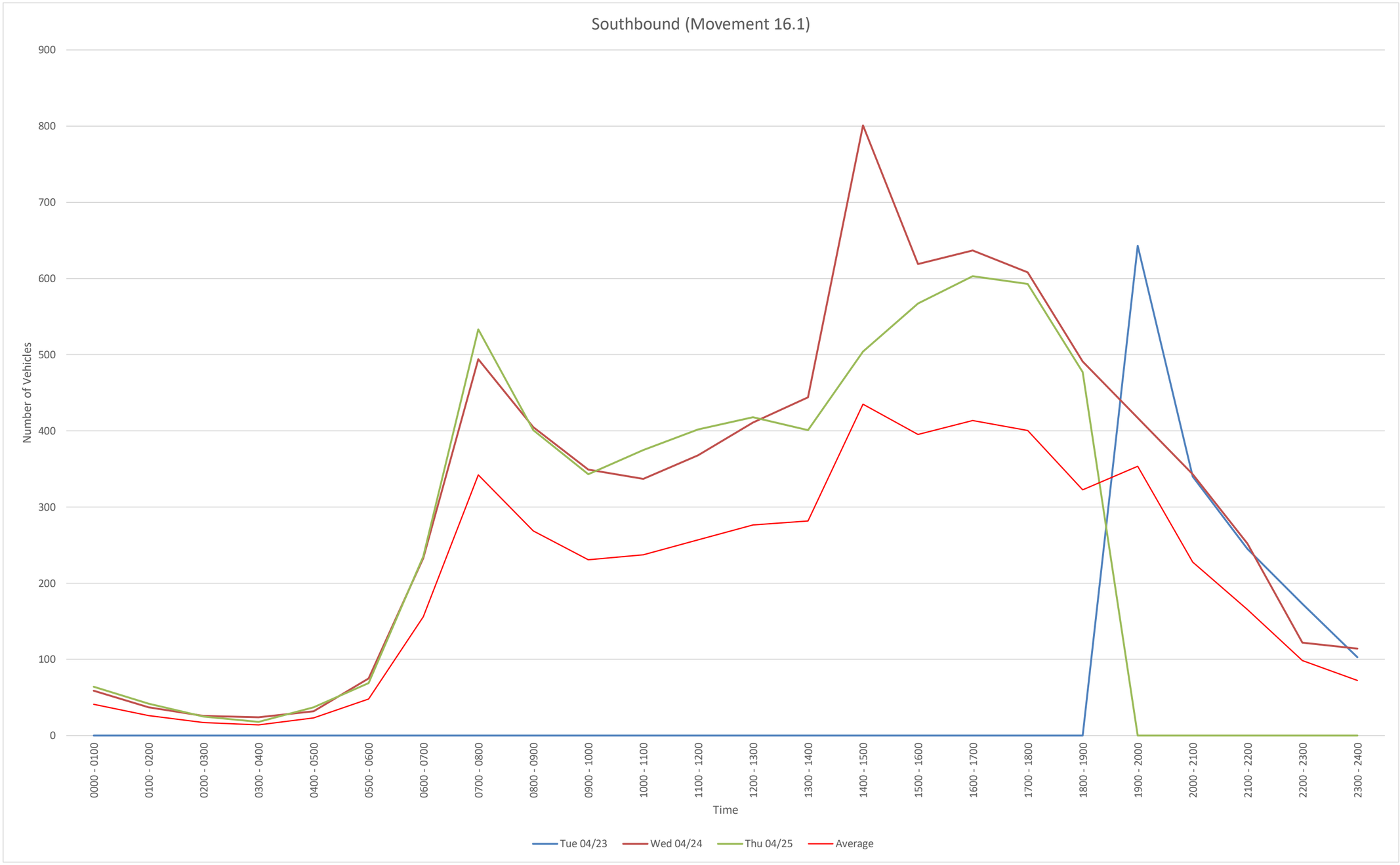

Time	Tue 04/23	Wed 04/24	Thu 04/25				
0000 - 0100	0	59	64				
0100 - 0200	0	37	42				
0200 - 0300	0	26	25				
0300 - 0400	0	24	18				
0400 - 0500	0	32	37				
0500 - 0600	0	75	69				
0600 - 0700	0	233	235				
0700 - 0800	0	494	533				
0800 - 0900	0	405	401				
0900 - 1000	0	349	343				
1000 - 1100	0	337	375				
1100 - 1200	0	368	402				
1200 - 1300	0	411	418				
1300 - 1400	0	444	401				
1400 - 1500	0	801	504				
1500 - 1600	0	619	567				
1600 - 1700	0	637	603				
1700 - 1800	0	608	593				
1800 - 1900	0	491	477				
1900 - 2000	643	417	0				
2000 - 2100	340	343	0				
2100 - 2200	245	252	0				
2200 - 2300	173	122	0				
2300 - 2400	103	114	0				
Daily Total	1504	7698	6107				

NB
File Name:
Start Date: 4/23/2024
Start Time: 0
Site Code: 16
Station ID: 1
Location 1: I-26 James F. Byrnes Expy On/Off-Ramp, north of US-176 Broad River Rd
Location 2:

Date	Time	1	2	3	4	5	6	7	8	9	10	11	12	13
4/23/2024	12:00 AM	0	0	0	0	0	0	0	0	0	0	0	0	0
4/23/2024	12:15 AM	0	0	0	0	0	0	0	0	0	0	0	0	0
4/23/2024	12:30 AM	0	0	0	0	0	0	0	0	0	0	0	0	0
4/23/2024	12:45 AM	0	0	0	0	0	0	0	0	0	0	0	0	0
4/23/2024	1:00 AM	0	0	0	0	0	0	0	0	0	0	0	0	0
4/23/2024	1:15 AM	0	0	0	0	0	0	0	0	0	0	0	0	0
4/23/2024	1:30 AM	0	0	0	0	0	0	0	0	0	0	0	0	0
4/23/2024	1:45 AM	0	0	0	0	0	0	0	0	0	0	0	0	0
4/23/2024	2:00 AM	0	0	0	0	0	0	0	0	0	0	0	0	0
4/23/2024	2:15 AM	0	0	0	0	0	0	0	0	0	0	0	0	0
4/23/2024	2:30 AM	0	0	0	0	0	0	0	0	0	0	0	0	0
4/23/2024	2:45 AM	0	0	0	0	0	0	0	0	0	0	0	0	0
4/23/2024	3:00 AM	0	0	0	0	0	0	0	0	0	0	0	0	0
4/23/2024	3:15 AM	0	0	0	0	0	0	0	0	0	0	0	0	0
4/23/2024	3:30 AM	0	0	0	0	0	0	0	0	0	0	0	0	0
4/23/2024	3:45 AM	0	0	0	0	0	0	0	0	0	0	0	0	0
4/23/2024	4:00 AM	0	0	0	0	0	0	0	0	0	0	0	0	0
4/23/2024	4:15 AM	0	0	0	0	0	0	0	0	0	0	0	0	0
4/23/2024	4:30 AM	0	0	0	0	0	0	0	0	0	0	0	0	0
4/23/2024	4:45 AM	0	0	0	0	0	0	0	0	0	0	0	0	0
4/23/2024	5:00 AM	0	0	0	0	0	0	0	0	0	0	0	0	0
4/23/2024	5:15 AM	0	0	0	0	0	0	0	0	0	0	0	0	0
4/23/2024	5:30 AM	0	0	0	0	0	0	0	0	0	0	0	0	0
4/23/2024	5:45 AM	0	0	0	0	0	0	0	0	0	0	0	0	0
4/23/2024	6:00 AM	0	0	0	0	0	0	0	0	0	0	0	0	0
4/23/2024	6:15 AM	0	0	0	0	0	0	0	0	0	0	0	0	0
4/23/2024	6:30 AM	0	0	0	0	0	0	0	0	0	0	0	0	0
4/23/2024	6:45 AM	0	0	0	0	0	0	0	0	0	0	0	0	0
4/23/2024	7:00 AM	0	0	0	0	0	0	0	0	0	0	0	0	0
4/23/2024	7:15 AM	0	0	0	0	0	0	0	0	0	0	0	0	0
4/23/2024	7:30 AM	0	0	0	0	0	0	0	0	0	0	0	0	0
4/23/2024	7:45 AM	0	0	0	0	0	0	0	0	0	0	0	0	0
4/23/2024	8:00 AM	0	0	0	0	0	0	0	0	0	0	0	0	0
4/23/2024	8:15 AM	0	0	0	0	0	0	0	0	0	0	0	0	0
4/23/2024	8:30 AM	0	0	0	0	0	0	0	0	0	0	0	0	0
4/23/2024	8:45 AM	0	0	0	0	0	0	0	0	0	0	0	0	0
4/23/2024	9:00 AM	0	0	0	0	0	0	0	0	0	0	0	0	0
4/23/2024	9:15 AM	0	0	0	0	0	0	0	0	0	0	0	0	0
4/23/2024	9:30 AM	0	0	0	0	0	0	0	0	0	0	0	0	0
4/23/2024	9:45 AM	0	0	0	0	0	0	0	0	0	0	0	0	0
4/23/2024	10:00 AM	0	0	0	0	0	0	0	0	0	0	0	0	0
4/23/2024	10:15 AM	0	0	0	0	0	0	0	0	0	0	0	0	0
4/23/2024	10:30 AM	0	0	0	0	0	0	0	0	0	0	0	0	0
4/23/2024	10:45 AM	0	0	0	0	0	0	0	0	0	0	0	0	0
4/23/2024	11:00 AM	0	0	0	0	0	0	0	0	0	0	0	0	0
4/23/2024	11:15 AM	0	0	0	0	0	0	0	0	0	0	0	0	0
4/23/2024	11:30 AM	0	0	0	0	0	0	0	0	0	0	0	0	0
4/23/2024	11:45 AM	0	0	0	0	0	0	0	0	0	0	0	0	0
4/23/2024	12:00 PM	0	0	0	0	0	0	0	0	0	0	0	0	0
4/23/2024	12:15 PM	0	0	0	0	0	0	0	0	0	0	0	0	0
4/23/2024	12:30 PM	0	0	0	0	0	0	0	0	0	0	0	0	0
4/23/2024	12:45 PM	0	0	0	0	0	0	0	0	0	0	0	0	0
4/23/2024	1:00 PM	0	0	0	0	0	0	0	0	0	0	0	0	0
4/23/2024	1:15 PM	0	0	0	0	0	0	0	0	0	0	0	0	0
4/23/2024	1:30 PM	0	0	0	0	0	0	0	0	0	0	0	0	0
4/23/2024	1:45 PM	0	0	0	0	0	0	0	0	0	0	0	0	0
4/23/2024	2:00 PM	0	0	0	0	0	0	0	0	0	0	0	0	0
4/23/2024	2:15 PM	0	0	0	0	0	0	0	0	0	0	0	0	0
4/23/2024	2:30 PM	0	0	0	0	0	0	0	0	0	0	0	0	0
4/23/2024	2:45 PM	0	0	0	0	0	0	0	0	0	0	0	0	0
4/23/2024	3:00 PM	0	0	0	0	0	0	0	0	0	0	0	0	0
4/23/2024	3:15 PM	0	0	0	0	0	0	0	0	0	0	0	0	0
4/23/2024	3:30 PM	0	0	0	0	0	0	0	0	0	0	0	0	0
4/23/2024	3:45 PM	0	0	0	0	0	0	0	0	0	0	0	0	0
4/23/2024	4:00 PM	0	0	0	0	0	0	0	0	0	0	0	0	0
4/23/2024	4:15 PM	0	0	0	0	0	0	0	0	0	0	0	0	0
4/23/2024	4:30 PM	0	0	0	0	0	0	0	0	0	0	0	0	0
4/23/2024	4:45 PM	0	0	0	0	0	0	0	0	0	0	0	0	0
4/23/2024	5:00 PM	0	0	0	0	0	0	0	0	0	0	0	0	0
4/23/2024	5:15 PM	0	0	0	0	0	0	0	0	0	0	0	0	0
4/23/2024	5:30 PM	0	0	0	0	0	0	0	0	0	0	0	0	0
4/23/2024	5:45 PM	0	0	0	0	0	0	0	0	0	0	0	0	0
4/23/2024	6:00 PM	0	0	0	0	0	0	0	0	0	0	0	0	0
4/23/2024	6:15 PM	0	0	0	0	0	0	0	0	0	0	0	0	0
4/23/2024	6:30 PM	0	0	0	0	0	0	0	0	0	0	0	0	0
4/23/2024	6:45 PM	0	0	0	0	0	0	0	0	0	0	0	0	0
4/23/2024	7:00 PM	0	0	0	0	0	0	0	0	0	0	0	0	0
4/23/2024	7:15 PM	0	0	0	0	0	0	0	0	0	0	0	0	0
4/23/2024	7:30 PM	0	0	0	0	0	0	0	0	0	0	0	0	0
4/23/2024	7:45 PM	0	0	0	0	0	0	0	0	0	0	0	0	0
4/23/2024	8:00 PM	0	0	0	0	0	0	0	0	0	0	0	0	0
4/23/2024	8:15 PM	0	0	0	0	0	0	0	0	0	0	0	0	0
4/23/2024	8:30 PM	0	0	0	0	0	0	0	0	0	0	0	0	0
4/23/2024	8:45 PM	0	0	0	0	0	0	0	0	0	0	0	0	0
4/23/2024	9:00 PM	0	0	0	0	0	0	0	0	0	0	0	0	0
4/23/2024	9:15 PM	0	0	0	0	0	0	0	0	0	0	0	0	0
4/23/2024	9:30 PM	0	0	0	0	0	0	0	0	0	0	0	0	0
4/23/2024	9:45 PM	0	0	0	0	0	0	0	0	0	0	0	0	0
4/23/2024	10:00 PM	0	0	0	0	0	0	0	0	0	0	0	0	0
4/23/2024	10:15 PM	0	0	0	0	0	0	0	0	0	0	0	0	0
4/23/2024	10:30 PM	0	0	0	0	0	0	0	0	0	0	0	0	0
4/23/2024	10:45 PM	0	0	0	0	0	0	0	0	0	0	0	0	0
4/23/2024	11:00 PM	0	0	0	0	0	0	0	0	0	0	0	0	0
4/23/2024	11:15 PM	0	0	0	0	0	0	0	0	0	0	0	0	0
4/23/2024	11:30 PM	0	0	0	0	0	0	0	0	0	0	0	0	0
4/23/2024	11:45 PM	0	0	0	0	0	0	0	0	0	0	0	0	0

4/24/2024	12:00 AM	0	0	0	0	0	0	0	0	0	0	0	0	0
4/24/2024	12:15 AM	0	0	0	0	0	0	0	0	0	0	0	0	0
4/24/2024	12:30 AM	0	0	0	0	0	0	0	0	0	0	0	0	0
4/24/2024	12:45 AM	0	0	0	0	0	0	0	0	0	0	0	0	0
4/24/2024	1:00 AM	0	0	0	0	0	0	0	0	0	0	0	0	0
4/24/2024	1:15 AM	0	0	0	0	0	0	0	0	0	0	0	0	0
4/24/2024	1:30 AM	0	0	0	0	0	0	0	0	0	0	0	0	0
4/24/2024	1:45 AM	0	0	0	0	0	0	0	0	0	0	0	0	0
4/24/2024	2:00 AM	0	0	0	0	0	0	0	0	0	0	0	0	0
4/24/2024	2:15 AM	0	0	0	0	0	0	0	0	0	0	0	0	0
4/24/2024	2:30 AM	0	0	0	0	0	0	0	0	0	0	0	0	0
4/24/2024	2:45 AM	0	0	0	0	0	0	0	0	0	0	0	0	0
4/24/2024	3:00 AM	0	0	0	0	0	0	0	0	0	0	0	0	0
4/24/2024	3:15 AM	0	0	0	0	0	0	0	0	0	0	0	0	0
4/24/2024	3:30 AM	0	0	0	0	0	0	0	0	0	0	0	0	0
4/24/2024	3:45 AM	0	0	0	0	0	0	0	0	0	0	0	0	0
4/24/2024	4:00 AM	0	0	0	0	0	0	0	0	0	0	0	0	0
4/24/2024	4:15 AM	0	0	0	0	0	0	0	0	0	0	0	0	0
4/24/2024	4:30 AM	0	0	0	0	0	0	0	0	0	0	0	0	0
4/24/2024	4:45 AM	0	0	0	0	0	0	0	0	0	0	0	0	0
4/24/2024	5:00 AM	0	0	0	0	0	0	0	0	0	0	0	0	0
4/24/2024	5:15 AM	0	0	0	0	0	0	0	0	0	0	0	0	0
4/24/2024	5:30 AM	0	0	0	0	0	0	0	0	0	0	0	0	0
4/24/2024	5:45 AM	0	0	0	0	0	0	0	0	0	0	0	0	0
4/24/2024	6:00 AM	0	0	0	0	0	0	0	0	0	0	0	0	0
4/24/2024	6:15 AM	0	0	0	0	0	0	0	0	0	0	0	0	0
4/24/2024	6:30 AM	0	0	0	0	0	0	0	0	0	0	0	0	0
4/24/2024	6:45 AM	0	0	0	0	0	0	0	0	0	0	0	0	0
4/24/2024	7:00 AM	0	0	0	0	0	0	0	0	0	0	0	0	0
4/24/2024	7:15 AM	0	0	0	0	0	0	0	0	0	0	0	0	0
4/24/2024	7:30 AM	0	0	0	0	0	0	0	0	0	0	0	0	0
4/24/2024	7:45 AM	0	0	0	0	0	0	0	0	0	0	0	0	0
4/24/2024	8:00 AM	0	0	0	0	0	0	0	0	0	0	0	0	0
4/24/2024	8:15 AM	0	0	0	0	0	0	0	0	0	0	0	0	0
4/24/2024	8:30 AM	0	0	0	0	0	0	0	0	0	0	0	0	0
4/24/2024	8:45 AM	0	0	0	0	0	0	0	0	0	0	0	0	0
4/24/2024	9:00 AM	0	0	0	0	0	0	0	0	0	0	0	0	0
4/24/2024	9:15 AM	0	0	0	0	0	0	0	0	0	0	0	0	0
4/24/2024	9:30 AM	0	0	0	0	0	0	0	0	0	0	0	0	0
4/24/2024	9:45 AM	0	0	0	0	0	0	0	0	0	0	0	0	0
4/24/2024	10:00 AM	0	0	0	0	0	0	0	0	0	0	0	0	0
4/24/2024	10:15 AM	0	0	0	0	0	0	0	0	0	0	0	0	0
4/24/2024	10:30 AM	0	0	0	0	0	0	0	0	0	0	0	0	0
4/24/2024	10:45 AM	0	0	0	0	0	0	0	0	0	0	0	0	0
4/24/2024	11:00 AM	0	0	0	0	0	0	0	0	0	0	0	0	0
4/24/2024	11:15 AM	0	0	0	0	0	0	0	0	0	0	0	0	0
4/24/2024	11:30 AM	0	0	0	0	0	0	0	0	0	0	0	0	0
4/24/2024	11:45 AM	0	0	0	0	0	0	0	0	0	0	0	0	0
4/24/2024	12:00 PM	0	0	0	0	0	0	0	0	0	0	0	0	0
4/24/2024	12:15 PM	0	0	0	0	0	0	0	0	0	0	0	0	0
4/24/2024	12:30 PM	0	0	0	0	0	0	0	0	0	0	0	0	0
4/24/2024	12:45 PM	0	0	0	0	0	0	0	0	0	0	0	0	0
4/24/2024	1:00 PM	0	0	0	0	0	0	0	0	0	0	0	0	0
4/24/2024	1:15 PM	0	0	0	0	0	0	0	0	0	0	0	0	0
4/24/2024	1:30 PM	0	0	0	0	0	0	0	0	0	0	0	0	0
4/24/2024	1:45 PM	0	0	0	0	0	0	0	0	0	0	0	0	0
4/24/2024	2:00 PM	0	0	0	0	0	0	0	0	0	0	0	0	0
4/24/2024	2:15 PM	0	0	0	0	0	0	0	0	0	0	0	0	0
4/24/2024	2:30 PM	0	0	0	0	0	0	0	0	0	0	0	0	0
4/24/2024	2:45 PM	0	0	0	0	0	0	0	0	0	0	0	0	0
4/24/2024	3:00 PM	0	0	0	0	0	0	0	0	0	0	0	0	0
4/24/2024	3:15 PM	0	0	0	0	0	0	0	0	0	0	0	0	0
4/24/2024	3:30 PM	0	0	0	0	0	0	0	0	0	0	0	0	0
4/24/2024	3:45 PM	0	0	0	0	0	0	0	0	0	0	0	0	0
4/24/2024	4:00 PM	0	0	0	0	0	0	0	0	0	0	0	0	0
4/24/2024	4:15 PM	0	0	0	0	0	0	0	0	0	0	0	0	0
4/24/2024	4:30 PM	0	0	0	0	0	0	0	0	0	0	0	0	0
4/24/2024	4:45 PM	0	0	0	0	0	0	0	0	0	0	0	0	0
4/24/2024	5:00 PM	0	0	0	0	0	0	0	0	0	0	0	0	0
4/24/2024	5:15 PM	0	0	0	0	0	0	0	0	0	0	0	0	0
4/24/2024	5:30 PM	0	0	0	0	0	0	0	0	0	0	0	0	0
4/24/2024	5:45 PM	0	0	0	0	0	0	0	0	0	0	0	0	0
4/24/2024	6:00 PM	0	0	0	0	0	0	0	0	0	0	0	0	0
4/24/2024	6:15 PM	0	0	0	0	0	0	0	0	0	0	0	0	0
4/24/2024	6:30 PM	0	0	0	0	0	0	0	0	0	0	0	0	0
4/24/2024	6:45 PM	0	0	0	0	0	0	0	0	0	0	0	0	0
4/24/2024	7:00 PM	0	0	0	0	0	0	0	0	0	0	0	0	0
4/24/2024	7:15 PM	0	0	0	0	0	0	0	0	0	0	0	0	0
4/24/2024	7:30 PM	0	0	0	0	0	0	0	0	0	0	0	0	0
4/24/2024	7:45 PM	0	0	0	0	0	0	0	0	0	0	0	0	0
4/24/2024	8:00 PM	0	0	0	0	0	0	0	0	0	0	0	0	0
4/24/2024	8:15 PM	0	0	0	0	0	0	0	0	0	0	0	0	0
4/24/2024	8:30 PM	0	0	0	0	0	0	0	0	0	0	0	0	0
4/24/2024	8:45 PM	0	0	0	0	0	0	0	0	0	0	0	0	0
4/24/2024	9:00 PM	0	0	0	0	0	0	0	0	0	0	0	0	0
4/24/2024	9:15 PM	0	0	0	0	0	0	0	0	0	0	0	0	0
4/24/2024	9:30 PM	0	0	0	0	0	0	0	0	0	0	0	0	0
4/24/2024	9:45 PM	0	0	0	0	0	0	0	0	0	0	0	0	0
4/24/2024	10:00 PM	0	0	0	0	0	0	0	0	0	0	0	0	0
4/24/2024	10:15 PM	0	0	0	0	0	0	0	0	0	0	0	0	0
4/24/2024	10:30 PM	0	0	0	0	0	0	0	0	0	0	0	0	0
4/24/2024	10:45 PM	0	0	0	0	0	0	0	0	0	0	0	0	0
4/24/2024	11:00 PM	0	0	0	0	0	0	0	0	0	0	0	0	0
4/24/2024	11:15 PM	0	0	0	0	0	0	0	0	0	0	0	0	0
4/24/2024	11:30 PM	0	0	0	0	0	0	0	0	0	0	0	0	0
4/24/2024	11:45 PM	0	0	0	0	0	0	0	0	0	0	0	0	0

4/25/2024	12:00 AM	0	0	0	0	0	0	0	0	0	0	0	0	0
4/25/2024	12:15 AM	0	0	0	0	0	0	0	0	0	0	0	0	0
4/25/2024	12:30 AM	0	0	0	0	0	0	0	0	0	0	0	0	0
4/25/2024	12:45 AM	0	0	0	0	0	0	0	0	0	0	0	0	0
4/25/2024	1:00 AM	0	0	0	0	0	0	0	0	0	0	0	0	0
4/25/2024	1:15 AM	0	0	0	0	0	0	0	0	0	0	0	0	0
4/25/2024	1:30 AM	0	0	0	0	0	0	0	0	0	0	0	0	0
4/25/2024	1:45 AM	0	0	0	0	0	0	0	0	0	0	0	0	0
4/25/2024	2:00 AM	0	0	0	0	0	0	0	0	0	0	0	0	0
4/25/2024	2:15 AM	0	0	0	0	0	0	0	0	0	0	0	0	0
4/25/2024	2:30 AM	0	0	0	0	0	0	0	0	0	0	0	0	0
4/25/2024	2:45 AM	0	0	0	0	0	0	0	0	0	0	0	0	0
4/25/2024	3:00 AM	0	0	0	0	0	0	0	0	0	0	0	0	0
4/25/2024	3:15 AM	0	0	0	0	0	0	0	0	0	0	0	0	0
4/25/2024	3:30 AM	0	0	0	0	0	0	0	0	0	0	0	0	0
4/25/2024	3:45 AM	0	0	0	0	0	0	0	0	0	0	0	0	0
4/25/2024	4:00 AM	0	0	0	0	0	0	0	0	0	0	0	0	0
4/25/2024	4:15 AM	0	0	0	0	0	0	0	0	0	0	0	0	0
4/25/2024	4:30 AM	0	0	0	0	0	0	0	0	0	0	0	0	0
4/25/2024	4:45 AM	0	0	0	0	0	0	0	0	0	0	0	0	0
4/25/2024	5:00 AM	0	0	0	0	0	0	0	0	0	0	0	0	0
4/25/2024	5:15 AM	0	0	0	0	0	0	0	0	0	0	0	0	0
4/25/2024	5:30 AM	0	0	0	0	0	0	0	0	0	0	0	0	0
4/25/2024	5:45 AM	0	0	0	0	0	0	0	0	0	0	0	0	0
4/25/2024	6:00 AM	0	0	0	0	0	0	0	0	0	0	0	0	0
4/25/2024	6:15 AM	0	0	0	0	0	0	0	0	0	0	0	0	0
4/25/2024	6:30 AM	0	0	0	0	0	0	0	0	0	0	0	0	0
4/25/2024	6:45 AM	0	0	0	0	0	0	0	0	0	0	0	0	0
4/25/2024	7:00 AM	0	0	0	0	0	0	0	0	0	0	0	0	0
4/25/2024	7:15 AM	0	0	0	0	0	0	0	0	0	0	0	0	0
4/25/2024	7:30 AM	0	0	0	0	0	0	0	0	0	0	0	0	0
4/25/2024	7:45 AM	0	0	0	0	0	0	0	0	0	0	0	0	0
4/25/2024	8:00 AM	0	0	0	0	0	0	0	0	0	0	0	0	0
4/25/2024	8:15 AM	0	0	0	0	0	0	0	0	0	0	0	0	0
4/25/2024	8:30 AM	0	0	0	0	0	0	0	0	0	0	0	0	0
4/25/2024	8:45 AM	0	0	0	0	0	0	0	0	0	0	0	0	0
4/25/2024	9:00 AM	0	0	0	0	0	0	0	0	0	0	0	0	0
4/25/2024	9:15 AM	0	0	0	0	0	0	0	0	0	0	0	0	0
4/25/2024	9:30 AM	0	0	0	0	0	0	0	0	0	0	0	0	0
4/25/2024	9:45 AM	0	0	0	0	0	0	0	0	0	0	0	0	0
4/25/2024	10:00 AM	0	0	0	0	0	0	0	0	0	0	0	0	0
4/25/2024	10:15 AM	0	0	0	0	0	0	0	0	0	0	0	0	0
4/25/2024	10:30 AM	0	0	0	0	0	0	0	0	0	0	0	0	0
4/25/2024	10:45 AM	0	0	0	0	0	0	0	0	0	0	0	0	0
4/25/2024	11:00 AM	0	0	0	0	0	0	0	0	0	0	0	0	0
4/25/2024	11:15 AM	0	0	0	0	0	0	0	0	0	0	0	0	0
4/25/2024	11:30 AM	0	0	0	0	0	0	0	0	0	0	0	0	0
4/25/2024	11:45 AM	0	0	0	0	0	0	0	0	0	0	0	0	0
4/25/2024	12:00 PM	0	0	0	0	0	0	0	0	0	0	0	0	0
4/25/2024	12:15 PM	0	0	0	0	0	0	0	0	0	0	0	0	0
4/25/2024	12:30 PM	0	0	0	0	0	0	0	0	0	0	0	0	0
4/25/2024	12:45 PM	0	0	0	0	0	0	0	0	0	0	0	0	0
4/25/2024	1:00 PM	0	0	0	0	0	0	0	0	0	0	0	0	0
4/25/2024	1:15 PM	0	0	0	0	0	0	0	0	0	0	0	0	0
4/25/2024	1:30 PM	0	0	0	0	0	0	0	0	0	0	0	0	0
4/25/2024	1:45 PM	0	0	0	0	0	0	0	0	0	0	0	0	0
4/25/2024	2:00 PM	0	0	0	0	0	0	0	0	0	0	0	0	0
4/25/2024	2:15 PM	0	0	0	0	0	0	0	0	0	0	0	0	0
4/25/2024	2:30 PM	0	0	0	0	0	0	0	0	0	0	0	0	0
4/25/2024	2:45 PM	0	0	0	0	0	0	0	0	0	0	0	0	0
4/25/2024	3:00 PM	0	0	0	0	0	0	0	0	0	0	0	0	0
4/25/2024	3:15 PM	0	0	0	0	0	0	0	0	0	0	0	0	0
4/25/2024	3:30 PM	0	0	0	0	0	0	0	0	0	0	0	0	0
4/25/2024	3:45 PM	0	0	0	0	0	0	0	0	0	0	0	0	0
4/25/2024	4:00 PM	0	0	0	0	0	0	0	0	0	0	0	0	0
4/25/2024	4:15 PM	0	0	0	0	0	0	0	0	0	0	0	0	0
4/25/2024	4:30 PM	0	0	0	0	0	0	0	0	0	0	0	0	0
4/25/2024	4:45 PM	0	0	0	0	0	0	0	0	0	0	0	0	0
4/25/2024	5:00 PM	0	0	0	0	0	0	0	0	0	0	0	0	0
4/25/2024	5:15 PM	0	0	0	0	0	0	0	0	0	0	0	0	0
4/25/2024	5:30 PM	0	0	0	0	0	0	0	0	0	0	0	0	0
4/25/2024	5:45 PM	0	0	0	0	0	0	0	0	0	0	0	0	0
4/25/2024	6:00 PM	0	0	0	0	0	0	0	0	0	0	0	0	0
4/25/2024	6:15 PM	0	0	0	0	0	0	0	0	0	0	0	0	0
4/25/2024	6:30 PM	0	0	0	0	0	0	0	0	0	0	0	0	0
4/25/2024	6:45 PM	0	0	0	0	0	0	0	0	0	0	0	0	0
4/25/2024	7:00 PM	0	0	0	0	0	0	0	0	0	0	0	0	0
4/25/2024	7:15 PM	0	0	0	0	0	0	0	0	0	0	0	0	0
4/25/2024	7:30 PM	0	0	0	0	0	0	0	0	0	0	0	0	0
4/25/2024	7:45 PM	0	0	0	0	0	0	0	0	0	0	0	0	0
4/25/2024	8:00 PM	0	0	0	0	0	0	0	0	0	0	0	0	0
4/25/2024	8:15 PM	0	0	0	0	0	0	0	0	0	0	0	0	0
4/25/2024	8:30 PM	0	0	0	0	0	0	0	0	0	0	0	0	0
4/25/2024	8:45 PM	0	0	0	0	0	0	0	0	0	0	0	0	0
4/25/2024	9:00 PM	0	0	0	0	0	0	0	0	0	0	0	0	0
4/25/2024	9:15 PM	0	0	0	0	0	0	0	0	0	0	0	0	0
4/25/2024	9:30 PM	0	0	0	0	0	0	0	0	0	0	0	0	0
4/25/2024	9:45 PM	0	0	0	0	0	0	0	0	0	0	0	0	0
4/25/2024	10:00 PM	0	0	0	0	0	0	0	0	0	0	0	0	0
4/25/2024	10:15 PM	0	0	0	0	0	0	0	0	0	0	0	0	0
4/25/2024	10:30 PM	0	0	0	0	0	0	0	0	0	0	0	0	0
4/25/2024	10:45 PM	0	0	0	0	0	0	0	0	0	0	0	0	0
4/25/2024	11:00 PM	0	0	0	0	0	0	0	0	0	0	0	0	0
4/25/2024	11:15 PM	0	0	0	0	0	0	0	0	0	0	0	0	0
4/25/2024	11:30 PM	0	0	0	0	0	0	0	0	0	0	0	0	0
4/25/2024	11:45 PM	0	0	0	0	0	0	0	0	0	0	0	0	0

SB
File Name:
Start Date: 4/23/2024
Start Time: 0
Site Code: 16
Station ID: 1
Location 1: I-26 James F. Byrnes Expy On/Off-Ramp, north of US-176 Broad River Rd
Location 2:

Date	Time	1	2	3	4	5	6	7	8	9	10	11	12	13
4/23/2024	12:00 AM	0	0	0	0	0	0	0	0	0	0	0	0	0
4/23/2024	12:15 AM	0	0	0	0	0	0	0	0	0	0	0	0	0
4/23/2024	12:30 AM	0	0	0	0	0	0	0	0	0	0	0	0	0
4/23/2024	12:45 AM	0	0	0	0	0	0	0	0	0	0	0	0	0
4/23/2024	1:00 AM	0	0	0	0	0	0	0	0	0	0	0	0	0
4/23/2024	1:15 AM	0	0	0	0	0	0	0	0	0	0	0	0	0
4/23/2024	1:30 AM	0	0	0	0	0	0	0	0	0	0	0	0	0
4/23/2024	1:45 AM	0	0	0	0	0	0	0	0	0	0	0	0	0
4/23/2024	2:00 AM	0	0	0	0	0	0	0	0	0	0	0	0	0
4/23/2024	2:15 AM	0	0	0	0	0	0	0	0	0	0	0	0	0
4/23/2024	2:30 AM	0	0	0	0	0	0	0	0	0	0	0	0	0
4/23/2024	2:45 AM	0	0	0	0	0	0	0	0	0	0	0	0	0
4/23/2024	3:00 AM	0	0	0	0	0	0	0	0	0	0	0	0	0
4/23/2024	3:15 AM	0	0	0	0	0	0	0	0	0	0	0	0	0
4/23/2024	3:30 AM	0	0	0	0	0	0	0	0	0	0	0	0	0
4/23/2024	3:45 AM	0	0	0	0	0	0	0	0	0	0	0	0	0
4/23/2024	4:00 AM	0	0	0	0	0	0	0	0	0	0	0	0	0
4/23/2024	4:15 AM	0	0	0	0	0	0	0	0	0	0	0	0	0
4/23/2024	4:30 AM	0	0	0	0	0	0	0	0	0	0	0	0	0
4/23/2024	4:45 AM	0	0	0	0	0	0	0	0	0	0	0	0	0
4/23/2024	5:00 AM	0	0	0	0	0	0	0	0	0	0	0	0	0
4/23/2024	5:15 AM	0	0	0	0	0	0	0	0	0	0	0	0	0
4/23/2024	5:30 AM	0	0	0	0	0	0	0	0	0	0	0	0	0
4/23/2024	5:45 AM	0	0	0	0	0	0	0	0	0	0	0	0	0
4/23/2024	6:00 AM	0	0	0	0	0	0	0	0	0	0	0	0	0
4/23/2024	6:15 AM	0	0	0	0	0	0	0	0	0	0	0	0	0
4/23/2024	6:30 AM	0	0	0	0	0	0	0	0	0	0	0	0	0
4/23/2024	6:45 AM	0	0	0	0	0	0	0	0	0	0	0	0	0
4/23/2024	7:00 AM	0	0	0	0	0	0	0	0	0	0	0	0	0
4/23/2024	7:15 AM	0	0	0	0	0	0	0	0	0	0	0	0	0
4/23/2024	7:30 AM	0	0	0	0	0	0	0	0	0	0	0	0	0
4/23/2024	7:45 AM	0	0	0	0	0	0	0	0	0	0	0	0	0
4/23/2024	8:00 AM	0	0	0	0	0	0	0	0	0	0	0	0	0
4/23/2024	8:15 AM	0	0	0	0	0	0	0	0	0	0	0	0	0
4/23/2024	8:30 AM	0	0	0	0	0	0	0	0	0	0	0	0	0
4/23/2024	8:45 AM	0	0	0	0	0	0	0	0	0	0	0	0	0
4/23/2024	9:00 AM	0	0	0	0	0	0	0	0	0	0	0	0	0
4/23/2024	9:15 AM	0	0	0	0	0	0	0	0	0	0	0	0	0
4/23/2024	9:30 AM	0	0	0	0	0	0	0	0	0	0	0	0	0
4/23/2024	9:45 AM	0	0	0	0	0	0	0	0	0	0	0	0	0
4/23/2024	10:00 AM	0	0	0	0	0	0	0	0	0	0	0	0	0
4/23/2024	10:15 AM	0	0	0	0	0	0	0	0	0	0	0	0	0
4/23/2024	10:30 AM	0	0	0	0	0	0	0	0	0	0	0	0	0
4/23/2024	10:45 AM	0	0	0	0	0	0	0	0	0	0	0	0	0
4/23/2024	11:00 AM	0	0	0	0	0	0	0	0	0	0	0	0	0
4/23/2024	11:15 AM	0	0	0	0	0	0	0	0	0	0	0	0	0
4/23/2024	11:30 AM	0	0	0	0	0	0	0	0	0	0	0	0	0
4/23/2024	11:45 AM	0	0	0	0	0	0	0	0	0	0	0	0	0
4/23/2024	12:00 PM	0	0	0	0	0	0	0	0	0	0	0	0	0
4/23/2024	12:15 PM	0	0	0	0	0	0	0	0	0	0	0	0	0
4/23/2024	12:30 PM	0	0	0	0	0	0	0	0	0	0	0	0	0
4/23/2024	12:45 PM	0	0	0	0	0	0	0	0	0	0	0	0	0
4/23/2024	1:00 PM	0	0	0	0	0	0	0	0	0	0	0	0	0
4/23/2024	1:15 PM	0	0	0	0	0	0	0	0	0	0	0	0	0
4/23/2024	1:30 PM	0	0	0	0	0	0	0	0	0	0	0	0	0
4/23/2024	1:45 PM	0	0	0	0	0	0	0	0	0	0	0	0	0
4/23/2024	2:00 PM	0	0	0	0	0	0	0	0	0	0	0	0	0
4/23/2024	2:15 PM	0	0	0	0	0	0	0	0	0	0	0	0	0
4/23/2024	2:30 PM	0	0	0	0	0	0	0	0	0	0	0	0	0
4/23/2024	2:45 PM	0	0	0	0	0	0	0	0	0	0	0	0	0
4/23/2024	3:00 PM	0	0	0	0	0	0	0	0	0	0	0	0	0
4/23/2024	3:15 PM	0	0	0	0	0	0	0	0	0	0	0	0	0
4/23/2024	3:30 PM	0	0	0	0	0	0	0	0	0	0	0	0	0
4/23/2024	3:45 PM	0	0	0	0	0	0	0	0	0	0	0	0	0
4/23/2024	4:00 PM	0	0	0	0	0	0	0	0	0	0	0	0	0
4/23/2024	4:15 PM	0	0	0	0	0	0	0	0	0	0	0	0	0
4/23/2024	4:30 PM	0	0	0	0	0	0	0	0	0	0	0	0	0
4/23/2024	4:45 PM	0	0	0	0	0	0	0	0	0	0	0	0	0
4/23/2024	5:00 PM	0	0	0	0	0	0	0	0	0	0	0	0	0
4/23/2024	5:15 PM	0	0	0	0	0	0	0	0	0	0	0	0	0
4/23/2024	5:30 PM	0	0	0	0	0	0	0	0	0	0	0	0	0
4/23/2024	5:45 PM	0	0	0	0	0	0	0	0	0	0	0	0	0
4/23/2024	6:00 PM	0	0	0	0	0	0	0	0	0	0	0	0	0
4/23/2024	6:15 PM	0	0	0	0	0	0	0	0	0	0	0	0	0
4/23/2024	6:30 PM	0	0	0	0	0	0	0	0	0	0	0	0	0
4/23/2024	6:45 PM	0	0	0	0	0	0	0	0	0	0	0	0	0
4/23/2024	7:00 PM	2	110	26	1	1	0	0	0	4	0	0	0	0
4/23/2024	7:15 PM	0	206	48	0	0	2	0	0	8	0	0	0	0
4/23/2024	7:30 PM	1	118	31	0	2	1	0	0	0	0	0	0	0
4/23/2024	7:45 PM	0	71	9	0	1	0	0	0	0	0	1	0	0
4/23/2024	8:00 PM	0	68	17	0	0	0	0	0	0	0	0	0	0
4/23/2024	8:15 PM	0	76	22	0	0	0	0	0	0	0	0	0	0
4/23/2024	8:30 PM	0	71	12	0	1	0	0	0	0	0	0	0	0
4/23/2024	8:45 PM	0	66	7	0	0	0	0	0	0	0	0	0	0
4/23/2024	9:00 PM	0	59	4	0	0	1	0	0	0	0	0	0	0
4/23/2024	9:15 PM	0	64	5	0	1	0	0	0	0	0	0	0	0
4/23/2024	9:30 PM	0	48	3	0	1	0	0	0	1	0	0	0	0
4/23/2024	9:45 PM	1	54	3	0	0	0	0	0	0	0	0	0	0
4/23/2024	10:00 PM	0	48	2	0	0	0	0	0	1	0	0	0	0
4/23/2024	10:15 PM	0	42	2	0	1	0	0	0	0	0	0	0	0
4/23/2024	10:30 PM	0	49	1	0	0	0	0	0	0	0	0	0	0
4/23/2024	10:45 PM	0	26	1	0	0	0	0	0	0	0	0	0	0
4/23/2024	11:00 PM	0	32	1	0	1	0	0	0	0	0	0	0	0
4/23/2024	11:15 PM	0	27	1	1	0	0	0	0	0	0	0	0	0
4/23/2024	11:30 PM	0	19	1	0	0	0	0	0	0	0	0	0	0
4/23/2024	11:45 PM	0	18	1	0	0	0	0	0	1	0	0	0	0

4/24/2024	12:00 AM	0	19	1	0	1	0	0	0	0	0	0	0
4/24/2024	12:15 AM	0	14	1	0	0	0	0	0	2	0	0	0
4/24/2024	12:30 AM	0	10	0	0	0	0	0	0	0	0	0	0
4/24/2024	12:45 AM	0	8	2	0	0	0	0	0	1	0	0	0
4/24/2024	1:00 AM	0	14	0	0	0	0	0	0	0	0	0	0
4/24/2024	1:15 AM	0	11	0	0	0	0	0	0	0	0	0	0
4/24/2024	1:30 AM	0	2	0	0	0	0	0	0	0	0	0	0
4/24/2024	1:45 AM	0	10	0	0	0	0	0	0	0	0	0	0
4/24/2024	2:00 AM	0	6	0	0	0	0	0	0	0	0	0	0
4/24/2024	2:15 AM	0	9	1	0	0	0	0	0	0	0	0	0
4/24/2024	2:30 AM	0	4	0	0	0	1	0	0	0	0	0	0
4/24/2024	2:45 AM	0	5	0	0	0	0	0	0	0	0	0	0
4/24/2024	3:00 AM	0	3	1	0	0	0	0	0	0	0	0	0
4/24/2024	3:15 AM	0	5	0	0	1	0	0	0	0	0	0	0
4/24/2024	3:30 AM	0	7	0	0	0	0	0	0	0	0	0	0
4/24/2024	3:45 AM	0	7	0	0	0	0	0	0	0	0	0	0
4/24/2024	4:00 AM	0	5	0	0	1	0	0	0	0	0	0	0
4/24/2024	4:15 AM	0	7	2	0	0	0	0	0	0	0	0	0
4/24/2024	4:30 AM	0	5	0	0	0	0	0	0	0	0	0	0
4/24/2024	4:45 AM	0	12	0	0	0	0	0	0	0	0	0	0
4/24/2024	5:00 AM	0	9	0	0	1	0	0	0	0	0	0	0
4/24/2024	5:15 AM	0	8	0	0	0	0	0	0	1	0	0	0
4/24/2024	5:30 AM	0	19	2	1	4	0	0	0	1	0	0	0
4/24/2024	5:45 AM	0	26	2	0	0	1	0	0	0	0	0	0
4/24/2024	6:00 AM	0	11	7	0	1	1	0	0	0	0	0	0
4/24/2024	6:15 AM	1	29	9	0	1	1	0	1	0	0	0	0
4/24/2024	6:30 AM	0	45	25	0	2	0	0	0	0	1	0	0
4/24/2024	6:45 AM	0	67	25	0	5	1	0	0	0	0	0	0
4/24/2024	7:00 AM	0	74	17	0	0	0	0	0	0	0	0	0
4/24/2024	7:15 AM	0	83	28	0	3	0	0	0	0	0	0	0
4/24/2024	7:30 AM	0	101	33	0	3	1	0	0	2	0	0	0
4/24/2024	7:45 AM	0	114	32	0	2	1	0	0	0	0	0	0
4/24/2024	8:00 AM	0	82	27	0	4	2	1	0	2	0	0	0
4/24/2024	8:15 AM	0	67	21	0	4	0	0	0	1	0	0	0
4/24/2024	8:30 AM	0	59	28	0	2	1	1	1	0	0	0	0
4/24/2024	8:45 AM	0	69	25	0	4	0	2	0	0	2	0	0
4/24/2024	9:00 AM	0	55	31	0	3	0	1	1	2	0	0	0
4/24/2024	9:15 AM	0	48	20	0	1	0	1	0	1	0	0	0
4/24/2024	9:30 AM	0	65	27	1	2	0	2	0	0	1	0	0
4/24/2024	9:45 AM	0	61	21	0	2	1	1	0	1	0	0	0
4/24/2024	10:00 AM	0	48	18	0	0	0	0	1	0	1	0	0
4/24/2024	10:15 AM	0	49	24	0	1	0	1	0	1	0	0	0
4/24/2024	10:30 AM	0	62	22	0	1	0	1	0	1	1	0	0
4/24/2024	10:45 AM	0	81	20	0	2	1	0	0	0	1	0	0
4/24/2024	11:00 AM	0	69	21	0	1	0	0	0	3	0	0	0
4/24/2024	11:15 AM	0	64	23	0	0	0	1	0	0	0	0	0
4/24/2024	11:30 AM	1	68	23	0	3	0	0	0	3	0	0	0
4/24/2024	11:45 AM	0	67	19	0	2	0	0	0	0	0	0	0
4/24/2024	12:00 PM	0	80	13	1	1	0	2	0	1	0	0	0
4/24/2024	12:15 PM	0	78	25	0	1	1	1	2	1	0	0	0
4/24/2024	12:30 PM	0	83	21	0	3	0	2	0	1	0	0	0
4/24/2024	12:45 PM	1	77	14	0	1	1	0	0	0	0	0	0
4/24/2024	1:00 PM	0	91	26	0	1	0	0	0	0	0	0	0
4/24/2024	1:15 PM	0	79	34	1	3	1	0	0	0	0	0	0
4/24/2024	1:30 PM	0	80	15	0	2	1	2	1	0	0	0	0
4/24/2024	1:45 PM	2	80	23	0	1	0	0	0	0	1	0	0
4/24/2024	2:00 PM	1	156	58	2	2	1	1	2	4	2	0	0
4/24/2024	2:15 PM	0	150	42	0	3	0	1	1	1	0	0	0
4/24/2024	2:30 PM	1	114	48	0	4	1	1	0	1	0	0	0
4/24/2024	2:45 PM	0	151	47	0	2	0	2	0	2	0	0	0
4/24/2024	3:00 PM	0	160	39	1	1	0	1	1	2	0	0	0
4/24/2024	3:15 PM	0	112	25	0	5	2	1	0	1	1	0	0
4/24/2024	3:30 PM	1	94	24	0	2	0	1	0	0	0	0	0
4/24/2024	3:45 PM	0	124	20	0	0	0	1	0	0	0	0	0
4/24/2024	4:00 PM	0	138	36	0	2	0	0	0	0	0	0	0
4/24/2024	4:15 PM	0	121	28	0	1	0	0	0	1	0	0	0
4/24/2024	4:30 PM	0	128	32	0	3	0	0	0	0	0	0	0
4/24/2024	4:45 PM	1	118	25	0	1	0	0	0	1	1	0	0
4/24/2024	5:00 PM	0	112	24	0	1	0	1	0	1	0	0	0
4/24/2024	5:15 PM	0	129	43	0	0	0	0	0	0	0	0	0
4/24/2024	5:30 PM	0	128	29	0	3	0	1	0	0	0	0	0
4/24/2024	5:45 PM	1	107	24	0	3	0	1	0	0	0	0	0
4/24/2024	6:00 PM	1	120	26	0	3	0	0	0	0	0	0	0
4/24/2024	6:15 PM	0	91	32	0	1	1	0	0	0	0	0	0
4/24/2024	6:30 PM	2	78	20	0	1	0	0	0	0	0	0	0
4/24/2024	6:45 PM	0	97	16	0	2	0	0	0	0	0	0	0
4/24/2024	7:00 PM	0	86	19	0	0	0	0	0	0	0	0	0
4/24/2024	7:15 PM	0	83	25	0	1	1	0	0	0	0	0	0
4/24/2024	7:30 PM	0	100	19	0	2	0	0	0	0	0	0	0
4/24/2024	7:45 PM	0	70	10	0	1	0	0	0	0	0	0	0
4/24/2024	8:00 PM	0	74	14	0	0	0	0	0	0	0	0	0
4/24/2024	8:15 PM	1	87	14	0	1	0	0	0	1	0	0	0
4/24/2024	8:30 PM	1	59	12	0	0	0	0	1	1	0	0	0
4/24/2024	8:45 PM	0	75	1	1	0	0	0	0	0	0	0	0
4/24/2024	9:00 PM	0	79	0	0	1	0	0	0	0	0	0	0
4/24/2024	9:15 PM	0	59	0	0	0	0	0	0	0	0	0	0
4/24/2024	9:30 PM	0	57	0	0	0	0	0	0	0	0	0	0
4/24/2024	9:45 PM	0	56	0	0	0	0	0	0	0	0	0	0
4/24/2024	10:00 PM	0	36	0	0	0	0	0	0	0	0	0	0
4/24/2024	10:15 PM	0	32	0	0	0	0	0	0	0	0	0	0
4/24/2024	10:30 PM	0	28	0	0	1	0	0	0	0	0	0	0
4/24/2024	10:45 PM	0	24	1	0	0	0	0	0	0	0	0	0
4/24/2024	11:00 PM	0	42	0	0	0	0	0	0	0	0	0	0
4/24/2024	11:15 PM	0	28	0	0	1	0	0	0	2	0	0	0
4/24/2024	11:30 PM	0	20	0	0	0	0	0	0	1	0	0	0
4/24/2024	11:45 PM	0	20	0	0	0	0	0	0	0	0	0	0

4/25/2024	12:00 AM	0	19	0	0	0	0	0	0	0	0	0	0
4/25/2024	12:15 AM	0	13	0	0	0	0	0	0	1	0	0	0
4/25/2024	12:30 AM	0	11	0	0	0	0	0	1	0	0	0	0
4/25/2024	12:45 AM	0	18	0	0	0	0	0	0	1	0	0	0
4/25/2024	1:00 AM	0	9	0	0	0	0	0	0	0	0	0	0
4/25/2024	1:15 AM	0	15	0	0	0	0	0	0	0	0	0	0
4/25/2024	1:30 AM	0	7	0	0	0	0	0	0	1	0	0	0
4/25/2024	1:45 AM	0	9	0	0	1	0	0	0	0	0	0	0
4/25/2024	2:00 AM	0	7	0	0	0	0	0	0	0	0	0	0
4/25/2024	2:15 AM	0	7	0	0	0	0	0	0	0	0	0	0
4/25/2024	2:30 AM	0	5	0	0	1	0	0	0	0	0	0	0
4/25/2024	2:45 AM	0	5	0	0	0	0	0	0	0	0	0	0
4/25/2024	3:00 AM	0	3	0	0	0	0	0	0	0	0	0	0
4/25/2024	3:15 AM	0	4	0	0	0	0	0	0	1	0	0	0
4/25/2024	3:30 AM	0	5	0	0	1	0	0	0	1	0	0	0
4/25/2024	3:45 AM	0	3	0	0	0	0	0	0	0	0	0	0
4/25/2024	4:00 AM	0	5	0	0	0	0	0	0	0	0	0	0
4/25/2024	4:15 AM	0	9	0	0	0	0	0	0	0	0	0	0
4/25/2024	4:30 AM	0	10	0	0	0	0	0	0	1	0	0	0
4/25/2024	4:45 AM	0	12	0	0	0	0	0	0	0	0	0	0
4/25/2024	5:00 AM	0	8	0	1	0	0	0	1	0	0	0	0
4/25/2024	5:15 AM	0	10	0	0	0	0	0	0	4	0	0	0
4/25/2024	5:30 AM	0	14	0	0	1	0	0	0	0	0	0	0
4/25/2024	5:45 AM	0	28	1	0	1	0	0	0	0	0	0	0
4/25/2024	6:00 AM	0	24	8	0	3	0	1	0	1	0	0	0
4/25/2024	6:15 AM	0	24	10	0	0	0	0	0	0	0	0	0
4/25/2024	6:30 AM	0	49	25	0	3	0	0	0	1	0	0	0
4/25/2024	6:45 AM	0	53	28	0	2	0	0	0	3	0	0	0
4/25/2024	7:00 AM	0	92	24	0	1	3	0	2	0	0	0	0
4/25/2024	7:15 AM	1	87	30	0	2	1	0	0	4	0	0	0
4/25/2024	7:30 AM	0	100	41	0	3	5	0	0	1	0	0	0
4/25/2024	7:45 AM	0	96	36	0	4	0	0	0	0	0	0	0
4/25/2024	8:00 AM	0	79	25	0	0	1	0	0	1	0	0	0
4/25/2024	8:15 AM	0	62	29	0	0	0	0	0	0	0	0	0
4/25/2024	8:30 AM	0	72	21	0	2	1	0	0	1	0	0	0
4/25/2024	8:45 AM	0	79	24	0	2	1	0	0	1	0	0	0
4/25/2024	9:00 AM	0	41	27	0	7	1	0	0	0	0	0	0
4/25/2024	9:15 AM	0	54	25	0	5	0	0	2	0	0	0	0
4/25/2024	9:30 AM	0	62	24	0	2	0	0	0	0	0	0	0
4/25/2024	9:45 AM	0	71	18	0	3	1	0	0	0	0	0	0
4/25/2024	10:00 AM	0	50	22	0	2	0	0	0	1	0	0	0
4/25/2024	10:15 AM	0	59	28	0	0	2	0	0	1	0	0	0
4/25/2024	10:30 AM	0	75	21	0	1	2	0	2	1	0	0	0
4/25/2024	10:45 AM	0	68	35	0	2	2	0	1	0	0	0	0
4/25/2024	11:00 AM	0	66	29	0	0	1	0	1	0	0	0	0
4/25/2024	11:15 AM	0	79	25	1	5	3	0	0	1	0	0	0
4/25/2024	11:30 AM	0	68	16	0	1	0	0	0	0	0	0	0
4/25/2024	11:45 AM	0	82	20	0	0	1	0	2	1	0	0	0
4/25/2024	12:00 PM	0	81	17	0	2	2	0	0	1	0	0	0
4/25/2024	12:15 PM	0	90	28	1	2	4	0	0	0	0	0	0
4/25/2024	12:30 PM	0	61	24	0	3	0	0	0	0	0	0	0
4/25/2024	12:45 PM	0	78	19	1	1	2	0	0	1	0	0	0
4/25/2024	1:00 PM	0	61	18	0	7	0	0	0	1	0	0	0
4/25/2024	1:15 PM	0	64	33	1	1	2	0	1	0	0	0	0
4/25/2024	1:30 PM	0	71	21	0	3	1	0	0	0	0	0	0
4/25/2024	1:45 PM	0	90	23	0	0	3	0	0	0	0	0	0
4/25/2024	2:00 PM	1	89	28	0	0	1	0	0	1	0	0	0
4/25/2024	2:15 PM	0	102	22	0	0	0	0	0	0	0	0	0
4/25/2024	2:30 PM	0	93	23	0	3	1	0	0	0	2	0	0
4/25/2024	2:45 PM	0	107	27	0	3	0	0	0	1	0	0	0
4/25/2024	3:00 PM	0	97	27	0	2	0	0	1	1	0	0	0
4/25/2024	3:15 PM	2	121	25	0	1	1	0	0	0	0	0	0
4/25/2024	3:30 PM	1	100	28	0	0	0	0	0	1	0	0	0
4/25/2024	3:45 PM	1	119	33	0	1	2	0	3	0	0	0	0
4/25/2024	4:00 PM	1	112	25	0	0	1	0	1	0	0	0	0
4/25/2024	4:15 PM	0	116	29	0	1	0	0	0	0	0	0	0
4/25/2024	4:30 PM	0	127	29	0	0	0	0	0	0	0	0	0
4/25/2024	4:45 PM	0	127	34	0	0	0	0	0	0	0	0	0
4/25/2024	5:00 PM	2	117	22	0	0	0	0	0	0	0	0	0
4/25/2024	5:15 PM	0	135	27	0	0	0	0	0	1	1	0	0
4/25/2024	5:30 PM	0	112	26	0	0	0	0	0	0	1	0	0
4/25/2024	5:45 PM	0	118	28	0	1	0	0	0	1	1	0	0
4/25/2024	6:00 PM	1	110	26	0	3	0	0	0	1	0	0	0
4/25/2024	6:15 PM	0	94	27	0	2	0	0	0	0	0	0	0
4/25/2024	6:30 PM	0	89	23	0	0	0	0	0	0	0	0	0
4/25/2024	6:45 PM	0	85	15	0	0	0	0	0	1	0	0	0
4/25/2024	7:00 PM	0	0	0	0	0	0	0	0	0	0	0	0
4/25/2024	7:15 PM	0	0	0	0	0	0	0	0	0	0	0	0
4/25/2024	7:30 PM	0	0	0	0	0	0	0	0	0	0	0	0
4/25/2024	7:45 PM	0	0	0	0	0	0	0	0	0	0	0	0
4/25/2024	8:00 PM	0	0	0	0	0	0	0	0	0	0	0	0
4/25/2024	8:15 PM	0	0	0	0	0	0	0	0	0	0	0	0
4/25/2024	8:30 PM	0	0	0	0	0	0	0	0	0	0	0	0
4/25/2024	8:45 PM	0	0	0	0	0	0	0	0	0	0	0	0
4/25/2024	9:00 PM	0	0	0	0	0	0	0	0	0	0	0	0
4/25/2024	9:15 PM	0	0	0	0	0	0	0	0	0	0	0	0
4/25/2024	9:30 PM	0	0	0	0	0	0	0	0	0	0	0	0
4/25/2024	9:45 PM	0	0	0	0	0	0	0	0	0	0	0	0
4/25/2024	10:00 PM	0	0	0	0	0	0	0	0	0	0	0	0
4/25/2024	10:15 PM	0	0	0	0	0	0	0	0	0	0	0	0
4/25/2024	10:30 PM	0	0	0	0	0	0	0	0	0	0	0	0
4/25/2024	10:45 PM	0	0	0	0	0	0	0	0	0	0	0	0
4/25/2024	11:00 PM	0	0	0	0	0	0	0	0	0	0	0	0
4/25/2024	11:15 PM	0	0	0	0	0	0	0	0	0	0	0	0
4/25/2024	11:30 PM	0	0	0	0	0	0	0	0	0	0	0	0
4/25/2024	11:45 PM	0	0	0	0	0	0	0	0	0	0	0	0

NB
File Name:
Start Date: 4/23/2024
Start Time: 0
Site Code: 16
Station ID: 1
Location 1: I-26 James F. Byrnes Expy On/Off-Ramp, north of US-176 Broad River Rd
Location 2:

Date	Time	1	2	3	4	5	6	7	8	9	10	11	12	13
4/23/2024	12:00 AM	0	0	0	0	0	0	0	0	0	0	0	0	0
4/23/2024	12:15 AM	0	0	0	0	0	0	0	0	0	0	0	0	0
4/23/2024	12:30 AM	0	0	0	0	0	0	0	0	0	0	0	0	0
4/23/2024	12:45 AM	0	0	0	0	0	0	0	0	0	0	0	0	0
4/23/2024	1:00 AM	0	0	0	0	0	0	0	0	0	0	0	0	0
4/23/2024	1:15 AM	0	0	0	0	0	0	0	0	0	0	0	0	0
4/23/2024	1:30 AM	0	0	0	0	0	0	0	0	0	0	0	0	0
4/23/2024	1:45 AM	0	0	0	0	0	0	0	0	0	0	0	0	0
4/23/2024	2:00 AM	0	0	0	0	0	0	0	0	0	0	0	0	0
4/23/2024	2:15 AM	0	0	0	0	0	0	0	0	0	0	0	0	0
4/23/2024	2:30 AM	0	0	0	0	0	0	0	0	0	0	0	0	0
4/23/2024	2:45 AM	0	0	0	0	0	0	0	0	0	0	0	0	0
4/23/2024	3:00 AM	0	0	0	0	0	0	0	0	0	0	0	0	0
4/23/2024	3:15 AM	0	0	0	0	0	0	0	0	0	0	0	0	0
4/23/2024	3:30 AM	0	0	0	0	0	0	0	0	0	0	0	0	0
4/23/2024	3:45 AM	0	0	0	0	0	0	0	0	0	0	0	0	0
4/23/2024	4:00 AM	0	0	0	0	0	0	0	0	0	0	0	0	0
4/23/2024	4:15 AM	0	0	0	0	0	0	0	0	0	0	0	0	0
4/23/2024	4:30 AM	0	0	0	0	0	0	0	0	0	0	0	0	0
4/23/2024	4:45 AM	0	0	0	0	0	0	0	0	0	0	0	0	0
4/23/2024	5:00 AM	0	0	0	0	0	0	0	0	0	0	0	0	0
4/23/2024	5:15 AM	0	0	0	0	0	0	0	0	0	0	0	0	0
4/23/2024	5:30 AM	0	0	0	0	0	0	0	0	0	0	0	0	0
4/23/2024	5:45 AM	0	0	0	0	0	0	0	0	0	0	0	0	0
4/23/2024	6:00 AM	0	0	0	0	0	0	0	0	0	0	0	0	0
4/23/2024	6:15 AM	0	0	0	0	0	0	0	0	0	0	0	0	0
4/23/2024	6:30 AM	0	0	0	0	0	0	0	0	0	0	0	0	0
4/23/2024	6:45 AM	0	0	0	0	0	0	0	0	0	0	0	0	0
4/23/2024	7:00 AM	0	0	0	0	0	0	0	0	0	0	0	0	0
4/23/2024	7:15 AM	0	0	0	0	0	0	0	0	0	0	0	0	0
4/23/2024	7:30 AM	0	0	0	0	0	0	0	0	0	0	0	0	0
4/23/2024	7:45 AM	0	0	0	0	0	0	0	0	0	0	0	0	0
4/23/2024	8:00 AM	0	0	0	0	0	0	0	0	0	0	0	0	0
4/23/2024	8:15 AM	0	0	0	0	0	0	0	0	0	0	0	0	0
4/23/2024	8:30 AM	0	0	0	0	0	0	0	0	0	0	0	0	0
4/23/2024	8:45 AM	0	0	0	0	0	0	0	0	0	0	0	0	0
4/23/2024	9:00 AM	0	0	0	0	0	0	0	0	0	0	0	0	0
4/23/2024	9:15 AM	0	0	0	0	0	0	0	0	0	0	0	0	0
4/23/2024	9:30 AM	0	0	0	0	0	0	0	0	0	0	0	0	0
4/23/2024	9:45 AM	0	0	0	0	0	0	0	0	0	0	0	0	0
4/23/2024	10:00 AM	0	0	0	0	0	0	0	0	0	0	0	0	0
4/23/2024	10:15 AM	0	0	0	0	0	0	0	0	0	0	0	0	0
4/23/2024	10:30 AM	0	0	0	0	0	0	0	0	0	0	0	0	0
4/23/2024	10:45 AM	0	0	0	0	0	0	0	0	0	0	0	0	0
4/23/2024	11:00 AM	0	0	0	0	0	0	0	0	0	0	0	0	0
4/23/2024	11:15 AM	0	0	0	0	0	0	0	0	0	0	0	0	0
4/23/2024	11:30 AM	0	0	0	0	0	0	0	0	0	0	0	0	0
4/23/2024	11:45 AM	0	0	0	0	0	0	0	0	0	0	0	0	0
4/23/2024	12:00 PM	0	0	0	0	0	0	0	0	0	0	0	0	0
4/23/2024	12:15 PM	0	0	0	0	0	0	0	0	0	0	0	0	0
4/23/2024	12:30 PM	0	0	0	0	0	0	0	0	0	0	0	0	0
4/23/2024	12:45 PM	0	0	0	0	0	0	0	0	0	0	0	0	0
4/23/2024	1:00 PM	0	0	0	0	0	0	0	0	0	0	0	0	0
4/23/2024	1:15 PM	0	0	0	0	0	0	0	0	0	0	0	0	0
4/23/2024	1:30 PM	0	0	0	0	0	0	0	0	0	0	0	0	0
4/23/2024	1:45 PM	0	0	0	0	0	0	0	0	0	0	0	0	0
4/23/2024	2:00 PM	0	0	0	0	0	0	0	0	0	0	0	0	0
4/23/2024	2:15 PM	0	0	0	0	0	0	0	0	0	0	0	0	0
4/23/2024	2:30 PM	0	0	0	0	0	0	0	0	0	0	0	0	0
4/23/2024	2:45 PM	0	0	0	0	0	0	0	0	0	0	0	0	0
4/23/2024	3:00 PM	0	0	0	0	0	0	0	0	0	0	0	0	0
4/23/2024	3:15 PM	0	0	0	0	0	0	0	0	0	0	0	0	0
4/23/2024	3:30 PM	0	0	0	0	0	0	0	0	0	0	0	0	0
4/23/2024	3:45 PM	0	0	0	0	0	0	0	0	0	0	0	0	0
4/23/2024	4:00 PM	0	0	0	0	0	0	0	0	0	0	0	0	0
4/23/2024	4:15 PM	0	0	0	0	0	0	0	0	0	0	0	0	0
4/23/2024	4:30 PM	0	0	0	0	0	0	0	0	0	0	0	0	0
4/23/2024	4:45 PM	0	0	0	0	0	0	0	0	0	0	0	0	0
4/23/2024	5:00 PM	0	0	0	0	0	0	0	0	0	0	0	0	0
4/23/2024	5:15 PM	0	0	0	0	0	0	0	0	0	0	0	0	0
4/23/2024	5:30 PM	0	0	0	0	0	0	0	0	0	0	0	0	0
4/23/2024	5:45 PM	0	0	0	0	0	0	0	0	0	0	0	0	0
4/23/2024	6:00 PM	0	0	0	0	0	0	0	0	0	0	0	0	0
4/23/2024	6:15 PM	0	0	0	0	0	0	0	0	0	0	0	0	0
4/23/2024	6:30 PM	0	0	0	0	0	0	0	0	0	0	0	0	0
4/23/2024	6:45 PM	0	0	0	0	0	0	0	0	0	0	0	0	0
4/23/2024	7:00 PM	0	0	0	0	0	0	0	0	0	0	0	0	0
4/23/2024	7:15 PM	0	0	0	0	0	0	0	0	0	0	0	0	0
4/23/2024	7:30 PM	0	0	0	0	0	0	0	0	0	0	0	0	0
4/23/2024	7:45 PM	0	0	0	0	0	0	0	0	0	0	0	0	0
4/23/2024	8:00 PM	0	0	0	0	0	0	0	0	0	0	0	0	0
4/23/2024	8:15 PM	0	0	0	0	0	0	0	0	0	0	0	0	0
4/23/2024	8:30 PM	0	0	0	0	0	0	0	0	0	0	0	0	0
4/23/2024	8:45 PM	0	0	0	0	0	0	0	0	0	0	0	0	0
4/23/2024	9:00 PM	0	0	0	0	0	0	0	0	0	0	0	0	0
4/23/2024	9:15 PM	0	0	0	0	0	0	0	0	0	0	0	0	0
4/23/2024	9:30 PM	0	0	0	0	0	0	0	0	0	0	0	0	0
4/23/2024	9:45 PM	0	0	0	0	0	0	0	0	0	0	0	0	0
4/23/2024	10:00 PM	0	0	0	0	0	0	0	0	0	0	0	0	0
4/23/2024	10:15 PM	0	0	0	0	0	0	0	0	0	0	0	0	0
4/23/2024	10:30 PM	0	0	0	0	0	0	0	0	0	0	0	0	0
4/23/2024	10:45 PM	0	0	0	0	0	0	0	0	0	0	0	0	0
4/23/2024	11:00 PM	0	0	0	0	0	0	0	0	0	0	0	0	0
4/23/2024	11:15 PM	0	0	0	0	0	0	0	0	0	0	0	0	0
4/23/2024	11:30 PM	0	0	0	0	0	0	0	0	0	0	0	0	0
4/23/2024	11:45 PM	0	0	0	0	0	0	0	0	0	0	0	0	0

4/24/2024	12:00 AM	0	0	0	0	0	0	0	0	0	0	0	0	0
4/24/2024	12:15 AM	0	0	0	0	0	0	0	0	0	0	0	0	0
4/24/2024	12:30 AM	0	0	0	0	0	0	0	0	0	0	0	0	0
4/24/2024	12:45 AM	0	0	0	0	0	0	0	0	0	0	0	0	0
4/24/2024	1:00 AM	0	0	0	0	0	0	0	0	0	0	0	0	0
4/24/2024	1:15 AM	0	0	0	0	0	0	0	0	0	0	0	0	0
4/24/2024	1:30 AM	0	0	0	0	0	0	0	0	0	0	0	0	0
4/24/2024	1:45 AM	0	0	0	0	0	0	0	0	0	0	0	0	0
4/24/2024	2:00 AM	0	0	0	0	0	0	0	0	0	0	0	0	0
4/24/2024	2:15 AM	0	0	0	0	0	0	0	0	0	0	0	0	0
4/24/2024	2:30 AM	0	0	0	0	0	0	0	0	0	0	0	0	0
4/24/2024	2:45 AM	0	0	0	0	0	0	0	0	0	0	0	0	0
4/24/2024	3:00 AM	0	0	0	0	0	0	0	0	0	0	0	0	0
4/24/2024	3:15 AM	0	0	0	0	0	0	0	0	0	0	0	0	0
4/24/2024	3:30 AM	0	0	0	0	0	0	0	0	0	0	0	0	0
4/24/2024	3:45 AM	0	0	0	0	0	0	0	0	0	0	0	0	0
4/24/2024	4:00 AM	0	0	0	0	0	0	0	0	0	0	0	0	0
4/24/2024	4:15 AM	0	0	0	0	0	0	0	0	0	0	0	0	0
4/24/2024	4:30 AM	0	0	0	0	0	0	0	0	0	0	0	0	0
4/24/2024	4:45 AM	0	0	0	0	0	0	0	0	0	0	0	0	0
4/24/2024	5:00 AM	0	0	0	0	0	0	0	0	0	0	0	0	0
4/24/2024	5:15 AM	0	0	0	0	0	0	0	0	0	0	0	0	0
4/24/2024	5:30 AM	0	0	0	0	0	0	0	0	0	0	0	0	0
4/24/2024	5:45 AM	0	0	0	0	0	0	0	0	0	0	0	0	0
4/24/2024	6:00 AM	0	0	0	0	0	0	0	0	0	0	0	0	0
4/24/2024	6:15 AM	0	0	0	0	0	0	0	0	0	0	0	0	0
4/24/2024	6:30 AM	0	0	0	0	0	0	0	0	0	0	0	0	0
4/24/2024	6:45 AM	0	0	0	0	0	0	0	0	0	0	0	0	0
4/24/2024	7:00 AM	0	0	0	0	0	0	0	0	0	0	0	0	0
4/24/2024	7:15 AM	0	0	0	0	0	0	0	0	0	0	0	0	0
4/24/2024	7:30 AM	0	0	0	0	0	0	0	0	0	0	0	0	0
4/24/2024	7:45 AM	0	0	0	0	0	0	0	0	0	0	0	0	0
4/24/2024	8:00 AM	0	0	0	0	0	0	0	0	0	0	0	0	0
4/24/2024	8:15 AM	0	0	0	0	0	0	0	0	0	0	0	0	0
4/24/2024	8:30 AM	0	0	0	0	0	0	0	0	0	0	0	0	0
4/24/2024	8:45 AM	0	0	0	0	0	0	0	0	0	0	0	0	0
4/24/2024	9:00 AM	0	0	0	0	0	0	0	0	0	0	0	0	0
4/24/2024	9:15 AM	0	0	0	0	0	0	0	0	0	0	0	0	0
4/24/2024	9:30 AM	0	0	0	0	0	0	0	0	0	0	0	0	0
4/24/2024	9:45 AM	0	0	0	0	0	0	0	0	0	0	0	0	0
4/24/2024	10:00 AM	0	0	0	0	0	0	0	0	0	0	0	0	0
4/24/2024	10:15 AM	0	0	0	0	0	0	0	0	0	0	0	0	0
4/24/2024	10:30 AM	0	0	0	0	0	0	0	0	0	0	0	0	0
4/24/2024	10:45 AM	0	0	0	0	0	0	0	0	0	0	0	0	0
4/24/2024	11:00 AM	0	0	0	0	0	0	0	0	0	0	0	0	0
4/24/2024	11:15 AM	0	0	0	0	0	0	0	0	0	0	0	0	0
4/24/2024	11:30 AM	0	0	0	0	0	0	0	0	0	0	0	0	0
4/24/2024	11:45 AM	0	0	0	0	0	0	0	0	0	0	0	0	0
4/24/2024	12:00 PM	0	0	0	0	0	0	0	0	0	0	0	0	0
4/24/2024	12:15 PM	0	0	0	0	0	0	0	0	0	0	0	0	0
4/24/2024	12:30 PM	0	0	0	0	0	0	0	0	0	0	0	0	0
4/24/2024	12:45 PM	0	0	0	0	0	0	0	0	0	0	0	0	0
4/24/2024	1:00 PM	0	0	0	0	0	0	0	0	0	0	0	0	0
4/24/2024	1:15 PM	0	0	0	0	0	0	0	0	0	0	0	0	0
4/24/2024	1:30 PM	0	0	0	0	0	0	0	0	0	0	0	0	0
4/24/2024	1:45 PM	0	0	0	0	0	0	0	0	0	0	0	0	0
4/24/2024	2:00 PM	0	0	0	0	0	0	0	0	0	0	0	0	0
4/24/2024	2:15 PM	0	0	0	0	0	0	0	0	0	0	0	0	0
4/24/2024	2:30 PM	0	0	0	0	0	0	0	0	0	0	0	0	0
4/24/2024	2:45 PM	0	0	0	0	0	0	0	0	0	0	0	0	0
4/24/2024	3:00 PM	0	0	0	0	0	0	0	0	0	0	0	0	0
4/24/2024	3:15 PM	0	0	0	0	0	0	0	0	0	0	0	0	0
4/24/2024	3:30 PM	0	0	0	0	0	0	0	0	0	0	0	0	0
4/24/2024	3:45 PM	0	0	0	0	0	0	0	0	0	0	0	0	0
4/24/2024	4:00 PM	0	0	0	0	0	0	0	0	0	0	0	0	0
4/24/2024	4:15 PM	0	0	0	0	0	0	0	0	0	0	0	0	0
4/24/2024	4:30 PM	0	0	0	0	0	0	0	0	0	0	0	0	0
4/24/2024	4:45 PM	0	0	0	0	0	0	0	0	0	0	0	0	0
4/24/2024	5:00 PM	0	0	0	0	0	0	0	0	0	0	0	0	0
4/24/2024	5:15 PM	0	0	0	0	0	0	0	0	0	0	0	0	0
4/24/2024	5:30 PM	0	0	0	0	0	0	0	0	0	0	0	0	0
4/24/2024	5:45 PM	0	0	0	0	0	0	0	0	0	0	0	0	0
4/24/2024	6:00 PM	0	0	0	0	0	0	0	0	0	0	0	0	0
4/24/2024	6:15 PM	0	0	0	0	0	0	0	0	0	0	0	0	0
4/24/2024	6:30 PM	0	0	0	0	0	0	0	0	0	0	0	0	0
4/24/2024	6:45 PM	0	0	0	0	0	0	0	0	0	0	0	0	0
4/24/2024	7:00 PM	0	0	0	0	0	0	0	0	0	0	0	0	0
4/24/2024	7:15 PM	0	0	0	0	0	0	0	0	0	0	0	0	0
4/24/2024	7:30 PM	0	0	0	0	0	0	0	0	0	0	0	0	0
4/24/2024	7:45 PM	0	0	0	0	0	0	0	0	0	0	0	0	0
4/24/2024	8:00 PM	0	0	0	0	0	0	0	0	0	0	0	0	0
4/24/2024	8:15 PM	0	0	0	0	0	0	0	0	0	0	0	0	0
4/24/2024	8:30 PM	0	0	0	0	0	0	0	0	0	0	0	0	0
4/24/2024	8:45 PM	0	0	0	0	0	0	0	0	0	0	0	0	0
4/24/2024	9:00 PM	0	0	0	0	0	0	0	0	0	0	0	0	0
4/24/2024	9:15 PM	0	0	0	0	0	0	0	0	0	0	0	0	0
4/24/2024	9:30 PM	0	0	0	0	0	0	0	0	0	0	0	0	0
4/24/2024	9:45 PM	0	0	0	0	0	0	0	0	0	0	0	0	0
4/24/2024	10:00 PM	0	0	0	0	0	0	0	0	0	0	0	0	0
4/24/2024	10:15 PM	0	0	0	0	0	0	0	0	0	0	0	0	0
4/24/2024	10:30 PM	0	0	0	0	0	0	0	0	0	0	0	0	0
4/24/2024	10:45 PM	0	0	0	0	0	0	0	0	0	0	0	0	0
4/24/2024	11:00 PM	0	0	0	0	0	0	0	0	0	0	0	0	0
4/24/2024	11:15 PM	0	0	0	0	0	0	0	0	0	0	0	0	0
4/24/2024	11:30 PM	0	0	0	0	0	0	0	0	0	0	0	0	0
4/24/2024	11:45 PM	0	0	0	0	0	0	0	0	0	0	0	0	0

4/25/2024	12:00 AM	0	0	0	0	0	0	0	0	0	0	0	0	0
4/25/2024	12:15 AM	0	0	0	0	0	0	0	0	0	0	0	0	0
4/25/2024	12:30 AM	0	0	0	0	0	0	0	0	0	0	0	0	0
4/25/2024	12:45 AM	0	0	0	0	0	0	0	0	0	0	0	0	0
4/25/2024	1:00 AM	0	0	0	0	0	0	0	0	0	0	0	0	0
4/25/2024	1:15 AM	0	0	0	0	0	0	0	0	0	0	0	0	0
4/25/2024	1:30 AM	0	0	0	0	0	0	0	0	0	0	0	0	0
4/25/2024	1:45 AM	0	0	0	0	0	0	0	0	0	0	0	0	0
4/25/2024	2:00 AM	0	0	0	0	0	0	0	0	0	0	0	0	0
4/25/2024	2:15 AM	0	0	0	0	0	0	0	0	0	0	0	0	0
4/25/2024	2:30 AM	0	0	0	0	0	0	0	0	0	0	0	0	0
4/25/2024	2:45 AM	0	0	0	0	0	0	0	0	0	0	0	0	0
4/25/2024	3:00 AM	0	0	0	0	0	0	0	0	0	0	0	0	0
4/25/2024	3:15 AM	0	0	0	0	0	0	0	0	0	0	0	0	0
4/25/2024	3:30 AM	0	0	0	0	0	0	0	0	0	0	0	0	0
4/25/2024	3:45 AM	0	0	0	0	0	0	0	0	0	0	0	0	0
4/25/2024	4:00 AM	0	0	0	0	0	0	0	0	0	0	0	0	0
4/25/2024	4:15 AM	0	0	0	0	0	0	0	0	0	0	0	0	0
4/25/2024	4:30 AM	0	0	0	0	0	0	0	0	0	0	0	0	0
4/25/2024	4:45 AM	0	0	0	0	0	0	0	0	0	0	0	0	0
4/25/2024	5:00 AM	0	0	0	0	0	0	0	0	0	0	0	0	0
4/25/2024	5:15 AM	0	0	0	0	0	0	0	0	0	0	0	0	0
4/25/2024	5:30 AM	0	0	0	0	0	0	0	0	0	0	0	0	0
4/25/2024	5:45 AM	0	0	0	0	0	0	0	0	0	0	0	0	0
4/25/2024	6:00 AM	0	0	0	0	0	0	0	0	0	0	0	0	0
4/25/2024	6:15 AM	0	0	0	0	0	0	0	0	0	0	0	0	0
4/25/2024	6:30 AM	0	0	0	0	0	0	0	0	0	0	0	0	0
4/25/2024	6:45 AM	0	0	0	0	0	0	0	0	0	0	0	0	0
4/25/2024	7:00 AM	0	0	0	0	0	0	0	0	0	0	0	0	0
4/25/2024	7:15 AM	0	0	0	0	0	0	0	0	0	0	0	0	0
4/25/2024	7:30 AM	0	0	0	0	0	0	0	0	0	0	0	0	0
4/25/2024	7:45 AM	0	0	0	0	0	0	0	0	0	0	0	0	0
4/25/2024	8:00 AM	0	0	0	0	0	0	0	0	0	0	0	0	0
4/25/2024	8:15 AM	0	0	0	0	0	0	0	0	0	0	0	0	0
4/25/2024	8:30 AM	0	0	0	0	0	0	0	0	0	0	0	0	0
4/25/2024	8:45 AM	0	0	0	0	0	0	0	0	0	0	0	0	0
4/25/2024	9:00 AM	0	0	0	0	0	0	0	0	0	0	0	0	0
4/25/2024	9:15 AM	0	0	0	0	0	0	0	0	0	0	0	0	0
4/25/2024	9:30 AM	0	0	0	0	0	0	0	0	0	0	0	0	0
4/25/2024	9:45 AM	0	0	0	0	0	0	0	0	0	0	0	0	0
4/25/2024	10:00 AM	0	0	0	0	0	0	0	0	0	0	0	0	0
4/25/2024	10:15 AM	0	0	0	0	0	0	0	0	0	0	0	0	0
4/25/2024	10:30 AM	0	0	0	0	0	0	0	0	0	0	0	0	0
4/25/2024	10:45 AM	0	0	0	0	0	0	0	0	0	0	0	0	0
4/25/2024	11:00 AM	0	0	0	0	0	0	0	0	0	0	0	0	0
4/25/2024	11:15 AM	0	0	0	0	0	0	0	0	0	0	0	0	0
4/25/2024	11:30 AM	0	0	0	0	0	0	0	0	0	0	0	0	0
4/25/2024	11:45 AM	0	0	0	0	0	0	0	0	0	0	0	0	0
4/25/2024	12:00 PM	0	0	0	0	0	0	0	0	0	0	0	0	0
4/25/2024	12:15 PM	0	0	0	0	0	0	0	0	0	0	0	0	0
4/25/2024	12:30 PM	0	0	0	0	0	0	0	0	0	0	0	0	0
4/25/2024	12:45 PM	0	0	0	0	0	0	0	0	0	0	0	0	0
4/25/2024	1:00 PM	0	0	0	0	0	0	0	0	0	0	0	0	0
4/25/2024	1:15 PM	0	0	0	0	0	0	0	0	0	0	0	0	0
4/25/2024	1:30 PM	0	0	0	0	0	0	0	0	0	0	0	0	0
4/25/2024	1:45 PM	0	0	0	0	0	0	0	0	0	0	0	0	0
4/25/2024	2:00 PM	0	0	0	0	0	0	0	0	0	0	0	0	0
4/25/2024	2:15 PM	0	0	0	0	0	0	0	0	0	0	0	0	0
4/25/2024	2:30 PM	0	0	0	0	0	0	0	0	0	0	0	0	0
4/25/2024	2:45 PM	0	0	0	0	0	0	0	0	0	0	0	0	0
4/25/2024	3:00 PM	0	0	0	0	0	0	0	0	0	0	0	0	0
4/25/2024	3:15 PM	0	0	0	0	0	0	0	0	0	0	0	0	0
4/25/2024	3:30 PM	0	0	0	0	0	0	0	0	0	0	0	0	0
4/25/2024	3:45 PM	0	0	0	0	0	0	0	0	0	0	0	0	0
4/25/2024	4:00 PM	0	0	0	0	0	0	0	0	0	0	0	0	0
4/25/2024	4:15 PM	0	0	0	0	0	0	0	0	0	0	0	0	0
4/25/2024	4:30 PM	0	0	0	0	0	0	0	0	0	0	0	0	0
4/25/2024	4:45 PM	0	0	0	0	0	0	0	0	0	0	0	0	0
4/25/2024	5:00 PM	0	0	0	0	0	0	0	0	0	0	0	0	0
4/25/2024	5:15 PM	0	0	0	0	0	0	0	0	0	0	0	0	0
4/25/2024	5:30 PM	0	0	0	0	0	0	0	0	0	0	0	0	0
4/25/2024	5:45 PM	0	0	0	0	0	0	0	0	0	0	0	0	0
4/25/2024	6:00 PM	0	0	0	0	0	0	0	0	0	0	0	0	0
4/25/2024	6:15 PM	0	0	0	0	0	0	0	0	0	0	0	0	0
4/25/2024	6:30 PM	0	0	0	0	0	0	0	0	0	0	0	0	0
4/25/2024	6:45 PM	0	0	0	0	0	0	0	0	0	0	0	0	0
4/25/2024	7:00 PM	0	0	0	0	0	0	0	0	0	0	0	0	0
4/25/2024	7:15 PM	0	0	0	0	0	0	0	0	0	0	0	0	0
4/25/2024	7:30 PM	0	0	0	0	0	0	0	0	0	0	0	0	0
4/25/2024	7:45 PM	0	0	0	0	0	0	0	0	0	0	0	0	0
4/25/2024	8:00 PM	0	0	0	0	0	0	0	0	0	0	0	0	0
4/25/2024	8:15 PM	0	0	0	0	0	0	0	0	0	0	0	0	0
4/25/2024	8:30 PM	0	0	0	0	0	0	0	0	0	0	0	0	0
4/25/2024	8:45 PM	0	0	0	0	0	0	0	0	0	0	0	0	0
4/25/2024	9:00 PM	0	0	0	0	0	0	0	0	0	0	0	0	0
4/25/2024	9:15 PM	0	0	0	0	0	0	0	0	0	0	0	0	0
4/25/2024	9:30 PM	0	0	0	0	0	0	0	0	0	0	0	0	0
4/25/2024	9:45 PM	0	0	0	0	0	0	0	0	0	0	0	0	0
4/25/2024	10:00 PM	0	0	0	0	0	0	0	0	0	0	0	0	0
4/25/2024	10:15 PM	0	0	0	0	0	0	0	0	0	0	0	0	0
4/25/2024	10:30 PM	0	0	0	0	0	0	0	0	0	0	0	0	0
4/25/2024	10:45 PM	0	0	0	0	0	0	0	0	0	0	0	0	0
4/25/2024	11:00 PM	0	0	0	0	0	0	0	0	0	0	0	0	0
4/25/2024	11:15 PM	0	0	0	0	0	0	0	0	0	0	0	0	0
4/25/2024	11:30 PM	0	0	0	0	0	0	0	0	0	0	0	0	0
4/25/2024	11:45 PM	0	0	0	0	0	0	0	0	0	0	0	0	0

SB
File Name:
Start Date: 4/23/2024
Start Time: 0
Site Code: 16
Station ID: 1
Location 1: I-26 James F. Byrnes Expy On/Off-Ramp, north of US-176 Broad River Rd
Location 2:

Date	Time	1	2	3	4	5	6	7	8	9	10	11	12	13
4/23/2024	12:00 AM	0	0	0	0	0	0	0	0	0	0	0	0	0
4/23/2024	12:15 AM	0	0	0	0	0	0	0	0	0	0	0	0	0
4/23/2024	12:30 AM	0	0	0	0	0	0	0	0	0	0	0	0	0
4/23/2024	12:45 AM	0	0	0	0	0	0	0	0	0	0	0	0	0
4/23/2024	1:00 AM	0	0	0	0	0	0	0	0	0	0	0	0	0
4/23/2024	1:15 AM	0	0	0	0	0	0	0	0	0	0	0	0	0
4/23/2024	1:30 AM	0	0	0	0	0	0	0	0	0	0	0	0	0
4/23/2024	1:45 AM	0	0	0	0	0	0	0	0	0	0	0	0	0
4/23/2024	2:00 AM	0	0	0	0	0	0	0	0	0	0	0	0	0
4/23/2024	2:15 AM	0	0	0	0	0	0	0	0	0	0	0	0	0
4/23/2024	2:30 AM	0	0	0	0	0	0	0	0	0	0	0	0	0
4/23/2024	2:45 AM	0	0	0	0	0	0	0	0	0	0	0	0	0
4/23/2024	3:00 AM	0	0	0	0	0	0	0	0	0	0	0	0	0
4/23/2024	3:15 AM	0	0	0	0	0	0	0	0	0	0	0	0	0
4/23/2024	3:30 AM	0	0	0	0	0	0	0	0	0	0	0	0	0
4/23/2024	3:45 AM	0	0	0	0	0	0	0	0	0	0	0	0	0
4/23/2024	4:00 AM	0	0	0	0	0	0	0	0	0	0	0	0	0
4/23/2024	4:15 AM	0	0	0	0	0	0	0	0	0	0	0	0	0
4/23/2024	4:30 AM	0	0	0	0	0	0	0	0	0	0	0	0	0
4/23/2024	4:45 AM	0	0	0	0	0	0	0	0	0	0	0	0	0
4/23/2024	5:00 AM	0	0	0	0	0	0	0	0	0	0	0	0	0
4/23/2024	5:15 AM	0	0	0	0	0	0	0	0	0	0	0	0	0
4/23/2024	5:30 AM	0	0	0	0	0	0	0	0	0	0	0	0	0
4/23/2024	5:45 AM	0	0	0	0	0	0	0	0	0	0	0	0	0
4/23/2024	6:00 AM	0	0	0	0	0	0	0	0	0	0	0	0	0
4/23/2024	6:15 AM	0	0	0	0	0	0	0	0	0	0	0	0	0
4/23/2024	6:30 AM	0	0	0	0	0	0	0	0	0	0	0	0	0
4/23/2024	6:45 AM	0	0	0	0	0	0	0	0	0	0	0	0	0
4/23/2024	7:00 AM	0	0	0	0	0	0	0	0	0	0	0	0	0
4/23/2024	7:15 AM	0	0	0	0	0	0	0	0	0	0	0	0	0
4/23/2024	7:30 AM	0	0	0	0	0	0	0	0	0	0	0	0	0
4/23/2024	7:45 AM	0	0	0	0	0	0	0	0	0	0	0	0	0
4/23/2024	8:00 AM	0	0	0	0	0	0	0	0	0	0	0	0	0
4/23/2024	8:15 AM	0	0	0	0	0	0	0	0	0	0	0	0	0
4/23/2024	8:30 AM	0	0	0	0	0	0	0	0	0	0	0	0	0
4/23/2024	8:45 AM	0	0	0	0	0	0	0	0	0	0	0	0	0
4/23/2024	9:00 AM	0	0	0	0	0	0	0	0	0	0	0	0	0
4/23/2024	9:15 AM	0	0	0	0	0	0	0	0	0	0	0	0	0
4/23/2024	9:30 AM	0	0	0	0	0	0	0	0	0	0	0	0	0
4/23/2024	9:45 AM	0	0	0	0	0	0	0	0	0	0	0	0	0
4/23/2024	10:00 AM	0	0	0	0	0	0	0	0	0	0	0	0	0
4/23/2024	10:15 AM	0	0	0	0	0	0	0	0	0	0	0	0	0
4/23/2024	10:30 AM	0	0	0	0	0	0	0	0	0	0	0	0	0
4/23/2024	10:45 AM	0	0	0	0	0	0	0	0	0	0	0	0	0
4/23/2024	11:00 AM	0	0	0	0	0	0	0	0	0	0	0	0	0
4/23/2024	11:15 AM	0	0	0	0	0	0	0	0	0	0	0	0	0
4/23/2024	11:30 AM	0	0	0	0	0	0	0	0	0	0	0	0	0
4/23/2024	11:45 AM	0	0	0	0	0	0	0	0	0	0	0	0	0
4/23/2024	12:00 PM	0	0	0	0	0	0	0	0	0	0	0	0	0
4/23/2024	12:15 PM	0	0	0	0	0	0	0	0	0	0	0	0	0
4/23/2024	12:30 PM	0	0	0	0	0	0	0	0	0	0	0	0	0
4/23/2024	12:45 PM	0	0	0	0	0	0	0	0	0	0	0	0	0
4/23/2024	1:00 PM	0	0	0	0	0	0	0	0	0	0	0	0	0
4/23/2024	1:15 PM	0	0	0	0	0	0	0	0	0	0	0	0	0
4/23/2024	1:30 PM	0	0	0	0	0	0	0	0	0	0	0	0	0
4/23/2024	1:45 PM	0	0	0	0	0	0	0	0	0	0	0	0	0
4/23/2024	2:00 PM	0	0	0	0	0	0	0	0	0	0	0	0	0
4/23/2024	2:15 PM	0	0	0	0	0	0	0	0	0	0	0	0	0
4/23/2024	2:30 PM	0	0	0	0	0	0	0	0	0	0	0	0	0
4/23/2024	2:45 PM	0	0	0	0	0	0	0	0	0	0	0	0	0
4/23/2024	3:00 PM	0	0	0	0	0	0	0	0	0	0	0	0	0
4/23/2024	3:15 PM	0	0	0	0	0	0	0	0	0	0	0	0	0
4/23/2024	3:30 PM	0	0	0	0	0	0	0	0	0	0	0	0	0
4/23/2024	3:45 PM	0	0	0	0	0	0	0	0	0	0	0	0	0
4/23/2024	4:00 PM	0	0	0	0	0	0	0	0	0	0	0	0	0
4/23/2024	4:15 PM	0	0	0	0	0	0	0	0	0	0	0	0	0
4/23/2024	4:30 PM	0	0	0	0	0	0	0	0	0	0	0	0	0
4/23/2024	4:45 PM	0	0	0	0	0	0	0	0	0	0	0	0	0
4/23/2024	5:00 PM	0	0	0	0	0	0	0	0	0	0	0	0	0
4/23/2024	5:15 PM	0	0	0	0	0	0	0	0	0	0	0	0	0
4/23/2024	5:30 PM	0	0	0	0	0	0	0	0	0	0	0	0	0
4/23/2024	5:45 PM	0	0	0	0	0	0	0	0	0	0	0	0	0
4/23/2024	6:00 PM	0	0	0	0	0	0	0	0	0	0	0	0	0
4/23/2024	6:15 PM	2	110	26	1	1	0	0	0	4	0	0	0	0
4/23/2024	6:30 PM	2	316	74	1	1	2	0	0	12	0	0	0	0
4/23/2024	6:45 PM	3	434	105	1	3	3	0	0	12	0	0	0	0
4/23/2024	7:00 PM	3	505	114	1	4	3	0	0	12	0	1	0	0
4/23/2024	7:15 PM	1	463	105	0	3	3	0	0	8	0	1	0	0
4/23/2024	7:30 PM	1	333	79	0	3	1	0	0	0	0	1	0	0
4/23/2024	7:45 PM	0	286	60	0	2	0	0	0	0	0	1	0	0
4/23/2024	8:00 PM	0	281	58	0	1	0	0	0	0	0	0	0	0
4/23/2024	8:15 PM	0	272	45	0	1	1	0	0	0	0	0	0	0
4/23/2024	8:30 PM	0	260	28	0	2	1	0	0	0	0	0	0	0
4/23/2024	8:45 PM	0	237	19	0	2	1	0	0	1	0	0	0	0
4/23/2024	9:00 PM	1	225	15	0	2	1	0	0	1	0	0	0	0
4/23/2024	9:15 PM	1	214	13	0	2	0	0	0	2	0	0	0	0
4/23/2024	9:30 PM	1	192	10	0	2	0	0	0	2	0	0	0	0
4/23/2024	9:45 PM	1	193	8	0	1	0	0	0	1	0	0	0	0
4/23/2024	10:00 PM	0	165	6	0	1	0	0	0	1	0	0	0	0
4/23/2024	10:15 PM	0	149	5	0	2	0	0	0	0	0	0	0	0
4/23/2024	10:30 PM	0	134	4	1	1	0	0	0	0	0	0	0	0
4/23/2024	10:45 PM	0	104	4	1	1	0	0	0	0	0	0	0	0
4/23/2024	11:00 PM	0	96	4	1	1	0	0	0	1	0	0	0	0
4/23/2024	11:15 PM	0	64	3	1	0	0	0	0	1	0	0	0	0
4/23/2024	11:30 PM	0	37	2	0	0	0	0	0	1	0	0	0	0
4/23/2024	11:45 PM	0	18	1	0	0	0	0	0	1	0	0	0	0

4/24/2024	12:00 AM	0	51	4	0	1	0	0	0	3	0	0	0	0
4/24/2024	12:15 AM	0	46	3	0	0	0	0	0	3	0	0	0	0
4/24/2024	12:30 AM	0	43	2	0	0	0	0	0	1	0	0	0	0
4/24/2024	12:45 AM	0	35	2	0	0	0	0	0	1	0	0	0	0
4/24/2024	1:00 AM	0	37	0	0	0	0	0	0	0	0	0	0	0
4/24/2024	1:15 AM	0	29	0	0	0	0	0	0	0	0	0	0	0
4/24/2024	1:30 AM	0	27	1	0	0	0	0	0	0	0	0	0	0
4/24/2024	1:45 AM	0	29	1	0	0	1	0	0	0	0	0	0	0
4/24/2024	2:00 AM	0	24	1	0	0	1	0	0	0	0	0	0	0
4/24/2024	2:15 AM	0	21	2	0	0	1	0	0	0	0	0	0	0
4/24/2024	2:30 AM	0	17	1	0	1	1	0	0	0	0	0	0	0
4/24/2024	2:45 AM	0	20	1	0	1	0	0	0	0	0	0	0	0
4/24/2024	3:00 AM	0	22	1	0	1	0	0	0	0	0	0	0	0
4/24/2024	3:15 AM	0	24	0	0	2	0	0	0	0	0	0	0	0
4/24/2024	3:30 AM	0	26	2	0	1	0	0	0	0	0	0	0	0
4/24/2024	3:45 AM	0	24	2	0	1	0	0	0	0	0	0	0	0
4/24/2024	4:00 AM	0	29	2	0	1	0	0	0	0	0	0	0	0
4/24/2024	4:15 AM	0	33	2	0	1	0	0	0	0	0	0	0	0
4/24/2024	4:30 AM	0	34	0	0	1	0	0	0	1	0	0	0	0
4/24/2024	4:45 AM	0	48	2	1	5	0	0	0	2	0	0	0	0
4/24/2024	5:00 AM	0	62	4	1	5	1	0	0	2	0	0	0	0
4/24/2024	5:15 AM	0	64	11	1	5	2	0	0	2	0	0	0	0
4/24/2024	5:30 AM	1	85	20	1	6	3	0	1	1	0	0	0	0
4/24/2024	5:45 AM	1	111	43	0	4	3	0	1	0	1	0	0	0
4/24/2024	6:00 AM	1	152	66	0	9	3	0	1	0	1	0	0	0
4/24/2024	6:15 AM	1	215	76	0	8	2	0	1	0	1	0	0	0
4/24/2024	6:30 AM	0	269	95	0	10	1	0	0	0	1	0	0	0
4/24/2024	6:45 AM	0	325	103	0	11	2	0	0	2	0	0	0	0
4/24/2024	7:00 AM	0	372	110	0	8	2	0	0	2	0	0	0	0
4/24/2024	7:15 AM	0	380	120	0	12	4	1	0	4	0	0	0	0
4/24/2024	7:30 AM	0	364	113	0	13	4	1	0	5	0	0	0	0
4/24/2024	7:45 AM	0	322	108	0	12	4	2	1	3	0	0	0	0
4/24/2024	8:00 AM	0	277	101	0	14	3	4	1	3	2	0	0	0
4/24/2024	8:15 AM	0	250	105	0	13	1	4	2	3	2	0	0	0
4/24/2024	8:30 AM	0	231	104	0	10	1	5	2	3	2	0	0	0
4/24/2024	8:45 AM	0	237	103	1	10	0	6	1	3	3	0	0	0
4/24/2024	9:00 AM	0	229	99	1	8	1	5	1	4	1	0	0	0
4/24/2024	9:15 AM	0	222	86	1	5	1	4	1	2	2	0	0	0
4/24/2024	9:30 AM	0	223	90	1	5	1	4	1	2	2	0	0	0
4/24/2024	9:45 AM	0	220	85	0	4	1	3	1	3	2	0	0	0
4/24/2024	10:00 AM	0	240	84	0	4	1	2	1	2	3	0	0	0
4/24/2024	10:15 AM	0	261	87	0	5	1	2	0	5	2	0	0	0
4/24/2024	10:30 AM	0	276	86	0	4	1	2	0	4	2	0	0	0
4/24/2024	10:45 AM	1	282	87	0	6	1	1	0	6	1	0	0	0
4/24/2024	11:00 AM	1	268	86	0	6	0	1	0	6	0	0	0	0
4/24/2024	11:15 AM	1	279	78	1	6	0	3	0	4	0	0	0	0
4/24/2024	11:30 AM	1	293	80	1	7	1	3	2	5	0	0	0	0
4/24/2024	11:45 AM	0	308	78	1	7	1	5	2	3	0	0	0	0
4/24/2024	12:00 PM	1	318	73	1	6	2	5	2	3	0	0	0	0
4/24/2024	12:15 PM	1	329	86	0	6	2	3	2	2	0	0	0	0
4/24/2024	12:30 PM	1	330	95	1	8	2	2	0	1	0	0	0	0
4/24/2024	12:45 PM	1	327	89	1	7	3	2	1	0	0	0	0	0
4/24/2024	1:00 PM	2	330	98	1	7	2	2	1	0	1	0	0	0
4/24/2024	1:15 PM	3	395	130	3	8	3	3	3	4	3	0	0	0
4/24/2024	1:30 PM	3	466	138	2	8	2	4	4	5	3	0	0	0
4/24/2024	1:45 PM	4	500	171	2	10	2	3	3	6	3	0	0	0
4/24/2024	2:00 PM	2	571	195	2	11	2	5	3	8	2	0	0	0
4/24/2024	2:15 PM	1	575	176	1	10	1	5	2	6	0	0	0	0
4/24/2024	2:30 PM	1	537	159	1	12	3	5	1	6	1	0	0	0
4/24/2024	2:45 PM	1	517	135	1	10	2	5	1	5	1	0	0	0
4/24/2024	3:00 PM	1	490	108	1	8	2	4	1	3	1	0	0	0
4/24/2024	3:15 PM	1	468	105	0	9	2	3	0	1	1	0	0	0
4/24/2024	3:30 PM	1	477	108	0	5	0	2	0	1	0	0	0	0
4/24/2024	3:45 PM	0	511	116	0	6	0	1	0	1	0	0	0	0
4/24/2024	4:00 PM	1	505	121	0	7	0	0	0	2	1	0	0	0
4/24/2024	4:15 PM	1	479	109	0	6	0	1	0	3	1	0	0	0
4/24/2024	4:30 PM	1	487	124	0	5	0	1	0	2	1	0	0	0
4/24/2024	4:45 PM	1	487	121	0	5	0	2	0	2	1	0	0	0
4/24/2024	5:00 PM	1	476	120	0	7	0	3	0	1	0	0	0	0
4/24/2024	5:15 PM	2	484	122	0	9	0	2	0	0	0	0	0	0
4/24/2024	5:30 PM	2	446	111	0	10	1	2	0	0	0	0	0	0
4/24/2024	5:45 PM	4	396	102	0	8	1	1	0	0	0	0	0	0
4/24/2024	6:00 PM	3	386	94	0	7	1	0	0	0	0	0	0	0
4/24/2024	6:15 PM	2	352	87	0	4	1	0	0	0	0	0	0	0
4/24/2024	6:30 PM	2	344	80	0	4	1	0	0	0	0	0	0	0
4/24/2024	6:45 PM	0	366	79	0	5	1	0	0	0	0	0	0	0
4/24/2024	7:00 PM	0	339	73	0	4	1	0	0	0	0	0	0	0
4/24/2024	7:15 PM	0	327	68	0	4	1	0	0	0	0	0	0	0
4/24/2024	7:30 PM	1	331	57	0	4	0	0	0	1	0	0	0	0
4/24/2024	7:45 PM	2	290	50	0	2	0	0	1	2	0	0	0	0
4/24/2024	8:00 PM	2	295	41	1	1	0	0	1	2	0	0	0	0
4/24/2024	8:15 PM	2	300	27	1	2	0	0	1	2	0	0	0	0
4/24/2024	8:30 PM	1	272	13	1	1	0	0	1	1	0	0	0	0
4/24/2024	8:45 PM	0	270	1	1	1	0	0	0	0	0	0	0	0
4/24/2024	9:00 PM	0	251	0	0	1	0	0	0	0	0	0	0	0
4/24/2024	9:15 PM	0	208	0	0	0	0	0	0	0	0	0	0	0
4/24/2024	9:30 PM	0	181	0	0	0	0	0	0	0	0	0	0	0
4/24/2024	9:45 PM	0	152	0	0	1	0	0	0	0	0	0	0	0
4/24/2024	10:00 PM	0	120	1	0	1	0	0	0	0	0	0	0	0
4/24/2024	10:15 PM	0	126	1	0	1	0	0	0	0	0	0	0	0
4/24/2024	10:30 PM	0	122	1	0	2	0	0	0	2	0	0	0	0
4/24/2024	10:45 PM	0	114	1	0	1	0	0	0	3	0	0	0	0
4/24/2024	11:00 PM	0	110	0	0	1	0	0	0	3	0	0	0	0
4/24/2024	11:15 PM	0	68	0	0	1	0	0	0	3	0	0	0	0
4/24/2024	11:30 PM	0	40	0	0	0	0	0	0	1	0	0	0	0
4/24/2024	11:45 PM	0	20	0	0	0	0	0	0	0	0	0	0	0

4/25/2024	12:00 AM	0	61	0	0	0	0	0	1	2	0	0	0	0
4/25/2024	12:15 AM	0	51	0	0	0	0	0	1	2	0	0	0	0
4/25/2024	12:30 AM	0	53	0	0	0	0	0	1	1	0	0	0	0
4/25/2024	12:45 AM	0	49	0	0	0	0	0	0	2	0	0	0	0
4/25/2024	1:00 AM	0	40	0	0	1	0	0	0	1	0	0	0	0
4/25/2024	1:15 AM	0	38	0	0	1	0	0	0	1	0	0	0	0
4/25/2024	1:30 AM	0	30	0	0	1	0	0	0	1	0	0	0	0
4/25/2024	1:45 AM	0	28	0	0	2	0	0	0	0	0	0	0	0
4/25/2024	2:00 AM	0	24	0	0	1	0	0	0	0	0	0	0	0
4/25/2024	2:15 AM	0	20	0	0	1	0	0	0	0	0	0	0	0
4/25/2024	2:30 AM	0	17	0	0	1	0	0	0	1	0	0	0	0
4/25/2024	2:45 AM	0	17	0	0	1	0	0	0	2	0	0	0	0
4/25/2024	3:00 AM	0	15	0	0	1	0	0	0	2	0	0	0	0
4/25/2024	3:15 AM	0	17	0	0	1	0	0	0	2	0	0	0	0
4/25/2024	3:30 AM	0	22	0	0	1	0	0	0	1	0	0	0	0
4/25/2024	3:45 AM	0	27	0	0	0	0	0	0	1	0	0	0	0
4/25/2024	4:00 AM	0	36	0	0	0	0	0	0	1	0	0	0	0
4/25/2024	4:15 AM	0	39	0	1	0	0	0	1	1	0	0	0	0
4/25/2024	4:30 AM	0	40	0	1	0	0	0	1	5	0	0	0	0
4/25/2024	4:45 AM	0	44	0	1	1	0	0	1	4	0	0	0	0
4/25/2024	5:00 AM	0	60	1	1	2	0	0	1	4	0	0	0	0
4/25/2024	5:15 AM	0	76	9	0	5	0	1	0	5	0	0	0	0
4/25/2024	5:30 AM	0	90	19	0	5	0	1	0	1	0	0	0	0
4/25/2024	5:45 AM	0	125	44	0	7	0	1	0	2	0	0	0	0
4/25/2024	6:00 AM	0	150	71	0	8	0	1	0	5	0	0	0	0
4/25/2024	6:15 AM	0	218	87	0	6	3	0	2	4	0	0	0	0
4/25/2024	6:30 AM	1	281	107	0	8	4	0	2	8	0	0	0	0
4/25/2024	6:45 AM	1	332	123	0	8	9	0	2	8	0	0	0	0
4/25/2024	7:00 AM	1	375	131	0	10	9	0	2	5	0	0	0	0
4/25/2024	7:15 AM	1	362	132	0	9	7	0	0	6	0	0	0	0
4/25/2024	7:30 AM	0	337	131	0	7	6	0	0	2	0	0	0	0
4/25/2024	7:45 AM	0	309	111	0	6	2	0	0	2	0	0	0	0
4/25/2024	8:00 AM	0	292	99	0	4	3	0	0	3	0	0	0	0
4/25/2024	8:15 AM	0	254	101	0	11	3	0	0	2	0	0	0	0
4/25/2024	8:30 AM	0	246	97	0	16	3	0	2	2	0	0	0	0
4/25/2024	8:45 AM	0	236	100	0	16	2	0	2	1	0	0	0	0
4/25/2024	9:00 AM	0	228	94	0	17	2	0	2	0	0	0	0	0
4/25/2024	9:15 AM	0	237	89	0	12	1	0	2	1	0	0	0	0
4/25/2024	9:30 AM	0	242	92	0	7	3	0	0	2	0	0	0	0
4/25/2024	9:45 AM	0	255	89	0	6	5	0	2	3	0	0	0	0
4/25/2024	10:00 AM	0	252	106	0	5	6	0	3	3	0	0	0	0
4/25/2024	10:15 AM	0	268	113	0	3	7	0	4	2	0	0	0	0
4/25/2024	10:30 AM	0	288	110	1	8	8	0	4	2	0	0	0	0
4/25/2024	10:45 AM	0	281	105	1	8	6	0	2	1	0	0	0	0
4/25/2024	11:00 AM	0	295	90	1	6	5	0	3	2	0	0	0	0
4/25/2024	11:15 AM	0	310	78	1	8	6	0	2	3	0	0	0	0
4/25/2024	11:30 AM	0	321	81	1	5	7	0	2	2	0	0	0	0
4/25/2024	11:45 AM	0	314	89	1	7	7	0	2	2	0	0	0	0
4/25/2024	12:00 PM	0	310	88	2	8	8	0	0	2	0	0	0	0
4/25/2024	12:15 PM	0	290	89	2	13	6	0	0	2	0	0	0	0
4/25/2024	12:30 PM	0	264	94	2	12	4	0	1	2	0	0	0	0
4/25/2024	12:45 PM	0	274	91	2	12	5	0	1	2	0	0	0	0
4/25/2024	1:00 PM	0	286	95	1	11	6	0	1	1	0	0	0	0
4/25/2024	1:15 PM	1	314	105	1	4	7	0	1	1	0	0	0	0
4/25/2024	1:30 PM	1	352	94	0	3	5	0	0	1	0	0	0	0
4/25/2024	1:45 PM	1	374	96	0	3	5	0	0	1	2	0	0	0
4/25/2024	2:00 PM	1	391	100	0	6	2	0	0	2	2	0	0	0
4/25/2024	2:15 PM	0	399	99	0	8	1	0	1	2	2	0	0	0
4/25/2024	2:30 PM	2	418	102	0	9	2	0	1	2	2	0	0	0
4/25/2024	2:45 PM	3	425	107	0	6	1	0	1	3	0	0	0	0
4/25/2024	3:00 PM	4	437	113	0	4	3	0	4	2	0	0	0	0
4/25/2024	3:15 PM	5	452	111	0	2	4	0	4	1	0	0	0	0
4/25/2024	3:30 PM	3	447	115	0	2	3	0	4	1	0	0	0	0
4/25/2024	3:45 PM	2	474	116	0	2	3	0	4	0	0	0	0	0
4/25/2024	4:00 PM	1	482	117	0	1	1	0	1	0	0	0	0	0
4/25/2024	4:15 PM	2	487	114	0	1	0	0	0	0	0	0	0	0
4/25/2024	4:30 PM	2	506	112	0	0	0	0	0	1	1	0	0	0
4/25/2024	4:45 PM	2	491	109	0	0	0	0	0	1	2	0	0	0
4/25/2024	5:00 PM	2	482	103	0	1	0	0	0	2	3	0	0	0
4/25/2024	5:15 PM	1	475	107	0	4	0	0	0	3	3	0	0	0
4/25/2024	5:30 PM	1	434	107	0	6	0	0	0	2	2	0	0	0
4/25/2024	5:45 PM	1	411	104	0	6	0	0	0	2	1	0	0	0
4/25/2024	6:00 PM	1	378	91	0	5	0	0	0	2	0	0	0	0
4/25/2024	6:15 PM	0	268	65	0	2	0	0	0	1	0	0	0	0
4/25/2024	6:30 PM	0	174	38	0	0	0	0	0	1	0	0	0	0
4/25/2024	6:45 PM	0	85	15	0	0	0	0	0	1	0	0	0	0
4/25/2024	7:00 PM	0	0	0	0	0	0	0	0	0	0	0	0	0
4/25/2024	7:15 PM	0	0	0	0	0	0	0	0	0	0	0	0	0
4/25/2024	7:30 PM	0	0	0	0	0	0	0	0	0	0	0	0	0
4/25/2024	7:45 PM	0	0	0	0	0	0	0	0	0	0	0	0	0
4/25/2024	8:00 PM	0	0	0	0	0	0	0	0	0	0	0	0	0
4/25/2024	8:15 PM	0	0	0	0	0	0	0	0	0	0	0	0	0
4/25/2024	8:30 PM	0	0	0	0	0	0	0	0	0	0	0	0	0
4/25/2024	8:45 PM	0	0	0	0	0	0	0	0	0	0	0	0	0
4/25/2024	9:00 PM	0	0	0	0	0	0	0	0	0	0	0	0	0
4/25/2024	9:15 PM	0	0	0	0	0	0	0	0	0	0	0	0	0
4/25/2024	9:30 PM	0	0	0	0	0	0	0	0	0	0	0	0	0
4/25/2024	9:45 PM	0	0	0	0	0	0	0	0	0	0	0	0	0
4/25/2024	10:00 PM	0	0	0	0	0	0	0	0	0	0	0	0	0
4/25/2024	10:15 PM	0	0	0	0	0	0	0	0	0	0	0	0	0
4/25/2024	10:30 PM	0	0	0	0	0	0	0	0	0	0	0	0	0
4/25/2024	10:45 PM	0	0	0	0	0	0	0	0	0	0	0	0	0
4/25/2024	11:00 PM	0	0	0	0	0	0	0	0	0	0	0	0	0
4/25/2024	11:15 PM	0	0	0	0	0	0	0	0	0	0	0	0	0
4/25/2024	11:30 PM	0	0	0	0	0	0	0	0	0	0	0	0	0
4/25/2024	11:45 PM	0	0	0	0	0	0	0	0	0	0	0	0	0

Bi-Directional Class Count || NB EB 15min

Columbia, SC

Marr Traffic DATA COLLECTION
www.marrtraffic.com

Site 17
I-26 James F. Byrnes Expy On/Off-Ramp,
south of US-176 Broad River Rd

Date
Tuesday, April 23, 2024

Lat/Long
34.097822°, -81.175099°

Weather
Fair
58°F

Click here for Detailed Weather

Click here for Map

0000 - 2400 (Weekday 24h Session) (04-23-2024)
NB EB 15min

	Northbound (Movement 17.1)													15min	60min
Time	1	2	3	4	5	6	7	8	9	10	11	12	13	Total	Total
0000 - 0015	0	0	0	0	0	0	0	0	0	0	0	0	0	**0**	
0015 - 0030	0	0	0	0	0	0	0	0	0	0	0	0	0	**0**	
0030 - 0045	0	0	0	0	0	0	0	0	0	0	0	0	0	**0**	
0045 - 0100	0	0	0	0	0	0	0	0	0	0	0	0	0	**0**	**0**
0100 - 0115	0	0	0	0	0	0	0	0	0	0	0	0	0	**0**	
0115 - 0130	0	0	0	0	0	0	0	0	0	0	0	0	0	**0**	
0130 - 0145	0	0	0	0	0	0	0	0	0	0	0	0	0	**0**	
0145 - 0200	0	0	0	0	0	0	0	0	0	0	0	0	0	**0**	**0**
0200 - 0215	0	0	0	0	0	0	0	0	0	0	0	0	0	**0**	
0215 - 0230	0	0	0	0	0	0	0	0	0	0	0	0	0	**0**	
0230 - 0245	0	0	0	0	0	0	0	0	0	0	0	0	0	**0**	
0245 - 0300	0	0	0	0	0	0	0	0	0	0	0	0	0	**0**	**0**
0300 - 0315	0	0	0	0	0	0	0	0	0	0	0	0	0	**0**	
0315 - 0330	0	0	0	0	0	0	0	0	0	0	0	0	0	**0**	
0330 - 0345	0	0	0	0	0	0	0	0	0	0	0	0	0	**0**	
0345 - 0400	0	0	0	0	0	0	0	0	0	0	0	0	0	**0**	**0**
0400 - 0415	0	0	0	0	0	0	0	0	0	0	0	0	0	**0**	
0415 - 0430	0	0	0	0	0	0	0	0	0	0	0	0	0	**0**	
0430 - 0445	0	0	0	0	0	0	0	0	0	0	0	0	0	**0**	
0445 - 0500	0	0	0	0	0	0	0	0	0	0	0	0	0	**0**	**0**
0500 - 0515	0	0	0	0	0	0	0	0	0	0	0	0	0	**0**	
0515 - 0530	0	0	0	0	0	0	0	0	0	0	0	0	0	**0**	
0530 - 0545	0	0	0	0	0	0	0	0	0	0	0	0	0	**0**	
0545 - 0600	0	0	0	0	0	0	0	0	0	0	0	0	0	**0**	**0**
0600 - 0615	0	0	0	0	0	0	0	0	0	0	0	0	0	**0**	
0615 - 0630	0	0	0	0	0	0	0	0	0	0	0	0	0	**0**	
0630 - 0645	0	0	0	0	0	0	0	0	0	0	0	0	0	**0**	
0645 - 0700	0	0	0	0	0	0	0	0	0	0	0	0	0	**0**	**0**
0700 - 0715	0	0	0	0	0	0	0	0	0	0	0	0	0	**0**	
0715 - 0730	0	0	0	0	0	0	0	0	0	0	0	0	0	**0**	
0730 - 0745	0	0	0	0	0	0	0	0	0	0	0	0	0	**0**	
0745 - 0800	0	0	0	0	0	0	0	0	0	0	0	0	0	**0**	**0**
0800 - 0815	0	0	0	0	0	0	0	0	0	0	0	0	0	**0**	
0815 - 0830	0	0	0	0	0	0	0	0	0	0	0	0	0	**0**	
0830 - 0845	0	0	0	0	0	0	0	0	0	0	0	0	0	**0**	
0845 - 0900	0	0	0	0	0	0	0	0	0	0	0	0	0	**0**	**0**
0900 - 0915	0	0	0	0	0	0	0	0	0	0	0	0	0	**0**	
0915 - 0930	0	0	0	0	0	0	0	0	0	0	0	0	0	**0**	
0930 - 0945	0	0	0	0	0	0	0	0	0	0	0	0	0	**0**	
0945 - 1000	0	0	0	0	0	0	0	0	0	0	0	0	0	**0**	**0**
1000 - 1015	0	0	0	0	0	0	0	0	0	0	0	0	0	**0**	
1015 - 1030	0	0	0	0	0	0	0	0	0	0	0	0	0	**0**	
1030 - 1045	0	0	0	0	0	0	0	0	0	0	0	0	0	**0**	
1045 - 1100	0	0	0	0	0	0	0	0	0	0	0	0	0	**0**	**0**
1100 - 1115	0	0	0	0	0	0	0	0	0	0	0	0	0	**0**	
1115 - 1130	0	0	0	0	0	0	0	0	0	0	0	0	0	**0**	
1130 - 1145	0	0	0	0	0	0	0	0	0	0	0	0	0	**0**	
1145 - 1200	0	0	0	0	0	0	0	0	0	0	0	0	0	**0**	**0**
1200 - 1215	0	0	0	0	0	0	0	0	0	0	0	0	0	**0**	
1215 - 1230	0	0	0	0	0	0	0	0	0	0	0	0	0	**0**	
1230 - 1245	0	0	0	0	0	0	0	0	0	0	0	0	0	**0**	
1245 - 1300	0	0	0	0	0	0	0	0	0	0	0	0	0	**0**	**0**
1300 - 1315	0	0	0	0	0	0	0	0	0	0	0	0	0	**0**	
1315 - 1330	0	0	0	0	0	0	0	0	0	0	0	0	0	**0**	
1330 - 1345	0	0	0	0	0	0	0	0	0	0	0	0	0	**0**	
1345 - 1400	0	0	0	0	0	0	0	0	0	0	0	0	0	**0**	**0**
1400 - 1415	0	0	0	0	0	0	0	0	0	0	0	0	0	**0**	
1415 - 1430	0	0	0	0	0	0	0	0	0	0	0	0	0	**0**	
1430 - 1445	0	0	0	0	0	0	0	0	0	0	0	0	0	**0**	
1445 - 1500	0	0	0	0	0	0	0	0	0	0	0	0	0	**0**	**0**
1500 - 1515	0	0	0	0	0	0	0	0	0	0	0	0	0	**0**	
1515 - 1530	0	0	0	0	0	0	0	0	0	0	0	0	0	**0**	
1530 - 1545	0	0	0	0	0	0	0	0	0	0	0	0	0	**0**	
1545 - 1600	0	0	0	0	0	0	0	0	0	0	0	0	0	**0**	**0**
1600 - 1615	0	0	0	0	0	0	0	0	0	0	0	0	0	**0**	
1615 - 1630	0	0	0	0	0	0	0	0	0	0	0	0	0	**0**	
1630 - 1645	0	0	0	0	0	0	0	0	0	0	0	0	0	**0**	
1645 - 1700	0	0	0	0	0	0	0	0	0	0	0	0	0	**0**	**0**
1700 - 1715	0	0	0	0	0	0	0	0	0	0	0	0	0	**0**	
1715 - 1730	0	0	0	0	0	0	0	0	0	0	0	0	0	**0**	
1730 - 1745	0	0	0	0	0	0	0	0	0	0	0	0	0	**0**	
1745 - 1800	0	0	0	0	0	0	0	0	0	0	0	0	0	**0**	**0**
1800 - 1815	0	0	0	0	0	0	0	0	0	0	0	0	0	**0**	
1815 - 1830	0	0	0	0	0	0	0	0	0	0	0	0	0	**0**	
1830 - 1845	0	0	0	0	0	0	0	0	0	0	0	0	0	**0**	
1845 - 1900	0	0	0	0	0	0	0	0	0	0	0	0	0	**0**	**0**
1900 - 1915	0	7	3	0	0	0	0	0	0	0	0	0	0	**10**	
1915 - 1930	0	3	1	0	0	0	0	0	0	0	0	0	0	**4**	
1930 - 1945	0	4	0	0	0	0	0	0	0	0	0	0	0	**4**	
1945 - 2000	0	6	2	0	0	0	0	0	0	0	0	0	0	**8**	**26**
2000 - 2015	0	2	1	0	0	0	0	0	0	0	0	0	0	**3**	
2015 - 2030	0	4	2	0	0	0	0	0	0	0	0	0	0	**6**	
2030 - 2045	0	6	0	0	0	0	0	0	0	0	0	0	0	**6**	
2045 - 2100	0	3	0	0	0	0	0	0	0	0	0	0	0	**3**	**18**
2100 - 2115	0	7	0	0	0	0	0	0	0	0	0	0	0	**7**	
2115 - 2130	0	4	0	0	0	0	0	0	1	0	0	0	0	**5**	
2130 - 2145	0	1	0	0	0	0	0	0	1	0	0	0	0	**2**	
2145 - 2200	0	4	0	0	0	0	0	0	0	0	0	0	0	**4**	**18**
2200 - 2215	0	1	0	0	0	0	0	0	0	0	0	0	0	**1**	
2215 - 2230	0	2	0	0	0	0	0	0	0	0	0	0	0	**2**	
2230 - 2245	0	2	0	0	0	0	0	0	0	0	0	0	0	**2**	
2245 - 2300	0	0	0	0	0	0	0	0	0	0	0	0	0	**0**	**5**
2300 - 2315	0	0	0	0	0	0	0	0	0	0	0	0	0	**0**	
2315 - 2330	0	0	0	0	0	0	0	0	0	0	0	0	0	**0**	
2330 - 2345	0	1	1	0	1	0	0	0	0	0	0	0	0	**3**	
2345 - 0000	0	1	0	0	0	0	0	0	0	0	0	0	0	**1**	**4**

Session Total	0	58	10	0	1	0	0	0	2	0	0	0	0	**71**
Session Average	0.00	0.60	0.10	0.00	0.01	0.00	0.00	0.00	0.02	0.00	0.00	0.00	0.00	**0.74**
Session Percentage	0.00	81.69	14.08	0.00	1.41	0.00	0.00	0.00	2.82	0.00	0.00	0.00	0.00	

AM Peak Hour	-	-	-	-	-	-	-	-	-	-	-	-	-	-
AM Peak Volume	0	0	0	0	0	0	0	0	0	0	0	0	0	**0**

Noon Peak Hour	-	-	-	-	-	-	-	-	-	-	-	-	-	-
Noon Peak Volume	0	0	0	0	0	0	0	0	0	0	0	0	0	**0**

PM Peak Hour	-	1900 - 2000	1900 - 2000	-	-	-	-	-	-	-	-	-	-	**1900 - 2000**
PM Peak Volume	0	20	6	0	0	0	0	0	0	0	0	0	0	**26**

Site 17
I-26 James F. Byrnes Expy On/Off-Ramp,
south of US-176 Broad River Rd

Date
Wednesday, April 24, 2024

Lat/Long
34.097822°, -81.175099°

Weather
Fair
66°F

Click here for Detailed Weather

0000 - 2400 (Weekday 24h Session) (04-24-2024)
NB EB 15min

	Northbound (Movement 17.1)														
Time	1	2	3	4	5	6	7	8	9	10	11	12	13	15min Total	60min Total
0000 - 0015	0	1	0	0	0	0	0	0	0	0	0	0	0	**1**	
0015 - 0030	0	0	0	0	0	1	0	0	0	0	0	0	0	**1**	
0030 - 0045	0	1	0	0	0	0	0	0	0	0	0	0	0	**1**	
0045 - 0100	0	1	0	0	0	0	0	0	0	0	0	0	0	**1**	**4**
0100 - 0115	0	0	0	0	0	0	0	0	0	0	0	0	0	**0**	
0115 - 0130	0	0	1	0	0	0	0	0	0	0	0	0	0	**1**	
0130 - 0145	0	1	0	0	0	0	0	0	0	0	0	0	0	**1**	
0145 - 0200	0	1	0	0	0	1	0	0	0	0	0	0	0	**2**	**4**
0200 - 0215	0	1	0	0	0	0	0	0	0	0	0	0	0	**1**	
0215 - 0230	0	1	0	0	0	0	0	0	0	0	0	0	0	**1**	
0230 - 0245	0	4	1	0	0	0	0	0	0	0	0	0	0	**5**	
0245 - 0300	0	2	1	0	0	0	0	0	0	0	0	0	0	**3**	**10**
0300 - 0315	0	1	1	0	0	0	0	0	0	0	0	0	0	**2**	
0315 - 0330	0	1	0	0	0	0	0	0	0	0	0	0	0	**1**	
0330 - 0345	0	1	0	0	0	0	0	0	0	0	0	0	0	**1**	
0345 - 0400	0	1	0	0	0	0	0	0	0	0	0	0	0	**1**	**5**
0400 - 0415	0	0	0	0	0	0	0	0	0	0	0	0	0	**0**	
0415 - 0430	0	1	0	0	0	0	0	0	0	0	0	0	0	**1**	
0430 - 0445	0	0	0	0	0	0	0	0	0	0	0	0	0	**0**	
0445 - 0500	0	1	0	0	0	0	0	0	0	0	0	0	0	**1**	**2**
0500 - 0515	0	1	0	0	0	0	0	0	0	0	0	0	0	**1**	
0515 - 0530	0	0	0	0	0	0	0	0	0	0	0	0	0	**0**	
0530 - 0545	0	2	0	0	0	0	0	0	0	0	0	0	0	**2**	
0545 - 0600	0	6	0	0	0	1	0	0	0	0	0	0	0	**7**	**10**
0600 - 0615	0	2	0	0	0	0	0	0	0	0	0	0	0	**2**	
0615 - 0630	0	1	1	0	0	0	0	0	0	0	0	0	0	**2**	
0630 - 0645	0	6	3	0	1	0	0	0	0	0	0	0	0	**10**	
0645 - 0700	0	7	3	0	0	0	0	0	0	0	0	0	0	**10**	**24**
0700 - 0715	0	10	6	0	0	0	0	0	0	0	0	0	0	**16**	
0715 - 0730	0	11	6	0	0	0	0	0	0	0	0	0	0	**17**	
0730 - 0745	0	18	3	0	0	0	0	0	0	0	0	0	0	**21**	
0745 - 0800	0	22	10	0	0	0	0	1	0	0	0	0	0	**33**	**87**
0800 - 0815	0	19	3	0	0	0	0	0	0	0	0	0	0	**22**	
0815 - 0830	1	11	2	0	0	0	0	0	0	0	0	0	0	**14**	
0830 - 0845	0	15	2	0	0	1	0	0	0	0	0	0	0	**18**	
0845 - 0900	0	4	5	0	0	0	0	0	0	0	0	0	0	**9**	**63**
0900 - 0915	0	11	5	0	0	0	0	0	0	0	0	0	0	**16**	
0915 - 0930	0	13	3	1	0	0	0	0	0	0	0	0	0	**17**	
0930 - 0945	0	14	4	0	0	0	0	0	0	0	0	0	0	**18**	
0945 - 1000	0	16	2	0	0	0	0	0	0	0	0	0	0	**18**	**69**
1000 - 1015	1	5	1	0	1	0	0	0	0	0	0	0	0	**8**	
1015 - 1030	0	6	2	0	1	0	0	0	0	0	0	0	0	**9**	
1030 - 1045	0	3	2	0	0	0	0	0	0	0	0	0	0	**5**	
1045 - 1100	0	2	1	0	0	0	0	0	0	0	0	0	0	**3**	**25**
1100 - 1115	0	2	0	0	0	0	0	0	0	0	0	0	0	**2**	
1115 - 1130	0	2	2	0	0	0	0	0	0	0	0	0	0	**4**	
1130 - 1145	0	0	0	0	0	0	0	0	0	0	0	0	0	**0**	
1145 - 1200	0	6	3	1	0	0	0	0	1	0	0	0	0	**11**	**17**
1200 - 1215	0	7	2	0	1	1	0	0	1	0	0	0	0	**12**	
1215 - 1230	0	6	3	0	1	0	0	0	0	0	0	0	0	**10**	
1230 - 1245	0	3	1	0	0	0	0	0	0	0	0	0	0	**4**	
1245 - 1300	0	5	4	0	0	0	0	0	0	0	0	0	0	**9**	**35**
1300 - 1315	0	4	3	0	0	1	0	0	0	0	0	0	0	**8**	
1315 - 1330	0	11	0	0	0	0	0	0	0	0	0	0	0	**11**	
1330 - 1345	0	12	3	0	0	0	0	2	0	0	0	0	0	**17**	
1345 - 1400	0	7	5	0	0	0	0	0	0	0	0	0	0	**12**	**48**
1400 - 1415	0	5	4	0	1	0	0	0	1	0	0	0	0	**11**	
1415 - 1430	0	4	3	0	1	0	0	0	0	0	0	0	0	**8**	
1430 - 1445	0	4	0	0	1	0	0	0	0	0	0	0	0	**5**	
1445 - 1500	0	6	0	0	0	0	0	0	0	0	0	0	0	**6**	**30**
1500 - 1515	0	6	0	0	0	0	0	0	0	0	0	0	0	**6**	
1515 - 1530	0	9	2	0	2	0	0	0	0	0	0	0	0	**13**	
1530 - 1545	0	15	3	0	0	0	0	0	0	0	0	0	0	**18**	
1545 - 1600	0	15	3	0	0	0	0	0	0	0	0	0	0	**18**	**55**
1600 - 1615	0	14	2	0	1	0	0	0	0	0	0	0	0	**17**	
1615 - 1630	0	14	3	0	0	0	0	0	0	0	0	0	0	**17**	
1630 - 1645	0	13	2	0	1	2	0	0	1	0	0	0	0	**19**	
1645 - 1700	0	13	3	0	0	0	0	0	0	0	0	0	0	**16**	**69**
1700 - 1715	0	10	3	0	0	0	0	0	0	0	0	0	0	**13**	
1715 - 1730	0	11	7	0	0	0	0	0	0	0	0	0	0	**18**	
1730 - 1745	0	8	3	0	2	0	0	0	0	0	0	0	0	**13**	
1745 - 1800	0	13	2	0	0	0	0	0	0	0	0	0	0	**15**	**59**
1800 - 1815	0	15	2	0	1	0	0	0	0	0	0	0	0	**18**	
1815 - 1830	0	8	3	0	0	0	0	0	0	0	0	0	0	**11**	
1830 - 1845	0	16	2	0	0	0	0	0	0	0	0	0	0	**18**	
1845 - 1900	0	10	3	0	0	0	0	0	0	0	0	0	0	**13**	**60**
1900 - 1915	0	8	2	0	0	0	0	0	1	0	0	0	0	**11**	
1915 - 1930	1	8	1	0	0	0	0	0	0	0	0	0	0	**10**	
1930 - 1945	0	1	1	0	0	0	0	0	0	0	0	0	0	**2**	
1945 - 2000	0	3	1	0	0	1	0	0	0	0	0	0	0	**5**	**28**
2000 - 2015	0	2	0	0	0	0	0	0	0	0	0	0	0	**2**	
2015 - 2030	0	5	2	0	0	0	0	0	0	0	0	0	0	**7**	
2030 - 2045	0	6	1	0	0	0	0	0	0	0	0	0	0	**7**	
2045 - 2100	0	3	0	0	0	0	0	0	0	0	0	0	0	**3**	**19**
2100 - 2115	0	5	0	0	0	0	0	0	1	0	0	0	0	**6**	
2115 - 2130	0	2	0	0	0	0	0	0	0	0	0	0	0	**2**	
2130 - 2145	0	1	0	0	0	0	0	0	0	0	0	0	0	**1**	
2145 - 2200	0	3	0	0	0	0	0	0	0	0	0	0	0	**3**	**12**
2200 - 2215	0	1	0	0	0	0	0	0	0	0	0	0	0	**1**	
2215 - 2230	0	1	0	0	0	0	0	0	0	0	0	0	0	**1**	
2230 - 2245	0	3	0	0	0	0	0	0	0	0	0	0	0	**3**	
2245 - 2300	0	3	0	0	0	0	0	0	0	0	0	0	0	**3**	**8**
2300 - 2315	0	1	0	0	0	0	0	0	0	0	0	0	0	**1**	
2315 - 2330	0	0	0	0	0	0	0	0	0	0	0	0	0	**0**	
2330 - 2345	0	1	0	0	0	0	0	0	0	0	0	0	0	**1**	
2345 - 0000	0	0	0	0	0	0	0	0	0	0	0	0	0	**0**	**2**

Session Total	3	555	152	2	15	9	0	3	6	0	0	0	0	**745**
Session Average	0.03	5.78	1.58	0.02	0.16	0.09	0.00	0.03	0.06	0.00	0.00	0.00	0.00	**7.76**
Session Percentage	0.40	74.50	20.40	0.27	2.01	1.21	0.00	0.40	0.81	0.00	0.00	0.00	0.00	

AM Peak Hour	0730 - 0830	0715 - 0815	0700 - 0800	0830 - 0930	0930 - 1030	0500 - 0600	-	0700 - 0800	-	-	-	-	-	**0715 - 0815**
AM Peak Volume	1	70	25	1	2	1	0	1	0	0	0	0	0	**93**

Noon Peak Hour	1000 - 1100	1445 - 1545	1330 - 1430	1100 - 1200	1345 - 1445	1115 - 1215	-	1245 - 1345	1115 - 1215	-	-	-	-	**1315 - 1415**
Noon Peak Volume	1	36	15	1	3	1	0	2	2	0	0	0	0	**51**

PM Peak Hour	1830 - 1930	1530 - 1630	1645 - 1745	-	1515 - 1615	1545 - 1645	-	-	1545 - 1645	-	-	-	-	**1545 - 1645**
PM Peak Volume	1	58	16	0	3	2	0	0	1	0	0	0	0	**71**

Site 17
I-26 James F. Byrnes Expy On/Off-Ramp,
south of US-176 Broad River Rd

Date
Thursday, April 25, 2024

Lat/Long
34.097822°, -81.175099°

Weather
Fair
67°F

Click here for Detailed Weather

0000 - 2400 (Weekday 24h Session) (04-25-2024)
NB EB 15min

	Northbound (Movement 17.1)													15min	60min
TIME	1	2	3	4	5	6	7	8	9	10	11	12	13	Total	Total
0000 - 0015	0	1	0	0	0	0	0	0	0	0	0	0	0	**1**	
0015 - 0030	0	1	0	0	1	0	0	0	0	0	0	0	0	**2**	
0030 - 0045	0	0	0	0	0	0	0	0	0	0	0	0	0	**0**	
0045 - 0100	0	0	0	0	0	0	0	0	0	0	0	0	0	**0**	**3**
0100 - 0115	0	0	0	0	0	0	0	0	0	0	0	0	0	**0**	
0115 - 0130	0	1	0	0	1	0	0	0	0	0	0	0	0	**2**	
0130 - 0145	0	0	0	0	1	0	0	0	0	0	0	0	0	**1**	
0145 - 0200	0	0	0	0	0	0	0	0	0	0	0	0	0	**0**	**3**
0200 - 0215	0	0	0	0	0	0	0	0	0	0	0	0	0	**0**	
0215 - 0230	0	0	0	0	1	0	0	0	0	0	0	0	0	**1**	
0230 - 0245	0	1	0	0	0	0	0	0	0	0	0	0	0	**1**	
0245 - 0300	0	3	0	0	0	0	0	0	0	0	0	0	0	**3**	**5**
0300 - 0315	0	1	0	0	0	0	0	0	0	0	0	0	0	**1**	
0315 - 0330	0	1	0	0	0	0	0	0	0	0	0	0	0	**1**	
0330 - 0345	0	0	0	0	0	0	0	0	1	0	0	0	0	**1**	
0345 - 0400	0	1	0	0	0	0	0	0	0	0	0	0	0	**1**	**4**
0400 - 0415	0	0	0	0	0	0	0	0	0	0	0	0	0	**0**	
0415 - 0430	0	0	0	0	0	0	0	0	0	0	0	0	0	**0**	
0430 - 0445	0	0	0	0	0	0	0	0	0	0	0	0	0	**0**	
0445 - 0500	0	0	0	0	0	0	0	0	0	0	0	0	0	**0**	**0**
0500 - 0515	0	1	0	0	0	0	0	0	0	0	0	0	0	**1**	
0515 - 0530	0	1	0	0	0	0	0	0	0	0	0	0	0	**1**	
0530 - 0545	0	2	0	0	0	0	0	0	0	0	0	0	0	**2**	
0545 - 0600	0	1	0	0	1	0	0	0	0	0	0	0	0	**2**	**6**
0600 - 0615	0	2	0	0	0	0	0	0	0	0	0	0	0	**2**	
0615 - 0630	0	7	0	0	0	0	0	0	0	0	0	0	0	**7**	
0630 - 0645	0	2	0	0	0	0	0	0	0	0	0	0	0	**2**	
0645 - 0700	0	4	3	0	0	0	0	0	0	0	0	0	0	**7**	**18**
0700 - 0715	0	7	6	0	1	0	0	0	0	0	0	0	0	**14**	
0715 - 0730	0	12	3	0	0	0	0	0	0	0	0	0	0	**15**	
0730 - 0745	0	19	8	0	0	0	0	0	1	0	0	0	0	**28**	
0745 - 0800	0	28	6	0	1	1	0	0	0	0	0	0	0	**36**	**93**
0800 - 0815	0	12	5	0	0	0	0	0	0	0	0	0	0	**17**	
0815 - 0830	0	20	4	0	0	0	0	0	0	0	0	0	0	**24**	
0830 - 0845	0	7	4	0	0	0	0	0	0	0	0	0	0	**11**	
0845 - 0900	0	8	4	0	0	0	0	0	1	1	0	0	0	**14**	**66**
0900 - 0915	0	4	4	0	0	0	0	0	1	0	0	0	0	**9**	
0915 - 0930	0	8	8	0	0	0	0	0	1	0	0	0	0	**17**	
0930 - 0945	0	9	4	0	1	0	0	0	0	0	0	0	0	**14**	
0945 - 1000	0	7	4	0	1	0	0	0	0	0	0	0	0	**12**	**52**
1000 - 1015	0	13	5	0	0	2	0	0	0	0	0	0	0	**20**	
1015 - 1030	0	6	6	1	0	0	0	0	0	0	0	0	0	**13**	
1030 - 1045	0	7	6	0	0	2	0	0	0	0	0	0	0	**15**	
1045 - 1100	1	3	2	0	1	0	0	0	0	0	0	0	0	**7**	**55**
1100 - 1115	0	9	4	0	0	0	0	0	0	0	0	0	0	**13**	
1115 - 1130	0	9	0	0	0	2	0	0	0	0	0	0	0	**11**	
1130 - 1145	1	11	2	0	0	0	0	0	1	0	0	0	0	**15**	
1145 - 1200	0	6	3	0	0	0	0	0	0	0	0	0	0	**9**	**48**
1200 - 1215	0	5	4	0	1	0	0	0	0	0	0	0	0	**10**	
1215 - 1230	0	10	5	0	0	0	0	1	0	0	0	0	0	**16**	
1230 - 1245	0	8	3	0	1	0	0	0	0	0	0	0	0	**12**	
1245 - 1300	0	8	3	0	0	0	0	0	0	0	0	0	0	**11**	**49**
1300 - 1315	0	7	2	0	0	1	0	0	0	0	0	0	0	**10**	
1315 - 1330	0	6	2	0	0	0	0	0	0	0	0	0	0	**8**	
1330 - 1345	0	6	3	0	0	1	0	0	0	0	0	0	0	**10**	
1345 - 1400	0	9	3	0	0	1	0	0	0	0	0	0	0	**13**	**41**
1400 - 1415	0	7	4	0	0	0	0	0	0	0	0	0	0	**11**	
1415 - 1430	0	5	0	0	1	0	0	0	0	0	0	0	0	**6**	
1430 - 1445	0	10	3	0	0	0	2	0	0	0	0	0	0	**15**	
1445 - 1500	0	6	1	0	0	1	0	0	0	0	0	0	0	**8**	**40**
1500 - 1515	0	12	2	0	0	1	0	0	1	0	0	0	0	**16**	
1515 - 1530	0	6	4	0	0	0	0	0	0	0	0	0	0	**10**	
1530 - 1545	0	4	3	0	1	0	0	0	0	0	0	0	0	**8**	
1545 - 1600	1	14	2	0	0	0	0	0	0	0	0	0	0	**17**	**51**
1600 - 1615	0	20	4	0	0	2	0	0	0	0	0	0	0	**26**	
1615 - 1630	0	11	2	0	0	1	0	0	0	0	0	0	0	**14**	
1630 - 1645	0	8	4	0	1	0	0	0	0	0	0	0	0	**13**	
1645 - 1700	0	6	2	0	0	0	0	0	0	0	0	0	0	**8**	**61**
1700 - 1715	1	6	5	0	1	0	0	0	0	0	0	0	0	**13**	
1715 - 1730	0	5	5	0	0	0	0	0	0	0	0	0	0	**10**	
1730 - 1745	0	13	1	0	1	1	0	1	0	0	0	0	0	**17**	
1745 - 1800	0	9	2	0	0	0	0	0	0	0	0	0	0	**11**	**51**
1800 - 1815	0	14	5	0	0	0	0	1	0	0	0	0	0	**20**	
1815 - 1830	0	9	2	0	1	0	0	0	0	0	0	0	0	**12**	
1830 - 1845	0	9	6	0	0	0	0	1	0	0	0	0	0	**16**	
1845 - 1900	0	3	0	0	0	0	0	0	0	0	0	0	0	**3**	**51**
1900 - 1915	0	0	0	0	0	0	0	0	0	0	0	0	0	**0**	
1915 - 1930	0	0	0	0	0	0	0	0	0	0	0	0	0	**0**	
1930 - 1945	0	0	0	0	0	0	0	0	0	0	0	0	0	**0**	
1945 - 2000	0	0	0	0	0	0	0	0	0	0	0	0	0	**0**	**0**
2000 - 2015	0	0	0	0	0	0	0	0	0	0	0	0	0	**0**	
2015 - 2030	0	0	0	0	0	0	0	0	0	0	0	0	0	**0**	
2030 - 2045	0	0	0	0	0	0	0	0	0	0	0	0	0	**0**	
2045 - 2100	0	0	0	0	0	0	0	0	0	0	0	0	0	**0**	**0**
2100 - 2115	0	0	0	0	0	0	0	0	0	0	0	0	0	**0**	
2115 - 2130	0	0	0	0	0	0	0	0	0	0	0	0	0	**0**	
2130 - 2145	0	0	0	0	0	0	0	0	0	0	0	0	0	**0**	
2145 - 2200	0	0	0	0	0	0	0	0	0	0	0	0	0	**0**	**0**
2200 - 2215	0	0	0	0	0	0	0	0	0	0	0	0	0	**0**	
2215 - 2230	0	0	0	0	0	0	0	0	0	0	0	0	0	**0**	
2230 - 2245	0	0	0	0	0	0	0	0	0	0	0	0	0	**0**	
2245 - 2300	0	0	0	0	0	0	0	0	0	0	0	0	0	**0**	**0**
2300 - 2315	0	0	0	0	0	0	0	0	0	0	0	0	0	**0**	
2315 - 2330	0	0	0	0	0	0	0	0	0	0	0	0	0	**0**	
2330 - 2345	0	0	0	0	0	0	0	0	0	0	0	0	0	**0**	
2345 - 0000	0	0	0	0	0	0	0	0	0	0	0	0	0	**0**	**0**

Session Total	4	471	173	1	18	16	2	4	7	1	0	0	0	**697**
Session Average	0.04	4.91	1.80	0.01	0.19	0.17	0.02	0.04	0.07	0.01	0.00	0.00	0.00	**7.26**
Session Percentage	0.57	67.58	24.82	0.14	2.58	2.30	0.29	0.57	1.00	0.14	0.00	0.00	0.00	

AM Peak Hour	-	0730 - 0830	0700 - 0800	0930 - 1030	0700 - 0800	0945 - 1045	-	-	0830 - 0930	0800 - 0900	-	-	-	**0730 - 0830**
AM Peak Hour Volume	0	79	23	1	2	4	0	0	3	1	0	0	0	**105**

Noon Peak Hour	1045 - 1145	1100 - 1200	1000 - 1100	1000 - 1100	1145 - 1245	1000 - 1100	1345 - 1445	1130 - 1230	1045 - 1145	-	-	-	-	**1000 - 1100**
Noon Peak Hour Volume	2	35	19	1	2	4	2	1	1	0	0	0	0	**55**

PM Peak Hour	1500 - 1600	1545 - 1645	1630 - 1730	-	1615 - 1715	1530 - 1630	-	1715 - 1815	1500 - 1600	-	-	-	-	**1545 - 1645**
PM Peak Hour Volume	1	53	16	0	2	3	0	2	1	0	0	0	0	**70**

Bi-Directional Class Count || NB EB Average 15min

Columbia, SC

Marr Traffic DATA COLLECTION
www.marrtraffic.com

Site 17
I-26 James F. Byrnes Expy On/Off-Ramp,
south of US-176 Broad River Rd

Date
Tuesday, April 23, 2024

Lat/Long
34.097822°, -81.175099°

Weather
Fair
58°F

0000 - 2400 (Weekday 24h Session) (All Dates)
NB EB Average 15min

	NB EB Average 15min													15min	60min
Time	1	2	3	4	5	6	7	8	9	10	11	12	13	Total	Total
0000 - 0015	0	1	0	0	0	0	0	0	0	0	0	0	0	**1**	
0015 - 0030	0	0	0	0	0	0	0	0	0	0	0	0	0	**1**	
0030 - 0045	0	0	0	0	0	0	0	0	0	0	0	0	0	**0**	
0045 - 0100	0	0	0	0	0	0	0	0	0	0	0	0	0	**0**	**2**
0100 - 0115	0	0	0	0	0	0	0	0	0	0	0	0	0	**0**	
0115 - 0130	0	0	0	0	0	0	0	0	0	0	0	0	0	**1**	
0130 - 0145	0	0	0	0	0	0	0	0	0	0	0	0	0	**1**	
0145 - 0200	0	0	0	0	0	0	0	0	0	0	0	0	0	**1**	**2**
0200 - 0215	0	0	0	0	0	0	0	0	0	0	0	0	0	**0**	
0215 - 0230	0	0	0	0	0	0	0	0	0	0	0	0	0	**1**	
0230 - 0245	0	2	0	0	0	0	0	0	0	0	0	0	0	**2**	
0245 - 0300	0	2	0	0	0	0	0	0	0	0	0	0	0	**2**	**5**
0300 - 0315	0	1	0	0	0	0	0	0	0	0	0	0	0	**1**	
0315 - 0330	0	1	0	0	0	0	0	0	0	0	0	0	0	**1**	
0330 - 0345	0	0	0	0	0	0	0	0	0	0	0	0	0	**1**	
0345 - 0400	0	1	0	0	0	0	0	0	0	0	0	0	0	**1**	**3**
0400 - 0415	0	0	0	0	0	0	0	0	0	0	0	0	0	**0**	
0415 - 0430	0	0	0	0	0	0	0	0	0	0	0	0	0	**0**	
0430 - 0445	0	0	0	0	0	0	0	0	0	0	0	0	0	**0**	
0445 - 0500	0	0	0	0	0	0	0	0	0	0	0	0	0	**0**	**1**
0500 - 0515	0	1	0	0	0	0	0	0	0	0	0	0	0	**1**	
0515 - 0530	0	0	0	0	0	0	0	0	0	0	0	0	0	**0**	
0530 - 0545	0	1	0	0	0	0	0	0	0	0	0	0	0	**1**	
0545 - 0600	0	2	0	0	0	0	0	0	0	0	0	0	0	**3**	**5**
0600 - 0615	0	1	0	0	0	0	0	0	0	0	0	0	0	**1**	
0615 - 0630	0	3	0	0	0	0	0	0	0	0	0	0	0	**3**	
0630 - 0645	0	3	1	0	0	0	0	0	0	0	0	0	0	**4**	
0645 - 0700	0	4	2	0	0	0	0	0	0	0	0	0	0	**6**	**14**
0700 - 0715	0	6	4	0	0	0	0	0	0	0	0	0	0	**10**	
0715 - 0730	0	8	3	0	0	0	0	0	0	0	0	0	0	**11**	
0730 - 0745	0	12	4	0	0	0	0	0	0	0	0	0	0	**16**	
0745 - 0800	0	17	5	0	0	0	0	0	0	0	0	0	0	**23**	**60**
0800 - 0815	0	10	3	0	0	0	0	0	0	0	0	0	0	**13**	
0815 - 0830	0	10	2	0	0	0	0	0	0	0	0	0	0	**13**	
0830 - 0845	0	7	2	0	0	0	0	0	0	0	0	0	0	**10**	
0845 - 0900	0	4	3	0	0	0	0	0	0	0	0	0	0	**8**	**43**
0900 - 0915	0	5	3	0	0	0	0	0	0	0	0	0	0	**8**	
0915 - 0930	0	7	4	0	0	0	0	0	0	0	0	0	0	**11**	
0930 - 0945	0	8	3	0	0	0	0	0	0	0	0	0	0	**11**	
0945 - 1000	0	8	2	0	0	0	0	0	0	0	0	0	0	**10**	**40**
1000 - 1015	0	6	2	0	0	1	0	0	0	0	0	0	0	**9**	
1015 - 1030	0	4	3	0	0	0	0	0	0	0	0	0	0	**7**	
1030 - 1045	0	3	3	0	0	1	0	0	0	0	0	0	0	**7**	
1045 - 1100	0	2	1	0	0	0	0	0	0	0	0	0	0	**3**	**27**
1100 - 1115	0	4	1	0	0	0	0	0	0	0	0	0	0	**5**	
1115 - 1130	0	4	1	0	0	1	0	0	0	0	0	0	0	**5**	
1130 - 1145	0	4	1	0	0	0	0	0	0	0	0	0	0	**5**	
1145 - 1200	0	4	2	0	0	0	0	0	0	0	0	0	0	**7**	**22**
1200 - 1215	0	4	2	0	1	0	0	0	0	0	0	0	0	**7**	
1215 - 1230	0	5	3	0	0	0	0	0	0	0	0	0	0	**9**	
1230 - 1245	0	4	1	0	0	0	0	0	0	0	0	0	0	**5**	
1245 - 1300	0	4	2	0	0	0	0	0	0	0	0	0	0	**7**	**28**
1300 - 1315	0	4	2	0	0	1	0	0	0	0	0	0	0	**6**	
1315 - 1330	0	6	1	0	0	0	0	0	0	0	0	0	0	**6**	
1330 - 1345	0	6	2	0	0	0	0	1	0	0	0	0	0	**9**	
1345 - 1400	0	5	3	0	0	0	0	0	0	0	0	0	0	**8**	**30**
1400 - 1415	0	4	3	0	0	0	0	0	0	0	0	0	0	**7**	
1415 - 1430	0	3	1	0	1	0	0	0	0	0	0	0	0	**5**	
1430 - 1445	0	5	1	0	0	0	1	0	0	0	0	0	0	**7**	
1445 - 1500	0	4	0	0	0	0	0	0	0	0	0	0	0	**5**	**23**
1500 - 1515	0	6	1	0	0	0	0	0	0	0	0	0	0	**7**	
1515 - 1530	0	5	2	0	1	0	0	0	0	0	0	0	0	**8**	
1530 - 1545	0	6	2	0	0	0	0	0	0	0	0	0	0	**9**	
1545 - 1600	0	10	2	0	0	0	0	0	0	0	0	0	0	**12**	**35**
1600 - 1615	0	11	2	0	0	1	0	0	0	0	0	0	0	**14**	
1615 - 1630	0	8	2	0	0	0	0	0	0	0	0	0	0	**10**	
1630 - 1645	0	7	2	0	1	1	0	0	0	0	0	0	0	**11**	
1645 - 1700	0	6	2	0	0	0	0	0	0	0	0	0	0	**8**	**43**
1700 - 1715	0	5	3	0	0	0	0	0	0	0	0	0	0	**9**	
1715 - 1730	0	5	4	0	0	0	0	0	0	0	0	0	0	**9**	
1730 - 1745	0	7	1	0	1	0	0	0	0	0	0	0	0	**10**	
1745 - 1800	0	7	1	0	0	0	0	0	0	0	0	0	0	**9**	**37**
1800 - 1815	0	10	2	0	0	0	0	0	0	0	0	0	0	**13**	
1815 - 1830	0	6	2	0	0	0	0	0	0	0	0	0	0	**8**	
1830 - 1845	0	8	3	0	0	0	0	0	0	0	0	0	0	**11**	
1845 - 1900	0	4	1	0	0	0	0	0	0	0	0	0	0	**5**	**37**
1900 - 1915	0	5	2	0	0	0	0	0	0	0	0	0	0	**7**	
1915 - 1930	0	4	1	0	0	0	0	0	0	0	0	0	0	**5**	
1930 - 1945	0	2	0	0	0	0	0	0	0	0	0	0	0	**2**	
1945 - 2000	0	3	1	0	0	0	0	0	0	0	0	0	0	**4**	**18**
2000 - 2015	0	1	0	0	0	0	0	0	0	0	0	0	0	**2**	
2015 - 2030	0	3	1	0	0	0	0	0	0	0	0	0	0	**4**	
2030 - 2045	0	4	0	0	0	0	0	0	0	0	0	0	0	**4**	
2045 - 2100	0	2	0	0	0	0	0	0	0	0	0	0	0	**2**	**12**
2100 - 2115	0	4	0	0	0	0	0	0	0	0	0	0	0	**4**	
2115 - 2130	0	2	0	0	0	0	0	0	0	0	0	0	0	**2**	
2130 - 2145	0	1	0	0	0	0	0	0	0	0	0	0	0	**1**	
2145 - 2200	0	2	0	0	0	0	0	0	0	0	0	0	0	**2**	**10**
2200 - 2215	0	1	0	0	0	0	0	0	0	0	0	0	0	**1**	
2215 - 2230	0	1	0	0	0	0	0	0	0	0	0	0	0	**1**	
2230 - 2245	0	2	0	0	0	0	0	0	0	0	0	0	0	**2**	
2245 - 2300	0	1	0	0	0	0	0	0	0	0	0	0	0	**1**	**4**
2300 - 2315	0	0	0	0	0	0	0	0	0	0	0	0	0	**0**	
2315 - 2330	0	0	0	0	0	0	0	0	0	0	0	0	0	**0**	
2330 - 2345	0	1	0	0	0	0	0	0	0	0	0	0	0	**1**	
2345 - 0000	0	0	0	0	0	0	0	0	0	0	0	0	0	**0**	**2**

Session Total	2	361	112	1	11	8	1	2	5	0	0	0	0	**504**
Session Average	0.02	3.76	1.16	0.01	0.12	0.09	0.01	0.02	0.05	0.00	0.00	0.00	0.00	**5.25**
Session Percentage	0.46	71.65	22.14	0.20	2.25	1.65	0.13	0.46	0.99	0.07	0.00	0.00	0.00	

AM Peak Hour	0730 - 0830	0730 - 0830	0700 - 0800	0830 - 0930	0930 - 1030	0945 - 1045	-	0700 - 0800	0830 - 0930	0800 - 0900	-	-	-	**0730 - 0830**
AM Peak Volume	0	50	16	0	1	1	0	0	1	0	0	0	0	**65**

Noon Peak Hour	1000 - 1100	1445 - 1545	1000 - 1100	1000 - 1100	1145 - 1245	1000 - 1100	1345 - 1445	1245 - 1345	1115 - 1215	-	-	-	-	**1315 - 1415**
Noon Peak Volume	1	21	8	0	1	1	1	1	1	0	0	0	0	**31**

PM Peak Hour	1500 - 1600	1545 - 1645	1630 - 1730	-	1730 - 1830	1545 - 1645	-	1715 - 1815	1500 - 1600	-	-	-	-	**1545 - 1645**
PM Peak Volume	0	36	10	0	2	2	0	1	0	0	0	0	0	**47**

Bi-Directional Class Count || Volume Summary 15min

Columbia, SC

Marr Traffic DATA COLLECTION

www.marrtraffic.com

Site 17

I-26 James F. Byrnes Expy On/Off-Ramp,
south of US-176 Broad River Rd

Date

Tuesday, April 23, 2024

Lat/Long

34.097822°, -81.175099°

Weather

Fair
58°F

Click here for Detailed Weather

0000 - 2400 (Weekday 24h Session) (04-23-2024)

Volume Summary 15min

TIME	Volume Summary 15min NB	Volume Summary 15min SB	15min Total	60min Total
0000 - 0015	0	0	**0**	
0015 - 0030	0	0	**0**	
0030 - 0045	0	0	**0**	
0045 - 0100	0	0	**0**	**0**
0100 - 0115	0	0	**0**	
0115 - 0130	0	0	**0**	
0130 - 0145	0	0	**0**	
0145 - 0200	0	0	**0**	**0**
0200 - 0215	0	0	**0**	
0215 - 0230	0	0	**0**	
0230 - 0245	0	0	**0**	
0245 - 0300	0	0	**0**	**0**
0300 - 0315	0	0	**0**	
0315 - 0330	0	0	**0**	
0330 - 0345	0	0	**0**	
0345 - 0400	0	0	**0**	**0**
0400 - 0415	0	0	**0**	
0415 - 0430	0	0	**0**	
0430 - 0445	0	0	**0**	
0445 - 0500	0	0	**0**	**0**
0500 - 0515	0	0	**0**	
0515 - 0530	0	0	**0**	
0530 - 0545	0	0	**0**	
0545 - 0600	0	0	**0**	**0**
0600 - 0615	0	0	**0**	
0615 - 0630	0	0	**0**	
0630 - 0645	0	0	**0**	
0645 - 0700	0	0	**0**	**0**
0700 - 0715	0	0	**0**	
0715 - 0730	0	0	**0**	
0730 - 0745	0	0	**0**	
0745 - 0800	0	0	**0**	**0**
0800 - 0815	0	0	**0**	
0815 - 0830	0	0	**0**	
0830 - 0845	0	0	**0**	
0845 - 0900	0	0	**0**	**0**
0900 - 0915	0	0	**0**	
0915 - 0930	0	0	**0**	
0930 - 0945	0	0	**0**	
0945 - 1000	0	0	**0**	**0**
1000 - 1015	0	0	**0**	
1015 - 1030	0	0	**0**	
1030 - 1045	0	0	**0**	
1045 - 1100	0	0	**0**	**0**
1100 - 1115	0	0	**0**	
1115 - 1130	0	0	**0**	
1130 - 1145	0	0	**0**	
1145 - 1200	0	0	**0**	**0**

Time	Volume Summary 15min NB	Volume Summary 15min SB	15min Total	60min Total
1200 - 1215	0	0	**0**	
1215 - 1230	0	0	**0**	
1230 - 1245	0	0	**0**	
1245 - 1300	0	0	**0**	**0**
1300 - 1315	0	0	**0**	
1315 - 1330	0	0	**0**	
1330 - 1345	0	0	**0**	
1345 - 1400	0	0	**0**	**0**
1400 - 1415	0	0	**0**	
1415 - 1430	0	0	**0**	
1430 - 1445	0	0	**0**	
1445 - 1500	0	0	**0**	**0**
1500 - 1515	0	0	**0**	
1515 - 1530	0	0	**0**	
1530 - 1545	0	0	**0**	
1545 - 1600	0	0	**0**	**0**
1600 - 1615	0	0	**0**	
1615 - 1630	0	0	**0**	
1630 - 1645	0	0	**0**	
1645 - 1700	0	0	**0**	**0**
1700 - 1715	0	0	**0**	
1715 - 1730	0	0	**0**	
1730 - 1745	0	0	**0**	
1745 - 1800	0	0	**0**	**0**
1800 - 1815	0	0	**0**	
1815 - 1830	0	0	**0**	
1830 - 1845	0	0	**0**	
1845 - 1900	0	0	**0**	**0**
1900 - 1915	10	0	**10**	
1915 - 1930	4	0	**4**	
1930 - 1945	4	0	**4**	
1945 - 2000	8	0	**8**	**26**
2000 - 2015	3	0	**3**	
2015 - 2030	6	0	**6**	
2030 - 2045	6	0	**6**	
2045 - 2100	3	0	**3**	**18**
2100 - 2115	7	0	**7**	
2115 - 2130	5	0	**5**	
2130 - 2145	2	0	**2**	
2145 - 2200	4	0	**4**	**18**
2200 - 2215	1	0	**1**	
2215 - 2230	2	0	**2**	
2230 - 2245	2	0	**2**	
2245 - 2300	0	0	**0**	**5**
2300 - 2315	0	0	**0**	
2315 - 2330	0	0	**0**	
2330 - 2345	3	0	**3**	
2345 - 0000	1	0	**1**	**4**

Session Total	71	0	**71**
Session Average	0.74	0.00	**0.74**
Session Percentage	100.00	0.00	

Site 17

I-26 James F. Byrnes Expy On/Off-Ramp,
south of US-176 Broad River Rd

Date

Wednesday, April 24, 2024

Lat/Long

34.097822°, -81.175099°

Weather

Fair
66°F

Click here for Detailed Weather

0000 - 2400 (Weekday 24h Session) (04-24-2024)

Volume Summary 15min

TIME	Volume Summary 15min NB	SB	15min Total	60min Total
0000 - 0015	1	0	**1**	
0015 - 0030	1	0	**1**	
0030 - 0045	1	0	**1**	
0045 - 0100	1	0	**1**	**4**
0100 - 0115	0	0	**0**	
0115 - 0130	1	0	**1**	
0130 - 0145	1	0	**1**	
0145 - 0200	2	0	**2**	**4**
0200 - 0215	1	0	**1**	
0215 - 0230	1	0	**1**	
0230 - 0245	5	0	**5**	
0245 - 0300	3	0	**3**	**10**
0300 - 0315	2	0	**2**	
0315 - 0330	1	0	**1**	
0330 - 0345	1	0	**1**	
0345 - 0400	1	0	**1**	**5**
0400 - 0415	0	0	**0**	
0415 - 0430	1	0	**1**	
0430 - 0445	0	0	**0**	
0445 - 0500	1	0	**1**	**2**
0500 - 0515	1	0	**1**	
0515 - 0530	0	0	**0**	
0530 - 0545	2	0	**2**	
0545 - 0600	7	0	**7**	**10**
0600 - 0615	2	0	**2**	
0615 - 0630	2	0	**2**	
0630 - 0645	10	0	**10**	
0645 - 0700	10	0	**10**	**24**
0700 - 0715	16	0	**16**	
0715 - 0730	17	0	**17**	
0730 - 0745	21	0	**21**	
0745 - 0800	33	0	**33**	**87**
0800 - 0815	22	0	**22**	
0815 - 0830	14	0	**14**	
0830 - 0845	18	0	**18**	
0845 - 0900	9	0	**9**	**63**
0900 - 0915	16	0	**16**	
0915 - 0930	17	0	**17**	
0930 - 0945	18	0	**18**	
0945 - 1000	18	0	**18**	**69**
1000 - 1015	8	0	**8**	
1015 - 1030	9	0	**9**	
1030 - 1045	5	0	**5**	
1045 - 1100	3	0	**3**	**25**
1100 - 1115	2	0	**2**	
1115 - 1130	4	0	**4**	
1130 - 1145	0	0	**0**	
1145 - 1200	11	0	**11**	**17**

Time	Volume Summary 15min NB	SB	15min Total	60min Total
1200 - 1215	12	0	**12**	
1215 - 1230	10	0	**10**	
1230 - 1245	4	0	**4**	
1245 - 1300	9	0	**9**	**35**
1300 - 1315	8	0	**8**	
1315 - 1330	11	0	**11**	
1330 - 1345	17	0	**17**	
1345 - 1400	12	0	**12**	**48**
1400 - 1415	11	0	**11**	
1415 - 1430	8	0	**8**	
1430 - 1445	5	0	**5**	
1445 - 1500	6	0	**6**	**30**
1500 - 1515	6	0	**6**	
1515 - 1530	13	0	**13**	
1530 - 1545	18	0	**18**	
1545 - 1600	18	0	**18**	**55**
1600 - 1615	17	0	**17**	
1615 - 1630	17	0	**17**	
1630 - 1645	19	0	**19**	
1645 - 1700	16	0	**16**	**69**
1700 - 1715	13	0	**13**	
1715 - 1730	18	0	**18**	
1730 - 1745	13	0	**13**	
1745 - 1800	15	0	**15**	**59**
1800 - 1815	18	0	**18**	
1815 - 1830	11	0	**11**	
1830 - 1845	18	0	**18**	
1845 - 1900	13	0	**13**	**60**
1900 - 1915	11	0	**11**	
1915 - 1930	10	0	**10**	
1930 - 1945	2	0	**2**	
1945 - 2000	5	0	**5**	**28**
2000 - 2015	2	0	**2**	
2015 - 2030	7	0	**7**	
2030 - 2045	7	0	**7**	
2045 - 2100	3	0	**3**	**19**
2100 - 2115	6	0	**6**	
2115 - 2130	2	0	**2**	
2130 - 2145	1	0	**1**	
2145 - 2200	3	0	**3**	**12**
2200 - 2215	1	0	**1**	
2215 - 2230	1	0	**1**	
2230 - 2245	3	0	**3**	
2245 - 2300	3	0	**3**	**8**
2300 - 2315	1	0	**1**	
2315 - 2330	0	0	**0**	
2330 - 2345	1	0	**1**	
2345 - 0000	0	0	**0**	**2**

Session Total	745	0	**745**
Session Average	7.76	0.00	**7.76**
Session Percentage	100.00	0.00	

Site 17

I-26 James F. Byrnes Expy On/Off-Ramp,
south of US-176 Broad River Rd

Date

Thursday, April 25, 2024

Lat/Long

34.097822°, -81.175099°

Weather

Fair
67°F

Click here for Detailed Weather

0000 - 2400 (Weekday 24h Session) (04-25-2024)

Volume Summary 15min

TIME	Volume Summary 15min NB	SB	15min Total	60min Total
0000 - 0015	1	0	**1**	
0015 - 0030	2	0	**2**	
0030 - 0045	0	0	**0**	
0045 - 0100	0	0	**0**	**3**
0100 - 0115	0	0	**0**	
0115 - 0130	2	0	**2**	
0130 - 0145	1	0	**1**	
0145 - 0200	0	0	**0**	**3**
0200 - 0215	0	0	**0**	
0215 - 0230	1	0	**1**	
0230 - 0245	1	0	**1**	
0245 - 0300	3	0	**3**	**5**
0300 - 0315	1	0	**1**	
0315 - 0330	1	0	**1**	
0330 - 0345	1	0	**1**	
0345 - 0400	1	0	**1**	**4**
0400 - 0415	0	0	**0**	
0415 - 0430	0	0	**0**	
0430 - 0445	0	0	**0**	
0445 - 0500	0	0	**0**	**0**
0500 - 0515	1	0	**1**	
0515 - 0530	1	0	**1**	
0530 - 0545	2	0	**2**	
0545 - 0600	2	0	**2**	**6**
0600 - 0615	2	0	**2**	
0615 - 0630	7	0	**7**	
0630 - 0645	2	0	**2**	
0645 - 0700	7	0	**7**	**18**
0700 - 0715	14	0	**14**	
0715 - 0730	15	0	**15**	
0730 - 0745	28	0	**28**	
0745 - 0800	36	0	**36**	**93**
0800 - 0815	17	0	**17**	
0815 - 0830	24	0	**24**	
0830 - 0845	11	0	**11**	
0845 - 0900	14	0	**14**	**66**
0900 - 0915	9	0	**9**	
0915 - 0930	17	0	**17**	
0930 - 0945	14	0	**14**	
0945 - 1000	12	0	**12**	**52**
1000 - 1015	20	0	**20**	
1015 - 1030	13	0	**13**	
1030 - 1045	15	0	**15**	
1045 - 1100	7	0	**7**	**55**
1100 - 1115	13	0	**13**	
1115 - 1130	11	0	**11**	
1130 - 1145	15	0	**15**	
1145 - 1200	9	0	**9**	**48**

Time	Volume Summary 15min NB	SB	15min Total	60min Total
1200 - 1215	10	0	**10**	
1215 - 1230	16	0	**16**	
1230 - 1245	12	0	**12**	
1245 - 1300	11	0	**11**	**49**
1300 - 1315	10	0	**10**	
1315 - 1330	8	0	**8**	
1330 - 1345	10	0	**10**	
1345 - 1400	13	0	**13**	**41**
1400 - 1415	11	0	**11**	
1415 - 1430	6	0	**6**	
1430 - 1445	15	0	**15**	
1445 - 1500	8	0	**8**	**40**
1500 - 1515	16	0	**16**	
1515 - 1530	10	0	**10**	
1530 - 1545	8	0	**8**	
1545 - 1600	17	0	**17**	**51**
1600 - 1615	26	0	**26**	
1615 - 1630	14	0	**14**	
1630 - 1645	13	0	**13**	
1645 - 1700	8	0	**8**	**61**
1700 - 1715	13	0	**13**	
1715 - 1730	10	0	**10**	
1730 - 1745	17	0	**17**	
1745 - 1800	11	0	**11**	**51**
1800 - 1815	20	0	**20**	
1815 - 1830	12	0	**12**	
1830 - 1845	16	0	**16**	
1845 - 1900	3	0	**3**	**51**
1900 - 1915	0	0	**0**	
1915 - 1930	0	0	**0**	
1930 - 1945	0	0	**0**	
1945 - 2000	0	0	**0**	**0**
2000 - 2015	0	0	**0**	
2015 - 2030	0	0	**0**	
2030 - 2045	0	0	**0**	
2045 - 2100	0	0	**0**	**0**
2100 - 2115	0	0	**0**	
2115 - 2130	0	0	**0**	
2130 - 2145	0	0	**0**	
2145 - 2200	0	0	**0**	**0**
2200 - 2215	0	0	**0**	
2215 - 2230	0	0	**0**	
2230 - 2245	0	0	**0**	
2245 - 2300	0	0	**0**	**0**
2300 - 2315	0	0	**0**	
2315 - 2330	0	0	**0**	
2330 - 2345	0	0	**0**	
2345 - 0000	0	0	**0**	**0**

Session Total	697	0	**697**
Session Average	7.26	0.00	**7.26**
Session Percentage	100.00	0.00	

Bi-Directional Class Count || NB EB 60min

Columbia, SC

Marr Traffic DATA COLLECTION

www.marrtraffic.com

Site 17
I-26 James F. Byrnes Expy On/Off-Ramp,
south of US-176 Broad River Rd

Date
Tuesday, April 23, 2024

Lat/Long
34.097822°, -81.175099°

Weather
Fair
58°F

Click here for Detailed Weather

0000 - 2400 (Weekday 24h Session) (04-23-2024)
NB EB 60min

	Northbound (Movement 17.1)													
TIME	1	2	3	4	5	6	7	8	9	10	11	12	13	**Total**
0000 - 0100	0	0	0	0	0	0	0	0	0	0	0	0	0	**0**
0100 - 0200	0	0	0	0	0	0	0	0	0	0	0	0	0	**0**
0200 - 0300	0	0	0	0	0	0	0	0	0	0	0	0	0	**0**
0300 - 0400	0	0	0	0	0	0	0	0	0	0	0	0	0	**0**
0400 - 0500	0	0	0	0	0	0	0	0	0	0	0	0	0	**0**
0500 - 0600	0	0	0	0	0	0	0	0	0	0	0	0	0	**0**
0600 - 0700	0	0	0	0	0	0	0	0	0	0	0	0	0	**0**
0700 - 0800	0	0	0	0	0	0	0	0	0	0	0	0	0	**0**
0800 - 0900	0	0	0	0	0	0	0	0	0	0	0	0	0	**0**
0900 - 1000	0	0	0	0	0	0	0	0	0	0	0	0	0	**0**
1000 - 1100	0	0	0	0	0	0	0	0	0	0	0	0	0	**0**
1100 - 1200	0	0	0	0	0	0	0	0	0	0	0	0	0	**0**
1200 - 1300	0	0	0	0	0	0	0	0	0	0	0	0	0	**0**
1300 - 1400	0	0	0	0	0	0	0	0	0	0	0	0	0	**0**
1400 - 1500	0	0	0	0	0	0	0	0	0	0	0	0	0	**0**
1500 - 1600	0	0	0	0	0	0	0	0	0	0	0	0	0	**0**
1600 - 1700	0	0	0	0	0	0	0	0	0	0	0	0	0	**0**
1700 - 1800	0	0	0	0	0	0	0	0	0	0	0	0	0	**0**
1800 - 1900	0	0	0	0	0	0	0	0	0	0	0	0	0	**0**
1900 - 2000	0	20	6	0	0	0	0	0	0	0	0	0	0	**26**
2000 - 2100	0	15	3	0	0	0	0	0	0	0	0	0	0	**18**
2100 - 2200	0	16	0	0	0	0	0	0	2	0	0	0	0	**18**
2200 - 2300	0	5	0	0	0	0	0	0	0	0	0	0	0	**5**
2300 - 2400	0	2	1	0	1	0	0	0	0	0	0	0	0	**4**
Session Total	0	58	10	0	1	0	0	0	2	0	0	0	0	**71**
Session Average	0.00	2.42	0.42	0.00	0.04	0.00	0.00	0.00	0.08	0.00	0.00	0.00	0.00	**2.96**
Session Percentage	0.00	81.69	14.08	0.00	1.41	0.00	0.00	0.00	2.82	0.00	0.00	0.00	0.00	
AM Peak Hour	-	-	-	-	-	-	-	-	-	-	-	-	-	**-**
AM Peak Volume	0	0	0	0	0	0	0	0	0	0	0	0	0	**0**
Noon Peak Hour	-	-	-	-	-	-	-	-	-	-	-	-	-	**-**
Noon Peak Volume	0	0	0	0	0	0	0	0	0	0	0	0	0	**0**
PM Peak Hour	-	1900 - 2000	1900 - 2000	-	-	-	-	-	-	-	-	-	-	**1900 - 2000**
PM Peak Volume	0	20	6	0	0	0	0	0	0	0	0	0	0	**26**

Site 17
I-26 James F. Byrnes Expy On/Off-Ramp,
south of US-176 Broad River Rd

Date
Wednesday, April 24, 2024

Lat/Long
34.097822°, -81.175099°

Weather
Fair
66°F

Click here for Detailed Weather

0000 - 2400 (Weekday 24h Session) (04-24-2024)
NB EB 60min

	Northbound (Movement 17.1)													
TIME	1	2	3	4	5	6	7	8	9	10	11	12	13	**Total**
0000 - 0100	0	3	0	0	0	1	0	0	0	0	0	0	0	**4**
0100 - 0200	0	2	1	0	0	1	0	0	0	0	0	0	0	**4**
0200 - 0300	0	8	2	0	0	0	0	0	0	0	0	0	0	**10**
0300 - 0400	0	4	1	0	0	0	0	0	0	0	0	0	0	**5**
0400 - 0500	0	2	0	0	0	0	0	0	0	0	0	0	0	**2**
0500 - 0600	0	9	0	0	0	1	0	0	0	0	0	0	0	**10**
0600 - 0700	0	16	7	0	1	0	0	0	0	0	0	0	0	**24**
0700 - 0800	0	61	25	0	0	0	0	1	0	0	0	0	0	**87**
0800 - 0900	1	49	12	0	0	1	0	0	0	0	0	0	0	**63**
0900 - 1000	0	54	14	1	0	0	0	0	0	0	0	0	0	**69**
1000 - 1100	1	16	6	0	2	0	0	0	0	0	0	0	0	**25**
1100 - 1200	0	10	5	1	0	0	0	0	1	0	0	0	0	**17**
1200 - 1300	0	21	10	0	2	1	0	0	1	0	0	0	0	**35**
1300 - 1400	0	34	11	0	0	1	0	2	0	0	0	0	0	**48**
1400 - 1500	0	19	7	0	3	0	0	0	1	0	0	0	0	**30**
1500 - 1600	0	45	8	0	2	0	0	0	0	0	0	0	0	**55**
1600 - 1700	0	54	10	0	2	2	0	0	1	0	0	0	0	**69**
1700 - 1800	0	42	15	0	2	0	0	0	0	0	0	0	0	**59**
1800 - 1900	0	49	10	0	1	0	0	0	0	0	0	0	0	**60**
1900 - 2000	1	20	5	0	0	1	0	0	1	0	0	0	0	**28**
2000 - 2100	0	16	3	0	0	0	0	0	0	0	0	0	0	**19**
2100 - 2200	0	11	0	0	0	0	0	0	1	0	0	0	0	**12**
2200 - 2300	0	8	0	0	0	0	0	0	0	0	0	0	0	**8**
2300 - 2400	0	2	0	0	0	0	0	0	0	0	0	0	0	**2**

Session Total	3	555	152	2	15	9	0	3	6	0	0	0	0	**745**
Session Average	0.13	23.13	6.33	0.08	0.63	0.38	0.00	0.13	0.25	0.00	0.00	0.00	0.00	**31.04**
Session Percentage	0.40	74.50	20.40	0.27	2.01	1.21	0.00	0.40	0.81	0.00	0.00	0.00	0.00	

AM Peak Hour	0800 - 0900	0700 - 0800	0700 - 0800	0900 - 1000	0600 - 0700	0500 - 0600	-	0700 - 0800	-	-	-	-	-	**0700 - 0800**
AM Peak Volume	1	61	25	1	1	1	0	1	0	0	0	0	0	**87**

Noon Peak Hour	1000 - 1100	1300 - 1400	1300 - 1400	1100 - 1200	1400 - 1500	1200 - 1300	-	1300 - 1400	1100 - 1200	-	-	-	-	**1300 - 1400**
Noon Peak Volume	1	34	11	1	3	1	0	2	1	0	0	0	0	**48**

PM Peak Hour	1900 - 2000	1600 - 1700	1700 - 1800	-	1500 - 1600	1600 - 1700	-	-	1600 - 1700	-	-	-	-	**1600 - 1700**
PM Peak Volume	1	54	15	0	2	2	0	0	1	0	0	0	0	**69**

Site 17
I-26 James F. Byrnes Expy On/Off-Ramp,
south of US-176 Broad River Rd

Date
Thursday, April 25, 2024

Lat/Long
34.097822°, -81.175099°

Weather
Fair
67°F

Click here for Detailed Weather

0000 - 2400 (Weekday 24h Session) (04-25-2024)
NB EB 60min

	Northbound (Movement 17.1)													
TIME	1	2	3	4	5	6	7	8	9	10	11	12	13	**Total**
0000 - 0100	0	2	0	0	1	0	0	0	0	0	0	0	0	**3**
0100 - 0200	0	1	0	0	2	0	0	0	0	0	0	0	0	**3**
0200 - 0300	0	4	0	0	1	0	0	0	0	0	0	0	0	**5**
0300 - 0400	0	3	0	0	0	0	0	0	1	0	0	0	0	**4**
0400 - 0500	0	0	0	0	0	0	0	0	0	0	0	0	0	**0**
0500 - 0600	0	5	0	0	1	0	0	0	0	0	0	0	0	**6**
0600 - 0700	0	15	3	0	0	0	0	0	0	0	0	0	0	**18**
0700 - 0800	0	66	23	0	2	1	0	0	1	0	0	0	0	**93**
0800 - 0900	0	47	17	0	0	0	0	0	1	1	0	0	0	**66**
0900 - 1000	0	28	20	0	2	0	0	0	2	0	0	0	0	**52**
1000 - 1100	1	29	19	1	1	4	0	0	0	0	0	0	0	**55**
1100 - 1200	1	35	9	0	0	2	0	0	1	0	0	0	0	**48**
1200 - 1300	0	31	15	0	2	0	0	1	0	0	0	0	0	**49**
1300 - 1400	0	28	10	0	0	3	0	0	0	0	0	0	0	**41**
1400 - 1500	0	28	8	0	1	1	2	0	0	0	0	0	0	**40**
1500 - 1600	1	36	11	0	1	1	0	0	1	0	0	0	0	**51**
1600 - 1700	0	45	12	0	1	3	0	0	0	0	0	0	0	**61**
1700 - 1800	1	33	13	0	2	1	0	1	0	0	0	0	0	**51**
1800 - 1900	0	35	13	0	1	0	0	2	0	0	0	0	0	**51**
1900 - 2000	0	0	0	0	0	0	0	0	0	0	0	0	0	**0**
2000 - 2100	0	0	0	0	0	0	0	0	0	0	0	0	0	**0**
2100 - 2200	0	0	0	0	0	0	0	0	0	0	0	0	0	**0**
2200 - 2300	0	0	0	0	0	0	0	0	0	0	0	0	0	**0**
2300 - 2400	0	0	0	0	0	0	0	0	0	0	0	0	0	**0**

Session Total	4	471	173	1	18	16	2	4	7	1	0	0	0	**697**
Session Average	0.17	19.63	7.21	0.04	0.75	0.67	0.08	0.17	0.29	0.04	0.00	0.00	0.00	**29.04**
Session Percentage	0.57	67.58	24.82	0.14	2.58	2.30	0.29	0.57	1.00	0.14	0.00	0.00	0.00	

AM Peak Hour	-	0700 - 0800	0700 - 0800	-	0700 - 0800	0700 - 0800	-	-	0900 - 1000	0800 - 0900	-	-	-	**0700 - 0800**
AM Peak Hour Volume	0	66	23	0	2	1	0	0	2	1	0	0	0	**93**

Noon Peak Hour	1000 - 1100	1100 - 1200	1000 - 1100	1000 - 1100	1200 - 1300	1000 - 1100	1400 - 1500	1200 - 1300	1100 - 1200	-	-	-	-	**1000 - 1100**
Noon Peak Hour Volume	1	35	19	1	2	4	2	1	1	0	0	0	0	**55**

PM Peak Hour	1500 - 1600	1600 - 1700	1700 - 1800	-	1700 - 1800	1600 - 1700	-	1800 - 1900	1500 - 1600	-	-	-	-	**1600 - 1700**
PM Peak Hour Volume	1	45	13	0	2	3	0	2	1	0	0	0	0	**61**

Bi-Directional Class Count || Volume Summary 60min

Columbia, SC

Marr Traffic DATA COLLECTION

www.marrtraffic.com

Site 17

I-26 James F. Byrnes Expy On/Off-Ramp,
south of US-176 Broad River Rd

Date

Tuesday, April 23, 2024

Lat/Long

34.097822°, -81.175099°

Weather

Fair
58°F

Click here for Detailed Weather

0000 - 2400 (Weekday 24h Session) (04-23-2024)

Volume Summary 60min

	Volume Summary 60min		
TIME	NB	SB	**Total**
0000 - 0100	0	0	**0**
0100 - 0200	0	0	**0**
0200 - 0300	0	0	**0**
0300 - 0400	0	0	**0**
0400 - 0500	0	0	**0**
0500 - 0600	0	0	**0**
0600 - 0700	0	0	**0**
0700 - 0800	0	0	**0**
0800 - 0900	0	0	**0**
0900 - 1000	0	0	**0**
1000 - 1100	0	0	**0**
1100 - 1200	0	0	**0**

	Volume Summary 60min		
Time	NB	SB	**Total**
1200 - 1300	0	0	**0**
1300 - 1400	0	0	**0**
1400 - 1500	0	0	**0**
1500 - 1600	0	0	**0**
1600 - 1700	0	0	**0**
1700 - 1800	0	0	**0**
1800 - 1900	0	0	**0**
1900 - 2000	26	0	**26**
2000 - 2100	18	0	**18**
2100 - 2200	18	0	**18**
2200 - 2300	5	0	**5**
2300 - 2400	4	0	**4**

Session Total	71	0	**71**
Session Average	2.96	0.00	**2.96**
Session Percentage	100.00	0.00	

Site 17

I-26 James F. Byrnes Expy On/Off-Ramp,
south of US-176 Broad River Rd

Date

Wednesday, April 24, 2024

Lat/Long

34.097822°, -81.175099°

Weather

Fair
66°F

Click here for Detailed Weather

0000 - 2400 (Weekday 24h Session) (04-24-2024)

Volume Summary 60min

	Volume Summary 60min		
TIME	NB	SB	**Total**
0000 - 0100	4	0	**4**
0100 - 0200	4	0	**4**
0200 - 0300	10	0	**10**
0300 - 0400	5	0	**5**
0400 - 0500	2	0	**2**
0500 - 0600	10	0	**10**
0600 - 0700	24	0	**24**
0700 - 0800	87	0	**87**
0800 - 0900	63	0	**63**
0900 - 1000	69	0	**69**
1000 - 1100	25	0	**25**
1100 - 1200	17	0	**17**

	Volume Summary 60min		
Time	NB	SB	**Total**
1200 - 1300	35	0	**35**
1300 - 1400	48	0	**48**
1400 - 1500	30	0	**30**
1500 - 1600	55	0	**55**
1600 - 1700	69	0	**69**
1700 - 1800	59	0	**59**
1800 - 1900	60	0	**60**
1900 - 2000	28	0	**28**
2000 - 2100	19	0	**19**
2100 - 2200	12	0	**12**
2200 - 2300	8	0	**8**
2300 - 2400	2	0	**2**

Session Total	745	0	**745**
Session Average	31.04	0.00	**31.04**
Session Percentage	100.00	0.00	

Site 17

I-26 James F. Byrnes Expy On/Off-Ramp,
south of US-176 Broad River Rd

Date

Thursday, April 25, 2024

Lat/Long

34.097822°, -81.175099°

Weather

Fair
67°F

Click here for Detailed Weather

0000 - 2400 (Weekday 24h Session) (04-25-2024)

Volume Summary 60min

	Volume Summary 60min		
TIME	NB	SB	**Total**
0000 - 0100	3	0	**3**
0100 - 0200	3	0	**3**
0200 - 0300	5	0	**5**
0300 - 0400	4	0	**4**
0400 - 0500	0	0	**0**
0500 - 0600	6	0	**6**
0600 - 0700	18	0	**18**
0700 - 0800	93	0	**93**
0800 - 0900	66	0	**66**
0900 - 1000	52	0	**52**
1000 - 1100	55	0	**55**
1100 - 1200	48	0	**48**

Session Total	697	0	**697**
Session Average	29.04	0.00	**29.04**
Session Percentage	100.00	0.00	

	Volume Summary 60min		
Time	NB	SB	**Total**
1200 - 1300	49	0	**49**
1300 - 1400	41	0	**41**
1400 - 1500	40	0	**40**
1500 - 1600	51	0	**51**
1600 - 1700	61	0	**61**
1700 - 1800	51	0	**51**
1800 - 1900	51	0	**51**
1900 - 2000	0	0	**0**
2000 - 2100	0	0	**0**
2100 - 2200	0	0	**0**
2200 - 2300	0	0	**0**
2300 - 2400	0	0	**0**

Bi-Directional Class Count || Graphical Analysis NB EB

Columbia, SC

Marr Traffic DATA COLLECTION

www.marrtraffic.com

Site 17

I-26 James F. Byrnes Expy On/Off-Ramp,
south of US-176 Broad River Rd

Lat/Long

34.097822°, -81.175099°

0000 - 2400 (Weekday 24h Session)

Graphical Analysis NB EB

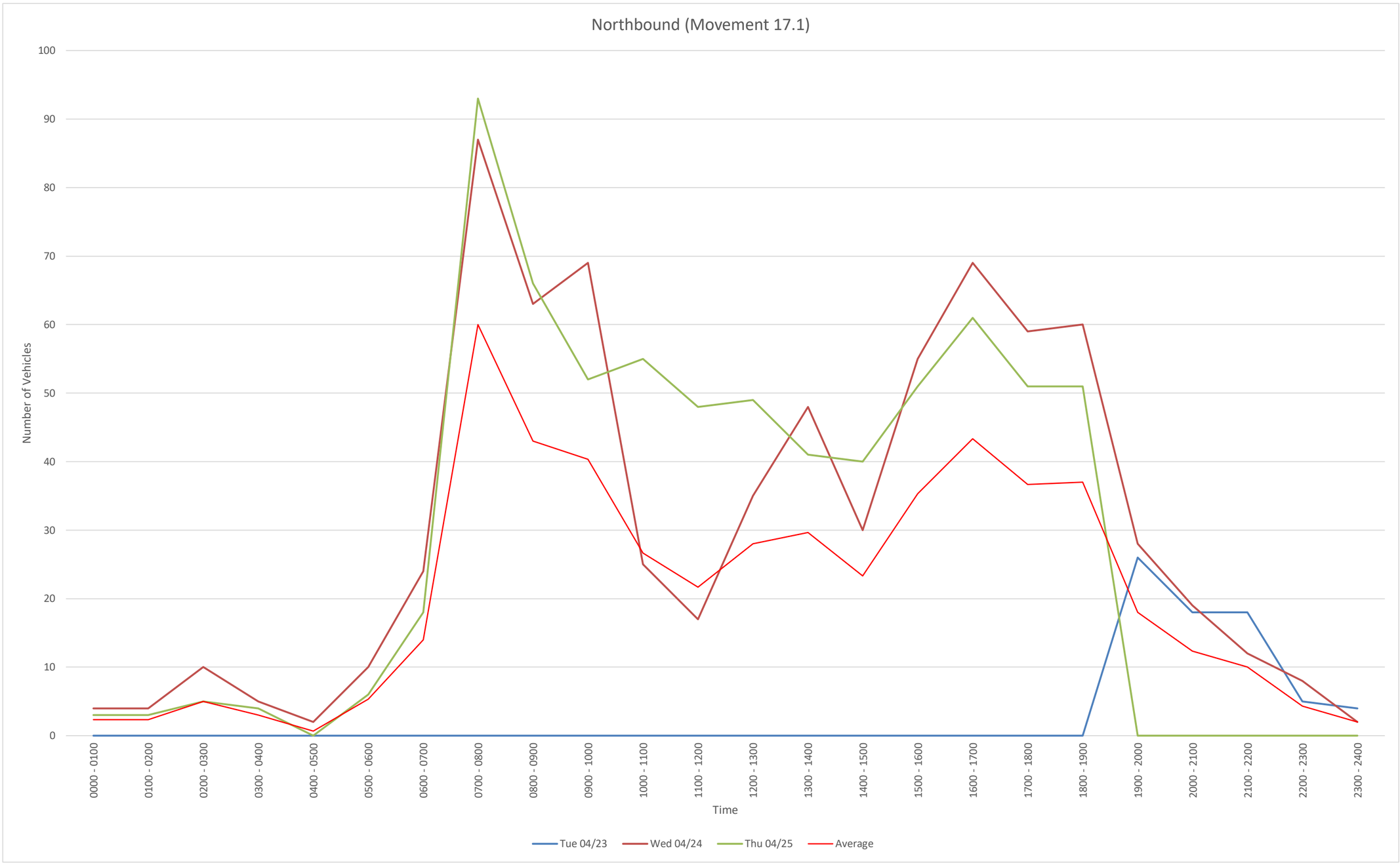

Time	Tue 04/23	Wed 04/24	Thu 04/25				
0000 - 0100	0	4	3				
0100 - 0200	0	4	3				
0200 - 0300	0	10	5				
0300 - 0400	0	5	4				
0400 - 0500	0	2	0				
0500 - 0600	0	10	6				
0600 - 0700	0	24	18				
0700 - 0800	0	87	93				
0800 - 0900	0	63	66				
0900 - 1000	0	69	52				
1000 - 1100	0	25	55				
1100 - 1200	0	17	48				
1200 - 1300	0	35	49				
1300 - 1400	0	48	41				
1400 - 1500	0	30	40				
1500 - 1600	0	55	51				
1600 - 1700	0	69	61				
1700 - 1800	0	59	51				
1800 - 1900	0	60	51				
1900 - 2000	26	28	0				
2000 - 2100	18	19	0				
2100 - 2200	18	12	0				
2200 - 2300	5	8	0				
2300 - 2400	4	2	0				
Daily Total	71	745	697				

NB
File Name:
Start Date: 4/23/2024
Start Time: 0
Site Code: 17
Station ID: 1
Location 1: I-26 James F. Byrnes Expy On/Off-Ramp, south of US-176 Broad River Rd
Location 2:

Date	Time	1	2	3	4	5	6	7	8	9	10	11	12	13
4/23/2024	12:00 AM	0	0	0	0	0	0	0	0	0	0	0	0	0
4/23/2024	12:15 AM	0	0	0	0	0	0	0	0	0	0	0	0	0
4/23/2024	12:30 AM	0	0	0	0	0	0	0	0	0	0	0	0	0
4/23/2024	12:45 AM	0	0	0	0	0	0	0	0	0	0	0	0	0
4/23/2024	1:00 AM	0	0	0	0	0	0	0	0	0	0	0	0	0
4/23/2024	1:15 AM	0	0	0	0	0	0	0	0	0	0	0	0	0
4/23/2024	1:30 AM	0	0	0	0	0	0	0	0	0	0	0	0	0
4/23/2024	1:45 AM	0	0	0	0	0	0	0	0	0	0	0	0	0
4/23/2024	2:00 AM	0	0	0	0	0	0	0	0	0	0	0	0	0
4/23/2024	2:15 AM	0	0	0	0	0	0	0	0	0	0	0	0	0
4/23/2024	2:30 AM	0	0	0	0	0	0	0	0	0	0	0	0	0
4/23/2024	2:45 AM	0	0	0	0	0	0	0	0	0	0	0	0	0
4/23/2024	3:00 AM	0	0	0	0	0	0	0	0	0	0	0	0	0
4/23/2024	3:15 AM	0	0	0	0	0	0	0	0	0	0	0	0	0
4/23/2024	3:30 AM	0	0	0	0	0	0	0	0	0	0	0	0	0
4/23/2024	3:45 AM	0	0	0	0	0	0	0	0	0	0	0	0	0
4/23/2024	4:00 AM	0	0	0	0	0	0	0	0	0	0	0	0	0
4/23/2024	4:15 AM	0	0	0	0	0	0	0	0	0	0	0	0	0
4/23/2024	4:30 AM	0	0	0	0	0	0	0	0	0	0	0	0	0
4/23/2024	4:45 AM	0	0	0	0	0	0	0	0	0	0	0	0	0
4/23/2024	5:00 AM	0	0	0	0	0	0	0	0	0	0	0	0	0
4/23/2024	5:15 AM	0	0	0	0	0	0	0	0	0	0	0	0	0
4/23/2024	5:30 AM	0	0	0	0	0	0	0	0	0	0	0	0	0
4/23/2024	5:45 AM	0	0	0	0	0	0	0	0	0	0	0	0	0
4/23/2024	6:00 AM	0	0	0	0	0	0	0	0	0	0	0	0	0
4/23/2024	6:15 AM	0	0	0	0	0	0	0	0	0	0	0	0	0
4/23/2024	6:30 AM	0	0	0	0	0	0	0	0	0	0	0	0	0
4/23/2024	6:45 AM	0	0	0	0	0	0	0	0	0	0	0	0	0
4/23/2024	7:00 AM	0	0	0	0	0	0	0	0	0	0	0	0	0
4/23/2024	7:15 AM	0	0	0	0	0	0	0	0	0	0	0	0	0
4/23/2024	7:30 AM	0	0	0	0	0	0	0	0	0	0	0	0	0
4/23/2024	7:45 AM	0	0	0	0	0	0	0	0	0	0	0	0	0
4/23/2024	8:00 AM	0	0	0	0	0	0	0	0	0	0	0	0	0
4/23/2024	8:15 AM	0	0	0	0	0	0	0	0	0	0	0	0	0
4/23/2024	8:30 AM	0	0	0	0	0	0	0	0	0	0	0	0	0
4/23/2024	8:45 AM	0	0	0	0	0	0	0	0	0	0	0	0	0
4/23/2024	9:00 AM	0	0	0	0	0	0	0	0	0	0	0	0	0
4/23/2024	9:15 AM	0	0	0	0	0	0	0	0	0	0	0	0	0
4/23/2024	9:30 AM	0	0	0	0	0	0	0	0	0	0	0	0	0
4/23/2024	9:45 AM	0	0	0	0	0	0	0	0	0	0	0	0	0
4/23/2024	10:00 AM	0	0	0	0	0	0	0	0	0	0	0	0	0
4/23/2024	10:15 AM	0	0	0	0	0	0	0	0	0	0	0	0	0
4/23/2024	10:30 AM	0	0	0	0	0	0	0	0	0	0	0	0	0
4/23/2024	10:45 AM	0	0	0	0	0	0	0	0	0	0	0	0	0
4/23/2024	11:00 AM	0	0	0	0	0	0	0	0	0	0	0	0	0
4/23/2024	11:15 AM	0	0	0	0	0	0	0	0	0	0	0	0	0
4/23/2024	11:30 AM	0	0	0	0	0	0	0	0	0	0	0	0	0
4/23/2024	11:45 AM	0	0	0	0	0	0	0	0	0	0	0	0	0
4/23/2024	12:00 PM	0	0	0	0	0	0	0	0	0	0	0	0	0
4/23/2024	12:15 PM	0	0	0	0	0	0	0	0	0	0	0	0	0
4/23/2024	12:30 PM	0	0	0	0	0	0	0	0	0	0	0	0	0
4/23/2024	12:45 PM	0	0	0	0	0	0	0	0	0	0	0	0	0
4/23/2024	1:00 PM	0	0	0	0	0	0	0	0	0	0	0	0	0
4/23/2024	1:15 PM	0	0	0	0	0	0	0	0	0	0	0	0	0
4/23/2024	1:30 PM	0	0	0	0	0	0	0	0	0	0	0	0	0
4/23/2024	1:45 PM	0	0	0	0	0	0	0	0	0	0	0	0	0
4/23/2024	2:00 PM	0	0	0	0	0	0	0	0	0	0	0	0	0
4/23/2024	2:15 PM	0	0	0	0	0	0	0	0	0	0	0	0	0
4/23/2024	2:30 PM	0	0	0	0	0	0	0	0	0	0	0	0	0
4/23/2024	2:45 PM	0	0	0	0	0	0	0	0	0	0	0	0	0
4/23/2024	3:00 PM	0	0	0	0	0	0	0	0	0	0	0	0	0
4/23/2024	3:15 PM	0	0	0	0	0	0	0	0	0	0	0	0	0
4/23/2024	3:30 PM	0	0	0	0	0	0	0	0	0	0	0	0	0
4/23/2024	3:45 PM	0	0	0	0	0	0	0	0	0	0	0	0	0
4/23/2024	4:00 PM	0	0	0	0	0	0	0	0	0	0	0	0	0
4/23/2024	4:15 PM	0	0	0	0	0	0	0	0	0	0	0	0	0
4/23/2024	4:30 PM	0	0	0	0	0	0	0	0	0	0	0	0	0
4/23/2024	4:45 PM	0	0	0	0	0	0	0	0	0	0	0	0	0
4/23/2024	5:00 PM	0	0	0	0	0	0	0	0	0	0	0	0	0
4/23/2024	5:15 PM	0	0	0	0	0	0	0	0	0	0	0	0	0
4/23/2024	5:30 PM	0	0	0	0	0	0	0	0	0	0	0	0	0
4/23/2024	5:45 PM	0	0	0	0	0	0	0	0	0	0	0	0	0
4/23/2024	6:00 PM	0	0	0	0	0	0	0	0	0	0	0	0	0
4/23/2024	6:15 PM	0	0	0	0	0	0	0	0	0	0	0	0	0
4/23/2024	6:30 PM	0	0	0	0	0	0	0	0	0	0	0	0	0
4/23/2024	6:45 PM	0	0	0	0	0	0	0	0	0	0	0	0	0
4/23/2024	7:00 PM	0	7	3	0	0	0	0	0	0	0	0	0	0
4/23/2024	7:15 PM	0	3	1	0	0	0	0	0	0	0	0	0	0
4/23/2024	7:30 PM	0	4	0	0	0	0	0	0	0	0	0	0	0
4/23/2024	7:45 PM	0	6	2	0	0	0	0	0	0	0	0	0	0
4/23/2024	8:00 PM	0	2	1	0	0	0	0	0	0	0	0	0	0
4/23/2024	8:15 PM	0	4	2	0	0	0	0	0	0	0	0	0	0
4/23/2024	8:30 PM	0	6	0	0	0	0	0	0	0	0	0	0	0
4/23/2024	8:45 PM	0	3	0	0	0	0	0	0	0	0	0	0	0
4/23/2024	9:00 PM	0	7	0	0	0	0	0	0	0	0	0	0	0
4/23/2024	9:15 PM	0	4	0	0	0	0	0	0	1	0	0	0	0
4/23/2024	9:30 PM	0	1	0	0	0	0	0	0	1	0	0	0	0
4/23/2024	9:45 PM	0	4	0	0	0	0	0	0	0	0	0	0	0
4/23/2024	10:00 PM	0	1	0	0	0	0	0	0	0	0	0	0	0
4/23/2024	10:15 PM	0	2	0	0	0	0	0	0	0	0	0	0	0
4/23/2024	10:30 PM	0	2	0	0	0	0	0	0	0	0	0	0	0
4/23/2024	10:45 PM	0	0	0	0	0	0	0	0	0	0	0	0	0
4/23/2024	11:00 PM	0	0	0	0	0	0	0	0	0	0	0	0	0
4/23/2024	11:15 PM	0	0	0	0	0	0	0	0	0	0	0	0	0
4/23/2024	11:30 PM	0	1	1	0	1	0	0	0	0	0	0	0	0
4/23/2024	11:45 PM	0	1	0	0	0	0	0	0	0	0	0	0	0

4/24/2024	12:00 AM	0	1	0	0	0	0	0	0	0	0	0	0
4/24/2024	12:15 AM	0	0	0	0	0	1	0	0	0	0	0	0
4/24/2024	12:30 AM	0	1	0	0	0	0	0	0	0	0	0	0
4/24/2024	12:45 AM	0	1	0	0	0	0	0	0	0	0	0	0
4/24/2024	1:00 AM	0	0	0	0	0	0	0	0	0	0	0	0
4/24/2024	1:15 AM	0	0	1	0	0	0	0	0	0	0	0	0
4/24/2024	1:30 AM	0	1	0	0	0	0	0	0	0	0	0	0
4/24/2024	1:45 AM	0	1	0	0	0	1	0	0	0	0	0	0
4/24/2024	2:00 AM	0	1	0	0	0	0	0	0	0	0	0	0
4/24/2024	2:15 AM	0	1	0	0	0	0	0	0	0	0	0	0
4/24/2024	2:30 AM	0	4	1	0	0	0	0	0	0	0	0	0
4/24/2024	2:45 AM	0	2	1	0	0	0	0	0	0	0	0	0
4/24/2024	3:00 AM	0	1	1	0	0	0	0	0	0	0	0	0
4/24/2024	3:15 AM	0	1	0	0	0	0	0	0	0	0	0	0
4/24/2024	3:30 AM	0	1	0	0	0	0	0	0	0	0	0	0
4/24/2024	3:45 AM	0	1	0	0	0	0	0	0	0	0	0	0
4/24/2024	4:00 AM	0	0	0	0	0	0	0	0	0	0	0	0
4/24/2024	4:15 AM	0	1	0	0	0	0	0	0	0	0	0	0
4/24/2024	4:30 AM	0	0	0	0	0	0	0	0	0	0	0	0
4/24/2024	4:45 AM	0	1	0	0	0	0	0	0	0	0	0	0
4/24/2024	5:00 AM	0	1	0	0	0	0	0	0	0	0	0	0
4/24/2024	5:15 AM	0	0	0	0	0	0	0	0	0	0	0	0
4/24/2024	5:30 AM	0	2	0	0	0	0	0	0	0	0	0	0
4/24/2024	5:45 AM	0	6	0	0	0	1	0	0	0	0	0	0
4/24/2024	6:00 AM	0	2	0	0	0	0	0	0	0	0	0	0
4/24/2024	6:15 AM	0	1	1	0	0	0	0	0	0	0	0	0
4/24/2024	6:30 AM	0	6	3	0	1	0	0	0	0	0	0	0
4/24/2024	6:45 AM	0	7	3	0	0	0	0	0	0	0	0	0
4/24/2024	7:00 AM	0	10	6	0	0	0	0	0	0	0	0	0
4/24/2024	7:15 AM	0	11	6	0	0	0	0	0	0	0	0	0
4/24/2024	7:30 AM	0	18	3	0	0	0	0	0	0	0	0	0
4/24/2024	7:45 AM	0	22	10	0	0	0	0	1	0	0	0	0
4/24/2024	8:00 AM	0	19	3	0	0	0	0	0	0	0	0	0
4/24/2024	8:15 AM	1	11	2	0	0	0	0	0	0	0	0	0
4/24/2024	8:30 AM	0	15	2	0	0	1	0	0	0	0	0	0
4/24/2024	8:45 AM	0	4	5	0	0	0	0	0	0	0	0	0
4/24/2024	9:00 AM	0	11	5	0	0	0	0	0	0	0	0	0
4/24/2024	9:15 AM	0	13	3	1	0	0	0	0	0	0	0	0
4/24/2024	9:30 AM	0	14	4	0	0	0	0	0	0	0	0	0
4/24/2024	9:45 AM	0	16	2	0	0	0	0	0	0	0	0	0
4/24/2024	10:00 AM	1	5	1	0	1	0	0	0	0	0	0	0
4/24/2024	10:15 AM	0	6	2	0	1	0	0	0	0	0	0	0
4/24/2024	10:30 AM	0	3	2	0	0	0	0	0	0	0	0	0
4/24/2024	10:45 AM	0	2	1	0	0	0	0	0	0	0	0	0
4/24/2024	11:00 AM	0	2	0	0	0	0	0	0	0	0	0	0
4/24/2024	11:15 AM	0	2	2	0	0	0	0	0	0	0	0	0
4/24/2024	11:30 AM	0	0	0	0	0	0	0	0	0	0	0	0
4/24/2024	11:45 AM	0	6	3	1	0	0	0	0	1	0	0	0
4/24/2024	12:00 PM	0	7	2	0	1	1	0	0	1	0	0	0
4/24/2024	12:15 PM	0	6	3	0	1	0	0	0	0	0	0	0
4/24/2024	12:30 PM	0	3	1	0	0	0	0	0	0	0	0	0
4/24/2024	12:45 PM	0	5	4	0	0	0	0	0	0	0	0	0
4/24/2024	1:00 PM	0	4	3	0	0	1	0	0	0	0	0	0
4/24/2024	1:15 PM	0	11	0	0	0	0	0	0	0	0	0	0
4/24/2024	1:30 PM	0	12	3	0	0	0	0	2	0	0	0	0
4/24/2024	1:45 PM	0	7	5	0	0	0	0	0	0	0	0	0
4/24/2024	2:00 PM	0	5	4	0	1	0	0	0	1	0	0	0
4/24/2024	2:15 PM	0	4	3	0	1	0	0	0	0	0	0	0
4/24/2024	2:30 PM	0	4	0	0	1	0	0	0	0	0	0	0
4/24/2024	2:45 PM	0	6	0	0	0	0	0	0	0	0	0	0
4/24/2024	3:00 PM	0	6	0	0	0	0	0	0	0	0	0	0
4/24/2024	3:15 PM	0	9	2	0	2	0	0	0	0	0	0	0
4/24/2024	3:30 PM	0	15	3	0	0	0	0	0	0	0	0	0
4/24/2024	3:45 PM	0	15	3	0	0	0	0	0	0	0	0	0
4/24/2024	4:00 PM	0	14	2	0	1	0	0	0	0	0	0	0
4/24/2024	4:15 PM	0	14	3	0	0	0	0	0	0	0	0	0
4/24/2024	4:30 PM	0	13	2	0	1	2	0	0	1	0	0	0
4/24/2024	4:45 PM	0	13	3	0	0	0	0	0	0	0	0	0
4/24/2024	5:00 PM	0	10	3	0	0	0	0	0	0	0	0	0
4/24/2024	5:15 PM	0	11	7	0	0	0	0	0	0	0	0	0
4/24/2024	5:30 PM	0	8	3	0	2	0	0	0	0	0	0	0
4/24/2024	5:45 PM	0	13	2	0	0	0	0	0	0	0	0	0
4/24/2024	6:00 PM	0	15	2	0	1	0	0	0	0	0	0	0
4/24/2024	6:15 PM	0	8	3	0	0	0	0	0	0	0	0	0
4/24/2024	6:30 PM	0	16	2	0	0	0	0	0	0	0	0	0
4/24/2024	6:45 PM	0	10	3	0	0	0	0	0	0	0	0	0
4/24/2024	7:00 PM	0	8	2	0	0	0	0	0	1	0	0	0
4/24/2024	7:15 PM	1	8	1	0	0	0	0	0	0	0	0	0
4/24/2024	7:30 PM	0	1	1	0	0	0	0	0	0	0	0	0
4/24/2024	7:45 PM	0	3	1	0	0	1	0	0	0	0	0	0
4/24/2024	8:00 PM	0	2	0	0	0	0	0	0	0	0	0	0
4/24/2024	8:15 PM	0	5	2	0	0	0	0	0	0	0	0	0
4/24/2024	8:30 PM	0	6	1	0	0	0	0	0	0	0	0	0
4/24/2024	8:45 PM	0	3	0	0	0	0	0	0	0	0	0	0
4/24/2024	9:00 PM	0	5	0	0	0	0	0	0	1	0	0	0
4/24/2024	9:15 PM	0	2	0	0	0	0	0	0	0	0	0	0
4/24/2024	9:30 PM	0	1	0	0	0	0	0	0	0	0	0	0
4/24/2024	9:45 PM	0	3	0	0	0	0	0	0	0	0	0	0
4/24/2024	10:00 PM	0	1	0	0	0	0	0	0	0	0	0	0
4/24/2024	10:15 PM	0	1	0	0	0	0	0	0	0	0	0	0
4/24/2024	10:30 PM	0	3	0	0	0	0	0	0	0	0	0	0
4/24/2024	10:45 PM	0	3	0	0	0	0	0	0	0	0	0	0
4/24/2024	11:00 PM	0	1	0	0	0	0	0	0	0	0	0	0
4/24/2024	11:15 PM	0	0	0	0	0	0	0	0	0	0	0	0
4/24/2024	11:30 PM	0	1	0	0	0	0	0	0	0	0	0	0
4/24/2024	11:45 PM	0	0	0	0	0	0	0	0	0	0	0	0

4/25/2024	12:00 AM	0	1	0	0	0	0	0	0	0	0	0	0
4/25/2024	12:15 AM	0	1	0	0	1	0	0	0	0	0	0	0
4/25/2024	12:30 AM	0	0	0	0	0	0	0	0	0	0	0	0
4/25/2024	12:45 AM	0	0	0	0	0	0	0	0	0	0	0	0
4/25/2024	1:00 AM	0	0	0	0	0	0	0	0	0	0	0	0
4/25/2024	1:15 AM	0	1	0	0	1	0	0	0	0	0	0	0
4/25/2024	1:30 AM	0	0	0	0	1	0	0	0	0	0	0	0
4/25/2024	1:45 AM	0	0	0	0	0	0	0	0	0	0	0	0
4/25/2024	2:00 AM	0	0	0	0	0	0	0	0	0	0	0	0
4/25/2024	2:15 AM	0	0	0	0	1	0	0	0	0	0	0	0
4/25/2024	2:30 AM	0	1	0	0	0	0	0	0	0	0	0	0
4/25/2024	2:45 AM	0	3	0	0	0	0	0	0	0	0	0	0
4/25/2024	3:00 AM	0	1	0	0	0	0	0	0	0	0	0	0
4/25/2024	3:15 AM	0	1	0	0	0	0	0	0	0	0	0	0
4/25/2024	3:30 AM	0	0	0	0	0	0	0	1	0	0	0	0
4/25/2024	3:45 AM	0	1	0	0	0	0	0	0	0	0	0	0
4/25/2024	4:00 AM	0	0	0	0	0	0	0	0	0	0	0	0
4/25/2024	4:15 AM	0	0	0	0	0	0	0	0	0	0	0	0
4/25/2024	4:30 AM	0	0	0	0	0	0	0	0	0	0	0	0
4/25/2024	4:45 AM	0	0	0	0	0	0	0	0	0	0	0	0
4/25/2024	5:00 AM	0	1	0	0	0	0	0	0	0	0	0	0
4/25/2024	5:15 AM	0	1	0	0	0	0	0	0	0	0	0	0
4/25/2024	5:30 AM	0	2	0	0	0	0	0	0	0	0	0	0
4/25/2024	5:45 AM	0	1	0	0	1	0	0	0	0	0	0	0
4/25/2024	6:00 AM	0	2	0	0	0	0	0	0	0	0	0	0
4/25/2024	6:15 AM	0	7	0	0	0	0	0	0	0	0	0	0
4/25/2024	6:30 AM	0	2	0	0	0	0	0	0	0	0	0	0
4/25/2024	6:45 AM	0	4	3	0	0	0	0	0	0	0	0	0
4/25/2024	7:00 AM	0	7	6	0	1	0	0	0	0	0	0	0
4/25/2024	7:15 AM	0	12	3	0	0	0	0	0	0	0	0	0
4/25/2024	7:30 AM	0	19	8	0	0	0	0	0	1	0	0	0
4/25/2024	7:45 AM	0	28	6	0	1	1	0	0	0	0	0	0
4/25/2024	8:00 AM	0	12	5	0	0	0	0	0	0	0	0	0
4/25/2024	8:15 AM	0	20	4	0	0	0	0	0	0	0	0	0
4/25/2024	8:30 AM	0	7	4	0	0	0	0	0	0	0	0	0
4/25/2024	8:45 AM	0	8	4	0	0	0	0	0	1	1	0	0	0
4/25/2024	9:00 AM	0	4	4	0	0	0	0	0	1	0	0	0	0
4/25/2024	9:15 AM	0	8	8	0	0	0	0	0	1	0	0	0	0
4/25/2024	9:30 AM	0	9	4	0	1	0	0	0	0	0	0	0	0
4/25/2024	9:45 AM	0	7	4	0	1	0	0	0	0	0	0	0	0
4/25/2024	10:00 AM	0	13	5	0	0	2	0	0	0	0	0	0	0
4/25/2024	10:15 AM	0	6	6	1	0	0	0	0	0	0	0	0	0
4/25/2024	10:30 AM	0	7	6	0	0	2	0	0	0	0	0	0	0
4/25/2024	10:45 AM	1	3	2	0	1	0	0	0	0	0	0	0	0
4/25/2024	11:00 AM	0	9	4	0	0	0	0	0	0	0	0	0	0
4/25/2024	11:15 AM	0	9	0	0	0	2	0	0	0	0	0	0	0
4/25/2024	11:30 AM	1	11	2	0	0	0	0	0	1	0	0	0	0
4/25/2024	11:45 AM	0	6	3	0	0	0	0	0	0	0	0	0	0
4/25/2024	12:00 PM	0	5	4	0	1	0	0	0	0	0	0	0	0
4/25/2024	12:15 PM	0	10	5	0	0	0	0	1	0	0	0	0	0
4/25/2024	12:30 PM	0	8	3	0	1	0	0	0	0	0	0	0	0
4/25/2024	12:45 PM	0	8	3	0	0	0	0	0	0	0	0	0	0
4/25/2024	1:00 PM	0	7	2	0	0	1	0	0	0	0	0	0	0
4/25/2024	1:15 PM	0	6	2	0	0	0	0	0	0	0	0	0	0
4/25/2024	1:30 PM	0	6	3	0	0	1	0	0	0	0	0	0	0
4/25/2024	1:45 PM	0	9	3	0	0	1	0	0	0	0	0	0	0
4/25/2024	2:00 PM	0	7	4	0	0	0	0	0	0	0	0	0	0
4/25/2024	2:15 PM	0	5	0	0	1	0	0	0	0	0	0	0	0
4/25/2024	2:30 PM	0	10	3	0	0	0	2	0	0	0	0	0	0
4/25/2024	2:45 PM	0	6	1	0	0	1	0	0	0	0	0	0	0
4/25/2024	3:00 PM	0	12	2	0	0	1	0	0	1	0	0	0	0
4/25/2024	3:15 PM	0	6	4	0	0	0	0	0	0	0	0	0	0
4/25/2024	3:30 PM	0	4	3	0	1	0	0	0	0	0	0	0	0
4/25/2024	3:45 PM	1	14	2	0	0	0	0	0	0	0	0	0	0
4/25/2024	4:00 PM	0	20	4	0	0	2	0	0	0	0	0	0	0
4/25/2024	4:15 PM	0	11	2	0	0	1	0	0	0	0	0	0	0
4/25/2024	4:30 PM	0	8	4	0	1	0	0	0	0	0	0	0	0
4/25/2024	4:45 PM	0	6	2	0	0	0	0	0	0	0	0	0	0
4/25/2024	5:00 PM	1	6	5	0	1	0	0	0	0	0	0	0	0
4/25/2024	5:15 PM	0	5	5	0	0	0	0	0	0	0	0	0	0
4/25/2024	5:30 PM	0	13	1	0	1	1	0	1	0	0	0	0	0
4/25/2024	5:45 PM	0	9	2	0	0	0	0	0	0	0	0	0	0
4/25/2024	6:00 PM	0	14	5	0	0	0	0	1	0	0	0	0	0
4/25/2024	6:15 PM	0	9	2	0	1	0	0	0	0	0	0	0	0
4/25/2024	6:30 PM	0	9	6	0	0	0	0	1	0	0	0	0	0
4/25/2024	6:45 PM	0	3	0	0	0	0	0	0	0	0	0	0	0
4/25/2024	7:00 PM	0	0	0	0	0	0	0	0	0	0	0	0	0
4/25/2024	7:15 PM	0	0	0	0	0	0	0	0	0	0	0	0	0
4/25/2024	7:30 PM	0	0	0	0	0	0	0	0	0	0	0	0	0
4/25/2024	7:45 PM	0	0	0	0	0	0	0	0	0	0	0	0	0
4/25/2024	8:00 PM	0	0	0	0	0	0	0	0	0	0	0	0	0
4/25/2024	8:15 PM	0	0	0	0	0	0	0	0	0	0	0	0	0
4/25/2024	8:30 PM	0	0	0	0	0	0	0	0	0	0	0	0	0
4/25/2024	8:45 PM	0	0	0	0	0	0	0	0	0	0	0	0	0
4/25/2024	9:00 PM	0	0	0	0	0	0	0	0	0	0	0	0	0
4/25/2024	9:15 PM	0	0	0	0	0	0	0	0	0	0	0	0	0
4/25/2024	9:30 PM	0	0	0	0	0	0	0	0	0	0	0	0	0
4/25/2024	9:45 PM	0	0	0	0	0	0	0	0	0	0	0	0	0
4/25/2024	10:00 PM	0	0	0	0	0	0	0	0	0	0	0	0	0
4/25/2024	10:15 PM	0	0	0	0	0	0	0	0	0	0	0	0	0
4/25/2024	10:30 PM	0	0	0	0	0	0	0	0	0	0	0	0	0
4/25/2024	10:45 PM	0	0	0	0	0	0	0	0	0	0	0	0	0
4/25/2024	11:00 PM	0	0	0	0	0	0	0	0	0	0	0	0	0
4/25/2024	11:15 PM	0	0	0	0	0	0	0	0	0	0	0	0	0
4/25/2024	11:30 PM	0	0	0	0	0	0	0	0	0	0	0	0	0
4/25/2024	11:45 PM	0	0	0	0	0	0	0	0	0	0	0	0	0

SB
File Name:
Start Date: 4/23/2024
Start Time: 0
Site Code: 17
Station ID: 1
Location 1: I-26 James F. Byrnes Expy On/Off-Ramp, south of US-176 Broad River Rd
Location 2:

Date	Time	1	2	3	4	5	6	7	8	9	10	11	12	13
4/23/2024	12:00 AM	0	0	0	0	0	0	0	0	0	0	0	0	0
4/23/2024	12:15 AM	0	0	0	0	0	0	0	0	0	0	0	0	0
4/23/2024	12:30 AM	0	0	0	0	0	0	0	0	0	0	0	0	0
4/23/2024	12:45 AM	0	0	0	0	0	0	0	0	0	0	0	0	0
4/23/2024	1:00 AM	0	0	0	0	0	0	0	0	0	0	0	0	0
4/23/2024	1:15 AM	0	0	0	0	0	0	0	0	0	0	0	0	0
4/23/2024	1:30 AM	0	0	0	0	0	0	0	0	0	0	0	0	0
4/23/2024	1:45 AM	0	0	0	0	0	0	0	0	0	0	0	0	0
4/23/2024	2:00 AM	0	0	0	0	0	0	0	0	0	0	0	0	0
4/23/2024	2:15 AM	0	0	0	0	0	0	0	0	0	0	0	0	0
4/23/2024	2:30 AM	0	0	0	0	0	0	0	0	0	0	0	0	0
4/23/2024	2:45 AM	0	0	0	0	0	0	0	0	0	0	0	0	0
4/23/2024	3:00 AM	0	0	0	0	0	0	0	0	0	0	0	0	0
4/23/2024	3:15 AM	0	0	0	0	0	0	0	0	0	0	0	0	0
4/23/2024	3:30 AM	0	0	0	0	0	0	0	0	0	0	0	0	0
4/23/2024	3:45 AM	0	0	0	0	0	0	0	0	0	0	0	0	0
4/23/2024	4:00 AM	0	0	0	0	0	0	0	0	0	0	0	0	0
4/23/2024	4:15 AM	0	0	0	0	0	0	0	0	0	0	0	0	0
4/23/2024	4:30 AM	0	0	0	0	0	0	0	0	0	0	0	0	0
4/23/2024	4:45 AM	0	0	0	0	0	0	0	0	0	0	0	0	0
4/23/2024	5:00 AM	0	0	0	0	0	0	0	0	0	0	0	0	0
4/23/2024	5:15 AM	0	0	0	0	0	0	0	0	0	0	0	0	0
4/23/2024	5:30 AM	0	0	0	0	0	0	0	0	0	0	0	0	0
4/23/2024	5:45 AM	0	0	0	0	0	0	0	0	0	0	0	0	0
4/23/2024	6:00 AM	0	0	0	0	0	0	0	0	0	0	0	0	0
4/23/2024	6:15 AM	0	0	0	0	0	0	0	0	0	0	0	0	0
4/23/2024	6:30 AM	0	0	0	0	0	0	0	0	0	0	0	0	0
4/23/2024	6:45 AM	0	0	0	0	0	0	0	0	0	0	0	0	0
4/23/2024	7:00 AM	0	0	0	0	0	0	0	0	0	0	0	0	0
4/23/2024	7:15 AM	0	0	0	0	0	0	0	0	0	0	0	0	0
4/23/2024	7:30 AM	0	0	0	0	0	0	0	0	0	0	0	0	0
4/23/2024	7:45 AM	0	0	0	0	0	0	0	0	0	0	0	0	0
4/23/2024	8:00 AM	0	0	0	0	0	0	0	0	0	0	0	0	0
4/23/2024	8:15 AM	0	0	0	0	0	0	0	0	0	0	0	0	0
4/23/2024	8:30 AM	0	0	0	0	0	0	0	0	0	0	0	0	0
4/23/2024	8:45 AM	0	0	0	0	0	0	0	0	0	0	0	0	0
4/23/2024	9:00 AM	0	0	0	0	0	0	0	0	0	0	0	0	0
4/23/2024	9:15 AM	0	0	0	0	0	0	0	0	0	0	0	0	0
4/23/2024	9:30 AM	0	0	0	0	0	0	0	0	0	0	0	0	0
4/23/2024	9:45 AM	0	0	0	0	0	0	0	0	0	0	0	0	0
4/23/2024	10:00 AM	0	0	0	0	0	0	0	0	0	0	0	0	0
4/23/2024	10:15 AM	0	0	0	0	0	0	0	0	0	0	0	0	0
4/23/2024	10:30 AM	0	0	0	0	0	0	0	0	0	0	0	0	0
4/23/2024	10:45 AM	0	0	0	0	0	0	0	0	0	0	0	0	0
4/23/2024	11:00 AM	0	0	0	0	0	0	0	0	0	0	0	0	0
4/23/2024	11:15 AM	0	0	0	0	0	0	0	0	0	0	0	0	0
4/23/2024	11:30 AM	0	0	0	0	0	0	0	0	0	0	0	0	0
4/23/2024	11:45 AM	0	0	0	0	0	0	0	0	0	0	0	0	0
4/23/2024	12:00 PM	0	0	0	0	0	0	0	0	0	0	0	0	0
4/23/2024	12:15 PM	0	0	0	0	0	0	0	0	0	0	0	0	0
4/23/2024	12:30 PM	0	0	0	0	0	0	0	0	0	0	0	0	0
4/23/2024	12:45 PM	0	0	0	0	0	0	0	0	0	0	0	0	0
4/23/2024	1:00 PM	0	0	0	0	0	0	0	0	0	0	0	0	0
4/23/2024	1:15 PM	0	0	0	0	0	0	0	0	0	0	0	0	0
4/23/2024	1:30 PM	0	0	0	0	0	0	0	0	0	0	0	0	0
4/23/2024	1:45 PM	0	0	0	0	0	0	0	0	0	0	0	0	0
4/23/2024	2:00 PM	0	0	0	0	0	0	0	0	0	0	0	0	0
4/23/2024	2:15 PM	0	0	0	0	0	0	0	0	0	0	0	0	0
4/23/2024	2:30 PM	0	0	0	0	0	0	0	0	0	0	0	0	0
4/23/2024	2:45 PM	0	0	0	0	0	0	0	0	0	0	0	0	0
4/23/2024	3:00 PM	0	0	0	0	0	0	0	0	0	0	0	0	0
4/23/2024	3:15 PM	0	0	0	0	0	0	0	0	0	0	0	0	0
4/23/2024	3:30 PM	0	0	0	0	0	0	0	0	0	0	0	0	0
4/23/2024	3:45 PM	0	0	0	0	0	0	0	0	0	0	0	0	0
4/23/2024	4:00 PM	0	0	0	0	0	0	0	0	0	0	0	0	0
4/23/2024	4:15 PM	0	0	0	0	0	0	0	0	0	0	0	0	0
4/23/2024	4:30 PM	0	0	0	0	0	0	0	0	0	0	0	0	0
4/23/2024	4:45 PM	0	0	0	0	0	0	0	0	0	0	0	0	0
4/23/2024	5:00 PM	0	0	0	0	0	0	0	0	0	0	0	0	0
4/23/2024	5:15 PM	0	0	0	0	0	0	0	0	0	0	0	0	0
4/23/2024	5:30 PM	0	0	0	0	0	0	0	0	0	0	0	0	0
4/23/2024	5:45 PM	0	0	0	0	0	0	0	0	0	0	0	0	0
4/23/2024	6:00 PM	0	0	0	0	0	0	0	0	0	0	0	0	0
4/23/2024	6:15 PM	0	0	0	0	0	0	0	0	0	0	0	0	0
4/23/2024	6:30 PM	0	0	0	0	0	0	0	0	0	0	0	0	0
4/23/2024	6:45 PM	0	0	0	0	0	0	0	0	0	0	0	0	0
4/23/2024	7:00 PM	0	0	0	0	0	0	0	0	0	0	0	0	0
4/23/2024	7:15 PM	0	0	0	0	0	0	0	0	0	0	0	0	0
4/23/2024	7:30 PM	0	0	0	0	0	0	0	0	0	0	0	0	0
4/23/2024	7:45 PM	0	0	0	0	0	0	0	0	0	0	0	0	0
4/23/2024	8:00 PM	0	0	0	0	0	0	0	0	0	0	0	0	0
4/23/2024	8:15 PM	0	0	0	0	0	0	0	0	0	0	0	0	0
4/23/2024	8:30 PM	0	0	0	0	0	0	0	0	0	0	0	0	0
4/23/2024	8:45 PM	0	0	0	0	0	0	0	0	0	0	0	0	0
4/23/2024	9:00 PM	0	0	0	0	0	0	0	0	0	0	0	0	0
4/23/2024	9:15 PM	0	0	0	0	0	0	0	0	0	0	0	0	0
4/23/2024	9:30 PM	0	0	0	0	0	0	0	0	0	0	0	0	0
4/23/2024	9:45 PM	0	0	0	0	0	0	0	0	0	0	0	0	0
4/23/2024	10:00 PM	0	0	0	0	0	0	0	0	0	0	0	0	0
4/23/2024	10:15 PM	0	0	0	0	0	0	0	0	0	0	0	0	0
4/23/2024	10:30 PM	0	0	0	0	0	0	0	0	0	0	0	0	0
4/23/2024	10:45 PM	0	0	0	0	0	0	0	0	0	0	0	0	0
4/23/2024	11:00 PM	0	0	0	0	0	0	0	0	0	0	0	0	0
4/23/2024	11:15 PM	0	0	0	0	0	0	0	0	0	0	0	0	0
4/23/2024	11:30 PM	0	0	0	0	0	0	0	0	0	0	0	0	0
4/23/2024	11:45 PM	0	0	0	0	0	0	0	0	0	0	0	0	0

4/24/2024	12:00 AM	0	0	0	0	0	0	0	0	0	0	0	0	0
4/24/2024	12:15 AM	0	0	0	0	0	0	0	0	0	0	0	0	0
4/24/2024	12:30 AM	0	0	0	0	0	0	0	0	0	0	0	0	0
4/24/2024	12:45 AM	0	0	0	0	0	0	0	0	0	0	0	0	0
4/24/2024	1:00 AM	0	0	0	0	0	0	0	0	0	0	0	0	0
4/24/2024	1:15 AM	0	0	0	0	0	0	0	0	0	0	0	0	0
4/24/2024	1:30 AM	0	0	0	0	0	0	0	0	0	0	0	0	0
4/24/2024	1:45 AM	0	0	0	0	0	0	0	0	0	0	0	0	0
4/24/2024	2:00 AM	0	0	0	0	0	0	0	0	0	0	0	0	0
4/24/2024	2:15 AM	0	0	0	0	0	0	0	0	0	0	0	0	0
4/24/2024	2:30 AM	0	0	0	0	0	0	0	0	0	0	0	0	0
4/24/2024	2:45 AM	0	0	0	0	0	0	0	0	0	0	0	0	0
4/24/2024	3:00 AM	0	0	0	0	0	0	0	0	0	0	0	0	0
4/24/2024	3:15 AM	0	0	0	0	0	0	0	0	0	0	0	0	0
4/24/2024	3:30 AM	0	0	0	0	0	0	0	0	0	0	0	0	0
4/24/2024	3:45 AM	0	0	0	0	0	0	0	0	0	0	0	0	0
4/24/2024	4:00 AM	0	0	0	0	0	0	0	0	0	0	0	0	0
4/24/2024	4:15 AM	0	0	0	0	0	0	0	0	0	0	0	0	0
4/24/2024	4:30 AM	0	0	0	0	0	0	0	0	0	0	0	0	0
4/24/2024	4:45 AM	0	0	0	0	0	0	0	0	0	0	0	0	0
4/24/2024	5:00 AM	0	0	0	0	0	0	0	0	0	0	0	0	0
4/24/2024	5:15 AM	0	0	0	0	0	0	0	0	0	0	0	0	0
4/24/2024	5:30 AM	0	0	0	0	0	0	0	0	0	0	0	0	0
4/24/2024	5:45 AM	0	0	0	0	0	0	0	0	0	0	0	0	0
4/24/2024	6:00 AM	0	0	0	0	0	0	0	0	0	0	0	0	0
4/24/2024	6:15 AM	0	0	0	0	0	0	0	0	0	0	0	0	0
4/24/2024	6:30 AM	0	0	0	0	0	0	0	0	0	0	0	0	0
4/24/2024	6:45 AM	0	0	0	0	0	0	0	0	0	0	0	0	0
4/24/2024	7:00 AM	0	0	0	0	0	0	0	0	0	0	0	0	0
4/24/2024	7:15 AM	0	0	0	0	0	0	0	0	0	0	0	0	0
4/24/2024	7:30 AM	0	0	0	0	0	0	0	0	0	0	0	0	0
4/24/2024	7:45 AM	0	0	0	0	0	0	0	0	0	0	0	0	0
4/24/2024	8:00 AM	0	0	0	0	0	0	0	0	0	0	0	0	0
4/24/2024	8:15 AM	0	0	0	0	0	0	0	0	0	0	0	0	0
4/24/2024	8:30 AM	0	0	0	0	0	0	0	0	0	0	0	0	0
4/24/2024	8:45 AM	0	0	0	0	0	0	0	0	0	0	0	0	0
4/24/2024	9:00 AM	0	0	0	0	0	0	0	0	0	0	0	0	0
4/24/2024	9:15 AM	0	0	0	0	0	0	0	0	0	0	0	0	0
4/24/2024	9:30 AM	0	0	0	0	0	0	0	0	0	0	0	0	0
4/24/2024	9:45 AM	0	0	0	0	0	0	0	0	0	0	0	0	0
4/24/2024	10:00 AM	0	0	0	0	0	0	0	0	0	0	0	0	0
4/24/2024	10:15 AM	0	0	0	0	0	0	0	0	0	0	0	0	0
4/24/2024	10:30 AM	0	0	0	0	0	0	0	0	0	0	0	0	0
4/24/2024	10:45 AM	0	0	0	0	0	0	0	0	0	0	0	0	0
4/24/2024	11:00 AM	0	0	0	0	0	0	0	0	0	0	0	0	0
4/24/2024	11:15 AM	0	0	0	0	0	0	0	0	0	0	0	0	0
4/24/2024	11:30 AM	0	0	0	0	0	0	0	0	0	0	0	0	0
4/24/2024	11:45 AM	0	0	0	0	0	0	0	0	0	0	0	0	0
4/24/2024	12:00 PM	0	0	0	0	0	0	0	0	0	0	0	0	0
4/24/2024	12:15 PM	0	0	0	0	0	0	0	0	0	0	0	0	0
4/24/2024	12:30 PM	0	0	0	0	0	0	0	0	0	0	0	0	0
4/24/2024	12:45 PM	0	0	0	0	0	0	0	0	0	0	0	0	0
4/24/2024	1:00 PM	0	0	0	0	0	0	0	0	0	0	0	0	0
4/24/2024	1:15 PM	0	0	0	0	0	0	0	0	0	0	0	0	0
4/24/2024	1:30 PM	0	0	0	0	0	0	0	0	0	0	0	0	0
4/24/2024	1:45 PM	0	0	0	0	0	0	0	0	0	0	0	0	0
4/24/2024	2:00 PM	0	0	0	0	0	0	0	0	0	0	0	0	0
4/24/2024	2:15 PM	0	0	0	0	0	0	0	0	0	0	0	0	0
4/24/2024	2:30 PM	0	0	0	0	0	0	0	0	0	0	0	0	0
4/24/2024	2:45 PM	0	0	0	0	0	0	0	0	0	0	0	0	0
4/24/2024	3:00 PM	0	0	0	0	0	0	0	0	0	0	0	0	0
4/24/2024	3:15 PM	0	0	0	0	0	0	0	0	0	0	0	0	0
4/24/2024	3:30 PM	0	0	0	0	0	0	0	0	0	0	0	0	0
4/24/2024	3:45 PM	0	0	0	0	0	0	0	0	0	0	0	0	0
4/24/2024	4:00 PM	0	0	0	0	0	0	0	0	0	0	0	0	0
4/24/2024	4:15 PM	0	0	0	0	0	0	0	0	0	0	0	0	0
4/24/2024	4:30 PM	0	0	0	0	0	0	0	0	0	0	0	0	0
4/24/2024	4:45 PM	0	0	0	0	0	0	0	0	0	0	0	0	0
4/24/2024	5:00 PM	0	0	0	0	0	0	0	0	0	0	0	0	0
4/24/2024	5:15 PM	0	0	0	0	0	0	0	0	0	0	0	0	0
4/24/2024	5:30 PM	0	0	0	0	0	0	0	0	0	0	0	0	0
4/24/2024	5:45 PM	0	0	0	0	0	0	0	0	0	0	0	0	0
4/24/2024	6:00 PM	0	0	0	0	0	0	0	0	0	0	0	0	0
4/24/2024	6:15 PM	0	0	0	0	0	0	0	0	0	0	0	0	0
4/24/2024	6:30 PM	0	0	0	0	0	0	0	0	0	0	0	0	0
4/24/2024	6:45 PM	0	0	0	0	0	0	0	0	0	0	0	0	0
4/24/2024	7:00 PM	0	0	0	0	0	0	0	0	0	0	0	0	0
4/24/2024	7:15 PM	0	0	0	0	0	0	0	0	0	0	0	0	0
4/24/2024	7:30 PM	0	0	0	0	0	0	0	0	0	0	0	0	0
4/24/2024	7:45 PM	0	0	0	0	0	0	0	0	0	0	0	0	0
4/24/2024	8:00 PM	0	0	0	0	0	0	0	0	0	0	0	0	0
4/24/2024	8:15 PM	0	0	0	0	0	0	0	0	0	0	0	0	0
4/24/2024	8:30 PM	0	0	0	0	0	0	0	0	0	0	0	0	0
4/24/2024	8:45 PM	0	0	0	0	0	0	0	0	0	0	0	0	0
4/24/2024	9:00 PM	0	0	0	0	0	0	0	0	0	0	0	0	0
4/24/2024	9:15 PM	0	0	0	0	0	0	0	0	0	0	0	0	0
4/24/2024	9:30 PM	0	0	0	0	0	0	0	0	0	0	0	0	0
4/24/2024	9:45 PM	0	0	0	0	0	0	0	0	0	0	0	0	0
4/24/2024	10:00 PM	0	0	0	0	0	0	0	0	0	0	0	0	0
4/24/2024	10:15 PM	0	0	0	0	0	0	0	0	0	0	0	0	0
4/24/2024	10:30 PM	0	0	0	0	0	0	0	0	0	0	0	0	0
4/24/2024	10:45 PM	0	0	0	0	0	0	0	0	0	0	0	0	0
4/24/2024	11:00 PM	0	0	0	0	0	0	0	0	0	0	0	0	0
4/24/2024	11:15 PM	0	0	0	0	0	0	0	0	0	0	0	0	0
4/24/2024	11:30 PM	0	0	0	0	0	0	0	0	0	0	0	0	0
4/24/2024	11:45 PM	0	0	0	0	0	0	0	0	0	0	0	0	0

4/25/2024	12:00 AM	0	0	0	0	0	0	0	0	0	0	0	0	0
4/25/2024	12:15 AM	0	0	0	0	0	0	0	0	0	0	0	0	0
4/25/2024	12:30 AM	0	0	0	0	0	0	0	0	0	0	0	0	0
4/25/2024	12:45 AM	0	0	0	0	0	0	0	0	0	0	0	0	0
4/25/2024	1:00 AM	0	0	0	0	0	0	0	0	0	0	0	0	0
4/25/2024	1:15 AM	0	0	0	0	0	0	0	0	0	0	0	0	0
4/25/2024	1:30 AM	0	0	0	0	0	0	0	0	0	0	0	0	0
4/25/2024	1:45 AM	0	0	0	0	0	0	0	0	0	0	0	0	0
4/25/2024	2:00 AM	0	0	0	0	0	0	0	0	0	0	0	0	0
4/25/2024	2:15 AM	0	0	0	0	0	0	0	0	0	0	0	0	0
4/25/2024	2:30 AM	0	0	0	0	0	0	0	0	0	0	0	0	0
4/25/2024	2:45 AM	0	0	0	0	0	0	0	0	0	0	0	0	0
4/25/2024	3:00 AM	0	0	0	0	0	0	0	0	0	0	0	0	0
4/25/2024	3:15 AM	0	0	0	0	0	0	0	0	0	0	0	0	0
4/25/2024	3:30 AM	0	0	0	0	0	0	0	0	0	0	0	0	0
4/25/2024	3:45 AM	0	0	0	0	0	0	0	0	0	0	0	0	0
4/25/2024	4:00 AM	0	0	0	0	0	0	0	0	0	0	0	0	0
4/25/2024	4:15 AM	0	0	0	0	0	0	0	0	0	0	0	0	0
4/25/2024	4:30 AM	0	0	0	0	0	0	0	0	0	0	0	0	0
4/25/2024	4:45 AM	0	0	0	0	0	0	0	0	0	0	0	0	0
4/25/2024	5:00 AM	0	0	0	0	0	0	0	0	0	0	0	0	0
4/25/2024	5:15 AM	0	0	0	0	0	0	0	0	0	0	0	0	0
4/25/2024	5:30 AM	0	0	0	0	0	0	0	0	0	0	0	0	0
4/25/2024	5:45 AM	0	0	0	0	0	0	0	0	0	0	0	0	0
4/25/2024	6:00 AM	0	0	0	0	0	0	0	0	0	0	0	0	0
4/25/2024	6:15 AM	0	0	0	0	0	0	0	0	0	0	0	0	0
4/25/2024	6:30 AM	0	0	0	0	0	0	0	0	0	0	0	0	0
4/25/2024	6:45 AM	0	0	0	0	0	0	0	0	0	0	0	0	0
4/25/2024	7:00 AM	0	0	0	0	0	0	0	0	0	0	0	0	0
4/25/2024	7:15 AM	0	0	0	0	0	0	0	0	0	0	0	0	0
4/25/2024	7:30 AM	0	0	0	0	0	0	0	0	0	0	0	0	0
4/25/2024	7:45 AM	0	0	0	0	0	0	0	0	0	0	0	0	0
4/25/2024	8:00 AM	0	0	0	0	0	0	0	0	0	0	0	0	0
4/25/2024	8:15 AM	0	0	0	0	0	0	0	0	0	0	0	0	0
4/25/2024	8:30 AM	0	0	0	0	0	0	0	0	0	0	0	0	0
4/25/2024	8:45 AM	0	0	0	0	0	0	0	0	0	0	0	0	0
4/25/2024	9:00 AM	0	0	0	0	0	0	0	0	0	0	0	0	0
4/25/2024	9:15 AM	0	0	0	0	0	0	0	0	0	0	0	0	0
4/25/2024	9:30 AM	0	0	0	0	0	0	0	0	0	0	0	0	0
4/25/2024	9:45 AM	0	0	0	0	0	0	0	0	0	0	0	0	0
4/25/2024	10:00 AM	0	0	0	0	0	0	0	0	0	0	0	0	0
4/25/2024	10:15 AM	0	0	0	0	0	0	0	0	0	0	0	0	0
4/25/2024	10:30 AM	0	0	0	0	0	0	0	0	0	0	0	0	0
4/25/2024	10:45 AM	0	0	0	0	0	0	0	0	0	0	0	0	0
4/25/2024	11:00 AM	0	0	0	0	0	0	0	0	0	0	0	0	0
4/25/2024	11:15 AM	0	0	0	0	0	0	0	0	0	0	0	0	0
4/25/2024	11:30 AM	0	0	0	0	0	0	0	0	0	0	0	0	0
4/25/2024	11:45 AM	0	0	0	0	0	0	0	0	0	0	0	0	0
4/25/2024	12:00 PM	0	0	0	0	0	0	0	0	0	0	0	0	0
4/25/2024	12:15 PM	0	0	0	0	0	0	0	0	0	0	0	0	0
4/25/2024	12:30 PM	0	0	0	0	0	0	0	0	0	0	0	0	0
4/25/2024	12:45 PM	0	0	0	0	0	0	0	0	0	0	0	0	0
4/25/2024	1:00 PM	0	0	0	0	0	0	0	0	0	0	0	0	0
4/25/2024	1:15 PM	0	0	0	0	0	0	0	0	0	0	0	0	0
4/25/2024	1:30 PM	0	0	0	0	0	0	0	0	0	0	0	0	0
4/25/2024	1:45 PM	0	0	0	0	0	0	0	0	0	0	0	0	0
4/25/2024	2:00 PM	0	0	0	0	0	0	0	0	0	0	0	0	0
4/25/2024	2:15 PM	0	0	0	0	0	0	0	0	0	0	0	0	0
4/25/2024	2:30 PM	0	0	0	0	0	0	0	0	0	0	0	0	0
4/25/2024	2:45 PM	0	0	0	0	0	0	0	0	0	0	0	0	0
4/25/2024	3:00 PM	0	0	0	0	0	0	0	0	0	0	0	0	0
4/25/2024	3:15 PM	0	0	0	0	0	0	0	0	0	0	0	0	0
4/25/2024	3:30 PM	0	0	0	0	0	0	0	0	0	0	0	0	0
4/25/2024	3:45 PM	0	0	0	0	0	0	0	0	0	0	0	0	0
4/25/2024	4:00 PM	0	0	0	0	0	0	0	0	0	0	0	0	0
4/25/2024	4:15 PM	0	0	0	0	0	0	0	0	0	0	0	0	0
4/25/2024	4:30 PM	0	0	0	0	0	0	0	0	0	0	0	0	0
4/25/2024	4:45 PM	0	0	0	0	0	0	0	0	0	0	0	0	0
4/25/2024	5:00 PM	0	0	0	0	0	0	0	0	0	0	0	0	0
4/25/2024	5:15 PM	0	0	0	0	0	0	0	0	0	0	0	0	0
4/25/2024	5:30 PM	0	0	0	0	0	0	0	0	0	0	0	0	0
4/25/2024	5:45 PM	0	0	0	0	0	0	0	0	0	0	0	0	0
4/25/2024	6:00 PM	0	0	0	0	0	0	0	0	0	0	0	0	0
4/25/2024	6:15 PM	0	0	0	0	0	0	0	0	0	0	0	0	0
4/25/2024	6:30 PM	0	0	0	0	0	0	0	0	0	0	0	0	0
4/25/2024	6:45 PM	0	0	0	0	0	0	0	0	0	0	0	0	0
4/25/2024	7:00 PM	0	0	0	0	0	0	0	0	0	0	0	0	0
4/25/2024	7:15 PM	0	0	0	0	0	0	0	0	0	0	0	0	0
4/25/2024	7:30 PM	0	0	0	0	0	0	0	0	0	0	0	0	0
4/25/2024	7:45 PM	0	0	0	0	0	0	0	0	0	0	0	0	0
4/25/2024	8:00 PM	0	0	0	0	0	0	0	0	0	0	0	0	0
4/25/2024	8:15 PM	0	0	0	0	0	0	0	0	0	0	0	0	0
4/25/2024	8:30 PM	0	0	0	0	0	0	0	0	0	0	0	0	0
4/25/2024	8:45 PM	0	0	0	0	0	0	0	0	0	0	0	0	0
4/25/2024	9:00 PM	0	0	0	0	0	0	0	0	0	0	0	0	0
4/25/2024	9:15 PM	0	0	0	0	0	0	0	0	0	0	0	0	0
4/25/2024	9:30 PM	0	0	0	0	0	0	0	0	0	0	0	0	0
4/25/2024	9:45 PM	0	0	0	0	0	0	0	0	0	0	0	0	0
4/25/2024	10:00 PM	0	0	0	0	0	0	0	0	0	0	0	0	0
4/25/2024	10:15 PM	0	0	0	0	0	0	0	0	0	0	0	0	0
4/25/2024	10:30 PM	0	0	0	0	0	0	0	0	0	0	0	0	0
4/25/2024	10:45 PM	0	0	0	0	0	0	0	0	0	0	0	0	0
4/25/2024	11:00 PM	0	0	0	0	0	0	0	0	0	0	0	0	0
4/25/2024	11:15 PM	0	0	0	0	0	0	0	0	0	0	0	0	0
4/25/2024	11:30 PM	0	0	0	0	0	0	0	0	0	0	0	0	0
4/25/2024	11:45 PM	0	0	0	0	0	0	0	0	0	0	0	0	0

NB
File Name:
Start Date: 4/23/2024
Start Time: 0
Site Code: 17
Station ID: 1
Location 1: I-26 James F. Byrnes Expy On/Off-Ramp, south of US-176 Broad River Rd
Location 2:

Date	Time	1	2	3	4	5	6	7	8	9	10	11	12	13
4/23/2024	12:00 AM	0	0	0	0	0	0	0	0	0	0	0	0	0
4/23/2024	12:15 AM	0	0	0	0	0	0	0	0	0	0	0	0	0
4/23/2024	12:30 AM	0	0	0	0	0	0	0	0	0	0	0	0	0
4/23/2024	12:45 AM	0	0	0	0	0	0	0	0	0	0	0	0	0
4/23/2024	1:00 AM	0	0	0	0	0	0	0	0	0	0	0	0	0
4/23/2024	1:15 AM	0	0	0	0	0	0	0	0	0	0	0	0	0
4/23/2024	1:30 AM	0	0	0	0	0	0	0	0	0	0	0	0	0
4/23/2024	1:45 AM	0	0	0	0	0	0	0	0	0	0	0	0	0
4/23/2024	2:00 AM	0	0	0	0	0	0	0	0	0	0	0	0	0
4/23/2024	2:15 AM	0	0	0	0	0	0	0	0	0	0	0	0	0
4/23/2024	2:30 AM	0	0	0	0	0	0	0	0	0	0	0	0	0
4/23/2024	2:45 AM	0	0	0	0	0	0	0	0	0	0	0	0	0
4/23/2024	3:00 AM	0	0	0	0	0	0	0	0	0	0	0	0	0
4/23/2024	3:15 AM	0	0	0	0	0	0	0	0	0	0	0	0	0
4/23/2024	3:30 AM	0	0	0	0	0	0	0	0	0	0	0	0	0
4/23/2024	3:45 AM	0	0	0	0	0	0	0	0	0	0	0	0	0
4/23/2024	4:00 AM	0	0	0	0	0	0	0	0	0	0	0	0	0
4/23/2024	4:15 AM	0	0	0	0	0	0	0	0	0	0	0	0	0
4/23/2024	4:30 AM	0	0	0	0	0	0	0	0	0	0	0	0	0
4/23/2024	4:45 AM	0	0	0	0	0	0	0	0	0	0	0	0	0
4/23/2024	5:00 AM	0	0	0	0	0	0	0	0	0	0	0	0	0
4/23/2024	5:15 AM	0	0	0	0	0	0	0	0	0	0	0	0	0
4/23/2024	5:30 AM	0	0	0	0	0	0	0	0	0	0	0	0	0
4/23/2024	5:45 AM	0	0	0	0	0	0	0	0	0	0	0	0	0
4/23/2024	6:00 AM	0	0	0	0	0	0	0	0	0	0	0	0	0
4/23/2024	6:15 AM	0	0	0	0	0	0	0	0	0	0	0	0	0
4/23/2024	6:30 AM	0	0	0	0	0	0	0	0	0	0	0	0	0
4/23/2024	6:45 AM	0	0	0	0	0	0	0	0	0	0	0	0	0
4/23/2024	7:00 AM	0	0	0	0	0	0	0	0	0	0	0	0	0
4/23/2024	7:15 AM	0	0	0	0	0	0	0	0	0	0	0	0	0
4/23/2024	7:30 AM	0	0	0	0	0	0	0	0	0	0	0	0	0
4/23/2024	7:45 AM	0	0	0	0	0	0	0	0	0	0	0	0	0
4/23/2024	8:00 AM	0	0	0	0	0	0	0	0	0	0	0	0	0
4/23/2024	8:15 AM	0	0	0	0	0	0	0	0	0	0	0	0	0
4/23/2024	8:30 AM	0	0	0	0	0	0	0	0	0	0	0	0	0
4/23/2024	8:45 AM	0	0	0	0	0	0	0	0	0	0	0	0	0
4/23/2024	9:00 AM	0	0	0	0	0	0	0	0	0	0	0	0	0
4/23/2024	9:15 AM	0	0	0	0	0	0	0	0	0	0	0	0	0
4/23/2024	9:30 AM	0	0	0	0	0	0	0	0	0	0	0	0	0
4/23/2024	9:45 AM	0	0	0	0	0	0	0	0	0	0	0	0	0
4/23/2024	10:00 AM	0	0	0	0	0	0	0	0	0	0	0	0	0
4/23/2024	10:15 AM	0	0	0	0	0	0	0	0	0	0	0	0	0
4/23/2024	10:30 AM	0	0	0	0	0	0	0	0	0	0	0	0	0
4/23/2024	10:45 AM	0	0	0	0	0	0	0	0	0	0	0	0	0
4/23/2024	11:00 AM	0	0	0	0	0	0	0	0	0	0	0	0	0
4/23/2024	11:15 AM	0	0	0	0	0	0	0	0	0	0	0	0	0
4/23/2024	11:30 AM	0	0	0	0	0	0	0	0	0	0	0	0	0
4/23/2024	11:45 AM	0	0	0	0	0	0	0	0	0	0	0	0	0
4/23/2024	12:00 PM	0	0	0	0	0	0	0	0	0	0	0	0	0
4/23/2024	12:15 PM	0	0	0	0	0	0	0	0	0	0	0	0	0
4/23/2024	12:30 PM	0	0	0	0	0	0	0	0	0	0	0	0	0
4/23/2024	12:45 PM	0	0	0	0	0	0	0	0	0	0	0	0	0
4/23/2024	1:00 PM	0	0	0	0	0	0	0	0	0	0	0	0	0
4/23/2024	1:15 PM	0	0	0	0	0	0	0	0	0	0	0	0	0
4/23/2024	1:30 PM	0	0	0	0	0	0	0	0	0	0	0	0	0
4/23/2024	1:45 PM	0	0	0	0	0	0	0	0	0	0	0	0	0
4/23/2024	2:00 PM	0	0	0	0	0	0	0	0	0	0	0	0	0
4/23/2024	2:15 PM	0	0	0	0	0	0	0	0	0	0	0	0	0
4/23/2024	2:30 PM	0	0	0	0	0	0	0	0	0	0	0	0	0
4/23/2024	2:45 PM	0	0	0	0	0	0	0	0	0	0	0	0	0
4/23/2024	3:00 PM	0	0	0	0	0	0	0	0	0	0	0	0	0
4/23/2024	3:15 PM	0	0	0	0	0	0	0	0	0	0	0	0	0
4/23/2024	3:30 PM	0	0	0	0	0	0	0	0	0	0	0	0	0
4/23/2024	3:45 PM	0	0	0	0	0	0	0	0	0	0	0	0	0
4/23/2024	4:00 PM	0	0	0	0	0	0	0	0	0	0	0	0	0
4/23/2024	4:15 PM	0	0	0	0	0	0	0	0	0	0	0	0	0
4/23/2024	4:30 PM	0	0	0	0	0	0	0	0	0	0	0	0	0
4/23/2024	4:45 PM	0	0	0	0	0	0	0	0	0	0	0	0	0
4/23/2024	5:00 PM	0	0	0	0	0	0	0	0	0	0	0	0	0
4/23/2024	5:15 PM	0	0	0	0	0	0	0	0	0	0	0	0	0
4/23/2024	5:30 PM	0	0	0	0	0	0	0	0	0	0	0	0	0
4/23/2024	5:45 PM	0	0	0	0	0	0	0	0	0	0	0	0	0
4/23/2024	6:00 PM	0	0	0	0	0	0	0	0	0	0	0	0	0
4/23/2024	6:15 PM	0	7	3	0	0	0	0	0	0	0	0	0	0
4/23/2024	6:30 PM	0	10	4	0	0	0	0	0	0	0	0	0	0
4/23/2024	6:45 PM	0	14	4	0	0	0	0	0	0	0	0	0	0
4/23/2024	7:00 PM	0	20	6	0	0	0	0	0	0	0	0	0	0
4/23/2024	7:15 PM	0	15	4	0	0	0	0	0	0	0	0	0	0
4/23/2024	7:30 PM	0	16	5	0	0	0	0	0	0	0	0	0	0
4/23/2024	7:45 PM	0	18	5	0	0	0	0	0	0	0	0	0	0
4/23/2024	8:00 PM	0	15	3	0	0	0	0	0	0	0	0	0	0
4/23/2024	8:15 PM	0	20	2	0	0	0	0	0	0	0	0	0	0
4/23/2024	8:30 PM	0	20	0	0	0	0	0	0	1	0	0	0	0
4/23/2024	8:45 PM	0	15	0	0	0	0	0	0	2	0	0	0	0
4/23/2024	9:00 PM	0	16	0	0	0	0	0	0	2	0	0	0	0
4/23/2024	9:15 PM	0	10	0	0	0	0	0	0	2	0	0	0	0
4/23/2024	9:30 PM	0	8	0	0	0	0	0	0	1	0	0	0	0
4/23/2024	9:45 PM	0	9	0	0	0	0	0	0	0	0	0	0	0
4/23/2024	10:00 PM	0	5	0	0	0	0	0	0	0	0	0	0	0
4/23/2024	10:15 PM	0	4	0	0	0	0	0	0	0	0	0	0	0
4/23/2024	10:30 PM	0	2	0	0	0	0	0	0	0	0	0	0	0
4/23/2024	10:45 PM	0	1	1	0	1	0	0	0	0	0	0	0	0
4/23/2024	11:00 PM	0	2	1	0	1	0	0	0	0	0	0	0	0
4/23/2024	11:15 PM	0	3	1	0	1	0	0	0	0	0	0	0	0
4/23/2024	11:30 PM	0	3	1	0	1	1	0	0	0	0	0	0	0
4/23/2024	11:45 PM	0	3	0	0	0	1	0	0	0	0	0	0	0

4/24/2024	12:00 AM	0	3	0	0	0	1	0	0	0	0	0	0	0
4/24/2024	12:15 AM	0	2	0	0	0	1	0	0	0	0	0	0	0
4/24/2024	12:30 AM	0	2	1	0	0	0	0	0	0	0	0	0	0
4/24/2024	12:45 AM	0	2	1	0	0	0	0	0	0	0	0	0	0
4/24/2024	1:00 AM	0	2	1	0	0	1	0	0	0	0	0	0	0
4/24/2024	1:15 AM	0	3	1	0	0	1	0	0	0	0	0	0	0
4/24/2024	1:30 AM	0	4	0	0	0	1	0	0	0	0	0	0	0
4/24/2024	1:45 AM	0	7	1	0	0	1	0	0	0	0	0	0	0
4/24/2024	2:00 AM	0	8	2	0	0	0	0	0	0	0	0	0	0
4/24/2024	2:15 AM	0	8	3	0	0	0	0	0	0	0	0	0	0
4/24/2024	2:30 AM	0	8	3	0	0	0	0	0	0	0	0	0	0
4/24/2024	2:45 AM	0	5	2	0	0	0	0	0	0	0	0	0	0
4/24/2024	3:00 AM	0	4	1	0	0	0	0	0	0	0	0	0	0
4/24/2024	3:15 AM	0	3	0	0	0	0	0	0	0	0	0	0	0
4/24/2024	3:30 AM	0	3	0	0	0	0	0	0	0	0	0	0	0
4/24/2024	3:45 AM	0	2	0	0	0	0	0	0	0	0	0	0	0
4/24/2024	4:00 AM	0	2	0	0	0	0	0	0	0	0	0	0	0
4/24/2024	4:15 AM	0	3	0	0	0	0	0	0	0	0	0	0	0
4/24/2024	4:30 AM	0	2	0	0	0	0	0	0	0	0	0	0	0
4/24/2024	4:45 AM	0	4	0	0	0	0	0	0	0	0	0	0	0
4/24/2024	5:00 AM	0	9	0	0	0	1	0	0	0	0	0	0	0
4/24/2024	5:15 AM	0	10	0	0	0	1	0	0	0	0	0	0	0
4/24/2024	5:30 AM	0	11	1	0	0	1	0	0	0	0	0	0	0
4/24/2024	5:45 AM	0	15	4	0	1	1	0	0	0	0	0	0	0
4/24/2024	6:00 AM	0	16	7	0	1	0	0	0	0	0	0	0	0
4/24/2024	6:15 AM	0	24	13	0	1	0	0	0	0	0	0	0	0
4/24/2024	6:30 AM	0	34	18	0	1	0	0	0	0	0	0	0	0
4/24/2024	6:45 AM	0	46	18	0	0	0	0	0	0	0	0	0	0
4/24/2024	7:00 AM	0	61	25	0	0	0	0	1	0	0	0	0	0
4/24/2024	7:15 AM	0	70	22	0	0	0	0	1	0	0	0	0	0
4/24/2024	7:30 AM	1	70	18	0	0	0	0	1	0	0	0	0	0
4/24/2024	7:45 AM	1	67	17	0	0	1	0	1	0	0	0	0	0
4/24/2024	8:00 AM	1	49	12	0	0	1	0	0	0	0	0	0	0
4/24/2024	8:15 AM	1	41	14	0	0	1	0	0	0	0	0	0	0
4/24/2024	8:30 AM	0	43	15	1	0	1	0	0	0	0	0	0	0
4/24/2024	8:45 AM	0	42	17	1	0	0	0	0	0	0	0	0	0
4/24/2024	9:00 AM	0	54	14	1	0	0	0	0	0	0	0	0	0
4/24/2024	9:15 AM	1	48	10	1	1	0	0	0	0	0	0	0	0
4/24/2024	9:30 AM	1	41	9	0	2	0	0	0	0	0	0	0	0
4/24/2024	9:45 AM	1	30	7	0	2	0	0	0	0	0	0	0	0
4/24/2024	10:00 AM	1	16	6	0	2	0	0	0	0	0	0	0	0
4/24/2024	10:15 AM	0	13	5	0	1	0	0	0	0	0	0	0	0
4/24/2024	10:30 AM	0	9	5	0	0	0	0	0	0	0	0	0	0
4/24/2024	10:45 AM	0	6	3	0	0	0	0	0	0	0	0	0	0
4/24/2024	11:00 AM	0	10	5	1	0	0	0	0	1	0	0	0	0
4/24/2024	11:15 AM	0	15	7	1	1	1	0	0	2	0	0	0	0
4/24/2024	11:30 AM	0	19	8	1	2	1	0	0	2	0	0	0	0
4/24/2024	11:45 AM	0	22	9	1	2	1	0	0	2	0	0	0	0
4/24/2024	12:00 PM	0	21	10	0	2	1	0	0	1	0	0	0	0
4/24/2024	12:15 PM	0	18	11	0	1	1	0	0	0	0	0	0	0
4/24/2024	12:30 PM	0	23	8	0	0	1	0	0	0	0	0	0	0
4/24/2024	12:45 PM	0	32	10	0	0	1	0	2	0	0	0	0	0
4/24/2024	1:00 PM	0	34	11	0	0	1	0	2	0	0	0	0	0
4/24/2024	1:15 PM	0	35	12	0	1	0	0	2	1	0	0	0	0
4/24/2024	1:30 PM	0	28	15	0	2	0	0	2	1	0	0	0	0
4/24/2024	1:45 PM	0	20	12	0	3	0	0	0	1	0	0	0	0
4/24/2024	2:00 PM	0	19	7	0	3	0	0	0	1	0	0	0	0
4/24/2024	2:15 PM	0	20	3	0	2	0	0	0	0	0	0	0	0
4/24/2024	2:30 PM	0	25	2	0	3	0	0	0	0	0	0	0	0
4/24/2024	2:45 PM	0	36	5	0	2	0	0	0	0	0	0	0	0
4/24/2024	3:00 PM	0	45	8	0	2	0	0	0	0	0	0	0	0
4/24/2024	3:15 PM	0	53	10	0	3	0	0	0	0	0	0	0	0
4/24/2024	3:30 PM	0	58	11	0	1	0	0	0	0	0	0	0	0
4/24/2024	3:45 PM	0	56	10	0	2	2	0	0	1	0	0	0	0
4/24/2024	4:00 PM	0	54	10	0	2	2	0	0	1	0	0	0	0
4/24/2024	4:15 PM	0	50	11	0	1	2	0	0	1	0	0	0	0
4/24/2024	4:30 PM	0	47	15	0	1	2	0	0	1	0	0	0	0
4/24/2024	4:45 PM	0	42	16	0	2	0	0	0	0	0	0	0	0
4/24/2024	5:00 PM	0	42	15	0	2	0	0	0	0	0	0	0	0
4/24/2024	5:15 PM	0	47	14	0	3	0	0	0	0	0	0	0	0
4/24/2024	5:30 PM	0	44	10	0	3	0	0	0	0	0	0	0	0
4/24/2024	5:45 PM	0	52	9	0	1	0	0	0	0	0	0	0	0
4/24/2024	6:00 PM	0	49	10	0	1	0	0	0	0	0	0	0	0
4/24/2024	6:15 PM	0	42	10	0	0	0	0	0	1	0	0	0	0
4/24/2024	6:30 PM	1	42	8	0	0	0	0	0	1	0	0	0	0
4/24/2024	6:45 PM	1	27	7	0	0	0	0	0	1	0	0	0	0
4/24/2024	7:00 PM	1	20	5	0	0	1	0	0	1	0	0	0	0
4/24/2024	7:15 PM	1	14	3	0	0	1	0	0	0	0	0	0	0
4/24/2024	7:30 PM	0	11	4	0	0	1	0	0	0	0	0	0	0
4/24/2024	7:45 PM	0	16	4	0	0	1	0	0	0	0	0	0	0
4/24/2024	8:00 PM	0	16	3	0	0	0	0	0	0	0	0	0	0
4/24/2024	8:15 PM	0	19	3	0	0	0	0	0	1	0	0	0	0
4/24/2024	8:30 PM	0	16	1	0	0	0	0	0	1	0	0	0	0
4/24/2024	8:45 PM	0	11	0	0	0	0	0	0	1	0	0	0	0
4/24/2024	9:00 PM	0	11	0	0	0	0	0	0	1	0	0	0	0
4/24/2024	9:15 PM	0	7	0	0	0	0	0	0	0	0	0	0	0
4/24/2024	9:30 PM	0	6	0	0	0	0	0	0	0	0	0	0	0
4/24/2024	9:45 PM	0	8	0	0	0	0	0	0	0	0	0	0	0
4/24/2024	10:00 PM	0	8	0	0	0	0	0	0	0	0	0	0	0
4/24/2024	10:15 PM	0	8	0	0	0	0	0	0	0	0	0	0	0
4/24/2024	10:30 PM	0	7	0	0	0	0	0	0	0	0	0	0	0
4/24/2024	10:45 PM	0	5	0	0	0	0	0	0	0	0	0	0	0
4/24/2024	11:00 PM	0	2	0	0	0	0	0	0	0	0	0	0	0
4/24/2024	11:15 PM	0	2	0	0	0	0	0	0	0	0	0	0	0
4/24/2024	11:30 PM	0	3	0	0	1	0	0	0	0	0	0	0	0
4/24/2024	11:45 PM	0	2	0	0	1	0	0	0	0	0	0	0	0

4/25/2024	12:00 AM	0	2	0	0	1	0	0	0	0	0	0	0	0
4/25/2024	12:15 AM	0	1	0	0	1	0	0	0	0	0	0	0	0
4/25/2024	12:30 AM	0	1	0	0	1	0	0	0	0	0	0	0	0
4/25/2024	12:45 AM	0	1	0	0	2	0	0	0	0	0	0	0	0
4/25/2024	1:00 AM	0	1	0	0	2	0	0	0	0	0	0	0	0
4/25/2024	1:15 AM	0	1	0	0	2	0	0	0	0	0	0	0	0
4/25/2024	1:30 AM	0	0	0	0	2	0	0	0	0	0	0	0	0
4/25/2024	1:45 AM	0	1	0	0	1	0	0	0	0	0	0	0	0
4/25/2024	2:00 AM	0	4	0	0	1	0	0	0	0	0	0	0	0
4/25/2024	2:15 AM	0	5	0	0	1	0	0	0	0	0	0	0	0
4/25/2024	2:30 AM	0	6	0	0	0	0	0	0	0	0	0	0	0
4/25/2024	2:45 AM	0	5	0	0	0	0	0	0	1	0	0	0	0
4/25/2024	3:00 AM	0	3	0	0	0	0	0	0	1	0	0	0	0
4/25/2024	3:15 AM	0	2	0	0	0	0	0	0	1	0	0	0	0
4/25/2024	3:30 AM	0	1	0	0	0	0	0	0	1	0	0	0	0
4/25/2024	3:45 AM	0	1	0	0	0	0	0	0	0	0	0	0	0
4/25/2024	4:00 AM	0	0	0	0	0	0	0	0	0	0	0	0	0
4/25/2024	4:15 AM	0	1	0	0	0	0	0	0	0	0	0	0	0
4/25/2024	4:30 AM	0	2	0	0	0	0	0	0	0	0	0	0	0
4/25/2024	4:45 AM	0	4	0	0	0	0	0	0	0	0	0	0	0
4/25/2024	5:00 AM	0	5	0	0	1	0	0	0	0	0	0	0	0
4/25/2024	5:15 AM	0	6	0	0	1	0	0	0	0	0	0	0	0
4/25/2024	5:30 AM	0	12	0	0	1	0	0	0	0	0	0	0	0
4/25/2024	5:45 AM	0	12	0	0	1	0	0	0	0	0	0	0	0
4/25/2024	6:00 AM	0	15	3	0	0	0	0	0	0	0	0	0	0
4/25/2024	6:15 AM	0	20	9	0	1	0	0	0	0	0	0	0	0
4/25/2024	6:30 AM	0	25	12	0	1	0	0	0	0	0	0	0	0
4/25/2024	6:45 AM	0	42	20	0	1	0	0	0	1	0	0	0	0
4/25/2024	7:00 AM	0	66	23	0	2	1	0	0	1	0	0	0	0
4/25/2024	7:15 AM	0	71	22	0	1	1	0	0	1	0	0	0	0
4/25/2024	7:30 AM	0	79	23	0	1	1	0	0	1	0	0	0	0
4/25/2024	7:45 AM	0	67	19	0	1	1	0	0	0	0	0	0	0
4/25/2024	8:00 AM	0	47	17	0	0	0	0	0	1	1	0	0	0
4/25/2024	8:15 AM	0	39	16	0	0	0	0	0	2	1	0	0	0
4/25/2024	8:30 AM	0	27	20	0	0	0	0	0	3	1	0	0	0
4/25/2024	8:45 AM	0	29	20	0	1	0	0	0	3	1	0	0	0
4/25/2024	9:00 AM	0	28	20	0	2	0	0	0	2	0	0	0	0
4/25/2024	9:15 AM	0	37	21	0	2	2	0	0	1	0	0	0	0
4/25/2024	9:30 AM	0	35	19	1	2	2	0	0	0	0	0	0	0
4/25/2024	9:45 AM	0	33	21	1	1	4	0	0	0	0	0	0	0
4/25/2024	10:00 AM	1	29	19	1	1	4	0	0	0	0	0	0	0
4/25/2024	10:15 AM	1	25	18	1	1	2	0	0	0	0	0	0	0
4/25/2024	10:30 AM	1	28	12	0	1	4	0	0	0	0	0	0	0
4/25/2024	10:45 AM	2	32	8	0	1	2	0	0	1	0	0	0	0
4/25/2024	11:00 AM	1	35	9	0	0	2	0	0	1	0	0	0	0
4/25/2024	11:15 AM	1	31	9	0	1	2	0	0	1	0	0	0	0
4/25/2024	11:30 AM	1	32	14	0	1	0	0	1	1	0	0	0	0
4/25/2024	11:45 AM	0	29	15	0	2	0	0	1	0	0	0	0	0
4/25/2024	12:00 PM	0	31	15	0	2	0	0	1	0	0	0	0	0
4/25/2024	12:15 PM	0	33	13	0	1	1	0	1	0	0	0	0	0
4/25/2024	12:30 PM	0	29	10	0	1	1	0	0	0	0	0	0	0
4/25/2024	12:45 PM	0	27	10	0	0	2	0	0	0	0	0	0	0
4/25/2024	1:00 PM	0	28	10	0	0	3	0	0	0	0	0	0	0
4/25/2024	1:15 PM	0	28	12	0	0	2	0	0	0	0	0	0	0
4/25/2024	1:30 PM	0	27	10	0	1	2	0	0	0	0	0	0	0
4/25/2024	1:45 PM	0	31	10	0	1	1	2	0	0	0	0	0	0
4/25/2024	2:00 PM	0	28	8	0	1	1	2	0	0	0	0	0	0
4/25/2024	2:15 PM	0	33	6	0	1	2	2	0	1	0	0	0	0
4/25/2024	2:30 PM	0	34	10	0	0	2	2	0	1	0	0	0	0
4/25/2024	2:45 PM	0	28	10	0	1	2	0	0	1	0	0	0	0
4/25/2024	3:00 PM	1	36	11	0	1	1	0	0	1	0	0	0	0
4/25/2024	3:15 PM	1	44	13	0	1	2	0	0	0	0	0	0	0
4/25/2024	3:30 PM	1	49	11	0	1	3	0	0	0	0	0	0	0
4/25/2024	3:45 PM	1	53	12	0	1	3	0	0	0	0	0	0	0
4/25/2024	4:00 PM	0	45	12	0	1	3	0	0	0	0	0	0	0
4/25/2024	4:15 PM	1	31	13	0	2	1	0	0	0	0	0	0	0
4/25/2024	4:30 PM	1	25	16	0	2	0	0	0	0	0	0	0	0
4/25/2024	4:45 PM	1	30	13	0	2	1	0	1	0	0	0	0	0
4/25/2024	5:00 PM	1	33	13	0	2	1	0	1	0	0	0	0	0
4/25/2024	5:15 PM	0	41	13	0	1	1	0	2	0	0	0	0	0
4/25/2024	5:30 PM	0	45	10	0	2	1	0	2	0	0	0	0	0
4/25/2024	5:45 PM	0	41	15	0	1	0	0	2	0	0	0	0	0
4/25/2024	6:00 PM	0	35	13	0	1	0	0	2	0	0	0	0	0
4/25/2024	6:15 PM	0	21	8	0	1	0	0	1	0	0	0	0	0
4/25/2024	6:30 PM	0	12	6	0	0	0	0	1	0	0	0	0	0
4/25/2024	6:45 PM	0	3	0	0	0	0	0	0	0	0	0	0	0
4/25/2024	7:00 PM	0	0	0	0	0	0	0	0	0	0	0	0	0
4/25/2024	7:15 PM	0	0	0	0	0	0	0	0	0	0	0	0	0
4/25/2024	7:30 PM	0	0	0	0	0	0	0	0	0	0	0	0	0
4/25/2024	7:45 PM	0	0	0	0	0	0	0	0	0	0	0	0	0
4/25/2024	8:00 PM	0	0	0	0	0	0	0	0	0	0	0	0	0
4/25/2024	8:15 PM	0	0	0	0	0	0	0	0	0	0	0	0	0
4/25/2024	8:30 PM	0	0	0	0	0	0	0	0	0	0	0	0	0
4/25/2024	8:45 PM	0	0	0	0	0	0	0	0	0	0	0	0	0
4/25/2024	9:00 PM	0	0	0	0	0	0	0	0	0	0	0	0	0
4/25/2024	9:15 PM	0	0	0	0	0	0	0	0	0	0	0	0	0
4/25/2024	9:30 PM	0	0	0	0	0	0	0	0	0	0	0	0	0
4/25/2024	9:45 PM	0	0	0	0	0	0	0	0	0	0	0	0	0
4/25/2024	10:00 PM	0	0	0	0	0	0	0	0	0	0	0	0	0
4/25/2024	10:15 PM	0	0	0	0	0	0	0	0	0	0	0	0	0
4/25/2024	10:30 PM	0	0	0	0	0	0	0	0	0	0	0	0	0
4/25/2024	10:45 PM	0	0	0	0	0	0	0	0	0	0	0	0	0
4/25/2024	11:00 PM	0	0	0	0	0	0	0	0	0	0	0	0	0
4/25/2024	11:15 PM	0	0	0	0	0	0	0	0	0	0	0	0	0
4/25/2024	11:30 PM	0	0	0	0	0	0	0	0	0	0	0	0	0
4/25/2024	11:45 PM	0	0	0	0	0	0	0	0	0	0	0	0	0

SB
File Name:
Start Date: 4/23/2024
Start Time: 0
Site Code: 17
Station ID: 1
Location 1: I-26 James F. Byrnes Expy On/Off-Ramp, south of US-176 Broad River Rd
Location 2:

Date	Time	1	2	3	4	5	6	7	8	9	10	11	12	13
4/23/2024	12:00 AM	0	0	0	0	0	0	0	0	0	0	0	0	0
4/23/2024	12:15 AM	0	0	0	0	0	0	0	0	0	0	0	0	0
4/23/2024	12:30 AM	0	0	0	0	0	0	0	0	0	0	0	0	0
4/23/2024	12:45 AM	0	0	0	0	0	0	0	0	0	0	0	0	0
4/23/2024	1:00 AM	0	0	0	0	0	0	0	0	0	0	0	0	0
4/23/2024	1:15 AM	0	0	0	0	0	0	0	0	0	0	0	0	0
4/23/2024	1:30 AM	0	0	0	0	0	0	0	0	0	0	0	0	0
4/23/2024	1:45 AM	0	0	0	0	0	0	0	0	0	0	0	0	0
4/23/2024	2:00 AM	0	0	0	0	0	0	0	0	0	0	0	0	0
4/23/2024	2:15 AM	0	0	0	0	0	0	0	0	0	0	0	0	0
4/23/2024	2:30 AM	0	0	0	0	0	0	0	0	0	0	0	0	0
4/23/2024	2:45 AM	0	0	0	0	0	0	0	0	0	0	0	0	0
4/23/2024	3:00 AM	0	0	0	0	0	0	0	0	0	0	0	0	0
4/23/2024	3:15 AM	0	0	0	0	0	0	0	0	0	0	0	0	0
4/23/2024	3:30 AM	0	0	0	0	0	0	0	0	0	0	0	0	0
4/23/2024	3:45 AM	0	0	0	0	0	0	0	0	0	0	0	0	0
4/23/2024	4:00 AM	0	0	0	0	0	0	0	0	0	0	0	0	0
4/23/2024	4:15 AM	0	0	0	0	0	0	0	0	0	0	0	0	0
4/23/2024	4:30 AM	0	0	0	0	0	0	0	0	0	0	0	0	0
4/23/2024	4:45 AM	0	0	0	0	0	0	0	0	0	0	0	0	0
4/23/2024	5:00 AM	0	0	0	0	0	0	0	0	0	0	0	0	0
4/23/2024	5:15 AM	0	0	0	0	0	0	0	0	0	0	0	0	0
4/23/2024	5:30 AM	0	0	0	0	0	0	0	0	0	0	0	0	0
4/23/2024	5:45 AM	0	0	0	0	0	0	0	0	0	0	0	0	0
4/23/2024	6:00 AM	0	0	0	0	0	0	0	0	0	0	0	0	0
4/23/2024	6:15 AM	0	0	0	0	0	0	0	0	0	0	0	0	0
4/23/2024	6:30 AM	0	0	0	0	0	0	0	0	0	0	0	0	0
4/23/2024	6:45 AM	0	0	0	0	0	0	0	0	0	0	0	0	0
4/23/2024	7:00 AM	0	0	0	0	0	0	0	0	0	0	0	0	0
4/23/2024	7:15 AM	0	0	0	0	0	0	0	0	0	0	0	0	0
4/23/2024	7:30 AM	0	0	0	0	0	0	0	0	0	0	0	0	0
4/23/2024	7:45 AM	0	0	0	0	0	0	0	0	0	0	0	0	0
4/23/2024	8:00 AM	0	0	0	0	0	0	0	0	0	0	0	0	0
4/23/2024	8:15 AM	0	0	0	0	0	0	0	0	0	0	0	0	0
4/23/2024	8:30 AM	0	0	0	0	0	0	0	0	0	0	0	0	0
4/23/2024	8:45 AM	0	0	0	0	0	0	0	0	0	0	0	0	0
4/23/2024	9:00 AM	0	0	0	0	0	0	0	0	0	0	0	0	0
4/23/2024	9:15 AM	0	0	0	0	0	0	0	0	0	0	0	0	0
4/23/2024	9:30 AM	0	0	0	0	0	0	0	0	0	0	0	0	0
4/23/2024	9:45 AM	0	0	0	0	0	0	0	0	0	0	0	0	0
4/23/2024	10:00 AM	0	0	0	0	0	0	0	0	0	0	0	0	0
4/23/2024	10:15 AM	0	0	0	0	0	0	0	0	0	0	0	0	0
4/23/2024	10:30 AM	0	0	0	0	0	0	0	0	0	0	0	0	0
4/23/2024	10:45 AM	0	0	0	0	0	0	0	0	0	0	0	0	0
4/23/2024	11:00 AM	0	0	0	0	0	0	0	0	0	0	0	0	0
4/23/2024	11:15 AM	0	0	0	0	0	0	0	0	0	0	0	0	0
4/23/2024	11:30 AM	0	0	0	0	0	0	0	0	0	0	0	0	0
4/23/2024	11:45 AM	0	0	0	0	0	0	0	0	0	0	0	0	0
4/23/2024	12:00 PM	0	0	0	0	0	0	0	0	0	0	0	0	0
4/23/2024	12:15 PM	0	0	0	0	0	0	0	0	0	0	0	0	0
4/23/2024	12:30 PM	0	0	0	0	0	0	0	0	0	0	0	0	0
4/23/2024	12:45 PM	0	0	0	0	0	0	0	0	0	0	0	0	0
4/23/2024	1:00 PM	0	0	0	0	0	0	0	0	0	0	0	0	0
4/23/2024	1:15 PM	0	0	0	0	0	0	0	0	0	0	0	0	0
4/23/2024	1:30 PM	0	0	0	0	0	0	0	0	0	0	0	0	0
4/23/2024	1:45 PM	0	0	0	0	0	0	0	0	0	0	0	0	0
4/23/2024	2:00 PM	0	0	0	0	0	0	0	0	0	0	0	0	0
4/23/2024	2:15 PM	0	0	0	0	0	0	0	0	0	0	0	0	0
4/23/2024	2:30 PM	0	0	0	0	0	0	0	0	0	0	0	0	0
4/23/2024	2:45 PM	0	0	0	0	0	0	0	0	0	0	0	0	0
4/23/2024	3:00 PM	0	0	0	0	0	0	0	0	0	0	0	0	0
4/23/2024	3:15 PM	0	0	0	0	0	0	0	0	0	0	0	0	0
4/23/2024	3:30 PM	0	0	0	0	0	0	0	0	0	0	0	0	0
4/23/2024	3:45 PM	0	0	0	0	0	0	0	0	0	0	0	0	0
4/23/2024	4:00 PM	0	0	0	0	0	0	0	0	0	0	0	0	0
4/23/2024	4:15 PM	0	0	0	0	0	0	0	0	0	0	0	0	0
4/23/2024	4:30 PM	0	0	0	0	0	0	0	0	0	0	0	0	0
4/23/2024	4:45 PM	0	0	0	0	0	0	0	0	0	0	0	0	0
4/23/2024	5:00 PM	0	0	0	0	0	0	0	0	0	0	0	0	0
4/23/2024	5:15 PM	0	0	0	0	0	0	0	0	0	0	0	0	0
4/23/2024	5:30 PM	0	0	0	0	0	0	0	0	0	0	0	0	0
4/23/2024	5:45 PM	0	0	0	0	0	0	0	0	0	0	0	0	0
4/23/2024	6:00 PM	0	0	0	0	0	0	0	0	0	0	0	0	0
4/23/2024	6:15 PM	0	0	0	0	0	0	0	0	0	0	0	0	0
4/23/2024	6:30 PM	0	0	0	0	0	0	0	0	0	0	0	0	0
4/23/2024	6:45 PM	0	0	0	0	0	0	0	0	0	0	0	0	0
4/23/2024	7:00 PM	0	0	0	0	0	0	0	0	0	0	0	0	0
4/23/2024	7:15 PM	0	0	0	0	0	0	0	0	0	0	0	0	0
4/23/2024	7:30 PM	0	0	0	0	0	0	0	0	0	0	0	0	0
4/23/2024	7:45 PM	0	0	0	0	0	0	0	0	0	0	0	0	0
4/23/2024	8:00 PM	0	0	0	0	0	0	0	0	0	0	0	0	0
4/23/2024	8:15 PM	0	0	0	0	0	0	0	0	0	0	0	0	0
4/23/2024	8:30 PM	0	0	0	0	0	0	0	0	0	0	0	0	0
4/23/2024	8:45 PM	0	0	0	0	0	0	0	0	0	0	0	0	0
4/23/2024	9:00 PM	0	0	0	0	0	0	0	0	0	0	0	0	0
4/23/2024	9:15 PM	0	0	0	0	0	0	0	0	0	0	0	0	0
4/23/2024	9:30 PM	0	0	0	0	0	0	0	0	0	0	0	0	0
4/23/2024	9:45 PM	0	0	0	0	0	0	0	0	0	0	0	0	0
4/23/2024	10:00 PM	0	0	0	0	0	0	0	0	0	0	0	0	0
4/23/2024	10:15 PM	0	0	0	0	0	0	0	0	0	0	0	0	0
4/23/2024	10:30 PM	0	0	0	0	0	0	0	0	0	0	0	0	0
4/23/2024	10:45 PM	0	0	0	0	0	0	0	0	0	0	0	0	0
4/23/2024	11:00 PM	0	0	0	0	0	0	0	0	0	0	0	0	0
4/23/2024	11:15 PM	0	0	0	0	0	0	0	0	0	0	0	0	0
4/23/2024	11:30 PM	0	0	0	0	0	0	0	0	0	0	0	0	0
4/23/2024	11:45 PM	0	0	0	0	0	0	0	0	0	0	0	0	0

4/24/2024	12:00 AM	0	0	0	0	0	0	0	0	0	0	0	0	0
4/24/2024	12:15 AM	0	0	0	0	0	0	0	0	0	0	0	0	0
4/24/2024	12:30 AM	0	0	0	0	0	0	0	0	0	0	0	0	0
4/24/2024	12:45 AM	0	0	0	0	0	0	0	0	0	0	0	0	0
4/24/2024	1:00 AM	0	0	0	0	0	0	0	0	0	0	0	0	0
4/24/2024	1:15 AM	0	0	0	0	0	0	0	0	0	0	0	0	0
4/24/2024	1:30 AM	0	0	0	0	0	0	0	0	0	0	0	0	0
4/24/2024	1:45 AM	0	0	0	0	0	0	0	0	0	0	0	0	0
4/24/2024	2:00 AM	0	0	0	0	0	0	0	0	0	0	0	0	0
4/24/2024	2:15 AM	0	0	0	0	0	0	0	0	0	0	0	0	0
4/24/2024	2:30 AM	0	0	0	0	0	0	0	0	0	0	0	0	0
4/24/2024	2:45 AM	0	0	0	0	0	0	0	0	0	0	0	0	0
4/24/2024	3:00 AM	0	0	0	0	0	0	0	0	0	0	0	0	0
4/24/2024	3:15 AM	0	0	0	0	0	0	0	0	0	0	0	0	0
4/24/2024	3:30 AM	0	0	0	0	0	0	0	0	0	0	0	0	0
4/24/2024	3:45 AM	0	0	0	0	0	0	0	0	0	0	0	0	0
4/24/2024	4:00 AM	0	0	0	0	0	0	0	0	0	0	0	0	0
4/24/2024	4:15 AM	0	0	0	0	0	0	0	0	0	0	0	0	0
4/24/2024	4:30 AM	0	0	0	0	0	0	0	0	0	0	0	0	0
4/24/2024	4:45 AM	0	0	0	0	0	0	0	0	0	0	0	0	0
4/24/2024	5:00 AM	0	0	0	0	0	0	0	0	0	0	0	0	0
4/24/2024	5:15 AM	0	0	0	0	0	0	0	0	0	0	0	0	0
4/24/2024	5:30 AM	0	0	0	0	0	0	0	0	0	0	0	0	0
4/24/2024	5:45 AM	0	0	0	0	0	0	0	0	0	0	0	0	0
4/24/2024	6:00 AM	0	0	0	0	0	0	0	0	0	0	0	0	0
4/24/2024	6:15 AM	0	0	0	0	0	0	0	0	0	0	0	0	0
4/24/2024	6:30 AM	0	0	0	0	0	0	0	0	0	0	0	0	0
4/24/2024	6:45 AM	0	0	0	0	0	0	0	0	0	0	0	0	0
4/24/2024	7:00 AM	0	0	0	0	0	0	0	0	0	0	0	0	0
4/24/2024	7:15 AM	0	0	0	0	0	0	0	0	0	0	0	0	0
4/24/2024	7:30 AM	0	0	0	0	0	0	0	0	0	0	0	0	0
4/24/2024	7:45 AM	0	0	0	0	0	0	0	0	0	0	0	0	0
4/24/2024	8:00 AM	0	0	0	0	0	0	0	0	0	0	0	0	0
4/24/2024	8:15 AM	0	0	0	0	0	0	0	0	0	0	0	0	0
4/24/2024	8:30 AM	0	0	0	0	0	0	0	0	0	0	0	0	0
4/24/2024	8:45 AM	0	0	0	0	0	0	0	0	0	0	0	0	0
4/24/2024	9:00 AM	0	0	0	0	0	0	0	0	0	0	0	0	0
4/24/2024	9:15 AM	0	0	0	0	0	0	0	0	0	0	0	0	0
4/24/2024	9:30 AM	0	0	0	0	0	0	0	0	0	0	0	0	0
4/24/2024	9:45 AM	0	0	0	0	0	0	0	0	0	0	0	0	0
4/24/2024	10:00 AM	0	0	0	0	0	0	0	0	0	0	0	0	0
4/24/2024	10:15 AM	0	0	0	0	0	0	0	0	0	0	0	0	0
4/24/2024	10:30 AM	0	0	0	0	0	0	0	0	0	0	0	0	0
4/24/2024	10:45 AM	0	0	0	0	0	0	0	0	0	0	0	0	0
4/24/2024	11:00 AM	0	0	0	0	0	0	0	0	0	0	0	0	0
4/24/2024	11:15 AM	0	0	0	0	0	0	0	0	0	0	0	0	0
4/24/2024	11:30 AM	0	0	0	0	0	0	0	0	0	0	0	0	0
4/24/2024	11:45 AM	0	0	0	0	0	0	0	0	0	0	0	0	0
4/24/2024	12:00 PM	0	0	0	0	0	0	0	0	0	0	0	0	0
4/24/2024	12:15 PM	0	0	0	0	0	0	0	0	0	0	0	0	0
4/24/2024	12:30 PM	0	0	0	0	0	0	0	0	0	0	0	0	0
4/24/2024	12:45 PM	0	0	0	0	0	0	0	0	0	0	0	0	0
4/24/2024	1:00 PM	0	0	0	0	0	0	0	0	0	0	0	0	0
4/24/2024	1:15 PM	0	0	0	0	0	0	0	0	0	0	0	0	0
4/24/2024	1:30 PM	0	0	0	0	0	0	0	0	0	0	0	0	0
4/24/2024	1:45 PM	0	0	0	0	0	0	0	0	0	0	0	0	0
4/24/2024	2:00 PM	0	0	0	0	0	0	0	0	0	0	0	0	0
4/24/2024	2:15 PM	0	0	0	0	0	0	0	0	0	0	0	0	0
4/24/2024	2:30 PM	0	0	0	0	0	0	0	0	0	0	0	0	0
4/24/2024	2:45 PM	0	0	0	0	0	0	0	0	0	0	0	0	0
4/24/2024	3:00 PM	0	0	0	0	0	0	0	0	0	0	0	0	0
4/24/2024	3:15 PM	0	0	0	0	0	0	0	0	0	0	0	0	0
4/24/2024	3:30 PM	0	0	0	0	0	0	0	0	0	0	0	0	0
4/24/2024	3:45 PM	0	0	0	0	0	0	0	0	0	0	0	0	0
4/24/2024	4:00 PM	0	0	0	0	0	0	0	0	0	0	0	0	0
4/24/2024	4:15 PM	0	0	0	0	0	0	0	0	0	0	0	0	0
4/24/2024	4:30 PM	0	0	0	0	0	0	0	0	0	0	0	0	0
4/24/2024	4:45 PM	0	0	0	0	0	0	0	0	0	0	0	0	0
4/24/2024	5:00 PM	0	0	0	0	0	0	0	0	0	0	0	0	0
4/24/2024	5:15 PM	0	0	0	0	0	0	0	0	0	0	0	0	0
4/24/2024	5:30 PM	0	0	0	0	0	0	0	0	0	0	0	0	0
4/24/2024	5:45 PM	0	0	0	0	0	0	0	0	0	0	0	0	0
4/24/2024	6:00 PM	0	0	0	0	0	0	0	0	0	0	0	0	0
4/24/2024	6:15 PM	0	0	0	0	0	0	0	0	0	0	0	0	0
4/24/2024	6:30 PM	0	0	0	0	0	0	0	0	0	0	0	0	0
4/24/2024	6:45 PM	0	0	0	0	0	0	0	0	0	0	0	0	0
4/24/2024	7:00 PM	0	0	0	0	0	0	0	0	0	0	0	0	0
4/24/2024	7:15 PM	0	0	0	0	0	0	0	0	0	0	0	0	0
4/24/2024	7:30 PM	0	0	0	0	0	0	0	0	0	0	0	0	0
4/24/2024	7:45 PM	0	0	0	0	0	0	0	0	0	0	0	0	0
4/24/2024	8:00 PM	0	0	0	0	0	0	0	0	0	0	0	0	0
4/24/2024	8:15 PM	0	0	0	0	0	0	0	0	0	0	0	0	0
4/24/2024	8:30 PM	0	0	0	0	0	0	0	0	0	0	0	0	0
4/24/2024	8:45 PM	0	0	0	0	0	0	0	0	0	0	0	0	0
4/24/2024	9:00 PM	0	0	0	0	0	0	0	0	0	0	0	0	0
4/24/2024	9:15 PM	0	0	0	0	0	0	0	0	0	0	0	0	0
4/24/2024	9:30 PM	0	0	0	0	0	0	0	0	0	0	0	0	0
4/24/2024	9:45 PM	0	0	0	0	0	0	0	0	0	0	0	0	0
4/24/2024	10:00 PM	0	0	0	0	0	0	0	0	0	0	0	0	0
4/24/2024	10:15 PM	0	0	0	0	0	0	0	0	0	0	0	0	0
4/24/2024	10:30 PM	0	0	0	0	0	0	0	0	0	0	0	0	0
4/24/2024	10:45 PM	0	0	0	0	0	0	0	0	0	0	0	0	0
4/24/2024	11:00 PM	0	0	0	0	0	0	0	0	0	0	0	0	0
4/24/2024	11:15 PM	0	0	0	0	0	0	0	0	0	0	0	0	0
4/24/2024	11:30 PM	0	0	0	0	0	0	0	0	0	0	0	0	0
4/24/2024	11:45 PM	0	0	0	0	0	0	0	0	0	0	0	0	0

4/25/2024	12:00 AM	0	0	0	0	0	0	0	0	0	0	0	0	0
4/25/2024	12:15 AM	0	0	0	0	0	0	0	0	0	0	0	0	0
4/25/2024	12:30 AM	0	0	0	0	0	0	0	0	0	0	0	0	0
4/25/2024	12:45 AM	0	0	0	0	0	0	0	0	0	0	0	0	0
4/25/2024	1:00 AM	0	0	0	0	0	0	0	0	0	0	0	0	0
4/25/2024	1:15 AM	0	0	0	0	0	0	0	0	0	0	0	0	0
4/25/2024	1:30 AM	0	0	0	0	0	0	0	0	0	0	0	0	0
4/25/2024	1:45 AM	0	0	0	0	0	0	0	0	0	0	0	0	0
4/25/2024	2:00 AM	0	0	0	0	0	0	0	0	0	0	0	0	0
4/25/2024	2:15 AM	0	0	0	0	0	0	0	0	0	0	0	0	0
4/25/2024	2:30 AM	0	0	0	0	0	0	0	0	0	0	0	0	0
4/25/2024	2:45 AM	0	0	0	0	0	0	0	0	0	0	0	0	0
4/25/2024	3:00 AM	0	0	0	0	0	0	0	0	0	0	0	0	0
4/25/2024	3:15 AM	0	0	0	0	0	0	0	0	0	0	0	0	0
4/25/2024	3:30 AM	0	0	0	0	0	0	0	0	0	0	0	0	0
4/25/2024	3:45 AM	0	0	0	0	0	0	0	0	0	0	0	0	0
4/25/2024	4:00 AM	0	0	0	0	0	0	0	0	0	0	0	0	0
4/25/2024	4:15 AM	0	0	0	0	0	0	0	0	0	0	0	0	0
4/25/2024	4:30 AM	0	0	0	0	0	0	0	0	0	0	0	0	0
4/25/2024	4:45 AM	0	0	0	0	0	0	0	0	0	0	0	0	0
4/25/2024	5:00 AM	0	0	0	0	0	0	0	0	0	0	0	0	0
4/25/2024	5:15 AM	0	0	0	0	0	0	0	0	0	0	0	0	0
4/25/2024	5:30 AM	0	0	0	0	0	0	0	0	0	0	0	0	0
4/25/2024	5:45 AM	0	0	0	0	0	0	0	0	0	0	0	0	0
4/25/2024	6:00 AM	0	0	0	0	0	0	0	0	0	0	0	0	0
4/25/2024	6:15 AM	0	0	0	0	0	0	0	0	0	0	0	0	0
4/25/2024	6:30 AM	0	0	0	0	0	0	0	0	0	0	0	0	0
4/25/2024	6:45 AM	0	0	0	0	0	0	0	0	0	0	0	0	0
4/25/2024	7:00 AM	0	0	0	0	0	0	0	0	0	0	0	0	0
4/25/2024	7:15 AM	0	0	0	0	0	0	0	0	0	0	0	0	0
4/25/2024	7:30 AM	0	0	0	0	0	0	0	0	0	0	0	0	0
4/25/2024	7:45 AM	0	0	0	0	0	0	0	0	0	0	0	0	0
4/25/2024	8:00 AM	0	0	0	0	0	0	0	0	0	0	0	0	0
4/25/2024	8:15 AM	0	0	0	0	0	0	0	0	0	0	0	0	0
4/25/2024	8:30 AM	0	0	0	0	0	0	0	0	0	0	0	0	0
4/25/2024	8:45 AM	0	0	0	0	0	0	0	0	0	0	0	0	0
4/25/2024	9:00 AM	0	0	0	0	0	0	0	0	0	0	0	0	0
4/25/2024	9:15 AM	0	0	0	0	0	0	0	0	0	0	0	0	0
4/25/2024	9:30 AM	0	0	0	0	0	0	0	0	0	0	0	0	0
4/25/2024	9:45 AM	0	0	0	0	0	0	0	0	0	0	0	0	0
4/25/2024	10:00 AM	0	0	0	0	0	0	0	0	0	0	0	0	0
4/25/2024	10:15 AM	0	0	0	0	0	0	0	0	0	0	0	0	0
4/25/2024	10:30 AM	0	0	0	0	0	0	0	0	0	0	0	0	0
4/25/2024	10:45 AM	0	0	0	0	0	0	0	0	0	0	0	0	0
4/25/2024	11:00 AM	0	0	0	0	0	0	0	0	0	0	0	0	0
4/25/2024	11:15 AM	0	0	0	0	0	0	0	0	0	0	0	0	0
4/25/2024	11:30 AM	0	0	0	0	0	0	0	0	0	0	0	0	0
4/25/2024	11:45 AM	0	0	0	0	0	0	0	0	0	0	0	0	0
4/25/2024	12:00 PM	0	0	0	0	0	0	0	0	0	0	0	0	0
4/25/2024	12:15 PM	0	0	0	0	0	0	0	0	0	0	0	0	0
4/25/2024	12:30 PM	0	0	0	0	0	0	0	0	0	0	0	0	0
4/25/2024	12:45 PM	0	0	0	0	0	0	0	0	0	0	0	0	0
4/25/2024	1:00 PM	0	0	0	0	0	0	0	0	0	0	0	0	0
4/25/2024	1:15 PM	0	0	0	0	0	0	0	0	0	0	0	0	0
4/25/2024	1:30 PM	0	0	0	0	0	0	0	0	0	0	0	0	0
4/25/2024	1:45 PM	0	0	0	0	0	0	0	0	0	0	0	0	0
4/25/2024	2:00 PM	0	0	0	0	0	0	0	0	0	0	0	0	0
4/25/2024	2:15 PM	0	0	0	0	0	0	0	0	0	0	0	0	0
4/25/2024	2:30 PM	0	0	0	0	0	0	0	0	0	0	0	0	0
4/25/2024	2:45 PM	0	0	0	0	0	0	0	0	0	0	0	0	0
4/25/2024	3:00 PM	0	0	0	0	0	0	0	0	0	0	0	0	0
4/25/2024	3:15 PM	0	0	0	0	0	0	0	0	0	0	0	0	0
4/25/2024	3:30 PM	0	0	0	0	0	0	0	0	0	0	0	0	0
4/25/2024	3:45 PM	0	0	0	0	0	0	0	0	0	0	0	0	0
4/25/2024	4:00 PM	0	0	0	0	0	0	0	0	0	0	0	0	0
4/25/2024	4:15 PM	0	0	0	0	0	0	0	0	0	0	0	0	0
4/25/2024	4:30 PM	0	0	0	0	0	0	0	0	0	0	0	0	0
4/25/2024	4:45 PM	0	0	0	0	0	0	0	0	0	0	0	0	0
4/25/2024	5:00 PM	0	0	0	0	0	0	0	0	0	0	0	0	0
4/25/2024	5:15 PM	0	0	0	0	0	0	0	0	0	0	0	0	0
4/25/2024	5:30 PM	0	0	0	0	0	0	0	0	0	0	0	0	0
4/25/2024	5:45 PM	0	0	0	0	0	0	0	0	0	0	0	0	0
4/25/2024	6:00 PM	0	0	0	0	0	0	0	0	0	0	0	0	0
4/25/2024	6:15 PM	0	0	0	0	0	0	0	0	0	0	0	0	0
4/25/2024	6:30 PM	0	0	0	0	0	0	0	0	0	0	0	0	0
4/25/2024	6:45 PM	0	0	0	0	0	0	0	0	0	0	0	0	0
4/25/2024	7:00 PM	0	0	0	0	0	0	0	0	0	0	0	0	0
4/25/2024	7:15 PM	0	0	0	0	0	0	0	0	0	0	0	0	0
4/25/2024	7:30 PM	0	0	0	0	0	0	0	0	0	0	0	0	0
4/25/2024	7:45 PM	0	0	0	0	0	0	0	0	0	0	0	0	0
4/25/2024	8:00 PM	0	0	0	0	0	0	0	0	0	0	0	0	0
4/25/2024	8:15 PM	0	0	0	0	0	0	0	0	0	0	0	0	0
4/25/2024	8:30 PM	0	0	0	0	0	0	0	0	0	0	0	0	0
4/25/2024	8:45 PM	0	0	0	0	0	0	0	0	0	0	0	0	0
4/25/2024	9:00 PM	0	0	0	0	0	0	0	0	0	0	0	0	0
4/25/2024	9:15 PM	0	0	0	0	0	0	0	0	0	0	0	0	0
4/25/2024	9:30 PM	0	0	0	0	0	0	0	0	0	0	0	0	0
4/25/2024	9:45 PM	0	0	0	0	0	0	0	0	0	0	0	0	0
4/25/2024	10:00 PM	0	0	0	0	0	0	0	0	0	0	0	0	0
4/25/2024	10:15 PM	0	0	0	0	0	0	0	0	0	0	0	0	0
4/25/2024	10:30 PM	0	0	0	0	0	0	0	0	0	0	0	0	0
4/25/2024	10:45 PM	0	0	0	0	0	0	0	0	0	0	0	0	0
4/25/2024	11:00 PM	0	0	0	0	0	0	0	0	0	0	0	0	0
4/25/2024	11:15 PM	0	0	0	0	0	0	0	0	0	0	0	0	0
4/25/2024	11:30 PM	0	0	0	0	0	0	0	0	0	0	0	0	0
4/25/2024	11:45 PM	0	0	0	0	0	0	0	0	0	0	0	0	0

Bi-Directional Class Count || SB WB 15min

Columbia, SC

Marr Traffic DATA COLLECTION
www.marrtraffic.com

Site 18
I-26 James F. Byrnes Expy S/Bound Off-Ramp,
north of US-176 Broad River Rd

Date
Tuesday, April 23, 2024

Lat/Long
34.101717°, -81.178195°

Weather
Fair
58°F

Click here for Detailed Weather

Click here for Map

0000 - 2400 (Weekday 24h Session) (04-23-2024)
SB WB 15min

	Southbound (Movement 18.1)													15min	60min
Time	1	2	3	4	5	6	7	8	9	10	11	12	13	Total	Total
0000 - 0015	0	0	0	0	0	0	0	0	0	0	0	0	0	**0**	
0015 - 0030	0	0	0	0	0	0	0	0	0	0	0	0	0	**0**	
0030 - 0045	0	0	0	0	0	0	0	0	0	0	0	0	0	**0**	
0045 - 0100	0	0	0	0	0	0	0	0	0	0	0	0	0	**0**	**0**
0100 - 0115	0	0	0	0	0	0	0	0	0	0	0	0	0	**0**	
0115 - 0130	0	0	0	0	0	0	0	0	0	0	0	0	0	**0**	
0130 - 0145	0	0	0	0	0	0	0	0	0	0	0	0	0	**0**	
0145 - 0200	0	0	0	0	0	0	0	0	0	0	0	0	0	**0**	**0**
0200 - 0215	0	0	0	0	0	0	0	0	0	0	0	0	0	**0**	
0215 - 0230	0	0	0	0	0	0	0	0	0	0	0	0	0	**0**	
0230 - 0245	0	0	0	0	0	0	0	0	0	0	0	0	0	**0**	
0245 - 0300	0	0	0	0	0	0	0	0	0	0	0	0	0	**0**	**0**
0300 - 0315	0	0	0	0	0	0	0	0	0	0	0	0	0	**0**	
0315 - 0330	0	0	0	0	0	0	0	0	0	0	0	0	0	**0**	
0330 - 0345	0	0	0	0	0	0	0	0	0	0	0	0	0	**0**	
0345 - 0400	0	0	0	0	0	0	0	0	0	0	0	0	0	**0**	**0**
0400 - 0415	0	0	0	0	0	0	0	0	0	0	0	0	0	**0**	
0415 - 0430	0	0	0	0	0	0	0	0	0	0	0	0	0	**0**	
0430 - 0445	0	0	0	0	0	0	0	0	0	0	0	0	0	**0**	
0445 - 0500	0	0	0	0	0	0	0	0	0	0	0	0	0	**0**	**0**
0500 - 0515	0	0	0	0	0	0	0	0	0	0	0	0	0	**0**	
0515 - 0530	0	0	0	0	0	0	0	0	0	0	0	0	0	**0**	
0530 - 0545	0	0	0	0	0	0	0	0	0	0	0	0	0	**0**	
0545 - 0600	0	0	0	0	0	0	0	0	0	0	0	0	0	**0**	**0**
0600 - 0615	0	0	0	0	0	0	0	0	0	0	0	0	0	**0**	
0615 - 0630	0	0	0	0	0	0	0	0	0	0	0	0	0	**0**	
0630 - 0645	0	0	0	0	0	0	0	0	0	0	0	0	0	**0**	
0645 - 0700	0	0	0	0	0	0	0	0	0	0	0	0	0	**0**	**0**
0700 - 0715	0	0	0	0	0	0	0	0	0	0	0	0	0	**0**	
0715 - 0730	0	0	0	0	0	0	0	0	0	0	0	0	0	**0**	
0730 - 0745	0	0	0	0	0	0	0	0	0	0	0	0	0	**0**	
0745 - 0800	0	0	0	0	0	0	0	0	0	0	0	0	0	**0**	**0**
0800 - 0815	0	0	0	0	0	0	0	0	0	0	0	0	0	**0**	
0815 - 0830	0	0	0	0	0	0	0	0	0	0	0	0	0	**0**	
0830 - 0845	0	0	0	0	0	0	0	0	0	0	0	0	0	**0**	
0845 - 0900	0	0	0	0	0	0	0	0	0	0	0	0	0	**0**	**0**
0900 - 0915	0	0	0	0	0	0	0	0	0	0	0	0	0	**0**	
0915 - 0930	0	0	0	0	0	0	0	0	0	0	0	0	0	**0**	
0930 - 0945	0	0	0	0	0	0	0	0	0	0	0	0	0	**0**	
0945 - 1000	0	0	0	0	0	0	0	0	0	0	0	0	0	**0**	**0**
1000 - 1015	0	0	0	0	0	0	0	0	0	0	0	0	0	**0**	
1015 - 1030	0	0	0	0	0	0	0	0	0	0	0	0	0	**0**	
1030 - 1045	0	0	0	0	0	0	0	0	0	0	0	0	0	**0**	
1045 - 1100	0	0	0	0	0	0	0	0	0	0	0	0	0	**0**	**0**
1100 - 1115	0	0	0	0	0	0	0	0	0	0	0	0	0	**0**	
1115 - 1130	0	0	0	0	0	0	0	0	0	0	0	0	0	**0**	
1130 - 1145	0	0	0	0	0	0	0	0	0	0	0	0	0	**0**	
1145 - 1200	0	0	0	0	0	0	0	0	0	0	0	0	0	**0**	**0**
1200 - 1215	0	0	0	0	0	0	0	0	0	0	0	0	0	**0**	
1215 - 1230	0	0	0	0	0	0	0	0	0	0	0	0	0	**0**	
1230 - 1245	0	0	0	0	0	0	0	0	0	0	0	0	0	**0**	
1245 - 1300	0	0	0	0	0	0	0	0	0	0	0	0	0	**0**	**0**
1300 - 1315	0	0	0	0	0	0	0	0	0	0	0	0	0	**0**	
1315 - 1330	0	0	0	0	0	0	0	0	0	0	0	0	0	**0**	
1330 - 1345	0	0	0	0	0	0	0	0	0	0	0	0	0	**0**	
1345 - 1400	0	0	0	0	0	0	0	0	0	0	0	0	0	**0**	**0**
1400 - 1415	0	0	0	0	0	0	0	0	0	0	0	0	0	**0**	
1415 - 1430	0	0	0	0	0	0	0	0	0	0	0	0	0	**0**	
1430 - 1445	0	0	0	0	0	0	0	0	0	0	0	0	0	**0**	
1445 - 1500	0	0	0	0	0	0	0	0	0	0	0	0	0	**0**	**0**
1500 - 1515	0	0	0	0	0	0	0	0	0	0	0	0	0	**0**	
1515 - 1530	0	0	0	0	0	0	0	0	0	0	0	0	0	**0**	
1530 - 1545	0	0	0	0	0	0	0	0	0	0	0	0	0	**0**	
1545 - 1600	0	0	0	0	0	0	0	0	0	0	0	0	0	**0**	**0**
1600 - 1615	0	0	0	0	0	0	0	0	0	0	0	0	0	**0**	
1615 - 1630	0	0	0	0	0	0	0	0	0	0	0	0	0	**0**	
1630 - 1645	0	0	0	0	0	0	0	0	0	0	0	0	0	**0**	
1645 - 1700	0	0	0	0	0	0	0	0	0	0	0	0	0	**0**	**0**
1700 - 1715	0	0	0	0	0	0	0	0	0	0	0	0	0	**0**	
1715 - 1730	0	0	0	0	0	0	0	0	0	0	0	0	0	**0**	
1730 - 1745	0	0	0	0	0	0	0	0	0	0	0	0	0	**0**	
1745 - 1800	0	0	0	0	0	0	0	0	0	0	0	0	0	**0**	**0**
1800 - 1815	0	0	0	0	0	0	0	0	0	0	0	0	0	**0**	
1815 - 1830	0	0	0	0	0	0	0	0	0	0	0	0	0	**0**	
1830 - 1845	0	0	0	0	0	0	0	0	0	0	0	0	0	**0**	
1845 - 1900	0	0	0	0	0	0	0	0	0	0	0	0	0	**0**	**0**
1900 - 1915	0	5	1	0	0	0	0	0	0	0	0	0	0	**6**	
1915 - 1930	0	6	1	0	0	0	0	0	0	0	0	0	0	**7**	
1930 - 1945	0	6	0	0	0	0	0	0	0	0	0	0	0	**6**	
1945 - 2000	0	5	2	0	0	0	0	0	0	0	0	0	0	**7**	**26**
2000 - 2015	0	6	2	0	0	0	0	0	0	0	0	0	0	**8**	
2015 - 2030	1	3	2	0	0	0	0	0	0	0	0	0	0	**6**	
2030 - 2045	0	4	1	0	0	0	0	0	0	0	0	0	0	**5**	
2045 - 2100	0	2	0	0	0	0	0	0	0	0	0	0	0	**2**	**21**
2100 - 2115	0	3	1	0	0	0	0	0	0	0	0	0	0	**4**	
2115 - 2130	0	3	0	0	0	0	0	0	0	0	0	0	0	**3**	
2130 - 2145	0	1	1	0	0	0	0	0	0	0	0	0	0	**2**	
2145 - 2200	0	2	1	0	0	0	0	0	0	0	0	0	0	**3**	**12**
2200 - 2215	0	0	0	0	0	0	0	0	0	0	0	0	0	**0**	
2215 - 2230	0	1	2	0	0	0	0	0	0	0	0	0	0	**3**	
2230 - 2245	0	0	0	0	0	0	0	0	0	0	0	0	0	**0**	
2245 - 2300	0	3	0	0	0	0	0	0	0	0	0	0	0	**3**	**6**
2300 - 2315	0	3	0	0	0	0	0	0	0	0	0	0	0	**3**	
2315 - 2330	0	0	0	0	0	0	0	0	0	0	0	0	0	**0**	
2330 - 2345	0	1	0	0	0	0	0	0	0	0	0	0	0	**1**	
2345 - 0000	0	1	0	0	0	0	0	0	0	0	0	0	0	**1**	**5**

Session Total	1	55	14	0	0	0	0	0	0	0	0	0	0	**70**
Session Average	0.01	0.57	0.15	0.00	0.00	0.00	0.00	0.00	0.00	0.00	0.00	0.00	0.00	**0.73**
Session Percentage	1.43	78.57	20.00	0.00	0.00	0.00	0.00	0.00	0.00	0.00	0.00	0.00	0.00	

AM Peak Hour	-	-	-	-	-	-	-	-	-	-	-	-	-	-
AM Peak Volume	0	0	0	0	0	0	0	0	0	0	0	0	0	**0**

Noon Peak Hour	-	-	-	-	-	-	-	-	-	-	-	-	-	-
Noon Peak Volume	0	0	0	0	0	0	0	0	0	0	0	0	0	**0**

PM Peak Hour	1930 - 2030	1915 - 2015	1945 - 2045	-	-	-	-	-	-	-	-	-	-	**1915 - 2015**
PM Peak Volume	1	23	7	0	0	0	0	0	0	0	0	0	0	**28**

Site 18
I-26 James F. Byrnes Expy S/Bound Off-Ramp,
north of US-176 Broad River Rd

Date
Wednesday, April 24, 2024

Lat/Long
34.101717°, -81.178195°

Weather
Fair
66°F

Click here for Detailed Weather

0000 - 2400 (Weekday 24h Session) (04-24-2024)
SB WB 15min

	Southbound (Movement 18.1)													15min	60min
Time	1	2	3	4	5	6	7	8	9	10	11	12	13	Total	Total
0000 - 0015	0	1	0	0	0	1	0	0	0	0	0	0	0	**2**	
0015 - 0030	0	0	0	0	0	0	0	0	0	0	0	0	0	**0**	
0030 - 0045	0	0	0	0	0	0	0	0	0	0	0	0	0	**0**	
0045 - 0100	0	1	1	0	0	0	0	0	0	0	0	0	0	**2**	**4**
0100 - 0115	0	0	0	0	0	0	0	0	0	0	0	0	0	**0**	
0115 - 0130	0	1	0	0	0	0	0	0	0	0	0	0	0	**1**	
0130 - 0145	0	0	0	0	0	0	0	0	0	0	0	0	0	**0**	
0145 - 0200	0	0	0	0	0	0	0	0	0	0	0	0	0	**0**	**1**
0200 - 0215	0	0	0	0	0	0	0	0	0	0	0	0	0	**0**	
0215 - 0230	0	0	0	0	0	0	0	0	0	0	0	0	0	**0**	
0230 - 0245	0	1	0	0	0	0	0	0	0	0	0	0	0	**1**	
0245 - 0300	0	0	0	0	0	0	0	0	0	0	0	0	0	**0**	**1**
0300 - 0315	0	0	0	0	0	0	0	0	0	0	0	0	0	**0**	
0315 - 0330	0	1	0	0	0	0	0	0	0	0	0	0	0	**1**	
0330 - 0345	0	0	0	0	0	0	0	0	0	0	0	0	0	**0**	
0345 - 0400	0	1	0	0	0	0	0	0	0	0	0	0	0	**1**	**2**
0400 - 0415	0	0	0	0	0	0	0	0	0	0	0	0	0	**0**	
0415 - 0430	0	1	0	0	0	0	0	0	0	0	0	0	0	**1**	
0430 - 0445	0	1	0	0	0	0	0	0	0	0	0	0	0	**1**	
0445 - 0500	0	2	1	0	0	0	0	0	0	0	0	0	0	**3**	**5**
0500 - 0515	0	1	1	0	0	0	0	0	0	0	0	0	0	**2**	
0515 - 0530	0	3	1	0	1	0	0	0	0	0	0	0	0	**5**	
0530 - 0545	0	1	0	0	0	0	0	0	0	0	0	0	0	**1**	
0545 - 0600	0	1	0	0	0	1	0	0	0	0	0	0	0	**2**	**10**
0600 - 0615	0	2	2	0	0	0	0	0	0	0	0	0	0	**4**	
0615 - 0630	0	3	1	0	0	0	0	0	0	0	0	0	0	**4**	
0630 - 0645	0	7	2	0	0	0	0	0	1	0	0	0	0	**10**	
0645 - 0700	0	9	1	0	0	0	0	0	0	0	0	0	0	**10**	**28**
0700 - 0715	0	14	1	0	0	0	0	0	0	0	0	0	0	**15**	
0715 - 0730	0	20	3	0	0	0	0	0	0	0	0	0	0	**23**	
0730 - 0745	0	14	5	0	0	0	0	0	0	0	0	0	0	**19**	
0745 - 0800	0	22	6	0	0	0	0	0	0	0	0	0	0	**28**	**85**
0800 - 0815	0	20	9	0	0	0	0	0	0	0	0	0	0	**29**	
0815 - 0830	0	12	2	0	0	0	0	0	0	0	0	0	0	**14**	
0830 - 0845	0	21	7	0	0	0	0	0	0	0	0	0	0	**28**	
0845 - 0900	0	15	4	0	0	0	0	0	0	0	0	0	0	**19**	**90**
0900 - 0915	0	12	5	0	0	1	0	0	0	0	0	0	0	**18**	
0915 - 0930	0	6	6	0	0	0	0	0	0	0	0	0	0	**12**	
0930 - 0945	0	11	3	0	0	0	0	0	0	0	0	0	0	**14**	
0945 - 1000	0	13	1	0	1	0	0	1	0	0	0	0	0	**16**	**60**
1000 - 1015	0	10	3	0	0	0	0	0	0	0	0	0	0	**13**	
1015 - 1030	0	11	5	0	0	0	0	0	0	0	0	0	0	**16**	
1030 - 1045	0	1	1	0	0	0	0	0	0	0	0	0	0	**2**	
1045 - 1100	0	2	1	0	0	0	0	0	0	0	0	0	0	**3**	**34**
1100 - 1115	0	4	0	0	1	0	0	0	0	0	0	0	0	**5**	
1115 - 1130	0	2	2	0	0	0	0	0	0	0	0	0	0	**4**	
1130 - 1145	0	2	2	0	0	0	0	0	0	0	0	0	0	**4**	
1145 - 1200	0	11	6	0	0	0	0	0	0	0	0	0	0	**17**	**30**
1200 - 1215	0	5	2	0	1	0	0	0	0	0	0	0	0	**8**	
1215 - 1230	0	7	7	0	1	0	0	0	0	0	0	0	0	**15**	
1230 - 1245	0	12	5	0	0	0	0	0	0	0	0	0	0	**17**	
1245 - 1300	0	9	4	0	0	0	0	0	0	0	0	0	0	**13**	**53**
1300 - 1315	0	9	3	0	4	0	0	0	1	0	0	0	0	**17**	
1315 - 1330	0	10	4	0	1	0	0	0	0	0	0	0	0	**15**	
1330 - 1345	0	8	2	0	0	0	0	1	0	0	0	0	0	**11**	
1345 - 1400	0	12	2	0	0	0	0	0	0	0	0	0	0	**14**	**57**
1400 - 1415	0	10	1	0	2	0	0	0	0	0	0	0	0	**13**	
1415 - 1430	0	16	2	0	2	0	0	0	0	0	0	0	0	**20**	
1430 - 1445	0	14	2	0	0	0	0	0	0	0	0	0	0	**16**	
1445 - 1500	0	11	2	0	0	0	0	0	0	0	0	0	0	**13**	**62**
1500 - 1515	0	9	2	0	0	0	0	0	0	0	0	0	0	**11**	
1515 - 1530	0	22	2	0	0	0	0	0	0	0	0	0	0	**24**	
1530 - 1545	0	12	3	0	0	0	0	0	0	0	0	0	0	**15**	
1545 - 1600	0	7	1	0	0	0	0	0	0	0	0	0	0	**8**	**58**
1600 - 1615	0	22	6	0	1	0	0	0	0	0	0	0	0	**29**	
1615 - 1630	0	22	4	0	0	0	0	0	0	0	0	0	0	**26**	
1630 - 1645	0	19	0	0	2	0	0	0	0	0	0	0	0	**21**	
1645 - 1700	0	16	5	0	0	0	0	0	1	0	0	0	0	**22**	**98**
1700 - 1715	0	11	4	0	0	0	0	0	0	0	0	0	0	**15**	
1715 - 1730	0	23	4	0	0	0	0	0	0	0	0	0	0	**27**	
1730 - 1745	0	8	5	0	0	0	0	0	0	0	0	0	0	**13**	
1745 - 1800	0	11	2	0	0	0	0	0	0	0	0	0	0	**13**	**68**
1800 - 1815	0	14	1	0	0	0	0	0	0	0	0	0	0	**15**	
1815 - 1830	0	8	1	0	0	0	0	0	0	0	0	0	0	**9**	
1830 - 1845	0	10	5	0	1	0	0	0	0	0	0	0	0	**16**	
1845 - 1900	0	10	0	0	1	0	0	0	0	0	0	0	0	**11**	**51**
1900 - 1915	0	8	3	0	0	0	0	0	0	0	0	0	0	**11**	
1915 - 1930	0	6	1	0	0	0	0	0	0	0	0	0	0	**7**	
1930 - 1945	0	0	0	0	0	0	0	0	0	0	0	0	0	**0**	
1945 - 2000	0	12	4	0	0	0	0	0	0	0	0	0	0	**16**	**34**
2000 - 2015	0	4	0	0	0	0	0	0	0	0	0	0	0	**4**	
2015 - 2030	0	3	1	0	0	0	0	0	0	0	0	0	0	**4**	
2030 - 2045	0	5	0	0	0	0	0	0	0	0	0	0	0	**5**	
2045 - 2100	0	5	1	0	0	0	0	0	0	0	0	0	0	**6**	**19**
2100 - 2115	0	3	2	0	0	0	0	0	0	0	0	0	0	**5**	
2115 - 2130	0	1	0	0	0	0	0	0	0	0	0	0	0	**1**	
2130 - 2145	0	4	0	0	0	0	0	0	0	0	0	0	0	**4**	
2145 - 2200	0	2	0	0	0	0	0	0	0	0	0	0	0	**2**	**12**
2200 - 2215	0	0	0	0	0	0	0	0	0	0	0	0	0	**0**	
2215 - 2230	0	2	0	0	0	0	0	0	0	0	0	0	0	**2**	
2230 - 2245	0	2	0	0	0	0	0	0	0	0	0	0	0	**2**	
2245 - 2300	0	1	0	0	0	0	0	0	0	0	0	0	0	**1**	**5**
2300 - 2315	0	3	0	0	0	0	0	0	0	0	0	0	0	**3**	
2315 - 2330	0	2	0	0	0	0	0	0	0	0	0	0	0	**2**	
2330 - 2345	0	1	0	0	0	0	0	0	0	0	0	0	0	**1**	
2345 - 0000	0	1	0	0	0	0	0	0	0	0	0	0	0	**1**	**7**

Session Total	0	672	175	0	19	3	0	2	3	0	0	0	0	**874**
Session Average	0.00	7.00	1.82	0.00	0.20	0.03	0.00	0.02	0.03	0.00	0.00	0.00	0.00	**9.10**
Session Percentage	0.00	76.89	20.02	0.00	2.17	0.34	0.00	0.23	0.34	0.00	0.00	0.00	0.00	

AM Peak Hour	-	0715 - 0815	0745 - 0845	-	0500 - 0600	0500 - 0600	-	0900 - 1000	0545 - 0645	-	-	-	-	**0715 - 0815**
AM Peak Volume	0	76	24	0	1	1	0	1	1	0	0	0	0	**99**

Noon Peak Hour	-	1430 - 1530	1145 - 1245	-	1215 - 1315	-	-	1245 - 1345	1215 - 1315	-	-	-	-	**1430 - 1530**
Noon Peak Volume	0	56	20	0	5	0	0	1	1	0	0	0	0	**64**

PM Peak Hour	-	1600 - 1700	1645 - 1745	-	1545 - 1645	-	-	-	1600 - 1700	-	-	-	-	**1600 - 1700**
PM Peak Volume	0	79	18	0	3	0	0	0	1	0	0	0	0	**98**

Site 18
I-26 James F. Byrnes Expy S/Bound Off-Ramp,
north of US-176 Broad River Rd

Date
Thursday, April 25, 2024

Lat/Long
34.101717°, -81.178195°

Weather
Fair
67°F

Click here for Detailed Weather

0000 - 2400 (Weekday 24h Session) (04-25-2024)
SB WB 15min

	Southbound (Movement 18.1)													15min	60min
TIME	1	2	3	4	5	6	7	8	9	10	11	12	13	Total	Total
0000 - 0015	0	1	0	0	0	0	0	0	0	0	0	0	0	**1**	
0015 - 0030	0	1	0	0	0	0	0	0	0	0	0	0	0	**1**	
0030 - 0045	0	1	0	0	0	1	0	0	0	0	0	0	0	**2**	
0045 - 0100	0	0	0	0	0	0	0	0	0	0	0	0	0	**0**	**4**
0100 - 0115	0	2	0	0	0	0	0	0	1	0	0	0	0	**3**	
0115 - 0130	0	0	0	0	0	0	0	0	0	0	0	0	0	**0**	
0130 - 0145	0	0	0	0	1	1	0	0	0	0	0	0	0	**2**	
0145 - 0200	0	0	0	0	0	0	0	0	0	0	0	0	0	**0**	**5**
0200 - 0215	0	1	0	0	0	0	0	0	0	0	0	0	0	**1**	
0215 - 0230	0	1	0	0	0	0	0	0	0	0	0	0	0	**1**	
0230 - 0245	0	0	0	0	0	0	0	0	0	0	0	0	0	**0**	
0245 - 0300	0	0	0	0	0	1	0	0	0	0	0	0	0	**1**	**3**
0300 - 0315	0	0	0	0	0	0	0	0	0	0	0	0	0	**0**	
0315 - 0330	0	0	0	0	0	1	0	0	0	0	0	0	0	**1**	
0330 - 0345	0	1	0	0	0	0	0	0	0	0	0	0	0	**1**	
0345 - 0400	0	3	1	0	0	0	0	0	0	0	0	0	0	**4**	**6**
0400 - 0415	0	0	0	0	0	0	0	0	0	0	0	0	0	**0**	
0415 - 0430	0	0	1	0	0	0	0	0	0	0	0	0	0	**1**	
0430 - 0445	0	1	0	0	0	0	0	0	0	0	0	0	0	**1**	
0445 - 0500	0	1	1	0	0	0	0	0	0	0	0	0	0	**2**	**4**
0500 - 0515	0	1	1	0	0	0	0	0	0	0	0	0	0	**2**	
0515 - 0530	0	2	2	0	0	0	0	0	0	0	0	0	0	**4**	
0530 - 0545	0	2	0	0	0	0	0	0	0	0	0	0	0	**2**	
0545 - 0600	0	2	0	0	0	0	0	0	1	0	0	0	0	**3**	**11**
0600 - 0615	0	4	3	0	0	0	0	0	0	0	0	0	0	**7**	
0615 - 0630	0	3	6	0	0	0	0	0	0	0	0	0	0	**9**	
0630 - 0645	0	5	4	0	0	0	0	0	0	0	0	0	0	**9**	
0645 - 0700	0	5	5	0	1	1	0	0	0	0	0	0	0	**12**	**37**
0700 - 0715	0	12	4	0	1	0	0	0	0	0	0	0	0	**17**	
0715 - 0730	0	23	5	0	0	0	0	0	1	0	0	0	0	**29**	
0730 - 0745	0	22	5	0	0	0	0	0	0	0	0	0	0	**27**	
0745 - 0800	0	19	7	0	0	0	0	0	0	0	0	0	0	**26**	**99**
0800 - 0815	0	22	2	0	0	0	0	1	0	0	0	0	0	**25**	
0815 - 0830	0	14	4	0	0	0	0	0	0	0	0	0	0	**18**	
0830 - 0845	0	14	3	0	0	0	0	0	0	0	0	0	0	**17**	
0845 - 0900	0	14	2	0	1	0	0	0	0	0	0	0	0	**17**	**77**
0900 - 0915	0	15	4	0	0	0	0	0	0	0	0	0	0	**19**	
0915 - 0930	0	10	5	0	0	0	0	0	0	0	0	0	0	**15**	
0930 - 0945	0	14	4	0	0	0	0	0	0	0	0	0	0	**18**	
0945 - 1000	0	7	6	0	0	0	0	0	1	0	0	0	0	**14**	**66**
1000 - 1015	0	9	4	0	1	1	0	0	0	0	0	0	0	**15**	
1015 - 1030	0	13	5	0	0	1	0	0	0	0	0	0	0	**19**	
1030 - 1045	0	5	3	0	1	0	0	0	0	0	0	0	0	**9**	
1045 - 1100	0	4	2	0	0	0	0	0	0	0	0	0	0	**6**	**49**
1100 - 1115	0	12	1	0	0	0	0	0	0	0	0	0	0	**13**	
1115 - 1130	0	9	8	0	0	0	0	0	0	0	0	0	0	**17**	
1130 - 1145	0	9	3	0	0	1	0	0	0	0	0	0	0	**13**	
1145 - 1200	0	14	3	0	0	0	0	0	0	0	0	0	0	**17**	**60**
1200 - 1215	0	13	2	0	0	0	0	0	0	0	0	0	0	**15**	
1215 - 1230	0	14	3	0	1	0	0	0	0	0	0	0	0	**18**	
1230 - 1245	0	15	5	0	0	0	0	0	1	0	0	0	0	**21**	
1245 - 1300	0	12	3	0	1	2	0	1	0	0	0	0	0	**19**	**73**
1300 - 1315	0	15	0	0	1	0	0	0	0	0	0	0	0	**16**	
1315 - 1330	0	7	1	0	0	0	0	1	0	0	0	0	0	**9**	
1330 - 1345	1	15	4	0	1	0	0	0	0	0	0	0	0	**21**	
1345 - 1400	0	10	2	0	2	1	0	0	0	0	0	0	0	**15**	**61**
1400 - 1415	0	12	2	0	1	0	0	0	0	0	0	0	0	**15**	
1415 - 1430	0	11	4	0	1	0	0	0	0	0	0	0	0	**16**	
1430 - 1445	0	8	1	0	0	0	0	0	0	0	0	0	0	**9**	
1445 - 1500	0	19	7	0	0	0	0	0	0	0	0	0	0	**26**	**66**
1500 - 1515	0	12	6	0	0	0	0	0	0	0	0	0	0	**18**	
1515 - 1530	0	20	1	0	1	0	0	0	0	0	0	0	0	**22**	
1530 - 1545	0	16	2	0	0	0	0	0	0	0	0	0	0	**18**	
1545 - 1600	0	12	3	0	0	0	0	0	0	0	0	0	0	**15**	**73**
1600 - 1615	0	19	6	0	0	0	0	0	0	0	0	0	0	**25**	
1615 - 1630	0	18	4	0	0	0	0	0	0	0	0	0	0	**22**	
1630 - 1645	0	10	4	0	2	0	0	0	0	0	0	0	0	**16**	
1645 - 1700	1	15	4	0	1	1	0	0	0	0	0	0	0	**22**	**85**
1700 - 1715	0	14	3	0	0	0	0	0	0	0	0	0	0	**17**	
1715 - 1730	0	15	1	0	0	0	0	0	0	0	0	0	0	**16**	
1730 - 1745	0	13	1	0	0	0	0	0	0	0	0	0	0	**14**	
1745 - 1800	0	11	5	0	0	0	0	0	0	0	0	0	0	**16**	**63**
1800 - 1815	0	18	2	0	0	0	0	0	0	0	0	0	0	**20**	
1815 - 1830	0	17	5	0	0	0	0	0	0	0	0	0	0	**22**	
1830 - 1845	0	14	6	0	1	0	0	0	0	0	0	0	0	**21**	
1845 - 1900	0	6	1	0	1	0	0	0	0	0	0	0	0	**8**	**71**
1900 - 1915	0	0	0	0	0	0	0	0	0	0	0	0	0	**0**	
1915 - 1930	0	0	0	0	0	0	0	0	0	0	0	0	0	**0**	
1930 - 1945	0	0	0	0	0	0	0	0	0	0	0	0	0	**0**	
1945 - 2000	0	0	0	0	0	0	0	0	0	0	0	0	0	**0**	**0**
2000 - 2015	0	0	0	0	0	0	0	0	0	0	0	0	0	**0**	
2015 - 2030	0	0	0	0	0	0	0	0	0	0	0	0	0	**0**	
2030 - 2045	0	0	0	0	0	0	0	0	0	0	0	0	0	**0**	
2045 - 2100	0	0	0	0	0	0	0	0	0	0	0	0	0	**0**	**0**
2100 - 2115	0	0	0	0	0	0	0	0	0	0	0	0	0	**0**	
2115 - 2130	0	0	0	0	0	0	0	0	0	0	0	0	0	**0**	
2130 - 2145	0	0	0	0	0	0	0	0	0	0	0	0	0	**0**	
2145 - 2200	0	0	0	0	0	0	0	0	0	0	0	0	0	**0**	**0**
2200 - 2215	0	0	0	0	0	0	0	0	0	0	0	0	0	**0**	
2215 - 2230	0	0	0	0	0	0	0	0	0	0	0	0	0	**0**	
2230 - 2245	0	0	0	0	0	0	0	0	0	0	0	0	0	**0**	
2245 - 2300	0	0	0	0	0	0	0	0	0	0	0	0	0	**0**	**0**
2300 - 2315	0	0	0	0	0	0	0	0	0	0	0	0	0	**0**	
2315 - 2330	0	0	0	0	0	0	0	0	0	0	0	0	0	**0**	
2330 - 2345	0	0	0	0	0	0	0	0	0	0	0	0	0	**0**	
2345 - 0000	0	0	0	0	0	0	0	0	0	0	0	0	0	**0**	**0**

Session Total	2	679	192	0	20	12	0	3	5	0	0	0	0	**913**
Session Average	0.02	7.07	2.00	0.00	0.21	0.13	0.00	0.03	0.05	0.00	0.00	0.00	0.00	**9.51**
Session Percentage	0.22	74.37	21.03	0.00	2.19	1.31	0.00	0.33	0.55	0.00	0.00	0.00	0.00	

AM Peak Hour	-	0715 - 0815	0700 - 0800	-	0615 - 0715	0930 - 1030	-	0715 - 0815	0500 - 0600	-	-	-	-	**0715 - 0815**
AM Peak Hour Volume	0	86	21	0	2	2	0	1	1	0	0	0	0	**107**

Noon Peak Hour	1245 - 1345	1445 - 1545	1415 - 1515	-	1330 - 1430	1000 - 1100	-	1230 - 1330	1145 - 1245	-	-	-	-	**1445 - 1545**
Noon Peak Hour Volume	1	67	18	0	5	2	0	2	1	0	0	0	0	**84**

PM Peak Hour	1600 - 1700	1515 - 1615	1600 - 1700	-	1600 - 1700	1600 - 1700	-	-	-	-	-	-	-	**1600 - 1700**
PM Peak Hour Volume	1	67	18	0	3	1	0	0	0	0	0	0	0	**85**

Bi-Directional Class Count || SB WB Average 15min

Columbia, SC

Marr Traffic DATA COLLECTION
www.marrtraffic.com

Site 18
I-26 James F. Byrnes Expy S/Bound Off-Ramp,
north of US-176 Broad River Rd

Date
Tuesday, April 23, 2024

Lat/Long
34.101717°, -81.178195°

Weather
Fair
58°F

0000 - 2400 (Weekday 24h Session) (All Dates)
SB WB Average 15min

	SB WB Average 15min													15min	60min
Time	1	2	3	4	5	6	7	8	9	10	11	12	13	Total	Total
0000 - 0015	0	1	0	0	0	0	0	0	0	0	0	0	0	**1**	
0015 - 0030	0	0	0	0	0	0	0	0	0	0	0	0	0	**0**	
0030 - 0045	0	0	0	0	0	0	0	0	0	0	0	0	0	**1**	
0045 - 0100	0	0	0	0	0	0	0	0	0	0	0	0	0	**1**	**3**
0100 - 0115	0	1	0	0	0	0	0	0	0	0	0	0	0	**1**	
0115 - 0130	0	0	0	0	0	0	0	0	0	0	0	0	0	**0**	
0130 - 0145	0	0	0	0	0	0	0	0	0	0	0	0	0	**1**	
0145 - 0200	0	0	0	0	0	0	0	0	0	0	0	0	0	**0**	**2**
0200 - 0215	0	0	0	0	0	0	0	0	0	0	0	0	0	**0**	
0215 - 0230	0	0	0	0	0	0	0	0	0	0	0	0	0	**0**	
0230 - 0245	0	0	0	0	0	0	0	0	0	0	0	0	0	**0**	
0245 - 0300	0	0	0	0	0	0	0	0	0	0	0	0	0	**0**	**1**
0300 - 0315	0	0	0	0	0	0	0	0	0	0	0	0	0	**0**	
0315 - 0330	0	0	0	0	0	0	0	0	0	0	0	0	0	**1**	
0330 - 0345	0	0	0	0	0	0	0	0	0	0	0	0	0	**0**	
0345 - 0400	0	1	0	0	0	0	0	0	0	0	0	0	0	**2**	**3**
0400 - 0415	0	0	0	0	0	0	0	0	0	0	0	0	0	**0**	
0415 - 0430	0	0	0	0	0	0	0	0	0	0	0	0	0	**1**	
0430 - 0445	0	1	0	0	0	0	0	0	0	0	0	0	0	**1**	
0445 - 0500	0	1	1	0	0	0	0	0	0	0	0	0	0	**2**	**3**
0500 - 0515	0	1	1	0	0	0	0	0	0	0	0	0	0	**1**	
0515 - 0530	0	2	1	0	0	0	0	0	0	0	0	0	0	**3**	
0530 - 0545	0	1	0	0	0	0	0	0	0	0	0	0	0	**1**	
0545 - 0600	0	1	0	0	0	0	0	0	0	0	0	0	0	**2**	**7**
0600 - 0615	0	2	2	0	0	0	0	0	0	0	0	0	0	**4**	
0615 - 0630	0	2	2	0	0	0	0	0	0	0	0	0	0	**4**	
0630 - 0645	0	4	2	0	0	0	0	0	0	0	0	0	0	**6**	
0645 - 0700	0	5	2	0	0	0	0	0	0	0	0	0	0	**7**	**22**
0700 - 0715	0	9	2	0	0	0	0	0	0	0	0	0	0	**11**	
0715 - 0730	0	14	3	0	0	0	0	0	0	0	0	0	0	**17**	
0730 - 0745	0	12	3	0	0	0	0	0	0	0	0	0	0	**15**	
0745 - 0800	0	14	4	0	0	0	0	0	0	0	0	0	0	**18**	**61**
0800 - 0815	0	14	4	0	0	0	0	0	0	0	0	0	0	**18**	
0815 - 0830	0	9	2	0	0	0	0	0	0	0	0	0	0	**11**	
0830 - 0845	0	12	3	0	0	0	0	0	0	0	0	0	0	**15**	
0845 - 0900	0	10	2	0	0	0	0	0	0	0	0	0	0	**12**	**56**
0900 - 0915	0	9	3	0	0	0	0	0	0	0	0	0	0	**12**	
0915 - 0930	0	5	4	0	0	0	0	0	0	0	0	0	0	**9**	
0930 - 0945	0	8	2	0	0	0	0	0	0	0	0	0	0	**11**	
0945 - 1000	0	7	2	0	0	0	0	0	0	0	0	0	0	**10**	**42**
1000 - 1015	0	6	2	0	0	0	0	0	0	0	0	0	0	**9**	
1015 - 1030	0	8	3	0	0	0	0	0	0	0	0	0	0	**12**	
1030 - 1045	0	2	1	0	0	0	0	0	0	0	0	0	0	**4**	
1045 - 1100	0	2	1	0	0	0	0	0	0	0	0	0	0	**3**	**28**
1100 - 1115	0	5	0	0	0	0	0	0	0	0	0	0	0	**6**	
1115 - 1130	0	4	3	0	0	0	0	0	0	0	0	0	0	**7**	
1130 - 1145	0	4	2	0	0	0	0	0	0	0	0	0	0	**6**	
1145 - 1200	0	8	3	0	0	0	0	0	0	0	0	0	0	**11**	**30**
1200 - 1215	0	6	1	0	0	0	0	0	0	0	0	0	0	**8**	
1215 - 1230	0	7	3	0	1	0	0	0	0	0	0	0	0	**11**	
1230 - 1245	0	9	3	0	0	0	0	0	0	0	0	0	0	**13**	
1245 - 1300	0	7	2	0	0	1	0	0	0	0	0	0	0	**11**	**42**
1300 - 1315	0	8	1	0	2	0	0	0	0	0	0	0	0	**11**	
1315 - 1330	0	6	2	0	0	0	0	0	0	0	0	0	0	**8**	
1330 - 1345	0	8	2	0	0	0	0	0	0	0	0	0	0	**11**	
1345 - 1400	0	7	1	0	1	0	0	0	0	0	0	0	0	**10**	**39**
1400 - 1415	0	7	1	0	1	0	0	0	0	0	0	0	0	**9**	
1415 - 1430	0	9	2	0	1	0	0	0	0	0	0	0	0	**12**	
1430 - 1445	0	7	1	0	0	0	0	0	0	0	0	0	0	**8**	
1445 - 1500	0	10	3	0	0	0	0	0	0	0	0	0	0	**13**	**43**
1500 - 1515	0	7	3	0	0	0	0	0	0	0	0	0	0	**10**	
1515 - 1530	0	14	1	0	0	0	0	0	0	0	0	0	0	**15**	
1530 - 1545	0	9	2	0	0	0	0	0	0	0	0	0	0	**11**	
1545 - 1600	0	6	1	0	0	0	0	0	0	0	0	0	0	**8**	**44**
1600 - 1615	0	14	4	0	0	0	0	0	0	0	0	0	0	**18**	
1615 - 1630	0	13	3	0	0	0	0	0	0	0	0	0	0	**16**	
1630 - 1645	0	10	1	0	1	0	0	0	0	0	0	0	0	**12**	
1645 - 1700	0	10	3	0	0	0	0	0	0	0	0	0	0	**15**	**61**
1700 - 1715	0	8	2	0	0	0	0	0	0	0	0	0	0	**11**	
1715 - 1730	0	13	2	0	0	0	0	0	0	0	0	0	0	**14**	
1730 - 1745	0	7	2	0	0	0	0	0	0	0	0	0	0	**9**	
1745 - 1800	0	7	2	0	0	0	0	0	0	0	0	0	0	**10**	**44**
1800 - 1815	0	11	1	0	0	0	0	0	0	0	0	0	0	**12**	
1815 - 1830	0	8	2	0	0	0	0	0	0	0	0	0	0	**10**	
1830 - 1845	0	8	4	0	1	0	0	0	0	0	0	0	0	**12**	
1845 - 1900	0	5	0	0	1	0	0	0	0	0	0	0	0	**6**	**41**
1900 - 1915	0	4	1	0	0	0	0	0	0	0	0	0	0	**6**	
1915 - 1930	0	4	1	0	0	0	0	0	0	0	0	0	0	**5**	
1930 - 1945	0	2	0	0	0	0	0	0	0	0	0	0	0	**2**	
1945 - 2000	0	6	2	0	0	0	0	0	0	0	0	0	0	**8**	**20**
2000 - 2015	0	3	1	0	0	0	0	0	0	0	0	0	0	**4**	
2015 - 2030	0	2	1	0	0	0	0	0	0	0	0	0	0	**3**	
2030 - 2045	0	3	0	0	0	0	0	0	0	0	0	0	0	**3**	
2045 - 2100	0	2	0	0	0	0	0	0	0	0	0	0	0	**3**	**13**
2100 - 2115	0	2	1	0	0	0	0	0	0	0	0	0	0	**3**	
2115 - 2130	0	1	0	0	0	0	0	0	0	0	0	0	0	**1**	
2130 - 2145	0	2	0	0	0	0	0	0	0	0	0	0	0	**2**	
2145 - 2200	0	1	0	0	0	0	0	0	0	0	0	0	0	**2**	**8**
2200 - 2215	0	0	0	0	0	0	0	0	0	0	0	0	0	**0**	
2215 - 2230	0	1	1	0	0	0	0	0	0	0	0	0	0	**2**	
2230 - 2245	0	1	0	0	0	0	0	0	0	0	0	0	0	**1**	
2245 - 2300	0	1	0	0	0	0	0	0	0	0	0	0	0	**1**	**4**
2300 - 2315	0	2	0	0	0	0	0	0	0	0	0	0	0	**2**	
2315 - 2330	0	1	0	0	0	0	0	0	0	0	0	0	0	**1**	
2330 - 2345	0	1	0	0	0	0	0	0	0	0	0	0	0	**1**	
2345 - 0000	0	1	0	0	0	0	0	0	0	0	0	0	0	**1**	**4**

Session Total	1	469	127	0	13	5	0	2	3	0	0	0	0	**619**
Session Average	0.01	4.88	1.32	0.00	0.14	0.05	0.00	0.02	0.03	0.00	0.00	0.00	0.00	**6.45**
Session Percentage	0.16	75.71	20.52	0.00	2.10	0.81	0.00	0.27	0.43	0.00	0.00	0.00	0.00	

AM Peak Hour	-	0715 - 0815	0715 - 0815	-	0945 - 1045	0930 - 1030	-	0715 - 0815	0545 - 0645	-	-	-	-	**0715 - 0815**
AM Peak Volume	0	54	14	0	1	1	0	0	1	0	0	0	0	**69**

Noon Peak Hour	1245 - 1345	1445 - 1545	1145 - 1245	-	1300 - 1400	1000 - 1100	-	1245 - 1345	1215 - 1315	-	-	-	-	**1445 - 1545**
Noon Peak Volume	0	40	11	0	3	1	0	1	1	0	0	0	0	**49**

PM Peak Hour	1600 - 1700	1600 - 1700	1600 - 1700	-	1600 - 1700	1600 - 1700	-	-	1600 - 1700	-	-	-	-	**1600 - 1700**
PM Peak Volume	0	47	11	0	2	0	0	0	0	0	0	0	0	**61**

Bi-Directional Class Count || Volume Summary 15min

Columbia, SC

Marr Traffic DATA COLLECTION

www.marrtraffic.com

Site 18

I-26 James F. Byrnes Expy S/Bound Off-Ramp,
north of US-176 Broad River Rd

Date

Tuesday, April 23, 2024

Lat/Long

34.101717°, -81.178195°

Weather

Fair
58°F

Click here for Detailed Weather

0000 - 2400 (Weekday 24h Session) (04-23-2024)

Volume Summary 15min

TIME	Volume Summary 15min NB	Volume Summary 15min SB	15min Total	60min Total
0000 - 0015	0	0	**0**	
0015 - 0030	0	0	**0**	
0030 - 0045	0	0	**0**	
0045 - 0100	0	0	**0**	**0**
0100 - 0115	0	0	**0**	
0115 - 0130	0	0	**0**	
0130 - 0145	0	0	**0**	
0145 - 0200	0	0	**0**	**0**
0200 - 0215	0	0	**0**	
0215 - 0230	0	0	**0**	
0230 - 0245	0	0	**0**	
0245 - 0300	0	0	**0**	**0**
0300 - 0315	0	0	**0**	
0315 - 0330	0	0	**0**	
0330 - 0345	0	0	**0**	
0345 - 0400	0	0	**0**	**0**
0400 - 0415	0	0	**0**	
0415 - 0430	0	0	**0**	
0430 - 0445	0	0	**0**	
0445 - 0500	0	0	**0**	**0**
0500 - 0515	0	0	**0**	
0515 - 0530	0	0	**0**	
0530 - 0545	0	0	**0**	
0545 - 0600	0	0	**0**	**0**
0600 - 0615	0	0	**0**	
0615 - 0630	0	0	**0**	
0630 - 0645	0	0	**0**	
0645 - 0700	0	0	**0**	**0**
0700 - 0715	0	0	**0**	
0715 - 0730	0	0	**0**	
0730 - 0745	0	0	**0**	
0745 - 0800	0	0	**0**	**0**
0800 - 0815	0	0	**0**	
0815 - 0830	0	0	**0**	
0830 - 0845	0	0	**0**	
0845 - 0900	0	0	**0**	**0**
0900 - 0915	0	0	**0**	
0915 - 0930	0	0	**0**	
0930 - 0945	0	0	**0**	
0945 - 1000	0	0	**0**	**0**
1000 - 1015	0	0	**0**	
1015 - 1030	0	0	**0**	
1030 - 1045	0	0	**0**	
1045 - 1100	0	0	**0**	**0**
1100 - 1115	0	0	**0**	
1115 - 1130	0	0	**0**	
1130 - 1145	0	0	**0**	
1145 - 1200	0	0	**0**	**0**

Time	Volume Summary 15min NB	Volume Summary 15min SB	15min Total	60min Total
1200 - 1215	0	0	**0**	
1215 - 1230	0	0	**0**	
1230 - 1245	0	0	**0**	
1245 - 1300	0	0	**0**	**0**
1300 - 1315	0	0	**0**	
1315 - 1330	0	0	**0**	
1330 - 1345	0	0	**0**	
1345 - 1400	0	0	**0**	**0**
1400 - 1415	0	0	**0**	
1415 - 1430	0	0	**0**	
1430 - 1445	0	0	**0**	
1445 - 1500	0	0	**0**	**0**
1500 - 1515	0	0	**0**	
1515 - 1530	0	0	**0**	
1530 - 1545	0	0	**0**	
1545 - 1600	0	0	**0**	**0**
1600 - 1615	0	0	**0**	
1615 - 1630	0	0	**0**	
1630 - 1645	0	0	**0**	
1645 - 1700	0	0	**0**	**0**
1700 - 1715	0	0	**0**	
1715 - 1730	0	0	**0**	
1730 - 1745	0	0	**0**	
1745 - 1800	0	0	**0**	**0**
1800 - 1815	0	0	**0**	
1815 - 1830	0	0	**0**	
1830 - 1845	0	0	**0**	
1845 - 1900	0	0	**0**	**0**
1900 - 1915	0	6	**6**	
1915 - 1930	0	7	**7**	
1930 - 1945	0	6	**6**	
1945 - 2000	0	7	**7**	**26**
2000 - 2015	0	8	**8**	
2015 - 2030	0	6	**6**	
2030 - 2045	0	5	**5**	
2045 - 2100	0	2	**2**	**21**
2100 - 2115	0	4	**4**	
2115 - 2130	0	3	**3**	
2130 - 2145	0	2	**2**	
2145 - 2200	0	3	**3**	**12**
2200 - 2215	0	0	**0**	
2215 - 2230	0	3	**3**	
2230 - 2245	0	0	**0**	
2245 - 2300	0	3	**3**	**6**
2300 - 2315	0	3	**3**	
2315 - 2330	0	0	**0**	
2330 - 2345	0	1	**1**	
2345 - 0000	0	1	**1**	**5**

Session Total	0	70	**70**
Session Average	0.00	0.73	**0.73**
Session Percentage	0.00	100.00	

Site 18

I-26 James F. Byrnes Expy S/Bound Off-Ramp,
north of US-176 Broad River Rd

Date

Wednesday, April 24, 2024

Lat/Long

34.101717°, -81.178195°

Weather

Fair
66°F

Click here for Detailed Weather

0000 - 2400 (Weekday 24h Session) (04-24-2024)

Volume Summary 15min

TIME	Volume Summary 15min NB	SB	15min Total	60min Total
0000 - 0015	0	2	**2**	
0015 - 0030	0	0	**0**	
0030 - 0045	0	0	**0**	
0045 - 0100	0	2	**2**	**4**
0100 - 0115	0	0	**0**	
0115 - 0130	0	1	**1**	
0130 - 0145	0	0	**0**	
0145 - 0200	0	0	**0**	**1**
0200 - 0215	0	0	**0**	
0215 - 0230	0	0	**0**	
0230 - 0245	0	1	**1**	
0245 - 0300	0	0	**0**	**1**
0300 - 0315	0	0	**0**	
0315 - 0330	0	1	**1**	
0330 - 0345	0	0	**0**	
0345 - 0400	0	1	**1**	**2**
0400 - 0415	0	0	**0**	
0415 - 0430	0	1	**1**	
0430 - 0445	0	1	**1**	
0445 - 0500	0	3	**3**	**5**
0500 - 0515	0	2	**2**	
0515 - 0530	0	5	**5**	
0530 - 0545	0	1	**1**	
0545 - 0600	0	2	**2**	**10**
0600 - 0615	0	4	**4**	
0615 - 0630	0	4	**4**	
0630 - 0645	0	10	**10**	
0645 - 0700	0	10	**10**	**28**
0700 - 0715	0	15	**15**	
0715 - 0730	0	23	**23**	
0730 - 0745	0	19	**19**	
0745 - 0800	0	28	**28**	**85**
0800 - 0815	0	29	**29**	
0815 - 0830	0	14	**14**	
0830 - 0845	0	28	**28**	
0845 - 0900	0	19	**19**	**90**
0900 - 0915	0	18	**18**	
0915 - 0930	0	12	**12**	
0930 - 0945	0	14	**14**	
0945 - 1000	0	16	**16**	**60**
1000 - 1015	0	13	**13**	
1015 - 1030	0	16	**16**	
1030 - 1045	0	2	**2**	
1045 - 1100	0	3	**3**	**34**
1100 - 1115	0	5	**5**	
1115 - 1130	0	4	**4**	
1130 - 1145	0	4	**4**	
1145 - 1200	0	17	**17**	**30**

Time	Volume Summary 15min NB	SB	15min Total	60min Total
1200 - 1215	0	8	**8**	
1215 - 1230	0	15	**15**	
1230 - 1245	0	17	**17**	
1245 - 1300	0	13	**13**	**53**
1300 - 1315	0	17	**17**	
1315 - 1330	0	15	**15**	
1330 - 1345	0	11	**11**	
1345 - 1400	0	14	**14**	**57**
1400 - 1415	0	13	**13**	
1415 - 1430	0	20	**20**	
1430 - 1445	0	16	**16**	
1445 - 1500	0	13	**13**	**62**
1500 - 1515	0	11	**11**	
1515 - 1530	0	24	**24**	
1530 - 1545	0	15	**15**	
1545 - 1600	0	8	**8**	**58**
1600 - 1615	0	29	**29**	
1615 - 1630	0	26	**26**	
1630 - 1645	0	21	**21**	
1645 - 1700	0	22	**22**	**98**
1700 - 1715	0	15	**15**	
1715 - 1730	0	27	**27**	
1730 - 1745	0	13	**13**	
1745 - 1800	0	13	**13**	**68**
1800 - 1815	0	15	**15**	
1815 - 1830	0	9	**9**	
1830 - 1845	0	16	**16**	
1845 - 1900	0	11	**11**	**51**
1900 - 1915	0	11	**11**	
1915 - 1930	0	7	**7**	
1930 - 1945	0	0	**0**	
1945 - 2000	0	16	**16**	**34**
2000 - 2015	0	4	**4**	
2015 - 2030	0	4	**4**	
2030 - 2045	0	5	**5**	
2045 - 2100	0	6	**6**	**19**
2100 - 2115	0	5	**5**	
2115 - 2130	0	1	**1**	
2130 - 2145	0	4	**4**	
2145 - 2200	0	2	**2**	**12**
2200 - 2215	0	0	**0**	
2215 - 2230	0	2	**2**	
2230 - 2245	0	2	**2**	
2245 - 2300	0	1	**1**	**5**
2300 - 2315	0	3	**3**	
2315 - 2330	0	2	**2**	
2330 - 2345	0	1	**1**	
2345 - 0000	0	1	**1**	**7**

Session Total	0	874	**874**
Session Average	0.00	9.10	**9.10**
Session Percentage	0.00	100.00	

Site 18

I-26 James F. Byrnes Expy S/Bound Off-Ramp,
north of US-176 Broad River Rd

Date

Thursday, April 25, 2024

Lat/Long

34.101717°, -81.178195°

Weather

Fair
67°F

Click here for Detailed Weather

0000 - 2400 (Weekday 24h Session) (04-25-2024)

Volume Summary 15min

TIME	Volume Summary 15min NB	Volume Summary 15min SB	15min Total	60min Total
0000 - 0015	0	1	**1**	
0015 - 0030	0	1	**1**	
0030 - 0045	0	2	**2**	
0045 - 0100	0	0	**0**	**4**
0100 - 0115	0	3	**3**	
0115 - 0130	0	0	**0**	
0130 - 0145	0	2	**2**	
0145 - 0200	0	0	**0**	**5**
0200 - 0215	0	1	**1**	
0215 - 0230	0	1	**1**	
0230 - 0245	0	0	**0**	
0245 - 0300	0	1	**1**	**3**
0300 - 0315	0	0	**0**	
0315 - 0330	0	1	**1**	
0330 - 0345	0	1	**1**	
0345 - 0400	0	4	**4**	**6**
0400 - 0415	0	0	**0**	
0415 - 0430	0	1	**1**	
0430 - 0445	0	1	**1**	
0445 - 0500	0	2	**2**	**4**
0500 - 0515	0	2	**2**	
0515 - 0530	0	4	**4**	
0530 - 0545	0	2	**2**	
0545 - 0600	0	3	**3**	**11**
0600 - 0615	0	7	**7**	
0615 - 0630	0	9	**9**	
0630 - 0645	0	9	**9**	
0645 - 0700	0	12	**12**	**37**
0700 - 0715	0	17	**17**	
0715 - 0730	0	29	**29**	
0730 - 0745	0	27	**27**	
0745 - 0800	0	26	**26**	**99**
0800 - 0815	0	25	**25**	
0815 - 0830	0	18	**18**	
0830 - 0845	0	17	**17**	
0845 - 0900	0	17	**17**	**77**
0900 - 0915	0	19	**19**	
0915 - 0930	0	15	**15**	
0930 - 0945	0	18	**18**	
0945 - 1000	0	14	**14**	**66**
1000 - 1015	0	15	**15**	
1015 - 1030	0	19	**19**	
1030 - 1045	0	9	**9**	
1045 - 1100	0	6	**6**	**49**
1100 - 1115	0	13	**13**	
1115 - 1130	0	17	**17**	
1130 - 1145	0	13	**13**	
1145 - 1200	0	17	**17**	**60**
1200 - 1215	0	15	**15**	
1215 - 1230	0	18	**18**	
1230 - 1245	0	21	**21**	
1245 - 1300	0	19	**19**	**73**
1300 - 1315	0	16	**16**	
1315 - 1330	0	9	**9**	
1330 - 1345	0	21	**21**	
1345 - 1400	0	15	**15**	**61**
1400 - 1415	0	15	**15**	
1415 - 1430	0	16	**16**	
1430 - 1445	0	9	**9**	
1445 - 1500	0	26	**26**	**66**
1500 - 1515	0	18	**18**	
1515 - 1530	0	22	**22**	
1530 - 1545	0	18	**18**	
1545 - 1600	0	15	**15**	**73**
1600 - 1615	0	25	**25**	
1615 - 1630	0	22	**22**	
1630 - 1645	0	16	**16**	
1645 - 1700	0	22	**22**	**85**
1700 - 1715	0	17	**17**	
1715 - 1730	0	16	**16**	
1730 - 1745	0	14	**14**	
1745 - 1800	0	16	**16**	**63**
1800 - 1815	0	20	**20**	
1815 - 1830	0	22	**22**	
1830 - 1845	0	21	**21**	
1845 - 1900	0	8	**8**	**71**
1900 - 1915	0	0	**0**	
1915 - 1930	0	0	**0**	
1930 - 1945	0	0	**0**	
1945 - 2000	0	0	**0**	**0**
2000 - 2015	0	0	**0**	
2015 - 2030	0	0	**0**	
2030 - 2045	0	0	**0**	
2045 - 2100	0	0	**0**	**0**
2100 - 2115	0	0	**0**	
2115 - 2130	0	0	**0**	
2130 - 2145	0	0	**0**	
2145 - 2200	0	0	**0**	**0**
2200 - 2215	0	0	**0**	
2215 - 2230	0	0	**0**	
2230 - 2245	0	0	**0**	
2245 - 2300	0	0	**0**	**0**
2300 - 2315	0	0	**0**	
2315 - 2330	0	0	**0**	
2330 - 2345	0	0	**0**	
2345 - 0000	0	0	**0**	**0**

Session Total	0	913	**913**
Session Average	0.00	9.51	**9.51**
Session Percentage	0.00	100.00	

Bi-Directional Class Count || SB WB 60min

Columbia, SC

Marr Traffic DATA COLLECTION

www.marrtraffic.com

Site 18
I-26 James F. Byrnes Expy S/Bound Off-Ramp,
north of US-176 Broad River Rd

Date
Tuesday, April 23, 2024

Lat/Long
34.101717°, -81.178195°

Weather
Fair
58°F

Click here for Detailed Weather

0000 - 2400 (Weekday 24h Session) (04-23-2024)
SB WB 60min

	Southbound (Movement 18.1)													
TIME	1	2	3	4	5	6	7	8	9	10	11	12	13	**Total**
0000 - 0100	0	0	0	0	0	0	0	0	0	0	0	0	0	**0**
0100 - 0200	0	0	0	0	0	0	0	0	0	0	0	0	0	**0**
0200 - 0300	0	0	0	0	0	0	0	0	0	0	0	0	0	**0**
0300 - 0400	0	0	0	0	0	0	0	0	0	0	0	0	0	**0**
0400 - 0500	0	0	0	0	0	0	0	0	0	0	0	0	0	**0**
0500 - 0600	0	0	0	0	0	0	0	0	0	0	0	0	0	**0**
0600 - 0700	0	0	0	0	0	0	0	0	0	0	0	0	0	**0**
0700 - 0800	0	0	0	0	0	0	0	0	0	0	0	0	0	**0**
0800 - 0900	0	0	0	0	0	0	0	0	0	0	0	0	0	**0**
0900 - 1000	0	0	0	0	0	0	0	0	0	0	0	0	0	**0**
1000 - 1100	0	0	0	0	0	0	0	0	0	0	0	0	0	**0**
1100 - 1200	0	0	0	0	0	0	0	0	0	0	0	0	0	**0**
1200 - 1300	0	0	0	0	0	0	0	0	0	0	0	0	0	**0**
1300 - 1400	0	0	0	0	0	0	0	0	0	0	0	0	0	**0**
1400 - 1500	0	0	0	0	0	0	0	0	0	0	0	0	0	**0**
1500 - 1600	0	0	0	0	0	0	0	0	0	0	0	0	0	**0**
1600 - 1700	0	0	0	0	0	0	0	0	0	0	0	0	0	**0**
1700 - 1800	0	0	0	0	0	0	0	0	0	0	0	0	0	**0**
1800 - 1900	0	0	0	0	0	0	0	0	0	0	0	0	0	**0**
1900 - 2000	0	22	4	0	0	0	0	0	0	0	0	0	0	**26**
2000 - 2100	1	15	5	0	0	0	0	0	0	0	0	0	0	**21**
2100 - 2200	0	9	3	0	0	0	0	0	0	0	0	0	0	**12**
2200 - 2300	0	4	2	0	0	0	0	0	0	0	0	0	0	**6**
2300 - 2400	0	5	0	0	0	0	0	0	0	0	0	0	0	**5**

Session Total	1	55	14	0	0	0	0	0	0	0	0	0	0	**70**
Session Average	0.04	2.29	0.58	0.00	0.00	0.00	0.00	0.00	0.00	0.00	0.00	0.00	0.00	**2.92**
Session Percentage	1.43	78.57	20.00	0.00	0.00	0.00	0.00	0.00	0.00	0.00	0.00	0.00	0.00	

AM Peak Hour	-	-	-	-	-	-	-	-	-	-	-	-	-	-
AM Peak Volume	0	0	0	0	0	0	0	0	0	0	0	0	0	**0**

Noon Peak Hour	-	-	-	-	-	-	-	-	-	-	-	-	-	-
Noon Peak Volume	0	0	0	0	0	0	0	0	0	0	0	0	0	**0**

PM Peak Hour	-	1900 - 2000	1900 - 2000	-	-	-	-	-	-	-	-	-	-	**1900 - 2000**
PM Peak Volume	0	22	4	0	0	0	0	0	0	0	0	0	0	**26**

Site 18
I-26 James F. Byrnes Expy S/Bound Off-Ramp,
north of US-176 Broad River Rd

Date
Wednesday, April 24, 2024

Lat/Long
34.101717°, -81.178195°

Weather
Fair
66°F

Click here for Detailed Weather

0000 - 2400 (Weekday 24h Session) (04-24-2024)
SB WB 60min

	Southbound (Movement 18.1)													
TIME	1	2	3	4	5	6	7	8	9	10	11	12	13	**Total**
0000 - 0100	0	2	1	0	0	1	0	0	0	0	0	0	0	**4**
0100 - 0200	0	1	0	0	0	0	0	0	0	0	0	0	0	**1**
0200 - 0300	0	1	0	0	0	0	0	0	0	0	0	0	0	**1**
0300 - 0400	0	2	0	0	0	0	0	0	0	0	0	0	0	**2**
0400 - 0500	0	4	1	0	0	0	0	0	0	0	0	0	0	**5**
0500 - 0600	0	6	2	0	1	1	0	0	0	0	0	0	0	**10**
0600 - 0700	0	21	6	0	0	0	0	0	1	0	0	0	0	**28**
0700 - 0800	0	70	15	0	0	0	0	0	0	0	0	0	0	**85**
0800 - 0900	0	68	22	0	0	0	0	0	0	0	0	0	0	**90**
0900 - 1000	0	42	15	0	1	1	0	1	0	0	0	0	0	**60**
1000 - 1100	0	24	10	0	0	0	0	0	0	0	0	0	0	**34**
1100 - 1200	0	19	10	0	1	0	0	0	0	0	0	0	0	**30**
1200 - 1300	0	33	18	0	2	0	0	0	0	0	0	0	0	**53**
1300 - 1400	0	39	11	0	5	0	0	1	1	0	0	0	0	**57**
1400 - 1500	0	51	7	0	4	0	0	0	0	0	0	0	0	**62**
1500 - 1600	0	50	8	0	0	0	0	0	0	0	0	0	0	**58**
1600 - 1700	0	79	15	0	3	0	0	0	1	0	0	0	0	**98**
1700 - 1800	0	53	15	0	0	0	0	0	0	0	0	0	0	**68**
1800 - 1900	0	42	7	0	2	0	0	0	0	0	0	0	0	**51**
1900 - 2000	0	26	8	0	0	0	0	0	0	0	0	0	0	**34**
2000 - 2100	0	17	2	0	0	0	0	0	0	0	0	0	0	**19**
2100 - 2200	0	10	2	0	0	0	0	0	0	0	0	0	0	**12**
2200 - 2300	0	5	0	0	0	0	0	0	0	0	0	0	0	**5**
2300 - 2400	0	7	0	0	0	0	0	0	0	0	0	0	0	**7**
Session Total	0	672	175	0	19	3	0	2	3	0	0	0	0	**874**
Session Average	0.00	28.00	7.29	0.00	0.79	0.13	0.00	0.08	0.13	0.00	0.00	0.00	0.00	**36.42**
Session Percentage	0.00	76.89	20.02	0.00	2.17	0.34	0.00	0.23	0.34	0.00	0.00	0.00	0.00	
AM Peak Hour	-	0700 - 0800	0800 - 0900	-	0500 - 0600	0500 - 0600	-	0900 - 1000	0600 - 0700	-	-	-	-	**0800 - 0900**
AM Peak Volume	0	70	22	0	1	1	0	1	1	0	0	0	0	**90**
Noon Peak Hour	-	1400 - 1500	1200 - 1300	-	1300 - 1400	-	-	1300 - 1400	1300 - 1400	-	-	-	-	**1400 - 1500**
Noon Peak Volume	0	51	18	0	5	0	0	1	1	0	0	0	0	**62**
PM Peak Hour	-	1600 - 1700	1600 - 1700	-	1600 - 1700	-	-	-	1600 - 1700	-	-	-	-	**1600 - 1700**
PM Peak Volume	0	79	15	0	3	0	0	0	1	0	0	0	0	**98**

Site 18
I-26 James F. Byrnes Expy S/Bound Off-Ramp,
north of US-176 Broad River Rd

Date
Thursday, April 25, 2024

Lat/Long
34.101717°, -81.178195°

Weather
Fair
67°F

Click here for Detailed Weather

0000 - 2400 (Weekday 24h Session) (04-25-2024)
SB WB 60min

	Southbound (Movement 18.1)													
TIME	1	2	3	4	5	6	7	8	9	10	11	12	13	**Total**
0000 - 0100	0	3	0	0	0	1	0	0	0	0	0	0	0	**4**
0100 - 0200	0	2	0	0	1	1	0	0	1	0	0	0	0	**5**
0200 - 0300	0	2	0	0	0	1	0	0	0	0	0	0	0	**3**
0300 - 0400	0	4	1	0	0	1	0	0	0	0	0	0	0	**6**
0400 - 0500	0	2	2	0	0	0	0	0	0	0	0	0	0	**4**
0500 - 0600	0	7	3	0	0	0	0	0	1	0	0	0	0	**11**
0600 - 0700	0	17	18	0	1	1	0	0	0	0	0	0	0	**37**
0700 - 0800	0	76	21	0	1	0	0	0	1	0	0	0	0	**99**
0800 - 0900	0	64	11	0	1	0	0	1	0	0	0	0	0	**77**
0900 - 1000	0	46	19	0	0	0	0	0	1	0	0	0	0	**66**
1000 - 1100	0	31	14	0	2	2	0	0	0	0	0	0	0	**49**
1100 - 1200	0	44	15	0	0	1	0	0	0	0	0	0	0	**60**
1200 - 1300	0	54	13	0	2	2	0	1	1	0	0	0	0	**73**
1300 - 1400	1	47	7	0	4	1	0	1	0	0	0	0	0	**61**
1400 - 1500	0	50	14	0	2	0	0	0	0	0	0	0	0	**66**
1500 - 1600	0	60	12	0	1	0	0	0	0	0	0	0	0	**73**
1600 - 1700	1	62	18	0	3	1	0	0	0	0	0	0	0	**85**
1700 - 1800	0	53	10	0	0	0	0	0	0	0	0	0	0	**63**
1800 - 1900	0	55	14	0	2	0	0	0	0	0	0	0	0	**71**
1900 - 2000	0	0	0	0	0	0	0	0	0	0	0	0	0	**0**
2000 - 2100	0	0	0	0	0	0	0	0	0	0	0	0	0	**0**
2100 - 2200	0	0	0	0	0	0	0	0	0	0	0	0	0	**0**
2200 - 2300	0	0	0	0	0	0	0	0	0	0	0	0	0	**0**
2300 - 2400	0	0	0	0	0	0	0	0	0	0	0	0	0	**0**

Session Total	2	679	192	0	20	12	0	3	5	0	0	0	0	**913**
Session Average	0.08	28.29	8.00	0.00	0.83	0.50	0.00	0.13	0.21	0.00	0.00	0.00	0.00	**38.04**
Session Percentage	0.22	74.37	21.03	0.00	2.19	1.31	0.00	0.33	0.55	0.00	0.00	0.00	0.00	

AM Peak Hour	-	0700 - 0800	0700 - 0800	-	0600 - 0700	0600 - 0700	-	0800 - 0900	0500 - 0600	-	-	-	-	**0700 - 0800**
AM Peak Hour Volume	0	76	21	0	1	1	0	1	1	0	0	0	0	**99**

Noon Peak Hour	1300 - 1400	1200 - 1300	1100 - 1200	-	1300 - 1400	1000 - 1100	-	1200 - 1300	1200 - 1300	-	-	-	-	**1200 - 1300**
Noon Peak Hour Volume	1	54	15	0	4	2	0	1	1	0	0	0	0	**73**

PM Peak Hour	1600 - 1700	1600 - 1700	1600 - 1700	-	1600 - 1700	1600 - 1700	-	-	-	-	-	-	-	**1600 - 1700**
PM Peak Hour Volume	1	62	18	0	3	1	0	0	0	0	0	0	0	**85**

Bi-Directional Class Count || Volume Summary 60min

Columbia, SC

Marr Traffic DATA COLLECTION

www.marrtraffic.com

Site 18

I-26 James F. Byrnes Expy S/Bound Off-Ramp,
north of US-176 Broad River Rd

Date

Tuesday, April 23, 2024

Lat/Long

34.101717°, -81.178195°

Weather

Fair
58°F

Click here for Detailed Weather

0000 - 2400 (Weekday 24h Session) (04-23-2024)

Volume Summary 60min

	Volume Summary 60min		
TIME	NB	SB	**Total**
0000 - 0100	0	0	**0**
0100 - 0200	0	0	**0**
0200 - 0300	0	0	**0**
0300 - 0400	0	0	**0**
0400 - 0500	0	0	**0**
0500 - 0600	0	0	**0**
0600 - 0700	0	0	**0**
0700 - 0800	0	0	**0**
0800 - 0900	0	0	**0**
0900 - 1000	0	0	**0**
1000 - 1100	0	0	**0**
1100 - 1200	0	0	**0**

	Volume Summary 60min		
Time	NB	SB	**Total**
1200 - 1300	0	0	**0**
1300 - 1400	0	0	**0**
1400 - 1500	0	0	**0**
1500 - 1600	0	0	**0**
1600 - 1700	0	0	**0**
1700 - 1800	0	0	**0**
1800 - 1900	0	0	**0**
1900 - 2000	0	26	**26**
2000 - 2100	0	21	**21**
2100 - 2200	0	12	**12**
2200 - 2300	0	6	**6**
2300 - 2400	0	5	**5**

Session Total	0	70	**70**
Session Average	0.00	2.92	**2.92**
Session Percentage	0.00	100.00	

Site 18

I-26 James F. Byrnes Expy S/Bound Off-Ramp,
north of US-176 Broad River Rd

Date

Wednesday, April 24, 2024

Lat/Long

34.101717°, -81.178195°

Weather

Fair
66°F

Click here for Detailed Weather

0000 - 2400 (Weekday 24h Session) (04-24-2024)

Volume Summary 60min

	Volume Summary 60min		
TIME	NB	SB	**Total**
0000 - 0100	0	4	**4**
0100 - 0200	0	1	**1**
0200 - 0300	0	1	**1**
0300 - 0400	0	2	**2**
0400 - 0500	0	5	**5**
0500 - 0600	0	10	**10**
0600 - 0700	0	28	**28**
0700 - 0800	0	85	**85**
0800 - 0900	0	90	**90**
0900 - 1000	0	60	**60**
1000 - 1100	0	34	**34**
1100 - 1200	0	30	**30**

Session Total	0	874	**874**
Session Average	0.00	36.42	**36.42**
Session Percentage	0.00	100.00	

	Volume Summary 60min		
Time	NB	SB	**Total**
1200 - 1300	0	53	**53**
1300 - 1400	0	57	**57**
1400 - 1500	0	62	**62**
1500 - 1600	0	58	**58**
1600 - 1700	0	98	**98**
1700 - 1800	0	68	**68**
1800 - 1900	0	51	**51**
1900 - 2000	0	34	**34**
2000 - 2100	0	19	**19**
2100 - 2200	0	12	**12**
2200 - 2300	0	5	**5**
2300 - 2400	0	7	**7**

Site 18

I-26 James F. Byrnes Expy S/Bound Off-Ramp,
north of US-176 Broad River Rd

Date

Thursday, April 25, 2024

Lat/Long

34.101717°, -81.178195°

Weather

Fair
67°F

Click here for Detailed Weather

0000 - 2400 (Weekday 24h Session) (04-25-2024)

Volume Summary 60min

	Volume Summary 60min		
TIME	NB	SB	**Total**
0000 - 0100	0	4	**4**
0100 - 0200	0	5	**5**
0200 - 0300	0	3	**3**
0300 - 0400	0	6	**6**
0400 - 0500	0	4	**4**
0500 - 0600	0	11	**11**
0600 - 0700	0	37	**37**
0700 - 0800	0	99	**99**
0800 - 0900	0	77	**77**
0900 - 1000	0	66	**66**
1000 - 1100	0	49	**49**
1100 - 1200	0	60	**60**

	Volume Summary 60min		
Time	NB	SB	**Total**
1200 - 1300	0	73	**73**
1300 - 1400	0	61	**61**
1400 - 1500	0	66	**66**
1500 - 1600	0	73	**73**
1600 - 1700	0	85	**85**
1700 - 1800	0	63	**63**
1800 - 1900	0	71	**71**
1900 - 2000	0	0	**0**
2000 - 2100	0	0	**0**
2100 - 2200	0	0	**0**
2200 - 2300	0	0	**0**
2300 - 2400	0	0	**0**

Session Total	0	913	**913**
Session Average	0.00	38.04	**38.04**
Session Percentage	0.00	100.00	

Bi-Directional Class Count || Graphical Analysis SB WB

Columbia, SC

Marr Traffic DATA COLLECTION

www.marrtraffic.com

Site 18

I-26 James F. Byrnes Expy S/Bound Off-Ramp,
north of US-176 Broad River Rd

Lat/Long

34.101717°, -81.178195°

0000 - 2400 (Weekday 24h Session)

Graphical Analysis SB WB

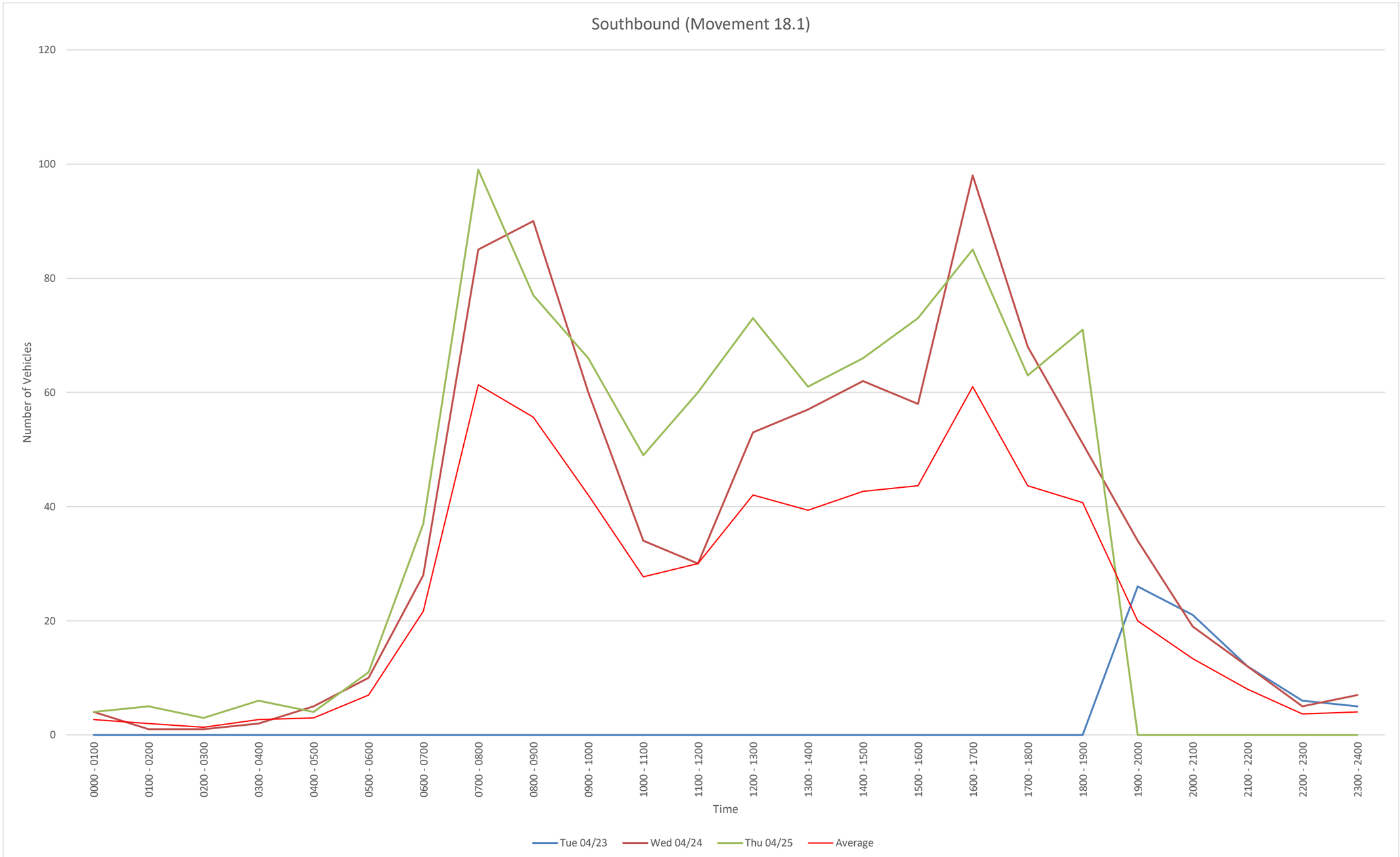

Time	Tue 04/23	Wed 04/24	Thu 04/25				
0000 - 0100	0	4	4				
0100 - 0200	0	1	5				
0200 - 0300	0	1	3				
0300 - 0400	0	2	6				
0400 - 0500	0	5	4				
0500 - 0600	0	10	11				
0600 - 0700	0	28	37				
0700 - 0800	0	85	99				
0800 - 0900	0	90	77				
0900 - 1000	0	60	66				
1000 - 1100	0	34	49				
1100 - 1200	0	30	60				
1200 - 1300	0	53	73				
1300 - 1400	0	57	61				
1400 - 1500	0	62	66				
1500 - 1600	0	58	73				
1600 - 1700	0	98	85				
1700 - 1800	0	68	63				
1800 - 1900	0	51	71				
1900 - 2000	26	34	0				
2000 - 2100	21	19	0				
2100 - 2200	12	12	0				
2200 - 2300	6	5	0				
2300 - 2400	5	7	0				
Daily Total	70	874	913				

NB
File Name:
Start Date: 4/23/2024
Start Time: 0
Site Code: 18
Station ID: 1
Location 1: I-26 James F. Byrnes Expy S/Bound Off-Ramp, north of US-176 Broad River Rd
Location 2:

Date	Time	1	2	3	4	5	6	7	8	9	10	11	12	13
4/23/2024	12:00 AM	0	0	0	0	0	0	0	0	0	0	0	0	0
4/23/2024	12:15 AM	0	0	0	0	0	0	0	0	0	0	0	0	0
4/23/2024	12:30 AM	0	0	0	0	0	0	0	0	0	0	0	0	0
4/23/2024	12:45 AM	0	0	0	0	0	0	0	0	0	0	0	0	0
4/23/2024	1:00 AM	0	0	0	0	0	0	0	0	0	0	0	0	0
4/23/2024	1:15 AM	0	0	0	0	0	0	0	0	0	0	0	0	0
4/23/2024	1:30 AM	0	0	0	0	0	0	0	0	0	0	0	0	0
4/23/2024	1:45 AM	0	0	0	0	0	0	0	0	0	0	0	0	0
4/23/2024	2:00 AM	0	0	0	0	0	0	0	0	0	0	0	0	0
4/23/2024	2:15 AM	0	0	0	0	0	0	0	0	0	0	0	0	0
4/23/2024	2:30 AM	0	0	0	0	0	0	0	0	0	0	0	0	0
4/23/2024	2:45 AM	0	0	0	0	0	0	0	0	0	0	0	0	0
4/23/2024	3:00 AM	0	0	0	0	0	0	0	0	0	0	0	0	0
4/23/2024	3:15 AM	0	0	0	0	0	0	0	0	0	0	0	0	0
4/23/2024	3:30 AM	0	0	0	0	0	0	0	0	0	0	0	0	0
4/23/2024	3:45 AM	0	0	0	0	0	0	0	0	0	0	0	0	0
4/23/2024	4:00 AM	0	0	0	0	0	0	0	0	0	0	0	0	0
4/23/2024	4:15 AM	0	0	0	0	0	0	0	0	0	0	0	0	0
4/23/2024	4:30 AM	0	0	0	0	0	0	0	0	0	0	0	0	0
4/23/2024	4:45 AM	0	0	0	0	0	0	0	0	0	0	0	0	0
4/23/2024	5:00 AM	0	0	0	0	0	0	0	0	0	0	0	0	0
4/23/2024	5:15 AM	0	0	0	0	0	0	0	0	0	0	0	0	0
4/23/2024	5:30 AM	0	0	0	0	0	0	0	0	0	0	0	0	0
4/23/2024	5:45 AM	0	0	0	0	0	0	0	0	0	0	0	0	0
4/23/2024	6:00 AM	0	0	0	0	0	0	0	0	0	0	0	0	0
4/23/2024	6:15 AM	0	0	0	0	0	0	0	0	0	0	0	0	0
4/23/2024	6:30 AM	0	0	0	0	0	0	0	0	0	0	0	0	0
4/23/2024	6:45 AM	0	0	0	0	0	0	0	0	0	0	0	0	0
4/23/2024	7:00 AM	0	0	0	0	0	0	0	0	0	0	0	0	0
4/23/2024	7:15 AM	0	0	0	0	0	0	0	0	0	0	0	0	0
4/23/2024	7:30 AM	0	0	0	0	0	0	0	0	0	0	0	0	0
4/23/2024	7:45 AM	0	0	0	0	0	0	0	0	0	0	0	0	0
4/23/2024	8:00 AM	0	0	0	0	0	0	0	0	0	0	0	0	0
4/23/2024	8:15 AM	0	0	0	0	0	0	0	0	0	0	0	0	0
4/23/2024	8:30 AM	0	0	0	0	0	0	0	0	0	0	0	0	0
4/23/2024	8:45 AM	0	0	0	0	0	0	0	0	0	0	0	0	0
4/23/2024	9:00 AM	0	0	0	0	0	0	0	0	0	0	0	0	0
4/23/2024	9:15 AM	0	0	0	0	0	0	0	0	0	0	0	0	0
4/23/2024	9:30 AM	0	0	0	0	0	0	0	0	0	0	0	0	0
4/23/2024	9:45 AM	0	0	0	0	0	0	0	0	0	0	0	0	0
4/23/2024	10:00 AM	0	0	0	0	0	0	0	0	0	0	0	0	0
4/23/2024	10:15 AM	0	0	0	0	0	0	0	0	0	0	0	0	0
4/23/2024	10:30 AM	0	0	0	0	0	0	0	0	0	0	0	0	0
4/23/2024	10:45 AM	0	0	0	0	0	0	0	0	0	0	0	0	0
4/23/2024	11:00 AM	0	0	0	0	0	0	0	0	0	0	0	0	0
4/23/2024	11:15 AM	0	0	0	0	0	0	0	0	0	0	0	0	0
4/23/2024	11:30 AM	0	0	0	0	0	0	0	0	0	0	0	0	0
4/23/2024	11:45 AM	0	0	0	0	0	0	0	0	0	0	0	0	0
4/23/2024	12:00 PM	0	0	0	0	0	0	0	0	0	0	0	0	0
4/23/2024	12:15 PM	0	0	0	0	0	0	0	0	0	0	0	0	0
4/23/2024	12:30 PM	0	0	0	0	0	0	0	0	0	0	0	0	0
4/23/2024	12:45 PM	0	0	0	0	0	0	0	0	0	0	0	0	0
4/23/2024	1:00 PM	0	0	0	0	0	0	0	0	0	0	0	0	0
4/23/2024	1:15 PM	0	0	0	0	0	0	0	0	0	0	0	0	0
4/23/2024	1:30 PM	0	0	0	0	0	0	0	0	0	0	0	0	0
4/23/2024	1:45 PM	0	0	0	0	0	0	0	0	0	0	0	0	0
4/23/2024	2:00 PM	0	0	0	0	0	0	0	0	0	0	0	0	0
4/23/2024	2:15 PM	0	0	0	0	0	0	0	0	0	0	0	0	0
4/23/2024	2:30 PM	0	0	0	0	0	0	0	0	0	0	0	0	0
4/23/2024	2:45 PM	0	0	0	0	0	0	0	0	0	0	0	0	0
4/23/2024	3:00 PM	0	0	0	0	0	0	0	0	0	0	0	0	0
4/23/2024	3:15 PM	0	0	0	0	0	0	0	0	0	0	0	0	0
4/23/2024	3:30 PM	0	0	0	0	0	0	0	0	0	0	0	0	0
4/23/2024	3:45 PM	0	0	0	0	0	0	0	0	0	0	0	0	0
4/23/2024	4:00 PM	0	0	0	0	0	0	0	0	0	0	0	0	0
4/23/2024	4:15 PM	0	0	0	0	0	0	0	0	0	0	0	0	0
4/23/2024	4:30 PM	0	0	0	0	0	0	0	0	0	0	0	0	0
4/23/2024	4:45 PM	0	0	0	0	0	0	0	0	0	0	0	0	0
4/23/2024	5:00 PM	0	0	0	0	0	0	0	0	0	0	0	0	0
4/23/2024	5:15 PM	0	0	0	0	0	0	0	0	0	0	0	0	0
4/23/2024	5:30 PM	0	0	0	0	0	0	0	0	0	0	0	0	0
4/23/2024	5:45 PM	0	0	0	0	0	0	0	0	0	0	0	0	0
4/23/2024	6:00 PM	0	0	0	0	0	0	0	0	0	0	0	0	0
4/23/2024	6:15 PM	0	0	0	0	0	0	0	0	0	0	0	0	0
4/23/2024	6:30 PM	0	0	0	0	0	0	0	0	0	0	0	0	0
4/23/2024	6:45 PM	0	0	0	0	0	0	0	0	0	0	0	0	0
4/23/2024	7:00 PM	0	0	0	0	0	0	0	0	0	0	0	0	0
4/23/2024	7:15 PM	0	0	0	0	0	0	0	0	0	0	0	0	0
4/23/2024	7:30 PM	0	0	0	0	0	0	0	0	0	0	0	0	0
4/23/2024	7:45 PM	0	0	0	0	0	0	0	0	0	0	0	0	0
4/23/2024	8:00 PM	0	0	0	0	0	0	0	0	0	0	0	0	0
4/23/2024	8:15 PM	0	0	0	0	0	0	0	0	0	0	0	0	0
4/23/2024	8:30 PM	0	0	0	0	0	0	0	0	0	0	0	0	0
4/23/2024	8:45 PM	0	0	0	0	0	0	0	0	0	0	0	0	0
4/23/2024	9:00 PM	0	0	0	0	0	0	0	0	0	0	0	0	0
4/23/2024	9:15 PM	0	0	0	0	0	0	0	0	0	0	0	0	0
4/23/2024	9:30 PM	0	0	0	0	0	0	0	0	0	0	0	0	0
4/23/2024	9:45 PM	0	0	0	0	0	0	0	0	0	0	0	0	0
4/23/2024	10:00 PM	0	0	0	0	0	0	0	0	0	0	0	0	0
4/23/2024	10:15 PM	0	0	0	0	0	0	0	0	0	0	0	0	0
4/23/2024	10:30 PM	0	0	0	0	0	0	0	0	0	0	0	0	0
4/23/2024	10:45 PM	0	0	0	0	0	0	0	0	0	0	0	0	0
4/23/2024	11:00 PM	0	0	0	0	0	0	0	0	0	0	0	0	0
4/23/2024	11:15 PM	0	0	0	0	0	0	0	0	0	0	0	0	0
4/23/2024	11:30 PM	0	0	0	0	0	0	0	0	0	0	0	0	0
4/23/2024	11:45 PM	0	0	0	0	0	0	0	0	0	0	0	0	0

4/24/2024	12:00 AM	0	0	0	0	0	0	0	0	0	0	0	0	0
4/24/2024	12:15 AM	0	0	0	0	0	0	0	0	0	0	0	0	0
4/24/2024	12:30 AM	0	0	0	0	0	0	0	0	0	0	0	0	0
4/24/2024	12:45 AM	0	0	0	0	0	0	0	0	0	0	0	0	0
4/24/2024	1:00 AM	0	0	0	0	0	0	0	0	0	0	0	0	0
4/24/2024	1:15 AM	0	0	0	0	0	0	0	0	0	0	0	0	0
4/24/2024	1:30 AM	0	0	0	0	0	0	0	0	0	0	0	0	0
4/24/2024	1:45 AM	0	0	0	0	0	0	0	0	0	0	0	0	0
4/24/2024	2:00 AM	0	0	0	0	0	0	0	0	0	0	0	0	0
4/24/2024	2:15 AM	0	0	0	0	0	0	0	0	0	0	0	0	0
4/24/2024	2:30 AM	0	0	0	0	0	0	0	0	0	0	0	0	0
4/24/2024	2:45 AM	0	0	0	0	0	0	0	0	0	0	0	0	0
4/24/2024	3:00 AM	0	0	0	0	0	0	0	0	0	0	0	0	0
4/24/2024	3:15 AM	0	0	0	0	0	0	0	0	0	0	0	0	0
4/24/2024	3:30 AM	0	0	0	0	0	0	0	0	0	0	0	0	0
4/24/2024	3:45 AM	0	0	0	0	0	0	0	0	0	0	0	0	0
4/24/2024	4:00 AM	0	0	0	0	0	0	0	0	0	0	0	0	0
4/24/2024	4:15 AM	0	0	0	0	0	0	0	0	0	0	0	0	0
4/24/2024	4:30 AM	0	0	0	0	0	0	0	0	0	0	0	0	0
4/24/2024	4:45 AM	0	0	0	0	0	0	0	0	0	0	0	0	0
4/24/2024	5:00 AM	0	0	0	0	0	0	0	0	0	0	0	0	0
4/24/2024	5:15 AM	0	0	0	0	0	0	0	0	0	0	0	0	0
4/24/2024	5:30 AM	0	0	0	0	0	0	0	0	0	0	0	0	0
4/24/2024	5:45 AM	0	0	0	0	0	0	0	0	0	0	0	0	0
4/24/2024	6:00 AM	0	0	0	0	0	0	0	0	0	0	0	0	0
4/24/2024	6:15 AM	0	0	0	0	0	0	0	0	0	0	0	0	0
4/24/2024	6:30 AM	0	0	0	0	0	0	0	0	0	0	0	0	0
4/24/2024	6:45 AM	0	0	0	0	0	0	0	0	0	0	0	0	0
4/24/2024	7:00 AM	0	0	0	0	0	0	0	0	0	0	0	0	0
4/24/2024	7:15 AM	0	0	0	0	0	0	0	0	0	0	0	0	0
4/24/2024	7:30 AM	0	0	0	0	0	0	0	0	0	0	0	0	0
4/24/2024	7:45 AM	0	0	0	0	0	0	0	0	0	0	0	0	0
4/24/2024	8:00 AM	0	0	0	0	0	0	0	0	0	0	0	0	0
4/24/2024	8:15 AM	0	0	0	0	0	0	0	0	0	0	0	0	0
4/24/2024	8:30 AM	0	0	0	0	0	0	0	0	0	0	0	0	0
4/24/2024	8:45 AM	0	0	0	0	0	0	0	0	0	0	0	0	0
4/24/2024	9:00 AM	0	0	0	0	0	0	0	0	0	0	0	0	0
4/24/2024	9:15 AM	0	0	0	0	0	0	0	0	0	0	0	0	0
4/24/2024	9:30 AM	0	0	0	0	0	0	0	0	0	0	0	0	0
4/24/2024	9:45 AM	0	0	0	0	0	0	0	0	0	0	0	0	0
4/24/2024	10:00 AM	0	0	0	0	0	0	0	0	0	0	0	0	0
4/24/2024	10:15 AM	0	0	0	0	0	0	0	0	0	0	0	0	0
4/24/2024	10:30 AM	0	0	0	0	0	0	0	0	0	0	0	0	0
4/24/2024	10:45 AM	0	0	0	0	0	0	0	0	0	0	0	0	0
4/24/2024	11:00 AM	0	0	0	0	0	0	0	0	0	0	0	0	0
4/24/2024	11:15 AM	0	0	0	0	0	0	0	0	0	0	0	0	0
4/24/2024	11:30 AM	0	0	0	0	0	0	0	0	0	0	0	0	0
4/24/2024	11:45 AM	0	0	0	0	0	0	0	0	0	0	0	0	0
4/24/2024	12:00 PM	0	0	0	0	0	0	0	0	0	0	0	0	0
4/24/2024	12:15 PM	0	0	0	0	0	0	0	0	0	0	0	0	0
4/24/2024	12:30 PM	0	0	0	0	0	0	0	0	0	0	0	0	0
4/24/2024	12:45 PM	0	0	0	0	0	0	0	0	0	0	0	0	0
4/24/2024	1:00 PM	0	0	0	0	0	0	0	0	0	0	0	0	0
4/24/2024	1:15 PM	0	0	0	0	0	0	0	0	0	0	0	0	0
4/24/2024	1:30 PM	0	0	0	0	0	0	0	0	0	0	0	0	0
4/24/2024	1:45 PM	0	0	0	0	0	0	0	0	0	0	0	0	0
4/24/2024	2:00 PM	0	0	0	0	0	0	0	0	0	0	0	0	0
4/24/2024	2:15 PM	0	0	0	0	0	0	0	0	0	0	0	0	0
4/24/2024	2:30 PM	0	0	0	0	0	0	0	0	0	0	0	0	0
4/24/2024	2:45 PM	0	0	0	0	0	0	0	0	0	0	0	0	0
4/24/2024	3:00 PM	0	0	0	0	0	0	0	0	0	0	0	0	0
4/24/2024	3:15 PM	0	0	0	0	0	0	0	0	0	0	0	0	0
4/24/2024	3:30 PM	0	0	0	0	0	0	0	0	0	0	0	0	0
4/24/2024	3:45 PM	0	0	0	0	0	0	0	0	0	0	0	0	0
4/24/2024	4:00 PM	0	0	0	0	0	0	0	0	0	0	0	0	0
4/24/2024	4:15 PM	0	0	0	0	0	0	0	0	0	0	0	0	0
4/24/2024	4:30 PM	0	0	0	0	0	0	0	0	0	0	0	0	0
4/24/2024	4:45 PM	0	0	0	0	0	0	0	0	0	0	0	0	0
4/24/2024	5:00 PM	0	0	0	0	0	0	0	0	0	0	0	0	0
4/24/2024	5:15 PM	0	0	0	0	0	0	0	0	0	0	0	0	0
4/24/2024	5:30 PM	0	0	0	0	0	0	0	0	0	0	0	0	0
4/24/2024	5:45 PM	0	0	0	0	0	0	0	0	0	0	0	0	0
4/24/2024	6:00 PM	0	0	0	0	0	0	0	0	0	0	0	0	0
4/24/2024	6:15 PM	0	0	0	0	0	0	0	0	0	0	0	0	0
4/24/2024	6:30 PM	0	0	0	0	0	0	0	0	0	0	0	0	0
4/24/2024	6:45 PM	0	0	0	0	0	0	0	0	0	0	0	0	0
4/24/2024	7:00 PM	0	0	0	0	0	0	0	0	0	0	0	0	0
4/24/2024	7:15 PM	0	0	0	0	0	0	0	0	0	0	0	0	0
4/24/2024	7:30 PM	0	0	0	0	0	0	0	0	0	0	0	0	0
4/24/2024	7:45 PM	0	0	0	0	0	0	0	0	0	0	0	0	0
4/24/2024	8:00 PM	0	0	0	0	0	0	0	0	0	0	0	0	0
4/24/2024	8:15 PM	0	0	0	0	0	0	0	0	0	0	0	0	0
4/24/2024	8:30 PM	0	0	0	0	0	0	0	0	0	0	0	0	0
4/24/2024	8:45 PM	0	0	0	0	0	0	0	0	0	0	0	0	0
4/24/2024	9:00 PM	0	0	0	0	0	0	0	0	0	0	0	0	0
4/24/2024	9:15 PM	0	0	0	0	0	0	0	0	0	0	0	0	0
4/24/2024	9:30 PM	0	0	0	0	0	0	0	0	0	0	0	0	0
4/24/2024	9:45 PM	0	0	0	0	0	0	0	0	0	0	0	0	0
4/24/2024	10:00 PM	0	0	0	0	0	0	0	0	0	0	0	0	0
4/24/2024	10:15 PM	0	0	0	0	0	0	0	0	0	0	0	0	0
4/24/2024	10:30 PM	0	0	0	0	0	0	0	0	0	0	0	0	0
4/24/2024	10:45 PM	0	0	0	0	0	0	0	0	0	0	0	0	0
4/24/2024	11:00 PM	0	0	0	0	0	0	0	0	0	0	0	0	0
4/24/2024	11:15 PM	0	0	0	0	0	0	0	0	0	0	0	0	0
4/24/2024	11:30 PM	0	0	0	0	0	0	0	0	0	0	0	0	0
4/24/2024	11:45 PM	0	0	0	0	0	0	0	0	0	0	0	0	0

4/25/2024	12:00 AM	0	0	0	0	0	0	0	0	0	0	0	0	0
4/25/2024	12:15 AM	0	0	0	0	0	0	0	0	0	0	0	0	0
4/25/2024	12:30 AM	0	0	0	0	0	0	0	0	0	0	0	0	0
4/25/2024	12:45 AM	0	0	0	0	0	0	0	0	0	0	0	0	0
4/25/2024	1:00 AM	0	0	0	0	0	0	0	0	0	0	0	0	0
4/25/2024	1:15 AM	0	0	0	0	0	0	0	0	0	0	0	0	0
4/25/2024	1:30 AM	0	0	0	0	0	0	0	0	0	0	0	0	0
4/25/2024	1:45 AM	0	0	0	0	0	0	0	0	0	0	0	0	0
4/25/2024	2:00 AM	0	0	0	0	0	0	0	0	0	0	0	0	0
4/25/2024	2:15 AM	0	0	0	0	0	0	0	0	0	0	0	0	0
4/25/2024	2:30 AM	0	0	0	0	0	0	0	0	0	0	0	0	0
4/25/2024	2:45 AM	0	0	0	0	0	0	0	0	0	0	0	0	0
4/25/2024	3:00 AM	0	0	0	0	0	0	0	0	0	0	0	0	0
4/25/2024	3:15 AM	0	0	0	0	0	0	0	0	0	0	0	0	0
4/25/2024	3:30 AM	0	0	0	0	0	0	0	0	0	0	0	0	0
4/25/2024	3:45 AM	0	0	0	0	0	0	0	0	0	0	0	0	0
4/25/2024	4:00 AM	0	0	0	0	0	0	0	0	0	0	0	0	0
4/25/2024	4:15 AM	0	0	0	0	0	0	0	0	0	0	0	0	0
4/25/2024	4:30 AM	0	0	0	0	0	0	0	0	0	0	0	0	0
4/25/2024	4:45 AM	0	0	0	0	0	0	0	0	0	0	0	0	0
4/25/2024	5:00 AM	0	0	0	0	0	0	0	0	0	0	0	0	0
4/25/2024	5:15 AM	0	0	0	0	0	0	0	0	0	0	0	0	0
4/25/2024	5:30 AM	0	0	0	0	0	0	0	0	0	0	0	0	0
4/25/2024	5:45 AM	0	0	0	0	0	0	0	0	0	0	0	0	0
4/25/2024	6:00 AM	0	0	0	0	0	0	0	0	0	0	0	0	0
4/25/2024	6:15 AM	0	0	0	0	0	0	0	0	0	0	0	0	0
4/25/2024	6:30 AM	0	0	0	0	0	0	0	0	0	0	0	0	0
4/25/2024	6:45 AM	0	0	0	0	0	0	0	0	0	0	0	0	0
4/25/2024	7:00 AM	0	0	0	0	0	0	0	0	0	0	0	0	0
4/25/2024	7:15 AM	0	0	0	0	0	0	0	0	0	0	0	0	0
4/25/2024	7:30 AM	0	0	0	0	0	0	0	0	0	0	0	0	0
4/25/2024	7:45 AM	0	0	0	0	0	0	0	0	0	0	0	0	0
4/25/2024	8:00 AM	0	0	0	0	0	0	0	0	0	0	0	0	0
4/25/2024	8:15 AM	0	0	0	0	0	0	0	0	0	0	0	0	0
4/25/2024	8:30 AM	0	0	0	0	0	0	0	0	0	0	0	0	0
4/25/2024	8:45 AM	0	0	0	0	0	0	0	0	0	0	0	0	0
4/25/2024	9:00 AM	0	0	0	0	0	0	0	0	0	0	0	0	0
4/25/2024	9:15 AM	0	0	0	0	0	0	0	0	0	0	0	0	0
4/25/2024	9:30 AM	0	0	0	0	0	0	0	0	0	0	0	0	0
4/25/2024	9:45 AM	0	0	0	0	0	0	0	0	0	0	0	0	0
4/25/2024	10:00 AM	0	0	0	0	0	0	0	0	0	0	0	0	0
4/25/2024	10:15 AM	0	0	0	0	0	0	0	0	0	0	0	0	0
4/25/2024	10:30 AM	0	0	0	0	0	0	0	0	0	0	0	0	0
4/25/2024	10:45 AM	0	0	0	0	0	0	0	0	0	0	0	0	0
4/25/2024	11:00 AM	0	0	0	0	0	0	0	0	0	0	0	0	0
4/25/2024	11:15 AM	0	0	0	0	0	0	0	0	0	0	0	0	0
4/25/2024	11:30 AM	0	0	0	0	0	0	0	0	0	0	0	0	0
4/25/2024	11:45 AM	0	0	0	0	0	0	0	0	0	0	0	0	0
4/25/2024	12:00 PM	0	0	0	0	0	0	0	0	0	0	0	0	0
4/25/2024	12:15 PM	0	0	0	0	0	0	0	0	0	0	0	0	0
4/25/2024	12:30 PM	0	0	0	0	0	0	0	0	0	0	0	0	0
4/25/2024	12:45 PM	0	0	0	0	0	0	0	0	0	0	0	0	0
4/25/2024	1:00 PM	0	0	0	0	0	0	0	0	0	0	0	0	0
4/25/2024	1:15 PM	0	0	0	0	0	0	0	0	0	0	0	0	0
4/25/2024	1:30 PM	0	0	0	0	0	0	0	0	0	0	0	0	0
4/25/2024	1:45 PM	0	0	0	0	0	0	0	0	0	0	0	0	0
4/25/2024	2:00 PM	0	0	0	0	0	0	0	0	0	0	0	0	0
4/25/2024	2:15 PM	0	0	0	0	0	0	0	0	0	0	0	0	0
4/25/2024	2:30 PM	0	0	0	0	0	0	0	0	0	0	0	0	0
4/25/2024	2:45 PM	0	0	0	0	0	0	0	0	0	0	0	0	0
4/25/2024	3:00 PM	0	0	0	0	0	0	0	0	0	0	0	0	0
4/25/2024	3:15 PM	0	0	0	0	0	0	0	0	0	0	0	0	0
4/25/2024	3:30 PM	0	0	0	0	0	0	0	0	0	0	0	0	0
4/25/2024	3:45 PM	0	0	0	0	0	0	0	0	0	0	0	0	0
4/25/2024	4:00 PM	0	0	0	0	0	0	0	0	0	0	0	0	0
4/25/2024	4:15 PM	0	0	0	0	0	0	0	0	0	0	0	0	0
4/25/2024	4:30 PM	0	0	0	0	0	0	0	0	0	0	0	0	0
4/25/2024	4:45 PM	0	0	0	0	0	0	0	0	0	0	0	0	0
4/25/2024	5:00 PM	0	0	0	0	0	0	0	0	0	0	0	0	0
4/25/2024	5:15 PM	0	0	0	0	0	0	0	0	0	0	0	0	0
4/25/2024	5:30 PM	0	0	0	0	0	0	0	0	0	0	0	0	0
4/25/2024	5:45 PM	0	0	0	0	0	0	0	0	0	0	0	0	0
4/25/2024	6:00 PM	0	0	0	0	0	0	0	0	0	0	0	0	0
4/25/2024	6:15 PM	0	0	0	0	0	0	0	0	0	0	0	0	0
4/25/2024	6:30 PM	0	0	0	0	0	0	0	0	0	0	0	0	0
4/25/2024	6:45 PM	0	0	0	0	0	0	0	0	0	0	0	0	0
4/25/2024	7:00 PM	0	0	0	0	0	0	0	0	0	0	0	0	0
4/25/2024	7:15 PM	0	0	0	0	0	0	0	0	0	0	0	0	0
4/25/2024	7:30 PM	0	0	0	0	0	0	0	0	0	0	0	0	0
4/25/2024	7:45 PM	0	0	0	0	0	0	0	0	0	0	0	0	0
4/25/2024	8:00 PM	0	0	0	0	0	0	0	0	0	0	0	0	0
4/25/2024	8:15 PM	0	0	0	0	0	0	0	0	0	0	0	0	0
4/25/2024	8:30 PM	0	0	0	0	0	0	0	0	0	0	0	0	0
4/25/2024	8:45 PM	0	0	0	0	0	0	0	0	0	0	0	0	0
4/25/2024	9:00 PM	0	0	0	0	0	0	0	0	0	0	0	0	0
4/25/2024	9:15 PM	0	0	0	0	0	0	0	0	0	0	0	0	0
4/25/2024	9:30 PM	0	0	0	0	0	0	0	0	0	0	0	0	0
4/25/2024	9:45 PM	0	0	0	0	0	0	0	0	0	0	0	0	0
4/25/2024	10:00 PM	0	0	0	0	0	0	0	0	0	0	0	0	0
4/25/2024	10:15 PM	0	0	0	0	0	0	0	0	0	0	0	0	0
4/25/2024	10:30 PM	0	0	0	0	0	0	0	0	0	0	0	0	0
4/25/2024	10:45 PM	0	0	0	0	0	0	0	0	0	0	0	0	0
4/25/2024	11:00 PM	0	0	0	0	0	0	0	0	0	0	0	0	0
4/25/2024	11:15 PM	0	0	0	0	0	0	0	0	0	0	0	0	0
4/25/2024	11:30 PM	0	0	0	0	0	0	0	0	0	0	0	0	0
4/25/2024	11:45 PM	0	0	0	0	0	0	0	0	0	0	0	0	0

SB
File Name:
Start Date: 4/23/2024
Start Time: 0
Site Code: 18
Station ID: 1
Location 1: I-26 James F. Byrnes Expy S/Bound Off-Ramp, north of US-176 Broad River Rd
Location 2:

Date	Time	1	2	3	4	5	6	7	8	9	10	11	12	13
4/23/2024	12:00 AM	0	0	0	0	0	0	0	0	0	0	0	0	0
4/23/2024	12:15 AM	0	0	0	0	0	0	0	0	0	0	0	0	0
4/23/2024	12:30 AM	0	0	0	0	0	0	0	0	0	0	0	0	0
4/23/2024	12:45 AM	0	0	0	0	0	0	0	0	0	0	0	0	0
4/23/2024	1:00 AM	0	0	0	0	0	0	0	0	0	0	0	0	0
4/23/2024	1:15 AM	0	0	0	0	0	0	0	0	0	0	0	0	0
4/23/2024	1:30 AM	0	0	0	0	0	0	0	0	0	0	0	0	0
4/23/2024	1:45 AM	0	0	0	0	0	0	0	0	0	0	0	0	0
4/23/2024	2:00 AM	0	0	0	0	0	0	0	0	0	0	0	0	0
4/23/2024	2:15 AM	0	0	0	0	0	0	0	0	0	0	0	0	0
4/23/2024	2:30 AM	0	0	0	0	0	0	0	0	0	0	0	0	0
4/23/2024	2:45 AM	0	0	0	0	0	0	0	0	0	0	0	0	0
4/23/2024	3:00 AM	0	0	0	0	0	0	0	0	0	0	0	0	0
4/23/2024	3:15 AM	0	0	0	0	0	0	0	0	0	0	0	0	0
4/23/2024	3:30 AM	0	0	0	0	0	0	0	0	0	0	0	0	0
4/23/2024	3:45 AM	0	0	0	0	0	0	0	0	0	0	0	0	0
4/23/2024	4:00 AM	0	0	0	0	0	0	0	0	0	0	0	0	0
4/23/2024	4:15 AM	0	0	0	0	0	0	0	0	0	0	0	0	0
4/23/2024	4:30 AM	0	0	0	0	0	0	0	0	0	0	0	0	0
4/23/2024	4:45 AM	0	0	0	0	0	0	0	0	0	0	0	0	0
4/23/2024	5:00 AM	0	0	0	0	0	0	0	0	0	0	0	0	0
4/23/2024	5:15 AM	0	0	0	0	0	0	0	0	0	0	0	0	0
4/23/2024	5:30 AM	0	0	0	0	0	0	0	0	0	0	0	0	0
4/23/2024	5:45 AM	0	0	0	0	0	0	0	0	0	0	0	0	0
4/23/2024	6:00 AM	0	0	0	0	0	0	0	0	0	0	0	0	0
4/23/2024	6:15 AM	0	0	0	0	0	0	0	0	0	0	0	0	0
4/23/2024	6:30 AM	0	0	0	0	0	0	0	0	0	0	0	0	0
4/23/2024	6:45 AM	0	0	0	0	0	0	0	0	0	0	0	0	0
4/23/2024	7:00 AM	0	0	0	0	0	0	0	0	0	0	0	0	0
4/23/2024	7:15 AM	0	0	0	0	0	0	0	0	0	0	0	0	0
4/23/2024	7:30 AM	0	0	0	0	0	0	0	0	0	0	0	0	0
4/23/2024	7:45 AM	0	0	0	0	0	0	0	0	0	0	0	0	0
4/23/2024	8:00 AM	0	0	0	0	0	0	0	0	0	0	0	0	0
4/23/2024	8:15 AM	0	0	0	0	0	0	0	0	0	0	0	0	0
4/23/2024	8:30 AM	0	0	0	0	0	0	0	0	0	0	0	0	0
4/23/2024	8:45 AM	0	0	0	0	0	0	0	0	0	0	0	0	0
4/23/2024	9:00 AM	0	0	0	0	0	0	0	0	0	0	0	0	0
4/23/2024	9:15 AM	0	0	0	0	0	0	0	0	0	0	0	0	0
4/23/2024	9:30 AM	0	0	0	0	0	0	0	0	0	0	0	0	0
4/23/2024	9:45 AM	0	0	0	0	0	0	0	0	0	0	0	0	0
4/23/2024	10:00 AM	0	0	0	0	0	0	0	0	0	0	0	0	0
4/23/2024	10:15 AM	0	0	0	0	0	0	0	0	0	0	0	0	0
4/23/2024	10:30 AM	0	0	0	0	0	0	0	0	0	0	0	0	0
4/23/2024	10:45 AM	0	0	0	0	0	0	0	0	0	0	0	0	0
4/23/2024	11:00 AM	0	0	0	0	0	0	0	0	0	0	0	0	0
4/23/2024	11:15 AM	0	0	0	0	0	0	0	0	0	0	0	0	0
4/23/2024	11:30 AM	0	0	0	0	0	0	0	0	0	0	0	0	0
4/23/2024	11:45 AM	0	0	0	0	0	0	0	0	0	0	0	0	0
4/23/2024	12:00 PM	0	0	0	0	0	0	0	0	0	0	0	0	0
4/23/2024	12:15 PM	0	0	0	0	0	0	0	0	0	0	0	0	0
4/23/2024	12:30 PM	0	0	0	0	0	0	0	0	0	0	0	0	0
4/23/2024	12:45 PM	0	0	0	0	0	0	0	0	0	0	0	0	0
4/23/2024	1:00 PM	0	0	0	0	0	0	0	0	0	0	0	0	0
4/23/2024	1:15 PM	0	0	0	0	0	0	0	0	0	0	0	0	0
4/23/2024	1:30 PM	0	0	0	0	0	0	0	0	0	0	0	0	0
4/23/2024	1:45 PM	0	0	0	0	0	0	0	0	0	0	0	0	0
4/23/2024	2:00 PM	0	0	0	0	0	0	0	0	0	0	0	0	0
4/23/2024	2:15 PM	0	0	0	0	0	0	0	0	0	0	0	0	0
4/23/2024	2:30 PM	0	0	0	0	0	0	0	0	0	0	0	0	0
4/23/2024	2:45 PM	0	0	0	0	0	0	0	0	0	0	0	0	0
4/23/2024	3:00 PM	0	0	0	0	0	0	0	0	0	0	0	0	0
4/23/2024	3:15 PM	0	0	0	0	0	0	0	0	0	0	0	0	0
4/23/2024	3:30 PM	0	0	0	0	0	0	0	0	0	0	0	0	0
4/23/2024	3:45 PM	0	0	0	0	0	0	0	0	0	0	0	0	0
4/23/2024	4:00 PM	0	0	0	0	0	0	0	0	0	0	0	0	0
4/23/2024	4:15 PM	0	0	0	0	0	0	0	0	0	0	0	0	0
4/23/2024	4:30 PM	0	0	0	0	0	0	0	0	0	0	0	0	0
4/23/2024	4:45 PM	0	0	0	0	0	0	0	0	0	0	0	0	0
4/23/2024	5:00 PM	0	0	0	0	0	0	0	0	0	0	0	0	0
4/23/2024	5:15 PM	0	0	0	0	0	0	0	0	0	0	0	0	0
4/23/2024	5:30 PM	0	0	0	0	0	0	0	0	0	0	0	0	0
4/23/2024	5:45 PM	0	0	0	0	0	0	0	0	0	0	0	0	0
4/23/2024	6:00 PM	0	0	0	0	0	0	0	0	0	0	0	0	0
4/23/2024	6:15 PM	0	0	0	0	0	0	0	0	0	0	0	0	0
4/23/2024	6:30 PM	0	0	0	0	0	0	0	0	0	0	0	0	0
4/23/2024	6:45 PM	0	0	0	0	0	0	0	0	0	0	0	0	0
4/23/2024	7:00 PM	0	5	1	0	0	0	0	0	0	0	0	0	0
4/23/2024	7:15 PM	0	6	1	0	0	0	0	0	0	0	0	0	0
4/23/2024	7:30 PM	0	6	0	0	0	0	0	0	0	0	0	0	0
4/23/2024	7:45 PM	0	5	2	0	0	0	0	0	0	0	0	0	0
4/23/2024	8:00 PM	0	6	2	0	0	0	0	0	0	0	0	0	0
4/23/2024	8:15 PM	1	3	2	0	0	0	0	0	0	0	0	0	0
4/23/2024	8:30 PM	0	4	1	0	0	0	0	0	0	0	0	0	0
4/23/2024	8:45 PM	0	2	0	0	0	0	0	0	0	0	0	0	0
4/23/2024	9:00 PM	0	3	1	0	0	0	0	0	0	0	0	0	0
4/23/2024	9:15 PM	0	3	0	0	0	0	0	0	0	0	0	0	0
4/23/2024	9:30 PM	0	1	1	0	0	0	0	0	0	0	0	0	0
4/23/2024	9:45 PM	0	2	1	0	0	0	0	0	0	0	0	0	0
4/23/2024	10:00 PM	0	0	0	0	0	0	0	0	0	0	0	0	0
4/23/2024	10:15 PM	0	1	2	0	0	0	0	0	0	0	0	0	0
4/23/2024	10:30 PM	0	0	0	0	0	0	0	0	0	0	0	0	0
4/23/2024	10:45 PM	0	3	0	0	0	0	0	0	0	0	0	0	0
4/23/2024	11:00 PM	0	3	0	0	0	0	0	0	0	0	0	0	0
4/23/2024	11:15 PM	0	0	0	0	0	0	0	0	0	0	0	0	0
4/23/2024	11:30 PM	0	1	0	0	0	0	0	0	0	0	0	0	0
4/23/2024	11:45 PM	0	1	0	0	0	0	0	0	0	0	0	0	0

4/24/2024	12:00 AM	0	1	0	0	0	1	0	0	0	0	0	0	0
4/24/2024	12:15 AM	0	0	0	0	0	0	0	0	0	0	0	0	0
4/24/2024	12:30 AM	0	0	0	0	0	0	0	0	0	0	0	0	0
4/24/2024	12:45 AM	0	1	1	0	0	0	0	0	0	0	0	0	0
4/24/2024	1:00 AM	0	0	0	0	0	0	0	0	0	0	0	0	0
4/24/2024	1:15 AM	0	1	0	0	0	0	0	0	0	0	0	0	0
4/24/2024	1:30 AM	0	0	0	0	0	0	0	0	0	0	0	0	0
4/24/2024	1:45 AM	0	0	0	0	0	0	0	0	0	0	0	0	0
4/24/2024	2:00 AM	0	0	0	0	0	0	0	0	0	0	0	0	0
4/24/2024	2:15 AM	0	0	0	0	0	0	0	0	0	0	0	0	0
4/24/2024	2:30 AM	0	1	0	0	0	0	0	0	0	0	0	0	0
4/24/2024	2:45 AM	0	0	0	0	0	0	0	0	0	0	0	0	0
4/24/2024	3:00 AM	0	0	0	0	0	0	0	0	0	0	0	0	0
4/24/2024	3:15 AM	0	1	0	0	0	0	0	0	0	0	0	0	0
4/24/2024	3:30 AM	0	0	0	0	0	0	0	0	0	0	0	0	0
4/24/2024	3:45 AM	0	1	0	0	0	0	0	0	0	0	0	0	0
4/24/2024	4:00 AM	0	0	0	0	0	0	0	0	0	0	0	0	0
4/24/2024	4:15 AM	0	1	0	0	0	0	0	0	0	0	0	0	0
4/24/2024	4:30 AM	0	1	0	0	0	0	0	0	0	0	0	0	0
4/24/2024	4:45 AM	0	2	1	0	0	0	0	0	0	0	0	0	0
4/24/2024	5:00 AM	0	1	1	0	0	0	0	0	0	0	0	0	0
4/24/2024	5:15 AM	0	3	1	0	1	0	0	0	0	0	0	0	0
4/24/2024	5:30 AM	0	1	0	0	0	0	0	0	0	0	0	0	0
4/24/2024	5:45 AM	0	1	0	0	0	1	0	0	0	0	0	0	0
4/24/2024	6:00 AM	0	2	2	0	0	0	0	0	0	0	0	0	0
4/24/2024	6:15 AM	0	3	1	0	0	0	0	0	0	0	0	0	0
4/24/2024	6:30 AM	0	7	2	0	0	0	0	0	1	0	0	0	0
4/24/2024	6:45 AM	0	9	1	0	0	0	0	0	0	0	0	0	0
4/24/2024	7:00 AM	0	14	1	0	0	0	0	0	0	0	0	0	0
4/24/2024	7:15 AM	0	20	3	0	0	0	0	0	0	0	0	0	0
4/24/2024	7:30 AM	0	14	5	0	0	0	0	0	0	0	0	0	0
4/24/2024	7:45 AM	0	22	6	0	0	0	0	0	0	0	0	0	0
4/24/2024	8:00 AM	0	20	9	0	0	0	0	0	0	0	0	0	0
4/24/2024	8:15 AM	0	12	2	0	0	0	0	0	0	0	0	0	0
4/24/2024	8:30 AM	0	21	7	0	0	0	0	0	0	0	0	0	0
4/24/2024	8:45 AM	0	15	4	0	0	0	0	0	0	0	0	0	0
4/24/2024	9:00 AM	0	12	5	0	0	1	0	0	0	0	0	0	0
4/24/2024	9:15 AM	0	6	6	0	0	0	0	0	0	0	0	0	0
4/24/2024	9:30 AM	0	11	3	0	0	0	0	0	0	0	0	0	0
4/24/2024	9:45 AM	0	13	1	0	1	0	0	1	0	0	0	0	0
4/24/2024	10:00 AM	0	10	3	0	0	0	0	0	0	0	0	0	0
4/24/2024	10:15 AM	0	11	5	0	0	0	0	0	0	0	0	0	0
4/24/2024	10:30 AM	0	1	1	0	0	0	0	0	0	0	0	0	0
4/24/2024	10:45 AM	0	2	1	0	0	0	0	0	0	0	0	0	0
4/24/2024	11:00 AM	0	4	0	0	1	0	0	0	0	0	0	0	0
4/24/2024	11:15 AM	0	2	2	0	0	0	0	0	0	0	0	0	0
4/24/2024	11:30 AM	0	2	2	0	0	0	0	0	0	0	0	0	0
4/24/2024	11:45 AM	0	11	6	0	0	0	0	0	0	0	0	0	0
4/24/2024	12:00 PM	0	5	2	0	1	0	0	0	0	0	0	0	0
4/24/2024	12:15 PM	0	7	7	0	1	0	0	0	0	0	0	0	0
4/24/2024	12:30 PM	0	12	5	0	0	0	0	0	0	0	0	0	0
4/24/2024	12:45 PM	0	9	4	0	0	0	0	0	0	0	0	0	0
4/24/2024	1:00 PM	0	9	3	0	4	0	0	0	1	0	0	0	0
4/24/2024	1:15 PM	0	10	4	0	1	0	0	0	0	0	0	0	0
4/24/2024	1:30 PM	0	8	2	0	0	0	0	1	0	0	0	0	0
4/24/2024	1:45 PM	0	12	2	0	0	0	0	0	0	0	0	0	0
4/24/2024	2:00 PM	0	10	1	0	2	0	0	0	0	0	0	0	0
4/24/2024	2:15 PM	0	16	2	0	2	0	0	0	0	0	0	0	0
4/24/2024	2:30 PM	0	14	2	0	0	0	0	0	0	0	0	0	0
4/24/2024	2:45 PM	0	11	2	0	0	0	0	0	0	0	0	0	0
4/24/2024	3:00 PM	0	9	2	0	0	0	0	0	0	0	0	0	0
4/24/2024	3:15 PM	0	22	2	0	0	0	0	0	0	0	0	0	0
4/24/2024	3:30 PM	0	12	3	0	0	0	0	0	0	0	0	0	0
4/24/2024	3:45 PM	0	7	1	0	0	0	0	0	0	0	0	0	0
4/24/2024	4:00 PM	0	22	6	0	1	0	0	0	0	0	0	0	0
4/24/2024	4:15 PM	0	22	4	0	0	0	0	0	0	0	0	0	0
4/24/2024	4:30 PM	0	19	0	0	2	0	0	0	0	0	0	0	0
4/24/2024	4:45 PM	0	16	5	0	0	0	0	0	1	0	0	0	0
4/24/2024	5:00 PM	0	11	4	0	0	0	0	0	0	0	0	0	0
4/24/2024	5:15 PM	0	23	4	0	0	0	0	0	0	0	0	0	0
4/24/2024	5:30 PM	0	8	5	0	0	0	0	0	0	0	0	0	0
4/24/2024	5:45 PM	0	11	2	0	0	0	0	0	0	0	0	0	0
4/24/2024	6:00 PM	0	14	1	0	0	0	0	0	0	0	0	0	0
4/24/2024	6:15 PM	0	8	1	0	0	0	0	0	0	0	0	0	0
4/24/2024	6:30 PM	0	10	5	0	1	0	0	0	0	0	0	0	0
4/24/2024	6:45 PM	0	10	0	0	1	0	0	0	0	0	0	0	0
4/24/2024	7:00 PM	0	8	3	0	0	0	0	0	0	0	0	0	0
4/24/2024	7:15 PM	0	6	1	0	0	0	0	0	0	0	0	0	0
4/24/2024	7:30 PM	0	0	0	0	0	0	0	0	0	0	0	0	0
4/24/2024	7:45 PM	0	12	4	0	0	0	0	0	0	0	0	0	0
4/24/2024	8:00 PM	0	4	0	0	0	0	0	0	0	0	0	0	0
4/24/2024	8:15 PM	0	3	1	0	0	0	0	0	0	0	0	0	0
4/24/2024	8:30 PM	0	5	0	0	0	0	0	0	0	0	0	0	0
4/24/2024	8:45 PM	0	5	1	0	0	0	0	0	0	0	0	0	0
4/24/2024	9:00 PM	0	3	2	0	0	0	0	0	0	0	0	0	0
4/24/2024	9:15 PM	0	1	0	0	0	0	0	0	0	0	0	0	0
4/24/2024	9:30 PM	0	4	0	0	0	0	0	0	0	0	0	0	0
4/24/2024	9:45 PM	0	2	0	0	0	0	0	0	0	0	0	0	0
4/24/2024	10:00 PM	0	0	0	0	0	0	0	0	0	0	0	0	0
4/24/2024	10:15 PM	0	2	0	0	0	0	0	0	0	0	0	0	0
4/24/2024	10:30 PM	0	2	0	0	0	0	0	0	0	0	0	0	0
4/24/2024	10:45 PM	0	1	0	0	0	0	0	0	0	0	0	0	0
4/24/2024	11:00 PM	0	3	0	0	0	0	0	0	0	0	0	0	0
4/24/2024	11:15 PM	0	2	0	0	0	0	0	0	0	0	0	0	0
4/24/2024	11:30 PM	0	1	0	0	0	0	0	0	0	0	0	0	0
4/24/2024	11:45 PM	0	1	0	0	0	0	0	0	0	0	0	0	0

4/25/2024	12:00 AM	0	1	0	0	0	0	0	0	0	0	0	0
4/25/2024	12:15 AM	0	1	0	0	0	0	0	0	0	0	0	0
4/25/2024	12:30 AM	0	1	0	0	0	1	0	0	0	0	0	0
4/25/2024	12:45 AM	0	0	0	0	0	0	0	0	0	0	0	0
4/25/2024	1:00 AM	0	2	0	0	0	0	0	0	1	0	0	0
4/25/2024	1:15 AM	0	0	0	0	0	0	0	0	0	0	0	0
4/25/2024	1:30 AM	0	0	0	0	1	1	0	0	0	0	0	0
4/25/2024	1:45 AM	0	0	0	0	0	0	0	0	0	0	0	0
4/25/2024	2:00 AM	0	1	0	0	0	0	0	0	0	0	0	0
4/25/2024	2:15 AM	0	1	0	0	0	0	0	0	0	0	0	0
4/25/2024	2:30 AM	0	0	0	0	0	0	0	0	0	0	0	0
4/25/2024	2:45 AM	0	0	0	0	0	1	0	0	0	0	0	0
4/25/2024	3:00 AM	0	0	0	0	0	0	0	0	0	0	0	0
4/25/2024	3:15 AM	0	0	0	0	0	1	0	0	0	0	0	0
4/25/2024	3:30 AM	0	1	0	0	0	0	0	0	0	0	0	0
4/25/2024	3:45 AM	0	3	1	0	0	0	0	0	0	0	0	0
4/25/2024	4:00 AM	0	0	0	0	0	0	0	0	0	0	0	0
4/25/2024	4:15 AM	0	0	1	0	0	0	0	0	0	0	0	0
4/25/2024	4:30 AM	0	1	0	0	0	0	0	0	0	0	0	0
4/25/2024	4:45 AM	0	1	1	0	0	0	0	0	0	0	0	0
4/25/2024	5:00 AM	0	1	1	0	0	0	0	0	0	0	0	0
4/25/2024	5:15 AM	0	2	2	0	0	0	0	0	0	0	0	0
4/25/2024	5:30 AM	0	2	0	0	0	0	0	0	0	0	0	0
4/25/2024	5:45 AM	0	2	0	0	0	0	0	0	1	0	0	0
4/25/2024	6:00 AM	0	4	3	0	0	0	0	0	0	0	0	0
4/25/2024	6:15 AM	0	3	6	0	0	0	0	0	0	0	0	0
4/25/2024	6:30 AM	0	5	4	0	0	0	0	0	0	0	0	0
4/25/2024	6:45 AM	0	5	5	0	1	1	0	0	0	0	0	0
4/25/2024	7:00 AM	0	12	4	0	1	0	0	0	0	0	0	0
4/25/2024	7:15 AM	0	23	5	0	0	0	0	0	1	0	0	0
4/25/2024	7:30 AM	0	22	5	0	0	0	0	0	0	0	0	0
4/25/2024	7:45 AM	0	19	7	0	0	0	0	0	0	0	0	0
4/25/2024	8:00 AM	0	22	2	0	0	0	0	1	0	0	0	0
4/25/2024	8:15 AM	0	14	4	0	0	0	0	0	0	0	0	0
4/25/2024	8:30 AM	0	14	3	0	0	0	0	0	0	0	0	0
4/25/2024	8:45 AM	0	14	2	0	1	0	0	0	0	0	0	0
4/25/2024	9:00 AM	0	15	4	0	0	0	0	0	0	0	0	0
4/25/2024	9:15 AM	0	10	5	0	0	0	0	0	0	0	0	0
4/25/2024	9:30 AM	0	14	4	0	0	0	0	0	0	0	0	0
4/25/2024	9:45 AM	0	7	6	0	0	0	0	0	1	0	0	0
4/25/2024	10:00 AM	0	9	4	0	1	1	0	0	0	0	0	0
4/25/2024	10:15 AM	0	13	5	0	0	1	0	0	0	0	0	0
4/25/2024	10:30 AM	0	5	3	0	1	0	0	0	0	0	0	0
4/25/2024	10:45 AM	0	4	2	0	0	0	0	0	0	0	0	0
4/25/2024	11:00 AM	0	12	1	0	0	0	0	0	0	0	0	0
4/25/2024	11:15 AM	0	9	8	0	0	0	0	0	0	0	0	0
4/25/2024	11:30 AM	0	9	3	0	0	1	0	0	0	0	0	0
4/25/2024	11:45 AM	0	14	3	0	0	0	0	0	0	0	0	0
4/25/2024	12:00 PM	0	13	2	0	0	0	0	0	0	0	0	0
4/25/2024	12:15 PM	0	14	3	0	1	0	0	0	0	0	0	0
4/25/2024	12:30 PM	0	15	5	0	0	0	0	0	1	0	0	0
4/25/2024	12:45 PM	0	12	3	0	1	2	0	1	0	0	0	0
4/25/2024	1:00 PM	0	15	0	0	1	0	0	0	0	0	0	0
4/25/2024	1:15 PM	0	7	1	0	0	0	0	1	0	0	0	0
4/25/2024	1:30 PM	1	15	4	0	1	0	0	0	0	0	0	0
4/25/2024	1:45 PM	0	10	2	0	2	1	0	0	0	0	0	0
4/25/2024	2:00 PM	0	12	2	0	1	0	0	0	0	0	0	0
4/25/2024	2:15 PM	0	11	4	0	1	0	0	0	0	0	0	0
4/25/2024	2:30 PM	0	8	1	0	0	0	0	0	0	0	0	0
4/25/2024	2:45 PM	0	19	7	0	0	0	0	0	0	0	0	0
4/25/2024	3:00 PM	0	12	6	0	0	0	0	0	0	0	0	0
4/25/2024	3:15 PM	0	20	1	0	1	0	0	0	0	0	0	0
4/25/2024	3:30 PM	0	16	2	0	0	0	0	0	0	0	0	0
4/25/2024	3:45 PM	0	12	3	0	0	0	0	0	0	0	0	0
4/25/2024	4:00 PM	0	19	6	0	0	0	0	0	0	0	0	0
4/25/2024	4:15 PM	0	18	4	0	0	0	0	0	0	0	0	0
4/25/2024	4:30 PM	0	10	4	0	2	0	0	0	0	0	0	0
4/25/2024	4:45 PM	1	15	4	0	1	1	0	0	0	0	0	0
4/25/2024	5:00 PM	0	14	3	0	0	0	0	0	0	0	0	0
4/25/2024	5:15 PM	0	15	1	0	0	0	0	0	0	0	0	0
4/25/2024	5:30 PM	0	13	1	0	0	0	0	0	0	0	0	0
4/25/2024	5:45 PM	0	11	5	0	0	0	0	0	0	0	0	0
4/25/2024	6:00 PM	0	18	2	0	0	0	0	0	0	0	0	0
4/25/2024	6:15 PM	0	17	5	0	0	0	0	0	0	0	0	0
4/25/2024	6:30 PM	0	14	6	0	1	0	0	0	0	0	0	0
4/25/2024	6:45 PM	0	6	1	0	1	0	0	0	0	0	0	0
4/25/2024	7:00 PM	0	0	0	0	0	0	0	0	0	0	0	0
4/25/2024	7:15 PM	0	0	0	0	0	0	0	0	0	0	0	0
4/25/2024	7:30 PM	0	0	0	0	0	0	0	0	0	0	0	0
4/25/2024	7:45 PM	0	0	0	0	0	0	0	0	0	0	0	0
4/25/2024	8:00 PM	0	0	0	0	0	0	0	0	0	0	0	0
4/25/2024	8:15 PM	0	0	0	0	0	0	0	0	0	0	0	0
4/25/2024	8:30 PM	0	0	0	0	0	0	0	0	0	0	0	0
4/25/2024	8:45 PM	0	0	0	0	0	0	0	0	0	0	0	0
4/25/2024	9:00 PM	0	0	0	0	0	0	0	0	0	0	0	0
4/25/2024	9:15 PM	0	0	0	0	0	0	0	0	0	0	0	0
4/25/2024	9:30 PM	0	0	0	0	0	0	0	0	0	0	0	0
4/25/2024	9:45 PM	0	0	0	0	0	0	0	0	0	0	0	0
4/25/2024	10:00 PM	0	0	0	0	0	0	0	0	0	0	0	0
4/25/2024	10:15 PM	0	0	0	0	0	0	0	0	0	0	0	0
4/25/2024	10:30 PM	0	0	0	0	0	0	0	0	0	0	0	0
4/25/2024	10:45 PM	0	0	0	0	0	0	0	0	0	0	0	0
4/25/2024	11:00 PM	0	0	0	0	0	0	0	0	0	0	0	0
4/25/2024	11:15 PM	0	0	0	0	0	0	0	0	0	0	0	0
4/25/2024	11:30 PM	0	0	0	0	0	0	0	0	0	0	0	0
4/25/2024	11:45 PM	0	0	0	0	0	0	0	0	0	0	0	0

NB
File Name:
Start Date: 4/23/2024
Start Time: 0
Site Code: 18
Station ID: 1
Location 1: I-26 James F. Byrnes Expy S/Bound Off-Ramp, north of US-176 Broad River Rd
Location 2:

Date	Time	1	2	3	4	5	6	7	8	9	10	11	12	13
4/23/2024	12:00 AM	0	0	0	0	0	0	0	0	0	0	0	0	0
4/23/2024	12:15 AM	0	0	0	0	0	0	0	0	0	0	0	0	0
4/23/2024	12:30 AM	0	0	0	0	0	0	0	0	0	0	0	0	0
4/23/2024	12:45 AM	0	0	0	0	0	0	0	0	0	0	0	0	0
4/23/2024	1:00 AM	0	0	0	0	0	0	0	0	0	0	0	0	0
4/23/2024	1:15 AM	0	0	0	0	0	0	0	0	0	0	0	0	0
4/23/2024	1:30 AM	0	0	0	0	0	0	0	0	0	0	0	0	0
4/23/2024	1:45 AM	0	0	0	0	0	0	0	0	0	0	0	0	0
4/23/2024	2:00 AM	0	0	0	0	0	0	0	0	0	0	0	0	0
4/23/2024	2:15 AM	0	0	0	0	0	0	0	0	0	0	0	0	0
4/23/2024	2:30 AM	0	0	0	0	0	0	0	0	0	0	0	0	0
4/23/2024	2:45 AM	0	0	0	0	0	0	0	0	0	0	0	0	0
4/23/2024	3:00 AM	0	0	0	0	0	0	0	0	0	0	0	0	0
4/23/2024	3:15 AM	0	0	0	0	0	0	0	0	0	0	0	0	0
4/23/2024	3:30 AM	0	0	0	0	0	0	0	0	0	0	0	0	0
4/23/2024	3:45 AM	0	0	0	0	0	0	0	0	0	0	0	0	0
4/23/2024	4:00 AM	0	0	0	0	0	0	0	0	0	0	0	0	0
4/23/2024	4:15 AM	0	0	0	0	0	0	0	0	0	0	0	0	0
4/23/2024	4:30 AM	0	0	0	0	0	0	0	0	0	0	0	0	0
4/23/2024	4:45 AM	0	0	0	0	0	0	0	0	0	0	0	0	0
4/23/2024	5:00 AM	0	0	0	0	0	0	0	0	0	0	0	0	0
4/23/2024	5:15 AM	0	0	0	0	0	0	0	0	0	0	0	0	0
4/23/2024	5:30 AM	0	0	0	0	0	0	0	0	0	0	0	0	0
4/23/2024	5:45 AM	0	0	0	0	0	0	0	0	0	0	0	0	0
4/23/2024	6:00 AM	0	0	0	0	0	0	0	0	0	0	0	0	0
4/23/2024	6:15 AM	0	0	0	0	0	0	0	0	0	0	0	0	0
4/23/2024	6:30 AM	0	0	0	0	0	0	0	0	0	0	0	0	0
4/23/2024	6:45 AM	0	0	0	0	0	0	0	0	0	0	0	0	0
4/23/2024	7:00 AM	0	0	0	0	0	0	0	0	0	0	0	0	0
4/23/2024	7:15 AM	0	0	0	0	0	0	0	0	0	0	0	0	0
4/23/2024	7:30 AM	0	0	0	0	0	0	0	0	0	0	0	0	0
4/23/2024	7:45 AM	0	0	0	0	0	0	0	0	0	0	0	0	0
4/23/2024	8:00 AM	0	0	0	0	0	0	0	0	0	0	0	0	0
4/23/2024	8:15 AM	0	0	0	0	0	0	0	0	0	0	0	0	0
4/23/2024	8:30 AM	0	0	0	0	0	0	0	0	0	0	0	0	0
4/23/2024	8:45 AM	0	0	0	0	0	0	0	0	0	0	0	0	0
4/23/2024	9:00 AM	0	0	0	0	0	0	0	0	0	0	0	0	0
4/23/2024	9:15 AM	0	0	0	0	0	0	0	0	0	0	0	0	0
4/23/2024	9:30 AM	0	0	0	0	0	0	0	0	0	0	0	0	0
4/23/2024	9:45 AM	0	0	0	0	0	0	0	0	0	0	0	0	0
4/23/2024	10:00 AM	0	0	0	0	0	0	0	0	0	0	0	0	0
4/23/2024	10:15 AM	0	0	0	0	0	0	0	0	0	0	0	0	0
4/23/2024	10:30 AM	0	0	0	0	0	0	0	0	0	0	0	0	0
4/23/2024	10:45 AM	0	0	0	0	0	0	0	0	0	0	0	0	0
4/23/2024	11:00 AM	0	0	0	0	0	0	0	0	0	0	0	0	0
4/23/2024	11:15 AM	0	0	0	0	0	0	0	0	0	0	0	0	0
4/23/2024	11:30 AM	0	0	0	0	0	0	0	0	0	0	0	0	0
4/23/2024	11:45 AM	0	0	0	0	0	0	0	0	0	0	0	0	0
4/23/2024	12:00 PM	0	0	0	0	0	0	0	0	0	0	0	0	0
4/23/2024	12:15 PM	0	0	0	0	0	0	0	0	0	0	0	0	0
4/23/2024	12:30 PM	0	0	0	0	0	0	0	0	0	0	0	0	0
4/23/2024	12:45 PM	0	0	0	0	0	0	0	0	0	0	0	0	0
4/23/2024	1:00 PM	0	0	0	0	0	0	0	0	0	0	0	0	0
4/23/2024	1:15 PM	0	0	0	0	0	0	0	0	0	0	0	0	0
4/23/2024	1:30 PM	0	0	0	0	0	0	0	0	0	0	0	0	0
4/23/2024	1:45 PM	0	0	0	0	0	0	0	0	0	0	0	0	0
4/23/2024	2:00 PM	0	0	0	0	0	0	0	0	0	0	0	0	0
4/23/2024	2:15 PM	0	0	0	0	0	0	0	0	0	0	0	0	0
4/23/2024	2:30 PM	0	0	0	0	0	0	0	0	0	0	0	0	0
4/23/2024	2:45 PM	0	0	0	0	0	0	0	0	0	0	0	0	0
4/23/2024	3:00 PM	0	0	0	0	0	0	0	0	0	0	0	0	0
4/23/2024	3:15 PM	0	0	0	0	0	0	0	0	0	0	0	0	0
4/23/2024	3:30 PM	0	0	0	0	0	0	0	0	0	0	0	0	0
4/23/2024	3:45 PM	0	0	0	0	0	0	0	0	0	0	0	0	0
4/23/2024	4:00 PM	0	0	0	0	0	0	0	0	0	0	0	0	0
4/23/2024	4:15 PM	0	0	0	0	0	0	0	0	0	0	0	0	0
4/23/2024	4:30 PM	0	0	0	0	0	0	0	0	0	0	0	0	0
4/23/2024	4:45 PM	0	0	0	0	0	0	0	0	0	0	0	0	0
4/23/2024	5:00 PM	0	0	0	0	0	0	0	0	0	0	0	0	0
4/23/2024	5:15 PM	0	0	0	0	0	0	0	0	0	0	0	0	0
4/23/2024	5:30 PM	0	0	0	0	0	0	0	0	0	0	0	0	0
4/23/2024	5:45 PM	0	0	0	0	0	0	0	0	0	0	0	0	0
4/23/2024	6:00 PM	0	0	0	0	0	0	0	0	0	0	0	0	0
4/23/2024	6:15 PM	0	0	0	0	0	0	0	0	0	0	0	0	0
4/23/2024	6:30 PM	0	0	0	0	0	0	0	0	0	0	0	0	0
4/23/2024	6:45 PM	0	0	0	0	0	0	0	0	0	0	0	0	0
4/23/2024	7:00 PM	0	0	0	0	0	0	0	0	0	0	0	0	0
4/23/2024	7:15 PM	0	0	0	0	0	0	0	0	0	0	0	0	0
4/23/2024	7:30 PM	0	0	0	0	0	0	0	0	0	0	0	0	0
4/23/2024	7:45 PM	0	0	0	0	0	0	0	0	0	0	0	0	0
4/23/2024	8:00 PM	0	0	0	0	0	0	0	0	0	0	0	0	0
4/23/2024	8:15 PM	0	0	0	0	0	0	0	0	0	0	0	0	0
4/23/2024	8:30 PM	0	0	0	0	0	0	0	0	0	0	0	0	0
4/23/2024	8:45 PM	0	0	0	0	0	0	0	0	0	0	0	0	0
4/23/2024	9:00 PM	0	0	0	0	0	0	0	0	0	0	0	0	0
4/23/2024	9:15 PM	0	0	0	0	0	0	0	0	0	0	0	0	0
4/23/2024	9:30 PM	0	0	0	0	0	0	0	0	0	0	0	0	0
4/23/2024	9:45 PM	0	0	0	0	0	0	0	0	0	0	0	0	0
4/23/2024	10:00 PM	0	0	0	0	0	0	0	0	0	0	0	0	0
4/23/2024	10:15 PM	0	0	0	0	0	0	0	0	0	0	0	0	0
4/23/2024	10:30 PM	0	0	0	0	0	0	0	0	0	0	0	0	0
4/23/2024	10:45 PM	0	0	0	0	0	0	0	0	0	0	0	0	0
4/23/2024	11:00 PM	0	0	0	0	0	0	0	0	0	0	0	0	0
4/23/2024	11:15 PM	0	0	0	0	0	0	0	0	0	0	0	0	0
4/23/2024	11:30 PM	0	0	0	0	0	0	0	0	0	0	0	0	0
4/23/2024	11:45 PM	0	0	0	0	0	0	0	0	0	0	0	0	0

4/24/2024	12:00 AM	0	0	0	0	0	0	0	0	0	0	0	0	0
4/24/2024	12:15 AM	0	0	0	0	0	0	0	0	0	0	0	0	0
4/24/2024	12:30 AM	0	0	0	0	0	0	0	0	0	0	0	0	0
4/24/2024	12:45 AM	0	0	0	0	0	0	0	0	0	0	0	0	0
4/24/2024	1:00 AM	0	0	0	0	0	0	0	0	0	0	0	0	0
4/24/2024	1:15 AM	0	0	0	0	0	0	0	0	0	0	0	0	0
4/24/2024	1:30 AM	0	0	0	0	0	0	0	0	0	0	0	0	0
4/24/2024	1:45 AM	0	0	0	0	0	0	0	0	0	0	0	0	0
4/24/2024	2:00 AM	0	0	0	0	0	0	0	0	0	0	0	0	0
4/24/2024	2:15 AM	0	0	0	0	0	0	0	0	0	0	0	0	0
4/24/2024	2:30 AM	0	0	0	0	0	0	0	0	0	0	0	0	0
4/24/2024	2:45 AM	0	0	0	0	0	0	0	0	0	0	0	0	0
4/24/2024	3:00 AM	0	0	0	0	0	0	0	0	0	0	0	0	0
4/24/2024	3:15 AM	0	0	0	0	0	0	0	0	0	0	0	0	0
4/24/2024	3:30 AM	0	0	0	0	0	0	0	0	0	0	0	0	0
4/24/2024	3:45 AM	0	0	0	0	0	0	0	0	0	0	0	0	0
4/24/2024	4:00 AM	0	0	0	0	0	0	0	0	0	0	0	0	0
4/24/2024	4:15 AM	0	0	0	0	0	0	0	0	0	0	0	0	0
4/24/2024	4:30 AM	0	0	0	0	0	0	0	0	0	0	0	0	0
4/24/2024	4:45 AM	0	0	0	0	0	0	0	0	0	0	0	0	0
4/24/2024	5:00 AM	0	0	0	0	0	0	0	0	0	0	0	0	0
4/24/2024	5:15 AM	0	0	0	0	0	0	0	0	0	0	0	0	0
4/24/2024	5:30 AM	0	0	0	0	0	0	0	0	0	0	0	0	0
4/24/2024	5:45 AM	0	0	0	0	0	0	0	0	0	0	0	0	0
4/24/2024	6:00 AM	0	0	0	0	0	0	0	0	0	0	0	0	0
4/24/2024	6:15 AM	0	0	0	0	0	0	0	0	0	0	0	0	0
4/24/2024	6:30 AM	0	0	0	0	0	0	0	0	0	0	0	0	0
4/24/2024	6:45 AM	0	0	0	0	0	0	0	0	0	0	0	0	0
4/24/2024	7:00 AM	0	0	0	0	0	0	0	0	0	0	0	0	0
4/24/2024	7:15 AM	0	0	0	0	0	0	0	0	0	0	0	0	0
4/24/2024	7:30 AM	0	0	0	0	0	0	0	0	0	0	0	0	0
4/24/2024	7:45 AM	0	0	0	0	0	0	0	0	0	0	0	0	0
4/24/2024	8:00 AM	0	0	0	0	0	0	0	0	0	0	0	0	0
4/24/2024	8:15 AM	0	0	0	0	0	0	0	0	0	0	0	0	0
4/24/2024	8:30 AM	0	0	0	0	0	0	0	0	0	0	0	0	0
4/24/2024	8:45 AM	0	0	0	0	0	0	0	0	0	0	0	0	0
4/24/2024	9:00 AM	0	0	0	0	0	0	0	0	0	0	0	0	0
4/24/2024	9:15 AM	0	0	0	0	0	0	0	0	0	0	0	0	0
4/24/2024	9:30 AM	0	0	0	0	0	0	0	0	0	0	0	0	0
4/24/2024	9:45 AM	0	0	0	0	0	0	0	0	0	0	0	0	0
4/24/2024	10:00 AM	0	0	0	0	0	0	0	0	0	0	0	0	0
4/24/2024	10:15 AM	0	0	0	0	0	0	0	0	0	0	0	0	0
4/24/2024	10:30 AM	0	0	0	0	0	0	0	0	0	0	0	0	0
4/24/2024	10:45 AM	0	0	0	0	0	0	0	0	0	0	0	0	0
4/24/2024	11:00 AM	0	0	0	0	0	0	0	0	0	0	0	0	0
4/24/2024	11:15 AM	0	0	0	0	0	0	0	0	0	0	0	0	0
4/24/2024	11:30 AM	0	0	0	0	0	0	0	0	0	0	0	0	0
4/24/2024	11:45 AM	0	0	0	0	0	0	0	0	0	0	0	0	0
4/24/2024	12:00 PM	0	0	0	0	0	0	0	0	0	0	0	0	0
4/24/2024	12:15 PM	0	0	0	0	0	0	0	0	0	0	0	0	0
4/24/2024	12:30 PM	0	0	0	0	0	0	0	0	0	0	0	0	0
4/24/2024	12:45 PM	0	0	0	0	0	0	0	0	0	0	0	0	0
4/24/2024	1:00 PM	0	0	0	0	0	0	0	0	0	0	0	0	0
4/24/2024	1:15 PM	0	0	0	0	0	0	0	0	0	0	0	0	0
4/24/2024	1:30 PM	0	0	0	0	0	0	0	0	0	0	0	0	0
4/24/2024	1:45 PM	0	0	0	0	0	0	0	0	0	0	0	0	0
4/24/2024	2:00 PM	0	0	0	0	0	0	0	0	0	0	0	0	0
4/24/2024	2:15 PM	0	0	0	0	0	0	0	0	0	0	0	0	0
4/24/2024	2:30 PM	0	0	0	0	0	0	0	0	0	0	0	0	0
4/24/2024	2:45 PM	0	0	0	0	0	0	0	0	0	0	0	0	0
4/24/2024	3:00 PM	0	0	0	0	0	0	0	0	0	0	0	0	0
4/24/2024	3:15 PM	0	0	0	0	0	0	0	0	0	0	0	0	0
4/24/2024	3:30 PM	0	0	0	0	0	0	0	0	0	0	0	0	0
4/24/2024	3:45 PM	0	0	0	0	0	0	0	0	0	0	0	0	0
4/24/2024	4:00 PM	0	0	0	0	0	0	0	0	0	0	0	0	0
4/24/2024	4:15 PM	0	0	0	0	0	0	0	0	0	0	0	0	0
4/24/2024	4:30 PM	0	0	0	0	0	0	0	0	0	0	0	0	0
4/24/2024	4:45 PM	0	0	0	0	0	0	0	0	0	0	0	0	0
4/24/2024	5:00 PM	0	0	0	0	0	0	0	0	0	0	0	0	0
4/24/2024	5:15 PM	0	0	0	0	0	0	0	0	0	0	0	0	0
4/24/2024	5:30 PM	0	0	0	0	0	0	0	0	0	0	0	0	0
4/24/2024	5:45 PM	0	0	0	0	0	0	0	0	0	0	0	0	0
4/24/2024	6:00 PM	0	0	0	0	0	0	0	0	0	0	0	0	0
4/24/2024	6:15 PM	0	0	0	0	0	0	0	0	0	0	0	0	0
4/24/2024	6:30 PM	0	0	0	0	0	0	0	0	0	0	0	0	0
4/24/2024	6:45 PM	0	0	0	0	0	0	0	0	0	0	0	0	0
4/24/2024	7:00 PM	0	0	0	0	0	0	0	0	0	0	0	0	0
4/24/2024	7:15 PM	0	0	0	0	0	0	0	0	0	0	0	0	0
4/24/2024	7:30 PM	0	0	0	0	0	0	0	0	0	0	0	0	0
4/24/2024	7:45 PM	0	0	0	0	0	0	0	0	0	0	0	0	0
4/24/2024	8:00 PM	0	0	0	0	0	0	0	0	0	0	0	0	0
4/24/2024	8:15 PM	0	0	0	0	0	0	0	0	0	0	0	0	0
4/24/2024	8:30 PM	0	0	0	0	0	0	0	0	0	0	0	0	0
4/24/2024	8:45 PM	0	0	0	0	0	0	0	0	0	0	0	0	0
4/24/2024	9:00 PM	0	0	0	0	0	0	0	0	0	0	0	0	0
4/24/2024	9:15 PM	0	0	0	0	0	0	0	0	0	0	0	0	0
4/24/2024	9:30 PM	0	0	0	0	0	0	0	0	0	0	0	0	0
4/24/2024	9:45 PM	0	0	0	0	0	0	0	0	0	0	0	0	0
4/24/2024	10:00 PM	0	0	0	0	0	0	0	0	0	0	0	0	0
4/24/2024	10:15 PM	0	0	0	0	0	0	0	0	0	0	0	0	0
4/24/2024	10:30 PM	0	0	0	0	0	0	0	0	0	0	0	0	0
4/24/2024	10:45 PM	0	0	0	0	0	0	0	0	0	0	0	0	0
4/24/2024	11:00 PM	0	0	0	0	0	0	0	0	0	0	0	0	0
4/24/2024	11:15 PM	0	0	0	0	0	0	0	0	0	0	0	0	0
4/24/2024	11:30 PM	0	0	0	0	0	0	0	0	0	0	0	0	0
4/24/2024	11:45 PM	0	0	0	0	0	0	0	0	0	0	0	0	0

4/25/2024	12:00 AM	0	0	0	0	0	0	0	0	0	0	0	0	0
4/25/2024	12:15 AM	0	0	0	0	0	0	0	0	0	0	0	0	0
4/25/2024	12:30 AM	0	0	0	0	0	0	0	0	0	0	0	0	0
4/25/2024	12:45 AM	0	0	0	0	0	0	0	0	0	0	0	0	0
4/25/2024	1:00 AM	0	0	0	0	0	0	0	0	0	0	0	0	0
4/25/2024	1:15 AM	0	0	0	0	0	0	0	0	0	0	0	0	0
4/25/2024	1:30 AM	0	0	0	0	0	0	0	0	0	0	0	0	0
4/25/2024	1:45 AM	0	0	0	0	0	0	0	0	0	0	0	0	0
4/25/2024	2:00 AM	0	0	0	0	0	0	0	0	0	0	0	0	0
4/25/2024	2:15 AM	0	0	0	0	0	0	0	0	0	0	0	0	0
4/25/2024	2:30 AM	0	0	0	0	0	0	0	0	0	0	0	0	0
4/25/2024	2:45 AM	0	0	0	0	0	0	0	0	0	0	0	0	0
4/25/2024	3:00 AM	0	0	0	0	0	0	0	0	0	0	0	0	0
4/25/2024	3:15 AM	0	0	0	0	0	0	0	0	0	0	0	0	0
4/25/2024	3:30 AM	0	0	0	0	0	0	0	0	0	0	0	0	0
4/25/2024	3:45 AM	0	0	0	0	0	0	0	0	0	0	0	0	0
4/25/2024	4:00 AM	0	0	0	0	0	0	0	0	0	0	0	0	0
4/25/2024	4:15 AM	0	0	0	0	0	0	0	0	0	0	0	0	0
4/25/2024	4:30 AM	0	0	0	0	0	0	0	0	0	0	0	0	0
4/25/2024	4:45 AM	0	0	0	0	0	0	0	0	0	0	0	0	0
4/25/2024	5:00 AM	0	0	0	0	0	0	0	0	0	0	0	0	0
4/25/2024	5:15 AM	0	0	0	0	0	0	0	0	0	0	0	0	0
4/25/2024	5:30 AM	0	0	0	0	0	0	0	0	0	0	0	0	0
4/25/2024	5:45 AM	0	0	0	0	0	0	0	0	0	0	0	0	0
4/25/2024	6:00 AM	0	0	0	0	0	0	0	0	0	0	0	0	0
4/25/2024	6:15 AM	0	0	0	0	0	0	0	0	0	0	0	0	0
4/25/2024	6:30 AM	0	0	0	0	0	0	0	0	0	0	0	0	0
4/25/2024	6:45 AM	0	0	0	0	0	0	0	0	0	0	0	0	0
4/25/2024	7:00 AM	0	0	0	0	0	0	0	0	0	0	0	0	0
4/25/2024	7:15 AM	0	0	0	0	0	0	0	0	0	0	0	0	0
4/25/2024	7:30 AM	0	0	0	0	0	0	0	0	0	0	0	0	0
4/25/2024	7:45 AM	0	0	0	0	0	0	0	0	0	0	0	0	0
4/25/2024	8:00 AM	0	0	0	0	0	0	0	0	0	0	0	0	0
4/25/2024	8:15 AM	0	0	0	0	0	0	0	0	0	0	0	0	0
4/25/2024	8:30 AM	0	0	0	0	0	0	0	0	0	0	0	0	0
4/25/2024	8:45 AM	0	0	0	0	0	0	0	0	0	0	0	0	0
4/25/2024	9:00 AM	0	0	0	0	0	0	0	0	0	0	0	0	0
4/25/2024	9:15 AM	0	0	0	0	0	0	0	0	0	0	0	0	0
4/25/2024	9:30 AM	0	0	0	0	0	0	0	0	0	0	0	0	0
4/25/2024	9:45 AM	0	0	0	0	0	0	0	0	0	0	0	0	0
4/25/2024	10:00 AM	0	0	0	0	0	0	0	0	0	0	0	0	0
4/25/2024	10:15 AM	0	0	0	0	0	0	0	0	0	0	0	0	0
4/25/2024	10:30 AM	0	0	0	0	0	0	0	0	0	0	0	0	0
4/25/2024	10:45 AM	0	0	0	0	0	0	0	0	0	0	0	0	0
4/25/2024	11:00 AM	0	0	0	0	0	0	0	0	0	0	0	0	0
4/25/2024	11:15 AM	0	0	0	0	0	0	0	0	0	0	0	0	0
4/25/2024	11:30 AM	0	0	0	0	0	0	0	0	0	0	0	0	0
4/25/2024	11:45 AM	0	0	0	0	0	0	0	0	0	0	0	0	0
4/25/2024	12:00 PM	0	0	0	0	0	0	0	0	0	0	0	0	0
4/25/2024	12:15 PM	0	0	0	0	0	0	0	0	0	0	0	0	0
4/25/2024	12:30 PM	0	0	0	0	0	0	0	0	0	0	0	0	0
4/25/2024	12:45 PM	0	0	0	0	0	0	0	0	0	0	0	0	0
4/25/2024	1:00 PM	0	0	0	0	0	0	0	0	0	0	0	0	0
4/25/2024	1:15 PM	0	0	0	0	0	0	0	0	0	0	0	0	0
4/25/2024	1:30 PM	0	0	0	0	0	0	0	0	0	0	0	0	0
4/25/2024	1:45 PM	0	0	0	0	0	0	0	0	0	0	0	0	0
4/25/2024	2:00 PM	0	0	0	0	0	0	0	0	0	0	0	0	0
4/25/2024	2:15 PM	0	0	0	0	0	0	0	0	0	0	0	0	0
4/25/2024	2:30 PM	0	0	0	0	0	0	0	0	0	0	0	0	0
4/25/2024	2:45 PM	0	0	0	0	0	0	0	0	0	0	0	0	0
4/25/2024	3:00 PM	0	0	0	0	0	0	0	0	0	0	0	0	0
4/25/2024	3:15 PM	0	0	0	0	0	0	0	0	0	0	0	0	0
4/25/2024	3:30 PM	0	0	0	0	0	0	0	0	0	0	0	0	0
4/25/2024	3:45 PM	0	0	0	0	0	0	0	0	0	0	0	0	0
4/25/2024	4:00 PM	0	0	0	0	0	0	0	0	0	0	0	0	0
4/25/2024	4:15 PM	0	0	0	0	0	0	0	0	0	0	0	0	0
4/25/2024	4:30 PM	0	0	0	0	0	0	0	0	0	0	0	0	0
4/25/2024	4:45 PM	0	0	0	0	0	0	0	0	0	0	0	0	0
4/25/2024	5:00 PM	0	0	0	0	0	0	0	0	0	0	0	0	0
4/25/2024	5:15 PM	0	0	0	0	0	0	0	0	0	0	0	0	0
4/25/2024	5:30 PM	0	0	0	0	0	0	0	0	0	0	0	0	0
4/25/2024	5:45 PM	0	0	0	0	0	0	0	0	0	0	0	0	0
4/25/2024	6:00 PM	0	0	0	0	0	0	0	0	0	0	0	0	0
4/25/2024	6:15 PM	0	0	0	0	0	0	0	0	0	0	0	0	0
4/25/2024	6:30 PM	0	0	0	0	0	0	0	0	0	0	0	0	0
4/25/2024	6:45 PM	0	0	0	0	0	0	0	0	0	0	0	0	0
4/25/2024	7:00 PM	0	0	0	0	0	0	0	0	0	0	0	0	0
4/25/2024	7:15 PM	0	0	0	0	0	0	0	0	0	0	0	0	0
4/25/2024	7:30 PM	0	0	0	0	0	0	0	0	0	0	0	0	0
4/25/2024	7:45 PM	0	0	0	0	0	0	0	0	0	0	0	0	0
4/25/2024	8:00 PM	0	0	0	0	0	0	0	0	0	0	0	0	0
4/25/2024	8:15 PM	0	0	0	0	0	0	0	0	0	0	0	0	0
4/25/2024	8:30 PM	0	0	0	0	0	0	0	0	0	0	0	0	0
4/25/2024	8:45 PM	0	0	0	0	0	0	0	0	0	0	0	0	0
4/25/2024	9:00 PM	0	0	0	0	0	0	0	0	0	0	0	0	0
4/25/2024	9:15 PM	0	0	0	0	0	0	0	0	0	0	0	0	0
4/25/2024	9:30 PM	0	0	0	0	0	0	0	0	0	0	0	0	0
4/25/2024	9:45 PM	0	0	0	0	0	0	0	0	0	0	0	0	0
4/25/2024	10:00 PM	0	0	0	0	0	0	0	0	0	0	0	0	0
4/25/2024	10:15 PM	0	0	0	0	0	0	0	0	0	0	0	0	0
4/25/2024	10:30 PM	0	0	0	0	0	0	0	0	0	0	0	0	0
4/25/2024	10:45 PM	0	0	0	0	0	0	0	0	0	0	0	0	0
4/25/2024	11:00 PM	0	0	0	0	0	0	0	0	0	0	0	0	0
4/25/2024	11:15 PM	0	0	0	0	0	0	0	0	0	0	0	0	0
4/25/2024	11:30 PM	0	0	0	0	0	0	0	0	0	0	0	0	0
4/25/2024	11:45 PM	0	0	0	0	0	0	0	0	0	0	0	0	0

SB
File Name:
Start Date: 4/23/2024
Start Time: 0
Site Code: 18
Station ID: 1
Location 1: I-26 James F. Byrnes Expy S/Bound Off-Ramp, north of US-176 Broad River Rd
Location 2:

Date	Time	1	2	3	4	5	6	7	8	9	10	11	12	13
4/23/2024	12:00 AM	0	0	0	0	0	0	0	0	0	0	0	0	0
4/23/2024	12:15 AM	0	0	0	0	0	0	0	0	0	0	0	0	0
4/23/2024	12:30 AM	0	0	0	0	0	0	0	0	0	0	0	0	0
4/23/2024	12:45 AM	0	0	0	0	0	0	0	0	0	0	0	0	0
4/23/2024	1:00 AM	0	0	0	0	0	0	0	0	0	0	0	0	0
4/23/2024	1:15 AM	0	0	0	0	0	0	0	0	0	0	0	0	0
4/23/2024	1:30 AM	0	0	0	0	0	0	0	0	0	0	0	0	0
4/23/2024	1:45 AM	0	0	0	0	0	0	0	0	0	0	0	0	0
4/23/2024	2:00 AM	0	0	0	0	0	0	0	0	0	0	0	0	0
4/23/2024	2:15 AM	0	0	0	0	0	0	0	0	0	0	0	0	0
4/23/2024	2:30 AM	0	0	0	0	0	0	0	0	0	0	0	0	0
4/23/2024	2:45 AM	0	0	0	0	0	0	0	0	0	0	0	0	0
4/23/2024	3:00 AM	0	0	0	0	0	0	0	0	0	0	0	0	0
4/23/2024	3:15 AM	0	0	0	0	0	0	0	0	0	0	0	0	0
4/23/2024	3:30 AM	0	0	0	0	0	0	0	0	0	0	0	0	0
4/23/2024	3:45 AM	0	0	0	0	0	0	0	0	0	0	0	0	0
4/23/2024	4:00 AM	0	0	0	0	0	0	0	0	0	0	0	0	0
4/23/2024	4:15 AM	0	0	0	0	0	0	0	0	0	0	0	0	0
4/23/2024	4:30 AM	0	0	0	0	0	0	0	0	0	0	0	0	0
4/23/2024	4:45 AM	0	0	0	0	0	0	0	0	0	0	0	0	0
4/23/2024	5:00 AM	0	0	0	0	0	0	0	0	0	0	0	0	0
4/23/2024	5:15 AM	0	0	0	0	0	0	0	0	0	0	0	0	0
4/23/2024	5:30 AM	0	0	0	0	0	0	0	0	0	0	0	0	0
4/23/2024	5:45 AM	0	0	0	0	0	0	0	0	0	0	0	0	0
4/23/2024	6:00 AM	0	0	0	0	0	0	0	0	0	0	0	0	0
4/23/2024	6:15 AM	0	0	0	0	0	0	0	0	0	0	0	0	0
4/23/2024	6:30 AM	0	0	0	0	0	0	0	0	0	0	0	0	0
4/23/2024	6:45 AM	0	0	0	0	0	0	0	0	0	0	0	0	0
4/23/2024	7:00 AM	0	0	0	0	0	0	0	0	0	0	0	0	0
4/23/2024	7:15 AM	0	0	0	0	0	0	0	0	0	0	0	0	0
4/23/2024	7:30 AM	0	0	0	0	0	0	0	0	0	0	0	0	0
4/23/2024	7:45 AM	0	0	0	0	0	0	0	0	0	0	0	0	0
4/23/2024	8:00 AM	0	0	0	0	0	0	0	0	0	0	0	0	0
4/23/2024	8:15 AM	0	0	0	0	0	0	0	0	0	0	0	0	0
4/23/2024	8:30 AM	0	0	0	0	0	0	0	0	0	0	0	0	0
4/23/2024	8:45 AM	0	0	0	0	0	0	0	0	0	0	0	0	0
4/23/2024	9:00 AM	0	0	0	0	0	0	0	0	0	0	0	0	0
4/23/2024	9:15 AM	0	0	0	0	0	0	0	0	0	0	0	0	0
4/23/2024	9:30 AM	0	0	0	0	0	0	0	0	0	0	0	0	0
4/23/2024	9:45 AM	0	0	0	0	0	0	0	0	0	0	0	0	0
4/23/2024	10:00 AM	0	0	0	0	0	0	0	0	0	0	0	0	0
4/23/2024	10:15 AM	0	0	0	0	0	0	0	0	0	0	0	0	0
4/23/2024	10:30 AM	0	0	0	0	0	0	0	0	0	0	0	0	0
4/23/2024	10:45 AM	0	0	0	0	0	0	0	0	0	0	0	0	0
4/23/2024	11:00 AM	0	0	0	0	0	0	0	0	0	0	0	0	0
4/23/2024	11:15 AM	0	0	0	0	0	0	0	0	0	0	0	0	0
4/23/2024	11:30 AM	0	0	0	0	0	0	0	0	0	0	0	0	0
4/23/2024	11:45 AM	0	0	0	0	0	0	0	0	0	0	0	0	0
4/23/2024	12:00 PM	0	0	0	0	0	0	0	0	0	0	0	0	0
4/23/2024	12:15 PM	0	0	0	0	0	0	0	0	0	0	0	0	0
4/23/2024	12:30 PM	0	0	0	0	0	0	0	0	0	0	0	0	0
4/23/2024	12:45 PM	0	0	0	0	0	0	0	0	0	0	0	0	0
4/23/2024	1:00 PM	0	0	0	0	0	0	0	0	0	0	0	0	0
4/23/2024	1:15 PM	0	0	0	0	0	0	0	0	0	0	0	0	0
4/23/2024	1:30 PM	0	0	0	0	0	0	0	0	0	0	0	0	0
4/23/2024	1:45 PM	0	0	0	0	0	0	0	0	0	0	0	0	0
4/23/2024	2:00 PM	0	0	0	0	0	0	0	0	0	0	0	0	0
4/23/2024	2:15 PM	0	0	0	0	0	0	0	0	0	0	0	0	0
4/23/2024	2:30 PM	0	0	0	0	0	0	0	0	0	0	0	0	0
4/23/2024	2:45 PM	0	0	0	0	0	0	0	0	0	0	0	0	0
4/23/2024	3:00 PM	0	0	0	0	0	0	0	0	0	0	0	0	0
4/23/2024	3:15 PM	0	0	0	0	0	0	0	0	0	0	0	0	0
4/23/2024	3:30 PM	0	0	0	0	0	0	0	0	0	0	0	0	0
4/23/2024	3:45 PM	0	0	0	0	0	0	0	0	0	0	0	0	0
4/23/2024	4:00 PM	0	0	0	0	0	0	0	0	0	0	0	0	0
4/23/2024	4:15 PM	0	0	0	0	0	0	0	0	0	0	0	0	0
4/23/2024	4:30 PM	0	0	0	0	0	0	0	0	0	0	0	0	0
4/23/2024	4:45 PM	0	0	0	0	0	0	0	0	0	0	0	0	0
4/23/2024	5:00 PM	0	0	0	0	0	0	0	0	0	0	0	0	0
4/23/2024	5:15 PM	0	0	0	0	0	0	0	0	0	0	0	0	0
4/23/2024	5:30 PM	0	0	0	0	0	0	0	0	0	0	0	0	0
4/23/2024	5:45 PM	0	0	0	0	0	0	0	0	0	0	0	0	0
4/23/2024	6:00 PM	0	0	0	0	0	0	0	0	0	0	0	0	0
4/23/2024	6:15 PM	0	5	1	0	0	0	0	0	0	0	0	0	0
4/23/2024	6:30 PM	0	11	2	0	0	0	0	0	0	0	0	0	0
4/23/2024	6:45 PM	0	17	2	0	0	0	0	0	0	0	0	0	0
4/23/2024	7:00 PM	0	22	4	0	0	0	0	0	0	0	0	0	0
4/23/2024	7:15 PM	0	23	5	0	0	0	0	0	0	0	0	0	0
4/23/2024	7:30 PM	1	20	6	0	0	0	0	0	0	0	0	0	0
4/23/2024	7:45 PM	1	18	7	0	0	0	0	0	0	0	0	0	0
4/23/2024	8:00 PM	1	15	5	0	0	0	0	0	0	0	0	0	0
4/23/2024	8:15 PM	1	12	4	0	0	0	0	0	0	0	0	0	0
4/23/2024	8:30 PM	0	12	2	0	0	0	0	0	0	0	0	0	0
4/23/2024	8:45 PM	0	9	2	0	0	0	0	0	0	0	0	0	0
4/23/2024	9:00 PM	0	9	3	0	0	0	0	0	0	0	0	0	0
4/23/2024	9:15 PM	0	6	2	0	0	0	0	0	0	0	0	0	0
4/23/2024	9:30 PM	0	4	4	0	0	0	0	0	0	0	0	0	0
4/23/2024	9:45 PM	0	3	3	0	0	0	0	0	0	0	0	0	0
4/23/2024	10:00 PM	0	4	2	0	0	0	0	0	0	0	0	0	0
4/23/2024	10:15 PM	0	7	2	0	0	0	0	0	0	0	0	0	0
4/23/2024	10:30 PM	0	6	0	0	0	0	0	0	0	0	0	0	0
4/23/2024	10:45 PM	0	7	0	0	0	0	0	0	0	0	0	0	0
4/23/2024	11:00 PM	0	5	0	0	0	0	0	0	0	0	0	0	0
4/23/2024	11:15 PM	0	2	0	0	0	0	0	0	0	0	0	0	0
4/23/2024	11:30 PM	0	2	0	0	0	0	0	0	0	0	0	0	0
4/23/2024	11:45 PM	0	1	0	0	0	0	0	0	0	0	0	0	0

4/24/2024	12:00 AM	0	2	1	0	0	1	0	0	0	0	0	0
4/24/2024	12:15 AM	0	1	1	0	0	0	0	0	0	0	0	0
4/24/2024	12:30 AM	0	2	1	0	0	0	0	0	0	0	0	0
4/24/2024	12:45 AM	0	2	1	0	0	0	0	0	0	0	0	0
4/24/2024	1:00 AM	0	1	0	0	0	0	0	0	0	0	0	0
4/24/2024	1:15 AM	0	1	0	0	0	0	0	0	0	0	0	0
4/24/2024	1:30 AM	0	0	0	0	0	0	0	0	0	0	0	0
4/24/2024	1:45 AM	0	1	0	0	0	0	0	0	0	0	0	0
4/24/2024	2:00 AM	0	1	0	0	0	0	0	0	0	0	0	0
4/24/2024	2:15 AM	0	1	0	0	0	0	0	0	0	0	0	0
4/24/2024	2:30 AM	0	2	0	0	0	0	0	0	0	0	0	0
4/24/2024	2:45 AM	0	1	0	0	0	0	0	0	0	0	0	0
4/24/2024	3:00 AM	0	2	0	0	0	0	0	0	0	0	0	0
4/24/2024	3:15 AM	0	2	0	0	0	0	0	0	0	0	0	0
4/24/2024	3:30 AM	0	2	0	0	0	0	0	0	0	0	0	0
4/24/2024	3:45 AM	0	3	0	0	0	0	0	0	0	0	0	0
4/24/2024	4:00 AM	0	4	1	0	0	0	0	0	0	0	0	0
4/24/2024	4:15 AM	0	5	2	0	0	0	0	0	0	0	0	0
4/24/2024	4:30 AM	0	7	3	0	1	0	0	0	0	0	0	0
4/24/2024	4:45 AM	0	7	3	0	1	0	0	0	0	0	0	0
4/24/2024	5:00 AM	0	6	2	0	1	1	0	0	0	0	0	0
4/24/2024	5:15 AM	0	7	3	0	1	1	0	0	0	0	0	0
4/24/2024	5:30 AM	0	7	3	0	0	1	0	0	0	0	0	0
4/24/2024	5:45 AM	0	13	5	0	0	1	0	0	1	0	0	0
4/24/2024	6:00 AM	0	21	6	0	0	0	0	0	1	0	0	0
4/24/2024	6:15 AM	0	33	5	0	0	0	0	0	1	0	0	0
4/24/2024	6:30 AM	0	50	7	0	0	0	0	0	1	0	0	0
4/24/2024	6:45 AM	0	57	10	0	0	0	0	0	0	0	0	0
4/24/2024	7:00 AM	0	70	15	0	0	0	0	0	0	0	0	0
4/24/2024	7:15 AM	0	76	23	0	0	0	0	0	0	0	0	0
4/24/2024	7:30 AM	0	68	22	0	0	0	0	0	0	0	0	0
4/24/2024	7:45 AM	0	75	24	0	0	0	0	0	0	0	0	0
4/24/2024	8:00 AM	0	68	22	0	0	0	0	0	0	0	0	0
4/24/2024	8:15 AM	0	60	18	0	0	1	0	0	0	0	0	0
4/24/2024	8:30 AM	0	54	22	0	0	1	0	0	0	0	0	0
4/24/2024	8:45 AM	0	44	18	0	0	1	0	0	0	0	0	0
4/24/2024	9:00 AM	0	42	15	0	1	1	0	1	0	0	0	0
4/24/2024	9:15 AM	0	40	13	0	1	0	0	1	0	0	0	0
4/24/2024	9:30 AM	0	45	12	0	1	0	0	1	0	0	0	0
4/24/2024	9:45 AM	0	35	10	0	1	0	0	1	0	0	0	0
4/24/2024	10:00 AM	0	24	10	0	0	0	0	0	0	0	0	0
4/24/2024	10:15 AM	0	18	7	0	1	0	0	0	0	0	0	0
4/24/2024	10:30 AM	0	9	4	0	1	0	0	0	0	0	0	0
4/24/2024	10:45 AM	0	10	5	0	1	0	0	0	0	0	0	0
4/24/2024	11:00 AM	0	19	10	0	1	0	0	0	0	0	0	0
4/24/2024	11:15 AM	0	20	12	0	1	0	0	0	0	0	0	0
4/24/2024	11:30 AM	0	25	17	0	2	0	0	0	0	0	0	0
4/24/2024	11:45 AM	0	35	20	0	2	0	0	0	0	0	0	0
4/24/2024	12:00 PM	0	33	18	0	2	0	0	0	0	0	0	0
4/24/2024	12:15 PM	0	37	19	0	5	0	0	0	1	0	0	0
4/24/2024	12:30 PM	0	40	16	0	5	0	0	0	1	0	0	0
4/24/2024	12:45 PM	0	36	13	0	5	0	0	1	1	0	0	0
4/24/2024	1:00 PM	0	39	11	0	5	0	0	1	1	0	0	0
4/24/2024	1:15 PM	0	40	9	0	3	0	0	1	0	0	0	0
4/24/2024	1:30 PM	0	46	7	0	4	0	0	1	0	0	0	0
4/24/2024	1:45 PM	0	52	7	0	4	0	0	0	0	0	0	0
4/24/2024	2:00 PM	0	51	7	0	4	0	0	0	0	0	0	0
4/24/2024	2:15 PM	0	50	8	0	2	0	0	0	0	0	0	0
4/24/2024	2:30 PM	0	56	8	0	0	0	0	0	0	0	0	0
4/24/2024	2:45 PM	0	54	9	0	0	0	0	0	0	0	0	0
4/24/2024	3:00 PM	0	50	8	0	0	0	0	0	0	0	0	0
4/24/2024	3:15 PM	0	63	12	0	1	0	0	0	0	0	0	0
4/24/2024	3:30 PM	0	63	14	0	1	0	0	0	0	0	0	0
4/24/2024	3:45 PM	0	70	11	0	3	0	0	0	0	0	0	0
4/24/2024	4:00 PM	0	79	15	0	3	0	0	0	1	0	0	0
4/24/2024	4:15 PM	0	68	13	0	2	0	0	0	1	0	0	0
4/24/2024	4:30 PM	0	69	13	0	2	0	0	0	1	0	0	0
4/24/2024	4:45 PM	0	58	18	0	0	0	0	0	1	0	0	0
4/24/2024	5:00 PM	0	53	15	0	0	0	0	0	0	0	0	0
4/24/2024	5:15 PM	0	56	12	0	0	0	0	0	0	0	0	0
4/24/2024	5:30 PM	0	41	9	0	0	0	0	0	0	0	0	0
4/24/2024	5:45 PM	0	43	9	0	1	0	0	0	0	0	0	0
4/24/2024	6:00 PM	0	42	7	0	2	0	0	0	0	0	0	0
4/24/2024	6:15 PM	0	36	9	0	2	0	0	0	0	0	0	0
4/24/2024	6:30 PM	0	34	9	0	2	0	0	0	0	0	0	0
4/24/2024	6:45 PM	0	24	4	0	1	0	0	0	0	0	0	0
4/24/2024	7:00 PM	0	26	8	0	0	0	0	0	0	0	0	0
4/24/2024	7:15 PM	0	22	5	0	0	0	0	0	0	0	0	0
4/24/2024	7:30 PM	0	19	5	0	0	0	0	0	0	0	0	0
4/24/2024	7:45 PM	0	24	5	0	0	0	0	0	0	0	0	0
4/24/2024	8:00 PM	0	17	2	0	0	0	0	0	0	0	0	0
4/24/2024	8:15 PM	0	16	4	0	0	0	0	0	0	0	0	0
4/24/2024	8:30 PM	0	14	3	0	0	0	0	0	0	0	0	0
4/24/2024	8:45 PM	0	13	3	0	0	0	0	0	0	0	0	0
4/24/2024	9:00 PM	0	10	2	0	0	0	0	0	0	0	0	0
4/24/2024	9:15 PM	0	7	0	0	0	0	0	0	0	0	0	0
4/24/2024	9:30 PM	0	8	0	0	0	0	0	0	0	0	0	0
4/24/2024	9:45 PM	0	6	0	0	0	0	0	0	0	0	0	0
4/24/2024	10:00 PM	0	5	0	0	0	0	0	0	0	0	0	0
4/24/2024	10:15 PM	0	8	0	0	0	0	0	0	0	0	0	0
4/24/2024	10:30 PM	0	8	0	0	0	0	0	0	0	0	0	0
4/24/2024	10:45 PM	0	7	0	0	0	0	0	0	0	0	0	0
4/24/2024	11:00 PM	0	7	0	0	0	0	0	0	0	0	0	0
4/24/2024	11:15 PM	0	4	0	0	0	0	0	0	0	0	0	0
4/24/2024	11:30 PM	0	2	0	0	0	0	0	0	0	0	0	0
4/24/2024	11:45 PM	0	1	0	0	0	0	0	0	0	0	0	0

4/25/2024	12:00 AM	0	3	0	0	0	1	0	0	0	0	0	0	0
4/25/2024	12:15 AM	0	4	0	0	0	1	0	0	1	0	0	0	0
4/25/2024	12:30 AM	0	3	0	0	0	1	0	0	1	0	0	0	0
4/25/2024	12:45 AM	0	2	0	0	1	1	0	0	1	0	0	0	0
4/25/2024	1:00 AM	0	2	0	0	1	1	0	0	1	0	0	0	0
4/25/2024	1:15 AM	0	1	0	0	1	1	0	0	0	0	0	0	0
4/25/2024	1:30 AM	0	2	0	0	1	1	0	0	0	0	0	0	0
4/25/2024	1:45 AM	0	2	0	0	0	0	0	0	0	0	0	0	0
4/25/2024	2:00 AM	0	2	0	0	0	1	0	0	0	0	0	0	0
4/25/2024	2:15 AM	0	1	0	0	0	1	0	0	0	0	0	0	0
4/25/2024	2:30 AM	0	0	0	0	0	2	0	0	0	0	0	0	0
4/25/2024	2:45 AM	0	1	0	0	0	2	0	0	0	0	0	0	0
4/25/2024	3:00 AM	0	4	1	0	0	1	0	0	0	0	0	0	0
4/25/2024	3:15 AM	0	4	1	0	0	1	0	0	0	0	0	0	0
4/25/2024	3:30 AM	0	4	2	0	0	0	0	0	0	0	0	0	0
4/25/2024	3:45 AM	0	4	2	0	0	0	0	0	0	0	0	0	0
4/25/2024	4:00 AM	0	2	2	0	0	0	0	0	0	0	0	0	0
4/25/2024	4:15 AM	0	3	3	0	0	0	0	0	0	0	0	0	0
4/25/2024	4:30 AM	0	5	4	0	0	0	0	0	0	0	0	0	0
4/25/2024	4:45 AM	0	6	4	0	0	0	0	0	0	0	0	0	0
4/25/2024	5:00 AM	0	7	3	0	0	0	0	0	1	0	0	0	0
4/25/2024	5:15 AM	0	10	5	0	0	0	0	0	1	0	0	0	0
4/25/2024	5:30 AM	0	11	9	0	0	0	0	0	1	0	0	0	0
4/25/2024	5:45 AM	0	14	13	0	0	0	0	0	1	0	0	0	0
4/25/2024	6:00 AM	0	17	18	0	1	1	0	0	0	0	0	0	0
4/25/2024	6:15 AM	0	25	19	0	2	1	0	0	0	0	0	0	0
4/25/2024	6:30 AM	0	45	18	0	2	1	0	0	1	0	0	0	0
4/25/2024	6:45 AM	0	62	19	0	2	1	0	0	1	0	0	0	0
4/25/2024	7:00 AM	0	76	21	0	1	0	0	0	1	0	0	0	0
4/25/2024	7:15 AM	0	86	19	0	0	0	0	1	1	0	0	0	0
4/25/2024	7:30 AM	0	77	18	0	0	0	0	1	0	0	0	0	0
4/25/2024	7:45 AM	0	69	16	0	0	0	0	1	0	0	0	0	0
4/25/2024	8:00 AM	0	64	11	0	1	0	0	1	0	0	0	0	0
4/25/2024	8:15 AM	0	57	13	0	1	0	0	0	0	0	0	0	0
4/25/2024	8:30 AM	0	53	14	0	1	0	0	0	0	0	0	0	0
4/25/2024	8:45 AM	0	53	15	0	1	0	0	0	0	0	0	0	0
4/25/2024	9:00 AM	0	46	19	0	0	0	0	0	1	0	0	0	0
4/25/2024	9:15 AM	0	40	19	0	1	1	0	0	1	0	0	0	0
4/25/2024	9:30 AM	0	43	19	0	1	2	0	0	1	0	0	0	0
4/25/2024	9:45 AM	0	34	18	0	2	2	0	0	1	0	0	0	0
4/25/2024	10:00 AM	0	31	14	0	2	2	0	0	0	0	0	0	0
4/25/2024	10:15 AM	0	34	11	0	1	1	0	0	0	0	0	0	0
4/25/2024	10:30 AM	0	30	14	0	1	0	0	0	0	0	0	0	0
4/25/2024	10:45 AM	0	34	14	0	0	1	0	0	0	0	0	0	0
4/25/2024	11:00 AM	0	44	15	0	0	1	0	0	0	0	0	0	0
4/25/2024	11:15 AM	0	45	16	0	0	1	0	0	0	0	0	0	0
4/25/2024	11:30 AM	0	50	11	0	1	1	0	0	0	0	0	0	0
4/25/2024	11:45 AM	0	56	13	0	1	0	0	0	1	0	0	0	0
4/25/2024	12:00 PM	0	54	13	0	2	2	0	1	1	0	0	0	0
4/25/2024	12:15 PM	0	56	11	0	3	2	0	1	1	0	0	0	0
4/25/2024	12:30 PM	0	49	9	0	2	2	0	2	1	0	0	0	0
4/25/2024	12:45 PM	1	49	8	0	3	2	0	2	0	0	0	0	0
4/25/2024	1:00 PM	1	47	7	0	4	1	0	1	0	0	0	0	0
4/25/2024	1:15 PM	1	44	9	0	4	1	0	1	0	0	0	0	0
4/25/2024	1:30 PM	1	48	12	0	5	1	0	0	0	0	0	0	0
4/25/2024	1:45 PM	0	41	9	0	4	1	0	0	0	0	0	0	0
4/25/2024	2:00 PM	0	50	14	0	2	0	0	0	0	0	0	0	0
4/25/2024	2:15 PM	0	50	18	0	1	0	0	0	0	0	0	0	0
4/25/2024	2:30 PM	0	59	15	0	1	0	0	0	0	0	0	0	0
4/25/2024	2:45 PM	0	67	16	0	1	0	0	0	0	0	0	0	0
4/25/2024	3:00 PM	0	60	12	0	1	0	0	0	0	0	0	0	0
4/25/2024	3:15 PM	0	67	12	0	1	0	0	0	0	0	0	0	0
4/25/2024	3:30 PM	0	65	15	0	0	0	0	0	0	0	0	0	0
4/25/2024	3:45 PM	0	59	17	0	2	0	0	0	0	0	0	0	0
4/25/2024	4:00 PM	1	62	18	0	3	1	0	0	0	0	0	0	0
4/25/2024	4:15 PM	1	57	15	0	3	1	0	0	0	0	0	0	0
4/25/2024	4:30 PM	1	54	12	0	3	1	0	0	0	0	0	0	0
4/25/2024	4:45 PM	1	57	9	0	1	1	0	0	0	0	0	0	0
4/25/2024	5:00 PM	0	53	10	0	0	0	0	0	0	0	0	0	0
4/25/2024	5:15 PM	0	57	9	0	0	0	0	0	0	0	0	0	0
4/25/2024	5:30 PM	0	59	13	0	0	0	0	0	0	0	0	0	0
4/25/2024	5:45 PM	0	60	18	0	1	0	0	0	0	0	0	0	0
4/25/2024	6:00 PM	0	55	14	0	2	0	0	0	0	0	0	0	0
4/25/2024	6:15 PM	0	37	12	0	2	0	0	0	0	0	0	0	0
4/25/2024	6:30 PM	0	20	7	0	2	0	0	0	0	0	0	0	0
4/25/2024	6:45 PM	0	6	1	0	1	0	0	0	0	0	0	0	0
4/25/2024	7:00 PM	0	0	0	0	0	0	0	0	0	0	0	0	0
4/25/2024	7:15 PM	0	0	0	0	0	0	0	0	0	0	0	0	0
4/25/2024	7:30 PM	0	0	0	0	0	0	0	0	0	0	0	0	0
4/25/2024	7:45 PM	0	0	0	0	0	0	0	0	0	0	0	0	0
4/25/2024	8:00 PM	0	0	0	0	0	0	0	0	0	0	0	0	0
4/25/2024	8:15 PM	0	0	0	0	0	0	0	0	0	0	0	0	0
4/25/2024	8:30 PM	0	0	0	0	0	0	0	0	0	0	0	0	0
4/25/2024	8:45 PM	0	0	0	0	0	0	0	0	0	0	0	0	0
4/25/2024	9:00 PM	0	0	0	0	0	0	0	0	0	0	0	0	0
4/25/2024	9:15 PM	0	0	0	0	0	0	0	0	0	0	0	0	0
4/25/2024	9:30 PM	0	0	0	0	0	0	0	0	0	0	0	0	0
4/25/2024	9:45 PM	0	0	0	0	0	0	0	0	0	0	0	0	0
4/25/2024	10:00 PM	0	0	0	0	0	0	0	0	0	0	0	0	0
4/25/2024	10:15 PM	0	0	0	0	0	0	0	0	0	0	0	0	0
4/25/2024	10:30 PM	0	0	0	0	0	0	0	0	0	0	0	0	0
4/25/2024	10:45 PM	0	0	0	0	0	0	0	0	0	0	0	0	0
4/25/2024	11:00 PM	0	0	0	0	0	0	0	0	0	0	0	0	0
4/25/2024	11:15 PM	0	0	0	0	0	0	0	0	0	0	0	0	0
4/25/2024	11:30 PM	0	0	0	0	0	0	0	0	0	0	0	0	0
4/25/2024	11:45 PM	0	0	0	0	0	0	0	0	0	0	0	0	0

Bi-Directional Class Count || SB WB 15min

Columbia, SC

Marr Traffic DATA COLLECTION
www.marrtraffic.com

Site 19
I-26 James F. Byrnes Expy On/Off-Ramp,
south of US-176 Broad River Rd

Date
Tuesday, April 23, 2024

Lat/Long
34.097573°, -81.175664°

Weather
Fair
58°F

Click here for Detailed Weather

Click here for Map

0000 - 2400 (Weekday 24h Session) (04-23-2024)
SB WB 15min

	Southbound (Movement 19.1)													15min	60min
Time	1	2	3	4	5	6	7	8	9	10	11	12	13	Total	Total
0000 - 0015	0	0	0	0	0	0	0	0	0	0	0	0	0	**0**	
0015 - 0030	0	0	0	0	0	0	0	0	0	0	0	0	0	**0**	
0030 - 0045	0	0	0	0	0	0	0	0	0	0	0	0	0	**0**	
0045 - 0100	0	0	0	0	0	0	0	0	0	0	0	0	0	**0**	**0**
0100 - 0115	0	0	0	0	0	0	0	0	0	0	0	0	0	**0**	
0115 - 0130	0	0	0	0	0	0	0	0	0	0	0	0	0	**0**	
0130 - 0145	0	0	0	0	0	0	0	0	0	0	0	0	0	**0**	
0145 - 0200	0	0	0	0	0	0	0	0	0	0	0	0	0	**0**	**0**
0200 - 0215	0	0	0	0	0	0	0	0	0	0	0	0	0	**0**	
0215 - 0230	0	0	0	0	0	0	0	0	0	0	0	0	0	**0**	
0230 - 0245	0	0	0	0	0	0	0	0	0	0	0	0	0	**0**	
0245 - 0300	0	0	0	0	0	0	0	0	0	0	0	0	0	**0**	**0**
0300 - 0315	0	0	0	0	0	0	0	0	0	0	0	0	0	**0**	
0315 - 0330	0	0	0	0	0	0	0	0	0	0	0	0	0	**0**	
0330 - 0345	0	0	0	0	0	0	0	0	0	0	0	0	0	**0**	
0345 - 0400	0	0	0	0	0	0	0	0	0	0	0	0	0	**0**	**0**
0400 - 0415	0	0	0	0	0	0	0	0	0	0	0	0	0	**0**	
0415 - 0430	0	0	0	0	0	0	0	0	0	0	0	0	0	**0**	
0430 - 0445	0	0	0	0	0	0	0	0	0	0	0	0	0	**0**	
0445 - 0500	0	0	0	0	0	0	0	0	0	0	0	0	0	**0**	**0**
0500 - 0515	0	0	0	0	0	0	0	0	0	0	0	0	0	**0**	
0515 - 0530	0	0	0	0	0	0	0	0	0	0	0	0	0	**0**	
0530 - 0545	0	0	0	0	0	0	0	0	0	0	0	0	0	**0**	
0545 - 0600	0	0	0	0	0	0	0	0	0	0	0	0	0	**0**	**0**
0600 - 0615	0	0	0	0	0	0	0	0	0	0	0	0	0	**0**	
0615 - 0630	0	0	0	0	0	0	0	0	0	0	0	0	0	**0**	
0630 - 0645	0	0	0	0	0	0	0	0	0	0	0	0	0	**0**	
0645 - 0700	0	0	0	0	0	0	0	0	0	0	0	0	0	**0**	**0**
0700 - 0715	0	0	0	0	0	0	0	0	0	0	0	0	0	**0**	
0715 - 0730	0	0	0	0	0	0	0	0	0	0	0	0	0	**0**	
0730 - 0745	0	0	0	0	0	0	0	0	0	0	0	0	0	**0**	
0745 - 0800	0	0	0	0	0	0	0	0	0	0	0	0	0	**0**	**0**
0800 - 0815	0	0	0	0	0	0	0	0	0	0	0	0	0	**0**	
0815 - 0830	0	0	0	0	0	0	0	0	0	0	0	0	0	**0**	
0830 - 0845	0	0	0	0	0	0	0	0	0	0	0	0	0	**0**	
0845 - 0900	0	0	0	0	0	0	0	0	0	0	0	0	0	**0**	**0**
0900 - 0915	0	0	0	0	0	0	0	0	0	0	0	0	0	**0**	
0915 - 0930	0	0	0	0	0	0	0	0	0	0	0	0	0	**0**	
0930 - 0945	0	0	0	0	0	0	0	0	0	0	0	0	0	**0**	
0945 - 1000	0	0	0	0	0	0	0	0	0	0	0	0	0	**0**	**0**
1000 - 1015	0	0	0	0	0	0	0	0	0	0	0	0	0	**0**	
1015 - 1030	0	0	0	0	0	0	0	0	0	0	0	0	0	**0**	
1030 - 1045	0	0	0	0	0	0	0	0	0	0	0	0	0	**0**	
1045 - 1100	0	0	0	0	0	0	0	0	0	0	0	0	0	**0**	**0**
1100 - 1115	0	0	0	0	0	0	0	0	0	0	0	0	0	**0**	
1115 - 1130	0	0	0	0	0	0	0	0	0	0	0	0	0	**0**	
1130 - 1145	0	0	0	0	0	0	0	0	0	0	0	0	0	**0**	
1145 - 1200	0	0	0	0	0	0	0	0	0	0	0	0	0	**0**	**0**
1200 - 1215	0	0	0	0	0	0	0	0	0	0	0	0	0	**0**	
1215 - 1230	0	0	0	0	0	0	0	0	0	0	0	0	0	**0**	
1230 - 1245	0	0	0	0	0	0	0	0	0	0	0	0	0	**0**	
1245 - 1300	0	0	0	0	0	0	0	0	0	0	0	0	0	**0**	**0**
1300 - 1315	0	0	0	0	0	0	0	0	0	0	0	0	0	**0**	
1315 - 1330	0	0	0	0	0	0	0	0	0	0	0	0	0	**0**	
1330 - 1345	0	0	0	0	0	0	0	0	0	0	0	0	0	**0**	
1345 - 1400	0	0	0	0	0	0	0	0	0	0	0	0	0	**0**	**0**
1400 - 1415	0	0	0	0	0	0	0	0	0	0	0	0	0	**0**	
1415 - 1430	0	0	0	0	0	0	0	0	0	0	0	0	0	**0**	
1430 - 1445	0	0	0	0	0	0	0	0	0	0	0	0	0	**0**	
1445 - 1500	0	0	0	0	0	0	0	0	0	0	0	0	0	**0**	**0**
1500 - 1515	0	0	0	0	0	0	0	0	0	0	0	0	0	**0**	
1515 - 1530	0	0	0	0	0	0	0	0	0	0	0	0	0	**0**	
1530 - 1545	0	0	0	0	0	0	0	0	0	0	0	0	0	**0**	
1545 - 1600	0	0	0	0	0	0	0	0	0	0	0	0	0	**0**	**0**
1600 - 1615	0	0	0	0	0	0	0	0	0	0	0	0	0	**0**	
1615 - 1630	0	0	0	0	0	0	0	0	0	0	0	0	0	**0**	
1630 - 1645	0	0	0	0	0	0	0	0	0	0	0	0	0	**0**	
1645 - 1700	0	0	0	0	0	0	0	0	0	0	0	0	0	**0**	**0**
1700 - 1715	0	0	0	0	0	0	0	0	0	0	0	0	0	**0**	
1715 - 1730	0	0	0	0	0	0	0	0	0	0	0	0	0	**0**	
1730 - 1745	0	0	0	0	0	0	0	0	0	0	0	0	0	**0**	
1745 - 1800	0	0	0	0	0	0	0	0	0	0	0	0	0	**0**	**0**
1800 - 1815	0	0	0	0	0	0	0	0	0	0	0	0	0	**0**	
1815 - 1830	0	0	0	0	0	0	0	0	0	0	0	0	0	**0**	
1830 - 1845	0	0	0	0	0	0	0	0	0	0	0	0	0	**0**	
1845 - 1900	0	0	0	0	0	0	0	0	0	0	0	0	0	**0**	**0**
1900 - 1915	0	100	8	0	2	0	0	0	2	0	0	0	0	**112**	
1915 - 1930	0	75	11	0	2	2	0	0	1	0	0	0	0	**91**	
1930 - 1945	1	82	15	0	0	1	0	0	0	0	0	0	0	**99**	
1945 - 2000	0	91	10	0	2	1	0	1	0	0	0	0	0	**105**	**407**
2000 - 2015	0	74	9	0	1	0	0	1	1	0	0	0	0	**86**	
2015 - 2030	0	77	10	0	2	0	0	0	1	0	0	0	0	**90**	
2030 - 2045	1	78	5	0	0	0	0	0	1	0	0	0	0	**85**	
2045 - 2100	0	58	3	0	0	1	0	0	1	0	0	0	0	**63**	**324**
2100 - 2115	0	41	1	0	0	0	0	0	0	0	0	0	0	**42**	
2115 - 2130	1	47	4	0	0	0	0	0	0	0	0	0	0	**52**	
2130 - 2145	0	66	4	0	1	0	0	0	0	0	0	0	0	**71**	
2145 - 2200	0	54	3	0	0	0	0	0	0	0	0	0	0	**57**	**222**
2200 - 2215	0	34	2	0	0	0	0	0	0	0	0	0	0	**36**	
2215 - 2230	0	39	4	0	1	0	0	0	0	0	0	0	0	**44**	
2230 - 2245	0	30	1	0	0	0	0	0	0	0	0	0	0	**31**	
2245 - 2300	0	30	2	0	0	0	0	0	0	0	0	0	0	**32**	**143**
2300 - 2315	0	30	3	0	0	0	0	0	0	0	0	0	0	**33**	
2315 - 2330	0	23	1	0	0	0	0	0	0	0	0	0	0	**24**	
2330 - 2345	0	21	0	0	0	0	0	0	0	0	0	0	0	**21**	
2345 - 0000	0	14	0	0	0	0	0	0	0	0	0	0	0	**14**	**92**

Session Total	3	1064	96	0	11	5	0	2	7	0	0	0	0	**1188**
Session Average	0.03	11.08	1.00	0.00	0.11	0.05	0.00	0.02	0.07	0.00	0.00	0.00	0.00	**12.38**
Session Percentage	0.25	89.56	8.08	0.00	0.93	0.42	0.00	0.17	0.59	0.00	0.00	0.00	0.00	

AM Peak Hour	-	-	-	-	-	-	-	-	-	-	-	-	-	**-**
AM Peak Volume	0	0	0	0	0	0	0	0	0	0	0	0	0	**0**

Noon Peak Hour	-	-	-	-	-	-	-	-	-	-	-	-	-	**-**
Noon Peak Volume	0	0	0	0	0	0	0	0	0	0	0	0	0	**0**

PM Peak Hour	1845 - 1945	1900 - 2000	1915 - 2015	-	1900 - 2000	1900 - 2000	-	1915 - 2015	1830 - 1930	-	-	-	-	**1900 - 2000**
PM Peak Volume	1	348	45	0	6	4	0	2	3	0	0	0	0	**407**

Site 19
I-26 James F. Byrnes Expy On/Off-Ramp,
south of US-176 Broad River Rd

Date
Wednesday, April 24, 2024

Lat/Long
34.097573°, -81.175664°

Weather
Fair
66°F

Click here for Detailed Weather

0000 - 2400 (Weekday 24h Session) (04-24-2024)
SB WB 15min

	Southbound (Movement 19.1)													15min	60min
Time	1	2	3	4	5	6	7	8	9	10	11	12	13	Total	Total
0000 - 0015	0	20	1	0	0	0	0	0	1	0	0	0	0	**22**	
0015 - 0030	0	7	0	0	1	0	0	0	1	0	0	0	0	**9**	
0030 - 0045	0	19	2	0	0	0	0	0	0	0	0	0	0	**21**	
0045 - 0100	0	8	0	0	0	0	0	0	0	0	0	0	0	**8**	**60**
0100 - 0115	0	9	0	0	0	0	0	0	1	0	0	0	0	**10**	
0115 - 0130	0	10	1	0	0	0	0	0	0	0	0	0	0	**11**	
0130 - 0145	0	14	0	0	0	0	0	0	0	0	0	0	0	**14**	
0145 - 0200	0	5	0	0	0	0	0	0	0	0	0	0	0	**5**	**40**
0200 - 0215	0	10	1	0	0	0	0	0	0	0	0	0	0	**11**	
0215 - 0230	0	9	0	0	0	0	0	0	0	0	0	0	0	**9**	
0230 - 0245	0	9	1	0	0	0	0	0	0	0	0	0	0	**10**	
0245 - 0300	0	9	0	0	0	0	0	0	1	0	0	0	0	**10**	**40**
0300 - 0315	0	17	1	0	0	0	0	0	0	0	0	0	0	**18**	
0315 - 0330	0	19	1	0	0	0	0	0	1	0	0	0	0	**21**	
0330 - 0345	0	13	0	0	1	0	0	0	0	0	0	0	0	**14**	
0345 - 0400	0	13	0	0	1	0	0	0	0	0	0	0	0	**14**	**67**
0400 - 0415	0	25	2	0	0	0	0	0	1	0	0	0	0	**28**	
0415 - 0430	0	23	0	0	0	0	0	0	0	0	0	0	0	**23**	
0430 - 0445	0	34	3	0	1	0	0	0	1	0	0	0	0	**39**	
0445 - 0500	0	36	4	0	1	0	0	0	0	0	0	0	0	**41**	**131**
0500 - 0515	0	48	9	0	0	0	0	0	0	0	0	0	0	**57**	
0515 - 0530	0	58	8	0	0	0	0	0	1	0	0	0	0	**67**	
0530 - 0545	0	81	9	0	1	2	0	0	1	0	0	0	0	**94**	
0545 - 0600	0	91	11	0	0	0	0	0	0	0	0	0	0	**102**	**320**
0600 - 0615	0	134	20	0	5	1	0	0	2	0	0	0	0	**162**	
0615 - 0630	3	158	32	0	6	0	0	0	2	0	0	0	0	**201**	
0630 - 0645	1	210	38	0	3	0	0	0	0	0	0	0	0	**252**	
0645 - 0700	1	219	43	0	5	10	0	1	2	1	0	0	0	**282**	**897**
0700 - 0715	1	279	50	0	1	2	0	0	0	0	0	0	0	**333**	
0715 - 0730	0	329	57	1	3	1	0	1	2	1	0	0	0	**395**	
0730 - 0745	0	262	48	0	4	0	0	2	2	0	0	0	0	**318**	
0745 - 0800	0	232	45	0	4	2	0	1	2	0	0	0	0	**286**	**1332**
0800 - 0815	0	209	40	2	4	0	0	0	1	0	0	0	0	**256**	
0815 - 0830	0	175	41	0	4	3	0	0	5	0	0	0	0	**228**	
0830 - 0845	0	229	41	0	3	2	0	0	2	0	1	0	0	**278**	
0845 - 0900	0	179	32	1	1	1	0	0	1	1	1	0	0	**217**	**979**
0900 - 0915	0	178	31	0	3	0	0	1	2	0	0	0	0	**215**	
0915 - 0930	0	194	30	0	3	2	0	1	2	0	1	0	0	**233**	
0930 - 0945	0	195	29	0	1	1	0	0	3	0	0	0	0	**229**	
0945 - 1000	0	174	29	0	5	6	0	5	4	0	0	0	0	**223**	**900**
1000 - 1015	0	142	27	0	4	5	0	1	2	1	0	0	0	**182**	
1015 - 1030	0	132	32	0	0	1	0	2	1	0	0	0	0	**168**	
1030 - 1045	0	159	35	2	3	4	0	4	3	0	0	0	0	**210**	
1045 - 1100	0	162	30	0	2	2	0	0	3	0	0	0	0	**199**	**759**
1100 - 1115	0	159	42	0	4	4	0	3	6	0	0	0	0	**218**	
1115 - 1130	0	162	37	0	6	6	0	0	6	0	0	0	0	**217**	
1130 - 1145	1	178	44	0	3	3	0	2	9	1	0	0	0	**241**	
1145 - 1200	0	187	38	0	7	2	0	1	6	0	0	0	0	**241**	**917**
1200 - 1215	0	158	34	0	6	2	0	2	10	0	0	0	0	**212**	
1215 - 1230	0	128	27	0	2	6	0	1	4	1	0	0	0	**169**	
1230 - 1245	0	173	26	0	5	6	0	2	2	0	0	0	0	**214**	
1245 - 1300	0	171	27	0	4	5	0	0	4	0	0	0	0	**211**	**806**
1300 - 1315	0	139	26	0	4	5	0	0	2	0	0	0	0	**176**	
1315 - 1330	0	150	25	0	4	4	0	1	2	0	0	0	0	**186**	
1330 - 1345	0	132	28	0	3	0	0	0	5	0	0	0	0	**168**	
1345 - 1400	0	124	19	0	3	1	0	0	2	0	0	0	0	**149**	**679**
1400 - 1415	0	134	25	0	5	3	0	1	2	0	0	0	0	**170**	
1415 - 1430	0	142	17	1	1	3	0	1	4	0	0	1	0	**170**	
1430 - 1445	0	158	19	1	6	0	0	0	3	0	0	0	0	**187**	
1445 - 1500	1	172	20	0	7	1	0	0	3	1	0	0	0	**205**	**732**
1500 - 1515	0	142	18	1	3	0	0	0	1	0	0	0	0	**165**	
1515 - 1530	0	161	21	1	6	2	0	0	1	0	0	0	0	**192**	
1530 - 1545	0	177	33	0	7	3	0	0	1	0	0	0	0	**221**	
1545 - 1600	1	170	30	1	7	0	0	0	3	0	0	0	0	**212**	**790**
1600 - 1615	0	180	31	0	6	1	0	0	1	0	0	0	0	**219**	
1615 - 1630	0	167	32	0	1	3	0	0	1	0	0	0	0	**204**	
1630 - 1645	0	171	22	0	3	1	0	1	3	1	0	0	1	**203**	
1645 - 1700	1	165	26	0	3	4	0	0	2	0	0	0	0	**201**	**827**
1700 - 1715	1	210	35	0	0	1	0	0	2	1	0	0	0	**250**	
1715 - 1730	1	210	26	0	3	0	0	0	0	0	0	0	0	**240**	
1730 - 1745	0	195	23	0	0	1	0	0	0	1	0	0	0	**220**	
1745 - 1800	1	186	21	0	2	1	0	1	0	0	0	0	0	**212**	**922**
1800 - 1815	0	151	22	0	1	0	0	0	0	0	0	0	0	**174**	
1815 - 1830	0	147	11	1	0	0	0	0	1	0	0	0	0	**160**	
1830 - 1845	0	136	14	0	3	1	0	0	1	0	0	0	0	**155**	
1845 - 1900	1	116	14	0	2	1	0	0	1	0	0	0	0	**135**	**624**
1900 - 1915	0	86	18	0	2	1	0	0	0	0	0	0	0	**107**	
1915 - 1930	0	97	18	0	5	0	0	1	2	0	0	0	0	**123**	
1930 - 1945	0	86	19	0	3	0	0	0	0	0	0	0	0	**108**	
1945 - 2000	1	66	8	0	0	0	0	0	0	0	0	0	0	**75**	**413**
2000 - 2015	1	79	19	0	1	1	0	0	0	0	0	0	0	**101**	
2015 - 2030	0	81	9	0	0	0	0	0	0	0	0	0	0	**90**	
2030 - 2045	0	101	7	0	1	0	0	0	0	0	0	0	0	**109**	
2045 - 2100	0	64	3	0	0	0	0	0	2	0	0	0	0	**69**	**369**
2100 - 2115	0	79	6	0	0	1	0	0	0	0	0	0	0	**86**	
2115 - 2130	0	52	4	0	0	0	0	0	0	0	0	0	0	**56**	
2130 - 2145	0	52	2	0	0	0	0	0	1	0	0	0	0	**55**	
2145 - 2200	0	66	0	0	0	0	0	0	0	0	0	0	0	**66**	**263**
2200 - 2215	0	37	5	0	0	0	0	0	0	0	0	0	0	**42**	
2215 - 2230	0	53	2	0	0	0	0	0	0	0	0	0	0	**55**	
2230 - 2245	0	24	3	0	1	0	0	0	0	0	0	0	0	**28**	
2245 - 2300	0	26	2	0	2	0	0	0	0	0	0	0	0	**30**	**155**
2300 - 2315	0	31	1	0	0	0	0	0	0	0	0	0	0	**32**	
2315 - 2330	0	28	1	0	0	0	0	0	1	0	0	0	0	**30**	
2330 - 2345	0	19	1	0	0	0	0	0	0	0	0	0	0	**20**	
2345 - 0000	0	18	1	0	1	0	0	0	0	0	0	0	0	**20**	**102**

Session Total	16	10834	1746	12	203	118	0	36	144	10	3	1	1	**13124**
Session Average	0.17	112.85	18.19	0.13	2.11	1.23	0.00	0.38	1.50	0.10	0.03	0.01	0.01	**136.71**
Session Percentage	0.12	82.55	13.30	0.09	1.55	0.90	0.00	0.27	1.10	0.08	0.02	0.01	0.01	

AM Peak Hour	0615 - 0715	0700 - 0800	0700 - 0800	0715 - 0815	0600 - 0700	0945 - 1045	-	0945 - 1045	0900 - 1000	0630 - 0730	0830 - 0930	-	-	**0700 - 0800**
AM Peak Volume	6	1102	200	3	19	16	0	12	11	2	3	0	0	**1332**

Noon Peak Hour	1045 - 1145	1100 - 1200	1100 - 1200	1415 - 1515	1445 - 1545	1215 - 1315	-	1015 - 1115	1115 - 1215	1130 - 1230	-	1330 - 1430	-	**1100 - 1200**
Noon Peak Volume	1	686	161	3	23	22	0	9	31	2	0	1	0	**917**

PM Peak Hour	1630 - 1730	1700 - 1800	1530 - 1630	1500 - 1600	1515 - 1615	1600 - 1700	-	1545 - 1645	1545 - 1645	1615 - 1715	-	-	1545 - 1645	**1700 - 1800**
PM Peak Volume	3	801	126	3	26	9	0	1	8	2	0	0	1	**922**

Site 19
I-26 James F. Byrnes Expy On/Off-Ramp,
south of US-176 Broad River Rd

Date
Thursday, April 25, 2024

Lat/Long
34.097573°, -81.175664°

Weather
Fair
67°F

Click here for Detailed Weather

0000 - 2400 (Weekday 24h Session) (04-25-2024)
SB WB 15min

	Southbound (Movement 19.1)													15min	60min
TIME	1	2	3	4	5	6	7	8	9	10	11	12	13	Total	Total
0000 - 0015	0	20	2	0	0	0	0	0	0	0	0	0	0	**22**	
0015 - 0030	0	10	2	0	0	0	0	0	0	0	0	0	0	**12**	
0030 - 0045	0	8	0	0	1	0	0	0	0	0	0	0	0	**9**	
0045 - 0100	0	10	0	0	0	0	0	0	0	0	0	0	0	**10**	**53**
0100 - 0115	0	16	1	0	0	0	0	0	0	0	0	0	0	**17**	
0115 - 0130	0	8	1	0	0	0	0	0	2	0	0	0	0	**11**	
0130 - 0145	0	15	2	0	1	0	0	0	0	0	0	0	0	**18**	
0145 - 0200	0	11	0	0	0	0	0	0	0	0	0	0	0	**11**	**57**
0200 - 0215	0	12	0	0	1	0	0	0	1	0	0	0	0	**14**	
0215 - 0230	0	8	2	0	0	0	0	0	0	0	0	0	0	**10**	
0230 - 0245	0	8	1	0	0	0	0	0	1	0	0	0	0	**10**	
0245 - 0300	0	14	1	0	0	0	0	0	0	0	0	0	0	**15**	**49**
0300 - 0315	0	6	2	0	0	0	0	0	0	0	0	0	0	**8**	
0315 - 0330	0	13	2	0	0	0	0	0	0	0	0	0	0	**15**	
0330 - 0345	0	11	2	0	0	0	0	0	1	0	0	0	0	**14**	
0345 - 0400	0	24	2	0	1	0	0	0	0	0	0	0	0	**27**	**64**
0400 - 0415	0	16	4	0	1	0	0	0	0	0	0	0	0	**21**	
0415 - 0430	0	26	2	0	0	0	0	0	0	0	0	0	0	**28**	
0430 - 0445	0	31	3	0	0	0	0	1	0	0	0	0	0	**35**	
0445 - 0500	0	46	5	0	0	0	0	0	2	0	0	0	0	**53**	**137**
0500 - 0515	0	40	9	0	1	0	0	1	0	0	0	0	0	**51**	
0515 - 0530	1	55	10	0	2	1	0	0	0	0	0	0	0	**69**	
0530 - 0545	0	87	13	1	0	2	0	0	1	0	0	0	0	**104**	
0545 - 0600	0	98	14	0	2	0	0	0	0	0	0	0	0	**114**	**338**
0600 - 0615	1	117	26	0	1	3	0	0	1	0	0	0	0	**149**	
0615 - 0630	0	167	44	0	1	5	0	2	1	0	0	0	0	**220**	
0630 - 0645	1	203	48	0	4	2	0	0	0	0	0	0	0	**258**	
0645 - 0700	0	211	55	0	1	6	0	0	1	0	0	0	0	**274**	**901**
0700 - 0715	1	259	55	0	1	7	0	0	3	0	0	0	0	**326**	
0715 - 0730	0	316	44	0	7	1	0	0	1	1	0	0	0	**370**	
0730 - 0745	0	300	52	0	4	0	0	0	3	0	0	0	0	**359**	
0745 - 0800	0	205	37	0	2	0	0	0	2	0	0	0	0	**246**	**1301**
0800 - 0815	0	231	38	1	5	0	0	0	0	1	0	0	1	**277**	
0815 - 0830	0	238	43	0	6	4	1	1	1	1	0	0	0	**295**	
0830 - 0845	0	190	52	0	5	2	0	5	3	2	0	0	0	**259**	
0845 - 0900	1	195	35	0	3	3	0	1	4	1	0	0	0	**243**	**1074**
0900 - 0915	0	169	31	0	2	4	0	2	0	0	0	0	0	**208**	
0915 - 0930	0	163	40	0	7	1	0	0	2	0	0	0	0	**213**	
0930 - 0945	0	164	44	1	5	7	0	0	3	2	0	0	0	**226**	
0945 - 1000	1	169	47	1	3	1	0	0	0	1	0	0	0	**223**	**870**
1000 - 1015	0	106	36	0	3	3	0	0	4	0	0	0	0	**152**	
1015 - 1030	0	136	30	0	2	4	0	1	4	0	0	0	0	**177**	
1030 - 1045	0	145	32	0	3	4	0	2	2	0	0	1	0	**189**	
1045 - 1100	0	141	30	1	6	0	0	0	3	0	0	0	0	**181**	**699**
1100 - 1115	0	106	26	0	2	3	0	0	1	1	0	0	0	**139**	
1115 - 1130	0	100	39	0	3	3	0	0	1	0	0	0	0	**146**	
1130 - 1145	0	131	32	1	2	5	0	0	2	0	0	0	0	**173**	
1145 - 1200	2	134	37	0	6	4	0	0	2	1	0	0	0	**186**	**644**
1200 - 1215	1	157	42	1	3	1	1	2	0	0	0	0	0	**208**	
1215 - 1230	0	129	29	0	3	4	0	1	2	0	0	0	0	**168**	
1230 - 1245	1	133	42	0	3	2	0	0	2	0	0	0	0	**183**	
1245 - 1300	1	136	42	0	5	5	0	2	1	0	0	0	0	**192**	**751**
1300 - 1315	2	127	38	1	6	1	0	2	2	0	0	0	0	**179**	
1315 - 1330	0	154	23	1	1	4	0	1	3	0	0	0	0	**187**	
1330 - 1345	0	145	37	0	4	1	0	1	1	0	0	0	0	**189**	
1345 - 1400	1	140	27	0	7	6	0	1	0	1	0	0	0	**183**	**738**
1400 - 1415	0	138	27	0	8	1	0	0	0	1	0	0	0	**175**	
1415 - 1430	0	147	27	0	5	2	0	2	2	1	0	0	0	**186**	
1430 - 1445	0	179	30	1	8	5	0	1	2	0	0	0	0	**226**	
1445 - 1500	0	125	29	0	5	2	0	1	1	0	0	0	0	**163**	**750**
1500 - 1515	0	158	34	1	1	2	0	1	1	0	0	0	0	**198**	
1515 - 1530	0	156	38	2	5	1	0	1	1	0	0	0	0	**204**	
1530 - 1545	0	143	37	1	6	0	0	0	2	0	0	0	0	**189**	
1545 - 1600	1	169	43	0	4	4	0	0	1	0	0	0	0	**222**	**813**
1600 - 1615	1	160	22	0	5	0	0	1	1	0	0	0	0	**190**	
1615 - 1630	1	179	42	0	2	2	0	1	1	0	0	0	0	**228**	
1630 - 1645	1	181	33	0	4	1	0	0	2	0	0	0	0	**222**	
1645 - 1700	0	177	37	0	3	0	0	1	1	0	0	0	0	**219**	**859**
1700 - 1715	0	212	27	0	4	3	0	1	0	0	0	0	0	**247**	
1715 - 1730	0	160	20	0	4	0	0	0	0	0	0	0	0	**184**	
1730 - 1745	0	173	18	0	3	2	0	1	1	0	0	0	0	**198**	
1745 - 1800	0	167	26	0	4	0	0	0	0	0	0	0	0	**197**	**826**
1800 - 1815	0	156	28	0	3	0	0	1	1	0	0	0	0	**189**	
1815 - 1830	1	159	37	0	2	0	0	1	0	0	0	0	0	**200**	
1830 - 1845	0	147	25	0	1	0	0	1	1	0	0	0	0	**175**	
1845 - 1900	0	123	18	0	1	0	0	0	2	0	0	0	0	**144**	**708**
1900 - 1915	0	0	0	0	0	0	0	0	0	0	0	0	0	**0**	
1915 - 1930	0	0	0	0	0	0	0	0	0	0	0	0	0	**0**	
1930 - 1945	0	0	0	0	0	0	0	0	0	0	0	0	0	**0**	
1945 - 2000	0	0	0	0	0	0	0	0	0	0	0	0	0	**0**	**0**
2000 - 2015	0	0	0	0	0	0	0	0	0	0	0	0	0	**0**	
2015 - 2030	0	0	0	0	0	0	0	0	0	0	0	0	0	**0**	
2030 - 2045	0	0	0	0	0	0	0	0	0	0	0	0	0	**0**	
2045 - 2100	0	0	0	0	0	0	0	0	0	0	0	0	0	**0**	**0**
2100 - 2115	0	0	0	0	0	0	0	0	0	0	0	0	0	**0**	
2115 - 2130	0	0	0	0	0	0	0	0	0	0	0	0	0	**0**	
2130 - 2145	0	0	0	0	0	0	0	0	0	0	0	0	0	**0**	
2145 - 2200	0	0	0	0	0	0	0	0	0	0	0	0	0	**0**	**0**
2200 - 2215	0	0	0	0	0	0	0	0	0	0	0	0	0	**0**	
2215 - 2230	0	0	0	0	0	0	0	0	0	0	0	0	0	**0**	
2230 - 2245	0	0	0	0	0	0	0	0	0	0	0	0	0	**0**	
2245 - 2300	0	0	0	0	0	0	0	0	0	0	0	0	0	**0**	**0**
2300 - 2315	0	0	0	0	0	0	0	0	0	0	0	0	0	**0**	
2315 - 2330	0	0	0	0	0	0	0	0	0	0	0	0	0	**0**	
2330 - 2345	0	0	0	0	0	0	0	0	0	0	0	0	0	**0**	
2345 - 0000	0	0	0	0	0	0	0	0	0	0	0	0	0	**0**	**0**

Session Total	19	9219	1911	14	204	124	2	40	83	14	0	1	1	**11632**
Session Average	0.20	96.03	19.91	0.15	2.13	1.29	0.02	0.42	0.86	0.15	0.00	0.01	0.01	**121.17**
Session Percentage	0.16	79.26	16.43	0.12	1.75	1.07	0.02	0.34	0.71	0.12	0.00	0.01	0.01	

AM Peak Hour	0515 - 0615	0645 - 0745	0645 - 0745	0900 - 1000	0800 - 0900	0615 - 0715	0730 - 0830	0815 - 0915	0930 - 1030	0800 - 0900	-	0945 - 1045	0715 - 0815	**0645 - 0745**
AM Peak Hour Volume	2	1086	206	2	19	20	1	9	11	5	0	1	1	**1329**

Noon Peak Hour	1145 - 1245	1430 - 1530	1200 - 1300	1430 - 1530	1345 - 1445	1100 - 1200	1115 - 1215	1245 - 1345	1000 - 1100	1330 - 1430	-	1000 - 1100	-	**1430 - 1530**
Noon Peak Hour Volume	4	618	155	4	28	15	1	6	13	3	0	1	0	**791**

PM Peak Hour	1545 - 1645	1615 - 1715	1500 - 1600	1500 - 1600	1515 - 1615	1500 - 1600	-	1600 - 1700	1500 - 1600	-	-	-	-	**1615 - 1715**
PM Peak Hour Volume	4	749	152	4	20	7	0	3	5	0	0	0	0	**916**

Bi-Directional Class Count || SB WB Average 15min

Columbia, SC

Marr Traffic DATA COLLECTION
www.marrtraffic.com

Site 19
I-26 James F. Byrnes Expy On/Off-Ramp,
south of US-176 Broad River Rd

Date
Tuesday, April 23, 2024

Lat/Long
34.097573°, -81.175664°

Weather
Fair
58°F

0000 - 2400 (Weekday 24h Session) (All Dates)
SB WB Average 15min

	SB WB Average 15min													15min	60min
Time	1	2	3	4	5	6	7	8	9	10	11	12	13	Total	Total
0000 - 0015	0	13	1	0	0	0	0	0	0	0	0	0	0	**15**	
0015 - 0030	0	6	1	0	0	0	0	0	0	0	0	0	0	**7**	
0030 - 0045	0	9	1	0	0	0	0	0	0	0	0	0	0	**10**	
0045 - 0100	0	6	0	0	0	0	0	0	0	0	0	0	0	**6**	**38**
0100 - 0115	0	8	0	0	0	0	0	0	0	0	0	0	0	**9**	
0115 - 0130	0	6	1	0	0	0	0	0	1	0	0	0	0	**7**	
0130 - 0145	0	10	1	0	0	0	0	0	0	0	0	0	0	**11**	
0145 - 0200	0	5	0	0	0	0	0	0	0	0	0	0	0	**5**	**32**
0200 - 0215	0	7	0	0	0	0	0	0	0	0	0	0	0	**8**	
0215 - 0230	0	6	1	0	0	0	0	0	0	0	0	0	0	**6**	
0230 - 0245	0	6	1	0	0	0	0	0	0	0	0	0	0	**7**	
0245 - 0300	0	8	0	0	0	0	0	0	0	0	0	0	0	**8**	**30**
0300 - 0315	0	8	1	0	0	0	0	0	0	0	0	0	0	**9**	
0315 - 0330	0	11	1	0	0	0	0	0	0	0	0	0	0	**12**	
0330 - 0345	0	8	1	0	0	0	0	0	0	0	0	0	0	**9**	
0345 - 0400	0	12	1	0	1	0	0	0	0	0	0	0	0	**14**	**44**
0400 - 0415	0	14	2	0	0	0	0	0	0	0	0	0	0	**16**	
0415 - 0430	0	16	1	0	0	0	0	0	0	0	0	0	0	**17**	
0430 - 0445	0	22	2	0	0	0	0	0	0	0	0	0	0	**25**	
0445 - 0500	0	27	3	0	0	0	0	0	1	0	0	0	0	**31**	**89**
0500 - 0515	0	29	6	0	0	0	0	0	0	0	0	0	0	**36**	
0515 - 0530	0	38	6	0	1	0	0	0	0	0	0	0	0	**45**	
0530 - 0545	0	56	7	0	0	1	0	0	1	0	0	0	0	**66**	
0545 - 0600	0	63	8	0	1	0	0	0	0	0	0	0	0	**72**	**219**
0600 - 0615	0	84	15	0	2	1	0	0	1	0	0	0	0	**104**	
0615 - 0630	1	108	25	0	2	2	0	1	1	0	0	0	0	**140**	
0630 - 0645	1	138	29	0	2	1	0	0	0	0	0	0	0	**170**	
0645 - 0700	0	143	33	0	2	5	0	0	1	0	0	0	0	**185**	**599**
0700 - 0715	1	179	35	0	1	3	0	0	1	0	0	0	0	**220**	
0715 - 0730	0	215	34	0	3	1	0	0	1	1	0	0	0	**255**	
0730 - 0745	0	187	33	0	3	0	0	1	2	0	0	0	0	**226**	
0745 - 0800	0	146	27	0	2	1	0	0	1	0	0	0	0	**177**	**878**
0800 - 0815	0	147	26	1	3	0	0	0	0	0	0	0	0	**178**	
0815 - 0830	0	138	28	0	3	2	0	0	2	0	0	0	0	**174**	
0830 - 0845	0	140	31	0	3	1	0	2	2	1	0	0	0	**179**	
0845 - 0900	0	125	22	0	1	1	0	0	2	1	0	0	0	**153**	**684**
0900 - 0915	0	116	21	0	2	1	0	1	1	0	0	0	0	**141**	
0915 - 0930	0	119	23	0	3	1	0	0	1	0	0	0	0	**149**	
0930 - 0945	0	120	24	0	2	3	0	0	2	1	0	0	0	**152**	
0945 - 1000	0	114	25	0	3	2	0	2	1	0	0	0	0	**149**	**590**
1000 - 1015	0	83	21	0	2	3	0	0	2	0	0	0	0	**111**	
1015 - 1030	0	89	21	0	1	2	0	1	2	0	0	0	0	**115**	
1030 - 1045	0	101	22	1	2	3	0	2	2	0	0	0	0	**133**	
1045 - 1100	0	101	20	0	3	1	0	0	2	0	0	0	0	**127**	**486**
1100 - 1115	0	88	23	0	2	2	0	1	2	0	0	0	0	**119**	
1115 - 1130	0	87	25	0	3	3	0	0	2	0	0	0	0	**121**	
1130 - 1145	0	103	25	0	2	3	0	1	4	0	0	0	0	**138**	
1145 - 1200	1	107	25	0	4	2	0	0	3	0	0	0	0	**142**	**520**
1200 - 1215	0	105	25	0	3	1	0	1	3	0	0	0	0	**140**	
1215 - 1230	0	86	19	0	2	3	0	1	2	0	0	0	0	**112**	
1230 - 1245	0	102	23	0	3	3	0	1	1	0	0	0	0	**132**	
1245 - 1300	0	102	23	0	3	3	0	1	2	0	0	0	0	**134**	**519**
1300 - 1315	1	89	21	0	3	2	0	1	1	0	0	0	0	**118**	
1315 - 1330	0	101	16	0	2	3	0	1	2	0	0	0	0	**124**	
1330 - 1345	0	92	22	0	2	0	0	0	2	0	0	0	0	**119**	
1345 - 1400	0	88	15	0	3	2	0	0	1	0	0	0	0	**111**	**472**
1400 - 1415	0	91	17	0	4	1	0	0	1	0	0	0	0	**115**	
1415 - 1430	0	96	15	0	2	2	0	1	2	0	0	0	0	**119**	
1430 - 1445	0	112	16	1	5	2	0	0	2	0	0	0	0	**138**	
1445 - 1500	0	99	16	0	4	1	0	0	1	0	0	0	0	**123**	**494**
1500 - 1515	0	100	17	1	1	1	0	0	1	0	0	0	0	**121**	
1515 - 1530	0	106	20	1	4	1	0	0	1	0	0	0	0	**132**	
1530 - 1545	0	107	23	0	4	1	0	0	1	0	0	0	0	**137**	
1545 - 1600	1	113	24	0	4	1	0	0	1	0	0	0	0	**145**	**534**
1600 - 1615	0	113	18	0	4	0	0	0	1	0	0	0	0	**136**	
1615 - 1630	0	115	25	0	1	2	0	0	1	0	0	0	0	**144**	
1630 - 1645	0	117	18	0	2	1	0	0	2	0	0	0	0	**142**	
1645 - 1700	0	114	21	0	2	1	0	0	1	0	0	0	0	**140**	**562**
1700 - 1715	0	141	21	0	1	1	0	0	1	0	0	0	0	**166**	
1715 - 1730	0	123	15	0	2	0	0	0	0	0	0	0	0	**141**	
1730 - 1745	0	123	14	0	1	1	0	0	0	0	0	0	0	**139**	
1745 - 1800	0	118	16	0	2	0	0	0	0	0	0	0	0	**136**	**583**
1800 - 1815	0	102	17	0	1	0	0	0	0	0	0	0	0	**121**	
1815 - 1830	0	102	16	0	1	0	0	0	0	0	0	0	0	**120**	
1830 - 1845	0	94	13	0	1	0	0	0	1	0	0	0	0	**110**	
1845 - 1900	0	80	11	0	1	0	0	0	1	0	0	0	0	**93**	**444**
1900 - 1915	0	62	9	0	1	0	0	0	1	0	0	0	0	**73**	
1915 - 1930	0	57	10	0	2	1	0	0	1	0	0	0	0	**71**	
1930 - 1945	0	56	11	0	1	0	0	0	0	0	0	0	0	**69**	
1945 - 2000	0	52	6	0	1	0	0	0	0	0	0	0	0	**60**	**273**
2000 - 2015	0	51	9	0	1	0	0	0	0	0	0	0	0	**62**	
2015 - 2030	0	53	6	0	1	0	0	0	0	0	0	0	0	**60**	
2030 - 2045	0	60	4	0	0	0	0	0	0	0	0	0	0	**65**	
2045 - 2100	0	41	2	0	0	0	0	0	1	0	0	0	0	**44**	**231**
2100 - 2115	0	40	2	0	0	0	0	0	0	0	0	0	0	**43**	
2115 - 2130	0	33	3	0	0	0	0	0	0	0	0	0	0	**36**	
2130 - 2145	0	39	2	0	0	0	0	0	0	0	0	0	0	**42**	
2145 - 2200	0	40	1	0	0	0	0	0	0	0	0	0	0	**41**	**162**
2200 - 2215	0	24	2	0	0	0	0	0	0	0	0	0	0	**26**	
2215 - 2230	0	31	2	0	0	0	0	0	0	0	0	0	0	**33**	
2230 - 2245	0	18	1	0	0	0	0	0	0	0	0	0	0	**20**	
2245 - 2300	0	19	1	0	1	0	0	0	0	0	0	0	0	**21**	**99**
2300 - 2315	0	20	1	0	0	0	0	0	0	0	0	0	0	**22**	
2315 - 2330	0	17	1	0	0	0	0	0	0	0	0	0	0	**18**	
2330 - 2345	0	13	0	0	0	0	0	0	0	0	0	0	0	**14**	
2345 - 0000	0	11	0	0	0	0	0	0	0	0	0	0	0	**11**	**65**

Session Total	13	7039	1251	9	139	82	1	26	78	8	1	1	1	**8648**
Session Average	0.13	73.32	13.03	0.09	1.45	0.86	0.01	0.27	0.81	0.08	0.01	0.01	0.01	**90.08**
Session Percentage	0.15	81.39	14.47	0.10	1.61	0.95	0.01	0.30	0.90	0.09	0.01	0.01	0.01	

AM Peak Hour	0615 - 0715	0700 - 0800	0645 - 0745	0715 - 0815	0715 - 0815	0615 - 0715	0730 - 0830	0945 - 1045	0930 - 1030	0800 - 0900	0830 - 0930	0945 - 1045	0715 - 0815	**0645 - 0745**
AM Peak Volume	3	727	135	1	11	11	0	5	7	2	1	0	0	**886**

Noon Peak Hour	1115 - 1215	1430 - 1530	1115 - 1215	1430 - 1530	1400 - 1500	1215 - 1315	1115 - 1215	1015 - 1115	1115 - 1215	1100 - 1200	-	1000 - 1100	-	**1115 - 1215**
Noon Peak Volume	1	417	101	2	15	11	0	4	12	1	0	0	0	**541**

PM Peak Hour	1545 - 1645	1700 - 1800	1530 - 1630	1500 - 1600	1515 - 1615	1615 - 1715	-	1600 - 1700	1545 - 1645	1615 - 1715	-	-	1545 - 1645	**1615 - 1715**
PM Peak Volume	2	504	90	2	15	5	0	1	4	1	0	0	0	**591**

Bi-Directional Class Count || Volume Summary 15min

Columbia, SC

Marr Traffic DATA COLLECTION

www.marrtraffic.com

Site 19

I-26 James F. Byrnes Expy On/Off-Ramp,
south of US-176 Broad River Rd

Date

Tuesday, April 23, 2024

Lat/Long

34.097573°, -81.175664°

Weather

Fair
58°F

Click here for Detailed Weather

0000 - 2400 (Weekday 24h Session) (04-23-2024)

Volume Summary 15min

TIME	Volume Summary 15min NB	SB	15min Total	60min Total
0000 - 0015	0	0	**0**	
0015 - 0030	0	0	**0**	
0030 - 0045	0	0	**0**	
0045 - 0100	0	0	**0**	**0**
0100 - 0115	0	0	**0**	
0115 - 0130	0	0	**0**	
0130 - 0145	0	0	**0**	
0145 - 0200	0	0	**0**	**0**
0200 - 0215	0	0	**0**	
0215 - 0230	0	0	**0**	
0230 - 0245	0	0	**0**	
0245 - 0300	0	0	**0**	**0**
0300 - 0315	0	0	**0**	
0315 - 0330	0	0	**0**	
0330 - 0345	0	0	**0**	
0345 - 0400	0	0	**0**	**0**
0400 - 0415	0	0	**0**	
0415 - 0430	0	0	**0**	
0430 - 0445	0	0	**0**	
0445 - 0500	0	0	**0**	**0**
0500 - 0515	0	0	**0**	
0515 - 0530	0	0	**0**	
0530 - 0545	0	0	**0**	
0545 - 0600	0	0	**0**	**0**
0600 - 0615	0	0	**0**	
0615 - 0630	0	0	**0**	
0630 - 0645	0	0	**0**	
0645 - 0700	0	0	**0**	**0**
0700 - 0715	0	0	**0**	
0715 - 0730	0	0	**0**	
0730 - 0745	0	0	**0**	
0745 - 0800	0	0	**0**	**0**
0800 - 0815	0	0	**0**	
0815 - 0830	0	0	**0**	
0830 - 0845	0	0	**0**	
0845 - 0900	0	0	**0**	**0**
0900 - 0915	0	0	**0**	
0915 - 0930	0	0	**0**	
0930 - 0945	0	0	**0**	
0945 - 1000	0	0	**0**	**0**
1000 - 1015	0	0	**0**	
1015 - 1030	0	0	**0**	
1030 - 1045	0	0	**0**	
1045 - 1100	0	0	**0**	**0**
1100 - 1115	0	0	**0**	
1115 - 1130	0	0	**0**	
1130 - 1145	0	0	**0**	
1145 - 1200	0	0	**0**	**0**

Time	Volume Summary 15min NB	SB	15min Total	60min Total
1200 - 1215	0	0	**0**	
1215 - 1230	0	0	**0**	
1230 - 1245	0	0	**0**	
1245 - 1300	0	0	**0**	**0**
1300 - 1315	0	0	**0**	
1315 - 1330	0	0	**0**	
1330 - 1345	0	0	**0**	
1345 - 1400	0	0	**0**	**0**
1400 - 1415	0	0	**0**	
1415 - 1430	0	0	**0**	
1430 - 1445	0	0	**0**	
1445 - 1500	0	0	**0**	**0**
1500 - 1515	0	0	**0**	
1515 - 1530	0	0	**0**	
1530 - 1545	0	0	**0**	
1545 - 1600	0	0	**0**	**0**
1600 - 1615	0	0	**0**	
1615 - 1630	0	0	**0**	
1630 - 1645	0	0	**0**	
1645 - 1700	0	0	**0**	**0**
1700 - 1715	0	0	**0**	
1715 - 1730	0	0	**0**	
1730 - 1745	0	0	**0**	
1745 - 1800	0	0	**0**	**0**
1800 - 1815	0	0	**0**	
1815 - 1830	0	0	**0**	
1830 - 1845	0	0	**0**	
1845 - 1900	0	0	**0**	**0**
1900 - 1915	0	112	**112**	
1915 - 1930	0	91	**91**	
1930 - 1945	0	99	**99**	
1945 - 2000	0	105	**105**	**407**
2000 - 2015	0	86	**86**	
2015 - 2030	0	90	**90**	
2030 - 2045	0	85	**85**	
2045 - 2100	0	63	**63**	**324**
2100 - 2115	0	42	**42**	
2115 - 2130	0	52	**52**	
2130 - 2145	0	71	**71**	
2145 - 2200	0	57	**57**	**222**
2200 - 2215	0	36	**36**	
2215 - 2230	0	44	**44**	
2230 - 2245	0	31	**31**	
2245 - 2300	0	32	**32**	**143**
2300 - 2315	0	33	**33**	
2315 - 2330	0	24	**24**	
2330 - 2345	0	21	**21**	
2345 - 0000	0	14	**14**	**92**

Session Total	0	1188	**1188**
Session Average	0.00	12.38	**12.38**
Session Percentage	0.00	100.00	

Site 19

I-26 James F. Byrnes Expy On/Off-Ramp,
south of US-176 Broad River Rd

Date

Wednesday, April 24, 2024

Lat/Long

34.097573°, -81.175664°

Weather

Fair
66°F

Click here for Detailed Weather

0000 - 2400 (Weekday 24h Session) (04-24-2024)

Volume Summary 15min

TIME	Volume Summary 15min NB	SB	15min Total	60min Total
0000 - 0015	0	22	**22**	
0015 - 0030	0	9	**9**	
0030 - 0045	0	21	**21**	
0045 - 0100	0	8	**8**	**60**
0100 - 0115	0	10	**10**	
0115 - 0130	0	11	**11**	
0130 - 0145	0	14	**14**	
0145 - 0200	0	5	**5**	**40**
0200 - 0215	0	11	**11**	
0215 - 0230	0	9	**9**	
0230 - 0245	0	10	**10**	
0245 - 0300	0	10	**10**	**40**
0300 - 0315	0	18	**18**	
0315 - 0330	0	21	**21**	
0330 - 0345	0	14	**14**	
0345 - 0400	0	14	**14**	**67**
0400 - 0415	0	28	**28**	
0415 - 0430	0	23	**23**	
0430 - 0445	0	39	**39**	
0445 - 0500	0	41	**41**	**131**
0500 - 0515	0	57	**57**	
0515 - 0530	0	67	**67**	
0530 - 0545	0	94	**94**	
0545 - 0600	0	102	**102**	**320**
0600 - 0615	0	162	**162**	
0615 - 0630	0	201	**201**	
0630 - 0645	0	252	**252**	
0645 - 0700	0	282	**282**	**897**
0700 - 0715	0	333	**333**	
0715 - 0730	0	395	**395**	
0730 - 0745	0	318	**318**	
0745 - 0800	0	286	**286**	**1332**
0800 - 0815	0	256	**256**	
0815 - 0830	0	228	**228**	
0830 - 0845	0	278	**278**	
0845 - 0900	0	217	**217**	**979**
0900 - 0915	0	215	**215**	
0915 - 0930	0	233	**233**	
0930 - 0945	0	229	**229**	
0945 - 1000	0	223	**223**	**900**
1000 - 1015	0	182	**182**	
1015 - 1030	0	168	**168**	
1030 - 1045	0	210	**210**	
1045 - 1100	0	199	**199**	**759**
1100 - 1115	0	218	**218**	
1115 - 1130	0	217	**217**	
1130 - 1145	0	241	**241**	
1145 - 1200	0	241	**241**	**917**

Time	Volume Summary 15min NB	SB	15min Total	60min Total
1200 - 1215	0	212	**212**	
1215 - 1230	0	169	**169**	
1230 - 1245	0	214	**214**	
1245 - 1300	0	211	**211**	**806**
1300 - 1315	0	176	**176**	
1315 - 1330	0	186	**186**	
1330 - 1345	0	168	**168**	
1345 - 1400	0	149	**149**	**679**
1400 - 1415	0	170	**170**	
1415 - 1430	0	170	**170**	
1430 - 1445	0	187	**187**	
1445 - 1500	0	205	**205**	**732**
1500 - 1515	0	165	**165**	
1515 - 1530	0	192	**192**	
1530 - 1545	0	221	**221**	
1545 - 1600	0	212	**212**	**790**
1600 - 1615	0	219	**219**	
1615 - 1630	0	204	**204**	
1630 - 1645	0	203	**203**	
1645 - 1700	0	201	**201**	**827**
1700 - 1715	0	250	**250**	
1715 - 1730	0	240	**240**	
1730 - 1745	0	220	**220**	
1745 - 1800	0	212	**212**	**922**
1800 - 1815	0	174	**174**	
1815 - 1830	0	160	**160**	
1830 - 1845	0	155	**155**	
1845 - 1900	0	135	**135**	**624**
1900 - 1915	0	107	**107**	
1915 - 1930	0	123	**123**	
1930 - 1945	0	108	**108**	
1945 - 2000	0	75	**75**	**413**
2000 - 2015	0	101	**101**	
2015 - 2030	0	90	**90**	
2030 - 2045	0	109	**109**	
2045 - 2100	0	69	**69**	**369**
2100 - 2115	0	86	**86**	
2115 - 2130	0	56	**56**	
2130 - 2145	0	55	**55**	
2145 - 2200	0	66	**66**	**263**
2200 - 2215	0	42	**42**	
2215 - 2230	0	55	**55**	
2230 - 2245	0	28	**28**	
2245 - 2300	0	30	**30**	**155**
2300 - 2315	0	32	**32**	
2315 - 2330	0	30	**30**	
2330 - 2345	0	20	**20**	
2345 - 0000	0	20	**20**	**102**

Session Total	0	13124	**13124**
Session Average	0.00	136.71	**136.71**
Session Percentage	0.00	100.00	

Site 19

I-26 James F. Byrnes Expy On/Off-Ramp,
south of US-176 Broad River Rd

Date

Thursday, April 25, 2024

Lat/Long

34.097573°, -81.175664°

Weather

Fair
67°F

Click here for Detailed Weather

0000 - 2400 (Weekday 24h Session) (04-25-2024)

Volume Summary 15min

	Volume Summary 15min		15min	60min
TIME	NB	SB	Total	Total
0000 - 0015	0	22	**22**	
0015 - 0030	0	12	**12**	
0030 - 0045	0	9	**9**	
0045 - 0100	0	10	**10**	**53**
0100 - 0115	0	17	**17**	
0115 - 0130	0	11	**11**	
0130 - 0145	0	18	**18**	
0145 - 0200	0	11	**11**	**57**
0200 - 0215	0	14	**14**	
0215 - 0230	0	10	**10**	
0230 - 0245	0	10	**10**	
0245 - 0300	0	15	**15**	**49**
0300 - 0315	0	8	**8**	
0315 - 0330	0	15	**15**	
0330 - 0345	0	14	**14**	
0345 - 0400	0	27	**27**	**64**
0400 - 0415	0	21	**21**	
0415 - 0430	0	28	**28**	
0430 - 0445	0	35	**35**	
0445 - 0500	0	53	**53**	**137**
0500 - 0515	0	51	**51**	
0515 - 0530	0	69	**69**	
0530 - 0545	0	104	**104**	
0545 - 0600	0	114	**114**	**338**
0600 - 0615	0	149	**149**	
0615 - 0630	0	220	**220**	
0630 - 0645	0	258	**258**	
0645 - 0700	0	274	**274**	**901**
0700 - 0715	0	326	**326**	
0715 - 0730	0	370	**370**	
0730 - 0745	0	359	**359**	
0745 - 0800	0	246	**246**	**1301**
0800 - 0815	0	277	**277**	
0815 - 0830	0	295	**295**	
0830 - 0845	0	259	**259**	
0845 - 0900	0	243	**243**	**1074**
0900 - 0915	0	208	**208**	
0915 - 0930	0	213	**213**	
0930 - 0945	0	226	**226**	
0945 - 1000	0	223	**223**	**870**
1000 - 1015	0	152	**152**	
1015 - 1030	0	177	**177**	
1030 - 1045	0	189	**189**	
1045 - 1100	0	181	**181**	**699**
1100 - 1115	0	139	**139**	
1115 - 1130	0	146	**146**	
1130 - 1145	0	173	**173**	
1145 - 1200	0	186	**186**	**644**

	Volume Summary 15min		15min	60min
Time	NB	SB	Total	Total
1200 - 1215	0	208	**208**	
1215 - 1230	0	168	**168**	
1230 - 1245	0	183	**183**	
1245 - 1300	0	192	**192**	**751**
1300 - 1315	0	179	**179**	
1315 - 1330	0	187	**187**	
1330 - 1345	0	189	**189**	
1345 - 1400	0	183	**183**	**738**
1400 - 1415	0	175	**175**	
1415 - 1430	0	186	**186**	
1430 - 1445	0	226	**226**	
1445 - 1500	0	163	**163**	**750**
1500 - 1515	0	198	**198**	
1515 - 1530	0	204	**204**	
1530 - 1545	0	189	**189**	
1545 - 1600	0	222	**222**	**813**
1600 - 1615	0	190	**190**	
1615 - 1630	0	228	**228**	
1630 - 1645	0	222	**222**	
1645 - 1700	0	219	**219**	**859**
1700 - 1715	0	247	**247**	
1715 - 1730	0	184	**184**	
1730 - 1745	0	198	**198**	
1745 - 1800	0	197	**197**	**826**
1800 - 1815	0	189	**189**	
1815 - 1830	0	200	**200**	
1830 - 1845	0	175	**175**	
1845 - 1900	0	144	**144**	**708**
1900 - 1915	0	0	**0**	
1915 - 1930	0	0	**0**	
1930 - 1945	0	0	**0**	
1945 - 2000	0	0	**0**	**0**
2000 - 2015	0	0	**0**	
2015 - 2030	0	0	**0**	
2030 - 2045	0	0	**0**	
2045 - 2100	0	0	**0**	**0**
2100 - 2115	0	0	**0**	
2115 - 2130	0	0	**0**	
2130 - 2145	0	0	**0**	
2145 - 2200	0	0	**0**	**0**
2200 - 2215	0	0	**0**	
2215 - 2230	0	0	**0**	
2230 - 2245	0	0	**0**	
2245 - 2300	0	0	**0**	**0**
2300 - 2315	0	0	**0**	
2315 - 2330	0	0	**0**	
2330 - 2345	0	0	**0**	
2345 - 0000	0	0	**0**	**0**

Session Total	0	11632	**11632**
Session Average	0.00	121.17	**121.17**
Session Percentage	0.00	100.00	

Bi-Directional Class Count || SB WB 60min

Columbia, SC

Marr Traffic DATA COLLECTION

www.marrtraffic.com

Site 19
I-26 James F. Byrnes Expy On/Off-Ramp,
south of US-176 Broad River Rd

Date
Tuesday, April 23, 2024

Lat/Long
34.097573°, -81.175664°

Weather
Fair
58°F

Click here for Detailed Weather

0000 - 2400 (Weekday 24h Session) (04-23-2024)
SB WB 60min

	Southbound (Movement 19.1)													
TIME	1	2	3	4	5	6	7	8	9	10	11	12	13	**Total**
0000 - 0100	0	0	0	0	0	0	0	0	0	0	0	0	0	**0**
0100 - 0200	0	0	0	0	0	0	0	0	0	0	0	0	0	**0**
0200 - 0300	0	0	0	0	0	0	0	0	0	0	0	0	0	**0**
0300 - 0400	0	0	0	0	0	0	0	0	0	0	0	0	0	**0**
0400 - 0500	0	0	0	0	0	0	0	0	0	0	0	0	0	**0**
0500 - 0600	0	0	0	0	0	0	0	0	0	0	0	0	0	**0**
0600 - 0700	0	0	0	0	0	0	0	0	0	0	0	0	0	**0**
0700 - 0800	0	0	0	0	0	0	0	0	0	0	0	0	0	**0**
0800 - 0900	0	0	0	0	0	0	0	0	0	0	0	0	0	**0**
0900 - 1000	0	0	0	0	0	0	0	0	0	0	0	0	0	**0**
1000 - 1100	0	0	0	0	0	0	0	0	0	0	0	0	0	**0**
1100 - 1200	0	0	0	0	0	0	0	0	0	0	0	0	0	**0**
1200 - 1300	0	0	0	0	0	0	0	0	0	0	0	0	0	**0**
1300 - 1400	0	0	0	0	0	0	0	0	0	0	0	0	0	**0**
1400 - 1500	0	0	0	0	0	0	0	0	0	0	0	0	0	**0**
1500 - 1600	0	0	0	0	0	0	0	0	0	0	0	0	0	**0**
1600 - 1700	0	0	0	0	0	0	0	0	0	0	0	0	0	**0**
1700 - 1800	0	0	0	0	0	0	0	0	0	0	0	0	0	**0**
1800 - 1900	0	0	0	0	0	0	0	0	0	0	0	0	0	**0**
1900 - 2000	1	348	44	0	6	4	0	1	3	0	0	0	0	**407**
2000 - 2100	1	287	27	0	3	1	0	1	4	0	0	0	0	**324**
2100 - 2200	1	208	12	0	1	0	0	0	0	0	0	0	0	**222**
2200 - 2300	0	133	9	0	1	0	0	0	0	0	0	0	0	**143**
2300 - 2400	0	88	4	0	0	0	0	0	0	0	0	0	0	**92**
Session Total	3	1064	96	0	11	5	0	2	7	0	0	0	0	**1188**
Session Average	0.13	44.33	4.00	0.00	0.46	0.21	0.00	0.08	0.29	0.00	0.00	0.00	0.00	**49.50**
Session Percentage	0.25	89.56	8.08	0.00	0.93	0.42	0.00	0.17	0.59	0.00	0.00	0.00	0.00	
AM Peak Hour	-	-	-	-	-	-	-	-	-	-	-	-	-	**-**
AM Peak Volume	0	0	0	0	0	0	0	0	0	0	0	0	0	**0**
Noon Peak Hour	-	-	-	-	-	-	-	-	-	-	-	-	-	**-**
Noon Peak Volume	0	0	0	0	0	0	0	0	0	0	0	0	0	**0**
PM Peak Hour	1900 - 2000	1900 - 2000	1900 - 2000	-	1900 - 2000	1900 - 2000	-	1900 - 2000	1900 - 2000	-	-	-	-	**1900 - 2000**
PM Peak Volume	1	348	44	0	6	4	0	1	3	0	0	0	0	**407**

Site 19

I-26 James F. Byrnes Expy On/Off-Ramp,
south of US-176 Broad River Rd

Date

Wednesday, April 24, 2024

Lat/Long

34.097573°, -81.175664°

Weather

Fair
66°F

Click here for Detailed Weather

0000 - 2400 (Weekday 24h Session) (04-24-2024)

SB WB 60min

	Southbound (Movement 19.1)													
TIME	1	2	3	4	5	6	7	8	9	10	11	12	13	**Total**
0000 - 0100	0	54	3	0	1	0	0	0	2	0	0	0	0	**60**
0100 - 0200	0	38	1	0	0	0	0	0	1	0	0	0	0	**40**
0200 - 0300	0	37	2	0	0	0	0	0	1	0	0	0	0	**40**
0300 - 0400	0	62	2	0	2	0	0	0	1	0	0	0	0	**67**
0400 - 0500	0	118	9	0	2	0	0	0	2	0	0	0	0	**131**
0500 - 0600	0	278	37	0	1	2	0	0	2	0	0	0	0	**320**
0600 - 0700	5	721	133	0	19	11	0	1	6	1	0	0	0	**897**
0700 - 0800	1	1102	200	1	12	5	0	4	6	1	0	0	0	**1332**
0800 - 0900	0	792	154	3	12	6	0	0	9	1	2	0	0	**979**
0900 - 1000	0	741	119	0	12	9	0	7	11	0	1	0	0	**900**
1000 - 1100	0	595	124	2	9	12	0	7	9	1	0	0	0	**759**
1100 - 1200	1	686	161	0	20	15	0	6	27	1	0	0	0	**917**
1200 - 1300	0	630	114	0	17	19	0	5	20	1	0	0	0	**806**
1300 - 1400	0	545	98	0	14	10	0	1	11	0	0	0	0	**679**
1400 - 1500	1	606	81	2	19	7	0	2	12	1	0	1	0	**732**
1500 - 1600	1	650	102	3	23	5	0	0	6	0	0	0	0	**790**
1600 - 1700	1	683	111	0	13	9	0	1	7	1	0	0	1	**827**
1700 - 1800	3	801	105	0	5	3	0	1	2	2	0	0	0	**922**
1800 - 1900	1	550	61	1	6	2	0	0	3	0	0	0	0	**624**
1900 - 2000	1	335	63	0	10	1	0	1	2	0	0	0	0	**413**
2000 - 2100	1	325	38	0	2	1	0	0	2	0	0	0	0	**369**
2100 - 2200	0	249	12	0	0	1	0	0	1	0	0	0	0	**263**
2200 - 2300	0	140	12	0	3	0	0	0	0	0	0	0	0	**155**
2300 - 2400	0	96	4	0	1	0	0	0	1	0	0	0	0	**102**

Session Total	16	10834	1746	12	203	118	0	36	144	10	3	1	1	**13124**
Session Average	0.67	451.42	72.75	0.50	8.46	4.92	0.00	1.50	6.00	0.42	0.13	0.04	0.04	**546.83**
Session Percentage	0.12	82.55	13.30	0.09	1.55	0.90	0.00	0.27	1.10	0.08	0.02	0.01	0.01	

AM Peak Hour	0600 - 0700	0700 - 0800	0700 - 0800	0800 - 0900	0600 - 0700	0600 - 0700	-	0900 - 1000	0900 - 1000	0600 - 0700	0800 - 0900	-	-	**0700 - 0800**
AM Peak Volume	5	1102	200	3	19	11	0	7	11	1	2	0	0	**1332**

Noon Peak Hour	1100 - 1200	1100 - 1200	1100 - 1200	1000 - 1100	1100 - 1200	1200 - 1300	-	1000 - 1100	1100 - 1200	1000 - 1100	-	1400 - 1500	-	**1100 - 1200**
Noon Peak Volume	1	686	161	2	20	19	0	7	27	1	0	1	0	**917**

PM Peak Hour	1700 - 1800	1700 - 1800	1600 - 1700	1500 - 1600	1500 - 1600	1600 - 1700	-	1600 - 1700	1600 - 1700	1700 - 1800	-	-	1600 - 1700	**1700 - 1800**
PM Peak Volume	3	801	111	3	23	9	0	1	7	2	0	0	1	**922**

Site 19
I-26 James F. Byrnes Expy On/Off-Ramp,
south of US-176 Broad River Rd

Date
Thursday, April 25, 2024

Lat/Long
34.097573°, -81.175664°

Weather
Fair
67°F

Click here for Detailed Weather

0000 - 2400 (Weekday 24h Session) (04-25-2024)
SB WB 60min

	Southbound (Movement 19.1)													
TIME	1	2	3	4	5	6	7	8	9	10	11	12	13	**Total**
0000 - 0100	0	48	4	0	1	0	0	0	0	0	0	0	0	**53**
0100 - 0200	0	50	4	0	1	0	0	0	2	0	0	0	0	**57**
0200 - 0300	0	42	4	0	1	0	0	0	2	0	0	0	0	**49**
0300 - 0400	0	54	8	0	1	0	0	0	1	0	0	0	0	**64**
0400 - 0500	0	119	14	0	1	0	0	1	2	0	0	0	0	**137**
0500 - 0600	1	280	46	1	5	3	0	1	1	0	0	0	0	**338**
0600 - 0700	2	698	173	0	7	16	0	2	3	0	0	0	0	**901**
0700 - 0800	1	1080	188	0	14	8	0	0	9	1	0	0	0	**1301**
0800 - 0900	1	854	168	1	19	9	1	7	8	5	0	0	1	**1074**
0900 - 1000	1	665	162	2	17	13	0	2	5	3	0	0	0	**870**
1000 - 1100	0	528	128	1	14	11	0	3	13	0	0	1	0	**699**
1100 - 1200	2	471	134	1	13	15	0	0	6	2	0	0	0	**644**
1200 - 1300	3	555	155	1	14	12	1	5	5	0	0	0	0	**751**
1300 - 1400	3	566	125	2	18	12	0	5	6	1	0	0	0	**738**
1400 - 1500	0	589	113	1	26	10	0	4	5	2	0	0	0	**750**
1500 - 1600	1	626	152	4	16	7	0	2	5	0	0	0	0	**813**
1600 - 1700	3	697	134	0	14	3	0	3	5	0	0	0	0	**859**
1700 - 1800	0	712	91	0	15	5	0	2	1	0	0	0	0	**826**
1800 - 1900	1	585	108	0	7	0	0	3	4	0	0	0	0	**708**
1900 - 2000	0	0	0	0	0	0	0	0	0	0	0	0	0	**0**
2000 - 2100	0	0	0	0	0	0	0	0	0	0	0	0	0	**0**
2100 - 2200	0	0	0	0	0	0	0	0	0	0	0	0	0	**0**
2200 - 2300	0	0	0	0	0	0	0	0	0	0	0	0	0	**0**
2300 - 2400	0	0	0	0	0	0	0	0	0	0	0	0	0	**0**

Session Total	19	9219	1911	14	204	124	2	40	83	14	0	1	1	**11632**
Session Average	0.79	384.13	79.63	0.58	8.50	5.17	0.08	1.67	3.46	0.58	0.00	0.04	0.04	**484.67**
Session Percentage	0.16	79.26	16.43	0.12	1.75	1.07	0.02	0.34	0.71	0.12	0.00	0.01	0.01	

AM Peak Hour	0600 - 0700	0700 - 0800	0700 - 0800	0900 - 1000	0800 - 0900	0600 - 0700	0800 - 0900	0800 - 0900	0700 - 0800	0800 - 0900	-	-	0800 - 0900	**0700 - 0800**
AM Peak Hour Volume	2	1080	188	2	19	16	1	7	9	5	0	0	1	**1301**

Noon Peak Hour	1200 - 1300	1400 - 1500	1200 - 1300	1300 - 1400	1400 - 1500	1100 - 1200	1200 - 1300	1200 - 1300	1000 - 1100	1100 - 1200	-	1000 - 1100	-	**1200 - 1300**
Noon Peak Hour Volume	3	589	155	2	26	15	1	5	13	2	0	1	0	**751**

PM Peak Hour	1600 - 1700	1700 - 1800	1500 - 1600	1500 - 1600	1500 - 1600	1500 - 1600	-	1600 - 1700	1500 - 1600	-	-	-	-	**1600 - 1700**
PM Peak Hour Volume	3	712	152	4	16	7	0	3	5	0	0	0	0	**859**

Bi-Directional Class Count || Volume Summary 60min

Columbia, SC

Marr Traffic DATA COLLECTION

www.marrtraffic.com

Site 19

I-26 James F. Byrnes Expy On/Off-Ramp,
south of US-176 Broad River Rd

Date

Tuesday, April 23, 2024

Lat/Long

34.097573°, -81.175664°

Weather

Fair
58°F

Click here for Detailed Weather

0000 - 2400 (Weekday 24h Session) (04-23-2024)

Volume Summary 60min

	Volume Summary 60min		
TIME	NB	SB	**Total**
0000 - 0100	0	0	**0**
0100 - 0200	0	0	**0**
0200 - 0300	0	0	**0**
0300 - 0400	0	0	**0**
0400 - 0500	0	0	**0**
0500 - 0600	0	0	**0**
0600 - 0700	0	0	**0**
0700 - 0800	0	0	**0**
0800 - 0900	0	0	**0**
0900 - 1000	0	0	**0**
1000 - 1100	0	0	**0**
1100 - 1200	0	0	**0**

	Volume Summary 60min		
Time	NB	SB	**Total**
1200 - 1300	0	0	**0**
1300 - 1400	0	0	**0**
1400 - 1500	0	0	**0**
1500 - 1600	0	0	**0**
1600 - 1700	0	0	**0**
1700 - 1800	0	0	**0**
1800 - 1900	0	0	**0**
1900 - 2000	0	407	**407**
2000 - 2100	0	324	**324**
2100 - 2200	0	222	**222**
2200 - 2300	0	143	**143**
2300 - 2400	0	92	**92**

Session Total	0	1188	**1188**
Session Average	0.00	49.50	**49.50**
Session Percentage	0.00	100.00	

Site 19

I-26 James F. Byrnes Expy On/Off-Ramp,
south of US-176 Broad River Rd

Date

Wednesday, April 24, 2024

Lat/Long

34.097573°, -81.175664°

Weather

Fair
66°F

Click here for Detailed Weather

0000 - 2400 (Weekday 24h Session) (04-24-2024)

Volume Summary 60min

	Volume Summary 60min		
TIME	NB	SB	**Total**
0000 - 0100	0	60	**60**
0100 - 0200	0	40	**40**
0200 - 0300	0	40	**40**
0300 - 0400	0	67	**67**
0400 - 0500	0	131	**131**
0500 - 0600	0	320	**320**
0600 - 0700	0	897	**897**
0700 - 0800	0	1332	**1332**
0800 - 0900	0	979	**979**
0900 - 1000	0	900	**900**
1000 - 1100	0	759	**759**
1100 - 1200	0	917	**917**

Session Total	0	13124	**13124**
Session Average	0.00	546.83	**546.83**
Session Percentage	0.00	100.00	

	Volume Summary 60min		
Time	NB	SB	**Total**
1200 - 1300	0	806	**806**
1300 - 1400	0	679	**679**
1400 - 1500	0	732	**732**
1500 - 1600	0	790	**790**
1600 - 1700	0	827	**827**
1700 - 1800	0	922	**922**
1800 - 1900	0	624	**624**
1900 - 2000	0	413	**413**
2000 - 2100	0	369	**369**
2100 - 2200	0	263	**263**
2200 - 2300	0	155	**155**
2300 - 2400	0	102	**102**

Site 19

I-26 James F. Byrnes Expy On/Off-Ramp,
south of US-176 Broad River Rd

Date

Thursday, April 25, 2024

Lat/Long

34.097573°, -81.175664°

Weather

Fair
67°F

Click here for Detailed Weather

0000 - 2400 (Weekday 24h Session) (04-25-2024)

Volume Summary 60min

	Volume Summary 60min		
TIME	NB	SB	**Total**
0000 - 0100	0	53	**53**
0100 - 0200	0	57	**57**
0200 - 0300	0	49	**49**
0300 - 0400	0	64	**64**
0400 - 0500	0	137	**137**
0500 - 0600	0	338	**338**
0600 - 0700	0	901	**901**
0700 - 0800	0	1301	**1301**
0800 - 0900	0	1074	**1074**
0900 - 1000	0	870	**870**
1000 - 1100	0	699	**699**
1100 - 1200	0	644	**644**

	Volume Summary 60min		
Time	NB	SB	**Total**
1200 - 1300	0	751	**751**
1300 - 1400	0	738	**738**
1400 - 1500	0	750	**750**
1500 - 1600	0	813	**813**
1600 - 1700	0	859	**859**
1700 - 1800	0	826	**826**
1800 - 1900	0	708	**708**
1900 - 2000	0	0	**0**
2000 - 2100	0	0	**0**
2100 - 2200	0	0	**0**
2200 - 2300	0	0	**0**
2300 - 2400	0	0	**0**

Session Total	0	11632	**11632**
Session Average	0.00	484.67	**484.67**
Session Percentage	0.00	100.00	

Bi-Directional Class Count || Graphical Analysis SB WB

Columbia, SC

Marr Traffic DATA COLLECTION

www.marrtraffic.com

Site 19

I-26 James F. Byrnes Expy On/Off-Ramp,
south of US-176 Broad River Rd

Lat/Long

34.097573°, -81.175664°

0000 - 2400 (Weekday 24h Session)

Graphical Analysis SB WB

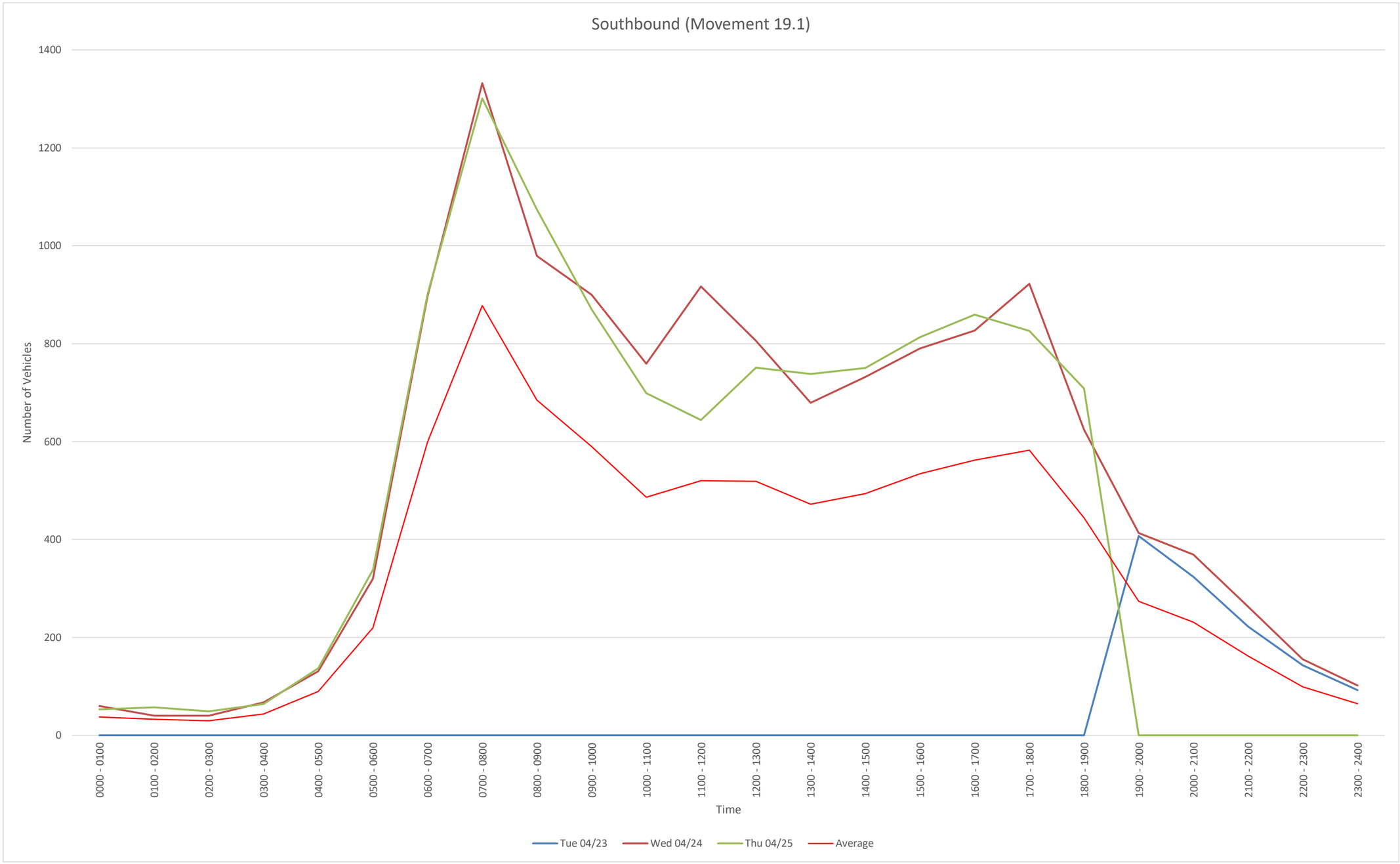

Time	Tue 04/23	Wed 04/24	Thu 04/25				
0000 - 0100	0	60	53				
0100 - 0200	0	40	57				
0200 - 0300	0	40	49				
0300 - 0400	0	67	64				
0400 - 0500	0	131	137				
0500 - 0600	0	320	338				
0600 - 0700	0	897	901				
0700 - 0800	0	1332	1301				
0800 - 0900	0	979	1074				
0900 - 1000	0	900	870				
1000 - 1100	0	759	699				
1100 - 1200	0	917	644				
1200 - 1300	0	806	751				
1300 - 1400	0	679	738				
1400 - 1500	0	732	750				
1500 - 1600	0	790	813				
1600 - 1700	0	827	859				
1700 - 1800	0	922	826				
1800 - 1900	0	624	708				
1900 - 2000	407	413	0				
2000 - 2100	324	369	0				
2100 - 2200	222	263	0				
2200 - 2300	143	155	0				
2300 - 2400	92	102	0				
Daily Total	1188	13124	11632				

NB
File Name:
Start Date: 4/23/2024
Start Time: 0
Site Code: 19
Station ID: 1
Location 1: I-26 James F. Byrnes Expy On/Off-Ramp, south of US-176 Broad River Rd
Location 2:

Date	Time	1	2	3	4	5	6	7	8	9	10	11	12	13
4/23/2024	12:00 AM	0	0	0	0	0	0	0	0	0	0	0	0	0
4/23/2024	12:15 AM	0	0	0	0	0	0	0	0	0	0	0	0	0
4/23/2024	12:30 AM	0	0	0	0	0	0	0	0	0	0	0	0	0
4/23/2024	12:45 AM	0	0	0	0	0	0	0	0	0	0	0	0	0
4/23/2024	1:00 AM	0	0	0	0	0	0	0	0	0	0	0	0	0
4/23/2024	1:15 AM	0	0	0	0	0	0	0	0	0	0	0	0	0
4/23/2024	1:30 AM	0	0	0	0	0	0	0	0	0	0	0	0	0
4/23/2024	1:45 AM	0	0	0	0	0	0	0	0	0	0	0	0	0
4/23/2024	2:00 AM	0	0	0	0	0	0	0	0	0	0	0	0	0
4/23/2024	2:15 AM	0	0	0	0	0	0	0	0	0	0	0	0	0
4/23/2024	2:30 AM	0	0	0	0	0	0	0	0	0	0	0	0	0
4/23/2024	2:45 AM	0	0	0	0	0	0	0	0	0	0	0	0	0
4/23/2024	3:00 AM	0	0	0	0	0	0	0	0	0	0	0	0	0
4/23/2024	3:15 AM	0	0	0	0	0	0	0	0	0	0	0	0	0
4/23/2024	3:30 AM	0	0	0	0	0	0	0	0	0	0	0	0	0
4/23/2024	3:45 AM	0	0	0	0	0	0	0	0	0	0	0	0	0
4/23/2024	4:00 AM	0	0	0	0	0	0	0	0	0	0	0	0	0
4/23/2024	4:15 AM	0	0	0	0	0	0	0	0	0	0	0	0	0
4/23/2024	4:30 AM	0	0	0	0	0	0	0	0	0	0	0	0	0
4/23/2024	4:45 AM	0	0	0	0	0	0	0	0	0	0	0	0	0
4/23/2024	5:00 AM	0	0	0	0	0	0	0	0	0	0	0	0	0
4/23/2024	5:15 AM	0	0	0	0	0	0	0	0	0	0	0	0	0
4/23/2024	5:30 AM	0	0	0	0	0	0	0	0	0	0	0	0	0
4/23/2024	5:45 AM	0	0	0	0	0	0	0	0	0	0	0	0	0
4/23/2024	6:00 AM	0	0	0	0	0	0	0	0	0	0	0	0	0
4/23/2024	6:15 AM	0	0	0	0	0	0	0	0	0	0	0	0	0
4/23/2024	6:30 AM	0	0	0	0	0	0	0	0	0	0	0	0	0
4/23/2024	6:45 AM	0	0	0	0	0	0	0	0	0	0	0	0	0
4/23/2024	7:00 AM	0	0	0	0	0	0	0	0	0	0	0	0	0
4/23/2024	7:15 AM	0	0	0	0	0	0	0	0	0	0	0	0	0
4/23/2024	7:30 AM	0	0	0	0	0	0	0	0	0	0	0	0	0
4/23/2024	7:45 AM	0	0	0	0	0	0	0	0	0	0	0	0	0
4/23/2024	8:00 AM	0	0	0	0	0	0	0	0	0	0	0	0	0
4/23/2024	8:15 AM	0	0	0	0	0	0	0	0	0	0	0	0	0
4/23/2024	8:30 AM	0	0	0	0	0	0	0	0	0	0	0	0	0
4/23/2024	8:45 AM	0	0	0	0	0	0	0	0	0	0	0	0	0
4/23/2024	9:00 AM	0	0	0	0	0	0	0	0	0	0	0	0	0
4/23/2024	9:15 AM	0	0	0	0	0	0	0	0	0	0	0	0	0
4/23/2024	9:30 AM	0	0	0	0	0	0	0	0	0	0	0	0	0
4/23/2024	9:45 AM	0	0	0	0	0	0	0	0	0	0	0	0	0
4/23/2024	10:00 AM	0	0	0	0	0	0	0	0	0	0	0	0	0
4/23/2024	10:15 AM	0	0	0	0	0	0	0	0	0	0	0	0	0
4/23/2024	10:30 AM	0	0	0	0	0	0	0	0	0	0	0	0	0
4/23/2024	10:45 AM	0	0	0	0	0	0	0	0	0	0	0	0	0
4/23/2024	11:00 AM	0	0	0	0	0	0	0	0	0	0	0	0	0
4/23/2024	11:15 AM	0	0	0	0	0	0	0	0	0	0	0	0	0
4/23/2024	11:30 AM	0	0	0	0	0	0	0	0	0	0	0	0	0
4/23/2024	11:45 AM	0	0	0	0	0	0	0	0	0	0	0	0	0
4/23/2024	12:00 PM	0	0	0	0	0	0	0	0	0	0	0	0	0
4/23/2024	12:15 PM	0	0	0	0	0	0	0	0	0	0	0	0	0
4/23/2024	12:30 PM	0	0	0	0	0	0	0	0	0	0	0	0	0
4/23/2024	12:45 PM	0	0	0	0	0	0	0	0	0	0	0	0	0
4/23/2024	1:00 PM	0	0	0	0	0	0	0	0	0	0	0	0	0
4/23/2024	1:15 PM	0	0	0	0	0	0	0	0	0	0	0	0	0
4/23/2024	1:30 PM	0	0	0	0	0	0	0	0	0	0	0	0	0
4/23/2024	1:45 PM	0	0	0	0	0	0	0	0	0	0	0	0	0
4/23/2024	2:00 PM	0	0	0	0	0	0	0	0	0	0	0	0	0
4/23/2024	2:15 PM	0	0	0	0	0	0	0	0	0	0	0	0	0
4/23/2024	2:30 PM	0	0	0	0	0	0	0	0	0	0	0	0	0
4/23/2024	2:45 PM	0	0	0	0	0	0	0	0	0	0	0	0	0
4/23/2024	3:00 PM	0	0	0	0	0	0	0	0	0	0	0	0	0
4/23/2024	3:15 PM	0	0	0	0	0	0	0	0	0	0	0	0	0
4/23/2024	3:30 PM	0	0	0	0	0	0	0	0	0	0	0	0	0
4/23/2024	3:45 PM	0	0	0	0	0	0	0	0	0	0	0	0	0
4/23/2024	4:00 PM	0	0	0	0	0	0	0	0	0	0	0	0	0
4/23/2024	4:15 PM	0	0	0	0	0	0	0	0	0	0	0	0	0
4/23/2024	4:30 PM	0	0	0	0	0	0	0	0	0	0	0	0	0
4/23/2024	4:45 PM	0	0	0	0	0	0	0	0	0	0	0	0	0
4/23/2024	5:00 PM	0	0	0	0	0	0	0	0	0	0	0	0	0
4/23/2024	5:15 PM	0	0	0	0	0	0	0	0	0	0	0	0	0
4/23/2024	5:30 PM	0	0	0	0	0	0	0	0	0	0	0	0	0
4/23/2024	5:45 PM	0	0	0	0	0	0	0	0	0	0	0	0	0
4/23/2024	6:00 PM	0	0	0	0	0	0	0	0	0	0	0	0	0
4/23/2024	6:15 PM	0	0	0	0	0	0	0	0	0	0	0	0	0
4/23/2024	6:30 PM	0	0	0	0	0	0	0	0	0	0	0	0	0
4/23/2024	6:45 PM	0	0	0	0	0	0	0	0	0	0	0	0	0
4/23/2024	7:00 PM	0	0	0	0	0	0	0	0	0	0	0	0	0
4/23/2024	7:15 PM	0	0	0	0	0	0	0	0	0	0	0	0	0
4/23/2024	7:30 PM	0	0	0	0	0	0	0	0	0	0	0	0	0
4/23/2024	7:45 PM	0	0	0	0	0	0	0	0	0	0	0	0	0
4/23/2024	8:00 PM	0	0	0	0	0	0	0	0	0	0	0	0	0
4/23/2024	8:15 PM	0	0	0	0	0	0	0	0	0	0	0	0	0
4/23/2024	8:30 PM	0	0	0	0	0	0	0	0	0	0	0	0	0
4/23/2024	8:45 PM	0	0	0	0	0	0	0	0	0	0	0	0	0
4/23/2024	9:00 PM	0	0	0	0	0	0	0	0	0	0	0	0	0
4/23/2024	9:15 PM	0	0	0	0	0	0	0	0	0	0	0	0	0
4/23/2024	9:30 PM	0	0	0	0	0	0	0	0	0	0	0	0	0
4/23/2024	9:45 PM	0	0	0	0	0	0	0	0	0	0	0	0	0
4/23/2024	10:00 PM	0	0	0	0	0	0	0	0	0	0	0	0	0
4/23/2024	10:15 PM	0	0	0	0	0	0	0	0	0	0	0	0	0
4/23/2024	10:30 PM	0	0	0	0	0	0	0	0	0	0	0	0	0
4/23/2024	10:45 PM	0	0	0	0	0	0	0	0	0	0	0	0	0
4/23/2024	11:00 PM	0	0	0	0	0	0	0	0	0	0	0	0	0
4/23/2024	11:15 PM	0	0	0	0	0	0	0	0	0	0	0	0	0
4/23/2024	11:30 PM	0	0	0	0	0	0	0	0	0	0	0	0	0
4/23/2024	11:45 PM	0	0	0	0	0	0	0	0	0	0	0	0	0

4/24/2024	12:00 AM	0	0	0	0	0	0	0	0	0	0	0	0	0
4/24/2024	12:15 AM	0	0	0	0	0	0	0	0	0	0	0	0	0
4/24/2024	12:30 AM	0	0	0	0	0	0	0	0	0	0	0	0	0
4/24/2024	12:45 AM	0	0	0	0	0	0	0	0	0	0	0	0	0
4/24/2024	1:00 AM	0	0	0	0	0	0	0	0	0	0	0	0	0
4/24/2024	1:15 AM	0	0	0	0	0	0	0	0	0	0	0	0	0
4/24/2024	1:30 AM	0	0	0	0	0	0	0	0	0	0	0	0	0
4/24/2024	1:45 AM	0	0	0	0	0	0	0	0	0	0	0	0	0
4/24/2024	2:00 AM	0	0	0	0	0	0	0	0	0	0	0	0	0
4/24/2024	2:15 AM	0	0	0	0	0	0	0	0	0	0	0	0	0
4/24/2024	2:30 AM	0	0	0	0	0	0	0	0	0	0	0	0	0
4/24/2024	2:45 AM	0	0	0	0	0	0	0	0	0	0	0	0	0
4/24/2024	3:00 AM	0	0	0	0	0	0	0	0	0	0	0	0	0
4/24/2024	3:15 AM	0	0	0	0	0	0	0	0	0	0	0	0	0
4/24/2024	3:30 AM	0	0	0	0	0	0	0	0	0	0	0	0	0
4/24/2024	3:45 AM	0	0	0	0	0	0	0	0	0	0	0	0	0
4/24/2024	4:00 AM	0	0	0	0	0	0	0	0	0	0	0	0	0
4/24/2024	4:15 AM	0	0	0	0	0	0	0	0	0	0	0	0	0
4/24/2024	4:30 AM	0	0	0	0	0	0	0	0	0	0	0	0	0
4/24/2024	4:45 AM	0	0	0	0	0	0	0	0	0	0	0	0	0
4/24/2024	5:00 AM	0	0	0	0	0	0	0	0	0	0	0	0	0
4/24/2024	5:15 AM	0	0	0	0	0	0	0	0	0	0	0	0	0
4/24/2024	5:30 AM	0	0	0	0	0	0	0	0	0	0	0	0	0
4/24/2024	5:45 AM	0	0	0	0	0	0	0	0	0	0	0	0	0
4/24/2024	6:00 AM	0	0	0	0	0	0	0	0	0	0	0	0	0
4/24/2024	6:15 AM	0	0	0	0	0	0	0	0	0	0	0	0	0
4/24/2024	6:30 AM	0	0	0	0	0	0	0	0	0	0	0	0	0
4/24/2024	6:45 AM	0	0	0	0	0	0	0	0	0	0	0	0	0
4/24/2024	7:00 AM	0	0	0	0	0	0	0	0	0	0	0	0	0
4/24/2024	7:15 AM	0	0	0	0	0	0	0	0	0	0	0	0	0
4/24/2024	7:30 AM	0	0	0	0	0	0	0	0	0	0	0	0	0
4/24/2024	7:45 AM	0	0	0	0	0	0	0	0	0	0	0	0	0
4/24/2024	8:00 AM	0	0	0	0	0	0	0	0	0	0	0	0	0
4/24/2024	8:15 AM	0	0	0	0	0	0	0	0	0	0	0	0	0
4/24/2024	8:30 AM	0	0	0	0	0	0	0	0	0	0	0	0	0
4/24/2024	8:45 AM	0	0	0	0	0	0	0	0	0	0	0	0	0
4/24/2024	9:00 AM	0	0	0	0	0	0	0	0	0	0	0	0	0
4/24/2024	9:15 AM	0	0	0	0	0	0	0	0	0	0	0	0	0
4/24/2024	9:30 AM	0	0	0	0	0	0	0	0	0	0	0	0	0
4/24/2024	9:45 AM	0	0	0	0	0	0	0	0	0	0	0	0	0
4/24/2024	10:00 AM	0	0	0	0	0	0	0	0	0	0	0	0	0
4/24/2024	10:15 AM	0	0	0	0	0	0	0	0	0	0	0	0	0
4/24/2024	10:30 AM	0	0	0	0	0	0	0	0	0	0	0	0	0
4/24/2024	10:45 AM	0	0	0	0	0	0	0	0	0	0	0	0	0
4/24/2024	11:00 AM	0	0	0	0	0	0	0	0	0	0	0	0	0
4/24/2024	11:15 AM	0	0	0	0	0	0	0	0	0	0	0	0	0
4/24/2024	11:30 AM	0	0	0	0	0	0	0	0	0	0	0	0	0
4/24/2024	11:45 AM	0	0	0	0	0	0	0	0	0	0	0	0	0
4/24/2024	12:00 PM	0	0	0	0	0	0	0	0	0	0	0	0	0
4/24/2024	12:15 PM	0	0	0	0	0	0	0	0	0	0	0	0	0
4/24/2024	12:30 PM	0	0	0	0	0	0	0	0	0	0	0	0	0
4/24/2024	12:45 PM	0	0	0	0	0	0	0	0	0	0	0	0	0
4/24/2024	1:00 PM	0	0	0	0	0	0	0	0	0	0	0	0	0
4/24/2024	1:15 PM	0	0	0	0	0	0	0	0	0	0	0	0	0
4/24/2024	1:30 PM	0	0	0	0	0	0	0	0	0	0	0	0	0
4/24/2024	1:45 PM	0	0	0	0	0	0	0	0	0	0	0	0	0
4/24/2024	2:00 PM	0	0	0	0	0	0	0	0	0	0	0	0	0
4/24/2024	2:15 PM	0	0	0	0	0	0	0	0	0	0	0	0	0
4/24/2024	2:30 PM	0	0	0	0	0	0	0	0	0	0	0	0	0
4/24/2024	2:45 PM	0	0	0	0	0	0	0	0	0	0	0	0	0
4/24/2024	3:00 PM	0	0	0	0	0	0	0	0	0	0	0	0	0
4/24/2024	3:15 PM	0	0	0	0	0	0	0	0	0	0	0	0	0
4/24/2024	3:30 PM	0	0	0	0	0	0	0	0	0	0	0	0	0
4/24/2024	3:45 PM	0	0	0	0	0	0	0	0	0	0	0	0	0
4/24/2024	4:00 PM	0	0	0	0	0	0	0	0	0	0	0	0	0
4/24/2024	4:15 PM	0	0	0	0	0	0	0	0	0	0	0	0	0
4/24/2024	4:30 PM	0	0	0	0	0	0	0	0	0	0	0	0	0
4/24/2024	4:45 PM	0	0	0	0	0	0	0	0	0	0	0	0	0
4/24/2024	5:00 PM	0	0	0	0	0	0	0	0	0	0	0	0	0
4/24/2024	5:15 PM	0	0	0	0	0	0	0	0	0	0	0	0	0
4/24/2024	5:30 PM	0	0	0	0	0	0	0	0	0	0	0	0	0
4/24/2024	5:45 PM	0	0	0	0	0	0	0	0	0	0	0	0	0
4/24/2024	6:00 PM	0	0	0	0	0	0	0	0	0	0	0	0	0
4/24/2024	6:15 PM	0	0	0	0	0	0	0	0	0	0	0	0	0
4/24/2024	6:30 PM	0	0	0	0	0	0	0	0	0	0	0	0	0
4/24/2024	6:45 PM	0	0	0	0	0	0	0	0	0	0	0	0	0
4/24/2024	7:00 PM	0	0	0	0	0	0	0	0	0	0	0	0	0
4/24/2024	7:15 PM	0	0	0	0	0	0	0	0	0	0	0	0	0
4/24/2024	7:30 PM	0	0	0	0	0	0	0	0	0	0	0	0	0
4/24/2024	7:45 PM	0	0	0	0	0	0	0	0	0	0	0	0	0
4/24/2024	8:00 PM	0	0	0	0	0	0	0	0	0	0	0	0	0
4/24/2024	8:15 PM	0	0	0	0	0	0	0	0	0	0	0	0	0
4/24/2024	8:30 PM	0	0	0	0	0	0	0	0	0	0	0	0	0
4/24/2024	8:45 PM	0	0	0	0	0	0	0	0	0	0	0	0	0
4/24/2024	9:00 PM	0	0	0	0	0	0	0	0	0	0	0	0	0
4/24/2024	9:15 PM	0	0	0	0	0	0	0	0	0	0	0	0	0
4/24/2024	9:30 PM	0	0	0	0	0	0	0	0	0	0	0	0	0
4/24/2024	9:45 PM	0	0	0	0	0	0	0	0	0	0	0	0	0
4/24/2024	10:00 PM	0	0	0	0	0	0	0	0	0	0	0	0	0
4/24/2024	10:15 PM	0	0	0	0	0	0	0	0	0	0	0	0	0
4/24/2024	10:30 PM	0	0	0	0	0	0	0	0	0	0	0	0	0
4/24/2024	10:45 PM	0	0	0	0	0	0	0	0	0	0	0	0	0
4/24/2024	11:00 PM	0	0	0	0	0	0	0	0	0	0	0	0	0
4/24/2024	11:15 PM	0	0	0	0	0	0	0	0	0	0	0	0	0
4/24/2024	11:30 PM	0	0	0	0	0	0	0	0	0	0	0	0	0
4/24/2024	11:45 PM	0	0	0	0	0	0	0	0	0	0	0	0	0

4/25/2024	12:00 AM	0	0	0	0	0	0	0	0	0	0	0	0	0
4/25/2024	12:15 AM	0	0	0	0	0	0	0	0	0	0	0	0	0
4/25/2024	12:30 AM	0	0	0	0	0	0	0	0	0	0	0	0	0
4/25/2024	12:45 AM	0	0	0	0	0	0	0	0	0	0	0	0	0
4/25/2024	1:00 AM	0	0	0	0	0	0	0	0	0	0	0	0	0
4/25/2024	1:15 AM	0	0	0	0	0	0	0	0	0	0	0	0	0
4/25/2024	1:30 AM	0	0	0	0	0	0	0	0	0	0	0	0	0
4/25/2024	1:45 AM	0	0	0	0	0	0	0	0	0	0	0	0	0
4/25/2024	2:00 AM	0	0	0	0	0	0	0	0	0	0	0	0	0
4/25/2024	2:15 AM	0	0	0	0	0	0	0	0	0	0	0	0	0
4/25/2024	2:30 AM	0	0	0	0	0	0	0	0	0	0	0	0	0
4/25/2024	2:45 AM	0	0	0	0	0	0	0	0	0	0	0	0	0
4/25/2024	3:00 AM	0	0	0	0	0	0	0	0	0	0	0	0	0
4/25/2024	3:15 AM	0	0	0	0	0	0	0	0	0	0	0	0	0
4/25/2024	3:30 AM	0	0	0	0	0	0	0	0	0	0	0	0	0
4/25/2024	3:45 AM	0	0	0	0	0	0	0	0	0	0	0	0	0
4/25/2024	4:00 AM	0	0	0	0	0	0	0	0	0	0	0	0	0
4/25/2024	4:15 AM	0	0	0	0	0	0	0	0	0	0	0	0	0
4/25/2024	4:30 AM	0	0	0	0	0	0	0	0	0	0	0	0	0
4/25/2024	4:45 AM	0	0	0	0	0	0	0	0	0	0	0	0	0
4/25/2024	5:00 AM	0	0	0	0	0	0	0	0	0	0	0	0	0
4/25/2024	5:15 AM	0	0	0	0	0	0	0	0	0	0	0	0	0
4/25/2024	5:30 AM	0	0	0	0	0	0	0	0	0	0	0	0	0
4/25/2024	5:45 AM	0	0	0	0	0	0	0	0	0	0	0	0	0
4/25/2024	6:00 AM	0	0	0	0	0	0	0	0	0	0	0	0	0
4/25/2024	6:15 AM	0	0	0	0	0	0	0	0	0	0	0	0	0
4/25/2024	6:30 AM	0	0	0	0	0	0	0	0	0	0	0	0	0
4/25/2024	6:45 AM	0	0	0	0	0	0	0	0	0	0	0	0	0
4/25/2024	7:00 AM	0	0	0	0	0	0	0	0	0	0	0	0	0
4/25/2024	7:15 AM	0	0	0	0	0	0	0	0	0	0	0	0	0
4/25/2024	7:30 AM	0	0	0	0	0	0	0	0	0	0	0	0	0
4/25/2024	7:45 AM	0	0	0	0	0	0	0	0	0	0	0	0	0
4/25/2024	8:00 AM	0	0	0	0	0	0	0	0	0	0	0	0	0
4/25/2024	8:15 AM	0	0	0	0	0	0	0	0	0	0	0	0	0
4/25/2024	8:30 AM	0	0	0	0	0	0	0	0	0	0	0	0	0
4/25/2024	8:45 AM	0	0	0	0	0	0	0	0	0	0	0	0	0
4/25/2024	9:00 AM	0	0	0	0	0	0	0	0	0	0	0	0	0
4/25/2024	9:15 AM	0	0	0	0	0	0	0	0	0	0	0	0	0
4/25/2024	9:30 AM	0	0	0	0	0	0	0	0	0	0	0	0	0
4/25/2024	9:45 AM	0	0	0	0	0	0	0	0	0	0	0	0	0
4/25/2024	10:00 AM	0	0	0	0	0	0	0	0	0	0	0	0	0
4/25/2024	10:15 AM	0	0	0	0	0	0	0	0	0	0	0	0	0
4/25/2024	10:30 AM	0	0	0	0	0	0	0	0	0	0	0	0	0
4/25/2024	10:45 AM	0	0	0	0	0	0	0	0	0	0	0	0	0
4/25/2024	11:00 AM	0	0	0	0	0	0	0	0	0	0	0	0	0
4/25/2024	11:15 AM	0	0	0	0	0	0	0	0	0	0	0	0	0
4/25/2024	11:30 AM	0	0	0	0	0	0	0	0	0	0	0	0	0
4/25/2024	11:45 AM	0	0	0	0	0	0	0	0	0	0	0	0	0
4/25/2024	12:00 PM	0	0	0	0	0	0	0	0	0	0	0	0	0
4/25/2024	12:15 PM	0	0	0	0	0	0	0	0	0	0	0	0	0
4/25/2024	12:30 PM	0	0	0	0	0	0	0	0	0	0	0	0	0
4/25/2024	12:45 PM	0	0	0	0	0	0	0	0	0	0	0	0	0
4/25/2024	1:00 PM	0	0	0	0	0	0	0	0	0	0	0	0	0
4/25/2024	1:15 PM	0	0	0	0	0	0	0	0	0	0	0	0	0
4/25/2024	1:30 PM	0	0	0	0	0	0	0	0	0	0	0	0	0
4/25/2024	1:45 PM	0	0	0	0	0	0	0	0	0	0	0	0	0
4/25/2024	2:00 PM	0	0	0	0	0	0	0	0	0	0	0	0	0
4/25/2024	2:15 PM	0	0	0	0	0	0	0	0	0	0	0	0	0
4/25/2024	2:30 PM	0	0	0	0	0	0	0	0	0	0	0	0	0
4/25/2024	2:45 PM	0	0	0	0	0	0	0	0	0	0	0	0	0
4/25/2024	3:00 PM	0	0	0	0	0	0	0	0	0	0	0	0	0
4/25/2024	3:15 PM	0	0	0	0	0	0	0	0	0	0	0	0	0
4/25/2024	3:30 PM	0	0	0	0	0	0	0	0	0	0	0	0	0
4/25/2024	3:45 PM	0	0	0	0	0	0	0	0	0	0	0	0	0
4/25/2024	4:00 PM	0	0	0	0	0	0	0	0	0	0	0	0	0
4/25/2024	4:15 PM	0	0	0	0	0	0	0	0	0	0	0	0	0
4/25/2024	4:30 PM	0	0	0	0	0	0	0	0	0	0	0	0	0
4/25/2024	4:45 PM	0	0	0	0	0	0	0	0	0	0	0	0	0
4/25/2024	5:00 PM	0	0	0	0	0	0	0	0	0	0	0	0	0
4/25/2024	5:15 PM	0	0	0	0	0	0	0	0	0	0	0	0	0
4/25/2024	5:30 PM	0	0	0	0	0	0	0	0	0	0	0	0	0
4/25/2024	5:45 PM	0	0	0	0	0	0	0	0	0	0	0	0	0
4/25/2024	6:00 PM	0	0	0	0	0	0	0	0	0	0	0	0	0
4/25/2024	6:15 PM	0	0	0	0	0	0	0	0	0	0	0	0	0
4/25/2024	6:30 PM	0	0	0	0	0	0	0	0	0	0	0	0	0
4/25/2024	6:45 PM	0	0	0	0	0	0	0	0	0	0	0	0	0
4/25/2024	7:00 PM	0	0	0	0	0	0	0	0	0	0	0	0	0
4/25/2024	7:15 PM	0	0	0	0	0	0	0	0	0	0	0	0	0
4/25/2024	7:30 PM	0	0	0	0	0	0	0	0	0	0	0	0	0
4/25/2024	7:45 PM	0	0	0	0	0	0	0	0	0	0	0	0	0
4/25/2024	8:00 PM	0	0	0	0	0	0	0	0	0	0	0	0	0
4/25/2024	8:15 PM	0	0	0	0	0	0	0	0	0	0	0	0	0
4/25/2024	8:30 PM	0	0	0	0	0	0	0	0	0	0	0	0	0
4/25/2024	8:45 PM	0	0	0	0	0	0	0	0	0	0	0	0	0
4/25/2024	9:00 PM	0	0	0	0	0	0	0	0	0	0	0	0	0
4/25/2024	9:15 PM	0	0	0	0	0	0	0	0	0	0	0	0	0
4/25/2024	9:30 PM	0	0	0	0	0	0	0	0	0	0	0	0	0
4/25/2024	9:45 PM	0	0	0	0	0	0	0	0	0	0	0	0	0
4/25/2024	10:00 PM	0	0	0	0	0	0	0	0	0	0	0	0	0
4/25/2024	10:15 PM	0	0	0	0	0	0	0	0	0	0	0	0	0
4/25/2024	10:30 PM	0	0	0	0	0	0	0	0	0	0	0	0	0
4/25/2024	10:45 PM	0	0	0	0	0	0	0	0	0	0	0	0	0
4/25/2024	11:00 PM	0	0	0	0	0	0	0	0	0	0	0	0	0
4/25/2024	11:15 PM	0	0	0	0	0	0	0	0	0	0	0	0	0
4/25/2024	11:30 PM	0	0	0	0	0	0	0	0	0	0	0	0	0
4/25/2024	11:45 PM	0	0	0	0	0	0	0	0	0	0	0	0	0

SB
File Name:
Start Date: 4/23/2024
Start Time: 0
Site Code: 19
Station ID: 1
Location 1: I-26 James F. Byrnes Expy On/Off-Ramp, south of US-176 Broad River Rd
Location 2:

Date	Time	1	2	3	4	5	6	7	8	9	10	11	12	13
4/23/2024	12:00 AM	0	0	0	0	0	0	0	0	0	0	0	0	0
4/23/2024	12:15 AM	0	0	0	0	0	0	0	0	0	0	0	0	0
4/23/2024	12:30 AM	0	0	0	0	0	0	0	0	0	0	0	0	0
4/23/2024	12:45 AM	0	0	0	0	0	0	0	0	0	0	0	0	0
4/23/2024	1:00 AM	0	0	0	0	0	0	0	0	0	0	0	0	0
4/23/2024	1:15 AM	0	0	0	0	0	0	0	0	0	0	0	0	0
4/23/2024	1:30 AM	0	0	0	0	0	0	0	0	0	0	0	0	0
4/23/2024	1:45 AM	0	0	0	0	0	0	0	0	0	0	0	0	0
4/23/2024	2:00 AM	0	0	0	0	0	0	0	0	0	0	0	0	0
4/23/2024	2:15 AM	0	0	0	0	0	0	0	0	0	0	0	0	0
4/23/2024	2:30 AM	0	0	0	0	0	0	0	0	0	0	0	0	0
4/23/2024	2:45 AM	0	0	0	0	0	0	0	0	0	0	0	0	0
4/23/2024	3:00 AM	0	0	0	0	0	0	0	0	0	0	0	0	0
4/23/2024	3:15 AM	0	0	0	0	0	0	0	0	0	0	0	0	0
4/23/2024	3:30 AM	0	0	0	0	0	0	0	0	0	0	0	0	0
4/23/2024	3:45 AM	0	0	0	0	0	0	0	0	0	0	0	0	0
4/23/2024	4:00 AM	0	0	0	0	0	0	0	0	0	0	0	0	0
4/23/2024	4:15 AM	0	0	0	0	0	0	0	0	0	0	0	0	0
4/23/2024	4:30 AM	0	0	0	0	0	0	0	0	0	0	0	0	0
4/23/2024	4:45 AM	0	0	0	0	0	0	0	0	0	0	0	0	0
4/23/2024	5:00 AM	0	0	0	0	0	0	0	0	0	0	0	0	0
4/23/2024	5:15 AM	0	0	0	0	0	0	0	0	0	0	0	0	0
4/23/2024	5:30 AM	0	0	0	0	0	0	0	0	0	0	0	0	0
4/23/2024	5:45 AM	0	0	0	0	0	0	0	0	0	0	0	0	0
4/23/2024	6:00 AM	0	0	0	0	0	0	0	0	0	0	0	0	0
4/23/2024	6:15 AM	0	0	0	0	0	0	0	0	0	0	0	0	0
4/23/2024	6:30 AM	0	0	0	0	0	0	0	0	0	0	0	0	0
4/23/2024	6:45 AM	0	0	0	0	0	0	0	0	0	0	0	0	0
4/23/2024	7:00 AM	0	0	0	0	0	0	0	0	0	0	0	0	0
4/23/2024	7:15 AM	0	0	0	0	0	0	0	0	0	0	0	0	0
4/23/2024	7:30 AM	0	0	0	0	0	0	0	0	0	0	0	0	0
4/23/2024	7:45 AM	0	0	0	0	0	0	0	0	0	0	0	0	0
4/23/2024	8:00 AM	0	0	0	0	0	0	0	0	0	0	0	0	0
4/23/2024	8:15 AM	0	0	0	0	0	0	0	0	0	0	0	0	0
4/23/2024	8:30 AM	0	0	0	0	0	0	0	0	0	0	0	0	0
4/23/2024	8:45 AM	0	0	0	0	0	0	0	0	0	0	0	0	0
4/23/2024	9:00 AM	0	0	0	0	0	0	0	0	0	0	0	0	0
4/23/2024	9:15 AM	0	0	0	0	0	0	0	0	0	0	0	0	0
4/23/2024	9:30 AM	0	0	0	0	0	0	0	0	0	0	0	0	0
4/23/2024	9:45 AM	0	0	0	0	0	0	0	0	0	0	0	0	0
4/23/2024	10:00 AM	0	0	0	0	0	0	0	0	0	0	0	0	0
4/23/2024	10:15 AM	0	0	0	0	0	0	0	0	0	0	0	0	0
4/23/2024	10:30 AM	0	0	0	0	0	0	0	0	0	0	0	0	0
4/23/2024	10:45 AM	0	0	0	0	0	0	0	0	0	0	0	0	0
4/23/2024	11:00 AM	0	0	0	0	0	0	0	0	0	0	0	0	0
4/23/2024	11:15 AM	0	0	0	0	0	0	0	0	0	0	0	0	0
4/23/2024	11:30 AM	0	0	0	0	0	0	0	0	0	0	0	0	0
4/23/2024	11:45 AM	0	0	0	0	0	0	0	0	0	0	0	0	0
4/23/2024	12:00 PM	0	0	0	0	0	0	0	0	0	0	0	0	0
4/23/2024	12:15 PM	0	0	0	0	0	0	0	0	0	0	0	0	0
4/23/2024	12:30 PM	0	0	0	0	0	0	0	0	0	0	0	0	0
4/23/2024	12:45 PM	0	0	0	0	0	0	0	0	0	0	0	0	0
4/23/2024	1:00 PM	0	0	0	0	0	0	0	0	0	0	0	0	0
4/23/2024	1:15 PM	0	0	0	0	0	0	0	0	0	0	0	0	0
4/23/2024	1:30 PM	0	0	0	0	0	0	0	0	0	0	0	0	0
4/23/2024	1:45 PM	0	0	0	0	0	0	0	0	0	0	0	0	0
4/23/2024	2:00 PM	0	0	0	0	0	0	0	0	0	0	0	0	0
4/23/2024	2:15 PM	0	0	0	0	0	0	0	0	0	0	0	0	0
4/23/2024	2:30 PM	0	0	0	0	0	0	0	0	0	0	0	0	0
4/23/2024	2:45 PM	0	0	0	0	0	0	0	0	0	0	0	0	0
4/23/2024	3:00 PM	0	0	0	0	0	0	0	0	0	0	0	0	0
4/23/2024	3:15 PM	0	0	0	0	0	0	0	0	0	0	0	0	0
4/23/2024	3:30 PM	0	0	0	0	0	0	0	0	0	0	0	0	0
4/23/2024	3:45 PM	0	0	0	0	0	0	0	0	0	0	0	0	0
4/23/2024	4:00 PM	0	0	0	0	0	0	0	0	0	0	0	0	0
4/23/2024	4:15 PM	0	0	0	0	0	0	0	0	0	0	0	0	0
4/23/2024	4:30 PM	0	0	0	0	0	0	0	0	0	0	0	0	0
4/23/2024	4:45 PM	0	0	0	0	0	0	0	0	0	0	0	0	0
4/23/2024	5:00 PM	0	0	0	0	0	0	0	0	0	0	0	0	0
4/23/2024	5:15 PM	0	0	0	0	0	0	0	0	0	0	0	0	0
4/23/2024	5:30 PM	0	0	0	0	0	0	0	0	0	0	0	0	0
4/23/2024	5:45 PM	0	0	0	0	0	0	0	0	0	0	0	0	0
4/23/2024	6:00 PM	0	0	0	0	0	0	0	0	0	0	0	0	0
4/23/2024	6:15 PM	0	0	0	0	0	0	0	0	0	0	0	0	0
4/23/2024	6:30 PM	0	0	0	0	0	0	0	0	0	0	0	0	0
4/23/2024	6:45 PM	0	0	0	0	0	0	0	0	0	0	0	0	0
4/23/2024	7:00 PM	0	100	8	0	2	0	0	0	2	0	0	0	0
4/23/2024	7:15 PM	0	75	11	0	2	2	0	0	1	0	0	0	0
4/23/2024	7:30 PM	1	82	15	0	0	1	0	0	0	0	0	0	0
4/23/2024	7:45 PM	0	91	10	0	2	1	0	1	0	0	0	0	0
4/23/2024	8:00 PM	0	74	9	0	1	0	0	1	1	0	0	0	0
4/23/2024	8:15 PM	0	77	10	0	2	0	0	0	1	0	0	0	0
4/23/2024	8:30 PM	1	78	5	0	0	0	0	0	1	0	0	0	0
4/23/2024	8:45 PM	0	58	3	0	0	1	0	0	1	0	0	0	0
4/23/2024	9:00 PM	0	41	1	0	0	0	0	0	0	0	0	0	0
4/23/2024	9:15 PM	1	47	4	0	0	0	0	0	0	0	0	0	0
4/23/2024	9:30 PM	0	66	4	0	1	0	0	0	0	0	0	0	0
4/23/2024	9:45 PM	0	54	3	0	0	0	0	0	0	0	0	0	0
4/23/2024	10:00 PM	0	34	2	0	0	0	0	0	0	0	0	0	0
4/23/2024	10:15 PM	0	39	4	0	1	0	0	0	0	0	0	0	0
4/23/2024	10:30 PM	0	30	1	0	0	0	0	0	0	0	0	0	0
4/23/2024	10:45 PM	0	30	2	0	0	0	0	0	0	0	0	0	0
4/23/2024	11:00 PM	0	30	3	0	0	0	0	0	0	0	0	0	0
4/23/2024	11:15 PM	0	23	1	0	0	0	0	0	0	0	0	0	0
4/23/2024	11:30 PM	0	21	0	0	0	0	0	0	0	0	0	0	0
4/23/2024	11:45 PM	0	14	0	0	0	0	0	0	0	0	0	0	0

4/24/2024	12:00 AM	0	20	1	0	0	0	0	0	1	0	0	0	0
4/24/2024	12:15 AM	0	7	0	0	1	0	0	0	1	0	0	0	0
4/24/2024	12:30 AM	0	19	2	0	0	0	0	0	0	0	0	0	0
4/24/2024	12:45 AM	0	8	0	0	0	0	0	0	0	0	0	0	0
4/24/2024	1:00 AM	0	9	0	0	0	0	0	0	1	0	0	0	0
4/24/2024	1:15 AM	0	10	1	0	0	0	0	0	0	0	0	0	0
4/24/2024	1:30 AM	0	14	0	0	0	0	0	0	0	0	0	0	0
4/24/2024	1:45 AM	0	5	0	0	0	0	0	0	0	0	0	0	0
4/24/2024	2:00 AM	0	10	1	0	0	0	0	0	0	0	0	0	0
4/24/2024	2:15 AM	0	9	0	0	0	0	0	0	0	0	0	0	0
4/24/2024	2:30 AM	0	9	1	0	0	0	0	0	0	0	0	0	0
4/24/2024	2:45 AM	0	9	0	0	0	0	0	0	1	0	0	0	0
4/24/2024	3:00 AM	0	17	1	0	0	0	0	0	0	0	0	0	0
4/24/2024	3:15 AM	0	19	1	0	0	0	0	0	1	0	0	0	0
4/24/2024	3:30 AM	0	13	0	0	1	0	0	0	0	0	0	0	0
4/24/2024	3:45 AM	0	13	0	0	1	0	0	0	0	0	0	0	0
4/24/2024	4:00 AM	0	25	2	0	0	0	0	0	1	0	0	0	0
4/24/2024	4:15 AM	0	23	0	0	0	0	0	0	0	0	0	0	0
4/24/2024	4:30 AM	0	34	3	0	1	0	0	0	1	0	0	0	0
4/24/2024	4:45 AM	0	36	4	0	1	0	0	0	0	0	0	0	0
4/24/2024	5:00 AM	0	48	9	0	0	0	0	0	0	0	0	0	0
4/24/2024	5:15 AM	0	58	8	0	0	0	0	0	1	0	0	0	0
4/24/2024	5:30 AM	0	81	9	0	1	2	0	0	1	0	0	0	0
4/24/2024	5:45 AM	0	91	11	0	0	0	0	0	0	0	0	0	0
4/24/2024	6:00 AM	0	134	20	0	5	1	0	0	2	0	0	0	0
4/24/2024	6:15 AM	3	158	32	0	6	0	0	0	2	0	0	0	0
4/24/2024	6:30 AM	1	210	38	0	3	0	0	0	0	0	0	0	0
4/24/2024	6:45 AM	1	219	43	0	5	10	0	1	2	1	0	0	0
4/24/2024	7:00 AM	1	279	50	0	1	2	0	0	0	0	0	0	0
4/24/2024	7:15 AM	0	329	57	1	3	1	0	1	2	1	0	0	0
4/24/2024	7:30 AM	0	262	48	0	4	0	0	2	2	0	0	0	0
4/24/2024	7:45 AM	0	232	45	0	4	2	0	1	2	0	0	0	0
4/24/2024	8:00 AM	0	209	40	2	4	0	0	0	1	0	0	0	0
4/24/2024	8:15 AM	0	175	41	0	4	3	0	0	5	0	0	0	0
4/24/2024	8:30 AM	0	229	41	0	3	2	0	0	2	0	1	0	0
4/24/2024	8:45 AM	0	179	32	1	1	1	0	0	1	1	1	0	0
4/24/2024	9:00 AM	0	178	31	0	3	0	0	1	2	0	0	0	0
4/24/2024	9:15 AM	0	194	30	0	3	2	0	1	2	0	1	0	0
4/24/2024	9:30 AM	0	195	29	0	1	1	0	0	3	0	0	0	0
4/24/2024	9:45 AM	0	174	29	0	5	6	0	5	4	0	0	0	0
4/24/2024	10:00 AM	0	142	27	0	4	5	0	1	2	1	0	0	0
4/24/2024	10:15 AM	0	132	32	0	0	1	0	2	1	0	0	0	0
4/24/2024	10:30 AM	0	159	35	2	3	4	0	4	3	0	0	0	0
4/24/2024	10:45 AM	0	162	30	0	2	2	0	0	3	0	0	0	0
4/24/2024	11:00 AM	0	159	42	0	4	4	0	3	6	0	0	0	0
4/24/2024	11:15 AM	0	162	37	0	6	6	0	0	6	0	0	0	0
4/24/2024	11:30 AM	1	178	44	0	3	3	0	2	9	1	0	0	0
4/24/2024	11:45 AM	0	187	38	0	7	2	0	1	6	0	0	0	0
4/24/2024	12:00 PM	0	158	34	0	6	2	0	2	10	0	0	0	0
4/24/2024	12:15 PM	0	128	27	0	2	6	0	1	4	1	0	0	0
4/24/2024	12:30 PM	0	173	26	0	5	6	0	2	2	0	0	0	0
4/24/2024	12:45 PM	0	171	27	0	4	5	0	0	4	0	0	0	0
4/24/2024	1:00 PM	0	139	26	0	4	5	0	0	2	0	0	0	0
4/24/2024	1:15 PM	0	150	25	0	4	4	0	1	2	0	0	0	0
4/24/2024	1:30 PM	0	132	28	0	3	0	0	0	5	0	0	0	0
4/24/2024	1:45 PM	0	124	19	0	3	1	0	0	2	0	0	0	0
4/24/2024	2:00 PM	0	134	25	0	5	3	0	1	2	0	0	0	0
4/24/2024	2:15 PM	0	142	17	1	1	3	0	1	4	0	0	1	0
4/24/2024	2:30 PM	0	158	19	1	6	0	0	0	3	0	0	0	0
4/24/2024	2:45 PM	1	172	20	0	7	1	0	0	3	1	0	0	0
4/24/2024	3:00 PM	0	142	18	1	3	0	0	0	1	0	0	0	0
4/24/2024	3:15 PM	0	161	21	1	6	2	0	0	1	0	0	0	0
4/24/2024	3:30 PM	0	177	33	0	7	3	0	0	1	0	0	0	0
4/24/2024	3:45 PM	1	170	30	1	7	0	0	0	3	0	0	0	0
4/24/2024	4:00 PM	0	180	31	0	6	1	0	0	1	0	0	0	0
4/24/2024	4:15 PM	0	167	32	0	1	3	0	0	1	0	0	0	0
4/24/2024	4:30 PM	0	171	22	0	3	1	0	1	3	1	0	0	1
4/24/2024	4:45 PM	1	165	26	0	3	4	0	0	2	0	0	0	0
4/24/2024	5:00 PM	1	210	35	0	0	1	0	0	2	1	0	0	0
4/24/2024	5:15 PM	1	210	26	0	3	0	0	0	0	0	0	0	0
4/24/2024	5:30 PM	0	195	23	0	0	1	0	0	0	1	0	0	0
4/24/2024	5:45 PM	1	186	21	0	2	1	0	1	0	0	0	0	0
4/24/2024	6:00 PM	0	151	22	0	1	0	0	0	0	0	0	0	0
4/24/2024	6:15 PM	0	147	11	1	0	0	0	0	1	0	0	0	0
4/24/2024	6:30 PM	0	136	14	0	3	1	0	0	1	0	0	0	0
4/24/2024	6:45 PM	1	116	14	0	2	1	0	0	1	0	0	0	0
4/24/2024	7:00 PM	0	86	18	0	2	1	0	0	0	0	0	0	0
4/24/2024	7:15 PM	0	97	18	0	5	0	0	1	2	0	0	0	0
4/24/2024	7:30 PM	0	86	19	0	3	0	0	0	0	0	0	0	0
4/24/2024	7:45 PM	1	66	8	0	0	0	0	0	0	0	0	0	0
4/24/2024	8:00 PM	1	79	19	0	1	1	0	0	0	0	0	0	0
4/24/2024	8:15 PM	0	81	9	0	0	0	0	0	0	0	0	0	0
4/24/2024	8:30 PM	0	101	7	0	1	0	0	0	0	0	0	0	0
4/24/2024	8:45 PM	0	64	3	0	0	0	0	0	2	0	0	0	0
4/24/2024	9:00 PM	0	79	6	0	0	1	0	0	0	0	0	0	0
4/24/2024	9:15 PM	0	52	4	0	0	0	0	0	0	0	0	0	0
4/24/2024	9:30 PM	0	52	2	0	0	0	0	0	1	0	0	0	0
4/24/2024	9:45 PM	0	66	0	0	0	0	0	0	0	0	0	0	0
4/24/2024	10:00 PM	0	37	5	0	0	0	0	0	0	0	0	0	0
4/24/2024	10:15 PM	0	53	2	0	0	0	0	0	0	0	0	0	0
4/24/2024	10:30 PM	0	24	3	0	1	0	0	0	0	0	0	0	0
4/24/2024	10:45 PM	0	26	2	0	2	0	0	0	0	0	0	0	0
4/24/2024	11:00 PM	0	31	1	0	0	0	0	0	0	0	0	0	0
4/24/2024	11:15 PM	0	28	1	0	0	0	0	0	1	0	0	0	0
4/24/2024	11:30 PM	0	19	1	0	0	0	0	0	0	0	0	0	0
4/24/2024	11:45 PM	0	18	1	0	1	0	0	0	0	0	0	0	0

4/25/2024	12:00 AM	0	20	2	0	0	0	0	0	0	0	0	0
4/25/2024	12:15 AM	0	10	2	0	0	0	0	0	0	0	0	0
4/25/2024	12:30 AM	0	8	0	0	1	0	0	0	0	0	0	0
4/25/2024	12:45 AM	0	10	0	0	0	0	0	0	0	0	0	0
4/25/2024	1:00 AM	0	16	1	0	0	0	0	0	0	0	0	0
4/25/2024	1:15 AM	0	8	1	0	0	0	0	0	2	0	0	0
4/25/2024	1:30 AM	0	15	2	0	1	0	0	0	0	0	0	0
4/25/2024	1:45 AM	0	11	0	0	0	0	0	0	0	0	0	0
4/25/2024	2:00 AM	0	12	0	0	1	0	0	0	1	0	0	0
4/25/2024	2:15 AM	0	8	2	0	0	0	0	0	0	0	0	0
4/25/2024	2:30 AM	0	8	1	0	0	0	0	0	1	0	0	0
4/25/2024	2:45 AM	0	14	1	0	0	0	0	0	0	0	0	0
4/25/2024	3:00 AM	0	6	2	0	0	0	0	0	0	0	0	0
4/25/2024	3:15 AM	0	13	2	0	0	0	0	0	0	0	0	0
4/25/2024	3:30 AM	0	11	2	0	0	0	0	0	1	0	0	0
4/25/2024	3:45 AM	0	24	2	0	1	0	0	0	0	0	0	0
4/25/2024	4:00 AM	0	16	4	0	1	0	0	0	0	0	0	0
4/25/2024	4:15 AM	0	26	2	0	0	0	0	0	0	0	0	0
4/25/2024	4:30 AM	0	31	3	0	0	0	0	1	0	0	0	0
4/25/2024	4:45 AM	0	46	5	0	0	0	0	0	2	0	0	0
4/25/2024	5:00 AM	0	40	9	0	1	0	0	1	0	0	0	0
4/25/2024	5:15 AM	1	55	10	0	2	1	0	0	0	0	0	0
4/25/2024	5:30 AM	0	87	13	1	0	2	0	0	1	0	0	0
4/25/2024	5:45 AM	0	98	14	0	2	0	0	0	0	0	0	0
4/25/2024	6:00 AM	1	117	26	0	1	3	0	0	1	0	0	0
4/25/2024	6:15 AM	0	167	44	0	1	5	0	2	1	0	0	0
4/25/2024	6:30 AM	1	203	48	0	4	2	0	0	0	0	0	0
4/25/2024	6:45 AM	0	211	55	0	1	6	0	0	1	0	0	0
4/25/2024	7:00 AM	1	259	55	0	1	7	0	0	3	0	0	0
4/25/2024	7:15 AM	0	316	44	0	7	1	0	0	1	1	0	0
4/25/2024	7:30 AM	0	300	52	0	4	0	0	0	3	0	0	0
4/25/2024	7:45 AM	0	205	37	0	2	0	0	0	2	0	0	0
4/25/2024	8:00 AM	0	231	38	1	5	0	0	0	0	1	0	1
4/25/2024	8:15 AM	0	238	43	0	6	4	1	1	1	1	0	0	0
4/25/2024	8:30 AM	0	190	52	0	5	2	0	5	3	2	0	0	0
4/25/2024	8:45 AM	1	195	35	0	3	3	0	1	4	1	0	0	0
4/25/2024	9:00 AM	0	169	31	0	2	4	0	2	0	0	0	0	0
4/25/2024	9:15 AM	0	163	40	0	7	1	0	0	2	0	0	0	0
4/25/2024	9:30 AM	0	164	44	1	5	7	0	0	3	2	0	0	0
4/25/2024	9:45 AM	1	169	47	1	3	1	0	0	0	1	0	0	0
4/25/2024	10:00 AM	0	106	36	0	3	3	0	0	4	0	0	0	0
4/25/2024	10:15 AM	0	136	30	0	2	4	0	1	4	0	0	0	0
4/25/2024	10:30 AM	0	145	32	0	3	4	0	2	2	0	0	1	0
4/25/2024	10:45 AM	0	141	30	1	6	0	0	0	3	0	0	0	0
4/25/2024	11:00 AM	0	106	26	0	2	3	0	0	1	1	0	0	0
4/25/2024	11:15 AM	0	100	39	0	3	3	0	0	1	0	0	0	0
4/25/2024	11:30 AM	0	131	32	1	2	5	0	0	2	0	0	0	0
4/25/2024	11:45 AM	2	134	37	0	6	4	0	0	2	1	0	0	0
4/25/2024	12:00 PM	1	157	42	1	3	1	1	2	0	0	0	0	0
4/25/2024	12:15 PM	0	129	29	0	3	4	0	1	2	0	0	0	0
4/25/2024	12:30 PM	1	133	42	0	3	2	0	0	2	0	0	0	0
4/25/2024	12:45 PM	1	136	42	0	5	5	0	2	1	0	0	0	0
4/25/2024	1:00 PM	2	127	38	1	6	1	0	2	2	0	0	0	0
4/25/2024	1:15 PM	0	154	23	1	1	4	0	1	3	0	0	0	0
4/25/2024	1:30 PM	0	145	37	0	4	1	0	1	1	0	0	0	0
4/25/2024	1:45 PM	1	140	27	0	7	6	0	1	0	1	0	0	0
4/25/2024	2:00 PM	0	138	27	0	8	1	0	0	0	1	0	0	0
4/25/2024	2:15 PM	0	147	27	0	5	2	0	2	2	1	0	0	0
4/25/2024	2:30 PM	0	179	30	1	8	5	0	1	2	0	0	0	0
4/25/2024	2:45 PM	0	125	29	0	5	2	0	1	1	0	0	0	0
4/25/2024	3:00 PM	0	158	34	1	1	2	0	1	1	0	0	0	0
4/25/2024	3:15 PM	0	156	38	2	5	1	0	1	1	0	0	0	0
4/25/2024	3:30 PM	0	143	37	1	6	0	0	0	2	0	0	0	0
4/25/2024	3:45 PM	1	169	43	0	4	4	0	0	1	0	0	0	0
4/25/2024	4:00 PM	1	160	22	0	5	0	0	1	1	0	0	0	0
4/25/2024	4:15 PM	1	179	42	0	2	2	0	1	1	0	0	0	0
4/25/2024	4:30 PM	1	181	33	0	4	1	0	0	2	0	0	0	0
4/25/2024	4:45 PM	0	177	37	0	3	0	0	1	1	0	0	0	0
4/25/2024	5:00 PM	0	212	27	0	4	3	0	1	0	0	0	0	0
4/25/2024	5:15 PM	0	160	20	0	4	0	0	0	0	0	0	0	0
4/25/2024	5:30 PM	0	173	18	0	3	2	0	1	1	0	0	0	0
4/25/2024	5:45 PM	0	167	26	0	4	0	0	0	0	0	0	0	0
4/25/2024	6:00 PM	0	156	28	0	3	0	0	1	1	0	0	0	0
4/25/2024	6:15 PM	1	159	37	0	2	0	0	1	0	0	0	0	0
4/25/2024	6:30 PM	0	147	25	0	1	0	0	1	1	0	0	0	0
4/25/2024	6:45 PM	0	123	18	0	1	0	0	0	2	0	0	0	0
4/25/2024	7:00 PM	0	0	0	0	0	0	0	0	0	0	0	0	0
4/25/2024	7:15 PM	0	0	0	0	0	0	0	0	0	0	0	0	0
4/25/2024	7:30 PM	0	0	0	0	0	0	0	0	0	0	0	0	0
4/25/2024	7:45 PM	0	0	0	0	0	0	0	0	0	0	0	0	0
4/25/2024	8:00 PM	0	0	0	0	0	0	0	0	0	0	0	0	0
4/25/2024	8:15 PM	0	0	0	0	0	0	0	0	0	0	0	0	0
4/25/2024	8:30 PM	0	0	0	0	0	0	0	0	0	0	0	0	0
4/25/2024	8:45 PM	0	0	0	0	0	0	0	0	0	0	0	0	0
4/25/2024	9:00 PM	0	0	0	0	0	0	0	0	0	0	0	0	0
4/25/2024	9:15 PM	0	0	0	0	0	0	0	0	0	0	0	0	0
4/25/2024	9:30 PM	0	0	0	0	0	0	0	0	0	0	0	0	0
4/25/2024	9:45 PM	0	0	0	0	0	0	0	0	0	0	0	0	0
4/25/2024	10:00 PM	0	0	0	0	0	0	0	0	0	0	0	0	0
4/25/2024	10:15 PM	0	0	0	0	0	0	0	0	0	0	0	0	0
4/25/2024	10:30 PM	0	0	0	0	0	0	0	0	0	0	0	0	0
4/25/2024	10:45 PM	0	0	0	0	0	0	0	0	0	0	0	0	0
4/25/2024	11:00 PM	0	0	0	0	0	0	0	0	0	0	0	0	0
4/25/2024	11:15 PM	0	0	0	0	0	0	0	0	0	0	0	0	0
4/25/2024	11:30 PM	0	0	0	0	0	0	0	0	0	0	0	0	0
4/25/2024	11:45 PM	0	0	0	0	0	0	0	0	0	0	0	0	0

NB
File Name:
Start Date: 4/23/2024
Start Time: 0
Site Code: 19
Station ID: 1
Location 1: I-26 James F. Byrnes Expy On/Off-Ramp, south of US-176 Broad River Rd
Location 2:

Date	Time	1	2	3	4	5	6	7	8	9	10	11	12	13
4/23/2024	12:00 AM	0	0	0	0	0	0	0	0	0	0	0	0	0
4/23/2024	12:15 AM	0	0	0	0	0	0	0	0	0	0	0	0	0
4/23/2024	12:30 AM	0	0	0	0	0	0	0	0	0	0	0	0	0
4/23/2024	12:45 AM	0	0	0	0	0	0	0	0	0	0	0	0	0
4/23/2024	1:00 AM	0	0	0	0	0	0	0	0	0	0	0	0	0
4/23/2024	1:15 AM	0	0	0	0	0	0	0	0	0	0	0	0	0
4/23/2024	1:30 AM	0	0	0	0	0	0	0	0	0	0	0	0	0
4/23/2024	1:45 AM	0	0	0	0	0	0	0	0	0	0	0	0	0
4/23/2024	2:00 AM	0	0	0	0	0	0	0	0	0	0	0	0	0
4/23/2024	2:15 AM	0	0	0	0	0	0	0	0	0	0	0	0	0
4/23/2024	2:30 AM	0	0	0	0	0	0	0	0	0	0	0	0	0
4/23/2024	2:45 AM	0	0	0	0	0	0	0	0	0	0	0	0	0
4/23/2024	3:00 AM	0	0	0	0	0	0	0	0	0	0	0	0	0
4/23/2024	3:15 AM	0	0	0	0	0	0	0	0	0	0	0	0	0
4/23/2024	3:30 AM	0	0	0	0	0	0	0	0	0	0	0	0	0
4/23/2024	3:45 AM	0	0	0	0	0	0	0	0	0	0	0	0	0
4/23/2024	4:00 AM	0	0	0	0	0	0	0	0	0	0	0	0	0
4/23/2024	4:15 AM	0	0	0	0	0	0	0	0	0	0	0	0	0
4/23/2024	4:30 AM	0	0	0	0	0	0	0	0	0	0	0	0	0
4/23/2024	4:45 AM	0	0	0	0	0	0	0	0	0	0	0	0	0
4/23/2024	5:00 AM	0	0	0	0	0	0	0	0	0	0	0	0	0
4/23/2024	5:15 AM	0	0	0	0	0	0	0	0	0	0	0	0	0
4/23/2024	5:30 AM	0	0	0	0	0	0	0	0	0	0	0	0	0
4/23/2024	5:45 AM	0	0	0	0	0	0	0	0	0	0	0	0	0
4/23/2024	6:00 AM	0	0	0	0	0	0	0	0	0	0	0	0	0
4/23/2024	6:15 AM	0	0	0	0	0	0	0	0	0	0	0	0	0
4/23/2024	6:30 AM	0	0	0	0	0	0	0	0	0	0	0	0	0
4/23/2024	6:45 AM	0	0	0	0	0	0	0	0	0	0	0	0	0
4/23/2024	7:00 AM	0	0	0	0	0	0	0	0	0	0	0	0	0
4/23/2024	7:15 AM	0	0	0	0	0	0	0	0	0	0	0	0	0
4/23/2024	7:30 AM	0	0	0	0	0	0	0	0	0	0	0	0	0
4/23/2024	7:45 AM	0	0	0	0	0	0	0	0	0	0	0	0	0
4/23/2024	8:00 AM	0	0	0	0	0	0	0	0	0	0	0	0	0
4/23/2024	8:15 AM	0	0	0	0	0	0	0	0	0	0	0	0	0
4/23/2024	8:30 AM	0	0	0	0	0	0	0	0	0	0	0	0	0
4/23/2024	8:45 AM	0	0	0	0	0	0	0	0	0	0	0	0	0
4/23/2024	9:00 AM	0	0	0	0	0	0	0	0	0	0	0	0	0
4/23/2024	9:15 AM	0	0	0	0	0	0	0	0	0	0	0	0	0
4/23/2024	9:30 AM	0	0	0	0	0	0	0	0	0	0	0	0	0
4/23/2024	9:45 AM	0	0	0	0	0	0	0	0	0	0	0	0	0
4/23/2024	10:00 AM	0	0	0	0	0	0	0	0	0	0	0	0	0
4/23/2024	10:15 AM	0	0	0	0	0	0	0	0	0	0	0	0	0
4/23/2024	10:30 AM	0	0	0	0	0	0	0	0	0	0	0	0	0
4/23/2024	10:45 AM	0	0	0	0	0	0	0	0	0	0	0	0	0
4/23/2024	11:00 AM	0	0	0	0	0	0	0	0	0	0	0	0	0
4/23/2024	11:15 AM	0	0	0	0	0	0	0	0	0	0	0	0	0
4/23/2024	11:30 AM	0	0	0	0	0	0	0	0	0	0	0	0	0
4/23/2024	11:45 AM	0	0	0	0	0	0	0	0	0	0	0	0	0
4/23/2024	12:00 PM	0	0	0	0	0	0	0	0	0	0	0	0	0
4/23/2024	12:15 PM	0	0	0	0	0	0	0	0	0	0	0	0	0
4/23/2024	12:30 PM	0	0	0	0	0	0	0	0	0	0	0	0	0
4/23/2024	12:45 PM	0	0	0	0	0	0	0	0	0	0	0	0	0
4/23/2024	1:00 PM	0	0	0	0	0	0	0	0	0	0	0	0	0
4/23/2024	1:15 PM	0	0	0	0	0	0	0	0	0	0	0	0	0
4/23/2024	1:30 PM	0	0	0	0	0	0	0	0	0	0	0	0	0
4/23/2024	1:45 PM	0	0	0	0	0	0	0	0	0	0	0	0	0
4/23/2024	2:00 PM	0	0	0	0	0	0	0	0	0	0	0	0	0
4/23/2024	2:15 PM	0	0	0	0	0	0	0	0	0	0	0	0	0
4/23/2024	2:30 PM	0	0	0	0	0	0	0	0	0	0	0	0	0
4/23/2024	2:45 PM	0	0	0	0	0	0	0	0	0	0	0	0	0
4/23/2024	3:00 PM	0	0	0	0	0	0	0	0	0	0	0	0	0
4/23/2024	3:15 PM	0	0	0	0	0	0	0	0	0	0	0	0	0
4/23/2024	3:30 PM	0	0	0	0	0	0	0	0	0	0	0	0	0
4/23/2024	3:45 PM	0	0	0	0	0	0	0	0	0	0	0	0	0
4/23/2024	4:00 PM	0	0	0	0	0	0	0	0	0	0	0	0	0
4/23/2024	4:15 PM	0	0	0	0	0	0	0	0	0	0	0	0	0
4/23/2024	4:30 PM	0	0	0	0	0	0	0	0	0	0	0	0	0
4/23/2024	4:45 PM	0	0	0	0	0	0	0	0	0	0	0	0	0
4/23/2024	5:00 PM	0	0	0	0	0	0	0	0	0	0	0	0	0
4/23/2024	5:15 PM	0	0	0	0	0	0	0	0	0	0	0	0	0
4/23/2024	5:30 PM	0	0	0	0	0	0	0	0	0	0	0	0	0
4/23/2024	5:45 PM	0	0	0	0	0	0	0	0	0	0	0	0	0
4/23/2024	6:00 PM	0	0	0	0	0	0	0	0	0	0	0	0	0
4/23/2024	6:15 PM	0	0	0	0	0	0	0	0	0	0	0	0	0
4/23/2024	6:30 PM	0	0	0	0	0	0	0	0	0	0	0	0	0
4/23/2024	6:45 PM	0	0	0	0	0	0	0	0	0	0	0	0	0
4/23/2024	7:00 PM	0	0	0	0	0	0	0	0	0	0	0	0	0
4/23/2024	7:15 PM	0	0	0	0	0	0	0	0	0	0	0	0	0
4/23/2024	7:30 PM	0	0	0	0	0	0	0	0	0	0	0	0	0
4/23/2024	7:45 PM	0	0	0	0	0	0	0	0	0	0	0	0	0
4/23/2024	8:00 PM	0	0	0	0	0	0	0	0	0	0	0	0	0
4/23/2024	8:15 PM	0	0	0	0	0	0	0	0	0	0	0	0	0
4/23/2024	8:30 PM	0	0	0	0	0	0	0	0	0	0	0	0	0
4/23/2024	8:45 PM	0	0	0	0	0	0	0	0	0	0	0	0	0
4/23/2024	9:00 PM	0	0	0	0	0	0	0	0	0	0	0	0	0
4/23/2024	9:15 PM	0	0	0	0	0	0	0	0	0	0	0	0	0
4/23/2024	9:30 PM	0	0	0	0	0	0	0	0	0	0	0	0	0
4/23/2024	9:45 PM	0	0	0	0	0	0	0	0	0	0	0	0	0
4/23/2024	10:00 PM	0	0	0	0	0	0	0	0	0	0	0	0	0
4/23/2024	10:15 PM	0	0	0	0	0	0	0	0	0	0	0	0	0
4/23/2024	10:30 PM	0	0	0	0	0	0	0	0	0	0	0	0	0
4/23/2024	10:45 PM	0	0	0	0	0	0	0	0	0	0	0	0	0
4/23/2024	11:00 PM	0	0	0	0	0	0	0	0	0	0	0	0	0
4/23/2024	11:15 PM	0	0	0	0	0	0	0	0	0	0	0	0	0
4/23/2024	11:30 PM	0	0	0	0	0	0	0	0	0	0	0	0	0
4/23/2024	11:45 PM	0	0	0	0	0	0	0	0	0	0	0	0	0

4/24/2024	12:00 AM	0	0	0	0	0	0	0	0	0	0	0	0	0
4/24/2024	12:15 AM	0	0	0	0	0	0	0	0	0	0	0	0	0
4/24/2024	12:30 AM	0	0	0	0	0	0	0	0	0	0	0	0	0
4/24/2024	12:45 AM	0	0	0	0	0	0	0	0	0	0	0	0	0
4/24/2024	1:00 AM	0	0	0	0	0	0	0	0	0	0	0	0	0
4/24/2024	1:15 AM	0	0	0	0	0	0	0	0	0	0	0	0	0
4/24/2024	1:30 AM	0	0	0	0	0	0	0	0	0	0	0	0	0
4/24/2024	1:45 AM	0	0	0	0	0	0	0	0	0	0	0	0	0
4/24/2024	2:00 AM	0	0	0	0	0	0	0	0	0	0	0	0	0
4/24/2024	2:15 AM	0	0	0	0	0	0	0	0	0	0	0	0	0
4/24/2024	2:30 AM	0	0	0	0	0	0	0	0	0	0	0	0	0
4/24/2024	2:45 AM	0	0	0	0	0	0	0	0	0	0	0	0	0
4/24/2024	3:00 AM	0	0	0	0	0	0	0	0	0	0	0	0	0
4/24/2024	3:15 AM	0	0	0	0	0	0	0	0	0	0	0	0	0
4/24/2024	3:30 AM	0	0	0	0	0	0	0	0	0	0	0	0	0
4/24/2024	3:45 AM	0	0	0	0	0	0	0	0	0	0	0	0	0
4/24/2024	4:00 AM	0	0	0	0	0	0	0	0	0	0	0	0	0
4/24/2024	4:15 AM	0	0	0	0	0	0	0	0	0	0	0	0	0
4/24/2024	4:30 AM	0	0	0	0	0	0	0	0	0	0	0	0	0
4/24/2024	4:45 AM	0	0	0	0	0	0	0	0	0	0	0	0	0
4/24/2024	5:00 AM	0	0	0	0	0	0	0	0	0	0	0	0	0
4/24/2024	5:15 AM	0	0	0	0	0	0	0	0	0	0	0	0	0
4/24/2024	5:30 AM	0	0	0	0	0	0	0	0	0	0	0	0	0
4/24/2024	5:45 AM	0	0	0	0	0	0	0	0	0	0	0	0	0
4/24/2024	6:00 AM	0	0	0	0	0	0	0	0	0	0	0	0	0
4/24/2024	6:15 AM	0	0	0	0	0	0	0	0	0	0	0	0	0
4/24/2024	6:30 AM	0	0	0	0	0	0	0	0	0	0	0	0	0
4/24/2024	6:45 AM	0	0	0	0	0	0	0	0	0	0	0	0	0
4/24/2024	7:00 AM	0	0	0	0	0	0	0	0	0	0	0	0	0
4/24/2024	7:15 AM	0	0	0	0	0	0	0	0	0	0	0	0	0
4/24/2024	7:30 AM	0	0	0	0	0	0	0	0	0	0	0	0	0
4/24/2024	7:45 AM	0	0	0	0	0	0	0	0	0	0	0	0	0
4/24/2024	8:00 AM	0	0	0	0	0	0	0	0	0	0	0	0	0
4/24/2024	8:15 AM	0	0	0	0	0	0	0	0	0	0	0	0	0
4/24/2024	8:30 AM	0	0	0	0	0	0	0	0	0	0	0	0	0
4/24/2024	8:45 AM	0	0	0	0	0	0	0	0	0	0	0	0	0
4/24/2024	9:00 AM	0	0	0	0	0	0	0	0	0	0	0	0	0
4/24/2024	9:15 AM	0	0	0	0	0	0	0	0	0	0	0	0	0
4/24/2024	9:30 AM	0	0	0	0	0	0	0	0	0	0	0	0	0
4/24/2024	9:45 AM	0	0	0	0	0	0	0	0	0	0	0	0	0
4/24/2024	10:00 AM	0	0	0	0	0	0	0	0	0	0	0	0	0
4/24/2024	10:15 AM	0	0	0	0	0	0	0	0	0	0	0	0	0
4/24/2024	10:30 AM	0	0	0	0	0	0	0	0	0	0	0	0	0
4/24/2024	10:45 AM	0	0	0	0	0	0	0	0	0	0	0	0	0
4/24/2024	11:00 AM	0	0	0	0	0	0	0	0	0	0	0	0	0
4/24/2024	11:15 AM	0	0	0	0	0	0	0	0	0	0	0	0	0
4/24/2024	11:30 AM	0	0	0	0	0	0	0	0	0	0	0	0	0
4/24/2024	11:45 AM	0	0	0	0	0	0	0	0	0	0	0	0	0
4/24/2024	12:00 PM	0	0	0	0	0	0	0	0	0	0	0	0	0
4/24/2024	12:15 PM	0	0	0	0	0	0	0	0	0	0	0	0	0
4/24/2024	12:30 PM	0	0	0	0	0	0	0	0	0	0	0	0	0
4/24/2024	12:45 PM	0	0	0	0	0	0	0	0	0	0	0	0	0
4/24/2024	1:00 PM	0	0	0	0	0	0	0	0	0	0	0	0	0
4/24/2024	1:15 PM	0	0	0	0	0	0	0	0	0	0	0	0	0
4/24/2024	1:30 PM	0	0	0	0	0	0	0	0	0	0	0	0	0
4/24/2024	1:45 PM	0	0	0	0	0	0	0	0	0	0	0	0	0
4/24/2024	2:00 PM	0	0	0	0	0	0	0	0	0	0	0	0	0
4/24/2024	2:15 PM	0	0	0	0	0	0	0	0	0	0	0	0	0
4/24/2024	2:30 PM	0	0	0	0	0	0	0	0	0	0	0	0	0
4/24/2024	2:45 PM	0	0	0	0	0	0	0	0	0	0	0	0	0
4/24/2024	3:00 PM	0	0	0	0	0	0	0	0	0	0	0	0	0
4/24/2024	3:15 PM	0	0	0	0	0	0	0	0	0	0	0	0	0
4/24/2024	3:30 PM	0	0	0	0	0	0	0	0	0	0	0	0	0
4/24/2024	3:45 PM	0	0	0	0	0	0	0	0	0	0	0	0	0
4/24/2024	4:00 PM	0	0	0	0	0	0	0	0	0	0	0	0	0
4/24/2024	4:15 PM	0	0	0	0	0	0	0	0	0	0	0	0	0
4/24/2024	4:30 PM	0	0	0	0	0	0	0	0	0	0	0	0	0
4/24/2024	4:45 PM	0	0	0	0	0	0	0	0	0	0	0	0	0
4/24/2024	5:00 PM	0	0	0	0	0	0	0	0	0	0	0	0	0
4/24/2024	5:15 PM	0	0	0	0	0	0	0	0	0	0	0	0	0
4/24/2024	5:30 PM	0	0	0	0	0	0	0	0	0	0	0	0	0
4/24/2024	5:45 PM	0	0	0	0	0	0	0	0	0	0	0	0	0
4/24/2024	6:00 PM	0	0	0	0	0	0	0	0	0	0	0	0	0
4/24/2024	6:15 PM	0	0	0	0	0	0	0	0	0	0	0	0	0
4/24/2024	6:30 PM	0	0	0	0	0	0	0	0	0	0	0	0	0
4/24/2024	6:45 PM	0	0	0	0	0	0	0	0	0	0	0	0	0
4/24/2024	7:00 PM	0	0	0	0	0	0	0	0	0	0	0	0	0
4/24/2024	7:15 PM	0	0	0	0	0	0	0	0	0	0	0	0	0
4/24/2024	7:30 PM	0	0	0	0	0	0	0	0	0	0	0	0	0
4/24/2024	7:45 PM	0	0	0	0	0	0	0	0	0	0	0	0	0
4/24/2024	8:00 PM	0	0	0	0	0	0	0	0	0	0	0	0	0
4/24/2024	8:15 PM	0	0	0	0	0	0	0	0	0	0	0	0	0
4/24/2024	8:30 PM	0	0	0	0	0	0	0	0	0	0	0	0	0
4/24/2024	8:45 PM	0	0	0	0	0	0	0	0	0	0	0	0	0
4/24/2024	9:00 PM	0	0	0	0	0	0	0	0	0	0	0	0	0
4/24/2024	9:15 PM	0	0	0	0	0	0	0	0	0	0	0	0	0
4/24/2024	9:30 PM	0	0	0	0	0	0	0	0	0	0	0	0	0
4/24/2024	9:45 PM	0	0	0	0	0	0	0	0	0	0	0	0	0
4/24/2024	10:00 PM	0	0	0	0	0	0	0	0	0	0	0	0	0
4/24/2024	10:15 PM	0	0	0	0	0	0	0	0	0	0	0	0	0
4/24/2024	10:30 PM	0	0	0	0	0	0	0	0	0	0	0	0	0
4/24/2024	10:45 PM	0	0	0	0	0	0	0	0	0	0	0	0	0
4/24/2024	11:00 PM	0	0	0	0	0	0	0	0	0	0	0	0	0
4/24/2024	11:15 PM	0	0	0	0	0	0	0	0	0	0	0	0	0
4/24/2024	11:30 PM	0	0	0	0	0	0	0	0	0	0	0	0	0
4/24/2024	11:45 PM	0	0	0	0	0	0	0	0	0	0	0	0	0

4/25/2024	12:00 AM	0	0	0	0	0	0	0	0	0	0	0	0	0
4/25/2024	12:15 AM	0	0	0	0	0	0	0	0	0	0	0	0	0
4/25/2024	12:30 AM	0	0	0	0	0	0	0	0	0	0	0	0	0
4/25/2024	12:45 AM	0	0	0	0	0	0	0	0	0	0	0	0	0
4/25/2024	1:00 AM	0	0	0	0	0	0	0	0	0	0	0	0	0
4/25/2024	1:15 AM	0	0	0	0	0	0	0	0	0	0	0	0	0
4/25/2024	1:30 AM	0	0	0	0	0	0	0	0	0	0	0	0	0
4/25/2024	1:45 AM	0	0	0	0	0	0	0	0	0	0	0	0	0
4/25/2024	2:00 AM	0	0	0	0	0	0	0	0	0	0	0	0	0
4/25/2024	2:15 AM	0	0	0	0	0	0	0	0	0	0	0	0	0
4/25/2024	2:30 AM	0	0	0	0	0	0	0	0	0	0	0	0	0
4/25/2024	2:45 AM	0	0	0	0	0	0	0	0	0	0	0	0	0
4/25/2024	3:00 AM	0	0	0	0	0	0	0	0	0	0	0	0	0
4/25/2024	3:15 AM	0	0	0	0	0	0	0	0	0	0	0	0	0
4/25/2024	3:30 AM	0	0	0	0	0	0	0	0	0	0	0	0	0
4/25/2024	3:45 AM	0	0	0	0	0	0	0	0	0	0	0	0	0
4/25/2024	4:00 AM	0	0	0	0	0	0	0	0	0	0	0	0	0
4/25/2024	4:15 AM	0	0	0	0	0	0	0	0	0	0	0	0	0
4/25/2024	4:30 AM	0	0	0	0	0	0	0	0	0	0	0	0	0
4/25/2024	4:45 AM	0	0	0	0	0	0	0	0	0	0	0	0	0
4/25/2024	5:00 AM	0	0	0	0	0	0	0	0	0	0	0	0	0
4/25/2024	5:15 AM	0	0	0	0	0	0	0	0	0	0	0	0	0
4/25/2024	5:30 AM	0	0	0	0	0	0	0	0	0	0	0	0	0
4/25/2024	5:45 AM	0	0	0	0	0	0	0	0	0	0	0	0	0
4/25/2024	6:00 AM	0	0	0	0	0	0	0	0	0	0	0	0	0
4/25/2024	6:15 AM	0	0	0	0	0	0	0	0	0	0	0	0	0
4/25/2024	6:30 AM	0	0	0	0	0	0	0	0	0	0	0	0	0
4/25/2024	6:45 AM	0	0	0	0	0	0	0	0	0	0	0	0	0
4/25/2024	7:00 AM	0	0	0	0	0	0	0	0	0	0	0	0	0
4/25/2024	7:15 AM	0	0	0	0	0	0	0	0	0	0	0	0	0
4/25/2024	7:30 AM	0	0	0	0	0	0	0	0	0	0	0	0	0
4/25/2024	7:45 AM	0	0	0	0	0	0	0	0	0	0	0	0	0
4/25/2024	8:00 AM	0	0	0	0	0	0	0	0	0	0	0	0	0
4/25/2024	8:15 AM	0	0	0	0	0	0	0	0	0	0	0	0	0
4/25/2024	8:30 AM	0	0	0	0	0	0	0	0	0	0	0	0	0
4/25/2024	8:45 AM	0	0	0	0	0	0	0	0	0	0	0	0	0
4/25/2024	9:00 AM	0	0	0	0	0	0	0	0	0	0	0	0	0
4/25/2024	9:15 AM	0	0	0	0	0	0	0	0	0	0	0	0	0
4/25/2024	9:30 AM	0	0	0	0	0	0	0	0	0	0	0	0	0
4/25/2024	9:45 AM	0	0	0	0	0	0	0	0	0	0	0	0	0
4/25/2024	10:00 AM	0	0	0	0	0	0	0	0	0	0	0	0	0
4/25/2024	10:15 AM	0	0	0	0	0	0	0	0	0	0	0	0	0
4/25/2024	10:30 AM	0	0	0	0	0	0	0	0	0	0	0	0	0
4/25/2024	10:45 AM	0	0	0	0	0	0	0	0	0	0	0	0	0
4/25/2024	11:00 AM	0	0	0	0	0	0	0	0	0	0	0	0	0
4/25/2024	11:15 AM	0	0	0	0	0	0	0	0	0	0	0	0	0
4/25/2024	11:30 AM	0	0	0	0	0	0	0	0	0	0	0	0	0
4/25/2024	11:45 AM	0	0	0	0	0	0	0	0	0	0	0	0	0
4/25/2024	12:00 PM	0	0	0	0	0	0	0	0	0	0	0	0	0
4/25/2024	12:15 PM	0	0	0	0	0	0	0	0	0	0	0	0	0
4/25/2024	12:30 PM	0	0	0	0	0	0	0	0	0	0	0	0	0
4/25/2024	12:45 PM	0	0	0	0	0	0	0	0	0	0	0	0	0
4/25/2024	1:00 PM	0	0	0	0	0	0	0	0	0	0	0	0	0
4/25/2024	1:15 PM	0	0	0	0	0	0	0	0	0	0	0	0	0
4/25/2024	1:30 PM	0	0	0	0	0	0	0	0	0	0	0	0	0
4/25/2024	1:45 PM	0	0	0	0	0	0	0	0	0	0	0	0	0
4/25/2024	2:00 PM	0	0	0	0	0	0	0	0	0	0	0	0	0
4/25/2024	2:15 PM	0	0	0	0	0	0	0	0	0	0	0	0	0
4/25/2024	2:30 PM	0	0	0	0	0	0	0	0	0	0	0	0	0
4/25/2024	2:45 PM	0	0	0	0	0	0	0	0	0	0	0	0	0
4/25/2024	3:00 PM	0	0	0	0	0	0	0	0	0	0	0	0	0
4/25/2024	3:15 PM	0	0	0	0	0	0	0	0	0	0	0	0	0
4/25/2024	3:30 PM	0	0	0	0	0	0	0	0	0	0	0	0	0
4/25/2024	3:45 PM	0	0	0	0	0	0	0	0	0	0	0	0	0
4/25/2024	4:00 PM	0	0	0	0	0	0	0	0	0	0	0	0	0
4/25/2024	4:15 PM	0	0	0	0	0	0	0	0	0	0	0	0	0
4/25/2024	4:30 PM	0	0	0	0	0	0	0	0	0	0	0	0	0
4/25/2024	4:45 PM	0	0	0	0	0	0	0	0	0	0	0	0	0
4/25/2024	5:00 PM	0	0	0	0	0	0	0	0	0	0	0	0	0
4/25/2024	5:15 PM	0	0	0	0	0	0	0	0	0	0	0	0	0
4/25/2024	5:30 PM	0	0	0	0	0	0	0	0	0	0	0	0	0
4/25/2024	5:45 PM	0	0	0	0	0	0	0	0	0	0	0	0	0
4/25/2024	6:00 PM	0	0	0	0	0	0	0	0	0	0	0	0	0
4/25/2024	6:15 PM	0	0	0	0	0	0	0	0	0	0	0	0	0
4/25/2024	6:30 PM	0	0	0	0	0	0	0	0	0	0	0	0	0
4/25/2024	6:45 PM	0	0	0	0	0	0	0	0	0	0	0	0	0
4/25/2024	7:00 PM	0	0	0	0	0	0	0	0	0	0	0	0	0
4/25/2024	7:15 PM	0	0	0	0	0	0	0	0	0	0	0	0	0
4/25/2024	7:30 PM	0	0	0	0	0	0	0	0	0	0	0	0	0
4/25/2024	7:45 PM	0	0	0	0	0	0	0	0	0	0	0	0	0
4/25/2024	8:00 PM	0	0	0	0	0	0	0	0	0	0	0	0	0
4/25/2024	8:15 PM	0	0	0	0	0	0	0	0	0	0	0	0	0
4/25/2024	8:30 PM	0	0	0	0	0	0	0	0	0	0	0	0	0
4/25/2024	8:45 PM	0	0	0	0	0	0	0	0	0	0	0	0	0
4/25/2024	9:00 PM	0	0	0	0	0	0	0	0	0	0	0	0	0
4/25/2024	9:15 PM	0	0	0	0	0	0	0	0	0	0	0	0	0
4/25/2024	9:30 PM	0	0	0	0	0	0	0	0	0	0	0	0	0
4/25/2024	9:45 PM	0	0	0	0	0	0	0	0	0	0	0	0	0
4/25/2024	10:00 PM	0	0	0	0	0	0	0	0	0	0	0	0	0
4/25/2024	10:15 PM	0	0	0	0	0	0	0	0	0	0	0	0	0
4/25/2024	10:30 PM	0	0	0	0	0	0	0	0	0	0	0	0	0
4/25/2024	10:45 PM	0	0	0	0	0	0	0	0	0	0	0	0	0
4/25/2024	11:00 PM	0	0	0	0	0	0	0	0	0	0	0	0	0
4/25/2024	11:15 PM	0	0	0	0	0	0	0	0	0	0	0	0	0
4/25/2024	11:30 PM	0	0	0	0	0	0	0	0	0	0	0	0	0
4/25/2024	11:45 PM	0	0	0	0	0	0	0	0	0	0	0	0	0

SB
File Name:
Start Date: 4/23/2024
Start Time: 0
Site Code: 19
Station ID: 1
Location 1: I-26 James F. Byrnes Expy On/Off-Ramp, south of US-176 Broad River Rd
Location 2:

Date	Time	1	2	3	4	5	6	7	8	9	10	11	12	13
4/23/2024	12:00 AM	0	0	0	0	0	0	0	0	0	0	0	0	0
4/23/2024	12:15 AM	0	0	0	0	0	0	0	0	0	0	0	0	0
4/23/2024	12:30 AM	0	0	0	0	0	0	0	0	0	0	0	0	0
4/23/2024	12:45 AM	0	0	0	0	0	0	0	0	0	0	0	0	0
4/23/2024	1:00 AM	0	0	0	0	0	0	0	0	0	0	0	0	0
4/23/2024	1:15 AM	0	0	0	0	0	0	0	0	0	0	0	0	0
4/23/2024	1:30 AM	0	0	0	0	0	0	0	0	0	0	0	0	0
4/23/2024	1:45 AM	0	0	0	0	0	0	0	0	0	0	0	0	0
4/23/2024	2:00 AM	0	0	0	0	0	0	0	0	0	0	0	0	0
4/23/2024	2:15 AM	0	0	0	0	0	0	0	0	0	0	0	0	0
4/23/2024	2:30 AM	0	0	0	0	0	0	0	0	0	0	0	0	0
4/23/2024	2:45 AM	0	0	0	0	0	0	0	0	0	0	0	0	0
4/23/2024	3:00 AM	0	0	0	0	0	0	0	0	0	0	0	0	0
4/23/2024	3:15 AM	0	0	0	0	0	0	0	0	0	0	0	0	0
4/23/2024	3:30 AM	0	0	0	0	0	0	0	0	0	0	0	0	0
4/23/2024	3:45 AM	0	0	0	0	0	0	0	0	0	0	0	0	0
4/23/2024	4:00 AM	0	0	0	0	0	0	0	0	0	0	0	0	0
4/23/2024	4:15 AM	0	0	0	0	0	0	0	0	0	0	0	0	0
4/23/2024	4:30 AM	0	0	0	0	0	0	0	0	0	0	0	0	0
4/23/2024	4:45 AM	0	0	0	0	0	0	0	0	0	0	0	0	0
4/23/2024	5:00 AM	0	0	0	0	0	0	0	0	0	0	0	0	0
4/23/2024	5:15 AM	0	0	0	0	0	0	0	0	0	0	0	0	0
4/23/2024	5:30 AM	0	0	0	0	0	0	0	0	0	0	0	0	0
4/23/2024	5:45 AM	0	0	0	0	0	0	0	0	0	0	0	0	0
4/23/2024	6:00 AM	0	0	0	0	0	0	0	0	0	0	0	0	0
4/23/2024	6:15 AM	0	0	0	0	0	0	0	0	0	0	0	0	0
4/23/2024	6:30 AM	0	0	0	0	0	0	0	0	0	0	0	0	0
4/23/2024	6:45 AM	0	0	0	0	0	0	0	0	0	0	0	0	0
4/23/2024	7:00 AM	0	0	0	0	0	0	0	0	0	0	0	0	0
4/23/2024	7:15 AM	0	0	0	0	0	0	0	0	0	0	0	0	0
4/23/2024	7:30 AM	0	0	0	0	0	0	0	0	0	0	0	0	0
4/23/2024	7:45 AM	0	0	0	0	0	0	0	0	0	0	0	0	0
4/23/2024	8:00 AM	0	0	0	0	0	0	0	0	0	0	0	0	0
4/23/2024	8:15 AM	0	0	0	0	0	0	0	0	0	0	0	0	0
4/23/2024	8:30 AM	0	0	0	0	0	0	0	0	0	0	0	0	0
4/23/2024	8:45 AM	0	0	0	0	0	0	0	0	0	0	0	0	0
4/23/2024	9:00 AM	0	0	0	0	0	0	0	0	0	0	0	0	0
4/23/2024	9:15 AM	0	0	0	0	0	0	0	0	0	0	0	0	0
4/23/2024	9:30 AM	0	0	0	0	0	0	0	0	0	0	0	0	0
4/23/2024	9:45 AM	0	0	0	0	0	0	0	0	0	0	0	0	0
4/23/2024	10:00 AM	0	0	0	0	0	0	0	0	0	0	0	0	0
4/23/2024	10:15 AM	0	0	0	0	0	0	0	0	0	0	0	0	0
4/23/2024	10:30 AM	0	0	0	0	0	0	0	0	0	0	0	0	0
4/23/2024	10:45 AM	0	0	0	0	0	0	0	0	0	0	0	0	0
4/23/2024	11:00 AM	0	0	0	0	0	0	0	0	0	0	0	0	0
4/23/2024	11:15 AM	0	0	0	0	0	0	0	0	0	0	0	0	0
4/23/2024	11:30 AM	0	0	0	0	0	0	0	0	0	0	0	0	0
4/23/2024	11:45 AM	0	0	0	0	0	0	0	0	0	0	0	0	0
4/23/2024	12:00 PM	0	0	0	0	0	0	0	0	0	0	0	0	0
4/23/2024	12:15 PM	0	0	0	0	0	0	0	0	0	0	0	0	0
4/23/2024	12:30 PM	0	0	0	0	0	0	0	0	0	0	0	0	0
4/23/2024	12:45 PM	0	0	0	0	0	0	0	0	0	0	0	0	0
4/23/2024	1:00 PM	0	0	0	0	0	0	0	0	0	0	0	0	0
4/23/2024	1:15 PM	0	0	0	0	0	0	0	0	0	0	0	0	0
4/23/2024	1:30 PM	0	0	0	0	0	0	0	0	0	0	0	0	0
4/23/2024	1:45 PM	0	0	0	0	0	0	0	0	0	0	0	0	0
4/23/2024	2:00 PM	0	0	0	0	0	0	0	0	0	0	0	0	0
4/23/2024	2:15 PM	0	0	0	0	0	0	0	0	0	0	0	0	0
4/23/2024	2:30 PM	0	0	0	0	0	0	0	0	0	0	0	0	0
4/23/2024	2:45 PM	0	0	0	0	0	0	0	0	0	0	0	0	0
4/23/2024	3:00 PM	0	0	0	0	0	0	0	0	0	0	0	0	0
4/23/2024	3:15 PM	0	0	0	0	0	0	0	0	0	0	0	0	0
4/23/2024	3:30 PM	0	0	0	0	0	0	0	0	0	0	0	0	0
4/23/2024	3:45 PM	0	0	0	0	0	0	0	0	0	0	0	0	0
4/23/2024	4:00 PM	0	0	0	0	0	0	0	0	0	0	0	0	0
4/23/2024	4:15 PM	0	0	0	0	0	0	0	0	0	0	0	0	0
4/23/2024	4:30 PM	0	0	0	0	0	0	0	0	0	0	0	0	0
4/23/2024	4:45 PM	0	0	0	0	0	0	0	0	0	0	0	0	0
4/23/2024	5:00 PM	0	0	0	0	0	0	0	0	0	0	0	0	0
4/23/2024	5:15 PM	0	0	0	0	0	0	0	0	0	0	0	0	0
4/23/2024	5:30 PM	0	0	0	0	0	0	0	0	0	0	0	0	0
4/23/2024	5:45 PM	0	0	0	0	0	0	0	0	0	0	0	0	0
4/23/2024	6:00 PM	0	0	0	0	0	0	0	0	0	0	0	0	0
4/23/2024	6:15 PM	0	100	8	0	2	0	0	0	2	0	0	0	0
4/23/2024	6:30 PM	0	175	19	0	4	2	0	0	3	0	0	0	0
4/23/2024	6:45 PM	1	257	34	0	4	3	0	0	3	0	0	0	0
4/23/2024	7:00 PM	1	348	44	0	6	4	0	1	3	0	0	0	0
4/23/2024	7:15 PM	1	322	45	0	5	4	0	2	2	0	0	0	0
4/23/2024	7:30 PM	1	324	44	0	5	2	0	2	2	0	0	0	0
4/23/2024	7:45 PM	1	320	34	0	5	1	0	2	3	0	0	0	0
4/23/2024	8:00 PM	1	287	27	0	3	1	0	1	4	0	0	0	0
4/23/2024	8:15 PM	1	254	19	0	2	1	0	0	3	0	0	0	0
4/23/2024	8:30 PM	2	224	13	0	0	1	0	0	2	0	0	0	0
4/23/2024	8:45 PM	1	212	12	0	1	1	0	0	1	0	0	0	0
4/23/2024	9:00 PM	1	208	12	0	1	0	0	0	0	0	0	0	0
4/23/2024	9:15 PM	1	201	13	0	1	0	0	0	0	0	0	0	0
4/23/2024	9:30 PM	0	193	13	0	2	0	0	0	0	0	0	0	0
4/23/2024	9:45 PM	0	157	10	0	1	0	0	0	0	0	0	0	0
4/23/2024	10:00 PM	0	133	9	0	1	0	0	0	0	0	0	0	0
4/23/2024	10:15 PM	0	129	10	0	1	0	0	0	0	0	0	0	0
4/23/2024	10:30 PM	0	113	7	0	0	0	0	0	0	0	0	0	0
4/23/2024	10:45 PM	0	104	6	0	0	0	0	0	0	0	0	0	0
4/23/2024	11:00 PM	0	88	4	0	0	0	0	0	0	0	0	0	0
4/23/2024	11:15 PM	0	58	1	0	0	0	0	0	0	0	0	0	0
4/23/2024	11:30 PM	0	35	0	0	0	0	0	0	0	0	0	0	0
4/23/2024	11:45 PM	0	14	0	0	0	0	0	0	0	0	0	0	0

4/24/2024	12:00 AM	0	54	3	0	1	0	0	0	2	0	0	0	0
4/24/2024	12:15 AM	0	43	2	0	1	0	0	0	2	0	0	0	0
4/24/2024	12:30 AM	0	46	3	0	0	0	0	0	1	0	0	0	0
4/24/2024	12:45 AM	0	41	1	0	0	0	0	0	1	0	0	0	0
4/24/2024	1:00 AM	0	38	1	0	0	0	0	0	1	0	0	0	0
4/24/2024	1:15 AM	0	39	2	0	0	0	0	0	0	0	0	0	0
4/24/2024	1:30 AM	0	38	1	0	0	0	0	0	0	0	0	0	0
4/24/2024	1:45 AM	0	33	2	0	0	0	0	0	0	0	0	0	0
4/24/2024	2:00 AM	0	37	2	0	0	0	0	0	1	0	0	0	0
4/24/2024	2:15 AM	0	44	2	0	0	0	0	0	1	0	0	0	0
4/24/2024	2:30 AM	0	54	3	0	0	0	0	0	2	0	0	0	0
4/24/2024	2:45 AM	0	58	2	0	1	0	0	0	2	0	0	0	0
4/24/2024	3:00 AM	0	62	2	0	2	0	0	0	1	0	0	0	0
4/24/2024	3:15 AM	0	70	3	0	2	0	0	0	2	0	0	0	0
4/24/2024	3:30 AM	0	74	2	0	2	0	0	0	1	0	0	0	0
4/24/2024	3:45 AM	0	95	5	0	2	0	0	0	2	0	0	0	0
4/24/2024	4:00 AM	0	118	9	0	2	0	0	0	2	0	0	0	0
4/24/2024	4:15 AM	0	141	16	0	2	0	0	0	1	0	0	0	0
4/24/2024	4:30 AM	0	176	24	0	2	0	0	0	2	0	0	0	0
4/24/2024	4:45 AM	0	223	30	0	2	2	0	0	2	0	0	0	0
4/24/2024	5:00 AM	0	278	37	0	1	2	0	0	2	0	0	0	0
4/24/2024	5:15 AM	0	364	48	0	6	3	0	0	4	0	0	0	0
4/24/2024	5:30 AM	3	464	72	0	12	3	0	0	5	0	0	0	0
4/24/2024	5:45 AM	4	593	101	0	14	1	0	0	4	0	0	0	0
4/24/2024	6:00 AM	5	721	133	0	19	11	0	1	6	1	0	0	0
4/24/2024	6:15 AM	6	866	163	0	15	12	0	1	4	1	0	0	0
4/24/2024	6:30 AM	3	1037	188	1	12	13	0	2	4	2	0	0	0
4/24/2024	6:45 AM	2	1089	198	1	13	13	0	4	6	2	0	0	0
4/24/2024	7:00 AM	1	1102	200	1	12	5	0	4	6	1	0	0	0
4/24/2024	7:15 AM	0	1032	190	3	15	3	0	4	7	1	0	0	0
4/24/2024	7:30 AM	0	878	174	2	16	5	0	3	10	0	0	0	0
4/24/2024	7:45 AM	0	845	167	2	15	7	0	1	10	0	1	0	0
4/24/2024	8:00 AM	0	792	154	3	12	6	0	0	9	1	2	0	0
4/24/2024	8:15 AM	0	761	145	1	11	6	0	1	10	1	2	0	0
4/24/2024	8:30 AM	0	780	134	1	10	5	0	2	7	1	3	0	0
4/24/2024	8:45 AM	0	746	122	1	8	4	0	2	8	1	2	0	0
4/24/2024	9:00 AM	0	741	119	0	12	9	0	7	11	0	1	0	0
4/24/2024	9:15 AM	0	705	115	0	13	14	0	7	11	1	1	0	0
4/24/2024	9:30 AM	0	643	117	0	10	13	0	8	10	1	0	0	0
4/24/2024	9:45 AM	0	607	123	2	12	16	0	12	10	1	0	0	0
4/24/2024	10:00 AM	0	595	124	2	9	12	0	7	9	1	0	0	0
4/24/2024	10:15 AM	0	612	139	2	9	11	0	9	13	0	0	0	0
4/24/2024	10:30 AM	0	642	144	2	15	16	0	7	18	0	0	0	0
4/24/2024	10:45 AM	1	661	153	0	15	15	0	5	24	1	0	0	0
4/24/2024	11:00 AM	1	686	161	0	20	15	0	6	27	1	0	0	0
4/24/2024	11:15 AM	1	685	153	0	22	13	0	5	31	1	0	0	0
4/24/2024	11:30 AM	1	651	143	0	18	13	0	6	29	2	0	0	0
4/24/2024	11:45 AM	0	646	125	0	20	16	0	6	22	1	0	0	0
4/24/2024	12:00 PM	0	630	114	0	17	19	0	5	20	1	0	0	0
4/24/2024	12:15 PM	0	611	106	0	15	22	0	3	12	1	0	0	0
4/24/2024	12:30 PM	0	633	104	0	17	20	0	3	10	0	0	0	0
4/24/2024	12:45 PM	0	592	106	0	15	14	0	1	13	0	0	0	0
4/24/2024	1:00 PM	0	545	98	0	14	10	0	1	11	0	0	0	0
4/24/2024	1:15 PM	0	540	97	0	15	8	0	2	11	0	0	0	0
4/24/2024	1:30 PM	0	532	89	1	12	7	0	2	13	0	0	1	0
4/24/2024	1:45 PM	0	558	80	2	15	7	0	2	11	0	0	1	0
4/24/2024	2:00 PM	1	606	81	2	19	7	0	2	12	1	0	1	0
4/24/2024	2:15 PM	1	614	74	3	17	4	0	1	11	1	0	1	0
4/24/2024	2:30 PM	1	633	78	3	22	3	0	0	8	1	0	0	0
4/24/2024	2:45 PM	1	652	92	2	23	6	0	0	6	1	0	0	0
4/24/2024	3:00 PM	1	650	102	3	23	5	0	0	6	0	0	0	0
4/24/2024	3:15 PM	1	688	115	2	26	6	0	0	6	0	0	0	0
4/24/2024	3:30 PM	1	694	126	1	21	7	0	0	6	0	0	0	0
4/24/2024	3:45 PM	1	688	115	1	17	5	0	1	8	1	0	0	1
4/24/2024	4:00 PM	1	683	111	0	13	9	0	1	7	1	0	0	1
4/24/2024	4:15 PM	2	713	115	0	7	9	0	1	8	2	0	0	1
4/24/2024	4:30 PM	3	756	109	0	9	6	0	1	7	2	0	0	1
4/24/2024	4:45 PM	3	780	110	0	6	6	0	0	4	2	0	0	0
4/24/2024	5:00 PM	3	801	105	0	5	3	0	1	2	2	0	0	0
4/24/2024	5:15 PM	2	742	92	0	6	2	0	1	0	1	0	0	0
4/24/2024	5:30 PM	1	679	77	1	3	2	0	1	1	1	0	0	0
4/24/2024	5:45 PM	1	620	68	1	6	2	0	1	2	0	0	0	0
4/24/2024	6:00 PM	1	550	61	1	6	2	0	0	3	0	0	0	0
4/24/2024	6:15 PM	1	485	57	1	7	3	0	0	3	0	0	0	0
4/24/2024	6:30 PM	1	435	64	0	12	3	0	1	4	0	0	0	0
4/24/2024	6:45 PM	1	385	69	0	12	2	0	1	3	0	0	0	0
4/24/2024	7:00 PM	1	335	63	0	10	1	0	1	2	0	0	0	0
4/24/2024	7:15 PM	2	328	64	0	9	1	0	1	2	0	0	0	0
4/24/2024	7:30 PM	2	312	55	0	4	1	0	0	0	0	0	0	0
4/24/2024	7:45 PM	2	327	43	0	2	1	0	0	0	0	0	0	0
4/24/2024	8:00 PM	1	325	38	0	2	1	0	0	2	0	0	0	0
4/24/2024	8:15 PM	0	325	25	0	1	1	0	0	2	0	0	0	0
4/24/2024	8:30 PM	0	296	20	0	1	1	0	0	2	0	0	0	0
4/24/2024	8:45 PM	0	247	15	0	0	1	0	0	3	0	0	0	0
4/24/2024	9:00 PM	0	249	12	0	0	1	0	0	1	0	0	0	0
4/24/2024	9:15 PM	0	207	11	0	0	0	0	0	1	0	0	0	0
4/24/2024	9:30 PM	0	208	9	0	0	0	0	0	1	0	0	0	0
4/24/2024	9:45 PM	0	180	10	0	1	0	0	0	0	0	0	0	0
4/24/2024	10:00 PM	0	140	12	0	3	0	0	0	0	0	0	0	0
4/24/2024	10:15 PM	0	134	8	0	3	0	0	0	0	0	0	0	0
4/24/2024	10:30 PM	0	109	7	0	3	0	0	0	1	0	0	0	0
4/24/2024	10:45 PM	0	104	5	0	2	0	0	0	1	0	0	0	0
4/24/2024	11:00 PM	0	96	4	0	1	0	0	0	1	0	0	0	0
4/24/2024	11:15 PM	0	65	3	0	1	0	0	0	1	0	0	0	0
4/24/2024	11:30 PM	0	37	2	0	1	0	0	0	0	0	0	0	0
4/24/2024	11:45 PM	0	18	1	0	1	0	0	0	0	0	0	0	0

4/25/2024	12:00 AM	0	48	4	0	1	0	0	0	0	0	0	0
4/25/2024	12:15 AM	0	44	3	0	1	0	0	0	0	0	0	0
4/25/2024	12:30 AM	0	42	2	0	1	0	0	0	2	0	0	0	0
4/25/2024	12:45 AM	0	49	4	0	1	0	0	0	2	0	0	0	0
4/25/2024	1:00 AM	0	50	4	0	1	0	0	0	2	0	0	0	0
4/25/2024	1:15 AM	0	46	3	0	2	0	0	0	3	0	0	0	0
4/25/2024	1:30 AM	0	46	4	0	2	0	0	0	1	0	0	0	0
4/25/2024	1:45 AM	0	39	3	0	1	0	0	0	2	0	0	0	0
4/25/2024	2:00 AM	0	42	4	0	1	0	0	0	2	0	0	0	0
4/25/2024	2:15 AM	0	36	6	0	0	0	0	0	1	0	0	0	0
4/25/2024	2:30 AM	0	41	6	0	0	0	0	0	1	0	0	0	0
4/25/2024	2:45 AM	0	44	7	0	0	0	0	0	1	0	0	0	0
4/25/2024	3:00 AM	0	54	8	0	1	0	0	0	1	0	0	0	0
4/25/2024	3:15 AM	0	64	10	0	2	0	0	0	1	0	0	0	0
4/25/2024	3:30 AM	0	77	10	0	2	0	0	0	1	0	0	0	0
4/25/2024	3:45 AM	0	97	11	0	2	0	0	1	0	0	0	0	0
4/25/2024	4:00 AM	0	119	14	0	1	0	0	1	2	0	0	0	0
4/25/2024	4:15 AM	0	143	19	0	1	0	0	2	2	0	0	0	0
4/25/2024	4:30 AM	1	172	27	0	3	1	0	2	2	0	0	0	0
4/25/2024	4:45 AM	1	228	37	1	3	3	0	1	3	0	0	0	0
4/25/2024	5:00 AM	1	280	46	1	5	3	0	1	1	0	0	0	0
4/25/2024	5:15 AM	2	357	63	1	5	6	0	0	2	0	0	0	0
4/25/2024	5:30 AM	1	469	97	1	4	10	0	2	3	0	0	0	0
4/25/2024	5:45 AM	2	585	132	0	8	10	0	2	2	0	0	0	0
4/25/2024	6:00 AM	2	698	173	0	7	16	0	2	3	0	0	0	0
4/25/2024	6:15 AM	2	840	202	0	7	20	0	2	5	0	0	0	0
4/25/2024	6:30 AM	2	989	202	0	13	16	0	0	5	1	0	0	0
4/25/2024	6:45 AM	1	1086	206	0	13	14	0	0	8	1	0	0	0
4/25/2024	7:00 AM	1	1080	188	0	14	8	0	0	9	1	0	0	0
4/25/2024	7:15 AM	0	1052	171	1	18	1	0	0	6	2	0	0	1
4/25/2024	7:30 AM	0	974	170	1	17	4	1	1	6	2	0	0	1
4/25/2024	7:45 AM	0	864	170	1	18	6	1	6	6	4	0	0	1
4/25/2024	8:00 AM	1	854	168	1	19	9	1	7	8	5	0	0	1
4/25/2024	8:15 AM	1	792	161	0	16	13	1	9	8	4	0	0	0
4/25/2024	8:30 AM	1	717	158	0	17	10	0	8	9	3	0	0	0
4/25/2024	8:45 AM	1	691	150	1	17	15	0	3	9	3	0	0	0
4/25/2024	9:00 AM	1	665	162	2	17	13	0	2	5	3	0	0	0
4/25/2024	9:15 AM	1	602	167	2	18	12	0	0	9	3	0	0	0
4/25/2024	9:30 AM	1	575	157	2	13	15	0	1	11	3	0	0	0
4/25/2024	9:45 AM	1	556	145	1	11	12	0	3	10	1	0	1	0
4/25/2024	10:00 AM	0	528	128	1	14	11	0	3	13	0	0	1	0
4/25/2024	10:15 AM	0	528	118	1	13	11	0	3	10	1	0	1	0
4/25/2024	10:30 AM	0	492	127	1	14	10	0	2	7	1	0	1	0
4/25/2024	10:45 AM	0	478	127	2	13	11	0	0	7	1	0	0	0
4/25/2024	11:00 AM	2	471	134	1	13	15	0	0	6	2	0	0	0
4/25/2024	11:15 AM	3	522	150	2	14	13	1	2	5	1	0	0	0
4/25/2024	11:30 AM	3	551	140	2	14	14	1	3	6	1	0	0	0
4/25/2024	11:45 AM	4	553	150	1	15	11	1	3	6	1	0	0	0
4/25/2024	12:00 PM	3	555	155	1	14	12	1	5	5	0	0	0	0
4/25/2024	12:15 PM	4	525	151	1	17	12	0	5	7	0	0	0	0
4/25/2024	12:30 PM	4	550	145	2	15	12	0	5	8	0	0	0	0
4/25/2024	12:45 PM	3	562	140	2	16	11	0	6	7	0	0	0	0
4/25/2024	1:00 PM	3	566	125	2	18	12	0	5	6	1	0	0	0
4/25/2024	1:15 PM	1	577	114	1	20	12	0	3	4	2	0	0	0
4/25/2024	1:30 PM	1	570	118	0	24	10	0	4	3	3	0	0	0
4/25/2024	1:45 PM	1	604	111	1	28	14	0	4	4	3	0	0	0
4/25/2024	2:00 PM	0	589	113	1	26	10	0	4	5	2	0	0	0
4/25/2024	2:15 PM	0	609	120	2	19	11	0	5	6	1	0	0	0
4/25/2024	2:30 PM	0	618	131	4	19	10	0	4	5	0	0	0	0
4/25/2024	2:45 PM	0	582	138	4	17	5	0	3	5	0	0	0	0
4/25/2024	3:00 PM	1	626	152	4	16	7	0	2	5	0	0	0	0
4/25/2024	3:15 PM	2	628	140	3	20	5	0	2	5	0	0	0	0
4/25/2024	3:30 PM	3	651	144	1	17	6	0	2	5	0	0	0	0
4/25/2024	3:45 PM	4	689	140	0	15	7	0	2	5	0	0	0	0
4/25/2024	4:00 PM	3	697	134	0	14	3	0	3	5	0	0	0	0
4/25/2024	4:15 PM	2	749	139	0	13	6	0	3	4	0	0	0	0
4/25/2024	4:30 PM	1	730	117	0	15	4	0	2	3	0	0	0	0
4/25/2024	4:45 PM	0	722	102	0	14	5	0	3	2	0	0	0	0
4/25/2024	5:00 PM	0	712	91	0	15	5	0	2	1	0	0	0	0
4/25/2024	5:15 PM	0	656	92	0	14	2	0	2	2	0	0	0	0
4/25/2024	5:30 PM	1	655	109	0	12	2	0	3	2	0	0	0	0
4/25/2024	5:45 PM	1	629	116	0	10	0	0	3	2	0	0	0	0
4/25/2024	6:00 PM	1	585	108	0	7	0	0	3	4	0	0	0	0
4/25/2024	6:15 PM	1	429	80	0	4	0	0	2	3	0	0	0	0
4/25/2024	6:30 PM	0	270	43	0	2	0	0	1	3	0	0	0	0
4/25/2024	6:45 PM	0	123	18	0	1	0	0	0	2	0	0	0	0
4/25/2024	7:00 PM	0	0	0	0	0	0	0	0	0	0	0	0	0
4/25/2024	7:15 PM	0	0	0	0	0	0	0	0	0	0	0	0	0
4/25/2024	7:30 PM	0	0	0	0	0	0	0	0	0	0	0	0	0
4/25/2024	7:45 PM	0	0	0	0	0	0	0	0	0	0	0	0	0
4/25/2024	8:00 PM	0	0	0	0	0	0	0	0	0	0	0	0	0
4/25/2024	8:15 PM	0	0	0	0	0	0	0	0	0	0	0	0	0
4/25/2024	8:30 PM	0	0	0	0	0	0	0	0	0	0	0	0	0
4/25/2024	8:45 PM	0	0	0	0	0	0	0	0	0	0	0	0	0
4/25/2024	9:00 PM	0	0	0	0	0	0	0	0	0	0	0	0	0
4/25/2024	9:15 PM	0	0	0	0	0	0	0	0	0	0	0	0	0
4/25/2024	9:30 PM	0	0	0	0	0	0	0	0	0	0	0	0	0
4/25/2024	9:45 PM	0	0	0	0	0	0	0	0	0	0	0	0	0
4/25/2024	10:00 PM	0	0	0	0	0	0	0	0	0	0	0	0	0
4/25/2024	10:15 PM	0	0	0	0	0	0	0	0	0	0	0	0	0
4/25/2024	10:30 PM	0	0	0	0	0	0	0	0	0	0	0	0	0
4/25/2024	10:45 PM	0	0	0	0	0	0	0	0	0	0	0	0	0
4/25/2024	11:00 PM	0	0	0	0	0	0	0	0	0	0	0	0	0
4/25/2024	11:15 PM	0	0	0	0	0	0	0	0	0	0	0	0	0
4/25/2024	11:30 PM	0	0	0	0	0	0	0	0	0	0	0	0	0
4/25/2024	11:45 PM	0	0	0	0	0	0	0	0	0	0	0	0	0

Bi-Directional Class Count || NB EB 15min

Columbia, SC

Marr Traffic DATA COLLECTION
www.marrtraffic.com

Site 20
I-26 James F. Byrnes Expy On/Off-Ramp,
north of US-176 Broad River Rd

Date
Tuesday, April 23, 2024

Lat/Long
34.100835°, -81.173944°

Click here for Map

Weather
Fair
58°F

Click here for Detailed Weather

0000 - 2400 (Weekday 24h Session) (04-23-2024)
NB EB 15min

	Northbound (Movement 20.1)													15min	60min
Time	1	2	3	4	5	6	7	8	9	10	11	12	13	Total	Total
0000 - 0015	0	0	0	0	0	0	0	0	0	0	0	0	0	**0**	
0015 - 0030	0	0	0	0	0	0	0	0	0	0	0	0	0	**0**	
0030 - 0045	0	0	0	0	0	0	0	0	0	0	0	0	0	**0**	
0045 - 0100	0	0	0	0	0	0	0	0	0	0	0	0	0	**0**	**0**
0100 - 0115	0	0	0	0	0	0	0	0	0	0	0	0	0	**0**	
0115 - 0130	0	0	0	0	0	0	0	0	0	0	0	0	0	**0**	
0130 - 0145	0	0	0	0	0	0	0	0	0	0	0	0	0	**0**	
0145 - 0200	0	0	0	0	0	0	0	0	0	0	0	0	0	**0**	**0**
0200 - 0215	0	0	0	0	0	0	0	0	0	0	0	0	0	**0**	
0215 - 0230	0	0	0	0	0	0	0	0	0	0	0	0	0	**0**	
0230 - 0245	0	0	0	0	0	0	0	0	0	0	0	0	0	**0**	
0245 - 0300	0	0	0	0	0	0	0	0	0	0	0	0	0	**0**	**0**
0300 - 0315	0	0	0	0	0	0	0	0	0	0	0	0	0	**0**	
0315 - 0330	0	0	0	0	0	0	0	0	0	0	0	0	0	**0**	
0330 - 0345	0	0	0	0	0	0	0	0	0	0	0	0	0	**0**	
0345 - 0400	0	0	0	0	0	0	0	0	0	0	0	0	0	**0**	**0**
0400 - 0415	0	0	0	0	0	0	0	0	0	0	0	0	0	**0**	
0415 - 0430	0	0	0	0	0	0	0	0	0	0	0	0	0	**0**	
0430 - 0445	0	0	0	0	0	0	0	0	0	0	0	0	0	**0**	
0445 - 0500	0	0	0	0	0	0	0	0	0	0	0	0	0	**0**	**0**
0500 - 0515	0	0	0	0	0	0	0	0	0	0	0	0	0	**0**	
0515 - 0530	0	0	0	0	0	0	0	0	0	0	0	0	0	**0**	
0530 - 0545	0	0	0	0	0	0	0	0	0	0	0	0	0	**0**	
0545 - 0600	0	0	0	0	0	0	0	0	0	0	0	0	0	**0**	**0**
0600 - 0615	0	0	0	0	0	0	0	0	0	0	0	0	0	**0**	
0615 - 0630	0	0	0	0	0	0	0	0	0	0	0	0	0	**0**	
0630 - 0645	0	0	0	0	0	0	0	0	0	0	0	0	0	**0**	
0645 - 0700	0	0	0	0	0	0	0	0	0	0	0	0	0	**0**	**0**
0700 - 0715	0	0	0	0	0	0	0	0	0	0	0	0	0	**0**	
0715 - 0730	0	0	0	0	0	0	0	0	0	0	0	0	0	**0**	
0730 - 0745	0	0	0	0	0	0	0	0	0	0	0	0	0	**0**	
0745 - 0800	0	0	0	0	0	0	0	0	0	0	0	0	0	**0**	**0**
0800 - 0815	0	0	0	0	0	0	0	0	0	0	0	0	0	**0**	
0815 - 0830	0	0	0	0	0	0	0	0	0	0	0	0	0	**0**	
0830 - 0845	0	0	0	0	0	0	0	0	0	0	0	0	0	**0**	
0845 - 0900	0	0	0	0	0	0	0	0	0	0	0	0	0	**0**	**0**
0900 - 0915	0	0	0	0	0	0	0	0	0	0	0	0	0	**0**	
0915 - 0930	0	0	0	0	0	0	0	0	0	0	0	0	0	**0**	
0930 - 0945	0	0	0	0	0	0	0	0	0	0	0	0	0	**0**	
0945 - 1000	0	0	0	0	0	0	0	0	0	0	0	0	0	**0**	**0**
1000 - 1015	0	0	0	0	0	0	0	0	0	0	0	0	0	**0**	
1015 - 1030	0	0	0	0	0	0	0	0	0	0	0	0	0	**0**	
1030 - 1045	0	0	0	0	0	0	0	0	0	0	0	0	0	**0**	
1045 - 1100	0	0	0	0	0	0	0	0	0	0	0	0	0	**0**	**0**
1100 - 1115	0	0	0	0	0	0	0	0	0	0	0	0	0	**0**	
1115 - 1130	0	0	0	0	0	0	0	0	0	0	0	0	0	**0**	
1130 - 1145	0	0	0	0	0	0	0	0	0	0	0	0	0	**0**	
1145 - 1200	0	0	0	0	0	0	0	0	0	0	0	0	0	**0**	**0**
1200 - 1215	0	0	0	0	0	0	0	0	0	0	0	0	0	**0**	
1215 - 1230	0	0	0	0	0	0	0	0	0	0	0	0	0	**0**	
1230 - 1245	0	0	0	0	0	0	0	0	0	0	0	0	0	**0**	
1245 - 1300	0	0	0	0	0	0	0	0	0	0	0	0	0	**0**	**0**
1300 - 1315	0	0	0	0	0	0	0	0	0	0	0	0	0	**0**	
1315 - 1330	0	0	0	0	0	0	0	0	0	0	0	0	0	**0**	
1330 - 1345	0	0	0	0	0	0	0	0	0	0	0	0	0	**0**	
1345 - 1400	0	0	0	0	0	0	0	0	0	0	0	0	0	**0**	**0**
1400 - 1415	0	0	0	0	0	0	0	0	0	0	0	0	0	**0**	
1415 - 1430	0	0	0	0	0	0	0	0	0	0	0	0	0	**0**	
1430 - 1445	0	0	0	0	0	0	0	0	0	0	0	0	0	**0**	
1445 - 1500	0	0	0	0	0	0	0	0	0	0	0	0	0	**0**	**0**
1500 - 1515	0	0	0	0	0	0	0	0	0	0	0	0	0	**0**	
1515 - 1530	0	0	0	0	0	0	0	0	0	0	0	0	0	**0**	
1530 - 1545	0	0	0	0	0	0	0	0	0	0	0	0	0	**0**	
1545 - 1600	0	0	0	0	0	0	0	0	0	0	0	0	0	**0**	**0**
1600 - 1615	0	0	0	0	0	0	0	0	0	0	0	0	0	**0**	
1615 - 1630	0	0	0	0	0	0	0	0	0	0	0	0	0	**0**	
1630 - 1645	0	0	0	0	0	0	0	0	0	0	0	0	0	**0**	
1645 - 1700	0	0	0	0	0	0	0	0	0	0	0	0	0	**0**	**0**
1700 - 1715	0	0	0	0	0	0	0	0	0	0	0	0	0	**0**	
1715 - 1730	0	0	0	0	0	0	0	0	0	0	0	0	0	**0**	
1730 - 1745	0	0	0	0	0	0	0	0	0	0	0	0	0	**0**	
1745 - 1800	0	0	0	0	0	0	0	0	0	0	0	0	0	**0**	**0**
1800 - 1815	0	0	0	0	0	0	0	0	0	0	0	0	0	**0**	
1815 - 1830	0	0	0	0	0	0	0	0	0	0	0	0	0	**0**	
1830 - 1845	0	0	0	0	0	0	0	0	0	0	0	0	0	**0**	
1845 - 1900	0	0	0	0	0	0	0	0	0	0	0	0	0	**0**	**0**
1900 - 1915	0	27	0	0	0	0	0	0	0	0	0	0	0	**27**	
1915 - 1930	0	16	1	0	0	0	0	0	0	0	0	0	0	**17**	
1930 - 1945	0	15	1	0	0	0	0	0	0	0	0	0	0	**16**	
1945 - 2000	0	18	0	0	0	1	0	0	0	0	0	0	0	**19**	**79**
2000 - 2015	0	9	0	0	0	0	0	0	0	0	0	0	0	**9**	
2015 - 2030	0	16	0	0	0	0	0	0	0	0	0	0	0	**16**	
2030 - 2045	0	10	0	0	0	0	0	0	0	0	0	0	0	**10**	
2045 - 2100	0	8	0	0	0	0	0	0	0	0	0	0	0	**8**	**43**
2100 - 2115	0	3	0	0	0	0	0	0	0	0	0	0	0	**3**	
2115 - 2130	0	7	0	0	0	0	0	0	0	0	0	0	0	**7**	
2130 - 2145	0	5	0	0	0	0	0	0	1	0	0	0	0	**6**	
2145 - 2200	0	11	0	0	0	0	0	0	0	0	0	0	0	**11**	**27**
2200 - 2215	0	2	0	0	0	0	0	0	0	0	0	0	0	**2**	
2215 - 2230	0	6	0	0	0	0	0	0	0	0	0	0	0	**6**	
2230 - 2245	0	4	0	0	0	0	0	0	0	0	0	0	0	**4**	
2245 - 2300	0	1	0	0	0	0	0	0	0	0	0	0	0	**1**	**13**
2300 - 2315	0	1	0	0	0	0	0	0	0	0	0	0	0	**1**	
2315 - 2330	0	1	0	0	0	0	0	0	0	0	0	0	0	**1**	
2330 - 2345	0	5	0	0	0	0	0	0	0	0	0	0	0	**5**	
2345 - 0000	0	2	0	0	0	0	0	0	0	0	0	0	0	**2**	**9**

Session Total	0	167	2	0	0	1	0	0	1	0	0	0	0	**171**
Session Average	0.00	1.74	0.02	0.00	0.00	0.01	0.00	0.00	0.01	0.00	0.00	0.00	0.00	**1.78**
Session Percentage	0.00	97.66	1.17	0.00	0.00	0.58	0.00	0.00	0.58	0.00	0.00	0.00	0.00	

AM Peak Hour	-	-	-	-	-	-	-	-	-	-	-	-	-	-
AM Peak Volume	0	0	0	0	0	0	0	0	0	0	0	0	0	**0**

Noon Peak Hour	-	-	-	-	-	-	-	-	-	-	-	-	-	-
Noon Peak Volume	0	0	0	0	0	0	0	0	0	0	0	0	0	**0**

PM Peak Hour	-	1900 - 2000	1845 - 1945	-	-	1900 - 2000	-	-	-	-	-	-	-	**1900 - 2000**
PM Peak Volume	0	76	2	0	0	1	0	0	0	0	0	0	0	**79**

Site 20
I-26 James F. Byrnes Expy On/Off-Ramp,
north of US-176 Broad River Rd

Date
Wednesday, April 24, 2024

Lat/Long
34.100835°, -81.173944°

Weather
Fair
66°F

Click here for Detailed Weather

0000 - 2400 (Weekday 24h Session) (04-24-2024)
NB EB 15min

	Northbound (Movement 20.1)														
Time	1	2	3	4	5	6	7	8	9	10	11	12	13	15min Total	60min Total
0000 - 0015	0	1	0	0	0	0	0	0	0	0	0	0	0	**1**	
0015 - 0030	0	1	0	0	0	0	0	0	1	0	0	0	0	**2**	
0030 - 0045	0	1	0	0	0	0	0	0	0	0	0	0	0	**1**	
0045 - 0100	0	1	0	0	0	0	0	0	0	0	0	0	0	**1**	**5**
0100 - 0115	0	0	1	0	0	0	0	0	0	0	0	0	0	**1**	
0115 - 0130	0	1	0	0	0	0	0	0	0	0	0	0	0	**1**	
0130 - 0145	0	2	0	0	0	0	0	0	0	0	0	0	0	**2**	
0145 - 0200	0	1	0	0	1	0	0	0	0	0	0	0	0	**2**	**6**
0200 - 0215	0	1	0	0	0	0	0	0	0	0	0	0	0	**1**	
0215 - 0230	0	1	0	0	0	0	0	0	0	0	0	0	0	**1**	
0230 - 0245	0	1	0	0	0	0	0	0	1	0	0	0	0	**2**	
0245 - 0300	0	2	0	0	0	0	0	0	0	0	0	0	0	**2**	**6**
0300 - 0315	0	2	1	0	0	0	0	0	0	0	0	0	0	**3**	
0315 - 0330	0	1	0	0	0	0	0	0	0	0	0	0	0	**1**	
0330 - 0345	0	1	0	0	0	0	0	0	0	0	0	0	0	**1**	
0345 - 0400	0	0	0	0	0	0	0	0	0	0	0	0	0	**0**	**5**
0400 - 0415	0	1	0	0	0	0	0	0	0	0	0	0	0	**1**	
0415 - 0430	0	0	0	0	0	0	0	0	0	0	0	0	0	**0**	
0430 - 0445	0	5	0	0	0	0	0	0	0	0	0	0	0	**5**	
0445 - 0500	0	3	0	0	0	0	0	0	0	0	0	0	0	**3**	**9**
0500 - 0515	0	4	0	0	1	0	0	0	0	0	0	0	0	**5**	
0515 - 0530	0	9	0	0	0	0	0	0	0	0	0	0	0	**9**	
0530 - 0545	0	13	0	0	1	0	0	0	1	0	0	0	0	**15**	
0545 - 0600	0	13	0	1	1	0	0	0	0	0	0	0	0	**15**	**44**
0600 - 0615	0	6	0	0	1	0	0	0	0	0	0	0	0	**7**	
0615 - 0630	0	16	0	0	0	1	0	0	0	0	0	0	0	**17**	
0630 - 0645	0	23	1	0	0	0	0	0	0	0	0	0	0	**24**	
0645 - 0700	0	17	0	0	0	0	0	0	0	0	0	0	0	**17**	**65**
0700 - 0715	0	18	0	0	0	0	0	0	0	0	0	0	0	**18**	
0715 - 0730	0	23	0	0	0	0	0	0	1	0	0	0	0	**24**	
0730 - 0745	0	29	0	1	0	0	0	0	0	0	0	0	0	**30**	
0745 - 0800	0	18	2	0	0	0	0	0	1	0	0	0	0	**21**	**93**
0800 - 0815	0	28	0	0	0	0	0	0	1	0	0	0	0	**29**	
0815 - 0830	0	10	8	0	0	0	0	0	0	0	0	0	0	**18**	
0830 - 0845	0	17	5	0	1	1	2	0	0	0	0	0	0	**26**	
0845 - 0900	0	21	7	0	0	0	0	0	1	0	0	0	0	**29**	**102**
0900 - 0915	0	14	6	0	0	0	0	1	0	0	0	0	0	**21**	
0915 - 0930	0	19	4	0	0	0	0	0	0	0	0	0	0	**23**	
0930 - 0945	0	22	6	0	2	0	0	0	0	0	0	0	0	**30**	
0945 - 1000	0	18	3	0	0	0	0	0	0	0	0	0	0	**21**	**95**
1000 - 1015	0	11	4	0	3	0	0	0	1	0	0	0	0	**19**	
1015 - 1030	0	16	4	0	0	0	0	0	0	0	0	0	0	**20**	
1030 - 1045	0	10	2	0	0	0	0	0	0	0	0	0	0	**12**	
1045 - 1100	0	21	8	0	1	0	0	1	0	0	0	0	0	**31**	**82**
1100 - 1115	0	17	2	0	0	0	0	0	3	0	0	0	0	**22**	
1115 - 1130	0	11	2	0	0	0	0	0	1	0	0	0	0	**14**	
1130 - 1145	0	17	5	0	1	0	0	0	0	0	0	0	0	**23**	
1145 - 1200	0	15	2	0	1	1	0	0	1	0	0	0	0	**20**	**79**
1200 - 1215	0	20	4	0	1	0	0	0	0	0	0	0	0	**25**	
1215 - 1230	1	29	2	0	0	0	0	0	1	0	0	0	0	**33**	
1230 - 1245	0	29	8	0	0	0	0	0	0	0	0	0	0	**37**	
1245 - 1300	0	25	8	0	0	0	0	0	0	0	0	0	0	**33**	**128**
1300 - 1315	0	22	10	0	0	0	0	0	0	0	0	0	0	**32**	
1315 - 1330	1	15	5	0	1	0	0	0	1	0	0	0	0	**23**	
1330 - 1345	0	11	4	0	0	0	0	4	0	0	0	0	0	**19**	
1345 - 1400	0	15	4	0	0	0	0	0	0	0	0	0	0	**19**	**93**
1400 - 1415	0	18	3	0	0	1	0	1	2	0	0	0	0	**25**	
1415 - 1430	0	24	9	0	0	0	0	0	0	0	0	0	0	**33**	
1430 - 1445	0	27	7	0	1	0	0	0	2	0	0	0	0	**37**	
1445 - 1500	0	20	3	0	0	0	1	0	0	0	0	0	0	**24**	**119**
1500 - 1515	1	34	10	0	2	0	0	0	0	0	0	0	0	**47**	
1515 - 1530	0	35	12	0	1	0	0	0	0	0	0	0	0	**48**	
1530 - 1545	0	34	4	0	1	0	0	0	0	0	0	0	0	**39**	
1545 - 1600	0	36	7	0	1	1	0	0	1	0	0	0	0	**46**	**180**
1600 - 1615	0	39	5	0	0	0	0	0	0	0	0	0	0	**44**	
1615 - 1630	1	43	8	0	0	0	0	0	0	0	0	0	0	**52**	
1630 - 1645	1	30	11	0	1	0	0	0	1	0	0	0	0	**44**	
1645 - 1700	1	35	9	0	2	0	0	0	2	0	0	0	0	**49**	**189**
1700 - 1715	0	57	11	1	0	0	0	0	0	0	0	0	0	**69**	
1715 - 1730	0	45	5	0	1	0	0	0	0	0	0	0	0	**51**	
1730 - 1745	0	30	8	0	1	0	0	0	0	0	0	0	0	**39**	
1745 - 1800	1	26	8	0	1	0	0	0	1	0	0	0	0	**37**	**196**
1800 - 1815	1	29	8	0	1	1	0	0	0	0	0	0	0	**40**	
1815 - 1830	0	26	6	0	0	1	0	0	0	0	0	0	0	**33**	
1830 - 1845	0	21	4	0	0	0	0	0	0	0	0	0	0	**25**	
1845 - 1900	0	19	1	0	0	0	0	0	0	0	0	0	0	**20**	**118**
1900 - 1915	0	23	5	0	0	0	0	0	0	0	0	0	0	**28**	
1915 - 1930	1	13	1	0	0	0	0	0	0	0	0	0	0	**15**	
1930 - 1945	0	16	0	0	0	0	0	0	0	0	0	0	0	**16**	
1945 - 2000	1	14	1	0	0	0	0	0	0	0	0	0	0	**16**	**75**
2000 - 2015	0	12	4	0	0	0	0	0	0	0	0	0	0	**16**	
2015 - 2030	0	18	4	0	0	0	0	0	0	0	0	0	0	**22**	
2030 - 2045	0	12	0	0	1	0	0	0	0	0	0	0	0	**13**	
2045 - 2100	0	10	0	0	0	0	0	0	0	0	0	0	0	**10**	**61**
2100 - 2115	0	14	0	0	0	0	0	0	0	0	0	0	0	**14**	
2115 - 2130	0	9	0	0	0	0	0	0	0	0	0	0	0	**9**	
2130 - 2145	0	11	0	0	0	0	0	0	0	0	0	0	0	**11**	
2145 - 2200	0	5	1	0	0	0	0	0	0	0	0	0	0	**6**	**40**
2200 - 2215	0	4	0	0	0	0	0	0	0	0	0	0	0	**4**	
2215 - 2230	0	3	0	0	0	0	0	0	0	0	0	0	0	**3**	
2230 - 2245	0	3	0	0	0	0	0	0	0	0	0	0	0	**3**	
2245 - 2300	0	2	1	0	0	0	0	0	0	0	0	0	0	**3**	**13**
2300 - 2315	0	4	0	0	0	0	0	0	0	0	0	0	0	**4**	
2315 - 2330	0	1	0	0	0	0	0	0	0	0	0	0	0	**1**	
2330 - 2345	0	3	0	0	0	0	0	0	0	0	0	0	0	**3**	
2345 - 0000	0	1	0	0	0	0	0	0	0	0	0	0	0	**1**	**9**

Session Total	10	1454	274	3	30	7	3	7	24	0	0	0	0	**1812**
Session Average	0.10	15.15	2.85	0.03	0.31	0.07	0.03	0.07	0.25	0.00	0.00	0.00	0.00	**18.88**
Session Percentage	0.55	80.24	15.12	0.17	1.66	0.39	0.17	0.39	1.32	0.00	0.00	0.00	0.00	

AM Peak Hour	-	0715 - 0815	0815 - 0915	0500 - 0600	0915 - 1015	0530 - 0630	0745 - 0845	0815 - 0915	0715 - 0815	-	-	-	-	**0715 - 0815**
AM Peak Volume	0	98	26	1	5	1	2	1	3	0	0	0	0	**104**

Noon Peak Hour	1130 - 1230	1445 - 1545	1430 - 1530	-	1000 - 1100	1100 - 1200	1400 - 1500	1315 - 1415	1100 - 1200	-	-	-	-	**1445 - 1545**
Noon Peak Volume	1	123	32	0	4	1	1	5	5	0	0	0	0	**158**

PM Peak Hour	1600 - 1700	1630 - 1730	1615 - 1715	1615 - 1715	1500 - 1600	1730 - 1830	-	-	1600 - 1700	-	-	-	-	**1615 - 1715**
PM Peak Volume	3	167	39	1	5	2	0	0	3	0	0	0	0	**214**

Site 20
I-26 James F. Byrnes Expy On/Off-Ramp,
north of US-176 Broad River Rd

Date
Thursday, April 25, 2024

Lat/Long
34.100835°, -81.173944°

Weather
Fair
67°F

Click here for Detailed Weather

0000 - 2400 (Weekday 24h Session) (04-25-2024)
NB EB 15min

	Northbound (Movement 20.1)													15min	60min
TIME	1	2	3	4	5	6	7	8	9	10	11	12	13	Total	Total
0000 - 0015	0	4	0	0	0	0	0	0	1	0	0	0	0	**5**	
0015 - 0030	0	2	0	0	1	0	0	0	0	0	0	0	0	**3**	
0030 - 0045	0	4	0	0	0	0	0	0	0	0	0	0	0	**4**	
0045 - 0100	0	2	0	0	0	0	0	0	0	0	0	0	0	**2**	**14**
0100 - 0115	0	0	0	0	0	0	0	0	0	0	0	0	0	**0**	
0115 - 0130	0	3	0	0	0	0	0	0	0	0	0	0	0	**3**	
0130 - 0145	0	1	0	0	0	0	0	0	0	0	0	0	0	**1**	
0145 - 0200	0	2	0	0	0	0	0	0	0	0	0	0	0	**2**	**6**
0200 - 0215	0	0	0	0	0	0	0	0	0	0	0	0	0	**0**	
0215 - 0230	0	0	0	0	1	0	0	0	1	0	0	0	0	**2**	
0230 - 0245	0	0	0	0	0	0	0	0	0	0	0	0	0	**0**	
0245 - 0300	0	0	0	0	0	0	0	0	0	0	0	0	0	**0**	**2**
0300 - 0315	0	1	0	0	0	0	0	0	0	0	0	0	0	**1**	
0315 - 0330	0	0	0	0	1	0	0	0	1	0	0	0	0	**2**	
0330 - 0345	0	0	1	0	0	0	0	0	0	0	0	0	0	**1**	
0345 - 0400	0	0	0	0	0	0	0	0	0	0	0	0	0	**0**	**4**
0400 - 0415	0	2	0	0	0	0	0	0	1	0	0	0	0	**3**	
0415 - 0430	0	2	0	0	0	0	0	0	0	0	0	0	0	**2**	
0430 - 0445	0	6	0	0	0	0	0	0	0	0	0	0	0	**6**	
0445 - 0500	0	0	0	0	0	0	0	0	0	0	0	0	0	**0**	**11**
0500 - 0515	0	7	0	0	0	0	0	0	1	0	0	0	0	**8**	
0515 - 0530	0	8	1	0	0	0	0	0	0	0	0	0	0	**9**	
0530 - 0545	0	21	0	0	1	0	0	0	0	0	0	0	0	**22**	
0545 - 0600	0	7	0	0	0	0	0	0	0	0	0	0	0	**7**	**46**
0600 - 0615	0	7	2	0	0	0	0	0	0	0	0	0	0	**9**	
0615 - 0630	0	12	2	0	0	0	0	0	1	0	0	0	0	**15**	
0630 - 0645	0	17	1	0	1	0	0	0	0	0	0	0	0	**19**	
0645 - 0700	0	13	3	0	0	0	0	0	0	0	0	0	0	**16**	**59**
0700 - 0715	0	15	4	0	1	0	0	0	0	0	0	0	0	**20**	
0715 - 0730	0	16	2	0	0	0	0	0	1	1	0	0	0	**20**	
0730 - 0745	0	21	4	0	1	0	0	0	1	0	0	0	0	**27**	
0745 - 0800	0	22	4	0	1	0	0	0	1	0	0	0	0	**28**	**95**
0800 - 0815	0	26	9	0	1	2	0	1	0	0	0	0	0	**39**	
0815 - 0830	0	18	7	0	0	0	0	0	0	0	0	0	0	**25**	
0830 - 0845	0	15	8	0	1	0	0	0	0	0	0	0	0	**24**	
0845 - 0900	0	12	6	0	0	0	0	0	0	0	0	0	0	**18**	**106**
0900 - 0915	0	16	7	0	0	0	0	0	0	0	0	0	0	**23**	
0915 - 0930	0	9	6	0	0	0	0	0	1	0	0	0	0	**16**	
0930 - 0945	0	14	7	0	1	0	0	0	0	1	0	0	0	**23**	
0945 - 1000	0	12	6	0	0	0	0	0	0	0	0	0	0	**18**	**80**
1000 - 1015	0	16	4	0	0	0	0	0	0	0	0	0	0	**20**	
1015 - 1030	0	16	6	0	1	0	0	0	0	0	0	0	0	**23**	
1030 - 1045	0	17	5	1	0	2	0	0	0	0	0	0	0	**25**	
1045 - 1100	0	13	9	0	0	0	0	0	1	0	0	0	0	**23**	**91**
1100 - 1115	0	22	10	0	0	0	1	0	0	0	0	0	0	**33**	
1115 - 1130	0	26	2	0	0	1	0	1	1	0	0	0	0	**31**	
1130 - 1145	0	14	4	0	0	2	1	1	0	0	0	0	0	**22**	
1145 - 1200	0	20	5	0	0	0	0	0	0	1	0	0	0	**26**	**112**
1200 - 1215	0	27	7	0	2	0	0	2	0	0	0	0	0	**38**	
1215 - 1230	0	20	6	0	0	0	0	0	0	0	0	0	0	**26**	
1230 - 1245	0	23	8	1	2	0	0	0	1	0	0	0	0	**35**	
1245 - 1300	0	24	2	0	0	0	0	0	0	0	0	0	0	**26**	**125**
1300 - 1315	0	18	6	0	1	0	0	0	0	0	0	0	0	**25**	
1315 - 1330	0	27	7	0	0	2	0	0	1	0	0	0	0	**37**	
1330 - 1345	0	17	4	0	1	1	1	0	0	0	0	0	0	**24**	
1345 - 1400	0	32	6	1	1	1	0	1	0	0	0	0	0	**42**	**128**
1400 - 1415	1	22	2	0	0	0	0	0	1	0	0	0	0	**26**	
1415 - 1430	0	31	4	0	0	0	0	0	0	0	0	0	0	**35**	
1430 - 1445	0	20	8	0	0	3	0	0	1	0	0	0	0	**32**	
1445 - 1500	0	21	5	0	0	1	0	0	0	0	0	0	0	**27**	**120**
1500 - 1515	1	33	12	0	1	1	0	0	1	0	0	0	0	**49**	
1515 - 1530	2	27	4	0	0	0	0	0	0	0	0	0	0	**33**	
1530 - 1545	0	33	11	0	3	1	0	1	0	0	0	0	0	**49**	
1545 - 1600	0	31	11	0	1	0	0	1	1	0	0	0	0	**45**	**176**
1600 - 1615	0	28	6	0	0	2	0	0	0	0	0	0	0	**36**	
1615 - 1630	0	37	2	0	0	1	0	0	0	0	0	0	0	**40**	
1630 - 1645	0	37	13	0	0	0	0	0	1	0	0	0	0	**51**	
1645 - 1700	0	31	10	0	1	0	0	0	0	0	0	0	0	**42**	**169**
1700 - 1715	0	45	15	0	0	0	0	0	0	0	0	0	0	**60**	
1715 - 1730	0	30	5	0	0	0	0	1	0	0	0	0	0	**36**	
1730 - 1745	0	43	5	0	2	0	0	0	0	0	0	0	0	**50**	
1745 - 1800	0	32	6	0	0	0	0	0	0	0	0	0	0	**38**	**184**
1800 - 1815	1	26	17	0	0	0	0	0	0	0	1	0	0	**45**	
1815 - 1830	0	36	5	0	0	0	0	0	0	0	0	0	0	**41**	
1830 - 1845	0	28	2	0	0	0	0	0	0	0	0	0	0	**30**	
1845 - 1900	0	20	4	0	1	0	0	0	0	0	0	0	0	**25**	**141**
1900 - 1915	0	0	0	0	0	0	0	0	0	0	0	0	0	**0**	
1915 - 1930	0	0	0	0	0	0	0	0	0	0	0	0	0	**0**	
1930 - 1945	0	0	0	0	0	0	0	0	0	0	0	0	0	**0**	
1945 - 2000	0	0	0	0	0	0	0	0	0	0	0	0	0	**0**	**0**
2000 - 2015	0	0	0	0	0	0	0	0	0	0	0	0	0	**0**	
2015 - 2030	0	0	0	0	0	0	0	0	0	0	0	0	0	**0**	
2030 - 2045	0	0	0	0	0	0	0	0	0	0	0	0	0	**0**	
2045 - 2100	0	0	0	0	0	0	0	0	0	0	0	0	0	**0**	**0**
2100 - 2115	0	0	0	0	0	0	0	0	0	0	0	0	0	**0**	
2115 - 2130	0	0	0	0	0	0	0	0	0	0	0	0	0	**0**	
2130 - 2145	0	0	0	0	0	0	0	0	0	0	0	0	0	**0**	
2145 - 2200	0	0	0	0	0	0	0	0	0	0	0	0	0	**0**	**0**
2200 - 2215	0	0	0	0	0	0	0	0	0	0	0	0	0	**0**	
2215 - 2230	0	0	0	0	0	0	0	0	0	0	0	0	0	**0**	
2230 - 2245	0	0	0	0	0	0	0	0	0	0	0	0	0	**0**	
2245 - 2300	0	0	0	0	0	0	0	0	0	0	0	0	0	**0**	**0**
2300 - 2315	0	0	0	0	0	0	0	0	0	0	0	0	0	**0**	
2315 - 2330	0	0	0	0	0	0	0	0	0	0	0	0	0	**0**	
2330 - 2345	0	0	0	0	0	0	0	0	0	0	0	0	0	**0**	
2345 - 0000	0	0	0	0	0	0	0	0	0	0	0	0	0	**0**	**0**

Session Total	5	1260	318	3	28	20	3	9	19	3	1	0	0	**1669**
Session Average	0.05	13.13	3.31	0.03	0.29	0.21	0.03	0.09	0.20	0.03	0.01	0.00	0.00	**17.39**
Session Percentage	0.30	75.49	19.05	0.18	1.68	1.20	0.18	0.54	1.14	0.18	0.06	0.00	0.00	

AM Peak Hour	-	0730 - 0830	0800 - 0900	0945 - 1045	0700 - 0800	0715 - 0815	-	0715 - 0815	0700 - 0800	0630 - 0730	-	-	-	**0730 - 0830**
AM Peak Hour Volume	0	87	30	1	3	2	0	1	3	1	0	0	0	**119**

Noon Peak Hour	1430 - 1530	1445 - 1545	1445 - 1545	1000 - 1100	1145 - 1245	1415 - 1515	1045 - 1145	1115 - 1215	1030 - 1130	1100 - 1200	-	-	-	**1445 - 1545**
Noon Peak Hour Volume	3	114	32	1	4	5	2	4	2	1	0	0	0	**158**

PM Peak Hour	1500 - 1600	1615 - 1715	1630 - 1730	-	1500 - 1600	1530 - 1630	-	1500 - 1600	1500 - 1600	-	1715 - 1815	-	-	**1615 - 1715**
PM Peak Hour Volume	3	150	43	0	5	4	0	2	2	0	1	0	0	**193**

Bi-Directional Class Count || NB EB Average 15min

Columbia, SC

Marr Traffic DATA COLLECTION
www.marrtraffic.com

Site 20
I-26 James F. Byrnes Expy On/Off-Ramp,
north of US-176 Broad River Rd

Date
Tuesday, April 23, 2024

Lat/Long
34.100835°, -81.173944°

Weather
Fair
58°F

0000 - 2400 (Weekday 24h Session) (All Dates)
NB EB Average 15min

	NB EB Average 15min													15min	60min
Time	1	2	3	4	5	6	7	8	9	10	11	12	13	Total	Total
0000 - 0015	0	2	0	0	0	0	0	0	0	0	0	0	0	**2**	
0015 - 0030	0	1	0	0	0	0	0	0	0	0	0	0	0	**2**	
0030 - 0045	0	2	0	0	0	0	0	0	0	0	0	0	0	**2**	
0045 - 0100	0	1	0	0	0	0	0	0	0	0	0	0	0	**1**	**6**
0100 - 0115	0	0	0	0	0	0	0	0	0	0	0	0	0	**0**	
0115 - 0130	0	1	0	0	0	0	0	0	0	0	0	0	0	**1**	
0130 - 0145	0	1	0	0	0	0	0	0	0	0	0	0	0	**1**	
0145 - 0200	0	1	0	0	0	0	0	0	0	0	0	0	0	**1**	**4**
0200 - 0215	0	0	0	0	0	0	0	0	0	0	0	0	0	**0**	
0215 - 0230	0	0	0	0	0	0	0	0	0	0	0	0	0	**1**	
0230 - 0245	0	0	0	0	0	0	0	0	0	0	0	0	0	**1**	
0245 - 0300	0	1	0	0	0	0	0	0	0	0	0	0	0	**1**	**3**
0300 - 0315	0	1	0	0	0	0	0	0	0	0	0	0	0	**1**	
0315 - 0330	0	0	0	0	0	0	0	0	0	0	0	0	0	**1**	
0330 - 0345	0	0	0	0	0	0	0	0	0	0	0	0	0	**1**	
0345 - 0400	0	0	0	0	0	0	0	0	0	0	0	0	0	**0**	**3**
0400 - 0415	0	1	0	0	0	0	0	0	0	0	0	0	0	**1**	
0415 - 0430	0	1	0	0	0	0	0	0	0	0	0	0	0	**1**	
0430 - 0445	0	4	0	0	0	0	0	0	0	0	0	0	0	**4**	
0445 - 0500	0	1	0	0	0	0	0	0	0	0	0	0	0	**1**	**7**
0500 - 0515	0	4	0	0	0	0	0	0	0	0	0	0	0	**4**	
0515 - 0530	0	6	0	0	0	0	0	0	0	0	0	0	0	**6**	
0530 - 0545	0	11	0	0	1	0	0	0	0	0	0	0	0	**12**	
0545 - 0600	0	7	0	0	0	0	0	0	0	0	0	0	0	**7**	**30**
0600 - 0615	0	4	1	0	0	0	0	0	0	0	0	0	0	**5**	
0615 - 0630	0	9	1	0	0	0	0	0	0	0	0	0	0	**11**	
0630 - 0645	0	13	1	0	0	0	0	0	0	0	0	0	0	**14**	
0645 - 0700	0	10	1	0	0	0	0	0	0	0	0	0	0	**11**	**41**
0700 - 0715	0	11	1	0	0	0	0	0	0	0	0	0	0	**13**	
0715 - 0730	0	13	1	0	0	0	0	0	1	0	0	0	0	**15**	
0730 - 0745	0	17	1	0	0	0	0	0	0	0	0	0	0	**19**	
0745 - 0800	0	13	2	0	0	0	0	0	1	0	0	0	0	**16**	**63**
0800 - 0815	0	18	3	0	0	1	0	0	0	0	0	0	0	**23**	
0815 - 0830	0	9	5	0	0	0	0	0	0	0	0	0	0	**14**	
0830 - 0845	0	11	4	0	1	0	1	0	0	0	0	0	0	**17**	
0845 - 0900	0	11	4	0	0	0	0	0	0	0	0	0	0	**16**	**69**
0900 - 0915	0	10	4	0	0	0	0	0	0	0	0	0	0	**15**	
0915 - 0930	0	9	3	0	0	0	0	0	0	0	0	0	0	**13**	
0930 - 0945	0	12	4	0	1	0	0	0	0	0	0	0	0	**18**	
0945 - 1000	0	10	3	0	0	0	0	0	0	0	0	0	0	**13**	**58**
1000 - 1015	0	9	3	0	1	0	0	0	0	0	0	0	0	**13**	
1015 - 1030	0	11	3	0	0	0	0	0	0	0	0	0	0	**14**	
1030 - 1045	0	9	2	0	0	1	0	0	0	0	0	0	0	**12**	
1045 - 1100	0	11	6	0	0	0	0	0	0	0	0	0	0	**18**	**58**
1100 - 1115	0	13	4	0	0	0	0	0	1	0	0	0	0	**18**	
1115 - 1130	0	12	1	0	0	0	0	0	1	0	0	0	0	**15**	
1130 - 1145	0	10	3	0	0	1	0	0	0	0	0	0	0	**15**	
1145 - 1200	0	12	2	0	0	0	0	0	0	0	0	0	0	**15**	**64**
1200 - 1215	0	16	4	0	1	0	0	1	0	0	0	0	0	**21**	
1215 - 1230	0	16	3	0	0	0	0	0	0	0	0	0	0	**20**	
1230 - 1245	0	17	5	0	1	0	0	0	0	0	0	0	0	**24**	
1245 - 1300	0	16	3	0	0	0	0	0	0	0	0	0	0	**20**	**84**
1300 - 1315	0	13	5	0	0	0	0	0	0	0	0	0	0	**19**	
1315 - 1330	0	14	4	0	0	1	0	0	1	0	0	0	0	**20**	
1330 - 1345	0	9	3	0	0	0	0	1	0	0	0	0	0	**14**	
1345 - 1400	0	16	3	0	0	0	0	0	0	0	0	0	0	**20**	**74**
1400 - 1415	0	13	2	0	0	0	0	0	1	0	0	0	0	**17**	
1415 - 1430	0	18	4	0	0	0	0	0	0	0	0	0	0	**23**	
1430 - 1445	0	16	5	0	0	1	0	0	1	0	0	0	0	**23**	
1445 - 1500	0	14	3	0	0	0	0	0	0	0	0	0	0	**17**	**80**
1500 - 1515	1	22	7	0	1	0	0	0	0	0	0	0	0	**32**	
1515 - 1530	1	21	5	0	0	0	0	0	0	0	0	0	0	**27**	
1530 - 1545	0	22	5	0	1	0	0	0	0	0	0	0	0	**29**	
1545 - 1600	0	22	6	0	1	0	0	0	1	0	0	0	0	**30**	**119**
1600 - 1615	0	22	4	0	0	1	0	0	0	0	0	0	0	**27**	
1615 - 1630	0	27	3	0	0	0	0	0	0	0	0	0	0	**31**	
1630 - 1645	0	22	8	0	0	0	0	0	1	0	0	0	0	**32**	
1645 - 1700	0	22	6	0	1	0	0	0	1	0	0	0	0	**30**	**119**
1700 - 1715	0	34	9	0	0	0	0	0	0	0	0	0	0	**43**	
1715 - 1730	0	25	3	0	0	0	0	0	0	0	0	0	0	**29**	
1730 - 1745	0	24	4	0	1	0	0	0	0	0	0	0	0	**30**	
1745 - 1800	0	19	5	0	0	0	0	0	0	0	0	0	0	**25**	**127**
1800 - 1815	1	18	8	0	0	0	0	0	0	0	0	0	0	**28**	
1815 - 1830	0	21	4	0	0	0	0	0	0	0	0	0	0	**25**	
1830 - 1845	0	16	2	0	0	0	0	0	0	0	0	0	0	**18**	
1845 - 1900	0	13	2	0	0	0	0	0	0	0	0	0	0	**15**	**86**
1900 - 1915	0	17	2	0	0	0	0	0	0	0	0	0	0	**18**	
1915 - 1930	0	10	1	0	0	0	0	0	0	0	0	0	0	**11**	
1930 - 1945	0	10	0	0	0	0	0	0	0	0	0	0	0	**11**	
1945 - 2000	0	11	0	0	0	0	0	0	0	0	0	0	0	**12**	**51**
2000 - 2015	0	7	1	0	0	0	0	0	0	0	0	0	0	**8**	
2015 - 2030	0	11	1	0	0	0	0	0	0	0	0	0	0	**13**	
2030 - 2045	0	7	0	0	0	0	0	0	0	0	0	0	0	**8**	
2045 - 2100	0	6	0	0	0	0	0	0	0	0	0	0	0	**6**	**35**
2100 - 2115	0	6	0	0	0	0	0	0	0	0	0	0	0	**6**	
2115 - 2130	0	5	0	0	0	0	0	0	0	0	0	0	0	**5**	
2130 - 2145	0	5	0	0	0	0	0	0	0	0	0	0	0	**6**	
2145 - 2200	0	5	0	0	0	0	0	0	0	0	0	0	0	**6**	**22**
2200 - 2215	0	2	0	0	0	0	0	0	0	0	0	0	0	**2**	
2215 - 2230	0	3	0	0	0	0	0	0	0	0	0	0	0	**3**	
2230 - 2245	0	2	0	0	0	0	0	0	0	0	0	0	0	**2**	
2245 - 2300	0	1	0	0	0	0	0	0	0	0	0	0	0	**1**	**9**
2300 - 2315	0	2	0	0	0	0	0	0	0	0	0	0	0	**2**	
2315 - 2330	0	1	0	0	0	0	0	0	0	0	0	0	0	**1**	
2330 - 2345	0	3	0	0	0	0	0	0	0	0	0	0	0	**3**	
2345 - 0000	0	1	0	0	0	0	0	0	0	0	0	0	0	**1**	**6**

Session Total	5	960	198	2	19	9	2	5	15	1	0	0	0	**1217**
Session Average	0.05	10.00	2.06	0.02	0.20	0.10	0.02	0.06	0.15	0.01	0.00	0.00	0.00	**12.68**
Session Percentage	0.41	78.89	16.27	0.16	1.59	0.77	0.16	0.44	1.20	0.08	0.03	0.00	0.00	

AM Peak Hour	-	0715 - 0815	0815 - 0915	0500 - 0600	0930 - 1030	0745 - 0845	0745 - 0845	0715 - 0815	0715 - 0815	0630 - 0730	-	-	-	**0715 - 0815**
AM Peak Volume	0	61	18	0	2	1	1	0	2	0	0	0	0	**73**

Noon Peak Hour	1430 - 1530	1445 - 1545	1430 - 1530	1000 - 1100	1445 - 1545	1315 - 1415	1045 - 1145	1315 - 1415	1030 - 1130	1100 - 1200	-	-	-	**1445 - 1545**
Noon Peak Volume	1	79	20	0	3	2	1	2	2	0	0	0	0	**105**

PM Peak Hour	1500 - 1600	1645 - 1745	1615 - 1715	1615 - 1715	1500 - 1600	1530 - 1630	-	1500 - 1600	1545 - 1645	-	1715 - 1815	-	-	**1615 - 1715**
PM Peak Volume	1	105	26	0	3	2	0	1	1	0	0	0	0	**136**

Bi-Directional Class Count || Volume Summary 15min

Columbia, SC

Marr Traffic DATA COLLECTION
www.marrtraffic.com

Site 20
I-26 James F. Byrnes Expy On/Off-Ramp,
north of US-176 Broad River Rd

Date
Tuesday, April 23, 2024

Lat/Long
34.100835°, -81.173944°

Weather
Fair
58°F

Click here for Detailed Weather

0000 - 2400 (Weekday 24h Session) (04-23-2024)

Volume Summary 15min

TIME	Volume Summary 15min NB	Volume Summary 15min SB	15min Total	60min Total
0000 - 0015	0	0	**0**	
0015 - 0030	0	0	**0**	
0030 - 0045	0	0	**0**	
0045 - 0100	0	0	**0**	**0**
0100 - 0115	0	0	**0**	
0115 - 0130	0	0	**0**	
0130 - 0145	0	0	**0**	
0145 - 0200	0	0	**0**	**0**
0200 - 0215	0	0	**0**	
0215 - 0230	0	0	**0**	
0230 - 0245	0	0	**0**	
0245 - 0300	0	0	**0**	**0**
0300 - 0315	0	0	**0**	
0315 - 0330	0	0	**0**	
0330 - 0345	0	0	**0**	
0345 - 0400	0	0	**0**	**0**
0400 - 0415	0	0	**0**	
0415 - 0430	0	0	**0**	
0430 - 0445	0	0	**0**	
0445 - 0500	0	0	**0**	**0**
0500 - 0515	0	0	**0**	
0515 - 0530	0	0	**0**	
0530 - 0545	0	0	**0**	
0545 - 0600	0	0	**0**	**0**
0600 - 0615	0	0	**0**	
0615 - 0630	0	0	**0**	
0630 - 0645	0	0	**0**	
0645 - 0700	0	0	**0**	**0**
0700 - 0715	0	0	**0**	
0715 - 0730	0	0	**0**	
0730 - 0745	0	0	**0**	
0745 - 0800	0	0	**0**	**0**
0800 - 0815	0	0	**0**	
0815 - 0830	0	0	**0**	
0830 - 0845	0	0	**0**	
0845 - 0900	0	0	**0**	**0**
0900 - 0915	0	0	**0**	
0915 - 0930	0	0	**0**	
0930 - 0945	0	0	**0**	
0945 - 1000	0	0	**0**	**0**
1000 - 1015	0	0	**0**	
1015 - 1030	0	0	**0**	
1030 - 1045	0	0	**0**	
1045 - 1100	0	0	**0**	**0**
1100 - 1115	0	0	**0**	
1115 - 1130	0	0	**0**	
1130 - 1145	0	0	**0**	
1145 - 1200	0	0	**0**	**0**

Time	Volume Summary 15min NB	Volume Summary 15min SB	15min Total	60min Total
1200 - 1215	0	0	**0**	
1215 - 1230	0	0	**0**	
1230 - 1245	0	0	**0**	
1245 - 1300	0	0	**0**	**0**
1300 - 1315	0	0	**0**	
1315 - 1330	0	0	**0**	
1330 - 1345	0	0	**0**	
1345 - 1400	0	0	**0**	**0**
1400 - 1415	0	0	**0**	
1415 - 1430	0	0	**0**	
1430 - 1445	0	0	**0**	
1445 - 1500	0	0	**0**	**0**
1500 - 1515	0	0	**0**	
1515 - 1530	0	0	**0**	
1530 - 1545	0	0	**0**	
1545 - 1600	0	0	**0**	**0**
1600 - 1615	0	0	**0**	
1615 - 1630	0	0	**0**	
1630 - 1645	0	0	**0**	
1645 - 1700	0	0	**0**	**0**
1700 - 1715	0	0	**0**	
1715 - 1730	0	0	**0**	
1730 - 1745	0	0	**0**	
1745 - 1800	0	0	**0**	**0**
1800 - 1815	0	0	**0**	
1815 - 1830	0	0	**0**	
1830 - 1845	0	0	**0**	
1845 - 1900	0	0	**0**	**0**
1900 - 1915	27	0	**27**	
1915 - 1930	17	0	**17**	
1930 - 1945	16	0	**16**	
1945 - 2000	19	0	**19**	**79**
2000 - 2015	9	0	**9**	
2015 - 2030	16	0	**16**	
2030 - 2045	10	0	**10**	
2045 - 2100	8	0	**8**	**43**
2100 - 2115	3	0	**3**	
2115 - 2130	7	0	**7**	
2130 - 2145	6	0	**6**	
2145 - 2200	11	0	**11**	**27**
2200 - 2215	2	0	**2**	
2215 - 2230	6	0	**6**	
2230 - 2245	4	0	**4**	
2245 - 2300	1	0	**1**	**13**
2300 - 2315	1	0	**1**	
2315 - 2330	1	0	**1**	
2330 - 2345	5	0	**5**	
2345 - 0000	2	0	**2**	**9**

Session Total	171	0	**171**
Session Average	1.78	0.00	**1.78**
Session Percentage	100.00	0.00	

Site 20

I-26 James F. Byrnes Expy On/Off-Ramp,
north of US-176 Broad River Rd

Date

Wednesday, April 24, 2024

Lat/Long

34.100835°, -81.173944°

Weather

Fair
66°F

Click here for Detailed Weather

0000 - 2400 (Weekday 24h Session) (04-24-2024)

Volume Summary 15min

TIME	Volume Summary 15min NB	SB	15min Total	60min Total
0000 - 0015	1	0	**1**	
0015 - 0030	2	0	**2**	
0030 - 0045	1	0	**1**	
0045 - 0100	1	0	**1**	**5**
0100 - 0115	1	0	**1**	
0115 - 0130	1	0	**1**	
0130 - 0145	2	0	**2**	
0145 - 0200	2	0	**2**	**6**
0200 - 0215	1	0	**1**	
0215 - 0230	1	0	**1**	
0230 - 0245	2	0	**2**	
0245 - 0300	2	0	**2**	**6**
0300 - 0315	3	0	**3**	
0315 - 0330	1	0	**1**	
0330 - 0345	1	0	**1**	
0345 - 0400	0	0	**0**	**5**
0400 - 0415	1	0	**1**	
0415 - 0430	0	0	**0**	
0430 - 0445	5	0	**5**	
0445 - 0500	3	0	**3**	**9**
0500 - 0515	5	0	**5**	
0515 - 0530	9	0	**9**	
0530 - 0545	15	0	**15**	
0545 - 0600	15	0	**15**	**44**
0600 - 0615	7	0	**7**	
0615 - 0630	17	0	**17**	
0630 - 0645	24	0	**24**	
0645 - 0700	17	0	**17**	**65**
0700 - 0715	18	0	**18**	
0715 - 0730	24	0	**24**	
0730 - 0745	30	0	**30**	
0745 - 0800	21	0	**21**	**93**
0800 - 0815	29	0	**29**	
0815 - 0830	18	0	**18**	
0830 - 0845	26	0	**26**	
0845 - 0900	29	0	**29**	**102**
0900 - 0915	21	0	**21**	
0915 - 0930	23	0	**23**	
0930 - 0945	30	0	**30**	
0945 - 1000	21	0	**21**	**95**
1000 - 1015	19	0	**19**	
1015 - 1030	20	0	**20**	
1030 - 1045	12	0	**12**	
1045 - 1100	31	0	**31**	**82**
1100 - 1115	22	0	**22**	
1115 - 1130	14	0	**14**	
1130 - 1145	23	0	**23**	
1145 - 1200	20	0	**20**	**79**

Time	Volume Summary 15min NB	SB	15min Total	60min Total
1200 - 1215	25	0	**25**	
1215 - 1230	33	0	**33**	
1230 - 1245	37	0	**37**	
1245 - 1300	33	0	**33**	**128**
1300 - 1315	32	0	**32**	
1315 - 1330	23	0	**23**	
1330 - 1345	19	0	**19**	
1345 - 1400	19	0	**19**	**93**
1400 - 1415	25	0	**25**	
1415 - 1430	33	0	**33**	
1430 - 1445	37	0	**37**	
1445 - 1500	24	0	**24**	**119**
1500 - 1515	47	0	**47**	
1515 - 1530	48	0	**48**	
1530 - 1545	39	0	**39**	
1545 - 1600	46	0	**46**	**180**
1600 - 1615	44	0	**44**	
1615 - 1630	52	0	**52**	
1630 - 1645	44	0	**44**	
1645 - 1700	49	0	**49**	**189**
1700 - 1715	69	0	**69**	
1715 - 1730	51	0	**51**	
1730 - 1745	39	0	**39**	
1745 - 1800	37	0	**37**	**196**
1800 - 1815	40	0	**40**	
1815 - 1830	33	0	**33**	
1830 - 1845	25	0	**25**	
1845 - 1900	20	0	**20**	**118**
1900 - 1915	28	0	**28**	
1915 - 1930	15	0	**15**	
1930 - 1945	16	0	**16**	
1945 - 2000	16	0	**16**	**75**
2000 - 2015	16	0	**16**	
2015 - 2030	22	0	**22**	
2030 - 2045	13	0	**13**	
2045 - 2100	10	0	**10**	**61**
2100 - 2115	14	0	**14**	
2115 - 2130	9	0	**9**	
2130 - 2145	11	0	**11**	
2145 - 2200	6	0	**6**	**40**
2200 - 2215	4	0	**4**	
2215 - 2230	3	0	**3**	
2230 - 2245	3	0	**3**	
2245 - 2300	3	0	**3**	**13**
2300 - 2315	4	0	**4**	
2315 - 2330	1	0	**1**	
2330 - 2345	3	0	**3**	
2345 - 0000	1	0	**1**	**9**

Session Total	1812	0	**1812**
Session Average	18.88	0.00	**18.88**
Session Percentage	100.00	0.00	

Site 20

I-26 James F. Byrnes Expy On/Off-Ramp,
north of US-176 Broad River Rd

Date

Thursday, April 25, 2024

Lat/Long

34.100835°, -81.173944°

Weather

Fair
67°F

Click here for Detailed Weather

0000 - 2400 (Weekday 24h Session) (04-25-2024)

Volume Summary 15min

TIME	Volume Summary 15min NB	SB	15min Total	60min Total
0000 - 0015	5	0	**5**	
0015 - 0030	3	0	**3**	
0030 - 0045	4	0	**4**	
0045 - 0100	2	0	**2**	**14**
0100 - 0115	0	0	**0**	
0115 - 0130	3	0	**3**	
0130 - 0145	1	0	**1**	
0145 - 0200	2	0	**2**	**6**
0200 - 0215	0	0	**0**	
0215 - 0230	2	0	**2**	
0230 - 0245	0	0	**0**	
0245 - 0300	0	0	**0**	**2**
0300 - 0315	1	0	**1**	
0315 - 0330	2	0	**2**	
0330 - 0345	1	0	**1**	
0345 - 0400	0	0	**0**	**4**
0400 - 0415	3	0	**3**	
0415 - 0430	2	0	**2**	
0430 - 0445	6	0	**6**	
0445 - 0500	0	0	**0**	**11**
0500 - 0515	8	0	**8**	
0515 - 0530	9	0	**9**	
0530 - 0545	22	0	**22**	
0545 - 0600	7	0	**7**	**46**
0600 - 0615	9	0	**9**	
0615 - 0630	15	0	**15**	
0630 - 0645	19	0	**19**	
0645 - 0700	16	0	**16**	**59**
0700 - 0715	20	0	**20**	
0715 - 0730	20	0	**20**	
0730 - 0745	27	0	**27**	
0745 - 0800	28	0	**28**	**95**
0800 - 0815	39	0	**39**	
0815 - 0830	25	0	**25**	
0830 - 0845	24	0	**24**	
0845 - 0900	18	0	**18**	**106**
0900 - 0915	23	0	**23**	
0915 - 0930	16	0	**16**	
0930 - 0945	23	0	**23**	
0945 - 1000	18	0	**18**	**80**
1000 - 1015	20	0	**20**	
1015 - 1030	23	0	**23**	
1030 - 1045	25	0	**25**	
1045 - 1100	23	0	**23**	**91**
1100 - 1115	33	0	**33**	
1115 - 1130	31	0	**31**	
1130 - 1145	22	0	**22**	
1145 - 1200	26	0	**26**	**112**

Time	Volume Summary 15min NB	SB	15min Total	60min Total
1200 - 1215	38	0	**38**	
1215 - 1230	26	0	**26**	
1230 - 1245	35	0	**35**	
1245 - 1300	26	0	**26**	**125**
1300 - 1315	25	0	**25**	
1315 - 1330	37	0	**37**	
1330 - 1345	24	0	**24**	
1345 - 1400	42	0	**42**	**128**
1400 - 1415	26	0	**26**	
1415 - 1430	35	0	**35**	
1430 - 1445	32	0	**32**	
1445 - 1500	27	0	**27**	**120**
1500 - 1515	49	0	**49**	
1515 - 1530	33	0	**33**	
1530 - 1545	49	0	**49**	
1545 - 1600	45	0	**45**	**176**
1600 - 1615	36	0	**36**	
1615 - 1630	40	0	**40**	
1630 - 1645	51	0	**51**	
1645 - 1700	42	0	**42**	**169**
1700 - 1715	60	0	**60**	
1715 - 1730	36	0	**36**	
1730 - 1745	50	0	**50**	
1745 - 1800	38	0	**38**	**184**
1800 - 1815	45	0	**45**	
1815 - 1830	41	0	**41**	
1830 - 1845	30	0	**30**	
1845 - 1900	25	0	**25**	**141**
1900 - 1915	0	0	**0**	
1915 - 1930	0	0	**0**	
1930 - 1945	0	0	**0**	
1945 - 2000	0	0	**0**	**0**
2000 - 2015	0	0	**0**	
2015 - 2030	0	0	**0**	
2030 - 2045	0	0	**0**	
2045 - 2100	0	0	**0**	**0**
2100 - 2115	0	0	**0**	
2115 - 2130	0	0	**0**	
2130 - 2145	0	0	**0**	
2145 - 2200	0	0	**0**	**0**
2200 - 2215	0	0	**0**	
2215 - 2230	0	0	**0**	
2230 - 2245	0	0	**0**	
2245 - 2300	0	0	**0**	**0**
2300 - 2315	0	0	**0**	
2315 - 2330	0	0	**0**	
2330 - 2345	0	0	**0**	
2345 - 0000	0	0	**0**	**0**

Session Total	1669	0	**1669**
Session Average	17.39	0.00	**17.39**
Session Percentage	100.00	0.00	

Bi-Directional Class Count || NB EB 60min

Columbia, SC

Marr Traffic DATA COLLECTION

www.marrtraffic.com

Site 20
I-26 James F. Byrnes Expy On/Off-Ramp,
north of US-176 Broad River Rd

Date
Tuesday, April 23, 2024

Lat/Long
34.100835°, -81.173944°

Weather
Fair
58°F

Click here for Detailed Weather

0000 - 2400 (Weekday 24h Session) (04-23-2024)
NB EB 60min

	Northbound (Movement 20.1)													
TIME	1	2	3	4	5	6	7	8	9	10	11	12	13	**Total**
0000 - 0100	0	0	0	0	0	0	0	0	0	0	0	0	0	**0**
0100 - 0200	0	0	0	0	0	0	0	0	0	0	0	0	0	**0**
0200 - 0300	0	0	0	0	0	0	0	0	0	0	0	0	0	**0**
0300 - 0400	0	0	0	0	0	0	0	0	0	0	0	0	0	**0**
0400 - 0500	0	0	0	0	0	0	0	0	0	0	0	0	0	**0**
0500 - 0600	0	0	0	0	0	0	0	0	0	0	0	0	0	**0**
0600 - 0700	0	0	0	0	0	0	0	0	0	0	0	0	0	**0**
0700 - 0800	0	0	0	0	0	0	0	0	0	0	0	0	0	**0**
0800 - 0900	0	0	0	0	0	0	0	0	0	0	0	0	0	**0**
0900 - 1000	0	0	0	0	0	0	0	0	0	0	0	0	0	**0**
1000 - 1100	0	0	0	0	0	0	0	0	0	0	0	0	0	**0**
1100 - 1200	0	0	0	0	0	0	0	0	0	0	0	0	0	**0**
1200 - 1300	0	0	0	0	0	0	0	0	0	0	0	0	0	**0**
1300 - 1400	0	0	0	0	0	0	0	0	0	0	0	0	0	**0**
1400 - 1500	0	0	0	0	0	0	0	0	0	0	0	0	0	**0**
1500 - 1600	0	0	0	0	0	0	0	0	0	0	0	0	0	**0**
1600 - 1700	0	0	0	0	0	0	0	0	0	0	0	0	0	**0**
1700 - 1800	0	0	0	0	0	0	0	0	0	0	0	0	0	**0**
1800 - 1900	0	0	0	0	0	0	0	0	0	0	0	0	0	**0**
1900 - 2000	0	76	2	0	0	1	0	0	0	0	0	0	0	**79**
2000 - 2100	0	43	0	0	0	0	0	0	0	0	0	0	0	**43**
2100 - 2200	0	26	0	0	0	0	0	0	1	0	0	0	0	**27**
2200 - 2300	0	13	0	0	0	0	0	0	0	0	0	0	0	**13**
2300 - 2400	0	9	0	0	0	0	0	0	0	0	0	0	0	**9**
Session Total	0	167	2	0	0	1	0	0	1	0	0	0	0	**171**
Session Average	0.00	6.96	0.08	0.00	0.00	0.04	0.00	0.00	0.04	0.00	0.00	0.00	0.00	**7.13**
Session Percentage	0.00	97.66	1.17	0.00	0.00	0.58	0.00	0.00	0.58	0.00	0.00	0.00	0.00	
AM Peak Hour	-	-	-	-	-	-	-	-	-	-	-	-	-	**-**
AM Peak Volume	0	0	0	0	0	0	0	0	0	0	0	0	0	**0**
Noon Peak Hour	-	-	-	-	-	-	-	-	-	-	-	-	-	**-**
Noon Peak Volume	0	0	0	0	0	0	0	0	0	0	0	0	0	**0**
PM Peak Hour	-	1900 - 2000	1900 - 2000	-	-	1900 - 2000	-	-	-	-	-	-	-	**1900 - 2000**
PM Peak Volume	0	76	2	0	0	1	0	0	0	0	0	0	0	**79**

Site 20
I-26 James F. Byrnes Expy On/Off-Ramp,
north of US-176 Broad River Rd

Date
Wednesday, April 24, 2024

Lat/Long
34.100835°, -81.173944°

Weather
Fair
66°F

Click here for Detailed Weather

0000 - 2400 (Weekday 24h Session) (04-24-2024)
NB EB 60min

	Northbound (Movement 20.1)													
TIME	1	2	3	4	5	6	7	8	9	10	11	12	13	**Total**
0000 - 0100	0	4	0	0	0	0	0	0	1	0	0	0	0	**5**
0100 - 0200	0	4	1	0	1	0	0	0	0	0	0	0	0	**6**
0200 - 0300	0	5	0	0	0	0	0	0	1	0	0	0	0	**6**
0300 - 0400	0	4	1	0	0	0	0	0	0	0	0	0	0	**5**
0400 - 0500	0	9	0	0	0	0	0	0	0	0	0	0	0	**9**
0500 - 0600	0	39	0	1	3	0	0	0	1	0	0	0	0	**44**
0600 - 0700	0	62	1	0	1	1	0	0	0	0	0	0	0	**65**
0700 - 0800	0	88	2	1	0	0	0	0	2	0	0	0	0	**93**
0800 - 0900	0	76	20	0	1	1	2	0	2	0	0	0	0	**102**
0900 - 1000	0	73	19	0	2	0	0	1	0	0	0	0	0	**95**
1000 - 1100	0	58	18	0	4	0	0	1	1	0	0	0	0	**82**
1100 - 1200	0	60	11	0	2	1	0	0	5	0	0	0	0	**79**
1200 - 1300	1	103	22	0	1	0	0	0	1	0	0	0	0	**128**
1300 - 1400	1	63	23	0	1	0	0	4	1	0	0	0	0	**93**
1400 - 1500	0	89	22	0	1	1	1	1	4	0	0	0	0	**119**
1500 - 1600	1	139	33	0	5	1	0	0	1	0	0	0	0	**180**
1600 - 1700	3	147	33	0	3	0	0	0	3	0	0	0	0	**189**
1700 - 1800	1	158	32	1	3	0	0	0	1	0	0	0	0	**196**
1800 - 1900	1	95	19	0	1	2	0	0	0	0	0	0	0	**118**
1900 - 2000	2	66	7	0	0	0	0	0	0	0	0	0	0	**75**
2000 - 2100	0	52	8	0	1	0	0	0	0	0	0	0	0	**61**
2100 - 2200	0	39	1	0	0	0	0	0	0	0	0	0	0	**40**
2200 - 2300	0	12	1	0	0	0	0	0	0	0	0	0	0	**13**
2300 - 2400	0	9	0	0	0	0	0	0	0	0	0	0	0	**9**

Session Total	10	1454	274	3	30	7	3	7	24	0	0	0	0	**1812**
Session Average	0.42	60.58	11.42	0.13	1.25	0.29	0.13	0.29	1.00	0.00	0.00	0.00	0.00	**75.50**
Session Percentage	0.55	80.24	15.12	0.17	1.66	0.39	0.17	0.39	1.32	0.00	0.00	0.00	0.00	

AM Peak Hour	-	0700 - 0800	0800 - 0900	0500 - 0600	0500 - 0600	0600 - 0700	0800 - 0900	0900 - 1000	0700 - 0800	-	-	-	-	**0800 - 0900**
AM Peak Volume	0	88	20	1	3	1	2	1	2	0	0	0	0	**102**

Noon Peak Hour	1200 - 1300	1200 - 1300	1300 - 1400	-	1000 - 1100	1100 - 1200	1400 - 1500	1300 - 1400	1100 - 1200	-	-	-	-	**1200 - 1300**
Noon Peak Volume	1	103	23	0	4	1	1	4	5	0	0	0	0	**128**

PM Peak Hour	1600 - 1700	1700 - 1800	1500 - 1600	1700 - 1800	1500 - 1600	1800 - 1900	-	-	1600 - 1700	-	-	-	-	**1700 - 1800**
PM Peak Volume	3	158	33	1	5	2	0	0	3	0	0	0	0	**196**

Site 20
I-26 James F. Byrnes Expy On/Off-Ramp,
north of US-176 Broad River Rd

Date
Thursday, April 25, 2024

Lat/Long
34.100835°, -81.173944°

Weather
Fair
67°F

Click here for Detailed Weather

0000 - 2400 (Weekday 24h Session) (04-25-2024)
NB EB 60min

	Northbound (Movement 20.1)													
TIME	1	2	3	4	5	6	7	8	9	10	11	12	13	**Total**
0000 - 0100	0	12	0	0	1	0	0	0	1	0	0	0	0	**14**
0100 - 0200	0	6	0	0	0	0	0	0	0	0	0	0	0	**6**
0200 - 0300	0	0	0	0	1	0	0	0	1	0	0	0	0	**2**
0300 - 0400	0	1	1	0	1	0	0	0	1	0	0	0	0	**4**
0400 - 0500	0	10	0	0	0	0	0	0	1	0	0	0	0	**11**
0500 - 0600	0	43	1	0	1	0	0	0	1	0	0	0	0	**46**
0600 - 0700	0	49	8	0	1	0	0	0	1	0	0	0	0	**59**
0700 - 0800	0	74	14	0	3	0	0	0	3	1	0	0	0	**95**
0800 - 0900	0	71	30	0	2	2	0	1	0	0	0	0	0	**106**
0900 - 1000	0	51	26	0	1	0	0	0	1	1	0	0	0	**80**
1000 - 1100	0	62	24	1	1	2	0	0	1	0	0	0	0	**91**
1100 - 1200	0	82	21	0	0	3	2	2	1	1	0	0	0	**112**
1200 - 1300	0	94	23	1	4	0	0	2	1	0	0	0	0	**125**
1300 - 1400	0	94	23	1	3	4	1	1	1	0	0	0	0	**128**
1400 - 1500	1	94	19	0	0	4	0	0	2	0	0	0	0	**120**
1500 - 1600	3	124	38	0	5	2	0	2	2	0	0	0	0	**176**
1600 - 1700	0	133	31	0	1	3	0	0	1	0	0	0	0	**169**
1700 - 1800	0	150	31	0	2	0	0	1	0	0	0	0	0	**184**
1800 - 1900	1	110	28	0	1	0	0	0	0	0	1	0	0	**141**
1900 - 2000	0	0	0	0	0	0	0	0	0	0	0	0	0	**0**
2000 - 2100	0	0	0	0	0	0	0	0	0	0	0	0	0	**0**
2100 - 2200	0	0	0	0	0	0	0	0	0	0	0	0	0	**0**
2200 - 2300	0	0	0	0	0	0	0	0	0	0	0	0	0	**0**
2300 - 2400	0	0	0	0	0	0	0	0	0	0	0	0	0	**0**

Session Total	5	1260	318	3	28	20	3	9	19	3	1	0	0	**1669**
Session Average	0.21	52.50	13.25	0.13	1.17	0.83	0.13	0.38	0.79	0.13	0.04	0.00	0.00	**69.54**
Session Percentage	0.30	75.49	19.05	0.18	1.68	1.20	0.18	0.54	1.14	0.18	0.06	0.00	0.00	

AM Peak Hour	-	0700 - 0800	0800 - 0900	-	0700 - 0800	0800 - 0900	-	0800 - 0900	0700 - 0800	0700 - 0800	-	-	-	**0800 - 0900**
AM Peak Hour Volume	0	74	30	0	3	2	0	1	3	1	0	0	0	**106**

Noon Peak Hour	1400 - 1500	1200 - 1300	1000 - 1100	1000 - 1100	1200 - 1300	1300 - 1400	1100 - 1200	1100 - 1200	1400 - 1500	1100 - 1200	-	-	-	**1300 - 1400**
Noon Peak Hour Volume	1	94	24	1	4	4	2	2	2	1	0	0	0	**128**

PM Peak Hour	1500 - 1600	1700 - 1800	1500 - 1600	-	1500 - 1600	1600 - 1700	-	1500 - 1600	1500 - 1600	-	1800 - 1900	-	-	**1700 - 1800**
PM Peak Hour Volume	3	150	38	0	5	3	0	2	2	0	1	0	0	**184**

Bi-Directional Class Count || Volume Summary 60min

Columbia, SC

Marr Traffic DATA COLLECTION

www.marrtraffic.com

Site 20

I-26 James F. Byrnes Expy On/Off-Ramp,
north of US-176 Broad River Rd

Date

Tuesday, April 23, 2024

Lat/Long

34.100835°, -81.173944°

Weather

Fair
58°F

Click here for Detailed Weather

0000 - 2400 (Weekday 24h Session) (04-23-2024)

Volume Summary 60min

	Volume Summary 60min		
TIME	NB	SB	**Total**
0000 - 0100	0	0	**0**
0100 - 0200	0	0	**0**
0200 - 0300	0	0	**0**
0300 - 0400	0	0	**0**
0400 - 0500	0	0	**0**
0500 - 0600	0	0	**0**
0600 - 0700	0	0	**0**
0700 - 0800	0	0	**0**
0800 - 0900	0	0	**0**
0900 - 1000	0	0	**0**
1000 - 1100	0	0	**0**
1100 - 1200	0	0	**0**

	Volume Summary 60min		
Time	NB	SB	**Total**
1200 - 1300	0	0	**0**
1300 - 1400	0	0	**0**
1400 - 1500	0	0	**0**
1500 - 1600	0	0	**0**
1600 - 1700	0	0	**0**
1700 - 1800	0	0	**0**
1800 - 1900	0	0	**0**
1900 - 2000	79	0	**79**
2000 - 2100	43	0	**43**
2100 - 2200	27	0	**27**
2200 - 2300	13	0	**13**
2300 - 2400	9	0	**9**

Session Total	171	0	**171**
Session Average	7.13	0.00	**7.13**
Session Percentage	100.00	0.00	

Site 20

I-26 James F. Byrnes Expy On/Off-Ramp,
north of US-176 Broad River Rd

Date

Wednesday, April 24, 2024

Lat/Long

34.100835°, -81.173944°

Weather

Fair
66°F

Click here for Detailed Weather

0000 - 2400 (Weekday 24h Session) (04-24-2024)

Volume Summary 60min

	Volume Summary 60min		
TIME	NB	SB	**Total**
0000 - 0100	5	0	**5**
0100 - 0200	6	0	**6**
0200 - 0300	6	0	**6**
0300 - 0400	5	0	**5**
0400 - 0500	9	0	**9**
0500 - 0600	44	0	**44**
0600 - 0700	65	0	**65**
0700 - 0800	93	0	**93**
0800 - 0900	102	0	**102**
0900 - 1000	95	0	**95**
1000 - 1100	82	0	**82**
1100 - 1200	79	0	**79**

	Volume Summary 60min		
Time	NB	SB	**Total**
1200 - 1300	128	0	**128**
1300 - 1400	93	0	**93**
1400 - 1500	119	0	**119**
1500 - 1600	180	0	**180**
1600 - 1700	189	0	**189**
1700 - 1800	196	0	**196**
1800 - 1900	118	0	**118**
1900 - 2000	75	0	**75**
2000 - 2100	61	0	**61**
2100 - 2200	40	0	**40**
2200 - 2300	13	0	**13**
2300 - 2400	9	0	**9**

Session Total	1812	0	**1812**
Session Average	75.50	0.00	**75.50**
Session Percentage	100.00	0.00	

Site 20

I-26 James F. Byrnes Expy On/Off-Ramp,
north of US-176 Broad River Rd

Date

Thursday, April 25, 2024

Lat/Long

34.100835°, -81.173944°

Weather

Fair
67°F

Click here for Detailed Weather

0000 - 2400 (Weekday 24h Session) (04-25-2024)

Volume Summary 60min

	Volume Summary 60min		
TIME	NB	SB	**Total**
0000 - 0100	14	0	**14**
0100 - 0200	6	0	**6**
0200 - 0300	2	0	**2**
0300 - 0400	4	0	**4**
0400 - 0500	11	0	**11**
0500 - 0600	46	0	**46**
0600 - 0700	59	0	**59**
0700 - 0800	95	0	**95**
0800 - 0900	106	0	**106**
0900 - 1000	80	0	**80**
1000 - 1100	91	0	**91**
1100 - 1200	112	0	**112**

Session Total	1669	0	**1669**
Session Average	69.54	0.00	**69.54**
Session Percentage	100.00	0.00	

	Volume Summary 60min		
Time	NB	SB	**Total**
1200 - 1300	125	0	**125**
1300 - 1400	128	0	**128**
1400 - 1500	120	0	**120**
1500 - 1600	176	0	**176**
1600 - 1700	169	0	**169**
1700 - 1800	184	0	**184**
1800 - 1900	141	0	**141**
1900 - 2000	0	0	**0**
2000 - 2100	0	0	**0**
2100 - 2200	0	0	**0**
2200 - 2300	0	0	**0**
2300 - 2400	0	0	**0**

Bi-Directional Class Count || Graphical Analysis NB EB

Columbia, SC

Marr Traffic DATA COLLECTION

www.marrtraffic.com

Site 20

I-26 James F. Byrnes Expy On/Off-Ramp,
north of US-176 Broad River Rd

Lat/Long

34.100835°, -81.173944°

0000 - 2400 (Weekday 24h Session)

Graphical Analysis NB EB

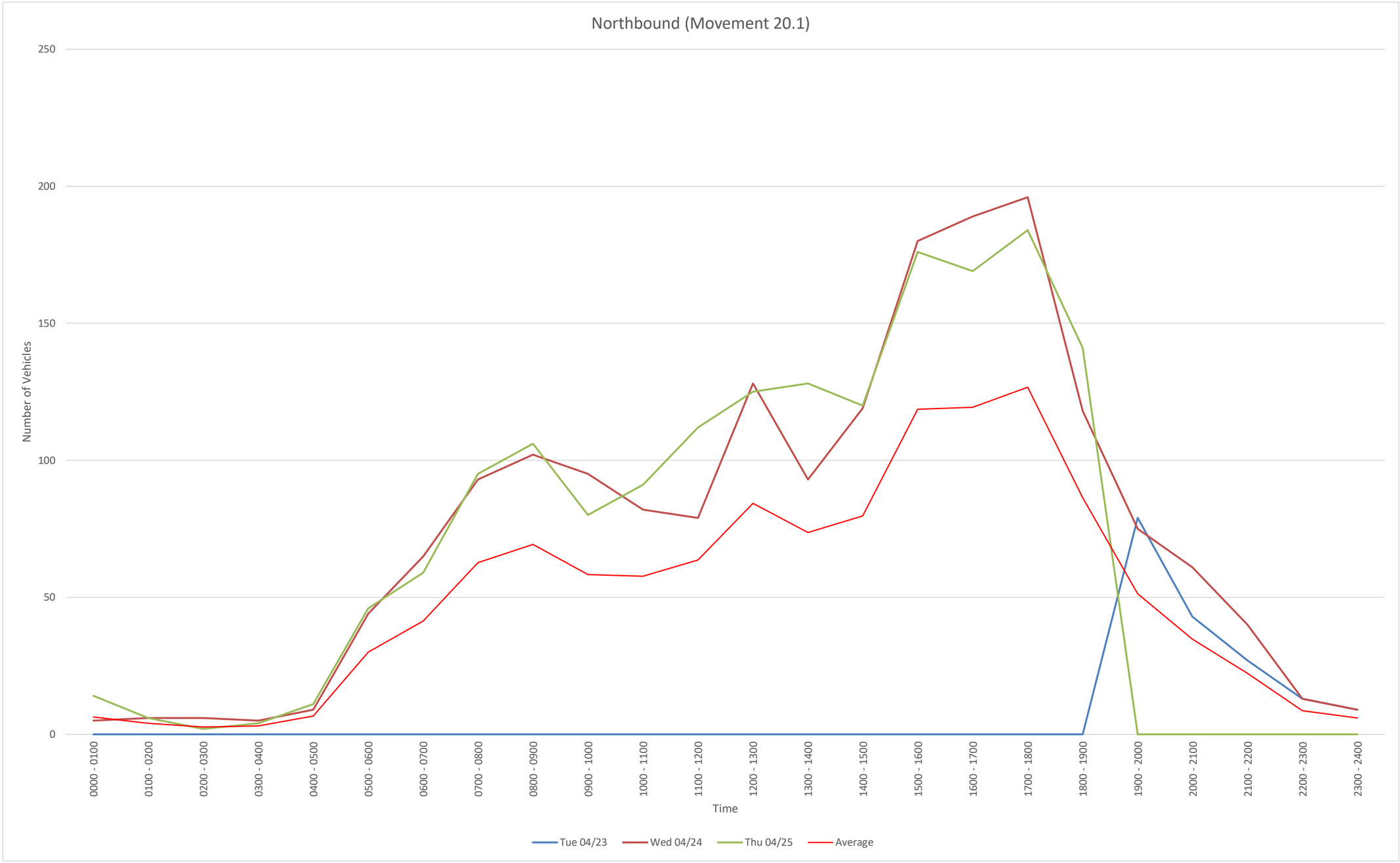

Time	Tue 04/23	Wed 04/24	Thu 04/25				
0000 - 0100	0	5	14				
0100 - 0200	0	6	6				
0200 - 0300	0	6	2				
0300 - 0400	0	5	4				
0400 - 0500	0	9	11				
0500 - 0600	0	44	46				
0600 - 0700	0	65	59				
0700 - 0800	0	93	95				
0800 - 0900	0	102	106				
0900 - 1000	0	95	80				
1000 - 1100	0	82	91				
1100 - 1200	0	79	112				
1200 - 1300	0	128	125				
1300 - 1400	0	93	128				
1400 - 1500	0	119	120				
1500 - 1600	0	180	176				
1600 - 1700	0	189	169				
1700 - 1800	0	196	184				
1800 - 1900	0	118	141				
1900 - 2000	79	75	0				
2000 - 2100	43	61	0				
2100 - 2200	27	40	0				
2200 - 2300	13	13	0				
2300 - 2400	9	9	0				
Daily Total	171	1812	1669				

NB
File Name:
Start Date: 4/23/2024
Start Time: 0
Site Code: 20
Station ID: 1
Location 1: I-26 James F. Byrnes Expy On/Off-Ramp, north of US-176 Broad River Rd
Location 2:

Date	Time	1	2	3	4	5	6	7	8	9	10	11	12	13
4/23/2024	12:00 AM	0	0	0	0	0	0	0	0	0	0	0	0	0
4/23/2024	12:15 AM	0	0	0	0	0	0	0	0	0	0	0	0	0
4/23/2024	12:30 AM	0	0	0	0	0	0	0	0	0	0	0	0	0
4/23/2024	12:45 AM	0	0	0	0	0	0	0	0	0	0	0	0	0
4/23/2024	1:00 AM	0	0	0	0	0	0	0	0	0	0	0	0	0
4/23/2024	1:15 AM	0	0	0	0	0	0	0	0	0	0	0	0	0
4/23/2024	1:30 AM	0	0	0	0	0	0	0	0	0	0	0	0	0
4/23/2024	1:45 AM	0	0	0	0	0	0	0	0	0	0	0	0	0
4/23/2024	2:00 AM	0	0	0	0	0	0	0	0	0	0	0	0	0
4/23/2024	2:15 AM	0	0	0	0	0	0	0	0	0	0	0	0	0
4/23/2024	2:30 AM	0	0	0	0	0	0	0	0	0	0	0	0	0
4/23/2024	2:45 AM	0	0	0	0	0	0	0	0	0	0	0	0	0
4/23/2024	3:00 AM	0	0	0	0	0	0	0	0	0	0	0	0	0
4/23/2024	3:15 AM	0	0	0	0	0	0	0	0	0	0	0	0	0
4/23/2024	3:30 AM	0	0	0	0	0	0	0	0	0	0	0	0	0
4/23/2024	3:45 AM	0	0	0	0	0	0	0	0	0	0	0	0	0
4/23/2024	4:00 AM	0	0	0	0	0	0	0	0	0	0	0	0	0
4/23/2024	4:15 AM	0	0	0	0	0	0	0	0	0	0	0	0	0
4/23/2024	4:30 AM	0	0	0	0	0	0	0	0	0	0	0	0	0
4/23/2024	4:45 AM	0	0	0	0	0	0	0	0	0	0	0	0	0
4/23/2024	5:00 AM	0	0	0	0	0	0	0	0	0	0	0	0	0
4/23/2024	5:15 AM	0	0	0	0	0	0	0	0	0	0	0	0	0
4/23/2024	5:30 AM	0	0	0	0	0	0	0	0	0	0	0	0	0
4/23/2024	5:45 AM	0	0	0	0	0	0	0	0	0	0	0	0	0
4/23/2024	6:00 AM	0	0	0	0	0	0	0	0	0	0	0	0	0
4/23/2024	6:15 AM	0	0	0	0	0	0	0	0	0	0	0	0	0
4/23/2024	6:30 AM	0	0	0	0	0	0	0	0	0	0	0	0	0
4/23/2024	6:45 AM	0	0	0	0	0	0	0	0	0	0	0	0	0
4/23/2024	7:00 AM	0	0	0	0	0	0	0	0	0	0	0	0	0
4/23/2024	7:15 AM	0	0	0	0	0	0	0	0	0	0	0	0	0
4/23/2024	7:30 AM	0	0	0	0	0	0	0	0	0	0	0	0	0
4/23/2024	7:45 AM	0	0	0	0	0	0	0	0	0	0	0	0	0
4/23/2024	8:00 AM	0	0	0	0	0	0	0	0	0	0	0	0	0
4/23/2024	8:15 AM	0	0	0	0	0	0	0	0	0	0	0	0	0
4/23/2024	8:30 AM	0	0	0	0	0	0	0	0	0	0	0	0	0
4/23/2024	8:45 AM	0	0	0	0	0	0	0	0	0	0	0	0	0
4/23/2024	9:00 AM	0	0	0	0	0	0	0	0	0	0	0	0	0
4/23/2024	9:15 AM	0	0	0	0	0	0	0	0	0	0	0	0	0
4/23/2024	9:30 AM	0	0	0	0	0	0	0	0	0	0	0	0	0
4/23/2024	9:45 AM	0	0	0	0	0	0	0	0	0	0	0	0	0
4/23/2024	10:00 AM	0	0	0	0	0	0	0	0	0	0	0	0	0
4/23/2024	10:15 AM	0	0	0	0	0	0	0	0	0	0	0	0	0
4/23/2024	10:30 AM	0	0	0	0	0	0	0	0	0	0	0	0	0
4/23/2024	10:45 AM	0	0	0	0	0	0	0	0	0	0	0	0	0
4/23/2024	11:00 AM	0	0	0	0	0	0	0	0	0	0	0	0	0
4/23/2024	11:15 AM	0	0	0	0	0	0	0	0	0	0	0	0	0
4/23/2024	11:30 AM	0	0	0	0	0	0	0	0	0	0	0	0	0
4/23/2024	11:45 AM	0	0	0	0	0	0	0	0	0	0	0	0	0
4/23/2024	12:00 PM	0	0	0	0	0	0	0	0	0	0	0	0	0
4/23/2024	12:15 PM	0	0	0	0	0	0	0	0	0	0	0	0	0
4/23/2024	12:30 PM	0	0	0	0	0	0	0	0	0	0	0	0	0
4/23/2024	12:45 PM	0	0	0	0	0	0	0	0	0	0	0	0	0
4/23/2024	1:00 PM	0	0	0	0	0	0	0	0	0	0	0	0	0
4/23/2024	1:15 PM	0	0	0	0	0	0	0	0	0	0	0	0	0
4/23/2024	1:30 PM	0	0	0	0	0	0	0	0	0	0	0	0	0
4/23/2024	1:45 PM	0	0	0	0	0	0	0	0	0	0	0	0	0
4/23/2024	2:00 PM	0	0	0	0	0	0	0	0	0	0	0	0	0
4/23/2024	2:15 PM	0	0	0	0	0	0	0	0	0	0	0	0	0
4/23/2024	2:30 PM	0	0	0	0	0	0	0	0	0	0	0	0	0
4/23/2024	2:45 PM	0	0	0	0	0	0	0	0	0	0	0	0	0
4/23/2024	3:00 PM	0	0	0	0	0	0	0	0	0	0	0	0	0
4/23/2024	3:15 PM	0	0	0	0	0	0	0	0	0	0	0	0	0
4/23/2024	3:30 PM	0	0	0	0	0	0	0	0	0	0	0	0	0
4/23/2024	3:45 PM	0	0	0	0	0	0	0	0	0	0	0	0	0
4/23/2024	4:00 PM	0	0	0	0	0	0	0	0	0	0	0	0	0
4/23/2024	4:15 PM	0	0	0	0	0	0	0	0	0	0	0	0	0
4/23/2024	4:30 PM	0	0	0	0	0	0	0	0	0	0	0	0	0
4/23/2024	4:45 PM	0	0	0	0	0	0	0	0	0	0	0	0	0
4/23/2024	5:00 PM	0	0	0	0	0	0	0	0	0	0	0	0	0
4/23/2024	5:15 PM	0	0	0	0	0	0	0	0	0	0	0	0	0
4/23/2024	5:30 PM	0	0	0	0	0	0	0	0	0	0	0	0	0
4/23/2024	5:45 PM	0	0	0	0	0	0	0	0	0	0	0	0	0
4/23/2024	6:00 PM	0	0	0	0	0	0	0	0	0	0	0	0	0
4/23/2024	6:15 PM	0	0	0	0	0	0	0	0	0	0	0	0	0
4/23/2024	6:30 PM	0	0	0	0	0	0	0	0	0	0	0	0	0
4/23/2024	6:45 PM	0	0	0	0	0	0	0	0	0	0	0	0	0
4/23/2024	7:00 PM	0	27	0	0	0	0	0	0	0	0	0	0	0
4/23/2024	7:15 PM	0	16	1	0	0	0	0	0	0	0	0	0	0
4/23/2024	7:30 PM	0	15	1	0	0	0	0	0	0	0	0	0	0
4/23/2024	7:45 PM	0	18	0	0	0	1	0	0	0	0	0	0	0
4/23/2024	8:00 PM	0	9	0	0	0	0	0	0	0	0	0	0	0
4/23/2024	8:15 PM	0	16	0	0	0	0	0	0	0	0	0	0	0
4/23/2024	8:30 PM	0	10	0	0	0	0	0	0	0	0	0	0	0
4/23/2024	8:45 PM	0	8	0	0	0	0	0	0	0	0	0	0	0
4/23/2024	9:00 PM	0	3	0	0	0	0	0	0	0	0	0	0	0
4/23/2024	9:15 PM	0	7	0	0	0	0	0	0	0	0	0	0	0
4/23/2024	9:30 PM	0	5	0	0	0	0	0	0	1	0	0	0	0
4/23/2024	9:45 PM	0	11	0	0	0	0	0	0	0	0	0	0	0
4/23/2024	10:00 PM	0	2	0	0	0	0	0	0	0	0	0	0	0
4/23/2024	10:15 PM	0	6	0	0	0	0	0	0	0	0	0	0	0
4/23/2024	10:30 PM	0	4	0	0	0	0	0	0	0	0	0	0	0
4/23/2024	10:45 PM	0	1	0	0	0	0	0	0	0	0	0	0	0
4/23/2024	11:00 PM	0	1	0	0	0	0	0	0	0	0	0	0	0
4/23/2024	11:15 PM	0	1	0	0	0	0	0	0	0	0	0	0	0
4/23/2024	11:30 PM	0	5	0	0	0	0	0	0	0	0	0	0	0
4/23/2024	11:45 PM	0	2	0	0	0	0	0	0	0	0	0	0	0

4/24/2024	12:00 AM	0	1	0	0	0	0	0	0	0	0	0	0
4/24/2024	12:15 AM	0	1	0	0	0	0	0	0	1	0	0	0
4/24/2024	12:30 AM	0	1	0	0	0	0	0	0	0	0	0	0
4/24/2024	12:45 AM	0	1	0	0	0	0	0	0	0	0	0	0
4/24/2024	1:00 AM	0	0	1	0	0	0	0	0	0	0	0	0
4/24/2024	1:15 AM	0	1	0	0	0	0	0	0	0	0	0	0
4/24/2024	1:30 AM	0	2	0	0	0	0	0	0	0	0	0	0
4/24/2024	1:45 AM	0	1	0	0	1	0	0	0	0	0	0	0
4/24/2024	2:00 AM	0	1	0	0	0	0	0	0	0	0	0	0
4/24/2024	2:15 AM	0	1	0	0	0	0	0	0	0	0	0	0
4/24/2024	2:30 AM	0	1	0	0	0	0	0	0	1	0	0	0
4/24/2024	2:45 AM	0	2	0	0	0	0	0	0	0	0	0	0
4/24/2024	3:00 AM	0	2	1	0	0	0	0	0	0	0	0	0
4/24/2024	3:15 AM	0	1	0	0	0	0	0	0	0	0	0	0
4/24/2024	3:30 AM	0	1	0	0	0	0	0	0	0	0	0	0
4/24/2024	3:45 AM	0	0	0	0	0	0	0	0	0	0	0	0
4/24/2024	4:00 AM	0	1	0	0	0	0	0	0	0	0	0	0
4/24/2024	4:15 AM	0	0	0	0	0	0	0	0	0	0	0	0
4/24/2024	4:30 AM	0	5	0	0	0	0	0	0	0	0	0	0
4/24/2024	4:45 AM	0	3	0	0	0	0	0	0	0	0	0	0
4/24/2024	5:00 AM	0	4	0	0	1	0	0	0	0	0	0	0
4/24/2024	5:15 AM	0	9	0	0	0	0	0	0	0	0	0	0
4/24/2024	5:30 AM	0	13	0	0	1	0	0	0	1	0	0	0
4/24/2024	5:45 AM	0	13	0	1	1	0	0	0	0	0	0	0
4/24/2024	6:00 AM	0	6	0	0	1	0	0	0	0	0	0	0
4/24/2024	6:15 AM	0	16	0	0	0	1	0	0	0	0	0	0
4/24/2024	6:30 AM	0	23	1	0	0	0	0	0	0	0	0	0
4/24/2024	6:45 AM	0	17	0	0	0	0	0	0	0	0	0	0
4/24/2024	7:00 AM	0	18	0	0	0	0	0	0	0	0	0	0
4/24/2024	7:15 AM	0	23	0	0	0	0	0	0	1	0	0	0
4/24/2024	7:30 AM	0	29	0	1	0	0	0	0	0	0	0	0
4/24/2024	7:45 AM	0	18	2	0	0	0	0	0	1	0	0	0
4/24/2024	8:00 AM	0	28	0	0	0	0	0	0	1	0	0	0
4/24/2024	8:15 AM	0	10	8	0	0	0	0	0	0	0	0	0
4/24/2024	8:30 AM	0	17	5	0	1	1	2	0	0	0	0	0
4/24/2024	8:45 AM	0	21	7	0	0	0	0	0	1	0	0	0
4/24/2024	9:00 AM	0	14	6	0	0	0	0	1	0	0	0	0
4/24/2024	9:15 AM	0	19	4	0	0	0	0	0	0	0	0	0
4/24/2024	9:30 AM	0	22	6	0	2	0	0	0	0	0	0	0
4/24/2024	9:45 AM	0	18	3	0	0	0	0	0	0	0	0	0
4/24/2024	10:00 AM	0	11	4	0	3	0	0	0	1	0	0	0
4/24/2024	10:15 AM	0	16	4	0	0	0	0	0	0	0	0	0
4/24/2024	10:30 AM	0	10	2	0	0	0	0	0	0	0	0	0
4/24/2024	10:45 AM	0	21	8	0	1	0	0	1	0	0	0	0
4/24/2024	11:00 AM	0	17	2	0	0	0	0	0	3	0	0	0
4/24/2024	11:15 AM	0	11	2	0	0	0	0	0	1	0	0	0
4/24/2024	11:30 AM	0	17	5	0	1	0	0	0	0	0	0	0
4/24/2024	11:45 AM	0	15	2	0	1	1	0	0	1	0	0	0
4/24/2024	12:00 PM	0	20	4	0	1	0	0	0	0	0	0	0
4/24/2024	12:15 PM	1	29	2	0	0	0	0	0	1	0	0	0
4/24/2024	12:30 PM	0	29	8	0	0	0	0	0	0	0	0	0
4/24/2024	12:45 PM	0	25	8	0	0	0	0	0	0	0	0	0
4/24/2024	1:00 PM	0	22	10	0	0	0	0	0	0	0	0	0
4/24/2024	1:15 PM	1	15	5	0	1	0	0	0	1	0	0	0
4/24/2024	1:30 PM	0	11	4	0	0	0	0	4	0	0	0	0
4/24/2024	1:45 PM	0	15	4	0	0	0	0	0	0	0	0	0
4/24/2024	2:00 PM	0	18	3	0	0	1	0	1	2	0	0	0
4/24/2024	2:15 PM	0	24	9	0	0	0	0	0	0	0	0	0
4/24/2024	2:30 PM	0	27	7	0	1	0	0	0	2	0	0	0
4/24/2024	2:45 PM	0	20	3	0	0	0	1	0	0	0	0	0
4/24/2024	3:00 PM	1	34	10	0	2	0	0	0	0	0	0	0
4/24/2024	3:15 PM	0	35	12	0	1	0	0	0	0	0	0	0
4/24/2024	3:30 PM	0	34	4	0	1	0	0	0	0	0	0	0
4/24/2024	3:45 PM	0	36	7	0	1	1	0	0	1	0	0	0
4/24/2024	4:00 PM	0	39	5	0	0	0	0	0	0	0	0	0
4/24/2024	4:15 PM	1	43	8	0	0	0	0	0	0	0	0	0
4/24/2024	4:30 PM	1	30	11	0	1	0	0	0	1	0	0	0
4/24/2024	4:45 PM	1	35	9	0	2	0	0	0	2	0	0	0
4/24/2024	5:00 PM	0	57	11	1	0	0	0	0	0	0	0	0
4/24/2024	5:15 PM	0	45	5	0	1	0	0	0	0	0	0	0
4/24/2024	5:30 PM	0	30	8	0	1	0	0	0	0	0	0	0
4/24/2024	5:45 PM	1	26	8	0	1	0	0	0	1	0	0	0
4/24/2024	6:00 PM	1	29	8	0	1	1	0	0	0	0	0	0
4/24/2024	6:15 PM	0	26	6	0	0	1	0	0	0	0	0	0
4/24/2024	6:30 PM	0	21	4	0	0	0	0	0	0	0	0	0
4/24/2024	6:45 PM	0	19	1	0	0	0	0	0	0	0	0	0
4/24/2024	7:00 PM	0	23	5	0	0	0	0	0	0	0	0	0
4/24/2024	7:15 PM	1	13	1	0	0	0	0	0	0	0	0	0
4/24/2024	7:30 PM	0	16	0	0	0	0	0	0	0	0	0	0
4/24/2024	7:45 PM	1	14	1	0	0	0	0	0	0	0	0	0
4/24/2024	8:00 PM	0	12	4	0	0	0	0	0	0	0	0	0
4/24/2024	8:15 PM	0	18	4	0	0	0	0	0	0	0	0	0
4/24/2024	8:30 PM	0	12	0	0	1	0	0	0	0	0	0	0
4/24/2024	8:45 PM	0	10	0	0	0	0	0	0	0	0	0	0
4/24/2024	9:00 PM	0	14	0	0	0	0	0	0	0	0	0	0
4/24/2024	9:15 PM	0	9	0	0	0	0	0	0	0	0	0	0
4/24/2024	9:30 PM	0	11	0	0	0	0	0	0	0	0	0	0
4/24/2024	9:45 PM	0	5	1	0	0	0	0	0	0	0	0	0
4/24/2024	10:00 PM	0	4	0	0	0	0	0	0	0	0	0	0
4/24/2024	10:15 PM	0	3	0	0	0	0	0	0	0	0	0	0
4/24/2024	10:30 PM	0	3	0	0	0	0	0	0	0	0	0	0
4/24/2024	10:45 PM	0	2	1	0	0	0	0	0	0	0	0	0
4/24/2024	11:00 PM	0	4	0	0	0	0	0	0	0	0	0	0
4/24/2024	11:15 PM	0	1	0	0	0	0	0	0	0	0	0	0
4/24/2024	11:30 PM	0	3	0	0	0	0	0	0	0	0	0	0
4/24/2024	11:45 PM	0	1	0	0	0	0	0	0	0	0	0	0

4/25/2024	12:00 AM	0	4	0	0	0	0	0	0	1	0	0	0	0
4/25/2024	12:15 AM	0	2	0	0	1	0	0	0	0	0	0	0	0
4/25/2024	12:30 AM	0	4	0	0	0	0	0	0	0	0	0	0	0
4/25/2024	12:45 AM	0	2	0	0	0	0	0	0	0	0	0	0	0
4/25/2024	1:00 AM	0	0	0	0	0	0	0	0	0	0	0	0	0
4/25/2024	1:15 AM	0	3	0	0	0	0	0	0	0	0	0	0	0
4/25/2024	1:30 AM	0	1	0	0	0	0	0	0	0	0	0	0	0
4/25/2024	1:45 AM	0	2	0	0	0	0	0	0	0	0	0	0	0
4/25/2024	2:00 AM	0	0	0	0	0	0	0	0	0	0	0	0	0
4/25/2024	2:15 AM	0	0	0	0	1	0	0	0	1	0	0	0	0
4/25/2024	2:30 AM	0	0	0	0	0	0	0	0	0	0	0	0	0
4/25/2024	2:45 AM	0	0	0	0	0	0	0	0	0	0	0	0	0
4/25/2024	3:00 AM	0	1	0	0	0	0	0	0	0	0	0	0	0
4/25/2024	3:15 AM	0	0	0	0	1	0	0	0	1	0	0	0	0
4/25/2024	3:30 AM	0	0	1	0	0	0	0	0	0	0	0	0	0
4/25/2024	3:45 AM	0	0	0	0	0	0	0	0	0	0	0	0	0
4/25/2024	4:00 AM	0	2	0	0	0	0	0	0	1	0	0	0	0
4/25/2024	4:15 AM	0	2	0	0	0	0	0	0	0	0	0	0	0
4/25/2024	4:30 AM	0	6	0	0	0	0	0	0	0	0	0	0	0
4/25/2024	4:45 AM	0	0	0	0	0	0	0	0	0	0	0	0	0
4/25/2024	5:00 AM	0	7	0	0	0	0	0	0	1	0	0	0	0
4/25/2024	5:15 AM	0	8	1	0	0	0	0	0	0	0	0	0	0
4/25/2024	5:30 AM	0	21	0	0	1	0	0	0	0	0	0	0	0
4/25/2024	5:45 AM	0	7	0	0	0	0	0	0	0	0	0	0	0
4/25/2024	6:00 AM	0	7	2	0	0	0	0	0	0	0	0	0	0
4/25/2024	6:15 AM	0	12	2	0	0	0	0	0	1	0	0	0	0
4/25/2024	6:30 AM	0	17	1	0	1	0	0	0	0	0	0	0	0
4/25/2024	6:45 AM	0	13	3	0	0	0	0	0	0	0	0	0	0
4/25/2024	7:00 AM	0	15	4	0	1	0	0	0	0	0	0	0	0
4/25/2024	7:15 AM	0	16	2	0	0	0	0	0	1	1	0	0	0
4/25/2024	7:30 AM	0	21	4	0	1	0	0	0	1	0	0	0	0
4/25/2024	7:45 AM	0	22	4	0	1	0	0	0	1	0	0	0	0
4/25/2024	8:00 AM	0	26	9	0	1	2	0	1	0	0	0	0	0
4/25/2024	8:15 AM	0	18	7	0	0	0	0	0	0	0	0	0	0
4/25/2024	8:30 AM	0	15	8	0	1	0	0	0	0	0	0	0	0
4/25/2024	8:45 AM	0	12	6	0	0	0	0	0	0	0	0	0	0
4/25/2024	9:00 AM	0	16	7	0	0	0	0	0	0	0	0	0	0
4/25/2024	9:15 AM	0	9	6	0	0	0	0	0	1	0	0	0	0
4/25/2024	9:30 AM	0	14	7	0	1	0	0	0	0	1	0	0	0
4/25/2024	9:45 AM	0	12	6	0	0	0	0	0	0	0	0	0	0
4/25/2024	10:00 AM	0	16	4	0	0	0	0	0	0	0	0	0	0
4/25/2024	10:15 AM	0	16	6	0	1	0	0	0	0	0	0	0	0
4/25/2024	10:30 AM	0	17	5	1	0	2	0	0	0	0	0	0	0
4/25/2024	10:45 AM	0	13	9	0	0	0	0	0	1	0	0	0	0
4/25/2024	11:00 AM	0	22	10	0	0	0	1	0	0	0	0	0	0
4/25/2024	11:15 AM	0	26	2	0	0	1	0	1	1	0	0	0	0
4/25/2024	11:30 AM	0	14	4	0	0	2	1	1	0	0	0	0	0
4/25/2024	11:45 AM	0	20	5	0	0	0	0	0	0	1	0	0	0
4/25/2024	12:00 PM	0	27	7	0	2	0	0	2	0	0	0	0	0
4/25/2024	12:15 PM	0	20	6	0	0	0	0	0	0	0	0	0	0
4/25/2024	12:30 PM	0	23	8	1	2	0	0	0	1	0	0	0	0
4/25/2024	12:45 PM	0	24	2	0	0	0	0	0	0	0	0	0	0
4/25/2024	1:00 PM	0	18	6	0	1	0	0	0	0	0	0	0	0
4/25/2024	1:15 PM	0	27	7	0	0	2	0	0	1	0	0	0	0
4/25/2024	1:30 PM	0	17	4	0	1	1	1	0	0	0	0	0	0
4/25/2024	1:45 PM	0	32	6	1	1	1	0	1	0	0	0	0	0
4/25/2024	2:00 PM	1	22	2	0	0	0	0	0	1	0	0	0	0
4/25/2024	2:15 PM	0	31	4	0	0	0	0	0	0	0	0	0	0
4/25/2024	2:30 PM	0	20	8	0	0	3	0	0	1	0	0	0	0
4/25/2024	2:45 PM	0	21	5	0	0	1	0	0	0	0	0	0	0
4/25/2024	3:00 PM	1	33	12	0	1	1	0	0	1	0	0	0	0
4/25/2024	3:15 PM	2	27	4	0	0	0	0	0	0	0	0	0	0
4/25/2024	3:30 PM	0	33	11	0	3	1	0	1	0	0	0	0	0
4/25/2024	3:45 PM	0	31	11	0	1	0	0	1	1	0	0	0	0
4/25/2024	4:00 PM	0	28	6	0	0	2	0	0	0	0	0	0	0
4/25/2024	4:15 PM	0	37	2	0	0	1	0	0	0	0	0	0	0
4/25/2024	4:30 PM	0	37	13	0	0	0	0	0	1	0	0	0	0
4/25/2024	4:45 PM	0	31	10	0	1	0	0	0	0	0	0	0	0
4/25/2024	5:00 PM	0	45	15	0	0	0	0	0	0	0	0	0	0
4/25/2024	5:15 PM	0	30	5	0	0	0	0	1	0	0	0	0	0
4/25/2024	5:30 PM	0	43	5	0	2	0	0	0	0	0	0	0	0
4/25/2024	5:45 PM	0	32	6	0	0	0	0	0	0	0	0	0	0
4/25/2024	6:00 PM	1	26	17	0	0	0	0	0	0	0	1	0	0
4/25/2024	6:15 PM	0	36	5	0	0	0	0	0	0	0	0	0	0
4/25/2024	6:30 PM	0	28	2	0	0	0	0	0	0	0	0	0	0
4/25/2024	6:45 PM	0	20	4	0	1	0	0	0	0	0	0	0	0
4/25/2024	7:00 PM	0	0	0	0	0	0	0	0	0	0	0	0	0
4/25/2024	7:15 PM	0	0	0	0	0	0	0	0	0	0	0	0	0
4/25/2024	7:30 PM	0	0	0	0	0	0	0	0	0	0	0	0	0
4/25/2024	7:45 PM	0	0	0	0	0	0	0	0	0	0	0	0	0
4/25/2024	8:00 PM	0	0	0	0	0	0	0	0	0	0	0	0	0
4/25/2024	8:15 PM	0	0	0	0	0	0	0	0	0	0	0	0	0
4/25/2024	8:30 PM	0	0	0	0	0	0	0	0	0	0	0	0	0
4/25/2024	8:45 PM	0	0	0	0	0	0	0	0	0	0	0	0	0
4/25/2024	9:00 PM	0	0	0	0	0	0	0	0	0	0	0	0	0
4/25/2024	9:15 PM	0	0	0	0	0	0	0	0	0	0	0	0	0
4/25/2024	9:30 PM	0	0	0	0	0	0	0	0	0	0	0	0	0
4/25/2024	9:45 PM	0	0	0	0	0	0	0	0	0	0	0	0	0
4/25/2024	10:00 PM	0	0	0	0	0	0	0	0	0	0	0	0	0
4/25/2024	10:15 PM	0	0	0	0	0	0	0	0	0	0	0	0	0
4/25/2024	10:30 PM	0	0	0	0	0	0	0	0	0	0	0	0	0
4/25/2024	10:45 PM	0	0	0	0	0	0	0	0	0	0	0	0	0
4/25/2024	11:00 PM	0	0	0	0	0	0	0	0	0	0	0	0	0
4/25/2024	11:15 PM	0	0	0	0	0	0	0	0	0	0	0	0	0
4/25/2024	11:30 PM	0	0	0	0	0	0	0	0	0	0	0	0	0
4/25/2024	11:45 PM	0	0	0	0	0	0	0	0	0	0	0	0	0

SB
File Name:
Start Date: 4/23/2024
Start Time: 0
Site Code: 20
Station ID: 1
Location 1: I-26 James F. Byrnes Expy On/Off-Ramp, north of US-176 Broad River Rd
Location 2:

Date	Time	1	2	3	4	5	6	7	8	9	10	11	12	13
4/23/2024	12:00 AM	0	0	0	0	0	0	0	0	0	0	0	0	0
4/23/2024	12:15 AM	0	0	0	0	0	0	0	0	0	0	0	0	0
4/23/2024	12:30 AM	0	0	0	0	0	0	0	0	0	0	0	0	0
4/23/2024	12:45 AM	0	0	0	0	0	0	0	0	0	0	0	0	0
4/23/2024	1:00 AM	0	0	0	0	0	0	0	0	0	0	0	0	0
4/23/2024	1:15 AM	0	0	0	0	0	0	0	0	0	0	0	0	0
4/23/2024	1:30 AM	0	0	0	0	0	0	0	0	0	0	0	0	0
4/23/2024	1:45 AM	0	0	0	0	0	0	0	0	0	0	0	0	0
4/23/2024	2:00 AM	0	0	0	0	0	0	0	0	0	0	0	0	0
4/23/2024	2:15 AM	0	0	0	0	0	0	0	0	0	0	0	0	0
4/23/2024	2:30 AM	0	0	0	0	0	0	0	0	0	0	0	0	0
4/23/2024	2:45 AM	0	0	0	0	0	0	0	0	0	0	0	0	0
4/23/2024	3:00 AM	0	0	0	0	0	0	0	0	0	0	0	0	0
4/23/2024	3:15 AM	0	0	0	0	0	0	0	0	0	0	0	0	0
4/23/2024	3:30 AM	0	0	0	0	0	0	0	0	0	0	0	0	0
4/23/2024	3:45 AM	0	0	0	0	0	0	0	0	0	0	0	0	0
4/23/2024	4:00 AM	0	0	0	0	0	0	0	0	0	0	0	0	0
4/23/2024	4:15 AM	0	0	0	0	0	0	0	0	0	0	0	0	0
4/23/2024	4:30 AM	0	0	0	0	0	0	0	0	0	0	0	0	0
4/23/2024	4:45 AM	0	0	0	0	0	0	0	0	0	0	0	0	0
4/23/2024	5:00 AM	0	0	0	0	0	0	0	0	0	0	0	0	0
4/23/2024	5:15 AM	0	0	0	0	0	0	0	0	0	0	0	0	0
4/23/2024	5:30 AM	0	0	0	0	0	0	0	0	0	0	0	0	0
4/23/2024	5:45 AM	0	0	0	0	0	0	0	0	0	0	0	0	0
4/23/2024	6:00 AM	0	0	0	0	0	0	0	0	0	0	0	0	0
4/23/2024	6:15 AM	0	0	0	0	0	0	0	0	0	0	0	0	0
4/23/2024	6:30 AM	0	0	0	0	0	0	0	0	0	0	0	0	0
4/23/2024	6:45 AM	0	0	0	0	0	0	0	0	0	0	0	0	0
4/23/2024	7:00 AM	0	0	0	0	0	0	0	0	0	0	0	0	0
4/23/2024	7:15 AM	0	0	0	0	0	0	0	0	0	0	0	0	0
4/23/2024	7:30 AM	0	0	0	0	0	0	0	0	0	0	0	0	0
4/23/2024	7:45 AM	0	0	0	0	0	0	0	0	0	0	0	0	0
4/23/2024	8:00 AM	0	0	0	0	0	0	0	0	0	0	0	0	0
4/23/2024	8:15 AM	0	0	0	0	0	0	0	0	0	0	0	0	0
4/23/2024	8:30 AM	0	0	0	0	0	0	0	0	0	0	0	0	0
4/23/2024	8:45 AM	0	0	0	0	0	0	0	0	0	0	0	0	0
4/23/2024	9:00 AM	0	0	0	0	0	0	0	0	0	0	0	0	0
4/23/2024	9:15 AM	0	0	0	0	0	0	0	0	0	0	0	0	0
4/23/2024	9:30 AM	0	0	0	0	0	0	0	0	0	0	0	0	0
4/23/2024	9:45 AM	0	0	0	0	0	0	0	0	0	0	0	0	0
4/23/2024	10:00 AM	0	0	0	0	0	0	0	0	0	0	0	0	0
4/23/2024	10:15 AM	0	0	0	0	0	0	0	0	0	0	0	0	0
4/23/2024	10:30 AM	0	0	0	0	0	0	0	0	0	0	0	0	0
4/23/2024	10:45 AM	0	0	0	0	0	0	0	0	0	0	0	0	0
4/23/2024	11:00 AM	0	0	0	0	0	0	0	0	0	0	0	0	0
4/23/2024	11:15 AM	0	0	0	0	0	0	0	0	0	0	0	0	0
4/23/2024	11:30 AM	0	0	0	0	0	0	0	0	0	0	0	0	0
4/23/2024	11:45 AM	0	0	0	0	0	0	0	0	0	0	0	0	0
4/23/2024	12:00 PM	0	0	0	0	0	0	0	0	0	0	0	0	0
4/23/2024	12:15 PM	0	0	0	0	0	0	0	0	0	0	0	0	0
4/23/2024	12:30 PM	0	0	0	0	0	0	0	0	0	0	0	0	0
4/23/2024	12:45 PM	0	0	0	0	0	0	0	0	0	0	0	0	0
4/23/2024	1:00 PM	0	0	0	0	0	0	0	0	0	0	0	0	0
4/23/2024	1:15 PM	0	0	0	0	0	0	0	0	0	0	0	0	0
4/23/2024	1:30 PM	0	0	0	0	0	0	0	0	0	0	0	0	0
4/23/2024	1:45 PM	0	0	0	0	0	0	0	0	0	0	0	0	0
4/23/2024	2:00 PM	0	0	0	0	0	0	0	0	0	0	0	0	0
4/23/2024	2:15 PM	0	0	0	0	0	0	0	0	0	0	0	0	0
4/23/2024	2:30 PM	0	0	0	0	0	0	0	0	0	0	0	0	0
4/23/2024	2:45 PM	0	0	0	0	0	0	0	0	0	0	0	0	0
4/23/2024	3:00 PM	0	0	0	0	0	0	0	0	0	0	0	0	0
4/23/2024	3:15 PM	0	0	0	0	0	0	0	0	0	0	0	0	0
4/23/2024	3:30 PM	0	0	0	0	0	0	0	0	0	0	0	0	0
4/23/2024	3:45 PM	0	0	0	0	0	0	0	0	0	0	0	0	0
4/23/2024	4:00 PM	0	0	0	0	0	0	0	0	0	0	0	0	0
4/23/2024	4:15 PM	0	0	0	0	0	0	0	0	0	0	0	0	0
4/23/2024	4:30 PM	0	0	0	0	0	0	0	0	0	0	0	0	0
4/23/2024	4:45 PM	0	0	0	0	0	0	0	0	0	0	0	0	0
4/23/2024	5:00 PM	0	0	0	0	0	0	0	0	0	0	0	0	0
4/23/2024	5:15 PM	0	0	0	0	0	0	0	0	0	0	0	0	0
4/23/2024	5:30 PM	0	0	0	0	0	0	0	0	0	0	0	0	0
4/23/2024	5:45 PM	0	0	0	0	0	0	0	0	0	0	0	0	0
4/23/2024	6:00 PM	0	0	0	0	0	0	0	0	0	0	0	0	0
4/23/2024	6:15 PM	0	0	0	0	0	0	0	0	0	0	0	0	0
4/23/2024	6:30 PM	0	0	0	0	0	0	0	0	0	0	0	0	0
4/23/2024	6:45 PM	0	0	0	0	0	0	0	0	0	0	0	0	0
4/23/2024	7:00 PM	0	0	0	0	0	0	0	0	0	0	0	0	0
4/23/2024	7:15 PM	0	0	0	0	0	0	0	0	0	0	0	0	0
4/23/2024	7:30 PM	0	0	0	0	0	0	0	0	0	0	0	0	0
4/23/2024	7:45 PM	0	0	0	0	0	0	0	0	0	0	0	0	0
4/23/2024	8:00 PM	0	0	0	0	0	0	0	0	0	0	0	0	0
4/23/2024	8:15 PM	0	0	0	0	0	0	0	0	0	0	0	0	0
4/23/2024	8:30 PM	0	0	0	0	0	0	0	0	0	0	0	0	0
4/23/2024	8:45 PM	0	0	0	0	0	0	0	0	0	0	0	0	0
4/23/2024	9:00 PM	0	0	0	0	0	0	0	0	0	0	0	0	0
4/23/2024	9:15 PM	0	0	0	0	0	0	0	0	0	0	0	0	0
4/23/2024	9:30 PM	0	0	0	0	0	0	0	0	0	0	0	0	0
4/23/2024	9:45 PM	0	0	0	0	0	0	0	0	0	0	0	0	0
4/23/2024	10:00 PM	0	0	0	0	0	0	0	0	0	0	0	0	0
4/23/2024	10:15 PM	0	0	0	0	0	0	0	0	0	0	0	0	0
4/23/2024	10:30 PM	0	0	0	0	0	0	0	0	0	0	0	0	0
4/23/2024	10:45 PM	0	0	0	0	0	0	0	0	0	0	0	0	0
4/23/2024	11:00 PM	0	0	0	0	0	0	0	0	0	0	0	0	0
4/23/2024	11:15 PM	0	0	0	0	0	0	0	0	0	0	0	0	0
4/23/2024	11:30 PM	0	0	0	0	0	0	0	0	0	0	0	0	0
4/23/2024	11:45 PM	0	0	0	0	0	0	0	0	0	0	0	0	0

4/24/2024	12:00 AM	0	0	0	0	0	0	0	0	0	0	0	0	0
4/24/2024	12:15 AM	0	0	0	0	0	0	0	0	0	0	0	0	0
4/24/2024	12:30 AM	0	0	0	0	0	0	0	0	0	0	0	0	0
4/24/2024	12:45 AM	0	0	0	0	0	0	0	0	0	0	0	0	0
4/24/2024	1:00 AM	0	0	0	0	0	0	0	0	0	0	0	0	0
4/24/2024	1:15 AM	0	0	0	0	0	0	0	0	0	0	0	0	0
4/24/2024	1:30 AM	0	0	0	0	0	0	0	0	0	0	0	0	0
4/24/2024	1:45 AM	0	0	0	0	0	0	0	0	0	0	0	0	0
4/24/2024	2:00 AM	0	0	0	0	0	0	0	0	0	0	0	0	0
4/24/2024	2:15 AM	0	0	0	0	0	0	0	0	0	0	0	0	0
4/24/2024	2:30 AM	0	0	0	0	0	0	0	0	0	0	0	0	0
4/24/2024	2:45 AM	0	0	0	0	0	0	0	0	0	0	0	0	0
4/24/2024	3:00 AM	0	0	0	0	0	0	0	0	0	0	0	0	0
4/24/2024	3:15 AM	0	0	0	0	0	0	0	0	0	0	0	0	0
4/24/2024	3:30 AM	0	0	0	0	0	0	0	0	0	0	0	0	0
4/24/2024	3:45 AM	0	0	0	0	0	0	0	0	0	0	0	0	0
4/24/2024	4:00 AM	0	0	0	0	0	0	0	0	0	0	0	0	0
4/24/2024	4:15 AM	0	0	0	0	0	0	0	0	0	0	0	0	0
4/24/2024	4:30 AM	0	0	0	0	0	0	0	0	0	0	0	0	0
4/24/2024	4:45 AM	0	0	0	0	0	0	0	0	0	0	0	0	0
4/24/2024	5:00 AM	0	0	0	0	0	0	0	0	0	0	0	0	0
4/24/2024	5:15 AM	0	0	0	0	0	0	0	0	0	0	0	0	0
4/24/2024	5:30 AM	0	0	0	0	0	0	0	0	0	0	0	0	0
4/24/2024	5:45 AM	0	0	0	0	0	0	0	0	0	0	0	0	0
4/24/2024	6:00 AM	0	0	0	0	0	0	0	0	0	0	0	0	0
4/24/2024	6:15 AM	0	0	0	0	0	0	0	0	0	0	0	0	0
4/24/2024	6:30 AM	0	0	0	0	0	0	0	0	0	0	0	0	0
4/24/2024	6:45 AM	0	0	0	0	0	0	0	0	0	0	0	0	0
4/24/2024	7:00 AM	0	0	0	0	0	0	0	0	0	0	0	0	0
4/24/2024	7:15 AM	0	0	0	0	0	0	0	0	0	0	0	0	0
4/24/2024	7:30 AM	0	0	0	0	0	0	0	0	0	0	0	0	0
4/24/2024	7:45 AM	0	0	0	0	0	0	0	0	0	0	0	0	0
4/24/2024	8:00 AM	0	0	0	0	0	0	0	0	0	0	0	0	0
4/24/2024	8:15 AM	0	0	0	0	0	0	0	0	0	0	0	0	0
4/24/2024	8:30 AM	0	0	0	0	0	0	0	0	0	0	0	0	0
4/24/2024	8:45 AM	0	0	0	0	0	0	0	0	0	0	0	0	0
4/24/2024	9:00 AM	0	0	0	0	0	0	0	0	0	0	0	0	0
4/24/2024	9:15 AM	0	0	0	0	0	0	0	0	0	0	0	0	0
4/24/2024	9:30 AM	0	0	0	0	0	0	0	0	0	0	0	0	0
4/24/2024	9:45 AM	0	0	0	0	0	0	0	0	0	0	0	0	0
4/24/2024	10:00 AM	0	0	0	0	0	0	0	0	0	0	0	0	0
4/24/2024	10:15 AM	0	0	0	0	0	0	0	0	0	0	0	0	0
4/24/2024	10:30 AM	0	0	0	0	0	0	0	0	0	0	0	0	0
4/24/2024	10:45 AM	0	0	0	0	0	0	0	0	0	0	0	0	0
4/24/2024	11:00 AM	0	0	0	0	0	0	0	0	0	0	0	0	0
4/24/2024	11:15 AM	0	0	0	0	0	0	0	0	0	0	0	0	0
4/24/2024	11:30 AM	0	0	0	0	0	0	0	0	0	0	0	0	0
4/24/2024	11:45 AM	0	0	0	0	0	0	0	0	0	0	0	0	0
4/24/2024	12:00 PM	0	0	0	0	0	0	0	0	0	0	0	0	0
4/24/2024	12:15 PM	0	0	0	0	0	0	0	0	0	0	0	0	0
4/24/2024	12:30 PM	0	0	0	0	0	0	0	0	0	0	0	0	0
4/24/2024	12:45 PM	0	0	0	0	0	0	0	0	0	0	0	0	0
4/24/2024	1:00 PM	0	0	0	0	0	0	0	0	0	0	0	0	0
4/24/2024	1:15 PM	0	0	0	0	0	0	0	0	0	0	0	0	0
4/24/2024	1:30 PM	0	0	0	0	0	0	0	0	0	0	0	0	0
4/24/2024	1:45 PM	0	0	0	0	0	0	0	0	0	0	0	0	0
4/24/2024	2:00 PM	0	0	0	0	0	0	0	0	0	0	0	0	0
4/24/2024	2:15 PM	0	0	0	0	0	0	0	0	0	0	0	0	0
4/24/2024	2:30 PM	0	0	0	0	0	0	0	0	0	0	0	0	0
4/24/2024	2:45 PM	0	0	0	0	0	0	0	0	0	0	0	0	0
4/24/2024	3:00 PM	0	0	0	0	0	0	0	0	0	0	0	0	0
4/24/2024	3:15 PM	0	0	0	0	0	0	0	0	0	0	0	0	0
4/24/2024	3:30 PM	0	0	0	0	0	0	0	0	0	0	0	0	0
4/24/2024	3:45 PM	0	0	0	0	0	0	0	0	0	0	0	0	0
4/24/2024	4:00 PM	0	0	0	0	0	0	0	0	0	0	0	0	0
4/24/2024	4:15 PM	0	0	0	0	0	0	0	0	0	0	0	0	0
4/24/2024	4:30 PM	0	0	0	0	0	0	0	0	0	0	0	0	0
4/24/2024	4:45 PM	0	0	0	0	0	0	0	0	0	0	0	0	0
4/24/2024	5:00 PM	0	0	0	0	0	0	0	0	0	0	0	0	0
4/24/2024	5:15 PM	0	0	0	0	0	0	0	0	0	0	0	0	0
4/24/2024	5:30 PM	0	0	0	0	0	0	0	0	0	0	0	0	0
4/24/2024	5:45 PM	0	0	0	0	0	0	0	0	0	0	0	0	0
4/24/2024	6:00 PM	0	0	0	0	0	0	0	0	0	0	0	0	0
4/24/2024	6:15 PM	0	0	0	0	0	0	0	0	0	0	0	0	0
4/24/2024	6:30 PM	0	0	0	0	0	0	0	0	0	0	0	0	0
4/24/2024	6:45 PM	0	0	0	0	0	0	0	0	0	0	0	0	0
4/24/2024	7:00 PM	0	0	0	0	0	0	0	0	0	0	0	0	0
4/24/2024	7:15 PM	0	0	0	0	0	0	0	0	0	0	0	0	0
4/24/2024	7:30 PM	0	0	0	0	0	0	0	0	0	0	0	0	0
4/24/2024	7:45 PM	0	0	0	0	0	0	0	0	0	0	0	0	0
4/24/2024	8:00 PM	0	0	0	0	0	0	0	0	0	0	0	0	0
4/24/2024	8:15 PM	0	0	0	0	0	0	0	0	0	0	0	0	0
4/24/2024	8:30 PM	0	0	0	0	0	0	0	0	0	0	0	0	0
4/24/2024	8:45 PM	0	0	0	0	0	0	0	0	0	0	0	0	0
4/24/2024	9:00 PM	0	0	0	0	0	0	0	0	0	0	0	0	0
4/24/2024	9:15 PM	0	0	0	0	0	0	0	0	0	0	0	0	0
4/24/2024	9:30 PM	0	0	0	0	0	0	0	0	0	0	0	0	0
4/24/2024	9:45 PM	0	0	0	0	0	0	0	0	0	0	0	0	0
4/24/2024	10:00 PM	0	0	0	0	0	0	0	0	0	0	0	0	0
4/24/2024	10:15 PM	0	0	0	0	0	0	0	0	0	0	0	0	0
4/24/2024	10:30 PM	0	0	0	0	0	0	0	0	0	0	0	0	0
4/24/2024	10:45 PM	0	0	0	0	0	0	0	0	0	0	0	0	0
4/24/2024	11:00 PM	0	0	0	0	0	0	0	0	0	0	0	0	0
4/24/2024	11:15 PM	0	0	0	0	0	0	0	0	0	0	0	0	0
4/24/2024	11:30 PM	0	0	0	0	0	0	0	0	0	0	0	0	0
4/24/2024	11:45 PM	0	0	0	0	0	0	0	0	0	0	0	0	0

4/25/2024	12:00 AM	0	0	0	0	0	0	0	0	0	0	0	0	0
4/25/2024	12:15 AM	0	0	0	0	0	0	0	0	0	0	0	0	0
4/25/2024	12:30 AM	0	0	0	0	0	0	0	0	0	0	0	0	0
4/25/2024	12:45 AM	0	0	0	0	0	0	0	0	0	0	0	0	0
4/25/2024	1:00 AM	0	0	0	0	0	0	0	0	0	0	0	0	0
4/25/2024	1:15 AM	0	0	0	0	0	0	0	0	0	0	0	0	0
4/25/2024	1:30 AM	0	0	0	0	0	0	0	0	0	0	0	0	0
4/25/2024	1:45 AM	0	0	0	0	0	0	0	0	0	0	0	0	0
4/25/2024	2:00 AM	0	0	0	0	0	0	0	0	0	0	0	0	0
4/25/2024	2:15 AM	0	0	0	0	0	0	0	0	0	0	0	0	0
4/25/2024	2:30 AM	0	0	0	0	0	0	0	0	0	0	0	0	0
4/25/2024	2:45 AM	0	0	0	0	0	0	0	0	0	0	0	0	0
4/25/2024	3:00 AM	0	0	0	0	0	0	0	0	0	0	0	0	0
4/25/2024	3:15 AM	0	0	0	0	0	0	0	0	0	0	0	0	0
4/25/2024	3:30 AM	0	0	0	0	0	0	0	0	0	0	0	0	0
4/25/2024	3:45 AM	0	0	0	0	0	0	0	0	0	0	0	0	0
4/25/2024	4:00 AM	0	0	0	0	0	0	0	0	0	0	0	0	0
4/25/2024	4:15 AM	0	0	0	0	0	0	0	0	0	0	0	0	0
4/25/2024	4:30 AM	0	0	0	0	0	0	0	0	0	0	0	0	0
4/25/2024	4:45 AM	0	0	0	0	0	0	0	0	0	0	0	0	0
4/25/2024	5:00 AM	0	0	0	0	0	0	0	0	0	0	0	0	0
4/25/2024	5:15 AM	0	0	0	0	0	0	0	0	0	0	0	0	0
4/25/2024	5:30 AM	0	0	0	0	0	0	0	0	0	0	0	0	0
4/25/2024	5:45 AM	0	0	0	0	0	0	0	0	0	0	0	0	0
4/25/2024	6:00 AM	0	0	0	0	0	0	0	0	0	0	0	0	0
4/25/2024	6:15 AM	0	0	0	0	0	0	0	0	0	0	0	0	0
4/25/2024	6:30 AM	0	0	0	0	0	0	0	0	0	0	0	0	0
4/25/2024	6:45 AM	0	0	0	0	0	0	0	0	0	0	0	0	0
4/25/2024	7:00 AM	0	0	0	0	0	0	0	0	0	0	0	0	0
4/25/2024	7:15 AM	0	0	0	0	0	0	0	0	0	0	0	0	0
4/25/2024	7:30 AM	0	0	0	0	0	0	0	0	0	0	0	0	0
4/25/2024	7:45 AM	0	0	0	0	0	0	0	0	0	0	0	0	0
4/25/2024	8:00 AM	0	0	0	0	0	0	0	0	0	0	0	0	0
4/25/2024	8:15 AM	0	0	0	0	0	0	0	0	0	0	0	0	0
4/25/2024	8:30 AM	0	0	0	0	0	0	0	0	0	0	0	0	0
4/25/2024	8:45 AM	0	0	0	0	0	0	0	0	0	0	0	0	0
4/25/2024	9:00 AM	0	0	0	0	0	0	0	0	0	0	0	0	0
4/25/2024	9:15 AM	0	0	0	0	0	0	0	0	0	0	0	0	0
4/25/2024	9:30 AM	0	0	0	0	0	0	0	0	0	0	0	0	0
4/25/2024	9:45 AM	0	0	0	0	0	0	0	0	0	0	0	0	0
4/25/2024	10:00 AM	0	0	0	0	0	0	0	0	0	0	0	0	0
4/25/2024	10:15 AM	0	0	0	0	0	0	0	0	0	0	0	0	0
4/25/2024	10:30 AM	0	0	0	0	0	0	0	0	0	0	0	0	0
4/25/2024	10:45 AM	0	0	0	0	0	0	0	0	0	0	0	0	0
4/25/2024	11:00 AM	0	0	0	0	0	0	0	0	0	0	0	0	0
4/25/2024	11:15 AM	0	0	0	0	0	0	0	0	0	0	0	0	0
4/25/2024	11:30 AM	0	0	0	0	0	0	0	0	0	0	0	0	0
4/25/2024	11:45 AM	0	0	0	0	0	0	0	0	0	0	0	0	0
4/25/2024	12:00 PM	0	0	0	0	0	0	0	0	0	0	0	0	0
4/25/2024	12:15 PM	0	0	0	0	0	0	0	0	0	0	0	0	0
4/25/2024	12:30 PM	0	0	0	0	0	0	0	0	0	0	0	0	0
4/25/2024	12:45 PM	0	0	0	0	0	0	0	0	0	0	0	0	0
4/25/2024	1:00 PM	0	0	0	0	0	0	0	0	0	0	0	0	0
4/25/2024	1:15 PM	0	0	0	0	0	0	0	0	0	0	0	0	0
4/25/2024	1:30 PM	0	0	0	0	0	0	0	0	0	0	0	0	0
4/25/2024	1:45 PM	0	0	0	0	0	0	0	0	0	0	0	0	0
4/25/2024	2:00 PM	0	0	0	0	0	0	0	0	0	0	0	0	0
4/25/2024	2:15 PM	0	0	0	0	0	0	0	0	0	0	0	0	0
4/25/2024	2:30 PM	0	0	0	0	0	0	0	0	0	0	0	0	0
4/25/2024	2:45 PM	0	0	0	0	0	0	0	0	0	0	0	0	0
4/25/2024	3:00 PM	0	0	0	0	0	0	0	0	0	0	0	0	0
4/25/2024	3:15 PM	0	0	0	0	0	0	0	0	0	0	0	0	0
4/25/2024	3:30 PM	0	0	0	0	0	0	0	0	0	0	0	0	0
4/25/2024	3:45 PM	0	0	0	0	0	0	0	0	0	0	0	0	0
4/25/2024	4:00 PM	0	0	0	0	0	0	0	0	0	0	0	0	0
4/25/2024	4:15 PM	0	0	0	0	0	0	0	0	0	0	0	0	0
4/25/2024	4:30 PM	0	0	0	0	0	0	0	0	0	0	0	0	0
4/25/2024	4:45 PM	0	0	0	0	0	0	0	0	0	0	0	0	0
4/25/2024	5:00 PM	0	0	0	0	0	0	0	0	0	0	0	0	0
4/25/2024	5:15 PM	0	0	0	0	0	0	0	0	0	0	0	0	0
4/25/2024	5:30 PM	0	0	0	0	0	0	0	0	0	0	0	0	0
4/25/2024	5:45 PM	0	0	0	0	0	0	0	0	0	0	0	0	0
4/25/2024	6:00 PM	0	0	0	0	0	0	0	0	0	0	0	0	0
4/25/2024	6:15 PM	0	0	0	0	0	0	0	0	0	0	0	0	0
4/25/2024	6:30 PM	0	0	0	0	0	0	0	0	0	0	0	0	0
4/25/2024	6:45 PM	0	0	0	0	0	0	0	0	0	0	0	0	0
4/25/2024	7:00 PM	0	0	0	0	0	0	0	0	0	0	0	0	0
4/25/2024	7:15 PM	0	0	0	0	0	0	0	0	0	0	0	0	0
4/25/2024	7:30 PM	0	0	0	0	0	0	0	0	0	0	0	0	0
4/25/2024	7:45 PM	0	0	0	0	0	0	0	0	0	0	0	0	0
4/25/2024	8:00 PM	0	0	0	0	0	0	0	0	0	0	0	0	0
4/25/2024	8:15 PM	0	0	0	0	0	0	0	0	0	0	0	0	0
4/25/2024	8:30 PM	0	0	0	0	0	0	0	0	0	0	0	0	0
4/25/2024	8:45 PM	0	0	0	0	0	0	0	0	0	0	0	0	0
4/25/2024	9:00 PM	0	0	0	0	0	0	0	0	0	0	0	0	0
4/25/2024	9:15 PM	0	0	0	0	0	0	0	0	0	0	0	0	0
4/25/2024	9:30 PM	0	0	0	0	0	0	0	0	0	0	0	0	0
4/25/2024	9:45 PM	0	0	0	0	0	0	0	0	0	0	0	0	0
4/25/2024	10:00 PM	0	0	0	0	0	0	0	0	0	0	0	0	0
4/25/2024	10:15 PM	0	0	0	0	0	0	0	0	0	0	0	0	0
4/25/2024	10:30 PM	0	0	0	0	0	0	0	0	0	0	0	0	0
4/25/2024	10:45 PM	0	0	0	0	0	0	0	0	0	0	0	0	0
4/25/2024	11:00 PM	0	0	0	0	0	0	0	0	0	0	0	0	0
4/25/2024	11:15 PM	0	0	0	0	0	0	0	0	0	0	0	0	0
4/25/2024	11:30 PM	0	0	0	0	0	0	0	0	0	0	0	0	0
4/25/2024	11:45 PM	0	0	0	0	0	0	0	0	0	0	0	0	0

NB
File Name:
Start Date: 4/23/2024
Start Time: 0
Site Code: 20
Station ID: 1
Location 1: I-26 James F. Byrnes Expy On/Off-Ramp, north of US-176 Broad River Rd
Location 2:

Date	Time	1	2	3	4	5	6	7	8	9	10	11	12	13
4/23/2024	12:00 AM	0	0	0	0	0	0	0	0	0	0	0	0	0
4/23/2024	12:15 AM	0	0	0	0	0	0	0	0	0	0	0	0	0
4/23/2024	12:30 AM	0	0	0	0	0	0	0	0	0	0	0	0	0
4/23/2024	12:45 AM	0	0	0	0	0	0	0	0	0	0	0	0	0
4/23/2024	1:00 AM	0	0	0	0	0	0	0	0	0	0	0	0	0
4/23/2024	1:15 AM	0	0	0	0	0	0	0	0	0	0	0	0	0
4/23/2024	1:30 AM	0	0	0	0	0	0	0	0	0	0	0	0	0
4/23/2024	1:45 AM	0	0	0	0	0	0	0	0	0	0	0	0	0
4/23/2024	2:00 AM	0	0	0	0	0	0	0	0	0	0	0	0	0
4/23/2024	2:15 AM	0	0	0	0	0	0	0	0	0	0	0	0	0
4/23/2024	2:30 AM	0	0	0	0	0	0	0	0	0	0	0	0	0
4/23/2024	2:45 AM	0	0	0	0	0	0	0	0	0	0	0	0	0
4/23/2024	3:00 AM	0	0	0	0	0	0	0	0	0	0	0	0	0
4/23/2024	3:15 AM	0	0	0	0	0	0	0	0	0	0	0	0	0
4/23/2024	3:30 AM	0	0	0	0	0	0	0	0	0	0	0	0	0
4/23/2024	3:45 AM	0	0	0	0	0	0	0	0	0	0	0	0	0
4/23/2024	4:00 AM	0	0	0	0	0	0	0	0	0	0	0	0	0
4/23/2024	4:15 AM	0	0	0	0	0	0	0	0	0	0	0	0	0
4/23/2024	4:30 AM	0	0	0	0	0	0	0	0	0	0	0	0	0
4/23/2024	4:45 AM	0	0	0	0	0	0	0	0	0	0	0	0	0
4/23/2024	5:00 AM	0	0	0	0	0	0	0	0	0	0	0	0	0
4/23/2024	5:15 AM	0	0	0	0	0	0	0	0	0	0	0	0	0
4/23/2024	5:30 AM	0	0	0	0	0	0	0	0	0	0	0	0	0
4/23/2024	5:45 AM	0	0	0	0	0	0	0	0	0	0	0	0	0
4/23/2024	6:00 AM	0	0	0	0	0	0	0	0	0	0	0	0	0
4/23/2024	6:15 AM	0	0	0	0	0	0	0	0	0	0	0	0	0
4/23/2024	6:30 AM	0	0	0	0	0	0	0	0	0	0	0	0	0
4/23/2024	6:45 AM	0	0	0	0	0	0	0	0	0	0	0	0	0
4/23/2024	7:00 AM	0	0	0	0	0	0	0	0	0	0	0	0	0
4/23/2024	7:15 AM	0	0	0	0	0	0	0	0	0	0	0	0	0
4/23/2024	7:30 AM	0	0	0	0	0	0	0	0	0	0	0	0	0
4/23/2024	7:45 AM	0	0	0	0	0	0	0	0	0	0	0	0	0
4/23/2024	8:00 AM	0	0	0	0	0	0	0	0	0	0	0	0	0
4/23/2024	8:15 AM	0	0	0	0	0	0	0	0	0	0	0	0	0
4/23/2024	8:30 AM	0	0	0	0	0	0	0	0	0	0	0	0	0
4/23/2024	8:45 AM	0	0	0	0	0	0	0	0	0	0	0	0	0
4/23/2024	9:00 AM	0	0	0	0	0	0	0	0	0	0	0	0	0
4/23/2024	9:15 AM	0	0	0	0	0	0	0	0	0	0	0	0	0
4/23/2024	9:30 AM	0	0	0	0	0	0	0	0	0	0	0	0	0
4/23/2024	9:45 AM	0	0	0	0	0	0	0	0	0	0	0	0	0
4/23/2024	10:00 AM	0	0	0	0	0	0	0	0	0	0	0	0	0
4/23/2024	10:15 AM	0	0	0	0	0	0	0	0	0	0	0	0	0
4/23/2024	10:30 AM	0	0	0	0	0	0	0	0	0	0	0	0	0
4/23/2024	10:45 AM	0	0	0	0	0	0	0	0	0	0	0	0	0
4/23/2024	11:00 AM	0	0	0	0	0	0	0	0	0	0	0	0	0
4/23/2024	11:15 AM	0	0	0	0	0	0	0	0	0	0	0	0	0
4/23/2024	11:30 AM	0	0	0	0	0	0	0	0	0	0	0	0	0
4/23/2024	11:45 AM	0	0	0	0	0	0	0	0	0	0	0	0	0
4/23/2024	12:00 PM	0	0	0	0	0	0	0	0	0	0	0	0	0
4/23/2024	12:15 PM	0	0	0	0	0	0	0	0	0	0	0	0	0
4/23/2024	12:30 PM	0	0	0	0	0	0	0	0	0	0	0	0	0
4/23/2024	12:45 PM	0	0	0	0	0	0	0	0	0	0	0	0	0
4/23/2024	1:00 PM	0	0	0	0	0	0	0	0	0	0	0	0	0
4/23/2024	1:15 PM	0	0	0	0	0	0	0	0	0	0	0	0	0
4/23/2024	1:30 PM	0	0	0	0	0	0	0	0	0	0	0	0	0
4/23/2024	1:45 PM	0	0	0	0	0	0	0	0	0	0	0	0	0
4/23/2024	2:00 PM	0	0	0	0	0	0	0	0	0	0	0	0	0
4/23/2024	2:15 PM	0	0	0	0	0	0	0	0	0	0	0	0	0
4/23/2024	2:30 PM	0	0	0	0	0	0	0	0	0	0	0	0	0
4/23/2024	2:45 PM	0	0	0	0	0	0	0	0	0	0	0	0	0
4/23/2024	3:00 PM	0	0	0	0	0	0	0	0	0	0	0	0	0
4/23/2024	3:15 PM	0	0	0	0	0	0	0	0	0	0	0	0	0
4/23/2024	3:30 PM	0	0	0	0	0	0	0	0	0	0	0	0	0
4/23/2024	3:45 PM	0	0	0	0	0	0	0	0	0	0	0	0	0
4/23/2024	4:00 PM	0	0	0	0	0	0	0	0	0	0	0	0	0
4/23/2024	4:15 PM	0	0	0	0	0	0	0	0	0	0	0	0	0
4/23/2024	4:30 PM	0	0	0	0	0	0	0	0	0	0	0	0	0
4/23/2024	4:45 PM	0	0	0	0	0	0	0	0	0	0	0	0	0
4/23/2024	5:00 PM	0	0	0	0	0	0	0	0	0	0	0	0	0
4/23/2024	5:15 PM	0	0	0	0	0	0	0	0	0	0	0	0	0
4/23/2024	5:30 PM	0	0	0	0	0	0	0	0	0	0	0	0	0
4/23/2024	5:45 PM	0	0	0	0	0	0	0	0	0	0	0	0	0
4/23/2024	6:00 PM	0	0	0	0	0	0	0	0	0	0	0	0	0
4/23/2024	6:15 PM	0	27	0	0	0	0	0	0	0	0	0	0	0
4/23/2024	6:30 PM	0	43	1	0	0	0	0	0	0	0	0	0	0
4/23/2024	6:45 PM	0	58	2	0	0	0	0	0	0	0	0	0	0
4/23/2024	7:00 PM	0	76	2	0	0	1	0	0	0	0	0	0	0
4/23/2024	7:15 PM	0	58	2	0	0	1	0	0	0	0	0	0	0
4/23/2024	7:30 PM	0	58	1	0	0	1	0	0	0	0	0	0	0
4/23/2024	7:45 PM	0	53	0	0	0	1	0	0	0	0	0	0	0
4/23/2024	8:00 PM	0	43	0	0	0	0	0	0	0	0	0	0	0
4/23/2024	8:15 PM	0	37	0	0	0	0	0	0	0	0	0	0	0
4/23/2024	8:30 PM	0	28	0	0	0	0	0	0	0	0	0	0	0
4/23/2024	8:45 PM	0	23	0	0	0	0	0	0	1	0	0	0	0
4/23/2024	9:00 PM	0	26	0	0	0	0	0	0	1	0	0	0	0
4/23/2024	9:15 PM	0	25	0	0	0	0	0	0	1	0	0	0	0
4/23/2024	9:30 PM	0	24	0	0	0	0	0	0	1	0	0	0	0
4/23/2024	9:45 PM	0	23	0	0	0	0	0	0	0	0	0	0	0
4/23/2024	10:00 PM	0	13	0	0	0	0	0	0	0	0	0	0	0
4/23/2024	10:15 PM	0	12	0	0	0	0	0	0	0	0	0	0	0
4/23/2024	10:30 PM	0	7	0	0	0	0	0	0	0	0	0	0	0
4/23/2024	10:45 PM	0	8	0	0	0	0	0	0	0	0	0	0	0
4/23/2024	11:00 PM	0	9	0	0	0	0	0	0	0	0	0	0	0
4/23/2024	11:15 PM	0	9	0	0	0	0	0	0	0	0	0	0	0
4/23/2024	11:30 PM	0	9	0	0	0	0	0	0	1	0	0	0	0
4/23/2024	11:45 PM	0	5	0	0	0	0	0	0	1	0	0	0	0

4/24/2024	12:00 AM	0	4	0	0	0	0	0	0	1	0	0	0	0
4/24/2024	12:15 AM	0	3	1	0	0	0	0	0	1	0	0	0	0
4/24/2024	12:30 AM	0	3	1	0	0	0	0	0	0	0	0	0	0
4/24/2024	12:45 AM	0	4	1	0	0	0	0	0	0	0	0	0	0
4/24/2024	1:00 AM	0	4	1	0	1	0	0	0	0	0	0	0	0
4/24/2024	1:15 AM	0	5	0	0	1	0	0	0	0	0	0	0	0
4/24/2024	1:30 AM	0	5	0	0	1	0	0	0	0	0	0	0	0
4/24/2024	1:45 AM	0	4	0	0	1	0	0	0	1	0	0	0	0
4/24/2024	2:00 AM	0	5	0	0	0	0	0	0	1	0	0	0	0
4/24/2024	2:15 AM	0	6	1	0	0	0	0	0	1	0	0	0	0
4/24/2024	2:30 AM	0	6	1	0	0	0	0	0	1	0	0	0	0
4/24/2024	2:45 AM	0	6	1	0	0	0	0	0	0	0	0	0	0
4/24/2024	3:00 AM	0	4	1	0	0	0	0	0	0	0	0	0	0
4/24/2024	3:15 AM	0	3	0	0	0	0	0	0	0	0	0	0	0
4/24/2024	3:30 AM	0	2	0	0	0	0	0	0	0	0	0	0	0
4/24/2024	3:45 AM	0	6	0	0	0	0	0	0	0	0	0	0	0
4/24/2024	4:00 AM	0	9	0	0	0	0	0	0	0	0	0	0	0
4/24/2024	4:15 AM	0	12	0	0	1	0	0	0	0	0	0	0	0
4/24/2024	4:30 AM	0	21	0	0	1	0	0	0	0	0	0	0	0
4/24/2024	4:45 AM	0	29	0	0	2	0	0	0	1	0	0	0	0
4/24/2024	5:00 AM	0	39	0	1	3	0	0	0	1	0	0	0	0
4/24/2024	5:15 AM	0	41	0	1	3	0	0	0	1	0	0	0	0
4/24/2024	5:30 AM	0	48	0	1	3	1	0	0	1	0	0	0	0
4/24/2024	5:45 AM	0	58	1	1	2	1	0	0	0	0	0	0	0
4/24/2024	6:00 AM	0	62	1	0	1	1	0	0	0	0	0	0	0
4/24/2024	6:15 AM	0	74	1	0	0	1	0	0	0	0	0	0	0
4/24/2024	6:30 AM	0	81	1	0	0	0	0	0	1	0	0	0	0
4/24/2024	6:45 AM	0	87	0	1	0	0	0	0	1	0	0	0	0
4/24/2024	7:00 AM	0	88	2	1	0	0	0	0	2	0	0	0	0
4/24/2024	7:15 AM	0	98	2	1	0	0	0	0	3	0	0	0	0
4/24/2024	7:30 AM	0	85	10	1	0	0	0	0	2	0	0	0	0
4/24/2024	7:45 AM	0	73	15	0	1	1	2	0	2	0	0	0	0
4/24/2024	8:00 AM	0	76	20	0	1	1	2	0	2	0	0	0	0
4/24/2024	8:15 AM	0	62	26	0	1	1	2	1	1	0	0	0	0
4/24/2024	8:30 AM	0	71	22	0	1	1	2	1	1	0	0	0	0
4/24/2024	8:45 AM	0	76	23	0	2	0	0	1	1	0	0	0	0
4/24/2024	9:00 AM	0	73	19	0	2	0	0	1	0	0	0	0	0
4/24/2024	9:15 AM	0	70	17	0	5	0	0	0	1	0	0	0	0
4/24/2024	9:30 AM	0	67	17	0	5	0	0	0	1	0	0	0	0
4/24/2024	9:45 AM	0	55	13	0	3	0	0	0	1	0	0	0	0
4/24/2024	10:00 AM	0	58	18	0	4	0	0	1	1	0	0	0	0
4/24/2024	10:15 AM	0	64	16	0	1	0	0	1	3	0	0	0	0
4/24/2024	10:30 AM	0	59	14	0	1	0	0	1	4	0	0	0	0
4/24/2024	10:45 AM	0	66	17	0	2	0	0	1	4	0	0	0	0
4/24/2024	11:00 AM	0	60	11	0	2	1	0	0	5	0	0	0	0
4/24/2024	11:15 AM	0	63	13	0	3	1	0	0	2	0	0	0	0
4/24/2024	11:30 AM	1	81	13	0	3	1	0	0	2	0	0	0	0
4/24/2024	11:45 AM	1	93	16	0	2	1	0	0	2	0	0	0	0
4/24/2024	12:00 PM	1	103	22	0	1	0	0	0	1	0	0	0	0
4/24/2024	12:15 PM	1	105	28	0	0	0	0	0	1	0	0	0	0
4/24/2024	12:30 PM	1	91	31	0	1	0	0	0	1	0	0	0	0
4/24/2024	12:45 PM	1	73	27	0	1	0	0	4	1	0	0	0	0
4/24/2024	1:00 PM	1	63	23	0	1	0	0	4	1	0	0	0	0
4/24/2024	1:15 PM	1	59	16	0	1	1	0	5	3	0	0	0	0
4/24/2024	1:30 PM	0	68	20	0	0	1	0	5	2	0	0	0	0
4/24/2024	1:45 PM	0	84	23	0	1	1	0	1	4	0	0	0	0
4/24/2024	2:00 PM	0	89	22	0	1	1	1	1	4	0	0	0	0
4/24/2024	2:15 PM	1	105	29	0	3	0	1	0	2	0	0	0	0
4/24/2024	2:30 PM	1	116	32	0	4	0	1	0	2	0	0	0	0
4/24/2024	2:45 PM	1	123	29	0	4	0	1	0	0	0	0	0	0
4/24/2024	3:00 PM	1	139	33	0	5	1	0	0	1	0	0	0	0
4/24/2024	3:15 PM	0	144	28	0	3	1	0	0	1	0	0	0	0
4/24/2024	3:30 PM	1	152	24	0	2	1	0	0	1	0	0	0	0
4/24/2024	3:45 PM	2	148	31	0	2	1	0	0	2	0	0	0	0
4/24/2024	4:00 PM	3	147	33	0	3	0	0	0	3	0	0	0	0
4/24/2024	4:15 PM	3	165	39	1	3	0	0	0	3	0	0	0	0
4/24/2024	4:30 PM	2	167	36	1	4	0	0	0	3	0	0	0	0
4/24/2024	4:45 PM	1	167	33	1	4	0	0	0	2	0	0	0	0
4/24/2024	5:00 PM	1	158	32	1	3	0	0	0	1	0	0	0	0
4/24/2024	5:15 PM	2	130	29	0	4	1	0	0	1	0	0	0	0
4/24/2024	5:30 PM	2	111	30	0	3	2	0	0	1	0	0	0	0
4/24/2024	5:45 PM	2	102	26	0	2	2	0	0	1	0	0	0	0
4/24/2024	6:00 PM	1	95	19	0	1	2	0	0	0	0	0	0	0
4/24/2024	6:15 PM	0	89	16	0	0	1	0	0	0	0	0	0	0
4/24/2024	6:30 PM	1	76	11	0	0	0	0	0	0	0	0	0	0
4/24/2024	6:45 PM	1	71	7	0	0	0	0	0	0	0	0	0	0
4/24/2024	7:00 PM	2	66	7	0	0	0	0	0	0	0	0	0	0
4/24/2024	7:15 PM	2	55	6	0	0	0	0	0	0	0	0	0	0
4/24/2024	7:30 PM	1	60	9	0	0	0	0	0	0	0	0	0	0
4/24/2024	7:45 PM	1	56	9	0	1	0	0	0	0	0	0	0	0
4/24/2024	8:00 PM	0	52	8	0	1	0	0	0	0	0	0	0	0
4/24/2024	8:15 PM	0	54	4	0	1	0	0	0	0	0	0	0	0
4/24/2024	8:30 PM	0	45	0	0	1	0	0	0	0	0	0	0	0
4/24/2024	8:45 PM	0	44	0	0	0	0	0	0	0	0	0	0	0
4/24/2024	9:00 PM	0	39	1	0	0	0	0	0	0	0	0	0	0
4/24/2024	9:15 PM	0	29	1	0	0	0	0	0	0	0	0	0	0
4/24/2024	9:30 PM	0	23	1	0	0	0	0	0	0	0	0	0	0
4/24/2024	9:45 PM	0	15	1	0	0	0	0	0	0	0	0	0	0
4/24/2024	10:00 PM	0	12	1	0	0	0	0	0	0	0	0	0	0
4/24/2024	10:15 PM	0	12	1	0	0	0	0	0	0	0	0	0	0
4/24/2024	10:30 PM	0	10	1	0	0	0	0	0	0	0	0	0	0
4/24/2024	10:45 PM	0	10	1	0	0	0	0	0	0	0	0	0	0
4/24/2024	11:00 PM	0	9	0	0	0	0	0	0	0	0	0	0	0
4/24/2024	11:15 PM	0	9	0	0	0	0	0	0	1	0	0	0	0
4/24/2024	11:30 PM	0	10	0	0	1	0	0	0	1	0	0	0	0
4/24/2024	11:45 PM	0	11	0	0	1	0	0	0	1	0	0	0	0

4/25/2024	12:00 AM	0	12	0	0	1	0	0	0	1	0	0	0	0
4/25/2024	12:15 AM	0	8	0	0	1	0	0	0	0	0	0	0	0
4/25/2024	12:30 AM	0	9	0	0	0	0	0	0	0	0	0	0	0
4/25/2024	12:45 AM	0	6	0	0	0	0	0	0	0	0	0	0	0
4/25/2024	1:00 AM	0	6	0	0	0	0	0	0	0	0	0	0	0
4/25/2024	1:15 AM	0	6	0	0	0	0	0	0	0	0	0	0	0
4/25/2024	1:30 AM	0	3	0	0	1	0	0	0	1	0	0	0	0
4/25/2024	1:45 AM	0	2	0	0	1	0	0	0	1	0	0	0	0
4/25/2024	2:00 AM	0	0	0	0	1	0	0	0	1	0	0	0	0
4/25/2024	2:15 AM	0	1	0	0	1	0	0	0	1	0	0	0	0
4/25/2024	2:30 AM	0	1	0	0	1	0	0	0	1	0	0	0	0
4/25/2024	2:45 AM	0	1	1	0	1	0	0	0	1	0	0	0	0
4/25/2024	3:00 AM	0	1	1	0	1	0	0	0	1	0	0	0	0
4/25/2024	3:15 AM	0	2	1	0	1	0	0	0	2	0	0	0	0
4/25/2024	3:30 AM	0	4	1	0	0	0	0	0	1	0	0	0	0
4/25/2024	3:45 AM	0	10	0	0	0	0	0	0	1	0	0	0	0
4/25/2024	4:00 AM	0	10	0	0	0	0	0	0	1	0	0	0	0
4/25/2024	4:15 AM	0	15	0	0	0	0	0	0	1	0	0	0	0
4/25/2024	4:30 AM	0	21	1	0	0	0	0	0	1	0	0	0	0
4/25/2024	4:45 AM	0	36	1	0	1	0	0	0	1	0	0	0	0
4/25/2024	5:00 AM	0	43	1	0	1	0	0	0	1	0	0	0	0
4/25/2024	5:15 AM	0	43	3	0	1	0	0	0	0	0	0	0	0
4/25/2024	5:30 AM	0	47	4	0	1	0	0	0	1	0	0	0	0
4/25/2024	5:45 AM	0	43	5	0	1	0	0	0	1	0	0	0	0
4/25/2024	6:00 AM	0	49	8	0	1	0	0	0	1	0	0	0	0
4/25/2024	6:15 AM	0	57	10	0	2	0	0	0	1	0	0	0	0
4/25/2024	6:30 AM	0	61	10	0	2	0	0	0	1	1	0	0	0
4/25/2024	6:45 AM	0	65	13	0	2	0	0	0	2	1	0	0	0
4/25/2024	7:00 AM	0	74	14	0	3	0	0	0	3	1	0	0	0
4/25/2024	7:15 AM	0	85	19	0	3	2	0	1	3	1	0	0	0
4/25/2024	7:30 AM	0	87	24	0	3	2	0	1	2	0	0	0	0
4/25/2024	7:45 AM	0	81	28	0	3	2	0	1	1	0	0	0	0
4/25/2024	8:00 AM	0	71	30	0	2	2	0	1	0	0	0	0	0
4/25/2024	8:15 AM	0	61	28	0	1	0	0	0	0	0	0	0	0
4/25/2024	8:30 AM	0	52	27	0	1	0	0	0	1	0	0	0	0
4/25/2024	8:45 AM	0	51	26	0	1	0	0	0	1	1	0	0	0
4/25/2024	9:00 AM	0	51	26	0	1	0	0	0	1	1	0	0	0
4/25/2024	9:15 AM	0	51	23	0	1	0	0	0	1	1	0	0	0
4/25/2024	9:30 AM	0	58	23	0	2	0	0	0	0	1	0	0	0
4/25/2024	9:45 AM	0	61	21	1	1	2	0	0	0	0	0	0	0
4/25/2024	10:00 AM	0	62	24	1	1	2	0	0	1	0	0	0	0
4/25/2024	10:15 AM	0	68	30	1	1	2	1	0	1	0	0	0	0
4/25/2024	10:30 AM	0	78	26	1	0	3	1	1	2	0	0	0	0
4/25/2024	10:45 AM	0	75	25	0	0	3	2	2	2	0	0	0	0
4/25/2024	11:00 AM	0	82	21	0	0	3	2	2	1	1	0	0	0
4/25/2024	11:15 AM	0	87	18	0	2	3	1	4	1	1	0	0	0
4/25/2024	11:30 AM	0	81	22	0	2	2	1	3	0	1	0	0	0
4/25/2024	11:45 AM	0	90	26	1	4	0	0	2	1	1	0	0	0
4/25/2024	12:00 PM	0	94	23	1	4	0	0	2	1	0	0	0	0
4/25/2024	12:15 PM	0	85	22	1	3	0	0	0	1	0	0	0	0
4/25/2024	12:30 PM	0	92	23	1	3	2	0	0	2	0	0	0	0
4/25/2024	12:45 PM	0	86	19	0	2	3	1	0	1	0	0	0	0
4/25/2024	1:00 PM	0	94	23	1	3	4	1	1	1	0	0	0	0
4/25/2024	1:15 PM	1	98	19	1	2	4	1	1	2	0	0	0	0
4/25/2024	1:30 PM	1	102	16	1	2	2	1	1	1	0	0	0	0
4/25/2024	1:45 PM	1	105	20	1	1	4	0	1	2	0	0	0	0
4/25/2024	2:00 PM	1	94	19	0	0	4	0	0	2	0	0	0	0
4/25/2024	2:15 PM	1	105	29	0	1	5	0	0	2	0	0	0	0
4/25/2024	2:30 PM	3	101	29	0	1	5	0	0	2	0	0	0	0
4/25/2024	2:45 PM	3	114	32	0	4	3	0	1	1	0	0	0	0
4/25/2024	3:00 PM	3	124	38	0	5	2	0	2	2	0	0	0	0
4/25/2024	3:15 PM	2	119	32	0	4	3	0	2	1	0	0	0	0
4/25/2024	3:30 PM	0	129	30	0	4	4	0	2	1	0	0	0	0
4/25/2024	3:45 PM	0	133	32	0	1	3	0	1	2	0	0	0	0
4/25/2024	4:00 PM	0	133	31	0	1	3	0	0	1	0	0	0	0
4/25/2024	4:15 PM	0	150	40	0	1	1	0	0	1	0	0	0	0
4/25/2024	4:30 PM	0	143	43	0	1	0	0	1	1	0	0	0	0
4/25/2024	4:45 PM	0	149	35	0	3	0	0	1	0	0	0	0	0
4/25/2024	5:00 PM	0	150	31	0	2	0	0	1	0	0	0	0	0
4/25/2024	5:15 PM	1	131	33	0	2	0	0	1	0	0	1	0	0
4/25/2024	5:30 PM	1	137	33	0	2	0	0	0	0	0	1	0	0
4/25/2024	5:45 PM	1	122	30	0	0	0	0	0	0	0	1	0	0
4/25/2024	6:00 PM	1	110	28	0	1	0	0	0	0	0	1	0	0
4/25/2024	6:15 PM	0	84	11	0	1	0	0	0	0	0	0	0	0
4/25/2024	6:30 PM	0	48	6	0	1	0	0	0	0	0	0	0	0
4/25/2024	6:45 PM	0	20	4	0	1	0	0	0	0	0	0	0	0
4/25/2024	7:00 PM	0	0	0	0	0	0	0	0	0	0	0	0	0
4/25/2024	7:15 PM	0	0	0	0	0	0	0	0	0	0	0	0	0
4/25/2024	7:30 PM	0	0	0	0	0	0	0	0	0	0	0	0	0
4/25/2024	7:45 PM	0	0	0	0	0	0	0	0	0	0	0	0	0
4/25/2024	8:00 PM	0	0	0	0	0	0	0	0	0	0	0	0	0
4/25/2024	8:15 PM	0	0	0	0	0	0	0	0	0	0	0	0	0
4/25/2024	8:30 PM	0	0	0	0	0	0	0	0	0	0	0	0	0
4/25/2024	8:45 PM	0	0	0	0	0	0	0	0	0	0	0	0	0
4/25/2024	9:00 PM	0	0	0	0	0	0	0	0	0	0	0	0	0
4/25/2024	9:15 PM	0	0	0	0	0	0	0	0	0	0	0	0	0
4/25/2024	9:30 PM	0	0	0	0	0	0	0	0	0	0	0	0	0
4/25/2024	9:45 PM	0	0	0	0	0	0	0	0	0	0	0	0	0
4/25/2024	10:00 PM	0	0	0	0	0	0	0	0	0	0	0	0	0
4/25/2024	10:15 PM	0	0	0	0	0	0	0	0	0	0	0	0	0
4/25/2024	10:30 PM	0	0	0	0	0	0	0	0	0	0	0	0	0
4/25/2024	10:45 PM	0	0	0	0	0	0	0	0	0	0	0	0	0
4/25/2024	11:00 PM	0	0	0	0	0	0	0	0	0	0	0	0	0
4/25/2024	11:15 PM	0	0	0	0	0	0	0	0	0	0	0	0	0
4/25/2024	11:30 PM	0	0	0	0	0	0	0	0	0	0	0	0	0
4/25/2024	11:45 PM	0	0	0	0	0	0	0	0	0	0	0	0	0

SB
File Name:
Start Date: 4/23/2024
Start Time: 0
Site Code: 20
Station ID: 1
Location 1: I-26 James F. Byrnes Expy On/Off-Ramp, north of US-176 Broad River Rd
Location 2:

Date	Time	1	2	3	4	5	6	7	8	9	10	11	12	13
4/23/2024	12:00 AM	0	0	0	0	0	0	0	0	0	0	0	0	0
4/23/2024	12:15 AM	0	0	0	0	0	0	0	0	0	0	0	0	0
4/23/2024	12:30 AM	0	0	0	0	0	0	0	0	0	0	0	0	0
4/23/2024	12:45 AM	0	0	0	0	0	0	0	0	0	0	0	0	0
4/23/2024	1:00 AM	0	0	0	0	0	0	0	0	0	0	0	0	0
4/23/2024	1:15 AM	0	0	0	0	0	0	0	0	0	0	0	0	0
4/23/2024	1:30 AM	0	0	0	0	0	0	0	0	0	0	0	0	0
4/23/2024	1:45 AM	0	0	0	0	0	0	0	0	0	0	0	0	0
4/23/2024	2:00 AM	0	0	0	0	0	0	0	0	0	0	0	0	0
4/23/2024	2:15 AM	0	0	0	0	0	0	0	0	0	0	0	0	0
4/23/2024	2:30 AM	0	0	0	0	0	0	0	0	0	0	0	0	0
4/23/2024	2:45 AM	0	0	0	0	0	0	0	0	0	0	0	0	0
4/23/2024	3:00 AM	0	0	0	0	0	0	0	0	0	0	0	0	0
4/23/2024	3:15 AM	0	0	0	0	0	0	0	0	0	0	0	0	0
4/23/2024	3:30 AM	0	0	0	0	0	0	0	0	0	0	0	0	0
4/23/2024	3:45 AM	0	0	0	0	0	0	0	0	0	0	0	0	0
4/23/2024	4:00 AM	0	0	0	0	0	0	0	0	0	0	0	0	0
4/23/2024	4:15 AM	0	0	0	0	0	0	0	0	0	0	0	0	0
4/23/2024	4:30 AM	0	0	0	0	0	0	0	0	0	0	0	0	0
4/23/2024	4:45 AM	0	0	0	0	0	0	0	0	0	0	0	0	0
4/23/2024	5:00 AM	0	0	0	0	0	0	0	0	0	0	0	0	0
4/23/2024	5:15 AM	0	0	0	0	0	0	0	0	0	0	0	0	0
4/23/2024	5:30 AM	0	0	0	0	0	0	0	0	0	0	0	0	0
4/23/2024	5:45 AM	0	0	0	0	0	0	0	0	0	0	0	0	0
4/23/2024	6:00 AM	0	0	0	0	0	0	0	0	0	0	0	0	0
4/23/2024	6:15 AM	0	0	0	0	0	0	0	0	0	0	0	0	0
4/23/2024	6:30 AM	0	0	0	0	0	0	0	0	0	0	0	0	0
4/23/2024	6:45 AM	0	0	0	0	0	0	0	0	0	0	0	0	0
4/23/2024	7:00 AM	0	0	0	0	0	0	0	0	0	0	0	0	0
4/23/2024	7:15 AM	0	0	0	0	0	0	0	0	0	0	0	0	0
4/23/2024	7:30 AM	0	0	0	0	0	0	0	0	0	0	0	0	0
4/23/2024	7:45 AM	0	0	0	0	0	0	0	0	0	0	0	0	0
4/23/2024	8:00 AM	0	0	0	0	0	0	0	0	0	0	0	0	0
4/23/2024	8:15 AM	0	0	0	0	0	0	0	0	0	0	0	0	0
4/23/2024	8:30 AM	0	0	0	0	0	0	0	0	0	0	0	0	0
4/23/2024	8:45 AM	0	0	0	0	0	0	0	0	0	0	0	0	0
4/23/2024	9:00 AM	0	0	0	0	0	0	0	0	0	0	0	0	0
4/23/2024	9:15 AM	0	0	0	0	0	0	0	0	0	0	0	0	0
4/23/2024	9:30 AM	0	0	0	0	0	0	0	0	0	0	0	0	0
4/23/2024	9:45 AM	0	0	0	0	0	0	0	0	0	0	0	0	0
4/23/2024	10:00 AM	0	0	0	0	0	0	0	0	0	0	0	0	0
4/23/2024	10:15 AM	0	0	0	0	0	0	0	0	0	0	0	0	0
4/23/2024	10:30 AM	0	0	0	0	0	0	0	0	0	0	0	0	0
4/23/2024	10:45 AM	0	0	0	0	0	0	0	0	0	0	0	0	0
4/23/2024	11:00 AM	0	0	0	0	0	0	0	0	0	0	0	0	0
4/23/2024	11:15 AM	0	0	0	0	0	0	0	0	0	0	0	0	0
4/23/2024	11:30 AM	0	0	0	0	0	0	0	0	0	0	0	0	0
4/23/2024	11:45 AM	0	0	0	0	0	0	0	0	0	0	0	0	0
4/23/2024	12:00 PM	0	0	0	0	0	0	0	0	0	0	0	0	0
4/23/2024	12:15 PM	0	0	0	0	0	0	0	0	0	0	0	0	0
4/23/2024	12:30 PM	0	0	0	0	0	0	0	0	0	0	0	0	0
4/23/2024	12:45 PM	0	0	0	0	0	0	0	0	0	0	0	0	0
4/23/2024	1:00 PM	0	0	0	0	0	0	0	0	0	0	0	0	0
4/23/2024	1:15 PM	0	0	0	0	0	0	0	0	0	0	0	0	0
4/23/2024	1:30 PM	0	0	0	0	0	0	0	0	0	0	0	0	0
4/23/2024	1:45 PM	0	0	0	0	0	0	0	0	0	0	0	0	0
4/23/2024	2:00 PM	0	0	0	0	0	0	0	0	0	0	0	0	0
4/23/2024	2:15 PM	0	0	0	0	0	0	0	0	0	0	0	0	0
4/23/2024	2:30 PM	0	0	0	0	0	0	0	0	0	0	0	0	0
4/23/2024	2:45 PM	0	0	0	0	0	0	0	0	0	0	0	0	0
4/23/2024	3:00 PM	0	0	0	0	0	0	0	0	0	0	0	0	0
4/23/2024	3:15 PM	0	0	0	0	0	0	0	0	0	0	0	0	0
4/23/2024	3:30 PM	0	0	0	0	0	0	0	0	0	0	0	0	0
4/23/2024	3:45 PM	0	0	0	0	0	0	0	0	0	0	0	0	0
4/23/2024	4:00 PM	0	0	0	0	0	0	0	0	0	0	0	0	0
4/23/2024	4:15 PM	0	0	0	0	0	0	0	0	0	0	0	0	0
4/23/2024	4:30 PM	0	0	0	0	0	0	0	0	0	0	0	0	0
4/23/2024	4:45 PM	0	0	0	0	0	0	0	0	0	0	0	0	0
4/23/2024	5:00 PM	0	0	0	0	0	0	0	0	0	0	0	0	0
4/23/2024	5:15 PM	0	0	0	0	0	0	0	0	0	0	0	0	0
4/23/2024	5:30 PM	0	0	0	0	0	0	0	0	0	0	0	0	0
4/23/2024	5:45 PM	0	0	0	0	0	0	0	0	0	0	0	0	0
4/23/2024	6:00 PM	0	0	0	0	0	0	0	0	0	0	0	0	0
4/23/2024	6:15 PM	0	0	0	0	0	0	0	0	0	0	0	0	0
4/23/2024	6:30 PM	0	0	0	0	0	0	0	0	0	0	0	0	0
4/23/2024	6:45 PM	0	0	0	0	0	0	0	0	0	0	0	0	0
4/23/2024	7:00 PM	0	0	0	0	0	0	0	0	0	0	0	0	0
4/23/2024	7:15 PM	0	0	0	0	0	0	0	0	0	0	0	0	0
4/23/2024	7:30 PM	0	0	0	0	0	0	0	0	0	0	0	0	0
4/23/2024	7:45 PM	0	0	0	0	0	0	0	0	0	0	0	0	0
4/23/2024	8:00 PM	0	0	0	0	0	0	0	0	0	0	0	0	0
4/23/2024	8:15 PM	0	0	0	0	0	0	0	0	0	0	0	0	0
4/23/2024	8:30 PM	0	0	0	0	0	0	0	0	0	0	0	0	0
4/23/2024	8:45 PM	0	0	0	0	0	0	0	0	0	0	0	0	0
4/23/2024	9:00 PM	0	0	0	0	0	0	0	0	0	0	0	0	0
4/23/2024	9:15 PM	0	0	0	0	0	0	0	0	0	0	0	0	0
4/23/2024	9:30 PM	0	0	0	0	0	0	0	0	0	0	0	0	0
4/23/2024	9:45 PM	0	0	0	0	0	0	0	0	0	0	0	0	0
4/23/2024	10:00 PM	0	0	0	0	0	0	0	0	0	0	0	0	0
4/23/2024	10:15 PM	0	0	0	0	0	0	0	0	0	0	0	0	0
4/23/2024	10:30 PM	0	0	0	0	0	0	0	0	0	0	0	0	0
4/23/2024	10:45 PM	0	0	0	0	0	0	0	0	0	0	0	0	0
4/23/2024	11:00 PM	0	0	0	0	0	0	0	0	0	0	0	0	0
4/23/2024	11:15 PM	0	0	0	0	0	0	0	0	0	0	0	0	0
4/23/2024	11:30 PM	0	0	0	0	0	0	0	0	0	0	0	0	0
4/23/2024	11:45 PM	0	0	0	0	0	0	0	0	0	0	0	0	0

4/24/2024	12:00 AM	0	0	0	0	0	0	0	0	0	0	0	0	0
4/24/2024	12:15 AM	0	0	0	0	0	0	0	0	0	0	0	0	0
4/24/2024	12:30 AM	0	0	0	0	0	0	0	0	0	0	0	0	0
4/24/2024	12:45 AM	0	0	0	0	0	0	0	0	0	0	0	0	0
4/24/2024	1:00 AM	0	0	0	0	0	0	0	0	0	0	0	0	0
4/24/2024	1:15 AM	0	0	0	0	0	0	0	0	0	0	0	0	0
4/24/2024	1:30 AM	0	0	0	0	0	0	0	0	0	0	0	0	0
4/24/2024	1:45 AM	0	0	0	0	0	0	0	0	0	0	0	0	0
4/24/2024	2:00 AM	0	0	0	0	0	0	0	0	0	0	0	0	0
4/24/2024	2:15 AM	0	0	0	0	0	0	0	0	0	0	0	0	0
4/24/2024	2:30 AM	0	0	0	0	0	0	0	0	0	0	0	0	0
4/24/2024	2:45 AM	0	0	0	0	0	0	0	0	0	0	0	0	0
4/24/2024	3:00 AM	0	0	0	0	0	0	0	0	0	0	0	0	0
4/24/2024	3:15 AM	0	0	0	0	0	0	0	0	0	0	0	0	0
4/24/2024	3:30 AM	0	0	0	0	0	0	0	0	0	0	0	0	0
4/24/2024	3:45 AM	0	0	0	0	0	0	0	0	0	0	0	0	0
4/24/2024	4:00 AM	0	0	0	0	0	0	0	0	0	0	0	0	0
4/24/2024	4:15 AM	0	0	0	0	0	0	0	0	0	0	0	0	0
4/24/2024	4:30 AM	0	0	0	0	0	0	0	0	0	0	0	0	0
4/24/2024	4:45 AM	0	0	0	0	0	0	0	0	0	0	0	0	0
4/24/2024	5:00 AM	0	0	0	0	0	0	0	0	0	0	0	0	0
4/24/2024	5:15 AM	0	0	0	0	0	0	0	0	0	0	0	0	0
4/24/2024	5:30 AM	0	0	0	0	0	0	0	0	0	0	0	0	0
4/24/2024	5:45 AM	0	0	0	0	0	0	0	0	0	0	0	0	0
4/24/2024	6:00 AM	0	0	0	0	0	0	0	0	0	0	0	0	0
4/24/2024	6:15 AM	0	0	0	0	0	0	0	0	0	0	0	0	0
4/24/2024	6:30 AM	0	0	0	0	0	0	0	0	0	0	0	0	0
4/24/2024	6:45 AM	0	0	0	0	0	0	0	0	0	0	0	0	0
4/24/2024	7:00 AM	0	0	0	0	0	0	0	0	0	0	0	0	0
4/24/2024	7:15 AM	0	0	0	0	0	0	0	0	0	0	0	0	0
4/24/2024	7:30 AM	0	0	0	0	0	0	0	0	0	0	0	0	0
4/24/2024	7:45 AM	0	0	0	0	0	0	0	0	0	0	0	0	0
4/24/2024	8:00 AM	0	0	0	0	0	0	0	0	0	0	0	0	0
4/24/2024	8:15 AM	0	0	0	0	0	0	0	0	0	0	0	0	0
4/24/2024	8:30 AM	0	0	0	0	0	0	0	0	0	0	0	0	0
4/24/2024	8:45 AM	0	0	0	0	0	0	0	0	0	0	0	0	0
4/24/2024	9:00 AM	0	0	0	0	0	0	0	0	0	0	0	0	0
4/24/2024	9:15 AM	0	0	0	0	0	0	0	0	0	0	0	0	0
4/24/2024	9:30 AM	0	0	0	0	0	0	0	0	0	0	0	0	0
4/24/2024	9:45 AM	0	0	0	0	0	0	0	0	0	0	0	0	0
4/24/2024	10:00 AM	0	0	0	0	0	0	0	0	0	0	0	0	0
4/24/2024	10:15 AM	0	0	0	0	0	0	0	0	0	0	0	0	0
4/24/2024	10:30 AM	0	0	0	0	0	0	0	0	0	0	0	0	0
4/24/2024	10:45 AM	0	0	0	0	0	0	0	0	0	0	0	0	0
4/24/2024	11:00 AM	0	0	0	0	0	0	0	0	0	0	0	0	0
4/24/2024	11:15 AM	0	0	0	0	0	0	0	0	0	0	0	0	0
4/24/2024	11:30 AM	0	0	0	0	0	0	0	0	0	0	0	0	0
4/24/2024	11:45 AM	0	0	0	0	0	0	0	0	0	0	0	0	0
4/24/2024	12:00 PM	0	0	0	0	0	0	0	0	0	0	0	0	0
4/24/2024	12:15 PM	0	0	0	0	0	0	0	0	0	0	0	0	0
4/24/2024	12:30 PM	0	0	0	0	0	0	0	0	0	0	0	0	0
4/24/2024	12:45 PM	0	0	0	0	0	0	0	0	0	0	0	0	0
4/24/2024	1:00 PM	0	0	0	0	0	0	0	0	0	0	0	0	0
4/24/2024	1:15 PM	0	0	0	0	0	0	0	0	0	0	0	0	0
4/24/2024	1:30 PM	0	0	0	0	0	0	0	0	0	0	0	0	0
4/24/2024	1:45 PM	0	0	0	0	0	0	0	0	0	0	0	0	0
4/24/2024	2:00 PM	0	0	0	0	0	0	0	0	0	0	0	0	0
4/24/2024	2:15 PM	0	0	0	0	0	0	0	0	0	0	0	0	0
4/24/2024	2:30 PM	0	0	0	0	0	0	0	0	0	0	0	0	0
4/24/2024	2:45 PM	0	0	0	0	0	0	0	0	0	0	0	0	0
4/24/2024	3:00 PM	0	0	0	0	0	0	0	0	0	0	0	0	0
4/24/2024	3:15 PM	0	0	0	0	0	0	0	0	0	0	0	0	0
4/24/2024	3:30 PM	0	0	0	0	0	0	0	0	0	0	0	0	0
4/24/2024	3:45 PM	0	0	0	0	0	0	0	0	0	0	0	0	0
4/24/2024	4:00 PM	0	0	0	0	0	0	0	0	0	0	0	0	0
4/24/2024	4:15 PM	0	0	0	0	0	0	0	0	0	0	0	0	0
4/24/2024	4:30 PM	0	0	0	0	0	0	0	0	0	0	0	0	0
4/24/2024	4:45 PM	0	0	0	0	0	0	0	0	0	0	0	0	0
4/24/2024	5:00 PM	0	0	0	0	0	0	0	0	0	0	0	0	0
4/24/2024	5:15 PM	0	0	0	0	0	0	0	0	0	0	0	0	0
4/24/2024	5:30 PM	0	0	0	0	0	0	0	0	0	0	0	0	0
4/24/2024	5:45 PM	0	0	0	0	0	0	0	0	0	0	0	0	0
4/24/2024	6:00 PM	0	0	0	0	0	0	0	0	0	0	0	0	0
4/24/2024	6:15 PM	0	0	0	0	0	0	0	0	0	0	0	0	0
4/24/2024	6:30 PM	0	0	0	0	0	0	0	0	0	0	0	0	0
4/24/2024	6:45 PM	0	0	0	0	0	0	0	0	0	0	0	0	0
4/24/2024	7:00 PM	0	0	0	0	0	0	0	0	0	0	0	0	0
4/24/2024	7:15 PM	0	0	0	0	0	0	0	0	0	0	0	0	0
4/24/2024	7:30 PM	0	0	0	0	0	0	0	0	0	0	0	0	0
4/24/2024	7:45 PM	0	0	0	0	0	0	0	0	0	0	0	0	0
4/24/2024	8:00 PM	0	0	0	0	0	0	0	0	0	0	0	0	0
4/24/2024	8:15 PM	0	0	0	0	0	0	0	0	0	0	0	0	0
4/24/2024	8:30 PM	0	0	0	0	0	0	0	0	0	0	0	0	0
4/24/2024	8:45 PM	0	0	0	0	0	0	0	0	0	0	0	0	0
4/24/2024	9:00 PM	0	0	0	0	0	0	0	0	0	0	0	0	0
4/24/2024	9:15 PM	0	0	0	0	0	0	0	0	0	0	0	0	0
4/24/2024	9:30 PM	0	0	0	0	0	0	0	0	0	0	0	0	0
4/24/2024	9:45 PM	0	0	0	0	0	0	0	0	0	0	0	0	0
4/24/2024	10:00 PM	0	0	0	0	0	0	0	0	0	0	0	0	0
4/24/2024	10:15 PM	0	0	0	0	0	0	0	0	0	0	0	0	0
4/24/2024	10:30 PM	0	0	0	0	0	0	0	0	0	0	0	0	0
4/24/2024	10:45 PM	0	0	0	0	0	0	0	0	0	0	0	0	0
4/24/2024	11:00 PM	0	0	0	0	0	0	0	0	0	0	0	0	0
4/24/2024	11:15 PM	0	0	0	0	0	0	0	0	0	0	0	0	0
4/24/2024	11:30 PM	0	0	0	0	0	0	0	0	0	0	0	0	0
4/24/2024	11:45 PM	0	0	0	0	0	0	0	0	0	0	0	0	0

4/25/2024	12:00 AM	0	0	0	0	0	0	0	0	0	0	0	0	0
4/25/2024	12:15 AM	0	0	0	0	0	0	0	0	0	0	0	0	0
4/25/2024	12:30 AM	0	0	0	0	0	0	0	0	0	0	0	0	0
4/25/2024	12:45 AM	0	0	0	0	0	0	0	0	0	0	0	0	0
4/25/2024	1:00 AM	0	0	0	0	0	0	0	0	0	0	0	0	0
4/25/2024	1:15 AM	0	0	0	0	0	0	0	0	0	0	0	0	0
4/25/2024	1:30 AM	0	0	0	0	0	0	0	0	0	0	0	0	0
4/25/2024	1:45 AM	0	0	0	0	0	0	0	0	0	0	0	0	0
4/25/2024	2:00 AM	0	0	0	0	0	0	0	0	0	0	0	0	0
4/25/2024	2:15 AM	0	0	0	0	0	0	0	0	0	0	0	0	0
4/25/2024	2:30 AM	0	0	0	0	0	0	0	0	0	0	0	0	0
4/25/2024	2:45 AM	0	0	0	0	0	0	0	0	0	0	0	0	0
4/25/2024	3:00 AM	0	0	0	0	0	0	0	0	0	0	0	0	0
4/25/2024	3:15 AM	0	0	0	0	0	0	0	0	0	0	0	0	0
4/25/2024	3:30 AM	0	0	0	0	0	0	0	0	0	0	0	0	0
4/25/2024	3:45 AM	0	0	0	0	0	0	0	0	0	0	0	0	0
4/25/2024	4:00 AM	0	0	0	0	0	0	0	0	0	0	0	0	0
4/25/2024	4:15 AM	0	0	0	0	0	0	0	0	0	0	0	0	0
4/25/2024	4:30 AM	0	0	0	0	0	0	0	0	0	0	0	0	0
4/25/2024	4:45 AM	0	0	0	0	0	0	0	0	0	0	0	0	0
4/25/2024	5:00 AM	0	0	0	0	0	0	0	0	0	0	0	0	0
4/25/2024	5:15 AM	0	0	0	0	0	0	0	0	0	0	0	0	0
4/25/2024	5:30 AM	0	0	0	0	0	0	0	0	0	0	0	0	0
4/25/2024	5:45 AM	0	0	0	0	0	0	0	0	0	0	0	0	0
4/25/2024	6:00 AM	0	0	0	0	0	0	0	0	0	0	0	0	0
4/25/2024	6:15 AM	0	0	0	0	0	0	0	0	0	0	0	0	0
4/25/2024	6:30 AM	0	0	0	0	0	0	0	0	0	0	0	0	0
4/25/2024	6:45 AM	0	0	0	0	0	0	0	0	0	0	0	0	0
4/25/2024	7:00 AM	0	0	0	0	0	0	0	0	0	0	0	0	0
4/25/2024	7:15 AM	0	0	0	0	0	0	0	0	0	0	0	0	0
4/25/2024	7:30 AM	0	0	0	0	0	0	0	0	0	0	0	0	0
4/25/2024	7:45 AM	0	0	0	0	0	0	0	0	0	0	0	0	0
4/25/2024	8:00 AM	0	0	0	0	0	0	0	0	0	0	0	0	0
4/25/2024	8:15 AM	0	0	0	0	0	0	0	0	0	0	0	0	0
4/25/2024	8:30 AM	0	0	0	0	0	0	0	0	0	0	0	0	0
4/25/2024	8:45 AM	0	0	0	0	0	0	0	0	0	0	0	0	0
4/25/2024	9:00 AM	0	0	0	0	0	0	0	0	0	0	0	0	0
4/25/2024	9:15 AM	0	0	0	0	0	0	0	0	0	0	0	0	0
4/25/2024	9:30 AM	0	0	0	0	0	0	0	0	0	0	0	0	0
4/25/2024	9:45 AM	0	0	0	0	0	0	0	0	0	0	0	0	0
4/25/2024	10:00 AM	0	0	0	0	0	0	0	0	0	0	0	0	0
4/25/2024	10:15 AM	0	0	0	0	0	0	0	0	0	0	0	0	0
4/25/2024	10:30 AM	0	0	0	0	0	0	0	0	0	0	0	0	0
4/25/2024	10:45 AM	0	0	0	0	0	0	0	0	0	0	0	0	0
4/25/2024	11:00 AM	0	0	0	0	0	0	0	0	0	0	0	0	0
4/25/2024	11:15 AM	0	0	0	0	0	0	0	0	0	0	0	0	0
4/25/2024	11:30 AM	0	0	0	0	0	0	0	0	0	0	0	0	0
4/25/2024	11:45 AM	0	0	0	0	0	0	0	0	0	0	0	0	0
4/25/2024	12:00 PM	0	0	0	0	0	0	0	0	0	0	0	0	0
4/25/2024	12:15 PM	0	0	0	0	0	0	0	0	0	0	0	0	0
4/25/2024	12:30 PM	0	0	0	0	0	0	0	0	0	0	0	0	0
4/25/2024	12:45 PM	0	0	0	0	0	0	0	0	0	0	0	0	0
4/25/2024	1:00 PM	0	0	0	0	0	0	0	0	0	0	0	0	0
4/25/2024	1:15 PM	0	0	0	0	0	0	0	0	0	0	0	0	0
4/25/2024	1:30 PM	0	0	0	0	0	0	0	0	0	0	0	0	0
4/25/2024	1:45 PM	0	0	0	0	0	0	0	0	0	0	0	0	0
4/25/2024	2:00 PM	0	0	0	0	0	0	0	0	0	0	0	0	0
4/25/2024	2:15 PM	0	0	0	0	0	0	0	0	0	0	0	0	0
4/25/2024	2:30 PM	0	0	0	0	0	0	0	0	0	0	0	0	0
4/25/2024	2:45 PM	0	0	0	0	0	0	0	0	0	0	0	0	0
4/25/2024	3:00 PM	0	0	0	0	0	0	0	0	0	0	0	0	0
4/25/2024	3:15 PM	0	0	0	0	0	0	0	0	0	0	0	0	0
4/25/2024	3:30 PM	0	0	0	0	0	0	0	0	0	0	0	0	0
4/25/2024	3:45 PM	0	0	0	0	0	0	0	0	0	0	0	0	0
4/25/2024	4:00 PM	0	0	0	0	0	0	0	0	0	0	0	0	0
4/25/2024	4:15 PM	0	0	0	0	0	0	0	0	0	0	0	0	0
4/25/2024	4:30 PM	0	0	0	0	0	0	0	0	0	0	0	0	0
4/25/2024	4:45 PM	0	0	0	0	0	0	0	0	0	0	0	0	0
4/25/2024	5:00 PM	0	0	0	0	0	0	0	0	0	0	0	0	0
4/25/2024	5:15 PM	0	0	0	0	0	0	0	0	0	0	0	0	0
4/25/2024	5:30 PM	0	0	0	0	0	0	0	0	0	0	0	0	0
4/25/2024	5:45 PM	0	0	0	0	0	0	0	0	0	0	0	0	0
4/25/2024	6:00 PM	0	0	0	0	0	0	0	0	0	0	0	0	0
4/25/2024	6:15 PM	0	0	0	0	0	0	0	0	0	0	0	0	0
4/25/2024	6:30 PM	0	0	0	0	0	0	0	0	0	0	0	0	0
4/25/2024	6:45 PM	0	0	0	0	0	0	0	0	0	0	0	0	0
4/25/2024	7:00 PM	0	0	0	0	0	0	0	0	0	0	0	0	0
4/25/2024	7:15 PM	0	0	0	0	0	0	0	0	0	0	0	0	0
4/25/2024	7:30 PM	0	0	0	0	0	0	0	0	0	0	0	0	0
4/25/2024	7:45 PM	0	0	0	0	0	0	0	0	0	0	0	0	0
4/25/2024	8:00 PM	0	0	0	0	0	0	0	0	0	0	0	0	0
4/25/2024	8:15 PM	0	0	0	0	0	0	0	0	0	0	0	0	0
4/25/2024	8:30 PM	0	0	0	0	0	0	0	0	0	0	0	0	0
4/25/2024	8:45 PM	0	0	0	0	0	0	0	0	0	0	0	0	0
4/25/2024	9:00 PM	0	0	0	0	0	0	0	0	0	0	0	0	0
4/25/2024	9:15 PM	0	0	0	0	0	0	0	0	0	0	0	0	0
4/25/2024	9:30 PM	0	0	0	0	0	0	0	0	0	0	0	0	0
4/25/2024	9:45 PM	0	0	0	0	0	0	0	0	0	0	0	0	0
4/25/2024	10:00 PM	0	0	0	0	0	0	0	0	0	0	0	0	0
4/25/2024	10:15 PM	0	0	0	0	0	0	0	0	0	0	0	0	0
4/25/2024	10:30 PM	0	0	0	0	0	0	0	0	0	0	0	0	0
4/25/2024	10:45 PM	0	0	0	0	0	0	0	0	0	0	0	0	0
4/25/2024	11:00 PM	0	0	0	0	0	0	0	0	0	0	0	0	0
4/25/2024	11:15 PM	0	0	0	0	0	0	0	0	0	0	0	0	0
4/25/2024	11:30 PM	0	0	0	0	0	0	0	0	0	0	0	0	0
4/25/2024	11:45 PM	0	0	0	0	0	0	0	0	0	0	0	0	0

Bi-Directional Class Count || NB EB 15min

Columbia, SC

Marr Traffic DATA COLLECTION
www.marrtraffic.com

Site 21
I-26 James F. Byrnes Expy N/Bound Off-Ramp,
south of SC-60 Lake Murray Blvd

Date
Tuesday, April 30, 2024

Lat/Long
34.089659°, -81.163720°

Click here for Map

Weather
Mostly Cloudy
70°F

Click here for Detailed Weather

0000 - 2400 (Weekday 24h Session) (04-30-2024)
NB EB 15min

	Northbound (Movement 21.1)													15min	60min
Time	1	2	3	4	5	6	7	8	9	10	11	12	13	Total	Total
0000 - 0015	0	0	0	0	0	0	0	0	0	0	0	0	0	**0**	
0015 - 0030	0	0	0	0	0	0	0	0	0	0	0	0	0	**0**	
0030 - 0045	0	0	0	0	0	0	0	0	0	0	0	0	0	**0**	
0045 - 0100	0	0	0	0	0	0	0	0	0	0	0	0	0	**0**	**0**
0100 - 0115	0	0	0	0	0	0	0	0	0	0	0	0	0	**0**	
0115 - 0130	0	0	0	0	0	0	0	0	0	0	0	0	0	**0**	
0130 - 0145	0	0	0	0	0	0	0	0	0	0	0	0	0	**0**	
0145 - 0200	0	0	0	0	0	0	0	0	0	0	0	0	0	**0**	**0**
0200 - 0215	0	0	0	0	0	0	0	0	0	0	0	0	0	**0**	
0215 - 0230	0	0	0	0	0	0	0	0	0	0	0	0	0	**0**	
0230 - 0245	0	0	0	0	0	0	0	0	0	0	0	0	0	**0**	
0245 - 0300	0	0	0	0	0	0	0	0	0	0	0	0	0	**0**	**0**
0300 - 0315	0	0	0	0	0	0	0	0	0	0	0	0	0	**0**	
0315 - 0330	0	0	0	0	0	0	0	0	0	0	0	0	0	**0**	
0330 - 0345	0	0	0	0	0	0	0	0	0	0	0	0	0	**0**	
0345 - 0400	0	0	0	0	0	0	0	0	0	0	0	0	0	**0**	**0**
0400 - 0415	0	0	0	0	0	0	0	0	0	0	0	0	0	**0**	
0415 - 0430	0	0	0	0	0	0	0	0	0	0	0	0	0	**0**	
0430 - 0445	0	0	0	0	0	0	0	0	0	0	0	0	0	**0**	
0445 - 0500	0	0	0	0	0	0	0	0	0	0	0	0	0	**0**	**0**
0500 - 0515	0	0	0	0	0	0	0	0	0	0	0	0	0	**0**	
0515 - 0530	0	0	0	0	0	0	0	0	0	0	0	0	0	**0**	
0530 - 0545	0	0	0	0	0	0	0	0	0	0	0	0	0	**0**	
0545 - 0600	0	0	0	0	0	0	0	0	0	0	0	0	0	**0**	**0**
0600 - 0615	0	0	0	0	0	0	0	0	0	0	0	0	0	**0**	
0615 - 0630	0	0	0	0	0	0	0	0	0	0	0	0	0	**0**	
0630 - 0645	0	0	0	0	0	0	0	0	0	0	0	0	0	**0**	
0645 - 0700	0	0	0	0	0	0	0	0	0	0	0	0	0	**0**	**0**
0700 - 0715	0	0	0	0	0	0	0	0	0	0	0	0	0	**0**	
0715 - 0730	0	0	0	0	0	0	0	0	0	0	0	0	0	**0**	
0730 - 0745	0	0	0	0	0	0	0	0	0	0	0	0	0	**0**	
0745 - 0800	0	0	0	0	0	0	0	0	0	0	0	0	0	**0**	**0**
0800 - 0815	0	0	0	0	0	0	0	0	0	0	0	0	0	**0**	
0815 - 0830	0	0	0	0	0	0	0	0	0	0	0	0	0	**0**	
0830 - 0845	0	0	0	0	0	0	0	0	0	0	0	0	0	**0**	
0845 - 0900	0	0	0	0	0	0	0	0	0	0	0	0	0	**0**	**0**
0900 - 0915	0	0	0	0	0	0	0	0	0	0	0	0	0	**0**	
0915 - 0930	0	0	0	0	0	0	0	0	0	0	0	0	0	**0**	
0930 - 0945	0	0	0	0	0	0	0	0	0	0	0	0	0	**0**	
0945 - 1000	0	0	0	0	0	0	0	0	0	0	0	0	0	**0**	**0**
1000 - 1015	0	0	0	0	0	0	0	0	0	0	0	0	0	**0**	
1015 - 1030	0	0	0	0	0	0	0	0	0	0	0	0	0	**0**	
1030 - 1045	0	0	0	0	0	0	0	0	0	0	0	0	0	**0**	
1045 - 1100	0	0	0	0	0	0	0	0	0	0	0	0	0	**0**	**0**
1100 - 1115	0	0	0	0	0	0	0	0	0	0	0	0	0	**0**	
1115 - 1130	0	0	0	0	0	0	0	0	0	0	0	0	0	**0**	
1130 - 1145	0	0	0	0	0	0	0	0	0	0	0	0	0	**0**	
1145 - 1200	0	0	0	0	0	0	0	0	0	0	0	0	0	**0**	**0**
1200 - 1215	0	0	0	0	0	0	0	0	0	0	0	0	0	**0**	
1215 - 1230	0	0	0	0	0	0	0	0	0	0	0	0	0	**0**	
1230 - 1245	0	0	0	0	0	0	0	0	0	0	0	0	0	**0**	
1245 - 1300	0	0	0	0	0	0	0	0	0	0	0	0	0	**0**	**0**
1300 - 1315	0	0	0	0	0	0	0	0	0	0	0	0	0	**0**	
1315 - 1330	0	0	0	0	0	0	0	0	0	0	0	0	0	**0**	
1330 - 1345	0	0	0	0	0	0	0	0	0	0	0	0	0	**0**	
1345 - 1400	0	0	0	0	0	0	0	0	0	0	0	0	0	**0**	**0**
1400 - 1415	0	0	0	0	0	0	0	0	0	0	0	0	0	**0**	
1415 - 1430	0	0	0	0	0	0	0	0	0	0	0	0	0	**0**	
1430 - 1445	0	0	0	0	0	0	0	0	0	0	0	0	0	**0**	
1445 - 1500	0	0	0	0	0	0	0	0	0	0	0	0	0	**0**	**0**
1500 - 1515	0	0	0	0	0	0	0	0	0	0	0	0	0	**0**	
1515 - 1530	0	0	0	0	0	0	0	0	0	0	0	0	0	**0**	
1530 - 1545	0	0	0	0	0	0	0	0	0	0	0	0	0	**0**	
1545 - 1600	0	0	0	0	0	0	0	0	0	0	0	0	0	**0**	**0**
1600 - 1615	0	0	0	0	0	0	0	0	0	0	0	0	0	**0**	
1615 - 1630	0	0	0	0	0	0	0	0	0	0	0	0	0	**0**	
1630 - 1645	0	0	0	0	0	0	0	0	0	0	0	0	0	**0**	
1645 - 1700	0	0	0	0	0	0	0	0	0	0	0	0	0	**0**	**0**
1700 - 1715	0	0	0	0	0	0	0	0	0	0	0	0	0	**0**	
1715 - 1730	0	0	0	0	0	0	0	0	0	0	0	0	0	**0**	
1730 - 1745	0	0	0	0	0	0	0	0	0	0	0	0	0	**0**	
1745 - 1800	0	0	0	0	0	0	0	0	0	0	0	0	0	**0**	**0**
1800 - 1815	0	0	0	0	0	0	0	0	0	0	0	0	0	**0**	
1815 - 1830	0	0	0	0	0	0	0	0	0	0	0	0	0	**0**	
1830 - 1845	0	0	0	0	0	0	0	0	0	0	0	0	0	**0**	
1845 - 1900	0	0	0	0	0	0	0	0	0	0	0	0	0	**0**	**0**
1900 - 1915	0	36	3	0	0	0	0	0	0	0	0	0	0	**39**	
1915 - 1930	0	45	4	0	0	0	0	0	0	0	0	0	0	**49**	
1930 - 1945	0	37	2	0	1	0	0	0	0	0	0	0	0	**40**	
1945 - 2000	0	45	1	0	0	0	0	0	0	0	0	0	0	**46**	**174**
2000 - 2015	0	45	2	0	0	0	0	0	0	0	0	0	0	**47**	
2015 - 2030	0	52	2	0	0	0	0	0	0	0	0	0	0	**54**	
2030 - 2045	0	42	1	0	0	0	0	0	0	0	0	0	0	**43**	
2045 - 2100	0	43	1	0	0	0	0	0	0	0	0	0	0	**44**	**188**
2100 - 2115	0	38	2	0	0	0	0	0	0	0	0	0	0	**40**	
2115 - 2130	0	25	0	0	0	0	0	0	0	0	0	0	0	**25**	
2130 - 2145	0	15	0	0	2	0	0	0	0	0	0	0	0	**17**	
2145 - 2200	0	33	2	0	0	0	0	0	0	0	0	0	0	**35**	**117**
2200 - 2215	0	18	0	0	0	0	0	0	0	0	0	0	0	**18**	
2215 - 2230	0	23	1	0	0	0	0	0	0	0	0	0	0	**24**	
2230 - 2245	0	20	0	0	0	0	0	0	0	0	0	0	0	**20**	
2245 - 2300	0	21	0	0	0	0	0	0	0	0	0	0	0	**21**	**83**
2300 - 2315	0	22	1	0	0	0	0	0	0	0	0	0	0	**23**	
2315 - 2330	0	19	0	0	0	0	0	0	0	0	0	0	0	**19**	
2330 - 2345	0	11	0	0	0	0	0	0	0	0	0	0	0	**11**	
2345 - 0000	0	17	0	0	0	0	0	0	0	0	0	0	0	**17**	**70**

Session Total	0	607	22	0	3	0	0	0	0	0	0	0	0	**632**
Session Average	0.00	6.32	0.23	0.00	0.03	0.00	0.00	0.00	0.00	0.00	0.00	0.00	0.00	**6.58**
Session Percentage	0.00	96.04	3.48	0.00	0.47	0.00	0.00	0.00	0.00	0.00	0.00	0.00	0.00	

AM Peak Hour	-	-	-	-	-	-	-	-	-	-	-	-	-	**-**
AM Peak Volume	0	0	0	0	0	0	0	0	0	0	0	0	0	**0**

Noon Peak Hour	-	-	-	-	-	-	-	-	-	-	-	-	-	**-**
Noon Peak Volume	0	0	0	0	0	0	0	0	0	0	0	0	0	**0**

PM Peak Hour	-	1945 - 2045	1900 - 2000	-	1845 - 1945	-	-	-	-	-	-	-	-	**1945 - 2045**
PM Peak Volume	0	184	10	0	1	0	0	0	0	0	0	0	0	**190**

Site 21
I-26 James F. Byrnes Expy N/Bound Off-Ramp,
south of SC-60 Lake Murray Blvd

Date
Wednesday, May 1, 2024

Lat/Long
34.089659°, -81.163720°

Weather
Partly Cloudy
71°F

Click here for Detailed Weather

0000 - 2400 (Weekday 24h Session) (05-01-2024)
NB EB 15min

	Northbound (Movement 21.1)													15min	60min
Time	1	2	3	4	5	6	7	8	9	10	11	12	13	Total	Total
0000 - 0015	0	13	1	0	1	0	0	0	0	0	0	0	0	**15**	
0015 - 0030	0	4	0	0	0	0	0	0	0	0	0	0	0	**4**	
0030 - 0045	0	5	1	0	0	0	0	0	0	0	0	0	0	**6**	
0045 - 0100	0	4	0	0	0	0	0	0	0	0	0	0	0	**4**	**29**
0100 - 0115	0	6	0	0	0	0	0	0	0	0	0	0	0	**6**	
0115 - 0130	0	4	0	0	0	0	0	0	0	0	0	0	0	**4**	
0130 - 0145	0	2	0	0	0	0	0	0	0	0	0	0	0	**2**	
0145 - 0200	0	1	0	0	0	0	0	0	0	0	0	0	0	**1**	**13**
0200 - 0215	0	4	0	0	1	0	0	0	0	0	0	0	0	**5**	
0215 - 0230	0	3	0	0	0	0	0	0	0	0	0	0	0	**3**	
0230 - 0245	0	5	0	0	0	0	0	0	0	0	0	0	0	**5**	
0245 - 0300	0	5	2	0	0	1	0	0	0	0	0	0	0	**8**	**21**
0300 - 0315	0	3	0	0	0	0	0	0	0	0	0	0	0	**3**	
0315 - 0330	0	0	2	0	0	0	0	0	0	0	0	0	0	**2**	
0330 - 0345	0	4	1	0	0	0	0	0	0	0	0	0	0	**5**	
0345 - 0400	0	2	1	0	0	0	0	0	1	0	0	0	0	**4**	**14**
0400 - 0415	0	3	0	0	0	0	0	0	0	0	0	0	0	**3**	
0415 - 0430	0	2	0	0	0	0	0	0	0	0	0	0	0	**2**	
0430 - 0445	0	3	1	0	0	0	0	0	0	0	0	0	0	**4**	
0445 - 0500	0	9	1	0	0	0	0	0	0	0	0	0	0	**10**	**19**
0500 - 0515	0	5	2	0	2	0	0	0	0	0	0	0	0	**9**	
0515 - 0530	0	14	3	0	0	0	0	0	0	0	0	0	0	**17**	
0530 - 0545	0	7	1	0	0	0	0	0	0	0	0	0	0	**8**	
0545 - 0600	0	14	2	0	0	1	0	0	0	0	0	0	0	**17**	**51**
0600 - 0615	1	26	2	0	1	0	0	0	0	0	0	0	0	**30**	
0615 - 0630	2	32	5	0	0	0	0	0	0	0	0	0	0	**39**	
0630 - 0645	0	34	4	0	0	0	0	0	0	0	0	0	0	**38**	
0645 - 0700	0	47	14	0	0	0	0	0	0	0	0	0	0	**61**	**168**
0700 - 0715	0	50	7	0	0	1	0	0	1	0	0	0	0	**59**	
0715 - 0730	0	47	10	0	2	0	0	1	0	0	0	0	0	**60**	
0730 - 0745	0	71	16	0	1	0	0	1	0	0	0	0	0	**89**	
0745 - 0800	0	72	10	0	1	2	0	0	0	0	0	0	0	**85**	**293**
0800 - 0815	0	56	14	0	2	0	0	0	0	0	0	0	0	**72**	
0815 - 0830	0	66	11	1	1	0	0	0	0	0	0	0	0	**79**	
0830 - 0845	0	41	16	0	2	0	0	0	0	0	0	0	0	**59**	
0845 - 0900	0	59	8	0	3	0	0	0	1	0	0	0	0	**71**	**281**
0900 - 0915	0	45	8	0	3	0	1	0	0	0	0	0	0	**57**	
0915 - 0930	0	38	14	0	1	0	0	1	0	0	0	0	0	**54**	
0930 - 0945	0	31	9	0	1	0	0	0	0	0	0	0	0	**41**	
0945 - 1000	0	47	5	0	2	1	0	0	0	0	0	0	0	**55**	**207**
1000 - 1015	0	45	8	0	3	0	0	0	0	0	0	0	0	**56**	
1015 - 1030	0	36	13	0	0	0	0	0	0	0	0	0	0	**49**	
1030 - 1045	1	29	9	0	0	0	0	0	0	0	0	0	0	**39**	
1045 - 1100	0	35	8	0	2	0	0	0	0	0	0	0	0	**45**	**189**
1100 - 1115	0	47	5	0	1	0	1	1	0	0	0	0	0	**55**	
1115 - 1130	0	33	6	0	0	0	0	0	0	0	0	0	0	**39**	
1130 - 1145	0	33	10	0	0	0	0	0	0	0	0	0	0	**43**	
1145 - 1200	0	51	10	0	0	3	0	0	0	0	0	0	0	**64**	**201**
1200 - 1215	0	38	6	0	1	0	0	0	0	0	0	0	0	**45**	
1215 - 1230	0	53	10	0	1	0	0	0	0	0	0	0	0	**64**	
1230 - 1245	0	46	10	0	0	0	1	0	0	0	0	0	0	**57**	
1245 - 1300	0	45	9	0	0	0	0	1	0	0	0	0	0	**55**	**221**
1300 - 1315	0	44	10	0	0	0	2	0	0	0	0	0	0	**56**	
1315 - 1330	0	54	11	0	0	0	0	0	0	0	0	0	0	**65**	
1330 - 1345	0	36	7	0	0	0	0	0	0	0	0	0	0	**43**	
1345 - 1400	0	63	15	0	0	0	0	0	0	0	0	0	0	**78**	**242**
1400 - 1415	0	47	11	0	1	0	0	0	0	0	0	0	0	**59**	
1415 - 1430	0	59	11	0	0	0	0	0	0	0	0	0	0	**70**	
1430 - 1445	0	58	9	0	1	0	0	0	0	0	0	0	0	**68**	
1445 - 1500	0	46	7	0	0	1	1	0	0	0	0	0	0	**55**	**252**
1500 - 1515	0	44	8	0	2	0	1	0	0	0	0	0	0	**55**	
1515 - 1530	0	50	9	0	0	0	0	0	0	0	0	0	0	**59**	
1530 - 1545	0	50	13	0	1	0	0	0	0	0	0	0	0	**64**	
1545 - 1600	0	50	9	0	0	0	0	0	0	0	0	0	0	**59**	**237**
1600 - 1615	0	47	6	0	0	0	0	0	0	0	0	0	0	**53**	
1615 - 1630	0	57	8	0	0	0	0	0	0	0	0	0	0	**65**	
1630 - 1645	0	39	10	0	0	0	0	0	0	0	0	0	0	**49**	
1645 - 1700	0	43	10	0	1	0	0	0	0	0	0	0	0	**54**	**221**
1700 - 1715	0	40	5	0	0	0	0	0	0	0	0	0	0	**45**	
1715 - 1730	0	41	8	0	0	0	0	0	0	0	0	0	0	**49**	
1730 - 1745	0	49	7	0	0	0	0	0	0	0	0	0	0	**56**	
1745 - 1800	0	48	9	0	0	0	0	0	0	0	0	0	0	**57**	**207**
1800 - 1815	0	66	12	0	0	0	0	0	0	0	0	0	0	**78**	
1815 - 1830	0	58	12	0	0	0	0	0	0	0	0	0	0	**70**	
1830 - 1845	0	58	9	0	1	0	0	0	0	0	0	0	0	**68**	
1845 - 1900	0	52	17	0	1	0	0	0	1	0	0	0	0	**71**	**287**
1900 - 1915	0	49	8	0	1	0	0	0	2	0	0	0	0	**60**	
1915 - 1930	0	41	9	0	0	0	0	0	0	0	0	0	0	**50**	
1930 - 1945	1	48	10	0	0	0	0	0	0	0	0	0	0	**59**	
1945 - 2000	0	49	5	0	0	0	0	0	0	0	0	0	0	**54**	**223**
2000 - 2015	0	34	7	0	0	0	0	0	0	0	0	0	0	**41**	
2015 - 2030	0	54	11	0	1	0	0	0	0	0	0	0	0	**66**	
2030 - 2045	0	47	4	0	0	0	0	0	0	0	0	0	0	**51**	
2045 - 2100	0	45	0	0	2	0	0	0	0	0	0	0	0	**47**	**205**
2100 - 2115	0	50	0	0	0	0	0	0	0	0	0	0	0	**50**	
2115 - 2130	0	38	0	0	0	0	0	0	0	0	0	0	0	**38**	
2130 - 2145	0	38	0	0	0	0	0	0	0	0	0	0	0	**38**	
2145 - 2200	0	32	0	0	0	0	0	0	1	0	0	0	0	**33**	**159**
2200 - 2215	0	19	1	0	1	0	0	0	0	0	0	0	0	**21**	
2215 - 2230	0	27	0	0	1	0	0	0	0	0	0	0	0	**28**	
2230 - 2245	0	19	0	0	0	0	0	0	0	0	0	0	0	**19**	
2245 - 2300	0	20	0	0	0	0	0	0	0	0	0	0	0	**20**	**88**
2300 - 2315	0	12	3	0	1	0	0	0	0	0	0	0	0	**16**	
2315 - 2330	0	14	2	0	0	0	0	0	0	0	0	0	0	**16**	
2330 - 2345	0	11	2	0	0	0	0	0	0	0	0	0	0	**13**	
2345 - 0000	0	8	3	0	1	0	0	0	0	0	0	0	0	**12**	**57**

Session Total	5	3229	573	1	48	10	7	5	7	0	0	0	0	**3885**
Session Average	0.05	33.64	5.97	0.01	0.50	0.10	0.07	0.05	0.07	0.00	0.00	0.00	0.00	**40.47**
Session Percentage	0.13	83.11	14.75	0.03	1.24	0.26	0.18	0.13	0.18	0.00	0.00	0.00	0.00	

AM Peak Hour	0530 - 0630	0730 - 0830	0730 - 0830	0730 - 0830	0815 - 0915	0700 - 0800	0815 - 0915	0645 - 0745	0615 - 0715	-	-	-	-	**0730 - 0830**
AM Peak Volume	3	265	51	1	9	3	1	2	1	0	0	0	0	**325**

Noon Peak Hour	1000 - 1100	1345 - 1445	1345 - 1445	-	1000 - 1100	1100 - 1200	1215 - 1315	1015 - 1115	-	-	-	-	-	**1345 - 1445**
Noon Peak Volume	1	227	46	0	5	3	3	1	0	0	0	0	0	**275**

PM Peak Hour	1845 - 1945	1800 - 1900	1800 - 1900	-	1500 - 1600	-	1500 - 1600	-	1815 - 1915	-	-	-	-	**1800 - 1900**
PM Peak Volume	1	234	50	0	3	0	1	0	3	0	0	0	0	**287**

Site 21
I-26 James F. Byrnes Expy N/Bound Off-Ramp,
south of SC-60 Lake Murray Blvd

Date
Thursday, May 2, 2024

Lat/Long
34.089659°, -81.163720°

Weather
Fair
74°F

Click here for Detailed Weather

0000 - 2400 (Weekday 24h Session) (05-02-2024)
NB EB 15min

	Northbound (Movement 21.1)													15min	60min
TIME	1	2	3	4	5	6	7	8	9	10	11	12	13	Total	Total
0000 - 0015	0	16	1	0	0	0	0	0	0	0	0	0	0	**17**	
0015 - 0030	0	7	0	0	0	0	0	0	0	0	0	0	0	**7**	
0030 - 0045	0	10	1	0	0	0	0	0	0	0	0	0	0	**11**	
0045 - 0100	0	8	1	0	0	1	0	0	0	0	0	0	0	**10**	**45**
0100 - 0115	0	10	0	0	0	0	0	0	0	0	0	0	0	**10**	
0115 - 0130	0	9	1	0	0	0	0	0	0	0	0	0	0	**10**	
0130 - 0145	0	6	0	0	0	0	0	0	0	0	0	0	0	**6**	
0145 - 0200	0	5	1	0	0	0	0	0	0	0	0	0	0	**6**	**32**
0200 - 0215	0	6	0	0	0	0	0	0	0	0	0	0	0	**6**	
0215 - 0230	0	4	1	0	0	0	0	0	0	0	0	0	0	**5**	
0230 - 0245	0	2	0	0	0	0	0	0	0	0	0	0	0	**2**	
0245 - 0300	0	7	0	0	0	0	0	0	0	0	0	0	0	**7**	**20**
0300 - 0315	0	8	1	0	0	0	0	0	0	0	0	0	0	**9**	
0315 - 0330	0	1	0	0	0	0	0	0	0	0	0	0	0	**1**	
0330 - 0345	0	3	0	0	0	0	0	0	1	0	0	0	0	**4**	
0345 - 0400	0	3	0	0	0	0	0	0	0	0	0	0	0	**3**	**17**
0400 - 0415	0	1	0	0	0	0	0	0	0	0	0	0	0	**1**	
0415 - 0430	0	4	0	0	0	0	0	0	0	0	0	0	0	**4**	
0430 - 0445	0	4	0	0	2	0	0	0	0	0	0	0	0	**6**	
0445 - 0500	0	8	0	0	0	0	0	0	0	0	0	0	0	**8**	**19**
0500 - 0515	0	5	1	0	0	0	0	0	0	0	0	0	0	**6**	
0515 - 0530	0	10	1	0	1	0	0	0	0	0	0	0	0	**12**	
0530 - 0545	0	10	3	0	0	0	0	0	0	0	0	0	0	**13**	
0545 - 0600	0	20	1	0	0	0	0	0	0	0	0	0	0	**21**	**52**
0600 - 0615	0	22	1	0	0	0	0	0	0	0	0	0	0	**23**	
0615 - 0630	0	32	2	0	0	0	0	0	0	0	0	0	0	**34**	
0630 - 0645	0	35	6	0	0	0	0	0	1	0	0	0	0	**42**	
0645 - 0700	0	40	13	0	0	0	0	0	0	0	0	0	0	**53**	**152**
0700 - 0715	0	40	11	0	0	1	0	1	0	0	0	0	0	**53**	
0715 - 0730	0	54	16	0	0	0	0	0	1	1	0	0	0	**72**	
0730 - 0745	0	77	16	0	1	0	0	1	0	0	0	0	0	**95**	
0745 - 0800	0	79	12	0	0	1	0	0	0	0	0	0	0	**92**	**312**
0800 - 0815	0	46	9	0	2	0	0	0	0	0	0	0	0	**57**	
0815 - 0830	0	65	19	0	1	0	0	0	0	0	0	0	0	**85**	
0830 - 0845	0	50	17	0	1	0	0	1	0	0	0	0	0	**69**	
0845 - 0900	0	37	7	0	2	0	0	0	0	0	0	0	0	**46**	**257**
0900 - 0915	0	49	12	0	3	0	1	0	0	0	0	0	0	**65**	
0915 - 0930	0	37	11	0	2	1	0	0	0	0	0	0	0	**51**	
0930 - 0945	0	33	11	0	1	0	0	0	0	0	0	0	0	**45**	
0945 - 1000	0	51	5	0	0	0	0	0	0	1	0	0	0	**57**	**218**
1000 - 1015	0	50	8	0	0	1	1	0	0	0	0	0	0	**60**	
1015 - 1030	0	33	12	0	0	0	0	0	0	0	0	0	0	**45**	
1030 - 1045	0	55	12	0	2	0	1	0	0	0	0	0	0	**70**	
1045 - 1100	0	62	15	0	1	0	0	0	0	0	0	0	0	**78**	**253**
1100 - 1115	0	48	7	0	1	0	0	0	0	0	0	0	0	**56**	
1115 - 1130	0	53	10	1	0	0	0	0	1	0	0	0	0	**65**	
1130 - 1145	0	43	8	0	0	0	0	1	0	0	0	0	0	**52**	
1145 - 1200	0	43	12	1	1	0	0	0	0	0	0	0	0	**57**	**230**
1200 - 1215	0	45	7	0	2	1	0	0	0	0	0	0	0	**55**	
1215 - 1230	0	30	7	0	0	0	0	0	0	0	0	0	0	**37**	
1230 - 1245	0	53	11	0	0	1	0	0	0	0	0	0	0	**65**	
1245 - 1300	0	55	10	0	1	0	1	0	0	0	0	0	0	**67**	**224**
1300 - 1315	0	42	4	0	1	0	0	0	0	0	0	0	0	**47**	
1315 - 1330	1	46	14	0	1	0	0	0	0	0	0	0	0	**62**	
1330 - 1345	0	43	11	0	2	0	0	0	0	0	0	0	0	**56**	
1345 - 1400	0	49	8	0	1	0	0	0	0	0	0	0	0	**58**	**223**
1400 - 1415	0	57	16	0	3	0	0	0	0	0	0	0	0	**76**	
1415 - 1430	0	70	15	0	0	0	0	0	0	0	0	0	0	**85**	
1430 - 1445	0	51	11	0	2	1	1	1	0	0	0	0	0	**67**	
1445 - 1500	0	59	13	0	0	1	0	0	0	0	0	0	0	**73**	**301**
1500 - 1515	0	42	13	0	0	0	0	0	0	0	0	0	0	**55**	
1515 - 1530	0	49	13	0	2	0	0	1	0	0	0	0	0	**65**	
1530 - 1545	0	43	10	0	1	0	0	0	1	0	0	0	0	**55**	
1545 - 1600	0	59	11	0	2	0	0	0	0	0	0	0	0	**72**	**247**
1600 - 1615	1	48	14	0	1	0	0	0	0	0	0	0	0	**64**	
1615 - 1630	0	52	10	0	1	1	1	0	0	0	0	0	0	**65**	
1630 - 1645	0	61	13	0	0	1	1	0	0	0	0	0	0	**76**	
1645 - 1700	0	69	9	0	0	0	0	0	0	0	0	0	0	**78**	**283**
1700 - 1715	0	56	13	0	0	0	0	0	0	0	0	0	0	**69**	
1715 - 1730	0	59	9	0	0	0	0	0	0	0	0	0	0	**68**	
1730 - 1745	0	66	11	0	0	0	0	0	0	0	0	0	0	**77**	
1745 - 1800	0	48	4	0	0	0	0	0	0	0	0	0	0	**52**	**266**
1800 - 1815	0	63	7	0	0	0	0	0	0	0	0	0	0	**70**	
1815 - 1830	0	47	13	0	0	0	0	0	0	0	0	0	0	**60**	
1830 - 1845	0	65	9	0	0	0	0	0	1	0	0	0	0	**75**	
1845 - 1900	0	46	13	0	0	0	0	0	0	0	0	0	0	**59**	**264**
1900 - 1915	0	0	0	0	0	0	0	0	0	0	0	0	0	**0**	
1915 - 1930	0	0	0	0	0	0	0	0	0	0	0	0	0	**0**	
1930 - 1945	0	0	0	0	0	0	0	0	0	0	0	0	0	**0**	
1945 - 2000	0	0	0	0	0	0	0	0	0	0	0	0	0	**0**	**0**
2000 - 2015	0	0	0	0	0	0	0	0	0	0	0	0	0	**0**	
2015 - 2030	0	0	0	0	0	0	0	0	0	0	0	0	0	**0**	
2030 - 2045	0	0	0	0	0	0	0	0	0	0	0	0	0	**0**	
2045 - 2100	0	0	0	0	0	0	0	0	0	0	0	0	0	**0**	**0**
2100 - 2115	0	0	0	0	0	0	0	0	0	0	0	0	0	**0**	
2115 - 2130	0	0	0	0	0	0	0	0	0	0	0	0	0	**0**	
2130 - 2145	0	0	0	0	0	0	0	0	0	0	0	0	0	**0**	
2145 - 2200	0	0	0	0	0	0	0	0	0	0	0	0	0	**0**	**0**
2200 - 2215	0	0	0	0	0	0	0	0	0	0	0	0	0	**0**	
2215 - 2230	0	0	0	0	0	0	0	0	0	0	0	0	0	**0**	
2230 - 2245	0	0	0	0	0	0	0	0	0	0	0	0	0	**0**	
2245 - 2300	0	0	0	0	0	0	0	0	0	0	0	0	0	**0**	**0**
2300 - 2315	0	0	0	0	0	0	0	0	0	0	0	0	0	**0**	
2315 - 2330	0	0	0	0	0	0	0	0	0	0	0	0	0	**0**	
2330 - 2345	0	0	0	0	0	0	0	0	0	0	0	0	0	**0**	
2345 - 0000	0	0	0	0	0	0	0	0	0	0	0	0	0	**0**	**0**

Session Total	2	2774	564	2	41	11	7	6	6	2	0	0	0	**3415**
Session Average	0.02	28.90	5.88	0.02	0.43	0.11	0.07	0.06	0.06	0.02	0.00	0.00	0.00	**35.57**
Session Percentage	0.06	81.23	16.52	0.06	1.20	0.32	0.20	0.18	0.18	0.06	0.00	0.00	0.00	

AM Peak Hour	-	0730 - 0830	0745 - 0845	-	0830 - 0930	0700 - 0800	0945 - 1045	0645 - 0745	0630 - 0730	0630 - 0730	-	-	-	**0730 - 0830**
AM Peak Hour Volume	0	267	57	0	8	2	2	2	2	1	0	0	0	**329**

Noon Peak Hour	1230 - 1330	1400 - 1500	1400 - 1500	1100 - 1200	1315 - 1415	1145 - 1245	1000 - 1100	1430 - 1530	1030 - 1130	-	-	-	-	**1400 - 1500**
Noon Peak Hour Volume	1	237	55	2	7	2	2	2	1	0	0	0	0	**301**

PM Peak Hour	1515 - 1615	1645 - 1745	1515 - 1615	-	1515 - 1615	1545 - 1645	1545 - 1645	1500 - 1600	1500 - 1600	-	-	-	-	**1645 - 1745**
PM Peak Hour Volume	1	250	48	0	6	2	2	1	1	0	0	0	0	**292**

Bi-Directional Class Count || NB EB Average 15min

Columbia, SC

Marr Traffic DATA COLLECTION
www.marrtraffic.com

Site 21
I-26 James F. Byrnes Expy N/Bound Off-Ramp,
south of SC-60 Lake Murray Blvd

Date
Tuesday, April 30, 2024

Lat/Long
34.089659°, -81.163720°

Weather
Mostly Cloudy
70°F

0000 - 2400 (Weekday 24h Session) (All Dates)
NB EB Average 15min

	NB EB Average 15min													15min	60min
Time	1	2	3	4	5	6	7	8	9	10	11	12	13	Total	Total
0000 - 0015	0	10	1	0	0	0	0	0	0	0	0	0	0	**11**	
0015 - 0030	0	4	0	0	0	0	0	0	0	0	0	0	0	**4**	
0030 - 0045	0	5	1	0	0	0	0	0	0	0	0	0	0	**6**	
0045 - 0100	0	4	0	0	0	0	0	0	0	0	0	0	0	**5**	**25**
0100 - 0115	0	5	0	0	0	0	0	0	0	0	0	0	0	**5**	
0115 - 0130	0	4	0	0	0	0	0	0	0	0	0	0	0	**5**	
0130 - 0145	0	3	0	0	0	0	0	0	0	0	0	0	0	**3**	
0145 - 0200	0	2	0	0	0	0	0	0	0	0	0	0	0	**2**	**15**
0200 - 0215	0	3	0	0	0	0	0	0	0	0	0	0	0	**4**	
0215 - 0230	0	2	0	0	0	0	0	0	0	0	0	0	0	**3**	
0230 - 0245	0	2	0	0	0	0	0	0	0	0	0	0	0	**2**	
0245 - 0300	0	4	1	0	0	0	0	0	0	0	0	0	0	**5**	**14**
0300 - 0315	0	4	0	0	0	0	0	0	0	0	0	0	0	**4**	
0315 - 0330	0	0	1	0	0	0	0	0	0	0	0	0	0	**1**	
0330 - 0345	0	2	0	0	0	0	0	0	0	0	0	0	0	**3**	
0345 - 0400	0	2	0	0	0	0	0	0	0	0	0	0	0	**2**	**10**
0400 - 0415	0	1	0	0	0	0	0	0	0	0	0	0	0	**1**	
0415 - 0430	0	2	0	0	0	0	0	0	0	0	0	0	0	**2**	
0430 - 0445	0	2	0	0	1	0	0	0	0	0	0	0	0	**3**	
0445 - 0500	0	6	0	0	0	0	0	0	0	0	0	0	0	**6**	**13**
0500 - 0515	0	3	1	0	1	0	0	0	0	0	0	0	0	**5**	
0515 - 0530	0	8	1	0	0	0	0	0	0	0	0	0	0	**10**	
0530 - 0545	0	6	1	0	0	0	0	0	0	0	0	0	0	**7**	
0545 - 0600	0	11	1	0	0	0	0	0	0	0	0	0	0	**13**	**34**
0600 - 0615	0	16	1	0	0	0	0	0	0	0	0	0	0	**18**	
0615 - 0630	1	21	2	0	0	0	0	0	0	0	0	0	0	**24**	
0630 - 0645	0	23	3	0	0	0	0	0	0	0	0	0	0	**27**	
0645 - 0700	0	29	9	0	0	0	0	0	0	0	0	0	0	**38**	**107**
0700 - 0715	0	30	6	0	0	1	0	0	0	0	0	0	0	**37**	
0715 - 0730	0	34	9	0	1	0	0	0	0	0	0	0	0	**44**	
0730 - 0745	0	49	11	0	1	0	0	1	0	0	0	0	0	**61**	
0745 - 0800	0	50	7	0	0	1	0	0	0	0	0	0	0	**59**	**202**
0800 - 0815	0	34	8	0	1	0	0	0	0	0	0	0	0	**43**	
0815 - 0830	0	44	10	0	1	0	0	0	0	0	0	0	0	**55**	
0830 - 0845	0	30	11	0	1	0	0	0	0	0	0	0	0	**43**	
0845 - 0900	0	32	5	0	2	0	0	0	0	0	0	0	0	**39**	**179**
0900 - 0915	0	31	7	0	2	0	1	0	0	0	0	0	0	**41**	
0915 - 0930	0	25	8	0	1	0	0	0	0	0	0	0	0	**35**	
0930 - 0945	0	21	7	0	1	0	0	0	0	0	0	0	0	**29**	
0945 - 1000	0	33	3	0	1	0	0	0	0	0	0	0	0	**37**	**142**
1000 - 1015	0	32	5	0	1	0	0	0	0	0	0	0	0	**39**	
1015 - 1030	0	23	8	0	0	0	0	0	0	0	0	0	0	**31**	
1030 - 1045	0	28	7	0	1	0	0	0	0	0	0	0	0	**36**	
1045 - 1100	0	32	8	0	1	0	0	0	0	0	0	0	0	**41**	**147**
1100 - 1115	0	32	4	0	1	0	0	0	0	0	0	0	0	**37**	
1115 - 1130	0	29	5	0	0	0	0	0	0	0	0	0	0	**35**	
1130 - 1145	0	25	6	0	0	0	0	0	0	0	0	0	0	**32**	
1145 - 1200	0	31	7	0	0	1	0	0	0	0	0	0	0	**40**	**144**
1200 - 1215	0	28	4	0	1	0	0	0	0	0	0	0	0	**33**	
1215 - 1230	0	28	6	0	0	0	0	0	0	0	0	0	0	**34**	
1230 - 1245	0	33	7	0	0	0	0	0	0	0	0	0	0	**41**	
1245 - 1300	0	33	6	0	0	0	0	0	0	0	0	0	0	**41**	**148**
1300 - 1315	0	29	5	0	0	0	1	0	0	0	0	0	0	**34**	
1315 - 1330	0	33	8	0	0	0	0	0	0	0	0	0	0	**42**	
1330 - 1345	0	26	6	0	1	0	0	0	0	0	0	0	0	**33**	
1345 - 1400	0	37	8	0	0	0	0	0	0	0	0	0	0	**45**	**155**
1400 - 1415	0	35	9	0	1	0	0	0	0	0	0	0	0	**45**	
1415 - 1430	0	43	9	0	0	0	0	0	0	0	0	0	0	**52**	
1430 - 1445	0	36	7	0	1	0	0	0	0	0	0	0	0	**45**	
1445 - 1500	0	35	7	0	0	1	0	0	0	0	0	0	0	**43**	**184**
1500 - 1515	0	29	7	0	1	0	0	0	0	0	0	0	0	**37**	
1515 - 1530	0	33	7	0	1	0	0	0	0	0	0	0	0	**41**	
1530 - 1545	0	31	8	0	1	0	0	0	0	0	0	0	0	**40**	
1545 - 1600	0	36	7	0	1	0	0	0	0	0	0	0	0	**44**	**161**
1600 - 1615	0	32	7	0	0	0	0	0	0	0	0	0	0	**39**	
1615 - 1630	0	36	6	0	0	0	0	0	0	0	0	0	0	**43**	
1630 - 1645	0	33	8	0	0	0	0	0	0	0	0	0	0	**42**	
1645 - 1700	0	37	6	0	0	0	0	0	0	0	0	0	0	**44**	**168**
1700 - 1715	0	32	6	0	0	0	0	0	0	0	0	0	0	**38**	
1715 - 1730	0	33	6	0	0	0	0	0	0	0	0	0	0	**39**	
1730 - 1745	0	38	6	0	0	0	0	0	0	0	0	0	0	**44**	
1745 - 1800	0	32	4	0	0	0	0	0	0	0	0	0	0	**36**	**158**
1800 - 1815	0	43	6	0	0	0	0	0	0	0	0	0	0	**49**	
1815 - 1830	0	35	8	0	0	0	0	0	0	0	0	0	0	**43**	
1830 - 1845	0	41	6	0	0	0	0	0	0	0	0	0	0	**48**	
1845 - 1900	0	33	10	0	0	0	0	0	0	0	0	0	0	**43**	**184**
1900 - 1915	0	28	4	0	0	0	0	0	1	0	0	0	0	**33**	
1915 - 1930	0	29	4	0	0	0	0	0	0	0	0	0	0	**33**	
1930 - 1945	0	28	4	0	0	0	0	0	0	0	0	0	0	**33**	
1945 - 2000	0	31	2	0	0	0	0	0	0	0	0	0	0	**33**	**132**
2000 - 2015	0	26	3	0	0	0	0	0	0	0	0	0	0	**29**	
2015 - 2030	0	35	4	0	0	0	0	0	0	0	0	0	0	**40**	
2030 - 2045	0	30	2	0	0	0	0	0	0	0	0	0	0	**31**	
2045 - 2100	0	29	0	0	1	0	0	0	0	0	0	0	0	**30**	**131**
2100 - 2115	0	29	1	0	0	0	0	0	0	0	0	0	0	**30**	
2115 - 2130	0	21	0	0	0	0	0	0	0	0	0	0	0	**21**	
2130 - 2145	0	18	0	0	1	0	0	0	0	0	0	0	0	**18**	
2145 - 2200	0	22	1	0	0	0	0	0	0	0	0	0	0	**23**	**92**
2200 - 2215	0	12	0	0	0	0	0	0	0	0	0	0	0	**13**	
2215 - 2230	0	17	0	0	0	0	0	0	0	0	0	0	0	**17**	
2230 - 2245	0	13	0	0	0	0	0	0	0	0	0	0	0	**13**	
2245 - 2300	0	14	0	0	0	0	0	0	0	0	0	0	0	**14**	**57**
2300 - 2315	0	11	1	0	0	0	0	0	0	0	0	0	0	**13**	
2315 - 2330	0	11	1	0	0	0	0	0	0	0	0	0	0	**12**	
2330 - 2345	0	7	1	0	0	0	0	0	0	0	0	0	0	**8**	
2345 - 0000	0	8	1	0	0	0	0	0	0	0	0	0	0	**10**	**42**

Session Total	2	2203	386	1	31	7	5	4	4	1	0	0	0	**2644**
Session Average	0.02	22.95	4.02	0.01	0.32	0.07	0.05	0.04	0.05	0.01	0.00	0.00	0.00	**27.54**
Session Percentage	0.09	83.33	14.61	0.04	1.16	0.26	0.18	0.14	0.16	0.03	0.00	0.00	0.00	

AM Peak Hour	0530 - 0630	0730 - 0830	0745 - 0845	0730 - 0830	0830 - 0930	0700 - 0800	0815 - 0915	0645 - 0745	0630 - 0730	0630 - 0730	-	-	-	**0730 - 0830**
AM Peak Volume	1	177	36	0	6	2	1	1	1	0	0	0	0	**218**

Noon Peak Hour	1000 - 1100	1345 - 1445	1345 - 1445	1100 - 1200	1000 - 1100	1145 - 1245	1215 - 1315	1045 - 1145	1030 - 1130	-	-	-	-	**1345 - 1445**
Noon Peak Volume	0	151	32	1	3	2	1	1	0	0	0	0	0	**187**

PM Peak Hour	1515 - 1615	1800 - 1900	1800 - 1900	-	1500 - 1600	1545 - 1645	1545 - 1645	1500 - 1600	1815 - 1915	-	-	-	-	**1800 - 1900**
PM Peak Volume	0	152	31	0	3	1	1	0	1	0	0	0	0	**184**

Bi-Directional Class Count || Volume Summary 15min

Columbia, SC

Marr Traffic DATA COLLECTION

www.marrtraffic.com

Site 21

I-26 James F. Byrnes Expy N/Bound Off-Ramp,
south of SC-60 Lake Murray Blvd

Date

Tuesday, April 30, 2024

Lat/Long

34.089659°, -81.163720°

Weather

Mostly Cloudy
70°F

Click here for Detailed Weather

0000 - 2400 (Weekday 24h Session) (04-30-2024)

Volume Summary 15min

TIME	Volume Summary 15min NB	SB	15min Total	60min Total
0000 - 0015	0	0	**0**	
0015 - 0030	0	0	**0**	
0030 - 0045	0	0	**0**	
0045 - 0100	0	0	**0**	**0**
0100 - 0115	0	0	**0**	
0115 - 0130	0	0	**0**	
0130 - 0145	0	0	**0**	
0145 - 0200	0	0	**0**	**0**
0200 - 0215	0	0	**0**	
0215 - 0230	0	0	**0**	
0230 - 0245	0	0	**0**	
0245 - 0300	0	0	**0**	**0**
0300 - 0315	0	0	**0**	
0315 - 0330	0	0	**0**	
0330 - 0345	0	0	**0**	
0345 - 0400	0	0	**0**	**0**
0400 - 0415	0	0	**0**	
0415 - 0430	0	0	**0**	
0430 - 0445	0	0	**0**	
0445 - 0500	0	0	**0**	**0**
0500 - 0515	0	0	**0**	
0515 - 0530	0	0	**0**	
0530 - 0545	0	0	**0**	
0545 - 0600	0	0	**0**	**0**
0600 - 0615	0	0	**0**	
0615 - 0630	0	0	**0**	
0630 - 0645	0	0	**0**	
0645 - 0700	0	0	**0**	**0**
0700 - 0715	0	0	**0**	
0715 - 0730	0	0	**0**	
0730 - 0745	0	0	**0**	
0745 - 0800	0	0	**0**	**0**
0800 - 0815	0	0	**0**	
0815 - 0830	0	0	**0**	
0830 - 0845	0	0	**0**	
0845 - 0900	0	0	**0**	**0**
0900 - 0915	0	0	**0**	
0915 - 0930	0	0	**0**	
0930 - 0945	0	0	**0**	
0945 - 1000	0	0	**0**	**0**
1000 - 1015	0	0	**0**	
1015 - 1030	0	0	**0**	
1030 - 1045	0	0	**0**	
1045 - 1100	0	0	**0**	**0**
1100 - 1115	0	0	**0**	
1115 - 1130	0	0	**0**	
1130 - 1145	0	0	**0**	
1145 - 1200	0	0	**0**	**0**

Time	Volume Summary 15min NB	SB	15min Total	60min Total
1200 - 1215	0	0	**0**	
1215 - 1230	0	0	**0**	
1230 - 1245	0	0	**0**	
1245 - 1300	0	0	**0**	**0**
1300 - 1315	0	0	**0**	
1315 - 1330	0	0	**0**	
1330 - 1345	0	0	**0**	
1345 - 1400	0	0	**0**	**0**
1400 - 1415	0	0	**0**	
1415 - 1430	0	0	**0**	
1430 - 1445	0	0	**0**	
1445 - 1500	0	0	**0**	**0**
1500 - 1515	0	0	**0**	
1515 - 1530	0	0	**0**	
1530 - 1545	0	0	**0**	
1545 - 1600	0	0	**0**	**0**
1600 - 1615	0	0	**0**	
1615 - 1630	0	0	**0**	
1630 - 1645	0	0	**0**	
1645 - 1700	0	0	**0**	**0**
1700 - 1715	0	0	**0**	
1715 - 1730	0	0	**0**	
1730 - 1745	0	0	**0**	
1745 - 1800	0	0	**0**	**0**
1800 - 1815	0	0	**0**	
1815 - 1830	0	0	**0**	
1830 - 1845	0	0	**0**	
1845 - 1900	0	0	**0**	**0**
1900 - 1915	39	0	**39**	
1915 - 1930	49	0	**49**	
1930 - 1945	40	0	**40**	
1945 - 2000	46	0	**46**	**174**
2000 - 2015	47	0	**47**	
2015 - 2030	54	0	**54**	
2030 - 2045	43	0	**43**	
2045 - 2100	44	0	**44**	**188**
2100 - 2115	40	0	**40**	
2115 - 2130	25	0	**25**	
2130 - 2145	17	0	**17**	
2145 - 2200	35	0	**35**	**117**
2200 - 2215	18	0	**18**	
2215 - 2230	24	0	**24**	
2230 - 2245	20	0	**20**	
2245 - 2300	21	0	**21**	**83**
2300 - 2315	23	0	**23**	
2315 - 2330	19	0	**19**	
2330 - 2345	11	0	**11**	
2345 - 0000	17	0	**17**	**70**

Session Total	632	0	**632**
Session Average	6.58	0.00	**6.58**
Session Percentage	100.00	0.00	

Site 21

I-26 James F. Byrnes Expy N/Bound Off-Ramp,
south of SC-60 Lake Murray Blvd

Date

Wednesday, May 1, 2024

Lat/Long

34.089659°, -81.163720°

Weather

Partly Cloudy
71°F

Click here for Detailed Weather

0000 - 2400 (Weekday 24h Session) (05-01-2024)

Volume Summary 15min

TIME	Volume Summary 15min NB	SB	15min Total	60min Total
0000 - 0015	15	0	**15**	
0015 - 0030	4	0	**4**	
0030 - 0045	6	0	**6**	
0045 - 0100	4	0	**4**	**29**
0100 - 0115	6	0	**6**	
0115 - 0130	4	0	**4**	
0130 - 0145	2	0	**2**	
0145 - 0200	1	0	**1**	**13**
0200 - 0215	5	0	**5**	
0215 - 0230	3	0	**3**	
0230 - 0245	5	0	**5**	
0245 - 0300	8	0	**8**	**21**
0300 - 0315	3	0	**3**	
0315 - 0330	2	0	**2**	
0330 - 0345	5	0	**5**	
0345 - 0400	4	0	**4**	**14**
0400 - 0415	3	0	**3**	
0415 - 0430	2	0	**2**	
0430 - 0445	4	0	**4**	
0445 - 0500	10	0	**10**	**19**
0500 - 0515	9	0	**9**	
0515 - 0530	17	0	**17**	
0530 - 0545	8	0	**8**	
0545 - 0600	17	0	**17**	**51**
0600 - 0615	30	0	**30**	
0615 - 0630	39	0	**39**	
0630 - 0645	38	0	**38**	
0645 - 0700	61	0	**61**	**168**
0700 - 0715	59	0	**59**	
0715 - 0730	60	0	**60**	
0730 - 0745	89	0	**89**	
0745 - 0800	85	0	**85**	**293**
0800 - 0815	72	0	**72**	
0815 - 0830	79	0	**79**	
0830 - 0845	59	0	**59**	
0845 - 0900	71	0	**71**	**281**
0900 - 0915	57	0	**57**	
0915 - 0930	54	0	**54**	
0930 - 0945	41	0	**41**	
0945 - 1000	55	0	**55**	**207**
1000 - 1015	56	0	**56**	
1015 - 1030	49	0	**49**	
1030 - 1045	39	0	**39**	
1045 - 1100	45	0	**45**	**189**
1100 - 1115	55	0	**55**	
1115 - 1130	39	0	**39**	
1130 - 1145	43	0	**43**	
1145 - 1200	64	0	**64**	**201**

Time	Volume Summary 15min NB	SB	15min Total	60min Total
1200 - 1215	45	0	**45**	
1215 - 1230	64	0	**64**	
1230 - 1245	57	0	**57**	
1245 - 1300	55	0	**55**	**221**
1300 - 1315	56	0	**56**	
1315 - 1330	65	0	**65**	
1330 - 1345	43	0	**43**	
1345 - 1400	78	0	**78**	**242**
1400 - 1415	59	0	**59**	
1415 - 1430	70	0	**70**	
1430 - 1445	68	0	**68**	
1445 - 1500	55	0	**55**	**252**
1500 - 1515	55	0	**55**	
1515 - 1530	59	0	**59**	
1530 - 1545	64	0	**64**	
1545 - 1600	59	0	**59**	**237**
1600 - 1615	53	0	**53**	
1615 - 1630	65	0	**65**	
1630 - 1645	49	0	**49**	
1645 - 1700	54	0	**54**	**221**
1700 - 1715	45	0	**45**	
1715 - 1730	49	0	**49**	
1730 - 1745	56	0	**56**	
1745 - 1800	57	0	**57**	**207**
1800 - 1815	78	0	**78**	
1815 - 1830	70	0	**70**	
1830 - 1845	68	0	**68**	
1845 - 1900	71	0	**71**	**287**
1900 - 1915	60	0	**60**	
1915 - 1930	50	0	**50**	
1930 - 1945	59	0	**59**	
1945 - 2000	54	0	**54**	**223**
2000 - 2015	41	0	**41**	
2015 - 2030	66	0	**66**	
2030 - 2045	51	0	**51**	
2045 - 2100	47	0	**47**	**205**
2100 - 2115	50	0	**50**	
2115 - 2130	38	0	**38**	
2130 - 2145	38	0	**38**	
2145 - 2200	33	0	**33**	**159**
2200 - 2215	21	0	**21**	
2215 - 2230	28	0	**28**	
2230 - 2245	19	0	**19**	
2245 - 2300	20	0	**20**	**88**
2300 - 2315	16	0	**16**	
2315 - 2330	16	0	**16**	
2330 - 2345	13	0	**13**	
2345 - 0000	12	0	**12**	**57**

Session Total	3885	0	**3885**
Session Average	40.47	0.00	**40.47**
Session Percentage	100.00	0.00	

Site 21

I-26 James F. Byrnes Expy N/Bound Off-Ramp,
south of SC-60 Lake Murray Blvd

Date

Thursday, May 2, 2024

Lat/Long

34.089659°, -81.163720°

Weather

Fair
74°F

Click here for Detailed Weather

0000 - 2400 (Weekday 24h Session) (05-02-2024)

Volume Summary 15min

TIME	Volume Summary 15min NB	SB	15min Total	60min Total
0000 - 0015	17	0	**17**	
0015 - 0030	7	0	**7**	
0030 - 0045	11	0	**11**	
0045 - 0100	10	0	**10**	**45**
0100 - 0115	10	0	**10**	
0115 - 0130	10	0	**10**	
0130 - 0145	6	0	**6**	
0145 - 0200	6	0	**6**	**32**
0200 - 0215	6	0	**6**	
0215 - 0230	5	0	**5**	
0230 - 0245	2	0	**2**	
0245 - 0300	7	0	**7**	**20**
0300 - 0315	9	0	**9**	
0315 - 0330	1	0	**1**	
0330 - 0345	4	0	**4**	
0345 - 0400	3	0	**3**	**17**
0400 - 0415	1	0	**1**	
0415 - 0430	4	0	**4**	
0430 - 0445	6	0	**6**	
0445 - 0500	8	0	**8**	**19**
0500 - 0515	6	0	**6**	
0515 - 0530	12	0	**12**	
0530 - 0545	13	0	**13**	
0545 - 0600	21	0	**21**	**52**
0600 - 0615	23	0	**23**	
0615 - 0630	34	0	**34**	
0630 - 0645	42	0	**42**	
0645 - 0700	53	0	**53**	**152**
0700 - 0715	53	0	**53**	
0715 - 0730	72	0	**72**	
0730 - 0745	95	0	**95**	
0745 - 0800	92	0	**92**	**312**
0800 - 0815	57	0	**57**	
0815 - 0830	85	0	**85**	
0830 - 0845	69	0	**69**	
0845 - 0900	46	0	**46**	**257**
0900 - 0915	65	0	**65**	
0915 - 0930	51	0	**51**	
0930 - 0945	45	0	**45**	
0945 - 1000	57	0	**57**	**218**
1000 - 1015	60	0	**60**	
1015 - 1030	45	0	**45**	
1030 - 1045	70	0	**70**	
1045 - 1100	78	0	**78**	**253**
1100 - 1115	56	0	**56**	
1115 - 1130	65	0	**65**	
1130 - 1145	52	0	**52**	
1145 - 1200	57	0	**57**	**230**

Time	Volume Summary 15min NB	SB	15min Total	60min Total
1200 - 1215	55	0	**55**	
1215 - 1230	37	0	**37**	
1230 - 1245	65	0	**65**	
1245 - 1300	67	0	**67**	**224**
1300 - 1315	47	0	**47**	
1315 - 1330	62	0	**62**	
1330 - 1345	56	0	**56**	
1345 - 1400	58	0	**58**	**223**
1400 - 1415	76	0	**76**	
1415 - 1430	85	0	**85**	
1430 - 1445	67	0	**67**	
1445 - 1500	73	0	**73**	**301**
1500 - 1515	55	0	**55**	
1515 - 1530	65	0	**65**	
1530 - 1545	55	0	**55**	
1545 - 1600	72	0	**72**	**247**
1600 - 1615	64	0	**64**	
1615 - 1630	65	0	**65**	
1630 - 1645	76	0	**76**	
1645 - 1700	78	0	**78**	**283**
1700 - 1715	69	0	**69**	
1715 - 1730	68	0	**68**	
1730 - 1745	77	0	**77**	
1745 - 1800	52	0	**52**	**266**
1800 - 1815	70	0	**70**	
1815 - 1830	60	0	**60**	
1830 - 1845	75	0	**75**	
1845 - 1900	59	0	**59**	**264**
1900 - 1915	0	0	**0**	
1915 - 1930	0	0	**0**	
1930 - 1945	0	0	**0**	
1945 - 2000	0	0	**0**	**0**
2000 - 2015	0	0	**0**	
2015 - 2030	0	0	**0**	
2030 - 2045	0	0	**0**	
2045 - 2100	0	0	**0**	**0**
2100 - 2115	0	0	**0**	
2115 - 2130	0	0	**0**	
2130 - 2145	0	0	**0**	
2145 - 2200	0	0	**0**	**0**
2200 - 2215	0	0	**0**	
2215 - 2230	0	0	**0**	
2230 - 2245	0	0	**0**	
2245 - 2300	0	0	**0**	**0**
2300 - 2315	0	0	**0**	
2315 - 2330	0	0	**0**	
2330 - 2345	0	0	**0**	
2345 - 0000	0	0	**0**	**0**

Session Total	3415	0	**3415**
Session Average	35.57	0.00	**35.57**
Session Percentage	100.00	0.00	

Bi-Directional Class Count || NB EB 60min

Columbia, SC

Marr Traffic DATA COLLECTION

www.marrtraffic.com

Site 21
I-26 James F. Byrnes Expy N/Bound Off-Ramp,
south of SC-60 Lake Murray Blvd

Date
Tuesday, April 30, 2024

Lat/Long
34.089659°, -81.163720°

Weather
Mostly Cloudy
70°F

Click here for Detailed Weather

0000 - 2400 (Weekday 24h Session) (04-30-2024)
NB EB 60min

	Northbound (Movement 21.1)													
TIME	1	2	3	4	5	6	7	8	9	10	11	12	13	**Total**
0000 - 0100	0	0	0	0	0	0	0	0	0	0	0	0	0	**0**
0100 - 0200	0	0	0	0	0	0	0	0	0	0	0	0	0	**0**
0200 - 0300	0	0	0	0	0	0	0	0	0	0	0	0	0	**0**
0300 - 0400	0	0	0	0	0	0	0	0	0	0	0	0	0	**0**
0400 - 0500	0	0	0	0	0	0	0	0	0	0	0	0	0	**0**
0500 - 0600	0	0	0	0	0	0	0	0	0	0	0	0	0	**0**
0600 - 0700	0	0	0	0	0	0	0	0	0	0	0	0	0	**0**
0700 - 0800	0	0	0	0	0	0	0	0	0	0	0	0	0	**0**
0800 - 0900	0	0	0	0	0	0	0	0	0	0	0	0	0	**0**
0900 - 1000	0	0	0	0	0	0	0	0	0	0	0	0	0	**0**
1000 - 1100	0	0	0	0	0	0	0	0	0	0	0	0	0	**0**
1100 - 1200	0	0	0	0	0	0	0	0	0	0	0	0	0	**0**
1200 - 1300	0	0	0	0	0	0	0	0	0	0	0	0	0	**0**
1300 - 1400	0	0	0	0	0	0	0	0	0	0	0	0	0	**0**
1400 - 1500	0	0	0	0	0	0	0	0	0	0	0	0	0	**0**
1500 - 1600	0	0	0	0	0	0	0	0	0	0	0	0	0	**0**
1600 - 1700	0	0	0	0	0	0	0	0	0	0	0	0	0	**0**
1700 - 1800	0	0	0	0	0	0	0	0	0	0	0	0	0	**0**
1800 - 1900	0	0	0	0	0	0	0	0	0	0	0	0	0	**0**
1900 - 2000	0	163	10	0	1	0	0	0	0	0	0	0	0	**174**
2000 - 2100	0	182	6	0	0	0	0	0	0	0	0	0	0	**188**
2100 - 2200	0	111	4	0	2	0	0	0	0	0	0	0	0	**117**
2200 - 2300	0	82	1	0	0	0	0	0	0	0	0	0	0	**83**
2300 - 2400	0	69	1	0	0	0	0	0	0	0	0	0	0	**70**
Session Total	0	607	22	0	3	0	0	0	0	0	0	0	0	**632**
Session Average	0.00	25.29	0.92	0.00	0.13	0.00	0.00	0.00	0.00	0.00	0.00	0.00	0.00	**26.33**
Session Percentage	0.00	96.04	3.48	0.00	0.47	0.00	0.00	0.00	0.00	0.00	0.00	0.00	0.00	
AM Peak Hour	-	-	-	-	-	-	-	-	-	-	-	-	-	**-**
AM Peak Volume	0	0	0	0	0	0	0	0	0	0	0	0	0	**0**
Noon Peak Hour	-	-	-	-	-	-	-	-	-	-	-	-	-	**-**
Noon Peak Volume	0	0	0	0	0	0	0	0	0	0	0	0	0	**0**
PM Peak Hour	-	1900 - 2000	1900 - 2000	-	1900 - 2000	-	-	-	-	-	-	-	-	**1900 - 2000**
PM Peak Volume	0	163	10	0	1	0	0	0	0	0	0	0	0	**174**

Site 21

I-26 James F. Byrnes Expy N/Bound Off-Ramp,
south of SC-60 Lake Murray Blvd

Date

Wednesday, May 1, 2024

Lat/Long

34.089659°, -81.163720°

Weather

Partly Cloudy
71°F

Click here for Detailed Weather

0000 - 2400 (Weekday 24h Session) (05-01-2024)

NB EB 60min

	Northbound (Movement 21.1)													
TIME	1	2	3	4	5	6	7	8	9	10	11	12	13	**Total**
0000 - 0100	0	26	2	0	1	0	0	0	0	0	0	0	0	**29**
0100 - 0200	0	13	0	0	0	0	0	0	0	0	0	0	0	**13**
0200 - 0300	0	17	2	0	1	1	0	0	0	0	0	0	0	**21**
0300 - 0400	0	9	4	0	0	0	0	0	1	0	0	0	0	**14**
0400 - 0500	0	17	2	0	0	0	0	0	0	0	0	0	0	**19**
0500 - 0600	0	40	8	0	2	1	0	0	0	0	0	0	0	**51**
0600 - 0700	3	139	25	0	1	0	0	0	0	0	0	0	0	**168**
0700 - 0800	0	240	43	0	4	3	0	2	1	0	0	0	0	**293**
0800 - 0900	0	222	49	1	8	0	0	0	1	0	0	0	0	**281**
0900 - 1000	0	161	36	0	7	1	1	1	0	0	0	0	0	**207**
1000 - 1100	1	145	38	0	5	0	0	0	0	0	0	0	0	**189**
1100 - 1200	0	164	31	0	1	3	1	1	0	0	0	0	0	**201**
1200 - 1300	0	182	35	0	2	0	1	1	0	0	0	0	0	**221**
1300 - 1400	0	197	43	0	0	0	2	0	0	0	0	0	0	**242**
1400 - 1500	0	210	38	0	2	1	1	0	0	0	0	0	0	**252**
1500 - 1600	0	194	39	0	3	0	1	0	0	0	0	0	0	**237**
1600 - 1700	0	186	34	0	1	0	0	0	0	0	0	0	0	**221**
1700 - 1800	0	178	29	0	0	0	0	0	0	0	0	0	0	**207**
1800 - 1900	0	234	50	0	2	0	0	0	1	0	0	0	0	**287**
1900 - 2000	1	187	32	0	1	0	0	0	2	0	0	0	0	**223**
2000 - 2100	0	180	22	0	3	0	0	0	0	0	0	0	0	**205**
2100 - 2200	0	158	0	0	0	0	0	0	1	0	0	0	0	**159**
2200 - 2300	0	85	1	0	2	0	0	0	0	0	0	0	0	**88**
2300 - 2400	0	45	10	0	2	0	0	0	0	0	0	0	0	**57**

Session Total	5	3229	573	1	48	10	7	5	7	0	0	0	0	**3885**
Session Average	0.21	134.54	23.88	0.04	2.00	0.42	0.29	0.21	0.29	0.00	0.00	0.00	0.00	**161.88**
Session Percentage	0.13	83.11	14.75	0.03	1.24	0.26	0.18	0.13	0.18	0.00	0.00	0.00	0.00	

AM Peak Hour	0600 - 0700	0700 - 0800	0800 - 0900	0800 - 0900	0800 - 0900	0700 - 0800	0900 - 1000	0700 - 0800	0700 - 0800	-	-	-	-	**0700 - 0800**
AM Peak Volume	3	240	49	1	8	3	1	2	1	0	0	0	0	**293**

Noon Peak Hour	1000 - 1100	1400 - 1500	1300 - 1400	-	1000 - 1100	1100 - 1200	1300 - 1400	1100 - 1200	-	-	-	-	-	**1400 - 1500**
Noon Peak Volume	1	210	43	0	5	3	2	1	0	0	0	0	0	**252**

PM Peak Hour	1900 - 2000	1800 - 1900	1800 - 1900	-	1500 - 1600	-	1500 - 1600	-	1900 - 2000	-	-	-	-	**1800 - 1900**
PM Peak Volume	1	234	50	0	3	0	1	0	2	0	0	0	0	**287**

Site 21

I-26 James F. Byrnes Expy N/Bound Off-Ramp,
south of SC-60 Lake Murray Blvd

Date

Thursday, May 2, 2024

Lat/Long

34.089659°, -81.163720°

Weather

Fair
74°F

Click here for Detailed Weather

0000 - 2400 (Weekday 24h Session) (05-02-2024)

NB EB 60min

	Northbound (Movement 21.1)													
TIME	1	2	3	4	5	6	7	8	9	10	11	12	13	**Total**
0000 - 0100	0	41	3	0	0	1	0	0	0	0	0	0	0	**45**
0100 - 0200	0	30	2	0	0	0	0	0	0	0	0	0	0	**32**
0200 - 0300	0	19	1	0	0	0	0	0	0	0	0	0	0	**20**
0300 - 0400	0	15	1	0	0	0	0	0	1	0	0	0	0	**17**
0400 - 0500	0	17	0	0	2	0	0	0	0	0	0	0	0	**19**
0500 - 0600	0	45	6	0	1	0	0	0	0	0	0	0	0	**52**
0600 - 0700	0	129	22	0	0	0	0	0	1	0	0	0	0	**152**
0700 - 0800	0	250	55	0	1	2	0	2	1	1	0	0	0	**312**
0800 - 0900	0	198	52	0	6	0	0	1	0	0	0	0	0	**257**
0900 - 1000	0	170	39	0	6	1	1	0	0	1	0	0	0	**218**
1000 - 1100	0	200	47	0	3	1	2	0	0	0	0	0	0	**253**
1100 - 1200	0	187	37	2	2	0	0	1	1	0	0	0	0	**230**
1200 - 1300	0	183	35	0	3	2	1	0	0	0	0	0	0	**224**
1300 - 1400	1	180	37	0	5	0	0	0	0	0	0	0	0	**223**
1400 - 1500	0	237	55	0	5	2	1	1	0	0	0	0	0	**301**
1500 - 1600	0	193	47	0	5	0	0	1	1	0	0	0	0	**247**
1600 - 1700	1	230	46	0	2	2	2	0	0	0	0	0	0	**283**
1700 - 1800	0	229	37	0	0	0	0	0	0	0	0	0	0	**266**
1800 - 1900	0	221	42	0	0	0	0	0	1	0	0	0	0	**264**
1900 - 2000	0	0	0	0	0	0	0	0	0	0	0	0	0	**0**
2000 - 2100	0	0	0	0	0	0	0	0	0	0	0	0	0	**0**
2100 - 2200	0	0	0	0	0	0	0	0	0	0	0	0	0	**0**
2200 - 2300	0	0	0	0	0	0	0	0	0	0	0	0	0	**0**
2300 - 2400	0	0	0	0	0	0	0	0	0	0	0	0	0	**0**

Session Total	2	2774	564	2	41	11	7	6	6	2	0	0	0	**3415**
Session Average	0.08	115.58	23.50	0.08	1.71	0.46	0.29	0.25	0.25	0.08	0.00	0.00	0.00	**142.29**
Session Percentage	0.06	81.23	16.52	0.06	1.20	0.32	0.20	0.18	0.18	0.06	0.00	0.00	0.00	

AM Peak Hour	-	0700 - 0800	0700 - 0800	-	0800 - 0900	0700 - 0800	0900 - 1000	0700 - 0800	0600 - 0700	0700 - 0800	-	-	-	**0700 - 0800**
AM Peak Hour Volume	0	250	55	0	6	2	1	2	1	1	0	0	0	**312**

Noon Peak Hour	1300 - 1400	1400 - 1500	1400 - 1500	1100 - 1200	1300 - 1400	1200 - 1300	1000 - 1100	1100 - 1200	1100 - 1200	-	-	-	-	**1400 - 1500**
Noon Peak Hour Volume	1	237	55	2	5	2	2	1	1	0	0	0	0	**301**

PM Peak Hour	1600 - 1700	1600 - 1700	1500 - 1600	-	1500 - 1600	1600 - 1700	1600 - 1700	1500 - 1600	1500 - 1600	-	-	-	-	**1600 - 1700**
PM Peak Hour Volume	1	230	47	0	5	2	2	1	1	0	0	0	0	**283**

Bi-Directional Class Count || Volume Summary 60min

Columbia, SC

Marr Traffic DATA COLLECTION

www.marrtraffic.com

Site 21

I-26 James F. Byrnes Expy N/Bound Off-Ramp,
south of SC-60 Lake Murray Blvd

Date

Tuesday, April 30, 2024

Lat/Long

34.089659°, -81.163720°

Weather

Mostly Cloudy
70°F

Click here for Detailed Weather

0000 - 2400 (Weekday 24h Session) (04-30-2024)

Volume Summary 60min

	Volume Summary 60min		
TIME	NB	SB	**Total**
0000 - 0100	0	0	**0**
0100 - 0200	0	0	**0**
0200 - 0300	0	0	**0**
0300 - 0400	0	0	**0**
0400 - 0500	0	0	**0**
0500 - 0600	0	0	**0**
0600 - 0700	0	0	**0**
0700 - 0800	0	0	**0**
0800 - 0900	0	0	**0**
0900 - 1000	0	0	**0**
1000 - 1100	0	0	**0**
1100 - 1200	0	0	**0**

	Volume Summary 60min		
Time	NB	SB	**Total**
1200 - 1300	0	0	**0**
1300 - 1400	0	0	**0**
1400 - 1500	0	0	**0**
1500 - 1600	0	0	**0**
1600 - 1700	0	0	**0**
1700 - 1800	0	0	**0**
1800 - 1900	0	0	**0**
1900 - 2000	174	0	**174**
2000 - 2100	188	0	**188**
2100 - 2200	117	0	**117**
2200 - 2300	83	0	**83**
2300 - 2400	70	0	**70**

Session Total	632	0	**632**
Session Average	26.33	0.00	**26.33**
Session Percentage	100.00	0.00	

Site 21

I-26 James F. Byrnes Expy N/Bound Off-Ramp,
south of SC-60 Lake Murray Blvd

Date

Wednesday, May 1, 2024

Lat/Long

34.089659°, -81.163720°

Weather

Partly Cloudy
71°F

Click here for Detailed Weather

0000 - 2400 (Weekday 24h Session) (05-01-2024)

Volume Summary 60min

	Volume Summary 60min		
TIME	NB	SB	**Total**
0000 - 0100	29	0	**29**
0100 - 0200	13	0	**13**
0200 - 0300	21	0	**21**
0300 - 0400	14	0	**14**
0400 - 0500	19	0	**19**
0500 - 0600	51	0	**51**
0600 - 0700	168	0	**168**
0700 - 0800	293	0	**293**
0800 - 0900	281	0	**281**
0900 - 1000	207	0	**207**
1000 - 1100	189	0	**189**
1100 - 1200	201	0	**201**

	Volume Summary 60min		
Time	NB	SB	**Total**
1200 - 1300	221	0	**221**
1300 - 1400	242	0	**242**
1400 - 1500	252	0	**252**
1500 - 1600	237	0	**237**
1600 - 1700	221	0	**221**
1700 - 1800	207	0	**207**
1800 - 1900	287	0	**287**
1900 - 2000	223	0	**223**
2000 - 2100	205	0	**205**
2100 - 2200	159	0	**159**
2200 - 2300	88	0	**88**
2300 - 2400	57	0	**57**

Session Total	3885	0	**3885**
Session Average	161.88	0.00	**161.88**
Session Percentage	100.00	0.00	

Site 21

I-26 James F. Byrnes Expy N/Bound Off-Ramp,
south of SC-60 Lake Murray Blvd

Date

Thursday, May 2, 2024

Lat/Long

34.089659°, -81.163720°

Weather

Fair
74°F

Click here for Detailed Weather

0000 - 2400 (Weekday 24h Session) (05-02-2024)

Volume Summary 60min

	Volume Summary 60min		
TIME	NB	SB	**Total**
0000 - 0100	45	0	**45**
0100 - 0200	32	0	**32**
0200 - 0300	20	0	**20**
0300 - 0400	17	0	**17**
0400 - 0500	19	0	**19**
0500 - 0600	52	0	**52**
0600 - 0700	152	0	**152**
0700 - 0800	312	0	**312**
0800 - 0900	257	0	**257**
0900 - 1000	218	0	**218**
1000 - 1100	253	0	**253**
1100 - 1200	230	0	**230**

	Volume Summary 60min		
Time	NB	SB	**Total**
1200 - 1300	224	0	**224**
1300 - 1400	223	0	**223**
1400 - 1500	301	0	**301**
1500 - 1600	247	0	**247**
1600 - 1700	283	0	**283**
1700 - 1800	266	0	**266**
1800 - 1900	264	0	**264**
1900 - 2000	0	0	**0**
2000 - 2100	0	0	**0**
2100 - 2200	0	0	**0**
2200 - 2300	0	0	**0**
2300 - 2400	0	0	**0**

Session Total	3415	0	**3415**
Session Average	142.29	0.00	**142.29**
Session Percentage	100.00	0.00	

Bi-Directional Class Count || Graphical Analysis NB EB

Columbia, SC

Marr Traffic DATA COLLECTION

www.marrtraffic.com

Site 21

I-26 James F. Byrnes Expy N/Bound Off-Ramp,
south of SC-60 Lake Murray Blvd

Lat/Long

34.089659°, -81.163720°

0000 - 2400 (Weekday 24h Session)

Graphical Analysis NB EB

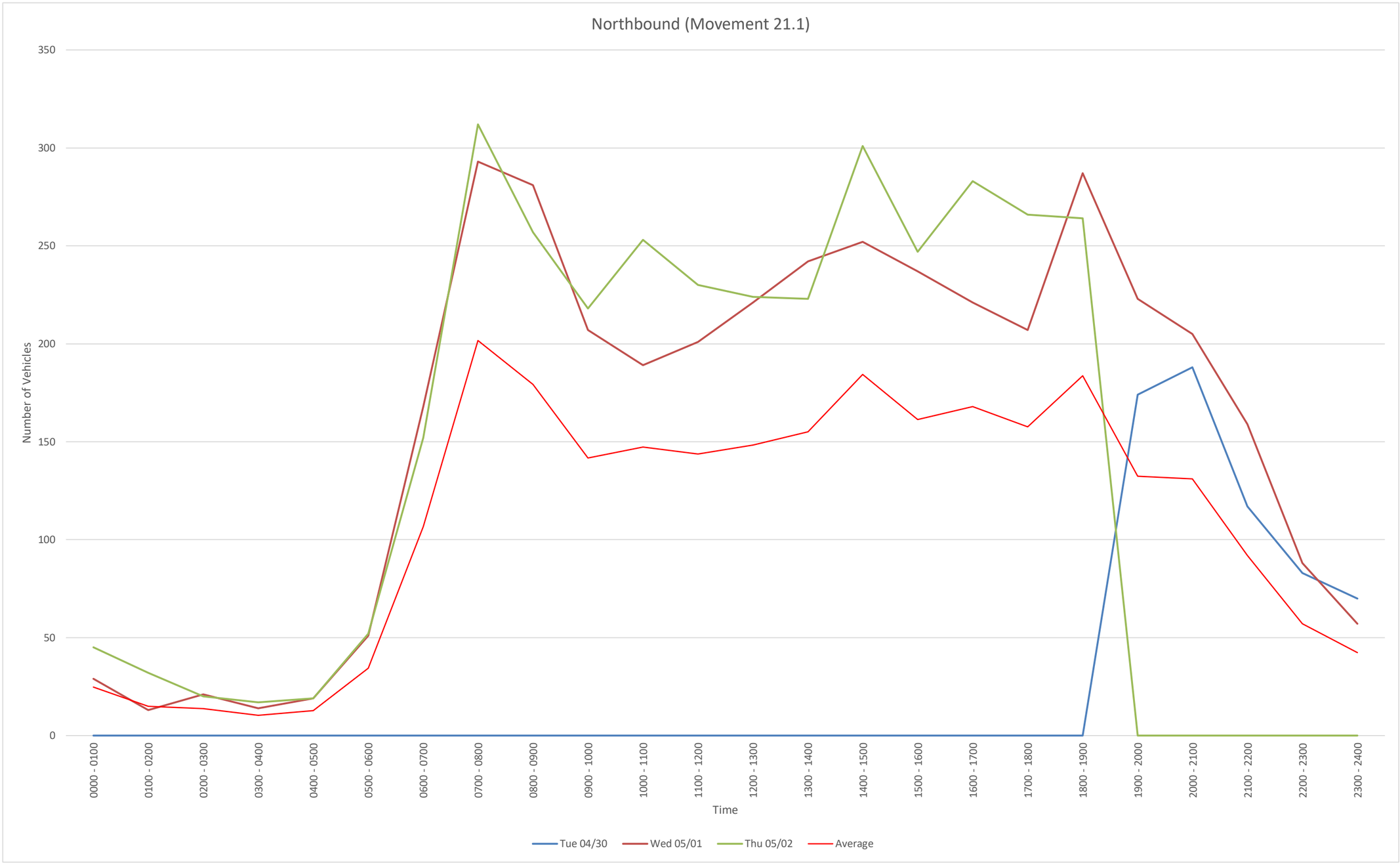

Time	Tue 04/30	Wed 05/01	Thu 05/02				
0000 - 0100	0	29	45				
0100 - 0200	0	13	32				
0200 - 0300	0	21	20				
0300 - 0400	0	14	17				
0400 - 0500	0	19	19				
0500 - 0600	0	51	52				
0600 - 0700	0	168	152				
0700 - 0800	0	293	312				
0800 - 0900	0	281	257				
0900 - 1000	0	207	218				
1000 - 1100	0	189	253				
1100 - 1200	0	201	230				
1200 - 1300	0	221	224				
1300 - 1400	0	242	223				
1400 - 1500	0	252	301				
1500 - 1600	0	237	247				
1600 - 1700	0	221	283				
1700 - 1800	0	207	266				
1800 - 1900	0	287	264				
1900 - 2000	174	223	0				
2000 - 2100	188	205	0				
2100 - 2200	117	159	0				
2200 - 2300	83	88	0				
2300 - 2400	70	57	0				
Daily Total	632	3885	3415				

NB
File Name:
Start Date: 4/30/2024
Start Time: 0
Site Code: 21
Station ID: 1
Location 1: I-26 James F. Byrnes Expy N/Bound Off-Ramp, south of SC-60 Lake Murray Blvd
Location 2:

Date	Time	1	2	3	4	5	6	7	8	9	10	11	12	13
4/30/2024	12:00 AM	0	0	0	0	0	0	0	0	0	0	0	0	0
4/30/2024	12:15 AM	0	0	0	0	0	0	0	0	0	0	0	0	0
4/30/2024	12:30 AM	0	0	0	0	0	0	0	0	0	0	0	0	0
4/30/2024	12:45 AM	0	0	0	0	0	0	0	0	0	0	0	0	0
4/30/2024	1:00 AM	0	0	0	0	0	0	0	0	0	0	0	0	0
4/30/2024	1:15 AM	0	0	0	0	0	0	0	0	0	0	0	0	0
4/30/2024	1:30 AM	0	0	0	0	0	0	0	0	0	0	0	0	0
4/30/2024	1:45 AM	0	0	0	0	0	0	0	0	0	0	0	0	0
4/30/2024	2:00 AM	0	0	0	0	0	0	0	0	0	0	0	0	0
4/30/2024	2:15 AM	0	0	0	0	0	0	0	0	0	0	0	0	0
4/30/2024	2:30 AM	0	0	0	0	0	0	0	0	0	0	0	0	0
4/30/2024	2:45 AM	0	0	0	0	0	0	0	0	0	0	0	0	0
4/30/2024	3:00 AM	0	0	0	0	0	0	0	0	0	0	0	0	0
4/30/2024	3:15 AM	0	0	0	0	0	0	0	0	0	0	0	0	0
4/30/2024	3:30 AM	0	0	0	0	0	0	0	0	0	0	0	0	0
4/30/2024	3:45 AM	0	0	0	0	0	0	0	0	0	0	0	0	0
4/30/2024	4:00 AM	0	0	0	0	0	0	0	0	0	0	0	0	0
4/30/2024	4:15 AM	0	0	0	0	0	0	0	0	0	0	0	0	0
4/30/2024	4:30 AM	0	0	0	0	0	0	0	0	0	0	0	0	0
4/30/2024	4:45 AM	0	0	0	0	0	0	0	0	0	0	0	0	0
4/30/2024	5:00 AM	0	0	0	0	0	0	0	0	0	0	0	0	0
4/30/2024	5:15 AM	0	0	0	0	0	0	0	0	0	0	0	0	0
4/30/2024	5:30 AM	0	0	0	0	0	0	0	0	0	0	0	0	0
4/30/2024	5:45 AM	0	0	0	0	0	0	0	0	0	0	0	0	0
4/30/2024	6:00 AM	0	0	0	0	0	0	0	0	0	0	0	0	0
4/30/2024	6:15 AM	0	0	0	0	0	0	0	0	0	0	0	0	0
4/30/2024	6:30 AM	0	0	0	0	0	0	0	0	0	0	0	0	0
4/30/2024	6:45 AM	0	0	0	0	0	0	0	0	0	0	0	0	0
4/30/2024	7:00 AM	0	0	0	0	0	0	0	0	0	0	0	0	0
4/30/2024	7:15 AM	0	0	0	0	0	0	0	0	0	0	0	0	0
4/30/2024	7:30 AM	0	0	0	0	0	0	0	0	0	0	0	0	0
4/30/2024	7:45 AM	0	0	0	0	0	0	0	0	0	0	0	0	0
4/30/2024	8:00 AM	0	0	0	0	0	0	0	0	0	0	0	0	0
4/30/2024	8:15 AM	0	0	0	0	0	0	0	0	0	0	0	0	0
4/30/2024	8:30 AM	0	0	0	0	0	0	0	0	0	0	0	0	0
4/30/2024	8:45 AM	0	0	0	0	0	0	0	0	0	0	0	0	0
4/30/2024	9:00 AM	0	0	0	0	0	0	0	0	0	0	0	0	0
4/30/2024	9:15 AM	0	0	0	0	0	0	0	0	0	0	0	0	0
4/30/2024	9:30 AM	0	0	0	0	0	0	0	0	0	0	0	0	0
4/30/2024	9:45 AM	0	0	0	0	0	0	0	0	0	0	0	0	0
4/30/2024	10:00 AM	0	0	0	0	0	0	0	0	0	0	0	0	0
4/30/2024	10:15 AM	0	0	0	0	0	0	0	0	0	0	0	0	0
4/30/2024	10:30 AM	0	0	0	0	0	0	0	0	0	0	0	0	0
4/30/2024	10:45 AM	0	0	0	0	0	0	0	0	0	0	0	0	0
4/30/2024	11:00 AM	0	0	0	0	0	0	0	0	0	0	0	0	0
4/30/2024	11:15 AM	0	0	0	0	0	0	0	0	0	0	0	0	0
4/30/2024	11:30 AM	0	0	0	0	0	0	0	0	0	0	0	0	0
4/30/2024	11:45 AM	0	0	0	0	0	0	0	0	0	0	0	0	0
4/30/2024	12:00 PM	0	0	0	0	0	0	0	0	0	0	0	0	0
4/30/2024	12:15 PM	0	0	0	0	0	0	0	0	0	0	0	0	0
4/30/2024	12:30 PM	0	0	0	0	0	0	0	0	0	0	0	0	0
4/30/2024	12:45 PM	0	0	0	0	0	0	0	0	0	0	0	0	0
4/30/2024	1:00 PM	0	0	0	0	0	0	0	0	0	0	0	0	0
4/30/2024	1:15 PM	0	0	0	0	0	0	0	0	0	0	0	0	0
4/30/2024	1:30 PM	0	0	0	0	0	0	0	0	0	0	0	0	0
4/30/2024	1:45 PM	0	0	0	0	0	0	0	0	0	0	0	0	0
4/30/2024	2:00 PM	0	0	0	0	0	0	0	0	0	0	0	0	0
4/30/2024	2:15 PM	0	0	0	0	0	0	0	0	0	0	0	0	0
4/30/2024	2:30 PM	0	0	0	0	0	0	0	0	0	0	0	0	0
4/30/2024	2:45 PM	0	0	0	0	0	0	0	0	0	0	0	0	0
4/30/2024	3:00 PM	0	0	0	0	0	0	0	0	0	0	0	0	0
4/30/2024	3:15 PM	0	0	0	0	0	0	0	0	0	0	0	0	0
4/30/2024	3:30 PM	0	0	0	0	0	0	0	0	0	0	0	0	0
4/30/2024	3:45 PM	0	0	0	0	0	0	0	0	0	0	0	0	0
4/30/2024	4:00 PM	0	0	0	0	0	0	0	0	0	0	0	0	0
4/30/2024	4:15 PM	0	0	0	0	0	0	0	0	0	0	0	0	0
4/30/2024	4:30 PM	0	0	0	0	0	0	0	0	0	0	0	0	0
4/30/2024	4:45 PM	0	0	0	0	0	0	0	0	0	0	0	0	0
4/30/2024	5:00 PM	0	0	0	0	0	0	0	0	0	0	0	0	0
4/30/2024	5:15 PM	0	0	0	0	0	0	0	0	0	0	0	0	0
4/30/2024	5:30 PM	0	0	0	0	0	0	0	0	0	0	0	0	0
4/30/2024	5:45 PM	0	0	0	0	0	0	0	0	0	0	0	0	0
4/30/2024	6:00 PM	0	0	0	0	0	0	0	0	0	0	0	0	0
4/30/2024	6:15 PM	0	0	0	0	0	0	0	0	0	0	0	0	0
4/30/2024	6:30 PM	0	0	0	0	0	0	0	0	0	0	0	0	0
4/30/2024	6:45 PM	0	0	0	0	0	0	0	0	0	0	0	0	0
4/30/2024	7:00 PM	0	36	3	0	0	0	0	0	0	0	0	0	0
4/30/2024	7:15 PM	0	45	4	0	0	0	0	0	0	0	0	0	0
4/30/2024	7:30 PM	0	37	2	0	1	0	0	0	0	0	0	0	0
4/30/2024	7:45 PM	0	45	1	0	0	0	0	0	0	0	0	0	0
4/30/2024	8:00 PM	0	45	2	0	0	0	0	0	0	0	0	0	0
4/30/2024	8:15 PM	0	52	2	0	0	0	0	0	0	0	0	0	0
4/30/2024	8:30 PM	0	42	1	0	0	0	0	0	0	0	0	0	0
4/30/2024	8:45 PM	0	43	1	0	0	0	0	0	0	0	0	0	0
4/30/2024	9:00 PM	0	38	2	0	0	0	0	0	0	0	0	0	0
4/30/2024	9:15 PM	0	25	0	0	0	0	0	0	0	0	0	0	0
4/30/2024	9:30 PM	0	15	0	0	2	0	0	0	0	0	0	0	0
4/30/2024	9:45 PM	0	33	2	0	0	0	0	0	0	0	0	0	0
4/30/2024	10:00 PM	0	18	0	0	0	0	0	0	0	0	0	0	0
4/30/2024	10:15 PM	0	23	1	0	0	0	0	0	0	0	0	0	0
4/30/2024	10:30 PM	0	20	0	0	0	0	0	0	0	0	0	0	0
4/30/2024	10:45 PM	0	21	0	0	0	0	0	0	0	0	0	0	0
4/30/2024	11:00 PM	0	22	1	0	0	0	0	0	0	0	0	0	0
4/30/2024	11:15 PM	0	19	0	0	0	0	0	0	0	0	0	0	0
4/30/2024	11:30 PM	0	11	0	0	0	0	0	0	0	0	0	0	0
4/30/2024	11:45 PM	0	17	0	0	0	0	0	0	0	0	0	0	0

5/1/2024	12:00 AM	0	13	1	0	1	0	0	0	0	0	0	0
5/1/2024	12:15 AM	0	4	0	0	0	0	0	0	0	0	0	0
5/1/2024	12:30 AM	0	5	1	0	0	0	0	0	0	0	0	0
5/1/2024	12:45 AM	0	4	0	0	0	0	0	0	0	0	0	0
5/1/2024	1:00 AM	0	6	0	0	0	0	0	0	0	0	0	0
5/1/2024	1:15 AM	0	4	0	0	0	0	0	0	0	0	0	0
5/1/2024	1:30 AM	0	2	0	0	0	0	0	0	0	0	0	0
5/1/2024	1:45 AM	0	1	0	0	0	0	0	0	0	0	0	0
5/1/2024	2:00 AM	0	4	0	0	1	0	0	0	0	0	0	0
5/1/2024	2:15 AM	0	3	0	0	0	0	0	0	0	0	0	0
5/1/2024	2:30 AM	0	5	0	0	0	0	0	0	0	0	0	0
5/1/2024	2:45 AM	0	5	2	0	0	1	0	0	0	0	0	0
5/1/2024	3:00 AM	0	3	0	0	0	0	0	0	0	0	0	0
5/1/2024	3:15 AM	0	0	2	0	0	0	0	0	0	0	0	0
5/1/2024	3:30 AM	0	4	1	0	0	0	0	0	0	0	0	0
5/1/2024	3:45 AM	0	2	1	0	0	0	0	0	1	0	0	0
5/1/2024	4:00 AM	0	3	0	0	0	0	0	0	0	0	0	0
5/1/2024	4:15 AM	0	2	0	0	0	0	0	0	0	0	0	0
5/1/2024	4:30 AM	0	3	1	0	0	0	0	0	0	0	0	0
5/1/2024	4:45 AM	0	9	1	0	0	0	0	0	0	0	0	0
5/1/2024	5:00 AM	0	5	2	0	2	0	0	0	0	0	0	0
5/1/2024	5:15 AM	0	14	3	0	0	0	0	0	0	0	0	0
5/1/2024	5:30 AM	0	7	1	0	0	0	0	0	0	0	0	0
5/1/2024	5:45 AM	0	14	2	0	0	1	0	0	0	0	0	0
5/1/2024	6:00 AM	1	26	2	0	1	0	0	0	0	0	0	0
5/1/2024	6:15 AM	2	32	5	0	0	0	0	0	0	0	0	0
5/1/2024	6:30 AM	0	34	4	0	0	0	0	0	0	0	0	0
5/1/2024	6:45 AM	0	47	14	0	0	0	0	0	0	0	0	0
5/1/2024	7:00 AM	0	50	7	0	0	1	0	0	1	0	0	0
5/1/2024	7:15 AM	0	47	10	0	2	0	0	1	0	0	0	0
5/1/2024	7:30 AM	0	71	16	0	1	0	0	1	0	0	0	0
5/1/2024	7:45 AM	0	72	10	0	1	2	0	0	0	0	0	0
5/1/2024	8:00 AM	0	56	14	0	2	0	0	0	0	0	0	0
5/1/2024	8:15 AM	0	66	11	1	1	0	0	0	0	0	0	0
5/1/2024	8:30 AM	0	41	16	0	2	0	0	0	0	0	0	0
5/1/2024	8:45 AM	0	59	8	0	3	0	0	0	1	0	0	0
5/1/2024	9:00 AM	0	45	8	0	3	0	1	0	0	0	0	0
5/1/2024	9:15 AM	0	38	14	0	1	0	0	1	0	0	0	0
5/1/2024	9:30 AM	0	31	9	0	1	0	0	0	0	0	0	0
5/1/2024	9:45 AM	0	47	5	0	2	1	0	0	0	0	0	0
5/1/2024	10:00 AM	0	45	8	0	3	0	0	0	0	0	0	0
5/1/2024	10:15 AM	0	36	13	0	0	0	0	0	0	0	0	0
5/1/2024	10:30 AM	1	29	9	0	0	0	0	0	0	0	0	0
5/1/2024	10:45 AM	0	35	8	0	2	0	0	0	0	0	0	0
5/1/2024	11:00 AM	0	47	5	0	1	0	1	1	0	0	0	0
5/1/2024	11:15 AM	0	33	6	0	0	0	0	0	0	0	0	0
5/1/2024	11:30 AM	0	33	10	0	0	0	0	0	0	0	0	0
5/1/2024	11:45 AM	0	51	10	0	0	3	0	0	0	0	0	0
5/1/2024	12:00 PM	0	38	6	0	1	0	0	0	0	0	0	0
5/1/2024	12:15 PM	0	53	10	0	1	0	0	0	0	0	0	0
5/1/2024	12:30 PM	0	46	10	0	0	0	1	0	0	0	0	0
5/1/2024	12:45 PM	0	45	9	0	0	0	0	1	0	0	0	0
5/1/2024	1:00 PM	0	44	10	0	0	0	2	0	0	0	0	0
5/1/2024	1:15 PM	0	54	11	0	0	0	0	0	0	0	0	0
5/1/2024	1:30 PM	0	36	7	0	0	0	0	0	0	0	0	0
5/1/2024	1:45 PM	0	63	15	0	0	0	0	0	0	0	0	0
5/1/2024	2:00 PM	0	47	11	0	1	0	0	0	0	0	0	0
5/1/2024	2:15 PM	0	59	11	0	0	0	0	0	0	0	0	0
5/1/2024	2:30 PM	0	58	9	0	1	0	0	0	0	0	0	0
5/1/2024	2:45 PM	0	46	7	0	0	1	1	0	0	0	0	0
5/1/2024	3:00 PM	0	44	8	0	2	0	1	0	0	0	0	0
5/1/2024	3:15 PM	0	50	9	0	0	0	0	0	0	0	0	0
5/1/2024	3:30 PM	0	50	13	0	1	0	0	0	0	0	0	0
5/1/2024	3:45 PM	0	50	9	0	0	0	0	0	0	0	0	0
5/1/2024	4:00 PM	0	47	6	0	0	0	0	0	0	0	0	0
5/1/2024	4:15 PM	0	57	8	0	0	0	0	0	0	0	0	0
5/1/2024	4:30 PM	0	39	10	0	0	0	0	0	0	0	0	0
5/1/2024	4:45 PM	0	43	10	0	1	0	0	0	0	0	0	0
5/1/2024	5:00 PM	0	40	5	0	0	0	0	0	0	0	0	0
5/1/2024	5:15 PM	0	41	8	0	0	0	0	0	0	0	0	0
5/1/2024	5:30 PM	0	49	7	0	0	0	0	0	0	0	0	0
5/1/2024	5:45 PM	0	48	9	0	0	0	0	0	0	0	0	0
5/1/2024	6:00 PM	0	66	12	0	0	0	0	0	0	0	0	0
5/1/2024	6:15 PM	0	58	12	0	0	0	0	0	0	0	0	0
5/1/2024	6:30 PM	0	58	9	0	1	0	0	0	0	0	0	0
5/1/2024	6:45 PM	0	52	17	0	1	0	0	0	1	0	0	0
5/1/2024	7:00 PM	0	49	8	0	1	0	0	0	2	0	0	0
5/1/2024	7:15 PM	0	41	9	0	0	0	0	0	0	0	0	0
5/1/2024	7:30 PM	1	48	10	0	0	0	0	0	0	0	0	0
5/1/2024	7:45 PM	0	49	5	0	0	0	0	0	0	0	0	0
5/1/2024	8:00 PM	0	34	7	0	0	0	0	0	0	0	0	0
5/1/2024	8:15 PM	0	54	11	0	1	0	0	0	0	0	0	0
5/1/2024	8:30 PM	0	47	4	0	0	0	0	0	0	0	0	0
5/1/2024	8:45 PM	0	45	0	0	2	0	0	0	0	0	0	0
5/1/2024	9:00 PM	0	50	0	0	0	0	0	0	0	0	0	0
5/1/2024	9:15 PM	0	38	0	0	0	0	0	0	0	0	0	0
5/1/2024	9:30 PM	0	38	0	0	0	0	0	0	0	0	0	0
5/1/2024	9:45 PM	0	32	0	0	0	0	0	0	1	0	0	0
5/1/2024	10:00 PM	0	19	1	0	1	0	0	0	0	0	0	0
5/1/2024	10:15 PM	0	27	0	0	1	0	0	0	0	0	0	0
5/1/2024	10:30 PM	0	19	0	0	0	0	0	0	0	0	0	0
5/1/2024	10:45 PM	0	20	0	0	0	0	0	0	0	0	0	0
5/1/2024	11:00 PM	0	12	3	0	1	0	0	0	0	0	0	0
5/1/2024	11:15 PM	0	14	2	0	0	0	0	0	0	0	0	0
5/1/2024	11:30 PM	0	11	2	0	0	0	0	0	0	0	0	0
5/1/2024	11:45 PM	0	8	3	0	1	0	0	0	0	0	0	0

5/2/2024	12:00 AM	0	16	1	0	0	0	0	0	0	0	0	0
5/2/2024	12:15 AM	0	7	0	0	0	0	0	0	0	0	0	0
5/2/2024	12:30 AM	0	10	1	0	0	0	0	0	0	0	0	0
5/2/2024	12:45 AM	0	8	1	0	0	1	0	0	0	0	0	0
5/2/2024	1:00 AM	0	10	0	0	0	0	0	0	0	0	0	0
5/2/2024	1:15 AM	0	9	1	0	0	0	0	0	0	0	0	0
5/2/2024	1:30 AM	0	6	0	0	0	0	0	0	0	0	0	0
5/2/2024	1:45 AM	0	5	1	0	0	0	0	0	0	0	0	0
5/2/2024	2:00 AM	0	6	0	0	0	0	0	0	0	0	0	0
5/2/2024	2:15 AM	0	4	1	0	0	0	0	0	0	0	0	0
5/2/2024	2:30 AM	0	2	0	0	0	0	0	0	0	0	0	0
5/2/2024	2:45 AM	0	7	0	0	0	0	0	0	0	0	0	0
5/2/2024	3:00 AM	0	8	1	0	0	0	0	0	0	0	0	0
5/2/2024	3:15 AM	0	1	0	0	0	0	0	0	0	0	0	0
5/2/2024	3:30 AM	0	3	0	0	0	0	0	1	0	0	0	0
5/2/2024	3:45 AM	0	3	0	0	0	0	0	0	0	0	0	0
5/2/2024	4:00 AM	0	1	0	0	0	0	0	0	0	0	0	0
5/2/2024	4:15 AM	0	4	0	0	0	0	0	0	0	0	0	0
5/2/2024	4:30 AM	0	4	0	0	2	0	0	0	0	0	0	0
5/2/2024	4:45 AM	0	8	0	0	0	0	0	0	0	0	0	0
5/2/2024	5:00 AM	0	5	1	0	0	0	0	0	0	0	0	0
5/2/2024	5:15 AM	0	10	1	0	1	0	0	0	0	0	0	0
5/2/2024	5:30 AM	0	10	3	0	0	0	0	0	0	0	0	0
5/2/2024	5:45 AM	0	20	1	0	0	0	0	0	0	0	0	0
5/2/2024	6:00 AM	0	22	1	0	0	0	0	0	0	0	0	0
5/2/2024	6:15 AM	0	32	2	0	0	0	0	0	0	0	0	0
5/2/2024	6:30 AM	0	35	6	0	0	0	0	0	1	0	0	0
5/2/2024	6:45 AM	0	40	13	0	0	0	0	0	0	0	0	0
5/2/2024	7:00 AM	0	40	11	0	0	1	0	1	0	0	0	0
5/2/2024	7:15 AM	0	54	16	0	0	0	0	0	1	1	0	0
5/2/2024	7:30 AM	0	77	16	0	1	0	0	1	0	0	0	0
5/2/2024	7:45 AM	0	79	12	0	0	1	0	0	0	0	0	0
5/2/2024	8:00 AM	0	46	9	0	2	0	0	0	0	0	0	0
5/2/2024	8:15 AM	0	65	19	0	1	0	0	0	0	0	0	0
5/2/2024	8:30 AM	0	50	17	0	1	0	0	1	0	0	0	0
5/2/2024	8:45 AM	0	37	7	0	2	0	0	0	0	0	0	0
5/2/2024	9:00 AM	0	49	12	0	3	0	1	0	0	0	0	0
5/2/2024	9:15 AM	0	37	11	0	2	1	0	0	0	0	0	0
5/2/2024	9:30 AM	0	33	11	0	1	0	0	0	0	0	0	0
5/2/2024	9:45 AM	0	51	5	0	0	0	0	0	0	1	0	0
5/2/2024	10:00 AM	0	50	8	0	0	1	1	0	0	0	0	0
5/2/2024	10:15 AM	0	33	12	0	0	0	0	0	0	0	0	0
5/2/2024	10:30 AM	0	55	12	0	2	0	1	0	0	0	0	0
5/2/2024	10:45 AM	0	62	15	0	1	0	0	0	0	0	0	0
5/2/2024	11:00 AM	0	48	7	0	1	0	0	0	0	0	0	0
5/2/2024	11:15 AM	0	53	10	1	0	0	0	0	1	0	0	0
5/2/2024	11:30 AM	0	43	8	0	0	0	0	1	0	0	0	0
5/2/2024	11:45 AM	0	43	12	1	1	0	0	0	0	0	0	0
5/2/2024	12:00 PM	0	45	7	0	2	1	0	0	0	0	0	0
5/2/2024	12:15 PM	0	30	7	0	0	0	0	0	0	0	0	0
5/2/2024	12:30 PM	0	53	11	0	0	1	0	0	0	0	0	0
5/2/2024	12:45 PM	0	55	10	0	1	0	1	0	0	0	0	0
5/2/2024	1:00 PM	0	42	4	0	1	0	0	0	0	0	0	0
5/2/2024	1:15 PM	1	46	14	0	1	0	0	0	0	0	0	0
5/2/2024	1:30 PM	0	43	11	0	2	0	0	0	0	0	0	0
5/2/2024	1:45 PM	0	49	8	0	1	0	0	0	0	0	0	0
5/2/2024	2:00 PM	0	57	16	0	3	0	0	0	0	0	0	0
5/2/2024	2:15 PM	0	70	15	0	0	0	0	0	0	0	0	0
5/2/2024	2:30 PM	0	51	11	0	2	1	1	1	0	0	0	0
5/2/2024	2:45 PM	0	59	13	0	0	1	0	0	0	0	0	0
5/2/2024	3:00 PM	0	42	13	0	0	0	0	0	0	0	0	0
5/2/2024	3:15 PM	0	49	13	0	2	0	0	1	0	0	0	0
5/2/2024	3:30 PM	0	43	10	0	1	0	0	0	1	0	0	0
5/2/2024	3:45 PM	0	59	11	0	2	0	0	0	0	0	0	0
5/2/2024	4:00 PM	1	48	14	0	1	0	0	0	0	0	0	0
5/2/2024	4:15 PM	0	52	10	0	1	1	1	0	0	0	0	0
5/2/2024	4:30 PM	0	61	13	0	0	1	1	0	0	0	0	0
5/2/2024	4:45 PM	0	69	9	0	0	0	0	0	0	0	0	0
5/2/2024	5:00 PM	0	56	13	0	0	0	0	0	0	0	0	0
5/2/2024	5:15 PM	0	59	9	0	0	0	0	0	0	0	0	0
5/2/2024	5:30 PM	0	66	11	0	0	0	0	0	0	0	0	0
5/2/2024	5:45 PM	0	48	4	0	0	0	0	0	0	0	0	0
5/2/2024	6:00 PM	0	63	7	0	0	0	0	0	0	0	0	0
5/2/2024	6:15 PM	0	47	13	0	0	0	0	0	0	0	0	0
5/2/2024	6:30 PM	0	65	9	0	0	0	0	0	1	0	0	0
5/2/2024	6:45 PM	0	46	13	0	0	0	0	0	0	0	0	0
5/2/2024	7:00 PM	0	0	0	0	0	0	0	0	0	0	0	0
5/2/2024	7:15 PM	0	0	0	0	0	0	0	0	0	0	0	0
5/2/2024	7:30 PM	0	0	0	0	0	0	0	0	0	0	0	0
5/2/2024	7:45 PM	0	0	0	0	0	0	0	0	0	0	0	0
5/2/2024	8:00 PM	0	0	0	0	0	0	0	0	0	0	0	0
5/2/2024	8:15 PM	0	0	0	0	0	0	0	0	0	0	0	0
5/2/2024	8:30 PM	0	0	0	0	0	0	0	0	0	0	0	0
5/2/2024	8:45 PM	0	0	0	0	0	0	0	0	0	0	0	0
5/2/2024	9:00 PM	0	0	0	0	0	0	0	0	0	0	0	0
5/2/2024	9:15 PM	0	0	0	0	0	0	0	0	0	0	0	0
5/2/2024	9:30 PM	0	0	0	0	0	0	0	0	0	0	0	0
5/2/2024	9:45 PM	0	0	0	0	0	0	0	0	0	0	0	0
5/2/2024	10:00 PM	0	0	0	0	0	0	0	0	0	0	0	0
5/2/2024	10:15 PM	0	0	0	0	0	0	0	0	0	0	0	0
5/2/2024	10:30 PM	0	0	0	0	0	0	0	0	0	0	0	0
5/2/2024	10:45 PM	0	0	0	0	0	0	0	0	0	0	0	0
5/2/2024	11:00 PM	0	0	0	0	0	0	0	0	0	0	0	0
5/2/2024	11:15 PM	0	0	0	0	0	0	0	0	0	0	0	0
5/2/2024	11:30 PM	0	0	0	0	0	0	0	0	0	0	0	0
5/2/2024	11:45 PM	0	0	0	0	0	0	0	0	0	0	0	0

SB
File Name:
Start Date: 4/30/2024
Start Time: 0
Site Code: 21
Station ID: 1
Location 1: I-26 James F. Byrnes Expy N/Bound Off-Ramp, south of SC-60 Lake Murray Blvd
Location 2:

Date	Time	1	2	3	4	5	6	7	8	9	10	11	12	13
4/30/2024	12:00 AM	0	0	0	0	0	0	0	0	0	0	0	0	0
4/30/2024	12:15 AM	0	0	0	0	0	0	0	0	0	0	0	0	0
4/30/2024	12:30 AM	0	0	0	0	0	0	0	0	0	0	0	0	0
4/30/2024	12:45 AM	0	0	0	0	0	0	0	0	0	0	0	0	0
4/30/2024	1:00 AM	0	0	0	0	0	0	0	0	0	0	0	0	0
4/30/2024	1:15 AM	0	0	0	0	0	0	0	0	0	0	0	0	0
4/30/2024	1:30 AM	0	0	0	0	0	0	0	0	0	0	0	0	0
4/30/2024	1:45 AM	0	0	0	0	0	0	0	0	0	0	0	0	0
4/30/2024	2:00 AM	0	0	0	0	0	0	0	0	0	0	0	0	0
4/30/2024	2:15 AM	0	0	0	0	0	0	0	0	0	0	0	0	0
4/30/2024	2:30 AM	0	0	0	0	0	0	0	0	0	0	0	0	0
4/30/2024	2:45 AM	0	0	0	0	0	0	0	0	0	0	0	0	0
4/30/2024	3:00 AM	0	0	0	0	0	0	0	0	0	0	0	0	0
4/30/2024	3:15 AM	0	0	0	0	0	0	0	0	0	0	0	0	0
4/30/2024	3:30 AM	0	0	0	0	0	0	0	0	0	0	0	0	0
4/30/2024	3:45 AM	0	0	0	0	0	0	0	0	0	0	0	0	0
4/30/2024	4:00 AM	0	0	0	0	0	0	0	0	0	0	0	0	0
4/30/2024	4:15 AM	0	0	0	0	0	0	0	0	0	0	0	0	0
4/30/2024	4:30 AM	0	0	0	0	0	0	0	0	0	0	0	0	0
4/30/2024	4:45 AM	0	0	0	0	0	0	0	0	0	0	0	0	0
4/30/2024	5:00 AM	0	0	0	0	0	0	0	0	0	0	0	0	0
4/30/2024	5:15 AM	0	0	0	0	0	0	0	0	0	0	0	0	0
4/30/2024	5:30 AM	0	0	0	0	0	0	0	0	0	0	0	0	0
4/30/2024	5:45 AM	0	0	0	0	0	0	0	0	0	0	0	0	0
4/30/2024	6:00 AM	0	0	0	0	0	0	0	0	0	0	0	0	0
4/30/2024	6:15 AM	0	0	0	0	0	0	0	0	0	0	0	0	0
4/30/2024	6:30 AM	0	0	0	0	0	0	0	0	0	0	0	0	0
4/30/2024	6:45 AM	0	0	0	0	0	0	0	0	0	0	0	0	0
4/30/2024	7:00 AM	0	0	0	0	0	0	0	0	0	0	0	0	0
4/30/2024	7:15 AM	0	0	0	0	0	0	0	0	0	0	0	0	0
4/30/2024	7:30 AM	0	0	0	0	0	0	0	0	0	0	0	0	0
4/30/2024	7:45 AM	0	0	0	0	0	0	0	0	0	0	0	0	0
4/30/2024	8:00 AM	0	0	0	0	0	0	0	0	0	0	0	0	0
4/30/2024	8:15 AM	0	0	0	0	0	0	0	0	0	0	0	0	0
4/30/2024	8:30 AM	0	0	0	0	0	0	0	0	0	0	0	0	0
4/30/2024	8:45 AM	0	0	0	0	0	0	0	0	0	0	0	0	0
4/30/2024	9:00 AM	0	0	0	0	0	0	0	0	0	0	0	0	0
4/30/2024	9:15 AM	0	0	0	0	0	0	0	0	0	0	0	0	0
4/30/2024	9:30 AM	0	0	0	0	0	0	0	0	0	0	0	0	0
4/30/2024	9:45 AM	0	0	0	0	0	0	0	0	0	0	0	0	0
4/30/2024	10:00 AM	0	0	0	0	0	0	0	0	0	0	0	0	0
4/30/2024	10:15 AM	0	0	0	0	0	0	0	0	0	0	0	0	0
4/30/2024	10:30 AM	0	0	0	0	0	0	0	0	0	0	0	0	0
4/30/2024	10:45 AM	0	0	0	0	0	0	0	0	0	0	0	0	0
4/30/2024	11:00 AM	0	0	0	0	0	0	0	0	0	0	0	0	0
4/30/2024	11:15 AM	0	0	0	0	0	0	0	0	0	0	0	0	0
4/30/2024	11:30 AM	0	0	0	0	0	0	0	0	0	0	0	0	0
4/30/2024	11:45 AM	0	0	0	0	0	0	0	0	0	0	0	0	0
4/30/2024	12:00 PM	0	0	0	0	0	0	0	0	0	0	0	0	0
4/30/2024	12:15 PM	0	0	0	0	0	0	0	0	0	0	0	0	0
4/30/2024	12:30 PM	0	0	0	0	0	0	0	0	0	0	0	0	0
4/30/2024	12:45 PM	0	0	0	0	0	0	0	0	0	0	0	0	0
4/30/2024	1:00 PM	0	0	0	0	0	0	0	0	0	0	0	0	0
4/30/2024	1:15 PM	0	0	0	0	0	0	0	0	0	0	0	0	0
4/30/2024	1:30 PM	0	0	0	0	0	0	0	0	0	0	0	0	0
4/30/2024	1:45 PM	0	0	0	0	0	0	0	0	0	0	0	0	0
4/30/2024	2:00 PM	0	0	0	0	0	0	0	0	0	0	0	0	0
4/30/2024	2:15 PM	0	0	0	0	0	0	0	0	0	0	0	0	0
4/30/2024	2:30 PM	0	0	0	0	0	0	0	0	0	0	0	0	0
4/30/2024	2:45 PM	0	0	0	0	0	0	0	0	0	0	0	0	0
4/30/2024	3:00 PM	0	0	0	0	0	0	0	0	0	0	0	0	0
4/30/2024	3:15 PM	0	0	0	0	0	0	0	0	0	0	0	0	0
4/30/2024	3:30 PM	0	0	0	0	0	0	0	0	0	0	0	0	0
4/30/2024	3:45 PM	0	0	0	0	0	0	0	0	0	0	0	0	0
4/30/2024	4:00 PM	0	0	0	0	0	0	0	0	0	0	0	0	0
4/30/2024	4:15 PM	0	0	0	0	0	0	0	0	0	0	0	0	0
4/30/2024	4:30 PM	0	0	0	0	0	0	0	0	0	0	0	0	0
4/30/2024	4:45 PM	0	0	0	0	0	0	0	0	0	0	0	0	0
4/30/2024	5:00 PM	0	0	0	0	0	0	0	0	0	0	0	0	0
4/30/2024	5:15 PM	0	0	0	0	0	0	0	0	0	0	0	0	0
4/30/2024	5:30 PM	0	0	0	0	0	0	0	0	0	0	0	0	0
4/30/2024	5:45 PM	0	0	0	0	0	0	0	0	0	0	0	0	0
4/30/2024	6:00 PM	0	0	0	0	0	0	0	0	0	0	0	0	0
4/30/2024	6:15 PM	0	0	0	0	0	0	0	0	0	0	0	0	0
4/30/2024	6:30 PM	0	0	0	0	0	0	0	0	0	0	0	0	0
4/30/2024	6:45 PM	0	0	0	0	0	0	0	0	0	0	0	0	0
4/30/2024	7:00 PM	0	0	0	0	0	0	0	0	0	0	0	0	0
4/30/2024	7:15 PM	0	0	0	0	0	0	0	0	0	0	0	0	0
4/30/2024	7:30 PM	0	0	0	0	0	0	0	0	0	0	0	0	0
4/30/2024	7:45 PM	0	0	0	0	0	0	0	0	0	0	0	0	0
4/30/2024	8:00 PM	0	0	0	0	0	0	0	0	0	0	0	0	0
4/30/2024	8:15 PM	0	0	0	0	0	0	0	0	0	0	0	0	0
4/30/2024	8:30 PM	0	0	0	0	0	0	0	0	0	0	0	0	0
4/30/2024	8:45 PM	0	0	0	0	0	0	0	0	0	0	0	0	0
4/30/2024	9:00 PM	0	0	0	0	0	0	0	0	0	0	0	0	0
4/30/2024	9:15 PM	0	0	0	0	0	0	0	0	0	0	0	0	0
4/30/2024	9:30 PM	0	0	0	0	0	0	0	0	0	0	0	0	0
4/30/2024	9:45 PM	0	0	0	0	0	0	0	0	0	0	0	0	0
4/30/2024	10:00 PM	0	0	0	0	0	0	0	0	0	0	0	0	0
4/30/2024	10:15 PM	0	0	0	0	0	0	0	0	0	0	0	0	0
4/30/2024	10:30 PM	0	0	0	0	0	0	0	0	0	0	0	0	0
4/30/2024	10:45 PM	0	0	0	0	0	0	0	0	0	0	0	0	0
4/30/2024	11:00 PM	0	0	0	0	0	0	0	0	0	0	0	0	0
4/30/2024	11:15 PM	0	0	0	0	0	0	0	0	0	0	0	0	0
4/30/2024	11:30 PM	0	0	0	0	0	0	0	0	0	0	0	0	0
4/30/2024	11:45 PM	0	0	0	0	0	0	0	0	0	0	0	0	0

5/1/2024	12:00 AM	0	0	0	0	0	0	0	0	0	0	0	0	0
5/1/2024	12:15 AM	0	0	0	0	0	0	0	0	0	0	0	0	0
5/1/2024	12:30 AM	0	0	0	0	0	0	0	0	0	0	0	0	0
5/1/2024	12:45 AM	0	0	0	0	0	0	0	0	0	0	0	0	0
5/1/2024	1:00 AM	0	0	0	0	0	0	0	0	0	0	0	0	0
5/1/2024	1:15 AM	0	0	0	0	0	0	0	0	0	0	0	0	0
5/1/2024	1:30 AM	0	0	0	0	0	0	0	0	0	0	0	0	0
5/1/2024	1:45 AM	0	0	0	0	0	0	0	0	0	0	0	0	0
5/1/2024	2:00 AM	0	0	0	0	0	0	0	0	0	0	0	0	0
5/1/2024	2:15 AM	0	0	0	0	0	0	0	0	0	0	0	0	0
5/1/2024	2:30 AM	0	0	0	0	0	0	0	0	0	0	0	0	0
5/1/2024	2:45 AM	0	0	0	0	0	0	0	0	0	0	0	0	0
5/1/2024	3:00 AM	0	0	0	0	0	0	0	0	0	0	0	0	0
5/1/2024	3:15 AM	0	0	0	0	0	0	0	0	0	0	0	0	0
5/1/2024	3:30 AM	0	0	0	0	0	0	0	0	0	0	0	0	0
5/1/2024	3:45 AM	0	0	0	0	0	0	0	0	0	0	0	0	0
5/1/2024	4:00 AM	0	0	0	0	0	0	0	0	0	0	0	0	0
5/1/2024	4:15 AM	0	0	0	0	0	0	0	0	0	0	0	0	0
5/1/2024	4:30 AM	0	0	0	0	0	0	0	0	0	0	0	0	0
5/1/2024	4:45 AM	0	0	0	0	0	0	0	0	0	0	0	0	0
5/1/2024	5:00 AM	0	0	0	0	0	0	0	0	0	0	0	0	0
5/1/2024	5:15 AM	0	0	0	0	0	0	0	0	0	0	0	0	0
5/1/2024	5:30 AM	0	0	0	0	0	0	0	0	0	0	0	0	0
5/1/2024	5:45 AM	0	0	0	0	0	0	0	0	0	0	0	0	0
5/1/2024	6:00 AM	0	0	0	0	0	0	0	0	0	0	0	0	0
5/1/2024	6:15 AM	0	0	0	0	0	0	0	0	0	0	0	0	0
5/1/2024	6:30 AM	0	0	0	0	0	0	0	0	0	0	0	0	0
5/1/2024	6:45 AM	0	0	0	0	0	0	0	0	0	0	0	0	0
5/1/2024	7:00 AM	0	0	0	0	0	0	0	0	0	0	0	0	0
5/1/2024	7:15 AM	0	0	0	0	0	0	0	0	0	0	0	0	0
5/1/2024	7:30 AM	0	0	0	0	0	0	0	0	0	0	0	0	0
5/1/2024	7:45 AM	0	0	0	0	0	0	0	0	0	0	0	0	0
5/1/2024	8:00 AM	0	0	0	0	0	0	0	0	0	0	0	0	0
5/1/2024	8:15 AM	0	0	0	0	0	0	0	0	0	0	0	0	0
5/1/2024	8:30 AM	0	0	0	0	0	0	0	0	0	0	0	0	0
5/1/2024	8:45 AM	0	0	0	0	0	0	0	0	0	0	0	0	0
5/1/2024	9:00 AM	0	0	0	0	0	0	0	0	0	0	0	0	0
5/1/2024	9:15 AM	0	0	0	0	0	0	0	0	0	0	0	0	0
5/1/2024	9:30 AM	0	0	0	0	0	0	0	0	0	0	0	0	0
5/1/2024	9:45 AM	0	0	0	0	0	0	0	0	0	0	0	0	0
5/1/2024	10:00 AM	0	0	0	0	0	0	0	0	0	0	0	0	0
5/1/2024	10:15 AM	0	0	0	0	0	0	0	0	0	0	0	0	0
5/1/2024	10:30 AM	0	0	0	0	0	0	0	0	0	0	0	0	0
5/1/2024	10:45 AM	0	0	0	0	0	0	0	0	0	0	0	0	0
5/1/2024	11:00 AM	0	0	0	0	0	0	0	0	0	0	0	0	0
5/1/2024	11:15 AM	0	0	0	0	0	0	0	0	0	0	0	0	0
5/1/2024	11:30 AM	0	0	0	0	0	0	0	0	0	0	0	0	0
5/1/2024	11:45 AM	0	0	0	0	0	0	0	0	0	0	0	0	0
5/1/2024	12:00 PM	0	0	0	0	0	0	0	0	0	0	0	0	0
5/1/2024	12:15 PM	0	0	0	0	0	0	0	0	0	0	0	0	0
5/1/2024	12:30 PM	0	0	0	0	0	0	0	0	0	0	0	0	0
5/1/2024	12:45 PM	0	0	0	0	0	0	0	0	0	0	0	0	0
5/1/2024	1:00 PM	0	0	0	0	0	0	0	0	0	0	0	0	0
5/1/2024	1:15 PM	0	0	0	0	0	0	0	0	0	0	0	0	0
5/1/2024	1:30 PM	0	0	0	0	0	0	0	0	0	0	0	0	0
5/1/2024	1:45 PM	0	0	0	0	0	0	0	0	0	0	0	0	0
5/1/2024	2:00 PM	0	0	0	0	0	0	0	0	0	0	0	0	0
5/1/2024	2:15 PM	0	0	0	0	0	0	0	0	0	0	0	0	0
5/1/2024	2:30 PM	0	0	0	0	0	0	0	0	0	0	0	0	0
5/1/2024	2:45 PM	0	0	0	0	0	0	0	0	0	0	0	0	0
5/1/2024	3:00 PM	0	0	0	0	0	0	0	0	0	0	0	0	0
5/1/2024	3:15 PM	0	0	0	0	0	0	0	0	0	0	0	0	0
5/1/2024	3:30 PM	0	0	0	0	0	0	0	0	0	0	0	0	0
5/1/2024	3:45 PM	0	0	0	0	0	0	0	0	0	0	0	0	0
5/1/2024	4:00 PM	0	0	0	0	0	0	0	0	0	0	0	0	0
5/1/2024	4:15 PM	0	0	0	0	0	0	0	0	0	0	0	0	0
5/1/2024	4:30 PM	0	0	0	0	0	0	0	0	0	0	0	0	0
5/1/2024	4:45 PM	0	0	0	0	0	0	0	0	0	0	0	0	0
5/1/2024	5:00 PM	0	0	0	0	0	0	0	0	0	0	0	0	0
5/1/2024	5:15 PM	0	0	0	0	0	0	0	0	0	0	0	0	0
5/1/2024	5:30 PM	0	0	0	0	0	0	0	0	0	0	0	0	0
5/1/2024	5:45 PM	0	0	0	0	0	0	0	0	0	0	0	0	0
5/1/2024	6:00 PM	0	0	0	0	0	0	0	0	0	0	0	0	0
5/1/2024	6:15 PM	0	0	0	0	0	0	0	0	0	0	0	0	0
5/1/2024	6:30 PM	0	0	0	0	0	0	0	0	0	0	0	0	0
5/1/2024	6:45 PM	0	0	0	0	0	0	0	0	0	0	0	0	0
5/1/2024	7:00 PM	0	0	0	0	0	0	0	0	0	0	0	0	0
5/1/2024	7:15 PM	0	0	0	0	0	0	0	0	0	0	0	0	0
5/1/2024	7:30 PM	0	0	0	0	0	0	0	0	0	0	0	0	0
5/1/2024	7:45 PM	0	0	0	0	0	0	0	0	0	0	0	0	0
5/1/2024	8:00 PM	0	0	0	0	0	0	0	0	0	0	0	0	0
5/1/2024	8:15 PM	0	0	0	0	0	0	0	0	0	0	0	0	0
5/1/2024	8:30 PM	0	0	0	0	0	0	0	0	0	0	0	0	0
5/1/2024	8:45 PM	0	0	0	0	0	0	0	0	0	0	0	0	0
5/1/2024	9:00 PM	0	0	0	0	0	0	0	0	0	0	0	0	0
5/1/2024	9:15 PM	0	0	0	0	0	0	0	0	0	0	0	0	0
5/1/2024	9:30 PM	0	0	0	0	0	0	0	0	0	0	0	0	0
5/1/2024	9:45 PM	0	0	0	0	0	0	0	0	0	0	0	0	0
5/1/2024	10:00 PM	0	0	0	0	0	0	0	0	0	0	0	0	0
5/1/2024	10:15 PM	0	0	0	0	0	0	0	0	0	0	0	0	0
5/1/2024	10:30 PM	0	0	0	0	0	0	0	0	0	0	0	0	0
5/1/2024	10:45 PM	0	0	0	0	0	0	0	0	0	0	0	0	0
5/1/2024	11:00 PM	0	0	0	0	0	0	0	0	0	0	0	0	0
5/1/2024	11:15 PM	0	0	0	0	0	0	0	0	0	0	0	0	0
5/1/2024	11:30 PM	0	0	0	0	0	0	0	0	0	0	0	0	0
5/1/2024	11:45 PM	0	0	0	0	0	0	0	0	0	0	0	0	0

5/2/2024	12:00 AM	0	0	0	0	0	0	0	0	0	0	0	0	0
5/2/2024	12:15 AM	0	0	0	0	0	0	0	0	0	0	0	0	0
5/2/2024	12:30 AM	0	0	0	0	0	0	0	0	0	0	0	0	0
5/2/2024	12:45 AM	0	0	0	0	0	0	0	0	0	0	0	0	0
5/2/2024	1:00 AM	0	0	0	0	0	0	0	0	0	0	0	0	0
5/2/2024	1:15 AM	0	0	0	0	0	0	0	0	0	0	0	0	0
5/2/2024	1:30 AM	0	0	0	0	0	0	0	0	0	0	0	0	0
5/2/2024	1:45 AM	0	0	0	0	0	0	0	0	0	0	0	0	0
5/2/2024	2:00 AM	0	0	0	0	0	0	0	0	0	0	0	0	0
5/2/2024	2:15 AM	0	0	0	0	0	0	0	0	0	0	0	0	0
5/2/2024	2:30 AM	0	0	0	0	0	0	0	0	0	0	0	0	0
5/2/2024	2:45 AM	0	0	0	0	0	0	0	0	0	0	0	0	0
5/2/2024	3:00 AM	0	0	0	0	0	0	0	0	0	0	0	0	0
5/2/2024	3:15 AM	0	0	0	0	0	0	0	0	0	0	0	0	0
5/2/2024	3:30 AM	0	0	0	0	0	0	0	0	0	0	0	0	0
5/2/2024	3:45 AM	0	0	0	0	0	0	0	0	0	0	0	0	0
5/2/2024	4:00 AM	0	0	0	0	0	0	0	0	0	0	0	0	0
5/2/2024	4:15 AM	0	0	0	0	0	0	0	0	0	0	0	0	0
5/2/2024	4:30 AM	0	0	0	0	0	0	0	0	0	0	0	0	0
5/2/2024	4:45 AM	0	0	0	0	0	0	0	0	0	0	0	0	0
5/2/2024	5:00 AM	0	0	0	0	0	0	0	0	0	0	0	0	0
5/2/2024	5:15 AM	0	0	0	0	0	0	0	0	0	0	0	0	0
5/2/2024	5:30 AM	0	0	0	0	0	0	0	0	0	0	0	0	0
5/2/2024	5:45 AM	0	0	0	0	0	0	0	0	0	0	0	0	0
5/2/2024	6:00 AM	0	0	0	0	0	0	0	0	0	0	0	0	0
5/2/2024	6:15 AM	0	0	0	0	0	0	0	0	0	0	0	0	0
5/2/2024	6:30 AM	0	0	0	0	0	0	0	0	0	0	0	0	0
5/2/2024	6:45 AM	0	0	0	0	0	0	0	0	0	0	0	0	0
5/2/2024	7:00 AM	0	0	0	0	0	0	0	0	0	0	0	0	0
5/2/2024	7:15 AM	0	0	0	0	0	0	0	0	0	0	0	0	0
5/2/2024	7:30 AM	0	0	0	0	0	0	0	0	0	0	0	0	0
5/2/2024	7:45 AM	0	0	0	0	0	0	0	0	0	0	0	0	0
5/2/2024	8:00 AM	0	0	0	0	0	0	0	0	0	0	0	0	0
5/2/2024	8:15 AM	0	0	0	0	0	0	0	0	0	0	0	0	0
5/2/2024	8:30 AM	0	0	0	0	0	0	0	0	0	0	0	0	0
5/2/2024	8:45 AM	0	0	0	0	0	0	0	0	0	0	0	0	0
5/2/2024	9:00 AM	0	0	0	0	0	0	0	0	0	0	0	0	0
5/2/2024	9:15 AM	0	0	0	0	0	0	0	0	0	0	0	0	0
5/2/2024	9:30 AM	0	0	0	0	0	0	0	0	0	0	0	0	0
5/2/2024	9:45 AM	0	0	0	0	0	0	0	0	0	0	0	0	0
5/2/2024	10:00 AM	0	0	0	0	0	0	0	0	0	0	0	0	0
5/2/2024	10:15 AM	0	0	0	0	0	0	0	0	0	0	0	0	0
5/2/2024	10:30 AM	0	0	0	0	0	0	0	0	0	0	0	0	0
5/2/2024	10:45 AM	0	0	0	0	0	0	0	0	0	0	0	0	0
5/2/2024	11:00 AM	0	0	0	0	0	0	0	0	0	0	0	0	0
5/2/2024	11:15 AM	0	0	0	0	0	0	0	0	0	0	0	0	0
5/2/2024	11:30 AM	0	0	0	0	0	0	0	0	0	0	0	0	0
5/2/2024	11:45 AM	0	0	0	0	0	0	0	0	0	0	0	0	0
5/2/2024	12:00 PM	0	0	0	0	0	0	0	0	0	0	0	0	0
5/2/2024	12:15 PM	0	0	0	0	0	0	0	0	0	0	0	0	0
5/2/2024	12:30 PM	0	0	0	0	0	0	0	0	0	0	0	0	0
5/2/2024	12:45 PM	0	0	0	0	0	0	0	0	0	0	0	0	0
5/2/2024	1:00 PM	0	0	0	0	0	0	0	0	0	0	0	0	0
5/2/2024	1:15 PM	0	0	0	0	0	0	0	0	0	0	0	0	0
5/2/2024	1:30 PM	0	0	0	0	0	0	0	0	0	0	0	0	0
5/2/2024	1:45 PM	0	0	0	0	0	0	0	0	0	0	0	0	0
5/2/2024	2:00 PM	0	0	0	0	0	0	0	0	0	0	0	0	0
5/2/2024	2:15 PM	0	0	0	0	0	0	0	0	0	0	0	0	0
5/2/2024	2:30 PM	0	0	0	0	0	0	0	0	0	0	0	0	0
5/2/2024	2:45 PM	0	0	0	0	0	0	0	0	0	0	0	0	0
5/2/2024	3:00 PM	0	0	0	0	0	0	0	0	0	0	0	0	0
5/2/2024	3:15 PM	0	0	0	0	0	0	0	0	0	0	0	0	0
5/2/2024	3:30 PM	0	0	0	0	0	0	0	0	0	0	0	0	0
5/2/2024	3:45 PM	0	0	0	0	0	0	0	0	0	0	0	0	0
5/2/2024	4:00 PM	0	0	0	0	0	0	0	0	0	0	0	0	0
5/2/2024	4:15 PM	0	0	0	0	0	0	0	0	0	0	0	0	0
5/2/2024	4:30 PM	0	0	0	0	0	0	0	0	0	0	0	0	0
5/2/2024	4:45 PM	0	0	0	0	0	0	0	0	0	0	0	0	0
5/2/2024	5:00 PM	0	0	0	0	0	0	0	0	0	0	0	0	0
5/2/2024	5:15 PM	0	0	0	0	0	0	0	0	0	0	0	0	0
5/2/2024	5:30 PM	0	0	0	0	0	0	0	0	0	0	0	0	0
5/2/2024	5:45 PM	0	0	0	0	0	0	0	0	0	0	0	0	0
5/2/2024	6:00 PM	0	0	0	0	0	0	0	0	0	0	0	0	0
5/2/2024	6:15 PM	0	0	0	0	0	0	0	0	0	0	0	0	0
5/2/2024	6:30 PM	0	0	0	0	0	0	0	0	0	0	0	0	0
5/2/2024	6:45 PM	0	0	0	0	0	0	0	0	0	0	0	0	0
5/2/2024	7:00 PM	0	0	0	0	0	0	0	0	0	0	0	0	0
5/2/2024	7:15 PM	0	0	0	0	0	0	0	0	0	0	0	0	0
5/2/2024	7:30 PM	0	0	0	0	0	0	0	0	0	0	0	0	0
5/2/2024	7:45 PM	0	0	0	0	0	0	0	0	0	0	0	0	0
5/2/2024	8:00 PM	0	0	0	0	0	0	0	0	0	0	0	0	0
5/2/2024	8:15 PM	0	0	0	0	0	0	0	0	0	0	0	0	0
5/2/2024	8:30 PM	0	0	0	0	0	0	0	0	0	0	0	0	0
5/2/2024	8:45 PM	0	0	0	0	0	0	0	0	0	0	0	0	0
5/2/2024	9:00 PM	0	0	0	0	0	0	0	0	0	0	0	0	0
5/2/2024	9:15 PM	0	0	0	0	0	0	0	0	0	0	0	0	0
5/2/2024	9:30 PM	0	0	0	0	0	0	0	0	0	0	0	0	0
5/2/2024	9:45 PM	0	0	0	0	0	0	0	0	0	0	0	0	0
5/2/2024	10:00 PM	0	0	0	0	0	0	0	0	0	0	0	0	0
5/2/2024	10:15 PM	0	0	0	0	0	0	0	0	0	0	0	0	0
5/2/2024	10:30 PM	0	0	0	0	0	0	0	0	0	0	0	0	0
5/2/2024	10:45 PM	0	0	0	0	0	0	0	0	0	0	0	0	0
5/2/2024	11:00 PM	0	0	0	0	0	0	0	0	0	0	0	0	0
5/2/2024	11:15 PM	0	0	0	0	0	0	0	0	0	0	0	0	0
5/2/2024	11:30 PM	0	0	0	0	0	0	0	0	0	0	0	0	0
5/2/2024	11:45 PM	0	0	0	0	0	0	0	0	0	0	0	0	0

NB
File Name:
Start Date: 4/30/2024
Start Time: 0
Site Code: 21
Station ID: 1
Location 1: I-26 James F. Byrnes Expy N/Bound Off-Ramp, south of SC-60 Lake Murray Blvd
Location 2:

Date	Time	1	2	3	4	5	6	7	8	9	10	11	12	13
4/30/2024	12:00 AM	0	0	0	0	0	0	0	0	0	0	0	0	0
4/30/2024	12:15 AM	0	0	0	0	0	0	0	0	0	0	0	0	0
4/30/2024	12:30 AM	0	0	0	0	0	0	0	0	0	0	0	0	0
4/30/2024	12:45 AM	0	0	0	0	0	0	0	0	0	0	0	0	0
4/30/2024	1:00 AM	0	0	0	0	0	0	0	0	0	0	0	0	0
4/30/2024	1:15 AM	0	0	0	0	0	0	0	0	0	0	0	0	0
4/30/2024	1:30 AM	0	0	0	0	0	0	0	0	0	0	0	0	0
4/30/2024	1:45 AM	0	0	0	0	0	0	0	0	0	0	0	0	0
4/30/2024	2:00 AM	0	0	0	0	0	0	0	0	0	0	0	0	0
4/30/2024	2:15 AM	0	0	0	0	0	0	0	0	0	0	0	0	0
4/30/2024	2:30 AM	0	0	0	0	0	0	0	0	0	0	0	0	0
4/30/2024	2:45 AM	0	0	0	0	0	0	0	0	0	0	0	0	0
4/30/2024	3:00 AM	0	0	0	0	0	0	0	0	0	0	0	0	0
4/30/2024	3:15 AM	0	0	0	0	0	0	0	0	0	0	0	0	0
4/30/2024	3:30 AM	0	0	0	0	0	0	0	0	0	0	0	0	0
4/30/2024	3:45 AM	0	0	0	0	0	0	0	0	0	0	0	0	0
4/30/2024	4:00 AM	0	0	0	0	0	0	0	0	0	0	0	0	0
4/30/2024	4:15 AM	0	0	0	0	0	0	0	0	0	0	0	0	0
4/30/2024	4:30 AM	0	0	0	0	0	0	0	0	0	0	0	0	0
4/30/2024	4:45 AM	0	0	0	0	0	0	0	0	0	0	0	0	0
4/30/2024	5:00 AM	0	0	0	0	0	0	0	0	0	0	0	0	0
4/30/2024	5:15 AM	0	0	0	0	0	0	0	0	0	0	0	0	0
4/30/2024	5:30 AM	0	0	0	0	0	0	0	0	0	0	0	0	0
4/30/2024	5:45 AM	0	0	0	0	0	0	0	0	0	0	0	0	0
4/30/2024	6:00 AM	0	0	0	0	0	0	0	0	0	0	0	0	0
4/30/2024	6:15 AM	0	0	0	0	0	0	0	0	0	0	0	0	0
4/30/2024	6:30 AM	0	0	0	0	0	0	0	0	0	0	0	0	0
4/30/2024	6:45 AM	0	0	0	0	0	0	0	0	0	0	0	0	0
4/30/2024	7:00 AM	0	0	0	0	0	0	0	0	0	0	0	0	0
4/30/2024	7:15 AM	0	0	0	0	0	0	0	0	0	0	0	0	0
4/30/2024	7:30 AM	0	0	0	0	0	0	0	0	0	0	0	0	0
4/30/2024	7:45 AM	0	0	0	0	0	0	0	0	0	0	0	0	0
4/30/2024	8:00 AM	0	0	0	0	0	0	0	0	0	0	0	0	0
4/30/2024	8:15 AM	0	0	0	0	0	0	0	0	0	0	0	0	0
4/30/2024	8:30 AM	0	0	0	0	0	0	0	0	0	0	0	0	0
4/30/2024	8:45 AM	0	0	0	0	0	0	0	0	0	0	0	0	0
4/30/2024	9:00 AM	0	0	0	0	0	0	0	0	0	0	0	0	0
4/30/2024	9:15 AM	0	0	0	0	0	0	0	0	0	0	0	0	0
4/30/2024	9:30 AM	0	0	0	0	0	0	0	0	0	0	0	0	0
4/30/2024	9:45 AM	0	0	0	0	0	0	0	0	0	0	0	0	0
4/30/2024	10:00 AM	0	0	0	0	0	0	0	0	0	0	0	0	0
4/30/2024	10:15 AM	0	0	0	0	0	0	0	0	0	0	0	0	0
4/30/2024	10:30 AM	0	0	0	0	0	0	0	0	0	0	0	0	0
4/30/2024	10:45 AM	0	0	0	0	0	0	0	0	0	0	0	0	0
4/30/2024	11:00 AM	0	0	0	0	0	0	0	0	0	0	0	0	0
4/30/2024	11:15 AM	0	0	0	0	0	0	0	0	0	0	0	0	0
4/30/2024	11:30 AM	0	0	0	0	0	0	0	0	0	0	0	0	0
4/30/2024	11:45 AM	0	0	0	0	0	0	0	0	0	0	0	0	0
4/30/2024	12:00 PM	0	0	0	0	0	0	0	0	0	0	0	0	0
4/30/2024	12:15 PM	0	0	0	0	0	0	0	0	0	0	0	0	0
4/30/2024	12:30 PM	0	0	0	0	0	0	0	0	0	0	0	0	0
4/30/2024	12:45 PM	0	0	0	0	0	0	0	0	0	0	0	0	0
4/30/2024	1:00 PM	0	0	0	0	0	0	0	0	0	0	0	0	0
4/30/2024	1:15 PM	0	0	0	0	0	0	0	0	0	0	0	0	0
4/30/2024	1:30 PM	0	0	0	0	0	0	0	0	0	0	0	0	0
4/30/2024	1:45 PM	0	0	0	0	0	0	0	0	0	0	0	0	0
4/30/2024	2:00 PM	0	0	0	0	0	0	0	0	0	0	0	0	0
4/30/2024	2:15 PM	0	0	0	0	0	0	0	0	0	0	0	0	0
4/30/2024	2:30 PM	0	0	0	0	0	0	0	0	0	0	0	0	0
4/30/2024	2:45 PM	0	0	0	0	0	0	0	0	0	0	0	0	0
4/30/2024	3:00 PM	0	0	0	0	0	0	0	0	0	0	0	0	0
4/30/2024	3:15 PM	0	0	0	0	0	0	0	0	0	0	0	0	0
4/30/2024	3:30 PM	0	0	0	0	0	0	0	0	0	0	0	0	0
4/30/2024	3:45 PM	0	0	0	0	0	0	0	0	0	0	0	0	0
4/30/2024	4:00 PM	0	0	0	0	0	0	0	0	0	0	0	0	0
4/30/2024	4:15 PM	0	0	0	0	0	0	0	0	0	0	0	0	0
4/30/2024	4:30 PM	0	0	0	0	0	0	0	0	0	0	0	0	0
4/30/2024	4:45 PM	0	0	0	0	0	0	0	0	0	0	0	0	0
4/30/2024	5:00 PM	0	0	0	0	0	0	0	0	0	0	0	0	0
4/30/2024	5:15 PM	0	0	0	0	0	0	0	0	0	0	0	0	0
4/30/2024	5:30 PM	0	0	0	0	0	0	0	0	0	0	0	0	0
4/30/2024	5:45 PM	0	0	0	0	0	0	0	0	0	0	0	0	0
4/30/2024	6:00 PM	0	0	0	0	0	0	0	0	0	0	0	0	0
4/30/2024	6:15 PM	0	36	3	0	0	0	0	0	0	0	0	0	0
4/30/2024	6:30 PM	0	81	7	0	0	0	0	0	0	0	0	0	0
4/30/2024	6:45 PM	0	118	9	0	1	0	0	0	0	0	0	0	0
4/30/2024	7:00 PM	0	163	10	0	1	0	0	0	0	0	0	0	0
4/30/2024	7:15 PM	0	172	9	0	1	0	0	0	0	0	0	0	0
4/30/2024	7:30 PM	0	179	7	0	1	0	0	0	0	0	0	0	0
4/30/2024	7:45 PM	0	184	6	0	0	0	0	0	0	0	0	0	0
4/30/2024	8:00 PM	0	182	6	0	0	0	0	0	0	0	0	0	0
4/30/2024	8:15 PM	0	175	6	0	0	0	0	0	0	0	0	0	0
4/30/2024	8:30 PM	0	148	4	0	0	0	0	0	0	0	0	0	0
4/30/2024	8:45 PM	0	121	3	0	2	0	0	0	0	0	0	0	0
4/30/2024	9:00 PM	0	111	4	0	2	0	0	0	0	0	0	0	0
4/30/2024	9:15 PM	0	91	2	0	2	0	0	0	0	0	0	0	0
4/30/2024	9:30 PM	0	89	3	0	2	0	0	0	0	0	0	0	0
4/30/2024	9:45 PM	0	94	3	0	0	0	0	0	0	0	0	0	0
4/30/2024	10:00 PM	0	82	1	0	0	0	0	0	0	0	0	0	0
4/30/2024	10:15 PM	0	86	2	0	0	0	0	0	0	0	0	0	0
4/30/2024	10:30 PM	0	82	1	0	0	0	0	0	0	0	0	0	0
4/30/2024	10:45 PM	0	73	1	0	0	0	0	0	0	0	0	0	0
4/30/2024	11:00 PM	0	69	1	0	0	0	0	0	0	0	0	0	0
4/30/2024	11:15 PM	0	60	1	0	1	0	0	0	0	0	0	0	0
4/30/2024	11:30 PM	0	45	1	0	1	0	0	0	0	0	0	0	0
4/30/2024	11:45 PM	0	39	2	0	1	0	0	0	0	0	0	0	0

5/1/2024	12:00 AM	0	26	2	0	1	0	0	0	0	0	0	0
5/1/2024	12:15 AM	0	19	1	0	0	0	0	0	0	0	0	0
5/1/2024	12:30 AM	0	19	1	0	0	0	0	0	0	0	0	0
5/1/2024	12:45 AM	0	16	0	0	0	0	0	0	0	0	0	0
5/1/2024	1:00 AM	0	13	0	0	0	0	0	0	0	0	0	0
5/1/2024	1:15 AM	0	11	0	0	1	0	0	0	0	0	0	0
5/1/2024	1:30 AM	0	10	0	0	1	0	0	0	0	0	0	0
5/1/2024	1:45 AM	0	13	0	0	1	0	0	0	0	0	0	0
5/1/2024	2:00 AM	0	17	2	0	1	1	0	0	0	0	0	0
5/1/2024	2:15 AM	0	16	2	0	0	1	0	0	0	0	0	0
5/1/2024	2:30 AM	0	13	4	0	0	1	0	0	0	0	0	0
5/1/2024	2:45 AM	0	12	5	0	0	1	0	0	0	0	0	0
5/1/2024	3:00 AM	0	9	4	0	0	0	0	0	1	0	0	0
5/1/2024	3:15 AM	0	9	4	0	0	0	0	0	1	0	0	0
5/1/2024	3:30 AM	0	11	2	0	0	0	0	0	1	0	0	0
5/1/2024	3:45 AM	0	10	2	0	0	0	0	0	1	0	0	0
5/1/2024	4:00 AM	0	17	2	0	0	0	0	0	0	0	0	0
5/1/2024	4:15 AM	0	19	4	0	2	0	0	0	0	0	0	0
5/1/2024	4:30 AM	0	31	7	0	2	0	0	0	0	0	0	0
5/1/2024	4:45 AM	0	35	7	0	2	0	0	0	0	0	0	0
5/1/2024	5:00 AM	0	40	8	0	2	1	0	0	0	0	0	0
5/1/2024	5:15 AM	1	61	8	0	1	1	0	0	0	0	0	0
5/1/2024	5:30 AM	3	79	10	0	1	1	0	0	0	0	0	0
5/1/2024	5:45 AM	3	106	13	0	1	1	0	0	0	0	0	0
5/1/2024	6:00 AM	3	139	25	0	1	0	0	0	0	0	0	0
5/1/2024	6:15 AM	2	163	30	0	0	1	0	0	1	0	0	0
5/1/2024	6:30 AM	0	178	35	0	2	1	0	1	1	0	0	0
5/1/2024	6:45 AM	0	215	47	0	3	1	0	2	1	0	0	0
5/1/2024	7:00 AM	0	240	43	0	4	3	0	2	1	0	0	0
5/1/2024	7:15 AM	0	246	50	0	6	2	0	2	0	0	0	0
5/1/2024	7:30 AM	0	265	51	1	5	2	0	1	0	0	0	0
5/1/2024	7:45 AM	0	235	51	1	6	2	0	0	0	0	0	0
5/1/2024	8:00 AM	0	222	49	1	8	0	0	0	1	0	0	0
5/1/2024	8:15 AM	0	211	43	1	9	0	1	0	1	0	0	0
5/1/2024	8:30 AM	0	183	46	0	9	0	1	1	1	0	0	0
5/1/2024	8:45 AM	0	173	39	0	8	0	1	1	1	0	0	0
5/1/2024	9:00 AM	0	161	36	0	7	1	1	1	0	0	0	0
5/1/2024	9:15 AM	0	161	36	0	7	1	0	1	0	0	0	0
5/1/2024	9:30 AM	0	159	35	0	6	1	0	0	0	0	0	0
5/1/2024	9:45 AM	1	157	35	0	5	1	0	0	0	0	0	0
5/1/2024	10:00 AM	1	145	38	0	5	0	0	0	0	0	0	0
5/1/2024	10:15 AM	1	147	35	0	3	0	1	1	0	0	0	0
5/1/2024	10:30 AM	1	144	28	0	3	0	1	1	0	0	0	0
5/1/2024	10:45 AM	0	148	29	0	3	0	1	1	0	0	0	0
5/1/2024	11:00 AM	0	164	31	0	1	3	1	1	0	0	0	0
5/1/2024	11:15 AM	0	155	32	0	1	3	0	0	0	0	0	0
5/1/2024	11:30 AM	0	175	36	0	2	3	0	0	0	0	0	0
5/1/2024	11:45 AM	0	188	36	0	2	3	1	0	0	0	0	0
5/1/2024	12:00 PM	0	182	35	0	2	0	1	1	0	0	0	0
5/1/2024	12:15 PM	0	188	39	0	1	0	3	1	0	0	0	0
5/1/2024	12:30 PM	0	189	40	0	0	0	3	1	0	0	0	0
5/1/2024	12:45 PM	0	179	37	0	0	0	2	1	0	0	0	0
5/1/2024	1:00 PM	0	197	43	0	0	0	2	0	0	0	0	0
5/1/2024	1:15 PM	0	200	44	0	1	0	0	0	0	0	0	0
5/1/2024	1:30 PM	0	205	44	0	1	0	0	0	0	0	0	0
5/1/2024	1:45 PM	0	227	46	0	2	0	0	0	0	0	0	0
5/1/2024	2:00 PM	0	210	38	0	2	1	1	0	0	0	0	0
5/1/2024	2:15 PM	0	207	35	0	3	1	2	0	0	0	0	0
5/1/2024	2:30 PM	0	198	33	0	3	1	2	0	0	0	0	0
5/1/2024	2:45 PM	0	190	37	0	3	1	2	0	0	0	0	0
5/1/2024	3:00 PM	0	194	39	0	3	0	1	0	0	0	0	0
5/1/2024	3:15 PM	0	197	37	0	1	0	0	0	0	0	0	0
5/1/2024	3:30 PM	0	204	36	0	1	0	0	0	0	0	0	0
5/1/2024	3:45 PM	0	193	33	0	0	0	0	0	0	0	0	0
5/1/2024	4:00 PM	0	186	34	0	1	0	0	0	0	0	0	0
5/1/2024	4:15 PM	0	179	33	0	1	0	0	0	0	0	0	0
5/1/2024	4:30 PM	0	163	33	0	1	0	0	0	0	0	0	0
5/1/2024	4:45 PM	0	173	30	0	1	0	0	0	0	0	0	0
5/1/2024	5:00 PM	0	178	29	0	0	0	0	0	0	0	0	0
5/1/2024	5:15 PM	0	204	36	0	0	0	0	0	0	0	0	0
5/1/2024	5:30 PM	0	221	40	0	0	0	0	0	0	0	0	0
5/1/2024	5:45 PM	0	230	42	0	1	0	0	0	0	0	0	0
5/1/2024	6:00 PM	0	234	50	0	2	0	0	0	1	0	0	0
5/1/2024	6:15 PM	0	217	46	0	3	0	0	0	3	0	0	0
5/1/2024	6:30 PM	0	200	43	0	3	0	0	0	3	0	0	0
5/1/2024	6:45 PM	1	190	44	0	2	0	0	0	3	0	0	0
5/1/2024	7:00 PM	1	187	32	0	1	0	0	0	2	0	0	0
5/1/2024	7:15 PM	1	172	31	0	0	0	0	0	0	0	0	0
5/1/2024	7:30 PM	1	185	33	0	1	0	0	0	0	0	0	0
5/1/2024	7:45 PM	0	184	27	0	1	0	0	0	0	0	0	0
5/1/2024	8:00 PM	0	180	22	0	3	0	0	0	0	0	0	0
5/1/2024	8:15 PM	0	196	15	0	3	0	0	0	0	0	0	0
5/1/2024	8:30 PM	0	180	4	0	2	0	0	0	0	0	0	0
5/1/2024	8:45 PM	0	171	0	0	2	0	0	0	0	0	0	0
5/1/2024	9:00 PM	0	158	0	0	0	0	0	0	1	0	0	0
5/1/2024	9:15 PM	0	127	1	0	1	0	0	0	1	0	0	0
5/1/2024	9:30 PM	0	116	1	0	2	0	0	0	1	0	0	0
5/1/2024	9:45 PM	0	97	1	0	2	0	0	0	1	0	0	0
5/1/2024	10:00 PM	0	85	1	0	2	0	0	0	0	0	0	0
5/1/2024	10:15 PM	0	78	3	0	2	0	0	0	0	0	0	0
5/1/2024	10:30 PM	0	65	5	0	1	0	0	0	0	0	0	0
5/1/2024	10:45 PM	0	57	7	0	1	0	0	0	0	0	0	0
5/1/2024	11:00 PM	0	45	10	0	2	0	0	0	0	0	0	0
5/1/2024	11:15 PM	0	49	8	0	1	0	0	0	0	0	0	0
5/1/2024	11:30 PM	0	42	6	0	1	0	0	0	0	0	0	0
5/1/2024	11:45 PM	0	41	5	0	1	0	0	0	0	0	0	0

5/2/2024	12:00 AM	0	41	3	0	0	1	0	0	0	0	0	0	0
5/2/2024	12:15 AM	0	35	2	0	0	1	0	0	0	0	0	0	0
5/2/2024	12:30 AM	0	37	3	0	0	1	0	0	0	0	0	0	0
5/2/2024	12:45 AM	0	33	2	0	0	1	0	0	0	0	0	0	0
5/2/2024	1:00 AM	0	30	2	0	0	0	0	0	0	0	0	0	0
5/2/2024	1:15 AM	0	26	2	0	0	0	0	0	0	0	0	0	0
5/2/2024	1:30 AM	0	21	2	0	0	0	0	0	0	0	0	0	0
5/2/2024	1:45 AM	0	17	2	0	0	0	0	0	0	0	0	0	0
5/2/2024	2:00 AM	0	19	1	0	0	0	0	0	0	0	0	0	0
5/2/2024	2:15 AM	0	21	2	0	0	0	0	0	0	0	0	0	0
5/2/2024	2:30 AM	0	18	1	0	0	0	0	0	0	0	0	0	0
5/2/2024	2:45 AM	0	19	1	0	0	0	0	0	1	0	0	0	0
5/2/2024	3:00 AM	0	15	1	0	0	0	0	0	1	0	0	0	0
5/2/2024	3:15 AM	0	8	0	0	0	0	0	0	1	0	0	0	0
5/2/2024	3:30 AM	0	11	0	0	0	0	0	0	1	0	0	0	0
5/2/2024	3:45 AM	0	12	0	0	2	0	0	0	0	0	0	0	0
5/2/2024	4:00 AM	0	17	0	0	2	0	0	0	0	0	0	0	0
5/2/2024	4:15 AM	0	21	1	0	2	0	0	0	0	0	0	0	0
5/2/2024	4:30 AM	0	27	2	0	3	0	0	0	0	0	0	0	0
5/2/2024	4:45 AM	0	33	5	0	1	0	0	0	0	0	0	0	0
5/2/2024	5:00 AM	0	45	6	0	1	0	0	0	0	0	0	0	0
5/2/2024	5:15 AM	0	62	6	0	1	0	0	0	0	0	0	0	0
5/2/2024	5:30 AM	0	84	7	0	0	0	0	0	0	0	0	0	0
5/2/2024	5:45 AM	0	109	10	0	0	0	0	0	1	0	0	0	0
5/2/2024	6:00 AM	0	129	22	0	0	0	0	0	1	0	0	0	0
5/2/2024	6:15 AM	0	147	32	0	0	1	0	1	1	0	0	0	0
5/2/2024	6:30 AM	0	169	46	0	0	1	0	1	2	1	0	0	0
5/2/2024	6:45 AM	0	211	56	0	1	1	0	2	1	1	0	0	0
5/2/2024	7:00 AM	0	250	55	0	1	2	0	2	1	1	0	0	0
5/2/2024	7:15 AM	0	256	53	0	3	1	0	1	1	1	0	0	0
5/2/2024	7:30 AM	0	267	56	0	4	1	0	1	0	0	0	0	0
5/2/2024	7:45 AM	0	240	57	0	4	1	0	1	0	0	0	0	0
5/2/2024	8:00 AM	0	198	52	0	6	0	0	1	0	0	0	0	0
5/2/2024	8:15 AM	0	201	55	0	7	0	1	1	0	0	0	0	0
5/2/2024	8:30 AM	0	173	47	0	8	1	1	1	0	0	0	0	0
5/2/2024	8:45 AM	0	156	41	0	8	1	1	0	0	0	0	0	0
5/2/2024	9:00 AM	0	170	39	0	6	1	1	0	0	1	0	0	0
5/2/2024	9:15 AM	0	171	35	0	3	2	1	0	0	1	0	0	0
5/2/2024	9:30 AM	0	167	36	0	1	1	1	0	0	1	0	0	0
5/2/2024	9:45 AM	0	189	37	0	2	1	2	0	0	1	0	0	0
5/2/2024	10:00 AM	0	200	47	0	3	1	2	0	0	0	0	0	0
5/2/2024	10:15 AM	0	198	46	0	4	0	1	0	0	0	0	0	0
5/2/2024	10:30 AM	0	218	44	1	4	0	1	0	1	0	0	0	0
5/2/2024	10:45 AM	0	206	40	1	2	0	0	1	1	0	0	0	0
5/2/2024	11:00 AM	0	187	37	2	2	0	0	1	1	0	0	0	0
5/2/2024	11:15 AM	0	184	37	2	3	1	0	1	1	0	0	0	0
5/2/2024	11:30 AM	0	161	34	1	3	1	0	1	0	0	0	0	0
5/2/2024	11:45 AM	0	171	37	1	3	2	0	0	0	0	0	0	0
5/2/2024	12:00 PM	0	183	35	0	3	2	1	0	0	0	0	0	0
5/2/2024	12:15 PM	0	180	32	0	2	1	1	0	0	0	0	0	0
5/2/2024	12:30 PM	1	196	39	0	3	1	1	0	0	0	0	0	0
5/2/2024	12:45 PM	1	186	39	0	5	0	1	0	0	0	0	0	0
5/2/2024	1:00 PM	1	180	37	0	5	0	0	0	0	0	0	0	0
5/2/2024	1:15 PM	1	195	49	0	7	0	0	0	0	0	0	0	0
5/2/2024	1:30 PM	0	219	50	0	6	0	0	0	0	0	0	0	0
5/2/2024	1:45 PM	0	227	50	0	6	1	1	1	0	0	0	0	0
5/2/2024	2:00 PM	0	237	55	0	5	2	1	1	0	0	0	0	0
5/2/2024	2:15 PM	0	222	52	0	2	2	1	1	0	0	0	0	0
5/2/2024	2:30 PM	0	201	50	0	4	2	1	2	0	0	0	0	0
5/2/2024	2:45 PM	0	193	49	0	3	1	0	1	1	0	0	0	0
5/2/2024	3:00 PM	0	193	47	0	5	0	0	1	1	0	0	0	0
5/2/2024	3:15 PM	1	199	48	0	6	0	0	1	1	0	0	0	0
5/2/2024	3:30 PM	1	202	45	0	5	1	1	0	1	0	0	0	0
5/2/2024	3:45 PM	1	220	48	0	4	2	2	0	0	0	0	0	0
5/2/2024	4:00 PM	1	230	46	0	2	2	2	0	0	0	0	0	0
5/2/2024	4:15 PM	0	238	45	0	1	2	2	0	0	0	0	0	0
5/2/2024	4:30 PM	0	245	44	0	0	1	1	0	0	0	0	0	0
5/2/2024	4:45 PM	0	250	42	0	0	0	0	0	0	0	0	0	0
5/2/2024	5:00 PM	0	229	37	0	0	0	0	0	0	0	0	0	0
5/2/2024	5:15 PM	0	236	31	0	0	0	0	0	0	0	0	0	0
5/2/2024	5:30 PM	0	224	35	0	0	0	0	0	0	0	0	0	0
5/2/2024	5:45 PM	0	223	33	0	0	0	0	0	1	0	0	0	0
5/2/2024	6:00 PM	0	221	42	0	0	0	0	0	1	0	0	0	0
5/2/2024	6:15 PM	0	158	35	0	0	0	0	0	1	0	0	0	0
5/2/2024	6:30 PM	0	111	22	0	0	0	0	0	1	0	0	0	0
5/2/2024	6:45 PM	0	46	13	0	0	0	0	0	0	0	0	0	0
5/2/2024	7:00 PM	0	0	0	0	0	0	0	0	0	0	0	0	0
5/2/2024	7:15 PM	0	0	0	0	0	0	0	0	0	0	0	0	0
5/2/2024	7:30 PM	0	0	0	0	0	0	0	0	0	0	0	0	0
5/2/2024	7:45 PM	0	0	0	0	0	0	0	0	0	0	0	0	0
5/2/2024	8:00 PM	0	0	0	0	0	0	0	0	0	0	0	0	0
5/2/2024	8:15 PM	0	0	0	0	0	0	0	0	0	0	0	0	0
5/2/2024	8:30 PM	0	0	0	0	0	0	0	0	0	0	0	0	0
5/2/2024	8:45 PM	0	0	0	0	0	0	0	0	0	0	0	0	0
5/2/2024	9:00 PM	0	0	0	0	0	0	0	0	0	0	0	0	0
5/2/2024	9:15 PM	0	0	0	0	0	0	0	0	0	0	0	0	0
5/2/2024	9:30 PM	0	0	0	0	0	0	0	0	0	0	0	0	0
5/2/2024	9:45 PM	0	0	0	0	0	0	0	0	0	0	0	0	0
5/2/2024	10:00 PM	0	0	0	0	0	0	0	0	0	0	0	0	0
5/2/2024	10:15 PM	0	0	0	0	0	0	0	0	0	0	0	0	0
5/2/2024	10:30 PM	0	0	0	0	0	0	0	0	0	0	0	0	0
5/2/2024	10:45 PM	0	0	0	0	0	0	0	0	0	0	0	0	0
5/2/2024	11:00 PM	0	0	0	0	0	0	0	0	0	0	0	0	0
5/2/2024	11:15 PM	0	0	0	0	0	0	0	0	0	0	0	0	0
5/2/2024	11:30 PM	0	0	0	0	0	0	0	0	0	0	0	0	0
5/2/2024	11:45 PM	0	0	0	0	0	0	0	0	0	0	0	0	0

SB
File Name:
Start Date: 4/30/2024
Start Time: 0
Site Code: 21
Station ID: 1
Location 1: I-26 James F. Byrnes Expy N/Bound Off-Ramp, south of SC-60 Lake Murray Blvd
Location 2:

Date	Time	1	2	3	4	5	6	7	8	9	10	11	12	13
4/30/2024	12:00 AM	0	0	0	0	0	0	0	0	0	0	0	0	0
4/30/2024	12:15 AM	0	0	0	0	0	0	0	0	0	0	0	0	0
4/30/2024	12:30 AM	0	0	0	0	0	0	0	0	0	0	0	0	0
4/30/2024	12:45 AM	0	0	0	0	0	0	0	0	0	0	0	0	0
4/30/2024	1:00 AM	0	0	0	0	0	0	0	0	0	0	0	0	0
4/30/2024	1:15 AM	0	0	0	0	0	0	0	0	0	0	0	0	0
4/30/2024	1:30 AM	0	0	0	0	0	0	0	0	0	0	0	0	0
4/30/2024	1:45 AM	0	0	0	0	0	0	0	0	0	0	0	0	0
4/30/2024	2:00 AM	0	0	0	0	0	0	0	0	0	0	0	0	0
4/30/2024	2:15 AM	0	0	0	0	0	0	0	0	0	0	0	0	0
4/30/2024	2:30 AM	0	0	0	0	0	0	0	0	0	0	0	0	0
4/30/2024	2:45 AM	0	0	0	0	0	0	0	0	0	0	0	0	0
4/30/2024	3:00 AM	0	0	0	0	0	0	0	0	0	0	0	0	0
4/30/2024	3:15 AM	0	0	0	0	0	0	0	0	0	0	0	0	0
4/30/2024	3:30 AM	0	0	0	0	0	0	0	0	0	0	0	0	0
4/30/2024	3:45 AM	0	0	0	0	0	0	0	0	0	0	0	0	0
4/30/2024	4:00 AM	0	0	0	0	0	0	0	0	0	0	0	0	0
4/30/2024	4:15 AM	0	0	0	0	0	0	0	0	0	0	0	0	0
4/30/2024	4:30 AM	0	0	0	0	0	0	0	0	0	0	0	0	0
4/30/2024	4:45 AM	0	0	0	0	0	0	0	0	0	0	0	0	0
4/30/2024	5:00 AM	0	0	0	0	0	0	0	0	0	0	0	0	0
4/30/2024	5:15 AM	0	0	0	0	0	0	0	0	0	0	0	0	0
4/30/2024	5:30 AM	0	0	0	0	0	0	0	0	0	0	0	0	0
4/30/2024	5:45 AM	0	0	0	0	0	0	0	0	0	0	0	0	0
4/30/2024	6:00 AM	0	0	0	0	0	0	0	0	0	0	0	0	0
4/30/2024	6:15 AM	0	0	0	0	0	0	0	0	0	0	0	0	0
4/30/2024	6:30 AM	0	0	0	0	0	0	0	0	0	0	0	0	0
4/30/2024	6:45 AM	0	0	0	0	0	0	0	0	0	0	0	0	0
4/30/2024	7:00 AM	0	0	0	0	0	0	0	0	0	0	0	0	0
4/30/2024	7:15 AM	0	0	0	0	0	0	0	0	0	0	0	0	0
4/30/2024	7:30 AM	0	0	0	0	0	0	0	0	0	0	0	0	0
4/30/2024	7:45 AM	0	0	0	0	0	0	0	0	0	0	0	0	0
4/30/2024	8:00 AM	0	0	0	0	0	0	0	0	0	0	0	0	0
4/30/2024	8:15 AM	0	0	0	0	0	0	0	0	0	0	0	0	0
4/30/2024	8:30 AM	0	0	0	0	0	0	0	0	0	0	0	0	0
4/30/2024	8:45 AM	0	0	0	0	0	0	0	0	0	0	0	0	0
4/30/2024	9:00 AM	0	0	0	0	0	0	0	0	0	0	0	0	0
4/30/2024	9:15 AM	0	0	0	0	0	0	0	0	0	0	0	0	0
4/30/2024	9:30 AM	0	0	0	0	0	0	0	0	0	0	0	0	0
4/30/2024	9:45 AM	0	0	0	0	0	0	0	0	0	0	0	0	0
4/30/2024	10:00 AM	0	0	0	0	0	0	0	0	0	0	0	0	0
4/30/2024	10:15 AM	0	0	0	0	0	0	0	0	0	0	0	0	0
4/30/2024	10:30 AM	0	0	0	0	0	0	0	0	0	0	0	0	0
4/30/2024	10:45 AM	0	0	0	0	0	0	0	0	0	0	0	0	0
4/30/2024	11:00 AM	0	0	0	0	0	0	0	0	0	0	0	0	0
4/30/2024	11:15 AM	0	0	0	0	0	0	0	0	0	0	0	0	0
4/30/2024	11:30 AM	0	0	0	0	0	0	0	0	0	0	0	0	0
4/30/2024	11:45 AM	0	0	0	0	0	0	0	0	0	0	0	0	0
4/30/2024	12:00 PM	0	0	0	0	0	0	0	0	0	0	0	0	0
4/30/2024	12:15 PM	0	0	0	0	0	0	0	0	0	0	0	0	0
4/30/2024	12:30 PM	0	0	0	0	0	0	0	0	0	0	0	0	0
4/30/2024	12:45 PM	0	0	0	0	0	0	0	0	0	0	0	0	0
4/30/2024	1:00 PM	0	0	0	0	0	0	0	0	0	0	0	0	0
4/30/2024	1:15 PM	0	0	0	0	0	0	0	0	0	0	0	0	0
4/30/2024	1:30 PM	0	0	0	0	0	0	0	0	0	0	0	0	0
4/30/2024	1:45 PM	0	0	0	0	0	0	0	0	0	0	0	0	0
4/30/2024	2:00 PM	0	0	0	0	0	0	0	0	0	0	0	0	0
4/30/2024	2:15 PM	0	0	0	0	0	0	0	0	0	0	0	0	0
4/30/2024	2:30 PM	0	0	0	0	0	0	0	0	0	0	0	0	0
4/30/2024	2:45 PM	0	0	0	0	0	0	0	0	0	0	0	0	0
4/30/2024	3:00 PM	0	0	0	0	0	0	0	0	0	0	0	0	0
4/30/2024	3:15 PM	0	0	0	0	0	0	0	0	0	0	0	0	0
4/30/2024	3:30 PM	0	0	0	0	0	0	0	0	0	0	0	0	0
4/30/2024	3:45 PM	0	0	0	0	0	0	0	0	0	0	0	0	0
4/30/2024	4:00 PM	0	0	0	0	0	0	0	0	0	0	0	0	0
4/30/2024	4:15 PM	0	0	0	0	0	0	0	0	0	0	0	0	0
4/30/2024	4:30 PM	0	0	0	0	0	0	0	0	0	0	0	0	0
4/30/2024	4:45 PM	0	0	0	0	0	0	0	0	0	0	0	0	0
4/30/2024	5:00 PM	0	0	0	0	0	0	0	0	0	0	0	0	0
4/30/2024	5:15 PM	0	0	0	0	0	0	0	0	0	0	0	0	0
4/30/2024	5:30 PM	0	0	0	0	0	0	0	0	0	0	0	0	0
4/30/2024	5:45 PM	0	0	0	0	0	0	0	0	0	0	0	0	0
4/30/2024	6:00 PM	0	0	0	0	0	0	0	0	0	0	0	0	0
4/30/2024	6:15 PM	0	0	0	0	0	0	0	0	0	0	0	0	0
4/30/2024	6:30 PM	0	0	0	0	0	0	0	0	0	0	0	0	0
4/30/2024	6:45 PM	0	0	0	0	0	0	0	0	0	0	0	0	0
4/30/2024	7:00 PM	0	0	0	0	0	0	0	0	0	0	0	0	0
4/30/2024	7:15 PM	0	0	0	0	0	0	0	0	0	0	0	0	0
4/30/2024	7:30 PM	0	0	0	0	0	0	0	0	0	0	0	0	0
4/30/2024	7:45 PM	0	0	0	0	0	0	0	0	0	0	0	0	0
4/30/2024	8:00 PM	0	0	0	0	0	0	0	0	0	0	0	0	0
4/30/2024	8:15 PM	0	0	0	0	0	0	0	0	0	0	0	0	0
4/30/2024	8:30 PM	0	0	0	0	0	0	0	0	0	0	0	0	0
4/30/2024	8:45 PM	0	0	0	0	0	0	0	0	0	0	0	0	0
4/30/2024	9:00 PM	0	0	0	0	0	0	0	0	0	0	0	0	0
4/30/2024	9:15 PM	0	0	0	0	0	0	0	0	0	0	0	0	0
4/30/2024	9:30 PM	0	0	0	0	0	0	0	0	0	0	0	0	0
4/30/2024	9:45 PM	0	0	0	0	0	0	0	0	0	0	0	0	0
4/30/2024	10:00 PM	0	0	0	0	0	0	0	0	0	0	0	0	0
4/30/2024	10:15 PM	0	0	0	0	0	0	0	0	0	0	0	0	0
4/30/2024	10:30 PM	0	0	0	0	0	0	0	0	0	0	0	0	0
4/30/2024	10:45 PM	0	0	0	0	0	0	0	0	0	0	0	0	0
4/30/2024	11:00 PM	0	0	0	0	0	0	0	0	0	0	0	0	0
4/30/2024	11:15 PM	0	0	0	0	0	0	0	0	0	0	0	0	0
4/30/2024	11:30 PM	0	0	0	0	0	0	0	0	0	0	0	0	0
4/30/2024	11:45 PM	0	0	0	0	0	0	0	0	0	0	0	0	0

5/1/2024	12:00 AM	0	0	0	0	0	0	0	0	0	0	0	0	0
5/1/2024	12:15 AM	0	0	0	0	0	0	0	0	0	0	0	0	0
5/1/2024	12:30 AM	0	0	0	0	0	0	0	0	0	0	0	0	0
5/1/2024	12:45 AM	0	0	0	0	0	0	0	0	0	0	0	0	0
5/1/2024	1:00 AM	0	0	0	0	0	0	0	0	0	0	0	0	0
5/1/2024	1:15 AM	0	0	0	0	0	0	0	0	0	0	0	0	0
5/1/2024	1:30 AM	0	0	0	0	0	0	0	0	0	0	0	0	0
5/1/2024	1:45 AM	0	0	0	0	0	0	0	0	0	0	0	0	0
5/1/2024	2:00 AM	0	0	0	0	0	0	0	0	0	0	0	0	0
5/1/2024	2:15 AM	0	0	0	0	0	0	0	0	0	0	0	0	0
5/1/2024	2:30 AM	0	0	0	0	0	0	0	0	0	0	0	0	0
5/1/2024	2:45 AM	0	0	0	0	0	0	0	0	0	0	0	0	0
5/1/2024	3:00 AM	0	0	0	0	0	0	0	0	0	0	0	0	0
5/1/2024	3:15 AM	0	0	0	0	0	0	0	0	0	0	0	0	0
5/1/2024	3:30 AM	0	0	0	0	0	0	0	0	0	0	0	0	0
5/1/2024	3:45 AM	0	0	0	0	0	0	0	0	0	0	0	0	0
5/1/2024	4:00 AM	0	0	0	0	0	0	0	0	0	0	0	0	0
5/1/2024	4:15 AM	0	0	0	0	0	0	0	0	0	0	0	0	0
5/1/2024	4:30 AM	0	0	0	0	0	0	0	0	0	0	0	0	0
5/1/2024	4:45 AM	0	0	0	0	0	0	0	0	0	0	0	0	0
5/1/2024	5:00 AM	0	0	0	0	0	0	0	0	0	0	0	0	0
5/1/2024	5:15 AM	0	0	0	0	0	0	0	0	0	0	0	0	0
5/1/2024	5:30 AM	0	0	0	0	0	0	0	0	0	0	0	0	0
5/1/2024	5:45 AM	0	0	0	0	0	0	0	0	0	0	0	0	0
5/1/2024	6:00 AM	0	0	0	0	0	0	0	0	0	0	0	0	0
5/1/2024	6:15 AM	0	0	0	0	0	0	0	0	0	0	0	0	0
5/1/2024	6:30 AM	0	0	0	0	0	0	0	0	0	0	0	0	0
5/1/2024	6:45 AM	0	0	0	0	0	0	0	0	0	0	0	0	0
5/1/2024	7:00 AM	0	0	0	0	0	0	0	0	0	0	0	0	0
5/1/2024	7:15 AM	0	0	0	0	0	0	0	0	0	0	0	0	0
5/1/2024	7:30 AM	0	0	0	0	0	0	0	0	0	0	0	0	0
5/1/2024	7:45 AM	0	0	0	0	0	0	0	0	0	0	0	0	0
5/1/2024	8:00 AM	0	0	0	0	0	0	0	0	0	0	0	0	0
5/1/2024	8:15 AM	0	0	0	0	0	0	0	0	0	0	0	0	0
5/1/2024	8:30 AM	0	0	0	0	0	0	0	0	0	0	0	0	0
5/1/2024	8:45 AM	0	0	0	0	0	0	0	0	0	0	0	0	0
5/1/2024	9:00 AM	0	0	0	0	0	0	0	0	0	0	0	0	0
5/1/2024	9:15 AM	0	0	0	0	0	0	0	0	0	0	0	0	0
5/1/2024	9:30 AM	0	0	0	0	0	0	0	0	0	0	0	0	0
5/1/2024	9:45 AM	0	0	0	0	0	0	0	0	0	0	0	0	0
5/1/2024	10:00 AM	0	0	0	0	0	0	0	0	0	0	0	0	0
5/1/2024	10:15 AM	0	0	0	0	0	0	0	0	0	0	0	0	0
5/1/2024	10:30 AM	0	0	0	0	0	0	0	0	0	0	0	0	0
5/1/2024	10:45 AM	0	0	0	0	0	0	0	0	0	0	0	0	0
5/1/2024	11:00 AM	0	0	0	0	0	0	0	0	0	0	0	0	0
5/1/2024	11:15 AM	0	0	0	0	0	0	0	0	0	0	0	0	0
5/1/2024	11:30 AM	0	0	0	0	0	0	0	0	0	0	0	0	0
5/1/2024	11:45 AM	0	0	0	0	0	0	0	0	0	0	0	0	0
5/1/2024	12:00 PM	0	0	0	0	0	0	0	0	0	0	0	0	0
5/1/2024	12:15 PM	0	0	0	0	0	0	0	0	0	0	0	0	0
5/1/2024	12:30 PM	0	0	0	0	0	0	0	0	0	0	0	0	0
5/1/2024	12:45 PM	0	0	0	0	0	0	0	0	0	0	0	0	0
5/1/2024	1:00 PM	0	0	0	0	0	0	0	0	0	0	0	0	0
5/1/2024	1:15 PM	0	0	0	0	0	0	0	0	0	0	0	0	0
5/1/2024	1:30 PM	0	0	0	0	0	0	0	0	0	0	0	0	0
5/1/2024	1:45 PM	0	0	0	0	0	0	0	0	0	0	0	0	0
5/1/2024	2:00 PM	0	0	0	0	0	0	0	0	0	0	0	0	0
5/1/2024	2:15 PM	0	0	0	0	0	0	0	0	0	0	0	0	0
5/1/2024	2:30 PM	0	0	0	0	0	0	0	0	0	0	0	0	0
5/1/2024	2:45 PM	0	0	0	0	0	0	0	0	0	0	0	0	0
5/1/2024	3:00 PM	0	0	0	0	0	0	0	0	0	0	0	0	0
5/1/2024	3:15 PM	0	0	0	0	0	0	0	0	0	0	0	0	0
5/1/2024	3:30 PM	0	0	0	0	0	0	0	0	0	0	0	0	0
5/1/2024	3:45 PM	0	0	0	0	0	0	0	0	0	0	0	0	0
5/1/2024	4:00 PM	0	0	0	0	0	0	0	0	0	0	0	0	0
5/1/2024	4:15 PM	0	0	0	0	0	0	0	0	0	0	0	0	0
5/1/2024	4:30 PM	0	0	0	0	0	0	0	0	0	0	0	0	0
5/1/2024	4:45 PM	0	0	0	0	0	0	0	0	0	0	0	0	0
5/1/2024	5:00 PM	0	0	0	0	0	0	0	0	0	0	0	0	0
5/1/2024	5:15 PM	0	0	0	0	0	0	0	0	0	0	0	0	0
5/1/2024	5:30 PM	0	0	0	0	0	0	0	0	0	0	0	0	0
5/1/2024	5:45 PM	0	0	0	0	0	0	0	0	0	0	0	0	0
5/1/2024	6:00 PM	0	0	0	0	0	0	0	0	0	0	0	0	0
5/1/2024	6:15 PM	0	0	0	0	0	0	0	0	0	0	0	0	0
5/1/2024	6:30 PM	0	0	0	0	0	0	0	0	0	0	0	0	0
5/1/2024	6:45 PM	0	0	0	0	0	0	0	0	0	0	0	0	0
5/1/2024	7:00 PM	0	0	0	0	0	0	0	0	0	0	0	0	0
5/1/2024	7:15 PM	0	0	0	0	0	0	0	0	0	0	0	0	0
5/1/2024	7:30 PM	0	0	0	0	0	0	0	0	0	0	0	0	0
5/1/2024	7:45 PM	0	0	0	0	0	0	0	0	0	0	0	0	0
5/1/2024	8:00 PM	0	0	0	0	0	0	0	0	0	0	0	0	0
5/1/2024	8:15 PM	0	0	0	0	0	0	0	0	0	0	0	0	0
5/1/2024	8:30 PM	0	0	0	0	0	0	0	0	0	0	0	0	0
5/1/2024	8:45 PM	0	0	0	0	0	0	0	0	0	0	0	0	0
5/1/2024	9:00 PM	0	0	0	0	0	0	0	0	0	0	0	0	0
5/1/2024	9:15 PM	0	0	0	0	0	0	0	0	0	0	0	0	0
5/1/2024	9:30 PM	0	0	0	0	0	0	0	0	0	0	0	0	0
5/1/2024	9:45 PM	0	0	0	0	0	0	0	0	0	0	0	0	0
5/1/2024	10:00 PM	0	0	0	0	0	0	0	0	0	0	0	0	0
5/1/2024	10:15 PM	0	0	0	0	0	0	0	0	0	0	0	0	0
5/1/2024	10:30 PM	0	0	0	0	0	0	0	0	0	0	0	0	0
5/1/2024	10:45 PM	0	0	0	0	0	0	0	0	0	0	0	0	0
5/1/2024	11:00 PM	0	0	0	0	0	0	0	0	0	0	0	0	0
5/1/2024	11:15 PM	0	0	0	0	0	0	0	0	0	0	0	0	0
5/1/2024	11:30 PM	0	0	0	0	0	0	0	0	0	0	0	0	0
5/1/2024	11:45 PM	0	0	0	0	0	0	0	0	0	0	0	0	0

5/2/2024	12:00 AM	0	0	0	0	0	0	0	0	0	0	0	0	0
5/2/2024	12:15 AM	0	0	0	0	0	0	0	0	0	0	0	0	0
5/2/2024	12:30 AM	0	0	0	0	0	0	0	0	0	0	0	0	0
5/2/2024	12:45 AM	0	0	0	0	0	0	0	0	0	0	0	0	0
5/2/2024	1:00 AM	0	0	0	0	0	0	0	0	0	0	0	0	0
5/2/2024	1:15 AM	0	0	0	0	0	0	0	0	0	0	0	0	0
5/2/2024	1:30 AM	0	0	0	0	0	0	0	0	0	0	0	0	0
5/2/2024	1:45 AM	0	0	0	0	0	0	0	0	0	0	0	0	0
5/2/2024	2:00 AM	0	0	0	0	0	0	0	0	0	0	0	0	0
5/2/2024	2:15 AM	0	0	0	0	0	0	0	0	0	0	0	0	0
5/2/2024	2:30 AM	0	0	0	0	0	0	0	0	0	0	0	0	0
5/2/2024	2:45 AM	0	0	0	0	0	0	0	0	0	0	0	0	0
5/2/2024	3:00 AM	0	0	0	0	0	0	0	0	0	0	0	0	0
5/2/2024	3:15 AM	0	0	0	0	0	0	0	0	0	0	0	0	0
5/2/2024	3:30 AM	0	0	0	0	0	0	0	0	0	0	0	0	0
5/2/2024	3:45 AM	0	0	0	0	0	0	0	0	0	0	0	0	0
5/2/2024	4:00 AM	0	0	0	0	0	0	0	0	0	0	0	0	0
5/2/2024	4:15 AM	0	0	0	0	0	0	0	0	0	0	0	0	0
5/2/2024	4:30 AM	0	0	0	0	0	0	0	0	0	0	0	0	0
5/2/2024	4:45 AM	0	0	0	0	0	0	0	0	0	0	0	0	0
5/2/2024	5:00 AM	0	0	0	0	0	0	0	0	0	0	0	0	0
5/2/2024	5:15 AM	0	0	0	0	0	0	0	0	0	0	0	0	0
5/2/2024	5:30 AM	0	0	0	0	0	0	0	0	0	0	0	0	0
5/2/2024	5:45 AM	0	0	0	0	0	0	0	0	0	0	0	0	0
5/2/2024	6:00 AM	0	0	0	0	0	0	0	0	0	0	0	0	0
5/2/2024	6:15 AM	0	0	0	0	0	0	0	0	0	0	0	0	0
5/2/2024	6:30 AM	0	0	0	0	0	0	0	0	0	0	0	0	0
5/2/2024	6:45 AM	0	0	0	0	0	0	0	0	0	0	0	0	0
5/2/2024	7:00 AM	0	0	0	0	0	0	0	0	0	0	0	0	0
5/2/2024	7:15 AM	0	0	0	0	0	0	0	0	0	0	0	0	0
5/2/2024	7:30 AM	0	0	0	0	0	0	0	0	0	0	0	0	0
5/2/2024	7:45 AM	0	0	0	0	0	0	0	0	0	0	0	0	0
5/2/2024	8:00 AM	0	0	0	0	0	0	0	0	0	0	0	0	0
5/2/2024	8:15 AM	0	0	0	0	0	0	0	0	0	0	0	0	0
5/2/2024	8:30 AM	0	0	0	0	0	0	0	0	0	0	0	0	0
5/2/2024	8:45 AM	0	0	0	0	0	0	0	0	0	0	0	0	0
5/2/2024	9:00 AM	0	0	0	0	0	0	0	0	0	0	0	0	0
5/2/2024	9:15 AM	0	0	0	0	0	0	0	0	0	0	0	0	0
5/2/2024	9:30 AM	0	0	0	0	0	0	0	0	0	0	0	0	0
5/2/2024	9:45 AM	0	0	0	0	0	0	0	0	0	0	0	0	0
5/2/2024	10:00 AM	0	0	0	0	0	0	0	0	0	0	0	0	0
5/2/2024	10:15 AM	0	0	0	0	0	0	0	0	0	0	0	0	0
5/2/2024	10:30 AM	0	0	0	0	0	0	0	0	0	0	0	0	0
5/2/2024	10:45 AM	0	0	0	0	0	0	0	0	0	0	0	0	0
5/2/2024	11:00 AM	0	0	0	0	0	0	0	0	0	0	0	0	0
5/2/2024	11:15 AM	0	0	0	0	0	0	0	0	0	0	0	0	0
5/2/2024	11:30 AM	0	0	0	0	0	0	0	0	0	0	0	0	0
5/2/2024	11:45 AM	0	0	0	0	0	0	0	0	0	0	0	0	0
5/2/2024	12:00 PM	0	0	0	0	0	0	0	0	0	0	0	0	0
5/2/2024	12:15 PM	0	0	0	0	0	0	0	0	0	0	0	0	0
5/2/2024	12:30 PM	0	0	0	0	0	0	0	0	0	0	0	0	0
5/2/2024	12:45 PM	0	0	0	0	0	0	0	0	0	0	0	0	0
5/2/2024	1:00 PM	0	0	0	0	0	0	0	0	0	0	0	0	0
5/2/2024	1:15 PM	0	0	0	0	0	0	0	0	0	0	0	0	0
5/2/2024	1:30 PM	0	0	0	0	0	0	0	0	0	0	0	0	0
5/2/2024	1:45 PM	0	0	0	0	0	0	0	0	0	0	0	0	0
5/2/2024	2:00 PM	0	0	0	0	0	0	0	0	0	0	0	0	0
5/2/2024	2:15 PM	0	0	0	0	0	0	0	0	0	0	0	0	0
5/2/2024	2:30 PM	0	0	0	0	0	0	0	0	0	0	0	0	0
5/2/2024	2:45 PM	0	0	0	0	0	0	0	0	0	0	0	0	0
5/2/2024	3:00 PM	0	0	0	0	0	0	0	0	0	0	0	0	0
5/2/2024	3:15 PM	0	0	0	0	0	0	0	0	0	0	0	0	0
5/2/2024	3:30 PM	0	0	0	0	0	0	0	0	0	0	0	0	0
5/2/2024	3:45 PM	0	0	0	0	0	0	0	0	0	0	0	0	0
5/2/2024	4:00 PM	0	0	0	0	0	0	0	0	0	0	0	0	0
5/2/2024	4:15 PM	0	0	0	0	0	0	0	0	0	0	0	0	0
5/2/2024	4:30 PM	0	0	0	0	0	0	0	0	0	0	0	0	0
5/2/2024	4:45 PM	0	0	0	0	0	0	0	0	0	0	0	0	0
5/2/2024	5:00 PM	0	0	0	0	0	0	0	0	0	0	0	0	0
5/2/2024	5:15 PM	0	0	0	0	0	0	0	0	0	0	0	0	0
5/2/2024	5:30 PM	0	0	0	0	0	0	0	0	0	0	0	0	0
5/2/2024	5:45 PM	0	0	0	0	0	0	0	0	0	0	0	0	0
5/2/2024	6:00 PM	0	0	0	0	0	0	0	0	0	0	0	0	0
5/2/2024	6:15 PM	0	0	0	0	0	0	0	0	0	0	0	0	0
5/2/2024	6:30 PM	0	0	0	0	0	0	0	0	0	0	0	0	0
5/2/2024	6:45 PM	0	0	0	0	0	0	0	0	0	0	0	0	0
5/2/2024	7:00 PM	0	0	0	0	0	0	0	0	0	0	0	0	0
5/2/2024	7:15 PM	0	0	0	0	0	0	0	0	0	0	0	0	0
5/2/2024	7:30 PM	0	0	0	0	0	0	0	0	0	0	0	0	0
5/2/2024	7:45 PM	0	0	0	0	0	0	0	0	0	0	0	0	0
5/2/2024	8:00 PM	0	0	0	0	0	0	0	0	0	0	0	0	0
5/2/2024	8:15 PM	0	0	0	0	0	0	0	0	0	0	0	0	0
5/2/2024	8:30 PM	0	0	0	0	0	0	0	0	0	0	0	0	0
5/2/2024	8:45 PM	0	0	0	0	0	0	0	0	0	0	0	0	0
5/2/2024	9:00 PM	0	0	0	0	0	0	0	0	0	0	0	0	0
5/2/2024	9:15 PM	0	0	0	0	0	0	0	0	0	0	0	0	0
5/2/2024	9:30 PM	0	0	0	0	0	0	0	0	0	0	0	0	0
5/2/2024	9:45 PM	0	0	0	0	0	0	0	0	0	0	0	0	0
5/2/2024	10:00 PM	0	0	0	0	0	0	0	0	0	0	0	0	0
5/2/2024	10:15 PM	0	0	0	0	0	0	0	0	0	0	0	0	0
5/2/2024	10:30 PM	0	0	0	0	0	0	0	0	0	0	0	0	0
5/2/2024	10:45 PM	0	0	0	0	0	0	0	0	0	0	0	0	0
5/2/2024	11:00 PM	0	0	0	0	0	0	0	0	0	0	0	0	0
5/2/2024	11:15 PM	0	0	0	0	0	0	0	0	0	0	0	0	0
5/2/2024	11:30 PM	0	0	0	0	0	0	0	0	0	0	0	0	0
5/2/2024	11:45 PM	0	0	0	0	0	0	0	0	0	0	0	0	0

Bi-Directional Class Count || SB WB 15min

Columbia, SC

Marr Traffic DATA COLLECTION
www.marrtraffic.com

Site 22
I-26 James F. Byrnes Expy On/Off-Ramp,
north of SC-60 Lake Murray Blvd

Date
Tuesday, April 23, 2024

Lat/Long
34.092072°, -81.165806°

Weather
Fair
58°F

Click here for Detailed Weather

Click here for Map

0000 - 2400 (Weekday 24h Session) (04-23-2024)
SB WB 15min

	Southbound (Movement 22.1)													15min	60min
Time	1	2	3	4	5	6	7	8	9	10	11	12	13	Total	Total
0000 - 0015	0	0	0	0	0	0	0	0	0	0	0	0	0	**0**	
0015 - 0030	0	0	0	0	0	0	0	0	0	0	0	0	0	**0**	
0030 - 0045	0	0	0	0	0	0	0	0	0	0	0	0	0	**0**	
0045 - 0100	0	0	0	0	0	0	0	0	0	0	0	0	0	**0**	**0**
0100 - 0115	0	0	0	0	0	0	0	0	0	0	0	0	0	**0**	
0115 - 0130	0	0	0	0	0	0	0	0	0	0	0	0	0	**0**	
0130 - 0145	0	0	0	0	0	0	0	0	0	0	0	0	0	**0**	
0145 - 0200	0	0	0	0	0	0	0	0	0	0	0	0	0	**0**	**0**
0200 - 0215	0	0	0	0	0	0	0	0	0	0	0	0	0	**0**	
0215 - 0230	0	0	0	0	0	0	0	0	0	0	0	0	0	**0**	
0230 - 0245	0	0	0	0	0	0	0	0	0	0	0	0	0	**0**	
0245 - 0300	0	0	0	0	0	0	0	0	0	0	0	0	0	**0**	**0**
0300 - 0315	0	0	0	0	0	0	0	0	0	0	0	0	0	**0**	
0315 - 0330	0	0	0	0	0	0	0	0	0	0	0	0	0	**0**	
0330 - 0345	0	0	0	0	0	0	0	0	0	0	0	0	0	**0**	
0345 - 0400	0	0	0	0	0	0	0	0	0	0	0	0	0	**0**	**0**
0400 - 0415	0	0	0	0	0	0	0	0	0	0	0	0	0	**0**	
0415 - 0430	0	0	0	0	0	0	0	0	0	0	0	0	0	**0**	
0430 - 0445	0	0	0	0	0	0	0	0	0	0	0	0	0	**0**	
0445 - 0500	0	0	0	0	0	0	0	0	0	0	0	0	0	**0**	**0**
0500 - 0515	0	0	0	0	0	0	0	0	0	0	0	0	0	**0**	
0515 - 0530	0	0	0	0	0	0	0	0	0	0	0	0	0	**0**	
0530 - 0545	0	0	0	0	0	0	0	0	0	0	0	0	0	**0**	
0545 - 0600	0	0	0	0	0	0	0	0	0	0	0	0	0	**0**	**0**
0600 - 0615	0	0	0	0	0	0	0	0	0	0	0	0	0	**0**	
0615 - 0630	0	0	0	0	0	0	0	0	0	0	0	0	0	**0**	
0630 - 0645	0	0	0	0	0	0	0	0	0	0	0	0	0	**0**	
0645 - 0700	0	0	0	0	0	0	0	0	0	0	0	0	0	**0**	**0**
0700 - 0715	0	0	0	0	0	0	0	0	0	0	0	0	0	**0**	
0715 - 0730	0	0	0	0	0	0	0	0	0	0	0	0	0	**0**	
0730 - 0745	0	0	0	0	0	0	0	0	0	0	0	0	0	**0**	
0745 - 0800	0	0	0	0	0	0	0	0	0	0	0	0	0	**0**	**0**
0800 - 0815	0	0	0	0	0	0	0	0	0	0	0	0	0	**0**	
0815 - 0830	0	0	0	0	0	0	0	0	0	0	0	0	0	**0**	
0830 - 0845	0	0	0	0	0	0	0	0	0	0	0	0	0	**0**	
0845 - 0900	0	0	0	0	0	0	0	0	0	0	0	0	0	**0**	**0**
0900 - 0915	0	0	0	0	0	0	0	0	0	0	0	0	0	**0**	
0915 - 0930	0	0	0	0	0	0	0	0	0	0	0	0	0	**0**	
0930 - 0945	0	0	0	0	0	0	0	0	0	0	0	0	0	**0**	
0945 - 1000	0	0	0	0	0	0	0	0	0	0	0	0	0	**0**	**0**
1000 - 1015	0	0	0	0	0	0	0	0	0	0	0	0	0	**0**	
1015 - 1030	0	0	0	0	0	0	0	0	0	0	0	0	0	**0**	
1030 - 1045	0	0	0	0	0	0	0	0	0	0	0	0	0	**0**	
1045 - 1100	0	0	0	0	0	0	0	0	0	0	0	0	0	**0**	**0**
1100 - 1115	0	0	0	0	0	0	0	0	0	0	0	0	0	**0**	
1115 - 1130	0	0	0	0	0	0	0	0	0	0	0	0	0	**0**	
1130 - 1145	0	0	0	0	0	0	0	0	0	0	0	0	0	**0**	
1145 - 1200	0	0	0	0	0	0	0	0	0	0	0	0	0	**0**	**0**
1200 - 1215	0	0	0	0	0	0	0	0	0	0	0	0	0	**0**	
1215 - 1230	0	0	0	0	0	0	0	0	0	0	0	0	0	**0**	
1230 - 1245	0	0	0	0	0	0	0	0	0	0	0	0	0	**0**	
1245 - 1300	0	0	0	0	0	0	0	0	0	0	0	0	0	**0**	**0**
1300 - 1315	0	0	0	0	0	0	0	0	0	0	0	0	0	**0**	
1315 - 1330	0	0	0	0	0	0	0	0	0	0	0	0	0	**0**	
1330 - 1345	0	0	0	0	0	0	0	0	0	0	0	0	0	**0**	
1345 - 1400	0	0	0	0	0	0	0	0	0	0	0	0	0	**0**	**0**
1400 - 1415	0	0	0	0	0	0	0	0	0	0	0	0	0	**0**	
1415 - 1430	0	0	0	0	0	0	0	0	0	0	0	0	0	**0**	
1430 - 1445	0	0	0	0	0	0	0	0	0	0	0	0	0	**0**	
1445 - 1500	0	0	0	0	0	0	0	0	0	0	0	0	0	**0**	**0**
1500 - 1515	0	0	0	0	0	0	0	0	0	0	0	0	0	**0**	
1515 - 1530	0	0	0	0	0	0	0	0	0	0	0	0	0	**0**	
1530 - 1545	0	0	0	0	0	0	0	0	0	0	0	0	0	**0**	
1545 - 1600	0	0	0	0	0	0	0	0	0	0	0	0	0	**0**	**0**
1600 - 1615	0	0	0	0	0	0	0	0	0	0	0	0	0	**0**	
1615 - 1630	0	0	0	0	0	0	0	0	0	0	0	0	0	**0**	
1630 - 1645	0	0	0	0	0	0	0	0	0	0	0	0	0	**0**	
1645 - 1700	0	0	0	0	0	0	0	0	0	0	0	0	0	**0**	**0**
1700 - 1715	0	0	0	0	0	0	0	0	0	0	0	0	0	**0**	
1715 - 1730	0	0	0	0	0	0	0	0	0	0	0	0	0	**0**	
1730 - 1745	0	0	0	0	0	0	0	0	0	0	0	0	0	**0**	
1745 - 1800	0	0	0	0	0	0	0	0	0	0	0	0	0	**0**	**0**
1800 - 1815	0	0	0	0	0	0	0	0	0	0	0	0	0	**0**	
1815 - 1830	0	0	0	0	0	0	0	0	0	0	0	0	0	**0**	
1830 - 1845	0	0	0	0	0	0	0	0	0	0	0	0	0	**0**	
1845 - 1900	0	0	0	0	0	0	0	0	0	0	0	0	0	**0**	**0**
1900 - 1915	0	90	11	0	0	0	0	0	0	0	0	0	0	**101**	
1915 - 1930	0	74	6	0	1	0	0	0	0	0	0	0	0	**81**	
1930 - 1945	0	82	5	0	0	0	0	0	0	0	0	0	0	**87**	
1945 - 2000	0	85	8	0	0	0	0	0	1	0	0	0	0	**94**	**363**
2000 - 2015	0	68	3	0	2	0	0	0	0	0	0	0	0	**73**	
2015 - 2030	0	55	4	0	4	0	0	0	0	0	0	0	0	**63**	
2030 - 2045	0	50	2	0	2	0	0	0	1	0	0	0	0	**55**	
2045 - 2100	0	56	3	0	3	1	0	0	1	0	0	0	0	**64**	**255**
2100 - 2115	0	59	3	0	0	0	0	0	0	0	0	0	0	**62**	
2115 - 2130	0	51	5	0	1	0	0	0	1	0	0	0	0	**58**	
2130 - 2145	0	38	3	0	0	0	0	0	0	0	0	0	0	**41**	
2145 - 2200	0	40	2	0	0	0	0	0	1	0	0	0	0	**43**	**204**
2200 - 2215	0	38	2	0	0	0	0	0	0	0	0	0	0	**40**	
2215 - 2230	0	39	1	0	0	0	0	0	1	0	0	0	0	**41**	
2230 - 2245	0	31	0	0	0	0	0	0	1	0	0	0	0	**32**	
2245 - 2300	0	16	1	0	0	0	0	0	1	0	0	0	0	**18**	**131**
2300 - 2315	0	18	2	0	1	0	0	0	0	0	0	0	0	**21**	
2315 - 2330	0	23	0	0	0	0	0	0	0	0	0	0	0	**23**	
2330 - 2345	0	15	1	0	1	0	0	0	0	0	0	0	0	**17**	
2345 - 0000	0	17	0	0	0	0	0	0	0	0	0	0	0	**17**	**78**

Session Total	0	945	62	0	15	1	0	0	8	0	0	0	0	**1031**
Session Average	0.00	9.84	0.65	0.00	0.16	0.01	0.00	0.00	0.08	0.00	0.00	0.00	0.00	**10.74**
Session Percentage	0.00	91.66	6.01	0.00	1.45	0.10	0.00	0.00	0.78	0.00	0.00	0.00	0.00	

AM Peak Hour	-	-	-	-	-	-	-	-	-	-	-	-	-	**-**
AM Peak Volume	0	0	0	0	0	0	0	0	0	0	0	0	0	**0**

Noon Peak Hour	-	-	-	-	-	-	-	-	-	-	-	-	-	**-**
Noon Peak Volume	0	0	0	0	0	0	0	0	0	0	0	0	0	**0**

PM Peak Hour	-	1900 - 2000	1900 - 2000	-	1945 - 2045	-	-	-	1945 - 2045	-	-	-	-	**1900 - 2000**
PM Peak Volume	0	331	30	0	8	0	0	0	2	0	0	0	0	**363**

Site 22
I-26 James F. Byrnes Expy On/Off-Ramp,
north of SC-60 Lake Murray Blvd

Date
Wednesday, April 24, 2024

Lat/Long
34.092072°, -81.165806°

Weather
Fair
66°F

Click here for Detailed Weather

0000 - 2400 (Weekday 24h Session) (04-24-2024)
SB WB 15min

	Southbound (Movement 22.1)													15min	60min
Time	1	2	3	4	5	6	7	8	9	10	11	12	13	Total	Total
0000 - 0015	0	14	0	0	0	0	0	0	0	0	0	0	0	**14**	
0015 - 0030	0	17	0	0	0	0	0	0	0	0	0	0	0	**17**	
0030 - 0045	0	8	0	0	1	0	0	0	0	0	0	0	0	**9**	
0045 - 0100	0	10	0	0	0	0	0	0	0	0	0	0	0	**10**	**50**
0100 - 0115	0	6	0	0	0	0	0	0	0	0	0	0	0	**6**	
0115 - 0130	0	7	0	0	0	0	0	0	1	0	0	0	0	**8**	
0130 - 0145	0	11	0	0	0	0	0	0	0	0	0	0	0	**11**	
0145 - 0200	0	8	0	0	0	0	0	0	0	0	0	0	0	**8**	**33**
0200 - 0215	0	6	0	0	0	0	0	0	1	0	0	0	0	**7**	
0215 - 0230	0	9	0	0	0	0	0	0	0	0	0	0	0	**9**	
0230 - 0245	0	5	0	0	1	0	0	0	0	0	0	0	0	**6**	
0245 - 0300	0	6	0	0	1	0	0	0	0	0	0	0	0	**7**	**29**
0300 - 0315	0	6	0	0	0	0	0	0	0	0	0	0	0	**6**	
0315 - 0330	0	3	0	0	1	0	0	0	0	0	0	0	0	**4**	
0330 - 0345	0	5	0	0	0	0	0	0	0	0	0	0	0	**5**	
0345 - 0400	0	5	0	0	1	0	0	0	0	0	0	0	0	**6**	**21**
0400 - 0415	0	4	0	0	0	0	0	0	0	0	0	0	0	**4**	
0415 - 0430	0	7	0	0	0	0	0	0	0	0	0	0	0	**7**	
0430 - 0445	0	7	0	0	0	0	0	0	0	0	0	0	0	**7**	
0445 - 0500	0	12	0	0	0	0	0	0	1	0	0	0	0	**13**	**31**
0500 - 0515	0	10	0	0	0	0	0	0	0	0	0	0	0	**10**	
0515 - 0530	0	6	0	0	0	0	0	0	1	0	0	0	0	**7**	
0530 - 0545	0	11	0	0	0	0	0	0	0	0	0	0	0	**11**	
0545 - 0600	0	22	0	0	0	0	0	0	1	0	0	0	0	**23**	**51**
0600 - 0615	0	27	1	0	1	0	0	0	0	0	0	0	0	**29**	
0615 - 0630	0	24	6	1	0	1	0	0	0	0	0	0	0	**32**	
0630 - 0645	1	38	9	0	1	0	0	0	1	0	0	0	0	**50**	
0645 - 0700	0	57	18	1	2	0	0	0	1	0	0	0	0	**79**	**190**
0700 - 0715	0	73	12	0	0	1	0	0	0	0	0	0	0	**86**	
0715 - 0730	0	93	18	0	3	0	0	1	0	0	0	0	0	**115**	
0730 - 0745	0	113	19	1	3	1	0	0	0	0	0	0	0	**137**	
0745 - 0800	1	120	35	0	2	0	0	0	0	0	0	0	0	**158**	**496**
0800 - 0815	0	86	28	0	2	2	0	1	0	0	0	0	0	**119**	
0815 - 0830	0	96	25	0	4	0	0	2	0	0	0	0	0	**127**	
0830 - 0845	0	77	22	0	1	0	0	0	2	0	0	0	0	**102**	
0845 - 0900	0	91	19	0	2	0	0	3	0	0	0	0	0	**115**	**463**
0900 - 0915	0	78	24	0	2	1	0	0	0	0	0	0	0	**105**	
0915 - 0930	0	83	17	0	5	0	0	1	1	0	0	0	0	**107**	
0930 - 0945	0	81	27	1	3	1	0	0	0	0	0	0	0	**113**	
0945 - 1000	0	78	23	0	6	0	0	0	0	0	0	0	0	**107**	**432**
1000 - 1015	1	69	24	0	1	0	0	2	0	0	0	0	0	**97**	
1015 - 1030	1	94	27	0	1	0	0	0	1	0	0	0	0	**124**	
1030 - 1045	0	87	15	0	2	0	0	0	1	0	0	0	0	**105**	
1045 - 1100	0	71	21	0	3	0	0	1	2	0	0	0	0	**98**	**424**
1100 - 1115	0	77	24	0	3	0	0	0	1	0	0	0	0	**105**	
1115 - 1130	0	98	19	0	2	1	0	0	1	0	0	0	0	**121**	
1130 - 1145	0	86	27	0	2	0	0	0	2	0	0	0	0	**117**	
1145 - 1200	0	101	28	0	1	0	0	0	0	0	0	0	0	**130**	**473**
1200 - 1215	0	84	21	0	1	0	0	1	0	0	0	0	0	**107**	
1215 - 1230	0	90	23	0	1	0	0	0	0	0	0	0	0	**114**	
1230 - 1245	1	101	27	0	1	0	0	0	0	0	0	0	0	**130**	
1245 - 1300	0	112	24	0	4	0	0	0	1	0	0	0	0	**141**	**492**
1300 - 1315	0	69	29	0	2	0	0	0	1	0	0	0	0	**101**	
1315 - 1330	0	112	29	0	2	0	0	0	0	0	0	0	0	**143**	
1330 - 1345	0	103	24	0	1	0	0	0	1	0	0	0	0	**129**	
1345 - 1400	0	101	26	0	1	0	0	0	0	0	0	0	0	**128**	**501**
1400 - 1415	0	87	31	0	1	0	0	1	0	0	0	0	0	**120**	
1415 - 1430	0	105	22	0	1	0	0	0	0	0	0	0	0	**128**	
1430 - 1445	0	103	27	0	0	0	0	0	0	0	0	0	0	**130**	
1445 - 1500	0	90	21	2	1	0	0	0	0	0	0	0	0	**114**	**492**
1500 - 1515	0	99	19	0	0	1	0	0	1	0	0	0	0	**120**	
1515 - 1530	1	112	20	0	0	0	0	0	0	0	0	0	0	**133**	
1530 - 1545	0	102	18	1	0	0	0	0	0	0	0	0	0	**121**	
1545 - 1600	0	94	21	0	0	0	0	0	1	0	0	0	0	**116**	**490**
1600 - 1615	0	101	20	1	0	1	0	0	0	0	0	0	0	**123**	
1615 - 1630	1	102	19	0	1	0	0	0	0	0	0	0	0	**123**	
1630 - 1645	0	81	23	0	0	0	0	0	0	0	0	0	0	**104**	
1645 - 1700	0	92	16	0	5	0	0	0	0	0	0	0	0	**113**	**463**
1700 - 1715	1	112	22	1	0	0	0	0	0	0	0	0	0	**136**	
1715 - 1730	0	92	27	0	1	0	0	0	0	0	0	0	0	**120**	
1730 - 1745	2	99	22	0	1	0	0	0	0	0	0	0	0	**124**	
1745 - 1800	0	125	19	0	1	0	0	0	0	0	0	0	0	**145**	**525**
1800 - 1815	0	116	16	0	0	0	0	0	1	0	0	0	0	**133**	
1815 - 1830	0	125	18	0	0	0	0	0	0	0	0	0	0	**143**	
1830 - 1845	0	97	17	0	0	0	0	1	1	0	0	0	0	**116**	
1845 - 1900	0	103	19	0	2	0	0	0	0	0	0	0	0	**124**	**516**
1900 - 1915	0	79	16	0	0	0	0	0	0	0	0	0	0	**95**	
1915 - 1930	1	99	10	0	0	0	1	0	0	0	0	0	0	**111**	
1930 - 1945	0	87	9	0	0	0	0	0	0	0	0	0	0	**96**	
1945 - 2000	0	80	17	0	0	0	0	0	0	0	0	0	0	**97**	**399**
2000 - 2015	0	55	15	0	2	0	0	0	0	0	0	0	0	**72**	
2015 - 2030	0	86	11	0	0	0	0	0	0	0	0	0	0	**97**	
2030 - 2045	0	74	3	0	2	0	0	0	0	0	0	0	0	**79**	
2045 - 2100	0	73	2	0	0	0	0	0	0	0	0	0	0	**75**	**323**
2100 - 2115	0	54	1	0	0	0	0	0	0	0	0	0	0	**55**	
2115 - 2130	0	47	0	0	0	0	0	0	0	0	0	0	0	**47**	
2130 - 2145	0	63	2	0	0	0	0	0	0	0	0	0	0	**65**	
2145 - 2200	0	37	1	0	0	0	0	0	0	0	0	0	0	**38**	**205**
2200 - 2215	0	49	0	0	0	0	0	0	0	0	0	0	0	**49**	
2215 - 2230	0	39	0	0	0	0	0	0	0	0	0	0	0	**39**	
2230 - 2245	0	29	0	0	0	0	0	0	0	0	0	0	0	**29**	
2245 - 2300	0	26	0	0	0	0	0	0	0	0	0	0	0	**26**	**143**
2300 - 2315	0	33	1	0	0	0	0	0	0	0	0	0	0	**34**	
2315 - 2330	0	24	1	0	0	0	0	1	0	0	0	0	0	**26**	
2330 - 2345	0	23	0	0	0	0	0	0	1	0	0	0	0	**24**	
2345 - 0000	0	24	0	0	0	0	0	0	0	0	0	0	0	**24**	**108**

Session Total	11	5993	1197	9	88	10	1	15	26	0	0	0	0	**7350**
Session Average	0.11	62.43	12.47	0.09	0.92	0.10	0.01	0.16	0.27	0.00	0.00	0.00	0.00	**76.56**
Session Percentage	0.15	81.54	16.29	0.12	1.20	0.14	0.01	0.20	0.35	0.00	0.00	0.00	0.00	

AM Peak Hour	0930 - 1030	0730 - 0830	0745 - 0845	0600 - 0700	0900 - 1000	0715 - 0815	-	0800 - 0900	0830 - 0930	-	-	-	-	**0730 - 0830**
AM Peak Volume	2	415	110	2	16	3	0	6	3	0	0	0	0	**541**

Noon Peak Hour	1000 - 1100	1430 - 1530	1315 - 1415	1445 - 1545	1030 - 1130	1030 - 1130	-	1000 - 1100	1045 - 1145	-	-	-	-	**1315 - 1415**
Noon Peak Volume	2	404	110	3	10	1	0	3	6	0	0	0	0	**520**

PM Peak Hour	1645 - 1745	1730 - 1830	1700 - 1800	1515 - 1615	1645 - 1745	1500 - 1600	1830 - 1930	1745 - 1845	1500 - 1600	-	-	-	-	**1730 - 1830**
PM Peak Volume	3	465	90	2	7	1	1	1	2	0	0	0	0	**545**

Site 22
I-26 James F. Byrnes Expy On/Off-Ramp,
north of SC-60 Lake Murray Blvd

Date
Thursday, April 25, 2024

Lat/Long
34.092072°, -81.165806°

Weather
Fair
67°F

Click here for Detailed Weather

0000 - 2400 (Weekday 24h Session) (04-25-2024)
SB WB 15min

	Southbound (Movement 22.1)													15min	60min
TIME	1	2	3	4	5	6	7	8	9	10	11	12	13	Total	Total
0000 - 0015	0	15	0	0	0	0	0	0	0	0	0	0	0	**15**	
0015 - 0030	0	16	0	0	1	0	0	0	1	0	0	0	0	**18**	
0030 - 0045	0	12	0	0	0	0	0	0	0	0	0	0	0	**12**	
0045 - 0100	0	13	0	0	0	0	0	0	0	0	0	0	0	**13**	**58**
0100 - 0115	0	8	0	0	0	0	0	0	0	0	0	0	0	**8**	
0115 - 0130	0	9	0	0	0	0	0	0	0	0	0	0	0	**9**	
0130 - 0145	0	2	0	0	0	0	0	0	2	0	0	0	0	**4**	
0145 - 0200	0	10	0	0	0	0	0	0	0	0	0	0	0	**10**	**31**
0200 - 0215	0	6	0	0	1	0	0	0	0	0	0	0	0	**7**	
0215 - 0230	0	5	0	0	0	0	0	0	0	0	0	0	0	**5**	
0230 - 0245	0	4	0	0	0	0	0	0	0	0	0	0	0	**4**	
0245 - 0300	0	5	0	0	0	0	0	0	0	0	0	0	0	**5**	**21**
0300 - 0315	0	3	0	0	2	0	0	0	0	0	0	0	0	**5**	
0315 - 0330	0	4	0	0	0	0	0	0	0	0	0	0	0	**4**	
0330 - 0345	0	6	0	0	2	0	0	0	0	0	0	0	0	**8**	
0345 - 0400	0	6	0	0	0	0	0	0	1	0	0	0	0	**7**	**24**
0400 - 0415	0	4	0	0	0	0	0	0	0	0	0	0	0	**4**	
0415 - 0430	0	5	0	0	0	0	0	0	0	0	0	0	0	**5**	
0430 - 0445	0	5	0	0	0	0	0	0	0	0	0	0	0	**5**	
0445 - 0500	0	7	0	0	0	0	0	0	0	0	0	0	0	**7**	**21**
0500 - 0515	0	14	0	0	1	0	0	0	0	0	0	0	0	**15**	
0515 - 0530	0	10	0	0	0	0	0	0	0	0	0	0	0	**10**	
0530 - 0545	0	16	0	0	1	0	0	0	1	0	0	0	0	**18**	
0545 - 0600	0	17	0	0	1	0	0	0	0	0	0	0	0	**18**	**61**
0600 - 0615	0	32	3	0	0	0	0	0	0	0	0	0	0	**35**	
0615 - 0630	0	18	5	1	1	1	0	0	0	0	0	0	0	**26**	
0630 - 0645	1	52	7	0	1	1	0	0	0	0	0	0	0	**62**	
0645 - 0700	0	62	12	0	1	1	0	0	0	0	0	0	0	**76**	**199**
0700 - 0715	0	72	13	0	1	2	0	1	2	0	0	0	0	**91**	
0715 - 0730	0	75	22	0	4	2	0	0	0	0	0	0	0	**103**	
0730 - 0745	0	112	26	0	4	1	0	0	1	0	0	0	0	**144**	
0745 - 0800	0	110	24	0	3	1	0	0	0	0	0	0	0	**138**	**476**
0800 - 0815	1	102	27	0	0	0	0	1	0	0	0	0	0	**131**	
0815 - 0830	0	111	31	0	1	1	0	0	1	0	0	0	0	**145**	
0830 - 0845	0	95	28	1	1	0	0	2	1	0	0	0	0	**128**	
0845 - 0900	0	89	30	0	2	0	0	0	0	0	0	0	0	**121**	**525**
0900 - 0915	0	74	21	1	0	0	0	0	0	0	0	0	0	**96**	
0915 - 0930	0	83	22	0	2	0	0	0	1	0	0	0	0	**108**	
0930 - 0945	0	75	17	0	3	0	0	1	0	0	0	0	0	**96**	
0945 - 1000	0	93	14	1	1	0	0	1	0	0	0	0	0	**110**	**410**
1000 - 1015	0	69	26	0	6	0	0	0	0	0	0	0	0	**101**	
1015 - 1030	0	83	21	0	3	3	0	0	1	0	0	0	0	**111**	
1030 - 1045	0	78	14	0	1	1	0	2	0	0	0	0	0	**96**	
1045 - 1100	0	96	24	0	1	0	0	0	1	0	0	0	0	**122**	**430**
1100 - 1115	0	78	29	0	3	1	0	0	0	0	0	0	0	**111**	
1115 - 1130	0	95	15	0	1	1	1	0	0	0	0	0	0	**113**	
1130 - 1145	0	101	23	0	2	1	0	0	0	0	0	0	0	**127**	
1145 - 1200	0	105	20	0	3	0	0	0	0	0	0	0	0	**128**	**479**
1200 - 1215	0	88	22	0	2	0	0	0	1	0	0	0	0	**113**	
1215 - 1230	0	101	22	0	3	0	0	0	1	0	0	0	0	**127**	
1230 - 1245	0	99	21	0	2	0	0	0	0	0	0	0	0	**122**	
1245 - 1300	0	102	19	0	2	1	0	0	0	0	0	0	0	**124**	**486**
1300 - 1315	0	100	23	0	2	0	0	1	0	0	0	0	0	**126**	
1315 - 1330	0	94	28	0	5	0	0	0	2	0	0	0	0	**129**	
1330 - 1345	0	100	26	0	0	0	0	0	0	0	0	0	0	**126**	
1345 - 1400	0	99	25	0	0	1	0	0	0	0	0	0	0	**125**	**506**
1400 - 1415	0	91	29	0	0	1	0	1	0	0	0	0	0	**122**	
1415 - 1430	0	99	21	0	2	0	0	0	1	0	0	0	0	**123**	
1430 - 1445	0	115	36	0	1	1	0	1	2	0	0	0	0	**156**	
1445 - 1500	0	96	26	1	1	0	0	1	0	0	0	0	0	**125**	**526**
1500 - 1515	0	97	32	0	2	0	0	0	1	0	0	0	0	**132**	
1515 - 1530	0	109	31	1	1	0	0	0	0	0	0	0	0	**142**	
1530 - 1545	0	79	17	1	2	0	0	0	0	0	0	0	0	**99**	
1545 - 1600	0	130	19	0	0	0	0	0	0	0	0	0	0	**149**	**522**
1600 - 1615	1	113	24	0	0	1	0	0	0	0	0	0	0	**139**	
1615 - 1630	1	132	21	0	0	0	0	0	1	0	0	0	0	**155**	
1630 - 1645	0	128	24	0	0	1	0	0	0	0	0	0	0	**153**	
1645 - 1700	1	101	25	0	3	1	0	0	1	0	0	0	0	**132**	**579**
1700 - 1715	2	123	27	1	2	0	0	0	0	0	0	0	0	**155**	
1715 - 1730	0	127	26	0	0	0	0	0	0	0	0	0	0	**153**	
1730 - 1745	0	134	25	0	0	1	0	0	0	0	0	0	0	**160**	
1745 - 1800	0	116	29	0	2	0	0	0	0	0	0	0	0	**147**	**615**
1800 - 1815	0	108	19	0	1	0	0	0	0	0	0	0	0	**128**	
1815 - 1830	0	122	22	0	1	0	0	1	0	0	0	0	0	**146**	
1830 - 1845	0	93	17	0	0	0	0	1	0	0	0	0	0	**111**	
1845 - 1900	0	96	20	1	0	0	0	0	0	0	0	0	0	**117**	**502**
1900 - 1915	0	0	0	0	0	0	0	0	0	0	0	0	0	**0**	
1915 - 1930	0	0	0	0	0	0	0	0	0	0	0	0	0	**0**	
1930 - 1945	0	0	0	0	0	0	0	0	0	0	0	0	0	**0**	
1945 - 2000	0	0	0	0	0	0	0	0	0	0	0	0	0	**0**	**0**
2000 - 2015	0	0	0	0	0	0	0	0	0	0	0	0	0	**0**	
2015 - 2030	0	0	0	0	0	0	0	0	0	0	0	0	0	**0**	
2030 - 2045	0	0	0	0	0	0	0	0	0	0	0	0	0	**0**	
2045 - 2100	0	0	0	0	0	0	0	0	0	0	0	0	0	**0**	**0**
2100 - 2115	0	0	0	0	0	0	0	0	0	0	0	0	0	**0**	
2115 - 2130	0	0	0	0	0	0	0	0	0	0	0	0	0	**0**	
2130 - 2145	0	0	0	0	0	0	0	0	0	0	0	0	0	**0**	
2145 - 2200	0	0	0	0	0	0	0	0	0	0	0	0	0	**0**	**0**
2200 - 2215	0	0	0	0	0	0	0	0	0	0	0	0	0	**0**	
2215 - 2230	0	0	0	0	0	0	0	0	0	0	0	0	0	**0**	
2230 - 2245	0	0	0	0	0	0	0	0	0	0	0	0	0	**0**	
2245 - 2300	0	0	0	0	0	0	0	0	0	0	0	0	0	**0**	**0**
2300 - 2315	0	0	0	0	0	0	0	0	0	0	0	0	0	**0**	
2315 - 2330	0	0	0	0	0	0	0	0	0	0	0	0	0	**0**	
2330 - 2345	0	0	0	0	0	0	0	0	0	0	0	0	0	**0**	
2345 - 0000	0	0	0	0	0	0	0	0	0	0	0	0	0	**0**	**0**

Session Total	7	5154	1150	9	88	25	1	14	23	0	0	0	0	**6471**
Session Average	0.07	53.69	11.98	0.09	0.92	0.26	0.01	0.15	0.24	0.00	0.00	0.00	0.00	**67.41**
Session Percentage	0.11	79.65	17.77	0.14	1.36	0.39	0.02	0.22	0.36	0.00	0.00	0.00	0.00	

AM Peak Hour	0545 - 0645	0730 - 0830	0800 - 0900	0815 - 0915	0930 - 1030	0630 - 0730	-	0745 - 0845	0645 - 0745	-	-	-	-	**0730 - 0830**
AM Peak Hour Volume	1	435	116	2	13	6	0	3	3	0	0	0	0	**558**

Noon Peak Hour	-	1430 - 1530	1430 - 1530	1445 - 1545	1000 - 1100	1015 - 1115	1030 - 1130	1400 - 1500	1415 - 1515	-	-	-	-	**1430 - 1530**
Noon Peak Hour Volume	0	417	125	3	11	5	1	3	4	0	0	0	0	**555**

PM Peak Hour	1615 - 1715	1545 - 1645	1700 - 1800	1500 - 1600	1500 - 1600	1600 - 1700	-	1745 - 1845	1600 - 1700	-	-	-	-	**1700 - 1800**
PM Peak Hour Volume	4	503	107	2	5	3	0	2	2	0	0	0	0	**615**

Bi-Directional Class Count || SB WB Average 15min

Columbia, SC

Marr Traffic DATA COLLECTION
www.marrtraffic.com

Site 22
I-26 James F. Byrnes Expy On/Off-Ramp,
north of SC-60 Lake Murray Blvd

Date
Tuesday, April 23, 2024

Lat/Long
34.092072°, -81.165806°

Weather
Fair
58°F

0000 - 2400 (Weekday 24h Session) (All Dates)
SB WB Average 15min

	SB WB Average 15min													15min	60min
Time	1	2	3	4	5	6	7	8	9	10	11	12	13	Total	Total
0000 - 0015	0	10	0	0	0	0	0	0	0	0	0	0	0	**10**	
0015 - 0030	0	11	0	0	0	0	0	0	0	0	0	0	0	**12**	
0030 - 0045	0	7	0	0	0	0	0	0	0	0	0	0	0	**7**	
0045 - 0100	0	8	0	0	0	0	0	0	0	0	0	0	0	**8**	**36**
0100 - 0115	0	5	0	0	0	0	0	0	0	0	0	0	0	**5**	
0115 - 0130	0	5	0	0	0	0	0	0	0	0	0	0	0	**6**	
0130 - 0145	0	4	0	0	0	0	0	0	1	0	0	0	0	**5**	
0145 - 0200	0	6	0	0	0	0	0	0	0	0	0	0	0	**6**	**21**
0200 - 0215	0	4	0	0	0	0	0	0	0	0	0	0	0	**5**	
0215 - 0230	0	5	0	0	0	0	0	0	0	0	0	0	0	**5**	
0230 - 0245	0	3	0	0	0	0	0	0	0	0	0	0	0	**3**	
0245 - 0300	0	4	0	0	0	0	0	0	0	0	0	0	0	**4**	**17**
0300 - 0315	0	3	0	0	1	0	0	0	0	0	0	0	0	**4**	
0315 - 0330	0	2	0	0	0	0	0	0	0	0	0	0	0	**3**	
0330 - 0345	0	4	0	0	1	0	0	0	0	0	0	0	0	**4**	
0345 - 0400	0	4	0	0	0	0	0	0	0	0	0	0	0	**4**	**15**
0400 - 0415	0	3	0	0	0	0	0	0	0	0	0	0	0	**3**	
0415 - 0430	0	4	0	0	0	0	0	0	0	0	0	0	0	**4**	
0430 - 0445	0	4	0	0	0	0	0	0	0	0	0	0	0	**4**	
0445 - 0500	0	6	0	0	0	0	0	0	0	0	0	0	0	**7**	**17**
0500 - 0515	0	8	0	0	0	0	0	0	0	0	0	0	0	**8**	
0515 - 0530	0	5	0	0	0	0	0	0	0	0	0	0	0	**6**	
0530 - 0545	0	9	0	0	0	0	0	0	0	0	0	0	0	**10**	
0545 - 0600	0	13	0	0	0	0	0	0	0	0	0	0	0	**14**	**37**
0600 - 0615	0	20	1	0	0	0	0	0	0	0	0	0	0	**21**	
0615 - 0630	0	14	4	1	0	1	0	0	0	0	0	0	0	**19**	
0630 - 0645	1	30	5	0	1	0	0	0	0	0	0	0	0	**37**	
0645 - 0700	0	40	10	0	1	0	0	0	0	0	0	0	0	**52**	**130**
0700 - 0715	0	48	8	0	0	1	0	0	1	0	0	0	0	**59**	
0715 - 0730	0	56	13	0	2	1	0	0	0	0	0	0	0	**73**	
0730 - 0745	0	75	15	0	2	1	0	0	0	0	0	0	0	**94**	
0745 - 0800	0	77	20	0	2	0	0	0	0	0	0	0	0	**99**	**324**
0800 - 0815	0	63	18	0	1	1	0	1	0	0	0	0	0	**83**	
0815 - 0830	0	69	19	0	2	0	0	1	0	0	0	0	0	**91**	
0830 - 0845	0	57	17	0	1	0	0	1	1	0	0	0	0	**77**	
0845 - 0900	0	60	16	0	1	0	0	1	0	0	0	0	0	**79**	**329**
0900 - 0915	0	51	15	0	1	0	0	0	0	0	0	0	0	**67**	
0915 - 0930	0	55	13	0	2	0	0	0	1	0	0	0	0	**72**	
0930 - 0945	0	52	15	0	2	0	0	0	0	0	0	0	0	**70**	
0945 - 1000	0	57	12	0	2	0	0	0	0	0	0	0	0	**72**	**281**
1000 - 1015	0	46	17	0	2	0	0	1	0	0	0	0	0	**66**	
1015 - 1030	0	59	16	0	1	1	0	0	1	0	0	0	0	**78**	
1030 - 1045	0	55	10	0	1	0	0	1	0	0	0	0	0	**67**	
1045 - 1100	0	56	15	0	1	0	0	0	1	0	0	0	0	**73**	**285**
1100 - 1115	0	52	18	0	2	0	0	0	0	0	0	0	0	**72**	
1115 - 1130	0	64	11	0	1	1	0	0	0	0	0	0	0	**78**	
1130 - 1145	0	62	17	0	1	0	0	0	1	0	0	0	0	**81**	
1145 - 1200	0	69	16	0	1	0	0	0	0	0	0	0	0	**86**	**317**
1200 - 1215	0	57	14	0	1	0	0	0	0	0	0	0	0	**73**	
1215 - 1230	0	64	15	0	1	0	0	0	0	0	0	0	0	**80**	
1230 - 1245	0	67	16	0	1	0	0	0	0	0	0	0	0	**84**	
1245 - 1300	0	71	14	0	2	0	0	0	0	0	0	0	0	**88**	**326**
1300 - 1315	0	56	17	0	1	0	0	0	0	0	0	0	0	**76**	
1315 - 1330	0	69	19	0	2	0	0	0	1	0	0	0	0	**91**	
1330 - 1345	0	68	17	0	0	0	0	0	0	0	0	0	0	**85**	
1345 - 1400	0	67	17	0	0	0	0	0	0	0	0	0	0	**84**	**336**
1400 - 1415	0	59	20	0	0	0	0	1	0	0	0	0	0	**81**	
1415 - 1430	0	68	14	0	1	0	0	0	0	0	0	0	0	**84**	
1430 - 1445	0	73	21	0	0	0	0	0	1	0	0	0	0	**95**	
1445 - 1500	0	62	16	1	1	0	0	0	0	0	0	0	0	**80**	**339**
1500 - 1515	0	65	17	0	1	0	0	0	1	0	0	0	0	**84**	
1515 - 1530	0	74	17	0	0	0	0	0	0	0	0	0	0	**92**	
1530 - 1545	0	60	12	1	1	0	0	0	0	0	0	0	0	**73**	
1545 - 1600	0	75	13	0	0	0	0	0	0	0	0	0	0	**88**	**337**
1600 - 1615	0	71	15	0	0	1	0	0	0	0	0	0	0	**87**	
1615 - 1630	1	78	13	0	0	0	0	0	0	0	0	0	0	**93**	
1630 - 1645	0	70	16	0	0	0	0	0	0	0	0	0	0	**86**	
1645 - 1700	0	64	14	0	3	0	0	0	0	0	0	0	0	**82**	**347**
1700 - 1715	1	78	16	1	1	0	0	0	0	0	0	0	0	**97**	
1715 - 1730	0	73	18	0	0	0	0	0	0	0	0	0	0	**91**	
1730 - 1745	1	78	16	0	0	0	0	0	0	0	0	0	0	**95**	
1745 - 1800	0	80	16	0	1	0	0	0	0	0	0	0	0	**97**	**380**
1800 - 1815	0	75	12	0	0	0	0	0	0	0	0	0	0	**87**	
1815 - 1830	0	82	13	0	0	0	0	0	0	0	0	0	0	**96**	
1830 - 1845	0	63	11	0	0	0	0	1	0	0	0	0	0	**76**	
1845 - 1900	0	66	13	0	1	0	0	0	0	0	0	0	0	**80**	**339**
1900 - 1915	0	56	9	0	0	0	0	0	0	0	0	0	0	**65**	
1915 - 1930	0	58	5	0	0	0	0	0	0	0	0	0	0	**64**	
1930 - 1945	0	56	5	0	0	0	0	0	0	0	0	0	0	**61**	
1945 - 2000	0	55	8	0	0	0	0	0	0	0	0	0	0	**64**	**254**
2000 - 2015	0	41	6	0	1	0	0	0	0	0	0	0	0	**48**	
2015 - 2030	0	47	5	0	1	0	0	0	0	0	0	0	0	**53**	
2030 - 2045	0	41	2	0	1	0	0	0	0	0	0	0	0	**45**	
2045 - 2100	0	43	2	0	1	0	0	0	0	0	0	0	0	**46**	**193**
2100 - 2115	0	38	1	0	0	0	0	0	0	0	0	0	0	**39**	
2115 - 2130	0	33	2	0	0	0	0	0	0	0	0	0	0	**35**	
2130 - 2145	0	34	2	0	0	0	0	0	0	0	0	0	0	**35**	
2145 - 2200	0	26	1	0	0	0	0	0	0	0	0	0	0	**27**	**136**
2200 - 2215	0	29	1	0	0	0	0	0	0	0	0	0	0	**30**	
2215 - 2230	0	26	0	0	0	0	0	0	0	0	0	0	0	**27**	
2230 - 2245	0	20	0	0	0	0	0	0	0	0	0	0	0	**20**	
2245 - 2300	0	14	0	0	0	0	0	0	0	0	0	0	0	**15**	**91**
2300 - 2315	0	17	1	0	0	0	0	0	0	0	0	0	0	**18**	
2315 - 2330	0	16	0	0	0	0	0	0	0	0	0	0	0	**16**	
2330 - 2345	0	13	0	0	0	0	0	0	0	0	0	0	0	**14**	
2345 - 0000	0	14	0	0	0	0	0	0	0	0	0	0	0	**14**	**62**

Session Total	6	4031	803	6	64	12	1	10	19	0	0	0	0	**4951**
Session Average	0.06	41.99	8.36	0.06	0.66	0.13	0.01	0.10	0.20	0.00	0.00	0.00	0.00	**51.57**
Session Percentage	0.12	81.42	16.22	0.12	1.29	0.24	0.01	0.20	0.38	0.00	0.00	0.00	0.00	

AM Peak Hour	0545 - 0645	0730 - 0830	0745 - 0845	0600 - 0700	0915 - 1015	0645 - 0745	-	0800 - 0900	0830 - 0930	-	-	-	-	**0730 - 0830**
AM Peak Volume	1	283	73	1	9	3	0	3	2	0	0	0	0	**366**

Noon Peak Hour	1000 - 1100	1430 - 1530	1315 - 1415	1445 - 1545	1230 - 1330	1015 - 1115	1030 - 1130	1000 - 1100	1015 - 1115	-	-	-	-	**1430 - 1530**
Noon Peak Volume	1	274	73	2	7	2	0	2	2	0	0	0	0	**351**

PM Peak Hour	1615 - 1715	1730 - 1830	1700 - 1800	1515 - 1615	1645 - 1745	1600 - 1700	1830 - 1930	1745 - 1845	1500 - 1600	-	-	-	-	**1700 - 1800**
PM Peak Volume	2	315	66	1	4	1	0	1	1	0	0	0	0	**380**

Bi-Directional Class Count || Volume Summary 15min

Columbia, SC

Marr Traffic DATA COLLECTION

www.marrtraffic.com

Site 22

I-26 James F. Byrnes Expy On/Off-Ramp,
north of SC-60 Lake Murray Blvd

Date

Tuesday, April 23, 2024

Lat/Long

34.092072°, -81.165806°

Weather

Fair
58°F

Click here for Detailed Weather

0000 - 2400 (Weekday 24h Session) (04-23-2024)

Volume Summary 15min

TIME	Volume Summary 15min		15min Total	60min Total
	NB	SB		
0000 - 0015	0	0	**0**	
0015 - 0030	0	0	**0**	
0030 - 0045	0	0	**0**	
0045 - 0100	0	0	**0**	**0**
0100 - 0115	0	0	**0**	
0115 - 0130	0	0	**0**	
0130 - 0145	0	0	**0**	
0145 - 0200	0	0	**0**	**0**
0200 - 0215	0	0	**0**	
0215 - 0230	0	0	**0**	
0230 - 0245	0	0	**0**	
0245 - 0300	0	0	**0**	**0**
0300 - 0315	0	0	**0**	
0315 - 0330	0	0	**0**	
0330 - 0345	0	0	**0**	
0345 - 0400	0	0	**0**	**0**
0400 - 0415	0	0	**0**	
0415 - 0430	0	0	**0**	
0430 - 0445	0	0	**0**	
0445 - 0500	0	0	**0**	**0**
0500 - 0515	0	0	**0**	
0515 - 0530	0	0	**0**	
0530 - 0545	0	0	**0**	
0545 - 0600	0	0	**0**	**0**
0600 - 0615	0	0	**0**	
0615 - 0630	0	0	**0**	
0630 - 0645	0	0	**0**	
0645 - 0700	0	0	**0**	**0**
0700 - 0715	0	0	**0**	
0715 - 0730	0	0	**0**	
0730 - 0745	0	0	**0**	
0745 - 0800	0	0	**0**	**0**
0800 - 0815	0	0	**0**	
0815 - 0830	0	0	**0**	
0830 - 0845	0	0	**0**	
0845 - 0900	0	0	**0**	**0**
0900 - 0915	0	0	**0**	
0915 - 0930	0	0	**0**	
0930 - 0945	0	0	**0**	
0945 - 1000	0	0	**0**	**0**
1000 - 1015	0	0	**0**	
1015 - 1030	0	0	**0**	
1030 - 1045	0	0	**0**	
1045 - 1100	0	0	**0**	**0**
1100 - 1115	0	0	**0**	
1115 - 1130	0	0	**0**	
1130 - 1145	0	0	**0**	
1145 - 1200	0	0	**0**	**0**

Time	Volume Summary 15min		15min Total	60min Total
	NB	SB		
1200 - 1215	0	0	**0**	
1215 - 1230	0	0	**0**	
1230 - 1245	0	0	**0**	
1245 - 1300	0	0	**0**	**0**
1300 - 1315	0	0	**0**	
1315 - 1330	0	0	**0**	
1330 - 1345	0	0	**0**	
1345 - 1400	0	0	**0**	**0**
1400 - 1415	0	0	**0**	
1415 - 1430	0	0	**0**	
1430 - 1445	0	0	**0**	
1445 - 1500	0	0	**0**	**0**
1500 - 1515	0	0	**0**	
1515 - 1530	0	0	**0**	
1530 - 1545	0	0	**0**	
1545 - 1600	0	0	**0**	**0**
1600 - 1615	0	0	**0**	
1615 - 1630	0	0	**0**	
1630 - 1645	0	0	**0**	
1645 - 1700	0	0	**0**	**0**
1700 - 1715	0	0	**0**	
1715 - 1730	0	0	**0**	
1730 - 1745	0	0	**0**	
1745 - 1800	0	0	**0**	**0**
1800 - 1815	0	0	**0**	
1815 - 1830	0	0	**0**	
1830 - 1845	0	0	**0**	
1845 - 1900	0	0	**0**	**0**
1900 - 1915	0	101	**101**	
1915 - 1930	0	81	**81**	
1930 - 1945	0	87	**87**	
1945 - 2000	0	94	**94**	**363**
2000 - 2015	0	73	**73**	
2015 - 2030	0	63	**63**	
2030 - 2045	0	55	**55**	
2045 - 2100	0	64	**64**	**255**
2100 - 2115	0	62	**62**	
2115 - 2130	0	58	**58**	
2130 - 2145	0	41	**41**	
2145 - 2200	0	43	**43**	**204**
2200 - 2215	0	40	**40**	
2215 - 2230	0	41	**41**	
2230 - 2245	0	32	**32**	
2245 - 2300	0	18	**18**	**131**
2300 - 2315	0	21	**21**	
2315 - 2330	0	23	**23**	
2330 - 2345	0	17	**17**	
2345 - 0000	0	17	**17**	**78**

Session Total	0	1031	**1031**
Session Average	0.00	10.74	**10.74**
Session Percentage	0.00	100.00	

Site 22

I-26 James F. Byrnes Expy On/Off-Ramp,
north of SC-60 Lake Murray Blvd

Date

Wednesday, April 24, 2024

Lat/Long

34.092072°, -81.165806°

Weather

Fair
66°F

Click here for Detailed Weather

0000 - 2400 (Weekday 24h Session) (04-24-2024)

Volume Summary 15min

TIME	Volume Summary 15min NB	SB	15min Total	60min Total
0000 - 0015	0	14	**14**	
0015 - 0030	0	17	**17**	
0030 - 0045	0	9	**9**	
0045 - 0100	0	10	**10**	**50**
0100 - 0115	0	6	**6**	
0115 - 0130	0	8	**8**	
0130 - 0145	0	11	**11**	
0145 - 0200	0	8	**8**	**33**
0200 - 0215	0	7	**7**	
0215 - 0230	0	9	**9**	
0230 - 0245	0	6	**6**	
0245 - 0300	0	7	**7**	**29**
0300 - 0315	0	6	**6**	
0315 - 0330	0	4	**4**	
0330 - 0345	0	5	**5**	
0345 - 0400	0	6	**6**	**21**
0400 - 0415	0	4	**4**	
0415 - 0430	0	7	**7**	
0430 - 0445	0	7	**7**	
0445 - 0500	0	13	**13**	**31**
0500 - 0515	0	10	**10**	
0515 - 0530	0	7	**7**	
0530 - 0545	0	11	**11**	
0545 - 0600	0	23	**23**	**51**
0600 - 0615	0	29	**29**	
0615 - 0630	0	32	**32**	
0630 - 0645	0	50	**50**	
0645 - 0700	0	79	**79**	**190**
0700 - 0715	0	86	**86**	
0715 - 0730	0	115	**115**	
0730 - 0745	0	137	**137**	
0745 - 0800	0	158	**158**	**496**
0800 - 0815	0	119	**119**	
0815 - 0830	0	127	**127**	
0830 - 0845	0	102	**102**	
0845 - 0900	0	115	**115**	**463**
0900 - 0915	0	105	**105**	
0915 - 0930	0	107	**107**	
0930 - 0945	0	113	**113**	
0945 - 1000	0	107	**107**	**432**
1000 - 1015	0	97	**97**	
1015 - 1030	0	124	**124**	
1030 - 1045	0	105	**105**	
1045 - 1100	0	98	**98**	**424**
1100 - 1115	0	105	**105**	
1115 - 1130	0	121	**121**	
1130 - 1145	0	117	**117**	
1145 - 1200	0	130	**130**	**473**

Time	Volume Summary 15min NB	SB	15min Total	60min Total
1200 - 1215	0	107	**107**	
1215 - 1230	0	114	**114**	
1230 - 1245	0	130	**130**	
1245 - 1300	0	141	**141**	**492**
1300 - 1315	0	101	**101**	
1315 - 1330	0	143	**143**	
1330 - 1345	0	129	**129**	
1345 - 1400	0	128	**128**	**501**
1400 - 1415	0	120	**120**	
1415 - 1430	0	128	**128**	
1430 - 1445	0	130	**130**	
1445 - 1500	0	114	**114**	**492**
1500 - 1515	0	120	**120**	
1515 - 1530	0	133	**133**	
1530 - 1545	0	121	**121**	
1545 - 1600	0	116	**116**	**490**
1600 - 1615	0	123	**123**	
1615 - 1630	0	123	**123**	
1630 - 1645	0	104	**104**	
1645 - 1700	0	113	**113**	**463**
1700 - 1715	0	136	**136**	
1715 - 1730	0	120	**120**	
1730 - 1745	0	124	**124**	
1745 - 1800	0	145	**145**	**525**
1800 - 1815	0	133	**133**	
1815 - 1830	0	143	**143**	
1830 - 1845	0	116	**116**	
1845 - 1900	0	124	**124**	**516**
1900 - 1915	0	95	**95**	
1915 - 1930	0	111	**111**	
1930 - 1945	0	96	**96**	
1945 - 2000	0	97	**97**	**399**
2000 - 2015	0	72	**72**	
2015 - 2030	0	97	**97**	
2030 - 2045	0	79	**79**	
2045 - 2100	0	75	**75**	**323**
2100 - 2115	0	55	**55**	
2115 - 2130	0	47	**47**	
2130 - 2145	0	65	**65**	
2145 - 2200	0	38	**38**	**205**
2200 - 2215	0	49	**49**	
2215 - 2230	0	39	**39**	
2230 - 2245	0	29	**29**	
2245 - 2300	0	26	**26**	**143**
2300 - 2315	0	34	**34**	
2315 - 2330	0	26	**26**	
2330 - 2345	0	24	**24**	
2345 - 0000	0	24	**24**	**108**

Session Total	0	7350	**7350**
Session Average	0.00	76.56	**76.56**
Session Percentage	0.00	100.00	

Site 22

I-26 James F. Byrnes Expy On/Off-Ramp,
north of SC-60 Lake Murray Blvd

Date

Thursday, April 25, 2024

Lat/Long

34.092072°, -81.165806°

Weather

Fair
67°F

Click here for Detailed Weather

0000 - 2400 (Weekday 24h Session) (04-25-2024)

Volume Summary 15min

TIME	Volume Summary 15min NB	Volume Summary 15min SB	15min Total	60min Total
0000 - 0015	0	15	**15**	
0015 - 0030	0	18	**18**	
0030 - 0045	0	12	**12**	
0045 - 0100	0	13	**13**	**58**
0100 - 0115	0	8	**8**	
0115 - 0130	0	9	**9**	
0130 - 0145	0	4	**4**	
0145 - 0200	0	10	**10**	**31**
0200 - 0215	0	7	**7**	
0215 - 0230	0	5	**5**	
0230 - 0245	0	4	**4**	
0245 - 0300	0	5	**5**	**21**
0300 - 0315	0	5	**5**	
0315 - 0330	0	4	**4**	
0330 - 0345	0	8	**8**	
0345 - 0400	0	7	**7**	**24**
0400 - 0415	0	4	**4**	
0415 - 0430	0	5	**5**	
0430 - 0445	0	5	**5**	
0445 - 0500	0	7	**7**	**21**
0500 - 0515	0	15	**15**	
0515 - 0530	0	10	**10**	
0530 - 0545	0	18	**18**	
0545 - 0600	0	18	**18**	**61**
0600 - 0615	0	35	**35**	
0615 - 0630	0	26	**26**	
0630 - 0645	0	62	**62**	
0645 - 0700	0	76	**76**	**199**
0700 - 0715	0	91	**91**	
0715 - 0730	0	103	**103**	
0730 - 0745	0	144	**144**	
0745 - 0800	0	138	**138**	**476**
0800 - 0815	0	131	**131**	
0815 - 0830	0	145	**145**	
0830 - 0845	0	128	**128**	
0845 - 0900	0	121	**121**	**525**
0900 - 0915	0	96	**96**	
0915 - 0930	0	108	**108**	
0930 - 0945	0	96	**96**	
0945 - 1000	0	110	**110**	**410**
1000 - 1015	0	101	**101**	
1015 - 1030	0	111	**111**	
1030 - 1045	0	96	**96**	
1045 - 1100	0	122	**122**	**430**
1100 - 1115	0	111	**111**	
1115 - 1130	0	113	**113**	
1130 - 1145	0	127	**127**	
1145 - 1200	0	128	**128**	**479**

Time	Volume Summary 15min NB	Volume Summary 15min SB	15min Total	60min Total
1200 - 1215	0	113	**113**	
1215 - 1230	0	127	**127**	
1230 - 1245	0	122	**122**	
1245 - 1300	0	124	**124**	**486**
1300 - 1315	0	126	**126**	
1315 - 1330	0	129	**129**	
1330 - 1345	0	126	**126**	
1345 - 1400	0	125	**125**	**506**
1400 - 1415	0	122	**122**	
1415 - 1430	0	123	**123**	
1430 - 1445	0	156	**156**	
1445 - 1500	0	125	**125**	**526**
1500 - 1515	0	132	**132**	
1515 - 1530	0	142	**142**	
1530 - 1545	0	99	**99**	
1545 - 1600	0	149	**149**	**522**
1600 - 1615	0	139	**139**	
1615 - 1630	0	155	**155**	
1630 - 1645	0	153	**153**	
1645 - 1700	0	132	**132**	**579**
1700 - 1715	0	155	**155**	
1715 - 1730	0	153	**153**	
1730 - 1745	0	160	**160**	
1745 - 1800	0	147	**147**	**615**
1800 - 1815	0	128	**128**	
1815 - 1830	0	146	**146**	
1830 - 1845	0	111	**111**	
1845 - 1900	0	117	**117**	**502**
1900 - 1915	0	0	**0**	
1915 - 1930	0	0	**0**	
1930 - 1945	0	0	**0**	
1945 - 2000	0	0	**0**	**0**
2000 - 2015	0	0	**0**	
2015 - 2030	0	0	**0**	
2030 - 2045	0	0	**0**	
2045 - 2100	0	0	**0**	**0**
2100 - 2115	0	0	**0**	
2115 - 2130	0	0	**0**	
2130 - 2145	0	0	**0**	
2145 - 2200	0	0	**0**	**0**
2200 - 2215	0	0	**0**	
2215 - 2230	0	0	**0**	
2230 - 2245	0	0	**0**	
2245 - 2300	0	0	**0**	**0**
2300 - 2315	0	0	**0**	
2315 - 2330	0	0	**0**	
2330 - 2345	0	0	**0**	
2345 - 0000	0	0	**0**	**0**

Session Total	0	6471	**6471**
Session Average	0.00	67.41	**67.41**
Session Percentage	0.00	100.00	

Bi-Directional Class Count || SB WB 60min

Columbia, SC

Marr Traffic DATA COLLECTION

www.marrtraffic.com

Site 22
I-26 James F. Byrnes Expy On/Off-Ramp,
north of SC-60 Lake Murray Blvd

Date
Tuesday, April 23, 2024

Lat/Long
34.092072°, -81.165806°

Weather
Fair
58°F

Click here for Detailed Weather

0000 - 2400 (Weekday 24h Session) (04-23-2024)
SB WB 60min

	Southbound (Movement 22.1)													
TIME	1	2	3	4	5	6	7	8	9	10	11	12	13	**Total**
0000 - 0100	0	0	0	0	0	0	0	0	0	0	0	0	0	**0**
0100 - 0200	0	0	0	0	0	0	0	0	0	0	0	0	0	**0**
0200 - 0300	0	0	0	0	0	0	0	0	0	0	0	0	0	**0**
0300 - 0400	0	0	0	0	0	0	0	0	0	0	0	0	0	**0**
0400 - 0500	0	0	0	0	0	0	0	0	0	0	0	0	0	**0**
0500 - 0600	0	0	0	0	0	0	0	0	0	0	0	0	0	**0**
0600 - 0700	0	0	0	0	0	0	0	0	0	0	0	0	0	**0**
0700 - 0800	0	0	0	0	0	0	0	0	0	0	0	0	0	**0**
0800 - 0900	0	0	0	0	0	0	0	0	0	0	0	0	0	**0**
0900 - 1000	0	0	0	0	0	0	0	0	0	0	0	0	0	**0**
1000 - 1100	0	0	0	0	0	0	0	0	0	0	0	0	0	**0**
1100 - 1200	0	0	0	0	0	0	0	0	0	0	0	0	0	**0**
1200 - 1300	0	0	0	0	0	0	0	0	0	0	0	0	0	**0**
1300 - 1400	0	0	0	0	0	0	0	0	0	0	0	0	0	**0**
1400 - 1500	0	0	0	0	0	0	0	0	0	0	0	0	0	**0**
1500 - 1600	0	0	0	0	0	0	0	0	0	0	0	0	0	**0**
1600 - 1700	0	0	0	0	0	0	0	0	0	0	0	0	0	**0**
1700 - 1800	0	0	0	0	0	0	0	0	0	0	0	0	0	**0**
1800 - 1900	0	0	0	0	0	0	0	0	0	0	0	0	0	**0**
1900 - 2000	0	331	30	0	1	0	0	0	1	0	0	0	0	**363**
2000 - 2100	0	229	12	0	11	1	0	0	2	0	0	0	0	**255**
2100 - 2200	0	188	13	0	1	0	0	0	2	0	0	0	0	**204**
2200 - 2300	0	124	4	0	0	0	0	0	3	0	0	0	0	**131**
2300 - 2400	0	73	3	0	2	0	0	0	0	0	0	0	0	**78**
Session Total	0	945	62	0	15	1	0	0	8	0	0	0	0	**1031**
Session Average	0.00	39.38	2.58	0.00	0.63	0.04	0.00	0.00	0.33	0.00	0.00	0.00	0.00	**42.96**
Session Percentage	0.00	91.66	6.01	0.00	1.45	0.10	0.00	0.00	0.78	0.00	0.00	0.00	0.00	
AM Peak Hour	-	-	-	-	-	-	-	-	-	-	-	-	-	**-**
AM Peak Volume	0	0	0	0	0	0	0	0	0	0	0	0	0	**0**
Noon Peak Hour	-	-	-	-	-	-	-	-	-	-	-	-	-	**-**
Noon Peak Volume	0	0	0	0	0	0	0	0	0	0	0	0	0	**0**
PM Peak Hour	-	1900 - 2000	1900 - 2000	-	1900 - 2000	-	-	-	1900 - 2000	-	-	-	-	**1900 - 2000**
PM Peak Volume	0	331	30	0	1	0	0	0	1	0	0	0	0	**363**

Site 22
I-26 James F. Byrnes Expy On/Off-Ramp,
north of SC-60 Lake Murray Blvd

Date
Wednesday, April 24, 2024

Lat/Long
34.092072°, -81.165806°

Weather
Fair
66°F

Click here for Detailed Weather

0000 - 2400 (Weekday 24h Session) (04-24-2024)
SB WB 60min

	Southbound (Movement 22.1)													
TIME	1	2	3	4	5	6	7	8	9	10	11	12	13	**Total**
0000 - 0100	0	49	0	0	1	0	0	0	0	0	0	0	0	**50**
0100 - 0200	0	32	0	0	0	0	0	0	1	0	0	0	0	**33**
0200 - 0300	0	26	0	0	2	0	0	0	1	0	0	0	0	**29**
0300 - 0400	0	19	0	0	2	0	0	0	0	0	0	0	0	**21**
0400 - 0500	0	30	0	0	0	0	0	0	1	0	0	0	0	**31**
0500 - 0600	0	49	0	0	0	0	0	0	2	0	0	0	0	**51**
0600 - 0700	1	146	34	2	4	1	0	0	2	0	0	0	0	**190**
0700 - 0800	1	399	84	1	8	2	0	1	0	0	0	0	0	**496**
0800 - 0900	0	350	94	0	9	2	0	6	2	0	0	0	0	**463**
0900 - 1000	0	320	91	1	16	2	0	1	1	0	0	0	0	**432**
1000 - 1100	2	321	87	0	7	0	0	3	4	0	0	0	0	**424**
1100 - 1200	0	362	98	0	8	1	0	0	4	0	0	0	0	**473**
1200 - 1300	1	387	95	0	7	0	0	1	1	0	0	0	0	**492**
1300 - 1400	0	385	108	0	6	0	0	0	2	0	0	0	0	**501**
1400 - 1500	0	385	101	2	3	0	0	1	0	0	0	0	0	**492**
1500 - 1600	1	407	78	1	0	1	0	0	2	0	0	0	0	**490**
1600 - 1700	1	376	78	1	6	1	0	0	0	0	0	0	0	**463**
1700 - 1800	3	428	90	1	3	0	0	0	0	0	0	0	0	**525**
1800 - 1900	0	441	70	0	2	0	0	1	2	0	0	0	0	**516**
1900 - 2000	1	345	52	0	0	0	1	0	0	0	0	0	0	**399**
2000 - 2100	0	288	31	0	4	0	0	0	0	0	0	0	0	**323**
2100 - 2200	0	201	4	0	0	0	0	0	0	0	0	0	0	**205**
2200 - 2300	0	143	0	0	0	0	0	0	0	0	0	0	0	**143**
2300 - 2400	0	104	2	0	0	0	0	1	1	0	0	0	0	**108**

Session Total	11	5993	1197	9	88	10	1	15	26	0	0	0	0	**7350**
Session Average	0.46	249.71	49.88	0.38	3.67	0.42	0.04	0.63	1.08	0.00	0.00	0.00	0.00	**306.25**
Session Percentage	0.15	81.54	16.29	0.12	1.20	0.14	0.01	0.20	0.35	0.00	0.00	0.00	0.00	

AM Peak Hour	0600 - 0700	0700 - 0800	0800 - 0900	0600 - 0700	0900 - 1000	0700 - 0800	-	0800 - 0900	0500 - 0600	-	-	-	-	**0700 - 0800**
AM Peak Volume	1	399	94	2	16	2	0	6	2	0	0	0	0	**496**

Noon Peak Hour	1000 - 1100	1200 - 1300	1300 - 1400	1400 - 1500	1100 - 1200	1100 - 1200	-	1000 - 1100	1000 - 1100	-	-	-	-	**1300 - 1400**
Noon Peak Volume	2	387	108	2	8	1	0	3	4	0	0	0	0	**501**

PM Peak Hour	1700 - 1800	1800 - 1900	1700 - 1800	1500 - 1600	1600 - 1700	1500 - 1600	1900 - 2000	1800 - 1900	1500 - 1600	-	-	-	-	**1700 - 1800**
PM Peak Volume	3	441	90	1	6	1	1	1	2	0	0	0	0	**525**

Site 22
I-26 James F. Byrnes Expy On/Off-Ramp,
north of SC-60 Lake Murray Blvd

Date
Thursday, April 25, 2024

Lat/Long
34.092072°, -81.165806°

Weather
Fair
67°F

Click here for Detailed Weather

0000 - 2400 (Weekday 24h Session) (04-25-2024)
SB WB 60min

	Southbound (Movement 22.1)													
TIME	1	2	3	4	5	6	7	8	9	10	11	12	13	**Total**
0000 - 0100	0	56	0	0	1	0	0	0	1	0	0	0	0	**58**
0100 - 0200	0	29	0	0	0	0	0	0	2	0	0	0	0	**31**
0200 - 0300	0	20	0	0	1	0	0	0	0	0	0	0	0	**21**
0300 - 0400	0	19	0	0	4	0	0	0	1	0	0	0	0	**24**
0400 - 0500	0	21	0	0	0	0	0	0	0	0	0	0	0	**21**
0500 - 0600	0	57	0	0	3	0	0	0	1	0	0	0	0	**61**
0600 - 0700	1	164	27	1	3	3	0	0	0	0	0	0	0	**199**
0700 - 0800	0	369	85	0	12	6	0	1	3	0	0	0	0	**476**
0800 - 0900	1	397	116	1	4	1	0	3	2	0	0	0	0	**525**
0900 - 1000	0	325	74	2	6	0	0	2	1	0	0	0	0	**410**
1000 - 1100	0	326	85	0	11	4	0	2	2	0	0	0	0	**430**
1100 - 1200	0	379	87	0	9	3	1	0	0	0	0	0	0	**479**
1200 - 1300	0	390	84	0	9	1	0	0	2	0	0	0	0	**486**
1300 - 1400	0	393	102	0	7	1	0	1	2	0	0	0	0	**506**
1400 - 1500	0	401	112	1	4	2	0	3	3	0	0	0	0	**526**
1500 - 1600	0	415	99	2	5	0	0	0	1	0	0	0	0	**522**
1600 - 1700	3	474	94	0	3	3	0	0	2	0	0	0	0	**579**
1700 - 1800	2	500	107	1	4	1	0	0	0	0	0	0	0	**615**
1800 - 1900	0	419	78	1	2	0	0	2	0	0	0	0	0	**502**
1900 - 2000	0	0	0	0	0	0	0	0	0	0	0	0	0	**0**
2000 - 2100	0	0	0	0	0	0	0	0	0	0	0	0	0	**0**
2100 - 2200	0	0	0	0	0	0	0	0	0	0	0	0	0	**0**
2200 - 2300	0	0	0	0	0	0	0	0	0	0	0	0	0	**0**
2300 - 2400	0	0	0	0	0	0	0	0	0	0	0	0	0	**0**

Session Total	7	5154	1150	9	88	25	1	14	23	0	0	0	0	**6471**
Session Average	0.29	214.75	47.92	0.38	3.67	1.04	0.04	0.58	0.96	0.00	0.00	0.00	0.00	**269.63**
Session Percentage	0.11	79.65	17.77	0.14	1.36	0.39	0.02	0.22	0.36	0.00	0.00	0.00	0.00	

AM Peak Hour	0600 - 0700	0800 - 0900	0800 - 0900	0900 - 1000	0700 - 0800	0700 - 0800	-	0800 - 0900	0700 - 0800	-	-	-	-	**0800 - 0900**
AM Peak Hour Volume	1	397	116	2	12	6	0	3	3	0	0	0	0	**525**

Noon Peak Hour	-	1400 - 1500	1400 - 1500	1400 - 1500	1000 - 1100	1000 - 1100	1100 - 1200	1400 - 1500	1400 - 1500	-	-	-	-	**1400 - 1500**
Noon Peak Hour Volume	0	401	112	1	11	4	1	3	3	0	0	0	0	**526**

PM Peak Hour	1600 - 1700	1700 - 1800	1700 - 1800	1500 - 1600	1500 - 1600	1600 - 1700	-	1800 - 1900	1600 - 1700	-	-	-	-	**1700 - 1800**
PM Peak Hour Volume	3	500	107	2	5	3	0	2	2	0	0	0	0	**615**

Bi-Directional Class Count || Volume Summary 60min

Columbia, SC

Marr Traffic DATA COLLECTION

www.marrtraffic.com

Site 22

I-26 James F. Byrnes Expy On/Off-Ramp,
north of SC-60 Lake Murray Blvd

Date

Tuesday, April 23, 2024

Lat/Long

34.092072°, -81.165806°

Weather

Fair
58°F

Click here for Detailed Weather

0000 - 2400 (Weekday 24h Session) (04-23-2024)

Volume Summary 60min

	Volume Summary 60min		
TIME	NB	SB	**Total**
0000 - 0100	0	0	**0**
0100 - 0200	0	0	**0**
0200 - 0300	0	0	**0**
0300 - 0400	0	0	**0**
0400 - 0500	0	0	**0**
0500 - 0600	0	0	**0**
0600 - 0700	0	0	**0**
0700 - 0800	0	0	**0**
0800 - 0900	0	0	**0**
0900 - 1000	0	0	**0**
1000 - 1100	0	0	**0**
1100 - 1200	0	0	**0**

	Volume Summary 60min		
Time	NB	SB	**Total**
1200 - 1300	0	0	**0**
1300 - 1400	0	0	**0**
1400 - 1500	0	0	**0**
1500 - 1600	0	0	**0**
1600 - 1700	0	0	**0**
1700 - 1800	0	0	**0**
1800 - 1900	0	0	**0**
1900 - 2000	0	363	**363**
2000 - 2100	0	255	**255**
2100 - 2200	0	204	**204**
2200 - 2300	0	131	**131**
2300 - 2400	0	78	**78**

Session Total	0	1031	**1031**
Session Average	0.00	42.96	**42.96**
Session Percentage	0.00	100.00	

Site 22

I-26 James F. Byrnes Expy On/Off-Ramp,
north of SC-60 Lake Murray Blvd

Date

Wednesday, April 24, 2024

Lat/Long

34.092072°, -81.165806°

Weather

Fair
66°F

Click here for Detailed Weather

0000 - 2400 (Weekday 24h Session) (04-24-2024)

Volume Summary 60min

	Volume Summary 60min		
TIME	NB	SB	**Total**
0000 - 0100	0	50	**50**
0100 - 0200	0	33	**33**
0200 - 0300	0	29	**29**
0300 - 0400	0	21	**21**
0400 - 0500	0	31	**31**
0500 - 0600	0	51	**51**
0600 - 0700	0	190	**190**
0700 - 0800	0	496	**496**
0800 - 0900	0	463	**463**
0900 - 1000	0	432	**432**
1000 - 1100	0	424	**424**
1100 - 1200	0	473	**473**

Session Total	0	7350	**7350**
Session Average	0.00	306.25	**306.25**
Session Percentage	0.00	100.00	

	Volume Summary 60min		
Time	NB	SB	**Total**
1200 - 1300	0	492	**492**
1300 - 1400	0	501	**501**
1400 - 1500	0	492	**492**
1500 - 1600	0	490	**490**
1600 - 1700	0	463	**463**
1700 - 1800	0	525	**525**
1800 - 1900	0	516	**516**
1900 - 2000	0	399	**399**
2000 - 2100	0	323	**323**
2100 - 2200	0	205	**205**
2200 - 2300	0	143	**143**
2300 - 2400	0	108	**108**

Site 22

I-26 James F. Byrnes Expy On/Off-Ramp,
north of SC-60 Lake Murray Blvd

Date

Thursday, April 25, 2024

Lat/Long

34.092072°, -81.165806°

Weather

Fair
67°F

Click here for Detailed Weather

0000 - 2400 (Weekday 24h Session) (04-25-2024)

Volume Summary 60min

	Volume Summary 60min		
TIME	NB	SB	**Total**
0000 - 0100	0	58	**58**
0100 - 0200	0	31	**31**
0200 - 0300	0	21	**21**
0300 - 0400	0	24	**24**
0400 - 0500	0	21	**21**
0500 - 0600	0	61	**61**
0600 - 0700	0	199	**199**
0700 - 0800	0	476	**476**
0800 - 0900	0	525	**525**
0900 - 1000	0	410	**410**
1000 - 1100	0	430	**430**
1100 - 1200	0	479	**479**

Session Total	0	6471	**6471**
Session Average	0.00	269.63	**269.63**
Session Percentage	0.00	100.00	

	Volume Summary 60min		
Time	NB	SB	**Total**
1200 - 1300	0	486	**486**
1300 - 1400	0	506	**506**
1400 - 1500	0	526	**526**
1500 - 1600	0	522	**522**
1600 - 1700	0	579	**579**
1700 - 1800	0	615	**615**
1800 - 1900	0	502	**502**
1900 - 2000	0	0	**0**
2000 - 2100	0	0	**0**
2100 - 2200	0	0	**0**
2200 - 2300	0	0	**0**
2300 - 2400	0	0	**0**

Bi-Directional Class Count || Graphical Analysis SB WB

Columbia, SC

Marr Traffic DATA COLLECTION

www.marrtraffic.com

Site 22

I-26 James F. Byrnes Expy On/Off-Ramp,
north of SC-60 Lake Murray Blvd

Lat/Long

34.092072°, -81.165806°

0000 - 2400 (Weekday 24h Session)

Graphical Analysis SB WB

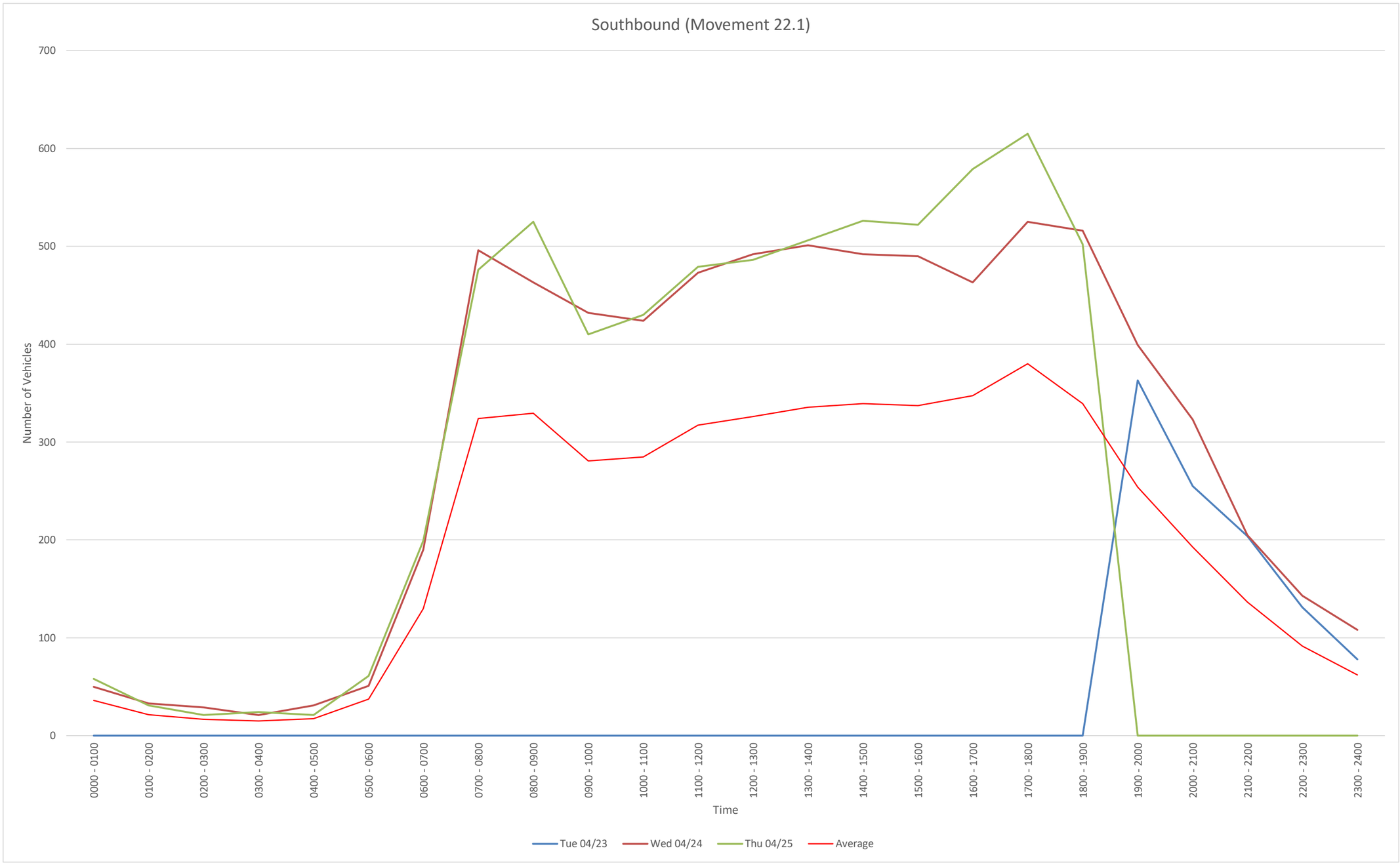

Time	Tue 04/23	Wed 04/24	Thu 04/25				
0000 - 0100	0	50	58				
0100 - 0200	0	33	31				
0200 - 0300	0	29	21				
0300 - 0400	0	21	24				
0400 - 0500	0	31	21				
0500 - 0600	0	51	61				
0600 - 0700	0	190	199				
0700 - 0800	0	496	476				
0800 - 0900	0	463	525				
0900 - 1000	0	432	410				
1000 - 1100	0	424	430				
1100 - 1200	0	473	479				
1200 - 1300	0	492	486				
1300 - 1400	0	501	506				
1400 - 1500	0	492	526				
1500 - 1600	0	490	522				
1600 - 1700	0	463	579				
1700 - 1800	0	525	615				
1800 - 1900	0	516	502				
1900 - 2000	363	399	0				
2000 - 2100	255	323	0				
2100 - 2200	204	205	0				
2200 - 2300	131	143	0				
2300 - 2400	78	108	0				
Daily Total	1031	7350	6471				

NB
File Name:
Start Date: 4/23/2024
Start Time: 0
Site Code: 22
Station ID: 1
Location 1: I-26 James F. Byrnes Expy On/Off-Ramp, north of SC-60 Lake Murray Blvd
Location 2:

Date	Time	1	2	3	4	5	6	7	8	9	10	11	12	13
4/23/2024	12:00 AM	0	0	0	0	0	0	0	0	0	0	0	0	0
4/23/2024	12:15 AM	0	0	0	0	0	0	0	0	0	0	0	0	0
4/23/2024	12:30 AM	0	0	0	0	0	0	0	0	0	0	0	0	0
4/23/2024	12:45 AM	0	0	0	0	0	0	0	0	0	0	0	0	0
4/23/2024	1:00 AM	0	0	0	0	0	0	0	0	0	0	0	0	0
4/23/2024	1:15 AM	0	0	0	0	0	0	0	0	0	0	0	0	0
4/23/2024	1:30 AM	0	0	0	0	0	0	0	0	0	0	0	0	0
4/23/2024	1:45 AM	0	0	0	0	0	0	0	0	0	0	0	0	0
4/23/2024	2:00 AM	0	0	0	0	0	0	0	0	0	0	0	0	0
4/23/2024	2:15 AM	0	0	0	0	0	0	0	0	0	0	0	0	0
4/23/2024	2:30 AM	0	0	0	0	0	0	0	0	0	0	0	0	0
4/23/2024	2:45 AM	0	0	0	0	0	0	0	0	0	0	0	0	0
4/23/2024	3:00 AM	0	0	0	0	0	0	0	0	0	0	0	0	0
4/23/2024	3:15 AM	0	0	0	0	0	0	0	0	0	0	0	0	0
4/23/2024	3:30 AM	0	0	0	0	0	0	0	0	0	0	0	0	0
4/23/2024	3:45 AM	0	0	0	0	0	0	0	0	0	0	0	0	0
4/23/2024	4:00 AM	0	0	0	0	0	0	0	0	0	0	0	0	0
4/23/2024	4:15 AM	0	0	0	0	0	0	0	0	0	0	0	0	0
4/23/2024	4:30 AM	0	0	0	0	0	0	0	0	0	0	0	0	0
4/23/2024	4:45 AM	0	0	0	0	0	0	0	0	0	0	0	0	0
4/23/2024	5:00 AM	0	0	0	0	0	0	0	0	0	0	0	0	0
4/23/2024	5:15 AM	0	0	0	0	0	0	0	0	0	0	0	0	0
4/23/2024	5:30 AM	0	0	0	0	0	0	0	0	0	0	0	0	0
4/23/2024	5:45 AM	0	0	0	0	0	0	0	0	0	0	0	0	0
4/23/2024	6:00 AM	0	0	0	0	0	0	0	0	0	0	0	0	0
4/23/2024	6:15 AM	0	0	0	0	0	0	0	0	0	0	0	0	0
4/23/2024	6:30 AM	0	0	0	0	0	0	0	0	0	0	0	0	0
4/23/2024	6:45 AM	0	0	0	0	0	0	0	0	0	0	0	0	0
4/23/2024	7:00 AM	0	0	0	0	0	0	0	0	0	0	0	0	0
4/23/2024	7:15 AM	0	0	0	0	0	0	0	0	0	0	0	0	0
4/23/2024	7:30 AM	0	0	0	0	0	0	0	0	0	0	0	0	0
4/23/2024	7:45 AM	0	0	0	0	0	0	0	0	0	0	0	0	0
4/23/2024	8:00 AM	0	0	0	0	0	0	0	0	0	0	0	0	0
4/23/2024	8:15 AM	0	0	0	0	0	0	0	0	0	0	0	0	0
4/23/2024	8:30 AM	0	0	0	0	0	0	0	0	0	0	0	0	0
4/23/2024	8:45 AM	0	0	0	0	0	0	0	0	0	0	0	0	0
4/23/2024	9:00 AM	0	0	0	0	0	0	0	0	0	0	0	0	0
4/23/2024	9:15 AM	0	0	0	0	0	0	0	0	0	0	0	0	0
4/23/2024	9:30 AM	0	0	0	0	0	0	0	0	0	0	0	0	0
4/23/2024	9:45 AM	0	0	0	0	0	0	0	0	0	0	0	0	0
4/23/2024	10:00 AM	0	0	0	0	0	0	0	0	0	0	0	0	0
4/23/2024	10:15 AM	0	0	0	0	0	0	0	0	0	0	0	0	0
4/23/2024	10:30 AM	0	0	0	0	0	0	0	0	0	0	0	0	0
4/23/2024	10:45 AM	0	0	0	0	0	0	0	0	0	0	0	0	0
4/23/2024	11:00 AM	0	0	0	0	0	0	0	0	0	0	0	0	0
4/23/2024	11:15 AM	0	0	0	0	0	0	0	0	0	0	0	0	0
4/23/2024	11:30 AM	0	0	0	0	0	0	0	0	0	0	0	0	0
4/23/2024	11:45 AM	0	0	0	0	0	0	0	0	0	0	0	0	0
4/23/2024	12:00 PM	0	0	0	0	0	0	0	0	0	0	0	0	0
4/23/2024	12:15 PM	0	0	0	0	0	0	0	0	0	0	0	0	0
4/23/2024	12:30 PM	0	0	0	0	0	0	0	0	0	0	0	0	0
4/23/2024	12:45 PM	0	0	0	0	0	0	0	0	0	0	0	0	0
4/23/2024	1:00 PM	0	0	0	0	0	0	0	0	0	0	0	0	0
4/23/2024	1:15 PM	0	0	0	0	0	0	0	0	0	0	0	0	0
4/23/2024	1:30 PM	0	0	0	0	0	0	0	0	0	0	0	0	0
4/23/2024	1:45 PM	0	0	0	0	0	0	0	0	0	0	0	0	0
4/23/2024	2:00 PM	0	0	0	0	0	0	0	0	0	0	0	0	0
4/23/2024	2:15 PM	0	0	0	0	0	0	0	0	0	0	0	0	0
4/23/2024	2:30 PM	0	0	0	0	0	0	0	0	0	0	0	0	0
4/23/2024	2:45 PM	0	0	0	0	0	0	0	0	0	0	0	0	0
4/23/2024	3:00 PM	0	0	0	0	0	0	0	0	0	0	0	0	0
4/23/2024	3:15 PM	0	0	0	0	0	0	0	0	0	0	0	0	0
4/23/2024	3:30 PM	0	0	0	0	0	0	0	0	0	0	0	0	0
4/23/2024	3:45 PM	0	0	0	0	0	0	0	0	0	0	0	0	0
4/23/2024	4:00 PM	0	0	0	0	0	0	0	0	0	0	0	0	0
4/23/2024	4:15 PM	0	0	0	0	0	0	0	0	0	0	0	0	0
4/23/2024	4:30 PM	0	0	0	0	0	0	0	0	0	0	0	0	0
4/23/2024	4:45 PM	0	0	0	0	0	0	0	0	0	0	0	0	0
4/23/2024	5:00 PM	0	0	0	0	0	0	0	0	0	0	0	0	0
4/23/2024	5:15 PM	0	0	0	0	0	0	0	0	0	0	0	0	0
4/23/2024	5:30 PM	0	0	0	0	0	0	0	0	0	0	0	0	0
4/23/2024	5:45 PM	0	0	0	0	0	0	0	0	0	0	0	0	0
4/23/2024	6:00 PM	0	0	0	0	0	0	0	0	0	0	0	0	0
4/23/2024	6:15 PM	0	0	0	0	0	0	0	0	0	0	0	0	0
4/23/2024	6:30 PM	0	0	0	0	0	0	0	0	0	0	0	0	0
4/23/2024	6:45 PM	0	0	0	0	0	0	0	0	0	0	0	0	0
4/23/2024	7:00 PM	0	0	0	0	0	0	0	0	0	0	0	0	0
4/23/2024	7:15 PM	0	0	0	0	0	0	0	0	0	0	0	0	0
4/23/2024	7:30 PM	0	0	0	0	0	0	0	0	0	0	0	0	0
4/23/2024	7:45 PM	0	0	0	0	0	0	0	0	0	0	0	0	0
4/23/2024	8:00 PM	0	0	0	0	0	0	0	0	0	0	0	0	0
4/23/2024	8:15 PM	0	0	0	0	0	0	0	0	0	0	0	0	0
4/23/2024	8:30 PM	0	0	0	0	0	0	0	0	0	0	0	0	0
4/23/2024	8:45 PM	0	0	0	0	0	0	0	0	0	0	0	0	0
4/23/2024	9:00 PM	0	0	0	0	0	0	0	0	0	0	0	0	0
4/23/2024	9:15 PM	0	0	0	0	0	0	0	0	0	0	0	0	0
4/23/2024	9:30 PM	0	0	0	0	0	0	0	0	0	0	0	0	0
4/23/2024	9:45 PM	0	0	0	0	0	0	0	0	0	0	0	0	0
4/23/2024	10:00 PM	0	0	0	0	0	0	0	0	0	0	0	0	0
4/23/2024	10:15 PM	0	0	0	0	0	0	0	0	0	0	0	0	0
4/23/2024	10:30 PM	0	0	0	0	0	0	0	0	0	0	0	0	0
4/23/2024	10:45 PM	0	0	0	0	0	0	0	0	0	0	0	0	0
4/23/2024	11:00 PM	0	0	0	0	0	0	0	0	0	0	0	0	0
4/23/2024	11:15 PM	0	0	0	0	0	0	0	0	0	0	0	0	0
4/23/2024	11:30 PM	0	0	0	0	0	0	0	0	0	0	0	0	0
4/23/2024	11:45 PM	0	0	0	0	0	0	0	0	0	0	0	0	0

4/24/2024	12:00 AM	0	0	0	0	0	0	0	0	0	0	0	0	0
4/24/2024	12:15 AM	0	0	0	0	0	0	0	0	0	0	0	0	0
4/24/2024	12:30 AM	0	0	0	0	0	0	0	0	0	0	0	0	0
4/24/2024	12:45 AM	0	0	0	0	0	0	0	0	0	0	0	0	0
4/24/2024	1:00 AM	0	0	0	0	0	0	0	0	0	0	0	0	0
4/24/2024	1:15 AM	0	0	0	0	0	0	0	0	0	0	0	0	0
4/24/2024	1:30 AM	0	0	0	0	0	0	0	0	0	0	0	0	0
4/24/2024	1:45 AM	0	0	0	0	0	0	0	0	0	0	0	0	0
4/24/2024	2:00 AM	0	0	0	0	0	0	0	0	0	0	0	0	0
4/24/2024	2:15 AM	0	0	0	0	0	0	0	0	0	0	0	0	0
4/24/2024	2:30 AM	0	0	0	0	0	0	0	0	0	0	0	0	0
4/24/2024	2:45 AM	0	0	0	0	0	0	0	0	0	0	0	0	0
4/24/2024	3:00 AM	0	0	0	0	0	0	0	0	0	0	0	0	0
4/24/2024	3:15 AM	0	0	0	0	0	0	0	0	0	0	0	0	0
4/24/2024	3:30 AM	0	0	0	0	0	0	0	0	0	0	0	0	0
4/24/2024	3:45 AM	0	0	0	0	0	0	0	0	0	0	0	0	0
4/24/2024	4:00 AM	0	0	0	0	0	0	0	0	0	0	0	0	0
4/24/2024	4:15 AM	0	0	0	0	0	0	0	0	0	0	0	0	0
4/24/2024	4:30 AM	0	0	0	0	0	0	0	0	0	0	0	0	0
4/24/2024	4:45 AM	0	0	0	0	0	0	0	0	0	0	0	0	0
4/24/2024	5:00 AM	0	0	0	0	0	0	0	0	0	0	0	0	0
4/24/2024	5:15 AM	0	0	0	0	0	0	0	0	0	0	0	0	0
4/24/2024	5:30 AM	0	0	0	0	0	0	0	0	0	0	0	0	0
4/24/2024	5:45 AM	0	0	0	0	0	0	0	0	0	0	0	0	0
4/24/2024	6:00 AM	0	0	0	0	0	0	0	0	0	0	0	0	0
4/24/2024	6:15 AM	0	0	0	0	0	0	0	0	0	0	0	0	0
4/24/2024	6:30 AM	0	0	0	0	0	0	0	0	0	0	0	0	0
4/24/2024	6:45 AM	0	0	0	0	0	0	0	0	0	0	0	0	0
4/24/2024	7:00 AM	0	0	0	0	0	0	0	0	0	0	0	0	0
4/24/2024	7:15 AM	0	0	0	0	0	0	0	0	0	0	0	0	0
4/24/2024	7:30 AM	0	0	0	0	0	0	0	0	0	0	0	0	0
4/24/2024	7:45 AM	0	0	0	0	0	0	0	0	0	0	0	0	0
4/24/2024	8:00 AM	0	0	0	0	0	0	0	0	0	0	0	0	0
4/24/2024	8:15 AM	0	0	0	0	0	0	0	0	0	0	0	0	0
4/24/2024	8:30 AM	0	0	0	0	0	0	0	0	0	0	0	0	0
4/24/2024	8:45 AM	0	0	0	0	0	0	0	0	0	0	0	0	0
4/24/2024	9:00 AM	0	0	0	0	0	0	0	0	0	0	0	0	0
4/24/2024	9:15 AM	0	0	0	0	0	0	0	0	0	0	0	0	0
4/24/2024	9:30 AM	0	0	0	0	0	0	0	0	0	0	0	0	0
4/24/2024	9:45 AM	0	0	0	0	0	0	0	0	0	0	0	0	0
4/24/2024	10:00 AM	0	0	0	0	0	0	0	0	0	0	0	0	0
4/24/2024	10:15 AM	0	0	0	0	0	0	0	0	0	0	0	0	0
4/24/2024	10:30 AM	0	0	0	0	0	0	0	0	0	0	0	0	0
4/24/2024	10:45 AM	0	0	0	0	0	0	0	0	0	0	0	0	0
4/24/2024	11:00 AM	0	0	0	0	0	0	0	0	0	0	0	0	0
4/24/2024	11:15 AM	0	0	0	0	0	0	0	0	0	0	0	0	0
4/24/2024	11:30 AM	0	0	0	0	0	0	0	0	0	0	0	0	0
4/24/2024	11:45 AM	0	0	0	0	0	0	0	0	0	0	0	0	0
4/24/2024	12:00 PM	0	0	0	0	0	0	0	0	0	0	0	0	0
4/24/2024	12:15 PM	0	0	0	0	0	0	0	0	0	0	0	0	0
4/24/2024	12:30 PM	0	0	0	0	0	0	0	0	0	0	0	0	0
4/24/2024	12:45 PM	0	0	0	0	0	0	0	0	0	0	0	0	0
4/24/2024	1:00 PM	0	0	0	0	0	0	0	0	0	0	0	0	0
4/24/2024	1:15 PM	0	0	0	0	0	0	0	0	0	0	0	0	0
4/24/2024	1:30 PM	0	0	0	0	0	0	0	0	0	0	0	0	0
4/24/2024	1:45 PM	0	0	0	0	0	0	0	0	0	0	0	0	0
4/24/2024	2:00 PM	0	0	0	0	0	0	0	0	0	0	0	0	0
4/24/2024	2:15 PM	0	0	0	0	0	0	0	0	0	0	0	0	0
4/24/2024	2:30 PM	0	0	0	0	0	0	0	0	0	0	0	0	0
4/24/2024	2:45 PM	0	0	0	0	0	0	0	0	0	0	0	0	0
4/24/2024	3:00 PM	0	0	0	0	0	0	0	0	0	0	0	0	0
4/24/2024	3:15 PM	0	0	0	0	0	0	0	0	0	0	0	0	0
4/24/2024	3:30 PM	0	0	0	0	0	0	0	0	0	0	0	0	0
4/24/2024	3:45 PM	0	0	0	0	0	0	0	0	0	0	0	0	0
4/24/2024	4:00 PM	0	0	0	0	0	0	0	0	0	0	0	0	0
4/24/2024	4:15 PM	0	0	0	0	0	0	0	0	0	0	0	0	0
4/24/2024	4:30 PM	0	0	0	0	0	0	0	0	0	0	0	0	0
4/24/2024	4:45 PM	0	0	0	0	0	0	0	0	0	0	0	0	0
4/24/2024	5:00 PM	0	0	0	0	0	0	0	0	0	0	0	0	0
4/24/2024	5:15 PM	0	0	0	0	0	0	0	0	0	0	0	0	0
4/24/2024	5:30 PM	0	0	0	0	0	0	0	0	0	0	0	0	0
4/24/2024	5:45 PM	0	0	0	0	0	0	0	0	0	0	0	0	0
4/24/2024	6:00 PM	0	0	0	0	0	0	0	0	0	0	0	0	0
4/24/2024	6:15 PM	0	0	0	0	0	0	0	0	0	0	0	0	0
4/24/2024	6:30 PM	0	0	0	0	0	0	0	0	0	0	0	0	0
4/24/2024	6:45 PM	0	0	0	0	0	0	0	0	0	0	0	0	0
4/24/2024	7:00 PM	0	0	0	0	0	0	0	0	0	0	0	0	0
4/24/2024	7:15 PM	0	0	0	0	0	0	0	0	0	0	0	0	0
4/24/2024	7:30 PM	0	0	0	0	0	0	0	0	0	0	0	0	0
4/24/2024	7:45 PM	0	0	0	0	0	0	0	0	0	0	0	0	0
4/24/2024	8:00 PM	0	0	0	0	0	0	0	0	0	0	0	0	0
4/24/2024	8:15 PM	0	0	0	0	0	0	0	0	0	0	0	0	0
4/24/2024	8:30 PM	0	0	0	0	0	0	0	0	0	0	0	0	0
4/24/2024	8:45 PM	0	0	0	0	0	0	0	0	0	0	0	0	0
4/24/2024	9:00 PM	0	0	0	0	0	0	0	0	0	0	0	0	0
4/24/2024	9:15 PM	0	0	0	0	0	0	0	0	0	0	0	0	0
4/24/2024	9:30 PM	0	0	0	0	0	0	0	0	0	0	0	0	0
4/24/2024	9:45 PM	0	0	0	0	0	0	0	0	0	0	0	0	0
4/24/2024	10:00 PM	0	0	0	0	0	0	0	0	0	0	0	0	0
4/24/2024	10:15 PM	0	0	0	0	0	0	0	0	0	0	0	0	0
4/24/2024	10:30 PM	0	0	0	0	0	0	0	0	0	0	0	0	0
4/24/2024	10:45 PM	0	0	0	0	0	0	0	0	0	0	0	0	0
4/24/2024	11:00 PM	0	0	0	0	0	0	0	0	0	0	0	0	0
4/24/2024	11:15 PM	0	0	0	0	0	0	0	0	0	0	0	0	0
4/24/2024	11:30 PM	0	0	0	0	0	0	0	0	0	0	0	0	0
4/24/2024	11:45 PM	0	0	0	0	0	0	0	0	0	0	0	0	0

4/25/2024	12:00 AM	0	0	0	0	0	0	0	0	0	0	0	0	0
4/25/2024	12:15 AM	0	0	0	0	0	0	0	0	0	0	0	0	0
4/25/2024	12:30 AM	0	0	0	0	0	0	0	0	0	0	0	0	0
4/25/2024	12:45 AM	0	0	0	0	0	0	0	0	0	0	0	0	0
4/25/2024	1:00 AM	0	0	0	0	0	0	0	0	0	0	0	0	0
4/25/2024	1:15 AM	0	0	0	0	0	0	0	0	0	0	0	0	0
4/25/2024	1:30 AM	0	0	0	0	0	0	0	0	0	0	0	0	0
4/25/2024	1:45 AM	0	0	0	0	0	0	0	0	0	0	0	0	0
4/25/2024	2:00 AM	0	0	0	0	0	0	0	0	0	0	0	0	0
4/25/2024	2:15 AM	0	0	0	0	0	0	0	0	0	0	0	0	0
4/25/2024	2:30 AM	0	0	0	0	0	0	0	0	0	0	0	0	0
4/25/2024	2:45 AM	0	0	0	0	0	0	0	0	0	0	0	0	0
4/25/2024	3:00 AM	0	0	0	0	0	0	0	0	0	0	0	0	0
4/25/2024	3:15 AM	0	0	0	0	0	0	0	0	0	0	0	0	0
4/25/2024	3:30 AM	0	0	0	0	0	0	0	0	0	0	0	0	0
4/25/2024	3:45 AM	0	0	0	0	0	0	0	0	0	0	0	0	0
4/25/2024	4:00 AM	0	0	0	0	0	0	0	0	0	0	0	0	0
4/25/2024	4:15 AM	0	0	0	0	0	0	0	0	0	0	0	0	0
4/25/2024	4:30 AM	0	0	0	0	0	0	0	0	0	0	0	0	0
4/25/2024	4:45 AM	0	0	0	0	0	0	0	0	0	0	0	0	0
4/25/2024	5:00 AM	0	0	0	0	0	0	0	0	0	0	0	0	0
4/25/2024	5:15 AM	0	0	0	0	0	0	0	0	0	0	0	0	0
4/25/2024	5:30 AM	0	0	0	0	0	0	0	0	0	0	0	0	0
4/25/2024	5:45 AM	0	0	0	0	0	0	0	0	0	0	0	0	0
4/25/2024	6:00 AM	0	0	0	0	0	0	0	0	0	0	0	0	0
4/25/2024	6:15 AM	0	0	0	0	0	0	0	0	0	0	0	0	0
4/25/2024	6:30 AM	0	0	0	0	0	0	0	0	0	0	0	0	0
4/25/2024	6:45 AM	0	0	0	0	0	0	0	0	0	0	0	0	0
4/25/2024	7:00 AM	0	0	0	0	0	0	0	0	0	0	0	0	0
4/25/2024	7:15 AM	0	0	0	0	0	0	0	0	0	0	0	0	0
4/25/2024	7:30 AM	0	0	0	0	0	0	0	0	0	0	0	0	0
4/25/2024	7:45 AM	0	0	0	0	0	0	0	0	0	0	0	0	0
4/25/2024	8:00 AM	0	0	0	0	0	0	0	0	0	0	0	0	0
4/25/2024	8:15 AM	0	0	0	0	0	0	0	0	0	0	0	0	0
4/25/2024	8:30 AM	0	0	0	0	0	0	0	0	0	0	0	0	0
4/25/2024	8:45 AM	0	0	0	0	0	0	0	0	0	0	0	0	0
4/25/2024	9:00 AM	0	0	0	0	0	0	0	0	0	0	0	0	0
4/25/2024	9:15 AM	0	0	0	0	0	0	0	0	0	0	0	0	0
4/25/2024	9:30 AM	0	0	0	0	0	0	0	0	0	0	0	0	0
4/25/2024	9:45 AM	0	0	0	0	0	0	0	0	0	0	0	0	0
4/25/2024	10:00 AM	0	0	0	0	0	0	0	0	0	0	0	0	0
4/25/2024	10:15 AM	0	0	0	0	0	0	0	0	0	0	0	0	0
4/25/2024	10:30 AM	0	0	0	0	0	0	0	0	0	0	0	0	0
4/25/2024	10:45 AM	0	0	0	0	0	0	0	0	0	0	0	0	0
4/25/2024	11:00 AM	0	0	0	0	0	0	0	0	0	0	0	0	0
4/25/2024	11:15 AM	0	0	0	0	0	0	0	0	0	0	0	0	0
4/25/2024	11:30 AM	0	0	0	0	0	0	0	0	0	0	0	0	0
4/25/2024	11:45 AM	0	0	0	0	0	0	0	0	0	0	0	0	0
4/25/2024	12:00 PM	0	0	0	0	0	0	0	0	0	0	0	0	0
4/25/2024	12:15 PM	0	0	0	0	0	0	0	0	0	0	0	0	0
4/25/2024	12:30 PM	0	0	0	0	0	0	0	0	0	0	0	0	0
4/25/2024	12:45 PM	0	0	0	0	0	0	0	0	0	0	0	0	0
4/25/2024	1:00 PM	0	0	0	0	0	0	0	0	0	0	0	0	0
4/25/2024	1:15 PM	0	0	0	0	0	0	0	0	0	0	0	0	0
4/25/2024	1:30 PM	0	0	0	0	0	0	0	0	0	0	0	0	0
4/25/2024	1:45 PM	0	0	0	0	0	0	0	0	0	0	0	0	0
4/25/2024	2:00 PM	0	0	0	0	0	0	0	0	0	0	0	0	0
4/25/2024	2:15 PM	0	0	0	0	0	0	0	0	0	0	0	0	0
4/25/2024	2:30 PM	0	0	0	0	0	0	0	0	0	0	0	0	0
4/25/2024	2:45 PM	0	0	0	0	0	0	0	0	0	0	0	0	0
4/25/2024	3:00 PM	0	0	0	0	0	0	0	0	0	0	0	0	0
4/25/2024	3:15 PM	0	0	0	0	0	0	0	0	0	0	0	0	0
4/25/2024	3:30 PM	0	0	0	0	0	0	0	0	0	0	0	0	0
4/25/2024	3:45 PM	0	0	0	0	0	0	0	0	0	0	0	0	0
4/25/2024	4:00 PM	0	0	0	0	0	0	0	0	0	0	0	0	0
4/25/2024	4:15 PM	0	0	0	0	0	0	0	0	0	0	0	0	0
4/25/2024	4:30 PM	0	0	0	0	0	0	0	0	0	0	0	0	0
4/25/2024	4:45 PM	0	0	0	0	0	0	0	0	0	0	0	0	0
4/25/2024	5:00 PM	0	0	0	0	0	0	0	0	0	0	0	0	0
4/25/2024	5:15 PM	0	0	0	0	0	0	0	0	0	0	0	0	0
4/25/2024	5:30 PM	0	0	0	0	0	0	0	0	0	0	0	0	0
4/25/2024	5:45 PM	0	0	0	0	0	0	0	0	0	0	0	0	0
4/25/2024	6:00 PM	0	0	0	0	0	0	0	0	0	0	0	0	0
4/25/2024	6:15 PM	0	0	0	0	0	0	0	0	0	0	0	0	0
4/25/2024	6:30 PM	0	0	0	0	0	0	0	0	0	0	0	0	0
4/25/2024	6:45 PM	0	0	0	0	0	0	0	0	0	0	0	0	0
4/25/2024	7:00 PM	0	0	0	0	0	0	0	0	0	0	0	0	0
4/25/2024	7:15 PM	0	0	0	0	0	0	0	0	0	0	0	0	0
4/25/2024	7:30 PM	0	0	0	0	0	0	0	0	0	0	0	0	0
4/25/2024	7:45 PM	0	0	0	0	0	0	0	0	0	0	0	0	0
4/25/2024	8:00 PM	0	0	0	0	0	0	0	0	0	0	0	0	0
4/25/2024	8:15 PM	0	0	0	0	0	0	0	0	0	0	0	0	0
4/25/2024	8:30 PM	0	0	0	0	0	0	0	0	0	0	0	0	0
4/25/2024	8:45 PM	0	0	0	0	0	0	0	0	0	0	0	0	0
4/25/2024	9:00 PM	0	0	0	0	0	0	0	0	0	0	0	0	0
4/25/2024	9:15 PM	0	0	0	0	0	0	0	0	0	0	0	0	0
4/25/2024	9:30 PM	0	0	0	0	0	0	0	0	0	0	0	0	0
4/25/2024	9:45 PM	0	0	0	0	0	0	0	0	0	0	0	0	0
4/25/2024	10:00 PM	0	0	0	0	0	0	0	0	0	0	0	0	0
4/25/2024	10:15 PM	0	0	0	0	0	0	0	0	0	0	0	0	0
4/25/2024	10:30 PM	0	0	0	0	0	0	0	0	0	0	0	0	0
4/25/2024	10:45 PM	0	0	0	0	0	0	0	0	0	0	0	0	0
4/25/2024	11:00 PM	0	0	0	0	0	0	0	0	0	0	0	0	0
4/25/2024	11:15 PM	0	0	0	0	0	0	0	0	0	0	0	0	0
4/25/2024	11:30 PM	0	0	0	0	0	0	0	0	0	0	0	0	0
4/25/2024	11:45 PM	0	0	0	0	0	0	0	0	0	0	0	0	0

SB
File Name:
Start Date: 4/23/2024
Start Time: 0
Site Code: 22
Station ID: 1
Location 1: I-26 James F. Byrnes Expy On/Off-Ramp, north of SC-60 Lake Murray Blvd
Location 2:

Date	Time	1	2	3	4	5	6	7	8	9	10	11	12	13
4/23/2024	12:00 AM	0	0	0	0	0	0	0	0	0	0	0	0	0
4/23/2024	12:15 AM	0	0	0	0	0	0	0	0	0	0	0	0	0
4/23/2024	12:30 AM	0	0	0	0	0	0	0	0	0	0	0	0	0
4/23/2024	12:45 AM	0	0	0	0	0	0	0	0	0	0	0	0	0
4/23/2024	1:00 AM	0	0	0	0	0	0	0	0	0	0	0	0	0
4/23/2024	1:15 AM	0	0	0	0	0	0	0	0	0	0	0	0	0
4/23/2024	1:30 AM	0	0	0	0	0	0	0	0	0	0	0	0	0
4/23/2024	1:45 AM	0	0	0	0	0	0	0	0	0	0	0	0	0
4/23/2024	2:00 AM	0	0	0	0	0	0	0	0	0	0	0	0	0
4/23/2024	2:15 AM	0	0	0	0	0	0	0	0	0	0	0	0	0
4/23/2024	2:30 AM	0	0	0	0	0	0	0	0	0	0	0	0	0
4/23/2024	2:45 AM	0	0	0	0	0	0	0	0	0	0	0	0	0
4/23/2024	3:00 AM	0	0	0	0	0	0	0	0	0	0	0	0	0
4/23/2024	3:15 AM	0	0	0	0	0	0	0	0	0	0	0	0	0
4/23/2024	3:30 AM	0	0	0	0	0	0	0	0	0	0	0	0	0
4/23/2024	3:45 AM	0	0	0	0	0	0	0	0	0	0	0	0	0
4/23/2024	4:00 AM	0	0	0	0	0	0	0	0	0	0	0	0	0
4/23/2024	4:15 AM	0	0	0	0	0	0	0	0	0	0	0	0	0
4/23/2024	4:30 AM	0	0	0	0	0	0	0	0	0	0	0	0	0
4/23/2024	4:45 AM	0	0	0	0	0	0	0	0	0	0	0	0	0
4/23/2024	5:00 AM	0	0	0	0	0	0	0	0	0	0	0	0	0
4/23/2024	5:15 AM	0	0	0	0	0	0	0	0	0	0	0	0	0
4/23/2024	5:30 AM	0	0	0	0	0	0	0	0	0	0	0	0	0
4/23/2024	5:45 AM	0	0	0	0	0	0	0	0	0	0	0	0	0
4/23/2024	6:00 AM	0	0	0	0	0	0	0	0	0	0	0	0	0
4/23/2024	6:15 AM	0	0	0	0	0	0	0	0	0	0	0	0	0
4/23/2024	6:30 AM	0	0	0	0	0	0	0	0	0	0	0	0	0
4/23/2024	6:45 AM	0	0	0	0	0	0	0	0	0	0	0	0	0
4/23/2024	7:00 AM	0	0	0	0	0	0	0	0	0	0	0	0	0
4/23/2024	7:15 AM	0	0	0	0	0	0	0	0	0	0	0	0	0
4/23/2024	7:30 AM	0	0	0	0	0	0	0	0	0	0	0	0	0
4/23/2024	7:45 AM	0	0	0	0	0	0	0	0	0	0	0	0	0
4/23/2024	8:00 AM	0	0	0	0	0	0	0	0	0	0	0	0	0
4/23/2024	8:15 AM	0	0	0	0	0	0	0	0	0	0	0	0	0
4/23/2024	8:30 AM	0	0	0	0	0	0	0	0	0	0	0	0	0
4/23/2024	8:45 AM	0	0	0	0	0	0	0	0	0	0	0	0	0
4/23/2024	9:00 AM	0	0	0	0	0	0	0	0	0	0	0	0	0
4/23/2024	9:15 AM	0	0	0	0	0	0	0	0	0	0	0	0	0
4/23/2024	9:30 AM	0	0	0	0	0	0	0	0	0	0	0	0	0
4/23/2024	9:45 AM	0	0	0	0	0	0	0	0	0	0	0	0	0
4/23/2024	10:00 AM	0	0	0	0	0	0	0	0	0	0	0	0	0
4/23/2024	10:15 AM	0	0	0	0	0	0	0	0	0	0	0	0	0
4/23/2024	10:30 AM	0	0	0	0	0	0	0	0	0	0	0	0	0
4/23/2024	10:45 AM	0	0	0	0	0	0	0	0	0	0	0	0	0
4/23/2024	11:00 AM	0	0	0	0	0	0	0	0	0	0	0	0	0
4/23/2024	11:15 AM	0	0	0	0	0	0	0	0	0	0	0	0	0
4/23/2024	11:30 AM	0	0	0	0	0	0	0	0	0	0	0	0	0
4/23/2024	11:45 AM	0	0	0	0	0	0	0	0	0	0	0	0	0
4/23/2024	12:00 PM	0	0	0	0	0	0	0	0	0	0	0	0	0
4/23/2024	12:15 PM	0	0	0	0	0	0	0	0	0	0	0	0	0
4/23/2024	12:30 PM	0	0	0	0	0	0	0	0	0	0	0	0	0
4/23/2024	12:45 PM	0	0	0	0	0	0	0	0	0	0	0	0	0
4/23/2024	1:00 PM	0	0	0	0	0	0	0	0	0	0	0	0	0
4/23/2024	1:15 PM	0	0	0	0	0	0	0	0	0	0	0	0	0
4/23/2024	1:30 PM	0	0	0	0	0	0	0	0	0	0	0	0	0
4/23/2024	1:45 PM	0	0	0	0	0	0	0	0	0	0	0	0	0
4/23/2024	2:00 PM	0	0	0	0	0	0	0	0	0	0	0	0	0
4/23/2024	2:15 PM	0	0	0	0	0	0	0	0	0	0	0	0	0
4/23/2024	2:30 PM	0	0	0	0	0	0	0	0	0	0	0	0	0
4/23/2024	2:45 PM	0	0	0	0	0	0	0	0	0	0	0	0	0
4/23/2024	3:00 PM	0	0	0	0	0	0	0	0	0	0	0	0	0
4/23/2024	3:15 PM	0	0	0	0	0	0	0	0	0	0	0	0	0
4/23/2024	3:30 PM	0	0	0	0	0	0	0	0	0	0	0	0	0
4/23/2024	3:45 PM	0	0	0	0	0	0	0	0	0	0	0	0	0
4/23/2024	4:00 PM	0	0	0	0	0	0	0	0	0	0	0	0	0
4/23/2024	4:15 PM	0	0	0	0	0	0	0	0	0	0	0	0	0
4/23/2024	4:30 PM	0	0	0	0	0	0	0	0	0	0	0	0	0
4/23/2024	4:45 PM	0	0	0	0	0	0	0	0	0	0	0	0	0
4/23/2024	5:00 PM	0	0	0	0	0	0	0	0	0	0	0	0	0
4/23/2024	5:15 PM	0	0	0	0	0	0	0	0	0	0	0	0	0
4/23/2024	5:30 PM	0	0	0	0	0	0	0	0	0	0	0	0	0
4/23/2024	5:45 PM	0	0	0	0	0	0	0	0	0	0	0	0	0
4/23/2024	6:00 PM	0	0	0	0	0	0	0	0	0	0	0	0	0
4/23/2024	6:15 PM	0	0	0	0	0	0	0	0	0	0	0	0	0
4/23/2024	6:30 PM	0	0	0	0	0	0	0	0	0	0	0	0	0
4/23/2024	6:45 PM	0	0	0	0	0	0	0	0	0	0	0	0	0
4/23/2024	7:00 PM	0	90	11	0	0	0	0	0	0	0	0	0	0
4/23/2024	7:15 PM	0	74	6	0	1	0	0	0	0	0	0	0	0
4/23/2024	7:30 PM	0	82	5	0	0	0	0	0	0	0	0	0	0
4/23/2024	7:45 PM	0	85	8	0	0	0	0	0	1	0	0	0	0
4/23/2024	8:00 PM	0	68	3	0	2	0	0	0	0	0	0	0	0
4/23/2024	8:15 PM	0	55	4	0	4	0	0	0	0	0	0	0	0
4/23/2024	8:30 PM	0	50	2	0	2	0	0	0	1	0	0	0	0
4/23/2024	8:45 PM	0	56	3	0	3	1	0	0	1	0	0	0	0
4/23/2024	9:00 PM	0	59	3	0	0	0	0	0	0	0	0	0	0
4/23/2024	9:15 PM	0	51	5	0	1	0	0	0	1	0	0	0	0
4/23/2024	9:30 PM	0	38	3	0	0	0	0	0	0	0	0	0	0
4/23/2024	9:45 PM	0	40	2	0	0	0	0	0	1	0	0	0	0
4/23/2024	10:00 PM	0	38	2	0	0	0	0	0	0	0	0	0	0
4/23/2024	10:15 PM	0	39	1	0	0	0	0	0	1	0	0	0	0
4/23/2024	10:30 PM	0	31	0	0	0	0	0	0	1	0	0	0	0
4/23/2024	10:45 PM	0	16	1	0	0	0	0	0	1	0	0	0	0
4/23/2024	11:00 PM	0	18	2	0	1	0	0	0	0	0	0	0	0
4/23/2024	11:15 PM	0	23	0	0	0	0	0	0	0	0	0	0	0
4/23/2024	11:30 PM	0	15	1	0	1	0	0	0	0	0	0	0	0
4/23/2024	11:45 PM	0	17	0	0	0	0	0	0	0	0	0	0	0

4/24/2024	12:00 AM	0	14	0	0	0	0	0	0	0	0	0	0
4/24/2024	12:15 AM	0	17	0	0	0	0	0	0	0	0	0	0
4/24/2024	12:30 AM	0	8	0	0	1	0	0	0	0	0	0	0
4/24/2024	12:45 AM	0	10	0	0	0	0	0	0	0	0	0	0
4/24/2024	1:00 AM	0	6	0	0	0	0	0	0	0	0	0	0
4/24/2024	1:15 AM	0	7	0	0	0	0	0	0	1	0	0	0
4/24/2024	1:30 AM	0	11	0	0	0	0	0	0	0	0	0	0
4/24/2024	1:45 AM	0	8	0	0	0	0	0	0	0	0	0	0
4/24/2024	2:00 AM	0	6	0	0	0	0	0	0	1	0	0	0
4/24/2024	2:15 AM	0	9	0	0	0	0	0	0	0	0	0	0
4/24/2024	2:30 AM	0	5	0	0	1	0	0	0	0	0	0	0
4/24/2024	2:45 AM	0	6	0	0	1	0	0	0	0	0	0	0
4/24/2024	3:00 AM	0	6	0	0	0	0	0	0	0	0	0	0
4/24/2024	3:15 AM	0	3	0	0	1	0	0	0	0	0	0	0
4/24/2024	3:30 AM	0	5	0	0	0	0	0	0	0	0	0	0
4/24/2024	3:45 AM	0	5	0	0	1	0	0	0	0	0	0	0
4/24/2024	4:00 AM	0	4	0	0	0	0	0	0	0	0	0	0
4/24/2024	4:15 AM	0	7	0	0	0	0	0	0	0	0	0	0
4/24/2024	4:30 AM	0	7	0	0	0	0	0	0	0	0	0	0
4/24/2024	4:45 AM	0	12	0	0	0	0	0	0	1	0	0	0
4/24/2024	5:00 AM	0	10	0	0	0	0	0	0	0	0	0	0
4/24/2024	5:15 AM	0	6	0	0	0	0	0	0	1	0	0	0
4/24/2024	5:30 AM	0	11	0	0	0	0	0	0	0	0	0	0
4/24/2024	5:45 AM	0	22	0	0	0	0	0	0	1	0	0	0
4/24/2024	6:00 AM	0	27	1	0	1	0	0	0	0	0	0	0
4/24/2024	6:15 AM	0	24	6	1	0	1	0	0	0	0	0	0
4/24/2024	6:30 AM	1	38	9	0	1	0	0	0	1	0	0	0
4/24/2024	6:45 AM	0	57	18	1	2	0	0	0	1	0	0	0
4/24/2024	7:00 AM	0	73	12	0	0	1	0	0	0	0	0	0
4/24/2024	7:15 AM	0	93	18	0	3	0	0	1	0	0	0	0
4/24/2024	7:30 AM	0	113	19	1	3	1	0	0	0	0	0	0
4/24/2024	7:45 AM	1	120	35	0	2	0	0	0	0	0	0	0
4/24/2024	8:00 AM	0	86	28	0	2	2	0	1	0	0	0	0
4/24/2024	8:15 AM	0	96	25	0	4	0	0	2	0	0	0	0
4/24/2024	8:30 AM	0	77	22	0	1	0	0	0	2	0	0	0
4/24/2024	8:45 AM	0	91	19	0	2	0	0	3	0	0	0	0
4/24/2024	9:00 AM	0	78	24	0	2	1	0	0	0	0	0	0
4/24/2024	9:15 AM	0	83	17	0	5	0	0	1	1	0	0	0
4/24/2024	9:30 AM	0	81	27	1	3	1	0	0	0	0	0	0
4/24/2024	9:45 AM	0	78	23	0	6	0	0	0	0	0	0	0
4/24/2024	10:00 AM	1	69	24	0	1	0	0	2	0	0	0	0
4/24/2024	10:15 AM	1	94	27	0	1	0	0	0	1	0	0	0
4/24/2024	10:30 AM	0	87	15	0	2	0	0	0	1	0	0	0
4/24/2024	10:45 AM	0	71	21	0	3	0	0	1	2	0	0	0
4/24/2024	11:00 AM	0	77	24	0	3	0	0	0	1	0	0	0
4/24/2024	11:15 AM	0	98	19	0	2	1	0	0	1	0	0	0
4/24/2024	11:30 AM	0	86	27	0	2	0	0	0	2	0	0	0
4/24/2024	11:45 AM	0	101	28	0	1	0	0	0	0	0	0	0
4/24/2024	12:00 PM	0	84	21	0	1	0	0	1	0	0	0	0
4/24/2024	12:15 PM	0	90	23	0	1	0	0	0	0	0	0	0
4/24/2024	12:30 PM	1	101	27	0	1	0	0	0	0	0	0	0
4/24/2024	12:45 PM	0	112	24	0	4	0	0	0	1	0	0	0
4/24/2024	1:00 PM	0	69	29	0	2	0	0	0	1	0	0	0
4/24/2024	1:15 PM	0	112	29	0	2	0	0	0	0	0	0	0
4/24/2024	1:30 PM	0	103	24	0	1	0	0	0	1	0	0	0
4/24/2024	1:45 PM	0	101	26	0	1	0	0	0	0	0	0	0
4/24/2024	2:00 PM	0	87	31	0	1	0	0	1	0	0	0	0
4/24/2024	2:15 PM	0	105	22	0	1	0	0	0	0	0	0	0
4/24/2024	2:30 PM	0	103	27	0	0	0	0	0	0	0	0	0
4/24/2024	2:45 PM	0	90	21	2	1	0	0	0	0	0	0	0
4/24/2024	3:00 PM	0	99	19	0	0	1	0	0	1	0	0	0
4/24/2024	3:15 PM	1	112	20	0	0	0	0	0	0	0	0	0
4/24/2024	3:30 PM	0	102	18	1	0	0	0	0	0	0	0	0
4/24/2024	3:45 PM	0	94	21	0	0	0	0	0	1	0	0	0
4/24/2024	4:00 PM	0	101	20	1	0	1	0	0	0	0	0	0
4/24/2024	4:15 PM	1	102	19	0	1	0	0	0	0	0	0	0
4/24/2024	4:30 PM	0	81	23	0	0	0	0	0	0	0	0	0
4/24/2024	4:45 PM	0	92	16	0	5	0	0	0	0	0	0	0
4/24/2024	5:00 PM	1	112	22	1	0	0	0	0	0	0	0	0
4/24/2024	5:15 PM	0	92	27	0	1	0	0	0	0	0	0	0
4/24/2024	5:30 PM	2	99	22	0	1	0	0	0	0	0	0	0
4/24/2024	5:45 PM	0	125	19	0	1	0	0	0	0	0	0	0
4/24/2024	6:00 PM	0	116	16	0	0	0	0	0	1	0	0	0
4/24/2024	6:15 PM	0	125	18	0	0	0	0	0	0	0	0	0
4/24/2024	6:30 PM	0	97	17	0	0	0	0	1	1	0	0	0
4/24/2024	6:45 PM	0	103	19	0	2	0	0	0	0	0	0	0
4/24/2024	7:00 PM	0	79	16	0	0	0	0	0	0	0	0	0
4/24/2024	7:15 PM	1	99	10	0	0	0	1	0	0	0	0	0
4/24/2024	7:30 PM	0	87	9	0	0	0	0	0	0	0	0	0
4/24/2024	7:45 PM	0	80	17	0	0	0	0	0	0	0	0	0
4/24/2024	8:00 PM	0	55	15	0	2	0	0	0	0	0	0	0
4/24/2024	8:15 PM	0	86	11	0	0	0	0	0	0	0	0	0
4/24/2024	8:30 PM	0	74	3	0	2	0	0	0	0	0	0	0
4/24/2024	8:45 PM	0	73	2	0	0	0	0	0	0	0	0	0
4/24/2024	9:00 PM	0	54	1	0	0	0	0	0	0	0	0	0
4/24/2024	9:15 PM	0	47	0	0	0	0	0	0	0	0	0	0
4/24/2024	9:30 PM	0	63	2	0	0	0	0	0	0	0	0	0
4/24/2024	9:45 PM	0	37	1	0	0	0	0	0	0	0	0	0
4/24/2024	10:00 PM	0	49	0	0	0	0	0	0	0	0	0	0
4/24/2024	10:15 PM	0	39	0	0	0	0	0	0	0	0	0	0
4/24/2024	10:30 PM	0	29	0	0	0	0	0	0	0	0	0	0
4/24/2024	10:45 PM	0	26	0	0	0	0	0	0	0	0	0	0
4/24/2024	11:00 PM	0	33	1	0	0	0	0	0	0	0	0	0
4/24/2024	11:15 PM	0	24	1	0	0	0	0	1	0	0	0	0
4/24/2024	11:30 PM	0	23	0	0	0	0	0	0	1	0	0	0
4/24/2024	11:45 PM	0	24	0	0	0	0	0	0	0	0	0	0

4/25/2024	12:00 AM	0	15	0	0	0	0	0	0	0	0	0	0
4/25/2024	12:15 AM	0	16	0	0	1	0	0	0	1	0	0	0
4/25/2024	12:30 AM	0	12	0	0	0	0	0	0	0	0	0	0
4/25/2024	12:45 AM	0	13	0	0	0	0	0	0	0	0	0	0
4/25/2024	1:00 AM	0	8	0	0	0	0	0	0	0	0	0	0
4/25/2024	1:15 AM	0	9	0	0	0	0	0	0	0	0	0	0
4/25/2024	1:30 AM	0	2	0	0	0	0	0	0	2	0	0	0
4/25/2024	1:45 AM	0	10	0	0	0	0	0	0	0	0	0	0
4/25/2024	2:00 AM	0	6	0	0	1	0	0	0	0	0	0	0
4/25/2024	2:15 AM	0	5	0	0	0	0	0	0	0	0	0	0
4/25/2024	2:30 AM	0	4	0	0	0	0	0	0	0	0	0	0
4/25/2024	2:45 AM	0	5	0	0	0	0	0	0	0	0	0	0
4/25/2024	3:00 AM	0	3	0	0	2	0	0	0	0	0	0	0
4/25/2024	3:15 AM	0	4	0	0	0	0	0	0	0	0	0	0
4/25/2024	3:30 AM	0	6	0	0	2	0	0	0	0	0	0	0
4/25/2024	3:45 AM	0	6	0	0	0	0	0	0	1	0	0	0
4/25/2024	4:00 AM	0	4	0	0	0	0	0	0	0	0	0	0
4/25/2024	4:15 AM	0	5	0	0	0	0	0	0	0	0	0	0
4/25/2024	4:30 AM	0	5	0	0	0	0	0	0	0	0	0	0
4/25/2024	4:45 AM	0	7	0	0	0	0	0	0	0	0	0	0
4/25/2024	5:00 AM	0	14	0	0	1	0	0	0	0	0	0	0
4/25/2024	5:15 AM	0	10	0	0	0	0	0	0	0	0	0	0
4/25/2024	5:30 AM	0	16	0	0	1	0	0	0	1	0	0	0
4/25/2024	5:45 AM	0	17	0	0	1	0	0	0	0	0	0	0
4/25/2024	6:00 AM	0	32	3	0	0	0	0	0	0	0	0	0
4/25/2024	6:15 AM	0	18	5	1	1	1	0	0	0	0	0	0
4/25/2024	6:30 AM	1	52	7	0	1	1	0	0	0	0	0	0
4/25/2024	6:45 AM	0	62	12	0	1	1	0	0	0	0	0	0
4/25/2024	7:00 AM	0	72	13	0	1	2	0	1	2	0	0	0
4/25/2024	7:15 AM	0	75	22	0	4	2	0	0	0	0	0	0
4/25/2024	7:30 AM	0	112	26	0	4	1	0	0	1	0	0	0
4/25/2024	7:45 AM	0	110	24	0	3	1	0	0	0	0	0	0
4/25/2024	8:00 AM	1	102	27	0	0	0	0	1	0	0	0	0
4/25/2024	8:15 AM	0	111	31	0	1	1	0	0	1	0	0	0
4/25/2024	8:30 AM	0	95	28	1	1	0	0	2	1	0	0	0
4/25/2024	8:45 AM	0	89	30	0	2	0	0	0	0	0	0	0
4/25/2024	9:00 AM	0	74	21	1	0	0	0	0	0	0	0	0
4/25/2024	9:15 AM	0	83	22	0	2	0	0	0	1	0	0	0
4/25/2024	9:30 AM	0	75	17	0	3	0	0	1	0	0	0	0
4/25/2024	9:45 AM	0	93	14	1	1	0	0	1	0	0	0	0
4/25/2024	10:00 AM	0	69	26	0	6	0	0	0	0	0	0	0
4/25/2024	10:15 AM	0	83	21	0	3	3	0	0	1	0	0	0
4/25/2024	10:30 AM	0	78	14	0	1	1	0	2	0	0	0	0
4/25/2024	10:45 AM	0	96	24	0	1	0	0	0	1	0	0	0
4/25/2024	11:00 AM	0	78	29	0	3	1	0	0	0	0	0	0
4/25/2024	11:15 AM	0	95	15	0	1	1	1	0	0	0	0	0
4/25/2024	11:30 AM	0	101	23	0	2	1	0	0	0	0	0	0
4/25/2024	11:45 AM	0	105	20	0	3	0	0	0	0	0	0	0
4/25/2024	12:00 PM	0	88	22	0	2	0	0	0	1	0	0	0
4/25/2024	12:15 PM	0	101	22	0	3	0	0	0	1	0	0	0
4/25/2024	12:30 PM	0	99	21	0	2	0	0	0	0	0	0	0
4/25/2024	12:45 PM	0	102	19	0	2	1	0	0	0	0	0	0
4/25/2024	1:00 PM	0	100	23	0	2	0	0	1	0	0	0	0
4/25/2024	1:15 PM	0	94	28	0	5	0	0	0	2	0	0	0
4/25/2024	1:30 PM	0	100	26	0	0	0	0	0	0	0	0	0
4/25/2024	1:45 PM	0	99	25	0	0	1	0	0	0	0	0	0
4/25/2024	2:00 PM	0	91	29	0	0	1	0	1	0	0	0	0
4/25/2024	2:15 PM	0	99	21	0	2	0	0	0	1	0	0	0
4/25/2024	2:30 PM	0	115	36	0	1	1	0	1	2	0	0	0
4/25/2024	2:45 PM	0	96	26	1	1	0	0	1	0	0	0	0
4/25/2024	3:00 PM	0	97	32	0	2	0	0	0	1	0	0	0
4/25/2024	3:15 PM	0	109	31	1	1	0	0	0	0	0	0	0
4/25/2024	3:30 PM	0	79	17	1	2	0	0	0	0	0	0	0
4/25/2024	3:45 PM	0	130	19	0	0	0	0	0	0	0	0	0
4/25/2024	4:00 PM	1	113	24	0	0	1	0	0	0	0	0	0
4/25/2024	4:15 PM	1	132	21	0	0	0	0	0	1	0	0	0
4/25/2024	4:30 PM	0	128	24	0	0	1	0	0	0	0	0	0
4/25/2024	4:45 PM	1	101	25	0	3	1	0	0	1	0	0	0
4/25/2024	5:00 PM	2	123	27	1	2	0	0	0	0	0	0	0
4/25/2024	5:15 PM	0	127	26	0	0	0	0	0	0	0	0	0
4/25/2024	5:30 PM	0	134	25	0	0	1	0	0	0	0	0	0
4/25/2024	5:45 PM	0	116	29	0	2	0	0	0	0	0	0	0
4/25/2024	6:00 PM	0	108	19	0	1	0	0	0	0	0	0	0
4/25/2024	6:15 PM	0	122	22	0	1	0	0	1	0	0	0	0
4/25/2024	6:30 PM	0	93	17	0	0	0	0	1	0	0	0	0
4/25/2024	6:45 PM	0	96	20	1	0	0	0	0	0	0	0	0
4/25/2024	7:00 PM	0	0	0	0	0	0	0	0	0	0	0	0
4/25/2024	7:15 PM	0	0	0	0	0	0	0	0	0	0	0	0
4/25/2024	7:30 PM	0	0	0	0	0	0	0	0	0	0	0	0
4/25/2024	7:45 PM	0	0	0	0	0	0	0	0	0	0	0	0
4/25/2024	8:00 PM	0	0	0	0	0	0	0	0	0	0	0	0
4/25/2024	8:15 PM	0	0	0	0	0	0	0	0	0	0	0	0
4/25/2024	8:30 PM	0	0	0	0	0	0	0	0	0	0	0	0
4/25/2024	8:45 PM	0	0	0	0	0	0	0	0	0	0	0	0
4/25/2024	9:00 PM	0	0	0	0	0	0	0	0	0	0	0	0
4/25/2024	9:15 PM	0	0	0	0	0	0	0	0	0	0	0	0
4/25/2024	9:30 PM	0	0	0	0	0	0	0	0	0	0	0	0
4/25/2024	9:45 PM	0	0	0	0	0	0	0	0	0	0	0	0
4/25/2024	10:00 PM	0	0	0	0	0	0	0	0	0	0	0	0
4/25/2024	10:15 PM	0	0	0	0	0	0	0	0	0	0	0	0
4/25/2024	10:30 PM	0	0	0	0	0	0	0	0	0	0	0	0
4/25/2024	10:45 PM	0	0	0	0	0	0	0	0	0	0	0	0
4/25/2024	11:00 PM	0	0	0	0	0	0	0	0	0	0	0	0
4/25/2024	11:15 PM	0	0	0	0	0	0	0	0	0	0	0	0
4/25/2024	11:30 PM	0	0	0	0	0	0	0	0	0	0	0	0
4/25/2024	11:45 PM	0	0	0	0	0	0	0	0	0	0	0	0

NB
File Name:
Start Date: 4/23/2024
Start Time: 0
Site Code: 22
Station ID: 1
Location 1: I-26 James F. Byrnes Expy On/Off-Ramp, north of SC-60 Lake Murray Blvd
Location 2:

Date	Time	1	2	3	4	5	6	7	8	9	10	11	12	13
4/23/2024	12:00 AM	0	0	0	0	0	0	0	0	0	0	0	0	0
4/23/2024	12:15 AM	0	0	0	0	0	0	0	0	0	0	0	0	0
4/23/2024	12:30 AM	0	0	0	0	0	0	0	0	0	0	0	0	0
4/23/2024	12:45 AM	0	0	0	0	0	0	0	0	0	0	0	0	0
4/23/2024	1:00 AM	0	0	0	0	0	0	0	0	0	0	0	0	0
4/23/2024	1:15 AM	0	0	0	0	0	0	0	0	0	0	0	0	0
4/23/2024	1:30 AM	0	0	0	0	0	0	0	0	0	0	0	0	0
4/23/2024	1:45 AM	0	0	0	0	0	0	0	0	0	0	0	0	0
4/23/2024	2:00 AM	0	0	0	0	0	0	0	0	0	0	0	0	0
4/23/2024	2:15 AM	0	0	0	0	0	0	0	0	0	0	0	0	0
4/23/2024	2:30 AM	0	0	0	0	0	0	0	0	0	0	0	0	0
4/23/2024	2:45 AM	0	0	0	0	0	0	0	0	0	0	0	0	0
4/23/2024	3:00 AM	0	0	0	0	0	0	0	0	0	0	0	0	0
4/23/2024	3:15 AM	0	0	0	0	0	0	0	0	0	0	0	0	0
4/23/2024	3:30 AM	0	0	0	0	0	0	0	0	0	0	0	0	0
4/23/2024	3:45 AM	0	0	0	0	0	0	0	0	0	0	0	0	0
4/23/2024	4:00 AM	0	0	0	0	0	0	0	0	0	0	0	0	0
4/23/2024	4:15 AM	0	0	0	0	0	0	0	0	0	0	0	0	0
4/23/2024	4:30 AM	0	0	0	0	0	0	0	0	0	0	0	0	0
4/23/2024	4:45 AM	0	0	0	0	0	0	0	0	0	0	0	0	0
4/23/2024	5:00 AM	0	0	0	0	0	0	0	0	0	0	0	0	0
4/23/2024	5:15 AM	0	0	0	0	0	0	0	0	0	0	0	0	0
4/23/2024	5:30 AM	0	0	0	0	0	0	0	0	0	0	0	0	0
4/23/2024	5:45 AM	0	0	0	0	0	0	0	0	0	0	0	0	0
4/23/2024	6:00 AM	0	0	0	0	0	0	0	0	0	0	0	0	0
4/23/2024	6:15 AM	0	0	0	0	0	0	0	0	0	0	0	0	0
4/23/2024	6:30 AM	0	0	0	0	0	0	0	0	0	0	0	0	0
4/23/2024	6:45 AM	0	0	0	0	0	0	0	0	0	0	0	0	0
4/23/2024	7:00 AM	0	0	0	0	0	0	0	0	0	0	0	0	0
4/23/2024	7:15 AM	0	0	0	0	0	0	0	0	0	0	0	0	0
4/23/2024	7:30 AM	0	0	0	0	0	0	0	0	0	0	0	0	0
4/23/2024	7:45 AM	0	0	0	0	0	0	0	0	0	0	0	0	0
4/23/2024	8:00 AM	0	0	0	0	0	0	0	0	0	0	0	0	0
4/23/2024	8:15 AM	0	0	0	0	0	0	0	0	0	0	0	0	0
4/23/2024	8:30 AM	0	0	0	0	0	0	0	0	0	0	0	0	0
4/23/2024	8:45 AM	0	0	0	0	0	0	0	0	0	0	0	0	0
4/23/2024	9:00 AM	0	0	0	0	0	0	0	0	0	0	0	0	0
4/23/2024	9:15 AM	0	0	0	0	0	0	0	0	0	0	0	0	0
4/23/2024	9:30 AM	0	0	0	0	0	0	0	0	0	0	0	0	0
4/23/2024	9:45 AM	0	0	0	0	0	0	0	0	0	0	0	0	0
4/23/2024	10:00 AM	0	0	0	0	0	0	0	0	0	0	0	0	0
4/23/2024	10:15 AM	0	0	0	0	0	0	0	0	0	0	0	0	0
4/23/2024	10:30 AM	0	0	0	0	0	0	0	0	0	0	0	0	0
4/23/2024	10:45 AM	0	0	0	0	0	0	0	0	0	0	0	0	0
4/23/2024	11:00 AM	0	0	0	0	0	0	0	0	0	0	0	0	0
4/23/2024	11:15 AM	0	0	0	0	0	0	0	0	0	0	0	0	0
4/23/2024	11:30 AM	0	0	0	0	0	0	0	0	0	0	0	0	0
4/23/2024	11:45 AM	0	0	0	0	0	0	0	0	0	0	0	0	0
4/23/2024	12:00 PM	0	0	0	0	0	0	0	0	0	0	0	0	0
4/23/2024	12:15 PM	0	0	0	0	0	0	0	0	0	0	0	0	0
4/23/2024	12:30 PM	0	0	0	0	0	0	0	0	0	0	0	0	0
4/23/2024	12:45 PM	0	0	0	0	0	0	0	0	0	0	0	0	0
4/23/2024	1:00 PM	0	0	0	0	0	0	0	0	0	0	0	0	0
4/23/2024	1:15 PM	0	0	0	0	0	0	0	0	0	0	0	0	0
4/23/2024	1:30 PM	0	0	0	0	0	0	0	0	0	0	0	0	0
4/23/2024	1:45 PM	0	0	0	0	0	0	0	0	0	0	0	0	0
4/23/2024	2:00 PM	0	0	0	0	0	0	0	0	0	0	0	0	0
4/23/2024	2:15 PM	0	0	0	0	0	0	0	0	0	0	0	0	0
4/23/2024	2:30 PM	0	0	0	0	0	0	0	0	0	0	0	0	0
4/23/2024	2:45 PM	0	0	0	0	0	0	0	0	0	0	0	0	0
4/23/2024	3:00 PM	0	0	0	0	0	0	0	0	0	0	0	0	0
4/23/2024	3:15 PM	0	0	0	0	0	0	0	0	0	0	0	0	0
4/23/2024	3:30 PM	0	0	0	0	0	0	0	0	0	0	0	0	0
4/23/2024	3:45 PM	0	0	0	0	0	0	0	0	0	0	0	0	0
4/23/2024	4:00 PM	0	0	0	0	0	0	0	0	0	0	0	0	0
4/23/2024	4:15 PM	0	0	0	0	0	0	0	0	0	0	0	0	0
4/23/2024	4:30 PM	0	0	0	0	0	0	0	0	0	0	0	0	0
4/23/2024	4:45 PM	0	0	0	0	0	0	0	0	0	0	0	0	0
4/23/2024	5:00 PM	0	0	0	0	0	0	0	0	0	0	0	0	0
4/23/2024	5:15 PM	0	0	0	0	0	0	0	0	0	0	0	0	0
4/23/2024	5:30 PM	0	0	0	0	0	0	0	0	0	0	0	0	0
4/23/2024	5:45 PM	0	0	0	0	0	0	0	0	0	0	0	0	0
4/23/2024	6:00 PM	0	0	0	0	0	0	0	0	0	0	0	0	0
4/23/2024	6:15 PM	0	0	0	0	0	0	0	0	0	0	0	0	0
4/23/2024	6:30 PM	0	0	0	0	0	0	0	0	0	0	0	0	0
4/23/2024	6:45 PM	0	0	0	0	0	0	0	0	0	0	0	0	0
4/23/2024	7:00 PM	0	0	0	0	0	0	0	0	0	0	0	0	0
4/23/2024	7:15 PM	0	0	0	0	0	0	0	0	0	0	0	0	0
4/23/2024	7:30 PM	0	0	0	0	0	0	0	0	0	0	0	0	0
4/23/2024	7:45 PM	0	0	0	0	0	0	0	0	0	0	0	0	0
4/23/2024	8:00 PM	0	0	0	0	0	0	0	0	0	0	0	0	0
4/23/2024	8:15 PM	0	0	0	0	0	0	0	0	0	0	0	0	0
4/23/2024	8:30 PM	0	0	0	0	0	0	0	0	0	0	0	0	0
4/23/2024	8:45 PM	0	0	0	0	0	0	0	0	0	0	0	0	0
4/23/2024	9:00 PM	0	0	0	0	0	0	0	0	0	0	0	0	0
4/23/2024	9:15 PM	0	0	0	0	0	0	0	0	0	0	0	0	0
4/23/2024	9:30 PM	0	0	0	0	0	0	0	0	0	0	0	0	0
4/23/2024	9:45 PM	0	0	0	0	0	0	0	0	0	0	0	0	0
4/23/2024	10:00 PM	0	0	0	0	0	0	0	0	0	0	0	0	0
4/23/2024	10:15 PM	0	0	0	0	0	0	0	0	0	0	0	0	0
4/23/2024	10:30 PM	0	0	0	0	0	0	0	0	0	0	0	0	0
4/23/2024	10:45 PM	0	0	0	0	0	0	0	0	0	0	0	0	0
4/23/2024	11:00 PM	0	0	0	0	0	0	0	0	0	0	0	0	0
4/23/2024	11:15 PM	0	0	0	0	0	0	0	0	0	0	0	0	0
4/23/2024	11:30 PM	0	0	0	0	0	0	0	0	0	0	0	0	0
4/23/2024	11:45 PM	0	0	0	0	0	0	0	0	0	0	0	0	0

4/24/2024	12:00 AM	0	0	0	0	0	0	0	0	0	0	0	0	0
4/24/2024	12:15 AM	0	0	0	0	0	0	0	0	0	0	0	0	0
4/24/2024	12:30 AM	0	0	0	0	0	0	0	0	0	0	0	0	0
4/24/2024	12:45 AM	0	0	0	0	0	0	0	0	0	0	0	0	0
4/24/2024	1:00 AM	0	0	0	0	0	0	0	0	0	0	0	0	0
4/24/2024	1:15 AM	0	0	0	0	0	0	0	0	0	0	0	0	0
4/24/2024	1:30 AM	0	0	0	0	0	0	0	0	0	0	0	0	0
4/24/2024	1:45 AM	0	0	0	0	0	0	0	0	0	0	0	0	0
4/24/2024	2:00 AM	0	0	0	0	0	0	0	0	0	0	0	0	0
4/24/2024	2:15 AM	0	0	0	0	0	0	0	0	0	0	0	0	0
4/24/2024	2:30 AM	0	0	0	0	0	0	0	0	0	0	0	0	0
4/24/2024	2:45 AM	0	0	0	0	0	0	0	0	0	0	0	0	0
4/24/2024	3:00 AM	0	0	0	0	0	0	0	0	0	0	0	0	0
4/24/2024	3:15 AM	0	0	0	0	0	0	0	0	0	0	0	0	0
4/24/2024	3:30 AM	0	0	0	0	0	0	0	0	0	0	0	0	0
4/24/2024	3:45 AM	0	0	0	0	0	0	0	0	0	0	0	0	0
4/24/2024	4:00 AM	0	0	0	0	0	0	0	0	0	0	0	0	0
4/24/2024	4:15 AM	0	0	0	0	0	0	0	0	0	0	0	0	0
4/24/2024	4:30 AM	0	0	0	0	0	0	0	0	0	0	0	0	0
4/24/2024	4:45 AM	0	0	0	0	0	0	0	0	0	0	0	0	0
4/24/2024	5:00 AM	0	0	0	0	0	0	0	0	0	0	0	0	0
4/24/2024	5:15 AM	0	0	0	0	0	0	0	0	0	0	0	0	0
4/24/2024	5:30 AM	0	0	0	0	0	0	0	0	0	0	0	0	0
4/24/2024	5:45 AM	0	0	0	0	0	0	0	0	0	0	0	0	0
4/24/2024	6:00 AM	0	0	0	0	0	0	0	0	0	0	0	0	0
4/24/2024	6:15 AM	0	0	0	0	0	0	0	0	0	0	0	0	0
4/24/2024	6:30 AM	0	0	0	0	0	0	0	0	0	0	0	0	0
4/24/2024	6:45 AM	0	0	0	0	0	0	0	0	0	0	0	0	0
4/24/2024	7:00 AM	0	0	0	0	0	0	0	0	0	0	0	0	0
4/24/2024	7:15 AM	0	0	0	0	0	0	0	0	0	0	0	0	0
4/24/2024	7:30 AM	0	0	0	0	0	0	0	0	0	0	0	0	0
4/24/2024	7:45 AM	0	0	0	0	0	0	0	0	0	0	0	0	0
4/24/2024	8:00 AM	0	0	0	0	0	0	0	0	0	0	0	0	0
4/24/2024	8:15 AM	0	0	0	0	0	0	0	0	0	0	0	0	0
4/24/2024	8:30 AM	0	0	0	0	0	0	0	0	0	0	0	0	0
4/24/2024	8:45 AM	0	0	0	0	0	0	0	0	0	0	0	0	0
4/24/2024	9:00 AM	0	0	0	0	0	0	0	0	0	0	0	0	0
4/24/2024	9:15 AM	0	0	0	0	0	0	0	0	0	0	0	0	0
4/24/2024	9:30 AM	0	0	0	0	0	0	0	0	0	0	0	0	0
4/24/2024	9:45 AM	0	0	0	0	0	0	0	0	0	0	0	0	0
4/24/2024	10:00 AM	0	0	0	0	0	0	0	0	0	0	0	0	0
4/24/2024	10:15 AM	0	0	0	0	0	0	0	0	0	0	0	0	0
4/24/2024	10:30 AM	0	0	0	0	0	0	0	0	0	0	0	0	0
4/24/2024	10:45 AM	0	0	0	0	0	0	0	0	0	0	0	0	0
4/24/2024	11:00 AM	0	0	0	0	0	0	0	0	0	0	0	0	0
4/24/2024	11:15 AM	0	0	0	0	0	0	0	0	0	0	0	0	0
4/24/2024	11:30 AM	0	0	0	0	0	0	0	0	0	0	0	0	0
4/24/2024	11:45 AM	0	0	0	0	0	0	0	0	0	0	0	0	0
4/24/2024	12:00 PM	0	0	0	0	0	0	0	0	0	0	0	0	0
4/24/2024	12:15 PM	0	0	0	0	0	0	0	0	0	0	0	0	0
4/24/2024	12:30 PM	0	0	0	0	0	0	0	0	0	0	0	0	0
4/24/2024	12:45 PM	0	0	0	0	0	0	0	0	0	0	0	0	0
4/24/2024	1:00 PM	0	0	0	0	0	0	0	0	0	0	0	0	0
4/24/2024	1:15 PM	0	0	0	0	0	0	0	0	0	0	0	0	0
4/24/2024	1:30 PM	0	0	0	0	0	0	0	0	0	0	0	0	0
4/24/2024	1:45 PM	0	0	0	0	0	0	0	0	0	0	0	0	0
4/24/2024	2:00 PM	0	0	0	0	0	0	0	0	0	0	0	0	0
4/24/2024	2:15 PM	0	0	0	0	0	0	0	0	0	0	0	0	0
4/24/2024	2:30 PM	0	0	0	0	0	0	0	0	0	0	0	0	0
4/24/2024	2:45 PM	0	0	0	0	0	0	0	0	0	0	0	0	0
4/24/2024	3:00 PM	0	0	0	0	0	0	0	0	0	0	0	0	0
4/24/2024	3:15 PM	0	0	0	0	0	0	0	0	0	0	0	0	0
4/24/2024	3:30 PM	0	0	0	0	0	0	0	0	0	0	0	0	0
4/24/2024	3:45 PM	0	0	0	0	0	0	0	0	0	0	0	0	0
4/24/2024	4:00 PM	0	0	0	0	0	0	0	0	0	0	0	0	0
4/24/2024	4:15 PM	0	0	0	0	0	0	0	0	0	0	0	0	0
4/24/2024	4:30 PM	0	0	0	0	0	0	0	0	0	0	0	0	0
4/24/2024	4:45 PM	0	0	0	0	0	0	0	0	0	0	0	0	0
4/24/2024	5:00 PM	0	0	0	0	0	0	0	0	0	0	0	0	0
4/24/2024	5:15 PM	0	0	0	0	0	0	0	0	0	0	0	0	0
4/24/2024	5:30 PM	0	0	0	0	0	0	0	0	0	0	0	0	0
4/24/2024	5:45 PM	0	0	0	0	0	0	0	0	0	0	0	0	0
4/24/2024	6:00 PM	0	0	0	0	0	0	0	0	0	0	0	0	0
4/24/2024	6:15 PM	0	0	0	0	0	0	0	0	0	0	0	0	0
4/24/2024	6:30 PM	0	0	0	0	0	0	0	0	0	0	0	0	0
4/24/2024	6:45 PM	0	0	0	0	0	0	0	0	0	0	0	0	0
4/24/2024	7:00 PM	0	0	0	0	0	0	0	0	0	0	0	0	0
4/24/2024	7:15 PM	0	0	0	0	0	0	0	0	0	0	0	0	0
4/24/2024	7:30 PM	0	0	0	0	0	0	0	0	0	0	0	0	0
4/24/2024	7:45 PM	0	0	0	0	0	0	0	0	0	0	0	0	0
4/24/2024	8:00 PM	0	0	0	0	0	0	0	0	0	0	0	0	0
4/24/2024	8:15 PM	0	0	0	0	0	0	0	0	0	0	0	0	0
4/24/2024	8:30 PM	0	0	0	0	0	0	0	0	0	0	0	0	0
4/24/2024	8:45 PM	0	0	0	0	0	0	0	0	0	0	0	0	0
4/24/2024	9:00 PM	0	0	0	0	0	0	0	0	0	0	0	0	0
4/24/2024	9:15 PM	0	0	0	0	0	0	0	0	0	0	0	0	0
4/24/2024	9:30 PM	0	0	0	0	0	0	0	0	0	0	0	0	0
4/24/2024	9:45 PM	0	0	0	0	0	0	0	0	0	0	0	0	0
4/24/2024	10:00 PM	0	0	0	0	0	0	0	0	0	0	0	0	0
4/24/2024	10:15 PM	0	0	0	0	0	0	0	0	0	0	0	0	0
4/24/2024	10:30 PM	0	0	0	0	0	0	0	0	0	0	0	0	0
4/24/2024	10:45 PM	0	0	0	0	0	0	0	0	0	0	0	0	0
4/24/2024	11:00 PM	0	0	0	0	0	0	0	0	0	0	0	0	0
4/24/2024	11:15 PM	0	0	0	0	0	0	0	0	0	0	0	0	0
4/24/2024	11:30 PM	0	0	0	0	0	0	0	0	0	0	0	0	0
4/24/2024	11:45 PM	0	0	0	0	0	0	0	0	0	0	0	0	0

4/25/2024	12:00 AM	0	0	0	0	0	0	0	0	0	0	0	0	0
4/25/2024	12:15 AM	0	0	0	0	0	0	0	0	0	0	0	0	0
4/25/2024	12:30 AM	0	0	0	0	0	0	0	0	0	0	0	0	0
4/25/2024	12:45 AM	0	0	0	0	0	0	0	0	0	0	0	0	0
4/25/2024	1:00 AM	0	0	0	0	0	0	0	0	0	0	0	0	0
4/25/2024	1:15 AM	0	0	0	0	0	0	0	0	0	0	0	0	0
4/25/2024	1:30 AM	0	0	0	0	0	0	0	0	0	0	0	0	0
4/25/2024	1:45 AM	0	0	0	0	0	0	0	0	0	0	0	0	0
4/25/2024	2:00 AM	0	0	0	0	0	0	0	0	0	0	0	0	0
4/25/2024	2:15 AM	0	0	0	0	0	0	0	0	0	0	0	0	0
4/25/2024	2:30 AM	0	0	0	0	0	0	0	0	0	0	0	0	0
4/25/2024	2:45 AM	0	0	0	0	0	0	0	0	0	0	0	0	0
4/25/2024	3:00 AM	0	0	0	0	0	0	0	0	0	0	0	0	0
4/25/2024	3:15 AM	0	0	0	0	0	0	0	0	0	0	0	0	0
4/25/2024	3:30 AM	0	0	0	0	0	0	0	0	0	0	0	0	0
4/25/2024	3:45 AM	0	0	0	0	0	0	0	0	0	0	0	0	0
4/25/2024	4:00 AM	0	0	0	0	0	0	0	0	0	0	0	0	0
4/25/2024	4:15 AM	0	0	0	0	0	0	0	0	0	0	0	0	0
4/25/2024	4:30 AM	0	0	0	0	0	0	0	0	0	0	0	0	0
4/25/2024	4:45 AM	0	0	0	0	0	0	0	0	0	0	0	0	0
4/25/2024	5:00 AM	0	0	0	0	0	0	0	0	0	0	0	0	0
4/25/2024	5:15 AM	0	0	0	0	0	0	0	0	0	0	0	0	0
4/25/2024	5:30 AM	0	0	0	0	0	0	0	0	0	0	0	0	0
4/25/2024	5:45 AM	0	0	0	0	0	0	0	0	0	0	0	0	0
4/25/2024	6:00 AM	0	0	0	0	0	0	0	0	0	0	0	0	0
4/25/2024	6:15 AM	0	0	0	0	0	0	0	0	0	0	0	0	0
4/25/2024	6:30 AM	0	0	0	0	0	0	0	0	0	0	0	0	0
4/25/2024	6:45 AM	0	0	0	0	0	0	0	0	0	0	0	0	0
4/25/2024	7:00 AM	0	0	0	0	0	0	0	0	0	0	0	0	0
4/25/2024	7:15 AM	0	0	0	0	0	0	0	0	0	0	0	0	0
4/25/2024	7:30 AM	0	0	0	0	0	0	0	0	0	0	0	0	0
4/25/2024	7:45 AM	0	0	0	0	0	0	0	0	0	0	0	0	0
4/25/2024	8:00 AM	0	0	0	0	0	0	0	0	0	0	0	0	0
4/25/2024	8:15 AM	0	0	0	0	0	0	0	0	0	0	0	0	0
4/25/2024	8:30 AM	0	0	0	0	0	0	0	0	0	0	0	0	0
4/25/2024	8:45 AM	0	0	0	0	0	0	0	0	0	0	0	0	0
4/25/2024	9:00 AM	0	0	0	0	0	0	0	0	0	0	0	0	0
4/25/2024	9:15 AM	0	0	0	0	0	0	0	0	0	0	0	0	0
4/25/2024	9:30 AM	0	0	0	0	0	0	0	0	0	0	0	0	0
4/25/2024	9:45 AM	0	0	0	0	0	0	0	0	0	0	0	0	0
4/25/2024	10:00 AM	0	0	0	0	0	0	0	0	0	0	0	0	0
4/25/2024	10:15 AM	0	0	0	0	0	0	0	0	0	0	0	0	0
4/25/2024	10:30 AM	0	0	0	0	0	0	0	0	0	0	0	0	0
4/25/2024	10:45 AM	0	0	0	0	0	0	0	0	0	0	0	0	0
4/25/2024	11:00 AM	0	0	0	0	0	0	0	0	0	0	0	0	0
4/25/2024	11:15 AM	0	0	0	0	0	0	0	0	0	0	0	0	0
4/25/2024	11:30 AM	0	0	0	0	0	0	0	0	0	0	0	0	0
4/25/2024	11:45 AM	0	0	0	0	0	0	0	0	0	0	0	0	0
4/25/2024	12:00 PM	0	0	0	0	0	0	0	0	0	0	0	0	0
4/25/2024	12:15 PM	0	0	0	0	0	0	0	0	0	0	0	0	0
4/25/2024	12:30 PM	0	0	0	0	0	0	0	0	0	0	0	0	0
4/25/2024	12:45 PM	0	0	0	0	0	0	0	0	0	0	0	0	0
4/25/2024	1:00 PM	0	0	0	0	0	0	0	0	0	0	0	0	0
4/25/2024	1:15 PM	0	0	0	0	0	0	0	0	0	0	0	0	0
4/25/2024	1:30 PM	0	0	0	0	0	0	0	0	0	0	0	0	0
4/25/2024	1:45 PM	0	0	0	0	0	0	0	0	0	0	0	0	0
4/25/2024	2:00 PM	0	0	0	0	0	0	0	0	0	0	0	0	0
4/25/2024	2:15 PM	0	0	0	0	0	0	0	0	0	0	0	0	0
4/25/2024	2:30 PM	0	0	0	0	0	0	0	0	0	0	0	0	0
4/25/2024	2:45 PM	0	0	0	0	0	0	0	0	0	0	0	0	0
4/25/2024	3:00 PM	0	0	0	0	0	0	0	0	0	0	0	0	0
4/25/2024	3:15 PM	0	0	0	0	0	0	0	0	0	0	0	0	0
4/25/2024	3:30 PM	0	0	0	0	0	0	0	0	0	0	0	0	0
4/25/2024	3:45 PM	0	0	0	0	0	0	0	0	0	0	0	0	0
4/25/2024	4:00 PM	0	0	0	0	0	0	0	0	0	0	0	0	0
4/25/2024	4:15 PM	0	0	0	0	0	0	0	0	0	0	0	0	0
4/25/2024	4:30 PM	0	0	0	0	0	0	0	0	0	0	0	0	0
4/25/2024	4:45 PM	0	0	0	0	0	0	0	0	0	0	0	0	0
4/25/2024	5:00 PM	0	0	0	0	0	0	0	0	0	0	0	0	0
4/25/2024	5:15 PM	0	0	0	0	0	0	0	0	0	0	0	0	0
4/25/2024	5:30 PM	0	0	0	0	0	0	0	0	0	0	0	0	0
4/25/2024	5:45 PM	0	0	0	0	0	0	0	0	0	0	0	0	0
4/25/2024	6:00 PM	0	0	0	0	0	0	0	0	0	0	0	0	0
4/25/2024	6:15 PM	0	0	0	0	0	0	0	0	0	0	0	0	0
4/25/2024	6:30 PM	0	0	0	0	0	0	0	0	0	0	0	0	0
4/25/2024	6:45 PM	0	0	0	0	0	0	0	0	0	0	0	0	0
4/25/2024	7:00 PM	0	0	0	0	0	0	0	0	0	0	0	0	0
4/25/2024	7:15 PM	0	0	0	0	0	0	0	0	0	0	0	0	0
4/25/2024	7:30 PM	0	0	0	0	0	0	0	0	0	0	0	0	0
4/25/2024	7:45 PM	0	0	0	0	0	0	0	0	0	0	0	0	0
4/25/2024	8:00 PM	0	0	0	0	0	0	0	0	0	0	0	0	0
4/25/2024	8:15 PM	0	0	0	0	0	0	0	0	0	0	0	0	0
4/25/2024	8:30 PM	0	0	0	0	0	0	0	0	0	0	0	0	0
4/25/2024	8:45 PM	0	0	0	0	0	0	0	0	0	0	0	0	0
4/25/2024	9:00 PM	0	0	0	0	0	0	0	0	0	0	0	0	0
4/25/2024	9:15 PM	0	0	0	0	0	0	0	0	0	0	0	0	0
4/25/2024	9:30 PM	0	0	0	0	0	0	0	0	0	0	0	0	0
4/25/2024	9:45 PM	0	0	0	0	0	0	0	0	0	0	0	0	0
4/25/2024	10:00 PM	0	0	0	0	0	0	0	0	0	0	0	0	0
4/25/2024	10:15 PM	0	0	0	0	0	0	0	0	0	0	0	0	0
4/25/2024	10:30 PM	0	0	0	0	0	0	0	0	0	0	0	0	0
4/25/2024	10:45 PM	0	0	0	0	0	0	0	0	0	0	0	0	0
4/25/2024	11:00 PM	0	0	0	0	0	0	0	0	0	0	0	0	0
4/25/2024	11:15 PM	0	0	0	0	0	0	0	0	0	0	0	0	0
4/25/2024	11:30 PM	0	0	0	0	0	0	0	0	0	0	0	0	0
4/25/2024	11:45 PM	0	0	0	0	0	0	0	0	0	0	0	0	0

SB
File Name:
Start Date: 4/23/2024
Start Time: 0
Site Code: 22
Station ID: 1
Location 1: I-26 James F. Byrnes Expy On/Off-Ramp, north of SC-60 Lake Murray Blvd
Location 2:

Date	Time	1	2	3	4	5	6	7	8	9	10	11	12	13
4/23/2024	12:00 AM	0	0	0	0	0	0	0	0	0	0	0	0	0
4/23/2024	12:15 AM	0	0	0	0	0	0	0	0	0	0	0	0	0
4/23/2024	12:30 AM	0	0	0	0	0	0	0	0	0	0	0	0	0
4/23/2024	12:45 AM	0	0	0	0	0	0	0	0	0	0	0	0	0
4/23/2024	1:00 AM	0	0	0	0	0	0	0	0	0	0	0	0	0
4/23/2024	1:15 AM	0	0	0	0	0	0	0	0	0	0	0	0	0
4/23/2024	1:30 AM	0	0	0	0	0	0	0	0	0	0	0	0	0
4/23/2024	1:45 AM	0	0	0	0	0	0	0	0	0	0	0	0	0
4/23/2024	2:00 AM	0	0	0	0	0	0	0	0	0	0	0	0	0
4/23/2024	2:15 AM	0	0	0	0	0	0	0	0	0	0	0	0	0
4/23/2024	2:30 AM	0	0	0	0	0	0	0	0	0	0	0	0	0
4/23/2024	2:45 AM	0	0	0	0	0	0	0	0	0	0	0	0	0
4/23/2024	3:00 AM	0	0	0	0	0	0	0	0	0	0	0	0	0
4/23/2024	3:15 AM	0	0	0	0	0	0	0	0	0	0	0	0	0
4/23/2024	3:30 AM	0	0	0	0	0	0	0	0	0	0	0	0	0
4/23/2024	3:45 AM	0	0	0	0	0	0	0	0	0	0	0	0	0
4/23/2024	4:00 AM	0	0	0	0	0	0	0	0	0	0	0	0	0
4/23/2024	4:15 AM	0	0	0	0	0	0	0	0	0	0	0	0	0
4/23/2024	4:30 AM	0	0	0	0	0	0	0	0	0	0	0	0	0
4/23/2024	4:45 AM	0	0	0	0	0	0	0	0	0	0	0	0	0
4/23/2024	5:00 AM	0	0	0	0	0	0	0	0	0	0	0	0	0
4/23/2024	5:15 AM	0	0	0	0	0	0	0	0	0	0	0	0	0
4/23/2024	5:30 AM	0	0	0	0	0	0	0	0	0	0	0	0	0
4/23/2024	5:45 AM	0	0	0	0	0	0	0	0	0	0	0	0	0
4/23/2024	6:00 AM	0	0	0	0	0	0	0	0	0	0	0	0	0
4/23/2024	6:15 AM	0	0	0	0	0	0	0	0	0	0	0	0	0
4/23/2024	6:30 AM	0	0	0	0	0	0	0	0	0	0	0	0	0
4/23/2024	6:45 AM	0	0	0	0	0	0	0	0	0	0	0	0	0
4/23/2024	7:00 AM	0	0	0	0	0	0	0	0	0	0	0	0	0
4/23/2024	7:15 AM	0	0	0	0	0	0	0	0	0	0	0	0	0
4/23/2024	7:30 AM	0	0	0	0	0	0	0	0	0	0	0	0	0
4/23/2024	7:45 AM	0	0	0	0	0	0	0	0	0	0	0	0	0
4/23/2024	8:00 AM	0	0	0	0	0	0	0	0	0	0	0	0	0
4/23/2024	8:15 AM	0	0	0	0	0	0	0	0	0	0	0	0	0
4/23/2024	8:30 AM	0	0	0	0	0	0	0	0	0	0	0	0	0
4/23/2024	8:45 AM	0	0	0	0	0	0	0	0	0	0	0	0	0
4/23/2024	9:00 AM	0	0	0	0	0	0	0	0	0	0	0	0	0
4/23/2024	9:15 AM	0	0	0	0	0	0	0	0	0	0	0	0	0
4/23/2024	9:30 AM	0	0	0	0	0	0	0	0	0	0	0	0	0
4/23/2024	9:45 AM	0	0	0	0	0	0	0	0	0	0	0	0	0
4/23/2024	10:00 AM	0	0	0	0	0	0	0	0	0	0	0	0	0
4/23/2024	10:15 AM	0	0	0	0	0	0	0	0	0	0	0	0	0
4/23/2024	10:30 AM	0	0	0	0	0	0	0	0	0	0	0	0	0
4/23/2024	10:45 AM	0	0	0	0	0	0	0	0	0	0	0	0	0
4/23/2024	11:00 AM	0	0	0	0	0	0	0	0	0	0	0	0	0
4/23/2024	11:15 AM	0	0	0	0	0	0	0	0	0	0	0	0	0
4/23/2024	11:30 AM	0	0	0	0	0	0	0	0	0	0	0	0	0
4/23/2024	11:45 AM	0	0	0	0	0	0	0	0	0	0	0	0	0
4/23/2024	12:00 PM	0	0	0	0	0	0	0	0	0	0	0	0	0
4/23/2024	12:15 PM	0	0	0	0	0	0	0	0	0	0	0	0	0
4/23/2024	12:30 PM	0	0	0	0	0	0	0	0	0	0	0	0	0
4/23/2024	12:45 PM	0	0	0	0	0	0	0	0	0	0	0	0	0
4/23/2024	1:00 PM	0	0	0	0	0	0	0	0	0	0	0	0	0
4/23/2024	1:15 PM	0	0	0	0	0	0	0	0	0	0	0	0	0
4/23/2024	1:30 PM	0	0	0	0	0	0	0	0	0	0	0	0	0
4/23/2024	1:45 PM	0	0	0	0	0	0	0	0	0	0	0	0	0
4/23/2024	2:00 PM	0	0	0	0	0	0	0	0	0	0	0	0	0
4/23/2024	2:15 PM	0	0	0	0	0	0	0	0	0	0	0	0	0
4/23/2024	2:30 PM	0	0	0	0	0	0	0	0	0	0	0	0	0
4/23/2024	2:45 PM	0	0	0	0	0	0	0	0	0	0	0	0	0
4/23/2024	3:00 PM	0	0	0	0	0	0	0	0	0	0	0	0	0
4/23/2024	3:15 PM	0	0	0	0	0	0	0	0	0	0	0	0	0
4/23/2024	3:30 PM	0	0	0	0	0	0	0	0	0	0	0	0	0
4/23/2024	3:45 PM	0	0	0	0	0	0	0	0	0	0	0	0	0
4/23/2024	4:00 PM	0	0	0	0	0	0	0	0	0	0	0	0	0
4/23/2024	4:15 PM	0	0	0	0	0	0	0	0	0	0	0	0	0
4/23/2024	4:30 PM	0	0	0	0	0	0	0	0	0	0	0	0	0
4/23/2024	4:45 PM	0	0	0	0	0	0	0	0	0	0	0	0	0
4/23/2024	5:00 PM	0	0	0	0	0	0	0	0	0	0	0	0	0
4/23/2024	5:15 PM	0	0	0	0	0	0	0	0	0	0	0	0	0
4/23/2024	5:30 PM	0	0	0	0	0	0	0	0	0	0	0	0	0
4/23/2024	5:45 PM	0	0	0	0	0	0	0	0	0	0	0	0	0
4/23/2024	6:00 PM	0	0	0	0	0	0	0	0	0	0	0	0	0
4/23/2024	6:15 PM	0	90	11	0	0	0	0	0	0	0	0	0	0
4/23/2024	6:30 PM	0	164	17	0	1	0	0	0	0	0	0	0	0
4/23/2024	6:45 PM	0	246	22	0	1	0	0	0	0	0	0	0	0
4/23/2024	7:00 PM	0	331	30	0	1	0	0	0	1	0	0	0	0
4/23/2024	7:15 PM	0	309	22	0	3	0	0	0	1	0	0	0	0
4/23/2024	7:30 PM	0	290	20	0	6	0	0	0	1	0	0	0	0
4/23/2024	7:45 PM	0	258	17	0	8	0	0	0	2	0	0	0	0
4/23/2024	8:00 PM	0	229	12	0	11	1	0	0	2	0	0	0	0
4/23/2024	8:15 PM	0	220	12	0	9	1	0	0	2	0	0	0	0
4/23/2024	8:30 PM	0	216	13	0	6	1	0	0	3	0	0	0	0
4/23/2024	8:45 PM	0	204	14	0	4	1	0	0	2	0	0	0	0
4/23/2024	9:00 PM	0	188	13	0	1	0	0	0	2	0	0	0	0
4/23/2024	9:15 PM	0	167	12	0	1	0	0	0	2	0	0	0	0
4/23/2024	9:30 PM	0	155	8	0	0	0	0	0	2	0	0	0	0
4/23/2024	9:45 PM	0	148	5	0	0	0	0	0	3	0	0	0	0
4/23/2024	10:00 PM	0	124	4	0	0	0	0	0	3	0	0	0	0
4/23/2024	10:15 PM	0	104	4	0	1	0	0	0	3	0	0	0	0
4/23/2024	10:30 PM	0	88	3	0	1	0	0	0	2	0	0	0	0
4/23/2024	10:45 PM	0	72	4	0	2	0	0	0	1	0	0	0	0
4/23/2024	11:00 PM	0	73	3	0	2	0	0	0	0	0	0	0	0
4/23/2024	11:15 PM	0	55	1	0	1	0	0	0	0	0	0	0	0
4/23/2024	11:30 PM	0	32	1	0	1	0	0	0	0	0	0	0	0
4/23/2024	11:45 PM	0	17	0	0	0	0	0	0	0	0	0	0	0

4/24/2024	12:00 AM	0	49	0	0	1	0	0	0	0	0	0	0
4/24/2024	12:15 AM	0	41	0	0	1	0	0	0	0	0	0	0
4/24/2024	12:30 AM	0	31	0	0	1	0	0	0	1	0	0	0
4/24/2024	12:45 AM	0	34	0	0	0	0	0	0	1	0	0	0
4/24/2024	1:00 AM	0	32	0	0	0	0	0	0	1	0	0	0
4/24/2024	1:15 AM	0	32	0	0	0	0	0	0	2	0	0	0
4/24/2024	1:30 AM	0	34	0	0	0	0	0	0	1	0	0	0
4/24/2024	1:45 AM	0	28	0	0	1	0	0	0	1	0	0	0
4/24/2024	2:00 AM	0	26	0	0	2	0	0	0	1	0	0	0
4/24/2024	2:15 AM	0	26	0	0	2	0	0	0	0	0	0	0
4/24/2024	2:30 AM	0	20	0	0	3	0	0	0	0	0	0	0
4/24/2024	2:45 AM	0	20	0	0	2	0	0	0	0	0	0	0
4/24/2024	3:00 AM	0	19	0	0	2	0	0	0	0	0	0	0
4/24/2024	3:15 AM	0	17	0	0	2	0	0	0	0	0	0	0
4/24/2024	3:30 AM	0	21	0	0	1	0	0	0	0	0	0	0
4/24/2024	3:45 AM	0	23	0	0	1	0	0	0	0	0	0	0
4/24/2024	4:00 AM	0	30	0	0	0	0	0	0	1	0	0	0
4/24/2024	4:15 AM	0	36	0	0	0	0	0	0	1	0	0	0
4/24/2024	4:30 AM	0	35	0	0	0	0	0	0	2	0	0	0
4/24/2024	4:45 AM	0	39	0	0	0	0	0	0	2	0	0	0
4/24/2024	5:00 AM	0	49	0	0	0	0	0	0	2	0	0	0
4/24/2024	5:15 AM	0	66	1	0	1	0	0	0	2	0	0	0
4/24/2024	5:30 AM	0	84	7	1	1	1	0	0	1	0	0	0
4/24/2024	5:45 AM	1	111	16	1	2	1	0	0	2	0	0	0
4/24/2024	6:00 AM	1	146	34	2	4	1	0	0	2	0	0	0
4/24/2024	6:15 AM	1	192	45	2	3	2	0	0	2	0	0	0
4/24/2024	6:30 AM	1	261	57	1	6	1	0	1	2	0	0	0
4/24/2024	6:45 AM	0	336	67	2	8	2	0	1	1	0	0	0
4/24/2024	7:00 AM	1	399	84	1	8	2	0	1	0	0	0	0
4/24/2024	7:15 AM	1	412	100	1	10	3	0	2	0	0	0	0
4/24/2024	7:30 AM	1	415	107	1	11	3	0	3	0	0	0	0
4/24/2024	7:45 AM	1	379	110	0	9	2	0	3	2	0	0	0
4/24/2024	8:00 AM	0	350	94	0	9	2	0	6	2	0	0	0
4/24/2024	8:15 AM	0	342	90	0	9	1	0	5	2	0	0	0
4/24/2024	8:30 AM	0	329	82	0	10	1	0	4	3	0	0	0
4/24/2024	8:45 AM	0	333	87	1	12	2	0	4	1	0	0	0
4/24/2024	9:00 AM	0	320	91	1	16	2	0	1	1	0	0	0
4/24/2024	9:15 AM	1	311	91	1	15	1	0	3	1	0	0	0
4/24/2024	9:30 AM	2	322	101	1	11	1	0	2	1	0	0	0
4/24/2024	9:45 AM	2	328	89	0	10	0	0	2	2	0	0	0
4/24/2024	10:00 AM	2	321	87	0	7	0	0	3	4	0	0	0
4/24/2024	10:15 AM	1	329	87	0	9	0	0	1	5	0	0	0
4/24/2024	10:30 AM	0	333	79	0	10	1	0	1	5	0	0	0
4/24/2024	10:45 AM	0	332	91	0	10	1	0	1	6	0	0	0
4/24/2024	11:00 AM	0	362	98	0	8	1	0	0	4	0	0	0
4/24/2024	11:15 AM	0	369	95	0	6	1	0	1	3	0	0	0
4/24/2024	11:30 AM	0	361	99	0	5	0	0	1	2	0	0	0
4/24/2024	11:45 AM	1	376	99	0	4	0	0	1	0	0	0	0
4/24/2024	12:00 PM	1	387	95	0	7	0	0	1	1	0	0	0
4/24/2024	12:15 PM	1	372	103	0	8	0	0	0	2	0	0	0
4/24/2024	12:30 PM	1	394	109	0	9	0	0	0	2	0	0	0
4/24/2024	12:45 PM	0	396	106	0	9	0	0	0	3	0	0	0
4/24/2024	1:00 PM	0	385	108	0	6	0	0	0	2	0	0	0
4/24/2024	1:15 PM	0	403	110	0	5	0	0	1	1	0	0	0
4/24/2024	1:30 PM	0	396	103	0	4	0	0	1	1	0	0	0
4/24/2024	1:45 PM	0	396	106	0	3	0	0	1	0	0	0	0
4/24/2024	2:00 PM	0	385	101	2	3	0	0	1	0	0	0	0
4/24/2024	2:15 PM	0	397	89	2	2	1	0	0	1	0	0	0
4/24/2024	2:30 PM	1	404	87	2	1	1	0	0	1	0	0	0
4/24/2024	2:45 PM	1	403	78	3	1	1	0	0	1	0	0	0
4/24/2024	3:00 PM	1	407	78	1	0	1	0	0	2	0	0	0
4/24/2024	3:15 PM	1	409	79	2	0	1	0	0	1	0	0	0
4/24/2024	3:30 PM	1	399	78	2	1	1	0	0	1	0	0	0
4/24/2024	3:45 PM	1	378	83	1	1	1	0	0	1	0	0	0
4/24/2024	4:00 PM	1	376	78	1	6	1	0	0	0	0	0	0
4/24/2024	4:15 PM	2	387	80	1	6	0	0	0	0	0	0	0
4/24/2024	4:30 PM	1	377	88	1	6	0	0	0	0	0	0	0
4/24/2024	4:45 PM	3	395	87	1	7	0	0	0	0	0	0	0
4/24/2024	5:00 PM	3	428	90	1	3	0	0	0	0	0	0	0
4/24/2024	5:15 PM	2	432	84	0	3	0	0	0	1	0	0	0
4/24/2024	5:30 PM	2	465	75	0	2	0	0	0	1	0	0	0
4/24/2024	5:45 PM	0	463	70	0	1	0	0	1	2	0	0	0
4/24/2024	6:00 PM	0	441	70	0	2	0	0	1	2	0	0	0
4/24/2024	6:15 PM	0	404	70	0	2	0	0	1	1	0	0	0
4/24/2024	6:30 PM	1	378	62	0	2	0	1	1	1	0	0	0
4/24/2024	6:45 PM	1	368	54	0	2	0	1	0	0	0	0	0
4/24/2024	7:00 PM	1	345	52	0	0	0	1	0	0	0	0	0
4/24/2024	7:15 PM	1	321	51	0	2	0	1	0	0	0	0	0
4/24/2024	7:30 PM	0	308	52	0	2	0	0	0	0	0	0	0
4/24/2024	7:45 PM	0	295	46	0	4	0	0	0	0	0	0	0
4/24/2024	8:00 PM	0	288	31	0	4	0	0	0	0	0	0	0
4/24/2024	8:15 PM	0	287	17	0	2	0	0	0	0	0	0	0
4/24/2024	8:30 PM	0	248	6	0	2	0	0	0	0	0	0	0
4/24/2024	8:45 PM	0	237	5	0	0	0	0	0	0	0	0	0
4/24/2024	9:00 PM	0	201	4	0	0	0	0	0	0	0	0	0
4/24/2024	9:15 PM	0	196	3	0	0	0	0	0	0	0	0	0
4/24/2024	9:30 PM	0	188	3	0	0	0	0	0	0	0	0	0
4/24/2024	9:45 PM	0	154	1	0	0	0	0	0	0	0	0	0
4/24/2024	10:00 PM	0	143	0	0	0	0	0	0	0	0	0	0
4/24/2024	10:15 PM	0	127	1	0	0	0	0	0	0	0	0	0
4/24/2024	10:30 PM	0	112	2	0	0	0	0	1	0	0	0	0
4/24/2024	10:45 PM	0	106	2	0	0	0	0	1	1	0	0	0
4/24/2024	11:00 PM	0	104	2	0	0	0	0	1	1	0	0	0
4/24/2024	11:15 PM	0	71	1	0	0	0	0	1	1	0	0	0
4/24/2024	11:30 PM	0	47	0	0	0	0	0	0	1	0	0	0
4/24/2024	11:45 PM	0	24	0	0	0	0	0	0	0	0	0	0

4/25/2024	12:00 AM	0	56	0	0	1	0	0	0	1	0	0	0	0
4/25/2024	12:15 AM	0	49	0	0	1	0	0	0	1	0	0	0	0
4/25/2024	12:30 AM	0	42	0	0	0	0	0	0	0	0	0	0	0
4/25/2024	12:45 AM	0	32	0	0	0	0	0	0	2	0	0	0	0
4/25/2024	1:00 AM	0	29	0	0	0	0	0	0	2	0	0	0	0
4/25/2024	1:15 AM	0	27	0	0	1	0	0	0	2	0	0	0	0
4/25/2024	1:30 AM	0	23	0	0	1	0	0	0	2	0	0	0	0
4/25/2024	1:45 AM	0	25	0	0	1	0	0	0	0	0	0	0	0
4/25/2024	2:00 AM	0	20	0	0	1	0	0	0	0	0	0	0	0
4/25/2024	2:15 AM	0	17	0	0	2	0	0	0	0	0	0	0	0
4/25/2024	2:30 AM	0	16	0	0	2	0	0	0	0	0	0	0	0
4/25/2024	2:45 AM	0	18	0	0	4	0	0	0	0	0	0	0	0
4/25/2024	3:00 AM	0	19	0	0	4	0	0	0	1	0	0	0	0
4/25/2024	3:15 AM	0	20	0	0	2	0	0	0	1	0	0	0	0
4/25/2024	3:30 AM	0	21	0	0	2	0	0	0	1	0	0	0	0
4/25/2024	3:45 AM	0	20	0	0	0	0	0	0	1	0	0	0	0
4/25/2024	4:00 AM	0	21	0	0	0	0	0	0	0	0	0	0	0
4/25/2024	4:15 AM	0	31	0	0	1	0	0	0	0	0	0	0	0
4/25/2024	4:30 AM	0	36	0	0	1	0	0	0	0	0	0	0	0
4/25/2024	4:45 AM	0	47	0	0	2	0	0	0	1	0	0	0	0
4/25/2024	5:00 AM	0	57	0	0	3	0	0	0	1	0	0	0	0
4/25/2024	5:15 AM	0	75	3	0	2	0	0	0	1	0	0	0	0
4/25/2024	5:30 AM	0	83	8	1	3	1	0	0	1	0	0	0	0
4/25/2024	5:45 AM	1	119	15	1	3	2	0	0	0	0	0	0	0
4/25/2024	6:00 AM	1	164	27	1	3	3	0	0	0	0	0	0	0
4/25/2024	6:15 AM	1	204	37	1	4	5	0	1	2	0	0	0	0
4/25/2024	6:30 AM	1	261	54	0	7	6	0	1	2	0	0	0	0
4/25/2024	6:45 AM	0	321	73	0	10	6	0	1	3	0	0	0	0
4/25/2024	7:00 AM	0	369	85	0	12	6	0	1	3	0	0	0	0
4/25/2024	7:15 AM	1	399	99	0	11	4	0	1	1	0	0	0	0
4/25/2024	7:30 AM	1	435	108	0	8	3	0	1	2	0	0	0	0
4/25/2024	7:45 AM	1	418	110	1	5	2	0	3	2	0	0	0	0
4/25/2024	8:00 AM	1	397	116	1	4	1	0	3	2	0	0	0	0
4/25/2024	8:15 AM	0	369	110	2	4	1	0	2	2	0	0	0	0
4/25/2024	8:30 AM	0	341	101	2	5	0	0	2	2	0	0	0	0
4/25/2024	8:45 AM	0	321	90	1	7	0	0	1	1	0	0	0	0
4/25/2024	9:00 AM	0	325	74	2	6	0	0	2	1	0	0	0	0
4/25/2024	9:15 AM	0	320	79	1	12	0	0	2	1	0	0	0	0
4/25/2024	9:30 AM	0	320	78	1	13	3	0	2	1	0	0	0	0
4/25/2024	9:45 AM	0	323	75	1	11	4	0	3	1	0	0	0	0
4/25/2024	10:00 AM	0	326	85	0	11	4	0	2	2	0	0	0	0
4/25/2024	10:15 AM	0	335	88	0	8	5	0	2	2	0	0	0	0
4/25/2024	10:30 AM	0	347	82	0	6	3	1	2	1	0	0	0	0
4/25/2024	10:45 AM	0	370	91	0	7	3	1	0	1	0	0	0	0
4/25/2024	11:00 AM	0	379	87	0	9	3	1	0	0	0	0	0	0
4/25/2024	11:15 AM	0	389	80	0	8	2	1	0	1	0	0	0	0
4/25/2024	11:30 AM	0	395	87	0	10	1	0	0	2	0	0	0	0
4/25/2024	11:45 AM	0	393	85	0	10	0	0	0	2	0	0	0	0
4/25/2024	12:00 PM	0	390	84	0	9	1	0	0	2	0	0	0	0
4/25/2024	12:15 PM	0	402	85	0	9	1	0	1	1	0	0	0	0
4/25/2024	12:30 PM	0	395	91	0	11	1	0	1	2	0	0	0	0
4/25/2024	12:45 PM	0	396	96	0	9	1	0	1	2	0	0	0	0
4/25/2024	1:00 PM	0	393	102	0	7	1	0	1	2	0	0	0	0
4/25/2024	1:15 PM	0	384	108	0	5	2	0	1	2	0	0	0	0
4/25/2024	1:30 PM	0	389	101	0	2	2	0	1	1	0	0	0	0
4/25/2024	1:45 PM	0	404	111	0	3	3	0	2	3	0	0	0	0
4/25/2024	2:00 PM	0	401	112	1	4	2	0	3	3	0	0	0	0
4/25/2024	2:15 PM	0	407	115	1	6	1	0	2	4	0	0	0	0
4/25/2024	2:30 PM	0	417	125	2	5	1	0	2	3	0	0	0	0
4/25/2024	2:45 PM	0	381	106	3	6	0	0	1	1	0	0	0	0
4/25/2024	3:00 PM	0	415	99	2	5	0	0	0	1	0	0	0	0
4/25/2024	3:15 PM	1	431	91	2	3	1	0	0	0	0	0	0	0
4/25/2024	3:30 PM	2	454	81	1	2	1	0	0	1	0	0	0	0
4/25/2024	3:45 PM	2	503	88	0	0	2	0	0	1	0	0	0	0
4/25/2024	4:00 PM	3	474	94	0	3	3	0	0	2	0	0	0	0
4/25/2024	4:15 PM	4	484	97	1	5	2	0	0	2	0	0	0	0
4/25/2024	4:30 PM	3	479	102	1	5	2	0	0	1	0	0	0	0
4/25/2024	4:45 PM	3	485	103	1	5	2	0	0	1	0	0	0	0
4/25/2024	5:00 PM	2	500	107	1	4	1	0	0	0	0	0	0	0
4/25/2024	5:15 PM	0	485	99	0	3	1	0	0	0	0	0	0	0
4/25/2024	5:30 PM	0	480	95	0	4	1	0	1	0	0	0	0	0
4/25/2024	5:45 PM	0	439	87	0	4	0	0	2	0	0	0	0	0
4/25/2024	6:00 PM	0	419	78	1	2	0	0	2	0	0	0	0	0
4/25/2024	6:15 PM	0	311	59	1	1	0	0	2	0	0	0	0	0
4/25/2024	6:30 PM	0	189	37	1	0	0	0	1	0	0	0	0	0
4/25/2024	6:45 PM	0	96	20	1	0	0	0	0	0	0	0	0	0
4/25/2024	7:00 PM	0	0	0	0	0	0	0	0	0	0	0	0	0
4/25/2024	7:15 PM	0	0	0	0	0	0	0	0	0	0	0	0	0
4/25/2024	7:30 PM	0	0	0	0	0	0	0	0	0	0	0	0	0
4/25/2024	7:45 PM	0	0	0	0	0	0	0	0	0	0	0	0	0
4/25/2024	8:00 PM	0	0	0	0	0	0	0	0	0	0	0	0	0
4/25/2024	8:15 PM	0	0	0	0	0	0	0	0	0	0	0	0	0
4/25/2024	8:30 PM	0	0	0	0	0	0	0	0	0	0	0	0	0
4/25/2024	8:45 PM	0	0	0	0	0	0	0	0	0	0	0	0	0
4/25/2024	9:00 PM	0	0	0	0	0	0	0	0	0	0	0	0	0
4/25/2024	9:15 PM	0	0	0	0	0	0	0	0	0	0	0	0	0
4/25/2024	9:30 PM	0	0	0	0	0	0	0	0	0	0	0	0	0
4/25/2024	9:45 PM	0	0	0	0	0	0	0	0	0	0	0	0	0
4/25/2024	10:00 PM	0	0	0	0	0	0	0	0	0	0	0	0	0
4/25/2024	10:15 PM	0	0	0	0	0	0	0	0	0	0	0	0	0
4/25/2024	10:30 PM	0	0	0	0	0	0	0	0	0	0	0	0	0
4/25/2024	10:45 PM	0	0	0	0	0	0	0	0	0	0	0	0	0
4/25/2024	11:00 PM	0	0	0	0	0	0	0	0	0	0	0	0	0
4/25/2024	11:15 PM	0	0	0	0	0	0	0	0	0	0	0	0	0
4/25/2024	11:30 PM	0	0	0	0	0	0	0	0	0	0	0	0	0
4/25/2024	11:45 PM	0	0	0	0	0	0	0	0	0	0	0	0	0

Bi-Directional Class Count || SB WB 15min

Columbia, SC

Marr Traffic DATA COLLECTION
www.marrtraffic.com

Site 23
I-26 James F. Byrnes Expy S/Bound Off-Ramp,
north of SC-60 Lake Murray Blvd

Date
Tuesday, April 23, 2024

Lat/Long
34.092781°, -81.168442°

Weather
Fair
58°F

Click here for Detailed Weather

Click here for Map

0000 - 2400 (Weekday 24h Session) (04-23-2024)
SB WB 15min

	Southbound (Movement 23.1)													15min	60min
Time	1	2	3	4	5	6	7	8	9	10	11	12	13	Total	Total
0000 - 0015	0	0	0	0	0	0	0	0	0	0	0	0	0	**0**	
0015 - 0030	0	0	0	0	0	0	0	0	0	0	0	0	0	**0**	
0030 - 0045	0	0	0	0	0	0	0	0	0	0	0	0	0	**0**	
0045 - 0100	0	0	0	0	0	0	0	0	0	0	0	0	0	**0**	**0**
0100 - 0115	0	0	0	0	0	0	0	0	0	0	0	0	0	**0**	
0115 - 0130	0	0	0	0	0	0	0	0	0	0	0	0	0	**0**	
0130 - 0145	0	0	0	0	0	0	0	0	0	0	0	0	0	**0**	
0145 - 0200	0	0	0	0	0	0	0	0	0	0	0	0	0	**0**	**0**
0200 - 0215	0	0	0	0	0	0	0	0	0	0	0	0	0	**0**	
0215 - 0230	0	0	0	0	0	0	0	0	0	0	0	0	0	**0**	
0230 - 0245	0	0	0	0	0	0	0	0	0	0	0	0	0	**0**	
0245 - 0300	0	0	0	0	0	0	0	0	0	0	0	0	0	**0**	**0**
0300 - 0315	0	0	0	0	0	0	0	0	0	0	0	0	0	**0**	
0315 - 0330	0	0	0	0	0	0	0	0	0	0	0	0	0	**0**	
0330 - 0345	0	0	0	0	0	0	0	0	0	0	0	0	0	**0**	
0345 - 0400	0	0	0	0	0	0	0	0	0	0	0	0	0	**0**	**0**
0400 - 0415	0	0	0	0	0	0	0	0	0	0	0	0	0	**0**	
0415 - 0430	0	0	0	0	0	0	0	0	0	0	0	0	0	**0**	
0430 - 0445	0	0	0	0	0	0	0	0	0	0	0	0	0	**0**	
0445 - 0500	0	0	0	0	0	0	0	0	0	0	0	0	0	**0**	**0**
0500 - 0515	0	0	0	0	0	0	0	0	0	0	0	0	0	**0**	
0515 - 0530	0	0	0	0	0	0	0	0	0	0	0	0	0	**0**	
0530 - 0545	0	0	0	0	0	0	0	0	0	0	0	0	0	**0**	
0545 - 0600	0	0	0	0	0	0	0	0	0	0	0	0	0	**0**	**0**
0600 - 0615	0	0	0	0	0	0	0	0	0	0	0	0	0	**0**	
0615 - 0630	0	0	0	0	0	0	0	0	0	0	0	0	0	**0**	
0630 - 0645	0	0	0	0	0	0	0	0	0	0	0	0	0	**0**	
0645 - 0700	0	0	0	0	0	0	0	0	0	0	0	0	0	**0**	**0**
0700 - 0715	0	0	0	0	0	0	0	0	0	0	0	0	0	**0**	
0715 - 0730	0	0	0	0	0	0	0	0	0	0	0	0	0	**0**	
0730 - 0745	0	0	0	0	0	0	0	0	0	0	0	0	0	**0**	
0745 - 0800	0	0	0	0	0	0	0	0	0	0	0	0	0	**0**	**0**
0800 - 0815	0	0	0	0	0	0	0	0	0	0	0	0	0	**0**	
0815 - 0830	0	0	0	0	0	0	0	0	0	0	0	0	0	**0**	
0830 - 0845	0	0	0	0	0	0	0	0	0	0	0	0	0	**0**	
0845 - 0900	0	0	0	0	0	0	0	0	0	0	0	0	0	**0**	**0**
0900 - 0915	0	0	0	0	0	0	0	0	0	0	0	0	0	**0**	
0915 - 0930	0	0	0	0	0	0	0	0	0	0	0	0	0	**0**	
0930 - 0945	0	0	0	0	0	0	0	0	0	0	0	0	0	**0**	
0945 - 1000	0	0	0	0	0	0	0	0	0	0	0	0	0	**0**	**0**
1000 - 1015	0	0	0	0	0	0	0	0	0	0	0	0	0	**0**	
1015 - 1030	0	0	0	0	0	0	0	0	0	0	0	0	0	**0**	
1030 - 1045	0	0	0	0	0	0	0	0	0	0	0	0	0	**0**	
1045 - 1100	0	0	0	0	0	0	0	0	0	0	0	0	0	**0**	**0**
1100 - 1115	0	0	0	0	0	0	0	0	0	0	0	0	0	**0**	
1115 - 1130	0	0	0	0	0	0	0	0	0	0	0	0	0	**0**	
1130 - 1145	0	0	0	0	0	0	0	0	0	0	0	0	0	**0**	
1145 - 1200	0	0	0	0	0	0	0	0	0	0	0	0	0	**0**	**0**
1200 - 1215	0	0	0	0	0	0	0	0	0	0	0	0	0	**0**	
1215 - 1230	0	0	0	0	0	0	0	0	0	0	0	0	0	**0**	
1230 - 1245	0	0	0	0	0	0	0	0	0	0	0	0	0	**0**	
1245 - 1300	0	0	0	0	0	0	0	0	0	0	0	0	0	**0**	**0**
1300 - 1315	0	0	0	0	0	0	0	0	0	0	0	0	0	**0**	
1315 - 1330	0	0	0	0	0	0	0	0	0	0	0	0	0	**0**	
1330 - 1345	0	0	0	0	0	0	0	0	0	0	0	0	0	**0**	
1345 - 1400	0	0	0	0	0	0	0	0	0	0	0	0	0	**0**	**0**
1400 - 1415	0	0	0	0	0	0	0	0	0	0	0	0	0	**0**	
1415 - 1430	0	0	0	0	0	0	0	0	0	0	0	0	0	**0**	
1430 - 1445	0	0	0	0	0	0	0	0	0	0	0	0	0	**0**	
1445 - 1500	0	0	0	0	0	0	0	0	0	0	0	0	0	**0**	**0**
1500 - 1515	0	0	0	0	0	0	0	0	0	0	0	0	0	**0**	
1515 - 1530	0	0	0	0	0	0	0	0	0	0	0	0	0	**0**	
1530 - 1545	0	0	0	0	0	0	0	0	0	0	0	0	0	**0**	
1545 - 1600	0	0	0	0	0	0	0	0	0	0	0	0	0	**0**	**0**
1600 - 1615	0	0	0	0	0	0	0	0	0	0	0	0	0	**0**	
1615 - 1630	0	0	0	0	0	0	0	0	0	0	0	0	0	**0**	
1630 - 1645	0	0	0	0	0	0	0	0	0	0	0	0	0	**0**	
1645 - 1700	0	0	0	0	0	0	0	0	0	0	0	0	0	**0**	**0**
1700 - 1715	0	0	0	0	0	0	0	0	0	0	0	0	0	**0**	
1715 - 1730	0	0	0	0	0	0	0	0	0	0	0	0	0	**0**	
1730 - 1745	0	0	0	0	0	0	0	0	0	0	0	0	0	**0**	
1745 - 1800	0	0	0	0	0	0	0	0	0	0	0	0	0	**0**	**0**
1800 - 1815	0	0	0	0	0	0	0	0	0	0	0	0	0	**0**	
1815 - 1830	0	0	0	0	0	0	0	0	0	0	0	0	0	**0**	
1830 - 1845	0	0	0	0	0	0	0	0	0	0	0	0	0	**0**	
1845 - 1900	0	0	0	0	0	0	0	0	0	0	0	0	0	**0**	**0**
1900 - 1915	0	18	4	0	0	0	0	0	0	0	0	0	0	**22**	
1915 - 1930	0	17	3	0	1	0	0	0	0	0	0	0	0	**21**	
1930 - 1945	0	11	4	0	0	0	0	0	0	0	0	0	0	**15**	
1945 - 2000	0	11	3	0	0	0	0	0	0	0	0	0	0	**14**	**72**
2000 - 2015	0	14	10	0	0	0	0	0	0	0	0	0	0	**24**	
2015 - 2030	0	6	4	0	0	0	0	0	0	0	0	0	0	**10**	
2030 - 2045	0	10	1	0	0	0	0	0	0	0	0	0	0	**11**	
2045 - 2100	0	6	0	0	0	0	0	0	0	0	0	0	0	**6**	**51**
2100 - 2115	0	14	0	0	0	0	0	0	0	0	0	0	0	**14**	
2115 - 2130	0	10	1	0	0	0	0	0	0	0	0	0	0	**11**	
2130 - 2145	0	3	1	0	0	0	0	0	0	0	0	0	0	**4**	
2145 - 2200	0	9	3	0	0	0	0	0	0	0	0	0	0	**12**	**41**
2200 - 2215	0	4	0	0	0	0	0	0	0	0	0	0	0	**4**	
2215 - 2230	0	7	0	0	0	0	0	0	0	0	0	0	0	**7**	
2230 - 2245	0	2	0	0	0	0	0	0	0	0	0	0	0	**2**	
2245 - 2300	0	3	0	0	0	0	0	0	0	0	0	0	0	**3**	**16**
2300 - 2315	0	0	1	0	0	0	0	0	0	0	0	0	0	**1**	
2315 - 2330	0	3	0	0	0	0	0	0	0	0	0	0	0	**3**	
2330 - 2345	0	2	0	0	0	0	0	0	0	0	0	0	0	**2**	
2345 - 0000	0	1	0	0	0	0	0	0	0	0	0	0	0	**1**	**7**

Session Total	0	151	35	0	1	0	0	0	0	0	0	0	0	**187**
Session Average	0.00	1.57	0.36	0.00	0.01	0.00	0.00	0.00	0.00	0.00	0.00	0.00	0.00	**1.95**
Session Percentage	0.00	80.75	18.72	0.00	0.53	0.00	0.00	0.00	0.00	0.00	0.00	0.00	0.00	

AM Peak Hour	-	-	-	-	-	-	-	-	-	-	-	-	-	-
AM Peak Volume	0	0	0	0	0	0	0	0	0	0	0	0	0	**0**

Noon Peak Hour	-	-	-	-	-	-	-	-	-	-	-	-	-	-
Noon Peak Volume	0	0	0	0	0	0	0	0	0	0	0	0	0	**0**

PM Peak Hour	-	1900 - 2000	1930 - 2030	-	1830 - 1930	-	-	-	-	-	-	-	-	**1915 - 2015**
PM Peak Volume	0	57	21	0	1	0	0	0	0	0	0	0	0	**74**

Site 23
I-26 James F. Byrnes Expy S/Bound Off-Ramp,
north of SC-60 Lake Murray Blvd

Date
Wednesday, April 24, 2024

Lat/Long
34.092781°, -81.168442°

Weather
Fair
66°F

Click here for Detailed Weather

0000 - 2400 (Weekday 24h Session) (04-24-2024)
SB WB 15min

	Southbound (Movement 23.1)													15min	60min
Time	1	2	3	4	5	6	7	8	9	10	11	12	13	Total	Total
0000 - 0015	0	3	0	0	0	0	0	0	0	0	0	0	0	**3**	
0015 - 0030	0	3	0	0	0	0	0	0	1	0	0	0	0	**4**	
0030 - 0045	0	0	0	0	0	0	0	0	0	0	0	0	0	**0**	
0045 - 0100	0	1	0	0	0	0	0	0	0	0	0	0	0	**1**	**8**
0100 - 0115	0	1	0	0	0	0	0	0	0	0	0	0	0	**1**	
0115 - 0130	0	0	0	0	0	0	0	0	0	0	0	0	0	**0**	
0130 - 0145	0	1	0	0	0	0	0	0	0	0	0	0	0	**1**	
0145 - 0200	0	1	0	0	0	0	0	0	0	0	0	0	0	**1**	**3**
0200 - 0215	0	1	0	0	0	0	0	0	0	0	0	0	0	**1**	
0215 - 0230	0	0	0	0	0	0	0	0	0	0	0	0	0	**0**	
0230 - 0245	0	3	0	0	0	0	0	0	0	0	0	0	0	**3**	
0245 - 0300	0	0	0	0	0	0	0	0	0	0	0	0	0	**0**	**4**
0300 - 0315	0	1	0	0	0	0	0	0	0	0	0	0	0	**1**	
0315 - 0330	0	0	0	0	0	0	0	0	0	0	0	0	0	**0**	
0330 - 0345	0	0	0	0	0	0	0	0	0	0	0	0	0	**0**	
0345 - 0400	0	1	0	0	0	0	0	0	0	0	0	0	0	**1**	**2**
0400 - 0415	0	1	0	0	0	0	0	0	0	0	0	0	0	**1**	
0415 - 0430	0	0	0	0	0	0	0	0	1	0	0	0	0	**1**	
0430 - 0445	0	3	0	0	0	0	0	0	0	0	0	0	0	**3**	
0445 - 0500	0	5	0	0	0	0	0	0	0	0	0	0	0	**5**	**10**
0500 - 0515	0	1	0	0	0	0	0	0	0	0	0	0	0	**1**	
0515 - 0530	0	2	0	0	0	0	0	0	0	0	0	0	0	**2**	
0530 - 0545	0	10	0	0	0	0	0	0	1	0	0	0	0	**11**	
0545 - 0600	0	6	2	0	0	0	0	0	0	0	0	0	0	**8**	**22**
0600 - 0615	0	4	1	0	0	0	0	0	0	0	0	0	0	**5**	
0615 - 0630	0	10	2	0	0	0	0	0	0	0	0	0	0	**12**	
0630 - 0645	0	11	3	0	0	0	0	0	0	0	0	0	0	**14**	
0645 - 0700	0	20	5	0	2	0	0	0	0	0	0	0	0	**27**	**58**
0700 - 0715	0	36	4	0	1	0	0	0	1	0	0	0	0	**42**	
0715 - 0730	0	44	8	0	0	0	0	0	1	0	0	0	0	**53**	
0730 - 0745	0	45	13	0	1	0	0	0	0	0	0	0	0	**59**	
0745 - 0800	0	38	4	0	1	0	0	0	0	0	0	0	0	**43**	**197**
0800 - 0815	0	40	13	0	0	0	0	0	0	0	0	0	0	**53**	
0815 - 0830	0	24	6	0	1	0	0	0	0	0	0	0	0	**31**	
0830 - 0845	0	32	6	0	0	0	0	0	0	0	0	0	0	**38**	
0845 - 0900	0	43	12	0	0	0	0	0	0	0	0	0	0	**55**	**177**
0900 - 0915	0	52	7	2	0	0	1	1	0	0	0	0	0	**63**	
0915 - 0930	0	28	2	0	0	0	0	0	0	0	0	0	0	**30**	
0930 - 0945	0	25	6	0	0	0	0	0	0	0	0	0	0	**31**	
0945 - 1000	0	21	10	0	0	0	0	0	0	0	0	0	0	**31**	**155**
1000 - 1015	0	31	4	0	1	0	0	0	0	0	0	0	0	**36**	
1015 - 1030	0	11	14	0	0	0	0	0	0	0	0	0	0	**25**	
1030 - 1045	0	17	5	0	0	0	0	0	0	0	0	0	0	**22**	
1045 - 1100	0	10	3	0	0	0	0	0	0	0	0	0	0	**13**	**96**
1100 - 1115	0	10	4	0	0	0	0	0	0	0	0	0	0	**14**	
1115 - 1130	0	17	10	0	0	0	0	0	0	0	0	0	0	**27**	
1130 - 1145	0	8	4	0	0	0	0	0	0	0	0	0	0	**12**	
1145 - 1200	0	18	14	0	0	0	0	0	0	0	0	0	0	**32**	**85**
1200 - 1215	0	29	11	0	0	0	0	0	1	0	0	0	0	**41**	
1215 - 1230	0	24	8	0	0	0	0	0	2	0	0	0	0	**34**	
1230 - 1245	0	20	5	0	0	0	0	0	0	0	0	0	0	**25**	
1245 - 1300	0	19	4	0	2	0	0	0	0	0	0	0	0	**25**	**125**
1300 - 1315	0	19	5	0	1	0	0	0	0	0	0	0	0	**25**	
1315 - 1330	0	17	7	0	1	0	0	0	0	0	0	0	0	**25**	
1330 - 1345	0	19	7	0	0	0	0	0	0	0	0	0	0	**26**	
1345 - 1400	0	23	5	0	1	0	0	0	0	0	0	0	0	**29**	**105**
1400 - 1415	0	21	4	0	0	0	0	0	0	0	0	0	0	**25**	
1415 - 1430	0	27	7	0	0	0	0	1	1	0	0	0	0	**36**	
1430 - 1445	0	28	8	0	0	0	0	0	0	0	0	0	0	**36**	
1445 - 1500	0	20	5	0	0	0	0	0	1	0	0	0	0	**26**	**123**
1500 - 1515	0	27	6	0	1	0	0	0	0	0	0	0	0	**34**	
1515 - 1530	0	29	5	0	0	0	0	0	0	0	0	0	0	**34**	
1530 - 1545	0	19	5	0	0	0	0	0	0	0	0	0	0	**24**	
1545 - 1600	0	35	5	0	0	0	0	0	0	0	0	0	0	**40**	**132**
1600 - 1615	0	42	9	0	0	0	0	0	1	0	0	0	0	**52**	
1615 - 1630	0	41	7	0	0	0	0	0	0	0	0	0	0	**48**	
1630 - 1645	0	38	4	0	1	0	0	0	0	0	0	0	0	**43**	
1645 - 1700	0	39	9	0	0	0	0	0	0	0	0	0	0	**48**	**191**
1700 - 1715	0	25	4	0	0	0	0	0	0	0	0	0	0	**29**	
1715 - 1730	1	26	5	0	0	0	0	0	0	0	0	0	0	**32**	
1730 - 1745	0	36	7	0	0	0	0	0	0	0	0	0	0	**43**	
1745 - 1800	0	30	13	0	0	0	0	0	0	0	0	0	0	**43**	**147**
1800 - 1815	0	19	1	0	0	0	0	0	0	0	0	0	0	**20**	
1815 - 1830	0	29	11	0	1	0	0	1	0	0	0	0	0	**42**	
1830 - 1845	0	31	4	0	0	0	0	0	0	0	0	0	0	**35**	
1845 - 1900	0	23	3	0	0	0	0	0	0	0	0	0	0	**26**	**123**
1900 - 1915	0	15	4	0	0	0	0	0	0	0	0	0	0	**19**	
1915 - 1930	0	9	3	0	0	0	0	0	0	0	0	0	0	**12**	
1930 - 1945	0	19	1	0	0	0	0	0	0	0	0	0	0	**20**	
1945 - 2000	0	21	4	0	1	0	0	0	1	0	0	0	0	**27**	**78**
2000 - 2015	0	15	3	0	0	0	0	0	0	0	0	0	0	**18**	
2015 - 2030	0	9	4	0	0	0	0	0	0	0	0	0	0	**13**	
2030 - 2045	0	14	4	0	0	0	0	0	0	0	0	0	0	**18**	
2045 - 2100	0	16	2	0	1	0	0	0	0	0	0	0	0	**19**	**68**
2100 - 2115	0	11	1	0	0	0	0	0	0	0	0	0	0	**12**	
2115 - 2130	0	9	0	0	0	0	0	0	0	0	0	0	0	**9**	
2130 - 2145	0	6	0	0	1	0	0	0	0	0	0	0	0	**7**	
2145 - 2200	0	8	0	0	1	0	0	0	0	0	0	0	0	**9**	**37**
2200 - 2215	0	7	0	0	0	0	0	0	0	0	0	0	0	**7**	
2215 - 2230	0	8	1	0	0	0	0	0	0	0	0	0	0	**9**	
2230 - 2245	0	10	0	0	0	0	0	0	0	0	0	0	0	**10**	
2245 - 2300	0	3	1	0	0	0	0	0	0	0	0	0	0	**4**	**30**
2300 - 2315	0	3	0	0	0	0	0	0	0	0	0	0	0	**3**	
2315 - 2330	0	1	0	0	0	0	0	0	0	0	0	0	0	**1**	
2330 - 2345	0	5	0	0	0	0	0	0	1	0	0	0	0	**6**	
2345 - 0000	0	1	0	0	0	0	0	0	0	0	0	0	0	**1**	**11**

Session Total	1	1584	364	2	19	0	1	3	13	0	0	0	0	**1987**
Session Average	0.01	16.50	3.79	0.02	0.20	0.00	0.01	0.03	0.14	0.00	0.00	0.00	0.00	**20.70**
Session Percentage	0.05	79.72	18.32	0.10	0.96	0.00	0.05	0.15	0.65	0.00	0.00	0.00	0.00	

AM Peak Hour	-	0715 - 0815	0715 - 0815	0815 - 0915	0645 - 0745	-	0815 - 0915	0815 - 0915	0630 - 0730	-	-	-	-	**0715 - 0815**
AM Peak Volume	0	167	38	2	4	0	1	1	2	0	0	0	0	**208**

Noon Peak Hour	-	1430 - 1530	1115 - 1215	-	1230 - 1330	-	-	1330 - 1430	1130 - 1230	-	-	-	-	**1145 - 1245**
Noon Peak Volume	0	104	39	0	4	0	0	1	3	0	0	0	0	**132**

PM Peak Hour	1630 - 1730	1600 - 1700	1730 - 1830	-	1500 - 1600	-	-	1730 - 1830	1515 - 1615	-	-	-	-	**1600 - 1700**
PM Peak Volume	1	160	32	0	1	0	0	1	1	0	0	0	0	**191**

Site 23
I-26 James F. Byrnes Expy S/Bound Off-Ramp,
north of SC-60 Lake Murray Blvd

Date
Thursday, April 25, 2024

Lat/Long
34.092781°, -81.168442°

Weather
Fair
67°F

Click here for Detailed Weather

0000 - 2400 (Weekday 24h Session) (04-25-2024)
SB WB 15min

	Southbound (Movement 23.1)													15min	60min
TIME	1	2	3	4	5	6	7	8	9	10	11	12	13	Total	Total
0000 - 0015	0	2	0	0	0	0	0	0	0	0	0	0	0	**2**	
0015 - 0030	0	1	0	0	0	0	0	0	0	0	0	0	0	**1**	
0030 - 0045	0	3	0	0	0	0	0	0	0	0	0	0	0	**3**	
0045 - 0100	0	5	0	0	0	0	0	0	0	0	0	0	0	**5**	**11**
0100 - 0115	0	0	0	0	0	0	0	0	0	0	0	0	0	**0**	
0115 - 0130	0	0	0	0	0	0	0	0	0	0	0	0	0	**0**	
0130 - 0145	0	1	0	0	0	0	0	0	0	0	0	0	0	**1**	
0145 - 0200	0	0	0	0	0	0	0	0	0	0	0	0	0	**0**	**1**
0200 - 0215	0	2	0	0	0	0	0	0	0	0	0	0	0	**2**	
0215 - 0230	0	0	0	0	0	0	0	0	0	0	0	0	0	**0**	
0230 - 0245	0	0	0	0	0	0	0	0	0	0	0	0	0	**0**	
0245 - 0300	0	0	0	0	0	0	0	0	0	0	0	0	0	**0**	**2**
0300 - 0315	0	1	0	0	0	0	0	0	0	0	0	0	0	**1**	
0315 - 0330	0	1	0	0	0	0	0	0	0	0	0	0	0	**1**	
0330 - 0345	0	0	0	0	0	0	0	0	0	0	0	0	0	**0**	
0345 - 0400	0	0	0	0	0	0	0	0	0	0	0	0	0	**0**	**2**
0400 - 0415	0	2	1	0	0	0	0	0	0	0	0	0	0	**3**	
0415 - 0430	0	1	0	0	0	0	0	0	0	0	0	0	0	**1**	
0430 - 0445	0	3	0	0	0	0	0	0	0	0	0	0	0	**3**	
0445 - 0500	0	4	0	0	0	0	0	0	0	0	0	0	0	**4**	**11**
0500 - 0515	0	6	0	0	0	0	0	0	0	0	0	0	0	**6**	
0515 - 0530	0	4	0	0	0	0	0	0	0	0	0	0	0	**4**	
0530 - 0545	0	4	0	0	0	0	0	0	0	0	0	0	0	**4**	
0545 - 0600	0	9	1	0	0	0	0	0	0	0	0	0	0	**10**	**24**
0600 - 0615	0	4	1	0	0	0	0	0	0	0	0	0	0	**5**	
0615 - 0630	0	8	1	0	0	0	0	0	0	0	0	0	0	**9**	
0630 - 0645	0	18	2	0	1	0	0	0	0	0	0	0	0	**21**	
0645 - 0700	0	21	3	0	0	0	1	0	0	0	0	0	0	**25**	**60**
0700 - 0715	0	24	5	0	1	1	0	0	0	0	0	0	0	**31**	
0715 - 0730	0	42	9	0	0	0	0	0	1	0	0	0	0	**52**	
0730 - 0745	0	56	11	0	0	0	0	0	0	0	0	0	0	**67**	
0745 - 0800	0	64	19	0	0	0	0	0	0	0	0	0	0	**83**	**233**
0800 - 0815	0	52	10	0	0	0	0	0	0	0	0	0	0	**62**	
0815 - 0830	0	29	13	0	0	1	0	0	1	0	0	0	0	**44**	
0830 - 0845	0	33	6	0	2	1	0	0	0	0	0	0	0	**42**	
0845 - 0900	0	19	8	1	0	0	0	0	0	0	0	0	0	**28**	**176**
0900 - 0915	0	25	2	0	0	2	0	0	0	0	0	0	0	**29**	
0915 - 0930	0	22	6	0	0	0	1	0	0	0	0	0	0	**29**	
0930 - 0945	0	25	10	0	1	3	0	0	0	0	0	0	0	**39**	
0945 - 1000	0	19	7	0	0	0	0	0	0	0	0	0	0	**26**	**123**
1000 - 1015	0	19	7	0	0	3	0	0	0	0	0	0	0	**29**	
1015 - 1030	0	21	7	0	1	0	0	1	0	0	0	0	0	**30**	
1030 - 1045	0	24	7	0	0	3	0	0	0	0	0	0	0	**34**	
1045 - 1100	0	27	10	0	0	0	0	0	0	0	0	0	0	**37**	**130**
1100 - 1115	0	18	8	0	0	0	0	0	0	0	0	0	0	**26**	
1115 - 1130	0	25	9	0	0	2	0	0	0	0	0	0	0	**36**	
1130 - 1145	0	22	9	0	0	2	0	0	0	0	0	0	0	**33**	
1145 - 1200	1	30	5	0	1	1	0	0	0	0	0	0	0	**38**	**133**
1200 - 1215	0	31	9	0	0	1	0	0	0	0	0	0	0	**41**	
1215 - 1230	0	22	6	0	0	2	0	0	1	0	0	0	0	**31**	
1230 - 1245	0	22	8	0	1	0	0	1	0	0	0	0	0	**32**	
1245 - 1300	0	28	8	0	0	1	0	0	0	0	0	0	0	**37**	**141**
1300 - 1315	0	22	3	0	1	0	0	0	0	0	0	0	0	**26**	
1315 - 1330	0	26	4	0	1	1	0	0	0	0	0	0	0	**32**	
1330 - 1345	0	22	6	0	1	1	0	0	0	0	0	0	0	**30**	
1345 - 1400	0	21	8	0	0	0	0	0	0	0	0	0	0	**29**	**117**
1400 - 1415	0	21	4	0	0	1	0	0	0	0	0	0	0	**26**	
1415 - 1430	0	25	4	0	0	0	0	0	0	0	0	0	0	**29**	
1430 - 1445	0	23	5	0	1	1	0	0	0	0	0	0	0	**30**	
1445 - 1500	0	20	8	0	0	1	0	0	0	0	0	0	0	**29**	**114**
1500 - 1515	0	48	13	0	0	1	0	0	0	0	0	0	0	**62**	
1515 - 1530	0	23	7	0	0	1	0	0	0	0	0	0	0	**31**	
1530 - 1545	0	24	8	0	1	0	0	0	1	0	0	0	0	**34**	
1545 - 1600	0	34	16	0	0	2	0	0	0	0	0	0	0	**52**	**179**
1600 - 1615	0	29	8	0	0	0	0	0	0	0	0	0	0	**37**	
1615 - 1630	0	33	7	0	0	0	0	0	0	0	0	0	0	**40**	
1630 - 1645	0	21	13	0	0	2	0	0	0	0	0	0	0	**36**	
1645 - 1700	0	35	4	0	0	0	0	0	0	0	0	0	0	**39**	**152**
1700 - 1715	0	33	11	0	0	1	0	1	0	0	0	0	0	**46**	
1715 - 1730	0	37	8	0	0	0	0	0	0	0	0	0	0	**45**	
1730 - 1745	0	29	3	0	0	0	0	0	0	0	0	0	0	**32**	
1745 - 1800	0	23	7	0	1	0	0	0	0	0	0	0	0	**31**	**154**
1800 - 1815	0	28	10	0	1	0	0	0	0	0	0	0	0	**39**	
1815 - 1830	0	20	8	0	1	0	0	0	0	0	0	0	0	**29**	
1830 - 1845	0	18	7	0	0	0	0	0	0	0	0	0	0	**25**	
1845 - 1900	0	21	7	0	0	0	0	0	0	0	0	0	0	**28**	**121**
1900 - 1915	0	0	0	0	0	0	0	0	0	0	0	0	0	**0**	
1915 - 1930	0	0	0	0	0	0	0	0	0	0	0	0	0	**0**	
1930 - 1945	0	0	0	0	0	0	0	0	0	0	0	0	0	**0**	
1945 - 2000	0	0	0	0	0	0	0	0	0	0	0	0	0	**0**	**0**
2000 - 2015	0	0	0	0	0	0	0	0	0	0	0	0	0	**0**	
2015 - 2030	0	0	0	0	0	0	0	0	0	0	0	0	0	**0**	
2030 - 2045	0	0	0	0	0	0	0	0	0	0	0	0	0	**0**	
2045 - 2100	0	0	0	0	0	0	0	0	0	0	0	0	0	**0**	**0**
2100 - 2115	0	0	0	0	0	0	0	0	0	0	0	0	0	**0**	
2115 - 2130	0	0	0	0	0	0	0	0	0	0	0	0	0	**0**	
2130 - 2145	0	0	0	0	0	0	0	0	0	0	0	0	0	**0**	
2145 - 2200	0	0	0	0	0	0	0	0	0	0	0	0	0	**0**	**0**
2200 - 2215	0	0	0	0	0	0	0	0	0	0	0	0	0	**0**	
2215 - 2230	0	0	0	0	0	0	0	0	0	0	0	0	0	**0**	
2230 - 2245	0	0	0	0	0	0	0	0	0	0	0	0	0	**0**	
2245 - 2300	0	0	0	0	0	0	0	0	0	0	0	0	0	**0**	**0**
2300 - 2315	0	0	0	0	0	0	0	0	0	0	0	0	0	**0**	
2315 - 2330	0	0	0	0	0	0	0	0	0	0	0	0	0	**0**	
2330 - 2345	0	0	0	0	0	0	0	0	0	0	0	0	0	**0**	
2345 - 0000	0	0	0	0	0	0	0	0	0	0	0	0	0	**0**	**0**

Session Total	1	1435	387	1	16	35	2	3	4	0	0	0	0	**1884**
Session Average	0.01	14.95	4.03	0.01	0.17	0.36	0.02	0.03	0.04	0.00	0.00	0.00	0.00	**19.63**
Session Percentage	0.05	76.17	20.54	0.05	0.85	1.86	0.11	0.16	0.21	0.00	0.00	0.00	0.00	

AM Peak Hour	-	0715 - 0815	0730 - 0830	0800 - 0900	0615 - 0715	0915 - 1015	0600 - 0700	0930 - 1030	0630 - 0730	-	-	-	-	**0715 - 0815**
AM Peak Hour Volume	0	214	53	1	2	6	1	1	1	0	0	0	0	**264**

Noon Peak Hour	1100 - 1200	1415 - 1515	1045 - 1145	-	1230 - 1330	1000 - 1100	-	1000 - 1100	1130 - 1230	-	-	-	-	**1445 - 1545**
Noon Peak Hour Volume	1	116	36	0	3	6	0	1	1	0	0	0	0	**156**

PM Peak Hour	-	1645 - 1745	1500 - 1600	-	1730 - 1830	1500 - 1600	-	1615 - 1715	1500 - 1600	-	-	-	-	**1500 - 1600**
PM Peak Hour Volume	0	134	44	0	3	4	0	1	1	0	0	0	0	**179**

Bi-Directional Class Count || SB WB Average 15min

Columbia, SC

Marr Traffic DATA COLLECTION
www.marrtraffic.com

Site 23
I-26 James F. Byrnes Expy S/Bound Off-Ramp,
north of SC-60 Lake Murray Blvd

Date
Tuesday, April 23, 2024

Lat/Long
34.092781°, -81.168442°

Weather
Fair
58°F

0000 - 2400 (Weekday 24h Session) (All Dates)
SB WB Average 15min

	SB WB Average 15min													15min	60min
Time	1	2	3	4	5	6	7	8	9	10	11	12	13	Total	Total
0000 - 0015	0	2	0	0	0	0	0	0	0	0	0	0	0	**2**	
0015 - 0030	0	1	0	0	0	0	0	0	0	0	0	0	0	**2**	
0030 - 0045	0	1	0	0	0	0	0	0	0	0	0	0	0	**1**	
0045 - 0100	0	2	0	0	0	0	0	0	0	0	0	0	0	**2**	**6**
0100 - 0115	0	0	0	0	0	0	0	0	0	0	0	0	0	**0**	
0115 - 0130	0	0	0	0	0	0	0	0	0	0	0	0	0	**0**	
0130 - 0145	0	1	0	0	0	0	0	0	0	0	0	0	0	**1**	
0145 - 0200	0	0	0	0	0	0	0	0	0	0	0	0	0	**0**	**1**
0200 - 0215	0	1	0	0	0	0	0	0	0	0	0	0	0	**1**	
0215 - 0230	0	0	0	0	0	0	0	0	0	0	0	0	0	**0**	
0230 - 0245	0	1	0	0	0	0	0	0	0	0	0	0	0	**1**	
0245 - 0300	0	0	0	0	0	0	0	0	0	0	0	0	0	**0**	**2**
0300 - 0315	0	1	0	0	0	0	0	0	0	0	0	0	0	**1**	
0315 - 0330	0	0	0	0	0	0	0	0	0	0	0	0	0	**0**	
0330 - 0345	0	0	0	0	0	0	0	0	0	0	0	0	0	**0**	
0345 - 0400	0	0	0	0	0	0	0	0	0	0	0	0	0	**0**	**1**
0400 - 0415	0	1	0	0	0	0	0	0	0	0	0	0	0	**1**	
0415 - 0430	0	0	0	0	0	0	0	0	0	0	0	0	0	**1**	
0430 - 0445	0	2	0	0	0	0	0	0	0	0	0	0	0	**2**	
0445 - 0500	0	3	0	0	0	0	0	0	0	0	0	0	0	**3**	**7**
0500 - 0515	0	2	0	0	0	0	0	0	0	0	0	0	0	**2**	
0515 - 0530	0	2	0	0	0	0	0	0	0	0	0	0	0	**2**	
0530 - 0545	0	5	0	0	0	0	0	0	0	0	0	0	0	**5**	
0545 - 0600	0	5	1	0	0	0	0	0	0	0	0	0	0	**6**	**15**
0600 - 0615	0	3	1	0	0	0	0	0	0	0	0	0	0	**3**	
0615 - 0630	0	6	1	0	0	0	0	0	0	0	0	0	0	**7**	
0630 - 0645	0	10	2	0	0	0	0	0	0	0	0	0	0	**12**	
0645 - 0700	0	14	3	0	1	0	0	0	0	0	0	0	0	**17**	**39**
0700 - 0715	0	20	3	0	1	0	0	0	0	0	0	0	0	**24**	
0715 - 0730	0	29	6	0	0	0	0	0	1	0	0	0	0	**35**	
0730 - 0745	0	34	8	0	0	0	0	0	0	0	0	0	0	**42**	
0745 - 0800	0	34	8	0	0	0	0	0	0	0	0	0	0	**42**	**143**
0800 - 0815	0	31	8	0	0	0	0	0	0	0	0	0	0	**38**	
0815 - 0830	0	18	6	0	0	0	0	0	0	0	0	0	0	**25**	
0830 - 0845	0	22	4	0	1	0	0	0	0	0	0	0	0	**27**	
0845 - 0900	0	21	7	0	0	0	0	0	0	0	0	0	0	**28**	**118**
0900 - 0915	0	26	3	1	0	1	0	0	0	0	0	0	0	**31**	
0915 - 0930	0	17	3	0	0	0	0	0	0	0	0	0	0	**20**	
0930 - 0945	0	17	5	0	0	1	0	0	0	0	0	0	0	**23**	
0945 - 1000	0	13	6	0	0	0	0	0	0	0	0	0	0	**19**	**93**
1000 - 1015	0	17	4	0	0	1	0	0	0	0	0	0	0	**22**	
1015 - 1030	0	11	7	0	0	0	0	0	0	0	0	0	0	**18**	
1030 - 1045	0	14	4	0	0	1	0	0	0	0	0	0	0	**19**	
1045 - 1100	0	12	4	0	0	0	0	0	0	0	0	0	0	**17**	**75**
1100 - 1115	0	9	4	0	0	0	0	0	0	0	0	0	0	**13**	
1115 - 1130	0	14	6	0	0	1	0	0	0	0	0	0	0	**21**	
1130 - 1145	0	10	4	0	0	1	0	0	0	0	0	0	0	**15**	
1145 - 1200	0	16	6	0	0	0	0	0	0	0	0	0	0	**23**	**73**
1200 - 1215	0	20	7	0	0	0	0	0	0	0	0	0	0	**27**	
1215 - 1230	0	15	5	0	0	1	0	0	1	0	0	0	0	**22**	
1230 - 1245	0	14	4	0	0	0	0	0	0	0	0	0	0	**19**	
1245 - 1300	0	16	4	0	1	0	0	0	0	0	0	0	0	**21**	**89**
1300 - 1315	0	14	3	0	1	0	0	0	0	0	0	0	0	**17**	
1315 - 1330	0	14	4	0	1	0	0	0	0	0	0	0	0	**19**	
1330 - 1345	0	14	4	0	0	0	0	0	0	0	0	0	0	**19**	
1345 - 1400	0	15	4	0	0	0	0	0	0	0	0	0	0	**19**	**74**
1400 - 1415	0	14	3	0	0	0	0	0	0	0	0	0	0	**17**	
1415 - 1430	0	17	4	0	0	0	0	0	0	0	0	0	0	**22**	
1430 - 1445	0	17	4	0	0	0	0	0	0	0	0	0	0	**22**	
1445 - 1500	0	13	4	0	0	0	0	0	0	0	0	0	0	**18**	**79**
1500 - 1515	0	25	6	0	0	0	0	0	0	0	0	0	0	**32**	
1515 - 1530	0	17	4	0	0	0	0	0	0	0	0	0	0	**22**	
1530 - 1545	0	14	4	0	0	0	0	0	0	0	0	0	0	**19**	
1545 - 1600	0	23	7	0	0	1	0	0	0	0	0	0	0	**31**	**104**
1600 - 1615	0	24	6	0	0	0	0	0	0	0	0	0	0	**30**	
1615 - 1630	0	25	5	0	0	0	0	0	0	0	0	0	0	**29**	
1630 - 1645	0	20	6	0	0	1	0	0	0	0	0	0	0	**26**	
1645 - 1700	0	25	4	0	0	0	0	0	0	0	0	0	0	**29**	**114**
1700 - 1715	0	19	5	0	0	0	0	0	0	0	0	0	0	**25**	
1715 - 1730	0	21	4	0	0	0	0	0	0	0	0	0	0	**26**	
1730 - 1745	0	22	3	0	0	0	0	0	0	0	0	0	0	**25**	
1745 - 1800	0	18	7	0	0	0	0	0	0	0	0	0	0	**25**	**100**
1800 - 1815	0	16	4	0	0	0	0	0	0	0	0	0	0	**20**	
1815 - 1830	0	16	6	0	1	0	0	0	0	0	0	0	0	**24**	
1830 - 1845	0	16	4	0	0	0	0	0	0	0	0	0	0	**20**	
1845 - 1900	0	15	3	0	0	0	0	0	0	0	0	0	0	**18**	**81**
1900 - 1915	0	11	3	0	0	0	0	0	0	0	0	0	0	**14**	
1915 - 1930	0	9	2	0	0	0	0	0	0	0	0	0	0	**11**	
1930 - 1945	0	10	2	0	0	0	0	0	0	0	0	0	0	**12**	
1945 - 2000	0	11	2	0	0	0	0	0	0	0	0	0	0	**14**	**50**
2000 - 2015	0	10	4	0	0	0	0	0	0	0	0	0	0	**14**	
2015 - 2030	0	5	3	0	0	0	0	0	0	0	0	0	0	**8**	
2030 - 2045	0	8	2	0	0	0	0	0	0	0	0	0	0	**10**	
2045 - 2100	0	7	1	0	0	0	0	0	0	0	0	0	0	**8**	**40**
2100 - 2115	0	8	0	0	0	0	0	0	0	0	0	0	0	**9**	
2115 - 2130	0	6	0	0	0	0	0	0	0	0	0	0	0	**7**	
2130 - 2145	0	3	0	0	0	0	0	0	0	0	0	0	0	**4**	
2145 - 2200	0	6	1	0	0	0	0	0	0	0	0	0	0	**7**	**26**
2200 - 2215	0	4	0	0	0	0	0	0	0	0	0	0	0	**4**	
2215 - 2230	0	5	0	0	0	0	0	0	0	0	0	0	0	**5**	
2230 - 2245	0	4	0	0	0	0	0	0	0	0	0	0	0	**4**	
2245 - 2300	0	2	0	0	0	0	0	0	0	0	0	0	0	**2**	**15**
2300 - 2315	0	1	0	0	0	0	0	0	0	0	0	0	0	**1**	
2315 - 2330	0	1	0	0	0	0	0	0	0	0	0	0	0	**1**	
2330 - 2345	0	2	0	0	0	0	0	0	0	0	0	0	0	**3**	
2345 - 0000	0	1	0	0	0	0	0	0	0	0	0	0	0	**1**	**6**

Session Total	1	1057	262	1	12	12	1	2	6	0	0	0	0	**1353**
Session Average	0.01	11.01	2.73	0.01	0.13	0.12	0.01	0.02	0.06	0.00	0.00	0.00	0.00	**14.09**
Session Percentage	0.05	78.12	19.37	0.07	0.89	0.86	0.07	0.15	0.42	0.00	0.00	0.00	0.00	

AM Peak Hour	-	0715 - 0815	0730 - 0830	0815 - 0915	0615 - 0715	0915 - 1015	0830 - 0930	0815 - 0915	0630 - 0730	-	-	-	-	**0715 - 0815**
AM Peak Volume	0	127	30	1	2	2	1	0	1	0	0	0	0	**157**

Noon Peak Hour	1100 - 1200	1430 - 1530	1115 - 1215	-	1245 - 1345	1000 - 1100	-	1000 - 1100	1130 - 1230	-	-	-	-	**1430 - 1530**
Noon Peak Volume	0	73	24	0	2	2	0	0	1	0	0	0	0	**94**

PM Peak Hour	1630 - 1730	1600 - 1700	1545 - 1645	-	1730 - 1830	1500 - 1600	-	1615 - 1715	1515 - 1615	-	-	-	-	**1545 - 1645**
PM Peak Volume	0	93	23	0	1	1	0	0	1	0	0	0	0	**116**

Bi-Directional Class Count || Volume Summary 15min

Columbia, SC

Marr Traffic DATA COLLECTION

www.marrtraffic.com

Site 23

I-26 James F. Byrnes Expy S/Bound Off-Ramp,
north of SC-60 Lake Murray Blvd

Date

Tuesday, April 23, 2024

Lat/Long

34.092781°, -81.168442°

Weather

Fair
58°F

Click here for Detailed Weather

0000 - 2400 (Weekday 24h Session) (04-23-2024)

Volume Summary 15min

TIME	Volume Summary 15min NB	Volume Summary 15min SB	15min Total	60min Total
0000 - 0015	0	0	**0**	
0015 - 0030	0	0	**0**	
0030 - 0045	0	0	**0**	
0045 - 0100	0	0	**0**	**0**
0100 - 0115	0	0	**0**	
0115 - 0130	0	0	**0**	
0130 - 0145	0	0	**0**	
0145 - 0200	0	0	**0**	**0**
0200 - 0215	0	0	**0**	
0215 - 0230	0	0	**0**	
0230 - 0245	0	0	**0**	
0245 - 0300	0	0	**0**	**0**
0300 - 0315	0	0	**0**	
0315 - 0330	0	0	**0**	
0330 - 0345	0	0	**0**	
0345 - 0400	0	0	**0**	**0**
0400 - 0415	0	0	**0**	
0415 - 0430	0	0	**0**	
0430 - 0445	0	0	**0**	
0445 - 0500	0	0	**0**	**0**
0500 - 0515	0	0	**0**	
0515 - 0530	0	0	**0**	
0530 - 0545	0	0	**0**	
0545 - 0600	0	0	**0**	**0**
0600 - 0615	0	0	**0**	
0615 - 0630	0	0	**0**	
0630 - 0645	0	0	**0**	
0645 - 0700	0	0	**0**	**0**
0700 - 0715	0	0	**0**	
0715 - 0730	0	0	**0**	
0730 - 0745	0	0	**0**	
0745 - 0800	0	0	**0**	**0**
0800 - 0815	0	0	**0**	
0815 - 0830	0	0	**0**	
0830 - 0845	0	0	**0**	
0845 - 0900	0	0	**0**	**0**
0900 - 0915	0	0	**0**	
0915 - 0930	0	0	**0**	
0930 - 0945	0	0	**0**	
0945 - 1000	0	0	**0**	**0**
1000 - 1015	0	0	**0**	
1015 - 1030	0	0	**0**	
1030 - 1045	0	0	**0**	
1045 - 1100	0	0	**0**	**0**
1100 - 1115	0	0	**0**	
1115 - 1130	0	0	**0**	
1130 - 1145	0	0	**0**	
1145 - 1200	0	0	**0**	**0**

Time	Volume Summary 15min NB	Volume Summary 15min SB	15min Total	60min Total
1200 - 1215	0	0	**0**	
1215 - 1230	0	0	**0**	
1230 - 1245	0	0	**0**	
1245 - 1300	0	0	**0**	**0**
1300 - 1315	0	0	**0**	
1315 - 1330	0	0	**0**	
1330 - 1345	0	0	**0**	
1345 - 1400	0	0	**0**	**0**
1400 - 1415	0	0	**0**	
1415 - 1430	0	0	**0**	
1430 - 1445	0	0	**0**	
1445 - 1500	0	0	**0**	**0**
1500 - 1515	0	0	**0**	
1515 - 1530	0	0	**0**	
1530 - 1545	0	0	**0**	
1545 - 1600	0	0	**0**	**0**
1600 - 1615	0	0	**0**	
1615 - 1630	0	0	**0**	
1630 - 1645	0	0	**0**	
1645 - 1700	0	0	**0**	**0**
1700 - 1715	0	0	**0**	
1715 - 1730	0	0	**0**	
1730 - 1745	0	0	**0**	
1745 - 1800	0	0	**0**	**0**
1800 - 1815	0	0	**0**	
1815 - 1830	0	0	**0**	
1830 - 1845	0	0	**0**	
1845 - 1900	0	0	**0**	**0**
1900 - 1915	0	22	**22**	
1915 - 1930	0	21	**21**	
1930 - 1945	0	15	**15**	
1945 - 2000	0	14	**14**	**72**
2000 - 2015	0	24	**24**	
2015 - 2030	0	10	**10**	
2030 - 2045	0	11	**11**	
2045 - 2100	0	6	**6**	**51**
2100 - 2115	0	14	**14**	
2115 - 2130	0	11	**11**	
2130 - 2145	0	4	**4**	
2145 - 2200	0	12	**12**	**41**
2200 - 2215	0	4	**4**	
2215 - 2230	0	7	**7**	
2230 - 2245	0	2	**2**	
2245 - 2300	0	3	**3**	**16**
2300 - 2315	0	1	**1**	
2315 - 2330	0	3	**3**	
2330 - 2345	0	2	**2**	
2345 - 0000	0	1	**1**	**7**

Session Total	0	187	**187**
Session Average	0.00	1.95	**1.95**
Session Percentage	0.00	100.00	

Site 23

I-26 James F. Byrnes Expy S/Bound Off-Ramp,
north of SC-60 Lake Murray Blvd

Date

Wednesday, April 24, 2024

Lat/Long

34.092781°, -81.168442°

Weather

Fair
66°F

Click here for Detailed Weather

0000 - 2400 (Weekday 24h Session) (04-24-2024)

Volume Summary 15min

TIME	Volume Summary 15min NB	SB	15min Total	60min Total
0000 - 0015	0	3	**3**	
0015 - 0030	0	4	**4**	
0030 - 0045	0	0	**0**	
0045 - 0100	0	1	**1**	**8**
0100 - 0115	0	1	**1**	
0115 - 0130	0	0	**0**	
0130 - 0145	0	1	**1**	
0145 - 0200	0	1	**1**	**3**
0200 - 0215	0	1	**1**	
0215 - 0230	0	0	**0**	
0230 - 0245	0	3	**3**	
0245 - 0300	0	0	**0**	**4**
0300 - 0315	0	1	**1**	
0315 - 0330	0	0	**0**	
0330 - 0345	0	0	**0**	
0345 - 0400	0	1	**1**	**2**
0400 - 0415	0	1	**1**	
0415 - 0430	0	1	**1**	
0430 - 0445	0	3	**3**	
0445 - 0500	0	5	**5**	**10**
0500 - 0515	0	1	**1**	
0515 - 0530	0	2	**2**	
0530 - 0545	0	11	**11**	
0545 - 0600	0	8	**8**	**22**
0600 - 0615	0	5	**5**	
0615 - 0630	0	12	**12**	
0630 - 0645	0	14	**14**	
0645 - 0700	0	27	**27**	**58**
0700 - 0715	0	42	**42**	
0715 - 0730	0	53	**53**	
0730 - 0745	0	59	**59**	
0745 - 0800	0	43	**43**	**197**
0800 - 0815	0	53	**53**	
0815 - 0830	0	31	**31**	
0830 - 0845	0	38	**38**	
0845 - 0900	0	55	**55**	**177**
0900 - 0915	0	63	**63**	
0915 - 0930	0	30	**30**	
0930 - 0945	0	31	**31**	
0945 - 1000	0	31	**31**	**155**
1000 - 1015	0	36	**36**	
1015 - 1030	0	25	**25**	
1030 - 1045	0	22	**22**	
1045 - 1100	0	13	**13**	**96**
1100 - 1115	0	14	**14**	
1115 - 1130	0	27	**27**	
1130 - 1145	0	12	**12**	
1145 - 1200	0	32	**32**	**85**

Time	Volume Summary 15min NB	SB	15min Total	60min Total
1200 - 1215	0	41	**41**	
1215 - 1230	0	34	**34**	
1230 - 1245	0	25	**25**	
1245 - 1300	0	25	**25**	**125**
1300 - 1315	0	25	**25**	
1315 - 1330	0	25	**25**	
1330 - 1345	0	26	**26**	
1345 - 1400	0	29	**29**	**105**
1400 - 1415	0	25	**25**	
1415 - 1430	0	36	**36**	
1430 - 1445	0	36	**36**	
1445 - 1500	0	26	**26**	**123**
1500 - 1515	0	34	**34**	
1515 - 1530	0	34	**34**	
1530 - 1545	0	24	**24**	
1545 - 1600	0	40	**40**	**132**
1600 - 1615	0	52	**52**	
1615 - 1630	0	48	**48**	
1630 - 1645	0	43	**43**	
1645 - 1700	0	48	**48**	**191**
1700 - 1715	0	29	**29**	
1715 - 1730	0	32	**32**	
1730 - 1745	0	43	**43**	
1745 - 1800	0	43	**43**	**147**
1800 - 1815	0	20	**20**	
1815 - 1830	0	42	**42**	
1830 - 1845	0	35	**35**	
1845 - 1900	0	26	**26**	**123**
1900 - 1915	0	19	**19**	
1915 - 1930	0	12	**12**	
1930 - 1945	0	20	**20**	
1945 - 2000	0	27	**27**	**78**
2000 - 2015	0	18	**18**	
2015 - 2030	0	13	**13**	
2030 - 2045	0	18	**18**	
2045 - 2100	0	19	**19**	**68**
2100 - 2115	0	12	**12**	
2115 - 2130	0	9	**9**	
2130 - 2145	0	7	**7**	
2145 - 2200	0	9	**9**	**37**
2200 - 2215	0	7	**7**	
2215 - 2230	0	9	**9**	
2230 - 2245	0	10	**10**	
2245 - 2300	0	4	**4**	**30**
2300 - 2315	0	3	**3**	
2315 - 2330	0	1	**1**	
2330 - 2345	0	6	**6**	
2345 - 0000	0	1	**1**	**11**

Session Total	0	1987	**1987**
Session Average	0.00	20.70	**20.70**
Session Percentage	0.00	100.00	

Site 23

I-26 James F. Byrnes Expy S/Bound Off-Ramp,
north of SC-60 Lake Murray Blvd

Date

Thursday, April 25, 2024

Lat/Long

34.092781°, -81.168442°

Weather

Fair
67°F

Click here for Detailed Weather

0000 - 2400 (Weekday 24h Session) (04-25-2024)

Volume Summary 15min

TIME	Volume Summary 15min NB	SB	15min Total	60min Total
0000 - 0015	0	2	**2**	
0015 - 0030	0	1	**1**	
0030 - 0045	0	3	**3**	
0045 - 0100	0	5	**5**	**11**
0100 - 0115	0	0	**0**	
0115 - 0130	0	0	**0**	
0130 - 0145	0	1	**1**	
0145 - 0200	0	0	**0**	**1**
0200 - 0215	0	2	**2**	
0215 - 0230	0	0	**0**	
0230 - 0245	0	0	**0**	
0245 - 0300	0	0	**0**	**2**
0300 - 0315	0	1	**1**	
0315 - 0330	0	1	**1**	
0330 - 0345	0	0	**0**	
0345 - 0400	0	0	**0**	**2**
0400 - 0415	0	3	**3**	
0415 - 0430	0	1	**1**	
0430 - 0445	0	3	**3**	
0445 - 0500	0	4	**4**	**11**
0500 - 0515	0	6	**6**	
0515 - 0530	0	4	**4**	
0530 - 0545	0	4	**4**	
0545 - 0600	0	10	**10**	**24**
0600 - 0615	0	5	**5**	
0615 - 0630	0	9	**9**	
0630 - 0645	0	21	**21**	
0645 - 0700	0	25	**25**	**60**
0700 - 0715	0	31	**31**	
0715 - 0730	0	52	**52**	
0730 - 0745	0	67	**67**	
0745 - 0800	0	83	**83**	**233**
0800 - 0815	0	62	**62**	
0815 - 0830	0	44	**44**	
0830 - 0845	0	42	**42**	
0845 - 0900	0	28	**28**	**176**
0900 - 0915	0	29	**29**	
0915 - 0930	0	29	**29**	
0930 - 0945	0	39	**39**	
0945 - 1000	0	26	**26**	**123**
1000 - 1015	0	29	**29**	
1015 - 1030	0	30	**30**	
1030 - 1045	0	34	**34**	
1045 - 1100	0	37	**37**	**130**
1100 - 1115	0	26	**26**	
1115 - 1130	0	36	**36**	
1130 - 1145	0	33	**33**	
1145 - 1200	0	38	**38**	**133**

Time	Volume Summary 15min NB	SB	15min Total	60min Total
1200 - 1215	0	41	**41**	
1215 - 1230	0	31	**31**	
1230 - 1245	0	32	**32**	
1245 - 1300	0	37	**37**	**141**
1300 - 1315	0	26	**26**	
1315 - 1330	0	32	**32**	
1330 - 1345	0	30	**30**	
1345 - 1400	0	29	**29**	**117**
1400 - 1415	0	26	**26**	
1415 - 1430	0	29	**29**	
1430 - 1445	0	30	**30**	
1445 - 1500	0	29	**29**	**114**
1500 - 1515	0	62	**62**	
1515 - 1530	0	31	**31**	
1530 - 1545	0	34	**34**	
1545 - 1600	0	52	**52**	**179**
1600 - 1615	0	37	**37**	
1615 - 1630	0	40	**40**	
1630 - 1645	0	36	**36**	
1645 - 1700	0	39	**39**	**152**
1700 - 1715	0	46	**46**	
1715 - 1730	0	45	**45**	
1730 - 1745	0	32	**32**	
1745 - 1800	0	31	**31**	**154**
1800 - 1815	0	39	**39**	
1815 - 1830	0	29	**29**	
1830 - 1845	0	25	**25**	
1845 - 1900	0	28	**28**	**121**
1900 - 1915	0	0	**0**	
1915 - 1930	0	0	**0**	
1930 - 1945	0	0	**0**	
1945 - 2000	0	0	**0**	**0**
2000 - 2015	0	0	**0**	
2015 - 2030	0	0	**0**	
2030 - 2045	0	0	**0**	
2045 - 2100	0	0	**0**	**0**
2100 - 2115	0	0	**0**	
2115 - 2130	0	0	**0**	
2130 - 2145	0	0	**0**	
2145 - 2200	0	0	**0**	**0**
2200 - 2215	0	0	**0**	
2215 - 2230	0	0	**0**	
2230 - 2245	0	0	**0**	
2245 - 2300	0	0	**0**	**0**
2300 - 2315	0	0	**0**	
2315 - 2330	0	0	**0**	
2330 - 2345	0	0	**0**	
2345 - 0000	0	0	**0**	**0**

Session Total	0	1884	**1884**
Session Average	0.00	19.63	**19.63**
Session Percentage	0.00	100.00	

Bi-Directional Class Count || SB WB 60min

Columbia, SC

Marr Traffic DATA COLLECTION

www.marrtraffic.com

Site 23

I-26 James F. Byrnes Expy S/Bound Off-Ramp,
north of SC-60 Lake Murray Blvd

Date

Tuesday, April 23, 2024

Lat/Long

34.092781°, -81.168442°

Weather

Fair
58°F

Click here for Detailed Weather

0000 - 2400 (Weekday 24h Session) (04-23-2024)

SB WB 60min

	Southbound (Movement 23.1)													
TIME	1	2	3	4	5	6	7	8	9	10	11	12	13	**Total**
0000 - 0100	0	0	0	0	0	0	0	0	0	0	0	0	0	**0**
0100 - 0200	0	0	0	0	0	0	0	0	0	0	0	0	0	**0**
0200 - 0300	0	0	0	0	0	0	0	0	0	0	0	0	0	**0**
0300 - 0400	0	0	0	0	0	0	0	0	0	0	0	0	0	**0**
0400 - 0500	0	0	0	0	0	0	0	0	0	0	0	0	0	**0**
0500 - 0600	0	0	0	0	0	0	0	0	0	0	0	0	0	**0**
0600 - 0700	0	0	0	0	0	0	0	0	0	0	0	0	0	**0**
0700 - 0800	0	0	0	0	0	0	0	0	0	0	0	0	0	**0**
0800 - 0900	0	0	0	0	0	0	0	0	0	0	0	0	0	**0**
0900 - 1000	0	0	0	0	0	0	0	0	0	0	0	0	0	**0**
1000 - 1100	0	0	0	0	0	0	0	0	0	0	0	0	0	**0**
1100 - 1200	0	0	0	0	0	0	0	0	0	0	0	0	0	**0**
1200 - 1300	0	0	0	0	0	0	0	0	0	0	0	0	0	**0**
1300 - 1400	0	0	0	0	0	0	0	0	0	0	0	0	0	**0**
1400 - 1500	0	0	0	0	0	0	0	0	0	0	0	0	0	**0**
1500 - 1600	0	0	0	0	0	0	0	0	0	0	0	0	0	**0**
1600 - 1700	0	0	0	0	0	0	0	0	0	0	0	0	0	**0**
1700 - 1800	0	0	0	0	0	0	0	0	0	0	0	0	0	**0**
1800 - 1900	0	0	0	0	0	0	0	0	0	0	0	0	0	**0**
1900 - 2000	0	57	14	0	1	0	0	0	0	0	0	0	0	**72**
2000 - 2100	0	36	15	0	0	0	0	0	0	0	0	0	0	**51**
2100 - 2200	0	36	5	0	0	0	0	0	0	0	0	0	0	**41**
2200 - 2300	0	16	0	0	0	0	0	0	0	0	0	0	0	**16**
2300 - 2400	0	6	1	0	0	0	0	0	0	0	0	0	0	**7**
Session Total	0	151	35	0	1	0	0	0	0	0	0	0	0	**187**
Session Average	0.00	6.29	1.46	0.00	0.04	0.00	0.00	0.00	0.00	0.00	0.00	0.00	0.00	**7.79**
Session Percentage	0.00	80.75	18.72	0.00	0.53	0.00	0.00	0.00	0.00	0.00	0.00	0.00	0.00	
AM Peak Hour	-	-	-	-	-	-	-	-	-	-	-	-	-	**-**
AM Peak Volume	0	0	0	0	0	0	0	0	0	0	0	0	0	**0**
Noon Peak Hour	-	-	-	-	-	-	-	-	-	-	-	-	-	**-**
Noon Peak Volume	0	0	0	0	0	0	0	0	0	0	0	0	0	**0**
PM Peak Hour	-	1900 - 2000	1900 - 2000	-	1900 - 2000	-	-	-	-	-	-	-	-	**1900 - 2000**
PM Peak Volume	0	57	14	0	1	0	0	0	0	0	0	0	0	**72**

Site 23

I-26 James F. Byrnes Expy S/Bound Off-Ramp,
north of SC-60 Lake Murray Blvd

Date

Wednesday, April 24, 2024

Lat/Long

34.092781°, -81.168442°

Weather

Fair
66°F

Click here for Detailed Weather

0000 - 2400 (Weekday 24h Session) (04-24-2024)

SB WB 60min

	Southbound (Movement 23.1)													
TIME	1	2	3	4	5	6	7	8	9	10	11	12	13	**Total**
0000 - 0100	0	7	0	0	0	0	0	0	1	0	0	0	0	**8**
0100 - 0200	0	3	0	0	0	0	0	0	0	0	0	0	0	**3**
0200 - 0300	0	4	0	0	0	0	0	0	0	0	0	0	0	**4**
0300 - 0400	0	2	0	0	0	0	0	0	0	0	0	0	0	**2**
0400 - 0500	0	9	0	0	0	0	0	0	1	0	0	0	0	**10**
0500 - 0600	0	19	2	0	0	0	0	0	1	0	0	0	0	**22**
0600 - 0700	0	45	11	0	2	0	0	0	0	0	0	0	0	**58**
0700 - 0800	0	163	29	0	3	0	0	0	2	0	0	0	0	**197**
0800 - 0900	0	139	37	0	1	0	0	0	0	0	0	0	0	**177**
0900 - 1000	0	126	25	2	0	0	1	1	0	0	0	0	0	**155**
1000 - 1100	0	69	26	0	1	0	0	0	0	0	0	0	0	**96**
1100 - 1200	0	53	32	0	0	0	0	0	0	0	0	0	0	**85**
1200 - 1300	0	92	28	0	2	0	0	0	3	0	0	0	0	**125**
1300 - 1400	0	78	24	0	3	0	0	0	0	0	0	0	0	**105**
1400 - 1500	0	96	24	0	0	0	0	1	2	0	0	0	0	**123**
1500 - 1600	0	110	21	0	1	0	0	0	0	0	0	0	0	**132**
1600 - 1700	0	160	29	0	1	0	0	0	1	0	0	0	0	**191**
1700 - 1800	1	117	29	0	0	0	0	0	0	0	0	0	0	**147**
1800 - 1900	0	102	19	0	1	0	0	1	0	0	0	0	0	**123**
1900 - 2000	0	64	12	0	1	0	0	0	1	0	0	0	0	**78**
2000 - 2100	0	54	13	0	1	0	0	0	0	0	0	0	0	**68**
2100 - 2200	0	34	1	0	2	0	0	0	0	0	0	0	0	**37**
2200 - 2300	0	28	2	0	0	0	0	0	0	0	0	0	0	**30**
2300 - 2400	0	10	0	0	0	0	0	0	1	0	0	0	0	**11**

Session Total	1	1584	364	2	19	0	1	3	13	0	0	0	0	**1987**
Session Average	0.04	66.00	15.17	0.08	0.79	0.00	0.04	0.13	0.54	0.00	0.00	0.00	0.00	**82.79**
Session Percentage	0.05	79.72	18.32	0.10	0.96	0.00	0.05	0.15	0.65	0.00	0.00	0.00	0.00	

AM Peak Hour	-	0700 - 0800	0800 - 0900	0900 - 1000	0700 - 0800	-	0900 - 1000	0900 - 1000	0700 - 0800	-	-	-	-	**0700 - 0800**
AM Peak Volume	0	163	37	2	3	0	1	1	2	0	0	0	0	**197**

Noon Peak Hour	-	1400 - 1500	1100 - 1200	-	1300 - 1400	-	-	1400 - 1500	1200 - 1300	-	-	-	-	**1200 - 1300**
Noon Peak Volume	0	96	32	0	3	0	0	1	3	0	0	0	0	**125**

PM Peak Hour	1700 - 1800	1600 - 1700	1600 - 1700	-	1500 - 1600	-	-	1800 - 1900	1600 - 1700	-	-	-	-	**1600 - 1700**
PM Peak Volume	1	160	29	0	1	0	0	1	1	0	0	0	0	**191**

Site 23
I-26 James F. Byrnes Expy S/Bound Off-Ramp,
north of SC-60 Lake Murray Blvd

Date
Thursday, April 25, 2024

Lat/Long
34.092781°, -81.168442°

Weather
Fair
67°F

Click here for Detailed Weather

0000 - 2400 (Weekday 24h Session) (04-25-2024)
SB WB 60min

	Southbound (Movement 23.1)													
TIME	1	2	3	4	5	6	7	8	9	10	11	12	13	**Total**
0000 - 0100	0	11	0	0	0	0	0	0	0	0	0	0	0	**11**
0100 - 0200	0	1	0	0	0	0	0	0	0	0	0	0	0	**1**
0200 - 0300	0	2	0	0	0	0	0	0	0	0	0	0	0	**2**
0300 - 0400	0	2	0	0	0	0	0	0	0	0	0	0	0	**2**
0400 - 0500	0	10	1	0	0	0	0	0	0	0	0	0	0	**11**
0500 - 0600	0	23	1	0	0	0	0	0	0	0	0	0	0	**24**
0600 - 0700	0	51	7	0	1	0	1	0	0	0	0	0	0	**60**
0700 - 0800	0	186	44	0	1	1	0	0	1	0	0	0	0	**233**
0800 - 0900	0	133	37	1	2	2	0	0	1	0	0	0	0	**176**
0900 - 1000	0	91	25	0	1	5	1	0	0	0	0	0	0	**123**
1000 - 1100	0	91	31	0	1	6	0	1	0	0	0	0	0	**130**
1100 - 1200	1	95	31	0	1	5	0	0	0	0	0	0	0	**133**
1200 - 1300	0	103	31	0	1	4	0	1	1	0	0	0	0	**141**
1300 - 1400	0	91	21	0	3	2	0	0	0	0	0	0	0	**117**
1400 - 1500	0	89	21	0	1	3	0	0	0	0	0	0	0	**114**
1500 - 1600	0	129	44	0	1	4	0	0	1	0	0	0	0	**179**
1600 - 1700	0	118	32	0	0	2	0	0	0	0	0	0	0	**152**
1700 - 1800	0	122	29	0	1	1	0	1	0	0	0	0	0	**154**
1800 - 1900	0	87	32	0	2	0	0	0	0	0	0	0	0	**121**
1900 - 2000	0	0	0	0	0	0	0	0	0	0	0	0	0	**0**
2000 - 2100	0	0	0	0	0	0	0	0	0	0	0	0	0	**0**
2100 - 2200	0	0	0	0	0	0	0	0	0	0	0	0	0	**0**
2200 - 2300	0	0	0	0	0	0	0	0	0	0	0	0	0	**0**
2300 - 2400	0	0	0	0	0	0	0	0	0	0	0	0	0	**0**

Session Total	1	1435	387	1	16	35	2	3	4	0	0	0	0	**1884**
Session Average	0.04	59.79	16.13	0.04	0.67	1.46	0.08	0.13	0.17	0.00	0.00	0.00	0.00	**78.50**
Session Percentage	0.05	76.17	20.54	0.05	0.85	1.86	0.11	0.16	0.21	0.00	0.00	0.00	0.00	

AM Peak Hour	-	0700 - 0800	0700 - 0800	0800 - 0900	0800 - 0900	0900 - 1000	0600 - 0700	-	0700 - 0800	-	-	-	-	**0700 - 0800**
AM Peak Hour Volume	0	186	44	1	2	5	1	0	1	0	0	0	0	**233**

Noon Peak Hour	1100 - 1200	1200 - 1300	1000 - 1100	-	1300 - 1400	1000 - 1100	-	1000 - 1100	1200 - 1300	-	-	-	-	**1200 - 1300**
Noon Peak Hour Volume	1	103	31	0	3	6	0	1	1	0	0	0	0	**141**

PM Peak Hour	-	1500 - 1600	1500 - 1600	-	1800 - 1900	1500 - 1600	-	1700 - 1800	1500 - 1600	-	-	-	-	**1500 - 1600**
PM Peak Hour Volume	0	129	44	0	2	4	0	1	1	0	0	0	0	**179**

Bi-Directional Class Count || Volume Summary 60min

Columbia, SC

Marr Traffic DATA COLLECTION

www.marrtraffic.com

Site 23

I-26 James F. Byrnes Expy S/Bound Off-Ramp,
north of SC-60 Lake Murray Blvd

Date

Tuesday, April 23, 2024

Lat/Long

34.092781°, -81.168442°

Weather

Fair
58°F

Click here for Detailed Weather

0000 - 2400 (Weekday 24h Session) (04-23-2024)

Volume Summary 60min

	Volume Summary 60min		
TIME	NB	SB	**Total**
0000 - 0100	0	0	**0**
0100 - 0200	0	0	**0**
0200 - 0300	0	0	**0**
0300 - 0400	0	0	**0**
0400 - 0500	0	0	**0**
0500 - 0600	0	0	**0**
0600 - 0700	0	0	**0**
0700 - 0800	0	0	**0**
0800 - 0900	0	0	**0**
0900 - 1000	0	0	**0**
1000 - 1100	0	0	**0**
1100 - 1200	0	0	**0**

	Volume Summary 60min		
Time	NB	SB	**Total**
1200 - 1300	0	0	**0**
1300 - 1400	0	0	**0**
1400 - 1500	0	0	**0**
1500 - 1600	0	0	**0**
1600 - 1700	0	0	**0**
1700 - 1800	0	0	**0**
1800 - 1900	0	0	**0**
1900 - 2000	0	72	**72**
2000 - 2100	0	51	**51**
2100 - 2200	0	41	**41**
2200 - 2300	0	16	**16**
2300 - 2400	0	7	**7**

Session Total	0	187	**187**
Session Average	0.00	7.79	**7.79**
Session Percentage	0.00	100.00	

Site 23

I-26 James F. Byrnes Expy S/Bound Off-Ramp,
north of SC-60 Lake Murray Blvd

Date

Wednesday, April 24, 2024

Lat/Long

34.092781°, -81.168442°

Weather

Fair
66°F

Click here for Detailed Weather

0000 - 2400 (Weekday 24h Session) (04-24-2024)

Volume Summary 60min

	Volume Summary 60min		
TIME	NB	SB	**Total**
0000 - 0100	0	8	**8**
0100 - 0200	0	3	**3**
0200 - 0300	0	4	**4**
0300 - 0400	0	2	**2**
0400 - 0500	0	10	**10**
0500 - 0600	0	22	**22**
0600 - 0700	0	58	**58**
0700 - 0800	0	197	**197**
0800 - 0900	0	177	**177**
0900 - 1000	0	155	**155**
1000 - 1100	0	96	**96**
1100 - 1200	0	85	**85**

Session Total	0	1987	**1987**
Session Average	0.00	82.79	**82.79**
Session Percentage	0.00	100.00	

	Volume Summary 60min		
Time	NB	SB	**Total**
1200 - 1300	0	125	**125**
1300 - 1400	0	105	**105**
1400 - 1500	0	123	**123**
1500 - 1600	0	132	**132**
1600 - 1700	0	191	**191**
1700 - 1800	0	147	**147**
1800 - 1900	0	123	**123**
1900 - 2000	0	78	**78**
2000 - 2100	0	68	**68**
2100 - 2200	0	37	**37**
2200 - 2300	0	30	**30**
2300 - 2400	0	11	**11**

Site 23

I-26 James F. Byrnes Expy S/Bound Off-Ramp,
north of SC-60 Lake Murray Blvd

Date

Thursday, April 25, 2024

Lat/Long

34.092781°, -81.168442°

Weather

Fair
67°F

Click here for Detailed Weather

0000 - 2400 (Weekday 24h Session) (04-25-2024)

Volume Summary 60min

	Volume Summary 60min		
TIME	NB	SB	**Total**
0000 - 0100	0	11	**11**
0100 - 0200	0	1	**1**
0200 - 0300	0	2	**2**
0300 - 0400	0	2	**2**
0400 - 0500	0	11	**11**
0500 - 0600	0	24	**24**
0600 - 0700	0	60	**60**
0700 - 0800	0	233	**233**
0800 - 0900	0	176	**176**
0900 - 1000	0	123	**123**
1000 - 1100	0	130	**130**
1100 - 1200	0	133	**133**

	Volume Summary 60min		
Time	NB	SB	**Total**
1200 - 1300	0	141	**141**
1300 - 1400	0	117	**117**
1400 - 1500	0	114	**114**
1500 - 1600	0	179	**179**
1600 - 1700	0	152	**152**
1700 - 1800	0	154	**154**
1800 - 1900	0	121	**121**
1900 - 2000	0	0	**0**
2000 - 2100	0	0	**0**
2100 - 2200	0	0	**0**
2200 - 2300	0	0	**0**
2300 - 2400	0	0	**0**

Session Total	0	1884	**1884**
Session Average	0.00	78.50	**78.50**
Session Percentage	0.00	100.00	

Bi-Directional Class Count || Graphical Analysis SB WB

Columbia, SC

Marr Traffic DATA COLLECTION

www.marrtraffic.com

Site 23

I-26 James F. Byrnes Expy S/Bound Off-Ramp,
north of SC-60 Lake Murray Blvd

Lat/Long

34.092781°, -81.168442°

0000 - 2400 (Weekday 24h Session)

Graphical Analysis SB WB

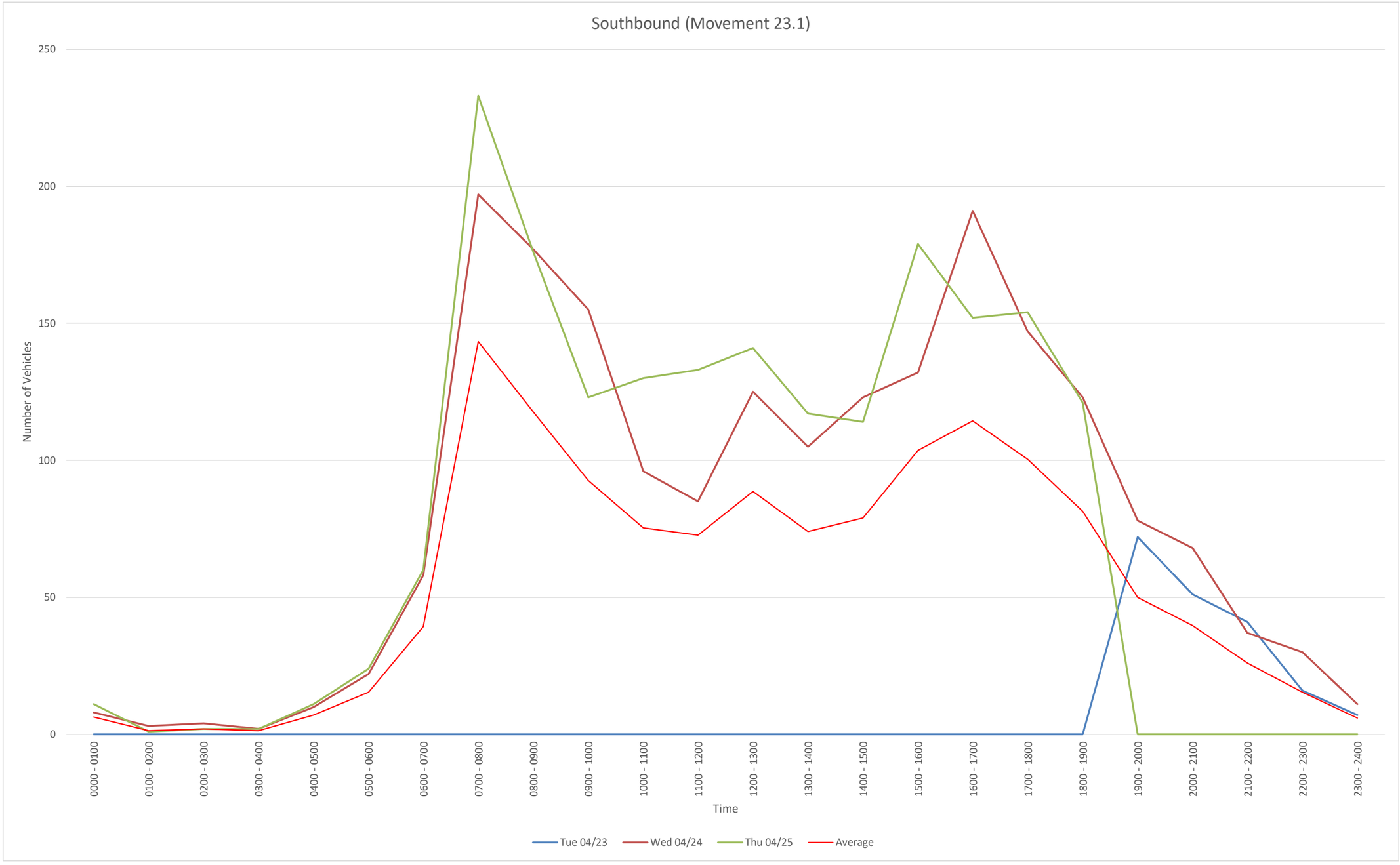

Time	Tue 04/23	Wed 04/24	Thu 04/25				
0000 - 0100	0	8	11				
0100 - 0200	0	3	1				
0200 - 0300	0	4	2				
0300 - 0400	0	2	2				
0400 - 0500	0	10	11				
0500 - 0600	0	22	24				
0600 - 0700	0	58	60				
0700 - 0800	0	197	233				
0800 - 0900	0	177	176				
0900 - 1000	0	155	123				
1000 - 1100	0	96	130				
1100 - 1200	0	85	133				
1200 - 1300	0	125	141				
1300 - 1400	0	105	117				
1400 - 1500	0	123	114				
1500 - 1600	0	132	179				
1600 - 1700	0	191	152				
1700 - 1800	0	147	154				
1800 - 1900	0	123	121				
1900 - 2000	72	78	0				
2000 - 2100	51	68	0				
2100 - 2200	41	37	0				
2200 - 2300	16	30	0				
2300 - 2400	7	11	0				
Daily Total	187	1987	1884				

NB
File Name:
Start Date: 4/23/2024
Start Time: 0
Site Code: 23
Station ID: 1
Location 1: I-26 James F. Byrnes Expy S/Bound Off-Ramp, north of SC-60 Lake Murray Blvd
Location 2:

Date	Time	1	2	3	4	5	6	7	8	9	10	11	12	13
4/23/2024	12:00 AM	0	0	0	0	0	0	0	0	0	0	0	0	0
4/23/2024	12:15 AM	0	0	0	0	0	0	0	0	0	0	0	0	0
4/23/2024	12:30 AM	0	0	0	0	0	0	0	0	0	0	0	0	0
4/23/2024	12:45 AM	0	0	0	0	0	0	0	0	0	0	0	0	0
4/23/2024	1:00 AM	0	0	0	0	0	0	0	0	0	0	0	0	0
4/23/2024	1:15 AM	0	0	0	0	0	0	0	0	0	0	0	0	0
4/23/2024	1:30 AM	0	0	0	0	0	0	0	0	0	0	0	0	0
4/23/2024	1:45 AM	0	0	0	0	0	0	0	0	0	0	0	0	0
4/23/2024	2:00 AM	0	0	0	0	0	0	0	0	0	0	0	0	0
4/23/2024	2:15 AM	0	0	0	0	0	0	0	0	0	0	0	0	0
4/23/2024	2:30 AM	0	0	0	0	0	0	0	0	0	0	0	0	0
4/23/2024	2:45 AM	0	0	0	0	0	0	0	0	0	0	0	0	0
4/23/2024	3:00 AM	0	0	0	0	0	0	0	0	0	0	0	0	0
4/23/2024	3:15 AM	0	0	0	0	0	0	0	0	0	0	0	0	0
4/23/2024	3:30 AM	0	0	0	0	0	0	0	0	0	0	0	0	0
4/23/2024	3:45 AM	0	0	0	0	0	0	0	0	0	0	0	0	0
4/23/2024	4:00 AM	0	0	0	0	0	0	0	0	0	0	0	0	0
4/23/2024	4:15 AM	0	0	0	0	0	0	0	0	0	0	0	0	0
4/23/2024	4:30 AM	0	0	0	0	0	0	0	0	0	0	0	0	0
4/23/2024	4:45 AM	0	0	0	0	0	0	0	0	0	0	0	0	0
4/23/2024	5:00 AM	0	0	0	0	0	0	0	0	0	0	0	0	0
4/23/2024	5:15 AM	0	0	0	0	0	0	0	0	0	0	0	0	0
4/23/2024	5:30 AM	0	0	0	0	0	0	0	0	0	0	0	0	0
4/23/2024	5:45 AM	0	0	0	0	0	0	0	0	0	0	0	0	0
4/23/2024	6:00 AM	0	0	0	0	0	0	0	0	0	0	0	0	0
4/23/2024	6:15 AM	0	0	0	0	0	0	0	0	0	0	0	0	0
4/23/2024	6:30 AM	0	0	0	0	0	0	0	0	0	0	0	0	0
4/23/2024	6:45 AM	0	0	0	0	0	0	0	0	0	0	0	0	0
4/23/2024	7:00 AM	0	0	0	0	0	0	0	0	0	0	0	0	0
4/23/2024	7:15 AM	0	0	0	0	0	0	0	0	0	0	0	0	0
4/23/2024	7:30 AM	0	0	0	0	0	0	0	0	0	0	0	0	0
4/23/2024	7:45 AM	0	0	0	0	0	0	0	0	0	0	0	0	0
4/23/2024	8:00 AM	0	0	0	0	0	0	0	0	0	0	0	0	0
4/23/2024	8:15 AM	0	0	0	0	0	0	0	0	0	0	0	0	0
4/23/2024	8:30 AM	0	0	0	0	0	0	0	0	0	0	0	0	0
4/23/2024	8:45 AM	0	0	0	0	0	0	0	0	0	0	0	0	0
4/23/2024	9:00 AM	0	0	0	0	0	0	0	0	0	0	0	0	0
4/23/2024	9:15 AM	0	0	0	0	0	0	0	0	0	0	0	0	0
4/23/2024	9:30 AM	0	0	0	0	0	0	0	0	0	0	0	0	0
4/23/2024	9:45 AM	0	0	0	0	0	0	0	0	0	0	0	0	0
4/23/2024	10:00 AM	0	0	0	0	0	0	0	0	0	0	0	0	0
4/23/2024	10:15 AM	0	0	0	0	0	0	0	0	0	0	0	0	0
4/23/2024	10:30 AM	0	0	0	0	0	0	0	0	0	0	0	0	0
4/23/2024	10:45 AM	0	0	0	0	0	0	0	0	0	0	0	0	0
4/23/2024	11:00 AM	0	0	0	0	0	0	0	0	0	0	0	0	0
4/23/2024	11:15 AM	0	0	0	0	0	0	0	0	0	0	0	0	0
4/23/2024	11:30 AM	0	0	0	0	0	0	0	0	0	0	0	0	0
4/23/2024	11:45 AM	0	0	0	0	0	0	0	0	0	0	0	0	0
4/23/2024	12:00 PM	0	0	0	0	0	0	0	0	0	0	0	0	0
4/23/2024	12:15 PM	0	0	0	0	0	0	0	0	0	0	0	0	0
4/23/2024	12:30 PM	0	0	0	0	0	0	0	0	0	0	0	0	0
4/23/2024	12:45 PM	0	0	0	0	0	0	0	0	0	0	0	0	0
4/23/2024	1:00 PM	0	0	0	0	0	0	0	0	0	0	0	0	0
4/23/2024	1:15 PM	0	0	0	0	0	0	0	0	0	0	0	0	0
4/23/2024	1:30 PM	0	0	0	0	0	0	0	0	0	0	0	0	0
4/23/2024	1:45 PM	0	0	0	0	0	0	0	0	0	0	0	0	0
4/23/2024	2:00 PM	0	0	0	0	0	0	0	0	0	0	0	0	0
4/23/2024	2:15 PM	0	0	0	0	0	0	0	0	0	0	0	0	0
4/23/2024	2:30 PM	0	0	0	0	0	0	0	0	0	0	0	0	0
4/23/2024	2:45 PM	0	0	0	0	0	0	0	0	0	0	0	0	0
4/23/2024	3:00 PM	0	0	0	0	0	0	0	0	0	0	0	0	0
4/23/2024	3:15 PM	0	0	0	0	0	0	0	0	0	0	0	0	0
4/23/2024	3:30 PM	0	0	0	0	0	0	0	0	0	0	0	0	0
4/23/2024	3:45 PM	0	0	0	0	0	0	0	0	0	0	0	0	0
4/23/2024	4:00 PM	0	0	0	0	0	0	0	0	0	0	0	0	0
4/23/2024	4:15 PM	0	0	0	0	0	0	0	0	0	0	0	0	0
4/23/2024	4:30 PM	0	0	0	0	0	0	0	0	0	0	0	0	0
4/23/2024	4:45 PM	0	0	0	0	0	0	0	0	0	0	0	0	0
4/23/2024	5:00 PM	0	0	0	0	0	0	0	0	0	0	0	0	0
4/23/2024	5:15 PM	0	0	0	0	0	0	0	0	0	0	0	0	0
4/23/2024	5:30 PM	0	0	0	0	0	0	0	0	0	0	0	0	0
4/23/2024	5:45 PM	0	0	0	0	0	0	0	0	0	0	0	0	0
4/23/2024	6:00 PM	0	0	0	0	0	0	0	0	0	0	0	0	0
4/23/2024	6:15 PM	0	0	0	0	0	0	0	0	0	0	0	0	0
4/23/2024	6:30 PM	0	0	0	0	0	0	0	0	0	0	0	0	0
4/23/2024	6:45 PM	0	0	0	0	0	0	0	0	0	0	0	0	0
4/23/2024	7:00 PM	0	0	0	0	0	0	0	0	0	0	0	0	0
4/23/2024	7:15 PM	0	0	0	0	0	0	0	0	0	0	0	0	0
4/23/2024	7:30 PM	0	0	0	0	0	0	0	0	0	0	0	0	0
4/23/2024	7:45 PM	0	0	0	0	0	0	0	0	0	0	0	0	0
4/23/2024	8:00 PM	0	0	0	0	0	0	0	0	0	0	0	0	0
4/23/2024	8:15 PM	0	0	0	0	0	0	0	0	0	0	0	0	0
4/23/2024	8:30 PM	0	0	0	0	0	0	0	0	0	0	0	0	0
4/23/2024	8:45 PM	0	0	0	0	0	0	0	0	0	0	0	0	0
4/23/2024	9:00 PM	0	0	0	0	0	0	0	0	0	0	0	0	0
4/23/2024	9:15 PM	0	0	0	0	0	0	0	0	0	0	0	0	0
4/23/2024	9:30 PM	0	0	0	0	0	0	0	0	0	0	0	0	0
4/23/2024	9:45 PM	0	0	0	0	0	0	0	0	0	0	0	0	0
4/23/2024	10:00 PM	0	0	0	0	0	0	0	0	0	0	0	0	0
4/23/2024	10:15 PM	0	0	0	0	0	0	0	0	0	0	0	0	0
4/23/2024	10:30 PM	0	0	0	0	0	0	0	0	0	0	0	0	0
4/23/2024	10:45 PM	0	0	0	0	0	0	0	0	0	0	0	0	0
4/23/2024	11:00 PM	0	0	0	0	0	0	0	0	0	0	0	0	0
4/23/2024	11:15 PM	0	0	0	0	0	0	0	0	0	0	0	0	0
4/23/2024	11:30 PM	0	0	0	0	0	0	0	0	0	0	0	0	0
4/23/2024	11:45 PM	0	0	0	0	0	0	0	0	0	0	0	0	0

4/24/2024	12:00 AM	0	0	0	0	0	0	0	0	0	0	0	0	0
4/24/2024	12:15 AM	0	0	0	0	0	0	0	0	0	0	0	0	0
4/24/2024	12:30 AM	0	0	0	0	0	0	0	0	0	0	0	0	0
4/24/2024	12:45 AM	0	0	0	0	0	0	0	0	0	0	0	0	0
4/24/2024	1:00 AM	0	0	0	0	0	0	0	0	0	0	0	0	0
4/24/2024	1:15 AM	0	0	0	0	0	0	0	0	0	0	0	0	0
4/24/2024	1:30 AM	0	0	0	0	0	0	0	0	0	0	0	0	0
4/24/2024	1:45 AM	0	0	0	0	0	0	0	0	0	0	0	0	0
4/24/2024	2:00 AM	0	0	0	0	0	0	0	0	0	0	0	0	0
4/24/2024	2:15 AM	0	0	0	0	0	0	0	0	0	0	0	0	0
4/24/2024	2:30 AM	0	0	0	0	0	0	0	0	0	0	0	0	0
4/24/2024	2:45 AM	0	0	0	0	0	0	0	0	0	0	0	0	0
4/24/2024	3:00 AM	0	0	0	0	0	0	0	0	0	0	0	0	0
4/24/2024	3:15 AM	0	0	0	0	0	0	0	0	0	0	0	0	0
4/24/2024	3:30 AM	0	0	0	0	0	0	0	0	0	0	0	0	0
4/24/2024	3:45 AM	0	0	0	0	0	0	0	0	0	0	0	0	0
4/24/2024	4:00 AM	0	0	0	0	0	0	0	0	0	0	0	0	0
4/24/2024	4:15 AM	0	0	0	0	0	0	0	0	0	0	0	0	0
4/24/2024	4:30 AM	0	0	0	0	0	0	0	0	0	0	0	0	0
4/24/2024	4:45 AM	0	0	0	0	0	0	0	0	0	0	0	0	0
4/24/2024	5:00 AM	0	0	0	0	0	0	0	0	0	0	0	0	0
4/24/2024	5:15 AM	0	0	0	0	0	0	0	0	0	0	0	0	0
4/24/2024	5:30 AM	0	0	0	0	0	0	0	0	0	0	0	0	0
4/24/2024	5:45 AM	0	0	0	0	0	0	0	0	0	0	0	0	0
4/24/2024	6:00 AM	0	0	0	0	0	0	0	0	0	0	0	0	0
4/24/2024	6:15 AM	0	0	0	0	0	0	0	0	0	0	0	0	0
4/24/2024	6:30 AM	0	0	0	0	0	0	0	0	0	0	0	0	0
4/24/2024	6:45 AM	0	0	0	0	0	0	0	0	0	0	0	0	0
4/24/2024	7:00 AM	0	0	0	0	0	0	0	0	0	0	0	0	0
4/24/2024	7:15 AM	0	0	0	0	0	0	0	0	0	0	0	0	0
4/24/2024	7:30 AM	0	0	0	0	0	0	0	0	0	0	0	0	0
4/24/2024	7:45 AM	0	0	0	0	0	0	0	0	0	0	0	0	0
4/24/2024	8:00 AM	0	0	0	0	0	0	0	0	0	0	0	0	0
4/24/2024	8:15 AM	0	0	0	0	0	0	0	0	0	0	0	0	0
4/24/2024	8:30 AM	0	0	0	0	0	0	0	0	0	0	0	0	0
4/24/2024	8:45 AM	0	0	0	0	0	0	0	0	0	0	0	0	0
4/24/2024	9:00 AM	0	0	0	0	0	0	0	0	0	0	0	0	0
4/24/2024	9:15 AM	0	0	0	0	0	0	0	0	0	0	0	0	0
4/24/2024	9:30 AM	0	0	0	0	0	0	0	0	0	0	0	0	0
4/24/2024	9:45 AM	0	0	0	0	0	0	0	0	0	0	0	0	0
4/24/2024	10:00 AM	0	0	0	0	0	0	0	0	0	0	0	0	0
4/24/2024	10:15 AM	0	0	0	0	0	0	0	0	0	0	0	0	0
4/24/2024	10:30 AM	0	0	0	0	0	0	0	0	0	0	0	0	0
4/24/2024	10:45 AM	0	0	0	0	0	0	0	0	0	0	0	0	0
4/24/2024	11:00 AM	0	0	0	0	0	0	0	0	0	0	0	0	0
4/24/2024	11:15 AM	0	0	0	0	0	0	0	0	0	0	0	0	0
4/24/2024	11:30 AM	0	0	0	0	0	0	0	0	0	0	0	0	0
4/24/2024	11:45 AM	0	0	0	0	0	0	0	0	0	0	0	0	0
4/24/2024	12:00 PM	0	0	0	0	0	0	0	0	0	0	0	0	0
4/24/2024	12:15 PM	0	0	0	0	0	0	0	0	0	0	0	0	0
4/24/2024	12:30 PM	0	0	0	0	0	0	0	0	0	0	0	0	0
4/24/2024	12:45 PM	0	0	0	0	0	0	0	0	0	0	0	0	0
4/24/2024	1:00 PM	0	0	0	0	0	0	0	0	0	0	0	0	0
4/24/2024	1:15 PM	0	0	0	0	0	0	0	0	0	0	0	0	0
4/24/2024	1:30 PM	0	0	0	0	0	0	0	0	0	0	0	0	0
4/24/2024	1:45 PM	0	0	0	0	0	0	0	0	0	0	0	0	0
4/24/2024	2:00 PM	0	0	0	0	0	0	0	0	0	0	0	0	0
4/24/2024	2:15 PM	0	0	0	0	0	0	0	0	0	0	0	0	0
4/24/2024	2:30 PM	0	0	0	0	0	0	0	0	0	0	0	0	0
4/24/2024	2:45 PM	0	0	0	0	0	0	0	0	0	0	0	0	0
4/24/2024	3:00 PM	0	0	0	0	0	0	0	0	0	0	0	0	0
4/24/2024	3:15 PM	0	0	0	0	0	0	0	0	0	0	0	0	0
4/24/2024	3:30 PM	0	0	0	0	0	0	0	0	0	0	0	0	0
4/24/2024	3:45 PM	0	0	0	0	0	0	0	0	0	0	0	0	0
4/24/2024	4:00 PM	0	0	0	0	0	0	0	0	0	0	0	0	0
4/24/2024	4:15 PM	0	0	0	0	0	0	0	0	0	0	0	0	0
4/24/2024	4:30 PM	0	0	0	0	0	0	0	0	0	0	0	0	0
4/24/2024	4:45 PM	0	0	0	0	0	0	0	0	0	0	0	0	0
4/24/2024	5:00 PM	0	0	0	0	0	0	0	0	0	0	0	0	0
4/24/2024	5:15 PM	0	0	0	0	0	0	0	0	0	0	0	0	0
4/24/2024	5:30 PM	0	0	0	0	0	0	0	0	0	0	0	0	0
4/24/2024	5:45 PM	0	0	0	0	0	0	0	0	0	0	0	0	0
4/24/2024	6:00 PM	0	0	0	0	0	0	0	0	0	0	0	0	0
4/24/2024	6:15 PM	0	0	0	0	0	0	0	0	0	0	0	0	0
4/24/2024	6:30 PM	0	0	0	0	0	0	0	0	0	0	0	0	0
4/24/2024	6:45 PM	0	0	0	0	0	0	0	0	0	0	0	0	0
4/24/2024	7:00 PM	0	0	0	0	0	0	0	0	0	0	0	0	0
4/24/2024	7:15 PM	0	0	0	0	0	0	0	0	0	0	0	0	0
4/24/2024	7:30 PM	0	0	0	0	0	0	0	0	0	0	0	0	0
4/24/2024	7:45 PM	0	0	0	0	0	0	0	0	0	0	0	0	0
4/24/2024	8:00 PM	0	0	0	0	0	0	0	0	0	0	0	0	0
4/24/2024	8:15 PM	0	0	0	0	0	0	0	0	0	0	0	0	0
4/24/2024	8:30 PM	0	0	0	0	0	0	0	0	0	0	0	0	0
4/24/2024	8:45 PM	0	0	0	0	0	0	0	0	0	0	0	0	0
4/24/2024	9:00 PM	0	0	0	0	0	0	0	0	0	0	0	0	0
4/24/2024	9:15 PM	0	0	0	0	0	0	0	0	0	0	0	0	0
4/24/2024	9:30 PM	0	0	0	0	0	0	0	0	0	0	0	0	0
4/24/2024	9:45 PM	0	0	0	0	0	0	0	0	0	0	0	0	0
4/24/2024	10:00 PM	0	0	0	0	0	0	0	0	0	0	0	0	0
4/24/2024	10:15 PM	0	0	0	0	0	0	0	0	0	0	0	0	0
4/24/2024	10:30 PM	0	0	0	0	0	0	0	0	0	0	0	0	0
4/24/2024	10:45 PM	0	0	0	0	0	0	0	0	0	0	0	0	0
4/24/2024	11:00 PM	0	0	0	0	0	0	0	0	0	0	0	0	0
4/24/2024	11:15 PM	0	0	0	0	0	0	0	0	0	0	0	0	0
4/24/2024	11:30 PM	0	0	0	0	0	0	0	0	0	0	0	0	0
4/24/2024	11:45 PM	0	0	0	0	0	0	0	0	0	0	0	0	0

4/25/2024	12:00 AM	0	0	0	0	0	0	0	0	0	0	0	0	0
4/25/2024	12:15 AM	0	0	0	0	0	0	0	0	0	0	0	0	0
4/25/2024	12:30 AM	0	0	0	0	0	0	0	0	0	0	0	0	0
4/25/2024	12:45 AM	0	0	0	0	0	0	0	0	0	0	0	0	0
4/25/2024	1:00 AM	0	0	0	0	0	0	0	0	0	0	0	0	0
4/25/2024	1:15 AM	0	0	0	0	0	0	0	0	0	0	0	0	0
4/25/2024	1:30 AM	0	0	0	0	0	0	0	0	0	0	0	0	0
4/25/2024	1:45 AM	0	0	0	0	0	0	0	0	0	0	0	0	0
4/25/2024	2:00 AM	0	0	0	0	0	0	0	0	0	0	0	0	0
4/25/2024	2:15 AM	0	0	0	0	0	0	0	0	0	0	0	0	0
4/25/2024	2:30 AM	0	0	0	0	0	0	0	0	0	0	0	0	0
4/25/2024	2:45 AM	0	0	0	0	0	0	0	0	0	0	0	0	0
4/25/2024	3:00 AM	0	0	0	0	0	0	0	0	0	0	0	0	0
4/25/2024	3:15 AM	0	0	0	0	0	0	0	0	0	0	0	0	0
4/25/2024	3:30 AM	0	0	0	0	0	0	0	0	0	0	0	0	0
4/25/2024	3:45 AM	0	0	0	0	0	0	0	0	0	0	0	0	0
4/25/2024	4:00 AM	0	0	0	0	0	0	0	0	0	0	0	0	0
4/25/2024	4:15 AM	0	0	0	0	0	0	0	0	0	0	0	0	0
4/25/2024	4:30 AM	0	0	0	0	0	0	0	0	0	0	0	0	0
4/25/2024	4:45 AM	0	0	0	0	0	0	0	0	0	0	0	0	0
4/25/2024	5:00 AM	0	0	0	0	0	0	0	0	0	0	0	0	0
4/25/2024	5:15 AM	0	0	0	0	0	0	0	0	0	0	0	0	0
4/25/2024	5:30 AM	0	0	0	0	0	0	0	0	0	0	0	0	0
4/25/2024	5:45 AM	0	0	0	0	0	0	0	0	0	0	0	0	0
4/25/2024	6:00 AM	0	0	0	0	0	0	0	0	0	0	0	0	0
4/25/2024	6:15 AM	0	0	0	0	0	0	0	0	0	0	0	0	0
4/25/2024	6:30 AM	0	0	0	0	0	0	0	0	0	0	0	0	0
4/25/2024	6:45 AM	0	0	0	0	0	0	0	0	0	0	0	0	0
4/25/2024	7:00 AM	0	0	0	0	0	0	0	0	0	0	0	0	0
4/25/2024	7:15 AM	0	0	0	0	0	0	0	0	0	0	0	0	0
4/25/2024	7:30 AM	0	0	0	0	0	0	0	0	0	0	0	0	0
4/25/2024	7:45 AM	0	0	0	0	0	0	0	0	0	0	0	0	0
4/25/2024	8:00 AM	0	0	0	0	0	0	0	0	0	0	0	0	0
4/25/2024	8:15 AM	0	0	0	0	0	0	0	0	0	0	0	0	0
4/25/2024	8:30 AM	0	0	0	0	0	0	0	0	0	0	0	0	0
4/25/2024	8:45 AM	0	0	0	0	0	0	0	0	0	0	0	0	0
4/25/2024	9:00 AM	0	0	0	0	0	0	0	0	0	0	0	0	0
4/25/2024	9:15 AM	0	0	0	0	0	0	0	0	0	0	0	0	0
4/25/2024	9:30 AM	0	0	0	0	0	0	0	0	0	0	0	0	0
4/25/2024	9:45 AM	0	0	0	0	0	0	0	0	0	0	0	0	0
4/25/2024	10:00 AM	0	0	0	0	0	0	0	0	0	0	0	0	0
4/25/2024	10:15 AM	0	0	0	0	0	0	0	0	0	0	0	0	0
4/25/2024	10:30 AM	0	0	0	0	0	0	0	0	0	0	0	0	0
4/25/2024	10:45 AM	0	0	0	0	0	0	0	0	0	0	0	0	0
4/25/2024	11:00 AM	0	0	0	0	0	0	0	0	0	0	0	0	0
4/25/2024	11:15 AM	0	0	0	0	0	0	0	0	0	0	0	0	0
4/25/2024	11:30 AM	0	0	0	0	0	0	0	0	0	0	0	0	0
4/25/2024	11:45 AM	0	0	0	0	0	0	0	0	0	0	0	0	0
4/25/2024	12:00 PM	0	0	0	0	0	0	0	0	0	0	0	0	0
4/25/2024	12:15 PM	0	0	0	0	0	0	0	0	0	0	0	0	0
4/25/2024	12:30 PM	0	0	0	0	0	0	0	0	0	0	0	0	0
4/25/2024	12:45 PM	0	0	0	0	0	0	0	0	0	0	0	0	0
4/25/2024	1:00 PM	0	0	0	0	0	0	0	0	0	0	0	0	0
4/25/2024	1:15 PM	0	0	0	0	0	0	0	0	0	0	0	0	0
4/25/2024	1:30 PM	0	0	0	0	0	0	0	0	0	0	0	0	0
4/25/2024	1:45 PM	0	0	0	0	0	0	0	0	0	0	0	0	0
4/25/2024	2:00 PM	0	0	0	0	0	0	0	0	0	0	0	0	0
4/25/2024	2:15 PM	0	0	0	0	0	0	0	0	0	0	0	0	0
4/25/2024	2:30 PM	0	0	0	0	0	0	0	0	0	0	0	0	0
4/25/2024	2:45 PM	0	0	0	0	0	0	0	0	0	0	0	0	0
4/25/2024	3:00 PM	0	0	0	0	0	0	0	0	0	0	0	0	0
4/25/2024	3:15 PM	0	0	0	0	0	0	0	0	0	0	0	0	0
4/25/2024	3:30 PM	0	0	0	0	0	0	0	0	0	0	0	0	0
4/25/2024	3:45 PM	0	0	0	0	0	0	0	0	0	0	0	0	0
4/25/2024	4:00 PM	0	0	0	0	0	0	0	0	0	0	0	0	0
4/25/2024	4:15 PM	0	0	0	0	0	0	0	0	0	0	0	0	0
4/25/2024	4:30 PM	0	0	0	0	0	0	0	0	0	0	0	0	0
4/25/2024	4:45 PM	0	0	0	0	0	0	0	0	0	0	0	0	0
4/25/2024	5:00 PM	0	0	0	0	0	0	0	0	0	0	0	0	0
4/25/2024	5:15 PM	0	0	0	0	0	0	0	0	0	0	0	0	0
4/25/2024	5:30 PM	0	0	0	0	0	0	0	0	0	0	0	0	0
4/25/2024	5:45 PM	0	0	0	0	0	0	0	0	0	0	0	0	0
4/25/2024	6:00 PM	0	0	0	0	0	0	0	0	0	0	0	0	0
4/25/2024	6:15 PM	0	0	0	0	0	0	0	0	0	0	0	0	0
4/25/2024	6:30 PM	0	0	0	0	0	0	0	0	0	0	0	0	0
4/25/2024	6:45 PM	0	0	0	0	0	0	0	0	0	0	0	0	0
4/25/2024	7:00 PM	0	0	0	0	0	0	0	0	0	0	0	0	0
4/25/2024	7:15 PM	0	0	0	0	0	0	0	0	0	0	0	0	0
4/25/2024	7:30 PM	0	0	0	0	0	0	0	0	0	0	0	0	0
4/25/2024	7:45 PM	0	0	0	0	0	0	0	0	0	0	0	0	0
4/25/2024	8:00 PM	0	0	0	0	0	0	0	0	0	0	0	0	0
4/25/2024	8:15 PM	0	0	0	0	0	0	0	0	0	0	0	0	0
4/25/2024	8:30 PM	0	0	0	0	0	0	0	0	0	0	0	0	0
4/25/2024	8:45 PM	0	0	0	0	0	0	0	0	0	0	0	0	0
4/25/2024	9:00 PM	0	0	0	0	0	0	0	0	0	0	0	0	0
4/25/2024	9:15 PM	0	0	0	0	0	0	0	0	0	0	0	0	0
4/25/2024	9:30 PM	0	0	0	0	0	0	0	0	0	0	0	0	0
4/25/2024	9:45 PM	0	0	0	0	0	0	0	0	0	0	0	0	0
4/25/2024	10:00 PM	0	0	0	0	0	0	0	0	0	0	0	0	0
4/25/2024	10:15 PM	0	0	0	0	0	0	0	0	0	0	0	0	0
4/25/2024	10:30 PM	0	0	0	0	0	0	0	0	0	0	0	0	0
4/25/2024	10:45 PM	0	0	0	0	0	0	0	0	0	0	0	0	0
4/25/2024	11:00 PM	0	0	0	0	0	0	0	0	0	0	0	0	0
4/25/2024	11:15 PM	0	0	0	0	0	0	0	0	0	0	0	0	0
4/25/2024	11:30 PM	0	0	0	0	0	0	0	0	0	0	0	0	0
4/25/2024	11:45 PM	0	0	0	0	0	0	0	0	0	0	0	0	0

SB
File Name:
Start Date: 4/23/2024
Start Time: 0
Site Code: 23
Station ID: 1
Location 1: I-26 James F. Byrnes Expy S/Bound Off-Ramp, north of SC-60 Lake Murray Blvd
Location 2:

Date	Time	1	2	3	4	5	6	7	8	9	10	11	12	13
4/23/2024	12:00 AM	0	0	0	0	0	0	0	0	0	0	0	0	0
4/23/2024	12:15 AM	0	0	0	0	0	0	0	0	0	0	0	0	0
4/23/2024	12:30 AM	0	0	0	0	0	0	0	0	0	0	0	0	0
4/23/2024	12:45 AM	0	0	0	0	0	0	0	0	0	0	0	0	0
4/23/2024	1:00 AM	0	0	0	0	0	0	0	0	0	0	0	0	0
4/23/2024	1:15 AM	0	0	0	0	0	0	0	0	0	0	0	0	0
4/23/2024	1:30 AM	0	0	0	0	0	0	0	0	0	0	0	0	0
4/23/2024	1:45 AM	0	0	0	0	0	0	0	0	0	0	0	0	0
4/23/2024	2:00 AM	0	0	0	0	0	0	0	0	0	0	0	0	0
4/23/2024	2:15 AM	0	0	0	0	0	0	0	0	0	0	0	0	0
4/23/2024	2:30 AM	0	0	0	0	0	0	0	0	0	0	0	0	0
4/23/2024	2:45 AM	0	0	0	0	0	0	0	0	0	0	0	0	0
4/23/2024	3:00 AM	0	0	0	0	0	0	0	0	0	0	0	0	0
4/23/2024	3:15 AM	0	0	0	0	0	0	0	0	0	0	0	0	0
4/23/2024	3:30 AM	0	0	0	0	0	0	0	0	0	0	0	0	0
4/23/2024	3:45 AM	0	0	0	0	0	0	0	0	0	0	0	0	0
4/23/2024	4:00 AM	0	0	0	0	0	0	0	0	0	0	0	0	0
4/23/2024	4:15 AM	0	0	0	0	0	0	0	0	0	0	0	0	0
4/23/2024	4:30 AM	0	0	0	0	0	0	0	0	0	0	0	0	0
4/23/2024	4:45 AM	0	0	0	0	0	0	0	0	0	0	0	0	0
4/23/2024	5:00 AM	0	0	0	0	0	0	0	0	0	0	0	0	0
4/23/2024	5:15 AM	0	0	0	0	0	0	0	0	0	0	0	0	0
4/23/2024	5:30 AM	0	0	0	0	0	0	0	0	0	0	0	0	0
4/23/2024	5:45 AM	0	0	0	0	0	0	0	0	0	0	0	0	0
4/23/2024	6:00 AM	0	0	0	0	0	0	0	0	0	0	0	0	0
4/23/2024	6:15 AM	0	0	0	0	0	0	0	0	0	0	0	0	0
4/23/2024	6:30 AM	0	0	0	0	0	0	0	0	0	0	0	0	0
4/23/2024	6:45 AM	0	0	0	0	0	0	0	0	0	0	0	0	0
4/23/2024	7:00 AM	0	0	0	0	0	0	0	0	0	0	0	0	0
4/23/2024	7:15 AM	0	0	0	0	0	0	0	0	0	0	0	0	0
4/23/2024	7:30 AM	0	0	0	0	0	0	0	0	0	0	0	0	0
4/23/2024	7:45 AM	0	0	0	0	0	0	0	0	0	0	0	0	0
4/23/2024	8:00 AM	0	0	0	0	0	0	0	0	0	0	0	0	0
4/23/2024	8:15 AM	0	0	0	0	0	0	0	0	0	0	0	0	0
4/23/2024	8:30 AM	0	0	0	0	0	0	0	0	0	0	0	0	0
4/23/2024	8:45 AM	0	0	0	0	0	0	0	0	0	0	0	0	0
4/23/2024	9:00 AM	0	0	0	0	0	0	0	0	0	0	0	0	0
4/23/2024	9:15 AM	0	0	0	0	0	0	0	0	0	0	0	0	0
4/23/2024	9:30 AM	0	0	0	0	0	0	0	0	0	0	0	0	0
4/23/2024	9:45 AM	0	0	0	0	0	0	0	0	0	0	0	0	0
4/23/2024	10:00 AM	0	0	0	0	0	0	0	0	0	0	0	0	0
4/23/2024	10:15 AM	0	0	0	0	0	0	0	0	0	0	0	0	0
4/23/2024	10:30 AM	0	0	0	0	0	0	0	0	0	0	0	0	0
4/23/2024	10:45 AM	0	0	0	0	0	0	0	0	0	0	0	0	0
4/23/2024	11:00 AM	0	0	0	0	0	0	0	0	0	0	0	0	0
4/23/2024	11:15 AM	0	0	0	0	0	0	0	0	0	0	0	0	0
4/23/2024	11:30 AM	0	0	0	0	0	0	0	0	0	0	0	0	0
4/23/2024	11:45 AM	0	0	0	0	0	0	0	0	0	0	0	0	0
4/23/2024	12:00 PM	0	0	0	0	0	0	0	0	0	0	0	0	0
4/23/2024	12:15 PM	0	0	0	0	0	0	0	0	0	0	0	0	0
4/23/2024	12:30 PM	0	0	0	0	0	0	0	0	0	0	0	0	0
4/23/2024	12:45 PM	0	0	0	0	0	0	0	0	0	0	0	0	0
4/23/2024	1:00 PM	0	0	0	0	0	0	0	0	0	0	0	0	0
4/23/2024	1:15 PM	0	0	0	0	0	0	0	0	0	0	0	0	0
4/23/2024	1:30 PM	0	0	0	0	0	0	0	0	0	0	0	0	0
4/23/2024	1:45 PM	0	0	0	0	0	0	0	0	0	0	0	0	0
4/23/2024	2:00 PM	0	0	0	0	0	0	0	0	0	0	0	0	0
4/23/2024	2:15 PM	0	0	0	0	0	0	0	0	0	0	0	0	0
4/23/2024	2:30 PM	0	0	0	0	0	0	0	0	0	0	0	0	0
4/23/2024	2:45 PM	0	0	0	0	0	0	0	0	0	0	0	0	0
4/23/2024	3:00 PM	0	0	0	0	0	0	0	0	0	0	0	0	0
4/23/2024	3:15 PM	0	0	0	0	0	0	0	0	0	0	0	0	0
4/23/2024	3:30 PM	0	0	0	0	0	0	0	0	0	0	0	0	0
4/23/2024	3:45 PM	0	0	0	0	0	0	0	0	0	0	0	0	0
4/23/2024	4:00 PM	0	0	0	0	0	0	0	0	0	0	0	0	0
4/23/2024	4:15 PM	0	0	0	0	0	0	0	0	0	0	0	0	0
4/23/2024	4:30 PM	0	0	0	0	0	0	0	0	0	0	0	0	0
4/23/2024	4:45 PM	0	0	0	0	0	0	0	0	0	0	0	0	0
4/23/2024	5:00 PM	0	0	0	0	0	0	0	0	0	0	0	0	0
4/23/2024	5:15 PM	0	0	0	0	0	0	0	0	0	0	0	0	0
4/23/2024	5:30 PM	0	0	0	0	0	0	0	0	0	0	0	0	0
4/23/2024	5:45 PM	0	0	0	0	0	0	0	0	0	0	0	0	0
4/23/2024	6:00 PM	0	0	0	0	0	0	0	0	0	0	0	0	0
4/23/2024	6:15 PM	0	0	0	0	0	0	0	0	0	0	0	0	0
4/23/2024	6:30 PM	0	0	0	0	0	0	0	0	0	0	0	0	0
4/23/2024	6:45 PM	0	0	0	0	0	0	0	0	0	0	0	0	0
4/23/2024	7:00 PM	0	18	4	0	0	0	0	0	0	0	0	0	0
4/23/2024	7:15 PM	0	17	3	0	1	0	0	0	0	0	0	0	0
4/23/2024	7:30 PM	0	11	4	0	0	0	0	0	0	0	0	0	0
4/23/2024	7:45 PM	0	11	3	0	0	0	0	0	0	0	0	0	0
4/23/2024	8:00 PM	0	14	10	0	0	0	0	0	0	0	0	0	0
4/23/2024	8:15 PM	0	6	4	0	0	0	0	0	0	0	0	0	0
4/23/2024	8:30 PM	0	10	1	0	0	0	0	0	0	0	0	0	0
4/23/2024	8:45 PM	0	6	0	0	0	0	0	0	0	0	0	0	0
4/23/2024	9:00 PM	0	14	0	0	0	0	0	0	0	0	0	0	0
4/23/2024	9:15 PM	0	10	1	0	0	0	0	0	0	0	0	0	0
4/23/2024	9:30 PM	0	3	1	0	0	0	0	0	0	0	0	0	0
4/23/2024	9:45 PM	0	9	3	0	0	0	0	0	0	0	0	0	0
4/23/2024	10:00 PM	0	4	0	0	0	0	0	0	0	0	0	0	0
4/23/2024	10:15 PM	0	7	0	0	0	0	0	0	0	0	0	0	0
4/23/2024	10:30 PM	0	2	0	0	0	0	0	0	0	0	0	0	0
4/23/2024	10:45 PM	0	3	0	0	0	0	0	0	0	0	0	0	0
4/23/2024	11:00 PM	0	0	1	0	0	0	0	0	0	0	0	0	0
4/23/2024	11:15 PM	0	3	0	0	0	0	0	0	0	0	0	0	0
4/23/2024	11:30 PM	0	2	0	0	0	0	0	0	0	0	0	0	0
4/23/2024	11:45 PM	0	1	0	0	0	0	0	0	0	0	0	0	0

4/24/2024	12:00 AM	0	3	0	0	0	0	0	0	0	0	0	0	0
4/24/2024	12:15 AM	0	3	0	0	0	0	0	0	1	0	0	0	0
4/24/2024	12:30 AM	0	0	0	0	0	0	0	0	0	0	0	0	0
4/24/2024	12:45 AM	0	1	0	0	0	0	0	0	0	0	0	0	0
4/24/2024	1:00 AM	0	1	0	0	0	0	0	0	0	0	0	0	0
4/24/2024	1:15 AM	0	0	0	0	0	0	0	0	0	0	0	0	0
4/24/2024	1:30 AM	0	1	0	0	0	0	0	0	0	0	0	0	0
4/24/2024	1:45 AM	0	1	0	0	0	0	0	0	0	0	0	0	0
4/24/2024	2:00 AM	0	1	0	0	0	0	0	0	0	0	0	0	0
4/24/2024	2:15 AM	0	0	0	0	0	0	0	0	0	0	0	0	0
4/24/2024	2:30 AM	0	3	0	0	0	0	0	0	0	0	0	0	0
4/24/2024	2:45 AM	0	0	0	0	0	0	0	0	0	0	0	0	0
4/24/2024	3:00 AM	0	1	0	0	0	0	0	0	0	0	0	0	0
4/24/2024	3:15 AM	0	0	0	0	0	0	0	0	0	0	0	0	0
4/24/2024	3:30 AM	0	0	0	0	0	0	0	0	0	0	0	0	0
4/24/2024	3:45 AM	0	1	0	0	0	0	0	0	0	0	0	0	0
4/24/2024	4:00 AM	0	1	0	0	0	0	0	0	0	0	0	0	0
4/24/2024	4:15 AM	0	0	0	0	0	0	0	0	1	0	0	0	0
4/24/2024	4:30 AM	0	3	0	0	0	0	0	0	0	0	0	0	0
4/24/2024	4:45 AM	0	5	0	0	0	0	0	0	0	0	0	0	0
4/24/2024	5:00 AM	0	1	0	0	0	0	0	0	0	0	0	0	0
4/24/2024	5:15 AM	0	2	0	0	0	0	0	0	0	0	0	0	0
4/24/2024	5:30 AM	0	10	0	0	0	0	0	0	1	0	0	0	0
4/24/2024	5:45 AM	0	6	2	0	0	0	0	0	0	0	0	0	0
4/24/2024	6:00 AM	0	4	1	0	0	0	0	0	0	0	0	0	0
4/24/2024	6:15 AM	0	10	2	0	0	0	0	0	0	0	0	0	0
4/24/2024	6:30 AM	0	11	3	0	0	0	0	0	0	0	0	0	0
4/24/2024	6:45 AM	0	20	5	0	2	0	0	0	0	0	0	0	0
4/24/2024	7:00 AM	0	36	4	0	1	0	0	0	1	0	0	0	0
4/24/2024	7:15 AM	0	44	8	0	0	0	0	0	1	0	0	0	0
4/24/2024	7:30 AM	0	45	13	0	1	0	0	0	0	0	0	0	0
4/24/2024	7:45 AM	0	38	4	0	1	0	0	0	0	0	0	0	0
4/24/2024	8:00 AM	0	40	13	0	0	0	0	0	0	0	0	0	0
4/24/2024	8:15 AM	0	24	6	0	1	0	0	0	0	0	0	0	0
4/24/2024	8:30 AM	0	32	6	0	0	0	0	0	0	0	0	0	0
4/24/2024	8:45 AM	0	43	12	0	0	0	0	0	0	0	0	0	0
4/24/2024	9:00 AM	0	52	7	2	0	0	1	1	0	0	0	0	0
4/24/2024	9:15 AM	0	28	2	0	0	0	0	0	0	0	0	0	0
4/24/2024	9:30 AM	0	25	6	0	0	0	0	0	0	0	0	0	0
4/24/2024	9:45 AM	0	21	10	0	0	0	0	0	0	0	0	0	0
4/24/2024	10:00 AM	0	31	4	0	1	0	0	0	0	0	0	0	0
4/24/2024	10:15 AM	0	11	14	0	0	0	0	0	0	0	0	0	0
4/24/2024	10:30 AM	0	17	5	0	0	0	0	0	0	0	0	0	0
4/24/2024	10:45 AM	0	10	3	0	0	0	0	0	0	0	0	0	0
4/24/2024	11:00 AM	0	10	4	0	0	0	0	0	0	0	0	0	0
4/24/2024	11:15 AM	0	17	10	0	0	0	0	0	0	0	0	0	0
4/24/2024	11:30 AM	0	8	4	0	0	0	0	0	0	0	0	0	0
4/24/2024	11:45 AM	0	18	14	0	0	0	0	0	0	0	0	0	0
4/24/2024	12:00 PM	0	29	11	0	0	0	0	0	1	0	0	0	0
4/24/2024	12:15 PM	0	24	8	0	0	0	0	0	2	0	0	0	0
4/24/2024	12:30 PM	0	20	5	0	0	0	0	0	0	0	0	0	0
4/24/2024	12:45 PM	0	19	4	0	2	0	0	0	0	0	0	0	0
4/24/2024	1:00 PM	0	19	5	0	1	0	0	0	0	0	0	0	0
4/24/2024	1:15 PM	0	17	7	0	1	0	0	0	0	0	0	0	0
4/24/2024	1:30 PM	0	19	7	0	0	0	0	0	0	0	0	0	0
4/24/2024	1:45 PM	0	23	5	0	1	0	0	0	0	0	0	0	0
4/24/2024	2:00 PM	0	21	4	0	0	0	0	0	0	0	0	0	0
4/24/2024	2:15 PM	0	27	7	0	0	0	0	1	1	0	0	0	0
4/24/2024	2:30 PM	0	28	8	0	0	0	0	0	0	0	0	0	0
4/24/2024	2:45 PM	0	20	5	0	0	0	0	0	1	0	0	0	0
4/24/2024	3:00 PM	0	27	6	0	1	0	0	0	0	0	0	0	0
4/24/2024	3:15 PM	0	29	5	0	0	0	0	0	0	0	0	0	0
4/24/2024	3:30 PM	0	19	5	0	0	0	0	0	0	0	0	0	0
4/24/2024	3:45 PM	0	35	5	0	0	0	0	0	0	0	0	0	0
4/24/2024	4:00 PM	0	42	9	0	0	0	0	0	1	0	0	0	0
4/24/2024	4:15 PM	0	41	7	0	0	0	0	0	0	0	0	0	0
4/24/2024	4:30 PM	0	38	4	0	1	0	0	0	0	0	0	0	0
4/24/2024	4:45 PM	0	39	9	0	0	0	0	0	0	0	0	0	0
4/24/2024	5:00 PM	0	25	4	0	0	0	0	0	0	0	0	0	0
4/24/2024	5:15 PM	1	26	5	0	0	0	0	0	0	0	0	0	0
4/24/2024	5:30 PM	0	36	7	0	0	0	0	0	0	0	0	0	0
4/24/2024	5:45 PM	0	30	13	0	0	0	0	0	0	0	0	0	0
4/24/2024	6:00 PM	0	19	1	0	0	0	0	0	0	0	0	0	0
4/24/2024	6:15 PM	0	29	11	0	1	0	0	1	0	0	0	0	0
4/24/2024	6:30 PM	0	31	4	0	0	0	0	0	0	0	0	0	0
4/24/2024	6:45 PM	0	23	3	0	0	0	0	0	0	0	0	0	0
4/24/2024	7:00 PM	0	15	4	0	0	0	0	0	0	0	0	0	0
4/24/2024	7:15 PM	0	9	3	0	0	0	0	0	0	0	0	0	0
4/24/2024	7:30 PM	0	19	1	0	0	0	0	0	0	0	0	0	0
4/24/2024	7:45 PM	0	21	4	0	1	0	0	0	1	0	0	0	0
4/24/2024	8:00 PM	0	15	3	0	0	0	0	0	0	0	0	0	0
4/24/2024	8:15 PM	0	9	4	0	0	0	0	0	0	0	0	0	0
4/24/2024	8:30 PM	0	14	4	0	0	0	0	0	0	0	0	0	0
4/24/2024	8:45 PM	0	16	2	0	1	0	0	0	0	0	0	0	0
4/24/2024	9:00 PM	0	11	1	0	0	0	0	0	0	0	0	0	0
4/24/2024	9:15 PM	0	9	0	0	0	0	0	0	0	0	0	0	0
4/24/2024	9:30 PM	0	6	0	0	1	0	0	0	0	0	0	0	0
4/24/2024	9:45 PM	0	8	0	0	1	0	0	0	0	0	0	0	0
4/24/2024	10:00 PM	0	7	0	0	0	0	0	0	0	0	0	0	0
4/24/2024	10:15 PM	0	8	1	0	0	0	0	0	0	0	0	0	0
4/24/2024	10:30 PM	0	10	0	0	0	0	0	0	0	0	0	0	0
4/24/2024	10:45 PM	0	3	1	0	0	0	0	0	0	0	0	0	0
4/24/2024	11:00 PM	0	3	0	0	0	0	0	0	0	0	0	0	0
4/24/2024	11:15 PM	0	1	0	0	0	0	0	0	0	0	0	0	0
4/24/2024	11:30 PM	0	5	0	0	0	0	0	0	1	0	0	0	0
4/24/2024	11:45 PM	0	1	0	0	0	0	0	0	0	0	0	0	0

4/25/2024	12:00 AM	0	2	0	0	0	0	0	0	0	0	0	0	0
4/25/2024	12:15 AM	0	1	0	0	0	0	0	0	0	0	0	0	0
4/25/2024	12:30 AM	0	3	0	0	0	0	0	0	0	0	0	0	0
4/25/2024	12:45 AM	0	5	0	0	0	0	0	0	0	0	0	0	0
4/25/2024	1:00 AM	0	0	0	0	0	0	0	0	0	0	0	0	0
4/25/2024	1:15 AM	0	0	0	0	0	0	0	0	0	0	0	0	0
4/25/2024	1:30 AM	0	1	0	0	0	0	0	0	0	0	0	0	0
4/25/2024	1:45 AM	0	0	0	0	0	0	0	0	0	0	0	0	0
4/25/2024	2:00 AM	0	2	0	0	0	0	0	0	0	0	0	0	0
4/25/2024	2:15 AM	0	0	0	0	0	0	0	0	0	0	0	0	0
4/25/2024	2:30 AM	0	0	0	0	0	0	0	0	0	0	0	0	0
4/25/2024	2:45 AM	0	0	0	0	0	0	0	0	0	0	0	0	0
4/25/2024	3:00 AM	0	1	0	0	0	0	0	0	0	0	0	0	0
4/25/2024	3:15 AM	0	1	0	0	0	0	0	0	0	0	0	0	0
4/25/2024	3:30 AM	0	0	0	0	0	0	0	0	0	0	0	0	0
4/25/2024	3:45 AM	0	0	0	0	0	0	0	0	0	0	0	0	0
4/25/2024	4:00 AM	0	2	1	0	0	0	0	0	0	0	0	0	0
4/25/2024	4:15 AM	0	1	0	0	0	0	0	0	0	0	0	0	0
4/25/2024	4:30 AM	0	3	0	0	0	0	0	0	0	0	0	0	0
4/25/2024	4:45 AM	0	4	0	0	0	0	0	0	0	0	0	0	0
4/25/2024	5:00 AM	0	6	0	0	0	0	0	0	0	0	0	0	0
4/25/2024	5:15 AM	0	4	0	0	0	0	0	0	0	0	0	0	0
4/25/2024	5:30 AM	0	4	0	0	0	0	0	0	0	0	0	0	0
4/25/2024	5:45 AM	0	9	1	0	0	0	0	0	0	0	0	0	0
4/25/2024	6:00 AM	0	4	1	0	0	0	0	0	0	0	0	0	0
4/25/2024	6:15 AM	0	8	1	0	0	0	0	0	0	0	0	0	0
4/25/2024	6:30 AM	0	18	2	0	1	0	0	0	0	0	0	0	0
4/25/2024	6:45 AM	0	21	3	0	0	0	1	0	0	0	0	0	0
4/25/2024	7:00 AM	0	24	5	0	1	1	0	0	0	0	0	0	0
4/25/2024	7:15 AM	0	42	9	0	0	0	0	0	1	0	0	0	0
4/25/2024	7:30 AM	0	56	11	0	0	0	0	0	0	0	0	0	0
4/25/2024	7:45 AM	0	64	19	0	0	0	0	0	0	0	0	0	0
4/25/2024	8:00 AM	0	52	10	0	0	0	0	0	0	0	0	0	0
4/25/2024	8:15 AM	0	29	13	0	0	1	0	0	1	0	0	0	0
4/25/2024	8:30 AM	0	33	6	0	2	1	0	0	0	0	0	0	0
4/25/2024	8:45 AM	0	19	8	1	0	0	0	0	0	0	0	0	0
4/25/2024	9:00 AM	0	25	2	0	0	2	0	0	0	0	0	0	0
4/25/2024	9:15 AM	0	22	6	0	0	0	1	0	0	0	0	0	0
4/25/2024	9:30 AM	0	25	10	0	1	3	0	0	0	0	0	0	0
4/25/2024	9:45 AM	0	19	7	0	0	0	0	0	0	0	0	0	0
4/25/2024	10:00 AM	0	19	7	0	0	3	0	0	0	0	0	0	0
4/25/2024	10:15 AM	0	21	7	0	1	0	0	1	0	0	0	0	0
4/25/2024	10:30 AM	0	24	7	0	0	3	0	0	0	0	0	0	0
4/25/2024	10:45 AM	0	27	10	0	0	0	0	0	0	0	0	0	0
4/25/2024	11:00 AM	0	18	8	0	0	0	0	0	0	0	0	0	0
4/25/2024	11:15 AM	0	25	9	0	0	2	0	0	0	0	0	0	0
4/25/2024	11:30 AM	0	22	9	0	0	2	0	0	0	0	0	0	0
4/25/2024	11:45 AM	1	30	5	0	1	1	0	0	0	0	0	0	0
4/25/2024	12:00 PM	0	31	9	0	0	1	0	0	0	0	0	0	0
4/25/2024	12:15 PM	0	22	6	0	0	2	0	0	1	0	0	0	0
4/25/2024	12:30 PM	0	22	8	0	1	0	0	1	0	0	0	0	0
4/25/2024	12:45 PM	0	28	8	0	0	1	0	0	0	0	0	0	0
4/25/2024	1:00 PM	0	22	3	0	1	0	0	0	0	0	0	0	0
4/25/2024	1:15 PM	0	26	4	0	1	1	0	0	0	0	0	0	0
4/25/2024	1:30 PM	0	22	6	0	1	1	0	0	0	0	0	0	0
4/25/2024	1:45 PM	0	21	8	0	0	0	0	0	0	0	0	0	0
4/25/2024	2:00 PM	0	21	4	0	0	1	0	0	0	0	0	0	0
4/25/2024	2:15 PM	0	25	4	0	0	0	0	0	0	0	0	0	0
4/25/2024	2:30 PM	0	23	5	0	1	1	0	0	0	0	0	0	0
4/25/2024	2:45 PM	0	20	8	0	0	1	0	0	0	0	0	0	0
4/25/2024	3:00 PM	0	48	13	0	0	1	0	0	0	0	0	0	0
4/25/2024	3:15 PM	0	23	7	0	0	1	0	0	0	0	0	0	0
4/25/2024	3:30 PM	0	24	8	0	1	0	0	0	1	0	0	0	0
4/25/2024	3:45 PM	0	34	16	0	0	2	0	0	0	0	0	0	0
4/25/2024	4:00 PM	0	29	8	0	0	0	0	0	0	0	0	0	0
4/25/2024	4:15 PM	0	33	7	0	0	0	0	0	0	0	0	0	0
4/25/2024	4:30 PM	0	21	13	0	0	2	0	0	0	0	0	0	0
4/25/2024	4:45 PM	0	35	4	0	0	0	0	0	0	0	0	0	0
4/25/2024	5:00 PM	0	33	11	0	0	1	0	1	0	0	0	0	0
4/25/2024	5:15 PM	0	37	8	0	0	0	0	0	0	0	0	0	0
4/25/2024	5:30 PM	0	29	3	0	0	0	0	0	0	0	0	0	0
4/25/2024	5:45 PM	0	23	7	0	1	0	0	0	0	0	0	0	0
4/25/2024	6:00 PM	0	28	10	0	1	0	0	0	0	0	0	0	0
4/25/2024	6:15 PM	0	20	8	0	1	0	0	0	0	0	0	0	0
4/25/2024	6:30 PM	0	18	7	0	0	0	0	0	0	0	0	0	0
4/25/2024	6:45 PM	0	21	7	0	0	0	0	0	0	0	0	0	0
4/25/2024	7:00 PM	0	0	0	0	0	0	0	0	0	0	0	0	0
4/25/2024	7:15 PM	0	0	0	0	0	0	0	0	0	0	0	0	0
4/25/2024	7:30 PM	0	0	0	0	0	0	0	0	0	0	0	0	0
4/25/2024	7:45 PM	0	0	0	0	0	0	0	0	0	0	0	0	0
4/25/2024	8:00 PM	0	0	0	0	0	0	0	0	0	0	0	0	0
4/25/2024	8:15 PM	0	0	0	0	0	0	0	0	0	0	0	0	0
4/25/2024	8:30 PM	0	0	0	0	0	0	0	0	0	0	0	0	0
4/25/2024	8:45 PM	0	0	0	0	0	0	0	0	0	0	0	0	0
4/25/2024	9:00 PM	0	0	0	0	0	0	0	0	0	0	0	0	0
4/25/2024	9:15 PM	0	0	0	0	0	0	0	0	0	0	0	0	0
4/25/2024	9:30 PM	0	0	0	0	0	0	0	0	0	0	0	0	0
4/25/2024	9:45 PM	0	0	0	0	0	0	0	0	0	0	0	0	0
4/25/2024	10:00 PM	0	0	0	0	0	0	0	0	0	0	0	0	0
4/25/2024	10:15 PM	0	0	0	0	0	0	0	0	0	0	0	0	0
4/25/2024	10:30 PM	0	0	0	0	0	0	0	0	0	0	0	0	0
4/25/2024	10:45 PM	0	0	0	0	0	0	0	0	0	0	0	0	0
4/25/2024	11:00 PM	0	0	0	0	0	0	0	0	0	0	0	0	0
4/25/2024	11:15 PM	0	0	0	0	0	0	0	0	0	0	0	0	0
4/25/2024	11:30 PM	0	0	0	0	0	0	0	0	0	0	0	0	0
4/25/2024	11:45 PM	0	0	0	0	0	0	0	0	0	0	0	0	0

NB
File Name:
Start Date: 4/23/2024
Start Time: 0
Site Code: 23
Station ID: 1
Location 1: I-26 James F. Byrnes Expy S/Bound Off-Ramp, north of SC-60 Lake Murray Blvd
Location 2:

Date	Time	1	2	3	4	5	6	7	8	9	10	11	12	13
4/23/2024	12:00 AM	0	0	0	0	0	0	0	0	0	0	0	0	0
4/23/2024	12:15 AM	0	0	0	0	0	0	0	0	0	0	0	0	0
4/23/2024	12:30 AM	0	0	0	0	0	0	0	0	0	0	0	0	0
4/23/2024	12:45 AM	0	0	0	0	0	0	0	0	0	0	0	0	0
4/23/2024	1:00 AM	0	0	0	0	0	0	0	0	0	0	0	0	0
4/23/2024	1:15 AM	0	0	0	0	0	0	0	0	0	0	0	0	0
4/23/2024	1:30 AM	0	0	0	0	0	0	0	0	0	0	0	0	0
4/23/2024	1:45 AM	0	0	0	0	0	0	0	0	0	0	0	0	0
4/23/2024	2:00 AM	0	0	0	0	0	0	0	0	0	0	0	0	0
4/23/2024	2:15 AM	0	0	0	0	0	0	0	0	0	0	0	0	0
4/23/2024	2:30 AM	0	0	0	0	0	0	0	0	0	0	0	0	0
4/23/2024	2:45 AM	0	0	0	0	0	0	0	0	0	0	0	0	0
4/23/2024	3:00 AM	0	0	0	0	0	0	0	0	0	0	0	0	0
4/23/2024	3:15 AM	0	0	0	0	0	0	0	0	0	0	0	0	0
4/23/2024	3:30 AM	0	0	0	0	0	0	0	0	0	0	0	0	0
4/23/2024	3:45 AM	0	0	0	0	0	0	0	0	0	0	0	0	0
4/23/2024	4:00 AM	0	0	0	0	0	0	0	0	0	0	0	0	0
4/23/2024	4:15 AM	0	0	0	0	0	0	0	0	0	0	0	0	0
4/23/2024	4:30 AM	0	0	0	0	0	0	0	0	0	0	0	0	0
4/23/2024	4:45 AM	0	0	0	0	0	0	0	0	0	0	0	0	0
4/23/2024	5:00 AM	0	0	0	0	0	0	0	0	0	0	0	0	0
4/23/2024	5:15 AM	0	0	0	0	0	0	0	0	0	0	0	0	0
4/23/2024	5:30 AM	0	0	0	0	0	0	0	0	0	0	0	0	0
4/23/2024	5:45 AM	0	0	0	0	0	0	0	0	0	0	0	0	0
4/23/2024	6:00 AM	0	0	0	0	0	0	0	0	0	0	0	0	0
4/23/2024	6:15 AM	0	0	0	0	0	0	0	0	0	0	0	0	0
4/23/2024	6:30 AM	0	0	0	0	0	0	0	0	0	0	0	0	0
4/23/2024	6:45 AM	0	0	0	0	0	0	0	0	0	0	0	0	0
4/23/2024	7:00 AM	0	0	0	0	0	0	0	0	0	0	0	0	0
4/23/2024	7:15 AM	0	0	0	0	0	0	0	0	0	0	0	0	0
4/23/2024	7:30 AM	0	0	0	0	0	0	0	0	0	0	0	0	0
4/23/2024	7:45 AM	0	0	0	0	0	0	0	0	0	0	0	0	0
4/23/2024	8:00 AM	0	0	0	0	0	0	0	0	0	0	0	0	0
4/23/2024	8:15 AM	0	0	0	0	0	0	0	0	0	0	0	0	0
4/23/2024	8:30 AM	0	0	0	0	0	0	0	0	0	0	0	0	0
4/23/2024	8:45 AM	0	0	0	0	0	0	0	0	0	0	0	0	0
4/23/2024	9:00 AM	0	0	0	0	0	0	0	0	0	0	0	0	0
4/23/2024	9:15 AM	0	0	0	0	0	0	0	0	0	0	0	0	0
4/23/2024	9:30 AM	0	0	0	0	0	0	0	0	0	0	0	0	0
4/23/2024	9:45 AM	0	0	0	0	0	0	0	0	0	0	0	0	0
4/23/2024	10:00 AM	0	0	0	0	0	0	0	0	0	0	0	0	0
4/23/2024	10:15 AM	0	0	0	0	0	0	0	0	0	0	0	0	0
4/23/2024	10:30 AM	0	0	0	0	0	0	0	0	0	0	0	0	0
4/23/2024	10:45 AM	0	0	0	0	0	0	0	0	0	0	0	0	0
4/23/2024	11:00 AM	0	0	0	0	0	0	0	0	0	0	0	0	0
4/23/2024	11:15 AM	0	0	0	0	0	0	0	0	0	0	0	0	0
4/23/2024	11:30 AM	0	0	0	0	0	0	0	0	0	0	0	0	0
4/23/2024	11:45 AM	0	0	0	0	0	0	0	0	0	0	0	0	0
4/23/2024	12:00 PM	0	0	0	0	0	0	0	0	0	0	0	0	0
4/23/2024	12:15 PM	0	0	0	0	0	0	0	0	0	0	0	0	0
4/23/2024	12:30 PM	0	0	0	0	0	0	0	0	0	0	0	0	0
4/23/2024	12:45 PM	0	0	0	0	0	0	0	0	0	0	0	0	0
4/23/2024	1:00 PM	0	0	0	0	0	0	0	0	0	0	0	0	0
4/23/2024	1:15 PM	0	0	0	0	0	0	0	0	0	0	0	0	0
4/23/2024	1:30 PM	0	0	0	0	0	0	0	0	0	0	0	0	0
4/23/2024	1:45 PM	0	0	0	0	0	0	0	0	0	0	0	0	0
4/23/2024	2:00 PM	0	0	0	0	0	0	0	0	0	0	0	0	0
4/23/2024	2:15 PM	0	0	0	0	0	0	0	0	0	0	0	0	0
4/23/2024	2:30 PM	0	0	0	0	0	0	0	0	0	0	0	0	0
4/23/2024	2:45 PM	0	0	0	0	0	0	0	0	0	0	0	0	0
4/23/2024	3:00 PM	0	0	0	0	0	0	0	0	0	0	0	0	0
4/23/2024	3:15 PM	0	0	0	0	0	0	0	0	0	0	0	0	0
4/23/2024	3:30 PM	0	0	0	0	0	0	0	0	0	0	0	0	0
4/23/2024	3:45 PM	0	0	0	0	0	0	0	0	0	0	0	0	0
4/23/2024	4:00 PM	0	0	0	0	0	0	0	0	0	0	0	0	0
4/23/2024	4:15 PM	0	0	0	0	0	0	0	0	0	0	0	0	0
4/23/2024	4:30 PM	0	0	0	0	0	0	0	0	0	0	0	0	0
4/23/2024	4:45 PM	0	0	0	0	0	0	0	0	0	0	0	0	0
4/23/2024	5:00 PM	0	0	0	0	0	0	0	0	0	0	0	0	0
4/23/2024	5:15 PM	0	0	0	0	0	0	0	0	0	0	0	0	0
4/23/2024	5:30 PM	0	0	0	0	0	0	0	0	0	0	0	0	0
4/23/2024	5:45 PM	0	0	0	0	0	0	0	0	0	0	0	0	0
4/23/2024	6:00 PM	0	0	0	0	0	0	0	0	0	0	0	0	0
4/23/2024	6:15 PM	0	0	0	0	0	0	0	0	0	0	0	0	0
4/23/2024	6:30 PM	0	0	0	0	0	0	0	0	0	0	0	0	0
4/23/2024	6:45 PM	0	0	0	0	0	0	0	0	0	0	0	0	0
4/23/2024	7:00 PM	0	0	0	0	0	0	0	0	0	0	0	0	0
4/23/2024	7:15 PM	0	0	0	0	0	0	0	0	0	0	0	0	0
4/23/2024	7:30 PM	0	0	0	0	0	0	0	0	0	0	0	0	0
4/23/2024	7:45 PM	0	0	0	0	0	0	0	0	0	0	0	0	0
4/23/2024	8:00 PM	0	0	0	0	0	0	0	0	0	0	0	0	0
4/23/2024	8:15 PM	0	0	0	0	0	0	0	0	0	0	0	0	0
4/23/2024	8:30 PM	0	0	0	0	0	0	0	0	0	0	0	0	0
4/23/2024	8:45 PM	0	0	0	0	0	0	0	0	0	0	0	0	0
4/23/2024	9:00 PM	0	0	0	0	0	0	0	0	0	0	0	0	0
4/23/2024	9:15 PM	0	0	0	0	0	0	0	0	0	0	0	0	0
4/23/2024	9:30 PM	0	0	0	0	0	0	0	0	0	0	0	0	0
4/23/2024	9:45 PM	0	0	0	0	0	0	0	0	0	0	0	0	0
4/23/2024	10:00 PM	0	0	0	0	0	0	0	0	0	0	0	0	0
4/23/2024	10:15 PM	0	0	0	0	0	0	0	0	0	0	0	0	0
4/23/2024	10:30 PM	0	0	0	0	0	0	0	0	0	0	0	0	0
4/23/2024	10:45 PM	0	0	0	0	0	0	0	0	0	0	0	0	0
4/23/2024	11:00 PM	0	0	0	0	0	0	0	0	0	0	0	0	0
4/23/2024	11:15 PM	0	0	0	0	0	0	0	0	0	0	0	0	0
4/23/2024	11:30 PM	0	0	0	0	0	0	0	0	0	0	0	0	0
4/23/2024	11:45 PM	0	0	0	0	0	0	0	0	0	0	0	0	0

4/24/2024	12:00 AM	0	0	0	0	0	0	0	0	0	0	0	0	0
4/24/2024	12:15 AM	0	0	0	0	0	0	0	0	0	0	0	0	0
4/24/2024	12:30 AM	0	0	0	0	0	0	0	0	0	0	0	0	0
4/24/2024	12:45 AM	0	0	0	0	0	0	0	0	0	0	0	0	0
4/24/2024	1:00 AM	0	0	0	0	0	0	0	0	0	0	0	0	0
4/24/2024	1:15 AM	0	0	0	0	0	0	0	0	0	0	0	0	0
4/24/2024	1:30 AM	0	0	0	0	0	0	0	0	0	0	0	0	0
4/24/2024	1:45 AM	0	0	0	0	0	0	0	0	0	0	0	0	0
4/24/2024	2:00 AM	0	0	0	0	0	0	0	0	0	0	0	0	0
4/24/2024	2:15 AM	0	0	0	0	0	0	0	0	0	0	0	0	0
4/24/2024	2:30 AM	0	0	0	0	0	0	0	0	0	0	0	0	0
4/24/2024	2:45 AM	0	0	0	0	0	0	0	0	0	0	0	0	0
4/24/2024	3:00 AM	0	0	0	0	0	0	0	0	0	0	0	0	0
4/24/2024	3:15 AM	0	0	0	0	0	0	0	0	0	0	0	0	0
4/24/2024	3:30 AM	0	0	0	0	0	0	0	0	0	0	0	0	0
4/24/2024	3:45 AM	0	0	0	0	0	0	0	0	0	0	0	0	0
4/24/2024	4:00 AM	0	0	0	0	0	0	0	0	0	0	0	0	0
4/24/2024	4:15 AM	0	0	0	0	0	0	0	0	0	0	0	0	0
4/24/2024	4:30 AM	0	0	0	0	0	0	0	0	0	0	0	0	0
4/24/2024	4:45 AM	0	0	0	0	0	0	0	0	0	0	0	0	0
4/24/2024	5:00 AM	0	0	0	0	0	0	0	0	0	0	0	0	0
4/24/2024	5:15 AM	0	0	0	0	0	0	0	0	0	0	0	0	0
4/24/2024	5:30 AM	0	0	0	0	0	0	0	0	0	0	0	0	0
4/24/2024	5:45 AM	0	0	0	0	0	0	0	0	0	0	0	0	0
4/24/2024	6:00 AM	0	0	0	0	0	0	0	0	0	0	0	0	0
4/24/2024	6:15 AM	0	0	0	0	0	0	0	0	0	0	0	0	0
4/24/2024	6:30 AM	0	0	0	0	0	0	0	0	0	0	0	0	0
4/24/2024	6:45 AM	0	0	0	0	0	0	0	0	0	0	0	0	0
4/24/2024	7:00 AM	0	0	0	0	0	0	0	0	0	0	0	0	0
4/24/2024	7:15 AM	0	0	0	0	0	0	0	0	0	0	0	0	0
4/24/2024	7:30 AM	0	0	0	0	0	0	0	0	0	0	0	0	0
4/24/2024	7:45 AM	0	0	0	0	0	0	0	0	0	0	0	0	0
4/24/2024	8:00 AM	0	0	0	0	0	0	0	0	0	0	0	0	0
4/24/2024	8:15 AM	0	0	0	0	0	0	0	0	0	0	0	0	0
4/24/2024	8:30 AM	0	0	0	0	0	0	0	0	0	0	0	0	0
4/24/2024	8:45 AM	0	0	0	0	0	0	0	0	0	0	0	0	0
4/24/2024	9:00 AM	0	0	0	0	0	0	0	0	0	0	0	0	0
4/24/2024	9:15 AM	0	0	0	0	0	0	0	0	0	0	0	0	0
4/24/2024	9:30 AM	0	0	0	0	0	0	0	0	0	0	0	0	0
4/24/2024	9:45 AM	0	0	0	0	0	0	0	0	0	0	0	0	0
4/24/2024	10:00 AM	0	0	0	0	0	0	0	0	0	0	0	0	0
4/24/2024	10:15 AM	0	0	0	0	0	0	0	0	0	0	0	0	0
4/24/2024	10:30 AM	0	0	0	0	0	0	0	0	0	0	0	0	0
4/24/2024	10:45 AM	0	0	0	0	0	0	0	0	0	0	0	0	0
4/24/2024	11:00 AM	0	0	0	0	0	0	0	0	0	0	0	0	0
4/24/2024	11:15 AM	0	0	0	0	0	0	0	0	0	0	0	0	0
4/24/2024	11:30 AM	0	0	0	0	0	0	0	0	0	0	0	0	0
4/24/2024	11:45 AM	0	0	0	0	0	0	0	0	0	0	0	0	0
4/24/2024	12:00 PM	0	0	0	0	0	0	0	0	0	0	0	0	0
4/24/2024	12:15 PM	0	0	0	0	0	0	0	0	0	0	0	0	0
4/24/2024	12:30 PM	0	0	0	0	0	0	0	0	0	0	0	0	0
4/24/2024	12:45 PM	0	0	0	0	0	0	0	0	0	0	0	0	0
4/24/2024	1:00 PM	0	0	0	0	0	0	0	0	0	0	0	0	0
4/24/2024	1:15 PM	0	0	0	0	0	0	0	0	0	0	0	0	0
4/24/2024	1:30 PM	0	0	0	0	0	0	0	0	0	0	0	0	0
4/24/2024	1:45 PM	0	0	0	0	0	0	0	0	0	0	0	0	0
4/24/2024	2:00 PM	0	0	0	0	0	0	0	0	0	0	0	0	0
4/24/2024	2:15 PM	0	0	0	0	0	0	0	0	0	0	0	0	0
4/24/2024	2:30 PM	0	0	0	0	0	0	0	0	0	0	0	0	0
4/24/2024	2:45 PM	0	0	0	0	0	0	0	0	0	0	0	0	0
4/24/2024	3:00 PM	0	0	0	0	0	0	0	0	0	0	0	0	0
4/24/2024	3:15 PM	0	0	0	0	0	0	0	0	0	0	0	0	0
4/24/2024	3:30 PM	0	0	0	0	0	0	0	0	0	0	0	0	0
4/24/2024	3:45 PM	0	0	0	0	0	0	0	0	0	0	0	0	0
4/24/2024	4:00 PM	0	0	0	0	0	0	0	0	0	0	0	0	0
4/24/2024	4:15 PM	0	0	0	0	0	0	0	0	0	0	0	0	0
4/24/2024	4:30 PM	0	0	0	0	0	0	0	0	0	0	0	0	0
4/24/2024	4:45 PM	0	0	0	0	0	0	0	0	0	0	0	0	0
4/24/2024	5:00 PM	0	0	0	0	0	0	0	0	0	0	0	0	0
4/24/2024	5:15 PM	0	0	0	0	0	0	0	0	0	0	0	0	0
4/24/2024	5:30 PM	0	0	0	0	0	0	0	0	0	0	0	0	0
4/24/2024	5:45 PM	0	0	0	0	0	0	0	0	0	0	0	0	0
4/24/2024	6:00 PM	0	0	0	0	0	0	0	0	0	0	0	0	0
4/24/2024	6:15 PM	0	0	0	0	0	0	0	0	0	0	0	0	0
4/24/2024	6:30 PM	0	0	0	0	0	0	0	0	0	0	0	0	0
4/24/2024	6:45 PM	0	0	0	0	0	0	0	0	0	0	0	0	0
4/24/2024	7:00 PM	0	0	0	0	0	0	0	0	0	0	0	0	0
4/24/2024	7:15 PM	0	0	0	0	0	0	0	0	0	0	0	0	0
4/24/2024	7:30 PM	0	0	0	0	0	0	0	0	0	0	0	0	0
4/24/2024	7:45 PM	0	0	0	0	0	0	0	0	0	0	0	0	0
4/24/2024	8:00 PM	0	0	0	0	0	0	0	0	0	0	0	0	0
4/24/2024	8:15 PM	0	0	0	0	0	0	0	0	0	0	0	0	0
4/24/2024	8:30 PM	0	0	0	0	0	0	0	0	0	0	0	0	0
4/24/2024	8:45 PM	0	0	0	0	0	0	0	0	0	0	0	0	0
4/24/2024	9:00 PM	0	0	0	0	0	0	0	0	0	0	0	0	0
4/24/2024	9:15 PM	0	0	0	0	0	0	0	0	0	0	0	0	0
4/24/2024	9:30 PM	0	0	0	0	0	0	0	0	0	0	0	0	0
4/24/2024	9:45 PM	0	0	0	0	0	0	0	0	0	0	0	0	0
4/24/2024	10:00 PM	0	0	0	0	0	0	0	0	0	0	0	0	0
4/24/2024	10:15 PM	0	0	0	0	0	0	0	0	0	0	0	0	0
4/24/2024	10:30 PM	0	0	0	0	0	0	0	0	0	0	0	0	0
4/24/2024	10:45 PM	0	0	0	0	0	0	0	0	0	0	0	0	0
4/24/2024	11:00 PM	0	0	0	0	0	0	0	0	0	0	0	0	0
4/24/2024	11:15 PM	0	0	0	0	0	0	0	0	0	0	0	0	0
4/24/2024	11:30 PM	0	0	0	0	0	0	0	0	0	0	0	0	0
4/24/2024	11:45 PM	0	0	0	0	0	0	0	0	0	0	0	0	0

4/25/2024	12:00 AM	0	0	0	0	0	0	0	0	0	0	0	0	0
4/25/2024	12:15 AM	0	0	0	0	0	0	0	0	0	0	0	0	0
4/25/2024	12:30 AM	0	0	0	0	0	0	0	0	0	0	0	0	0
4/25/2024	12:45 AM	0	0	0	0	0	0	0	0	0	0	0	0	0
4/25/2024	1:00 AM	0	0	0	0	0	0	0	0	0	0	0	0	0
4/25/2024	1:15 AM	0	0	0	0	0	0	0	0	0	0	0	0	0
4/25/2024	1:30 AM	0	0	0	0	0	0	0	0	0	0	0	0	0
4/25/2024	1:45 AM	0	0	0	0	0	0	0	0	0	0	0	0	0
4/25/2024	2:00 AM	0	0	0	0	0	0	0	0	0	0	0	0	0
4/25/2024	2:15 AM	0	0	0	0	0	0	0	0	0	0	0	0	0
4/25/2024	2:30 AM	0	0	0	0	0	0	0	0	0	0	0	0	0
4/25/2024	2:45 AM	0	0	0	0	0	0	0	0	0	0	0	0	0
4/25/2024	3:00 AM	0	0	0	0	0	0	0	0	0	0	0	0	0
4/25/2024	3:15 AM	0	0	0	0	0	0	0	0	0	0	0	0	0
4/25/2024	3:30 AM	0	0	0	0	0	0	0	0	0	0	0	0	0
4/25/2024	3:45 AM	0	0	0	0	0	0	0	0	0	0	0	0	0
4/25/2024	4:00 AM	0	0	0	0	0	0	0	0	0	0	0	0	0
4/25/2024	4:15 AM	0	0	0	0	0	0	0	0	0	0	0	0	0
4/25/2024	4:30 AM	0	0	0	0	0	0	0	0	0	0	0	0	0
4/25/2024	4:45 AM	0	0	0	0	0	0	0	0	0	0	0	0	0
4/25/2024	5:00 AM	0	0	0	0	0	0	0	0	0	0	0	0	0
4/25/2024	5:15 AM	0	0	0	0	0	0	0	0	0	0	0	0	0
4/25/2024	5:30 AM	0	0	0	0	0	0	0	0	0	0	0	0	0
4/25/2024	5:45 AM	0	0	0	0	0	0	0	0	0	0	0	0	0
4/25/2024	6:00 AM	0	0	0	0	0	0	0	0	0	0	0	0	0
4/25/2024	6:15 AM	0	0	0	0	0	0	0	0	0	0	0	0	0
4/25/2024	6:30 AM	0	0	0	0	0	0	0	0	0	0	0	0	0
4/25/2024	6:45 AM	0	0	0	0	0	0	0	0	0	0	0	0	0
4/25/2024	7:00 AM	0	0	0	0	0	0	0	0	0	0	0	0	0
4/25/2024	7:15 AM	0	0	0	0	0	0	0	0	0	0	0	0	0
4/25/2024	7:30 AM	0	0	0	0	0	0	0	0	0	0	0	0	0
4/25/2024	7:45 AM	0	0	0	0	0	0	0	0	0	0	0	0	0
4/25/2024	8:00 AM	0	0	0	0	0	0	0	0	0	0	0	0	0
4/25/2024	8:15 AM	0	0	0	0	0	0	0	0	0	0	0	0	0
4/25/2024	8:30 AM	0	0	0	0	0	0	0	0	0	0	0	0	0
4/25/2024	8:45 AM	0	0	0	0	0	0	0	0	0	0	0	0	0
4/25/2024	9:00 AM	0	0	0	0	0	0	0	0	0	0	0	0	0
4/25/2024	9:15 AM	0	0	0	0	0	0	0	0	0	0	0	0	0
4/25/2024	9:30 AM	0	0	0	0	0	0	0	0	0	0	0	0	0
4/25/2024	9:45 AM	0	0	0	0	0	0	0	0	0	0	0	0	0
4/25/2024	10:00 AM	0	0	0	0	0	0	0	0	0	0	0	0	0
4/25/2024	10:15 AM	0	0	0	0	0	0	0	0	0	0	0	0	0
4/25/2024	10:30 AM	0	0	0	0	0	0	0	0	0	0	0	0	0
4/25/2024	10:45 AM	0	0	0	0	0	0	0	0	0	0	0	0	0
4/25/2024	11:00 AM	0	0	0	0	0	0	0	0	0	0	0	0	0
4/25/2024	11:15 AM	0	0	0	0	0	0	0	0	0	0	0	0	0
4/25/2024	11:30 AM	0	0	0	0	0	0	0	0	0	0	0	0	0
4/25/2024	11:45 AM	0	0	0	0	0	0	0	0	0	0	0	0	0
4/25/2024	12:00 PM	0	0	0	0	0	0	0	0	0	0	0	0	0
4/25/2024	12:15 PM	0	0	0	0	0	0	0	0	0	0	0	0	0
4/25/2024	12:30 PM	0	0	0	0	0	0	0	0	0	0	0	0	0
4/25/2024	12:45 PM	0	0	0	0	0	0	0	0	0	0	0	0	0
4/25/2024	1:00 PM	0	0	0	0	0	0	0	0	0	0	0	0	0
4/25/2024	1:15 PM	0	0	0	0	0	0	0	0	0	0	0	0	0
4/25/2024	1:30 PM	0	0	0	0	0	0	0	0	0	0	0	0	0
4/25/2024	1:45 PM	0	0	0	0	0	0	0	0	0	0	0	0	0
4/25/2024	2:00 PM	0	0	0	0	0	0	0	0	0	0	0	0	0
4/25/2024	2:15 PM	0	0	0	0	0	0	0	0	0	0	0	0	0
4/25/2024	2:30 PM	0	0	0	0	0	0	0	0	0	0	0	0	0
4/25/2024	2:45 PM	0	0	0	0	0	0	0	0	0	0	0	0	0
4/25/2024	3:00 PM	0	0	0	0	0	0	0	0	0	0	0	0	0
4/25/2024	3:15 PM	0	0	0	0	0	0	0	0	0	0	0	0	0
4/25/2024	3:30 PM	0	0	0	0	0	0	0	0	0	0	0	0	0
4/25/2024	3:45 PM	0	0	0	0	0	0	0	0	0	0	0	0	0
4/25/2024	4:00 PM	0	0	0	0	0	0	0	0	0	0	0	0	0
4/25/2024	4:15 PM	0	0	0	0	0	0	0	0	0	0	0	0	0
4/25/2024	4:30 PM	0	0	0	0	0	0	0	0	0	0	0	0	0
4/25/2024	4:45 PM	0	0	0	0	0	0	0	0	0	0	0	0	0
4/25/2024	5:00 PM	0	0	0	0	0	0	0	0	0	0	0	0	0
4/25/2024	5:15 PM	0	0	0	0	0	0	0	0	0	0	0	0	0
4/25/2024	5:30 PM	0	0	0	0	0	0	0	0	0	0	0	0	0
4/25/2024	5:45 PM	0	0	0	0	0	0	0	0	0	0	0	0	0
4/25/2024	6:00 PM	0	0	0	0	0	0	0	0	0	0	0	0	0
4/25/2024	6:15 PM	0	0	0	0	0	0	0	0	0	0	0	0	0
4/25/2024	6:30 PM	0	0	0	0	0	0	0	0	0	0	0	0	0
4/25/2024	6:45 PM	0	0	0	0	0	0	0	0	0	0	0	0	0
4/25/2024	7:00 PM	0	0	0	0	0	0	0	0	0	0	0	0	0
4/25/2024	7:15 PM	0	0	0	0	0	0	0	0	0	0	0	0	0
4/25/2024	7:30 PM	0	0	0	0	0	0	0	0	0	0	0	0	0
4/25/2024	7:45 PM	0	0	0	0	0	0	0	0	0	0	0	0	0
4/25/2024	8:00 PM	0	0	0	0	0	0	0	0	0	0	0	0	0
4/25/2024	8:15 PM	0	0	0	0	0	0	0	0	0	0	0	0	0
4/25/2024	8:30 PM	0	0	0	0	0	0	0	0	0	0	0	0	0
4/25/2024	8:45 PM	0	0	0	0	0	0	0	0	0	0	0	0	0
4/25/2024	9:00 PM	0	0	0	0	0	0	0	0	0	0	0	0	0
4/25/2024	9:15 PM	0	0	0	0	0	0	0	0	0	0	0	0	0
4/25/2024	9:30 PM	0	0	0	0	0	0	0	0	0	0	0	0	0
4/25/2024	9:45 PM	0	0	0	0	0	0	0	0	0	0	0	0	0
4/25/2024	10:00 PM	0	0	0	0	0	0	0	0	0	0	0	0	0
4/25/2024	10:15 PM	0	0	0	0	0	0	0	0	0	0	0	0	0
4/25/2024	10:30 PM	0	0	0	0	0	0	0	0	0	0	0	0	0
4/25/2024	10:45 PM	0	0	0	0	0	0	0	0	0	0	0	0	0
4/25/2024	11:00 PM	0	0	0	0	0	0	0	0	0	0	0	0	0
4/25/2024	11:15 PM	0	0	0	0	0	0	0	0	0	0	0	0	0
4/25/2024	11:30 PM	0	0	0	0	0	0	0	0	0	0	0	0	0
4/25/2024	11:45 PM	0	0	0	0	0	0	0	0	0	0	0	0	0

SB
File Name:
Start Date: 4/23/2024
Start Time: 0
Site Code: 23
Station ID: 1
Location 1: I-26 James F. Byrnes Expy S/Bound Off-Ramp, north of SC-60 Lake Murray Blvd
Location 2:

Date	Time	1	2	3	4	5	6	7	8	9	10	11	12	13
4/23/2024	12:00 AM	0	0	0	0	0	0	0	0	0	0	0	0	0
4/23/2024	12:15 AM	0	0	0	0	0	0	0	0	0	0	0	0	0
4/23/2024	12:30 AM	0	0	0	0	0	0	0	0	0	0	0	0	0
4/23/2024	12:45 AM	0	0	0	0	0	0	0	0	0	0	0	0	0
4/23/2024	1:00 AM	0	0	0	0	0	0	0	0	0	0	0	0	0
4/23/2024	1:15 AM	0	0	0	0	0	0	0	0	0	0	0	0	0
4/23/2024	1:30 AM	0	0	0	0	0	0	0	0	0	0	0	0	0
4/23/2024	1:45 AM	0	0	0	0	0	0	0	0	0	0	0	0	0
4/23/2024	2:00 AM	0	0	0	0	0	0	0	0	0	0	0	0	0
4/23/2024	2:15 AM	0	0	0	0	0	0	0	0	0	0	0	0	0
4/23/2024	2:30 AM	0	0	0	0	0	0	0	0	0	0	0	0	0
4/23/2024	2:45 AM	0	0	0	0	0	0	0	0	0	0	0	0	0
4/23/2024	3:00 AM	0	0	0	0	0	0	0	0	0	0	0	0	0
4/23/2024	3:15 AM	0	0	0	0	0	0	0	0	0	0	0	0	0
4/23/2024	3:30 AM	0	0	0	0	0	0	0	0	0	0	0	0	0
4/23/2024	3:45 AM	0	0	0	0	0	0	0	0	0	0	0	0	0
4/23/2024	4:00 AM	0	0	0	0	0	0	0	0	0	0	0	0	0
4/23/2024	4:15 AM	0	0	0	0	0	0	0	0	0	0	0	0	0
4/23/2024	4:30 AM	0	0	0	0	0	0	0	0	0	0	0	0	0
4/23/2024	4:45 AM	0	0	0	0	0	0	0	0	0	0	0	0	0
4/23/2024	5:00 AM	0	0	0	0	0	0	0	0	0	0	0	0	0
4/23/2024	5:15 AM	0	0	0	0	0	0	0	0	0	0	0	0	0
4/23/2024	5:30 AM	0	0	0	0	0	0	0	0	0	0	0	0	0
4/23/2024	5:45 AM	0	0	0	0	0	0	0	0	0	0	0	0	0
4/23/2024	6:00 AM	0	0	0	0	0	0	0	0	0	0	0	0	0
4/23/2024	6:15 AM	0	0	0	0	0	0	0	0	0	0	0	0	0
4/23/2024	6:30 AM	0	0	0	0	0	0	0	0	0	0	0	0	0
4/23/2024	6:45 AM	0	0	0	0	0	0	0	0	0	0	0	0	0
4/23/2024	7:00 AM	0	0	0	0	0	0	0	0	0	0	0	0	0
4/23/2024	7:15 AM	0	0	0	0	0	0	0	0	0	0	0	0	0
4/23/2024	7:30 AM	0	0	0	0	0	0	0	0	0	0	0	0	0
4/23/2024	7:45 AM	0	0	0	0	0	0	0	0	0	0	0	0	0
4/23/2024	8:00 AM	0	0	0	0	0	0	0	0	0	0	0	0	0
4/23/2024	8:15 AM	0	0	0	0	0	0	0	0	0	0	0	0	0
4/23/2024	8:30 AM	0	0	0	0	0	0	0	0	0	0	0	0	0
4/23/2024	8:45 AM	0	0	0	0	0	0	0	0	0	0	0	0	0
4/23/2024	9:00 AM	0	0	0	0	0	0	0	0	0	0	0	0	0
4/23/2024	9:15 AM	0	0	0	0	0	0	0	0	0	0	0	0	0
4/23/2024	9:30 AM	0	0	0	0	0	0	0	0	0	0	0	0	0
4/23/2024	9:45 AM	0	0	0	0	0	0	0	0	0	0	0	0	0
4/23/2024	10:00 AM	0	0	0	0	0	0	0	0	0	0	0	0	0
4/23/2024	10:15 AM	0	0	0	0	0	0	0	0	0	0	0	0	0
4/23/2024	10:30 AM	0	0	0	0	0	0	0	0	0	0	0	0	0
4/23/2024	10:45 AM	0	0	0	0	0	0	0	0	0	0	0	0	0
4/23/2024	11:00 AM	0	0	0	0	0	0	0	0	0	0	0	0	0
4/23/2024	11:15 AM	0	0	0	0	0	0	0	0	0	0	0	0	0
4/23/2024	11:30 AM	0	0	0	0	0	0	0	0	0	0	0	0	0
4/23/2024	11:45 AM	0	0	0	0	0	0	0	0	0	0	0	0	0
4/23/2024	12:00 PM	0	0	0	0	0	0	0	0	0	0	0	0	0
4/23/2024	12:15 PM	0	0	0	0	0	0	0	0	0	0	0	0	0
4/23/2024	12:30 PM	0	0	0	0	0	0	0	0	0	0	0	0	0
4/23/2024	12:45 PM	0	0	0	0	0	0	0	0	0	0	0	0	0
4/23/2024	1:00 PM	0	0	0	0	0	0	0	0	0	0	0	0	0
4/23/2024	1:15 PM	0	0	0	0	0	0	0	0	0	0	0	0	0
4/23/2024	1:30 PM	0	0	0	0	0	0	0	0	0	0	0	0	0
4/23/2024	1:45 PM	0	0	0	0	0	0	0	0	0	0	0	0	0
4/23/2024	2:00 PM	0	0	0	0	0	0	0	0	0	0	0	0	0
4/23/2024	2:15 PM	0	0	0	0	0	0	0	0	0	0	0	0	0
4/23/2024	2:30 PM	0	0	0	0	0	0	0	0	0	0	0	0	0
4/23/2024	2:45 PM	0	0	0	0	0	0	0	0	0	0	0	0	0
4/23/2024	3:00 PM	0	0	0	0	0	0	0	0	0	0	0	0	0
4/23/2024	3:15 PM	0	0	0	0	0	0	0	0	0	0	0	0	0
4/23/2024	3:30 PM	0	0	0	0	0	0	0	0	0	0	0	0	0
4/23/2024	3:45 PM	0	0	0	0	0	0	0	0	0	0	0	0	0
4/23/2024	4:00 PM	0	0	0	0	0	0	0	0	0	0	0	0	0
4/23/2024	4:15 PM	0	0	0	0	0	0	0	0	0	0	0	0	0
4/23/2024	4:30 PM	0	0	0	0	0	0	0	0	0	0	0	0	0
4/23/2024	4:45 PM	0	0	0	0	0	0	0	0	0	0	0	0	0
4/23/2024	5:00 PM	0	0	0	0	0	0	0	0	0	0	0	0	0
4/23/2024	5:15 PM	0	0	0	0	0	0	0	0	0	0	0	0	0
4/23/2024	5:30 PM	0	0	0	0	0	0	0	0	0	0	0	0	0
4/23/2024	5:45 PM	0	0	0	0	0	0	0	0	0	0	0	0	0
4/23/2024	6:00 PM	0	0	0	0	0	0	0	0	0	0	0	0	0
4/23/2024	6:15 PM	0	18	4	0	0	0	0	0	0	0	0	0	0
4/23/2024	6:30 PM	0	35	7	0	1	0	0	0	0	0	0	0	0
4/23/2024	6:45 PM	0	46	11	0	1	0	0	0	0	0	0	0	0
4/23/2024	7:00 PM	0	57	14	0	1	0	0	0	0	0	0	0	0
4/23/2024	7:15 PM	0	53	20	0	1	0	0	0	0	0	0	0	0
4/23/2024	7:30 PM	0	42	21	0	0	0	0	0	0	0	0	0	0
4/23/2024	7:45 PM	0	41	18	0	0	0	0	0	0	0	0	0	0
4/23/2024	8:00 PM	0	36	15	0	0	0	0	0	0	0	0	0	0
4/23/2024	8:15 PM	0	36	5	0	0	0	0	0	0	0	0	0	0
4/23/2024	8:30 PM	0	40	2	0	0	0	0	0	0	0	0	0	0
4/23/2024	8:45 PM	0	33	2	0	0	0	0	0	0	0	0	0	0
4/23/2024	9:00 PM	0	36	5	0	0	0	0	0	0	0	0	0	0
4/23/2024	9:15 PM	0	26	5	0	0	0	0	0	0	0	0	0	0
4/23/2024	9:30 PM	0	23	4	0	0	0	0	0	0	0	0	0	0
4/23/2024	9:45 PM	0	22	3	0	0	0	0	0	0	0	0	0	0
4/23/2024	10:00 PM	0	16	0	0	0	0	0	0	0	0	0	0	0
4/23/2024	10:15 PM	0	12	1	0	0	0	0	0	0	0	0	0	0
4/23/2024	10:30 PM	0	8	1	0	0	0	0	0	0	0	0	0	0
4/23/2024	10:45 PM	0	8	1	0	0	0	0	0	0	0	0	0	0
4/23/2024	11:00 PM	0	6	1	0	0	0	0	0	0	0	0	0	0
4/23/2024	11:15 PM	0	6	0	0	0	0	0	0	0	0	0	0	0
4/23/2024	11:30 PM	0	3	0	0	0	0	0	0	0	0	0	0	0
4/23/2024	11:45 PM	0	1	0	0	0	0	0	0	0	0	0	0	0

4/24/2024	12:00 AM	0	7	0	0	0	0	0	0	1	0	0	0	0
4/24/2024	12:15 AM	0	5	0	0	0	0	0	0	1	0	0	0	0
4/24/2024	12:30 AM	0	2	0	0	0	0	0	0	0	0	0	0	0
4/24/2024	12:45 AM	0	3	0	0	0	0	0	0	0	0	0	0	0
4/24/2024	1:00 AM	0	3	0	0	0	0	0	0	0	0	0	0	0
4/24/2024	1:15 AM	0	3	0	0	0	0	0	0	0	0	0	0	0
4/24/2024	1:30 AM	0	3	0	0	0	0	0	0	0	0	0	0	0
4/24/2024	1:45 AM	0	5	0	0	0	0	0	0	0	0	0	0	0
4/24/2024	2:00 AM	0	4	0	0	0	0	0	0	0	0	0	0	0
4/24/2024	2:15 AM	0	4	0	0	0	0	0	0	0	0	0	0	0
4/24/2024	2:30 AM	0	4	0	0	0	0	0	0	0	0	0	0	0
4/24/2024	2:45 AM	0	1	0	0	0	0	0	0	0	0	0	0	0
4/24/2024	3:00 AM	0	2	0	0	0	0	0	0	0	0	0	0	0
4/24/2024	3:15 AM	0	2	0	0	0	0	0	0	0	0	0	0	0
4/24/2024	3:30 AM	0	2	0	0	0	0	0	0	1	0	0	0	0
4/24/2024	3:45 AM	0	5	0	0	0	0	0	0	1	0	0	0	0
4/24/2024	4:00 AM	0	9	0	0	0	0	0	0	1	0	0	0	0
4/24/2024	4:15 AM	0	9	0	0	0	0	0	0	1	0	0	0	0
4/24/2024	4:30 AM	0	11	0	0	0	0	0	0	0	0	0	0	0
4/24/2024	4:45 AM	0	18	0	0	0	0	0	0	1	0	0	0	0
4/24/2024	5:00 AM	0	19	2	0	0	0	0	0	1	0	0	0	0
4/24/2024	5:15 AM	0	22	3	0	0	0	0	0	1	0	0	0	0
4/24/2024	5:30 AM	0	30	5	0	0	0	0	0	1	0	0	0	0
4/24/2024	5:45 AM	0	31	8	0	0	0	0	0	0	0	0	0	0
4/24/2024	6:00 AM	0	45	11	0	2	0	0	0	0	0	0	0	0
4/24/2024	6:15 AM	0	77	14	0	3	0	0	0	1	0	0	0	0
4/24/2024	6:30 AM	0	111	20	0	3	0	0	0	2	0	0	0	0
4/24/2024	6:45 AM	0	145	30	0	4	0	0	0	2	0	0	0	0
4/24/2024	7:00 AM	0	163	29	0	3	0	0	0	2	0	0	0	0
4/24/2024	7:15 AM	0	167	38	0	2	0	0	0	1	0	0	0	0
4/24/2024	7:30 AM	0	147	36	0	3	0	0	0	0	0	0	0	0
4/24/2024	7:45 AM	0	134	29	0	2	0	0	0	0	0	0	0	0
4/24/2024	8:00 AM	0	139	37	0	1	0	0	0	0	0	0	0	0
4/24/2024	8:15 AM	0	151	31	2	1	0	1	1	0	0	0	0	0
4/24/2024	8:30 AM	0	155	27	2	0	0	1	1	0	0	0	0	0
4/24/2024	8:45 AM	0	148	27	2	0	0	1	1	0	0	0	0	0
4/24/2024	9:00 AM	0	126	25	2	0	0	1	1	0	0	0	0	0
4/24/2024	9:15 AM	0	105	22	0	1	0	0	0	0	0	0	0	0
4/24/2024	9:30 AM	0	88	34	0	1	0	0	0	0	0	0	0	0
4/24/2024	9:45 AM	0	80	33	0	1	0	0	0	0	0	0	0	0
4/24/2024	10:00 AM	0	69	26	0	1	0	0	0	0	0	0	0	0
4/24/2024	10:15 AM	0	48	26	0	0	0	0	0	0	0	0	0	0
4/24/2024	10:30 AM	0	54	22	0	0	0	0	0	0	0	0	0	0
4/24/2024	10:45 AM	0	45	21	0	0	0	0	0	0	0	0	0	0
4/24/2024	11:00 AM	0	53	32	0	0	0	0	0	0	0	0	0	0
4/24/2024	11:15 AM	0	72	39	0	0	0	0	0	1	0	0	0	0
4/24/2024	11:30 AM	0	79	37	0	0	0	0	0	3	0	0	0	0
4/24/2024	11:45 AM	0	91	38	0	0	0	0	0	3	0	0	0	0
4/24/2024	12:00 PM	0	92	28	0	2	0	0	0	3	0	0	0	0
4/24/2024	12:15 PM	0	82	22	0	3	0	0	0	2	0	0	0	0
4/24/2024	12:30 PM	0	75	21	0	4	0	0	0	0	0	0	0	0
4/24/2024	12:45 PM	0	74	23	0	4	0	0	0	0	0	0	0	0
4/24/2024	1:00 PM	0	78	24	0	3	0	0	0	0	0	0	0	0
4/24/2024	1:15 PM	0	80	23	0	2	0	0	0	0	0	0	0	0
4/24/2024	1:30 PM	0	90	23	0	1	0	0	1	1	0	0	0	0
4/24/2024	1:45 PM	0	99	24	0	1	0	0	1	1	0	0	0	0
4/24/2024	2:00 PM	0	96	24	0	0	0	0	1	2	0	0	0	0
4/24/2024	2:15 PM	0	102	26	0	1	0	0	1	2	0	0	0	0
4/24/2024	2:30 PM	0	104	24	0	1	0	0	0	1	0	0	0	0
4/24/2024	2:45 PM	0	95	21	0	1	0	0	0	1	0	0	0	0
4/24/2024	3:00 PM	0	110	21	0	1	0	0	0	0	0	0	0	0
4/24/2024	3:15 PM	0	125	24	0	0	0	0	0	1	0	0	0	0
4/24/2024	3:30 PM	0	137	26	0	0	0	0	0	1	0	0	0	0
4/24/2024	3:45 PM	0	156	25	0	1	0	0	0	1	0	0	0	0
4/24/2024	4:00 PM	0	160	29	0	1	0	0	0	1	0	0	0	0
4/24/2024	4:15 PM	0	143	24	0	1	0	0	0	0	0	0	0	0
4/24/2024	4:30 PM	1	128	22	0	1	0	0	0	0	0	0	0	0
4/24/2024	4:45 PM	1	126	25	0	0	0	0	0	0	0	0	0	0
4/24/2024	5:00 PM	1	117	29	0	0	0	0	0	0	0	0	0	0
4/24/2024	5:15 PM	1	111	26	0	0	0	0	0	0	0	0	0	0
4/24/2024	5:30 PM	0	114	32	0	1	0	0	1	0	0	0	0	0
4/24/2024	5:45 PM	0	109	29	0	1	0	0	1	0	0	0	0	0
4/24/2024	6:00 PM	0	102	19	0	1	0	0	1	0	0	0	0	0
4/24/2024	6:15 PM	0	98	22	0	1	0	0	1	0	0	0	0	0
4/24/2024	6:30 PM	0	78	14	0	0	0	0	0	0	0	0	0	0
4/24/2024	6:45 PM	0	66	11	0	0	0	0	0	0	0	0	0	0
4/24/2024	7:00 PM	0	64	12	0	1	0	0	0	1	0	0	0	0
4/24/2024	7:15 PM	0	64	11	0	1	0	0	0	1	0	0	0	0
4/24/2024	7:30 PM	0	64	12	0	1	0	0	0	1	0	0	0	0
4/24/2024	7:45 PM	0	59	15	0	1	0	0	0	1	0	0	0	0
4/24/2024	8:00 PM	0	54	13	0	1	0	0	0	0	0	0	0	0
4/24/2024	8:15 PM	0	50	11	0	1	0	0	0	0	0	0	0	0
4/24/2024	8:30 PM	0	50	7	0	1	0	0	0	0	0	0	0	0
4/24/2024	8:45 PM	0	42	3	0	2	0	0	0	0	0	0	0	0
4/24/2024	9:00 PM	0	34	1	0	2	0	0	0	0	0	0	0	0
4/24/2024	9:15 PM	0	30	0	0	2	0	0	0	0	0	0	0	0
4/24/2024	9:30 PM	0	29	1	0	2	0	0	0	0	0	0	0	0
4/24/2024	9:45 PM	0	33	1	0	1	0	0	0	0	0	0	0	0
4/24/2024	10:00 PM	0	28	2	0	0	0	0	0	0	0	0	0	0
4/24/2024	10:15 PM	0	24	2	0	0	0	0	0	0	0	0	0	0
4/24/2024	10:30 PM	0	17	1	0	0	0	0	0	0	0	0	0	0
4/24/2024	10:45 PM	0	12	1	0	0	0	0	0	1	0	0	0	0
4/24/2024	11:00 PM	0	10	0	0	0	0	0	0	1	0	0	0	0
4/24/2024	11:15 PM	0	7	0	0	0	0	0	0	1	0	0	0	0
4/24/2024	11:30 PM	0	6	0	0	0	0	0	0	1	0	0	0	0
4/24/2024	11:45 PM	0	1	0	0	0	0	0	0	0	0	0	0	0

4/25/2024	12:00 AM	0	11	0	0	0	0	0	0	0	0	0	0
4/25/2024	12:15 AM	0	9	0	0	0	0	0	0	0	0	0	0
4/25/2024	12:30 AM	0	8	0	0	0	0	0	0	0	0	0	0
4/25/2024	12:45 AM	0	6	0	0	0	0	0	0	0	0	0	0
4/25/2024	1:00 AM	0	1	0	0	0	0	0	0	0	0	0	0
4/25/2024	1:15 AM	0	3	0	0	0	0	0	0	0	0	0	0
4/25/2024	1:30 AM	0	3	0	0	0	0	0	0	0	0	0	0
4/25/2024	1:45 AM	0	2	0	0	0	0	0	0	0	0	0	0
4/25/2024	2:00 AM	0	2	0	0	0	0	0	0	0	0	0	0
4/25/2024	2:15 AM	0	1	0	0	0	0	0	0	0	0	0	0
4/25/2024	2:30 AM	0	2	0	0	0	0	0	0	0	0	0	0
4/25/2024	2:45 AM	0	2	0	0	0	0	0	0	0	0	0	0
4/25/2024	3:00 AM	0	2	0	0	0	0	0	0	0	0	0	0
4/25/2024	3:15 AM	0	3	1	0	0	0	0	0	0	0	0	0
4/25/2024	3:30 AM	0	3	1	0	0	0	0	0	0	0	0	0
4/25/2024	3:45 AM	0	6	1	0	0	0	0	0	0	0	0	0
4/25/2024	4:00 AM	0	10	1	0	0	0	0	0	0	0	0	0
4/25/2024	4:15 AM	0	14	0	0	0	0	0	0	0	0	0	0
4/25/2024	4:30 AM	0	17	0	0	0	0	0	0	0	0	0	0
4/25/2024	4:45 AM	0	18	0	0	0	0	0	0	0	0	0	0
4/25/2024	5:00 AM	0	23	1	0	0	0	0	0	0	0	0	0
4/25/2024	5:15 AM	0	21	2	0	0	0	0	0	0	0	0	0
4/25/2024	5:30 AM	0	25	3	0	0	0	0	0	0	0	0	0
4/25/2024	5:45 AM	0	39	5	0	1	0	0	0	0	0	0	0
4/25/2024	6:00 AM	0	51	7	0	1	0	1	0	0	0	0	0
4/25/2024	6:15 AM	0	71	11	0	2	1	1	0	0	0	0	0
4/25/2024	6:30 AM	0	105	19	0	2	1	1	0	1	0	0	0
4/25/2024	6:45 AM	0	143	28	0	1	1	1	0	1	0	0	0
4/25/2024	7:00 AM	0	186	44	0	1	1	0	0	1	0	0	0
4/25/2024	7:15 AM	0	214	49	0	0	0	0	0	1	0	0	0
4/25/2024	7:30 AM	0	201	53	0	0	1	0	0	1	0	0	0
4/25/2024	7:45 AM	0	178	48	0	2	2	0	0	1	0	0	0
4/25/2024	8:00 AM	0	133	37	1	2	2	0	0	1	0	0	0
4/25/2024	8:15 AM	0	106	29	1	2	4	0	0	1	0	0	0
4/25/2024	8:30 AM	0	99	22	1	2	3	1	0	0	0	0	0
4/25/2024	8:45 AM	0	91	26	1	1	5	1	0	0	0	0	0
4/25/2024	9:00 AM	0	91	25	0	1	5	1	0	0	0	0	0
4/25/2024	9:15 AM	0	85	30	0	1	6	1	0	0	0	0	0
4/25/2024	9:30 AM	0	84	31	0	2	6	0	1	0	0	0	0
4/25/2024	9:45 AM	0	83	28	0	1	6	0	1	0	0	0	0
4/25/2024	10:00 AM	0	91	31	0	1	6	0	1	0	0	0	0
4/25/2024	10:15 AM	0	90	32	0	1	3	0	1	0	0	0	0
4/25/2024	10:30 AM	0	94	34	0	0	5	0	0	0	0	0	0
4/25/2024	10:45 AM	0	92	36	0	0	4	0	0	0	0	0	0
4/25/2024	11:00 AM	1	95	31	0	1	5	0	0	0	0	0	0
4/25/2024	11:15 AM	1	108	32	0	1	6	0	0	0	0	0	0
4/25/2024	11:30 AM	1	105	29	0	1	6	0	0	1	0	0	0
4/25/2024	11:45 AM	1	105	28	0	2	4	0	1	1	0	0	0
4/25/2024	12:00 PM	0	103	31	0	1	4	0	1	1	0	0	0
4/25/2024	12:15 PM	0	94	25	0	2	3	0	1	1	0	0	0
4/25/2024	12:30 PM	0	98	23	0	3	2	0	1	0	0	0	0
4/25/2024	12:45 PM	0	98	21	0	3	3	0	0	0	0	0	0
4/25/2024	1:00 PM	0	91	21	0	3	2	0	0	0	0	0	0
4/25/2024	1:15 PM	0	90	22	0	2	3	0	0	0	0	0	0
4/25/2024	1:30 PM	0	89	22	0	1	2	0	0	0	0	0	0
4/25/2024	1:45 PM	0	90	21	0	1	2	0	0	0	0	0	0
4/25/2024	2:00 PM	0	89	21	0	1	3	0	0	0	0	0	0
4/25/2024	2:15 PM	0	116	30	0	1	3	0	0	0	0	0	0
4/25/2024	2:30 PM	0	114	33	0	1	4	0	0	0	0	0	0
4/25/2024	2:45 PM	0	115	36	0	1	3	0	0	1	0	0	0
4/25/2024	3:00 PM	0	129	44	0	1	4	0	0	1	0	0	0
4/25/2024	3:15 PM	0	110	39	0	1	3	0	0	1	0	0	0
4/25/2024	3:30 PM	0	120	39	0	1	2	0	0	1	0	0	0
4/25/2024	3:45 PM	0	117	44	0	0	4	0	0	0	0	0	0
4/25/2024	4:00 PM	0	118	32	0	0	2	0	0	0	0	0	0
4/25/2024	4:15 PM	0	122	35	0	0	3	0	1	0	0	0	0
4/25/2024	4:30 PM	0	126	36	0	0	3	0	1	0	0	0	0
4/25/2024	4:45 PM	0	134	26	0	0	1	0	1	0	0	0	0
4/25/2024	5:00 PM	0	122	29	0	1	1	0	1	0	0	0	0
4/25/2024	5:15 PM	0	117	28	0	2	0	0	0	0	0	0	0
4/25/2024	5:30 PM	0	100	28	0	3	0	0	0	0	0	0	0
4/25/2024	5:45 PM	0	89	32	0	3	0	0	0	0	0	0	0
4/25/2024	6:00 PM	0	87	32	0	2	0	0	0	0	0	0	0
4/25/2024	6:15 PM	0	59	22	0	1	0	0	0	0	0	0	0
4/25/2024	6:30 PM	0	39	14	0	0	0	0	0	0	0	0	0
4/25/2024	6:45 PM	0	21	7	0	0	0	0	0	0	0	0	0
4/25/2024	7:00 PM	0	0	0	0	0	0	0	0	0	0	0	0
4/25/2024	7:15 PM	0	0	0	0	0	0	0	0	0	0	0	0
4/25/2024	7:30 PM	0	0	0	0	0	0	0	0	0	0	0	0
4/25/2024	7:45 PM	0	0	0	0	0	0	0	0	0	0	0	0
4/25/2024	8:00 PM	0	0	0	0	0	0	0	0	0	0	0	0
4/25/2024	8:15 PM	0	0	0	0	0	0	0	0	0	0	0	0
4/25/2024	8:30 PM	0	0	0	0	0	0	0	0	0	0	0	0
4/25/2024	8:45 PM	0	0	0	0	0	0	0	0	0	0	0	0
4/25/2024	9:00 PM	0	0	0	0	0	0	0	0	0	0	0	0
4/25/2024	9:15 PM	0	0	0	0	0	0	0	0	0	0	0	0
4/25/2024	9:30 PM	0	0	0	0	0	0	0	0	0	0	0	0
4/25/2024	9:45 PM	0	0	0	0	0	0	0	0	0	0	0	0
4/25/2024	10:00 PM	0	0	0	0	0	0	0	0	0	0	0	0
4/25/2024	10:15 PM	0	0	0	0	0	0	0	0	0	0	0	0
4/25/2024	10:30 PM	0	0	0	0	0	0	0	0	0	0	0	0
4/25/2024	10:45 PM	0	0	0	0	0	0	0	0	0	0	0	0
4/25/2024	11:00 PM	0	0	0	0	0	0	0	0	0	0	0	0
4/25/2024	11:15 PM	0	0	0	0	0	0	0	0	0	0	0	0
4/25/2024	11:30 PM	0	0	0	0	0	0	0	0	0	0	0	0
4/25/2024	11:45 PM	0	0	0	0	0	0	0	0	0	0	0	0

Bi-Directional Class Count || NB EB 15min

Columbia, SC

Marr Traffic DATA COLLECTION
www.marrtraffic.com

Site 24
I-26 James F. Byrnes Expy On/Off-Ramp,
south of SC-60 Lake Murray Blvd

Date
Tuesday, April 23, 2024

Lat/Long
34.089516°, -81.166130°

Weather
Fair
58°F

Click here for Detailed Weather

Click here for Map

0000 - 2400 (Weekday 24h Session) (04-23-2024)
NB EB 15min

	Northbound (Movement 24.1)													15min	60min
Time	1	2	3	4	5	6	7	8	9	10	11	12	13	Total	Total
0000 - 0015	0	0	0	0	0	0	0	0	0	0	0	0	0	**0**	
0015 - 0030	0	0	0	0	0	0	0	0	0	0	0	0	0	**0**	
0030 - 0045	0	0	0	0	0	0	0	0	0	0	0	0	0	**0**	
0045 - 0100	0	0	0	0	0	0	0	0	0	0	0	0	0	**0**	**0**
0100 - 0115	0	0	0	0	0	0	0	0	0	0	0	0	0	**0**	
0115 - 0130	0	0	0	0	0	0	0	0	0	0	0	0	0	**0**	
0130 - 0145	0	0	0	0	0	0	0	0	0	0	0	0	0	**0**	
0145 - 0200	0	0	0	0	0	0	0	0	0	0	0	0	0	**0**	**0**
0200 - 0215	0	0	0	0	0	0	0	0	0	0	0	0	0	**0**	
0215 - 0230	0	0	0	0	0	0	0	0	0	0	0	0	0	**0**	
0230 - 0245	0	0	0	0	0	0	0	0	0	0	0	0	0	**0**	
0245 - 0300	0	0	0	0	0	0	0	0	0	0	0	0	0	**0**	**0**
0300 - 0315	0	0	0	0	0	0	0	0	0	0	0	0	0	**0**	
0315 - 0330	0	0	0	0	0	0	0	0	0	0	0	0	0	**0**	
0330 - 0345	0	0	0	0	0	0	0	0	0	0	0	0	0	**0**	
0345 - 0400	0	0	0	0	0	0	0	0	0	0	0	0	0	**0**	**0**
0400 - 0415	0	0	0	0	0	0	0	0	0	0	0	0	0	**0**	
0415 - 0430	0	0	0	0	0	0	0	0	0	0	0	0	0	**0**	
0430 - 0445	0	0	0	0	0	0	0	0	0	0	0	0	0	**0**	
0445 - 0500	0	0	0	0	0	0	0	0	0	0	0	0	0	**0**	**0**
0500 - 0515	0	0	0	0	0	0	0	0	0	0	0	0	0	**0**	
0515 - 0530	0	0	0	0	0	0	0	0	0	0	0	0	0	**0**	
0530 - 0545	0	0	0	0	0	0	0	0	0	0	0	0	0	**0**	
0545 - 0600	0	0	0	0	0	0	0	0	0	0	0	0	0	**0**	**0**
0600 - 0615	0	0	0	0	0	0	0	0	0	0	0	0	0	**0**	
0615 - 0630	0	0	0	0	0	0	0	0	0	0	0	0	0	**0**	
0630 - 0645	0	0	0	0	0	0	0	0	0	0	0	0	0	**0**	
0645 - 0700	0	0	0	0	0	0	0	0	0	0	0	0	0	**0**	**0**
0700 - 0715	0	0	0	0	0	0	0	0	0	0	0	0	0	**0**	
0715 - 0730	0	0	0	0	0	0	0	0	0	0	0	0	0	**0**	
0730 - 0745	0	0	0	0	0	0	0	0	0	0	0	0	0	**0**	
0745 - 0800	0	0	0	0	0	0	0	0	0	0	0	0	0	**0**	**0**
0800 - 0815	0	0	0	0	0	0	0	0	0	0	0	0	0	**0**	
0815 - 0830	0	0	0	0	0	0	0	0	0	0	0	0	0	**0**	
0830 - 0845	0	0	0	0	0	0	0	0	0	0	0	0	0	**0**	
0845 - 0900	0	0	0	0	0	0	0	0	0	0	0	0	0	**0**	**0**
0900 - 0915	0	0	0	0	0	0	0	0	0	0	0	0	0	**0**	
0915 - 0930	0	0	0	0	0	0	0	0	0	0	0	0	0	**0**	
0930 - 0945	0	0	0	0	0	0	0	0	0	0	0	0	0	**0**	
0945 - 1000	0	0	0	0	0	0	0	0	0	0	0	0	0	**0**	**0**
1000 - 1015	0	0	0	0	0	0	0	0	0	0	0	0	0	**0**	
1015 - 1030	0	0	0	0	0	0	0	0	0	0	0	0	0	**0**	
1030 - 1045	0	0	0	0	0	0	0	0	0	0	0	0	0	**0**	
1045 - 1100	0	0	0	0	0	0	0	0	0	0	0	0	0	**0**	**0**
1100 - 1115	0	0	0	0	0	0	0	0	0	0	0	0	0	**0**	
1115 - 1130	0	0	0	0	0	0	0	0	0	0	0	0	0	**0**	
1130 - 1145	0	0	0	0	0	0	0	0	0	0	0	0	0	**0**	
1145 - 1200	0	0	0	0	0	0	0	0	0	0	0	0	0	**0**	**0**
1200 - 1215	0	0	0	0	0	0	0	0	0	0	0	0	0	**0**	
1215 - 1230	0	0	0	0	0	0	0	0	0	0	0	0	0	**0**	
1230 - 1245	0	0	0	0	0	0	0	0	0	0	0	0	0	**0**	
1245 - 1300	0	0	0	0	0	0	0	0	0	0	0	0	0	**0**	**0**
1300 - 1315	0	0	0	0	0	0	0	0	0	0	0	0	0	**0**	
1315 - 1330	0	0	0	0	0	0	0	0	0	0	0	0	0	**0**	
1330 - 1345	0	0	0	0	0	0	0	0	0	0	0	0	0	**0**	
1345 - 1400	0	0	0	0	0	0	0	0	0	0	0	0	0	**0**	**0**
1400 - 1415	0	0	0	0	0	0	0	0	0	0	0	0	0	**0**	
1415 - 1430	0	0	0	0	0	0	0	0	0	0	0	0	0	**0**	
1430 - 1445	0	0	0	0	0	0	0	0	0	0	0	0	0	**0**	
1445 - 1500	0	0	0	0	0	0	0	0	0	0	0	0	0	**0**	**0**
1500 - 1515	0	0	0	0	0	0	0	0	0	0	0	0	0	**0**	
1515 - 1530	0	0	0	0	0	0	0	0	0	0	0	0	0	**0**	
1530 - 1545	0	0	0	0	0	0	0	0	0	0	0	0	0	**0**	
1545 - 1600	0	0	0	0	0	0	0	0	0	0	0	0	0	**0**	**0**
1600 - 1615	0	0	0	0	0	0	0	0	0	0	0	0	0	**0**	
1615 - 1630	0	0	0	0	0	0	0	0	0	0	0	0	0	**0**	
1630 - 1645	0	0	0	0	0	0	0	0	0	0	0	0	0	**0**	
1645 - 1700	0	0	0	0	0	0	0	0	0	0	0	0	0	**0**	**0**
1700 - 1715	0	0	0	0	0	0	0	0	0	0	0	0	0	**0**	
1715 - 1730	0	0	0	0	0	0	0	0	0	0	0	0	0	**0**	
1730 - 1745	0	0	0	0	0	0	0	0	0	0	0	0	0	**0**	
1745 - 1800	0	0	0	0	0	0	0	0	0	0	0	0	0	**0**	**0**
1800 - 1815	0	0	0	0	0	0	0	0	0	0	0	0	0	**0**	
1815 - 1830	0	0	0	0	0	0	0	0	0	0	0	0	0	**0**	
1830 - 1845	0	0	0	0	0	0	0	0	0	0	0	0	0	**0**	
1845 - 1900	0	0	0	0	0	0	0	0	0	0	0	0	0	**0**	**0**
1900 - 1915	0	7	0	0	0	0	0	0	0	0	0	0	0	**7**	
1915 - 1930	0	4	3	0	0	0	0	0	0	0	0	0	0	**7**	
1930 - 1945	0	5	1	0	0	0	0	0	0	0	0	0	0	**6**	
1945 - 2000	0	7	0	0	0	0	0	0	0	0	0	0	0	**7**	**27**
2000 - 2015	0	5	2	0	0	0	0	0	0	0	0	0	0	**7**	
2015 - 2030	0	5	1	0	0	0	0	0	1	0	0	0	0	**7**	
2030 - 2045	0	8	0	0	0	0	0	0	0	0	0	0	0	**8**	
2045 - 2100	0	4	0	0	5	0	0	0	0	0	0	0	0	**9**	**31**
2100 - 2115	1	3	0	0	0	0	0	0	0	0	0	0	0	**4**	
2115 - 2130	0	2	0	0	0	0	0	0	0	0	0	0	0	**2**	
2130 - 2145	0	6	0	0	0	0	0	0	0	0	0	0	0	**6**	
2145 - 2200	0	2	0	0	0	0	0	0	0	0	0	0	0	**2**	**14**
2200 - 2215	0	6	2	0	0	0	0	0	0	0	0	0	0	**8**	
2215 - 2230	0	4	1	0	0	0	0	0	0	0	0	0	0	**5**	
2230 - 2245	0	0	0	0	0	0	0	0	0	0	0	0	0	**0**	
2245 - 2300	0	4	0	0	0	0	0	0	0	0	0	0	0	**4**	**17**
2300 - 2315	0	1	0	0	0	0	0	0	0	0	0	0	0	**1**	
2315 - 2330	0	0	0	0	0	0	0	0	0	0	0	0	0	**0**	
2330 - 2345	0	1	0	0	0	0	0	0	0	0	0	0	0	**1**	
2345 - 0000	0	0	0	0	0	0	0	0	0	0	0	0	0	**0**	**2**

Session Total	1	74	10	0	5	0	0	0	1	0	0	0	0	**91**
Session Average	0.01	0.77	0.10	0.00	0.05	0.00	0.00	0.00	0.01	0.00	0.00	0.00	0.00	**0.95**
Session Percentage	1.10	81.32	10.99	0.00	5.49	0.00	0.00	0.00	1.10	0.00	0.00	0.00	0.00	

AM Peak Hour	-	-	-	-	-	-	-	-	-	-	-	-	-	**-**
AM Peak Volume	0	0	0	0	0	0	0	0	0	0	0	0	0	**0**

Noon Peak Hour	-	-	-	-	-	-	-	-	-	-	-	-	-	**-**
Noon Peak Volume	0	0	0	0	0	0	0	0	0	0	0	0	0	**0**

PM Peak Hour	-	1945 - 2045	1915 - 2015	-	-	-	-	-	1930 - 2030	-	-	-	-	**1945 - 2045**
PM Peak Volume	0	25	6	0	0	0	0	0	1	0	0	0	0	**29**

Site 24
I-26 James F. Byrnes Expy On/Off-Ramp,
south of SC-60 Lake Murray Blvd

Date
Wednesday, April 24, 2024

Lat/Long
34.089516°, -81.166130°

Weather
Fair
66°F

Click here for Detailed Weather

0000 - 2400 (Weekday 24h Session) (04-24-2024)
NB EB 15min

	Northbound (Movement 24.1)													15min	60min
Time	1	2	3	4	5	6	7	8	9	10	11	12	13	Total	Total
0000 - 0015	0	1	0	0	0	0	0	0	0	0	0	0	0	**1**	
0015 - 0030	0	0	0	0	0	0	0	0	0	0	0	0	0	**0**	
0030 - 0045	0	1	0	0	0	0	0	0	0	0	0	0	0	**1**	
0045 - 0100	0	1	0	0	0	0	0	0	0	0	0	0	0	**1**	**3**
0100 - 0115	0	0	0	0	0	0	0	0	0	0	0	0	0	**0**	
0115 - 0130	0	0	0	0	0	0	0	0	0	0	0	0	0	**0**	
0130 - 0145	0	2	0	0	0	0	0	0	0	0	0	0	0	**2**	
0145 - 0200	0	0	0	0	0	0	0	0	0	0	0	0	0	**0**	**2**
0200 - 0215	0	0	0	0	0	0	0	0	0	0	0	0	0	**0**	
0215 - 0230	0	0	0	0	0	0	0	0	0	0	0	0	0	**0**	
0230 - 0245	0	0	0	0	0	0	0	0	0	0	0	0	0	**0**	
0245 - 0300	0	0	0	0	0	0	0	0	0	0	0	0	0	**0**	**0**
0300 - 0315	0	1	0	0	0	0	0	0	0	0	0	0	0	**1**	
0315 - 0330	0	1	0	0	0	0	0	0	0	0	0	0	0	**1**	
0330 - 0345	0	0	0	0	0	0	0	0	0	0	0	0	0	**0**	
0345 - 0400	0	1	0	0	0	0	0	0	0	0	0	0	0	**1**	**3**
0400 - 0415	0	1	0	0	0	0	0	0	0	0	0	0	0	**1**	
0415 - 0430	0	0	0	0	0	0	0	0	0	0	0	0	0	**0**	
0430 - 0445	0	0	0	0	0	0	0	0	0	0	0	0	0	**0**	
0445 - 0500	0	2	0	0	0	0	0	0	0	0	0	0	0	**2**	**3**
0500 - 0515	0	0	1	0	0	0	0	0	0	0	0	0	0	**1**	
0515 - 0530	0	5	0	0	0	0	0	0	0	0	0	0	0	**5**	
0530 - 0545	0	3	0	0	0	0	0	0	0	0	0	0	0	**3**	
0545 - 0600	0	7	2	0	0	0	0	0	0	0	0	0	0	**9**	**18**
0600 - 0615	0	7	3	0	0	0	0	0	0	0	0	0	0	**10**	
0615 - 0630	0	8	1	0	0	0	0	0	0	0	0	0	0	**9**	
0630 - 0645	0	15	5	0	0	0	0	0	0	0	0	0	0	**20**	
0645 - 0700	1	14	2	0	0	0	0	0	0	0	0	0	0	**17**	**56**
0700 - 0715	0	14	8	0	0	0	0	0	0	0	0	0	0	**22**	
0715 - 0730	0	31	9	0	0	0	0	0	0	0	0	0	0	**40**	
0730 - 0745	0	54	20	0	0	0	0	0	0	0	0	0	0	**74**	
0745 - 0800	0	63	13	0	1	0	0	0	1	0	0	0	0	**78**	**214**
0800 - 0815	0	44	14	1	1	0	0	0	1	0	0	0	0	**61**	
0815 - 0830	0	20	9	0	1	0	0	0	0	0	0	0	0	**30**	
0830 - 0845	0	26	1	0	0	0	0	0	0	0	0	0	0	**27**	
0845 - 0900	0	32	9	0	0	0	0	0	0	0	0	0	0	**41**	**159**
0900 - 0915	0	19	3	0	1	0	0	0	0	0	0	0	0	**23**	
0915 - 0930	0	12	6	0	0	0	0	0	0	0	0	0	0	**18**	
0930 - 0945	0	19	4	0	1	0	0	0	0	0	0	0	0	**24**	
0945 - 1000	0	14	7	0	0	0	0	0	0	0	0	0	0	**21**	**86**
1000 - 1015	0	15	5	0	0	0	0	0	0	0	0	0	0	**20**	
1015 - 1030	0	10	0	0	0	0	0	0	0	0	0	0	0	**10**	
1030 - 1045	0	7	0	0	0	0	0	0	0	0	0	0	0	**7**	
1045 - 1100	0	13	6	0	0	0	0	0	0	0	0	0	0	**19**	**56**
1100 - 1115	0	7	1	0	0	0	0	0	0	0	0	0	0	**8**	
1115 - 1130	0	2	0	0	0	0	0	0	0	0	0	0	0	**2**	
1130 - 1145	1	6	5	0	0	0	0	0	0	0	0	0	0	**12**	
1145 - 1200	0	8	2	0	0	0	0	0	0	0	0	0	0	**10**	**32**
1200 - 1215	0	9	1	0	1	0	0	0	0	0	0	0	0	**11**	
1215 - 1230	0	9	1	0	0	0	0	0	0	0	0	0	0	**10**	
1230 - 1245	0	10	2	0	0	0	0	0	0	0	0	0	0	**12**	
1245 - 1300	1	7	1	0	0	0	0	0	0	0	0	0	0	**9**	**42**
1300 - 1315	0	11	3	0	1	0	0	0	0	0	0	0	0	**15**	
1315 - 1330	0	11	0	0	0	1	0	0	0	0	0	0	0	**12**	
1330 - 1345	0	10	2	0	0	0	0	0	0	0	0	0	0	**12**	
1345 - 1400	0	5	2	0	0	0	0	0	0	0	0	0	0	**7**	**46**
1400 - 1415	0	9	1	0	0	0	0	0	0	0	0	0	0	**10**	
1415 - 1430	0	12	2	0	0	0	0	0	0	0	0	0	0	**14**	
1430 - 1445	0	2	1	0	0	0	0	0	0	0	0	0	0	**3**	
1445 - 1500	0	12	2	0	1	0	0	0	0	0	0	0	0	**15**	**42**
1500 - 1515	0	17	2	0	0	0	0	0	0	0	0	0	0	**19**	
1515 - 1530	0	8	2	0	0	0	0	0	0	0	0	0	0	**10**	
1530 - 1545	0	12	1	0	0	0	0	0	0	0	0	0	0	**13**	
1545 - 1600	0	7	1	0	0	0	0	0	0	0	0	0	0	**8**	**50**
1600 - 1615	0	13	1	0	0	0	0	0	0	0	0	0	0	**14**	
1615 - 1630	0	11	3	0	0	0	0	0	0	0	0	0	0	**14**	
1630 - 1645	0	7	3	0	0	0	0	0	0	0	0	0	0	**10**	
1645 - 1700	0	9	2	0	0	0	0	0	1	0	0	0	0	**12**	**50**
1700 - 1715	0	6	4	0	0	0	1	0	0	0	0	0	0	**11**	
1715 - 1730	0	20	5	0	1	0	0	0	0	0	0	0	0	**26**	
1730 - 1745	0	13	0	0	0	0	0	0	0	0	0	0	0	**13**	
1745 - 1800	0	18	2	0	0	0	1	0	0	0	0	0	0	**21**	**71**
1800 - 1815	0	12	5	0	0	0	0	0	0	0	0	0	0	**17**	
1815 - 1830	0	18	4	0	0	0	0	1	0	0	0	0	0	**23**	
1830 - 1845	0	4	2	0	0	0	0	0	0	0	0	0	0	**6**	
1845 - 1900	0	14	1	0	0	0	0	0	0	0	0	0	0	**15**	**61**
1900 - 1915	0	6	1	0	0	0	0	0	0	0	0	0	0	**7**	
1915 - 1930	0	4	4	0	0	0	0	0	0	0	0	0	0	**8**	
1930 - 1945	0	3	0	0	0	0	0	0	0	0	0	0	0	**3**	
1945 - 2000	0	6	1	0	0	0	0	0	0	0	0	0	0	**7**	**25**
2000 - 2015	0	1	1	0	0	0	0	0	0	0	0	0	0	**2**	
2015 - 2030	0	5	2	0	0	0	0	0	0	0	0	0	0	**7**	
2030 - 2045	0	4	0	0	0	0	0	0	0	0	0	0	0	**4**	
2045 - 2100	0	4	0	0	0	0	0	0	0	0	0	0	0	**4**	**17**
2100 - 2115	0	1	0	0	0	0	0	0	0	0	0	0	0	**1**	
2115 - 2130	0	1	0	0	0	0	0	0	0	0	0	0	0	**1**	
2130 - 2145	0	3	1	0	0	0	0	0	0	0	0	0	0	**4**	
2145 - 2200	0	1	0	0	0	0	0	0	0	0	0	0	0	**1**	**7**
2200 - 2215	0	3	0	0	0	0	0	0	0	0	0	0	0	**3**	
2215 - 2230	0	1	1	0	0	0	0	0	0	0	0	0	0	**2**	
2230 - 2245	0	0	0	0	0	0	0	0	0	0	0	0	0	**0**	
2245 - 2300	0	4	0	0	0	0	0	0	0	0	0	0	0	**4**	**9**
2300 - 2315	0	2	0	0	0	0	0	0	0	0	0	0	0	**2**	
2315 - 2330	0	1	0	0	0	0	0	0	0	0	0	0	0	**1**	
2330 - 2345	0	1	0	0	0	0	0	0	0	0	0	0	0	**1**	
2345 - 0000	0	1	1	0	1	0	0	0	0	0	0	0	0	**3**	**7**

Session Total	3	834	204	1	10	1	2	1	3	0	0	0	0	**1059**
Session Average	0.03	8.69	2.13	0.01	0.10	0.01	0.02	0.01	0.03	0.00	0.00	0.00	0.00	**11.03**
Session Percentage	0.28	78.75	19.26	0.09	0.94	0.09	0.19	0.09	0.28	0.00	0.00	0.00	0.00	

AM Peak Hour	0600 - 0700	0715 - 0815	0715 - 0815	0715 - 0815	0730 - 0830	-	-	-	0715 - 0815	-	-	-	-	**0715 - 0815**
AM Peak Volume	1	192	56	1	3	0	0	0	2	0	0	0	0	**253**

Noon Peak Hour	1045 - 1145	1445 - 1545	1045 - 1145	-	1115 - 1215	1230 - 1330	-	-	-	-	-	-	-	**1445 - 1545**
Noon Peak Volume	1	49	12	0	1	1	0	0	0	0	0	0	0	**57**

PM Peak Hour	-	1715 - 1815	1630 - 1730	-	1630 - 1730	-	1700 - 1800	1730 - 1830	1600 - 1700	-	-	-	-	**1715 - 1815**
PM Peak Volume	0	63	14	0	1	0	2	1	1	0	0	0	0	**77**

Site 24
I-26 James F. Byrnes Expy On/Off-Ramp,
south of SC-60 Lake Murray Blvd

Date
Thursday, April 25, 2024

Lat/Long
34.089516°, -81.166130°

Weather
Fair
67°F

Click here for Detailed Weather

0000 - 2400 (Weekday 24h Session) (04-25-2024)
NB EB 15min

	Northbound (Movement 24.1)													15min	60min
TIME	1	2	3	4	5	6	7	8	9	10	11	12	13	Total	Total
0000 - 0015	0	0	0	0	0	0	0	0	0	0	0	0	0	**0**	
0015 - 0030	0	0	0	0	0	0	0	0	0	0	0	0	0	**0**	
0030 - 0045	0	0	0	0	0	0	0	0	0	0	0	0	0	**0**	
0045 - 0100	0	0	0	0	0	0	0	0	0	0	0	0	0	**0**	**0**
0100 - 0115	0	0	0	0	0	0	0	0	0	0	0	0	0	**0**	
0115 - 0130	0	0	0	0	0	0	0	0	0	0	0	0	0	**0**	
0130 - 0145	0	0	0	0	0	0	0	0	0	0	0	0	0	**0**	
0145 - 0200	0	0	0	0	0	0	0	0	0	0	0	0	0	**0**	**0**
0200 - 0215	0	0	0	0	0	0	0	0	0	0	0	0	0	**0**	
0215 - 0230	0	0	0	0	0	0	0	0	0	0	0	0	0	**0**	
0230 - 0245	0	0	0	0	0	0	0	0	0	0	0	0	0	**0**	
0245 - 0300	0	0	0	0	0	0	0	0	0	0	0	0	0	**0**	**0**
0300 - 0315	0	0	0	0	0	0	0	0	0	0	0	0	0	**0**	
0315 - 0330	0	0	0	0	0	0	0	0	0	0	0	0	0	**0**	
0330 - 0345	0	0	0	0	0	0	0	0	0	0	0	0	0	**0**	
0345 - 0400	0	0	0	0	0	0	0	0	0	0	0	0	0	**0**	**0**
0400 - 0415	0	4	0	0	0	0	0	0	0	0	0	0	0	**4**	
0415 - 0430	0	1	0	0	0	0	0	0	0	0	0	0	0	**1**	
0430 - 0445	0	3	0	0	0	0	0	0	0	0	0	0	0	**3**	
0445 - 0500	0	0	0	0	0	0	0	0	0	0	0	0	0	**0**	**8**
0500 - 0515	0	3	0	0	0	0	0	0	0	0	0	0	0	**3**	
0515 - 0530	0	1	0	0	0	0	0	0	0	0	0	0	0	**1**	
0530 - 0545	0	4	0	0	0	0	0	0	0	0	0	0	0	**4**	
0545 - 0600	0	6	3	0	0	0	0	0	0	0	0	0	0	**9**	**17**
0600 - 0615	0	6	2	0	0	0	0	0	0	0	0	0	0	**8**	
0615 - 0630	0	10	4	0	0	0	0	0	0	0	0	0	0	**14**	
0630 - 0645	0	13	8	0	0	0	0	0	0	0	0	0	0	**21**	
0645 - 0700	0	13	4	0	0	0	0	0	0	0	0	0	0	**17**	**60**
0700 - 0715	0	13	8	0	0	0	0	0	0	0	0	0	0	**21**	
0715 - 0730	0	38	4	0	0	0	0	0	1	0	0	0	0	**43**	
0730 - 0745	0	51	14	0	0	0	0	0	0	0	0	0	0	**65**	
0745 - 0800	0	59	12	0	0	0	0	0	0	0	0	0	0	**71**	**200**
0800 - 0815	0	47	9	0	0	0	0	0	1	0	0	0	0	**57**	
0815 - 0830	0	40	10	0	0	0	0	0	0	0	0	0	0	**50**	
0830 - 0845	0	42	9	0	0	0	2	0	0	0	0	0	0	**53**	
0845 - 0900	0	23	9	0	0	0	0	0	0	0	0	0	0	**32**	**192**
0900 - 0915	0	17	7	0	0	0	0	0	0	0	0	0	0	**24**	
0915 - 0930	0	13	7	0	0	0	0	0	0	0	0	0	0	**20**	
0930 - 0945	0	12	3	0	0	0	0	0	0	0	0	0	0	**15**	
0945 - 1000	0	8	0	0	0	0	0	0	0	0	0	0	0	**8**	**67**
1000 - 1015	0	8	7	0	0	0	0	0	0	0	0	0	0	**15**	
1015 - 1030	0	7	3	0	0	0	0	0	0	0	0	0	0	**10**	
1030 - 1045	0	5	4	0	0	0	0	0	0	0	0	0	0	**9**	
1045 - 1100	0	8	3	0	0	0	0	0	0	0	0	0	0	**11**	**45**
1100 - 1115	0	7	3	0	0	0	0	0	1	0	0	0	0	**11**	
1115 - 1130	0	8	1	0	0	0	0	0	0	0	0	0	0	**9**	
1130 - 1145	0	7	1	0	0	0	0	0	0	0	0	0	0	**8**	
1145 - 1200	0	11	4	0	0	0	0	0	0	0	0	0	0	**15**	**43**
1200 - 1215	0	7	5	0	0	0	0	0	0	0	0	0	0	**12**	
1215 - 1230	0	10	3	0	0	0	0	0	0	0	0	0	0	**13**	
1230 - 1245	0	9	5	0	0	0	0	0	0	0	0	0	0	**14**	
1245 - 1300	0	13	3	0	0	0	0	0	0	0	0	0	0	**16**	**55**
1300 - 1315	0	9	3	0	0	0	0	0	0	0	0	0	0	**12**	
1315 - 1330	0	7	4	0	1	0	0	0	0	0	0	0	0	**12**	
1330 - 1345	0	8	3	0	0	0	0	0	0	0	0	0	0	**11**	
1345 - 1400	0	8	6	0	0	0	0	0	0	0	0	0	0	**14**	**49**
1400 - 1415	0	8	2	0	0	0	0	0	0	0	0	0	0	**10**	
1415 - 1430	0	8	7	0	0	0	0	0	0	0	0	0	0	**15**	
1430 - 1445	0	5	6	0	0	0	0	0	0	0	0	0	0	**11**	
1445 - 1500	0	7	1	0	0	0	0	1	0	0	0	0	0	**9**	**45**
1500 - 1515	0	5	5	0	0	0	0	0	0	0	0	0	0	**10**	
1515 - 1530	0	8	1	0	0	0	0	0	0	0	0	0	0	**9**	
1530 - 1545	0	10	2	0	0	0	0	0	0	0	0	0	0	**12**	
1545 - 1600	0	16	2	0	0	0	0	0	1	0	0	0	0	**19**	**50**
1600 - 1615	0	9	5	0	0	0	0	0	0	0	0	0	0	**14**	
1615 - 1630	0	10	5	0	0	0	0	0	0	0	0	0	0	**15**	
1630 - 1645	0	5	2	0	0	0	0	0	0	0	0	0	0	**7**	
1645 - 1700	0	4	7	0	1	0	0	0	0	0	0	0	0	**12**	**48**
1700 - 1715	0	6	3	0	1	0	0	0	0	0	0	0	0	**10**	
1715 - 1730	0	9	3	0	1	0	0	0	0	0	0	0	0	**13**	
1730 - 1745	0	12	6	0	0	0	0	0	0	0	0	0	0	**18**	
1745 - 1800	0	7	5	0	1	0	0	1	0	0	0	0	0	**14**	**55**
1800 - 1815	0	13	2	0	0	0	0	0	0	0	0	0	0	**15**	
1815 - 1830	0	6	3	0	0	0	0	0	0	0	0	0	0	**9**	
1830 - 1845	0	12	2	0	0	0	0	0	0	0	0	0	0	**14**	
1845 - 1900	0	8	3	1	0	0	0	0	0	0	0	0	0	**12**	**50**
1900 - 1915	0	0	0	0	0	0	0	0	0	0	0	0	0	**0**	
1915 - 1930	0	0	0	0	0	0	0	0	0	0	0	0	0	**0**	
1930 - 1945	0	0	0	0	0	0	0	0	0	0	0	0	0	**0**	
1945 - 2000	0	0	0	0	0	0	0	0	0	0	0	0	0	**0**	**0**
2000 - 2015	0	0	0	0	0	0	0	0	0	0	0	0	0	**0**	
2015 - 2030	0	0	0	0	0	0	0	0	0	0	0	0	0	**0**	
2030 - 2045	0	0	0	0	0	0	0	0	0	0	0	0	0	**0**	
2045 - 2100	0	0	0	0	0	0	0	0	0	0	0	0	0	**0**	**0**
2100 - 2115	0	0	0	0	0	0	0	0	0	0	0	0	0	**0**	
2115 - 2130	0	0	0	0	0	0	0	0	0	0	0	0	0	**0**	
2130 - 2145	0	0	0	0	0	0	0	0	0	0	0	0	0	**0**	
2145 - 2200	0	0	0	0	0	0	0	0	0	0	0	0	0	**0**	**0**
2200 - 2215	0	0	0	0	0	0	0	0	0	0	0	0	0	**0**	
2215 - 2230	0	0	0	0	0	0	0	0	0	0	0	0	0	**0**	
2230 - 2245	0	0	0	0	0	0	0	0	0	0	0	0	0	**0**	
2245 - 2300	0	0	0	0	0	0	0	0	0	0	0	0	0	**0**	**0**
2300 - 2315	0	0	0	0	0	0	0	0	0	0	0	0	0	**0**	
2315 - 2330	0	0	0	0	0	0	0	0	0	0	0	0	0	**0**	
2330 - 2345	0	0	0	0	0	0	0	0	0	0	0	0	0	**0**	
2345 - 0000	0	0	0	0	0	0	0	0	0	0	0	0	0	**0**	**0**

Session Total	0	727	243	1	5	0	2	2	4	0	0	0	0	**984**
Session Average	0.00	7.57	2.53	0.01	0.05	0.00	0.02	0.02	0.04	0.00	0.00	0.00	0.00	**10.25**
Session Percentage	0.00	73.88	24.70	0.10	0.51	0.00	0.20	0.20	0.41	0.00	0.00	0.00	0.00	

AM Peak Hour	-	0730 - 0830	0730 - 0830	-	-	-	0745 - 0845	-	0715 - 0815	-	-	-	-	**0730 - 0830**
AM Peak Hour Volume	0	197	45	0	0	0	2	0	2	0	0	0	0	**243**

Noon Peak Hour	-	1215 - 1315	1345 - 1445	-	1230 - 1330	-	-	1400 - 1500	1015 - 1115	-	-	-	-	**1200 - 1300**
Noon Peak Hour Volume	0	41	21	0	1	0	0	1	1	0	0	0	0	**55**

PM Peak Hour	-	1530 - 1630	1600 - 1700	1800 - 1900	1630 - 1730	-	-	1700 - 1800	1500 - 1600	-	-	-	-	**1530 - 1630**
PM Peak Hour Volume	0	45	19	1	3	0	0	1	1	0	0	0	0	**60**

Bi-Directional Class Count || NB EB Average 15min

Columbia, SC

Marr Traffic DATA COLLECTION
www.marrtraffic.com

Site 24
I-26 James F. Byrnes Expy On/Off-Ramp,
south of SC-60 Lake Murray Blvd

Date
Tuesday, April 23, 2024

Lat/Long
34.089516°, -81.166130°

Weather
Fair
58°F

0000 - 2400 (Weekday 24h Session) (All Dates)
NB EB Average 15min

	NB EB Average 15min													15min	60min
Time	1	2	3	4	5	6	7	8	9	10	11	12	13	Total	Total
0000 - 0015	0	0	0	0	0	0	0	0	0	0	0	0	0	**0**	
0015 - 0030	0	0	0	0	0	0	0	0	0	0	0	0	0	**0**	
0030 - 0045	0	0	0	0	0	0	0	0	0	0	0	0	0	**0**	
0045 - 0100	0	0	0	0	0	0	0	0	0	0	0	0	0	**0**	**1**
0100 - 0115	0	0	0	0	0	0	0	0	0	0	0	0	0	**0**	
0115 - 0130	0	0	0	0	0	0	0	0	0	0	0	0	0	**0**	
0130 - 0145	0	1	0	0	0	0	0	0	0	0	0	0	0	**1**	
0145 - 0200	0	0	0	0	0	0	0	0	0	0	0	0	0	**0**	**1**
0200 - 0215	0	0	0	0	0	0	0	0	0	0	0	0	0	**0**	
0215 - 0230	0	0	0	0	0	0	0	0	0	0	0	0	0	**0**	
0230 - 0245	0	0	0	0	0	0	0	0	0	0	0	0	0	**0**	
0245 - 0300	0	0	0	0	0	0	0	0	0	0	0	0	0	**0**	**0**
0300 - 0315	0	0	0	0	0	0	0	0	0	0	0	0	0	**0**	
0315 - 0330	0	0	0	0	0	0	0	0	0	0	0	0	0	**0**	
0330 - 0345	0	0	0	0	0	0	0	0	0	0	0	0	0	**0**	
0345 - 0400	0	0	0	0	0	0	0	0	0	0	0	0	0	**0**	**1**
0400 - 0415	0	2	0	0	0	0	0	0	0	0	0	0	0	**2**	
0415 - 0430	0	0	0	0	0	0	0	0	0	0	0	0	0	**0**	
0430 - 0445	0	1	0	0	0	0	0	0	0	0	0	0	0	**1**	
0445 - 0500	0	1	0	0	0	0	0	0	0	0	0	0	0	**1**	**4**
0500 - 0515	0	1	0	0	0	0	0	0	0	0	0	0	0	**1**	
0515 - 0530	0	2	0	0	0	0	0	0	0	0	0	0	0	**2**	
0530 - 0545	0	2	0	0	0	0	0	0	0	0	0	0	0	**2**	
0545 - 0600	0	4	2	0	0	0	0	0	0	0	0	0	0	**6**	**12**
0600 - 0615	0	4	2	0	0	0	0	0	0	0	0	0	0	**6**	
0615 - 0630	0	6	2	0	0	0	0	0	0	0	0	0	0	**8**	
0630 - 0645	0	9	4	0	0	0	0	0	0	0	0	0	0	**14**	
0645 - 0700	0	9	2	0	0	0	0	0	0	0	0	0	0	**11**	**39**
0700 - 0715	0	9	5	0	0	0	0	0	0	0	0	0	0	**14**	
0715 - 0730	0	23	4	0	0	0	0	0	0	0	0	0	0	**28**	
0730 - 0745	0	35	11	0	0	0	0	0	0	0	0	0	0	**46**	
0745 - 0800	0	41	8	0	0	0	0	0	0	0	0	0	0	**50**	**138**
0800 - 0815	0	30	8	0	0	0	0	0	1	0	0	0	0	**39**	
0815 - 0830	0	20	6	0	0	0	0	0	0	0	0	0	0	**27**	
0830 - 0845	0	23	3	0	0	0	1	0	0	0	0	0	0	**27**	
0845 - 0900	0	18	6	0	0	0	0	0	0	0	0	0	0	**24**	**117**
0900 - 0915	0	12	3	0	0	0	0	0	0	0	0	0	0	**16**	
0915 - 0930	0	8	4	0	0	0	0	0	0	0	0	0	0	**13**	
0930 - 0945	0	10	2	0	0	0	0	0	0	0	0	0	0	**13**	
0945 - 1000	0	7	2	0	0	0	0	0	0	0	0	0	0	**10**	**51**
1000 - 1015	0	8	4	0	0	0	0	0	0	0	0	0	0	**12**	
1015 - 1030	0	6	1	0	0	0	0	0	0	0	0	0	0	**7**	
1030 - 1045	0	4	1	0	0	0	0	0	0	0	0	0	0	**5**	
1045 - 1100	0	7	3	0	0	0	0	0	0	0	0	0	0	**10**	**34**
1100 - 1115	0	5	1	0	0	0	0	0	0	0	0	0	0	**6**	
1115 - 1130	0	3	0	0	0	0	0	0	0	0	0	0	0	**4**	
1130 - 1145	0	4	2	0	0	0	0	0	0	0	0	0	0	**7**	
1145 - 1200	0	6	2	0	0	0	0	0	0	0	0	0	0	**8**	**25**
1200 - 1215	0	5	2	0	0	0	0	0	0	0	0	0	0	**8**	
1215 - 1230	0	6	1	0	0	0	0	0	0	0	0	0	0	**8**	
1230 - 1245	0	6	2	0	0	0	0	0	0	0	0	0	0	**9**	
1245 - 1300	0	7	1	0	0	0	0	0	0	0	0	0	0	**8**	**32**
1300 - 1315	0	7	2	0	0	0	0	0	0	0	0	0	0	**9**	
1315 - 1330	0	6	1	0	0	0	0	0	0	0	0	0	0	**8**	
1330 - 1345	0	6	2	0	0	0	0	0	0	0	0	0	0	**8**	
1345 - 1400	0	4	3	0	0	0	0	0	0	0	0	0	0	**7**	**32**
1400 - 1415	0	6	1	0	0	0	0	0	0	0	0	0	0	**7**	
1415 - 1430	0	7	3	0	0	0	0	0	0	0	0	0	0	**10**	
1430 - 1445	0	2	2	0	0	0	0	0	0	0	0	0	0	**5**	
1445 - 1500	0	6	1	0	0	0	0	0	0	0	0	0	0	**8**	**29**
1500 - 1515	0	7	2	0	0	0	0	0	0	0	0	0	0	**10**	
1515 - 1530	0	5	1	0	0	0	0	0	0	0	0	0	0	**6**	
1530 - 1545	0	7	1	0	0	0	0	0	0	0	0	0	0	**8**	
1545 - 1600	0	8	1	0	0	0	0	0	0	0	0	0	0	**9**	**33**
1600 - 1615	0	7	2	0	0	0	0	0	0	0	0	0	0	**9**	
1615 - 1630	0	7	3	0	0	0	0	0	0	0	0	0	0	**10**	
1630 - 1645	0	4	2	0	0	0	0	0	0	0	0	0	0	**6**	
1645 - 1700	0	4	3	0	0	0	0	0	0	0	0	0	0	**8**	**33**
1700 - 1715	0	4	2	0	0	0	0	0	0	0	0	0	0	**7**	
1715 - 1730	0	10	3	0	1	0	0	0	0	0	0	0	0	**13**	
1730 - 1745	0	8	2	0	0	0	0	0	0	0	0	0	0	**10**	
1745 - 1800	0	8	2	0	0	0	0	0	0	0	0	0	0	**12**	**42**
1800 - 1815	0	8	2	0	0	0	0	0	0	0	0	0	0	**11**	
1815 - 1830	0	8	2	0	0	0	0	0	0	0	0	0	0	**11**	
1830 - 1845	0	5	1	0	0	0	0	0	0	0	0	0	0	**7**	
1845 - 1900	0	7	1	0	0	0	0	0	0	0	0	0	0	**9**	**37**
1900 - 1915	0	4	0	0	0	0	0	0	0	0	0	0	0	**5**	
1915 - 1930	0	3	2	0	0	0	0	0	0	0	0	0	0	**5**	
1930 - 1945	0	3	0	0	0	0	0	0	0	0	0	0	0	**3**	
1945 - 2000	0	4	0	0	0	0	0	0	0	0	0	0	0	**5**	**17**
2000 - 2015	0	2	1	0	0	0	0	0	0	0	0	0	0	**3**	
2015 - 2030	0	3	1	0	0	0	0	0	0	0	0	0	0	**5**	
2030 - 2045	0	4	0	0	0	0	0	0	0	0	0	0	0	**4**	
2045 - 2100	0	3	0	0	2	0	0	0	0	0	0	0	0	**4**	**16**
2100 - 2115	0	1	0	0	0	0	0	0	0	0	0	0	0	**2**	
2115 - 2130	0	1	0	0	0	0	0	0	0	0	0	0	0	**1**	
2130 - 2145	0	3	0	0	0	0	0	0	0	0	0	0	0	**3**	
2145 - 2200	0	1	0	0	0	0	0	0	0	0	0	0	0	**1**	**7**
2200 - 2215	0	3	1	0	0	0	0	0	0	0	0	0	0	**4**	
2215 - 2230	0	2	1	0	0	0	0	0	0	0	0	0	0	**2**	
2230 - 2245	0	0	0	0	0	0	0	0	0	0	0	0	0	**0**	
2245 - 2300	0	3	0	0	0	0	0	0	0	0	0	0	0	**3**	**9**
2300 - 2315	0	1	0	0	0	0	0	0	0	0	0	0	0	**1**	
2315 - 2330	0	0	0	0	0	0	0	0	0	0	0	0	0	**0**	
2330 - 2345	0	1	0	0	0	0	0	0	0	0	0	0	0	**1**	
2345 - 0000	0	0	0	0	0	0	0	0	0	0	0	0	0	**1**	**3**

Session Total	1	545	152	1	7	0	1	1	3	0	0	0	0	**711**
Session Average	0.01	5.68	1.59	0.01	0.07	0.00	0.01	0.01	0.03	0.00	0.00	0.00	0.00	**7.41**
Session Percentage	0.19	76.62	21.42	0.09	0.94	0.05	0.19	0.14	0.37	0.00	0.00	0.00	0.00	

AM Peak Hour	0600 - 0700	0715 - 0815	0730 - 0830	0715 - 0815	0730 - 0830	-	0745 - 0845	-	0715 - 0815	-	-	-	-	**0715 - 0815**
AM Peak Volume	0	129	34	0	1	0	1	0	1	0	0	0	0	**163**

Noon Peak Hour	1045 - 1145	1445 - 1545	1000 - 1100	-	1230 - 1330	1230 - 1330	-	1400 - 1500	1015 - 1115	-	-	-	-	**1230 - 1330**
Noon Peak Volume	0	26	9	0	1	0	0	0	0	0	0	0	0	**34**

PM Peak Hour	-	1715 - 1815	1645 - 1745	1800 - 1900	1630 - 1730	-	1700 - 1800	1730 - 1830	1500 - 1600	-	-	-	-	**1715 - 1815**
PM Peak Volume	0	35	10	0	1	0	1	1	0	0	0	0	0	**46**

Bi-Directional Class Count || Volume Summary 15min

Columbia, SC

Marr Traffic DATA COLLECTION

www.marrtraffic.com

Site 24

I-26 James F. Byrnes Expy On/Off-Ramp,
south of SC-60 Lake Murray Blvd

Date

Tuesday, April 23, 2024

Lat/Long

34.089516°, -81.166130°

Weather

Fair
58°F

Click here for Detailed Weather

0000 - 2400 (Weekday 24h Session) (04-23-2024)

Volume Summary 15min

TIME	Volume Summary 15min		15min Total	60min Total
	NB	SB		
0000 - 0015	0	0	**0**	
0015 - 0030	0	0	**0**	
0030 - 0045	0	0	**0**	
0045 - 0100	0	0	**0**	**0**
0100 - 0115	0	0	**0**	
0115 - 0130	0	0	**0**	
0130 - 0145	0	0	**0**	
0145 - 0200	0	0	**0**	**0**
0200 - 0215	0	0	**0**	
0215 - 0230	0	0	**0**	
0230 - 0245	0	0	**0**	
0245 - 0300	0	0	**0**	**0**
0300 - 0315	0	0	**0**	
0315 - 0330	0	0	**0**	
0330 - 0345	0	0	**0**	
0345 - 0400	0	0	**0**	**0**
0400 - 0415	0	0	**0**	
0415 - 0430	0	0	**0**	
0430 - 0445	0	0	**0**	
0445 - 0500	0	0	**0**	**0**
0500 - 0515	0	0	**0**	
0515 - 0530	0	0	**0**	
0530 - 0545	0	0	**0**	
0545 - 0600	0	0	**0**	**0**
0600 - 0615	0	0	**0**	
0615 - 0630	0	0	**0**	
0630 - 0645	0	0	**0**	
0645 - 0700	0	0	**0**	**0**
0700 - 0715	0	0	**0**	
0715 - 0730	0	0	**0**	
0730 - 0745	0	0	**0**	
0745 - 0800	0	0	**0**	**0**
0800 - 0815	0	0	**0**	
0815 - 0830	0	0	**0**	
0830 - 0845	0	0	**0**	
0845 - 0900	0	0	**0**	**0**
0900 - 0915	0	0	**0**	
0915 - 0930	0	0	**0**	
0930 - 0945	0	0	**0**	
0945 - 1000	0	0	**0**	**0**
1000 - 1015	0	0	**0**	
1015 - 1030	0	0	**0**	
1030 - 1045	0	0	**0**	
1045 - 1100	0	0	**0**	**0**
1100 - 1115	0	0	**0**	
1115 - 1130	0	0	**0**	
1130 - 1145	0	0	**0**	
1145 - 1200	0	0	**0**	**0**

Time	Volume Summary 15min		15min Total	60min Total
	NB	SB		
1200 - 1215	0	0	**0**	
1215 - 1230	0	0	**0**	
1230 - 1245	0	0	**0**	
1245 - 1300	0	0	**0**	**0**
1300 - 1315	0	0	**0**	
1315 - 1330	0	0	**0**	
1330 - 1345	0	0	**0**	
1345 - 1400	0	0	**0**	**0**
1400 - 1415	0	0	**0**	
1415 - 1430	0	0	**0**	
1430 - 1445	0	0	**0**	
1445 - 1500	0	0	**0**	**0**
1500 - 1515	0	0	**0**	
1515 - 1530	0	0	**0**	
1530 - 1545	0	0	**0**	
1545 - 1600	0	0	**0**	**0**
1600 - 1615	0	0	**0**	
1615 - 1630	0	0	**0**	
1630 - 1645	0	0	**0**	
1645 - 1700	0	0	**0**	**0**
1700 - 1715	0	0	**0**	
1715 - 1730	0	0	**0**	
1730 - 1745	0	0	**0**	
1745 - 1800	0	0	**0**	**0**
1800 - 1815	0	0	**0**	
1815 - 1830	0	0	**0**	
1830 - 1845	0	0	**0**	
1845 - 1900	0	0	**0**	**0**
1900 - 1915	7	0	**7**	
1915 - 1930	7	0	**7**	
1930 - 1945	6	0	**6**	
1945 - 2000	7	0	**7**	**27**
2000 - 2015	7	0	**7**	
2015 - 2030	7	0	**7**	
2030 - 2045	8	0	**8**	
2045 - 2100	9	0	**9**	**31**
2100 - 2115	4	0	**4**	
2115 - 2130	2	0	**2**	
2130 - 2145	6	0	**6**	
2145 - 2200	2	0	**2**	**14**
2200 - 2215	8	0	**8**	
2215 - 2230	5	0	**5**	
2230 - 2245	0	0	**0**	
2245 - 2300	4	0	**4**	**17**
2300 - 2315	1	0	**1**	
2315 - 2330	0	0	**0**	
2330 - 2345	1	0	**1**	
2345 - 0000	0	0	**0**	**2**

Session Total	91	0	**91**
Session Average	0.95	0.00	**0.95**
Session Percentage	100.00	0.00	

Site 24

I-26 James F. Byrnes Expy On/Off-Ramp,
south of SC-60 Lake Murray Blvd

Date

Wednesday, April 24, 2024

Lat/Long

34.089516°, -81.166130°

Weather

Fair
66°F

Click here for Detailed Weather

0000 - 2400 (Weekday 24h Session) (04-24-2024)

Volume Summary 15min

TIME	Volume Summary 15min NB	SB	15min Total	60min Total
0000 - 0015	1	0	**1**	
0015 - 0030	0	0	**0**	
0030 - 0045	1	0	**1**	
0045 - 0100	1	0	**1**	**3**
0100 - 0115	0	0	**0**	
0115 - 0130	0	0	**0**	
0130 - 0145	2	0	**2**	
0145 - 0200	0	0	**0**	**2**
0200 - 0215	0	0	**0**	
0215 - 0230	0	0	**0**	
0230 - 0245	0	0	**0**	
0245 - 0300	0	0	**0**	**0**
0300 - 0315	1	0	**1**	
0315 - 0330	1	0	**1**	
0330 - 0345	0	0	**0**	
0345 - 0400	1	0	**1**	**3**
0400 - 0415	1	0	**1**	
0415 - 0430	0	0	**0**	
0430 - 0445	0	0	**0**	
0445 - 0500	2	0	**2**	**3**
0500 - 0515	1	0	**1**	
0515 - 0530	5	0	**5**	
0530 - 0545	3	0	**3**	
0545 - 0600	9	0	**9**	**18**
0600 - 0615	10	0	**10**	
0615 - 0630	9	0	**9**	
0630 - 0645	20	0	**20**	
0645 - 0700	17	0	**17**	**56**
0700 - 0715	22	0	**22**	
0715 - 0730	40	0	**40**	
0730 - 0745	74	0	**74**	
0745 - 0800	78	0	**78**	**214**
0800 - 0815	61	0	**61**	
0815 - 0830	30	0	**30**	
0830 - 0845	27	0	**27**	
0845 - 0900	41	0	**41**	**159**
0900 - 0915	23	0	**23**	
0915 - 0930	18	0	**18**	
0930 - 0945	24	0	**24**	
0945 - 1000	21	0	**21**	**86**
1000 - 1015	20	0	**20**	
1015 - 1030	10	0	**10**	
1030 - 1045	7	0	**7**	
1045 - 1100	19	0	**19**	**56**
1100 - 1115	8	0	**8**	
1115 - 1130	2	0	**2**	
1130 - 1145	12	0	**12**	
1145 - 1200	10	0	**10**	**32**

Time	Volume Summary 15min NB	SB	15min Total	60min Total
1200 - 1215	11	0	**11**	
1215 - 1230	10	0	**10**	
1230 - 1245	12	0	**12**	
1245 - 1300	9	0	**9**	**42**
1300 - 1315	15	0	**15**	
1315 - 1330	12	0	**12**	
1330 - 1345	12	0	**12**	
1345 - 1400	7	0	**7**	**46**
1400 - 1415	10	0	**10**	
1415 - 1430	14	0	**14**	
1430 - 1445	3	0	**3**	
1445 - 1500	15	0	**15**	**42**
1500 - 1515	19	0	**19**	
1515 - 1530	10	0	**10**	
1530 - 1545	13	0	**13**	
1545 - 1600	8	0	**8**	**50**
1600 - 1615	14	0	**14**	
1615 - 1630	14	0	**14**	
1630 - 1645	10	0	**10**	
1645 - 1700	12	0	**12**	**50**
1700 - 1715	11	0	**11**	
1715 - 1730	26	0	**26**	
1730 - 1745	13	0	**13**	
1745 - 1800	21	0	**21**	**71**
1800 - 1815	17	0	**17**	
1815 - 1830	23	0	**23**	
1830 - 1845	6	0	**6**	
1845 - 1900	15	0	**15**	**61**
1900 - 1915	7	0	**7**	
1915 - 1930	8	0	**8**	
1930 - 1945	3	0	**3**	
1945 - 2000	7	0	**7**	**25**
2000 - 2015	2	0	**2**	
2015 - 2030	7	0	**7**	
2030 - 2045	4	0	**4**	
2045 - 2100	4	0	**4**	**17**
2100 - 2115	1	0	**1**	
2115 - 2130	1	0	**1**	
2130 - 2145	4	0	**4**	
2145 - 2200	1	0	**1**	**7**
2200 - 2215	3	0	**3**	
2215 - 2230	2	0	**2**	
2230 - 2245	0	0	**0**	
2245 - 2300	4	0	**4**	**9**
2300 - 2315	2	0	**2**	
2315 - 2330	1	0	**1**	
2330 - 2345	1	0	**1**	
2345 - 0000	3	0	**3**	**7**

Session Total	1059	0	**1059**
Session Average	11.03	0.00	**11.03**
Session Percentage	100.00	0.00	

Site 24

I-26 James F. Byrnes Expy On/Off-Ramp,
south of SC-60 Lake Murray Blvd

Date

Thursday, April 25, 2024

Lat/Long

34.089516°, -81.166130°

Weather

Fair
67°F

Click here for Detailed Weather

0000 - 2400 (Weekday 24h Session) (04-25-2024)

Volume Summary 15min

TIME	Volume Summary 15min NB	SB	15min Total	60min Total
0000 - 0015	0	0	**0**	
0015 - 0030	0	0	**0**	
0030 - 0045	0	0	**0**	
0045 - 0100	0	0	**0**	**0**
0100 - 0115	0	0	**0**	
0115 - 0130	0	0	**0**	
0130 - 0145	0	0	**0**	
0145 - 0200	0	0	**0**	**0**
0200 - 0215	0	0	**0**	
0215 - 0230	0	0	**0**	
0230 - 0245	0	0	**0**	
0245 - 0300	0	0	**0**	**0**
0300 - 0315	0	0	**0**	
0315 - 0330	0	0	**0**	
0330 - 0345	0	0	**0**	
0345 - 0400	0	0	**0**	**0**
0400 - 0415	4	0	**4**	
0415 - 0430	1	0	**1**	
0430 - 0445	3	0	**3**	
0445 - 0500	0	0	**0**	**8**
0500 - 0515	3	0	**3**	
0515 - 0530	1	0	**1**	
0530 - 0545	4	0	**4**	
0545 - 0600	9	0	**9**	**17**
0600 - 0615	8	0	**8**	
0615 - 0630	14	0	**14**	
0630 - 0645	21	0	**21**	
0645 - 0700	17	0	**17**	**60**
0700 - 0715	21	0	**21**	
0715 - 0730	43	0	**43**	
0730 - 0745	65	0	**65**	
0745 - 0800	71	0	**71**	**200**
0800 - 0815	57	0	**57**	
0815 - 0830	50	0	**50**	
0830 - 0845	53	0	**53**	
0845 - 0900	32	0	**32**	**192**
0900 - 0915	24	0	**24**	
0915 - 0930	20	0	**20**	
0930 - 0945	15	0	**15**	
0945 - 1000	8	0	**8**	**67**
1000 - 1015	15	0	**15**	
1015 - 1030	10	0	**10**	
1030 - 1045	9	0	**9**	
1045 - 1100	11	0	**11**	**45**
1100 - 1115	11	0	**11**	
1115 - 1130	9	0	**9**	
1130 - 1145	8	0	**8**	
1145 - 1200	15	0	**15**	**43**

Time	Volume Summary 15min NB	SB	15min Total	60min Total
1200 - 1215	12	0	**12**	
1215 - 1230	13	0	**13**	
1230 - 1245	14	0	**14**	
1245 - 1300	16	0	**16**	**55**
1300 - 1315	12	0	**12**	
1315 - 1330	12	0	**12**	
1330 - 1345	11	0	**11**	
1345 - 1400	14	0	**14**	**49**
1400 - 1415	10	0	**10**	
1415 - 1430	15	0	**15**	
1430 - 1445	11	0	**11**	
1445 - 1500	9	0	**9**	**45**
1500 - 1515	10	0	**10**	
1515 - 1530	9	0	**9**	
1530 - 1545	12	0	**12**	
1545 - 1600	19	0	**19**	**50**
1600 - 1615	14	0	**14**	
1615 - 1630	15	0	**15**	
1630 - 1645	7	0	**7**	
1645 - 1700	12	0	**12**	**48**
1700 - 1715	10	0	**10**	
1715 - 1730	13	0	**13**	
1730 - 1745	18	0	**18**	
1745 - 1800	14	0	**14**	**55**
1800 - 1815	15	0	**15**	
1815 - 1830	9	0	**9**	
1830 - 1845	14	0	**14**	
1845 - 1900	12	0	**12**	**50**
1900 - 1915	0	0	**0**	
1915 - 1930	0	0	**0**	
1930 - 1945	0	0	**0**	
1945 - 2000	0	0	**0**	**0**
2000 - 2015	0	0	**0**	
2015 - 2030	0	0	**0**	
2030 - 2045	0	0	**0**	
2045 - 2100	0	0	**0**	**0**
2100 - 2115	0	0	**0**	
2115 - 2130	0	0	**0**	
2130 - 2145	0	0	**0**	
2145 - 2200	0	0	**0**	**0**
2200 - 2215	0	0	**0**	
2215 - 2230	0	0	**0**	
2230 - 2245	0	0	**0**	
2245 - 2300	0	0	**0**	**0**
2300 - 2315	0	0	**0**	
2315 - 2330	0	0	**0**	
2330 - 2345	0	0	**0**	
2345 - 0000	0	0	**0**	**0**

Session Total	984	0	**984**
Session Average	10.25	0.00	**10.25**
Session Percentage	100.00	0.00	

Bi-Directional Class Count || NB EB 60min

Columbia, SC

Marr Traffic DATA COLLECTION

www.marrtraffic.com

Site 24

I-26 James F. Byrnes Expy On/Off-Ramp,
south of SC-60 Lake Murray Blvd

Date

Tuesday, April 23, 2024

Lat/Long

34.089516°, -81.166130°

Weather

Fair
58°F

Click here for Detailed Weather

0000 - 2400 (Weekday 24h Session) (04-23-2024)

NB EB 60min

	Northbound (Movement 24.1)													
TIME	1	2	3	4	5	6	7	8	9	10	11	12	13	**Total**
0000 - 0100	0	0	0	0	0	0	0	0	0	0	0	0	0	**0**
0100 - 0200	0	0	0	0	0	0	0	0	0	0	0	0	0	**0**
0200 - 0300	0	0	0	0	0	0	0	0	0	0	0	0	0	**0**
0300 - 0400	0	0	0	0	0	0	0	0	0	0	0	0	0	**0**
0400 - 0500	0	0	0	0	0	0	0	0	0	0	0	0	0	**0**
0500 - 0600	0	0	0	0	0	0	0	0	0	0	0	0	0	**0**
0600 - 0700	0	0	0	0	0	0	0	0	0	0	0	0	0	**0**
0700 - 0800	0	0	0	0	0	0	0	0	0	0	0	0	0	**0**
0800 - 0900	0	0	0	0	0	0	0	0	0	0	0	0	0	**0**
0900 - 1000	0	0	0	0	0	0	0	0	0	0	0	0	0	**0**
1000 - 1100	0	0	0	0	0	0	0	0	0	0	0	0	0	**0**
1100 - 1200	0	0	0	0	0	0	0	0	0	0	0	0	0	**0**
1200 - 1300	0	0	0	0	0	0	0	0	0	0	0	0	0	**0**
1300 - 1400	0	0	0	0	0	0	0	0	0	0	0	0	0	**0**
1400 - 1500	0	0	0	0	0	0	0	0	0	0	0	0	0	**0**
1500 - 1600	0	0	0	0	0	0	0	0	0	0	0	0	0	**0**
1600 - 1700	0	0	0	0	0	0	0	0	0	0	0	0	0	**0**
1700 - 1800	0	0	0	0	0	0	0	0	0	0	0	0	0	**0**
1800 - 1900	0	0	0	0	0	0	0	0	0	0	0	0	0	**0**
1900 - 2000	0	23	4	0	0	0	0	0	0	0	0	0	0	**27**
2000 - 2100	0	22	3	0	5	0	0	0	1	0	0	0	0	**31**
2100 - 2200	1	13	0	0	0	0	0	0	0	0	0	0	0	**14**
2200 - 2300	0	14	3	0	0	0	0	0	0	0	0	0	0	**17**
2300 - 2400	0	2	0	0	0	0	0	0	0	0	0	0	0	**2**
Session Total	1	74	10	0	5	0	0	0	1	0	0	0	0	**91**
Session Average	0.04	3.08	0.42	0.00	0.21	0.00	0.00	0.00	0.04	0.00	0.00	0.00	0.00	**3.79**
Session Percentage	1.10	81.32	10.99	0.00	5.49	0.00	0.00	0.00	1.10	0.00	0.00	0.00	0.00	
AM Peak Hour	-	-	-	-	-	-	-	-	-	-	-	-	-	-
AM Peak Volume	0	0	0	0	0	0	0	0	0	0	0	0	0	**0**
Noon Peak Hour	-	-	-	-	-	-	-	-	-	-	-	-	-	-
Noon Peak Volume	0	0	0	0	0	0	0	0	0	0	0	0	0	**0**
PM Peak Hour	-	1900 - 2000	1900 - 2000	-	-	-	-	-	-	-	-	-	-	**1900 - 2000**
PM Peak Volume	0	23	4	0	0	0	0	0	0	0	0	0	0	**27**

Site 24

I-26 James F. Byrnes Expy On/Off-Ramp,
south of SC-60 Lake Murray Blvd

Date

Wednesday, April 24, 2024

Lat/Long

34.089516°, -81.166130°

Weather

Fair
66°F

Click here for Detailed Weather

0000 - 2400 (Weekday 24h Session) (04-24-2024)

NB EB 60min

	Northbound (Movement 24.1)													
TIME	1	2	3	4	5	6	7	8	9	10	11	12	13	**Total**
0000 - 0100	0	3	0	0	0	0	0	0	0	0	0	0	0	**3**
0100 - 0200	0	2	0	0	0	0	0	0	0	0	0	0	0	**2**
0200 - 0300	0	0	0	0	0	0	0	0	0	0	0	0	0	**0**
0300 - 0400	0	3	0	0	0	0	0	0	0	0	0	0	0	**3**
0400 - 0500	0	3	0	0	0	0	0	0	0	0	0	0	0	**3**
0500 - 0600	0	15	3	0	0	0	0	0	0	0	0	0	0	**18**
0600 - 0700	1	44	11	0	0	0	0	0	0	0	0	0	0	**56**
0700 - 0800	0	162	50	0	1	0	0	0	1	0	0	0	0	**214**
0800 - 0900	0	122	33	1	2	0	0	0	1	0	0	0	0	**159**
0900 - 1000	0	64	20	0	2	0	0	0	0	0	0	0	0	**86**
1000 - 1100	0	45	11	0	0	0	0	0	0	0	0	0	0	**56**
1100 - 1200	1	23	8	0	0	0	0	0	0	0	0	0	0	**32**
1200 - 1300	1	35	5	0	1	0	0	0	0	0	0	0	0	**42**
1300 - 1400	0	37	7	0	1	1	0	0	0	0	0	0	0	**46**
1400 - 1500	0	35	6	0	1	0	0	0	0	0	0	0	0	**42**
1500 - 1600	0	44	6	0	0	0	0	0	0	0	0	0	0	**50**
1600 - 1700	0	40	9	0	0	0	0	0	1	0	0	0	0	**50**
1700 - 1800	0	57	11	0	1	0	2	0	0	0	0	0	0	**71**
1800 - 1900	0	48	12	0	0	0	0	1	0	0	0	0	0	**61**
1900 - 2000	0	19	6	0	0	0	0	0	0	0	0	0	0	**25**
2000 - 2100	0	14	3	0	0	0	0	0	0	0	0	0	0	**17**
2100 - 2200	0	6	1	0	0	0	0	0	0	0	0	0	0	**7**
2200 - 2300	0	8	1	0	0	0	0	0	0	0	0	0	0	**9**
2300 - 2400	0	5	1	0	1	0	0	0	0	0	0	0	0	**7**

Session Total	3	834	204	1	10	1	2	1	3	0	0	0	0	**1059**
Session Average	0.13	34.75	8.50	0.04	0.42	0.04	0.08	0.04	0.13	0.00	0.00	0.00	0.00	**44.13**
Session Percentage	0.28	78.75	19.26	0.09	0.94	0.09	0.19	0.09	0.28	0.00	0.00	0.00	0.00	

AM Peak Hour	0600 - 0700	0700 - 0800	0700 - 0800	0800 - 0900	0800 - 0900	-	-	-	0700 - 0800	-	-	-	-	**0700 - 0800**
AM Peak Volume	1	162	50	1	2	0	0	0	1	0	0	0	0	**214**

Noon Peak Hour	1100 - 1200	1000 - 1100	1000 - 1100	-	1200 - 1300	1300 - 1400	-	-	-	-	-	-	-	**1000 - 1100**
Noon Peak Volume	1	45	11	0	1	1	0	0	0	0	0	0	0	**56**

PM Peak Hour	-	1700 - 1800	1800 - 1900	-	1700 - 1800	-	1700 - 1800	1800 - 1900	1600 - 1700	-	-	-	-	**1700 - 1800**
PM Peak Volume	0	57	12	0	1	0	2	1	1	0	0	0	0	**71**

Site 24
I-26 James F. Byrnes Expy On/Off-Ramp,
south of SC-60 Lake Murray Blvd

Date
Thursday, April 25, 2024

Weather
Fair
67°F

Lat/Long
34.089516°, -81.166130°

Click here for Detailed Weather

0000 - 2400 (Weekday 24h Session) (04-25-2024)
NB EB 60min

	Northbound (Movement 24.1)													
TIME	1	2	3	4	5	6	7	8	9	10	11	12	13	**Total**
0000 - 0100	0	0	0	0	0	0	0	0	0	0	0	0	0	**0**
0100 - 0200	0	0	0	0	0	0	0	0	0	0	0	0	0	**0**
0200 - 0300	0	0	0	0	0	0	0	0	0	0	0	0	0	**0**
0300 - 0400	0	0	0	0	0	0	0	0	0	0	0	0	0	**0**
0400 - 0500	0	8	0	0	0	0	0	0	0	0	0	0	0	**8**
0500 - 0600	0	14	3	0	0	0	0	0	0	0	0	0	0	**17**
0600 - 0700	0	42	18	0	0	0	0	0	0	0	0	0	0	**60**
0700 - 0800	0	161	38	0	0	0	0	0	1	0	0	0	0	**200**
0800 - 0900	0	152	37	0	0	0	2	0	1	0	0	0	0	**192**
0900 - 1000	0	50	17	0	0	0	0	0	0	0	0	0	0	**67**
1000 - 1100	0	28	17	0	0	0	0	0	0	0	0	0	0	**45**
1100 - 1200	0	33	9	0	0	0	0	0	1	0	0	0	0	**43**
1200 - 1300	0	39	16	0	0	0	0	0	0	0	0	0	0	**55**
1300 - 1400	0	32	16	0	1	0	0	0	0	0	0	0	0	**49**
1400 - 1500	0	28	16	0	0	0	0	1	0	0	0	0	0	**45**
1500 - 1600	0	39	10	0	0	0	0	0	1	0	0	0	0	**50**
1600 - 1700	0	28	19	0	1	0	0	0	0	0	0	0	0	**48**
1700 - 1800	0	34	17	0	3	0	0	1	0	0	0	0	0	**55**
1800 - 1900	0	39	10	1	0	0	0	0	0	0	0	0	0	**50**
1900 - 2000	0	0	0	0	0	0	0	0	0	0	0	0	0	**0**
2000 - 2100	0	0	0	0	0	0	0	0	0	0	0	0	0	**0**
2100 - 2200	0	0	0	0	0	0	0	0	0	0	0	0	0	**0**
2200 - 2300	0	0	0	0	0	0	0	0	0	0	0	0	0	**0**
2300 - 2400	0	0	0	0	0	0	0	0	0	0	0	0	0	**0**

Session Total	0	727	243	1	5	0	2	2	4	0	0	0	0	**984**
Session Average	0.00	30.29	10.13	0.04	0.21	0.00	0.08	0.08	0.17	0.00	0.00	0.00	0.00	**41.00**
Session Percentage	0.00	73.88	24.70	0.10	0.51	0.00	0.20	0.20	0.41	0.00	0.00	0.00	0.00	

AM Peak Hour	-	0700 - 0800	0700 - 0800	-	-	-	0800 - 0900	-	0700 - 0800	-	-	-	-	**0700 - 0800**
AM Peak Hour Volume	0	161	38	0	0	0	2	0	1	0	0	0	0	**200**

Noon Peak Hour	-	1200 - 1300	1000 - 1100	-	1300 - 1400	-	-	1400 - 1500	1100 - 1200	-	-	-	-	**1200 - 1300**
Noon Peak Hour Volume	0	39	17	0	1	0	0	1	1	0	0	0	0	**55**

PM Peak Hour	-	1500 - 1600	1600 - 1700	1800 - 1900	1700 - 1800	-	-	1700 - 1800	1500 - 1600	-	-	-	-	**1700 - 1800**
PM Peak Hour Volume	0	39	19	1	3	0	0	1	1	0	0	0	0	**55**

Bi-Directional Class Count || Volume Summary 60min

Columbia, SC

Marr Traffic DATA COLLECTION

www.marrtraffic.com

Site 24

I-26 James F. Byrnes Expy On/Off-Ramp,
south of SC-60 Lake Murray Blvd

Date

Tuesday, April 23, 2024

Lat/Long

34.089516°, -81.166130°

Weather

Fair
58°F

Click here for Detailed Weather

0000 - 2400 (Weekday 24h Session) (04-23-2024)

Volume Summary 60min

	Volume Summary 60min		
TIME	NB	SB	**Total**
0000 - 0100	0	0	**0**
0100 - 0200	0	0	**0**
0200 - 0300	0	0	**0**
0300 - 0400	0	0	**0**
0400 - 0500	0	0	**0**
0500 - 0600	0	0	**0**
0600 - 0700	0	0	**0**
0700 - 0800	0	0	**0**
0800 - 0900	0	0	**0**
0900 - 1000	0	0	**0**
1000 - 1100	0	0	**0**
1100 - 1200	0	0	**0**

	Volume Summary 60min		
Time	NB	SB	**Total**
1200 - 1300	0	0	**0**
1300 - 1400	0	0	**0**
1400 - 1500	0	0	**0**
1500 - 1600	0	0	**0**
1600 - 1700	0	0	**0**
1700 - 1800	0	0	**0**
1800 - 1900	0	0	**0**
1900 - 2000	27	0	**27**
2000 - 2100	31	0	**31**
2100 - 2200	14	0	**14**
2200 - 2300	17	0	**17**
2300 - 2400	2	0	**2**

Session Total	91	0	**91**
Session Average	3.79	0.00	**3.79**
Session Percentage	100.00	0.00	

Site 24

I-26 James F. Byrnes Expy On/Off-Ramp,
south of SC-60 Lake Murray Blvd

Date

Wednesday, April 24, 2024

Lat/Long

34.089516°, -81.166130°

Weather

Fair
66°F

Click here for Detailed Weather

0000 - 2400 (Weekday 24h Session) (04-24-2024)

Volume Summary 60min

	Volume Summary 60min		
TIME	NB	SB	**Total**
0000 - 0100	3	0	**3**
0100 - 0200	2	0	**2**
0200 - 0300	0	0	**0**
0300 - 0400	3	0	**3**
0400 - 0500	3	0	**3**
0500 - 0600	18	0	**18**
0600 - 0700	56	0	**56**
0700 - 0800	214	0	**214**
0800 - 0900	159	0	**159**
0900 - 1000	86	0	**86**
1000 - 1100	56	0	**56**
1100 - 1200	32	0	**32**

	Volume Summary 60min		
Time	NB	SB	**Total**
1200 - 1300	42	0	**42**
1300 - 1400	46	0	**46**
1400 - 1500	42	0	**42**
1500 - 1600	50	0	**50**
1600 - 1700	50	0	**50**
1700 - 1800	71	0	**71**
1800 - 1900	61	0	**61**
1900 - 2000	25	0	**25**
2000 - 2100	17	0	**17**
2100 - 2200	7	0	**7**
2200 - 2300	9	0	**9**
2300 - 2400	7	0	**7**

Session Total	1059	0	**1059**
Session Average	44.13	0.00	**44.13**
Session Percentage	100.00	0.00	

Site 24

I-26 James F. Byrnes Expy On/Off-Ramp,
south of SC-60 Lake Murray Blvd

Date

Thursday, April 25, 2024

Lat/Long

34.089516°, -81.166130°

Weather

Fair
67°F

Click here for Detailed Weather

0000 - 2400 (Weekday 24h Session) (04-25-2024)

Volume Summary 60min

	Volume Summary 60min		
TIME	NB	SB	**Total**
0000 - 0100	0	0	**0**
0100 - 0200	0	0	**0**
0200 - 0300	0	0	**0**
0300 - 0400	0	0	**0**
0400 - 0500	8	0	**8**
0500 - 0600	17	0	**17**
0600 - 0700	60	0	**60**
0700 - 0800	200	0	**200**
0800 - 0900	192	0	**192**
0900 - 1000	67	0	**67**
1000 - 1100	45	0	**45**
1100 - 1200	43	0	**43**

Session Total	984	0	**984**
Session Average	41.00	0.00	**41.00**
Session Percentage	100.00	0.00	

	Volume Summary 60min		
Time	NB	SB	**Total**
1200 - 1300	55	0	**55**
1300 - 1400	49	0	**49**
1400 - 1500	45	0	**45**
1500 - 1600	50	0	**50**
1600 - 1700	48	0	**48**
1700 - 1800	55	0	**55**
1800 - 1900	50	0	**50**
1900 - 2000	0	0	**0**
2000 - 2100	0	0	**0**
2100 - 2200	0	0	**0**
2200 - 2300	0	0	**0**
2300 - 2400	0	0	**0**

Bi-Directional Class Count || Graphical Analysis NB EB

Columbia, SC

Marr Traffic DATA COLLECTION

www.marrtraffic.com

Site 24

I-26 James F. Byrnes Expy On/Off-Ramp,
south of SC-60 Lake Murray Blvd

Lat/Long

34.089516°, -81.166130°

0000 - 2400 (Weekday 24h Session)

Graphical Analysis NB EB

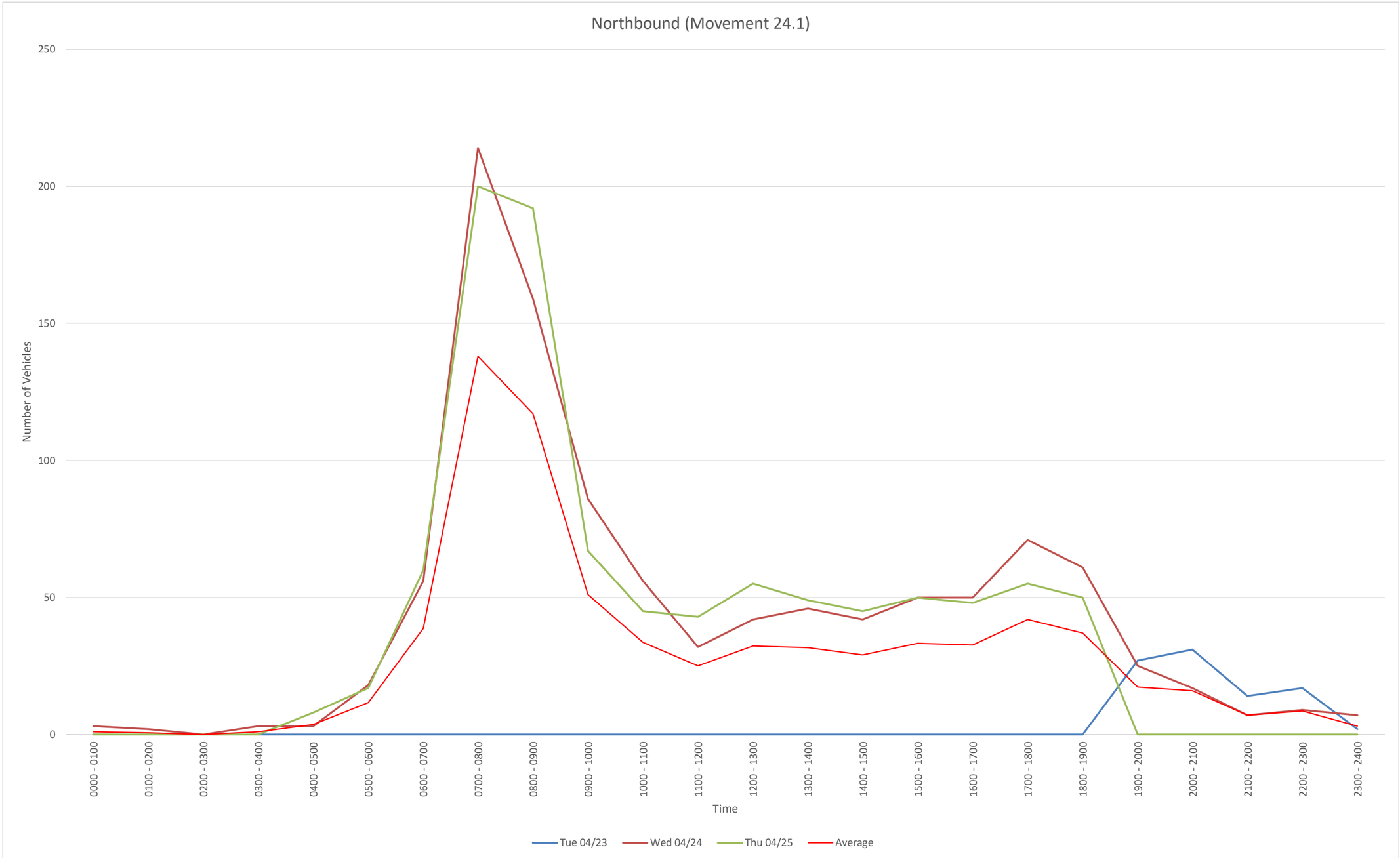

Time	Tue 04/23	Wed 04/24	Thu 04/25				
0000 - 0100	0	3	0				
0100 - 0200	0	2	0				
0200 - 0300	0	0	0				
0300 - 0400	0	3	0				
0400 - 0500	0	3	8				
0500 - 0600	0	18	17				
0600 - 0700	0	56	60				
0700 - 0800	0	214	200				
0800 - 0900	0	159	192				
0900 - 1000	0	86	67				
1000 - 1100	0	56	45				
1100 - 1200	0	32	43				
1200 - 1300	0	42	55				
1300 - 1400	0	46	49				
1400 - 1500	0	42	45				
1500 - 1600	0	50	50				
1600 - 1700	0	50	48				
1700 - 1800	0	71	55				
1800 - 1900	0	61	50				
1900 - 2000	27	25	0				
2000 - 2100	31	17	0				
2100 - 2200	14	7	0				
2200 - 2300	17	9	0				
2300 - 2400	2	7	0				
Daily Total	91	1059	984				

NB
File Name:
Start Date: 4/23/2024
Start Time: 0
Site Code: 24
Station ID: 1
Location 1: I-26 James F. Byrnes Expy On/Off-Ramp, south of SC-60 Lake Murray Blvd
Location 2:

Date	Time	1	2	3	4	5	6	7	8	9	10	11	12	13
4/23/2024	12:00 AM	0	0	0	0	0	0	0	0	0	0	0	0	0
4/23/2024	12:15 AM	0	0	0	0	0	0	0	0	0	0	0	0	0
4/23/2024	12:30 AM	0	0	0	0	0	0	0	0	0	0	0	0	0
4/23/2024	12:45 AM	0	0	0	0	0	0	0	0	0	0	0	0	0
4/23/2024	1:00 AM	0	0	0	0	0	0	0	0	0	0	0	0	0
4/23/2024	1:15 AM	0	0	0	0	0	0	0	0	0	0	0	0	0
4/23/2024	1:30 AM	0	0	0	0	0	0	0	0	0	0	0	0	0
4/23/2024	1:45 AM	0	0	0	0	0	0	0	0	0	0	0	0	0
4/23/2024	2:00 AM	0	0	0	0	0	0	0	0	0	0	0	0	0
4/23/2024	2:15 AM	0	0	0	0	0	0	0	0	0	0	0	0	0
4/23/2024	2:30 AM	0	0	0	0	0	0	0	0	0	0	0	0	0
4/23/2024	2:45 AM	0	0	0	0	0	0	0	0	0	0	0	0	0
4/23/2024	3:00 AM	0	0	0	0	0	0	0	0	0	0	0	0	0
4/23/2024	3:15 AM	0	0	0	0	0	0	0	0	0	0	0	0	0
4/23/2024	3:30 AM	0	0	0	0	0	0	0	0	0	0	0	0	0
4/23/2024	3:45 AM	0	0	0	0	0	0	0	0	0	0	0	0	0
4/23/2024	4:00 AM	0	0	0	0	0	0	0	0	0	0	0	0	0
4/23/2024	4:15 AM	0	0	0	0	0	0	0	0	0	0	0	0	0
4/23/2024	4:30 AM	0	0	0	0	0	0	0	0	0	0	0	0	0
4/23/2024	4:45 AM	0	0	0	0	0	0	0	0	0	0	0	0	0
4/23/2024	5:00 AM	0	0	0	0	0	0	0	0	0	0	0	0	0
4/23/2024	5:15 AM	0	0	0	0	0	0	0	0	0	0	0	0	0
4/23/2024	5:30 AM	0	0	0	0	0	0	0	0	0	0	0	0	0
4/23/2024	5:45 AM	0	0	0	0	0	0	0	0	0	0	0	0	0
4/23/2024	6:00 AM	0	0	0	0	0	0	0	0	0	0	0	0	0
4/23/2024	6:15 AM	0	0	0	0	0	0	0	0	0	0	0	0	0
4/23/2024	6:30 AM	0	0	0	0	0	0	0	0	0	0	0	0	0
4/23/2024	6:45 AM	0	0	0	0	0	0	0	0	0	0	0	0	0
4/23/2024	7:00 AM	0	0	0	0	0	0	0	0	0	0	0	0	0
4/23/2024	7:15 AM	0	0	0	0	0	0	0	0	0	0	0	0	0
4/23/2024	7:30 AM	0	0	0	0	0	0	0	0	0	0	0	0	0
4/23/2024	7:45 AM	0	0	0	0	0	0	0	0	0	0	0	0	0
4/23/2024	8:00 AM	0	0	0	0	0	0	0	0	0	0	0	0	0
4/23/2024	8:15 AM	0	0	0	0	0	0	0	0	0	0	0	0	0
4/23/2024	8:30 AM	0	0	0	0	0	0	0	0	0	0	0	0	0
4/23/2024	8:45 AM	0	0	0	0	0	0	0	0	0	0	0	0	0
4/23/2024	9:00 AM	0	0	0	0	0	0	0	0	0	0	0	0	0
4/23/2024	9:15 AM	0	0	0	0	0	0	0	0	0	0	0	0	0
4/23/2024	9:30 AM	0	0	0	0	0	0	0	0	0	0	0	0	0
4/23/2024	9:45 AM	0	0	0	0	0	0	0	0	0	0	0	0	0
4/23/2024	10:00 AM	0	0	0	0	0	0	0	0	0	0	0	0	0
4/23/2024	10:15 AM	0	0	0	0	0	0	0	0	0	0	0	0	0
4/23/2024	10:30 AM	0	0	0	0	0	0	0	0	0	0	0	0	0
4/23/2024	10:45 AM	0	0	0	0	0	0	0	0	0	0	0	0	0
4/23/2024	11:00 AM	0	0	0	0	0	0	0	0	0	0	0	0	0
4/23/2024	11:15 AM	0	0	0	0	0	0	0	0	0	0	0	0	0
4/23/2024	11:30 AM	0	0	0	0	0	0	0	0	0	0	0	0	0
4/23/2024	11:45 AM	0	0	0	0	0	0	0	0	0	0	0	0	0
4/23/2024	12:00 PM	0	0	0	0	0	0	0	0	0	0	0	0	0
4/23/2024	12:15 PM	0	0	0	0	0	0	0	0	0	0	0	0	0
4/23/2024	12:30 PM	0	0	0	0	0	0	0	0	0	0	0	0	0
4/23/2024	12:45 PM	0	0	0	0	0	0	0	0	0	0	0	0	0
4/23/2024	1:00 PM	0	0	0	0	0	0	0	0	0	0	0	0	0
4/23/2024	1:15 PM	0	0	0	0	0	0	0	0	0	0	0	0	0
4/23/2024	1:30 PM	0	0	0	0	0	0	0	0	0	0	0	0	0
4/23/2024	1:45 PM	0	0	0	0	0	0	0	0	0	0	0	0	0
4/23/2024	2:00 PM	0	0	0	0	0	0	0	0	0	0	0	0	0
4/23/2024	2:15 PM	0	0	0	0	0	0	0	0	0	0	0	0	0
4/23/2024	2:30 PM	0	0	0	0	0	0	0	0	0	0	0	0	0
4/23/2024	2:45 PM	0	0	0	0	0	0	0	0	0	0	0	0	0
4/23/2024	3:00 PM	0	0	0	0	0	0	0	0	0	0	0	0	0
4/23/2024	3:15 PM	0	0	0	0	0	0	0	0	0	0	0	0	0
4/23/2024	3:30 PM	0	0	0	0	0	0	0	0	0	0	0	0	0
4/23/2024	3:45 PM	0	0	0	0	0	0	0	0	0	0	0	0	0
4/23/2024	4:00 PM	0	0	0	0	0	0	0	0	0	0	0	0	0
4/23/2024	4:15 PM	0	0	0	0	0	0	0	0	0	0	0	0	0
4/23/2024	4:30 PM	0	0	0	0	0	0	0	0	0	0	0	0	0
4/23/2024	4:45 PM	0	0	0	0	0	0	0	0	0	0	0	0	0
4/23/2024	5:00 PM	0	0	0	0	0	0	0	0	0	0	0	0	0
4/23/2024	5:15 PM	0	0	0	0	0	0	0	0	0	0	0	0	0
4/23/2024	5:30 PM	0	0	0	0	0	0	0	0	0	0	0	0	0
4/23/2024	5:45 PM	0	0	0	0	0	0	0	0	0	0	0	0	0
4/23/2024	6:00 PM	0	0	0	0	0	0	0	0	0	0	0	0	0
4/23/2024	6:15 PM	0	0	0	0	0	0	0	0	0	0	0	0	0
4/23/2024	6:30 PM	0	0	0	0	0	0	0	0	0	0	0	0	0
4/23/2024	6:45 PM	0	0	0	0	0	0	0	0	0	0	0	0	0
4/23/2024	7:00 PM	0	7	0	0	0	0	0	0	0	0	0	0	0
4/23/2024	7:15 PM	0	4	3	0	0	0	0	0	0	0	0	0	0
4/23/2024	7:30 PM	0	5	1	0	0	0	0	0	0	0	0	0	0
4/23/2024	7:45 PM	0	7	0	0	0	0	0	0	0	0	0	0	0
4/23/2024	8:00 PM	0	5	2	0	0	0	0	0	0	0	0	0	0
4/23/2024	8:15 PM	0	5	1	0	0	0	0	0	1	0	0	0	0
4/23/2024	8:30 PM	0	8	0	0	0	0	0	0	0	0	0	0	0
4/23/2024	8:45 PM	0	4	0	0	5	0	0	0	0	0	0	0	0
4/23/2024	9:00 PM	1	3	0	0	0	0	0	0	0	0	0	0	0
4/23/2024	9:15 PM	0	2	0	0	0	0	0	0	0	0	0	0	0
4/23/2024	9:30 PM	0	6	0	0	0	0	0	0	0	0	0	0	0
4/23/2024	9:45 PM	0	2	0	0	0	0	0	0	0	0	0	0	0
4/23/2024	10:00 PM	0	6	2	0	0	0	0	0	0	0	0	0	0
4/23/2024	10:15 PM	0	4	1	0	0	0	0	0	0	0	0	0	0
4/23/2024	10:30 PM	0	0	0	0	0	0	0	0	0	0	0	0	0
4/23/2024	10:45 PM	0	4	0	0	0	0	0	0	0	0	0	0	0
4/23/2024	11:00 PM	0	1	0	0	0	0	0	0	0	0	0	0	0
4/23/2024	11:15 PM	0	0	0	0	0	0	0	0	0	0	0	0	0
4/23/2024	11:30 PM	0	1	0	0	0	0	0	0	0	0	0	0	0
4/23/2024	11:45 PM	0	0	0	0	0	0	0	0	0	0	0	0	0

4/24/2024	12:00 AM	0	1	0	0	0	0	0	0	0	0	0	0
4/24/2024	12:15 AM	0	0	0	0	0	0	0	0	0	0	0	0
4/24/2024	12:30 AM	0	1	0	0	0	0	0	0	0	0	0	0
4/24/2024	12:45 AM	0	1	0	0	0	0	0	0	0	0	0	0
4/24/2024	1:00 AM	0	0	0	0	0	0	0	0	0	0	0	0
4/24/2024	1:15 AM	0	0	0	0	0	0	0	0	0	0	0	0
4/24/2024	1:30 AM	0	2	0	0	0	0	0	0	0	0	0	0
4/24/2024	1:45 AM	0	0	0	0	0	0	0	0	0	0	0	0
4/24/2024	2:00 AM	0	0	0	0	0	0	0	0	0	0	0	0
4/24/2024	2:15 AM	0	0	0	0	0	0	0	0	0	0	0	0
4/24/2024	2:30 AM	0	0	0	0	0	0	0	0	0	0	0	0
4/24/2024	2:45 AM	0	0	0	0	0	0	0	0	0	0	0	0
4/24/2024	3:00 AM	0	1	0	0	0	0	0	0	0	0	0	0
4/24/2024	3:15 AM	0	1	0	0	0	0	0	0	0	0	0	0
4/24/2024	3:30 AM	0	0	0	0	0	0	0	0	0	0	0	0
4/24/2024	3:45 AM	0	1	0	0	0	0	0	0	0	0	0	0
4/24/2024	4:00 AM	0	1	0	0	0	0	0	0	0	0	0	0
4/24/2024	4:15 AM	0	0	0	0	0	0	0	0	0	0	0	0
4/24/2024	4:30 AM	0	0	0	0	0	0	0	0	0	0	0	0
4/24/2024	4:45 AM	0	2	0	0	0	0	0	0	0	0	0	0
4/24/2024	5:00 AM	0	0	1	0	0	0	0	0	0	0	0	0
4/24/2024	5:15 AM	0	5	0	0	0	0	0	0	0	0	0	0
4/24/2024	5:30 AM	0	3	0	0	0	0	0	0	0	0	0	0
4/24/2024	5:45 AM	0	7	2	0	0	0	0	0	0	0	0	0
4/24/2024	6:00 AM	0	7	3	0	0	0	0	0	0	0	0	0
4/24/2024	6:15 AM	0	8	1	0	0	0	0	0	0	0	0	0
4/24/2024	6:30 AM	0	15	5	0	0	0	0	0	0	0	0	0
4/24/2024	6:45 AM	1	14	2	0	0	0	0	0	0	0	0	0
4/24/2024	7:00 AM	0	14	8	0	0	0	0	0	0	0	0	0
4/24/2024	7:15 AM	0	31	9	0	0	0	0	0	0	0	0	0
4/24/2024	7:30 AM	0	54	20	0	0	0	0	0	0	0	0	0
4/24/2024	7:45 AM	0	63	13	0	1	0	0	0	1	0	0	0
4/24/2024	8:00 AM	0	44	14	1	1	0	0	0	1	0	0	0
4/24/2024	8:15 AM	0	20	9	0	1	0	0	0	0	0	0	0
4/24/2024	8:30 AM	0	26	1	0	0	0	0	0	0	0	0	0
4/24/2024	8:45 AM	0	32	9	0	0	0	0	0	0	0	0	0
4/24/2024	9:00 AM	0	19	3	0	1	0	0	0	0	0	0	0
4/24/2024	9:15 AM	0	12	6	0	0	0	0	0	0	0	0	0
4/24/2024	9:30 AM	0	19	4	0	1	0	0	0	0	0	0	0
4/24/2024	9:45 AM	0	14	7	0	0	0	0	0	0	0	0	0
4/24/2024	10:00 AM	0	15	5	0	0	0	0	0	0	0	0	0
4/24/2024	10:15 AM	0	10	0	0	0	0	0	0	0	0	0	0
4/24/2024	10:30 AM	0	7	0	0	0	0	0	0	0	0	0	0
4/24/2024	10:45 AM	0	13	6	0	0	0	0	0	0	0	0	0
4/24/2024	11:00 AM	0	7	1	0	0	0	0	0	0	0	0	0
4/24/2024	11:15 AM	0	2	0	0	0	0	0	0	0	0	0	0
4/24/2024	11:30 AM	1	6	5	0	0	0	0	0	0	0	0	0
4/24/2024	11:45 AM	0	8	2	0	0	0	0	0	0	0	0	0
4/24/2024	12:00 PM	0	9	1	0	1	0	0	0	0	0	0	0
4/24/2024	12:15 PM	0	9	1	0	0	0	0	0	0	0	0	0
4/24/2024	12:30 PM	0	10	2	0	0	0	0	0	0	0	0	0
4/24/2024	12:45 PM	1	7	1	0	0	0	0	0	0	0	0	0
4/24/2024	1:00 PM	0	11	3	0	1	0	0	0	0	0	0	0
4/24/2024	1:15 PM	0	11	0	0	0	1	0	0	0	0	0	0
4/24/2024	1:30 PM	0	10	2	0	0	0	0	0	0	0	0	0
4/24/2024	1:45 PM	0	5	2	0	0	0	0	0	0	0	0	0
4/24/2024	2:00 PM	0	9	1	0	0	0	0	0	0	0	0	0
4/24/2024	2:15 PM	0	12	2	0	0	0	0	0	0	0	0	0
4/24/2024	2:30 PM	0	2	1	0	0	0	0	0	0	0	0	0
4/24/2024	2:45 PM	0	12	2	0	1	0	0	0	0	0	0	0
4/24/2024	3:00 PM	0	17	2	0	0	0	0	0	0	0	0	0
4/24/2024	3:15 PM	0	8	2	0	0	0	0	0	0	0	0	0
4/24/2024	3:30 PM	0	12	1	0	0	0	0	0	0	0	0	0
4/24/2024	3:45 PM	0	7	1	0	0	0	0	0	0	0	0	0
4/24/2024	4:00 PM	0	13	1	0	0	0	0	0	0	0	0	0
4/24/2024	4:15 PM	0	11	3	0	0	0	0	0	0	0	0	0
4/24/2024	4:30 PM	0	7	3	0	0	0	0	0	0	0	0	0
4/24/2024	4:45 PM	0	9	2	0	0	0	0	0	1	0	0	0
4/24/2024	5:00 PM	0	6	4	0	0	0	1	0	0	0	0	0
4/24/2024	5:15 PM	0	20	5	0	1	0	0	0	0	0	0	0
4/24/2024	5:30 PM	0	13	0	0	0	0	0	0	0	0	0	0
4/24/2024	5:45 PM	0	18	2	0	0	0	1	0	0	0	0	0
4/24/2024	6:00 PM	0	12	5	0	0	0	0	0	0	0	0	0
4/24/2024	6:15 PM	0	18	4	0	0	0	0	1	0	0	0	0
4/24/2024	6:30 PM	0	4	2	0	0	0	0	0	0	0	0	0
4/24/2024	6:45 PM	0	14	1	0	0	0	0	0	0	0	0	0
4/24/2024	7:00 PM	0	6	1	0	0	0	0	0	0	0	0	0
4/24/2024	7:15 PM	0	4	4	0	0	0	0	0	0	0	0	0
4/24/2024	7:30 PM	0	3	0	0	0	0	0	0	0	0	0	0
4/24/2024	7:45 PM	0	6	1	0	0	0	0	0	0	0	0	0
4/24/2024	8:00 PM	0	1	1	0	0	0	0	0	0	0	0	0
4/24/2024	8:15 PM	0	5	2	0	0	0	0	0	0	0	0	0
4/24/2024	8:30 PM	0	4	0	0	0	0	0	0	0	0	0	0
4/24/2024	8:45 PM	0	4	0	0	0	0	0	0	0	0	0	0
4/24/2024	9:00 PM	0	1	0	0	0	0	0	0	0	0	0	0
4/24/2024	9:15 PM	0	1	0	0	0	0	0	0	0	0	0	0
4/24/2024	9:30 PM	0	3	1	0	0	0	0	0	0	0	0	0
4/24/2024	9:45 PM	0	1	0	0	0	0	0	0	0	0	0	0
4/24/2024	10:00 PM	0	3	0	0	0	0	0	0	0	0	0	0
4/24/2024	10:15 PM	0	1	1	0	0	0	0	0	0	0	0	0
4/24/2024	10:30 PM	0	0	0	0	0	0	0	0	0	0	0	0
4/24/2024	10:45 PM	0	4	0	0	0	0	0	0	0	0	0	0
4/24/2024	11:00 PM	0	2	0	0	0	0	0	0	0	0	0	0
4/24/2024	11:15 PM	0	1	0	0	0	0	0	0	0	0	0	0
4/24/2024	11:30 PM	0	1	0	0	0	0	0	0	0	0	0	0
4/24/2024	11:45 PM	0	1	1	0	1	0	0	0	0	0	0	0

4/25/2024	12:00 AM	0	0	0	0	0	0	0	0	0	0	0	0	0
4/25/2024	12:15 AM	0	0	0	0	0	0	0	0	0	0	0	0	0
4/25/2024	12:30 AM	0	0	0	0	0	0	0	0	0	0	0	0	0
4/25/2024	12:45 AM	0	0	0	0	0	0	0	0	0	0	0	0	0
4/25/2024	1:00 AM	0	0	0	0	0	0	0	0	0	0	0	0	0
4/25/2024	1:15 AM	0	0	0	0	0	0	0	0	0	0	0	0	0
4/25/2024	1:30 AM	0	0	0	0	0	0	0	0	0	0	0	0	0
4/25/2024	1:45 AM	0	0	0	0	0	0	0	0	0	0	0	0	0
4/25/2024	2:00 AM	0	0	0	0	0	0	0	0	0	0	0	0	0
4/25/2024	2:15 AM	0	0	0	0	0	0	0	0	0	0	0	0	0
4/25/2024	2:30 AM	0	0	0	0	0	0	0	0	0	0	0	0	0
4/25/2024	2:45 AM	0	0	0	0	0	0	0	0	0	0	0	0	0
4/25/2024	3:00 AM	0	0	0	0	0	0	0	0	0	0	0	0	0
4/25/2024	3:15 AM	0	0	0	0	0	0	0	0	0	0	0	0	0
4/25/2024	3:30 AM	0	0	0	0	0	0	0	0	0	0	0	0	0
4/25/2024	3:45 AM	0	0	0	0	0	0	0	0	0	0	0	0	0
4/25/2024	4:00 AM	0	4	0	0	0	0	0	0	0	0	0	0	0
4/25/2024	4:15 AM	0	1	0	0	0	0	0	0	0	0	0	0	0
4/25/2024	4:30 AM	0	3	0	0	0	0	0	0	0	0	0	0	0
4/25/2024	4:45 AM	0	0	0	0	0	0	0	0	0	0	0	0	0
4/25/2024	5:00 AM	0	3	0	0	0	0	0	0	0	0	0	0	0
4/25/2024	5:15 AM	0	1	0	0	0	0	0	0	0	0	0	0	0
4/25/2024	5:30 AM	0	4	0	0	0	0	0	0	0	0	0	0	0
4/25/2024	5:45 AM	0	6	3	0	0	0	0	0	0	0	0	0	0
4/25/2024	6:00 AM	0	6	2	0	0	0	0	0	0	0	0	0	0
4/25/2024	6:15 AM	0	10	4	0	0	0	0	0	0	0	0	0	0
4/25/2024	6:30 AM	0	13	8	0	0	0	0	0	0	0	0	0	0
4/25/2024	6:45 AM	0	13	4	0	0	0	0	0	0	0	0	0	0
4/25/2024	7:00 AM	0	13	8	0	0	0	0	0	0	0	0	0	0
4/25/2024	7:15 AM	0	38	4	0	0	0	0	0	1	0	0	0	0
4/25/2024	7:30 AM	0	51	14	0	0	0	0	0	0	0	0	0	0
4/25/2024	7:45 AM	0	59	12	0	0	0	0	0	0	0	0	0	0
4/25/2024	8:00 AM	0	47	9	0	0	0	0	0	1	0	0	0	0
4/25/2024	8:15 AM	0	40	10	0	0	0	0	0	0	0	0	0	0
4/25/2024	8:30 AM	0	42	9	0	0	0	2	0	0	0	0	0	0
4/25/2024	8:45 AM	0	23	9	0	0	0	0	0	0	0	0	0	0
4/25/2024	9:00 AM	0	17	7	0	0	0	0	0	0	0	0	0	0
4/25/2024	9:15 AM	0	13	7	0	0	0	0	0	0	0	0	0	0
4/25/2024	9:30 AM	0	12	3	0	0	0	0	0	0	0	0	0	0
4/25/2024	9:45 AM	0	8	0	0	0	0	0	0	0	0	0	0	0
4/25/2024	10:00 AM	0	8	7	0	0	0	0	0	0	0	0	0	0
4/25/2024	10:15 AM	0	7	3	0	0	0	0	0	0	0	0	0	0
4/25/2024	10:30 AM	0	5	4	0	0	0	0	0	0	0	0	0	0
4/25/2024	10:45 AM	0	8	3	0	0	0	0	0	0	0	0	0	0
4/25/2024	11:00 AM	0	7	3	0	0	0	0	0	1	0	0	0	0
4/25/2024	11:15 AM	0	8	1	0	0	0	0	0	0	0	0	0	0
4/25/2024	11:30 AM	0	7	1	0	0	0	0	0	0	0	0	0	0
4/25/2024	11:45 AM	0	11	4	0	0	0	0	0	0	0	0	0	0
4/25/2024	12:00 PM	0	7	5	0	0	0	0	0	0	0	0	0	0
4/25/2024	12:15 PM	0	10	3	0	0	0	0	0	0	0	0	0	0
4/25/2024	12:30 PM	0	9	5	0	0	0	0	0	0	0	0	0	0
4/25/2024	12:45 PM	0	13	3	0	0	0	0	0	0	0	0	0	0
4/25/2024	1:00 PM	0	9	3	0	0	0	0	0	0	0	0	0	0
4/25/2024	1:15 PM	0	7	4	0	1	0	0	0	0	0	0	0	0
4/25/2024	1:30 PM	0	8	3	0	0	0	0	0	0	0	0	0	0
4/25/2024	1:45 PM	0	8	6	0	0	0	0	0	0	0	0	0	0
4/25/2024	2:00 PM	0	8	2	0	0	0	0	0	0	0	0	0	0
4/25/2024	2:15 PM	0	8	7	0	0	0	0	0	0	0	0	0	0
4/25/2024	2:30 PM	0	5	6	0	0	0	0	0	0	0	0	0	0
4/25/2024	2:45 PM	0	7	1	0	0	0	0	1	0	0	0	0	0
4/25/2024	3:00 PM	0	5	5	0	0	0	0	0	0	0	0	0	0
4/25/2024	3:15 PM	0	8	1	0	0	0	0	0	0	0	0	0	0
4/25/2024	3:30 PM	0	10	2	0	0	0	0	0	0	0	0	0	0
4/25/2024	3:45 PM	0	16	2	0	0	0	0	0	1	0	0	0	0
4/25/2024	4:00 PM	0	9	5	0	0	0	0	0	0	0	0	0	0
4/25/2024	4:15 PM	0	10	5	0	0	0	0	0	0	0	0	0	0
4/25/2024	4:30 PM	0	5	2	0	0	0	0	0	0	0	0	0	0
4/25/2024	4:45 PM	0	4	7	0	1	0	0	0	0	0	0	0	0
4/25/2024	5:00 PM	0	6	3	0	1	0	0	0	0	0	0	0	0
4/25/2024	5:15 PM	0	9	3	0	1	0	0	0	0	0	0	0	0
4/25/2024	5:30 PM	0	12	6	0	0	0	0	0	0	0	0	0	0
4/25/2024	5:45 PM	0	7	5	0	1	0	0	1	0	0	0	0	0
4/25/2024	6:00 PM	0	13	2	0	0	0	0	0	0	0	0	0	0
4/25/2024	6:15 PM	0	6	3	0	0	0	0	0	0	0	0	0	0
4/25/2024	6:30 PM	0	12	2	0	0	0	0	0	0	0	0	0	0
4/25/2024	6:45 PM	0	8	3	1	0	0	0	0	0	0	0	0	0
4/25/2024	7:00 PM	0	0	0	0	0	0	0	0	0	0	0	0	0
4/25/2024	7:15 PM	0	0	0	0	0	0	0	0	0	0	0	0	0
4/25/2024	7:30 PM	0	0	0	0	0	0	0	0	0	0	0	0	0
4/25/2024	7:45 PM	0	0	0	0	0	0	0	0	0	0	0	0	0
4/25/2024	8:00 PM	0	0	0	0	0	0	0	0	0	0	0	0	0
4/25/2024	8:15 PM	0	0	0	0	0	0	0	0	0	0	0	0	0
4/25/2024	8:30 PM	0	0	0	0	0	0	0	0	0	0	0	0	0
4/25/2024	8:45 PM	0	0	0	0	0	0	0	0	0	0	0	0	0
4/25/2024	9:00 PM	0	0	0	0	0	0	0	0	0	0	0	0	0
4/25/2024	9:15 PM	0	0	0	0	0	0	0	0	0	0	0	0	0
4/25/2024	9:30 PM	0	0	0	0	0	0	0	0	0	0	0	0	0
4/25/2024	9:45 PM	0	0	0	0	0	0	0	0	0	0	0	0	0
4/25/2024	10:00 PM	0	0	0	0	0	0	0	0	0	0	0	0	0
4/25/2024	10:15 PM	0	0	0	0	0	0	0	0	0	0	0	0	0
4/25/2024	10:30 PM	0	0	0	0	0	0	0	0	0	0	0	0	0
4/25/2024	10:45 PM	0	0	0	0	0	0	0	0	0	0	0	0	0
4/25/2024	11:00 PM	0	0	0	0	0	0	0	0	0	0	0	0	0
4/25/2024	11:15 PM	0	0	0	0	0	0	0	0	0	0	0	0	0
4/25/2024	11:30 PM	0	0	0	0	0	0	0	0	0	0	0	0	0
4/25/2024	11:45 PM	0	0	0	0	0	0	0	0	0	0	0	0	0

SB
File Name:
Start Date: 4/23/2024
Start Time: 0
Site Code: 24
Station ID: 1
Location 1: I-26 James F. Byrnes Expy On/Off-Ramp, south of SC-60 Lake Murray Blvd
Location 2:

Date	Time	1	2	3	4	5	6	7	8	9	10	11	12	13
4/23/2024	12:00 AM	0	0	0	0	0	0	0	0	0	0	0	0	0
4/23/2024	12:15 AM	0	0	0	0	0	0	0	0	0	0	0	0	0
4/23/2024	12:30 AM	0	0	0	0	0	0	0	0	0	0	0	0	0
4/23/2024	12:45 AM	0	0	0	0	0	0	0	0	0	0	0	0	0
4/23/2024	1:00 AM	0	0	0	0	0	0	0	0	0	0	0	0	0
4/23/2024	1:15 AM	0	0	0	0	0	0	0	0	0	0	0	0	0
4/23/2024	1:30 AM	0	0	0	0	0	0	0	0	0	0	0	0	0
4/23/2024	1:45 AM	0	0	0	0	0	0	0	0	0	0	0	0	0
4/23/2024	2:00 AM	0	0	0	0	0	0	0	0	0	0	0	0	0
4/23/2024	2:15 AM	0	0	0	0	0	0	0	0	0	0	0	0	0
4/23/2024	2:30 AM	0	0	0	0	0	0	0	0	0	0	0	0	0
4/23/2024	2:45 AM	0	0	0	0	0	0	0	0	0	0	0	0	0
4/23/2024	3:00 AM	0	0	0	0	0	0	0	0	0	0	0	0	0
4/23/2024	3:15 AM	0	0	0	0	0	0	0	0	0	0	0	0	0
4/23/2024	3:30 AM	0	0	0	0	0	0	0	0	0	0	0	0	0
4/23/2024	3:45 AM	0	0	0	0	0	0	0	0	0	0	0	0	0
4/23/2024	4:00 AM	0	0	0	0	0	0	0	0	0	0	0	0	0
4/23/2024	4:15 AM	0	0	0	0	0	0	0	0	0	0	0	0	0
4/23/2024	4:30 AM	0	0	0	0	0	0	0	0	0	0	0	0	0
4/23/2024	4:45 AM	0	0	0	0	0	0	0	0	0	0	0	0	0
4/23/2024	5:00 AM	0	0	0	0	0	0	0	0	0	0	0	0	0
4/23/2024	5:15 AM	0	0	0	0	0	0	0	0	0	0	0	0	0
4/23/2024	5:30 AM	0	0	0	0	0	0	0	0	0	0	0	0	0
4/23/2024	5:45 AM	0	0	0	0	0	0	0	0	0	0	0	0	0
4/23/2024	6:00 AM	0	0	0	0	0	0	0	0	0	0	0	0	0
4/23/2024	6:15 AM	0	0	0	0	0	0	0	0	0	0	0	0	0
4/23/2024	6:30 AM	0	0	0	0	0	0	0	0	0	0	0	0	0
4/23/2024	6:45 AM	0	0	0	0	0	0	0	0	0	0	0	0	0
4/23/2024	7:00 AM	0	0	0	0	0	0	0	0	0	0	0	0	0
4/23/2024	7:15 AM	0	0	0	0	0	0	0	0	0	0	0	0	0
4/23/2024	7:30 AM	0	0	0	0	0	0	0	0	0	0	0	0	0
4/23/2024	7:45 AM	0	0	0	0	0	0	0	0	0	0	0	0	0
4/23/2024	8:00 AM	0	0	0	0	0	0	0	0	0	0	0	0	0
4/23/2024	8:15 AM	0	0	0	0	0	0	0	0	0	0	0	0	0
4/23/2024	8:30 AM	0	0	0	0	0	0	0	0	0	0	0	0	0
4/23/2024	8:45 AM	0	0	0	0	0	0	0	0	0	0	0	0	0
4/23/2024	9:00 AM	0	0	0	0	0	0	0	0	0	0	0	0	0
4/23/2024	9:15 AM	0	0	0	0	0	0	0	0	0	0	0	0	0
4/23/2024	9:30 AM	0	0	0	0	0	0	0	0	0	0	0	0	0
4/23/2024	9:45 AM	0	0	0	0	0	0	0	0	0	0	0	0	0
4/23/2024	10:00 AM	0	0	0	0	0	0	0	0	0	0	0	0	0
4/23/2024	10:15 AM	0	0	0	0	0	0	0	0	0	0	0	0	0
4/23/2024	10:30 AM	0	0	0	0	0	0	0	0	0	0	0	0	0
4/23/2024	10:45 AM	0	0	0	0	0	0	0	0	0	0	0	0	0
4/23/2024	11:00 AM	0	0	0	0	0	0	0	0	0	0	0	0	0
4/23/2024	11:15 AM	0	0	0	0	0	0	0	0	0	0	0	0	0
4/23/2024	11:30 AM	0	0	0	0	0	0	0	0	0	0	0	0	0
4/23/2024	11:45 AM	0	0	0	0	0	0	0	0	0	0	0	0	0
4/23/2024	12:00 PM	0	0	0	0	0	0	0	0	0	0	0	0	0
4/23/2024	12:15 PM	0	0	0	0	0	0	0	0	0	0	0	0	0
4/23/2024	12:30 PM	0	0	0	0	0	0	0	0	0	0	0	0	0
4/23/2024	12:45 PM	0	0	0	0	0	0	0	0	0	0	0	0	0
4/23/2024	1:00 PM	0	0	0	0	0	0	0	0	0	0	0	0	0
4/23/2024	1:15 PM	0	0	0	0	0	0	0	0	0	0	0	0	0
4/23/2024	1:30 PM	0	0	0	0	0	0	0	0	0	0	0	0	0
4/23/2024	1:45 PM	0	0	0	0	0	0	0	0	0	0	0	0	0
4/23/2024	2:00 PM	0	0	0	0	0	0	0	0	0	0	0	0	0
4/23/2024	2:15 PM	0	0	0	0	0	0	0	0	0	0	0	0	0
4/23/2024	2:30 PM	0	0	0	0	0	0	0	0	0	0	0	0	0
4/23/2024	2:45 PM	0	0	0	0	0	0	0	0	0	0	0	0	0
4/23/2024	3:00 PM	0	0	0	0	0	0	0	0	0	0	0	0	0
4/23/2024	3:15 PM	0	0	0	0	0	0	0	0	0	0	0	0	0
4/23/2024	3:30 PM	0	0	0	0	0	0	0	0	0	0	0	0	0
4/23/2024	3:45 PM	0	0	0	0	0	0	0	0	0	0	0	0	0
4/23/2024	4:00 PM	0	0	0	0	0	0	0	0	0	0	0	0	0
4/23/2024	4:15 PM	0	0	0	0	0	0	0	0	0	0	0	0	0
4/23/2024	4:30 PM	0	0	0	0	0	0	0	0	0	0	0	0	0
4/23/2024	4:45 PM	0	0	0	0	0	0	0	0	0	0	0	0	0
4/23/2024	5:00 PM	0	0	0	0	0	0	0	0	0	0	0	0	0
4/23/2024	5:15 PM	0	0	0	0	0	0	0	0	0	0	0	0	0
4/23/2024	5:30 PM	0	0	0	0	0	0	0	0	0	0	0	0	0
4/23/2024	5:45 PM	0	0	0	0	0	0	0	0	0	0	0	0	0
4/23/2024	6:00 PM	0	0	0	0	0	0	0	0	0	0	0	0	0
4/23/2024	6:15 PM	0	0	0	0	0	0	0	0	0	0	0	0	0
4/23/2024	6:30 PM	0	0	0	0	0	0	0	0	0	0	0	0	0
4/23/2024	6:45 PM	0	0	0	0	0	0	0	0	0	0	0	0	0
4/23/2024	7:00 PM	0	0	0	0	0	0	0	0	0	0	0	0	0
4/23/2024	7:15 PM	0	0	0	0	0	0	0	0	0	0	0	0	0
4/23/2024	7:30 PM	0	0	0	0	0	0	0	0	0	0	0	0	0
4/23/2024	7:45 PM	0	0	0	0	0	0	0	0	0	0	0	0	0
4/23/2024	8:00 PM	0	0	0	0	0	0	0	0	0	0	0	0	0
4/23/2024	8:15 PM	0	0	0	0	0	0	0	0	0	0	0	0	0
4/23/2024	8:30 PM	0	0	0	0	0	0	0	0	0	0	0	0	0
4/23/2024	8:45 PM	0	0	0	0	0	0	0	0	0	0	0	0	0
4/23/2024	9:00 PM	0	0	0	0	0	0	0	0	0	0	0	0	0
4/23/2024	9:15 PM	0	0	0	0	0	0	0	0	0	0	0	0	0
4/23/2024	9:30 PM	0	0	0	0	0	0	0	0	0	0	0	0	0
4/23/2024	9:45 PM	0	0	0	0	0	0	0	0	0	0	0	0	0
4/23/2024	10:00 PM	0	0	0	0	0	0	0	0	0	0	0	0	0
4/23/2024	10:15 PM	0	0	0	0	0	0	0	0	0	0	0	0	0
4/23/2024	10:30 PM	0	0	0	0	0	0	0	0	0	0	0	0	0
4/23/2024	10:45 PM	0	0	0	0	0	0	0	0	0	0	0	0	0
4/23/2024	11:00 PM	0	0	0	0	0	0	0	0	0	0	0	0	0
4/23/2024	11:15 PM	0	0	0	0	0	0	0	0	0	0	0	0	0
4/23/2024	11:30 PM	0	0	0	0	0	0	0	0	0	0	0	0	0
4/23/2024	11:45 PM	0	0	0	0	0	0	0	0	0	0	0	0	0

4/24/2024	12:00 AM	0	0	0	0	0	0	0	0	0	0	0	0	0
4/24/2024	12:15 AM	0	0	0	0	0	0	0	0	0	0	0	0	0
4/24/2024	12:30 AM	0	0	0	0	0	0	0	0	0	0	0	0	0
4/24/2024	12:45 AM	0	0	0	0	0	0	0	0	0	0	0	0	0
4/24/2024	1:00 AM	0	0	0	0	0	0	0	0	0	0	0	0	0
4/24/2024	1:15 AM	0	0	0	0	0	0	0	0	0	0	0	0	0
4/24/2024	1:30 AM	0	0	0	0	0	0	0	0	0	0	0	0	0
4/24/2024	1:45 AM	0	0	0	0	0	0	0	0	0	0	0	0	0
4/24/2024	2:00 AM	0	0	0	0	0	0	0	0	0	0	0	0	0
4/24/2024	2:15 AM	0	0	0	0	0	0	0	0	0	0	0	0	0
4/24/2024	2:30 AM	0	0	0	0	0	0	0	0	0	0	0	0	0
4/24/2024	2:45 AM	0	0	0	0	0	0	0	0	0	0	0	0	0
4/24/2024	3:00 AM	0	0	0	0	0	0	0	0	0	0	0	0	0
4/24/2024	3:15 AM	0	0	0	0	0	0	0	0	0	0	0	0	0
4/24/2024	3:30 AM	0	0	0	0	0	0	0	0	0	0	0	0	0
4/24/2024	3:45 AM	0	0	0	0	0	0	0	0	0	0	0	0	0
4/24/2024	4:00 AM	0	0	0	0	0	0	0	0	0	0	0	0	0
4/24/2024	4:15 AM	0	0	0	0	0	0	0	0	0	0	0	0	0
4/24/2024	4:30 AM	0	0	0	0	0	0	0	0	0	0	0	0	0
4/24/2024	4:45 AM	0	0	0	0	0	0	0	0	0	0	0	0	0
4/24/2024	5:00 AM	0	0	0	0	0	0	0	0	0	0	0	0	0
4/24/2024	5:15 AM	0	0	0	0	0	0	0	0	0	0	0	0	0
4/24/2024	5:30 AM	0	0	0	0	0	0	0	0	0	0	0	0	0
4/24/2024	5:45 AM	0	0	0	0	0	0	0	0	0	0	0	0	0
4/24/2024	6:00 AM	0	0	0	0	0	0	0	0	0	0	0	0	0
4/24/2024	6:15 AM	0	0	0	0	0	0	0	0	0	0	0	0	0
4/24/2024	6:30 AM	0	0	0	0	0	0	0	0	0	0	0	0	0
4/24/2024	6:45 AM	0	0	0	0	0	0	0	0	0	0	0	0	0
4/24/2024	7:00 AM	0	0	0	0	0	0	0	0	0	0	0	0	0
4/24/2024	7:15 AM	0	0	0	0	0	0	0	0	0	0	0	0	0
4/24/2024	7:30 AM	0	0	0	0	0	0	0	0	0	0	0	0	0
4/24/2024	7:45 AM	0	0	0	0	0	0	0	0	0	0	0	0	0
4/24/2024	8:00 AM	0	0	0	0	0	0	0	0	0	0	0	0	0
4/24/2024	8:15 AM	0	0	0	0	0	0	0	0	0	0	0	0	0
4/24/2024	8:30 AM	0	0	0	0	0	0	0	0	0	0	0	0	0
4/24/2024	8:45 AM	0	0	0	0	0	0	0	0	0	0	0	0	0
4/24/2024	9:00 AM	0	0	0	0	0	0	0	0	0	0	0	0	0
4/24/2024	9:15 AM	0	0	0	0	0	0	0	0	0	0	0	0	0
4/24/2024	9:30 AM	0	0	0	0	0	0	0	0	0	0	0	0	0
4/24/2024	9:45 AM	0	0	0	0	0	0	0	0	0	0	0	0	0
4/24/2024	10:00 AM	0	0	0	0	0	0	0	0	0	0	0	0	0
4/24/2024	10:15 AM	0	0	0	0	0	0	0	0	0	0	0	0	0
4/24/2024	10:30 AM	0	0	0	0	0	0	0	0	0	0	0	0	0
4/24/2024	10:45 AM	0	0	0	0	0	0	0	0	0	0	0	0	0
4/24/2024	11:00 AM	0	0	0	0	0	0	0	0	0	0	0	0	0
4/24/2024	11:15 AM	0	0	0	0	0	0	0	0	0	0	0	0	0
4/24/2024	11:30 AM	0	0	0	0	0	0	0	0	0	0	0	0	0
4/24/2024	11:45 AM	0	0	0	0	0	0	0	0	0	0	0	0	0
4/24/2024	12:00 PM	0	0	0	0	0	0	0	0	0	0	0	0	0
4/24/2024	12:15 PM	0	0	0	0	0	0	0	0	0	0	0	0	0
4/24/2024	12:30 PM	0	0	0	0	0	0	0	0	0	0	0	0	0
4/24/2024	12:45 PM	0	0	0	0	0	0	0	0	0	0	0	0	0
4/24/2024	1:00 PM	0	0	0	0	0	0	0	0	0	0	0	0	0
4/24/2024	1:15 PM	0	0	0	0	0	0	0	0	0	0	0	0	0
4/24/2024	1:30 PM	0	0	0	0	0	0	0	0	0	0	0	0	0
4/24/2024	1:45 PM	0	0	0	0	0	0	0	0	0	0	0	0	0
4/24/2024	2:00 PM	0	0	0	0	0	0	0	0	0	0	0	0	0
4/24/2024	2:15 PM	0	0	0	0	0	0	0	0	0	0	0	0	0
4/24/2024	2:30 PM	0	0	0	0	0	0	0	0	0	0	0	0	0
4/24/2024	2:45 PM	0	0	0	0	0	0	0	0	0	0	0	0	0
4/24/2024	3:00 PM	0	0	0	0	0	0	0	0	0	0	0	0	0
4/24/2024	3:15 PM	0	0	0	0	0	0	0	0	0	0	0	0	0
4/24/2024	3:30 PM	0	0	0	0	0	0	0	0	0	0	0	0	0
4/24/2024	3:45 PM	0	0	0	0	0	0	0	0	0	0	0	0	0
4/24/2024	4:00 PM	0	0	0	0	0	0	0	0	0	0	0	0	0
4/24/2024	4:15 PM	0	0	0	0	0	0	0	0	0	0	0	0	0
4/24/2024	4:30 PM	0	0	0	0	0	0	0	0	0	0	0	0	0
4/24/2024	4:45 PM	0	0	0	0	0	0	0	0	0	0	0	0	0
4/24/2024	5:00 PM	0	0	0	0	0	0	0	0	0	0	0	0	0
4/24/2024	5:15 PM	0	0	0	0	0	0	0	0	0	0	0	0	0
4/24/2024	5:30 PM	0	0	0	0	0	0	0	0	0	0	0	0	0
4/24/2024	5:45 PM	0	0	0	0	0	0	0	0	0	0	0	0	0
4/24/2024	6:00 PM	0	0	0	0	0	0	0	0	0	0	0	0	0
4/24/2024	6:15 PM	0	0	0	0	0	0	0	0	0	0	0	0	0
4/24/2024	6:30 PM	0	0	0	0	0	0	0	0	0	0	0	0	0
4/24/2024	6:45 PM	0	0	0	0	0	0	0	0	0	0	0	0	0
4/24/2024	7:00 PM	0	0	0	0	0	0	0	0	0	0	0	0	0
4/24/2024	7:15 PM	0	0	0	0	0	0	0	0	0	0	0	0	0
4/24/2024	7:30 PM	0	0	0	0	0	0	0	0	0	0	0	0	0
4/24/2024	7:45 PM	0	0	0	0	0	0	0	0	0	0	0	0	0
4/24/2024	8:00 PM	0	0	0	0	0	0	0	0	0	0	0	0	0
4/24/2024	8:15 PM	0	0	0	0	0	0	0	0	0	0	0	0	0
4/24/2024	8:30 PM	0	0	0	0	0	0	0	0	0	0	0	0	0
4/24/2024	8:45 PM	0	0	0	0	0	0	0	0	0	0	0	0	0
4/24/2024	9:00 PM	0	0	0	0	0	0	0	0	0	0	0	0	0
4/24/2024	9:15 PM	0	0	0	0	0	0	0	0	0	0	0	0	0
4/24/2024	9:30 PM	0	0	0	0	0	0	0	0	0	0	0	0	0
4/24/2024	9:45 PM	0	0	0	0	0	0	0	0	0	0	0	0	0
4/24/2024	10:00 PM	0	0	0	0	0	0	0	0	0	0	0	0	0
4/24/2024	10:15 PM	0	0	0	0	0	0	0	0	0	0	0	0	0
4/24/2024	10:30 PM	0	0	0	0	0	0	0	0	0	0	0	0	0
4/24/2024	10:45 PM	0	0	0	0	0	0	0	0	0	0	0	0	0
4/24/2024	11:00 PM	0	0	0	0	0	0	0	0	0	0	0	0	0
4/24/2024	11:15 PM	0	0	0	0	0	0	0	0	0	0	0	0	0
4/24/2024	11:30 PM	0	0	0	0	0	0	0	0	0	0	0	0	0
4/24/2024	11:45 PM	0	0	0	0	0	0	0	0	0	0	0	0	0

4/25/2024	12:00 AM	0	0	0	0	0	0	0	0	0	0	0	0	0
4/25/2024	12:15 AM	0	0	0	0	0	0	0	0	0	0	0	0	0
4/25/2024	12:30 AM	0	0	0	0	0	0	0	0	0	0	0	0	0
4/25/2024	12:45 AM	0	0	0	0	0	0	0	0	0	0	0	0	0
4/25/2024	1:00 AM	0	0	0	0	0	0	0	0	0	0	0	0	0
4/25/2024	1:15 AM	0	0	0	0	0	0	0	0	0	0	0	0	0
4/25/2024	1:30 AM	0	0	0	0	0	0	0	0	0	0	0	0	0
4/25/2024	1:45 AM	0	0	0	0	0	0	0	0	0	0	0	0	0
4/25/2024	2:00 AM	0	0	0	0	0	0	0	0	0	0	0	0	0
4/25/2024	2:15 AM	0	0	0	0	0	0	0	0	0	0	0	0	0
4/25/2024	2:30 AM	0	0	0	0	0	0	0	0	0	0	0	0	0
4/25/2024	2:45 AM	0	0	0	0	0	0	0	0	0	0	0	0	0
4/25/2024	3:00 AM	0	0	0	0	0	0	0	0	0	0	0	0	0
4/25/2024	3:15 AM	0	0	0	0	0	0	0	0	0	0	0	0	0
4/25/2024	3:30 AM	0	0	0	0	0	0	0	0	0	0	0	0	0
4/25/2024	3:45 AM	0	0	0	0	0	0	0	0	0	0	0	0	0
4/25/2024	4:00 AM	0	0	0	0	0	0	0	0	0	0	0	0	0
4/25/2024	4:15 AM	0	0	0	0	0	0	0	0	0	0	0	0	0
4/25/2024	4:30 AM	0	0	0	0	0	0	0	0	0	0	0	0	0
4/25/2024	4:45 AM	0	0	0	0	0	0	0	0	0	0	0	0	0
4/25/2024	5:00 AM	0	0	0	0	0	0	0	0	0	0	0	0	0
4/25/2024	5:15 AM	0	0	0	0	0	0	0	0	0	0	0	0	0
4/25/2024	5:30 AM	0	0	0	0	0	0	0	0	0	0	0	0	0
4/25/2024	5:45 AM	0	0	0	0	0	0	0	0	0	0	0	0	0
4/25/2024	6:00 AM	0	0	0	0	0	0	0	0	0	0	0	0	0
4/25/2024	6:15 AM	0	0	0	0	0	0	0	0	0	0	0	0	0
4/25/2024	6:30 AM	0	0	0	0	0	0	0	0	0	0	0	0	0
4/25/2024	6:45 AM	0	0	0	0	0	0	0	0	0	0	0	0	0
4/25/2024	7:00 AM	0	0	0	0	0	0	0	0	0	0	0	0	0
4/25/2024	7:15 AM	0	0	0	0	0	0	0	0	0	0	0	0	0
4/25/2024	7:30 AM	0	0	0	0	0	0	0	0	0	0	0	0	0
4/25/2024	7:45 AM	0	0	0	0	0	0	0	0	0	0	0	0	0
4/25/2024	8:00 AM	0	0	0	0	0	0	0	0	0	0	0	0	0
4/25/2024	8:15 AM	0	0	0	0	0	0	0	0	0	0	0	0	0
4/25/2024	8:30 AM	0	0	0	0	0	0	0	0	0	0	0	0	0
4/25/2024	8:45 AM	0	0	0	0	0	0	0	0	0	0	0	0	0
4/25/2024	9:00 AM	0	0	0	0	0	0	0	0	0	0	0	0	0
4/25/2024	9:15 AM	0	0	0	0	0	0	0	0	0	0	0	0	0
4/25/2024	9:30 AM	0	0	0	0	0	0	0	0	0	0	0	0	0
4/25/2024	9:45 AM	0	0	0	0	0	0	0	0	0	0	0	0	0
4/25/2024	10:00 AM	0	0	0	0	0	0	0	0	0	0	0	0	0
4/25/2024	10:15 AM	0	0	0	0	0	0	0	0	0	0	0	0	0
4/25/2024	10:30 AM	0	0	0	0	0	0	0	0	0	0	0	0	0
4/25/2024	10:45 AM	0	0	0	0	0	0	0	0	0	0	0	0	0
4/25/2024	11:00 AM	0	0	0	0	0	0	0	0	0	0	0	0	0
4/25/2024	11:15 AM	0	0	0	0	0	0	0	0	0	0	0	0	0
4/25/2024	11:30 AM	0	0	0	0	0	0	0	0	0	0	0	0	0
4/25/2024	11:45 AM	0	0	0	0	0	0	0	0	0	0	0	0	0
4/25/2024	12:00 PM	0	0	0	0	0	0	0	0	0	0	0	0	0
4/25/2024	12:15 PM	0	0	0	0	0	0	0	0	0	0	0	0	0
4/25/2024	12:30 PM	0	0	0	0	0	0	0	0	0	0	0	0	0
4/25/2024	12:45 PM	0	0	0	0	0	0	0	0	0	0	0	0	0
4/25/2024	1:00 PM	0	0	0	0	0	0	0	0	0	0	0	0	0
4/25/2024	1:15 PM	0	0	0	0	0	0	0	0	0	0	0	0	0
4/25/2024	1:30 PM	0	0	0	0	0	0	0	0	0	0	0	0	0
4/25/2024	1:45 PM	0	0	0	0	0	0	0	0	0	0	0	0	0
4/25/2024	2:00 PM	0	0	0	0	0	0	0	0	0	0	0	0	0
4/25/2024	2:15 PM	0	0	0	0	0	0	0	0	0	0	0	0	0
4/25/2024	2:30 PM	0	0	0	0	0	0	0	0	0	0	0	0	0
4/25/2024	2:45 PM	0	0	0	0	0	0	0	0	0	0	0	0	0
4/25/2024	3:00 PM	0	0	0	0	0	0	0	0	0	0	0	0	0
4/25/2024	3:15 PM	0	0	0	0	0	0	0	0	0	0	0	0	0
4/25/2024	3:30 PM	0	0	0	0	0	0	0	0	0	0	0	0	0
4/25/2024	3:45 PM	0	0	0	0	0	0	0	0	0	0	0	0	0
4/25/2024	4:00 PM	0	0	0	0	0	0	0	0	0	0	0	0	0
4/25/2024	4:15 PM	0	0	0	0	0	0	0	0	0	0	0	0	0
4/25/2024	4:30 PM	0	0	0	0	0	0	0	0	0	0	0	0	0
4/25/2024	4:45 PM	0	0	0	0	0	0	0	0	0	0	0	0	0
4/25/2024	5:00 PM	0	0	0	0	0	0	0	0	0	0	0	0	0
4/25/2024	5:15 PM	0	0	0	0	0	0	0	0	0	0	0	0	0
4/25/2024	5:30 PM	0	0	0	0	0	0	0	0	0	0	0	0	0
4/25/2024	5:45 PM	0	0	0	0	0	0	0	0	0	0	0	0	0
4/25/2024	6:00 PM	0	0	0	0	0	0	0	0	0	0	0	0	0
4/25/2024	6:15 PM	0	0	0	0	0	0	0	0	0	0	0	0	0
4/25/2024	6:30 PM	0	0	0	0	0	0	0	0	0	0	0	0	0
4/25/2024	6:45 PM	0	0	0	0	0	0	0	0	0	0	0	0	0
4/25/2024	7:00 PM	0	0	0	0	0	0	0	0	0	0	0	0	0
4/25/2024	7:15 PM	0	0	0	0	0	0	0	0	0	0	0	0	0
4/25/2024	7:30 PM	0	0	0	0	0	0	0	0	0	0	0	0	0
4/25/2024	7:45 PM	0	0	0	0	0	0	0	0	0	0	0	0	0
4/25/2024	8:00 PM	0	0	0	0	0	0	0	0	0	0	0	0	0
4/25/2024	8:15 PM	0	0	0	0	0	0	0	0	0	0	0	0	0
4/25/2024	8:30 PM	0	0	0	0	0	0	0	0	0	0	0	0	0
4/25/2024	8:45 PM	0	0	0	0	0	0	0	0	0	0	0	0	0
4/25/2024	9:00 PM	0	0	0	0	0	0	0	0	0	0	0	0	0
4/25/2024	9:15 PM	0	0	0	0	0	0	0	0	0	0	0	0	0
4/25/2024	9:30 PM	0	0	0	0	0	0	0	0	0	0	0	0	0
4/25/2024	9:45 PM	0	0	0	0	0	0	0	0	0	0	0	0	0
4/25/2024	10:00 PM	0	0	0	0	0	0	0	0	0	0	0	0	0
4/25/2024	10:15 PM	0	0	0	0	0	0	0	0	0	0	0	0	0
4/25/2024	10:30 PM	0	0	0	0	0	0	0	0	0	0	0	0	0
4/25/2024	10:45 PM	0	0	0	0	0	0	0	0	0	0	0	0	0
4/25/2024	11:00 PM	0	0	0	0	0	0	0	0	0	0	0	0	0
4/25/2024	11:15 PM	0	0	0	0	0	0	0	0	0	0	0	0	0
4/25/2024	11:30 PM	0	0	0	0	0	0	0	0	0	0	0	0	0
4/25/2024	11:45 PM	0	0	0	0	0	0	0	0	0	0	0	0	0

NB
File Name:
Start Date: 4/23/2024
Start Time: 0
Site Code: 24
Station ID: 1
Location 1: I-26 James F. Byrnes Expy On/Off-Ramp, south of SC-60 Lake Murray Blvd
Location 2:

Date	Time	1	2	3	4	5	6	7	8	9	10	11	12	13
4/23/2024	12:00 AM	0	0	0	0	0	0	0	0	0	0	0	0	0
4/23/2024	12:15 AM	0	0	0	0	0	0	0	0	0	0	0	0	0
4/23/2024	12:30 AM	0	0	0	0	0	0	0	0	0	0	0	0	0
4/23/2024	12:45 AM	0	0	0	0	0	0	0	0	0	0	0	0	0
4/23/2024	1:00 AM	0	0	0	0	0	0	0	0	0	0	0	0	0
4/23/2024	1:15 AM	0	0	0	0	0	0	0	0	0	0	0	0	0
4/23/2024	1:30 AM	0	0	0	0	0	0	0	0	0	0	0	0	0
4/23/2024	1:45 AM	0	0	0	0	0	0	0	0	0	0	0	0	0
4/23/2024	2:00 AM	0	0	0	0	0	0	0	0	0	0	0	0	0
4/23/2024	2:15 AM	0	0	0	0	0	0	0	0	0	0	0	0	0
4/23/2024	2:30 AM	0	0	0	0	0	0	0	0	0	0	0	0	0
4/23/2024	2:45 AM	0	0	0	0	0	0	0	0	0	0	0	0	0
4/23/2024	3:00 AM	0	0	0	0	0	0	0	0	0	0	0	0	0
4/23/2024	3:15 AM	0	0	0	0	0	0	0	0	0	0	0	0	0
4/23/2024	3:30 AM	0	0	0	0	0	0	0	0	0	0	0	0	0
4/23/2024	3:45 AM	0	0	0	0	0	0	0	0	0	0	0	0	0
4/23/2024	4:00 AM	0	0	0	0	0	0	0	0	0	0	0	0	0
4/23/2024	4:15 AM	0	0	0	0	0	0	0	0	0	0	0	0	0
4/23/2024	4:30 AM	0	0	0	0	0	0	0	0	0	0	0	0	0
4/23/2024	4:45 AM	0	0	0	0	0	0	0	0	0	0	0	0	0
4/23/2024	5:00 AM	0	0	0	0	0	0	0	0	0	0	0	0	0
4/23/2024	5:15 AM	0	0	0	0	0	0	0	0	0	0	0	0	0
4/23/2024	5:30 AM	0	0	0	0	0	0	0	0	0	0	0	0	0
4/23/2024	5:45 AM	0	0	0	0	0	0	0	0	0	0	0	0	0
4/23/2024	6:00 AM	0	0	0	0	0	0	0	0	0	0	0	0	0
4/23/2024	6:15 AM	0	0	0	0	0	0	0	0	0	0	0	0	0
4/23/2024	6:30 AM	0	0	0	0	0	0	0	0	0	0	0	0	0
4/23/2024	6:45 AM	0	0	0	0	0	0	0	0	0	0	0	0	0
4/23/2024	7:00 AM	0	0	0	0	0	0	0	0	0	0	0	0	0
4/23/2024	7:15 AM	0	0	0	0	0	0	0	0	0	0	0	0	0
4/23/2024	7:30 AM	0	0	0	0	0	0	0	0	0	0	0	0	0
4/23/2024	7:45 AM	0	0	0	0	0	0	0	0	0	0	0	0	0
4/23/2024	8:00 AM	0	0	0	0	0	0	0	0	0	0	0	0	0
4/23/2024	8:15 AM	0	0	0	0	0	0	0	0	0	0	0	0	0
4/23/2024	8:30 AM	0	0	0	0	0	0	0	0	0	0	0	0	0
4/23/2024	8:45 AM	0	0	0	0	0	0	0	0	0	0	0	0	0
4/23/2024	9:00 AM	0	0	0	0	0	0	0	0	0	0	0	0	0
4/23/2024	9:15 AM	0	0	0	0	0	0	0	0	0	0	0	0	0
4/23/2024	9:30 AM	0	0	0	0	0	0	0	0	0	0	0	0	0
4/23/2024	9:45 AM	0	0	0	0	0	0	0	0	0	0	0	0	0
4/23/2024	10:00 AM	0	0	0	0	0	0	0	0	0	0	0	0	0
4/23/2024	10:15 AM	0	0	0	0	0	0	0	0	0	0	0	0	0
4/23/2024	10:30 AM	0	0	0	0	0	0	0	0	0	0	0	0	0
4/23/2024	10:45 AM	0	0	0	0	0	0	0	0	0	0	0	0	0
4/23/2024	11:00 AM	0	0	0	0	0	0	0	0	0	0	0	0	0
4/23/2024	11:15 AM	0	0	0	0	0	0	0	0	0	0	0	0	0
4/23/2024	11:30 AM	0	0	0	0	0	0	0	0	0	0	0	0	0
4/23/2024	11:45 AM	0	0	0	0	0	0	0	0	0	0	0	0	0
4/23/2024	12:00 PM	0	0	0	0	0	0	0	0	0	0	0	0	0
4/23/2024	12:15 PM	0	0	0	0	0	0	0	0	0	0	0	0	0
4/23/2024	12:30 PM	0	0	0	0	0	0	0	0	0	0	0	0	0
4/23/2024	12:45 PM	0	0	0	0	0	0	0	0	0	0	0	0	0
4/23/2024	1:00 PM	0	0	0	0	0	0	0	0	0	0	0	0	0
4/23/2024	1:15 PM	0	0	0	0	0	0	0	0	0	0	0	0	0
4/23/2024	1:30 PM	0	0	0	0	0	0	0	0	0	0	0	0	0
4/23/2024	1:45 PM	0	0	0	0	0	0	0	0	0	0	0	0	0
4/23/2024	2:00 PM	0	0	0	0	0	0	0	0	0	0	0	0	0
4/23/2024	2:15 PM	0	0	0	0	0	0	0	0	0	0	0	0	0
4/23/2024	2:30 PM	0	0	0	0	0	0	0	0	0	0	0	0	0
4/23/2024	2:45 PM	0	0	0	0	0	0	0	0	0	0	0	0	0
4/23/2024	3:00 PM	0	0	0	0	0	0	0	0	0	0	0	0	0
4/23/2024	3:15 PM	0	0	0	0	0	0	0	0	0	0	0	0	0
4/23/2024	3:30 PM	0	0	0	0	0	0	0	0	0	0	0	0	0
4/23/2024	3:45 PM	0	0	0	0	0	0	0	0	0	0	0	0	0
4/23/2024	4:00 PM	0	0	0	0	0	0	0	0	0	0	0	0	0
4/23/2024	4:15 PM	0	0	0	0	0	0	0	0	0	0	0	0	0
4/23/2024	4:30 PM	0	0	0	0	0	0	0	0	0	0	0	0	0
4/23/2024	4:45 PM	0	0	0	0	0	0	0	0	0	0	0	0	0
4/23/2024	5:00 PM	0	0	0	0	0	0	0	0	0	0	0	0	0
4/23/2024	5:15 PM	0	0	0	0	0	0	0	0	0	0	0	0	0
4/23/2024	5:30 PM	0	0	0	0	0	0	0	0	0	0	0	0	0
4/23/2024	5:45 PM	0	0	0	0	0	0	0	0	0	0	0	0	0
4/23/2024	6:00 PM	0	0	0	0	0	0	0	0	0	0	0	0	0
4/23/2024	6:15 PM	0	7	0	0	0	0	0	0	0	0	0	0	0
4/23/2024	6:30 PM	0	11	3	0	0	0	0	0	0	0	0	0	0
4/23/2024	6:45 PM	0	16	4	0	0	0	0	0	0	0	0	0	0
4/23/2024	7:00 PM	0	23	4	0	0	0	0	0	0	0	0	0	0
4/23/2024	7:15 PM	0	21	6	0	0	0	0	0	0	0	0	0	0
4/23/2024	7:30 PM	0	22	4	0	0	0	0	0	1	0	0	0	0
4/23/2024	7:45 PM	0	25	3	0	0	0	0	0	1	0	0	0	0
4/23/2024	8:00 PM	0	22	3	0	5	0	0	0	1	0	0	0	0
4/23/2024	8:15 PM	1	20	1	0	5	0	0	0	1	0	0	0	0
4/23/2024	8:30 PM	1	17	0	0	5	0	0	0	0	0	0	0	0
4/23/2024	8:45 PM	1	15	0	0	5	0	0	0	0	0	0	0	0
4/23/2024	9:00 PM	1	13	0	0	0	0	0	0	0	0	0	0	0
4/23/2024	9:15 PM	0	16	2	0	0	0	0	0	0	0	0	0	0
4/23/2024	9:30 PM	0	18	3	0	0	0	0	0	0	0	0	0	0
4/23/2024	9:45 PM	0	12	3	0	0	0	0	0	0	0	0	0	0
4/23/2024	10:00 PM	0	14	3	0	0	0	0	0	0	0	0	0	0
4/23/2024	10:15 PM	0	9	1	0	0	0	0	0	0	0	0	0	0
4/23/2024	10:30 PM	0	5	0	0	0	0	0	0	0	0	0	0	0
4/23/2024	10:45 PM	0	6	0	0	0	0	0	0	0	0	0	0	0
4/23/2024	11:00 PM	0	2	0	0	0	0	0	0	0	0	0	0	0
4/23/2024	11:15 PM	0	2	0	0	0	0	0	0	0	0	0	0	0
4/23/2024	11:30 PM	0	2	0	0	0	0	0	0	0	0	0	0	0
4/23/2024	11:45 PM	0	2	0	0	0	0	0	0	0	0	0	0	0

4/24/2024	12:00 AM	0	3	0	0	0	0	0	0	0	0	0	0
4/24/2024	12:15 AM	0	2	0	0	0	0	0	0	0	0	0	0
4/24/2024	12:30 AM	0	2	0	0	0	0	0	0	0	0	0	0
4/24/2024	12:45 AM	0	3	0	0	0	0	0	0	0	0	0	0
4/24/2024	1:00 AM	0	2	0	0	0	0	0	0	0	0	0	0
4/24/2024	1:15 AM	0	2	0	0	0	0	0	0	0	0	0	0
4/24/2024	1:30 AM	0	2	0	0	0	0	0	0	0	0	0	0
4/24/2024	1:45 AM	0	0	0	0	0	0	0	0	0	0	0	0
4/24/2024	2:00 AM	0	0	0	0	0	0	0	0	0	0	0	0
4/24/2024	2:15 AM	0	1	0	0	0	0	0	0	0	0	0	0
4/24/2024	2:30 AM	0	2	0	0	0	0	0	0	0	0	0	0
4/24/2024	2:45 AM	0	2	0	0	0	0	0	0	0	0	0	0
4/24/2024	3:00 AM	0	3	0	0	0	0	0	0	0	0	0	0
4/24/2024	3:15 AM	0	3	0	0	0	0	0	0	0	0	0	0
4/24/2024	3:30 AM	0	2	0	0	0	0	0	0	0	0	0	0
4/24/2024	3:45 AM	0	2	0	0	0	0	0	0	0	0	0	0
4/24/2024	4:00 AM	0	3	0	0	0	0	0	0	0	0	0	0
4/24/2024	4:15 AM	0	2	1	0	0	0	0	0	0	0	0	0
4/24/2024	4:30 AM	0	7	1	0	0	0	0	0	0	0	0	0
4/24/2024	4:45 AM	0	10	1	0	0	0	0	0	0	0	0	0
4/24/2024	5:00 AM	0	15	3	0	0	0	0	0	0	0	0	0
4/24/2024	5:15 AM	0	22	5	0	0	0	0	0	0	0	0	0
4/24/2024	5:30 AM	0	25	6	0	0	0	0	0	0	0	0	0
4/24/2024	5:45 AM	0	37	11	0	0	0	0	0	0	0	0	0
4/24/2024	6:00 AM	1	44	11	0	0	0	0	0	0	0	0	0
4/24/2024	6:15 AM	1	51	16	0	0	0	0	0	0	0	0	0
4/24/2024	6:30 AM	1	74	24	0	0	0	0	0	0	0	0	0
4/24/2024	6:45 AM	1	113	39	0	0	0	0	0	0	0	0	0
4/24/2024	7:00 AM	0	162	50	0	1	0	0	0	1	0	0	0
4/24/2024	7:15 AM	0	192	56	1	2	0	0	0	2	0	0	0
4/24/2024	7:30 AM	0	181	56	1	3	0	0	0	2	0	0	0
4/24/2024	7:45 AM	0	153	37	1	3	0	0	0	2	0	0	0
4/24/2024	8:00 AM	0	122	33	1	2	0	0	0	1	0	0	0
4/24/2024	8:15 AM	0	97	22	0	2	0	0	0	0	0	0	0
4/24/2024	8:30 AM	0	89	19	0	1	0	0	0	0	0	0	0
4/24/2024	8:45 AM	0	82	22	0	2	0	0	0	0	0	0	0
4/24/2024	9:00 AM	0	64	20	0	2	0	0	0	0	0	0	0
4/24/2024	9:15 AM	0	60	22	0	1	0	0	0	0	0	0	0
4/24/2024	9:30 AM	0	58	16	0	1	0	0	0	0	0	0	0
4/24/2024	9:45 AM	0	46	12	0	0	0	0	0	0	0	0	0
4/24/2024	10:00 AM	0	45	11	0	0	0	0	0	0	0	0	0
4/24/2024	10:15 AM	0	37	7	0	0	0	0	0	0	0	0	0
4/24/2024	10:30 AM	0	29	7	0	0	0	0	0	0	0	0	0
4/24/2024	10:45 AM	1	28	12	0	0	0	0	0	0	0	0	0
4/24/2024	11:00 AM	1	23	8	0	0	0	0	0	0	0	0	0
4/24/2024	11:15 AM	1	25	8	0	1	0	0	0	0	0	0	0
4/24/2024	11:30 AM	1	32	9	0	1	0	0	0	0	0	0	0
4/24/2024	11:45 AM	0	36	6	0	1	0	0	0	0	0	0	0
4/24/2024	12:00 PM	1	35	5	0	1	0	0	0	0	0	0	0
4/24/2024	12:15 PM	1	37	7	0	1	0	0	0	0	0	0	0
4/24/2024	12:30 PM	1	39	6	0	1	1	0	0	0	0	0	0
4/24/2024	12:45 PM	1	39	6	0	1	1	0	0	0	0	0	0
4/24/2024	1:00 PM	0	37	7	0	1	1	0	0	0	0	0	0
4/24/2024	1:15 PM	0	35	5	0	0	1	0	0	0	0	0	0
4/24/2024	1:30 PM	0	36	7	0	0	0	0	0	0	0	0	0
4/24/2024	1:45 PM	0	28	6	0	0	0	0	0	0	0	0	0
4/24/2024	2:00 PM	0	35	6	0	1	0	0	0	0	0	0	0
4/24/2024	2:15 PM	0	43	7	0	1	0	0	0	0	0	0	0
4/24/2024	2:30 PM	0	39	7	0	1	0	0	0	0	0	0	0
4/24/2024	2:45 PM	0	49	7	0	1	0	0	0	0	0	0	0
4/24/2024	3:00 PM	0	44	6	0	0	0	0	0	0	0	0	0
4/24/2024	3:15 PM	0	40	5	0	0	0	0	0	0	0	0	0
4/24/2024	3:30 PM	0	43	6	0	0	0	0	0	0	0	0	0
4/24/2024	3:45 PM	0	38	8	0	0	0	0	0	0	0	0	0
4/24/2024	4:00 PM	0	40	9	0	0	0	0	0	1	0	0	0
4/24/2024	4:15 PM	0	33	12	0	0	0	1	0	1	0	0	0
4/24/2024	4:30 PM	0	42	14	0	1	0	1	0	1	0	0	0
4/24/2024	4:45 PM	0	48	11	0	1	0	1	0	1	0	0	0
4/24/2024	5:00 PM	0	57	11	0	1	0	2	0	0	0	0	0
4/24/2024	5:15 PM	0	63	12	0	1	0	1	0	0	0	0	0
4/24/2024	5:30 PM	0	61	11	0	0	0	1	1	0	0	0	0
4/24/2024	5:45 PM	0	52	13	0	0	0	1	1	0	0	0	0
4/24/2024	6:00 PM	0	48	12	0	0	0	0	1	0	0	0	0
4/24/2024	6:15 PM	0	42	8	0	0	0	0	1	0	0	0	0
4/24/2024	6:30 PM	0	28	8	0	0	0	0	0	0	0	0	0
4/24/2024	6:45 PM	0	27	6	0	0	0	0	0	0	0	0	0
4/24/2024	7:00 PM	0	19	6	0	0	0	0	0	0	0	0	0
4/24/2024	7:15 PM	0	14	6	0	0	0	0	0	0	0	0	0
4/24/2024	7:30 PM	0	15	4	0	0	0	0	0	0	0	0	0
4/24/2024	7:45 PM	0	16	4	0	0	0	0	0	0	0	0	0
4/24/2024	8:00 PM	0	14	3	0	0	0	0	0	0	0	0	0
4/24/2024	8:15 PM	0	14	2	0	0	0	0	0	0	0	0	0
4/24/2024	8:30 PM	0	10	0	0	0	0	0	0	0	0	0	0
4/24/2024	8:45 PM	0	9	1	0	0	0	0	0	0	0	0	0
4/24/2024	9:00 PM	0	6	1	0	0	0	0	0	0	0	0	0
4/24/2024	9:15 PM	0	8	1	0	0	0	0	0	0	0	0	0
4/24/2024	9:30 PM	0	8	2	0	0	0	0	0	0	0	0	0
4/24/2024	9:45 PM	0	5	1	0	0	0	0	0	0	0	0	0
4/24/2024	10:00 PM	0	8	1	0	0	0	0	0	0	0	0	0
4/24/2024	10:15 PM	0	7	1	0	0	0	0	0	0	0	0	0
4/24/2024	10:30 PM	0	7	0	0	0	0	0	0	0	0	0	0
4/24/2024	10:45 PM	0	8	0	0	0	0	0	0	0	0	0	0
4/24/2024	11:00 PM	0	5	1	0	1	0	0	0	0	0	0	0
4/24/2024	11:15 PM	0	3	1	0	1	0	0	0	0	0	0	0
4/24/2024	11:30 PM	0	2	1	0	1	0	0	0	0	0	0	0
4/24/2024	11:45 PM	0	1	1	0	1	0	0	0	0	0	0	0

4/25/2024	12:00 AM	0	0	0	0	0	0	0	0	0	0	0	0	0
4/25/2024	12:15 AM	0	0	0	0	0	0	0	0	0	0	0	0	0
4/25/2024	12:30 AM	0	0	0	0	0	0	0	0	0	0	0	0	0
4/25/2024	12:45 AM	0	0	0	0	0	0	0	0	0	0	0	0	0
4/25/2024	1:00 AM	0	0	0	0	0	0	0	0	0	0	0	0	0
4/25/2024	1:15 AM	0	0	0	0	0	0	0	0	0	0	0	0	0
4/25/2024	1:30 AM	0	0	0	0	0	0	0	0	0	0	0	0	0
4/25/2024	1:45 AM	0	0	0	0	0	0	0	0	0	0	0	0	0
4/25/2024	2:00 AM	0	0	0	0	0	0	0	0	0	0	0	0	0
4/25/2024	2:15 AM	0	0	0	0	0	0	0	0	0	0	0	0	0
4/25/2024	2:30 AM	0	0	0	0	0	0	0	0	0	0	0	0	0
4/25/2024	2:45 AM	0	0	0	0	0	0	0	0	0	0	0	0	0
4/25/2024	3:00 AM	0	0	0	0	0	0	0	0	0	0	0	0	0
4/25/2024	3:15 AM	0	4	0	0	0	0	0	0	0	0	0	0	0
4/25/2024	3:30 AM	0	5	0	0	0	0	0	0	0	0	0	0	0
4/25/2024	3:45 AM	0	8	0	0	0	0	0	0	0	0	0	0	0
4/25/2024	4:00 AM	0	8	0	0	0	0	0	0	0	0	0	0	0
4/25/2024	4:15 AM	0	7	0	0	0	0	0	0	0	0	0	0	0
4/25/2024	4:30 AM	0	7	0	0	0	0	0	0	0	0	0	0	0
4/25/2024	4:45 AM	0	8	0	0	0	0	0	0	0	0	0	0	0
4/25/2024	5:00 AM	0	14	3	0	0	0	0	0	0	0	0	0	0
4/25/2024	5:15 AM	0	17	5	0	0	0	0	0	0	0	0	0	0
4/25/2024	5:30 AM	0	26	9	0	0	0	0	0	0	0	0	0	0
4/25/2024	5:45 AM	0	35	17	0	0	0	0	0	0	0	0	0	0
4/25/2024	6:00 AM	0	42	18	0	0	0	0	0	0	0	0	0	0
4/25/2024	6:15 AM	0	49	24	0	0	0	0	0	0	0	0	0	0
4/25/2024	6:30 AM	0	77	24	0	0	0	0	0	1	0	0	0	0
4/25/2024	6:45 AM	0	115	30	0	0	0	0	0	1	0	0	0	0
4/25/2024	7:00 AM	0	161	38	0	0	0	0	0	1	0	0	0	0
4/25/2024	7:15 AM	0	195	39	0	0	0	0	0	2	0	0	0	0
4/25/2024	7:30 AM	0	197	45	0	0	0	0	0	1	0	0	0	0
4/25/2024	7:45 AM	0	188	40	0	0	0	2	0	1	0	0	0	0
4/25/2024	8:00 AM	0	152	37	0	0	0	2	0	1	0	0	0	0
4/25/2024	8:15 AM	0	122	35	0	0	0	2	0	0	0	0	0	0
4/25/2024	8:30 AM	0	95	32	0	0	0	2	0	0	0	0	0	0
4/25/2024	8:45 AM	0	65	26	0	0	0	0	0	0	0	0	0	0
4/25/2024	9:00 AM	0	50	17	0	0	0	0	0	0	0	0	0	0
4/25/2024	9:15 AM	0	41	17	0	0	0	0	0	0	0	0	0	0
4/25/2024	9:30 AM	0	35	13	0	0	0	0	0	0	0	0	0	0
4/25/2024	9:45 AM	0	28	14	0	0	0	0	0	0	0	0	0	0
4/25/2024	10:00 AM	0	28	17	0	0	0	0	0	0	0	0	0	0
4/25/2024	10:15 AM	0	27	13	0	0	0	0	0	1	0	0	0	0
4/25/2024	10:30 AM	0	28	11	0	0	0	0	0	1	0	0	0	0
4/25/2024	10:45 AM	0	30	8	0	0	0	0	0	1	0	0	0	0
4/25/2024	11:00 AM	0	33	9	0	0	0	0	0	1	0	0	0	0
4/25/2024	11:15 AM	0	33	11	0	0	0	0	0	0	0	0	0	0
4/25/2024	11:30 AM	0	35	13	0	0	0	0	0	0	0	0	0	0
4/25/2024	11:45 AM	0	37	17	0	0	0	0	0	0	0	0	0	0
4/25/2024	12:00 PM	0	39	16	0	0	0	0	0	0	0	0	0	0
4/25/2024	12:15 PM	0	41	14	0	0	0	0	0	0	0	0	0	0
4/25/2024	12:30 PM	0	38	15	0	1	0	0	0	0	0	0	0	0
4/25/2024	12:45 PM	0	37	13	0	1	0	0	0	0	0	0	0	0
4/25/2024	1:00 PM	0	32	16	0	1	0	0	0	0	0	0	0	0
4/25/2024	1:15 PM	0	31	15	0	1	0	0	0	0	0	0	0	0
4/25/2024	1:30 PM	0	32	18	0	0	0	0	0	0	0	0	0	0
4/25/2024	1:45 PM	0	29	21	0	0	0	0	0	0	0	0	0	0
4/25/2024	2:00 PM	0	28	16	0	0	0	0	1	0	0	0	0	0
4/25/2024	2:15 PM	0	25	19	0	0	0	0	1	0	0	0	0	0
4/25/2024	2:30 PM	0	25	13	0	0	0	0	1	0	0	0	0	0
4/25/2024	2:45 PM	0	30	9	0	0	0	0	1	0	0	0	0	0
4/25/2024	3:00 PM	0	39	10	0	0	0	0	0	1	0	0	0	0
4/25/2024	3:15 PM	0	43	10	0	0	0	0	0	1	0	0	0	0
4/25/2024	3:30 PM	0	45	14	0	0	0	0	0	1	0	0	0	0
4/25/2024	3:45 PM	0	40	14	0	0	0	0	0	1	0	0	0	0
4/25/2024	4:00 PM	0	28	19	0	1	0	0	0	0	0	0	0	0
4/25/2024	4:15 PM	0	25	17	0	2	0	0	0	0	0	0	0	0
4/25/2024	4:30 PM	0	24	15	0	3	0	0	0	0	0	0	0	0
4/25/2024	4:45 PM	0	31	19	0	3	0	0	0	0	0	0	0	0
4/25/2024	5:00 PM	0	34	17	0	3	0	0	1	0	0	0	0	0
4/25/2024	5:15 PM	0	41	16	0	2	0	0	1	0	0	0	0	0
4/25/2024	5:30 PM	0	38	16	0	1	0	0	1	0	0	0	0	0
4/25/2024	5:45 PM	0	38	12	0	1	0	0	1	0	0	0	0	0
4/25/2024	6:00 PM	0	39	10	1	0	0	0	0	0	0	0	0	0
4/25/2024	6:15 PM	0	26	8	1	0	0	0	0	0	0	0	0	0
4/25/2024	6:30 PM	0	20	5	1	0	0	0	0	0	0	0	0	0
4/25/2024	6:45 PM	0	8	3	1	0	0	0	0	0	0	0	0	0
4/25/2024	7:00 PM	0	0	0	0	0	0	0	0	0	0	0	0	0
4/25/2024	7:15 PM	0	0	0	0	0	0	0	0	0	0	0	0	0
4/25/2024	7:30 PM	0	0	0	0	0	0	0	0	0	0	0	0	0
4/25/2024	7:45 PM	0	0	0	0	0	0	0	0	0	0	0	0	0
4/25/2024	8:00 PM	0	0	0	0	0	0	0	0	0	0	0	0	0
4/25/2024	8:15 PM	0	0	0	0	0	0	0	0	0	0	0	0	0
4/25/2024	8:30 PM	0	0	0	0	0	0	0	0	0	0	0	0	0
4/25/2024	8:45 PM	0	0	0	0	0	0	0	0	0	0	0	0	0
4/25/2024	9:00 PM	0	0	0	0	0	0	0	0	0	0	0	0	0
4/25/2024	9:15 PM	0	0	0	0	0	0	0	0	0	0	0	0	0
4/25/2024	9:30 PM	0	0	0	0	0	0	0	0	0	0	0	0	0
4/25/2024	9:45 PM	0	0	0	0	0	0	0	0	0	0	0	0	0
4/25/2024	10:00 PM	0	0	0	0	0	0	0	0	0	0	0	0	0
4/25/2024	10:15 PM	0	0	0	0	0	0	0	0	0	0	0	0	0
4/25/2024	10:30 PM	0	0	0	0	0	0	0	0	0	0	0	0	0
4/25/2024	10:45 PM	0	0	0	0	0	0	0	0	0	0	0	0	0
4/25/2024	11:00 PM	0	0	0	0	0	0	0	0	0	0	0	0	0
4/25/2024	11:15 PM	0	0	0	0	0	0	0	0	0	0	0	0	0
4/25/2024	11:30 PM	0	0	0	0	0	0	0	0	0	0	0	0	0
4/25/2024	11:45 PM	0	0	0	0	0	0	0	0	0	0	0	0	0

SB
File Name:
Start Date: 4/23/2024
Start Time: 0
Site Code: 24
Station ID: 1
Location 1: I-26 James F. Byrnes Expy On/Off-Ramp, south of SC-60 Lake Murray Blvd
Location 2:

Date	Time	1	2	3	4	5	6	7	8	9	10	11	12	13
4/23/2024	12:00 AM	0	0	0	0	0	0	0	0	0	0	0	0	0
4/23/2024	12:15 AM	0	0	0	0	0	0	0	0	0	0	0	0	0
4/23/2024	12:30 AM	0	0	0	0	0	0	0	0	0	0	0	0	0
4/23/2024	12:45 AM	0	0	0	0	0	0	0	0	0	0	0	0	0
4/23/2024	1:00 AM	0	0	0	0	0	0	0	0	0	0	0	0	0
4/23/2024	1:15 AM	0	0	0	0	0	0	0	0	0	0	0	0	0
4/23/2024	1:30 AM	0	0	0	0	0	0	0	0	0	0	0	0	0
4/23/2024	1:45 AM	0	0	0	0	0	0	0	0	0	0	0	0	0
4/23/2024	2:00 AM	0	0	0	0	0	0	0	0	0	0	0	0	0
4/23/2024	2:15 AM	0	0	0	0	0	0	0	0	0	0	0	0	0
4/23/2024	2:30 AM	0	0	0	0	0	0	0	0	0	0	0	0	0
4/23/2024	2:45 AM	0	0	0	0	0	0	0	0	0	0	0	0	0
4/23/2024	3:00 AM	0	0	0	0	0	0	0	0	0	0	0	0	0
4/23/2024	3:15 AM	0	0	0	0	0	0	0	0	0	0	0	0	0
4/23/2024	3:30 AM	0	0	0	0	0	0	0	0	0	0	0	0	0
4/23/2024	3:45 AM	0	0	0	0	0	0	0	0	0	0	0	0	0
4/23/2024	4:00 AM	0	0	0	0	0	0	0	0	0	0	0	0	0
4/23/2024	4:15 AM	0	0	0	0	0	0	0	0	0	0	0	0	0
4/23/2024	4:30 AM	0	0	0	0	0	0	0	0	0	0	0	0	0
4/23/2024	4:45 AM	0	0	0	0	0	0	0	0	0	0	0	0	0
4/23/2024	5:00 AM	0	0	0	0	0	0	0	0	0	0	0	0	0
4/23/2024	5:15 AM	0	0	0	0	0	0	0	0	0	0	0	0	0
4/23/2024	5:30 AM	0	0	0	0	0	0	0	0	0	0	0	0	0
4/23/2024	5:45 AM	0	0	0	0	0	0	0	0	0	0	0	0	0
4/23/2024	6:00 AM	0	0	0	0	0	0	0	0	0	0	0	0	0
4/23/2024	6:15 AM	0	0	0	0	0	0	0	0	0	0	0	0	0
4/23/2024	6:30 AM	0	0	0	0	0	0	0	0	0	0	0	0	0
4/23/2024	6:45 AM	0	0	0	0	0	0	0	0	0	0	0	0	0
4/23/2024	7:00 AM	0	0	0	0	0	0	0	0	0	0	0	0	0
4/23/2024	7:15 AM	0	0	0	0	0	0	0	0	0	0	0	0	0
4/23/2024	7:30 AM	0	0	0	0	0	0	0	0	0	0	0	0	0
4/23/2024	7:45 AM	0	0	0	0	0	0	0	0	0	0	0	0	0
4/23/2024	8:00 AM	0	0	0	0	0	0	0	0	0	0	0	0	0
4/23/2024	8:15 AM	0	0	0	0	0	0	0	0	0	0	0	0	0
4/23/2024	8:30 AM	0	0	0	0	0	0	0	0	0	0	0	0	0
4/23/2024	8:45 AM	0	0	0	0	0	0	0	0	0	0	0	0	0
4/23/2024	9:00 AM	0	0	0	0	0	0	0	0	0	0	0	0	0
4/23/2024	9:15 AM	0	0	0	0	0	0	0	0	0	0	0	0	0
4/23/2024	9:30 AM	0	0	0	0	0	0	0	0	0	0	0	0	0
4/23/2024	9:45 AM	0	0	0	0	0	0	0	0	0	0	0	0	0
4/23/2024	10:00 AM	0	0	0	0	0	0	0	0	0	0	0	0	0
4/23/2024	10:15 AM	0	0	0	0	0	0	0	0	0	0	0	0	0
4/23/2024	10:30 AM	0	0	0	0	0	0	0	0	0	0	0	0	0
4/23/2024	10:45 AM	0	0	0	0	0	0	0	0	0	0	0	0	0
4/23/2024	11:00 AM	0	0	0	0	0	0	0	0	0	0	0	0	0
4/23/2024	11:15 AM	0	0	0	0	0	0	0	0	0	0	0	0	0
4/23/2024	11:30 AM	0	0	0	0	0	0	0	0	0	0	0	0	0
4/23/2024	11:45 AM	0	0	0	0	0	0	0	0	0	0	0	0	0
4/23/2024	12:00 PM	0	0	0	0	0	0	0	0	0	0	0	0	0
4/23/2024	12:15 PM	0	0	0	0	0	0	0	0	0	0	0	0	0
4/23/2024	12:30 PM	0	0	0	0	0	0	0	0	0	0	0	0	0
4/23/2024	12:45 PM	0	0	0	0	0	0	0	0	0	0	0	0	0
4/23/2024	1:00 PM	0	0	0	0	0	0	0	0	0	0	0	0	0
4/23/2024	1:15 PM	0	0	0	0	0	0	0	0	0	0	0	0	0
4/23/2024	1:30 PM	0	0	0	0	0	0	0	0	0	0	0	0	0
4/23/2024	1:45 PM	0	0	0	0	0	0	0	0	0	0	0	0	0
4/23/2024	2:00 PM	0	0	0	0	0	0	0	0	0	0	0	0	0
4/23/2024	2:15 PM	0	0	0	0	0	0	0	0	0	0	0	0	0
4/23/2024	2:30 PM	0	0	0	0	0	0	0	0	0	0	0	0	0
4/23/2024	2:45 PM	0	0	0	0	0	0	0	0	0	0	0	0	0
4/23/2024	3:00 PM	0	0	0	0	0	0	0	0	0	0	0	0	0
4/23/2024	3:15 PM	0	0	0	0	0	0	0	0	0	0	0	0	0
4/23/2024	3:30 PM	0	0	0	0	0	0	0	0	0	0	0	0	0
4/23/2024	3:45 PM	0	0	0	0	0	0	0	0	0	0	0	0	0
4/23/2024	4:00 PM	0	0	0	0	0	0	0	0	0	0	0	0	0
4/23/2024	4:15 PM	0	0	0	0	0	0	0	0	0	0	0	0	0
4/23/2024	4:30 PM	0	0	0	0	0	0	0	0	0	0	0	0	0
4/23/2024	4:45 PM	0	0	0	0	0	0	0	0	0	0	0	0	0
4/23/2024	5:00 PM	0	0	0	0	0	0	0	0	0	0	0	0	0
4/23/2024	5:15 PM	0	0	0	0	0	0	0	0	0	0	0	0	0
4/23/2024	5:30 PM	0	0	0	0	0	0	0	0	0	0	0	0	0
4/23/2024	5:45 PM	0	0	0	0	0	0	0	0	0	0	0	0	0
4/23/2024	6:00 PM	0	0	0	0	0	0	0	0	0	0	0	0	0
4/23/2024	6:15 PM	0	0	0	0	0	0	0	0	0	0	0	0	0
4/23/2024	6:30 PM	0	0	0	0	0	0	0	0	0	0	0	0	0
4/23/2024	6:45 PM	0	0	0	0	0	0	0	0	0	0	0	0	0
4/23/2024	7:00 PM	0	0	0	0	0	0	0	0	0	0	0	0	0
4/23/2024	7:15 PM	0	0	0	0	0	0	0	0	0	0	0	0	0
4/23/2024	7:30 PM	0	0	0	0	0	0	0	0	0	0	0	0	0
4/23/2024	7:45 PM	0	0	0	0	0	0	0	0	0	0	0	0	0
4/23/2024	8:00 PM	0	0	0	0	0	0	0	0	0	0	0	0	0
4/23/2024	8:15 PM	0	0	0	0	0	0	0	0	0	0	0	0	0
4/23/2024	8:30 PM	0	0	0	0	0	0	0	0	0	0	0	0	0
4/23/2024	8:45 PM	0	0	0	0	0	0	0	0	0	0	0	0	0
4/23/2024	9:00 PM	0	0	0	0	0	0	0	0	0	0	0	0	0
4/23/2024	9:15 PM	0	0	0	0	0	0	0	0	0	0	0	0	0
4/23/2024	9:30 PM	0	0	0	0	0	0	0	0	0	0	0	0	0
4/23/2024	9:45 PM	0	0	0	0	0	0	0	0	0	0	0	0	0
4/23/2024	10:00 PM	0	0	0	0	0	0	0	0	0	0	0	0	0
4/23/2024	10:15 PM	0	0	0	0	0	0	0	0	0	0	0	0	0
4/23/2024	10:30 PM	0	0	0	0	0	0	0	0	0	0	0	0	0
4/23/2024	10:45 PM	0	0	0	0	0	0	0	0	0	0	0	0	0
4/23/2024	11:00 PM	0	0	0	0	0	0	0	0	0	0	0	0	0
4/23/2024	11:15 PM	0	0	0	0	0	0	0	0	0	0	0	0	0
4/23/2024	11:30 PM	0	0	0	0	0	0	0	0	0	0	0	0	0
4/23/2024	11:45 PM	0	0	0	0	0	0	0	0	0	0	0	0	0

4/24/2024	12:00 AM	0	0	0	0	0	0	0	0	0	0	0	0	0
4/24/2024	12:15 AM	0	0	0	0	0	0	0	0	0	0	0	0	0
4/24/2024	12:30 AM	0	0	0	0	0	0	0	0	0	0	0	0	0
4/24/2024	12:45 AM	0	0	0	0	0	0	0	0	0	0	0	0	0
4/24/2024	1:00 AM	0	0	0	0	0	0	0	0	0	0	0	0	0
4/24/2024	1:15 AM	0	0	0	0	0	0	0	0	0	0	0	0	0
4/24/2024	1:30 AM	0	0	0	0	0	0	0	0	0	0	0	0	0
4/24/2024	1:45 AM	0	0	0	0	0	0	0	0	0	0	0	0	0
4/24/2024	2:00 AM	0	0	0	0	0	0	0	0	0	0	0	0	0
4/24/2024	2:15 AM	0	0	0	0	0	0	0	0	0	0	0	0	0
4/24/2024	2:30 AM	0	0	0	0	0	0	0	0	0	0	0	0	0
4/24/2024	2:45 AM	0	0	0	0	0	0	0	0	0	0	0	0	0
4/24/2024	3:00 AM	0	0	0	0	0	0	0	0	0	0	0	0	0
4/24/2024	3:15 AM	0	0	0	0	0	0	0	0	0	0	0	0	0
4/24/2024	3:30 AM	0	0	0	0	0	0	0	0	0	0	0	0	0
4/24/2024	3:45 AM	0	0	0	0	0	0	0	0	0	0	0	0	0
4/24/2024	4:00 AM	0	0	0	0	0	0	0	0	0	0	0	0	0
4/24/2024	4:15 AM	0	0	0	0	0	0	0	0	0	0	0	0	0
4/24/2024	4:30 AM	0	0	0	0	0	0	0	0	0	0	0	0	0
4/24/2024	4:45 AM	0	0	0	0	0	0	0	0	0	0	0	0	0
4/24/2024	5:00 AM	0	0	0	0	0	0	0	0	0	0	0	0	0
4/24/2024	5:15 AM	0	0	0	0	0	0	0	0	0	0	0	0	0
4/24/2024	5:30 AM	0	0	0	0	0	0	0	0	0	0	0	0	0
4/24/2024	5:45 AM	0	0	0	0	0	0	0	0	0	0	0	0	0
4/24/2024	6:00 AM	0	0	0	0	0	0	0	0	0	0	0	0	0
4/24/2024	6:15 AM	0	0	0	0	0	0	0	0	0	0	0	0	0
4/24/2024	6:30 AM	0	0	0	0	0	0	0	0	0	0	0	0	0
4/24/2024	6:45 AM	0	0	0	0	0	0	0	0	0	0	0	0	0
4/24/2024	7:00 AM	0	0	0	0	0	0	0	0	0	0	0	0	0
4/24/2024	7:15 AM	0	0	0	0	0	0	0	0	0	0	0	0	0
4/24/2024	7:30 AM	0	0	0	0	0	0	0	0	0	0	0	0	0
4/24/2024	7:45 AM	0	0	0	0	0	0	0	0	0	0	0	0	0
4/24/2024	8:00 AM	0	0	0	0	0	0	0	0	0	0	0	0	0
4/24/2024	8:15 AM	0	0	0	0	0	0	0	0	0	0	0	0	0
4/24/2024	8:30 AM	0	0	0	0	0	0	0	0	0	0	0	0	0
4/24/2024	8:45 AM	0	0	0	0	0	0	0	0	0	0	0	0	0
4/24/2024	9:00 AM	0	0	0	0	0	0	0	0	0	0	0	0	0
4/24/2024	9:15 AM	0	0	0	0	0	0	0	0	0	0	0	0	0
4/24/2024	9:30 AM	0	0	0	0	0	0	0	0	0	0	0	0	0
4/24/2024	9:45 AM	0	0	0	0	0	0	0	0	0	0	0	0	0
4/24/2024	10:00 AM	0	0	0	0	0	0	0	0	0	0	0	0	0
4/24/2024	10:15 AM	0	0	0	0	0	0	0	0	0	0	0	0	0
4/24/2024	10:30 AM	0	0	0	0	0	0	0	0	0	0	0	0	0
4/24/2024	10:45 AM	0	0	0	0	0	0	0	0	0	0	0	0	0
4/24/2024	11:00 AM	0	0	0	0	0	0	0	0	0	0	0	0	0
4/24/2024	11:15 AM	0	0	0	0	0	0	0	0	0	0	0	0	0
4/24/2024	11:30 AM	0	0	0	0	0	0	0	0	0	0	0	0	0
4/24/2024	11:45 AM	0	0	0	0	0	0	0	0	0	0	0	0	0
4/24/2024	12:00 PM	0	0	0	0	0	0	0	0	0	0	0	0	0
4/24/2024	12:15 PM	0	0	0	0	0	0	0	0	0	0	0	0	0
4/24/2024	12:30 PM	0	0	0	0	0	0	0	0	0	0	0	0	0
4/24/2024	12:45 PM	0	0	0	0	0	0	0	0	0	0	0	0	0
4/24/2024	1:00 PM	0	0	0	0	0	0	0	0	0	0	0	0	0
4/24/2024	1:15 PM	0	0	0	0	0	0	0	0	0	0	0	0	0
4/24/2024	1:30 PM	0	0	0	0	0	0	0	0	0	0	0	0	0
4/24/2024	1:45 PM	0	0	0	0	0	0	0	0	0	0	0	0	0
4/24/2024	2:00 PM	0	0	0	0	0	0	0	0	0	0	0	0	0
4/24/2024	2:15 PM	0	0	0	0	0	0	0	0	0	0	0	0	0
4/24/2024	2:30 PM	0	0	0	0	0	0	0	0	0	0	0	0	0
4/24/2024	2:45 PM	0	0	0	0	0	0	0	0	0	0	0	0	0
4/24/2024	3:00 PM	0	0	0	0	0	0	0	0	0	0	0	0	0
4/24/2024	3:15 PM	0	0	0	0	0	0	0	0	0	0	0	0	0
4/24/2024	3:30 PM	0	0	0	0	0	0	0	0	0	0	0	0	0
4/24/2024	3:45 PM	0	0	0	0	0	0	0	0	0	0	0	0	0
4/24/2024	4:00 PM	0	0	0	0	0	0	0	0	0	0	0	0	0
4/24/2024	4:15 PM	0	0	0	0	0	0	0	0	0	0	0	0	0
4/24/2024	4:30 PM	0	0	0	0	0	0	0	0	0	0	0	0	0
4/24/2024	4:45 PM	0	0	0	0	0	0	0	0	0	0	0	0	0
4/24/2024	5:00 PM	0	0	0	0	0	0	0	0	0	0	0	0	0
4/24/2024	5:15 PM	0	0	0	0	0	0	0	0	0	0	0	0	0
4/24/2024	5:30 PM	0	0	0	0	0	0	0	0	0	0	0	0	0
4/24/2024	5:45 PM	0	0	0	0	0	0	0	0	0	0	0	0	0
4/24/2024	6:00 PM	0	0	0	0	0	0	0	0	0	0	0	0	0
4/24/2024	6:15 PM	0	0	0	0	0	0	0	0	0	0	0	0	0
4/24/2024	6:30 PM	0	0	0	0	0	0	0	0	0	0	0	0	0
4/24/2024	6:45 PM	0	0	0	0	0	0	0	0	0	0	0	0	0
4/24/2024	7:00 PM	0	0	0	0	0	0	0	0	0	0	0	0	0
4/24/2024	7:15 PM	0	0	0	0	0	0	0	0	0	0	0	0	0
4/24/2024	7:30 PM	0	0	0	0	0	0	0	0	0	0	0	0	0
4/24/2024	7:45 PM	0	0	0	0	0	0	0	0	0	0	0	0	0
4/24/2024	8:00 PM	0	0	0	0	0	0	0	0	0	0	0	0	0
4/24/2024	8:15 PM	0	0	0	0	0	0	0	0	0	0	0	0	0
4/24/2024	8:30 PM	0	0	0	0	0	0	0	0	0	0	0	0	0
4/24/2024	8:45 PM	0	0	0	0	0	0	0	0	0	0	0	0	0
4/24/2024	9:00 PM	0	0	0	0	0	0	0	0	0	0	0	0	0
4/24/2024	9:15 PM	0	0	0	0	0	0	0	0	0	0	0	0	0
4/24/2024	9:30 PM	0	0	0	0	0	0	0	0	0	0	0	0	0
4/24/2024	9:45 PM	0	0	0	0	0	0	0	0	0	0	0	0	0
4/24/2024	10:00 PM	0	0	0	0	0	0	0	0	0	0	0	0	0
4/24/2024	10:15 PM	0	0	0	0	0	0	0	0	0	0	0	0	0
4/24/2024	10:30 PM	0	0	0	0	0	0	0	0	0	0	0	0	0
4/24/2024	10:45 PM	0	0	0	0	0	0	0	0	0	0	0	0	0
4/24/2024	11:00 PM	0	0	0	0	0	0	0	0	0	0	0	0	0
4/24/2024	11:15 PM	0	0	0	0	0	0	0	0	0	0	0	0	0
4/24/2024	11:30 PM	0	0	0	0	0	0	0	0	0	0	0	0	0
4/24/2024	11:45 PM	0	0	0	0	0	0	0	0	0	0	0	0	0

4/25/2024	12:00 AM	0	0	0	0	0	0	0	0	0	0	0	0	0
4/25/2024	12:15 AM	0	0	0	0	0	0	0	0	0	0	0	0	0
4/25/2024	12:30 AM	0	0	0	0	0	0	0	0	0	0	0	0	0
4/25/2024	12:45 AM	0	0	0	0	0	0	0	0	0	0	0	0	0
4/25/2024	1:00 AM	0	0	0	0	0	0	0	0	0	0	0	0	0
4/25/2024	1:15 AM	0	0	0	0	0	0	0	0	0	0	0	0	0
4/25/2024	1:30 AM	0	0	0	0	0	0	0	0	0	0	0	0	0
4/25/2024	1:45 AM	0	0	0	0	0	0	0	0	0	0	0	0	0
4/25/2024	2:00 AM	0	0	0	0	0	0	0	0	0	0	0	0	0
4/25/2024	2:15 AM	0	0	0	0	0	0	0	0	0	0	0	0	0
4/25/2024	2:30 AM	0	0	0	0	0	0	0	0	0	0	0	0	0
4/25/2024	2:45 AM	0	0	0	0	0	0	0	0	0	0	0	0	0
4/25/2024	3:00 AM	0	0	0	0	0	0	0	0	0	0	0	0	0
4/25/2024	3:15 AM	0	0	0	0	0	0	0	0	0	0	0	0	0
4/25/2024	3:30 AM	0	0	0	0	0	0	0	0	0	0	0	0	0
4/25/2024	3:45 AM	0	0	0	0	0	0	0	0	0	0	0	0	0
4/25/2024	4:00 AM	0	0	0	0	0	0	0	0	0	0	0	0	0
4/25/2024	4:15 AM	0	0	0	0	0	0	0	0	0	0	0	0	0
4/25/2024	4:30 AM	0	0	0	0	0	0	0	0	0	0	0	0	0
4/25/2024	4:45 AM	0	0	0	0	0	0	0	0	0	0	0	0	0
4/25/2024	5:00 AM	0	0	0	0	0	0	0	0	0	0	0	0	0
4/25/2024	5:15 AM	0	0	0	0	0	0	0	0	0	0	0	0	0
4/25/2024	5:30 AM	0	0	0	0	0	0	0	0	0	0	0	0	0
4/25/2024	5:45 AM	0	0	0	0	0	0	0	0	0	0	0	0	0
4/25/2024	6:00 AM	0	0	0	0	0	0	0	0	0	0	0	0	0
4/25/2024	6:15 AM	0	0	0	0	0	0	0	0	0	0	0	0	0
4/25/2024	6:30 AM	0	0	0	0	0	0	0	0	0	0	0	0	0
4/25/2024	6:45 AM	0	0	0	0	0	0	0	0	0	0	0	0	0
4/25/2024	7:00 AM	0	0	0	0	0	0	0	0	0	0	0	0	0
4/25/2024	7:15 AM	0	0	0	0	0	0	0	0	0	0	0	0	0
4/25/2024	7:30 AM	0	0	0	0	0	0	0	0	0	0	0	0	0
4/25/2024	7:45 AM	0	0	0	0	0	0	0	0	0	0	0	0	0
4/25/2024	8:00 AM	0	0	0	0	0	0	0	0	0	0	0	0	0
4/25/2024	8:15 AM	0	0	0	0	0	0	0	0	0	0	0	0	0
4/25/2024	8:30 AM	0	0	0	0	0	0	0	0	0	0	0	0	0
4/25/2024	8:45 AM	0	0	0	0	0	0	0	0	0	0	0	0	0
4/25/2024	9:00 AM	0	0	0	0	0	0	0	0	0	0	0	0	0
4/25/2024	9:15 AM	0	0	0	0	0	0	0	0	0	0	0	0	0
4/25/2024	9:30 AM	0	0	0	0	0	0	0	0	0	0	0	0	0
4/25/2024	9:45 AM	0	0	0	0	0	0	0	0	0	0	0	0	0
4/25/2024	10:00 AM	0	0	0	0	0	0	0	0	0	0	0	0	0
4/25/2024	10:15 AM	0	0	0	0	0	0	0	0	0	0	0	0	0
4/25/2024	10:30 AM	0	0	0	0	0	0	0	0	0	0	0	0	0
4/25/2024	10:45 AM	0	0	0	0	0	0	0	0	0	0	0	0	0
4/25/2024	11:00 AM	0	0	0	0	0	0	0	0	0	0	0	0	0
4/25/2024	11:15 AM	0	0	0	0	0	0	0	0	0	0	0	0	0
4/25/2024	11:30 AM	0	0	0	0	0	0	0	0	0	0	0	0	0
4/25/2024	11:45 AM	0	0	0	0	0	0	0	0	0	0	0	0	0
4/25/2024	12:00 PM	0	0	0	0	0	0	0	0	0	0	0	0	0
4/25/2024	12:15 PM	0	0	0	0	0	0	0	0	0	0	0	0	0
4/25/2024	12:30 PM	0	0	0	0	0	0	0	0	0	0	0	0	0
4/25/2024	12:45 PM	0	0	0	0	0	0	0	0	0	0	0	0	0
4/25/2024	1:00 PM	0	0	0	0	0	0	0	0	0	0	0	0	0
4/25/2024	1:15 PM	0	0	0	0	0	0	0	0	0	0	0	0	0
4/25/2024	1:30 PM	0	0	0	0	0	0	0	0	0	0	0	0	0
4/25/2024	1:45 PM	0	0	0	0	0	0	0	0	0	0	0	0	0
4/25/2024	2:00 PM	0	0	0	0	0	0	0	0	0	0	0	0	0
4/25/2024	2:15 PM	0	0	0	0	0	0	0	0	0	0	0	0	0
4/25/2024	2:30 PM	0	0	0	0	0	0	0	0	0	0	0	0	0
4/25/2024	2:45 PM	0	0	0	0	0	0	0	0	0	0	0	0	0
4/25/2024	3:00 PM	0	0	0	0	0	0	0	0	0	0	0	0	0
4/25/2024	3:15 PM	0	0	0	0	0	0	0	0	0	0	0	0	0
4/25/2024	3:30 PM	0	0	0	0	0	0	0	0	0	0	0	0	0
4/25/2024	3:45 PM	0	0	0	0	0	0	0	0	0	0	0	0	0
4/25/2024	4:00 PM	0	0	0	0	0	0	0	0	0	0	0	0	0
4/25/2024	4:15 PM	0	0	0	0	0	0	0	0	0	0	0	0	0
4/25/2024	4:30 PM	0	0	0	0	0	0	0	0	0	0	0	0	0
4/25/2024	4:45 PM	0	0	0	0	0	0	0	0	0	0	0	0	0
4/25/2024	5:00 PM	0	0	0	0	0	0	0	0	0	0	0	0	0
4/25/2024	5:15 PM	0	0	0	0	0	0	0	0	0	0	0	0	0
4/25/2024	5:30 PM	0	0	0	0	0	0	0	0	0	0	0	0	0
4/25/2024	5:45 PM	0	0	0	0	0	0	0	0	0	0	0	0	0
4/25/2024	6:00 PM	0	0	0	0	0	0	0	0	0	0	0	0	0
4/25/2024	6:15 PM	0	0	0	0	0	0	0	0	0	0	0	0	0
4/25/2024	6:30 PM	0	0	0	0	0	0	0	0	0	0	0	0	0
4/25/2024	6:45 PM	0	0	0	0	0	0	0	0	0	0	0	0	0
4/25/2024	7:00 PM	0	0	0	0	0	0	0	0	0	0	0	0	0
4/25/2024	7:15 PM	0	0	0	0	0	0	0	0	0	0	0	0	0
4/25/2024	7:30 PM	0	0	0	0	0	0	0	0	0	0	0	0	0
4/25/2024	7:45 PM	0	0	0	0	0	0	0	0	0	0	0	0	0
4/25/2024	8:00 PM	0	0	0	0	0	0	0	0	0	0	0	0	0
4/25/2024	8:15 PM	0	0	0	0	0	0	0	0	0	0	0	0	0
4/25/2024	8:30 PM	0	0	0	0	0	0	0	0	0	0	0	0	0
4/25/2024	8:45 PM	0	0	0	0	0	0	0	0	0	0	0	0	0
4/25/2024	9:00 PM	0	0	0	0	0	0	0	0	0	0	0	0	0
4/25/2024	9:15 PM	0	0	0	0	0	0	0	0	0	0	0	0	0
4/25/2024	9:30 PM	0	0	0	0	0	0	0	0	0	0	0	0	0
4/25/2024	9:45 PM	0	0	0	0	0	0	0	0	0	0	0	0	0
4/25/2024	10:00 PM	0	0	0	0	0	0	0	0	0	0	0	0	0
4/25/2024	10:15 PM	0	0	0	0	0	0	0	0	0	0	0	0	0
4/25/2024	10:30 PM	0	0	0	0	0	0	0	0	0	0	0	0	0
4/25/2024	10:45 PM	0	0	0	0	0	0	0	0	0	0	0	0	0
4/25/2024	11:00 PM	0	0	0	0	0	0	0	0	0	0	0	0	0
4/25/2024	11:15 PM	0	0	0	0	0	0	0	0	0	0	0	0	0
4/25/2024	11:30 PM	0	0	0	0	0	0	0	0	0	0	0	0	0
4/25/2024	11:45 PM	0	0	0	0	0	0	0	0	0	0	0	0	0

Bi-Directional Class Count || NB EB 15min

Columbia, SC

Marr Traffic DATA COLLECTION
www.marrtraffic.com

Site 25
I-26 James F. Byrnes Expy On/Off-Ramp,
north of SC-60 Lake Murray Blvd

Date
Tuesday, April 23, 2024

Lat/Long
34.091845°, -81.163993°

Weather
Fair
58°F

Click here for Detailed Weather

Click here for Map

0000 - 2400 (Weekday 24h Session) (04-23-2024)
NB EB 15min

	Northbound (Movement 25.1)													15min	60min
Time	1	2	3	4	5	6	7	8	9	10	11	12	13	Total	Total
0000 - 0015	0	0	0	0	0	0	0	0	0	0	0	0	0	**0**	
0015 - 0030	0	0	0	0	0	0	0	0	0	0	0	0	0	**0**	
0030 - 0045	0	0	0	0	0	0	0	0	0	0	0	0	0	**0**	
0045 - 0100	0	0	0	0	0	0	0	0	0	0	0	0	0	**0**	**0**
0100 - 0115	0	0	0	0	0	0	0	0	0	0	0	0	0	**0**	
0115 - 0130	0	0	0	0	0	0	0	0	0	0	0	0	0	**0**	
0130 - 0145	0	0	0	0	0	0	0	0	0	0	0	0	0	**0**	
0145 - 0200	0	0	0	0	0	0	0	0	0	0	0	0	0	**0**	**0**
0200 - 0215	0	0	0	0	0	0	0	0	0	0	0	0	0	**0**	
0215 - 0230	0	0	0	0	0	0	0	0	0	0	0	0	0	**0**	
0230 - 0245	0	0	0	0	0	0	0	0	0	0	0	0	0	**0**	
0245 - 0300	0	0	0	0	0	0	0	0	0	0	0	0	0	**0**	**0**
0300 - 0315	0	0	0	0	0	0	0	0	0	0	0	0	0	**0**	
0315 - 0330	0	0	0	0	0	0	0	0	0	0	0	0	0	**0**	
0330 - 0345	0	0	0	0	0	0	0	0	0	0	0	0	0	**0**	
0345 - 0400	0	0	0	0	0	0	0	0	0	0	0	0	0	**0**	**0**
0400 - 0415	0	0	0	0	0	0	0	0	0	0	0	0	0	**0**	
0415 - 0430	0	0	0	0	0	0	0	0	0	0	0	0	0	**0**	
0430 - 0445	0	0	0	0	0	0	0	0	0	0	0	0	0	**0**	
0445 - 0500	0	0	0	0	0	0	0	0	0	0	0	0	0	**0**	**0**
0500 - 0515	0	0	0	0	0	0	0	0	0	0	0	0	0	**0**	
0515 - 0530	0	0	0	0	0	0	0	0	0	0	0	0	0	**0**	
0530 - 0545	0	0	0	0	0	0	0	0	0	0	0	0	0	**0**	
0545 - 0600	0	0	0	0	0	0	0	0	0	0	0	0	0	**0**	**0**
0600 - 0615	0	0	0	0	0	0	0	0	0	0	0	0	0	**0**	
0615 - 0630	0	0	0	0	0	0	0	0	0	0	0	0	0	**0**	
0630 - 0645	0	0	0	0	0	0	0	0	0	0	0	0	0	**0**	
0645 - 0700	0	0	0	0	0	0	0	0	0	0	0	0	0	**0**	**0**
0700 - 0715	0	0	0	0	0	0	0	0	0	0	0	0	0	**0**	
0715 - 0730	0	0	0	0	0	0	0	0	0	0	0	0	0	**0**	
0730 - 0745	0	0	0	0	0	0	0	0	0	0	0	0	0	**0**	
0745 - 0800	0	0	0	0	0	0	0	0	0	0	0	0	0	**0**	**0**
0800 - 0815	0	0	0	0	0	0	0	0	0	0	0	0	0	**0**	
0815 - 0830	0	0	0	0	0	0	0	0	0	0	0	0	0	**0**	
0830 - 0845	0	0	0	0	0	0	0	0	0	0	0	0	0	**0**	
0845 - 0900	0	0	0	0	0	0	0	0	0	0	0	0	0	**0**	**0**
0900 - 0915	0	0	0	0	0	0	0	0	0	0	0	0	0	**0**	
0915 - 0930	0	0	0	0	0	0	0	0	0	0	0	0	0	**0**	
0930 - 0945	0	0	0	0	0	0	0	0	0	0	0	0	0	**0**	
0945 - 1000	0	0	0	0	0	0	0	0	0	0	0	0	0	**0**	**0**
1000 - 1015	0	0	0	0	0	0	0	0	0	0	0	0	0	**0**	
1015 - 1030	0	0	0	0	0	0	0	0	0	0	0	0	0	**0**	
1030 - 1045	0	0	0	0	0	0	0	0	0	0	0	0	0	**0**	
1045 - 1100	0	0	0	0	0	0	0	0	0	0	0	0	0	**0**	**0**
1100 - 1115	0	0	0	0	0	0	0	0	0	0	0	0	0	**0**	
1115 - 1130	0	0	0	0	0	0	0	0	0	0	0	0	0	**0**	
1130 - 1145	0	0	0	0	0	0	0	0	0	0	0	0	0	**0**	
1145 - 1200	0	0	0	0	0	0	0	0	0	0	0	0	0	**0**	**0**
1200 - 1215	0	0	0	0	0	0	0	0	0	0	0	0	0	**0**	
1215 - 1230	0	0	0	0	0	0	0	0	0	0	0	0	0	**0**	
1230 - 1245	0	0	0	0	0	0	0	0	0	0	0	0	0	**0**	
1245 - 1300	0	0	0	0	0	0	0	0	0	0	0	0	0	**0**	**0**
1300 - 1315	0	0	0	0	0	0	0	0	0	0	0	0	0	**0**	
1315 - 1330	0	0	0	0	0	0	0	0	0	0	0	0	0	**0**	
1330 - 1345	0	0	0	0	0	0	0	0	0	0	0	0	0	**0**	
1345 - 1400	0	0	0	0	0	0	0	0	0	0	0	0	0	**0**	**0**
1400 - 1415	0	0	0	0	0	0	0	0	0	0	0	0	0	**0**	
1415 - 1430	0	0	0	0	0	0	0	0	0	0	0	0	0	**0**	
1430 - 1445	0	0	0	0	0	0	0	0	0	0	0	0	0	**0**	
1445 - 1500	0	0	0	0	0	0	0	0	0	0	0	0	0	**0**	**0**
1500 - 1515	0	0	0	0	0	0	0	0	0	0	0	0	0	**0**	
1515 - 1530	0	0	0	0	0	0	0	0	0	0	0	0	0	**0**	
1530 - 1545	0	0	0	0	0	0	0	0	0	0	0	0	0	**0**	
1545 - 1600	0	0	0	0	0	0	0	0	0	0	0	0	0	**0**	**0**
1600 - 1615	0	0	0	0	0	0	0	0	0	0	0	0	0	**0**	
1615 - 1630	0	0	0	0	0	0	0	0	0	0	0	0	0	**0**	
1630 - 1645	0	0	0	0	0	0	0	0	0	0	0	0	0	**0**	
1645 - 1700	0	0	0	0	0	0	0	0	0	0	0	0	0	**0**	**0**
1700 - 1715	0	0	0	0	0	0	0	0	0	0	0	0	0	**0**	
1715 - 1730	0	0	0	0	0	0	0	0	0	0	0	0	0	**0**	
1730 - 1745	0	0	0	0	0	0	0	0	0	0	0	0	0	**0**	
1745 - 1800	0	0	0	0	0	0	0	0	0	0	0	0	0	**0**	**0**
1800 - 1815	0	0	0	0	0	0	0	0	0	0	0	0	0	**0**	
1815 - 1830	0	0	0	0	0	0	0	0	0	0	0	0	0	**0**	
1830 - 1845	0	0	0	0	0	0	0	0	0	0	0	0	0	**0**	
1845 - 1900	0	0	0	0	0	0	0	0	0	0	0	0	0	**0**	**0**
1900 - 1915	0	47	3	0	0	0	0	0	0	0	0	0	0	**50**	
1915 - 1930	0	34	6	0	0	0	0	0	0	0	0	0	0	**40**	
1930 - 1945	0	38	9	0	0	0	0	0	0	0	0	0	0	**47**	
1945 - 2000	0	30	7	0	0	0	0	0	0	0	0	0	0	**37**	**174**
2000 - 2015	0	20	3	0	0	0	0	0	0	0	0	0	0	**23**	
2015 - 2030	0	32	9	0	0	0	0	0	0	0	0	0	0	**41**	
2030 - 2045	0	22	8	0	0	0	0	0	1	0	0	0	0	**31**	
2045 - 2100	0	6	3	0	0	0	0	0	0	0	0	0	0	**9**	**104**
2100 - 2115	0	3	1	0	0	0	0	0	0	0	0	0	0	**4**	
2115 - 2130	0	8	1	0	0	0	0	0	0	0	0	0	0	**9**	
2130 - 2145	0	10	2	0	1	0	0	0	0	0	0	0	0	**13**	
2145 - 2200	0	18	4	0	0	0	0	0	0	0	0	0	0	**22**	**48**
2200 - 2215	0	15	2	0	0	0	0	0	0	0	0	0	0	**17**	
2215 - 2230	0	11	1	0	0	0	0	0	0	0	0	0	0	**12**	
2230 - 2245	0	7	2	0	0	0	0	0	0	0	0	0	0	**9**	
2245 - 2300	0	4	3	0	0	0	0	0	0	0	0	0	0	**7**	**45**
2300 - 2315	0	8	2	0	0	0	0	0	0	0	0	0	0	**10**	
2315 - 2330	0	2	0	0	0	0	0	0	0	0	0	0	0	**2**	
2330 - 2345	0	1	0	0	0	0	0	0	0	0	0	0	0	**1**	
2345 - 0000	0	3	1	0	0	0	0	0	0	0	0	0	0	**4**	**17**

Session Total	0	319	67	0	1	0	0	0	1	0	0	0	0	**388**
Session Average	0.00	3.32	0.70	0.00	0.01	0.00	0.00	0.00	0.01	0.00	0.00	0.00	0.00	**4.04**
Session Percentage	0.00	82.22	17.27	0.00	0.26	0.00	0.00	0.00	0.26	0.00	0.00	0.00	0.00	

AM Peak Hour	-	-	-	-	-	-	-	-	-	-	-	-	-	-
AM Peak Volume	0	0	0	0	0	0	0	0	0	0	0	0	0	**0**

Noon Peak Hour	-	-	-	-	-	-	-	-	-	-	-	-	-	-
Noon Peak Volume	0	0	0	0	0	0	0	0	0	0	0	0	0	**0**

PM Peak Hour	-	1900 - 2000	1930 - 2030	-	-	-	-	-	1945 - 2045	-	-	-	-	**1900 - 2000**
PM Peak Volume	0	149	28	0	0	0	0	0	1	0	0	0	0	**174**

Site 25
I-26 James F. Byrnes Expy On/Off-Ramp,
north of SC-60 Lake Murray Blvd

Date
Wednesday, April 24, 2024

Lat/Long
34.091845°, -81.163993°

Weather
Fair
66°F

Click here for Detailed Weather

0000 - 2400 (Weekday 24h Session) (04-24-2024)
NB EB 15min

	Northbound (Movement 25.1)													15min	60min
Time	1	2	3	4	5	6	7	8	9	10	11	12	13	Total	Total
0000 - 0015	0	2	1	0	1	0	0	0	0	0	0	0	0	**4**	
0015 - 0030	0	1	0	0	0	0	0	0	0	0	0	0	0	**1**	
0030 - 0045	0	2	0	0	0	0	0	0	0	0	0	0	0	**2**	
0045 - 0100	0	0	0	0	0	0	0	0	0	0	0	0	0	**0**	**7**
0100 - 0115	0	3	0	0	0	0	0	0	0	0	0	0	0	**3**	
0115 - 0130	0	3	0	0	0	0	0	0	0	0	0	0	0	**3**	
0130 - 0145	0	1	0	0	0	0	0	0	0	0	0	0	0	**1**	
0145 - 0200	0	1	0	0	0	0	0	0	0	0	0	0	0	**1**	**8**
0200 - 0215	0	2	0	0	0	0	0	0	0	0	0	0	0	**2**	
0215 - 0230	0	2	0	0	0	0	0	0	0	0	0	0	0	**2**	
0230 - 0245	0	2	1	0	0	0	0	0	0	0	0	0	0	**3**	
0245 - 0300	0	1	0	0	0	0	0	0	0	0	0	0	0	**1**	**8**
0300 - 0315	0	0	0	0	0	0	0	0	0	0	0	0	0	**0**	
0315 - 0330	0	0	1	0	0	0	0	0	0	0	0	0	0	**1**	
0330 - 0345	0	2	0	0	0	0	0	0	0	0	0	0	0	**2**	
0345 - 0400	0	2	0	0	0	0	0	0	0	0	0	0	0	**2**	**5**
0400 - 0415	0	0	0	0	0	0	0	0	0	0	0	0	0	**0**	
0415 - 0430	0	1	0	0	0	0	0	0	0	0	0	0	0	**1**	
0430 - 0445	0	6	0	0	1	0	0	0	0	0	0	0	0	**7**	
0445 - 0500	0	4	0	0	1	0	0	0	0	0	0	0	0	**5**	**13**
0500 - 0515	0	3	0	0	0	0	0	0	1	0	0	0	0	**4**	
0515 - 0530	0	2	0	0	0	0	0	0	0	0	0	0	0	**2**	
0530 - 0545	0	12	0	0	1	0	0	0	0	0	0	0	0	**13**	
0545 - 0600	0	4	1	0	0	0	0	0	1	0	0	0	0	**6**	**25**
0600 - 0615	0	21	0	0	0	0	0	0	0	0	0	0	0	**21**	
0615 - 0630	0	19	4	0	0	0	0	0	0	0	0	0	0	**23**	
0630 - 0645	0	22	7	0	0	0	0	0	0	0	0	0	0	**29**	
0645 - 0700	0	26	5	0	0	1	0	0	1	0	0	0	0	**33**	**106**
0700 - 0715	0	30	4	0	0	0	0	0	1	0	0	0	0	**35**	
0715 - 0730	0	30	6	0	0	0	0	1	0	0	0	0	0	**37**	
0730 - 0745	0	46	11	0	2	0	0	0	0	0	0	0	0	**59**	
0745 - 0800	0	58	3	0	1	0	0	0	0	0	0	0	0	**62**	**193**
0800 - 0815	0	32	7	0	0	0	0	1	0	0	0	0	0	**40**	
0815 - 0830	0	40	9	0	0	0	0	0	1	0	0	0	0	**50**	
0830 - 0845	0	24	8	0	0	0	0	0	0	0	0	0	0	**32**	
0845 - 0900	0	30	10	1	0	0	0	0	0	0	0	0	0	**41**	**163**
0900 - 0915	0	31	6	0	3	0	0	0	0	0	0	0	0	**40**	
0915 - 0930	0	26	11	0	0	0	0	0	0	0	0	0	0	**37**	
0930 - 0945	0	17	4	0	1	0	0	0	0	0	0	0	0	**22**	
0945 - 1000	0	26	4	0	2	0	0	0	3	0	0	0	0	**35**	**134**
1000 - 1015	0	22	5	0	1	0	0	1	0	0	0	0	0	**29**	
1015 - 1030	0	24	7	0	0	0	0	0	1	0	0	0	0	**32**	
1030 - 1045	0	25	6	0	0	0	0	0	0	0	0	0	0	**31**	
1045 - 1100	0	18	11	0	1	0	0	0	0	0	0	0	0	**30**	**122**
1100 - 1115	0	25	13	1	0	0	0	0	0	0	0	0	0	**39**	
1115 - 1130	0	33	7	0	0	0	0	0	1	0	0	0	0	**41**	
1130 - 1145	1	34	7	0	0	0	0	0	0	0	0	0	0	**42**	
1145 - 1200	0	32	7	0	3	0	0	0	1	0	0	0	0	**43**	**165**
1200 - 1215	0	38	78	0	1	0	0	0	0	0	0	0	0	**117**	
1215 - 1230	0	36	10	1	1	0	0	0	0	0	0	0	0	**48**	
1230 - 1245	0	46	5	0	0	0	0	0	1	0	0	0	0	**52**	
1245 - 1300	0	39	11	0	0	0	0	0	1	0	0	0	0	**51**	**268**
1300 - 1315	0	31	9	0	0	0	0	0	1	0	0	0	0	**41**	
1315 - 1330	0	33	5	0	0	1	0	0	2	0	0	0	0	**41**	
1330 - 1345	0	37	9	0	0	0	0	0	0	0	0	0	0	**46**	
1345 - 1400	0	32	4	0	1	0	0	0	1	0	0	0	0	**38**	**166**
1400 - 1415	0	46	10	0	0	0	0	0	0	0	0	0	0	**56**	
1415 - 1430	0	36	5	0	0	0	0	0	1	0	0	0	0	**42**	
1430 - 1445	0	37	11	0	3	0	0	1	0	0	0	0	0	**52**	
1445 - 1500	0	58	11	0	0	0	0	0	0	0	0	0	0	**69**	**219**
1500 - 1515	0	54	10	0	1	0	0	0	2	0	0	0	0	**67**	
1515 - 1530	0	53	9	0	0	0	0	0	0	0	0	0	0	**62**	
1530 - 1545	0	58	15	0	0	0	0	0	0	0	0	0	0	**73**	
1545 - 1600	0	65	16	0	0	0	0	0	0	0	0	0	0	**81**	**283**
1600 - 1615	0	65	9	0	1	0	0	0	0	0	0	0	0	**75**	
1615 - 1630	0	55	15	0	1	0	0	0	0	0	0	0	0	**71**	
1630 - 1645	0	67	14	1	0	0	0	0	0	0	0	0	0	**82**	
1645 - 1700	0	65	11	0	0	0	0	0	0	0	0	0	0	**76**	**304**
1700 - 1715	0	93	27	0	2	0	0	0	0	0	0	0	0	**122**	
1715 - 1730	0	82	18	0	0	0	0	0	0	0	0	0	0	**100**	
1730 - 1745	0	53	12	0	0	0	0	0	0	0	0	0	0	**65**	
1745 - 1800	0	68	11	0	0	0	0	0	0	0	0	0	0	**79**	**366**
1800 - 1815	0	46	6	0	0	0	0	0	0	0	0	0	0	**52**	
1815 - 1830	0	37	6	0	0	0	0	0	0	0	0	0	0	**43**	
1830 - 1845	0	36	6	0	0	0	0	0	0	0	0	0	0	**42**	
1845 - 1900	0	33	17	0	0	0	0	0	0	0	0	0	0	**50**	**187**
1900 - 1915	0	31	7	0	0	0	0	0	0	0	0	0	0	**38**	
1915 - 1930	0	26	7	0	0	0	0	0	0	0	0	0	0	**33**	
1930 - 1945	0	25	4	0	0	0	0	0	0	0	0	0	0	**29**	
1945 - 2000	0	34	3	0	3	0	0	0	0	0	0	0	0	**40**	**140**
2000 - 2015	1	31	1	0	0	0	0	0	0	0	0	0	0	**33**	
2015 - 2030	1	27	8	0	0	0	0	0	0	0	0	0	0	**36**	
2030 - 2045	0	24	2	0	0	0	0	0	0	0	0	0	0	**26**	
2045 - 2100	0	32	0	0	0	0	0	0	0	0	0	0	0	**32**	**127**
2100 - 2115	0	16	0	0	0	0	0	0	0	0	0	0	0	**16**	
2115 - 2130	0	19	1	0	0	0	0	0	0	0	0	0	0	**20**	
2130 - 2145	0	19	0	0	0	0	0	0	0	0	0	0	0	**19**	
2145 - 2200	0	20	1	0	0	0	0	1	0	0	0	0	0	**22**	**77**
2200 - 2215	0	12	0	0	0	0	0	0	0	0	0	0	0	**12**	
2215 - 2230	0	14	0	0	0	0	0	0	0	0	0	0	0	**14**	
2230 - 2245	0	1	0	0	0	0	0	0	0	0	0	0	0	**1**	
2245 - 2300	0	7	1	0	0	0	0	0	0	0	0	0	0	**8**	**35**
2300 - 2315	0	5	0	0	0	0	0	0	0	0	0	0	0	**5**	
2315 - 2330	0	4	0	0	1	0	0	0	0	0	0	0	0	**5**	
2330 - 2345	0	2	0	0	0	0	0	0	0	0	0	0	0	**2**	
2345 - 0000	0	6	0	0	0	0	0	0	0	0	0	0	0	**6**	**18**

Session Total	3	2501	571	4	33	2	0	5	20	0	0	0	0	**3139**
Session Average	0.03	26.05	5.95	0.04	0.34	0.02	0.00	0.05	0.21	0.00	0.00	0.00	0.00	**32.70**
Session Percentage	0.10	79.68	18.19	0.13	1.05	0.06	0.00	0.16	0.64	0.00	0.00	0.00	0.00	

AM Peak Hour	-	0730 - 0830	0830 - 0930	0800 - 0900	0900 - 1000	0600 - 0700	-	0715 - 0815	0930 - 1030	-	-	-	-	**0730 - 0830**
AM Peak Volume	0	176	35	1	6	1	0	2	4	0	0	0	0	**211**

Noon Peak Hour	1045 - 1145	1445 - 1545	1200 - 1300	1015 - 1115	1130 - 1230	1230 - 1330	-	1000 - 1100	1230 - 1330	-	-	-	-	**1445 - 1545**
Noon Peak Volume	1	223	104	1	5	1	0	1	5	0	0	0	0	**271**

PM Peak Hour	1930 - 2030	1630 - 1730	1630 - 1730	1545 - 1645	1615 - 1715	-	-	-	1500 - 1600	-	-	-	-	**1630 - 1730**
PM Peak Volume	2	307	70	1	3	0	0	0	2	0	0	0	0	**380**

Site 25
I-26 James F. Byrnes Expy On/Off-Ramp,
north of SC-60 Lake Murray Blvd

Date
Thursday, April 25, 2024

Lat/Long
34.091845°, -81.163993°

Weather
Fair
67°F

Click here for Detailed Weather

0000 - 2400 (Weekday 24h Session) (04-25-2024)
NB EB 15min

	Northbound (Movement 25.1)													15min	60min
TIME	1	2	3	4	5	6	7	8	9	10	11	12	13	Total	Total
0000 - 0015	0	2	0	0	1	0	0	0	0	0	0	0	0	**3**	
0015 - 0030	0	2	0	0	0	0	0	0	0	0	0	0	0	**2**	
0030 - 0045	0	0	0	0	0	0	0	0	0	0	0	0	0	**0**	
0045 - 0100	0	3	0	0	0	0	0	0	0	0	0	0	0	**3**	**8**
0100 - 0115	0	1	0	0	0	0	0	0	0	0	0	0	0	**1**	
0115 - 0130	0	2	0	0	0	0	0	0	0	0	0	0	0	**2**	
0130 - 0145	0	2	0	0	0	0	0	0	0	0	0	0	0	**2**	
0145 - 0200	0	0	1	0	0	0	0	0	0	0	0	0	0	**1**	**6**
0200 - 0215	0	1	0	0	0	0	0	0	0	0	0	0	0	**1**	
0215 - 0230	0	0	1	0	0	0	0	0	0	0	0	0	0	**1**	
0230 - 0245	0	0	0	0	0	0	0	0	0	0	0	0	0	**0**	
0245 - 0300	0	1	0	0	0	0	0	0	0	0	0	0	0	**1**	**3**
0300 - 0315	0	0	0	0	0	0	0	0	0	0	0	0	0	**0**	
0315 - 0330	0	3	0	0	0	0	0	0	0	0	0	0	0	**3**	
0330 - 0345	0	4	0	0	0	0	0	0	0	0	0	0	0	**4**	
0345 - 0400	0	2	1	0	0	0	0	0	0	0	0	0	0	**3**	**10**
0400 - 0415	0	0	0	0	0	0	0	0	0	0	0	0	0	**0**	
0415 - 0430	0	1	0	0	0	0	0	0	0	0	0	0	0	**1**	
0430 - 0445	0	7	0	0	0	0	0	0	0	0	0	0	0	**7**	
0445 - 0500	0	2	0	0	0	0	0	0	1	0	0	0	0	**3**	**11**
0500 - 0515	0	5	0	0	1	0	0	0	0	0	0	0	0	**6**	
0515 - 0530	0	3	0	0	0	0	0	0	0	0	0	0	0	**3**	
0530 - 0545	0	6	1	0	0	0	0	0	0	0	0	0	0	**7**	
0545 - 0600	0	8	0	0	0	0	0	0	0	0	0	0	0	**8**	**24**
0600 - 0615	0	10	5	0	0	0	0	0	0	0	0	0	0	**15**	
0615 - 0630	0	15	6	0	0	0	0	0	0	0	0	0	0	**21**	
0630 - 0645	0	17	8	0	0	0	0	0	0	0	0	0	0	**25**	
0645 - 0700	0	18	6	0	2	0	0	0	1	0	0	0	0	**27**	**88**
0700 - 0715	0	23	12	0	0	0	0	0	0	0	0	0	0	**35**	
0715 - 0730	0	30	6	0	1	0	0	0	1	0	0	0	0	**38**	
0730 - 0745	0	40	11	0	2	0	2	1	1	0	0	0	0	**57**	
0745 - 0800	0	36	14	0	5	0	1	0	2	0	0	0	0	**58**	**188**
0800 - 0815	1	41	4	0	0	0	0	0	0	0	0	0	0	**46**	
0815 - 0830	0	33	8	0	1	0	4	0	0	0	0	0	0	**46**	
0830 - 0845	0	25	7	0	0	0	0	0	0	0	0	0	0	**32**	
0845 - 0900	0	27	20	0	2	0	2	0	0	0	0	0	0	**51**	**175**
0900 - 0915	0	33	8	0	2	0	2	0	1	0	0	0	0	**46**	
0915 - 0930	0	42	7	1	0	0	1	0	0	0	0	0	0	**51**	
0930 - 0945	0	28	9	0	1	0	3	0	0	0	0	0	0	**41**	
0945 - 1000	0	25	7	0	1	0	1	1	1	0	0	0	0	**36**	**174**
1000 - 1015	0	38	6	0	0	0	3	0	0	0	0	0	0	**47**	
1015 - 1030	0	19	7	0	2	0	0	0	0	0	0	0	0	**28**	
1030 - 1045	0	26	7	0	0	0	2	0	0	0	0	0	0	**35**	
1045 - 1100	0	24	11	0	0	0	2	0	0	0	0	0	0	**37**	**147**
1100 - 1115	1	29	8	0	2	0	0	0	0	0	0	0	0	**40**	
1115 - 1130	0	30	4	0	0	0	3	0	0	0	0	0	0	**37**	
1130 - 1145	0	40	10	0	0	0	0	0	0	0	0	0	0	**50**	
1145 - 1200	0	28	5	0	0	0	1	0	0	0	0	0	0	**34**	**161**
1200 - 1215	0	47	13	0	0	0	1	0	0	0	0	0	0	**61**	
1215 - 1230	0	41	12	0	1	0	1	0	1	0	0	0	0	**56**	
1230 - 1245	0	30	12	0	0	0	1	0	1	0	0	0	0	**44**	
1245 - 1300	0	34	16	1	1	1	0	0	0	0	0	0	0	**53**	**214**
1300 - 1315	1	41	11	0	2	2	2	0	0	0	0	0	0	**59**	
1315 - 1330	0	41	5	1	2	0	2	0	0	0	0	0	0	**51**	
1330 - 1345	0	36	13	1	1	0	1	1	0	0	0	0	0	**53**	
1345 - 1400	0	40	11	0	1	0	3	0	0	0	0	0	0	**55**	**218**
1400 - 1415	0	41	9	0	0	0	0	0	0	0	0	0	0	**50**	
1415 - 1430	0	48	10	0	1	0	2	0	0	0	0	0	0	**61**	
1430 - 1445	0	37	6	0	0	0	2	0	0	0	0	0	0	**45**	
1445 - 1500	0	55	11	0	2	0	0	0	0	0	0	0	0	**68**	**224**
1500 - 1515	0	58	15	0	4	2	3	0	0	0	0	0	0	**82**	
1515 - 1530	0	56	13	0	0	0	1	0	0	0	0	0	0	**70**	
1530 - 1545	0	52	15	0	0	0	1	0	0	0	0	0	0	**68**	
1545 - 1600	0	68	20	0	1	1	3	0	1	0	0	0	0	**94**	**314**
1600 - 1615	0	60	15	0	1	0	0	0	0	0	0	0	0	**76**	
1615 - 1630	0	70	14	0	2	0	3	0	0	0	0	0	0	**89**	
1630 - 1645	0	50	16	0	0	0	1	0	0	0	0	0	0	**67**	
1645 - 1700	0	64	20	0	1	0	0	0	1	0	0	0	0	**86**	**318**
1700 - 1715	1	79	11	1	0	0	4	0	0	0	0	0	0	**96**	
1715 - 1730	0	77	14	0	1	0	0	0	0	0	0	0	0	**92**	
1730 - 1745	0	82	14	0	1	0	0	0	0	0	0	0	0	**97**	
1745 - 1800	0	64	12	0	0	0	0	0	0	0	0	0	0	**76**	**361**
1800 - 1815	1	39	17	0	0	0	0	0	1	0	0	0	0	**58**	
1815 - 1830	0	46	12	0	0	0	0	0	0	0	0	0	0	**58**	
1830 - 1845	0	35	9	0	0	0	0	0	0	0	0	0	0	**44**	
1845 - 1900	1	38	8	0	0	0	0	0	0	0	0	0	0	**47**	**207**
1900 - 1915	0	0	0	0	0	0	0	0	0	0	0	0	0	**0**	
1915 - 1930	0	0	0	0	0	0	0	0	0	0	0	0	0	**0**	
1930 - 1945	0	0	0	0	0	0	0	0	0	0	0	0	0	**0**	
1945 - 2000	0	0	0	0	0	0	0	0	0	0	0	0	0	**0**	**0**
2000 - 2015	0	0	0	0	0	0	0	0	0	0	0	0	0	**0**	
2015 - 2030	0	0	0	0	0	0	0	0	0	0	0	0	0	**0**	
2030 - 2045	0	0	0	0	0	0	0	0	0	0	0	0	0	**0**	
2045 - 2100	0	0	0	0	0	0	0	0	0	0	0	0	0	**0**	**0**
2100 - 2115	0	0	0	0	0	0	0	0	0	0	0	0	0	**0**	
2115 - 2130	0	0	0	0	0	0	0	0	0	0	0	0	0	**0**	
2130 - 2145	0	0	0	0	0	0	0	0	0	0	0	0	0	**0**	
2145 - 2200	0	0	0	0	0	0	0	0	0	0	0	0	0	**0**	**0**
2200 - 2215	0	0	0	0	0	0	0	0	0	0	0	0	0	**0**	
2215 - 2230	0	0	0	0	0	0	0	0	0	0	0	0	0	**0**	
2230 - 2245	0	0	0	0	0	0	0	0	0	0	0	0	0	**0**	
2245 - 2300	0	0	0	0	0	0	0	0	0	0	0	0	0	**0**	**0**
2300 - 2315	0	0	0	0	0	0	0	0	0	0	0	0	0	**0**	
2315 - 2330	0	0	0	0	0	0	0	0	0	0	0	0	0	**0**	
2330 - 2345	0	0	0	0	0	0	0	0	0	0	0	0	0	**0**	
2345 - 0000	0	0	0	0	0	0	0	0	0	0	0	0	0	**0**	**0**

Session Total	6	2161	554	5	45	6	58	3	13	0	0	0	0	**2851**
Session Average	0.06	22.51	5.77	0.05	0.47	0.06	0.60	0.03	0.14	0.00	0.00	0.00	0.00	**29.70**
Session Percentage	0.21	75.80	19.43	0.18	1.58	0.21	2.03	0.11	0.46	0.00	0.00	0.00	0.00	

AM Peak Hour	0715 - 0815	0730 - 0830	0845 - 0945	0830 - 0930	0700 - 0800	-	0815 - 0915	0645 - 0745	0700 - 0800	-	-	-	-	**0730 - 0830**
AM Peak Hour Volume	1	150	44	1	8	0	8	1	4	0	0	0	0	**207**

Noon Peak Hour	1015 - 1115	1445 - 1545	1445 - 1545	1245 - 1345	1415 - 1515	1215 - 1315	1300 - 1400	1245 - 1345	1145 - 1245	-	-	-	-	**1445 - 1545**
Noon Peak Hour Volume	1	221	54	3	7	3	8	1	2	0	0	0	0	**288**

PM Peak Hour	1800 - 1900	1645 - 1745	1545 - 1645	1615 - 1715	1500 - 1600	1500 - 1600	1500 - 1600	-	1500 - 1600	-	-	-	-	**1645 - 1745**
PM Peak Hour Volume	2	302	65	1	5	3	8	0	1	0	0	0	0	**371**

Bi-Directional Class Count || NB EB Average 15min

Columbia, SC

Marr Traffic DATA COLLECTION
www.marrtraffic.com

Site 25
I-26 James F. Byrnes Expy On/Off-Ramp,
north of SC-60 Lake Murray Blvd

Date
Tuesday, April 23, 2024

Lat/Long
34.091845°, -81.163993°

Weather
Fair
58°F

0000 - 2400 (Weekday 24h Session) (All Dates)
NB EB Average 15min

	NB EB Average 15min													15min	60min
Time	1	2	3	4	5	6	7	8	9	10	11	12	13	Total	Total
0000 - 0015	0	1	0	0	1	0	0	0	0	0	0	0	0	**2**	
0015 - 0030	0	1	0	0	0	0	0	0	0	0	0	0	0	**1**	
0030 - 0045	0	1	0	0	0	0	0	0	0	0	0	0	0	**1**	
0045 - 0100	0	1	0	0	0	0	0	0	0	0	0	0	0	**1**	**5**
0100 - 0115	0	1	0	0	0	0	0	0	0	0	0	0	0	**1**	
0115 - 0130	0	2	0	0	0	0	0	0	0	0	0	0	0	**2**	
0130 - 0145	0	1	0	0	0	0	0	0	0	0	0	0	0	**1**	
0145 - 0200	0	0	0	0	0	0	0	0	0	0	0	0	0	**1**	**5**
0200 - 0215	0	1	0	0	0	0	0	0	0	0	0	0	0	**1**	
0215 - 0230	0	1	0	0	0	0	0	0	0	0	0	0	0	**1**	
0230 - 0245	0	1	0	0	0	0	0	0	0	0	0	0	0	**1**	
0245 - 0300	0	1	0	0	0	0	0	0	0	0	0	0	0	**1**	**4**
0300 - 0315	0	0	0	0	0	0	0	0	0	0	0	0	0	**0**	
0315 - 0330	0	1	0	0	0	0	0	0	0	0	0	0	0	**1**	
0330 - 0345	0	2	0	0	0	0	0	0	0	0	0	0	0	**2**	
0345 - 0400	0	1	0	0	0	0	0	0	0	0	0	0	0	**2**	**5**
0400 - 0415	0	0	0	0	0	0	0	0	0	0	0	0	0	**0**	
0415 - 0430	0	1	0	0	0	0	0	0	0	0	0	0	0	**1**	
0430 - 0445	0	4	0	0	0	0	0	0	0	0	0	0	0	**5**	
0445 - 0500	0	2	0	0	0	0	0	0	0	0	0	0	0	**3**	**8**
0500 - 0515	0	3	0	0	0	0	0	0	0	0	0	0	0	**3**	
0515 - 0530	0	2	0	0	0	0	0	0	0	0	0	0	0	**2**	
0530 - 0545	0	6	0	0	0	0	0	0	0	0	0	0	0	**7**	
0545 - 0600	0	4	0	0	0	0	0	0	0	0	0	0	0	**5**	**16**
0600 - 0615	0	10	2	0	0	0	0	0	0	0	0	0	0	**12**	
0615 - 0630	0	11	3	0	0	0	0	0	0	0	0	0	0	**15**	
0630 - 0645	0	13	5	0	0	0	0	0	0	0	0	0	0	**18**	
0645 - 0700	0	15	4	0	1	0	0	0	1	0	0	0	0	**20**	**65**
0700 - 0715	0	18	5	0	0	0	0	0	0	0	0	0	0	**23**	
0715 - 0730	0	20	4	0	0	0	0	0	0	0	0	0	0	**25**	
0730 - 0745	0	29	7	0	1	0	1	0	0	0	0	0	0	**39**	
0745 - 0800	0	31	6	0	2	0	0	0	1	0	0	0	0	**40**	**127**
0800 - 0815	0	24	4	0	0	0	0	0	0	0	0	0	0	**29**	
0815 - 0830	0	24	6	0	0	0	1	0	0	0	0	0	0	**32**	
0830 - 0845	0	16	5	0	0	0	0	0	0	0	0	0	0	**21**	
0845 - 0900	0	19	10	0	1	0	1	0	0	0	0	0	0	**31**	**113**
0900 - 0915	0	21	5	0	2	0	1	0	0	0	0	0	0	**29**	
0915 - 0930	0	23	6	0	0	0	0	0	0	0	0	0	0	**29**	
0930 - 0945	0	15	4	0	1	0	1	0	0	0	0	0	0	**21**	
0945 - 1000	0	17	4	0	1	0	0	0	1	0	0	0	0	**24**	**103**
1000 - 1015	0	20	4	0	0	0	1	0	0	0	0	0	0	**25**	
1015 - 1030	0	14	5	0	1	0	0	0	0	0	0	0	0	**20**	
1030 - 1045	0	17	4	0	0	0	1	0	0	0	0	0	0	**22**	
1045 - 1100	0	14	7	0	0	0	1	0	0	0	0	0	0	**22**	**90**
1100 - 1115	0	18	7	0	1	0	0	0	0	0	0	0	0	**26**	
1115 - 1130	0	21	4	0	0	0	1	0	0	0	0	0	0	**26**	
1130 - 1145	0	25	6	0	0	0	0	0	0	0	0	0	0	**31**	
1145 - 1200	0	20	4	0	1	0	0	0	0	0	0	0	0	**26**	**109**
1200 - 1215	0	28	30	0	0	0	0	0	0	0	0	0	0	**59**	
1215 - 1230	0	26	7	0	1	0	0	0	0	0	0	0	0	**35**	
1230 - 1245	0	25	6	0	0	0	0	0	1	0	0	0	0	**32**	
1245 - 1300	0	24	9	0	0	0	0	0	0	0	0	0	0	**35**	**161**
1300 - 1315	0	24	7	0	1	1	1	0	0	0	0	0	0	**33**	
1315 - 1330	0	25	3	0	1	0	1	0	1	0	0	0	0	**31**	
1330 - 1345	0	24	7	0	0	0	0	0	0	0	0	0	0	**33**	
1345 - 1400	0	24	5	0	1	0	1	0	0	0	0	0	0	**31**	**128**
1400 - 1415	0	29	6	0	0	0	0	0	0	0	0	0	0	**35**	
1415 - 1430	0	28	5	0	0	0	1	0	0	0	0	0	0	**34**	
1430 - 1445	0	25	6	0	1	0	1	0	0	0	0	0	0	**32**	
1445 - 1500	0	38	7	0	1	0	0	0	0	0	0	0	0	**46**	**148**
1500 - 1515	0	37	8	0	2	1	1	0	1	0	0	0	0	**50**	
1515 - 1530	0	36	7	0	0	0	0	0	0	0	0	0	0	**44**	
1530 - 1545	0	37	10	0	0	0	0	0	0	0	0	0	0	**47**	
1545 - 1600	0	44	12	0	0	0	1	0	0	0	0	0	0	**58**	**199**
1600 - 1615	0	42	8	0	1	0	0	0	0	0	0	0	0	**50**	
1615 - 1630	0	42	10	0	1	0	1	0	0	0	0	0	0	**53**	
1630 - 1645	0	39	10	0	0	0	0	0	0	0	0	0	0	**50**	
1645 - 1700	0	43	10	0	0	0	0	0	0	0	0	0	0	**54**	**207**
1700 - 1715	0	57	13	0	1	0	1	0	0	0	0	0	0	**73**	
1715 - 1730	0	53	11	0	0	0	0	0	0	0	0	0	0	**64**	
1730 - 1745	0	45	9	0	0	0	0	0	0	0	0	0	0	**54**	
1745 - 1800	0	44	8	0	0	0	0	0	0	0	0	0	0	**52**	**242**
1800 - 1815	0	28	8	0	0	0	0	0	0	0	0	0	0	**37**	
1815 - 1830	0	28	6	0	0	0	0	0	0	0	0	0	0	**34**	
1830 - 1845	0	24	5	0	0	0	0	0	0	0	0	0	0	**29**	
1845 - 1900	0	24	8	0	0	0	0	0	0	0	0	0	0	**32**	**131**
1900 - 1915	0	26	3	0	0	0	0	0	0	0	0	0	0	**29**	
1915 - 1930	0	20	4	0	0	0	0	0	0	0	0	0	0	**24**	
1930 - 1945	0	21	4	0	0	0	0	0	0	0	0	0	0	**25**	
1945 - 2000	0	21	3	0	1	0	0	0	0	0	0	0	0	**26**	**105**
2000 - 2015	0	17	1	0	0	0	0	0	0	0	0	0	0	**19**	
2015 - 2030	0	20	6	0	0	0	0	0	0	0	0	0	0	**26**	
2030 - 2045	0	15	3	0	0	0	0	0	0	0	0	0	0	**19**	
2045 - 2100	0	13	1	0	0	0	0	0	0	0	0	0	0	**14**	**77**
2100 - 2115	0	6	0	0	0	0	0	0	0	0	0	0	0	**7**	
2115 - 2130	0	9	1	0	0	0	0	0	0	0	0	0	0	**10**	
2130 - 2145	0	10	1	0	0	0	0	0	0	0	0	0	0	**11**	
2145 - 2200	0	13	2	0	0	0	0	0	0	0	0	0	0	**15**	**42**
2200 - 2215	0	9	1	0	0	0	0	0	0	0	0	0	0	**10**	
2215 - 2230	0	8	0	0	0	0	0	0	0	0	0	0	0	**9**	
2230 - 2245	0	3	1	0	0	0	0	0	0	0	0	0	0	**3**	
2245 - 2300	0	4	1	0	0	0	0	0	0	0	0	0	0	**5**	**27**
2300 - 2315	0	4	1	0	0	0	0	0	0	0	0	0	0	**5**	
2315 - 2330	0	2	0	0	0	0	0	0	0	0	0	0	0	**2**	
2330 - 2345	0	1	0	0	0	0	0	0	0	0	0	0	0	**1**	
2345 - 0000	0	3	0	0	0	0	0	0	0	0	0	0	0	**3**	**12**

Session Total	3	1660	397	3	26	3	19	3	11	0	0	0	0	**2126**
Session Average	0.03	17.30	4.14	0.03	0.27	0.03	0.20	0.03	0.12	0.00	0.00	0.00	0.00	**22.15**
Session Percentage	0.14	78.10	18.69	0.14	1.24	0.13	0.91	0.13	0.53	0.00	0.00	0.00	0.00	

AM Peak Hour	0715 - 0815	0730 - 0830	0830 - 0930	0830 - 0930	0700 - 0800	0600 - 0700	0815 - 0915	0715 - 0815	0645 - 0745	-	-	-	-	**0730 - 0830**
AM Peak Volume	0	109	26	1	4	0	3	1	2	0	0	0	0	**139**

Noon Peak Hour	1045 - 1145	1445 - 1545	1200 - 1300	1245 - 1345	1415 - 1515	1230 - 1330	1300 - 1400	1000 - 1100	1230 - 1330	-	-	-	-	**1445 - 1545**
Noon Peak Volume	1	148	52	1	4	1	3	0	2	0	0	0	0	**186**

PM Peak Hour	1800 - 1900	1700 - 1800	1630 - 1730	1615 - 1715	1500 - 1600	1500 - 1600	1500 - 1600	-	1500 - 1600	-	-	-	-	**1645 - 1745**
PM Peak Volume	1	199	44	1	2	1	3	0	1	0	0	0	0	**245**

Bi-Directional Class Count || Volume Summary 15min

Columbia, SC

Marr Traffic DATA COLLECTION

www.marrtraffic.com

Site 25

I-26 James F. Byrnes Expy On/Off-Ramp,
north of SC-60 Lake Murray Blvd

Date

Tuesday, April 23, 2024

Lat/Long

34.091845°, -81.163993°

Weather

Fair
58°F

Click here for Detailed Weather

0000 - 2400 (Weekday 24h Session) (04-23-2024)

Volume Summary 15min

TIME	Volume Summary 15min		15min Total	60min Total
	NB	SB		
0000 - 0015	0	0	**0**	
0015 - 0030	0	0	**0**	
0030 - 0045	0	0	**0**	
0045 - 0100	0	0	**0**	**0**
0100 - 0115	0	0	**0**	
0115 - 0130	0	0	**0**	
0130 - 0145	0	0	**0**	
0145 - 0200	0	0	**0**	**0**
0200 - 0215	0	0	**0**	
0215 - 0230	0	0	**0**	
0230 - 0245	0	0	**0**	
0245 - 0300	0	0	**0**	**0**
0300 - 0315	0	0	**0**	
0315 - 0330	0	0	**0**	
0330 - 0345	0	0	**0**	
0345 - 0400	0	0	**0**	**0**
0400 - 0415	0	0	**0**	
0415 - 0430	0	0	**0**	
0430 - 0445	0	0	**0**	
0445 - 0500	0	0	**0**	**0**
0500 - 0515	0	0	**0**	
0515 - 0530	0	0	**0**	
0530 - 0545	0	0	**0**	
0545 - 0600	0	0	**0**	**0**
0600 - 0615	0	0	**0**	
0615 - 0630	0	0	**0**	
0630 - 0645	0	0	**0**	
0645 - 0700	0	0	**0**	**0**
0700 - 0715	0	0	**0**	
0715 - 0730	0	0	**0**	
0730 - 0745	0	0	**0**	
0745 - 0800	0	0	**0**	**0**
0800 - 0815	0	0	**0**	
0815 - 0830	0	0	**0**	
0830 - 0845	0	0	**0**	
0845 - 0900	0	0	**0**	**0**
0900 - 0915	0	0	**0**	
0915 - 0930	0	0	**0**	
0930 - 0945	0	0	**0**	
0945 - 1000	0	0	**0**	**0**
1000 - 1015	0	0	**0**	
1015 - 1030	0	0	**0**	
1030 - 1045	0	0	**0**	
1045 - 1100	0	0	**0**	**0**
1100 - 1115	0	0	**0**	
1115 - 1130	0	0	**0**	
1130 - 1145	0	0	**0**	
1145 - 1200	0	0	**0**	**0**

Time	Volume Summary 15min		15min Total	60min Total
	NB	SB		
1200 - 1215	0	0	**0**	
1215 - 1230	0	0	**0**	
1230 - 1245	0	0	**0**	
1245 - 1300	0	0	**0**	**0**
1300 - 1315	0	0	**0**	
1315 - 1330	0	0	**0**	
1330 - 1345	0	0	**0**	
1345 - 1400	0	0	**0**	**0**
1400 - 1415	0	0	**0**	
1415 - 1430	0	0	**0**	
1430 - 1445	0	0	**0**	
1445 - 1500	0	0	**0**	**0**
1500 - 1515	0	0	**0**	
1515 - 1530	0	0	**0**	
1530 - 1545	0	0	**0**	
1545 - 1600	0	0	**0**	**0**
1600 - 1615	0	0	**0**	
1615 - 1630	0	0	**0**	
1630 - 1645	0	0	**0**	
1645 - 1700	0	0	**0**	**0**
1700 - 1715	0	0	**0**	
1715 - 1730	0	0	**0**	
1730 - 1745	0	0	**0**	
1745 - 1800	0	0	**0**	**0**
1800 - 1815	0	0	**0**	
1815 - 1830	0	0	**0**	
1830 - 1845	0	0	**0**	
1845 - 1900	0	0	**0**	**0**
1900 - 1915	50	0	**50**	
1915 - 1930	40	0	**40**	
1930 - 1945	47	0	**47**	
1945 - 2000	37	0	**37**	**174**
2000 - 2015	23	0	**23**	
2015 - 2030	41	0	**41**	
2030 - 2045	31	0	**31**	
2045 - 2100	9	0	**9**	**104**
2100 - 2115	4	0	**4**	
2115 - 2130	9	0	**9**	
2130 - 2145	13	0	**13**	
2145 - 2200	22	0	**22**	**48**
2200 - 2215	17	0	**17**	
2215 - 2230	12	0	**12**	
2230 - 2245	9	0	**9**	
2245 - 2300	7	0	**7**	**45**
2300 - 2315	10	0	**10**	
2315 - 2330	2	0	**2**	
2330 - 2345	1	0	**1**	
2345 - 0000	4	0	**4**	**17**

Session Total	388	0	**388**
Session Average	4.04	0.00	**4.04**
Session Percentage	100.00	0.00	

Site 25

I-26 James F. Byrnes Expy On/Off-Ramp,
north of SC-60 Lake Murray Blvd

Date

Wednesday, April 24, 2024

Lat/Long

34.091845°, -81.163993°

Weather

Fair
66°F

Click here for Detailed Weather

0000 - 2400 (Weekday 24h Session) (04-24-2024)

Volume Summary 15min

TIME	Volume Summary 15min NB	SB	15min Total	60min Total
0000 - 0015	4	0	**4**	
0015 - 0030	1	0	**1**	
0030 - 0045	2	0	**2**	
0045 - 0100	0	0	**0**	**7**
0100 - 0115	3	0	**3**	
0115 - 0130	3	0	**3**	
0130 - 0145	1	0	**1**	
0145 - 0200	1	0	**1**	**8**
0200 - 0215	2	0	**2**	
0215 - 0230	2	0	**2**	
0230 - 0245	3	0	**3**	
0245 - 0300	1	0	**1**	**8**
0300 - 0315	0	0	**0**	
0315 - 0330	1	0	**1**	
0330 - 0345	2	0	**2**	
0345 - 0400	2	0	**2**	**5**
0400 - 0415	0	0	**0**	
0415 - 0430	1	0	**1**	
0430 - 0445	7	0	**7**	
0445 - 0500	5	0	**5**	**13**
0500 - 0515	4	0	**4**	
0515 - 0530	2	0	**2**	
0530 - 0545	13	0	**13**	
0545 - 0600	6	0	**6**	**25**
0600 - 0615	21	0	**21**	
0615 - 0630	23	0	**23**	
0630 - 0645	29	0	**29**	
0645 - 0700	33	0	**33**	**106**
0700 - 0715	35	0	**35**	
0715 - 0730	37	0	**37**	
0730 - 0745	59	0	**59**	
0745 - 0800	62	0	**62**	**193**
0800 - 0815	40	0	**40**	
0815 - 0830	50	0	**50**	
0830 - 0845	32	0	**32**	
0845 - 0900	41	0	**41**	**163**
0900 - 0915	40	0	**40**	
0915 - 0930	37	0	**37**	
0930 - 0945	22	0	**22**	
0945 - 1000	35	0	**35**	**134**
1000 - 1015	29	0	**29**	
1015 - 1030	32	0	**32**	
1030 - 1045	31	0	**31**	
1045 - 1100	30	0	**30**	**122**
1100 - 1115	39	0	**39**	
1115 - 1130	41	0	**41**	
1130 - 1145	42	0	**42**	
1145 - 1200	43	0	**43**	**165**

Time	Volume Summary 15min NB	SB	15min Total	60min Total
1200 - 1215	117	0	**117**	
1215 - 1230	48	0	**48**	
1230 - 1245	52	0	**52**	
1245 - 1300	51	0	**51**	**268**
1300 - 1315	41	0	**41**	
1315 - 1330	41	0	**41**	
1330 - 1345	46	0	**46**	
1345 - 1400	38	0	**38**	**166**
1400 - 1415	56	0	**56**	
1415 - 1430	42	0	**42**	
1430 - 1445	52	0	**52**	
1445 - 1500	69	0	**69**	**219**
1500 - 1515	67	0	**67**	
1515 - 1530	62	0	**62**	
1530 - 1545	73	0	**73**	
1545 - 1600	81	0	**81**	**283**
1600 - 1615	75	0	**75**	
1615 - 1630	71	0	**71**	
1630 - 1645	82	0	**82**	
1645 - 1700	76	0	**76**	**304**
1700 - 1715	122	0	**122**	
1715 - 1730	100	0	**100**	
1730 - 1745	65	0	**65**	
1745 - 1800	79	0	**79**	**366**
1800 - 1815	52	0	**52**	
1815 - 1830	43	0	**43**	
1830 - 1845	42	0	**42**	
1845 - 1900	50	0	**50**	**187**
1900 - 1915	38	0	**38**	
1915 - 1930	33	0	**33**	
1930 - 1945	29	0	**29**	
1945 - 2000	40	0	**40**	**140**
2000 - 2015	33	0	**33**	
2015 - 2030	36	0	**36**	
2030 - 2045	26	0	**26**	
2045 - 2100	32	0	**32**	**127**
2100 - 2115	16	0	**16**	
2115 - 2130	20	0	**20**	
2130 - 2145	19	0	**19**	
2145 - 2200	22	0	**22**	**77**
2200 - 2215	12	0	**12**	
2215 - 2230	14	0	**14**	
2230 - 2245	1	0	**1**	
2245 - 2300	8	0	**8**	**35**
2300 - 2315	5	0	**5**	
2315 - 2330	5	0	**5**	
2330 - 2345	2	0	**2**	
2345 - 0000	6	0	**6**	**18**

Session Total	3139	0	**3139**
Session Average	32.70	0.00	**32.70**
Session Percentage	100.00	0.00	

Site 25

I-26 James F. Byrnes Expy On/Off-Ramp,
north of SC-60 Lake Murray Blvd

Date

Thursday, April 25, 2024

Lat/Long

34.091845°, -81.163993°

Weather

Fair
67°F

Click here for Detailed Weather

0000 - 2400 (Weekday 24h Session) (04-25-2024)

Volume Summary 15min

TIME	Volume Summary 15min NB	SB	15min Total	60min Total
0000 - 0015	3	0	**3**	
0015 - 0030	2	0	**2**	
0030 - 0045	0	0	**0**	
0045 - 0100	3	0	**3**	**8**
0100 - 0115	1	0	**1**	
0115 - 0130	2	0	**2**	
0130 - 0145	2	0	**2**	
0145 - 0200	1	0	**1**	**6**
0200 - 0215	1	0	**1**	
0215 - 0230	1	0	**1**	
0230 - 0245	0	0	**0**	
0245 - 0300	1	0	**1**	**3**
0300 - 0315	0	0	**0**	
0315 - 0330	3	0	**3**	
0330 - 0345	4	0	**4**	
0345 - 0400	3	0	**3**	**10**
0400 - 0415	0	0	**0**	
0415 - 0430	1	0	**1**	
0430 - 0445	7	0	**7**	
0445 - 0500	3	0	**3**	**11**
0500 - 0515	6	0	**6**	
0515 - 0530	3	0	**3**	
0530 - 0545	7	0	**7**	
0545 - 0600	8	0	**8**	**24**
0600 - 0615	15	0	**15**	
0615 - 0630	21	0	**21**	
0630 - 0645	25	0	**25**	
0645 - 0700	27	0	**27**	**88**
0700 - 0715	35	0	**35**	
0715 - 0730	38	0	**38**	
0730 - 0745	57	0	**57**	
0745 - 0800	58	0	**58**	**188**
0800 - 0815	46	0	**46**	
0815 - 0830	46	0	**46**	
0830 - 0845	32	0	**32**	
0845 - 0900	51	0	**51**	**175**
0900 - 0915	46	0	**46**	
0915 - 0930	51	0	**51**	
0930 - 0945	41	0	**41**	
0945 - 1000	36	0	**36**	**174**
1000 - 1015	47	0	**47**	
1015 - 1030	28	0	**28**	
1030 - 1045	35	0	**35**	
1045 - 1100	37	0	**37**	**147**
1100 - 1115	40	0	**40**	
1115 - 1130	37	0	**37**	
1130 - 1145	50	0	**50**	
1145 - 1200	34	0	**34**	**161**

Time	Volume Summary 15min NB	SB	15min Total	60min Total
1200 - 1215	61	0	**61**	
1215 - 1230	56	0	**56**	
1230 - 1245	44	0	**44**	
1245 - 1300	53	0	**53**	**214**
1300 - 1315	59	0	**59**	
1315 - 1330	51	0	**51**	
1330 - 1345	53	0	**53**	
1345 - 1400	55	0	**55**	**218**
1400 - 1415	50	0	**50**	
1415 - 1430	61	0	**61**	
1430 - 1445	45	0	**45**	
1445 - 1500	68	0	**68**	**224**
1500 - 1515	82	0	**82**	
1515 - 1530	70	0	**70**	
1530 - 1545	68	0	**68**	
1545 - 1600	94	0	**94**	**314**
1600 - 1615	76	0	**76**	
1615 - 1630	89	0	**89**	
1630 - 1645	67	0	**67**	
1645 - 1700	86	0	**86**	**318**
1700 - 1715	96	0	**96**	
1715 - 1730	92	0	**92**	
1730 - 1745	97	0	**97**	
1745 - 1800	76	0	**76**	**361**
1800 - 1815	58	0	**58**	
1815 - 1830	58	0	**58**	
1830 - 1845	44	0	**44**	
1845 - 1900	47	0	**47**	**207**
1900 - 1915	0	0	**0**	
1915 - 1930	0	0	**0**	
1930 - 1945	0	0	**0**	
1945 - 2000	0	0	**0**	**0**
2000 - 2015	0	0	**0**	
2015 - 2030	0	0	**0**	
2030 - 2045	0	0	**0**	
2045 - 2100	0	0	**0**	**0**
2100 - 2115	0	0	**0**	
2115 - 2130	0	0	**0**	
2130 - 2145	0	0	**0**	
2145 - 2200	0	0	**0**	**0**
2200 - 2215	0	0	**0**	
2215 - 2230	0	0	**0**	
2230 - 2245	0	0	**0**	
2245 - 2300	0	0	**0**	**0**
2300 - 2315	0	0	**0**	
2315 - 2330	0	0	**0**	
2330 - 2345	0	0	**0**	
2345 - 0000	0	0	**0**	**0**

Session Total	2851	0	**2851**
Session Average	29.70	0.00	**29.70**
Session Percentage	100.00	0.00	

Bi-Directional Class Count || NB EB 60min

Columbia, SC

Marr Traffic DATA COLLECTION

www.marrtraffic.com

Site 25

I-26 James F. Byrnes Expy On/Off-Ramp,
north of SC-60 Lake Murray Blvd

Date

Tuesday, April 23, 2024

Lat/Long

34.091845°, -81.163993°

Weather

Fair
58°F

Click here for Detailed Weather

0000 - 2400 (Weekday 24h Session) (04-23-2024)

NB EB 60min

	Northbound (Movement 25.1)													
TIME	1	2	3	4	5	6	7	8	9	10	11	12	13	**Total**
0000 - 0100	0	0	0	0	0	0	0	0	0	0	0	0	0	**0**
0100 - 0200	0	0	0	0	0	0	0	0	0	0	0	0	0	**0**
0200 - 0300	0	0	0	0	0	0	0	0	0	0	0	0	0	**0**
0300 - 0400	0	0	0	0	0	0	0	0	0	0	0	0	0	**0**
0400 - 0500	0	0	0	0	0	0	0	0	0	0	0	0	0	**0**
0500 - 0600	0	0	0	0	0	0	0	0	0	0	0	0	0	**0**
0600 - 0700	0	0	0	0	0	0	0	0	0	0	0	0	0	**0**
0700 - 0800	0	0	0	0	0	0	0	0	0	0	0	0	0	**0**
0800 - 0900	0	0	0	0	0	0	0	0	0	0	0	0	0	**0**
0900 - 1000	0	0	0	0	0	0	0	0	0	0	0	0	0	**0**
1000 - 1100	0	0	0	0	0	0	0	0	0	0	0	0	0	**0**
1100 - 1200	0	0	0	0	0	0	0	0	0	0	0	0	0	**0**
1200 - 1300	0	0	0	0	0	0	0	0	0	0	0	0	0	**0**
1300 - 1400	0	0	0	0	0	0	0	0	0	0	0	0	0	**0**
1400 - 1500	0	0	0	0	0	0	0	0	0	0	0	0	0	**0**
1500 - 1600	0	0	0	0	0	0	0	0	0	0	0	0	0	**0**
1600 - 1700	0	0	0	0	0	0	0	0	0	0	0	0	0	**0**
1700 - 1800	0	0	0	0	0	0	0	0	0	0	0	0	0	**0**
1800 - 1900	0	0	0	0	0	0	0	0	0	0	0	0	0	**0**
1900 - 2000	0	149	25	0	0	0	0	0	0	0	0	0	0	**174**
2000 - 2100	0	80	23	0	0	0	0	0	1	0	0	0	0	**104**
2100 - 2200	0	39	8	0	1	0	0	0	0	0	0	0	0	**48**
2200 - 2300	0	37	8	0	0	0	0	0	0	0	0	0	0	**45**
2300 - 2400	0	14	3	0	0	0	0	0	0	0	0	0	0	**17**
Session Total	0	319	67	0	1	0	0	0	1	0	0	0	0	**388**
Session Average	0.00	13.29	2.79	0.00	0.04	0.00	0.00	0.00	0.04	0.00	0.00	0.00	0.00	**16.17**
Session Percentage	0.00	82.22	17.27	0.00	0.26	0.00	0.00	0.00	0.26	0.00	0.00	0.00	0.00	
AM Peak Hour	-	-	-	-	-	-	-	-	-	-	-	-	-	**-**
AM Peak Volume	0	0	0	0	0	0	0	0	0	0	0	0	0	**0**
Noon Peak Hour	-	-	-	-	-	-	-	-	-	-	-	-	-	**-**
Noon Peak Volume	0	0	0	0	0	0	0	0	0	0	0	0	0	**0**
PM Peak Hour	-	1900 - 2000	1900 - 2000	-	-	-	-	-	-	-	-	-	-	**1900 - 2000**
PM Peak Volume	0	149	25	0	0	0	0	0	0	0	0	0	0	**174**

Site 25
I-26 James F. Byrnes Expy On/Off-Ramp,
north of SC-60 Lake Murray Blvd

Date
Wednesday, April 24, 2024

Weather
Fair
66°F

Lat/Long
34.091845°, -81.163993°

Click here for Detailed Weather

0000 - 2400 (Weekday 24h Session) (04-24-2024)
NB EB 60min

	Northbound (Movement 25.1)													
TIME	1	2	3	4	5	6	7	8	9	10	11	12	13	**Total**
0000 - 0100	0	5	1	0	1	0	0	0	0	0	0	0	0	**7**
0100 - 0200	0	8	0	0	0	0	0	0	0	0	0	0	0	**8**
0200 - 0300	0	7	1	0	0	0	0	0	0	0	0	0	0	**8**
0300 - 0400	0	4	1	0	0	0	0	0	0	0	0	0	0	**5**
0400 - 0500	0	11	0	0	2	0	0	0	0	0	0	0	0	**13**
0500 - 0600	0	21	1	0	1	0	0	0	2	0	0	0	0	**25**
0600 - 0700	0	88	16	0	0	1	0	0	1	0	0	0	0	**106**
0700 - 0800	0	164	24	0	3	0	0	1	1	0	0	0	0	**193**
0800 - 0900	0	126	34	1	0	0	0	1	1	0	0	0	0	**163**
0900 - 1000	0	100	25	0	6	0	0	0	3	0	0	0	0	**134**
1000 - 1100	0	89	29	0	2	0	0	1	1	0	0	0	0	**122**
1100 - 1200	1	124	34	1	3	0	0	0	2	0	0	0	0	**165**
1200 - 1300	0	159	104	1	2	0	0	0	2	0	0	0	0	**268**
1300 - 1400	0	133	27	0	1	1	0	0	4	0	0	0	0	**166**
1400 - 1500	0	177	37	0	3	0	0	1	1	0	0	0	0	**219**
1500 - 1600	0	230	50	0	1	0	0	0	2	0	0	0	0	**283**
1600 - 1700	0	252	49	1	2	0	0	0	0	0	0	0	0	**304**
1700 - 1800	0	296	68	0	2	0	0	0	0	0	0	0	0	**366**
1800 - 1900	0	152	35	0	0	0	0	0	0	0	0	0	0	**187**
1900 - 2000	0	116	21	0	3	0	0	0	0	0	0	0	0	**140**
2000 - 2100	2	114	11	0	0	0	0	0	0	0	0	0	0	**127**
2100 - 2200	0	74	2	0	0	0	0	1	0	0	0	0	0	**77**
2200 - 2300	0	34	1	0	0	0	0	0	0	0	0	0	0	**35**
2300 - 2400	0	17	0	0	1	0	0	0	0	0	0	0	0	**18**

Session Total	3	2501	571	4	33	2	0	5	20	0	0	0	0	**3139**
Session Average	0.13	104.21	23.79	0.17	1.38	0.08	0.00	0.21	0.83	0.00	0.00	0.00	0.00	**130.79**
Session Percentage	0.10	79.68	18.19	0.13	1.05	0.06	0.00	0.16	0.64	0.00	0.00	0.00	0.00	

AM Peak Hour	-	0700 - 0800	0800 - 0900	0800 - 0900	0900 - 1000	0600 - 0700	-	0700 - 0800	0900 - 1000	-	-	-	-	**0700 - 0800**
AM Peak Volume	0	164	34	1	6	1	0	1	3	0	0	0	0	**193**

Noon Peak Hour	1100 - 1200	1400 - 1500	1200 - 1300	1100 - 1200	1100 - 1200	1300 - 1400	-	1000 - 1100	1300 - 1400	-	-	-	-	**1200 - 1300**
Noon Peak Volume	1	177	104	1	3	1	0	1	4	0	0	0	0	**268**

PM Peak Hour	-	1700 - 1800	1700 - 1800	1600 - 1700	1900 - 2000	-	-	-	1500 - 1600	-	-	-	-	**1700 - 1800**
PM Peak Volume	0	296	68	1	3	0	0	0	2	0	0	0	0	**366**

Site 25
I-26 James F. Byrnes Expy On/Off-Ramp,
north of SC-60 Lake Murray Blvd

Date
Thursday, April 25, 2024

Weather
Fair
67°F

Lat/Long
34.091845°, -81.163993°

Click here for Detailed Weather

0000 - 2400 (Weekday 24h Session) (04-25-2024)
NB EB 60min

	Northbound (Movement 25.1)													
TIME	1	2	3	4	5	6	7	8	9	10	11	12	13	**Total**
0000 - 0100	0	7	0	0	1	0	0	0	0	0	0	0	0	**8**
0100 - 0200	0	5	1	0	0	0	0	0	0	0	0	0	0	**6**
0200 - 0300	0	2	1	0	0	0	0	0	0	0	0	0	0	**3**
0300 - 0400	0	9	1	0	0	0	0	0	0	0	0	0	0	**10**
0400 - 0500	0	10	0	0	0	0	0	0	1	0	0	0	0	**11**
0500 - 0600	0	22	1	0	1	0	0	0	0	0	0	0	0	**24**
0600 - 0700	0	60	25	0	2	0	0	0	1	0	0	0	0	**88**
0700 - 0800	0	129	43	0	8	0	3	1	4	0	0	0	0	**188**
0800 - 0900	1	126	39	0	3	0	6	0	0	0	0	0	0	**175**
0900 - 1000	0	128	31	1	4	0	7	1	2	0	0	0	0	**174**
1000 - 1100	0	107	31	0	2	0	7	0	0	0	0	0	0	**147**
1100 - 1200	1	127	27	0	2	0	4	0	0	0	0	0	0	**161**
1200 - 1300	0	152	53	1	2	1	3	0	2	0	0	0	0	**214**
1300 - 1400	1	158	40	2	6	2	8	1	0	0	0	0	0	**218**
1400 - 1500	0	181	36	0	3	0	4	0	0	0	0	0	0	**224**
1500 - 1600	0	234	63	0	5	3	8	0	1	0	0	0	0	**314**
1600 - 1700	0	244	65	0	4	0	4	0	1	0	0	0	0	**318**
1700 - 1800	1	302	51	1	2	0	4	0	0	0	0	0	0	**361**
1800 - 1900	2	158	46	0	0	0	0	0	1	0	0	0	0	**207**
1900 - 2000	0	0	0	0	0	0	0	0	0	0	0	0	0	**0**
2000 - 2100	0	0	0	0	0	0	0	0	0	0	0	0	0	**0**
2100 - 2200	0	0	0	0	0	0	0	0	0	0	0	0	0	**0**
2200 - 2300	0	0	0	0	0	0	0	0	0	0	0	0	0	**0**
2300 - 2400	0	0	0	0	0	0	0	0	0	0	0	0	0	**0**

Session Total	6	2161	554	5	45	6	58	3	13	0	0	0	0	**2851**
Session Average	0.25	90.04	23.08	0.21	1.88	0.25	2.42	0.13	0.54	0.00	0.00	0.00	0.00	**118.79**
Session Percentage	0.21	75.80	19.43	0.18	1.58	0.21	2.03	0.11	0.46	0.00	0.00	0.00	0.00	

AM Peak Hour	0800 - 0900	0700 - 0800	0700 - 0800	0900 - 1000	0700 - 0800	-	0900 - 1000	0700 - 0800	0700 - 0800	-	-	-	-	**0700 - 0800**
AM Peak Hour Volume	1	129	43	1	8	0	7	1	4	0	0	0	0	**188**

Noon Peak Hour	1100 - 1200	1400 - 1500	1200 - 1300	1300 - 1400	1300 - 1400	1300 - 1400	1300 - 1400	1300 - 1400	1200 - 1300	-	-	-	-	**1400 - 1500**
Noon Peak Hour Volume	1	181	53	2	6	2	8	1	2	0	0	0	0	**224**

PM Peak Hour	1800 - 1900	1700 - 1800	1600 - 1700	1700 - 1800	1500 - 1600	1500 - 1600	1500 - 1600	-	1500 - 1600	-	-	-	-	**1700 - 1800**
PM Peak Hour Volume	2	302	65	1	5	3	8	0	1	0	0	0	0	**361**

Bi-Directional Class Count || Volume Summary 60min

Columbia, SC

Marr Traffic DATA COLLECTION

www.marrtraffic.com

Site 25

I-26 James F. Byrnes Expy On/Off-Ramp,
north of SC-60 Lake Murray Blvd

Date

Tuesday, April 23, 2024

Lat/Long

34.091845°, -81.163993°

Weather

Fair
58°F

Click here for Detailed Weather

0000 - 2400 (Weekday 24h Session) (04-23-2024)

Volume Summary 60min

	Volume Summary 60min		
TIME	NB	SB	**Total**
0000 - 0100	0	0	**0**
0100 - 0200	0	0	**0**
0200 - 0300	0	0	**0**
0300 - 0400	0	0	**0**
0400 - 0500	0	0	**0**
0500 - 0600	0	0	**0**
0600 - 0700	0	0	**0**
0700 - 0800	0	0	**0**
0800 - 0900	0	0	**0**
0900 - 1000	0	0	**0**
1000 - 1100	0	0	**0**
1100 - 1200	0	0	**0**

	Volume Summary 60min		
Time	NB	SB	**Total**
1200 - 1300	0	0	**0**
1300 - 1400	0	0	**0**
1400 - 1500	0	0	**0**
1500 - 1600	0	0	**0**
1600 - 1700	0	0	**0**
1700 - 1800	0	0	**0**
1800 - 1900	0	0	**0**
1900 - 2000	174	0	**174**
2000 - 2100	104	0	**104**
2100 - 2200	48	0	**48**
2200 - 2300	45	0	**45**
2300 - 2400	17	0	**17**

Session Total	388	0	**388**
Session Average	16.17	0.00	**16.17**
Session Percentage	100.00	0.00	

Site 25

I-26 James F. Byrnes Expy On/Off-Ramp,
north of SC-60 Lake Murray Blvd

Date

Wednesday, April 24, 2024

Lat/Long

34.091845°, -81.163993°

Weather

Fair
66°F

Click here for Detailed Weather

0000 - 2400 (Weekday 24h Session) (04-24-2024)

Volume Summary 60min

	Volume Summary 60min		
TIME	NB	SB	**Total**
0000 - 0100	7	0	**7**
0100 - 0200	8	0	**8**
0200 - 0300	8	0	**8**
0300 - 0400	5	0	**5**
0400 - 0500	13	0	**13**
0500 - 0600	25	0	**25**
0600 - 0700	106	0	**106**
0700 - 0800	193	0	**193**
0800 - 0900	163	0	**163**
0900 - 1000	134	0	**134**
1000 - 1100	122	0	**122**
1100 - 1200	165	0	**165**

	Volume Summary 60min		
Time	NB	SB	**Total**
1200 - 1300	268	0	**268**
1300 - 1400	166	0	**166**
1400 - 1500	219	0	**219**
1500 - 1600	283	0	**283**
1600 - 1700	304	0	**304**
1700 - 1800	366	0	**366**
1800 - 1900	187	0	**187**
1900 - 2000	140	0	**140**
2000 - 2100	127	0	**127**
2100 - 2200	77	0	**77**
2200 - 2300	35	0	**35**
2300 - 2400	18	0	**18**

Session Total	3139	0	**3139**
Session Average	130.79	0.00	**130.79**
Session Percentage	100.00	0.00	

Site 25

I-26 James F. Byrnes Expy On/Off-Ramp,
north of SC-60 Lake Murray Blvd

Date

Thursday, April 25, 2024

Lat/Long

34.091845°, -81.163993°

Weather

Fair
67°F

Click here for Detailed Weather

0000 - 2400 (Weekday 24h Session) (04-25-2024)

Volume Summary 60min

	Volume Summary 60min		
TIME	NB	SB	**Total**
0000 - 0100	8	0	**8**
0100 - 0200	6	0	**6**
0200 - 0300	3	0	**3**
0300 - 0400	10	0	**10**
0400 - 0500	11	0	**11**
0500 - 0600	24	0	**24**
0600 - 0700	88	0	**88**
0700 - 0800	188	0	**188**
0800 - 0900	175	0	**175**
0900 - 1000	174	0	**174**
1000 - 1100	147	0	**147**
1100 - 1200	161	0	**161**

	Volume Summary 60min		
Time	NB	SB	**Total**
1200 - 1300	214	0	**214**
1300 - 1400	218	0	**218**
1400 - 1500	224	0	**224**
1500 - 1600	314	0	**314**
1600 - 1700	318	0	**318**
1700 - 1800	361	0	**361**
1800 - 1900	207	0	**207**
1900 - 2000	0	0	**0**
2000 - 2100	0	0	**0**
2100 - 2200	0	0	**0**
2200 - 2300	0	0	**0**
2300 - 2400	0	0	**0**

Session Total	2851	0	**2851**
Session Average	118.79	0.00	**118.79**
Session Percentage	100.00	0.00	

Bi-Directional Class Count || Graphical Analysis NB EB

Columbia, SC

Marr Traffic DATA COLLECTION

www.marrtraffic.com

Site 25

I-26 James F. Byrnes Expy On/Off-Ramp,
north of SC-60 Lake Murray Blvd

Lat/Long

34.091845°, -81.163993°

0000 - 2400 (Weekday 24h Session)

Graphical Analysis NB EB

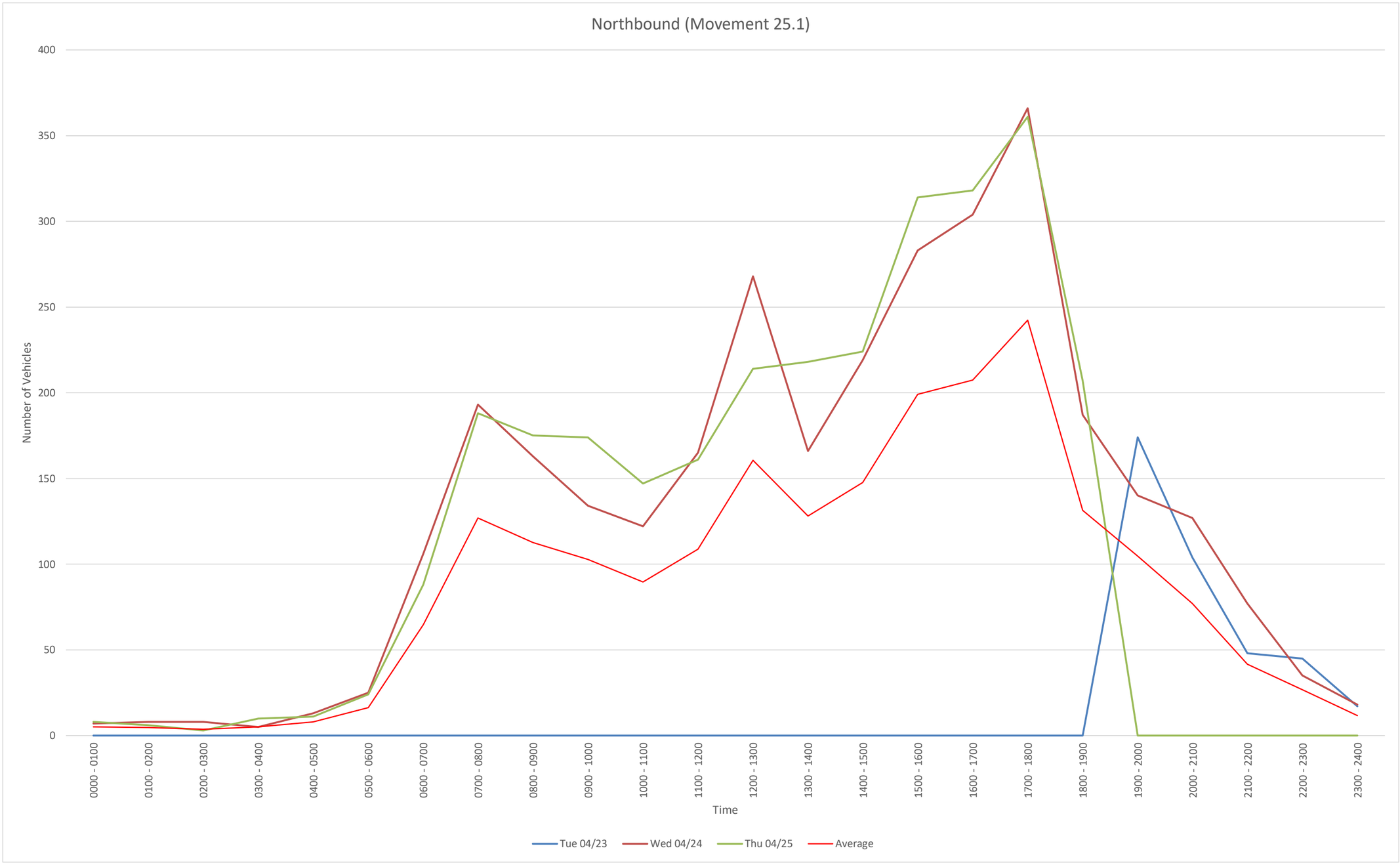

Time	Tue 04/23	Wed 04/24	Thu 04/25				
0000 - 0100	0	7	8				
0100 - 0200	0	8	6				
0200 - 0300	0	8	3				
0300 - 0400	0	5	10				
0400 - 0500	0	13	11				
0500 - 0600	0	25	24				
0600 - 0700	0	106	88				
0700 - 0800	0	193	188				
0800 - 0900	0	163	175				
0900 - 1000	0	134	174				
1000 - 1100	0	122	147				
1100 - 1200	0	165	161				
1200 - 1300	0	268	214				
1300 - 1400	0	166	218				
1400 - 1500	0	219	224				
1500 - 1600	0	283	314				
1600 - 1700	0	304	318				
1700 - 1800	0	366	361				
1800 - 1900	0	187	207				
1900 - 2000	174	140	0				
2000 - 2100	104	127	0				
2100 - 2200	48	77	0				
2200 - 2300	45	35	0				
2300 - 2400	17	18	0				
Daily Total	388	3139	2851				

NB
File Name:
Start Date: 4/23/2024
Start Time: 0
Site Code: 25
Station ID: 1
Location 1: I-26 James F. Byrnes Expy On/Off-Ramp, north of SC-60 Lake Murray Blvd
Location 2:

Date	Time	1	2	3	4	5	6	7	8	9	10	11	12	13
4/23/2024	12:00 AM	0	0	0	0	0	0	0	0	0	0	0	0	0
4/23/2024	12:15 AM	0	0	0	0	0	0	0	0	0	0	0	0	0
4/23/2024	12:30 AM	0	0	0	0	0	0	0	0	0	0	0	0	0
4/23/2024	12:45 AM	0	0	0	0	0	0	0	0	0	0	0	0	0
4/23/2024	1:00 AM	0	0	0	0	0	0	0	0	0	0	0	0	0
4/23/2024	1:15 AM	0	0	0	0	0	0	0	0	0	0	0	0	0
4/23/2024	1:30 AM	0	0	0	0	0	0	0	0	0	0	0	0	0
4/23/2024	1:45 AM	0	0	0	0	0	0	0	0	0	0	0	0	0
4/23/2024	2:00 AM	0	0	0	0	0	0	0	0	0	0	0	0	0
4/23/2024	2:15 AM	0	0	0	0	0	0	0	0	0	0	0	0	0
4/23/2024	2:30 AM	0	0	0	0	0	0	0	0	0	0	0	0	0
4/23/2024	2:45 AM	0	0	0	0	0	0	0	0	0	0	0	0	0
4/23/2024	3:00 AM	0	0	0	0	0	0	0	0	0	0	0	0	0
4/23/2024	3:15 AM	0	0	0	0	0	0	0	0	0	0	0	0	0
4/23/2024	3:30 AM	0	0	0	0	0	0	0	0	0	0	0	0	0
4/23/2024	3:45 AM	0	0	0	0	0	0	0	0	0	0	0	0	0
4/23/2024	4:00 AM	0	0	0	0	0	0	0	0	0	0	0	0	0
4/23/2024	4:15 AM	0	0	0	0	0	0	0	0	0	0	0	0	0
4/23/2024	4:30 AM	0	0	0	0	0	0	0	0	0	0	0	0	0
4/23/2024	4:45 AM	0	0	0	0	0	0	0	0	0	0	0	0	0
4/23/2024	5:00 AM	0	0	0	0	0	0	0	0	0	0	0	0	0
4/23/2024	5:15 AM	0	0	0	0	0	0	0	0	0	0	0	0	0
4/23/2024	5:30 AM	0	0	0	0	0	0	0	0	0	0	0	0	0
4/23/2024	5:45 AM	0	0	0	0	0	0	0	0	0	0	0	0	0
4/23/2024	6:00 AM	0	0	0	0	0	0	0	0	0	0	0	0	0
4/23/2024	6:15 AM	0	0	0	0	0	0	0	0	0	0	0	0	0
4/23/2024	6:30 AM	0	0	0	0	0	0	0	0	0	0	0	0	0
4/23/2024	6:45 AM	0	0	0	0	0	0	0	0	0	0	0	0	0
4/23/2024	7:00 AM	0	0	0	0	0	0	0	0	0	0	0	0	0
4/23/2024	7:15 AM	0	0	0	0	0	0	0	0	0	0	0	0	0
4/23/2024	7:30 AM	0	0	0	0	0	0	0	0	0	0	0	0	0
4/23/2024	7:45 AM	0	0	0	0	0	0	0	0	0	0	0	0	0
4/23/2024	8:00 AM	0	0	0	0	0	0	0	0	0	0	0	0	0
4/23/2024	8:15 AM	0	0	0	0	0	0	0	0	0	0	0	0	0
4/23/2024	8:30 AM	0	0	0	0	0	0	0	0	0	0	0	0	0
4/23/2024	8:45 AM	0	0	0	0	0	0	0	0	0	0	0	0	0
4/23/2024	9:00 AM	0	0	0	0	0	0	0	0	0	0	0	0	0
4/23/2024	9:15 AM	0	0	0	0	0	0	0	0	0	0	0	0	0
4/23/2024	9:30 AM	0	0	0	0	0	0	0	0	0	0	0	0	0
4/23/2024	9:45 AM	0	0	0	0	0	0	0	0	0	0	0	0	0
4/23/2024	10:00 AM	0	0	0	0	0	0	0	0	0	0	0	0	0
4/23/2024	10:15 AM	0	0	0	0	0	0	0	0	0	0	0	0	0
4/23/2024	10:30 AM	0	0	0	0	0	0	0	0	0	0	0	0	0
4/23/2024	10:45 AM	0	0	0	0	0	0	0	0	0	0	0	0	0
4/23/2024	11:00 AM	0	0	0	0	0	0	0	0	0	0	0	0	0
4/23/2024	11:15 AM	0	0	0	0	0	0	0	0	0	0	0	0	0
4/23/2024	11:30 AM	0	0	0	0	0	0	0	0	0	0	0	0	0
4/23/2024	11:45 AM	0	0	0	0	0	0	0	0	0	0	0	0	0
4/23/2024	12:00 PM	0	0	0	0	0	0	0	0	0	0	0	0	0
4/23/2024	12:15 PM	0	0	0	0	0	0	0	0	0	0	0	0	0
4/23/2024	12:30 PM	0	0	0	0	0	0	0	0	0	0	0	0	0
4/23/2024	12:45 PM	0	0	0	0	0	0	0	0	0	0	0	0	0
4/23/2024	1:00 PM	0	0	0	0	0	0	0	0	0	0	0	0	0
4/23/2024	1:15 PM	0	0	0	0	0	0	0	0	0	0	0	0	0
4/23/2024	1:30 PM	0	0	0	0	0	0	0	0	0	0	0	0	0
4/23/2024	1:45 PM	0	0	0	0	0	0	0	0	0	0	0	0	0
4/23/2024	2:00 PM	0	0	0	0	0	0	0	0	0	0	0	0	0
4/23/2024	2:15 PM	0	0	0	0	0	0	0	0	0	0	0	0	0
4/23/2024	2:30 PM	0	0	0	0	0	0	0	0	0	0	0	0	0
4/23/2024	2:45 PM	0	0	0	0	0	0	0	0	0	0	0	0	0
4/23/2024	3:00 PM	0	0	0	0	0	0	0	0	0	0	0	0	0
4/23/2024	3:15 PM	0	0	0	0	0	0	0	0	0	0	0	0	0
4/23/2024	3:30 PM	0	0	0	0	0	0	0	0	0	0	0	0	0
4/23/2024	3:45 PM	0	0	0	0	0	0	0	0	0	0	0	0	0
4/23/2024	4:00 PM	0	0	0	0	0	0	0	0	0	0	0	0	0
4/23/2024	4:15 PM	0	0	0	0	0	0	0	0	0	0	0	0	0
4/23/2024	4:30 PM	0	0	0	0	0	0	0	0	0	0	0	0	0
4/23/2024	4:45 PM	0	0	0	0	0	0	0	0	0	0	0	0	0
4/23/2024	5:00 PM	0	0	0	0	0	0	0	0	0	0	0	0	0
4/23/2024	5:15 PM	0	0	0	0	0	0	0	0	0	0	0	0	0
4/23/2024	5:30 PM	0	0	0	0	0	0	0	0	0	0	0	0	0
4/23/2024	5:45 PM	0	0	0	0	0	0	0	0	0	0	0	0	0
4/23/2024	6:00 PM	0	0	0	0	0	0	0	0	0	0	0	0	0
4/23/2024	6:15 PM	0	0	0	0	0	0	0	0	0	0	0	0	0
4/23/2024	6:30 PM	0	0	0	0	0	0	0	0	0	0	0	0	0
4/23/2024	6:45 PM	0	0	0	0	0	0	0	0	0	0	0	0	0
4/23/2024	7:00 PM	0	47	3	0	0	0	0	0	0	0	0	0	0
4/23/2024	7:15 PM	0	34	6	0	0	0	0	0	0	0	0	0	0
4/23/2024	7:30 PM	0	38	9	0	0	0	0	0	0	0	0	0	0
4/23/2024	7:45 PM	0	30	7	0	0	0	0	0	0	0	0	0	0
4/23/2024	8:00 PM	0	20	3	0	0	0	0	0	0	0	0	0	0
4/23/2024	8:15 PM	0	32	9	0	0	0	0	0	0	0	0	0	0
4/23/2024	8:30 PM	0	22	8	0	0	0	0	0	1	0	0	0	0
4/23/2024	8:45 PM	0	6	3	0	0	0	0	0	0	0	0	0	0
4/23/2024	9:00 PM	0	3	1	0	0	0	0	0	0	0	0	0	0
4/23/2024	9:15 PM	0	8	1	0	0	0	0	0	0	0	0	0	0
4/23/2024	9:30 PM	0	10	2	0	1	0	0	0	0	0	0	0	0
4/23/2024	9:45 PM	0	18	4	0	0	0	0	0	0	0	0	0	0
4/23/2024	10:00 PM	0	15	2	0	0	0	0	0	0	0	0	0	0
4/23/2024	10:15 PM	0	11	1	0	0	0	0	0	0	0	0	0	0
4/23/2024	10:30 PM	0	7	2	0	0	0	0	0	0	0	0	0	0
4/23/2024	10:45 PM	0	4	3	0	0	0	0	0	0	0	0	0	0
4/23/2024	11:00 PM	0	8	2	0	0	0	0	0	0	0	0	0	0
4/23/2024	11:15 PM	0	2	0	0	0	0	0	0	0	0	0	0	0
4/23/2024	11:30 PM	0	1	0	0	0	0	0	0	0	0	0	0	0
4/23/2024	11:45 PM	0	3	1	0	0	0	0	0	0	0	0	0	0

4/24/2024	12:00 AM	0	2	1	0	1	0	0	0	0	0	0	0
4/24/2024	12:15 AM	0	1	0	0	0	0	0	0	0	0	0	0
4/24/2024	12:30 AM	0	2	0	0	0	0	0	0	0	0	0	0
4/24/2024	12:45 AM	0	0	0	0	0	0	0	0	0	0	0	0
4/24/2024	1:00 AM	0	3	0	0	0	0	0	0	0	0	0	0
4/24/2024	1:15 AM	0	3	0	0	0	0	0	0	0	0	0	0
4/24/2024	1:30 AM	0	1	0	0	0	0	0	0	0	0	0	0
4/24/2024	1:45 AM	0	1	0	0	0	0	0	0	0	0	0	0
4/24/2024	2:00 AM	0	2	0	0	0	0	0	0	0	0	0	0
4/24/2024	2:15 AM	0	2	0	0	0	0	0	0	0	0	0	0
4/24/2024	2:30 AM	0	2	1	0	0	0	0	0	0	0	0	0
4/24/2024	2:45 AM	0	1	0	0	0	0	0	0	0	0	0	0
4/24/2024	3:00 AM	0	0	0	0	0	0	0	0	0	0	0	0
4/24/2024	3:15 AM	0	0	1	0	0	0	0	0	0	0	0	0
4/24/2024	3:30 AM	0	2	0	0	0	0	0	0	0	0	0	0
4/24/2024	3:45 AM	0	2	0	0	0	0	0	0	0	0	0	0
4/24/2024	4:00 AM	0	0	0	0	0	0	0	0	0	0	0	0
4/24/2024	4:15 AM	0	1	0	0	0	0	0	0	0	0	0	0
4/24/2024	4:30 AM	0	6	0	0	1	0	0	0	0	0	0	0
4/24/2024	4:45 AM	0	4	0	0	1	0	0	0	0	0	0	0
4/24/2024	5:00 AM	0	3	0	0	0	0	0	0	1	0	0	0
4/24/2024	5:15 AM	0	2	0	0	0	0	0	0	0	0	0	0
4/24/2024	5:30 AM	0	12	0	0	1	0	0	0	0	0	0	0
4/24/2024	5:45 AM	0	4	1	0	0	0	0	0	1	0	0	0
4/24/2024	6:00 AM	0	21	0	0	0	0	0	0	0	0	0	0
4/24/2024	6:15 AM	0	19	4	0	0	0	0	0	0	0	0	0
4/24/2024	6:30 AM	0	22	7	0	0	0	0	0	0	0	0	0
4/24/2024	6:45 AM	0	26	5	0	0	1	0	0	1	0	0	0
4/24/2024	7:00 AM	0	30	4	0	0	0	0	0	1	0	0	0
4/24/2024	7:15 AM	0	30	6	0	0	0	0	1	0	0	0	0
4/24/2024	7:30 AM	0	46	11	0	2	0	0	0	0	0	0	0
4/24/2024	7:45 AM	0	58	3	0	1	0	0	0	0	0	0	0
4/24/2024	8:00 AM	0	32	7	0	0	0	0	1	0	0	0	0
4/24/2024	8:15 AM	0	40	9	0	0	0	0	0	1	0	0	0
4/24/2024	8:30 AM	0	24	8	0	0	0	0	0	0	0	0	0
4/24/2024	8:45 AM	0	30	10	1	0	0	0	0	0	0	0	0
4/24/2024	9:00 AM	0	31	6	0	3	0	0	0	0	0	0	0
4/24/2024	9:15 AM	0	26	11	0	0	0	0	0	0	0	0	0
4/24/2024	9:30 AM	0	17	4	0	1	0	0	0	0	0	0	0
4/24/2024	9:45 AM	0	26	4	0	2	0	0	0	3	0	0	0
4/24/2024	10:00 AM	0	22	5	0	1	0	0	1	0	0	0	0
4/24/2024	10:15 AM	0	24	7	0	0	0	0	0	1	0	0	0
4/24/2024	10:30 AM	0	25	6	0	0	0	0	0	0	0	0	0
4/24/2024	10:45 AM	0	18	11	0	1	0	0	0	0	0	0	0
4/24/2024	11:00 AM	0	25	13	1	0	0	0	0	0	0	0	0
4/24/2024	11:15 AM	0	33	7	0	0	0	0	0	1	0	0	0
4/24/2024	11:30 AM	1	34	7	0	0	0	0	0	0	0	0	0
4/24/2024	11:45 AM	0	32	7	0	3	0	0	0	1	0	0	0
4/24/2024	12:00 PM	0	38	78	0	1	0	0	0	0	0	0	0
4/24/2024	12:15 PM	0	36	10	1	1	0	0	0	0	0	0	0
4/24/2024	12:30 PM	0	46	5	0	0	0	0	0	1	0	0	0
4/24/2024	12:45 PM	0	39	11	0	0	0	0	0	1	0	0	0
4/24/2024	1:00 PM	0	31	9	0	0	0	0	0	1	0	0	0
4/24/2024	1:15 PM	0	33	5	0	0	1	0	0	2	0	0	0
4/24/2024	1:30 PM	0	37	9	0	0	0	0	0	0	0	0	0
4/24/2024	1:45 PM	0	32	4	0	1	0	0	0	1	0	0	0
4/24/2024	2:00 PM	0	46	10	0	0	0	0	0	0	0	0	0
4/24/2024	2:15 PM	0	36	5	0	0	0	0	0	1	0	0	0
4/24/2024	2:30 PM	0	37	11	0	3	0	0	1	0	0	0	0
4/24/2024	2:45 PM	0	58	11	0	0	0	0	0	0	0	0	0
4/24/2024	3:00 PM	0	54	10	0	1	0	0	0	2	0	0	0
4/24/2024	3:15 PM	0	53	9	0	0	0	0	0	0	0	0	0
4/24/2024	3:30 PM	0	58	15	0	0	0	0	0	0	0	0	0
4/24/2024	3:45 PM	0	65	16	0	0	0	0	0	0	0	0	0
4/24/2024	4:00 PM	0	65	9	0	1	0	0	0	0	0	0	0
4/24/2024	4:15 PM	0	55	15	0	1	0	0	0	0	0	0	0
4/24/2024	4:30 PM	0	67	14	1	0	0	0	0	0	0	0	0
4/24/2024	4:45 PM	0	65	11	0	0	0	0	0	0	0	0	0
4/24/2024	5:00 PM	0	93	27	0	2	0	0	0	0	0	0	0
4/24/2024	5:15 PM	0	82	18	0	0	0	0	0	0	0	0	0
4/24/2024	5:30 PM	0	53	12	0	0	0	0	0	0	0	0	0
4/24/2024	5:45 PM	0	68	11	0	0	0	0	0	0	0	0	0
4/24/2024	6:00 PM	0	46	6	0	0	0	0	0	0	0	0	0
4/24/2024	6:15 PM	0	37	6	0	0	0	0	0	0	0	0	0
4/24/2024	6:30 PM	0	36	6	0	0	0	0	0	0	0	0	0
4/24/2024	6:45 PM	0	33	17	0	0	0	0	0	0	0	0	0
4/24/2024	7:00 PM	0	31	7	0	0	0	0	0	0	0	0	0
4/24/2024	7:15 PM	0	26	7	0	0	0	0	0	0	0	0	0
4/24/2024	7:30 PM	0	25	4	0	0	0	0	0	0	0	0	0
4/24/2024	7:45 PM	0	34	3	0	3	0	0	0	0	0	0	0
4/24/2024	8:00 PM	1	31	1	0	0	0	0	0	0	0	0	0
4/24/2024	8:15 PM	1	27	8	0	0	0	0	0	0	0	0	0
4/24/2024	8:30 PM	0	24	2	0	0	0	0	0	0	0	0	0
4/24/2024	8:45 PM	0	32	0	0	0	0	0	0	0	0	0	0
4/24/2024	9:00 PM	0	16	0	0	0	0	0	0	0	0	0	0
4/24/2024	9:15 PM	0	19	1	0	0	0	0	0	0	0	0	0
4/24/2024	9:30 PM	0	19	0	0	0	0	0	0	0	0	0	0
4/24/2024	9:45 PM	0	20	1	0	0	0	0	1	0	0	0	0
4/24/2024	10:00 PM	0	12	0	0	0	0	0	0	0	0	0	0
4/24/2024	10:15 PM	0	14	0	0	0	0	0	0	0	0	0	0
4/24/2024	10:30 PM	0	1	0	0	0	0	0	0	0	0	0	0
4/24/2024	10:45 PM	0	7	1	0	0	0	0	0	0	0	0	0
4/24/2024	11:00 PM	0	5	0	0	0	0	0	0	0	0	0	0
4/24/2024	11:15 PM	0	4	0	0	1	0	0	0	0	0	0	0
4/24/2024	11:30 PM	0	2	0	0	0	0	0	0	0	0	0	0
4/24/2024	11:45 PM	0	6	0	0	0	0	0	0	0	0	0	0

4/25/2024	12:00 AM	0	2	0	0	1	0	0	0	0	0	0	0	0
4/25/2024	12:15 AM	0	2	0	0	0	0	0	0	0	0	0	0	0
4/25/2024	12:30 AM	0	0	0	0	0	0	0	0	0	0	0	0	0
4/25/2024	12:45 AM	0	3	0	0	0	0	0	0	0	0	0	0	0
4/25/2024	1:00 AM	0	1	0	0	0	0	0	0	0	0	0	0	0
4/25/2024	1:15 AM	0	2	0	0	0	0	0	0	0	0	0	0	0
4/25/2024	1:30 AM	0	2	0	0	0	0	0	0	0	0	0	0	0
4/25/2024	1:45 AM	0	0	1	0	0	0	0	0	0	0	0	0	0
4/25/2024	2:00 AM	0	1	0	0	0	0	0	0	0	0	0	0	0
4/25/2024	2:15 AM	0	0	1	0	0	0	0	0	0	0	0	0	0
4/25/2024	2:30 AM	0	0	0	0	0	0	0	0	0	0	0	0	0
4/25/2024	2:45 AM	0	1	0	0	0	0	0	0	0	0	0	0	0
4/25/2024	3:00 AM	0	0	0	0	0	0	0	0	0	0	0	0	0
4/25/2024	3:15 AM	0	3	0	0	0	0	0	0	0	0	0	0	0
4/25/2024	3:30 AM	0	4	0	0	0	0	0	0	0	0	0	0	0
4/25/2024	3:45 AM	0	2	1	0	0	0	0	0	0	0	0	0	0
4/25/2024	4:00 AM	0	0	0	0	0	0	0	0	0	0	0	0	0
4/25/2024	4:15 AM	0	1	0	0	0	0	0	0	0	0	0	0	0
4/25/2024	4:30 AM	0	7	0	0	0	0	0	0	0	0	0	0	0
4/25/2024	4:45 AM	0	2	0	0	0	0	0	0	1	0	0	0	0
4/25/2024	5:00 AM	0	5	0	0	1	0	0	0	0	0	0	0	0
4/25/2024	5:15 AM	0	3	0	0	0	0	0	0	0	0	0	0	0
4/25/2024	5:30 AM	0	6	1	0	0	0	0	0	0	0	0	0	0
4/25/2024	5:45 AM	0	8	0	0	0	0	0	0	0	0	0	0	0
4/25/2024	6:00 AM	0	10	5	0	0	0	0	0	0	0	0	0	0
4/25/2024	6:15 AM	0	15	6	0	0	0	0	0	0	0	0	0	0
4/25/2024	6:30 AM	0	17	8	0	0	0	0	0	0	0	0	0	0
4/25/2024	6:45 AM	0	18	6	0	2	0	0	0	1	0	0	0	0
4/25/2024	7:00 AM	0	23	12	0	0	0	0	0	0	0	0	0	0
4/25/2024	7:15 AM	0	30	6	0	1	0	0	0	1	0	0	0	0
4/25/2024	7:30 AM	0	40	11	0	2	0	2	1	1	0	0	0	0
4/25/2024	7:45 AM	0	36	14	0	5	0	1	0	2	0	0	0	0
4/25/2024	8:00 AM	1	41	4	0	0	0	0	0	0	0	0	0	0
4/25/2024	8:15 AM	0	33	8	0	1	0	4	0	0	0	0	0	0
4/25/2024	8:30 AM	0	25	7	0	0	0	0	0	0	0	0	0	0
4/25/2024	8:45 AM	0	27	20	0	2	0	2	0	0	0	0	0	0
4/25/2024	9:00 AM	0	33	8	0	2	0	2	0	1	0	0	0	0
4/25/2024	9:15 AM	0	42	7	1	0	0	1	0	0	0	0	0	0
4/25/2024	9:30 AM	0	28	9	0	1	0	3	0	0	0	0	0	0
4/25/2024	9:45 AM	0	25	7	0	1	0	1	1	1	0	0	0	0
4/25/2024	10:00 AM	0	38	6	0	0	0	3	0	0	0	0	0	0
4/25/2024	10:15 AM	0	19	7	0	2	0	0	0	0	0	0	0	0
4/25/2024	10:30 AM	0	26	7	0	0	0	2	0	0	0	0	0	0
4/25/2024	10:45 AM	0	24	11	0	0	0	2	0	0	0	0	0	0
4/25/2024	11:00 AM	1	29	8	0	2	0	0	0	0	0	0	0	0
4/25/2024	11:15 AM	0	30	4	0	0	0	3	0	0	0	0	0	0
4/25/2024	11:30 AM	0	40	10	0	0	0	0	0	0	0	0	0	0
4/25/2024	11:45 AM	0	28	5	0	0	0	1	0	0	0	0	0	0
4/25/2024	12:00 PM	0	47	13	0	0	0	1	0	0	0	0	0	0
4/25/2024	12:15 PM	0	41	12	0	1	0	1	0	1	0	0	0	0
4/25/2024	12:30 PM	0	30	12	0	0	0	1	0	1	0	0	0	0
4/25/2024	12:45 PM	0	34	16	1	1	1	0	0	0	0	0	0	0
4/25/2024	1:00 PM	1	41	11	0	2	2	2	0	0	0	0	0	0
4/25/2024	1:15 PM	0	41	5	1	2	0	2	0	0	0	0	0	0
4/25/2024	1:30 PM	0	36	13	1	1	0	1	1	0	0	0	0	0
4/25/2024	1:45 PM	0	40	11	0	1	0	3	0	0	0	0	0	0
4/25/2024	2:00 PM	0	41	9	0	0	0	0	0	0	0	0	0	0
4/25/2024	2:15 PM	0	48	10	0	1	0	2	0	0	0	0	0	0
4/25/2024	2:30 PM	0	37	6	0	0	0	2	0	0	0	0	0	0
4/25/2024	2:45 PM	0	55	11	0	2	0	0	0	0	0	0	0	0
4/25/2024	3:00 PM	0	58	15	0	4	2	3	0	0	0	0	0	0
4/25/2024	3:15 PM	0	56	13	0	0	0	1	0	0	0	0	0	0
4/25/2024	3:30 PM	0	52	15	0	0	0	1	0	0	0	0	0	0
4/25/2024	3:45 PM	0	68	20	0	1	1	3	0	1	0	0	0	0
4/25/2024	4:00 PM	0	60	15	0	1	0	0	0	0	0	0	0	0
4/25/2024	4:15 PM	0	70	14	0	2	0	3	0	0	0	0	0	0
4/25/2024	4:30 PM	0	50	16	0	0	0	1	0	0	0	0	0	0
4/25/2024	4:45 PM	0	64	20	0	1	0	0	0	1	0	0	0	0
4/25/2024	5:00 PM	1	79	11	1	0	0	4	0	0	0	0	0	0
4/25/2024	5:15 PM	0	77	14	0	1	0	0	0	0	0	0	0	0
4/25/2024	5:30 PM	0	82	14	0	1	0	0	0	0	0	0	0	0
4/25/2024	5:45 PM	0	64	12	0	0	0	0	0	0	0	0	0	0
4/25/2024	6:00 PM	1	39	17	0	0	0	0	0	1	0	0	0	0
4/25/2024	6:15 PM	0	46	12	0	0	0	0	0	0	0	0	0	0
4/25/2024	6:30 PM	0	35	9	0	0	0	0	0	0	0	0	0	0
4/25/2024	6:45 PM	1	38	8	0	0	0	0	0	0	0	0	0	0
4/25/2024	7:00 PM	0	0	0	0	0	0	0	0	0	0	0	0	0
4/25/2024	7:15 PM	0	0	0	0	0	0	0	0	0	0	0	0	0
4/25/2024	7:30 PM	0	0	0	0	0	0	0	0	0	0	0	0	0
4/25/2024	7:45 PM	0	0	0	0	0	0	0	0	0	0	0	0	0
4/25/2024	8:00 PM	0	0	0	0	0	0	0	0	0	0	0	0	0
4/25/2024	8:15 PM	0	0	0	0	0	0	0	0	0	0	0	0	0
4/25/2024	8:30 PM	0	0	0	0	0	0	0	0	0	0	0	0	0
4/25/2024	8:45 PM	0	0	0	0	0	0	0	0	0	0	0	0	0
4/25/2024	9:00 PM	0	0	0	0	0	0	0	0	0	0	0	0	0
4/25/2024	9:15 PM	0	0	0	0	0	0	0	0	0	0	0	0	0
4/25/2024	9:30 PM	0	0	0	0	0	0	0	0	0	0	0	0	0
4/25/2024	9:45 PM	0	0	0	0	0	0	0	0	0	0	0	0	0
4/25/2024	10:00 PM	0	0	0	0	0	0	0	0	0	0	0	0	0
4/25/2024	10:15 PM	0	0	0	0	0	0	0	0	0	0	0	0	0
4/25/2024	10:30 PM	0	0	0	0	0	0	0	0	0	0	0	0	0
4/25/2024	10:45 PM	0	0	0	0	0	0	0	0	0	0	0	0	0
4/25/2024	11:00 PM	0	0	0	0	0	0	0	0	0	0	0	0	0
4/25/2024	11:15 PM	0	0	0	0	0	0	0	0	0	0	0	0	0
4/25/2024	11:30 PM	0	0	0	0	0	0	0	0	0	0	0	0	0
4/25/2024	11:45 PM	0	0	0	0	0	0	0	0	0	0	0	0	0

SB
File Name:
Start Date: 4/23/2024
Start Time: 0
Site Code: 25
Station ID: 1
Location 1: I-26 James F. Byrnes Expy On/Off-Ramp, north of SC-60 Lake Murray Blvd
Location 2:

Date	Time	1	2	3	4	5	6	7	8	9	10	11	12	13
4/23/2024	12:00 AM	0	0	0	0	0	0	0	0	0	0	0	0	0
4/23/2024	12:15 AM	0	0	0	0	0	0	0	0	0	0	0	0	0
4/23/2024	12:30 AM	0	0	0	0	0	0	0	0	0	0	0	0	0
4/23/2024	12:45 AM	0	0	0	0	0	0	0	0	0	0	0	0	0
4/23/2024	1:00 AM	0	0	0	0	0	0	0	0	0	0	0	0	0
4/23/2024	1:15 AM	0	0	0	0	0	0	0	0	0	0	0	0	0
4/23/2024	1:30 AM	0	0	0	0	0	0	0	0	0	0	0	0	0
4/23/2024	1:45 AM	0	0	0	0	0	0	0	0	0	0	0	0	0
4/23/2024	2:00 AM	0	0	0	0	0	0	0	0	0	0	0	0	0
4/23/2024	2:15 AM	0	0	0	0	0	0	0	0	0	0	0	0	0
4/23/2024	2:30 AM	0	0	0	0	0	0	0	0	0	0	0	0	0
4/23/2024	2:45 AM	0	0	0	0	0	0	0	0	0	0	0	0	0
4/23/2024	3:00 AM	0	0	0	0	0	0	0	0	0	0	0	0	0
4/23/2024	3:15 AM	0	0	0	0	0	0	0	0	0	0	0	0	0
4/23/2024	3:30 AM	0	0	0	0	0	0	0	0	0	0	0	0	0
4/23/2024	3:45 AM	0	0	0	0	0	0	0	0	0	0	0	0	0
4/23/2024	4:00 AM	0	0	0	0	0	0	0	0	0	0	0	0	0
4/23/2024	4:15 AM	0	0	0	0	0	0	0	0	0	0	0	0	0
4/23/2024	4:30 AM	0	0	0	0	0	0	0	0	0	0	0	0	0
4/23/2024	4:45 AM	0	0	0	0	0	0	0	0	0	0	0	0	0
4/23/2024	5:00 AM	0	0	0	0	0	0	0	0	0	0	0	0	0
4/23/2024	5:15 AM	0	0	0	0	0	0	0	0	0	0	0	0	0
4/23/2024	5:30 AM	0	0	0	0	0	0	0	0	0	0	0	0	0
4/23/2024	5:45 AM	0	0	0	0	0	0	0	0	0	0	0	0	0
4/23/2024	6:00 AM	0	0	0	0	0	0	0	0	0	0	0	0	0
4/23/2024	6:15 AM	0	0	0	0	0	0	0	0	0	0	0	0	0
4/23/2024	6:30 AM	0	0	0	0	0	0	0	0	0	0	0	0	0
4/23/2024	6:45 AM	0	0	0	0	0	0	0	0	0	0	0	0	0
4/23/2024	7:00 AM	0	0	0	0	0	0	0	0	0	0	0	0	0
4/23/2024	7:15 AM	0	0	0	0	0	0	0	0	0	0	0	0	0
4/23/2024	7:30 AM	0	0	0	0	0	0	0	0	0	0	0	0	0
4/23/2024	7:45 AM	0	0	0	0	0	0	0	0	0	0	0	0	0
4/23/2024	8:00 AM	0	0	0	0	0	0	0	0	0	0	0	0	0
4/23/2024	8:15 AM	0	0	0	0	0	0	0	0	0	0	0	0	0
4/23/2024	8:30 AM	0	0	0	0	0	0	0	0	0	0	0	0	0
4/23/2024	8:45 AM	0	0	0	0	0	0	0	0	0	0	0	0	0
4/23/2024	9:00 AM	0	0	0	0	0	0	0	0	0	0	0	0	0
4/23/2024	9:15 AM	0	0	0	0	0	0	0	0	0	0	0	0	0
4/23/2024	9:30 AM	0	0	0	0	0	0	0	0	0	0	0	0	0
4/23/2024	9:45 AM	0	0	0	0	0	0	0	0	0	0	0	0	0
4/23/2024	10:00 AM	0	0	0	0	0	0	0	0	0	0	0	0	0
4/23/2024	10:15 AM	0	0	0	0	0	0	0	0	0	0	0	0	0
4/23/2024	10:30 AM	0	0	0	0	0	0	0	0	0	0	0	0	0
4/23/2024	10:45 AM	0	0	0	0	0	0	0	0	0	0	0	0	0
4/23/2024	11:00 AM	0	0	0	0	0	0	0	0	0	0	0	0	0
4/23/2024	11:15 AM	0	0	0	0	0	0	0	0	0	0	0	0	0
4/23/2024	11:30 AM	0	0	0	0	0	0	0	0	0	0	0	0	0
4/23/2024	11:45 AM	0	0	0	0	0	0	0	0	0	0	0	0	0
4/23/2024	12:00 PM	0	0	0	0	0	0	0	0	0	0	0	0	0
4/23/2024	12:15 PM	0	0	0	0	0	0	0	0	0	0	0	0	0
4/23/2024	12:30 PM	0	0	0	0	0	0	0	0	0	0	0	0	0
4/23/2024	12:45 PM	0	0	0	0	0	0	0	0	0	0	0	0	0
4/23/2024	1:00 PM	0	0	0	0	0	0	0	0	0	0	0	0	0
4/23/2024	1:15 PM	0	0	0	0	0	0	0	0	0	0	0	0	0
4/23/2024	1:30 PM	0	0	0	0	0	0	0	0	0	0	0	0	0
4/23/2024	1:45 PM	0	0	0	0	0	0	0	0	0	0	0	0	0
4/23/2024	2:00 PM	0	0	0	0	0	0	0	0	0	0	0	0	0
4/23/2024	2:15 PM	0	0	0	0	0	0	0	0	0	0	0	0	0
4/23/2024	2:30 PM	0	0	0	0	0	0	0	0	0	0	0	0	0
4/23/2024	2:45 PM	0	0	0	0	0	0	0	0	0	0	0	0	0
4/23/2024	3:00 PM	0	0	0	0	0	0	0	0	0	0	0	0	0
4/23/2024	3:15 PM	0	0	0	0	0	0	0	0	0	0	0	0	0
4/23/2024	3:30 PM	0	0	0	0	0	0	0	0	0	0	0	0	0
4/23/2024	3:45 PM	0	0	0	0	0	0	0	0	0	0	0	0	0
4/23/2024	4:00 PM	0	0	0	0	0	0	0	0	0	0	0	0	0
4/23/2024	4:15 PM	0	0	0	0	0	0	0	0	0	0	0	0	0
4/23/2024	4:30 PM	0	0	0	0	0	0	0	0	0	0	0	0	0
4/23/2024	4:45 PM	0	0	0	0	0	0	0	0	0	0	0	0	0
4/23/2024	5:00 PM	0	0	0	0	0	0	0	0	0	0	0	0	0
4/23/2024	5:15 PM	0	0	0	0	0	0	0	0	0	0	0	0	0
4/23/2024	5:30 PM	0	0	0	0	0	0	0	0	0	0	0	0	0
4/23/2024	5:45 PM	0	0	0	0	0	0	0	0	0	0	0	0	0
4/23/2024	6:00 PM	0	0	0	0	0	0	0	0	0	0	0	0	0
4/23/2024	6:15 PM	0	0	0	0	0	0	0	0	0	0	0	0	0
4/23/2024	6:30 PM	0	0	0	0	0	0	0	0	0	0	0	0	0
4/23/2024	6:45 PM	0	0	0	0	0	0	0	0	0	0	0	0	0
4/23/2024	7:00 PM	0	0	0	0	0	0	0	0	0	0	0	0	0
4/23/2024	7:15 PM	0	0	0	0	0	0	0	0	0	0	0	0	0
4/23/2024	7:30 PM	0	0	0	0	0	0	0	0	0	0	0	0	0
4/23/2024	7:45 PM	0	0	0	0	0	0	0	0	0	0	0	0	0
4/23/2024	8:00 PM	0	0	0	0	0	0	0	0	0	0	0	0	0
4/23/2024	8:15 PM	0	0	0	0	0	0	0	0	0	0	0	0	0
4/23/2024	8:30 PM	0	0	0	0	0	0	0	0	0	0	0	0	0
4/23/2024	8:45 PM	0	0	0	0	0	0	0	0	0	0	0	0	0
4/23/2024	9:00 PM	0	0	0	0	0	0	0	0	0	0	0	0	0
4/23/2024	9:15 PM	0	0	0	0	0	0	0	0	0	0	0	0	0
4/23/2024	9:30 PM	0	0	0	0	0	0	0	0	0	0	0	0	0
4/23/2024	9:45 PM	0	0	0	0	0	0	0	0	0	0	0	0	0
4/23/2024	10:00 PM	0	0	0	0	0	0	0	0	0	0	0	0	0
4/23/2024	10:15 PM	0	0	0	0	0	0	0	0	0	0	0	0	0
4/23/2024	10:30 PM	0	0	0	0	0	0	0	0	0	0	0	0	0
4/23/2024	10:45 PM	0	0	0	0	0	0	0	0	0	0	0	0	0
4/23/2024	11:00 PM	0	0	0	0	0	0	0	0	0	0	0	0	0
4/23/2024	11:15 PM	0	0	0	0	0	0	0	0	0	0	0	0	0
4/23/2024	11:30 PM	0	0	0	0	0	0	0	0	0	0	0	0	0
4/23/2024	11:45 PM	0	0	0	0	0	0	0	0	0	0	0	0	0

4/24/2024	12:00 AM	0	0	0	0	0	0	0	0	0	0	0	0	0
4/24/2024	12:15 AM	0	0	0	0	0	0	0	0	0	0	0	0	0
4/24/2024	12:30 AM	0	0	0	0	0	0	0	0	0	0	0	0	0
4/24/2024	12:45 AM	0	0	0	0	0	0	0	0	0	0	0	0	0
4/24/2024	1:00 AM	0	0	0	0	0	0	0	0	0	0	0	0	0
4/24/2024	1:15 AM	0	0	0	0	0	0	0	0	0	0	0	0	0
4/24/2024	1:30 AM	0	0	0	0	0	0	0	0	0	0	0	0	0
4/24/2024	1:45 AM	0	0	0	0	0	0	0	0	0	0	0	0	0
4/24/2024	2:00 AM	0	0	0	0	0	0	0	0	0	0	0	0	0
4/24/2024	2:15 AM	0	0	0	0	0	0	0	0	0	0	0	0	0
4/24/2024	2:30 AM	0	0	0	0	0	0	0	0	0	0	0	0	0
4/24/2024	2:45 AM	0	0	0	0	0	0	0	0	0	0	0	0	0
4/24/2024	3:00 AM	0	0	0	0	0	0	0	0	0	0	0	0	0
4/24/2024	3:15 AM	0	0	0	0	0	0	0	0	0	0	0	0	0
4/24/2024	3:30 AM	0	0	0	0	0	0	0	0	0	0	0	0	0
4/24/2024	3:45 AM	0	0	0	0	0	0	0	0	0	0	0	0	0
4/24/2024	4:00 AM	0	0	0	0	0	0	0	0	0	0	0	0	0
4/24/2024	4:15 AM	0	0	0	0	0	0	0	0	0	0	0	0	0
4/24/2024	4:30 AM	0	0	0	0	0	0	0	0	0	0	0	0	0
4/24/2024	4:45 AM	0	0	0	0	0	0	0	0	0	0	0	0	0
4/24/2024	5:00 AM	0	0	0	0	0	0	0	0	0	0	0	0	0
4/24/2024	5:15 AM	0	0	0	0	0	0	0	0	0	0	0	0	0
4/24/2024	5:30 AM	0	0	0	0	0	0	0	0	0	0	0	0	0
4/24/2024	5:45 AM	0	0	0	0	0	0	0	0	0	0	0	0	0
4/24/2024	6:00 AM	0	0	0	0	0	0	0	0	0	0	0	0	0
4/24/2024	6:15 AM	0	0	0	0	0	0	0	0	0	0	0	0	0
4/24/2024	6:30 AM	0	0	0	0	0	0	0	0	0	0	0	0	0
4/24/2024	6:45 AM	0	0	0	0	0	0	0	0	0	0	0	0	0
4/24/2024	7:00 AM	0	0	0	0	0	0	0	0	0	0	0	0	0
4/24/2024	7:15 AM	0	0	0	0	0	0	0	0	0	0	0	0	0
4/24/2024	7:30 AM	0	0	0	0	0	0	0	0	0	0	0	0	0
4/24/2024	7:45 AM	0	0	0	0	0	0	0	0	0	0	0	0	0
4/24/2024	8:00 AM	0	0	0	0	0	0	0	0	0	0	0	0	0
4/24/2024	8:15 AM	0	0	0	0	0	0	0	0	0	0	0	0	0
4/24/2024	8:30 AM	0	0	0	0	0	0	0	0	0	0	0	0	0
4/24/2024	8:45 AM	0	0	0	0	0	0	0	0	0	0	0	0	0
4/24/2024	9:00 AM	0	0	0	0	0	0	0	0	0	0	0	0	0
4/24/2024	9:15 AM	0	0	0	0	0	0	0	0	0	0	0	0	0
4/24/2024	9:30 AM	0	0	0	0	0	0	0	0	0	0	0	0	0
4/24/2024	9:45 AM	0	0	0	0	0	0	0	0	0	0	0	0	0
4/24/2024	10:00 AM	0	0	0	0	0	0	0	0	0	0	0	0	0
4/24/2024	10:15 AM	0	0	0	0	0	0	0	0	0	0	0	0	0
4/24/2024	10:30 AM	0	0	0	0	0	0	0	0	0	0	0	0	0
4/24/2024	10:45 AM	0	0	0	0	0	0	0	0	0	0	0	0	0
4/24/2024	11:00 AM	0	0	0	0	0	0	0	0	0	0	0	0	0
4/24/2024	11:15 AM	0	0	0	0	0	0	0	0	0	0	0	0	0
4/24/2024	11:30 AM	0	0	0	0	0	0	0	0	0	0	0	0	0
4/24/2024	11:45 AM	0	0	0	0	0	0	0	0	0	0	0	0	0
4/24/2024	12:00 PM	0	0	0	0	0	0	0	0	0	0	0	0	0
4/24/2024	12:15 PM	0	0	0	0	0	0	0	0	0	0	0	0	0
4/24/2024	12:30 PM	0	0	0	0	0	0	0	0	0	0	0	0	0
4/24/2024	12:45 PM	0	0	0	0	0	0	0	0	0	0	0	0	0
4/24/2024	1:00 PM	0	0	0	0	0	0	0	0	0	0	0	0	0
4/24/2024	1:15 PM	0	0	0	0	0	0	0	0	0	0	0	0	0
4/24/2024	1:30 PM	0	0	0	0	0	0	0	0	0	0	0	0	0
4/24/2024	1:45 PM	0	0	0	0	0	0	0	0	0	0	0	0	0
4/24/2024	2:00 PM	0	0	0	0	0	0	0	0	0	0	0	0	0
4/24/2024	2:15 PM	0	0	0	0	0	0	0	0	0	0	0	0	0
4/24/2024	2:30 PM	0	0	0	0	0	0	0	0	0	0	0	0	0
4/24/2024	2:45 PM	0	0	0	0	0	0	0	0	0	0	0	0	0
4/24/2024	3:00 PM	0	0	0	0	0	0	0	0	0	0	0	0	0
4/24/2024	3:15 PM	0	0	0	0	0	0	0	0	0	0	0	0	0
4/24/2024	3:30 PM	0	0	0	0	0	0	0	0	0	0	0	0	0
4/24/2024	3:45 PM	0	0	0	0	0	0	0	0	0	0	0	0	0
4/24/2024	4:00 PM	0	0	0	0	0	0	0	0	0	0	0	0	0
4/24/2024	4:15 PM	0	0	0	0	0	0	0	0	0	0	0	0	0
4/24/2024	4:30 PM	0	0	0	0	0	0	0	0	0	0	0	0	0
4/24/2024	4:45 PM	0	0	0	0	0	0	0	0	0	0	0	0	0
4/24/2024	5:00 PM	0	0	0	0	0	0	0	0	0	0	0	0	0
4/24/2024	5:15 PM	0	0	0	0	0	0	0	0	0	0	0	0	0
4/24/2024	5:30 PM	0	0	0	0	0	0	0	0	0	0	0	0	0
4/24/2024	5:45 PM	0	0	0	0	0	0	0	0	0	0	0	0	0
4/24/2024	6:00 PM	0	0	0	0	0	0	0	0	0	0	0	0	0
4/24/2024	6:15 PM	0	0	0	0	0	0	0	0	0	0	0	0	0
4/24/2024	6:30 PM	0	0	0	0	0	0	0	0	0	0	0	0	0
4/24/2024	6:45 PM	0	0	0	0	0	0	0	0	0	0	0	0	0
4/24/2024	7:00 PM	0	0	0	0	0	0	0	0	0	0	0	0	0
4/24/2024	7:15 PM	0	0	0	0	0	0	0	0	0	0	0	0	0
4/24/2024	7:30 PM	0	0	0	0	0	0	0	0	0	0	0	0	0
4/24/2024	7:45 PM	0	0	0	0	0	0	0	0	0	0	0	0	0
4/24/2024	8:00 PM	0	0	0	0	0	0	0	0	0	0	0	0	0
4/24/2024	8:15 PM	0	0	0	0	0	0	0	0	0	0	0	0	0
4/24/2024	8:30 PM	0	0	0	0	0	0	0	0	0	0	0	0	0
4/24/2024	8:45 PM	0	0	0	0	0	0	0	0	0	0	0	0	0
4/24/2024	9:00 PM	0	0	0	0	0	0	0	0	0	0	0	0	0
4/24/2024	9:15 PM	0	0	0	0	0	0	0	0	0	0	0	0	0
4/24/2024	9:30 PM	0	0	0	0	0	0	0	0	0	0	0	0	0
4/24/2024	9:45 PM	0	0	0	0	0	0	0	0	0	0	0	0	0
4/24/2024	10:00 PM	0	0	0	0	0	0	0	0	0	0	0	0	0
4/24/2024	10:15 PM	0	0	0	0	0	0	0	0	0	0	0	0	0
4/24/2024	10:30 PM	0	0	0	0	0	0	0	0	0	0	0	0	0
4/24/2024	10:45 PM	0	0	0	0	0	0	0	0	0	0	0	0	0
4/24/2024	11:00 PM	0	0	0	0	0	0	0	0	0	0	0	0	0
4/24/2024	11:15 PM	0	0	0	0	0	0	0	0	0	0	0	0	0
4/24/2024	11:30 PM	0	0	0	0	0	0	0	0	0	0	0	0	0
4/24/2024	11:45 PM	0	0	0	0	0	0	0	0	0	0	0	0	0

4/25/2024	12:00 AM	0	0	0	0	0	0	0	0	0	0	0	0	0
4/25/2024	12:15 AM	0	0	0	0	0	0	0	0	0	0	0	0	0
4/25/2024	12:30 AM	0	0	0	0	0	0	0	0	0	0	0	0	0
4/25/2024	12:45 AM	0	0	0	0	0	0	0	0	0	0	0	0	0
4/25/2024	1:00 AM	0	0	0	0	0	0	0	0	0	0	0	0	0
4/25/2024	1:15 AM	0	0	0	0	0	0	0	0	0	0	0	0	0
4/25/2024	1:30 AM	0	0	0	0	0	0	0	0	0	0	0	0	0
4/25/2024	1:45 AM	0	0	0	0	0	0	0	0	0	0	0	0	0
4/25/2024	2:00 AM	0	0	0	0	0	0	0	0	0	0	0	0	0
4/25/2024	2:15 AM	0	0	0	0	0	0	0	0	0	0	0	0	0
4/25/2024	2:30 AM	0	0	0	0	0	0	0	0	0	0	0	0	0
4/25/2024	2:45 AM	0	0	0	0	0	0	0	0	0	0	0	0	0
4/25/2024	3:00 AM	0	0	0	0	0	0	0	0	0	0	0	0	0
4/25/2024	3:15 AM	0	0	0	0	0	0	0	0	0	0	0	0	0
4/25/2024	3:30 AM	0	0	0	0	0	0	0	0	0	0	0	0	0
4/25/2024	3:45 AM	0	0	0	0	0	0	0	0	0	0	0	0	0
4/25/2024	4:00 AM	0	0	0	0	0	0	0	0	0	0	0	0	0
4/25/2024	4:15 AM	0	0	0	0	0	0	0	0	0	0	0	0	0
4/25/2024	4:30 AM	0	0	0	0	0	0	0	0	0	0	0	0	0
4/25/2024	4:45 AM	0	0	0	0	0	0	0	0	0	0	0	0	0
4/25/2024	5:00 AM	0	0	0	0	0	0	0	0	0	0	0	0	0
4/25/2024	5:15 AM	0	0	0	0	0	0	0	0	0	0	0	0	0
4/25/2024	5:30 AM	0	0	0	0	0	0	0	0	0	0	0	0	0
4/25/2024	5:45 AM	0	0	0	0	0	0	0	0	0	0	0	0	0
4/25/2024	6:00 AM	0	0	0	0	0	0	0	0	0	0	0	0	0
4/25/2024	6:15 AM	0	0	0	0	0	0	0	0	0	0	0	0	0
4/25/2024	6:30 AM	0	0	0	0	0	0	0	0	0	0	0	0	0
4/25/2024	6:45 AM	0	0	0	0	0	0	0	0	0	0	0	0	0
4/25/2024	7:00 AM	0	0	0	0	0	0	0	0	0	0	0	0	0
4/25/2024	7:15 AM	0	0	0	0	0	0	0	0	0	0	0	0	0
4/25/2024	7:30 AM	0	0	0	0	0	0	0	0	0	0	0	0	0
4/25/2024	7:45 AM	0	0	0	0	0	0	0	0	0	0	0	0	0
4/25/2024	8:00 AM	0	0	0	0	0	0	0	0	0	0	0	0	0
4/25/2024	8:15 AM	0	0	0	0	0	0	0	0	0	0	0	0	0
4/25/2024	8:30 AM	0	0	0	0	0	0	0	0	0	0	0	0	0
4/25/2024	8:45 AM	0	0	0	0	0	0	0	0	0	0	0	0	0
4/25/2024	9:00 AM	0	0	0	0	0	0	0	0	0	0	0	0	0
4/25/2024	9:15 AM	0	0	0	0	0	0	0	0	0	0	0	0	0
4/25/2024	9:30 AM	0	0	0	0	0	0	0	0	0	0	0	0	0
4/25/2024	9:45 AM	0	0	0	0	0	0	0	0	0	0	0	0	0
4/25/2024	10:00 AM	0	0	0	0	0	0	0	0	0	0	0	0	0
4/25/2024	10:15 AM	0	0	0	0	0	0	0	0	0	0	0	0	0
4/25/2024	10:30 AM	0	0	0	0	0	0	0	0	0	0	0	0	0
4/25/2024	10:45 AM	0	0	0	0	0	0	0	0	0	0	0	0	0
4/25/2024	11:00 AM	0	0	0	0	0	0	0	0	0	0	0	0	0
4/25/2024	11:15 AM	0	0	0	0	0	0	0	0	0	0	0	0	0
4/25/2024	11:30 AM	0	0	0	0	0	0	0	0	0	0	0	0	0
4/25/2024	11:45 AM	0	0	0	0	0	0	0	0	0	0	0	0	0
4/25/2024	12:00 PM	0	0	0	0	0	0	0	0	0	0	0	0	0
4/25/2024	12:15 PM	0	0	0	0	0	0	0	0	0	0	0	0	0
4/25/2024	12:30 PM	0	0	0	0	0	0	0	0	0	0	0	0	0
4/25/2024	12:45 PM	0	0	0	0	0	0	0	0	0	0	0	0	0
4/25/2024	1:00 PM	0	0	0	0	0	0	0	0	0	0	0	0	0
4/25/2024	1:15 PM	0	0	0	0	0	0	0	0	0	0	0	0	0
4/25/2024	1:30 PM	0	0	0	0	0	0	0	0	0	0	0	0	0
4/25/2024	1:45 PM	0	0	0	0	0	0	0	0	0	0	0	0	0
4/25/2024	2:00 PM	0	0	0	0	0	0	0	0	0	0	0	0	0
4/25/2024	2:15 PM	0	0	0	0	0	0	0	0	0	0	0	0	0
4/25/2024	2:30 PM	0	0	0	0	0	0	0	0	0	0	0	0	0
4/25/2024	2:45 PM	0	0	0	0	0	0	0	0	0	0	0	0	0
4/25/2024	3:00 PM	0	0	0	0	0	0	0	0	0	0	0	0	0
4/25/2024	3:15 PM	0	0	0	0	0	0	0	0	0	0	0	0	0
4/25/2024	3:30 PM	0	0	0	0	0	0	0	0	0	0	0	0	0
4/25/2024	3:45 PM	0	0	0	0	0	0	0	0	0	0	0	0	0
4/25/2024	4:00 PM	0	0	0	0	0	0	0	0	0	0	0	0	0
4/25/2024	4:15 PM	0	0	0	0	0	0	0	0	0	0	0	0	0
4/25/2024	4:30 PM	0	0	0	0	0	0	0	0	0	0	0	0	0
4/25/2024	4:45 PM	0	0	0	0	0	0	0	0	0	0	0	0	0
4/25/2024	5:00 PM	0	0	0	0	0	0	0	0	0	0	0	0	0
4/25/2024	5:15 PM	0	0	0	0	0	0	0	0	0	0	0	0	0
4/25/2024	5:30 PM	0	0	0	0	0	0	0	0	0	0	0	0	0
4/25/2024	5:45 PM	0	0	0	0	0	0	0	0	0	0	0	0	0
4/25/2024	6:00 PM	0	0	0	0	0	0	0	0	0	0	0	0	0
4/25/2024	6:15 PM	0	0	0	0	0	0	0	0	0	0	0	0	0
4/25/2024	6:30 PM	0	0	0	0	0	0	0	0	0	0	0	0	0
4/25/2024	6:45 PM	0	0	0	0	0	0	0	0	0	0	0	0	0
4/25/2024	7:00 PM	0	0	0	0	0	0	0	0	0	0	0	0	0
4/25/2024	7:15 PM	0	0	0	0	0	0	0	0	0	0	0	0	0
4/25/2024	7:30 PM	0	0	0	0	0	0	0	0	0	0	0	0	0
4/25/2024	7:45 PM	0	0	0	0	0	0	0	0	0	0	0	0	0
4/25/2024	8:00 PM	0	0	0	0	0	0	0	0	0	0	0	0	0
4/25/2024	8:15 PM	0	0	0	0	0	0	0	0	0	0	0	0	0
4/25/2024	8:30 PM	0	0	0	0	0	0	0	0	0	0	0	0	0
4/25/2024	8:45 PM	0	0	0	0	0	0	0	0	0	0	0	0	0
4/25/2024	9:00 PM	0	0	0	0	0	0	0	0	0	0	0	0	0
4/25/2024	9:15 PM	0	0	0	0	0	0	0	0	0	0	0	0	0
4/25/2024	9:30 PM	0	0	0	0	0	0	0	0	0	0	0	0	0
4/25/2024	9:45 PM	0	0	0	0	0	0	0	0	0	0	0	0	0
4/25/2024	10:00 PM	0	0	0	0	0	0	0	0	0	0	0	0	0
4/25/2024	10:15 PM	0	0	0	0	0	0	0	0	0	0	0	0	0
4/25/2024	10:30 PM	0	0	0	0	0	0	0	0	0	0	0	0	0
4/25/2024	10:45 PM	0	0	0	0	0	0	0	0	0	0	0	0	0
4/25/2024	11:00 PM	0	0	0	0	0	0	0	0	0	0	0	0	0
4/25/2024	11:15 PM	0	0	0	0	0	0	0	0	0	0	0	0	0
4/25/2024	11:30 PM	0	0	0	0	0	0	0	0	0	0	0	0	0
4/25/2024	11:45 PM	0	0	0	0	0	0	0	0	0	0	0	0	0

NB
File Name:
Start Date: 4/23/2024
Start Time: 0
Site Code: 25
Station ID: 1
Location 1: I-26 James F. Byrnes Expy On/Off-Ramp, north of SC-60 Lake Murray Blvd
Location 2:

Date	Time	1	2	3	4	5	6	7	8	9	10	11	12	13
4/23/2024	12:00 AM	0	0	0	0	0	0	0	0	0	0	0	0	0
4/23/2024	12:15 AM	0	0	0	0	0	0	0	0	0	0	0	0	0
4/23/2024	12:30 AM	0	0	0	0	0	0	0	0	0	0	0	0	0
4/23/2024	12:45 AM	0	0	0	0	0	0	0	0	0	0	0	0	0
4/23/2024	1:00 AM	0	0	0	0	0	0	0	0	0	0	0	0	0
4/23/2024	1:15 AM	0	0	0	0	0	0	0	0	0	0	0	0	0
4/23/2024	1:30 AM	0	0	0	0	0	0	0	0	0	0	0	0	0
4/23/2024	1:45 AM	0	0	0	0	0	0	0	0	0	0	0	0	0
4/23/2024	2:00 AM	0	0	0	0	0	0	0	0	0	0	0	0	0
4/23/2024	2:15 AM	0	0	0	0	0	0	0	0	0	0	0	0	0
4/23/2024	2:30 AM	0	0	0	0	0	0	0	0	0	0	0	0	0
4/23/2024	2:45 AM	0	0	0	0	0	0	0	0	0	0	0	0	0
4/23/2024	3:00 AM	0	0	0	0	0	0	0	0	0	0	0	0	0
4/23/2024	3:15 AM	0	0	0	0	0	0	0	0	0	0	0	0	0
4/23/2024	3:30 AM	0	0	0	0	0	0	0	0	0	0	0	0	0
4/23/2024	3:45 AM	0	0	0	0	0	0	0	0	0	0	0	0	0
4/23/2024	4:00 AM	0	0	0	0	0	0	0	0	0	0	0	0	0
4/23/2024	4:15 AM	0	0	0	0	0	0	0	0	0	0	0	0	0
4/23/2024	4:30 AM	0	0	0	0	0	0	0	0	0	0	0	0	0
4/23/2024	4:45 AM	0	0	0	0	0	0	0	0	0	0	0	0	0
4/23/2024	5:00 AM	0	0	0	0	0	0	0	0	0	0	0	0	0
4/23/2024	5:15 AM	0	0	0	0	0	0	0	0	0	0	0	0	0
4/23/2024	5:30 AM	0	0	0	0	0	0	0	0	0	0	0	0	0
4/23/2024	5:45 AM	0	0	0	0	0	0	0	0	0	0	0	0	0
4/23/2024	6:00 AM	0	0	0	0	0	0	0	0	0	0	0	0	0
4/23/2024	6:15 AM	0	0	0	0	0	0	0	0	0	0	0	0	0
4/23/2024	6:30 AM	0	0	0	0	0	0	0	0	0	0	0	0	0
4/23/2024	6:45 AM	0	0	0	0	0	0	0	0	0	0	0	0	0
4/23/2024	7:00 AM	0	0	0	0	0	0	0	0	0	0	0	0	0
4/23/2024	7:15 AM	0	0	0	0	0	0	0	0	0	0	0	0	0
4/23/2024	7:30 AM	0	0	0	0	0	0	0	0	0	0	0	0	0
4/23/2024	7:45 AM	0	0	0	0	0	0	0	0	0	0	0	0	0
4/23/2024	8:00 AM	0	0	0	0	0	0	0	0	0	0	0	0	0
4/23/2024	8:15 AM	0	0	0	0	0	0	0	0	0	0	0	0	0
4/23/2024	8:30 AM	0	0	0	0	0	0	0	0	0	0	0	0	0
4/23/2024	8:45 AM	0	0	0	0	0	0	0	0	0	0	0	0	0
4/23/2024	9:00 AM	0	0	0	0	0	0	0	0	0	0	0	0	0
4/23/2024	9:15 AM	0	0	0	0	0	0	0	0	0	0	0	0	0
4/23/2024	9:30 AM	0	0	0	0	0	0	0	0	0	0	0	0	0
4/23/2024	9:45 AM	0	0	0	0	0	0	0	0	0	0	0	0	0
4/23/2024	10:00 AM	0	0	0	0	0	0	0	0	0	0	0	0	0
4/23/2024	10:15 AM	0	0	0	0	0	0	0	0	0	0	0	0	0
4/23/2024	10:30 AM	0	0	0	0	0	0	0	0	0	0	0	0	0
4/23/2024	10:45 AM	0	0	0	0	0	0	0	0	0	0	0	0	0
4/23/2024	11:00 AM	0	0	0	0	0	0	0	0	0	0	0	0	0
4/23/2024	11:15 AM	0	0	0	0	0	0	0	0	0	0	0	0	0
4/23/2024	11:30 AM	0	0	0	0	0	0	0	0	0	0	0	0	0
4/23/2024	11:45 AM	0	0	0	0	0	0	0	0	0	0	0	0	0
4/23/2024	12:00 PM	0	0	0	0	0	0	0	0	0	0	0	0	0
4/23/2024	12:15 PM	0	0	0	0	0	0	0	0	0	0	0	0	0
4/23/2024	12:30 PM	0	0	0	0	0	0	0	0	0	0	0	0	0
4/23/2024	12:45 PM	0	0	0	0	0	0	0	0	0	0	0	0	0
4/23/2024	1:00 PM	0	0	0	0	0	0	0	0	0	0	0	0	0
4/23/2024	1:15 PM	0	0	0	0	0	0	0	0	0	0	0	0	0
4/23/2024	1:30 PM	0	0	0	0	0	0	0	0	0	0	0	0	0
4/23/2024	1:45 PM	0	0	0	0	0	0	0	0	0	0	0	0	0
4/23/2024	2:00 PM	0	0	0	0	0	0	0	0	0	0	0	0	0
4/23/2024	2:15 PM	0	0	0	0	0	0	0	0	0	0	0	0	0
4/23/2024	2:30 PM	0	0	0	0	0	0	0	0	0	0	0	0	0
4/23/2024	2:45 PM	0	0	0	0	0	0	0	0	0	0	0	0	0
4/23/2024	3:00 PM	0	0	0	0	0	0	0	0	0	0	0	0	0
4/23/2024	3:15 PM	0	0	0	0	0	0	0	0	0	0	0	0	0
4/23/2024	3:30 PM	0	0	0	0	0	0	0	0	0	0	0	0	0
4/23/2024	3:45 PM	0	0	0	0	0	0	0	0	0	0	0	0	0
4/23/2024	4:00 PM	0	0	0	0	0	0	0	0	0	0	0	0	0
4/23/2024	4:15 PM	0	0	0	0	0	0	0	0	0	0	0	0	0
4/23/2024	4:30 PM	0	0	0	0	0	0	0	0	0	0	0	0	0
4/23/2024	4:45 PM	0	0	0	0	0	0	0	0	0	0	0	0	0
4/23/2024	5:00 PM	0	0	0	0	0	0	0	0	0	0	0	0	0
4/23/2024	5:15 PM	0	0	0	0	0	0	0	0	0	0	0	0	0
4/23/2024	5:30 PM	0	0	0	0	0	0	0	0	0	0	0	0	0
4/23/2024	5:45 PM	0	0	0	0	0	0	0	0	0	0	0	0	0
4/23/2024	6:00 PM	0	0	0	0	0	0	0	0	0	0	0	0	0
4/23/2024	6:15 PM	0	47	3	0	0	0	0	0	0	0	0	0	0
4/23/2024	6:30 PM	0	81	9	0	0	0	0	0	0	0	0	0	0
4/23/2024	6:45 PM	0	119	18	0	0	0	0	0	0	0	0	0	0
4/23/2024	7:00 PM	0	149	25	0	0	0	0	0	0	0	0	0	0
4/23/2024	7:15 PM	0	122	25	0	0	0	0	0	0	0	0	0	0
4/23/2024	7:30 PM	0	120	28	0	0	0	0	0	0	0	0	0	0
4/23/2024	7:45 PM	0	104	27	0	0	0	0	0	1	0	0	0	0
4/23/2024	8:00 PM	0	80	23	0	0	0	0	0	1	0	0	0	0
4/23/2024	8:15 PM	0	63	21	0	0	0	0	0	1	0	0	0	0
4/23/2024	8:30 PM	0	39	13	0	0	0	0	0	1	0	0	0	0
4/23/2024	8:45 PM	0	27	7	0	1	0	0	0	0	0	0	0	0
4/23/2024	9:00 PM	0	39	8	0	1	0	0	0	0	0	0	0	0
4/23/2024	9:15 PM	0	51	9	0	1	0	0	0	0	0	0	0	0
4/23/2024	9:30 PM	0	54	9	0	1	0	0	0	0	0	0	0	0
4/23/2024	9:45 PM	0	51	9	0	0	0	0	0	0	0	0	0	0
4/23/2024	10:00 PM	0	37	8	0	0	0	0	0	0	0	0	0	0
4/23/2024	10:15 PM	0	30	8	0	0	0	0	0	0	0	0	0	0
4/23/2024	10:30 PM	0	21	7	0	0	0	0	0	0	0	0	0	0
4/23/2024	10:45 PM	0	15	5	0	0	0	0	0	0	0	0	0	0
4/23/2024	11:00 PM	0	14	3	0	0	0	0	0	0	0	0	0	0
4/23/2024	11:15 PM	0	8	2	0	1	0	0	0	0	0	0	0	0
4/23/2024	11:30 PM	0	7	2	0	1	0	0	0	0	0	0	0	0
4/23/2024	11:45 PM	0	8	2	0	1	0	0	0	0	0	0	0	0

4/24/2024	12:00 AM	0	5	1	0	1	0	0	0	0	0	0	0
4/24/2024	12:15 AM	0	6	0	0	0	0	0	0	0	0	0	0
4/24/2024	12:30 AM	0	8	0	0	0	0	0	0	0	0	0	0
4/24/2024	12:45 AM	0	7	0	0	0	0	0	0	0	0	0	0
4/24/2024	1:00 AM	0	8	0	0	0	0	0	0	0	0	0	0
4/24/2024	1:15 AM	0	7	0	0	0	0	0	0	0	0	0	0
4/24/2024	1:30 AM	0	6	0	0	0	0	0	0	0	0	0	0
4/24/2024	1:45 AM	0	7	1	0	0	0	0	0	0	0	0	0
4/24/2024	2:00 AM	0	7	1	0	0	0	0	0	0	0	0	0
4/24/2024	2:15 AM	0	5	1	0	0	0	0	0	0	0	0	0
4/24/2024	2:30 AM	0	3	2	0	0	0	0	0	0	0	0	0
4/24/2024	2:45 AM	0	3	1	0	0	0	0	0	0	0	0	0
4/24/2024	3:00 AM	0	4	1	0	0	0	0	0	0	0	0	0
4/24/2024	3:15 AM	0	4	1	0	0	0	0	0	0	0	0	0
4/24/2024	3:30 AM	0	5	0	0	0	0	0	0	0	0	0	0
4/24/2024	3:45 AM	0	9	0	0	1	0	0	0	0	0	0	0
4/24/2024	4:00 AM	0	11	0	0	2	0	0	0	0	0	0	0
4/24/2024	4:15 AM	0	14	0	0	2	0	0	0	1	0	0	0
4/24/2024	4:30 AM	0	15	0	0	2	0	0	0	1	0	0	0
4/24/2024	4:45 AM	0	21	0	0	2	0	0	0	1	0	0	0
4/24/2024	5:00 AM	0	21	1	0	1	0	0	0	2	0	0	0
4/24/2024	5:15 AM	0	39	1	0	1	0	0	0	1	0	0	0
4/24/2024	5:30 AM	0	56	5	0	1	0	0	0	1	0	0	0
4/24/2024	5:45 AM	0	66	12	0	0	0	0	0	1	0	0	0
4/24/2024	6:00 AM	0	88	16	0	0	1	0	0	1	0	0	0
4/24/2024	6:15 AM	0	97	20	0	0	1	0	0	2	0	0	0
4/24/2024	6:30 AM	0	108	22	0	0	1	0	1	2	0	0	0
4/24/2024	6:45 AM	0	132	26	0	2	1	0	1	2	0	0	0
4/24/2024	7:00 AM	0	164	24	0	3	0	0	1	1	0	0	0
4/24/2024	7:15 AM	0	166	27	0	3	0	0	2	0	0	0	0
4/24/2024	7:30 AM	0	176	30	0	3	0	0	1	1	0	0	0
4/24/2024	7:45 AM	0	154	27	0	1	0	0	1	1	0	0	0
4/24/2024	8:00 AM	0	126	34	1	0	0	0	1	1	0	0	0
4/24/2024	8:15 AM	0	125	33	1	3	0	0	0	1	0	0	0
4/24/2024	8:30 AM	0	111	35	1	3	0	0	0	0	0	0	0
4/24/2024	8:45 AM	0	104	31	1	4	0	0	0	0	0	0	0
4/24/2024	9:00 AM	0	100	25	0	6	0	0	0	3	0	0	0
4/24/2024	9:15 AM	0	91	24	0	4	0	0	1	3	0	0	0
4/24/2024	9:30 AM	0	89	20	0	4	0	0	1	4	0	0	0
4/24/2024	9:45 AM	0	97	22	0	3	0	0	1	4	0	0	0
4/24/2024	10:00 AM	0	89	29	0	2	0	0	1	1	0	0	0
4/24/2024	10:15 AM	0	92	37	1	1	0	0	0	1	0	0	0
4/24/2024	10:30 AM	0	101	37	1	1	0	0	0	1	0	0	0
4/24/2024	10:45 AM	1	110	38	1	1	0	0	0	1	0	0	0
4/24/2024	11:00 AM	1	124	34	1	3	0	0	0	2	0	0	0
4/24/2024	11:15 AM	1	137	99	0	4	0	0	0	2	0	0	0
4/24/2024	11:30 AM	1	140	102	1	5	0	0	0	1	0	0	0
4/24/2024	11:45 AM	0	152	100	1	5	0	0	0	2	0	0	0
4/24/2024	12:00 PM	0	159	104	1	2	0	0	0	2	0	0	0
4/24/2024	12:15 PM	0	152	35	1	1	0	0	0	3	0	0	0
4/24/2024	12:30 PM	0	149	30	0	0	1	0	0	5	0	0	0
4/24/2024	12:45 PM	0	140	34	0	0	1	0	0	4	0	0	0
4/24/2024	1:00 PM	0	133	27	0	1	1	0	0	4	0	0	0
4/24/2024	1:15 PM	0	148	28	0	1	1	0	0	3	0	0	0
4/24/2024	1:30 PM	0	151	28	0	1	0	0	0	2	0	0	0
4/24/2024	1:45 PM	0	151	30	0	4	0	0	1	2	0	0	0
4/24/2024	2:00 PM	0	177	37	0	3	0	0	1	1	0	0	0
4/24/2024	2:15 PM	0	185	37	0	4	0	0	1	3	0	0	0
4/24/2024	2:30 PM	0	202	41	0	4	0	0	1	2	0	0	0
4/24/2024	2:45 PM	0	223	45	0	1	0	0	0	2	0	0	0
4/24/2024	3:00 PM	0	230	50	0	1	0	0	0	2	0	0	0
4/24/2024	3:15 PM	0	241	49	0	1	0	0	0	0	0	0	0
4/24/2024	3:30 PM	0	243	55	0	2	0	0	0	0	0	0	0
4/24/2024	3:45 PM	0	252	54	1	2	0	0	0	0	0	0	0
4/24/2024	4:00 PM	0	252	49	1	2	0	0	0	0	0	0	0
4/24/2024	4:15 PM	0	280	67	1	3	0	0	0	0	0	0	0
4/24/2024	4:30 PM	0	307	70	1	2	0	0	0	0	0	0	0
4/24/2024	4:45 PM	0	293	68	0	2	0	0	0	0	0	0	0
4/24/2024	5:00 PM	0	296	68	0	2	0	0	0	0	0	0	0
4/24/2024	5:15 PM	0	249	47	0	0	0	0	0	0	0	0	0
4/24/2024	5:30 PM	0	204	35	0	0	0	0	0	0	0	0	0
4/24/2024	5:45 PM	0	187	29	0	0	0	0	0	0	0	0	0
4/24/2024	6:00 PM	0	152	35	0	0	0	0	0	0	0	0	0
4/24/2024	6:15 PM	0	137	36	0	0	0	0	0	0	0	0	0
4/24/2024	6:30 PM	0	126	37	0	0	0	0	0	0	0	0	0
4/24/2024	6:45 PM	0	115	35	0	0	0	0	0	0	0	0	0
4/24/2024	7:00 PM	0	116	21	0	3	0	0	0	0	0	0	0
4/24/2024	7:15 PM	1	116	15	0	3	0	0	0	0	0	0	0
4/24/2024	7:30 PM	2	117	16	0	3	0	0	0	0	0	0	0
4/24/2024	7:45 PM	2	116	14	0	3	0	0	0	0	0	0	0
4/24/2024	8:00 PM	2	114	11	0	0	0	0	0	0	0	0	0
4/24/2024	8:15 PM	1	99	10	0	0	0	0	0	0	0	0	0
4/24/2024	8:30 PM	0	91	3	0	0	0	0	0	0	0	0	0
4/24/2024	8:45 PM	0	86	1	0	0	0	0	0	0	0	0	0
4/24/2024	9:00 PM	0	74	2	0	0	0	0	1	0	0	0	0
4/24/2024	9:15 PM	0	70	2	0	0	0	0	1	0	0	0	0
4/24/2024	9:30 PM	0	65	1	0	0	0	0	1	0	0	0	0
4/24/2024	9:45 PM	0	47	1	0	0	0	0	1	0	0	0	0
4/24/2024	10:00 PM	0	34	1	0	0	0	0	0	0	0	0	0
4/24/2024	10:15 PM	0	27	1	0	0	0	0	0	0	0	0	0
4/24/2024	10:30 PM	0	17	1	0	1	0	0	0	0	0	0	0
4/24/2024	10:45 PM	0	18	1	0	1	0	0	0	0	0	0	0
4/24/2024	11:00 PM	0	17	0	0	1	0	0	0	0	0	0	0
4/24/2024	11:15 PM	0	14	0	0	2	0	0	0	0	0	0	0
4/24/2024	11:30 PM	0	12	0	0	1	0	0	0	0	0	0	0
4/24/2024	11:45 PM	0	10	0	0	1	0	0	0	0	0	0	0

4/25/2024	12:00 AM	0	7	0	0	1	0	0	0	0	0	0	0	0
4/25/2024	12:15 AM	0	6	0	0	0	0	0	0	0	0	0	0	0
4/25/2024	12:30 AM	0	6	0	0	0	0	0	0	0	0	0	0	0
4/25/2024	12:45 AM	0	8	0	0	0	0	0	0	0	0	0	0	0
4/25/2024	1:00 AM	0	5	1	0	0	0	0	0	0	0	0	0	0
4/25/2024	1:15 AM	0	5	1	0	0	0	0	0	0	0	0	0	0
4/25/2024	1:30 AM	0	3	2	0	0	0	0	0	0	0	0	0	0
4/25/2024	1:45 AM	0	1	2	0	0	0	0	0	0	0	0	0	0
4/25/2024	2:00 AM	0	2	1	0	0	0	0	0	0	0	0	0	0
4/25/2024	2:15 AM	0	1	1	0	0	0	0	0	0	0	0	0	0
4/25/2024	2:30 AM	0	4	0	0	0	0	0	0	0	0	0	0	0
4/25/2024	2:45 AM	0	8	0	0	0	0	0	0	0	0	0	0	0
4/25/2024	3:00 AM	0	9	1	0	0	0	0	0	0	0	0	0	0
4/25/2024	3:15 AM	0	9	1	0	0	0	0	0	0	0	0	0	0
4/25/2024	3:30 AM	0	7	1	0	0	0	0	0	0	0	0	0	0
4/25/2024	3:45 AM	0	10	1	0	0	0	0	0	0	0	0	0	0
4/25/2024	4:00 AM	0	10	0	0	0	0	0	0	1	0	0	0	0
4/25/2024	4:15 AM	0	15	0	0	1	0	0	0	1	0	0	0	0
4/25/2024	4:30 AM	0	17	0	0	1	0	0	0	1	0	0	0	0
4/25/2024	4:45 AM	0	16	1	0	1	0	0	0	1	0	0	0	0
4/25/2024	5:00 AM	0	22	1	0	1	0	0	0	0	0	0	0	0
4/25/2024	5:15 AM	0	27	6	0	0	0	0	0	0	0	0	0	0
4/25/2024	5:30 AM	0	39	12	0	0	0	0	0	0	0	0	0	0
4/25/2024	5:45 AM	0	50	19	0	0	0	0	0	0	0	0	0	0
4/25/2024	6:00 AM	0	60	25	0	2	0	0	0	1	0	0	0	0
4/25/2024	6:15 AM	0	73	32	0	2	0	0	0	1	0	0	0	0
4/25/2024	6:30 AM	0	88	32	0	3	0	0	0	2	0	0	0	0
4/25/2024	6:45 AM	0	111	35	0	5	0	2	1	3	0	0	0	0
4/25/2024	7:00 AM	0	129	43	0	8	0	3	1	4	0	0	0	0
4/25/2024	7:15 AM	1	147	35	0	8	0	3	1	4	0	0	0	0
4/25/2024	7:30 AM	1	150	37	0	8	0	7	1	3	0	0	0	0
4/25/2024	7:45 AM	1	135	33	0	6	0	5	0	2	0	0	0	0
4/25/2024	8:00 AM	1	126	39	0	3	0	6	0	0	0	0	0	0
4/25/2024	8:15 AM	0	118	43	0	5	0	8	0	1	0	0	0	0
4/25/2024	8:30 AM	0	127	42	1	4	0	5	0	1	0	0	0	0
4/25/2024	8:45 AM	0	130	44	1	5	0	8	0	1	0	0	0	0
4/25/2024	9:00 AM	0	128	31	1	4	0	7	1	2	0	0	0	0
4/25/2024	9:15 AM	0	133	29	1	2	0	8	1	1	0	0	0	0
4/25/2024	9:30 AM	0	110	29	0	4	0	7	1	1	0	0	0	0
4/25/2024	9:45 AM	0	108	27	0	3	0	6	1	1	0	0	0	0
4/25/2024	10:00 AM	0	107	31	0	2	0	7	0	0	0	0	0	0
4/25/2024	10:15 AM	1	98	33	0	4	0	4	0	0	0	0	0	0
4/25/2024	10:30 AM	1	109	30	0	2	0	7	0	0	0	0	0	0
4/25/2024	10:45 AM	1	123	33	0	2	0	5	0	0	0	0	0	0
4/25/2024	11:00 AM	1	127	27	0	2	0	4	0	0	0	0	0	0
4/25/2024	11:15 AM	0	145	32	0	0	0	5	0	0	0	0	0	0
4/25/2024	11:30 AM	0	156	40	0	1	0	3	0	1	0	0	0	0
4/25/2024	11:45 AM	0	146	42	0	1	0	4	0	2	0	0	0	0
4/25/2024	12:00 PM	0	152	53	1	2	1	3	0	2	0	0	0	0
4/25/2024	12:15 PM	1	146	51	1	4	3	4	0	2	0	0	0	0
4/25/2024	12:30 PM	1	146	44	2	5	3	5	0	1	0	0	0	0
4/25/2024	12:45 PM	1	152	45	3	6	3	5	1	0	0	0	0	0
4/25/2024	1:00 PM	1	158	40	2	6	2	8	1	0	0	0	0	0
4/25/2024	1:15 PM	0	158	38	2	4	0	6	1	0	0	0	0	0
4/25/2024	1:30 PM	0	165	43	1	3	0	6	1	0	0	0	0	0
4/25/2024	1:45 PM	0	166	36	0	2	0	7	0	0	0	0	0	0
4/25/2024	2:00 PM	0	181	36	0	3	0	4	0	0	0	0	0	0
4/25/2024	2:15 PM	0	198	42	0	7	2	7	0	0	0	0	0	0
4/25/2024	2:30 PM	0	206	45	0	6	2	6	0	0	0	0	0	0
4/25/2024	2:45 PM	0	221	54	0	6	2	5	0	0	0	0	0	0
4/25/2024	3:00 PM	0	234	63	0	5	3	8	0	1	0	0	0	0
4/25/2024	3:15 PM	0	236	63	0	2	1	5	0	1	0	0	0	0
4/25/2024	3:30 PM	0	250	64	0	4	1	7	0	1	0	0	0	0
4/25/2024	3:45 PM	0	248	65	0	4	1	7	0	1	0	0	0	0
4/25/2024	4:00 PM	0	244	65	0	4	0	4	0	1	0	0	0	0
4/25/2024	4:15 PM	1	263	61	1	3	0	8	0	1	0	0	0	0
4/25/2024	4:30 PM	1	270	61	1	2	0	5	0	1	0	0	0	0
4/25/2024	4:45 PM	1	302	59	1	3	0	4	0	1	0	0	0	0
4/25/2024	5:00 PM	1	302	51	1	2	0	4	0	0	0	0	0	0
4/25/2024	5:15 PM	1	262	57	0	2	0	0	0	1	0	0	0	0
4/25/2024	5:30 PM	1	231	55	0	1	0	0	0	1	0	0	0	0
4/25/2024	5:45 PM	1	184	50	0	0	0	0	0	1	0	0	0	0
4/25/2024	6:00 PM	2	158	46	0	0	0	0	0	1	0	0	0	0
4/25/2024	6:15 PM	1	119	29	0	0	0	0	0	0	0	0	0	0
4/25/2024	6:30 PM	1	73	17	0	0	0	0	0	0	0	0	0	0
4/25/2024	6:45 PM	1	38	8	0	0	0	0	0	0	0	0	0	0
4/25/2024	7:00 PM	0	0	0	0	0	0	0	0	0	0	0	0	0
4/25/2024	7:15 PM	0	0	0	0	0	0	0	0	0	0	0	0	0
4/25/2024	7:30 PM	0	0	0	0	0	0	0	0	0	0	0	0	0
4/25/2024	7:45 PM	0	0	0	0	0	0	0	0	0	0	0	0	0
4/25/2024	8:00 PM	0	0	0	0	0	0	0	0	0	0	0	0	0
4/25/2024	8:15 PM	0	0	0	0	0	0	0	0	0	0	0	0	0
4/25/2024	8:30 PM	0	0	0	0	0	0	0	0	0	0	0	0	0
4/25/2024	8:45 PM	0	0	0	0	0	0	0	0	0	0	0	0	0
4/25/2024	9:00 PM	0	0	0	0	0	0	0	0	0	0	0	0	0
4/25/2024	9:15 PM	0	0	0	0	0	0	0	0	0	0	0	0	0
4/25/2024	9:30 PM	0	0	0	0	0	0	0	0	0	0	0	0	0
4/25/2024	9:45 PM	0	0	0	0	0	0	0	0	0	0	0	0	0
4/25/2024	10:00 PM	0	0	0	0	0	0	0	0	0	0	0	0	0
4/25/2024	10:15 PM	0	0	0	0	0	0	0	0	0	0	0	0	0
4/25/2024	10:30 PM	0	0	0	0	0	0	0	0	0	0	0	0	0
4/25/2024	10:45 PM	0	0	0	0	0	0	0	0	0	0	0	0	0
4/25/2024	11:00 PM	0	0	0	0	0	0	0	0	0	0	0	0	0
4/25/2024	11:15 PM	0	0	0	0	0	0	0	0	0	0	0	0	0
4/25/2024	11:30 PM	0	0	0	0	0	0	0	0	0	0	0	0	0
4/25/2024	11:45 PM	0	0	0	0	0	0	0	0	0	0	0	0	0

SB
File Name:
Start Date: 4/23/2024
Start Time: 0
Site Code: 25
Station ID: 1
Location 1: I-26 James F. Byrnes Expy On/Off-Ramp, north of SC-60 Lake Murray Blvd
Location 2:

Date	Time	1	2	3	4	5	6	7	8	9	10	11	12	13
4/23/2024	12:00 AM	0	0	0	0	0	0	0	0	0	0	0	0	0
4/23/2024	12:15 AM	0	0	0	0	0	0	0	0	0	0	0	0	0
4/23/2024	12:30 AM	0	0	0	0	0	0	0	0	0	0	0	0	0
4/23/2024	12:45 AM	0	0	0	0	0	0	0	0	0	0	0	0	0
4/23/2024	1:00 AM	0	0	0	0	0	0	0	0	0	0	0	0	0
4/23/2024	1:15 AM	0	0	0	0	0	0	0	0	0	0	0	0	0
4/23/2024	1:30 AM	0	0	0	0	0	0	0	0	0	0	0	0	0
4/23/2024	1:45 AM	0	0	0	0	0	0	0	0	0	0	0	0	0
4/23/2024	2:00 AM	0	0	0	0	0	0	0	0	0	0	0	0	0
4/23/2024	2:15 AM	0	0	0	0	0	0	0	0	0	0	0	0	0
4/23/2024	2:30 AM	0	0	0	0	0	0	0	0	0	0	0	0	0
4/23/2024	2:45 AM	0	0	0	0	0	0	0	0	0	0	0	0	0
4/23/2024	3:00 AM	0	0	0	0	0	0	0	0	0	0	0	0	0
4/23/2024	3:15 AM	0	0	0	0	0	0	0	0	0	0	0	0	0
4/23/2024	3:30 AM	0	0	0	0	0	0	0	0	0	0	0	0	0
4/23/2024	3:45 AM	0	0	0	0	0	0	0	0	0	0	0	0	0
4/23/2024	4:00 AM	0	0	0	0	0	0	0	0	0	0	0	0	0
4/23/2024	4:15 AM	0	0	0	0	0	0	0	0	0	0	0	0	0
4/23/2024	4:30 AM	0	0	0	0	0	0	0	0	0	0	0	0	0
4/23/2024	4:45 AM	0	0	0	0	0	0	0	0	0	0	0	0	0
4/23/2024	5:00 AM	0	0	0	0	0	0	0	0	0	0	0	0	0
4/23/2024	5:15 AM	0	0	0	0	0	0	0	0	0	0	0	0	0
4/23/2024	5:30 AM	0	0	0	0	0	0	0	0	0	0	0	0	0
4/23/2024	5:45 AM	0	0	0	0	0	0	0	0	0	0	0	0	0
4/23/2024	6:00 AM	0	0	0	0	0	0	0	0	0	0	0	0	0
4/23/2024	6:15 AM	0	0	0	0	0	0	0	0	0	0	0	0	0
4/23/2024	6:30 AM	0	0	0	0	0	0	0	0	0	0	0	0	0
4/23/2024	6:45 AM	0	0	0	0	0	0	0	0	0	0	0	0	0
4/23/2024	7:00 AM	0	0	0	0	0	0	0	0	0	0	0	0	0
4/23/2024	7:15 AM	0	0	0	0	0	0	0	0	0	0	0	0	0
4/23/2024	7:30 AM	0	0	0	0	0	0	0	0	0	0	0	0	0
4/23/2024	7:45 AM	0	0	0	0	0	0	0	0	0	0	0	0	0
4/23/2024	8:00 AM	0	0	0	0	0	0	0	0	0	0	0	0	0
4/23/2024	8:15 AM	0	0	0	0	0	0	0	0	0	0	0	0	0
4/23/2024	8:30 AM	0	0	0	0	0	0	0	0	0	0	0	0	0
4/23/2024	8:45 AM	0	0	0	0	0	0	0	0	0	0	0	0	0
4/23/2024	9:00 AM	0	0	0	0	0	0	0	0	0	0	0	0	0
4/23/2024	9:15 AM	0	0	0	0	0	0	0	0	0	0	0	0	0
4/23/2024	9:30 AM	0	0	0	0	0	0	0	0	0	0	0	0	0
4/23/2024	9:45 AM	0	0	0	0	0	0	0	0	0	0	0	0	0
4/23/2024	10:00 AM	0	0	0	0	0	0	0	0	0	0	0	0	0
4/23/2024	10:15 AM	0	0	0	0	0	0	0	0	0	0	0	0	0
4/23/2024	10:30 AM	0	0	0	0	0	0	0	0	0	0	0	0	0
4/23/2024	10:45 AM	0	0	0	0	0	0	0	0	0	0	0	0	0
4/23/2024	11:00 AM	0	0	0	0	0	0	0	0	0	0	0	0	0
4/23/2024	11:15 AM	0	0	0	0	0	0	0	0	0	0	0	0	0
4/23/2024	11:30 AM	0	0	0	0	0	0	0	0	0	0	0	0	0
4/23/2024	11:45 AM	0	0	0	0	0	0	0	0	0	0	0	0	0
4/23/2024	12:00 PM	0	0	0	0	0	0	0	0	0	0	0	0	0
4/23/2024	12:15 PM	0	0	0	0	0	0	0	0	0	0	0	0	0
4/23/2024	12:30 PM	0	0	0	0	0	0	0	0	0	0	0	0	0
4/23/2024	12:45 PM	0	0	0	0	0	0	0	0	0	0	0	0	0
4/23/2024	1:00 PM	0	0	0	0	0	0	0	0	0	0	0	0	0
4/23/2024	1:15 PM	0	0	0	0	0	0	0	0	0	0	0	0	0
4/23/2024	1:30 PM	0	0	0	0	0	0	0	0	0	0	0	0	0
4/23/2024	1:45 PM	0	0	0	0	0	0	0	0	0	0	0	0	0
4/23/2024	2:00 PM	0	0	0	0	0	0	0	0	0	0	0	0	0
4/23/2024	2:15 PM	0	0	0	0	0	0	0	0	0	0	0	0	0
4/23/2024	2:30 PM	0	0	0	0	0	0	0	0	0	0	0	0	0
4/23/2024	2:45 PM	0	0	0	0	0	0	0	0	0	0	0	0	0
4/23/2024	3:00 PM	0	0	0	0	0	0	0	0	0	0	0	0	0
4/23/2024	3:15 PM	0	0	0	0	0	0	0	0	0	0	0	0	0
4/23/2024	3:30 PM	0	0	0	0	0	0	0	0	0	0	0	0	0
4/23/2024	3:45 PM	0	0	0	0	0	0	0	0	0	0	0	0	0
4/23/2024	4:00 PM	0	0	0	0	0	0	0	0	0	0	0	0	0
4/23/2024	4:15 PM	0	0	0	0	0	0	0	0	0	0	0	0	0
4/23/2024	4:30 PM	0	0	0	0	0	0	0	0	0	0	0	0	0
4/23/2024	4:45 PM	0	0	0	0	0	0	0	0	0	0	0	0	0
4/23/2024	5:00 PM	0	0	0	0	0	0	0	0	0	0	0	0	0
4/23/2024	5:15 PM	0	0	0	0	0	0	0	0	0	0	0	0	0
4/23/2024	5:30 PM	0	0	0	0	0	0	0	0	0	0	0	0	0
4/23/2024	5:45 PM	0	0	0	0	0	0	0	0	0	0	0	0	0
4/23/2024	6:00 PM	0	0	0	0	0	0	0	0	0	0	0	0	0
4/23/2024	6:15 PM	0	0	0	0	0	0	0	0	0	0	0	0	0
4/23/2024	6:30 PM	0	0	0	0	0	0	0	0	0	0	0	0	0
4/23/2024	6:45 PM	0	0	0	0	0	0	0	0	0	0	0	0	0
4/23/2024	7:00 PM	0	0	0	0	0	0	0	0	0	0	0	0	0
4/23/2024	7:15 PM	0	0	0	0	0	0	0	0	0	0	0	0	0
4/23/2024	7:30 PM	0	0	0	0	0	0	0	0	0	0	0	0	0
4/23/2024	7:45 PM	0	0	0	0	0	0	0	0	0	0	0	0	0
4/23/2024	8:00 PM	0	0	0	0	0	0	0	0	0	0	0	0	0
4/23/2024	8:15 PM	0	0	0	0	0	0	0	0	0	0	0	0	0
4/23/2024	8:30 PM	0	0	0	0	0	0	0	0	0	0	0	0	0
4/23/2024	8:45 PM	0	0	0	0	0	0	0	0	0	0	0	0	0
4/23/2024	9:00 PM	0	0	0	0	0	0	0	0	0	0	0	0	0
4/23/2024	9:15 PM	0	0	0	0	0	0	0	0	0	0	0	0	0
4/23/2024	9:30 PM	0	0	0	0	0	0	0	0	0	0	0	0	0
4/23/2024	9:45 PM	0	0	0	0	0	0	0	0	0	0	0	0	0
4/23/2024	10:00 PM	0	0	0	0	0	0	0	0	0	0	0	0	0
4/23/2024	10:15 PM	0	0	0	0	0	0	0	0	0	0	0	0	0
4/23/2024	10:30 PM	0	0	0	0	0	0	0	0	0	0	0	0	0
4/23/2024	10:45 PM	0	0	0	0	0	0	0	0	0	0	0	0	0
4/23/2024	11:00 PM	0	0	0	0	0	0	0	0	0	0	0	0	0
4/23/2024	11:15 PM	0	0	0	0	0	0	0	0	0	0	0	0	0
4/23/2024	11:30 PM	0	0	0	0	0	0	0	0	0	0	0	0	0
4/23/2024	11:45 PM	0	0	0	0	0	0	0	0	0	0	0	0	0

4/24/2024	12:00 AM	0	0	0	0	0	0	0	0	0	0	0	0	0
4/24/2024	12:15 AM	0	0	0	0	0	0	0	0	0	0	0	0	0
4/24/2024	12:30 AM	0	0	0	0	0	0	0	0	0	0	0	0	0
4/24/2024	12:45 AM	0	0	0	0	0	0	0	0	0	0	0	0	0
4/24/2024	1:00 AM	0	0	0	0	0	0	0	0	0	0	0	0	0
4/24/2024	1:15 AM	0	0	0	0	0	0	0	0	0	0	0	0	0
4/24/2024	1:30 AM	0	0	0	0	0	0	0	0	0	0	0	0	0
4/24/2024	1:45 AM	0	0	0	0	0	0	0	0	0	0	0	0	0
4/24/2024	2:00 AM	0	0	0	0	0	0	0	0	0	0	0	0	0
4/24/2024	2:15 AM	0	0	0	0	0	0	0	0	0	0	0	0	0
4/24/2024	2:30 AM	0	0	0	0	0	0	0	0	0	0	0	0	0
4/24/2024	2:45 AM	0	0	0	0	0	0	0	0	0	0	0	0	0
4/24/2024	3:00 AM	0	0	0	0	0	0	0	0	0	0	0	0	0
4/24/2024	3:15 AM	0	0	0	0	0	0	0	0	0	0	0	0	0
4/24/2024	3:30 AM	0	0	0	0	0	0	0	0	0	0	0	0	0
4/24/2024	3:45 AM	0	0	0	0	0	0	0	0	0	0	0	0	0
4/24/2024	4:00 AM	0	0	0	0	0	0	0	0	0	0	0	0	0
4/24/2024	4:15 AM	0	0	0	0	0	0	0	0	0	0	0	0	0
4/24/2024	4:30 AM	0	0	0	0	0	0	0	0	0	0	0	0	0
4/24/2024	4:45 AM	0	0	0	0	0	0	0	0	0	0	0	0	0
4/24/2024	5:00 AM	0	0	0	0	0	0	0	0	0	0	0	0	0
4/24/2024	5:15 AM	0	0	0	0	0	0	0	0	0	0	0	0	0
4/24/2024	5:30 AM	0	0	0	0	0	0	0	0	0	0	0	0	0
4/24/2024	5:45 AM	0	0	0	0	0	0	0	0	0	0	0	0	0
4/24/2024	6:00 AM	0	0	0	0	0	0	0	0	0	0	0	0	0
4/24/2024	6:15 AM	0	0	0	0	0	0	0	0	0	0	0	0	0
4/24/2024	6:30 AM	0	0	0	0	0	0	0	0	0	0	0	0	0
4/24/2024	6:45 AM	0	0	0	0	0	0	0	0	0	0	0	0	0
4/24/2024	7:00 AM	0	0	0	0	0	0	0	0	0	0	0	0	0
4/24/2024	7:15 AM	0	0	0	0	0	0	0	0	0	0	0	0	0
4/24/2024	7:30 AM	0	0	0	0	0	0	0	0	0	0	0	0	0
4/24/2024	7:45 AM	0	0	0	0	0	0	0	0	0	0	0	0	0
4/24/2024	8:00 AM	0	0	0	0	0	0	0	0	0	0	0	0	0
4/24/2024	8:15 AM	0	0	0	0	0	0	0	0	0	0	0	0	0
4/24/2024	8:30 AM	0	0	0	0	0	0	0	0	0	0	0	0	0
4/24/2024	8:45 AM	0	0	0	0	0	0	0	0	0	0	0	0	0
4/24/2024	9:00 AM	0	0	0	0	0	0	0	0	0	0	0	0	0
4/24/2024	9:15 AM	0	0	0	0	0	0	0	0	0	0	0	0	0
4/24/2024	9:30 AM	0	0	0	0	0	0	0	0	0	0	0	0	0
4/24/2024	9:45 AM	0	0	0	0	0	0	0	0	0	0	0	0	0
4/24/2024	10:00 AM	0	0	0	0	0	0	0	0	0	0	0	0	0
4/24/2024	10:15 AM	0	0	0	0	0	0	0	0	0	0	0	0	0
4/24/2024	10:30 AM	0	0	0	0	0	0	0	0	0	0	0	0	0
4/24/2024	10:45 AM	0	0	0	0	0	0	0	0	0	0	0	0	0
4/24/2024	11:00 AM	0	0	0	0	0	0	0	0	0	0	0	0	0
4/24/2024	11:15 AM	0	0	0	0	0	0	0	0	0	0	0	0	0
4/24/2024	11:30 AM	0	0	0	0	0	0	0	0	0	0	0	0	0
4/24/2024	11:45 AM	0	0	0	0	0	0	0	0	0	0	0	0	0
4/24/2024	12:00 PM	0	0	0	0	0	0	0	0	0	0	0	0	0
4/24/2024	12:15 PM	0	0	0	0	0	0	0	0	0	0	0	0	0
4/24/2024	12:30 PM	0	0	0	0	0	0	0	0	0	0	0	0	0
4/24/2024	12:45 PM	0	0	0	0	0	0	0	0	0	0	0	0	0
4/24/2024	1:00 PM	0	0	0	0	0	0	0	0	0	0	0	0	0
4/24/2024	1:15 PM	0	0	0	0	0	0	0	0	0	0	0	0	0
4/24/2024	1:30 PM	0	0	0	0	0	0	0	0	0	0	0	0	0
4/24/2024	1:45 PM	0	0	0	0	0	0	0	0	0	0	0	0	0
4/24/2024	2:00 PM	0	0	0	0	0	0	0	0	0	0	0	0	0
4/24/2024	2:15 PM	0	0	0	0	0	0	0	0	0	0	0	0	0
4/24/2024	2:30 PM	0	0	0	0	0	0	0	0	0	0	0	0	0
4/24/2024	2:45 PM	0	0	0	0	0	0	0	0	0	0	0	0	0
4/24/2024	3:00 PM	0	0	0	0	0	0	0	0	0	0	0	0	0
4/24/2024	3:15 PM	0	0	0	0	0	0	0	0	0	0	0	0	0
4/24/2024	3:30 PM	0	0	0	0	0	0	0	0	0	0	0	0	0
4/24/2024	3:45 PM	0	0	0	0	0	0	0	0	0	0	0	0	0
4/24/2024	4:00 PM	0	0	0	0	0	0	0	0	0	0	0	0	0
4/24/2024	4:15 PM	0	0	0	0	0	0	0	0	0	0	0	0	0
4/24/2024	4:30 PM	0	0	0	0	0	0	0	0	0	0	0	0	0
4/24/2024	4:45 PM	0	0	0	0	0	0	0	0	0	0	0	0	0
4/24/2024	5:00 PM	0	0	0	0	0	0	0	0	0	0	0	0	0
4/24/2024	5:15 PM	0	0	0	0	0	0	0	0	0	0	0	0	0
4/24/2024	5:30 PM	0	0	0	0	0	0	0	0	0	0	0	0	0
4/24/2024	5:45 PM	0	0	0	0	0	0	0	0	0	0	0	0	0
4/24/2024	6:00 PM	0	0	0	0	0	0	0	0	0	0	0	0	0
4/24/2024	6:15 PM	0	0	0	0	0	0	0	0	0	0	0	0	0
4/24/2024	6:30 PM	0	0	0	0	0	0	0	0	0	0	0	0	0
4/24/2024	6:45 PM	0	0	0	0	0	0	0	0	0	0	0	0	0
4/24/2024	7:00 PM	0	0	0	0	0	0	0	0	0	0	0	0	0
4/24/2024	7:15 PM	0	0	0	0	0	0	0	0	0	0	0	0	0
4/24/2024	7:30 PM	0	0	0	0	0	0	0	0	0	0	0	0	0
4/24/2024	7:45 PM	0	0	0	0	0	0	0	0	0	0	0	0	0
4/24/2024	8:00 PM	0	0	0	0	0	0	0	0	0	0	0	0	0
4/24/2024	8:15 PM	0	0	0	0	0	0	0	0	0	0	0	0	0
4/24/2024	8:30 PM	0	0	0	0	0	0	0	0	0	0	0	0	0
4/24/2024	8:45 PM	0	0	0	0	0	0	0	0	0	0	0	0	0
4/24/2024	9:00 PM	0	0	0	0	0	0	0	0	0	0	0	0	0
4/24/2024	9:15 PM	0	0	0	0	0	0	0	0	0	0	0	0	0
4/24/2024	9:30 PM	0	0	0	0	0	0	0	0	0	0	0	0	0
4/24/2024	9:45 PM	0	0	0	0	0	0	0	0	0	0	0	0	0
4/24/2024	10:00 PM	0	0	0	0	0	0	0	0	0	0	0	0	0
4/24/2024	10:15 PM	0	0	0	0	0	0	0	0	0	0	0	0	0
4/24/2024	10:30 PM	0	0	0	0	0	0	0	0	0	0	0	0	0
4/24/2024	10:45 PM	0	0	0	0	0	0	0	0	0	0	0	0	0
4/24/2024	11:00 PM	0	0	0	0	0	0	0	0	0	0	0	0	0
4/24/2024	11:15 PM	0	0	0	0	0	0	0	0	0	0	0	0	0
4/24/2024	11:30 PM	0	0	0	0	0	0	0	0	0	0	0	0	0
4/24/2024	11:45 PM	0	0	0	0	0	0	0	0	0	0	0	0	0

4/25/2024	12:00 AM	0	0	0	0	0	0	0	0	0	0	0	0	0
4/25/2024	12:15 AM	0	0	0	0	0	0	0	0	0	0	0	0	0
4/25/2024	12:30 AM	0	0	0	0	0	0	0	0	0	0	0	0	0
4/25/2024	12:45 AM	0	0	0	0	0	0	0	0	0	0	0	0	0
4/25/2024	1:00 AM	0	0	0	0	0	0	0	0	0	0	0	0	0
4/25/2024	1:15 AM	0	0	0	0	0	0	0	0	0	0	0	0	0
4/25/2024	1:30 AM	0	0	0	0	0	0	0	0	0	0	0	0	0
4/25/2024	1:45 AM	0	0	0	0	0	0	0	0	0	0	0	0	0
4/25/2024	2:00 AM	0	0	0	0	0	0	0	0	0	0	0	0	0
4/25/2024	2:15 AM	0	0	0	0	0	0	0	0	0	0	0	0	0
4/25/2024	2:30 AM	0	0	0	0	0	0	0	0	0	0	0	0	0
4/25/2024	2:45 AM	0	0	0	0	0	0	0	0	0	0	0	0	0
4/25/2024	3:00 AM	0	0	0	0	0	0	0	0	0	0	0	0	0
4/25/2024	3:15 AM	0	0	0	0	0	0	0	0	0	0	0	0	0
4/25/2024	3:30 AM	0	0	0	0	0	0	0	0	0	0	0	0	0
4/25/2024	3:45 AM	0	0	0	0	0	0	0	0	0	0	0	0	0
4/25/2024	4:00 AM	0	0	0	0	0	0	0	0	0	0	0	0	0
4/25/2024	4:15 AM	0	0	0	0	0	0	0	0	0	0	0	0	0
4/25/2024	4:30 AM	0	0	0	0	0	0	0	0	0	0	0	0	0
4/25/2024	4:45 AM	0	0	0	0	0	0	0	0	0	0	0	0	0
4/25/2024	5:00 AM	0	0	0	0	0	0	0	0	0	0	0	0	0
4/25/2024	5:15 AM	0	0	0	0	0	0	0	0	0	0	0	0	0
4/25/2024	5:30 AM	0	0	0	0	0	0	0	0	0	0	0	0	0
4/25/2024	5:45 AM	0	0	0	0	0	0	0	0	0	0	0	0	0
4/25/2024	6:00 AM	0	0	0	0	0	0	0	0	0	0	0	0	0
4/25/2024	6:15 AM	0	0	0	0	0	0	0	0	0	0	0	0	0
4/25/2024	6:30 AM	0	0	0	0	0	0	0	0	0	0	0	0	0
4/25/2024	6:45 AM	0	0	0	0	0	0	0	0	0	0	0	0	0
4/25/2024	7:00 AM	0	0	0	0	0	0	0	0	0	0	0	0	0
4/25/2024	7:15 AM	0	0	0	0	0	0	0	0	0	0	0	0	0
4/25/2024	7:30 AM	0	0	0	0	0	0	0	0	0	0	0	0	0
4/25/2024	7:45 AM	0	0	0	0	0	0	0	0	0	0	0	0	0
4/25/2024	8:00 AM	0	0	0	0	0	0	0	0	0	0	0	0	0
4/25/2024	8:15 AM	0	0	0	0	0	0	0	0	0	0	0	0	0
4/25/2024	8:30 AM	0	0	0	0	0	0	0	0	0	0	0	0	0
4/25/2024	8:45 AM	0	0	0	0	0	0	0	0	0	0	0	0	0
4/25/2024	9:00 AM	0	0	0	0	0	0	0	0	0	0	0	0	0
4/25/2024	9:15 AM	0	0	0	0	0	0	0	0	0	0	0	0	0
4/25/2024	9:30 AM	0	0	0	0	0	0	0	0	0	0	0	0	0
4/25/2024	9:45 AM	0	0	0	0	0	0	0	0	0	0	0	0	0
4/25/2024	10:00 AM	0	0	0	0	0	0	0	0	0	0	0	0	0
4/25/2024	10:15 AM	0	0	0	0	0	0	0	0	0	0	0	0	0
4/25/2024	10:30 AM	0	0	0	0	0	0	0	0	0	0	0	0	0
4/25/2024	10:45 AM	0	0	0	0	0	0	0	0	0	0	0	0	0
4/25/2024	11:00 AM	0	0	0	0	0	0	0	0	0	0	0	0	0
4/25/2024	11:15 AM	0	0	0	0	0	0	0	0	0	0	0	0	0
4/25/2024	11:30 AM	0	0	0	0	0	0	0	0	0	0	0	0	0
4/25/2024	11:45 AM	0	0	0	0	0	0	0	0	0	0	0	0	0
4/25/2024	12:00 PM	0	0	0	0	0	0	0	0	0	0	0	0	0
4/25/2024	12:15 PM	0	0	0	0	0	0	0	0	0	0	0	0	0
4/25/2024	12:30 PM	0	0	0	0	0	0	0	0	0	0	0	0	0
4/25/2024	12:45 PM	0	0	0	0	0	0	0	0	0	0	0	0	0
4/25/2024	1:00 PM	0	0	0	0	0	0	0	0	0	0	0	0	0
4/25/2024	1:15 PM	0	0	0	0	0	0	0	0	0	0	0	0	0
4/25/2024	1:30 PM	0	0	0	0	0	0	0	0	0	0	0	0	0
4/25/2024	1:45 PM	0	0	0	0	0	0	0	0	0	0	0	0	0
4/25/2024	2:00 PM	0	0	0	0	0	0	0	0	0	0	0	0	0
4/25/2024	2:15 PM	0	0	0	0	0	0	0	0	0	0	0	0	0
4/25/2024	2:30 PM	0	0	0	0	0	0	0	0	0	0	0	0	0
4/25/2024	2:45 PM	0	0	0	0	0	0	0	0	0	0	0	0	0
4/25/2024	3:00 PM	0	0	0	0	0	0	0	0	0	0	0	0	0
4/25/2024	3:15 PM	0	0	0	0	0	0	0	0	0	0	0	0	0
4/25/2024	3:30 PM	0	0	0	0	0	0	0	0	0	0	0	0	0
4/25/2024	3:45 PM	0	0	0	0	0	0	0	0	0	0	0	0	0
4/25/2024	4:00 PM	0	0	0	0	0	0	0	0	0	0	0	0	0
4/25/2024	4:15 PM	0	0	0	0	0	0	0	0	0	0	0	0	0
4/25/2024	4:30 PM	0	0	0	0	0	0	0	0	0	0	0	0	0
4/25/2024	4:45 PM	0	0	0	0	0	0	0	0	0	0	0	0	0
4/25/2024	5:00 PM	0	0	0	0	0	0	0	0	0	0	0	0	0
4/25/2024	5:15 PM	0	0	0	0	0	0	0	0	0	0	0	0	0
4/25/2024	5:30 PM	0	0	0	0	0	0	0	0	0	0	0	0	0
4/25/2024	5:45 PM	0	0	0	0	0	0	0	0	0	0	0	0	0
4/25/2024	6:00 PM	0	0	0	0	0	0	0	0	0	0	0	0	0
4/25/2024	6:15 PM	0	0	0	0	0	0	0	0	0	0	0	0	0
4/25/2024	6:30 PM	0	0	0	0	0	0	0	0	0	0	0	0	0
4/25/2024	6:45 PM	0	0	0	0	0	0	0	0	0	0	0	0	0
4/25/2024	7:00 PM	0	0	0	0	0	0	0	0	0	0	0	0	0
4/25/2024	7:15 PM	0	0	0	0	0	0	0	0	0	0	0	0	0
4/25/2024	7:30 PM	0	0	0	0	0	0	0	0	0	0	0	0	0
4/25/2024	7:45 PM	0	0	0	0	0	0	0	0	0	0	0	0	0
4/25/2024	8:00 PM	0	0	0	0	0	0	0	0	0	0	0	0	0
4/25/2024	8:15 PM	0	0	0	0	0	0	0	0	0	0	0	0	0
4/25/2024	8:30 PM	0	0	0	0	0	0	0	0	0	0	0	0	0
4/25/2024	8:45 PM	0	0	0	0	0	0	0	0	0	0	0	0	0
4/25/2024	9:00 PM	0	0	0	0	0	0	0	0	0	0	0	0	0
4/25/2024	9:15 PM	0	0	0	0	0	0	0	0	0	0	0	0	0
4/25/2024	9:30 PM	0	0	0	0	0	0	0	0	0	0	0	0	0
4/25/2024	9:45 PM	0	0	0	0	0	0	0	0	0	0	0	0	0
4/25/2024	10:00 PM	0	0	0	0	0	0	0	0	0	0	0	0	0
4/25/2024	10:15 PM	0	0	0	0	0	0	0	0	0	0	0	0	0
4/25/2024	10:30 PM	0	0	0	0	0	0	0	0	0	0	0	0	0
4/25/2024	10:45 PM	0	0	0	0	0	0	0	0	0	0	0	0	0
4/25/2024	11:00 PM	0	0	0	0	0	0	0	0	0	0	0	0	0
4/25/2024	11:15 PM	0	0	0	0	0	0	0	0	0	0	0	0	0
4/25/2024	11:30 PM	0	0	0	0	0	0	0	0	0	0	0	0	0
4/25/2024	11:45 PM	0	0	0	0	0	0	0	0	0	0	0	0	0

Bi-Directional Class Count || SB WB 15min

Columbia, SC

Marr Traffic DATA COLLECTION
www.marrtraffic.com

Site 26
I-26 James F. Byrnes Expy On/Off-Ramp,
south of SC-60 Lake Murray Blvd

Date
Tuesday, April 23, 2024

Lat/Long
34.089182°, -81.165472°

Weather
Fair
58°F

Click here for Detailed Weather

Click here for Map

0000 - 2400 (Weekday 24h Session) (04-23-2024)
SB WB 15min

	Southbound (Movement 26.1)													15min	60min
Time	1	2	3	4	5	6	7	8	9	10	11	12	13	Total	Total
0000 - 0015	0	0	0	0	0	0	0	0	0	0	0	0	0	**0**	
0015 - 0030	0	0	0	0	0	0	0	0	0	0	0	0	0	**0**	
0030 - 0045	0	0	0	0	0	0	0	0	0	0	0	0	0	**0**	
0045 - 0100	0	0	0	0	0	0	0	0	0	0	0	0	0	**0**	**0**
0100 - 0115	0	0	0	0	0	0	0	0	0	0	0	0	0	**0**	
0115 - 0130	0	0	0	0	0	0	0	0	0	0	0	0	0	**0**	
0130 - 0145	0	0	0	0	0	0	0	0	0	0	0	0	0	**0**	
0145 - 0200	0	0	0	0	0	0	0	0	0	0	0	0	0	**0**	**0**
0200 - 0215	0	0	0	0	0	0	0	0	0	0	0	0	0	**0**	
0215 - 0230	0	0	0	0	0	0	0	0	0	0	0	0	0	**0**	
0230 - 0245	0	0	0	0	0	0	0	0	0	0	0	0	0	**0**	
0245 - 0300	0	0	0	0	0	0	0	0	0	0	0	0	0	**0**	**0**
0300 - 0315	0	0	0	0	0	0	0	0	0	0	0	0	0	**0**	
0315 - 0330	0	0	0	0	0	0	0	0	0	0	0	0	0	**0**	
0330 - 0345	0	0	0	0	0	0	0	0	0	0	0	0	0	**0**	
0345 - 0400	0	0	0	0	0	0	0	0	0	0	0	0	0	**0**	**0**
0400 - 0415	0	0	0	0	0	0	0	0	0	0	0	0	0	**0**	
0415 - 0430	0	0	0	0	0	0	0	0	0	0	0	0	0	**0**	
0430 - 0445	0	0	0	0	0	0	0	0	0	0	0	0	0	**0**	
0445 - 0500	0	0	0	0	0	0	0	0	0	0	0	0	0	**0**	**0**
0500 - 0515	0	0	0	0	0	0	0	0	0	0	0	0	0	**0**	
0515 - 0530	0	0	0	0	0	0	0	0	0	0	0	0	0	**0**	
0530 - 0545	0	0	0	0	0	0	0	0	0	0	0	0	0	**0**	
0545 - 0600	0	0	0	0	0	0	0	0	0	0	0	0	0	**0**	**0**
0600 - 0615	0	0	0	0	0	0	0	0	0	0	0	0	0	**0**	
0615 - 0630	0	0	0	0	0	0	0	0	0	0	0	0	0	**0**	
0630 - 0645	0	0	0	0	0	0	0	0	0	0	0	0	0	**0**	
0645 - 0700	0	0	0	0	0	0	0	0	0	0	0	0	0	**0**	**0**
0700 - 0715	0	0	0	0	0	0	0	0	0	0	0	0	0	**0**	
0715 - 0730	0	0	0	0	0	0	0	0	0	0	0	0	0	**0**	
0730 - 0745	0	0	0	0	0	0	0	0	0	0	0	0	0	**0**	
0745 - 0800	0	0	0	0	0	0	0	0	0	0	0	0	0	**0**	**0**
0800 - 0815	0	0	0	0	0	0	0	0	0	0	0	0	0	**0**	
0815 - 0830	0	0	0	0	0	0	0	0	0	0	0	0	0	**0**	
0830 - 0845	0	0	0	0	0	0	0	0	0	0	0	0	0	**0**	
0845 - 0900	0	0	0	0	0	0	0	0	0	0	0	0	0	**0**	**0**
0900 - 0915	0	0	0	0	0	0	0	0	0	0	0	0	0	**0**	
0915 - 0930	0	0	0	0	0	0	0	0	0	0	0	0	0	**0**	
0930 - 0945	0	0	0	0	0	0	0	0	0	0	0	0	0	**0**	
0945 - 1000	0	0	0	0	0	0	0	0	0	0	0	0	0	**0**	**0**
1000 - 1015	0	0	0	0	0	0	0	0	0	0	0	0	0	**0**	
1015 - 1030	0	0	0	0	0	0	0	0	0	0	0	0	0	**0**	
1030 - 1045	0	0	0	0	0	0	0	0	0	0	0	0	0	**0**	
1045 - 1100	0	0	0	0	0	0	0	0	0	0	0	0	0	**0**	**0**
1100 - 1115	0	0	0	0	0	0	0	0	0	0	0	0	0	**0**	
1115 - 1130	0	0	0	0	0	0	0	0	0	0	0	0	0	**0**	
1130 - 1145	0	0	0	0	0	0	0	0	0	0	0	0	0	**0**	
1145 - 1200	0	0	0	0	0	0	0	0	0	0	0	0	0	**0**	**0**
1200 - 1215	0	0	0	0	0	0	0	0	0	0	0	0	0	**0**	
1215 - 1230	0	0	0	0	0	0	0	0	0	0	0	0	0	**0**	
1230 - 1245	0	0	0	0	0	0	0	0	0	0	0	0	0	**0**	
1245 - 1300	0	0	0	0	0	0	0	0	0	0	0	0	0	**0**	**0**
1300 - 1315	0	0	0	0	0	0	0	0	0	0	0	0	0	**0**	
1315 - 1330	0	0	0	0	0	0	0	0	0	0	0	0	0	**0**	
1330 - 1345	0	0	0	0	0	0	0	0	0	0	0	0	0	**0**	
1345 - 1400	0	0	0	0	0	0	0	0	0	0	0	0	0	**0**	**0**
1400 - 1415	0	0	0	0	0	0	0	0	0	0	0	0	0	**0**	
1415 - 1430	0	0	0	0	0	0	0	0	0	0	0	0	0	**0**	
1430 - 1445	0	0	0	0	0	0	0	0	0	0	0	0	0	**0**	
1445 - 1500	0	0	0	0	0	0	0	0	0	0	0	0	0	**0**	**0**
1500 - 1515	0	0	0	0	0	0	0	0	0	0	0	0	0	**0**	
1515 - 1530	0	0	0	0	0	0	0	0	0	0	0	0	0	**0**	
1530 - 1545	0	0	0	0	0	0	0	0	0	0	0	0	0	**0**	
1545 - 1600	0	0	0	0	0	0	0	0	0	0	0	0	0	**0**	**0**
1600 - 1615	0	0	0	0	0	0	0	0	0	0	0	0	0	**0**	
1615 - 1630	0	0	0	0	0	0	0	0	0	0	0	0	0	**0**	
1630 - 1645	0	0	0	0	0	0	0	0	0	0	0	0	0	**0**	
1645 - 1700	0	0	0	0	0	0	0	0	0	0	0	0	0	**0**	**0**
1700 - 1715	0	0	0	0	0	0	0	0	0	0	0	0	0	**0**	
1715 - 1730	0	0	0	0	0	0	0	0	0	0	0	0	0	**0**	
1730 - 1745	0	0	0	0	0	0	0	0	0	0	0	0	0	**0**	
1745 - 1800	0	0	0	0	0	0	0	0	0	0	0	0	0	**0**	**0**
1800 - 1815	0	0	0	0	0	0	0	0	0	0	0	0	0	**0**	
1815 - 1830	0	0	0	0	0	0	0	0	0	0	0	0	0	**0**	
1830 - 1845	0	0	0	0	0	0	0	0	0	0	0	0	0	**0**	
1845 - 1900	0	0	0	0	0	0	0	0	0	0	0	0	0	**0**	**0**
1900 - 1915	1	91	14	0	1	0	0	0	0	0	0	0	0	**107**	
1915 - 1930	0	96	17	0	0	1	0	0	1	0	0	0	0	**115**	
1930 - 1945	0	88	12	0	0	0	0	0	0	0	0	0	0	**100**	
1945 - 2000	0	101	18	0	2	0	1	0	0	0	0	0	0	**122**	**444**
2000 - 2015	0	98	15	0	0	0	0	0	0	0	0	0	0	**113**	
2015 - 2030	0	96	18	0	0	0	0	0	0	0	0	0	0	**114**	
2030 - 2045	1	66	15	0	0	0	0	0	1	0	0	0	0	**83**	
2045 - 2100	0	62	14	0	0	0	0	0	1	0	0	0	0	**77**	**387**
2100 - 2115	0	88	9	0	0	0	0	0	0	0	0	0	0	**97**	
2115 - 2130	1	60	12	0	0	0	0	0	0	0	0	0	0	**73**	
2130 - 2145	0	65	13	0	1	0	0	0	0	0	0	0	0	**79**	
2145 - 2200	0	46	10	0	0	0	0	0	0	0	0	0	0	**56**	**305**
2200 - 2215	0	41	4	0	0	0	0	0	0	0	0	0	0	**45**	
2215 - 2230	1	34	7	0	0	0	0	0	0	0	0	0	0	**42**	
2230 - 2245	0	35	7	0	1	0	0	0	0	0	0	0	0	**43**	
2245 - 2300	0	28	4	0	0	0	0	0	0	0	0	0	0	**32**	**162**
2300 - 2315	1	24	8	0	0	0	0	0	0	0	0	0	0	**33**	
2315 - 2330	0	24	7	0	0	0	0	0	0	0	0	0	0	**31**	
2330 - 2345	0	21	4	0	0	0	0	0	0	0	0	0	0	**25**	
2345 - 0000	0	14	4	0	0	0	0	0	0	0	0	0	0	**18**	**107**

Session Total	5	1178	212	0	5	1	1	0	3	0	0	0	0	**1405**
Session Average	0.05	12.27	2.21	0.00	0.05	0.01	0.01	0.00	0.03	0.00	0.00	0.00	0.00	**14.64**
Session Percentage	0.36	83.84	15.09	0.00	0.36	0.07	0.07	0.00	0.21	0.00	0.00	0.00	0.00	

AM Peak Hour	-	-	-	-	-	-	-	-	-	-	-	-	-	**-**
AM Peak Volume	0	0	0	0	0	0	0	0	0	0	0	0	0	**0**

Noon Peak Hour	-	-	-	-	-	-	-	-	-	-	-	-	-	**-**
Noon Peak Volume	0	0	0	0	0	0	0	0	0	0	0	0	0	**0**

PM Peak Hour	1815 - 1915	1915 - 2015	1945 - 2045	-	1900 - 2000	1830 - 1930	1900 - 2000	-	1830 - 1930	-	-	-	-	**1915 - 2015**
PM Peak Volume	1	383	66	0	3	1	1	0	1	0	0	0	0	**450**

Site 26
I-26 James F. Byrnes Expy On/Off-Ramp,
south of SC-60 Lake Murray Blvd

Date
Wednesday, April 24, 2024

Lat/Long
34.089182°, -81.165472°

Weather
Fair
66°F

Click here for Detailed Weather

0000 - 2400 (Weekday 24h Session) (04-24-2024)
SB WB 15min

	Southbound (Movement 26.1)													15min	60min
Time	1	2	3	4	5	6	7	8	9	10	11	12	13	Total	Total
0000 - 0015	0	16	0	0	0	0	0	0	0	0	0	0	0	**16**	
0015 - 0030	0	13	0	0	0	0	0	0	0	0	0	0	0	**13**	
0030 - 0045	0	10	0	0	0	0	0	0	1	0	0	0	0	**11**	
0045 - 0100	0	10	0	0	0	0	0	0	0	0	0	0	0	**10**	**50**
0100 - 0115	0	5	0	0	1	0	0	0	0	0	0	0	0	**6**	
0115 - 0130	0	4	0	0	0	0	0	0	0	0	0	0	0	**4**	
0130 - 0145	0	2	0	0	0	0	0	0	1	0	0	0	0	**3**	
0145 - 0200	0	9	0	0	0	0	0	0	0	0	0	0	0	**9**	**22**
0200 - 0215	0	10	0	0	0	0	0	0	0	0	0	0	0	**10**	
0215 - 0230	0	6	1	0	0	0	0	0	0	0	0	0	0	**7**	
0230 - 0245	0	11	0	0	1	0	0	0	0	0	0	0	0	**12**	
0245 - 0300	0	6	0	0	0	0	0	0	1	0	0	0	0	**7**	**36**
0300 - 0315	0	7	0	0	0	0	0	0	0	0	0	0	0	**7**	
0315 - 0330	0	8	0	0	1	0	0	0	0	0	0	0	0	**9**	
0330 - 0345	0	16	1	0	0	0	0	0	0	0	0	0	0	**17**	
0345 - 0400	0	11	0	0	1	0	0	0	0	0	0	0	0	**12**	**45**
0400 - 0415	0	17	0	0	0	0	0	0	0	0	0	0	0	**17**	
0415 - 0430	0	17	1	0	0	0	0	0	0	0	0	0	0	**18**	
0430 - 0445	0	25	0	0	0	0	0	0	0	0	0	0	0	**25**	
0445 - 0500	0	34	1	0	0	0	0	0	0	0	0	0	0	**35**	**95**
0500 - 0515	0	38	0	1	0	0	0	0	0	0	0	0	0	**39**	
0515 - 0530	0	46	1	0	1	0	0	1	0	0	0	0	0	**49**	
0530 - 0545	0	90	0	0	0	0	0	0	1	0	0	0	0	**91**	
0545 - 0600	0	93	1	0	1	0	0	0	0	0	0	0	0	**95**	**274**
0600 - 0615	0	95	17	0	0	0	0	0	0	0	0	0	0	**112**	
0615 - 0630	0	122	28	0	1	0	0	0	1	0	0	0	0	**152**	
0630 - 0645	0	147	58	0	0	1	0	0	1	0	0	0	0	**207**	
0645 - 0700	0	175	41	0	1	0	0	0	0	0	0	0	0	**217**	**688**
0700 - 0715	0	167	45	0	0	0	0	0	0	0	0	0	0	**212**	
0715 - 0730	0	274	42	0	1	0	1	1	0	0	0	0	0	**319**	
0730 - 0745	0	219	41	0	0	1	0	0	1	0	0	0	0	**262**	
0745 - 0800	0	197	48	0	2	0	1	0	3	0	0	0	0	**251**	**1044**
0800 - 0815	0	132	43	0	5	0	0	0	1	0	0	0	0	**181**	
0815 - 0830	0	168	40	0	1	0	0	0	0	0	0	0	0	**209**	
0830 - 0845	0	183	41	0	4	0	0	0	2	0	0	0	0	**230**	
0845 - 0900	1	162	34	0	4	0	0	1	2	0	0	0	0	**204**	**824**
0900 - 0915	0	153	34	0	3	1	0	1	1	0	0	0	0	**193**	
0915 - 0930	0	162	34	0	4	0	0	0	0	0	0	0	0	**200**	
0930 - 0945	0	126	23	1	2	0	0	0	0	0	0	0	0	**152**	
0945 - 1000	0	135	19	0	4	0	0	0	0	0	0	0	0	**158**	**703**
1000 - 1015	0	133	23	0	2	1	0	0	2	0	0	0	0	**161**	
1015 - 1030	0	144	28	0	5	1	0	0	0	0	0	0	0	**178**	
1030 - 1045	0	158	24	0	5	1	0	1	0	0	0	0	0	**189**	
1045 - 1100	0	137	31	1	2	1	0	0	1	0	0	0	0	**173**	**701**
1100 - 1115	0	129	50	0	3	0	0	0	1	0	0	0	0	**183**	
1115 - 1130	0	117	31	0	2	0	0	0	0	0	0	0	0	**150**	
1130 - 1145	1	142	31	0	0	0	0	0	0	0	0	0	0	**174**	
1145 - 1200	0	131	48	0	7	0	0	0	5	1	0	0	0	**192**	**699**
1200 - 1215	0	134	26	0	4	1	0	0	1	0	0	0	0	**166**	
1215 - 1230	1	132	26	0	2	2	0	0	0	0	0	0	0	**163**	
1230 - 1245	3	143	38	0	1	0	0	0	1	0	0	0	0	**186**	
1245 - 1300	0	143	25	0	5	0	0	0	2	0	0	0	0	**175**	**690**
1300 - 1315	0	132	39	0	2	2	0	0	0	0	0	0	0	**175**	
1315 - 1330	0	126	35	0	3	1	0	1	0	0	0	0	0	**166**	
1330 - 1345	1	148	35	0	2	1	0	0	0	0	0	0	0	**187**	
1345 - 1400	0	117	33	0	4	0	0	0	1	0	0	0	0	**155**	**683**
1400 - 1415	0	133	30	0	3	0	0	0	1	0	0	0	0	**167**	
1415 - 1430	0	141	22	0	3	1	0	0	1	0	0	0	0	**168**	
1430 - 1445	0	145	18	0	3	1	1	1	2	0	0	0	0	**171**	
1445 - 1500	0	146	30	0	5	0	0	1	0	0	0	0	0	**182**	**688**
1500 - 1515	0	149	30	1	0	1	0	0	1	0	0	0	0	**182**	
1515 - 1530	1	159	22	0	3	0	0	0	0	0	0	0	0	**185**	
1530 - 1545	0	137	16	0	1	0	0	0	1	0	0	0	0	**155**	
1545 - 1600	0	131	20	0	2	0	0	0	1	0	0	0	0	**154**	**676**
1600 - 1615	0	195	17	0	6	0	0	0	0	0	0	0	0	**218**	
1615 - 1630	0	178	20	0	8	1	0	0	0	0	0	0	0	**207**	
1630 - 1645	0	181	35	0	5	0	0	0	1	0	0	0	0	**222**	
1645 - 1700	0	159	28	0	3	1	1	0	0	0	0	0	0	**192**	**839**
1700 - 1715	0	200	25	0	2	1	0	0	0	0	0	0	0	**228**	
1715 - 1730	0	160	27	0	1	0	0	0	0	0	0	0	0	**188**	
1730 - 1745	0	159	33	0	3	1	0	0	1	0	0	0	0	**197**	
1745 - 1800	0	149	16	0	2	0	0	0	0	0	0	0	0	**167**	**780**
1800 - 1815	0	157	39	0	3	0	0	0	0	0	0	0	0	**199**	
1815 - 1830	0	124	22	0	3	0	0	0	1	0	0	0	0	**150**	
1830 - 1845	0	122	34	1	3	0	0	0	0	0	0	0	0	**160**	
1845 - 1900	0	114	21	0	3	0	0	0	1	0	0	0	0	**139**	**648**
1900 - 1915	1	95	29	0	0	0	0	0	0	0	0	0	0	**125**	
1915 - 1930	0	97	11	0	1	0	0	0	1	0	0	0	0	**110**	
1930 - 1945	1	100	11	0	0	0	0	0	1	0	0	0	0	**113**	
1945 - 2000	0	80	14	0	2	0	0	0	0	0	0	0	0	**96**	**444**
2000 - 2015	0	91	17	0	2	0	0	0	0	0	0	0	0	**110**	
2015 - 2030	0	95	12	0	0	0	0	0	1	0	0	0	0	**108**	
2030 - 2045	1	83	15	0	0	0	0	0	0	0	0	0	0	**99**	
2045 - 2100	1	76	15	0	0	0	0	0	0	0	0	0	0	**92**	**409**
2100 - 2115	0	78	3	0	1	0	0	0	0	0	0	0	0	**82**	
2115 - 2130	0	72	6	0	0	0	0	0	0	0	0	0	0	**78**	
2130 - 2145	0	60	2	0	0	0	0	0	0	0	0	0	0	**62**	
2145 - 2200	0	38	1	0	0	0	0	0	0	0	0	0	0	**39**	**261**
2200 - 2215	0	42	1	0	0	0	0	0	0	0	0	0	0	**43**	
2215 - 2230	0	27	2	0	0	0	0	0	1	0	0	0	0	**30**	
2230 - 2245	0	38	1	0	0	0	0	0	0	0	0	0	0	**39**	
2245 - 2300	0	35	1	0	0	0	0	0	0	0	0	0	0	**36**	**148**
2300 - 2315	0	32	1	0	0	0	0	0	0	0	0	0	0	**33**	
2315 - 2330	0	24	0	0	0	0	0	0	0	0	0	0	0	**24**	
2330 - 2345	0	23	1	0	0	0	0	0	0	0	0	0	0	**24**	
2345 - 0000	0	22	1	0	0	0	0	0	0	0	0	0	0	**23**	**104**

Session Total	12	9534	1766	5	155	21	4	8	45	1	0	0	0	**11551**
Session Average	0.13	99.31	18.40	0.05	1.61	0.22	0.04	0.08	0.47	0.01	0.00	0.00	0.00	**120.32**
Session Percentage	0.10	82.54	15.29	0.04	1.34	0.18	0.03	0.07	0.39	0.01	0.00	0.00	0.00	

AM Peak Hour	0800 - 0900	0700 - 0800	0630 - 0730	0500 - 0600	0945 - 1045	0945 - 1045	0700 - 0800	0815 - 0915	0745 - 0845	-	-	-	-	**0700 - 0800**
AM Peak Volume	1	857	186	1	16	3	2	2	6	0	0	0	0	**1044**

Noon Peak Hour	1145 - 1245	1430 - 1530	1100 - 1200	1000 - 1100	1015 - 1115	1000 - 1100	1345 - 1445	1400 - 1500	1145 - 1245	1100 - 1200	-	-	-	**1015 - 1115**
Noon Peak Volume	4	599	160	1	15	4	1	2	7	1	0	0	0	**723**

PM Peak Hour	1845 - 1945	1615 - 1715	1800 - 1900	1500 - 1600	1600 - 1700	1615 - 1715	1600 - 1700	-	1500 - 1600	-	-	-	-	**1615 - 1715**
PM Peak Volume	2	718	116	1	22	3	1	0	3	0	0	0	0	**849**

Site 26
I-26 James F. Byrnes Expy On/Off-Ramp,
south of SC-60 Lake Murray Blvd

Date
Thursday, April 25, 2024

Lat/Long
34.089182°, -81.165472°

Weather
Fair
67°F

Click here for Detailed Weather

0000 - 2400 (Weekday 24h Session) (04-25-2024)
SB WB 15min

	Southbound (Movement 26.1)													15min	60min
TIME	1	2	3	4	5	6	7	8	9	10	11	12	13	Total	Total
0000 - 0015	0	12	4	0	0	0	0	0	0	0	0	0	0	**16**	
0015 - 0030	0	10	5	0	0	0	0	0	0	0	0	0	0	**15**	
0030 - 0045	0	13	6	0	0	0	0	0	0	0	0	0	0	**19**	
0045 - 0100	0	10	4	0	0	0	0	0	0	0	0	0	0	**14**	**64**
0100 - 0115	0	8	4	0	0	0	0	0	0	0	0	0	0	**12**	
0115 - 0130	0	6	3	0	0	0	0	0	0	0	0	0	0	**9**	
0130 - 0145	0	4	1	0	0	0	0	0	0	0	0	0	0	**5**	
0145 - 0200	0	7	0	0	0	0	0	0	0	0	0	0	0	**7**	**33**
0200 - 0215	0	6	1	0	1	0	0	0	0	0	0	0	0	**8**	
0215 - 0230	0	4	2	0	0	0	0	0	0	0	0	0	0	**6**	
0230 - 0245	0	4	1	0	0	0	0	0	2	0	0	0	0	**7**	
0245 - 0300	0	7	1	0	0	0	0	0	0	0	0	0	0	**8**	**29**
0300 - 0315	0	6	4	0	0	0	0	0	0	0	0	0	0	**10**	
0315 - 0330	0	8	4	0	0	0	0	0	0	0	0	0	0	**12**	
0330 - 0345	0	11	3	0	0	0	0	0	0	0	0	0	0	**14**	
0345 - 0400	0	13	5	0	0	0	0	0	0	0	0	0	0	**18**	**54**
0400 - 0415	0	16	4	0	0	0	0	0	0	0	0	0	0	**20**	
0415 - 0430	0	13	4	0	0	0	0	0	0	0	0	0	0	**17**	
0430 - 0445	0	21	10	0	0	0	0	0	0	0	0	0	0	**31**	
0445 - 0500	0	23	9	0	0	0	0	0	0	0	0	0	0	**32**	**100**
0500 - 0515	0	35	12	0	0	2	0	0	0	0	0	0	0	**49**	
0515 - 0530	0	41	16	0	0	0	0	0	1	0	0	0	0	**58**	
0530 - 0545	0	56	16	0	0	1	0	0	0	0	0	0	0	**73**	
0545 - 0600	0	66	14	0	0	0	0	0	1	0	0	0	0	**81**	**261**
0600 - 0615	0	85	25	0	0	0	0	0	0	0	0	0	0	**110**	
0615 - 0630	0	116	37	0	0	0	0	0	0	0	0	0	0	**153**	
0630 - 0645	1	136	47	0	1	0	0	0	0	0	0	0	0	**185**	
0645 - 0700	0	173	33	0	1	0	0	0	1	0	0	0	0	**208**	**656**
0700 - 0715	0	194	52	0	2	1	0	0	0	0	0	0	0	**249**	
0715 - 0730	0	217	51	0	4	0	1	1	1	0	0	0	0	**275**	
0730 - 0745	0	210	65	0	3	1	0	0	0	0	0	0	0	**279**	
0745 - 0800	0	195	51	0	5	1	1	0	4	0	0	0	0	**257**	**1060**
0800 - 0815	0	176	44	0	3	3	2	0	3	0	0	0	0	**231**	
0815 - 0830	0	184	38	0	3	1	0	0	1	0	0	0	0	**227**	
0830 - 0845	0	165	34	0	6	0	0	0	2	0	0	0	0	**207**	
0845 - 0900	0	148	44	0	3	1	1	0	2	0	0	0	0	**199**	**864**
0900 - 0915	0	159	43	0	2	3	0	0	0	0	0	0	0	**207**	
0915 - 0930	0	174	35	1	1	0	0	0	0	0	0	0	0	**211**	
0930 - 0945	0	163	39	1	0	6	0	0	3	0	0	0	0	**212**	
0945 - 1000	0	144	26	0	2	2	0	1	0	0	0	0	0	**175**	**805**
1000 - 1015	0	132	25	2	5	1	1	0	0	0	0	0	0	**166**	
1015 - 1030	0	147	32	0	5	1	1	1	0	0	0	0	0	**187**	
1030 - 1045	0	142	31	0	4	1	0	0	1	0	0	0	0	**179**	
1045 - 1100	0	156	27	1	1	1	0	0	2	0	0	0	0	**188**	**720**
1100 - 1115	0	154	22	1	0	2	0	1	1	0	0	0	0	**181**	
1115 - 1130	0	134	43	1	1	0	0	0	3	0	0	0	0	**182**	
1130 - 1145	1	140	35	0	1	0	0	0	3	0	0	0	0	**180**	
1145 - 1200	0	139	34	0	1	0	0	0	1	0	0	0	0	**175**	**718**
1200 - 1215	1	164	36	1	3	0	0	0	1	0	0	0	0	**206**	
1215 - 1230	0	157	33	1	5	0	0	0	3	0	0	0	0	**199**	
1230 - 1245	0	145	37	1	3	0	0	0	2	0	0	0	0	**188**	
1245 - 1300	0	127	31	4	4	0	2	0	4	0	0	0	0	**172**	**765**
1300 - 1315	0	156	42	1	3	0	0	0	0	0	0	0	0	**202**	
1315 - 1330	1	134	31	0	5	0	0	1	0	0	0	0	0	**172**	
1330 - 1345	1	118	35	1	5	0	0	0	3	0	0	0	0	**163**	
1345 - 1400	0	144	27	0	1	0	0	0	0	0	0	0	0	**172**	**709**
1400 - 1415	0	159	21	1	3	0	0	0	2	0	0	0	0	**186**	
1415 - 1430	0	144	32	0	3	1	0	2	0	0	0	0	0	**182**	
1430 - 1445	0	156	28	1	4	1	0	0	1	0	0	0	0	**191**	
1445 - 1500	0	135	26	1	5	0	0	0	3	0	0	0	0	**170**	**729**
1500 - 1515	1	161	27	2	4	0	0	1	0	0	0	0	0	**196**	
1515 - 1530	1	138	31	0	5	0	0	0	1	0	0	0	0	**176**	
1530 - 1545	0	165	28	0	4	1	0	0	1	0	0	0	0	**199**	
1545 - 1600	0	156	44	0	2	0	0	0	0	0	0	0	0	**202**	**773**
1600 - 1615	0	148	35	0	1	0	0	0	2	0	0	0	0	**186**	
1615 - 1630	0	169	38	0	3	0	0	0	2	0	0	0	0	**212**	
1630 - 1645	0	197	27	0	4	0	0	0	0	0	0	0	0	**228**	
1645 - 1700	0	162	40	0	2	0	0	0	0	0	0	0	0	**204**	**830**
1700 - 1715	0	212	26	0	3	0	0	0	0	0	0	0	0	**241**	
1715 - 1730	0	128	34	0	0	0	0	0	2	0	0	0	0	**164**	
1730 - 1745	0	155	24	0	1	0	0	0	0	0	0	0	0	**180**	
1745 - 1800	0	147	20	0	1	0	0	0	1	0	0	0	0	**169**	**754**
1800 - 1815	0	159	19	1	2	1	0	0	0	0	0	0	0	**182**	
1815 - 1830	0	145	27	0	2	0	0	0	1	0	0	0	0	**175**	
1830 - 1845	1	136	25	0	2	0	0	1	0	0	0	0	0	**165**	
1845 - 1900	0	125	16	0	1	0	0	0	1	0	0	0	0	**143**	**665**
1900 - 1915	0	0	0	0	0	0	0	0	0	0	0	0	0	**0**	
1915 - 1930	0	0	0	0	0	0	0	0	0	0	0	0	0	**0**	
1930 - 1945	0	0	0	0	0	0	0	0	0	0	0	0	0	**0**	
1945 - 2000	0	0	0	0	0	0	0	0	0	0	0	0	0	**0**	**0**
2000 - 2015	0	0	0	0	0	0	0	0	0	0	0	0	0	**0**	
2015 - 2030	0	0	0	0	0	0	0	0	0	0	0	0	0	**0**	
2030 - 2045	0	0	0	0	0	0	0	0	0	0	0	0	0	**0**	
2045 - 2100	0	0	0	0	0	0	0	0	0	0	0	0	0	**0**	**0**
2100 - 2115	0	0	0	0	0	0	0	0	0	0	0	0	0	**0**	
2115 - 2130	0	0	0	0	0	0	0	0	0	0	0	0	0	**0**	
2130 - 2145	0	0	0	0	0	0	0	0	0	0	0	0	0	**0**	
2145 - 2200	0	0	0	0	0	0	0	0	0	0	0	0	0	**0**	**0**
2200 - 2215	0	0	0	0	0	0	0	0	0	0	0	0	0	**0**	
2215 - 2230	0	0	0	0	0	0	0	0	0	0	0	0	0	**0**	
2230 - 2245	0	0	0	0	0	0	0	0	0	0	0	0	0	**0**	
2245 - 2300	0	0	0	0	0	0	0	0	0	0	0	0	0	**0**	**0**
2300 - 2315	0	0	0	0	0	0	0	0	0	0	0	0	0	**0**	
2315 - 2330	0	0	0	0	0	0	0	0	0	0	0	0	0	**0**	
2330 - 2345	0	0	0	0	0	0	0	0	0	0	0	0	0	**0**	
2345 - 0000	0	0	0	0	0	0	0	0	0	0	0	0	0	**0**	**0**

Session Total	8	8425	1886	22	136	32	9	9	62	0	0	0	0	**10589**
Session Average	0.08	87.76	19.65	0.23	1.42	0.33	0.09	0.09	0.65	0.00	0.00	0.00	0.00	**110.30**
Session Percentage	0.08	79.56	17.81	0.21	1.28	0.30	0.08	0.08	0.59	0.00	0.00	0.00	0.00	

AM Peak Hour	0545 - 0645	0700 - 0800	0700 - 0800	0915 - 1015	0745 - 0845	0900 - 1000	0715 - 0815	0930 - 1030	0745 - 0845	-	-	-	-	**0700 - 0800**
AM Peak Hour Volume	1	816	219	4	17	11	4	2	10	0	0	0	0	**1060**

Noon Peak Hour	1115 - 1215	1145 - 1245	1115 - 1215	1200 - 1300	1430 - 1530	1015 - 1115	1000 - 1100	1415 - 1515	1200 - 1300	-	-	-	-	**1145 - 1245**
Noon Peak Hour Volume	2	605	148	7	18	5	2	3	10	0	0	0	0	**768**

PM Peak Hour	1500 - 1600	1615 - 1715	1530 - 1630	1500 - 1600	1500 - 1600	1500 - 1600	-	1500 - 1600	1530 - 1630	-	-	-	-	**1615 - 1715**
PM Peak Hour Volume	2	740	145	2	15	1	0	1	5	0	0	0	0	**885**

Bi-Directional Class Count || SB WB Average 15min

Columbia, SC

Marr Traffic DATA COLLECTION
www.marrtraffic.com

Site 26
I-26 James F. Byrnes Expy On/Off-Ramp,
south of SC-60 Lake Murray Blvd

Date
Tuesday, April 23, 2024

Lat/Long
34.089182°, -81.165472°

Weather
Fair
58°F

0000 - 2400 (Weekday 24h Session) (All Dates)
SB WB Average 15min

	SB WB Average 15min													15min	60min
Time	1	2	3	4	5	6	7	8	9	10	11	12	13	Total	Total
0000 - 0015	0	9	1	0	0	0	0	0	0	0	0	0	0	**11**	
0015 - 0030	0	8	2	0	0	0	0	0	0	0	0	0	0	**9**	
0030 - 0045	0	8	2	0	0	0	0	0	0	0	0	0	0	**10**	
0045 - 0100	0	7	1	0	0	0	0	0	0	0	0	0	0	**8**	**38**
0100 - 0115	0	4	1	0	0	0	0	0	0	0	0	0	0	**6**	
0115 - 0130	0	3	1	0	0	0	0	0	0	0	0	0	0	**4**	
0130 - 0145	0	2	0	0	0	0	0	0	0	0	0	0	0	**3**	
0145 - 0200	0	5	0	0	0	0	0	0	0	0	0	0	0	**5**	**18**
0200 - 0215	0	5	0	0	0	0	0	0	0	0	0	0	0	**6**	
0215 - 0230	0	3	1	0	0	0	0	0	0	0	0	0	0	**4**	
0230 - 0245	0	5	0	0	0	0	0	0	1	0	0	0	0	**6**	
0245 - 0300	0	4	0	0	0	0	0	0	0	0	0	0	0	**5**	**22**
0300 - 0315	0	4	1	0	0	0	0	0	0	0	0	0	0	**6**	
0315 - 0330	0	5	1	0	0	0	0	0	0	0	0	0	0	**7**	
0330 - 0345	0	9	1	0	0	0	0	0	0	0	0	0	0	**10**	
0345 - 0400	0	8	2	0	0	0	0	0	0	0	0	0	0	**10**	**33**
0400 - 0415	0	11	1	0	0	0	0	0	0	0	0	0	0	**12**	
0415 - 0430	0	10	2	0	0	0	0	0	0	0	0	0	0	**12**	
0430 - 0445	0	15	3	0	0	0	0	0	0	0	0	0	0	**19**	
0445 - 0500	0	19	3	0	0	0	0	0	0	0	0	0	0	**22**	**65**
0500 - 0515	0	24	4	0	0	1	0	0	0	0	0	0	0	**29**	
0515 - 0530	0	29	6	0	0	0	0	0	0	0	0	0	0	**36**	
0530 - 0545	0	49	5	0	0	0	0	0	0	0	0	0	0	**55**	
0545 - 0600	0	53	5	0	0	0	0	0	0	0	0	0	0	**59**	**178**
0600 - 0615	0	60	14	0	0	0	0	0	0	0	0	0	0	**74**	
0615 - 0630	0	79	22	0	0	0	0	0	0	0	0	0	0	**102**	
0630 - 0645	0	94	35	0	0	0	0	0	0	0	0	0	0	**131**	
0645 - 0700	0	116	25	0	1	0	0	0	0	0	0	0	0	**142**	**448**
0700 - 0715	0	120	32	0	1	0	0	0	0	0	0	0	0	**154**	
0715 - 0730	0	164	31	0	2	0	1	1	0	0	0	0	0	**198**	
0730 - 0745	0	143	35	0	1	1	0	0	0	0	0	0	0	**180**	
0745 - 0800	0	131	33	0	2	0	1	0	2	0	0	0	0	**169**	**701**
0800 - 0815	0	103	29	0	3	1	1	0	1	0	0	0	0	**137**	
0815 - 0830	0	117	26	0	1	0	0	0	0	0	0	0	0	**145**	
0830 - 0845	0	116	25	0	3	0	0	0	1	0	0	0	0	**146**	
0845 - 0900	0	103	26	0	2	0	0	0	1	0	0	0	0	**134**	**563**
0900 - 0915	0	104	26	0	2	1	0	0	0	0	0	0	0	**133**	
0915 - 0930	0	112	23	0	2	0	0	0	0	0	0	0	0	**137**	
0930 - 0945	0	96	21	1	1	2	0	0	1	0	0	0	0	**121**	
0945 - 1000	0	93	15	0	2	1	0	0	0	0	0	0	0	**111**	**503**
1000 - 1015	0	88	16	1	2	1	0	0	1	0	0	0	0	**109**	
1015 - 1030	0	97	20	0	3	1	0	0	0	0	0	0	0	**122**	
1030 - 1045	0	100	18	0	3	1	0	0	0	0	0	0	0	**123**	
1045 - 1100	0	98	19	1	1	1	0	0	1	0	0	0	0	**120**	**474**
1100 - 1115	0	94	24	0	1	1	0	0	1	0	0	0	0	**121**	
1115 - 1130	0	84	25	0	1	0	0	0	1	0	0	0	0	**111**	
1130 - 1145	1	94	22	0	0	0	0	0	1	0	0	0	0	**118**	
1145 - 1200	0	90	27	0	3	0	0	0	2	0	0	0	0	**122**	**472**
1200 - 1215	0	99	21	0	2	0	0	0	1	0	0	0	0	**124**	
1215 - 1230	0	96	20	0	2	1	0	0	1	0	0	0	0	**121**	
1230 - 1245	1	96	25	0	1	0	0	0	1	0	0	0	0	**125**	
1245 - 1300	0	90	19	1	3	0	1	0	2	0	0	0	0	**116**	**485**
1300 - 1315	0	96	27	0	2	1	0	0	0	0	0	0	0	**126**	
1315 - 1330	0	87	22	0	3	0	0	1	0	0	0	0	0	**113**	
1330 - 1345	1	89	23	0	2	0	0	0	1	0	0	0	0	**117**	
1345 - 1400	0	87	20	0	2	0	0	0	0	0	0	0	0	**109**	**464**
1400 - 1415	0	97	17	0	2	0	0	0	1	0	0	0	0	**118**	
1415 - 1430	0	95	18	0	2	1	0	1	0	0	0	0	0	**117**	
1430 - 1445	0	100	15	0	2	1	0	0	1	0	0	0	0	**121**	
1445 - 1500	0	94	19	0	3	0	0	0	1	0	0	0	0	**117**	**472**
1500 - 1515	0	103	19	1	1	0	0	0	0	0	0	0	0	**126**	
1515 - 1530	1	99	18	0	3	0	0	0	0	0	0	0	0	**120**	
1530 - 1545	0	101	15	0	2	0	0	0	1	0	0	0	0	**118**	
1545 - 1600	0	96	21	0	1	0	0	0	0	0	0	0	0	**119**	**483**
1600 - 1615	0	114	17	0	2	0	0	0	1	0	0	0	0	**135**	
1615 - 1630	0	116	19	0	4	0	0	0	1	0	0	0	0	**140**	
1630 - 1645	0	126	21	0	3	0	0	0	0	0	0	0	0	**150**	
1645 - 1700	0	107	23	0	2	0	0	0	0	0	0	0	0	**132**	**556**
1700 - 1715	0	137	17	0	2	0	0	0	0	0	0	0	0	**156**	
1715 - 1730	0	96	20	0	0	0	0	0	1	0	0	0	0	**117**	
1730 - 1745	0	105	19	0	1	0	0	0	0	0	0	0	0	**126**	
1745 - 1800	0	99	12	0	1	0	0	0	0	0	0	0	0	**112**	**511**
1800 - 1815	0	105	19	0	2	0	0	0	0	0	0	0	0	**127**	
1815 - 1830	0	90	16	0	2	0	0	0	1	0	0	0	0	**108**	
1830 - 1845	0	86	20	0	2	0	0	0	0	0	0	0	0	**108**	
1845 - 1900	0	80	12	0	1	0	0	0	1	0	0	0	0	**94**	**438**
1900 - 1915	1	62	14	0	0	0	0	0	0	0	0	0	0	**77**	
1915 - 1930	0	64	9	0	0	0	0	0	1	0	0	0	0	**75**	
1930 - 1945	0	63	8	0	0	0	0	0	0	0	0	0	0	**71**	
1945 - 2000	0	60	11	0	1	0	0	0	0	0	0	0	0	**73**	**296**
2000 - 2015	0	63	11	0	1	0	0	0	0	0	0	0	0	**74**	
2015 - 2030	0	64	10	0	0	0	0	0	0	0	0	0	0	**74**	
2030 - 2045	1	50	10	0	0	0	0	0	0	0	0	0	0	**61**	
2045 - 2100	0	46	10	0	0	0	0	0	0	0	0	0	0	**56**	**265**
2100 - 2115	0	55	4	0	0	0	0	0	0	0	0	0	0	**60**	
2115 - 2130	0	44	6	0	0	0	0	0	0	0	0	0	0	**50**	
2130 - 2145	0	42	5	0	0	0	0	0	0	0	0	0	0	**47**	
2145 - 2200	0	28	4	0	0	0	0	0	0	0	0	0	0	**32**	**189**
2200 - 2215	0	28	2	0	0	0	0	0	0	0	0	0	0	**29**	
2215 - 2230	0	20	3	0	0	0	0	0	0	0	0	0	0	**24**	
2230 - 2245	0	24	3	0	0	0	0	0	0	0	0	0	0	**27**	
2245 - 2300	0	21	2	0	0	0	0	0	0	0	0	0	0	**23**	**103**
2300 - 2315	0	19	3	0	0	0	0	0	0	0	0	0	0	**22**	
2315 - 2330	0	16	2	0	0	0	0	0	0	0	0	0	0	**18**	
2330 - 2345	0	15	2	0	0	0	0	0	0	0	0	0	0	**16**	
2345 - 0000	0	12	2	0	0	0	0	0	0	0	0	0	0	**14**	**70**

Session Total	8	6379	1288	9	99	18	5	6	37	0	0	0	0	**7848**
Session Average	0.09	66.45	13.42	0.09	1.03	0.19	0.05	0.06	0.38	0.00	0.00	0.00	0.00	**81.75**
Session Percentage	0.11	81.28	16.41	0.11	1.26	0.23	0.06	0.07	0.47	0.00	0.00	0.00	0.00	

AM Peak Hour	0545 - 0645	0700 - 0800	0700 - 0800	0915 - 1015	0945 - 1045	0900 - 1000	0715 - 0815	0945 - 1045	0745 - 0845	-	-	-	-	**0700 - 0800**
AM Peak Volume	0	558	132	2	11	4	2	1	5	0	0	0	0	**701**

Noon Peak Hour	1145 - 1245	1445 - 1545	1100 - 1200	1215 - 1315	1000 - 1100	1000 - 1100	1000 - 1100	1415 - 1515	1115 - 1215	1100 - 1200	-	-	-	**1145 - 1245**
Noon Peak Volume	2	397	98	2	10	3	1	2	5	0	0	0	0	**492**

PM Peak Hour	1500 - 1600	1615 - 1715	1630 - 1730	1500 - 1600	1600 - 1700	1615 - 1715	1600 - 1700	1500 - 1600	1530 - 1630	-	-	-	-	**1615 - 1715**
PM Peak Volume	1	486	81	1	11	1	0	0	2	0	0	0	0	**578**

Bi-Directional Class Count || Volume Summary 15min

Columbia, SC

Marr Traffic DATA COLLECTION

www.marrtraffic.com

Site 26

I-26 James F. Byrnes Expy On/Off-Ramp,
south of SC-60 Lake Murray Blvd

Date

Tuesday, April 23, 2024

Lat/Long

34.089182°, -81.165472°

Weather

Fair
58°F

Click here for Detailed Weather

0000 - 2400 (Weekday 24h Session) (04-23-2024)

Volume Summary 15min

TIME	Volume Summary 15min NB	Volume Summary 15min SB	15min Total	60min Total
0000 - 0015	0	0	**0**	
0015 - 0030	0	0	**0**	
0030 - 0045	0	0	**0**	
0045 - 0100	0	0	**0**	**0**
0100 - 0115	0	0	**0**	
0115 - 0130	0	0	**0**	
0130 - 0145	0	0	**0**	
0145 - 0200	0	0	**0**	**0**
0200 - 0215	0	0	**0**	
0215 - 0230	0	0	**0**	
0230 - 0245	0	0	**0**	
0245 - 0300	0	0	**0**	**0**
0300 - 0315	0	0	**0**	
0315 - 0330	0	0	**0**	
0330 - 0345	0	0	**0**	
0345 - 0400	0	0	**0**	**0**
0400 - 0415	0	0	**0**	
0415 - 0430	0	0	**0**	
0430 - 0445	0	0	**0**	
0445 - 0500	0	0	**0**	**0**
0500 - 0515	0	0	**0**	
0515 - 0530	0	0	**0**	
0530 - 0545	0	0	**0**	
0545 - 0600	0	0	**0**	**0**
0600 - 0615	0	0	**0**	
0615 - 0630	0	0	**0**	
0630 - 0645	0	0	**0**	
0645 - 0700	0	0	**0**	**0**
0700 - 0715	0	0	**0**	
0715 - 0730	0	0	**0**	
0730 - 0745	0	0	**0**	
0745 - 0800	0	0	**0**	**0**
0800 - 0815	0	0	**0**	
0815 - 0830	0	0	**0**	
0830 - 0845	0	0	**0**	
0845 - 0900	0	0	**0**	**0**
0900 - 0915	0	0	**0**	
0915 - 0930	0	0	**0**	
0930 - 0945	0	0	**0**	
0945 - 1000	0	0	**0**	**0**
1000 - 1015	0	0	**0**	
1015 - 1030	0	0	**0**	
1030 - 1045	0	0	**0**	
1045 - 1100	0	0	**0**	**0**
1100 - 1115	0	0	**0**	
1115 - 1130	0	0	**0**	
1130 - 1145	0	0	**0**	
1145 - 1200	0	0	**0**	**0**

Time	Volume Summary 15min NB	Volume Summary 15min SB	15min Total	60min Total
1200 - 1215	0	0	**0**	
1215 - 1230	0	0	**0**	
1230 - 1245	0	0	**0**	
1245 - 1300	0	0	**0**	**0**
1300 - 1315	0	0	**0**	
1315 - 1330	0	0	**0**	
1330 - 1345	0	0	**0**	
1345 - 1400	0	0	**0**	**0**
1400 - 1415	0	0	**0**	
1415 - 1430	0	0	**0**	
1430 - 1445	0	0	**0**	
1445 - 1500	0	0	**0**	**0**
1500 - 1515	0	0	**0**	
1515 - 1530	0	0	**0**	
1530 - 1545	0	0	**0**	
1545 - 1600	0	0	**0**	**0**
1600 - 1615	0	0	**0**	
1615 - 1630	0	0	**0**	
1630 - 1645	0	0	**0**	
1645 - 1700	0	0	**0**	**0**
1700 - 1715	0	0	**0**	
1715 - 1730	0	0	**0**	
1730 - 1745	0	0	**0**	
1745 - 1800	0	0	**0**	**0**
1800 - 1815	0	0	**0**	
1815 - 1830	0	0	**0**	
1830 - 1845	0	0	**0**	
1845 - 1900	0	0	**0**	**0**
1900 - 1915	0	107	**107**	
1915 - 1930	0	115	**115**	
1930 - 1945	0	100	**100**	
1945 - 2000	0	122	**122**	**444**
2000 - 2015	0	113	**113**	
2015 - 2030	0	114	**114**	
2030 - 2045	0	83	**83**	
2045 - 2100	0	77	**77**	**387**
2100 - 2115	0	97	**97**	
2115 - 2130	0	73	**73**	
2130 - 2145	0	79	**79**	
2145 - 2200	0	56	**56**	**305**
2200 - 2215	0	45	**45**	
2215 - 2230	0	42	**42**	
2230 - 2245	0	43	**43**	
2245 - 2300	0	32	**32**	**162**
2300 - 2315	0	33	**33**	
2315 - 2330	0	31	**31**	
2330 - 2345	0	25	**25**	
2345 - 0000	0	18	**18**	**107**

Session Total	0	1405	**1405**
Session Average	0.00	14.64	**14.64**
Session Percentage	0.00	100.00	

Site 26

I-26 James F. Byrnes Expy On/Off-Ramp,
south of SC-60 Lake Murray Blvd

Date

Wednesday, April 24, 2024

Lat/Long

34.089182°, -81.165472°

Weather

Fair
66°F

Click here for Detailed Weather

0000 - 2400 (Weekday 24h Session) (04-24-2024)

Volume Summary 15min

TIME	Volume Summary 15min NB	SB	15min Total	60min Total
0000 - 0015	0	16	**16**	
0015 - 0030	0	13	**13**	
0030 - 0045	0	11	**11**	
0045 - 0100	0	10	**10**	**50**
0100 - 0115	0	6	**6**	
0115 - 0130	0	4	**4**	
0130 - 0145	0	3	**3**	
0145 - 0200	0	9	**9**	**22**
0200 - 0215	0	10	**10**	
0215 - 0230	0	7	**7**	
0230 - 0245	0	12	**12**	
0245 - 0300	0	7	**7**	**36**
0300 - 0315	0	7	**7**	
0315 - 0330	0	9	**9**	
0330 - 0345	0	17	**17**	
0345 - 0400	0	12	**12**	**45**
0400 - 0415	0	17	**17**	
0415 - 0430	0	18	**18**	
0430 - 0445	0	25	**25**	
0445 - 0500	0	35	**35**	**95**
0500 - 0515	0	39	**39**	
0515 - 0530	0	49	**49**	
0530 - 0545	0	91	**91**	
0545 - 0600	0	95	**95**	**274**
0600 - 0615	0	112	**112**	
0615 - 0630	0	152	**152**	
0630 - 0645	0	207	**207**	
0645 - 0700	0	217	**217**	**688**
0700 - 0715	0	212	**212**	
0715 - 0730	0	319	**319**	
0730 - 0745	0	262	**262**	
0745 - 0800	0	251	**251**	**1044**
0800 - 0815	0	181	**181**	
0815 - 0830	0	209	**209**	
0830 - 0845	0	230	**230**	
0845 - 0900	0	204	**204**	**824**
0900 - 0915	0	193	**193**	
0915 - 0930	0	200	**200**	
0930 - 0945	0	152	**152**	
0945 - 1000	0	158	**158**	**703**
1000 - 1015	0	161	**161**	
1015 - 1030	0	178	**178**	
1030 - 1045	0	189	**189**	
1045 - 1100	0	173	**173**	**701**
1100 - 1115	0	183	**183**	
1115 - 1130	0	150	**150**	
1130 - 1145	0	174	**174**	
1145 - 1200	0	192	**192**	**699**
1200 - 1215	0	166	**166**	
1215 - 1230	0	163	**163**	
1230 - 1245	0	186	**186**	
1245 - 1300	0	175	**175**	**690**
1300 - 1315	0	175	**175**	
1315 - 1330	0	166	**166**	
1330 - 1345	0	187	**187**	
1345 - 1400	0	155	**155**	**683**
1400 - 1415	0	167	**167**	
1415 - 1430	0	168	**168**	
1430 - 1445	0	171	**171**	
1445 - 1500	0	182	**182**	**688**
1500 - 1515	0	182	**182**	
1515 - 1530	0	185	**185**	
1530 - 1545	0	155	**155**	
1545 - 1600	0	154	**154**	**676**
1600 - 1615	0	218	**218**	
1615 - 1630	0	207	**207**	
1630 - 1645	0	222	**222**	
1645 - 1700	0	192	**192**	**839**
1700 - 1715	0	228	**228**	
1715 - 1730	0	188	**188**	
1730 - 1745	0	197	**197**	
1745 - 1800	0	167	**167**	**780**
1800 - 1815	0	199	**199**	
1815 - 1830	0	150	**150**	
1830 - 1845	0	160	**160**	
1845 - 1900	0	139	**139**	**648**
1900 - 1915	0	125	**125**	
1915 - 1930	0	110	**110**	
1930 - 1945	0	113	**113**	
1945 - 2000	0	96	**96**	**444**
2000 - 2015	0	110	**110**	
2015 - 2030	0	108	**108**	
2030 - 2045	0	99	**99**	
2045 - 2100	0	92	**92**	**409**
2100 - 2115	0	82	**82**	
2115 - 2130	0	78	**78**	
2130 - 2145	0	62	**62**	
2145 - 2200	0	39	**39**	**261**
2200 - 2215	0	43	**43**	
2215 - 2230	0	30	**30**	
2230 - 2245	0	39	**39**	
2245 - 2300	0	36	**36**	**148**
2300 - 2315	0	33	**33**	
2315 - 2330	0	24	**24**	
2330 - 2345	0	24	**24**	
2345 - 0000	0	23	**23**	**104**

Session Total	0	11551	**11551**
Session Average	0.00	120.32	**120.32**
Session Percentage	0.00	100.00	

Site 26

I-26 James F. Byrnes Expy On/Off-Ramp,
south of SC-60 Lake Murray Blvd

Date

Thursday, April 25, 2024

Lat/Long

34.089182°, -81.165472°

Weather

Fair
67°F

Click here for Detailed Weather

0000 - 2400 (Weekday 24h Session) (04-25-2024)

Volume Summary 15min

TIME	Volume Summary 15min NB	Volume Summary 15min SB	15min Total	60min Total
0000 - 0015	0	16	**16**	
0015 - 0030	0	15	**15**	
0030 - 0045	0	19	**19**	
0045 - 0100	0	14	**14**	**64**
0100 - 0115	0	12	**12**	
0115 - 0130	0	9	**9**	
0130 - 0145	0	5	**5**	
0145 - 0200	0	7	**7**	**33**
0200 - 0215	0	8	**8**	
0215 - 0230	0	6	**6**	
0230 - 0245	0	7	**7**	
0245 - 0300	0	8	**8**	**29**
0300 - 0315	0	10	**10**	
0315 - 0330	0	12	**12**	
0330 - 0345	0	14	**14**	
0345 - 0400	0	18	**18**	**54**
0400 - 0415	0	20	**20**	
0415 - 0430	0	17	**17**	
0430 - 0445	0	31	**31**	
0445 - 0500	0	32	**32**	**100**
0500 - 0515	0	49	**49**	
0515 - 0530	0	58	**58**	
0530 - 0545	0	73	**73**	
0545 - 0600	0	81	**81**	**261**
0600 - 0615	0	110	**110**	
0615 - 0630	0	153	**153**	
0630 - 0645	0	185	**185**	
0645 - 0700	0	208	**208**	**656**
0700 - 0715	0	249	**249**	
0715 - 0730	0	275	**275**	
0730 - 0745	0	279	**279**	
0745 - 0800	0	257	**257**	**1060**
0800 - 0815	0	231	**231**	
0815 - 0830	0	227	**227**	
0830 - 0845	0	207	**207**	
0845 - 0900	0	199	**199**	**864**
0900 - 0915	0	207	**207**	
0915 - 0930	0	211	**211**	
0930 - 0945	0	212	**212**	
0945 - 1000	0	175	**175**	**805**
1000 - 1015	0	166	**166**	
1015 - 1030	0	187	**187**	
1030 - 1045	0	179	**179**	
1045 - 1100	0	188	**188**	**720**
1100 - 1115	0	181	**181**	
1115 - 1130	0	182	**182**	
1130 - 1145	0	180	**180**	
1145 - 1200	0	175	**175**	**718**

Time	Volume Summary 15min NB	Volume Summary 15min SB	15min Total	60min Total
1200 - 1215	0	206	**206**	
1215 - 1230	0	199	**199**	
1230 - 1245	0	188	**188**	
1245 - 1300	0	172	**172**	**765**
1300 - 1315	0	202	**202**	
1315 - 1330	0	172	**172**	
1330 - 1345	0	163	**163**	
1345 - 1400	0	172	**172**	**709**
1400 - 1415	0	186	**186**	
1415 - 1430	0	182	**182**	
1430 - 1445	0	191	**191**	
1445 - 1500	0	170	**170**	**729**
1500 - 1515	0	196	**196**	
1515 - 1530	0	176	**176**	
1530 - 1545	0	199	**199**	
1545 - 1600	0	202	**202**	**773**
1600 - 1615	0	186	**186**	
1615 - 1630	0	212	**212**	
1630 - 1645	0	228	**228**	
1645 - 1700	0	204	**204**	**830**
1700 - 1715	0	241	**241**	
1715 - 1730	0	164	**164**	
1730 - 1745	0	180	**180**	
1745 - 1800	0	169	**169**	**754**
1800 - 1815	0	182	**182**	
1815 - 1830	0	175	**175**	
1830 - 1845	0	165	**165**	
1845 - 1900	0	143	**143**	**665**
1900 - 1915	0	0	**0**	
1915 - 1930	0	0	**0**	
1930 - 1945	0	0	**0**	
1945 - 2000	0	0	**0**	**0**
2000 - 2015	0	0	**0**	
2015 - 2030	0	0	**0**	
2030 - 2045	0	0	**0**	
2045 - 2100	0	0	**0**	**0**
2100 - 2115	0	0	**0**	
2115 - 2130	0	0	**0**	
2130 - 2145	0	0	**0**	
2145 - 2200	0	0	**0**	**0**
2200 - 2215	0	0	**0**	
2215 - 2230	0	0	**0**	
2230 - 2245	0	0	**0**	
2245 - 2300	0	0	**0**	**0**
2300 - 2315	0	0	**0**	
2315 - 2330	0	0	**0**	
2330 - 2345	0	0	**0**	
2345 - 0000	0	0	**0**	**0**

Session Total	0	10589	**10589**
Session Average	0.00	110.30	**110.30**
Session Percentage	0.00	100.00	

Bi-Directional Class Count || SB WB 60min

Columbia, SC

Marr Traffic DATA COLLECTION

www.marrtraffic.com

Site 26
I-26 James F. Byrnes Expy On/Off-Ramp,
south of SC-60 Lake Murray Blvd

Date
Tuesday, April 23, 2024

Lat/Long
34.089182°, -81.165472°

Weather
Fair
58°F

Click here for Detailed Weather

0000 - 2400 (Weekday 24h Session) (04-23-2024)
SB WB 60min

	Southbound (Movement 26.1)													
TIME	1	2	3	4	5	6	7	8	9	10	11	12	13	**Total**
0000 - 0100	0	0	0	0	0	0	0	0	0	0	0	0	0	**0**
0100 - 0200	0	0	0	0	0	0	0	0	0	0	0	0	0	**0**
0200 - 0300	0	0	0	0	0	0	0	0	0	0	0	0	0	**0**
0300 - 0400	0	0	0	0	0	0	0	0	0	0	0	0	0	**0**
0400 - 0500	0	0	0	0	0	0	0	0	0	0	0	0	0	**0**
0500 - 0600	0	0	0	0	0	0	0	0	0	0	0	0	0	**0**
0600 - 0700	0	0	0	0	0	0	0	0	0	0	0	0	0	**0**
0700 - 0800	0	0	0	0	0	0	0	0	0	0	0	0	0	**0**
0800 - 0900	0	0	0	0	0	0	0	0	0	0	0	0	0	**0**
0900 - 1000	0	0	0	0	0	0	0	0	0	0	0	0	0	**0**
1000 - 1100	0	0	0	0	0	0	0	0	0	0	0	0	0	**0**
1100 - 1200	0	0	0	0	0	0	0	0	0	0	0	0	0	**0**
1200 - 1300	0	0	0	0	0	0	0	0	0	0	0	0	0	**0**
1300 - 1400	0	0	0	0	0	0	0	0	0	0	0	0	0	**0**
1400 - 1500	0	0	0	0	0	0	0	0	0	0	0	0	0	**0**
1500 - 1600	0	0	0	0	0	0	0	0	0	0	0	0	0	**0**
1600 - 1700	0	0	0	0	0	0	0	0	0	0	0	0	0	**0**
1700 - 1800	0	0	0	0	0	0	0	0	0	0	0	0	0	**0**
1800 - 1900	0	0	0	0	0	0	0	0	0	0	0	0	0	**0**
1900 - 2000	1	376	61	0	3	1	1	0	1	0	0	0	0	**444**
2000 - 2100	1	322	62	0	0	0	0	0	2	0	0	0	0	**387**
2100 - 2200	1	259	44	0	1	0	0	0	0	0	0	0	0	**305**
2200 - 2300	1	138	22	0	1	0	0	0	0	0	0	0	0	**162**
2300 - 2400	1	83	23	0	0	0	0	0	0	0	0	0	0	**107**
Session Total	5	1178	212	0	5	1	1	0	3	0	0	0	0	**1405**
Session Average	0.21	49.08	8.83	0.00	0.21	0.04	0.04	0.00	0.13	0.00	0.00	0.00	0.00	**58.54**
Session Percentage	0.36	83.84	15.09	0.00	0.36	0.07	0.07	0.00	0.21	0.00	0.00	0.00	0.00	
AM Peak Hour	-	-	-	-	-	-	-	-	-	-	-	-	-	**-**
AM Peak Volume	0	0	0	0	0	0	0	0	0	0	0	0	0	**0**
Noon Peak Hour	-	-	-	-	-	-	-	-	-	-	-	-	-	**-**
Noon Peak Volume	0	0	0	0	0	0	0	0	0	0	0	0	0	**0**
PM Peak Hour	1900 - 2000	1900 - 2000	1900 - 2000	-	1900 - 2000	1900 - 2000	1900 - 2000	-	1900 - 2000	-	-	-	-	**1900 - 2000**
PM Peak Volume	1	376	61	0	3	1	1	0	1	0	0	0	0	**444**

Site 26

I-26 James F. Byrnes Expy On/Off-Ramp,
south of SC-60 Lake Murray Blvd

Date

Wednesday, April 24, 2024

Lat/Long

34.089182°, -81.165472°

Weather

Fair
66°F

Click here for Detailed Weather

0000 - 2400 (Weekday 24h Session) (04-24-2024)

SB WB 60min

	Southbound (Movement 26.1)													
TIME	1	2	3	4	5	6	7	8	9	10	11	12	13	**Total**
0000 - 0100	0	49	0	0	0	0	0	0	1	0	0	0	0	**50**
0100 - 0200	0	20	0	0	1	0	0	0	1	0	0	0	0	**22**
0200 - 0300	0	33	1	0	1	0	0	0	1	0	0	0	0	**36**
0300 - 0400	0	42	1	0	2	0	0	0	0	0	0	0	0	**45**
0400 - 0500	0	93	2	0	0	0	0	0	0	0	0	0	0	**95**
0500 - 0600	0	267	2	1	2	0	0	1	1	0	0	0	0	**274**
0600 - 0700	0	539	144	0	2	1	0	0	2	0	0	0	0	**688**
0700 - 0800	0	857	176	0	3	1	2	1	4	0	0	0	0	**1044**
0800 - 0900	1	645	158	0	14	0	0	1	5	0	0	0	0	**824**
0900 - 1000	0	576	110	1	13	1	0	1	1	0	0	0	0	**703**
1000 - 1100	0	572	106	1	14	4	0	1	3	0	0	0	0	**701**
1100 - 1200	1	519	160	0	12	0	0	0	6	1	0	0	0	**699**
1200 - 1300	4	552	115	0	12	3	0	0	4	0	0	0	0	**690**
1300 - 1400	1	523	142	0	11	4	0	1	1	0	0	0	0	**683**
1400 - 1500	0	565	100	0	14	2	1	2	4	0	0	0	0	**688**
1500 - 1600	1	576	88	1	6	1	0	0	3	0	0	0	0	**676**
1600 - 1700	0	713	100	0	22	2	1	0	1	0	0	0	0	**839**
1700 - 1800	0	668	101	0	8	2	0	0	1	0	0	0	0	**780**
1800 - 1900	0	517	116	1	12	0	0	0	2	0	0	0	0	**648**
1900 - 2000	2	372	65	0	3	0	0	0	2	0	0	0	0	**444**
2000 - 2100	2	345	59	0	2	0	0	0	1	0	0	0	0	**409**
2100 - 2200	0	248	12	0	1	0	0	0	0	0	0	0	0	**261**
2200 - 2300	0	142	5	0	0	0	0	0	1	0	0	0	0	**148**
2300 - 2400	0	101	3	0	0	0	0	0	0	0	0	0	0	**104**

Session Total	12	9534	1766	5	155	21	4	8	45	1	0	0	0	**11551**
Session Average	0.50	397.25	73.58	0.21	6.46	0.88	0.17	0.33	1.88	0.04	0.00	0.00	0.00	**481.29**
Session Percentage	0.10	82.54	15.29	0.04	1.34	0.18	0.03	0.07	0.39	0.01	0.00	0.00	0.00	

AM Peak Hour	0800 - 0900	0700 - 0800	0700 - 0800	0500 - 0600	0800 - 0900	0600 - 0700	0700 - 0800	0500 - 0600	0800 - 0900	-	-	-	-	**0700 - 0800**
AM Peak Volume	1	857	176	1	14	1	2	1	5	0	0	0	0	**1044**

Noon Peak Hour	1200 - 1300	1000 - 1100	1100 - 1200	1000 - 1100	1000 - 1100	1000 - 1100	1400 - 1500	1400 - 1500	1100 - 1200	1100 - 1200	-	-	-	**1000 - 1100**
Noon Peak Volume	4	572	160	1	14	4	1	2	6	1	0	0	0	**701**

PM Peak Hour	1900 - 2000	1600 - 1700	1800 - 1900	1500 - 1600	1600 - 1700	1600 - 1700	1600 - 1700	-	1500 - 1600	-	-	-	-	**1600 - 1700**
PM Peak Volume	2	713	116	1	22	2	1	0	3	0	0	0	0	**839**

Site 26

I-26 James F. Byrnes Expy On/Off-Ramp,
south of SC-60 Lake Murray Blvd

Date

Thursday, April 25, 2024

Lat/Long

34.089182°, -81.165472°

Weather

Fair
67°F

Click here for Detailed Weather

0000 - 2400 (Weekday 24h Session) (04-25-2024)

SB WB 60min

	Southbound (Movement 26.1)													
TIME	1	2	3	4	5	6	7	8	9	10	11	12	13	**Total**
0000 - 0100	0	45	19	0	0	0	0	0	0	0	0	0	0	**64**
0100 - 0200	0	25	8	0	0	0	0	0	0	0	0	0	0	**33**
0200 - 0300	0	21	5	0	1	0	0	0	2	0	0	0	0	**29**
0300 - 0400	0	38	16	0	0	0	0	0	0	0	0	0	0	**54**
0400 - 0500	0	73	27	0	0	0	0	0	0	0	0	0	0	**100**
0500 - 0600	0	198	58	0	0	3	0	0	2	0	0	0	0	**261**
0600 - 0700	1	510	142	0	2	0	0	0	1	0	0	0	0	**656**
0700 - 0800	0	816	219	0	14	3	2	1	5	0	0	0	0	**1060**
0800 - 0900	0	673	160	0	15	5	3	0	8	0	0	0	0	**864**
0900 - 1000	0	640	143	2	5	11	0	1	3	0	0	0	0	**805**
1000 - 1100	0	577	115	3	15	4	2	1	3	0	0	0	0	**720**
1100 - 1200	1	567	134	2	3	2	0	1	8	0	0	0	0	**718**
1200 - 1300	1	593	137	7	15	0	2	0	10	0	0	0	0	**765**
1300 - 1400	2	552	135	2	14	0	0	1	3	0	0	0	0	**709**
1400 - 1500	0	594	107	3	15	2	0	2	6	0	0	0	0	**729**
1500 - 1600	2	620	130	2	15	1	0	1	2	0	0	0	0	**773**
1600 - 1700	0	676	140	0	10	0	0	0	4	0	0	0	0	**830**
1700 - 1800	0	642	104	0	5	0	0	0	3	0	0	0	0	**754**
1800 - 1900	1	565	87	1	7	1	0	1	2	0	0	0	0	**665**
1900 - 2000	0	0	0	0	0	0	0	0	0	0	0	0	0	**0**
2000 - 2100	0	0	0	0	0	0	0	0	0	0	0	0	0	**0**
2100 - 2200	0	0	0	0	0	0	0	0	0	0	0	0	0	**0**
2200 - 2300	0	0	0	0	0	0	0	0	0	0	0	0	0	**0**
2300 - 2400	0	0	0	0	0	0	0	0	0	0	0	0	0	**0**

Session Total	8	8425	1886	22	136	32	9	9	62	0	0	0	0	**10589**
Session Average	0.33	351.04	78.58	0.92	5.67	1.33	0.38	0.38	2.58	0.00	0.00	0.00	0.00	**441.21**
Session Percentage	0.08	79.56	17.81	0.21	1.28	0.30	0.08	0.08	0.59	0.00	0.00	0.00	0.00	

AM Peak Hour	0600 - 0700	0700 - 0800	0700 - 0800	0900 - 1000	0800 - 0900	0900 - 1000	0800 - 0900	0700 - 0800	0800 - 0900	-	-	-	-	**0700 - 0800**
AM Peak Hour Volume	1	816	219	2	15	11	3	1	8	0	0	0	0	**1060**

Noon Peak Hour	1300 - 1400	1400 - 1500	1200 - 1300	1200 - 1300	1000 - 1100	1000 - 1100	1000 - 1100	1400 - 1500	1200 - 1300	-	-	-	-	**1200 - 1300**
Noon Peak Hour Volume	2	594	137	7	15	4	2	2	10	0	0	0	0	**765**

PM Peak Hour	1500 - 1600	1600 - 1700	1600 - 1700	1500 - 1600	1500 - 1600	1500 - 1600	-	1500 - 1600	1600 - 1700	-	-	-	-	**1600 - 1700**
PM Peak Hour Volume	2	676	140	2	15	1	0	1	4	0	0	0	0	**830**

Bi-Directional Class Count || Volume Summary 60min

Columbia, SC

Marr Traffic DATA COLLECTION

www.marrtraffic.com

Site 26

I-26 James F. Byrnes Expy On/Off-Ramp,
south of SC-60 Lake Murray Blvd

Date

Tuesday, April 23, 2024

Lat/Long

34.089182°, -81.165472°

Weather

Fair
58°F

Click here for Detailed Weather

0000 - 2400 (Weekday 24h Session) (04-23-2024)

Volume Summary 60min

	Volume Summary 60min		
TIME	NB	SB	**Total**
0000 - 0100	0	0	**0**
0100 - 0200	0	0	**0**
0200 - 0300	0	0	**0**
0300 - 0400	0	0	**0**
0400 - 0500	0	0	**0**
0500 - 0600	0	0	**0**
0600 - 0700	0	0	**0**
0700 - 0800	0	0	**0**
0800 - 0900	0	0	**0**
0900 - 1000	0	0	**0**
1000 - 1100	0	0	**0**
1100 - 1200	0	0	**0**

	Volume Summary 60min		
Time	NB	SB	**Total**
1200 - 1300	0	0	**0**
1300 - 1400	0	0	**0**
1400 - 1500	0	0	**0**
1500 - 1600	0	0	**0**
1600 - 1700	0	0	**0**
1700 - 1800	0	0	**0**
1800 - 1900	0	0	**0**
1900 - 2000	0	444	**444**
2000 - 2100	0	387	**387**
2100 - 2200	0	305	**305**
2200 - 2300	0	162	**162**
2300 - 2400	0	107	**107**

Session Total	0	1405	**1405**
Session Average	0.00	58.54	**58.54**
Session Percentage	0.00	100.00	

Site 26

I-26 James F. Byrnes Expy On/Off-Ramp,
south of SC-60 Lake Murray Blvd

Date

Wednesday, April 24, 2024

Lat/Long

34.089182°, -81.165472°

Weather

Fair
66°F

Click here for Detailed Weather

0000 - 2400 (Weekday 24h Session) (04-24-2024)

Volume Summary 60min

	Volume Summary 60min		
TIME	NB	SB	**Total**
0000 - 0100	0	50	**50**
0100 - 0200	0	22	**22**
0200 - 0300	0	36	**36**
0300 - 0400	0	45	**45**
0400 - 0500	0	95	**95**
0500 - 0600	0	274	**274**
0600 - 0700	0	688	**688**
0700 - 0800	0	1044	**1044**
0800 - 0900	0	824	**824**
0900 - 1000	0	703	**703**
1000 - 1100	0	701	**701**
1100 - 1200	0	699	**699**

Session Total	0	11551	**11551**
Session Average	0.00	481.29	**481.29**
Session Percentage	0.00	100.00	

	Volume Summary 60min		
Time	NB	SB	**Total**
1200 - 1300	0	690	**690**
1300 - 1400	0	683	**683**
1400 - 1500	0	688	**688**
1500 - 1600	0	676	**676**
1600 - 1700	0	839	**839**
1700 - 1800	0	780	**780**
1800 - 1900	0	648	**648**
1900 - 2000	0	444	**444**
2000 - 2100	0	409	**409**
2100 - 2200	0	261	**261**
2200 - 2300	0	148	**148**
2300 - 2400	0	104	**104**

Site 26

I-26 James F. Byrnes Expy On/Off-Ramp,
south of SC-60 Lake Murray Blvd

Date

Thursday, April 25, 2024

Lat/Long

34.089182°, -81.165472°

Weather

Fair
67°F

Click here for Detailed Weather

0000 - 2400 (Weekday 24h Session) (04-25-2024)

Volume Summary 60min

	Volume Summary 60min		
TIME	NB	SB	**Total**
0000 - 0100	0	64	**64**
0100 - 0200	0	33	**33**
0200 - 0300	0	29	**29**
0300 - 0400	0	54	**54**
0400 - 0500	0	100	**100**
0500 - 0600	0	261	**261**
0600 - 0700	0	656	**656**
0700 - 0800	0	1060	**1060**
0800 - 0900	0	864	**864**
0900 - 1000	0	805	**805**
1000 - 1100	0	720	**720**
1100 - 1200	0	718	**718**

Session Total	0	10589	**10589**
Session Average	0.00	441.21	**441.21**
Session Percentage	0.00	100.00	

	Volume Summary 60min		
Time	NB	SB	**Total**
1200 - 1300	0	765	**765**
1300 - 1400	0	709	**709**
1400 - 1500	0	729	**729**
1500 - 1600	0	773	**773**
1600 - 1700	0	830	**830**
1700 - 1800	0	754	**754**
1800 - 1900	0	665	**665**
1900 - 2000	0	0	**0**
2000 - 2100	0	0	**0**
2100 - 2200	0	0	**0**
2200 - 2300	0	0	**0**
2300 - 2400	0	0	**0**

Bi-Directional Class Count || Graphical Analysis SB WB

Columbia, SC

Marr Traffic DATA COLLECTION

www.marrtraffic.com

Site 26

I-26 James F. Byrnes Expy On/Off-Ramp,
south of SC-60 Lake Murray Blvd

Lat/Long

34.089182°, -81.165472°

0000 - 2400 (Weekday 24h Session)

Graphical Analysis SB WB

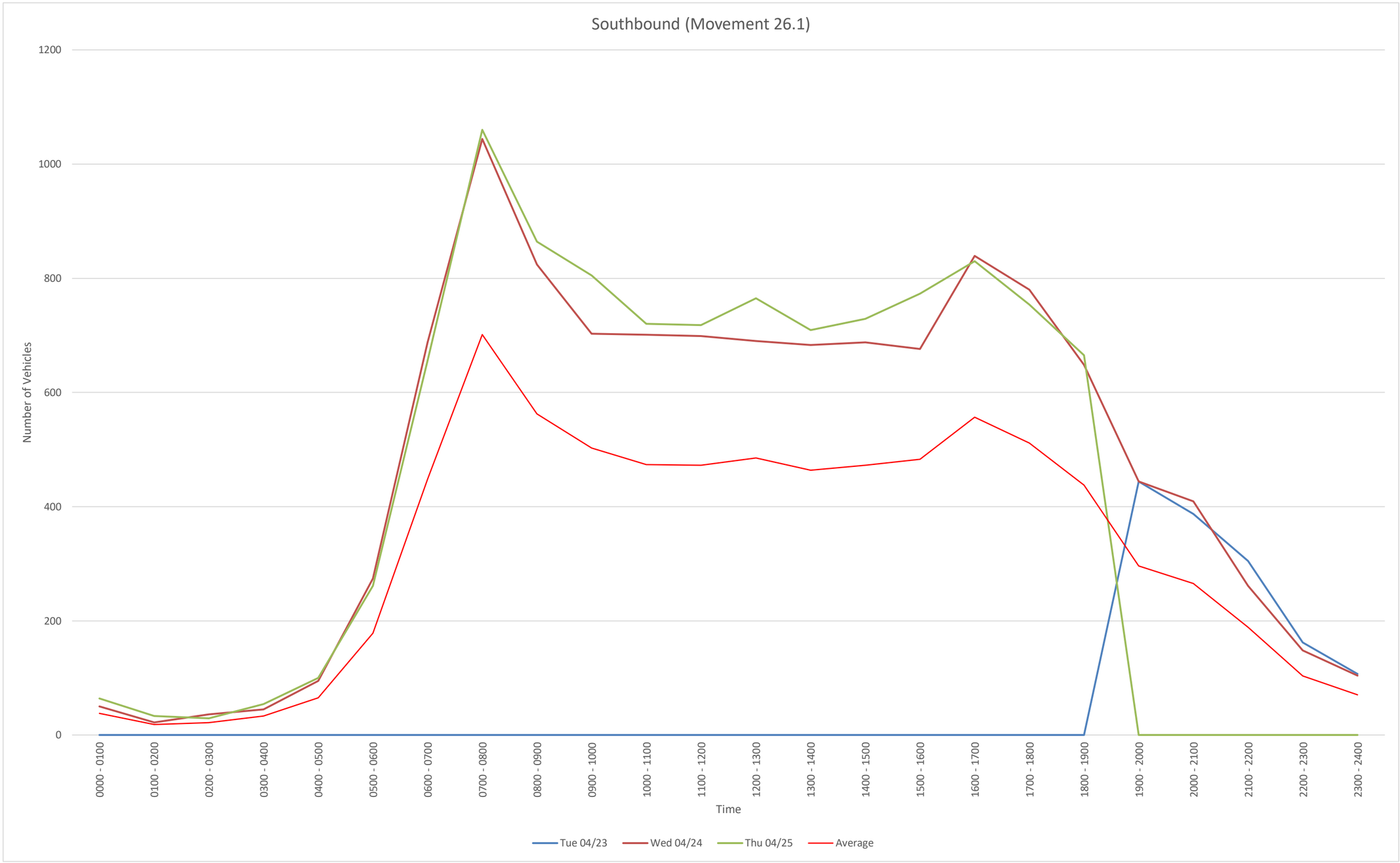

Time	Tue 04/23	Wed 04/24	Thu 04/25				
0000 - 0100	0	50	64				
0100 - 0200	0	22	33				
0200 - 0300	0	36	29				
0300 - 0400	0	45	54				
0400 - 0500	0	95	100				
0500 - 0600	0	274	261				
0600 - 0700	0	688	656				
0700 - 0800	0	1044	1060				
0800 - 0900	0	824	864				
0900 - 1000	0	703	805				
1000 - 1100	0	701	720				
1100 - 1200	0	699	718				
1200 - 1300	0	690	765				
1300 - 1400	0	683	709				
1400 - 1500	0	688	729				
1500 - 1600	0	676	773				
1600 - 1700	0	839	830				
1700 - 1800	0	780	754				
1800 - 1900	0	648	665				
1900 - 2000	444	444	0				
2000 - 2100	387	409	0				
2100 - 2200	305	261	0				
2200 - 2300	162	148	0				
2300 - 2400	107	104	0				
Daily Total	1405	11551	10589				

NB
File Name:
Start Date: 4/23/2024
Start Time: 0
Site Code: 26
Station ID: 1
Location 1: I-26 James F. Byrnes Expy On/Off-Ramp, south of SC-60 Lake Murray Blvd
Location 2:

Date	Time	1	2	3	4	5	6	7	8	9	10	11	12	13
4/23/2024	12:00 AM	0	0	0	0	0	0	0	0	0	0	0	0	0
4/23/2024	12:15 AM	0	0	0	0	0	0	0	0	0	0	0	0	0
4/23/2024	12:30 AM	0	0	0	0	0	0	0	0	0	0	0	0	0
4/23/2024	12:45 AM	0	0	0	0	0	0	0	0	0	0	0	0	0
4/23/2024	1:00 AM	0	0	0	0	0	0	0	0	0	0	0	0	0
4/23/2024	1:15 AM	0	0	0	0	0	0	0	0	0	0	0	0	0
4/23/2024	1:30 AM	0	0	0	0	0	0	0	0	0	0	0	0	0
4/23/2024	1:45 AM	0	0	0	0	0	0	0	0	0	0	0	0	0
4/23/2024	2:00 AM	0	0	0	0	0	0	0	0	0	0	0	0	0
4/23/2024	2:15 AM	0	0	0	0	0	0	0	0	0	0	0	0	0
4/23/2024	2:30 AM	0	0	0	0	0	0	0	0	0	0	0	0	0
4/23/2024	2:45 AM	0	0	0	0	0	0	0	0	0	0	0	0	0
4/23/2024	3:00 AM	0	0	0	0	0	0	0	0	0	0	0	0	0
4/23/2024	3:15 AM	0	0	0	0	0	0	0	0	0	0	0	0	0
4/23/2024	3:30 AM	0	0	0	0	0	0	0	0	0	0	0	0	0
4/23/2024	3:45 AM	0	0	0	0	0	0	0	0	0	0	0	0	0
4/23/2024	4:00 AM	0	0	0	0	0	0	0	0	0	0	0	0	0
4/23/2024	4:15 AM	0	0	0	0	0	0	0	0	0	0	0	0	0
4/23/2024	4:30 AM	0	0	0	0	0	0	0	0	0	0	0	0	0
4/23/2024	4:45 AM	0	0	0	0	0	0	0	0	0	0	0	0	0
4/23/2024	5:00 AM	0	0	0	0	0	0	0	0	0	0	0	0	0
4/23/2024	5:15 AM	0	0	0	0	0	0	0	0	0	0	0	0	0
4/23/2024	5:30 AM	0	0	0	0	0	0	0	0	0	0	0	0	0
4/23/2024	5:45 AM	0	0	0	0	0	0	0	0	0	0	0	0	0
4/23/2024	6:00 AM	0	0	0	0	0	0	0	0	0	0	0	0	0
4/23/2024	6:15 AM	0	0	0	0	0	0	0	0	0	0	0	0	0
4/23/2024	6:30 AM	0	0	0	0	0	0	0	0	0	0	0	0	0
4/23/2024	6:45 AM	0	0	0	0	0	0	0	0	0	0	0	0	0
4/23/2024	7:00 AM	0	0	0	0	0	0	0	0	0	0	0	0	0
4/23/2024	7:15 AM	0	0	0	0	0	0	0	0	0	0	0	0	0
4/23/2024	7:30 AM	0	0	0	0	0	0	0	0	0	0	0	0	0
4/23/2024	7:45 AM	0	0	0	0	0	0	0	0	0	0	0	0	0
4/23/2024	8:00 AM	0	0	0	0	0	0	0	0	0	0	0	0	0
4/23/2024	8:15 AM	0	0	0	0	0	0	0	0	0	0	0	0	0
4/23/2024	8:30 AM	0	0	0	0	0	0	0	0	0	0	0	0	0
4/23/2024	8:45 AM	0	0	0	0	0	0	0	0	0	0	0	0	0
4/23/2024	9:00 AM	0	0	0	0	0	0	0	0	0	0	0	0	0
4/23/2024	9:15 AM	0	0	0	0	0	0	0	0	0	0	0	0	0
4/23/2024	9:30 AM	0	0	0	0	0	0	0	0	0	0	0	0	0
4/23/2024	9:45 AM	0	0	0	0	0	0	0	0	0	0	0	0	0
4/23/2024	10:00 AM	0	0	0	0	0	0	0	0	0	0	0	0	0
4/23/2024	10:15 AM	0	0	0	0	0	0	0	0	0	0	0	0	0
4/23/2024	10:30 AM	0	0	0	0	0	0	0	0	0	0	0	0	0
4/23/2024	10:45 AM	0	0	0	0	0	0	0	0	0	0	0	0	0
4/23/2024	11:00 AM	0	0	0	0	0	0	0	0	0	0	0	0	0
4/23/2024	11:15 AM	0	0	0	0	0	0	0	0	0	0	0	0	0
4/23/2024	11:30 AM	0	0	0	0	0	0	0	0	0	0	0	0	0
4/23/2024	11:45 AM	0	0	0	0	0	0	0	0	0	0	0	0	0
4/23/2024	12:00 PM	0	0	0	0	0	0	0	0	0	0	0	0	0
4/23/2024	12:15 PM	0	0	0	0	0	0	0	0	0	0	0	0	0
4/23/2024	12:30 PM	0	0	0	0	0	0	0	0	0	0	0	0	0
4/23/2024	12:45 PM	0	0	0	0	0	0	0	0	0	0	0	0	0
4/23/2024	1:00 PM	0	0	0	0	0	0	0	0	0	0	0	0	0
4/23/2024	1:15 PM	0	0	0	0	0	0	0	0	0	0	0	0	0
4/23/2024	1:30 PM	0	0	0	0	0	0	0	0	0	0	0	0	0
4/23/2024	1:45 PM	0	0	0	0	0	0	0	0	0	0	0	0	0
4/23/2024	2:00 PM	0	0	0	0	0	0	0	0	0	0	0	0	0
4/23/2024	2:15 PM	0	0	0	0	0	0	0	0	0	0	0	0	0
4/23/2024	2:30 PM	0	0	0	0	0	0	0	0	0	0	0	0	0
4/23/2024	2:45 PM	0	0	0	0	0	0	0	0	0	0	0	0	0
4/23/2024	3:00 PM	0	0	0	0	0	0	0	0	0	0	0	0	0
4/23/2024	3:15 PM	0	0	0	0	0	0	0	0	0	0	0	0	0
4/23/2024	3:30 PM	0	0	0	0	0	0	0	0	0	0	0	0	0
4/23/2024	3:45 PM	0	0	0	0	0	0	0	0	0	0	0	0	0
4/23/2024	4:00 PM	0	0	0	0	0	0	0	0	0	0	0	0	0
4/23/2024	4:15 PM	0	0	0	0	0	0	0	0	0	0	0	0	0
4/23/2024	4:30 PM	0	0	0	0	0	0	0	0	0	0	0	0	0
4/23/2024	4:45 PM	0	0	0	0	0	0	0	0	0	0	0	0	0
4/23/2024	5:00 PM	0	0	0	0	0	0	0	0	0	0	0	0	0
4/23/2024	5:15 PM	0	0	0	0	0	0	0	0	0	0	0	0	0
4/23/2024	5:30 PM	0	0	0	0	0	0	0	0	0	0	0	0	0
4/23/2024	5:45 PM	0	0	0	0	0	0	0	0	0	0	0	0	0
4/23/2024	6:00 PM	0	0	0	0	0	0	0	0	0	0	0	0	0
4/23/2024	6:15 PM	0	0	0	0	0	0	0	0	0	0	0	0	0
4/23/2024	6:30 PM	0	0	0	0	0	0	0	0	0	0	0	0	0
4/23/2024	6:45 PM	0	0	0	0	0	0	0	0	0	0	0	0	0
4/23/2024	7:00 PM	0	0	0	0	0	0	0	0	0	0	0	0	0
4/23/2024	7:15 PM	0	0	0	0	0	0	0	0	0	0	0	0	0
4/23/2024	7:30 PM	0	0	0	0	0	0	0	0	0	0	0	0	0
4/23/2024	7:45 PM	0	0	0	0	0	0	0	0	0	0	0	0	0
4/23/2024	8:00 PM	0	0	0	0	0	0	0	0	0	0	0	0	0
4/23/2024	8:15 PM	0	0	0	0	0	0	0	0	0	0	0	0	0
4/23/2024	8:30 PM	0	0	0	0	0	0	0	0	0	0	0	0	0
4/23/2024	8:45 PM	0	0	0	0	0	0	0	0	0	0	0	0	0
4/23/2024	9:00 PM	0	0	0	0	0	0	0	0	0	0	0	0	0
4/23/2024	9:15 PM	0	0	0	0	0	0	0	0	0	0	0	0	0
4/23/2024	9:30 PM	0	0	0	0	0	0	0	0	0	0	0	0	0
4/23/2024	9:45 PM	0	0	0	0	0	0	0	0	0	0	0	0	0
4/23/2024	10:00 PM	0	0	0	0	0	0	0	0	0	0	0	0	0
4/23/2024	10:15 PM	0	0	0	0	0	0	0	0	0	0	0	0	0
4/23/2024	10:30 PM	0	0	0	0	0	0	0	0	0	0	0	0	0
4/23/2024	10:45 PM	0	0	0	0	0	0	0	0	0	0	0	0	0
4/23/2024	11:00 PM	0	0	0	0	0	0	0	0	0	0	0	0	0
4/23/2024	11:15 PM	0	0	0	0	0	0	0	0	0	0	0	0	0
4/23/2024	11:30 PM	0	0	0	0	0	0	0	0	0	0	0	0	0
4/23/2024	11:45 PM	0	0	0	0	0	0	0	0	0	0	0	0	0

4/24/2024	12:00 AM	0	0	0	0	0	0	0	0	0	0	0	0	0
4/24/2024	12:15 AM	0	0	0	0	0	0	0	0	0	0	0	0	0
4/24/2024	12:30 AM	0	0	0	0	0	0	0	0	0	0	0	0	0
4/24/2024	12:45 AM	0	0	0	0	0	0	0	0	0	0	0	0	0
4/24/2024	1:00 AM	0	0	0	0	0	0	0	0	0	0	0	0	0
4/24/2024	1:15 AM	0	0	0	0	0	0	0	0	0	0	0	0	0
4/24/2024	1:30 AM	0	0	0	0	0	0	0	0	0	0	0	0	0
4/24/2024	1:45 AM	0	0	0	0	0	0	0	0	0	0	0	0	0
4/24/2024	2:00 AM	0	0	0	0	0	0	0	0	0	0	0	0	0
4/24/2024	2:15 AM	0	0	0	0	0	0	0	0	0	0	0	0	0
4/24/2024	2:30 AM	0	0	0	0	0	0	0	0	0	0	0	0	0
4/24/2024	2:45 AM	0	0	0	0	0	0	0	0	0	0	0	0	0
4/24/2024	3:00 AM	0	0	0	0	0	0	0	0	0	0	0	0	0
4/24/2024	3:15 AM	0	0	0	0	0	0	0	0	0	0	0	0	0
4/24/2024	3:30 AM	0	0	0	0	0	0	0	0	0	0	0	0	0
4/24/2024	3:45 AM	0	0	0	0	0	0	0	0	0	0	0	0	0
4/24/2024	4:00 AM	0	0	0	0	0	0	0	0	0	0	0	0	0
4/24/2024	4:15 AM	0	0	0	0	0	0	0	0	0	0	0	0	0
4/24/2024	4:30 AM	0	0	0	0	0	0	0	0	0	0	0	0	0
4/24/2024	4:45 AM	0	0	0	0	0	0	0	0	0	0	0	0	0
4/24/2024	5:00 AM	0	0	0	0	0	0	0	0	0	0	0	0	0
4/24/2024	5:15 AM	0	0	0	0	0	0	0	0	0	0	0	0	0
4/24/2024	5:30 AM	0	0	0	0	0	0	0	0	0	0	0	0	0
4/24/2024	5:45 AM	0	0	0	0	0	0	0	0	0	0	0	0	0
4/24/2024	6:00 AM	0	0	0	0	0	0	0	0	0	0	0	0	0
4/24/2024	6:15 AM	0	0	0	0	0	0	0	0	0	0	0	0	0
4/24/2024	6:30 AM	0	0	0	0	0	0	0	0	0	0	0	0	0
4/24/2024	6:45 AM	0	0	0	0	0	0	0	0	0	0	0	0	0
4/24/2024	7:00 AM	0	0	0	0	0	0	0	0	0	0	0	0	0
4/24/2024	7:15 AM	0	0	0	0	0	0	0	0	0	0	0	0	0
4/24/2024	7:30 AM	0	0	0	0	0	0	0	0	0	0	0	0	0
4/24/2024	7:45 AM	0	0	0	0	0	0	0	0	0	0	0	0	0
4/24/2024	8:00 AM	0	0	0	0	0	0	0	0	0	0	0	0	0
4/24/2024	8:15 AM	0	0	0	0	0	0	0	0	0	0	0	0	0
4/24/2024	8:30 AM	0	0	0	0	0	0	0	0	0	0	0	0	0
4/24/2024	8:45 AM	0	0	0	0	0	0	0	0	0	0	0	0	0
4/24/2024	9:00 AM	0	0	0	0	0	0	0	0	0	0	0	0	0
4/24/2024	9:15 AM	0	0	0	0	0	0	0	0	0	0	0	0	0
4/24/2024	9:30 AM	0	0	0	0	0	0	0	0	0	0	0	0	0
4/24/2024	9:45 AM	0	0	0	0	0	0	0	0	0	0	0	0	0
4/24/2024	10:00 AM	0	0	0	0	0	0	0	0	0	0	0	0	0
4/24/2024	10:15 AM	0	0	0	0	0	0	0	0	0	0	0	0	0
4/24/2024	10:30 AM	0	0	0	0	0	0	0	0	0	0	0	0	0
4/24/2024	10:45 AM	0	0	0	0	0	0	0	0	0	0	0	0	0
4/24/2024	11:00 AM	0	0	0	0	0	0	0	0	0	0	0	0	0
4/24/2024	11:15 AM	0	0	0	0	0	0	0	0	0	0	0	0	0
4/24/2024	11:30 AM	0	0	0	0	0	0	0	0	0	0	0	0	0
4/24/2024	11:45 AM	0	0	0	0	0	0	0	0	0	0	0	0	0
4/24/2024	12:00 PM	0	0	0	0	0	0	0	0	0	0	0	0	0
4/24/2024	12:15 PM	0	0	0	0	0	0	0	0	0	0	0	0	0
4/24/2024	12:30 PM	0	0	0	0	0	0	0	0	0	0	0	0	0
4/24/2024	12:45 PM	0	0	0	0	0	0	0	0	0	0	0	0	0
4/24/2024	1:00 PM	0	0	0	0	0	0	0	0	0	0	0	0	0
4/24/2024	1:15 PM	0	0	0	0	0	0	0	0	0	0	0	0	0
4/24/2024	1:30 PM	0	0	0	0	0	0	0	0	0	0	0	0	0
4/24/2024	1:45 PM	0	0	0	0	0	0	0	0	0	0	0	0	0
4/24/2024	2:00 PM	0	0	0	0	0	0	0	0	0	0	0	0	0
4/24/2024	2:15 PM	0	0	0	0	0	0	0	0	0	0	0	0	0
4/24/2024	2:30 PM	0	0	0	0	0	0	0	0	0	0	0	0	0
4/24/2024	2:45 PM	0	0	0	0	0	0	0	0	0	0	0	0	0
4/24/2024	3:00 PM	0	0	0	0	0	0	0	0	0	0	0	0	0
4/24/2024	3:15 PM	0	0	0	0	0	0	0	0	0	0	0	0	0
4/24/2024	3:30 PM	0	0	0	0	0	0	0	0	0	0	0	0	0
4/24/2024	3:45 PM	0	0	0	0	0	0	0	0	0	0	0	0	0
4/24/2024	4:00 PM	0	0	0	0	0	0	0	0	0	0	0	0	0
4/24/2024	4:15 PM	0	0	0	0	0	0	0	0	0	0	0	0	0
4/24/2024	4:30 PM	0	0	0	0	0	0	0	0	0	0	0	0	0
4/24/2024	4:45 PM	0	0	0	0	0	0	0	0	0	0	0	0	0
4/24/2024	5:00 PM	0	0	0	0	0	0	0	0	0	0	0	0	0
4/24/2024	5:15 PM	0	0	0	0	0	0	0	0	0	0	0	0	0
4/24/2024	5:30 PM	0	0	0	0	0	0	0	0	0	0	0	0	0
4/24/2024	5:45 PM	0	0	0	0	0	0	0	0	0	0	0	0	0
4/24/2024	6:00 PM	0	0	0	0	0	0	0	0	0	0	0	0	0
4/24/2024	6:15 PM	0	0	0	0	0	0	0	0	0	0	0	0	0
4/24/2024	6:30 PM	0	0	0	0	0	0	0	0	0	0	0	0	0
4/24/2024	6:45 PM	0	0	0	0	0	0	0	0	0	0	0	0	0
4/24/2024	7:00 PM	0	0	0	0	0	0	0	0	0	0	0	0	0
4/24/2024	7:15 PM	0	0	0	0	0	0	0	0	0	0	0	0	0
4/24/2024	7:30 PM	0	0	0	0	0	0	0	0	0	0	0	0	0
4/24/2024	7:45 PM	0	0	0	0	0	0	0	0	0	0	0	0	0
4/24/2024	8:00 PM	0	0	0	0	0	0	0	0	0	0	0	0	0
4/24/2024	8:15 PM	0	0	0	0	0	0	0	0	0	0	0	0	0
4/24/2024	8:30 PM	0	0	0	0	0	0	0	0	0	0	0	0	0
4/24/2024	8:45 PM	0	0	0	0	0	0	0	0	0	0	0	0	0
4/24/2024	9:00 PM	0	0	0	0	0	0	0	0	0	0	0	0	0
4/24/2024	9:15 PM	0	0	0	0	0	0	0	0	0	0	0	0	0
4/24/2024	9:30 PM	0	0	0	0	0	0	0	0	0	0	0	0	0
4/24/2024	9:45 PM	0	0	0	0	0	0	0	0	0	0	0	0	0
4/24/2024	10:00 PM	0	0	0	0	0	0	0	0	0	0	0	0	0
4/24/2024	10:15 PM	0	0	0	0	0	0	0	0	0	0	0	0	0
4/24/2024	10:30 PM	0	0	0	0	0	0	0	0	0	0	0	0	0
4/24/2024	10:45 PM	0	0	0	0	0	0	0	0	0	0	0	0	0
4/24/2024	11:00 PM	0	0	0	0	0	0	0	0	0	0	0	0	0
4/24/2024	11:15 PM	0	0	0	0	0	0	0	0	0	0	0	0	0
4/24/2024	11:30 PM	0	0	0	0	0	0	0	0	0	0	0	0	0
4/24/2024	11:45 PM	0	0	0	0	0	0	0	0	0	0	0	0	0

4/25/2024	12:00 AM	0	0	0	0	0	0	0	0	0	0	0	0	0
4/25/2024	12:15 AM	0	0	0	0	0	0	0	0	0	0	0	0	0
4/25/2024	12:30 AM	0	0	0	0	0	0	0	0	0	0	0	0	0
4/25/2024	12:45 AM	0	0	0	0	0	0	0	0	0	0	0	0	0
4/25/2024	1:00 AM	0	0	0	0	0	0	0	0	0	0	0	0	0
4/25/2024	1:15 AM	0	0	0	0	0	0	0	0	0	0	0	0	0
4/25/2024	1:30 AM	0	0	0	0	0	0	0	0	0	0	0	0	0
4/25/2024	1:45 AM	0	0	0	0	0	0	0	0	0	0	0	0	0
4/25/2024	2:00 AM	0	0	0	0	0	0	0	0	0	0	0	0	0
4/25/2024	2:15 AM	0	0	0	0	0	0	0	0	0	0	0	0	0
4/25/2024	2:30 AM	0	0	0	0	0	0	0	0	0	0	0	0	0
4/25/2024	2:45 AM	0	0	0	0	0	0	0	0	0	0	0	0	0
4/25/2024	3:00 AM	0	0	0	0	0	0	0	0	0	0	0	0	0
4/25/2024	3:15 AM	0	0	0	0	0	0	0	0	0	0	0	0	0
4/25/2024	3:30 AM	0	0	0	0	0	0	0	0	0	0	0	0	0
4/25/2024	3:45 AM	0	0	0	0	0	0	0	0	0	0	0	0	0
4/25/2024	4:00 AM	0	0	0	0	0	0	0	0	0	0	0	0	0
4/25/2024	4:15 AM	0	0	0	0	0	0	0	0	0	0	0	0	0
4/25/2024	4:30 AM	0	0	0	0	0	0	0	0	0	0	0	0	0
4/25/2024	4:45 AM	0	0	0	0	0	0	0	0	0	0	0	0	0
4/25/2024	5:00 AM	0	0	0	0	0	0	0	0	0	0	0	0	0
4/25/2024	5:15 AM	0	0	0	0	0	0	0	0	0	0	0	0	0
4/25/2024	5:30 AM	0	0	0	0	0	0	0	0	0	0	0	0	0
4/25/2024	5:45 AM	0	0	0	0	0	0	0	0	0	0	0	0	0
4/25/2024	6:00 AM	0	0	0	0	0	0	0	0	0	0	0	0	0
4/25/2024	6:15 AM	0	0	0	0	0	0	0	0	0	0	0	0	0
4/25/2024	6:30 AM	0	0	0	0	0	0	0	0	0	0	0	0	0
4/25/2024	6:45 AM	0	0	0	0	0	0	0	0	0	0	0	0	0
4/25/2024	7:00 AM	0	0	0	0	0	0	0	0	0	0	0	0	0
4/25/2024	7:15 AM	0	0	0	0	0	0	0	0	0	0	0	0	0
4/25/2024	7:30 AM	0	0	0	0	0	0	0	0	0	0	0	0	0
4/25/2024	7:45 AM	0	0	0	0	0	0	0	0	0	0	0	0	0
4/25/2024	8:00 AM	0	0	0	0	0	0	0	0	0	0	0	0	0
4/25/2024	8:15 AM	0	0	0	0	0	0	0	0	0	0	0	0	0
4/25/2024	8:30 AM	0	0	0	0	0	0	0	0	0	0	0	0	0
4/25/2024	8:45 AM	0	0	0	0	0	0	0	0	0	0	0	0	0
4/25/2024	9:00 AM	0	0	0	0	0	0	0	0	0	0	0	0	0
4/25/2024	9:15 AM	0	0	0	0	0	0	0	0	0	0	0	0	0
4/25/2024	9:30 AM	0	0	0	0	0	0	0	0	0	0	0	0	0
4/25/2024	9:45 AM	0	0	0	0	0	0	0	0	0	0	0	0	0
4/25/2024	10:00 AM	0	0	0	0	0	0	0	0	0	0	0	0	0
4/25/2024	10:15 AM	0	0	0	0	0	0	0	0	0	0	0	0	0
4/25/2024	10:30 AM	0	0	0	0	0	0	0	0	0	0	0	0	0
4/25/2024	10:45 AM	0	0	0	0	0	0	0	0	0	0	0	0	0
4/25/2024	11:00 AM	0	0	0	0	0	0	0	0	0	0	0	0	0
4/25/2024	11:15 AM	0	0	0	0	0	0	0	0	0	0	0	0	0
4/25/2024	11:30 AM	0	0	0	0	0	0	0	0	0	0	0	0	0
4/25/2024	11:45 AM	0	0	0	0	0	0	0	0	0	0	0	0	0
4/25/2024	12:00 PM	0	0	0	0	0	0	0	0	0	0	0	0	0
4/25/2024	12:15 PM	0	0	0	0	0	0	0	0	0	0	0	0	0
4/25/2024	12:30 PM	0	0	0	0	0	0	0	0	0	0	0	0	0
4/25/2024	12:45 PM	0	0	0	0	0	0	0	0	0	0	0	0	0
4/25/2024	1:00 PM	0	0	0	0	0	0	0	0	0	0	0	0	0
4/25/2024	1:15 PM	0	0	0	0	0	0	0	0	0	0	0	0	0
4/25/2024	1:30 PM	0	0	0	0	0	0	0	0	0	0	0	0	0
4/25/2024	1:45 PM	0	0	0	0	0	0	0	0	0	0	0	0	0
4/25/2024	2:00 PM	0	0	0	0	0	0	0	0	0	0	0	0	0
4/25/2024	2:15 PM	0	0	0	0	0	0	0	0	0	0	0	0	0
4/25/2024	2:30 PM	0	0	0	0	0	0	0	0	0	0	0	0	0
4/25/2024	2:45 PM	0	0	0	0	0	0	0	0	0	0	0	0	0
4/25/2024	3:00 PM	0	0	0	0	0	0	0	0	0	0	0	0	0
4/25/2024	3:15 PM	0	0	0	0	0	0	0	0	0	0	0	0	0
4/25/2024	3:30 PM	0	0	0	0	0	0	0	0	0	0	0	0	0
4/25/2024	3:45 PM	0	0	0	0	0	0	0	0	0	0	0	0	0
4/25/2024	4:00 PM	0	0	0	0	0	0	0	0	0	0	0	0	0
4/25/2024	4:15 PM	0	0	0	0	0	0	0	0	0	0	0	0	0
4/25/2024	4:30 PM	0	0	0	0	0	0	0	0	0	0	0	0	0
4/25/2024	4:45 PM	0	0	0	0	0	0	0	0	0	0	0	0	0
4/25/2024	5:00 PM	0	0	0	0	0	0	0	0	0	0	0	0	0
4/25/2024	5:15 PM	0	0	0	0	0	0	0	0	0	0	0	0	0
4/25/2024	5:30 PM	0	0	0	0	0	0	0	0	0	0	0	0	0
4/25/2024	5:45 PM	0	0	0	0	0	0	0	0	0	0	0	0	0
4/25/2024	6:00 PM	0	0	0	0	0	0	0	0	0	0	0	0	0
4/25/2024	6:15 PM	0	0	0	0	0	0	0	0	0	0	0	0	0
4/25/2024	6:30 PM	0	0	0	0	0	0	0	0	0	0	0	0	0
4/25/2024	6:45 PM	0	0	0	0	0	0	0	0	0	0	0	0	0
4/25/2024	7:00 PM	0	0	0	0	0	0	0	0	0	0	0	0	0
4/25/2024	7:15 PM	0	0	0	0	0	0	0	0	0	0	0	0	0
4/25/2024	7:30 PM	0	0	0	0	0	0	0	0	0	0	0	0	0
4/25/2024	7:45 PM	0	0	0	0	0	0	0	0	0	0	0	0	0
4/25/2024	8:00 PM	0	0	0	0	0	0	0	0	0	0	0	0	0
4/25/2024	8:15 PM	0	0	0	0	0	0	0	0	0	0	0	0	0
4/25/2024	8:30 PM	0	0	0	0	0	0	0	0	0	0	0	0	0
4/25/2024	8:45 PM	0	0	0	0	0	0	0	0	0	0	0	0	0
4/25/2024	9:00 PM	0	0	0	0	0	0	0	0	0	0	0	0	0
4/25/2024	9:15 PM	0	0	0	0	0	0	0	0	0	0	0	0	0
4/25/2024	9:30 PM	0	0	0	0	0	0	0	0	0	0	0	0	0
4/25/2024	9:45 PM	0	0	0	0	0	0	0	0	0	0	0	0	0
4/25/2024	10:00 PM	0	0	0	0	0	0	0	0	0	0	0	0	0
4/25/2024	10:15 PM	0	0	0	0	0	0	0	0	0	0	0	0	0
4/25/2024	10:30 PM	0	0	0	0	0	0	0	0	0	0	0	0	0
4/25/2024	10:45 PM	0	0	0	0	0	0	0	0	0	0	0	0	0
4/25/2024	11:00 PM	0	0	0	0	0	0	0	0	0	0	0	0	0
4/25/2024	11:15 PM	0	0	0	0	0	0	0	0	0	0	0	0	0
4/25/2024	11:30 PM	0	0	0	0	0	0	0	0	0	0	0	0	0
4/25/2024	11:45 PM	0	0	0	0	0	0	0	0	0	0	0	0	0

SB
File Name:
Start Date: 4/23/2024
Start Time: 0
Site Code: 26
Station ID: 1
Location 1: I-26 James F. Byrnes Expy On/Off-Ramp, south of SC-60 Lake Murray Blvd
Location 2:

Date	Time	1	2	3	4	5	6	7	8	9	10	11	12	13
4/23/2024	12:00 AM	0	0	0	0	0	0	0	0	0	0	0	0	0
4/23/2024	12:15 AM	0	0	0	0	0	0	0	0	0	0	0	0	0
4/23/2024	12:30 AM	0	0	0	0	0	0	0	0	0	0	0	0	0
4/23/2024	12:45 AM	0	0	0	0	0	0	0	0	0	0	0	0	0
4/23/2024	1:00 AM	0	0	0	0	0	0	0	0	0	0	0	0	0
4/23/2024	1:15 AM	0	0	0	0	0	0	0	0	0	0	0	0	0
4/23/2024	1:30 AM	0	0	0	0	0	0	0	0	0	0	0	0	0
4/23/2024	1:45 AM	0	0	0	0	0	0	0	0	0	0	0	0	0
4/23/2024	2:00 AM	0	0	0	0	0	0	0	0	0	0	0	0	0
4/23/2024	2:15 AM	0	0	0	0	0	0	0	0	0	0	0	0	0
4/23/2024	2:30 AM	0	0	0	0	0	0	0	0	0	0	0	0	0
4/23/2024	2:45 AM	0	0	0	0	0	0	0	0	0	0	0	0	0
4/23/2024	3:00 AM	0	0	0	0	0	0	0	0	0	0	0	0	0
4/23/2024	3:15 AM	0	0	0	0	0	0	0	0	0	0	0	0	0
4/23/2024	3:30 AM	0	0	0	0	0	0	0	0	0	0	0	0	0
4/23/2024	3:45 AM	0	0	0	0	0	0	0	0	0	0	0	0	0
4/23/2024	4:00 AM	0	0	0	0	0	0	0	0	0	0	0	0	0
4/23/2024	4:15 AM	0	0	0	0	0	0	0	0	0	0	0	0	0
4/23/2024	4:30 AM	0	0	0	0	0	0	0	0	0	0	0	0	0
4/23/2024	4:45 AM	0	0	0	0	0	0	0	0	0	0	0	0	0
4/23/2024	5:00 AM	0	0	0	0	0	0	0	0	0	0	0	0	0
4/23/2024	5:15 AM	0	0	0	0	0	0	0	0	0	0	0	0	0
4/23/2024	5:30 AM	0	0	0	0	0	0	0	0	0	0	0	0	0
4/23/2024	5:45 AM	0	0	0	0	0	0	0	0	0	0	0	0	0
4/23/2024	6:00 AM	0	0	0	0	0	0	0	0	0	0	0	0	0
4/23/2024	6:15 AM	0	0	0	0	0	0	0	0	0	0	0	0	0
4/23/2024	6:30 AM	0	0	0	0	0	0	0	0	0	0	0	0	0
4/23/2024	6:45 AM	0	0	0	0	0	0	0	0	0	0	0	0	0
4/23/2024	7:00 AM	0	0	0	0	0	0	0	0	0	0	0	0	0
4/23/2024	7:15 AM	0	0	0	0	0	0	0	0	0	0	0	0	0
4/23/2024	7:30 AM	0	0	0	0	0	0	0	0	0	0	0	0	0
4/23/2024	7:45 AM	0	0	0	0	0	0	0	0	0	0	0	0	0
4/23/2024	8:00 AM	0	0	0	0	0	0	0	0	0	0	0	0	0
4/23/2024	8:15 AM	0	0	0	0	0	0	0	0	0	0	0	0	0
4/23/2024	8:30 AM	0	0	0	0	0	0	0	0	0	0	0	0	0
4/23/2024	8:45 AM	0	0	0	0	0	0	0	0	0	0	0	0	0
4/23/2024	9:00 AM	0	0	0	0	0	0	0	0	0	0	0	0	0
4/23/2024	9:15 AM	0	0	0	0	0	0	0	0	0	0	0	0	0
4/23/2024	9:30 AM	0	0	0	0	0	0	0	0	0	0	0	0	0
4/23/2024	9:45 AM	0	0	0	0	0	0	0	0	0	0	0	0	0
4/23/2024	10:00 AM	0	0	0	0	0	0	0	0	0	0	0	0	0
4/23/2024	10:15 AM	0	0	0	0	0	0	0	0	0	0	0	0	0
4/23/2024	10:30 AM	0	0	0	0	0	0	0	0	0	0	0	0	0
4/23/2024	10:45 AM	0	0	0	0	0	0	0	0	0	0	0	0	0
4/23/2024	11:00 AM	0	0	0	0	0	0	0	0	0	0	0	0	0
4/23/2024	11:15 AM	0	0	0	0	0	0	0	0	0	0	0	0	0
4/23/2024	11:30 AM	0	0	0	0	0	0	0	0	0	0	0	0	0
4/23/2024	11:45 AM	0	0	0	0	0	0	0	0	0	0	0	0	0
4/23/2024	12:00 PM	0	0	0	0	0	0	0	0	0	0	0	0	0
4/23/2024	12:15 PM	0	0	0	0	0	0	0	0	0	0	0	0	0
4/23/2024	12:30 PM	0	0	0	0	0	0	0	0	0	0	0	0	0
4/23/2024	12:45 PM	0	0	0	0	0	0	0	0	0	0	0	0	0
4/23/2024	1:00 PM	0	0	0	0	0	0	0	0	0	0	0	0	0
4/23/2024	1:15 PM	0	0	0	0	0	0	0	0	0	0	0	0	0
4/23/2024	1:30 PM	0	0	0	0	0	0	0	0	0	0	0	0	0
4/23/2024	1:45 PM	0	0	0	0	0	0	0	0	0	0	0	0	0
4/23/2024	2:00 PM	0	0	0	0	0	0	0	0	0	0	0	0	0
4/23/2024	2:15 PM	0	0	0	0	0	0	0	0	0	0	0	0	0
4/23/2024	2:30 PM	0	0	0	0	0	0	0	0	0	0	0	0	0
4/23/2024	2:45 PM	0	0	0	0	0	0	0	0	0	0	0	0	0
4/23/2024	3:00 PM	0	0	0	0	0	0	0	0	0	0	0	0	0
4/23/2024	3:15 PM	0	0	0	0	0	0	0	0	0	0	0	0	0
4/23/2024	3:30 PM	0	0	0	0	0	0	0	0	0	0	0	0	0
4/23/2024	3:45 PM	0	0	0	0	0	0	0	0	0	0	0	0	0
4/23/2024	4:00 PM	0	0	0	0	0	0	0	0	0	0	0	0	0
4/23/2024	4:15 PM	0	0	0	0	0	0	0	0	0	0	0	0	0
4/23/2024	4:30 PM	0	0	0	0	0	0	0	0	0	0	0	0	0
4/23/2024	4:45 PM	0	0	0	0	0	0	0	0	0	0	0	0	0
4/23/2024	5:00 PM	0	0	0	0	0	0	0	0	0	0	0	0	0
4/23/2024	5:15 PM	0	0	0	0	0	0	0	0	0	0	0	0	0
4/23/2024	5:30 PM	0	0	0	0	0	0	0	0	0	0	0	0	0
4/23/2024	5:45 PM	0	0	0	0	0	0	0	0	0	0	0	0	0
4/23/2024	6:00 PM	0	0	0	0	0	0	0	0	0	0	0	0	0
4/23/2024	6:15 PM	0	0	0	0	0	0	0	0	0	0	0	0	0
4/23/2024	6:30 PM	0	0	0	0	0	0	0	0	0	0	0	0	0
4/23/2024	6:45 PM	0	0	0	0	0	0	0	0	0	0	0	0	0
4/23/2024	7:00 PM	1	91	14	0	1	0	0	0	0	0	0	0	0
4/23/2024	7:15 PM	0	96	17	0	0	1	0	0	1	0	0	0	0
4/23/2024	7:30 PM	0	88	12	0	0	0	0	0	0	0	0	0	0
4/23/2024	7:45 PM	0	101	18	0	2	0	1	0	0	0	0	0	0
4/23/2024	8:00 PM	0	98	15	0	0	0	0	0	0	0	0	0	0
4/23/2024	8:15 PM	0	96	18	0	0	0	0	0	0	0	0	0	0
4/23/2024	8:30 PM	1	66	15	0	0	0	0	0	1	0	0	0	0
4/23/2024	8:45 PM	0	62	14	0	0	0	0	0	1	0	0	0	0
4/23/2024	9:00 PM	0	88	9	0	0	0	0	0	0	0	0	0	0
4/23/2024	9:15 PM	1	60	12	0	0	0	0	0	0	0	0	0	0
4/23/2024	9:30 PM	0	65	13	0	1	0	0	0	0	0	0	0	0
4/23/2024	9:45 PM	0	46	10	0	0	0	0	0	0	0	0	0	0
4/23/2024	10:00 PM	0	41	4	0	0	0	0	0	0	0	0	0	0
4/23/2024	10:15 PM	1	34	7	0	0	0	0	0	0	0	0	0	0
4/23/2024	10:30 PM	0	35	7	0	1	0	0	0	0	0	0	0	0
4/23/2024	10:45 PM	0	28	4	0	0	0	0	0	0	0	0	0	0
4/23/2024	11:00 PM	1	24	8	0	0	0	0	0	0	0	0	0	0
4/23/2024	11:15 PM	0	24	7	0	0	0	0	0	0	0	0	0	0
4/23/2024	11:30 PM	0	21	4	0	0	0	0	0	0	0	0	0	0
4/23/2024	11:45 PM	0	14	4	0	0	0	0	0	0	0	0	0	0

4/24/2024	12:00 AM	0	16	0	0	0	0	0	0	0	0	0	0	0
4/24/2024	12:15 AM	0	13	0	0	0	0	0	0	0	0	0	0	0
4/24/2024	12:30 AM	0	10	0	0	0	0	0	0	1	0	0	0	0
4/24/2024	12:45 AM	0	10	0	0	0	0	0	0	0	0	0	0	0
4/24/2024	1:00 AM	0	5	0	0	1	0	0	0	0	0	0	0	0
4/24/2024	1:15 AM	0	4	0	0	0	0	0	0	0	0	0	0	0
4/24/2024	1:30 AM	0	2	0	0	0	0	0	0	1	0	0	0	0
4/24/2024	1:45 AM	0	9	0	0	0	0	0	0	0	0	0	0	0
4/24/2024	2:00 AM	0	10	0	0	0	0	0	0	0	0	0	0	0
4/24/2024	2:15 AM	0	6	1	0	0	0	0	0	0	0	0	0	0
4/24/2024	2:30 AM	0	11	0	0	1	0	0	0	0	0	0	0	0
4/24/2024	2:45 AM	0	6	0	0	0	0	0	0	1	0	0	0	0
4/24/2024	3:00 AM	0	7	0	0	0	0	0	0	0	0	0	0	0
4/24/2024	3:15 AM	0	8	0	0	1	0	0	0	0	0	0	0	0
4/24/2024	3:30 AM	0	16	1	0	0	0	0	0	0	0	0	0	0
4/24/2024	3:45 AM	0	11	0	0	1	0	0	0	0	0	0	0	0
4/24/2024	4:00 AM	0	17	0	0	0	0	0	0	0	0	0	0	0
4/24/2024	4:15 AM	0	17	1	0	0	0	0	0	0	0	0	0	0
4/24/2024	4:30 AM	0	25	0	0	0	0	0	0	0	0	0	0	0
4/24/2024	4:45 AM	0	34	1	0	0	0	0	0	0	0	0	0	0
4/24/2024	5:00 AM	0	38	0	1	0	0	0	0	0	0	0	0	0
4/24/2024	5:15 AM	0	46	1	0	1	0	0	1	0	0	0	0	0
4/24/2024	5:30 AM	0	90	0	0	0	0	0	0	1	0	0	0	0
4/24/2024	5:45 AM	0	93	1	0	1	0	0	0	0	0	0	0	0
4/24/2024	6:00 AM	0	95	17	0	0	0	0	0	0	0	0	0	0
4/24/2024	6:15 AM	0	122	28	0	1	0	0	0	1	0	0	0	0
4/24/2024	6:30 AM	0	147	58	0	0	1	0	0	1	0	0	0	0
4/24/2024	6:45 AM	0	175	41	0	1	0	0	0	0	0	0	0	0
4/24/2024	7:00 AM	0	167	45	0	0	0	0	0	0	0	0	0	0
4/24/2024	7:15 AM	0	274	42	0	1	0	1	1	0	0	0	0	0
4/24/2024	7:30 AM	0	219	41	0	0	1	0	0	1	0	0	0	0
4/24/2024	7:45 AM	0	197	48	0	2	0	1	0	3	0	0	0	0
4/24/2024	8:00 AM	0	132	43	0	5	0	0	0	1	0	0	0	0
4/24/2024	8:15 AM	0	168	40	0	1	0	0	0	0	0	0	0	0
4/24/2024	8:30 AM	0	183	41	0	4	0	0	0	2	0	0	0	0
4/24/2024	8:45 AM	1	162	34	0	4	0	0	1	2	0	0	0	0
4/24/2024	9:00 AM	0	153	34	0	3	1	0	1	1	0	0	0	0
4/24/2024	9:15 AM	0	162	34	0	4	0	0	0	0	0	0	0	0
4/24/2024	9:30 AM	0	126	23	1	2	0	0	0	0	0	0	0	0
4/24/2024	9:45 AM	0	135	19	0	4	0	0	0	0	0	0	0	0
4/24/2024	10:00 AM	0	133	23	0	2	1	0	0	2	0	0	0	0
4/24/2024	10:15 AM	0	144	28	0	5	1	0	0	0	0	0	0	0
4/24/2024	10:30 AM	0	158	24	0	5	1	0	1	0	0	0	0	0
4/24/2024	10:45 AM	0	137	31	1	2	1	0	0	1	0	0	0	0
4/24/2024	11:00 AM	0	129	50	0	3	0	0	0	1	0	0	0	0
4/24/2024	11:15 AM	0	117	31	0	2	0	0	0	0	0	0	0	0
4/24/2024	11:30 AM	1	142	31	0	0	0	0	0	0	0	0	0	0
4/24/2024	11:45 AM	0	131	48	0	7	0	0	0	5	1	0	0	0
4/24/2024	12:00 PM	0	134	26	0	4	1	0	0	1	0	0	0	0
4/24/2024	12:15 PM	1	132	26	0	2	2	0	0	0	0	0	0	0
4/24/2024	12:30 PM	3	143	38	0	1	0	0	0	1	0	0	0	0
4/24/2024	12:45 PM	0	143	25	0	5	0	0	0	2	0	0	0	0
4/24/2024	1:00 PM	0	132	39	0	2	2	0	0	0	0	0	0	0
4/24/2024	1:15 PM	0	126	35	0	3	1	0	1	0	0	0	0	0
4/24/2024	1:30 PM	1	148	35	0	2	1	0	0	0	0	0	0	0
4/24/2024	1:45 PM	0	117	33	0	4	0	0	0	1	0	0	0	0
4/24/2024	2:00 PM	0	133	30	0	3	0	0	0	1	0	0	0	0
4/24/2024	2:15 PM	0	141	22	0	3	1	0	0	1	0	0	0	0
4/24/2024	2:30 PM	0	145	18	0	3	1	1	1	2	0	0	0	0
4/24/2024	2:45 PM	0	146	30	0	5	0	0	1	0	0	0	0	0
4/24/2024	3:00 PM	0	149	30	1	0	1	0	0	1	0	0	0	0
4/24/2024	3:15 PM	1	159	22	0	3	0	0	0	0	0	0	0	0
4/24/2024	3:30 PM	0	137	16	0	1	0	0	0	1	0	0	0	0
4/24/2024	3:45 PM	0	131	20	0	2	0	0	0	1	0	0	0	0
4/24/2024	4:00 PM	0	195	17	0	6	0	0	0	0	0	0	0	0
4/24/2024	4:15 PM	0	178	20	0	8	1	0	0	0	0	0	0	0
4/24/2024	4:30 PM	0	181	35	0	5	0	0	0	1	0	0	0	0
4/24/2024	4:45 PM	0	159	28	0	3	1	1	0	0	0	0	0	0
4/24/2024	5:00 PM	0	200	25	0	2	1	0	0	0	0	0	0	0
4/24/2024	5:15 PM	0	160	27	0	1	0	0	0	0	0	0	0	0
4/24/2024	5:30 PM	0	159	33	0	3	1	0	0	1	0	0	0	0
4/24/2024	5:45 PM	0	149	16	0	2	0	0	0	0	0	0	0	0
4/24/2024	6:00 PM	0	157	39	0	3	0	0	0	0	0	0	0	0
4/24/2024	6:15 PM	0	124	22	0	3	0	0	0	1	0	0	0	0
4/24/2024	6:30 PM	0	122	34	1	3	0	0	0	0	0	0	0	0
4/24/2024	6:45 PM	0	114	21	0	3	0	0	0	1	0	0	0	0
4/24/2024	7:00 PM	1	95	29	0	0	0	0	0	0	0	0	0	0
4/24/2024	7:15 PM	0	97	11	0	1	0	0	0	1	0	0	0	0
4/24/2024	7:30 PM	1	100	11	0	0	0	0	0	1	0	0	0	0
4/24/2024	7:45 PM	0	80	14	0	2	0	0	0	0	0	0	0	0
4/24/2024	8:00 PM	0	91	17	0	2	0	0	0	0	0	0	0	0
4/24/2024	8:15 PM	0	95	12	0	0	0	0	0	1	0	0	0	0
4/24/2024	8:30 PM	1	83	15	0	0	0	0	0	0	0	0	0	0
4/24/2024	8:45 PM	1	76	15	0	0	0	0	0	0	0	0	0	0
4/24/2024	9:00 PM	0	78	3	0	1	0	0	0	0	0	0	0	0
4/24/2024	9:15 PM	0	72	6	0	0	0	0	0	0	0	0	0	0
4/24/2024	9:30 PM	0	60	2	0	0	0	0	0	0	0	0	0	0
4/24/2024	9:45 PM	0	38	1	0	0	0	0	0	0	0	0	0	0
4/24/2024	10:00 PM	0	42	1	0	0	0	0	0	0	0	0	0	0
4/24/2024	10:15 PM	0	27	2	0	0	0	0	0	1	0	0	0	0
4/24/2024	10:30 PM	0	38	1	0	0	0	0	0	0	0	0	0	0
4/24/2024	10:45 PM	0	35	1	0	0	0	0	0	0	0	0	0	0
4/24/2024	11:00 PM	0	32	1	0	0	0	0	0	0	0	0	0	0
4/24/2024	11:15 PM	0	24	0	0	0	0	0	0	0	0	0	0	0
4/24/2024	11:30 PM	0	23	1	0	0	0	0	0	0	0	0	0	0
4/24/2024	11:45 PM	0	22	1	0	0	0	0	0	0	0	0	0	0

4/25/2024	12:00 AM	0	12	4	0	0	0	0	0	0	0	0	0
4/25/2024	12:15 AM	0	10	5	0	0	0	0	0	0	0	0	0
4/25/2024	12:30 AM	0	13	6	0	0	0	0	0	0	0	0	0
4/25/2024	12:45 AM	0	10	4	0	0	0	0	0	0	0	0	0
4/25/2024	1:00 AM	0	8	4	0	0	0	0	0	0	0	0	0
4/25/2024	1:15 AM	0	6	3	0	0	0	0	0	0	0	0	0
4/25/2024	1:30 AM	0	4	1	0	0	0	0	0	0	0	0	0
4/25/2024	1:45 AM	0	7	0	0	0	0	0	0	0	0	0	0
4/25/2024	2:00 AM	0	6	1	0	1	0	0	0	0	0	0	0
4/25/2024	2:15 AM	0	4	2	0	0	0	0	0	0	0	0	0
4/25/2024	2:30 AM	0	4	1	0	0	0	0	0	2	0	0	0
4/25/2024	2:45 AM	0	7	1	0	0	0	0	0	0	0	0	0
4/25/2024	3:00 AM	0	6	4	0	0	0	0	0	0	0	0	0
4/25/2024	3:15 AM	0	8	4	0	0	0	0	0	0	0	0	0
4/25/2024	3:30 AM	0	11	3	0	0	0	0	0	0	0	0	0
4/25/2024	3:45 AM	0	13	5	0	0	0	0	0	0	0	0	0
4/25/2024	4:00 AM	0	16	4	0	0	0	0	0	0	0	0	0
4/25/2024	4:15 AM	0	13	4	0	0	0	0	0	0	0	0	0
4/25/2024	4:30 AM	0	21	10	0	0	0	0	0	0	0	0	0
4/25/2024	4:45 AM	0	23	9	0	0	0	0	0	0	0	0	0
4/25/2024	5:00 AM	0	35	12	0	0	2	0	0	0	0	0	0
4/25/2024	5:15 AM	0	41	16	0	0	0	0	0	1	0	0	0
4/25/2024	5:30 AM	0	56	16	0	0	1	0	0	0	0	0	0
4/25/2024	5:45 AM	0	66	14	0	0	0	0	0	1	0	0	0
4/25/2024	6:00 AM	0	85	25	0	0	0	0	0	0	0	0	0
4/25/2024	6:15 AM	0	116	37	0	0	0	0	0	0	0	0	0
4/25/2024	6:30 AM	1	136	47	0	1	0	0	0	0	0	0	0
4/25/2024	6:45 AM	0	173	33	0	1	0	0	0	1	0	0	0
4/25/2024	7:00 AM	0	194	52	0	2	1	0	0	0	0	0	0
4/25/2024	7:15 AM	0	217	51	0	4	0	1	1	1	0	0	0
4/25/2024	7:30 AM	0	210	65	0	3	1	0	0	0	0	0	0
4/25/2024	7:45 AM	0	195	51	0	5	1	1	0	4	0	0	0
4/25/2024	8:00 AM	0	176	44	0	3	3	2	0	3	0	0	0
4/25/2024	8:15 AM	0	184	38	0	3	1	0	0	1	0	0	0
4/25/2024	8:30 AM	0	165	34	0	6	0	0	0	2	0	0	0
4/25/2024	8:45 AM	0	148	44	0	3	1	1	0	2	0	0	0
4/25/2024	9:00 AM	0	159	43	0	2	3	0	0	0	0	0	0
4/25/2024	9:15 AM	0	174	35	1	1	0	0	0	0	0	0	0
4/25/2024	9:30 AM	0	163	39	1	0	6	0	0	3	0	0	0
4/25/2024	9:45 AM	0	144	26	0	2	2	0	1	0	0	0	0
4/25/2024	10:00 AM	0	132	25	2	5	1	1	0	0	0	0	0
4/25/2024	10:15 AM	0	147	32	0	5	1	1	1	0	0	0	0
4/25/2024	10:30 AM	0	142	31	0	4	1	0	0	1	0	0	0
4/25/2024	10:45 AM	0	156	27	1	1	1	0	0	2	0	0	0
4/25/2024	11:00 AM	0	154	22	1	0	2	0	1	1	0	0	0
4/25/2024	11:15 AM	0	134	43	1	1	0	0	0	3	0	0	0
4/25/2024	11:30 AM	1	140	35	0	1	0	0	0	3	0	0	0
4/25/2024	11:45 AM	0	139	34	0	1	0	0	0	1	0	0	0
4/25/2024	12:00 PM	1	164	36	1	3	0	0	0	1	0	0	0
4/25/2024	12:15 PM	0	157	33	1	5	0	0	0	3	0	0	0
4/25/2024	12:30 PM	0	145	37	1	3	0	0	0	2	0	0	0
4/25/2024	12:45 PM	0	127	31	4	4	0	2	0	4	0	0	0
4/25/2024	1:00 PM	0	156	42	1	3	0	0	0	0	0	0	0
4/25/2024	1:15 PM	1	134	31	0	5	0	0	1	0	0	0	0
4/25/2024	1:30 PM	1	118	35	1	5	0	0	0	3	0	0	0
4/25/2024	1:45 PM	0	144	27	0	1	0	0	0	0	0	0	0
4/25/2024	2:00 PM	0	159	21	1	3	0	0	0	2	0	0	0
4/25/2024	2:15 PM	0	144	32	0	3	1	0	2	0	0	0	0
4/25/2024	2:30 PM	0	156	28	1	4	1	0	0	1	0	0	0
4/25/2024	2:45 PM	0	135	26	1	5	0	0	0	3	0	0	0
4/25/2024	3:00 PM	1	161	27	2	4	0	0	1	0	0	0	0
4/25/2024	3:15 PM	1	138	31	0	5	0	0	0	1	0	0	0
4/25/2024	3:30 PM	0	165	28	0	4	1	0	0	1	0	0	0
4/25/2024	3:45 PM	0	156	44	0	2	0	0	0	0	0	0	0
4/25/2024	4:00 PM	0	148	35	0	1	0	0	0	2	0	0	0
4/25/2024	4:15 PM	0	169	38	0	3	0	0	0	2	0	0	0
4/25/2024	4:30 PM	0	197	27	0	4	0	0	0	0	0	0	0
4/25/2024	4:45 PM	0	162	40	0	2	0	0	0	0	0	0	0
4/25/2024	5:00 PM	0	212	26	0	3	0	0	0	0	0	0	0
4/25/2024	5:15 PM	0	128	34	0	0	0	0	0	2	0	0	0
4/25/2024	5:30 PM	0	155	24	0	1	0	0	0	0	0	0	0
4/25/2024	5:45 PM	0	147	20	0	1	0	0	0	1	0	0	0
4/25/2024	6:00 PM	0	159	19	1	2	1	0	0	0	0	0	0
4/25/2024	6:15 PM	0	145	27	0	2	0	0	0	1	0	0	0
4/25/2024	6:30 PM	1	136	25	0	2	0	0	1	0	0	0	0
4/25/2024	6:45 PM	0	125	16	0	1	0	0	0	1	0	0	0
4/25/2024	7:00 PM	0	0	0	0	0	0	0	0	0	0	0	0
4/25/2024	7:15 PM	0	0	0	0	0	0	0	0	0	0	0	0
4/25/2024	7:30 PM	0	0	0	0	0	0	0	0	0	0	0	0
4/25/2024	7:45 PM	0	0	0	0	0	0	0	0	0	0	0	0
4/25/2024	8:00 PM	0	0	0	0	0	0	0	0	0	0	0	0
4/25/2024	8:15 PM	0	0	0	0	0	0	0	0	0	0	0	0
4/25/2024	8:30 PM	0	0	0	0	0	0	0	0	0	0	0	0
4/25/2024	8:45 PM	0	0	0	0	0	0	0	0	0	0	0	0
4/25/2024	9:00 PM	0	0	0	0	0	0	0	0	0	0	0	0
4/25/2024	9:15 PM	0	0	0	0	0	0	0	0	0	0	0	0
4/25/2024	9:30 PM	0	0	0	0	0	0	0	0	0	0	0	0
4/25/2024	9:45 PM	0	0	0	0	0	0	0	0	0	0	0	0
4/25/2024	10:00 PM	0	0	0	0	0	0	0	0	0	0	0	0
4/25/2024	10:15 PM	0	0	0	0	0	0	0	0	0	0	0	0
4/25/2024	10:30 PM	0	0	0	0	0	0	0	0	0	0	0	0
4/25/2024	10:45 PM	0	0	0	0	0	0	0	0	0	0	0	0
4/25/2024	11:00 PM	0	0	0	0	0	0	0	0	0	0	0	0
4/25/2024	11:15 PM	0	0	0	0	0	0	0	0	0	0	0	0
4/25/2024	11:30 PM	0	0	0	0	0	0	0	0	0	0	0	0
4/25/2024	11:45 PM	0	0	0	0	0	0	0	0	0	0	0	0

NB
File Name:
Start Date: 4/23/2024
Start Time: 0
Site Code: 26
Station ID: 1
Location 1: I-26 James F. Byrnes Expy On/Off-Ramp, south of SC-60 Lake Murray Blvd
Location 2:

Date	Time	1	2	3	4	5	6	7	8	9	10	11	12	13
4/23/2024	12:00 AM	0	0	0	0	0	0	0	0	0	0	0	0	0
4/23/2024	12:15 AM	0	0	0	0	0	0	0	0	0	0	0	0	0
4/23/2024	12:30 AM	0	0	0	0	0	0	0	0	0	0	0	0	0
4/23/2024	12:45 AM	0	0	0	0	0	0	0	0	0	0	0	0	0
4/23/2024	1:00 AM	0	0	0	0	0	0	0	0	0	0	0	0	0
4/23/2024	1:15 AM	0	0	0	0	0	0	0	0	0	0	0	0	0
4/23/2024	1:30 AM	0	0	0	0	0	0	0	0	0	0	0	0	0
4/23/2024	1:45 AM	0	0	0	0	0	0	0	0	0	0	0	0	0
4/23/2024	2:00 AM	0	0	0	0	0	0	0	0	0	0	0	0	0
4/23/2024	2:15 AM	0	0	0	0	0	0	0	0	0	0	0	0	0
4/23/2024	2:30 AM	0	0	0	0	0	0	0	0	0	0	0	0	0
4/23/2024	2:45 AM	0	0	0	0	0	0	0	0	0	0	0	0	0
4/23/2024	3:00 AM	0	0	0	0	0	0	0	0	0	0	0	0	0
4/23/2024	3:15 AM	0	0	0	0	0	0	0	0	0	0	0	0	0
4/23/2024	3:30 AM	0	0	0	0	0	0	0	0	0	0	0	0	0
4/23/2024	3:45 AM	0	0	0	0	0	0	0	0	0	0	0	0	0
4/23/2024	4:00 AM	0	0	0	0	0	0	0	0	0	0	0	0	0
4/23/2024	4:15 AM	0	0	0	0	0	0	0	0	0	0	0	0	0
4/23/2024	4:30 AM	0	0	0	0	0	0	0	0	0	0	0	0	0
4/23/2024	4:45 AM	0	0	0	0	0	0	0	0	0	0	0	0	0
4/23/2024	5:00 AM	0	0	0	0	0	0	0	0	0	0	0	0	0
4/23/2024	5:15 AM	0	0	0	0	0	0	0	0	0	0	0	0	0
4/23/2024	5:30 AM	0	0	0	0	0	0	0	0	0	0	0	0	0
4/23/2024	5:45 AM	0	0	0	0	0	0	0	0	0	0	0	0	0
4/23/2024	6:00 AM	0	0	0	0	0	0	0	0	0	0	0	0	0
4/23/2024	6:15 AM	0	0	0	0	0	0	0	0	0	0	0	0	0
4/23/2024	6:30 AM	0	0	0	0	0	0	0	0	0	0	0	0	0
4/23/2024	6:45 AM	0	0	0	0	0	0	0	0	0	0	0	0	0
4/23/2024	7:00 AM	0	0	0	0	0	0	0	0	0	0	0	0	0
4/23/2024	7:15 AM	0	0	0	0	0	0	0	0	0	0	0	0	0
4/23/2024	7:30 AM	0	0	0	0	0	0	0	0	0	0	0	0	0
4/23/2024	7:45 AM	0	0	0	0	0	0	0	0	0	0	0	0	0
4/23/2024	8:00 AM	0	0	0	0	0	0	0	0	0	0	0	0	0
4/23/2024	8:15 AM	0	0	0	0	0	0	0	0	0	0	0	0	0
4/23/2024	8:30 AM	0	0	0	0	0	0	0	0	0	0	0	0	0
4/23/2024	8:45 AM	0	0	0	0	0	0	0	0	0	0	0	0	0
4/23/2024	9:00 AM	0	0	0	0	0	0	0	0	0	0	0	0	0
4/23/2024	9:15 AM	0	0	0	0	0	0	0	0	0	0	0	0	0
4/23/2024	9:30 AM	0	0	0	0	0	0	0	0	0	0	0	0	0
4/23/2024	9:45 AM	0	0	0	0	0	0	0	0	0	0	0	0	0
4/23/2024	10:00 AM	0	0	0	0	0	0	0	0	0	0	0	0	0
4/23/2024	10:15 AM	0	0	0	0	0	0	0	0	0	0	0	0	0
4/23/2024	10:30 AM	0	0	0	0	0	0	0	0	0	0	0	0	0
4/23/2024	10:45 AM	0	0	0	0	0	0	0	0	0	0	0	0	0
4/23/2024	11:00 AM	0	0	0	0	0	0	0	0	0	0	0	0	0
4/23/2024	11:15 AM	0	0	0	0	0	0	0	0	0	0	0	0	0
4/23/2024	11:30 AM	0	0	0	0	0	0	0	0	0	0	0	0	0
4/23/2024	11:45 AM	0	0	0	0	0	0	0	0	0	0	0	0	0
4/23/2024	12:00 PM	0	0	0	0	0	0	0	0	0	0	0	0	0
4/23/2024	12:15 PM	0	0	0	0	0	0	0	0	0	0	0	0	0
4/23/2024	12:30 PM	0	0	0	0	0	0	0	0	0	0	0	0	0
4/23/2024	12:45 PM	0	0	0	0	0	0	0	0	0	0	0	0	0
4/23/2024	1:00 PM	0	0	0	0	0	0	0	0	0	0	0	0	0
4/23/2024	1:15 PM	0	0	0	0	0	0	0	0	0	0	0	0	0
4/23/2024	1:30 PM	0	0	0	0	0	0	0	0	0	0	0	0	0
4/23/2024	1:45 PM	0	0	0	0	0	0	0	0	0	0	0	0	0
4/23/2024	2:00 PM	0	0	0	0	0	0	0	0	0	0	0	0	0
4/23/2024	2:15 PM	0	0	0	0	0	0	0	0	0	0	0	0	0
4/23/2024	2:30 PM	0	0	0	0	0	0	0	0	0	0	0	0	0
4/23/2024	2:45 PM	0	0	0	0	0	0	0	0	0	0	0	0	0
4/23/2024	3:00 PM	0	0	0	0	0	0	0	0	0	0	0	0	0
4/23/2024	3:15 PM	0	0	0	0	0	0	0	0	0	0	0	0	0
4/23/2024	3:30 PM	0	0	0	0	0	0	0	0	0	0	0	0	0
4/23/2024	3:45 PM	0	0	0	0	0	0	0	0	0	0	0	0	0
4/23/2024	4:00 PM	0	0	0	0	0	0	0	0	0	0	0	0	0
4/23/2024	4:15 PM	0	0	0	0	0	0	0	0	0	0	0	0	0
4/23/2024	4:30 PM	0	0	0	0	0	0	0	0	0	0	0	0	0
4/23/2024	4:45 PM	0	0	0	0	0	0	0	0	0	0	0	0	0
4/23/2024	5:00 PM	0	0	0	0	0	0	0	0	0	0	0	0	0
4/23/2024	5:15 PM	0	0	0	0	0	0	0	0	0	0	0	0	0
4/23/2024	5:30 PM	0	0	0	0	0	0	0	0	0	0	0	0	0
4/23/2024	5:45 PM	0	0	0	0	0	0	0	0	0	0	0	0	0
4/23/2024	6:00 PM	0	0	0	0	0	0	0	0	0	0	0	0	0
4/23/2024	6:15 PM	0	0	0	0	0	0	0	0	0	0	0	0	0
4/23/2024	6:30 PM	0	0	0	0	0	0	0	0	0	0	0	0	0
4/23/2024	6:45 PM	0	0	0	0	0	0	0	0	0	0	0	0	0
4/23/2024	7:00 PM	0	0	0	0	0	0	0	0	0	0	0	0	0
4/23/2024	7:15 PM	0	0	0	0	0	0	0	0	0	0	0	0	0
4/23/2024	7:30 PM	0	0	0	0	0	0	0	0	0	0	0	0	0
4/23/2024	7:45 PM	0	0	0	0	0	0	0	0	0	0	0	0	0
4/23/2024	8:00 PM	0	0	0	0	0	0	0	0	0	0	0	0	0
4/23/2024	8:15 PM	0	0	0	0	0	0	0	0	0	0	0	0	0
4/23/2024	8:30 PM	0	0	0	0	0	0	0	0	0	0	0	0	0
4/23/2024	8:45 PM	0	0	0	0	0	0	0	0	0	0	0	0	0
4/23/2024	9:00 PM	0	0	0	0	0	0	0	0	0	0	0	0	0
4/23/2024	9:15 PM	0	0	0	0	0	0	0	0	0	0	0	0	0
4/23/2024	9:30 PM	0	0	0	0	0	0	0	0	0	0	0	0	0
4/23/2024	9:45 PM	0	0	0	0	0	0	0	0	0	0	0	0	0
4/23/2024	10:00 PM	0	0	0	0	0	0	0	0	0	0	0	0	0
4/23/2024	10:15 PM	0	0	0	0	0	0	0	0	0	0	0	0	0
4/23/2024	10:30 PM	0	0	0	0	0	0	0	0	0	0	0	0	0
4/23/2024	10:45 PM	0	0	0	0	0	0	0	0	0	0	0	0	0
4/23/2024	11:00 PM	0	0	0	0	0	0	0	0	0	0	0	0	0
4/23/2024	11:15 PM	0	0	0	0	0	0	0	0	0	0	0	0	0
4/23/2024	11:30 PM	0	0	0	0	0	0	0	0	0	0	0	0	0
4/23/2024	11:45 PM	0	0	0	0	0	0	0	0	0	0	0	0	0

4/24/2024	12:00 AM	0	0	0	0	0	0	0	0	0	0	0	0	0
4/24/2024	12:15 AM	0	0	0	0	0	0	0	0	0	0	0	0	0
4/24/2024	12:30 AM	0	0	0	0	0	0	0	0	0	0	0	0	0
4/24/2024	12:45 AM	0	0	0	0	0	0	0	0	0	0	0	0	0
4/24/2024	1:00 AM	0	0	0	0	0	0	0	0	0	0	0	0	0
4/24/2024	1:15 AM	0	0	0	0	0	0	0	0	0	0	0	0	0
4/24/2024	1:30 AM	0	0	0	0	0	0	0	0	0	0	0	0	0
4/24/2024	1:45 AM	0	0	0	0	0	0	0	0	0	0	0	0	0
4/24/2024	2:00 AM	0	0	0	0	0	0	0	0	0	0	0	0	0
4/24/2024	2:15 AM	0	0	0	0	0	0	0	0	0	0	0	0	0
4/24/2024	2:30 AM	0	0	0	0	0	0	0	0	0	0	0	0	0
4/24/2024	2:45 AM	0	0	0	0	0	0	0	0	0	0	0	0	0
4/24/2024	3:00 AM	0	0	0	0	0	0	0	0	0	0	0	0	0
4/24/2024	3:15 AM	0	0	0	0	0	0	0	0	0	0	0	0	0
4/24/2024	3:30 AM	0	0	0	0	0	0	0	0	0	0	0	0	0
4/24/2024	3:45 AM	0	0	0	0	0	0	0	0	0	0	0	0	0
4/24/2024	4:00 AM	0	0	0	0	0	0	0	0	0	0	0	0	0
4/24/2024	4:15 AM	0	0	0	0	0	0	0	0	0	0	0	0	0
4/24/2024	4:30 AM	0	0	0	0	0	0	0	0	0	0	0	0	0
4/24/2024	4:45 AM	0	0	0	0	0	0	0	0	0	0	0	0	0
4/24/2024	5:00 AM	0	0	0	0	0	0	0	0	0	0	0	0	0
4/24/2024	5:15 AM	0	0	0	0	0	0	0	0	0	0	0	0	0
4/24/2024	5:30 AM	0	0	0	0	0	0	0	0	0	0	0	0	0
4/24/2024	5:45 AM	0	0	0	0	0	0	0	0	0	0	0	0	0
4/24/2024	6:00 AM	0	0	0	0	0	0	0	0	0	0	0	0	0
4/24/2024	6:15 AM	0	0	0	0	0	0	0	0	0	0	0	0	0
4/24/2024	6:30 AM	0	0	0	0	0	0	0	0	0	0	0	0	0
4/24/2024	6:45 AM	0	0	0	0	0	0	0	0	0	0	0	0	0
4/24/2024	7:00 AM	0	0	0	0	0	0	0	0	0	0	0	0	0
4/24/2024	7:15 AM	0	0	0	0	0	0	0	0	0	0	0	0	0
4/24/2024	7:30 AM	0	0	0	0	0	0	0	0	0	0	0	0	0
4/24/2024	7:45 AM	0	0	0	0	0	0	0	0	0	0	0	0	0
4/24/2024	8:00 AM	0	0	0	0	0	0	0	0	0	0	0	0	0
4/24/2024	8:15 AM	0	0	0	0	0	0	0	0	0	0	0	0	0
4/24/2024	8:30 AM	0	0	0	0	0	0	0	0	0	0	0	0	0
4/24/2024	8:45 AM	0	0	0	0	0	0	0	0	0	0	0	0	0
4/24/2024	9:00 AM	0	0	0	0	0	0	0	0	0	0	0	0	0
4/24/2024	9:15 AM	0	0	0	0	0	0	0	0	0	0	0	0	0
4/24/2024	9:30 AM	0	0	0	0	0	0	0	0	0	0	0	0	0
4/24/2024	9:45 AM	0	0	0	0	0	0	0	0	0	0	0	0	0
4/24/2024	10:00 AM	0	0	0	0	0	0	0	0	0	0	0	0	0
4/24/2024	10:15 AM	0	0	0	0	0	0	0	0	0	0	0	0	0
4/24/2024	10:30 AM	0	0	0	0	0	0	0	0	0	0	0	0	0
4/24/2024	10:45 AM	0	0	0	0	0	0	0	0	0	0	0	0	0
4/24/2024	11:00 AM	0	0	0	0	0	0	0	0	0	0	0	0	0
4/24/2024	11:15 AM	0	0	0	0	0	0	0	0	0	0	0	0	0
4/24/2024	11:30 AM	0	0	0	0	0	0	0	0	0	0	0	0	0
4/24/2024	11:45 AM	0	0	0	0	0	0	0	0	0	0	0	0	0
4/24/2024	12:00 PM	0	0	0	0	0	0	0	0	0	0	0	0	0
4/24/2024	12:15 PM	0	0	0	0	0	0	0	0	0	0	0	0	0
4/24/2024	12:30 PM	0	0	0	0	0	0	0	0	0	0	0	0	0
4/24/2024	12:45 PM	0	0	0	0	0	0	0	0	0	0	0	0	0
4/24/2024	1:00 PM	0	0	0	0	0	0	0	0	0	0	0	0	0
4/24/2024	1:15 PM	0	0	0	0	0	0	0	0	0	0	0	0	0
4/24/2024	1:30 PM	0	0	0	0	0	0	0	0	0	0	0	0	0
4/24/2024	1:45 PM	0	0	0	0	0	0	0	0	0	0	0	0	0
4/24/2024	2:00 PM	0	0	0	0	0	0	0	0	0	0	0	0	0
4/24/2024	2:15 PM	0	0	0	0	0	0	0	0	0	0	0	0	0
4/24/2024	2:30 PM	0	0	0	0	0	0	0	0	0	0	0	0	0
4/24/2024	2:45 PM	0	0	0	0	0	0	0	0	0	0	0	0	0
4/24/2024	3:00 PM	0	0	0	0	0	0	0	0	0	0	0	0	0
4/24/2024	3:15 PM	0	0	0	0	0	0	0	0	0	0	0	0	0
4/24/2024	3:30 PM	0	0	0	0	0	0	0	0	0	0	0	0	0
4/24/2024	3:45 PM	0	0	0	0	0	0	0	0	0	0	0	0	0
4/24/2024	4:00 PM	0	0	0	0	0	0	0	0	0	0	0	0	0
4/24/2024	4:15 PM	0	0	0	0	0	0	0	0	0	0	0	0	0
4/24/2024	4:30 PM	0	0	0	0	0	0	0	0	0	0	0	0	0
4/24/2024	4:45 PM	0	0	0	0	0	0	0	0	0	0	0	0	0
4/24/2024	5:00 PM	0	0	0	0	0	0	0	0	0	0	0	0	0
4/24/2024	5:15 PM	0	0	0	0	0	0	0	0	0	0	0	0	0
4/24/2024	5:30 PM	0	0	0	0	0	0	0	0	0	0	0	0	0
4/24/2024	5:45 PM	0	0	0	0	0	0	0	0	0	0	0	0	0
4/24/2024	6:00 PM	0	0	0	0	0	0	0	0	0	0	0	0	0
4/24/2024	6:15 PM	0	0	0	0	0	0	0	0	0	0	0	0	0
4/24/2024	6:30 PM	0	0	0	0	0	0	0	0	0	0	0	0	0
4/24/2024	6:45 PM	0	0	0	0	0	0	0	0	0	0	0	0	0
4/24/2024	7:00 PM	0	0	0	0	0	0	0	0	0	0	0	0	0
4/24/2024	7:15 PM	0	0	0	0	0	0	0	0	0	0	0	0	0
4/24/2024	7:30 PM	0	0	0	0	0	0	0	0	0	0	0	0	0
4/24/2024	7:45 PM	0	0	0	0	0	0	0	0	0	0	0	0	0
4/24/2024	8:00 PM	0	0	0	0	0	0	0	0	0	0	0	0	0
4/24/2024	8:15 PM	0	0	0	0	0	0	0	0	0	0	0	0	0
4/24/2024	8:30 PM	0	0	0	0	0	0	0	0	0	0	0	0	0
4/24/2024	8:45 PM	0	0	0	0	0	0	0	0	0	0	0	0	0
4/24/2024	9:00 PM	0	0	0	0	0	0	0	0	0	0	0	0	0
4/24/2024	9:15 PM	0	0	0	0	0	0	0	0	0	0	0	0	0
4/24/2024	9:30 PM	0	0	0	0	0	0	0	0	0	0	0	0	0
4/24/2024	9:45 PM	0	0	0	0	0	0	0	0	0	0	0	0	0
4/24/2024	10:00 PM	0	0	0	0	0	0	0	0	0	0	0	0	0
4/24/2024	10:15 PM	0	0	0	0	0	0	0	0	0	0	0	0	0
4/24/2024	10:30 PM	0	0	0	0	0	0	0	0	0	0	0	0	0
4/24/2024	10:45 PM	0	0	0	0	0	0	0	0	0	0	0	0	0
4/24/2024	11:00 PM	0	0	0	0	0	0	0	0	0	0	0	0	0
4/24/2024	11:15 PM	0	0	0	0	0	0	0	0	0	0	0	0	0
4/24/2024	11:30 PM	0	0	0	0	0	0	0	0	0	0	0	0	0
4/24/2024	11:45 PM	0	0	0	0	0	0	0	0	0	0	0	0	0

4/25/2024	12:00 AM	0	0	0	0	0	0	0	0	0	0	0	0	0
4/25/2024	12:15 AM	0	0	0	0	0	0	0	0	0	0	0	0	0
4/25/2024	12:30 AM	0	0	0	0	0	0	0	0	0	0	0	0	0
4/25/2024	12:45 AM	0	0	0	0	0	0	0	0	0	0	0	0	0
4/25/2024	1:00 AM	0	0	0	0	0	0	0	0	0	0	0	0	0
4/25/2024	1:15 AM	0	0	0	0	0	0	0	0	0	0	0	0	0
4/25/2024	1:30 AM	0	0	0	0	0	0	0	0	0	0	0	0	0
4/25/2024	1:45 AM	0	0	0	0	0	0	0	0	0	0	0	0	0
4/25/2024	2:00 AM	0	0	0	0	0	0	0	0	0	0	0	0	0
4/25/2024	2:15 AM	0	0	0	0	0	0	0	0	0	0	0	0	0
4/25/2024	2:30 AM	0	0	0	0	0	0	0	0	0	0	0	0	0
4/25/2024	2:45 AM	0	0	0	0	0	0	0	0	0	0	0	0	0
4/25/2024	3:00 AM	0	0	0	0	0	0	0	0	0	0	0	0	0
4/25/2024	3:15 AM	0	0	0	0	0	0	0	0	0	0	0	0	0
4/25/2024	3:30 AM	0	0	0	0	0	0	0	0	0	0	0	0	0
4/25/2024	3:45 AM	0	0	0	0	0	0	0	0	0	0	0	0	0
4/25/2024	4:00 AM	0	0	0	0	0	0	0	0	0	0	0	0	0
4/25/2024	4:15 AM	0	0	0	0	0	0	0	0	0	0	0	0	0
4/25/2024	4:30 AM	0	0	0	0	0	0	0	0	0	0	0	0	0
4/25/2024	4:45 AM	0	0	0	0	0	0	0	0	0	0	0	0	0
4/25/2024	5:00 AM	0	0	0	0	0	0	0	0	0	0	0	0	0
4/25/2024	5:15 AM	0	0	0	0	0	0	0	0	0	0	0	0	0
4/25/2024	5:30 AM	0	0	0	0	0	0	0	0	0	0	0	0	0
4/25/2024	5:45 AM	0	0	0	0	0	0	0	0	0	0	0	0	0
4/25/2024	6:00 AM	0	0	0	0	0	0	0	0	0	0	0	0	0
4/25/2024	6:15 AM	0	0	0	0	0	0	0	0	0	0	0	0	0
4/25/2024	6:30 AM	0	0	0	0	0	0	0	0	0	0	0	0	0
4/25/2024	6:45 AM	0	0	0	0	0	0	0	0	0	0	0	0	0
4/25/2024	7:00 AM	0	0	0	0	0	0	0	0	0	0	0	0	0
4/25/2024	7:15 AM	0	0	0	0	0	0	0	0	0	0	0	0	0
4/25/2024	7:30 AM	0	0	0	0	0	0	0	0	0	0	0	0	0
4/25/2024	7:45 AM	0	0	0	0	0	0	0	0	0	0	0	0	0
4/25/2024	8:00 AM	0	0	0	0	0	0	0	0	0	0	0	0	0
4/25/2024	8:15 AM	0	0	0	0	0	0	0	0	0	0	0	0	0
4/25/2024	8:30 AM	0	0	0	0	0	0	0	0	0	0	0	0	0
4/25/2024	8:45 AM	0	0	0	0	0	0	0	0	0	0	0	0	0
4/25/2024	9:00 AM	0	0	0	0	0	0	0	0	0	0	0	0	0
4/25/2024	9:15 AM	0	0	0	0	0	0	0	0	0	0	0	0	0
4/25/2024	9:30 AM	0	0	0	0	0	0	0	0	0	0	0	0	0
4/25/2024	9:45 AM	0	0	0	0	0	0	0	0	0	0	0	0	0
4/25/2024	10:00 AM	0	0	0	0	0	0	0	0	0	0	0	0	0
4/25/2024	10:15 AM	0	0	0	0	0	0	0	0	0	0	0	0	0
4/25/2024	10:30 AM	0	0	0	0	0	0	0	0	0	0	0	0	0
4/25/2024	10:45 AM	0	0	0	0	0	0	0	0	0	0	0	0	0
4/25/2024	11:00 AM	0	0	0	0	0	0	0	0	0	0	0	0	0
4/25/2024	11:15 AM	0	0	0	0	0	0	0	0	0	0	0	0	0
4/25/2024	11:30 AM	0	0	0	0	0	0	0	0	0	0	0	0	0
4/25/2024	11:45 AM	0	0	0	0	0	0	0	0	0	0	0	0	0
4/25/2024	12:00 PM	0	0	0	0	0	0	0	0	0	0	0	0	0
4/25/2024	12:15 PM	0	0	0	0	0	0	0	0	0	0	0	0	0
4/25/2024	12:30 PM	0	0	0	0	0	0	0	0	0	0	0	0	0
4/25/2024	12:45 PM	0	0	0	0	0	0	0	0	0	0	0	0	0
4/25/2024	1:00 PM	0	0	0	0	0	0	0	0	0	0	0	0	0
4/25/2024	1:15 PM	0	0	0	0	0	0	0	0	0	0	0	0	0
4/25/2024	1:30 PM	0	0	0	0	0	0	0	0	0	0	0	0	0
4/25/2024	1:45 PM	0	0	0	0	0	0	0	0	0	0	0	0	0
4/25/2024	2:00 PM	0	0	0	0	0	0	0	0	0	0	0	0	0
4/25/2024	2:15 PM	0	0	0	0	0	0	0	0	0	0	0	0	0
4/25/2024	2:30 PM	0	0	0	0	0	0	0	0	0	0	0	0	0
4/25/2024	2:45 PM	0	0	0	0	0	0	0	0	0	0	0	0	0
4/25/2024	3:00 PM	0	0	0	0	0	0	0	0	0	0	0	0	0
4/25/2024	3:15 PM	0	0	0	0	0	0	0	0	0	0	0	0	0
4/25/2024	3:30 PM	0	0	0	0	0	0	0	0	0	0	0	0	0
4/25/2024	3:45 PM	0	0	0	0	0	0	0	0	0	0	0	0	0
4/25/2024	4:00 PM	0	0	0	0	0	0	0	0	0	0	0	0	0
4/25/2024	4:15 PM	0	0	0	0	0	0	0	0	0	0	0	0	0
4/25/2024	4:30 PM	0	0	0	0	0	0	0	0	0	0	0	0	0
4/25/2024	4:45 PM	0	0	0	0	0	0	0	0	0	0	0	0	0
4/25/2024	5:00 PM	0	0	0	0	0	0	0	0	0	0	0	0	0
4/25/2024	5:15 PM	0	0	0	0	0	0	0	0	0	0	0	0	0
4/25/2024	5:30 PM	0	0	0	0	0	0	0	0	0	0	0	0	0
4/25/2024	5:45 PM	0	0	0	0	0	0	0	0	0	0	0	0	0
4/25/2024	6:00 PM	0	0	0	0	0	0	0	0	0	0	0	0	0
4/25/2024	6:15 PM	0	0	0	0	0	0	0	0	0	0	0	0	0
4/25/2024	6:30 PM	0	0	0	0	0	0	0	0	0	0	0	0	0
4/25/2024	6:45 PM	0	0	0	0	0	0	0	0	0	0	0	0	0
4/25/2024	7:00 PM	0	0	0	0	0	0	0	0	0	0	0	0	0
4/25/2024	7:15 PM	0	0	0	0	0	0	0	0	0	0	0	0	0
4/25/2024	7:30 PM	0	0	0	0	0	0	0	0	0	0	0	0	0
4/25/2024	7:45 PM	0	0	0	0	0	0	0	0	0	0	0	0	0
4/25/2024	8:00 PM	0	0	0	0	0	0	0	0	0	0	0	0	0
4/25/2024	8:15 PM	0	0	0	0	0	0	0	0	0	0	0	0	0
4/25/2024	8:30 PM	0	0	0	0	0	0	0	0	0	0	0	0	0
4/25/2024	8:45 PM	0	0	0	0	0	0	0	0	0	0	0	0	0
4/25/2024	9:00 PM	0	0	0	0	0	0	0	0	0	0	0	0	0
4/25/2024	9:15 PM	0	0	0	0	0	0	0	0	0	0	0	0	0
4/25/2024	9:30 PM	0	0	0	0	0	0	0	0	0	0	0	0	0
4/25/2024	9:45 PM	0	0	0	0	0	0	0	0	0	0	0	0	0
4/25/2024	10:00 PM	0	0	0	0	0	0	0	0	0	0	0	0	0
4/25/2024	10:15 PM	0	0	0	0	0	0	0	0	0	0	0	0	0
4/25/2024	10:30 PM	0	0	0	0	0	0	0	0	0	0	0	0	0
4/25/2024	10:45 PM	0	0	0	0	0	0	0	0	0	0	0	0	0
4/25/2024	11:00 PM	0	0	0	0	0	0	0	0	0	0	0	0	0
4/25/2024	11:15 PM	0	0	0	0	0	0	0	0	0	0	0	0	0
4/25/2024	11:30 PM	0	0	0	0	0	0	0	0	0	0	0	0	0
4/25/2024	11:45 PM	0	0	0	0	0	0	0	0	0	0	0	0	0

SB
File Name:
Start Date: 4/23/2024
Start Time: 0
Site Code: 26
Station ID: 1
Location 1: I-26 James F. Byrnes Expy On/Off-Ramp, south of SC-60 Lake Murray Blvd
Location 2:

Date	Time	1	2	3	4	5	6	7	8	9	10	11	12	13
4/23/2024	12:00 AM	0	0	0	0	0	0	0	0	0	0	0	0	0
4/23/2024	12:15 AM	0	0	0	0	0	0	0	0	0	0	0	0	0
4/23/2024	12:30 AM	0	0	0	0	0	0	0	0	0	0	0	0	0
4/23/2024	12:45 AM	0	0	0	0	0	0	0	0	0	0	0	0	0
4/23/2024	1:00 AM	0	0	0	0	0	0	0	0	0	0	0	0	0
4/23/2024	1:15 AM	0	0	0	0	0	0	0	0	0	0	0	0	0
4/23/2024	1:30 AM	0	0	0	0	0	0	0	0	0	0	0	0	0
4/23/2024	1:45 AM	0	0	0	0	0	0	0	0	0	0	0	0	0
4/23/2024	2:00 AM	0	0	0	0	0	0	0	0	0	0	0	0	0
4/23/2024	2:15 AM	0	0	0	0	0	0	0	0	0	0	0	0	0
4/23/2024	2:30 AM	0	0	0	0	0	0	0	0	0	0	0	0	0
4/23/2024	2:45 AM	0	0	0	0	0	0	0	0	0	0	0	0	0
4/23/2024	3:00 AM	0	0	0	0	0	0	0	0	0	0	0	0	0
4/23/2024	3:15 AM	0	0	0	0	0	0	0	0	0	0	0	0	0
4/23/2024	3:30 AM	0	0	0	0	0	0	0	0	0	0	0	0	0
4/23/2024	3:45 AM	0	0	0	0	0	0	0	0	0	0	0	0	0
4/23/2024	4:00 AM	0	0	0	0	0	0	0	0	0	0	0	0	0
4/23/2024	4:15 AM	0	0	0	0	0	0	0	0	0	0	0	0	0
4/23/2024	4:30 AM	0	0	0	0	0	0	0	0	0	0	0	0	0
4/23/2024	4:45 AM	0	0	0	0	0	0	0	0	0	0	0	0	0
4/23/2024	5:00 AM	0	0	0	0	0	0	0	0	0	0	0	0	0
4/23/2024	5:15 AM	0	0	0	0	0	0	0	0	0	0	0	0	0
4/23/2024	5:30 AM	0	0	0	0	0	0	0	0	0	0	0	0	0
4/23/2024	5:45 AM	0	0	0	0	0	0	0	0	0	0	0	0	0
4/23/2024	6:00 AM	0	0	0	0	0	0	0	0	0	0	0	0	0
4/23/2024	6:15 AM	0	0	0	0	0	0	0	0	0	0	0	0	0
4/23/2024	6:30 AM	0	0	0	0	0	0	0	0	0	0	0	0	0
4/23/2024	6:45 AM	0	0	0	0	0	0	0	0	0	0	0	0	0
4/23/2024	7:00 AM	0	0	0	0	0	0	0	0	0	0	0	0	0
4/23/2024	7:15 AM	0	0	0	0	0	0	0	0	0	0	0	0	0
4/23/2024	7:30 AM	0	0	0	0	0	0	0	0	0	0	0	0	0
4/23/2024	7:45 AM	0	0	0	0	0	0	0	0	0	0	0	0	0
4/23/2024	8:00 AM	0	0	0	0	0	0	0	0	0	0	0	0	0
4/23/2024	8:15 AM	0	0	0	0	0	0	0	0	0	0	0	0	0
4/23/2024	8:30 AM	0	0	0	0	0	0	0	0	0	0	0	0	0
4/23/2024	8:45 AM	0	0	0	0	0	0	0	0	0	0	0	0	0
4/23/2024	9:00 AM	0	0	0	0	0	0	0	0	0	0	0	0	0
4/23/2024	9:15 AM	0	0	0	0	0	0	0	0	0	0	0	0	0
4/23/2024	9:30 AM	0	0	0	0	0	0	0	0	0	0	0	0	0
4/23/2024	9:45 AM	0	0	0	0	0	0	0	0	0	0	0	0	0
4/23/2024	10:00 AM	0	0	0	0	0	0	0	0	0	0	0	0	0
4/23/2024	10:15 AM	0	0	0	0	0	0	0	0	0	0	0	0	0
4/23/2024	10:30 AM	0	0	0	0	0	0	0	0	0	0	0	0	0
4/23/2024	10:45 AM	0	0	0	0	0	0	0	0	0	0	0	0	0
4/23/2024	11:00 AM	0	0	0	0	0	0	0	0	0	0	0	0	0
4/23/2024	11:15 AM	0	0	0	0	0	0	0	0	0	0	0	0	0
4/23/2024	11:30 AM	0	0	0	0	0	0	0	0	0	0	0	0	0
4/23/2024	11:45 AM	0	0	0	0	0	0	0	0	0	0	0	0	0
4/23/2024	12:00 PM	0	0	0	0	0	0	0	0	0	0	0	0	0
4/23/2024	12:15 PM	0	0	0	0	0	0	0	0	0	0	0	0	0
4/23/2024	12:30 PM	0	0	0	0	0	0	0	0	0	0	0	0	0
4/23/2024	12:45 PM	0	0	0	0	0	0	0	0	0	0	0	0	0
4/23/2024	1:00 PM	0	0	0	0	0	0	0	0	0	0	0	0	0
4/23/2024	1:15 PM	0	0	0	0	0	0	0	0	0	0	0	0	0
4/23/2024	1:30 PM	0	0	0	0	0	0	0	0	0	0	0	0	0
4/23/2024	1:45 PM	0	0	0	0	0	0	0	0	0	0	0	0	0
4/23/2024	2:00 PM	0	0	0	0	0	0	0	0	0	0	0	0	0
4/23/2024	2:15 PM	0	0	0	0	0	0	0	0	0	0	0	0	0
4/23/2024	2:30 PM	0	0	0	0	0	0	0	0	0	0	0	0	0
4/23/2024	2:45 PM	0	0	0	0	0	0	0	0	0	0	0	0	0
4/23/2024	3:00 PM	0	0	0	0	0	0	0	0	0	0	0	0	0
4/23/2024	3:15 PM	0	0	0	0	0	0	0	0	0	0	0	0	0
4/23/2024	3:30 PM	0	0	0	0	0	0	0	0	0	0	0	0	0
4/23/2024	3:45 PM	0	0	0	0	0	0	0	0	0	0	0	0	0
4/23/2024	4:00 PM	0	0	0	0	0	0	0	0	0	0	0	0	0
4/23/2024	4:15 PM	0	0	0	0	0	0	0	0	0	0	0	0	0
4/23/2024	4:30 PM	0	0	0	0	0	0	0	0	0	0	0	0	0
4/23/2024	4:45 PM	0	0	0	0	0	0	0	0	0	0	0	0	0
4/23/2024	5:00 PM	0	0	0	0	0	0	0	0	0	0	0	0	0
4/23/2024	5:15 PM	0	0	0	0	0	0	0	0	0	0	0	0	0
4/23/2024	5:30 PM	0	0	0	0	0	0	0	0	0	0	0	0	0
4/23/2024	5:45 PM	0	0	0	0	0	0	0	0	0	0	0	0	0
4/23/2024	6:00 PM	0	0	0	0	0	0	0	0	0	0	0	0	0
4/23/2024	6:15 PM	1	91	14	0	1	0	0	0	0	0	0	0	0
4/23/2024	6:30 PM	1	187	31	0	1	1	0	0	1	0	0	0	0
4/23/2024	6:45 PM	1	275	43	0	1	1	0	0	1	0	0	0	0
4/23/2024	7:00 PM	1	376	61	0	3	1	1	0	1	0	0	0	0
4/23/2024	7:15 PM	0	383	62	0	2	1	1	0	1	0	0	0	0
4/23/2024	7:30 PM	0	383	63	0	2	0	1	0	0	0	0	0	0
4/23/2024	7:45 PM	1	361	66	0	2	0	1	0	1	0	0	0	0
4/23/2024	8:00 PM	1	322	62	0	0	0	0	0	2	0	0	0	0
4/23/2024	8:15 PM	1	312	56	0	0	0	0	0	2	0	0	0	0
4/23/2024	8:30 PM	2	276	50	0	0	0	0	0	2	0	0	0	0
4/23/2024	8:45 PM	1	275	48	0	1	0	0	0	1	0	0	0	0
4/23/2024	9:00 PM	1	259	44	0	1	0	0	0	0	0	0	0	0
4/23/2024	9:15 PM	1	212	39	0	1	0	0	0	0	0	0	0	0
4/23/2024	9:30 PM	1	186	34	0	1	0	0	0	0	0	0	0	0
4/23/2024	9:45 PM	1	156	28	0	1	0	0	0	0	0	0	0	0
4/23/2024	10:00 PM	1	138	22	0	1	0	0	0	0	0	0	0	0
4/23/2024	10:15 PM	2	121	26	0	1	0	0	0	0	0	0	0	0
4/23/2024	10:30 PM	1	111	26	0	1	0	0	0	0	0	0	0	0
4/23/2024	10:45 PM	1	97	23	0	0	0	0	0	0	0	0	0	0
4/23/2024	11:00 PM	1	83	23	0	0	0	0	0	0	0	0	0	0
4/23/2024	11:15 PM	0	59	15	0	0	0	0	0	0	0	0	0	0
4/23/2024	11:30 PM	0	35	8	0	0	0	0	0	0	0	0	0	0
4/23/2024	11:45 PM	0	14	4	0	0	0	0	0	0	0	0	0	0

4/24/2024	12:00 AM	0	49	0	0	0	0	0	0	1	0	0	0	0
4/24/2024	12:15 AM	0	38	0	0	1	0	0	0	1	0	0	0	0
4/24/2024	12:30 AM	0	29	0	0	1	0	0	0	1	0	0	0	0
4/24/2024	12:45 AM	0	21	0	0	1	0	0	0	1	0	0	0	0
4/24/2024	1:00 AM	0	20	0	0	1	0	0	0	1	0	0	0	0
4/24/2024	1:15 AM	0	25	0	0	0	0	0	0	1	0	0	0	0
4/24/2024	1:30 AM	0	27	1	0	0	0	0	0	1	0	0	0	0
4/24/2024	1:45 AM	0	36	1	0	1	0	0	0	0	0	0	0	0
4/24/2024	2:00 AM	0	33	1	0	1	0	0	0	1	0	0	0	0
4/24/2024	2:15 AM	0	30	1	0	1	0	0	0	1	0	0	0	0
4/24/2024	2:30 AM	0	32	0	0	2	0	0	0	1	0	0	0	0
4/24/2024	2:45 AM	0	37	1	0	1	0	0	0	1	0	0	0	0
4/24/2024	3:00 AM	0	42	1	0	2	0	0	0	0	0	0	0	0
4/24/2024	3:15 AM	0	52	1	0	2	0	0	0	0	0	0	0	0
4/24/2024	3:30 AM	0	61	2	0	1	0	0	0	0	0	0	0	0
4/24/2024	3:45 AM	0	70	1	0	1	0	0	0	0	0	0	0	0
4/24/2024	4:00 AM	0	93	2	0	0	0	0	0	0	0	0	0	0
4/24/2024	4:15 AM	0	114	2	1	0	0	0	0	0	0	0	0	0
4/24/2024	4:30 AM	0	143	2	1	1	0	0	1	0	0	0	0	0
4/24/2024	4:45 AM	0	208	2	1	1	0	0	1	1	0	0	0	0
4/24/2024	5:00 AM	0	267	2	1	2	0	0	1	1	0	0	0	0
4/24/2024	5:15 AM	0	324	19	0	2	0	0	1	1	0	0	0	0
4/24/2024	5:30 AM	0	400	46	0	2	0	0	0	2	0	0	0	0
4/24/2024	5:45 AM	0	457	104	0	2	1	0	0	2	0	0	0	0
4/24/2024	6:00 AM	0	539	144	0	2	1	0	0	2	0	0	0	0
4/24/2024	6:15 AM	0	611	172	0	2	1	0	0	2	0	0	0	0
4/24/2024	6:30 AM	0	763	186	0	2	1	1	1	1	0	0	0	0
4/24/2024	6:45 AM	0	835	169	0	2	1	1	1	1	0	0	0	0
4/24/2024	7:00 AM	0	857	176	0	3	1	2	1	4	0	0	0	0
4/24/2024	7:15 AM	0	822	174	0	8	1	2	1	5	0	0	0	0
4/24/2024	7:30 AM	0	716	172	0	8	1	1	0	5	0	0	0	0
4/24/2024	7:45 AM	0	680	172	0	12	0	1	0	6	0	0	0	0
4/24/2024	8:00 AM	1	645	158	0	14	0	0	1	5	0	0	0	0
4/24/2024	8:15 AM	1	666	149	0	12	1	0	2	5	0	0	0	0
4/24/2024	8:30 AM	1	660	143	0	15	1	0	2	5	0	0	0	0
4/24/2024	8:45 AM	1	603	125	1	13	1	0	2	3	0	0	0	0
4/24/2024	9:00 AM	0	576	110	1	13	1	0	1	1	0	0	0	0
4/24/2024	9:15 AM	0	556	99	1	12	1	0	0	2	0	0	0	0
4/24/2024	9:30 AM	0	538	93	1	13	2	0	0	2	0	0	0	0
4/24/2024	9:45 AM	0	570	94	0	16	3	0	1	2	0	0	0	0
4/24/2024	10:00 AM	0	572	106	1	14	4	0	1	3	0	0	0	0
4/24/2024	10:15 AM	0	568	133	1	15	3	0	1	2	0	0	0	0
4/24/2024	10:30 AM	0	541	136	1	12	2	0	1	2	0	0	0	0
4/24/2024	10:45 AM	1	525	143	1	7	1	0	0	2	0	0	0	0
4/24/2024	11:00 AM	1	519	160	0	12	0	0	0	6	1	0	0	0
4/24/2024	11:15 AM	1	524	136	0	13	1	0	0	6	1	0	0	0
4/24/2024	11:30 AM	2	539	131	0	13	3	0	0	6	1	0	0	0
4/24/2024	11:45 AM	4	540	138	0	14	3	0	0	7	1	0	0	0
4/24/2024	12:00 PM	4	552	115	0	12	3	0	0	4	0	0	0	0
4/24/2024	12:15 PM	4	550	128	0	10	4	0	0	3	0	0	0	0
4/24/2024	12:30 PM	3	544	137	0	11	3	0	1	3	0	0	0	0
4/24/2024	12:45 PM	1	549	134	0	12	4	0	1	2	0	0	0	0
4/24/2024	1:00 PM	1	523	142	0	11	4	0	1	1	0	0	0	0
4/24/2024	1:15 PM	1	524	133	0	12	2	0	1	2	0	0	0	0
4/24/2024	1:30 PM	1	539	120	0	12	2	0	0	3	0	0	0	0
4/24/2024	1:45 PM	0	536	103	0	13	2	1	1	5	0	0	0	0
4/24/2024	2:00 PM	0	565	100	0	14	2	1	2	4	0	0	0	0
4/24/2024	2:15 PM	0	581	100	1	11	3	1	2	4	0	0	0	0
4/24/2024	2:30 PM	1	599	100	1	11	2	1	2	3	0	0	0	0
4/24/2024	2:45 PM	1	591	98	1	9	1	0	1	2	0	0	0	0
4/24/2024	3:00 PM	1	576	88	1	6	1	0	0	3	0	0	0	0
4/24/2024	3:15 PM	1	622	75	0	12	0	0	0	2	0	0	0	0
4/24/2024	3:30 PM	0	641	73	0	17	1	0	0	2	0	0	0	0
4/24/2024	3:45 PM	0	685	92	0	21	1	0	0	2	0	0	0	0
4/24/2024	4:00 PM	0	713	100	0	22	2	1	0	1	0	0	0	0
4/24/2024	4:15 PM	0	718	108	0	18	3	1	0	1	0	0	0	0
4/24/2024	4:30 PM	0	700	115	0	11	2	1	0	1	0	0	0	0
4/24/2024	4:45 PM	0	678	113	0	9	3	1	0	1	0	0	0	0
4/24/2024	5:00 PM	0	668	101	0	8	2	0	0	1	0	0	0	0
4/24/2024	5:15 PM	0	625	115	0	9	1	0	0	1	0	0	0	0
4/24/2024	5:30 PM	0	589	110	0	11	1	0	0	2	0	0	0	0
4/24/2024	5:45 PM	0	552	111	1	11	0	0	0	1	0	0	0	0
4/24/2024	6:00 PM	0	517	116	1	12	0	0	0	2	0	0	0	0
4/24/2024	6:15 PM	1	455	106	1	9	0	0	0	2	0	0	0	0
4/24/2024	6:30 PM	1	428	95	1	7	0	0	0	2	0	0	0	0
4/24/2024	6:45 PM	2	406	72	0	4	0	0	0	3	0	0	0	0
4/24/2024	7:00 PM	2	372	65	0	3	0	0	0	2	0	0	0	0
4/24/2024	7:15 PM	1	368	53	0	5	0	0	0	2	0	0	0	0
4/24/2024	7:30 PM	1	366	54	0	4	0	0	0	2	0	0	0	0
4/24/2024	7:45 PM	1	349	58	0	4	0	0	0	1	0	0	0	0
4/24/2024	8:00 PM	2	345	59	0	2	0	0	0	1	0	0	0	0
4/24/2024	8:15 PM	2	332	45	0	1	0	0	0	1	0	0	0	0
4/24/2024	8:30 PM	2	309	39	0	1	0	0	0	0	0	0	0	0
4/24/2024	8:45 PM	1	286	26	0	1	0	0	0	0	0	0	0	0
4/24/2024	9:00 PM	0	248	12	0	1	0	0	0	0	0	0	0	0
4/24/2024	9:15 PM	0	212	10	0	0	0	0	0	0	0	0	0	0
4/24/2024	9:30 PM	0	167	6	0	0	0	0	0	1	0	0	0	0
4/24/2024	9:45 PM	0	145	5	0	0	0	0	0	1	0	0	0	0
4/24/2024	10:00 PM	0	142	5	0	0	0	0	0	1	0	0	0	0
4/24/2024	10:15 PM	0	132	5	0	0	0	0	0	1	0	0	0	0
4/24/2024	10:30 PM	0	129	3	0	0	0	0	0	0	0	0	0	0
4/24/2024	10:45 PM	0	114	3	0	0	0	0	0	0	0	0	0	0
4/24/2024	11:00 PM	0	101	3	0	0	0	0	0	0	0	0	0	0
4/24/2024	11:15 PM	0	69	2	0	0	0	0	0	0	0	0	0	0
4/24/2024	11:30 PM	0	45	2	0	0	0	0	0	0	0	0	0	0
4/24/2024	11:45 PM	0	22	1	0	0	0	0	0	0	0	0	0	0

4/25/2024	12:00 AM	0	45	19	0	0	0	0	0	0	0	0	0
4/25/2024	12:15 AM	0	41	19	0	0	0	0	0	0	0	0	0
4/25/2024	12:30 AM	0	37	17	0	0	0	0	0	0	0	0	0
4/25/2024	12:45 AM	0	28	12	0	0	0	0	0	0	0	0	0
4/25/2024	1:00 AM	0	25	8	0	0	0	0	0	0	0	0	0
4/25/2024	1:15 AM	0	23	5	0	1	0	0	0	0	0	0	0
4/25/2024	1:30 AM	0	21	4	0	1	0	0	0	0	0	0	0
4/25/2024	1:45 AM	0	21	4	0	1	0	0	0	2	0	0	0
4/25/2024	2:00 AM	0	21	5	0	1	0	0	0	2	0	0	0
4/25/2024	2:15 AM	0	21	8	0	0	0	0	0	2	0	0	0
4/25/2024	2:30 AM	0	25	10	0	0	0	0	0	2	0	0	0
4/25/2024	2:45 AM	0	32	12	0	0	0	0	0	0	0	0	0
4/25/2024	3:00 AM	0	38	16	0	0	0	0	0	0	0	0	0
4/25/2024	3:15 AM	0	48	16	0	0	0	0	0	0	0	0	0
4/25/2024	3:30 AM	0	53	16	0	0	0	0	0	0	0	0	0
4/25/2024	3:45 AM	0	63	23	0	0	0	0	0	0	0	0	0
4/25/2024	4:00 AM	0	73	27	0	0	0	0	0	0	0	0	0
4/25/2024	4:15 AM	0	92	35	0	0	2	0	0	0	0	0	0
4/25/2024	4:30 AM	0	120	47	0	0	2	0	0	1	0	0	0
4/25/2024	4:45 AM	0	155	53	0	0	3	0	0	1	0	0	0
4/25/2024	5:00 AM	0	198	58	0	0	3	0	0	2	0	0	0
4/25/2024	5:15 AM	0	248	71	0	0	1	0	0	2	0	0	0
4/25/2024	5:30 AM	0	323	92	0	0	1	0	0	1	0	0	0
4/25/2024	5:45 AM	1	403	123	0	1	0	0	0	1	0	0	0
4/25/2024	6:00 AM	1	510	142	0	2	0	0	0	1	0	0	0
4/25/2024	6:15 AM	1	619	169	0	4	1	0	0	1	0	0	0
4/25/2024	6:30 AM	1	720	183	0	8	1	1	1	2	0	0	0
4/25/2024	6:45 AM	0	794	201	0	10	2	1	1	2	0	0	0
4/25/2024	7:00 AM	0	816	219	0	14	3	2	1	5	0	0	0
4/25/2024	7:15 AM	0	798	211	0	15	5	4	1	8	0	0	0
4/25/2024	7:30 AM	0	765	198	0	14	6	3	0	8	0	0	0
4/25/2024	7:45 AM	0	720	167	0	17	5	3	0	10	0	0	0
4/25/2024	8:00 AM	0	673	160	0	15	5	3	0	8	0	0	0
4/25/2024	8:15 AM	0	656	159	0	14	5	1	0	5	0	0	0
4/25/2024	8:30 AM	0	646	156	1	12	4	1	0	4	0	0	0
4/25/2024	8:45 AM	0	644	161	2	6	10	1	0	5	0	0	0
4/25/2024	9:00 AM	0	640	143	2	5	11	0	1	3	0	0	0
4/25/2024	9:15 AM	0	613	125	4	8	9	1	1	3	0	0	0
4/25/2024	9:30 AM	0	586	122	3	12	10	2	2	3	0	0	0
4/25/2024	9:45 AM	0	565	114	2	16	5	2	2	1	0	0	0
4/25/2024	10:00 AM	0	577	115	3	15	4	2	1	3	0	0	0
4/25/2024	10:15 AM	0	599	112	2	10	5	1	2	4	0	0	0
4/25/2024	10:30 AM	0	586	123	3	6	4	0	1	7	0	0	0
4/25/2024	10:45 AM	1	584	127	3	3	3	0	1	9	0	0	0
4/25/2024	11:00 AM	1	567	134	2	3	2	0	1	8	0	0	0
4/25/2024	11:15 AM	2	577	148	2	6	0	0	0	8	0	0	0
4/25/2024	11:30 AM	2	600	138	2	10	0	0	0	8	0	0	0
4/25/2024	11:45 AM	1	605	140	3	12	0	0	0	7	0	0	0
4/25/2024	12:00 PM	1	593	137	7	15	0	2	0	10	0	0	0
4/25/2024	12:15 PM	0	585	143	7	15	0	2	0	9	0	0	0
4/25/2024	12:30 PM	1	562	141	6	15	0	2	1	6	0	0	0
4/25/2024	12:45 PM	2	535	139	6	17	0	2	1	7	0	0	0
4/25/2024	1:00 PM	2	552	135	2	14	0	0	1	3	0	0	0
4/25/2024	1:15 PM	2	555	114	2	14	0	0	1	5	0	0	0
4/25/2024	1:30 PM	1	565	115	2	12	1	0	2	5	0	0	0
4/25/2024	1:45 PM	0	603	108	2	11	2	0	2	3	0	0	0
4/25/2024	2:00 PM	0	594	107	3	15	2	0	2	6	0	0	0
4/25/2024	2:15 PM	1	596	113	4	16	2	0	3	4	0	0	0
4/25/2024	2:30 PM	2	590	112	4	18	1	0	1	5	0	0	0
4/25/2024	2:45 PM	2	599	112	3	18	1	0	1	5	0	0	0
4/25/2024	3:00 PM	2	620	130	2	15	1	0	1	2	0	0	0
4/25/2024	3:15 PM	1	607	138	0	12	1	0	0	4	0	0	0
4/25/2024	3:30 PM	0	638	145	0	10	1	0	0	5	0	0	0
4/25/2024	3:45 PM	0	670	144	0	10	0	0	0	4	0	0	0
4/25/2024	4:00 PM	0	676	140	0	10	0	0	0	4	0	0	0
4/25/2024	4:15 PM	0	740	131	0	12	0	0	0	2	0	0	0
4/25/2024	4:30 PM	0	699	127	0	9	0	0	0	2	0	0	0
4/25/2024	4:45 PM	0	657	124	0	6	0	0	0	2	0	0	0
4/25/2024	5:00 PM	0	642	104	0	5	0	0	0	3	0	0	0
4/25/2024	5:15 PM	0	589	97	1	4	1	0	0	3	0	0	0
4/25/2024	5:30 PM	0	606	90	1	6	1	0	0	2	0	0	0
4/25/2024	5:45 PM	1	587	91	1	7	1	0	1	2	0	0	0
4/25/2024	6:00 PM	1	565	87	1	7	1	0	1	2	0	0	0
4/25/2024	6:15 PM	1	406	68	0	5	0	0	1	2	0	0	0
4/25/2024	6:30 PM	1	261	41	0	3	0	0	1	1	0	0	0
4/25/2024	6:45 PM	0	125	16	0	1	0	0	0	1	0	0	0
4/25/2024	7:00 PM	0	0	0	0	0	0	0	0	0	0	0	0
4/25/2024	7:15 PM	0	0	0	0	0	0	0	0	0	0	0	0
4/25/2024	7:30 PM	0	0	0	0	0	0	0	0	0	0	0	0
4/25/2024	7:45 PM	0	0	0	0	0	0	0	0	0	0	0	0
4/25/2024	8:00 PM	0	0	0	0	0	0	0	0	0	0	0	0
4/25/2024	8:15 PM	0	0	0	0	0	0	0	0	0	0	0	0
4/25/2024	8:30 PM	0	0	0	0	0	0	0	0	0	0	0	0
4/25/2024	8:45 PM	0	0	0	0	0	0	0	0	0	0	0	0
4/25/2024	9:00 PM	0	0	0	0	0	0	0	0	0	0	0	0
4/25/2024	9:15 PM	0	0	0	0	0	0	0	0	0	0	0	0
4/25/2024	9:30 PM	0	0	0	0	0	0	0	0	0	0	0	0
4/25/2024	9:45 PM	0	0	0	0	0	0	0	0	0	0	0	0
4/25/2024	10:00 PM	0	0	0	0	0	0	0	0	0	0	0	0
4/25/2024	10:15 PM	0	0	0	0	0	0	0	0	0	0	0	0
4/25/2024	10:30 PM	0	0	0	0	0	0	0	0	0	0	0	0
4/25/2024	10:45 PM	0	0	0	0	0	0	0	0	0	0	0	0
4/25/2024	11:00 PM	0	0	0	0	0	0	0	0	0	0	0	0
4/25/2024	11:15 PM	0	0	0	0	0	0	0	0	0	0	0	0
4/25/2024	11:30 PM	0	0	0	0	0	0	0	0	0	0	0	0
4/25/2024	11:45 PM	0	0	0	0	0	0	0	0	0	0	0	0

Bi-Directional Class Count || NB EB 15min

Columbia, SC

Marr Traffic DATA COLLECTION
www.marrtraffic.com

Site 27
I-26 James F. Byrnes Expy On/Off-Ramp,
west of Harbison Blvd

Date
Tuesday, April 23, 2024

Lat/Long
34.078961°, -81.153215°

Weather
Fair
58°F

Click here for Detailed Weather

Click here for Map

0000 - 2400 (Weekday 24h Session) (04-23-2024)
NB EB 15min

	Eastbound (Movement 27.1)													15min	60min
Time	1	2	3	4	5	6	7	8	9	10	11	12	13	Total	Total
0000 - 0015	0	0	0	0	0	0	0	0	0	0	0	0	0	**0**	
0015 - 0030	0	0	0	0	0	0	0	0	0	0	0	0	0	**0**	
0030 - 0045	0	0	0	0	0	0	0	0	0	0	0	0	0	**0**	
0045 - 0100	0	0	0	0	0	0	0	0	0	0	0	0	0	**0**	**0**
0100 - 0115	0	0	0	0	0	0	0	0	0	0	0	0	0	**0**	
0115 - 0130	0	0	0	0	0	0	0	0	0	0	0	0	0	**0**	
0130 - 0145	0	0	0	0	0	0	0	0	0	0	0	0	0	**0**	
0145 - 0200	0	0	0	0	0	0	0	0	0	0	0	0	0	**0**	**0**
0200 - 0215	0	0	0	0	0	0	0	0	0	0	0	0	0	**0**	
0215 - 0230	0	0	0	0	0	0	0	0	0	0	0	0	0	**0**	
0230 - 0245	0	0	0	0	0	0	0	0	0	0	0	0	0	**0**	
0245 - 0300	0	0	0	0	0	0	0	0	0	0	0	0	0	**0**	**0**
0300 - 0315	0	0	0	0	0	0	0	0	0	0	0	0	0	**0**	
0315 - 0330	0	0	0	0	0	0	0	0	0	0	0	0	0	**0**	
0330 - 0345	0	0	0	0	0	0	0	0	0	0	0	0	0	**0**	
0345 - 0400	0	0	0	0	0	0	0	0	0	0	0	0	0	**0**	**0**
0400 - 0415	0	0	0	0	0	0	0	0	0	0	0	0	0	**0**	
0415 - 0430	0	0	0	0	0	0	0	0	0	0	0	0	0	**0**	
0430 - 0445	0	0	0	0	0	0	0	0	0	0	0	0	0	**0**	
0445 - 0500	0	0	0	0	0	0	0	0	0	0	0	0	0	**0**	**0**
0500 - 0515	0	0	0	0	0	0	0	0	0	0	0	0	0	**0**	
0515 - 0530	0	0	0	0	0	0	0	0	0	0	0	0	0	**0**	
0530 - 0545	0	0	0	0	0	0	0	0	0	0	0	0	0	**0**	
0545 - 0600	0	0	0	0	0	0	0	0	0	0	0	0	0	**0**	**0**
0600 - 0615	0	0	0	0	0	0	0	0	0	0	0	0	0	**0**	
0615 - 0630	0	0	0	0	0	0	0	0	0	0	0	0	0	**0**	
0630 - 0645	0	0	0	0	0	0	0	0	0	0	0	0	0	**0**	
0645 - 0700	0	0	0	0	0	0	0	0	0	0	0	0	0	**0**	**0**
0700 - 0715	0	0	0	0	0	0	0	0	0	0	0	0	0	**0**	
0715 - 0730	0	0	0	0	0	0	0	0	0	0	0	0	0	**0**	
0730 - 0745	0	0	0	0	0	0	0	0	0	0	0	0	0	**0**	
0745 - 0800	0	0	0	0	0	0	0	0	0	0	0	0	0	**0**	**0**
0800 - 0815	0	0	0	0	0	0	0	0	0	0	0	0	0	**0**	
0815 - 0830	0	0	0	0	0	0	0	0	0	0	0	0	0	**0**	
0830 - 0845	0	0	0	0	0	0	0	0	0	0	0	0	0	**0**	
0845 - 0900	0	0	0	0	0	0	0	0	0	0	0	0	0	**0**	**0**
0900 - 0915	0	0	0	0	0	0	0	0	0	0	0	0	0	**0**	
0915 - 0930	0	0	0	0	0	0	0	0	0	0	0	0	0	**0**	
0930 - 0945	0	0	0	0	0	0	0	0	0	0	0	0	0	**0**	
0945 - 1000	0	0	0	0	0	0	0	0	0	0	0	0	0	**0**	**0**
1000 - 1015	0	0	0	0	0	0	0	0	0	0	0	0	0	**0**	
1015 - 1030	0	0	0	0	0	0	0	0	0	0	0	0	0	**0**	
1030 - 1045	0	0	0	0	0	0	0	0	0	0	0	0	0	**0**	
1045 - 1100	0	0	0	0	0	0	0	0	0	0	0	0	0	**0**	**0**
1100 - 1115	0	0	0	0	0	0	0	0	0	0	0	0	0	**0**	
1115 - 1130	0	0	0	0	0	0	0	0	0	0	0	0	0	**0**	
1130 - 1145	0	0	0	0	0	0	0	0	0	0	0	0	0	**0**	
1145 - 1200	0	0	0	0	0	0	0	0	0	0	0	0	0	**0**	**0**
1200 - 1215	0	0	0	0	0	0	0	0	0	0	0	0	0	**0**	
1215 - 1230	0	0	0	0	0	0	0	0	0	0	0	0	0	**0**	
1230 - 1245	0	0	0	0	0	0	0	0	0	0	0	0	0	**0**	
1245 - 1300	0	0	0	0	0	0	0	0	0	0	0	0	0	**0**	**0**
1300 - 1315	0	0	0	0	0	0	0	0	0	0	0	0	0	**0**	
1315 - 1330	0	0	0	0	0	0	0	0	0	0	0	0	0	**0**	
1330 - 1345	0	0	0	0	0	0	0	0	0	0	0	0	0	**0**	
1345 - 1400	0	0	0	0	0	0	0	0	0	0	0	0	0	**0**	**0**
1400 - 1415	0	0	0	0	0	0	0	0	0	0	0	0	0	**0**	
1415 - 1430	0	0	0	0	0	0	0	0	0	0	0	0	0	**0**	
1430 - 1445	0	0	0	0	0	0	0	0	0	0	0	0	0	**0**	
1445 - 1500	0	0	0	0	0	0	0	0	0	0	0	0	0	**0**	**0**
1500 - 1515	0	0	0	0	0	0	0	0	0	0	0	0	0	**0**	
1515 - 1530	0	0	0	0	0	0	0	0	0	0	0	0	0	**0**	
1530 - 1545	0	0	0	0	0	0	0	0	0	0	0	0	0	**0**	
1545 - 1600	0	0	0	0	0	0	0	0	0	0	0	0	0	**0**	**0**
1600 - 1615	0	0	0	0	0	0	0	0	0	0	0	0	0	**0**	
1615 - 1630	0	0	0	0	0	0	0	0	0	0	0	0	0	**0**	
1630 - 1645	0	0	0	0	0	0	0	0	0	0	0	0	0	**0**	
1645 - 1700	0	0	0	0	0	0	0	0	0	0	0	0	0	**0**	**0**
1700 - 1715	0	0	0	0	0	0	0	0	0	0	0	0	0	**0**	
1715 - 1730	0	0	0	0	0	0	0	0	0	0	0	0	0	**0**	
1730 - 1745	0	0	0	0	0	0	0	0	0	0	0	0	0	**0**	
1745 - 1800	0	0	0	0	0	0	0	0	0	0	0	0	0	**0**	**0**
1800 - 1815	0	0	0	0	0	0	0	0	0	0	0	0	0	**0**	
1815 - 1830	0	0	0	0	0	0	0	0	0	0	0	0	0	**0**	
1830 - 1845	0	0	0	0	0	0	0	0	0	0	0	0	0	**0**	
1845 - 1900	0	0	0	0	0	0	0	0	0	0	0	0	0	**0**	**0**
1900 - 1915	0	125	24	0	1	0	0	0	1	0	0	0	0	**151**	
1915 - 1930	0	110	19	1	1	0	0	0	1	0	0	0	0	**132**	
1930 - 1945	0	108	32	0	0	2	0	0	0	0	0	0	0	**142**	
1945 - 2000	0	100	15	0	0	1	0	1	0	0	0	0	0	**117**	**542**
2000 - 2015	0	85	14	0	0	0	0	0	0	0	0	0	0	**99**	
2015 - 2030	0	83	9	0	0	0	0	0	2	0	0	0	0	**94**	
2030 - 2045	0	86	9	0	1	0	0	0	0	0	0	0	0	**96**	
2045 - 2100	0	50	15	0	0	0	0	0	0	0	0	0	0	**65**	**354**
2100 - 2115	0	74	2	0	1	0	0	0	0	0	0	0	0	**77**	
2115 - 2130	0	47	5	0	0	0	0	0	0	0	0	0	0	**52**	
2130 - 2145	0	66	3	0	0	0	0	0	0	0	0	0	0	**69**	
2145 - 2200	0	45	1	0	0	0	0	0	1	0	0	0	0	**47**	**245**
2200 - 2215	0	47	6	1	1	0	0	0	1	0	0	0	0	**56**	
2215 - 2230	0	37	4	0	0	0	0	0	0	0	0	0	0	**41**	
2230 - 2245	0	39	3	0	0	0	0	0	0	0	0	0	0	**42**	
2245 - 2300	0	27	1	0	0	0	0	0	0	0	0	0	0	**28**	**167**
2300 - 2315	0	24	2	0	1	0	0	0	1	0	0	0	0	**28**	
2315 - 2330	0	22	3	1	0	0	0	0	0	0	0	0	0	**26**	
2330 - 2345	0	18	2	0	0	0	0	0	0	0	0	0	0	**20**	
2345 - 0000	0	21	0	0	0	0	0	0	0	0	0	0	0	**21**	**95**

Session Total	0	1214	169	3	6	3	0	1	7	0	0	0	0	**1403**
Session Average	0.00	12.65	1.76	0.03	0.06	0.03	0.00	0.01	0.07	0.00	0.00	0.00	0.00	**14.61**
Session Percentage	0.00	86.53	12.05	0.21	0.43	0.21	0.00	0.07	0.50	0.00	0.00	0.00	0.00	

AM Peak Hour	-	-	-	-	-	-	-	-	-	-	-	-	-	**-**
AM Peak Volume	0	0	0	0	0	0	0	0	0	0	0	0	0	**0**

Noon Peak Hour	-	-	-	-	-	-	-	-	-	-	-	-	-	**-**
Noon Peak Volume	0	0	0	0	0	0	0	0	0	0	0	0	0	**0**

PM Peak Hour	-	1900 - 2000	1900 - 2000	1830 - 1930	1830 - 1930	1900 - 2000	-	1900 - 2000	1830 - 1930	-	-	-	-	**1900 - 2000**
PM Peak Volume	0	443	90	1	2	3	0	1	2	0	0	0	0	**542**

Site 27
I-26 James F. Byrnes Expy On/Off-Ramp,
west of Harbison Blvd

Date
Wednesday, April 24, 2024

Lat/Long
34.078961°, -81.153215°

Weather
Fair
66°F

Click here for Detailed Weather

0000 - 2400 (Weekday 24h Session) (04-24-2024)
NB EB 15min

	Eastbound (Movement 27.1)													15min	60min
Time	1	2	3	4	5	6	7	8	9	10	11	12	13	Total	Total
0000 - 0015	0	22	1	0	0	0	0	0	0	0	0	0	0	**23**	
0015 - 0030	0	11	0	0	0	0	0	0	1	0	0	0	0	**12**	
0030 - 0045	0	13	0	0	0	0	0	0	0	0	0	0	0	**13**	
0045 - 0100	0	9	1	0	0	0	0	0	0	0	0	0	0	**10**	**58**
0100 - 0115	0	9	2	0	0	0	0	0	0	0	0	0	0	**11**	
0115 - 0130	0	7	0	0	0	0	0	0	0	0	0	0	0	**7**	
0130 - 0145	0	9	0	0	0	0	0	0	0	0	0	0	0	**9**	
0145 - 0200	0	9	0	0	0	0	0	0	0	0	0	0	0	**9**	**36**
0200 - 0215	0	3	0	0	0	0	0	0	0	0	0	0	0	**3**	
0215 - 0230	0	8	3	0	0	0	0	0	0	0	0	0	0	**11**	
0230 - 0245	0	7	0	0	0	0	0	0	0	0	0	0	0	**7**	
0245 - 0300	0	6	0	0	0	1	0	0	1	0	0	0	0	**8**	**29**
0300 - 0315	0	8	0	0	0	0	0	0	0	0	0	0	0	**8**	
0315 - 0330	0	7	0	0	0	0	0	0	0	0	0	0	0	**7**	
0330 - 0345	0	8	0	0	0	1	0	0	0	0	0	0	0	**9**	
0345 - 0400	0	5	0	0	0	0	0	0	0	0	0	0	0	**5**	**29**
0400 - 0415	0	6	0	0	0	0	0	0	0	0	0	0	0	**6**	
0415 - 0430	0	2	1	0	0	0	0	0	1	0	0	0	0	**4**	
0430 - 0445	0	7	0	0	0	0	0	0	1	0	0	0	0	**8**	
0445 - 0500	0	18	2	0	1	0	0	0	1	0	0	0	0	**22**	**40**
0500 - 0515	0	6	2	0	0	1	0	0	0	0	0	0	0	**9**	
0515 - 0530	0	26	2	0	0	0	0	0	1	0	0	0	0	**29**	
0530 - 0545	0	24	0	0	0	1	0	0	0	0	0	0	0	**25**	
0545 - 0600	0	38	2	0	1	0	0	0	0	0	0	0	0	**41**	**104**
0600 - 0615	0	22	4	0	0	0	0	1	3	0	0	0	0	**30**	
0615 - 0630	0	32	9	0	0	0	0	0	0	0	0	0	0	**41**	
0630 - 0645	0	54	7	0	0	1	0	0	2	0	0	0	0	**64**	
0645 - 0700	0	57	12	0	0	0	0	0	1	0	0	0	0	**70**	**205**
0700 - 0715	0	79	17	0	0	0	0	0	0	0	0	0	0	**96**	
0715 - 0730	0	96	16	0	4	0	1	0	1	0	0	0	0	**118**	
0730 - 0745	0	117	23	1	5	1	0	0	1	0	0	0	0	**148**	
0745 - 0800	0	132	28	0	3	1	0	0	0	0	0	0	0	**164**	**526**
0800 - 0815	0	105	25	2	1	3	0	0	0	0	0	0	0	**136**	
0815 - 0830	0	93	38	0	2	4	0	0	0	0	0	0	0	**137**	
0830 - 0845	0	112	35	0	2	1	0	0	2	0	0	0	0	**152**	
0845 - 0900	0	112	31	0	1	0	0	1	1	0	0	0	0	**146**	**571**
0900 - 0915	0	110	32	1	1	2	0	0	0	0	0	0	0	**146**	
0915 - 0930	0	79	17	1	2	1	0	0	1	0	0	0	0	**101**	
0930 - 0945	0	109	22	0	3	0	0	0	1	0	0	0	0	**135**	
0945 - 1000	0	137	32	0	3	0	0	0	0	0	0	0	0	**172**	**554**
1000 - 1015	1	121	35	0	0	0	0	0	2	0	0	0	0	**159**	
1015 - 1030	0	133	37	0	0	1	0	0	2	0	0	0	0	**173**	
1030 - 1045	0	148	30	0	1	0	0	1	1	0	0	0	0	**181**	
1045 - 1100	0	155	36	0	3	0	0	0	1	0	0	0	0	**195**	**708**
1100 - 1115	0	155	31	0	5	1	1	0	0	0	0	0	0	**193**	
1115 - 1130	0	167	39	3	1	0	0	0	2	0	0	0	0	**212**	
1130 - 1145	0	175	35	1	1	0	0	0	0	0	0	0	0	**212**	
1145 - 1200	0	171	46	1	3	0	0	0	0	0	0	0	0	**221**	**838**
1200 - 1215	1	183	43	1	2	0	0	0	0	0	0	0	0	**230**	
1215 - 1230	1	199	41	5	2	0	0	0	1	0	0	0	0	**249**	
1230 - 1245	0	175	43	0	2	0	0	0	1	0	0	0	0	**221**	
1245 - 1300	0	179	38	1	2	0	0	0	0	0	0	0	0	**220**	**920**
1300 - 1315	0	159	29	0	0	1	0	0	0	0	0	0	0	**189**	
1315 - 1330	0	182	29	0	1	0	0	0	1	0	0	0	0	**213**	
1330 - 1345	0	165	29	0	1	2	0	0	2	0	0	0	0	**199**	
1345 - 1400	0	147	37	0	0	1	0	0	0	0	0	0	0	**185**	**786**
1400 - 1415	1	160	26	0	0	1	0	0	1	0	0	0	0	**189**	
1415 - 1430	0	163	34	1	0	0	0	0	2	0	0	0	0	**200**	
1430 - 1445	0	167	32	0	1	0	0	0	2	0	0	0	0	**202**	
1445 - 1500	0	173	29	0	2	0	0	0	0	0	0	0	0	**204**	**795**
1500 - 1515	0	183	32	0	0	1	0	0	0	0	0	0	0	**216**	
1515 - 1530	0	187	30	0	2	0	0	0	0	0	0	0	0	**219**	
1530 - 1545	0	190	29	0	2	0	0	0	0	0	0	0	0	**221**	
1545 - 1600	0	211	32	0	1	0	0	0	2	0	0	0	0	**246**	**902**
1600 - 1615	0	175	25	0	0	0	0	0	1	0	0	0	0	**201**	
1615 - 1630	1	181	30	0	0	0	0	0	1	0	0	0	0	**213**	
1630 - 1645	1	196	24	0	0	0	0	0	1	0	0	0	0	**222**	
1645 - 1700	0	173	36	0	2	1	0	0	0	0	0	0	0	**212**	**848**
1700 - 1715	0	163	28	0	3	0	0	0	0	0	0	0	0	**194**	
1715 - 1730	0	152	31	0	0	0	0	0	0	0	0	0	0	**183**	
1730 - 1745	0	154	28	0	0	0	0	0	0	0	0	0	0	**182**	
1745 - 1800	0	193	29	0	0	0	0	0	1	0	0	0	0	**223**	**782**
1800 - 1815	0	183	34	0	1	1	0	0	1	0	0	0	0	**220**	
1815 - 1830	1	185	37	1	2	0	0	0	1	0	0	0	0	**227**	
1830 - 1845	0	171	26	0	1	3	0	0	0	0	0	0	0	**201**	
1845 - 1900	1	140	16	0	1	0	0	0	1	0	0	0	0	**159**	**807**
1900 - 1915	1	147	16	0	2	0	0	0	0	0	0	0	0	**166**	
1915 - 1930	0	127	29	0	1	1	0	0	0	0	0	0	0	**158**	
1930 - 1945	0	107	22	0	0	0	0	0	1	0	0	0	0	**130**	
1945 - 2000	0	107	12	0	0	0	0	0	0	0	0	0	0	**119**	**573**
2000 - 2015	0	84	16	0	0	0	0	0	0	0	0	0	0	**100**	
2015 - 2030	0	99	12	0	0	0	0	0	0	0	0	0	0	**111**	
2030 - 2045	0	101	11	0	0	0	0	0	0	0	0	0	0	**112**	
2045 - 2100	0	65	8	0	0	0	0	0	0	0	0	0	0	**73**	**396**
2100 - 2115	0	79	5	0	0	0	0	0	0	0	0	0	0	**84**	
2115 - 2130	0	53	2	0	0	0	0	0	0	0	0	0	0	**55**	
2130 - 2145	0	63	1	0	0	0	0	0	0	0	0	0	0	**64**	
2145 - 2200	1	60	2	0	0	0	0	0	0	0	0	0	0	**63**	**266**
2200 - 2215	0	38	3	0	1	0	0	0	0	0	0	0	0	**42**	
2215 - 2230	0	35	1	0	0	0	0	0	0	0	0	0	0	**36**	
2230 - 2245	0	41	0	0	0	0	0	0	0	0	0	0	0	**41**	
2245 - 2300	0	32	0	0	1	0	0	0	1	0	0	0	0	**34**	**153**
2300 - 2315	0	29	3	1	1	1	0	0	0	0	0	0	0	**35**	
2315 - 2330	0	27	0	0	0	0	0	0	0	0	0	0	0	**27**	
2330 - 2345	0	17	0	0	0	0	0	0	0	0	0	0	0	**17**	
2345 - 0000	0	12	0	0	0	0	0	0	1	0	0	0	0	**13**	**92**

Session Total	10	9151	1673	20	77	33	2	3	49	0	0	0	0	**11018**
Session Average	0.10	95.32	17.43	0.21	0.80	0.34	0.02	0.03	0.51	0.00	0.00	0.00	0.00	**114.77**
Session Percentage	0.09	83.06	15.18	0.18	0.70	0.30	0.02	0.03	0.44	0.00	0.00	0.00	0.00	

AM Peak Hour	0915 - 1015	0945 - 1045	0815 - 0915	0715 - 0815	0715 - 0815	0730 - 0830	0630 - 0730	0515 - 0615	0600 - 0700	-	-	-	-	**0945 - 1045**
AM Peak Volume	1	539	136	3	13	9	1	1	6	0	0	0	0	**685**

Noon Peak Hour	1130 - 1230	1200 - 1300	1145 - 1245	1130 - 1230	1030 - 1130	1300 - 1400	1015 - 1115	1000 - 1100	1000 - 1100	-	-	-	-	**1145 - 1245**
Noon Peak Volume	2	736	173	8	10	4	1	1	6	0	0	0	0	**921**

PM Peak Hour	1815 - 1915	1500 - 1600	1730 - 1830	1730 - 1830	1815 - 1915	1745 - 1845	-	-	1545 - 1645	-	-	-	-	**1500 - 1600**
PM Peak Volume	3	771	128	1	6	4	0	0	5	0	0	0	0	**902**

Site 27
I-26 James F. Byrnes Expy On/Off-Ramp,
west of Harbison Blvd

Date
Thursday, April 25, 2024

Lat/Long
34.078961°, -81.153215°

Weather
Fair
67°F

Click here for Detailed Weather

0000 - 2400 (Weekday 24h Session) (04-25-2024)
NB EB 15min

	Eastbound (Movement 27.1)													15min	60min
TIME	1	2	3	4	5	6	7	8	9	10	11	12	13	Total	Total
0000 - 0015	0	15	5	0	0	0	0	0	0	0	0	0	0	**20**	
0015 - 0030	0	8	2	0	0	0	0	0	1	0	0	0	0	**11**	
0030 - 0045	0	12	2	0	0	0	0	0	0	0	0	0	0	**14**	
0045 - 0100	0	6	2	0	0	0	0	0	0	0	0	0	0	**8**	**53**
0100 - 0115	0	10	2	0	0	0	0	1	0	0	0	0	0	**13**	
0115 - 0130	0	11	3	0	0	0	0	0	1	0	0	0	0	**15**	
0130 - 0145	0	4	0	0	0	0	0	0	0	0	0	0	0	**4**	
0145 - 0200	0	4	2	0	0	0	0	0	0	0	0	0	0	**6**	**38**
0200 - 0215	0	7	2	0	0	0	0	0	0	0	0	0	0	**9**	
0215 - 0230	0	6	1	0	0	0	0	0	0	0	0	0	0	**7**	
0230 - 0245	0	7	2	0	0	0	0	0	0	0	0	0	0	**9**	
0245 - 0300	0	5	1	0	1	0	0	0	0	0	0	0	0	**7**	**32**
0300 - 0315	0	3	0	0	2	0	0	0	0	0	0	0	0	**5**	
0315 - 0330	0	8	2	0	0	0	0	0	0	0	0	0	0	**10**	
0330 - 0345	0	5	2	0	0	0	0	0	0	0	0	0	0	**7**	
0345 - 0400	0	4	2	0	0	0	0	0	0	0	0	0	0	**6**	**28**
0400 - 0415	0	10	1	0	2	0	0	1	0	0	0	0	0	**14**	
0415 - 0430	0	4	1	0	1	0	0	0	0	0	0	0	0	**6**	
0430 - 0445	0	6	3	0	0	0	0	0	0	0	0	0	0	**9**	
0445 - 0500	0	14	3	0	2	0	0	0	0	0	0	0	0	**19**	**48**
0500 - 0515	0	16	2	0	0	0	0	0	0	0	0	0	0	**18**	
0515 - 0530	0	21	2	0	2	0	0	0	1	0	0	0	0	**26**	
0530 - 0545	0	29	2	0	0	0	0	0	0	0	0	0	0	**31**	
0545 - 0600	0	31	3	0	0	0	0	0	1	0	0	0	0	**35**	**110**
0600 - 0615	0	29	5	0	1	0	0	0	0	0	0	0	0	**35**	
0615 - 0630	1	29	8	0	0	0	0	0	3	0	0	0	0	**41**	
0630 - 0645	0	38	11	1	1	0	0	1	0	0	0	0	0	**52**	
0645 - 0700	0	45	14	0	1	0	0	2	1	0	0	0	0	**63**	**191**
0700 - 0715	0	84	17	0	1	1	0	0	3	0	0	0	0	**106**	
0715 - 0730	0	94	22	0	1	0	0	0	0	0	0	0	0	**117**	
0730 - 0745	0	127	23	0	3	0	0	0	0	0	0	0	0	**154**	
0745 - 0800	0	103	30	0	1	0	0	0	0	0	0	0	0	**134**	**511**
0800 - 0815	0	115	26	0	0	1	0	0	0	0	0	0	0	**142**	
0815 - 0830	0	97	28	0	1	0	0	0	1	0	0	0	0	**127**	
0830 - 0845	0	115	31	0	1	1	0	0	0	0	0	0	0	**148**	
0845 - 0900	0	96	32	0	3	0	0	0	0	0	0	0	0	**131**	**548**
0900 - 0915	0	117	26	0	3	1	0	0	1	0	0	0	0	**148**	
0915 - 0930	0	100	23	1	3	0	0	0	2	0	0	0	0	**129**	
0930 - 0945	0	126	41	0	3	0	0	0	0	0	0	0	0	**170**	
0945 - 1000	0	130	35	0	4	0	0	0	0	1	0	0	0	**170**	**617**
1000 - 1015	0	114	28	0	4	1	0	1	1	0	0	0	0	**149**	
1015 - 1030	0	146	32	0	3	0	0	0	1	0	0	0	0	**182**	
1030 - 1045	0	143	27	1	2	0	0	0	1	0	0	0	0	**174**	
1045 - 1100	1	176	37	0	2	0	0	1	2	0	0	0	0	**219**	**724**
1100 - 1115	0	178	34	0	4	0	1	1	0	0	0	0	0	**218**	
1115 - 1130	0	195	33	0	0	0	0	1	0	0	0	0	0	**229**	
1130 - 1145	1	200	43	0	4	0	0	2	3	0	0	0	0	**253**	
1145 - 1200	1	187	31	1	2	1	1	0	1	0	0	0	0	**225**	**925**
1200 - 1215	0	221	33	0	1	0	0	0	0	0	0	0	0	**255**	
1215 - 1230	0	216	29	0	4	1	0	0	1	0	0	0	0	**251**	
1230 - 1245	1	194	33	0	4	0	0	0	1	0	0	0	0	**233**	
1245 - 1300	1	183	30	1	1	1	0	0	0	0	0	0	0	**217**	**956**
1300 - 1315	0	187	23	0	1	0	0	0	0	0	0	0	0	**211**	
1315 - 1330	0	191	33	0	2	0	0	0	0	0	0	0	0	**226**	
1330 - 1345	0	204	36	0	1	0	0	0	1	0	0	0	0	**242**	
1345 - 1400	0	203	30	1	0	0	0	0	0	0	0	0	0	**234**	**913**
1400 - 1415	1	183	26	0	1	1	0	0	2	0	0	0	0	**214**	
1415 - 1430	0	176	21	0	3	0	0	0	4	0	0	0	0	**204**	
1430 - 1445	1	187	28	0	2	0	0	0	1	0	0	0	0	**219**	
1445 - 1500	0	186	20	0	0	1	0	0	1	0	0	0	0	**208**	**845**
1500 - 1515	0	171	31	0	2	1	0	0	0	0	0	0	0	**205**	
1515 - 1530	0	179	27	0	1	0	0	0	1	0	0	0	0	**208**	
1530 - 1545	0	167	24	0	2	0	0	0	1	0	0	0	0	**194**	
1545 - 1600	0	183	14	0	0	0	0	0	1	0	0	0	0	**198**	**805**
1600 - 1615	0	179	31	0	1	0	0	0	2	0	0	0	0	**213**	
1615 - 1630	0	154	17	0	0	0	0	0	2	0	0	0	0	**173**	
1630 - 1645	0	169	25	0	1	0	0	0	1	0	0	0	0	**196**	
1645 - 1700	0	173	24	0	3	0	0	0	1	0	0	0	0	**201**	**783**
1700 - 1715	0	177	19	0	1	1	0	0	0	0	0	0	0	**198**	
1715 - 1730	0	169	25	0	0	0	0	0	0	0	0	0	0	**194**	
1730 - 1745	0	182	18	1	0	0	0	0	0	0	0	0	0	**201**	
1745 - 1800	0	172	28	0	0	0	0	0	0	0	0	0	0	**200**	**793**
1800 - 1815	0	188	29	0	0	0	0	0	0	0	0	0	0	**217**	
1815 - 1830	2	195	28	1	0	0	0	0	0	0	0	0	0	**226**	
1830 - 1845	1	176	14	1	1	0	0	0	0	0	0	0	0	**193**	
1845 - 1900	0	147	19	0	0	0	0	0	0	0	0	0	0	**166**	**802**
1900 - 1915	0	0	0	0	0	0	0	0	0	0	0	0	0	**0**	
1915 - 1930	0	0	0	0	0	0	0	0	0	0	0	0	0	**0**	
1930 - 1945	0	0	0	0	0	0	0	0	0	0	0	0	0	**0**	
1945 - 2000	0	0	0	0	0	0	0	0	0	0	0	0	0	**0**	**0**
2000 - 2015	0	0	0	0	0	0	0	0	0	0	0	0	0	**0**	
2015 - 2030	0	0	0	0	0	0	0	0	0	0	0	0	0	**0**	
2030 - 2045	0	0	0	0	0	0	0	0	0	0	0	0	0	**0**	
2045 - 2100	0	0	0	0	0	0	0	0	0	0	0	0	0	**0**	**0**
2100 - 2115	0	0	0	0	0	0	0	0	0	0	0	0	0	**0**	
2115 - 2130	0	0	0	0	0	0	0	0	0	0	0	0	0	**0**	
2130 - 2145	0	0	0	0	0	0	0	0	0	0	0	0	0	**0**	
2145 - 2200	0	0	0	0	0	0	0	0	0	0	0	0	0	**0**	**0**
2200 - 2215	0	0	0	0	0	0	0	0	0	0	0	0	0	**0**	
2215 - 2230	0	0	0	0	0	0	0	0	0	0	0	0	0	**0**	
2230 - 2245	0	0	0	0	0	0	0	0	0	0	0	0	0	**0**	
2245 - 2300	0	0	0	0	0	0	0	0	0	0	0	0	0	**0**	**0**
2300 - 2315	0	0	0	0	0	0	0	0	0	0	0	0	0	**0**	
2315 - 2330	0	0	0	0	0	0	0	0	0	0	0	0	0	**0**	
2330 - 2345	0	0	0	0	0	0	0	0	0	0	0	0	0	**0**	
2345 - 0000	0	0	0	0	0	0	0	0	0	0	0	0	0	**0**	**0**

Session Total	11	8142	1399	9	90	12	2	11	45	1	0	0	0	**9722**
Session Average	0.11	84.81	14.57	0.09	0.94	0.13	0.02	0.11	0.47	0.01	0.00	0.00	0.00	**101.27**
Session Percentage	0.11	83.75	14.39	0.09	0.93	0.12	0.02	0.11	0.46	0.01	0.00	0.00	0.00	

AM Peak Hour	0530 - 0630	0945 - 1045	0930 - 1030	0545 - 0645	0915 - 1015	0745 - 0845	-	0600 - 0700	0615 - 0715	0900 - 1000	-	-	-	**0945 - 1045**
AM Peak Hour Volume	1	533	136	1	14	2	0	3	7	1	0	0	0	**675**

Noon Peak Hour	1045 - 1145	1130 - 1230	1045 - 1145	1000 - 1100	1000 - 1100	1130 - 1230	1100 - 1200	1045 - 1145	1400 - 1500	-	-	-	-	**1130 - 1230**
Noon Peak Hour Volume	2	824	147	1	11	2	2	5	8	0	0	0	0	**984**

PM Peak Hour	1745 - 1845	1730 - 1830	1730 - 1830	1730 - 1830	1500 - 1600	1500 - 1600	-	-	1530 - 1630	-	-	-	-	**1730 - 1830**
PM Peak Hour Volume	3	737	103	2	5	1	0	0	6	0	0	0	0	**844**

Bi-Directional Class Count || NB EB Average 15min

Columbia, SC

Marr Traffic DATA COLLECTION
www.marrtraffic.com

Site 27
I-26 James F. Byrnes Expy On/Off-Ramp,
west of Harbison Blvd

Date
Tuesday, April 23, 2024

Lat/Long
34.078961°, -81.153215°

Weather
Fair
58°F

0000 - 2400 (Weekday 24h Session) (All Dates)
NB EB Average 15min

	NB EB Average 15min													15min	60min
Time	1	2	3	4	5	6	7	8	9	10	11	12	13	Total	Total
0000 - 0015	0	12	2	0	0	0	0	0	0	0	0	0	0	**14**	
0015 - 0030	0	6	1	0	0	0	0	0	1	0	0	0	0	**8**	
0030 - 0045	0	8	1	0	0	0	0	0	0	0	0	0	0	**9**	
0045 - 0100	0	5	1	0	0	0	0	0	0	0	0	0	0	**6**	**37**
0100 - 0115	0	6	1	0	0	0	0	0	0	0	0	0	0	**8**	
0115 - 0130	0	6	1	0	0	0	0	0	0	0	0	0	0	**7**	
0130 - 0145	0	4	0	0	0	0	0	0	0	0	0	0	0	**4**	
0145 - 0200	0	4	1	0	0	0	0	0	0	0	0	0	0	**5**	**25**
0200 - 0215	0	3	1	0	0	0	0	0	0	0	0	0	0	**4**	
0215 - 0230	0	5	1	0	0	0	0	0	0	0	0	0	0	**6**	
0230 - 0245	0	5	1	0	0	0	0	0	0	0	0	0	0	**5**	
0245 - 0300	0	4	0	0	0	0	0	0	0	0	0	0	0	**5**	**20**
0300 - 0315	0	4	0	0	1	0	0	0	0	0	0	0	0	**4**	
0315 - 0330	0	5	1	0	0	0	0	0	0	0	0	0	0	**6**	
0330 - 0345	0	4	1	0	0	0	0	0	0	0	0	0	0	**5**	
0345 - 0400	0	3	1	0	0	0	0	0	0	0	0	0	0	**4**	**19**
0400 - 0415	0	5	0	0	1	0	0	0	0	0	0	0	0	**7**	
0415 - 0430	0	2	1	0	0	0	0	0	0	0	0	0	0	**3**	
0430 - 0445	0	4	1	0	0	0	0	0	0	0	0	0	0	**6**	
0445 - 0500	0	11	2	0	1	0	0	0	0	0	0	0	0	**14**	**29**
0500 - 0515	0	7	1	0	0	0	0	0	0	0	0	0	0	**9**	
0515 - 0530	0	16	1	0	1	0	0	0	1	0	0	0	0	**18**	
0530 - 0545	0	18	1	0	0	0	0	0	0	0	0	0	0	**19**	
0545 - 0600	0	23	2	0	0	0	0	0	0	0	0	0	0	**25**	**71**
0600 - 0615	0	17	3	0	0	0	0	0	1	0	0	0	0	**22**	
0615 - 0630	0	20	6	0	0	0	0	0	1	0	0	0	0	**27**	
0630 - 0645	0	31	6	0	0	0	0	0	1	0	0	0	0	**39**	
0645 - 0700	0	34	9	0	0	0	0	1	1	0	0	0	0	**44**	**132**
0700 - 0715	0	54	11	0	0	0	0	0	1	0	0	0	0	**67**	
0715 - 0730	0	63	13	0	2	0	0	0	0	0	0	0	0	**78**	
0730 - 0745	0	81	15	0	3	0	0	0	1	0	0	0	0	**101**	
0745 - 0800	0	78	19	0	1	0	0	0	0	0	0	0	0	**99**	**346**
0800 - 0815	0	73	17	1	0	1	0	0	0	0	0	0	0	**93**	
0815 - 0830	0	63	22	0	1	1	0	0	0	0	0	0	0	**88**	
0830 - 0845	0	76	22	0	1	1	0	0	1	0	0	0	0	**100**	
0845 - 0900	0	69	21	0	1	0	0	0	0	0	0	0	0	**92**	**373**
0900 - 0915	0	76	19	0	1	1	0	0	0	0	0	0	0	**98**	
0915 - 0930	0	60	13	1	2	0	0	0	1	0	0	0	0	**77**	
0930 - 0945	0	78	21	0	2	0	0	0	0	0	0	0	0	**102**	
0945 - 1000	0	89	22	0	2	0	0	0	0	0	0	0	0	**114**	**390**
1000 - 1015	0	78	21	0	1	0	0	0	1	0	0	0	0	**103**	
1015 - 1030	0	93	23	0	1	0	0	0	1	0	0	0	0	**118**	
1030 - 1045	0	97	19	0	1	0	0	0	1	0	0	0	0	**118**	
1045 - 1100	0	110	24	0	2	0	0	0	1	0	0	0	0	**138**	**477**
1100 - 1115	0	111	22	0	3	0	1	0	0	0	0	0	0	**137**	
1115 - 1130	0	121	24	1	0	0	0	0	1	0	0	0	0	**147**	
1130 - 1145	0	125	26	0	2	0	0	1	1	0	0	0	0	**155**	
1145 - 1200	0	119	26	1	2	0	0	0	0	0	0	0	0	**149**	**588**
1200 - 1215	0	135	25	0	1	0	0	0	0	0	0	0	0	**162**	
1215 - 1230	0	138	23	2	2	0	0	0	1	0	0	0	0	**167**	
1230 - 1245	0	123	25	0	2	0	0	0	1	0	0	0	0	**151**	
1245 - 1300	0	121	23	1	1	0	0	0	0	0	0	0	0	**146**	**625**
1300 - 1315	0	115	17	0	0	0	0	0	0	0	0	0	0	**133**	
1315 - 1330	0	124	21	0	1	0	0	0	0	0	0	0	0	**146**	
1330 - 1345	0	123	22	0	1	1	0	0	1	0	0	0	0	**147**	
1345 - 1400	0	117	22	0	0	0	0	0	0	0	0	0	0	**140**	**566**
1400 - 1415	1	114	17	0	0	1	0	0	1	0	0	0	0	**134**	
1415 - 1430	0	113	18	0	1	0	0	0	2	0	0	0	0	**135**	
1430 - 1445	0	118	20	0	1	0	0	0	1	0	0	0	0	**140**	
1445 - 1500	0	120	16	0	1	0	0	0	0	0	0	0	0	**137**	**547**
1500 - 1515	0	118	21	0	1	1	0	0	0	0	0	0	0	**140**	
1515 - 1530	0	122	19	0	1	0	0	0	0	0	0	0	0	**142**	
1530 - 1545	0	119	18	0	1	0	0	0	0	0	0	0	0	**138**	
1545 - 1600	0	131	15	0	0	0	0	0	1	0	0	0	0	**148**	**569**
1600 - 1615	0	118	19	0	0	0	0	0	1	0	0	0	0	**138**	
1615 - 1630	0	112	16	0	0	0	0	0	1	0	0	0	0	**129**	
1630 - 1645	0	122	16	0	0	0	0	0	1	0	0	0	0	**139**	
1645 - 1700	0	115	20	0	2	0	0	0	0	0	0	0	0	**138**	**544**
1700 - 1715	0	113	16	0	1	0	0	0	0	0	0	0	0	**131**	
1715 - 1730	0	107	19	0	0	0	0	0	0	0	0	0	0	**126**	
1730 - 1745	0	112	15	0	0	0	0	0	0	0	0	0	0	**128**	
1745 - 1800	0	122	19	0	0	0	0	0	0	0	0	0	0	**141**	**525**
1800 - 1815	0	124	21	0	0	0	0	0	0	0	0	0	0	**146**	
1815 - 1830	1	127	22	1	1	0	0	0	0	0	0	0	0	**151**	
1830 - 1845	0	116	13	0	1	1	0	0	0	0	0	0	0	**131**	
1845 - 1900	0	96	12	0	0	0	0	0	0	0	0	0	0	**108**	**536**
1900 - 1915	0	91	13	0	1	0	0	0	0	0	0	0	0	**106**	
1915 - 1930	0	79	16	0	1	0	0	0	0	0	0	0	0	**97**	
1930 - 1945	0	72	18	0	0	1	0	0	0	0	0	0	0	**91**	
1945 - 2000	0	69	9	0	0	0	0	0	0	0	0	0	0	**79**	**372**
2000 - 2015	0	56	10	0	0	0	0	0	0	0	0	0	0	**66**	
2015 - 2030	0	61	7	0	0	0	0	0	1	0	0	0	0	**68**	
2030 - 2045	0	62	7	0	0	0	0	0	0	0	0	0	0	**69**	
2045 - 2100	0	38	8	0	0	0	0	0	0	0	0	0	0	**46**	**250**
2100 - 2115	0	51	2	0	0	0	0	0	0	0	0	0	0	**54**	
2115 - 2130	0	33	2	0	0	0	0	0	0	0	0	0	0	**36**	
2130 - 2145	0	43	1	0	0	0	0	0	0	0	0	0	0	**44**	
2145 - 2200	0	35	1	0	0	0	0	0	0	0	0	0	0	**37**	**170**
2200 - 2215	0	28	3	0	1	0	0	0	0	0	0	0	0	**33**	
2215 - 2230	0	24	2	0	0	0	0	0	0	0	0	0	0	**26**	
2230 - 2245	0	27	1	0	0	0	0	0	0	0	0	0	0	**28**	
2245 - 2300	0	20	0	0	0	0	0	0	0	0	0	0	0	**21**	**107**
2300 - 2315	0	18	2	0	1	0	0	0	0	0	0	0	0	**21**	
2315 - 2330	0	16	1	0	0	0	0	0	0	0	0	0	0	**18**	
2330 - 2345	0	12	1	0	0	0	0	0	0	0	0	0	0	**12**	
2345 - 0000	0	11	0	0	0	0	0	0	0	0	0	0	0	**11**	**62**

Session Total	7	6169	1080	11	58	16	1	5	34	0	0	0	0	**7381**
Session Average	0.07	64.26	11.25	0.11	0.60	0.17	0.01	0.05	0.35	0.00	0.00	0.00	0.00	**76.89**
Session Percentage	0.09	83.58	14.64	0.14	0.78	0.22	0.02	0.07	0.46	0.00	0.00	0.00	0.00	

AM Peak Hour	0530 - 0630	0945 - 1045	0930 - 1030	0715 - 0815	0900 - 1000	0745 - 0845	0630 - 0730	0600 - 0700	0600 - 0700	0900 - 1000	-	-	-	**0945 - 1045**
AM Peak Volume	0	357	87	1	7	4	0	1	3	0	0	0	0	**453**

Noon Peak Hour	1130 - 1230	1130 - 1230	1115 - 1215	1130 - 1230	1015 - 1115	1315 - 1415	1100 - 1200	1045 - 1145	1400 - 1500	-	-	-	-	**1130 - 1230**
Noon Peak Volume	1	517	101	3	7	2	1	2	4	0	0	0	0	**632**

PM Peak Hour	1815 - 1915	1500 - 1600	1730 - 1830	1730 - 1830	1500 - 1600	1745 - 1845	-	1900 - 2000	1545 - 1645	-	-	-	-	**1745 - 1845**
PM Peak Volume	2	490	77	1	3	1	0	0	4	0	0	0	0	**569**

Bi-Directional Class Count || Volume Summary 15min

Columbia, SC

Marr Traffic DATA COLLECTION
www.marrtraffic.com

Site 27
I-26 James F. Byrnes Expy On/Off-Ramp,
west of Harbison Blvd

Date
Tuesday, April 23, 2024

Lat/Long
34.078961°, -81.153215°

Weather
Fair
58°F

Click here for Detailed Weather

0000 - 2400 (Weekday 24h Session) (04-23-2024)

Volume Summary 15min

TIME	Volume Summary 15min EB	Volume Summary 15min WB	15min Total	60min Total
0000 - 0015	0	0	**0**	
0015 - 0030	0	0	**0**	
0030 - 0045	0	0	**0**	
0045 - 0100	0	0	**0**	**0**
0100 - 0115	0	0	**0**	
0115 - 0130	0	0	**0**	
0130 - 0145	0	0	**0**	
0145 - 0200	0	0	**0**	**0**
0200 - 0215	0	0	**0**	
0215 - 0230	0	0	**0**	
0230 - 0245	0	0	**0**	
0245 - 0300	0	0	**0**	**0**
0300 - 0315	0	0	**0**	
0315 - 0330	0	0	**0**	
0330 - 0345	0	0	**0**	
0345 - 0400	0	0	**0**	**0**
0400 - 0415	0	0	**0**	
0415 - 0430	0	0	**0**	
0430 - 0445	0	0	**0**	
0445 - 0500	0	0	**0**	**0**
0500 - 0515	0	0	**0**	
0515 - 0530	0	0	**0**	
0530 - 0545	0	0	**0**	
0545 - 0600	0	0	**0**	**0**
0600 - 0615	0	0	**0**	
0615 - 0630	0	0	**0**	
0630 - 0645	0	0	**0**	
0645 - 0700	0	0	**0**	**0**
0700 - 0715	0	0	**0**	
0715 - 0730	0	0	**0**	
0730 - 0745	0	0	**0**	
0745 - 0800	0	0	**0**	**0**
0800 - 0815	0	0	**0**	
0815 - 0830	0	0	**0**	
0830 - 0845	0	0	**0**	
0845 - 0900	0	0	**0**	**0**
0900 - 0915	0	0	**0**	
0915 - 0930	0	0	**0**	
0930 - 0945	0	0	**0**	
0945 - 1000	0	0	**0**	**0**
1000 - 1015	0	0	**0**	
1015 - 1030	0	0	**0**	
1030 - 1045	0	0	**0**	
1045 - 1100	0	0	**0**	**0**
1100 - 1115	0	0	**0**	
1115 - 1130	0	0	**0**	
1130 - 1145	0	0	**0**	
1145 - 1200	0	0	**0**	**0**

Time	Volume Summary 15min EB	Volume Summary 15min WB	15min Total	60min Total
1200 - 1215	0	0	**0**	
1215 - 1230	0	0	**0**	
1230 - 1245	0	0	**0**	
1245 - 1300	0	0	**0**	**0**
1300 - 1315	0	0	**0**	
1315 - 1330	0	0	**0**	
1330 - 1345	0	0	**0**	
1345 - 1400	0	0	**0**	**0**
1400 - 1415	0	0	**0**	
1415 - 1430	0	0	**0**	
1430 - 1445	0	0	**0**	
1445 - 1500	0	0	**0**	**0**
1500 - 1515	0	0	**0**	
1515 - 1530	0	0	**0**	
1530 - 1545	0	0	**0**	
1545 - 1600	0	0	**0**	**0**
1600 - 1615	0	0	**0**	
1615 - 1630	0	0	**0**	
1630 - 1645	0	0	**0**	
1645 - 1700	0	0	**0**	**0**
1700 - 1715	0	0	**0**	
1715 - 1730	0	0	**0**	
1730 - 1745	0	0	**0**	
1745 - 1800	0	0	**0**	**0**
1800 - 1815	0	0	**0**	
1815 - 1830	0	0	**0**	
1830 - 1845	0	0	**0**	
1845 - 1900	0	0	**0**	**0**
1900 - 1915	151	0	**151**	
1915 - 1930	132	0	**132**	
1930 - 1945	142	0	**142**	
1945 - 2000	117	0	**117**	**542**
2000 - 2015	99	0	**99**	
2015 - 2030	94	0	**94**	
2030 - 2045	96	0	**96**	
2045 - 2100	65	0	**65**	**354**
2100 - 2115	77	0	**77**	
2115 - 2130	52	0	**52**	
2130 - 2145	69	0	**69**	
2145 - 2200	47	0	**47**	**245**
2200 - 2215	56	0	**56**	
2215 - 2230	41	0	**41**	
2230 - 2245	42	0	**42**	
2245 - 2300	28	0	**28**	**167**
2300 - 2315	28	0	**28**	
2315 - 2330	26	0	**26**	
2330 - 2345	20	0	**20**	
2345 - 0000	21	0	**21**	**95**

Session Total	1403	0	**1403**
Session Average	14.61	0.00	**14.61**
Session Percentage	100.00	0.00	

Site 27

I-26 James F. Byrnes Expy On/Off-Ramp,
west of Harbison Blvd

Date

Wednesday, April 24, 2024

Lat/Long

34.078961°, -81.153215°

Weather

Fair
66°F

Click here for Detailed Weather

0000 - 2400 (Weekday 24h Session) (04-24-2024)

Volume Summary 15min

TIME	Volume Summary 15min EB	WB	15min Total	60min Total
0000 - 0015	23	0	**23**	
0015 - 0030	12	0	**12**	
0030 - 0045	13	0	**13**	
0045 - 0100	10	0	**10**	**58**
0100 - 0115	11	0	**11**	
0115 - 0130	7	0	**7**	
0130 - 0145	9	0	**9**	
0145 - 0200	9	0	**9**	**36**
0200 - 0215	3	0	**3**	
0215 - 0230	11	0	**11**	
0230 - 0245	7	0	**7**	
0245 - 0300	8	0	**8**	**29**
0300 - 0315	8	0	**8**	
0315 - 0330	7	0	**7**	
0330 - 0345	9	0	**9**	
0345 - 0400	5	0	**5**	**29**
0400 - 0415	6	0	**6**	
0415 - 0430	4	0	**4**	
0430 - 0445	8	0	**8**	
0445 - 0500	22	0	**22**	**40**
0500 - 0515	9	0	**9**	
0515 - 0530	29	0	**29**	
0530 - 0545	25	0	**25**	
0545 - 0600	41	0	**41**	**104**
0600 - 0615	30	0	**30**	
0615 - 0630	41	0	**41**	
0630 - 0645	64	0	**64**	
0645 - 0700	70	0	**70**	**205**
0700 - 0715	96	0	**96**	
0715 - 0730	118	0	**118**	
0730 - 0745	148	0	**148**	
0745 - 0800	164	0	**164**	**526**
0800 - 0815	136	0	**136**	
0815 - 0830	137	0	**137**	
0830 - 0845	152	0	**152**	
0845 - 0900	146	0	**146**	**571**
0900 - 0915	146	0	**146**	
0915 - 0930	101	0	**101**	
0930 - 0945	135	0	**135**	
0945 - 1000	172	0	**172**	**554**
1000 - 1015	159	0	**159**	
1015 - 1030	173	0	**173**	
1030 - 1045	181	0	**181**	
1045 - 1100	195	0	**195**	**708**
1100 - 1115	193	0	**193**	
1115 - 1130	212	0	**212**	
1130 - 1145	212	0	**212**	
1145 - 1200	221	0	**221**	**838**

Time	Volume Summary 15min EB	WB	15min Total	60min Total
1200 - 1215	230	0	**230**	
1215 - 1230	249	0	**249**	
1230 - 1245	221	0	**221**	
1245 - 1300	220	0	**220**	**920**
1300 - 1315	189	0	**189**	
1315 - 1330	213	0	**213**	
1330 - 1345	199	0	**199**	
1345 - 1400	185	0	**185**	**786**
1400 - 1415	189	0	**189**	
1415 - 1430	200	0	**200**	
1430 - 1445	202	0	**202**	
1445 - 1500	204	0	**204**	**795**
1500 - 1515	216	0	**216**	
1515 - 1530	219	0	**219**	
1530 - 1545	221	0	**221**	
1545 - 1600	246	0	**246**	**902**
1600 - 1615	201	0	**201**	
1615 - 1630	213	0	**213**	
1630 - 1645	222	0	**222**	
1645 - 1700	212	0	**212**	**848**
1700 - 1715	194	0	**194**	
1715 - 1730	183	0	**183**	
1730 - 1745	182	0	**182**	
1745 - 1800	223	0	**223**	**782**
1800 - 1815	220	0	**220**	
1815 - 1830	227	0	**227**	
1830 - 1845	201	0	**201**	
1845 - 1900	159	0	**159**	**807**
1900 - 1915	166	0	**166**	
1915 - 1930	158	0	**158**	
1930 - 1945	130	0	**130**	
1945 - 2000	119	0	**119**	**573**
2000 - 2015	100	0	**100**	
2015 - 2030	111	0	**111**	
2030 - 2045	112	0	**112**	
2045 - 2100	73	0	**73**	**396**
2100 - 2115	84	0	**84**	
2115 - 2130	55	0	**55**	
2130 - 2145	64	0	**64**	
2145 - 2200	63	0	**63**	**266**
2200 - 2215	42	0	**42**	
2215 - 2230	36	0	**36**	
2230 - 2245	41	0	**41**	
2245 - 2300	34	0	**34**	**153**
2300 - 2315	35	0	**35**	
2315 - 2330	27	0	**27**	
2330 - 2345	17	0	**17**	
2345 - 0000	13	0	**13**	**92**

Session Total	11018	0	**11018**
Session Average	114.77	0.00	**114.77**
Session Percentage	100.00	0.00	

Site 27

I-26 James F. Byrnes Expy On/Off-Ramp,
west of Harbison Blvd

Date

Thursday, April 25, 2024

Lat/Long

34.078961°, -81.153215°

Weather

Fair
67°F

Click here for Detailed Weather

0000 - 2400 (Weekday 24h Session) (04-25-2024)

Volume Summary 15min

TIME	Volume Summary 15min EB	WB	15min Total	60min Total
0000 - 0015	20	0	**20**	
0015 - 0030	11	0	**11**	
0030 - 0045	14	0	**14**	
0045 - 0100	8	0	**8**	**53**
0100 - 0115	13	0	**13**	
0115 - 0130	15	0	**15**	
0130 - 0145	4	0	**4**	
0145 - 0200	6	0	**6**	**38**
0200 - 0215	9	0	**9**	
0215 - 0230	7	0	**7**	
0230 - 0245	9	0	**9**	
0245 - 0300	7	0	**7**	**32**
0300 - 0315	5	0	**5**	
0315 - 0330	10	0	**10**	
0330 - 0345	7	0	**7**	
0345 - 0400	6	0	**6**	**28**
0400 - 0415	14	0	**14**	
0415 - 0430	6	0	**6**	
0430 - 0445	9	0	**9**	
0445 - 0500	19	0	**19**	**48**
0500 - 0515	18	0	**18**	
0515 - 0530	26	0	**26**	
0530 - 0545	31	0	**31**	
0545 - 0600	35	0	**35**	**110**
0600 - 0615	35	0	**35**	
0615 - 0630	41	0	**41**	
0630 - 0645	52	0	**52**	
0645 - 0700	63	0	**63**	**191**
0700 - 0715	106	0	**106**	
0715 - 0730	117	0	**117**	
0730 - 0745	154	0	**154**	
0745 - 0800	134	0	**134**	**511**
0800 - 0815	142	0	**142**	
0815 - 0830	127	0	**127**	
0830 - 0845	148	0	**148**	
0845 - 0900	131	0	**131**	**548**
0900 - 0915	148	0	**148**	
0915 - 0930	129	0	**129**	
0930 - 0945	170	0	**170**	
0945 - 1000	170	0	**170**	**617**
1000 - 1015	149	0	**149**	
1015 - 1030	182	0	**182**	
1030 - 1045	174	0	**174**	
1045 - 1100	219	0	**219**	**724**
1100 - 1115	218	0	**218**	
1115 - 1130	229	0	**229**	
1130 - 1145	253	0	**253**	
1145 - 1200	225	0	**225**	**925**

Time	Volume Summary 15min EB	WB	15min Total	60min Total
1200 - 1215	255	0	**255**	
1215 - 1230	251	0	**251**	
1230 - 1245	233	0	**233**	
1245 - 1300	217	0	**217**	**956**
1300 - 1315	211	0	**211**	
1315 - 1330	226	0	**226**	
1330 - 1345	242	0	**242**	
1345 - 1400	234	0	**234**	**913**
1400 - 1415	214	0	**214**	
1415 - 1430	204	0	**204**	
1430 - 1445	219	0	**219**	
1445 - 1500	208	0	**208**	**845**
1500 - 1515	205	0	**205**	
1515 - 1530	208	0	**208**	
1530 - 1545	194	0	**194**	
1545 - 1600	198	0	**198**	**805**
1600 - 1615	213	0	**213**	
1615 - 1630	173	0	**173**	
1630 - 1645	196	0	**196**	
1645 - 1700	201	0	**201**	**783**
1700 - 1715	198	0	**198**	
1715 - 1730	194	0	**194**	
1730 - 1745	201	0	**201**	
1745 - 1800	200	0	**200**	**793**
1800 - 1815	217	0	**217**	
1815 - 1830	226	0	**226**	
1830 - 1845	193	0	**193**	
1845 - 1900	166	0	**166**	**802**
1900 - 1915	0	0	**0**	
1915 - 1930	0	0	**0**	
1930 - 1945	0	0	**0**	
1945 - 2000	0	0	**0**	**0**
2000 - 2015	0	0	**0**	
2015 - 2030	0	0	**0**	
2030 - 2045	0	0	**0**	
2045 - 2100	0	0	**0**	**0**
2100 - 2115	0	0	**0**	
2115 - 2130	0	0	**0**	
2130 - 2145	0	0	**0**	
2145 - 2200	0	0	**0**	**0**
2200 - 2215	0	0	**0**	
2215 - 2230	0	0	**0**	
2230 - 2245	0	0	**0**	
2245 - 2300	0	0	**0**	**0**
2300 - 2315	0	0	**0**	
2315 - 2330	0	0	**0**	
2330 - 2345	0	0	**0**	
2345 - 0000	0	0	**0**	**0**

Session Total	9722	0	**9722**
Session Average	101.27	0.00	**101.27**
Session Percentage	100.00	0.00	

Bi-Directional Class Count || NB EB 60min

Columbia, SC

Marr Traffic DATA COLLECTION

www.marrtraffic.com

Site 27
I-26 James F. Byrnes Expy On/Off-Ramp,
west of Harbison Blvd

Date
Tuesday, April 23, 2024

Lat/Long
34.078961°, -81.153215°

Weather
Fair
58°F

Click here for Detailed Weather

0000 - 2400 (Weekday 24h Session) (04-23-2024)
NB EB 60min

	Eastbound (Movement 27.1)													
TIME	1	2	3	4	5	6	7	8	9	10	11	12	13	**Total**
0000 - 0100	0	0	0	0	0	0	0	0	0	0	0	0	0	**0**
0100 - 0200	0	0	0	0	0	0	0	0	0	0	0	0	0	**0**
0200 - 0300	0	0	0	0	0	0	0	0	0	0	0	0	0	**0**
0300 - 0400	0	0	0	0	0	0	0	0	0	0	0	0	0	**0**
0400 - 0500	0	0	0	0	0	0	0	0	0	0	0	0	0	**0**
0500 - 0600	0	0	0	0	0	0	0	0	0	0	0	0	0	**0**
0600 - 0700	0	0	0	0	0	0	0	0	0	0	0	0	0	**0**
0700 - 0800	0	0	0	0	0	0	0	0	0	0	0	0	0	**0**
0800 - 0900	0	0	0	0	0	0	0	0	0	0	0	0	0	**0**
0900 - 1000	0	0	0	0	0	0	0	0	0	0	0	0	0	**0**
1000 - 1100	0	0	0	0	0	0	0	0	0	0	0	0	0	**0**
1100 - 1200	0	0	0	0	0	0	0	0	0	0	0	0	0	**0**
1200 - 1300	0	0	0	0	0	0	0	0	0	0	0	0	0	**0**
1300 - 1400	0	0	0	0	0	0	0	0	0	0	0	0	0	**0**
1400 - 1500	0	0	0	0	0	0	0	0	0	0	0	0	0	**0**
1500 - 1600	0	0	0	0	0	0	0	0	0	0	0	0	0	**0**
1600 - 1700	0	0	0	0	0	0	0	0	0	0	0	0	0	**0**
1700 - 1800	0	0	0	0	0	0	0	0	0	0	0	0	0	**0**
1800 - 1900	0	0	0	0	0	0	0	0	0	0	0	0	0	**0**
1900 - 2000	0	443	90	1	2	3	0	1	2	0	0	0	0	**542**
2000 - 2100	0	304	47	0	1	0	0	0	2	0	0	0	0	**354**
2100 - 2200	0	232	11	0	1	0	0	0	1	0	0	0	0	**245**
2200 - 2300	0	150	14	1	1	0	0	0	1	0	0	0	0	**167**
2300 - 2400	0	85	7	1	1	0	0	0	1	0	0	0	0	**95**
Session Total	0	1214	169	3	6	3	0	1	7	0	0	0	0	**1403**
Session Average	0.00	50.58	7.04	0.13	0.25	0.13	0.00	0.04	0.29	0.00	0.00	0.00	0.00	**58.46**
Session Percentage	0.00	86.53	12.05	0.21	0.43	0.21	0.00	0.07	0.50	0.00	0.00	0.00	0.00	
AM Peak Hour	-	-	-	-	-	-	-	-	-	-	-	-	-	**-**
AM Peak Volume	0	0	0	0	0	0	0	0	0	0	0	0	0	**0**
Noon Peak Hour	-	-	-	-	-	-	-	-	-	-	-	-	-	**-**
Noon Peak Volume	0	0	0	0	0	0	0	0	0	0	0	0	0	**0**
PM Peak Hour	-	1900 - 2000	1900 - 2000	1900 - 2000	1900 - 2000	1900 - 2000	-	1900 - 2000	1900 - 2000	-	-	-	-	**1900 - 2000**
PM Peak Volume	0	443	90	1	2	3	0	1	2	0	0	0	0	**542**

Site 27
I-26 James F. Byrnes Expy On/Off-Ramp,
west of Harbison Blvd

Date
Wednesday, April 24, 2024

Lat/Long
34.078961°, -81.153215°

Weather
Fair
66°F

Click here for Detailed Weather

0000 - 2400 (Weekday 24h Session) (04-24-2024)
NB EB 60min

	Eastbound (Movement 27.1)													
TIME	1	2	3	4	5	6	7	8	9	10	11	12	13	**Total**
0000 - 0100	0	55	2	0	0	0	0	0	1	0	0	0	0	**58**
0100 - 0200	0	34	2	0	0	0	0	0	0	0	0	0	0	**36**
0200 - 0300	0	24	3	0	0	1	0	0	1	0	0	0	0	**29**
0300 - 0400	0	28	0	0	0	1	0	0	0	0	0	0	0	**29**
0400 - 0500	0	33	3	0	1	0	0	0	3	0	0	0	0	**40**
0500 - 0600	0	94	6	0	1	2	0	0	1	0	0	0	0	**104**
0600 - 0700	0	165	32	0	0	1	0	1	6	0	0	0	0	**205**
0700 - 0800	0	424	84	1	12	2	1	0	2	0	0	0	0	**526**
0800 - 0900	0	422	129	2	6	8	0	1	3	0	0	0	0	**571**
0900 - 1000	0	435	103	2	9	3	0	0	2	0	0	0	0	**554**
1000 - 1100	1	557	138	0	4	1	0	1	6	0	0	0	0	**708**
1100 - 1200	0	668	151	5	10	1	1	0	2	0	0	0	0	**838**
1200 - 1300	2	736	165	7	8	0	0	0	2	0	0	0	0	**920**
1300 - 1400	0	653	124	0	2	4	0	0	3	0	0	0	0	**786**
1400 - 1500	1	663	121	1	3	1	0	0	5	0	0	0	0	**795**
1500 - 1600	0	771	123	0	5	1	0	0	2	0	0	0	0	**902**
1600 - 1700	2	725	115	0	2	1	0	0	3	0	0	0	0	**848**
1700 - 1800	0	662	116	0	3	0	0	0	1	0	0	0	0	**782**
1800 - 1900	2	679	113	1	5	4	0	0	3	0	0	0	0	**807**
1900 - 2000	1	488	79	0	3	1	0	0	1	0	0	0	0	**573**
2000 - 2100	0	349	47	0	0	0	0	0	0	0	0	0	0	**396**
2100 - 2200	1	255	10	0	0	0	0	0	0	0	0	0	0	**266**
2200 - 2300	0	146	4	0	2	0	0	0	1	0	0	0	0	**153**
2300 - 2400	0	85	3	1	1	1	0	0	1	0	0	0	0	**92**

Session Total	10	9151	1673	20	77	33	2	3	49	0	0	0	0	**11018**
Session Average	0.42	381.29	69.71	0.83	3.21	1.38	0.08	0.13	2.04	0.00	0.00	0.00	0.00	**459.08**
Session Percentage	0.09	83.06	15.18	0.18	0.70	0.30	0.02	0.03	0.44	0.00	0.00	0.00	0.00	

AM Peak Hour	-	0900 - 1000	0800 - 0900	0800 - 0900	0700 - 0800	0800 - 0900	0700 - 0800	0600 - 0700	0600 - 0700	-	-	-	-	**0800 - 0900**
AM Peak Volume	0	435	129	2	12	8	1	1	6	0	0	0	0	**571**

Noon Peak Hour	1200 - 1300	1200 - 1300	1200 - 1300	1200 - 1300	1100 - 1200	1300 - 1400	1100 - 1200	1000 - 1100	1000 - 1100	-	-	-	-	**1200 - 1300**
Noon Peak Volume	2	736	165	7	10	4	1	1	6	0	0	0	0	**920**

PM Peak Hour	1600 - 1700	1500 - 1600	1500 - 1600	1800 - 1900	1500 - 1600	1800 - 1900	-	-	1600 - 1700	-	-	-	-	**1500 - 1600**
PM Peak Volume	2	771	123	1	5	4	0	0	3	0	0	0	0	**902**

Site 27
I-26 James F. Byrnes Expy On/Off-Ramp,
west of Harbison Blvd

Date
Thursday, April 25, 2024

Lat/Long
34.078961°, -81.153215°

Weather
Fair
67°F

Click here for Detailed Weather

0000 - 2400 (Weekday 24h Session) (04-25-2024)
NB EB 60min

	Eastbound (Movement 27.1)													
TIME	1	2	3	4	5	6	7	8	9	10	11	12	13	**Total**
0000 - 0100	0	41	11	0	0	0	0	0	1	0	0	0	0	**53**
0100 - 0200	0	29	7	0	0	0	0	1	1	0	0	0	0	**38**
0200 - 0300	0	25	6	0	1	0	0	0	0	0	0	0	0	**32**
0300 - 0400	0	20	6	0	2	0	0	0	0	0	0	0	0	**28**
0400 - 0500	0	34	8	0	5	0	0	1	0	0	0	0	0	**48**
0500 - 0600	0	97	9	0	2	0	0	0	2	0	0	0	0	**110**
0600 - 0700	1	141	38	1	3	0	0	3	4	0	0	0	0	**191**
0700 - 0800	0	408	92	0	6	1	0	0	4	0	0	0	0	**511**
0800 - 0900	0	423	117	0	5	2	0	0	1	0	0	0	0	**548**
0900 - 1000	0	473	125	1	13	1	0	0	3	1	0	0	0	**617**
1000 - 1100	1	579	124	1	11	1	0	2	5	0	0	0	0	**724**
1100 - 1200	2	760	141	1	10	1	2	4	4	0	0	0	0	**925**
1200 - 1300	2	814	125	1	10	2	0	0	2	0	0	0	0	**956**
1300 - 1400	0	785	122	1	4	0	0	0	1	0	0	0	0	**913**
1400 - 1500	2	732	95	0	6	2	0	0	8	0	0	0	0	**845**
1500 - 1600	0	700	96	0	5	1	0	0	3	0	0	0	0	**805**
1600 - 1700	0	675	97	0	5	0	0	0	6	0	0	0	0	**783**
1700 - 1800	0	700	90	1	1	1	0	0	0	0	0	0	0	**793**
1800 - 1900	3	706	90	2	1	0	0	0	0	0	0	0	0	**802**
1900 - 2000	0	0	0	0	0	0	0	0	0	0	0	0	0	**0**
2000 - 2100	0	0	0	0	0	0	0	0	0	0	0	0	0	**0**
2100 - 2200	0	0	0	0	0	0	0	0	0	0	0	0	0	**0**
2200 - 2300	0	0	0	0	0	0	0	0	0	0	0	0	0	**0**
2300 - 2400	0	0	0	0	0	0	0	0	0	0	0	0	0	**0**

Session Total	11	8142	1399	9	90	12	2	11	45	1	0	0	0	**9722**
Session Average	0.46	339.25	58.29	0.38	3.75	0.50	0.08	0.46	1.88	0.04	0.00	0.00	0.00	**405.08**
Session Percentage	0.11	83.75	14.39	0.09	0.93	0.12	0.02	0.11	0.46	0.01	0.00	0.00	0.00	

AM Peak Hour	0600 - 0700	0900 - 1000	0900 - 1000	0600 - 0700	0900 - 1000	0800 - 0900	-	0600 - 0700	0600 - 0700	0900 - 1000	-	-	-	**0900 - 1000**
AM Peak Hour Volume	1	473	125	1	13	2	0	3	4	1	0	0	0	**617**

Noon Peak Hour	1100 - 1200	1200 - 1300	1100 - 1200	1000 - 1100	1000 - 1100	1200 - 1300	1100 - 1200	1100 - 1200	1400 - 1500	-	-	-	-	**1200 - 1300**
Noon Peak Hour Volume	2	814	141	1	11	2	2	4	8	0	0	0	0	**956**

PM Peak Hour	1800 - 1900	1800 - 1900	1600 - 1700	1800 - 1900	1500 - 1600	1500 - 1600	-	-	1600 - 1700	-	-	-	-	**1500 - 1600**
PM Peak Hour Volume	3	706	97	2	5	1	0	0	6	0	0	0	0	**805**

Bi-Directional Class Count || Volume Summary 60min

Columbia, SC

Marr Traffic DATA COLLECTION

www.marrtraffic.com

Site 27

I-26 James F. Byrnes Expy On/Off-Ramp,
west of Harbison Blvd

Date

Tuesday, April 23, 2024

Lat/Long

34.078961°, -81.153215°

Weather

Fair
58°F

Click here for Detailed Weather

0000 - 2400 (Weekday 24h Session) (04-23-2024)

Volume Summary 60min

	Volume Summary 60min		
TIME	EB	WB	**Total**
0000 - 0100	0	0	**0**
0100 - 0200	0	0	**0**
0200 - 0300	0	0	**0**
0300 - 0400	0	0	**0**
0400 - 0500	0	0	**0**
0500 - 0600	0	0	**0**
0600 - 0700	0	0	**0**
0700 - 0800	0	0	**0**
0800 - 0900	0	0	**0**
0900 - 1000	0	0	**0**
1000 - 1100	0	0	**0**
1100 - 1200	0	0	**0**

	Volume Summary 60min		
Time	EB	WB	**Total**
1200 - 1300	0	0	**0**
1300 - 1400	0	0	**0**
1400 - 1500	0	0	**0**
1500 - 1600	0	0	**0**
1600 - 1700	0	0	**0**
1700 - 1800	0	0	**0**
1800 - 1900	0	0	**0**
1900 - 2000	542	0	**542**
2000 - 2100	354	0	**354**
2100 - 2200	245	0	**245**
2200 - 2300	167	0	**167**
2300 - 2400	95	0	**95**

Session Total	1403	0	**1403**
Session Average	58.46	0.00	**58.46**
Session Percentage	100.00	0.00	

Site 27

I-26 James F. Byrnes Expy On/Off-Ramp,
west of Harbison Blvd

Date

Wednesday, April 24, 2024

Lat/Long

34.078961°, -81.153215°

Weather

Fair
66°F

Click here for Detailed Weather

0000 - 2400 (Weekday 24h Session) (04-24-2024)

Volume Summary 60min

	Volume Summary 60min		
TIME	EB	WB	**Total**
0000 - 0100	58	0	**58**
0100 - 0200	36	0	**36**
0200 - 0300	29	0	**29**
0300 - 0400	29	0	**29**
0400 - 0500	40	0	**40**
0500 - 0600	104	0	**104**
0600 - 0700	205	0	**205**
0700 - 0800	526	0	**526**
0800 - 0900	571	0	**571**
0900 - 1000	554	0	**554**
1000 - 1100	708	0	**708**
1100 - 1200	838	0	**838**

	Volume Summary 60min		
Time	EB	WB	**Total**
1200 - 1300	920	0	**920**
1300 - 1400	786	0	**786**
1400 - 1500	795	0	**795**
1500 - 1600	902	0	**902**
1600 - 1700	848	0	**848**
1700 - 1800	782	0	**782**
1800 - 1900	807	0	**807**
1900 - 2000	573	0	**573**
2000 - 2100	396	0	**396**
2100 - 2200	266	0	**266**
2200 - 2300	153	0	**153**
2300 - 2400	92	0	**92**

Session Total	11018	0	**11018**
Session Average	459.08	0.00	**459.08**
Session Percentage	100.00	0.00	

Site 27

I-26 James F. Byrnes Expy On/Off-Ramp,
west of Harbison Blvd

Date

Thursday, April 25, 2024

Lat/Long

34.078961°, -81.153215°

Weather

Fair
67°F

Click here for Detailed Weather

0000 - 2400 (Weekday 24h Session) (04-25-2024)

Volume Summary 60min

	Volume Summary 60min		
TIME	EB	WB	**Total**
0000 - 0100	53	0	**53**
0100 - 0200	38	0	**38**
0200 - 0300	32	0	**32**
0300 - 0400	28	0	**28**
0400 - 0500	48	0	**48**
0500 - 0600	110	0	**110**
0600 - 0700	191	0	**191**
0700 - 0800	511	0	**511**
0800 - 0900	548	0	**548**
0900 - 1000	617	0	**617**
1000 - 1100	724	0	**724**
1100 - 1200	925	0	**925**

	Volume Summary 60min		
Time	EB	WB	**Total**
1200 - 1300	956	0	**956**
1300 - 1400	913	0	**913**
1400 - 1500	845	0	**845**
1500 - 1600	805	0	**805**
1600 - 1700	783	0	**783**
1700 - 1800	793	0	**793**
1800 - 1900	802	0	**802**
1900 - 2000	0	0	**0**
2000 - 2100	0	0	**0**
2100 - 2200	0	0	**0**
2200 - 2300	0	0	**0**
2300 - 2400	0	0	**0**

Session Total	9722	0	**9722**
Session Average	405.08	0.00	**405.08**
Session Percentage	100.00	0.00	

Bi-Directional Class Count || Graphical Analysis NB EB

Columbia, SC

Marr Traffic DATA COLLECTION

www.marrtraffic.com

Site 27

I-26 James F. Byrnes Expy On/Off-Ramp,
west of Harbison Blvd

Lat/Long

34.078961°, -81.153215°

0000 - 2400 (Weekday 24h Session)

Graphical Analysis NB EB

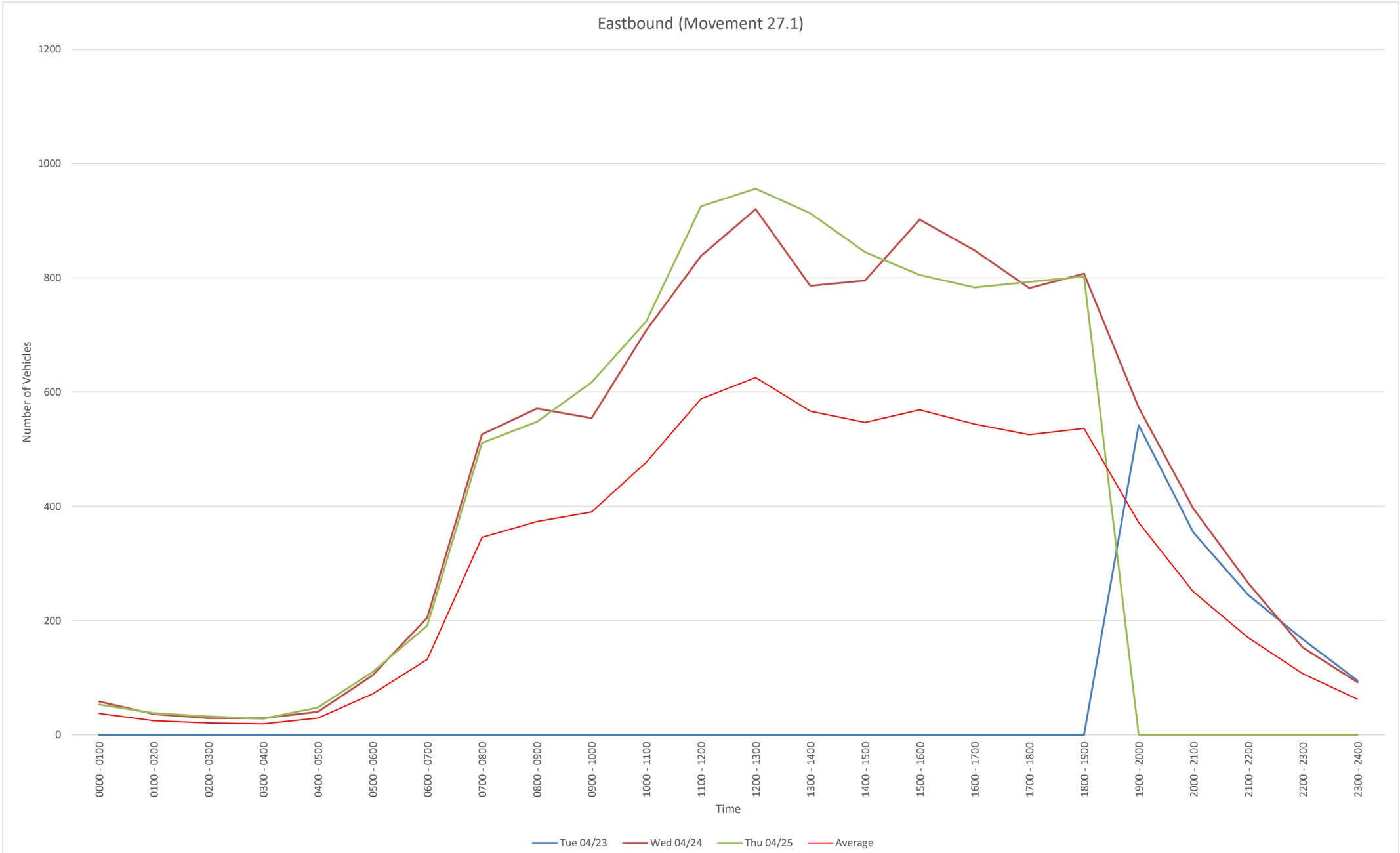

Time	Tue 04/23	Wed 04/24	Thu 04/25				
0000 - 0100	0	58	53				
0100 - 0200	0	36	38				
0200 - 0300	0	29	32				
0300 - 0400	0	29	28				
0400 - 0500	0	40	48				
0500 - 0600	0	104	110				
0600 - 0700	0	205	191				
0700 - 0800	0	526	511				
0800 - 0900	0	571	548				
0900 - 1000	0	554	617				
1000 - 1100	0	708	724				
1100 - 1200	0	838	925				
1200 - 1300	0	920	956				
1300 - 1400	0	786	913				
1400 - 1500	0	795	845				
1500 - 1600	0	902	805				
1600 - 1700	0	848	783				
1700 - 1800	0	782	793				
1800 - 1900	0	807	802				
1900 - 2000	542	573	0				
2000 - 2100	354	396	0				
2100 - 2200	245	266	0				
2200 - 2300	167	153	0				
2300 - 2400	95	92	0				
Daily Total	1403	11018	9722				

EB
File Name:
Start Date: 4/23/2024
Start Time: 0
Site Code: 27
Station ID: 1
Location 1: I-26 James F. Byrnes Expy On/Off-Ramp, west of Harbison Blvd
Location 2:

Date	Time	1	2	3	4	5	6	7	8	9	10	11	12	13
4/23/2024	12:00 AM	0	0	0	0	0	0	0	0	0	0	0	0	0
4/23/2024	12:15 AM	0	0	0	0	0	0	0	0	0	0	0	0	0
4/23/2024	12:30 AM	0	0	0	0	0	0	0	0	0	0	0	0	0
4/23/2024	12:45 AM	0	0	0	0	0	0	0	0	0	0	0	0	0
4/23/2024	1:00 AM	0	0	0	0	0	0	0	0	0	0	0	0	0
4/23/2024	1:15 AM	0	0	0	0	0	0	0	0	0	0	0	0	0
4/23/2024	1:30 AM	0	0	0	0	0	0	0	0	0	0	0	0	0
4/23/2024	1:45 AM	0	0	0	0	0	0	0	0	0	0	0	0	0
4/23/2024	2:00 AM	0	0	0	0	0	0	0	0	0	0	0	0	0
4/23/2024	2:15 AM	0	0	0	0	0	0	0	0	0	0	0	0	0
4/23/2024	2:30 AM	0	0	0	0	0	0	0	0	0	0	0	0	0
4/23/2024	2:45 AM	0	0	0	0	0	0	0	0	0	0	0	0	0
4/23/2024	3:00 AM	0	0	0	0	0	0	0	0	0	0	0	0	0
4/23/2024	3:15 AM	0	0	0	0	0	0	0	0	0	0	0	0	0
4/23/2024	3:30 AM	0	0	0	0	0	0	0	0	0	0	0	0	0
4/23/2024	3:45 AM	0	0	0	0	0	0	0	0	0	0	0	0	0
4/23/2024	4:00 AM	0	0	0	0	0	0	0	0	0	0	0	0	0
4/23/2024	4:15 AM	0	0	0	0	0	0	0	0	0	0	0	0	0
4/23/2024	4:30 AM	0	0	0	0	0	0	0	0	0	0	0	0	0
4/23/2024	4:45 AM	0	0	0	0	0	0	0	0	0	0	0	0	0
4/23/2024	5:00 AM	0	0	0	0	0	0	0	0	0	0	0	0	0
4/23/2024	5:15 AM	0	0	0	0	0	0	0	0	0	0	0	0	0
4/23/2024	5:30 AM	0	0	0	0	0	0	0	0	0	0	0	0	0
4/23/2024	5:45 AM	0	0	0	0	0	0	0	0	0	0	0	0	0
4/23/2024	6:00 AM	0	0	0	0	0	0	0	0	0	0	0	0	0
4/23/2024	6:15 AM	0	0	0	0	0	0	0	0	0	0	0	0	0
4/23/2024	6:30 AM	0	0	0	0	0	0	0	0	0	0	0	0	0
4/23/2024	6:45 AM	0	0	0	0	0	0	0	0	0	0	0	0	0
4/23/2024	7:00 AM	0	0	0	0	0	0	0	0	0	0	0	0	0
4/23/2024	7:15 AM	0	0	0	0	0	0	0	0	0	0	0	0	0
4/23/2024	7:30 AM	0	0	0	0	0	0	0	0	0	0	0	0	0
4/23/2024	7:45 AM	0	0	0	0	0	0	0	0	0	0	0	0	0
4/23/2024	8:00 AM	0	0	0	0	0	0	0	0	0	0	0	0	0
4/23/2024	8:15 AM	0	0	0	0	0	0	0	0	0	0	0	0	0
4/23/2024	8:30 AM	0	0	0	0	0	0	0	0	0	0	0	0	0
4/23/2024	8:45 AM	0	0	0	0	0	0	0	0	0	0	0	0	0
4/23/2024	9:00 AM	0	0	0	0	0	0	0	0	0	0	0	0	0
4/23/2024	9:15 AM	0	0	0	0	0	0	0	0	0	0	0	0	0
4/23/2024	9:30 AM	0	0	0	0	0	0	0	0	0	0	0	0	0
4/23/2024	9:45 AM	0	0	0	0	0	0	0	0	0	0	0	0	0
4/23/2024	10:00 AM	0	0	0	0	0	0	0	0	0	0	0	0	0
4/23/2024	10:15 AM	0	0	0	0	0	0	0	0	0	0	0	0	0
4/23/2024	10:30 AM	0	0	0	0	0	0	0	0	0	0	0	0	0
4/23/2024	10:45 AM	0	0	0	0	0	0	0	0	0	0	0	0	0
4/23/2024	11:00 AM	0	0	0	0	0	0	0	0	0	0	0	0	0
4/23/2024	11:15 AM	0	0	0	0	0	0	0	0	0	0	0	0	0
4/23/2024	11:30 AM	0	0	0	0	0	0	0	0	0	0	0	0	0
4/23/2024	11:45 AM	0	0	0	0	0	0	0	0	0	0	0	0	0
4/23/2024	12:00 PM	0	0	0	0	0	0	0	0	0	0	0	0	0
4/23/2024	12:15 PM	0	0	0	0	0	0	0	0	0	0	0	0	0
4/23/2024	12:30 PM	0	0	0	0	0	0	0	0	0	0	0	0	0
4/23/2024	12:45 PM	0	0	0	0	0	0	0	0	0	0	0	0	0
4/23/2024	1:00 PM	0	0	0	0	0	0	0	0	0	0	0	0	0
4/23/2024	1:15 PM	0	0	0	0	0	0	0	0	0	0	0	0	0
4/23/2024	1:30 PM	0	0	0	0	0	0	0	0	0	0	0	0	0
4/23/2024	1:45 PM	0	0	0	0	0	0	0	0	0	0	0	0	0
4/23/2024	2:00 PM	0	0	0	0	0	0	0	0	0	0	0	0	0
4/23/2024	2:15 PM	0	0	0	0	0	0	0	0	0	0	0	0	0
4/23/2024	2:30 PM	0	0	0	0	0	0	0	0	0	0	0	0	0
4/23/2024	2:45 PM	0	0	0	0	0	0	0	0	0	0	0	0	0
4/23/2024	3:00 PM	0	0	0	0	0	0	0	0	0	0	0	0	0
4/23/2024	3:15 PM	0	0	0	0	0	0	0	0	0	0	0	0	0
4/23/2024	3:30 PM	0	0	0	0	0	0	0	0	0	0	0	0	0
4/23/2024	3:45 PM	0	0	0	0	0	0	0	0	0	0	0	0	0
4/23/2024	4:00 PM	0	0	0	0	0	0	0	0	0	0	0	0	0
4/23/2024	4:15 PM	0	0	0	0	0	0	0	0	0	0	0	0	0
4/23/2024	4:30 PM	0	0	0	0	0	0	0	0	0	0	0	0	0
4/23/2024	4:45 PM	0	0	0	0	0	0	0	0	0	0	0	0	0
4/23/2024	5:00 PM	0	0	0	0	0	0	0	0	0	0	0	0	0
4/23/2024	5:15 PM	0	0	0	0	0	0	0	0	0	0	0	0	0
4/23/2024	5:30 PM	0	0	0	0	0	0	0	0	0	0	0	0	0
4/23/2024	5:45 PM	0	0	0	0	0	0	0	0	0	0	0	0	0
4/23/2024	6:00 PM	0	0	0	0	0	0	0	0	0	0	0	0	0
4/23/2024	6:15 PM	0	0	0	0	0	0	0	0	0	0	0	0	0
4/23/2024	6:30 PM	0	0	0	0	0	0	0	0	0	0	0	0	0
4/23/2024	6:45 PM	0	0	0	0	0	0	0	0	0	0	0	0	0
4/23/2024	7:00 PM	0	125	24	0	1	0	0	0	1	0	0	0	0
4/23/2024	7:15 PM	0	110	19	1	1	0	0	0	1	0	0	0	0
4/23/2024	7:30 PM	0	108	32	0	0	2	0	0	0	0	0	0	0
4/23/2024	7:45 PM	0	100	15	0	0	1	0	1	0	0	0	0	0
4/23/2024	8:00 PM	0	85	14	0	0	0	0	0	0	0	0	0	0
4/23/2024	8:15 PM	0	83	9	0	0	0	0	0	2	0	0	0	0
4/23/2024	8:30 PM	0	86	9	0	1	0	0	0	0	0	0	0	0
4/23/2024	8:45 PM	0	50	15	0	0	0	0	0	0	0	0	0	0
4/23/2024	9:00 PM	0	74	2	0	1	0	0	0	0	0	0	0	0
4/23/2024	9:15 PM	0	47	5	0	0	0	0	0	0	0	0	0	0
4/23/2024	9:30 PM	0	66	3	0	0	0	0	0	0	0	0	0	0
4/23/2024	9:45 PM	0	45	1	0	0	0	0	0	1	0	0	0	0
4/23/2024	10:00 PM	0	47	6	1	1	0	0	0	1	0	0	0	0
4/23/2024	10:15 PM	0	37	4	0	0	0	0	0	0	0	0	0	0
4/23/2024	10:30 PM	0	39	3	0	0	0	0	0	0	0	0	0	0
4/23/2024	10:45 PM	0	27	1	0	0	0	0	0	0	0	0	0	0
4/23/2024	11:00 PM	0	24	2	0	1	0	0	0	1	0	0	0	0
4/23/2024	11:15 PM	0	22	3	1	0	0	0	0	0	0	0	0	0
4/23/2024	11:30 PM	0	18	2	0	0	0	0	0	0	0	0	0	0
4/23/2024	11:45 PM	0	21	0	0	0	0	0	0	0	0	0	0	0

4/24/2024	12:00 AM	0	22	1	0	0	0	0	0	0	0	0	0
4/24/2024	12:15 AM	0	11	0	0	0	0	0	0	1	0	0	0
4/24/2024	12:30 AM	0	13	0	0	0	0	0	0	0	0	0	0
4/24/2024	12:45 AM	0	9	1	0	0	0	0	0	0	0	0	0
4/24/2024	1:00 AM	0	9	2	0	0	0	0	0	0	0	0	0
4/24/2024	1:15 AM	0	7	0	0	0	0	0	0	0	0	0	0
4/24/2024	1:30 AM	0	9	0	0	0	0	0	0	0	0	0	0
4/24/2024	1:45 AM	0	9	0	0	0	0	0	0	0	0	0	0
4/24/2024	2:00 AM	0	3	0	0	0	0	0	0	0	0	0	0
4/24/2024	2:15 AM	0	8	3	0	0	0	0	0	0	0	0	0
4/24/2024	2:30 AM	0	7	0	0	0	0	0	0	0	0	0	0
4/24/2024	2:45 AM	0	6	0	0	0	1	0	0	1	0	0	0
4/24/2024	3:00 AM	0	8	0	0	0	0	0	0	0	0	0	0
4/24/2024	3:15 AM	0	7	0	0	0	0	0	0	0	0	0	0
4/24/2024	3:30 AM	0	8	0	0	0	1	0	0	0	0	0	0
4/24/2024	3:45 AM	0	5	0	0	0	0	0	0	0	0	0	0
4/24/2024	4:00 AM	0	6	0	0	0	0	0	0	0	0	0	0
4/24/2024	4:15 AM	0	2	1	0	0	0	0	0	1	0	0	0
4/24/2024	4:30 AM	0	7	0	0	0	0	0	0	1	0	0	0
4/24/2024	4:45 AM	0	18	2	0	1	0	0	0	1	0	0	0
4/24/2024	5:00 AM	0	6	2	0	0	1	0	0	0	0	0	0
4/24/2024	5:15 AM	0	26	2	0	0	0	0	0	1	0	0	0
4/24/2024	5:30 AM	0	24	0	0	0	1	0	0	0	0	0	0
4/24/2024	5:45 AM	0	38	2	0	1	0	0	0	0	0	0	0
4/24/2024	6:00 AM	0	22	4	0	0	0	0	1	3	0	0	0
4/24/2024	6:15 AM	0	32	9	0	0	0	0	0	0	0	0	0
4/24/2024	6:30 AM	0	54	7	0	0	1	0	0	2	0	0	0
4/24/2024	6:45 AM	0	57	12	0	0	0	0	0	1	0	0	0
4/24/2024	7:00 AM	0	79	17	0	0	0	0	0	0	0	0	0
4/24/2024	7:15 AM	0	96	16	0	4	0	1	0	1	0	0	0
4/24/2024	7:30 AM	0	117	23	1	5	1	0	0	1	0	0	0
4/24/2024	7:45 AM	0	132	28	0	3	1	0	0	0	0	0	0
4/24/2024	8:00 AM	0	105	25	2	1	3	0	0	0	0	0	0
4/24/2024	8:15 AM	0	93	38	0	2	4	0	0	0	0	0	0
4/24/2024	8:30 AM	0	112	35	0	2	1	0	0	2	0	0	0
4/24/2024	8:45 AM	0	112	31	0	1	0	0	1	1	0	0	0
4/24/2024	9:00 AM	0	110	32	1	1	2	0	0	0	0	0	0
4/24/2024	9:15 AM	0	79	17	1	2	1	0	0	1	0	0	0
4/24/2024	9:30 AM	0	109	22	0	3	0	0	0	1	0	0	0
4/24/2024	9:45 AM	0	137	32	0	3	0	0	0	0	0	0	0
4/24/2024	10:00 AM	1	121	35	0	0	0	0	0	2	0	0	0
4/24/2024	10:15 AM	0	133	37	0	0	1	0	0	2	0	0	0
4/24/2024	10:30 AM	0	148	30	0	1	0	0	1	1	0	0	0
4/24/2024	10:45 AM	0	155	36	0	3	0	0	0	1	0	0	0
4/24/2024	11:00 AM	0	155	31	0	5	1	1	0	0	0	0	0
4/24/2024	11:15 AM	0	167	39	3	1	0	0	0	2	0	0	0
4/24/2024	11:30 AM	0	175	35	1	1	0	0	0	0	0	0	0
4/24/2024	11:45 AM	0	171	46	1	3	0	0	0	0	0	0	0
4/24/2024	12:00 PM	1	183	43	1	2	0	0	0	0	0	0	0
4/24/2024	12:15 PM	1	199	41	5	2	0	0	0	1	0	0	0
4/24/2024	12:30 PM	0	175	43	0	2	0	0	0	1	0	0	0
4/24/2024	12:45 PM	0	179	38	1	2	0	0	0	0	0	0	0
4/24/2024	1:00 PM	0	159	29	0	0	1	0	0	0	0	0	0
4/24/2024	1:15 PM	0	182	29	0	1	0	0	0	1	0	0	0
4/24/2024	1:30 PM	0	165	29	0	1	2	0	0	2	0	0	0
4/24/2024	1:45 PM	0	147	37	0	0	1	0	0	0	0	0	0
4/24/2024	2:00 PM	1	160	26	0	0	1	0	0	1	0	0	0
4/24/2024	2:15 PM	0	163	34	1	0	0	0	0	2	0	0	0
4/24/2024	2:30 PM	0	167	32	0	1	0	0	0	2	0	0	0
4/24/2024	2:45 PM	0	173	29	0	2	0	0	0	0	0	0	0
4/24/2024	3:00 PM	0	183	32	0	0	1	0	0	0	0	0	0
4/24/2024	3:15 PM	0	187	30	0	2	0	0	0	0	0	0	0
4/24/2024	3:30 PM	0	190	29	0	2	0	0	0	0	0	0	0
4/24/2024	3:45 PM	0	211	32	0	1	0	0	0	2	0	0	0
4/24/2024	4:00 PM	0	175	25	0	0	0	0	0	1	0	0	0
4/24/2024	4:15 PM	1	181	30	0	0	0	0	0	1	0	0	0
4/24/2024	4:30 PM	1	196	24	0	0	0	0	0	1	0	0	0
4/24/2024	4:45 PM	0	173	36	0	2	1	0	0	0	0	0	0
4/24/2024	5:00 PM	0	163	28	0	3	0	0	0	0	0	0	0
4/24/2024	5:15 PM	0	152	31	0	0	0	0	0	0	0	0	0
4/24/2024	5:30 PM	0	154	28	0	0	0	0	0	0	0	0	0
4/24/2024	5:45 PM	0	193	29	0	0	0	0	0	1	0	0	0
4/24/2024	6:00 PM	0	183	34	0	1	1	0	0	1	0	0	0
4/24/2024	6:15 PM	1	185	37	1	2	0	0	0	1	0	0	0
4/24/2024	6:30 PM	0	171	26	0	1	3	0	0	0	0	0	0
4/24/2024	6:45 PM	1	140	16	0	1	0	0	0	1	0	0	0
4/24/2024	7:00 PM	1	147	16	0	2	0	0	0	0	0	0	0
4/24/2024	7:15 PM	0	127	29	0	1	1	0	0	0	0	0	0
4/24/2024	7:30 PM	0	107	22	0	0	0	0	0	1	0	0	0
4/24/2024	7:45 PM	0	107	12	0	0	0	0	0	0	0	0	0
4/24/2024	8:00 PM	0	84	16	0	0	0	0	0	0	0	0	0
4/24/2024	8:15 PM	0	99	12	0	0	0	0	0	0	0	0	0
4/24/2024	8:30 PM	0	101	11	0	0	0	0	0	0	0	0	0
4/24/2024	8:45 PM	0	65	8	0	0	0	0	0	0	0	0	0
4/24/2024	9:00 PM	0	79	5	0	0	0	0	0	0	0	0	0
4/24/2024	9:15 PM	0	53	2	0	0	0	0	0	0	0	0	0
4/24/2024	9:30 PM	0	63	1	0	0	0	0	0	0	0	0	0
4/24/2024	9:45 PM	1	60	2	0	0	0	0	0	0	0	0	0
4/24/2024	10:00 PM	0	38	3	0	1	0	0	0	0	0	0	0
4/24/2024	10:15 PM	0	35	1	0	0	0	0	0	0	0	0	0
4/24/2024	10:30 PM	0	41	0	0	0	0	0	0	0	0	0	0
4/24/2024	10:45 PM	0	32	0	0	1	0	0	0	1	0	0	0
4/24/2024	11:00 PM	0	29	3	1	1	1	0	0	0	0	0	0
4/24/2024	11:15 PM	0	27	0	0	0	0	0	0	0	0	0	0
4/24/2024	11:30 PM	0	17	0	0	0	0	0	0	0	0	0	0
4/24/2024	11:45 PM	0	12	0	0	0	0	0	0	1	0	0	0

4/25/2024	12:00 AM	0	15	5	0	0	0	0	0	0	0	0	0
4/25/2024	12:15 AM	0	8	2	0	0	0	0	0	1	0	0	0
4/25/2024	12:30 AM	0	12	2	0	0	0	0	0	0	0	0	0
4/25/2024	12:45 AM	0	6	2	0	0	0	0	0	0	0	0	0
4/25/2024	1:00 AM	0	10	2	0	0	0	0	1	0	0	0	0
4/25/2024	1:15 AM	0	11	3	0	0	0	0	0	1	0	0	0
4/25/2024	1:30 AM	0	4	0	0	0	0	0	0	0	0	0	0
4/25/2024	1:45 AM	0	4	2	0	0	0	0	0	0	0	0	0
4/25/2024	2:00 AM	0	7	2	0	0	0	0	0	0	0	0	0
4/25/2024	2:15 AM	0	6	1	0	0	0	0	0	0	0	0	0
4/25/2024	2:30 AM	0	7	2	0	0	0	0	0	0	0	0	0
4/25/2024	2:45 AM	0	5	1	0	1	0	0	0	0	0	0	0
4/25/2024	3:00 AM	0	3	0	0	2	0	0	0	0	0	0	0
4/25/2024	3:15 AM	0	8	2	0	0	0	0	0	0	0	0	0
4/25/2024	3:30 AM	0	5	2	0	0	0	0	0	0	0	0	0
4/25/2024	3:45 AM	0	4	2	0	0	0	0	0	0	0	0	0
4/25/2024	4:00 AM	0	10	1	0	2	0	0	1	0	0	0	0
4/25/2024	4:15 AM	0	4	1	0	1	0	0	0	0	0	0	0
4/25/2024	4:30 AM	0	6	3	0	0	0	0	0	0	0	0	0
4/25/2024	4:45 AM	0	14	3	0	2	0	0	0	0	0	0	0
4/25/2024	5:00 AM	0	16	2	0	0	0	0	0	0	0	0	0
4/25/2024	5:15 AM	0	21	2	0	2	0	0	0	1	0	0	0
4/25/2024	5:30 AM	0	29	2	0	0	0	0	0	0	0	0	0
4/25/2024	5:45 AM	0	31	3	0	0	0	0	0	1	0	0	0
4/25/2024	6:00 AM	0	29	5	0	1	0	0	0	0	0	0	0
4/25/2024	6:15 AM	1	29	8	0	0	0	0	0	3	0	0	0
4/25/2024	6:30 AM	0	38	11	1	1	0	0	1	0	0	0	0
4/25/2024	6:45 AM	0	45	14	0	1	0	0	2	1	0	0	0
4/25/2024	7:00 AM	0	84	17	0	1	1	0	0	3	0	0	0
4/25/2024	7:15 AM	0	94	22	0	1	0	0	0	0	0	0	0
4/25/2024	7:30 AM	0	127	23	0	3	0	0	0	1	0	0	0
4/25/2024	7:45 AM	0	103	30	0	1	0	0	0	0	0	0	0
4/25/2024	8:00 AM	0	115	26	0	0	1	0	0	0	0	0	0
4/25/2024	8:15 AM	0	97	28	0	1	0	0	0	1	0	0	0
4/25/2024	8:30 AM	0	115	31	0	1	1	0	0	0	0	0	0
4/25/2024	8:45 AM	0	96	32	0	3	0	0	0	0	0	0	0
4/25/2024	9:00 AM	0	117	26	0	3	1	0	0	1	0	0	0
4/25/2024	9:15 AM	0	100	23	1	3	0	0	0	2	0	0	0
4/25/2024	9:30 AM	0	126	41	0	3	0	0	0	0	0	0	0
4/25/2024	9:45 AM	0	130	35	0	4	0	0	0	0	1	0	0
4/25/2024	10:00 AM	0	114	28	0	4	1	0	1	1	0	0	0
4/25/2024	10:15 AM	0	146	32	0	3	0	0	0	1	0	0	0
4/25/2024	10:30 AM	0	143	27	1	2	0	0	0	1	0	0	0
4/25/2024	10:45 AM	1	176	37	0	2	0	0	1	2	0	0	0
4/25/2024	11:00 AM	0	178	34	0	4	0	1	1	0	0	0	0
4/25/2024	11:15 AM	0	195	33	0	0	0	0	1	0	0	0	0
4/25/2024	11:30 AM	1	200	43	0	4	0	0	2	3	0	0	0
4/25/2024	11:45 AM	1	187	31	1	2	1	1	0	1	0	0	0
4/25/2024	12:00 PM	0	221	33	0	1	0	0	0	0	0	0	0
4/25/2024	12:15 PM	0	216	29	0	4	1	0	0	1	0	0	0
4/25/2024	12:30 PM	1	194	33	0	4	0	0	0	1	0	0	0
4/25/2024	12:45 PM	1	183	30	1	1	1	0	0	0	0	0	0
4/25/2024	1:00 PM	0	187	23	0	1	0	0	0	0	0	0	0
4/25/2024	1:15 PM	0	191	33	0	2	0	0	0	0	0	0	0
4/25/2024	1:30 PM	0	204	36	0	1	0	0	0	1	0	0	0
4/25/2024	1:45 PM	0	203	30	1	0	0	0	0	0	0	0	0
4/25/2024	2:00 PM	1	183	26	0	1	1	0	0	2	0	0	0
4/25/2024	2:15 PM	0	176	21	0	3	0	0	0	4	0	0	0
4/25/2024	2:30 PM	1	187	28	0	2	0	0	0	1	0	0	0
4/25/2024	2:45 PM	0	186	20	0	0	1	0	0	1	0	0	0
4/25/2024	3:00 PM	0	171	31	0	2	1	0	0	0	0	0	0
4/25/2024	3:15 PM	0	179	27	0	1	0	0	0	1	0	0	0
4/25/2024	3:30 PM	0	167	24	0	2	0	0	0	1	0	0	0
4/25/2024	3:45 PM	0	183	14	0	0	0	0	0	1	0	0	0
4/25/2024	4:00 PM	0	179	31	0	1	0	0	0	2	0	0	0
4/25/2024	4:15 PM	0	154	17	0	0	0	0	0	2	0	0	0
4/25/2024	4:30 PM	0	169	25	0	1	0	0	0	1	0	0	0
4/25/2024	4:45 PM	0	173	24	0	3	0	0	0	1	0	0	0
4/25/2024	5:00 PM	0	177	19	0	1	1	0	0	0	0	0	0
4/25/2024	5:15 PM	0	169	25	0	0	0	0	0	0	0	0	0
4/25/2024	5:30 PM	0	182	18	1	0	0	0	0	0	0	0	0
4/25/2024	5:45 PM	0	172	28	0	0	0	0	0	0	0	0	0
4/25/2024	6:00 PM	0	188	29	0	0	0	0	0	0	0	0	0
4/25/2024	6:15 PM	2	195	28	1	0	0	0	0	0	0	0	0
4/25/2024	6:30 PM	1	176	14	1	1	0	0	0	0	0	0	0
4/25/2024	6:45 PM	0	147	19	0	0	0	0	0	0	0	0	0
4/25/2024	7:00 PM	0	0	0	0	0	0	0	0	0	0	0	0
4/25/2024	7:15 PM	0	0	0	0	0	0	0	0	0	0	0	0
4/25/2024	7:30 PM	0	0	0	0	0	0	0	0	0	0	0	0
4/25/2024	7:45 PM	0	0	0	0	0	0	0	0	0	0	0	0
4/25/2024	8:00 PM	0	0	0	0	0	0	0	0	0	0	0	0
4/25/2024	8:15 PM	0	0	0	0	0	0	0	0	0	0	0	0
4/25/2024	8:30 PM	0	0	0	0	0	0	0	0	0	0	0	0
4/25/2024	8:45 PM	0	0	0	0	0	0	0	0	0	0	0	0
4/25/2024	9:00 PM	0	0	0	0	0	0	0	0	0	0	0	0
4/25/2024	9:15 PM	0	0	0	0	0	0	0	0	0	0	0	0
4/25/2024	9:30 PM	0	0	0	0	0	0	0	0	0	0	0	0
4/25/2024	9:45 PM	0	0	0	0	0	0	0	0	0	0	0	0
4/25/2024	10:00 PM	0	0	0	0	0	0	0	0	0	0	0	0
4/25/2024	10:15 PM	0	0	0	0	0	0	0	0	0	0	0	0
4/25/2024	10:30 PM	0	0	0	0	0	0	0	0	0	0	0	0
4/25/2024	10:45 PM	0	0	0	0	0	0	0	0	0	0	0	0
4/25/2024	11:00 PM	0	0	0	0	0	0	0	0	0	0	0	0
4/25/2024	11:15 PM	0	0	0	0	0	0	0	0	0	0	0	0
4/25/2024	11:30 PM	0	0	0	0	0	0	0	0	0	0	0	0
4/25/2024	11:45 PM	0	0	0	0	0	0	0	0	0	0	0	0

WB
File Name:
Start Date: 4/23/2024
Start Time: 0
Site Code: 27
Station ID: 1
Location 1: I-26 James F. Byrnes Expy On/Off-Ramp, west of Harbison Blvd
Location 2:

Date	Time	1	2	3	4	5	6	7	8	9	10	11	12	13
4/23/2024	12:00 AM	0	0	0	0	0	0	0	0	0	0	0	0	0
4/23/2024	12:15 AM	0	0	0	0	0	0	0	0	0	0	0	0	0
4/23/2024	12:30 AM	0	0	0	0	0	0	0	0	0	0	0	0	0
4/23/2024	12:45 AM	0	0	0	0	0	0	0	0	0	0	0	0	0
4/23/2024	1:00 AM	0	0	0	0	0	0	0	0	0	0	0	0	0
4/23/2024	1:15 AM	0	0	0	0	0	0	0	0	0	0	0	0	0
4/23/2024	1:30 AM	0	0	0	0	0	0	0	0	0	0	0	0	0
4/23/2024	1:45 AM	0	0	0	0	0	0	0	0	0	0	0	0	0
4/23/2024	2:00 AM	0	0	0	0	0	0	0	0	0	0	0	0	0
4/23/2024	2:15 AM	0	0	0	0	0	0	0	0	0	0	0	0	0
4/23/2024	2:30 AM	0	0	0	0	0	0	0	0	0	0	0	0	0
4/23/2024	2:45 AM	0	0	0	0	0	0	0	0	0	0	0	0	0
4/23/2024	3:00 AM	0	0	0	0	0	0	0	0	0	0	0	0	0
4/23/2024	3:15 AM	0	0	0	0	0	0	0	0	0	0	0	0	0
4/23/2024	3:30 AM	0	0	0	0	0	0	0	0	0	0	0	0	0
4/23/2024	3:45 AM	0	0	0	0	0	0	0	0	0	0	0	0	0
4/23/2024	4:00 AM	0	0	0	0	0	0	0	0	0	0	0	0	0
4/23/2024	4:15 AM	0	0	0	0	0	0	0	0	0	0	0	0	0
4/23/2024	4:30 AM	0	0	0	0	0	0	0	0	0	0	0	0	0
4/23/2024	4:45 AM	0	0	0	0	0	0	0	0	0	0	0	0	0
4/23/2024	5:00 AM	0	0	0	0	0	0	0	0	0	0	0	0	0
4/23/2024	5:15 AM	0	0	0	0	0	0	0	0	0	0	0	0	0
4/23/2024	5:30 AM	0	0	0	0	0	0	0	0	0	0	0	0	0
4/23/2024	5:45 AM	0	0	0	0	0	0	0	0	0	0	0	0	0
4/23/2024	6:00 AM	0	0	0	0	0	0	0	0	0	0	0	0	0
4/23/2024	6:15 AM	0	0	0	0	0	0	0	0	0	0	0	0	0
4/23/2024	6:30 AM	0	0	0	0	0	0	0	0	0	0	0	0	0
4/23/2024	6:45 AM	0	0	0	0	0	0	0	0	0	0	0	0	0
4/23/2024	7:00 AM	0	0	0	0	0	0	0	0	0	0	0	0	0
4/23/2024	7:15 AM	0	0	0	0	0	0	0	0	0	0	0	0	0
4/23/2024	7:30 AM	0	0	0	0	0	0	0	0	0	0	0	0	0
4/23/2024	7:45 AM	0	0	0	0	0	0	0	0	0	0	0	0	0
4/23/2024	8:00 AM	0	0	0	0	0	0	0	0	0	0	0	0	0
4/23/2024	8:15 AM	0	0	0	0	0	0	0	0	0	0	0	0	0
4/23/2024	8:30 AM	0	0	0	0	0	0	0	0	0	0	0	0	0
4/23/2024	8:45 AM	0	0	0	0	0	0	0	0	0	0	0	0	0
4/23/2024	9:00 AM	0	0	0	0	0	0	0	0	0	0	0	0	0
4/23/2024	9:15 AM	0	0	0	0	0	0	0	0	0	0	0	0	0
4/23/2024	9:30 AM	0	0	0	0	0	0	0	0	0	0	0	0	0
4/23/2024	9:45 AM	0	0	0	0	0	0	0	0	0	0	0	0	0
4/23/2024	10:00 AM	0	0	0	0	0	0	0	0	0	0	0	0	0
4/23/2024	10:15 AM	0	0	0	0	0	0	0	0	0	0	0	0	0
4/23/2024	10:30 AM	0	0	0	0	0	0	0	0	0	0	0	0	0
4/23/2024	10:45 AM	0	0	0	0	0	0	0	0	0	0	0	0	0
4/23/2024	11:00 AM	0	0	0	0	0	0	0	0	0	0	0	0	0
4/23/2024	11:15 AM	0	0	0	0	0	0	0	0	0	0	0	0	0
4/23/2024	11:30 AM	0	0	0	0	0	0	0	0	0	0	0	0	0
4/23/2024	11:45 AM	0	0	0	0	0	0	0	0	0	0	0	0	0
4/23/2024	12:00 PM	0	0	0	0	0	0	0	0	0	0	0	0	0
4/23/2024	12:15 PM	0	0	0	0	0	0	0	0	0	0	0	0	0
4/23/2024	12:30 PM	0	0	0	0	0	0	0	0	0	0	0	0	0
4/23/2024	12:45 PM	0	0	0	0	0	0	0	0	0	0	0	0	0
4/23/2024	1:00 PM	0	0	0	0	0	0	0	0	0	0	0	0	0
4/23/2024	1:15 PM	0	0	0	0	0	0	0	0	0	0	0	0	0
4/23/2024	1:30 PM	0	0	0	0	0	0	0	0	0	0	0	0	0
4/23/2024	1:45 PM	0	0	0	0	0	0	0	0	0	0	0	0	0
4/23/2024	2:00 PM	0	0	0	0	0	0	0	0	0	0	0	0	0
4/23/2024	2:15 PM	0	0	0	0	0	0	0	0	0	0	0	0	0
4/23/2024	2:30 PM	0	0	0	0	0	0	0	0	0	0	0	0	0
4/23/2024	2:45 PM	0	0	0	0	0	0	0	0	0	0	0	0	0
4/23/2024	3:00 PM	0	0	0	0	0	0	0	0	0	0	0	0	0
4/23/2024	3:15 PM	0	0	0	0	0	0	0	0	0	0	0	0	0
4/23/2024	3:30 PM	0	0	0	0	0	0	0	0	0	0	0	0	0
4/23/2024	3:45 PM	0	0	0	0	0	0	0	0	0	0	0	0	0
4/23/2024	4:00 PM	0	0	0	0	0	0	0	0	0	0	0	0	0
4/23/2024	4:15 PM	0	0	0	0	0	0	0	0	0	0	0	0	0
4/23/2024	4:30 PM	0	0	0	0	0	0	0	0	0	0	0	0	0
4/23/2024	4:45 PM	0	0	0	0	0	0	0	0	0	0	0	0	0
4/23/2024	5:00 PM	0	0	0	0	0	0	0	0	0	0	0	0	0
4/23/2024	5:15 PM	0	0	0	0	0	0	0	0	0	0	0	0	0
4/23/2024	5:30 PM	0	0	0	0	0	0	0	0	0	0	0	0	0
4/23/2024	5:45 PM	0	0	0	0	0	0	0	0	0	0	0	0	0
4/23/2024	6:00 PM	0	0	0	0	0	0	0	0	0	0	0	0	0
4/23/2024	6:15 PM	0	0	0	0	0	0	0	0	0	0	0	0	0
4/23/2024	6:30 PM	0	0	0	0	0	0	0	0	0	0	0	0	0
4/23/2024	6:45 PM	0	0	0	0	0	0	0	0	0	0	0	0	0
4/23/2024	7:00 PM	0	0	0	0	0	0	0	0	0	0	0	0	0
4/23/2024	7:15 PM	0	0	0	0	0	0	0	0	0	0	0	0	0
4/23/2024	7:30 PM	0	0	0	0	0	0	0	0	0	0	0	0	0
4/23/2024	7:45 PM	0	0	0	0	0	0	0	0	0	0	0	0	0
4/23/2024	8:00 PM	0	0	0	0	0	0	0	0	0	0	0	0	0
4/23/2024	8:15 PM	0	0	0	0	0	0	0	0	0	0	0	0	0
4/23/2024	8:30 PM	0	0	0	0	0	0	0	0	0	0	0	0	0
4/23/2024	8:45 PM	0	0	0	0	0	0	0	0	0	0	0	0	0
4/23/2024	9:00 PM	0	0	0	0	0	0	0	0	0	0	0	0	0
4/23/2024	9:15 PM	0	0	0	0	0	0	0	0	0	0	0	0	0
4/23/2024	9:30 PM	0	0	0	0	0	0	0	0	0	0	0	0	0
4/23/2024	9:45 PM	0	0	0	0	0	0	0	0	0	0	0	0	0
4/23/2024	10:00 PM	0	0	0	0	0	0	0	0	0	0	0	0	0
4/23/2024	10:15 PM	0	0	0	0	0	0	0	0	0	0	0	0	0
4/23/2024	10:30 PM	0	0	0	0	0	0	0	0	0	0	0	0	0
4/23/2024	10:45 PM	0	0	0	0	0	0	0	0	0	0	0	0	0
4/23/2024	11:00 PM	0	0	0	0	0	0	0	0	0	0	0	0	0
4/23/2024	11:15 PM	0	0	0	0	0	0	0	0	0	0	0	0	0
4/23/2024	11:30 PM	0	0	0	0	0	0	0	0	0	0	0	0	0
4/23/2024	11:45 PM	0	0	0	0	0	0	0	0	0	0	0	0	0

4/24/2024	12:00 AM	0	0	0	0	0	0	0	0	0	0	0	0	0
4/24/2024	12:15 AM	0	0	0	0	0	0	0	0	0	0	0	0	0
4/24/2024	12:30 AM	0	0	0	0	0	0	0	0	0	0	0	0	0
4/24/2024	12:45 AM	0	0	0	0	0	0	0	0	0	0	0	0	0
4/24/2024	1:00 AM	0	0	0	0	0	0	0	0	0	0	0	0	0
4/24/2024	1:15 AM	0	0	0	0	0	0	0	0	0	0	0	0	0
4/24/2024	1:30 AM	0	0	0	0	0	0	0	0	0	0	0	0	0
4/24/2024	1:45 AM	0	0	0	0	0	0	0	0	0	0	0	0	0
4/24/2024	2:00 AM	0	0	0	0	0	0	0	0	0	0	0	0	0
4/24/2024	2:15 AM	0	0	0	0	0	0	0	0	0	0	0	0	0
4/24/2024	2:30 AM	0	0	0	0	0	0	0	0	0	0	0	0	0
4/24/2024	2:45 AM	0	0	0	0	0	0	0	0	0	0	0	0	0
4/24/2024	3:00 AM	0	0	0	0	0	0	0	0	0	0	0	0	0
4/24/2024	3:15 AM	0	0	0	0	0	0	0	0	0	0	0	0	0
4/24/2024	3:30 AM	0	0	0	0	0	0	0	0	0	0	0	0	0
4/24/2024	3:45 AM	0	0	0	0	0	0	0	0	0	0	0	0	0
4/24/2024	4:00 AM	0	0	0	0	0	0	0	0	0	0	0	0	0
4/24/2024	4:15 AM	0	0	0	0	0	0	0	0	0	0	0	0	0
4/24/2024	4:30 AM	0	0	0	0	0	0	0	0	0	0	0	0	0
4/24/2024	4:45 AM	0	0	0	0	0	0	0	0	0	0	0	0	0
4/24/2024	5:00 AM	0	0	0	0	0	0	0	0	0	0	0	0	0
4/24/2024	5:15 AM	0	0	0	0	0	0	0	0	0	0	0	0	0
4/24/2024	5:30 AM	0	0	0	0	0	0	0	0	0	0	0	0	0
4/24/2024	5:45 AM	0	0	0	0	0	0	0	0	0	0	0	0	0
4/24/2024	6:00 AM	0	0	0	0	0	0	0	0	0	0	0	0	0
4/24/2024	6:15 AM	0	0	0	0	0	0	0	0	0	0	0	0	0
4/24/2024	6:30 AM	0	0	0	0	0	0	0	0	0	0	0	0	0
4/24/2024	6:45 AM	0	0	0	0	0	0	0	0	0	0	0	0	0
4/24/2024	7:00 AM	0	0	0	0	0	0	0	0	0	0	0	0	0
4/24/2024	7:15 AM	0	0	0	0	0	0	0	0	0	0	0	0	0
4/24/2024	7:30 AM	0	0	0	0	0	0	0	0	0	0	0	0	0
4/24/2024	7:45 AM	0	0	0	0	0	0	0	0	0	0	0	0	0
4/24/2024	8:00 AM	0	0	0	0	0	0	0	0	0	0	0	0	0
4/24/2024	8:15 AM	0	0	0	0	0	0	0	0	0	0	0	0	0
4/24/2024	8:30 AM	0	0	0	0	0	0	0	0	0	0	0	0	0
4/24/2024	8:45 AM	0	0	0	0	0	0	0	0	0	0	0	0	0
4/24/2024	9:00 AM	0	0	0	0	0	0	0	0	0	0	0	0	0
4/24/2024	9:15 AM	0	0	0	0	0	0	0	0	0	0	0	0	0
4/24/2024	9:30 AM	0	0	0	0	0	0	0	0	0	0	0	0	0
4/24/2024	9:45 AM	0	0	0	0	0	0	0	0	0	0	0	0	0
4/24/2024	10:00 AM	0	0	0	0	0	0	0	0	0	0	0	0	0
4/24/2024	10:15 AM	0	0	0	0	0	0	0	0	0	0	0	0	0
4/24/2024	10:30 AM	0	0	0	0	0	0	0	0	0	0	0	0	0
4/24/2024	10:45 AM	0	0	0	0	0	0	0	0	0	0	0	0	0
4/24/2024	11:00 AM	0	0	0	0	0	0	0	0	0	0	0	0	0
4/24/2024	11:15 AM	0	0	0	0	0	0	0	0	0	0	0	0	0
4/24/2024	11:30 AM	0	0	0	0	0	0	0	0	0	0	0	0	0
4/24/2024	11:45 AM	0	0	0	0	0	0	0	0	0	0	0	0	0
4/24/2024	12:00 PM	0	0	0	0	0	0	0	0	0	0	0	0	0
4/24/2024	12:15 PM	0	0	0	0	0	0	0	0	0	0	0	0	0
4/24/2024	12:30 PM	0	0	0	0	0	0	0	0	0	0	0	0	0
4/24/2024	12:45 PM	0	0	0	0	0	0	0	0	0	0	0	0	0
4/24/2024	1:00 PM	0	0	0	0	0	0	0	0	0	0	0	0	0
4/24/2024	1:15 PM	0	0	0	0	0	0	0	0	0	0	0	0	0
4/24/2024	1:30 PM	0	0	0	0	0	0	0	0	0	0	0	0	0
4/24/2024	1:45 PM	0	0	0	0	0	0	0	0	0	0	0	0	0
4/24/2024	2:00 PM	0	0	0	0	0	0	0	0	0	0	0	0	0
4/24/2024	2:15 PM	0	0	0	0	0	0	0	0	0	0	0	0	0
4/24/2024	2:30 PM	0	0	0	0	0	0	0	0	0	0	0	0	0
4/24/2024	2:45 PM	0	0	0	0	0	0	0	0	0	0	0	0	0
4/24/2024	3:00 PM	0	0	0	0	0	0	0	0	0	0	0	0	0
4/24/2024	3:15 PM	0	0	0	0	0	0	0	0	0	0	0	0	0
4/24/2024	3:30 PM	0	0	0	0	0	0	0	0	0	0	0	0	0
4/24/2024	3:45 PM	0	0	0	0	0	0	0	0	0	0	0	0	0
4/24/2024	4:00 PM	0	0	0	0	0	0	0	0	0	0	0	0	0
4/24/2024	4:15 PM	0	0	0	0	0	0	0	0	0	0	0	0	0
4/24/2024	4:30 PM	0	0	0	0	0	0	0	0	0	0	0	0	0
4/24/2024	4:45 PM	0	0	0	0	0	0	0	0	0	0	0	0	0
4/24/2024	5:00 PM	0	0	0	0	0	0	0	0	0	0	0	0	0
4/24/2024	5:15 PM	0	0	0	0	0	0	0	0	0	0	0	0	0
4/24/2024	5:30 PM	0	0	0	0	0	0	0	0	0	0	0	0	0
4/24/2024	5:45 PM	0	0	0	0	0	0	0	0	0	0	0	0	0
4/24/2024	6:00 PM	0	0	0	0	0	0	0	0	0	0	0	0	0
4/24/2024	6:15 PM	0	0	0	0	0	0	0	0	0	0	0	0	0
4/24/2024	6:30 PM	0	0	0	0	0	0	0	0	0	0	0	0	0
4/24/2024	6:45 PM	0	0	0	0	0	0	0	0	0	0	0	0	0
4/24/2024	7:00 PM	0	0	0	0	0	0	0	0	0	0	0	0	0
4/24/2024	7:15 PM	0	0	0	0	0	0	0	0	0	0	0	0	0
4/24/2024	7:30 PM	0	0	0	0	0	0	0	0	0	0	0	0	0
4/24/2024	7:45 PM	0	0	0	0	0	0	0	0	0	0	0	0	0
4/24/2024	8:00 PM	0	0	0	0	0	0	0	0	0	0	0	0	0
4/24/2024	8:15 PM	0	0	0	0	0	0	0	0	0	0	0	0	0
4/24/2024	8:30 PM	0	0	0	0	0	0	0	0	0	0	0	0	0
4/24/2024	8:45 PM	0	0	0	0	0	0	0	0	0	0	0	0	0
4/24/2024	9:00 PM	0	0	0	0	0	0	0	0	0	0	0	0	0
4/24/2024	9:15 PM	0	0	0	0	0	0	0	0	0	0	0	0	0
4/24/2024	9:30 PM	0	0	0	0	0	0	0	0	0	0	0	0	0
4/24/2024	9:45 PM	0	0	0	0	0	0	0	0	0	0	0	0	0
4/24/2024	10:00 PM	0	0	0	0	0	0	0	0	0	0	0	0	0
4/24/2024	10:15 PM	0	0	0	0	0	0	0	0	0	0	0	0	0
4/24/2024	10:30 PM	0	0	0	0	0	0	0	0	0	0	0	0	0
4/24/2024	10:45 PM	0	0	0	0	0	0	0	0	0	0	0	0	0
4/24/2024	11:00 PM	0	0	0	0	0	0	0	0	0	0	0	0	0
4/24/2024	11:15 PM	0	0	0	0	0	0	0	0	0	0	0	0	0
4/24/2024	11:30 PM	0	0	0	0	0	0	0	0	0	0	0	0	0
4/24/2024	11:45 PM	0	0	0	0	0	0	0	0	0	0	0	0	0

4/25/2024	12:00 AM	0	0	0	0	0	0	0	0	0	0	0	0	0
4/25/2024	12:15 AM	0	0	0	0	0	0	0	0	0	0	0	0	0
4/25/2024	12:30 AM	0	0	0	0	0	0	0	0	0	0	0	0	0
4/25/2024	12:45 AM	0	0	0	0	0	0	0	0	0	0	0	0	0
4/25/2024	1:00 AM	0	0	0	0	0	0	0	0	0	0	0	0	0
4/25/2024	1:15 AM	0	0	0	0	0	0	0	0	0	0	0	0	0
4/25/2024	1:30 AM	0	0	0	0	0	0	0	0	0	0	0	0	0
4/25/2024	1:45 AM	0	0	0	0	0	0	0	0	0	0	0	0	0
4/25/2024	2:00 AM	0	0	0	0	0	0	0	0	0	0	0	0	0
4/25/2024	2:15 AM	0	0	0	0	0	0	0	0	0	0	0	0	0
4/25/2024	2:30 AM	0	0	0	0	0	0	0	0	0	0	0	0	0
4/25/2024	2:45 AM	0	0	0	0	0	0	0	0	0	0	0	0	0
4/25/2024	3:00 AM	0	0	0	0	0	0	0	0	0	0	0	0	0
4/25/2024	3:15 AM	0	0	0	0	0	0	0	0	0	0	0	0	0
4/25/2024	3:30 AM	0	0	0	0	0	0	0	0	0	0	0	0	0
4/25/2024	3:45 AM	0	0	0	0	0	0	0	0	0	0	0	0	0
4/25/2024	4:00 AM	0	0	0	0	0	0	0	0	0	0	0	0	0
4/25/2024	4:15 AM	0	0	0	0	0	0	0	0	0	0	0	0	0
4/25/2024	4:30 AM	0	0	0	0	0	0	0	0	0	0	0	0	0
4/25/2024	4:45 AM	0	0	0	0	0	0	0	0	0	0	0	0	0
4/25/2024	5:00 AM	0	0	0	0	0	0	0	0	0	0	0	0	0
4/25/2024	5:15 AM	0	0	0	0	0	0	0	0	0	0	0	0	0
4/25/2024	5:30 AM	0	0	0	0	0	0	0	0	0	0	0	0	0
4/25/2024	5:45 AM	0	0	0	0	0	0	0	0	0	0	0	0	0
4/25/2024	6:00 AM	0	0	0	0	0	0	0	0	0	0	0	0	0
4/25/2024	6:15 AM	0	0	0	0	0	0	0	0	0	0	0	0	0
4/25/2024	6:30 AM	0	0	0	0	0	0	0	0	0	0	0	0	0
4/25/2024	6:45 AM	0	0	0	0	0	0	0	0	0	0	0	0	0
4/25/2024	7:00 AM	0	0	0	0	0	0	0	0	0	0	0	0	0
4/25/2024	7:15 AM	0	0	0	0	0	0	0	0	0	0	0	0	0
4/25/2024	7:30 AM	0	0	0	0	0	0	0	0	0	0	0	0	0
4/25/2024	7:45 AM	0	0	0	0	0	0	0	0	0	0	0	0	0
4/25/2024	8:00 AM	0	0	0	0	0	0	0	0	0	0	0	0	0
4/25/2024	8:15 AM	0	0	0	0	0	0	0	0	0	0	0	0	0
4/25/2024	8:30 AM	0	0	0	0	0	0	0	0	0	0	0	0	0
4/25/2024	8:45 AM	0	0	0	0	0	0	0	0	0	0	0	0	0
4/25/2024	9:00 AM	0	0	0	0	0	0	0	0	0	0	0	0	0
4/25/2024	9:15 AM	0	0	0	0	0	0	0	0	0	0	0	0	0
4/25/2024	9:30 AM	0	0	0	0	0	0	0	0	0	0	0	0	0
4/25/2024	9:45 AM	0	0	0	0	0	0	0	0	0	0	0	0	0
4/25/2024	10:00 AM	0	0	0	0	0	0	0	0	0	0	0	0	0
4/25/2024	10:15 AM	0	0	0	0	0	0	0	0	0	0	0	0	0
4/25/2024	10:30 AM	0	0	0	0	0	0	0	0	0	0	0	0	0
4/25/2024	10:45 AM	0	0	0	0	0	0	0	0	0	0	0	0	0
4/25/2024	11:00 AM	0	0	0	0	0	0	0	0	0	0	0	0	0
4/25/2024	11:15 AM	0	0	0	0	0	0	0	0	0	0	0	0	0
4/25/2024	11:30 AM	0	0	0	0	0	0	0	0	0	0	0	0	0
4/25/2024	11:45 AM	0	0	0	0	0	0	0	0	0	0	0	0	0
4/25/2024	12:00 PM	0	0	0	0	0	0	0	0	0	0	0	0	0
4/25/2024	12:15 PM	0	0	0	0	0	0	0	0	0	0	0	0	0
4/25/2024	12:30 PM	0	0	0	0	0	0	0	0	0	0	0	0	0
4/25/2024	12:45 PM	0	0	0	0	0	0	0	0	0	0	0	0	0
4/25/2024	1:00 PM	0	0	0	0	0	0	0	0	0	0	0	0	0
4/25/2024	1:15 PM	0	0	0	0	0	0	0	0	0	0	0	0	0
4/25/2024	1:30 PM	0	0	0	0	0	0	0	0	0	0	0	0	0
4/25/2024	1:45 PM	0	0	0	0	0	0	0	0	0	0	0	0	0
4/25/2024	2:00 PM	0	0	0	0	0	0	0	0	0	0	0	0	0
4/25/2024	2:15 PM	0	0	0	0	0	0	0	0	0	0	0	0	0
4/25/2024	2:30 PM	0	0	0	0	0	0	0	0	0	0	0	0	0
4/25/2024	2:45 PM	0	0	0	0	0	0	0	0	0	0	0	0	0
4/25/2024	3:00 PM	0	0	0	0	0	0	0	0	0	0	0	0	0
4/25/2024	3:15 PM	0	0	0	0	0	0	0	0	0	0	0	0	0
4/25/2024	3:30 PM	0	0	0	0	0	0	0	0	0	0	0	0	0
4/25/2024	3:45 PM	0	0	0	0	0	0	0	0	0	0	0	0	0
4/25/2024	4:00 PM	0	0	0	0	0	0	0	0	0	0	0	0	0
4/25/2024	4:15 PM	0	0	0	0	0	0	0	0	0	0	0	0	0
4/25/2024	4:30 PM	0	0	0	0	0	0	0	0	0	0	0	0	0
4/25/2024	4:45 PM	0	0	0	0	0	0	0	0	0	0	0	0	0
4/25/2024	5:00 PM	0	0	0	0	0	0	0	0	0	0	0	0	0
4/25/2024	5:15 PM	0	0	0	0	0	0	0	0	0	0	0	0	0
4/25/2024	5:30 PM	0	0	0	0	0	0	0	0	0	0	0	0	0
4/25/2024	5:45 PM	0	0	0	0	0	0	0	0	0	0	0	0	0
4/25/2024	6:00 PM	0	0	0	0	0	0	0	0	0	0	0	0	0
4/25/2024	6:15 PM	0	0	0	0	0	0	0	0	0	0	0	0	0
4/25/2024	6:30 PM	0	0	0	0	0	0	0	0	0	0	0	0	0
4/25/2024	6:45 PM	0	0	0	0	0	0	0	0	0	0	0	0	0
4/25/2024	7:00 PM	0	0	0	0	0	0	0	0	0	0	0	0	0
4/25/2024	7:15 PM	0	0	0	0	0	0	0	0	0	0	0	0	0
4/25/2024	7:30 PM	0	0	0	0	0	0	0	0	0	0	0	0	0
4/25/2024	7:45 PM	0	0	0	0	0	0	0	0	0	0	0	0	0
4/25/2024	8:00 PM	0	0	0	0	0	0	0	0	0	0	0	0	0
4/25/2024	8:15 PM	0	0	0	0	0	0	0	0	0	0	0	0	0
4/25/2024	8:30 PM	0	0	0	0	0	0	0	0	0	0	0	0	0
4/25/2024	8:45 PM	0	0	0	0	0	0	0	0	0	0	0	0	0
4/25/2024	9:00 PM	0	0	0	0	0	0	0	0	0	0	0	0	0
4/25/2024	9:15 PM	0	0	0	0	0	0	0	0	0	0	0	0	0
4/25/2024	9:30 PM	0	0	0	0	0	0	0	0	0	0	0	0	0
4/25/2024	9:45 PM	0	0	0	0	0	0	0	0	0	0	0	0	0
4/25/2024	10:00 PM	0	0	0	0	0	0	0	0	0	0	0	0	0
4/25/2024	10:15 PM	0	0	0	0	0	0	0	0	0	0	0	0	0
4/25/2024	10:30 PM	0	0	0	0	0	0	0	0	0	0	0	0	0
4/25/2024	10:45 PM	0	0	0	0	0	0	0	0	0	0	0	0	0
4/25/2024	11:00 PM	0	0	0	0	0	0	0	0	0	0	0	0	0
4/25/2024	11:15 PM	0	0	0	0	0	0	0	0	0	0	0	0	0
4/25/2024	11:30 PM	0	0	0	0	0	0	0	0	0	0	0	0	0
4/25/2024	11:45 PM	0	0	0	0	0	0	0	0	0	0	0	0	0

EB
File Name:
Start Date: 4/23/2024
Start Time: 0
Site Code: 27
Station ID: 1
Location 1: I-26 James F. Byrnes Expy On/Off-Ramp, west of Harbison Blvd
Location 2:

Date	Time	1	2	3	4	5	6	7	8	9	10	11	12	13
4/23/2024	12:00 AM	0	0	0	0	0	0	0	0	0	0	0	0	0
4/23/2024	12:15 AM	0	0	0	0	0	0	0	0	0	0	0	0	0
4/23/2024	12:30 AM	0	0	0	0	0	0	0	0	0	0	0	0	0
4/23/2024	12:45 AM	0	0	0	0	0	0	0	0	0	0	0	0	0
4/23/2024	1:00 AM	0	0	0	0	0	0	0	0	0	0	0	0	0
4/23/2024	1:15 AM	0	0	0	0	0	0	0	0	0	0	0	0	0
4/23/2024	1:30 AM	0	0	0	0	0	0	0	0	0	0	0	0	0
4/23/2024	1:45 AM	0	0	0	0	0	0	0	0	0	0	0	0	0
4/23/2024	2:00 AM	0	0	0	0	0	0	0	0	0	0	0	0	0
4/23/2024	2:15 AM	0	0	0	0	0	0	0	0	0	0	0	0	0
4/23/2024	2:30 AM	0	0	0	0	0	0	0	0	0	0	0	0	0
4/23/2024	2:45 AM	0	0	0	0	0	0	0	0	0	0	0	0	0
4/23/2024	3:00 AM	0	0	0	0	0	0	0	0	0	0	0	0	0
4/23/2024	3:15 AM	0	0	0	0	0	0	0	0	0	0	0	0	0
4/23/2024	3:30 AM	0	0	0	0	0	0	0	0	0	0	0	0	0
4/23/2024	3:45 AM	0	0	0	0	0	0	0	0	0	0	0	0	0
4/23/2024	4:00 AM	0	0	0	0	0	0	0	0	0	0	0	0	0
4/23/2024	4:15 AM	0	0	0	0	0	0	0	0	0	0	0	0	0
4/23/2024	4:30 AM	0	0	0	0	0	0	0	0	0	0	0	0	0
4/23/2024	4:45 AM	0	0	0	0	0	0	0	0	0	0	0	0	0
4/23/2024	5:00 AM	0	0	0	0	0	0	0	0	0	0	0	0	0
4/23/2024	5:15 AM	0	0	0	0	0	0	0	0	0	0	0	0	0
4/23/2024	5:30 AM	0	0	0	0	0	0	0	0	0	0	0	0	0
4/23/2024	5:45 AM	0	0	0	0	0	0	0	0	0	0	0	0	0
4/23/2024	6:00 AM	0	0	0	0	0	0	0	0	0	0	0	0	0
4/23/2024	6:15 AM	0	0	0	0	0	0	0	0	0	0	0	0	0
4/23/2024	6:30 AM	0	0	0	0	0	0	0	0	0	0	0	0	0
4/23/2024	6:45 AM	0	0	0	0	0	0	0	0	0	0	0	0	0
4/23/2024	7:00 AM	0	0	0	0	0	0	0	0	0	0	0	0	0
4/23/2024	7:15 AM	0	0	0	0	0	0	0	0	0	0	0	0	0
4/23/2024	7:30 AM	0	0	0	0	0	0	0	0	0	0	0	0	0
4/23/2024	7:45 AM	0	0	0	0	0	0	0	0	0	0	0	0	0
4/23/2024	8:00 AM	0	0	0	0	0	0	0	0	0	0	0	0	0
4/23/2024	8:15 AM	0	0	0	0	0	0	0	0	0	0	0	0	0
4/23/2024	8:30 AM	0	0	0	0	0	0	0	0	0	0	0	0	0
4/23/2024	8:45 AM	0	0	0	0	0	0	0	0	0	0	0	0	0
4/23/2024	9:00 AM	0	0	0	0	0	0	0	0	0	0	0	0	0
4/23/2024	9:15 AM	0	0	0	0	0	0	0	0	0	0	0	0	0
4/23/2024	9:30 AM	0	0	0	0	0	0	0	0	0	0	0	0	0
4/23/2024	9:45 AM	0	0	0	0	0	0	0	0	0	0	0	0	0
4/23/2024	10:00 AM	0	0	0	0	0	0	0	0	0	0	0	0	0
4/23/2024	10:15 AM	0	0	0	0	0	0	0	0	0	0	0	0	0
4/23/2024	10:30 AM	0	0	0	0	0	0	0	0	0	0	0	0	0
4/23/2024	10:45 AM	0	0	0	0	0	0	0	0	0	0	0	0	0
4/23/2024	11:00 AM	0	0	0	0	0	0	0	0	0	0	0	0	0
4/23/2024	11:15 AM	0	0	0	0	0	0	0	0	0	0	0	0	0
4/23/2024	11:30 AM	0	0	0	0	0	0	0	0	0	0	0	0	0
4/23/2024	11:45 AM	0	0	0	0	0	0	0	0	0	0	0	0	0
4/23/2024	12:00 PM	0	0	0	0	0	0	0	0	0	0	0	0	0
4/23/2024	12:15 PM	0	0	0	0	0	0	0	0	0	0	0	0	0
4/23/2024	12:30 PM	0	0	0	0	0	0	0	0	0	0	0	0	0
4/23/2024	12:45 PM	0	0	0	0	0	0	0	0	0	0	0	0	0
4/23/2024	1:00 PM	0	0	0	0	0	0	0	0	0	0	0	0	0
4/23/2024	1:15 PM	0	0	0	0	0	0	0	0	0	0	0	0	0
4/23/2024	1:30 PM	0	0	0	0	0	0	0	0	0	0	0	0	0
4/23/2024	1:45 PM	0	0	0	0	0	0	0	0	0	0	0	0	0
4/23/2024	2:00 PM	0	0	0	0	0	0	0	0	0	0	0	0	0
4/23/2024	2:15 PM	0	0	0	0	0	0	0	0	0	0	0	0	0
4/23/2024	2:30 PM	0	0	0	0	0	0	0	0	0	0	0	0	0
4/23/2024	2:45 PM	0	0	0	0	0	0	0	0	0	0	0	0	0
4/23/2024	3:00 PM	0	0	0	0	0	0	0	0	0	0	0	0	0
4/23/2024	3:15 PM	0	0	0	0	0	0	0	0	0	0	0	0	0
4/23/2024	3:30 PM	0	0	0	0	0	0	0	0	0	0	0	0	0
4/23/2024	3:45 PM	0	0	0	0	0	0	0	0	0	0	0	0	0
4/23/2024	4:00 PM	0	0	0	0	0	0	0	0	0	0	0	0	0
4/23/2024	4:15 PM	0	0	0	0	0	0	0	0	0	0	0	0	0
4/23/2024	4:30 PM	0	0	0	0	0	0	0	0	0	0	0	0	0
4/23/2024	4:45 PM	0	0	0	0	0	0	0	0	0	0	0	0	0
4/23/2024	5:00 PM	0	0	0	0	0	0	0	0	0	0	0	0	0
4/23/2024	5:15 PM	0	0	0	0	0	0	0	0	0	0	0	0	0
4/23/2024	5:30 PM	0	0	0	0	0	0	0	0	0	0	0	0	0
4/23/2024	5:45 PM	0	0	0	0	0	0	0	0	0	0	0	0	0
4/23/2024	6:00 PM	0	0	0	0	0	0	0	0	0	0	0	0	0
4/23/2024	6:15 PM	0	125	24	0	1	0	0	0	1	0	0	0	0
4/23/2024	6:30 PM	0	235	43	1	2	0	0	0	2	0	0	0	0
4/23/2024	6:45 PM	0	343	75	1	2	2	0	0	2	0	0	0	0
4/23/2024	7:00 PM	0	443	90	1	2	3	0	1	2	0	0	0	0
4/23/2024	7:15 PM	0	403	80	1	1	3	0	1	1	0	0	0	0
4/23/2024	7:30 PM	0	376	70	0	0	3	0	1	2	0	0	0	0
4/23/2024	7:45 PM	0	354	47	0	1	1	0	1	2	0	0	0	0
4/23/2024	8:00 PM	0	304	47	0	1	0	0	0	2	0	0	0	0
4/23/2024	8:15 PM	0	293	35	0	2	0	0	0	2	0	0	0	0
4/23/2024	8:30 PM	0	257	31	0	2	0	0	0	0	0	0	0	0
4/23/2024	8:45 PM	0	237	25	0	1	0	0	0	0	0	0	0	0
4/23/2024	9:00 PM	0	232	11	0	1	0	0	0	1	0	0	0	0
4/23/2024	9:15 PM	0	205	15	1	1	0	0	0	2	0	0	0	0
4/23/2024	9:30 PM	0	195	14	1	1	0	0	0	2	0	0	0	0
4/23/2024	9:45 PM	0	168	14	1	1	0	0	0	2	0	0	0	0
4/23/2024	10:00 PM	0	150	14	1	1	0	0	0	1	0	0	0	0
4/23/2024	10:15 PM	0	127	10	0	1	0	0	0	1	0	0	0	0
4/23/2024	10:30 PM	0	112	9	1	1	0	0	0	1	0	0	0	0
4/23/2024	10:45 PM	0	91	8	1	1	0	0	0	1	0	0	0	0
4/23/2024	11:00 PM	0	85	7	1	1	0	0	0	1	0	0	0	0
4/23/2024	11:15 PM	0	83	6	1	0	0	0	0	0	0	0	0	0
4/23/2024	11:30 PM	0	72	3	0	0	0	0	0	1	0	0	0	0
4/23/2024	11:45 PM	0	67	1	0	0	0	0	0	1	0	0	0	0

4/24/2024	12:00 AM	0	55	2	0	0	0	0	0	1	0	0	0	0
4/24/2024	12:15 AM	0	42	3	0	0	0	0	0	1	0	0	0	0
4/24/2024	12:30 AM	0	38	3	0	0	0	0	0	0	0	0	0	0
4/24/2024	12:45 AM	0	34	3	0	0	0	0	0	0	0	0	0	0
4/24/2024	1:00 AM	0	34	2	0	0	0	0	0	0	0	0	0	0
4/24/2024	1:15 AM	0	28	0	0	0	0	0	0	0	0	0	0	0
4/24/2024	1:30 AM	0	29	3	0	0	0	0	0	0	0	0	0	0
4/24/2024	1:45 AM	0	27	3	0	0	0	0	0	0	0	0	0	0
4/24/2024	2:00 AM	0	24	3	0	0	1	0	0	1	0	0	0	0
4/24/2024	2:15 AM	0	29	3	0	0	1	0	0	1	0	0	0	0
4/24/2024	2:30 AM	0	28	0	0	0	1	0	0	1	0	0	0	0
4/24/2024	2:45 AM	0	29	0	0	0	2	0	0	1	0	0	0	0
4/24/2024	3:00 AM	0	28	0	0	0	1	0	0	0	0	0	0	0
4/24/2024	3:15 AM	0	26	0	0	0	1	0	0	0	0	0	0	0
4/24/2024	3:30 AM	0	21	1	0	0	1	0	0	1	0	0	0	0
4/24/2024	3:45 AM	0	20	1	0	0	0	0	0	2	0	0	0	0
4/24/2024	4:00 AM	0	33	3	0	1	0	0	0	3	0	0	0	0
4/24/2024	4:15 AM	0	33	5	0	1	1	0	0	3	0	0	0	0
4/24/2024	4:30 AM	0	57	6	0	1	1	0	0	3	0	0	0	0
4/24/2024	4:45 AM	0	74	6	0	1	2	0	0	2	0	0	0	0
4/24/2024	5:00 AM	0	94	6	0	1	2	0	0	1	0	0	0	0
4/24/2024	5:15 AM	0	110	8	0	1	1	0	1	4	0	0	0	0
4/24/2024	5:30 AM	0	116	15	0	1	1	0	1	3	0	0	0	0
4/24/2024	5:45 AM	0	146	22	0	1	1	0	1	5	0	0	0	0
4/24/2024	6:00 AM	0	165	32	0	0	1	0	1	6	0	0	0	0
4/24/2024	6:15 AM	0	222	45	0	0	1	0	0	3	0	0	0	0
4/24/2024	6:30 AM	0	286	52	0	4	1	1	0	4	0	0	0	0
4/24/2024	6:45 AM	0	349	68	1	9	1	1	0	3	0	0	0	0
4/24/2024	7:00 AM	0	424	84	1	12	2	1	0	2	0	0	0	0
4/24/2024	7:15 AM	0	450	92	3	13	5	1	0	2	0	0	0	0
4/24/2024	7:30 AM	0	447	114	3	11	9	0	0	1	0	0	0	0
4/24/2024	7:45 AM	0	442	126	2	8	9	0	0	2	0	0	0	0
4/24/2024	8:00 AM	0	422	129	2	6	8	0	1	3	0	0	0	0
4/24/2024	8:15 AM	0	427	136	1	6	7	0	1	3	0	0	0	0
4/24/2024	8:30 AM	0	413	115	2	6	4	0	1	4	0	0	0	0
4/24/2024	8:45 AM	0	410	102	2	7	3	0	1	3	0	0	0	0
4/24/2024	9:00 AM	0	435	103	2	9	3	0	0	2	0	0	0	0
4/24/2024	9:15 AM	1	446	106	1	8	1	0	0	4	0	0	0	0
4/24/2024	9:30 AM	1	500	126	0	6	1	0	0	5	0	0	0	0
4/24/2024	9:45 AM	1	539	134	0	4	1	0	1	5	0	0	0	0
4/24/2024	10:00 AM	1	557	138	0	4	1	0	1	6	0	0	0	0
4/24/2024	10:15 AM	0	591	134	0	9	2	1	1	4	0	0	0	0
4/24/2024	10:30 AM	0	625	136	3	10	1	1	1	4	0	0	0	0
4/24/2024	10:45 AM	0	652	141	4	10	1	1	0	3	0	0	0	0
4/24/2024	11:00 AM	0	668	151	5	10	1	1	0	2	0	0	0	0
4/24/2024	11:15 AM	1	696	163	6	7	0	0	0	2	0	0	0	0
4/24/2024	11:30 AM	2	728	165	8	8	0	0	0	1	0	0	0	0
4/24/2024	11:45 AM	2	728	173	7	9	0	0	0	2	0	0	0	0
4/24/2024	12:00 PM	2	736	165	7	8	0	0	0	2	0	0	0	0
4/24/2024	12:15 PM	1	712	151	6	6	1	0	0	2	0	0	0	0
4/24/2024	12:30 PM	0	695	139	1	5	1	0	0	2	0	0	0	0
4/24/2024	12:45 PM	0	685	125	1	4	3	0	0	3	0	0	0	0
4/24/2024	1:00 PM	0	653	124	0	2	4	0	0	3	0	0	0	0
4/24/2024	1:15 PM	1	654	121	0	2	4	0	0	4	0	0	0	0
4/24/2024	1:30 PM	1	635	126	1	1	4	0	0	5	0	0	0	0
4/24/2024	1:45 PM	1	637	129	1	1	2	0	0	5	0	0	0	0
4/24/2024	2:00 PM	1	663	121	1	3	1	0	0	5	0	0	0	0
4/24/2024	2:15 PM	0	686	127	1	3	1	0	0	4	0	0	0	0
4/24/2024	2:30 PM	0	710	123	0	5	1	0	0	2	0	0	0	0
4/24/2024	2:45 PM	0	733	120	0	6	1	0	0	0	0	0	0	0
4/24/2024	3:00 PM	0	771	123	0	5	1	0	0	2	0	0	0	0
4/24/2024	3:15 PM	0	763	116	0	5	0	0	0	3	0	0	0	0
4/24/2024	3:30 PM	1	757	116	0	3	0	0	0	4	0	0	0	0
4/24/2024	3:45 PM	2	763	111	0	1	0	0	0	5	0	0	0	0
4/24/2024	4:00 PM	2	725	115	0	2	1	0	0	3	0	0	0	0
4/24/2024	4:15 PM	2	713	118	0	5	1	0	0	2	0	0	0	0
4/24/2024	4:30 PM	1	684	119	0	5	1	0	0	1	0	0	0	0
4/24/2024	4:45 PM	0	642	123	0	5	1	0	0	0	0	0	0	0
4/24/2024	5:00 PM	0	662	116	0	3	0	0	0	1	0	0	0	0
4/24/2024	5:15 PM	0	682	122	0	1	1	0	0	2	0	0	0	0
4/24/2024	5:30 PM	1	715	128	1	3	1	0	0	3	0	0	0	0
4/24/2024	5:45 PM	1	732	126	1	4	4	0	0	3	0	0	0	0
4/24/2024	6:00 PM	2	679	113	1	5	4	0	0	3	0	0	0	0
4/24/2024	6:15 PM	3	643	95	1	6	3	0	0	2	0	0	0	0
4/24/2024	6:30 PM	2	585	87	0	5	4	0	0	1	0	0	0	0
4/24/2024	6:45 PM	2	521	83	0	4	1	0	0	2	0	0	0	0
4/24/2024	7:00 PM	1	488	79	0	3	1	0	0	1	0	0	0	0
4/24/2024	7:15 PM	0	425	79	0	1	1	0	0	1	0	0	0	0
4/24/2024	7:30 PM	0	397	62	0	0	0	0	0	1	0	0	0	0
4/24/2024	7:45 PM	0	391	51	0	0	0	0	0	0	0	0	0	0
4/24/2024	8:00 PM	0	349	47	0	0	0	0	0	0	0	0	0	0
4/24/2024	8:15 PM	0	344	36	0	0	0	0	0	0	0	0	0	0
4/24/2024	8:30 PM	0	298	26	0	0	0	0	0	0	0	0	0	0
4/24/2024	8:45 PM	0	260	16	0	0	0	0	0	0	0	0	0	0
4/24/2024	9:00 PM	1	255	10	0	0	0	0	0	0	0	0	0	0
4/24/2024	9:15 PM	1	214	8	0	1	0	0	0	0	0	0	0	0
4/24/2024	9:30 PM	1	196	7	0	1	0	0	0	0	0	0	0	0
4/24/2024	9:45 PM	1	174	6	0	1	0	0	0	0	0	0	0	0
4/24/2024	10:00 PM	0	146	4	0	2	0	0	0	1	0	0	0	0
4/24/2024	10:15 PM	0	137	4	1	2	1	0	0	1	0	0	0	0
4/24/2024	10:30 PM	0	129	3	1	2	1	0	0	1	0	0	0	0
4/24/2024	10:45 PM	0	105	3	1	2	1	0	0	1	0	0	0	0
4/24/2024	11:00 PM	0	85	3	1	1	1	0	0	1	0	0	0	0
4/24/2024	11:15 PM	0	71	5	0	0	0	0	0	1	0	0	0	0
4/24/2024	11:30 PM	0	52	7	0	0	0	0	0	2	0	0	0	0
4/24/2024	11:45 PM	0	47	9	0	0	0	0	0	2	0	0	0	0

4/25/2024	12:00 AM	0	41	11	0	0	0	0	0	1	0	0	0	0
4/25/2024	12:15 AM	0	36	8	0	0	0	0	1	1	0	0	0	0
4/25/2024	12:30 AM	0	39	9	0	0	0	0	1	1	0	0	0	0
4/25/2024	12:45 AM	0	31	7	0	0	0	0	1	1	0	0	0	0
4/25/2024	1:00 AM	0	29	7	0	0	0	0	1	1	0	0	0	0
4/25/2024	1:15 AM	0	26	7	0	0	0	0	0	1	0	0	0	0
4/25/2024	1:30 AM	0	21	5	0	0	0	0	0	0	0	0	0	0
4/25/2024	1:45 AM	0	24	7	0	0	0	0	0	0	0	0	0	0
4/25/2024	2:00 AM	0	25	6	0	1	0	0	0	0	0	0	0	0
4/25/2024	2:15 AM	0	21	4	0	3	0	0	0	0	0	0	0	0
4/25/2024	2:30 AM	0	23	5	0	3	0	0	0	0	0	0	0	0
4/25/2024	2:45 AM	0	21	5	0	3	0	0	0	0	0	0	0	0
4/25/2024	3:00 AM	0	20	6	0	2	0	0	0	0	0	0	0	0
4/25/2024	3:15 AM	0	27	7	0	2	0	0	1	0	0	0	0	0
4/25/2024	3:30 AM	0	23	6	0	3	0	0	1	0	0	0	0	0
4/25/2024	3:45 AM	0	24	7	0	3	0	0	1	0	0	0	0	0
4/25/2024	4:00 AM	0	34	8	0	5	0	0	1	0	0	0	0	0
4/25/2024	4:15 AM	0	40	9	0	3	0	0	0	0	0	0	0	0
4/25/2024	4:30 AM	0	57	10	0	4	0	0	0	1	0	0	0	0
4/25/2024	4:45 AM	0	80	9	0	4	0	0	0	1	0	0	0	0
4/25/2024	5:00 AM	0	97	9	0	2	0	0	0	2	0	0	0	0
4/25/2024	5:15 AM	0	110	12	0	3	0	0	0	2	0	0	0	0
4/25/2024	5:30 AM	1	118	18	0	1	0	0	0	4	0	0	0	0
4/25/2024	5:45 AM	1	127	27	1	2	0	0	1	4	0	0	0	0
4/25/2024	6:00 AM	1	141	38	1	3	0	0	3	4	0	0	0	0
4/25/2024	6:15 AM	1	196	50	1	3	1	0	3	7	0	0	0	0
4/25/2024	6:30 AM	0	261	64	1	4	1	0	3	4	0	0	0	0
4/25/2024	6:45 AM	0	350	76	0	6	1	0	2	5	0	0	0	0
4/25/2024	7:00 AM	0	408	92	0	6	1	0	0	4	0	0	0	0
4/25/2024	7:15 AM	0	439	101	0	5	1	0	0	1	0	0	0	0
4/25/2024	7:30 AM	0	442	107	0	5	1	0	0	2	0	0	0	0
4/25/2024	7:45 AM	0	430	115	0	3	2	0	0	1	0	0	0	0
4/25/2024	8:00 AM	0	423	117	0	5	2	0	0	1	0	0	0	0
4/25/2024	8:15 AM	0	425	117	0	8	2	0	0	2	0	0	0	0
4/25/2024	8:30 AM	0	428	112	1	10	2	0	0	3	0	0	0	0
4/25/2024	8:45 AM	0	439	122	1	12	1	0	0	3	0	0	0	0
4/25/2024	9:00 AM	0	473	125	1	13	1	0	0	3	1	0	0	0
4/25/2024	9:15 AM	0	470	127	1	14	1	0	1	3	1	0	0	0
4/25/2024	9:30 AM	0	516	136	0	14	1	0	1	2	1	0	0	0
4/25/2024	9:45 AM	0	533	122	1	13	1	0	1	3	1	0	0	0
4/25/2024	10:00 AM	1	579	124	1	11	1	0	2	5	0	0	0	0
4/25/2024	10:15 AM	1	643	130	1	11	0	1	2	4	0	0	0	0
4/25/2024	10:30 AM	1	692	131	1	8	0	1	3	3	0	0	0	0
4/25/2024	10:45 AM	2	749	147	0	10	0	1	5	5	0	0	0	0
4/25/2024	11:00 AM	2	760	141	1	10	1	2	4	4	0	0	0	0
4/25/2024	11:15 AM	2	803	140	1	7	1	1	3	4	0	0	0	0
4/25/2024	11:30 AM	2	824	136	1	11	2	1	2	5	0	0	0	0
4/25/2024	11:45 AM	2	818	126	1	11	2	1	0	3	0	0	0	0
4/25/2024	12:00 PM	2	814	125	1	10	2	0	0	2	0	0	0	0
4/25/2024	12:15 PM	2	780	115	1	10	2	0	0	2	0	0	0	0
4/25/2024	12:30 PM	2	755	119	1	8	1	0	0	1	0	0	0	0
4/25/2024	12:45 PM	1	765	122	1	5	1	0	0	1	0	0	0	0
4/25/2024	1:00 PM	0	785	122	1	4	0	0	0	1	0	0	0	0
4/25/2024	1:15 PM	1	781	125	1	4	1	0	0	3	0	0	0	0
4/25/2024	1:30 PM	1	766	113	1	5	1	0	0	7	0	0	0	0
4/25/2024	1:45 PM	2	749	105	1	6	1	0	0	7	0	0	0	0
4/25/2024	2:00 PM	2	732	95	0	6	2	0	0	8	0	0	0	0
4/25/2024	2:15 PM	1	720	100	0	7	2	0	0	6	0	0	0	0
4/25/2024	2:30 PM	1	723	106	0	5	2	0	0	3	0	0	0	0
4/25/2024	2:45 PM	0	703	102	0	5	2	0	0	3	0	0	0	0
4/25/2024	3:00 PM	0	700	96	0	5	1	0	0	3	0	0	0	0
4/25/2024	3:15 PM	0	708	96	0	4	0	0	0	5	0	0	0	0
4/25/2024	3:30 PM	0	683	86	0	3	0	0	0	6	0	0	0	0
4/25/2024	3:45 PM	0	685	87	0	2	0	0	0	6	0	0	0	0
4/25/2024	4:00 PM	0	675	97	0	5	0	0	0	6	0	0	0	0
4/25/2024	4:15 PM	0	673	85	0	5	1	0	0	4	0	0	0	0
4/25/2024	4:30 PM	0	688	93	0	5	1	0	0	2	0	0	0	0
4/25/2024	4:45 PM	0	701	86	1	4	1	0	0	1	0	0	0	0
4/25/2024	5:00 PM	0	700	90	1	1	1	0	0	0	0	0	0	0
4/25/2024	5:15 PM	0	711	100	1	0	0	0	0	0	0	0	0	0
4/25/2024	5:30 PM	2	737	103	2	0	0	0	0	0	0	0	0	0
4/25/2024	5:45 PM	3	731	99	2	1	0	0	0	0	0	0	0	0
4/25/2024	6:00 PM	3	706	90	2	1	0	0	0	0	0	0	0	0
4/25/2024	6:15 PM	3	518	61	2	1	0	0	0	0	0	0	0	0
4/25/2024	6:30 PM	1	323	33	1	1	0	0	0	0	0	0	0	0
4/25/2024	6:45 PM	0	147	19	0	0	0	0	0	0	0	0	0	0
4/25/2024	7:00 PM	0	0	0	0	0	0	0	0	0	0	0	0	0
4/25/2024	7:15 PM	0	0	0	0	0	0	0	0	0	0	0	0	0
4/25/2024	7:30 PM	0	0	0	0	0	0	0	0	0	0	0	0	0
4/25/2024	7:45 PM	0	0	0	0	0	0	0	0	0	0	0	0	0
4/25/2024	8:00 PM	0	0	0	0	0	0	0	0	0	0	0	0	0
4/25/2024	8:15 PM	0	0	0	0	0	0	0	0	0	0	0	0	0
4/25/2024	8:30 PM	0	0	0	0	0	0	0	0	0	0	0	0	0
4/25/2024	8:45 PM	0	0	0	0	0	0	0	0	0	0	0	0	0
4/25/2024	9:00 PM	0	0	0	0	0	0	0	0	0	0	0	0	0
4/25/2024	9:15 PM	0	0	0	0	0	0	0	0	0	0	0	0	0
4/25/2024	9:30 PM	0	0	0	0	0	0	0	0	0	0	0	0	0
4/25/2024	9:45 PM	0	0	0	0	0	0	0	0	0	0	0	0	0
4/25/2024	10:00 PM	0	0	0	0	0	0	0	0	0	0	0	0	0
4/25/2024	10:15 PM	0	0	0	0	0	0	0	0	0	0	0	0	0
4/25/2024	10:30 PM	0	0	0	0	0	0	0	0	0	0	0	0	0
4/25/2024	10:45 PM	0	0	0	0	0	0	0	0	0	0	0	0	0
4/25/2024	11:00 PM	0	0	0	0	0	0	0	0	0	0	0	0	0
4/25/2024	11:15 PM	0	0	0	0	0	0	0	0	0	0	0	0	0
4/25/2024	11:30 PM	0	0	0	0	0	0	0	0	0	0	0	0	0
4/25/2024	11:45 PM	0	0	0	0	0	0	0	0	0	0	0	0	0

WB
File Name:
Start Date: 4/23/2024
Start Time: 0
Site Code: 27
Station ID: 1
Location 1: I-26 James F. Byrnes Expy On/Off-Ramp, west of Harbison Blvd
Location 2:

Date	Time	1	2	3	4	5	6	7	8	9	10	11	12	13
4/23/2024	12:00 AM	0	0	0	0	0	0	0	0	0	0	0	0	0
4/23/2024	12:15 AM	0	0	0	0	0	0	0	0	0	0	0	0	0
4/23/2024	12:30 AM	0	0	0	0	0	0	0	0	0	0	0	0	0
4/23/2024	12:45 AM	0	0	0	0	0	0	0	0	0	0	0	0	0
4/23/2024	1:00 AM	0	0	0	0	0	0	0	0	0	0	0	0	0
4/23/2024	1:15 AM	0	0	0	0	0	0	0	0	0	0	0	0	0
4/23/2024	1:30 AM	0	0	0	0	0	0	0	0	0	0	0	0	0
4/23/2024	1:45 AM	0	0	0	0	0	0	0	0	0	0	0	0	0
4/23/2024	2:00 AM	0	0	0	0	0	0	0	0	0	0	0	0	0
4/23/2024	2:15 AM	0	0	0	0	0	0	0	0	0	0	0	0	0
4/23/2024	2:30 AM	0	0	0	0	0	0	0	0	0	0	0	0	0
4/23/2024	2:45 AM	0	0	0	0	0	0	0	0	0	0	0	0	0
4/23/2024	3:00 AM	0	0	0	0	0	0	0	0	0	0	0	0	0
4/23/2024	3:15 AM	0	0	0	0	0	0	0	0	0	0	0	0	0
4/23/2024	3:30 AM	0	0	0	0	0	0	0	0	0	0	0	0	0
4/23/2024	3:45 AM	0	0	0	0	0	0	0	0	0	0	0	0	0
4/23/2024	4:00 AM	0	0	0	0	0	0	0	0	0	0	0	0	0
4/23/2024	4:15 AM	0	0	0	0	0	0	0	0	0	0	0	0	0
4/23/2024	4:30 AM	0	0	0	0	0	0	0	0	0	0	0	0	0
4/23/2024	4:45 AM	0	0	0	0	0	0	0	0	0	0	0	0	0
4/23/2024	5:00 AM	0	0	0	0	0	0	0	0	0	0	0	0	0
4/23/2024	5:15 AM	0	0	0	0	0	0	0	0	0	0	0	0	0
4/23/2024	5:30 AM	0	0	0	0	0	0	0	0	0	0	0	0	0
4/23/2024	5:45 AM	0	0	0	0	0	0	0	0	0	0	0	0	0
4/23/2024	6:00 AM	0	0	0	0	0	0	0	0	0	0	0	0	0
4/23/2024	6:15 AM	0	0	0	0	0	0	0	0	0	0	0	0	0
4/23/2024	6:30 AM	0	0	0	0	0	0	0	0	0	0	0	0	0
4/23/2024	6:45 AM	0	0	0	0	0	0	0	0	0	0	0	0	0
4/23/2024	7:00 AM	0	0	0	0	0	0	0	0	0	0	0	0	0
4/23/2024	7:15 AM	0	0	0	0	0	0	0	0	0	0	0	0	0
4/23/2024	7:30 AM	0	0	0	0	0	0	0	0	0	0	0	0	0
4/23/2024	7:45 AM	0	0	0	0	0	0	0	0	0	0	0	0	0
4/23/2024	8:00 AM	0	0	0	0	0	0	0	0	0	0	0	0	0
4/23/2024	8:15 AM	0	0	0	0	0	0	0	0	0	0	0	0	0
4/23/2024	8:30 AM	0	0	0	0	0	0	0	0	0	0	0	0	0
4/23/2024	8:45 AM	0	0	0	0	0	0	0	0	0	0	0	0	0
4/23/2024	9:00 AM	0	0	0	0	0	0	0	0	0	0	0	0	0
4/23/2024	9:15 AM	0	0	0	0	0	0	0	0	0	0	0	0	0
4/23/2024	9:30 AM	0	0	0	0	0	0	0	0	0	0	0	0	0
4/23/2024	9:45 AM	0	0	0	0	0	0	0	0	0	0	0	0	0
4/23/2024	10:00 AM	0	0	0	0	0	0	0	0	0	0	0	0	0
4/23/2024	10:15 AM	0	0	0	0	0	0	0	0	0	0	0	0	0
4/23/2024	10:30 AM	0	0	0	0	0	0	0	0	0	0	0	0	0
4/23/2024	10:45 AM	0	0	0	0	0	0	0	0	0	0	0	0	0
4/23/2024	11:00 AM	0	0	0	0	0	0	0	0	0	0	0	0	0
4/23/2024	11:15 AM	0	0	0	0	0	0	0	0	0	0	0	0	0
4/23/2024	11:30 AM	0	0	0	0	0	0	0	0	0	0	0	0	0
4/23/2024	11:45 AM	0	0	0	0	0	0	0	0	0	0	0	0	0
4/23/2024	12:00 PM	0	0	0	0	0	0	0	0	0	0	0	0	0
4/23/2024	12:15 PM	0	0	0	0	0	0	0	0	0	0	0	0	0
4/23/2024	12:30 PM	0	0	0	0	0	0	0	0	0	0	0	0	0
4/23/2024	12:45 PM	0	0	0	0	0	0	0	0	0	0	0	0	0
4/23/2024	1:00 PM	0	0	0	0	0	0	0	0	0	0	0	0	0
4/23/2024	1:15 PM	0	0	0	0	0	0	0	0	0	0	0	0	0
4/23/2024	1:30 PM	0	0	0	0	0	0	0	0	0	0	0	0	0
4/23/2024	1:45 PM	0	0	0	0	0	0	0	0	0	0	0	0	0
4/23/2024	2:00 PM	0	0	0	0	0	0	0	0	0	0	0	0	0
4/23/2024	2:15 PM	0	0	0	0	0	0	0	0	0	0	0	0	0
4/23/2024	2:30 PM	0	0	0	0	0	0	0	0	0	0	0	0	0
4/23/2024	2:45 PM	0	0	0	0	0	0	0	0	0	0	0	0	0
4/23/2024	3:00 PM	0	0	0	0	0	0	0	0	0	0	0	0	0
4/23/2024	3:15 PM	0	0	0	0	0	0	0	0	0	0	0	0	0
4/23/2024	3:30 PM	0	0	0	0	0	0	0	0	0	0	0	0	0
4/23/2024	3:45 PM	0	0	0	0	0	0	0	0	0	0	0	0	0
4/23/2024	4:00 PM	0	0	0	0	0	0	0	0	0	0	0	0	0
4/23/2024	4:15 PM	0	0	0	0	0	0	0	0	0	0	0	0	0
4/23/2024	4:30 PM	0	0	0	0	0	0	0	0	0	0	0	0	0
4/23/2024	4:45 PM	0	0	0	0	0	0	0	0	0	0	0	0	0
4/23/2024	5:00 PM	0	0	0	0	0	0	0	0	0	0	0	0	0
4/23/2024	5:15 PM	0	0	0	0	0	0	0	0	0	0	0	0	0
4/23/2024	5:30 PM	0	0	0	0	0	0	0	0	0	0	0	0	0
4/23/2024	5:45 PM	0	0	0	0	0	0	0	0	0	0	0	0	0
4/23/2024	6:00 PM	0	0	0	0	0	0	0	0	0	0	0	0	0
4/23/2024	6:15 PM	0	0	0	0	0	0	0	0	0	0	0	0	0
4/23/2024	6:30 PM	0	0	0	0	0	0	0	0	0	0	0	0	0
4/23/2024	6:45 PM	0	0	0	0	0	0	0	0	0	0	0	0	0
4/23/2024	7:00 PM	0	0	0	0	0	0	0	0	0	0	0	0	0
4/23/2024	7:15 PM	0	0	0	0	0	0	0	0	0	0	0	0	0
4/23/2024	7:30 PM	0	0	0	0	0	0	0	0	0	0	0	0	0
4/23/2024	7:45 PM	0	0	0	0	0	0	0	0	0	0	0	0	0
4/23/2024	8:00 PM	0	0	0	0	0	0	0	0	0	0	0	0	0
4/23/2024	8:15 PM	0	0	0	0	0	0	0	0	0	0	0	0	0
4/23/2024	8:30 PM	0	0	0	0	0	0	0	0	0	0	0	0	0
4/23/2024	8:45 PM	0	0	0	0	0	0	0	0	0	0	0	0	0
4/23/2024	9:00 PM	0	0	0	0	0	0	0	0	0	0	0	0	0
4/23/2024	9:15 PM	0	0	0	0	0	0	0	0	0	0	0	0	0
4/23/2024	9:30 PM	0	0	0	0	0	0	0	0	0	0	0	0	0
4/23/2024	9:45 PM	0	0	0	0	0	0	0	0	0	0	0	0	0
4/23/2024	10:00 PM	0	0	0	0	0	0	0	0	0	0	0	0	0
4/23/2024	10:15 PM	0	0	0	0	0	0	0	0	0	0	0	0	0
4/23/2024	10:30 PM	0	0	0	0	0	0	0	0	0	0	0	0	0
4/23/2024	10:45 PM	0	0	0	0	0	0	0	0	0	0	0	0	0
4/23/2024	11:00 PM	0	0	0	0	0	0	0	0	0	0	0	0	0
4/23/2024	11:15 PM	0	0	0	0	0	0	0	0	0	0	0	0	0
4/23/2024	11:30 PM	0	0	0	0	0	0	0	0	0	0	0	0	0
4/23/2024	11:45 PM	0	0	0	0	0	0	0	0	0	0	0	0	0

4/24/2024	12:00 AM	0	0	0	0	0	0	0	0	0	0	0	0	0
4/24/2024	12:15 AM	0	0	0	0	0	0	0	0	0	0	0	0	0
4/24/2024	12:30 AM	0	0	0	0	0	0	0	0	0	0	0	0	0
4/24/2024	12:45 AM	0	0	0	0	0	0	0	0	0	0	0	0	0
4/24/2024	1:00 AM	0	0	0	0	0	0	0	0	0	0	0	0	0
4/24/2024	1:15 AM	0	0	0	0	0	0	0	0	0	0	0	0	0
4/24/2024	1:30 AM	0	0	0	0	0	0	0	0	0	0	0	0	0
4/24/2024	1:45 AM	0	0	0	0	0	0	0	0	0	0	0	0	0
4/24/2024	2:00 AM	0	0	0	0	0	0	0	0	0	0	0	0	0
4/24/2024	2:15 AM	0	0	0	0	0	0	0	0	0	0	0	0	0
4/24/2024	2:30 AM	0	0	0	0	0	0	0	0	0	0	0	0	0
4/24/2024	2:45 AM	0	0	0	0	0	0	0	0	0	0	0	0	0
4/24/2024	3:00 AM	0	0	0	0	0	0	0	0	0	0	0	0	0
4/24/2024	3:15 AM	0	0	0	0	0	0	0	0	0	0	0	0	0
4/24/2024	3:30 AM	0	0	0	0	0	0	0	0	0	0	0	0	0
4/24/2024	3:45 AM	0	0	0	0	0	0	0	0	0	0	0	0	0
4/24/2024	4:00 AM	0	0	0	0	0	0	0	0	0	0	0	0	0
4/24/2024	4:15 AM	0	0	0	0	0	0	0	0	0	0	0	0	0
4/24/2024	4:30 AM	0	0	0	0	0	0	0	0	0	0	0	0	0
4/24/2024	4:45 AM	0	0	0	0	0	0	0	0	0	0	0	0	0
4/24/2024	5:00 AM	0	0	0	0	0	0	0	0	0	0	0	0	0
4/24/2024	5:15 AM	0	0	0	0	0	0	0	0	0	0	0	0	0
4/24/2024	5:30 AM	0	0	0	0	0	0	0	0	0	0	0	0	0
4/24/2024	5:45 AM	0	0	0	0	0	0	0	0	0	0	0	0	0
4/24/2024	6:00 AM	0	0	0	0	0	0	0	0	0	0	0	0	0
4/24/2024	6:15 AM	0	0	0	0	0	0	0	0	0	0	0	0	0
4/24/2024	6:30 AM	0	0	0	0	0	0	0	0	0	0	0	0	0
4/24/2024	6:45 AM	0	0	0	0	0	0	0	0	0	0	0	0	0
4/24/2024	7:00 AM	0	0	0	0	0	0	0	0	0	0	0	0	0
4/24/2024	7:15 AM	0	0	0	0	0	0	0	0	0	0	0	0	0
4/24/2024	7:30 AM	0	0	0	0	0	0	0	0	0	0	0	0	0
4/24/2024	7:45 AM	0	0	0	0	0	0	0	0	0	0	0	0	0
4/24/2024	8:00 AM	0	0	0	0	0	0	0	0	0	0	0	0	0
4/24/2024	8:15 AM	0	0	0	0	0	0	0	0	0	0	0	0	0
4/24/2024	8:30 AM	0	0	0	0	0	0	0	0	0	0	0	0	0
4/24/2024	8:45 AM	0	0	0	0	0	0	0	0	0	0	0	0	0
4/24/2024	9:00 AM	0	0	0	0	0	0	0	0	0	0	0	0	0
4/24/2024	9:15 AM	0	0	0	0	0	0	0	0	0	0	0	0	0
4/24/2024	9:30 AM	0	0	0	0	0	0	0	0	0	0	0	0	0
4/24/2024	9:45 AM	0	0	0	0	0	0	0	0	0	0	0	0	0
4/24/2024	10:00 AM	0	0	0	0	0	0	0	0	0	0	0	0	0
4/24/2024	10:15 AM	0	0	0	0	0	0	0	0	0	0	0	0	0
4/24/2024	10:30 AM	0	0	0	0	0	0	0	0	0	0	0	0	0
4/24/2024	10:45 AM	0	0	0	0	0	0	0	0	0	0	0	0	0
4/24/2024	11:00 AM	0	0	0	0	0	0	0	0	0	0	0	0	0
4/24/2024	11:15 AM	0	0	0	0	0	0	0	0	0	0	0	0	0
4/24/2024	11:30 AM	0	0	0	0	0	0	0	0	0	0	0	0	0
4/24/2024	11:45 AM	0	0	0	0	0	0	0	0	0	0	0	0	0
4/24/2024	12:00 PM	0	0	0	0	0	0	0	0	0	0	0	0	0
4/24/2024	12:15 PM	0	0	0	0	0	0	0	0	0	0	0	0	0
4/24/2024	12:30 PM	0	0	0	0	0	0	0	0	0	0	0	0	0
4/24/2024	12:45 PM	0	0	0	0	0	0	0	0	0	0	0	0	0
4/24/2024	1:00 PM	0	0	0	0	0	0	0	0	0	0	0	0	0
4/24/2024	1:15 PM	0	0	0	0	0	0	0	0	0	0	0	0	0
4/24/2024	1:30 PM	0	0	0	0	0	0	0	0	0	0	0	0	0
4/24/2024	1:45 PM	0	0	0	0	0	0	0	0	0	0	0	0	0
4/24/2024	2:00 PM	0	0	0	0	0	0	0	0	0	0	0	0	0
4/24/2024	2:15 PM	0	0	0	0	0	0	0	0	0	0	0	0	0
4/24/2024	2:30 PM	0	0	0	0	0	0	0	0	0	0	0	0	0
4/24/2024	2:45 PM	0	0	0	0	0	0	0	0	0	0	0	0	0
4/24/2024	3:00 PM	0	0	0	0	0	0	0	0	0	0	0	0	0
4/24/2024	3:15 PM	0	0	0	0	0	0	0	0	0	0	0	0	0
4/24/2024	3:30 PM	0	0	0	0	0	0	0	0	0	0	0	0	0
4/24/2024	3:45 PM	0	0	0	0	0	0	0	0	0	0	0	0	0
4/24/2024	4:00 PM	0	0	0	0	0	0	0	0	0	0	0	0	0
4/24/2024	4:15 PM	0	0	0	0	0	0	0	0	0	0	0	0	0
4/24/2024	4:30 PM	0	0	0	0	0	0	0	0	0	0	0	0	0
4/24/2024	4:45 PM	0	0	0	0	0	0	0	0	0	0	0	0	0
4/24/2024	5:00 PM	0	0	0	0	0	0	0	0	0	0	0	0	0
4/24/2024	5:15 PM	0	0	0	0	0	0	0	0	0	0	0	0	0
4/24/2024	5:30 PM	0	0	0	0	0	0	0	0	0	0	0	0	0
4/24/2024	5:45 PM	0	0	0	0	0	0	0	0	0	0	0	0	0
4/24/2024	6:00 PM	0	0	0	0	0	0	0	0	0	0	0	0	0
4/24/2024	6:15 PM	0	0	0	0	0	0	0	0	0	0	0	0	0
4/24/2024	6:30 PM	0	0	0	0	0	0	0	0	0	0	0	0	0
4/24/2024	6:45 PM	0	0	0	0	0	0	0	0	0	0	0	0	0
4/24/2024	7:00 PM	0	0	0	0	0	0	0	0	0	0	0	0	0
4/24/2024	7:15 PM	0	0	0	0	0	0	0	0	0	0	0	0	0
4/24/2024	7:30 PM	0	0	0	0	0	0	0	0	0	0	0	0	0
4/24/2024	7:45 PM	0	0	0	0	0	0	0	0	0	0	0	0	0
4/24/2024	8:00 PM	0	0	0	0	0	0	0	0	0	0	0	0	0
4/24/2024	8:15 PM	0	0	0	0	0	0	0	0	0	0	0	0	0
4/24/2024	8:30 PM	0	0	0	0	0	0	0	0	0	0	0	0	0
4/24/2024	8:45 PM	0	0	0	0	0	0	0	0	0	0	0	0	0
4/24/2024	9:00 PM	0	0	0	0	0	0	0	0	0	0	0	0	0
4/24/2024	9:15 PM	0	0	0	0	0	0	0	0	0	0	0	0	0
4/24/2024	9:30 PM	0	0	0	0	0	0	0	0	0	0	0	0	0
4/24/2024	9:45 PM	0	0	0	0	0	0	0	0	0	0	0	0	0
4/24/2024	10:00 PM	0	0	0	0	0	0	0	0	0	0	0	0	0
4/24/2024	10:15 PM	0	0	0	0	0	0	0	0	0	0	0	0	0
4/24/2024	10:30 PM	0	0	0	0	0	0	0	0	0	0	0	0	0
4/24/2024	10:45 PM	0	0	0	0	0	0	0	0	0	0	0	0	0
4/24/2024	11:00 PM	0	0	0	0	0	0	0	0	0	0	0	0	0
4/24/2024	11:15 PM	0	0	0	0	0	0	0	0	0	0	0	0	0
4/24/2024	11:30 PM	0	0	0	0	0	0	0	0	0	0	0	0	0
4/24/2024	11:45 PM	0	0	0	0	0	0	0	0	0	0	0	0	0

4/25/2024	12:00 AM	0	0	0	0	0	0	0	0	0	0	0	0	0
4/25/2024	12:15 AM	0	0	0	0	0	0	0	0	0	0	0	0	0
4/25/2024	12:30 AM	0	0	0	0	0	0	0	0	0	0	0	0	0
4/25/2024	12:45 AM	0	0	0	0	0	0	0	0	0	0	0	0	0
4/25/2024	1:00 AM	0	0	0	0	0	0	0	0	0	0	0	0	0
4/25/2024	1:15 AM	0	0	0	0	0	0	0	0	0	0	0	0	0
4/25/2024	1:30 AM	0	0	0	0	0	0	0	0	0	0	0	0	0
4/25/2024	1:45 AM	0	0	0	0	0	0	0	0	0	0	0	0	0
4/25/2024	2:00 AM	0	0	0	0	0	0	0	0	0	0	0	0	0
4/25/2024	2:15 AM	0	0	0	0	0	0	0	0	0	0	0	0	0
4/25/2024	2:30 AM	0	0	0	0	0	0	0	0	0	0	0	0	0
4/25/2024	2:45 AM	0	0	0	0	0	0	0	0	0	0	0	0	0
4/25/2024	3:00 AM	0	0	0	0	0	0	0	0	0	0	0	0	0
4/25/2024	3:15 AM	0	0	0	0	0	0	0	0	0	0	0	0	0
4/25/2024	3:30 AM	0	0	0	0	0	0	0	0	0	0	0	0	0
4/25/2024	3:45 AM	0	0	0	0	0	0	0	0	0	0	0	0	0
4/25/2024	4:00 AM	0	0	0	0	0	0	0	0	0	0	0	0	0
4/25/2024	4:15 AM	0	0	0	0	0	0	0	0	0	0	0	0	0
4/25/2024	4:30 AM	0	0	0	0	0	0	0	0	0	0	0	0	0
4/25/2024	4:45 AM	0	0	0	0	0	0	0	0	0	0	0	0	0
4/25/2024	5:00 AM	0	0	0	0	0	0	0	0	0	0	0	0	0
4/25/2024	5:15 AM	0	0	0	0	0	0	0	0	0	0	0	0	0
4/25/2024	5:30 AM	0	0	0	0	0	0	0	0	0	0	0	0	0
4/25/2024	5:45 AM	0	0	0	0	0	0	0	0	0	0	0	0	0
4/25/2024	6:00 AM	0	0	0	0	0	0	0	0	0	0	0	0	0
4/25/2024	6:15 AM	0	0	0	0	0	0	0	0	0	0	0	0	0
4/25/2024	6:30 AM	0	0	0	0	0	0	0	0	0	0	0	0	0
4/25/2024	6:45 AM	0	0	0	0	0	0	0	0	0	0	0	0	0
4/25/2024	7:00 AM	0	0	0	0	0	0	0	0	0	0	0	0	0
4/25/2024	7:15 AM	0	0	0	0	0	0	0	0	0	0	0	0	0
4/25/2024	7:30 AM	0	0	0	0	0	0	0	0	0	0	0	0	0
4/25/2024	7:45 AM	0	0	0	0	0	0	0	0	0	0	0	0	0
4/25/2024	8:00 AM	0	0	0	0	0	0	0	0	0	0	0	0	0
4/25/2024	8:15 AM	0	0	0	0	0	0	0	0	0	0	0	0	0
4/25/2024	8:30 AM	0	0	0	0	0	0	0	0	0	0	0	0	0
4/25/2024	8:45 AM	0	0	0	0	0	0	0	0	0	0	0	0	0
4/25/2024	9:00 AM	0	0	0	0	0	0	0	0	0	0	0	0	0
4/25/2024	9:15 AM	0	0	0	0	0	0	0	0	0	0	0	0	0
4/25/2024	9:30 AM	0	0	0	0	0	0	0	0	0	0	0	0	0
4/25/2024	9:45 AM	0	0	0	0	0	0	0	0	0	0	0	0	0
4/25/2024	10:00 AM	0	0	0	0	0	0	0	0	0	0	0	0	0
4/25/2024	10:15 AM	0	0	0	0	0	0	0	0	0	0	0	0	0
4/25/2024	10:30 AM	0	0	0	0	0	0	0	0	0	0	0	0	0
4/25/2024	10:45 AM	0	0	0	0	0	0	0	0	0	0	0	0	0
4/25/2024	11:00 AM	0	0	0	0	0	0	0	0	0	0	0	0	0
4/25/2024	11:15 AM	0	0	0	0	0	0	0	0	0	0	0	0	0
4/25/2024	11:30 AM	0	0	0	0	0	0	0	0	0	0	0	0	0
4/25/2024	11:45 AM	0	0	0	0	0	0	0	0	0	0	0	0	0
4/25/2024	12:00 PM	0	0	0	0	0	0	0	0	0	0	0	0	0
4/25/2024	12:15 PM	0	0	0	0	0	0	0	0	0	0	0	0	0
4/25/2024	12:30 PM	0	0	0	0	0	0	0	0	0	0	0	0	0
4/25/2024	12:45 PM	0	0	0	0	0	0	0	0	0	0	0	0	0
4/25/2024	1:00 PM	0	0	0	0	0	0	0	0	0	0	0	0	0
4/25/2024	1:15 PM	0	0	0	0	0	0	0	0	0	0	0	0	0
4/25/2024	1:30 PM	0	0	0	0	0	0	0	0	0	0	0	0	0
4/25/2024	1:45 PM	0	0	0	0	0	0	0	0	0	0	0	0	0
4/25/2024	2:00 PM	0	0	0	0	0	0	0	0	0	0	0	0	0
4/25/2024	2:15 PM	0	0	0	0	0	0	0	0	0	0	0	0	0
4/25/2024	2:30 PM	0	0	0	0	0	0	0	0	0	0	0	0	0
4/25/2024	2:45 PM	0	0	0	0	0	0	0	0	0	0	0	0	0
4/25/2024	3:00 PM	0	0	0	0	0	0	0	0	0	0	0	0	0
4/25/2024	3:15 PM	0	0	0	0	0	0	0	0	0	0	0	0	0
4/25/2024	3:30 PM	0	0	0	0	0	0	0	0	0	0	0	0	0
4/25/2024	3:45 PM	0	0	0	0	0	0	0	0	0	0	0	0	0
4/25/2024	4:00 PM	0	0	0	0	0	0	0	0	0	0	0	0	0
4/25/2024	4:15 PM	0	0	0	0	0	0	0	0	0	0	0	0	0
4/25/2024	4:30 PM	0	0	0	0	0	0	0	0	0	0	0	0	0
4/25/2024	4:45 PM	0	0	0	0	0	0	0	0	0	0	0	0	0
4/25/2024	5:00 PM	0	0	0	0	0	0	0	0	0	0	0	0	0
4/25/2024	5:15 PM	0	0	0	0	0	0	0	0	0	0	0	0	0
4/25/2024	5:30 PM	0	0	0	0	0	0	0	0	0	0	0	0	0
4/25/2024	5:45 PM	0	0	0	0	0	0	0	0	0	0	0	0	0
4/25/2024	6:00 PM	0	0	0	0	0	0	0	0	0	0	0	0	0
4/25/2024	6:15 PM	0	0	0	0	0	0	0	0	0	0	0	0	0
4/25/2024	6:30 PM	0	0	0	0	0	0	0	0	0	0	0	0	0
4/25/2024	6:45 PM	0	0	0	0	0	0	0	0	0	0	0	0	0
4/25/2024	7:00 PM	0	0	0	0	0	0	0	0	0	0	0	0	0
4/25/2024	7:15 PM	0	0	0	0	0	0	0	0	0	0	0	0	0
4/25/2024	7:30 PM	0	0	0	0	0	0	0	0	0	0	0	0	0
4/25/2024	7:45 PM	0	0	0	0	0	0	0	0	0	0	0	0	0
4/25/2024	8:00 PM	0	0	0	0	0	0	0	0	0	0	0	0	0
4/25/2024	8:15 PM	0	0	0	0	0	0	0	0	0	0	0	0	0
4/25/2024	8:30 PM	0	0	0	0	0	0	0	0	0	0	0	0	0
4/25/2024	8:45 PM	0	0	0	0	0	0	0	0	0	0	0	0	0
4/25/2024	9:00 PM	0	0	0	0	0	0	0	0	0	0	0	0	0
4/25/2024	9:15 PM	0	0	0	0	0	0	0	0	0	0	0	0	0
4/25/2024	9:30 PM	0	0	0	0	0	0	0	0	0	0	0	0	0
4/25/2024	9:45 PM	0	0	0	0	0	0	0	0	0	0	0	0	0
4/25/2024	10:00 PM	0	0	0	0	0	0	0	0	0	0	0	0	0
4/25/2024	10:15 PM	0	0	0	0	0	0	0	0	0	0	0	0	0
4/25/2024	10:30 PM	0	0	0	0	0	0	0	0	0	0	0	0	0
4/25/2024	10:45 PM	0	0	0	0	0	0	0	0	0	0	0	0	0
4/25/2024	11:00 PM	0	0	0	0	0	0	0	0	0	0	0	0	0
4/25/2024	11:15 PM	0	0	0	0	0	0	0	0	0	0	0	0	0
4/25/2024	11:30 PM	0	0	0	0	0	0	0	0	0	0	0	0	0
4/25/2024	11:45 PM	0	0	0	0	0	0	0	0	0	0	0	0	0

Bi-Directional Class Count || NB EB 15min

Columbia, SC

Marr Traffic DATA COLLECTION
www.marrtraffic.com

Site 28
I-26 James F. Byrnes Expy E/Bound Off-Ramp,
west of Harbison Blvd

Date
Tuesday, April 23, 2024

Lat/Long
34.078073°, -81.153890°

Weather
Fair
58°F

Click here for Detailed Weather

Click here for Map

0000 - 2400 (Weekday 24h Session) (04-23-2024)
NB EB 15min

	Eastbound (Movement 28.1)													15min	60min
Time	1	2	3	4	5	6	7	8	9	10	11	12	13	Total	Total
0000 - 0015	0	0	0	0	0	0	0	0	0	0	0	0	0	**0**	
0015 - 0030	0	0	0	0	0	0	0	0	0	0	0	0	0	**0**	
0030 - 0045	0	0	0	0	0	0	0	0	0	0	0	0	0	**0**	
0045 - 0100	0	0	0	0	0	0	0	0	0	0	0	0	0	**0**	**0**
0100 - 0115	0	0	0	0	0	0	0	0	0	0	0	0	0	**0**	
0115 - 0130	0	0	0	0	0	0	0	0	0	0	0	0	0	**0**	
0130 - 0145	0	0	0	0	0	0	0	0	0	0	0	0	0	**0**	
0145 - 0200	0	0	0	0	0	0	0	0	0	0	0	0	0	**0**	**0**
0200 - 0215	0	0	0	0	0	0	0	0	0	0	0	0	0	**0**	
0215 - 0230	0	0	0	0	0	0	0	0	0	0	0	0	0	**0**	
0230 - 0245	0	0	0	0	0	0	0	0	0	0	0	0	0	**0**	
0245 - 0300	0	0	0	0	0	0	0	0	0	0	0	0	0	**0**	**0**
0300 - 0315	0	0	0	0	0	0	0	0	0	0	0	0	0	**0**	
0315 - 0330	0	0	0	0	0	0	0	0	0	0	0	0	0	**0**	
0330 - 0345	0	0	0	0	0	0	0	0	0	0	0	0	0	**0**	
0345 - 0400	0	0	0	0	0	0	0	0	0	0	0	0	0	**0**	**0**
0400 - 0415	0	0	0	0	0	0	0	0	0	0	0	0	0	**0**	
0415 - 0430	0	0	0	0	0	0	0	0	0	0	0	0	0	**0**	
0430 - 0445	0	0	0	0	0	0	0	0	0	0	0	0	0	**0**	
0445 - 0500	0	0	0	0	0	0	0	0	0	0	0	0	0	**0**	**0**
0500 - 0515	0	0	0	0	0	0	0	0	0	0	0	0	0	**0**	
0515 - 0530	0	0	0	0	0	0	0	0	0	0	0	0	0	**0**	
0530 - 0545	0	0	0	0	0	0	0	0	0	0	0	0	0	**0**	
0545 - 0600	0	0	0	0	0	0	0	0	0	0	0	0	0	**0**	**0**
0600 - 0615	0	0	0	0	0	0	0	0	0	0	0	0	0	**0**	
0615 - 0630	0	0	0	0	0	0	0	0	0	0	0	0	0	**0**	
0630 - 0645	0	0	0	0	0	0	0	0	0	0	0	0	0	**0**	
0645 - 0700	0	0	0	0	0	0	0	0	0	0	0	0	0	**0**	**0**
0700 - 0715	0	0	0	0	0	0	0	0	0	0	0	0	0	**0**	
0715 - 0730	0	0	0	0	0	0	0	0	0	0	0	0	0	**0**	
0730 - 0745	0	0	0	0	0	0	0	0	0	0	0	0	0	**0**	
0745 - 0800	0	0	0	0	0	0	0	0	0	0	0	0	0	**0**	**0**
0800 - 0815	0	0	0	0	0	0	0	0	0	0	0	0	0	**0**	
0815 - 0830	0	0	0	0	0	0	0	0	0	0	0	0	0	**0**	
0830 - 0845	0	0	0	0	0	0	0	0	0	0	0	0	0	**0**	
0845 - 0900	0	0	0	0	0	0	0	0	0	0	0	0	0	**0**	**0**
0900 - 0915	0	0	0	0	0	0	0	0	0	0	0	0	0	**0**	
0915 - 0930	0	0	0	0	0	0	0	0	0	0	0	0	0	**0**	
0930 - 0945	0	0	0	0	0	0	0	0	0	0	0	0	0	**0**	
0945 - 1000	0	0	0	0	0	0	0	0	0	0	0	0	0	**0**	**0**
1000 - 1015	0	0	0	0	0	0	0	0	0	0	0	0	0	**0**	
1015 - 1030	0	0	0	0	0	0	0	0	0	0	0	0	0	**0**	
1030 - 1045	0	0	0	0	0	0	0	0	0	0	0	0	0	**0**	
1045 - 1100	0	0	0	0	0	0	0	0	0	0	0	0	0	**0**	**0**
1100 - 1115	0	0	0	0	0	0	0	0	0	0	0	0	0	**0**	
1115 - 1130	0	0	0	0	0	0	0	0	0	0	0	0	0	**0**	
1130 - 1145	0	0	0	0	0	0	0	0	0	0	0	0	0	**0**	
1145 - 1200	0	0	0	0	0	0	0	0	0	0	0	0	0	**0**	**0**
1200 - 1215	0	0	0	0	0	0	0	0	0	0	0	0	0	**0**	
1215 - 1230	0	0	0	0	0	0	0	0	0	0	0	0	0	**0**	
1230 - 1245	0	0	0	0	0	0	0	0	0	0	0	0	0	**0**	
1245 - 1300	0	0	0	0	0	0	0	0	0	0	0	0	0	**0**	**0**
1300 - 1315	0	0	0	0	0	0	0	0	0	0	0	0	0	**0**	
1315 - 1330	0	0	0	0	0	0	0	0	0	0	0	0	0	**0**	
1330 - 1345	0	0	0	0	0	0	0	0	0	0	0	0	0	**0**	
1345 - 1400	0	0	0	0	0	0	0	0	0	0	0	0	0	**0**	**0**
1400 - 1415	0	0	0	0	0	0	0	0	0	0	0	0	0	**0**	
1415 - 1430	0	0	0	0	0	0	0	0	0	0	0	0	0	**0**	
1430 - 1445	0	0	0	0	0	0	0	0	0	0	0	0	0	**0**	
1445 - 1500	0	0	0	0	0	0	0	0	0	0	0	0	0	**0**	**0**
1500 - 1515	0	0	0	0	0	0	0	0	0	0	0	0	0	**0**	
1515 - 1530	0	0	0	0	0	0	0	0	0	0	0	0	0	**0**	
1530 - 1545	0	0	0	0	0	0	0	0	0	0	0	0	0	**0**	
1545 - 1600	0	0	0	0	0	0	0	0	0	0	0	0	0	**0**	**0**
1600 - 1615	0	0	0	0	0	0	0	0	0	0	0	0	0	**0**	
1615 - 1630	0	0	0	0	0	0	0	0	0	0	0	0	0	**0**	
1630 - 1645	0	0	0	0	0	0	0	0	0	0	0	0	0	**0**	
1645 - 1700	0	0	0	0	0	0	0	0	0	0	0	0	0	**0**	**0**
1700 - 1715	0	0	0	0	0	0	0	0	0	0	0	0	0	**0**	
1715 - 1730	0	0	0	0	0	0	0	0	0	0	0	0	0	**0**	
1730 - 1745	0	0	0	0	0	0	0	0	0	0	0	0	0	**0**	
1745 - 1800	0	0	0	0	0	0	0	0	0	0	0	0	0	**0**	**0**
1800 - 1815	0	0	0	0	0	0	0	0	0	0	0	0	0	**0**	
1815 - 1830	0	0	0	0	0	0	0	0	0	0	0	0	0	**0**	
1830 - 1845	0	0	0	0	0	0	0	0	0	0	0	0	0	**0**	
1845 - 1900	0	0	0	0	0	0	0	0	0	0	0	0	0	**0**	**0**
1900 - 1915	0	38	7	0	0	1	0	0	1	0	0	0	0	**47**	
1915 - 1930	0	33	7	0	0	0	0	0	1	0	0	0	0	**41**	
1930 - 1945	0	30	5	0	0	0	0	0	0	0	0	0	0	**35**	
1945 - 2000	0	30	4	0	0	0	0	0	0	0	0	0	0	**34**	**157**
2000 - 2015	0	22	6	0	0	0	0	0	0	0	0	0	0	**28**	
2015 - 2030	0	28	9	0	0	0	0	0	1	0	0	0	0	**38**	
2030 - 2045	0	28	2	0	0	0	0	0	0	0	0	0	0	**30**	
2045 - 2100	0	21	1	0	0	0	0	0	0	0	0	0	0	**22**	**118**
2100 - 2115	0	14	0	0	0	0	0	0	0	0	0	0	0	**14**	
2115 - 2130	0	11	0	0	0	0	0	0	1	0	0	0	0	**12**	
2130 - 2145	0	17	1	0	0	0	0	0	0	0	0	0	0	**18**	
2145 - 2200	0	10	0	0	0	0	0	0	0	0	0	0	0	**10**	**54**
2200 - 2215	0	11	0	0	0	0	0	0	0	0	0	0	0	**11**	
2215 - 2230	0	7	2	0	0	0	0	0	0	0	0	0	0	**9**	
2230 - 2245	0	9	0	0	0	0	0	0	0	0	0	0	0	**9**	
2245 - 2300	0	6	0	0	0	0	0	0	0	0	0	0	0	**6**	**35**
2300 - 2315	0	5	0	0	0	0	0	0	1	0	0	0	0	**6**	
2315 - 2330	0	8	0	0	0	0	0	0	0	0	0	0	0	**8**	
2330 - 2345	0	7	0	0	0	0	0	0	0	0	0	0	0	**7**	
2345 - 0000	0	5	0	0	0	0	0	0	0	0	0	0	0	**5**	**26**

Session Total	0	340	44	0	0	1	0	0	5	0	0	0	0	**390**
Session Average	0.00	3.54	0.46	0.00	0.00	0.01	0.00	0.00	0.05	0.00	0.00	0.00	0.00	**4.06**
Session Percentage	0.00	87.18	11.28	0.00	0.00	0.26	0.00	0.00	1.28	0.00	0.00	0.00	0.00	

AM Peak Hour	-	-	-	-	-	-	-	-	-	-	-	-	-	**-**
AM Peak Volume	0	0	0	0	0	0	0	0	0	0	0	0	0	**0**

Noon Peak Hour	-	-	-	-	-	-	-	-	-	-	-	-	-	**-**
Noon Peak Volume	0	0	0	0	0	0	0	0	0	0	0	0	0	**0**

PM Peak Hour	-	1900 - 2000	1930 - 2030	-	-	1815 - 1915	-	-	1830 - 1930	-	-	-	-	**1900 - 2000**
PM Peak Volume	0	131	24	0	0	1	0	0	2	0	0	0	0	**157**

Site 28
I-26 James F. Byrnes Expy E/Bound Off-Ramp,
west of Harbison Blvd

Date
Wednesday, April 24, 2024

Lat/Long
34.078073°, -81.153890°

Weather
Fair
66°F

Click here for Detailed Weather

0000 - 2400 (Weekday 24h Session) (04-24-2024)
NB EB 15min

	Eastbound (Movement 28.1)													15min	60min
Time	1	2	3	4	5	6	7	8	9	10	11	12	13	Total	Total
0000 - 0015	0	0	0	0	0	0	0	0	0	0	0	0	0	**0**	
0015 - 0030	0	1	2	0	0	0	0	0	0	0	0	0	0	**3**	
0030 - 0045	0	2	0	0	0	0	0	0	0	0	0	0	0	**2**	
0045 - 0100	0	1	0	0	0	0	0	0	0	0	0	0	0	**1**	**6**
0100 - 0115	0	1	2	0	0	0	0	0	0	0	0	0	0	**3**	
0115 - 0130	0	0	0	0	0	0	0	0	0	0	0	0	0	**0**	
0130 - 0145	0	2	0	0	0	0	0	0	0	0	0	0	0	**2**	
0145 - 0200	0	0	1	0	0	0	0	0	0	0	0	0	0	**1**	**6**
0200 - 0215	0	0	0	0	0	0	0	0	0	0	0	0	0	**0**	
0215 - 0230	0	1	1	0	0	0	0	0	0	0	0	0	0	**2**	
0230 - 0245	0	1	0	0	0	0	0	0	0	0	0	0	0	**1**	
0245 - 0300	0	0	0	0	0	0	0	0	1	0	0	0	0	**1**	**4**
0300 - 0315	0	2	0	0	0	0	0	0	0	0	0	0	0	**2**	
0315 - 0330	0	2	0	0	0	0	0	0	0	0	0	0	0	**2**	
0330 - 0345	0	1	0	0	0	0	0	0	0	0	0	0	0	**1**	
0345 - 0400	0	2	0	0	0	0	0	0	0	0	0	0	0	**2**	**7**
0400 - 0415	0	3	0	0	0	0	0	0	0	0	0	0	0	**3**	
0415 - 0430	0	2	1	0	0	0	0	0	0	0	0	0	0	**3**	
0430 - 0445	0	3	0	0	0	0	0	0	0	0	0	0	0	**3**	
0445 - 0500	0	7	2	0	0	0	0	0	0	0	0	0	0	**9**	**18**
0500 - 0515	0	2	1	0	0	0	0	0	0	0	0	0	0	**3**	
0515 - 0530	0	7	3	0	0	0	0	0	1	0	0	0	0	**11**	
0530 - 0545	0	5	2	0	0	0	0	0	0	0	0	0	0	**7**	
0545 - 0600	0	4	2	0	0	0	0	0	0	0	0	0	0	**6**	**27**
0600 - 0615	0	8	4	0	0	0	0	0	0	0	0	0	0	**12**	
0615 - 0630	0	13	3	0	0	0	0	0	0	0	0	0	0	**16**	
0630 - 0645	0	14	7	0	0	0	0	0	0	0	0	0	0	**21**	
0645 - 0700	0	18	7	0	0	0	1	0	0	0	0	0	0	**26**	**75**
0700 - 0715	0	27	5	0	0	0	0	0	0	0	0	0	0	**32**	
0715 - 0730	0	28	9	0	1	0	0	0	0	0	0	0	0	**38**	
0730 - 0745	0	25	8	0	0	0	0	0	0	0	0	0	0	**33**	
0745 - 0800	0	24	12	0	0	0	0	0	0	0	0	0	0	**36**	**139**
0800 - 0815	0	33	14	0	0	0	0	0	1	0	0	0	0	**48**	
0815 - 0830	0	33	9	0	0	0	0	0	0	0	0	0	0	**42**	
0830 - 0845	0	47	11	0	0	0	0	0	1	0	0	0	0	**59**	
0845 - 0900	1	57	16	2	0	0	0	0	0	0	0	0	0	**76**	**225**
0900 - 0915	0	38	11	0	0	0	0	0	0	0	0	0	0	**49**	
0915 - 0930	0	36	21	0	0	0	0	0	0	0	0	0	0	**57**	
0930 - 0945	0	69	15	0	0	0	0	0	0	0	0	0	0	**84**	
0945 - 1000	0	51	19	0	2	0	0	0	1	0	0	0	0	**73**	**263**
1000 - 1015	0	49	18	0	2	0	0	0	1	1	0	0	0	**71**	
1015 - 1030	0	46	10	1	0	0	0	0	0	0	0	0	0	**57**	
1030 - 1045	0	43	9	0	0	0	0	0	0	0	0	0	0	**52**	
1045 - 1100	0	38	14	0	1	0	0	0	0	0	0	0	0	**53**	**233**
1100 - 1115	0	43	14	0	0	0	0	0	0	0	0	0	0	**57**	
1115 - 1130	0	40	16	1	0	1	0	0	1	0	0	0	0	**59**	
1130 - 1145	1	32	21	0	2	0	0	0	0	0	0	0	0	**56**	
1145 - 1200	0	57	18	0	0	0	0	0	1	0	0	0	0	**76**	**248**
1200 - 1215	0	64	25	0	0	0	0	0	0	0	0	0	0	**89**	
1215 - 1230	0	55	11	0	0	0	0	0	0	0	0	0	0	**66**	
1230 - 1245	1	63	14	0	3	0	0	0	0	0	0	0	0	**81**	
1245 - 1300	0	50	15	0	2	0	0	0	0	0	0	0	0	**67**	**303**
1300 - 1315	0	53	13	0	0	0	0	0	0	0	0	0	0	**66**	
1315 - 1330	0	67	18	0	1	0	0	0	1	0	0	0	0	**87**	
1330 - 1345	1	44	13	0	0	0	0	0	1	0	0	0	0	**59**	
1345 - 1400	0	58	10	0	2	1	0	0	0	0	0	0	0	**71**	**283**
1400 - 1415	0	48	15	0	0	0	0	0	0	0	0	0	0	**63**	
1415 - 1430	0	44	19	0	0	0	0	0	1	0	0	0	0	**64**	
1430 - 1445	0	46	7	0	0	0	0	0	2	0	0	0	0	**55**	
1445 - 1500	0	34	9	1	1	0	0	0	0	0	0	0	0	**45**	**227**
1500 - 1515	0	52	16	0	0	1	0	0	0	0	0	0	0	**69**	
1515 - 1530	0	60	13	0	0	0	0	0	0	0	0	0	0	**73**	
1530 - 1545	0	41	17	0	1	0	0	0	0	0	0	0	0	**59**	
1545 - 1600	1	70	13	0	0	0	0	0	1	0	0	0	0	**85**	**286**
1600 - 1615	0	74	18	0	0	0	0	0	1	0	0	0	0	**93**	
1615 - 1630	0	63	17	0	0	0	0	0	1	0	0	0	0	**81**	
1630 - 1645	0	58	8	0	2	0	0	0	1	0	0	0	0	**69**	
1645 - 1700	0	53	9	0	0	0	0	0	0	0	0	0	0	**62**	**305**
1700 - 1715	0	51	13	0	1	0	0	0	0	0	0	0	0	**65**	
1715 - 1730	0	58	13	0	1	0	0	0	1	0	0	0	0	**73**	
1730 - 1745	0	64	7	0	0	0	0	0	0	0	0	0	0	**71**	
1745 - 1800	0	62	14	0	0	0	0	0	0	0	0	0	0	**76**	**285**
1800 - 1815	0	53	18	0	0	0	0	0	1	0	0	0	0	**72**	
1815 - 1830	0	52	7	0	0	0	0	0	0	0	0	0	0	**59**	
1830 - 1845	0	49	12	0	0	0	0	0	0	0	0	0	0	**61**	
1845 - 1900	0	45	5	0	1	0	0	0	0	0	0	0	0	**51**	**243**
1900 - 1915	0	30	12	0	1	0	0	0	0	0	0	0	0	**43**	
1915 - 1930	0	38	10	0	0	0	0	0	0	0	0	0	0	**48**	
1930 - 1945	0	32	6	0	0	0	0	0	0	0	0	0	0	**38**	
1945 - 2000	0	23	3	0	0	0	0	0	1	0	0	0	0	**27**	**156**
2000 - 2015	0	28	5	0	0	0	0	0	1	0	0	0	0	**34**	
2015 - 2030	0	33	2	0	0	0	0	0	1	0	0	0	0	**36**	
2030 - 2045	0	21	6	0	0	0	0	0	0	0	0	0	0	**27**	
2045 - 2100	0	22	5	0	0	0	0	0	0	0	0	0	0	**27**	**124**
2100 - 2115	0	13	1	0	0	0	0	0	0	0	0	0	0	**14**	
2115 - 2130	0	10	1	0	0	0	0	0	0	0	0	0	0	**11**	
2130 - 2145	0	13	2	0	1	0	0	0	0	0	0	0	0	**16**	
2145 - 2200	0	11	1	0	0	0	0	0	0	0	0	0	0	**12**	**53**
2200 - 2215	0	9	1	0	0	0	0	0	0	0	0	0	0	**10**	
2215 - 2230	0	8	0	0	0	0	0	0	0	0	0	0	0	**8**	
2230 - 2245	0	3	0	0	0	0	0	0	0	0	0	0	0	**3**	
2245 - 2300	1	8	0	0	0	0	0	0	0	0	0	0	0	**9**	**30**
2300 - 2315	0	7	1	0	0	0	0	0	0	0	0	0	0	**8**	
2315 - 2330	0	4	0	0	0	0	0	0	0	0	0	0	0	**4**	
2330 - 2345	0	2	2	0	0	0	0	0	1	0	0	0	0	**5**	
2345 - 0000	0	1	0	0	0	0	0	0	1	0	0	0	0	**2**	**19**

Session Total	6	2765	735	5	25	3	1	0	24	1	0	0	0	**3565**
Session Average	0.06	28.80	7.66	0.05	0.26	0.03	0.01	0.00	0.25	0.01	0.00	0.00	0.00	**37.14**
Session Percentage	0.17	77.56	20.62	0.14	0.70	0.08	0.03	0.00	0.67	0.03	0.00	0.00	0.00	

AM Peak Hour	0800 - 0900	0930 - 1030	0915 - 1015	0800 - 0900	0915 - 1015	-	0600 - 0700	-	0745 - 0845	0915 - 1015	-	-	-	**0915 - 1015**
AM Peak Volume	1	215	73	2	4	0	1	0	2	1	0	0	0	**285**

Noon Peak Hour	1045 - 1145	1145 - 1245	1115 - 1215	1000 - 1100	1230 - 1330	1030 - 1130	-	-	1345 - 1445	1000 - 1100	-	-	-	**1145 - 1245**
Noon Peak Volume	1	239	80	1	6	1	0	0	3	1	0	0	0	**312**

PM Peak Hour	1500 - 1600	1545 - 1645	1530 - 1630	-	1630 - 1730	1500 - 1600	-	-	1545 - 1645	-	-	-	-	**1545 - 1645**
PM Peak Volume	1	265	65	0	4	1	0	0	4	0	0	0	0	**328**

Site 28
I-26 James F. Byrnes Expy E/Bound Off-Ramp,
west of Harbison Blvd

Date
Thursday, April 25, 2024

Lat/Long
34.078073°, -81.153890°

Weather
Fair
67°F

Click here for Detailed Weather

0000 - 2400 (Weekday 24h Session) (04-25-2024)
NB EB 15min

	Eastbound (Movement 28.1)													15min	60min
TIME	1	2	3	4	5	6	7	8	9	10	11	12	13	Total	Total
0000 - 0015	0	5	0	0	0	0	0	0	0	0	0	0	0	**5**	
0015 - 0030	0	3	0	0	0	0	0	1	0	0	0	0	0	**4**	
0030 - 0045	0	4	0	0	0	0	0	0	0	0	0	0	0	**4**	
0045 - 0100	0	3	0	0	0	0	0	0	0	0	0	0	0	**3**	**16**
0100 - 0115	0	1	0	0	0	0	0	0	0	0	0	0	0	**1**	
0115 - 0130	0	3	0	0	0	0	0	0	0	0	0	0	0	**3**	
0130 - 0145	0	0	0	0	0	0	0	0	0	0	0	0	0	**0**	
0145 - 0200	0	2	0	0	0	0	0	0	0	0	0	0	0	**2**	**6**
0200 - 0215	0	1	0	0	0	0	0	0	0	0	0	0	0	**1**	
0215 - 0230	0	1	0	0	0	0	0	0	0	0	0	0	0	**1**	
0230 - 0245	0	0	0	0	0	0	0	0	0	0	0	0	0	**0**	
0245 - 0300	0	1	0	0	0	0	0	0	0	0	0	0	0	**1**	**3**
0300 - 0315	0	1	1	0	0	0	0	0	0	0	0	0	0	**2**	
0315 - 0330	0	2	0	0	0	0	0	0	0	0	0	0	0	**2**	
0330 - 0345	0	2	0	0	0	0	0	0	0	0	0	0	0	**2**	
0345 - 0400	0	5	0	0	0	0	0	0	0	0	0	0	0	**5**	**11**
0400 - 0415	0	2	0	0	0	0	0	1	0	0	0	0	0	**3**	
0415 - 0430	0	4	0	0	0	0	0	0	0	0	0	0	0	**4**	
0430 - 0445	0	1	0	0	0	0	0	0	0	0	0	0	0	**1**	
0445 - 0500	0	4	0	0	0	0	0	0	0	0	0	0	0	**4**	**12**
0500 - 0515	0	5	1	0	0	0	0	0	0	0	0	0	0	**6**	
0515 - 0530	0	3	1	0	0	0	0	0	0	0	0	0	0	**4**	
0530 - 0545	0	7	1	0	0	0	0	0	0	0	0	0	0	**8**	
0545 - 0600	0	8	2	0	1	0	0	0	0	0	0	0	0	**11**	**29**
0600 - 0615	0	15	7	0	0	0	0	0	0	0	0	0	0	**22**	
0615 - 0630	0	17	3	0	0	0	0	0	0	0	0	0	0	**20**	
0630 - 0645	0	14	4	0	0	0	0	0	0	0	0	0	0	**18**	
0645 - 0700	0	32	7	0	0	0	0	0	0	0	0	0	0	**39**	**99**
0700 - 0715	0	19	2	0	0	0	0	0	0	0	0	0	0	**21**	
0715 - 0730	0	39	7	0	1	0	0	1	0	0	0	0	0	**48**	
0730 - 0745	0	28	10	0	0	0	0	0	0	0	0	0	0	**38**	
0745 - 0800	0	16	4	0	0	0	0	0	0	0	0	0	0	**20**	**127**
0800 - 0815	0	34	7	0	2	0	0	0	1	0	0	0	0	**44**	
0815 - 0830	0	54	12	0	0	0	0	0	0	0	0	0	0	**66**	
0830 - 0845	0	51	14	0	0	0	0	0	1	0	0	0	0	**66**	
0845 - 0900	0	51	14	1	1	0	0	0	0	0	0	0	0	**67**	**243**
0900 - 0915	0	50	11	0	0	0	0	0	1	0	0	0	0	**62**	
0915 - 0930	0	52	17	0	1	0	0	0	0	0	0	0	0	**70**	
0930 - 0945	0	62	17	0	1	0	0	0	0	0	0	0	0	**80**	
0945 - 1000	0	78	6	0	2	0	0	1	0	0	0	0	0	**87**	**299**
1000 - 1015	0	52	14	0	0	0	0	0	0	0	0	0	0	**66**	
1015 - 1030	0	57	12	0	0	0	0	0	1	0	0	0	0	**70**	
1030 - 1045	0	55	13	0	1	1	0	0	0	0	0	0	0	**70**	
1045 - 1100	0	56	19	0	0	0	0	0	0	0	0	0	0	**75**	**281**
1100 - 1115	0	59	7	0	0	0	0	0	0	0	0	0	0	**66**	
1115 - 1130	0	56	22	0	1	0	0	1	1	0	0	0	0	**81**	
1130 - 1145	0	75	10	1	0	0	0	0	0	0	0	0	0	**86**	
1145 - 1200	0	55	14	0	1	0	0	0	0	0	0	0	0	**70**	**303**
1200 - 1215	2	86	16	0	0	0	0	0	0	0	0	0	0	**104**	
1215 - 1230	0	71	17	0	1	0	0	0	0	0	0	0	0	**89**	
1230 - 1245	0	76	13	0	1	0	0	0	1	0	0	0	0	**91**	
1245 - 1300	0	74	17	0	0	0	0	0	1	0	0	0	0	**92**	**376**
1300 - 1315	0	60	24	0	1	0	0	0	0	0	0	0	0	**85**	
1315 - 1330	0	58	14	1	0	0	0	0	2	0	0	0	0	**75**	
1330 - 1345	0	52	17	0	0	1	0	0	0	0	0	0	0	**70**	
1345 - 1400	0	51	18	0	1	0	0	0	1	0	0	0	0	**71**	**301**
1400 - 1415	2	61	18	1	0	0	0	0	1	0	0	0	0	**83**	
1415 - 1430	0	41	13	0	1	0	0	1	0	0	0	0	0	**56**	
1430 - 1445	0	54	14	0	0	0	0	0	0	0	0	0	0	**68**	
1445 - 1500	0	66	17	1	1	0	0	0	0	0	0	0	0	**85**	**292**
1500 - 1515	0	55	9	0	0	1	0	0	0	0	0	0	0	**65**	
1515 - 1530	0	48	5	0	0	0	0	0	0	0	0	0	0	**53**	
1530 - 1545	0	54	9	0	0	0	0	0	1	0	0	0	0	**64**	
1545 - 1600	0	58	5	0	0	0	0	0	0	0	0	0	0	**63**	**245**
1600 - 1615	0	79	16	0	0	0	0	0	0	0	0	0	0	**95**	
1615 - 1630	0	49	15	0	0	0	0	0	1	0	0	0	0	**65**	
1630 - 1645	0	58	13	0	1	1	0	0	0	0	0	0	0	**73**	
1645 - 1700	0	52	9	0	0	0	0	0	1	0	0	0	0	**62**	**295**
1700 - 1715	0	55	25	0	0	0	0	0	1	0	0	0	0	**81**	
1715 - 1730	0	67	14	0	1	0	0	0	0	0	0	0	0	**82**	
1730 - 1745	0	54	16	0	0	0	0	0	0	0	0	0	0	**70**	
1745 - 1800	0	43	15	0	0	0	0	0	0	0	0	0	0	**58**	**291**
1800 - 1815	0	49	14	0	1	0	0	0	0	0	0	0	0	**64**	
1815 - 1830	0	51	18	0	0	0	0	0	2	0	0	0	0	**71**	
1830 - 1845	0	52	10	0	0	0	0	0	1	0	0	0	0	**63**	
1845 - 1900	0	49	10	0	0	0	0	0	0	0	0	0	0	**59**	**257**
1900 - 1915	0	0	0	0	0	0	0	0	0	0	0	0	0	**0**	
1915 - 1930	0	0	0	0	0	0	0	0	0	0	0	0	0	**0**	
1930 - 1945	0	0	0	0	0	0	0	0	0	0	0	0	0	**0**	
1945 - 2000	0	0	0	0	0	0	0	0	0	0	0	0	0	**0**	**0**
2000 - 2015	0	0	0	0	0	0	0	0	0	0	0	0	0	**0**	
2015 - 2030	0	0	0	0	0	0	0	0	0	0	0	0	0	**0**	
2030 - 2045	0	0	0	0	0	0	0	0	0	0	0	0	0	**0**	
2045 - 2100	0	0	0	0	0	0	0	0	0	0	0	0	0	**0**	**0**
2100 - 2115	0	0	0	0	0	0	0	0	0	0	0	0	0	**0**	
2115 - 2130	0	0	0	0	0	0	0	0	0	0	0	0	0	**0**	
2130 - 2145	0	0	0	0	0	0	0	0	0	0	0	0	0	**0**	
2145 - 2200	0	0	0	0	0	0	0	0	0	0	0	0	0	**0**	**0**
2200 - 2215	0	0	0	0	0	0	0	0	0	0	0	0	0	**0**	
2215 - 2230	0	0	0	0	0	0	0	0	0	0	0	0	0	**0**	
2230 - 2245	0	0	0	0	0	0	0	0	0	0	0	0	0	**0**	
2245 - 2300	0	0	0	0	0	0	0	0	0	0	0	0	0	**0**	**0**
2300 - 2315	0	0	0	0	0	0	0	0	0	0	0	0	0	**0**	
2315 - 2330	0	0	0	0	0	0	0	0	0	0	0	0	0	**0**	
2330 - 2345	0	0	0	0	0	0	0	0	0	0	0	0	0	**0**	
2345 - 0000	0	0	0	0	0	0	0	0	0	0	0	0	0	**0**	**0**

Session Total	4	2768	660	5	21	4	0	6	18	0	0	0	0	**3486**
Session Average	0.04	28.83	6.88	0.05	0.22	0.04	0.00	0.06	0.19	0.00	0.00	0.00	0.00	**36.31**
Session Percentage	0.11	79.40	18.93	0.14	0.60	0.11	0.00	0.17	0.52	0.00	0.00	0.00	0.00	

AM Peak Hour	-	0930 - 1030	0845 - 0945	0800 - 0900	0900 - 1000	0945 - 1045	-	0630 - 0730	0745 - 0845	-	-	-	-	**0915 - 1015**
AM Peak Hour Volume	0	249	59	1	4	1	0	1	2	0	0	0	0	**303**

Noon Peak Hour	1115 - 1215	1200 - 1300	1300 - 1400	1315 - 1415	1145 - 1245	1000 - 1100	-	1030 - 1130	1230 - 1330	-	-	-	-	**1200 - 1300**
Noon Peak Hour Volume	2	307	73	2	3	1	0	1	4	0	0	0	0	**376**

PM Peak Hour	-	1545 - 1645	1700 - 1800	-	1630 - 1730	1500 - 1600	-	-	1615 - 1715	-	-	-	-	**1630 - 1730**
PM Peak Hour Volume	0	244	70	0	2	1	0	0	3	0	0	0	0	**298**

Bi-Directional Class Count || NB EB Average 15min

Columbia, SC

Marr Traffic DATA COLLECTION
www.marrtraffic.com

Site 28
I-26 James F. Byrnes Expy E/Bound Off-Ramp,
west of Harbison Blvd

Date
Tuesday, April 23, 2024

Lat/Long
34.078073°, -81.153890°

Weather
Fair
58°F

0000 - 2400 (Weekday 24h Session) (All Dates)
NB EB Average 15min

	NB EB Average 15min													15min	60min
Time	1	2	3	4	5	6	7	8	9	10	11	12	13	Total	Total
0000 - 0015	0	2	0	0	0	0	0	0	0	0	0	0	0	**2**	
0015 - 0030	0	1	1	0	0	0	0	0	0	0	0	0	0	**2**	
0030 - 0045	0	2	0	0	0	0	0	0	0	0	0	0	0	**2**	
0045 - 0100	0	1	0	0	0	0	0	0	0	0	0	0	0	**1**	**7**
0100 - 0115	0	1	1	0	0	0	0	0	0	0	0	0	0	**1**	
0115 - 0130	0	1	0	0	0	0	0	0	0	0	0	0	0	**1**	
0130 - 0145	0	1	0	0	0	0	0	0	0	0	0	0	0	**1**	
0145 - 0200	0	1	0	0	0	0	0	0	0	0	0	0	0	**1**	**4**
0200 - 0215	0	0	0	0	0	0	0	0	0	0	0	0	0	**0**	
0215 - 0230	0	1	0	0	0	0	0	0	0	0	0	0	0	**1**	
0230 - 0245	0	0	0	0	0	0	0	0	0	0	0	0	0	**0**	
0245 - 0300	0	0	0	0	0	0	0	0	0	0	0	0	0	**1**	**2**
0300 - 0315	0	1	0	0	0	0	0	0	0	0	0	0	0	**1**	
0315 - 0330	0	1	0	0	0	0	0	0	0	0	0	0	0	**1**	
0330 - 0345	0	1	0	0	0	0	0	0	0	0	0	0	0	**1**	
0345 - 0400	0	2	0	0	0	0	0	0	0	0	0	0	0	**2**	**6**
0400 - 0415	0	2	0	0	0	0	0	0	0	0	0	0	0	**2**	
0415 - 0430	0	2	0	0	0	0	0	0	0	0	0	0	0	**2**	
0430 - 0445	0	1	0	0	0	0	0	0	0	0	0	0	0	**1**	
0445 - 0500	0	4	1	0	0	0	0	0	0	0	0	0	0	**4**	**10**
0500 - 0515	0	2	1	0	0	0	0	0	0	0	0	0	0	**3**	
0515 - 0530	0	3	1	0	0	0	0	0	0	0	0	0	0	**5**	
0530 - 0545	0	4	1	0	0	0	0	0	0	0	0	0	0	**5**	
0545 - 0600	0	4	1	0	0	0	0	0	0	0	0	0	0	**6**	**19**
0600 - 0615	0	8	4	0	0	0	0	0	0	0	0	0	0	**11**	
0615 - 0630	0	10	2	0	0	0	0	0	0	0	0	0	0	**12**	
0630 - 0645	0	9	4	0	0	0	0	0	0	0	0	0	0	**13**	
0645 - 0700	0	17	5	0	0	0	0	0	0	0	0	0	0	**22**	**58**
0700 - 0715	0	15	2	0	0	0	0	0	0	0	0	0	0	**18**	
0715 - 0730	0	22	5	0	1	0	0	0	0	0	0	0	0	**29**	
0730 - 0745	0	18	6	0	0	0	0	0	0	0	0	0	0	**24**	
0745 - 0800	0	13	5	0	0	0	0	0	0	0	0	0	0	**19**	**89**
0800 - 0815	0	22	7	0	1	0	0	0	1	0	0	0	0	**31**	
0815 - 0830	0	29	7	0	0	0	0	0	0	0	0	0	0	**36**	
0830 - 0845	0	33	8	0	0	0	0	0	1	0	0	0	0	**42**	
0845 - 0900	0	36	10	1	0	0	0	0	0	0	0	0	0	**48**	**156**
0900 - 0915	0	29	7	0	0	0	0	0	0	0	0	0	0	**37**	
0915 - 0930	0	29	13	0	0	0	0	0	0	0	0	0	0	**42**	
0930 - 0945	0	44	11	0	0	0	0	0	0	0	0	0	0	**55**	
0945 - 1000	0	43	8	0	1	0	0	0	0	0	0	0	0	**53**	**187**
1000 - 1015	0	34	11	0	1	0	0	0	0	0	0	0	0	**46**	
1015 - 1030	0	34	7	0	0	0	0	0	0	0	0	0	0	**42**	
1030 - 1045	0	33	7	0	0	0	0	0	0	0	0	0	0	**41**	
1045 - 1100	0	31	11	0	0	0	0	0	0	0	0	0	0	**43**	**171**
1100 - 1115	0	34	7	0	0	0	0	0	0	0	0	0	0	**41**	
1115 - 1130	0	32	13	0	0	0	0	0	1	0	0	0	0	**47**	
1130 - 1145	0	36	10	0	1	0	0	0	0	0	0	0	0	**47**	
1145 - 1200	0	37	11	0	0	0	0	0	0	0	0	0	0	**49**	**184**
1200 - 1215	1	50	14	0	0	0	0	0	0	0	0	0	0	**64**	
1215 - 1230	0	42	9	0	0	0	0	0	0	0	0	0	0	**52**	
1230 - 1245	0	46	9	0	1	0	0	0	0	0	0	0	0	**57**	
1245 - 1300	0	41	11	0	1	0	0	0	0	0	0	0	0	**53**	**226**
1300 - 1315	0	38	12	0	0	0	0	0	0	0	0	0	0	**50**	
1315 - 1330	0	42	11	0	0	0	0	0	1	0	0	0	0	**54**	
1330 - 1345	0	32	10	0	0	0	0	0	0	0	0	0	0	**43**	
1345 - 1400	0	36	9	0	1	0	0	0	0	0	0	0	0	**47**	**195**
1400 - 1415	1	36	11	0	0	0	0	0	0	0	0	0	0	**49**	
1415 - 1430	0	28	11	0	0	0	0	0	0	0	0	0	0	**40**	
1430 - 1445	0	33	7	0	0	0	0	0	1	0	0	0	0	**41**	
1445 - 1500	0	33	9	1	1	0	0	0	0	0	0	0	0	**43**	**173**
1500 - 1515	0	36	8	0	0	1	0	0	0	0	0	0	0	**45**	
1515 - 1530	0	36	6	0	0	0	0	0	0	0	0	0	0	**42**	
1530 - 1545	0	32	9	0	0	0	0	0	0	0	0	0	0	**41**	
1545 - 1600	0	43	6	0	0	0	0	0	0	0	0	0	0	**49**	**177**
1600 - 1615	0	51	11	0	0	0	0	0	0	0	0	0	0	**63**	
1615 - 1630	0	37	11	0	0	0	0	0	1	0	0	0	0	**49**	
1630 - 1645	0	39	7	0	1	0	0	0	0	0	0	0	0	**47**	
1645 - 1700	0	35	6	0	0	0	0	0	0	0	0	0	0	**41**	**200**
1700 - 1715	0	35	13	0	0	0	0	0	0	0	0	0	0	**49**	
1715 - 1730	0	42	9	0	1	0	0	0	0	0	0	0	0	**52**	
1730 - 1745	0	39	8	0	0	0	0	0	0	0	0	0	0	**47**	
1745 - 1800	0	35	10	0	0	0	0	0	0	0	0	0	0	**45**	**192**
1800 - 1815	0	34	11	0	0	0	0	0	0	0	0	0	0	**45**	
1815 - 1830	0	34	8	0	0	0	0	0	1	0	0	0	0	**43**	
1830 - 1845	0	34	7	0	0	0	0	0	0	0	0	0	0	**41**	
1845 - 1900	0	31	5	0	0	0	0	0	0	0	0	0	0	**37**	**167**
1900 - 1915	0	23	6	0	0	0	0	0	0	0	0	0	0	**30**	
1915 - 1930	0	24	6	0	0	0	0	0	0	0	0	0	0	**30**	
1930 - 1945	0	21	4	0	0	0	0	0	0	0	0	0	0	**24**	
1945 - 2000	0	18	2	0	0	0	0	0	0	0	0	0	0	**20**	**104**
2000 - 2015	0	17	4	0	0	0	0	0	0	0	0	0	0	**21**	
2015 - 2030	0	20	4	0	0	0	0	0	1	0	0	0	0	**25**	
2030 - 2045	0	16	3	0	0	0	0	0	0	0	0	0	0	**19**	
2045 - 2100	0	14	2	0	0	0	0	0	0	0	0	0	0	**16**	**81**
2100 - 2115	0	9	0	0	0	0	0	0	0	0	0	0	0	**9**	
2115 - 2130	0	7	0	0	0	0	0	0	0	0	0	0	0	**8**	
2130 - 2145	0	10	1	0	0	0	0	0	0	0	0	0	0	**11**	
2145 - 2200	0	7	0	0	0	0	0	0	0	0	0	0	0	**7**	**36**
2200 - 2215	0	7	0	0	0	0	0	0	0	0	0	0	0	**7**	
2215 - 2230	0	5	1	0	0	0	0	0	0	0	0	0	0	**6**	
2230 - 2245	0	4	0	0	0	0	0	0	0	0	0	0	0	**4**	
2245 - 2300	0	5	0	0	0	0	0	0	0	0	0	0	0	**5**	**22**
2300 - 2315	0	4	0	0	0	0	0	0	0	0	0	0	0	**5**	
2315 - 2330	0	4	0	0	0	0	0	0	0	0	0	0	0	**4**	
2330 - 2345	0	3	1	0	0	0	0	0	0	0	0	0	0	**4**	
2345 - 0000	0	2	0	0	0	0	0	0	0	0	0	0	0	**2**	**15**

Session Total	3	1958	480	3	15	3	0	2	16	0	0	0	0	**2480**
Session Average	0.03	20.39	5.00	0.03	0.16	0.03	0.00	0.02	0.16	0.00	0.00	0.00	0.00	**25.84**
Session Percentage	0.13	78.93	19.34	0.13	0.62	0.11	0.01	0.08	0.63	0.01	0.00	0.00	0.00	

AM Peak Hour	0800 - 0900	0930 - 1030	0915 - 1015	0800 - 0900	0915 - 1015	0945 - 1045	0600 - 0700	0630 - 0730	0745 - 0845	0915 - 1015	-	-	-	**0915 - 1015**
AM Peak Volume	0	155	42	1	3	0	0	0	1	0	0	0	0	**196**

Noon Peak Hour	1115 - 1215	1200 - 1300	1115 - 1215	1400 - 1500	1230 - 1330	1030 - 1130	-	1030 - 1130	1315 - 1415	1000 - 1100	-	-	-	**1200 - 1300**
Noon Peak Volume	1	180	47	1	3	1	0	0	2	0	0	0	0	**226**

PM Peak Hour	1500 - 1600	1545 - 1645	1700 - 1800	-	1630 - 1730	1500 - 1600	-	-	1530 - 1630	-	-	-	-	**1545 - 1645**
PM Peak Volume	0	170	39	0	2	1	0	0	2	0	0	0	0	**208**

Bi-Directional Class Count || Volume Summary 15min

Columbia, SC

Marr Traffic DATA COLLECTION
www.marrtraffic.com

Site 28
I-26 James F. Byrnes Expy E/Bound Off-Ramp,
west of Harbison Blvd

Date
Tuesday, April 23, 2024

Lat/Long
34.078073°, -81.153890°

Weather
Fair
58°F

Click here for Detailed Weather

0000 - 2400 (Weekday 24h Session) (04-23-2024)

Volume Summary 15min

TIME	Volume Summary 15min EB	Volume Summary 15min WB	15min Total	60min Total
0000 - 0015	0	0	**0**	
0015 - 0030	0	0	**0**	
0030 - 0045	0	0	**0**	
0045 - 0100	0	0	**0**	**0**
0100 - 0115	0	0	**0**	
0115 - 0130	0	0	**0**	
0130 - 0145	0	0	**0**	
0145 - 0200	0	0	**0**	**0**
0200 - 0215	0	0	**0**	
0215 - 0230	0	0	**0**	
0230 - 0245	0	0	**0**	
0245 - 0300	0	0	**0**	**0**
0300 - 0315	0	0	**0**	
0315 - 0330	0	0	**0**	
0330 - 0345	0	0	**0**	
0345 - 0400	0	0	**0**	**0**
0400 - 0415	0	0	**0**	
0415 - 0430	0	0	**0**	
0430 - 0445	0	0	**0**	
0445 - 0500	0	0	**0**	**0**
0500 - 0515	0	0	**0**	
0515 - 0530	0	0	**0**	
0530 - 0545	0	0	**0**	
0545 - 0600	0	0	**0**	**0**
0600 - 0615	0	0	**0**	
0615 - 0630	0	0	**0**	
0630 - 0645	0	0	**0**	
0645 - 0700	0	0	**0**	**0**
0700 - 0715	0	0	**0**	
0715 - 0730	0	0	**0**	
0730 - 0745	0	0	**0**	
0745 - 0800	0	0	**0**	**0**
0800 - 0815	0	0	**0**	
0815 - 0830	0	0	**0**	
0830 - 0845	0	0	**0**	
0845 - 0900	0	0	**0**	**0**
0900 - 0915	0	0	**0**	
0915 - 0930	0	0	**0**	
0930 - 0945	0	0	**0**	
0945 - 1000	0	0	**0**	**0**
1000 - 1015	0	0	**0**	
1015 - 1030	0	0	**0**	
1030 - 1045	0	0	**0**	
1045 - 1100	0	0	**0**	**0**
1100 - 1115	0	0	**0**	
1115 - 1130	0	0	**0**	
1130 - 1145	0	0	**0**	
1145 - 1200	0	0	**0**	**0**

Time	Volume Summary 15min EB	Volume Summary 15min WB	15min Total	60min Total
1200 - 1215	0	0	**0**	
1215 - 1230	0	0	**0**	
1230 - 1245	0	0	**0**	
1245 - 1300	0	0	**0**	**0**
1300 - 1315	0	0	**0**	
1315 - 1330	0	0	**0**	
1330 - 1345	0	0	**0**	
1345 - 1400	0	0	**0**	**0**
1400 - 1415	0	0	**0**	
1415 - 1430	0	0	**0**	
1430 - 1445	0	0	**0**	
1445 - 1500	0	0	**0**	**0**
1500 - 1515	0	0	**0**	
1515 - 1530	0	0	**0**	
1530 - 1545	0	0	**0**	
1545 - 1600	0	0	**0**	**0**
1600 - 1615	0	0	**0**	
1615 - 1630	0	0	**0**	
1630 - 1645	0	0	**0**	
1645 - 1700	0	0	**0**	**0**
1700 - 1715	0	0	**0**	
1715 - 1730	0	0	**0**	
1730 - 1745	0	0	**0**	
1745 - 1800	0	0	**0**	**0**
1800 - 1815	0	0	**0**	
1815 - 1830	0	0	**0**	
1830 - 1845	0	0	**0**	
1845 - 1900	0	0	**0**	**0**
1900 - 1915	47	0	**47**	
1915 - 1930	41	0	**41**	
1930 - 1945	35	0	**35**	
1945 - 2000	34	0	**34**	**157**
2000 - 2015	28	0	**28**	
2015 - 2030	38	0	**38**	
2030 - 2045	30	0	**30**	
2045 - 2100	22	0	**22**	**118**
2100 - 2115	14	0	**14**	
2115 - 2130	12	0	**12**	
2130 - 2145	18	0	**18**	
2145 - 2200	10	0	**10**	**54**
2200 - 2215	11	0	**11**	
2215 - 2230	9	0	**9**	
2230 - 2245	9	0	**9**	
2245 - 2300	6	0	**6**	**35**
2300 - 2315	6	0	**6**	
2315 - 2330	8	0	**8**	
2330 - 2345	7	0	**7**	
2345 - 0000	5	0	**5**	**26**

Session Total	390	0	**390**
Session Average	4.06	0.00	**4.06**
Session Percentage	100.00	0.00	

Site 28

I-26 James F. Byrnes Expy E/Bound Off-Ramp,
west of Harbison Blvd

Date

Wednesday, April 24, 2024

Lat/Long

34.078073°, -81.153890°

Weather

Fair
66°F

Click here for Detailed Weather

0000 - 2400 (Weekday 24h Session) (04-24-2024)

Volume Summary 15min

TIME	Volume Summary 15min EB	WB	15min Total	60min Total
0000 - 0015	0	0	**0**	
0015 - 0030	3	0	**3**	
0030 - 0045	2	0	**2**	
0045 - 0100	1	0	**1**	**6**
0100 - 0115	3	0	**3**	
0115 - 0130	0	0	**0**	
0130 - 0145	2	0	**2**	
0145 - 0200	1	0	**1**	**6**
0200 - 0215	0	0	**0**	
0215 - 0230	2	0	**2**	
0230 - 0245	1	0	**1**	
0245 - 0300	1	0	**1**	**4**
0300 - 0315	2	0	**2**	
0315 - 0330	2	0	**2**	
0330 - 0345	1	0	**1**	
0345 - 0400	2	0	**2**	**7**
0400 - 0415	3	0	**3**	
0415 - 0430	3	0	**3**	
0430 - 0445	3	0	**3**	
0445 - 0500	9	0	**9**	**18**
0500 - 0515	3	0	**3**	
0515 - 0530	11	0	**11**	
0530 - 0545	7	0	**7**	
0545 - 0600	6	0	**6**	**27**
0600 - 0615	12	0	**12**	
0615 - 0630	16	0	**16**	
0630 - 0645	21	0	**21**	
0645 - 0700	26	0	**26**	**75**
0700 - 0715	32	0	**32**	
0715 - 0730	38	0	**38**	
0730 - 0745	33	0	**33**	
0745 - 0800	36	0	**36**	**139**
0800 - 0815	48	0	**48**	
0815 - 0830	42	0	**42**	
0830 - 0845	59	0	**59**	
0845 - 0900	76	0	**76**	**225**
0900 - 0915	49	0	**49**	
0915 - 0930	57	0	**57**	
0930 - 0945	84	0	**84**	
0945 - 1000	73	0	**73**	**263**
1000 - 1015	71	0	**71**	
1015 - 1030	57	0	**57**	
1030 - 1045	52	0	**52**	
1045 - 1100	53	0	**53**	**233**
1100 - 1115	57	0	**57**	
1115 - 1130	59	0	**59**	
1130 - 1145	56	0	**56**	
1145 - 1200	76	0	**76**	**248**

Time	Volume Summary 15min EB	WB	15min Total	60min Total
1200 - 1215	89	0	**89**	
1215 - 1230	66	0	**66**	
1230 - 1245	81	0	**81**	
1245 - 1300	67	0	**67**	**303**
1300 - 1315	66	0	**66**	
1315 - 1330	87	0	**87**	
1330 - 1345	59	0	**59**	
1345 - 1400	71	0	**71**	**283**
1400 - 1415	63	0	**63**	
1415 - 1430	64	0	**64**	
1430 - 1445	55	0	**55**	
1445 - 1500	45	0	**45**	**227**
1500 - 1515	69	0	**69**	
1515 - 1530	73	0	**73**	
1530 - 1545	59	0	**59**	
1545 - 1600	85	0	**85**	**286**
1600 - 1615	93	0	**93**	
1615 - 1630	81	0	**81**	
1630 - 1645	69	0	**69**	
1645 - 1700	62	0	**62**	**305**
1700 - 1715	65	0	**65**	
1715 - 1730	73	0	**73**	
1730 - 1745	71	0	**71**	
1745 - 1800	76	0	**76**	**285**
1800 - 1815	72	0	**72**	
1815 - 1830	59	0	**59**	
1830 - 1845	61	0	**61**	
1845 - 1900	51	0	**51**	**243**
1900 - 1915	43	0	**43**	
1915 - 1930	48	0	**48**	
1930 - 1945	38	0	**38**	
1945 - 2000	27	0	**27**	**156**
2000 - 2015	34	0	**34**	
2015 - 2030	36	0	**36**	
2030 - 2045	27	0	**27**	
2045 - 2100	27	0	**27**	**124**
2100 - 2115	14	0	**14**	
2115 - 2130	11	0	**11**	
2130 - 2145	16	0	**16**	
2145 - 2200	12	0	**12**	**53**
2200 - 2215	10	0	**10**	
2215 - 2230	8	0	**8**	
2230 - 2245	3	0	**3**	
2245 - 2300	9	0	**9**	**30**
2300 - 2315	8	0	**8**	
2315 - 2330	4	0	**4**	
2330 - 2345	5	0	**5**	
2345 - 0000	2	0	**2**	**19**

Session Total	3565	0	**3565**
Session Average	37.14	0.00	**37.14**
Session Percentage	100.00	0.00	

Site 28
I-26 James F. Byrnes Expy E/Bound Off-Ramp,
west of Harbison Blvd

Date
Thursday, April 25, 2024

Lat/Long
34.078073°, -81.153890°

Weather
Fair
67°F

Click here for Detailed Weather

0000 - 2400 (Weekday 24h Session) (04-25-2024)
Volume Summary 15min

TIME	Volume Summary 15min EB	WB	15min Total	60min Total
0000 - 0015	5	0	**5**	
0015 - 0030	4	0	**4**	
0030 - 0045	4	0	**4**	
0045 - 0100	3	0	**3**	**16**
0100 - 0115	1	0	**1**	
0115 - 0130	3	0	**3**	
0130 - 0145	0	0	**0**	
0145 - 0200	2	0	**2**	**6**
0200 - 0215	1	0	**1**	
0215 - 0230	1	0	**1**	
0230 - 0245	0	0	**0**	
0245 - 0300	1	0	**1**	**3**
0300 - 0315	2	0	**2**	
0315 - 0330	2	0	**2**	
0330 - 0345	2	0	**2**	
0345 - 0400	5	0	**5**	**11**
0400 - 0415	3	0	**3**	
0415 - 0430	4	0	**4**	
0430 - 0445	1	0	**1**	
0445 - 0500	4	0	**4**	**12**
0500 - 0515	6	0	**6**	
0515 - 0530	4	0	**4**	
0530 - 0545	8	0	**8**	
0545 - 0600	11	0	**11**	**29**
0600 - 0615	22	0	**22**	
0615 - 0630	20	0	**20**	
0630 - 0645	18	0	**18**	
0645 - 0700	39	0	**39**	**99**
0700 - 0715	21	0	**21**	
0715 - 0730	48	0	**48**	
0730 - 0745	38	0	**38**	
0745 - 0800	20	0	**20**	**127**
0800 - 0815	44	0	**44**	
0815 - 0830	66	0	**66**	
0830 - 0845	66	0	**66**	
0845 - 0900	67	0	**67**	**243**
0900 - 0915	62	0	**62**	
0915 - 0930	70	0	**70**	
0930 - 0945	80	0	**80**	
0945 - 1000	87	0	**87**	**299**
1000 - 1015	66	0	**66**	
1015 - 1030	70	0	**70**	
1030 - 1045	70	0	**70**	
1045 - 1100	75	0	**75**	**281**
1100 - 1115	66	0	**66**	
1115 - 1130	81	0	**81**	
1130 - 1145	86	0	**86**	
1145 - 1200	70	0	**70**	**303**

Time	Volume Summary 15min EB	WB	15min Total	60min Total
1200 - 1215	104	0	**104**	
1215 - 1230	89	0	**89**	
1230 - 1245	91	0	**91**	
1245 - 1300	92	0	**92**	**376**
1300 - 1315	85	0	**85**	
1315 - 1330	75	0	**75**	
1330 - 1345	70	0	**70**	
1345 - 1400	71	0	**71**	**301**
1400 - 1415	83	0	**83**	
1415 - 1430	56	0	**56**	
1430 - 1445	68	0	**68**	
1445 - 1500	85	0	**85**	**292**
1500 - 1515	65	0	**65**	
1515 - 1530	53	0	**53**	
1530 - 1545	64	0	**64**	
1545 - 1600	63	0	**63**	**245**
1600 - 1615	95	0	**95**	
1615 - 1630	65	0	**65**	
1630 - 1645	73	0	**73**	
1645 - 1700	62	0	**62**	**295**
1700 - 1715	81	0	**81**	
1715 - 1730	82	0	**82**	
1730 - 1745	70	0	**70**	
1745 - 1800	58	0	**58**	**291**
1800 - 1815	64	0	**64**	
1815 - 1830	71	0	**71**	
1830 - 1845	63	0	**63**	
1845 - 1900	59	0	**59**	**257**
1900 - 1915	0	0	**0**	
1915 - 1930	0	0	**0**	
1930 - 1945	0	0	**0**	
1945 - 2000	0	0	**0**	**0**
2000 - 2015	0	0	**0**	
2015 - 2030	0	0	**0**	
2030 - 2045	0	0	**0**	
2045 - 2100	0	0	**0**	**0**
2100 - 2115	0	0	**0**	
2115 - 2130	0	0	**0**	
2130 - 2145	0	0	**0**	
2145 - 2200	0	0	**0**	**0**
2200 - 2215	0	0	**0**	
2215 - 2230	0	0	**0**	
2230 - 2245	0	0	**0**	
2245 - 2300	0	0	**0**	**0**
2300 - 2315	0	0	**0**	
2315 - 2330	0	0	**0**	
2330 - 2345	0	0	**0**	
2345 - 0000	0	0	**0**	**0**

Session Total	3486	0	**3486**
Session Average	36.31	0.00	**36.31**
Session Percentage	100.00	0.00	

Bi-Directional Class Count || NB EB 60min

Columbia, SC

Marr Traffic DATA COLLECTION

www.marrtraffic.com

Site 28
I-26 James F. Byrnes Expy E/Bound Off-Ramp,
west of Harbison Blvd

Date
Tuesday, April 23, 2024

Lat/Long
34.078073°, -81.153890°

Weather
Fair
58°F

Click here for Detailed Weather

0000 - 2400 (Weekday 24h Session) (04-23-2024)
NB EB 60min

	Eastbound (Movement 28.1)													
TIME	1	2	3	4	5	6	7	8	9	10	11	12	13	**Total**
0000 - 0100	0	0	0	0	0	0	0	0	0	0	0	0	0	**0**
0100 - 0200	0	0	0	0	0	0	0	0	0	0	0	0	0	**0**
0200 - 0300	0	0	0	0	0	0	0	0	0	0	0	0	0	**0**
0300 - 0400	0	0	0	0	0	0	0	0	0	0	0	0	0	**0**
0400 - 0500	0	0	0	0	0	0	0	0	0	0	0	0	0	**0**
0500 - 0600	0	0	0	0	0	0	0	0	0	0	0	0	0	**0**
0600 - 0700	0	0	0	0	0	0	0	0	0	0	0	0	0	**0**
0700 - 0800	0	0	0	0	0	0	0	0	0	0	0	0	0	**0**
0800 - 0900	0	0	0	0	0	0	0	0	0	0	0	0	0	**0**
0900 - 1000	0	0	0	0	0	0	0	0	0	0	0	0	0	**0**
1000 - 1100	0	0	0	0	0	0	0	0	0	0	0	0	0	**0**
1100 - 1200	0	0	0	0	0	0	0	0	0	0	0	0	0	**0**
1200 - 1300	0	0	0	0	0	0	0	0	0	0	0	0	0	**0**
1300 - 1400	0	0	0	0	0	0	0	0	0	0	0	0	0	**0**
1400 - 1500	0	0	0	0	0	0	0	0	0	0	0	0	0	**0**
1500 - 1600	0	0	0	0	0	0	0	0	0	0	0	0	0	**0**
1600 - 1700	0	0	0	0	0	0	0	0	0	0	0	0	0	**0**
1700 - 1800	0	0	0	0	0	0	0	0	0	0	0	0	0	**0**
1800 - 1900	0	0	0	0	0	0	0	0	0	0	0	0	0	**0**
1900 - 2000	0	131	23	0	0	1	0	0	2	0	0	0	0	**157**
2000 - 2100	0	99	18	0	0	0	0	0	1	0	0	0	0	**118**
2100 - 2200	0	52	1	0	0	0	0	0	1	0	0	0	0	**54**
2200 - 2300	0	33	2	0	0	0	0	0	0	0	0	0	0	**35**
2300 - 2400	0	25	0	0	0	0	0	0	1	0	0	0	0	**26**
Session Total	0	340	44	0	0	1	0	0	5	0	0	0	0	**390**
Session Average	0.00	14.17	1.83	0.00	0.00	0.04	0.00	0.00	0.21	0.00	0.00	0.00	0.00	**16.25**
Session Percentage	0.00	87.18	11.28	0.00	0.00	0.26	0.00	0.00	1.28	0.00	0.00	0.00	0.00	
AM Peak Hour	-	-	-	-	-	-	-	-	-	-	-	-	-	**-**
AM Peak Volume	0	0	0	0	0	0	0	0	0	0	0	0	0	**0**
Noon Peak Hour	-	-	-	-	-	-	-	-	-	-	-	-	-	**-**
Noon Peak Volume	0	0	0	0	0	0	0	0	0	0	0	0	0	**0**
PM Peak Hour	-	1900 - 2000	1900 - 2000	-	-	1900 - 2000	-	-	1900 - 2000	-	-	-	-	**1900 - 2000**
PM Peak Volume	0	131	23	0	0	1	0	0	2	0	0	0	0	**157**

Site 28
I-26 James F. Byrnes Expy E/Bound Off-Ramp,
west of Harbison Blvd

Date
Wednesday, April 24, 2024

Lat/Long
34.078073°, -81.153890°

Weather
Fair
66°F

Click here for Detailed Weather

0000 - 2400 (Weekday 24h Session) (04-24-2024)
NB EB 60min

	Eastbound (Movement 28.1)													
TIME	1	2	3	4	5	6	7	8	9	10	11	12	13	**Total**
0000 - 0100	0	4	2	0	0	0	0	0	0	0	0	0	0	**6**
0100 - 0200	0	3	3	0	0	0	0	0	0	0	0	0	0	**6**
0200 - 0300	0	2	1	0	0	0	0	0	1	0	0	0	0	**4**
0300 - 0400	0	7	0	0	0	0	0	0	0	0	0	0	0	**7**
0400 - 0500	0	15	3	0	0	0	0	0	0	0	0	0	0	**18**
0500 - 0600	0	18	8	0	0	0	0	0	1	0	0	0	0	**27**
0600 - 0700	0	53	21	0	0	0	1	0	0	0	0	0	0	**75**
0700 - 0800	0	104	34	0	1	0	0	0	0	0	0	0	0	**139**
0800 - 0900	1	170	50	2	0	0	0	0	2	0	0	0	0	**225**
0900 - 1000	0	194	66	0	2	0	0	0	1	0	0	0	0	**263**
1000 - 1100	0	176	51	1	3	0	0	0	1	1	0	0	0	**233**
1100 - 1200	1	172	69	1	2	1	0	0	2	0	0	0	0	**248**
1200 - 1300	1	232	65	0	5	0	0	0	0	0	0	0	0	**303**
1300 - 1400	1	222	54	0	3	1	0	0	2	0	0	0	0	**283**
1400 - 1500	0	172	50	1	1	0	0	0	3	0	0	0	0	**227**
1500 - 1600	1	223	59	0	1	1	0	0	1	0	0	0	0	**286**
1600 - 1700	0	248	52	0	2	0	0	0	3	0	0	0	0	**305**
1700 - 1800	0	235	47	0	2	0	0	0	1	0	0	0	0	**285**
1800 - 1900	0	199	42	0	1	0	0	0	1	0	0	0	0	**243**
1900 - 2000	0	123	31	0	1	0	0	0	1	0	0	0	0	**156**
2000 - 2100	0	104	18	0	0	0	0	0	2	0	0	0	0	**124**
2100 - 2200	0	47	5	0	1	0	0	0	0	0	0	0	0	**53**
2200 - 2300	1	28	1	0	0	0	0	0	0	0	0	0	0	**30**
2300 - 2400	0	14	3	0	0	0	0	0	2	0	0	0	0	**19**
Session Total	6	2765	735	5	25	3	1	0	24	1	0	0	0	**3565**
Session Average	0.25	115.21	30.63	0.21	1.04	0.13	0.04	0.00	1.00	0.04	0.00	0.00	0.00	**148.54**
Session Percentage	0.17	77.56	20.62	0.14	0.70	0.08	0.03	0.00	0.67	0.03	0.00	0.00	0.00	
AM Peak Hour	0800 - 0900	0900 - 1000	0900 - 1000	0800 - 0900	0900 - 1000	-	0600 - 0700	-	0800 - 0900	-	-	-	-	**0900 - 1000**
AM Peak Volume	1	194	66	2	2	0	1	0	2	0	0	0	0	**263**
Noon Peak Hour	1100 - 1200	1200 - 1300	1100 - 1200	1000 - 1100	1200 - 1300	1100 - 1200	-	-	1400 - 1500	1000 - 1100	-	-	-	**1200 - 1300**
Noon Peak Volume	1	232	69	1	5	1	0	0	3	1	0	0	0	**303**
PM Peak Hour	1500 - 1600	1600 - 1700	1500 - 1600	-	1600 - 1700	1500 - 1600	-	-	1600 - 1700	-	-	-	-	**1600 - 1700**
PM Peak Volume	1	248	59	0	2	1	0	0	3	0	0	0	0	**305**

Site 28
I-26 James F. Byrnes Expy E/Bound Off-Ramp,
west of Harbison Blvd

Date
Thursday, April 25, 2024

Lat/Long
34.078073°, -81.153890°

Weather
Fair
67°F

Click here for Detailed Weather

0000 - 2400 (Weekday 24h Session) (04-25-2024)
NB EB 60min

	Eastbound (Movement 28.1)													
TIME	1	2	3	4	5	6	7	8	9	10	11	12	13	**Total**
0000 - 0100	0	15	0	0	0	0	0	1	0	0	0	0	0	**16**
0100 - 0200	0	6	0	0	0	0	0	0	0	0	0	0	0	**6**
0200 - 0300	0	3	0	0	0	0	0	0	0	0	0	0	0	**3**
0300 - 0400	0	10	1	0	0	0	0	0	0	0	0	0	0	**11**
0400 - 0500	0	11	0	0	0	0	0	1	0	0	0	0	0	**12**
0500 - 0600	0	23	5	0	1	0	0	0	0	0	0	0	0	**29**
0600 - 0700	0	78	21	0	0	0	0	0	0	0	0	0	0	**99**
0700 - 0800	0	102	23	0	1	0	0	1	0	0	0	0	0	**127**
0800 - 0900	0	190	47	1	3	0	0	0	2	0	0	0	0	**243**
0900 - 1000	0	242	51	0	4	0	0	1	1	0	0	0	0	**299**
1000 - 1100	0	220	58	0	1	1	0	0	1	0	0	0	0	**281**
1100 - 1200	0	245	53	1	2	0	0	1	1	0	0	0	0	**303**
1200 - 1300	2	307	63	0	2	0	0	0	2	0	0	0	0	**376**
1300 - 1400	0	221	73	1	2	1	0	0	3	0	0	0	0	**301**
1400 - 1500	2	222	62	2	2	0	0	1	1	0	0	0	0	**292**
1500 - 1600	0	215	28	0	0	1	0	0	1	0	0	0	0	**245**
1600 - 1700	0	238	53	0	1	1	0	0	2	0	0	0	0	**295**
1700 - 1800	0	219	70	0	1	0	0	0	1	0	0	0	0	**291**
1800 - 1900	0	201	52	0	1	0	0	0	3	0	0	0	0	**257**
1900 - 2000	0	0	0	0	0	0	0	0	0	0	0	0	0	**0**
2000 - 2100	0	0	0	0	0	0	0	0	0	0	0	0	0	**0**
2100 - 2200	0	0	0	0	0	0	0	0	0	0	0	0	0	**0**
2200 - 2300	0	0	0	0	0	0	0	0	0	0	0	0	0	**0**
2300 - 2400	0	0	0	0	0	0	0	0	0	0	0	0	0	**0**

Session Total	4	2768	660	5	21	4	0	6	18	0	0	0	0	**3486**
Session Average	0.17	115.33	27.50	0.21	0.88	0.17	0.00	0.25	0.75	0.00	0.00	0.00	0.00	**145.25**
Session Percentage	0.11	79.40	18.93	0.14	0.60	0.11	0.00	0.17	0.52	0.00	0.00	0.00	0.00	

AM Peak Hour	-	0900 - 1000	0900 - 1000	0800 - 0900	0900 - 1000	-	-	0700 - 0800	0800 - 0900	-	-	-	-	**0900 - 1000**
AM Peak Hour Volume	0	242	51	1	4	0	0	1	2	0	0	0	0	**299**

Noon Peak Hour	1200 - 1300	1200 - 1300	1300 - 1400	1400 - 1500	1100 - 1200	1000 - 1100	-	1100 - 1200	1300 - 1400	-	-	-	-	**1200 - 1300**
Noon Peak Hour Volume	2	307	73	2	2	1	0	1	3	0	0	0	0	**376**

PM Peak Hour	-	1600 - 1700	1700 - 1800	-	1600 - 1700	1500 - 1600	-	-	1800 - 1900	-	-	-	-	**1600 - 1700**
PM Peak Hour Volume	0	238	70	0	1	1	0	0	3	0	0	0	0	**295**

Bi-Directional Class Count || Volume Summary 60min

Columbia, SC

Marr Traffic DATA COLLECTION

www.marrtraffic.com

Site 28

I-26 James F. Byrnes Expy E/Bound Off-Ramp,
west of Harbison Blvd

Date

Tuesday, April 23, 2024

Lat/Long

34.078073°, -81.153890°

Weather

Fair
58°F

Click here for Detailed Weather

0000 - 2400 (Weekday 24h Session) (04-23-2024)

Volume Summary 60min

	Volume Summary 60min		
TIME	EB	WB	**Total**
0000 - 0100	0	0	**0**
0100 - 0200	0	0	**0**
0200 - 0300	0	0	**0**
0300 - 0400	0	0	**0**
0400 - 0500	0	0	**0**
0500 - 0600	0	0	**0**
0600 - 0700	0	0	**0**
0700 - 0800	0	0	**0**
0800 - 0900	0	0	**0**
0900 - 1000	0	0	**0**
1000 - 1100	0	0	**0**
1100 - 1200	0	0	**0**

	Volume Summary 60min		
Time	EB	WB	**Total**
1200 - 1300	0	0	**0**
1300 - 1400	0	0	**0**
1400 - 1500	0	0	**0**
1500 - 1600	0	0	**0**
1600 - 1700	0	0	**0**
1700 - 1800	0	0	**0**
1800 - 1900	0	0	**0**
1900 - 2000	157	0	**157**
2000 - 2100	118	0	**118**
2100 - 2200	54	0	**54**
2200 - 2300	35	0	**35**
2300 - 2400	26	0	**26**

Session Total	390	0	**390**
Session Average	16.25	0.00	**16.25**
Session Percentage	100.00	0.00	

Site 28

I-26 James F. Byrnes Expy E/Bound Off-Ramp,
west of Harbison Blvd

Date

Wednesday, April 24, 2024

Lat/Long

34.078073°, -81.153890°

Weather

Fair
66°F

Click here for Detailed Weather

0000 - 2400 (Weekday 24h Session) (04-24-2024)

Volume Summary 60min

	Volume Summary 60min		
TIME	EB	WB	**Total**
0000 - 0100	6	0	**6**
0100 - 0200	6	0	**6**
0200 - 0300	4	0	**4**
0300 - 0400	7	0	**7**
0400 - 0500	18	0	**18**
0500 - 0600	27	0	**27**
0600 - 0700	75	0	**75**
0700 - 0800	139	0	**139**
0800 - 0900	225	0	**225**
0900 - 1000	263	0	**263**
1000 - 1100	233	0	**233**
1100 - 1200	248	0	**248**

	Volume Summary 60min		
Time	EB	WB	**Total**
1200 - 1300	303	0	**303**
1300 - 1400	283	0	**283**
1400 - 1500	227	0	**227**
1500 - 1600	286	0	**286**
1600 - 1700	305	0	**305**
1700 - 1800	285	0	**285**
1800 - 1900	243	0	**243**
1900 - 2000	156	0	**156**
2000 - 2100	124	0	**124**
2100 - 2200	53	0	**53**
2200 - 2300	30	0	**30**
2300 - 2400	19	0	**19**

Session Total	3565	0	**3565**
Session Average	148.54	0.00	**148.54**
Session Percentage	100.00	0.00	

Site 28

I-26 James F. Byrnes Expy E/Bound Off-Ramp,
west of Harbison Blvd

Date

Thursday, April 25, 2024

Lat/Long

34.078073°, -81.153890°

Weather

Fair
67°F

Click here for Detailed Weather

0000 - 2400 (Weekday 24h Session) (04-25-2024)

Volume Summary 60min

	Volume Summary 60min		
TIME	EB	WB	**Total**
0000 - 0100	16	0	**16**
0100 - 0200	6	0	**6**
0200 - 0300	3	0	**3**
0300 - 0400	11	0	**11**
0400 - 0500	12	0	**12**
0500 - 0600	29	0	**29**
0600 - 0700	99	0	**99**
0700 - 0800	127	0	**127**
0800 - 0900	243	0	**243**
0900 - 1000	299	0	**299**
1000 - 1100	281	0	**281**
1100 - 1200	303	0	**303**

	Volume Summary 60min		
Time	EB	WB	**Total**
1200 - 1300	376	0	**376**
1300 - 1400	301	0	**301**
1400 - 1500	292	0	**292**
1500 - 1600	245	0	**245**
1600 - 1700	295	0	**295**
1700 - 1800	291	0	**291**
1800 - 1900	257	0	**257**
1900 - 2000	0	0	**0**
2000 - 2100	0	0	**0**
2100 - 2200	0	0	**0**
2200 - 2300	0	0	**0**
2300 - 2400	0	0	**0**

Session Total	3486	0	**3486**
Session Average	145.25	0.00	**145.25**
Session Percentage	100.00	0.00	

Bi-Directional Class Count || Graphical Analysis NB EB

Columbia, SC

Marr Traffic DATA COLLECTION

www.marrtraffic.com

Site 28

I-26 James F. Byrnes Expy E/Bound Off-Ramp,
west of Harbison Blvd

Lat/Long

34.078073°, -81.153890°

0000 - 2400 (Weekday 24h Session)

Graphical Analysis NB EB

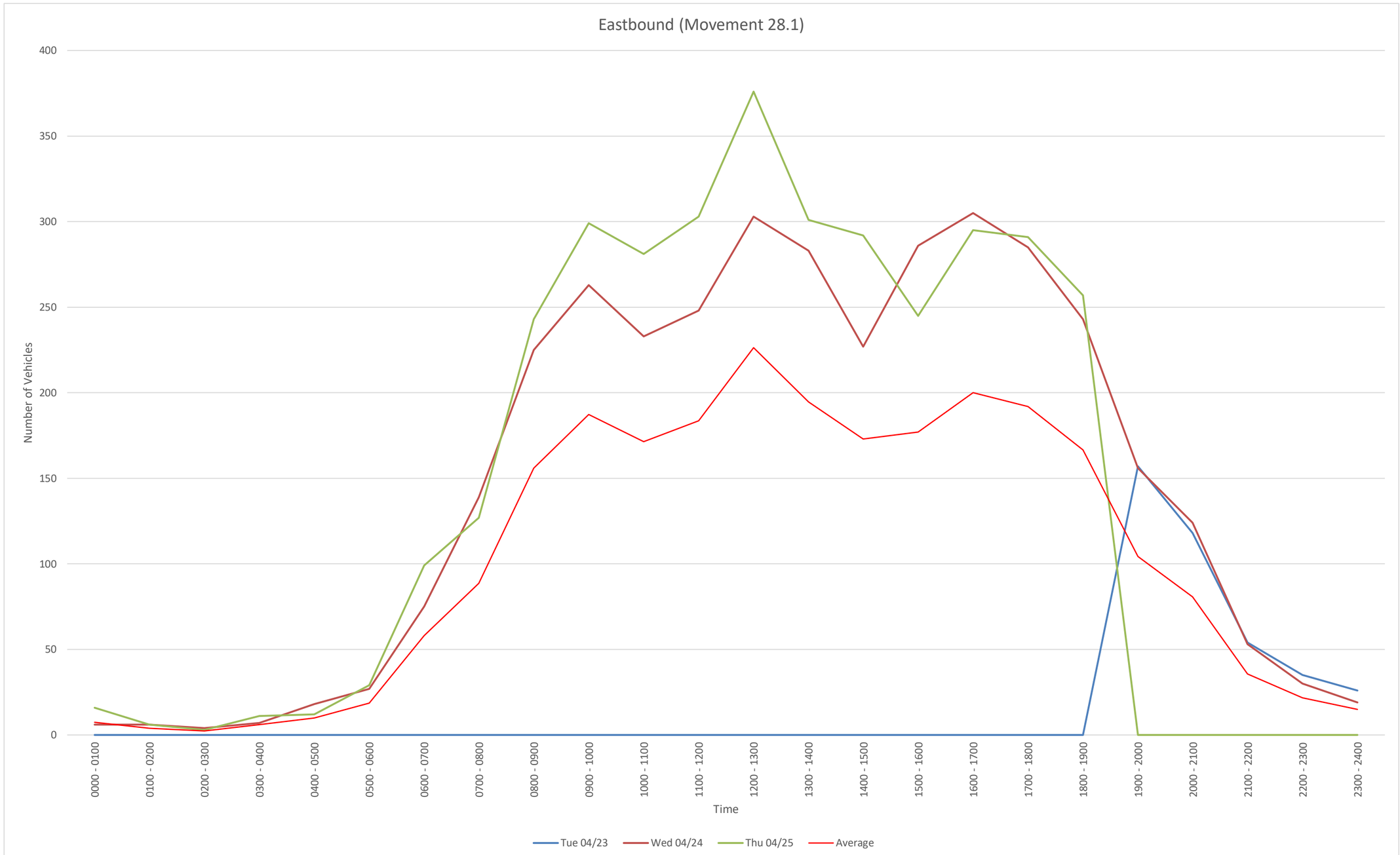

Time	Tue 04/23	Wed 04/24	Thu 04/25				
0000 - 0100	0	6	16				
0100 - 0200	0	6	6				
0200 - 0300	0	4	3				
0300 - 0400	0	7	11				
0400 - 0500	0	18	12				
0500 - 0600	0	27	29				
0600 - 0700	0	75	99				
0700 - 0800	0	139	127				
0800 - 0900	0	225	243				
0900 - 1000	0	263	299				
1000 - 1100	0	233	281				
1100 - 1200	0	248	303				
1200 - 1300	0	303	376				
1300 - 1400	0	283	301				
1400 - 1500	0	227	292				
1500 - 1600	0	286	245				
1600 - 1700	0	305	295				
1700 - 1800	0	285	291				
1800 - 1900	0	243	257				
1900 - 2000	157	156	0				
2000 - 2100	118	124	0				
2100 - 2200	54	53	0				
2200 - 2300	35	30	0				
2300 - 2400	26	19	0				
Daily Total	390	3565	3486				

EB
File Name:
Start Date: 4/23/2024
Start Time: 0
Site Code: 28
Station ID: 1
Location 1: I-26 James F. Byrnes Expy E/Bound Off-Ramp, west of Harbison Blvd
Location 2:

Date	Time	1	2	3	4	5	6	7	8	9	10	11	12	13
4/23/2024	12:00 AM	0	0	0	0	0	0	0	0	0	0	0	0	0
4/23/2024	12:15 AM	0	0	0	0	0	0	0	0	0	0	0	0	0
4/23/2024	12:30 AM	0	0	0	0	0	0	0	0	0	0	0	0	0
4/23/2024	12:45 AM	0	0	0	0	0	0	0	0	0	0	0	0	0
4/23/2024	1:00 AM	0	0	0	0	0	0	0	0	0	0	0	0	0
4/23/2024	1:15 AM	0	0	0	0	0	0	0	0	0	0	0	0	0
4/23/2024	1:30 AM	0	0	0	0	0	0	0	0	0	0	0	0	0
4/23/2024	1:45 AM	0	0	0	0	0	0	0	0	0	0	0	0	0
4/23/2024	2:00 AM	0	0	0	0	0	0	0	0	0	0	0	0	0
4/23/2024	2:15 AM	0	0	0	0	0	0	0	0	0	0	0	0	0
4/23/2024	2:30 AM	0	0	0	0	0	0	0	0	0	0	0	0	0
4/23/2024	2:45 AM	0	0	0	0	0	0	0	0	0	0	0	0	0
4/23/2024	3:00 AM	0	0	0	0	0	0	0	0	0	0	0	0	0
4/23/2024	3:15 AM	0	0	0	0	0	0	0	0	0	0	0	0	0
4/23/2024	3:30 AM	0	0	0	0	0	0	0	0	0	0	0	0	0
4/23/2024	3:45 AM	0	0	0	0	0	0	0	0	0	0	0	0	0
4/23/2024	4:00 AM	0	0	0	0	0	0	0	0	0	0	0	0	0
4/23/2024	4:15 AM	0	0	0	0	0	0	0	0	0	0	0	0	0
4/23/2024	4:30 AM	0	0	0	0	0	0	0	0	0	0	0	0	0
4/23/2024	4:45 AM	0	0	0	0	0	0	0	0	0	0	0	0	0
4/23/2024	5:00 AM	0	0	0	0	0	0	0	0	0	0	0	0	0
4/23/2024	5:15 AM	0	0	0	0	0	0	0	0	0	0	0	0	0
4/23/2024	5:30 AM	0	0	0	0	0	0	0	0	0	0	0	0	0
4/23/2024	5:45 AM	0	0	0	0	0	0	0	0	0	0	0	0	0
4/23/2024	6:00 AM	0	0	0	0	0	0	0	0	0	0	0	0	0
4/23/2024	6:15 AM	0	0	0	0	0	0	0	0	0	0	0	0	0
4/23/2024	6:30 AM	0	0	0	0	0	0	0	0	0	0	0	0	0
4/23/2024	6:45 AM	0	0	0	0	0	0	0	0	0	0	0	0	0
4/23/2024	7:00 AM	0	0	0	0	0	0	0	0	0	0	0	0	0
4/23/2024	7:15 AM	0	0	0	0	0	0	0	0	0	0	0	0	0
4/23/2024	7:30 AM	0	0	0	0	0	0	0	0	0	0	0	0	0
4/23/2024	7:45 AM	0	0	0	0	0	0	0	0	0	0	0	0	0
4/23/2024	8:00 AM	0	0	0	0	0	0	0	0	0	0	0	0	0
4/23/2024	8:15 AM	0	0	0	0	0	0	0	0	0	0	0	0	0
4/23/2024	8:30 AM	0	0	0	0	0	0	0	0	0	0	0	0	0
4/23/2024	8:45 AM	0	0	0	0	0	0	0	0	0	0	0	0	0
4/23/2024	9:00 AM	0	0	0	0	0	0	0	0	0	0	0	0	0
4/23/2024	9:15 AM	0	0	0	0	0	0	0	0	0	0	0	0	0
4/23/2024	9:30 AM	0	0	0	0	0	0	0	0	0	0	0	0	0
4/23/2024	9:45 AM	0	0	0	0	0	0	0	0	0	0	0	0	0
4/23/2024	10:00 AM	0	0	0	0	0	0	0	0	0	0	0	0	0
4/23/2024	10:15 AM	0	0	0	0	0	0	0	0	0	0	0	0	0
4/23/2024	10:30 AM	0	0	0	0	0	0	0	0	0	0	0	0	0
4/23/2024	10:45 AM	0	0	0	0	0	0	0	0	0	0	0	0	0
4/23/2024	11:00 AM	0	0	0	0	0	0	0	0	0	0	0	0	0
4/23/2024	11:15 AM	0	0	0	0	0	0	0	0	0	0	0	0	0
4/23/2024	11:30 AM	0	0	0	0	0	0	0	0	0	0	0	0	0
4/23/2024	11:45 AM	0	0	0	0	0	0	0	0	0	0	0	0	0
4/23/2024	12:00 PM	0	0	0	0	0	0	0	0	0	0	0	0	0
4/23/2024	12:15 PM	0	0	0	0	0	0	0	0	0	0	0	0	0
4/23/2024	12:30 PM	0	0	0	0	0	0	0	0	0	0	0	0	0
4/23/2024	12:45 PM	0	0	0	0	0	0	0	0	0	0	0	0	0
4/23/2024	1:00 PM	0	0	0	0	0	0	0	0	0	0	0	0	0
4/23/2024	1:15 PM	0	0	0	0	0	0	0	0	0	0	0	0	0
4/23/2024	1:30 PM	0	0	0	0	0	0	0	0	0	0	0	0	0
4/23/2024	1:45 PM	0	0	0	0	0	0	0	0	0	0	0	0	0
4/23/2024	2:00 PM	0	0	0	0	0	0	0	0	0	0	0	0	0
4/23/2024	2:15 PM	0	0	0	0	0	0	0	0	0	0	0	0	0
4/23/2024	2:30 PM	0	0	0	0	0	0	0	0	0	0	0	0	0
4/23/2024	2:45 PM	0	0	0	0	0	0	0	0	0	0	0	0	0
4/23/2024	3:00 PM	0	0	0	0	0	0	0	0	0	0	0	0	0
4/23/2024	3:15 PM	0	0	0	0	0	0	0	0	0	0	0	0	0
4/23/2024	3:30 PM	0	0	0	0	0	0	0	0	0	0	0	0	0
4/23/2024	3:45 PM	0	0	0	0	0	0	0	0	0	0	0	0	0
4/23/2024	4:00 PM	0	0	0	0	0	0	0	0	0	0	0	0	0
4/23/2024	4:15 PM	0	0	0	0	0	0	0	0	0	0	0	0	0
4/23/2024	4:30 PM	0	0	0	0	0	0	0	0	0	0	0	0	0
4/23/2024	4:45 PM	0	0	0	0	0	0	0	0	0	0	0	0	0
4/23/2024	5:00 PM	0	0	0	0	0	0	0	0	0	0	0	0	0
4/23/2024	5:15 PM	0	0	0	0	0	0	0	0	0	0	0	0	0
4/23/2024	5:30 PM	0	0	0	0	0	0	0	0	0	0	0	0	0
4/23/2024	5:45 PM	0	0	0	0	0	0	0	0	0	0	0	0	0
4/23/2024	6:00 PM	0	0	0	0	0	0	0	0	0	0	0	0	0
4/23/2024	6:15 PM	0	0	0	0	0	0	0	0	0	0	0	0	0
4/23/2024	6:30 PM	0	0	0	0	0	0	0	0	0	0	0	0	0
4/23/2024	6:45 PM	0	0	0	0	0	0	0	0	0	0	0	0	0
4/23/2024	7:00 PM	0	38	7	0	0	1	0	0	1	0	0	0	0
4/23/2024	7:15 PM	0	33	7	0	0	0	0	0	1	0	0	0	0
4/23/2024	7:30 PM	0	30	5	0	0	0	0	0	0	0	0	0	0
4/23/2024	7:45 PM	0	30	4	0	0	0	0	0	0	0	0	0	0
4/23/2024	8:00 PM	0	22	6	0	0	0	0	0	0	0	0	0	0
4/23/2024	8:15 PM	0	28	9	0	0	0	0	0	1	0	0	0	0
4/23/2024	8:30 PM	0	28	2	0	0	0	0	0	0	0	0	0	0
4/23/2024	8:45 PM	0	21	1	0	0	0	0	0	0	0	0	0	0
4/23/2024	9:00 PM	0	14	0	0	0	0	0	0	0	0	0	0	0
4/23/2024	9:15 PM	0	11	0	0	0	0	0	0	1	0	0	0	0
4/23/2024	9:30 PM	0	17	1	0	0	0	0	0	0	0	0	0	0
4/23/2024	9:45 PM	0	10	0	0	0	0	0	0	0	0	0	0	0
4/23/2024	10:00 PM	0	11	0	0	0	0	0	0	0	0	0	0	0
4/23/2024	10:15 PM	0	7	2	0	0	0	0	0	0	0	0	0	0
4/23/2024	10:30 PM	0	9	0	0	0	0	0	0	0	0	0	0	0
4/23/2024	10:45 PM	0	6	0	0	0	0	0	0	0	0	0	0	0
4/23/2024	11:00 PM	0	5	0	0	0	0	0	0	1	0	0	0	0
4/23/2024	11:15 PM	0	8	0	0	0	0	0	0	0	0	0	0	0
4/23/2024	11:30 PM	0	7	0	0	0	0	0	0	0	0	0	0	0
4/23/2024	11:45 PM	0	5	0	0	0	0	0	0	0	0	0	0	0

4/24/2024	12:00 AM	0	0	0	0	0	0	0	0	0	0	0	0	0
4/24/2024	12:15 AM	0	1	2	0	0	0	0	0	0	0	0	0	0
4/24/2024	12:30 AM	0	2	0	0	0	0	0	0	0	0	0	0	0
4/24/2024	12:45 AM	0	1	0	0	0	0	0	0	0	0	0	0	0
4/24/2024	1:00 AM	0	1	2	0	0	0	0	0	0	0	0	0	0
4/24/2024	1:15 AM	0	0	0	0	0	0	0	0	0	0	0	0	0
4/24/2024	1:30 AM	0	2	0	0	0	0	0	0	0	0	0	0	0
4/24/2024	1:45 AM	0	0	1	0	0	0	0	0	0	0	0	0	0
4/24/2024	2:00 AM	0	0	0	0	0	0	0	0	0	0	0	0	0
4/24/2024	2:15 AM	0	1	1	0	0	0	0	0	0	0	0	0	0
4/24/2024	2:30 AM	0	1	0	0	0	0	0	0	0	0	0	0	0
4/24/2024	2:45 AM	0	0	0	0	0	0	0	0	1	0	0	0	0
4/24/2024	3:00 AM	0	2	0	0	0	0	0	0	0	0	0	0	0
4/24/2024	3:15 AM	0	2	0	0	0	0	0	0	0	0	0	0	0
4/24/2024	3:30 AM	0	1	0	0	0	0	0	0	0	0	0	0	0
4/24/2024	3:45 AM	0	2	0	0	0	0	0	0	0	0	0	0	0
4/24/2024	4:00 AM	0	3	0	0	0	0	0	0	0	0	0	0	0
4/24/2024	4:15 AM	0	2	1	0	0	0	0	0	0	0	0	0	0
4/24/2024	4:30 AM	0	3	0	0	0	0	0	0	0	0	0	0	0
4/24/2024	4:45 AM	0	7	2	0	0	0	0	0	0	0	0	0	0
4/24/2024	5:00 AM	0	2	1	0	0	0	0	0	0	0	0	0	0
4/24/2024	5:15 AM	0	7	3	0	0	0	0	0	1	0	0	0	0
4/24/2024	5:30 AM	0	5	2	0	0	0	0	0	0	0	0	0	0
4/24/2024	5:45 AM	0	4	2	0	0	0	0	0	0	0	0	0	0
4/24/2024	6:00 AM	0	8	4	0	0	0	0	0	0	0	0	0	0
4/24/2024	6:15 AM	0	13	3	0	0	0	0	0	0	0	0	0	0
4/24/2024	6:30 AM	0	14	7	0	0	0	0	0	0	0	0	0	0
4/24/2024	6:45 AM	0	18	7	0	0	0	1	0	0	0	0	0	0
4/24/2024	7:00 AM	0	27	5	0	0	0	0	0	0	0	0	0	0
4/24/2024	7:15 AM	0	28	9	0	1	0	0	0	0	0	0	0	0
4/24/2024	7:30 AM	0	25	8	0	0	0	0	0	0	0	0	0	0
4/24/2024	7:45 AM	0	24	12	0	0	0	0	0	0	0	0	0	0
4/24/2024	8:00 AM	0	33	14	0	0	0	0	0	1	0	0	0	0
4/24/2024	8:15 AM	0	33	9	0	0	0	0	0	0	0	0	0	0
4/24/2024	8:30 AM	0	47	11	0	0	0	0	0	1	0	0	0	0
4/24/2024	8:45 AM	1	57	16	2	0	0	0	0	0	0	0	0	0
4/24/2024	9:00 AM	0	38	11	0	0	0	0	0	0	0	0	0	0
4/24/2024	9:15 AM	0	36	21	0	0	0	0	0	0	0	0	0	0
4/24/2024	9:30 AM	0	69	15	0	0	0	0	0	0	0	0	0	0
4/24/2024	9:45 AM	0	51	19	0	2	0	0	0	1	0	0	0	0
4/24/2024	10:00 AM	0	49	18	0	2	0	0	0	1	1	0	0	0
4/24/2024	10:15 AM	0	46	10	1	0	0	0	0	0	0	0	0	0
4/24/2024	10:30 AM	0	43	9	0	0	0	0	0	0	0	0	0	0
4/24/2024	10:45 AM	0	38	14	0	1	0	0	0	0	0	0	0	0
4/24/2024	11:00 AM	0	43	14	0	0	0	0	0	0	0	0	0	0
4/24/2024	11:15 AM	0	40	16	1	0	1	0	0	1	0	0	0	0
4/24/2024	11:30 AM	1	32	21	0	2	0	0	0	0	0	0	0	0
4/24/2024	11:45 AM	0	57	18	0	0	0	0	0	1	0	0	0	0
4/24/2024	12:00 PM	0	64	25	0	0	0	0	0	0	0	0	0	0
4/24/2024	12:15 PM	0	55	11	0	0	0	0	0	0	0	0	0	0
4/24/2024	12:30 PM	1	63	14	0	3	0	0	0	0	0	0	0	0
4/24/2024	12:45 PM	0	50	15	0	2	0	0	0	0	0	0	0	0
4/24/2024	1:00 PM	0	53	13	0	0	0	0	0	0	0	0	0	0
4/24/2024	1:15 PM	0	67	18	0	1	0	0	0	1	0	0	0	0
4/24/2024	1:30 PM	1	44	13	0	0	0	0	0	1	0	0	0	0
4/24/2024	1:45 PM	0	58	10	0	2	1	0	0	0	0	0	0	0
4/24/2024	2:00 PM	0	48	15	0	0	0	0	0	0	0	0	0	0
4/24/2024	2:15 PM	0	44	19	0	0	0	0	0	1	0	0	0	0
4/24/2024	2:30 PM	0	46	7	0	0	0	0	0	2	0	0	0	0
4/24/2024	2:45 PM	0	34	9	1	1	0	0	0	0	0	0	0	0
4/24/2024	3:00 PM	0	52	16	0	0	1	0	0	0	0	0	0	0
4/24/2024	3:15 PM	0	60	13	0	0	0	0	0	0	0	0	0	0
4/24/2024	3:30 PM	0	41	17	0	1	0	0	0	0	0	0	0	0
4/24/2024	3:45 PM	1	70	13	0	0	0	0	0	1	0	0	0	0
4/24/2024	4:00 PM	0	74	18	0	0	0	0	0	1	0	0	0	0
4/24/2024	4:15 PM	0	63	17	0	0	0	0	0	1	0	0	0	0
4/24/2024	4:30 PM	0	58	8	0	2	0	0	0	1	0	0	0	0
4/24/2024	4:45 PM	0	53	9	0	0	0	0	0	0	0	0	0	0
4/24/2024	5:00 PM	0	51	13	0	1	0	0	0	0	0	0	0	0
4/24/2024	5:15 PM	0	58	13	0	1	0	0	0	1	0	0	0	0
4/24/2024	5:30 PM	0	64	7	0	0	0	0	0	0	0	0	0	0
4/24/2024	5:45 PM	0	62	14	0	0	0	0	0	0	0	0	0	0
4/24/2024	6:00 PM	0	53	18	0	0	0	0	0	1	0	0	0	0
4/24/2024	6:15 PM	0	52	7	0	0	0	0	0	0	0	0	0	0
4/24/2024	6:30 PM	0	49	12	0	0	0	0	0	0	0	0	0	0
4/24/2024	6:45 PM	0	45	5	0	1	0	0	0	0	0	0	0	0
4/24/2024	7:00 PM	0	30	12	0	1	0	0	0	0	0	0	0	0
4/24/2024	7:15 PM	0	38	10	0	0	0	0	0	0	0	0	0	0
4/24/2024	7:30 PM	0	32	6	0	0	0	0	0	0	0	0	0	0
4/24/2024	7:45 PM	0	23	3	0	0	0	0	0	1	0	0	0	0
4/24/2024	8:00 PM	0	28	5	0	0	0	0	0	1	0	0	0	0
4/24/2024	8:15 PM	0	33	2	0	0	0	0	0	1	0	0	0	0
4/24/2024	8:30 PM	0	21	6	0	0	0	0	0	0	0	0	0	0
4/24/2024	8:45 PM	0	22	5	0	0	0	0	0	0	0	0	0	0
4/24/2024	9:00 PM	0	13	1	0	0	0	0	0	0	0	0	0	0
4/24/2024	9:15 PM	0	10	1	0	0	0	0	0	0	0	0	0	0
4/24/2024	9:30 PM	0	13	2	0	1	0	0	0	0	0	0	0	0
4/24/2024	9:45 PM	0	11	1	0	0	0	0	0	0	0	0	0	0
4/24/2024	10:00 PM	0	9	1	0	0	0	0	0	0	0	0	0	0
4/24/2024	10:15 PM	0	8	0	0	0	0	0	0	0	0	0	0	0
4/24/2024	10:30 PM	0	3	0	0	0	0	0	0	0	0	0	0	0
4/24/2024	10:45 PM	1	8	0	0	0	0	0	0	0	0	0	0	0
4/24/2024	11:00 PM	0	7	1	0	0	0	0	0	0	0	0	0	0
4/24/2024	11:15 PM	0	4	0	0	0	0	0	0	0	0	0	0	0
4/24/2024	11:30 PM	0	2	2	0	0	0	0	0	1	0	0	0	0
4/24/2024	11:45 PM	0	1	0	0	0	0	0	0	1	0	0	0	0

4/25/2024	12:00 AM	0	5	0	0	0	0	0	0	0	0	0	0	0
4/25/2024	12:15 AM	0	3	0	0	0	0	0	1	0	0	0	0	0
4/25/2024	12:30 AM	0	4	0	0	0	0	0	0	0	0	0	0	0
4/25/2024	12:45 AM	0	3	0	0	0	0	0	0	0	0	0	0	0
4/25/2024	1:00 AM	0	1	0	0	0	0	0	0	0	0	0	0	0
4/25/2024	1:15 AM	0	3	0	0	0	0	0	0	0	0	0	0	0
4/25/2024	1:30 AM	0	0	0	0	0	0	0	0	0	0	0	0	0
4/25/2024	1:45 AM	0	2	0	0	0	0	0	0	0	0	0	0	0
4/25/2024	2:00 AM	0	1	0	0	0	0	0	0	0	0	0	0	0
4/25/2024	2:15 AM	0	1	0	0	0	0	0	0	0	0	0	0	0
4/25/2024	2:30 AM	0	0	0	0	0	0	0	0	0	0	0	0	0
4/25/2024	2:45 AM	0	1	0	0	0	0	0	0	0	0	0	0	0
4/25/2024	3:00 AM	0	1	1	0	0	0	0	0	0	0	0	0	0
4/25/2024	3:15 AM	0	2	0	0	0	0	0	0	0	0	0	0	0
4/25/2024	3:30 AM	0	2	0	0	0	0	0	0	0	0	0	0	0
4/25/2024	3:45 AM	0	5	0	0	0	0	0	0	0	0	0	0	0
4/25/2024	4:00 AM	0	2	0	0	0	0	0	1	0	0	0	0	0
4/25/2024	4:15 AM	0	4	0	0	0	0	0	0	0	0	0	0	0
4/25/2024	4:30 AM	0	1	0	0	0	0	0	0	0	0	0	0	0
4/25/2024	4:45 AM	0	4	0	0	0	0	0	0	0	0	0	0	0
4/25/2024	5:00 AM	0	5	1	0	0	0	0	0	0	0	0	0	0
4/25/2024	5:15 AM	0	3	1	0	0	0	0	0	0	0	0	0	0
4/25/2024	5:30 AM	0	7	1	0	0	0	0	0	0	0	0	0	0
4/25/2024	5:45 AM	0	8	2	0	1	0	0	0	0	0	0	0	0
4/25/2024	6:00 AM	0	15	7	0	0	0	0	0	0	0	0	0	0
4/25/2024	6:15 AM	0	17	3	0	0	0	0	0	0	0	0	0	0
4/25/2024	6:30 AM	0	14	4	0	0	0	0	0	0	0	0	0	0
4/25/2024	6:45 AM	0	32	7	0	0	0	0	0	0	0	0	0	0
4/25/2024	7:00 AM	0	19	2	0	0	0	0	0	0	0	0	0	0
4/25/2024	7:15 AM	0	39	7	0	1	0	0	1	0	0	0	0	0
4/25/2024	7:30 AM	0	28	10	0	0	0	0	0	0	0	0	0	0
4/25/2024	7:45 AM	0	16	4	0	0	0	0	0	0	0	0	0	0
4/25/2024	8:00 AM	0	34	7	0	2	0	0	0	1	0	0	0	0
4/25/2024	8:15 AM	0	54	12	0	0	0	0	0	0	0	0	0	0
4/25/2024	8:30 AM	0	51	14	0	0	0	0	0	1	0	0	0	0
4/25/2024	8:45 AM	0	51	14	1	1	0	0	0	0	0	0	0	0
4/25/2024	9:00 AM	0	50	11	0	0	0	0	0	1	0	0	0	0
4/25/2024	9:15 AM	0	52	17	0	1	0	0	0	0	0	0	0	0
4/25/2024	9:30 AM	0	62	17	0	1	0	0	0	0	0	0	0	0
4/25/2024	9:45 AM	0	78	6	0	2	0	0	1	0	0	0	0	0
4/25/2024	10:00 AM	0	52	14	0	0	0	0	0	0	0	0	0	0
4/25/2024	10:15 AM	0	57	12	0	0	0	0	0	1	0	0	0	0
4/25/2024	10:30 AM	0	55	13	0	1	1	0	0	0	0	0	0	0
4/25/2024	10:45 AM	0	56	19	0	0	0	0	0	0	0	0	0	0
4/25/2024	11:00 AM	0	59	7	0	0	0	0	0	0	0	0	0	0
4/25/2024	11:15 AM	0	56	22	0	1	0	0	1	1	0	0	0	0
4/25/2024	11:30 AM	0	75	10	1	0	0	0	0	0	0	0	0	0
4/25/2024	11:45 AM	0	55	14	0	1	0	0	0	0	0	0	0	0
4/25/2024	12:00 PM	2	86	16	0	0	0	0	0	0	0	0	0	0
4/25/2024	12:15 PM	0	71	17	0	1	0	0	0	0	0	0	0	0
4/25/2024	12:30 PM	0	76	13	0	1	0	0	0	1	0	0	0	0
4/25/2024	12:45 PM	0	74	17	0	0	0	0	0	1	0	0	0	0
4/25/2024	1:00 PM	0	60	24	0	1	0	0	0	0	0	0	0	0
4/25/2024	1:15 PM	0	58	14	1	0	0	0	0	2	0	0	0	0
4/25/2024	1:30 PM	0	52	17	0	0	1	0	0	0	0	0	0	0
4/25/2024	1:45 PM	0	51	18	0	1	0	0	0	1	0	0	0	0
4/25/2024	2:00 PM	2	61	18	1	0	0	0	0	1	0	0	0	0
4/25/2024	2:15 PM	0	41	13	0	1	0	0	1	0	0	0	0	0
4/25/2024	2:30 PM	0	54	14	0	0	0	0	0	0	0	0	0	0
4/25/2024	2:45 PM	0	66	17	1	1	0	0	0	0	0	0	0	0
4/25/2024	3:00 PM	0	55	9	0	0	1	0	0	0	0	0	0	0
4/25/2024	3:15 PM	0	48	5	0	0	0	0	0	0	0	0	0	0
4/25/2024	3:30 PM	0	54	9	0	0	0	0	0	1	0	0	0	0
4/25/2024	3:45 PM	0	58	5	0	0	0	0	0	0	0	0	0	0
4/25/2024	4:00 PM	0	79	16	0	0	0	0	0	0	0	0	0	0
4/25/2024	4:15 PM	0	49	15	0	0	0	0	0	1	0	0	0	0
4/25/2024	4:30 PM	0	58	13	0	1	1	0	0	0	0	0	0	0
4/25/2024	4:45 PM	0	52	9	0	0	0	0	0	1	0	0	0	0
4/25/2024	5:00 PM	0	55	25	0	0	0	0	0	1	0	0	0	0
4/25/2024	5:15 PM	0	67	14	0	1	0	0	0	0	0	0	0	0
4/25/2024	5:30 PM	0	54	16	0	0	0	0	0	0	0	0	0	0
4/25/2024	5:45 PM	0	43	15	0	0	0	0	0	0	0	0	0	0
4/25/2024	6:00 PM	0	49	14	0	1	0	0	0	0	0	0	0	0
4/25/2024	6:15 PM	0	51	18	0	0	0	0	0	2	0	0	0	0
4/25/2024	6:30 PM	0	52	10	0	0	0	0	0	1	0	0	0	0
4/25/2024	6:45 PM	0	49	10	0	0	0	0	0	0	0	0	0	0
4/25/2024	7:00 PM	0	0	0	0	0	0	0	0	0	0	0	0	0
4/25/2024	7:15 PM	0	0	0	0	0	0	0	0	0	0	0	0	0
4/25/2024	7:30 PM	0	0	0	0	0	0	0	0	0	0	0	0	0
4/25/2024	7:45 PM	0	0	0	0	0	0	0	0	0	0	0	0	0
4/25/2024	8:00 PM	0	0	0	0	0	0	0	0	0	0	0	0	0
4/25/2024	8:15 PM	0	0	0	0	0	0	0	0	0	0	0	0	0
4/25/2024	8:30 PM	0	0	0	0	0	0	0	0	0	0	0	0	0
4/25/2024	8:45 PM	0	0	0	0	0	0	0	0	0	0	0	0	0
4/25/2024	9:00 PM	0	0	0	0	0	0	0	0	0	0	0	0	0
4/25/2024	9:15 PM	0	0	0	0	0	0	0	0	0	0	0	0	0
4/25/2024	9:30 PM	0	0	0	0	0	0	0	0	0	0	0	0	0
4/25/2024	9:45 PM	0	0	0	0	0	0	0	0	0	0	0	0	0
4/25/2024	10:00 PM	0	0	0	0	0	0	0	0	0	0	0	0	0
4/25/2024	10:15 PM	0	0	0	0	0	0	0	0	0	0	0	0	0
4/25/2024	10:30 PM	0	0	0	0	0	0	0	0	0	0	0	0	0
4/25/2024	10:45 PM	0	0	0	0	0	0	0	0	0	0	0	0	0
4/25/2024	11:00 PM	0	0	0	0	0	0	0	0	0	0	0	0	0
4/25/2024	11:15 PM	0	0	0	0	0	0	0	0	0	0	0	0	0
4/25/2024	11:30 PM	0	0	0	0	0	0	0	0	0	0	0	0	0
4/25/2024	11:45 PM	0	0	0	0	0	0	0	0	0	0	0	0	0

WB
File Name:
Start Date: 4/23/2024
Start Time: 0
Site Code: 28
Station ID: 1
Location 1: I-26 James F. Byrnes Expy E/Bound Off-Ramp, west of Harbison Blvd
Location 2:

Date	Time	1	2	3	4	5	6	7	8	9	10	11	12	13
4/23/2024	12:00 AM	0	0	0	0	0	0	0	0	0	0	0	0	0
4/23/2024	12:15 AM	0	0	0	0	0	0	0	0	0	0	0	0	0
4/23/2024	12:30 AM	0	0	0	0	0	0	0	0	0	0	0	0	0
4/23/2024	12:45 AM	0	0	0	0	0	0	0	0	0	0	0	0	0
4/23/2024	1:00 AM	0	0	0	0	0	0	0	0	0	0	0	0	0
4/23/2024	1:15 AM	0	0	0	0	0	0	0	0	0	0	0	0	0
4/23/2024	1:30 AM	0	0	0	0	0	0	0	0	0	0	0	0	0
4/23/2024	1:45 AM	0	0	0	0	0	0	0	0	0	0	0	0	0
4/23/2024	2:00 AM	0	0	0	0	0	0	0	0	0	0	0	0	0
4/23/2024	2:15 AM	0	0	0	0	0	0	0	0	0	0	0	0	0
4/23/2024	2:30 AM	0	0	0	0	0	0	0	0	0	0	0	0	0
4/23/2024	2:45 AM	0	0	0	0	0	0	0	0	0	0	0	0	0
4/23/2024	3:00 AM	0	0	0	0	0	0	0	0	0	0	0	0	0
4/23/2024	3:15 AM	0	0	0	0	0	0	0	0	0	0	0	0	0
4/23/2024	3:30 AM	0	0	0	0	0	0	0	0	0	0	0	0	0
4/23/2024	3:45 AM	0	0	0	0	0	0	0	0	0	0	0	0	0
4/23/2024	4:00 AM	0	0	0	0	0	0	0	0	0	0	0	0	0
4/23/2024	4:15 AM	0	0	0	0	0	0	0	0	0	0	0	0	0
4/23/2024	4:30 AM	0	0	0	0	0	0	0	0	0	0	0	0	0
4/23/2024	4:45 AM	0	0	0	0	0	0	0	0	0	0	0	0	0
4/23/2024	5:00 AM	0	0	0	0	0	0	0	0	0	0	0	0	0
4/23/2024	5:15 AM	0	0	0	0	0	0	0	0	0	0	0	0	0
4/23/2024	5:30 AM	0	0	0	0	0	0	0	0	0	0	0	0	0
4/23/2024	5:45 AM	0	0	0	0	0	0	0	0	0	0	0	0	0
4/23/2024	6:00 AM	0	0	0	0	0	0	0	0	0	0	0	0	0
4/23/2024	6:15 AM	0	0	0	0	0	0	0	0	0	0	0	0	0
4/23/2024	6:30 AM	0	0	0	0	0	0	0	0	0	0	0	0	0
4/23/2024	6:45 AM	0	0	0	0	0	0	0	0	0	0	0	0	0
4/23/2024	7:00 AM	0	0	0	0	0	0	0	0	0	0	0	0	0
4/23/2024	7:15 AM	0	0	0	0	0	0	0	0	0	0	0	0	0
4/23/2024	7:30 AM	0	0	0	0	0	0	0	0	0	0	0	0	0
4/23/2024	7:45 AM	0	0	0	0	0	0	0	0	0	0	0	0	0
4/23/2024	8:00 AM	0	0	0	0	0	0	0	0	0	0	0	0	0
4/23/2024	8:15 AM	0	0	0	0	0	0	0	0	0	0	0	0	0
4/23/2024	8:30 AM	0	0	0	0	0	0	0	0	0	0	0	0	0
4/23/2024	8:45 AM	0	0	0	0	0	0	0	0	0	0	0	0	0
4/23/2024	9:00 AM	0	0	0	0	0	0	0	0	0	0	0	0	0
4/23/2024	9:15 AM	0	0	0	0	0	0	0	0	0	0	0	0	0
4/23/2024	9:30 AM	0	0	0	0	0	0	0	0	0	0	0	0	0
4/23/2024	9:45 AM	0	0	0	0	0	0	0	0	0	0	0	0	0
4/23/2024	10:00 AM	0	0	0	0	0	0	0	0	0	0	0	0	0
4/23/2024	10:15 AM	0	0	0	0	0	0	0	0	0	0	0	0	0
4/23/2024	10:30 AM	0	0	0	0	0	0	0	0	0	0	0	0	0
4/23/2024	10:45 AM	0	0	0	0	0	0	0	0	0	0	0	0	0
4/23/2024	11:00 AM	0	0	0	0	0	0	0	0	0	0	0	0	0
4/23/2024	11:15 AM	0	0	0	0	0	0	0	0	0	0	0	0	0
4/23/2024	11:30 AM	0	0	0	0	0	0	0	0	0	0	0	0	0
4/23/2024	11:45 AM	0	0	0	0	0	0	0	0	0	0	0	0	0
4/23/2024	12:00 PM	0	0	0	0	0	0	0	0	0	0	0	0	0
4/23/2024	12:15 PM	0	0	0	0	0	0	0	0	0	0	0	0	0
4/23/2024	12:30 PM	0	0	0	0	0	0	0	0	0	0	0	0	0
4/23/2024	12:45 PM	0	0	0	0	0	0	0	0	0	0	0	0	0
4/23/2024	1:00 PM	0	0	0	0	0	0	0	0	0	0	0	0	0
4/23/2024	1:15 PM	0	0	0	0	0	0	0	0	0	0	0	0	0
4/23/2024	1:30 PM	0	0	0	0	0	0	0	0	0	0	0	0	0
4/23/2024	1:45 PM	0	0	0	0	0	0	0	0	0	0	0	0	0
4/23/2024	2:00 PM	0	0	0	0	0	0	0	0	0	0	0	0	0
4/23/2024	2:15 PM	0	0	0	0	0	0	0	0	0	0	0	0	0
4/23/2024	2:30 PM	0	0	0	0	0	0	0	0	0	0	0	0	0
4/23/2024	2:45 PM	0	0	0	0	0	0	0	0	0	0	0	0	0
4/23/2024	3:00 PM	0	0	0	0	0	0	0	0	0	0	0	0	0
4/23/2024	3:15 PM	0	0	0	0	0	0	0	0	0	0	0	0	0
4/23/2024	3:30 PM	0	0	0	0	0	0	0	0	0	0	0	0	0
4/23/2024	3:45 PM	0	0	0	0	0	0	0	0	0	0	0	0	0
4/23/2024	4:00 PM	0	0	0	0	0	0	0	0	0	0	0	0	0
4/23/2024	4:15 PM	0	0	0	0	0	0	0	0	0	0	0	0	0
4/23/2024	4:30 PM	0	0	0	0	0	0	0	0	0	0	0	0	0
4/23/2024	4:45 PM	0	0	0	0	0	0	0	0	0	0	0	0	0
4/23/2024	5:00 PM	0	0	0	0	0	0	0	0	0	0	0	0	0
4/23/2024	5:15 PM	0	0	0	0	0	0	0	0	0	0	0	0	0
4/23/2024	5:30 PM	0	0	0	0	0	0	0	0	0	0	0	0	0
4/23/2024	5:45 PM	0	0	0	0	0	0	0	0	0	0	0	0	0
4/23/2024	6:00 PM	0	0	0	0	0	0	0	0	0	0	0	0	0
4/23/2024	6:15 PM	0	0	0	0	0	0	0	0	0	0	0	0	0
4/23/2024	6:30 PM	0	0	0	0	0	0	0	0	0	0	0	0	0
4/23/2024	6:45 PM	0	0	0	0	0	0	0	0	0	0	0	0	0
4/23/2024	7:00 PM	0	0	0	0	0	0	0	0	0	0	0	0	0
4/23/2024	7:15 PM	0	0	0	0	0	0	0	0	0	0	0	0	0
4/23/2024	7:30 PM	0	0	0	0	0	0	0	0	0	0	0	0	0
4/23/2024	7:45 PM	0	0	0	0	0	0	0	0	0	0	0	0	0
4/23/2024	8:00 PM	0	0	0	0	0	0	0	0	0	0	0	0	0
4/23/2024	8:15 PM	0	0	0	0	0	0	0	0	0	0	0	0	0
4/23/2024	8:30 PM	0	0	0	0	0	0	0	0	0	0	0	0	0
4/23/2024	8:45 PM	0	0	0	0	0	0	0	0	0	0	0	0	0
4/23/2024	9:00 PM	0	0	0	0	0	0	0	0	0	0	0	0	0
4/23/2024	9:15 PM	0	0	0	0	0	0	0	0	0	0	0	0	0
4/23/2024	9:30 PM	0	0	0	0	0	0	0	0	0	0	0	0	0
4/23/2024	9:45 PM	0	0	0	0	0	0	0	0	0	0	0	0	0
4/23/2024	10:00 PM	0	0	0	0	0	0	0	0	0	0	0	0	0
4/23/2024	10:15 PM	0	0	0	0	0	0	0	0	0	0	0	0	0
4/23/2024	10:30 PM	0	0	0	0	0	0	0	0	0	0	0	0	0
4/23/2024	10:45 PM	0	0	0	0	0	0	0	0	0	0	0	0	0
4/23/2024	11:00 PM	0	0	0	0	0	0	0	0	0	0	0	0	0
4/23/2024	11:15 PM	0	0	0	0	0	0	0	0	0	0	0	0	0
4/23/2024	11:30 PM	0	0	0	0	0	0	0	0	0	0	0	0	0
4/23/2024	11:45 PM	0	0	0	0	0	0	0	0	0	0	0	0	0

4/24/2024	12:00 AM	0	0	0	0	0	0	0	0	0	0	0	0	0
4/24/2024	12:15 AM	0	0	0	0	0	0	0	0	0	0	0	0	0
4/24/2024	12:30 AM	0	0	0	0	0	0	0	0	0	0	0	0	0
4/24/2024	12:45 AM	0	0	0	0	0	0	0	0	0	0	0	0	0
4/24/2024	1:00 AM	0	0	0	0	0	0	0	0	0	0	0	0	0
4/24/2024	1:15 AM	0	0	0	0	0	0	0	0	0	0	0	0	0
4/24/2024	1:30 AM	0	0	0	0	0	0	0	0	0	0	0	0	0
4/24/2024	1:45 AM	0	0	0	0	0	0	0	0	0	0	0	0	0
4/24/2024	2:00 AM	0	0	0	0	0	0	0	0	0	0	0	0	0
4/24/2024	2:15 AM	0	0	0	0	0	0	0	0	0	0	0	0	0
4/24/2024	2:30 AM	0	0	0	0	0	0	0	0	0	0	0	0	0
4/24/2024	2:45 AM	0	0	0	0	0	0	0	0	0	0	0	0	0
4/24/2024	3:00 AM	0	0	0	0	0	0	0	0	0	0	0	0	0
4/24/2024	3:15 AM	0	0	0	0	0	0	0	0	0	0	0	0	0
4/24/2024	3:30 AM	0	0	0	0	0	0	0	0	0	0	0	0	0
4/24/2024	3:45 AM	0	0	0	0	0	0	0	0	0	0	0	0	0
4/24/2024	4:00 AM	0	0	0	0	0	0	0	0	0	0	0	0	0
4/24/2024	4:15 AM	0	0	0	0	0	0	0	0	0	0	0	0	0
4/24/2024	4:30 AM	0	0	0	0	0	0	0	0	0	0	0	0	0
4/24/2024	4:45 AM	0	0	0	0	0	0	0	0	0	0	0	0	0
4/24/2024	5:00 AM	0	0	0	0	0	0	0	0	0	0	0	0	0
4/24/2024	5:15 AM	0	0	0	0	0	0	0	0	0	0	0	0	0
4/24/2024	5:30 AM	0	0	0	0	0	0	0	0	0	0	0	0	0
4/24/2024	5:45 AM	0	0	0	0	0	0	0	0	0	0	0	0	0
4/24/2024	6:00 AM	0	0	0	0	0	0	0	0	0	0	0	0	0
4/24/2024	6:15 AM	0	0	0	0	0	0	0	0	0	0	0	0	0
4/24/2024	6:30 AM	0	0	0	0	0	0	0	0	0	0	0	0	0
4/24/2024	6:45 AM	0	0	0	0	0	0	0	0	0	0	0	0	0
4/24/2024	7:00 AM	0	0	0	0	0	0	0	0	0	0	0	0	0
4/24/2024	7:15 AM	0	0	0	0	0	0	0	0	0	0	0	0	0
4/24/2024	7:30 AM	0	0	0	0	0	0	0	0	0	0	0	0	0
4/24/2024	7:45 AM	0	0	0	0	0	0	0	0	0	0	0	0	0
4/24/2024	8:00 AM	0	0	0	0	0	0	0	0	0	0	0	0	0
4/24/2024	8:15 AM	0	0	0	0	0	0	0	0	0	0	0	0	0
4/24/2024	8:30 AM	0	0	0	0	0	0	0	0	0	0	0	0	0
4/24/2024	8:45 AM	0	0	0	0	0	0	0	0	0	0	0	0	0
4/24/2024	9:00 AM	0	0	0	0	0	0	0	0	0	0	0	0	0
4/24/2024	9:15 AM	0	0	0	0	0	0	0	0	0	0	0	0	0
4/24/2024	9:30 AM	0	0	0	0	0	0	0	0	0	0	0	0	0
4/24/2024	9:45 AM	0	0	0	0	0	0	0	0	0	0	0	0	0
4/24/2024	10:00 AM	0	0	0	0	0	0	0	0	0	0	0	0	0
4/24/2024	10:15 AM	0	0	0	0	0	0	0	0	0	0	0	0	0
4/24/2024	10:30 AM	0	0	0	0	0	0	0	0	0	0	0	0	0
4/24/2024	10:45 AM	0	0	0	0	0	0	0	0	0	0	0	0	0
4/24/2024	11:00 AM	0	0	0	0	0	0	0	0	0	0	0	0	0
4/24/2024	11:15 AM	0	0	0	0	0	0	0	0	0	0	0	0	0
4/24/2024	11:30 AM	0	0	0	0	0	0	0	0	0	0	0	0	0
4/24/2024	11:45 AM	0	0	0	0	0	0	0	0	0	0	0	0	0
4/24/2024	12:00 PM	0	0	0	0	0	0	0	0	0	0	0	0	0
4/24/2024	12:15 PM	0	0	0	0	0	0	0	0	0	0	0	0	0
4/24/2024	12:30 PM	0	0	0	0	0	0	0	0	0	0	0	0	0
4/24/2024	12:45 PM	0	0	0	0	0	0	0	0	0	0	0	0	0
4/24/2024	1:00 PM	0	0	0	0	0	0	0	0	0	0	0	0	0
4/24/2024	1:15 PM	0	0	0	0	0	0	0	0	0	0	0	0	0
4/24/2024	1:30 PM	0	0	0	0	0	0	0	0	0	0	0	0	0
4/24/2024	1:45 PM	0	0	0	0	0	0	0	0	0	0	0	0	0
4/24/2024	2:00 PM	0	0	0	0	0	0	0	0	0	0	0	0	0
4/24/2024	2:15 PM	0	0	0	0	0	0	0	0	0	0	0	0	0
4/24/2024	2:30 PM	0	0	0	0	0	0	0	0	0	0	0	0	0
4/24/2024	2:45 PM	0	0	0	0	0	0	0	0	0	0	0	0	0
4/24/2024	3:00 PM	0	0	0	0	0	0	0	0	0	0	0	0	0
4/24/2024	3:15 PM	0	0	0	0	0	0	0	0	0	0	0	0	0
4/24/2024	3:30 PM	0	0	0	0	0	0	0	0	0	0	0	0	0
4/24/2024	3:45 PM	0	0	0	0	0	0	0	0	0	0	0	0	0
4/24/2024	4:00 PM	0	0	0	0	0	0	0	0	0	0	0	0	0
4/24/2024	4:15 PM	0	0	0	0	0	0	0	0	0	0	0	0	0
4/24/2024	4:30 PM	0	0	0	0	0	0	0	0	0	0	0	0	0
4/24/2024	4:45 PM	0	0	0	0	0	0	0	0	0	0	0	0	0
4/24/2024	5:00 PM	0	0	0	0	0	0	0	0	0	0	0	0	0
4/24/2024	5:15 PM	0	0	0	0	0	0	0	0	0	0	0	0	0
4/24/2024	5:30 PM	0	0	0	0	0	0	0	0	0	0	0	0	0
4/24/2024	5:45 PM	0	0	0	0	0	0	0	0	0	0	0	0	0
4/24/2024	6:00 PM	0	0	0	0	0	0	0	0	0	0	0	0	0
4/24/2024	6:15 PM	0	0	0	0	0	0	0	0	0	0	0	0	0
4/24/2024	6:30 PM	0	0	0	0	0	0	0	0	0	0	0	0	0
4/24/2024	6:45 PM	0	0	0	0	0	0	0	0	0	0	0	0	0
4/24/2024	7:00 PM	0	0	0	0	0	0	0	0	0	0	0	0	0
4/24/2024	7:15 PM	0	0	0	0	0	0	0	0	0	0	0	0	0
4/24/2024	7:30 PM	0	0	0	0	0	0	0	0	0	0	0	0	0
4/24/2024	7:45 PM	0	0	0	0	0	0	0	0	0	0	0	0	0
4/24/2024	8:00 PM	0	0	0	0	0	0	0	0	0	0	0	0	0
4/24/2024	8:15 PM	0	0	0	0	0	0	0	0	0	0	0	0	0
4/24/2024	8:30 PM	0	0	0	0	0	0	0	0	0	0	0	0	0
4/24/2024	8:45 PM	0	0	0	0	0	0	0	0	0	0	0	0	0
4/24/2024	9:00 PM	0	0	0	0	0	0	0	0	0	0	0	0	0
4/24/2024	9:15 PM	0	0	0	0	0	0	0	0	0	0	0	0	0
4/24/2024	9:30 PM	0	0	0	0	0	0	0	0	0	0	0	0	0
4/24/2024	9:45 PM	0	0	0	0	0	0	0	0	0	0	0	0	0
4/24/2024	10:00 PM	0	0	0	0	0	0	0	0	0	0	0	0	0
4/24/2024	10:15 PM	0	0	0	0	0	0	0	0	0	0	0	0	0
4/24/2024	10:30 PM	0	0	0	0	0	0	0	0	0	0	0	0	0
4/24/2024	10:45 PM	0	0	0	0	0	0	0	0	0	0	0	0	0
4/24/2024	11:00 PM	0	0	0	0	0	0	0	0	0	0	0	0	0
4/24/2024	11:15 PM	0	0	0	0	0	0	0	0	0	0	0	0	0
4/24/2024	11:30 PM	0	0	0	0	0	0	0	0	0	0	0	0	0
4/24/2024	11:45 PM	0	0	0	0	0	0	0	0	0	0	0	0	0

4/25/2024	12:00 AM	0	0	0	0	0	0	0	0	0	0	0	0	0
4/25/2024	12:15 AM	0	0	0	0	0	0	0	0	0	0	0	0	0
4/25/2024	12:30 AM	0	0	0	0	0	0	0	0	0	0	0	0	0
4/25/2024	12:45 AM	0	0	0	0	0	0	0	0	0	0	0	0	0
4/25/2024	1:00 AM	0	0	0	0	0	0	0	0	0	0	0	0	0
4/25/2024	1:15 AM	0	0	0	0	0	0	0	0	0	0	0	0	0
4/25/2024	1:30 AM	0	0	0	0	0	0	0	0	0	0	0	0	0
4/25/2024	1:45 AM	0	0	0	0	0	0	0	0	0	0	0	0	0
4/25/2024	2:00 AM	0	0	0	0	0	0	0	0	0	0	0	0	0
4/25/2024	2:15 AM	0	0	0	0	0	0	0	0	0	0	0	0	0
4/25/2024	2:30 AM	0	0	0	0	0	0	0	0	0	0	0	0	0
4/25/2024	2:45 AM	0	0	0	0	0	0	0	0	0	0	0	0	0
4/25/2024	3:00 AM	0	0	0	0	0	0	0	0	0	0	0	0	0
4/25/2024	3:15 AM	0	0	0	0	0	0	0	0	0	0	0	0	0
4/25/2024	3:30 AM	0	0	0	0	0	0	0	0	0	0	0	0	0
4/25/2024	3:45 AM	0	0	0	0	0	0	0	0	0	0	0	0	0
4/25/2024	4:00 AM	0	0	0	0	0	0	0	0	0	0	0	0	0
4/25/2024	4:15 AM	0	0	0	0	0	0	0	0	0	0	0	0	0
4/25/2024	4:30 AM	0	0	0	0	0	0	0	0	0	0	0	0	0
4/25/2024	4:45 AM	0	0	0	0	0	0	0	0	0	0	0	0	0
4/25/2024	5:00 AM	0	0	0	0	0	0	0	0	0	0	0	0	0
4/25/2024	5:15 AM	0	0	0	0	0	0	0	0	0	0	0	0	0
4/25/2024	5:30 AM	0	0	0	0	0	0	0	0	0	0	0	0	0
4/25/2024	5:45 AM	0	0	0	0	0	0	0	0	0	0	0	0	0
4/25/2024	6:00 AM	0	0	0	0	0	0	0	0	0	0	0	0	0
4/25/2024	6:15 AM	0	0	0	0	0	0	0	0	0	0	0	0	0
4/25/2024	6:30 AM	0	0	0	0	0	0	0	0	0	0	0	0	0
4/25/2024	6:45 AM	0	0	0	0	0	0	0	0	0	0	0	0	0
4/25/2024	7:00 AM	0	0	0	0	0	0	0	0	0	0	0	0	0
4/25/2024	7:15 AM	0	0	0	0	0	0	0	0	0	0	0	0	0
4/25/2024	7:30 AM	0	0	0	0	0	0	0	0	0	0	0	0	0
4/25/2024	7:45 AM	0	0	0	0	0	0	0	0	0	0	0	0	0
4/25/2024	8:00 AM	0	0	0	0	0	0	0	0	0	0	0	0	0
4/25/2024	8:15 AM	0	0	0	0	0	0	0	0	0	0	0	0	0
4/25/2024	8:30 AM	0	0	0	0	0	0	0	0	0	0	0	0	0
4/25/2024	8:45 AM	0	0	0	0	0	0	0	0	0	0	0	0	0
4/25/2024	9:00 AM	0	0	0	0	0	0	0	0	0	0	0	0	0
4/25/2024	9:15 AM	0	0	0	0	0	0	0	0	0	0	0	0	0
4/25/2024	9:30 AM	0	0	0	0	0	0	0	0	0	0	0	0	0
4/25/2024	9:45 AM	0	0	0	0	0	0	0	0	0	0	0	0	0
4/25/2024	10:00 AM	0	0	0	0	0	0	0	0	0	0	0	0	0
4/25/2024	10:15 AM	0	0	0	0	0	0	0	0	0	0	0	0	0
4/25/2024	10:30 AM	0	0	0	0	0	0	0	0	0	0	0	0	0
4/25/2024	10:45 AM	0	0	0	0	0	0	0	0	0	0	0	0	0
4/25/2024	11:00 AM	0	0	0	0	0	0	0	0	0	0	0	0	0
4/25/2024	11:15 AM	0	0	0	0	0	0	0	0	0	0	0	0	0
4/25/2024	11:30 AM	0	0	0	0	0	0	0	0	0	0	0	0	0
4/25/2024	11:45 AM	0	0	0	0	0	0	0	0	0	0	0	0	0
4/25/2024	12:00 PM	0	0	0	0	0	0	0	0	0	0	0	0	0
4/25/2024	12:15 PM	0	0	0	0	0	0	0	0	0	0	0	0	0
4/25/2024	12:30 PM	0	0	0	0	0	0	0	0	0	0	0	0	0
4/25/2024	12:45 PM	0	0	0	0	0	0	0	0	0	0	0	0	0
4/25/2024	1:00 PM	0	0	0	0	0	0	0	0	0	0	0	0	0
4/25/2024	1:15 PM	0	0	0	0	0	0	0	0	0	0	0	0	0
4/25/2024	1:30 PM	0	0	0	0	0	0	0	0	0	0	0	0	0
4/25/2024	1:45 PM	0	0	0	0	0	0	0	0	0	0	0	0	0
4/25/2024	2:00 PM	0	0	0	0	0	0	0	0	0	0	0	0	0
4/25/2024	2:15 PM	0	0	0	0	0	0	0	0	0	0	0	0	0
4/25/2024	2:30 PM	0	0	0	0	0	0	0	0	0	0	0	0	0
4/25/2024	2:45 PM	0	0	0	0	0	0	0	0	0	0	0	0	0
4/25/2024	3:00 PM	0	0	0	0	0	0	0	0	0	0	0	0	0
4/25/2024	3:15 PM	0	0	0	0	0	0	0	0	0	0	0	0	0
4/25/2024	3:30 PM	0	0	0	0	0	0	0	0	0	0	0	0	0
4/25/2024	3:45 PM	0	0	0	0	0	0	0	0	0	0	0	0	0
4/25/2024	4:00 PM	0	0	0	0	0	0	0	0	0	0	0	0	0
4/25/2024	4:15 PM	0	0	0	0	0	0	0	0	0	0	0	0	0
4/25/2024	4:30 PM	0	0	0	0	0	0	0	0	0	0	0	0	0
4/25/2024	4:45 PM	0	0	0	0	0	0	0	0	0	0	0	0	0
4/25/2024	5:00 PM	0	0	0	0	0	0	0	0	0	0	0	0	0
4/25/2024	5:15 PM	0	0	0	0	0	0	0	0	0	0	0	0	0
4/25/2024	5:30 PM	0	0	0	0	0	0	0	0	0	0	0	0	0
4/25/2024	5:45 PM	0	0	0	0	0	0	0	0	0	0	0	0	0
4/25/2024	6:00 PM	0	0	0	0	0	0	0	0	0	0	0	0	0
4/25/2024	6:15 PM	0	0	0	0	0	0	0	0	0	0	0	0	0
4/25/2024	6:30 PM	0	0	0	0	0	0	0	0	0	0	0	0	0
4/25/2024	6:45 PM	0	0	0	0	0	0	0	0	0	0	0	0	0
4/25/2024	7:00 PM	0	0	0	0	0	0	0	0	0	0	0	0	0
4/25/2024	7:15 PM	0	0	0	0	0	0	0	0	0	0	0	0	0
4/25/2024	7:30 PM	0	0	0	0	0	0	0	0	0	0	0	0	0
4/25/2024	7:45 PM	0	0	0	0	0	0	0	0	0	0	0	0	0
4/25/2024	8:00 PM	0	0	0	0	0	0	0	0	0	0	0	0	0
4/25/2024	8:15 PM	0	0	0	0	0	0	0	0	0	0	0	0	0
4/25/2024	8:30 PM	0	0	0	0	0	0	0	0	0	0	0	0	0
4/25/2024	8:45 PM	0	0	0	0	0	0	0	0	0	0	0	0	0
4/25/2024	9:00 PM	0	0	0	0	0	0	0	0	0	0	0	0	0
4/25/2024	9:15 PM	0	0	0	0	0	0	0	0	0	0	0	0	0
4/25/2024	9:30 PM	0	0	0	0	0	0	0	0	0	0	0	0	0
4/25/2024	9:45 PM	0	0	0	0	0	0	0	0	0	0	0	0	0
4/25/2024	10:00 PM	0	0	0	0	0	0	0	0	0	0	0	0	0
4/25/2024	10:15 PM	0	0	0	0	0	0	0	0	0	0	0	0	0
4/25/2024	10:30 PM	0	0	0	0	0	0	0	0	0	0	0	0	0
4/25/2024	10:45 PM	0	0	0	0	0	0	0	0	0	0	0	0	0
4/25/2024	11:00 PM	0	0	0	0	0	0	0	0	0	0	0	0	0
4/25/2024	11:15 PM	0	0	0	0	0	0	0	0	0	0	0	0	0
4/25/2024	11:30 PM	0	0	0	0	0	0	0	0	0	0	0	0	0
4/25/2024	11:45 PM	0	0	0	0	0	0	0	0	0	0	0	0	0

EB
File Name:
Start Date: 4/23/2024
Start Time: 0
Site Code: 28
Station ID: 1
Location 1: I-26 James F. Byrnes Expy E/Bound Off-Ramp, west of Harbison Blvd
Location 2:

Date	Time	1	2	3	4	5	6	7	8	9	10	11	12	13
4/23/2024	12:00 AM	0	0	0	0	0	0	0	0	0	0	0	0	0
4/23/2024	12:15 AM	0	0	0	0	0	0	0	0	0	0	0	0	0
4/23/2024	12:30 AM	0	0	0	0	0	0	0	0	0	0	0	0	0
4/23/2024	12:45 AM	0	0	0	0	0	0	0	0	0	0	0	0	0
4/23/2024	1:00 AM	0	0	0	0	0	0	0	0	0	0	0	0	0
4/23/2024	1:15 AM	0	0	0	0	0	0	0	0	0	0	0	0	0
4/23/2024	1:30 AM	0	0	0	0	0	0	0	0	0	0	0	0	0
4/23/2024	1:45 AM	0	0	0	0	0	0	0	0	0	0	0	0	0
4/23/2024	2:00 AM	0	0	0	0	0	0	0	0	0	0	0	0	0
4/23/2024	2:15 AM	0	0	0	0	0	0	0	0	0	0	0	0	0
4/23/2024	2:30 AM	0	0	0	0	0	0	0	0	0	0	0	0	0
4/23/2024	2:45 AM	0	0	0	0	0	0	0	0	0	0	0	0	0
4/23/2024	3:00 AM	0	0	0	0	0	0	0	0	0	0	0	0	0
4/23/2024	3:15 AM	0	0	0	0	0	0	0	0	0	0	0	0	0
4/23/2024	3:30 AM	0	0	0	0	0	0	0	0	0	0	0	0	0
4/23/2024	3:45 AM	0	0	0	0	0	0	0	0	0	0	0	0	0
4/23/2024	4:00 AM	0	0	0	0	0	0	0	0	0	0	0	0	0
4/23/2024	4:15 AM	0	0	0	0	0	0	0	0	0	0	0	0	0
4/23/2024	4:30 AM	0	0	0	0	0	0	0	0	0	0	0	0	0
4/23/2024	4:45 AM	0	0	0	0	0	0	0	0	0	0	0	0	0
4/23/2024	5:00 AM	0	0	0	0	0	0	0	0	0	0	0	0	0
4/23/2024	5:15 AM	0	0	0	0	0	0	0	0	0	0	0	0	0
4/23/2024	5:30 AM	0	0	0	0	0	0	0	0	0	0	0	0	0
4/23/2024	5:45 AM	0	0	0	0	0	0	0	0	0	0	0	0	0
4/23/2024	6:00 AM	0	0	0	0	0	0	0	0	0	0	0	0	0
4/23/2024	6:15 AM	0	0	0	0	0	0	0	0	0	0	0	0	0
4/23/2024	6:30 AM	0	0	0	0	0	0	0	0	0	0	0	0	0
4/23/2024	6:45 AM	0	0	0	0	0	0	0	0	0	0	0	0	0
4/23/2024	7:00 AM	0	0	0	0	0	0	0	0	0	0	0	0	0
4/23/2024	7:15 AM	0	0	0	0	0	0	0	0	0	0	0	0	0
4/23/2024	7:30 AM	0	0	0	0	0	0	0	0	0	0	0	0	0
4/23/2024	7:45 AM	0	0	0	0	0	0	0	0	0	0	0	0	0
4/23/2024	8:00 AM	0	0	0	0	0	0	0	0	0	0	0	0	0
4/23/2024	8:15 AM	0	0	0	0	0	0	0	0	0	0	0	0	0
4/23/2024	8:30 AM	0	0	0	0	0	0	0	0	0	0	0	0	0
4/23/2024	8:45 AM	0	0	0	0	0	0	0	0	0	0	0	0	0
4/23/2024	9:00 AM	0	0	0	0	0	0	0	0	0	0	0	0	0
4/23/2024	9:15 AM	0	0	0	0	0	0	0	0	0	0	0	0	0
4/23/2024	9:30 AM	0	0	0	0	0	0	0	0	0	0	0	0	0
4/23/2024	9:45 AM	0	0	0	0	0	0	0	0	0	0	0	0	0
4/23/2024	10:00 AM	0	0	0	0	0	0	0	0	0	0	0	0	0
4/23/2024	10:15 AM	0	0	0	0	0	0	0	0	0	0	0	0	0
4/23/2024	10:30 AM	0	0	0	0	0	0	0	0	0	0	0	0	0
4/23/2024	10:45 AM	0	0	0	0	0	0	0	0	0	0	0	0	0
4/23/2024	11:00 AM	0	0	0	0	0	0	0	0	0	0	0	0	0
4/23/2024	11:15 AM	0	0	0	0	0	0	0	0	0	0	0	0	0
4/23/2024	11:30 AM	0	0	0	0	0	0	0	0	0	0	0	0	0
4/23/2024	11:45 AM	0	0	0	0	0	0	0	0	0	0	0	0	0
4/23/2024	12:00 PM	0	0	0	0	0	0	0	0	0	0	0	0	0
4/23/2024	12:15 PM	0	0	0	0	0	0	0	0	0	0	0	0	0
4/23/2024	12:30 PM	0	0	0	0	0	0	0	0	0	0	0	0	0
4/23/2024	12:45 PM	0	0	0	0	0	0	0	0	0	0	0	0	0
4/23/2024	1:00 PM	0	0	0	0	0	0	0	0	0	0	0	0	0
4/23/2024	1:15 PM	0	0	0	0	0	0	0	0	0	0	0	0	0
4/23/2024	1:30 PM	0	0	0	0	0	0	0	0	0	0	0	0	0
4/23/2024	1:45 PM	0	0	0	0	0	0	0	0	0	0	0	0	0
4/23/2024	2:00 PM	0	0	0	0	0	0	0	0	0	0	0	0	0
4/23/2024	2:15 PM	0	0	0	0	0	0	0	0	0	0	0	0	0
4/23/2024	2:30 PM	0	0	0	0	0	0	0	0	0	0	0	0	0
4/23/2024	2:45 PM	0	0	0	0	0	0	0	0	0	0	0	0	0
4/23/2024	3:00 PM	0	0	0	0	0	0	0	0	0	0	0	0	0
4/23/2024	3:15 PM	0	0	0	0	0	0	0	0	0	0	0	0	0
4/23/2024	3:30 PM	0	0	0	0	0	0	0	0	0	0	0	0	0
4/23/2024	3:45 PM	0	0	0	0	0	0	0	0	0	0	0	0	0
4/23/2024	4:00 PM	0	0	0	0	0	0	0	0	0	0	0	0	0
4/23/2024	4:15 PM	0	0	0	0	0	0	0	0	0	0	0	0	0
4/23/2024	4:30 PM	0	0	0	0	0	0	0	0	0	0	0	0	0
4/23/2024	4:45 PM	0	0	0	0	0	0	0	0	0	0	0	0	0
4/23/2024	5:00 PM	0	0	0	0	0	0	0	0	0	0	0	0	0
4/23/2024	5:15 PM	0	0	0	0	0	0	0	0	0	0	0	0	0
4/23/2024	5:30 PM	0	0	0	0	0	0	0	0	0	0	0	0	0
4/23/2024	5:45 PM	0	0	0	0	0	0	0	0	0	0	0	0	0
4/23/2024	6:00 PM	0	0	0	0	0	0	0	0	0	0	0	0	0
4/23/2024	6:15 PM	0	38	7	0	0	1	0	0	1	0	0	0	0
4/23/2024	6:30 PM	0	71	14	0	0	1	0	0	2	0	0	0	0
4/23/2024	6:45 PM	0	101	19	0	0	1	0	0	2	0	0	0	0
4/23/2024	7:00 PM	0	131	23	0	0	1	0	0	2	0	0	0	0
4/23/2024	7:15 PM	0	115	22	0	0	0	0	0	1	0	0	0	0
4/23/2024	7:30 PM	0	110	24	0	0	0	0	0	1	0	0	0	0
4/23/2024	7:45 PM	0	108	21	0	0	0	0	0	1	0	0	0	0
4/23/2024	8:00 PM	0	99	18	0	0	0	0	0	1	0	0	0	0
4/23/2024	8:15 PM	0	91	12	0	0	0	0	0	1	0	0	0	0
4/23/2024	8:30 PM	0	74	3	0	0	0	0	0	1	0	0	0	0
4/23/2024	8:45 PM	0	63	2	0	0	0	0	0	1	0	0	0	0
4/23/2024	9:00 PM	0	52	1	0	0	0	0	0	1	0	0	0	0
4/23/2024	9:15 PM	0	49	1	0	0	0	0	0	1	0	0	0	0
4/23/2024	9:30 PM	0	45	3	0	0	0	0	0	0	0	0	0	0
4/23/2024	9:45 PM	0	37	2	0	0	0	0	0	0	0	0	0	0
4/23/2024	10:00 PM	0	33	2	0	0	0	0	0	0	0	0	0	0
4/23/2024	10:15 PM	0	27	2	0	0	0	0	0	1	0	0	0	0
4/23/2024	10:30 PM	0	28	0	0	0	0	0	0	1	0	0	0	0
4/23/2024	10:45 PM	0	26	0	0	0	0	0	0	1	0	0	0	0
4/23/2024	11:00 PM	0	25	0	0	0	0	0	0	1	0	0	0	0
4/23/2024	11:15 PM	0	20	0	0	0	0	0	0	0	0	0	0	0
4/23/2024	11:30 PM	0	13	2	0	0	0	0	0	0	0	0	0	0
4/23/2024	11:45 PM	0	8	2	0	0	0	0	0	0	0	0	0	0

4/24/2024	12:00 AM	0	4	2	0	0	0	0	0	0	0	0	0
4/24/2024	12:15 AM	0	5	4	0	0	0	0	0	0	0	0	0
4/24/2024	12:30 AM	0	4	2	0	0	0	0	0	0	0	0	0
4/24/2024	12:45 AM	0	4	2	0	0	0	0	0	0	0	0	0
4/24/2024	1:00 AM	0	3	3	0	0	0	0	0	0	0	0	0
4/24/2024	1:15 AM	0	2	1	0	0	0	0	0	0	0	0	0
4/24/2024	1:30 AM	0	3	2	0	0	0	0	0	0	0	0	0
4/24/2024	1:45 AM	0	2	2	0	0	0	0	0	0	0	0	0
4/24/2024	2:00 AM	0	2	1	0	0	0	0	1	0	0	0	0
4/24/2024	2:15 AM	0	4	1	0	0	0	0	1	0	0	0	0
4/24/2024	2:30 AM	0	5	0	0	0	0	0	1	0	0	0	0
4/24/2024	2:45 AM	0	5	0	0	0	0	0	1	0	0	0	0
4/24/2024	3:00 AM	0	7	0	0	0	0	0	0	0	0	0	0
4/24/2024	3:15 AM	0	8	0	0	0	0	0	0	0	0	0	0
4/24/2024	3:30 AM	0	8	1	0	0	0	0	0	0	0	0	0
4/24/2024	3:45 AM	0	10	1	0	0	0	0	0	0	0	0	0
4/24/2024	4:00 AM	0	15	3	0	0	0	0	0	0	0	0	0
4/24/2024	4:15 AM	0	14	4	0	0	0	0	0	0	0	0	0
4/24/2024	4:30 AM	0	19	6	0	0	0	0	1	0	0	0	0
4/24/2024	4:45 AM	0	21	8	0	0	0	0	1	0	0	0	0
4/24/2024	5:00 AM	0	18	8	0	0	0	0	1	0	0	0	0
4/24/2024	5:15 AM	0	24	11	0	0	0	0	1	0	0	0	0
4/24/2024	5:30 AM	0	30	11	0	0	0	0	0	0	0	0	0
4/24/2024	5:45 AM	0	39	16	0	0	0	0	0	0	0	0	0
4/24/2024	6:00 AM	0	53	21	0	0	0	1	0	0	0	0	0
4/24/2024	6:15 AM	0	72	22	0	0	0	1	0	0	0	0	0
4/24/2024	6:30 AM	0	87	28	0	1	0	1	0	0	0	0	0
4/24/2024	6:45 AM	0	98	29	0	1	0	1	0	0	0	0	0
4/24/2024	7:00 AM	0	104	34	0	1	0	0	0	0	0	0	0
4/24/2024	7:15 AM	0	110	43	0	1	0	0	0	1	0	0	0
4/24/2024	7:30 AM	0	115	43	0	0	0	0	0	1	0	0	0
4/24/2024	7:45 AM	0	137	46	0	0	0	0	0	2	0	0	0
4/24/2024	8:00 AM	1	170	50	2	0	0	0	0	2	0	0	0
4/24/2024	8:15 AM	1	175	47	2	0	0	0	0	1	0	0	0
4/24/2024	8:30 AM	1	178	59	2	0	0	0	0	1	0	0	0
4/24/2024	8:45 AM	1	200	63	2	0	0	0	0	0	0	0	0
4/24/2024	9:00 AM	0	194	66	0	2	0	0	0	1	0	0	0
4/24/2024	9:15 AM	0	205	73	0	4	0	0	0	2	1	0	0
4/24/2024	9:30 AM	0	215	62	1	4	0	0	0	2	1	0	0
4/24/2024	9:45 AM	0	189	56	1	4	0	0	0	2	1	0	0
4/24/2024	10:00 AM	0	176	51	1	3	0	0	0	1	1	0	0
4/24/2024	10:15 AM	0	170	47	1	1	0	0	0	0	0	0	0
4/24/2024	10:30 AM	0	164	53	1	1	1	0	0	1	0	0	0
4/24/2024	10:45 AM	1	153	65	1	3	1	0	0	1	0	0	0
4/24/2024	11:00 AM	1	172	69	1	2	1	0	0	2	0	0	0
4/24/2024	11:15 AM	1	193	80	1	2	1	0	0	2	0	0	0
4/24/2024	11:30 AM	1	208	75	0	2	0	0	0	1	0	0	0
4/24/2024	11:45 AM	1	239	68	0	3	0	0	0	1	0	0	0
4/24/2024	12:00 PM	1	232	65	0	5	0	0	0	0	0	0	0
4/24/2024	12:15 PM	1	221	53	0	5	0	0	0	0	0	0	0
4/24/2024	12:30 PM	1	233	60	0	6	0	0	0	1	0	0	0
4/24/2024	12:45 PM	1	214	59	0	3	0	0	0	2	0	0	0
4/24/2024	1:00 PM	1	222	54	0	3	1	0	0	2	0	0	0
4/24/2024	1:15 PM	1	217	56	0	3	1	0	0	2	0	0	0
4/24/2024	1:30 PM	1	194	57	0	2	1	0	0	2	0	0	0
4/24/2024	1:45 PM	0	196	51	0	2	1	0	0	3	0	0	0
4/24/2024	2:00 PM	0	172	50	1	1	0	0	0	3	0	0	0
4/24/2024	2:15 PM	0	176	51	1	1	1	0	0	3	0	0	0
4/24/2024	2:30 PM	0	192	45	1	1	1	0	0	2	0	0	0
4/24/2024	2:45 PM	0	187	55	1	2	1	0	0	0	0	0	0
4/24/2024	3:00 PM	1	223	59	0	1	1	0	0	1	0	0	0
4/24/2024	3:15 PM	1	245	61	0	1	0	0	0	2	0	0	0
4/24/2024	3:30 PM	1	248	65	0	1	0	0	0	3	0	0	0
4/24/2024	3:45 PM	1	265	56	0	2	0	0	0	4	0	0	0
4/24/2024	4:00 PM	0	248	52	0	2	0	0	0	3	0	0	0
4/24/2024	4:15 PM	0	225	47	0	3	0	0	0	2	0	0	0
4/24/2024	4:30 PM	0	220	43	0	4	0	0	0	2	0	0	0
4/24/2024	4:45 PM	0	226	42	0	2	0	0	0	1	0	0	0
4/24/2024	5:00 PM	0	235	47	0	2	0	0	0	1	0	0	0
4/24/2024	5:15 PM	0	237	52	0	1	0	0	0	2	0	0	0
4/24/2024	5:30 PM	0	231	46	0	0	0	0	0	1	0	0	0
4/24/2024	5:45 PM	0	216	51	0	0	0	0	0	1	0	0	0
4/24/2024	6:00 PM	0	199	42	0	1	0	0	0	1	0	0	0
4/24/2024	6:15 PM	0	176	36	0	2	0	0	0	0	0	0	0
4/24/2024	6:30 PM	0	162	39	0	2	0	0	0	0	0	0	0
4/24/2024	6:45 PM	0	145	33	0	2	0	0	0	0	0	0	0
4/24/2024	7:00 PM	0	123	31	0	1	0	0	0	1	0	0	0
4/24/2024	7:15 PM	0	121	24	0	0	0	0	0	2	0	0	0
4/24/2024	7:30 PM	0	116	16	0	0	0	0	0	3	0	0	0
4/24/2024	7:45 PM	0	105	16	0	0	0	0	0	3	0	0	0
4/24/2024	8:00 PM	0	104	18	0	0	0	0	0	2	0	0	0
4/24/2024	8:15 PM	0	89	14	0	0	0	0	0	1	0	0	0
4/24/2024	8:30 PM	0	66	13	0	0	0	0	0	0	0	0	0
4/24/2024	8:45 PM	0	58	9	0	1	0	0	0	0	0	0	0
4/24/2024	9:00 PM	0	47	5	0	1	0	0	0	0	0	0	0
4/24/2024	9:15 PM	0	43	5	0	1	0	0	0	0	0	0	0
4/24/2024	9:30 PM	0	41	4	0	1	0	0	0	0	0	0	0
4/24/2024	9:45 PM	0	31	2	0	0	0	0	0	0	0	0	0
4/24/2024	10:00 PM	1	28	1	0	0	0	0	0	0	0	0	0
4/24/2024	10:15 PM	1	26	1	0	0	0	0	0	0	0	0	0
4/24/2024	10:30 PM	1	22	1	0	0	0	0	0	0	0	0	0
4/24/2024	10:45 PM	1	21	3	0	0	0	0	0	1	0	0	0
4/24/2024	11:00 PM	0	14	3	0	0	0	0	0	2	0	0	0
4/24/2024	11:15 PM	0	12	2	0	0	0	0	0	2	0	0	0
4/24/2024	11:30 PM	0	11	2	0	0	0	0	1	2	0	0	0
4/24/2024	11:45 PM	0	13	0	0	0	0	0	1	1	0	0	0

4/25/2024	12:00 AM	0	15	0	0	0	0	0	1	0	0	0	0	0
4/25/2024	12:15 AM	0	11	0	0	0	0	0	1	0	0	0	0	0
4/25/2024	12:30 AM	0	11	0	0	0	0	0	0	0	0	0	0	0
4/25/2024	12:45 AM	0	7	0	0	0	0	0	0	0	0	0	0	0
4/25/2024	1:00 AM	0	6	0	0	0	0	0	0	0	0	0	0	0
4/25/2024	1:15 AM	0	6	0	0	0	0	0	0	0	0	0	0	0
4/25/2024	1:30 AM	0	4	0	0	0	0	0	0	0	0	0	0	0
4/25/2024	1:45 AM	0	4	0	0	0	0	0	0	0	0	0	0	0
4/25/2024	2:00 AM	0	3	0	0	0	0	0	0	0	0	0	0	0
4/25/2024	2:15 AM	0	3	1	0	0	0	0	0	0	0	0	0	0
4/25/2024	2:30 AM	0	4	1	0	0	0	0	0	0	0	0	0	0
4/25/2024	2:45 AM	0	6	1	0	0	0	0	0	0	0	0	0	0
4/25/2024	3:00 AM	0	10	1	0	0	0	0	0	0	0	0	0	0
4/25/2024	3:15 AM	0	11	0	0	0	0	0	1	0	0	0	0	0
4/25/2024	3:30 AM	0	13	0	0	0	0	0	1	0	0	0	0	0
4/25/2024	3:45 AM	0	12	0	0	0	0	0	1	0	0	0	0	0
4/25/2024	4:00 AM	0	11	0	0	0	0	0	1	0	0	0	0	0
4/25/2024	4:15 AM	0	14	1	0	0	0	0	0	0	0	0	0	0
4/25/2024	4:30 AM	0	13	2	0	0	0	0	0	0	0	0	0	0
4/25/2024	4:45 AM	0	19	3	0	0	0	0	0	0	0	0	0	0
4/25/2024	5:00 AM	0	23	5	0	1	0	0	0	0	0	0	0	0
4/25/2024	5:15 AM	0	33	11	0	1	0	0	0	0	0	0	0	0
4/25/2024	5:30 AM	0	47	13	0	1	0	0	0	0	0	0	0	0
4/25/2024	5:45 AM	0	54	16	0	1	0	0	0	0	0	0	0	0
4/25/2024	6:00 AM	0	78	21	0	0	0	0	0	0	0	0	0	0
4/25/2024	6:15 AM	0	82	16	0	0	0	0	0	0	0	0	0	0
4/25/2024	6:30 AM	0	104	20	0	1	0	0	1	0	0	0	0	0
4/25/2024	6:45 AM	0	118	26	0	1	0	0	1	0	0	0	0	0
4/25/2024	7:00 AM	0	102	23	0	1	0	0	1	0	0	0	0	0
4/25/2024	7:15 AM	0	117	28	0	3	0	0	1	1	0	0	0	0
4/25/2024	7:30 AM	0	132	33	0	2	0	0	0	1	0	0	0	0
4/25/2024	7:45 AM	0	155	37	0	2	0	0	0	2	0	0	0	0
4/25/2024	8:00 AM	0	190	47	1	3	0	0	0	2	0	0	0	0
4/25/2024	8:15 AM	0	206	51	1	1	0	0	0	2	0	0	0	0
4/25/2024	8:30 AM	0	204	56	1	2	0	0	0	2	0	0	0	0
4/25/2024	8:45 AM	0	215	59	1	3	0	0	0	1	0	0	0	0
4/25/2024	9:00 AM	0	242	51	0	4	0	0	1	1	0	0	0	0
4/25/2024	9:15 AM	0	244	54	0	4	0	0	1	0	0	0	0	0
4/25/2024	9:30 AM	0	249	49	0	3	0	0	1	1	0	0	0	0
4/25/2024	9:45 AM	0	242	45	0	3	1	0	1	1	0	0	0	0
4/25/2024	10:00 AM	0	220	58	0	1	1	0	0	1	0	0	0	0
4/25/2024	10:15 AM	0	227	51	0	1	1	0	0	1	0	0	0	0
4/25/2024	10:30 AM	0	226	61	0	2	1	0	1	1	0	0	0	0
4/25/2024	10:45 AM	0	246	58	1	1	0	0	1	1	0	0	0	0
4/25/2024	11:00 AM	0	245	53	1	2	0	0	1	1	0	0	0	0
4/25/2024	11:15 AM	2	272	62	1	2	0	0	1	1	0	0	0	0
4/25/2024	11:30 AM	2	287	57	1	2	0	0	0	0	0	0	0	0
4/25/2024	11:45 AM	2	288	60	0	3	0	0	0	1	0	0	0	0
4/25/2024	12:00 PM	2	307	63	0	2	0	0	0	2	0	0	0	0
4/25/2024	12:15 PM	0	281	71	0	3	0	0	0	2	0	0	0	0
4/25/2024	12:30 PM	0	268	68	1	2	0	0	0	4	0	0	0	0
4/25/2024	12:45 PM	0	244	72	1	1	1	0	0	3	0	0	0	0
4/25/2024	1:00 PM	0	221	73	1	2	1	0	0	3	0	0	0	0
4/25/2024	1:15 PM	2	222	67	2	1	1	0	0	4	0	0	0	0
4/25/2024	1:30 PM	2	205	66	1	2	1	0	1	2	0	0	0	0
4/25/2024	1:45 PM	2	207	63	1	2	0	0	1	2	0	0	0	0
4/25/2024	2:00 PM	2	222	62	2	2	0	0	1	1	0	0	0	0
4/25/2024	2:15 PM	0	216	53	1	2	1	0	1	0	0	0	0	0
4/25/2024	2:30 PM	0	223	45	1	1	1	0	0	0	0	0	0	0
4/25/2024	2:45 PM	0	223	40	1	1	1	0	0	1	0	0	0	0
4/25/2024	3:00 PM	0	215	28	0	0	1	0	0	1	0	0	0	0
4/25/2024	3:15 PM	0	239	35	0	0	0	0	0	1	0	0	0	0
4/25/2024	3:30 PM	0	240	45	0	0	0	0	0	2	0	0	0	0
4/25/2024	3:45 PM	0	244	49	0	1	1	0	0	1	0	0	0	0
4/25/2024	4:00 PM	0	238	53	0	1	1	0	0	2	0	0	0	0
4/25/2024	4:15 PM	0	214	62	0	1	1	0	0	3	0	0	0	0
4/25/2024	4:30 PM	0	232	61	0	2	1	0	0	2	0	0	0	0
4/25/2024	4:45 PM	0	228	64	0	1	0	0	0	2	0	0	0	0
4/25/2024	5:00 PM	0	219	70	0	1	0	0	0	1	0	0	0	0
4/25/2024	5:15 PM	0	213	59	0	2	0	0	0	0	0	0	0	0
4/25/2024	5:30 PM	0	197	63	0	1	0	0	0	2	0	0	0	0
4/25/2024	5:45 PM	0	195	57	0	1	0	0	0	3	0	0	0	0
4/25/2024	6:00 PM	0	201	52	0	1	0	0	0	3	0	0	0	0
4/25/2024	6:15 PM	0	152	38	0	0	0	0	0	3	0	0	0	0
4/25/2024	6:30 PM	0	101	20	0	0	0	0	0	1	0	0	0	0
4/25/2024	6:45 PM	0	49	10	0	0	0	0	0	0	0	0	0	0
4/25/2024	7:00 PM	0	0	0	0	0	0	0	0	0	0	0	0	0
4/25/2024	7:15 PM	0	0	0	0	0	0	0	0	0	0	0	0	0
4/25/2024	7:30 PM	0	0	0	0	0	0	0	0	0	0	0	0	0
4/25/2024	7:45 PM	0	0	0	0	0	0	0	0	0	0	0	0	0
4/25/2024	8:00 PM	0	0	0	0	0	0	0	0	0	0	0	0	0
4/25/2024	8:15 PM	0	0	0	0	0	0	0	0	0	0	0	0	0
4/25/2024	8:30 PM	0	0	0	0	0	0	0	0	0	0	0	0	0
4/25/2024	8:45 PM	0	0	0	0	0	0	0	0	0	0	0	0	0
4/25/2024	9:00 PM	0	0	0	0	0	0	0	0	0	0	0	0	0
4/25/2024	9:15 PM	0	0	0	0	0	0	0	0	0	0	0	0	0
4/25/2024	9:30 PM	0	0	0	0	0	0	0	0	0	0	0	0	0
4/25/2024	9:45 PM	0	0	0	0	0	0	0	0	0	0	0	0	0
4/25/2024	10:00 PM	0	0	0	0	0	0	0	0	0	0	0	0	0
4/25/2024	10:15 PM	0	0	0	0	0	0	0	0	0	0	0	0	0
4/25/2024	10:30 PM	0	0	0	0	0	0	0	0	0	0	0	0	0
4/25/2024	10:45 PM	0	0	0	0	0	0	0	0	0	0	0	0	0
4/25/2024	11:00 PM	0	0	0	0	0	0	0	0	0	0	0	0	0
4/25/2024	11:15 PM	0	0	0	0	0	0	0	0	0	0	0	0	0
4/25/2024	11:30 PM	0	0	0	0	0	0	0	0	0	0	0	0	0
4/25/2024	11:45 PM	0	0	0	0	0	0	0	0	0	0	0	0	0

WB
File Name:
Start Date: 4/23/2024
Start Time: 0
Site Code: 28
Station ID: 1
Location 1: I-26 James F. Byrnes Expy E/Bound Off-Ramp, west of Harbison Blvd
Location 2:

Date	Time	1	2	3	4	5	6	7	8	9	10	11	12	13
4/23/2024	12:00 AM	0	0	0	0	0	0	0	0	0	0	0	0	0
4/23/2024	12:15 AM	0	0	0	0	0	0	0	0	0	0	0	0	0
4/23/2024	12:30 AM	0	0	0	0	0	0	0	0	0	0	0	0	0
4/23/2024	12:45 AM	0	0	0	0	0	0	0	0	0	0	0	0	0
4/23/2024	1:00 AM	0	0	0	0	0	0	0	0	0	0	0	0	0
4/23/2024	1:15 AM	0	0	0	0	0	0	0	0	0	0	0	0	0
4/23/2024	1:30 AM	0	0	0	0	0	0	0	0	0	0	0	0	0
4/23/2024	1:45 AM	0	0	0	0	0	0	0	0	0	0	0	0	0
4/23/2024	2:00 AM	0	0	0	0	0	0	0	0	0	0	0	0	0
4/23/2024	2:15 AM	0	0	0	0	0	0	0	0	0	0	0	0	0
4/23/2024	2:30 AM	0	0	0	0	0	0	0	0	0	0	0	0	0
4/23/2024	2:45 AM	0	0	0	0	0	0	0	0	0	0	0	0	0
4/23/2024	3:00 AM	0	0	0	0	0	0	0	0	0	0	0	0	0
4/23/2024	3:15 AM	0	0	0	0	0	0	0	0	0	0	0	0	0
4/23/2024	3:30 AM	0	0	0	0	0	0	0	0	0	0	0	0	0
4/23/2024	3:45 AM	0	0	0	0	0	0	0	0	0	0	0	0	0
4/23/2024	4:00 AM	0	0	0	0	0	0	0	0	0	0	0	0	0
4/23/2024	4:15 AM	0	0	0	0	0	0	0	0	0	0	0	0	0
4/23/2024	4:30 AM	0	0	0	0	0	0	0	0	0	0	0	0	0
4/23/2024	4:45 AM	0	0	0	0	0	0	0	0	0	0	0	0	0
4/23/2024	5:00 AM	0	0	0	0	0	0	0	0	0	0	0	0	0
4/23/2024	5:15 AM	0	0	0	0	0	0	0	0	0	0	0	0	0
4/23/2024	5:30 AM	0	0	0	0	0	0	0	0	0	0	0	0	0
4/23/2024	5:45 AM	0	0	0	0	0	0	0	0	0	0	0	0	0
4/23/2024	6:00 AM	0	0	0	0	0	0	0	0	0	0	0	0	0
4/23/2024	6:15 AM	0	0	0	0	0	0	0	0	0	0	0	0	0
4/23/2024	6:30 AM	0	0	0	0	0	0	0	0	0	0	0	0	0
4/23/2024	6:45 AM	0	0	0	0	0	0	0	0	0	0	0	0	0
4/23/2024	7:00 AM	0	0	0	0	0	0	0	0	0	0	0	0	0
4/23/2024	7:15 AM	0	0	0	0	0	0	0	0	0	0	0	0	0
4/23/2024	7:30 AM	0	0	0	0	0	0	0	0	0	0	0	0	0
4/23/2024	7:45 AM	0	0	0	0	0	0	0	0	0	0	0	0	0
4/23/2024	8:00 AM	0	0	0	0	0	0	0	0	0	0	0	0	0
4/23/2024	8:15 AM	0	0	0	0	0	0	0	0	0	0	0	0	0
4/23/2024	8:30 AM	0	0	0	0	0	0	0	0	0	0	0	0	0
4/23/2024	8:45 AM	0	0	0	0	0	0	0	0	0	0	0	0	0
4/23/2024	9:00 AM	0	0	0	0	0	0	0	0	0	0	0	0	0
4/23/2024	9:15 AM	0	0	0	0	0	0	0	0	0	0	0	0	0
4/23/2024	9:30 AM	0	0	0	0	0	0	0	0	0	0	0	0	0
4/23/2024	9:45 AM	0	0	0	0	0	0	0	0	0	0	0	0	0
4/23/2024	10:00 AM	0	0	0	0	0	0	0	0	0	0	0	0	0
4/23/2024	10:15 AM	0	0	0	0	0	0	0	0	0	0	0	0	0
4/23/2024	10:30 AM	0	0	0	0	0	0	0	0	0	0	0	0	0
4/23/2024	10:45 AM	0	0	0	0	0	0	0	0	0	0	0	0	0
4/23/2024	11:00 AM	0	0	0	0	0	0	0	0	0	0	0	0	0
4/23/2024	11:15 AM	0	0	0	0	0	0	0	0	0	0	0	0	0
4/23/2024	11:30 AM	0	0	0	0	0	0	0	0	0	0	0	0	0
4/23/2024	11:45 AM	0	0	0	0	0	0	0	0	0	0	0	0	0
4/23/2024	12:00 PM	0	0	0	0	0	0	0	0	0	0	0	0	0
4/23/2024	12:15 PM	0	0	0	0	0	0	0	0	0	0	0	0	0
4/23/2024	12:30 PM	0	0	0	0	0	0	0	0	0	0	0	0	0
4/23/2024	12:45 PM	0	0	0	0	0	0	0	0	0	0	0	0	0
4/23/2024	1:00 PM	0	0	0	0	0	0	0	0	0	0	0	0	0
4/23/2024	1:15 PM	0	0	0	0	0	0	0	0	0	0	0	0	0
4/23/2024	1:30 PM	0	0	0	0	0	0	0	0	0	0	0	0	0
4/23/2024	1:45 PM	0	0	0	0	0	0	0	0	0	0	0	0	0
4/23/2024	2:00 PM	0	0	0	0	0	0	0	0	0	0	0	0	0
4/23/2024	2:15 PM	0	0	0	0	0	0	0	0	0	0	0	0	0
4/23/2024	2:30 PM	0	0	0	0	0	0	0	0	0	0	0	0	0
4/23/2024	2:45 PM	0	0	0	0	0	0	0	0	0	0	0	0	0
4/23/2024	3:00 PM	0	0	0	0	0	0	0	0	0	0	0	0	0
4/23/2024	3:15 PM	0	0	0	0	0	0	0	0	0	0	0	0	0
4/23/2024	3:30 PM	0	0	0	0	0	0	0	0	0	0	0	0	0
4/23/2024	3:45 PM	0	0	0	0	0	0	0	0	0	0	0	0	0
4/23/2024	4:00 PM	0	0	0	0	0	0	0	0	0	0	0	0	0
4/23/2024	4:15 PM	0	0	0	0	0	0	0	0	0	0	0	0	0
4/23/2024	4:30 PM	0	0	0	0	0	0	0	0	0	0	0	0	0
4/23/2024	4:45 PM	0	0	0	0	0	0	0	0	0	0	0	0	0
4/23/2024	5:00 PM	0	0	0	0	0	0	0	0	0	0	0	0	0
4/23/2024	5:15 PM	0	0	0	0	0	0	0	0	0	0	0	0	0
4/23/2024	5:30 PM	0	0	0	0	0	0	0	0	0	0	0	0	0
4/23/2024	5:45 PM	0	0	0	0	0	0	0	0	0	0	0	0	0
4/23/2024	6:00 PM	0	0	0	0	0	0	0	0	0	0	0	0	0
4/23/2024	6:15 PM	0	0	0	0	0	0	0	0	0	0	0	0	0
4/23/2024	6:30 PM	0	0	0	0	0	0	0	0	0	0	0	0	0
4/23/2024	6:45 PM	0	0	0	0	0	0	0	0	0	0	0	0	0
4/23/2024	7:00 PM	0	0	0	0	0	0	0	0	0	0	0	0	0
4/23/2024	7:15 PM	0	0	0	0	0	0	0	0	0	0	0	0	0
4/23/2024	7:30 PM	0	0	0	0	0	0	0	0	0	0	0	0	0
4/23/2024	7:45 PM	0	0	0	0	0	0	0	0	0	0	0	0	0
4/23/2024	8:00 PM	0	0	0	0	0	0	0	0	0	0	0	0	0
4/23/2024	8:15 PM	0	0	0	0	0	0	0	0	0	0	0	0	0
4/23/2024	8:30 PM	0	0	0	0	0	0	0	0	0	0	0	0	0
4/23/2024	8:45 PM	0	0	0	0	0	0	0	0	0	0	0	0	0
4/23/2024	9:00 PM	0	0	0	0	0	0	0	0	0	0	0	0	0
4/23/2024	9:15 PM	0	0	0	0	0	0	0	0	0	0	0	0	0
4/23/2024	9:30 PM	0	0	0	0	0	0	0	0	0	0	0	0	0
4/23/2024	9:45 PM	0	0	0	0	0	0	0	0	0	0	0	0	0
4/23/2024	10:00 PM	0	0	0	0	0	0	0	0	0	0	0	0	0
4/23/2024	10:15 PM	0	0	0	0	0	0	0	0	0	0	0	0	0
4/23/2024	10:30 PM	0	0	0	0	0	0	0	0	0	0	0	0	0
4/23/2024	10:45 PM	0	0	0	0	0	0	0	0	0	0	0	0	0
4/23/2024	11:00 PM	0	0	0	0	0	0	0	0	0	0	0	0	0
4/23/2024	11:15 PM	0	0	0	0	0	0	0	0	0	0	0	0	0
4/23/2024	11:30 PM	0	0	0	0	0	0	0	0	0	0	0	0	0
4/23/2024	11:45 PM	0	0	0	0	0	0	0	0	0	0	0	0	0

4/24/2024	12:00 AM	0	0	0	0	0	0	0	0	0	0	0	0	0
4/24/2024	12:15 AM	0	0	0	0	0	0	0	0	0	0	0	0	0
4/24/2024	12:30 AM	0	0	0	0	0	0	0	0	0	0	0	0	0
4/24/2024	12:45 AM	0	0	0	0	0	0	0	0	0	0	0	0	0
4/24/2024	1:00 AM	0	0	0	0	0	0	0	0	0	0	0	0	0
4/24/2024	1:15 AM	0	0	0	0	0	0	0	0	0	0	0	0	0
4/24/2024	1:30 AM	0	0	0	0	0	0	0	0	0	0	0	0	0
4/24/2024	1:45 AM	0	0	0	0	0	0	0	0	0	0	0	0	0
4/24/2024	2:00 AM	0	0	0	0	0	0	0	0	0	0	0	0	0
4/24/2024	2:15 AM	0	0	0	0	0	0	0	0	0	0	0	0	0
4/24/2024	2:30 AM	0	0	0	0	0	0	0	0	0	0	0	0	0
4/24/2024	2:45 AM	0	0	0	0	0	0	0	0	0	0	0	0	0
4/24/2024	3:00 AM	0	0	0	0	0	0	0	0	0	0	0	0	0
4/24/2024	3:15 AM	0	0	0	0	0	0	0	0	0	0	0	0	0
4/24/2024	3:30 AM	0	0	0	0	0	0	0	0	0	0	0	0	0
4/24/2024	3:45 AM	0	0	0	0	0	0	0	0	0	0	0	0	0
4/24/2024	4:00 AM	0	0	0	0	0	0	0	0	0	0	0	0	0
4/24/2024	4:15 AM	0	0	0	0	0	0	0	0	0	0	0	0	0
4/24/2024	4:30 AM	0	0	0	0	0	0	0	0	0	0	0	0	0
4/24/2024	4:45 AM	0	0	0	0	0	0	0	0	0	0	0	0	0
4/24/2024	5:00 AM	0	0	0	0	0	0	0	0	0	0	0	0	0
4/24/2024	5:15 AM	0	0	0	0	0	0	0	0	0	0	0	0	0
4/24/2024	5:30 AM	0	0	0	0	0	0	0	0	0	0	0	0	0
4/24/2024	5:45 AM	0	0	0	0	0	0	0	0	0	0	0	0	0
4/24/2024	6:00 AM	0	0	0	0	0	0	0	0	0	0	0	0	0
4/24/2024	6:15 AM	0	0	0	0	0	0	0	0	0	0	0	0	0
4/24/2024	6:30 AM	0	0	0	0	0	0	0	0	0	0	0	0	0
4/24/2024	6:45 AM	0	0	0	0	0	0	0	0	0	0	0	0	0
4/24/2024	7:00 AM	0	0	0	0	0	0	0	0	0	0	0	0	0
4/24/2024	7:15 AM	0	0	0	0	0	0	0	0	0	0	0	0	0
4/24/2024	7:30 AM	0	0	0	0	0	0	0	0	0	0	0	0	0
4/24/2024	7:45 AM	0	0	0	0	0	0	0	0	0	0	0	0	0
4/24/2024	8:00 AM	0	0	0	0	0	0	0	0	0	0	0	0	0
4/24/2024	8:15 AM	0	0	0	0	0	0	0	0	0	0	0	0	0
4/24/2024	8:30 AM	0	0	0	0	0	0	0	0	0	0	0	0	0
4/24/2024	8:45 AM	0	0	0	0	0	0	0	0	0	0	0	0	0
4/24/2024	9:00 AM	0	0	0	0	0	0	0	0	0	0	0	0	0
4/24/2024	9:15 AM	0	0	0	0	0	0	0	0	0	0	0	0	0
4/24/2024	9:30 AM	0	0	0	0	0	0	0	0	0	0	0	0	0
4/24/2024	9:45 AM	0	0	0	0	0	0	0	0	0	0	0	0	0
4/24/2024	10:00 AM	0	0	0	0	0	0	0	0	0	0	0	0	0
4/24/2024	10:15 AM	0	0	0	0	0	0	0	0	0	0	0	0	0
4/24/2024	10:30 AM	0	0	0	0	0	0	0	0	0	0	0	0	0
4/24/2024	10:45 AM	0	0	0	0	0	0	0	0	0	0	0	0	0
4/24/2024	11:00 AM	0	0	0	0	0	0	0	0	0	0	0	0	0
4/24/2024	11:15 AM	0	0	0	0	0	0	0	0	0	0	0	0	0
4/24/2024	11:30 AM	0	0	0	0	0	0	0	0	0	0	0	0	0
4/24/2024	11:45 AM	0	0	0	0	0	0	0	0	0	0	0	0	0
4/24/2024	12:00 PM	0	0	0	0	0	0	0	0	0	0	0	0	0
4/24/2024	12:15 PM	0	0	0	0	0	0	0	0	0	0	0	0	0
4/24/2024	12:30 PM	0	0	0	0	0	0	0	0	0	0	0	0	0
4/24/2024	12:45 PM	0	0	0	0	0	0	0	0	0	0	0	0	0
4/24/2024	1:00 PM	0	0	0	0	0	0	0	0	0	0	0	0	0
4/24/2024	1:15 PM	0	0	0	0	0	0	0	0	0	0	0	0	0
4/24/2024	1:30 PM	0	0	0	0	0	0	0	0	0	0	0	0	0
4/24/2024	1:45 PM	0	0	0	0	0	0	0	0	0	0	0	0	0
4/24/2024	2:00 PM	0	0	0	0	0	0	0	0	0	0	0	0	0
4/24/2024	2:15 PM	0	0	0	0	0	0	0	0	0	0	0	0	0
4/24/2024	2:30 PM	0	0	0	0	0	0	0	0	0	0	0	0	0
4/24/2024	2:45 PM	0	0	0	0	0	0	0	0	0	0	0	0	0
4/24/2024	3:00 PM	0	0	0	0	0	0	0	0	0	0	0	0	0
4/24/2024	3:15 PM	0	0	0	0	0	0	0	0	0	0	0	0	0
4/24/2024	3:30 PM	0	0	0	0	0	0	0	0	0	0	0	0	0
4/24/2024	3:45 PM	0	0	0	0	0	0	0	0	0	0	0	0	0
4/24/2024	4:00 PM	0	0	0	0	0	0	0	0	0	0	0	0	0
4/24/2024	4:15 PM	0	0	0	0	0	0	0	0	0	0	0	0	0
4/24/2024	4:30 PM	0	0	0	0	0	0	0	0	0	0	0	0	0
4/24/2024	4:45 PM	0	0	0	0	0	0	0	0	0	0	0	0	0
4/24/2024	5:00 PM	0	0	0	0	0	0	0	0	0	0	0	0	0
4/24/2024	5:15 PM	0	0	0	0	0	0	0	0	0	0	0	0	0
4/24/2024	5:30 PM	0	0	0	0	0	0	0	0	0	0	0	0	0
4/24/2024	5:45 PM	0	0	0	0	0	0	0	0	0	0	0	0	0
4/24/2024	6:00 PM	0	0	0	0	0	0	0	0	0	0	0	0	0
4/24/2024	6:15 PM	0	0	0	0	0	0	0	0	0	0	0	0	0
4/24/2024	6:30 PM	0	0	0	0	0	0	0	0	0	0	0	0	0
4/24/2024	6:45 PM	0	0	0	0	0	0	0	0	0	0	0	0	0
4/24/2024	7:00 PM	0	0	0	0	0	0	0	0	0	0	0	0	0
4/24/2024	7:15 PM	0	0	0	0	0	0	0	0	0	0	0	0	0
4/24/2024	7:30 PM	0	0	0	0	0	0	0	0	0	0	0	0	0
4/24/2024	7:45 PM	0	0	0	0	0	0	0	0	0	0	0	0	0
4/24/2024	8:00 PM	0	0	0	0	0	0	0	0	0	0	0	0	0
4/24/2024	8:15 PM	0	0	0	0	0	0	0	0	0	0	0	0	0
4/24/2024	8:30 PM	0	0	0	0	0	0	0	0	0	0	0	0	0
4/24/2024	8:45 PM	0	0	0	0	0	0	0	0	0	0	0	0	0
4/24/2024	9:00 PM	0	0	0	0	0	0	0	0	0	0	0	0	0
4/24/2024	9:15 PM	0	0	0	0	0	0	0	0	0	0	0	0	0
4/24/2024	9:30 PM	0	0	0	0	0	0	0	0	0	0	0	0	0
4/24/2024	9:45 PM	0	0	0	0	0	0	0	0	0	0	0	0	0
4/24/2024	10:00 PM	0	0	0	0	0	0	0	0	0	0	0	0	0
4/24/2024	10:15 PM	0	0	0	0	0	0	0	0	0	0	0	0	0
4/24/2024	10:30 PM	0	0	0	0	0	0	0	0	0	0	0	0	0
4/24/2024	10:45 PM	0	0	0	0	0	0	0	0	0	0	0	0	0
4/24/2024	11:00 PM	0	0	0	0	0	0	0	0	0	0	0	0	0
4/24/2024	11:15 PM	0	0	0	0	0	0	0	0	0	0	0	0	0
4/24/2024	11:30 PM	0	0	0	0	0	0	0	0	0	0	0	0	0
4/24/2024	11:45 PM	0	0	0	0	0	0	0	0	0	0	0	0	0

4/25/2024	12:00 AM	0	0	0	0	0	0	0	0	0	0	0	0	0
4/25/2024	12:15 AM	0	0	0	0	0	0	0	0	0	0	0	0	0
4/25/2024	12:30 AM	0	0	0	0	0	0	0	0	0	0	0	0	0
4/25/2024	12:45 AM	0	0	0	0	0	0	0	0	0	0	0	0	0
4/25/2024	1:00 AM	0	0	0	0	0	0	0	0	0	0	0	0	0
4/25/2024	1:15 AM	0	0	0	0	0	0	0	0	0	0	0	0	0
4/25/2024	1:30 AM	0	0	0	0	0	0	0	0	0	0	0	0	0
4/25/2024	1:45 AM	0	0	0	0	0	0	0	0	0	0	0	0	0
4/25/2024	2:00 AM	0	0	0	0	0	0	0	0	0	0	0	0	0
4/25/2024	2:15 AM	0	0	0	0	0	0	0	0	0	0	0	0	0
4/25/2024	2:30 AM	0	0	0	0	0	0	0	0	0	0	0	0	0
4/25/2024	2:45 AM	0	0	0	0	0	0	0	0	0	0	0	0	0
4/25/2024	3:00 AM	0	0	0	0	0	0	0	0	0	0	0	0	0
4/25/2024	3:15 AM	0	0	0	0	0	0	0	0	0	0	0	0	0
4/25/2024	3:30 AM	0	0	0	0	0	0	0	0	0	0	0	0	0
4/25/2024	3:45 AM	0	0	0	0	0	0	0	0	0	0	0	0	0
4/25/2024	4:00 AM	0	0	0	0	0	0	0	0	0	0	0	0	0
4/25/2024	4:15 AM	0	0	0	0	0	0	0	0	0	0	0	0	0
4/25/2024	4:30 AM	0	0	0	0	0	0	0	0	0	0	0	0	0
4/25/2024	4:45 AM	0	0	0	0	0	0	0	0	0	0	0	0	0
4/25/2024	5:00 AM	0	0	0	0	0	0	0	0	0	0	0	0	0
4/25/2024	5:15 AM	0	0	0	0	0	0	0	0	0	0	0	0	0
4/25/2024	5:30 AM	0	0	0	0	0	0	0	0	0	0	0	0	0
4/25/2024	5:45 AM	0	0	0	0	0	0	0	0	0	0	0	0	0
4/25/2024	6:00 AM	0	0	0	0	0	0	0	0	0	0	0	0	0
4/25/2024	6:15 AM	0	0	0	0	0	0	0	0	0	0	0	0	0
4/25/2024	6:30 AM	0	0	0	0	0	0	0	0	0	0	0	0	0
4/25/2024	6:45 AM	0	0	0	0	0	0	0	0	0	0	0	0	0
4/25/2024	7:00 AM	0	0	0	0	0	0	0	0	0	0	0	0	0
4/25/2024	7:15 AM	0	0	0	0	0	0	0	0	0	0	0	0	0
4/25/2024	7:30 AM	0	0	0	0	0	0	0	0	0	0	0	0	0
4/25/2024	7:45 AM	0	0	0	0	0	0	0	0	0	0	0	0	0
4/25/2024	8:00 AM	0	0	0	0	0	0	0	0	0	0	0	0	0
4/25/2024	8:15 AM	0	0	0	0	0	0	0	0	0	0	0	0	0
4/25/2024	8:30 AM	0	0	0	0	0	0	0	0	0	0	0	0	0
4/25/2024	8:45 AM	0	0	0	0	0	0	0	0	0	0	0	0	0
4/25/2024	9:00 AM	0	0	0	0	0	0	0	0	0	0	0	0	0
4/25/2024	9:15 AM	0	0	0	0	0	0	0	0	0	0	0	0	0
4/25/2024	9:30 AM	0	0	0	0	0	0	0	0	0	0	0	0	0
4/25/2024	9:45 AM	0	0	0	0	0	0	0	0	0	0	0	0	0
4/25/2024	10:00 AM	0	0	0	0	0	0	0	0	0	0	0	0	0
4/25/2024	10:15 AM	0	0	0	0	0	0	0	0	0	0	0	0	0
4/25/2024	10:30 AM	0	0	0	0	0	0	0	0	0	0	0	0	0
4/25/2024	10:45 AM	0	0	0	0	0	0	0	0	0	0	0	0	0
4/25/2024	11:00 AM	0	0	0	0	0	0	0	0	0	0	0	0	0
4/25/2024	11:15 AM	0	0	0	0	0	0	0	0	0	0	0	0	0
4/25/2024	11:30 AM	0	0	0	0	0	0	0	0	0	0	0	0	0
4/25/2024	11:45 AM	0	0	0	0	0	0	0	0	0	0	0	0	0
4/25/2024	12:00 PM	0	0	0	0	0	0	0	0	0	0	0	0	0
4/25/2024	12:15 PM	0	0	0	0	0	0	0	0	0	0	0	0	0
4/25/2024	12:30 PM	0	0	0	0	0	0	0	0	0	0	0	0	0
4/25/2024	12:45 PM	0	0	0	0	0	0	0	0	0	0	0	0	0
4/25/2024	1:00 PM	0	0	0	0	0	0	0	0	0	0	0	0	0
4/25/2024	1:15 PM	0	0	0	0	0	0	0	0	0	0	0	0	0
4/25/2024	1:30 PM	0	0	0	0	0	0	0	0	0	0	0	0	0
4/25/2024	1:45 PM	0	0	0	0	0	0	0	0	0	0	0	0	0
4/25/2024	2:00 PM	0	0	0	0	0	0	0	0	0	0	0	0	0
4/25/2024	2:15 PM	0	0	0	0	0	0	0	0	0	0	0	0	0
4/25/2024	2:30 PM	0	0	0	0	0	0	0	0	0	0	0	0	0
4/25/2024	2:45 PM	0	0	0	0	0	0	0	0	0	0	0	0	0
4/25/2024	3:00 PM	0	0	0	0	0	0	0	0	0	0	0	0	0
4/25/2024	3:15 PM	0	0	0	0	0	0	0	0	0	0	0	0	0
4/25/2024	3:30 PM	0	0	0	0	0	0	0	0	0	0	0	0	0
4/25/2024	3:45 PM	0	0	0	0	0	0	0	0	0	0	0	0	0
4/25/2024	4:00 PM	0	0	0	0	0	0	0	0	0	0	0	0	0
4/25/2024	4:15 PM	0	0	0	0	0	0	0	0	0	0	0	0	0
4/25/2024	4:30 PM	0	0	0	0	0	0	0	0	0	0	0	0	0
4/25/2024	4:45 PM	0	0	0	0	0	0	0	0	0	0	0	0	0
4/25/2024	5:00 PM	0	0	0	0	0	0	0	0	0	0	0	0	0
4/25/2024	5:15 PM	0	0	0	0	0	0	0	0	0	0	0	0	0
4/25/2024	5:30 PM	0	0	0	0	0	0	0	0	0	0	0	0	0
4/25/2024	5:45 PM	0	0	0	0	0	0	0	0	0	0	0	0	0
4/25/2024	6:00 PM	0	0	0	0	0	0	0	0	0	0	0	0	0
4/25/2024	6:15 PM	0	0	0	0	0	0	0	0	0	0	0	0	0
4/25/2024	6:30 PM	0	0	0	0	0	0	0	0	0	0	0	0	0
4/25/2024	6:45 PM	0	0	0	0	0	0	0	0	0	0	0	0	0
4/25/2024	7:00 PM	0	0	0	0	0	0	0	0	0	0	0	0	0
4/25/2024	7:15 PM	0	0	0	0	0	0	0	0	0	0	0	0	0
4/25/2024	7:30 PM	0	0	0	0	0	0	0	0	0	0	0	0	0
4/25/2024	7:45 PM	0	0	0	0	0	0	0	0	0	0	0	0	0
4/25/2024	8:00 PM	0	0	0	0	0	0	0	0	0	0	0	0	0
4/25/2024	8:15 PM	0	0	0	0	0	0	0	0	0	0	0	0	0
4/25/2024	8:30 PM	0	0	0	0	0	0	0	0	0	0	0	0	0
4/25/2024	8:45 PM	0	0	0	0	0	0	0	0	0	0	0	0	0
4/25/2024	9:00 PM	0	0	0	0	0	0	0	0	0	0	0	0	0
4/25/2024	9:15 PM	0	0	0	0	0	0	0	0	0	0	0	0	0
4/25/2024	9:30 PM	0	0	0	0	0	0	0	0	0	0	0	0	0
4/25/2024	9:45 PM	0	0	0	0	0	0	0	0	0	0	0	0	0
4/25/2024	10:00 PM	0	0	0	0	0	0	0	0	0	0	0	0	0
4/25/2024	10:15 PM	0	0	0	0	0	0	0	0	0	0	0	0	0
4/25/2024	10:30 PM	0	0	0	0	0	0	0	0	0	0	0	0	0
4/25/2024	10:45 PM	0	0	0	0	0	0	0	0	0	0	0	0	0
4/25/2024	11:00 PM	0	0	0	0	0	0	0	0	0	0	0	0	0
4/25/2024	11:15 PM	0	0	0	0	0	0	0	0	0	0	0	0	0
4/25/2024	11:30 PM	0	0	0	0	0	0	0	0	0	0	0	0	0
4/25/2024	11:45 PM	0	0	0	0	0	0	0	0	0	0	0	0	0

Bi-Directional Class Count || NB EB 15min

Columbia, SC

Marr Traffic DATA COLLECTION
www.marrtraffic.com

Site 29
I-26 James F. Byrnes Expy E/Bound On-Ramp,
east of Harbison Blvd

Date
Tuesday, April 23, 2024

Lat/Long
34.076573°, -81.152147°

Weather
Fair
58°F

Click here for Detailed Weather

Click here for Map

0000 - 2400 (Weekday 24h Session) (04-23-2024)
NB EB 15min

	Eastbound (Movement 29.1)													15min	60min
Time	1	2	3	4	5	6	7	8	9	10	11	12	13	Total	Total
0000 - 0015	0	0	0	0	0	0	0	0	0	0	0	0	0	**0**	
0015 - 0030	0	0	0	0	0	0	0	0	0	0	0	0	0	**0**	
0030 - 0045	0	0	0	0	0	0	0	0	0	0	0	0	0	**0**	
0045 - 0100	0	0	0	0	0	0	0	0	0	0	0	0	0	**0**	**0**
0100 - 0115	0	0	0	0	0	0	0	0	0	0	0	0	0	**0**	
0115 - 0130	0	0	0	0	0	0	0	0	0	0	0	0	0	**0**	
0130 - 0145	0	0	0	0	0	0	0	0	0	0	0	0	0	**0**	
0145 - 0200	0	0	0	0	0	0	0	0	0	0	0	0	0	**0**	**0**
0200 - 0215	0	0	0	0	0	0	0	0	0	0	0	0	0	**0**	
0215 - 0230	0	0	0	0	0	0	0	0	0	0	0	0	0	**0**	
0230 - 0245	0	0	0	0	0	0	0	0	0	0	0	0	0	**0**	
0245 - 0300	0	0	0	0	0	0	0	0	0	0	0	0	0	**0**	**0**
0300 - 0315	0	0	0	0	0	0	0	0	0	0	0	0	0	**0**	
0315 - 0330	0	0	0	0	0	0	0	0	0	0	0	0	0	**0**	
0330 - 0345	0	0	0	0	0	0	0	0	0	0	0	0	0	**0**	
0345 - 0400	0	0	0	0	0	0	0	0	0	0	0	0	0	**0**	**0**
0400 - 0415	0	0	0	0	0	0	0	0	0	0	0	0	0	**0**	
0415 - 0430	0	0	0	0	0	0	0	0	0	0	0	0	0	**0**	
0430 - 0445	0	0	0	0	0	0	0	0	0	0	0	0	0	**0**	
0445 - 0500	0	0	0	0	0	0	0	0	0	0	0	0	0	**0**	**0**
0500 - 0515	0	0	0	0	0	0	0	0	0	0	0	0	0	**0**	
0515 - 0530	0	0	0	0	0	0	0	0	0	0	0	0	0	**0**	
0530 - 0545	0	0	0	0	0	0	0	0	0	0	0	0	0	**0**	
0545 - 0600	0	0	0	0	0	0	0	0	0	0	0	0	0	**0**	**0**
0600 - 0615	0	0	0	0	0	0	0	0	0	0	0	0	0	**0**	
0615 - 0630	0	0	0	0	0	0	0	0	0	0	0	0	0	**0**	
0630 - 0645	0	0	0	0	0	0	0	0	0	0	0	0	0	**0**	
0645 - 0700	0	0	0	0	0	0	0	0	0	0	0	0	0	**0**	**0**
0700 - 0715	0	0	0	0	0	0	0	0	0	0	0	0	0	**0**	
0715 - 0730	0	0	0	0	0	0	0	0	0	0	0	0	0	**0**	
0730 - 0745	0	0	0	0	0	0	0	0	0	0	0	0	0	**0**	
0745 - 0800	0	0	0	0	0	0	0	0	0	0	0	0	0	**0**	**0**
0800 - 0815	0	0	0	0	0	0	0	0	0	0	0	0	0	**0**	
0815 - 0830	0	0	0	0	0	0	0	0	0	0	0	0	0	**0**	
0830 - 0845	0	0	0	0	0	0	0	0	0	0	0	0	0	**0**	
0845 - 0900	0	0	0	0	0	0	0	0	0	0	0	0	0	**0**	**0**
0900 - 0915	0	0	0	0	0	0	0	0	0	0	0	0	0	**0**	
0915 - 0930	0	0	0	0	0	0	0	0	0	0	0	0	0	**0**	
0930 - 0945	0	0	0	0	0	0	0	0	0	0	0	0	0	**0**	
0945 - 1000	0	0	0	0	0	0	0	0	0	0	0	0	0	**0**	**0**
1000 - 1015	0	0	0	0	0	0	0	0	0	0	0	0	0	**0**	
1015 - 1030	0	0	0	0	0	0	0	0	0	0	0	0	0	**0**	
1030 - 1045	0	0	0	0	0	0	0	0	0	0	0	0	0	**0**	
1045 - 1100	0	0	0	0	0	0	0	0	0	0	0	0	0	**0**	**0**
1100 - 1115	0	0	0	0	0	0	0	0	0	0	0	0	0	**0**	
1115 - 1130	0	0	0	0	0	0	0	0	0	0	0	0	0	**0**	
1130 - 1145	0	0	0	0	0	0	0	0	0	0	0	0	0	**0**	
1145 - 1200	0	0	0	0	0	0	0	0	0	0	0	0	0	**0**	**0**
1200 - 1215	0	0	0	0	0	0	0	0	0	0	0	0	0	**0**	
1215 - 1230	0	0	0	0	0	0	0	0	0	0	0	0	0	**0**	
1230 - 1245	0	0	0	0	0	0	0	0	0	0	0	0	0	**0**	
1245 - 1300	0	0	0	0	0	0	0	0	0	0	0	0	0	**0**	**0**
1300 - 1315	0	0	0	0	0	0	0	0	0	0	0	0	0	**0**	
1315 - 1330	0	0	0	0	0	0	0	0	0	0	0	0	0	**0**	
1330 - 1345	0	0	0	0	0	0	0	0	0	0	0	0	0	**0**	
1345 - 1400	0	0	0	0	0	0	0	0	0	0	0	0	0	**0**	**0**
1400 - 1415	0	0	0	0	0	0	0	0	0	0	0	0	0	**0**	
1415 - 1430	0	0	0	0	0	0	0	0	0	0	0	0	0	**0**	
1430 - 1445	0	0	0	0	0	0	0	0	0	0	0	0	0	**0**	
1445 - 1500	0	0	0	0	0	0	0	0	0	0	0	0	0	**0**	**0**
1500 - 1515	0	0	0	0	0	0	0	0	0	0	0	0	0	**0**	
1515 - 1530	0	0	0	0	0	0	0	0	0	0	0	0	0	**0**	
1530 - 1545	0	0	0	0	0	0	0	0	0	0	0	0	0	**0**	
1545 - 1600	0	0	0	0	0	0	0	0	0	0	0	0	0	**0**	**0**
1600 - 1615	0	0	0	0	0	0	0	0	0	0	0	0	0	**0**	
1615 - 1630	0	0	0	0	0	0	0	0	0	0	0	0	0	**0**	
1630 - 1645	0	0	0	0	0	0	0	0	0	0	0	0	0	**0**	
1645 - 1700	0	0	0	0	0	0	0	0	0	0	0	0	0	**0**	**0**
1700 - 1715	0	0	0	0	0	0	0	0	0	0	0	0	0	**0**	
1715 - 1730	0	0	0	0	0	0	0	0	0	0	0	0	0	**0**	
1730 - 1745	0	0	0	0	0	0	0	0	0	0	0	0	0	**0**	
1745 - 1800	0	0	0	0	0	0	0	0	0	0	0	0	0	**0**	**0**
1800 - 1815	0	0	0	0	0	0	0	0	0	0	0	0	0	**0**	
1815 - 1830	0	0	0	0	0	0	0	0	0	0	0	0	0	**0**	
1830 - 1845	0	0	0	0	0	0	0	0	0	0	0	0	0	**0**	
1845 - 1900	0	0	0	0	0	0	0	0	0	0	0	0	0	**0**	**0**
1900 - 1915	0	183	23	0	0	0	0	0	0	0	0	0	0	**206**	
1915 - 1930	0	161	20	0	1	0	0	0	0	0	0	0	0	**182**	
1930 - 1945	0	156	22	0	0	0	0	0	2	0	0	0	0	**180**	
1945 - 2000	0	140	23	0	0	0	0	0	0	0	0	0	0	**163**	**731**
2000 - 2015	0	166	29	0	0	0	0	0	0	0	0	0	0	**195**	
2015 - 2030	0	131	19	0	1	0	0	0	0	0	0	0	0	**151**	
2030 - 2045	0	118	28	0	1	0	0	0	0	0	0	0	0	**147**	
2045 - 2100	0	104	13	0	1	0	0	1	0	0	0	0	0	**119**	**612**
2100 - 2115	0	102	23	0	0	0	0	0	0	0	0	0	0	**125**	
2115 - 2130	0	89	11	0	1	0	0	0	1	0	0	0	0	**102**	
2130 - 2145	0	85	5	1	0	0	0	0	0	0	0	0	0	**91**	
2145 - 2200	0	89	5	1	0	1	0	0	0	0	0	0	0	**96**	**414**
2200 - 2215	0	88	8	0	0	0	0	0	1	0	0	0	0	**97**	
2215 - 2230	0	67	6	1	1	0	0	0	0	0	0	0	0	**75**	
2230 - 2245	0	56	3	0	1	0	0	0	0	0	0	0	0	**60**	
2245 - 2300	0	45	3	0	0	0	0	0	0	0	0	0	0	**48**	**280**
2300 - 2315	0	25	11	0	0	0	0	0	0	0	0	0	0	**36**	
2315 - 2330	0	31	7	0	0	0	0	0	0	0	0	0	0	**38**	
2330 - 2345	0	24	7	0	0	0	0	0	0	0	0	0	0	**31**	
2345 - 0000	0	15	3	0	0	0	0	0	1	0	0	0	0	**19**	**124**

Session Total	0	1875	269	3	7	1	0	1	5	0	0	0	0	**2161**
Session Average	0.00	19.53	2.80	0.03	0.07	0.01	0.00	0.01	0.05	0.00	0.00	0.00	0.00	**22.51**
Session Percentage	0.00	86.77	12.45	0.14	0.32	0.05	0.00	0.05	0.23	0.00	0.00	0.00	0.00	

AM Peak Hour	-	-	-	-	-	-	-	-	-	-	-	-	-	**-**
AM Peak Volume	0	0	0	0	0	0	0	0	0	0	0	0	0	**0**

Noon Peak Hour	-	-	-	-	-	-	-	-	-	-	-	-	-	**-**
Noon Peak Volume	0	0	0	0	0	0	0	0	0	0	0	0	0	**0**

PM Peak Hour	-	1900 - 2000	1945 - 2045	-	1945 - 2045	-	-	-	1845 - 1945	-	-	-	-	**1900 - 2000**
PM Peak Volume	0	640	99	0	2	0	0	0	2	0	0	0	0	**731**

Site 29
I-26 James F. Byrnes Expy E/Bound On-Ramp,
east of Harbison Blvd

Date
Wednesday, April 24, 2024

Lat/Long
34.076573°, -81.152147°

Weather
Fair
66°F

Click here for Detailed Weather

0000 - 2400 (Weekday 24h Session) (04-24-2024)
NB EB 15min

	Eastbound (Movement 29.1)													15min	60min
Time	1	2	3	4	5	6	7	8	9	10	11	12	13	Total	Total
0000 - 0015	0	19	3	0	0	0	0	0	0	0	0	0	0	**22**	
0015 - 0030	0	22	2	0	0	0	0	0	0	0	0	0	0	**24**	
0030 - 0045	0	20	2	0	0	0	0	0	0	0	0	0	0	**22**	
0045 - 0100	0	15	1	0	0	0	0	0	1	0	0	0	0	**17**	**85**
0100 - 0115	0	5	1	0	0	0	0	0	0	0	0	0	0	**6**	
0115 - 0130	0	10	0	0	0	0	0	0	0	0	0	0	0	**10**	
0130 - 0145	0	10	0	0	0	0	0	0	0	0	0	0	0	**10**	
0145 - 0200	0	12	1	0	0	0	0	0	0	0	0	0	0	**13**	**39**
0200 - 0215	0	6	0	0	0	0	0	0	0	0	0	0	0	**6**	
0215 - 0230	0	5	1	0	0	0	0	0	0	0	0	0	0	**6**	
0230 - 0245	0	5	0	0	1	0	0	0	0	0	0	0	0	**6**	
0245 - 0300	0	5	1	0	0	0	0	0	0	0	0	0	0	**6**	**24**
0300 - 0315	0	5	0	0	0	0	0	0	1	0	0	0	0	**6**	
0315 - 0330	0	10	0	0	0	0	0	0	1	0	0	0	0	**11**	
0330 - 0345	0	11	1	0	0	0	0	0	0	0	0	0	0	**12**	
0345 - 0400	0	5	1	0	0	0	0	0	0	0	0	0	0	**6**	**35**
0400 - 0415	0	16	1	0	0	0	0	0	0	0	0	0	0	**17**	
0415 - 0430	0	9	2	0	0	0	0	0	0	0	0	0	0	**11**	
0430 - 0445	0	7	1	0	0	0	0	0	0	0	0	0	0	**8**	
0445 - 0500	0	11	3	0	0	0	0	0	0	0	0	0	0	**14**	**50**
0500 - 0515	0	21	5	0	0	0	0	0	0	0	0	0	0	**26**	
0515 - 0530	0	18	5	0	0	0	0	0	3	0	0	0	0	**26**	
0530 - 0545	0	26	7	0	0	0	0	0	0	0	0	0	0	**33**	
0545 - 0600	0	31	5	0	0	0	0	0	0	0	0	0	0	**36**	**121**
0600 - 0615	0	38	12	0	1	1	0	0	0	0	0	0	0	**52**	
0615 - 0630	0	56	15	0	1	0	0	0	0	0	0	0	0	**72**	
0630 - 0645	0	74	33	0	0	1	0	0	0	0	0	0	0	**108**	
0645 - 0700	0	81	29	0	1	0	1	0	2	0	0	0	0	**114**	**346**
0700 - 0715	0	94	21	0	1	1	0	0	0	0	0	0	0	**117**	
0715 - 0730	0	127	31	0	0	0	0	0	0	0	0	0	0	**158**	
0730 - 0745	0	130	42	0	0	0	0	0	1	0	0	0	0	**173**	
0745 - 0800	0	155	24	0	2	0	0	0	0	0	0	0	0	**181**	**629**
0800 - 0815	0	102	26	1	3	0	0	0	0	0	0	0	0	**132**	
0815 - 0830	0	102	19	0	3	0	0	0	2	0	0	0	0	**126**	
0830 - 0845	0	100	26	0	1	0	0	0	3	0	0	0	0	**130**	
0845 - 0900	0	78	26	0	0	0	0	0	0	0	0	0	0	**104**	**492**
0900 - 0915	0	110	28	0	3	1	0	0	2	0	0	0	0	**144**	
0915 - 0930	0	92	29	0	1	0	0	0	3	0	0	0	0	**125**	
0930 - 0945	0	96	26	0	3	0	0	0	1	0	0	0	0	**126**	
0945 - 1000	0	90	27	0	3	0	0	0	0	0	0	0	0	**120**	**515**
1000 - 1015	0	108	28	0	3	0	0	1	1	0	0	0	0	**141**	
1015 - 1030	1	121	36	0	0	0	0	0	1	0	0	0	0	**159**	
1030 - 1045	0	107	23	0	0	0	0	0	1	0	0	0	0	**131**	
1045 - 1100	0	97	29	0	2	0	0	0	1	0	0	0	0	**129**	**560**
1100 - 1115	0	118	37	0	4	0	0	0	2	0	0	0	0	**161**	
1115 - 1130	0	118	25	1	0	0	0	0	2	0	0	0	0	**146**	
1130 - 1145	0	129	36	0	2	0	0	1	0	0	0	0	0	**168**	
1145 - 1200	0	138	31	0	0	0	0	0	2	0	0	0	0	**171**	**646**
1200 - 1215	0	146	28	0	2	0	0	0	0	0	0	0	0	**176**	
1215 - 1230	1	167	36	1	2	1	0	0	1	0	0	0	0	**209**	
1230 - 1245	0	173	26	0	1	0	0	1	3	0	0	0	0	**204**	
1245 - 1300	1	199	33	0	1	1	0	0	2	0	0	0	0	**237**	**826**
1300 - 1315	1	166	47	0	5	0	1	0	0	0	0	0	0	**220**	
1315 - 1330	1	195	33	0	0	0	0	1	1	0	0	0	0	**231**	
1330 - 1345	0	181	46	0	2	0	0	0	0	0	0	0	0	**229**	
1345 - 1400	0	194	41	6	0	0	0	0	2	0	0	0	0	**243**	**923**
1400 - 1415	1	196	28	0	2	1	0	0	2	0	0	0	0	**230**	
1415 - 1430	0	179	37	0	1	0	0	0	1	0	0	0	0	**218**	
1430 - 1445	0	164	22	1	1	0	0	0	0	0	0	0	0	**188**	
1445 - 1500	0	164	41	1	1	0	0	0	3	0	0	0	0	**210**	**846**
1500 - 1515	0	184	28	0	3	0	0	0	0	0	0	0	0	**215**	
1515 - 1530	0	167	26	0	2	0	0	0	1	0	0	0	0	**196**	
1530 - 1545	0	172	35	1	2	0	0	0	0	0	0	0	0	**210**	
1545 - 1600	1	156	26	0	1	0	0	0	1	0	0	0	0	**185**	**806**
1600 - 1615	1	194	38	0	0	0	0	0	1	0	0	0	0	**234**	
1615 - 1630	0	184	31	1	0	0	0	0	0	0	0	0	0	**216**	
1630 - 1645	0	166	26	0	1	0	0	0	0	0	0	0	0	**193**	
1645 - 1700	0	167	33	0	1	0	0	0	1	0	0	0	0	**202**	**845**
1700 - 1715	0	185	37	0	3	0	0	0	0	0	0	0	0	**225**	
1715 - 1730	0	169	29	0	1	1	0	0	2	0	0	0	0	**202**	
1730 - 1745	1	129	28	0	3	0	0	0	0	0	0	0	0	**161**	
1745 - 1800	0	169	25	0	2	0	0	0	0	0	0	0	0	**196**	**784**
1800 - 1815	0	177	22	0	1	1	0	0	0	0	0	0	0	**201**	
1815 - 1830	1	170	28	1	0	0	0	0	0	0	0	0	0	**200**	
1830 - 1845	0	172	27	1	0	0	0	0	0	0	0	0	0	**200**	
1845 - 1900	0	156	24	0	1	0	0	0	0	0	0	0	0	**181**	**782**
1900 - 1915	0	182	19	0	1	0	0	0	0	0	0	0	0	**202**	
1915 - 1930	0	162	24	0	2	0	0	0	0	0	0	0	0	**188**	
1930 - 1945	0	174	27	0	0	0	0	0	0	0	0	0	0	**201**	
1945 - 2000	0	124	21	0	1	0	0	0	0	0	0	0	0	**146**	**737**
2000 - 2015	0	171	25	0	1	0	0	0	0	0	0	0	0	**197**	
2015 - 2030	0	153	19	0	1	0	0	0	1	0	0	0	0	**174**	
2030 - 2045	0	143	22	0	1	0	0	0	0	0	0	0	0	**166**	
2045 - 2100	0	108	11	0	0	0	0	0	0	0	0	0	0	**119**	**656**
2100 - 2115	0	121	16	0	0	0	0	0	0	0	0	0	0	**137**	
2115 - 2130	0	106	12	0	0	0	0	0	0	0	0	0	0	**118**	
2130 - 2145	0	104	15	0	0	0	0	0	0	0	0	0	0	**119**	
2145 - 2200	0	76	13	1	1	0	0	0	0	0	0	0	0	**91**	**465**
2200 - 2215	0	80	11	0	0	0	0	0	0	0	0	0	0	**91**	
2215 - 2230	0	59	8	0	1	0	0	0	0	0	0	0	0	**68**	
2230 - 2245	0	34	7	0	0	0	0	0	0	0	0	0	0	**41**	
2245 - 2300	0	43	4	0	0	0	0	0	0	0	0	0	0	**47**	**247**
2300 - 2315	0	44	4	0	0	0	0	0	0	0	0	0	0	**48**	
2315 - 2330	0	26	1	0	0	0	0	0	0	0	0	0	0	**27**	
2330 - 2345	0	19	0	0	1	0	0	0	0	0	0	0	0	**20**	
2345 - 0000	0	26	1	0	0	0	0	0	0	0	0	0	0	**27**	**122**

Session Total	10	9561	1843	16	84	9	2	4	52	0	0	0	0	**11581**
Session Average	0.10	99.59	19.20	0.17	0.88	0.09	0.02	0.04	0.54	0.00	0.00	0.00	0.00	**120.64**
Session Percentage	0.09	82.56	15.91	0.14	0.73	0.08	0.02	0.03	0.45	0.00	0.00	0.00	0.00	

AM Peak Hour	0930 - 1030	0715 - 0815	0645 - 0745	0715 - 0815	0900 - 1000	0545 - 0645	0600 - 0700	0915 - 1015	0830 - 0930	-	-	-	-	**0715 - 0815**
AM Peak Volume	1	514	123	1	10	2	1	1	8	0	0	0	0	**644**

Noon Peak Hour	1215 - 1315	1315 - 1415	1300 - 1400	1345 - 1445	1215 - 1315	1200 - 1300	1215 - 1315	1230 - 1330	1030 - 1130	-	-	-	-	**1315 - 1415**
Noon Peak Volume	3	766	167	7	9	2	1	2	6	0	0	0	0	**933**

PM Peak Hour	1515 - 1615	1600 - 1700	1530 - 1630	1530 - 1630	1700 - 1800	1715 - 1815	-	-	1515 - 1615	-	-	-	-	**1530 - 1630**
PM Peak Volume	2	711	130	2	9	2	0	0	3	0	0	0	0	**845**

Site 29
I-26 James F. Byrnes Expy E/Bound On-Ramp,
east of Harbison Blvd

Date
Thursday, April 25, 2024

Lat/Long
34.076573°, -81.152147°

Weather
Fair
67°F

Click here for Detailed Weather

0000 - 2400 (Weekday 24h Session) (04-25-2024)
NB EB 15min

	Eastbound (Movement 29.1)													15min	60min
TIME	1	2	3	4	5	6	7	8	9	10	11	12	13	Total	Total
0000 - 0015	0	25	2	0	0	0	0	0	0	0	0	0	0	**27**	
0015 - 0030	0	15	2	0	1	0	0	0	1	0	1	0	0	**20**	
0030 - 0045	0	11	5	0	0	0	0	0	0	0	0	0	0	**16**	
0045 - 0100	0	10	3	0	0	0	0	0	0	0	0	0	0	**13**	**76**
0100 - 0115	0	11	3	0	0	0	0	0	0	0	0	0	0	**14**	
0115 - 0130	1	18	6	0	0	0	0	0	1	0	0	0	0	**26**	
0130 - 0145	0	7	4	0	0	0	0	0	0	0	0	0	0	**11**	
0145 - 0200	0	7	1	0	0	0	0	0	0	0	0	0	0	**8**	**59**
0200 - 0215	0	6	1	0	0	0	0	0	0	0	0	0	0	**7**	
0215 - 0230	0	9	1	0	0	0	0	0	2	0	0	0	0	**12**	
0230 - 0245	0	6	2	0	0	0	0	0	0	0	0	0	0	**8**	
0245 - 0300	0	9	2	0	0	0	0	0	1	0	0	0	0	**12**	**39**
0300 - 0315	0	5	4	0	0	0	0	0	0	0	0	0	0	**9**	
0315 - 0330	0	5	1	0	0	0	0	0	0	0	0	0	0	**6**	
0330 - 0345	0	6	1	0	0	0	0	0	0	0	0	0	0	**7**	
0345 - 0400	0	8	2	0	0	0	0	0	0	0	0	0	0	**10**	**32**
0400 - 0415	0	8	3	0	0	0	0	1	0	0	0	0	0	**12**	
0415 - 0430	0	12	3	0	0	0	0	0	2	0	0	0	0	**17**	
0430 - 0445	0	13	3	0	0	0	0	0	1	0	0	0	0	**17**	
0445 - 0500	0	8	2	0	1	0	0	0	1	0	0	0	0	**12**	**58**
0500 - 0515	0	19	1	0	0	0	0	0	1	0	0	0	0	**21**	
0515 - 0530	0	33	4	0	0	0	0	0	0	0	0	0	0	**37**	
0530 - 0545	0	36	2	0	0	0	0	0	0	0	0	0	0	**38**	
0545 - 0600	0	32	5	0	1	0	0	0	0	0	0	0	0	**38**	**134**
0600 - 0615	0	43	9	0	0	0	0	0	0	0	0	0	0	**52**	
0615 - 0630	0	50	14	0	0	0	0	0	0	0	0	0	0	**64**	
0630 - 0645	0	68	31	0	3	1	0	1	1	0	0	0	0	**105**	
0645 - 0700	0	84	25	1	0	0	0	0	0	0	0	0	0	**110**	**331**
0700 - 0715	0	103	23	0	2	0	0	0	1	0	0	0	0	**129**	
0715 - 0730	0	102	15	0	0	0	0	0	3	0	0	0	0	**120**	
0730 - 0745	0	141	28	0	1	0	0	0	1	0	0	0	0	**171**	
0745 - 0800	0	114	17	0	0	0	0	0	2	0	0	0	0	**133**	**553**
0800 - 0815	0	124	29	1	1	1	0	0	2	0	0	0	0	**158**	
0815 - 0830	0	113	28	0	0	0	0	0	1	0	0	0	0	**142**	
0830 - 0845	0	99	20	0	0	0	0	0	0	0	0	0	0	**119**	
0845 - 0900	0	86	24	0	0	0	0	1	0	0	0	0	0	**111**	**530**
0900 - 0915	1	109	25	0	3	1	0	0	1	0	0	0	0	**140**	
0915 - 0930	0	75	22	1	2	0	0	0	0	0	0	0	0	**100**	
0930 - 0945	0	106	28	1	4	0	0	0	0	0	0	0	0	**139**	
0945 - 1000	0	76	30	0	0	0	0	0	0	0	0	0	0	**106**	**485**
1000 - 1015	0	98	27	1	3	0	0	0	4	0	0	0	0	**133**	
1015 - 1030	0	94	35	0	1	0	0	1	0	0	0	0	0	**131**	
1030 - 1045	0	112	19	0	3	0	0	0	3	0	0	0	0	**137**	
1045 - 1100	0	94	13	1	1	0	0	0	1	0	0	0	0	**110**	**511**
1100 - 1115	0	133	31	2	3	0	0	1	3	0	0	0	0	**173**	
1115 - 1130	1	137	32	1	4	0	0	0	1	0	0	0	0	**176**	
1130 - 1145	0	130	35	0	0	0	0	1	1	0	0	0	0	**167**	
1145 - 1200	0	138	36	0	3	0	0	0	2	0	0	0	0	**179**	**695**
1200 - 1215	1	177	33	0	3	0	0	0	0	0	0	0	0	**214**	
1215 - 1230	0	185	51	0	3	0	0	0	0	0	0	0	0	**239**	
1230 - 1245	0	194	26	0	1	0	0	0	1	0	0	0	0	**222**	
1245 - 1300	0	187	43	0	4	0	0	0	1	0	0	0	0	**235**	**910**
1300 - 1315	0	190	34	0	3	0	0	0	0	0	0	0	0	**227**	
1315 - 1330	0	224	36	0	1	1	0	0	0	0	0	0	0	**262**	
1330 - 1345	1	200	34	0	2	0	0	0	1	0	0	0	0	**238**	
1345 - 1400	0	197	40	0	0	0	0	0	1	0	0	0	0	**238**	**965**
1400 - 1415	1	215	33	0	0	0	0	0	2	0	0	0	0	**251**	
1415 - 1430	0	195	36	0	1	0	0	0	0	0	0	0	0	**232**	
1430 - 1445	2	162	33	1	2	0	0	0	0	0	0	0	0	**200**	
1445 - 1500	0	208	30	0	2	0	0	0	0	0	0	0	0	**240**	**923**
1500 - 1515	0	188	29	0	1	1	0	0	0	0	0	0	0	**219**	
1515 - 1530	0	207	38	0	2	0	0	0	0	0	0	0	0	**247**	
1530 - 1545	0	170	41	0	3	1	0	0	1	0	0	0	0	**216**	
1545 - 1600	1	189	25	1	3	0	1	0	1	0	0	0	0	**221**	**903**
1600 - 1615	1	187	21	0	2	0	0	0	1	0	0	0	0	**212**	
1615 - 1630	1	169	21	0	1	0	0	0	0	0	0	0	0	**192**	
1630 - 1645	0	182	25	0	1	0	0	0	1	0	0	0	0	**209**	
1645 - 1700	0	159	28	0	0	0	0	1	1	0	0	0	0	**189**	**802**
1700 - 1715	0	208	27	0	3	0	0	0	0	0	0	0	0	**238**	
1715 - 1730	0	182	21	0	1	0	0	0	1	0	0	0	0	**205**	
1730 - 1745	0	164	25	0	1	1	0	0	2	0	0	0	0	**193**	
1745 - 1800	0	182	5	0	6	0	0	0	1	0	0	0	0	**194**	**830**
1800 - 1815	0	171	34	0	2	0	1	0	1	0	0	0	0	**209**	
1815 - 1830	0	177	29	0	1	0	0	0	0	0	0	0	0	**207**	
1830 - 1845	1	187	19	0	1	0	0	0	0	0	0	0	0	**208**	
1845 - 1900	0	174	41	0	1	0	0	0	0	0	0	0	0	**216**	**840**
1900 - 1915	0	0	0	0	0	0	0	0	0	0	0	0	0	**0**	
1915 - 1930	0	0	0	0	0	0	0	0	0	0	0	0	0	**0**	
1930 - 1945	0	0	0	0	0	0	0	0	0	0	0	0	0	**0**	
1945 - 2000	0	0	0	0	0	0	0	0	0	0	0	0	0	**0**	**0**
2000 - 2015	0	0	0	0	0	0	0	0	0	0	0	0	0	**0**	
2015 - 2030	0	0	0	0	0	0	0	0	0	0	0	0	0	**0**	
2030 - 2045	0	0	0	0	0	0	0	0	0	0	0	0	0	**0**	
2045 - 2100	0	0	0	0	0	0	0	0	0	0	0	0	0	**0**	**0**
2100 - 2115	0	0	0	0	0	0	0	0	0	0	0	0	0	**0**	
2115 - 2130	0	0	0	0	0	0	0	0	0	0	0	0	0	**0**	
2130 - 2145	0	0	0	0	0	0	0	0	0	0	0	0	0	**0**	
2145 - 2200	0	0	0	0	0	0	0	0	0	0	0	0	0	**0**	**0**
2200 - 2215	0	0	0	0	0	0	0	0	0	0	0	0	0	**0**	
2215 - 2230	0	0	0	0	0	0	0	0	0	0	0	0	0	**0**	
2230 - 2245	0	0	0	0	0	0	0	0	0	0	0	0	0	**0**	
2245 - 2300	0	0	0	0	0	0	0	0	0	0	0	0	0	**0**	**0**
2300 - 2315	0	0	0	0	0	0	0	0	0	0	0	0	0	**0**	
2315 - 2330	0	0	0	0	0	0	0	0	0	0	0	0	0	**0**	
2330 - 2345	0	0	0	0	0	0	0	0	0	0	0	0	0	**0**	
2345 - 0000	0	0	0	0	0	0	0	0	0	0	0	0	0	**0**	**0**

Session Total	12	7978	1517	11	88	7	2	7	53	0	1	0	0	9676
Session Average	0.13	83.10	15.80	0.11	0.92	0.07	0.02	0.07	0.55	0.00	0.01	0.00	0.00	**100.79**
Session Percentage	0.12	82.45	15.68	0.11	0.91	0.07	0.02	0.07	0.55	0.00	0.01	0.00	0.00	

AM Peak Hour	0815 - 0915	0730 - 0830	0930 - 1030	0915 - 1015	0845 - 0945	0545 - 0645	-	0545 - 0645	0715 - 0815	-	-	-	-	**0730 - 0830**
AM Peak Hour Volume	1	492	120	3	9	1	0	1	8	0	0	0	0	**604**

Noon Peak Hour	1345 - 1445	1315 - 1415	1130 - 1230	1030 - 1130	1030 - 1130	1445 - 1545	-	1015 - 1115	1000 - 1100	-	-	-	-	**1315 - 1415**
Noon Peak Hour Volume	3	836	155	4	11	2	0	2	8	0	0	0	0	**989**

PM Peak Hour	1530 - 1630	1500 - 1600	1500 - 1600	1500 - 1600	1700 - 1800	1500 - 1600	1500 - 1600	1600 - 1700	1715 - 1815	-	-	-	-	**1500 - 1600**
PM Peak Hour Volume	3	754	133	1	11	2	1	1	5	0	0	0	0	**903**

Bi-Directional Class Count || NB EB Average 15min

Columbia, SC

Marr Traffic DATA COLLECTION
www.marrtraffic.com

Site 29
I-26 James F. Byrnes Expy E/Bound On-Ramp,
east of Harbison Blvd

Date
Tuesday, April 23, 2024

Lat/Long
34.076573°, -81.152147°

Weather
Fair
58°F

0000 - 2400 (Weekday 24h Session) (All Dates)
NB EB Average 15min

	NB EB Average 15min													15min	60min
Time	1	2	3	4	5	6	7	8	9	10	11	12	13	Total	Total
0000 - 0015	0	15	2	0	0	0	0	0	0	0	0	0	0	**16**	
0015 - 0030	0	12	1	0	0	0	0	0	0	0	0	0	0	**15**	
0030 - 0045	0	10	2	0	0	0	0	0	0	0	0	0	0	**13**	
0045 - 0100	0	8	1	0	0	0	0	0	0	0	0	0	0	**10**	**54**
0100 - 0115	0	5	1	0	0	0	0	0	0	0	0	0	0	**7**	
0115 - 0130	0	9	2	0	0	0	0	0	0	0	0	0	0	**12**	
0130 - 0145	0	6	1	0	0	0	0	0	0	0	0	0	0	**7**	
0145 - 0200	0	6	1	0	0	0	0	0	0	0	0	0	0	**7**	**33**
0200 - 0215	0	4	0	0	0	0	0	0	0	0	0	0	0	**4**	
0215 - 0230	0	5	1	0	0	0	0	0	1	0	0	0	0	**6**	
0230 - 0245	0	4	1	0	0	0	0	0	0	0	0	0	0	**5**	
0245 - 0300	0	5	1	0	0	0	0	0	0	0	0	0	0	**6**	**21**
0300 - 0315	0	3	1	0	0	0	0	0	0	0	0	0	0	**5**	
0315 - 0330	0	5	0	0	0	0	0	0	0	0	0	0	0	**6**	
0330 - 0345	0	6	1	0	0	0	0	0	0	0	0	0	0	**6**	
0345 - 0400	0	4	1	0	0	0	0	0	0	0	0	0	0	**5**	**22**
0400 - 0415	0	8	1	0	0	0	0	0	0	0	0	0	0	**10**	
0415 - 0430	0	7	2	0	0	0	0	0	1	0	0	0	0	**9**	
0430 - 0445	0	7	1	0	0	0	0	0	0	0	0	0	0	**8**	
0445 - 0500	0	6	2	0	0	0	0	0	0	0	0	0	0	**9**	**36**
0500 - 0515	0	13	2	0	0	0	0	0	0	0	0	0	0	**16**	
0515 - 0530	0	17	3	0	0	0	0	0	1	0	0	0	0	**21**	
0530 - 0545	0	21	3	0	0	0	0	0	0	0	0	0	0	**24**	
0545 - 0600	0	21	3	0	0	0	0	0	0	0	0	0	0	**25**	**85**
0600 - 0615	0	27	7	0	0	0	0	0	0	0	0	0	0	**35**	
0615 - 0630	0	35	10	0	0	0	0	0	0	0	0	0	0	**45**	
0630 - 0645	0	47	21	0	1	1	0	0	0	0	0	0	0	**71**	
0645 - 0700	0	55	18	0	0	0	0	0	1	0	0	0	0	**75**	**226**
0700 - 0715	0	66	15	0	1	0	0	0	0	0	0	0	0	**82**	
0715 - 0730	0	76	15	0	0	0	0	0	1	0	0	0	0	**93**	
0730 - 0745	0	90	23	0	0	0	0	0	1	0	0	0	0	**115**	
0745 - 0800	0	90	14	0	1	0	0	0	1	0	0	0	0	**105**	**394**
0800 - 0815	0	75	18	1	1	0	0	0	1	0	0	0	0	**97**	
0815 - 0830	0	72	16	0	1	0	0	0	1	0	0	0	0	**89**	
0830 - 0845	0	66	15	0	0	0	0	0	1	0	0	0	0	**83**	
0845 - 0900	0	55	17	0	0	0	0	0	0	0	0	0	0	**72**	**341**
0900 - 0915	0	73	18	0	2	1	0	0	1	0	0	0	0	**95**	
0915 - 0930	0	56	17	0	1	0	0	0	1	0	0	0	0	**75**	
0930 - 0945	0	67	18	0	2	0	0	0	0	0	0	0	0	**88**	
0945 - 1000	0	55	19	0	1	0	0	0	0	0	0	0	0	**75**	**333**
1000 - 1015	0	69	18	0	2	0	0	0	2	0	0	0	0	**91**	
1015 - 1030	0	72	24	0	0	0	0	0	0	0	0	0	0	**97**	
1030 - 1045	0	73	14	0	1	0	0	0	1	0	0	0	0	**89**	
1045 - 1100	0	64	14	0	1	0	0	0	1	0	0	0	0	**80**	**357**
1100 - 1115	0	84	23	1	2	0	0	0	2	0	0	0	0	**111**	
1115 - 1130	0	85	19	1	1	0	0	0	1	0	0	0	0	**107**	
1130 - 1145	0	86	24	0	1	0	0	1	0	0	0	0	0	**112**	
1145 - 1200	0	92	22	0	1	0	0	0	1	0	0	0	0	**117**	**447**
1200 - 1215	0	108	20	0	2	0	0	0	0	0	0	0	0	**130**	
1215 - 1230	0	117	29	0	2	0	0	0	0	0	0	0	0	**149**	
1230 - 1245	0	122	17	0	1	0	0	0	1	0	0	0	0	**142**	
1245 - 1300	0	129	25	0	2	0	0	0	1	0	0	0	0	**157**	**579**
1300 - 1315	0	119	27	0	3	0	0	0	0	0	0	0	0	**149**	
1315 - 1330	0	140	23	0	0	0	0	0	0	0	0	0	0	**164**	
1330 - 1345	0	127	27	0	1	0	0	0	0	0	0	0	0	**156**	
1345 - 1400	0	130	27	2	0	0	0	0	1	0	0	0	0	**160**	**629**
1400 - 1415	1	137	20	0	1	0	0	0	1	0	0	0	0	**160**	
1415 - 1430	0	125	24	0	1	0	0	0	0	0	0	0	0	**150**	
1430 - 1445	1	109	18	1	1	0	0	0	0	0	0	0	0	**129**	
1445 - 1500	0	124	24	0	1	0	0	0	1	0	0	0	0	**150**	**590**
1500 - 1515	0	124	19	0	1	0	0	0	0	0	0	0	0	**145**	
1515 - 1530	0	125	21	0	1	0	0	0	0	0	0	0	0	**148**	
1530 - 1545	0	114	25	0	2	0	0	0	0	0	0	0	0	**142**	
1545 - 1600	1	115	17	0	1	0	0	0	1	0	0	0	0	**135**	**570**
1600 - 1615	1	127	20	0	1	0	0	0	1	0	0	0	0	**149**	
1615 - 1630	0	118	17	0	0	0	0	0	0	0	0	0	0	**136**	
1630 - 1645	0	116	17	0	1	0	0	0	0	0	0	0	0	**134**	
1645 - 1700	0	109	20	0	0	0	0	0	1	0	0	0	0	**130**	**549**
1700 - 1715	0	131	21	0	2	0	0	0	0	0	0	0	0	**154**	
1715 - 1730	0	117	17	0	1	0	0	0	1	0	0	0	0	**136**	
1730 - 1745	0	98	18	0	1	0	0	0	1	0	0	0	0	**118**	
1745 - 1800	0	117	10	0	3	0	0	0	0	0	0	0	0	**130**	**538**
1800 - 1815	0	116	19	0	1	0	0	0	0	0	0	0	0	**137**	
1815 - 1830	0	116	19	0	0	0	0	0	0	0	0	0	0	**136**	
1830 - 1845	0	120	15	0	0	0	0	0	0	0	0	0	0	**136**	
1845 - 1900	0	110	22	0	1	0	0	0	0	0	0	0	0	**132**	**541**
1900 - 1915	0	122	14	0	0	0	0	0	0	0	0	0	0	**136**	
1915 - 1930	0	108	15	0	1	0	0	0	0	0	0	0	0	**123**	
1930 - 1945	0	110	16	0	0	0	0	0	1	0	0	0	0	**127**	
1945 - 2000	0	88	15	0	0	0	0	0	0	0	0	0	0	**103**	**489**
2000 - 2015	0	112	18	0	0	0	0	0	0	0	0	0	0	**131**	
2015 - 2030	0	95	13	0	1	0	0	0	0	0	0	0	0	**108**	
2030 - 2045	0	87	17	0	1	0	0	0	0	0	0	0	0	**104**	
2045 - 2100	0	71	8	0	0	0	0	0	0	0	0	0	0	**79**	**423**
2100 - 2115	0	74	13	0	0	0	0	0	0	0	0	0	0	**87**	
2115 - 2130	0	65	8	0	0	0	0	0	0	0	0	0	0	**73**	
2130 - 2145	0	63	7	0	0	0	0	0	0	0	0	0	0	**70**	
2145 - 2200	0	55	6	1	0	0	0	0	0	0	0	0	0	**62**	**293**
2200 - 2215	0	56	6	0	0	0	0	0	0	0	0	0	0	**63**	
2215 - 2230	0	42	5	0	1	0	0	0	0	0	0	0	0	**48**	
2230 - 2245	0	30	3	0	0	0	0	0	0	0	0	0	0	**34**	
2245 - 2300	0	29	2	0	0	0	0	0	0	0	0	0	0	**32**	**176**
2300 - 2315	0	23	5	0	0	0	0	0	0	0	0	0	0	**28**	
2315 - 2330	0	19	3	0	0	0	0	0	0	0	0	0	0	**22**	
2330 - 2345	0	14	2	0	0	0	0	0	0	0	0	0	0	**17**	
2345 - 0000	0	14	1	0	0	0	0	0	0	0	0	0	0	**15**	**82**

Session Total	7	6471	1210	10	60	6	1	4	37	0	0	0	0	**7806**
Session Average	0.08	67.41	12.60	0.10	0.62	0.06	0.01	0.04	0.38	0.00	0.00	0.00	0.00	**81.31**
Session Percentage	0.09	82.90	15.50	0.13	0.76	0.07	0.02	0.05	0.47	0.00	0.00	0.00	0.00	

AM Peak Hour	0815 - 0915	0715 - 0815	0930 - 1030	0915 - 1015	0900 - 1000	0545 - 0645	0600 - 0700	0930 - 1030	0745 - 0845	-	-	-	-	**0715 - 0815**
AM Peak Volume	0	332	79	1	6	1	0	1	3	0	0	0	0	**409**

Noon Peak Hour	1245 - 1345	1315 - 1415	1300 - 1400	1345 - 1445	1215 - 1315	1200 - 1300	1215 - 1315	1045 - 1145	1030 - 1130	-	-	-	-	**1315 - 1415**
Noon Peak Volume	1	534	104	3	7	1	0	1	5	0	0	0	0	**641**

PM Peak Hour	1530 - 1630	1515 - 1615	1515 - 1615	1530 - 1630	1700 - 1800	1715 - 1815	1500 - 1600	1600 - 1700	1645 - 1745	-	-	-	-	**1515 - 1615**
PM Peak Volume	2	481	83	1	7	1	0	0	2	0	0	0	0	**574**

Bi-Directional Class Count || Volume Summary 15min

Columbia, SC

Marr Traffic DATA COLLECTION

www.marrtraffic.com

Site 29

I-26 James F. Byrnes Expy E/Bound On-Ramp,
east of Harbison Blvd

Date

Tuesday, April 23, 2024

Lat/Long

34.076573°, -81.152147°

Weather

Fair
58°F

Click here for Detailed Weather

0000 - 2400 (Weekday 24h Session) (04-23-2024)

Volume Summary 15min

TIME	Volume Summary 15min EB	Volume Summary 15min WB	15min Total	60min Total
0000 - 0015	0	0	**0**	
0015 - 0030	0	0	**0**	
0030 - 0045	0	0	**0**	
0045 - 0100	0	0	**0**	**0**
0100 - 0115	0	0	**0**	
0115 - 0130	0	0	**0**	
0130 - 0145	0	0	**0**	
0145 - 0200	0	0	**0**	**0**
0200 - 0215	0	0	**0**	
0215 - 0230	0	0	**0**	
0230 - 0245	0	0	**0**	
0245 - 0300	0	0	**0**	**0**
0300 - 0315	0	0	**0**	
0315 - 0330	0	0	**0**	
0330 - 0345	0	0	**0**	
0345 - 0400	0	0	**0**	**0**
0400 - 0415	0	0	**0**	
0415 - 0430	0	0	**0**	
0430 - 0445	0	0	**0**	
0445 - 0500	0	0	**0**	**0**
0500 - 0515	0	0	**0**	
0515 - 0530	0	0	**0**	
0530 - 0545	0	0	**0**	
0545 - 0600	0	0	**0**	**0**
0600 - 0615	0	0	**0**	
0615 - 0630	0	0	**0**	
0630 - 0645	0	0	**0**	
0645 - 0700	0	0	**0**	**0**
0700 - 0715	0	0	**0**	
0715 - 0730	0	0	**0**	
0730 - 0745	0	0	**0**	
0745 - 0800	0	0	**0**	**0**
0800 - 0815	0	0	**0**	
0815 - 0830	0	0	**0**	
0830 - 0845	0	0	**0**	
0845 - 0900	0	0	**0**	**0**
0900 - 0915	0	0	**0**	
0915 - 0930	0	0	**0**	
0930 - 0945	0	0	**0**	
0945 - 1000	0	0	**0**	**0**
1000 - 1015	0	0	**0**	
1015 - 1030	0	0	**0**	
1030 - 1045	0	0	**0**	
1045 - 1100	0	0	**0**	**0**
1100 - 1115	0	0	**0**	
1115 - 1130	0	0	**0**	
1130 - 1145	0	0	**0**	
1145 - 1200	0	0	**0**	**0**

Time	Volume Summary 15min EB	Volume Summary 15min WB	15min Total	60min Total
1200 - 1215	0	0	**0**	
1215 - 1230	0	0	**0**	
1230 - 1245	0	0	**0**	
1245 - 1300	0	0	**0**	**0**
1300 - 1315	0	0	**0**	
1315 - 1330	0	0	**0**	
1330 - 1345	0	0	**0**	
1345 - 1400	0	0	**0**	**0**
1400 - 1415	0	0	**0**	
1415 - 1430	0	0	**0**	
1430 - 1445	0	0	**0**	
1445 - 1500	0	0	**0**	**0**
1500 - 1515	0	0	**0**	
1515 - 1530	0	0	**0**	
1530 - 1545	0	0	**0**	
1545 - 1600	0	0	**0**	**0**
1600 - 1615	0	0	**0**	
1615 - 1630	0	0	**0**	
1630 - 1645	0	0	**0**	
1645 - 1700	0	0	**0**	**0**
1700 - 1715	0	0	**0**	
1715 - 1730	0	0	**0**	
1730 - 1745	0	0	**0**	
1745 - 1800	0	0	**0**	**0**
1800 - 1815	0	0	**0**	
1815 - 1830	0	0	**0**	
1830 - 1845	0	0	**0**	
1845 - 1900	0	0	**0**	**0**
1900 - 1915	206	0	**206**	
1915 - 1930	182	0	**182**	
1930 - 1945	180	0	**180**	
1945 - 2000	163	0	**163**	**731**
2000 - 2015	195	0	**195**	
2015 - 2030	151	0	**151**	
2030 - 2045	147	0	**147**	
2045 - 2100	119	0	**119**	**612**
2100 - 2115	125	0	**125**	
2115 - 2130	102	0	**102**	
2130 - 2145	91	0	**91**	
2145 - 2200	96	0	**96**	**414**
2200 - 2215	97	0	**97**	
2215 - 2230	75	0	**75**	
2230 - 2245	60	0	**60**	
2245 - 2300	48	0	**48**	**280**
2300 - 2315	36	0	**36**	
2315 - 2330	38	0	**38**	
2330 - 2345	31	0	**31**	
2345 - 0000	19	0	**19**	**124**

Session Total	2161	0	**2161**
Session Average	22.51	0.00	**22.51**
Session Percentage	100.00	0.00	

Site 29

I-26 James F. Byrnes Expy E/Bound On-Ramp,
east of Harbison Blvd

Date

Wednesday, April 24, 2024

Lat/Long

34.076573°, -81.152147°

Weather

Fair
66°F

Click here for Detailed Weather

0000 - 2400 (Weekday 24h Session) (04-24-2024)

Volume Summary 15min

TIME	Volume Summary 15min EB	Volume Summary 15min WB	15min Total	60min Total
0000 - 0015	22	0	**22**	
0015 - 0030	24	0	**24**	
0030 - 0045	22	0	**22**	
0045 - 0100	17	0	**17**	**85**
0100 - 0115	6	0	**6**	
0115 - 0130	10	0	**10**	
0130 - 0145	10	0	**10**	
0145 - 0200	13	0	**13**	**39**
0200 - 0215	6	0	**6**	
0215 - 0230	6	0	**6**	
0230 - 0245	6	0	**6**	
0245 - 0300	6	0	**6**	**24**
0300 - 0315	6	0	**6**	
0315 - 0330	11	0	**11**	
0330 - 0345	12	0	**12**	
0345 - 0400	6	0	**6**	**35**
0400 - 0415	17	0	**17**	
0415 - 0430	11	0	**11**	
0430 - 0445	8	0	**8**	
0445 - 0500	14	0	**14**	**50**
0500 - 0515	26	0	**26**	
0515 - 0530	26	0	**26**	
0530 - 0545	33	0	**33**	
0545 - 0600	36	0	**36**	**121**
0600 - 0615	52	0	**52**	
0615 - 0630	72	0	**72**	
0630 - 0645	108	0	**108**	
0645 - 0700	114	0	**114**	**346**
0700 - 0715	117	0	**117**	
0715 - 0730	158	0	**158**	
0730 - 0745	173	0	**173**	
0745 - 0800	181	0	**181**	**629**
0800 - 0815	132	0	**132**	
0815 - 0830	126	0	**126**	
0830 - 0845	130	0	**130**	
0845 - 0900	104	0	**104**	**492**
0900 - 0915	144	0	**144**	
0915 - 0930	125	0	**125**	
0930 - 0945	126	0	**126**	
0945 - 1000	120	0	**120**	**515**
1000 - 1015	141	0	**141**	
1015 - 1030	159	0	**159**	
1030 - 1045	131	0	**131**	
1045 - 1100	129	0	**129**	**560**
1100 - 1115	161	0	**161**	
1115 - 1130	146	0	**146**	
1130 - 1145	168	0	**168**	
1145 - 1200	171	0	**171**	**646**

Time	Volume Summary 15min EB	Volume Summary 15min WB	15min Total	60min Total
1200 - 1215	176	0	**176**	
1215 - 1230	209	0	**209**	
1230 - 1245	204	0	**204**	
1245 - 1300	237	0	**237**	**826**
1300 - 1315	220	0	**220**	
1315 - 1330	231	0	**231**	
1330 - 1345	229	0	**229**	
1345 - 1400	243	0	**243**	**923**
1400 - 1415	230	0	**230**	
1415 - 1430	218	0	**218**	
1430 - 1445	188	0	**188**	
1445 - 1500	210	0	**210**	**846**
1500 - 1515	215	0	**215**	
1515 - 1530	196	0	**196**	
1530 - 1545	210	0	**210**	
1545 - 1600	185	0	**185**	**806**
1600 - 1615	234	0	**234**	
1615 - 1630	216	0	**216**	
1630 - 1645	193	0	**193**	
1645 - 1700	202	0	**202**	**845**
1700 - 1715	225	0	**225**	
1715 - 1730	202	0	**202**	
1730 - 1745	161	0	**161**	
1745 - 1800	196	0	**196**	**784**
1800 - 1815	201	0	**201**	
1815 - 1830	200	0	**200**	
1830 - 1845	200	0	**200**	
1845 - 1900	181	0	**181**	**782**
1900 - 1915	202	0	**202**	
1915 - 1930	188	0	**188**	
1930 - 1945	201	0	**201**	
1945 - 2000	146	0	**146**	**737**
2000 - 2015	197	0	**197**	
2015 - 2030	174	0	**174**	
2030 - 2045	166	0	**166**	
2045 - 2100	119	0	**119**	**656**
2100 - 2115	137	0	**137**	
2115 - 2130	118	0	**118**	
2130 - 2145	119	0	**119**	
2145 - 2200	91	0	**91**	**465**
2200 - 2215	91	0	**91**	
2215 - 2230	68	0	**68**	
2230 - 2245	41	0	**41**	
2245 - 2300	47	0	**47**	**247**
2300 - 2315	48	0	**48**	
2315 - 2330	27	0	**27**	
2330 - 2345	20	0	**20**	
2345 - 0000	27	0	**27**	**122**

Session Total	11581	0	**11581**
Session Average	120.64	0.00	**120.64**
Session Percentage	100.00	0.00	

Site 29

I-26 James F. Byrnes Expy E/Bound On-Ramp,
east of Harbison Blvd

Date

Thursday, April 25, 2024

Lat/Long

34.076573°, -81.152147°

Weather

Fair
67°F

Click here for Detailed Weather

0000 - 2400 (Weekday 24h Session) (04-25-2024)

Volume Summary 15min

	Volume Summary 15min		15min	60min
TIME	EB	WB	Total	Total
0000 - 0015	27	0	**27**	
0015 - 0030	20	0	**20**	
0030 - 0045	16	0	**16**	
0045 - 0100	13	0	**13**	**76**
0100 - 0115	14	0	**14**	
0115 - 0130	26	0	**26**	
0130 - 0145	11	0	**11**	
0145 - 0200	8	0	**8**	**59**
0200 - 0215	7	0	**7**	
0215 - 0230	12	0	**12**	
0230 - 0245	8	0	**8**	
0245 - 0300	12	0	**12**	**39**
0300 - 0315	9	0	**9**	
0315 - 0330	6	0	**6**	
0330 - 0345	7	0	**7**	
0345 - 0400	10	0	**10**	**32**
0400 - 0415	12	0	**12**	
0415 - 0430	17	0	**17**	
0430 - 0445	17	0	**17**	
0445 - 0500	12	0	**12**	**58**
0500 - 0515	21	0	**21**	
0515 - 0530	37	0	**37**	
0530 - 0545	38	0	**38**	
0545 - 0600	38	0	**38**	**134**
0600 - 0615	52	0	**52**	
0615 - 0630	64	0	**64**	
0630 - 0645	105	0	**105**	
0645 - 0700	110	0	**110**	**331**
0700 - 0715	129	0	**129**	
0715 - 0730	120	0	**120**	
0730 - 0745	171	0	**171**	
0745 - 0800	133	0	**133**	**553**
0800 - 0815	158	0	**158**	
0815 - 0830	142	0	**142**	
0830 - 0845	119	0	**119**	
0845 - 0900	111	0	**111**	**530**
0900 - 0915	140	0	**140**	
0915 - 0930	100	0	**100**	
0930 - 0945	139	0	**139**	
0945 - 1000	106	0	**106**	**485**
1000 - 1015	133	0	**133**	
1015 - 1030	131	0	**131**	
1030 - 1045	137	0	**137**	
1045 - 1100	110	0	**110**	**511**
1100 - 1115	173	0	**173**	
1115 - 1130	176	0	**176**	
1130 - 1145	167	0	**167**	
1145 - 1200	179	0	**179**	**695**

	Volume Summary 15min		15min	60min
Time	EB	WB	Total	Total
1200 - 1215	214	0	**214**	
1215 - 1230	239	0	**239**	
1230 - 1245	222	0	**222**	
1245 - 1300	235	0	**235**	**910**
1300 - 1315	227	0	**227**	
1315 - 1330	262	0	**262**	
1330 - 1345	238	0	**238**	
1345 - 1400	238	0	**238**	**965**
1400 - 1415	251	0	**251**	
1415 - 1430	232	0	**232**	
1430 - 1445	200	0	**200**	
1445 - 1500	240	0	**240**	**923**
1500 - 1515	219	0	**219**	
1515 - 1530	247	0	**247**	
1530 - 1545	216	0	**216**	
1545 - 1600	221	0	**221**	**903**
1600 - 1615	212	0	**212**	
1615 - 1630	192	0	**192**	
1630 - 1645	209	0	**209**	
1645 - 1700	189	0	**189**	**802**
1700 - 1715	238	0	**238**	
1715 - 1730	205	0	**205**	
1730 - 1745	193	0	**193**	
1745 - 1800	194	0	**194**	**830**
1800 - 1815	209	0	**209**	
1815 - 1830	207	0	**207**	
1830 - 1845	208	0	**208**	
1845 - 1900	216	0	**216**	**840**
1900 - 1915	0	0	**0**	
1915 - 1930	0	0	**0**	
1930 - 1945	0	0	**0**	
1945 - 2000	0	0	**0**	**0**
2000 - 2015	0	0	**0**	
2015 - 2030	0	0	**0**	
2030 - 2045	0	0	**0**	
2045 - 2100	0	0	**0**	**0**
2100 - 2115	0	0	**0**	
2115 - 2130	0	0	**0**	
2130 - 2145	0	0	**0**	
2145 - 2200	0	0	**0**	**0**
2200 - 2215	0	0	**0**	
2215 - 2230	0	0	**0**	
2230 - 2245	0	0	**0**	
2245 - 2300	0	0	**0**	**0**
2300 - 2315	0	0	**0**	
2315 - 2330	0	0	**0**	
2330 - 2345	0	0	**0**	
2345 - 0000	0	0	**0**	**0**

Session Total	9676	0	**9676**
Session Average	100.79	0.00	**100.79**
Session Percentage	100.00	0.00	

Bi-Directional Class Count || NB EB 60min

Columbia, SC

Marr Traffic DATA COLLECTION

www.marrtraffic.com

Site 29
I-26 James F. Byrnes Expy E/Bound On-Ramp,
east of Harbison Blvd

Date
Tuesday, April 23, 2024

Lat/Long
34.076573°, -81.152147°

Weather
Fair
58°F

Click here for Detailed Weather

0000 - 2400 (Weekday 24h Session) (04-23-2024)
NB EB 60min

	Eastbound (Movement 29.1)													
TIME	1	2	3	4	5	6	7	8	9	10	11	12	13	**Total**
0000 - 0100	0	0	0	0	0	0	0	0	0	0	0	0	0	**0**
0100 - 0200	0	0	0	0	0	0	0	0	0	0	0	0	0	**0**
0200 - 0300	0	0	0	0	0	0	0	0	0	0	0	0	0	**0**
0300 - 0400	0	0	0	0	0	0	0	0	0	0	0	0	0	**0**
0400 - 0500	0	0	0	0	0	0	0	0	0	0	0	0	0	**0**
0500 - 0600	0	0	0	0	0	0	0	0	0	0	0	0	0	**0**
0600 - 0700	0	0	0	0	0	0	0	0	0	0	0	0	0	**0**
0700 - 0800	0	0	0	0	0	0	0	0	0	0	0	0	0	**0**
0800 - 0900	0	0	0	0	0	0	0	0	0	0	0	0	0	**0**
0900 - 1000	0	0	0	0	0	0	0	0	0	0	0	0	0	**0**
1000 - 1100	0	0	0	0	0	0	0	0	0	0	0	0	0	**0**
1100 - 1200	0	0	0	0	0	0	0	0	0	0	0	0	0	**0**
1200 - 1300	0	0	0	0	0	0	0	0	0	0	0	0	0	**0**
1300 - 1400	0	0	0	0	0	0	0	0	0	0	0	0	0	**0**
1400 - 1500	0	0	0	0	0	0	0	0	0	0	0	0	0	**0**
1500 - 1600	0	0	0	0	0	0	0	0	0	0	0	0	0	**0**
1600 - 1700	0	0	0	0	0	0	0	0	0	0	0	0	0	**0**
1700 - 1800	0	0	0	0	0	0	0	0	0	0	0	0	0	**0**
1800 - 1900	0	0	0	0	0	0	0	0	0	0	0	0	0	**0**
1900 - 2000	0	640	88	0	1	0	0	0	2	0	0	0	0	**731**
2000 - 2100	0	519	89	0	3	0	0	1	0	0	0	0	0	**612**
2100 - 2200	0	365	44	2	1	1	0	0	1	0	0	0	0	**414**
2200 - 2300	0	256	20	1	2	0	0	0	1	0	0	0	0	**280**
2300 - 2400	0	95	28	0	0	0	0	0	1	0	0	0	0	**124**
Session Total	0	1875	269	3	7	1	0	1	5	0	0	0	0	**2161**
Session Average	0.00	78.13	11.21	0.13	0.29	0.04	0.00	0.04	0.21	0.00	0.00	0.00	0.00	**90.04**
Session Percentage	0.00	86.77	12.45	0.14	0.32	0.05	0.00	0.05	0.23	0.00	0.00	0.00	0.00	
AM Peak Hour	-	-	-	-	-	-	-	-	-	-	-	-	-	**-**
AM Peak Volume	0	0	0	0	0	0	0	0	0	0	0	0	0	**0**
Noon Peak Hour	-	-	-	-	-	-	-	-	-	-	-	-	-	**-**
Noon Peak Volume	0	0	0	0	0	0	0	0	0	0	0	0	0	**0**
PM Peak Hour	-	1900 - 2000	1900 - 2000	-	1900 - 2000	-	-	-	1900 - 2000	-	-	-	-	**1900 - 2000**
PM Peak Volume	0	640	88	0	1	0	0	0	2	0	0	0	0	**731**

Site 29
I-26 James F. Byrnes Expy E/Bound On-Ramp,
east of Harbison Blvd

Date
Wednesday, April 24, 2024

Lat/Long
34.076573°, -81.152147°

Weather
Fair
66°F

Click here for Detailed Weather

0000 - 2400 (Weekday 24h Session) (04-24-2024)
NB EB 60min

	Eastbound (Movement 29.1)													
TIME	1	2	3	4	5	6	7	8	9	10	11	12	13	**Total**
0000 - 0100	0	76	8	0	0	0	0	0	1	0	0	0	0	**85**
0100 - 0200	0	37	2	0	0	0	0	0	0	0	0	0	0	**39**
0200 - 0300	0	21	2	0	1	0	0	0	0	0	0	0	0	**24**
0300 - 0400	0	31	2	0	0	0	0	0	2	0	0	0	0	**35**
0400 - 0500	0	43	7	0	0	0	0	0	0	0	0	0	0	**50**
0500 - 0600	0	96	22	0	0	0	0	0	3	0	0	0	0	**121**
0600 - 0700	0	249	89	0	3	2	1	0	2	0	0	0	0	**346**
0700 - 0800	0	506	118	0	3	1	0	0	1	0	0	0	0	**629**
0800 - 0900	0	382	97	1	7	0	0	0	5	0	0	0	0	**492**
0900 - 1000	0	388	110	0	10	1	0	0	6	0	0	0	0	**515**
1000 - 1100	1	433	116	0	5	0	0	1	4	0	0	0	0	**560**
1100 - 1200	0	503	129	1	6	0	0	1	6	0	0	0	0	**646**
1200 - 1300	2	685	123	1	6	2	0	1	6	0	0	0	0	**826**
1300 - 1400	2	736	167	6	7	0	1	1	3	0	0	0	0	**923**
1400 - 1500	1	703	128	2	5	1	0	0	6	0	0	0	0	**846**
1500 - 1600	1	679	115	1	8	0	0	0	2	0	0	0	0	**806**
1600 - 1700	1	711	128	1	2	0	0	0	2	0	0	0	0	**845**
1700 - 1800	1	652	119	0	9	1	0	0	2	0	0	0	0	**784**
1800 - 1900	1	675	101	2	2	1	0	0	0	0	0	0	0	**782**
1900 - 2000	0	642	91	0	4	0	0	0	0	0	0	0	0	**737**
2000 - 2100	0	575	77	0	3	0	0	0	1	0	0	0	0	**656**
2100 - 2200	0	407	56	1	1	0	0	0	0	0	0	0	0	**465**
2200 - 2300	0	216	30	0	1	0	0	0	0	0	0	0	0	**247**
2300 - 2400	0	115	6	0	1	0	0	0	0	0	0	0	0	**122**

Session Total	10	9561	1843	16	84	9	2	4	52	0	0	0	0	**11581**
Session Average	0.42	398.38	76.79	0.67	3.50	0.38	0.08	0.17	2.17	0.00	0.00	0.00	0.00	**482.54**
Session Percentage	0.09	82.56	15.91	0.14	0.73	0.08	0.02	0.03	0.45	0.00	0.00	0.00	0.00	

AM Peak Hour	-	0700 - 0800	0700 - 0800	0800 - 0900	0900 - 1000	0600 - 0700	0600 - 0700	-	0900 - 1000	-	-	-	-	**0700 - 0800**
AM Peak Volume	0	506	118	1	10	2	1	0	6	0	0	0	0	**629**

Noon Peak Hour	1200 - 1300	1300 - 1400	1300 - 1400	1300 - 1400	1300 - 1400	1200 - 1300	1300 - 1400	1000 - 1100	1100 - 1200	-	-	-	-	**1300 - 1400**
Noon Peak Volume	2	736	167	6	7	2	1	1	6	0	0	0	0	**923**

PM Peak Hour	1500 - 1600	1600 - 1700	1600 - 1700	1800 - 1900	1700 - 1800	1700 - 1800	-	-	1500 - 1600	-	-	-	-	**1600 - 1700**
PM Peak Volume	1	711	128	2	9	1	0	0	2	0	0	0	0	**845**

Site 29

I-26 James F. Byrnes Expy E/Bound On-Ramp,
east of Harbison Blvd

Date

Thursday, April 25, 2024

Lat/Long

34.076573°, -81.152147°

Weather

Fair
67°F

Click here for Detailed Weather

0000 - 2400 (Weekday 24h Session) (04-25-2024)

NB EB 60min

	Eastbound (Movement 29.1)													
TIME	1	2	3	4	5	6	7	8	9	10	11	12	13	**Total**
0000 - 0100	0	61	12	0	1	0	0	0	1	0	1	0	0	**76**
0100 - 0200	1	43	14	0	0	0	0	0	1	0	0	0	0	**59**
0200 - 0300	0	30	6	0	0	0	0	0	3	0	0	0	0	**39**
0300 - 0400	0	24	8	0	0	0	0	0	0	0	0	0	0	**32**
0400 - 0500	0	41	11	0	1	0	0	1	4	0	0	0	0	**58**
0500 - 0600	0	120	12	0	1	0	0	0	1	0	0	0	0	**134**
0600 - 0700	0	245	79	1	3	1	0	1	1	0	0	0	0	**331**
0700 - 0800	0	460	83	0	3	0	0	0	7	0	0	0	0	**553**
0800 - 0900	0	422	101	1	1	1	0	1	3	0	0	0	0	**530**
0900 - 1000	1	366	105	2	9	1	0	0	1	0	0	0	0	**485**
1000 - 1100	0	398	94	2	8	0	0	1	8	0	0	0	0	**511**
1100 - 1200	1	538	134	3	10	0	0	2	7	0	0	0	0	**695**
1200 - 1300	1	743	153	0	11	0	0	0	2	0	0	0	0	**910**
1300 - 1400	1	811	144	0	6	1	0	0	2	0	0	0	0	**965**
1400 - 1500	3	780	132	1	5	0	0	0	2	0	0	0	0	**923**
1500 - 1600	1	754	133	1	9	2	1	0	2	0	0	0	0	**903**
1600 - 1700	2	697	95	0	4	0	0	1	3	0	0	0	0	**802**
1700 - 1800	0	736	78	0	11	1	0	0	4	0	0	0	0	**830**
1800 - 1900	1	709	123	0	5	0	1	0	1	0	0	0	0	**840**
1900 - 2000	0	0	0	0	0	0	0	0	0	0	0	0	0	**0**
2000 - 2100	0	0	0	0	0	0	0	0	0	0	0	0	0	**0**
2100 - 2200	0	0	0	0	0	0	0	0	0	0	0	0	0	**0**
2200 - 2300	0	0	0	0	0	0	0	0	0	0	0	0	0	**0**
2300 - 2400	0	0	0	0	0	0	0	0	0	0	0	0	0	**0**

Session Total	12	7978	1517	11	88	7	2	7	53	0	1	0	0	**9676**
Session Average	0.50	332.42	63.21	0.46	3.67	0.29	0.08	0.29	2.21	0.00	0.04	0.00	0.00	**403.17**
Session Percentage	0.12	82.45	15.68	0.11	0.91	0.07	0.02	0.07	0.55	0.00	0.01	0.00	0.00	

AM Peak Hour	0900 - 1000	0700 - 0800	0900 - 1000	0900 - 1000	0900 - 1000	0600 - 0700	-	0600 - 0700	0700 - 0800	-	-	-	-	**0700 - 0800**
AM Peak Hour Volume	1	460	105	2	9	1	0	1	7	0	0	0	0	**553**

Noon Peak Hour	1400 - 1500	1300 - 1400	1200 - 1300	1100 - 1200	1200 - 1300	1300 - 1400	-	1100 - 1200	1000 - 1100	-	-	-	-	**1300 - 1400**
Noon Peak Hour Volume	3	811	153	3	11	1	0	2	8	0	0	0	0	**965**

PM Peak Hour	1600 - 1700	1500 - 1600	1500 - 1600	1500 - 1600	1700 - 1800	1500 - 1600	1500 - 1600	1600 - 1700	1700 - 1800	-	-	-	-	**1500 - 1600**
PM Peak Hour Volume	2	754	133	1	11	2	1	1	4	0	0	0	0	**903**

Bi-Directional Class Count || Volume Summary 60min

Columbia, SC

Marr Traffic DATA COLLECTION

www.marrtraffic.com

Site 29

I-26 James F. Byrnes Expy E/Bound On-Ramp,
east of Harbison Blvd

Date

Tuesday, April 23, 2024

Lat/Long

34.076573°, -81.152147°

Weather

Fair
58°F

Click here for Detailed Weather

0000 - 2400 (Weekday 24h Session) (04-23-2024)

Volume Summary 60min

	Volume Summary 60min		
TIME	EB	WB	**Total**
0000 - 0100	0	0	**0**
0100 - 0200	0	0	**0**
0200 - 0300	0	0	**0**
0300 - 0400	0	0	**0**
0400 - 0500	0	0	**0**
0500 - 0600	0	0	**0**
0600 - 0700	0	0	**0**
0700 - 0800	0	0	**0**
0800 - 0900	0	0	**0**
0900 - 1000	0	0	**0**
1000 - 1100	0	0	**0**
1100 - 1200	0	0	**0**

	Volume Summary 60min		
Time	EB	WB	**Total**
1200 - 1300	0	0	**0**
1300 - 1400	0	0	**0**
1400 - 1500	0	0	**0**
1500 - 1600	0	0	**0**
1600 - 1700	0	0	**0**
1700 - 1800	0	0	**0**
1800 - 1900	0	0	**0**
1900 - 2000	731	0	**731**
2000 - 2100	612	0	**612**
2100 - 2200	414	0	**414**
2200 - 2300	280	0	**280**
2300 - 2400	124	0	**124**

Session Total	2161	0	**2161**
Session Average	90.04	0.00	**90.04**
Session Percentage	100.00	0.00	

Site 29

I-26 James F. Byrnes Expy E/Bound On-Ramp,
east of Harbison Blvd

Date

Wednesday, April 24, 2024

Lat/Long

34.076573°, -81.152147°

Weather

Fair
66°F

Click here for Detailed Weather

0000 - 2400 (Weekday 24h Session) (04-24-2024)

Volume Summary 60min

	Volume Summary 60min		
TIME	EB	WB	**Total**
0000 - 0100	85	0	**85**
0100 - 0200	39	0	**39**
0200 - 0300	24	0	**24**
0300 - 0400	35	0	**35**
0400 - 0500	50	0	**50**
0500 - 0600	121	0	**121**
0600 - 0700	346	0	**346**
0700 - 0800	629	0	**629**
0800 - 0900	492	0	**492**
0900 - 1000	515	0	**515**
1000 - 1100	560	0	**560**
1100 - 1200	646	0	**646**

Session Total	11581	0	**11581**
Session Average	482.54	0.00	**482.54**
Session Percentage	100.00	0.00	

	Volume Summary 60min		
Time	EB	WB	**Total**
1200 - 1300	826	0	**826**
1300 - 1400	923	0	**923**
1400 - 1500	846	0	**846**
1500 - 1600	806	0	**806**
1600 - 1700	845	0	**845**
1700 - 1800	784	0	**784**
1800 - 1900	782	0	**782**
1900 - 2000	737	0	**737**
2000 - 2100	656	0	**656**
2100 - 2200	465	0	**465**
2200 - 2300	247	0	**247**
2300 - 2400	122	0	**122**

Site 29

I-26 James F. Byrnes Expy E/Bound On-Ramp,
east of Harbison Blvd

Date

Thursday, April 25, 2024

Lat/Long

34.076573°, -81.152147°

Weather

Fair
67°F

Click here for Detailed Weather

0000 - 2400 (Weekday 24h Session) (04-25-2024)

Volume Summary 60min

	Volume Summary 60min		
TIME	EB	WB	**Total**
0000 - 0100	76	0	**76**
0100 - 0200	59	0	**59**
0200 - 0300	39	0	**39**
0300 - 0400	32	0	**32**
0400 - 0500	58	0	**58**
0500 - 0600	134	0	**134**
0600 - 0700	331	0	**331**
0700 - 0800	553	0	**553**
0800 - 0900	530	0	**530**
0900 - 1000	485	0	**485**
1000 - 1100	511	0	**511**
1100 - 1200	695	0	**695**

Session Total	9676	0	**9676**
Session Average	403.17	0.00	**403.17**
Session Percentage	100.00	0.00	

	Volume Summary 60min		
Time	EB	WB	**Total**
1200 - 1300	910	0	**910**
1300 - 1400	965	0	**965**
1400 - 1500	923	0	**923**
1500 - 1600	903	0	**903**
1600 - 1700	802	0	**802**
1700 - 1800	830	0	**830**
1800 - 1900	840	0	**840**
1900 - 2000	0	0	**0**
2000 - 2100	0	0	**0**
2100 - 2200	0	0	**0**
2200 - 2300	0	0	**0**
2300 - 2400	0	0	**0**

Bi-Directional Class Count || Graphical Analysis NB EB

Columbia, SC

Marr Traffic DATA COLLECTION

www.marrtraffic.com

Site 29

I-26 James F. Byrnes Expy E/Bound On-Ramp,
east of Harbison Blvd

Lat/Long

34.076573°, -81.152147°

0000 - 2400 (Weekday 24h Session)

Graphical Analysis NB EB

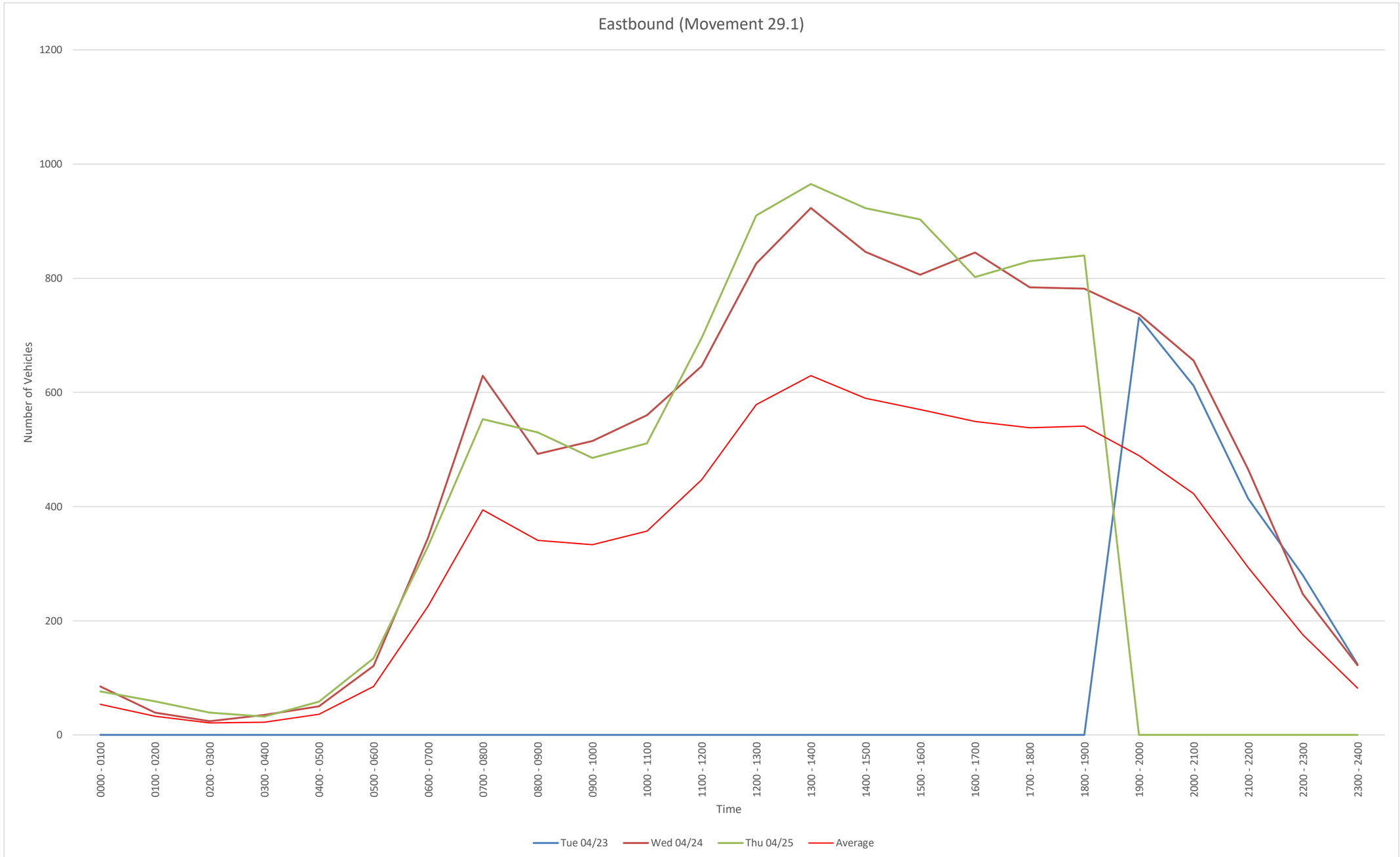

Time	Tue 04/23	Wed 04/24	Thu 04/25				
0000 - 0100	0	85	76				
0100 - 0200	0	39	59				
0200 - 0300	0	24	39				
0300 - 0400	0	35	32				
0400 - 0500	0	50	58				
0500 - 0600	0	121	134				
0600 - 0700	0	346	331				
0700 - 0800	0	629	553				
0800 - 0900	0	492	530				
0900 - 1000	0	515	485				
1000 - 1100	0	560	511				
1100 - 1200	0	646	695				
1200 - 1300	0	826	910				
1300 - 1400	0	923	965				
1400 - 1500	0	846	923				
1500 - 1600	0	806	903				
1600 - 1700	0	845	802				
1700 - 1800	0	784	830				
1800 - 1900	0	782	840				
1900 - 2000	731	737	0				
2000 - 2100	612	656	0				
2100 - 2200	414	465	0				
2200 - 2300	280	247	0				
2300 - 2400	124	122	0				
Daily Total	2161	11581	9676				

EB
File Name:
Start Date: 4/23/2024
Start Time: 0
Site Code: 29
Station ID: 1
Location 1: I-26 James F. Byrnes Expy E/Bound On-Ramp, east of Harbison Blvd
Location 2:

Date	Time	1	2	3	4	5	6	7	8	9	10	11	12	13
4/23/2024	12:00 AM	0	0	0	0	0	0	0	0	0	0	0	0	0
4/23/2024	12:15 AM	0	0	0	0	0	0	0	0	0	0	0	0	0
4/23/2024	12:30 AM	0	0	0	0	0	0	0	0	0	0	0	0	0
4/23/2024	12:45 AM	0	0	0	0	0	0	0	0	0	0	0	0	0
4/23/2024	1:00 AM	0	0	0	0	0	0	0	0	0	0	0	0	0
4/23/2024	1:15 AM	0	0	0	0	0	0	0	0	0	0	0	0	0
4/23/2024	1:30 AM	0	0	0	0	0	0	0	0	0	0	0	0	0
4/23/2024	1:45 AM	0	0	0	0	0	0	0	0	0	0	0	0	0
4/23/2024	2:00 AM	0	0	0	0	0	0	0	0	0	0	0	0	0
4/23/2024	2:15 AM	0	0	0	0	0	0	0	0	0	0	0	0	0
4/23/2024	2:30 AM	0	0	0	0	0	0	0	0	0	0	0	0	0
4/23/2024	2:45 AM	0	0	0	0	0	0	0	0	0	0	0	0	0
4/23/2024	3:00 AM	0	0	0	0	0	0	0	0	0	0	0	0	0
4/23/2024	3:15 AM	0	0	0	0	0	0	0	0	0	0	0	0	0
4/23/2024	3:30 AM	0	0	0	0	0	0	0	0	0	0	0	0	0
4/23/2024	3:45 AM	0	0	0	0	0	0	0	0	0	0	0	0	0
4/23/2024	4:00 AM	0	0	0	0	0	0	0	0	0	0	0	0	0
4/23/2024	4:15 AM	0	0	0	0	0	0	0	0	0	0	0	0	0
4/23/2024	4:30 AM	0	0	0	0	0	0	0	0	0	0	0	0	0
4/23/2024	4:45 AM	0	0	0	0	0	0	0	0	0	0	0	0	0
4/23/2024	5:00 AM	0	0	0	0	0	0	0	0	0	0	0	0	0
4/23/2024	5:15 AM	0	0	0	0	0	0	0	0	0	0	0	0	0
4/23/2024	5:30 AM	0	0	0	0	0	0	0	0	0	0	0	0	0
4/23/2024	5:45 AM	0	0	0	0	0	0	0	0	0	0	0	0	0
4/23/2024	6:00 AM	0	0	0	0	0	0	0	0	0	0	0	0	0
4/23/2024	6:15 AM	0	0	0	0	0	0	0	0	0	0	0	0	0
4/23/2024	6:30 AM	0	0	0	0	0	0	0	0	0	0	0	0	0
4/23/2024	6:45 AM	0	0	0	0	0	0	0	0	0	0	0	0	0
4/23/2024	7:00 AM	0	0	0	0	0	0	0	0	0	0	0	0	0
4/23/2024	7:15 AM	0	0	0	0	0	0	0	0	0	0	0	0	0
4/23/2024	7:30 AM	0	0	0	0	0	0	0	0	0	0	0	0	0
4/23/2024	7:45 AM	0	0	0	0	0	0	0	0	0	0	0	0	0
4/23/2024	8:00 AM	0	0	0	0	0	0	0	0	0	0	0	0	0
4/23/2024	8:15 AM	0	0	0	0	0	0	0	0	0	0	0	0	0
4/23/2024	8:30 AM	0	0	0	0	0	0	0	0	0	0	0	0	0
4/23/2024	8:45 AM	0	0	0	0	0	0	0	0	0	0	0	0	0
4/23/2024	9:00 AM	0	0	0	0	0	0	0	0	0	0	0	0	0
4/23/2024	9:15 AM	0	0	0	0	0	0	0	0	0	0	0	0	0
4/23/2024	9:30 AM	0	0	0	0	0	0	0	0	0	0	0	0	0
4/23/2024	9:45 AM	0	0	0	0	0	0	0	0	0	0	0	0	0
4/23/2024	10:00 AM	0	0	0	0	0	0	0	0	0	0	0	0	0
4/23/2024	10:15 AM	0	0	0	0	0	0	0	0	0	0	0	0	0
4/23/2024	10:30 AM	0	0	0	0	0	0	0	0	0	0	0	0	0
4/23/2024	10:45 AM	0	0	0	0	0	0	0	0	0	0	0	0	0
4/23/2024	11:00 AM	0	0	0	0	0	0	0	0	0	0	0	0	0
4/23/2024	11:15 AM	0	0	0	0	0	0	0	0	0	0	0	0	0
4/23/2024	11:30 AM	0	0	0	0	0	0	0	0	0	0	0	0	0
4/23/2024	11:45 AM	0	0	0	0	0	0	0	0	0	0	0	0	0
4/23/2024	12:00 PM	0	0	0	0	0	0	0	0	0	0	0	0	0
4/23/2024	12:15 PM	0	0	0	0	0	0	0	0	0	0	0	0	0
4/23/2024	12:30 PM	0	0	0	0	0	0	0	0	0	0	0	0	0
4/23/2024	12:45 PM	0	0	0	0	0	0	0	0	0	0	0	0	0
4/23/2024	1:00 PM	0	0	0	0	0	0	0	0	0	0	0	0	0
4/23/2024	1:15 PM	0	0	0	0	0	0	0	0	0	0	0	0	0
4/23/2024	1:30 PM	0	0	0	0	0	0	0	0	0	0	0	0	0
4/23/2024	1:45 PM	0	0	0	0	0	0	0	0	0	0	0	0	0
4/23/2024	2:00 PM	0	0	0	0	0	0	0	0	0	0	0	0	0
4/23/2024	2:15 PM	0	0	0	0	0	0	0	0	0	0	0	0	0
4/23/2024	2:30 PM	0	0	0	0	0	0	0	0	0	0	0	0	0
4/23/2024	2:45 PM	0	0	0	0	0	0	0	0	0	0	0	0	0
4/23/2024	3:00 PM	0	0	0	0	0	0	0	0	0	0	0	0	0
4/23/2024	3:15 PM	0	0	0	0	0	0	0	0	0	0	0	0	0
4/23/2024	3:30 PM	0	0	0	0	0	0	0	0	0	0	0	0	0
4/23/2024	3:45 PM	0	0	0	0	0	0	0	0	0	0	0	0	0
4/23/2024	4:00 PM	0	0	0	0	0	0	0	0	0	0	0	0	0
4/23/2024	4:15 PM	0	0	0	0	0	0	0	0	0	0	0	0	0
4/23/2024	4:30 PM	0	0	0	0	0	0	0	0	0	0	0	0	0
4/23/2024	4:45 PM	0	0	0	0	0	0	0	0	0	0	0	0	0
4/23/2024	5:00 PM	0	0	0	0	0	0	0	0	0	0	0	0	0
4/23/2024	5:15 PM	0	0	0	0	0	0	0	0	0	0	0	0	0
4/23/2024	5:30 PM	0	0	0	0	0	0	0	0	0	0	0	0	0
4/23/2024	5:45 PM	0	0	0	0	0	0	0	0	0	0	0	0	0
4/23/2024	6:00 PM	0	0	0	0	0	0	0	0	0	0	0	0	0
4/23/2024	6:15 PM	0	0	0	0	0	0	0	0	0	0	0	0	0
4/23/2024	6:30 PM	0	0	0	0	0	0	0	0	0	0	0	0	0
4/23/2024	6:45 PM	0	0	0	0	0	0	0	0	0	0	0	0	0
4/23/2024	7:00 PM	0	183	23	0	0	0	0	0	0	0	0	0	0
4/23/2024	7:15 PM	0	161	20	0	1	0	0	0	0	0	0	0	0
4/23/2024	7:30 PM	0	156	22	0	0	0	0	0	2	0	0	0	0
4/23/2024	7:45 PM	0	140	23	0	0	0	0	0	0	0	0	0	0
4/23/2024	8:00 PM	0	166	29	0	0	0	0	0	0	0	0	0	0
4/23/2024	8:15 PM	0	131	19	0	1	0	0	0	0	0	0	0	0
4/23/2024	8:30 PM	0	118	28	0	1	0	0	0	0	0	0	0	0
4/23/2024	8:45 PM	0	104	13	0	1	0	0	1	0	0	0	0	0
4/23/2024	9:00 PM	0	102	23	0	0	0	0	0	0	0	0	0	0
4/23/2024	9:15 PM	0	89	11	0	1	0	0	0	1	0	0	0	0
4/23/2024	9:30 PM	0	85	5	1	0	0	0	0	0	0	0	0	0
4/23/2024	9:45 PM	0	89	5	1	0	1	0	0	0	0	0	0	0
4/23/2024	10:00 PM	0	88	8	0	0	0	0	0	1	0	0	0	0
4/23/2024	10:15 PM	0	67	6	1	1	0	0	0	0	0	0	0	0
4/23/2024	10:30 PM	0	56	3	0	1	0	0	0	0	0	0	0	0
4/23/2024	10:45 PM	0	45	3	0	0	0	0	0	0	0	0	0	0
4/23/2024	11:00 PM	0	25	11	0	0	0	0	0	0	0	0	0	0
4/23/2024	11:15 PM	0	31	7	0	0	0	0	0	0	0	0	0	0
4/23/2024	11:30 PM	0	24	7	0	0	0	0	0	0	0	0	0	0
4/23/2024	11:45 PM	0	15	3	0	0	0	0	0	1	0	0	0	0

4/24/2024	12:00 AM	0	19	3	0	0	0	0	0	0	0	0	0
4/24/2024	12:15 AM	0	22	2	0	0	0	0	0	0	0	0	0
4/24/2024	12:30 AM	0	20	2	0	0	0	0	0	0	0	0	0
4/24/2024	12:45 AM	0	15	1	0	0	0	0	0	1	0	0	0
4/24/2024	1:00 AM	0	5	1	0	0	0	0	0	0	0	0	0
4/24/2024	1:15 AM	0	10	0	0	0	0	0	0	0	0	0	0
4/24/2024	1:30 AM	0	10	0	0	0	0	0	0	0	0	0	0
4/24/2024	1:45 AM	0	12	1	0	0	0	0	0	0	0	0	0
4/24/2024	2:00 AM	0	6	0	0	0	0	0	0	0	0	0	0
4/24/2024	2:15 AM	0	5	1	0	0	0	0	0	0	0	0	0
4/24/2024	2:30 AM	0	5	0	0	1	0	0	0	0	0	0	0
4/24/2024	2:45 AM	0	5	1	0	0	0	0	0	0	0	0	0
4/24/2024	3:00 AM	0	5	0	0	0	0	0	0	1	0	0	0
4/24/2024	3:15 AM	0	10	0	0	0	0	0	0	1	0	0	0
4/24/2024	3:30 AM	0	11	1	0	0	0	0	0	0	0	0	0
4/24/2024	3:45 AM	0	5	1	0	0	0	0	0	0	0	0	0
4/24/2024	4:00 AM	0	16	1	0	0	0	0	0	0	0	0	0
4/24/2024	4:15 AM	0	9	2	0	0	0	0	0	0	0	0	0
4/24/2024	4:30 AM	0	7	1	0	0	0	0	0	0	0	0	0
4/24/2024	4:45 AM	0	11	3	0	0	0	0	0	0	0	0	0
4/24/2024	5:00 AM	0	21	5	0	0	0	0	0	0	0	0	0
4/24/2024	5:15 AM	0	18	5	0	0	0	0	0	3	0	0	0
4/24/2024	5:30 AM	0	26	7	0	0	0	0	0	0	0	0	0
4/24/2024	5:45 AM	0	31	5	0	0	0	0	0	0	0	0	0
4/24/2024	6:00 AM	0	38	12	0	1	1	0	0	0	0	0	0
4/24/2024	6:15 AM	0	56	15	0	1	0	0	0	0	0	0	0
4/24/2024	6:30 AM	0	74	33	0	0	1	0	0	0	0	0	0
4/24/2024	6:45 AM	0	81	29	0	1	0	1	0	2	0	0	0
4/24/2024	7:00 AM	0	94	21	0	1	1	0	0	0	0	0	0
4/24/2024	7:15 AM	0	127	31	0	0	0	0	0	0	0	0	0
4/24/2024	7:30 AM	0	130	42	0	0	0	0	0	1	0	0	0
4/24/2024	7:45 AM	0	155	24	0	2	0	0	0	0	0	0	0
4/24/2024	8:00 AM	0	102	26	1	3	0	0	0	0	0	0	0
4/24/2024	8:15 AM	0	102	19	0	3	0	0	0	2	0	0	0
4/24/2024	8:30 AM	0	100	26	0	1	0	0	0	3	0	0	0
4/24/2024	8:45 AM	0	78	26	0	0	0	0	0	0	0	0	0
4/24/2024	9:00 AM	0	110	28	0	3	1	0	0	2	0	0	0
4/24/2024	9:15 AM	0	92	29	0	1	0	0	0	3	0	0	0
4/24/2024	9:30 AM	0	96	26	0	3	0	0	0	1	0	0	0
4/24/2024	9:45 AM	0	90	27	0	3	0	0	0	0	0	0	0
4/24/2024	10:00 AM	0	108	28	0	3	0	0	1	1	0	0	0
4/24/2024	10:15 AM	1	121	36	0	0	0	0	0	1	0	0	0
4/24/2024	10:30 AM	0	107	23	0	0	0	0	0	1	0	0	0
4/24/2024	10:45 AM	0	97	29	0	2	0	0	0	1	0	0	0
4/24/2024	11:00 AM	0	118	37	0	4	0	0	0	2	0	0	0
4/24/2024	11:15 AM	0	118	25	1	0	0	0	0	2	0	0	0
4/24/2024	11:30 AM	0	129	36	0	2	0	0	1	0	0	0	0
4/24/2024	11:45 AM	0	138	31	0	0	0	0	0	2	0	0	0
4/24/2024	12:00 PM	0	146	28	0	2	0	0	0	0	0	0	0
4/24/2024	12:15 PM	1	167	36	1	2	1	0	0	1	0	0	0
4/24/2024	12:30 PM	0	173	26	0	1	0	0	1	3	0	0	0
4/24/2024	12:45 PM	1	199	33	0	1	1	0	0	2	0	0	0
4/24/2024	1:00 PM	1	166	47	0	5	0	1	0	0	0	0	0
4/24/2024	1:15 PM	1	195	33	0	0	0	0	1	1	0	0	0
4/24/2024	1:30 PM	0	181	46	0	2	0	0	0	0	0	0	0
4/24/2024	1:45 PM	0	194	41	6	0	0	0	0	2	0	0	0
4/24/2024	2:00 PM	1	196	28	0	2	1	0	0	2	0	0	0
4/24/2024	2:15 PM	0	179	37	0	1	0	0	0	1	0	0	0
4/24/2024	2:30 PM	0	164	22	1	1	0	0	0	0	0	0	0
4/24/2024	2:45 PM	0	164	41	1	1	0	0	0	3	0	0	0
4/24/2024	3:00 PM	0	184	28	0	3	0	0	0	0	0	0	0
4/24/2024	3:15 PM	0	167	26	0	2	0	0	0	1	0	0	0
4/24/2024	3:30 PM	0	172	35	1	2	0	0	0	0	0	0	0
4/24/2024	3:45 PM	1	156	26	0	1	0	0	0	1	0	0	0
4/24/2024	4:00 PM	1	194	38	0	0	0	0	0	1	0	0	0
4/24/2024	4:15 PM	0	184	31	1	0	0	0	0	0	0	0	0
4/24/2024	4:30 PM	0	166	26	0	1	0	0	0	0	0	0	0
4/24/2024	4:45 PM	0	167	33	0	1	0	0	0	1	0	0	0
4/24/2024	5:00 PM	0	185	37	0	3	0	0	0	0	0	0	0
4/24/2024	5:15 PM	0	169	29	0	1	1	0	0	2	0	0	0
4/24/2024	5:30 PM	1	129	28	0	3	0	0	0	0	0	0	0
4/24/2024	5:45 PM	0	169	25	0	2	0	0	0	0	0	0	0
4/24/2024	6:00 PM	0	177	22	0	1	1	0	0	0	0	0	0
4/24/2024	6:15 PM	1	170	28	1	0	0	0	0	0	0	0	0
4/24/2024	6:30 PM	0	172	27	1	0	0	0	0	0	0	0	0
4/24/2024	6:45 PM	0	156	24	0	1	0	0	0	0	0	0	0
4/24/2024	7:00 PM	0	182	19	0	1	0	0	0	0	0	0	0
4/24/2024	7:15 PM	0	162	24	0	2	0	0	0	0	0	0	0
4/24/2024	7:30 PM	0	174	27	0	0	0	0	0	0	0	0	0
4/24/2024	7:45 PM	0	124	21	0	1	0	0	0	0	0	0	0
4/24/2024	8:00 PM	0	171	25	0	1	0	0	0	0	0	0	0
4/24/2024	8:15 PM	0	153	19	0	1	0	0	0	1	0	0	0
4/24/2024	8:30 PM	0	143	22	0	1	0	0	0	0	0	0	0
4/24/2024	8:45 PM	0	108	11	0	0	0	0	0	0	0	0	0
4/24/2024	9:00 PM	0	121	16	0	0	0	0	0	0	0	0	0
4/24/2024	9:15 PM	0	106	12	0	0	0	0	0	0	0	0	0
4/24/2024	9:30 PM	0	104	15	0	0	0	0	0	0	0	0	0
4/24/2024	9:45 PM	0	76	13	1	1	0	0	0	0	0	0	0
4/24/2024	10:00 PM	0	80	11	0	0	0	0	0	0	0	0	0
4/24/2024	10:15 PM	0	59	8	0	1	0	0	0	0	0	0	0
4/24/2024	10:30 PM	0	34	7	0	0	0	0	0	0	0	0	0
4/24/2024	10:45 PM	0	43	4	0	0	0	0	0	0	0	0	0
4/24/2024	11:00 PM	0	44	4	0	0	0	0	0	0	0	0	0
4/24/2024	11:15 PM	0	26	1	0	0	0	0	0	0	0	0	0
4/24/2024	11:30 PM	0	19	0	0	1	0	0	0	0	0	0	0
4/24/2024	11:45 PM	0	26	1	0	0	0	0	0	0	0	0	0

4/25/2024	12:00 AM	0	25	2	0	0	0	0	0	0	0	0	0
4/25/2024	12:15 AM	0	15	2	0	1	0	0	0	1	0	1	0	0
4/25/2024	12:30 AM	0	11	5	0	0	0	0	0	0	0	0	0	0
4/25/2024	12:45 AM	0	10	3	0	0	0	0	0	0	0	0	0	0
4/25/2024	1:00 AM	0	11	3	0	0	0	0	0	0	0	0	0	0
4/25/2024	1:15 AM	1	18	6	0	0	0	0	0	1	0	0	0	0
4/25/2024	1:30 AM	0	7	4	0	0	0	0	0	0	0	0	0	0
4/25/2024	1:45 AM	0	7	1	0	0	0	0	0	0	0	0	0	0
4/25/2024	2:00 AM	0	6	1	0	0	0	0	0	0	0	0	0	0
4/25/2024	2:15 AM	0	9	1	0	0	0	0	0	2	0	0	0	0
4/25/2024	2:30 AM	0	6	2	0	0	0	0	0	0	0	0	0	0
4/25/2024	2:45 AM	0	9	2	0	0	0	0	0	1	0	0	0	0
4/25/2024	3:00 AM	0	5	4	0	0	0	0	0	0	0	0	0	0
4/25/2024	3:15 AM	0	5	1	0	0	0	0	0	0	0	0	0	0
4/25/2024	3:30 AM	0	6	1	0	0	0	0	0	0	0	0	0	0
4/25/2024	3:45 AM	0	8	2	0	0	0	0	0	0	0	0	0	0
4/25/2024	4:00 AM	0	8	3	0	0	0	0	1	0	0	0	0	0
4/25/2024	4:15 AM	0	12	3	0	0	0	0	0	2	0	0	0	0
4/25/2024	4:30 AM	0	13	3	0	0	0	0	0	1	0	0	0	0
4/25/2024	4:45 AM	0	8	2	0	1	0	0	0	1	0	0	0	0
4/25/2024	5:00 AM	0	19	1	0	0	0	0	0	1	0	0	0	0
4/25/2024	5:15 AM	0	33	4	0	0	0	0	0	0	0	0	0	0
4/25/2024	5:30 AM	0	36	2	0	0	0	0	0	0	0	0	0	0
4/25/2024	5:45 AM	0	32	5	0	1	0	0	0	0	0	0	0	0
4/25/2024	6:00 AM	0	43	9	0	0	0	0	0	0	0	0	0	0
4/25/2024	6:15 AM	0	50	14	0	0	0	0	0	0	0	0	0	0
4/25/2024	6:30 AM	0	68	31	0	3	1	0	1	1	0	0	0	0
4/25/2024	6:45 AM	0	84	25	1	0	0	0	0	0	0	0	0	0
4/25/2024	7:00 AM	0	103	23	0	2	0	0	0	1	0	0	0	0
4/25/2024	7:15 AM	0	102	15	0	0	0	0	0	3	0	0	0	0
4/25/2024	7:30 AM	0	141	28	0	1	0	0	0	1	0	0	0	0
4/25/2024	7:45 AM	0	114	17	0	0	0	0	0	2	0	0	0	0
4/25/2024	8:00 AM	0	124	29	1	1	1	0	0	2	0	0	0	0
4/25/2024	8:15 AM	0	113	28	0	0	0	0	0	1	0	0	0	0
4/25/2024	8:30 AM	0	99	20	0	0	0	0	0	0	0	0	0	0
4/25/2024	8:45 AM	0	86	24	0	0	0	0	1	0	0	0	0	0
4/25/2024	9:00 AM	1	109	25	0	3	1	0	0	1	0	0	0	0
4/25/2024	9:15 AM	0	75	22	1	2	0	0	0	0	0	0	0	0
4/25/2024	9:30 AM	0	106	28	1	4	0	0	0	0	0	0	0	0
4/25/2024	9:45 AM	0	76	30	0	0	0	0	0	0	0	0	0	0
4/25/2024	10:00 AM	0	98	27	1	3	0	0	0	4	0	0	0	0
4/25/2024	10:15 AM	0	94	35	0	1	0	0	1	0	0	0	0	0
4/25/2024	10:30 AM	0	112	19	0	3	0	0	0	3	0	0	0	0
4/25/2024	10:45 AM	0	94	13	1	1	0	0	0	1	0	0	0	0
4/25/2024	11:00 AM	0	133	31	2	3	0	0	1	3	0	0	0	0
4/25/2024	11:15 AM	1	137	32	1	4	0	0	0	1	0	0	0	0
4/25/2024	11:30 AM	0	130	35	0	0	0	0	1	1	0	0	0	0
4/25/2024	11:45 AM	0	138	36	0	3	0	0	0	2	0	0	0	0
4/25/2024	12:00 PM	1	177	33	0	3	0	0	0	0	0	0	0	0
4/25/2024	12:15 PM	0	185	51	0	3	0	0	0	0	0	0	0	0
4/25/2024	12:30 PM	0	194	26	0	1	0	0	0	1	0	0	0	0
4/25/2024	12:45 PM	0	187	43	0	4	0	0	0	1	0	0	0	0
4/25/2024	1:00 PM	0	190	34	0	3	0	0	0	0	0	0	0	0
4/25/2024	1:15 PM	0	224	36	0	1	1	0	0	0	0	0	0	0
4/25/2024	1:30 PM	1	200	34	0	2	0	0	0	1	0	0	0	0
4/25/2024	1:45 PM	0	197	40	0	0	0	0	0	1	0	0	0	0
4/25/2024	2:00 PM	1	215	33	0	0	0	0	0	2	0	0	0	0
4/25/2024	2:15 PM	0	195	36	0	1	0	0	0	0	0	0	0	0
4/25/2024	2:30 PM	2	162	33	1	2	0	0	0	0	0	0	0	0
4/25/2024	2:45 PM	0	208	30	0	2	0	0	0	0	0	0	0	0
4/25/2024	3:00 PM	0	188	29	0	1	1	0	0	0	0	0	0	0
4/25/2024	3:15 PM	0	207	38	0	2	0	0	0	0	0	0	0	0
4/25/2024	3:30 PM	0	170	41	0	3	1	0	0	1	0	0	0	0
4/25/2024	3:45 PM	1	189	25	1	3	0	1	0	1	0	0	0	0
4/25/2024	4:00 PM	1	187	21	0	2	0	0	0	1	0	0	0	0
4/25/2024	4:15 PM	1	169	21	0	1	0	0	0	0	0	0	0	0
4/25/2024	4:30 PM	0	182	25	0	1	0	0	0	1	0	0	0	0
4/25/2024	4:45 PM	0	159	28	0	0	0	0	1	1	0	0	0	0
4/25/2024	5:00 PM	0	208	27	0	3	0	0	0	0	0	0	0	0
4/25/2024	5:15 PM	0	182	21	0	1	0	0	0	1	0	0	0	0
4/25/2024	5:30 PM	0	164	25	0	1	1	0	0	2	0	0	0	0
4/25/2024	5:45 PM	0	182	5	0	6	0	0	0	1	0	0	0	0
4/25/2024	6:00 PM	0	171	34	0	2	0	1	0	1	0	0	0	0
4/25/2024	6:15 PM	0	177	29	0	1	0	0	0	0	0	0	0	0
4/25/2024	6:30 PM	1	187	19	0	1	0	0	0	0	0	0	0	0
4/25/2024	6:45 PM	0	174	41	0	1	0	0	0	0	0	0	0	0
4/25/2024	7:00 PM	0	0	0	0	0	0	0	0	0	0	0	0	0
4/25/2024	7:15 PM	0	0	0	0	0	0	0	0	0	0	0	0	0
4/25/2024	7:30 PM	0	0	0	0	0	0	0	0	0	0	0	0	0
4/25/2024	7:45 PM	0	0	0	0	0	0	0	0	0	0	0	0	0
4/25/2024	8:00 PM	0	0	0	0	0	0	0	0	0	0	0	0	0
4/25/2024	8:15 PM	0	0	0	0	0	0	0	0	0	0	0	0	0
4/25/2024	8:30 PM	0	0	0	0	0	0	0	0	0	0	0	0	0
4/25/2024	8:45 PM	0	0	0	0	0	0	0	0	0	0	0	0	0
4/25/2024	9:00 PM	0	0	0	0	0	0	0	0	0	0	0	0	0
4/25/2024	9:15 PM	0	0	0	0	0	0	0	0	0	0	0	0	0
4/25/2024	9:30 PM	0	0	0	0	0	0	0	0	0	0	0	0	0
4/25/2024	9:45 PM	0	0	0	0	0	0	0	0	0	0	0	0	0
4/25/2024	10:00 PM	0	0	0	0	0	0	0	0	0	0	0	0	0
4/25/2024	10:15 PM	0	0	0	0	0	0	0	0	0	0	0	0	0
4/25/2024	10:30 PM	0	0	0	0	0	0	0	0	0	0	0	0	0
4/25/2024	10:45 PM	0	0	0	0	0	0	0	0	0	0	0	0	0
4/25/2024	11:00 PM	0	0	0	0	0	0	0	0	0	0	0	0	0
4/25/2024	11:15 PM	0	0	0	0	0	0	0	0	0	0	0	0	0
4/25/2024	11:30 PM	0	0	0	0	0	0	0	0	0	0	0	0	0
4/25/2024	11:45 PM	0	0	0	0	0	0	0	0	0	0	0	0	0

WB
File Name:
Start Date: 4/23/2024
Start Time: 0
Site Code: 29
Station ID: 1
Location 1: I-26 James F. Byrnes Expy E/Bound On-Ramp, east of Harbison Blvd
Location 2:

Date	Time	1	2	3	4	5	6	7	8	9	10	11	12	13
4/23/2024	12:00 AM	0	0	0	0	0	0	0	0	0	0	0	0	0
4/23/2024	12:15 AM	0	0	0	0	0	0	0	0	0	0	0	0	0
4/23/2024	12:30 AM	0	0	0	0	0	0	0	0	0	0	0	0	0
4/23/2024	12:45 AM	0	0	0	0	0	0	0	0	0	0	0	0	0
4/23/2024	1:00 AM	0	0	0	0	0	0	0	0	0	0	0	0	0
4/23/2024	1:15 AM	0	0	0	0	0	0	0	0	0	0	0	0	0
4/23/2024	1:30 AM	0	0	0	0	0	0	0	0	0	0	0	0	0
4/23/2024	1:45 AM	0	0	0	0	0	0	0	0	0	0	0	0	0
4/23/2024	2:00 AM	0	0	0	0	0	0	0	0	0	0	0	0	0
4/23/2024	2:15 AM	0	0	0	0	0	0	0	0	0	0	0	0	0
4/23/2024	2:30 AM	0	0	0	0	0	0	0	0	0	0	0	0	0
4/23/2024	2:45 AM	0	0	0	0	0	0	0	0	0	0	0	0	0
4/23/2024	3:00 AM	0	0	0	0	0	0	0	0	0	0	0	0	0
4/23/2024	3:15 AM	0	0	0	0	0	0	0	0	0	0	0	0	0
4/23/2024	3:30 AM	0	0	0	0	0	0	0	0	0	0	0	0	0
4/23/2024	3:45 AM	0	0	0	0	0	0	0	0	0	0	0	0	0
4/23/2024	4:00 AM	0	0	0	0	0	0	0	0	0	0	0	0	0
4/23/2024	4:15 AM	0	0	0	0	0	0	0	0	0	0	0	0	0
4/23/2024	4:30 AM	0	0	0	0	0	0	0	0	0	0	0	0	0
4/23/2024	4:45 AM	0	0	0	0	0	0	0	0	0	0	0	0	0
4/23/2024	5:00 AM	0	0	0	0	0	0	0	0	0	0	0	0	0
4/23/2024	5:15 AM	0	0	0	0	0	0	0	0	0	0	0	0	0
4/23/2024	5:30 AM	0	0	0	0	0	0	0	0	0	0	0	0	0
4/23/2024	5:45 AM	0	0	0	0	0	0	0	0	0	0	0	0	0
4/23/2024	6:00 AM	0	0	0	0	0	0	0	0	0	0	0	0	0
4/23/2024	6:15 AM	0	0	0	0	0	0	0	0	0	0	0	0	0
4/23/2024	6:30 AM	0	0	0	0	0	0	0	0	0	0	0	0	0
4/23/2024	6:45 AM	0	0	0	0	0	0	0	0	0	0	0	0	0
4/23/2024	7:00 AM	0	0	0	0	0	0	0	0	0	0	0	0	0
4/23/2024	7:15 AM	0	0	0	0	0	0	0	0	0	0	0	0	0
4/23/2024	7:30 AM	0	0	0	0	0	0	0	0	0	0	0	0	0
4/23/2024	7:45 AM	0	0	0	0	0	0	0	0	0	0	0	0	0
4/23/2024	8:00 AM	0	0	0	0	0	0	0	0	0	0	0	0	0
4/23/2024	8:15 AM	0	0	0	0	0	0	0	0	0	0	0	0	0
4/23/2024	8:30 AM	0	0	0	0	0	0	0	0	0	0	0	0	0
4/23/2024	8:45 AM	0	0	0	0	0	0	0	0	0	0	0	0	0
4/23/2024	9:00 AM	0	0	0	0	0	0	0	0	0	0	0	0	0
4/23/2024	9:15 AM	0	0	0	0	0	0	0	0	0	0	0	0	0
4/23/2024	9:30 AM	0	0	0	0	0	0	0	0	0	0	0	0	0
4/23/2024	9:45 AM	0	0	0	0	0	0	0	0	0	0	0	0	0
4/23/2024	10:00 AM	0	0	0	0	0	0	0	0	0	0	0	0	0
4/23/2024	10:15 AM	0	0	0	0	0	0	0	0	0	0	0	0	0
4/23/2024	10:30 AM	0	0	0	0	0	0	0	0	0	0	0	0	0
4/23/2024	10:45 AM	0	0	0	0	0	0	0	0	0	0	0	0	0
4/23/2024	11:00 AM	0	0	0	0	0	0	0	0	0	0	0	0	0
4/23/2024	11:15 AM	0	0	0	0	0	0	0	0	0	0	0	0	0
4/23/2024	11:30 AM	0	0	0	0	0	0	0	0	0	0	0	0	0
4/23/2024	11:45 AM	0	0	0	0	0	0	0	0	0	0	0	0	0
4/23/2024	12:00 PM	0	0	0	0	0	0	0	0	0	0	0	0	0
4/23/2024	12:15 PM	0	0	0	0	0	0	0	0	0	0	0	0	0
4/23/2024	12:30 PM	0	0	0	0	0	0	0	0	0	0	0	0	0
4/23/2024	12:45 PM	0	0	0	0	0	0	0	0	0	0	0	0	0
4/23/2024	1:00 PM	0	0	0	0	0	0	0	0	0	0	0	0	0
4/23/2024	1:15 PM	0	0	0	0	0	0	0	0	0	0	0	0	0
4/23/2024	1:30 PM	0	0	0	0	0	0	0	0	0	0	0	0	0
4/23/2024	1:45 PM	0	0	0	0	0	0	0	0	0	0	0	0	0
4/23/2024	2:00 PM	0	0	0	0	0	0	0	0	0	0	0	0	0
4/23/2024	2:15 PM	0	0	0	0	0	0	0	0	0	0	0	0	0
4/23/2024	2:30 PM	0	0	0	0	0	0	0	0	0	0	0	0	0
4/23/2024	2:45 PM	0	0	0	0	0	0	0	0	0	0	0	0	0
4/23/2024	3:00 PM	0	0	0	0	0	0	0	0	0	0	0	0	0
4/23/2024	3:15 PM	0	0	0	0	0	0	0	0	0	0	0	0	0
4/23/2024	3:30 PM	0	0	0	0	0	0	0	0	0	0	0	0	0
4/23/2024	3:45 PM	0	0	0	0	0	0	0	0	0	0	0	0	0
4/23/2024	4:00 PM	0	0	0	0	0	0	0	0	0	0	0	0	0
4/23/2024	4:15 PM	0	0	0	0	0	0	0	0	0	0	0	0	0
4/23/2024	4:30 PM	0	0	0	0	0	0	0	0	0	0	0	0	0
4/23/2024	4:45 PM	0	0	0	0	0	0	0	0	0	0	0	0	0
4/23/2024	5:00 PM	0	0	0	0	0	0	0	0	0	0	0	0	0
4/23/2024	5:15 PM	0	0	0	0	0	0	0	0	0	0	0	0	0
4/23/2024	5:30 PM	0	0	0	0	0	0	0	0	0	0	0	0	0
4/23/2024	5:45 PM	0	0	0	0	0	0	0	0	0	0	0	0	0
4/23/2024	6:00 PM	0	0	0	0	0	0	0	0	0	0	0	0	0
4/23/2024	6:15 PM	0	0	0	0	0	0	0	0	0	0	0	0	0
4/23/2024	6:30 PM	0	0	0	0	0	0	0	0	0	0	0	0	0
4/23/2024	6:45 PM	0	0	0	0	0	0	0	0	0	0	0	0	0
4/23/2024	7:00 PM	0	0	0	0	0	0	0	0	0	0	0	0	0
4/23/2024	7:15 PM	0	0	0	0	0	0	0	0	0	0	0	0	0
4/23/2024	7:30 PM	0	0	0	0	0	0	0	0	0	0	0	0	0
4/23/2024	7:45 PM	0	0	0	0	0	0	0	0	0	0	0	0	0
4/23/2024	8:00 PM	0	0	0	0	0	0	0	0	0	0	0	0	0
4/23/2024	8:15 PM	0	0	0	0	0	0	0	0	0	0	0	0	0
4/23/2024	8:30 PM	0	0	0	0	0	0	0	0	0	0	0	0	0
4/23/2024	8:45 PM	0	0	0	0	0	0	0	0	0	0	0	0	0
4/23/2024	9:00 PM	0	0	0	0	0	0	0	0	0	0	0	0	0
4/23/2024	9:15 PM	0	0	0	0	0	0	0	0	0	0	0	0	0
4/23/2024	9:30 PM	0	0	0	0	0	0	0	0	0	0	0	0	0
4/23/2024	9:45 PM	0	0	0	0	0	0	0	0	0	0	0	0	0
4/23/2024	10:00 PM	0	0	0	0	0	0	0	0	0	0	0	0	0
4/23/2024	10:15 PM	0	0	0	0	0	0	0	0	0	0	0	0	0
4/23/2024	10:30 PM	0	0	0	0	0	0	0	0	0	0	0	0	0
4/23/2024	10:45 PM	0	0	0	0	0	0	0	0	0	0	0	0	0
4/23/2024	11:00 PM	0	0	0	0	0	0	0	0	0	0	0	0	0
4/23/2024	11:15 PM	0	0	0	0	0	0	0	0	0	0	0	0	0
4/23/2024	11:30 PM	0	0	0	0	0	0	0	0	0	0	0	0	0
4/23/2024	11:45 PM	0	0	0	0	0	0	0	0	0	0	0	0	0

4/24/2024	12:00 AM	0	0	0	0	0	0	0	0	0	0	0	0	0
4/24/2024	12:15 AM	0	0	0	0	0	0	0	0	0	0	0	0	0
4/24/2024	12:30 AM	0	0	0	0	0	0	0	0	0	0	0	0	0
4/24/2024	12:45 AM	0	0	0	0	0	0	0	0	0	0	0	0	0
4/24/2024	1:00 AM	0	0	0	0	0	0	0	0	0	0	0	0	0
4/24/2024	1:15 AM	0	0	0	0	0	0	0	0	0	0	0	0	0
4/24/2024	1:30 AM	0	0	0	0	0	0	0	0	0	0	0	0	0
4/24/2024	1:45 AM	0	0	0	0	0	0	0	0	0	0	0	0	0
4/24/2024	2:00 AM	0	0	0	0	0	0	0	0	0	0	0	0	0
4/24/2024	2:15 AM	0	0	0	0	0	0	0	0	0	0	0	0	0
4/24/2024	2:30 AM	0	0	0	0	0	0	0	0	0	0	0	0	0
4/24/2024	2:45 AM	0	0	0	0	0	0	0	0	0	0	0	0	0
4/24/2024	3:00 AM	0	0	0	0	0	0	0	0	0	0	0	0	0
4/24/2024	3:15 AM	0	0	0	0	0	0	0	0	0	0	0	0	0
4/24/2024	3:30 AM	0	0	0	0	0	0	0	0	0	0	0	0	0
4/24/2024	3:45 AM	0	0	0	0	0	0	0	0	0	0	0	0	0
4/24/2024	4:00 AM	0	0	0	0	0	0	0	0	0	0	0	0	0
4/24/2024	4:15 AM	0	0	0	0	0	0	0	0	0	0	0	0	0
4/24/2024	4:30 AM	0	0	0	0	0	0	0	0	0	0	0	0	0
4/24/2024	4:45 AM	0	0	0	0	0	0	0	0	0	0	0	0	0
4/24/2024	5:00 AM	0	0	0	0	0	0	0	0	0	0	0	0	0
4/24/2024	5:15 AM	0	0	0	0	0	0	0	0	0	0	0	0	0
4/24/2024	5:30 AM	0	0	0	0	0	0	0	0	0	0	0	0	0
4/24/2024	5:45 AM	0	0	0	0	0	0	0	0	0	0	0	0	0
4/24/2024	6:00 AM	0	0	0	0	0	0	0	0	0	0	0	0	0
4/24/2024	6:15 AM	0	0	0	0	0	0	0	0	0	0	0	0	0
4/24/2024	6:30 AM	0	0	0	0	0	0	0	0	0	0	0	0	0
4/24/2024	6:45 AM	0	0	0	0	0	0	0	0	0	0	0	0	0
4/24/2024	7:00 AM	0	0	0	0	0	0	0	0	0	0	0	0	0
4/24/2024	7:15 AM	0	0	0	0	0	0	0	0	0	0	0	0	0
4/24/2024	7:30 AM	0	0	0	0	0	0	0	0	0	0	0	0	0
4/24/2024	7:45 AM	0	0	0	0	0	0	0	0	0	0	0	0	0
4/24/2024	8:00 AM	0	0	0	0	0	0	0	0	0	0	0	0	0
4/24/2024	8:15 AM	0	0	0	0	0	0	0	0	0	0	0	0	0
4/24/2024	8:30 AM	0	0	0	0	0	0	0	0	0	0	0	0	0
4/24/2024	8:45 AM	0	0	0	0	0	0	0	0	0	0	0	0	0
4/24/2024	9:00 AM	0	0	0	0	0	0	0	0	0	0	0	0	0
4/24/2024	9:15 AM	0	0	0	0	0	0	0	0	0	0	0	0	0
4/24/2024	9:30 AM	0	0	0	0	0	0	0	0	0	0	0	0	0
4/24/2024	9:45 AM	0	0	0	0	0	0	0	0	0	0	0	0	0
4/24/2024	10:00 AM	0	0	0	0	0	0	0	0	0	0	0	0	0
4/24/2024	10:15 AM	0	0	0	0	0	0	0	0	0	0	0	0	0
4/24/2024	10:30 AM	0	0	0	0	0	0	0	0	0	0	0	0	0
4/24/2024	10:45 AM	0	0	0	0	0	0	0	0	0	0	0	0	0
4/24/2024	11:00 AM	0	0	0	0	0	0	0	0	0	0	0	0	0
4/24/2024	11:15 AM	0	0	0	0	0	0	0	0	0	0	0	0	0
4/24/2024	11:30 AM	0	0	0	0	0	0	0	0	0	0	0	0	0
4/24/2024	11:45 AM	0	0	0	0	0	0	0	0	0	0	0	0	0
4/24/2024	12:00 PM	0	0	0	0	0	0	0	0	0	0	0	0	0
4/24/2024	12:15 PM	0	0	0	0	0	0	0	0	0	0	0	0	0
4/24/2024	12:30 PM	0	0	0	0	0	0	0	0	0	0	0	0	0
4/24/2024	12:45 PM	0	0	0	0	0	0	0	0	0	0	0	0	0
4/24/2024	1:00 PM	0	0	0	0	0	0	0	0	0	0	0	0	0
4/24/2024	1:15 PM	0	0	0	0	0	0	0	0	0	0	0	0	0
4/24/2024	1:30 PM	0	0	0	0	0	0	0	0	0	0	0	0	0
4/24/2024	1:45 PM	0	0	0	0	0	0	0	0	0	0	0	0	0
4/24/2024	2:00 PM	0	0	0	0	0	0	0	0	0	0	0	0	0
4/24/2024	2:15 PM	0	0	0	0	0	0	0	0	0	0	0	0	0
4/24/2024	2:30 PM	0	0	0	0	0	0	0	0	0	0	0	0	0
4/24/2024	2:45 PM	0	0	0	0	0	0	0	0	0	0	0	0	0
4/24/2024	3:00 PM	0	0	0	0	0	0	0	0	0	0	0	0	0
4/24/2024	3:15 PM	0	0	0	0	0	0	0	0	0	0	0	0	0
4/24/2024	3:30 PM	0	0	0	0	0	0	0	0	0	0	0	0	0
4/24/2024	3:45 PM	0	0	0	0	0	0	0	0	0	0	0	0	0
4/24/2024	4:00 PM	0	0	0	0	0	0	0	0	0	0	0	0	0
4/24/2024	4:15 PM	0	0	0	0	0	0	0	0	0	0	0	0	0
4/24/2024	4:30 PM	0	0	0	0	0	0	0	0	0	0	0	0	0
4/24/2024	4:45 PM	0	0	0	0	0	0	0	0	0	0	0	0	0
4/24/2024	5:00 PM	0	0	0	0	0	0	0	0	0	0	0	0	0
4/24/2024	5:15 PM	0	0	0	0	0	0	0	0	0	0	0	0	0
4/24/2024	5:30 PM	0	0	0	0	0	0	0	0	0	0	0	0	0
4/24/2024	5:45 PM	0	0	0	0	0	0	0	0	0	0	0	0	0
4/24/2024	6:00 PM	0	0	0	0	0	0	0	0	0	0	0	0	0
4/24/2024	6:15 PM	0	0	0	0	0	0	0	0	0	0	0	0	0
4/24/2024	6:30 PM	0	0	0	0	0	0	0	0	0	0	0	0	0
4/24/2024	6:45 PM	0	0	0	0	0	0	0	0	0	0	0	0	0
4/24/2024	7:00 PM	0	0	0	0	0	0	0	0	0	0	0	0	0
4/24/2024	7:15 PM	0	0	0	0	0	0	0	0	0	0	0	0	0
4/24/2024	7:30 PM	0	0	0	0	0	0	0	0	0	0	0	0	0
4/24/2024	7:45 PM	0	0	0	0	0	0	0	0	0	0	0	0	0
4/24/2024	8:00 PM	0	0	0	0	0	0	0	0	0	0	0	0	0
4/24/2024	8:15 PM	0	0	0	0	0	0	0	0	0	0	0	0	0
4/24/2024	8:30 PM	0	0	0	0	0	0	0	0	0	0	0	0	0
4/24/2024	8:45 PM	0	0	0	0	0	0	0	0	0	0	0	0	0
4/24/2024	9:00 PM	0	0	0	0	0	0	0	0	0	0	0	0	0
4/24/2024	9:15 PM	0	0	0	0	0	0	0	0	0	0	0	0	0
4/24/2024	9:30 PM	0	0	0	0	0	0	0	0	0	0	0	0	0
4/24/2024	9:45 PM	0	0	0	0	0	0	0	0	0	0	0	0	0
4/24/2024	10:00 PM	0	0	0	0	0	0	0	0	0	0	0	0	0
4/24/2024	10:15 PM	0	0	0	0	0	0	0	0	0	0	0	0	0
4/24/2024	10:30 PM	0	0	0	0	0	0	0	0	0	0	0	0	0
4/24/2024	10:45 PM	0	0	0	0	0	0	0	0	0	0	0	0	0
4/24/2024	11:00 PM	0	0	0	0	0	0	0	0	0	0	0	0	0
4/24/2024	11:15 PM	0	0	0	0	0	0	0	0	0	0	0	0	0
4/24/2024	11:30 PM	0	0	0	0	0	0	0	0	0	0	0	0	0
4/24/2024	11:45 PM	0	0	0	0	0	0	0	0	0	0	0	0	0

4/25/2024	12:00 AM	0	0	0	0	0	0	0	0	0	0	0	0	0
4/25/2024	12:15 AM	0	0	0	0	0	0	0	0	0	0	0	0	0
4/25/2024	12:30 AM	0	0	0	0	0	0	0	0	0	0	0	0	0
4/25/2024	12:45 AM	0	0	0	0	0	0	0	0	0	0	0	0	0
4/25/2024	1:00 AM	0	0	0	0	0	0	0	0	0	0	0	0	0
4/25/2024	1:15 AM	0	0	0	0	0	0	0	0	0	0	0	0	0
4/25/2024	1:30 AM	0	0	0	0	0	0	0	0	0	0	0	0	0
4/25/2024	1:45 AM	0	0	0	0	0	0	0	0	0	0	0	0	0
4/25/2024	2:00 AM	0	0	0	0	0	0	0	0	0	0	0	0	0
4/25/2024	2:15 AM	0	0	0	0	0	0	0	0	0	0	0	0	0
4/25/2024	2:30 AM	0	0	0	0	0	0	0	0	0	0	0	0	0
4/25/2024	2:45 AM	0	0	0	0	0	0	0	0	0	0	0	0	0
4/25/2024	3:00 AM	0	0	0	0	0	0	0	0	0	0	0	0	0
4/25/2024	3:15 AM	0	0	0	0	0	0	0	0	0	0	0	0	0
4/25/2024	3:30 AM	0	0	0	0	0	0	0	0	0	0	0	0	0
4/25/2024	3:45 AM	0	0	0	0	0	0	0	0	0	0	0	0	0
4/25/2024	4:00 AM	0	0	0	0	0	0	0	0	0	0	0	0	0
4/25/2024	4:15 AM	0	0	0	0	0	0	0	0	0	0	0	0	0
4/25/2024	4:30 AM	0	0	0	0	0	0	0	0	0	0	0	0	0
4/25/2024	4:45 AM	0	0	0	0	0	0	0	0	0	0	0	0	0
4/25/2024	5:00 AM	0	0	0	0	0	0	0	0	0	0	0	0	0
4/25/2024	5:15 AM	0	0	0	0	0	0	0	0	0	0	0	0	0
4/25/2024	5:30 AM	0	0	0	0	0	0	0	0	0	0	0	0	0
4/25/2024	5:45 AM	0	0	0	0	0	0	0	0	0	0	0	0	0
4/25/2024	6:00 AM	0	0	0	0	0	0	0	0	0	0	0	0	0
4/25/2024	6:15 AM	0	0	0	0	0	0	0	0	0	0	0	0	0
4/25/2024	6:30 AM	0	0	0	0	0	0	0	0	0	0	0	0	0
4/25/2024	6:45 AM	0	0	0	0	0	0	0	0	0	0	0	0	0
4/25/2024	7:00 AM	0	0	0	0	0	0	0	0	0	0	0	0	0
4/25/2024	7:15 AM	0	0	0	0	0	0	0	0	0	0	0	0	0
4/25/2024	7:30 AM	0	0	0	0	0	0	0	0	0	0	0	0	0
4/25/2024	7:45 AM	0	0	0	0	0	0	0	0	0	0	0	0	0
4/25/2024	8:00 AM	0	0	0	0	0	0	0	0	0	0	0	0	0
4/25/2024	8:15 AM	0	0	0	0	0	0	0	0	0	0	0	0	0
4/25/2024	8:30 AM	0	0	0	0	0	0	0	0	0	0	0	0	0
4/25/2024	8:45 AM	0	0	0	0	0	0	0	0	0	0	0	0	0
4/25/2024	9:00 AM	0	0	0	0	0	0	0	0	0	0	0	0	0
4/25/2024	9:15 AM	0	0	0	0	0	0	0	0	0	0	0	0	0
4/25/2024	9:30 AM	0	0	0	0	0	0	0	0	0	0	0	0	0
4/25/2024	9:45 AM	0	0	0	0	0	0	0	0	0	0	0	0	0
4/25/2024	10:00 AM	0	0	0	0	0	0	0	0	0	0	0	0	0
4/25/2024	10:15 AM	0	0	0	0	0	0	0	0	0	0	0	0	0
4/25/2024	10:30 AM	0	0	0	0	0	0	0	0	0	0	0	0	0
4/25/2024	10:45 AM	0	0	0	0	0	0	0	0	0	0	0	0	0
4/25/2024	11:00 AM	0	0	0	0	0	0	0	0	0	0	0	0	0
4/25/2024	11:15 AM	0	0	0	0	0	0	0	0	0	0	0	0	0
4/25/2024	11:30 AM	0	0	0	0	0	0	0	0	0	0	0	0	0
4/25/2024	11:45 AM	0	0	0	0	0	0	0	0	0	0	0	0	0
4/25/2024	12:00 PM	0	0	0	0	0	0	0	0	0	0	0	0	0
4/25/2024	12:15 PM	0	0	0	0	0	0	0	0	0	0	0	0	0
4/25/2024	12:30 PM	0	0	0	0	0	0	0	0	0	0	0	0	0
4/25/2024	12:45 PM	0	0	0	0	0	0	0	0	0	0	0	0	0
4/25/2024	1:00 PM	0	0	0	0	0	0	0	0	0	0	0	0	0
4/25/2024	1:15 PM	0	0	0	0	0	0	0	0	0	0	0	0	0
4/25/2024	1:30 PM	0	0	0	0	0	0	0	0	0	0	0	0	0
4/25/2024	1:45 PM	0	0	0	0	0	0	0	0	0	0	0	0	0
4/25/2024	2:00 PM	0	0	0	0	0	0	0	0	0	0	0	0	0
4/25/2024	2:15 PM	0	0	0	0	0	0	0	0	0	0	0	0	0
4/25/2024	2:30 PM	0	0	0	0	0	0	0	0	0	0	0	0	0
4/25/2024	2:45 PM	0	0	0	0	0	0	0	0	0	0	0	0	0
4/25/2024	3:00 PM	0	0	0	0	0	0	0	0	0	0	0	0	0
4/25/2024	3:15 PM	0	0	0	0	0	0	0	0	0	0	0	0	0
4/25/2024	3:30 PM	0	0	0	0	0	0	0	0	0	0	0	0	0
4/25/2024	3:45 PM	0	0	0	0	0	0	0	0	0	0	0	0	0
4/25/2024	4:00 PM	0	0	0	0	0	0	0	0	0	0	0	0	0
4/25/2024	4:15 PM	0	0	0	0	0	0	0	0	0	0	0	0	0
4/25/2024	4:30 PM	0	0	0	0	0	0	0	0	0	0	0	0	0
4/25/2024	4:45 PM	0	0	0	0	0	0	0	0	0	0	0	0	0
4/25/2024	5:00 PM	0	0	0	0	0	0	0	0	0	0	0	0	0
4/25/2024	5:15 PM	0	0	0	0	0	0	0	0	0	0	0	0	0
4/25/2024	5:30 PM	0	0	0	0	0	0	0	0	0	0	0	0	0
4/25/2024	5:45 PM	0	0	0	0	0	0	0	0	0	0	0	0	0
4/25/2024	6:00 PM	0	0	0	0	0	0	0	0	0	0	0	0	0
4/25/2024	6:15 PM	0	0	0	0	0	0	0	0	0	0	0	0	0
4/25/2024	6:30 PM	0	0	0	0	0	0	0	0	0	0	0	0	0
4/25/2024	6:45 PM	0	0	0	0	0	0	0	0	0	0	0	0	0
4/25/2024	7:00 PM	0	0	0	0	0	0	0	0	0	0	0	0	0
4/25/2024	7:15 PM	0	0	0	0	0	0	0	0	0	0	0	0	0
4/25/2024	7:30 PM	0	0	0	0	0	0	0	0	0	0	0	0	0
4/25/2024	7:45 PM	0	0	0	0	0	0	0	0	0	0	0	0	0
4/25/2024	8:00 PM	0	0	0	0	0	0	0	0	0	0	0	0	0
4/25/2024	8:15 PM	0	0	0	0	0	0	0	0	0	0	0	0	0
4/25/2024	8:30 PM	0	0	0	0	0	0	0	0	0	0	0	0	0
4/25/2024	8:45 PM	0	0	0	0	0	0	0	0	0	0	0	0	0
4/25/2024	9:00 PM	0	0	0	0	0	0	0	0	0	0	0	0	0
4/25/2024	9:15 PM	0	0	0	0	0	0	0	0	0	0	0	0	0
4/25/2024	9:30 PM	0	0	0	0	0	0	0	0	0	0	0	0	0
4/25/2024	9:45 PM	0	0	0	0	0	0	0	0	0	0	0	0	0
4/25/2024	10:00 PM	0	0	0	0	0	0	0	0	0	0	0	0	0
4/25/2024	10:15 PM	0	0	0	0	0	0	0	0	0	0	0	0	0
4/25/2024	10:30 PM	0	0	0	0	0	0	0	0	0	0	0	0	0
4/25/2024	10:45 PM	0	0	0	0	0	0	0	0	0	0	0	0	0
4/25/2024	11:00 PM	0	0	0	0	0	0	0	0	0	0	0	0	0
4/25/2024	11:15 PM	0	0	0	0	0	0	0	0	0	0	0	0	0
4/25/2024	11:30 PM	0	0	0	0	0	0	0	0	0	0	0	0	0
4/25/2024	11:45 PM	0	0	0	0	0	0	0	0	0	0	0	0	0

EB
File Name:
Start Date: 4/23/2024
Start Time: 0
Site Code: 29
Station ID: 1
Location 1: I-26 James F. Byrnes Expy E/Bound On-Ramp, east of Harbison Blvd
Location 2:

Date	Time	1	2	3	4	5	6	7	8	9	10	11	12	13
4/23/2024	12:00 AM	0	0	0	0	0	0	0	0	0	0	0	0	0
4/23/2024	12:15 AM	0	0	0	0	0	0	0	0	0	0	0	0	0
4/23/2024	12:30 AM	0	0	0	0	0	0	0	0	0	0	0	0	0
4/23/2024	12:45 AM	0	0	0	0	0	0	0	0	0	0	0	0	0
4/23/2024	1:00 AM	0	0	0	0	0	0	0	0	0	0	0	0	0
4/23/2024	1:15 AM	0	0	0	0	0	0	0	0	0	0	0	0	0
4/23/2024	1:30 AM	0	0	0	0	0	0	0	0	0	0	0	0	0
4/23/2024	1:45 AM	0	0	0	0	0	0	0	0	0	0	0	0	0
4/23/2024	2:00 AM	0	0	0	0	0	0	0	0	0	0	0	0	0
4/23/2024	2:15 AM	0	0	0	0	0	0	0	0	0	0	0	0	0
4/23/2024	2:30 AM	0	0	0	0	0	0	0	0	0	0	0	0	0
4/23/2024	2:45 AM	0	0	0	0	0	0	0	0	0	0	0	0	0
4/23/2024	3:00 AM	0	0	0	0	0	0	0	0	0	0	0	0	0
4/23/2024	3:15 AM	0	0	0	0	0	0	0	0	0	0	0	0	0
4/23/2024	3:30 AM	0	0	0	0	0	0	0	0	0	0	0	0	0
4/23/2024	3:45 AM	0	0	0	0	0	0	0	0	0	0	0	0	0
4/23/2024	4:00 AM	0	0	0	0	0	0	0	0	0	0	0	0	0
4/23/2024	4:15 AM	0	0	0	0	0	0	0	0	0	0	0	0	0
4/23/2024	4:30 AM	0	0	0	0	0	0	0	0	0	0	0	0	0
4/23/2024	4:45 AM	0	0	0	0	0	0	0	0	0	0	0	0	0
4/23/2024	5:00 AM	0	0	0	0	0	0	0	0	0	0	0	0	0
4/23/2024	5:15 AM	0	0	0	0	0	0	0	0	0	0	0	0	0
4/23/2024	5:30 AM	0	0	0	0	0	0	0	0	0	0	0	0	0
4/23/2024	5:45 AM	0	0	0	0	0	0	0	0	0	0	0	0	0
4/23/2024	6:00 AM	0	0	0	0	0	0	0	0	0	0	0	0	0
4/23/2024	6:15 AM	0	0	0	0	0	0	0	0	0	0	0	0	0
4/23/2024	6:30 AM	0	0	0	0	0	0	0	0	0	0	0	0	0
4/23/2024	6:45 AM	0	0	0	0	0	0	0	0	0	0	0	0	0
4/23/2024	7:00 AM	0	0	0	0	0	0	0	0	0	0	0	0	0
4/23/2024	7:15 AM	0	0	0	0	0	0	0	0	0	0	0	0	0
4/23/2024	7:30 AM	0	0	0	0	0	0	0	0	0	0	0	0	0
4/23/2024	7:45 AM	0	0	0	0	0	0	0	0	0	0	0	0	0
4/23/2024	8:00 AM	0	0	0	0	0	0	0	0	0	0	0	0	0
4/23/2024	8:15 AM	0	0	0	0	0	0	0	0	0	0	0	0	0
4/23/2024	8:30 AM	0	0	0	0	0	0	0	0	0	0	0	0	0
4/23/2024	8:45 AM	0	0	0	0	0	0	0	0	0	0	0	0	0
4/23/2024	9:00 AM	0	0	0	0	0	0	0	0	0	0	0	0	0
4/23/2024	9:15 AM	0	0	0	0	0	0	0	0	0	0	0	0	0
4/23/2024	9:30 AM	0	0	0	0	0	0	0	0	0	0	0	0	0
4/23/2024	9:45 AM	0	0	0	0	0	0	0	0	0	0	0	0	0
4/23/2024	10:00 AM	0	0	0	0	0	0	0	0	0	0	0	0	0
4/23/2024	10:15 AM	0	0	0	0	0	0	0	0	0	0	0	0	0
4/23/2024	10:30 AM	0	0	0	0	0	0	0	0	0	0	0	0	0
4/23/2024	10:45 AM	0	0	0	0	0	0	0	0	0	0	0	0	0
4/23/2024	11:00 AM	0	0	0	0	0	0	0	0	0	0	0	0	0
4/23/2024	11:15 AM	0	0	0	0	0	0	0	0	0	0	0	0	0
4/23/2024	11:30 AM	0	0	0	0	0	0	0	0	0	0	0	0	0
4/23/2024	11:45 AM	0	0	0	0	0	0	0	0	0	0	0	0	0
4/23/2024	12:00 PM	0	0	0	0	0	0	0	0	0	0	0	0	0
4/23/2024	12:15 PM	0	0	0	0	0	0	0	0	0	0	0	0	0
4/23/2024	12:30 PM	0	0	0	0	0	0	0	0	0	0	0	0	0
4/23/2024	12:45 PM	0	0	0	0	0	0	0	0	0	0	0	0	0
4/23/2024	1:00 PM	0	0	0	0	0	0	0	0	0	0	0	0	0
4/23/2024	1:15 PM	0	0	0	0	0	0	0	0	0	0	0	0	0
4/23/2024	1:30 PM	0	0	0	0	0	0	0	0	0	0	0	0	0
4/23/2024	1:45 PM	0	0	0	0	0	0	0	0	0	0	0	0	0
4/23/2024	2:00 PM	0	0	0	0	0	0	0	0	0	0	0	0	0
4/23/2024	2:15 PM	0	0	0	0	0	0	0	0	0	0	0	0	0
4/23/2024	2:30 PM	0	0	0	0	0	0	0	0	0	0	0	0	0
4/23/2024	2:45 PM	0	0	0	0	0	0	0	0	0	0	0	0	0
4/23/2024	3:00 PM	0	0	0	0	0	0	0	0	0	0	0	0	0
4/23/2024	3:15 PM	0	0	0	0	0	0	0	0	0	0	0	0	0
4/23/2024	3:30 PM	0	0	0	0	0	0	0	0	0	0	0	0	0
4/23/2024	3:45 PM	0	0	0	0	0	0	0	0	0	0	0	0	0
4/23/2024	4:00 PM	0	0	0	0	0	0	0	0	0	0	0	0	0
4/23/2024	4:15 PM	0	0	0	0	0	0	0	0	0	0	0	0	0
4/23/2024	4:30 PM	0	0	0	0	0	0	0	0	0	0	0	0	0
4/23/2024	4:45 PM	0	0	0	0	0	0	0	0	0	0	0	0	0
4/23/2024	5:00 PM	0	0	0	0	0	0	0	0	0	0	0	0	0
4/23/2024	5:15 PM	0	0	0	0	0	0	0	0	0	0	0	0	0
4/23/2024	5:30 PM	0	0	0	0	0	0	0	0	0	0	0	0	0
4/23/2024	5:45 PM	0	0	0	0	0	0	0	0	0	0	0	0	0
4/23/2024	6:00 PM	0	0	0	0	0	0	0	0	0	0	0	0	0
4/23/2024	6:15 PM	0	183	23	0	0	0	0	0	0	0	0	0	0
4/23/2024	6:30 PM	0	344	43	0	1	0	0	0	0	0	0	0	0
4/23/2024	6:45 PM	0	500	65	0	1	0	0	0	2	0	0	0	0
4/23/2024	7:00 PM	0	640	88	0	1	0	0	0	2	0	0	0	0
4/23/2024	7:15 PM	0	623	94	0	1	0	0	0	2	0	0	0	0
4/23/2024	7:30 PM	0	593	93	0	1	0	0	0	2	0	0	0	0
4/23/2024	7:45 PM	0	555	99	0	2	0	0	0	0	0	0	0	0
4/23/2024	8:00 PM	0	519	89	0	3	0	0	1	0	0	0	0	0
4/23/2024	8:15 PM	0	455	83	0	3	0	0	1	0	0	0	0	0
4/23/2024	8:30 PM	0	413	75	0	3	0	0	1	1	0	0	0	0
4/23/2024	8:45 PM	0	380	52	1	2	0	0	1	1	0	0	0	0
4/23/2024	9:00 PM	0	365	44	2	1	1	0	0	1	0	0	0	0
4/23/2024	9:15 PM	0	351	29	2	1	1	0	0	2	0	0	0	0
4/23/2024	9:30 PM	0	329	24	3	1	1	0	0	1	0	0	0	0
4/23/2024	9:45 PM	0	300	22	2	2	1	0	0	1	0	0	0	0
4/23/2024	10:00 PM	0	256	20	1	2	0	0	0	1	0	0	0	0
4/23/2024	10:15 PM	0	193	23	1	2	0	0	0	0	0	0	0	0
4/23/2024	10:30 PM	0	157	24	0	1	0	0	0	0	0	0	0	0
4/23/2024	10:45 PM	0	125	28	0	0	0	0	0	0	0	0	0	0
4/23/2024	11:00 PM	0	95	28	0	0	0	0	0	1	0	0	0	0
4/23/2024	11:15 PM	0	89	20	0	0	0	0	0	1	0	0	0	0
4/23/2024	11:30 PM	0	80	15	0	0	0	0	0	1	0	0	0	0
4/23/2024	11:45 PM	0	76	10	0	0	0	0	0	1	0	0	0	0

4/24/2024	12:00 AM	0	76	8	0	0	0	0	0	1	0	0	0	0
4/24/2024	12:15 AM	0	62	6	0	0	0	0	0	1	0	0	0	0
4/24/2024	12:30 AM	0	50	4	0	0	0	0	0	1	0	0	0	0
4/24/2024	12:45 AM	0	40	2	0	0	0	0	0	1	0	0	0	0
4/24/2024	1:00 AM	0	37	2	0	0	0	0	0	0	0	0	0	0
4/24/2024	1:15 AM	0	38	1	0	0	0	0	0	0	0	0	0	0
4/24/2024	1:30 AM	0	33	2	0	0	0	0	0	0	0	0	0	0
4/24/2024	1:45 AM	0	28	2	0	1	0	0	0	0	0	0	0	0
4/24/2024	2:00 AM	0	21	2	0	1	0	0	0	0	0	0	0	0
4/24/2024	2:15 AM	0	20	2	0	1	0	0	0	1	0	0	0	0
4/24/2024	2:30 AM	0	25	1	0	1	0	0	0	2	0	0	0	0
4/24/2024	2:45 AM	0	31	2	0	0	0	0	0	2	0	0	0	0
4/24/2024	3:00 AM	0	31	2	0	0	0	0	0	2	0	0	0	0
4/24/2024	3:15 AM	0	42	3	0	0	0	0	0	1	0	0	0	0
4/24/2024	3:30 AM	0	41	5	0	0	0	0	0	0	0	0	0	0
4/24/2024	3:45 AM	0	37	5	0	0	0	0	0	0	0	0	0	0
4/24/2024	4:00 AM	0	43	7	0	0	0	0	0	0	0	0	0	0
4/24/2024	4:15 AM	0	48	11	0	0	0	0	0	0	0	0	0	0
4/24/2024	4:30 AM	0	57	14	0	0	0	0	0	3	0	0	0	0
4/24/2024	4:45 AM	0	76	20	0	0	0	0	0	3	0	0	0	0
4/24/2024	5:00 AM	0	96	22	0	0	0	0	0	3	0	0	0	0
4/24/2024	5:15 AM	0	113	29	0	1	1	0	0	3	0	0	0	0
4/24/2024	5:30 AM	0	151	39	0	2	1	0	0	0	0	0	0	0
4/24/2024	5:45 AM	0	199	65	0	2	2	0	0	0	0	0	0	0
4/24/2024	6:00 AM	0	249	89	0	3	2	1	0	2	0	0	0	0
4/24/2024	6:15 AM	0	305	98	0	3	2	1	0	2	0	0	0	0
4/24/2024	6:30 AM	0	376	114	0	2	2	1	0	2	0	0	0	0
4/24/2024	6:45 AM	0	432	123	0	2	1	1	0	3	0	0	0	0
4/24/2024	7:00 AM	0	506	118	0	3	1	0	0	1	0	0	0	0
4/24/2024	7:15 AM	0	514	123	1	5	0	0	0	1	0	0	0	0
4/24/2024	7:30 AM	0	489	111	1	8	0	0	0	3	0	0	0	0
4/24/2024	7:45 AM	0	459	95	1	9	0	0	0	5	0	0	0	0
4/24/2024	8:00 AM	0	382	97	1	7	0	0	0	5	0	0	0	0
4/24/2024	8:15 AM	0	390	99	0	7	1	0	0	7	0	0	0	0
4/24/2024	8:30 AM	0	380	109	0	5	1	0	0	8	0	0	0	0
4/24/2024	8:45 AM	0	376	109	0	7	1	0	0	6	0	0	0	0
4/24/2024	9:00 AM	0	388	110	0	10	1	0	0	6	0	0	0	0
4/24/2024	9:15 AM	0	386	110	0	10	0	0	1	5	0	0	0	0
4/24/2024	9:30 AM	1	415	117	0	9	0	0	1	3	0	0	0	0
4/24/2024	9:45 AM	1	426	114	0	6	0	0	1	3	0	0	0	0
4/24/2024	10:00 AM	1	433	116	0	5	0	0	1	4	0	0	0	0
4/24/2024	10:15 AM	1	443	125	0	6	0	0	0	5	0	0	0	0
4/24/2024	10:30 AM	0	440	114	1	6	0	0	0	6	0	0	0	0
4/24/2024	10:45 AM	0	462	127	1	8	0	0	1	5	0	0	0	0
4/24/2024	11:00 AM	0	503	129	1	6	0	0	1	6	0	0	0	0
4/24/2024	11:15 AM	0	531	120	1	4	0	0	1	4	0	0	0	0
4/24/2024	11:30 AM	1	580	131	1	6	1	0	1	3	0	0	0	0
4/24/2024	11:45 AM	1	624	121	1	5	1	0	1	6	0	0	0	0
4/24/2024	12:00 PM	2	685	123	1	6	2	0	1	6	0	0	0	0
4/24/2024	12:15 PM	3	705	142	1	9	2	1	1	6	0	0	0	0
4/24/2024	12:30 PM	3	733	139	0	7	1	1	2	6	0	0	0	0
4/24/2024	12:45 PM	3	741	159	0	8	1	1	1	3	0	0	0	0
4/24/2024	1:00 PM	2	736	167	6	7	0	1	1	3	0	0	0	0
4/24/2024	1:15 PM	2	766	148	6	4	1	0	1	5	0	0	0	0
4/24/2024	1:30 PM	1	750	152	6	5	1	0	0	5	0	0	0	0
4/24/2024	1:45 PM	1	733	128	7	4	1	0	0	5	0	0	0	0
4/24/2024	2:00 PM	1	703	128	2	5	1	0	0	6	0	0	0	0
4/24/2024	2:15 PM	0	691	128	2	6	0	0	0	4	0	0	0	0
4/24/2024	2:30 PM	0	679	117	2	7	0	0	0	4	0	0	0	0
4/24/2024	2:45 PM	0	687	130	2	8	0	0	0	4	0	0	0	0
4/24/2024	3:00 PM	1	679	115	1	8	0	0	0	2	0	0	0	0
4/24/2024	3:15 PM	2	689	125	1	5	0	0	0	3	0	0	0	0
4/24/2024	3:30 PM	2	706	130	2	3	0	0	0	2	0	0	0	0
4/24/2024	3:45 PM	2	700	121	1	2	0	0	0	2	0	0	0	0
4/24/2024	4:00 PM	1	711	128	1	2	0	0	0	2	0	0	0	0
4/24/2024	4:15 PM	0	702	127	1	5	0	0	0	1	0	0	0	0
4/24/2024	4:30 PM	0	687	125	0	6	1	0	0	3	0	0	0	0
4/24/2024	4:45 PM	1	650	127	0	8	1	0	0	3	0	0	0	0
4/24/2024	5:00 PM	1	652	119	0	9	1	0	0	2	0	0	0	0
4/24/2024	5:15 PM	1	644	104	0	7	2	0	0	2	0	0	0	0
4/24/2024	5:30 PM	2	645	103	1	6	1	0	0	0	0	0	0	0
4/24/2024	5:45 PM	1	688	102	2	3	1	0	0	0	0	0	0	0
4/24/2024	6:00 PM	1	675	101	2	2	1	0	0	0	0	0	0	0
4/24/2024	6:15 PM	1	680	98	2	2	0	0	0	0	0	0	0	0
4/24/2024	6:30 PM	0	672	94	1	4	0	0	0	0	0	0	0	0
4/24/2024	6:45 PM	0	674	94	0	4	0	0	0	0	0	0	0	0
4/24/2024	7:00 PM	0	642	91	0	4	0	0	0	0	0	0	0	0
4/24/2024	7:15 PM	0	631	97	0	4	0	0	0	0	0	0	0	0
4/24/2024	7:30 PM	0	622	92	0	3	0	0	0	1	0	0	0	0
4/24/2024	7:45 PM	0	591	87	0	4	0	0	0	1	0	0	0	0
4/24/2024	8:00 PM	0	575	77	0	3	0	0	0	1	0	0	0	0
4/24/2024	8:15 PM	0	525	68	0	2	0	0	0	1	0	0	0	0
4/24/2024	8:30 PM	0	478	61	0	1	0	0	0	0	0	0	0	0
4/24/2024	8:45 PM	0	439	54	0	0	0	0	0	0	0	0	0	0
4/24/2024	9:00 PM	0	407	56	1	1	0	0	0	0	0	0	0	0
4/24/2024	9:15 PM	0	366	51	1	1	0	0	0	0	0	0	0	0
4/24/2024	9:30 PM	0	319	47	1	2	0	0	0	0	0	0	0	0
4/24/2024	9:45 PM	0	249	39	1	2	0	0	0	0	0	0	0	0
4/24/2024	10:00 PM	0	216	30	0	1	0	0	0	0	0	0	0	0
4/24/2024	10:15 PM	0	180	23	0	1	0	0	0	0	0	0	0	0
4/24/2024	10:30 PM	0	147	16	0	0	0	0	0	0	0	0	0	0
4/24/2024	10:45 PM	0	132	9	0	1	0	0	0	0	0	0	0	0
4/24/2024	11:00 PM	0	115	6	0	1	0	0	0	0	0	0	0	0
4/24/2024	11:15 PM	0	96	4	0	1	0	0	0	0	0	0	0	0
4/24/2024	11:30 PM	0	85	5	0	2	0	0	0	1	0	1	0	0
4/24/2024	11:45 PM	0	77	10	0	1	0	0	0	1	0	1	0	0

4/25/2024	12:00 AM	0	61	12	0	1	0	0	0	1	0	1	0	0
4/25/2024	12:15 AM	0	47	13	0	1	0	0	0	1	0	1	0	0
4/25/2024	12:30 AM	1	50	17	0	0	0	0	0	1	0	0	0	0
4/25/2024	12:45 AM	1	46	16	0	0	0	0	0	1	0	0	0	0
4/25/2024	1:00 AM	1	43	14	0	0	0	0	0	1	0	0	0	0
4/25/2024	1:15 AM	1	38	12	0	0	0	0	0	1	0	0	0	0
4/25/2024	1:30 AM	0	29	7	0	0	0	0	0	2	0	0	0	0
4/25/2024	1:45 AM	0	28	5	0	0	0	0	0	2	0	0	0	0
4/25/2024	2:00 AM	0	30	6	0	0	0	0	0	3	0	0	0	0
4/25/2024	2:15 AM	0	29	9	0	0	0	0	0	3	0	0	0	0
4/25/2024	2:30 AM	0	25	9	0	0	0	0	0	1	0	0	0	0
4/25/2024	2:45 AM	0	25	8	0	0	0	0	0	1	0	0	0	0
4/25/2024	3:00 AM	0	24	8	0	0	0	0	0	0	0	0	0	0
4/25/2024	3:15 AM	0	27	7	0	0	0	0	1	0	0	0	0	0
4/25/2024	3:30 AM	0	34	9	0	0	0	0	1	2	0	0	0	0
4/25/2024	3:45 AM	0	41	11	0	0	0	0	1	3	0	0	0	0
4/25/2024	4:00 AM	0	41	11	0	1	0	0	1	4	0	0	0	0
4/25/2024	4:15 AM	0	52	9	0	1	0	0	0	5	0	0	0	0
4/25/2024	4:30 AM	0	73	10	0	1	0	0	0	3	0	0	0	0
4/25/2024	4:45 AM	0	96	9	0	1	0	0	0	2	0	0	0	0
4/25/2024	5:00 AM	0	120	12	0	1	0	0	0	1	0	0	0	0
4/25/2024	5:15 AM	0	144	20	0	1	0	0	0	0	0	0	0	0
4/25/2024	5:30 AM	0	161	30	0	1	0	0	0	0	0	0	0	0
4/25/2024	5:45 AM	0	193	59	0	4	1	0	1	1	0	0	0	0
4/25/2024	6:00 AM	0	245	79	1	3	1	0	1	1	0	0	0	0
4/25/2024	6:15 AM	0	305	93	1	5	1	0	1	2	0	0	0	0
4/25/2024	6:30 AM	0	357	94	1	5	1	0	1	5	0	0	0	0
4/25/2024	6:45 AM	0	430	91	1	3	0	0	0	5	0	0	0	0
4/25/2024	7:00 AM	0	460	83	0	3	0	0	0	7	0	0	0	0
4/25/2024	7:15 AM	0	481	89	1	2	1	0	0	8	0	0	0	0
4/25/2024	7:30 AM	0	492	102	1	2	1	0	0	6	0	0	0	0
4/25/2024	7:45 AM	0	450	94	1	1	1	0	0	5	0	0	0	0
4/25/2024	8:00 AM	0	422	101	1	1	1	0	1	3	0	0	0	0
4/25/2024	8:15 AM	1	407	97	0	3	1	0	1	2	0	0	0	0
4/25/2024	8:30 AM	1	369	91	1	5	1	0	1	1	0	0	0	0
4/25/2024	8:45 AM	1	376	99	2	9	1	0	1	1	0	0	0	0
4/25/2024	9:00 AM	1	366	105	2	9	1	0	0	1	0	0	0	0
4/25/2024	9:15 AM	0	355	107	3	9	0	0	0	4	0	0	0	0
4/25/2024	9:30 AM	0	374	120	2	8	0	0	1	4	0	0	0	0
4/25/2024	9:45 AM	0	380	111	1	7	0	0	1	7	0	0	0	0
4/25/2024	10:00 AM	0	398	94	2	8	0	0	1	8	0	0	0	0
4/25/2024	10:15 AM	0	433	98	3	8	0	0	2	7	0	0	0	0
4/25/2024	10:30 AM	1	476	95	4	11	0	0	1	8	0	0	0	0
4/25/2024	10:45 AM	1	494	111	4	8	0	0	2	6	0	0	0	0
4/25/2024	11:00 AM	1	538	134	3	10	0	0	2	7	0	0	0	0
4/25/2024	11:15 AM	2	582	136	1	10	0	0	1	4	0	0	0	0
4/25/2024	11:30 AM	1	630	155	0	9	0	0	1	3	0	0	0	0
4/25/2024	11:45 AM	1	694	146	0	10	0	0	0	3	0	0	0	0
4/25/2024	12:00 PM	1	743	153	0	11	0	0	0	2	0	0	0	0
4/25/2024	12:15 PM	0	756	154	0	11	0	0	0	2	0	0	0	0
4/25/2024	12:30 PM	0	795	139	0	9	1	0	0	2	0	0	0	0
4/25/2024	12:45 PM	1	801	147	0	10	1	0	0	2	0	0	0	0
4/25/2024	1:00 PM	1	811	144	0	6	1	0	0	2	0	0	0	0
4/25/2024	1:15 PM	2	836	143	0	3	1	0	0	4	0	0	0	0
4/25/2024	1:30 PM	2	807	143	0	3	0	0	0	4	0	0	0	0
4/25/2024	1:45 PM	3	769	142	1	3	0	0	0	3	0	0	0	0
4/25/2024	2:00 PM	3	780	132	1	5	0	0	0	2	0	0	0	0
4/25/2024	2:15 PM	2	753	128	1	6	1	0	0	0	0	0	0	0
4/25/2024	2:30 PM	2	765	130	1	7	1	0	0	0	0	0	0	0
4/25/2024	2:45 PM	0	773	138	0	8	2	0	0	1	0	0	0	0
4/25/2024	3:00 PM	1	754	133	1	9	2	1	0	2	0	0	0	0
4/25/2024	3:15 PM	2	753	125	1	10	1	1	0	3	0	0	0	0
4/25/2024	3:30 PM	3	715	108	1	9	1	1	0	3	0	0	0	0
4/25/2024	3:45 PM	3	727	92	1	7	0	1	0	3	0	0	0	0
4/25/2024	4:00 PM	2	697	95	0	4	0	0	1	3	0	0	0	0
4/25/2024	4:15 PM	1	718	101	0	5	0	0	1	2	0	0	0	0
4/25/2024	4:30 PM	0	731	101	0	5	0	0	1	3	0	0	0	0
4/25/2024	4:45 PM	0	713	101	0	5	1	0	1	4	0	0	0	0
4/25/2024	5:00 PM	0	736	78	0	11	1	0	0	4	0	0	0	0
4/25/2024	5:15 PM	0	699	85	0	10	1	1	0	5	0	0	0	0
4/25/2024	5:30 PM	0	694	93	0	10	1	1	0	4	0	0	0	0
4/25/2024	5:45 PM	1	717	87	0	10	0	1	0	2	0	0	0	0
4/25/2024	6:00 PM	1	709	123	0	5	0	1	0	1	0	0	0	0
4/25/2024	6:15 PM	1	538	89	0	3	0	0	0	0	0	0	0	0
4/25/2024	6:30 PM	1	361	60	0	2	0	0	0	0	0	0	0	0
4/25/2024	6:45 PM	0	174	41	0	1	0	0	0	0	0	0	0	0
4/25/2024	7:00 PM	0	0	0	0	0	0	0	0	0	0	0	0	0
4/25/2024	7:15 PM	0	0	0	0	0	0	0	0	0	0	0	0	0
4/25/2024	7:30 PM	0	0	0	0	0	0	0	0	0	0	0	0	0
4/25/2024	7:45 PM	0	0	0	0	0	0	0	0	0	0	0	0	0
4/25/2024	8:00 PM	0	0	0	0	0	0	0	0	0	0	0	0	0
4/25/2024	8:15 PM	0	0	0	0	0	0	0	0	0	0	0	0	0
4/25/2024	8:30 PM	0	0	0	0	0	0	0	0	0	0	0	0	0
4/25/2024	8:45 PM	0	0	0	0	0	0	0	0	0	0	0	0	0
4/25/2024	9:00 PM	0	0	0	0	0	0	0	0	0	0	0	0	0
4/25/2024	9:15 PM	0	0	0	0	0	0	0	0	0	0	0	0	0
4/25/2024	9:30 PM	0	0	0	0	0	0	0	0	0	0	0	0	0
4/25/2024	9:45 PM	0	0	0	0	0	0	0	0	0	0	0	0	0
4/25/2024	10:00 PM	0	0	0	0	0	0	0	0	0	0	0	0	0
4/25/2024	10:15 PM	0	0	0	0	0	0	0	0	0	0	0	0	0
4/25/2024	10:30 PM	0	0	0	0	0	0	0	0	0	0	0	0	0
4/25/2024	10:45 PM	0	0	0	0	0	0	0	0	0	0	0	0	0
4/25/2024	11:00 PM	0	0	0	0	0	0	0	0	0	0	0	0	0
4/25/2024	11:15 PM	0	0	0	0	0	0	0	0	0	0	0	0	0
4/25/2024	11:30 PM	0	0	0	0	0	0	0	0	0	0	0	0	0
4/25/2024	11:45 PM	0	0	0	0	0	0	0	0	0	0	0	0	0

WB
File Name:
Start Date: 4/23/2024
Start Time: 0
Site Code: 29
Station ID: 1
Location 1: I-26 James F. Byrnes Expy E/Bound On-Ramp, east of Harbison Blvd
Location 2:

Date	Time	1	2	3	4	5	6	7	8	9	10	11	12	13
4/23/2024	12:00 AM	0	0	0	0	0	0	0	0	0	0	0	0	0
4/23/2024	12:15 AM	0	0	0	0	0	0	0	0	0	0	0	0	0
4/23/2024	12:30 AM	0	0	0	0	0	0	0	0	0	0	0	0	0
4/23/2024	12:45 AM	0	0	0	0	0	0	0	0	0	0	0	0	0
4/23/2024	1:00 AM	0	0	0	0	0	0	0	0	0	0	0	0	0
4/23/2024	1:15 AM	0	0	0	0	0	0	0	0	0	0	0	0	0
4/23/2024	1:30 AM	0	0	0	0	0	0	0	0	0	0	0	0	0
4/23/2024	1:45 AM	0	0	0	0	0	0	0	0	0	0	0	0	0
4/23/2024	2:00 AM	0	0	0	0	0	0	0	0	0	0	0	0	0
4/23/2024	2:15 AM	0	0	0	0	0	0	0	0	0	0	0	0	0
4/23/2024	2:30 AM	0	0	0	0	0	0	0	0	0	0	0	0	0
4/23/2024	2:45 AM	0	0	0	0	0	0	0	0	0	0	0	0	0
4/23/2024	3:00 AM	0	0	0	0	0	0	0	0	0	0	0	0	0
4/23/2024	3:15 AM	0	0	0	0	0	0	0	0	0	0	0	0	0
4/23/2024	3:30 AM	0	0	0	0	0	0	0	0	0	0	0	0	0
4/23/2024	3:45 AM	0	0	0	0	0	0	0	0	0	0	0	0	0
4/23/2024	4:00 AM	0	0	0	0	0	0	0	0	0	0	0	0	0
4/23/2024	4:15 AM	0	0	0	0	0	0	0	0	0	0	0	0	0
4/23/2024	4:30 AM	0	0	0	0	0	0	0	0	0	0	0	0	0
4/23/2024	4:45 AM	0	0	0	0	0	0	0	0	0	0	0	0	0
4/23/2024	5:00 AM	0	0	0	0	0	0	0	0	0	0	0	0	0
4/23/2024	5:15 AM	0	0	0	0	0	0	0	0	0	0	0	0	0
4/23/2024	5:30 AM	0	0	0	0	0	0	0	0	0	0	0	0	0
4/23/2024	5:45 AM	0	0	0	0	0	0	0	0	0	0	0	0	0
4/23/2024	6:00 AM	0	0	0	0	0	0	0	0	0	0	0	0	0
4/23/2024	6:15 AM	0	0	0	0	0	0	0	0	0	0	0	0	0
4/23/2024	6:30 AM	0	0	0	0	0	0	0	0	0	0	0	0	0
4/23/2024	6:45 AM	0	0	0	0	0	0	0	0	0	0	0	0	0
4/23/2024	7:00 AM	0	0	0	0	0	0	0	0	0	0	0	0	0
4/23/2024	7:15 AM	0	0	0	0	0	0	0	0	0	0	0	0	0
4/23/2024	7:30 AM	0	0	0	0	0	0	0	0	0	0	0	0	0
4/23/2024	7:45 AM	0	0	0	0	0	0	0	0	0	0	0	0	0
4/23/2024	8:00 AM	0	0	0	0	0	0	0	0	0	0	0	0	0
4/23/2024	8:15 AM	0	0	0	0	0	0	0	0	0	0	0	0	0
4/23/2024	8:30 AM	0	0	0	0	0	0	0	0	0	0	0	0	0
4/23/2024	8:45 AM	0	0	0	0	0	0	0	0	0	0	0	0	0
4/23/2024	9:00 AM	0	0	0	0	0	0	0	0	0	0	0	0	0
4/23/2024	9:15 AM	0	0	0	0	0	0	0	0	0	0	0	0	0
4/23/2024	9:30 AM	0	0	0	0	0	0	0	0	0	0	0	0	0
4/23/2024	9:45 AM	0	0	0	0	0	0	0	0	0	0	0	0	0
4/23/2024	10:00 AM	0	0	0	0	0	0	0	0	0	0	0	0	0
4/23/2024	10:15 AM	0	0	0	0	0	0	0	0	0	0	0	0	0
4/23/2024	10:30 AM	0	0	0	0	0	0	0	0	0	0	0	0	0
4/23/2024	10:45 AM	0	0	0	0	0	0	0	0	0	0	0	0	0
4/23/2024	11:00 AM	0	0	0	0	0	0	0	0	0	0	0	0	0
4/23/2024	11:15 AM	0	0	0	0	0	0	0	0	0	0	0	0	0
4/23/2024	11:30 AM	0	0	0	0	0	0	0	0	0	0	0	0	0
4/23/2024	11:45 AM	0	0	0	0	0	0	0	0	0	0	0	0	0
4/23/2024	12:00 PM	0	0	0	0	0	0	0	0	0	0	0	0	0
4/23/2024	12:15 PM	0	0	0	0	0	0	0	0	0	0	0	0	0
4/23/2024	12:30 PM	0	0	0	0	0	0	0	0	0	0	0	0	0
4/23/2024	12:45 PM	0	0	0	0	0	0	0	0	0	0	0	0	0
4/23/2024	1:00 PM	0	0	0	0	0	0	0	0	0	0	0	0	0
4/23/2024	1:15 PM	0	0	0	0	0	0	0	0	0	0	0	0	0
4/23/2024	1:30 PM	0	0	0	0	0	0	0	0	0	0	0	0	0
4/23/2024	1:45 PM	0	0	0	0	0	0	0	0	0	0	0	0	0
4/23/2024	2:00 PM	0	0	0	0	0	0	0	0	0	0	0	0	0
4/23/2024	2:15 PM	0	0	0	0	0	0	0	0	0	0	0	0	0
4/23/2024	2:30 PM	0	0	0	0	0	0	0	0	0	0	0	0	0
4/23/2024	2:45 PM	0	0	0	0	0	0	0	0	0	0	0	0	0
4/23/2024	3:00 PM	0	0	0	0	0	0	0	0	0	0	0	0	0
4/23/2024	3:15 PM	0	0	0	0	0	0	0	0	0	0	0	0	0
4/23/2024	3:30 PM	0	0	0	0	0	0	0	0	0	0	0	0	0
4/23/2024	3:45 PM	0	0	0	0	0	0	0	0	0	0	0	0	0
4/23/2024	4:00 PM	0	0	0	0	0	0	0	0	0	0	0	0	0
4/23/2024	4:15 PM	0	0	0	0	0	0	0	0	0	0	0	0	0
4/23/2024	4:30 PM	0	0	0	0	0	0	0	0	0	0	0	0	0
4/23/2024	4:45 PM	0	0	0	0	0	0	0	0	0	0	0	0	0
4/23/2024	5:00 PM	0	0	0	0	0	0	0	0	0	0	0	0	0
4/23/2024	5:15 PM	0	0	0	0	0	0	0	0	0	0	0	0	0
4/23/2024	5:30 PM	0	0	0	0	0	0	0	0	0	0	0	0	0
4/23/2024	5:45 PM	0	0	0	0	0	0	0	0	0	0	0	0	0
4/23/2024	6:00 PM	0	0	0	0	0	0	0	0	0	0	0	0	0
4/23/2024	6:15 PM	0	0	0	0	0	0	0	0	0	0	0	0	0
4/23/2024	6:30 PM	0	0	0	0	0	0	0	0	0	0	0	0	0
4/23/2024	6:45 PM	0	0	0	0	0	0	0	0	0	0	0	0	0
4/23/2024	7:00 PM	0	0	0	0	0	0	0	0	0	0	0	0	0
4/23/2024	7:15 PM	0	0	0	0	0	0	0	0	0	0	0	0	0
4/23/2024	7:30 PM	0	0	0	0	0	0	0	0	0	0	0	0	0
4/23/2024	7:45 PM	0	0	0	0	0	0	0	0	0	0	0	0	0
4/23/2024	8:00 PM	0	0	0	0	0	0	0	0	0	0	0	0	0
4/23/2024	8:15 PM	0	0	0	0	0	0	0	0	0	0	0	0	0
4/23/2024	8:30 PM	0	0	0	0	0	0	0	0	0	0	0	0	0
4/23/2024	8:45 PM	0	0	0	0	0	0	0	0	0	0	0	0	0
4/23/2024	9:00 PM	0	0	0	0	0	0	0	0	0	0	0	0	0
4/23/2024	9:15 PM	0	0	0	0	0	0	0	0	0	0	0	0	0
4/23/2024	9:30 PM	0	0	0	0	0	0	0	0	0	0	0	0	0
4/23/2024	9:45 PM	0	0	0	0	0	0	0	0	0	0	0	0	0
4/23/2024	10:00 PM	0	0	0	0	0	0	0	0	0	0	0	0	0
4/23/2024	10:15 PM	0	0	0	0	0	0	0	0	0	0	0	0	0
4/23/2024	10:30 PM	0	0	0	0	0	0	0	0	0	0	0	0	0
4/23/2024	10:45 PM	0	0	0	0	0	0	0	0	0	0	0	0	0
4/23/2024	11:00 PM	0	0	0	0	0	0	0	0	0	0	0	0	0
4/23/2024	11:15 PM	0	0	0	0	0	0	0	0	0	0	0	0	0
4/23/2024	11:30 PM	0	0	0	0	0	0	0	0	0	0	0	0	0
4/23/2024	11:45 PM	0	0	0	0	0	0	0	0	0	0	0	0	0

4/24/2024	12:00 AM	0	0	0	0	0	0	0	0	0	0	0	0	0
4/24/2024	12:15 AM	0	0	0	0	0	0	0	0	0	0	0	0	0
4/24/2024	12:30 AM	0	0	0	0	0	0	0	0	0	0	0	0	0
4/24/2024	12:45 AM	0	0	0	0	0	0	0	0	0	0	0	0	0
4/24/2024	1:00 AM	0	0	0	0	0	0	0	0	0	0	0	0	0
4/24/2024	1:15 AM	0	0	0	0	0	0	0	0	0	0	0	0	0
4/24/2024	1:30 AM	0	0	0	0	0	0	0	0	0	0	0	0	0
4/24/2024	1:45 AM	0	0	0	0	0	0	0	0	0	0	0	0	0
4/24/2024	2:00 AM	0	0	0	0	0	0	0	0	0	0	0	0	0
4/24/2024	2:15 AM	0	0	0	0	0	0	0	0	0	0	0	0	0
4/24/2024	2:30 AM	0	0	0	0	0	0	0	0	0	0	0	0	0
4/24/2024	2:45 AM	0	0	0	0	0	0	0	0	0	0	0	0	0
4/24/2024	3:00 AM	0	0	0	0	0	0	0	0	0	0	0	0	0
4/24/2024	3:15 AM	0	0	0	0	0	0	0	0	0	0	0	0	0
4/24/2024	3:30 AM	0	0	0	0	0	0	0	0	0	0	0	0	0
4/24/2024	3:45 AM	0	0	0	0	0	0	0	0	0	0	0	0	0
4/24/2024	4:00 AM	0	0	0	0	0	0	0	0	0	0	0	0	0
4/24/2024	4:15 AM	0	0	0	0	0	0	0	0	0	0	0	0	0
4/24/2024	4:30 AM	0	0	0	0	0	0	0	0	0	0	0	0	0
4/24/2024	4:45 AM	0	0	0	0	0	0	0	0	0	0	0	0	0
4/24/2024	5:00 AM	0	0	0	0	0	0	0	0	0	0	0	0	0
4/24/2024	5:15 AM	0	0	0	0	0	0	0	0	0	0	0	0	0
4/24/2024	5:30 AM	0	0	0	0	0	0	0	0	0	0	0	0	0
4/24/2024	5:45 AM	0	0	0	0	0	0	0	0	0	0	0	0	0
4/24/2024	6:00 AM	0	0	0	0	0	0	0	0	0	0	0	0	0
4/24/2024	6:15 AM	0	0	0	0	0	0	0	0	0	0	0	0	0
4/24/2024	6:30 AM	0	0	0	0	0	0	0	0	0	0	0	0	0
4/24/2024	6:45 AM	0	0	0	0	0	0	0	0	0	0	0	0	0
4/24/2024	7:00 AM	0	0	0	0	0	0	0	0	0	0	0	0	0
4/24/2024	7:15 AM	0	0	0	0	0	0	0	0	0	0	0	0	0
4/24/2024	7:30 AM	0	0	0	0	0	0	0	0	0	0	0	0	0
4/24/2024	7:45 AM	0	0	0	0	0	0	0	0	0	0	0	0	0
4/24/2024	8:00 AM	0	0	0	0	0	0	0	0	0	0	0	0	0
4/24/2024	8:15 AM	0	0	0	0	0	0	0	0	0	0	0	0	0
4/24/2024	8:30 AM	0	0	0	0	0	0	0	0	0	0	0	0	0
4/24/2024	8:45 AM	0	0	0	0	0	0	0	0	0	0	0	0	0
4/24/2024	9:00 AM	0	0	0	0	0	0	0	0	0	0	0	0	0
4/24/2024	9:15 AM	0	0	0	0	0	0	0	0	0	0	0	0	0
4/24/2024	9:30 AM	0	0	0	0	0	0	0	0	0	0	0	0	0
4/24/2024	9:45 AM	0	0	0	0	0	0	0	0	0	0	0	0	0
4/24/2024	10:00 AM	0	0	0	0	0	0	0	0	0	0	0	0	0
4/24/2024	10:15 AM	0	0	0	0	0	0	0	0	0	0	0	0	0
4/24/2024	10:30 AM	0	0	0	0	0	0	0	0	0	0	0	0	0
4/24/2024	10:45 AM	0	0	0	0	0	0	0	0	0	0	0	0	0
4/24/2024	11:00 AM	0	0	0	0	0	0	0	0	0	0	0	0	0
4/24/2024	11:15 AM	0	0	0	0	0	0	0	0	0	0	0	0	0
4/24/2024	11:30 AM	0	0	0	0	0	0	0	0	0	0	0	0	0
4/24/2024	11:45 AM	0	0	0	0	0	0	0	0	0	0	0	0	0
4/24/2024	12:00 PM	0	0	0	0	0	0	0	0	0	0	0	0	0
4/24/2024	12:15 PM	0	0	0	0	0	0	0	0	0	0	0	0	0
4/24/2024	12:30 PM	0	0	0	0	0	0	0	0	0	0	0	0	0
4/24/2024	12:45 PM	0	0	0	0	0	0	0	0	0	0	0	0	0
4/24/2024	1:00 PM	0	0	0	0	0	0	0	0	0	0	0	0	0
4/24/2024	1:15 PM	0	0	0	0	0	0	0	0	0	0	0	0	0
4/24/2024	1:30 PM	0	0	0	0	0	0	0	0	0	0	0	0	0
4/24/2024	1:45 PM	0	0	0	0	0	0	0	0	0	0	0	0	0
4/24/2024	2:00 PM	0	0	0	0	0	0	0	0	0	0	0	0	0
4/24/2024	2:15 PM	0	0	0	0	0	0	0	0	0	0	0	0	0
4/24/2024	2:30 PM	0	0	0	0	0	0	0	0	0	0	0	0	0
4/24/2024	2:45 PM	0	0	0	0	0	0	0	0	0	0	0	0	0
4/24/2024	3:00 PM	0	0	0	0	0	0	0	0	0	0	0	0	0
4/24/2024	3:15 PM	0	0	0	0	0	0	0	0	0	0	0	0	0
4/24/2024	3:30 PM	0	0	0	0	0	0	0	0	0	0	0	0	0
4/24/2024	3:45 PM	0	0	0	0	0	0	0	0	0	0	0	0	0
4/24/2024	4:00 PM	0	0	0	0	0	0	0	0	0	0	0	0	0
4/24/2024	4:15 PM	0	0	0	0	0	0	0	0	0	0	0	0	0
4/24/2024	4:30 PM	0	0	0	0	0	0	0	0	0	0	0	0	0
4/24/2024	4:45 PM	0	0	0	0	0	0	0	0	0	0	0	0	0
4/24/2024	5:00 PM	0	0	0	0	0	0	0	0	0	0	0	0	0
4/24/2024	5:15 PM	0	0	0	0	0	0	0	0	0	0	0	0	0
4/24/2024	5:30 PM	0	0	0	0	0	0	0	0	0	0	0	0	0
4/24/2024	5:45 PM	0	0	0	0	0	0	0	0	0	0	0	0	0
4/24/2024	6:00 PM	0	0	0	0	0	0	0	0	0	0	0	0	0
4/24/2024	6:15 PM	0	0	0	0	0	0	0	0	0	0	0	0	0
4/24/2024	6:30 PM	0	0	0	0	0	0	0	0	0	0	0	0	0
4/24/2024	6:45 PM	0	0	0	0	0	0	0	0	0	0	0	0	0
4/24/2024	7:00 PM	0	0	0	0	0	0	0	0	0	0	0	0	0
4/24/2024	7:15 PM	0	0	0	0	0	0	0	0	0	0	0	0	0
4/24/2024	7:30 PM	0	0	0	0	0	0	0	0	0	0	0	0	0
4/24/2024	7:45 PM	0	0	0	0	0	0	0	0	0	0	0	0	0
4/24/2024	8:00 PM	0	0	0	0	0	0	0	0	0	0	0	0	0
4/24/2024	8:15 PM	0	0	0	0	0	0	0	0	0	0	0	0	0
4/24/2024	8:30 PM	0	0	0	0	0	0	0	0	0	0	0	0	0
4/24/2024	8:45 PM	0	0	0	0	0	0	0	0	0	0	0	0	0
4/24/2024	9:00 PM	0	0	0	0	0	0	0	0	0	0	0	0	0
4/24/2024	9:15 PM	0	0	0	0	0	0	0	0	0	0	0	0	0
4/24/2024	9:30 PM	0	0	0	0	0	0	0	0	0	0	0	0	0
4/24/2024	9:45 PM	0	0	0	0	0	0	0	0	0	0	0	0	0
4/24/2024	10:00 PM	0	0	0	0	0	0	0	0	0	0	0	0	0
4/24/2024	10:15 PM	0	0	0	0	0	0	0	0	0	0	0	0	0
4/24/2024	10:30 PM	0	0	0	0	0	0	0	0	0	0	0	0	0
4/24/2024	10:45 PM	0	0	0	0	0	0	0	0	0	0	0	0	0
4/24/2024	11:00 PM	0	0	0	0	0	0	0	0	0	0	0	0	0
4/24/2024	11:15 PM	0	0	0	0	0	0	0	0	0	0	0	0	0
4/24/2024	11:30 PM	0	0	0	0	0	0	0	0	0	0	0	0	0
4/24/2024	11:45 PM	0	0	0	0	0	0	0	0	0	0	0	0	0

4/25/2024	12:00 AM	0	0	0	0	0	0	0	0	0	0	0	0	0
4/25/2024	12:15 AM	0	0	0	0	0	0	0	0	0	0	0	0	0
4/25/2024	12:30 AM	0	0	0	0	0	0	0	0	0	0	0	0	0
4/25/2024	12:45 AM	0	0	0	0	0	0	0	0	0	0	0	0	0
4/25/2024	1:00 AM	0	0	0	0	0	0	0	0	0	0	0	0	0
4/25/2024	1:15 AM	0	0	0	0	0	0	0	0	0	0	0	0	0
4/25/2024	1:30 AM	0	0	0	0	0	0	0	0	0	0	0	0	0
4/25/2024	1:45 AM	0	0	0	0	0	0	0	0	0	0	0	0	0
4/25/2024	2:00 AM	0	0	0	0	0	0	0	0	0	0	0	0	0
4/25/2024	2:15 AM	0	0	0	0	0	0	0	0	0	0	0	0	0
4/25/2024	2:30 AM	0	0	0	0	0	0	0	0	0	0	0	0	0
4/25/2024	2:45 AM	0	0	0	0	0	0	0	0	0	0	0	0	0
4/25/2024	3:00 AM	0	0	0	0	0	0	0	0	0	0	0	0	0
4/25/2024	3:15 AM	0	0	0	0	0	0	0	0	0	0	0	0	0
4/25/2024	3:30 AM	0	0	0	0	0	0	0	0	0	0	0	0	0
4/25/2024	3:45 AM	0	0	0	0	0	0	0	0	0	0	0	0	0
4/25/2024	4:00 AM	0	0	0	0	0	0	0	0	0	0	0	0	0
4/25/2024	4:15 AM	0	0	0	0	0	0	0	0	0	0	0	0	0
4/25/2024	4:30 AM	0	0	0	0	0	0	0	0	0	0	0	0	0
4/25/2024	4:45 AM	0	0	0	0	0	0	0	0	0	0	0	0	0
4/25/2024	5:00 AM	0	0	0	0	0	0	0	0	0	0	0	0	0
4/25/2024	5:15 AM	0	0	0	0	0	0	0	0	0	0	0	0	0
4/25/2024	5:30 AM	0	0	0	0	0	0	0	0	0	0	0	0	0
4/25/2024	5:45 AM	0	0	0	0	0	0	0	0	0	0	0	0	0
4/25/2024	6:00 AM	0	0	0	0	0	0	0	0	0	0	0	0	0
4/25/2024	6:15 AM	0	0	0	0	0	0	0	0	0	0	0	0	0
4/25/2024	6:30 AM	0	0	0	0	0	0	0	0	0	0	0	0	0
4/25/2024	6:45 AM	0	0	0	0	0	0	0	0	0	0	0	0	0
4/25/2024	7:00 AM	0	0	0	0	0	0	0	0	0	0	0	0	0
4/25/2024	7:15 AM	0	0	0	0	0	0	0	0	0	0	0	0	0
4/25/2024	7:30 AM	0	0	0	0	0	0	0	0	0	0	0	0	0
4/25/2024	7:45 AM	0	0	0	0	0	0	0	0	0	0	0	0	0
4/25/2024	8:00 AM	0	0	0	0	0	0	0	0	0	0	0	0	0
4/25/2024	8:15 AM	0	0	0	0	0	0	0	0	0	0	0	0	0
4/25/2024	8:30 AM	0	0	0	0	0	0	0	0	0	0	0	0	0
4/25/2024	8:45 AM	0	0	0	0	0	0	0	0	0	0	0	0	0
4/25/2024	9:00 AM	0	0	0	0	0	0	0	0	0	0	0	0	0
4/25/2024	9:15 AM	0	0	0	0	0	0	0	0	0	0	0	0	0
4/25/2024	9:30 AM	0	0	0	0	0	0	0	0	0	0	0	0	0
4/25/2024	9:45 AM	0	0	0	0	0	0	0	0	0	0	0	0	0
4/25/2024	10:00 AM	0	0	0	0	0	0	0	0	0	0	0	0	0
4/25/2024	10:15 AM	0	0	0	0	0	0	0	0	0	0	0	0	0
4/25/2024	10:30 AM	0	0	0	0	0	0	0	0	0	0	0	0	0
4/25/2024	10:45 AM	0	0	0	0	0	0	0	0	0	0	0	0	0
4/25/2024	11:00 AM	0	0	0	0	0	0	0	0	0	0	0	0	0
4/25/2024	11:15 AM	0	0	0	0	0	0	0	0	0	0	0	0	0
4/25/2024	11:30 AM	0	0	0	0	0	0	0	0	0	0	0	0	0
4/25/2024	11:45 AM	0	0	0	0	0	0	0	0	0	0	0	0	0
4/25/2024	12:00 PM	0	0	0	0	0	0	0	0	0	0	0	0	0
4/25/2024	12:15 PM	0	0	0	0	0	0	0	0	0	0	0	0	0
4/25/2024	12:30 PM	0	0	0	0	0	0	0	0	0	0	0	0	0
4/25/2024	12:45 PM	0	0	0	0	0	0	0	0	0	0	0	0	0
4/25/2024	1:00 PM	0	0	0	0	0	0	0	0	0	0	0	0	0
4/25/2024	1:15 PM	0	0	0	0	0	0	0	0	0	0	0	0	0
4/25/2024	1:30 PM	0	0	0	0	0	0	0	0	0	0	0	0	0
4/25/2024	1:45 PM	0	0	0	0	0	0	0	0	0	0	0	0	0
4/25/2024	2:00 PM	0	0	0	0	0	0	0	0	0	0	0	0	0
4/25/2024	2:15 PM	0	0	0	0	0	0	0	0	0	0	0	0	0
4/25/2024	2:30 PM	0	0	0	0	0	0	0	0	0	0	0	0	0
4/25/2024	2:45 PM	0	0	0	0	0	0	0	0	0	0	0	0	0
4/25/2024	3:00 PM	0	0	0	0	0	0	0	0	0	0	0	0	0
4/25/2024	3:15 PM	0	0	0	0	0	0	0	0	0	0	0	0	0
4/25/2024	3:30 PM	0	0	0	0	0	0	0	0	0	0	0	0	0
4/25/2024	3:45 PM	0	0	0	0	0	0	0	0	0	0	0	0	0
4/25/2024	4:00 PM	0	0	0	0	0	0	0	0	0	0	0	0	0
4/25/2024	4:15 PM	0	0	0	0	0	0	0	0	0	0	0	0	0
4/25/2024	4:30 PM	0	0	0	0	0	0	0	0	0	0	0	0	0
4/25/2024	4:45 PM	0	0	0	0	0	0	0	0	0	0	0	0	0
4/25/2024	5:00 PM	0	0	0	0	0	0	0	0	0	0	0	0	0
4/25/2024	5:15 PM	0	0	0	0	0	0	0	0	0	0	0	0	0
4/25/2024	5:30 PM	0	0	0	0	0	0	0	0	0	0	0	0	0
4/25/2024	5:45 PM	0	0	0	0	0	0	0	0	0	0	0	0	0
4/25/2024	6:00 PM	0	0	0	0	0	0	0	0	0	0	0	0	0
4/25/2024	6:15 PM	0	0	0	0	0	0	0	0	0	0	0	0	0
4/25/2024	6:30 PM	0	0	0	0	0	0	0	0	0	0	0	0	0
4/25/2024	6:45 PM	0	0	0	0	0	0	0	0	0	0	0	0	0
4/25/2024	7:00 PM	0	0	0	0	0	0	0	0	0	0	0	0	0
4/25/2024	7:15 PM	0	0	0	0	0	0	0	0	0	0	0	0	0
4/25/2024	7:30 PM	0	0	0	0	0	0	0	0	0	0	0	0	0
4/25/2024	7:45 PM	0	0	0	0	0	0	0	0	0	0	0	0	0
4/25/2024	8:00 PM	0	0	0	0	0	0	0	0	0	0	0	0	0
4/25/2024	8:15 PM	0	0	0	0	0	0	0	0	0	0	0	0	0
4/25/2024	8:30 PM	0	0	0	0	0	0	0	0	0	0	0	0	0
4/25/2024	8:45 PM	0	0	0	0	0	0	0	0	0	0	0	0	0
4/25/2024	9:00 PM	0	0	0	0	0	0	0	0	0	0	0	0	0
4/25/2024	9:15 PM	0	0	0	0	0	0	0	0	0	0	0	0	0
4/25/2024	9:30 PM	0	0	0	0	0	0	0	0	0	0	0	0	0
4/25/2024	9:45 PM	0	0	0	0	0	0	0	0	0	0	0	0	0
4/25/2024	10:00 PM	0	0	0	0	0	0	0	0	0	0	0	0	0
4/25/2024	10:15 PM	0	0	0	0	0	0	0	0	0	0	0	0	0
4/25/2024	10:30 PM	0	0	0	0	0	0	0	0	0	0	0	0	0
4/25/2024	10:45 PM	0	0	0	0	0	0	0	0	0	0	0	0	0
4/25/2024	11:00 PM	0	0	0	0	0	0	0	0	0	0	0	0	0
4/25/2024	11:15 PM	0	0	0	0	0	0	0	0	0	0	0	0	0
4/25/2024	11:30 PM	0	0	0	0	0	0	0	0	0	0	0	0	0
4/25/2024	11:45 PM	0	0	0	0	0	0	0	0	0	0	0	0	0

Bi-Directional Class Count || SB WB 15min

Columbia, SC

Marr Traffic DATA COLLECTION
www.marrtraffic.com

Site 30
I-26 James F. Byrnes Expy On/Off-Ramp,
west of Harbison Blvd

Date
Tuesday, April 23, 2024

Lat/Long
34.079722°, -81.153537°

Weather
Fair
58°F

Click here for Detailed Weather

Click here for Map

0000 - 2400 (Weekday 24h Session) (04-23-2024)
SB WB 15min

	Westbound (Movement 30.1)													15min	60min
Time	1	2	3	4	5	6	7	8	9	10	11	12	13	Total	Total
0000 - 0015	0	0	0	0	0	0	0	0	0	0	0	0	0	**0**	
0015 - 0030	0	0	0	0	0	0	0	0	0	0	0	0	0	**0**	
0030 - 0045	0	0	0	0	0	0	0	0	0	0	0	0	0	**0**	
0045 - 0100	0	0	0	0	0	0	0	0	0	0	0	0	0	**0**	**0**
0100 - 0115	0	0	0	0	0	0	0	0	0	0	0	0	0	**0**	
0115 - 0130	0	0	0	0	0	0	0	0	0	0	0	0	0	**0**	
0130 - 0145	0	0	0	0	0	0	0	0	0	0	0	0	0	**0**	
0145 - 0200	0	0	0	0	0	0	0	0	0	0	0	0	0	**0**	**0**
0200 - 0215	0	0	0	0	0	0	0	0	0	0	0	0	0	**0**	
0215 - 0230	0	0	0	0	0	0	0	0	0	0	0	0	0	**0**	
0230 - 0245	0	0	0	0	0	0	0	0	0	0	0	0	0	**0**	
0245 - 0300	0	0	0	0	0	0	0	0	0	0	0	0	0	**0**	**0**
0300 - 0315	0	0	0	0	0	0	0	0	0	0	0	0	0	**0**	
0315 - 0330	0	0	0	0	0	0	0	0	0	0	0	0	0	**0**	
0330 - 0345	0	0	0	0	0	0	0	0	0	0	0	0	0	**0**	
0345 - 0400	0	0	0	0	0	0	0	0	0	0	0	0	0	**0**	**0**
0400 - 0415	0	0	0	0	0	0	0	0	0	0	0	0	0	**0**	
0415 - 0430	0	0	0	0	0	0	0	0	0	0	0	0	0	**0**	
0430 - 0445	0	0	0	0	0	0	0	0	0	0	0	0	0	**0**	
0445 - 0500	0	0	0	0	0	0	0	0	0	0	0	0	0	**0**	**0**
0500 - 0515	0	0	0	0	0	0	0	0	0	0	0	0	0	**0**	
0515 - 0530	0	0	0	0	0	0	0	0	0	0	0	0	0	**0**	
0530 - 0545	0	0	0	0	0	0	0	0	0	0	0	0	0	**0**	
0545 - 0600	0	0	0	0	0	0	0	0	0	0	0	0	0	**0**	**0**
0600 - 0615	0	0	0	0	0	0	0	0	0	0	0	0	0	**0**	
0615 - 0630	0	0	0	0	0	0	0	0	0	0	0	0	0	**0**	
0630 - 0645	0	0	0	0	0	0	0	0	0	0	0	0	0	**0**	
0645 - 0700	0	0	0	0	0	0	0	0	0	0	0	0	0	**0**	**0**
0700 - 0715	0	0	0	0	0	0	0	0	0	0	0	0	0	**0**	
0715 - 0730	0	0	0	0	0	0	0	0	0	0	0	0	0	**0**	
0730 - 0745	0	0	0	0	0	0	0	0	0	0	0	0	0	**0**	
0745 - 0800	0	0	0	0	0	0	0	0	0	0	0	0	0	**0**	**0**
0800 - 0815	0	0	0	0	0	0	0	0	0	0	0	0	0	**0**	
0815 - 0830	0	0	0	0	0	0	0	0	0	0	0	0	0	**0**	
0830 - 0845	0	0	0	0	0	0	0	0	0	0	0	0	0	**0**	
0845 - 0900	0	0	0	0	0	0	0	0	0	0	0	0	0	**0**	**0**
0900 - 0915	0	0	0	0	0	0	0	0	0	0	0	0	0	**0**	
0915 - 0930	0	0	0	0	0	0	0	0	0	0	0	0	0	**0**	
0930 - 0945	0	0	0	0	0	0	0	0	0	0	0	0	0	**0**	
0945 - 1000	0	0	0	0	0	0	0	0	0	0	0	0	0	**0**	**0**
1000 - 1015	0	0	0	0	0	0	0	0	0	0	0	0	0	**0**	
1015 - 1030	0	0	0	0	0	0	0	0	0	0	0	0	0	**0**	
1030 - 1045	0	0	0	0	0	0	0	0	0	0	0	0	0	**0**	
1045 - 1100	0	0	0	0	0	0	0	0	0	0	0	0	0	**0**	**0**
1100 - 1115	0	0	0	0	0	0	0	0	0	0	0	0	0	**0**	
1115 - 1130	0	0	0	0	0	0	0	0	0	0	0	0	0	**0**	
1130 - 1145	0	0	0	0	0	0	0	0	0	0	0	0	0	**0**	
1145 - 1200	0	0	0	0	0	0	0	0	0	0	0	0	0	**0**	**0**
1200 - 1215	0	0	0	0	0	0	0	0	0	0	0	0	0	**0**	
1215 - 1230	0	0	0	0	0	0	0	0	0	0	0	0	0	**0**	
1230 - 1245	0	0	0	0	0	0	0	0	0	0	0	0	0	**0**	
1245 - 1300	0	0	0	0	0	0	0	0	0	0	0	0	0	**0**	**0**
1300 - 1315	0	0	0	0	0	0	0	0	0	0	0	0	0	**0**	
1315 - 1330	0	0	0	0	0	0	0	0	0	0	0	0	0	**0**	
1330 - 1345	0	0	0	0	0	0	0	0	0	0	0	0	0	**0**	
1345 - 1400	0	0	0	0	0	0	0	0	0	0	0	0	0	**0**	**0**
1400 - 1415	0	0	0	0	0	0	0	0	0	0	0	0	0	**0**	
1415 - 1430	0	0	0	0	0	0	0	0	0	0	0	0	0	**0**	
1430 - 1445	0	0	0	0	0	0	0	0	0	0	0	0	0	**0**	
1445 - 1500	0	0	0	0	0	0	0	0	0	0	0	0	0	**0**	**0**
1500 - 1515	0	0	0	0	0	0	0	0	0	0	0	0	0	**0**	
1515 - 1530	0	0	0	0	0	0	0	0	0	0	0	0	0	**0**	
1530 - 1545	0	0	0	0	0	0	0	0	0	0	0	0	0	**0**	
1545 - 1600	0	0	0	0	0	0	0	0	0	0	0	0	0	**0**	**0**
1600 - 1615	0	0	0	0	0	0	0	0	0	0	0	0	0	**0**	
1615 - 1630	0	0	0	0	0	0	0	0	0	0	0	0	0	**0**	
1630 - 1645	0	0	0	0	0	0	0	0	0	0	0	0	0	**0**	
1645 - 1700	0	0	0	0	0	0	0	0	0	0	0	0	0	**0**	**0**
1700 - 1715	0	0	0	0	0	0	0	0	0	0	0	0	0	**0**	
1715 - 1730	0	0	0	0	0	0	0	0	0	0	0	0	0	**0**	
1730 - 1745	0	0	0	0	0	0	0	0	0	0	0	0	0	**0**	
1745 - 1800	0	0	0	0	0	0	0	0	0	0	0	0	0	**0**	**0**
1800 - 1815	0	0	0	0	0	0	0	0	0	0	0	0	0	**0**	
1815 - 1830	0	0	0	0	0	0	0	0	0	0	0	0	0	**0**	
1830 - 1845	0	0	0	0	0	0	0	0	0	0	0	0	0	**0**	
1845 - 1900	0	0	0	0	0	0	0	0	0	0	0	0	0	**0**	**0**
1900 - 1915	1	70	18	0	0	0	0	0	0	0	0	0	0	**89**	
1915 - 1930	0	54	16	0	0	0	0	0	0	0	0	0	0	**70**	
1930 - 1945	0	49	9	0	0	0	0	0	2	0	0	0	0	**60**	
1945 - 2000	1	43	10	0	0	0	0	0	1	0	0	0	0	**55**	**274**
2000 - 2015	0	43	12	0	0	0	0	0	0	0	0	0	0	**55**	
2015 - 2030	0	42	6	0	0	0	0	0	0	0	0	0	0	**48**	
2030 - 2045	0	39	10	0	0	0	0	0	0	0	0	0	0	**49**	
2045 - 2100	0	31	2	0	0	0	0	0	0	0	0	0	0	**33**	**185**
2100 - 2115	0	27	2	0	0	0	0	0	0	0	0	0	0	**29**	
2115 - 2130	0	21	5	0	0	0	0	0	0	0	0	0	0	**26**	
2130 - 2145	1	25	3	0	0	0	0	0	0	0	0	0	0	**29**	
2145 - 2200	0	20	3	0	0	0	0	0	0	0	0	0	0	**23**	**107**
2200 - 2215	0	23	2	0	0	0	0	0	0	0	0	0	0	**25**	
2215 - 2230	0	17	1	0	1	0	0	0	0	0	0	0	0	**19**	
2230 - 2245	1	11	1	0	0	0	0	0	0	0	0	0	0	**13**	
2245 - 2300	0	11	0	0	0	0	0	0	0	0	0	0	0	**11**	**68**
2300 - 2315	0	7	3	0	0	0	0	0	0	0	0	0	0	**10**	
2315 - 2330	0	12	1	0	0	0	0	0	0	0	0	0	0	**13**	
2330 - 2345	0	3	1	0	0	0	0	0	0	0	0	0	0	**4**	
2345 - 0000	0	5	0	0	0	0	0	0	0	0	0	0	0	**5**	**32**

Session Total	4	553	105	0	1	0	0	0	3	0	0	0	0	**666**
Session Average	0.04	5.76	1.09	0.00	0.01	0.00	0.00	0.00	0.03	0.00	0.00	0.00	0.00	**6.94**
Session Percentage	0.60	83.03	15.77	0.00	0.15	0.00	0.00	0.00	0.45	0.00	0.00	0.00	0.00	

AM Peak Hour	-	-	-	-	-	-	-	-	-	-	-	-	-	**-**
AM Peak Volume	0	0	0	0	0	0	0	0	0	0	0	0	0	**0**

Noon Peak Hour	-	-	-	-	-	-	-	-	-	-	-	-	-	**-**
Noon Peak Volume	0	0	0	0	0	0	0	0	0	0	0	0	0	**0**

PM Peak Hour	1900 - 2000	1900 - 2000	1900 - 2000	-	-	-	-	-	1900 - 2000	-	-	-	-	**1900 - 2000**
PM Peak Volume	2	216	53	0	0	0	0	0	3	0	0	0	0	**274**

Site 30
I-26 James F. Byrnes Expy On/Off-Ramp,
west of Harbison Blvd

Date
Wednesday, April 24, 2024

Lat/Long
34.079722°, -81.153537°

Weather
Fair
66°F

Click here for Detailed Weather

0000 - 2400 (Weekday 24h Session) (04-24-2024)
SB WB 15min

	Westbound (Movement 30.1)													15min	60min
Time	1	2	3	4	5	6	7	8	9	10	11	12	13	Total	Total
0000 - 0015	0	6	0	0	0	0	0	0	0	0	0	0	0	**6**	
0015 - 0030	0	2	0	0	0	0	0	0	0	0	0	0	0	**2**	
0030 - 0045	0	3	0	0	0	0	0	0	0	0	0	0	0	**3**	
0045 - 0100	0	2	2	0	0	0	0	0	0	0	0	0	0	**4**	**15**
0100 - 0115	0	2	0	0	0	0	0	0	0	0	0	0	0	**2**	
0115 - 0130	0	1	1	0	0	0	0	0	1	0	0	0	0	**3**	
0130 - 0145	0	1	0	0	0	0	0	0	0	0	0	0	0	**1**	
0145 - 0200	0	4	0	0	0	0	0	0	0	0	0	0	0	**4**	**10**
0200 - 0215	0	2	0	0	0	0	0	0	0	0	0	0	0	**2**	
0215 - 0230	0	0	0	0	0	0	0	0	0	0	0	0	0	**0**	
0230 - 0245	0	0	1	0	0	0	0	0	0	0	0	0	0	**1**	
0245 - 0300	0	0	0	0	0	0	0	0	0	0	0	0	0	**0**	**3**
0300 - 0315	0	1	0	0	0	1	0	0	0	0	0	0	0	**2**	
0315 - 0330	0	1	0	0	0	0	0	0	1	0	0	0	0	**2**	
0330 - 0345	0	2	0	0	0	0	0	0	0	0	0	0	0	**2**	
0345 - 0400	0	2	0	0	0	1	0	0	0	0	0	0	0	**3**	**9**
0400 - 0415	0	2	0	0	0	0	0	0	0	0	0	0	0	**2**	
0415 - 0430	0	0	0	0	0	0	0	0	0	0	0	0	0	**0**	
0430 - 0445	0	1	0	0	0	0	0	0	0	0	0	0	0	**1**	
0445 - 0500	0	0	0	0	0	0	0	0	0	0	0	0	0	**0**	**3**
0500 - 0515	0	0	0	0	0	0	0	0	2	0	0	0	0	**2**	
0515 - 0530	0	5	0	0	0	0	0	0	0	0	0	0	0	**5**	
0530 - 0545	0	7	2	0	1	0	0	0	0	0	0	0	0	**10**	
0545 - 0600	0	3	1	0	0	0	0	0	0	0	0	0	0	**4**	**21**
0600 - 0615	0	9	3	0	1	0	0	0	1	0	0	0	0	**14**	
0615 - 0630	0	18	1	0	0	0	0	0	1	0	0	0	0	**20**	
0630 - 0645	0	14	1	0	0	0	0	0	0	0	0	0	0	**15**	
0645 - 0700	0	13	5	0	0	0	0	0	1	0	0	0	0	**19**	**68**
0700 - 0715	0	14	6	0	0	0	0	0	1	0	0	0	0	**21**	
0715 - 0730	0	19	11	0	0	0	0	0	1	0	0	0	0	**31**	
0730 - 0745	0	29	8	0	0	0	0	0	0	0	0	0	0	**37**	
0745 - 0800	0	33	8	0	1	0	0	0	1	0	0	0	0	**43**	**132**
0800 - 0815	0	27	10	0	2	0	0	0	0	0	0	0	0	**39**	
0815 - 0830	0	22	7	0	0	0	0	0	1	0	0	0	0	**30**	
0830 - 0845	0	21	18	0	0	0	0	0	0	0	0	0	0	**39**	
0845 - 0900	0	38	14	0	0	0	0	0	0	0	0	0	0	**52**	**160**
0900 - 0915	0	27	16	0	1	0	0	0	0	0	0	0	0	**44**	
0915 - 0930	0	41	19	0	0	0	0	0	1	0	0	0	0	**61**	
0930 - 0945	0	28	16	0	2	0	0	0	0	0	0	0	0	**46**	
0945 - 1000	0	37	10	0	0	0	0	0	0	0	0	0	0	**47**	**198**
1000 - 1015	0	28	14	0	2	0	0	0	0	0	0	0	0	**44**	
1015 - 1030	0	29	10	0	1	0	0	0	0	0	0	0	0	**40**	
1030 - 1045	0	46	23	0	0	0	0	0	2	0	0	0	0	**71**	
1045 - 1100	0	44	11	0	2	0	0	0	1	0	0	0	0	**58**	**213**
1100 - 1115	0	27	13	0	0	0	0	0	0	0	0	0	0	**40**	
1115 - 1130	0	53	21	0	1	0	0	0	1	0	0	0	0	**76**	
1130 - 1145	0	47	21	1	0	0	0	0	0	0	0	0	0	**69**	
1145 - 1200	0	52	23	0	0	0	0	0	0	0	0	0	0	**75**	**260**
1200 - 1215	0	60	18	0	0	0	0	0	0	0	0	0	0	**78**	
1215 - 1230	0	57	22	0	0	0	0	0	1	0	0	0	0	**80**	
1230 - 1245	0	67	21	0	0	0	0	0	0	0	0	0	0	**88**	
1245 - 1300	0	65	18	0	1	0	0	0	1	0	0	0	0	**85**	**331**
1300 - 1315	0	66	22	0	1	0	0	0	0	0	0	0	0	**89**	
1315 - 1330	0	83	28	1	0	0	0	0	0	0	0	0	0	**112**	
1330 - 1345	0	81	21	0	1	0	0	0	0	0	0	0	0	**103**	
1345 - 1400	0	59	18	0	1	0	0	0	1	0	0	0	0	**79**	**383**
1400 - 1415	0	70	24	1	0	0	0	0	0	0	0	0	0	**95**	
1415 - 1430	0	66	24	0	3	0	0	0	1	0	0	0	0	**94**	
1430 - 1445	0	69	20	0	0	0	0	0	0	0	0	0	0	**89**	
1445 - 1500	0	67	13	0	0	0	0	0	0	0	0	0	0	**80**	**358**
1500 - 1515	0	69	13	4	1	0	0	0	0	0	0	0	0	**87**	
1515 - 1530	0	65	18	0	0	0	0	0	1	0	0	0	0	**84**	
1530 - 1545	0	76	25	0	0	0	0	0	0	0	0	0	0	**101**	
1545 - 1600	0	76	21	0	0	0	0	0	0	0	0	0	0	**97**	**369**
1600 - 1615	0	87	31	0	1	0	0	0	1	0	0	0	0	**120**	
1615 - 1630	0	80	24	0	1	0	0	0	0	0	0	0	0	**105**	
1630 - 1645	0	73	23	0	0	0	0	0	0	0	0	0	0	**96**	
1645 - 1700	0	83	19	0	0	0	0	0	1	0	0	0	0	**103**	**424**
1700 - 1715	1	90	23	0	1	0	0	0	0	0	0	0	0	**115**	
1715 - 1730	0	82	19	0	0	0	0	0	0	0	0	0	0	**101**	
1730 - 1745	0	78	17	0	0	0	0	0	0	0	0	0	0	**95**	
1745 - 1800	0	80	17	0	0	0	0	0	0	0	0	0	0	**97**	**408**
1800 - 1815	0	69	13	0	0	0	0	0	0	0	0	0	0	**82**	
1815 - 1830	0	63	17	0	0	0	0	0	0	0	0	0	0	**80**	
1830 - 1845	0	54	22	0	0	0	0	0	0	0	0	0	0	**76**	
1845 - 1900	0	81	19	0	0	0	0	0	1	0	0	0	0	**101**	**339**
1900 - 1915	0	51	12	0	0	0	0	0	0	0	0	0	0	**63**	
1915 - 1930	0	53	14	0	1	0	0	0	0	0	0	0	0	**68**	
1930 - 1945	0	62	12	0	0	0	0	0	0	0	0	0	0	**74**	
1945 - 2000	0	39	8	1	0	0	0	0	0	0	0	0	0	**48**	**253**
2000 - 2015	2	68	11	0	0	0	0	0	0	0	0	0	0	**81**	
2015 - 2030	0	47	10	0	0	0	0	0	0	0	0	0	0	**57**	
2030 - 2045	0	39	4	0	0	0	0	0	0	0	0	0	0	**43**	
2045 - 2100	0	43	8	0	0	0	0	0	0	0	0	0	0	**51**	**232**
2100 - 2115	0	30	7	0	1	0	0	0	0	0	0	0	0	**38**	
2115 - 2130	0	34	2	0	0	0	0	0	0	0	0	0	0	**36**	
2130 - 2145	0	22	2	0	0	0	0	0	0	0	0	0	0	**24**	
2145 - 2200	0	24	2	0	0	0	0	0	0	0	0	0	0	**26**	**124**
2200 - 2215	0	22	2	0	0	0	0	0	0	0	0	0	0	**24**	
2215 - 2230	0	14	0	0	0	0	0	0	0	0	0	0	0	**14**	
2230 - 2245	0	10	3	0	0	0	0	0	0	0	0	0	0	**13**	
2245 - 2300	0	14	0	0	0	0	0	0	0	0	0	0	0	**14**	**65**
2300 - 2315	0	17	0	0	0	0	0	0	0	0	0	0	0	**17**	
2315 - 2330	0	8	0	0	1	0	0	0	0	0	0	0	0	**9**	
2330 - 2345	0	2	0	0	0	0	0	0	0	0	0	0	0	**2**	
2345 - 0000	0	6	1	0	0	0	0	0	0	0	0	0	0	**7**	**35**

Session Total	3	3384	964	8	28	2	0	0	24	0	0	0	0	**4413**
Session Average	0.03	35.25	10.04	0.08	0.29	0.02	0.00	0.00	0.25	0.00	0.00	0.00	0.00	**45.97**
Session Percentage	0.07	76.68	21.84	0.18	0.63	0.05	0.00	0.00	0.54	0.00	0.00	0.00	0.00	

AM Peak Hour	-	0945 - 1045	0830 - 0930	-	0930 - 1030	-	-	-	0600 - 0700	-	-	-	-	**0845 - 0945**
AM Peak Volume	0	140	67	0	5	0	0	0	3	0	0	0	0	**203**

Noon Peak Hour	-	1245 - 1345	1315 - 1415	1415 - 1515	1000 - 1100	-	-	-	1030 - 1130	-	-	-	-	**1245 - 1345**
Noon Peak Volume	0	295	91	4	5	0	0	0	4	0	0	0	0	**389**

PM Peak Hour	1915 - 2015	1645 - 1745	1530 - 1630	1500 - 1600	1530 - 1630	-	-	-	1515 - 1615	-	-	-	-	**1600 - 1700**
PM Peak Volume	2	333	101	4	2	0	0	0	2	0	0	0	0	**424**

Site 30
I-26 James F. Byrnes Expy On/Off-Ramp,
west of Harbison Blvd

Date
Thursday, April 25, 2024

Lat/Long
34.079722°, -81.153537°

Weather
Fair
67°F

Click here for Detailed Weather

0000 - 2400 (Weekday 24h Session) (04-25-2024)
SB WB 15min

	Westbound (Movement 30.1)													15min	60min
TIME	1	2	3	4	5	6	7	8	9	10	11	12	13	Total	Total
0000 - 0015	0	7	0	0	0	0	0	0	0	0	0	0	0	**7**	
0015 - 0030	0	5	0	0	0	0	0	0	1	0	0	0	0	**6**	
0030 - 0045	0	2	0	0	0	0	0	0	0	0	0	0	0	**2**	
0045 - 0100	0	2	0	0	0	0	0	0	0	0	0	0	0	**2**	**17**
0100 - 0115	0	2	0	0	0	0	0	0	0	0	0	0	0	**2**	
0115 - 0130	0	1	0	0	0	0	0	0	0	0	0	0	0	**1**	
0130 - 0145	0	2	0	0	0	0	0	0	0	0	0	0	0	**2**	
0145 - 0200	0	0	0	0	0	0	0	0	0	0	0	0	0	**0**	**5**
0200 - 0215	0	3	0	0	0	0	0	0	0	0	0	0	0	**3**	
0215 - 0230	0	1	0	0	0	0	0	0	0	0	0	0	0	**1**	
0230 - 0245	0	1	0	0	0	0	0	0	0	0	0	0	0	**1**	
0245 - 0300	0	0	0	0	0	0	0	0	0	0	0	0	0	**0**	**5**
0300 - 0315	0	1	0	0	0	0	0	0	0	0	0	0	0	**1**	
0315 - 0330	0	1	0	0	0	0	0	0	0	0	0	0	0	**1**	
0330 - 0345	0	2	0	0	0	0	0	0	1	0	0	0	0	**3**	
0345 - 0400	0	1	0	0	0	0	0	0	0	0	0	0	0	**1**	**6**
0400 - 0415	0	1	0	0	0	1	0	0	0	0	0	0	0	**2**	
0415 - 0430	0	0	0	0	0	0	0	0	1	0	0	0	0	**1**	
0430 - 0445	0	0	0	0	0	0	0	0	0	0	0	0	0	**0**	
0445 - 0500	0	3	0	0	0	0	0	1	0	0	0	0	0	**4**	**7**
0500 - 0515	0	0	0	0	0	0	0	0	0	0	0	0	0	**0**	
0515 - 0530	0	6	0	0	0	0	0	0	0	0	0	0	0	**6**	
0530 - 0545	0	5	2	0	0	0	0	0	0	0	0	0	0	**7**	
0545 - 0600	0	3	1	0	0	0	0	0	0	0	0	0	0	**4**	**17**
0600 - 0615	0	7	7	0	0	0	0	0	2	0	0	0	0	**16**	
0615 - 0630	0	7	5	0	0	0	0	0	0	0	0	0	0	**12**	
0630 - 0645	0	11	4	0	0	0	0	0	0	0	0	0	0	**15**	
0645 - 0700	0	13	4	0	0	0	0	0	1	0	0	0	0	**18**	**61**
0700 - 0715	0	20	8	0	0	0	0	0	0	0	0	0	0	**28**	
0715 - 0730	0	27	5	0	0	0	0	0	0	0	0	0	0	**32**	
0730 - 0745	0	29	5	0	0	0	0	0	0	0	0	0	0	**34**	
0745 - 0800	0	27	9	0	1	0	0	0	1	0	0	0	0	**38**	**132**
0800 - 0815	0	28	13	0	3	0	0	0	0	0	0	0	0	**44**	
0815 - 0830	0	32	11	0	1	0	0	0	1	0	0	0	0	**45**	
0830 - 0845	0	29	14	0	1	0	0	0	0	0	0	0	0	**44**	
0845 - 0900	0	28	15	0	0	0	0	0	1	0	0	0	0	**44**	**177**
0900 - 0915	0	20	11	0	1	0	0	0	0	0	0	0	0	**32**	
0915 - 0930	0	32	18	0	0	0	0	0	0	0	0	0	0	**50**	
0930 - 0945	1	33	15	0	2	0	0	0	0	0	0	0	0	**51**	
0945 - 1000	0	37	18	0	0	0	0	0	0	0	0	0	0	**55**	**188**
1000 - 1015	1	32	16	0	0	0	0	0	0	0	0	0	0	**49**	
1015 - 1030	0	44	18	0	0	0	0	0	0	0	0	0	0	**62**	
1030 - 1045	0	53	22	0	2	1	0	0	1	0	0	0	0	**79**	
1045 - 1100	0	48	33	0	0	0	0	0	0	0	0	0	0	**81**	**271**
1100 - 1115	0	71	17	0	0	0	0	0	0	0	0	0	0	**88**	
1115 - 1130	0	55	27	1	0	0	0	0	0	0	0	0	0	**83**	
1130 - 1145	0	67	25	0	0	0	0	1	1	0	0	0	0	**94**	
1145 - 1200	1	55	24	0	1	0	0	1	0	0	0	0	0	**82**	**347**
1200 - 1215	0	60	30	0	0	0	0	0	0	0	0	0	0	**90**	
1215 - 1230	0	63	18	0	0	0	0	0	0	0	0	0	0	**81**	
1230 - 1245	0	62	29	0	1	0	0	0	1	0	0	0	0	**93**	
1245 - 1300	0	70	28	0	1	0	0	0	0	0	0	0	0	**99**	**363**
1300 - 1315	0	61	14	0	0	0	0	0	2	0	0	0	0	**77**	
1315 - 1330	0	65	26	0	2	0	0	0	0	0	0	0	0	**93**	
1330 - 1345	0	78	17	1	1	0	0	0	2	0	0	0	0	**99**	
1345 - 1400	0	81	23	0	0	0	0	0	0	0	0	0	0	**104**	**373**
1400 - 1415	0	71	28	0	2	0	0	0	0	0	0	0	0	**101**	
1415 - 1430	0	87	32	0	0	0	0	0	0	0	0	0	0	**119**	
1430 - 1445	0	69	23	0	0	0	0	0	0	0	0	0	0	**92**	
1445 - 1500	0	61	21	0	2	0	0	0	0	0	0	0	0	**84**	**396**
1500 - 1515	0	87	18	0	0	0	0	0	0	0	0	0	0	**105**	
1515 - 1530	0	72	22	0	0	0	0	0	0	0	0	0	0	**94**	
1530 - 1545	0	74	16	0	0	0	0	0	0	0	0	0	0	**90**	
1545 - 1600	0	87	22	0	0	0	0	0	1	0	0	0	0	**110**	**399**
1600 - 1615	0	71	17	0	0	1	0	1	0	0	0	0	0	**90**	
1615 - 1630	0	76	23	0	0	0	0	0	0	0	0	0	0	**99**	
1630 - 1645	0	91	19	0	0	0	0	1	2	0	0	0	0	**113**	
1645 - 1700	2	67	16	0	0	0	0	0	0	0	0	0	0	**85**	**387**
1700 - 1715	1	77	22	0	0	0	0	0	0	0	0	0	0	**100**	
1715 - 1730	0	94	19	0	0	0	0	0	0	0	0	0	0	**113**	
1730 - 1745	0	69	13	0	0	0	0	0	0	0	0	0	0	**82**	
1745 - 1800	0	72	15	0	1	0	0	0	0	0	0	0	0	**88**	**383**
1800 - 1815	0	68	17	0	0	0	0	0	0	0	0	0	0	**85**	
1815 - 1830	1	63	10	0	0	0	0	0	1	0	0	0	0	**75**	
1830 - 1845	0	65	9	0	0	0	0	0	0	0	0	0	0	**74**	
1845 - 1900	0	66	14	0	1	0	0	0	0	0	0	0	0	**81**	**315**
1900 - 1915	0	0	0	0	0	0	0	0	0	0	0	0	0	**0**	
1915 - 1930	0	0	0	0	0	0	0	0	0	0	0	0	0	**0**	
1930 - 1945	0	0	0	0	0	0	0	0	0	0	0	0	0	**0**	
1945 - 2000	0	0	0	0	0	0	0	0	0	0	0	0	0	**0**	**0**
2000 - 2015	0	0	0	0	0	0	0	0	0	0	0	0	0	**0**	
2015 - 2030	0	0	0	0	0	0	0	0	0	0	0	0	0	**0**	
2030 - 2045	0	0	0	0	0	0	0	0	0	0	0	0	0	**0**	
2045 - 2100	0	0	0	0	0	0	0	0	0	0	0	0	0	**0**	**0**
2100 - 2115	0	0	0	0	0	0	0	0	0	0	0	0	0	**0**	
2115 - 2130	0	0	0	0	0	0	0	0	0	0	0	0	0	**0**	
2130 - 2145	0	0	0	0	0	0	0	0	0	0	0	0	0	**0**	
2145 - 2200	0	0	0	0	0	0	0	0	0	0	0	0	0	**0**	**0**
2200 - 2215	0	0	0	0	0	0	0	0	0	0	0	0	0	**0**	
2215 - 2230	0	0	0	0	0	0	0	0	0	0	0	0	0	**0**	
2230 - 2245	0	0	0	0	0	0	0	0	0	0	0	0	0	**0**	
2245 - 2300	0	0	0	0	0	0	0	0	0	0	0	0	0	**0**	**0**
2300 - 2315	0	0	0	0	0	0	0	0	0	0	0	0	0	**0**	
2315 - 2330	0	0	0	0	0	0	0	0	0	0	0	0	0	**0**	
2330 - 2345	0	0	0	0	0	0	0	0	0	0	0	0	0	**0**	
2345 - 0000	0	0	0	0	0	0	0	0	0	0	0	0	0	**0**	**0**

Session Total	7	2881	908	2	23	3	0	5	20	0	0	0	0	**3849**
Session Average	0.07	30.01	9.46	0.02	0.24	0.03	0.00	0.05	0.21	0.00	0.00	0.00	0.00	**40.09**
Session Percentage	0.18	74.85	23.59	0.05	0.60	0.08	0.00	0.13	0.52	0.00	0.00	0.00	0.00	

AM Peak Hour	0915 - 1015	0945 - 1045	0945 - 1045	-	0745 - 0845	0945 - 1045	-	-	0600 - 0700	-	-	-	-	**0945 - 1045**
AM Peak Hour Volume	2	166	74	0	6	1	0	0	3	0	0	0	0	**245**

Noon Peak Hour	1000 - 1100	1330 - 1430	1115 - 1215	1030 - 1130	1315 - 1415	1000 - 1100	-	1100 - 1200	1245 - 1345	-	-	-	-	**1330 - 1430**
Noon Peak Hour Volume	1	317	106	1	5	1	0	2	4	0	0	0	0	**423**

PM Peak Hour	1615 - 1715	1630 - 1730	1545 - 1645	-	1700 - 1800	1515 - 1615	-	1545 - 1645	1545 - 1645	-	-	-	-	**1545 - 1645**
PM Peak Hour Volume	3	329	81	0	1	1	0	2	3	0	0	0	0	**412**

Bi-Directional Class Count || SB WB Average 15min

Columbia, SC

Marr Traffic DATA COLLECTION
www.marrtraffic.com

Site 30
I-26 James F. Byrnes Expy On/Off-Ramp,
west of Harbison Blvd

Date
Tuesday, April 23, 2024

Lat/Long
34.079722°, -81.153537°

Weather
Fair
58°F

0000 - 2400 (Weekday 24h Session) (All Dates)
SB WB Average 15min

	SB WB Average 15min													15min	60min
Time	1	2	3	4	5	6	7	8	9	10	11	12	13	Total	Total
0000 - 0015	0	4	0	0	0	0	0	0	0	0	0	0	0	**4**	
0015 - 0030	0	2	0	0	0	0	0	0	0	0	0	0	0	**3**	
0030 - 0045	0	2	0	0	0	0	0	0	0	0	0	0	0	**2**	
0045 - 0100	0	1	1	0	0	0	0	0	0	0	0	0	0	**2**	**11**
0100 - 0115	0	1	0	0	0	0	0	0	0	0	0	0	0	**1**	
0115 - 0130	0	1	0	0	0	0	0	0	0	0	0	0	0	**1**	
0130 - 0145	0	1	0	0	0	0	0	0	0	0	0	0	0	**1**	
0145 - 0200	0	1	0	0	0	0	0	0	0	0	0	0	0	**1**	**5**
0200 - 0215	0	2	0	0	0	0	0	0	0	0	0	0	0	**2**	
0215 - 0230	0	0	0	0	0	0	0	0	0	0	0	0	0	**0**	
0230 - 0245	0	0	0	0	0	0	0	0	0	0	0	0	0	**1**	
0245 - 0300	0	0	0	0	0	0	0	0	0	0	0	0	0	**0**	**3**
0300 - 0315	0	1	0	0	0	0	0	0	0	0	0	0	0	**1**	
0315 - 0330	0	1	0	0	0	0	0	0	0	0	0	0	0	**1**	
0330 - 0345	0	1	0	0	0	0	0	0	0	0	0	0	0	**2**	
0345 - 0400	0	1	0	0	0	0	0	0	0	0	0	0	0	**1**	**5**
0400 - 0415	0	1	0	0	0	0	0	0	0	0	0	0	0	**1**	
0415 - 0430	0	0	0	0	0	0	0	0	0	0	0	0	0	**0**	
0430 - 0445	0	0	0	0	0	0	0	0	0	0	0	0	0	**0**	
0445 - 0500	0	1	0	0	0	0	0	0	0	0	0	0	0	**1**	**3**
0500 - 0515	0	0	0	0	0	0	0	0	1	0	0	0	0	**1**	
0515 - 0530	0	4	0	0	0	0	0	0	0	0	0	0	0	**4**	
0530 - 0545	0	4	1	0	0	0	0	0	0	0	0	0	0	**6**	
0545 - 0600	0	2	1	0	0	0	0	0	0	0	0	0	0	**3**	**13**
0600 - 0615	0	5	3	0	0	0	0	0	1	0	0	0	0	**10**	
0615 - 0630	0	8	2	0	0	0	0	0	0	0	0	0	0	**11**	
0630 - 0645	0	8	2	0	0	0	0	0	0	0	0	0	0	**10**	
0645 - 0700	0	9	3	0	0	0	0	0	1	0	0	0	0	**12**	**43**
0700 - 0715	0	11	5	0	0	0	0	0	0	0	0	0	0	**16**	
0715 - 0730	0	15	5	0	0	0	0	0	0	0	0	0	0	**21**	
0730 - 0745	0	19	4	0	0	0	0	0	0	0	0	0	0	**24**	
0745 - 0800	0	20	6	0	1	0	0	0	1	0	0	0	0	**27**	**88**
0800 - 0815	0	18	8	0	2	0	0	0	0	0	0	0	0	**28**	
0815 - 0830	0	18	6	0	0	0	0	0	1	0	0	0	0	**25**	
0830 - 0845	0	17	11	0	0	0	0	0	0	0	0	0	0	**28**	
0845 - 0900	0	22	10	0	0	0	0	0	0	0	0	0	0	**32**	**112**
0900 - 0915	0	16	9	0	1	0	0	0	0	0	0	0	0	**25**	
0915 - 0930	0	24	12	0	0	0	0	0	0	0	0	0	0	**37**	
0930 - 0945	0	20	10	0	1	0	0	0	0	0	0	0	0	**32**	
0945 - 1000	0	25	9	0	0	0	0	0	0	0	0	0	0	**34**	**129**
1000 - 1015	0	20	10	0	1	0	0	0	0	0	0	0	0	**31**	
1015 - 1030	0	24	9	0	0	0	0	0	0	0	0	0	0	**34**	
1030 - 1045	0	33	15	0	1	0	0	0	1	0	0	0	0	**50**	
1045 - 1100	0	31	15	0	1	0	0	0	0	0	0	0	0	**46**	**161**
1100 - 1115	0	33	10	0	0	0	0	0	0	0	0	0	0	**43**	
1115 - 1130	0	36	16	0	0	0	0	0	0	0	0	0	0	**53**	
1130 - 1145	0	38	15	0	0	0	0	0	0	0	0	0	0	**54**	
1145 - 1200	0	36	16	0	0	0	0	0	0	0	0	0	0	**52**	**202**
1200 - 1215	0	40	16	0	0	0	0	0	0	0	0	0	0	**56**	
1215 - 1230	0	40	13	0	0	0	0	0	0	0	0	0	0	**54**	
1230 - 1245	0	43	17	0	0	0	0	0	0	0	0	0	0	**60**	
1245 - 1300	0	45	15	0	1	0	0	0	0	0	0	0	0	**61**	**231**
1300 - 1315	0	42	12	0	0	0	0	0	1	0	0	0	0	**55**	
1315 - 1330	0	49	18	0	1	0	0	0	0	0	0	0	0	**68**	
1330 - 1345	0	53	13	0	1	0	0	0	1	0	0	0	0	**67**	
1345 - 1400	0	47	14	0	0	0	0	0	0	0	0	0	0	**61**	**252**
1400 - 1415	0	47	17	0	1	0	0	0	0	0	0	0	0	**65**	
1415 - 1430	0	51	19	0	1	0	0	0	0	0	0	0	0	**71**	
1430 - 1445	0	46	14	0	0	0	0	0	0	0	0	0	0	**60**	
1445 - 1500	0	43	11	0	1	0	0	0	0	0	0	0	0	**55**	**251**
1500 - 1515	0	52	10	1	0	0	0	0	0	0	0	0	0	**64**	
1515 - 1530	0	46	13	0	0	0	0	0	0	0	0	0	0	**59**	
1530 - 1545	0	50	14	0	0	0	0	0	0	0	0	0	0	**64**	
1545 - 1600	0	54	14	0	0	0	0	0	0	0	0	0	0	**69**	**256**
1600 - 1615	0	53	16	0	0	0	0	0	0	0	0	0	0	**70**	
1615 - 1630	0	52	16	0	0	0	0	0	0	0	0	0	0	**68**	
1630 - 1645	0	55	14	0	0	0	0	0	1	0	0	0	0	**70**	
1645 - 1700	1	50	12	0	0	0	0	0	0	0	0	0	0	**63**	**270**
1700 - 1715	1	56	15	0	0	0	0	0	0	0	0	0	0	**72**	
1715 - 1730	0	59	13	0	0	0	0	0	0	0	0	0	0	**71**	
1730 - 1745	0	49	10	0	0	0	0	0	0	0	0	0	0	**59**	
1745 - 1800	0	51	11	0	0	0	0	0	0	0	0	0	0	**62**	**264**
1800 - 1815	0	46	10	0	0	0	0	0	0	0	0	0	0	**56**	
1815 - 1830	0	42	9	0	0	0	0	0	0	0	0	0	0	**52**	
1830 - 1845	0	40	10	0	0	0	0	0	0	0	0	0	0	**50**	
1845 - 1900	0	49	11	0	0	0	0	0	0	0	0	0	0	**61**	**218**
1900 - 1915	0	40	10	0	0	0	0	0	0	0	0	0	0	**51**	
1915 - 1930	0	36	10	0	0	0	0	0	0	0	0	0	0	**46**	
1930 - 1945	0	37	7	0	0	0	0	0	1	0	0	0	0	**45**	
1945 - 2000	0	27	6	0	0	0	0	0	0	0	0	0	0	**34**	**176**
2000 - 2015	1	37	8	0	0	0	0	0	0	0	0	0	0	**45**	
2015 - 2030	0	30	5	0	0	0	0	0	0	0	0	0	0	**35**	
2030 - 2045	0	26	5	0	0	0	0	0	0	0	0	0	0	**31**	
2045 - 2100	0	25	3	0	0	0	0	0	0	0	0	0	0	**28**	**139**
2100 - 2115	0	19	3	0	0	0	0	0	0	0	0	0	0	**22**	
2115 - 2130	0	18	2	0	0	0	0	0	0	0	0	0	0	**21**	
2130 - 2145	0	16	2	0	0	0	0	0	0	0	0	0	0	**18**	
2145 - 2200	0	15	2	0	0	0	0	0	0	0	0	0	0	**16**	**77**
2200 - 2215	0	15	1	0	0	0	0	0	0	0	0	0	0	**16**	
2215 - 2230	0	10	0	0	0	0	0	0	0	0	0	0	0	**11**	
2230 - 2245	0	7	1	0	0	0	0	0	0	0	0	0	0	**9**	
2245 - 2300	0	8	0	0	0	0	0	0	0	0	0	0	0	**8**	**44**
2300 - 2315	0	8	1	0	0	0	0	0	0	0	0	0	0	**9**	
2315 - 2330	0	7	0	0	0	0	0	0	0	0	0	0	0	**7**	
2330 - 2345	0	2	0	0	0	0	0	0	0	0	0	0	0	**2**	
2345 - 0000	0	4	0	0	0	0	0	0	0	0	0	0	0	**4**	**22**

Session Total	5	2273	659	3	17	2	0	2	16	0	0	0	0	**2976**
Session Average	0.05	23.67	6.86	0.03	0.18	0.02	0.00	0.02	0.16	0.00	0.00	0.00	0.00	**31.00**
Session Percentage	0.16	76.37	22.14	0.11	0.58	0.06	0.00	0.06	0.53	0.00	0.00	0.00	0.00	

AM Peak Hour	0915 - 1015	0945 - 1045	0945 - 1045	-	0745 - 0845	0945 - 1045	-	-	0600 - 0700	-	-	-	-	**0945 - 1045**
AM Peak Volume	1	102	44	0	3	0	0	0	2	0	0	0	0	**149**

Noon Peak Hour	1000 - 1100	1330 - 1430	1345 - 1445	1415 - 1515	1330 - 1430	1000 - 1100	-	1100 - 1200	1030 - 1130	-	-	-	-	**1330 - 1430**
Noon Peak Volume	0	198	64	1	3	0	0	1	2	0	0	0	0	**265**

PM Peak Hour	1615 - 1715	1630 - 1730	1545 - 1645	1500 - 1600	1530 - 1630	1515 - 1615	-	1545 - 1645	1545 - 1645	-	-	-	-	**1545 - 1645**
PM Peak Volume	1	219	60	1	1	0	0	1	1	0	0	0	0	**277**

Bi-Directional Class Count || Volume Summary 15min

Columbia, SC

Marr Traffic DATA COLLECTION

www.marrtraffic.com

Site 30

I-26 James F. Byrnes Expy On/Off-Ramp,
west of Harbison Blvd

Date

Tuesday, April 23, 2024

Lat/Long

34.079722°, -81.153537°

Weather

Fair
58°F

Click here for Detailed Weather

0000 - 2400 (Weekday 24h Session) (04-23-2024)

Volume Summary 15min

TIME	Volume Summary 15min EB	Volume Summary 15min WB	15min Total	60min Total
0000 - 0015	0	0	**0**	
0015 - 0030	0	0	**0**	
0030 - 0045	0	0	**0**	
0045 - 0100	0	0	**0**	**0**
0100 - 0115	0	0	**0**	
0115 - 0130	0	0	**0**	
0130 - 0145	0	0	**0**	
0145 - 0200	0	0	**0**	**0**
0200 - 0215	0	0	**0**	
0215 - 0230	0	0	**0**	
0230 - 0245	0	0	**0**	
0245 - 0300	0	0	**0**	**0**
0300 - 0315	0	0	**0**	
0315 - 0330	0	0	**0**	
0330 - 0345	0	0	**0**	
0345 - 0400	0	0	**0**	**0**
0400 - 0415	0	0	**0**	
0415 - 0430	0	0	**0**	
0430 - 0445	0	0	**0**	
0445 - 0500	0	0	**0**	**0**
0500 - 0515	0	0	**0**	
0515 - 0530	0	0	**0**	
0530 - 0545	0	0	**0**	
0545 - 0600	0	0	**0**	**0**
0600 - 0615	0	0	**0**	
0615 - 0630	0	0	**0**	
0630 - 0645	0	0	**0**	
0645 - 0700	0	0	**0**	**0**
0700 - 0715	0	0	**0**	
0715 - 0730	0	0	**0**	
0730 - 0745	0	0	**0**	
0745 - 0800	0	0	**0**	**0**
0800 - 0815	0	0	**0**	
0815 - 0830	0	0	**0**	
0830 - 0845	0	0	**0**	
0845 - 0900	0	0	**0**	**0**
0900 - 0915	0	0	**0**	
0915 - 0930	0	0	**0**	
0930 - 0945	0	0	**0**	
0945 - 1000	0	0	**0**	**0**
1000 - 1015	0	0	**0**	
1015 - 1030	0	0	**0**	
1030 - 1045	0	0	**0**	
1045 - 1100	0	0	**0**	**0**
1100 - 1115	0	0	**0**	
1115 - 1130	0	0	**0**	
1130 - 1145	0	0	**0**	
1145 - 1200	0	0	**0**	**0**

Time	Volume Summary 15min EB	Volume Summary 15min WB	15min Total	60min Total
1200 - 1215	0	0	**0**	
1215 - 1230	0	0	**0**	
1230 - 1245	0	0	**0**	
1245 - 1300	0	0	**0**	**0**
1300 - 1315	0	0	**0**	
1315 - 1330	0	0	**0**	
1330 - 1345	0	0	**0**	
1345 - 1400	0	0	**0**	**0**
1400 - 1415	0	0	**0**	
1415 - 1430	0	0	**0**	
1430 - 1445	0	0	**0**	
1445 - 1500	0	0	**0**	**0**
1500 - 1515	0	0	**0**	
1515 - 1530	0	0	**0**	
1530 - 1545	0	0	**0**	
1545 - 1600	0	0	**0**	**0**
1600 - 1615	0	0	**0**	
1615 - 1630	0	0	**0**	
1630 - 1645	0	0	**0**	
1645 - 1700	0	0	**0**	**0**
1700 - 1715	0	0	**0**	
1715 - 1730	0	0	**0**	
1730 - 1745	0	0	**0**	
1745 - 1800	0	0	**0**	**0**
1800 - 1815	0	0	**0**	
1815 - 1830	0	0	**0**	
1830 - 1845	0	0	**0**	
1845 - 1900	0	0	**0**	**0**
1900 - 1915	0	89	**89**	
1915 - 1930	0	70	**70**	
1930 - 1945	0	60	**60**	
1945 - 2000	0	55	**55**	**274**
2000 - 2015	0	55	**55**	
2015 - 2030	0	48	**48**	
2030 - 2045	0	49	**49**	
2045 - 2100	0	33	**33**	**185**
2100 - 2115	0	29	**29**	
2115 - 2130	0	26	**26**	
2130 - 2145	0	29	**29**	
2145 - 2200	0	23	**23**	**107**
2200 - 2215	0	25	**25**	
2215 - 2230	0	19	**19**	
2230 - 2245	0	13	**13**	
2245 - 2300	0	11	**11**	**68**
2300 - 2315	0	10	**10**	
2315 - 2330	0	13	**13**	
2330 - 2345	0	4	**4**	
2345 - 0000	0	5	**5**	**32**

Session Total	0	666	**666**
Session Average	0.00	6.94	**6.94**
Session Percentage	0.00	100.00	

Site 30

I-26 James F. Byrnes Expy On/Off-Ramp,
west of Harbison Blvd

Date

Wednesday, April 24, 2024

Lat/Long

34.079722°, -81.153537°

Weather

Fair
66°F

Click here for Detailed Weather

0000 - 2400 (Weekday 24h Session) (04-24-2024)

Volume Summary 15min

TIME	Volume Summary 15min EB	Volume Summary 15min WB	15min Total	60min Total
0000 - 0015	0	6	**6**	
0015 - 0030	0	2	**2**	
0030 - 0045	0	3	**3**	
0045 - 0100	0	4	**4**	**15**
0100 - 0115	0	2	**2**	
0115 - 0130	0	3	**3**	
0130 - 0145	0	1	**1**	
0145 - 0200	0	4	**4**	**10**
0200 - 0215	0	2	**2**	
0215 - 0230	0	0	**0**	
0230 - 0245	0	1	**1**	
0245 - 0300	0	0	**0**	**3**
0300 - 0315	0	2	**2**	
0315 - 0330	0	2	**2**	
0330 - 0345	0	2	**2**	
0345 - 0400	0	3	**3**	**9**
0400 - 0415	0	2	**2**	
0415 - 0430	0	0	**0**	
0430 - 0445	0	1	**1**	
0445 - 0500	0	0	**0**	**3**
0500 - 0515	0	2	**2**	
0515 - 0530	0	5	**5**	
0530 - 0545	0	10	**10**	
0545 - 0600	0	4	**4**	**21**
0600 - 0615	0	14	**14**	
0615 - 0630	0	20	**20**	
0630 - 0645	0	15	**15**	
0645 - 0700	0	19	**19**	**68**
0700 - 0715	0	21	**21**	
0715 - 0730	0	31	**31**	
0730 - 0745	0	37	**37**	
0745 - 0800	0	43	**43**	**132**
0800 - 0815	0	39	**39**	
0815 - 0830	0	30	**30**	
0830 - 0845	0	39	**39**	
0845 - 0900	0	52	**52**	**160**
0900 - 0915	0	44	**44**	
0915 - 0930	0	61	**61**	
0930 - 0945	0	46	**46**	
0945 - 1000	0	47	**47**	**198**
1000 - 1015	0	44	**44**	
1015 - 1030	0	40	**40**	
1030 - 1045	0	71	**71**	
1045 - 1100	0	58	**58**	**213**
1100 - 1115	0	40	**40**	
1115 - 1130	0	76	**76**	
1130 - 1145	0	69	**69**	
1145 - 1200	0	75	**75**	**260**

Time	Volume Summary 15min EB	Volume Summary 15min WB	15min Total	60min Total
1200 - 1215	0	78	**78**	
1215 - 1230	0	80	**80**	
1230 - 1245	0	88	**88**	
1245 - 1300	0	85	**85**	**331**
1300 - 1315	0	89	**89**	
1315 - 1330	0	112	**112**	
1330 - 1345	0	103	**103**	
1345 - 1400	0	79	**79**	**383**
1400 - 1415	0	95	**95**	
1415 - 1430	0	94	**94**	
1430 - 1445	0	89	**89**	
1445 - 1500	0	80	**80**	**358**
1500 - 1515	0	87	**87**	
1515 - 1530	0	84	**84**	
1530 - 1545	0	101	**101**	
1545 - 1600	0	97	**97**	**369**
1600 - 1615	0	120	**120**	
1615 - 1630	0	105	**105**	
1630 - 1645	0	96	**96**	
1645 - 1700	0	103	**103**	**424**
1700 - 1715	0	115	**115**	
1715 - 1730	0	101	**101**	
1730 - 1745	0	95	**95**	
1745 - 1800	0	97	**97**	**408**
1800 - 1815	0	82	**82**	
1815 - 1830	0	80	**80**	
1830 - 1845	0	76	**76**	
1845 - 1900	0	101	**101**	**339**
1900 - 1915	0	63	**63**	
1915 - 1930	0	68	**68**	
1930 - 1945	0	74	**74**	
1945 - 2000	0	48	**48**	**253**
2000 - 2015	0	81	**81**	
2015 - 2030	0	57	**57**	
2030 - 2045	0	43	**43**	
2045 - 2100	0	51	**51**	**232**
2100 - 2115	0	38	**38**	
2115 - 2130	0	36	**36**	
2130 - 2145	0	24	**24**	
2145 - 2200	0	26	**26**	**124**
2200 - 2215	0	24	**24**	
2215 - 2230	0	14	**14**	
2230 - 2245	0	13	**13**	
2245 - 2300	0	14	**14**	**65**
2300 - 2315	0	17	**17**	
2315 - 2330	0	9	**9**	
2330 - 2345	0	2	**2**	
2345 - 0000	0	7	**7**	**35**

Session Total	0	4413	**4413**
Session Average	0.00	45.97	**45.97**
Session Percentage	0.00	100.00	

Site 30

I-26 James F. Byrnes Expy On/Off-Ramp,
west of Harbison Blvd

Date

Thursday, April 25, 2024

Lat/Long

34.079722°, -81.153537°

Weather

Fair
67°F

Click here for Detailed Weather

0000 - 2400 (Weekday 24h Session) (04-25-2024)

Volume Summary 15min

TIME	Volume Summary 15min EB	Volume Summary 15min WB	15min Total	60min Total
0000 - 0015	0	7	**7**	
0015 - 0030	0	6	**6**	
0030 - 0045	0	2	**2**	
0045 - 0100	0	2	**2**	**17**
0100 - 0115	0	2	**2**	
0115 - 0130	0	1	**1**	
0130 - 0145	0	2	**2**	
0145 - 0200	0	0	**0**	**5**
0200 - 0215	0	3	**3**	
0215 - 0230	0	1	**1**	
0230 - 0245	0	1	**1**	
0245 - 0300	0	0	**0**	**5**
0300 - 0315	0	1	**1**	
0315 - 0330	0	1	**1**	
0330 - 0345	0	3	**3**	
0345 - 0400	0	1	**1**	**6**
0400 - 0415	0	2	**2**	
0415 - 0430	0	1	**1**	
0430 - 0445	0	0	**0**	
0445 - 0500	0	4	**4**	**7**
0500 - 0515	0	0	**0**	
0515 - 0530	0	6	**6**	
0530 - 0545	0	7	**7**	
0545 - 0600	0	4	**4**	**17**
0600 - 0615	0	16	**16**	
0615 - 0630	0	12	**12**	
0630 - 0645	0	15	**15**	
0645 - 0700	0	18	**18**	**61**
0700 - 0715	0	28	**28**	
0715 - 0730	0	32	**32**	
0730 - 0745	0	34	**34**	
0745 - 0800	0	38	**38**	**132**
0800 - 0815	0	44	**44**	
0815 - 0830	0	45	**45**	
0830 - 0845	0	44	**44**	
0845 - 0900	0	44	**44**	**177**
0900 - 0915	0	32	**32**	
0915 - 0930	0	50	**50**	
0930 - 0945	0	51	**51**	
0945 - 1000	0	55	**55**	**188**
1000 - 1015	0	49	**49**	
1015 - 1030	0	62	**62**	
1030 - 1045	0	79	**79**	
1045 - 1100	0	81	**81**	**271**
1100 - 1115	0	88	**88**	
1115 - 1130	0	83	**83**	
1130 - 1145	0	94	**94**	
1145 - 1200	0	82	**82**	**347**

Time	Volume Summary 15min EB	Volume Summary 15min WB	15min Total	60min Total
1200 - 1215	0	90	**90**	
1215 - 1230	0	81	**81**	
1230 - 1245	0	93	**93**	
1245 - 1300	0	99	**99**	**363**
1300 - 1315	0	77	**77**	
1315 - 1330	0	93	**93**	
1330 - 1345	0	99	**99**	
1345 - 1400	0	104	**104**	**373**
1400 - 1415	0	101	**101**	
1415 - 1430	0	119	**119**	
1430 - 1445	0	92	**92**	
1445 - 1500	0	84	**84**	**396**
1500 - 1515	0	105	**105**	
1515 - 1530	0	94	**94**	
1530 - 1545	0	90	**90**	
1545 - 1600	0	110	**110**	**399**
1600 - 1615	0	90	**90**	
1615 - 1630	0	99	**99**	
1630 - 1645	0	113	**113**	
1645 - 1700	0	85	**85**	**387**
1700 - 1715	0	100	**100**	
1715 - 1730	0	113	**113**	
1730 - 1745	0	82	**82**	
1745 - 1800	0	88	**88**	**383**
1800 - 1815	0	85	**85**	
1815 - 1830	0	75	**75**	
1830 - 1845	0	74	**74**	
1845 - 1900	0	81	**81**	**315**
1900 - 1915	0	0	**0**	
1915 - 1930	0	0	**0**	
1930 - 1945	0	0	**0**	
1945 - 2000	0	0	**0**	**0**
2000 - 2015	0	0	**0**	
2015 - 2030	0	0	**0**	
2030 - 2045	0	0	**0**	
2045 - 2100	0	0	**0**	**0**
2100 - 2115	0	0	**0**	
2115 - 2130	0	0	**0**	
2130 - 2145	0	0	**0**	
2145 - 2200	0	0	**0**	**0**
2200 - 2215	0	0	**0**	
2215 - 2230	0	0	**0**	
2230 - 2245	0	0	**0**	
2245 - 2300	0	0	**0**	**0**
2300 - 2315	0	0	**0**	
2315 - 2330	0	0	**0**	
2330 - 2345	0	0	**0**	
2345 - 0000	0	0	**0**	**0**

Session Total	0	3849	**3849**
Session Average	0.00	40.09	**40.09**
Session Percentage	0.00	100.00	

Bi-Directional Class Count || SB WB 60min

Columbia, SC

Marr Traffic DATA COLLECTION

www.marrtraffic.com

Site 30
I-26 James F. Byrnes Expy On/Off-Ramp,
west of Harbison Blvd

Date
Tuesday, April 23, 2024

Lat/Long
34.079722°, -81.153537°

Weather
Fair
58°F

Click here for Detailed Weather

0000 - 2400 (Weekday 24h Session) (04-23-2024)
SB WB 60min

	Westbound (Movement 30.1)													
TIME	1	2	3	4	5	6	7	8	9	10	11	12	13	**Total**
0000 - 0100	0	0	0	0	0	0	0	0	0	0	0	0	0	**0**
0100 - 0200	0	0	0	0	0	0	0	0	0	0	0	0	0	**0**
0200 - 0300	0	0	0	0	0	0	0	0	0	0	0	0	0	**0**
0300 - 0400	0	0	0	0	0	0	0	0	0	0	0	0	0	**0**
0400 - 0500	0	0	0	0	0	0	0	0	0	0	0	0	0	**0**
0500 - 0600	0	0	0	0	0	0	0	0	0	0	0	0	0	**0**
0600 - 0700	0	0	0	0	0	0	0	0	0	0	0	0	0	**0**
0700 - 0800	0	0	0	0	0	0	0	0	0	0	0	0	0	**0**
0800 - 0900	0	0	0	0	0	0	0	0	0	0	0	0	0	**0**
0900 - 1000	0	0	0	0	0	0	0	0	0	0	0	0	0	**0**
1000 - 1100	0	0	0	0	0	0	0	0	0	0	0	0	0	**0**
1100 - 1200	0	0	0	0	0	0	0	0	0	0	0	0	0	**0**
1200 - 1300	0	0	0	0	0	0	0	0	0	0	0	0	0	**0**
1300 - 1400	0	0	0	0	0	0	0	0	0	0	0	0	0	**0**
1400 - 1500	0	0	0	0	0	0	0	0	0	0	0	0	0	**0**
1500 - 1600	0	0	0	0	0	0	0	0	0	0	0	0	0	**0**
1600 - 1700	0	0	0	0	0	0	0	0	0	0	0	0	0	**0**
1700 - 1800	0	0	0	0	0	0	0	0	0	0	0	0	0	**0**
1800 - 1900	0	0	0	0	0	0	0	0	0	0	0	0	0	**0**
1900 - 2000	2	216	53	0	0	0	0	0	3	0	0	0	0	**274**
2000 - 2100	0	155	30	0	0	0	0	0	0	0	0	0	0	**185**
2100 - 2200	1	93	13	0	0	0	0	0	0	0	0	0	0	**107**
2200 - 2300	1	62	4	0	1	0	0	0	0	0	0	0	0	**68**
2300 - 2400	0	27	5	0	0	0	0	0	0	0	0	0	0	**32**

Session Total	4	553	105	0	1	0	0	0	3	0	0	0	0	**666**
Session Average	0.17	23.04	4.38	0.00	0.04	0.00	0.00	0.00	0.13	0.00	0.00	0.00	0.00	**27.75**
Session Percentage	0.60	83.03	15.77	0.00	0.15	0.00	0.00	0.00	0.45	0.00	0.00	0.00	0.00	

AM Peak Hour	-	-	-	-	-	-	-	-	-	-	-	-	-	**-**
AM Peak Volume	0	0	0	0	0	0	0	0	0	0	0	0	0	**0**

Noon Peak Hour	-	-	-	-	-	-	-	-	-	-	-	-	-	**-**
Noon Peak Volume	0	0	0	0	0	0	0	0	0	0	0	0	0	**0**

PM Peak Hour	1900 - 2000	1900 - 2000	1900 - 2000	-	-	-	-	-	1900 - 2000	-	-	-	-	**1900 - 2000**
PM Peak Volume	2	216	53	0	0	0	0	0	3	0	0	0	0	**274**

Site 30

I-26 James F. Byrnes Expy On/Off-Ramp,
west of Harbison Blvd

Date

Wednesday, April 24, 2024

Lat/Long

34.079722°, -81.153537°

Weather

Fair
66°F

Click here for Detailed Weather

0000 - 2400 (Weekday 24h Session) (04-24-2024)

SB WB 60min

	Westbound (Movement 30.1)													
TIME	1	2	3	4	5	6	7	8	9	10	11	12	13	**Total**
0000 - 0100	0	13	2	0	0	0	0	0	0	0	0	0	0	**15**
0100 - 0200	0	8	1	0	0	0	0	0	1	0	0	0	0	**10**
0200 - 0300	0	2	1	0	0	0	0	0	0	0	0	0	0	**3**
0300 - 0400	0	6	0	0	0	2	0	0	1	0	0	0	0	**9**
0400 - 0500	0	3	0	0	0	0	0	0	0	0	0	0	0	**3**
0500 - 0600	0	15	3	0	1	0	0	0	2	0	0	0	0	**21**
0600 - 0700	0	54	10	0	1	0	0	0	3	0	0	0	0	**68**
0700 - 0800	0	95	33	0	1	0	0	0	3	0	0	0	0	**132**
0800 - 0900	0	108	49	0	2	0	0	0	1	0	0	0	0	**160**
0900 - 1000	0	133	61	0	3	0	0	0	1	0	0	0	0	**198**
1000 - 1100	0	147	58	0	5	0	0	0	3	0	0	0	0	**213**
1100 - 1200	0	179	78	1	1	0	0	0	1	0	0	0	0	**260**
1200 - 1300	0	249	79	0	1	0	0	0	2	0	0	0	0	**331**
1300 - 1400	0	289	89	1	3	0	0	0	1	0	0	0	0	**383**
1400 - 1500	0	272	81	1	3	0	0	0	1	0	0	0	0	**358**
1500 - 1600	0	286	77	4	1	0	0	0	1	0	0	0	0	**369**
1600 - 1700	0	323	97	0	2	0	0	0	2	0	0	0	0	**424**
1700 - 1800	1	330	76	0	1	0	0	0	0	0	0	0	0	**408**
1800 - 1900	0	267	71	0	0	0	0	0	1	0	0	0	0	**339**
1900 - 2000	0	205	46	1	1	0	0	0	0	0	0	0	0	**253**
2000 - 2100	2	197	33	0	0	0	0	0	0	0	0	0	0	**232**
2100 - 2200	0	110	13	0	1	0	0	0	0	0	0	0	0	**124**
2200 - 2300	0	60	5	0	0	0	0	0	0	0	0	0	0	**65**
2300 - 2400	0	33	1	0	1	0	0	0	0	0	0	0	0	**35**

Session Total	3	3384	964	8	28	2	0	0	24	0	0	0	0	**4413**
Session Average	0.13	141.00	40.17	0.33	1.17	0.08	0.00	0.00	1.00	0.00	0.00	0.00	0.00	**183.88**
Session Percentage	0.07	76.68	21.84	0.18	0.63	0.05	0.00	0.00	0.54	0.00	0.00	0.00	0.00	

AM Peak Hour	-	0900 - 1000	0900 - 1000	-	0900 - 1000	-	-	-	0600 - 0700	-	-	-	-	**0900 - 1000**
AM Peak Volume	0	133	61	0	3	0	0	0	3	0	0	0	0	**198**

Noon Peak Hour	-	1300 - 1400	1300 - 1400	1100 - 1200	1000 - 1100	-	-	-	1000 - 1100	-	-	-	-	**1300 - 1400**
Noon Peak Volume	0	289	89	1	5	0	0	0	3	0	0	0	0	**383**

PM Peak Hour	1700 - 1800	1700 - 1800	1600 - 1700	1500 - 1600	1600 - 1700	-	-	-	1600 - 1700	-	-	-	-	**1600 - 1700**
PM Peak Volume	1	330	97	4	2	0	0	0	2	0	0	0	0	**424**

Site 30
I-26 James F. Byrnes Expy On/Off-Ramp,
west of Harbison Blvd

Date
Thursday, April 25, 2024

Lat/Long
34.079722°, -81.153537°

Weather
Fair
67°F

Click here for Detailed Weather

0000 - 2400 (Weekday 24h Session) (04-25-2024)
SB WB 60min

	Westbound (Movement 30.1)													
TIME	1	2	3	4	5	6	7	8	9	10	11	12	13	**Total**
0000 - 0100	0	16	0	0	0	0	0	0	1	0	0	0	0	**17**
0100 - 0200	0	5	0	0	0	0	0	0	0	0	0	0	0	**5**
0200 - 0300	0	5	0	0	0	0	0	0	0	0	0	0	0	**5**
0300 - 0400	0	5	0	0	0	0	0	0	1	0	0	0	0	**6**
0400 - 0500	0	4	0	0	0	1	0	1	1	0	0	0	0	**7**
0500 - 0600	0	14	3	0	0	0	0	0	0	0	0	0	0	**17**
0600 - 0700	0	38	20	0	0	0	0	0	3	0	0	0	0	**61**
0700 - 0800	0	103	27	0	1	0	0	0	1	0	0	0	0	**132**
0800 - 0900	0	117	53	0	5	0	0	0	2	0	0	0	0	**177**
0900 - 1000	1	122	62	0	3	0	0	0	0	0	0	0	0	**188**
1000 - 1100	1	177	89	0	2	1	0	0	1	0	0	0	0	**271**
1100 - 1200	1	248	93	1	1	0	0	2	1	0	0	0	0	**347**
1200 - 1300	0	255	105	0	2	0	0	0	1	0	0	0	0	**363**
1300 - 1400	0	285	80	1	3	0	0	0	4	0	0	0	0	**373**
1400 - 1500	0	288	104	0	4	0	0	0	0	0	0	0	0	**396**
1500 - 1600	0	320	78	0	0	0	0	0	1	0	0	0	0	**399**
1600 - 1700	2	305	75	0	0	1	0	2	2	0	0	0	0	**387**
1700 - 1800	1	312	69	0	1	0	0	0	0	0	0	0	0	**383**
1800 - 1900	1	262	50	0	1	0	0	0	1	0	0	0	0	**315**
1900 - 2000	0	0	0	0	0	0	0	0	0	0	0	0	0	**0**
2000 - 2100	0	0	0	0	0	0	0	0	0	0	0	0	0	**0**
2100 - 2200	0	0	0	0	0	0	0	0	0	0	0	0	0	**0**
2200 - 2300	0	0	0	0	0	0	0	0	0	0	0	0	0	**0**
2300 - 2400	0	0	0	0	0	0	0	0	0	0	0	0	0	**0**

Session Total	7	2881	908	2	23	3	0	5	20	0	0	0	0	**3849**
Session Average	0.29	120.04	37.83	0.08	0.96	0.13	0.00	0.21	0.83	0.00	0.00	0.00	0.00	**160.38**
Session Percentage	0.18	74.85	23.59	0.05	0.60	0.08	0.00	0.13	0.52	0.00	0.00	0.00	0.00	

AM Peak Hour	0900 - 1000	0900 - 1000	0900 - 1000	-	0800 - 0900	-	-	-	0600 - 0700	-	-	-	-	**0900 - 1000**
AM Peak Hour Volume	1	122	62	0	5	0	0	0	3	0	0	0	0	**188**

Noon Peak Hour	1000 - 1100	1400 - 1500	1200 - 1300	1100 - 1200	1400 - 1500	1000 - 1100	-	1100 - 1200	1300 - 1400	-	-	-	-	**1400 - 1500**
Noon Peak Hour Volume	1	288	105	1	4	1	0	2	4	0	0	0	0	**396**

PM Peak Hour	1600 - 1700	1500 - 1600	1500 - 1600	-	1700 - 1800	1600 - 1700	-	1600 - 1700	1600 - 1700	-	-	-	-	**1500 - 1600**
PM Peak Hour Volume	2	320	78	0	1	1	0	2	2	0	0	0	0	**399**

Bi-Directional Class Count || Volume Summary 60min

Columbia, SC

Marr Traffic DATA COLLECTION

www.marrtraffic.com

Site 30

I-26 James F. Byrnes Expy On/Off-Ramp,
west of Harbison Blvd

Date

Tuesday, April 23, 2024

Lat/Long

34.079722°, -81.153537°

Weather

Fair
58°F

Click here for Detailed Weather

0000 - 2400 (Weekday 24h Session) (04-23-2024)

Volume Summary 60min

	Volume Summary 60min		
TIME	EB	WB	**Total**
0000 - 0100	0	0	**0**
0100 - 0200	0	0	**0**
0200 - 0300	0	0	**0**
0300 - 0400	0	0	**0**
0400 - 0500	0	0	**0**
0500 - 0600	0	0	**0**
0600 - 0700	0	0	**0**
0700 - 0800	0	0	**0**
0800 - 0900	0	0	**0**
0900 - 1000	0	0	**0**
1000 - 1100	0	0	**0**
1100 - 1200	0	0	**0**

	Volume Summary 60min		
Time	EB	WB	**Total**
1200 - 1300	0	0	**0**
1300 - 1400	0	0	**0**
1400 - 1500	0	0	**0**
1500 - 1600	0	0	**0**
1600 - 1700	0	0	**0**
1700 - 1800	0	0	**0**
1800 - 1900	0	0	**0**
1900 - 2000	0	274	**274**
2000 - 2100	0	185	**185**
2100 - 2200	0	107	**107**
2200 - 2300	0	68	**68**
2300 - 2400	0	32	**32**

Session Total	0	666	**666**
Session Average	0.00	27.75	**27.75**
Session Percentage	0.00	100.00	

Site 30

I-26 James F. Byrnes Expy On/Off-Ramp,
west of Harbison Blvd

Date

Wednesday, April 24, 2024

Lat/Long

34.079722°, -81.153537°

Weather

Fair
66°F

Click here for Detailed Weather

0000 - 2400 (Weekday 24h Session) (04-24-2024)

Volume Summary 60min

	Volume Summary 60min		
TIME	EB	WB	**Total**
0000 - 0100	0	15	**15**
0100 - 0200	0	10	**10**
0200 - 0300	0	3	**3**
0300 - 0400	0	9	**9**
0400 - 0500	0	3	**3**
0500 - 0600	0	21	**21**
0600 - 0700	0	68	**68**
0700 - 0800	0	132	**132**
0800 - 0900	0	160	**160**
0900 - 1000	0	198	**198**
1000 - 1100	0	213	**213**
1100 - 1200	0	260	**260**

Session Total	0	4413	**4413**
Session Average	0.00	183.88	**183.88**
Session Percentage	0.00	100.00	

	Volume Summary 60min		
Time	EB	WB	**Total**
1200 - 1300	0	331	**331**
1300 - 1400	0	383	**383**
1400 - 1500	0	358	**358**
1500 - 1600	0	369	**369**
1600 - 1700	0	424	**424**
1700 - 1800	0	408	**408**
1800 - 1900	0	339	**339**
1900 - 2000	0	253	**253**
2000 - 2100	0	232	**232**
2100 - 2200	0	124	**124**
2200 - 2300	0	65	**65**
2300 - 2400	0	35	**35**

Site 30

I-26 James F. Byrnes Expy On/Off-Ramp,
west of Harbison Blvd

Date

Thursday, April 25, 2024

Lat/Long

34.079722°, -81.153537°

Weather

Fair
67°F

Click here for Detailed Weather

0000 - 2400 (Weekday 24h Session) (04-25-2024)

Volume Summary 60min

	Volume Summary 60min		
TIME	EB	WB	**Total**
0000 - 0100	0	17	**17**
0100 - 0200	0	5	**5**
0200 - 0300	0	5	**5**
0300 - 0400	0	6	**6**
0400 - 0500	0	7	**7**
0500 - 0600	0	17	**17**
0600 - 0700	0	61	**61**
0700 - 0800	0	132	**132**
0800 - 0900	0	177	**177**
0900 - 1000	0	188	**188**
1000 - 1100	0	271	**271**
1100 - 1200	0	347	**347**

	Volume Summary 60min		
Time	EB	WB	**Total**
1200 - 1300	0	363	**363**
1300 - 1400	0	373	**373**
1400 - 1500	0	396	**396**
1500 - 1600	0	399	**399**
1600 - 1700	0	387	**387**
1700 - 1800	0	383	**383**
1800 - 1900	0	315	**315**
1900 - 2000	0	0	**0**
2000 - 2100	0	0	**0**
2100 - 2200	0	0	**0**
2200 - 2300	0	0	**0**
2300 - 2400	0	0	**0**

Session Total	0	3849	**3849**
Session Average	0.00	160.38	**160.38**
Session Percentage	0.00	100.00	

Bi-Directional Class Count || Graphical Analysis SB WB

Columbia, SC

Marr Traffic DATA COLLECTION

www.marrtraffic.com

Site 30

I-26 James F. Byrnes Expy On/Off-Ramp,
west of Harbison Blvd

Lat/Long

34.079722°, -81.153537°

0000 - 2400 (Weekday 24h Session)

Graphical Analysis SB WB

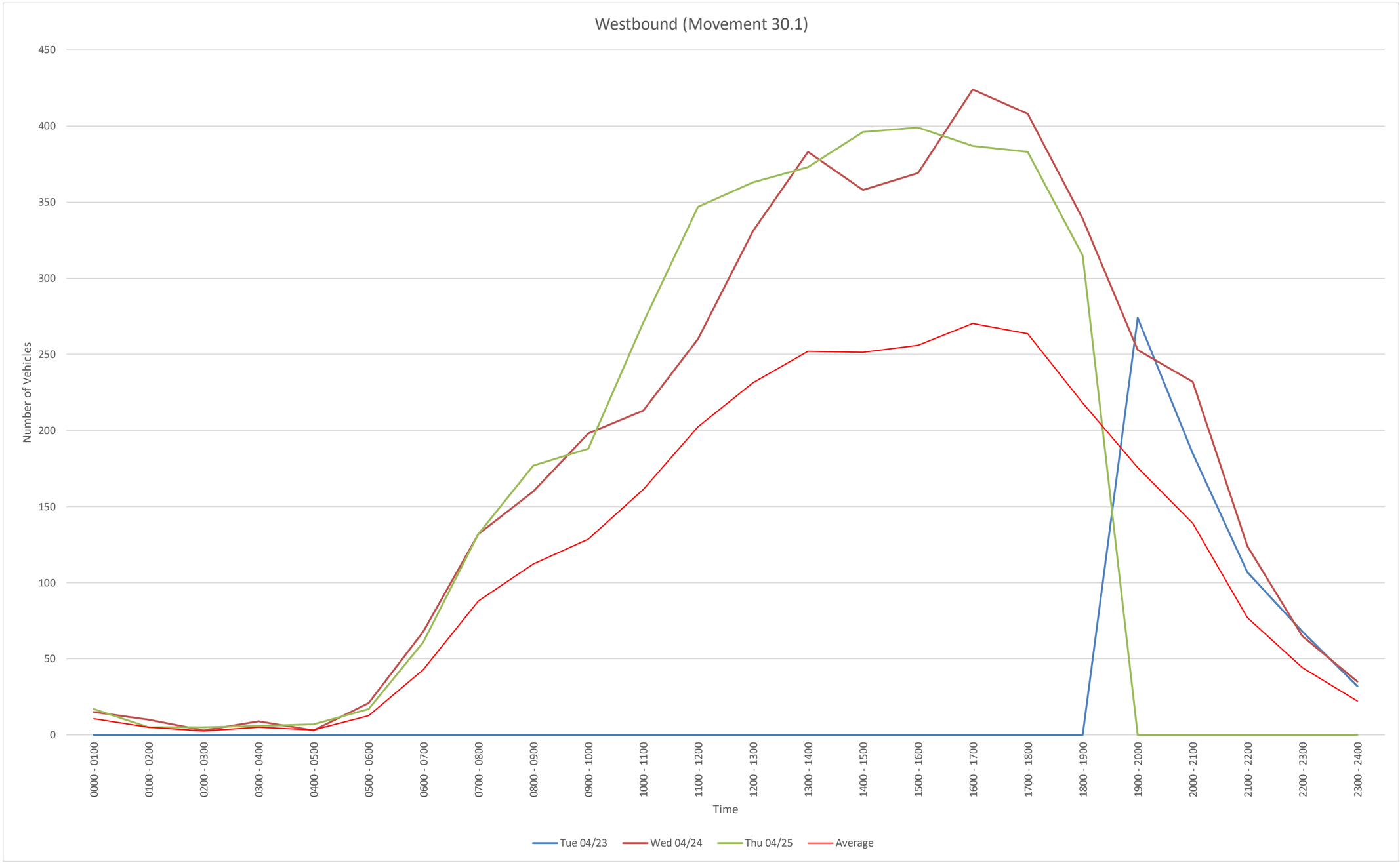

Time	Tue 04/23	Wed 04/24	Thu 04/25				
0000 - 0100	0	15	17				
0100 - 0200	0	10	5				
0200 - 0300	0	3	5				
0300 - 0400	0	9	6				
0400 - 0500	0	3	7				
0500 - 0600	0	21	17				
0600 - 0700	0	68	61				
0700 - 0800	0	132	132				
0800 - 0900	0	160	177				
0900 - 1000	0	198	188				
1000 - 1100	0	213	271				
1100 - 1200	0	260	347				
1200 - 1300	0	331	363				
1300 - 1400	0	383	373				
1400 - 1500	0	358	396				
1500 - 1600	0	369	399				
1600 - 1700	0	424	387				
1700 - 1800	0	408	383				
1800 - 1900	0	339	315				
1900 - 2000	274	253	0				
2000 - 2100	185	232	0				
2100 - 2200	107	124	0				
2200 - 2300	68	65	0				
2300 - 2400	32	35	0				
Daily Total	666	4413	3849				

EB
File Name:
Start Date: 4/23/2024
Start Time: 0
Site Code: 30
Station ID: 1
Location 1: I-26 James F. Byrnes Expy On/Off-Ramp, west of Harbison Blvd
Location 2:

Date	Time	1	2	3	4	5	6	7	8	9	10	11	12	13
4/23/2024	12:00 AM	0	0	0	0	0	0	0	0	0	0	0	0	0
4/23/2024	12:15 AM	0	0	0	0	0	0	0	0	0	0	0	0	0
4/23/2024	12:30 AM	0	0	0	0	0	0	0	0	0	0	0	0	0
4/23/2024	12:45 AM	0	0	0	0	0	0	0	0	0	0	0	0	0
4/23/2024	1:00 AM	0	0	0	0	0	0	0	0	0	0	0	0	0
4/23/2024	1:15 AM	0	0	0	0	0	0	0	0	0	0	0	0	0
4/23/2024	1:30 AM	0	0	0	0	0	0	0	0	0	0	0	0	0
4/23/2024	1:45 AM	0	0	0	0	0	0	0	0	0	0	0	0	0
4/23/2024	2:00 AM	0	0	0	0	0	0	0	0	0	0	0	0	0
4/23/2024	2:15 AM	0	0	0	0	0	0	0	0	0	0	0	0	0
4/23/2024	2:30 AM	0	0	0	0	0	0	0	0	0	0	0	0	0
4/23/2024	2:45 AM	0	0	0	0	0	0	0	0	0	0	0	0	0
4/23/2024	3:00 AM	0	0	0	0	0	0	0	0	0	0	0	0	0
4/23/2024	3:15 AM	0	0	0	0	0	0	0	0	0	0	0	0	0
4/23/2024	3:30 AM	0	0	0	0	0	0	0	0	0	0	0	0	0
4/23/2024	3:45 AM	0	0	0	0	0	0	0	0	0	0	0	0	0
4/23/2024	4:00 AM	0	0	0	0	0	0	0	0	0	0	0	0	0
4/23/2024	4:15 AM	0	0	0	0	0	0	0	0	0	0	0	0	0
4/23/2024	4:30 AM	0	0	0	0	0	0	0	0	0	0	0	0	0
4/23/2024	4:45 AM	0	0	0	0	0	0	0	0	0	0	0	0	0
4/23/2024	5:00 AM	0	0	0	0	0	0	0	0	0	0	0	0	0
4/23/2024	5:15 AM	0	0	0	0	0	0	0	0	0	0	0	0	0
4/23/2024	5:30 AM	0	0	0	0	0	0	0	0	0	0	0	0	0
4/23/2024	5:45 AM	0	0	0	0	0	0	0	0	0	0	0	0	0
4/23/2024	6:00 AM	0	0	0	0	0	0	0	0	0	0	0	0	0
4/23/2024	6:15 AM	0	0	0	0	0	0	0	0	0	0	0	0	0
4/23/2024	6:30 AM	0	0	0	0	0	0	0	0	0	0	0	0	0
4/23/2024	6:45 AM	0	0	0	0	0	0	0	0	0	0	0	0	0
4/23/2024	7:00 AM	0	0	0	0	0	0	0	0	0	0	0	0	0
4/23/2024	7:15 AM	0	0	0	0	0	0	0	0	0	0	0	0	0
4/23/2024	7:30 AM	0	0	0	0	0	0	0	0	0	0	0	0	0
4/23/2024	7:45 AM	0	0	0	0	0	0	0	0	0	0	0	0	0
4/23/2024	8:00 AM	0	0	0	0	0	0	0	0	0	0	0	0	0
4/23/2024	8:15 AM	0	0	0	0	0	0	0	0	0	0	0	0	0
4/23/2024	8:30 AM	0	0	0	0	0	0	0	0	0	0	0	0	0
4/23/2024	8:45 AM	0	0	0	0	0	0	0	0	0	0	0	0	0
4/23/2024	9:00 AM	0	0	0	0	0	0	0	0	0	0	0	0	0
4/23/2024	9:15 AM	0	0	0	0	0	0	0	0	0	0	0	0	0
4/23/2024	9:30 AM	0	0	0	0	0	0	0	0	0	0	0	0	0
4/23/2024	9:45 AM	0	0	0	0	0	0	0	0	0	0	0	0	0
4/23/2024	10:00 AM	0	0	0	0	0	0	0	0	0	0	0	0	0
4/23/2024	10:15 AM	0	0	0	0	0	0	0	0	0	0	0	0	0
4/23/2024	10:30 AM	0	0	0	0	0	0	0	0	0	0	0	0	0
4/23/2024	10:45 AM	0	0	0	0	0	0	0	0	0	0	0	0	0
4/23/2024	11:00 AM	0	0	0	0	0	0	0	0	0	0	0	0	0
4/23/2024	11:15 AM	0	0	0	0	0	0	0	0	0	0	0	0	0
4/23/2024	11:30 AM	0	0	0	0	0	0	0	0	0	0	0	0	0
4/23/2024	11:45 AM	0	0	0	0	0	0	0	0	0	0	0	0	0
4/23/2024	12:00 PM	0	0	0	0	0	0	0	0	0	0	0	0	0
4/23/2024	12:15 PM	0	0	0	0	0	0	0	0	0	0	0	0	0
4/23/2024	12:30 PM	0	0	0	0	0	0	0	0	0	0	0	0	0
4/23/2024	12:45 PM	0	0	0	0	0	0	0	0	0	0	0	0	0
4/23/2024	1:00 PM	0	0	0	0	0	0	0	0	0	0	0	0	0
4/23/2024	1:15 PM	0	0	0	0	0	0	0	0	0	0	0	0	0
4/23/2024	1:30 PM	0	0	0	0	0	0	0	0	0	0	0	0	0
4/23/2024	1:45 PM	0	0	0	0	0	0	0	0	0	0	0	0	0
4/23/2024	2:00 PM	0	0	0	0	0	0	0	0	0	0	0	0	0
4/23/2024	2:15 PM	0	0	0	0	0	0	0	0	0	0	0	0	0
4/23/2024	2:30 PM	0	0	0	0	0	0	0	0	0	0	0	0	0
4/23/2024	2:45 PM	0	0	0	0	0	0	0	0	0	0	0	0	0
4/23/2024	3:00 PM	0	0	0	0	0	0	0	0	0	0	0	0	0
4/23/2024	3:15 PM	0	0	0	0	0	0	0	0	0	0	0	0	0
4/23/2024	3:30 PM	0	0	0	0	0	0	0	0	0	0	0	0	0
4/23/2024	3:45 PM	0	0	0	0	0	0	0	0	0	0	0	0	0
4/23/2024	4:00 PM	0	0	0	0	0	0	0	0	0	0	0	0	0
4/23/2024	4:15 PM	0	0	0	0	0	0	0	0	0	0	0	0	0
4/23/2024	4:30 PM	0	0	0	0	0	0	0	0	0	0	0	0	0
4/23/2024	4:45 PM	0	0	0	0	0	0	0	0	0	0	0	0	0
4/23/2024	5:00 PM	0	0	0	0	0	0	0	0	0	0	0	0	0
4/23/2024	5:15 PM	0	0	0	0	0	0	0	0	0	0	0	0	0
4/23/2024	5:30 PM	0	0	0	0	0	0	0	0	0	0	0	0	0
4/23/2024	5:45 PM	0	0	0	0	0	0	0	0	0	0	0	0	0
4/23/2024	6:00 PM	0	0	0	0	0	0	0	0	0	0	0	0	0
4/23/2024	6:15 PM	0	0	0	0	0	0	0	0	0	0	0	0	0
4/23/2024	6:30 PM	0	0	0	0	0	0	0	0	0	0	0	0	0
4/23/2024	6:45 PM	0	0	0	0	0	0	0	0	0	0	0	0	0
4/23/2024	7:00 PM	0	0	0	0	0	0	0	0	0	0	0	0	0
4/23/2024	7:15 PM	0	0	0	0	0	0	0	0	0	0	0	0	0
4/23/2024	7:30 PM	0	0	0	0	0	0	0	0	0	0	0	0	0
4/23/2024	7:45 PM	0	0	0	0	0	0	0	0	0	0	0	0	0
4/23/2024	8:00 PM	0	0	0	0	0	0	0	0	0	0	0	0	0
4/23/2024	8:15 PM	0	0	0	0	0	0	0	0	0	0	0	0	0
4/23/2024	8:30 PM	0	0	0	0	0	0	0	0	0	0	0	0	0
4/23/2024	8:45 PM	0	0	0	0	0	0	0	0	0	0	0	0	0
4/23/2024	9:00 PM	0	0	0	0	0	0	0	0	0	0	0	0	0
4/23/2024	9:15 PM	0	0	0	0	0	0	0	0	0	0	0	0	0
4/23/2024	9:30 PM	0	0	0	0	0	0	0	0	0	0	0	0	0
4/23/2024	9:45 PM	0	0	0	0	0	0	0	0	0	0	0	0	0
4/23/2024	10:00 PM	0	0	0	0	0	0	0	0	0	0	0	0	0
4/23/2024	10:15 PM	0	0	0	0	0	0	0	0	0	0	0	0	0
4/23/2024	10:30 PM	0	0	0	0	0	0	0	0	0	0	0	0	0
4/23/2024	10:45 PM	0	0	0	0	0	0	0	0	0	0	0	0	0
4/23/2024	11:00 PM	0	0	0	0	0	0	0	0	0	0	0	0	0
4/23/2024	11:15 PM	0	0	0	0	0	0	0	0	0	0	0	0	0
4/23/2024	11:30 PM	0	0	0	0	0	0	0	0	0	0	0	0	0
4/23/2024	11:45 PM	0	0	0	0	0	0	0	0	0	0	0	0	0

4/24/2024	12:00 AM	0	0	0	0	0	0	0	0	0	0	0	0	0
4/24/2024	12:15 AM	0	0	0	0	0	0	0	0	0	0	0	0	0
4/24/2024	12:30 AM	0	0	0	0	0	0	0	0	0	0	0	0	0
4/24/2024	12:45 AM	0	0	0	0	0	0	0	0	0	0	0	0	0
4/24/2024	1:00 AM	0	0	0	0	0	0	0	0	0	0	0	0	0
4/24/2024	1:15 AM	0	0	0	0	0	0	0	0	0	0	0	0	0
4/24/2024	1:30 AM	0	0	0	0	0	0	0	0	0	0	0	0	0
4/24/2024	1:45 AM	0	0	0	0	0	0	0	0	0	0	0	0	0
4/24/2024	2:00 AM	0	0	0	0	0	0	0	0	0	0	0	0	0
4/24/2024	2:15 AM	0	0	0	0	0	0	0	0	0	0	0	0	0
4/24/2024	2:30 AM	0	0	0	0	0	0	0	0	0	0	0	0	0
4/24/2024	2:45 AM	0	0	0	0	0	0	0	0	0	0	0	0	0
4/24/2024	3:00 AM	0	0	0	0	0	0	0	0	0	0	0	0	0
4/24/2024	3:15 AM	0	0	0	0	0	0	0	0	0	0	0	0	0
4/24/2024	3:30 AM	0	0	0	0	0	0	0	0	0	0	0	0	0
4/24/2024	3:45 AM	0	0	0	0	0	0	0	0	0	0	0	0	0
4/24/2024	4:00 AM	0	0	0	0	0	0	0	0	0	0	0	0	0
4/24/2024	4:15 AM	0	0	0	0	0	0	0	0	0	0	0	0	0
4/24/2024	4:30 AM	0	0	0	0	0	0	0	0	0	0	0	0	0
4/24/2024	4:45 AM	0	0	0	0	0	0	0	0	0	0	0	0	0
4/24/2024	5:00 AM	0	0	0	0	0	0	0	0	0	0	0	0	0
4/24/2024	5:15 AM	0	0	0	0	0	0	0	0	0	0	0	0	0
4/24/2024	5:30 AM	0	0	0	0	0	0	0	0	0	0	0	0	0
4/24/2024	5:45 AM	0	0	0	0	0	0	0	0	0	0	0	0	0
4/24/2024	6:00 AM	0	0	0	0	0	0	0	0	0	0	0	0	0
4/24/2024	6:15 AM	0	0	0	0	0	0	0	0	0	0	0	0	0
4/24/2024	6:30 AM	0	0	0	0	0	0	0	0	0	0	0	0	0
4/24/2024	6:45 AM	0	0	0	0	0	0	0	0	0	0	0	0	0
4/24/2024	7:00 AM	0	0	0	0	0	0	0	0	0	0	0	0	0
4/24/2024	7:15 AM	0	0	0	0	0	0	0	0	0	0	0	0	0
4/24/2024	7:30 AM	0	0	0	0	0	0	0	0	0	0	0	0	0
4/24/2024	7:45 AM	0	0	0	0	0	0	0	0	0	0	0	0	0
4/24/2024	8:00 AM	0	0	0	0	0	0	0	0	0	0	0	0	0
4/24/2024	8:15 AM	0	0	0	0	0	0	0	0	0	0	0	0	0
4/24/2024	8:30 AM	0	0	0	0	0	0	0	0	0	0	0	0	0
4/24/2024	8:45 AM	0	0	0	0	0	0	0	0	0	0	0	0	0
4/24/2024	9:00 AM	0	0	0	0	0	0	0	0	0	0	0	0	0
4/24/2024	9:15 AM	0	0	0	0	0	0	0	0	0	0	0	0	0
4/24/2024	9:30 AM	0	0	0	0	0	0	0	0	0	0	0	0	0
4/24/2024	9:45 AM	0	0	0	0	0	0	0	0	0	0	0	0	0
4/24/2024	10:00 AM	0	0	0	0	0	0	0	0	0	0	0	0	0
4/24/2024	10:15 AM	0	0	0	0	0	0	0	0	0	0	0	0	0
4/24/2024	10:30 AM	0	0	0	0	0	0	0	0	0	0	0	0	0
4/24/2024	10:45 AM	0	0	0	0	0	0	0	0	0	0	0	0	0
4/24/2024	11:00 AM	0	0	0	0	0	0	0	0	0	0	0	0	0
4/24/2024	11:15 AM	0	0	0	0	0	0	0	0	0	0	0	0	0
4/24/2024	11:30 AM	0	0	0	0	0	0	0	0	0	0	0	0	0
4/24/2024	11:45 AM	0	0	0	0	0	0	0	0	0	0	0	0	0
4/24/2024	12:00 PM	0	0	0	0	0	0	0	0	0	0	0	0	0
4/24/2024	12:15 PM	0	0	0	0	0	0	0	0	0	0	0	0	0
4/24/2024	12:30 PM	0	0	0	0	0	0	0	0	0	0	0	0	0
4/24/2024	12:45 PM	0	0	0	0	0	0	0	0	0	0	0	0	0
4/24/2024	1:00 PM	0	0	0	0	0	0	0	0	0	0	0	0	0
4/24/2024	1:15 PM	0	0	0	0	0	0	0	0	0	0	0	0	0
4/24/2024	1:30 PM	0	0	0	0	0	0	0	0	0	0	0	0	0
4/24/2024	1:45 PM	0	0	0	0	0	0	0	0	0	0	0	0	0
4/24/2024	2:00 PM	0	0	0	0	0	0	0	0	0	0	0	0	0
4/24/2024	2:15 PM	0	0	0	0	0	0	0	0	0	0	0	0	0
4/24/2024	2:30 PM	0	0	0	0	0	0	0	0	0	0	0	0	0
4/24/2024	2:45 PM	0	0	0	0	0	0	0	0	0	0	0	0	0
4/24/2024	3:00 PM	0	0	0	0	0	0	0	0	0	0	0	0	0
4/24/2024	3:15 PM	0	0	0	0	0	0	0	0	0	0	0	0	0
4/24/2024	3:30 PM	0	0	0	0	0	0	0	0	0	0	0	0	0
4/24/2024	3:45 PM	0	0	0	0	0	0	0	0	0	0	0	0	0
4/24/2024	4:00 PM	0	0	0	0	0	0	0	0	0	0	0	0	0
4/24/2024	4:15 PM	0	0	0	0	0	0	0	0	0	0	0	0	0
4/24/2024	4:30 PM	0	0	0	0	0	0	0	0	0	0	0	0	0
4/24/2024	4:45 PM	0	0	0	0	0	0	0	0	0	0	0	0	0
4/24/2024	5:00 PM	0	0	0	0	0	0	0	0	0	0	0	0	0
4/24/2024	5:15 PM	0	0	0	0	0	0	0	0	0	0	0	0	0
4/24/2024	5:30 PM	0	0	0	0	0	0	0	0	0	0	0	0	0
4/24/2024	5:45 PM	0	0	0	0	0	0	0	0	0	0	0	0	0
4/24/2024	6:00 PM	0	0	0	0	0	0	0	0	0	0	0	0	0
4/24/2024	6:15 PM	0	0	0	0	0	0	0	0	0	0	0	0	0
4/24/2024	6:30 PM	0	0	0	0	0	0	0	0	0	0	0	0	0
4/24/2024	6:45 PM	0	0	0	0	0	0	0	0	0	0	0	0	0
4/24/2024	7:00 PM	0	0	0	0	0	0	0	0	0	0	0	0	0
4/24/2024	7:15 PM	0	0	0	0	0	0	0	0	0	0	0	0	0
4/24/2024	7:30 PM	0	0	0	0	0	0	0	0	0	0	0	0	0
4/24/2024	7:45 PM	0	0	0	0	0	0	0	0	0	0	0	0	0
4/24/2024	8:00 PM	0	0	0	0	0	0	0	0	0	0	0	0	0
4/24/2024	8:15 PM	0	0	0	0	0	0	0	0	0	0	0	0	0
4/24/2024	8:30 PM	0	0	0	0	0	0	0	0	0	0	0	0	0
4/24/2024	8:45 PM	0	0	0	0	0	0	0	0	0	0	0	0	0
4/24/2024	9:00 PM	0	0	0	0	0	0	0	0	0	0	0	0	0
4/24/2024	9:15 PM	0	0	0	0	0	0	0	0	0	0	0	0	0
4/24/2024	9:30 PM	0	0	0	0	0	0	0	0	0	0	0	0	0
4/24/2024	9:45 PM	0	0	0	0	0	0	0	0	0	0	0	0	0
4/24/2024	10:00 PM	0	0	0	0	0	0	0	0	0	0	0	0	0
4/24/2024	10:15 PM	0	0	0	0	0	0	0	0	0	0	0	0	0
4/24/2024	10:30 PM	0	0	0	0	0	0	0	0	0	0	0	0	0
4/24/2024	10:45 PM	0	0	0	0	0	0	0	0	0	0	0	0	0
4/24/2024	11:00 PM	0	0	0	0	0	0	0	0	0	0	0	0	0
4/24/2024	11:15 PM	0	0	0	0	0	0	0	0	0	0	0	0	0
4/24/2024	11:30 PM	0	0	0	0	0	0	0	0	0	0	0	0	0
4/24/2024	11:45 PM	0	0	0	0	0	0	0	0	0	0	0	0	0

4/25/2024	12:00 AM	0	0	0	0	0	0	0	0	0	0	0	0	0
4/25/2024	12:15 AM	0	0	0	0	0	0	0	0	0	0	0	0	0
4/25/2024	12:30 AM	0	0	0	0	0	0	0	0	0	0	0	0	0
4/25/2024	12:45 AM	0	0	0	0	0	0	0	0	0	0	0	0	0
4/25/2024	1:00 AM	0	0	0	0	0	0	0	0	0	0	0	0	0
4/25/2024	1:15 AM	0	0	0	0	0	0	0	0	0	0	0	0	0
4/25/2024	1:30 AM	0	0	0	0	0	0	0	0	0	0	0	0	0
4/25/2024	1:45 AM	0	0	0	0	0	0	0	0	0	0	0	0	0
4/25/2024	2:00 AM	0	0	0	0	0	0	0	0	0	0	0	0	0
4/25/2024	2:15 AM	0	0	0	0	0	0	0	0	0	0	0	0	0
4/25/2024	2:30 AM	0	0	0	0	0	0	0	0	0	0	0	0	0
4/25/2024	2:45 AM	0	0	0	0	0	0	0	0	0	0	0	0	0
4/25/2024	3:00 AM	0	0	0	0	0	0	0	0	0	0	0	0	0
4/25/2024	3:15 AM	0	0	0	0	0	0	0	0	0	0	0	0	0
4/25/2024	3:30 AM	0	0	0	0	0	0	0	0	0	0	0	0	0
4/25/2024	3:45 AM	0	0	0	0	0	0	0	0	0	0	0	0	0
4/25/2024	4:00 AM	0	0	0	0	0	0	0	0	0	0	0	0	0
4/25/2024	4:15 AM	0	0	0	0	0	0	0	0	0	0	0	0	0
4/25/2024	4:30 AM	0	0	0	0	0	0	0	0	0	0	0	0	0
4/25/2024	4:45 AM	0	0	0	0	0	0	0	0	0	0	0	0	0
4/25/2024	5:00 AM	0	0	0	0	0	0	0	0	0	0	0	0	0
4/25/2024	5:15 AM	0	0	0	0	0	0	0	0	0	0	0	0	0
4/25/2024	5:30 AM	0	0	0	0	0	0	0	0	0	0	0	0	0
4/25/2024	5:45 AM	0	0	0	0	0	0	0	0	0	0	0	0	0
4/25/2024	6:00 AM	0	0	0	0	0	0	0	0	0	0	0	0	0
4/25/2024	6:15 AM	0	0	0	0	0	0	0	0	0	0	0	0	0
4/25/2024	6:30 AM	0	0	0	0	0	0	0	0	0	0	0	0	0
4/25/2024	6:45 AM	0	0	0	0	0	0	0	0	0	0	0	0	0
4/25/2024	7:00 AM	0	0	0	0	0	0	0	0	0	0	0	0	0
4/25/2024	7:15 AM	0	0	0	0	0	0	0	0	0	0	0	0	0
4/25/2024	7:30 AM	0	0	0	0	0	0	0	0	0	0	0	0	0
4/25/2024	7:45 AM	0	0	0	0	0	0	0	0	0	0	0	0	0
4/25/2024	8:00 AM	0	0	0	0	0	0	0	0	0	0	0	0	0
4/25/2024	8:15 AM	0	0	0	0	0	0	0	0	0	0	0	0	0
4/25/2024	8:30 AM	0	0	0	0	0	0	0	0	0	0	0	0	0
4/25/2024	8:45 AM	0	0	0	0	0	0	0	0	0	0	0	0	0
4/25/2024	9:00 AM	0	0	0	0	0	0	0	0	0	0	0	0	0
4/25/2024	9:15 AM	0	0	0	0	0	0	0	0	0	0	0	0	0
4/25/2024	9:30 AM	0	0	0	0	0	0	0	0	0	0	0	0	0
4/25/2024	9:45 AM	0	0	0	0	0	0	0	0	0	0	0	0	0
4/25/2024	10:00 AM	0	0	0	0	0	0	0	0	0	0	0	0	0
4/25/2024	10:15 AM	0	0	0	0	0	0	0	0	0	0	0	0	0
4/25/2024	10:30 AM	0	0	0	0	0	0	0	0	0	0	0	0	0
4/25/2024	10:45 AM	0	0	0	0	0	0	0	0	0	0	0	0	0
4/25/2024	11:00 AM	0	0	0	0	0	0	0	0	0	0	0	0	0
4/25/2024	11:15 AM	0	0	0	0	0	0	0	0	0	0	0	0	0
4/25/2024	11:30 AM	0	0	0	0	0	0	0	0	0	0	0	0	0
4/25/2024	11:45 AM	0	0	0	0	0	0	0	0	0	0	0	0	0
4/25/2024	12:00 PM	0	0	0	0	0	0	0	0	0	0	0	0	0
4/25/2024	12:15 PM	0	0	0	0	0	0	0	0	0	0	0	0	0
4/25/2024	12:30 PM	0	0	0	0	0	0	0	0	0	0	0	0	0
4/25/2024	12:45 PM	0	0	0	0	0	0	0	0	0	0	0	0	0
4/25/2024	1:00 PM	0	0	0	0	0	0	0	0	0	0	0	0	0
4/25/2024	1:15 PM	0	0	0	0	0	0	0	0	0	0	0	0	0
4/25/2024	1:30 PM	0	0	0	0	0	0	0	0	0	0	0	0	0
4/25/2024	1:45 PM	0	0	0	0	0	0	0	0	0	0	0	0	0
4/25/2024	2:00 PM	0	0	0	0	0	0	0	0	0	0	0	0	0
4/25/2024	2:15 PM	0	0	0	0	0	0	0	0	0	0	0	0	0
4/25/2024	2:30 PM	0	0	0	0	0	0	0	0	0	0	0	0	0
4/25/2024	2:45 PM	0	0	0	0	0	0	0	0	0	0	0	0	0
4/25/2024	3:00 PM	0	0	0	0	0	0	0	0	0	0	0	0	0
4/25/2024	3:15 PM	0	0	0	0	0	0	0	0	0	0	0	0	0
4/25/2024	3:30 PM	0	0	0	0	0	0	0	0	0	0	0	0	0
4/25/2024	3:45 PM	0	0	0	0	0	0	0	0	0	0	0	0	0
4/25/2024	4:00 PM	0	0	0	0	0	0	0	0	0	0	0	0	0
4/25/2024	4:15 PM	0	0	0	0	0	0	0	0	0	0	0	0	0
4/25/2024	4:30 PM	0	0	0	0	0	0	0	0	0	0	0	0	0
4/25/2024	4:45 PM	0	0	0	0	0	0	0	0	0	0	0	0	0
4/25/2024	5:00 PM	0	0	0	0	0	0	0	0	0	0	0	0	0
4/25/2024	5:15 PM	0	0	0	0	0	0	0	0	0	0	0	0	0
4/25/2024	5:30 PM	0	0	0	0	0	0	0	0	0	0	0	0	0
4/25/2024	5:45 PM	0	0	0	0	0	0	0	0	0	0	0	0	0
4/25/2024	6:00 PM	0	0	0	0	0	0	0	0	0	0	0	0	0
4/25/2024	6:15 PM	0	0	0	0	0	0	0	0	0	0	0	0	0
4/25/2024	6:30 PM	0	0	0	0	0	0	0	0	0	0	0	0	0
4/25/2024	6:45 PM	0	0	0	0	0	0	0	0	0	0	0	0	0
4/25/2024	7:00 PM	0	0	0	0	0	0	0	0	0	0	0	0	0
4/25/2024	7:15 PM	0	0	0	0	0	0	0	0	0	0	0	0	0
4/25/2024	7:30 PM	0	0	0	0	0	0	0	0	0	0	0	0	0
4/25/2024	7:45 PM	0	0	0	0	0	0	0	0	0	0	0	0	0
4/25/2024	8:00 PM	0	0	0	0	0	0	0	0	0	0	0	0	0
4/25/2024	8:15 PM	0	0	0	0	0	0	0	0	0	0	0	0	0
4/25/2024	8:30 PM	0	0	0	0	0	0	0	0	0	0	0	0	0
4/25/2024	8:45 PM	0	0	0	0	0	0	0	0	0	0	0	0	0
4/25/2024	9:00 PM	0	0	0	0	0	0	0	0	0	0	0	0	0
4/25/2024	9:15 PM	0	0	0	0	0	0	0	0	0	0	0	0	0
4/25/2024	9:30 PM	0	0	0	0	0	0	0	0	0	0	0	0	0
4/25/2024	9:45 PM	0	0	0	0	0	0	0	0	0	0	0	0	0
4/25/2024	10:00 PM	0	0	0	0	0	0	0	0	0	0	0	0	0
4/25/2024	10:15 PM	0	0	0	0	0	0	0	0	0	0	0	0	0
4/25/2024	10:30 PM	0	0	0	0	0	0	0	0	0	0	0	0	0
4/25/2024	10:45 PM	0	0	0	0	0	0	0	0	0	0	0	0	0
4/25/2024	11:00 PM	0	0	0	0	0	0	0	0	0	0	0	0	0
4/25/2024	11:15 PM	0	0	0	0	0	0	0	0	0	0	0	0	0
4/25/2024	11:30 PM	0	0	0	0	0	0	0	0	0	0	0	0	0
4/25/2024	11:45 PM	0	0	0	0	0	0	0	0	0	0	0	0	0

WB
File Name:
Start Date: 4/23/2024
Start Time: 0
Site Code: 30
Station ID: 1
Location 1: I-26 James F. Byrnes Expy On/Off-Ramp, west of Harbison Blvd
Location 2:

Date	Time	1	2	3	4	5	6	7	8	9	10	11	12	13
4/23/2024	12:00 AM	0	0	0	0	0	0	0	0	0	0	0	0	0
4/23/2024	12:15 AM	0	0	0	0	0	0	0	0	0	0	0	0	0
4/23/2024	12:30 AM	0	0	0	0	0	0	0	0	0	0	0	0	0
4/23/2024	12:45 AM	0	0	0	0	0	0	0	0	0	0	0	0	0
4/23/2024	1:00 AM	0	0	0	0	0	0	0	0	0	0	0	0	0
4/23/2024	1:15 AM	0	0	0	0	0	0	0	0	0	0	0	0	0
4/23/2024	1:30 AM	0	0	0	0	0	0	0	0	0	0	0	0	0
4/23/2024	1:45 AM	0	0	0	0	0	0	0	0	0	0	0	0	0
4/23/2024	2:00 AM	0	0	0	0	0	0	0	0	0	0	0	0	0
4/23/2024	2:15 AM	0	0	0	0	0	0	0	0	0	0	0	0	0
4/23/2024	2:30 AM	0	0	0	0	0	0	0	0	0	0	0	0	0
4/23/2024	2:45 AM	0	0	0	0	0	0	0	0	0	0	0	0	0
4/23/2024	3:00 AM	0	0	0	0	0	0	0	0	0	0	0	0	0
4/23/2024	3:15 AM	0	0	0	0	0	0	0	0	0	0	0	0	0
4/23/2024	3:30 AM	0	0	0	0	0	0	0	0	0	0	0	0	0
4/23/2024	3:45 AM	0	0	0	0	0	0	0	0	0	0	0	0	0
4/23/2024	4:00 AM	0	0	0	0	0	0	0	0	0	0	0	0	0
4/23/2024	4:15 AM	0	0	0	0	0	0	0	0	0	0	0	0	0
4/23/2024	4:30 AM	0	0	0	0	0	0	0	0	0	0	0	0	0
4/23/2024	4:45 AM	0	0	0	0	0	0	0	0	0	0	0	0	0
4/23/2024	5:00 AM	0	0	0	0	0	0	0	0	0	0	0	0	0
4/23/2024	5:15 AM	0	0	0	0	0	0	0	0	0	0	0	0	0
4/23/2024	5:30 AM	0	0	0	0	0	0	0	0	0	0	0	0	0
4/23/2024	5:45 AM	0	0	0	0	0	0	0	0	0	0	0	0	0
4/23/2024	6:00 AM	0	0	0	0	0	0	0	0	0	0	0	0	0
4/23/2024	6:15 AM	0	0	0	0	0	0	0	0	0	0	0	0	0
4/23/2024	6:30 AM	0	0	0	0	0	0	0	0	0	0	0	0	0
4/23/2024	6:45 AM	0	0	0	0	0	0	0	0	0	0	0	0	0
4/23/2024	7:00 AM	0	0	0	0	0	0	0	0	0	0	0	0	0
4/23/2024	7:15 AM	0	0	0	0	0	0	0	0	0	0	0	0	0
4/23/2024	7:30 AM	0	0	0	0	0	0	0	0	0	0	0	0	0
4/23/2024	7:45 AM	0	0	0	0	0	0	0	0	0	0	0	0	0
4/23/2024	8:00 AM	0	0	0	0	0	0	0	0	0	0	0	0	0
4/23/2024	8:15 AM	0	0	0	0	0	0	0	0	0	0	0	0	0
4/23/2024	8:30 AM	0	0	0	0	0	0	0	0	0	0	0	0	0
4/23/2024	8:45 AM	0	0	0	0	0	0	0	0	0	0	0	0	0
4/23/2024	9:00 AM	0	0	0	0	0	0	0	0	0	0	0	0	0
4/23/2024	9:15 AM	0	0	0	0	0	0	0	0	0	0	0	0	0
4/23/2024	9:30 AM	0	0	0	0	0	0	0	0	0	0	0	0	0
4/23/2024	9:45 AM	0	0	0	0	0	0	0	0	0	0	0	0	0
4/23/2024	10:00 AM	0	0	0	0	0	0	0	0	0	0	0	0	0
4/23/2024	10:15 AM	0	0	0	0	0	0	0	0	0	0	0	0	0
4/23/2024	10:30 AM	0	0	0	0	0	0	0	0	0	0	0	0	0
4/23/2024	10:45 AM	0	0	0	0	0	0	0	0	0	0	0	0	0
4/23/2024	11:00 AM	0	0	0	0	0	0	0	0	0	0	0	0	0
4/23/2024	11:15 AM	0	0	0	0	0	0	0	0	0	0	0	0	0
4/23/2024	11:30 AM	0	0	0	0	0	0	0	0	0	0	0	0	0
4/23/2024	11:45 AM	0	0	0	0	0	0	0	0	0	0	0	0	0
4/23/2024	12:00 PM	0	0	0	0	0	0	0	0	0	0	0	0	0
4/23/2024	12:15 PM	0	0	0	0	0	0	0	0	0	0	0	0	0
4/23/2024	12:30 PM	0	0	0	0	0	0	0	0	0	0	0	0	0
4/23/2024	12:45 PM	0	0	0	0	0	0	0	0	0	0	0	0	0
4/23/2024	1:00 PM	0	0	0	0	0	0	0	0	0	0	0	0	0
4/23/2024	1:15 PM	0	0	0	0	0	0	0	0	0	0	0	0	0
4/23/2024	1:30 PM	0	0	0	0	0	0	0	0	0	0	0	0	0
4/23/2024	1:45 PM	0	0	0	0	0	0	0	0	0	0	0	0	0
4/23/2024	2:00 PM	0	0	0	0	0	0	0	0	0	0	0	0	0
4/23/2024	2:15 PM	0	0	0	0	0	0	0	0	0	0	0	0	0
4/23/2024	2:30 PM	0	0	0	0	0	0	0	0	0	0	0	0	0
4/23/2024	2:45 PM	0	0	0	0	0	0	0	0	0	0	0	0	0
4/23/2024	3:00 PM	0	0	0	0	0	0	0	0	0	0	0	0	0
4/23/2024	3:15 PM	0	0	0	0	0	0	0	0	0	0	0	0	0
4/23/2024	3:30 PM	0	0	0	0	0	0	0	0	0	0	0	0	0
4/23/2024	3:45 PM	0	0	0	0	0	0	0	0	0	0	0	0	0
4/23/2024	4:00 PM	0	0	0	0	0	0	0	0	0	0	0	0	0
4/23/2024	4:15 PM	0	0	0	0	0	0	0	0	0	0	0	0	0
4/23/2024	4:30 PM	0	0	0	0	0	0	0	0	0	0	0	0	0
4/23/2024	4:45 PM	0	0	0	0	0	0	0	0	0	0	0	0	0
4/23/2024	5:00 PM	0	0	0	0	0	0	0	0	0	0	0	0	0
4/23/2024	5:15 PM	0	0	0	0	0	0	0	0	0	0	0	0	0
4/23/2024	5:30 PM	0	0	0	0	0	0	0	0	0	0	0	0	0
4/23/2024	5:45 PM	0	0	0	0	0	0	0	0	0	0	0	0	0
4/23/2024	6:00 PM	0	0	0	0	0	0	0	0	0	0	0	0	0
4/23/2024	6:15 PM	0	0	0	0	0	0	0	0	0	0	0	0	0
4/23/2024	6:30 PM	0	0	0	0	0	0	0	0	0	0	0	0	0
4/23/2024	6:45 PM	0	0	0	0	0	0	0	0	0	0	0	0	0
4/23/2024	7:00 PM	1	70	18	0	0	0	0	0	0	0	0	0	0
4/23/2024	7:15 PM	0	54	16	0	0	0	0	0	0	0	0	0	0
4/23/2024	7:30 PM	0	49	9	0	0	0	0	0	2	0	0	0	0
4/23/2024	7:45 PM	1	43	10	0	0	0	0	0	1	0	0	0	0
4/23/2024	8:00 PM	0	43	12	0	0	0	0	0	0	0	0	0	0
4/23/2024	8:15 PM	0	42	6	0	0	0	0	0	0	0	0	0	0
4/23/2024	8:30 PM	0	39	10	0	0	0	0	0	0	0	0	0	0
4/23/2024	8:45 PM	0	31	2	0	0	0	0	0	0	0	0	0	0
4/23/2024	9:00 PM	0	27	2	0	0	0	0	0	0	0	0	0	0
4/23/2024	9:15 PM	0	21	5	0	0	0	0	0	0	0	0	0	0
4/23/2024	9:30 PM	1	25	3	0	0	0	0	0	0	0	0	0	0
4/23/2024	9:45 PM	0	20	3	0	0	0	0	0	0	0	0	0	0
4/23/2024	10:00 PM	0	23	2	0	0	0	0	0	0	0	0	0	0
4/23/2024	10:15 PM	0	17	1	0	1	0	0	0	0	0	0	0	0
4/23/2024	10:30 PM	1	11	1	0	0	0	0	0	0	0	0	0	0
4/23/2024	10:45 PM	0	11	0	0	0	0	0	0	0	0	0	0	0
4/23/2024	11:00 PM	0	7	3	0	0	0	0	0	0	0	0	0	0
4/23/2024	11:15 PM	0	12	1	0	0	0	0	0	0	0	0	0	0
4/23/2024	11:30 PM	0	3	1	0	0	0	0	0	0	0	0	0	0
4/23/2024	11:45 PM	0	5	0	0	0	0	0	0	0	0	0	0	0

4/24/2024	12:00 AM	0	6	0	0	0	0	0	0	0	0	0	0	0
4/24/2024	12:15 AM	0	2	0	0	0	0	0	0	0	0	0	0	0
4/24/2024	12:30 AM	0	3	0	0	0	0	0	0	0	0	0	0	0
4/24/2024	12:45 AM	0	2	2	0	0	0	0	0	0	0	0	0	0
4/24/2024	1:00 AM	0	2	0	0	0	0	0	0	0	0	0	0	0
4/24/2024	1:15 AM	0	1	1	0	0	0	0	0	1	0	0	0	0
4/24/2024	1:30 AM	0	1	0	0	0	0	0	0	0	0	0	0	0
4/24/2024	1:45 AM	0	4	0	0	0	0	0	0	0	0	0	0	0
4/24/2024	2:00 AM	0	2	0	0	0	0	0	0	0	0	0	0	0
4/24/2024	2:15 AM	0	0	0	0	0	0	0	0	0	0	0	0	0
4/24/2024	2:30 AM	0	0	1	0	0	0	0	0	0	0	0	0	0
4/24/2024	2:45 AM	0	0	0	0	0	0	0	0	0	0	0	0	0
4/24/2024	3:00 AM	0	1	0	0	0	1	0	0	0	0	0	0	0
4/24/2024	3:15 AM	0	1	0	0	0	0	0	0	1	0	0	0	0
4/24/2024	3:30 AM	0	2	0	0	0	0	0	0	0	0	0	0	0
4/24/2024	3:45 AM	0	2	0	0	0	1	0	0	0	0	0	0	0
4/24/2024	4:00 AM	0	2	0	0	0	0	0	0	0	0	0	0	0
4/24/2024	4:15 AM	0	0	0	0	0	0	0	0	0	0	0	0	0
4/24/2024	4:30 AM	0	1	0	0	0	0	0	0	0	0	0	0	0
4/24/2024	4:45 AM	0	0	0	0	0	0	0	0	0	0	0	0	0
4/24/2024	5:00 AM	0	0	0	0	0	0	0	0	2	0	0	0	0
4/24/2024	5:15 AM	0	5	0	0	0	0	0	0	0	0	0	0	0
4/24/2024	5:30 AM	0	7	2	0	1	0	0	0	0	0	0	0	0
4/24/2024	5:45 AM	0	3	1	0	0	0	0	0	0	0	0	0	0
4/24/2024	6:00 AM	0	9	3	0	1	0	0	0	1	0	0	0	0
4/24/2024	6:15 AM	0	18	1	0	0	0	0	0	1	0	0	0	0
4/24/2024	6:30 AM	0	14	1	0	0	0	0	0	0	0	0	0	0
4/24/2024	6:45 AM	0	13	5	0	0	0	0	0	1	0	0	0	0
4/24/2024	7:00 AM	0	14	6	0	0	0	0	0	1	0	0	0	0
4/24/2024	7:15 AM	0	19	11	0	0	0	0	0	1	0	0	0	0
4/24/2024	7:30 AM	0	29	8	0	0	0	0	0	0	0	0	0	0
4/24/2024	7:45 AM	0	33	8	0	1	0	0	0	1	0	0	0	0
4/24/2024	8:00 AM	0	27	10	0	2	0	0	0	0	0	0	0	0
4/24/2024	8:15 AM	0	22	7	0	0	0	0	0	1	0	0	0	0
4/24/2024	8:30 AM	0	21	18	0	0	0	0	0	0	0	0	0	0
4/24/2024	8:45 AM	0	38	14	0	0	0	0	0	0	0	0	0	0
4/24/2024	9:00 AM	0	27	16	0	1	0	0	0	0	0	0	0	0
4/24/2024	9:15 AM	0	41	19	0	0	0	0	0	1	0	0	0	0
4/24/2024	9:30 AM	0	28	16	0	2	0	0	0	0	0	0	0	0
4/24/2024	9:45 AM	0	37	10	0	0	0	0	0	0	0	0	0	0
4/24/2024	10:00 AM	0	28	14	0	2	0	0	0	0	0	0	0	0
4/24/2024	10:15 AM	0	29	10	0	1	0	0	0	0	0	0	0	0
4/24/2024	10:30 AM	0	46	23	0	0	0	0	0	2	0	0	0	0
4/24/2024	10:45 AM	0	44	11	0	2	0	0	0	1	0	0	0	0
4/24/2024	11:00 AM	0	27	13	0	0	0	0	0	0	0	0	0	0
4/24/2024	11:15 AM	0	53	21	0	1	0	0	0	1	0	0	0	0
4/24/2024	11:30 AM	0	47	21	1	0	0	0	0	0	0	0	0	0
4/24/2024	11:45 AM	0	52	23	0	0	0	0	0	0	0	0	0	0
4/24/2024	12:00 PM	0	60	18	0	0	0	0	0	0	0	0	0	0
4/24/2024	12:15 PM	0	57	22	0	0	0	0	0	1	0	0	0	0
4/24/2024	12:30 PM	0	67	21	0	0	0	0	0	0	0	0	0	0
4/24/2024	12:45 PM	0	65	18	0	1	0	0	0	1	0	0	0	0
4/24/2024	1:00 PM	0	66	22	0	1	0	0	0	0	0	0	0	0
4/24/2024	1:15 PM	0	83	28	1	0	0	0	0	0	0	0	0	0
4/24/2024	1:30 PM	0	81	21	0	1	0	0	0	0	0	0	0	0
4/24/2024	1:45 PM	0	59	18	0	1	0	0	0	1	0	0	0	0
4/24/2024	2:00 PM	0	70	24	1	0	0	0	0	0	0	0	0	0
4/24/2024	2:15 PM	0	66	24	0	3	0	0	0	1	0	0	0	0
4/24/2024	2:30 PM	0	69	20	0	0	0	0	0	0	0	0	0	0
4/24/2024	2:45 PM	0	67	13	0	0	0	0	0	0	0	0	0	0
4/24/2024	3:00 PM	0	69	13	4	1	0	0	0	0	0	0	0	0
4/24/2024	3:15 PM	0	65	18	0	0	0	0	0	1	0	0	0	0
4/24/2024	3:30 PM	0	76	25	0	0	0	0	0	0	0	0	0	0
4/24/2024	3:45 PM	0	76	21	0	0	0	0	0	0	0	0	0	0
4/24/2024	4:00 PM	0	87	31	0	1	0	0	0	1	0	0	0	0
4/24/2024	4:15 PM	0	80	24	0	1	0	0	0	0	0	0	0	0
4/24/2024	4:30 PM	0	73	23	0	0	0	0	0	0	0	0	0	0
4/24/2024	4:45 PM	0	83	19	0	0	0	0	0	1	0	0	0	0
4/24/2024	5:00 PM	1	90	23	0	1	0	0	0	0	0	0	0	0
4/24/2024	5:15 PM	0	82	19	0	0	0	0	0	0	0	0	0	0
4/24/2024	5:30 PM	0	78	17	0	0	0	0	0	0	0	0	0	0
4/24/2024	5:45 PM	0	80	17	0	0	0	0	0	0	0	0	0	0
4/24/2024	6:00 PM	0	69	13	0	0	0	0	0	0	0	0	0	0
4/24/2024	6:15 PM	0	63	17	0	0	0	0	0	0	0	0	0	0
4/24/2024	6:30 PM	0	54	22	0	0	0	0	0	0	0	0	0	0
4/24/2024	6:45 PM	0	81	19	0	0	0	0	0	1	0	0	0	0
4/24/2024	7:00 PM	0	51	12	0	0	0	0	0	0	0	0	0	0
4/24/2024	7:15 PM	0	53	14	0	1	0	0	0	0	0	0	0	0
4/24/2024	7:30 PM	0	62	12	0	0	0	0	0	0	0	0	0	0
4/24/2024	7:45 PM	0	39	8	1	0	0	0	0	0	0	0	0	0
4/24/2024	8:00 PM	2	68	11	0	0	0	0	0	0	0	0	0	0
4/24/2024	8:15 PM	0	47	10	0	0	0	0	0	0	0	0	0	0
4/24/2024	8:30 PM	0	39	4	0	0	0	0	0	0	0	0	0	0
4/24/2024	8:45 PM	0	43	8	0	0	0	0	0	0	0	0	0	0
4/24/2024	9:00 PM	0	30	7	0	1	0	0	0	0	0	0	0	0
4/24/2024	9:15 PM	0	34	2	0	0	0	0	0	0	0	0	0	0
4/24/2024	9:30 PM	0	22	2	0	0	0	0	0	0	0	0	0	0
4/24/2024	9:45 PM	0	24	2	0	0	0	0	0	0	0	0	0	0
4/24/2024	10:00 PM	0	22	2	0	0	0	0	0	0	0	0	0	0
4/24/2024	10:15 PM	0	14	0	0	0	0	0	0	0	0	0	0	0
4/24/2024	10:30 PM	0	10	3	0	0	0	0	0	0	0	0	0	0
4/24/2024	10:45 PM	0	14	0	0	0	0	0	0	0	0	0	0	0
4/24/2024	11:00 PM	0	17	0	0	0	0	0	0	0	0	0	0	0
4/24/2024	11:15 PM	0	8	0	0	1	0	0	0	0	0	0	0	0
4/24/2024	11:30 PM	0	2	0	0	0	0	0	0	0	0	0	0	0
4/24/2024	11:45 PM	0	6	1	0	0	0	0	0	0	0	0	0	0

4/25/2024	12:00 AM	0	7	0	0	0	0	0	0	0	0	0	0	0
4/25/2024	12:15 AM	0	5	0	0	0	0	0	0	1	0	0	0	0
4/25/2024	12:30 AM	0	2	0	0	0	0	0	0	0	0	0	0	0
4/25/2024	12:45 AM	0	2	0	0	0	0	0	0	0	0	0	0	0
4/25/2024	1:00 AM	0	2	0	0	0	0	0	0	0	0	0	0	0
4/25/2024	1:15 AM	0	1	0	0	0	0	0	0	0	0	0	0	0
4/25/2024	1:30 AM	0	2	0	0	0	0	0	0	0	0	0	0	0
4/25/2024	1:45 AM	0	0	0	0	0	0	0	0	0	0	0	0	0
4/25/2024	2:00 AM	0	3	0	0	0	0	0	0	0	0	0	0	0
4/25/2024	2:15 AM	0	1	0	0	0	0	0	0	0	0	0	0	0
4/25/2024	2:30 AM	0	1	0	0	0	0	0	0	0	0	0	0	0
4/25/2024	2:45 AM	0	0	0	0	0	0	0	0	0	0	0	0	0
4/25/2024	3:00 AM	0	1	0	0	0	0	0	0	0	0	0	0	0
4/25/2024	3:15 AM	0	1	0	0	0	0	0	0	0	0	0	0	0
4/25/2024	3:30 AM	0	2	0	0	0	0	0	0	1	0	0	0	0
4/25/2024	3:45 AM	0	1	0	0	0	0	0	0	0	0	0	0	0
4/25/2024	4:00 AM	0	1	0	0	0	1	0	0	0	0	0	0	0
4/25/2024	4:15 AM	0	0	0	0	0	0	0	0	1	0	0	0	0
4/25/2024	4:30 AM	0	0	0	0	0	0	0	0	0	0	0	0	0
4/25/2024	4:45 AM	0	3	0	0	0	0	0	1	0	0	0	0	0
4/25/2024	5:00 AM	0	0	0	0	0	0	0	0	0	0	0	0	0
4/25/2024	5:15 AM	0	6	0	0	0	0	0	0	0	0	0	0	0
4/25/2024	5:30 AM	0	5	2	0	0	0	0	0	0	0	0	0	0
4/25/2024	5:45 AM	0	3	1	0	0	0	0	0	0	0	0	0	0
4/25/2024	6:00 AM	0	7	7	0	0	0	0	0	2	0	0	0	0
4/25/2024	6:15 AM	0	7	5	0	0	0	0	0	0	0	0	0	0
4/25/2024	6:30 AM	0	11	4	0	0	0	0	0	0	0	0	0	0
4/25/2024	6:45 AM	0	13	4	0	0	0	0	0	1	0	0	0	0
4/25/2024	7:00 AM	0	20	8	0	0	0	0	0	0	0	0	0	0
4/25/2024	7:15 AM	0	27	5	0	0	0	0	0	0	0	0	0	0
4/25/2024	7:30 AM	0	29	5	0	0	0	0	0	0	0	0	0	0
4/25/2024	7:45 AM	0	27	9	0	1	0	0	0	1	0	0	0	0
4/25/2024	8:00 AM	0	28	13	0	3	0	0	0	0	0	0	0	0
4/25/2024	8:15 AM	0	32	11	0	1	0	0	0	1	0	0	0	0
4/25/2024	8:30 AM	0	29	14	0	1	0	0	0	0	0	0	0	0
4/25/2024	8:45 AM	0	28	15	0	0	0	0	0	1	0	0	0	0
4/25/2024	9:00 AM	0	20	11	0	1	0	0	0	0	0	0	0	0
4/25/2024	9:15 AM	0	32	18	0	0	0	0	0	0	0	0	0	0
4/25/2024	9:30 AM	1	33	15	0	2	0	0	0	0	0	0	0	0
4/25/2024	9:45 AM	0	37	18	0	0	0	0	0	0	0	0	0	0
4/25/2024	10:00 AM	1	32	16	0	0	0	0	0	0	0	0	0	0
4/25/2024	10:15 AM	0	44	18	0	0	0	0	0	0	0	0	0	0
4/25/2024	10:30 AM	0	53	22	0	2	1	0	0	1	0	0	0	0
4/25/2024	10:45 AM	0	48	33	0	0	0	0	0	0	0	0	0	0
4/25/2024	11:00 AM	0	71	17	0	0	0	0	0	0	0	0	0	0
4/25/2024	11:15 AM	0	55	27	1	0	0	0	0	0	0	0	0	0
4/25/2024	11:30 AM	0	67	25	0	0	0	0	1	1	0	0	0	0
4/25/2024	11:45 AM	1	55	24	0	1	0	0	1	0	0	0	0	0
4/25/2024	12:00 PM	0	60	30	0	0	0	0	0	0	0	0	0	0
4/25/2024	12:15 PM	0	63	18	0	0	0	0	0	0	0	0	0	0
4/25/2024	12:30 PM	0	62	29	0	1	0	0	0	1	0	0	0	0
4/25/2024	12:45 PM	0	70	28	0	1	0	0	0	0	0	0	0	0
4/25/2024	1:00 PM	0	61	14	0	0	0	0	0	2	0	0	0	0
4/25/2024	1:15 PM	0	65	26	0	2	0	0	0	0	0	0	0	0
4/25/2024	1:30 PM	0	78	17	1	1	0	0	0	2	0	0	0	0
4/25/2024	1:45 PM	0	81	23	0	0	0	0	0	0	0	0	0	0
4/25/2024	2:00 PM	0	71	28	0	2	0	0	0	0	0	0	0	0
4/25/2024	2:15 PM	0	87	32	0	0	0	0	0	0	0	0	0	0
4/25/2024	2:30 PM	0	69	23	0	0	0	0	0	0	0	0	0	0
4/25/2024	2:45 PM	0	61	21	0	2	0	0	0	0	0	0	0	0
4/25/2024	3:00 PM	0	87	18	0	0	0	0	0	0	0	0	0	0
4/25/2024	3:15 PM	0	72	22	0	0	0	0	0	0	0	0	0	0
4/25/2024	3:30 PM	0	74	16	0	0	0	0	0	0	0	0	0	0
4/25/2024	3:45 PM	0	87	22	0	0	0	0	0	1	0	0	0	0
4/25/2024	4:00 PM	0	71	17	0	0	1	0	1	0	0	0	0	0
4/25/2024	4:15 PM	0	76	23	0	0	0	0	0	0	0	0	0	0
4/25/2024	4:30 PM	0	91	19	0	0	0	0	1	2	0	0	0	0
4/25/2024	4:45 PM	2	67	16	0	0	0	0	0	0	0	0	0	0
4/25/2024	5:00 PM	1	77	22	0	0	0	0	0	0	0	0	0	0
4/25/2024	5:15 PM	0	94	19	0	0	0	0	0	0	0	0	0	0
4/25/2024	5:30 PM	0	69	13	0	0	0	0	0	0	0	0	0	0
4/25/2024	5:45 PM	0	72	15	0	1	0	0	0	0	0	0	0	0
4/25/2024	6:00 PM	0	68	17	0	0	0	0	0	0	0	0	0	0
4/25/2024	6:15 PM	1	63	10	0	0	0	0	0	1	0	0	0	0
4/25/2024	6:30 PM	0	65	9	0	0	0	0	0	0	0	0	0	0
4/25/2024	6:45 PM	0	66	14	0	1	0	0	0	0	0	0	0	0
4/25/2024	7:00 PM	0	0	0	0	0	0	0	0	0	0	0	0	0
4/25/2024	7:15 PM	0	0	0	0	0	0	0	0	0	0	0	0	0
4/25/2024	7:30 PM	0	0	0	0	0	0	0	0	0	0	0	0	0
4/25/2024	7:45 PM	0	0	0	0	0	0	0	0	0	0	0	0	0
4/25/2024	8:00 PM	0	0	0	0	0	0	0	0	0	0	0	0	0
4/25/2024	8:15 PM	0	0	0	0	0	0	0	0	0	0	0	0	0
4/25/2024	8:30 PM	0	0	0	0	0	0	0	0	0	0	0	0	0
4/25/2024	8:45 PM	0	0	0	0	0	0	0	0	0	0	0	0	0
4/25/2024	9:00 PM	0	0	0	0	0	0	0	0	0	0	0	0	0
4/25/2024	9:15 PM	0	0	0	0	0	0	0	0	0	0	0	0	0
4/25/2024	9:30 PM	0	0	0	0	0	0	0	0	0	0	0	0	0
4/25/2024	9:45 PM	0	0	0	0	0	0	0	0	0	0	0	0	0
4/25/2024	10:00 PM	0	0	0	0	0	0	0	0	0	0	0	0	0
4/25/2024	10:15 PM	0	0	0	0	0	0	0	0	0	0	0	0	0
4/25/2024	10:30 PM	0	0	0	0	0	0	0	0	0	0	0	0	0
4/25/2024	10:45 PM	0	0	0	0	0	0	0	0	0	0	0	0	0
4/25/2024	11:00 PM	0	0	0	0	0	0	0	0	0	0	0	0	0
4/25/2024	11:15 PM	0	0	0	0	0	0	0	0	0	0	0	0	0
4/25/2024	11:30 PM	0	0	0	0	0	0	0	0	0	0	0	0	0
4/25/2024	11:45 PM	0	0	0	0	0	0	0	0	0	0	0	0	0

EB
File Name:
Start Date: 4/23/2024
Start Time: 0
Site Code: 30
Station ID: 1
Location 1: I-26 James F. Byrnes Expy On/Off-Ramp, west of Harbison Blvd
Location 2:

Date	Time	1	2	3	4	5	6	7	8	9	10	11	12	13
4/23/2024	12:00 AM	0	0	0	0	0	0	0	0	0	0	0	0	0
4/23/2024	12:15 AM	0	0	0	0	0	0	0	0	0	0	0	0	0
4/23/2024	12:30 AM	0	0	0	0	0	0	0	0	0	0	0	0	0
4/23/2024	12:45 AM	0	0	0	0	0	0	0	0	0	0	0	0	0
4/23/2024	1:00 AM	0	0	0	0	0	0	0	0	0	0	0	0	0
4/23/2024	1:15 AM	0	0	0	0	0	0	0	0	0	0	0	0	0
4/23/2024	1:30 AM	0	0	0	0	0	0	0	0	0	0	0	0	0
4/23/2024	1:45 AM	0	0	0	0	0	0	0	0	0	0	0	0	0
4/23/2024	2:00 AM	0	0	0	0	0	0	0	0	0	0	0	0	0
4/23/2024	2:15 AM	0	0	0	0	0	0	0	0	0	0	0	0	0
4/23/2024	2:30 AM	0	0	0	0	0	0	0	0	0	0	0	0	0
4/23/2024	2:45 AM	0	0	0	0	0	0	0	0	0	0	0	0	0
4/23/2024	3:00 AM	0	0	0	0	0	0	0	0	0	0	0	0	0
4/23/2024	3:15 AM	0	0	0	0	0	0	0	0	0	0	0	0	0
4/23/2024	3:30 AM	0	0	0	0	0	0	0	0	0	0	0	0	0
4/23/2024	3:45 AM	0	0	0	0	0	0	0	0	0	0	0	0	0
4/23/2024	4:00 AM	0	0	0	0	0	0	0	0	0	0	0	0	0
4/23/2024	4:15 AM	0	0	0	0	0	0	0	0	0	0	0	0	0
4/23/2024	4:30 AM	0	0	0	0	0	0	0	0	0	0	0	0	0
4/23/2024	4:45 AM	0	0	0	0	0	0	0	0	0	0	0	0	0
4/23/2024	5:00 AM	0	0	0	0	0	0	0	0	0	0	0	0	0
4/23/2024	5:15 AM	0	0	0	0	0	0	0	0	0	0	0	0	0
4/23/2024	5:30 AM	0	0	0	0	0	0	0	0	0	0	0	0	0
4/23/2024	5:45 AM	0	0	0	0	0	0	0	0	0	0	0	0	0
4/23/2024	6:00 AM	0	0	0	0	0	0	0	0	0	0	0	0	0
4/23/2024	6:15 AM	0	0	0	0	0	0	0	0	0	0	0	0	0
4/23/2024	6:30 AM	0	0	0	0	0	0	0	0	0	0	0	0	0
4/23/2024	6:45 AM	0	0	0	0	0	0	0	0	0	0	0	0	0
4/23/2024	7:00 AM	0	0	0	0	0	0	0	0	0	0	0	0	0
4/23/2024	7:15 AM	0	0	0	0	0	0	0	0	0	0	0	0	0
4/23/2024	7:30 AM	0	0	0	0	0	0	0	0	0	0	0	0	0
4/23/2024	7:45 AM	0	0	0	0	0	0	0	0	0	0	0	0	0
4/23/2024	8:00 AM	0	0	0	0	0	0	0	0	0	0	0	0	0
4/23/2024	8:15 AM	0	0	0	0	0	0	0	0	0	0	0	0	0
4/23/2024	8:30 AM	0	0	0	0	0	0	0	0	0	0	0	0	0
4/23/2024	8:45 AM	0	0	0	0	0	0	0	0	0	0	0	0	0
4/23/2024	9:00 AM	0	0	0	0	0	0	0	0	0	0	0	0	0
4/23/2024	9:15 AM	0	0	0	0	0	0	0	0	0	0	0	0	0
4/23/2024	9:30 AM	0	0	0	0	0	0	0	0	0	0	0	0	0
4/23/2024	9:45 AM	0	0	0	0	0	0	0	0	0	0	0	0	0
4/23/2024	10:00 AM	0	0	0	0	0	0	0	0	0	0	0	0	0
4/23/2024	10:15 AM	0	0	0	0	0	0	0	0	0	0	0	0	0
4/23/2024	10:30 AM	0	0	0	0	0	0	0	0	0	0	0	0	0
4/23/2024	10:45 AM	0	0	0	0	0	0	0	0	0	0	0	0	0
4/23/2024	11:00 AM	0	0	0	0	0	0	0	0	0	0	0	0	0
4/23/2024	11:15 AM	0	0	0	0	0	0	0	0	0	0	0	0	0
4/23/2024	11:30 AM	0	0	0	0	0	0	0	0	0	0	0	0	0
4/23/2024	11:45 AM	0	0	0	0	0	0	0	0	0	0	0	0	0
4/23/2024	12:00 PM	0	0	0	0	0	0	0	0	0	0	0	0	0
4/23/2024	12:15 PM	0	0	0	0	0	0	0	0	0	0	0	0	0
4/23/2024	12:30 PM	0	0	0	0	0	0	0	0	0	0	0	0	0
4/23/2024	12:45 PM	0	0	0	0	0	0	0	0	0	0	0	0	0
4/23/2024	1:00 PM	0	0	0	0	0	0	0	0	0	0	0	0	0
4/23/2024	1:15 PM	0	0	0	0	0	0	0	0	0	0	0	0	0
4/23/2024	1:30 PM	0	0	0	0	0	0	0	0	0	0	0	0	0
4/23/2024	1:45 PM	0	0	0	0	0	0	0	0	0	0	0	0	0
4/23/2024	2:00 PM	0	0	0	0	0	0	0	0	0	0	0	0	0
4/23/2024	2:15 PM	0	0	0	0	0	0	0	0	0	0	0	0	0
4/23/2024	2:30 PM	0	0	0	0	0	0	0	0	0	0	0	0	0
4/23/2024	2:45 PM	0	0	0	0	0	0	0	0	0	0	0	0	0
4/23/2024	3:00 PM	0	0	0	0	0	0	0	0	0	0	0	0	0
4/23/2024	3:15 PM	0	0	0	0	0	0	0	0	0	0	0	0	0
4/23/2024	3:30 PM	0	0	0	0	0	0	0	0	0	0	0	0	0
4/23/2024	3:45 PM	0	0	0	0	0	0	0	0	0	0	0	0	0
4/23/2024	4:00 PM	0	0	0	0	0	0	0	0	0	0	0	0	0
4/23/2024	4:15 PM	0	0	0	0	0	0	0	0	0	0	0	0	0
4/23/2024	4:30 PM	0	0	0	0	0	0	0	0	0	0	0	0	0
4/23/2024	4:45 PM	0	0	0	0	0	0	0	0	0	0	0	0	0
4/23/2024	5:00 PM	0	0	0	0	0	0	0	0	0	0	0	0	0
4/23/2024	5:15 PM	0	0	0	0	0	0	0	0	0	0	0	0	0
4/23/2024	5:30 PM	0	0	0	0	0	0	0	0	0	0	0	0	0
4/23/2024	5:45 PM	0	0	0	0	0	0	0	0	0	0	0	0	0
4/23/2024	6:00 PM	0	0	0	0	0	0	0	0	0	0	0	0	0
4/23/2024	6:15 PM	0	0	0	0	0	0	0	0	0	0	0	0	0
4/23/2024	6:30 PM	0	0	0	0	0	0	0	0	0	0	0	0	0
4/23/2024	6:45 PM	0	0	0	0	0	0	0	0	0	0	0	0	0
4/23/2024	7:00 PM	0	0	0	0	0	0	0	0	0	0	0	0	0
4/23/2024	7:15 PM	0	0	0	0	0	0	0	0	0	0	0	0	0
4/23/2024	7:30 PM	0	0	0	0	0	0	0	0	0	0	0	0	0
4/23/2024	7:45 PM	0	0	0	0	0	0	0	0	0	0	0	0	0
4/23/2024	8:00 PM	0	0	0	0	0	0	0	0	0	0	0	0	0
4/23/2024	8:15 PM	0	0	0	0	0	0	0	0	0	0	0	0	0
4/23/2024	8:30 PM	0	0	0	0	0	0	0	0	0	0	0	0	0
4/23/2024	8:45 PM	0	0	0	0	0	0	0	0	0	0	0	0	0
4/23/2024	9:00 PM	0	0	0	0	0	0	0	0	0	0	0	0	0
4/23/2024	9:15 PM	0	0	0	0	0	0	0	0	0	0	0	0	0
4/23/2024	9:30 PM	0	0	0	0	0	0	0	0	0	0	0	0	0
4/23/2024	9:45 PM	0	0	0	0	0	0	0	0	0	0	0	0	0
4/23/2024	10:00 PM	0	0	0	0	0	0	0	0	0	0	0	0	0
4/23/2024	10:15 PM	0	0	0	0	0	0	0	0	0	0	0	0	0
4/23/2024	10:30 PM	0	0	0	0	0	0	0	0	0	0	0	0	0
4/23/2024	10:45 PM	0	0	0	0	0	0	0	0	0	0	0	0	0
4/23/2024	11:00 PM	0	0	0	0	0	0	0	0	0	0	0	0	0
4/23/2024	11:15 PM	0	0	0	0	0	0	0	0	0	0	0	0	0
4/23/2024	11:30 PM	0	0	0	0	0	0	0	0	0	0	0	0	0
4/23/2024	11:45 PM	0	0	0	0	0	0	0	0	0	0	0	0	0

4/24/2024	12:00 AM	0	0	0	0	0	0	0	0	0	0	0	0	0
4/24/2024	12:15 AM	0	0	0	0	0	0	0	0	0	0	0	0	0
4/24/2024	12:30 AM	0	0	0	0	0	0	0	0	0	0	0	0	0
4/24/2024	12:45 AM	0	0	0	0	0	0	0	0	0	0	0	0	0
4/24/2024	1:00 AM	0	0	0	0	0	0	0	0	0	0	0	0	0
4/24/2024	1:15 AM	0	0	0	0	0	0	0	0	0	0	0	0	0
4/24/2024	1:30 AM	0	0	0	0	0	0	0	0	0	0	0	0	0
4/24/2024	1:45 AM	0	0	0	0	0	0	0	0	0	0	0	0	0
4/24/2024	2:00 AM	0	0	0	0	0	0	0	0	0	0	0	0	0
4/24/2024	2:15 AM	0	0	0	0	0	0	0	0	0	0	0	0	0
4/24/2024	2:30 AM	0	0	0	0	0	0	0	0	0	0	0	0	0
4/24/2024	2:45 AM	0	0	0	0	0	0	0	0	0	0	0	0	0
4/24/2024	3:00 AM	0	0	0	0	0	0	0	0	0	0	0	0	0
4/24/2024	3:15 AM	0	0	0	0	0	0	0	0	0	0	0	0	0
4/24/2024	3:30 AM	0	0	0	0	0	0	0	0	0	0	0	0	0
4/24/2024	3:45 AM	0	0	0	0	0	0	0	0	0	0	0	0	0
4/24/2024	4:00 AM	0	0	0	0	0	0	0	0	0	0	0	0	0
4/24/2024	4:15 AM	0	0	0	0	0	0	0	0	0	0	0	0	0
4/24/2024	4:30 AM	0	0	0	0	0	0	0	0	0	0	0	0	0
4/24/2024	4:45 AM	0	0	0	0	0	0	0	0	0	0	0	0	0
4/24/2024	5:00 AM	0	0	0	0	0	0	0	0	0	0	0	0	0
4/24/2024	5:15 AM	0	0	0	0	0	0	0	0	0	0	0	0	0
4/24/2024	5:30 AM	0	0	0	0	0	0	0	0	0	0	0	0	0
4/24/2024	5:45 AM	0	0	0	0	0	0	0	0	0	0	0	0	0
4/24/2024	6:00 AM	0	0	0	0	0	0	0	0	0	0	0	0	0
4/24/2024	6:15 AM	0	0	0	0	0	0	0	0	0	0	0	0	0
4/24/2024	6:30 AM	0	0	0	0	0	0	0	0	0	0	0	0	0
4/24/2024	6:45 AM	0	0	0	0	0	0	0	0	0	0	0	0	0
4/24/2024	7:00 AM	0	0	0	0	0	0	0	0	0	0	0	0	0
4/24/2024	7:15 AM	0	0	0	0	0	0	0	0	0	0	0	0	0
4/24/2024	7:30 AM	0	0	0	0	0	0	0	0	0	0	0	0	0
4/24/2024	7:45 AM	0	0	0	0	0	0	0	0	0	0	0	0	0
4/24/2024	8:00 AM	0	0	0	0	0	0	0	0	0	0	0	0	0
4/24/2024	8:15 AM	0	0	0	0	0	0	0	0	0	0	0	0	0
4/24/2024	8:30 AM	0	0	0	0	0	0	0	0	0	0	0	0	0
4/24/2024	8:45 AM	0	0	0	0	0	0	0	0	0	0	0	0	0
4/24/2024	9:00 AM	0	0	0	0	0	0	0	0	0	0	0	0	0
4/24/2024	9:15 AM	0	0	0	0	0	0	0	0	0	0	0	0	0
4/24/2024	9:30 AM	0	0	0	0	0	0	0	0	0	0	0	0	0
4/24/2024	9:45 AM	0	0	0	0	0	0	0	0	0	0	0	0	0
4/24/2024	10:00 AM	0	0	0	0	0	0	0	0	0	0	0	0	0
4/24/2024	10:15 AM	0	0	0	0	0	0	0	0	0	0	0	0	0
4/24/2024	10:30 AM	0	0	0	0	0	0	0	0	0	0	0	0	0
4/24/2024	10:45 AM	0	0	0	0	0	0	0	0	0	0	0	0	0
4/24/2024	11:00 AM	0	0	0	0	0	0	0	0	0	0	0	0	0
4/24/2024	11:15 AM	0	0	0	0	0	0	0	0	0	0	0	0	0
4/24/2024	11:30 AM	0	0	0	0	0	0	0	0	0	0	0	0	0
4/24/2024	11:45 AM	0	0	0	0	0	0	0	0	0	0	0	0	0
4/24/2024	12:00 PM	0	0	0	0	0	0	0	0	0	0	0	0	0
4/24/2024	12:15 PM	0	0	0	0	0	0	0	0	0	0	0	0	0
4/24/2024	12:30 PM	0	0	0	0	0	0	0	0	0	0	0	0	0
4/24/2024	12:45 PM	0	0	0	0	0	0	0	0	0	0	0	0	0
4/24/2024	1:00 PM	0	0	0	0	0	0	0	0	0	0	0	0	0
4/24/2024	1:15 PM	0	0	0	0	0	0	0	0	0	0	0	0	0
4/24/2024	1:30 PM	0	0	0	0	0	0	0	0	0	0	0	0	0
4/24/2024	1:45 PM	0	0	0	0	0	0	0	0	0	0	0	0	0
4/24/2024	2:00 PM	0	0	0	0	0	0	0	0	0	0	0	0	0
4/24/2024	2:15 PM	0	0	0	0	0	0	0	0	0	0	0	0	0
4/24/2024	2:30 PM	0	0	0	0	0	0	0	0	0	0	0	0	0
4/24/2024	2:45 PM	0	0	0	0	0	0	0	0	0	0	0	0	0
4/24/2024	3:00 PM	0	0	0	0	0	0	0	0	0	0	0	0	0
4/24/2024	3:15 PM	0	0	0	0	0	0	0	0	0	0	0	0	0
4/24/2024	3:30 PM	0	0	0	0	0	0	0	0	0	0	0	0	0
4/24/2024	3:45 PM	0	0	0	0	0	0	0	0	0	0	0	0	0
4/24/2024	4:00 PM	0	0	0	0	0	0	0	0	0	0	0	0	0
4/24/2024	4:15 PM	0	0	0	0	0	0	0	0	0	0	0	0	0
4/24/2024	4:30 PM	0	0	0	0	0	0	0	0	0	0	0	0	0
4/24/2024	4:45 PM	0	0	0	0	0	0	0	0	0	0	0	0	0
4/24/2024	5:00 PM	0	0	0	0	0	0	0	0	0	0	0	0	0
4/24/2024	5:15 PM	0	0	0	0	0	0	0	0	0	0	0	0	0
4/24/2024	5:30 PM	0	0	0	0	0	0	0	0	0	0	0	0	0
4/24/2024	5:45 PM	0	0	0	0	0	0	0	0	0	0	0	0	0
4/24/2024	6:00 PM	0	0	0	0	0	0	0	0	0	0	0	0	0
4/24/2024	6:15 PM	0	0	0	0	0	0	0	0	0	0	0	0	0
4/24/2024	6:30 PM	0	0	0	0	0	0	0	0	0	0	0	0	0
4/24/2024	6:45 PM	0	0	0	0	0	0	0	0	0	0	0	0	0
4/24/2024	7:00 PM	0	0	0	0	0	0	0	0	0	0	0	0	0
4/24/2024	7:15 PM	0	0	0	0	0	0	0	0	0	0	0	0	0
4/24/2024	7:30 PM	0	0	0	0	0	0	0	0	0	0	0	0	0
4/24/2024	7:45 PM	0	0	0	0	0	0	0	0	0	0	0	0	0
4/24/2024	8:00 PM	0	0	0	0	0	0	0	0	0	0	0	0	0
4/24/2024	8:15 PM	0	0	0	0	0	0	0	0	0	0	0	0	0
4/24/2024	8:30 PM	0	0	0	0	0	0	0	0	0	0	0	0	0
4/24/2024	8:45 PM	0	0	0	0	0	0	0	0	0	0	0	0	0
4/24/2024	9:00 PM	0	0	0	0	0	0	0	0	0	0	0	0	0
4/24/2024	9:15 PM	0	0	0	0	0	0	0	0	0	0	0	0	0
4/24/2024	9:30 PM	0	0	0	0	0	0	0	0	0	0	0	0	0
4/24/2024	9:45 PM	0	0	0	0	0	0	0	0	0	0	0	0	0
4/24/2024	10:00 PM	0	0	0	0	0	0	0	0	0	0	0	0	0
4/24/2024	10:15 PM	0	0	0	0	0	0	0	0	0	0	0	0	0
4/24/2024	10:30 PM	0	0	0	0	0	0	0	0	0	0	0	0	0
4/24/2024	10:45 PM	0	0	0	0	0	0	0	0	0	0	0	0	0
4/24/2024	11:00 PM	0	0	0	0	0	0	0	0	0	0	0	0	0
4/24/2024	11:15 PM	0	0	0	0	0	0	0	0	0	0	0	0	0
4/24/2024	11:30 PM	0	0	0	0	0	0	0	0	0	0	0	0	0
4/24/2024	11:45 PM	0	0	0	0	0	0	0	0	0	0	0	0	0

4/25/2024	12:00 AM	0	0	0	0	0	0	0	0	0	0	0	0	0
4/25/2024	12:15 AM	0	0	0	0	0	0	0	0	0	0	0	0	0
4/25/2024	12:30 AM	0	0	0	0	0	0	0	0	0	0	0	0	0
4/25/2024	12:45 AM	0	0	0	0	0	0	0	0	0	0	0	0	0
4/25/2024	1:00 AM	0	0	0	0	0	0	0	0	0	0	0	0	0
4/25/2024	1:15 AM	0	0	0	0	0	0	0	0	0	0	0	0	0
4/25/2024	1:30 AM	0	0	0	0	0	0	0	0	0	0	0	0	0
4/25/2024	1:45 AM	0	0	0	0	0	0	0	0	0	0	0	0	0
4/25/2024	2:00 AM	0	0	0	0	0	0	0	0	0	0	0	0	0
4/25/2024	2:15 AM	0	0	0	0	0	0	0	0	0	0	0	0	0
4/25/2024	2:30 AM	0	0	0	0	0	0	0	0	0	0	0	0	0
4/25/2024	2:45 AM	0	0	0	0	0	0	0	0	0	0	0	0	0
4/25/2024	3:00 AM	0	0	0	0	0	0	0	0	0	0	0	0	0
4/25/2024	3:15 AM	0	0	0	0	0	0	0	0	0	0	0	0	0
4/25/2024	3:30 AM	0	0	0	0	0	0	0	0	0	0	0	0	0
4/25/2024	3:45 AM	0	0	0	0	0	0	0	0	0	0	0	0	0
4/25/2024	4:00 AM	0	0	0	0	0	0	0	0	0	0	0	0	0
4/25/2024	4:15 AM	0	0	0	0	0	0	0	0	0	0	0	0	0
4/25/2024	4:30 AM	0	0	0	0	0	0	0	0	0	0	0	0	0
4/25/2024	4:45 AM	0	0	0	0	0	0	0	0	0	0	0	0	0
4/25/2024	5:00 AM	0	0	0	0	0	0	0	0	0	0	0	0	0
4/25/2024	5:15 AM	0	0	0	0	0	0	0	0	0	0	0	0	0
4/25/2024	5:30 AM	0	0	0	0	0	0	0	0	0	0	0	0	0
4/25/2024	5:45 AM	0	0	0	0	0	0	0	0	0	0	0	0	0
4/25/2024	6:00 AM	0	0	0	0	0	0	0	0	0	0	0	0	0
4/25/2024	6:15 AM	0	0	0	0	0	0	0	0	0	0	0	0	0
4/25/2024	6:30 AM	0	0	0	0	0	0	0	0	0	0	0	0	0
4/25/2024	6:45 AM	0	0	0	0	0	0	0	0	0	0	0	0	0
4/25/2024	7:00 AM	0	0	0	0	0	0	0	0	0	0	0	0	0
4/25/2024	7:15 AM	0	0	0	0	0	0	0	0	0	0	0	0	0
4/25/2024	7:30 AM	0	0	0	0	0	0	0	0	0	0	0	0	0
4/25/2024	7:45 AM	0	0	0	0	0	0	0	0	0	0	0	0	0
4/25/2024	8:00 AM	0	0	0	0	0	0	0	0	0	0	0	0	0
4/25/2024	8:15 AM	0	0	0	0	0	0	0	0	0	0	0	0	0
4/25/2024	8:30 AM	0	0	0	0	0	0	0	0	0	0	0	0	0
4/25/2024	8:45 AM	0	0	0	0	0	0	0	0	0	0	0	0	0
4/25/2024	9:00 AM	0	0	0	0	0	0	0	0	0	0	0	0	0
4/25/2024	9:15 AM	0	0	0	0	0	0	0	0	0	0	0	0	0
4/25/2024	9:30 AM	0	0	0	0	0	0	0	0	0	0	0	0	0
4/25/2024	9:45 AM	0	0	0	0	0	0	0	0	0	0	0	0	0
4/25/2024	10:00 AM	0	0	0	0	0	0	0	0	0	0	0	0	0
4/25/2024	10:15 AM	0	0	0	0	0	0	0	0	0	0	0	0	0
4/25/2024	10:30 AM	0	0	0	0	0	0	0	0	0	0	0	0	0
4/25/2024	10:45 AM	0	0	0	0	0	0	0	0	0	0	0	0	0
4/25/2024	11:00 AM	0	0	0	0	0	0	0	0	0	0	0	0	0
4/25/2024	11:15 AM	0	0	0	0	0	0	0	0	0	0	0	0	0
4/25/2024	11:30 AM	0	0	0	0	0	0	0	0	0	0	0	0	0
4/25/2024	11:45 AM	0	0	0	0	0	0	0	0	0	0	0	0	0
4/25/2024	12:00 PM	0	0	0	0	0	0	0	0	0	0	0	0	0
4/25/2024	12:15 PM	0	0	0	0	0	0	0	0	0	0	0	0	0
4/25/2024	12:30 PM	0	0	0	0	0	0	0	0	0	0	0	0	0
4/25/2024	12:45 PM	0	0	0	0	0	0	0	0	0	0	0	0	0
4/25/2024	1:00 PM	0	0	0	0	0	0	0	0	0	0	0	0	0
4/25/2024	1:15 PM	0	0	0	0	0	0	0	0	0	0	0	0	0
4/25/2024	1:30 PM	0	0	0	0	0	0	0	0	0	0	0	0	0
4/25/2024	1:45 PM	0	0	0	0	0	0	0	0	0	0	0	0	0
4/25/2024	2:00 PM	0	0	0	0	0	0	0	0	0	0	0	0	0
4/25/2024	2:15 PM	0	0	0	0	0	0	0	0	0	0	0	0	0
4/25/2024	2:30 PM	0	0	0	0	0	0	0	0	0	0	0	0	0
4/25/2024	2:45 PM	0	0	0	0	0	0	0	0	0	0	0	0	0
4/25/2024	3:00 PM	0	0	0	0	0	0	0	0	0	0	0	0	0
4/25/2024	3:15 PM	0	0	0	0	0	0	0	0	0	0	0	0	0
4/25/2024	3:30 PM	0	0	0	0	0	0	0	0	0	0	0	0	0
4/25/2024	3:45 PM	0	0	0	0	0	0	0	0	0	0	0	0	0
4/25/2024	4:00 PM	0	0	0	0	0	0	0	0	0	0	0	0	0
4/25/2024	4:15 PM	0	0	0	0	0	0	0	0	0	0	0	0	0
4/25/2024	4:30 PM	0	0	0	0	0	0	0	0	0	0	0	0	0
4/25/2024	4:45 PM	0	0	0	0	0	0	0	0	0	0	0	0	0
4/25/2024	5:00 PM	0	0	0	0	0	0	0	0	0	0	0	0	0
4/25/2024	5:15 PM	0	0	0	0	0	0	0	0	0	0	0	0	0
4/25/2024	5:30 PM	0	0	0	0	0	0	0	0	0	0	0	0	0
4/25/2024	5:45 PM	0	0	0	0	0	0	0	0	0	0	0	0	0
4/25/2024	6:00 PM	0	0	0	0	0	0	0	0	0	0	0	0	0
4/25/2024	6:15 PM	0	0	0	0	0	0	0	0	0	0	0	0	0
4/25/2024	6:30 PM	0	0	0	0	0	0	0	0	0	0	0	0	0
4/25/2024	6:45 PM	0	0	0	0	0	0	0	0	0	0	0	0	0
4/25/2024	7:00 PM	0	0	0	0	0	0	0	0	0	0	0	0	0
4/25/2024	7:15 PM	0	0	0	0	0	0	0	0	0	0	0	0	0
4/25/2024	7:30 PM	0	0	0	0	0	0	0	0	0	0	0	0	0
4/25/2024	7:45 PM	0	0	0	0	0	0	0	0	0	0	0	0	0
4/25/2024	8:00 PM	0	0	0	0	0	0	0	0	0	0	0	0	0
4/25/2024	8:15 PM	0	0	0	0	0	0	0	0	0	0	0	0	0
4/25/2024	8:30 PM	0	0	0	0	0	0	0	0	0	0	0	0	0
4/25/2024	8:45 PM	0	0	0	0	0	0	0	0	0	0	0	0	0
4/25/2024	9:00 PM	0	0	0	0	0	0	0	0	0	0	0	0	0
4/25/2024	9:15 PM	0	0	0	0	0	0	0	0	0	0	0	0	0
4/25/2024	9:30 PM	0	0	0	0	0	0	0	0	0	0	0	0	0
4/25/2024	9:45 PM	0	0	0	0	0	0	0	0	0	0	0	0	0
4/25/2024	10:00 PM	0	0	0	0	0	0	0	0	0	0	0	0	0
4/25/2024	10:15 PM	0	0	0	0	0	0	0	0	0	0	0	0	0
4/25/2024	10:30 PM	0	0	0	0	0	0	0	0	0	0	0	0	0
4/25/2024	10:45 PM	0	0	0	0	0	0	0	0	0	0	0	0	0
4/25/2024	11:00 PM	0	0	0	0	0	0	0	0	0	0	0	0	0
4/25/2024	11:15 PM	0	0	0	0	0	0	0	0	0	0	0	0	0
4/25/2024	11:30 PM	0	0	0	0	0	0	0	0	0	0	0	0	0
4/25/2024	11:45 PM	0	0	0	0	0	0	0	0	0	0	0	0	0

WB
File Name:
Start Date: 4/23/2024
Start Time: 0
Site Code: 30
Station ID: 1
Location 1: I-26 James F. Byrnes Expy On/Off-Ramp, west of Harbison Blvd
Location 2:

Date	Time	1	2	3	4	5	6	7	8	9	10	11	12	13
4/23/2024	12:00 AM	0	0	0	0	0	0	0	0	0	0	0	0	0
4/23/2024	12:15 AM	0	0	0	0	0	0	0	0	0	0	0	0	0
4/23/2024	12:30 AM	0	0	0	0	0	0	0	0	0	0	0	0	0
4/23/2024	12:45 AM	0	0	0	0	0	0	0	0	0	0	0	0	0
4/23/2024	1:00 AM	0	0	0	0	0	0	0	0	0	0	0	0	0
4/23/2024	1:15 AM	0	0	0	0	0	0	0	0	0	0	0	0	0
4/23/2024	1:30 AM	0	0	0	0	0	0	0	0	0	0	0	0	0
4/23/2024	1:45 AM	0	0	0	0	0	0	0	0	0	0	0	0	0
4/23/2024	2:00 AM	0	0	0	0	0	0	0	0	0	0	0	0	0
4/23/2024	2:15 AM	0	0	0	0	0	0	0	0	0	0	0	0	0
4/23/2024	2:30 AM	0	0	0	0	0	0	0	0	0	0	0	0	0
4/23/2024	2:45 AM	0	0	0	0	0	0	0	0	0	0	0	0	0
4/23/2024	3:00 AM	0	0	0	0	0	0	0	0	0	0	0	0	0
4/23/2024	3:15 AM	0	0	0	0	0	0	0	0	0	0	0	0	0
4/23/2024	3:30 AM	0	0	0	0	0	0	0	0	0	0	0	0	0
4/23/2024	3:45 AM	0	0	0	0	0	0	0	0	0	0	0	0	0
4/23/2024	4:00 AM	0	0	0	0	0	0	0	0	0	0	0	0	0
4/23/2024	4:15 AM	0	0	0	0	0	0	0	0	0	0	0	0	0
4/23/2024	4:30 AM	0	0	0	0	0	0	0	0	0	0	0	0	0
4/23/2024	4:45 AM	0	0	0	0	0	0	0	0	0	0	0	0	0
4/23/2024	5:00 AM	0	0	0	0	0	0	0	0	0	0	0	0	0
4/23/2024	5:15 AM	0	0	0	0	0	0	0	0	0	0	0	0	0
4/23/2024	5:30 AM	0	0	0	0	0	0	0	0	0	0	0	0	0
4/23/2024	5:45 AM	0	0	0	0	0	0	0	0	0	0	0	0	0
4/23/2024	6:00 AM	0	0	0	0	0	0	0	0	0	0	0	0	0
4/23/2024	6:15 AM	0	0	0	0	0	0	0	0	0	0	0	0	0
4/23/2024	6:30 AM	0	0	0	0	0	0	0	0	0	0	0	0	0
4/23/2024	6:45 AM	0	0	0	0	0	0	0	0	0	0	0	0	0
4/23/2024	7:00 AM	0	0	0	0	0	0	0	0	0	0	0	0	0
4/23/2024	7:15 AM	0	0	0	0	0	0	0	0	0	0	0	0	0
4/23/2024	7:30 AM	0	0	0	0	0	0	0	0	0	0	0	0	0
4/23/2024	7:45 AM	0	0	0	0	0	0	0	0	0	0	0	0	0
4/23/2024	8:00 AM	0	0	0	0	0	0	0	0	0	0	0	0	0
4/23/2024	8:15 AM	0	0	0	0	0	0	0	0	0	0	0	0	0
4/23/2024	8:30 AM	0	0	0	0	0	0	0	0	0	0	0	0	0
4/23/2024	8:45 AM	0	0	0	0	0	0	0	0	0	0	0	0	0
4/23/2024	9:00 AM	0	0	0	0	0	0	0	0	0	0	0	0	0
4/23/2024	9:15 AM	0	0	0	0	0	0	0	0	0	0	0	0	0
4/23/2024	9:30 AM	0	0	0	0	0	0	0	0	0	0	0	0	0
4/23/2024	9:45 AM	0	0	0	0	0	0	0	0	0	0	0	0	0
4/23/2024	10:00 AM	0	0	0	0	0	0	0	0	0	0	0	0	0
4/23/2024	10:15 AM	0	0	0	0	0	0	0	0	0	0	0	0	0
4/23/2024	10:30 AM	0	0	0	0	0	0	0	0	0	0	0	0	0
4/23/2024	10:45 AM	0	0	0	0	0	0	0	0	0	0	0	0	0
4/23/2024	11:00 AM	0	0	0	0	0	0	0	0	0	0	0	0	0
4/23/2024	11:15 AM	0	0	0	0	0	0	0	0	0	0	0	0	0
4/23/2024	11:30 AM	0	0	0	0	0	0	0	0	0	0	0	0	0
4/23/2024	11:45 AM	0	0	0	0	0	0	0	0	0	0	0	0	0
4/23/2024	12:00 PM	0	0	0	0	0	0	0	0	0	0	0	0	0
4/23/2024	12:15 PM	0	0	0	0	0	0	0	0	0	0	0	0	0
4/23/2024	12:30 PM	0	0	0	0	0	0	0	0	0	0	0	0	0
4/23/2024	12:45 PM	0	0	0	0	0	0	0	0	0	0	0	0	0
4/23/2024	1:00 PM	0	0	0	0	0	0	0	0	0	0	0	0	0
4/23/2024	1:15 PM	0	0	0	0	0	0	0	0	0	0	0	0	0
4/23/2024	1:30 PM	0	0	0	0	0	0	0	0	0	0	0	0	0
4/23/2024	1:45 PM	0	0	0	0	0	0	0	0	0	0	0	0	0
4/23/2024	2:00 PM	0	0	0	0	0	0	0	0	0	0	0	0	0
4/23/2024	2:15 PM	0	0	0	0	0	0	0	0	0	0	0	0	0
4/23/2024	2:30 PM	0	0	0	0	0	0	0	0	0	0	0	0	0
4/23/2024	2:45 PM	0	0	0	0	0	0	0	0	0	0	0	0	0
4/23/2024	3:00 PM	0	0	0	0	0	0	0	0	0	0	0	0	0
4/23/2024	3:15 PM	0	0	0	0	0	0	0	0	0	0	0	0	0
4/23/2024	3:30 PM	0	0	0	0	0	0	0	0	0	0	0	0	0
4/23/2024	3:45 PM	0	0	0	0	0	0	0	0	0	0	0	0	0
4/23/2024	4:00 PM	0	0	0	0	0	0	0	0	0	0	0	0	0
4/23/2024	4:15 PM	0	0	0	0	0	0	0	0	0	0	0	0	0
4/23/2024	4:30 PM	0	0	0	0	0	0	0	0	0	0	0	0	0
4/23/2024	4:45 PM	0	0	0	0	0	0	0	0	0	0	0	0	0
4/23/2024	5:00 PM	0	0	0	0	0	0	0	0	0	0	0	0	0
4/23/2024	5:15 PM	0	0	0	0	0	0	0	0	0	0	0	0	0
4/23/2024	5:30 PM	0	0	0	0	0	0	0	0	0	0	0	0	0
4/23/2024	5:45 PM	0	0	0	0	0	0	0	0	0	0	0	0	0
4/23/2024	6:00 PM	0	0	0	0	0	0	0	0	0	0	0	0	0
4/23/2024	6:15 PM	1	70	18	0	0	0	0	0	0	0	0	0	0
4/23/2024	6:30 PM	1	124	34	0	0	0	0	0	0	0	0	0	0
4/23/2024	6:45 PM	1	173	43	0	0	0	0	0	2	0	0	0	0
4/23/2024	7:00 PM	2	216	53	0	0	0	0	0	3	0	0	0	0
4/23/2024	7:15 PM	1	189	47	0	0	0	0	0	3	0	0	0	0
4/23/2024	7:30 PM	1	177	37	0	0	0	0	0	3	0	0	0	0
4/23/2024	7:45 PM	1	167	38	0	0	0	0	0	1	0	0	0	0
4/23/2024	8:00 PM	0	155	30	0	0	0	0	0	0	0	0	0	0
4/23/2024	8:15 PM	0	139	20	0	0	0	0	0	0	0	0	0	0
4/23/2024	8:30 PM	0	118	19	0	0	0	0	0	0	0	0	0	0
4/23/2024	8:45 PM	1	104	12	0	0	0	0	0	0	0	0	0	0
4/23/2024	9:00 PM	1	93	13	0	0	0	0	0	0	0	0	0	0
4/23/2024	9:15 PM	1	89	13	0	0	0	0	0	0	0	0	0	0
4/23/2024	9:30 PM	1	85	9	0	1	0	0	0	0	0	0	0	0
4/23/2024	9:45 PM	1	71	7	0	1	0	0	0	0	0	0	0	0
4/23/2024	10:00 PM	1	62	4	0	1	0	0	0	0	0	0	0	0
4/23/2024	10:15 PM	1	46	5	0	1	0	0	0	0	0	0	0	0
4/23/2024	10:30 PM	1	41	5	0	0	0	0	0	0	0	0	0	0
4/23/2024	10:45 PM	0	33	5	0	0	0	0	0	0	0	0	0	0
4/23/2024	11:00 PM	0	27	5	0	0	0	0	0	0	0	0	0	0
4/23/2024	11:15 PM	0	20	2	0	0	0	0	0	0	0	0	0	0
4/23/2024	11:30 PM	0	8	1	0	0	0	0	0	0	0	0	0	0
4/23/2024	11:45 PM	0	5	0	0	0	0	0	0	0	0	0	0	0

4/24/2024	12:00 AM	0	13	2	0	0	0	0	0	0	0	0	0
4/24/2024	12:15 AM	0	9	2	0	0	0	0	0	0	0	0	0
4/24/2024	12:30 AM	0	8	3	0	0	0	0	0	1	0	0	0
4/24/2024	12:45 AM	0	6	3	0	0	0	0	0	1	0	0	0
4/24/2024	1:00 AM	0	8	1	0	0	0	0	0	1	0	0	0
4/24/2024	1:15 AM	0	8	1	0	0	0	0	0	1	0	0	0
4/24/2024	1:30 AM	0	7	0	0	0	0	0	0	0	0	0	0
4/24/2024	1:45 AM	0	6	1	0	0	0	0	0	0	0	0	0
4/24/2024	2:00 AM	0	2	1	0	0	0	0	0	0	0	0	0
4/24/2024	2:15 AM	0	1	1	0	0	1	0	0	0	0	0	0
4/24/2024	2:30 AM	0	2	1	0	0	1	0	0	1	0	0	0
4/24/2024	2:45 AM	0	4	0	0	0	1	0	0	1	0	0	0
4/24/2024	3:00 AM	0	6	0	0	0	2	0	0	1	0	0	0
4/24/2024	3:15 AM	0	7	0	0	0	1	0	0	1	0	0	0
4/24/2024	3:30 AM	0	6	0	0	0	1	0	0	0	0	0	0
4/24/2024	3:45 AM	0	5	0	0	0	1	0	0	0	0	0	0
4/24/2024	4:00 AM	0	3	0	0	0	0	0	0	0	0	0	0
4/24/2024	4:15 AM	0	1	0	0	0	0	0	0	2	0	0	0
4/24/2024	4:30 AM	0	6	0	0	0	0	0	0	2	0	0	0
4/24/2024	4:45 AM	0	12	2	0	1	0	0	0	2	0	0	0
4/24/2024	5:00 AM	0	15	3	0	1	0	0	0	2	0	0	0
4/24/2024	5:15 AM	0	24	6	0	2	0	0	0	1	0	0	0
4/24/2024	5:30 AM	0	37	7	0	2	0	0	0	2	0	0	0
4/24/2024	5:45 AM	0	44	6	0	1	0	0	0	2	0	0	0
4/24/2024	6:00 AM	0	54	10	0	1	0	0	0	3	0	0	0
4/24/2024	6:15 AM	0	59	13	0	0	0	0	0	3	0	0	0
4/24/2024	6:30 AM	0	60	23	0	0	0	0	0	3	0	0	0
4/24/2024	6:45 AM	0	75	30	0	0	0	0	0	3	0	0	0
4/24/2024	7:00 AM	0	95	33	0	1	0	0	0	3	0	0	0
4/24/2024	7:15 AM	0	108	37	0	3	0	0	0	2	0	0	0
4/24/2024	7:30 AM	0	111	33	0	3	0	0	0	2	0	0	0
4/24/2024	7:45 AM	0	103	43	0	3	0	0	0	2	0	0	0
4/24/2024	8:00 AM	0	108	49	0	2	0	0	0	1	0	0	0
4/24/2024	8:15 AM	0	108	55	0	1	0	0	0	1	0	0	0
4/24/2024	8:30 AM	0	127	67	0	1	0	0	0	1	0	0	0
4/24/2024	8:45 AM	0	134	65	0	3	0	0	0	1	0	0	0
4/24/2024	9:00 AM	0	133	61	0	3	0	0	0	1	0	0	0
4/24/2024	9:15 AM	0	134	59	0	4	0	0	0	1	0	0	0
4/24/2024	9:30 AM	0	122	50	0	5	0	0	0	0	0	0	0
4/24/2024	9:45 AM	0	140	57	0	3	0	0	0	2	0	0	0
4/24/2024	10:00 AM	0	147	58	0	5	0	0	0	3	0	0	0
4/24/2024	10:15 AM	0	146	57	0	3	0	0	0	3	0	0	0
4/24/2024	10:30 AM	0	170	68	0	3	0	0	0	4	0	0	0
4/24/2024	10:45 AM	0	171	66	1	3	0	0	0	2	0	0	0
4/24/2024	11:00 AM	0	179	78	1	1	0	0	0	1	0	0	0
4/24/2024	11:15 AM	0	212	83	1	1	0	0	0	1	0	0	0
4/24/2024	11:30 AM	0	216	84	1	0	0	0	0	1	0	0	0
4/24/2024	11:45 AM	0	236	84	0	0	0	0	0	1	0	0	0
4/24/2024	12:00 PM	0	249	79	0	1	0	0	0	2	0	0	0
4/24/2024	12:15 PM	0	255	83	0	2	0	0	0	2	0	0	0
4/24/2024	12:30 PM	0	281	89	1	2	0	0	0	1	0	0	0
4/24/2024	12:45 PM	0	295	89	1	3	0	0	0	1	0	0	0
4/24/2024	1:00 PM	0	289	89	1	3	0	0	0	1	0	0	0
4/24/2024	1:15 PM	0	293	91	2	2	0	0	0	1	0	0	0
4/24/2024	1:30 PM	0	276	87	1	5	0	0	0	2	0	0	0
4/24/2024	1:45 PM	0	264	86	1	4	0	0	0	2	0	0	0
4/24/2024	2:00 PM	0	272	81	1	3	0	0	0	1	0	0	0
4/24/2024	2:15 PM	0	271	70	4	4	0	0	0	1	0	0	0
4/24/2024	2:30 PM	0	270	64	4	1	0	0	0	1	0	0	0
4/24/2024	2:45 PM	0	277	69	4	1	0	0	0	1	0	0	0
4/24/2024	3:00 PM	0	286	77	4	1	0	0	0	1	0	0	0
4/24/2024	3:15 PM	0	304	95	0	1	0	0	0	2	0	0	0
4/24/2024	3:30 PM	0	319	101	0	2	0	0	0	1	0	0	0
4/24/2024	3:45 PM	0	316	99	0	2	0	0	0	1	0	0	0
4/24/2024	4:00 PM	0	323	97	0	2	0	0	0	2	0	0	0
4/24/2024	4:15 PM	1	326	89	0	2	0	0	0	1	0	0	0
4/24/2024	4:30 PM	1	328	84	0	1	0	0	0	1	0	0	0
4/24/2024	4:45 PM	1	333	78	0	1	0	0	0	1	0	0	0
4/24/2024	5:00 PM	1	330	76	0	1	0	0	0	0	0	0	0
4/24/2024	5:15 PM	0	309	66	0	0	0	0	0	0	0	0	0
4/24/2024	5:30 PM	0	290	64	0	0	0	0	0	0	0	0	0
4/24/2024	5:45 PM	0	266	69	0	0	0	0	0	0	0	0	0
4/24/2024	6:00 PM	0	267	71	0	0	0	0	0	1	0	0	0
4/24/2024	6:15 PM	0	249	70	0	0	0	0	0	1	0	0	0
4/24/2024	6:30 PM	0	239	67	0	1	0	0	0	1	0	0	0
4/24/2024	6:45 PM	0	247	57	0	1	0	0	0	1	0	0	0
4/24/2024	7:00 PM	0	205	46	1	1	0	0	0	0	0	0	0
4/24/2024	7:15 PM	2	222	45	1	1	0	0	0	0	0	0	0
4/24/2024	7:30 PM	2	216	41	1	0	0	0	0	0	0	0	0
4/24/2024	7:45 PM	2	193	33	1	0	0	0	0	0	0	0	0
4/24/2024	8:00 PM	2	197	33	0	0	0	0	0	0	0	0	0
4/24/2024	8:15 PM	0	159	29	0	1	0	0	0	0	0	0	0
4/24/2024	8:30 PM	0	146	21	0	1	0	0	0	0	0	0	0
4/24/2024	8:45 PM	0	129	19	0	1	0	0	0	0	0	0	0
4/24/2024	9:00 PM	0	110	13	0	1	0	0	0	0	0	0	0
4/24/2024	9:15 PM	0	102	8	0	0	0	0	0	0	0	0	0
4/24/2024	9:30 PM	0	82	6	0	0	0	0	0	0	0	0	0
4/24/2024	9:45 PM	0	70	7	0	0	0	0	0	0	0	0	0
4/24/2024	10:00 PM	0	60	5	0	0	0	0	0	0	0	0	0
4/24/2024	10:15 PM	0	55	3	0	0	0	0	0	0	0	0	0
4/24/2024	10:30 PM	0	49	3	0	1	0	0	0	0	0	0	0
4/24/2024	10:45 PM	0	41	0	0	1	0	0	0	0	0	0	0
4/24/2024	11:00 PM	0	33	1	0	1	0	0	0	0	0	0	0
4/24/2024	11:15 PM	0	16	1	0	1	0	0	0	0	0	0	0
4/24/2024	11:30 PM	0	8	1	0	0	0	0	0	0	0	0	0
4/24/2024	11:45 PM	0	6	1	0	0	0	0	0	0	0	0	0

4/25/2024	12:00 AM	0	16	0	0	0	0	0	0	1	0	0	0	0
4/25/2024	12:15 AM	0	11	0	0	0	0	0	0	1	0	0	0	0
4/25/2024	12:30 AM	0	7	0	0	0	0	0	0	0	0	0	0	0
4/25/2024	12:45 AM	0	7	0	0	0	0	0	0	0	0	0	0	0
4/25/2024	1:00 AM	0	5	0	0	0	0	0	0	0	0	0	0	0
4/25/2024	1:15 AM	0	6	0	0	0	0	0	0	0	0	0	0	0
4/25/2024	1:30 AM	0	6	0	0	0	0	0	0	0	0	0	0	0
4/25/2024	1:45 AM	0	5	0	0	0	0	0	0	0	0	0	0	0
4/25/2024	2:00 AM	0	5	0	0	0	0	0	0	0	0	0	0	0
4/25/2024	2:15 AM	0	3	0	0	0	0	0	0	0	0	0	0	0
4/25/2024	2:30 AM	0	3	0	0	0	0	0	0	0	0	0	0	0
4/25/2024	2:45 AM	0	4	0	0	0	0	0	0	1	0	0	0	0
4/25/2024	3:00 AM	0	5	0	0	0	0	0	0	1	0	0	0	0
4/25/2024	3:15 AM	0	5	0	0	0	1	0	0	1	0	0	0	0
4/25/2024	3:30 AM	0	4	0	0	0	1	0	0	2	0	0	0	0
4/25/2024	3:45 AM	0	2	0	0	0	1	0	0	1	0	0	0	0
4/25/2024	4:00 AM	0	4	0	0	0	1	0	1	1	0	0	0	0
4/25/2024	4:15 AM	0	3	0	0	0	0	0	1	1	0	0	0	0
4/25/2024	4:30 AM	0	9	0	0	0	0	0	1	0	0	0	0	0
4/25/2024	4:45 AM	0	14	2	0	0	0	0	1	0	0	0	0	0
4/25/2024	5:00 AM	0	14	3	0	0	0	0	0	0	0	0	0	0
4/25/2024	5:15 AM	0	21	10	0	0	0	0	0	2	0	0	0	0
4/25/2024	5:30 AM	0	22	15	0	0	0	0	0	2	0	0	0	0
4/25/2024	5:45 AM	0	28	17	0	0	0	0	0	2	0	0	0	0
4/25/2024	6:00 AM	0	38	20	0	0	0	0	0	3	0	0	0	0
4/25/2024	6:15 AM	0	51	21	0	0	0	0	0	1	0	0	0	0
4/25/2024	6:30 AM	0	71	21	0	0	0	0	0	1	0	0	0	0
4/25/2024	6:45 AM	0	89	22	0	0	0	0	0	1	0	0	0	0
4/25/2024	7:00 AM	0	103	27	0	1	0	0	0	1	0	0	0	0
4/25/2024	7:15 AM	0	111	32	0	4	0	0	0	1	0	0	0	0
4/25/2024	7:30 AM	0	116	38	0	5	0	0	0	2	0	0	0	0
4/25/2024	7:45 AM	0	116	47	0	6	0	0	0	2	0	0	0	0
4/25/2024	8:00 AM	0	117	53	0	5	0	0	0	2	0	0	0	0
4/25/2024	8:15 AM	0	109	51	0	3	0	0	0	2	0	0	0	0
4/25/2024	8:30 AM	0	109	58	0	2	0	0	0	1	0	0	0	0
4/25/2024	8:45 AM	1	113	59	0	3	0	0	0	1	0	0	0	0
4/25/2024	9:00 AM	1	122	62	0	3	0	0	0	0	0	0	0	0
4/25/2024	9:15 AM	2	134	67	0	2	0	0	0	0	0	0	0	0
4/25/2024	9:30 AM	2	146	67	0	2	0	0	0	0	0	0	0	0
4/25/2024	9:45 AM	1	166	74	0	2	1	0	0	1	0	0	0	0
4/25/2024	10:00 AM	1	177	89	0	2	1	0	0	1	0	0	0	0
4/25/2024	10:15 AM	0	216	90	0	2	1	0	0	1	0	0	0	0
4/25/2024	10:30 AM	0	227	99	1	2	1	0	0	1	0	0	0	0
4/25/2024	10:45 AM	0	241	102	1	0	0	0	1	1	0	0	0	0
4/25/2024	11:00 AM	1	248	93	1	1	0	0	2	1	0	0	0	0
4/25/2024	11:15 AM	1	237	106	1	1	0	0	2	1	0	0	0	0
4/25/2024	11:30 AM	1	245	97	0	1	0	0	2	1	0	0	0	0
4/25/2024	11:45 AM	1	240	101	0	2	0	0	1	1	0	0	0	0
4/25/2024	12:00 PM	0	255	105	0	2	0	0	0	1	0	0	0	0
4/25/2024	12:15 PM	0	256	89	0	2	0	0	0	3	0	0	0	0
4/25/2024	12:30 PM	0	258	97	0	4	0	0	0	3	0	0	0	0
4/25/2024	12:45 PM	0	274	85	1	4	0	0	0	4	0	0	0	0
4/25/2024	1:00 PM	0	285	80	1	3	0	0	0	4	0	0	0	0
4/25/2024	1:15 PM	0	295	94	1	5	0	0	0	2	0	0	0	0
4/25/2024	1:30 PM	0	317	100	1	3	0	0	0	2	0	0	0	0
4/25/2024	1:45 PM	0	308	106	0	2	0	0	0	0	0	0	0	0
4/25/2024	2:00 PM	0	288	104	0	4	0	0	0	0	0	0	0	0
4/25/2024	2:15 PM	0	304	94	0	2	0	0	0	0	0	0	0	0
4/25/2024	2:30 PM	0	289	84	0	2	0	0	0	0	0	0	0	0
4/25/2024	2:45 PM	0	294	77	0	2	0	0	0	0	0	0	0	0
4/25/2024	3:00 PM	0	320	78	0	0	0	0	0	1	0	0	0	0
4/25/2024	3:15 PM	0	304	77	0	0	1	0	1	1	0	0	0	0
4/25/2024	3:30 PM	0	308	78	0	0	1	0	1	1	0	0	0	0
4/25/2024	3:45 PM	0	325	81	0	0	1	0	2	3	0	0	0	0
4/25/2024	4:00 PM	2	305	75	0	0	1	0	2	2	0	0	0	0
4/25/2024	4:15 PM	3	311	80	0	0	0	0	1	2	0	0	0	0
4/25/2024	4:30 PM	3	329	76	0	0	0	0	1	2	0	0	0	0
4/25/2024	4:45 PM	3	307	70	0	0	0	0	0	0	0	0	0	0
4/25/2024	5:00 PM	1	312	69	0	1	0	0	0	0	0	0	0	0
4/25/2024	5:15 PM	0	303	64	0	1	0	0	0	0	0	0	0	0
4/25/2024	5:30 PM	1	272	55	0	1	0	0	0	1	0	0	0	0
4/25/2024	5:45 PM	1	268	51	0	1	0	0	0	1	0	0	0	0
4/25/2024	6:00 PM	1	262	50	0	1	0	0	0	1	0	0	0	0
4/25/2024	6:15 PM	1	194	33	0	1	0	0	0	1	0	0	0	0
4/25/2024	6:30 PM	0	131	23	0	1	0	0	0	0	0	0	0	0
4/25/2024	6:45 PM	0	66	14	0	1	0	0	0	0	0	0	0	0
4/25/2024	7:00 PM	0	0	0	0	0	0	0	0	0	0	0	0	0
4/25/2024	7:15 PM	0	0	0	0	0	0	0	0	0	0	0	0	0
4/25/2024	7:30 PM	0	0	0	0	0	0	0	0	0	0	0	0	0
4/25/2024	7:45 PM	0	0	0	0	0	0	0	0	0	0	0	0	0
4/25/2024	8:00 PM	0	0	0	0	0	0	0	0	0	0	0	0	0
4/25/2024	8:15 PM	0	0	0	0	0	0	0	0	0	0	0	0	0
4/25/2024	8:30 PM	0	0	0	0	0	0	0	0	0	0	0	0	0
4/25/2024	8:45 PM	0	0	0	0	0	0	0	0	0	0	0	0	0
4/25/2024	9:00 PM	0	0	0	0	0	0	0	0	0	0	0	0	0
4/25/2024	9:15 PM	0	0	0	0	0	0	0	0	0	0	0	0	0
4/25/2024	9:30 PM	0	0	0	0	0	0	0	0	0	0	0	0	0
4/25/2024	9:45 PM	0	0	0	0	0	0	0	0	0	0	0	0	0
4/25/2024	10:00 PM	0	0	0	0	0	0	0	0	0	0	0	0	0
4/25/2024	10:15 PM	0	0	0	0	0	0	0	0	0	0	0	0	0
4/25/2024	10:30 PM	0	0	0	0	0	0	0	0	0	0	0	0	0
4/25/2024	10:45 PM	0	0	0	0	0	0	0	0	0	0	0	0	0
4/25/2024	11:00 PM	0	0	0	0	0	0	0	0	0	0	0	0	0
4/25/2024	11:15 PM	0	0	0	0	0	0	0	0	0	0	0	0	0
4/25/2024	11:30 PM	0	0	0	0	0	0	0	0	0	0	0	0	0
4/25/2024	11:45 PM	0	0	0	0	0	0	0	0	0	0	0	0	0

Bi-Directional Class Count || NB EB 15min

Columbia, SC

Marr Traffic DATA COLLECTION
www.marrtraffic.com

Site 31
I-26 James F. Byrnes Expy N/Bound Off-Ramp, south of Piney Grove Rd

Date
Tuesday, April 23, 2024

Lat/Long
34.066544°, -81.140849°

Click here for Map

Weather
Fair
58°F

Click here for Detailed Weather

0000 - 2400 (Weekday 24h Session) (04-23-2024)
NB EB 15min

	Northbound (Movement 31.1)													15min	60min
Time	1	2	3	4	5	6	7	8	9	10	11	12	13	Total	Total
0000 - 0015	0	0	0	0	0	0	0	0	0	0	0	0	0	**0**	
0015 - 0030	0	0	0	0	0	0	0	0	0	0	0	0	0	**0**	
0030 - 0045	0	0	0	0	0	0	0	0	0	0	0	0	0	**0**	
0045 - 0100	0	0	0	0	0	0	0	0	0	0	0	0	0	**0**	**0**
0100 - 0115	0	0	0	0	0	0	0	0	0	0	0	0	0	**0**	
0115 - 0130	0	0	0	0	0	0	0	0	0	0	0	0	0	**0**	
0130 - 0145	0	0	0	0	0	0	0	0	0	0	0	0	0	**0**	
0145 - 0200	0	0	0	0	0	0	0	0	0	0	0	0	0	**0**	**0**
0200 - 0215	0	0	0	0	0	0	0	0	0	0	0	0	0	**0**	
0215 - 0230	0	0	0	0	0	0	0	0	0	0	0	0	0	**0**	
0230 - 0245	0	0	0	0	0	0	0	0	0	0	0	0	0	**0**	
0245 - 0300	0	0	0	0	0	0	0	0	0	0	0	0	0	**0**	**0**
0300 - 0315	0	0	0	0	0	0	0	0	0	0	0	0	0	**0**	
0315 - 0330	0	0	0	0	0	0	0	0	0	0	0	0	0	**0**	
0330 - 0345	0	0	0	0	0	0	0	0	0	0	0	0	0	**0**	
0345 - 0400	0	0	0	0	0	0	0	0	0	0	0	0	0	**0**	**0**
0400 - 0415	0	0	0	0	0	0	0	0	0	0	0	0	0	**0**	
0415 - 0430	0	0	0	0	0	0	0	0	0	0	0	0	0	**0**	
0430 - 0445	0	0	0	0	0	0	0	0	0	0	0	0	0	**0**	
0445 - 0500	0	0	0	0	0	0	0	0	0	0	0	0	0	**0**	**0**
0500 - 0515	0	0	0	0	0	0	0	0	0	0	0	0	0	**0**	
0515 - 0530	0	0	0	0	0	0	0	0	0	0	0	0	0	**0**	
0530 - 0545	0	0	0	0	0	0	0	0	0	0	0	0	0	**0**	
0545 - 0600	0	0	0	0	0	0	0	0	0	0	0	0	0	**0**	**0**
0600 - 0615	0	0	0	0	0	0	0	0	0	0	0	0	0	**0**	
0615 - 0630	0	0	0	0	0	0	0	0	0	0	0	0	0	**0**	
0630 - 0645	0	0	0	0	0	0	0	0	0	0	0	0	0	**0**	
0645 - 0700	0	0	0	0	0	0	0	0	0	0	0	0	0	**0**	**0**
0700 - 0715	0	0	0	0	0	0	0	0	0	0	0	0	0	**0**	
0715 - 0730	0	0	0	0	0	0	0	0	0	0	0	0	0	**0**	
0730 - 0745	0	0	0	0	0	0	0	0	0	0	0	0	0	**0**	
0745 - 0800	0	0	0	0	0	0	0	0	0	0	0	0	0	**0**	**0**
0800 - 0815	0	0	0	0	0	0	0	0	0	0	0	0	0	**0**	
0815 - 0830	0	0	0	0	0	0	0	0	0	0	0	0	0	**0**	
0830 - 0845	0	0	0	0	0	0	0	0	0	0	0	0	0	**0**	
0845 - 0900	0	0	0	0	0	0	0	0	0	0	0	0	0	**0**	**0**
0900 - 0915	0	0	0	0	0	0	0	0	0	0	0	0	0	**0**	
0915 - 0930	0	0	0	0	0	0	0	0	0	0	0	0	0	**0**	
0930 - 0945	0	0	0	0	0	0	0	0	0	0	0	0	0	**0**	
0945 - 1000	0	0	0	0	0	0	0	0	0	0	0	0	0	**0**	**0**
1000 - 1015	0	0	0	0	0	0	0	0	0	0	0	0	0	**0**	
1015 - 1030	0	0	0	0	0	0	0	0	0	0	0	0	0	**0**	
1030 - 1045	0	0	0	0	0	0	0	0	0	0	0	0	0	**0**	
1045 - 1100	0	0	0	0	0	0	0	0	0	0	0	0	0	**0**	**0**
1100 - 1115	0	0	0	0	0	0	0	0	0	0	0	0	0	**0**	
1115 - 1130	0	0	0	0	0	0	0	0	0	0	0	0	0	**0**	
1130 - 1145	0	0	0	0	0	0	0	0	0	0	0	0	0	**0**	
1145 - 1200	0	0	0	0	0	0	0	0	0	0	0	0	0	**0**	**0**
1200 - 1215	0	0	0	0	0	0	0	0	0	0	0	0	0	**0**	
1215 - 1230	0	0	0	0	0	0	0	0	0	0	0	0	0	**0**	
1230 - 1245	0	0	0	0	0	0	0	0	0	0	0	0	0	**0**	
1245 - 1300	0	0	0	0	0	0	0	0	0	0	0	0	0	**0**	**0**
1300 - 1315	0	0	0	0	0	0	0	0	0	0	0	0	0	**0**	
1315 - 1330	0	0	0	0	0	0	0	0	0	0	0	0	0	**0**	
1330 - 1345	0	0	0	0	0	0	0	0	0	0	0	0	0	**0**	
1345 - 1400	0	0	0	0	0	0	0	0	0	0	0	0	0	**0**	**0**
1400 - 1415	0	0	0	0	0	0	0	0	0	0	0	0	0	**0**	
1415 - 1430	0	0	0	0	0	0	0	0	0	0	0	0	0	**0**	
1430 - 1445	0	0	0	0	0	0	0	0	0	0	0	0	0	**0**	
1445 - 1500	0	0	0	0	0	0	0	0	0	0	0	0	0	**0**	**0**
1500 - 1515	0	0	0	0	0	0	0	0	0	0	0	0	0	**0**	
1515 - 1530	0	0	0	0	0	0	0	0	0	0	0	0	0	**0**	
1530 - 1545	0	0	0	0	0	0	0	0	0	0	0	0	0	**0**	
1545 - 1600	0	0	0	0	0	0	0	0	0	0	0	0	0	**0**	**0**
1600 - 1615	0	0	0	0	0	0	0	0	0	0	0	0	0	**0**	
1615 - 1630	0	0	0	0	0	0	0	0	0	0	0	0	0	**0**	
1630 - 1645	0	0	0	0	0	0	0	0	0	0	0	0	0	**0**	
1645 - 1700	0	0	0	0	0	0	0	0	0	0	0	0	0	**0**	**0**
1700 - 1715	0	0	0	0	0	0	0	0	0	0	0	0	0	**0**	
1715 - 1730	0	0	0	0	0	0	0	0	0	0	0	0	0	**0**	
1730 - 1745	0	0	0	0	0	0	0	0	0	0	0	0	0	**0**	
1745 - 1800	0	0	0	0	0	0	0	0	0	0	0	0	0	**0**	**0**
1800 - 1815	0	0	0	0	0	0	0	0	0	0	0	0	0	**0**	
1815 - 1830	0	0	0	0	0	0	0	0	0	0	0	0	0	**0**	
1830 - 1845	0	0	0	0	0	0	0	0	0	0	0	0	0	**0**	
1845 - 1900	0	0	0	0	0	0	0	0	0	0	0	0	0	**0**	**0**
1900 - 1915	0	130	11	0	1	0	0	0	0	0	0	0	0	**142**	
1915 - 1930	0	124	14	0	0	0	0	0	0	0	0	0	0	**138**	
1930 - 1945	0	116	12	0	3	0	0	0	0	0	0	0	0	**131**	
1945 - 2000	0	111	12	0	1	0	0	0	0	0	0	0	0	**124**	**535**
2000 - 2015	0	85	16	0	1	0	0	0	1	0	0	0	0	**103**	
2015 - 2030	0	82	12	0	1	0	0	0	0	0	0	0	0	**95**	
2030 - 2045	0	77	10	0	1	0	0	0	1	0	0	0	0	**89**	
2045 - 2100	0	64	6	0	0	0	0	0	0	0	0	0	0	**70**	**357**
2100 - 2115	0	79	10	0	0	0	0	0	1	0	0	0	0	**90**	
2115 - 2130	0	66	6	0	0	0	0	0	0	0	0	0	0	**72**	
2130 - 2145	0	51	4	0	0	0	0	0	1	0	0	0	0	**56**	
2145 - 2200	0	60	4	0	0	0	0	0	0	0	0	0	0	**64**	**282**
2200 - 2215	0	40	5	0	0	0	0	0	0	0	0	0	0	**45**	
2215 - 2230	0	45	7	0	0	0	0	0	1	0	0	0	0	**53**	
2230 - 2245	0	34	3	0	0	0	0	0	1	0	0	0	0	**38**	
2245 - 2300	0	24	5	0	0	0	0	0	0	0	0	0	0	**29**	**165**
2300 - 2315	0	26	5	0	0	0	0	0	0	0	0	0	0	**31**	
2315 - 2330	0	32	4	0	0	0	0	0	0	0	0	0	0	**36**	
2330 - 2345	0	24	4	0	0	0	0	0	0	0	0	0	0	**28**	
2345 - 0000	0	17	4	0	0	0	0	0	1	0	0	0	0	**22**	**117**

Session Total	0	1287	154	0	8	0	0	0	7	0	0	0	0	**1456**
Session Average	0.00	13.41	1.60	0.00	0.08	0.00	0.00	0.00	0.07	0.00	0.00	0.00	0.00	**15.17**
Session Percentage	0.00	88.39	10.58	0.00	0.55	0.00	0.00	0.00	0.48	0.00	0.00	0.00	0.00	

AM Peak Hour	-	-	-	-	-	-	-	-	-	-	-	-	-	**-**
AM Peak Volume	0	0	0	0	0	0	0	0	0	0	0	0	0	**0**

Noon Peak Hour	-	-	-	-	-	-	-	-	-	-	-	-	-	**-**
Noon Peak Volume	0	0	0	0	0	0	0	0	0	0	0	0	0	**0**

PM Peak Hour	-	1900 - 2000	1915 - 2015	-	1930 - 2030	-	-	-	1945 - 2045	-	-	-	-	**1900 - 2000**
PM Peak Volume	0	481	54	0	6	0	0	0	2	0	0	0	0	**535**

Site 31
I-26 James F. Byrnes Expy N/Bound Off-Ramp,
south of Piney Grove Rd

Date
Wednesday, April 24, 2024

Lat/Long
34.066544°, -81.140849°

Weather
Fair
66°F

Click here for Detailed Weather

0000 - 2400 (Weekday 24h Session) (04-24-2024)
NB EB 15min

	Northbound (Movement 31.1)													15min	60min
Time	1	2	3	4	5	6	7	8	9	10	11	12	13	Total	Total
0000 - 0015	0	19	4	0	0	0	0	0	0	0	0	0	0	**23**	
0015 - 0030	0	19	3	0	0	0	0	0	1	0	1	0	0	**24**	
0030 - 0045	0	14	1	0	0	0	0	0	0	0	0	0	0	**15**	
0045 - 0100	0	17	3	0	1	0	0	0	0	0	0	0	0	**21**	**83**
0100 - 0115	0	11	1	0	0	0	0	0	1	0	0	0	0	**13**	
0115 - 0130	0	16	3	0	0	0	0	0	0	0	0	0	0	**19**	
0130 - 0145	0	7	1	0	0	0	0	0	0	0	0	0	0	**8**	
0145 - 0200	0	9	2	0	0	0	0	0	1	0	0	0	0	**12**	**52**
0200 - 0215	0	9	2	0	0	0	0	0	1	0	0	0	0	**12**	
0215 - 0230	0	9	2	0	0	0	0	0	0	0	0	0	0	**11**	
0230 - 0245	0	10	2	0	0	1	0	0	1	0	0	0	0	**14**	
0245 - 0300	0	5	0	0	0	0	0	0	1	0	0	0	0	**6**	**43**
0300 - 0315	0	7	2	0	0	0	0	0	0	0	0	0	0	**9**	
0315 - 0330	0	10	0	0	0	0	0	0	3	0	0	0	0	**13**	
0330 - 0345	0	5	0	0	0	0	0	0	1	0	0	0	0	**6**	
0345 - 0400	0	15	2	0	1	0	0	0	1	0	0	0	0	**19**	**47**
0400 - 0415	0	13	2	0	0	0	0	0	3	0	0	0	0	**18**	
0415 - 0430	0	13	2	0	0	0	0	0	2	0	0	0	0	**17**	
0430 - 0445	0	15	1	0	0	0	0	0	3	0	0	0	0	**19**	
0445 - 0500	0	31	4	0	1	1	0	0	0	0	0	0	0	**37**	**91**
0500 - 0515	0	18	2	0	0	0	0	0	1	0	0	0	0	**21**	
0515 - 0530	0	12	1	0	1	0	0	0	2	0	0	0	0	**16**	
0530 - 0545	0	15	3	0	0	0	0	0	2	0	0	0	0	**20**	
0545 - 0600	0	30	5	0	0	0	0	0	1	0	0	0	0	**36**	**93**
0600 - 0615	0	33	10	0	2	1	0	0	0	0	0	0	0	**46**	
0615 - 0630	0	30	11	0	2	0	0	0	1	0	0	0	0	**44**	
0630 - 0645	0	39	6	0	0	0	0	0	2	0	0	0	0	**47**	
0645 - 0700	0	65	14	0	2	0	0	0	0	0	0	0	0	**81**	**218**
0700 - 0715	0	74	15	0	4	1	0	0	0	0	0	0	0	**94**	
0715 - 0730	0	109	21	0	3	0	0	0	3	0	0	0	0	**136**	
0730 - 0745	0	94	17	0	2	0	0	0	0	0	0	0	0	**113**	
0745 - 0800	0	138	22	0	2	0	0	0	2	0	0	0	0	**164**	**507**
0800 - 0815	0	110	23	0	3	0	0	0	0	0	0	0	0	**136**	
0815 - 0830	0	139	26	0	3	0	0	1	0	0	0	0	0	**169**	
0830 - 0845	0	101	27	0	2	0	0	1	0	0	0	0	0	**131**	
0845 - 0900	0	150	17	0	6	0	0	0	0	0	0	0	0	**173**	**609**
0900 - 0915	0	139	26	0	5	1	0	0	0	0	0	0	0	**171**	
0915 - 0930	0	95	25	0	3	0	0	0	0	0	0	0	0	**123**	
0930 - 0945	0	132	26	0	6	0	0	0	2	0	0	0	0	**166**	
0945 - 1000	0	162	30	0	4	0	0	1	2	0	0	0	0	**199**	**659**
1000 - 1015	0	129	37	1	2	0	0	0	1	0	0	0	0	**170**	
1015 - 1030	0	189	37	1	0	0	0	1	2	0	0	0	0	**230**	
1030 - 1045	0	138	34	1	2	0	0	1	1	0	0	0	0	**177**	
1045 - 1100	0	134	38	0	3	0	0	0	0	0	0	0	0	**175**	**752**
1100 - 1115	0	132	30	0	2	0	1	2	1	0	0	0	0	**168**	
1115 - 1130	0	133	33	0	4	0	0	0	0	0	0	0	0	**170**	
1130 - 1145	1	165	46	0	2	0	0	1	1	0	0	0	0	**216**	
1145 - 1200	0	168	40	0	2	0	0	1	1	0	0	0	0	**212**	**766**
1200 - 1215	0	170	34	3	0	1	0	1	0	0	0	0	0	**209**	
1215 - 1230	0	182	33	0	0	0	0	2	2	0	0	0	0	**219**	
1230 - 1245	0	179	34	0	1	0	0	0	0	0	0	0	0	**214**	
1245 - 1300	0	182	29	0	0	0	0	0	0	0	0	0	0	**211**	**853**
1300 - 1315	1	172	21	0	2	1	0	0	0	0	0	0	0	**197**	
1315 - 1330	0	178	33	0	3	0	0	0	0	0	0	0	0	**214**	
1330 - 1345	1	169	31	0	2	1	0	0	2	0	0	0	0	**206**	
1345 - 1400	0	153	30	1	1	0	1	0	0	0	0	0	0	**186**	**803**
1400 - 1415	0	147	47	0	1	0	0	1	0	0	0	0	0	**196**	
1415 - 1430	0	177	41	0	3	0	0	1	0	0	0	0	0	**222**	
1430 - 1445	1	168	35	0	1	1	0	0	0	0	0	0	0	**206**	
1445 - 1500	0	173	34	0	2	0	0	0	1	0	0	0	0	**210**	**834**
1500 - 1515	0	178	23	0	3	1	0	0	0	0	0	0	0	**205**	
1515 - 1530	0	186	36	0	0	1	0	0	1	0	0	0	0	**224**	
1530 - 1545	0	203	28	0	0	0	0	0	0	0	0	0	0	**231**	
1545 - 1600	0	201	25	0	1	0	0	0	0	0	0	0	0	**227**	**887**
1600 - 1615	0	312	38	0	2	0	0	1	2	0	0	0	0	**355**	
1615 - 1630	0	163	22	0	0	0	0	0	0	0	0	0	0	**185**	
1630 - 1645	0	140	26	0	0	0	0	0	1	0	0	0	0	**167**	
1645 - 1700	0	171	29	0	0	0	0	0	0	0	0	0	0	**200**	**907**
1700 - 1715	0	146	26	0	2	0	0	0	1	0	0	0	0	**175**	
1715 - 1730	0	143	22	0	0	0	0	1	3	0	0	0	0	**169**	
1730 - 1745	0	161	17	0	1	0	0	0	1	0	0	0	0	**180**	
1745 - 1800	0	164	20	0	0	0	0	0	0	0	0	0	0	**184**	**708**
1800 - 1815	0	173	28	0	1	0	0	0	0	0	0	0	0	**202**	
1815 - 1830	0	153	18	0	2	0	0	1	4	0	0	0	0	**178**	
1830 - 1845	0	153	15	0	2	0	0	0	2	0	0	0	0	**172**	
1845 - 1900	0	152	17	0	0	0	0	0	1	0	0	0	0	**170**	**722**
1900 - 1915	0	120	9	0	0	0	0	0	1	0	0	0	0	**130**	
1915 - 1930	0	138	17	0	0	0	0	0	2	0	0	0	0	**157**	
1930 - 1945	0	125	24	0	3	0	0	0	0	0	0	0	0	**152**	
1945 - 2000	0	116	12	0	0	0	0	0	0	0	0	0	0	**128**	**567**
2000 - 2015	0	117	16	0	1	1	0	0	0	0	0	0	0	**135**	
2015 - 2030	0	97	12	0	0	0	0	0	1	0	0	0	0	**110**	
2030 - 2045	0	82	7	0	2	0	0	0	1	0	0	0	0	**92**	
2045 - 2100	0	68	7	0	0	0	0	0	0	0	0	0	0	**75**	**412**
2100 - 2115	0	50	8	0	0	0	0	0	2	0	0	0	0	**60**	
2115 - 2130	0	63	5	0	0	0	0	0	0	0	0	0	0	**68**	
2130 - 2145	0	54	4	0	1	0	0	0	0	0	0	0	0	**59**	
2145 - 2200	0	54	3	0	0	0	0	0	1	0	0	0	0	**58**	**245**
2200 - 2215	0	55	4	0	0	0	0	0	0	0	0	0	0	**59**	
2215 - 2230	0	45	4	0	1	0	0	0	0	0	0	0	0	**50**	
2230 - 2245	0	37	2	0	0	0	0	0	1	0	0	0	0	**40**	
2245 - 2300	0	34	3	0	0	0	0	0	0	0	0	0	0	**37**	**186**
2300 - 2315	0	36	5	0	0	0	0	0	0	0	0	0	0	**41**	
2315 - 2330	0	30	3	0	0	0	0	0	0	0	0	0	0	**33**	
2330 - 2345	0	20	1	0	0	0	0	0	0	0	0	0	0	**21**	
2345 - 0000	0	27	3	0	0	0	0	0	1	0	0	0	0	**31**	**126**

Session Total	4	9344	1600	7	108	12	2	17	75	0	1	0	0	**11170**
Session Average	0.04	97.33	16.67	0.07	1.13	0.13	0.02	0.18	0.78	0.00	0.01	0.00	0.00	**116.35**
Session Percentage	0.04	83.65	14.32	0.06	0.97	0.11	0.02	0.15	0.67	0.00	0.01	0.00	0.00	

AM Peak Hour	-	0945 - 1045	0945 - 1045	0945 - 1045	0845 - 0945	0515 - 0615	-	0945 - 1045	0930 - 1030	-	-	-	-	**0945 - 1045**
AM Peak Volume	0	618	138	3	20	1	0	3	7	0	0	0	0	**776**

Noon Peak Hour	1245 - 1345	1445 - 1545	1400 - 1500	1000 - 1100	1030 - 1130	1430 - 1530	1015 - 1115	1130 - 1230	1000 - 1100	-	-	-	-	**1445 - 1545**
Noon Peak Volume	2	740	157	3	11	3	1	5	4	0	0	0	0	**870**

PM Peak Hour	-	1515 - 1615	1515 - 1615	-	1745 - 1845	1500 - 1600	-	1515 - 1615	1815 - 1915	-	-	-	-	**1515 - 1615**
PM Peak Volume	0	902	127	0	5	2	0	1	8	0	0	0	0	**1037**

Site 31
I-26 James F. Byrnes Expy N/Bound Off-Ramp,
south of Piney Grove Rd

Date
Thursday, April 25, 2024

Lat/Long
34.066544°, -81.140849°

Weather
Fair
67°F

Click here for Detailed Weather

0000 - 2400 (Weekday 24h Session) (04-25-2024)
NB EB 15min

	Northbound (Movement 31.1)													15min	60min
TIME	1	2	3	4	5	6	7	8	9	10	11	12	13	Total	Total
0000 - 0015	0	13	2	0	0	0	0	0	0	0	0	0	0	**15**	
0015 - 0030	0	21	3	0	0	0	0	0	0	0	0	0	0	**24**	
0030 - 0045	0	11	3	0	0	0	0	0	0	0	0	0	0	**14**	
0045 - 0100	0	13	2	0	0	0	0	0	0	0	0	0	0	**15**	**68**
0100 - 0115	0	9	1	0	0	0	0	0	0	0	0	0	0	**10**	
0115 - 0130	0	10	2	0	0	0	0	0	0	0	0	0	0	**12**	
0130 - 0145	0	7	2	0	0	0	0	0	0	0	0	0	0	**9**	
0145 - 0200	0	7	1	0	0	0	0	0	0	0	0	0	0	**8**	**39**
0200 - 0215	0	11	2	0	0	0	0	1	0	0	0	0	0	**14**	
0215 - 0230	0	8	1	0	1	0	0	0	1	0	0	0	0	**11**	
0230 - 0245	0	6	0	0	1	0	0	0	0	0	0	0	0	**7**	
0245 - 0300	0	5	1	0	0	0	0	0	1	0	0	0	0	**7**	**39**
0300 - 0315	0	5	0	0	0	0	0	0	2	0	0	0	0	**7**	
0315 - 0330	0	7	2	0	1	0	0	0	2	0	0	0	0	**12**	
0330 - 0345	0	9	1	0	0	0	0	0	2	0	0	0	0	**12**	
0345 - 0400	0	15	2	0	0	0	0	0	1	0	0	0	0	**18**	**49**
0400 - 0415	0	15	2	0	0	0	0	0	2	0	0	0	0	**19**	
0415 - 0430	0	18	2	0	0	0	0	0	2	0	0	0	0	**22**	
0430 - 0445	0	17	2	0	1	0	0	0	1	0	0	0	0	**21**	
0445 - 0500	0	28	3	0	0	0	0	0	2	0	0	0	0	**33**	**95**
0500 - 0515	0	19	3	0	1	0	0	0	2	0	0	0	0	**25**	
0515 - 0530	0	15	2	0	2	1	0	0	0	0	0	0	0	**20**	
0530 - 0545	0	17	2	0	2	0	0	0	0	0	0	0	0	**21**	
0545 - 0600	0	30	4	0	0	0	0	0	0	0	0	0	0	**34**	**100**
0600 - 0615	0	25	10	0	1	0	0	0	1	0	0	0	0	**37**	
0615 - 0630	0	35	4	0	1	1	0	0	2	0	0	0	0	**43**	
0630 - 0645	0	39	8	2	1	0	0	0	1	0	0	0	0	**51**	
0645 - 0700	0	64	17	0	1	1	0	0	1	0	0	0	0	**84**	**215**
0700 - 0715	0	56	13	0	8	0	1	1	1	0	0	0	0	**80**	
0715 - 0730	0	95	21	0	5	1	0	1	1	0	0	0	0	**124**	
0730 - 0745	0	90	15	0	3	2	0	0	1	0	0	0	0	**111**	
0745 - 0800	0	143	17	0	7	0	0	0	0	0	0	0	0	**167**	**482**
0800 - 0815	0	115	25	0	0	1	0	0	1	0	0	0	0	**142**	
0815 - 0830	1	125	22	0	3	1	0	0	4	0	0	0	0	**156**	
0830 - 0845	0	112	18	0	1	0	0	0	0	0	0	0	0	**131**	
0845 - 0900	1	142	30	0	5	1	0	0	0	0	0	0	0	**179**	**608**
0900 - 0915	0	129	26	1	2	3	0	2	1	0	0	0	0	**164**	
0915 - 0930	0	99	16	0	2	2	0	2	0	0	0	0	0	**121**	
0930 - 0945	0	145	35	1	2	0	0	0	1	0	0	0	0	**184**	
0945 - 1000	0	140	32	0	4	1	0	0	1	0	0	0	0	**178**	**647**
1000 - 1015	0	138	33	1	2	0	0	2	3	0	0	0	0	**179**	
1015 - 1030	0	136	26	0	2	0	0	0	1	0	0	0	0	**165**	
1030 - 1045	0	162	39	1	1	0	0	0	1	0	0	0	0	**204**	
1045 - 1100	2	169	36	0	1	0	0	0	2	0	0	0	0	**210**	**758**
1100 - 1115	0	146	23	0	2	0	1	0	3	0	0	0	0	**175**	
1115 - 1130	0	142	34	0	4	0	0	0	0	0	0	0	0	**180**	
1130 - 1145	0	185	38	0	1	0	0	0	1	0	0	0	0	**225**	
1145 - 1200	1	118	39	0	4	0	1	0	0	0	0	0	0	**163**	**743**
1200 - 1215	0	199	30	0	1	0	0	0	2	0	0	0	0	**232**	
1215 - 1230	2	189	26	1	3	0	0	0	1	0	0	0	0	**222**	
1230 - 1245	0	192	37	0	1	0	0	0	1	0	0	0	0	**231**	
1245 - 1300	0	197	33	0	1	1	0	0	1	0	0	0	0	**233**	**918**
1300 - 1315	0	163	32	0	3	0	0	1	0	0	0	0	0	**199**	
1315 - 1330	0	186	33	0	3	0	0	0	0	0	0	0	0	**222**	
1330 - 1345	0	156	34	0	1	0	0	1	3	0	0	0	0	**195**	
1345 - 1400	0	202	21	0	2	2	0	0	1	0	0	0	0	**228**	**844**
1400 - 1415	0	165	33	0	3	1	0	0	0	0	0	0	0	**202**	
1415 - 1430	0	189	33	0	1	0	0	0	0	0	0	0	0	**223**	
1430 - 1445	0	175	36	0	2	0	1	0	1	0	0	0	0	**215**	
1445 - 1500	1	186	36	0	2	1	0	1	2	0	0	0	0	**229**	**869**
1500 - 1515	0	177	25	1	2	2	0	0	1	0	0	0	0	**208**	
1515 - 1530	0	171	32	0	6	0	0	0	0	0	0	0	0	**209**	
1530 - 1545	0	172	31	0	0	0	0	0	2	0	0	0	0	**205**	
1545 - 1600	0	154	30	0	0	0	0	0	3	0	0	0	0	**187**	**809**
1600 - 1615	1	164	28	0	2	0	0	0	0	0	0	0	0	**195**	
1615 - 1630	0	142	19	0	4	0	0	0	0	0	0	0	0	**165**	
1630 - 1645	0	136	22	0	3	0	0	0	0	0	0	0	0	**161**	
1645 - 1700	1	185	20	0	3	0	0	0	1	0	0	0	0	**210**	**731**
1700 - 1715	0	146	14	0	0	0	0	0	1	0	0	0	0	**161**	
1715 - 1730	0	148	19	0	3	0	0	0	2	0	0	0	0	**172**	
1730 - 1745	0	155	21	0	1	0	0	0	2	0	0	0	0	**179**	
1745 - 1800	0	157	20	0	2	0	0	0	2	0	0	0	0	**181**	**693**
1800 - 1815	0	163	11	0	0	0	0	0	0	0	0	0	0	**174**	
1815 - 1830	0	175	21	0	1	0	0	0	1	0	0	0	0	**198**	
1830 - 1845	0	134	21	1	2	0	0	0	1	0	0	0	0	**159**	
1845 - 1900	0	137	17	0	2	0	0	0	1	0	0	0	0	**157**	**688**
1900 - 1915	0	0	0	0	0	0	0	0	0	0	0	0	0	**0**	
1915 - 1930	0	0	0	0	0	0	0	0	0	0	0	0	0	**0**	
1930 - 1945	0	0	0	0	0	0	0	0	0	0	0	0	0	**0**	
1945 - 2000	0	0	0	0	0	0	0	0	0	0	0	0	0	**0**	**0**
2000 - 2015	0	0	0	0	0	0	0	0	0	0	0	0	0	**0**	
2015 - 2030	0	0	0	0	0	0	0	0	0	0	0	0	0	**0**	
2030 - 2045	0	0	0	0	0	0	0	0	0	0	0	0	0	**0**	
2045 - 2100	0	0	0	0	0	0	0	0	0	0	0	0	0	**0**	**0**
2100 - 2115	0	0	0	0	0	0	0	0	0	0	0	0	0	**0**	
2115 - 2130	0	0	0	0	0	0	0	0	0	0	0	0	0	**0**	
2130 - 2145	0	0	0	0	0	0	0	0	0	0	0	0	0	**0**	
2145 - 2200	0	0	0	0	0	0	0	0	0	0	0	0	0	**0**	**0**
2200 - 2215	0	0	0	0	0	0	0	0	0	0	0	0	0	**0**	
2215 - 2230	0	0	0	0	0	0	0	0	0	0	0	0	0	**0**	
2230 - 2245	0	0	0	0	0	0	0	0	0	0	0	0	0	**0**	
2245 - 2300	0	0	0	0	0	0	0	0	0	0	0	0	0	**0**	**0**
2300 - 2315	0	0	0	0	0	0	0	0	0	0	0	0	0	**0**	
2315 - 2330	0	0	0	0	0	0	0	0	0	0	0	0	0	**0**	
2330 - 2345	0	0	0	0	0	0	0	0	0	0	0	0	0	**0**	
2345 - 0000	0	0	0	0	0	0	0	0	0	0	0	0	0	**0**	**0**

Session Total	10	7781	1357	9	126	22	4	12	74	0	0	0	0	**9395**
Session Average	0.10	81.05	14.14	0.09	1.31	0.23	0.04	0.13	0.77	0.00	0.00	0.00	0.00	**97.86**
Session Percentage	0.11	82.82	14.44	0.10	1.34	0.23	0.04	0.13	0.79	0.00	0.00	0.00	0.00	

AM Peak Hour	0800 - 0900	0945 - 1045	0945 - 1045	0545 - 0645	0700 - 0800	0830 - 0930	0615 - 0715	0830 - 0930	0730 - 0830	-	-	-	-	**0945 - 1045**
AM Peak Hour Volume	2	576	130	2	23	6	1	4	6	0	0	0	0	**726**

Noon Peak Hour	1130 - 1230	1200 - 1300	1115 - 1215	1000 - 1100	1430 - 1530	1315 - 1415	1100 - 1200	1000 - 1100	1000 - 1100	-	-	-	-	**1200 - 1300**
Noon Peak Hour Volume	3	777	141	2	12	3	2	2	7	0	0	0	0	**918**

PM Peak Hour	1600 - 1700	1500 - 1600	1515 - 1615	1500 - 1600	1600 - 1700	1500 - 1600	-	-	1700 - 1800	-	-	-	-	**1500 - 1600**
PM Peak Hour Volume	2	674	121	1	12	2	0	0	7	0	0	0	0	**809**

Bi-Directional Class Count || NB EB Average 15min

Columbia, SC

Marr Traffic DATA COLLECTION
www.marrtraffic.com

Site 31
I-26 James F. Byrnes Expy N/Bound Off-Ramp, south of Piney Grove Rd

Date
Tuesday, April 23, 2024

Lat/Long
34.066544°, -81.140849°

Weather
Fair
58°F

0000 - 2400 (Weekday 24h Session) (All Dates)
NB EB Average 15min

	NB EB Average 15min													15min	60min
Time	1	2	3	4	5	6	7	8	9	10	11	12	13	Total	Total
0000 - 0015	0	11	2	0	0	0	0	0	0	0	0	0	0	**13**	
0015 - 0030	0	13	2	0	0	0	0	0	0	0	0	0	0	**16**	
0030 - 0045	0	8	1	0	0	0	0	0	0	0	0	0	0	**10**	
0045 - 0100	0	10	2	0	0	0	0	0	0	0	0	0	0	**12**	**50**
0100 - 0115	0	7	1	0	0	0	0	0	0	0	0	0	0	**8**	
0115 - 0130	0	9	2	0	0	0	0	0	0	0	0	0	0	**10**	
0130 - 0145	0	5	1	0	0	0	0	0	0	0	0	0	0	**6**	
0145 - 0200	0	5	1	0	0	0	0	0	0	0	0	0	0	**7**	**30**
0200 - 0215	0	7	1	0	0	0	0	0	0	0	0	0	0	**9**	
0215 - 0230	0	6	1	0	0	0	0	0	0	0	0	0	0	**7**	
0230 - 0245	0	5	1	0	0	0	0	0	0	0	0	0	0	**7**	
0245 - 0300	0	3	0	0	0	0	0	0	1	0	0	0	0	**4**	**27**
0300 - 0315	0	4	1	0	0	0	0	0	1	0	0	0	0	**5**	
0315 - 0330	0	6	1	0	0	0	0	0	2	0	0	0	0	**8**	
0330 - 0345	0	5	0	0	0	0	0	0	1	0	0	0	0	**6**	
0345 - 0400	0	10	1	0	0	0	0	0	1	0	0	0	0	**12**	**32**
0400 - 0415	0	9	1	0	0	0	0	0	2	0	0	0	0	**12**	
0415 - 0430	0	10	1	0	0	0	0	0	1	0	0	0	0	**13**	
0430 - 0445	0	11	1	0	0	0	0	0	1	0	0	0	0	**13**	
0445 - 0500	0	20	2	0	0	0	0	0	1	0	0	0	0	**23**	**62**
0500 - 0515	0	12	2	0	0	0	0	0	1	0	0	0	0	**15**	
0515 - 0530	0	9	1	0	1	0	0	0	1	0	0	0	0	**12**	
0530 - 0545	0	11	2	0	1	0	0	0	1	0	0	0	0	**14**	
0545 - 0600	0	20	3	0	0	0	0	0	0	0	0	0	0	**23**	**64**
0600 - 0615	0	19	7	0	1	0	0	0	0	0	0	0	0	**28**	
0615 - 0630	0	22	5	0	1	0	0	0	1	0	0	0	0	**29**	
0630 - 0645	0	26	5	1	0	0	0	0	1	0	0	0	0	**33**	
0645 - 0700	0	43	10	0	1	0	0	0	0	0	0	0	0	**55**	**144**
0700 - 0715	0	43	9	0	4	0	0	0	0	0	0	0	0	**58**	
0715 - 0730	0	68	14	0	3	0	0	0	1	0	0	0	0	**87**	
0730 - 0745	0	61	11	0	2	1	0	0	0	0	0	0	0	**75**	
0745 - 0800	0	94	13	0	3	0	0	0	1	0	0	0	0	**110**	**330**
0800 - 0815	0	75	16	0	1	0	0	0	0	0	0	0	0	**93**	
0815 - 0830	0	88	16	0	2	0	0	0	1	0	0	0	0	**108**	
0830 - 0845	0	71	15	0	1	0	0	0	0	0	0	0	0	**87**	
0845 - 0900	0	97	16	0	4	0	0	0	0	0	0	0	0	**117**	**406**
0900 - 0915	0	89	17	0	2	1	0	1	0	0	0	0	0	**112**	
0915 - 0930	0	65	14	0	2	1	0	1	0	0	0	0	0	**81**	
0930 - 0945	0	92	20	0	3	0	0	0	1	0	0	0	0	**117**	
0945 - 1000	0	101	21	0	3	0	0	0	1	0	0	0	0	**126**	**435**
1000 - 1015	0	89	23	1	1	0	0	1	1	0	0	0	0	**116**	
1015 - 1030	0	108	21	0	1	0	0	0	1	0	0	0	0	**132**	
1030 - 1045	0	100	24	1	1	0	0	0	1	0	0	0	0	**127**	
1045 - 1100	1	101	25	0	1	0	0	0	1	0	0	0	0	**128**	**503**
1100 - 1115	0	93	18	0	1	0	1	1	1	0	0	0	0	**114**	
1115 - 1130	0	92	22	0	3	0	0	0	0	0	0	0	0	**117**	
1130 - 1145	0	117	28	0	1	0	0	0	1	0	0	0	0	**147**	
1145 - 1200	0	95	26	0	2	0	0	0	0	0	0	0	0	**125**	**503**
1200 - 1215	0	123	21	1	0	0	0	0	1	0	0	0	0	**147**	
1215 - 1230	1	124	20	0	1	0	0	1	1	0	0	0	0	**147**	
1230 - 1245	0	124	24	0	1	0	0	0	0	0	0	0	0	**148**	
1245 - 1300	0	126	21	0	0	0	0	0	0	0	0	0	0	**148**	**590**
1300 - 1315	0	112	18	0	2	0	0	0	0	0	0	0	0	**132**	
1315 - 1330	0	121	22	0	2	0	0	0	0	0	0	0	0	**145**	
1330 - 1345	0	108	22	0	1	0	0	0	2	0	0	0	0	**134**	
1345 - 1400	0	118	17	0	1	1	0	0	0	0	0	0	0	**138**	**549**
1400 - 1415	0	104	27	0	1	0	0	0	0	0	0	0	0	**133**	
1415 - 1430	0	122	25	0	1	0	0	0	0	0	0	0	0	**148**	
1430 - 1445	0	114	24	0	1	0	0	0	0	0	0	0	0	**140**	
1445 - 1500	0	120	23	0	1	0	0	0	1	0	0	0	0	**146**	**568**
1500 - 1515	0	118	16	0	2	1	0	0	0	0	0	0	0	**138**	
1515 - 1530	0	119	23	0	2	0	0	0	0	0	0	0	0	**144**	
1530 - 1545	0	125	20	0	0	0	0	0	1	0	0	0	0	**145**	
1545 - 1600	0	118	18	0	0	0	0	0	1	0	0	0	0	**138**	**565**
1600 - 1615	0	159	22	0	1	0	0	0	1	0	0	0	0	**183**	
1615 - 1630	0	102	14	0	1	0	0	0	0	0	0	0	0	**117**	
1630 - 1645	0	92	16	0	1	0	0	0	0	0	0	0	0	**109**	
1645 - 1700	0	119	16	0	1	0	0	0	0	0	0	0	0	**137**	**546**
1700 - 1715	0	97	13	0	1	0	0	0	1	0	0	0	0	**112**	
1715 - 1730	0	97	14	0	1	0	0	0	2	0	0	0	0	**114**	
1730 - 1745	0	105	13	0	1	0	0	0	1	0	0	0	0	**120**	
1745 - 1800	0	107	13	0	1	0	0	0	1	0	0	0	0	**122**	**467**
1800 - 1815	0	112	13	0	0	0	0	0	0	0	0	0	0	**125**	
1815 - 1830	0	109	13	0	1	0	0	0	2	0	0	0	0	**125**	
1830 - 1845	0	96	12	0	1	0	0	0	1	0	0	0	0	**110**	
1845 - 1900	0	96	11	0	1	0	0	0	1	0	0	0	0	**109**	**470**
1900 - 1915	0	83	7	0	0	0	0	0	0	0	0	0	0	**91**	
1915 - 1930	0	87	10	0	0	0	0	0	1	0	0	0	0	**98**	
1930 - 1945	0	80	12	0	2	0	0	0	0	0	0	0	0	**94**	
1945 - 2000	0	76	8	0	0	0	0	0	0	0	0	0	0	**84**	**367**
2000 - 2015	0	67	11	0	1	0	0	0	0	0	0	0	0	**79**	
2015 - 2030	0	60	8	0	0	0	0	0	0	0	0	0	0	**68**	
2030 - 2045	0	53	6	0	1	0	0	0	1	0	0	0	0	**60**	
2045 - 2100	0	44	4	0	0	0	0	0	0	0	0	0	0	**48**	**256**
2100 - 2115	0	43	6	0	0	0	0	0	1	0	0	0	0	**50**	
2115 - 2130	0	43	4	0	0	0	0	0	0	0	0	0	0	**47**	
2130 - 2145	0	35	3	0	0	0	0	0	0	0	0	0	0	**38**	
2145 - 2200	0	38	2	0	0	0	0	0	0	0	0	0	0	**41**	**176**
2200 - 2215	0	32	3	0	0	0	0	0	0	0	0	0	0	**35**	
2215 - 2230	0	30	4	0	0	0	0	0	0	0	0	0	0	**34**	
2230 - 2245	0	24	2	0	0	0	0	0	1	0	0	0	0	**26**	
2245 - 2300	0	19	3	0	0	0	0	0	0	0	0	0	0	**22**	**117**
2300 - 2315	0	21	3	0	0	0	0	0	0	0	0	0	0	**24**	
2315 - 2330	0	21	2	0	0	0	0	0	0	0	0	0	0	**23**	
2330 - 2345	0	15	2	0	0	0	0	0	0	0	0	0	0	**16**	
2345 - 0000	0	15	2	0	0	0	0	0	1	0	0	0	0	**18**	**81**

Session Total	5	6137	1037	5	81	11	2	10	52	0	0	0	0	**7340**
Session Average	0.05	63.93	10.80	0.06	0.84	0.12	0.02	0.10	0.54	0.00	0.00	0.00	0.00	**76.46**
Session Percentage	0.06	83.61	14.13	0.07	1.10	0.15	0.03	0.13	0.71	0.00	0.00	0.00	0.00	

AM Peak Hour	0800 - 0900	0945 - 1045	0945 - 1045	0945 - 1045	0700 - 0800	0900 - 1000	0615 - 0715	0830 - 0930	0930 - 1030	-	-	-	-	**0945 - 1045**
AM Peak Volume	1	398	89	2	11	2	0	2	4	0	0	0	0	**501**

Noon Peak Hour	1130 - 1230	1200 - 1300	1400 - 1500	1000 - 1100	1100 - 1200	1430 - 1530	1100 - 1200	1130 - 1230	1000 - 1100	-	-	-	-	**1200 - 1300**
Noon Peak Volume	1	497	98	2	7	2	1	2	4	0	0	0	0	**590**

PM Peak Hour	1600 - 1700	1515 - 1615	1515 - 1615	1500 - 1600	1600 - 1700	1500 - 1600	-	1515 - 1615	1700 - 1800	-	-	-	-	**1515 - 1615**
PM Peak Volume	1	521	83	0	5	1	0	0	4	0	0	0	0	**611**

Bi-Directional Class Count || Volume Summary 15min

Columbia, SC

Marr Traffic DATA COLLECTION

www.marrtraffic.com

Site 31

I-26 James F. Byrnes Expy N/Bound Off-Ramp,
south of Piney Grove Rd

Date

Tuesday, April 23, 2024

Lat/Long

34.066544°, -81.140849°

Weather

Fair
58°F

Click here for Detailed Weather

0000 - 2400 (Weekday 24h Session) (04-23-2024)

Volume Summary 15min

TIME	Volume Summary 15min NB	Volume Summary 15min SB	15min Total	60min Total
0000 - 0015	0	0	**0**	
0015 - 0030	0	0	**0**	
0030 - 0045	0	0	**0**	
0045 - 0100	0	0	**0**	**0**
0100 - 0115	0	0	**0**	
0115 - 0130	0	0	**0**	
0130 - 0145	0	0	**0**	
0145 - 0200	0	0	**0**	**0**
0200 - 0215	0	0	**0**	
0215 - 0230	0	0	**0**	
0230 - 0245	0	0	**0**	
0245 - 0300	0	0	**0**	**0**
0300 - 0315	0	0	**0**	
0315 - 0330	0	0	**0**	
0330 - 0345	0	0	**0**	
0345 - 0400	0	0	**0**	**0**
0400 - 0415	0	0	**0**	
0415 - 0430	0	0	**0**	
0430 - 0445	0	0	**0**	
0445 - 0500	0	0	**0**	**0**
0500 - 0515	0	0	**0**	
0515 - 0530	0	0	**0**	
0530 - 0545	0	0	**0**	
0545 - 0600	0	0	**0**	**0**
0600 - 0615	0	0	**0**	
0615 - 0630	0	0	**0**	
0630 - 0645	0	0	**0**	
0645 - 0700	0	0	**0**	**0**
0700 - 0715	0	0	**0**	
0715 - 0730	0	0	**0**	
0730 - 0745	0	0	**0**	
0745 - 0800	0	0	**0**	**0**
0800 - 0815	0	0	**0**	
0815 - 0830	0	0	**0**	
0830 - 0845	0	0	**0**	
0845 - 0900	0	0	**0**	**0**
0900 - 0915	0	0	**0**	
0915 - 0930	0	0	**0**	
0930 - 0945	0	0	**0**	
0945 - 1000	0	0	**0**	**0**
1000 - 1015	0	0	**0**	
1015 - 1030	0	0	**0**	
1030 - 1045	0	0	**0**	
1045 - 1100	0	0	**0**	**0**
1100 - 1115	0	0	**0**	
1115 - 1130	0	0	**0**	
1130 - 1145	0	0	**0**	
1145 - 1200	0	0	**0**	**0**

Time	Volume Summary 15min NB	Volume Summary 15min SB	15min Total	60min Total
1200 - 1215	0	0	**0**	
1215 - 1230	0	0	**0**	
1230 - 1245	0	0	**0**	
1245 - 1300	0	0	**0**	**0**
1300 - 1315	0	0	**0**	
1315 - 1330	0	0	**0**	
1330 - 1345	0	0	**0**	
1345 - 1400	0	0	**0**	**0**
1400 - 1415	0	0	**0**	
1415 - 1430	0	0	**0**	
1430 - 1445	0	0	**0**	
1445 - 1500	0	0	**0**	**0**
1500 - 1515	0	0	**0**	
1515 - 1530	0	0	**0**	
1530 - 1545	0	0	**0**	
1545 - 1600	0	0	**0**	**0**
1600 - 1615	0	0	**0**	
1615 - 1630	0	0	**0**	
1630 - 1645	0	0	**0**	
1645 - 1700	0	0	**0**	**0**
1700 - 1715	0	0	**0**	
1715 - 1730	0	0	**0**	
1730 - 1745	0	0	**0**	
1745 - 1800	0	0	**0**	**0**
1800 - 1815	0	0	**0**	
1815 - 1830	0	0	**0**	
1830 - 1845	0	0	**0**	
1845 - 1900	0	0	**0**	**0**
1900 - 1915	142	0	**142**	
1915 - 1930	138	0	**138**	
1930 - 1945	131	0	**131**	
1945 - 2000	124	0	**124**	**535**
2000 - 2015	103	0	**103**	
2015 - 2030	95	0	**95**	
2030 - 2045	89	0	**89**	
2045 - 2100	70	0	**70**	**357**
2100 - 2115	90	0	**90**	
2115 - 2130	72	0	**72**	
2130 - 2145	56	0	**56**	
2145 - 2200	64	0	**64**	**282**
2200 - 2215	45	0	**45**	
2215 - 2230	53	0	**53**	
2230 - 2245	38	0	**38**	
2245 - 2300	29	0	**29**	**165**
2300 - 2315	31	0	**31**	
2315 - 2330	36	0	**36**	
2330 - 2345	28	0	**28**	
2345 - 0000	22	0	**22**	**117**

Session Total	1456	0	**1456**
Session Average	15.17	0.00	**15.17**
Session Percentage	100.00	0.00	

Site 31

I-26 James F. Byrnes Expy N/Bound Off-Ramp,
south of Piney Grove Rd

Date

Wednesday, April 24, 2024

Lat/Long

34.066544°, -81.140849°

Weather

Fair
66°F

Click here for Detailed Weather

0000 - 2400 (Weekday 24h Session) (04-24-2024)

Volume Summary 15min

TIME	Volume Summary 15min NB	SB	15min Total	60min Total
0000 - 0015	23	0	**23**	
0015 - 0030	24	0	**24**	
0030 - 0045	15	0	**15**	
0045 - 0100	21	0	**21**	**83**
0100 - 0115	13	0	**13**	
0115 - 0130	19	0	**19**	
0130 - 0145	8	0	**8**	
0145 - 0200	12	0	**12**	**52**
0200 - 0215	12	0	**12**	
0215 - 0230	11	0	**11**	
0230 - 0245	14	0	**14**	
0245 - 0300	6	0	**6**	**43**
0300 - 0315	9	0	**9**	
0315 - 0330	13	0	**13**	
0330 - 0345	6	0	**6**	
0345 - 0400	19	0	**19**	**47**
0400 - 0415	18	0	**18**	
0415 - 0430	17	0	**17**	
0430 - 0445	19	0	**19**	
0445 - 0500	37	0	**37**	**91**
0500 - 0515	21	0	**21**	
0515 - 0530	16	0	**16**	
0530 - 0545	20	0	**20**	
0545 - 0600	36	0	**36**	**93**
0600 - 0615	46	0	**46**	
0615 - 0630	44	0	**44**	
0630 - 0645	47	0	**47**	
0645 - 0700	81	0	**81**	**218**
0700 - 0715	94	0	**94**	
0715 - 0730	136	0	**136**	
0730 - 0745	113	0	**113**	
0745 - 0800	164	0	**164**	**507**
0800 - 0815	136	0	**136**	
0815 - 0830	169	0	**169**	
0830 - 0845	131	0	**131**	
0845 - 0900	173	0	**173**	**609**
0900 - 0915	171	0	**171**	
0915 - 0930	123	0	**123**	
0930 - 0945	166	0	**166**	
0945 - 1000	199	0	**199**	**659**
1000 - 1015	170	0	**170**	
1015 - 1030	230	0	**230**	
1030 - 1045	177	0	**177**	
1045 - 1100	175	0	**175**	**752**
1100 - 1115	168	0	**168**	
1115 - 1130	170	0	**170**	
1130 - 1145	216	0	**216**	
1145 - 1200	212	0	**212**	**766**

Time	Volume Summary 15min NB	SB	15min Total	60min Total
1200 - 1215	209	0	**209**	
1215 - 1230	219	0	**219**	
1230 - 1245	214	0	**214**	
1245 - 1300	211	0	**211**	**853**
1300 - 1315	197	0	**197**	
1315 - 1330	214	0	**214**	
1330 - 1345	206	0	**206**	
1345 - 1400	186	0	**186**	**803**
1400 - 1415	196	0	**196**	
1415 - 1430	222	0	**222**	
1430 - 1445	206	0	**206**	
1445 - 1500	210	0	**210**	**834**
1500 - 1515	205	0	**205**	
1515 - 1530	224	0	**224**	
1530 - 1545	231	0	**231**	
1545 - 1600	227	0	**227**	**887**
1600 - 1615	355	0	**355**	
1615 - 1630	185	0	**185**	
1630 - 1645	167	0	**167**	
1645 - 1700	200	0	**200**	**907**
1700 - 1715	175	0	**175**	
1715 - 1730	169	0	**169**	
1730 - 1745	180	0	**180**	
1745 - 1800	184	0	**184**	**708**
1800 - 1815	202	0	**202**	
1815 - 1830	178	0	**178**	
1830 - 1845	172	0	**172**	
1845 - 1900	170	0	**170**	**722**
1900 - 1915	130	0	**130**	
1915 - 1930	157	0	**157**	
1930 - 1945	152	0	**152**	
1945 - 2000	128	0	**128**	**567**
2000 - 2015	135	0	**135**	
2015 - 2030	110	0	**110**	
2030 - 2045	92	0	**92**	
2045 - 2100	75	0	**75**	**412**
2100 - 2115	60	0	**60**	
2115 - 2130	68	0	**68**	
2130 - 2145	59	0	**59**	
2145 - 2200	58	0	**58**	**245**
2200 - 2215	59	0	**59**	
2215 - 2230	50	0	**50**	
2230 - 2245	40	0	**40**	
2245 - 2300	37	0	**37**	**186**
2300 - 2315	41	0	**41**	
2315 - 2330	33	0	**33**	
2330 - 2345	21	0	**21**	
2345 - 0000	31	0	**31**	**126**

Session Total	11170	0	**11170**
Session Average	116.35	0.00	**116.35**
Session Percentage	100.00	0.00	

Site 31

I-26 James F. Byrnes Expy N/Bound Off-Ramp,
south of Piney Grove Rd

Date

Thursday, April 25, 2024

Lat/Long

34.066544°, -81.140849°

Weather

Fair
67°F

Click here for Detailed Weather

0000 - 2400 (Weekday 24h Session) (04-25-2024)

Volume Summary 15min

TIME	Volume Summary 15min NB	SB	15min Total	60min Total
0000 - 0015	15	0	**15**	
0015 - 0030	24	0	**24**	
0030 - 0045	14	0	**14**	
0045 - 0100	15	0	**15**	**68**
0100 - 0115	10	0	**10**	
0115 - 0130	12	0	**12**	
0130 - 0145	9	0	**9**	
0145 - 0200	8	0	**8**	**39**
0200 - 0215	14	0	**14**	
0215 - 0230	11	0	**11**	
0230 - 0245	7	0	**7**	
0245 - 0300	7	0	**7**	**39**
0300 - 0315	7	0	**7**	
0315 - 0330	12	0	**12**	
0330 - 0345	12	0	**12**	
0345 - 0400	18	0	**18**	**49**
0400 - 0415	19	0	**19**	
0415 - 0430	22	0	**22**	
0430 - 0445	21	0	**21**	
0445 - 0500	33	0	**33**	**95**
0500 - 0515	25	0	**25**	
0515 - 0530	20	0	**20**	
0530 - 0545	21	0	**21**	
0545 - 0600	34	0	**34**	**100**
0600 - 0615	37	0	**37**	
0615 - 0630	43	0	**43**	
0630 - 0645	51	0	**51**	
0645 - 0700	84	0	**84**	**215**
0700 - 0715	80	0	**80**	
0715 - 0730	124	0	**124**	
0730 - 0745	111	0	**111**	
0745 - 0800	167	0	**167**	**482**
0800 - 0815	142	0	**142**	
0815 - 0830	156	0	**156**	
0830 - 0845	131	0	**131**	
0845 - 0900	179	0	**179**	**608**
0900 - 0915	164	0	**164**	
0915 - 0930	121	0	**121**	
0930 - 0945	184	0	**184**	
0945 - 1000	178	0	**178**	**647**
1000 - 1015	179	0	**179**	
1015 - 1030	165	0	**165**	
1030 - 1045	204	0	**204**	
1045 - 1100	210	0	**210**	**758**
1100 - 1115	175	0	**175**	
1115 - 1130	180	0	**180**	
1130 - 1145	225	0	**225**	
1145 - 1200	163	0	**163**	**743**

Time	Volume Summary 15min NB	SB	15min Total	60min Total
1200 - 1215	232	0	**232**	
1215 - 1230	222	0	**222**	
1230 - 1245	231	0	**231**	
1245 - 1300	233	0	**233**	**918**
1300 - 1315	199	0	**199**	
1315 - 1330	222	0	**222**	
1330 - 1345	195	0	**195**	
1345 - 1400	228	0	**228**	**844**
1400 - 1415	202	0	**202**	
1415 - 1430	223	0	**223**	
1430 - 1445	215	0	**215**	
1445 - 1500	229	0	**229**	**869**
1500 - 1515	208	0	**208**	
1515 - 1530	209	0	**209**	
1530 - 1545	205	0	**205**	
1545 - 1600	187	0	**187**	**809**
1600 - 1615	195	0	**195**	
1615 - 1630	165	0	**165**	
1630 - 1645	161	0	**161**	
1645 - 1700	210	0	**210**	**731**
1700 - 1715	161	0	**161**	
1715 - 1730	172	0	**172**	
1730 - 1745	179	0	**179**	
1745 - 1800	181	0	**181**	**693**
1800 - 1815	174	0	**174**	
1815 - 1830	198	0	**198**	
1830 - 1845	159	0	**159**	
1845 - 1900	157	0	**157**	**688**
1900 - 1915	0	0	**0**	
1915 - 1930	0	0	**0**	
1930 - 1945	0	0	**0**	
1945 - 2000	0	0	**0**	**0**
2000 - 2015	0	0	**0**	
2015 - 2030	0	0	**0**	
2030 - 2045	0	0	**0**	
2045 - 2100	0	0	**0**	**0**
2100 - 2115	0	0	**0**	
2115 - 2130	0	0	**0**	
2130 - 2145	0	0	**0**	
2145 - 2200	0	0	**0**	**0**
2200 - 2215	0	0	**0**	
2215 - 2230	0	0	**0**	
2230 - 2245	0	0	**0**	
2245 - 2300	0	0	**0**	**0**
2300 - 2315	0	0	**0**	
2315 - 2330	0	0	**0**	
2330 - 2345	0	0	**0**	
2345 - 0000	0	0	**0**	**0**

Session Total	9395	0	**9395**
Session Average	97.86	0.00	**97.86**
Session Percentage	100.00	0.00	

Bi-Directional Class Count || NB EB 60min

Columbia, SC

Marr Traffic DATA COLLECTION

www.marrtraffic.com

Site 31
I-26 James F. Byrnes Expy N/Bound Off-Ramp,
south of Piney Grove Rd

Date
Tuesday, April 23, 2024

Lat/Long
34.066544°, -81.140849°

Weather
Fair
58°F

Click here for Detailed Weather

0000 - 2400 (Weekday 24h Session) (04-23-2024)
NB EB 60min

	Northbound (Movement 31.1)													
TIME	1	2	3	4	5	6	7	8	9	10	11	12	13	**Total**
0000 - 0100	0	0	0	0	0	0	0	0	0	0	0	0	0	**0**
0100 - 0200	0	0	0	0	0	0	0	0	0	0	0	0	0	**0**
0200 - 0300	0	0	0	0	0	0	0	0	0	0	0	0	0	**0**
0300 - 0400	0	0	0	0	0	0	0	0	0	0	0	0	0	**0**
0400 - 0500	0	0	0	0	0	0	0	0	0	0	0	0	0	**0**
0500 - 0600	0	0	0	0	0	0	0	0	0	0	0	0	0	**0**
0600 - 0700	0	0	0	0	0	0	0	0	0	0	0	0	0	**0**
0700 - 0800	0	0	0	0	0	0	0	0	0	0	0	0	0	**0**
0800 - 0900	0	0	0	0	0	0	0	0	0	0	0	0	0	**0**
0900 - 1000	0	0	0	0	0	0	0	0	0	0	0	0	0	**0**
1000 - 1100	0	0	0	0	0	0	0	0	0	0	0	0	0	**0**
1100 - 1200	0	0	0	0	0	0	0	0	0	0	0	0	0	**0**
1200 - 1300	0	0	0	0	0	0	0	0	0	0	0	0	0	**0**
1300 - 1400	0	0	0	0	0	0	0	0	0	0	0	0	0	**0**
1400 - 1500	0	0	0	0	0	0	0	0	0	0	0	0	0	**0**
1500 - 1600	0	0	0	0	0	0	0	0	0	0	0	0	0	**0**
1600 - 1700	0	0	0	0	0	0	0	0	0	0	0	0	0	**0**
1700 - 1800	0	0	0	0	0	0	0	0	0	0	0	0	0	**0**
1800 - 1900	0	0	0	0	0	0	0	0	0	0	0	0	0	**0**
1900 - 2000	0	481	49	0	5	0	0	0	0	0	0	0	0	**535**
2000 - 2100	0	308	44	0	3	0	0	0	2	0	0	0	0	**357**
2100 - 2200	0	256	24	0	0	0	0	0	2	0	0	0	0	**282**
2200 - 2300	0	143	20	0	0	0	0	0	2	0	0	0	0	**165**
2300 - 2400	0	99	17	0	0	0	0	0	1	0	0	0	0	**117**
Session Total	0	1287	154	0	8	0	0	0	7	0	0	0	0	**1456**
Session Average	0.00	53.63	6.42	0.00	0.33	0.00	0.00	0.00	0.29	0.00	0.00	0.00	0.00	**60.67**
Session Percentage	0.00	88.39	10.58	0.00	0.55	0.00	0.00	0.00	0.48	0.00	0.00	0.00	0.00	
AM Peak Hour	-	-	-	-	-	-	-	-	-	-	-	-	-	**-**
AM Peak Volume	0	0	0	0	0	0	0	0	0	0	0	0	0	**0**
Noon Peak Hour	-	-	-	-	-	-	-	-	-	-	-	-	-	**-**
Noon Peak Volume	0	0	0	0	0	0	0	0	0	0	0	0	0	**0**
PM Peak Hour	-	1900 - 2000	1900 - 2000	-	1900 - 2000	-	-	-	-	-	-	-	-	**1900 - 2000**
PM Peak Volume	0	481	49	0	5	0	0	0	0	0	0	0	0	**535**

Site 31

I-26 James F. Byrnes Expy N/Bound Off-Ramp,
south of Piney Grove Rd

Date

Wednesday, April 24, 2024

Lat/Long

34.066544°, -81.140849°

Weather

Fair
66°F

Click here for Detailed Weather

0000 - 2400 (Weekday 24h Session) (04-24-2024)

NB EB 60min

	Northbound (Movement 31.1)													
TIME	1	2	3	4	5	6	7	8	9	10	11	12	13	**Total**
0000 - 0100	0	69	11	0	1	0	0	0	1	0	1	0	0	**83**
0100 - 0200	0	43	7	0	0	0	0	0	2	0	0	0	0	**52**
0200 - 0300	0	33	6	0	0	1	0	0	3	0	0	0	0	**43**
0300 - 0400	0	37	4	0	1	0	0	0	5	0	0	0	0	**47**
0400 - 0500	0	72	9	0	1	1	0	0	8	0	0	0	0	**91**
0500 - 0600	0	75	11	0	1	0	0	0	6	0	0	0	0	**93**
0600 - 0700	0	167	41	0	6	1	0	0	3	0	0	0	0	**218**
0700 - 0800	0	415	75	0	11	1	0	0	5	0	0	0	0	**507**
0800 - 0900	0	500	93	0	14	0	0	2	0	0	0	0	0	**609**
0900 - 1000	0	528	107	0	18	1	0	1	4	0	0	0	0	**659**
1000 - 1100	0	590	146	3	7	0	0	2	4	0	0	0	0	**752**
1100 - 1200	1	598	149	0	10	0	1	4	3	0	0	0	0	**766**
1200 - 1300	0	713	130	3	1	1	0	3	2	0	0	0	0	**853**
1300 - 1400	2	672	115	1	8	2	1	0	2	0	0	0	0	**803**
1400 - 1500	1	665	157	0	7	1	0	2	1	0	0	0	0	**834**
1500 - 1600	0	768	112	0	4	2	0	0	1	0	0	0	0	**887**
1600 - 1700	0	786	115	0	2	0	0	1	3	0	0	0	0	**907**
1700 - 1800	0	614	85	0	3	0	0	1	5	0	0	0	0	**708**
1800 - 1900	0	631	78	0	5	0	0	1	7	0	0	0	0	**722**
1900 - 2000	0	499	62	0	3	0	0	0	3	0	0	0	0	**567**
2000 - 2100	0	364	42	0	3	1	0	0	2	0	0	0	0	**412**
2100 - 2200	0	221	20	0	1	0	0	0	3	0	0	0	0	**245**
2200 - 2300	0	171	13	0	1	0	0	0	1	0	0	0	0	**186**
2300 - 2400	0	113	12	0	0	0	0	0	1	0	0	0	0	**126**

Session Total	4	9344	1600	7	108	12	2	17	75	0	1	0	0	**11170**
Session Average	0.17	389.33	66.67	0.29	4.50	0.50	0.08	0.71	3.13	0.00	0.04	0.00	0.00	**465.42**
Session Percentage	0.04	83.65	14.32	0.06	0.97	0.11	0.02	0.15	0.67	0.00	0.01	0.00	0.00	

AM Peak Hour	-	0900 - 1000	0900 - 1000	-	0900 - 1000	0600 - 0700	-	0800 - 0900	0500 - 0600	-	-	-	-	**0900 - 1000**
AM Peak Volume	0	528	107	0	18	1	0	2	6	0	0	0	0	**659**

Noon Peak Hour	1300 - 1400	1200 - 1300	1400 - 1500	1000 - 1100	1100 - 1200	1300 - 1400	1100 - 1200	1100 - 1200	1000 - 1100	-	-	-	-	**1200 - 1300**
Noon Peak Volume	2	713	157	3	10	2	1	4	4	0	0	0	0	**853**

PM Peak Hour	-	1600 - 1700	1600 - 1700	-	1800 - 1900	1500 - 1600	-	1600 - 1700	1800 - 1900	-	-	-	-	**1600 - 1700**
PM Peak Volume	0	786	115	0	5	2	0	1	7	0	0	0	0	**907**

Site 31

I-26 James F. Byrnes Expy N/Bound Off-Ramp,
south of Piney Grove Rd

Date

Thursday, April 25, 2024

Lat/Long

34.066544°, -81.140849°

Weather

Fair
67°F

Click here for Detailed Weather

0000 - 2400 (Weekday 24h Session) (04-25-2024)

NB EB 60min

	Northbound (Movement 31.1)													
TIME	1	2	3	4	5	6	7	8	9	10	11	12	13	**Total**
0000 - 0100	0	58	10	0	0	0	0	0	0	0	0	0	0	**68**
0100 - 0200	0	33	6	0	0	0	0	0	0	0	0	0	0	**39**
0200 - 0300	0	30	4	0	2	0	0	1	2	0	0	0	0	**39**
0300 - 0400	0	36	5	0	1	0	0	0	7	0	0	0	0	**49**
0400 - 0500	0	78	9	0	1	0	0	0	7	0	0	0	0	**95**
0500 - 0600	0	81	11	0	5	1	0	0	2	0	0	0	0	**100**
0600 - 0700	0	163	39	2	4	2	0	0	5	0	0	0	0	**215**
0700 - 0800	0	384	66	0	23	3	1	2	3	0	0	0	0	**482**
0800 - 0900	2	494	95	0	9	3	0	0	5	0	0	0	0	**608**
0900 - 1000	0	513	109	2	10	6	0	4	3	0	0	0	0	**647**
1000 - 1100	2	605	134	2	6	0	0	2	7	0	0	0	0	**758**
1100 - 1200	1	591	134	0	11	0	2	0	4	0	0	0	0	**743**
1200 - 1300	2	777	126	1	6	1	0	0	5	0	0	0	0	**918**
1300 - 1400	0	707	120	0	9	2	0	2	4	0	0	0	0	**844**
1400 - 1500	1	715	138	0	8	2	1	1	3	0	0	0	0	**869**
1500 - 1600	0	674	118	1	8	2	0	0	6	0	0	0	0	**809**
1600 - 1700	2	627	89	0	12	0	0	0	1	0	0	0	0	**731**
1700 - 1800	0	606	74	0	6	0	0	0	7	0	0	0	0	**693**
1800 - 1900	0	609	70	1	5	0	0	0	3	0	0	0	0	**688**
1900 - 2000	0	0	0	0	0	0	0	0	0	0	0	0	0	**0**
2000 - 2100	0	0	0	0	0	0	0	0	0	0	0	0	0	**0**
2100 - 2200	0	0	0	0	0	0	0	0	0	0	0	0	0	**0**
2200 - 2300	0	0	0	0	0	0	0	0	0	0	0	0	0	**0**
2300 - 2400	0	0	0	0	0	0	0	0	0	0	0	0	0	**0**

Session Total	10	7781	1357	9	126	22	4	12	74	0	0	0	0	**9395**
Session Average	0.42	324.21	56.54	0.38	5.25	0.92	0.17	0.50	3.08	0.00	0.00	0.00	0.00	**391.46**
Session Percentage	0.11	82.82	14.44	0.10	1.34	0.23	0.04	0.13	0.79	0.00	0.00	0.00	0.00	

AM Peak Hour	0800 - 0900	0900 - 1000	0900 - 1000	0600 - 0700	0700 - 0800	0900 - 1000	0700 - 0800	0900 - 1000	0600 - 0700	-	-	-	-	**0900 - 1000**
AM Peak Hour Volume	2	513	109	2	23	6	1	4	5	0	0	0	0	**647**

Noon Peak Hour	1000 - 1100	1200 - 1300	1400 - 1500	1000 - 1100	1100 - 1200	1300 - 1400	1100 - 1200	1000 - 1100	1000 - 1100	-	-	-	-	**1200 - 1300**
Noon Peak Hour Volume	2	777	138	2	11	2	2	2	7	0	0	0	0	**918**

PM Peak Hour	1600 - 1700	1500 - 1600	1500 - 1600	1500 - 1600	1600 - 1700	1500 - 1600	-	-	1700 - 1800	-	-	-	-	**1500 - 1600**
PM Peak Hour Volume	2	674	118	1	12	2	0	0	7	0	0	0	0	**809**

Bi-Directional Class Count || Volume Summary 60min

Columbia, SC

Marr Traffic DATA COLLECTION

www.marrtraffic.com

Site 31

I-26 James F. Byrnes Expy N/Bound Off-Ramp,
south of Piney Grove Rd

Date

Tuesday, April 23, 2024

Lat/Long

34.066544°, -81.140849°

Weather

Fair
58°F

Click here for Detailed Weather

0000 - 2400 (Weekday 24h Session) (04-23-2024)

Volume Summary 60min

	Volume Summary 60min		
TIME	NB	SB	**Total**
0000 - 0100	0	0	**0**
0100 - 0200	0	0	**0**
0200 - 0300	0	0	**0**
0300 - 0400	0	0	**0**
0400 - 0500	0	0	**0**
0500 - 0600	0	0	**0**
0600 - 0700	0	0	**0**
0700 - 0800	0	0	**0**
0800 - 0900	0	0	**0**
0900 - 1000	0	0	**0**
1000 - 1100	0	0	**0**
1100 - 1200	0	0	**0**

	Volume Summary 60min		
Time	NB	SB	**Total**
1200 - 1300	0	0	**0**
1300 - 1400	0	0	**0**
1400 - 1500	0	0	**0**
1500 - 1600	0	0	**0**
1600 - 1700	0	0	**0**
1700 - 1800	0	0	**0**
1800 - 1900	0	0	**0**
1900 - 2000	535	0	**535**
2000 - 2100	357	0	**357**
2100 - 2200	282	0	**282**
2200 - 2300	165	0	**165**
2300 - 2400	117	0	**117**

Session Total	1456	0	**1456**
Session Average	60.67	0.00	**60.67**
Session Percentage	100.00	0.00	

Site 31

I-26 James F. Byrnes Expy N/Bound Off-Ramp,
south of Piney Grove Rd

Date

Wednesday, April 24, 2024

Lat/Long

34.066544°, -81.140849°

Weather

Fair
66°F

Click here for Detailed Weather

0000 - 2400 (Weekday 24h Session) (04-24-2024)

Volume Summary 60min

	Volume Summary 60min		
TIME	NB	SB	**Total**
0000 - 0100	83	0	**83**
0100 - 0200	52	0	**52**
0200 - 0300	43	0	**43**
0300 - 0400	47	0	**47**
0400 - 0500	91	0	**91**
0500 - 0600	93	0	**93**
0600 - 0700	218	0	**218**
0700 - 0800	507	0	**507**
0800 - 0900	609	0	**609**
0900 - 1000	659	0	**659**
1000 - 1100	752	0	**752**
1100 - 1200	766	0	**766**

	Volume Summary 60min		
Time	NB	SB	**Total**
1200 - 1300	853	0	**853**
1300 - 1400	803	0	**803**
1400 - 1500	834	0	**834**
1500 - 1600	887	0	**887**
1600 - 1700	907	0	**907**
1700 - 1800	708	0	**708**
1800 - 1900	722	0	**722**
1900 - 2000	567	0	**567**
2000 - 2100	412	0	**412**
2100 - 2200	245	0	**245**
2200 - 2300	186	0	**186**
2300 - 2400	126	0	**126**

Session Total	11170	0	**11170**
Session Average	465.42	0.00	**465.42**
Session Percentage	100.00	0.00	

Site 31

I-26 James F. Byrnes Expy N/Bound Off-Ramp,
south of Piney Grove Rd

Date

Thursday, April 25, 2024

Lat/Long

34.066544°, -81.140849°

Weather

Fair
67°F

Click here for Detailed Weather

0000 - 2400 (Weekday 24h Session) (04-25-2024)

Volume Summary 60min

	Volume Summary 60min		
TIME	NB	SB	**Total**
0000 - 0100	68	0	**68**
0100 - 0200	39	0	**39**
0200 - 0300	39	0	**39**
0300 - 0400	49	0	**49**
0400 - 0500	95	0	**95**
0500 - 0600	100	0	**100**
0600 - 0700	215	0	**215**
0700 - 0800	482	0	**482**
0800 - 0900	608	0	**608**
0900 - 1000	647	0	**647**
1000 - 1100	758	0	**758**
1100 - 1200	743	0	**743**

	Volume Summary 60min		
Time	NB	SB	**Total**
1200 - 1300	918	0	**918**
1300 - 1400	844	0	**844**
1400 - 1500	869	0	**869**
1500 - 1600	809	0	**809**
1600 - 1700	731	0	**731**
1700 - 1800	693	0	**693**
1800 - 1900	688	0	**688**
1900 - 2000	0	0	**0**
2000 - 2100	0	0	**0**
2100 - 2200	0	0	**0**
2200 - 2300	0	0	**0**
2300 - 2400	0	0	**0**

Session Total	9395	0	**9395**
Session Average	391.46	0.00	**391.46**
Session Percentage	100.00	0.00	

Bi-Directional Class Count || Graphical Analysis NB EB

Columbia, SC

Marr Traffic DATA COLLECTION

www.marrtraffic.com

Site 31

I-26 James F. Byrnes Expy N/Bound Off-Ramp,
south of Piney Grove Rd

Lat/Long

34.066544°, -81.140849°

0000 - 2400 (Weekday 24h Session)

Graphical Analysis NB EB

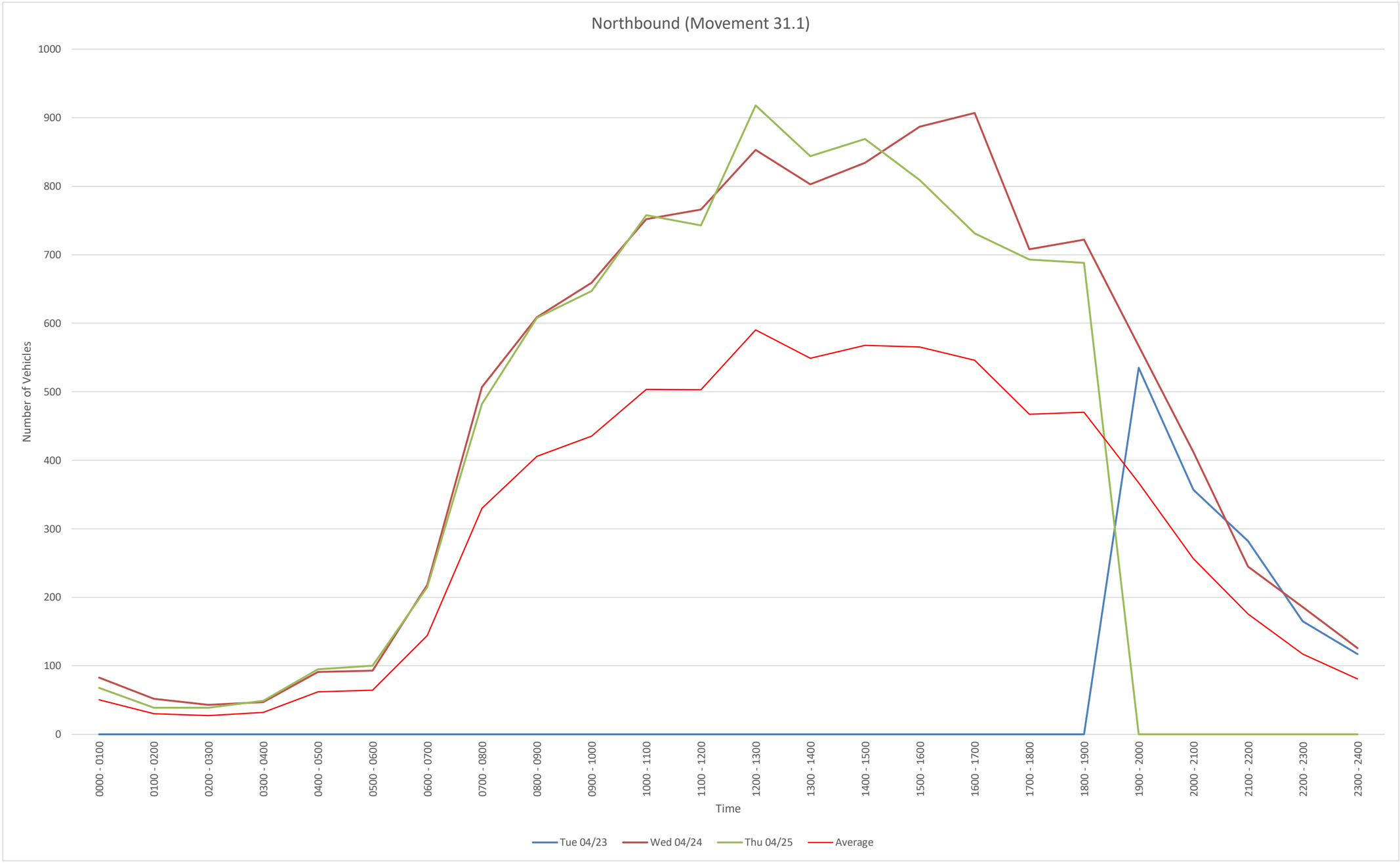

Time	Tue 04/23	Wed 04/24	Thu 04/25				
0000 - 0100	0	83	68				
0100 - 0200	0	52	39				
0200 - 0300	0	43	39				
0300 - 0400	0	47	49				
0400 - 0500	0	91	95				
0500 - 0600	0	93	100				
0600 - 0700	0	218	215				
0700 - 0800	0	507	482				
0800 - 0900	0	609	608				
0900 - 1000	0	659	647				
1000 - 1100	0	752	758				
1100 - 1200	0	766	743				
1200 - 1300	0	853	918				
1300 - 1400	0	803	844				
1400 - 1500	0	834	869				
1500 - 1600	0	887	809				
1600 - 1700	0	907	731				
1700 - 1800	0	708	693				
1800 - 1900	0	722	688				
1900 - 2000	535	567	0				
2000 - 2100	357	412	0				
2100 - 2200	282	245	0				
2200 - 2300	165	186	0				
2300 - 2400	117	126	0				
Daily Total	1456	11170	9395				

NB
File Name:
Start Date: 4/23/2024
Start Time: 0
Site Code: 31
Station ID: 1
Location 1: I-26 James F. Byrnes Expy N/Bound Off-Ramp, south of Piney Grove Rd
Location 2:

Date	Time	1	2	3	4	5	6	7	8	9	10	11	12	13
4/23/2024	12:00 AM	0	0	0	0	0	0	0	0	0	0	0	0	0
4/23/2024	12:15 AM	0	0	0	0	0	0	0	0	0	0	0	0	0
4/23/2024	12:30 AM	0	0	0	0	0	0	0	0	0	0	0	0	0
4/23/2024	12:45 AM	0	0	0	0	0	0	0	0	0	0	0	0	0
4/23/2024	1:00 AM	0	0	0	0	0	0	0	0	0	0	0	0	0
4/23/2024	1:15 AM	0	0	0	0	0	0	0	0	0	0	0	0	0
4/23/2024	1:30 AM	0	0	0	0	0	0	0	0	0	0	0	0	0
4/23/2024	1:45 AM	0	0	0	0	0	0	0	0	0	0	0	0	0
4/23/2024	2:00 AM	0	0	0	0	0	0	0	0	0	0	0	0	0
4/23/2024	2:15 AM	0	0	0	0	0	0	0	0	0	0	0	0	0
4/23/2024	2:30 AM	0	0	0	0	0	0	0	0	0	0	0	0	0
4/23/2024	2:45 AM	0	0	0	0	0	0	0	0	0	0	0	0	0
4/23/2024	3:00 AM	0	0	0	0	0	0	0	0	0	0	0	0	0
4/23/2024	3:15 AM	0	0	0	0	0	0	0	0	0	0	0	0	0
4/23/2024	3:30 AM	0	0	0	0	0	0	0	0	0	0	0	0	0
4/23/2024	3:45 AM	0	0	0	0	0	0	0	0	0	0	0	0	0
4/23/2024	4:00 AM	0	0	0	0	0	0	0	0	0	0	0	0	0
4/23/2024	4:15 AM	0	0	0	0	0	0	0	0	0	0	0	0	0
4/23/2024	4:30 AM	0	0	0	0	0	0	0	0	0	0	0	0	0
4/23/2024	4:45 AM	0	0	0	0	0	0	0	0	0	0	0	0	0
4/23/2024	5:00 AM	0	0	0	0	0	0	0	0	0	0	0	0	0
4/23/2024	5:15 AM	0	0	0	0	0	0	0	0	0	0	0	0	0
4/23/2024	5:30 AM	0	0	0	0	0	0	0	0	0	0	0	0	0
4/23/2024	5:45 AM	0	0	0	0	0	0	0	0	0	0	0	0	0
4/23/2024	6:00 AM	0	0	0	0	0	0	0	0	0	0	0	0	0
4/23/2024	6:15 AM	0	0	0	0	0	0	0	0	0	0	0	0	0
4/23/2024	6:30 AM	0	0	0	0	0	0	0	0	0	0	0	0	0
4/23/2024	6:45 AM	0	0	0	0	0	0	0	0	0	0	0	0	0
4/23/2024	7:00 AM	0	0	0	0	0	0	0	0	0	0	0	0	0
4/23/2024	7:15 AM	0	0	0	0	0	0	0	0	0	0	0	0	0
4/23/2024	7:30 AM	0	0	0	0	0	0	0	0	0	0	0	0	0
4/23/2024	7:45 AM	0	0	0	0	0	0	0	0	0	0	0	0	0
4/23/2024	8:00 AM	0	0	0	0	0	0	0	0	0	0	0	0	0
4/23/2024	8:15 AM	0	0	0	0	0	0	0	0	0	0	0	0	0
4/23/2024	8:30 AM	0	0	0	0	0	0	0	0	0	0	0	0	0
4/23/2024	8:45 AM	0	0	0	0	0	0	0	0	0	0	0	0	0
4/23/2024	9:00 AM	0	0	0	0	0	0	0	0	0	0	0	0	0
4/23/2024	9:15 AM	0	0	0	0	0	0	0	0	0	0	0	0	0
4/23/2024	9:30 AM	0	0	0	0	0	0	0	0	0	0	0	0	0
4/23/2024	9:45 AM	0	0	0	0	0	0	0	0	0	0	0	0	0
4/23/2024	10:00 AM	0	0	0	0	0	0	0	0	0	0	0	0	0
4/23/2024	10:15 AM	0	0	0	0	0	0	0	0	0	0	0	0	0
4/23/2024	10:30 AM	0	0	0	0	0	0	0	0	0	0	0	0	0
4/23/2024	10:45 AM	0	0	0	0	0	0	0	0	0	0	0	0	0
4/23/2024	11:00 AM	0	0	0	0	0	0	0	0	0	0	0	0	0
4/23/2024	11:15 AM	0	0	0	0	0	0	0	0	0	0	0	0	0
4/23/2024	11:30 AM	0	0	0	0	0	0	0	0	0	0	0	0	0
4/23/2024	11:45 AM	0	0	0	0	0	0	0	0	0	0	0	0	0
4/23/2024	12:00 PM	0	0	0	0	0	0	0	0	0	0	0	0	0
4/23/2024	12:15 PM	0	0	0	0	0	0	0	0	0	0	0	0	0
4/23/2024	12:30 PM	0	0	0	0	0	0	0	0	0	0	0	0	0
4/23/2024	12:45 PM	0	0	0	0	0	0	0	0	0	0	0	0	0
4/23/2024	1:00 PM	0	0	0	0	0	0	0	0	0	0	0	0	0
4/23/2024	1:15 PM	0	0	0	0	0	0	0	0	0	0	0	0	0
4/23/2024	1:30 PM	0	0	0	0	0	0	0	0	0	0	0	0	0
4/23/2024	1:45 PM	0	0	0	0	0	0	0	0	0	0	0	0	0
4/23/2024	2:00 PM	0	0	0	0	0	0	0	0	0	0	0	0	0
4/23/2024	2:15 PM	0	0	0	0	0	0	0	0	0	0	0	0	0
4/23/2024	2:30 PM	0	0	0	0	0	0	0	0	0	0	0	0	0
4/23/2024	2:45 PM	0	0	0	0	0	0	0	0	0	0	0	0	0
4/23/2024	3:00 PM	0	0	0	0	0	0	0	0	0	0	0	0	0
4/23/2024	3:15 PM	0	0	0	0	0	0	0	0	0	0	0	0	0
4/23/2024	3:30 PM	0	0	0	0	0	0	0	0	0	0	0	0	0
4/23/2024	3:45 PM	0	0	0	0	0	0	0	0	0	0	0	0	0
4/23/2024	4:00 PM	0	0	0	0	0	0	0	0	0	0	0	0	0
4/23/2024	4:15 PM	0	0	0	0	0	0	0	0	0	0	0	0	0
4/23/2024	4:30 PM	0	0	0	0	0	0	0	0	0	0	0	0	0
4/23/2024	4:45 PM	0	0	0	0	0	0	0	0	0	0	0	0	0
4/23/2024	5:00 PM	0	0	0	0	0	0	0	0	0	0	0	0	0
4/23/2024	5:15 PM	0	0	0	0	0	0	0	0	0	0	0	0	0
4/23/2024	5:30 PM	0	0	0	0	0	0	0	0	0	0	0	0	0
4/23/2024	5:45 PM	0	0	0	0	0	0	0	0	0	0	0	0	0
4/23/2024	6:00 PM	0	0	0	0	0	0	0	0	0	0	0	0	0
4/23/2024	6:15 PM	0	0	0	0	0	0	0	0	0	0	0	0	0
4/23/2024	6:30 PM	0	0	0	0	0	0	0	0	0	0	0	0	0
4/23/2024	6:45 PM	0	0	0	0	0	0	0	0	0	0	0	0	0
4/23/2024	7:00 PM	0	130	11	0	1	0	0	0	0	0	0	0	0
4/23/2024	7:15 PM	0	124	14	0	0	0	0	0	0	0	0	0	0
4/23/2024	7:30 PM	0	116	12	0	3	0	0	0	0	0	0	0	0
4/23/2024	7:45 PM	0	111	12	0	1	0	0	0	0	0	0	0	0
4/23/2024	8:00 PM	0	85	16	0	1	0	0	0	1	0	0	0	0
4/23/2024	8:15 PM	0	82	12	0	1	0	0	0	0	0	0	0	0
4/23/2024	8:30 PM	0	77	10	0	1	0	0	0	1	0	0	0	0
4/23/2024	8:45 PM	0	64	6	0	0	0	0	0	0	0	0	0	0
4/23/2024	9:00 PM	0	79	10	0	0	0	0	0	1	0	0	0	0
4/23/2024	9:15 PM	0	66	6	0	0	0	0	0	0	0	0	0	0
4/23/2024	9:30 PM	0	51	4	0	0	0	0	0	1	0	0	0	0
4/23/2024	9:45 PM	0	60	4	0	0	0	0	0	0	0	0	0	0
4/23/2024	10:00 PM	0	40	5	0	0	0	0	0	0	0	0	0	0
4/23/2024	10:15 PM	0	45	7	0	0	0	0	0	1	0	0	0	0
4/23/2024	10:30 PM	0	34	3	0	0	0	0	0	1	0	0	0	0
4/23/2024	10:45 PM	0	24	5	0	0	0	0	0	0	0	0	0	0
4/23/2024	11:00 PM	0	26	5	0	0	0	0	0	0	0	0	0	0
4/23/2024	11:15 PM	0	32	4	0	0	0	0	0	0	0	0	0	0
4/23/2024	11:30 PM	0	24	4	0	0	0	0	0	0	0	0	0	0
4/23/2024	11:45 PM	0	17	4	0	0	0	0	0	1	0	0	0	0

4/24/2024	12:00 AM	0	19	4	0	0	0	0	0	0	0	0	0
4/24/2024	12:15 AM	0	19	3	0	0	0	0	0	1	0	1	0	0
4/24/2024	12:30 AM	0	14	1	0	0	0	0	0	0	0	0	0	0
4/24/2024	12:45 AM	0	17	3	0	1	0	0	0	0	0	0	0	0
4/24/2024	1:00 AM	0	11	1	0	0	0	0	0	1	0	0	0	0
4/24/2024	1:15 AM	0	16	3	0	0	0	0	0	0	0	0	0	0
4/24/2024	1:30 AM	0	7	1	0	0	0	0	0	0	0	0	0	0
4/24/2024	1:45 AM	0	9	2	0	0	0	0	0	1	0	0	0	0
4/24/2024	2:00 AM	0	9	2	0	0	0	0	0	1	0	0	0	0
4/24/2024	2:15 AM	0	9	2	0	0	0	0	0	0	0	0	0	0
4/24/2024	2:30 AM	0	10	2	0	0	1	0	0	1	0	0	0	0
4/24/2024	2:45 AM	0	5	0	0	0	0	0	0	1	0	0	0	0
4/24/2024	3:00 AM	0	7	2	0	0	0	0	0	0	0	0	0	0
4/24/2024	3:15 AM	0	10	0	0	0	0	0	0	3	0	0	0	0
4/24/2024	3:30 AM	0	5	0	0	0	0	0	0	1	0	0	0	0
4/24/2024	3:45 AM	0	15	2	0	1	0	0	0	1	0	0	0	0
4/24/2024	4:00 AM	0	13	2	0	0	0	0	0	3	0	0	0	0
4/24/2024	4:15 AM	0	13	2	0	0	0	0	0	2	0	0	0	0
4/24/2024	4:30 AM	0	15	1	0	0	0	0	0	3	0	0	0	0
4/24/2024	4:45 AM	0	31	4	0	1	1	0	0	0	0	0	0	0
4/24/2024	5:00 AM	0	18	2	0	0	0	0	0	1	0	0	0	0
4/24/2024	5:15 AM	0	12	1	0	1	0	0	0	2	0	0	0	0
4/24/2024	5:30 AM	0	15	3	0	0	0	0	0	2	0	0	0	0
4/24/2024	5:45 AM	0	30	5	0	0	0	0	0	1	0	0	0	0
4/24/2024	6:00 AM	0	33	10	0	2	1	0	0	0	0	0	0	0
4/24/2024	6:15 AM	0	30	11	0	2	0	0	0	1	0	0	0	0
4/24/2024	6:30 AM	0	39	6	0	0	0	0	0	2	0	0	0	0
4/24/2024	6:45 AM	0	65	14	0	2	0	0	0	0	0	0	0	0
4/24/2024	7:00 AM	0	74	15	0	4	1	0	0	0	0	0	0	0
4/24/2024	7:15 AM	0	109	21	0	3	0	0	0	3	0	0	0	0
4/24/2024	7:30 AM	0	94	17	0	2	0	0	0	0	0	0	0	0
4/24/2024	7:45 AM	0	138	22	0	2	0	0	0	2	0	0	0	0
4/24/2024	8:00 AM	0	110	23	0	3	0	0	0	0	0	0	0	0
4/24/2024	8:15 AM	0	139	26	0	3	0	0	1	0	0	0	0	0
4/24/2024	8:30 AM	0	101	27	0	2	0	0	1	0	0	0	0	0
4/24/2024	8:45 AM	0	150	17	0	6	0	0	0	0	0	0	0	0
4/24/2024	9:00 AM	0	139	26	0	5	1	0	0	0	0	0	0	0
4/24/2024	9:15 AM	0	95	25	0	3	0	0	0	0	0	0	0	0
4/24/2024	9:30 AM	0	132	26	0	6	0	0	0	2	0	0	0	0
4/24/2024	9:45 AM	0	162	30	0	4	0	0	1	2	0	0	0	0
4/24/2024	10:00 AM	0	129	37	1	2	0	0	0	1	0	0	0	0
4/24/2024	10:15 AM	0	189	37	1	0	0	0	1	2	0	0	0	0
4/24/2024	10:30 AM	0	138	34	1	2	0	0	1	1	0	0	0	0
4/24/2024	10:45 AM	0	134	38	0	3	0	0	0	0	0	0	0	0
4/24/2024	11:00 AM	0	132	30	0	2	0	1	2	1	0	0	0	0
4/24/2024	11:15 AM	0	133	33	0	4	0	0	0	0	0	0	0	0
4/24/2024	11:30 AM	1	165	46	0	2	0	0	1	1	0	0	0	0
4/24/2024	11:45 AM	0	168	40	0	2	0	0	1	1	0	0	0	0
4/24/2024	12:00 PM	0	170	34	3	0	1	0	1	0	0	0	0	0
4/24/2024	12:15 PM	0	182	33	0	0	0	0	2	2	0	0	0	0
4/24/2024	12:30 PM	0	179	34	0	1	0	0	0	0	0	0	0	0
4/24/2024	12:45 PM	0	182	29	0	0	0	0	0	0	0	0	0	0
4/24/2024	1:00 PM	1	172	21	0	2	1	0	0	0	0	0	0	0
4/24/2024	1:15 PM	0	178	33	0	3	0	0	0	0	0	0	0	0
4/24/2024	1:30 PM	1	169	31	0	2	1	0	0	2	0	0	0	0
4/24/2024	1:45 PM	0	153	30	1	1	0	1	0	0	0	0	0	0
4/24/2024	2:00 PM	0	147	47	0	1	0	0	1	0	0	0	0	0
4/24/2024	2:15 PM	0	177	41	0	3	0	0	1	0	0	0	0	0
4/24/2024	2:30 PM	1	168	35	0	1	1	0	0	0	0	0	0	0
4/24/2024	2:45 PM	0	173	34	0	2	0	0	0	1	0	0	0	0
4/24/2024	3:00 PM	0	178	23	0	3	1	0	0	0	0	0	0	0
4/24/2024	3:15 PM	0	186	36	0	0	1	0	0	1	0	0	0	0
4/24/2024	3:30 PM	0	203	28	0	0	0	0	0	0	0	0	0	0
4/24/2024	3:45 PM	0	201	25	0	1	0	0	0	0	0	0	0	0
4/24/2024	4:00 PM	0	312	38	0	2	0	0	1	2	0	0	0	0
4/24/2024	4:15 PM	0	163	22	0	0	0	0	0	0	0	0	0	0
4/24/2024	4:30 PM	0	140	26	0	0	0	0	0	1	0	0	0	0
4/24/2024	4:45 PM	0	171	29	0	0	0	0	0	0	0	0	0	0
4/24/2024	5:00 PM	0	146	26	0	2	0	0	0	1	0	0	0	0
4/24/2024	5:15 PM	0	143	22	0	0	0	0	1	3	0	0	0	0
4/24/2024	5:30 PM	0	161	17	0	1	0	0	0	1	0	0	0	0
4/24/2024	5:45 PM	0	164	20	0	0	0	0	0	0	0	0	0	0
4/24/2024	6:00 PM	0	173	28	0	1	0	0	0	0	0	0	0	0
4/24/2024	6:15 PM	0	153	18	0	2	0	0	1	4	0	0	0	0
4/24/2024	6:30 PM	0	153	15	0	2	0	0	0	2	0	0	0	0
4/24/2024	6:45 PM	0	152	17	0	0	0	0	0	1	0	0	0	0
4/24/2024	7:00 PM	0	120	9	0	0	0	0	0	1	0	0	0	0
4/24/2024	7:15 PM	0	138	17	0	0	0	0	0	2	0	0	0	0
4/24/2024	7:30 PM	0	125	24	0	3	0	0	0	0	0	0	0	0
4/24/2024	7:45 PM	0	116	12	0	0	0	0	0	0	0	0	0	0
4/24/2024	8:00 PM	0	117	16	0	1	1	0	0	0	0	0	0	0
4/24/2024	8:15 PM	0	97	12	0	0	0	0	0	1	0	0	0	0
4/24/2024	8:30 PM	0	82	7	0	2	0	0	0	1	0	0	0	0
4/24/2024	8:45 PM	0	68	7	0	0	0	0	0	0	0	0	0	0
4/24/2024	9:00 PM	0	50	8	0	0	0	0	0	2	0	0	0	0
4/24/2024	9:15 PM	0	63	5	0	0	0	0	0	0	0	0	0	0
4/24/2024	9:30 PM	0	54	4	0	1	0	0	0	0	0	0	0	0
4/24/2024	9:45 PM	0	54	3	0	0	0	0	0	1	0	0	0	0
4/24/2024	10:00 PM	0	55	4	0	0	0	0	0	0	0	0	0	0
4/24/2024	10:15 PM	0	45	4	0	1	0	0	0	0	0	0	0	0
4/24/2024	10:30 PM	0	37	2	0	0	0	0	0	1	0	0	0	0
4/24/2024	10:45 PM	0	34	3	0	0	0	0	0	0	0	0	0	0
4/24/2024	11:00 PM	0	36	5	0	0	0	0	0	0	0	0	0	0
4/24/2024	11:15 PM	0	30	3	0	0	0	0	0	0	0	0	0	0
4/24/2024	11:30 PM	0	20	1	0	0	0	0	0	0	0	0	0	0
4/24/2024	11:45 PM	0	27	3	0	0	0	0	0	1	0	0	0	0

4/25/2024	12:00 AM	0	13	2	0	0	0	0	0	0	0	0	0
4/25/2024	12:15 AM	0	21	3	0	0	0	0	0	0	0	0	0
4/25/2024	12:30 AM	0	11	3	0	0	0	0	0	0	0	0	0
4/25/2024	12:45 AM	0	13	2	0	0	0	0	0	0	0	0	0
4/25/2024	1:00 AM	0	9	1	0	0	0	0	0	0	0	0	0
4/25/2024	1:15 AM	0	10	2	0	0	0	0	0	0	0	0	0
4/25/2024	1:30 AM	0	7	2	0	0	0	0	0	0	0	0	0
4/25/2024	1:45 AM	0	7	1	0	0	0	0	0	0	0	0	0
4/25/2024	2:00 AM	0	11	2	0	0	0	0	1	0	0	0	0
4/25/2024	2:15 AM	0	8	1	0	1	0	0	0	1	0	0	0
4/25/2024	2:30 AM	0	6	0	0	1	0	0	0	0	0	0	0
4/25/2024	2:45 AM	0	5	1	0	0	0	0	0	1	0	0	0
4/25/2024	3:00 AM	0	5	0	0	0	0	0	0	2	0	0	0
4/25/2024	3:15 AM	0	7	2	0	1	0	0	0	2	0	0	0
4/25/2024	3:30 AM	0	9	1	0	0	0	0	0	2	0	0	0
4/25/2024	3:45 AM	0	15	2	0	0	0	0	0	1	0	0	0
4/25/2024	4:00 AM	0	15	2	0	0	0	0	0	2	0	0	0
4/25/2024	4:15 AM	0	18	2	0	0	0	0	0	2	0	0	0
4/25/2024	4:30 AM	0	17	2	0	1	0	0	0	1	0	0	0
4/25/2024	4:45 AM	0	28	3	0	0	0	0	0	2	0	0	0
4/25/2024	5:00 AM	0	19	3	0	1	0	0	0	2	0	0	0
4/25/2024	5:15 AM	0	15	2	0	2	1	0	0	0	0	0	0
4/25/2024	5:30 AM	0	17	2	0	2	0	0	0	0	0	0	0
4/25/2024	5:45 AM	0	30	4	0	0	0	0	0	0	0	0	0
4/25/2024	6:00 AM	0	25	10	0	1	0	0	0	1	0	0	0
4/25/2024	6:15 AM	0	35	4	0	1	1	0	0	2	0	0	0
4/25/2024	6:30 AM	0	39	8	2	1	0	0	0	1	0	0	0
4/25/2024	6:45 AM	0	64	17	0	1	1	0	0	1	0	0	0
4/25/2024	7:00 AM	0	56	13	0	8	0	1	1	1	0	0	0
4/25/2024	7:15 AM	0	95	21	0	5	1	0	1	1	0	0	0
4/25/2024	7:30 AM	0	90	15	0	3	2	0	0	1	0	0	0
4/25/2024	7:45 AM	0	143	17	0	7	0	0	0	0	0	0	0
4/25/2024	8:00 AM	0	115	25	0	0	1	0	0	1	0	0	0
4/25/2024	8:15 AM	1	125	22	0	3	1	0	0	4	0	0	0
4/25/2024	8:30 AM	0	112	18	0	1	0	0	0	0	0	0	0
4/25/2024	8:45 AM	1	142	30	0	5	1	0	0	0	0	0	0
4/25/2024	9:00 AM	0	129	26	1	2	3	0	2	1	0	0	0
4/25/2024	9:15 AM	0	99	16	0	2	2	0	2	0	0	0	0
4/25/2024	9:30 AM	0	145	35	1	2	0	0	0	1	0	0	0
4/25/2024	9:45 AM	0	140	32	0	4	1	0	0	1	0	0	0
4/25/2024	10:00 AM	0	138	33	1	2	0	0	2	3	0	0	0
4/25/2024	10:15 AM	0	136	26	0	2	0	0	0	1	0	0	0
4/25/2024	10:30 AM	0	162	39	1	1	0	0	0	1	0	0	0
4/25/2024	10:45 AM	2	169	36	0	1	0	0	0	2	0	0	0
4/25/2024	11:00 AM	0	146	23	0	2	0	1	0	3	0	0	0
4/25/2024	11:15 AM	0	142	34	0	4	0	0	0	0	0	0	0
4/25/2024	11:30 AM	0	185	38	0	1	0	0	0	1	0	0	0
4/25/2024	11:45 AM	1	118	39	0	4	0	1	0	0	0	0	0
4/25/2024	12:00 PM	0	199	30	0	1	0	0	0	2	0	0	0
4/25/2024	12:15 PM	2	189	26	1	3	0	0	0	1	0	0	0
4/25/2024	12:30 PM	0	192	37	0	1	0	0	0	1	0	0	0
4/25/2024	12:45 PM	0	197	33	0	1	1	0	0	1	0	0	0
4/25/2024	1:00 PM	0	163	32	0	3	0	0	1	0	0	0	0
4/25/2024	1:15 PM	0	186	33	0	3	0	0	0	0	0	0	0
4/25/2024	1:30 PM	0	156	34	0	1	0	0	1	3	0	0	0
4/25/2024	1:45 PM	0	202	21	0	2	2	0	0	1	0	0	0
4/25/2024	2:00 PM	0	165	33	0	3	1	0	0	0	0	0	0
4/25/2024	2:15 PM	0	189	33	0	1	0	0	0	0	0	0	0
4/25/2024	2:30 PM	0	175	36	0	2	0	1	0	1	0	0	0
4/25/2024	2:45 PM	1	186	36	0	2	1	0	1	2	0	0	0
4/25/2024	3:00 PM	0	177	25	1	2	2	0	0	1	0	0	0
4/25/2024	3:15 PM	0	171	32	0	6	0	0	0	0	0	0	0
4/25/2024	3:30 PM	0	172	31	0	0	0	0	0	2	0	0	0
4/25/2024	3:45 PM	0	154	30	0	0	0	0	0	3	0	0	0
4/25/2024	4:00 PM	1	164	28	0	2	0	0	0	0	0	0	0
4/25/2024	4:15 PM	0	142	19	0	4	0	0	0	0	0	0	0
4/25/2024	4:30 PM	0	136	22	0	3	0	0	0	0	0	0	0
4/25/2024	4:45 PM	1	185	20	0	3	0	0	0	1	0	0	0
4/25/2024	5:00 PM	0	146	14	0	0	0	0	0	1	0	0	0
4/25/2024	5:15 PM	0	148	19	0	3	0	0	0	2	0	0	0
4/25/2024	5:30 PM	0	155	21	0	1	0	0	0	2	0	0	0
4/25/2024	5:45 PM	0	157	20	0	2	0	0	0	2	0	0	0
4/25/2024	6:00 PM	0	163	11	0	0	0	0	0	0	0	0	0
4/25/2024	6:15 PM	0	175	21	0	1	0	0	0	1	0	0	0
4/25/2024	6:30 PM	0	134	21	1	2	0	0	0	1	0	0	0
4/25/2024	6:45 PM	0	137	17	0	2	0	0	0	1	0	0	0
4/25/2024	7:00 PM	0	0	0	0	0	0	0	0	0	0	0	0
4/25/2024	7:15 PM	0	0	0	0	0	0	0	0	0	0	0	0
4/25/2024	7:30 PM	0	0	0	0	0	0	0	0	0	0	0	0
4/25/2024	7:45 PM	0	0	0	0	0	0	0	0	0	0	0	0
4/25/2024	8:00 PM	0	0	0	0	0	0	0	0	0	0	0	0
4/25/2024	8:15 PM	0	0	0	0	0	0	0	0	0	0	0	0
4/25/2024	8:30 PM	0	0	0	0	0	0	0	0	0	0	0	0
4/25/2024	8:45 PM	0	0	0	0	0	0	0	0	0	0	0	0
4/25/2024	9:00 PM	0	0	0	0	0	0	0	0	0	0	0	0
4/25/2024	9:15 PM	0	0	0	0	0	0	0	0	0	0	0	0
4/25/2024	9:30 PM	0	0	0	0	0	0	0	0	0	0	0	0
4/25/2024	9:45 PM	0	0	0	0	0	0	0	0	0	0	0	0
4/25/2024	10:00 PM	0	0	0	0	0	0	0	0	0	0	0	0
4/25/2024	10:15 PM	0	0	0	0	0	0	0	0	0	0	0	0
4/25/2024	10:30 PM	0	0	0	0	0	0	0	0	0	0	0	0
4/25/2024	10:45 PM	0	0	0	0	0	0	0	0	0	0	0	0
4/25/2024	11:00 PM	0	0	0	0	0	0	0	0	0	0	0	0
4/25/2024	11:15 PM	0	0	0	0	0	0	0	0	0	0	0	0
4/25/2024	11:30 PM	0	0	0	0	0	0	0	0	0	0	0	0
4/25/2024	11:45 PM	0	0	0	0	0	0	0	0	0	0	0	0

SB
File Name:
Start Date: 4/23/2024
Start Time: 0
Site Code: 31
Station ID: 1
Location 1: I-26 James F. Byrnes Expy N/Bound Off-Ramp, south of Piney Grove Rd
Location 2:

Date	Time	1	2	3	4	5	6	7	8	9	10	11	12	13
4/23/2024	12:00 AM	0	0	0	0	0	0	0	0	0	0	0	0	0
4/23/2024	12:15 AM	0	0	0	0	0	0	0	0	0	0	0	0	0
4/23/2024	12:30 AM	0	0	0	0	0	0	0	0	0	0	0	0	0
4/23/2024	12:45 AM	0	0	0	0	0	0	0	0	0	0	0	0	0
4/23/2024	1:00 AM	0	0	0	0	0	0	0	0	0	0	0	0	0
4/23/2024	1:15 AM	0	0	0	0	0	0	0	0	0	0	0	0	0
4/23/2024	1:30 AM	0	0	0	0	0	0	0	0	0	0	0	0	0
4/23/2024	1:45 AM	0	0	0	0	0	0	0	0	0	0	0	0	0
4/23/2024	2:00 AM	0	0	0	0	0	0	0	0	0	0	0	0	0
4/23/2024	2:15 AM	0	0	0	0	0	0	0	0	0	0	0	0	0
4/23/2024	2:30 AM	0	0	0	0	0	0	0	0	0	0	0	0	0
4/23/2024	2:45 AM	0	0	0	0	0	0	0	0	0	0	0	0	0
4/23/2024	3:00 AM	0	0	0	0	0	0	0	0	0	0	0	0	0
4/23/2024	3:15 AM	0	0	0	0	0	0	0	0	0	0	0	0	0
4/23/2024	3:30 AM	0	0	0	0	0	0	0	0	0	0	0	0	0
4/23/2024	3:45 AM	0	0	0	0	0	0	0	0	0	0	0	0	0
4/23/2024	4:00 AM	0	0	0	0	0	0	0	0	0	0	0	0	0
4/23/2024	4:15 AM	0	0	0	0	0	0	0	0	0	0	0	0	0
4/23/2024	4:30 AM	0	0	0	0	0	0	0	0	0	0	0	0	0
4/23/2024	4:45 AM	0	0	0	0	0	0	0	0	0	0	0	0	0
4/23/2024	5:00 AM	0	0	0	0	0	0	0	0	0	0	0	0	0
4/23/2024	5:15 AM	0	0	0	0	0	0	0	0	0	0	0	0	0
4/23/2024	5:30 AM	0	0	0	0	0	0	0	0	0	0	0	0	0
4/23/2024	5:45 AM	0	0	0	0	0	0	0	0	0	0	0	0	0
4/23/2024	6:00 AM	0	0	0	0	0	0	0	0	0	0	0	0	0
4/23/2024	6:15 AM	0	0	0	0	0	0	0	0	0	0	0	0	0
4/23/2024	6:30 AM	0	0	0	0	0	0	0	0	0	0	0	0	0
4/23/2024	6:45 AM	0	0	0	0	0	0	0	0	0	0	0	0	0
4/23/2024	7:00 AM	0	0	0	0	0	0	0	0	0	0	0	0	0
4/23/2024	7:15 AM	0	0	0	0	0	0	0	0	0	0	0	0	0
4/23/2024	7:30 AM	0	0	0	0	0	0	0	0	0	0	0	0	0
4/23/2024	7:45 AM	0	0	0	0	0	0	0	0	0	0	0	0	0
4/23/2024	8:00 AM	0	0	0	0	0	0	0	0	0	0	0	0	0
4/23/2024	8:15 AM	0	0	0	0	0	0	0	0	0	0	0	0	0
4/23/2024	8:30 AM	0	0	0	0	0	0	0	0	0	0	0	0	0
4/23/2024	8:45 AM	0	0	0	0	0	0	0	0	0	0	0	0	0
4/23/2024	9:00 AM	0	0	0	0	0	0	0	0	0	0	0	0	0
4/23/2024	9:15 AM	0	0	0	0	0	0	0	0	0	0	0	0	0
4/23/2024	9:30 AM	0	0	0	0	0	0	0	0	0	0	0	0	0
4/23/2024	9:45 AM	0	0	0	0	0	0	0	0	0	0	0	0	0
4/23/2024	10:00 AM	0	0	0	0	0	0	0	0	0	0	0	0	0
4/23/2024	10:15 AM	0	0	0	0	0	0	0	0	0	0	0	0	0
4/23/2024	10:30 AM	0	0	0	0	0	0	0	0	0	0	0	0	0
4/23/2024	10:45 AM	0	0	0	0	0	0	0	0	0	0	0	0	0
4/23/2024	11:00 AM	0	0	0	0	0	0	0	0	0	0	0	0	0
4/23/2024	11:15 AM	0	0	0	0	0	0	0	0	0	0	0	0	0
4/23/2024	11:30 AM	0	0	0	0	0	0	0	0	0	0	0	0	0
4/23/2024	11:45 AM	0	0	0	0	0	0	0	0	0	0	0	0	0
4/23/2024	12:00 PM	0	0	0	0	0	0	0	0	0	0	0	0	0
4/23/2024	12:15 PM	0	0	0	0	0	0	0	0	0	0	0	0	0
4/23/2024	12:30 PM	0	0	0	0	0	0	0	0	0	0	0	0	0
4/23/2024	12:45 PM	0	0	0	0	0	0	0	0	0	0	0	0	0
4/23/2024	1:00 PM	0	0	0	0	0	0	0	0	0	0	0	0	0
4/23/2024	1:15 PM	0	0	0	0	0	0	0	0	0	0	0	0	0
4/23/2024	1:30 PM	0	0	0	0	0	0	0	0	0	0	0	0	0
4/23/2024	1:45 PM	0	0	0	0	0	0	0	0	0	0	0	0	0
4/23/2024	2:00 PM	0	0	0	0	0	0	0	0	0	0	0	0	0
4/23/2024	2:15 PM	0	0	0	0	0	0	0	0	0	0	0	0	0
4/23/2024	2:30 PM	0	0	0	0	0	0	0	0	0	0	0	0	0
4/23/2024	2:45 PM	0	0	0	0	0	0	0	0	0	0	0	0	0
4/23/2024	3:00 PM	0	0	0	0	0	0	0	0	0	0	0	0	0
4/23/2024	3:15 PM	0	0	0	0	0	0	0	0	0	0	0	0	0
4/23/2024	3:30 PM	0	0	0	0	0	0	0	0	0	0	0	0	0
4/23/2024	3:45 PM	0	0	0	0	0	0	0	0	0	0	0	0	0
4/23/2024	4:00 PM	0	0	0	0	0	0	0	0	0	0	0	0	0
4/23/2024	4:15 PM	0	0	0	0	0	0	0	0	0	0	0	0	0
4/23/2024	4:30 PM	0	0	0	0	0	0	0	0	0	0	0	0	0
4/23/2024	4:45 PM	0	0	0	0	0	0	0	0	0	0	0	0	0
4/23/2024	5:00 PM	0	0	0	0	0	0	0	0	0	0	0	0	0
4/23/2024	5:15 PM	0	0	0	0	0	0	0	0	0	0	0	0	0
4/23/2024	5:30 PM	0	0	0	0	0	0	0	0	0	0	0	0	0
4/23/2024	5:45 PM	0	0	0	0	0	0	0	0	0	0	0	0	0
4/23/2024	6:00 PM	0	0	0	0	0	0	0	0	0	0	0	0	0
4/23/2024	6:15 PM	0	0	0	0	0	0	0	0	0	0	0	0	0
4/23/2024	6:30 PM	0	0	0	0	0	0	0	0	0	0	0	0	0
4/23/2024	6:45 PM	0	0	0	0	0	0	0	0	0	0	0	0	0
4/23/2024	7:00 PM	0	0	0	0	0	0	0	0	0	0	0	0	0
4/23/2024	7:15 PM	0	0	0	0	0	0	0	0	0	0	0	0	0
4/23/2024	7:30 PM	0	0	0	0	0	0	0	0	0	0	0	0	0
4/23/2024	7:45 PM	0	0	0	0	0	0	0	0	0	0	0	0	0
4/23/2024	8:00 PM	0	0	0	0	0	0	0	0	0	0	0	0	0
4/23/2024	8:15 PM	0	0	0	0	0	0	0	0	0	0	0	0	0
4/23/2024	8:30 PM	0	0	0	0	0	0	0	0	0	0	0	0	0
4/23/2024	8:45 PM	0	0	0	0	0	0	0	0	0	0	0	0	0
4/23/2024	9:00 PM	0	0	0	0	0	0	0	0	0	0	0	0	0
4/23/2024	9:15 PM	0	0	0	0	0	0	0	0	0	0	0	0	0
4/23/2024	9:30 PM	0	0	0	0	0	0	0	0	0	0	0	0	0
4/23/2024	9:45 PM	0	0	0	0	0	0	0	0	0	0	0	0	0
4/23/2024	10:00 PM	0	0	0	0	0	0	0	0	0	0	0	0	0
4/23/2024	10:15 PM	0	0	0	0	0	0	0	0	0	0	0	0	0
4/23/2024	10:30 PM	0	0	0	0	0	0	0	0	0	0	0	0	0
4/23/2024	10:45 PM	0	0	0	0	0	0	0	0	0	0	0	0	0
4/23/2024	11:00 PM	0	0	0	0	0	0	0	0	0	0	0	0	0
4/23/2024	11:15 PM	0	0	0	0	0	0	0	0	0	0	0	0	0
4/23/2024	11:30 PM	0	0	0	0	0	0	0	0	0	0	0	0	0
4/23/2024	11:45 PM	0	0	0	0	0	0	0	0	0	0	0	0	0

4/24/2024	12:00 AM	0	0	0	0	0	0	0	0	0	0	0	0	0
4/24/2024	12:15 AM	0	0	0	0	0	0	0	0	0	0	0	0	0
4/24/2024	12:30 AM	0	0	0	0	0	0	0	0	0	0	0	0	0
4/24/2024	12:45 AM	0	0	0	0	0	0	0	0	0	0	0	0	0
4/24/2024	1:00 AM	0	0	0	0	0	0	0	0	0	0	0	0	0
4/24/2024	1:15 AM	0	0	0	0	0	0	0	0	0	0	0	0	0
4/24/2024	1:30 AM	0	0	0	0	0	0	0	0	0	0	0	0	0
4/24/2024	1:45 AM	0	0	0	0	0	0	0	0	0	0	0	0	0
4/24/2024	2:00 AM	0	0	0	0	0	0	0	0	0	0	0	0	0
4/24/2024	2:15 AM	0	0	0	0	0	0	0	0	0	0	0	0	0
4/24/2024	2:30 AM	0	0	0	0	0	0	0	0	0	0	0	0	0
4/24/2024	2:45 AM	0	0	0	0	0	0	0	0	0	0	0	0	0
4/24/2024	3:00 AM	0	0	0	0	0	0	0	0	0	0	0	0	0
4/24/2024	3:15 AM	0	0	0	0	0	0	0	0	0	0	0	0	0
4/24/2024	3:30 AM	0	0	0	0	0	0	0	0	0	0	0	0	0
4/24/2024	3:45 AM	0	0	0	0	0	0	0	0	0	0	0	0	0
4/24/2024	4:00 AM	0	0	0	0	0	0	0	0	0	0	0	0	0
4/24/2024	4:15 AM	0	0	0	0	0	0	0	0	0	0	0	0	0
4/24/2024	4:30 AM	0	0	0	0	0	0	0	0	0	0	0	0	0
4/24/2024	4:45 AM	0	0	0	0	0	0	0	0	0	0	0	0	0
4/24/2024	5:00 AM	0	0	0	0	0	0	0	0	0	0	0	0	0
4/24/2024	5:15 AM	0	0	0	0	0	0	0	0	0	0	0	0	0
4/24/2024	5:30 AM	0	0	0	0	0	0	0	0	0	0	0	0	0
4/24/2024	5:45 AM	0	0	0	0	0	0	0	0	0	0	0	0	0
4/24/2024	6:00 AM	0	0	0	0	0	0	0	0	0	0	0	0	0
4/24/2024	6:15 AM	0	0	0	0	0	0	0	0	0	0	0	0	0
4/24/2024	6:30 AM	0	0	0	0	0	0	0	0	0	0	0	0	0
4/24/2024	6:45 AM	0	0	0	0	0	0	0	0	0	0	0	0	0
4/24/2024	7:00 AM	0	0	0	0	0	0	0	0	0	0	0	0	0
4/24/2024	7:15 AM	0	0	0	0	0	0	0	0	0	0	0	0	0
4/24/2024	7:30 AM	0	0	0	0	0	0	0	0	0	0	0	0	0
4/24/2024	7:45 AM	0	0	0	0	0	0	0	0	0	0	0	0	0
4/24/2024	8:00 AM	0	0	0	0	0	0	0	0	0	0	0	0	0
4/24/2024	8:15 AM	0	0	0	0	0	0	0	0	0	0	0	0	0
4/24/2024	8:30 AM	0	0	0	0	0	0	0	0	0	0	0	0	0
4/24/2024	8:45 AM	0	0	0	0	0	0	0	0	0	0	0	0	0
4/24/2024	9:00 AM	0	0	0	0	0	0	0	0	0	0	0	0	0
4/24/2024	9:15 AM	0	0	0	0	0	0	0	0	0	0	0	0	0
4/24/2024	9:30 AM	0	0	0	0	0	0	0	0	0	0	0	0	0
4/24/2024	9:45 AM	0	0	0	0	0	0	0	0	0	0	0	0	0
4/24/2024	10:00 AM	0	0	0	0	0	0	0	0	0	0	0	0	0
4/24/2024	10:15 AM	0	0	0	0	0	0	0	0	0	0	0	0	0
4/24/2024	10:30 AM	0	0	0	0	0	0	0	0	0	0	0	0	0
4/24/2024	10:45 AM	0	0	0	0	0	0	0	0	0	0	0	0	0
4/24/2024	11:00 AM	0	0	0	0	0	0	0	0	0	0	0	0	0
4/24/2024	11:15 AM	0	0	0	0	0	0	0	0	0	0	0	0	0
4/24/2024	11:30 AM	0	0	0	0	0	0	0	0	0	0	0	0	0
4/24/2024	11:45 AM	0	0	0	0	0	0	0	0	0	0	0	0	0
4/24/2024	12:00 PM	0	0	0	0	0	0	0	0	0	0	0	0	0
4/24/2024	12:15 PM	0	0	0	0	0	0	0	0	0	0	0	0	0
4/24/2024	12:30 PM	0	0	0	0	0	0	0	0	0	0	0	0	0
4/24/2024	12:45 PM	0	0	0	0	0	0	0	0	0	0	0	0	0
4/24/2024	1:00 PM	0	0	0	0	0	0	0	0	0	0	0	0	0
4/24/2024	1:15 PM	0	0	0	0	0	0	0	0	0	0	0	0	0
4/24/2024	1:30 PM	0	0	0	0	0	0	0	0	0	0	0	0	0
4/24/2024	1:45 PM	0	0	0	0	0	0	0	0	0	0	0	0	0
4/24/2024	2:00 PM	0	0	0	0	0	0	0	0	0	0	0	0	0
4/24/2024	2:15 PM	0	0	0	0	0	0	0	0	0	0	0	0	0
4/24/2024	2:30 PM	0	0	0	0	0	0	0	0	0	0	0	0	0
4/24/2024	2:45 PM	0	0	0	0	0	0	0	0	0	0	0	0	0
4/24/2024	3:00 PM	0	0	0	0	0	0	0	0	0	0	0	0	0
4/24/2024	3:15 PM	0	0	0	0	0	0	0	0	0	0	0	0	0
4/24/2024	3:30 PM	0	0	0	0	0	0	0	0	0	0	0	0	0
4/24/2024	3:45 PM	0	0	0	0	0	0	0	0	0	0	0	0	0
4/24/2024	4:00 PM	0	0	0	0	0	0	0	0	0	0	0	0	0
4/24/2024	4:15 PM	0	0	0	0	0	0	0	0	0	0	0	0	0
4/24/2024	4:30 PM	0	0	0	0	0	0	0	0	0	0	0	0	0
4/24/2024	4:45 PM	0	0	0	0	0	0	0	0	0	0	0	0	0
4/24/2024	5:00 PM	0	0	0	0	0	0	0	0	0	0	0	0	0
4/24/2024	5:15 PM	0	0	0	0	0	0	0	0	0	0	0	0	0
4/24/2024	5:30 PM	0	0	0	0	0	0	0	0	0	0	0	0	0
4/24/2024	5:45 PM	0	0	0	0	0	0	0	0	0	0	0	0	0
4/24/2024	6:00 PM	0	0	0	0	0	0	0	0	0	0	0	0	0
4/24/2024	6:15 PM	0	0	0	0	0	0	0	0	0	0	0	0	0
4/24/2024	6:30 PM	0	0	0	0	0	0	0	0	0	0	0	0	0
4/24/2024	6:45 PM	0	0	0	0	0	0	0	0	0	0	0	0	0
4/24/2024	7:00 PM	0	0	0	0	0	0	0	0	0	0	0	0	0
4/24/2024	7:15 PM	0	0	0	0	0	0	0	0	0	0	0	0	0
4/24/2024	7:30 PM	0	0	0	0	0	0	0	0	0	0	0	0	0
4/24/2024	7:45 PM	0	0	0	0	0	0	0	0	0	0	0	0	0
4/24/2024	8:00 PM	0	0	0	0	0	0	0	0	0	0	0	0	0
4/24/2024	8:15 PM	0	0	0	0	0	0	0	0	0	0	0	0	0
4/24/2024	8:30 PM	0	0	0	0	0	0	0	0	0	0	0	0	0
4/24/2024	8:45 PM	0	0	0	0	0	0	0	0	0	0	0	0	0
4/24/2024	9:00 PM	0	0	0	0	0	0	0	0	0	0	0	0	0
4/24/2024	9:15 PM	0	0	0	0	0	0	0	0	0	0	0	0	0
4/24/2024	9:30 PM	0	0	0	0	0	0	0	0	0	0	0	0	0
4/24/2024	9:45 PM	0	0	0	0	0	0	0	0	0	0	0	0	0
4/24/2024	10:00 PM	0	0	0	0	0	0	0	0	0	0	0	0	0
4/24/2024	10:15 PM	0	0	0	0	0	0	0	0	0	0	0	0	0
4/24/2024	10:30 PM	0	0	0	0	0	0	0	0	0	0	0	0	0
4/24/2024	10:45 PM	0	0	0	0	0	0	0	0	0	0	0	0	0
4/24/2024	11:00 PM	0	0	0	0	0	0	0	0	0	0	0	0	0
4/24/2024	11:15 PM	0	0	0	0	0	0	0	0	0	0	0	0	0
4/24/2024	11:30 PM	0	0	0	0	0	0	0	0	0	0	0	0	0
4/24/2024	11:45 PM	0	0	0	0	0	0	0	0	0	0	0	0	0

4/25/2024	12:00 AM	0	0	0	0	0	0	0	0	0	0	0	0	0
4/25/2024	12:15 AM	0	0	0	0	0	0	0	0	0	0	0	0	0
4/25/2024	12:30 AM	0	0	0	0	0	0	0	0	0	0	0	0	0
4/25/2024	12:45 AM	0	0	0	0	0	0	0	0	0	0	0	0	0
4/25/2024	1:00 AM	0	0	0	0	0	0	0	0	0	0	0	0	0
4/25/2024	1:15 AM	0	0	0	0	0	0	0	0	0	0	0	0	0
4/25/2024	1:30 AM	0	0	0	0	0	0	0	0	0	0	0	0	0
4/25/2024	1:45 AM	0	0	0	0	0	0	0	0	0	0	0	0	0
4/25/2024	2:00 AM	0	0	0	0	0	0	0	0	0	0	0	0	0
4/25/2024	2:15 AM	0	0	0	0	0	0	0	0	0	0	0	0	0
4/25/2024	2:30 AM	0	0	0	0	0	0	0	0	0	0	0	0	0
4/25/2024	2:45 AM	0	0	0	0	0	0	0	0	0	0	0	0	0
4/25/2024	3:00 AM	0	0	0	0	0	0	0	0	0	0	0	0	0
4/25/2024	3:15 AM	0	0	0	0	0	0	0	0	0	0	0	0	0
4/25/2024	3:30 AM	0	0	0	0	0	0	0	0	0	0	0	0	0
4/25/2024	3:45 AM	0	0	0	0	0	0	0	0	0	0	0	0	0
4/25/2024	4:00 AM	0	0	0	0	0	0	0	0	0	0	0	0	0
4/25/2024	4:15 AM	0	0	0	0	0	0	0	0	0	0	0	0	0
4/25/2024	4:30 AM	0	0	0	0	0	0	0	0	0	0	0	0	0
4/25/2024	4:45 AM	0	0	0	0	0	0	0	0	0	0	0	0	0
4/25/2024	5:00 AM	0	0	0	0	0	0	0	0	0	0	0	0	0
4/25/2024	5:15 AM	0	0	0	0	0	0	0	0	0	0	0	0	0
4/25/2024	5:30 AM	0	0	0	0	0	0	0	0	0	0	0	0	0
4/25/2024	5:45 AM	0	0	0	0	0	0	0	0	0	0	0	0	0
4/25/2024	6:00 AM	0	0	0	0	0	0	0	0	0	0	0	0	0
4/25/2024	6:15 AM	0	0	0	0	0	0	0	0	0	0	0	0	0
4/25/2024	6:30 AM	0	0	0	0	0	0	0	0	0	0	0	0	0
4/25/2024	6:45 AM	0	0	0	0	0	0	0	0	0	0	0	0	0
4/25/2024	7:00 AM	0	0	0	0	0	0	0	0	0	0	0	0	0
4/25/2024	7:15 AM	0	0	0	0	0	0	0	0	0	0	0	0	0
4/25/2024	7:30 AM	0	0	0	0	0	0	0	0	0	0	0	0	0
4/25/2024	7:45 AM	0	0	0	0	0	0	0	0	0	0	0	0	0
4/25/2024	8:00 AM	0	0	0	0	0	0	0	0	0	0	0	0	0
4/25/2024	8:15 AM	0	0	0	0	0	0	0	0	0	0	0	0	0
4/25/2024	8:30 AM	0	0	0	0	0	0	0	0	0	0	0	0	0
4/25/2024	8:45 AM	0	0	0	0	0	0	0	0	0	0	0	0	0
4/25/2024	9:00 AM	0	0	0	0	0	0	0	0	0	0	0	0	0
4/25/2024	9:15 AM	0	0	0	0	0	0	0	0	0	0	0	0	0
4/25/2024	9:30 AM	0	0	0	0	0	0	0	0	0	0	0	0	0
4/25/2024	9:45 AM	0	0	0	0	0	0	0	0	0	0	0	0	0
4/25/2024	10:00 AM	0	0	0	0	0	0	0	0	0	0	0	0	0
4/25/2024	10:15 AM	0	0	0	0	0	0	0	0	0	0	0	0	0
4/25/2024	10:30 AM	0	0	0	0	0	0	0	0	0	0	0	0	0
4/25/2024	10:45 AM	0	0	0	0	0	0	0	0	0	0	0	0	0
4/25/2024	11:00 AM	0	0	0	0	0	0	0	0	0	0	0	0	0
4/25/2024	11:15 AM	0	0	0	0	0	0	0	0	0	0	0	0	0
4/25/2024	11:30 AM	0	0	0	0	0	0	0	0	0	0	0	0	0
4/25/2024	11:45 AM	0	0	0	0	0	0	0	0	0	0	0	0	0
4/25/2024	12:00 PM	0	0	0	0	0	0	0	0	0	0	0	0	0
4/25/2024	12:15 PM	0	0	0	0	0	0	0	0	0	0	0	0	0
4/25/2024	12:30 PM	0	0	0	0	0	0	0	0	0	0	0	0	0
4/25/2024	12:45 PM	0	0	0	0	0	0	0	0	0	0	0	0	0
4/25/2024	1:00 PM	0	0	0	0	0	0	0	0	0	0	0	0	0
4/25/2024	1:15 PM	0	0	0	0	0	0	0	0	0	0	0	0	0
4/25/2024	1:30 PM	0	0	0	0	0	0	0	0	0	0	0	0	0
4/25/2024	1:45 PM	0	0	0	0	0	0	0	0	0	0	0	0	0
4/25/2024	2:00 PM	0	0	0	0	0	0	0	0	0	0	0	0	0
4/25/2024	2:15 PM	0	0	0	0	0	0	0	0	0	0	0	0	0
4/25/2024	2:30 PM	0	0	0	0	0	0	0	0	0	0	0	0	0
4/25/2024	2:45 PM	0	0	0	0	0	0	0	0	0	0	0	0	0
4/25/2024	3:00 PM	0	0	0	0	0	0	0	0	0	0	0	0	0
4/25/2024	3:15 PM	0	0	0	0	0	0	0	0	0	0	0	0	0
4/25/2024	3:30 PM	0	0	0	0	0	0	0	0	0	0	0	0	0
4/25/2024	3:45 PM	0	0	0	0	0	0	0	0	0	0	0	0	0
4/25/2024	4:00 PM	0	0	0	0	0	0	0	0	0	0	0	0	0
4/25/2024	4:15 PM	0	0	0	0	0	0	0	0	0	0	0	0	0
4/25/2024	4:30 PM	0	0	0	0	0	0	0	0	0	0	0	0	0
4/25/2024	4:45 PM	0	0	0	0	0	0	0	0	0	0	0	0	0
4/25/2024	5:00 PM	0	0	0	0	0	0	0	0	0	0	0	0	0
4/25/2024	5:15 PM	0	0	0	0	0	0	0	0	0	0	0	0	0
4/25/2024	5:30 PM	0	0	0	0	0	0	0	0	0	0	0	0	0
4/25/2024	5:45 PM	0	0	0	0	0	0	0	0	0	0	0	0	0
4/25/2024	6:00 PM	0	0	0	0	0	0	0	0	0	0	0	0	0
4/25/2024	6:15 PM	0	0	0	0	0	0	0	0	0	0	0	0	0
4/25/2024	6:30 PM	0	0	0	0	0	0	0	0	0	0	0	0	0
4/25/2024	6:45 PM	0	0	0	0	0	0	0	0	0	0	0	0	0
4/25/2024	7:00 PM	0	0	0	0	0	0	0	0	0	0	0	0	0
4/25/2024	7:15 PM	0	0	0	0	0	0	0	0	0	0	0	0	0
4/25/2024	7:30 PM	0	0	0	0	0	0	0	0	0	0	0	0	0
4/25/2024	7:45 PM	0	0	0	0	0	0	0	0	0	0	0	0	0
4/25/2024	8:00 PM	0	0	0	0	0	0	0	0	0	0	0	0	0
4/25/2024	8:15 PM	0	0	0	0	0	0	0	0	0	0	0	0	0
4/25/2024	8:30 PM	0	0	0	0	0	0	0	0	0	0	0	0	0
4/25/2024	8:45 PM	0	0	0	0	0	0	0	0	0	0	0	0	0
4/25/2024	9:00 PM	0	0	0	0	0	0	0	0	0	0	0	0	0
4/25/2024	9:15 PM	0	0	0	0	0	0	0	0	0	0	0	0	0
4/25/2024	9:30 PM	0	0	0	0	0	0	0	0	0	0	0	0	0
4/25/2024	9:45 PM	0	0	0	0	0	0	0	0	0	0	0	0	0
4/25/2024	10:00 PM	0	0	0	0	0	0	0	0	0	0	0	0	0
4/25/2024	10:15 PM	0	0	0	0	0	0	0	0	0	0	0	0	0
4/25/2024	10:30 PM	0	0	0	0	0	0	0	0	0	0	0	0	0
4/25/2024	10:45 PM	0	0	0	0	0	0	0	0	0	0	0	0	0
4/25/2024	11:00 PM	0	0	0	0	0	0	0	0	0	0	0	0	0
4/25/2024	11:15 PM	0	0	0	0	0	0	0	0	0	0	0	0	0
4/25/2024	11:30 PM	0	0	0	0	0	0	0	0	0	0	0	0	0
4/25/2024	11:45 PM	0	0	0	0	0	0	0	0	0	0	0	0	0

NB
File Name:
Start Date: 4/23/2024
Start Time: 0
Site Code: 31
Station ID: 1
Location 1: I-26 James F. Byrnes Expy N/Bound Off-Ramp, south of Piney Grove Rd
Location 2:

Date	Time	1	2	3	4	5	6	7	8	9	10	11	12	13
4/23/2024	12:00 AM	0	0	0	0	0	0	0	0	0	0	0	0	0
4/23/2024	12:15 AM	0	0	0	0	0	0	0	0	0	0	0	0	0
4/23/2024	12:30 AM	0	0	0	0	0	0	0	0	0	0	0	0	0
4/23/2024	12:45 AM	0	0	0	0	0	0	0	0	0	0	0	0	0
4/23/2024	1:00 AM	0	0	0	0	0	0	0	0	0	0	0	0	0
4/23/2024	1:15 AM	0	0	0	0	0	0	0	0	0	0	0	0	0
4/23/2024	1:30 AM	0	0	0	0	0	0	0	0	0	0	0	0	0
4/23/2024	1:45 AM	0	0	0	0	0	0	0	0	0	0	0	0	0
4/23/2024	2:00 AM	0	0	0	0	0	0	0	0	0	0	0	0	0
4/23/2024	2:15 AM	0	0	0	0	0	0	0	0	0	0	0	0	0
4/23/2024	2:30 AM	0	0	0	0	0	0	0	0	0	0	0	0	0
4/23/2024	2:45 AM	0	0	0	0	0	0	0	0	0	0	0	0	0
4/23/2024	3:00 AM	0	0	0	0	0	0	0	0	0	0	0	0	0
4/23/2024	3:15 AM	0	0	0	0	0	0	0	0	0	0	0	0	0
4/23/2024	3:30 AM	0	0	0	0	0	0	0	0	0	0	0	0	0
4/23/2024	3:45 AM	0	0	0	0	0	0	0	0	0	0	0	0	0
4/23/2024	4:00 AM	0	0	0	0	0	0	0	0	0	0	0	0	0
4/23/2024	4:15 AM	0	0	0	0	0	0	0	0	0	0	0	0	0
4/23/2024	4:30 AM	0	0	0	0	0	0	0	0	0	0	0	0	0
4/23/2024	4:45 AM	0	0	0	0	0	0	0	0	0	0	0	0	0
4/23/2024	5:00 AM	0	0	0	0	0	0	0	0	0	0	0	0	0
4/23/2024	5:15 AM	0	0	0	0	0	0	0	0	0	0	0	0	0
4/23/2024	5:30 AM	0	0	0	0	0	0	0	0	0	0	0	0	0
4/23/2024	5:45 AM	0	0	0	0	0	0	0	0	0	0	0	0	0
4/23/2024	6:00 AM	0	0	0	0	0	0	0	0	0	0	0	0	0
4/23/2024	6:15 AM	0	0	0	0	0	0	0	0	0	0	0	0	0
4/23/2024	6:30 AM	0	0	0	0	0	0	0	0	0	0	0	0	0
4/23/2024	6:45 AM	0	0	0	0	0	0	0	0	0	0	0	0	0
4/23/2024	7:00 AM	0	0	0	0	0	0	0	0	0	0	0	0	0
4/23/2024	7:15 AM	0	0	0	0	0	0	0	0	0	0	0	0	0
4/23/2024	7:30 AM	0	0	0	0	0	0	0	0	0	0	0	0	0
4/23/2024	7:45 AM	0	0	0	0	0	0	0	0	0	0	0	0	0
4/23/2024	8:00 AM	0	0	0	0	0	0	0	0	0	0	0	0	0
4/23/2024	8:15 AM	0	0	0	0	0	0	0	0	0	0	0	0	0
4/23/2024	8:30 AM	0	0	0	0	0	0	0	0	0	0	0	0	0
4/23/2024	8:45 AM	0	0	0	0	0	0	0	0	0	0	0	0	0
4/23/2024	9:00 AM	0	0	0	0	0	0	0	0	0	0	0	0	0
4/23/2024	9:15 AM	0	0	0	0	0	0	0	0	0	0	0	0	0
4/23/2024	9:30 AM	0	0	0	0	0	0	0	0	0	0	0	0	0
4/23/2024	9:45 AM	0	0	0	0	0	0	0	0	0	0	0	0	0
4/23/2024	10:00 AM	0	0	0	0	0	0	0	0	0	0	0	0	0
4/23/2024	10:15 AM	0	0	0	0	0	0	0	0	0	0	0	0	0
4/23/2024	10:30 AM	0	0	0	0	0	0	0	0	0	0	0	0	0
4/23/2024	10:45 AM	0	0	0	0	0	0	0	0	0	0	0	0	0
4/23/2024	11:00 AM	0	0	0	0	0	0	0	0	0	0	0	0	0
4/23/2024	11:15 AM	0	0	0	0	0	0	0	0	0	0	0	0	0
4/23/2024	11:30 AM	0	0	0	0	0	0	0	0	0	0	0	0	0
4/23/2024	11:45 AM	0	0	0	0	0	0	0	0	0	0	0	0	0
4/23/2024	12:00 PM	0	0	0	0	0	0	0	0	0	0	0	0	0
4/23/2024	12:15 PM	0	0	0	0	0	0	0	0	0	0	0	0	0
4/23/2024	12:30 PM	0	0	0	0	0	0	0	0	0	0	0	0	0
4/23/2024	12:45 PM	0	0	0	0	0	0	0	0	0	0	0	0	0
4/23/2024	1:00 PM	0	0	0	0	0	0	0	0	0	0	0	0	0
4/23/2024	1:15 PM	0	0	0	0	0	0	0	0	0	0	0	0	0
4/23/2024	1:30 PM	0	0	0	0	0	0	0	0	0	0	0	0	0
4/23/2024	1:45 PM	0	0	0	0	0	0	0	0	0	0	0	0	0
4/23/2024	2:00 PM	0	0	0	0	0	0	0	0	0	0	0	0	0
4/23/2024	2:15 PM	0	0	0	0	0	0	0	0	0	0	0	0	0
4/23/2024	2:30 PM	0	0	0	0	0	0	0	0	0	0	0	0	0
4/23/2024	2:45 PM	0	0	0	0	0	0	0	0	0	0	0	0	0
4/23/2024	3:00 PM	0	0	0	0	0	0	0	0	0	0	0	0	0
4/23/2024	3:15 PM	0	0	0	0	0	0	0	0	0	0	0	0	0
4/23/2024	3:30 PM	0	0	0	0	0	0	0	0	0	0	0	0	0
4/23/2024	3:45 PM	0	0	0	0	0	0	0	0	0	0	0	0	0
4/23/2024	4:00 PM	0	0	0	0	0	0	0	0	0	0	0	0	0
4/23/2024	4:15 PM	0	0	0	0	0	0	0	0	0	0	0	0	0
4/23/2024	4:30 PM	0	0	0	0	0	0	0	0	0	0	0	0	0
4/23/2024	4:45 PM	0	0	0	0	0	0	0	0	0	0	0	0	0
4/23/2024	5:00 PM	0	0	0	0	0	0	0	0	0	0	0	0	0
4/23/2024	5:15 PM	0	0	0	0	0	0	0	0	0	0	0	0	0
4/23/2024	5:30 PM	0	0	0	0	0	0	0	0	0	0	0	0	0
4/23/2024	5:45 PM	0	0	0	0	0	0	0	0	0	0	0	0	0
4/23/2024	6:00 PM	0	0	0	0	0	0	0	0	0	0	0	0	0
4/23/2024	6:15 PM	0	130	11	0	1	0	0	0	0	0	0	0	0
4/23/2024	6:30 PM	0	254	25	0	1	0	0	0	0	0	0	0	0
4/23/2024	6:45 PM	0	370	37	0	4	0	0	0	0	0	0	0	0
4/23/2024	7:00 PM	0	481	49	0	5	0	0	0	0	0	0	0	0
4/23/2024	7:15 PM	0	436	54	0	5	0	0	0	1	0	0	0	0
4/23/2024	7:30 PM	0	394	52	0	6	0	0	0	1	0	0	0	0
4/23/2024	7:45 PM	0	355	50	0	4	0	0	0	2	0	0	0	0
4/23/2024	8:00 PM	0	308	44	0	3	0	0	0	2	0	0	0	0
4/23/2024	8:15 PM	0	302	38	0	2	0	0	0	2	0	0	0	0
4/23/2024	8:30 PM	0	286	32	0	1	0	0	0	2	0	0	0	0
4/23/2024	8:45 PM	0	260	26	0	0	0	0	0	2	0	0	0	0
4/23/2024	9:00 PM	0	256	24	0	0	0	0	0	2	0	0	0	0
4/23/2024	9:15 PM	0	217	19	0	0	0	0	0	1	0	0	0	0
4/23/2024	9:30 PM	0	196	20	0	0	0	0	0	2	0	0	0	0
4/23/2024	9:45 PM	0	179	19	0	0	0	0	0	2	0	0	0	0
4/23/2024	10:00 PM	0	143	20	0	0	0	0	0	2	0	0	0	0
4/23/2024	10:15 PM	0	129	20	0	0	0	0	0	2	0	0	0	0
4/23/2024	10:30 PM	0	116	17	0	0	0	0	0	1	0	0	0	0
4/23/2024	10:45 PM	0	106	18	0	0	0	0	0	0	0	0	0	0
4/23/2024	11:00 PM	0	99	17	0	0	0	0	0	1	0	0	0	0
4/23/2024	11:15 PM	0	92	16	0	0	0	0	0	1	0	0	0	0
4/23/2024	11:30 PM	0	79	15	0	0	0	0	0	2	0	1	0	0
4/23/2024	11:45 PM	0	69	12	0	0	0	0	0	2	0	1	0	0

4/24/2024	12:00 AM	0	69	11	0	1	0	0	0	1	0	1	0	0
4/24/2024	12:15 AM	0	61	8	0	1	0	0	0	2	0	1	0	0
4/24/2024	12:30 AM	0	58	8	0	1	0	0	0	1	0	0	0	0
4/24/2024	12:45 AM	0	51	8	0	1	0	0	0	1	0	0	0	0
4/24/2024	1:00 AM	0	43	7	0	0	0	0	0	2	0	0	0	0
4/24/2024	1:15 AM	0	41	8	0	0	0	0	0	2	0	0	0	0
4/24/2024	1:30 AM	0	34	7	0	0	0	0	0	2	0	0	0	0
4/24/2024	1:45 AM	0	37	8	0	0	1	0	0	3	0	0	0	0
4/24/2024	2:00 AM	0	33	6	0	0	1	0	0	3	0	0	0	0
4/24/2024	2:15 AM	0	31	6	0	0	1	0	0	2	0	0	0	0
4/24/2024	2:30 AM	0	32	4	0	0	1	0	0	5	0	0	0	0
4/24/2024	2:45 AM	0	27	2	0	0	0	0	0	5	0	0	0	0
4/24/2024	3:00 AM	0	37	4	0	1	0	0	0	5	0	0	0	0
4/24/2024	3:15 AM	0	43	4	0	1	0	0	0	8	0	0	0	0
4/24/2024	3:30 AM	0	46	6	0	1	0	0	0	7	0	0	0	0
4/24/2024	3:45 AM	0	56	7	0	1	0	0	0	9	0	0	0	0
4/24/2024	4:00 AM	0	72	9	0	1	1	0	0	8	0	0	0	0
4/24/2024	4:15 AM	0	77	9	0	1	1	0	0	6	0	0	0	0
4/24/2024	4:30 AM	0	76	8	0	2	1	0	0	6	0	0	0	0
4/24/2024	4:45 AM	0	76	10	0	2	1	0	0	5	0	0	0	0
4/24/2024	5:00 AM	0	75	11	0	1	0	0	0	6	0	0	0	0
4/24/2024	5:15 AM	0	90	19	0	3	1	0	0	5	0	0	0	0
4/24/2024	5:30 AM	0	108	29	0	4	1	0	0	4	0	0	0	0
4/24/2024	5:45 AM	0	132	32	0	4	1	0	0	4	0	0	0	0
4/24/2024	6:00 AM	0	167	41	0	6	1	0	0	3	0	0	0	0
4/24/2024	6:15 AM	0	208	46	0	8	1	0	0	3	0	0	0	0
4/24/2024	6:30 AM	0	287	56	0	9	1	0	0	5	0	0	0	0
4/24/2024	6:45 AM	0	342	67	0	11	1	0	0	3	0	0	0	0
4/24/2024	7:00 AM	0	415	75	0	11	1	0	0	5	0	0	0	0
4/24/2024	7:15 AM	0	451	83	0	10	0	0	0	5	0	0	0	0
4/24/2024	7:30 AM	0	481	88	0	10	0	0	1	2	0	0	0	0
4/24/2024	7:45 AM	0	488	98	0	10	0	0	2	2	0	0	0	0
4/24/2024	8:00 AM	0	500	93	0	14	0	0	2	0	0	0	0	0
4/24/2024	8:15 AM	0	529	96	0	16	1	0	2	0	0	0	0	0
4/24/2024	8:30 AM	0	485	95	0	16	1	0	1	0	0	0	0	0
4/24/2024	8:45 AM	0	516	94	0	20	1	0	0	2	0	0	0	0
4/24/2024	9:00 AM	0	528	107	0	18	1	0	1	4	0	0	0	0
4/24/2024	9:15 AM	0	518	118	1	15	0	0	1	5	0	0	0	0
4/24/2024	9:30 AM	0	612	130	2	12	0	0	2	7	0	0	0	0
4/24/2024	9:45 AM	0	618	138	3	8	0	0	3	6	0	0	0	0
4/24/2024	10:00 AM	0	590	146	3	7	0	0	2	4	0	0	0	0
4/24/2024	10:15 AM	0	593	139	2	7	0	1	4	4	0	0	0	0
4/24/2024	10:30 AM	0	537	135	1	11	0	1	3	2	0	0	0	0
4/24/2024	10:45 AM	1	564	147	0	11	0	1	3	2	0	0	0	0
4/24/2024	11:00 AM	1	598	149	0	10	0	1	4	3	0	0	0	0
4/24/2024	11:15 AM	1	636	153	3	8	1	0	3	2	0	0	0	0
4/24/2024	11:30 AM	1	685	153	3	4	1	0	5	4	0	0	0	0
4/24/2024	11:45 AM	0	699	141	3	3	1	0	4	3	0	0	0	0
4/24/2024	12:00 PM	0	713	130	3	1	1	0	3	2	0	0	0	0
4/24/2024	12:15 PM	1	715	117	0	3	1	0	2	2	0	0	0	0
4/24/2024	12:30 PM	1	711	117	0	6	1	0	0	0	0	0	0	0
4/24/2024	12:45 PM	2	701	114	0	7	2	0	0	2	0	0	0	0
4/24/2024	1:00 PM	2	672	115	1	8	2	1	0	2	0	0	0	0
4/24/2024	1:15 PM	1	647	141	1	7	1	1	1	2	0	0	0	0
4/24/2024	1:30 PM	1	646	149	1	7	1	1	2	2	0	0	0	0
4/24/2024	1:45 PM	1	645	153	1	6	1	1	2	0	0	0	0	0
4/24/2024	2:00 PM	1	665	157	0	7	1	0	2	1	0	0	0	0
4/24/2024	2:15 PM	1	696	133	0	9	2	0	1	1	0	0	0	0
4/24/2024	2:30 PM	1	705	128	0	6	3	0	0	2	0	0	0	0
4/24/2024	2:45 PM	0	740	121	0	5	2	0	0	2	0	0	0	0
4/24/2024	3:00 PM	0	768	112	0	4	2	0	0	1	0	0	0	0
4/24/2024	3:15 PM	0	902	127	0	3	1	0	1	3	0	0	0	0
4/24/2024	3:30 PM	0	879	113	0	3	0	0	1	2	0	0	0	0
4/24/2024	3:45 PM	0	816	111	0	3	0	0	1	3	0	0	0	0
4/24/2024	4:00 PM	0	786	115	0	2	0	0	1	3	0	0	0	0
4/24/2024	4:15 PM	0	620	103	0	2	0	0	0	2	0	0	0	0
4/24/2024	4:30 PM	0	600	103	0	2	0	0	1	5	0	0	0	0
4/24/2024	4:45 PM	0	621	94	0	3	0	0	1	5	0	0	0	0
4/24/2024	5:00 PM	0	614	85	0	3	0	0	1	5	0	0	0	0
4/24/2024	5:15 PM	0	641	87	0	2	0	0	1	4	0	0	0	0
4/24/2024	5:30 PM	0	651	83	0	4	0	0	1	5	0	0	0	0
4/24/2024	5:45 PM	0	643	81	0	5	0	0	1	6	0	0	0	0
4/24/2024	6:00 PM	0	631	78	0	5	0	0	1	7	0	0	0	0
4/24/2024	6:15 PM	0	578	59	0	4	0	0	1	8	0	0	0	0
4/24/2024	6:30 PM	0	563	58	0	2	0	0	0	6	0	0	0	0
4/24/2024	6:45 PM	0	535	67	0	3	0	0	0	4	0	0	0	0
4/24/2024	7:00 PM	0	499	62	0	3	0	0	0	3	0	0	0	0
4/24/2024	7:15 PM	0	496	69	0	4	1	0	0	2	0	0	0	0
4/24/2024	7:30 PM	0	455	64	0	4	1	0	0	1	0	0	0	0
4/24/2024	7:45 PM	0	412	47	0	3	1	0	0	2	0	0	0	0
4/24/2024	8:00 PM	0	364	42	0	3	1	0	0	2	0	0	0	0
4/24/2024	8:15 PM	0	297	34	0	2	0	0	0	4	0	0	0	0
4/24/2024	8:30 PM	0	263	27	0	2	0	0	0	3	0	0	0	0
4/24/2024	8:45 PM	0	235	24	0	1	0	0	0	2	0	0	0	0
4/24/2024	9:00 PM	0	221	20	0	1	0	0	0	3	0	0	0	0
4/24/2024	9:15 PM	0	226	16	0	1	0	0	0	1	0	0	0	0
4/24/2024	9:30 PM	0	208	15	0	2	0	0	0	1	0	0	0	0
4/24/2024	9:45 PM	0	191	13	0	1	0	0	0	2	0	0	0	0
4/24/2024	10:00 PM	0	171	13	0	1	0	0	0	1	0	0	0	0
4/24/2024	10:15 PM	0	152	14	0	1	0	0	0	1	0	0	0	0
4/24/2024	10:30 PM	0	137	13	0	0	0	0	0	1	0	0	0	0
4/24/2024	10:45 PM	0	120	12	0	0	0	0	0	0	0	0	0	0
4/24/2024	11:00 PM	0	113	12	0	0	0	0	0	1	0	0	0	0
4/24/2024	11:15 PM	0	90	9	0	0	0	0	0	1	0	0	0	0
4/24/2024	11:30 PM	0	81	9	0	0	0	0	0	1	0	0	0	0
4/24/2024	11:45 PM	0	72	11	0	0	0	0	0	1	0	0	0	0

4/25/2024	12:00 AM	0	58	10	0	0	0	0	0	0	0	0	0
4/25/2024	12:15 AM	0	54	9	0	0	0	0	0	0	0	0	0
4/25/2024	12:30 AM	0	43	8	0	0	0	0	0	0	0	0	0
4/25/2024	12:45 AM	0	39	7	0	0	0	0	0	0	0	0	0
4/25/2024	1:00 AM	0	33	6	0	0	0	0	0	0	0	0	0
4/25/2024	1:15 AM	0	35	7	0	0	0	0	1	0	0	0	0
4/25/2024	1:30 AM	0	33	6	0	1	0	0	1	1	0	0	0
4/25/2024	1:45 AM	0	32	4	0	2	0	0	1	1	0	0	0
4/25/2024	2:00 AM	0	30	4	0	2	0	0	1	2	0	0	0
4/25/2024	2:15 AM	0	24	2	0	2	0	0	0	4	0	0	0
4/25/2024	2:30 AM	0	23	3	0	2	0	0	0	5	0	0	0
4/25/2024	2:45 AM	0	26	4	0	1	0	0	0	7	0	0	0
4/25/2024	3:00 AM	0	36	5	0	1	0	0	0	7	0	0	0
4/25/2024	3:15 AM	0	46	7	0	1	0	0	0	7	0	0	0
4/25/2024	3:30 AM	0	57	7	0	0	0	0	0	7	0	0	0
4/25/2024	3:45 AM	0	65	8	0	1	0	0	0	6	0	0	0
4/25/2024	4:00 AM	0	78	9	0	1	0	0	0	7	0	0	0
4/25/2024	4:15 AM	0	82	10	0	2	0	0	0	7	0	0	0
4/25/2024	4:30 AM	0	79	10	0	4	1	0	0	5	0	0	0
4/25/2024	4:45 AM	0	79	10	0	5	1	0	0	4	0	0	0
4/25/2024	5:00 AM	0	81	11	0	5	1	0	0	2	0	0	0
4/25/2024	5:15 AM	0	87	18	0	5	1	0	0	1	0	0	0
4/25/2024	5:30 AM	0	107	20	0	4	1	0	0	3	0	0	0
4/25/2024	5:45 AM	0	129	26	2	3	1	0	0	4	0	0	0
4/25/2024	6:00 AM	0	163	39	2	4	2	0	0	5	0	0	0
4/25/2024	6:15 AM	0	194	42	2	11	2	1	1	5	0	0	0
4/25/2024	6:30 AM	0	254	59	2	15	2	1	2	4	0	0	0
4/25/2024	6:45 AM	0	305	66	0	17	4	1	2	4	0	0	0
4/25/2024	7:00 AM	0	384	66	0	23	3	1	2	3	0	0	0
4/25/2024	7:15 AM	0	443	78	0	15	4	0	1	3	0	0	0
4/25/2024	7:30 AM	1	473	79	0	13	4	0	0	6	0	0	0
4/25/2024	7:45 AM	1	495	82	0	11	2	0	0	5	0	0	0
4/25/2024	8:00 AM	2	494	95	0	9	3	0	0	5	0	0	0
4/25/2024	8:15 AM	2	508	96	1	11	5	0	2	5	0	0	0
4/25/2024	8:30 AM	1	482	90	1	10	6	0	4	1	0	0	0
4/25/2024	8:45 AM	1	515	107	2	11	6	0	4	2	0	0	0
4/25/2024	9:00 AM	0	513	109	2	10	6	0	4	3	0	0	0
4/25/2024	9:15 AM	0	522	116	2	10	3	0	4	5	0	0	0
4/25/2024	9:30 AM	0	559	126	2	10	1	0	2	6	0	0	0
4/25/2024	9:45 AM	0	576	130	2	9	1	0	2	6	0	0	0
4/25/2024	10:00 AM	2	605	134	2	6	0	0	2	7	0	0	0
4/25/2024	10:15 AM	2	613	124	1	6	0	1	0	7	0	0	0
4/25/2024	10:30 AM	2	619	132	1	8	0	1	0	6	0	0	0
4/25/2024	10:45 AM	2	642	131	0	8	0	1	0	6	0	0	0
4/25/2024	11:00 AM	1	591	134	0	11	0	2	0	4	0	0	0
4/25/2024	11:15 AM	1	644	141	0	10	0	1	0	3	0	0	0
4/25/2024	11:30 AM	3	691	133	1	9	0	1	0	4	0	0	0
4/25/2024	11:45 AM	3	698	132	1	9	0	1	0	4	0	0	0
4/25/2024	12:00 PM	2	777	126	1	6	1	0	0	5	0	0	0
4/25/2024	12:15 PM	2	741	128	1	8	1	0	1	3	0	0	0
4/25/2024	12:30 PM	0	738	135	0	8	1	0	1	2	0	0	0
4/25/2024	12:45 PM	0	702	132	0	8	1	0	2	4	0	0	0
4/25/2024	1:00 PM	0	707	120	0	9	2	0	2	4	0	0	0
4/25/2024	1:15 PM	0	709	121	0	9	3	0	1	4	0	0	0
4/25/2024	1:30 PM	0	712	121	0	7	3	0	1	4	0	0	0
4/25/2024	1:45 PM	0	731	123	0	8	3	1	0	2	0	0	0
4/25/2024	2:00 PM	1	715	138	0	8	2	1	1	3	0	0	0
4/25/2024	2:15 PM	1	727	130	1	7	3	1	1	4	0	0	0
4/25/2024	2:30 PM	1	709	129	1	12	3	1	1	4	0	0	0
4/25/2024	2:45 PM	1	706	124	1	10	3	0	1	5	0	0	0
4/25/2024	3:00 PM	0	674	118	1	8	2	0	0	6	0	0	0
4/25/2024	3:15 PM	1	661	121	0	8	0	0	0	5	0	0	0
4/25/2024	3:30 PM	1	632	108	0	6	0	0	0	5	0	0	0
4/25/2024	3:45 PM	1	596	99	0	9	0	0	0	3	0	0	0
4/25/2024	4:00 PM	2	627	89	0	12	0	0	0	1	0	0	0
4/25/2024	4:15 PM	1	609	75	0	10	0	0	0	2	0	0	0
4/25/2024	4:30 PM	1	615	75	0	9	0	0	0	4	0	0	0
4/25/2024	4:45 PM	1	634	74	0	7	0	0	0	6	0	0	0
4/25/2024	5:00 PM	0	606	74	0	6	0	0	0	7	0	0	0
4/25/2024	5:15 PM	0	623	71	0	6	0	0	0	6	0	0	0
4/25/2024	5:30 PM	0	650	73	0	4	0	0	0	5	0	0	0
4/25/2024	5:45 PM	0	629	73	1	5	0	0	0	4	0	0	0
4/25/2024	6:00 PM	0	609	70	1	5	0	0	0	3	0	0	0
4/25/2024	6:15 PM	0	446	59	1	5	0	0	0	3	0	0	0
4/25/2024	6:30 PM	0	271	38	1	4	0	0	0	2	0	0	0
4/25/2024	6:45 PM	0	137	17	0	2	0	0	0	1	0	0	0
4/25/2024	7:00 PM	0	0	0	0	0	0	0	0	0	0	0	0
4/25/2024	7:15 PM	0	0	0	0	0	0	0	0	0	0	0	0
4/25/2024	7:30 PM	0	0	0	0	0	0	0	0	0	0	0	0
4/25/2024	7:45 PM	0	0	0	0	0	0	0	0	0	0	0	0
4/25/2024	8:00 PM	0	0	0	0	0	0	0	0	0	0	0	0
4/25/2024	8:15 PM	0	0	0	0	0	0	0	0	0	0	0	0
4/25/2024	8:30 PM	0	0	0	0	0	0	0	0	0	0	0	0
4/25/2024	8:45 PM	0	0	0	0	0	0	0	0	0	0	0	0
4/25/2024	9:00 PM	0	0	0	0	0	0	0	0	0	0	0	0
4/25/2024	9:15 PM	0	0	0	0	0	0	0	0	0	0	0	0
4/25/2024	9:30 PM	0	0	0	0	0	0	0	0	0	0	0	0
4/25/2024	9:45 PM	0	0	0	0	0	0	0	0	0	0	0	0
4/25/2024	10:00 PM	0	0	0	0	0	0	0	0	0	0	0	0
4/25/2024	10:15 PM	0	0	0	0	0	0	0	0	0	0	0	0
4/25/2024	10:30 PM	0	0	0	0	0	0	0	0	0	0	0	0
4/25/2024	10:45 PM	0	0	0	0	0	0	0	0	0	0	0	0
4/25/2024	11:00 PM	0	0	0	0	0	0	0	0	0	0	0	0
4/25/2024	11:15 PM	0	0	0	0	0	0	0	0	0	0	0	0
4/25/2024	11:30 PM	0	0	0	0	0	0	0	0	0	0	0	0
4/25/2024	11:45 PM	0	0	0	0	0	0	0	0	0	0	0	0

SB
File Name:
Start Date: 4/23/2024
Start Time: 0
Site Code: 31
Station ID: 1
Location 1: I-26 James F. Byrnes Expy N/Bound Off-Ramp, south of Piney Grove Rd
Location 2:

Date	Time	1	2	3	4	5	6	7	8	9	10	11	12	13
4/23/2024	12:00 AM	0	0	0	0	0	0	0	0	0	0	0	0	0
4/23/2024	12:15 AM	0	0	0	0	0	0	0	0	0	0	0	0	0
4/23/2024	12:30 AM	0	0	0	0	0	0	0	0	0	0	0	0	0
4/23/2024	12:45 AM	0	0	0	0	0	0	0	0	0	0	0	0	0
4/23/2024	1:00 AM	0	0	0	0	0	0	0	0	0	0	0	0	0
4/23/2024	1:15 AM	0	0	0	0	0	0	0	0	0	0	0	0	0
4/23/2024	1:30 AM	0	0	0	0	0	0	0	0	0	0	0	0	0
4/23/2024	1:45 AM	0	0	0	0	0	0	0	0	0	0	0	0	0
4/23/2024	2:00 AM	0	0	0	0	0	0	0	0	0	0	0	0	0
4/23/2024	2:15 AM	0	0	0	0	0	0	0	0	0	0	0	0	0
4/23/2024	2:30 AM	0	0	0	0	0	0	0	0	0	0	0	0	0
4/23/2024	2:45 AM	0	0	0	0	0	0	0	0	0	0	0	0	0
4/23/2024	3:00 AM	0	0	0	0	0	0	0	0	0	0	0	0	0
4/23/2024	3:15 AM	0	0	0	0	0	0	0	0	0	0	0	0	0
4/23/2024	3:30 AM	0	0	0	0	0	0	0	0	0	0	0	0	0
4/23/2024	3:45 AM	0	0	0	0	0	0	0	0	0	0	0	0	0
4/23/2024	4:00 AM	0	0	0	0	0	0	0	0	0	0	0	0	0
4/23/2024	4:15 AM	0	0	0	0	0	0	0	0	0	0	0	0	0
4/23/2024	4:30 AM	0	0	0	0	0	0	0	0	0	0	0	0	0
4/23/2024	4:45 AM	0	0	0	0	0	0	0	0	0	0	0	0	0
4/23/2024	5:00 AM	0	0	0	0	0	0	0	0	0	0	0	0	0
4/23/2024	5:15 AM	0	0	0	0	0	0	0	0	0	0	0	0	0
4/23/2024	5:30 AM	0	0	0	0	0	0	0	0	0	0	0	0	0
4/23/2024	5:45 AM	0	0	0	0	0	0	0	0	0	0	0	0	0
4/23/2024	6:00 AM	0	0	0	0	0	0	0	0	0	0	0	0	0
4/23/2024	6:15 AM	0	0	0	0	0	0	0	0	0	0	0	0	0
4/23/2024	6:30 AM	0	0	0	0	0	0	0	0	0	0	0	0	0
4/23/2024	6:45 AM	0	0	0	0	0	0	0	0	0	0	0	0	0
4/23/2024	7:00 AM	0	0	0	0	0	0	0	0	0	0	0	0	0
4/23/2024	7:15 AM	0	0	0	0	0	0	0	0	0	0	0	0	0
4/23/2024	7:30 AM	0	0	0	0	0	0	0	0	0	0	0	0	0
4/23/2024	7:45 AM	0	0	0	0	0	0	0	0	0	0	0	0	0
4/23/2024	8:00 AM	0	0	0	0	0	0	0	0	0	0	0	0	0
4/23/2024	8:15 AM	0	0	0	0	0	0	0	0	0	0	0	0	0
4/23/2024	8:30 AM	0	0	0	0	0	0	0	0	0	0	0	0	0
4/23/2024	8:45 AM	0	0	0	0	0	0	0	0	0	0	0	0	0
4/23/2024	9:00 AM	0	0	0	0	0	0	0	0	0	0	0	0	0
4/23/2024	9:15 AM	0	0	0	0	0	0	0	0	0	0	0	0	0
4/23/2024	9:30 AM	0	0	0	0	0	0	0	0	0	0	0	0	0
4/23/2024	9:45 AM	0	0	0	0	0	0	0	0	0	0	0	0	0
4/23/2024	10:00 AM	0	0	0	0	0	0	0	0	0	0	0	0	0
4/23/2024	10:15 AM	0	0	0	0	0	0	0	0	0	0	0	0	0
4/23/2024	10:30 AM	0	0	0	0	0	0	0	0	0	0	0	0	0
4/23/2024	10:45 AM	0	0	0	0	0	0	0	0	0	0	0	0	0
4/23/2024	11:00 AM	0	0	0	0	0	0	0	0	0	0	0	0	0
4/23/2024	11:15 AM	0	0	0	0	0	0	0	0	0	0	0	0	0
4/23/2024	11:30 AM	0	0	0	0	0	0	0	0	0	0	0	0	0
4/23/2024	11:45 AM	0	0	0	0	0	0	0	0	0	0	0	0	0
4/23/2024	12:00 PM	0	0	0	0	0	0	0	0	0	0	0	0	0
4/23/2024	12:15 PM	0	0	0	0	0	0	0	0	0	0	0	0	0
4/23/2024	12:30 PM	0	0	0	0	0	0	0	0	0	0	0	0	0
4/23/2024	12:45 PM	0	0	0	0	0	0	0	0	0	0	0	0	0
4/23/2024	1:00 PM	0	0	0	0	0	0	0	0	0	0	0	0	0
4/23/2024	1:15 PM	0	0	0	0	0	0	0	0	0	0	0	0	0
4/23/2024	1:30 PM	0	0	0	0	0	0	0	0	0	0	0	0	0
4/23/2024	1:45 PM	0	0	0	0	0	0	0	0	0	0	0	0	0
4/23/2024	2:00 PM	0	0	0	0	0	0	0	0	0	0	0	0	0
4/23/2024	2:15 PM	0	0	0	0	0	0	0	0	0	0	0	0	0
4/23/2024	2:30 PM	0	0	0	0	0	0	0	0	0	0	0	0	0
4/23/2024	2:45 PM	0	0	0	0	0	0	0	0	0	0	0	0	0
4/23/2024	3:00 PM	0	0	0	0	0	0	0	0	0	0	0	0	0
4/23/2024	3:15 PM	0	0	0	0	0	0	0	0	0	0	0	0	0
4/23/2024	3:30 PM	0	0	0	0	0	0	0	0	0	0	0	0	0
4/23/2024	3:45 PM	0	0	0	0	0	0	0	0	0	0	0	0	0
4/23/2024	4:00 PM	0	0	0	0	0	0	0	0	0	0	0	0	0
4/23/2024	4:15 PM	0	0	0	0	0	0	0	0	0	0	0	0	0
4/23/2024	4:30 PM	0	0	0	0	0	0	0	0	0	0	0	0	0
4/23/2024	4:45 PM	0	0	0	0	0	0	0	0	0	0	0	0	0
4/23/2024	5:00 PM	0	0	0	0	0	0	0	0	0	0	0	0	0
4/23/2024	5:15 PM	0	0	0	0	0	0	0	0	0	0	0	0	0
4/23/2024	5:30 PM	0	0	0	0	0	0	0	0	0	0	0	0	0
4/23/2024	5:45 PM	0	0	0	0	0	0	0	0	0	0	0	0	0
4/23/2024	6:00 PM	0	0	0	0	0	0	0	0	0	0	0	0	0
4/23/2024	6:15 PM	0	0	0	0	0	0	0	0	0	0	0	0	0
4/23/2024	6:30 PM	0	0	0	0	0	0	0	0	0	0	0	0	0
4/23/2024	6:45 PM	0	0	0	0	0	0	0	0	0	0	0	0	0
4/23/2024	7:00 PM	0	0	0	0	0	0	0	0	0	0	0	0	0
4/23/2024	7:15 PM	0	0	0	0	0	0	0	0	0	0	0	0	0
4/23/2024	7:30 PM	0	0	0	0	0	0	0	0	0	0	0	0	0
4/23/2024	7:45 PM	0	0	0	0	0	0	0	0	0	0	0	0	0
4/23/2024	8:00 PM	0	0	0	0	0	0	0	0	0	0	0	0	0
4/23/2024	8:15 PM	0	0	0	0	0	0	0	0	0	0	0	0	0
4/23/2024	8:30 PM	0	0	0	0	0	0	0	0	0	0	0	0	0
4/23/2024	8:45 PM	0	0	0	0	0	0	0	0	0	0	0	0	0
4/23/2024	9:00 PM	0	0	0	0	0	0	0	0	0	0	0	0	0
4/23/2024	9:15 PM	0	0	0	0	0	0	0	0	0	0	0	0	0
4/23/2024	9:30 PM	0	0	0	0	0	0	0	0	0	0	0	0	0
4/23/2024	9:45 PM	0	0	0	0	0	0	0	0	0	0	0	0	0
4/23/2024	10:00 PM	0	0	0	0	0	0	0	0	0	0	0	0	0
4/23/2024	10:15 PM	0	0	0	0	0	0	0	0	0	0	0	0	0
4/23/2024	10:30 PM	0	0	0	0	0	0	0	0	0	0	0	0	0
4/23/2024	10:45 PM	0	0	0	0	0	0	0	0	0	0	0	0	0
4/23/2024	11:00 PM	0	0	0	0	0	0	0	0	0	0	0	0	0
4/23/2024	11:15 PM	0	0	0	0	0	0	0	0	0	0	0	0	0
4/23/2024	11:30 PM	0	0	0	0	0	0	0	0	0	0	0	0	0
4/23/2024	11:45 PM	0	0	0	0	0	0	0	0	0	0	0	0	0

4/24/2024	12:00 AM	0	0	0	0	0	0	0	0	0	0	0	0	0
4/24/2024	12:15 AM	0	0	0	0	0	0	0	0	0	0	0	0	0
4/24/2024	12:30 AM	0	0	0	0	0	0	0	0	0	0	0	0	0
4/24/2024	12:45 AM	0	0	0	0	0	0	0	0	0	0	0	0	0
4/24/2024	1:00 AM	0	0	0	0	0	0	0	0	0	0	0	0	0
4/24/2024	1:15 AM	0	0	0	0	0	0	0	0	0	0	0	0	0
4/24/2024	1:30 AM	0	0	0	0	0	0	0	0	0	0	0	0	0
4/24/2024	1:45 AM	0	0	0	0	0	0	0	0	0	0	0	0	0
4/24/2024	2:00 AM	0	0	0	0	0	0	0	0	0	0	0	0	0
4/24/2024	2:15 AM	0	0	0	0	0	0	0	0	0	0	0	0	0
4/24/2024	2:30 AM	0	0	0	0	0	0	0	0	0	0	0	0	0
4/24/2024	2:45 AM	0	0	0	0	0	0	0	0	0	0	0	0	0
4/24/2024	3:00 AM	0	0	0	0	0	0	0	0	0	0	0	0	0
4/24/2024	3:15 AM	0	0	0	0	0	0	0	0	0	0	0	0	0
4/24/2024	3:30 AM	0	0	0	0	0	0	0	0	0	0	0	0	0
4/24/2024	3:45 AM	0	0	0	0	0	0	0	0	0	0	0	0	0
4/24/2024	4:00 AM	0	0	0	0	0	0	0	0	0	0	0	0	0
4/24/2024	4:15 AM	0	0	0	0	0	0	0	0	0	0	0	0	0
4/24/2024	4:30 AM	0	0	0	0	0	0	0	0	0	0	0	0	0
4/24/2024	4:45 AM	0	0	0	0	0	0	0	0	0	0	0	0	0
4/24/2024	5:00 AM	0	0	0	0	0	0	0	0	0	0	0	0	0
4/24/2024	5:15 AM	0	0	0	0	0	0	0	0	0	0	0	0	0
4/24/2024	5:30 AM	0	0	0	0	0	0	0	0	0	0	0	0	0
4/24/2024	5:45 AM	0	0	0	0	0	0	0	0	0	0	0	0	0
4/24/2024	6:00 AM	0	0	0	0	0	0	0	0	0	0	0	0	0
4/24/2024	6:15 AM	0	0	0	0	0	0	0	0	0	0	0	0	0
4/24/2024	6:30 AM	0	0	0	0	0	0	0	0	0	0	0	0	0
4/24/2024	6:45 AM	0	0	0	0	0	0	0	0	0	0	0	0	0
4/24/2024	7:00 AM	0	0	0	0	0	0	0	0	0	0	0	0	0
4/24/2024	7:15 AM	0	0	0	0	0	0	0	0	0	0	0	0	0
4/24/2024	7:30 AM	0	0	0	0	0	0	0	0	0	0	0	0	0
4/24/2024	7:45 AM	0	0	0	0	0	0	0	0	0	0	0	0	0
4/24/2024	8:00 AM	0	0	0	0	0	0	0	0	0	0	0	0	0
4/24/2024	8:15 AM	0	0	0	0	0	0	0	0	0	0	0	0	0
4/24/2024	8:30 AM	0	0	0	0	0	0	0	0	0	0	0	0	0
4/24/2024	8:45 AM	0	0	0	0	0	0	0	0	0	0	0	0	0
4/24/2024	9:00 AM	0	0	0	0	0	0	0	0	0	0	0	0	0
4/24/2024	9:15 AM	0	0	0	0	0	0	0	0	0	0	0	0	0
4/24/2024	9:30 AM	0	0	0	0	0	0	0	0	0	0	0	0	0
4/24/2024	9:45 AM	0	0	0	0	0	0	0	0	0	0	0	0	0
4/24/2024	10:00 AM	0	0	0	0	0	0	0	0	0	0	0	0	0
4/24/2024	10:15 AM	0	0	0	0	0	0	0	0	0	0	0	0	0
4/24/2024	10:30 AM	0	0	0	0	0	0	0	0	0	0	0	0	0
4/24/2024	10:45 AM	0	0	0	0	0	0	0	0	0	0	0	0	0
4/24/2024	11:00 AM	0	0	0	0	0	0	0	0	0	0	0	0	0
4/24/2024	11:15 AM	0	0	0	0	0	0	0	0	0	0	0	0	0
4/24/2024	11:30 AM	0	0	0	0	0	0	0	0	0	0	0	0	0
4/24/2024	11:45 AM	0	0	0	0	0	0	0	0	0	0	0	0	0
4/24/2024	12:00 PM	0	0	0	0	0	0	0	0	0	0	0	0	0
4/24/2024	12:15 PM	0	0	0	0	0	0	0	0	0	0	0	0	0
4/24/2024	12:30 PM	0	0	0	0	0	0	0	0	0	0	0	0	0
4/24/2024	12:45 PM	0	0	0	0	0	0	0	0	0	0	0	0	0
4/24/2024	1:00 PM	0	0	0	0	0	0	0	0	0	0	0	0	0
4/24/2024	1:15 PM	0	0	0	0	0	0	0	0	0	0	0	0	0
4/24/2024	1:30 PM	0	0	0	0	0	0	0	0	0	0	0	0	0
4/24/2024	1:45 PM	0	0	0	0	0	0	0	0	0	0	0	0	0
4/24/2024	2:00 PM	0	0	0	0	0	0	0	0	0	0	0	0	0
4/24/2024	2:15 PM	0	0	0	0	0	0	0	0	0	0	0	0	0
4/24/2024	2:30 PM	0	0	0	0	0	0	0	0	0	0	0	0	0
4/24/2024	2:45 PM	0	0	0	0	0	0	0	0	0	0	0	0	0
4/24/2024	3:00 PM	0	0	0	0	0	0	0	0	0	0	0	0	0
4/24/2024	3:15 PM	0	0	0	0	0	0	0	0	0	0	0	0	0
4/24/2024	3:30 PM	0	0	0	0	0	0	0	0	0	0	0	0	0
4/24/2024	3:45 PM	0	0	0	0	0	0	0	0	0	0	0	0	0
4/24/2024	4:00 PM	0	0	0	0	0	0	0	0	0	0	0	0	0
4/24/2024	4:15 PM	0	0	0	0	0	0	0	0	0	0	0	0	0
4/24/2024	4:30 PM	0	0	0	0	0	0	0	0	0	0	0	0	0
4/24/2024	4:45 PM	0	0	0	0	0	0	0	0	0	0	0	0	0
4/24/2024	5:00 PM	0	0	0	0	0	0	0	0	0	0	0	0	0
4/24/2024	5:15 PM	0	0	0	0	0	0	0	0	0	0	0	0	0
4/24/2024	5:30 PM	0	0	0	0	0	0	0	0	0	0	0	0	0
4/24/2024	5:45 PM	0	0	0	0	0	0	0	0	0	0	0	0	0
4/24/2024	6:00 PM	0	0	0	0	0	0	0	0	0	0	0	0	0
4/24/2024	6:15 PM	0	0	0	0	0	0	0	0	0	0	0	0	0
4/24/2024	6:30 PM	0	0	0	0	0	0	0	0	0	0	0	0	0
4/24/2024	6:45 PM	0	0	0	0	0	0	0	0	0	0	0	0	0
4/24/2024	7:00 PM	0	0	0	0	0	0	0	0	0	0	0	0	0
4/24/2024	7:15 PM	0	0	0	0	0	0	0	0	0	0	0	0	0
4/24/2024	7:30 PM	0	0	0	0	0	0	0	0	0	0	0	0	0
4/24/2024	7:45 PM	0	0	0	0	0	0	0	0	0	0	0	0	0
4/24/2024	8:00 PM	0	0	0	0	0	0	0	0	0	0	0	0	0
4/24/2024	8:15 PM	0	0	0	0	0	0	0	0	0	0	0	0	0
4/24/2024	8:30 PM	0	0	0	0	0	0	0	0	0	0	0	0	0
4/24/2024	8:45 PM	0	0	0	0	0	0	0	0	0	0	0	0	0
4/24/2024	9:00 PM	0	0	0	0	0	0	0	0	0	0	0	0	0
4/24/2024	9:15 PM	0	0	0	0	0	0	0	0	0	0	0	0	0
4/24/2024	9:30 PM	0	0	0	0	0	0	0	0	0	0	0	0	0
4/24/2024	9:45 PM	0	0	0	0	0	0	0	0	0	0	0	0	0
4/24/2024	10:00 PM	0	0	0	0	0	0	0	0	0	0	0	0	0
4/24/2024	10:15 PM	0	0	0	0	0	0	0	0	0	0	0	0	0
4/24/2024	10:30 PM	0	0	0	0	0	0	0	0	0	0	0	0	0
4/24/2024	10:45 PM	0	0	0	0	0	0	0	0	0	0	0	0	0
4/24/2024	11:00 PM	0	0	0	0	0	0	0	0	0	0	0	0	0
4/24/2024	11:15 PM	0	0	0	0	0	0	0	0	0	0	0	0	0
4/24/2024	11:30 PM	0	0	0	0	0	0	0	0	0	0	0	0	0
4/24/2024	11:45 PM	0	0	0	0	0	0	0	0	0	0	0	0	0

4/25/2024	12:00 AM	0	0	0	0	0	0	0	0	0	0	0	0	0
4/25/2024	12:15 AM	0	0	0	0	0	0	0	0	0	0	0	0	0
4/25/2024	12:30 AM	0	0	0	0	0	0	0	0	0	0	0	0	0
4/25/2024	12:45 AM	0	0	0	0	0	0	0	0	0	0	0	0	0
4/25/2024	1:00 AM	0	0	0	0	0	0	0	0	0	0	0	0	0
4/25/2024	1:15 AM	0	0	0	0	0	0	0	0	0	0	0	0	0
4/25/2024	1:30 AM	0	0	0	0	0	0	0	0	0	0	0	0	0
4/25/2024	1:45 AM	0	0	0	0	0	0	0	0	0	0	0	0	0
4/25/2024	2:00 AM	0	0	0	0	0	0	0	0	0	0	0	0	0
4/25/2024	2:15 AM	0	0	0	0	0	0	0	0	0	0	0	0	0
4/25/2024	2:30 AM	0	0	0	0	0	0	0	0	0	0	0	0	0
4/25/2024	2:45 AM	0	0	0	0	0	0	0	0	0	0	0	0	0
4/25/2024	3:00 AM	0	0	0	0	0	0	0	0	0	0	0	0	0
4/25/2024	3:15 AM	0	0	0	0	0	0	0	0	0	0	0	0	0
4/25/2024	3:30 AM	0	0	0	0	0	0	0	0	0	0	0	0	0
4/25/2024	3:45 AM	0	0	0	0	0	0	0	0	0	0	0	0	0
4/25/2024	4:00 AM	0	0	0	0	0	0	0	0	0	0	0	0	0
4/25/2024	4:15 AM	0	0	0	0	0	0	0	0	0	0	0	0	0
4/25/2024	4:30 AM	0	0	0	0	0	0	0	0	0	0	0	0	0
4/25/2024	4:45 AM	0	0	0	0	0	0	0	0	0	0	0	0	0
4/25/2024	5:00 AM	0	0	0	0	0	0	0	0	0	0	0	0	0
4/25/2024	5:15 AM	0	0	0	0	0	0	0	0	0	0	0	0	0
4/25/2024	5:30 AM	0	0	0	0	0	0	0	0	0	0	0	0	0
4/25/2024	5:45 AM	0	0	0	0	0	0	0	0	0	0	0	0	0
4/25/2024	6:00 AM	0	0	0	0	0	0	0	0	0	0	0	0	0
4/25/2024	6:15 AM	0	0	0	0	0	0	0	0	0	0	0	0	0
4/25/2024	6:30 AM	0	0	0	0	0	0	0	0	0	0	0	0	0
4/25/2024	6:45 AM	0	0	0	0	0	0	0	0	0	0	0	0	0
4/25/2024	7:00 AM	0	0	0	0	0	0	0	0	0	0	0	0	0
4/25/2024	7:15 AM	0	0	0	0	0	0	0	0	0	0	0	0	0
4/25/2024	7:30 AM	0	0	0	0	0	0	0	0	0	0	0	0	0
4/25/2024	7:45 AM	0	0	0	0	0	0	0	0	0	0	0	0	0
4/25/2024	8:00 AM	0	0	0	0	0	0	0	0	0	0	0	0	0
4/25/2024	8:15 AM	0	0	0	0	0	0	0	0	0	0	0	0	0
4/25/2024	8:30 AM	0	0	0	0	0	0	0	0	0	0	0	0	0
4/25/2024	8:45 AM	0	0	0	0	0	0	0	0	0	0	0	0	0
4/25/2024	9:00 AM	0	0	0	0	0	0	0	0	0	0	0	0	0
4/25/2024	9:15 AM	0	0	0	0	0	0	0	0	0	0	0	0	0
4/25/2024	9:30 AM	0	0	0	0	0	0	0	0	0	0	0	0	0
4/25/2024	9:45 AM	0	0	0	0	0	0	0	0	0	0	0	0	0
4/25/2024	10:00 AM	0	0	0	0	0	0	0	0	0	0	0	0	0
4/25/2024	10:15 AM	0	0	0	0	0	0	0	0	0	0	0	0	0
4/25/2024	10:30 AM	0	0	0	0	0	0	0	0	0	0	0	0	0
4/25/2024	10:45 AM	0	0	0	0	0	0	0	0	0	0	0	0	0
4/25/2024	11:00 AM	0	0	0	0	0	0	0	0	0	0	0	0	0
4/25/2024	11:15 AM	0	0	0	0	0	0	0	0	0	0	0	0	0
4/25/2024	11:30 AM	0	0	0	0	0	0	0	0	0	0	0	0	0
4/25/2024	11:45 AM	0	0	0	0	0	0	0	0	0	0	0	0	0
4/25/2024	12:00 PM	0	0	0	0	0	0	0	0	0	0	0	0	0
4/25/2024	12:15 PM	0	0	0	0	0	0	0	0	0	0	0	0	0
4/25/2024	12:30 PM	0	0	0	0	0	0	0	0	0	0	0	0	0
4/25/2024	12:45 PM	0	0	0	0	0	0	0	0	0	0	0	0	0
4/25/2024	1:00 PM	0	0	0	0	0	0	0	0	0	0	0	0	0
4/25/2024	1:15 PM	0	0	0	0	0	0	0	0	0	0	0	0	0
4/25/2024	1:30 PM	0	0	0	0	0	0	0	0	0	0	0	0	0
4/25/2024	1:45 PM	0	0	0	0	0	0	0	0	0	0	0	0	0
4/25/2024	2:00 PM	0	0	0	0	0	0	0	0	0	0	0	0	0
4/25/2024	2:15 PM	0	0	0	0	0	0	0	0	0	0	0	0	0
4/25/2024	2:30 PM	0	0	0	0	0	0	0	0	0	0	0	0	0
4/25/2024	2:45 PM	0	0	0	0	0	0	0	0	0	0	0	0	0
4/25/2024	3:00 PM	0	0	0	0	0	0	0	0	0	0	0	0	0
4/25/2024	3:15 PM	0	0	0	0	0	0	0	0	0	0	0	0	0
4/25/2024	3:30 PM	0	0	0	0	0	0	0	0	0	0	0	0	0
4/25/2024	3:45 PM	0	0	0	0	0	0	0	0	0	0	0	0	0
4/25/2024	4:00 PM	0	0	0	0	0	0	0	0	0	0	0	0	0
4/25/2024	4:15 PM	0	0	0	0	0	0	0	0	0	0	0	0	0
4/25/2024	4:30 PM	0	0	0	0	0	0	0	0	0	0	0	0	0
4/25/2024	4:45 PM	0	0	0	0	0	0	0	0	0	0	0	0	0
4/25/2024	5:00 PM	0	0	0	0	0	0	0	0	0	0	0	0	0
4/25/2024	5:15 PM	0	0	0	0	0	0	0	0	0	0	0	0	0
4/25/2024	5:30 PM	0	0	0	0	0	0	0	0	0	0	0	0	0
4/25/2024	5:45 PM	0	0	0	0	0	0	0	0	0	0	0	0	0
4/25/2024	6:00 PM	0	0	0	0	0	0	0	0	0	0	0	0	0
4/25/2024	6:15 PM	0	0	0	0	0	0	0	0	0	0	0	0	0
4/25/2024	6:30 PM	0	0	0	0	0	0	0	0	0	0	0	0	0
4/25/2024	6:45 PM	0	0	0	0	0	0	0	0	0	0	0	0	0
4/25/2024	7:00 PM	0	0	0	0	0	0	0	0	0	0	0	0	0
4/25/2024	7:15 PM	0	0	0	0	0	0	0	0	0	0	0	0	0
4/25/2024	7:30 PM	0	0	0	0	0	0	0	0	0	0	0	0	0
4/25/2024	7:45 PM	0	0	0	0	0	0	0	0	0	0	0	0	0
4/25/2024	8:00 PM	0	0	0	0	0	0	0	0	0	0	0	0	0
4/25/2024	8:15 PM	0	0	0	0	0	0	0	0	0	0	0	0	0
4/25/2024	8:30 PM	0	0	0	0	0	0	0	0	0	0	0	0	0
4/25/2024	8:45 PM	0	0	0	0	0	0	0	0	0	0	0	0	0
4/25/2024	9:00 PM	0	0	0	0	0	0	0	0	0	0	0	0	0
4/25/2024	9:15 PM	0	0	0	0	0	0	0	0	0	0	0	0	0
4/25/2024	9:30 PM	0	0	0	0	0	0	0	0	0	0	0	0	0
4/25/2024	9:45 PM	0	0	0	0	0	0	0	0	0	0	0	0	0
4/25/2024	10:00 PM	0	0	0	0	0	0	0	0	0	0	0	0	0
4/25/2024	10:15 PM	0	0	0	0	0	0	0	0	0	0	0	0	0
4/25/2024	10:30 PM	0	0	0	0	0	0	0	0	0	0	0	0	0
4/25/2024	10:45 PM	0	0	0	0	0	0	0	0	0	0	0	0	0
4/25/2024	11:00 PM	0	0	0	0	0	0	0	0	0	0	0	0	0
4/25/2024	11:15 PM	0	0	0	0	0	0	0	0	0	0	0	0	0
4/25/2024	11:30 PM	0	0	0	0	0	0	0	0	0	0	0	0	0
4/25/2024	11:45 PM	0	0	0	0	0	0	0	0	0	0	0	0	0

Bi-Directional Class Count || SB WB 15min

Columbia, SC

Marr Traffic DATA COLLECTION
www.marrtraffic.com

Site 32
I-26 James F. Byrnes Expy S/Bound Off-Ramp, north of Piney Grove Rd

Date
Tuesday, April 23, 2024

Lat/Long
34.068065°, -81.143739°

Click here for Map

Weather
Fair
58°F

Click here for Detailed Weather

0000 - 2400 (Weekday 24h Session) (04-23-2024)
SB WB 15min

	Southbound (Movement 32.1)													15min	60min
Time	1	2	3	4	5	6	7	8	9	10	11	12	13	Total	Total
0000 - 0015	0	0	0	0	0	0	0	0	0	0	0	0	0	**0**	
0015 - 0030	0	0	0	0	0	0	0	0	0	0	0	0	0	**0**	
0030 - 0045	0	0	0	0	0	0	0	0	0	0	0	0	0	**0**	
0045 - 0100	0	0	0	0	0	0	0	0	0	0	0	0	0	**0**	**0**
0100 - 0115	0	0	0	0	0	0	0	0	0	0	0	0	0	**0**	
0115 - 0130	0	0	0	0	0	0	0	0	0	0	0	0	0	**0**	
0130 - 0145	0	0	0	0	0	0	0	0	0	0	0	0	0	**0**	
0145 - 0200	0	0	0	0	0	0	0	0	0	0	0	0	0	**0**	**0**
0200 - 0215	0	0	0	0	0	0	0	0	0	0	0	0	0	**0**	
0215 - 0230	0	0	0	0	0	0	0	0	0	0	0	0	0	**0**	
0230 - 0245	0	0	0	0	0	0	0	0	0	0	0	0	0	**0**	
0245 - 0300	0	0	0	0	0	0	0	0	0	0	0	0	0	**0**	**0**
0300 - 0315	0	0	0	0	0	0	0	0	0	0	0	0	0	**0**	
0315 - 0330	0	0	0	0	0	0	0	0	0	0	0	0	0	**0**	
0330 - 0345	0	0	0	0	0	0	0	0	0	0	0	0	0	**0**	
0345 - 0400	0	0	0	0	0	0	0	0	0	0	0	0	0	**0**	**0**
0400 - 0415	0	0	0	0	0	0	0	0	0	0	0	0	0	**0**	
0415 - 0430	0	0	0	0	0	0	0	0	0	0	0	0	0	**0**	
0430 - 0445	0	0	0	0	0	0	0	0	0	0	0	0	0	**0**	
0445 - 0500	0	0	0	0	0	0	0	0	0	0	0	0	0	**0**	**0**
0500 - 0515	0	0	0	0	0	0	0	0	0	0	0	0	0	**0**	
0515 - 0530	0	0	0	0	0	0	0	0	0	0	0	0	0	**0**	
0530 - 0545	0	0	0	0	0	0	0	0	0	0	0	0	0	**0**	
0545 - 0600	0	0	0	0	0	0	0	0	0	0	0	0	0	**0**	**0**
0600 - 0615	0	0	0	0	0	0	0	0	0	0	0	0	0	**0**	
0615 - 0630	0	0	0	0	0	0	0	0	0	0	0	0	0	**0**	
0630 - 0645	0	0	0	0	0	0	0	0	0	0	0	0	0	**0**	
0645 - 0700	0	0	0	0	0	0	0	0	0	0	0	0	0	**0**	**0**
0700 - 0715	0	0	0	0	0	0	0	0	0	0	0	0	0	**0**	
0715 - 0730	0	0	0	0	0	0	0	0	0	0	0	0	0	**0**	
0730 - 0745	0	0	0	0	0	0	0	0	0	0	0	0	0	**0**	
0745 - 0800	0	0	0	0	0	0	0	0	0	0	0	0	0	**0**	**0**
0800 - 0815	0	0	0	0	0	0	0	0	0	0	0	0	0	**0**	
0815 - 0830	0	0	0	0	0	0	0	0	0	0	0	0	0	**0**	
0830 - 0845	0	0	0	0	0	0	0	0	0	0	0	0	0	**0**	
0845 - 0900	0	0	0	0	0	0	0	0	0	0	0	0	0	**0**	**0**
0900 - 0915	0	0	0	0	0	0	0	0	0	0	0	0	0	**0**	
0915 - 0930	0	0	0	0	0	0	0	0	0	0	0	0	0	**0**	
0930 - 0945	0	0	0	0	0	0	0	0	0	0	0	0	0	**0**	
0945 - 1000	0	0	0	0	0	0	0	0	0	0	0	0	0	**0**	**0**
1000 - 1015	0	0	0	0	0	0	0	0	0	0	0	0	0	**0**	
1015 - 1030	0	0	0	0	0	0	0	0	0	0	0	0	0	**0**	
1030 - 1045	0	0	0	0	0	0	0	0	0	0	0	0	0	**0**	
1045 - 1100	0	0	0	0	0	0	0	0	0	0	0	0	0	**0**	**0**
1100 - 1115	0	0	0	0	0	0	0	0	0	0	0	0	0	**0**	
1115 - 1130	0	0	0	0	0	0	0	0	0	0	0	0	0	**0**	
1130 - 1145	0	0	0	0	0	0	0	0	0	0	0	0	0	**0**	
1145 - 1200	0	0	0	0	0	0	0	0	0	0	0	0	0	**0**	**0**
1200 - 1215	0	0	0	0	0	0	0	0	0	0	0	0	0	**0**	
1215 - 1230	0	0	0	0	0	0	0	0	0	0	0	0	0	**0**	
1230 - 1245	0	0	0	0	0	0	0	0	0	0	0	0	0	**0**	
1245 - 1300	0	0	0	0	0	0	0	0	0	0	0	0	0	**0**	**0**
1300 - 1315	0	0	0	0	0	0	0	0	0	0	0	0	0	**0**	
1315 - 1330	0	0	0	0	0	0	0	0	0	0	0	0	0	**0**	
1330 - 1345	0	0	0	0	0	0	0	0	0	0	0	0	0	**0**	
1345 - 1400	0	0	0	0	0	0	0	0	0	0	0	0	0	**0**	**0**
1400 - 1415	0	0	0	0	0	0	0	0	0	0	0	0	0	**0**	
1415 - 1430	0	0	0	0	0	0	0	0	0	0	0	0	0	**0**	
1430 - 1445	0	0	0	0	0	0	0	0	0	0	0	0	0	**0**	
1445 - 1500	0	0	0	0	0	0	0	0	0	0	0	0	0	**0**	**0**
1500 - 1515	0	0	0	0	0	0	0	0	0	0	0	0	0	**0**	
1515 - 1530	0	0	0	0	0	0	0	0	0	0	0	0	0	**0**	
1530 - 1545	0	0	0	0	0	0	0	0	0	0	0	0	0	**0**	
1545 - 1600	0	0	0	0	0	0	0	0	0	0	0	0	0	**0**	**0**
1600 - 1615	0	0	0	0	0	0	0	0	0	0	0	0	0	**0**	
1615 - 1630	0	0	0	0	0	0	0	0	0	0	0	0	0	**0**	
1630 - 1645	0	0	0	0	0	0	0	0	0	0	0	0	0	**0**	
1645 - 1700	0	0	0	0	0	0	0	0	0	0	0	0	0	**0**	**0**
1700 - 1715	0	0	0	0	0	0	0	0	0	0	0	0	0	**0**	
1715 - 1730	0	0	0	0	0	0	0	0	0	0	0	0	0	**0**	
1730 - 1745	0	0	0	0	0	0	0	0	0	0	0	0	0	**0**	
1745 - 1800	0	0	0	0	0	0	0	0	0	0	0	0	0	**0**	**0**
1800 - 1815	0	0	0	0	0	0	0	0	0	0	0	0	0	**0**	
1815 - 1830	0	0	0	0	0	0	0	0	0	0	0	0	0	**0**	
1830 - 1845	0	0	0	0	0	0	0	0	0	0	0	0	0	**0**	
1845 - 1900	0	0	0	0	0	0	0	0	0	0	0	0	0	**0**	**0**
1900 - 1915	0	26	5	0	0	0	1	0	0	0	0	0	0	**32**	
1915 - 1930	0	24	2	0	0	0	0	0	0	0	0	0	0	**26**	
1930 - 1945	0	23	0	0	1	0	0	0	0	0	0	0	0	**24**	
1945 - 2000	0	25	4	0	0	0	0	0	0	0	0	0	0	**29**	**111**
2000 - 2015	0	27	2	0	0	0	0	0	0	0	0	0	0	**29**	
2015 - 2030	0	19	4	0	0	0	0	0	1	0	0	0	0	**24**	
2030 - 2045	0	18	3	0	0	0	0	0	0	0	0	0	0	**21**	
2045 - 2100	0	25	1	0	0	0	0	0	0	0	0	0	0	**26**	**100**
2100 - 2115	0	14	1	0	0	0	0	0	0	0	0	0	0	**15**	
2115 - 2130	0	24	3	0	0	0	0	0	0	0	0	0	0	**27**	
2130 - 2145	0	17	1	0	1	0	0	0	0	0	0	0	0	**19**	
2145 - 2200	0	14	1	0	0	0	0	0	0	0	0	0	0	**15**	**76**
2200 - 2215	0	13	1	0	0	0	0	0	0	0	0	0	0	**14**	
2215 - 2230	0	14	0	0	0	0	0	0	0	0	0	0	0	**14**	
2230 - 2245	0	18	3	0	0	0	0	0	0	0	0	0	0	**21**	
2245 - 2300	0	10	1	0	0	0	0	0	0	0	0	0	0	**11**	**60**
2300 - 2315	0	6	1	0	0	0	0	0	0	0	0	0	0	**7**	
2315 - 2330	0	11	0	0	0	0	0	0	0	0	0	0	0	**11**	
2330 - 2345	0	6	1	0	0	0	0	0	0	0	0	0	0	**7**	
2345 - 0000	0	3	0	0	0	0	0	0	0	0	0	0	0	**3**	**28**

Session Total	0	337	34	0	2	0	1	0	1	0	0	0	0	**375**
Session Average	0.00	3.51	0.35	0.00	0.02	0.00	0.01	0.00	0.01	0.00	0.00	0.00	0.00	**3.91**
Session Percentage	0.00	89.87	9.07	0.00	0.53	0.00	0.27	0.00	0.27	0.00	0.00	0.00	0.00	

AM Peak Hour	-	-	-	-	-	-	-	-	-	-	-	-	-	**-**
AM Peak Volume	0	0	0	0	0	0	0	0	0	0	0	0	0	**0**

Noon Peak Hour	-	-	-	-	-	-	-	-	-	-	-	-	-	**-**
Noon Peak Volume	0	0	0	0	0	0	0	0	0	0	0	0	0	**0**

PM Peak Hour	-	1915 - 2015	1945 - 2045	-	1845 - 1945	-	1815 - 1915	-	1930 - 2030	-	-	-	-	**1900 - 2000**
PM Peak Volume	0	99	13	0	1	0	1	0	1	0	0	0	0	**111**

Site 32
I-26 James F. Byrnes Expy S/Bound Off-Ramp,
north of Piney Grove Rd

Date
Wednesday, April 24, 2024

Lat/Long
34.068065°, -81.143739°

Weather
Fair
66°F

Click here for Detailed Weather

0000 - 2400 (Weekday 24h Session) (04-24-2024)
SB WB 15min

	Southbound (Movement 32.1)													15min	60min
Time	1	2	3	4	5	6	7	8	9	10	11	12	13	Total	Total
0000 - 0015	0	5	0	0	0	0	0	0	1	0	0	0	0	**6**	
0015 - 0030	0	3	0	0	0	0	0	0	0	0	0	0	0	**3**	
0030 - 0045	0	2	0	0	0	0	0	0	0	0	0	0	0	**2**	
0045 - 0100	0	3	0	0	0	0	0	0	0	0	0	0	0	**3**	**14**
0100 - 0115	0	1	0	0	0	0	0	0	0	0	0	0	0	**1**	
0115 - 0130	0	5	0	0	0	0	0	0	0	0	0	0	0	**5**	
0130 - 0145	0	3	0	0	0	0	0	0	1	0	0	0	0	**4**	
0145 - 0200	0	2	0	0	0	0	0	0	0	0	0	0	0	**2**	**12**
0200 - 0215	0	2	0	0	0	0	0	0	0	0	0	0	0	**2**	
0215 - 0230	0	2	0	0	0	0	0	0	0	0	0	0	0	**2**	
0230 - 0245	0	0	0	0	0	0	0	0	0	0	0	0	0	**0**	
0245 - 0300	0	2	0	0	1	0	0	0	0	0	0	0	0	**3**	**7**
0300 - 0315	0	2	0	0	0	0	0	0	0	0	0	0	0	**2**	
0315 - 0330	0	2	1	0	0	0	0	0	0	0	0	0	0	**3**	
0330 - 0345	0	3	0	0	0	0	0	0	0	0	0	0	0	**3**	
0345 - 0400	0	4	1	0	0	0	0	0	0	0	0	0	0	**5**	**13**
0400 - 0415	0	3	0	0	0	0	0	0	0	0	0	0	0	**3**	
0415 - 0430	0	2	0	0	0	0	0	0	0	0	0	0	0	**2**	
0430 - 0445	0	4	0	0	0	0	0	0	0	0	0	0	0	**4**	
0445 - 0500	0	11	0	0	0	0	0	0	0	0	0	0	0	**11**	**20**
0500 - 0515	0	9	0	0	0	0	0	0	0	0	0	0	0	**9**	
0515 - 0530	0	6	0	0	0	0	0	0	0	0	0	0	0	**6**	
0530 - 0545	0	7	0	0	0	0	0	0	0	0	0	0	0	**7**	
0545 - 0600	0	12	3	0	0	0	0	0	0	0	0	0	0	**15**	**37**
0600 - 0615	0	7	0	0	0	0	0	0	1	0	0	0	0	**8**	
0615 - 0630	0	15	5	0	0	0	0	0	0	0	0	0	0	**20**	
0630 - 0645	0	13	6	0	0	0	0	0	0	0	0	0	0	**19**	
0645 - 0700	1	22	10	0	0	0	0	0	0	0	0	0	0	**33**	**80**
0700 - 0715	0	38	16	0	0	0	0	0	0	0	0	0	0	**54**	
0715 - 0730	0	41	20	0	1	0	0	0	0	0	0	0	0	**62**	
0730 - 0745	0	31	19	0	1	1	0	0	0	0	0	0	0	**52**	
0745 - 0800	0	25	21	0	1	0	0	0	1	0	0	0	0	**48**	**216**
0800 - 0815	0	50	33	0	0	0	0	0	0	0	0	0	0	**83**	
0815 - 0830	0	24	9	0	0	0	0	0	0	0	0	0	0	**33**	
0830 - 0845	0	47	17	0	0	0	0	0	0	0	0	0	0	**64**	
0845 - 0900	0	47	15	0	0	0	0	0	0	0	0	0	0	**62**	**242**
0900 - 0915	0	34	13	0	0	0	0	0	0	0	0	0	0	**47**	
0915 - 0930	0	41	19	0	0	0	0	0	1	0	0	0	0	**61**	
0930 - 0945	1	91	21	0	2	1	0	0	0	0	0	0	0	**116**	
0945 - 1000	0	56	10	0	0	0	0	0	0	0	0	0	0	**66**	**290**
1000 - 1015	0	49	19	0	0	0	0	0	0	0	0	0	0	**68**	
1015 - 1030	0	53	20	0	1	0	0	0	0	0	0	0	0	**74**	
1030 - 1045	0	58	21	0	3	1	0	0	0	0	0	0	0	**83**	
1045 - 1100	0	35	11	0	0	1	0	0	0	0	0	0	0	**47**	**272**
1100 - 1115	0	22	12	1	2	0	0	0	0	0	0	0	0	**37**	
1115 - 1130	0	34	10	0	0	0	0	0	0	0	0	0	0	**44**	
1130 - 1145	0	27	15	0	1	0	0	0	0	0	0	0	0	**43**	
1145 - 1200	0	45	22	0	0	0	0	0	0	0	0	0	0	**67**	**191**
1200 - 1215	0	33	25	0	1	0	0	0	0	0	0	0	0	**59**	
1215 - 1230	0	37	19	0	1	0	0	0	0	0	0	0	0	**57**	
1230 - 1245	0	37	14	0	1	0	0	0	1	0	0	0	0	**53**	
1245 - 1300	0	50	17	0	0	1	0	0	0	0	0	0	0	**68**	**237**
1300 - 1315	0	36	13	0	1	1	0	0	0	0	0	0	0	**51**	
1315 - 1330	0	34	15	0	2	0	0	0	0	0	0	0	0	**51**	
1330 - 1345	0	43	11	0	1	0	0	0	1	0	0	0	0	**56**	
1345 - 1400	0	47	21	0	1	0	0	0	1	0	0	0	0	**70**	**228**
1400 - 1415	0	30	15	0	0	0	0	0	0	0	0	0	0	**45**	
1415 - 1430	0	40	10	0	0	0	0	0	0	0	0	0	0	**50**	
1430 - 1445	0	52	15	0	2	0	0	0	1	0	0	0	0	**70**	
1445 - 1500	0	54	17	0	0	0	0	0	0	0	0	0	0	**71**	**236**
1500 - 1515	0	37	11	0	1	0	0	0	0	0	0	0	0	**49**	
1515 - 1530	0	54	15	0	2	1	0	0	0	0	0	0	0	**72**	
1530 - 1545	0	45	12	0	2	0	0	0	1	0	0	0	0	**60**	
1545 - 1600	0	34	37	0	2	0	0	0	1	0	0	0	0	**74**	**255**
1600 - 1615	0	44	11	0	0	0	0	0	0	0	0	0	0	**55**	
1615 - 1630	0	50	17	0	3	0	0	0	0	0	0	0	0	**70**	
1630 - 1645	0	41	10	0	0	0	0	1	1	0	0	0	0	**53**	
1645 - 1700	0	29	9	0	1	0	0	0	1	0	0	0	0	**40**	**218**
1700 - 1715	0	44	14	0	1	0	0	0	1	0	0	0	0	**60**	
1715 - 1730	0	43	14	0	0	0	0	0	0	0	0	0	0	**57**	
1730 - 1745	0	49	18	0	0	0	0	1	1	0	0	0	0	**69**	
1745 - 1800	0	42	15	0	1	0	0	0	0	0	0	0	0	**58**	**244**
1800 - 1815	0	43	12	0	0	1	0	0	0	0	0	0	0	**56**	
1815 - 1830	0	42	11	0	1	0	0	0	0	0	0	0	0	**54**	
1830 - 1845	0	35	11	0	0	0	0	0	0	0	0	0	0	**46**	
1845 - 1900	0	35	10	0	1	0	0	0	0	0	0	0	0	**46**	**202**
1900 - 1915	0	37	12	0	0	0	0	0	0	0	0	0	0	**49**	
1915 - 1930	0	30	7	0	0	0	0	1	0	0	0	0	0	**38**	
1930 - 1945	0	24	6	0	2	0	0	0	0	0	0	0	0	**32**	
1945 - 2000	0	18	4	0	0	0	0	0	0	0	0	0	0	**22**	**141**
2000 - 2015	0	21	5	0	1	0	0	0	0	0	0	0	0	**27**	
2015 - 2030	0	26	4	0	0	0	0	0	0	0	0	0	0	**30**	
2030 - 2045	0	30	6	0	0	0	0	0	0	0	0	0	0	**36**	
2045 - 2100	0	25	5	0	0	0	0	0	2	0	0	0	0	**32**	**125**
2100 - 2115	0	18	8	0	0	0	0	0	0	0	0	0	0	**26**	
2115 - 2130	0	16	5	0	0	0	0	0	0	0	0	0	0	**21**	
2130 - 2145	0	11	3	0	0	0	0	0	0	0	0	0	0	**14**	
2145 - 2200	0	13	3	0	0	0	0	0	0	0	0	0	0	**16**	**77**
2200 - 2215	0	16	4	0	0	0	0	0	0	0	0	0	0	**20**	
2215 - 2230	0	9	0	0	0	0	0	0	0	0	0	0	0	**9**	
2230 - 2245	0	10	0	0	0	0	0	0	0	0	0	0	0	**10**	
2245 - 2300	0	8	0	0	0	0	0	0	0	0	0	0	0	**8**	**47**
2300 - 2315	0	9	0	0	0	0	0	0	0	0	0	0	0	**9**	
2315 - 2330	0	4	0	0	0	0	0	0	0	0	0	0	0	**4**	
2330 - 2345	0	4	0	0	0	0	0	0	0	0	0	0	0	**4**	
2345 - 0000	0	5	0	0	0	0	0	0	0	0	0	0	0	**5**	**22**

Session Total	2	2494	860	1	41	8	0	3	17	0	0	0	0	**3426**
Session Average	0.02	25.98	8.96	0.01	0.43	0.08	0.00	0.03	0.18	0.00	0.00	0.00	0.00	**35.69**
Session Percentage	0.06	72.80	25.10	0.03	1.20	0.23	0.00	0.09	0.50	0.00	0.00	0.00	0.00	

AM Peak Hour	0600 - 0700	0930 - 1030	0715 - 0815	-	0945 - 1045	0645 - 0745	-	-	0515 - 0615	-	-	-	-	**0930 - 1030**
AM Peak Volume	1	249	93	0	4	1	0	0	1	0	0	0	0	**324**

Noon Peak Hour	-	1430 - 1530	1130 - 1230	1015 - 1115	1015 - 1115	1000 - 1100	-	-	1300 - 1400	-	-	-	-	**1000 - 1100**
Noon Peak Volume	0	197	81	1	6	2	0	0	2	0	0	0	0	**272**

PM Peak Hour	-	1700 - 1800	1530 - 1630	-	1500 - 1600	1500 - 1600	-	1545 - 1645	1615 - 1715	-	-	-	-	**1515 - 1615**
PM Peak Volume	0	178	77	0	7	1	0	1	3	0	0	0	0	**261**

Site 32
I-26 James F. Byrnes Expy S/Bound Off-Ramp,
north of Piney Grove Rd

Date
Thursday, April 25, 2024

Lat/Long
34.068065°, -81.143739°

Weather
Fair
67°F

Click here for Detailed Weather

0000 - 2400 (Weekday 24h Session) (04-25-2024)
SB WB 15min

	Southbound (Movement 32.1)													15min	60min
TIME	1	2	3	4	5	6	7	8	9	10	11	12	13	Total	Total
0000 - 0015	0	5	0	0	0	0	0	0	0	0	0	0	0	**5**	
0015 - 0030	0	5	0	0	0	0	0	0	0	0	0	0	0	**5**	
0030 - 0045	0	5	0	0	0	0	0	0	0	0	0	0	0	**5**	
0045 - 0100	0	6	0	0	0	0	0	0	0	0	0	0	0	**6**	**21**
0100 - 0115	0	2	0	0	0	0	0	0	0	0	0	0	0	**2**	
0115 - 0130	0	3	0	0	0	0	0	0	0	0	0	0	0	**3**	
0130 - 0145	0	7	0	0	0	0	0	0	0	0	0	0	0	**7**	
0145 - 0200	0	4	1	0	0	0	0	0	1	0	0	0	0	**6**	**18**
0200 - 0215	0	3	1	0	0	0	0	0	0	0	0	0	0	**4**	
0215 - 0230	0	2	0	0	1	0	0	0	0	0	0	0	0	**3**	
0230 - 0245	0	3	0	0	0	0	0	0	1	0	0	0	0	**4**	
0245 - 0300	0	2	0	0	1	0	0	0	0	0	0	0	0	**3**	**14**
0300 - 0315	0	3	0	0	0	0	0	0	0	0	0	0	0	**3**	
0315 - 0330	0	1	0	0	0	0	0	0	0	0	0	0	0	**1**	
0330 - 0345	0	0	0	0	0	0	0	0	0	0	0	0	0	**0**	
0345 - 0400	0	4	0	0	0	0	0	0	0	0	0	0	0	**4**	**8**
0400 - 0415	0	4	0	0	0	0	0	0	0	0	0	0	0	**4**	
0415 - 0430	0	4	0	0	0	0	0	0	0	0	0	0	0	**4**	
0430 - 0445	0	4	0	0	0	0	0	0	0	0	0	0	0	**4**	
0445 - 0500	0	6	2	0	0	0	0	0	0	0	0	0	0	**8**	**20**
0500 - 0515	0	4	1	0	0	0	0	0	0	0	0	0	0	**5**	
0515 - 0530	0	5	0	0	0	0	0	0	0	0	0	0	0	**5**	
0530 - 0545	0	8	1	0	0	0	0	0	0	0	0	0	0	**9**	
0545 - 0600	0	12	4	0	1	0	0	0	0	0	0	0	0	**17**	**36**
0600 - 0615	0	9	0	1	0	0	0	0	1	0	0	0	0	**11**	
0615 - 0630	0	8	1	0	0	0	0	0	0	0	0	0	0	**9**	
0630 - 0645	0	19	4	0	0	0	0	0	0	0	0	0	0	**23**	
0645 - 0700	0	31	7	1	0	0	0	0	0	0	0	0	0	**39**	**82**
0700 - 0715	0	46	11	0	0	0	0	0	0	0	0	0	0	**57**	
0715 - 0730	0	46	9	0	0	0	0	0	1	0	0	0	0	**56**	
0730 - 0745	0	32	6	0	0	0	0	0	1	0	0	0	0	**39**	
0745 - 0800	0	20	5	0	0	1	0	0	0	0	0	0	0	**26**	**178**
0800 - 0815	0	37	12	0	1	0	0	0	0	0	0	0	0	**50**	
0815 - 0830	0	36	9	0	1	0	0	0	0	0	0	0	0	**46**	
0830 - 0845	0	38	9	0	1	0	0	0	2	0	0	0	0	**50**	
0845 - 0900	0	61	10	0	1	0	0	1	0	0	0	0	0	**73**	**219**
0900 - 0915	0	36	7	0	0	0	0	0	0	0	0	0	0	**43**	
0915 - 0930	0	42	13	0	0	0	0	0	5	0	0	0	0	**60**	
0930 - 0945	0	27	13	0	0	0	0	0	0	0	0	0	0	**40**	
0945 - 1000	0	39	17	0	0	0	0	0	0	0	0	0	0	**56**	**199**
1000 - 1015	0	42	13	0	1	0	0	0	0	0	0	0	0	**56**	
1015 - 1030	0	51	18	0	0	0	0	0	1	0	0	0	0	**70**	
1030 - 1045	0	37	15	0	2	0	0	0	1	0	0	0	0	**55**	
1045 - 1100	0	48	16	1	3	0	0	0	0	0	0	0	0	**68**	**249**
1100 - 1115	0	41	14	0	0	0	0	0	0	0	0	0	0	**55**	
1115 - 1130	0	44	12	0	0	0	0	0	0	0	0	0	0	**56**	
1130 - 1145	0	35	14	0	1	0	0	0	1	0	0	0	0	**51**	
1145 - 1200	0	47	12	0	1	0	0	0	0	0	0	0	0	**60**	**222**
1200 - 1215	0	49	15	0	3	0	0	0	0	0	0	0	0	**67**	
1215 - 1230	0	52	17	0	1	0	0	0	1	0	0	0	0	**71**	
1230 - 1245	0	34	16	0	0	0	0	0	0	0	0	0	0	**50**	
1245 - 1300	0	40	17	0	0	0	0	0	0	0	0	0	0	**57**	**245**
1300 - 1315	0	47	22	0	0	1	0	0	1	0	0	0	0	**71**	
1315 - 1330	0	50	13	0	0	0	0	0	2	0	0	0	0	**65**	
1330 - 1345	0	46	15	0	0	1	0	0	0	0	0	0	0	**62**	
1345 - 1400	0	51	24	0	0	0	0	0	1	0	0	0	0	**76**	**274**
1400 - 1415	0	46	15	0	0	0	0	0	0	0	0	0	0	**61**	
1415 - 1430	0	39	16	0	0	0	0	0	0	0	0	0	0	**55**	
1430 - 1445	0	53	11	0	0	0	0	0	0	0	0	0	0	**64**	
1445 - 1500	0	38	12	0	0	0	0	0	0	0	0	0	0	**50**	**230**
1500 - 1515	0	43	9	0	0	0	0	0	0	0	0	0	0	**52**	
1515 - 1530	0	65	8	0	0	0	0	0	0	0	0	0	0	**73**	
1530 - 1545	0	42	7	0	1	0	0	0	0	0	0	0	0	**50**	
1545 - 1600	0	41	10	0	0	0	0	0	0	0	0	0	0	**51**	**226**
1600 - 1615	0	38	10	0	0	0	0	0	0	0	0	0	0	**48**	
1615 - 1630	1	51	10	0	1	0	0	1	2	0	0	0	0	**66**	
1630 - 1645	0	39	10	0	0	0	0	0	1	0	0	0	0	**50**	
1645 - 1700	0	46	14	0	0	0	0	0	0	0	0	0	0	**60**	**224**
1700 - 1715	0	47	10	0	0	0	0	0	1	0	0	0	0	**58**	
1715 - 1730	0	69	17	0	2	0	0	0	0	0	0	0	0	**88**	
1730 - 1745	0	79	11	0	0	0	0	0	0	0	0	0	0	**90**	
1745 - 1800	0	48	10	0	0	0	0	0	0	0	0	0	0	**58**	**294**
1800 - 1815	0	58	7	0	0	0	0	0	0	0	0	0	0	**65**	
1815 - 1830	0	49	10	0	0	0	0	0	0	0	0	0	0	**59**	
1830 - 1845	0	41	4	0	0	0	0	1	0	0	0	0	0	**46**	
1845 - 1900	0	54	4	0	0	0	0	0	0	0	0	0	0	**58**	**228**
1900 - 1915	0	0	0	0	0	0	0	0	0	0	0	0	0	**0**	
1915 - 1930	0	0	0	0	0	0	0	0	0	0	0	0	0	**0**	
1930 - 1945	0	0	0	0	0	0	0	0	0	0	0	0	0	**0**	
1945 - 2000	0	0	0	0	0	0	0	0	0	0	0	0	0	**0**	**0**
2000 - 2015	0	0	0	0	0	0	0	0	0	0	0	0	0	**0**	
2015 - 2030	0	0	0	0	0	0	0	0	0	0	0	0	0	**0**	
2030 - 2045	0	0	0	0	0	0	0	0	0	0	0	0	0	**0**	
2045 - 2100	0	0	0	0	0	0	0	0	0	0	0	0	0	**0**	**0**
2100 - 2115	0	0	0	0	0	0	0	0	0	0	0	0	0	**0**	
2115 - 2130	0	0	0	0	0	0	0	0	0	0	0	0	0	**0**	
2130 - 2145	0	0	0	0	0	0	0	0	0	0	0	0	0	**0**	
2145 - 2200	0	0	0	0	0	0	0	0	0	0	0	0	0	**0**	**0**
2200 - 2215	0	0	0	0	0	0	0	0	0	0	0	0	0	**0**	
2215 - 2230	0	0	0	0	0	0	0	0	0	0	0	0	0	**0**	
2230 - 2245	0	0	0	0	0	0	0	0	0	0	0	0	0	**0**	
2245 - 2300	0	0	0	0	0	0	0	0	0	0	0	0	0	**0**	**0**
2300 - 2315	0	0	0	0	0	0	0	0	0	0	0	0	0	**0**	
2315 - 2330	0	0	0	0	0	0	0	0	0	0	0	0	0	**0**	
2330 - 2345	0	0	0	0	0	0	0	0	0	0	0	0	0	**0**	
2345 - 0000	0	0	0	0	0	0	0	0	0	0	0	0	0	**0**	**0**

Session Total	1	2329	601	3	23	3	0	3	24	0	0	0	0	**2987**
Session Average	0.01	24.26	6.26	0.03	0.24	0.03	0.00	0.03	0.25	0.00	0.00	0.00	0.00	**31.11**
Session Percentage	0.03	77.97	20.12	0.10	0.77	0.10	0.00	0.10	0.80	0.00	0.00	0.00	0.00	

AM Peak Hour	-	0830 - 0930	0945 - 1045	0600 - 0700	0800 - 0900	0700 - 0800	-	0800 - 0900	0830 - 0930	-	-	-	-	**0945 - 1045**
AM Peak Hour Volume	0	177	63	2	4	1	0	1	7	0	0	0	0	**237**

Noon Peak Hour	-	1430 - 1530	1300 - 1400	1000 - 1100	1000 - 1100	1245 - 1345	-	-	1300 - 1400	-	-	-	-	**1300 - 1400**
Noon Peak Hour Volume	0	199	74	1	6	2	0	0	4	0	0	0	0	**274**

PM Peak Hour	1530 - 1630	1715 - 1815	1645 - 1745	-	1530 - 1630	-	-	1530 - 1630	1615 - 1715	-	-	-	-	**1715 - 1815**
PM Peak Hour Volume	1	254	52	0	2	0	0	1	4	0	0	0	0	**301**

Bi-Directional Class Count || SB WB Average 15min

Columbia, SC

Marr Traffic DATA COLLECTION
www.marrtraffic.com

Site 32
I-26 James F. Byrnes Expy S/Bound Off-Ramp, north of Piney Grove Rd

Date
Tuesday, April 23, 2024

Lat/Long
34.068065°, -81.143739°

Weather
Fair
58°F

0000 - 2400 (Weekday 24h Session) (All Dates)
SB WB Average 15min

	SB WB Average 15min													15min	60min
Time	1	2	3	4	5	6	7	8	9	10	11	12	13	Total	Total
0000 - 0015	0	3	0	0	0	0	0	0	0	0	0	0	0	**4**	
0015 - 0030	0	3	0	0	0	0	0	0	0	0	0	0	0	**3**	
0030 - 0045	0	2	0	0	0	0	0	0	0	0	0	0	0	**2**	
0045 - 0100	0	3	0	0	0	0	0	0	0	0	0	0	0	**3**	**12**
0100 - 0115	0	1	0	0	0	0	0	0	0	0	0	0	0	**1**	
0115 - 0130	0	3	0	0	0	0	0	0	0	0	0	0	0	**3**	
0130 - 0145	0	3	0	0	0	0	0	0	0	0	0	0	0	**4**	
0145 - 0200	0	2	0	0	0	0	0	0	0	0	0	0	0	**3**	**10**
0200 - 0215	0	2	0	0	0	0	0	0	0	0	0	0	0	**2**	
0215 - 0230	0	1	0	0	0	0	0	0	0	0	0	0	0	**2**	
0230 - 0245	0	1	0	0	0	0	0	0	0	0	0	0	0	**1**	
0245 - 0300	0	1	0	0	1	0	0	0	0	0	0	0	0	**2**	**7**
0300 - 0315	0	2	0	0	0	0	0	0	0	0	0	0	0	**2**	
0315 - 0330	0	1	0	0	0	0	0	0	0	0	0	0	0	**1**	
0330 - 0345	0	1	0	0	0	0	0	0	0	0	0	0	0	**1**	
0345 - 0400	0	3	0	0	0	0	0	0	0	0	0	0	0	**3**	**7**
0400 - 0415	0	2	0	0	0	0	0	0	0	0	0	0	0	**2**	
0415 - 0430	0	2	0	0	0	0	0	0	0	0	0	0	0	**2**	
0430 - 0445	0	3	0	0	0	0	0	0	0	0	0	0	0	**3**	
0445 - 0500	0	6	1	0	0	0	0	0	0	0	0	0	0	**6**	**13**
0500 - 0515	0	4	0	0	0	0	0	0	0	0	0	0	0	**5**	
0515 - 0530	0	4	0	0	0	0	0	0	0	0	0	0	0	**4**	
0530 - 0545	0	5	0	0	0	0	0	0	0	0	0	0	0	**5**	
0545 - 0600	0	8	2	0	0	0	0	0	0	0	0	0	0	**11**	**24**
0600 - 0615	0	5	0	0	0	0	0	0	1	0	0	0	0	**6**	
0615 - 0630	0	8	2	0	0	0	0	0	0	0	0	0	0	**10**	
0630 - 0645	0	11	3	0	0	0	0	0	0	0	0	0	0	**14**	
0645 - 0700	0	18	6	0	0	0	0	0	0	0	0	0	0	**24**	**54**
0700 - 0715	0	28	9	0	0	0	0	0	0	0	0	0	0	**37**	
0715 - 0730	0	29	10	0	0	0	0	0	0	0	0	0	0	**39**	
0730 - 0745	0	21	8	0	0	0	0	0	0	0	0	0	0	**30**	
0745 - 0800	0	15	9	0	0	0	0	0	0	0	0	0	0	**25**	**131**
0800 - 0815	0	29	15	0	0	0	0	0	0	0	0	0	0	**44**	
0815 - 0830	0	20	6	0	0	0	0	0	0	0	0	0	0	**26**	
0830 - 0845	0	28	9	0	0	0	0	0	1	0	0	0	0	**38**	
0845 - 0900	0	36	8	0	0	0	0	0	0	0	0	0	0	**45**	**154**
0900 - 0915	0	23	7	0	0	0	0	0	0	0	0	0	0	**30**	
0915 - 0930	0	28	11	0	0	0	0	0	2	0	0	0	0	**40**	
0930 - 0945	0	39	11	0	1	0	0	0	0	0	0	0	0	**52**	
0945 - 1000	0	32	9	0	0	0	0	0	0	0	0	0	0	**41**	**163**
1000 - 1015	0	30	11	0	0	0	0	0	0	0	0	0	0	**41**	
1015 - 1030	0	35	13	0	0	0	0	0	0	0	0	0	0	**48**	
1030 - 1045	0	32	12	0	2	0	0	0	0	0	0	0	0	**46**	
1045 - 1100	0	28	9	0	1	0	0	0	0	0	0	0	0	**38**	**174**
1100 - 1115	0	21	9	0	1	0	0	0	0	0	0	0	0	**31**	
1115 - 1130	0	26	7	0	0	0	0	0	0	0	0	0	0	**33**	
1130 - 1145	0	21	10	0	1	0	0	0	0	0	0	0	0	**31**	
1145 - 1200	0	31	11	0	0	0	0	0	0	0	0	0	0	**42**	**138**
1200 - 1215	0	27	13	0	1	0	0	0	0	0	0	0	0	**42**	
1215 - 1230	0	30	12	0	1	0	0	0	0	0	0	0	0	**43**	
1230 - 1245	0	24	10	0	0	0	0	0	0	0	0	0	0	**34**	
1245 - 1300	0	30	11	0	0	0	0	0	0	0	0	0	0	**42**	**161**
1300 - 1315	0	28	12	0	0	1	0	0	0	0	0	0	0	**41**	
1315 - 1330	0	28	9	0	1	0	0	0	1	0	0	0	0	**39**	
1330 - 1345	0	30	9	0	0	0	0	0	0	0	0	0	0	**39**	
1345 - 1400	0	33	15	0	0	0	0	0	1	0	0	0	0	**49**	**167**
1400 - 1415	0	25	10	0	0	0	0	0	0	0	0	0	0	**35**	
1415 - 1430	0	26	9	0	0	0	0	0	0	0	0	0	0	**35**	
1430 - 1445	0	35	9	0	1	0	0	0	0	0	0	0	0	**45**	
1445 - 1500	0	31	10	0	0	0	0	0	0	0	0	0	0	**40**	**155**
1500 - 1515	0	27	7	0	0	0	0	0	0	0	0	0	0	**34**	
1515 - 1530	0	40	8	0	1	0	0	0	0	0	0	0	0	**48**	
1530 - 1545	0	29	6	0	1	0	0	0	0	0	0	0	0	**37**	
1545 - 1600	0	25	16	0	1	0	0	0	0	0	0	0	0	**42**	**160**
1600 - 1615	0	27	7	0	0	0	0	0	0	0	0	0	0	**34**	
1615 - 1630	0	34	9	0	1	0	0	0	1	0	0	0	0	**45**	
1630 - 1645	0	27	7	0	0	0	0	0	1	0	0	0	0	**34**	
1645 - 1700	0	25	8	0	0	0	0	0	0	0	0	0	0	**33**	**147**
1700 - 1715	0	30	8	0	0	0	0	0	1	0	0	0	0	**39**	
1715 - 1730	0	37	10	0	1	0	0	0	0	0	0	0	0	**48**	
1730 - 1745	0	43	10	0	0	0	0	0	0	0	0	0	0	**53**	
1745 - 1800	0	30	8	0	0	0	0	0	0	0	0	0	0	**39**	**179**
1800 - 1815	0	34	6	0	0	0	0	0	0	0	0	0	0	**40**	
1815 - 1830	0	30	7	0	0	0	0	0	0	0	0	0	0	**38**	
1830 - 1845	0	25	5	0	0	0	0	0	0	0	0	0	0	**31**	
1845 - 1900	0	30	5	0	0	0	0	0	0	0	0	0	0	**35**	**143**
1900 - 1915	0	21	6	0	0	0	0	0	0	0	0	0	0	**27**	
1915 - 1930	0	18	3	0	0	0	0	0	0	0	0	0	0	**21**	
1930 - 1945	0	16	2	0	1	0	0	0	0	0	0	0	0	**19**	
1945 - 2000	0	14	3	0	0	0	0	0	0	0	0	0	0	**17**	**84**
2000 - 2015	0	16	2	0	0	0	0	0	0	0	0	0	0	**19**	
2015 - 2030	0	15	3	0	0	0	0	0	0	0	0	0	0	**18**	
2030 - 2045	0	16	3	0	0	0	0	0	0	0	0	0	0	**19**	
2045 - 2100	0	17	2	0	0	0	0	0	1	0	0	0	0	**19**	**75**
2100 - 2115	0	11	3	0	0	0	0	0	0	0	0	0	0	**14**	
2115 - 2130	0	13	3	0	0	0	0	0	0	0	0	0	0	**16**	
2130 - 2145	0	9	1	0	0	0	0	0	0	0	0	0	0	**11**	
2145 - 2200	0	9	1	0	0	0	0	0	0	0	0	0	0	**10**	**51**
2200 - 2215	0	10	2	0	0	0	0	0	0	0	0	0	0	**11**	
2215 - 2230	0	8	0	0	0	0	0	0	0	0	0	0	0	**8**	
2230 - 2245	0	9	1	0	0	0	0	0	0	0	0	0	0	**10**	
2245 - 2300	0	6	0	0	0	0	0	0	0	0	0	0	0	**6**	**36**
2300 - 2315	0	5	0	0	0	0	0	0	0	0	0	0	0	**5**	
2315 - 2330	0	5	0	0	0	0	0	0	0	0	0	0	0	**5**	
2330 - 2345	0	3	0	0	0	0	0	0	0	0	0	0	0	**4**	
2345 - 0000	0	3	0	0	0	0	0	0	0	0	0	0	0	**3**	**17**

Session Total	1	1720	498	1	22	4	0	2	14	0	0	0	0	**2263**
Session Average	0.01	17.92	5.19	0.01	0.23	0.04	0.00	0.02	0.15	0.00	0.00	0.00	0.00	**23.57**
Session Percentage	0.04	76.02	22.02	0.06	0.97	0.16	0.01	0.09	0.62	0.00	0.00	0.00	0.00	

AM Peak Hour	0600 - 0700	0930 - 1030	0945 - 1045	0600 - 0700	0945 - 1045	0700 - 0800	-	0800 - 0900	0830 - 0930	-	-	-	-	**0930 - 1030**
AM Peak Volume	0	136	44	1	2	1	0	0	3	0	0	0	0	**182**

Noon Peak Hour	-	1430 - 1530	1145 - 1245	1015 - 1115	1015 - 1115	1245 - 1345	-	-	1300 - 1400	-	-	-	-	**1000 - 1100**
Noon Peak Volume	0	132	47	1	4	1	0	0	2	0	0	0	0	**174**

PM Peak Hour	1530 - 1630	1715 - 1815	1545 - 1645	-	1530 - 1630	1500 - 1600	1815 - 1915	1545 - 1645	1615 - 1715	-	-	-	-	**1715 - 1815**
PM Peak Volume	0	144	38	0	3	0	0	1	2	0	0	0	0	**180**

Bi-Directional Class Count || Volume Summary 15min

Columbia, SC

Marr Traffic DATA COLLECTION

www.marrtraffic.com

Site 32

I-26 James F. Byrnes Expy S/Bound Off-Ramp,
north of Piney Grove Rd

Date

Tuesday, April 23, 2024

Lat/Long

34.068065°, -81.143739°

Weather

Fair
58°F

Click here for Detailed Weather

0000 - 2400 (Weekday 24h Session) (04-23-2024)

Volume Summary 15min

TIME	Volume Summary 15min		15min Total	60min Total
	NB	SB		
0000 - 0015	0	0	**0**	
0015 - 0030	0	0	**0**	
0030 - 0045	0	0	**0**	
0045 - 0100	0	0	**0**	**0**
0100 - 0115	0	0	**0**	
0115 - 0130	0	0	**0**	
0130 - 0145	0	0	**0**	
0145 - 0200	0	0	**0**	**0**
0200 - 0215	0	0	**0**	
0215 - 0230	0	0	**0**	
0230 - 0245	0	0	**0**	
0245 - 0300	0	0	**0**	**0**
0300 - 0315	0	0	**0**	
0315 - 0330	0	0	**0**	
0330 - 0345	0	0	**0**	
0345 - 0400	0	0	**0**	**0**
0400 - 0415	0	0	**0**	
0415 - 0430	0	0	**0**	
0430 - 0445	0	0	**0**	
0445 - 0500	0	0	**0**	**0**
0500 - 0515	0	0	**0**	
0515 - 0530	0	0	**0**	
0530 - 0545	0	0	**0**	
0545 - 0600	0	0	**0**	**0**
0600 - 0615	0	0	**0**	
0615 - 0630	0	0	**0**	
0630 - 0645	0	0	**0**	
0645 - 0700	0	0	**0**	**0**
0700 - 0715	0	0	**0**	
0715 - 0730	0	0	**0**	
0730 - 0745	0	0	**0**	
0745 - 0800	0	0	**0**	**0**
0800 - 0815	0	0	**0**	
0815 - 0830	0	0	**0**	
0830 - 0845	0	0	**0**	
0845 - 0900	0	0	**0**	**0**
0900 - 0915	0	0	**0**	
0915 - 0930	0	0	**0**	
0930 - 0945	0	0	**0**	
0945 - 1000	0	0	**0**	**0**
1000 - 1015	0	0	**0**	
1015 - 1030	0	0	**0**	
1030 - 1045	0	0	**0**	
1045 - 1100	0	0	**0**	**0**
1100 - 1115	0	0	**0**	
1115 - 1130	0	0	**0**	
1130 - 1145	0	0	**0**	
1145 - 1200	0	0	**0**	**0**

Time	Volume Summary 15min		15min Total	60min Total
	NB	SB		
1200 - 1215	0	0	**0**	
1215 - 1230	0	0	**0**	
1230 - 1245	0	0	**0**	
1245 - 1300	0	0	**0**	**0**
1300 - 1315	0	0	**0**	
1315 - 1330	0	0	**0**	
1330 - 1345	0	0	**0**	
1345 - 1400	0	0	**0**	**0**
1400 - 1415	0	0	**0**	
1415 - 1430	0	0	**0**	
1430 - 1445	0	0	**0**	
1445 - 1500	0	0	**0**	**0**
1500 - 1515	0	0	**0**	
1515 - 1530	0	0	**0**	
1530 - 1545	0	0	**0**	
1545 - 1600	0	0	**0**	**0**
1600 - 1615	0	0	**0**	
1615 - 1630	0	0	**0**	
1630 - 1645	0	0	**0**	
1645 - 1700	0	0	**0**	**0**
1700 - 1715	0	0	**0**	
1715 - 1730	0	0	**0**	
1730 - 1745	0	0	**0**	
1745 - 1800	0	0	**0**	**0**
1800 - 1815	0	0	**0**	
1815 - 1830	0	0	**0**	
1830 - 1845	0	0	**0**	
1845 - 1900	0	0	**0**	**0**
1900 - 1915	0	32	**32**	
1915 - 1930	0	26	**26**	
1930 - 1945	0	24	**24**	
1945 - 2000	0	29	**29**	**111**
2000 - 2015	0	29	**29**	
2015 - 2030	0	24	**24**	
2030 - 2045	0	21	**21**	
2045 - 2100	0	26	**26**	**100**
2100 - 2115	0	15	**15**	
2115 - 2130	0	27	**27**	
2130 - 2145	0	19	**19**	
2145 - 2200	0	15	**15**	**76**
2200 - 2215	0	14	**14**	
2215 - 2230	0	14	**14**	
2230 - 2245	0	21	**21**	
2245 - 2300	0	11	**11**	**60**
2300 - 2315	0	7	**7**	
2315 - 2330	0	11	**11**	
2330 - 2345	0	7	**7**	
2345 - 0000	0	3	**3**	**28**

Session Total	0	375	**375**
Session Average	0.00	3.91	**3.91**
Session Percentage	0.00	100.00	

Site 32

I-26 James F. Byrnes Expy S/Bound Off-Ramp,
north of Piney Grove Rd

Date

Wednesday, April 24, 2024

Lat/Long

34.068065°, -81.143739°

Weather

Fair
66°F

Click here for Detailed Weather

0000 - 2400 (Weekday 24h Session) (04-24-2024)

Volume Summary 15min

TIME	Volume Summary 15min NB	SB	15min Total	60min Total
0000 - 0015	0	6	**6**	
0015 - 0030	0	3	**3**	
0030 - 0045	0	2	**2**	
0045 - 0100	0	3	**3**	**14**
0100 - 0115	0	1	**1**	
0115 - 0130	0	5	**5**	
0130 - 0145	0	4	**4**	
0145 - 0200	0	2	**2**	**12**
0200 - 0215	0	2	**2**	
0215 - 0230	0	2	**2**	
0230 - 0245	0	0	**0**	
0245 - 0300	0	3	**3**	**7**
0300 - 0315	0	2	**2**	
0315 - 0330	0	3	**3**	
0330 - 0345	0	3	**3**	
0345 - 0400	0	5	**5**	**13**
0400 - 0415	0	3	**3**	
0415 - 0430	0	2	**2**	
0430 - 0445	0	4	**4**	
0445 - 0500	0	11	**11**	**20**
0500 - 0515	0	9	**9**	
0515 - 0530	0	6	**6**	
0530 - 0545	0	7	**7**	
0545 - 0600	0	15	**15**	**37**
0600 - 0615	0	8	**8**	
0615 - 0630	0	20	**20**	
0630 - 0645	0	19	**19**	
0645 - 0700	0	33	**33**	**80**
0700 - 0715	0	54	**54**	
0715 - 0730	0	62	**62**	
0730 - 0745	0	52	**52**	
0745 - 0800	0	48	**48**	**216**
0800 - 0815	0	83	**83**	
0815 - 0830	0	33	**33**	
0830 - 0845	0	64	**64**	
0845 - 0900	0	62	**62**	**242**
0900 - 0915	0	47	**47**	
0915 - 0930	0	61	**61**	
0930 - 0945	0	116	**116**	
0945 - 1000	0	66	**66**	**290**
1000 - 1015	0	68	**68**	
1015 - 1030	0	74	**74**	
1030 - 1045	0	83	**83**	
1045 - 1100	0	47	**47**	**272**
1100 - 1115	0	37	**37**	
1115 - 1130	0	44	**44**	
1130 - 1145	0	43	**43**	
1145 - 1200	0	67	**67**	**191**

Time	Volume Summary 15min NB	SB	15min Total	60min Total
1200 - 1215	0	59	**59**	
1215 - 1230	0	57	**57**	
1230 - 1245	0	53	**53**	
1245 - 1300	0	68	**68**	**237**
1300 - 1315	0	51	**51**	
1315 - 1330	0	51	**51**	
1330 - 1345	0	56	**56**	
1345 - 1400	0	70	**70**	**228**
1400 - 1415	0	45	**45**	
1415 - 1430	0	50	**50**	
1430 - 1445	0	70	**70**	
1445 - 1500	0	71	**71**	**236**
1500 - 1515	0	49	**49**	
1515 - 1530	0	72	**72**	
1530 - 1545	0	60	**60**	
1545 - 1600	0	74	**74**	**255**
1600 - 1615	0	55	**55**	
1615 - 1630	0	70	**70**	
1630 - 1645	0	53	**53**	
1645 - 1700	0	40	**40**	**218**
1700 - 1715	0	60	**60**	
1715 - 1730	0	57	**57**	
1730 - 1745	0	69	**69**	
1745 - 1800	0	58	**58**	**244**
1800 - 1815	0	56	**56**	
1815 - 1830	0	54	**54**	
1830 - 1845	0	46	**46**	
1845 - 1900	0	46	**46**	**202**
1900 - 1915	0	49	**49**	
1915 - 1930	0	38	**38**	
1930 - 1945	0	32	**32**	
1945 - 2000	0	22	**22**	**141**
2000 - 2015	0	27	**27**	
2015 - 2030	0	30	**30**	
2030 - 2045	0	36	**36**	
2045 - 2100	0	32	**32**	**125**
2100 - 2115	0	26	**26**	
2115 - 2130	0	21	**21**	
2130 - 2145	0	14	**14**	
2145 - 2200	0	16	**16**	**77**
2200 - 2215	0	20	**20**	
2215 - 2230	0	9	**9**	
2230 - 2245	0	10	**10**	
2245 - 2300	0	8	**8**	**47**
2300 - 2315	0	9	**9**	
2315 - 2330	0	4	**4**	
2330 - 2345	0	4	**4**	
2345 - 0000	0	5	**5**	**22**

Session Total	0	3426	**3426**
Session Average	0.00	35.69	**35.69**
Session Percentage	0.00	100.00	

Site 32

I-26 James F. Byrnes Expy S/Bound Off-Ramp,
north of Piney Grove Rd

Date

Thursday, April 25, 2024

Lat/Long

34.068065°, -81.143739°

Weather

Fair
67°F

Click here for Detailed Weather

0000 - 2400 (Weekday 24h Session) (04-25-2024)

Volume Summary 15min

TIME	Volume Summary 15min NB	SB	15min Total	60min Total
0000 - 0015	0	5	**5**	
0015 - 0030	0	5	**5**	
0030 - 0045	0	5	**5**	
0045 - 0100	0	6	**6**	**21**
0100 - 0115	0	2	**2**	
0115 - 0130	0	3	**3**	
0130 - 0145	0	7	**7**	
0145 - 0200	0	6	**6**	**18**
0200 - 0215	0	4	**4**	
0215 - 0230	0	3	**3**	
0230 - 0245	0	4	**4**	
0245 - 0300	0	3	**3**	**14**
0300 - 0315	0	3	**3**	
0315 - 0330	0	1	**1**	
0330 - 0345	0	0	**0**	
0345 - 0400	0	4	**4**	**8**
0400 - 0415	0	4	**4**	
0415 - 0430	0	4	**4**	
0430 - 0445	0	4	**4**	
0445 - 0500	0	8	**8**	**20**
0500 - 0515	0	5	**5**	
0515 - 0530	0	5	**5**	
0530 - 0545	0	9	**9**	
0545 - 0600	0	17	**17**	**36**
0600 - 0615	0	11	**11**	
0615 - 0630	0	9	**9**	
0630 - 0645	0	23	**23**	
0645 - 0700	0	39	**39**	**82**
0700 - 0715	0	57	**57**	
0715 - 0730	0	56	**56**	
0730 - 0745	0	39	**39**	
0745 - 0800	0	26	**26**	**178**
0800 - 0815	0	50	**50**	
0815 - 0830	0	46	**46**	
0830 - 0845	0	50	**50**	
0845 - 0900	0	73	**73**	**219**
0900 - 0915	0	43	**43**	
0915 - 0930	0	60	**60**	
0930 - 0945	0	40	**40**	
0945 - 1000	0	56	**56**	**199**
1000 - 1015	0	56	**56**	
1015 - 1030	0	70	**70**	
1030 - 1045	0	55	**55**	
1045 - 1100	0	68	**68**	**249**
1100 - 1115	0	55	**55**	
1115 - 1130	0	56	**56**	
1130 - 1145	0	51	**51**	
1145 - 1200	0	60	**60**	**222**

Time	Volume Summary 15min NB	SB	15min Total	60min Total
1200 - 1215	0	67	**67**	
1215 - 1230	0	71	**71**	
1230 - 1245	0	50	**50**	
1245 - 1300	0	57	**57**	**245**
1300 - 1315	0	71	**71**	
1315 - 1330	0	65	**65**	
1330 - 1345	0	62	**62**	
1345 - 1400	0	76	**76**	**274**
1400 - 1415	0	61	**61**	
1415 - 1430	0	55	**55**	
1430 - 1445	0	64	**64**	
1445 - 1500	0	50	**50**	**230**
1500 - 1515	0	52	**52**	
1515 - 1530	0	73	**73**	
1530 - 1545	0	50	**50**	
1545 - 1600	0	51	**51**	**226**
1600 - 1615	0	48	**48**	
1615 - 1630	0	66	**66**	
1630 - 1645	0	50	**50**	
1645 - 1700	0	60	**60**	**224**
1700 - 1715	0	58	**58**	
1715 - 1730	0	88	**88**	
1730 - 1745	0	90	**90**	
1745 - 1800	0	58	**58**	**294**
1800 - 1815	0	65	**65**	
1815 - 1830	0	59	**59**	
1830 - 1845	0	46	**46**	
1845 - 1900	0	58	**58**	**228**
1900 - 1915	0	0	**0**	
1915 - 1930	0	0	**0**	
1930 - 1945	0	0	**0**	
1945 - 2000	0	0	**0**	**0**
2000 - 2015	0	0	**0**	
2015 - 2030	0	0	**0**	
2030 - 2045	0	0	**0**	
2045 - 2100	0	0	**0**	**0**
2100 - 2115	0	0	**0**	
2115 - 2130	0	0	**0**	
2130 - 2145	0	0	**0**	
2145 - 2200	0	0	**0**	**0**
2200 - 2215	0	0	**0**	
2215 - 2230	0	0	**0**	
2230 - 2245	0	0	**0**	
2245 - 2300	0	0	**0**	**0**
2300 - 2315	0	0	**0**	
2315 - 2330	0	0	**0**	
2330 - 2345	0	0	**0**	
2345 - 0000	0	0	**0**	**0**

Session Total	0	2987	**2987**
Session Average	0.00	31.11	**31.11**
Session Percentage	0.00	100.00	

Bi-Directional Class Count || SB WB 60min

Columbia, SC

Marr Traffic DATA COLLECTION

www.marrtraffic.com

Site 32
I-26 James F. Byrnes Expy S/Bound Off-Ramp,
north of Piney Grove Rd

Date
Tuesday, April 23, 2024

Lat/Long
34.068065°, -81.143739°

Weather
Fair
58°F

Click here for Detailed Weather

0000 - 2400 (Weekday 24h Session) (04-23-2024)
SB WB 60min

	Southbound (Movement 32.1)													
TIME	1	2	3	4	5	6	7	8	9	10	11	12	13	**Total**
0000 - 0100	0	0	0	0	0	0	0	0	0	0	0	0	0	**0**
0100 - 0200	0	0	0	0	0	0	0	0	0	0	0	0	0	**0**
0200 - 0300	0	0	0	0	0	0	0	0	0	0	0	0	0	**0**
0300 - 0400	0	0	0	0	0	0	0	0	0	0	0	0	0	**0**
0400 - 0500	0	0	0	0	0	0	0	0	0	0	0	0	0	**0**
0500 - 0600	0	0	0	0	0	0	0	0	0	0	0	0	0	**0**
0600 - 0700	0	0	0	0	0	0	0	0	0	0	0	0	0	**0**
0700 - 0800	0	0	0	0	0	0	0	0	0	0	0	0	0	**0**
0800 - 0900	0	0	0	0	0	0	0	0	0	0	0	0	0	**0**
0900 - 1000	0	0	0	0	0	0	0	0	0	0	0	0	0	**0**
1000 - 1100	0	0	0	0	0	0	0	0	0	0	0	0	0	**0**
1100 - 1200	0	0	0	0	0	0	0	0	0	0	0	0	0	**0**
1200 - 1300	0	0	0	0	0	0	0	0	0	0	0	0	0	**0**
1300 - 1400	0	0	0	0	0	0	0	0	0	0	0	0	0	**0**
1400 - 1500	0	0	0	0	0	0	0	0	0	0	0	0	0	**0**
1500 - 1600	0	0	0	0	0	0	0	0	0	0	0	0	0	**0**
1600 - 1700	0	0	0	0	0	0	0	0	0	0	0	0	0	**0**
1700 - 1800	0	0	0	0	0	0	0	0	0	0	0	0	0	**0**
1800 - 1900	0	0	0	0	0	0	0	0	0	0	0	0	0	**0**
1900 - 2000	0	98	11	0	1	0	1	0	0	0	0	0	0	**111**
2000 - 2100	0	89	10	0	0	0	0	0	1	0	0	0	0	**100**
2100 - 2200	0	69	6	0	1	0	0	0	0	0	0	0	0	**76**
2200 - 2300	0	55	5	0	0	0	0	0	0	0	0	0	0	**60**
2300 - 2400	0	26	2	0	0	0	0	0	0	0	0	0	0	**28**

Session Total	0	337	34	0	2	0	1	0	1	0	0	0	0	**375**
Session Average	0.00	14.04	1.42	0.00	0.08	0.00	0.04	0.00	0.04	0.00	0.00	0.00	0.00	**15.63**
Session Percentage	0.00	89.87	9.07	0.00	0.53	0.00	0.27	0.00	0.27	0.00	0.00	0.00	0.00	

AM Peak Hour	-	-	-	-	-	-	-	-	-	-	-	-	-	**-**
AM Peak Volume	0	0	0	0	0	0	0	0	0	0	0	0	0	**0**

Noon Peak Hour	-	-	-	-	-	-	-	-	-	-	-	-	-	**-**
Noon Peak Volume	0	0	0	0	0	0	0	0	0	0	0	0	0	**0**

PM Peak Hour	-	1900 - 2000	1900 - 2000	-	1900 - 2000	-	1900 - 2000	-	-	-	-	-	-	**1900 - 2000**
PM Peak Volume	0	98	11	0	1	0	1	0	0	0	0	0	0	**111**

Site 32
I-26 James F. Byrnes Expy S/Bound Off-Ramp,
north of Piney Grove Rd

Date
Wednesday, April 24, 2024

Lat/Long
34.068065°, -81.143739°

Weather
Fair
66°F

Click here for Detailed Weather

0000 - 2400 (Weekday 24h Session) (04-24-2024)
SB WB 60min

	Southbound (Movement 32.1)													
TIME	1	2	3	4	5	6	7	8	9	10	11	12	13	**Total**
0000 - 0100	0	13	0	0	0	0	0	0	1	0	0	0	0	**14**
0100 - 0200	0	11	0	0	0	0	0	0	1	0	0	0	0	**12**
0200 - 0300	0	6	0	0	1	0	0	0	0	0	0	0	0	**7**
0300 - 0400	0	11	2	0	0	0	0	0	0	0	0	0	0	**13**
0400 - 0500	0	20	0	0	0	0	0	0	0	0	0	0	0	**20**
0500 - 0600	0	34	3	0	0	0	0	0	0	0	0	0	0	**37**
0600 - 0700	1	57	21	0	0	0	0	0	1	0	0	0	0	**80**
0700 - 0800	0	135	76	0	3	1	0	0	1	0	0	0	0	**216**
0800 - 0900	0	168	74	0	0	0	0	0	0	0	0	0	0	**242**
0900 - 1000	1	222	63	0	2	1	0	0	1	0	0	0	0	**290**
1000 - 1100	0	195	71	0	4	2	0	0	0	0	0	0	0	**272**
1100 - 1200	0	128	59	1	3	0	0	0	0	0	0	0	0	**191**
1200 - 1300	0	157	75	0	3	1	0	0	1	0	0	0	0	**237**
1300 - 1400	0	160	60	0	5	1	0	0	2	0	0	0	0	**228**
1400 - 1500	0	176	57	0	2	0	0	0	1	0	0	0	0	**236**
1500 - 1600	0	170	75	0	7	1	0	0	2	0	0	0	0	**255**
1600 - 1700	0	164	47	0	4	0	0	1	2	0	0	0	0	**218**
1700 - 1800	0	178	61	0	2	0	0	1	2	0	0	0	0	**244**
1800 - 1900	0	155	44	0	2	1	0	0	0	0	0	0	0	**202**
1900 - 2000	0	109	29	0	2	0	0	1	0	0	0	0	0	**141**
2000 - 2100	0	102	20	0	1	0	0	0	2	0	0	0	0	**125**
2100 - 2200	0	58	19	0	0	0	0	0	0	0	0	0	0	**77**
2200 - 2300	0	43	4	0	0	0	0	0	0	0	0	0	0	**47**
2300 - 2400	0	22	0	0	0	0	0	0	0	0	0	0	0	**22**

Session Total	2	2494	860	1	41	8	0	3	17	0	0	0	0	**3426**
Session Average	0.08	103.92	35.83	0.04	1.71	0.33	0.00	0.13	0.71	0.00	0.00	0.00	0.00	**142.75**
Session Percentage	0.06	72.80	25.10	0.03	1.20	0.23	0.00	0.09	0.50	0.00	0.00	0.00	0.00	

AM Peak Hour	0600 - 0700	0900 - 1000	0700 - 0800	-	0700 - 0800	0700 - 0800	-	-	0600 - 0700	-	-	-	-	**0900 - 1000**
AM Peak Volume	1	222	76	0	3	1	0	0	1	0	0	0	0	**290**

Noon Peak Hour	-	1000 - 1100	1200 - 1300	1100 - 1200	1300 - 1400	1000 - 1100	-	-	1300 - 1400	-	-	-	-	**1000 - 1100**
Noon Peak Volume	0	195	75	1	5	2	0	0	2	0	0	0	0	**272**

PM Peak Hour	-	1700 - 1800	1500 - 1600	-	1500 - 1600	1500 - 1600	-	1600 - 1700	1500 - 1600	-	-	-	-	**1500 - 1600**
PM Peak Volume	0	178	75	0	7	1	0	1	2	0	0	0	0	**255**

Site 32
I-26 James F. Byrnes Expy S/Bound Off-Ramp,
north of Piney Grove Rd

Date
Thursday, April 25, 2024

Lat/Long
34.068065°, -81.143739°

Weather
Fair
67°F

Click here for Detailed Weather

0000 - 2400 (Weekday 24h Session) (04-25-2024)
SB WB 60min

	Southbound (Movement 32.1)													
TIME	1	2	3	4	5	6	7	8	9	10	11	12	13	**Total**
0000 - 0100	0	21	0	0	0	0	0	0	0	0	0	0	0	**21**
0100 - 0200	0	16	1	0	0	0	0	0	1	0	0	0	0	**18**
0200 - 0300	0	10	1	0	2	0	0	0	1	0	0	0	0	**14**
0300 - 0400	0	8	0	0	0	0	0	0	0	0	0	0	0	**8**
0400 - 0500	0	18	2	0	0	0	0	0	0	0	0	0	0	**20**
0500 - 0600	0	29	6	0	1	0	0	0	0	0	0	0	0	**36**
0600 - 0700	0	67	12	2	0	0	0	0	1	0	0	0	0	**82**
0700 - 0800	0	144	31	0	0	1	0	0	2	0	0	0	0	**178**
0800 - 0900	0	172	40	0	4	0	0	1	2	0	0	0	0	**219**
0900 - 1000	0	144	50	0	0	0	0	0	5	0	0	0	0	**199**
1000 - 1100	0	178	62	1	6	0	0	0	2	0	0	0	0	**249**
1100 - 1200	0	167	52	0	2	0	0	0	1	0	0	0	0	**222**
1200 - 1300	0	175	65	0	4	0	0	0	1	0	0	0	0	**245**
1300 - 1400	0	194	74	0	0	2	0	0	4	0	0	0	0	**274**
1400 - 1500	0	176	54	0	0	0	0	0	0	0	0	0	0	**230**
1500 - 1600	0	191	34	0	1	0	0	0	0	0	0	0	0	**226**
1600 - 1700	1	174	44	0	1	0	0	1	3	0	0	0	0	**224**
1700 - 1800	0	243	48	0	2	0	0	0	1	0	0	0	0	**294**
1800 - 1900	0	202	25	0	0	0	0	1	0	0	0	0	0	**228**
1900 - 2000	0	0	0	0	0	0	0	0	0	0	0	0	0	**0**
2000 - 2100	0	0	0	0	0	0	0	0	0	0	0	0	0	**0**
2100 - 2200	0	0	0	0	0	0	0	0	0	0	0	0	0	**0**
2200 - 2300	0	0	0	0	0	0	0	0	0	0	0	0	0	**0**
2300 - 2400	0	0	0	0	0	0	0	0	0	0	0	0	0	**0**

Session Total	1	2329	601	3	23	3	0	3	24	0	0	0	0	**2987**
Session Average	0.04	97.04	25.04	0.13	0.96	0.13	0.00	0.13	1.00	0.00	0.00	0.00	0.00	**124.46**
Session Percentage	0.03	77.97	20.12	0.10	0.77	0.10	0.00	0.10	0.80	0.00	0.00	0.00	0.00	

AM Peak Hour	-	0800 - 0900	0900 - 1000	0600 - 0700	0800 - 0900	0700 - 0800	-	0800 - 0900	0900 - 1000	-	-	-	-	**0800 - 0900**
AM Peak Hour Volume	0	172	50	2	4	1	0	1	5	0	0	0	0	**219**

Noon Peak Hour	-	1300 - 1400	1300 - 1400	1000 - 1100	1000 - 1100	1300 - 1400	-	-	1300 - 1400	-	-	-	-	**1300 - 1400**
Noon Peak Hour Volume	0	194	74	1	6	2	0	0	4	0	0	0	0	**274**

PM Peak Hour	1600 - 1700	1700 - 1800	1700 - 1800	-	1700 - 1800	-	-	1600 - 1700	1600 - 1700	-	-	-	-	**1700 - 1800**
PM Peak Hour Volume	1	243	48	0	2	0	0	1	3	0	0	0	0	**294**

Bi-Directional Class Count || Volume Summary 60min

Columbia, SC

Marr Traffic DATA COLLECTION

www.marrtraffic.com

Site 32

I-26 James F. Byrnes Expy S/Bound Off-Ramp,
north of Piney Grove Rd

Date

Tuesday, April 23, 2024

Lat/Long

34.068065°, -81.143739°

Weather

Fair
58°F

Click here for Detailed Weather

0000 - 2400 (Weekday 24h Session) (04-23-2024)

Volume Summary 60min

	Volume Summary 60min		
TIME	NB	SB	**Total**
0000 - 0100	0	0	**0**
0100 - 0200	0	0	**0**
0200 - 0300	0	0	**0**
0300 - 0400	0	0	**0**
0400 - 0500	0	0	**0**
0500 - 0600	0	0	**0**
0600 - 0700	0	0	**0**
0700 - 0800	0	0	**0**
0800 - 0900	0	0	**0**
0900 - 1000	0	0	**0**
1000 - 1100	0	0	**0**
1100 - 1200	0	0	**0**

	Volume Summary 60min		
Time	NB	SB	**Total**
1200 - 1300	0	0	**0**
1300 - 1400	0	0	**0**
1400 - 1500	0	0	**0**
1500 - 1600	0	0	**0**
1600 - 1700	0	0	**0**
1700 - 1800	0	0	**0**
1800 - 1900	0	0	**0**
1900 - 2000	0	111	**111**
2000 - 2100	0	100	**100**
2100 - 2200	0	76	**76**
2200 - 2300	0	60	**60**
2300 - 2400	0	28	**28**

Session Total	0	375	**375**
Session Average	0.00	15.63	**15.63**
Session Percentage	0.00	100.00	

Site 32

I-26 James F. Byrnes Expy S/Bound Off-Ramp,
north of Piney Grove Rd

Date

Wednesday, April 24, 2024

Lat/Long

34.068065°, -81.143739°

Weather

Fair
66°F

Click here for Detailed Weather

0000 - 2400 (Weekday 24h Session) (04-24-2024)

Volume Summary 60min

	Volume Summary 60min		
TIME	NB	SB	**Total**
0000 - 0100	0	14	**14**
0100 - 0200	0	12	**12**
0200 - 0300	0	7	**7**
0300 - 0400	0	13	**13**
0400 - 0500	0	20	**20**
0500 - 0600	0	37	**37**
0600 - 0700	0	80	**80**
0700 - 0800	0	216	**216**
0800 - 0900	0	242	**242**
0900 - 1000	0	290	**290**
1000 - 1100	0	272	**272**
1100 - 1200	0	191	**191**

Session Total	0	3426	**3426**
Session Average	0.00	142.75	**142.75**
Session Percentage	0.00	100.00	

	Volume Summary 60min		
Time	NB	SB	**Total**
1200 - 1300	0	237	**237**
1300 - 1400	0	228	**228**
1400 - 1500	0	236	**236**
1500 - 1600	0	255	**255**
1600 - 1700	0	218	**218**
1700 - 1800	0	244	**244**
1800 - 1900	0	202	**202**
1900 - 2000	0	141	**141**
2000 - 2100	0	125	**125**
2100 - 2200	0	77	**77**
2200 - 2300	0	47	**47**
2300 - 2400	0	22	**22**

Site 32

I-26 James F. Byrnes Expy S/Bound Off-Ramp,
north of Piney Grove Rd

Date

Thursday, April 25, 2024

Lat/Long

34.068065°, -81.143739°

Weather

Fair
67°F

Click here for Detailed Weather

0000 - 2400 (Weekday 24h Session) (04-25-2024)

Volume Summary 60min

	Volume Summary 60min		
TIME	NB	SB	**Total**
0000 - 0100	0	21	**21**
0100 - 0200	0	18	**18**
0200 - 0300	0	14	**14**
0300 - 0400	0	8	**8**
0400 - 0500	0	20	**20**
0500 - 0600	0	36	**36**
0600 - 0700	0	82	**82**
0700 - 0800	0	178	**178**
0800 - 0900	0	219	**219**
0900 - 1000	0	199	**199**
1000 - 1100	0	249	**249**
1100 - 1200	0	222	**222**

Session Total	0	2987	**2987**
Session Average	0.00	124.46	**124.46**
Session Percentage	0.00	100.00	

	Volume Summary 60min		
Time	NB	SB	**Total**
1200 - 1300	0	245	**245**
1300 - 1400	0	274	**274**
1400 - 1500	0	230	**230**
1500 - 1600	0	226	**226**
1600 - 1700	0	224	**224**
1700 - 1800	0	294	**294**
1800 - 1900	0	228	**228**
1900 - 2000	0	0	**0**
2000 - 2100	0	0	**0**
2100 - 2200	0	0	**0**
2200 - 2300	0	0	**0**
2300 - 2400	0	0	**0**

Bi-Directional Class Count || Graphical Analysis SB WB

Columbia, SC

Marr Traffic DATA COLLECTION

www.marrtraffic.com

Site 32

I-26 James F. Byrnes Expy S/Bound Off-Ramp,
north of Piney Grove Rd

Lat/Long

34.068065°, -81.143739°

0000 - 2400 (Weekday 24h Session)

Graphical Analysis SB WB

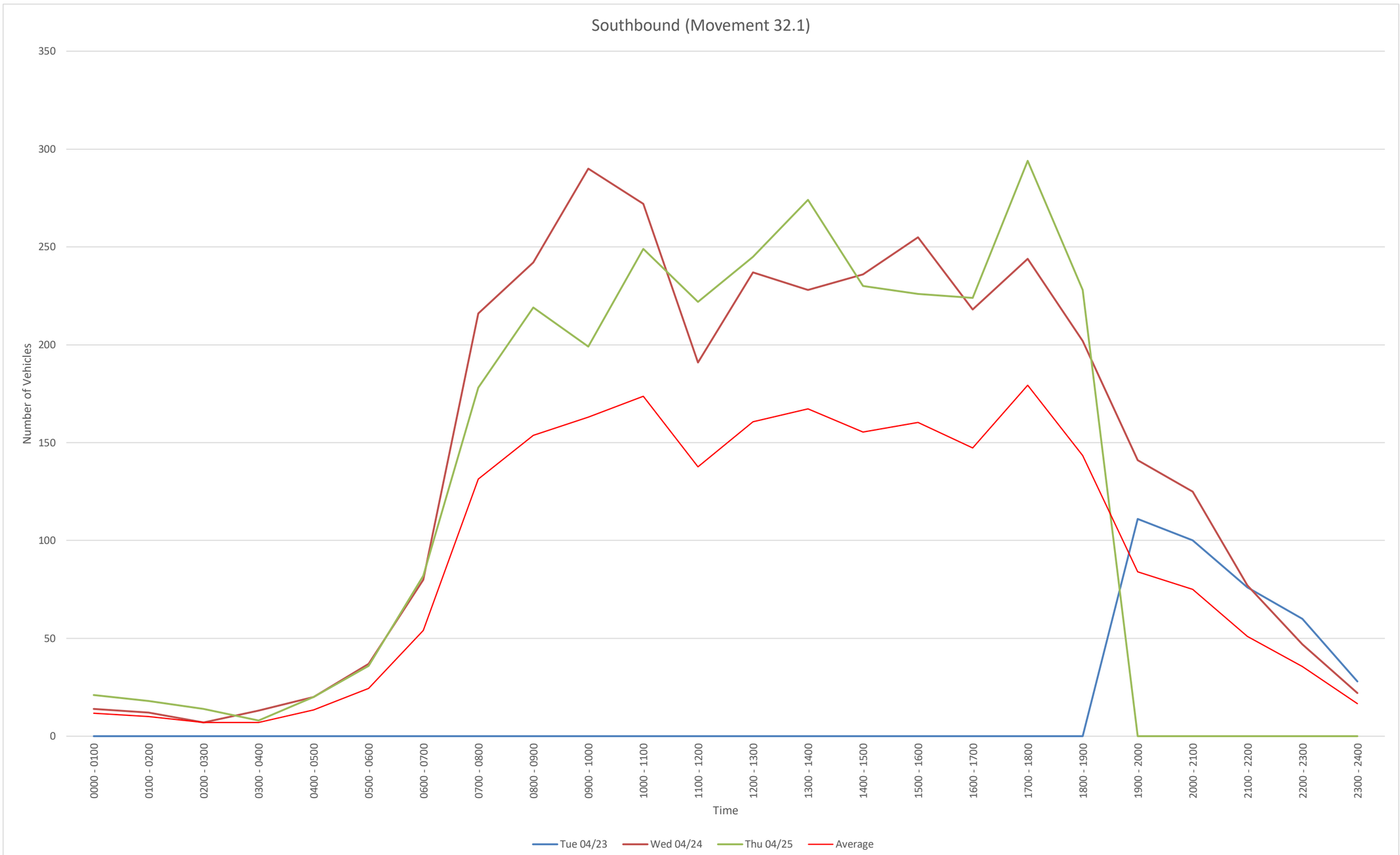

Time	Tue 04/23	Wed 04/24	Thu 04/25				
0000 - 0100	0	14	21				
0100 - 0200	0	12	18				
0200 - 0300	0	7	14				
0300 - 0400	0	13	8				
0400 - 0500	0	20	20				
0500 - 0600	0	37	36				
0600 - 0700	0	80	82				
0700 - 0800	0	216	178				
0800 - 0900	0	242	219				
0900 - 1000	0	290	199				
1000 - 1100	0	272	249				
1100 - 1200	0	191	222				
1200 - 1300	0	237	245				
1300 - 1400	0	228	274				
1400 - 1500	0	236	230				
1500 - 1600	0	255	226				
1600 - 1700	0	218	224				
1700 - 1800	0	244	294				
1800 - 1900	0	202	228				
1900 - 2000	111	141	0				
2000 - 2100	100	125	0				
2100 - 2200	76	77	0				
2200 - 2300	60	47	0				
2300 - 2400	28	22	0				
Daily Total	375	3426	2987				

NB
File Name:
Start Date: 4/23/2024
Start Time: 0
Site Code: 32
Station ID: 1
Location 1: I-26 James F. Byrnes Expy S/Bound Off-Ramp, north of Piney Grove Rd
Location 2:

Date	Time	1	2	3	4	5	6	7	8	9	10	11	12	13
4/23/2024	12:00 AM	0	0	0	0	0	0	0	0	0	0	0	0	0
4/23/2024	12:15 AM	0	0	0	0	0	0	0	0	0	0	0	0	0
4/23/2024	12:30 AM	0	0	0	0	0	0	0	0	0	0	0	0	0
4/23/2024	12:45 AM	0	0	0	0	0	0	0	0	0	0	0	0	0
4/23/2024	1:00 AM	0	0	0	0	0	0	0	0	0	0	0	0	0
4/23/2024	1:15 AM	0	0	0	0	0	0	0	0	0	0	0	0	0
4/23/2024	1:30 AM	0	0	0	0	0	0	0	0	0	0	0	0	0
4/23/2024	1:45 AM	0	0	0	0	0	0	0	0	0	0	0	0	0
4/23/2024	2:00 AM	0	0	0	0	0	0	0	0	0	0	0	0	0
4/23/2024	2:15 AM	0	0	0	0	0	0	0	0	0	0	0	0	0
4/23/2024	2:30 AM	0	0	0	0	0	0	0	0	0	0	0	0	0
4/23/2024	2:45 AM	0	0	0	0	0	0	0	0	0	0	0	0	0
4/23/2024	3:00 AM	0	0	0	0	0	0	0	0	0	0	0	0	0
4/23/2024	3:15 AM	0	0	0	0	0	0	0	0	0	0	0	0	0
4/23/2024	3:30 AM	0	0	0	0	0	0	0	0	0	0	0	0	0
4/23/2024	3:45 AM	0	0	0	0	0	0	0	0	0	0	0	0	0
4/23/2024	4:00 AM	0	0	0	0	0	0	0	0	0	0	0	0	0
4/23/2024	4:15 AM	0	0	0	0	0	0	0	0	0	0	0	0	0
4/23/2024	4:30 AM	0	0	0	0	0	0	0	0	0	0	0	0	0
4/23/2024	4:45 AM	0	0	0	0	0	0	0	0	0	0	0	0	0
4/23/2024	5:00 AM	0	0	0	0	0	0	0	0	0	0	0	0	0
4/23/2024	5:15 AM	0	0	0	0	0	0	0	0	0	0	0	0	0
4/23/2024	5:30 AM	0	0	0	0	0	0	0	0	0	0	0	0	0
4/23/2024	5:45 AM	0	0	0	0	0	0	0	0	0	0	0	0	0
4/23/2024	6:00 AM	0	0	0	0	0	0	0	0	0	0	0	0	0
4/23/2024	6:15 AM	0	0	0	0	0	0	0	0	0	0	0	0	0
4/23/2024	6:30 AM	0	0	0	0	0	0	0	0	0	0	0	0	0
4/23/2024	6:45 AM	0	0	0	0	0	0	0	0	0	0	0	0	0
4/23/2024	7:00 AM	0	0	0	0	0	0	0	0	0	0	0	0	0
4/23/2024	7:15 AM	0	0	0	0	0	0	0	0	0	0	0	0	0
4/23/2024	7:30 AM	0	0	0	0	0	0	0	0	0	0	0	0	0
4/23/2024	7:45 AM	0	0	0	0	0	0	0	0	0	0	0	0	0
4/23/2024	8:00 AM	0	0	0	0	0	0	0	0	0	0	0	0	0
4/23/2024	8:15 AM	0	0	0	0	0	0	0	0	0	0	0	0	0
4/23/2024	8:30 AM	0	0	0	0	0	0	0	0	0	0	0	0	0
4/23/2024	8:45 AM	0	0	0	0	0	0	0	0	0	0	0	0	0
4/23/2024	9:00 AM	0	0	0	0	0	0	0	0	0	0	0	0	0
4/23/2024	9:15 AM	0	0	0	0	0	0	0	0	0	0	0	0	0
4/23/2024	9:30 AM	0	0	0	0	0	0	0	0	0	0	0	0	0
4/23/2024	9:45 AM	0	0	0	0	0	0	0	0	0	0	0	0	0
4/23/2024	10:00 AM	0	0	0	0	0	0	0	0	0	0	0	0	0
4/23/2024	10:15 AM	0	0	0	0	0	0	0	0	0	0	0	0	0
4/23/2024	10:30 AM	0	0	0	0	0	0	0	0	0	0	0	0	0
4/23/2024	10:45 AM	0	0	0	0	0	0	0	0	0	0	0	0	0
4/23/2024	11:00 AM	0	0	0	0	0	0	0	0	0	0	0	0	0
4/23/2024	11:15 AM	0	0	0	0	0	0	0	0	0	0	0	0	0
4/23/2024	11:30 AM	0	0	0	0	0	0	0	0	0	0	0	0	0
4/23/2024	11:45 AM	0	0	0	0	0	0	0	0	0	0	0	0	0
4/23/2024	12:00 PM	0	0	0	0	0	0	0	0	0	0	0	0	0
4/23/2024	12:15 PM	0	0	0	0	0	0	0	0	0	0	0	0	0
4/23/2024	12:30 PM	0	0	0	0	0	0	0	0	0	0	0	0	0
4/23/2024	12:45 PM	0	0	0	0	0	0	0	0	0	0	0	0	0
4/23/2024	1:00 PM	0	0	0	0	0	0	0	0	0	0	0	0	0
4/23/2024	1:15 PM	0	0	0	0	0	0	0	0	0	0	0	0	0
4/23/2024	1:30 PM	0	0	0	0	0	0	0	0	0	0	0	0	0
4/23/2024	1:45 PM	0	0	0	0	0	0	0	0	0	0	0	0	0
4/23/2024	2:00 PM	0	0	0	0	0	0	0	0	0	0	0	0	0
4/23/2024	2:15 PM	0	0	0	0	0	0	0	0	0	0	0	0	0
4/23/2024	2:30 PM	0	0	0	0	0	0	0	0	0	0	0	0	0
4/23/2024	2:45 PM	0	0	0	0	0	0	0	0	0	0	0	0	0
4/23/2024	3:00 PM	0	0	0	0	0	0	0	0	0	0	0	0	0
4/23/2024	3:15 PM	0	0	0	0	0	0	0	0	0	0	0	0	0
4/23/2024	3:30 PM	0	0	0	0	0	0	0	0	0	0	0	0	0
4/23/2024	3:45 PM	0	0	0	0	0	0	0	0	0	0	0	0	0
4/23/2024	4:00 PM	0	0	0	0	0	0	0	0	0	0	0	0	0
4/23/2024	4:15 PM	0	0	0	0	0	0	0	0	0	0	0	0	0
4/23/2024	4:30 PM	0	0	0	0	0	0	0	0	0	0	0	0	0
4/23/2024	4:45 PM	0	0	0	0	0	0	0	0	0	0	0	0	0
4/23/2024	5:00 PM	0	0	0	0	0	0	0	0	0	0	0	0	0
4/23/2024	5:15 PM	0	0	0	0	0	0	0	0	0	0	0	0	0
4/23/2024	5:30 PM	0	0	0	0	0	0	0	0	0	0	0	0	0
4/23/2024	5:45 PM	0	0	0	0	0	0	0	0	0	0	0	0	0
4/23/2024	6:00 PM	0	0	0	0	0	0	0	0	0	0	0	0	0
4/23/2024	6:15 PM	0	0	0	0	0	0	0	0	0	0	0	0	0
4/23/2024	6:30 PM	0	0	0	0	0	0	0	0	0	0	0	0	0
4/23/2024	6:45 PM	0	0	0	0	0	0	0	0	0	0	0	0	0
4/23/2024	7:00 PM	0	0	0	0	0	0	0	0	0	0	0	0	0
4/23/2024	7:15 PM	0	0	0	0	0	0	0	0	0	0	0	0	0
4/23/2024	7:30 PM	0	0	0	0	0	0	0	0	0	0	0	0	0
4/23/2024	7:45 PM	0	0	0	0	0	0	0	0	0	0	0	0	0
4/23/2024	8:00 PM	0	0	0	0	0	0	0	0	0	0	0	0	0
4/23/2024	8:15 PM	0	0	0	0	0	0	0	0	0	0	0	0	0
4/23/2024	8:30 PM	0	0	0	0	0	0	0	0	0	0	0	0	0
4/23/2024	8:45 PM	0	0	0	0	0	0	0	0	0	0	0	0	0
4/23/2024	9:00 PM	0	0	0	0	0	0	0	0	0	0	0	0	0
4/23/2024	9:15 PM	0	0	0	0	0	0	0	0	0	0	0	0	0
4/23/2024	9:30 PM	0	0	0	0	0	0	0	0	0	0	0	0	0
4/23/2024	9:45 PM	0	0	0	0	0	0	0	0	0	0	0	0	0
4/23/2024	10:00 PM	0	0	0	0	0	0	0	0	0	0	0	0	0
4/23/2024	10:15 PM	0	0	0	0	0	0	0	0	0	0	0	0	0
4/23/2024	10:30 PM	0	0	0	0	0	0	0	0	0	0	0	0	0
4/23/2024	10:45 PM	0	0	0	0	0	0	0	0	0	0	0	0	0
4/23/2024	11:00 PM	0	0	0	0	0	0	0	0	0	0	0	0	0
4/23/2024	11:15 PM	0	0	0	0	0	0	0	0	0	0	0	0	0
4/23/2024	11:30 PM	0	0	0	0	0	0	0	0	0	0	0	0	0
4/23/2024	11:45 PM	0	0	0	0	0	0	0	0	0	0	0	0	0

4/24/2024	12:00 AM	0	0	0	0	0	0	0	0	0	0	0	0	0
4/24/2024	12:15 AM	0	0	0	0	0	0	0	0	0	0	0	0	0
4/24/2024	12:30 AM	0	0	0	0	0	0	0	0	0	0	0	0	0
4/24/2024	12:45 AM	0	0	0	0	0	0	0	0	0	0	0	0	0
4/24/2024	1:00 AM	0	0	0	0	0	0	0	0	0	0	0	0	0
4/24/2024	1:15 AM	0	0	0	0	0	0	0	0	0	0	0	0	0
4/24/2024	1:30 AM	0	0	0	0	0	0	0	0	0	0	0	0	0
4/24/2024	1:45 AM	0	0	0	0	0	0	0	0	0	0	0	0	0
4/24/2024	2:00 AM	0	0	0	0	0	0	0	0	0	0	0	0	0
4/24/2024	2:15 AM	0	0	0	0	0	0	0	0	0	0	0	0	0
4/24/2024	2:30 AM	0	0	0	0	0	0	0	0	0	0	0	0	0
4/24/2024	2:45 AM	0	0	0	0	0	0	0	0	0	0	0	0	0
4/24/2024	3:00 AM	0	0	0	0	0	0	0	0	0	0	0	0	0
4/24/2024	3:15 AM	0	0	0	0	0	0	0	0	0	0	0	0	0
4/24/2024	3:30 AM	0	0	0	0	0	0	0	0	0	0	0	0	0
4/24/2024	3:45 AM	0	0	0	0	0	0	0	0	0	0	0	0	0
4/24/2024	4:00 AM	0	0	0	0	0	0	0	0	0	0	0	0	0
4/24/2024	4:15 AM	0	0	0	0	0	0	0	0	0	0	0	0	0
4/24/2024	4:30 AM	0	0	0	0	0	0	0	0	0	0	0	0	0
4/24/2024	4:45 AM	0	0	0	0	0	0	0	0	0	0	0	0	0
4/24/2024	5:00 AM	0	0	0	0	0	0	0	0	0	0	0	0	0
4/24/2024	5:15 AM	0	0	0	0	0	0	0	0	0	0	0	0	0
4/24/2024	5:30 AM	0	0	0	0	0	0	0	0	0	0	0	0	0
4/24/2024	5:45 AM	0	0	0	0	0	0	0	0	0	0	0	0	0
4/24/2024	6:00 AM	0	0	0	0	0	0	0	0	0	0	0	0	0
4/24/2024	6:15 AM	0	0	0	0	0	0	0	0	0	0	0	0	0
4/24/2024	6:30 AM	0	0	0	0	0	0	0	0	0	0	0	0	0
4/24/2024	6:45 AM	0	0	0	0	0	0	0	0	0	0	0	0	0
4/24/2024	7:00 AM	0	0	0	0	0	0	0	0	0	0	0	0	0
4/24/2024	7:15 AM	0	0	0	0	0	0	0	0	0	0	0	0	0
4/24/2024	7:30 AM	0	0	0	0	0	0	0	0	0	0	0	0	0
4/24/2024	7:45 AM	0	0	0	0	0	0	0	0	0	0	0	0	0
4/24/2024	8:00 AM	0	0	0	0	0	0	0	0	0	0	0	0	0
4/24/2024	8:15 AM	0	0	0	0	0	0	0	0	0	0	0	0	0
4/24/2024	8:30 AM	0	0	0	0	0	0	0	0	0	0	0	0	0
4/24/2024	8:45 AM	0	0	0	0	0	0	0	0	0	0	0	0	0
4/24/2024	9:00 AM	0	0	0	0	0	0	0	0	0	0	0	0	0
4/24/2024	9:15 AM	0	0	0	0	0	0	0	0	0	0	0	0	0
4/24/2024	9:30 AM	0	0	0	0	0	0	0	0	0	0	0	0	0
4/24/2024	9:45 AM	0	0	0	0	0	0	0	0	0	0	0	0	0
4/24/2024	10:00 AM	0	0	0	0	0	0	0	0	0	0	0	0	0
4/24/2024	10:15 AM	0	0	0	0	0	0	0	0	0	0	0	0	0
4/24/2024	10:30 AM	0	0	0	0	0	0	0	0	0	0	0	0	0
4/24/2024	10:45 AM	0	0	0	0	0	0	0	0	0	0	0	0	0
4/24/2024	11:00 AM	0	0	0	0	0	0	0	0	0	0	0	0	0
4/24/2024	11:15 AM	0	0	0	0	0	0	0	0	0	0	0	0	0
4/24/2024	11:30 AM	0	0	0	0	0	0	0	0	0	0	0	0	0
4/24/2024	11:45 AM	0	0	0	0	0	0	0	0	0	0	0	0	0
4/24/2024	12:00 PM	0	0	0	0	0	0	0	0	0	0	0	0	0
4/24/2024	12:15 PM	0	0	0	0	0	0	0	0	0	0	0	0	0
4/24/2024	12:30 PM	0	0	0	0	0	0	0	0	0	0	0	0	0
4/24/2024	12:45 PM	0	0	0	0	0	0	0	0	0	0	0	0	0
4/24/2024	1:00 PM	0	0	0	0	0	0	0	0	0	0	0	0	0
4/24/2024	1:15 PM	0	0	0	0	0	0	0	0	0	0	0	0	0
4/24/2024	1:30 PM	0	0	0	0	0	0	0	0	0	0	0	0	0
4/24/2024	1:45 PM	0	0	0	0	0	0	0	0	0	0	0	0	0
4/24/2024	2:00 PM	0	0	0	0	0	0	0	0	0	0	0	0	0
4/24/2024	2:15 PM	0	0	0	0	0	0	0	0	0	0	0	0	0
4/24/2024	2:30 PM	0	0	0	0	0	0	0	0	0	0	0	0	0
4/24/2024	2:45 PM	0	0	0	0	0	0	0	0	0	0	0	0	0
4/24/2024	3:00 PM	0	0	0	0	0	0	0	0	0	0	0	0	0
4/24/2024	3:15 PM	0	0	0	0	0	0	0	0	0	0	0	0	0
4/24/2024	3:30 PM	0	0	0	0	0	0	0	0	0	0	0	0	0
4/24/2024	3:45 PM	0	0	0	0	0	0	0	0	0	0	0	0	0
4/24/2024	4:00 PM	0	0	0	0	0	0	0	0	0	0	0	0	0
4/24/2024	4:15 PM	0	0	0	0	0	0	0	0	0	0	0	0	0
4/24/2024	4:30 PM	0	0	0	0	0	0	0	0	0	0	0	0	0
4/24/2024	4:45 PM	0	0	0	0	0	0	0	0	0	0	0	0	0
4/24/2024	5:00 PM	0	0	0	0	0	0	0	0	0	0	0	0	0
4/24/2024	5:15 PM	0	0	0	0	0	0	0	0	0	0	0	0	0
4/24/2024	5:30 PM	0	0	0	0	0	0	0	0	0	0	0	0	0
4/24/2024	5:45 PM	0	0	0	0	0	0	0	0	0	0	0	0	0
4/24/2024	6:00 PM	0	0	0	0	0	0	0	0	0	0	0	0	0
4/24/2024	6:15 PM	0	0	0	0	0	0	0	0	0	0	0	0	0
4/24/2024	6:30 PM	0	0	0	0	0	0	0	0	0	0	0	0	0
4/24/2024	6:45 PM	0	0	0	0	0	0	0	0	0	0	0	0	0
4/24/2024	7:00 PM	0	0	0	0	0	0	0	0	0	0	0	0	0
4/24/2024	7:15 PM	0	0	0	0	0	0	0	0	0	0	0	0	0
4/24/2024	7:30 PM	0	0	0	0	0	0	0	0	0	0	0	0	0
4/24/2024	7:45 PM	0	0	0	0	0	0	0	0	0	0	0	0	0
4/24/2024	8:00 PM	0	0	0	0	0	0	0	0	0	0	0	0	0
4/24/2024	8:15 PM	0	0	0	0	0	0	0	0	0	0	0	0	0
4/24/2024	8:30 PM	0	0	0	0	0	0	0	0	0	0	0	0	0
4/24/2024	8:45 PM	0	0	0	0	0	0	0	0	0	0	0	0	0
4/24/2024	9:00 PM	0	0	0	0	0	0	0	0	0	0	0	0	0
4/24/2024	9:15 PM	0	0	0	0	0	0	0	0	0	0	0	0	0
4/24/2024	9:30 PM	0	0	0	0	0	0	0	0	0	0	0	0	0
4/24/2024	9:45 PM	0	0	0	0	0	0	0	0	0	0	0	0	0
4/24/2024	10:00 PM	0	0	0	0	0	0	0	0	0	0	0	0	0
4/24/2024	10:15 PM	0	0	0	0	0	0	0	0	0	0	0	0	0
4/24/2024	10:30 PM	0	0	0	0	0	0	0	0	0	0	0	0	0
4/24/2024	10:45 PM	0	0	0	0	0	0	0	0	0	0	0	0	0
4/24/2024	11:00 PM	0	0	0	0	0	0	0	0	0	0	0	0	0
4/24/2024	11:15 PM	0	0	0	0	0	0	0	0	0	0	0	0	0
4/24/2024	11:30 PM	0	0	0	0	0	0	0	0	0	0	0	0	0
4/24/2024	11:45 PM	0	0	0	0	0	0	0	0	0	0	0	0	0

4/25/2024	12:00 AM	0	0	0	0	0	0	0	0	0	0	0	0	0
4/25/2024	12:15 AM	0	0	0	0	0	0	0	0	0	0	0	0	0
4/25/2024	12:30 AM	0	0	0	0	0	0	0	0	0	0	0	0	0
4/25/2024	12:45 AM	0	0	0	0	0	0	0	0	0	0	0	0	0
4/25/2024	1:00 AM	0	0	0	0	0	0	0	0	0	0	0	0	0
4/25/2024	1:15 AM	0	0	0	0	0	0	0	0	0	0	0	0	0
4/25/2024	1:30 AM	0	0	0	0	0	0	0	0	0	0	0	0	0
4/25/2024	1:45 AM	0	0	0	0	0	0	0	0	0	0	0	0	0
4/25/2024	2:00 AM	0	0	0	0	0	0	0	0	0	0	0	0	0
4/25/2024	2:15 AM	0	0	0	0	0	0	0	0	0	0	0	0	0
4/25/2024	2:30 AM	0	0	0	0	0	0	0	0	0	0	0	0	0
4/25/2024	2:45 AM	0	0	0	0	0	0	0	0	0	0	0	0	0
4/25/2024	3:00 AM	0	0	0	0	0	0	0	0	0	0	0	0	0
4/25/2024	3:15 AM	0	0	0	0	0	0	0	0	0	0	0	0	0
4/25/2024	3:30 AM	0	0	0	0	0	0	0	0	0	0	0	0	0
4/25/2024	3:45 AM	0	0	0	0	0	0	0	0	0	0	0	0	0
4/25/2024	4:00 AM	0	0	0	0	0	0	0	0	0	0	0	0	0
4/25/2024	4:15 AM	0	0	0	0	0	0	0	0	0	0	0	0	0
4/25/2024	4:30 AM	0	0	0	0	0	0	0	0	0	0	0	0	0
4/25/2024	4:45 AM	0	0	0	0	0	0	0	0	0	0	0	0	0
4/25/2024	5:00 AM	0	0	0	0	0	0	0	0	0	0	0	0	0
4/25/2024	5:15 AM	0	0	0	0	0	0	0	0	0	0	0	0	0
4/25/2024	5:30 AM	0	0	0	0	0	0	0	0	0	0	0	0	0
4/25/2024	5:45 AM	0	0	0	0	0	0	0	0	0	0	0	0	0
4/25/2024	6:00 AM	0	0	0	0	0	0	0	0	0	0	0	0	0
4/25/2024	6:15 AM	0	0	0	0	0	0	0	0	0	0	0	0	0
4/25/2024	6:30 AM	0	0	0	0	0	0	0	0	0	0	0	0	0
4/25/2024	6:45 AM	0	0	0	0	0	0	0	0	0	0	0	0	0
4/25/2024	7:00 AM	0	0	0	0	0	0	0	0	0	0	0	0	0
4/25/2024	7:15 AM	0	0	0	0	0	0	0	0	0	0	0	0	0
4/25/2024	7:30 AM	0	0	0	0	0	0	0	0	0	0	0	0	0
4/25/2024	7:45 AM	0	0	0	0	0	0	0	0	0	0	0	0	0
4/25/2024	8:00 AM	0	0	0	0	0	0	0	0	0	0	0	0	0
4/25/2024	8:15 AM	0	0	0	0	0	0	0	0	0	0	0	0	0
4/25/2024	8:30 AM	0	0	0	0	0	0	0	0	0	0	0	0	0
4/25/2024	8:45 AM	0	0	0	0	0	0	0	0	0	0	0	0	0
4/25/2024	9:00 AM	0	0	0	0	0	0	0	0	0	0	0	0	0
4/25/2024	9:15 AM	0	0	0	0	0	0	0	0	0	0	0	0	0
4/25/2024	9:30 AM	0	0	0	0	0	0	0	0	0	0	0	0	0
4/25/2024	9:45 AM	0	0	0	0	0	0	0	0	0	0	0	0	0
4/25/2024	10:00 AM	0	0	0	0	0	0	0	0	0	0	0	0	0
4/25/2024	10:15 AM	0	0	0	0	0	0	0	0	0	0	0	0	0
4/25/2024	10:30 AM	0	0	0	0	0	0	0	0	0	0	0	0	0
4/25/2024	10:45 AM	0	0	0	0	0	0	0	0	0	0	0	0	0
4/25/2024	11:00 AM	0	0	0	0	0	0	0	0	0	0	0	0	0
4/25/2024	11:15 AM	0	0	0	0	0	0	0	0	0	0	0	0	0
4/25/2024	11:30 AM	0	0	0	0	0	0	0	0	0	0	0	0	0
4/25/2024	11:45 AM	0	0	0	0	0	0	0	0	0	0	0	0	0
4/25/2024	12:00 PM	0	0	0	0	0	0	0	0	0	0	0	0	0
4/25/2024	12:15 PM	0	0	0	0	0	0	0	0	0	0	0	0	0
4/25/2024	12:30 PM	0	0	0	0	0	0	0	0	0	0	0	0	0
4/25/2024	12:45 PM	0	0	0	0	0	0	0	0	0	0	0	0	0
4/25/2024	1:00 PM	0	0	0	0	0	0	0	0	0	0	0	0	0
4/25/2024	1:15 PM	0	0	0	0	0	0	0	0	0	0	0	0	0
4/25/2024	1:30 PM	0	0	0	0	0	0	0	0	0	0	0	0	0
4/25/2024	1:45 PM	0	0	0	0	0	0	0	0	0	0	0	0	0
4/25/2024	2:00 PM	0	0	0	0	0	0	0	0	0	0	0	0	0
4/25/2024	2:15 PM	0	0	0	0	0	0	0	0	0	0	0	0	0
4/25/2024	2:30 PM	0	0	0	0	0	0	0	0	0	0	0	0	0
4/25/2024	2:45 PM	0	0	0	0	0	0	0	0	0	0	0	0	0
4/25/2024	3:00 PM	0	0	0	0	0	0	0	0	0	0	0	0	0
4/25/2024	3:15 PM	0	0	0	0	0	0	0	0	0	0	0	0	0
4/25/2024	3:30 PM	0	0	0	0	0	0	0	0	0	0	0	0	0
4/25/2024	3:45 PM	0	0	0	0	0	0	0	0	0	0	0	0	0
4/25/2024	4:00 PM	0	0	0	0	0	0	0	0	0	0	0	0	0
4/25/2024	4:15 PM	0	0	0	0	0	0	0	0	0	0	0	0	0
4/25/2024	4:30 PM	0	0	0	0	0	0	0	0	0	0	0	0	0
4/25/2024	4:45 PM	0	0	0	0	0	0	0	0	0	0	0	0	0
4/25/2024	5:00 PM	0	0	0	0	0	0	0	0	0	0	0	0	0
4/25/2024	5:15 PM	0	0	0	0	0	0	0	0	0	0	0	0	0
4/25/2024	5:30 PM	0	0	0	0	0	0	0	0	0	0	0	0	0
4/25/2024	5:45 PM	0	0	0	0	0	0	0	0	0	0	0	0	0
4/25/2024	6:00 PM	0	0	0	0	0	0	0	0	0	0	0	0	0
4/25/2024	6:15 PM	0	0	0	0	0	0	0	0	0	0	0	0	0
4/25/2024	6:30 PM	0	0	0	0	0	0	0	0	0	0	0	0	0
4/25/2024	6:45 PM	0	0	0	0	0	0	0	0	0	0	0	0	0
4/25/2024	7:00 PM	0	0	0	0	0	0	0	0	0	0	0	0	0
4/25/2024	7:15 PM	0	0	0	0	0	0	0	0	0	0	0	0	0
4/25/2024	7:30 PM	0	0	0	0	0	0	0	0	0	0	0	0	0
4/25/2024	7:45 PM	0	0	0	0	0	0	0	0	0	0	0	0	0
4/25/2024	8:00 PM	0	0	0	0	0	0	0	0	0	0	0	0	0
4/25/2024	8:15 PM	0	0	0	0	0	0	0	0	0	0	0	0	0
4/25/2024	8:30 PM	0	0	0	0	0	0	0	0	0	0	0	0	0
4/25/2024	8:45 PM	0	0	0	0	0	0	0	0	0	0	0	0	0
4/25/2024	9:00 PM	0	0	0	0	0	0	0	0	0	0	0	0	0
4/25/2024	9:15 PM	0	0	0	0	0	0	0	0	0	0	0	0	0
4/25/2024	9:30 PM	0	0	0	0	0	0	0	0	0	0	0	0	0
4/25/2024	9:45 PM	0	0	0	0	0	0	0	0	0	0	0	0	0
4/25/2024	10:00 PM	0	0	0	0	0	0	0	0	0	0	0	0	0
4/25/2024	10:15 PM	0	0	0	0	0	0	0	0	0	0	0	0	0
4/25/2024	10:30 PM	0	0	0	0	0	0	0	0	0	0	0	0	0
4/25/2024	10:45 PM	0	0	0	0	0	0	0	0	0	0	0	0	0
4/25/2024	11:00 PM	0	0	0	0	0	0	0	0	0	0	0	0	0
4/25/2024	11:15 PM	0	0	0	0	0	0	0	0	0	0	0	0	0
4/25/2024	11:30 PM	0	0	0	0	0	0	0	0	0	0	0	0	0
4/25/2024	11:45 PM	0	0	0	0	0	0	0	0	0	0	0	0	0

SB
File Name:
Start Date: 4/23/2024
Start Time: 0
Site Code: 32
Station ID: 1
Location 1: I-26 James F. Byrnes Expy S/Bound Off-Ramp, north of Piney Grove Rd
Location 2:

Date	Time	1	2	3	4	5	6	7	8	9	10	11	12	13
4/23/2024	12:00 AM	0	0	0	0	0	0	0	0	0	0	0	0	0
4/23/2024	12:15 AM	0	0	0	0	0	0	0	0	0	0	0	0	0
4/23/2024	12:30 AM	0	0	0	0	0	0	0	0	0	0	0	0	0
4/23/2024	12:45 AM	0	0	0	0	0	0	0	0	0	0	0	0	0
4/23/2024	1:00 AM	0	0	0	0	0	0	0	0	0	0	0	0	0
4/23/2024	1:15 AM	0	0	0	0	0	0	0	0	0	0	0	0	0
4/23/2024	1:30 AM	0	0	0	0	0	0	0	0	0	0	0	0	0
4/23/2024	1:45 AM	0	0	0	0	0	0	0	0	0	0	0	0	0
4/23/2024	2:00 AM	0	0	0	0	0	0	0	0	0	0	0	0	0
4/23/2024	2:15 AM	0	0	0	0	0	0	0	0	0	0	0	0	0
4/23/2024	2:30 AM	0	0	0	0	0	0	0	0	0	0	0	0	0
4/23/2024	2:45 AM	0	0	0	0	0	0	0	0	0	0	0	0	0
4/23/2024	3:00 AM	0	0	0	0	0	0	0	0	0	0	0	0	0
4/23/2024	3:15 AM	0	0	0	0	0	0	0	0	0	0	0	0	0
4/23/2024	3:30 AM	0	0	0	0	0	0	0	0	0	0	0	0	0
4/23/2024	3:45 AM	0	0	0	0	0	0	0	0	0	0	0	0	0
4/23/2024	4:00 AM	0	0	0	0	0	0	0	0	0	0	0	0	0
4/23/2024	4:15 AM	0	0	0	0	0	0	0	0	0	0	0	0	0
4/23/2024	4:30 AM	0	0	0	0	0	0	0	0	0	0	0	0	0
4/23/2024	4:45 AM	0	0	0	0	0	0	0	0	0	0	0	0	0
4/23/2024	5:00 AM	0	0	0	0	0	0	0	0	0	0	0	0	0
4/23/2024	5:15 AM	0	0	0	0	0	0	0	0	0	0	0	0	0
4/23/2024	5:30 AM	0	0	0	0	0	0	0	0	0	0	0	0	0
4/23/2024	5:45 AM	0	0	0	0	0	0	0	0	0	0	0	0	0
4/23/2024	6:00 AM	0	0	0	0	0	0	0	0	0	0	0	0	0
4/23/2024	6:15 AM	0	0	0	0	0	0	0	0	0	0	0	0	0
4/23/2024	6:30 AM	0	0	0	0	0	0	0	0	0	0	0	0	0
4/23/2024	6:45 AM	0	0	0	0	0	0	0	0	0	0	0	0	0
4/23/2024	7:00 AM	0	0	0	0	0	0	0	0	0	0	0	0	0
4/23/2024	7:15 AM	0	0	0	0	0	0	0	0	0	0	0	0	0
4/23/2024	7:30 AM	0	0	0	0	0	0	0	0	0	0	0	0	0
4/23/2024	7:45 AM	0	0	0	0	0	0	0	0	0	0	0	0	0
4/23/2024	8:00 AM	0	0	0	0	0	0	0	0	0	0	0	0	0
4/23/2024	8:15 AM	0	0	0	0	0	0	0	0	0	0	0	0	0
4/23/2024	8:30 AM	0	0	0	0	0	0	0	0	0	0	0	0	0
4/23/2024	8:45 AM	0	0	0	0	0	0	0	0	0	0	0	0	0
4/23/2024	9:00 AM	0	0	0	0	0	0	0	0	0	0	0	0	0
4/23/2024	9:15 AM	0	0	0	0	0	0	0	0	0	0	0	0	0
4/23/2024	9:30 AM	0	0	0	0	0	0	0	0	0	0	0	0	0
4/23/2024	9:45 AM	0	0	0	0	0	0	0	0	0	0	0	0	0
4/23/2024	10:00 AM	0	0	0	0	0	0	0	0	0	0	0	0	0
4/23/2024	10:15 AM	0	0	0	0	0	0	0	0	0	0	0	0	0
4/23/2024	10:30 AM	0	0	0	0	0	0	0	0	0	0	0	0	0
4/23/2024	10:45 AM	0	0	0	0	0	0	0	0	0	0	0	0	0
4/23/2024	11:00 AM	0	0	0	0	0	0	0	0	0	0	0	0	0
4/23/2024	11:15 AM	0	0	0	0	0	0	0	0	0	0	0	0	0
4/23/2024	11:30 AM	0	0	0	0	0	0	0	0	0	0	0	0	0
4/23/2024	11:45 AM	0	0	0	0	0	0	0	0	0	0	0	0	0
4/23/2024	12:00 PM	0	0	0	0	0	0	0	0	0	0	0	0	0
4/23/2024	12:15 PM	0	0	0	0	0	0	0	0	0	0	0	0	0
4/23/2024	12:30 PM	0	0	0	0	0	0	0	0	0	0	0	0	0
4/23/2024	12:45 PM	0	0	0	0	0	0	0	0	0	0	0	0	0
4/23/2024	1:00 PM	0	0	0	0	0	0	0	0	0	0	0	0	0
4/23/2024	1:15 PM	0	0	0	0	0	0	0	0	0	0	0	0	0
4/23/2024	1:30 PM	0	0	0	0	0	0	0	0	0	0	0	0	0
4/23/2024	1:45 PM	0	0	0	0	0	0	0	0	0	0	0	0	0
4/23/2024	2:00 PM	0	0	0	0	0	0	0	0	0	0	0	0	0
4/23/2024	2:15 PM	0	0	0	0	0	0	0	0	0	0	0	0	0
4/23/2024	2:30 PM	0	0	0	0	0	0	0	0	0	0	0	0	0
4/23/2024	2:45 PM	0	0	0	0	0	0	0	0	0	0	0	0	0
4/23/2024	3:00 PM	0	0	0	0	0	0	0	0	0	0	0	0	0
4/23/2024	3:15 PM	0	0	0	0	0	0	0	0	0	0	0	0	0
4/23/2024	3:30 PM	0	0	0	0	0	0	0	0	0	0	0	0	0
4/23/2024	3:45 PM	0	0	0	0	0	0	0	0	0	0	0	0	0
4/23/2024	4:00 PM	0	0	0	0	0	0	0	0	0	0	0	0	0
4/23/2024	4:15 PM	0	0	0	0	0	0	0	0	0	0	0	0	0
4/23/2024	4:30 PM	0	0	0	0	0	0	0	0	0	0	0	0	0
4/23/2024	4:45 PM	0	0	0	0	0	0	0	0	0	0	0	0	0
4/23/2024	5:00 PM	0	0	0	0	0	0	0	0	0	0	0	0	0
4/23/2024	5:15 PM	0	0	0	0	0	0	0	0	0	0	0	0	0
4/23/2024	5:30 PM	0	0	0	0	0	0	0	0	0	0	0	0	0
4/23/2024	5:45 PM	0	0	0	0	0	0	0	0	0	0	0	0	0
4/23/2024	6:00 PM	0	0	0	0	0	0	0	0	0	0	0	0	0
4/23/2024	6:15 PM	0	0	0	0	0	0	0	0	0	0	0	0	0
4/23/2024	6:30 PM	0	0	0	0	0	0	0	0	0	0	0	0	0
4/23/2024	6:45 PM	0	0	0	0	0	0	0	0	0	0	0	0	0
4/23/2024	7:00 PM	0	26	5	0	0	0	1	0	0	0	0	0	0
4/23/2024	7:15 PM	0	24	2	0	0	0	0	0	0	0	0	0	0
4/23/2024	7:30 PM	0	23	0	0	1	0	0	0	0	0	0	0	0
4/23/2024	7:45 PM	0	25	4	0	0	0	0	0	0	0	0	0	0
4/23/2024	8:00 PM	0	27	2	0	0	0	0	0	0	0	0	0	0
4/23/2024	8:15 PM	0	19	4	0	0	0	0	0	1	0	0	0	0
4/23/2024	8:30 PM	0	18	3	0	0	0	0	0	0	0	0	0	0
4/23/2024	8:45 PM	0	25	1	0	0	0	0	0	0	0	0	0	0
4/23/2024	9:00 PM	0	14	1	0	0	0	0	0	0	0	0	0	0
4/23/2024	9:15 PM	0	24	3	0	0	0	0	0	0	0	0	0	0
4/23/2024	9:30 PM	0	17	1	0	1	0	0	0	0	0	0	0	0
4/23/2024	9:45 PM	0	14	1	0	0	0	0	0	0	0	0	0	0
4/23/2024	10:00 PM	0	13	1	0	0	0	0	0	0	0	0	0	0
4/23/2024	10:15 PM	0	14	0	0	0	0	0	0	0	0	0	0	0
4/23/2024	10:30 PM	0	18	3	0	0	0	0	0	0	0	0	0	0
4/23/2024	10:45 PM	0	10	1	0	0	0	0	0	0	0	0	0	0
4/23/2024	11:00 PM	0	6	1	0	0	0	0	0	0	0	0	0	0
4/23/2024	11:15 PM	0	11	0	0	0	0	0	0	0	0	0	0	0
4/23/2024	11:30 PM	0	6	1	0	0	0	0	0	0	0	0	0	0
4/23/2024	11:45 PM	0	3	0	0	0	0	0	0	0	0	0	0	0

4/24/2024	12:00 AM	0	5	0	0	0	0	0	0	1	0	0	0	0
4/24/2024	12:15 AM	0	3	0	0	0	0	0	0	0	0	0	0	0
4/24/2024	12:30 AM	0	2	0	0	0	0	0	0	0	0	0	0	0
4/24/2024	12:45 AM	0	3	0	0	0	0	0	0	0	0	0	0	0
4/24/2024	1:00 AM	0	1	0	0	0	0	0	0	0	0	0	0	0
4/24/2024	1:15 AM	0	5	0	0	0	0	0	0	0	0	0	0	0
4/24/2024	1:30 AM	0	3	0	0	0	0	0	0	1	0	0	0	0
4/24/2024	1:45 AM	0	2	0	0	0	0	0	0	0	0	0	0	0
4/24/2024	2:00 AM	0	2	0	0	0	0	0	0	0	0	0	0	0
4/24/2024	2:15 AM	0	2	0	0	0	0	0	0	0	0	0	0	0
4/24/2024	2:30 AM	0	0	0	0	0	0	0	0	0	0	0	0	0
4/24/2024	2:45 AM	0	2	0	0	1	0	0	0	0	0	0	0	0
4/24/2024	3:00 AM	0	2	0	0	0	0	0	0	0	0	0	0	0
4/24/2024	3:15 AM	0	2	1	0	0	0	0	0	0	0	0	0	0
4/24/2024	3:30 AM	0	3	0	0	0	0	0	0	0	0	0	0	0
4/24/2024	3:45 AM	0	4	1	0	0	0	0	0	0	0	0	0	0
4/24/2024	4:00 AM	0	3	0	0	0	0	0	0	0	0	0	0	0
4/24/2024	4:15 AM	0	2	0	0	0	0	0	0	0	0	0	0	0
4/24/2024	4:30 AM	0	4	0	0	0	0	0	0	0	0	0	0	0
4/24/2024	4:45 AM	0	11	0	0	0	0	0	0	0	0	0	0	0
4/24/2024	5:00 AM	0	9	0	0	0	0	0	0	0	0	0	0	0
4/24/2024	5:15 AM	0	6	0	0	0	0	0	0	0	0	0	0	0
4/24/2024	5:30 AM	0	7	0	0	0	0	0	0	0	0	0	0	0
4/24/2024	5:45 AM	0	12	3	0	0	0	0	0	0	0	0	0	0
4/24/2024	6:00 AM	0	7	0	0	0	0	0	0	1	0	0	0	0
4/24/2024	6:15 AM	0	15	5	0	0	0	0	0	0	0	0	0	0
4/24/2024	6:30 AM	0	13	6	0	0	0	0	0	0	0	0	0	0
4/24/2024	6:45 AM	1	22	10	0	0	0	0	0	0	0	0	0	0
4/24/2024	7:00 AM	0	38	16	0	0	0	0	0	0	0	0	0	0
4/24/2024	7:15 AM	0	41	20	0	1	0	0	0	0	0	0	0	0
4/24/2024	7:30 AM	0	31	19	0	1	1	0	0	0	0	0	0	0
4/24/2024	7:45 AM	0	25	21	0	1	0	0	0	1	0	0	0	0
4/24/2024	8:00 AM	0	50	33	0	0	0	0	0	0	0	0	0	0
4/24/2024	8:15 AM	0	24	9	0	0	0	0	0	0	0	0	0	0
4/24/2024	8:30 AM	0	47	17	0	0	0	0	0	0	0	0	0	0
4/24/2024	8:45 AM	0	47	15	0	0	0	0	0	0	0	0	0	0
4/24/2024	9:00 AM	0	34	13	0	0	0	0	0	0	0	0	0	0
4/24/2024	9:15 AM	0	41	19	0	0	0	0	0	1	0	0	0	0
4/24/2024	9:30 AM	1	91	21	0	2	1	0	0	0	0	0	0	0
4/24/2024	9:45 AM	0	56	10	0	0	0	0	0	0	0	0	0	0
4/24/2024	10:00 AM	0	49	19	0	0	0	0	0	0	0	0	0	0
4/24/2024	10:15 AM	0	53	20	0	1	0	0	0	0	0	0	0	0
4/24/2024	10:30 AM	0	58	21	0	3	1	0	0	0	0	0	0	0
4/24/2024	10:45 AM	0	35	11	0	0	1	0	0	0	0	0	0	0
4/24/2024	11:00 AM	0	22	12	1	2	0	0	0	0	0	0	0	0
4/24/2024	11:15 AM	0	34	10	0	0	0	0	0	0	0	0	0	0
4/24/2024	11:30 AM	0	27	15	0	1	0	0	0	0	0	0	0	0
4/24/2024	11:45 AM	0	45	22	0	0	0	0	0	0	0	0	0	0
4/24/2024	12:00 PM	0	33	25	0	1	0	0	0	0	0	0	0	0
4/24/2024	12:15 PM	0	37	19	0	1	0	0	0	0	0	0	0	0
4/24/2024	12:30 PM	0	37	14	0	1	0	0	0	1	0	0	0	0
4/24/2024	12:45 PM	0	50	17	0	0	1	0	0	0	0	0	0	0
4/24/2024	1:00 PM	0	36	13	0	1	1	0	0	0	0	0	0	0
4/24/2024	1:15 PM	0	34	15	0	2	0	0	0	0	0	0	0	0
4/24/2024	1:30 PM	0	43	11	0	1	0	0	0	1	0	0	0	0
4/24/2024	1:45 PM	0	47	21	0	1	0	0	0	1	0	0	0	0
4/24/2024	2:00 PM	0	30	15	0	0	0	0	0	0	0	0	0	0
4/24/2024	2:15 PM	0	40	10	0	0	0	0	0	0	0	0	0	0
4/24/2024	2:30 PM	0	52	15	0	2	0	0	0	1	0	0	0	0
4/24/2024	2:45 PM	0	54	17	0	0	0	0	0	0	0	0	0	0
4/24/2024	3:00 PM	0	37	11	0	1	0	0	0	0	0	0	0	0
4/24/2024	3:15 PM	0	54	15	0	2	1	0	0	0	0	0	0	0
4/24/2024	3:30 PM	0	45	12	0	2	0	0	0	1	0	0	0	0
4/24/2024	3:45 PM	0	34	37	0	2	0	0	0	1	0	0	0	0
4/24/2024	4:00 PM	0	44	11	0	0	0	0	0	0	0	0	0	0
4/24/2024	4:15 PM	0	50	17	0	3	0	0	0	0	0	0	0	0
4/24/2024	4:30 PM	0	41	10	0	0	0	0	1	1	0	0	0	0
4/24/2024	4:45 PM	0	29	9	0	1	0	0	0	1	0	0	0	0
4/24/2024	5:00 PM	0	44	14	0	1	0	0	0	1	0	0	0	0
4/24/2024	5:15 PM	0	43	14	0	0	0	0	0	0	0	0	0	0
4/24/2024	5:30 PM	0	49	18	0	0	0	0	1	1	0	0	0	0
4/24/2024	5:45 PM	0	42	15	0	1	0	0	0	0	0	0	0	0
4/24/2024	6:00 PM	0	43	12	0	0	1	0	0	0	0	0	0	0
4/24/2024	6:15 PM	0	42	11	0	1	0	0	0	0	0	0	0	0
4/24/2024	6:30 PM	0	35	11	0	0	0	0	0	0	0	0	0	0
4/24/2024	6:45 PM	0	35	10	0	1	0	0	0	0	0	0	0	0
4/24/2024	7:00 PM	0	37	12	0	0	0	0	0	0	0	0	0	0
4/24/2024	7:15 PM	0	30	7	0	0	0	0	1	0	0	0	0	0
4/24/2024	7:30 PM	0	24	6	0	2	0	0	0	0	0	0	0	0
4/24/2024	7:45 PM	0	18	4	0	0	0	0	0	0	0	0	0	0
4/24/2024	8:00 PM	0	21	5	0	1	0	0	0	0	0	0	0	0
4/24/2024	8:15 PM	0	26	4	0	0	0	0	0	0	0	0	0	0
4/24/2024	8:30 PM	0	30	6	0	0	0	0	0	0	0	0	0	0
4/24/2024	8:45 PM	0	25	5	0	0	0	0	0	2	0	0	0	0
4/24/2024	9:00 PM	0	18	8	0	0	0	0	0	0	0	0	0	0
4/24/2024	9:15 PM	0	16	5	0	0	0	0	0	0	0	0	0	0
4/24/2024	9:30 PM	0	11	3	0	0	0	0	0	0	0	0	0	0
4/24/2024	9:45 PM	0	13	3	0	0	0	0	0	0	0	0	0	0
4/24/2024	10:00 PM	0	16	4	0	0	0	0	0	0	0	0	0	0
4/24/2024	10:15 PM	0	9	0	0	0	0	0	0	0	0	0	0	0
4/24/2024	10:30 PM	0	10	0	0	0	0	0	0	0	0	0	0	0
4/24/2024	10:45 PM	0	8	0	0	0	0	0	0	0	0	0	0	0
4/24/2024	11:00 PM	0	9	0	0	0	0	0	0	0	0	0	0	0
4/24/2024	11:15 PM	0	4	0	0	0	0	0	0	0	0	0	0	0
4/24/2024	11:30 PM	0	4	0	0	0	0	0	0	0	0	0	0	0
4/24/2024	11:45 PM	0	5	0	0	0	0	0	0	0	0	0	0	0

4/25/2024	12:00 AM	0	5	0	0	0	0	0	0	0	0	0	0	0
4/25/2024	12:15 AM	0	5	0	0	0	0	0	0	0	0	0	0	0
4/25/2024	12:30 AM	0	5	0	0	0	0	0	0	0	0	0	0	0
4/25/2024	12:45 AM	0	6	0	0	0	0	0	0	0	0	0	0	0
4/25/2024	1:00 AM	0	2	0	0	0	0	0	0	0	0	0	0	0
4/25/2024	1:15 AM	0	3	0	0	0	0	0	0	0	0	0	0	0
4/25/2024	1:30 AM	0	7	0	0	0	0	0	0	0	0	0	0	0
4/25/2024	1:45 AM	0	4	1	0	0	0	0	0	1	0	0	0	0
4/25/2024	2:00 AM	0	3	1	0	0	0	0	0	0	0	0	0	0
4/25/2024	2:15 AM	0	2	0	0	1	0	0	0	0	0	0	0	0
4/25/2024	2:30 AM	0	3	0	0	0	0	0	0	1	0	0	0	0
4/25/2024	2:45 AM	0	2	0	0	1	0	0	0	0	0	0	0	0
4/25/2024	3:00 AM	0	3	0	0	0	0	0	0	0	0	0	0	0
4/25/2024	3:15 AM	0	1	0	0	0	0	0	0	0	0	0	0	0
4/25/2024	3:30 AM	0	0	0	0	0	0	0	0	0	0	0	0	0
4/25/2024	3:45 AM	0	4	0	0	0	0	0	0	0	0	0	0	0
4/25/2024	4:00 AM	0	4	0	0	0	0	0	0	0	0	0	0	0
4/25/2024	4:15 AM	0	4	0	0	0	0	0	0	0	0	0	0	0
4/25/2024	4:30 AM	0	4	0	0	0	0	0	0	0	0	0	0	0
4/25/2024	4:45 AM	0	6	2	0	0	0	0	0	0	0	0	0	0
4/25/2024	5:00 AM	0	4	1	0	0	0	0	0	0	0	0	0	0
4/25/2024	5:15 AM	0	5	0	0	0	0	0	0	0	0	0	0	0
4/25/2024	5:30 AM	0	8	1	0	0	0	0	0	0	0	0	0	0
4/25/2024	5:45 AM	0	12	4	0	1	0	0	0	0	0	0	0	0
4/25/2024	6:00 AM	0	9	0	1	0	0	0	0	1	0	0	0	0
4/25/2024	6:15 AM	0	8	1	0	0	0	0	0	0	0	0	0	0
4/25/2024	6:30 AM	0	19	4	0	0	0	0	0	0	0	0	0	0
4/25/2024	6:45 AM	0	31	7	1	0	0	0	0	0	0	0	0	0
4/25/2024	7:00 AM	0	46	11	0	0	0	0	0	0	0	0	0	0
4/25/2024	7:15 AM	0	46	9	0	0	0	0	0	1	0	0	0	0
4/25/2024	7:30 AM	0	32	6	0	0	0	0	0	1	0	0	0	0
4/25/2024	7:45 AM	0	20	5	0	0	1	0	0	0	0	0	0	0
4/25/2024	8:00 AM	0	37	12	0	1	0	0	0	0	0	0	0	0
4/25/2024	8:15 AM	0	36	9	0	1	0	0	0	0	0	0	0	0
4/25/2024	8:30 AM	0	38	9	0	1	0	0	0	2	0	0	0	0
4/25/2024	8:45 AM	0	61	10	0	1	0	0	1	0	0	0	0	0
4/25/2024	9:00 AM	0	36	7	0	0	0	0	0	0	0	0	0	0
4/25/2024	9:15 AM	0	42	13	0	0	0	0	0	5	0	0	0	0
4/25/2024	9:30 AM	0	27	13	0	0	0	0	0	0	0	0	0	0
4/25/2024	9:45 AM	0	39	17	0	0	0	0	0	0	0	0	0	0
4/25/2024	10:00 AM	0	42	13	0	1	0	0	0	0	0	0	0	0
4/25/2024	10:15 AM	0	51	18	0	0	0	0	0	1	0	0	0	0
4/25/2024	10:30 AM	0	37	15	0	2	0	0	0	1	0	0	0	0
4/25/2024	10:45 AM	0	48	16	1	3	0	0	0	0	0	0	0	0
4/25/2024	11:00 AM	0	41	14	0	0	0	0	0	0	0	0	0	0
4/25/2024	11:15 AM	0	44	12	0	0	0	0	0	0	0	0	0	0
4/25/2024	11:30 AM	0	35	14	0	1	0	0	0	1	0	0	0	0
4/25/2024	11:45 AM	0	47	12	0	1	0	0	0	0	0	0	0	0
4/25/2024	12:00 PM	0	49	15	0	3	0	0	0	0	0	0	0	0
4/25/2024	12:15 PM	0	52	17	0	1	0	0	0	1	0	0	0	0
4/25/2024	12:30 PM	0	34	16	0	0	0	0	0	0	0	0	0	0
4/25/2024	12:45 PM	0	40	17	0	0	0	0	0	0	0	0	0	0
4/25/2024	1:00 PM	0	47	22	0	0	1	0	0	1	0	0	0	0
4/25/2024	1:15 PM	0	50	13	0	0	0	0	0	2	0	0	0	0
4/25/2024	1:30 PM	0	46	15	0	0	1	0	0	0	0	0	0	0
4/25/2024	1:45 PM	0	51	24	0	0	0	0	0	1	0	0	0	0
4/25/2024	2:00 PM	0	46	15	0	0	0	0	0	0	0	0	0	0
4/25/2024	2:15 PM	0	39	16	0	0	0	0	0	0	0	0	0	0
4/25/2024	2:30 PM	0	53	11	0	0	0	0	0	0	0	0	0	0
4/25/2024	2:45 PM	0	38	12	0	0	0	0	0	0	0	0	0	0
4/25/2024	3:00 PM	0	43	9	0	0	0	0	0	0	0	0	0	0
4/25/2024	3:15 PM	0	65	8	0	0	0	0	0	0	0	0	0	0
4/25/2024	3:30 PM	0	42	7	0	1	0	0	0	0	0	0	0	0
4/25/2024	3:45 PM	0	41	10	0	0	0	0	0	0	0	0	0	0
4/25/2024	4:00 PM	0	38	10	0	0	0	0	0	0	0	0	0	0
4/25/2024	4:15 PM	1	51	10	0	1	0	0	1	2	0	0	0	0
4/25/2024	4:30 PM	0	39	10	0	0	0	0	0	1	0	0	0	0
4/25/2024	4:45 PM	0	46	14	0	0	0	0	0	0	0	0	0	0
4/25/2024	5:00 PM	0	47	10	0	0	0	0	0	1	0	0	0	0
4/25/2024	5:15 PM	0	69	17	0	2	0	0	0	0	0	0	0	0
4/25/2024	5:30 PM	0	79	11	0	0	0	0	0	0	0	0	0	0
4/25/2024	5:45 PM	0	48	10	0	0	0	0	0	0	0	0	0	0
4/25/2024	6:00 PM	0	58	7	0	0	0	0	0	0	0	0	0	0
4/25/2024	6:15 PM	0	49	10	0	0	0	0	0	0	0	0	0	0
4/25/2024	6:30 PM	0	41	4	0	0	0	0	1	0	0	0	0	0
4/25/2024	6:45 PM	0	54	4	0	0	0	0	0	0	0	0	0	0
4/25/2024	7:00 PM	0	0	0	0	0	0	0	0	0	0	0	0	0
4/25/2024	7:15 PM	0	0	0	0	0	0	0	0	0	0	0	0	0
4/25/2024	7:30 PM	0	0	0	0	0	0	0	0	0	0	0	0	0
4/25/2024	7:45 PM	0	0	0	0	0	0	0	0	0	0	0	0	0
4/25/2024	8:00 PM	0	0	0	0	0	0	0	0	0	0	0	0	0
4/25/2024	8:15 PM	0	0	0	0	0	0	0	0	0	0	0	0	0
4/25/2024	8:30 PM	0	0	0	0	0	0	0	0	0	0	0	0	0
4/25/2024	8:45 PM	0	0	0	0	0	0	0	0	0	0	0	0	0
4/25/2024	9:00 PM	0	0	0	0	0	0	0	0	0	0	0	0	0
4/25/2024	9:15 PM	0	0	0	0	0	0	0	0	0	0	0	0	0
4/25/2024	9:30 PM	0	0	0	0	0	0	0	0	0	0	0	0	0
4/25/2024	9:45 PM	0	0	0	0	0	0	0	0	0	0	0	0	0
4/25/2024	10:00 PM	0	0	0	0	0	0	0	0	0	0	0	0	0
4/25/2024	10:15 PM	0	0	0	0	0	0	0	0	0	0	0	0	0
4/25/2024	10:30 PM	0	0	0	0	0	0	0	0	0	0	0	0	0
4/25/2024	10:45 PM	0	0	0	0	0	0	0	0	0	0	0	0	0
4/25/2024	11:00 PM	0	0	0	0	0	0	0	0	0	0	0	0	0
4/25/2024	11:15 PM	0	0	0	0	0	0	0	0	0	0	0	0	0
4/25/2024	11:30 PM	0	0	0	0	0	0	0	0	0	0	0	0	0
4/25/2024	11:45 PM	0	0	0	0	0	0	0	0	0	0	0	0	0

NB
File Name:
Start Date: 4/23/2024
Start Time: 0
Site Code: 32
Station ID: 1
Location 1: I-26 James F. Byrnes Expy S/Bound Off-Ramp, north of Piney Grove Rd
Location 2:

Date	Time	1	2	3	4	5	6	7	8	9	10	11	12	13
4/23/2024	12:00 AM	0	0	0	0	0	0	0	0	0	0	0	0	0
4/23/2024	12:15 AM	0	0	0	0	0	0	0	0	0	0	0	0	0
4/23/2024	12:30 AM	0	0	0	0	0	0	0	0	0	0	0	0	0
4/23/2024	12:45 AM	0	0	0	0	0	0	0	0	0	0	0	0	0
4/23/2024	1:00 AM	0	0	0	0	0	0	0	0	0	0	0	0	0
4/23/2024	1:15 AM	0	0	0	0	0	0	0	0	0	0	0	0	0
4/23/2024	1:30 AM	0	0	0	0	0	0	0	0	0	0	0	0	0
4/23/2024	1:45 AM	0	0	0	0	0	0	0	0	0	0	0	0	0
4/23/2024	2:00 AM	0	0	0	0	0	0	0	0	0	0	0	0	0
4/23/2024	2:15 AM	0	0	0	0	0	0	0	0	0	0	0	0	0
4/23/2024	2:30 AM	0	0	0	0	0	0	0	0	0	0	0	0	0
4/23/2024	2:45 AM	0	0	0	0	0	0	0	0	0	0	0	0	0
4/23/2024	3:00 AM	0	0	0	0	0	0	0	0	0	0	0	0	0
4/23/2024	3:15 AM	0	0	0	0	0	0	0	0	0	0	0	0	0
4/23/2024	3:30 AM	0	0	0	0	0	0	0	0	0	0	0	0	0
4/23/2024	3:45 AM	0	0	0	0	0	0	0	0	0	0	0	0	0
4/23/2024	4:00 AM	0	0	0	0	0	0	0	0	0	0	0	0	0
4/23/2024	4:15 AM	0	0	0	0	0	0	0	0	0	0	0	0	0
4/23/2024	4:30 AM	0	0	0	0	0	0	0	0	0	0	0	0	0
4/23/2024	4:45 AM	0	0	0	0	0	0	0	0	0	0	0	0	0
4/23/2024	5:00 AM	0	0	0	0	0	0	0	0	0	0	0	0	0
4/23/2024	5:15 AM	0	0	0	0	0	0	0	0	0	0	0	0	0
4/23/2024	5:30 AM	0	0	0	0	0	0	0	0	0	0	0	0	0
4/23/2024	5:45 AM	0	0	0	0	0	0	0	0	0	0	0	0	0
4/23/2024	6:00 AM	0	0	0	0	0	0	0	0	0	0	0	0	0
4/23/2024	6:15 AM	0	0	0	0	0	0	0	0	0	0	0	0	0
4/23/2024	6:30 AM	0	0	0	0	0	0	0	0	0	0	0	0	0
4/23/2024	6:45 AM	0	0	0	0	0	0	0	0	0	0	0	0	0
4/23/2024	7:00 AM	0	0	0	0	0	0	0	0	0	0	0	0	0
4/23/2024	7:15 AM	0	0	0	0	0	0	0	0	0	0	0	0	0
4/23/2024	7:30 AM	0	0	0	0	0	0	0	0	0	0	0	0	0
4/23/2024	7:45 AM	0	0	0	0	0	0	0	0	0	0	0	0	0
4/23/2024	8:00 AM	0	0	0	0	0	0	0	0	0	0	0	0	0
4/23/2024	8:15 AM	0	0	0	0	0	0	0	0	0	0	0	0	0
4/23/2024	8:30 AM	0	0	0	0	0	0	0	0	0	0	0	0	0
4/23/2024	8:45 AM	0	0	0	0	0	0	0	0	0	0	0	0	0
4/23/2024	9:00 AM	0	0	0	0	0	0	0	0	0	0	0	0	0
4/23/2024	9:15 AM	0	0	0	0	0	0	0	0	0	0	0	0	0
4/23/2024	9:30 AM	0	0	0	0	0	0	0	0	0	0	0	0	0
4/23/2024	9:45 AM	0	0	0	0	0	0	0	0	0	0	0	0	0
4/23/2024	10:00 AM	0	0	0	0	0	0	0	0	0	0	0	0	0
4/23/2024	10:15 AM	0	0	0	0	0	0	0	0	0	0	0	0	0
4/23/2024	10:30 AM	0	0	0	0	0	0	0	0	0	0	0	0	0
4/23/2024	10:45 AM	0	0	0	0	0	0	0	0	0	0	0	0	0
4/23/2024	11:00 AM	0	0	0	0	0	0	0	0	0	0	0	0	0
4/23/2024	11:15 AM	0	0	0	0	0	0	0	0	0	0	0	0	0
4/23/2024	11:30 AM	0	0	0	0	0	0	0	0	0	0	0	0	0
4/23/2024	11:45 AM	0	0	0	0	0	0	0	0	0	0	0	0	0
4/23/2024	12:00 PM	0	0	0	0	0	0	0	0	0	0	0	0	0
4/23/2024	12:15 PM	0	0	0	0	0	0	0	0	0	0	0	0	0
4/23/2024	12:30 PM	0	0	0	0	0	0	0	0	0	0	0	0	0
4/23/2024	12:45 PM	0	0	0	0	0	0	0	0	0	0	0	0	0
4/23/2024	1:00 PM	0	0	0	0	0	0	0	0	0	0	0	0	0
4/23/2024	1:15 PM	0	0	0	0	0	0	0	0	0	0	0	0	0
4/23/2024	1:30 PM	0	0	0	0	0	0	0	0	0	0	0	0	0
4/23/2024	1:45 PM	0	0	0	0	0	0	0	0	0	0	0	0	0
4/23/2024	2:00 PM	0	0	0	0	0	0	0	0	0	0	0	0	0
4/23/2024	2:15 PM	0	0	0	0	0	0	0	0	0	0	0	0	0
4/23/2024	2:30 PM	0	0	0	0	0	0	0	0	0	0	0	0	0
4/23/2024	2:45 PM	0	0	0	0	0	0	0	0	0	0	0	0	0
4/23/2024	3:00 PM	0	0	0	0	0	0	0	0	0	0	0	0	0
4/23/2024	3:15 PM	0	0	0	0	0	0	0	0	0	0	0	0	0
4/23/2024	3:30 PM	0	0	0	0	0	0	0	0	0	0	0	0	0
4/23/2024	3:45 PM	0	0	0	0	0	0	0	0	0	0	0	0	0
4/23/2024	4:00 PM	0	0	0	0	0	0	0	0	0	0	0	0	0
4/23/2024	4:15 PM	0	0	0	0	0	0	0	0	0	0	0	0	0
4/23/2024	4:30 PM	0	0	0	0	0	0	0	0	0	0	0	0	0
4/23/2024	4:45 PM	0	0	0	0	0	0	0	0	0	0	0	0	0
4/23/2024	5:00 PM	0	0	0	0	0	0	0	0	0	0	0	0	0
4/23/2024	5:15 PM	0	0	0	0	0	0	0	0	0	0	0	0	0
4/23/2024	5:30 PM	0	0	0	0	0	0	0	0	0	0	0	0	0
4/23/2024	5:45 PM	0	0	0	0	0	0	0	0	0	0	0	0	0
4/23/2024	6:00 PM	0	0	0	0	0	0	0	0	0	0	0	0	0
4/23/2024	6:15 PM	0	0	0	0	0	0	0	0	0	0	0	0	0
4/23/2024	6:30 PM	0	0	0	0	0	0	0	0	0	0	0	0	0
4/23/2024	6:45 PM	0	0	0	0	0	0	0	0	0	0	0	0	0
4/23/2024	7:00 PM	0	0	0	0	0	0	0	0	0	0	0	0	0
4/23/2024	7:15 PM	0	0	0	0	0	0	0	0	0	0	0	0	0
4/23/2024	7:30 PM	0	0	0	0	0	0	0	0	0	0	0	0	0
4/23/2024	7:45 PM	0	0	0	0	0	0	0	0	0	0	0	0	0
4/23/2024	8:00 PM	0	0	0	0	0	0	0	0	0	0	0	0	0
4/23/2024	8:15 PM	0	0	0	0	0	0	0	0	0	0	0	0	0
4/23/2024	8:30 PM	0	0	0	0	0	0	0	0	0	0	0	0	0
4/23/2024	8:45 PM	0	0	0	0	0	0	0	0	0	0	0	0	0
4/23/2024	9:00 PM	0	0	0	0	0	0	0	0	0	0	0	0	0
4/23/2024	9:15 PM	0	0	0	0	0	0	0	0	0	0	0	0	0
4/23/2024	9:30 PM	0	0	0	0	0	0	0	0	0	0	0	0	0
4/23/2024	9:45 PM	0	0	0	0	0	0	0	0	0	0	0	0	0
4/23/2024	10:00 PM	0	0	0	0	0	0	0	0	0	0	0	0	0
4/23/2024	10:15 PM	0	0	0	0	0	0	0	0	0	0	0	0	0
4/23/2024	10:30 PM	0	0	0	0	0	0	0	0	0	0	0	0	0
4/23/2024	10:45 PM	0	0	0	0	0	0	0	0	0	0	0	0	0
4/23/2024	11:00 PM	0	0	0	0	0	0	0	0	0	0	0	0	0
4/23/2024	11:15 PM	0	0	0	0	0	0	0	0	0	0	0	0	0
4/23/2024	11:30 PM	0	0	0	0	0	0	0	0	0	0	0	0	0
4/23/2024	11:45 PM	0	0	0	0	0	0	0	0	0	0	0	0	0

4/24/2024	12:00 AM	0	0	0	0	0	0	0	0	0	0	0	0	0
4/24/2024	12:15 AM	0	0	0	0	0	0	0	0	0	0	0	0	0
4/24/2024	12:30 AM	0	0	0	0	0	0	0	0	0	0	0	0	0
4/24/2024	12:45 AM	0	0	0	0	0	0	0	0	0	0	0	0	0
4/24/2024	1:00 AM	0	0	0	0	0	0	0	0	0	0	0	0	0
4/24/2024	1:15 AM	0	0	0	0	0	0	0	0	0	0	0	0	0
4/24/2024	1:30 AM	0	0	0	0	0	0	0	0	0	0	0	0	0
4/24/2024	1:45 AM	0	0	0	0	0	0	0	0	0	0	0	0	0
4/24/2024	2:00 AM	0	0	0	0	0	0	0	0	0	0	0	0	0
4/24/2024	2:15 AM	0	0	0	0	0	0	0	0	0	0	0	0	0
4/24/2024	2:30 AM	0	0	0	0	0	0	0	0	0	0	0	0	0
4/24/2024	2:45 AM	0	0	0	0	0	0	0	0	0	0	0	0	0
4/24/2024	3:00 AM	0	0	0	0	0	0	0	0	0	0	0	0	0
4/24/2024	3:15 AM	0	0	0	0	0	0	0	0	0	0	0	0	0
4/24/2024	3:30 AM	0	0	0	0	0	0	0	0	0	0	0	0	0
4/24/2024	3:45 AM	0	0	0	0	0	0	0	0	0	0	0	0	0
4/24/2024	4:00 AM	0	0	0	0	0	0	0	0	0	0	0	0	0
4/24/2024	4:15 AM	0	0	0	0	0	0	0	0	0	0	0	0	0
4/24/2024	4:30 AM	0	0	0	0	0	0	0	0	0	0	0	0	0
4/24/2024	4:45 AM	0	0	0	0	0	0	0	0	0	0	0	0	0
4/24/2024	5:00 AM	0	0	0	0	0	0	0	0	0	0	0	0	0
4/24/2024	5:15 AM	0	0	0	0	0	0	0	0	0	0	0	0	0
4/24/2024	5:30 AM	0	0	0	0	0	0	0	0	0	0	0	0	0
4/24/2024	5:45 AM	0	0	0	0	0	0	0	0	0	0	0	0	0
4/24/2024	6:00 AM	0	0	0	0	0	0	0	0	0	0	0	0	0
4/24/2024	6:15 AM	0	0	0	0	0	0	0	0	0	0	0	0	0
4/24/2024	6:30 AM	0	0	0	0	0	0	0	0	0	0	0	0	0
4/24/2024	6:45 AM	0	0	0	0	0	0	0	0	0	0	0	0	0
4/24/2024	7:00 AM	0	0	0	0	0	0	0	0	0	0	0	0	0
4/24/2024	7:15 AM	0	0	0	0	0	0	0	0	0	0	0	0	0
4/24/2024	7:30 AM	0	0	0	0	0	0	0	0	0	0	0	0	0
4/24/2024	7:45 AM	0	0	0	0	0	0	0	0	0	0	0	0	0
4/24/2024	8:00 AM	0	0	0	0	0	0	0	0	0	0	0	0	0
4/24/2024	8:15 AM	0	0	0	0	0	0	0	0	0	0	0	0	0
4/24/2024	8:30 AM	0	0	0	0	0	0	0	0	0	0	0	0	0
4/24/2024	8:45 AM	0	0	0	0	0	0	0	0	0	0	0	0	0
4/24/2024	9:00 AM	0	0	0	0	0	0	0	0	0	0	0	0	0
4/24/2024	9:15 AM	0	0	0	0	0	0	0	0	0	0	0	0	0
4/24/2024	9:30 AM	0	0	0	0	0	0	0	0	0	0	0	0	0
4/24/2024	9:45 AM	0	0	0	0	0	0	0	0	0	0	0	0	0
4/24/2024	10:00 AM	0	0	0	0	0	0	0	0	0	0	0	0	0
4/24/2024	10:15 AM	0	0	0	0	0	0	0	0	0	0	0	0	0
4/24/2024	10:30 AM	0	0	0	0	0	0	0	0	0	0	0	0	0
4/24/2024	10:45 AM	0	0	0	0	0	0	0	0	0	0	0	0	0
4/24/2024	11:00 AM	0	0	0	0	0	0	0	0	0	0	0	0	0
4/24/2024	11:15 AM	0	0	0	0	0	0	0	0	0	0	0	0	0
4/24/2024	11:30 AM	0	0	0	0	0	0	0	0	0	0	0	0	0
4/24/2024	11:45 AM	0	0	0	0	0	0	0	0	0	0	0	0	0
4/24/2024	12:00 PM	0	0	0	0	0	0	0	0	0	0	0	0	0
4/24/2024	12:15 PM	0	0	0	0	0	0	0	0	0	0	0	0	0
4/24/2024	12:30 PM	0	0	0	0	0	0	0	0	0	0	0	0	0
4/24/2024	12:45 PM	0	0	0	0	0	0	0	0	0	0	0	0	0
4/24/2024	1:00 PM	0	0	0	0	0	0	0	0	0	0	0	0	0
4/24/2024	1:15 PM	0	0	0	0	0	0	0	0	0	0	0	0	0
4/24/2024	1:30 PM	0	0	0	0	0	0	0	0	0	0	0	0	0
4/24/2024	1:45 PM	0	0	0	0	0	0	0	0	0	0	0	0	0
4/24/2024	2:00 PM	0	0	0	0	0	0	0	0	0	0	0	0	0
4/24/2024	2:15 PM	0	0	0	0	0	0	0	0	0	0	0	0	0
4/24/2024	2:30 PM	0	0	0	0	0	0	0	0	0	0	0	0	0
4/24/2024	2:45 PM	0	0	0	0	0	0	0	0	0	0	0	0	0
4/24/2024	3:00 PM	0	0	0	0	0	0	0	0	0	0	0	0	0
4/24/2024	3:15 PM	0	0	0	0	0	0	0	0	0	0	0	0	0
4/24/2024	3:30 PM	0	0	0	0	0	0	0	0	0	0	0	0	0
4/24/2024	3:45 PM	0	0	0	0	0	0	0	0	0	0	0	0	0
4/24/2024	4:00 PM	0	0	0	0	0	0	0	0	0	0	0	0	0
4/24/2024	4:15 PM	0	0	0	0	0	0	0	0	0	0	0	0	0
4/24/2024	4:30 PM	0	0	0	0	0	0	0	0	0	0	0	0	0
4/24/2024	4:45 PM	0	0	0	0	0	0	0	0	0	0	0	0	0
4/24/2024	5:00 PM	0	0	0	0	0	0	0	0	0	0	0	0	0
4/24/2024	5:15 PM	0	0	0	0	0	0	0	0	0	0	0	0	0
4/24/2024	5:30 PM	0	0	0	0	0	0	0	0	0	0	0	0	0
4/24/2024	5:45 PM	0	0	0	0	0	0	0	0	0	0	0	0	0
4/24/2024	6:00 PM	0	0	0	0	0	0	0	0	0	0	0	0	0
4/24/2024	6:15 PM	0	0	0	0	0	0	0	0	0	0	0	0	0
4/24/2024	6:30 PM	0	0	0	0	0	0	0	0	0	0	0	0	0
4/24/2024	6:45 PM	0	0	0	0	0	0	0	0	0	0	0	0	0
4/24/2024	7:00 PM	0	0	0	0	0	0	0	0	0	0	0	0	0
4/24/2024	7:15 PM	0	0	0	0	0	0	0	0	0	0	0	0	0
4/24/2024	7:30 PM	0	0	0	0	0	0	0	0	0	0	0	0	0
4/24/2024	7:45 PM	0	0	0	0	0	0	0	0	0	0	0	0	0
4/24/2024	8:00 PM	0	0	0	0	0	0	0	0	0	0	0	0	0
4/24/2024	8:15 PM	0	0	0	0	0	0	0	0	0	0	0	0	0
4/24/2024	8:30 PM	0	0	0	0	0	0	0	0	0	0	0	0	0
4/24/2024	8:45 PM	0	0	0	0	0	0	0	0	0	0	0	0	0
4/24/2024	9:00 PM	0	0	0	0	0	0	0	0	0	0	0	0	0
4/24/2024	9:15 PM	0	0	0	0	0	0	0	0	0	0	0	0	0
4/24/2024	9:30 PM	0	0	0	0	0	0	0	0	0	0	0	0	0
4/24/2024	9:45 PM	0	0	0	0	0	0	0	0	0	0	0	0	0
4/24/2024	10:00 PM	0	0	0	0	0	0	0	0	0	0	0	0	0
4/24/2024	10:15 PM	0	0	0	0	0	0	0	0	0	0	0	0	0
4/24/2024	10:30 PM	0	0	0	0	0	0	0	0	0	0	0	0	0
4/24/2024	10:45 PM	0	0	0	0	0	0	0	0	0	0	0	0	0
4/24/2024	11:00 PM	0	0	0	0	0	0	0	0	0	0	0	0	0
4/24/2024	11:15 PM	0	0	0	0	0	0	0	0	0	0	0	0	0
4/24/2024	11:30 PM	0	0	0	0	0	0	0	0	0	0	0	0	0
4/24/2024	11:45 PM	0	0	0	0	0	0	0	0	0	0	0	0	0

4/25/2024	12:00 AM	0	0	0	0	0	0	0	0	0	0	0	0	0
4/25/2024	12:15 AM	0	0	0	0	0	0	0	0	0	0	0	0	0
4/25/2024	12:30 AM	0	0	0	0	0	0	0	0	0	0	0	0	0
4/25/2024	12:45 AM	0	0	0	0	0	0	0	0	0	0	0	0	0
4/25/2024	1:00 AM	0	0	0	0	0	0	0	0	0	0	0	0	0
4/25/2024	1:15 AM	0	0	0	0	0	0	0	0	0	0	0	0	0
4/25/2024	1:30 AM	0	0	0	0	0	0	0	0	0	0	0	0	0
4/25/2024	1:45 AM	0	0	0	0	0	0	0	0	0	0	0	0	0
4/25/2024	2:00 AM	0	0	0	0	0	0	0	0	0	0	0	0	0
4/25/2024	2:15 AM	0	0	0	0	0	0	0	0	0	0	0	0	0
4/25/2024	2:30 AM	0	0	0	0	0	0	0	0	0	0	0	0	0
4/25/2024	2:45 AM	0	0	0	0	0	0	0	0	0	0	0	0	0
4/25/2024	3:00 AM	0	0	0	0	0	0	0	0	0	0	0	0	0
4/25/2024	3:15 AM	0	0	0	0	0	0	0	0	0	0	0	0	0
4/25/2024	3:30 AM	0	0	0	0	0	0	0	0	0	0	0	0	0
4/25/2024	3:45 AM	0	0	0	0	0	0	0	0	0	0	0	0	0
4/25/2024	4:00 AM	0	0	0	0	0	0	0	0	0	0	0	0	0
4/25/2024	4:15 AM	0	0	0	0	0	0	0	0	0	0	0	0	0
4/25/2024	4:30 AM	0	0	0	0	0	0	0	0	0	0	0	0	0
4/25/2024	4:45 AM	0	0	0	0	0	0	0	0	0	0	0	0	0
4/25/2024	5:00 AM	0	0	0	0	0	0	0	0	0	0	0	0	0
4/25/2024	5:15 AM	0	0	0	0	0	0	0	0	0	0	0	0	0
4/25/2024	5:30 AM	0	0	0	0	0	0	0	0	0	0	0	0	0
4/25/2024	5:45 AM	0	0	0	0	0	0	0	0	0	0	0	0	0
4/25/2024	6:00 AM	0	0	0	0	0	0	0	0	0	0	0	0	0
4/25/2024	6:15 AM	0	0	0	0	0	0	0	0	0	0	0	0	0
4/25/2024	6:30 AM	0	0	0	0	0	0	0	0	0	0	0	0	0
4/25/2024	6:45 AM	0	0	0	0	0	0	0	0	0	0	0	0	0
4/25/2024	7:00 AM	0	0	0	0	0	0	0	0	0	0	0	0	0
4/25/2024	7:15 AM	0	0	0	0	0	0	0	0	0	0	0	0	0
4/25/2024	7:30 AM	0	0	0	0	0	0	0	0	0	0	0	0	0
4/25/2024	7:45 AM	0	0	0	0	0	0	0	0	0	0	0	0	0
4/25/2024	8:00 AM	0	0	0	0	0	0	0	0	0	0	0	0	0
4/25/2024	8:15 AM	0	0	0	0	0	0	0	0	0	0	0	0	0
4/25/2024	8:30 AM	0	0	0	0	0	0	0	0	0	0	0	0	0
4/25/2024	8:45 AM	0	0	0	0	0	0	0	0	0	0	0	0	0
4/25/2024	9:00 AM	0	0	0	0	0	0	0	0	0	0	0	0	0
4/25/2024	9:15 AM	0	0	0	0	0	0	0	0	0	0	0	0	0
4/25/2024	9:30 AM	0	0	0	0	0	0	0	0	0	0	0	0	0
4/25/2024	9:45 AM	0	0	0	0	0	0	0	0	0	0	0	0	0
4/25/2024	10:00 AM	0	0	0	0	0	0	0	0	0	0	0	0	0
4/25/2024	10:15 AM	0	0	0	0	0	0	0	0	0	0	0	0	0
4/25/2024	10:30 AM	0	0	0	0	0	0	0	0	0	0	0	0	0
4/25/2024	10:45 AM	0	0	0	0	0	0	0	0	0	0	0	0	0
4/25/2024	11:00 AM	0	0	0	0	0	0	0	0	0	0	0	0	0
4/25/2024	11:15 AM	0	0	0	0	0	0	0	0	0	0	0	0	0
4/25/2024	11:30 AM	0	0	0	0	0	0	0	0	0	0	0	0	0
4/25/2024	11:45 AM	0	0	0	0	0	0	0	0	0	0	0	0	0
4/25/2024	12:00 PM	0	0	0	0	0	0	0	0	0	0	0	0	0
4/25/2024	12:15 PM	0	0	0	0	0	0	0	0	0	0	0	0	0
4/25/2024	12:30 PM	0	0	0	0	0	0	0	0	0	0	0	0	0
4/25/2024	12:45 PM	0	0	0	0	0	0	0	0	0	0	0	0	0
4/25/2024	1:00 PM	0	0	0	0	0	0	0	0	0	0	0	0	0
4/25/2024	1:15 PM	0	0	0	0	0	0	0	0	0	0	0	0	0
4/25/2024	1:30 PM	0	0	0	0	0	0	0	0	0	0	0	0	0
4/25/2024	1:45 PM	0	0	0	0	0	0	0	0	0	0	0	0	0
4/25/2024	2:00 PM	0	0	0	0	0	0	0	0	0	0	0	0	0
4/25/2024	2:15 PM	0	0	0	0	0	0	0	0	0	0	0	0	0
4/25/2024	2:30 PM	0	0	0	0	0	0	0	0	0	0	0	0	0
4/25/2024	2:45 PM	0	0	0	0	0	0	0	0	0	0	0	0	0
4/25/2024	3:00 PM	0	0	0	0	0	0	0	0	0	0	0	0	0
4/25/2024	3:15 PM	0	0	0	0	0	0	0	0	0	0	0	0	0
4/25/2024	3:30 PM	0	0	0	0	0	0	0	0	0	0	0	0	0
4/25/2024	3:45 PM	0	0	0	0	0	0	0	0	0	0	0	0	0
4/25/2024	4:00 PM	0	0	0	0	0	0	0	0	0	0	0	0	0
4/25/2024	4:15 PM	0	0	0	0	0	0	0	0	0	0	0	0	0
4/25/2024	4:30 PM	0	0	0	0	0	0	0	0	0	0	0	0	0
4/25/2024	4:45 PM	0	0	0	0	0	0	0	0	0	0	0	0	0
4/25/2024	5:00 PM	0	0	0	0	0	0	0	0	0	0	0	0	0
4/25/2024	5:15 PM	0	0	0	0	0	0	0	0	0	0	0	0	0
4/25/2024	5:30 PM	0	0	0	0	0	0	0	0	0	0	0	0	0
4/25/2024	5:45 PM	0	0	0	0	0	0	0	0	0	0	0	0	0
4/25/2024	6:00 PM	0	0	0	0	0	0	0	0	0	0	0	0	0
4/25/2024	6:15 PM	0	0	0	0	0	0	0	0	0	0	0	0	0
4/25/2024	6:30 PM	0	0	0	0	0	0	0	0	0	0	0	0	0
4/25/2024	6:45 PM	0	0	0	0	0	0	0	0	0	0	0	0	0
4/25/2024	7:00 PM	0	0	0	0	0	0	0	0	0	0	0	0	0
4/25/2024	7:15 PM	0	0	0	0	0	0	0	0	0	0	0	0	0
4/25/2024	7:30 PM	0	0	0	0	0	0	0	0	0	0	0	0	0
4/25/2024	7:45 PM	0	0	0	0	0	0	0	0	0	0	0	0	0
4/25/2024	8:00 PM	0	0	0	0	0	0	0	0	0	0	0	0	0
4/25/2024	8:15 PM	0	0	0	0	0	0	0	0	0	0	0	0	0
4/25/2024	8:30 PM	0	0	0	0	0	0	0	0	0	0	0	0	0
4/25/2024	8:45 PM	0	0	0	0	0	0	0	0	0	0	0	0	0
4/25/2024	9:00 PM	0	0	0	0	0	0	0	0	0	0	0	0	0
4/25/2024	9:15 PM	0	0	0	0	0	0	0	0	0	0	0	0	0
4/25/2024	9:30 PM	0	0	0	0	0	0	0	0	0	0	0	0	0
4/25/2024	9:45 PM	0	0	0	0	0	0	0	0	0	0	0	0	0
4/25/2024	10:00 PM	0	0	0	0	0	0	0	0	0	0	0	0	0
4/25/2024	10:15 PM	0	0	0	0	0	0	0	0	0	0	0	0	0
4/25/2024	10:30 PM	0	0	0	0	0	0	0	0	0	0	0	0	0
4/25/2024	10:45 PM	0	0	0	0	0	0	0	0	0	0	0	0	0
4/25/2024	11:00 PM	0	0	0	0	0	0	0	0	0	0	0	0	0
4/25/2024	11:15 PM	0	0	0	0	0	0	0	0	0	0	0	0	0
4/25/2024	11:30 PM	0	0	0	0	0	0	0	0	0	0	0	0	0
4/25/2024	11:45 PM	0	0	0	0	0	0	0	0	0	0	0	0	0

SB
File Name:
Start Date: 4/23/2024
Start Time: 0
Site Code: 32
Station ID: 1
Location 1: I-26 James F. Byrnes Expy S/Bound Off-Ramp, north of Piney Grove Rd
Location 2:

Date	Time	1	2	3	4	5	6	7	8	9	10	11	12	13
4/23/2024	12:00 AM	0	0	0	0	0	0	0	0	0	0	0	0	0
4/23/2024	12:15 AM	0	0	0	0	0	0	0	0	0	0	0	0	0
4/23/2024	12:30 AM	0	0	0	0	0	0	0	0	0	0	0	0	0
4/23/2024	12:45 AM	0	0	0	0	0	0	0	0	0	0	0	0	0
4/23/2024	1:00 AM	0	0	0	0	0	0	0	0	0	0	0	0	0
4/23/2024	1:15 AM	0	0	0	0	0	0	0	0	0	0	0	0	0
4/23/2024	1:30 AM	0	0	0	0	0	0	0	0	0	0	0	0	0
4/23/2024	1:45 AM	0	0	0	0	0	0	0	0	0	0	0	0	0
4/23/2024	2:00 AM	0	0	0	0	0	0	0	0	0	0	0	0	0
4/23/2024	2:15 AM	0	0	0	0	0	0	0	0	0	0	0	0	0
4/23/2024	2:30 AM	0	0	0	0	0	0	0	0	0	0	0	0	0
4/23/2024	2:45 AM	0	0	0	0	0	0	0	0	0	0	0	0	0
4/23/2024	3:00 AM	0	0	0	0	0	0	0	0	0	0	0	0	0
4/23/2024	3:15 AM	0	0	0	0	0	0	0	0	0	0	0	0	0
4/23/2024	3:30 AM	0	0	0	0	0	0	0	0	0	0	0	0	0
4/23/2024	3:45 AM	0	0	0	0	0	0	0	0	0	0	0	0	0
4/23/2024	4:00 AM	0	0	0	0	0	0	0	0	0	0	0	0	0
4/23/2024	4:15 AM	0	0	0	0	0	0	0	0	0	0	0	0	0
4/23/2024	4:30 AM	0	0	0	0	0	0	0	0	0	0	0	0	0
4/23/2024	4:45 AM	0	0	0	0	0	0	0	0	0	0	0	0	0
4/23/2024	5:00 AM	0	0	0	0	0	0	0	0	0	0	0	0	0
4/23/2024	5:15 AM	0	0	0	0	0	0	0	0	0	0	0	0	0
4/23/2024	5:30 AM	0	0	0	0	0	0	0	0	0	0	0	0	0
4/23/2024	5:45 AM	0	0	0	0	0	0	0	0	0	0	0	0	0
4/23/2024	6:00 AM	0	0	0	0	0	0	0	0	0	0	0	0	0
4/23/2024	6:15 AM	0	0	0	0	0	0	0	0	0	0	0	0	0
4/23/2024	6:30 AM	0	0	0	0	0	0	0	0	0	0	0	0	0
4/23/2024	6:45 AM	0	0	0	0	0	0	0	0	0	0	0	0	0
4/23/2024	7:00 AM	0	0	0	0	0	0	0	0	0	0	0	0	0
4/23/2024	7:15 AM	0	0	0	0	0	0	0	0	0	0	0	0	0
4/23/2024	7:30 AM	0	0	0	0	0	0	0	0	0	0	0	0	0
4/23/2024	7:45 AM	0	0	0	0	0	0	0	0	0	0	0	0	0
4/23/2024	8:00 AM	0	0	0	0	0	0	0	0	0	0	0	0	0
4/23/2024	8:15 AM	0	0	0	0	0	0	0	0	0	0	0	0	0
4/23/2024	8:30 AM	0	0	0	0	0	0	0	0	0	0	0	0	0
4/23/2024	8:45 AM	0	0	0	0	0	0	0	0	0	0	0	0	0
4/23/2024	9:00 AM	0	0	0	0	0	0	0	0	0	0	0	0	0
4/23/2024	9:15 AM	0	0	0	0	0	0	0	0	0	0	0	0	0
4/23/2024	9:30 AM	0	0	0	0	0	0	0	0	0	0	0	0	0
4/23/2024	9:45 AM	0	0	0	0	0	0	0	0	0	0	0	0	0
4/23/2024	10:00 AM	0	0	0	0	0	0	0	0	0	0	0	0	0
4/23/2024	10:15 AM	0	0	0	0	0	0	0	0	0	0	0	0	0
4/23/2024	10:30 AM	0	0	0	0	0	0	0	0	0	0	0	0	0
4/23/2024	10:45 AM	0	0	0	0	0	0	0	0	0	0	0	0	0
4/23/2024	11:00 AM	0	0	0	0	0	0	0	0	0	0	0	0	0
4/23/2024	11:15 AM	0	0	0	0	0	0	0	0	0	0	0	0	0
4/23/2024	11:30 AM	0	0	0	0	0	0	0	0	0	0	0	0	0
4/23/2024	11:45 AM	0	0	0	0	0	0	0	0	0	0	0	0	0
4/23/2024	12:00 PM	0	0	0	0	0	0	0	0	0	0	0	0	0
4/23/2024	12:15 PM	0	0	0	0	0	0	0	0	0	0	0	0	0
4/23/2024	12:30 PM	0	0	0	0	0	0	0	0	0	0	0	0	0
4/23/2024	12:45 PM	0	0	0	0	0	0	0	0	0	0	0	0	0
4/23/2024	1:00 PM	0	0	0	0	0	0	0	0	0	0	0	0	0
4/23/2024	1:15 PM	0	0	0	0	0	0	0	0	0	0	0	0	0
4/23/2024	1:30 PM	0	0	0	0	0	0	0	0	0	0	0	0	0
4/23/2024	1:45 PM	0	0	0	0	0	0	0	0	0	0	0	0	0
4/23/2024	2:00 PM	0	0	0	0	0	0	0	0	0	0	0	0	0
4/23/2024	2:15 PM	0	0	0	0	0	0	0	0	0	0	0	0	0
4/23/2024	2:30 PM	0	0	0	0	0	0	0	0	0	0	0	0	0
4/23/2024	2:45 PM	0	0	0	0	0	0	0	0	0	0	0	0	0
4/23/2024	3:00 PM	0	0	0	0	0	0	0	0	0	0	0	0	0
4/23/2024	3:15 PM	0	0	0	0	0	0	0	0	0	0	0	0	0
4/23/2024	3:30 PM	0	0	0	0	0	0	0	0	0	0	0	0	0
4/23/2024	3:45 PM	0	0	0	0	0	0	0	0	0	0	0	0	0
4/23/2024	4:00 PM	0	0	0	0	0	0	0	0	0	0	0	0	0
4/23/2024	4:15 PM	0	0	0	0	0	0	0	0	0	0	0	0	0
4/23/2024	4:30 PM	0	0	0	0	0	0	0	0	0	0	0	0	0
4/23/2024	4:45 PM	0	0	0	0	0	0	0	0	0	0	0	0	0
4/23/2024	5:00 PM	0	0	0	0	0	0	0	0	0	0	0	0	0
4/23/2024	5:15 PM	0	0	0	0	0	0	0	0	0	0	0	0	0
4/23/2024	5:30 PM	0	0	0	0	0	0	0	0	0	0	0	0	0
4/23/2024	5:45 PM	0	0	0	0	0	0	0	0	0	0	0	0	0
4/23/2024	6:00 PM	0	0	0	0	0	0	0	0	0	0	0	0	0
4/23/2024	6:15 PM	0	26	5	0	0	0	1	0	0	0	0	0	0
4/23/2024	6:30 PM	0	50	7	0	0	0	1	0	0	0	0	0	0
4/23/2024	6:45 PM	0	73	7	0	1	0	1	0	0	0	0	0	0
4/23/2024	7:00 PM	0	98	11	0	1	0	1	0	0	0	0	0	0
4/23/2024	7:15 PM	0	99	8	0	1	0	0	0	0	0	0	0	0
4/23/2024	7:30 PM	0	94	10	0	1	0	0	0	1	0	0	0	0
4/23/2024	7:45 PM	0	89	13	0	0	0	0	0	1	0	0	0	0
4/23/2024	8:00 PM	0	89	10	0	0	0	0	0	1	0	0	0	0
4/23/2024	8:15 PM	0	76	9	0	0	0	0	0	1	0	0	0	0
4/23/2024	8:30 PM	0	81	8	0	0	0	0	0	0	0	0	0	0
4/23/2024	8:45 PM	0	80	6	0	1	0	0	0	0	0	0	0	0
4/23/2024	9:00 PM	0	69	6	0	1	0	0	0	0	0	0	0	0
4/23/2024	9:15 PM	0	68	6	0	1	0	0	0	0	0	0	0	0
4/23/2024	9:30 PM	0	58	3	0	1	0	0	0	0	0	0	0	0
4/23/2024	9:45 PM	0	59	5	0	0	0	0	0	0	0	0	0	0
4/23/2024	10:00 PM	0	55	5	0	0	0	0	0	0	0	0	0	0
4/23/2024	10:15 PM	0	48	5	0	0	0	0	0	0	0	0	0	0
4/23/2024	10:30 PM	0	45	5	0	0	0	0	0	0	0	0	0	0
4/23/2024	10:45 PM	0	33	3	0	0	0	0	0	0	0	0	0	0
4/23/2024	11:00 PM	0	26	2	0	0	0	0	0	0	0	0	0	0
4/23/2024	11:15 PM	0	20	1	0	0	0	0	0	0	0	0	0	0
4/23/2024	11:30 PM	0	9	1	0	0	0	0	0	0	0	0	0	0
4/23/2024	11:45 PM	0	3	0	0	0	0	0	0	0	0	0	0	0

4/24/2024	12:00 AM	0	13	0	0	0	0	0	0	1	0	0	0	0
4/24/2024	12:15 AM	0	9	0	0	0	0	0	0	0	0	0	0	0
4/24/2024	12:30 AM	0	11	0	0	0	0	0	0	0	0	0	0	0
4/24/2024	12:45 AM	0	12	0	0	0	0	0	0	1	0	0	0	0
4/24/2024	1:00 AM	0	11	0	0	0	0	0	0	1	0	0	0	0
4/24/2024	1:15 AM	0	12	0	0	0	0	0	0	1	0	0	0	0
4/24/2024	1:30 AM	0	9	0	0	0	0	0	0	1	0	0	0	0
4/24/2024	1:45 AM	0	6	0	0	0	0	0	0	0	0	0	0	0
4/24/2024	2:00 AM	0	6	0	0	1	0	0	0	0	0	0	0	0
4/24/2024	2:15 AM	0	6	0	0	1	0	0	0	0	0	0	0	0
4/24/2024	2:30 AM	0	6	1	0	1	0	0	0	0	0	0	0	0
4/24/2024	2:45 AM	0	9	1	0	1	0	0	0	0	0	0	0	0
4/24/2024	3:00 AM	0	11	2	0	0	0	0	0	0	0	0	0	0
4/24/2024	3:15 AM	0	12	2	0	0	0	0	0	0	0	0	0	0
4/24/2024	3:30 AM	0	12	1	0	0	0	0	0	0	0	0	0	0
4/24/2024	3:45 AM	0	13	1	0	0	0	0	0	0	0	0	0	0
4/24/2024	4:00 AM	0	20	0	0	0	0	0	0	0	0	0	0	0
4/24/2024	4:15 AM	0	26	0	0	0	0	0	0	0	0	0	0	0
4/24/2024	4:30 AM	0	30	0	0	0	0	0	0	0	0	0	0	0
4/24/2024	4:45 AM	0	33	0	0	0	0	0	0	0	0	0	0	0
4/24/2024	5:00 AM	0	34	3	0	0	0	0	0	0	0	0	0	0
4/24/2024	5:15 AM	0	32	3	0	0	0	0	0	1	0	0	0	0
4/24/2024	5:30 AM	0	41	8	0	0	0	0	0	1	0	0	0	0
4/24/2024	5:45 AM	0	47	14	0	0	0	0	0	1	0	0	0	0
4/24/2024	6:00 AM	1	57	21	0	0	0	0	0	1	0	0	0	0
4/24/2024	6:15 AM	1	88	37	0	0	0	0	0	0	0	0	0	0
4/24/2024	6:30 AM	1	114	52	0	1	0	0	0	0	0	0	0	0
4/24/2024	6:45 AM	1	132	65	0	2	1	0	0	0	0	0	0	0
4/24/2024	7:00 AM	0	135	76	0	3	1	0	0	1	0	0	0	0
4/24/2024	7:15 AM	0	147	93	0	3	1	0	0	1	0	0	0	0
4/24/2024	7:30 AM	0	130	82	0	2	1	0	0	1	0	0	0	0
4/24/2024	7:45 AM	0	146	80	0	1	0	0	0	1	0	0	0	0
4/24/2024	8:00 AM	0	168	74	0	0	0	0	0	0	0	0	0	0
4/24/2024	8:15 AM	0	152	54	0	0	0	0	0	0	0	0	0	0
4/24/2024	8:30 AM	0	169	64	0	0	0	0	0	1	0	0	0	0
4/24/2024	8:45 AM	1	213	68	0	2	1	0	0	1	0	0	0	0
4/24/2024	9:00 AM	1	222	63	0	2	1	0	0	1	0	0	0	0
4/24/2024	9:15 AM	1	237	69	0	2	1	0	0	1	0	0	0	0
4/24/2024	9:30 AM	1	249	70	0	3	1	0	0	0	0	0	0	0
4/24/2024	9:45 AM	0	216	70	0	4	1	0	0	0	0	0	0	0
4/24/2024	10:00 AM	0	195	71	0	4	2	0	0	0	0	0	0	0
4/24/2024	10:15 AM	0	168	64	1	6	2	0	0	0	0	0	0	0
4/24/2024	10:30 AM	0	149	54	1	5	2	0	0	0	0	0	0	0
4/24/2024	10:45 AM	0	118	48	1	3	1	0	0	0	0	0	0	0
4/24/2024	11:00 AM	0	128	59	1	3	0	0	0	0	0	0	0	0
4/24/2024	11:15 AM	0	139	72	0	2	0	0	0	0	0	0	0	0
4/24/2024	11:30 AM	0	142	81	0	3	0	0	0	0	0	0	0	0
4/24/2024	11:45 AM	0	152	80	0	3	0	0	0	1	0	0	0	0
4/24/2024	12:00 PM	0	157	75	0	3	1	0	0	1	0	0	0	0
4/24/2024	12:15 PM	0	160	63	0	3	2	0	0	1	0	0	0	0
4/24/2024	12:30 PM	0	157	59	0	4	2	0	0	1	0	0	0	0
4/24/2024	12:45 PM	0	163	56	0	4	2	0	0	1	0	0	0	0
4/24/2024	1:00 PM	0	160	60	0	5	1	0	0	2	0	0	0	0
4/24/2024	1:15 PM	0	154	62	0	4	0	0	0	2	0	0	0	0
4/24/2024	1:30 PM	0	160	57	0	2	0	0	0	2	0	0	0	0
4/24/2024	1:45 PM	0	169	61	0	3	0	0	0	2	0	0	0	0
4/24/2024	2:00 PM	0	176	57	0	2	0	0	0	1	0	0	0	0
4/24/2024	2:15 PM	0	183	53	0	3	0	0	0	1	0	0	0	0
4/24/2024	2:30 PM	0	197	58	0	5	1	0	0	1	0	0	0	0
4/24/2024	2:45 PM	0	190	55	0	5	1	0	0	1	0	0	0	0
4/24/2024	3:00 PM	0	170	75	0	7	1	0	0	2	0	0	0	0
4/24/2024	3:15 PM	0	177	75	0	6	1	0	0	2	0	0	0	0
4/24/2024	3:30 PM	0	173	77	0	7	0	0	0	2	0	0	0	0
4/24/2024	3:45 PM	0	169	75	0	5	0	0	1	2	0	0	0	0
4/24/2024	4:00 PM	0	164	47	0	4	0	0	1	2	0	0	0	0
4/24/2024	4:15 PM	0	164	50	0	5	0	0	1	3	0	0	0	0
4/24/2024	4:30 PM	0	157	47	0	2	0	0	1	3	0	0	0	0
4/24/2024	4:45 PM	0	165	55	0	2	0	0	1	3	0	0	0	0
4/24/2024	5:00 PM	0	178	61	0	2	0	0	1	2	0	0	0	0
4/24/2024	5:15 PM	0	177	59	0	1	1	0	1	1	0	0	0	0
4/24/2024	5:30 PM	0	176	56	0	2	1	0	1	1	0	0	0	0
4/24/2024	5:45 PM	0	162	49	0	2	1	0	0	0	0	0	0	0
4/24/2024	6:00 PM	0	155	44	0	2	1	0	0	0	0	0	0	0
4/24/2024	6:15 PM	0	149	44	0	2	0	0	0	0	0	0	0	0
4/24/2024	6:30 PM	0	137	40	0	1	0	0	1	0	0	0	0	0
4/24/2024	6:45 PM	0	126	35	0	3	0	0	1	0	0	0	0	0
4/24/2024	7:00 PM	0	109	29	0	2	0	0	1	0	0	0	0	0
4/24/2024	7:15 PM	0	93	22	0	3	0	0	1	0	0	0	0	0
4/24/2024	7:30 PM	0	89	19	0	3	0	0	0	0	0	0	0	0
4/24/2024	7:45 PM	0	95	19	0	1	0	0	0	0	0	0	0	0
4/24/2024	8:00 PM	0	102	20	0	1	0	0	0	2	0	0	0	0
4/24/2024	8:15 PM	0	99	23	0	0	0	0	0	2	0	0	0	0
4/24/2024	8:30 PM	0	89	24	0	0	0	0	0	2	0	0	0	0
4/24/2024	8:45 PM	0	70	21	0	0	0	0	0	2	0	0	0	0
4/24/2024	9:00 PM	0	58	19	0	0	0	0	0	0	0	0	0	0
4/24/2024	9:15 PM	0	56	15	0	0	0	0	0	0	0	0	0	0
4/24/2024	9:30 PM	0	49	10	0	0	0	0	0	0	0	0	0	0
4/24/2024	9:45 PM	0	48	7	0	0	0	0	0	0	0	0	0	0
4/24/2024	10:00 PM	0	43	4	0	0	0	0	0	0	0	0	0	0
4/24/2024	10:15 PM	0	36	0	0	0	0	0	0	0	0	0	0	0
4/24/2024	10:30 PM	0	31	0	0	0	0	0	0	0	0	0	0	0
4/24/2024	10:45 PM	0	25	0	0	0	0	0	0	0	0	0	0	0
4/24/2024	11:00 PM	0	22	0	0	0	0	0	0	0	0	0	0	0
4/24/2024	11:15 PM	0	13	0	0	0	0	0	0	0	0	0	0	0
4/24/2024	11:30 PM	0	9	0	0	0	0	0	0	0	0	0	0	0
4/24/2024	11:45 PM	0	5	0	0	0	0	0	0	0	0	0	0	0

4/25/2024	12:00 AM	0	21	0	0	0	0	0	0	0	0	0	0	0
4/25/2024	12:15 AM	0	18	0	0	0	0	0	0	0	0	0	0	0
4/25/2024	12:30 AM	0	16	0	0	0	0	0	0	0	0	0	0	0
4/25/2024	12:45 AM	0	18	0	0	0	0	0	0	0	0	0	0	0
4/25/2024	1:00 AM	0	16	1	0	0	0	0	0	1	0	0	0	0
4/25/2024	1:15 AM	0	17	2	0	0	0	0	0	1	0	0	0	0
4/25/2024	1:30 AM	0	16	2	0	1	0	0	0	1	0	0	0	0
4/25/2024	1:45 AM	0	12	2	0	1	0	0	0	2	0	0	0	0
4/25/2024	2:00 AM	0	10	1	0	2	0	0	0	1	0	0	0	0
4/25/2024	2:15 AM	0	10	0	0	2	0	0	0	1	0	0	0	0
4/25/2024	2:30 AM	0	9	0	0	1	0	0	0	1	0	0	0	0
4/25/2024	2:45 AM	0	6	0	0	1	0	0	0	0	0	0	0	0
4/25/2024	3:00 AM	0	8	0	0	0	0	0	0	0	0	0	0	0
4/25/2024	3:15 AM	0	9	0	0	0	0	0	0	0	0	0	0	0
4/25/2024	3:30 AM	0	12	0	0	0	0	0	0	0	0	0	0	0
4/25/2024	3:45 AM	0	16	0	0	0	0	0	0	0	0	0	0	0
4/25/2024	4:00 AM	0	18	2	0	0	0	0	0	0	0	0	0	0
4/25/2024	4:15 AM	0	18	3	0	0	0	0	0	0	0	0	0	0
4/25/2024	4:30 AM	0	19	3	0	0	0	0	0	0	0	0	0	0
4/25/2024	4:45 AM	0	23	4	0	0	0	0	0	0	0	0	0	0
4/25/2024	5:00 AM	0	29	6	0	1	0	0	0	0	0	0	0	0
4/25/2024	5:15 AM	0	34	5	1	1	0	0	0	1	0	0	0	0
4/25/2024	5:30 AM	0	37	6	1	1	0	0	0	1	0	0	0	0
4/25/2024	5:45 AM	0	48	9	1	1	0	0	0	1	0	0	0	0
4/25/2024	6:00 AM	0	67	12	2	0	0	0	0	1	0	0	0	0
4/25/2024	6:15 AM	0	104	23	1	0	0	0	0	0	0	0	0	0
4/25/2024	6:30 AM	0	142	31	1	0	0	0	0	1	0	0	0	0
4/25/2024	6:45 AM	0	155	33	1	0	0	0	0	2	0	0	0	0
4/25/2024	7:00 AM	0	144	31	0	0	1	0	0	2	0	0	0	0
4/25/2024	7:15 AM	0	135	32	0	1	1	0	0	2	0	0	0	0
4/25/2024	7:30 AM	0	125	32	0	2	1	0	0	1	0	0	0	0
4/25/2024	7:45 AM	0	131	35	0	3	1	0	0	2	0	0	0	0
4/25/2024	8:00 AM	0	172	40	0	4	0	0	1	2	0	0	0	0
4/25/2024	8:15 AM	0	171	35	0	3	0	0	1	2	0	0	0	0
4/25/2024	8:30 AM	0	177	39	0	2	0	0	1	7	0	0	0	0
4/25/2024	8:45 AM	0	166	43	0	1	0	0	1	5	0	0	0	0
4/25/2024	9:00 AM	0	144	50	0	0	0	0	0	5	0	0	0	0
4/25/2024	9:15 AM	0	150	56	0	1	0	0	0	5	0	0	0	0
4/25/2024	9:30 AM	0	159	61	0	1	0	0	0	1	0	0	0	0
4/25/2024	9:45 AM	0	169	63	0	3	0	0	0	2	0	0	0	0
4/25/2024	10:00 AM	0	178	62	1	6	0	0	0	2	0	0	0	0
4/25/2024	10:15 AM	0	177	63	1	5	0	0	0	2	0	0	0	0
4/25/2024	10:30 AM	0	170	57	1	5	0	0	0	1	0	0	0	0
4/25/2024	10:45 AM	0	168	56	1	4	0	0	0	1	0	0	0	0
4/25/2024	11:00 AM	0	167	52	0	2	0	0	0	1	0	0	0	0
4/25/2024	11:15 AM	0	175	53	0	5	0	0	0	1	0	0	0	0
4/25/2024	11:30 AM	0	183	58	0	6	0	0	0	2	0	0	0	0
4/25/2024	11:45 AM	0	182	60	0	5	0	0	0	1	0	0	0	0
4/25/2024	12:00 PM	0	175	65	0	4	0	0	0	1	0	0	0	0
4/25/2024	12:15 PM	0	173	72	0	1	1	0	0	2	0	0	0	0
4/25/2024	12:30 PM	0	171	68	0	0	1	0	0	3	0	0	0	0
4/25/2024	12:45 PM	0	183	67	0	0	2	0	0	3	0	0	0	0
4/25/2024	1:00 PM	0	194	74	0	0	2	0	0	4	0	0	0	0
4/25/2024	1:15 PM	0	193	67	0	0	1	0	0	3	0	0	0	0
4/25/2024	1:30 PM	0	182	70	0	0	1	0	0	1	0	0	0	0
4/25/2024	1:45 PM	0	189	66	0	0	0	0	0	1	0	0	0	0
4/25/2024	2:00 PM	0	176	54	0	0	0	0	0	0	0	0	0	0
4/25/2024	2:15 PM	0	173	48	0	0	0	0	0	0	0	0	0	0
4/25/2024	2:30 PM	0	199	40	0	0	0	0	0	0	0	0	0	0
4/25/2024	2:45 PM	0	188	36	0	1	0	0	0	0	0	0	0	0
4/25/2024	3:00 PM	0	191	34	0	1	0	0	0	0	0	0	0	0
4/25/2024	3:15 PM	0	186	35	0	1	0	0	0	0	0	0	0	0
4/25/2024	3:30 PM	1	172	37	0	2	0	0	1	2	0	0	0	0
4/25/2024	3:45 PM	1	169	40	0	1	0	0	1	3	0	0	0	0
4/25/2024	4:00 PM	1	174	44	0	1	0	0	1	3	0	0	0	0
4/25/2024	4:15 PM	1	183	44	0	1	0	0	1	4	0	0	0	0
4/25/2024	4:30 PM	0	201	51	0	2	0	0	0	2	0	0	0	0
4/25/2024	4:45 PM	0	241	52	0	2	0	0	0	1	0	0	0	0
4/25/2024	5:00 PM	0	243	48	0	2	0	0	0	1	0	0	0	0
4/25/2024	5:15 PM	0	254	45	0	2	0	0	0	0	0	0	0	0
4/25/2024	5:30 PM	0	234	38	0	0	0	0	0	0	0	0	0	0
4/25/2024	5:45 PM	0	196	31	0	0	0	0	1	0	0	0	0	0
4/25/2024	6:00 PM	0	202	25	0	0	0	0	1	0	0	0	0	0
4/25/2024	6:15 PM	0	144	18	0	0	0	0	1	0	0	0	0	0
4/25/2024	6:30 PM	0	95	8	0	0	0	0	1	0	0	0	0	0
4/25/2024	6:45 PM	0	54	4	0	0	0	0	0	0	0	0	0	0
4/25/2024	7:00 PM	0	0	0	0	0	0	0	0	0	0	0	0	0
4/25/2024	7:15 PM	0	0	0	0	0	0	0	0	0	0	0	0	0
4/25/2024	7:30 PM	0	0	0	0	0	0	0	0	0	0	0	0	0
4/25/2024	7:45 PM	0	0	0	0	0	0	0	0	0	0	0	0	0
4/25/2024	8:00 PM	0	0	0	0	0	0	0	0	0	0	0	0	0
4/25/2024	8:15 PM	0	0	0	0	0	0	0	0	0	0	0	0	0
4/25/2024	8:30 PM	0	0	0	0	0	0	0	0	0	0	0	0	0
4/25/2024	8:45 PM	0	0	0	0	0	0	0	0	0	0	0	0	0
4/25/2024	9:00 PM	0	0	0	0	0	0	0	0	0	0	0	0	0
4/25/2024	9:15 PM	0	0	0	0	0	0	0	0	0	0	0	0	0
4/25/2024	9:30 PM	0	0	0	0	0	0	0	0	0	0	0	0	0
4/25/2024	9:45 PM	0	0	0	0	0	0	0	0	0	0	0	0	0
4/25/2024	10:00 PM	0	0	0	0	0	0	0	0	0	0	0	0	0
4/25/2024	10:15 PM	0	0	0	0	0	0	0	0	0	0	0	0	0
4/25/2024	10:30 PM	0	0	0	0	0	0	0	0	0	0	0	0	0
4/25/2024	10:45 PM	0	0	0	0	0	0	0	0	0	0	0	0	0
4/25/2024	11:00 PM	0	0	0	0	0	0	0	0	0	0	0	0	0
4/25/2024	11:15 PM	0	0	0	0	0	0	0	0	0	0	0	0	0
4/25/2024	11:30 PM	0	0	0	0	0	0	0	0	0	0	0	0	0
4/25/2024	11:45 PM	0	0	0	0	0	0	0	0	0	0	0	0	0

Bi-Directional Class Count || NB EB 15min

Columbia, SC

Marr Traffic DATA COLLECTION
www.marrtraffic.com

Site 33
I-26 James F. Byrnes Expy N/Bound On-Ramp,
north of Piney Grove Rd

Date
Tuesday, April 23, 2024

Lat/Long
34.068290°, -81.142560°

Weather
Fair
58°F

Click here for Detailed Weather

Click here for Map

0000 - 2400 (Weekday 24h Session) (04-23-2024)
NB EB 15min

	Northbound (Movement 33.1)													15min	60min
Time	1	2	3	4	5	6	7	8	9	10	11	12	13	Total	Total
0000 - 0015	0	0	0	0	0	0	0	0	0	0	0	0	0	**0**	
0015 - 0030	0	0	0	0	0	0	0	0	0	0	0	0	0	**0**	
0030 - 0045	0	0	0	0	0	0	0	0	0	0	0	0	0	**0**	
0045 - 0100	0	0	0	0	0	0	0	0	0	0	0	0	0	**0**	**0**
0100 - 0115	0	0	0	0	0	0	0	0	0	0	0	0	0	**0**	
0115 - 0130	0	0	0	0	0	0	0	0	0	0	0	0	0	**0**	
0130 - 0145	0	0	0	0	0	0	0	0	0	0	0	0	0	**0**	
0145 - 0200	0	0	0	0	0	0	0	0	0	0	0	0	0	**0**	**0**
0200 - 0215	0	0	0	0	0	0	0	0	0	0	0	0	0	**0**	
0215 - 0230	0	0	0	0	0	0	0	0	0	0	0	0	0	**0**	
0230 - 0245	0	0	0	0	0	0	0	0	0	0	0	0	0	**0**	
0245 - 0300	0	0	0	0	0	0	0	0	0	0	0	0	0	**0**	**0**
0300 - 0315	0	0	0	0	0	0	0	0	0	0	0	0	0	**0**	
0315 - 0330	0	0	0	0	0	0	0	0	0	0	0	0	0	**0**	
0330 - 0345	0	0	0	0	0	0	0	0	0	0	0	0	0	**0**	
0345 - 0400	0	0	0	0	0	0	0	0	0	0	0	0	0	**0**	**0**
0400 - 0415	0	0	0	0	0	0	0	0	0	0	0	0	0	**0**	
0415 - 0430	0	0	0	0	0	0	0	0	0	0	0	0	0	**0**	
0430 - 0445	0	0	0	0	0	0	0	0	0	0	0	0	0	**0**	
0445 - 0500	0	0	0	0	0	0	0	0	0	0	0	0	0	**0**	**0**
0500 - 0515	0	0	0	0	0	0	0	0	0	0	0	0	0	**0**	
0515 - 0530	0	0	0	0	0	0	0	0	0	0	0	0	0	**0**	
0530 - 0545	0	0	0	0	0	0	0	0	0	0	0	0	0	**0**	
0545 - 0600	0	0	0	0	0	0	0	0	0	0	0	0	0	**0**	**0**
0600 - 0615	0	0	0	0	0	0	0	0	0	0	0	0	0	**0**	
0615 - 0630	0	0	0	0	0	0	0	0	0	0	0	0	0	**0**	
0630 - 0645	0	0	0	0	0	0	0	0	0	0	0	0	0	**0**	
0645 - 0700	0	0	0	0	0	0	0	0	0	0	0	0	0	**0**	**0**
0700 - 0715	0	0	0	0	0	0	0	0	0	0	0	0	0	**0**	
0715 - 0730	0	0	0	0	0	0	0	0	0	0	0	0	0	**0**	
0730 - 0745	0	0	0	0	0	0	0	0	0	0	0	0	0	**0**	
0745 - 0800	0	0	0	0	0	0	0	0	0	0	0	0	0	**0**	**0**
0800 - 0815	0	0	0	0	0	0	0	0	0	0	0	0	0	**0**	
0815 - 0830	0	0	0	0	0	0	0	0	0	0	0	0	0	**0**	
0830 - 0845	0	0	0	0	0	0	0	0	0	0	0	0	0	**0**	
0845 - 0900	0	0	0	0	0	0	0	0	0	0	0	0	0	**0**	**0**
0900 - 0915	0	0	0	0	0	0	0	0	0	0	0	0	0	**0**	
0915 - 0930	0	0	0	0	0	0	0	0	0	0	0	0	0	**0**	
0930 - 0945	0	0	0	0	0	0	0	0	0	0	0	0	0	**0**	
0945 - 1000	0	0	0	0	0	0	0	0	0	0	0	0	0	**0**	**0**
1000 - 1015	0	0	0	0	0	0	0	0	0	0	0	0	0	**0**	
1015 - 1030	0	0	0	0	0	0	0	0	0	0	0	0	0	**0**	
1030 - 1045	0	0	0	0	0	0	0	0	0	0	0	0	0	**0**	
1045 - 1100	0	0	0	0	0	0	0	0	0	0	0	0	0	**0**	**0**
1100 - 1115	0	0	0	0	0	0	0	0	0	0	0	0	0	**0**	
1115 - 1130	0	0	0	0	0	0	0	0	0	0	0	0	0	**0**	
1130 - 1145	0	0	0	0	0	0	0	0	0	0	0	0	0	**0**	
1145 - 1200	0	0	0	0	0	0	0	0	0	0	0	0	0	**0**	**0**
1200 - 1215	0	0	0	0	0	0	0	0	0	0	0	0	0	**0**	
1215 - 1230	0	0	0	0	0	0	0	0	0	0	0	0	0	**0**	
1230 - 1245	0	0	0	0	0	0	0	0	0	0	0	0	0	**0**	
1245 - 1300	0	0	0	0	0	0	0	0	0	0	0	0	0	**0**	**0**
1300 - 1315	0	0	0	0	0	0	0	0	0	0	0	0	0	**0**	
1315 - 1330	0	0	0	0	0	0	0	0	0	0	0	0	0	**0**	
1330 - 1345	0	0	0	0	0	0	0	0	0	0	0	0	0	**0**	
1345 - 1400	0	0	0	0	0	0	0	0	0	0	0	0	0	**0**	**0**
1400 - 1415	0	0	0	0	0	0	0	0	0	0	0	0	0	**0**	
1415 - 1430	0	0	0	0	0	0	0	0	0	0	0	0	0	**0**	
1430 - 1445	0	0	0	0	0	0	0	0	0	0	0	0	0	**0**	
1445 - 1500	0	0	0	0	0	0	0	0	0	0	0	0	0	**0**	**0**
1500 - 1515	0	0	0	0	0	0	0	0	0	0	0	0	0	**0**	
1515 - 1530	0	0	0	0	0	0	0	0	0	0	0	0	0	**0**	
1530 - 1545	0	0	0	0	0	0	0	0	0	0	0	0	0	**0**	
1545 - 1600	0	0	0	0	0	0	0	0	0	0	0	0	0	**0**	**0**
1600 - 1615	0	0	0	0	0	0	0	0	0	0	0	0	0	**0**	
1615 - 1630	0	0	0	0	0	0	0	0	0	0	0	0	0	**0**	
1630 - 1645	0	0	0	0	0	0	0	0	0	0	0	0	0	**0**	
1645 - 1700	0	0	0	0	0	0	0	0	0	0	0	0	0	**0**	**0**
1700 - 1715	0	0	0	0	0	0	0	0	0	0	0	0	0	**0**	
1715 - 1730	0	0	0	0	0	0	0	0	0	0	0	0	0	**0**	
1730 - 1745	0	0	0	0	0	0	0	0	0	0	0	0	0	**0**	
1745 - 1800	0	0	0	0	0	0	0	0	0	0	0	0	0	**0**	**0**
1800 - 1815	0	0	0	0	0	0	0	0	0	0	0	0	0	**0**	
1815 - 1830	0	0	0	0	0	0	0	0	0	0	0	0	0	**0**	
1830 - 1845	0	0	0	0	0	0	0	0	0	0	0	0	0	**0**	
1845 - 1900	0	0	0	0	0	0	0	0	0	0	0	0	0	**0**	**0**
1900 - 1915	0	38	8	0	0	0	0	0	0	0	0	0	0	**46**	
1915 - 1930	1	43	8	0	0	0	0	0	0	0	0	0	0	**52**	
1930 - 1945	0	24	7	0	0	0	0	0	0	0	0	0	0	**31**	
1945 - 2000	0	41	8	0	0	0	0	0	0	0	0	0	0	**49**	**178**
2000 - 2015	1	36	4	0	0	0	0	0	1	0	0	0	0	**42**	
2015 - 2030	0	38	7	0	1	0	0	0	0	0	0	0	0	**46**	
2030 - 2045	0	21	2	0	0	0	0	0	1	0	0	0	0	**24**	
2045 - 2100	0	25	5	0	1	0	0	0	0	0	0	0	0	**31**	**143**
2100 - 2115	0	17	3	0	0	0	0	0	0	0	0	0	0	**20**	
2115 - 2130	0	18	2	0	0	0	0	0	0	0	0	0	0	**20**	
2130 - 2145	0	14	2	0	0	0	0	0	1	0	0	0	0	**17**	
2145 - 2200	0	10	2	0	0	0	0	0	1	0	0	0	0	**13**	**70**
2200 - 2215	0	12	1	0	0	0	0	0	0	0	0	0	0	**13**	
2215 - 2230	0	11	2	0	0	0	0	0	0	0	0	0	0	**13**	
2230 - 2245	0	5	0	0	0	0	0	0	0	0	0	0	0	**5**	
2245 - 2300	0	12	1	0	0	0	0	0	0	0	0	0	0	**13**	**44**
2300 - 2315	0	4	0	0	0	0	0	0	1	0	0	0	0	**5**	
2315 - 2330	0	9	2	0	0	0	0	0	0	0	0	0	0	**11**	
2330 - 2345	0	6	1	0	0	0	0	0	0	0	0	0	0	**7**	
2345 - 0000	0	7	0	0	0	0	0	0	0	0	0	0	0	**7**	**30**

Session Total	2	391	65	0	2	0	0	0	5	0	0	0	0	**465**
Session Average	0.02	4.07	0.68	0.00	0.02	0.00	0.00	0.00	0.05	0.00	0.00	0.00	0.00	**4.84**
Session Percentage	0.43	84.09	13.98	0.00	0.43	0.00	0.00	0.00	1.08	0.00	0.00	0.00	0.00	

AM Peak Hour	-	-	-	-	-	-	-	-	-	-	-	-	-	-
AM Peak Volume	0	0	0	0	0	0	0	0	0	0	0	0	0	**0**

Noon Peak Hour	-	-	-	-	-	-	-	-	-	-	-	-	-	-
Noon Peak Volume	0	0	0	0	0	0	0	0	0	0	0	0	0	**0**

PM Peak Hour	1915 - 2015	1900 - 2000	1900 - 2000	-	1930 - 2030	-	-	-	1945 - 2045	-	-	-	-	**1900 - 2000**
PM Peak Volume	2	146	31	0	1	0	0	0	2	0	0	0	0	**178**

Site 33
I-26 James F. Byrnes Expy N/Bound On-Ramp,
north of Piney Grove Rd

Date
Wednesday, April 24, 2024

Lat/Long
34.068290°, -81.142560°

Weather
Fair
66°F

Click here for Detailed Weather

0000 - 2400 (Weekday 24h Session) (04-24-2024)
NB EB 15min

	Northbound (Movement 33.1)													15min	60min
Time	1	2	3	4	5	6	7	8	9	10	11	12	13	Total	Total
0000 - 0015	0	11	2	0	0	0	0	0	0	0	0	0	0	**13**	
0015 - 0030	0	8	3	0	0	0	0	0	0	0	1	0	0	**12**	
0030 - 0045	0	6	3	0	0	0	0	0	0	0	0	0	0	**9**	
0045 - 0100	0	0	0	0	0	0	0	0	0	0	0	0	0	**0**	**34**
0100 - 0115	0	2	0	0	0	0	0	0	0	0	0	0	0	**2**	
0115 - 0130	0	3	0	0	0	0	0	0	0	0	0	0	0	**3**	
0130 - 0145	0	2	0	0	0	0	0	0	0	0	0	0	0	**2**	
0145 - 0200	0	2	0	0	0	0	0	0	0	0	0	0	0	**2**	**9**
0200 - 0215	0	1	0	0	0	0	0	0	0	0	0	0	0	**1**	
0215 - 0230	0	3	0	0	0	0	0	0	0	0	0	0	0	**3**	
0230 - 0245	0	4	0	0	0	0	0	0	0	0	0	0	0	**4**	
0245 - 0300	0	5	0	0	0	0	0	0	0	0	0	0	0	**5**	**13**
0300 - 0315	0	1	0	0	0	0	0	0	0	0	0	0	0	**1**	
0315 - 0330	0	2	0	0	0	0	0	0	1	0	0	0	0	**3**	
0330 - 0345	0	6	0	0	0	0	0	0	1	0	0	0	0	**7**	
0345 - 0400	0	4	1	0	0	0	0	0	1	0	0	0	0	**6**	**17**
0400 - 0415	0	0	0	0	0	0	0	0	0	0	0	0	0	**0**	
0415 - 0430	0	1	0	0	0	0	0	0	0	0	0	0	0	**1**	
0430 - 0445	0	4	1	0	0	0	0	0	1	0	0	0	0	**6**	
0445 - 0500	0	5	0	0	0	0	0	0	1	0	0	0	0	**6**	**13**
0500 - 0515	0	8	1	0	0	0	0	0	0	0	0	0	0	**9**	
0515 - 0530	0	9	1	0	0	0	0	0	0	0	0	0	0	**10**	
0530 - 0545	0	8	2	0	0	0	0	0	0	0	0	0	0	**10**	
0545 - 0600	0	12	0	0	0	0	0	0	0	0	0	0	0	**12**	**41**
0600 - 0615	0	14	4	0	0	0	0	0	0	0	0	0	0	**18**	
0615 - 0630	0	14	2	0	1	0	0	0	1	0	0	0	0	**18**	
0630 - 0645	0	24	6	0	0	0	0	0	0	0	0	0	0	**30**	
0645 - 0700	0	25	6	0	2	1	0	0	0	0	0	0	0	**34**	**100**
0700 - 0715	0	31	5	0	1	0	0	0	0	0	0	0	0	**37**	
0715 - 0730	0	34	9	0	3	0	0	0	1	0	0	0	0	**47**	
0730 - 0745	0	44	15	0	2	0	0	0	0	0	0	0	0	**61**	
0745 - 0800	0	46	18	0	1	0	0	0	0	0	0	0	0	**65**	**210**
0800 - 0815	0	36	12	0	2	0	0	0	1	0	0	0	0	**51**	
0815 - 0830	0	29	8	0	0	0	0	0	0	0	0	0	0	**37**	
0830 - 0845	0	26	5	0	2	0	0	0	0	0	0	0	0	**33**	
0845 - 0900	0	41	11	0	0	0	0	0	0	0	0	0	0	**52**	**173**
0900 - 0915	0	39	11	1	0	0	0	0	0	0	0	0	0	**51**	
0915 - 0930	0	32	14	1	2	0	0	0	0	0	0	0	0	**49**	
0930 - 0945	0	31	14	0	2	0	0	0	0	0	0	0	0	**47**	
0945 - 1000	0	29	7	0	0	1	0	0	0	0	0	0	0	**37**	**184**
1000 - 1015	0	34	6	0	0	0	0	0	2	0	0	0	0	**42**	
1015 - 1030	1	46	14	1	1	0	0	0	1	0	0	0	0	**64**	
1030 - 1045	0	51	17	1	3	0	0	0	0	0	0	0	0	**72**	
1045 - 1100	0	37	10	0	1	0	0	0	1	0	0	0	0	**49**	**227**
1100 - 1115	0	48	11	0	1	0	0	1	0	0	0	0	0	**61**	
1115 - 1130	0	45	9	0	0	0	0	0	0	0	0	0	0	**54**	
1130 - 1145	0	54	11	0	2	0	0	0	1	0	0	0	0	**68**	
1145 - 1200	0	35	18	0	0	0	0	0	0	0	0	0	0	**53**	**236**
1200 - 1215	0	59	15	0	1	0	0	0	0	0	0	0	0	**75**	
1215 - 1230	0	59	18	0	0	0	0	1	0	0	0	0	0	**78**	
1230 - 1245	0	48	23	2	2	1	0	0	0	0	0	0	0	**76**	
1245 - 1300	0	51	14	0	0	0	0	0	0	0	0	0	0	**65**	**294**
1300 - 1315	1	57	12	0	0	0	0	0	0	0	0	0	0	**70**	
1315 - 1330	0	65	15	0	3	0	0	0	0	0	0	0	0	**83**	
1330 - 1345	0	62	11	0	1	0	0	0	0	0	0	0	0	**74**	
1345 - 1400	0	49	11	0	1	0	0	0	0	0	0	0	0	**61**	**288**
1400 - 1415	0	63	14	0	0	0	0	0	0	0	0	0	0	**77**	
1415 - 1430	0	54	9	0	1	0	0	0	1	0	0	0	0	**65**	
1430 - 1445	0	54	12	0	0	0	0	0	0	0	0	0	0	**66**	
1445 - 1500	0	55	17	0	4	1	0	0	0	0	0	0	0	**77**	**285**
1500 - 1515	0	55	12	0	1	0	0	0	0	0	0	0	0	**68**	
1515 - 1530	0	56	14	0	0	0	0	1	0	0	0	0	0	**71**	
1530 - 1545	0	59	8	0	0	2	0	1	0	0	0	0	0	**70**	
1545 - 1600	0	45	18	0	2	0	0	0	0	0	0	0	0	**65**	**274**
1600 - 1615	0	230	13	0	1	0	0	0	0	0	0	0	0	**244**	
1615 - 1630	0	68	18	0	1	0	0	0	2	0	0	0	0	**89**	
1630 - 1645	0	66	16	0	0	0	0	0	1	0	0	0	0	**83**	
1645 - 1700	1	73	14	0	2	0	0	0	1	0	0	0	0	**91**	**507**
1700 - 1715	0	77	15	0	1	0	0	0	0	0	0	0	0	**93**	
1715 - 1730	1	73	12	0	1	0	0	0	0	0	0	0	0	**87**	
1730 - 1745	0	73	20	0	2	0	0	0	1	0	0	0	0	**96**	
1745 - 1800	0	61	15	0	0	0	0	0	0	0	0	0	0	**76**	**352**
1800 - 1815	0	78	11	0	0	0	0	0	0	0	0	0	0	**89**	
1815 - 1830	1	46	5	0	0	0	0	0	0	0	0	0	0	**52**	
1830 - 1845	0	48	5	0	0	0	0	0	1	0	0	0	0	**54**	
1845 - 1900	0	55	4	0	1	0	0	0	0	0	0	0	0	**60**	**255**
1900 - 1915	0	33	8	0	1	0	0	0	0	0	0	0	0	**42**	
1915 - 1930	0	51	11	0	1	0	0	0	0	0	0	0	0	**63**	
1930 - 1945	0	33	6	0	0	0	0	0	0	0	0	0	0	**39**	
1945 - 2000	0	37	7	0	1	0	0	0	0	0	0	0	0	**45**	**189**
2000 - 2015	0	40	3	0	0	0	0	0	0	0	0	0	0	**43**	
2015 - 2030	0	28	7	0	0	0	0	0	0	0	0	0	0	**35**	
2030 - 2045	0	27	5	0	0	0	0	0	1	0	0	0	0	**33**	
2045 - 2100	1	27	9	0	0	0	0	0	0	0	0	0	0	**37**	**148**
2100 - 2115	0	23	6	0	0	0	0	0	0	0	0	0	0	**29**	
2115 - 2130	0	12	4	0	0	0	0	0	0	0	0	0	0	**16**	
2130 - 2145	0	10	2	0	0	0	0	0	0	0	0	0	0	**12**	
2145 - 2200	1	13	6	0	0	0	0	0	1	0	0	0	0	**21**	**78**
2200 - 2215	0	12	3	0	0	0	0	0	0	0	0	0	0	**15**	
2215 - 2230	0	11	5	0	0	0	0	0	0	0	0	0	0	**16**	
2230 - 2245	0	5	1	0	0	0	0	0	0	0	0	0	0	**6**	
2245 - 2300	0	5	2	0	0	0	0	0	0	0	0	0	0	**7**	**44**
2300 - 2315	0	6	2	0	0	0	0	0	0	0	0	0	0	**8**	
2315 - 2330	0	4	2	0	0	0	0	0	0	0	0	0	0	**6**	
2330 - 2345	0	3	1	0	0	0	0	0	0	0	0	0	0	**4**	
2345 - 0000	0	7	3	0	0	0	0	0	1	0	0	0	0	**11**	**29**

Session Total	7	3178	721	6	54	6	0	4	23	0	1	0	0	4000
Session Average	0.07	33.10	7.51	0.06	0.56	0.06	0.00	0.04	0.24	0.00	0.01	0.00	0.00	**41.67**
Session Percentage	0.18	79.45	18.03	0.15	1.35	0.15	0.00	0.10	0.58	0.00	0.03	0.00	0.00	

AM Peak Hour	0930 - 1030	0715 - 0815	0715 - 0815	0830 - 0930	0645 - 0745	0600 - 0700	-	-	0930 - 1030	-	-	-	-	**0715 - 0815**
AM Peak Volume	1	160	54	2	8	1	0	0	3	0	0	0	0	**224**

Noon Peak Hour	1000 - 1100	1315 - 1415	1145 - 1245	1000 - 1100	1015 - 1115	1445 - 1545	-	1445 - 1545	1000 - 1100	-	-	-	-	**1315 - 1415**
Noon Peak Volume	1	239	74	2	6	3	0	2	4	0	0	0	0	**295**

PM Peak Hour	1630 - 1730	1600 - 1700	1545 - 1645	-	1645 - 1745	1500 - 1600	-	1500 - 1600	1600 - 1700	-	-	-	-	**1600 - 1700**
PM Peak Volume	2	437	65	0	6	2	0	2	4	0	0	0	0	**507**

Site 33
I-26 James F. Byrnes Expy N/Bound On-Ramp,
north of Piney Grove Rd

Date
Thursday, April 25, 2024

Lat/Long
34.068290°, -81.142560°

Weather
Fair
67°F

Click here for Detailed Weather

0000 - 2400 (Weekday 24h Session) (04-25-2024)
NB EB 15min

	Northbound (Movement 33.1)													15min	60min
TIME	1	2	3	4	5	6	7	8	9	10	11	12	13	Total	Total
0000 - 0015	0	11	2	0	0	0	0	0	0	0	0	0	0	**13**	
0015 - 0030	0	2	1	0	1	0	0	0	0	0	0	0	0	**4**	
0030 - 0045	0	6	2	0	0	0	0	0	0	0	0	0	0	**8**	
0045 - 0100	0	6	4	0	0	0	0	0	0	0	0	0	0	**10**	**35**
0100 - 0115	0	5	1	0	0	0	0	0	0	0	0	0	0	**6**	
0115 - 0130	0	3	0	0	0	0	0	0	0	0	0	0	0	**3**	
0130 - 0145	0	2	0	0	0	0	0	0	0	0	0	0	0	**2**	
0145 - 0200	0	4	0	0	0	0	0	0	0	0	0	0	0	**4**	**15**
0200 - 0215	0	2	0	0	0	0	0	0	1	0	0	0	0	**3**	
0215 - 0230	0	1	1	0	0	0	0	0	0	0	0	0	0	**2**	
0230 - 0245	0	3	0	0	0	0	0	0	0	0	0	0	0	**3**	
0245 - 0300	0	4	2	0	0	0	0	0	1	0	0	0	0	**7**	**15**
0300 - 0315	0	0	0	0	0	0	0	0	0	0	0	0	0	**0**	
0315 - 0330	0	1	0	0	0	0	0	0	1	0	0	0	0	**2**	
0330 - 0345	0	1	0	0	0	0	0	0	0	0	0	0	0	**1**	
0345 - 0400	0	1	1	0	0	0	0	0	0	0	0	0	0	**2**	**5**
0400 - 0415	0	1	0	0	1	0	0	0	1	0	0	0	0	**3**	
0415 - 0430	0	1	0	0	0	0	0	0	1	0	0	0	0	**2**	
0430 - 0445	0	6	1	0	0	0	0	0	0	0	0	0	0	**7**	
0445 - 0500	0	1	0	0	0	0	0	0	1	0	0	0	0	**2**	**14**
0500 - 0515	0	11	3	0	0	0	0	0	0	0	0	0	0	**14**	
0515 - 0530	0	13	5	0	0	0	0	0	0	0	0	0	0	**18**	
0530 - 0545	0	9	6	0	0	0	0	0	0	0	0	0	0	**15**	
0545 - 0600	0	14	3	0	2	0	0	0	0	0	0	0	0	**19**	**66**
0600 - 0615	0	16	5	0	0	0	0	0	0	0	0	0	0	**21**	
0615 - 0630	0	16	4	0	1	0	0	0	0	0	0	0	0	**21**	
0630 - 0645	0	27	4	0	2	1	0	0	0	0	0	0	0	**34**	
0645 - 0700	1	24	4	0	1	0	0	0	0	0	0	0	0	**30**	**106**
0700 - 0715	0	34	10	0	0	0	0	0	0	0	0	0	0	**44**	
0715 - 0730	0	47	12	0	1	1	1	0	2	0	0	0	0	**64**	
0730 - 0745	0	52	15	0	3	0	0	0	1	0	0	0	0	**71**	
0745 - 0800	0	48	12	0	2	0	0	2	0	0	0	0	0	**64**	**243**
0800 - 0815	0	38	11	0	2	0	0	0	0	0	0	0	0	**51**	
0815 - 0830	0	41	5	0	2	0	0	0	0	0	0	0	0	**48**	
0830 - 0845	0	31	8	0	0	1	0	0	0	0	0	0	0	**40**	
0845 - 0900	0	39	6	0	1	0	0	0	0	0	0	0	0	**46**	**185**
0900 - 0915	0	32	11	0	2	0	0	0	0	0	0	0	0	**45**	
0915 - 0930	0	31	7	0	2	0	0	0	2	0	0	0	0	**42**	
0930 - 0945	0	30	15	0	0	0	0	1	1	0	0	0	0	**47**	
0945 - 1000	0	33	12	0	2	1	0	0	1	0	0	0	0	**49**	**183**
1000 - 1015	0	34	16	0	0	0	0	0	0	0	0	0	0	**50**	
1015 - 1030	0	36	9	0	3	0	1	0	0	0	0	0	0	**49**	
1030 - 1045	0	42	9	0	1	0	0	0	0	0	0	0	0	**52**	
1045 - 1100	0	42	21	0	0	0	0	0	0	0	0	0	0	**63**	**214**
1100 - 1115	0	64	11	0	1	0	0	0	0	0	0	0	0	**76**	
1115 - 1130	0	55	12	0	1	0	0	0	0	0	0	0	0	**68**	
1130 - 1145	0	53	17	0	1	0	0	0	1	0	0	0	0	**72**	
1145 - 1200	0	64	10	0	3	0	0	0	0	0	0	0	0	**77**	**293**
1200 - 1215	0	61	17	0	0	0	0	0	1	0	0	0	0	**79**	
1215 - 1230	1	68	15	0	0	0	0	0	1	0	0	0	0	**85**	
1230 - 1245	0	51	11	0	1	0	0	1	0	0	0	0	0	**64**	
1245 - 1300	0	54	12	1	1	1	0	1	0	0	0	0	0	**70**	**298**
1300 - 1315	0	63	16	0	0	0	0	0	0	0	0	0	0	**79**	
1315 - 1330	1	62	10	0	1	0	0	0	0	0	0	0	0	**74**	
1330 - 1345	0	64	15	0	2	1	0	0	0	0	0	0	0	**82**	
1345 - 1400	0	63	15	0	1	1	0	0	0	0	0	0	0	**80**	**315**
1400 - 1415	0	58	24	0	2	0	0	0	0	0	0	0	0	**84**	
1415 - 1430	0	63	18	0	1	0	0	0	0	0	0	0	0	**82**	
1430 - 1445	1	62	15	0	0	0	0	0	0	0	0	0	0	**78**	
1445 - 1500	0	67	11	0	1	0	0	0	0	0	0	0	0	**79**	**323**
1500 - 1515	0	68	14	0	0	0	0	0	0	0	0	0	0	**82**	
1515 - 1530	1	52	8	0	0	0	0	0	0	0	0	0	0	**61**	
1530 - 1545	0	51	17	0	0	0	0	0	0	0	0	0	0	**68**	
1545 - 1600	0	57	21	0	0	0	0	0	0	0	0	0	0	**78**	**289**
1600 - 1615	0	79	21	0	1	0	0	0	0	0	0	0	0	**101**	
1615 - 1630	0	64	18	0	1	0	0	0	1	0	0	0	0	**84**	
1630 - 1645	0	67	19	0	0	2	0	0	2	0	0	0	0	**90**	
1645 - 1700	1	76	20	0	1	0	0	0	0	0	0	0	0	**98**	**373**
1700 - 1715	0	86	18	0	0	0	0	0	0	0	0	0	0	**104**	
1715 - 1730	0	69	12	0	2	0	0	0	0	0	0	0	0	**83**	
1730 - 1745	0	72	10	0	0	0	0	0	0	0	0	0	0	**82**	
1745 - 1800	0	76	8	0	1	0	0	0	0	0	0	0	0	**85**	**354**
1800 - 1815	0	79	14	0	0	0	0	0	0	0	0	0	0	**93**	
1815 - 1830	0	59	14	0	0	0	0	0	0	0	0	0	0	**73**	
1830 - 1845	2	48	8	0	0	0	0	0	0	0	0	0	0	**58**	
1845 - 1900	0	60	6	0	0	0	0	0	0	0	0	0	0	**66**	**290**
1900 - 1915	0	0	0	0	0	0	0	0	0	0	0	0	0	**0**	
1915 - 1930	0	0	0	0	0	0	0	0	0	0	0	0	0	**0**	
1930 - 1945	0	0	0	0	0	0	0	0	0	0	0	0	0	**0**	
1945 - 2000	0	0	0	0	0	0	0	0	0	0	0	0	0	**0**	**0**
2000 - 2015	0	0	0	0	0	0	0	0	0	0	0	0	0	**0**	
2015 - 2030	0	0	0	0	0	0	0	0	0	0	0	0	0	**0**	
2030 - 2045	0	0	0	0	0	0	0	0	0	0	0	0	0	**0**	
2045 - 2100	0	0	0	0	0	0	0	0	0	0	0	0	0	**0**	**0**
2100 - 2115	0	0	0	0	0	0	0	0	0	0	0	0	0	**0**	
2115 - 2130	0	0	0	0	0	0	0	0	0	0	0	0	0	**0**	
2130 - 2145	0	0	0	0	0	0	0	0	0	0	0	0	0	**0**	
2145 - 2200	0	0	0	0	0	0	0	0	0	0	0	0	0	**0**	**0**
2200 - 2215	0	0	0	0	0	0	0	0	0	0	0	0	0	**0**	
2215 - 2230	0	0	0	0	0	0	0	0	0	0	0	0	0	**0**	
2230 - 2245	0	0	0	0	0	0	0	0	0	0	0	0	0	**0**	
2245 - 2300	0	0	0	0	0	0	0	0	0	0	0	0	0	**0**	**0**
2300 - 2315	0	0	0	0	0	0	0	0	0	0	0	0	0	**0**	
2315 - 2330	0	0	0	0	0	0	0	0	0	0	0	0	0	**0**	
2330 - 2345	0	0	0	0	0	0	0	0	0	0	0	0	0	**0**	
2345 - 0000	0	0	0	0	0	0	0	0	0	0	0	0	0	**0**	**0**

Session Total	8	2836	685	1	51	9	2	5	19	0	0	0	0	3616
Session Average	0.08	29.54	7.14	0.01	0.53	0.09	0.02	0.05	0.20	0.00	0.00	0.00	0.00	**37.67**
Session Percentage	0.22	78.43	18.94	0.03	1.41	0.25	0.06	0.14	0.53	0.00	0.00	0.00	0.00	

AM Peak Hour	0600 - 0700	0715 - 0815	0930 - 1030	-	0730 - 0830	0630 - 0730	0630 - 0730	0700 - 0800	0900 - 1000	-	-	-	-	**0715 - 0815**
AM Peak Hour Volume	1	185	52	0	9	2	1	2	4	0	0	0	0	**250**

Noon Peak Hour	1430 - 1530	1415 - 1515	1330 - 1430	1200 - 1300	1100 - 1200	1245 - 1345	1000 - 1100	1200 - 1300	1130 - 1230	-	-	-	-	**1330 - 1430**
Noon Peak Hour Volume	2	260	72	1	6	2	1	2	3	0	0	0	0	**328**

PM Peak Hour	1745 - 1845	1645 - 1745	1545 - 1645	-	1600 - 1700	1545 - 1645	-	-	1545 - 1645	-	-	-	-	**1615 - 1715**
PM Peak Hour Volume	2	303	79	0	3	2	0	0	3	0	0	0	0	**376**

Bi-Directional Class Count || NB EB Average 15min

Columbia, SC

Marr Traffic DATA COLLECTION
www.marrtraffic.com

Site 33
I-26 James F. Byrnes Expy N/Bound On-Ramp,
north of Piney Grove Rd

Date
Tuesday, April 23, 2024

Lat/Long
34.068290°, -81.142560°

Weather
Fair
58°F

0000 - 2400 (Weekday 24h Session) (All Dates)
NB EB Average 15min

	NB EB Average 15min													15min	60min
Time	1	2	3	4	5	6	7	8	9	10	11	12	13	Total	Total
0000 - 0015	0	7	1	0	0	0	0	0	0	0	0	0	0	**9**	
0015 - 0030	0	3	1	0	0	0	0	0	0	0	0	0	0	**5**	
0030 - 0045	0	4	2	0	0	0	0	0	0	0	0	0	0	**6**	
0045 - 0100	0	2	1	0	0	0	0	0	0	0	0	0	0	**3**	**23**
0100 - 0115	0	2	0	0	0	0	0	0	0	0	0	0	0	**3**	
0115 - 0130	0	2	0	0	0	0	0	0	0	0	0	0	0	**2**	
0130 - 0145	0	1	0	0	0	0	0	0	0	0	0	0	0	**1**	
0145 - 0200	0	2	0	0	0	0	0	0	0	0	0	0	0	**2**	**8**
0200 - 0215	0	1	0	0	0	0	0	0	0	0	0	0	0	**1**	
0215 - 0230	0	1	0	0	0	0	0	0	0	0	0	0	0	**2**	
0230 - 0245	0	2	0	0	0	0	0	0	0	0	0	0	0	**2**	
0245 - 0300	0	3	1	0	0	0	0	0	0	0	0	0	0	**4**	**9**
0300 - 0315	0	0	0	0	0	0	0	0	0	0	0	0	0	**0**	
0315 - 0330	0	1	0	0	0	0	0	0	1	0	0	0	0	**2**	
0330 - 0345	0	2	0	0	0	0	0	0	0	0	0	0	0	**3**	
0345 - 0400	0	2	1	0	0	0	0	0	0	0	0	0	0	**3**	**7**
0400 - 0415	0	0	0	0	0	0	0	0	0	0	0	0	0	**1**	
0415 - 0430	0	1	0	0	0	0	0	0	0	0	0	0	0	**1**	
0430 - 0445	0	3	1	0	0	0	0	0	0	0	0	0	0	**4**	
0445 - 0500	0	2	0	0	0	0	0	0	1	0	0	0	0	**3**	**9**
0500 - 0515	0	6	1	0	0	0	0	0	0	0	0	0	0	**8**	
0515 - 0530	0	7	2	0	0	0	0	0	0	0	0	0	0	**9**	
0530 - 0545	0	6	3	0	0	0	0	0	0	0	0	0	0	**8**	
0545 - 0600	0	9	1	0	1	0	0	0	0	0	0	0	0	**10**	**36**
0600 - 0615	0	10	3	0	0	0	0	0	0	0	0	0	0	**13**	
0615 - 0630	0	10	2	0	1	0	0	0	0	0	0	0	0	**13**	
0630 - 0645	0	17	3	0	1	0	0	0	0	0	0	0	0	**21**	
0645 - 0700	0	16	3	0	1	0	0	0	0	0	0	0	0	**21**	**69**
0700 - 0715	0	22	5	0	0	0	0	0	0	0	0	0	0	**27**	
0715 - 0730	0	27	7	0	1	0	0	0	1	0	0	0	0	**37**	
0730 - 0745	0	32	10	0	2	0	0	0	0	0	0	0	0	**44**	
0745 - 0800	0	31	10	0	1	0	0	1	0	0	0	0	0	**43**	**151**
0800 - 0815	0	25	8	0	1	0	0	0	0	0	0	0	0	**34**	
0815 - 0830	0	23	4	0	1	0	0	0	0	0	0	0	0	**28**	
0830 - 0845	0	19	4	0	1	0	0	0	0	0	0	0	0	**24**	
0845 - 0900	0	27	6	0	0	0	0	0	0	0	0	0	0	**33**	**119**
0900 - 0915	0	24	7	0	1	0	0	0	0	0	0	0	0	**32**	
0915 - 0930	0	21	7	0	1	0	0	0	1	0	0	0	0	**30**	
0930 - 0945	0	20	10	0	1	0	0	0	0	0	0	0	0	**31**	
0945 - 1000	0	21	6	0	1	1	0	0	0	0	0	0	0	**29**	**122**
1000 - 1015	0	23	7	0	0	0	0	0	1	0	0	0	0	**31**	
1015 - 1030	0	27	8	0	1	0	0	0	0	0	0	0	0	**38**	
1030 - 1045	0	31	9	0	1	0	0	0	0	0	0	0	0	**41**	
1045 - 1100	0	26	10	0	0	0	0	0	0	0	0	0	0	**37**	**147**
1100 - 1115	0	37	7	0	1	0	0	0	0	0	0	0	0	**46**	
1115 - 1130	0	33	7	0	0	0	0	0	0	0	0	0	0	**41**	
1130 - 1145	0	36	9	0	1	0	0	0	1	0	0	0	0	**47**	
1145 - 1200	0	33	9	0	1	0	0	0	0	0	0	0	0	**43**	**176**
1200 - 1215	0	40	11	0	0	0	0	0	0	0	0	0	0	**51**	
1215 - 1230	0	42	11	0	0	0	0	0	0	0	0	0	0	**54**	
1230 - 1245	0	33	11	1	1	0	0	0	0	0	0	0	0	**47**	
1245 - 1300	0	35	9	0	0	0	0	0	0	0	0	0	0	**45**	**197**
1300 - 1315	0	40	9	0	0	0	0	0	0	0	0	0	0	**50**	
1315 - 1330	0	42	8	0	1	0	0	0	0	0	0	0	0	**52**	
1330 - 1345	0	42	9	0	1	0	0	0	0	0	0	0	0	**52**	
1345 - 1400	0	37	9	0	1	0	0	0	0	0	0	0	0	**47**	**201**
1400 - 1415	0	40	13	0	1	0	0	0	0	0	0	0	0	**54**	
1415 - 1430	0	39	9	0	1	0	0	0	0	0	0	0	0	**49**	
1430 - 1445	0	39	9	0	0	0	0	0	0	0	0	0	0	**48**	
1445 - 1500	0	41	9	0	2	0	0	0	0	0	0	0	0	**52**	**203**
1500 - 1515	0	41	9	0	0	0	0	0	0	0	0	0	0	**50**	
1515 - 1530	0	36	7	0	0	0	0	0	0	0	0	0	0	**44**	
1530 - 1545	0	37	8	0	0	1	0	0	0	0	0	0	0	**46**	
1545 - 1600	0	34	13	0	1	0	0	0	0	0	0	0	0	**48**	**188**
1600 - 1615	0	103	11	0	1	0	0	0	0	0	0	0	0	**115**	
1615 - 1630	0	44	12	0	1	0	0	0	1	0	0	0	0	**58**	
1630 - 1645	0	44	12	0	0	1	0	0	1	0	0	0	0	**58**	
1645 - 1700	1	50	11	0	1	0	0	0	0	0	0	0	0	**63**	**293**
1700 - 1715	0	54	11	0	0	0	0	0	0	0	0	0	0	**66**	
1715 - 1730	0	47	8	0	1	0	0	0	0	0	0	0	0	**57**	
1730 - 1745	0	48	10	0	1	0	0	0	0	0	0	0	0	**59**	
1745 - 1800	0	46	8	0	0	0	0	0	0	0	0	0	0	**54**	**235**
1800 - 1815	0	52	8	0	0	0	0	0	0	0	0	0	0	**61**	
1815 - 1830	0	35	6	0	0	0	0	0	0	0	0	0	0	**42**	
1830 - 1845	1	32	4	0	0	0	0	0	0	0	0	0	0	**37**	
1845 - 1900	0	38	3	0	0	0	0	0	0	0	0	0	0	**42**	**182**
1900 - 1915	0	24	5	0	0	0	0	0	0	0	0	0	0	**29**	
1915 - 1930	0	31	6	0	0	0	0	0	0	0	0	0	0	**38**	
1930 - 1945	0	19	4	0	0	0	0	0	0	0	0	0	0	**23**	
1945 - 2000	0	26	5	0	0	0	0	0	0	0	0	0	0	**31**	**122**
2000 - 2015	0	25	2	0	0	0	0	0	0	0	0	0	0	**28**	
2015 - 2030	0	22	5	0	0	0	0	0	0	0	0	0	0	**27**	
2030 - 2045	0	16	2	0	0	0	0	0	1	0	0	0	0	**19**	
2045 - 2100	0	17	5	0	0	0	0	0	0	0	0	0	0	**23**	**97**
2100 - 2115	0	13	3	0	0	0	0	0	0	0	0	0	0	**16**	
2115 - 2130	0	10	2	0	0	0	0	0	0	0	0	0	0	**12**	
2130 - 2145	0	8	1	0	0	0	0	0	0	0	0	0	0	**10**	
2145 - 2200	0	8	3	0	0	0	0	0	1	0	0	0	0	**11**	**49**
2200 - 2215	0	8	1	0	0	0	0	0	0	0	0	0	0	**9**	
2215 - 2230	0	7	2	0	0	0	0	0	0	0	0	0	0	**10**	
2230 - 2245	0	3	0	0	0	0	0	0	0	0	0	0	0	**4**	
2245 - 2300	0	6	1	0	0	0	0	0	0	0	0	0	0	**7**	**29**
2300 - 2315	0	3	1	0	0	0	0	0	0	0	0	0	0	**4**	
2315 - 2330	0	4	1	0	0	0	0	0	0	0	0	0	0	**6**	
2330 - 2345	0	3	1	0	0	0	0	0	0	0	0	0	0	**4**	
2345 - 0000	0	5	1	0	0	0	0	0	0	0	0	0	0	**6**	**20**

Session Total	6	2135	490	2	36	5	1	3	16	0	0	0	0	**2694**
Session Average	0.06	22.24	5.11	0.02	0.37	0.05	0.01	0.03	0.16	0.00	0.00	0.00	0.00	**28.06**
Session Percentage	0.21	79.26	18.20	0.09	1.32	0.19	0.02	0.11	0.58	0.00	0.01	0.00	0.00	

AM Peak Hour	0600 - 0700	0715 - 0815	0715 - 0815	0830 - 0930	0715 - 0815	0630 - 0730	0630 - 0730	0700 - 0800	0915 - 1015	-	-	-	-	**0715 - 0815**
AM Peak Volume	0	115	35	1	5	1	0	1	2	0	0	0	0	**158**

Noon Peak Hour	1215 - 1315	1315 - 1415	1145 - 1245	1200 - 1300	1015 - 1115	1445 - 1545	1000 - 1100	1200 - 1300	1000 - 1100	-	-	-	-	**1315 - 1415**
Noon Peak Volume	1	162	42	1	4	1	0	1	1	0	0	0	0	**205**

PM Peak Hour	1630 - 1730	1600 - 1700	1545 - 1645	-	1645 - 1745	1500 - 1600	-	1500 - 1600	1600 - 1700	-	-	-	-	**1600 - 1700**
PM Peak Volume	1	241	48	0	3	1	0	1	2	0	0	0	0	**293**

Bi-Directional Class Count || Volume Summary 15min

Columbia, SC

Marr Traffic DATA COLLECTION
www.marrtraffic.com

Site 33
I-26 James F. Byrnes Expy N/Bound On-Ramp,
north of Piney Grove Rd

Date
Tuesday, April 23, 2024

Lat/Long
34.068290°, -81.142560°

Weather
Fair
58°F

Click here for Detailed Weather

0000 - 2400 (Weekday 24h Session) (04-23-2024)

Volume Summary 15min

TIME	Volume Summary 15min NB	Volume Summary 15min SB	15min Total	60min Total
0000 - 0015	0	0	**0**	
0015 - 0030	0	0	**0**	
0030 - 0045	0	0	**0**	
0045 - 0100	0	0	**0**	**0**
0100 - 0115	0	0	**0**	
0115 - 0130	0	0	**0**	
0130 - 0145	0	0	**0**	
0145 - 0200	0	0	**0**	**0**
0200 - 0215	0	0	**0**	
0215 - 0230	0	0	**0**	
0230 - 0245	0	0	**0**	
0245 - 0300	0	0	**0**	**0**
0300 - 0315	0	0	**0**	
0315 - 0330	0	0	**0**	
0330 - 0345	0	0	**0**	
0345 - 0400	0	0	**0**	**0**
0400 - 0415	0	0	**0**	
0415 - 0430	0	0	**0**	
0430 - 0445	0	0	**0**	
0445 - 0500	0	0	**0**	**0**
0500 - 0515	0	0	**0**	
0515 - 0530	0	0	**0**	
0530 - 0545	0	0	**0**	
0545 - 0600	0	0	**0**	**0**
0600 - 0615	0	0	**0**	
0615 - 0630	0	0	**0**	
0630 - 0645	0	0	**0**	
0645 - 0700	0	0	**0**	**0**
0700 - 0715	0	0	**0**	
0715 - 0730	0	0	**0**	
0730 - 0745	0	0	**0**	
0745 - 0800	0	0	**0**	**0**
0800 - 0815	0	0	**0**	
0815 - 0830	0	0	**0**	
0830 - 0845	0	0	**0**	
0845 - 0900	0	0	**0**	**0**
0900 - 0915	0	0	**0**	
0915 - 0930	0	0	**0**	
0930 - 0945	0	0	**0**	
0945 - 1000	0	0	**0**	**0**
1000 - 1015	0	0	**0**	
1015 - 1030	0	0	**0**	
1030 - 1045	0	0	**0**	
1045 - 1100	0	0	**0**	**0**
1100 - 1115	0	0	**0**	
1115 - 1130	0	0	**0**	
1130 - 1145	0	0	**0**	
1145 - 1200	0	0	**0**	**0**

Time	Volume Summary 15min NB	Volume Summary 15min SB	15min Total	60min Total
1200 - 1215	0	0	**0**	
1215 - 1230	0	0	**0**	
1230 - 1245	0	0	**0**	
1245 - 1300	0	0	**0**	**0**
1300 - 1315	0	0	**0**	
1315 - 1330	0	0	**0**	
1330 - 1345	0	0	**0**	
1345 - 1400	0	0	**0**	**0**
1400 - 1415	0	0	**0**	
1415 - 1430	0	0	**0**	
1430 - 1445	0	0	**0**	
1445 - 1500	0	0	**0**	**0**
1500 - 1515	0	0	**0**	
1515 - 1530	0	0	**0**	
1530 - 1545	0	0	**0**	
1545 - 1600	0	0	**0**	**0**
1600 - 1615	0	0	**0**	
1615 - 1630	0	0	**0**	
1630 - 1645	0	0	**0**	
1645 - 1700	0	0	**0**	**0**
1700 - 1715	0	0	**0**	
1715 - 1730	0	0	**0**	
1730 - 1745	0	0	**0**	
1745 - 1800	0	0	**0**	**0**
1800 - 1815	0	0	**0**	
1815 - 1830	0	0	**0**	
1830 - 1845	0	0	**0**	
1845 - 1900	0	0	**0**	**0**
1900 - 1915	46	0	**46**	
1915 - 1930	52	0	**52**	
1930 - 1945	31	0	**31**	
1945 - 2000	49	0	**49**	**178**
2000 - 2015	42	0	**42**	
2015 - 2030	46	0	**46**	
2030 - 2045	24	0	**24**	
2045 - 2100	31	0	**31**	**143**
2100 - 2115	20	0	**20**	
2115 - 2130	20	0	**20**	
2130 - 2145	17	0	**17**	
2145 - 2200	13	0	**13**	**70**
2200 - 2215	13	0	**13**	
2215 - 2230	13	0	**13**	
2230 - 2245	5	0	**5**	
2245 - 2300	13	0	**13**	**44**
2300 - 2315	5	0	**5**	
2315 - 2330	11	0	**11**	
2330 - 2345	7	0	**7**	
2345 - 0000	7	0	**7**	**30**

Session Total	465	0	**465**
Session Average	4.84	0.00	**4.84**
Session Percentage	100.00	0.00	

Site 33

I-26 James F. Byrnes Expy N/Bound On-Ramp,
north of Piney Grove Rd

Date

Wednesday, April 24, 2024

Lat/Long

34.068290°, -81.142560°

Weather

Fair
66°F

Click here for Detailed Weather

0000 - 2400 (Weekday 24h Session) (04-24-2024)

Volume Summary 15min

TIME	Volume Summary 15min NB	SB	15min Total	60min Total
0000 - 0015	13	0	**13**	
0015 - 0030	12	0	**12**	
0030 - 0045	9	0	**9**	
0045 - 0100	0	0	**0**	**34**
0100 - 0115	2	0	**2**	
0115 - 0130	3	0	**3**	
0130 - 0145	2	0	**2**	
0145 - 0200	2	0	**2**	**9**
0200 - 0215	1	0	**1**	
0215 - 0230	3	0	**3**	
0230 - 0245	4	0	**4**	
0245 - 0300	5	0	**5**	**13**
0300 - 0315	1	0	**1**	
0315 - 0330	3	0	**3**	
0330 - 0345	7	0	**7**	
0345 - 0400	6	0	**6**	**17**
0400 - 0415	0	0	**0**	
0415 - 0430	1	0	**1**	
0430 - 0445	6	0	**6**	
0445 - 0500	6	0	**6**	**13**
0500 - 0515	9	0	**9**	
0515 - 0530	10	0	**10**	
0530 - 0545	10	0	**10**	
0545 - 0600	12	0	**12**	**41**
0600 - 0615	18	0	**18**	
0615 - 0630	18	0	**18**	
0630 - 0645	30	0	**30**	
0645 - 0700	34	0	**34**	**100**
0700 - 0715	37	0	**37**	
0715 - 0730	47	0	**47**	
0730 - 0745	61	0	**61**	
0745 - 0800	65	0	**65**	**210**
0800 - 0815	51	0	**51**	
0815 - 0830	37	0	**37**	
0830 - 0845	33	0	**33**	
0845 - 0900	52	0	**52**	**173**
0900 - 0915	51	0	**51**	
0915 - 0930	49	0	**49**	
0930 - 0945	47	0	**47**	
0945 - 1000	37	0	**37**	**184**
1000 - 1015	42	0	**42**	
1015 - 1030	64	0	**64**	
1030 - 1045	72	0	**72**	
1045 - 1100	49	0	**49**	**227**
1100 - 1115	61	0	**61**	
1115 - 1130	54	0	**54**	
1130 - 1145	68	0	**68**	
1145 - 1200	53	0	**53**	**236**

Time	Volume Summary 15min NB	SB	15min Total	60min Total
1200 - 1215	75	0	**75**	
1215 - 1230	78	0	**78**	
1230 - 1245	76	0	**76**	
1245 - 1300	65	0	**65**	**294**
1300 - 1315	70	0	**70**	
1315 - 1330	83	0	**83**	
1330 - 1345	74	0	**74**	
1345 - 1400	61	0	**61**	**288**
1400 - 1415	77	0	**77**	
1415 - 1430	65	0	**65**	
1430 - 1445	66	0	**66**	
1445 - 1500	77	0	**77**	**285**
1500 - 1515	68	0	**68**	
1515 - 1530	71	0	**71**	
1530 - 1545	70	0	**70**	
1545 - 1600	65	0	**65**	**274**
1600 - 1615	244	0	**244**	
1615 - 1630	89	0	**89**	
1630 - 1645	83	0	**83**	
1645 - 1700	91	0	**91**	**507**
1700 - 1715	93	0	**93**	
1715 - 1730	87	0	**87**	
1730 - 1745	96	0	**96**	
1745 - 1800	76	0	**76**	**352**
1800 - 1815	89	0	**89**	
1815 - 1830	52	0	**52**	
1830 - 1845	54	0	**54**	
1845 - 1900	60	0	**60**	**255**
1900 - 1915	42	0	**42**	
1915 - 1930	63	0	**63**	
1930 - 1945	39	0	**39**	
1945 - 2000	45	0	**45**	**189**
2000 - 2015	43	0	**43**	
2015 - 2030	35	0	**35**	
2030 - 2045	33	0	**33**	
2045 - 2100	37	0	**37**	**148**
2100 - 2115	29	0	**29**	
2115 - 2130	16	0	**16**	
2130 - 2145	12	0	**12**	
2145 - 2200	21	0	**21**	**78**
2200 - 2215	15	0	**15**	
2215 - 2230	16	0	**16**	
2230 - 2245	6	0	**6**	
2245 - 2300	7	0	**7**	**44**
2300 - 2315	8	0	**8**	
2315 - 2330	6	0	**6**	
2330 - 2345	4	0	**4**	
2345 - 0000	11	0	**11**	**29**

Session Total	4000	0	**4000**
Session Average	41.67	0.00	**41.67**
Session Percentage	100.00	0.00	

Site 33

I-26 James F. Byrnes Expy N/Bound On-Ramp,
north of Piney Grove Rd

Date

Thursday, April 25, 2024

Lat/Long

34.068290°, -81.142560°

Weather

Fair
67°F

Click here for Detailed Weather

0000 - 2400 (Weekday 24h Session) (04-25-2024)

Volume Summary 15min

TIME	Volume Summary 15min NB	SB	15min Total	60min Total
0000 - 0015	13	0	**13**	
0015 - 0030	4	0	**4**	
0030 - 0045	8	0	**8**	
0045 - 0100	10	0	**10**	**35**
0100 - 0115	6	0	**6**	
0115 - 0130	3	0	**3**	
0130 - 0145	2	0	**2**	
0145 - 0200	4	0	**4**	**15**
0200 - 0215	3	0	**3**	
0215 - 0230	2	0	**2**	
0230 - 0245	3	0	**3**	
0245 - 0300	7	0	**7**	**15**
0300 - 0315	0	0	**0**	
0315 - 0330	2	0	**2**	
0330 - 0345	1	0	**1**	
0345 - 0400	2	0	**2**	**5**
0400 - 0415	3	0	**3**	
0415 - 0430	2	0	**2**	
0430 - 0445	7	0	**7**	
0445 - 0500	2	0	**2**	**14**
0500 - 0515	14	0	**14**	
0515 - 0530	18	0	**18**	
0530 - 0545	15	0	**15**	
0545 - 0600	19	0	**19**	**66**
0600 - 0615	21	0	**21**	
0615 - 0630	21	0	**21**	
0630 - 0645	34	0	**34**	
0645 - 0700	30	0	**30**	**106**
0700 - 0715	44	0	**44**	
0715 - 0730	64	0	**64**	
0730 - 0745	71	0	**71**	
0745 - 0800	64	0	**64**	**243**
0800 - 0815	51	0	**51**	
0815 - 0830	48	0	**48**	
0830 - 0845	40	0	**40**	
0845 - 0900	46	0	**46**	**185**
0900 - 0915	45	0	**45**	
0915 - 0930	42	0	**42**	
0930 - 0945	47	0	**47**	
0945 - 1000	49	0	**49**	**183**
1000 - 1015	50	0	**50**	
1015 - 1030	49	0	**49**	
1030 - 1045	52	0	**52**	
1045 - 1100	63	0	**63**	**214**
1100 - 1115	76	0	**76**	
1115 - 1130	68	0	**68**	
1130 - 1145	72	0	**72**	
1145 - 1200	77	0	**77**	**293**

Time	Volume Summary 15min NB	SB	15min Total	60min Total
1200 - 1215	79	0	**79**	
1215 - 1230	85	0	**85**	
1230 - 1245	64	0	**64**	
1245 - 1300	70	0	**70**	**298**
1300 - 1315	79	0	**79**	
1315 - 1330	74	0	**74**	
1330 - 1345	82	0	**82**	
1345 - 1400	80	0	**80**	**315**
1400 - 1415	84	0	**84**	
1415 - 1430	82	0	**82**	
1430 - 1445	78	0	**78**	
1445 - 1500	79	0	**79**	**323**
1500 - 1515	82	0	**82**	
1515 - 1530	61	0	**61**	
1530 - 1545	68	0	**68**	
1545 - 1600	78	0	**78**	**289**
1600 - 1615	101	0	**101**	
1615 - 1630	84	0	**84**	
1630 - 1645	90	0	**90**	
1645 - 1700	98	0	**98**	**373**
1700 - 1715	104	0	**104**	
1715 - 1730	83	0	**83**	
1730 - 1745	82	0	**82**	
1745 - 1800	85	0	**85**	**354**
1800 - 1815	93	0	**93**	
1815 - 1830	73	0	**73**	
1830 - 1845	58	0	**58**	
1845 - 1900	66	0	**66**	**290**
1900 - 1915	0	0	**0**	
1915 - 1930	0	0	**0**	
1930 - 1945	0	0	**0**	
1945 - 2000	0	0	**0**	**0**
2000 - 2015	0	0	**0**	
2015 - 2030	0	0	**0**	
2030 - 2045	0	0	**0**	
2045 - 2100	0	0	**0**	**0**
2100 - 2115	0	0	**0**	
2115 - 2130	0	0	**0**	
2130 - 2145	0	0	**0**	
2145 - 2200	0	0	**0**	**0**
2200 - 2215	0	0	**0**	
2215 - 2230	0	0	**0**	
2230 - 2245	0	0	**0**	
2245 - 2300	0	0	**0**	**0**
2300 - 2315	0	0	**0**	
2315 - 2330	0	0	**0**	
2330 - 2345	0	0	**0**	
2345 - 0000	0	0	**0**	**0**

Session Total	3616	0	**3616**
Session Average	37.67	0.00	**37.67**
Session Percentage	100.00	0.00	

Bi-Directional Class Count || NB EB 60min

Columbia, SC

Marr Traffic DATA COLLECTION

www.marrtraffic.com

Site 33
I-26 James F. Byrnes Expy N/Bound On-Ramp,
north of Piney Grove Rd

Date
Tuesday, April 23, 2024

Lat/Long
34.068290°, -81.142560°

Weather
Fair
58°F

Click here for Detailed Weather

0000 - 2400 (Weekday 24h Session) (04-23-2024)
NB EB 60min

	Northbound (Movement 33.1)													
TIME	1	2	3	4	5	6	7	8	9	10	11	12	13	**Total**
0000 - 0100	0	0	0	0	0	0	0	0	0	0	0	0	0	**0**
0100 - 0200	0	0	0	0	0	0	0	0	0	0	0	0	0	**0**
0200 - 0300	0	0	0	0	0	0	0	0	0	0	0	0	0	**0**
0300 - 0400	0	0	0	0	0	0	0	0	0	0	0	0	0	**0**
0400 - 0500	0	0	0	0	0	0	0	0	0	0	0	0	0	**0**
0500 - 0600	0	0	0	0	0	0	0	0	0	0	0	0	0	**0**
0600 - 0700	0	0	0	0	0	0	0	0	0	0	0	0	0	**0**
0700 - 0800	0	0	0	0	0	0	0	0	0	0	0	0	0	**0**
0800 - 0900	0	0	0	0	0	0	0	0	0	0	0	0	0	**0**
0900 - 1000	0	0	0	0	0	0	0	0	0	0	0	0	0	**0**
1000 - 1100	0	0	0	0	0	0	0	0	0	0	0	0	0	**0**
1100 - 1200	0	0	0	0	0	0	0	0	0	0	0	0	0	**0**
1200 - 1300	0	0	0	0	0	0	0	0	0	0	0	0	0	**0**
1300 - 1400	0	0	0	0	0	0	0	0	0	0	0	0	0	**0**
1400 - 1500	0	0	0	0	0	0	0	0	0	0	0	0	0	**0**
1500 - 1600	0	0	0	0	0	0	0	0	0	0	0	0	0	**0**
1600 - 1700	0	0	0	0	0	0	0	0	0	0	0	0	0	**0**
1700 - 1800	0	0	0	0	0	0	0	0	0	0	0	0	0	**0**
1800 - 1900	0	0	0	0	0	0	0	0	0	0	0	0	0	**0**
1900 - 2000	1	146	31	0	0	0	0	0	0	0	0	0	0	**178**
2000 - 2100	1	120	18	0	2	0	0	0	2	0	0	0	0	**143**
2100 - 2200	0	59	9	0	0	0	0	0	2	0	0	0	0	**70**
2200 - 2300	0	40	4	0	0	0	0	0	0	0	0	0	0	**44**
2300 - 2400	0	26	3	0	0	0	0	0	1	0	0	0	0	**30**
Session Total	2	391	65	0	2	0	0	0	5	0	0	0	0	**465**
Session Average	0.08	16.29	2.71	0.00	0.08	0.00	0.00	0.00	0.21	0.00	0.00	0.00	0.00	**19.38**
Session Percentage	0.43	84.09	13.98	0.00	0.43	0.00	0.00	0.00	1.08	0.00	0.00	0.00	0.00	
AM Peak Hour	-	-	-	-	-	-	-	-	-	-	-	-	-	**-**
AM Peak Volume	0	0	0	0	0	0	0	0	0	0	0	0	0	**0**
Noon Peak Hour	-	-	-	-	-	-	-	-	-	-	-	-	-	**-**
Noon Peak Volume	0	0	0	0	0	0	0	0	0	0	0	0	0	**0**
PM Peak Hour	1900 - 2000	1900 - 2000	1900 - 2000	-	-	-	-	-	-	-	-	-	-	**1900 - 2000**
PM Peak Volume	1	146	31	0	0	0	0	0	0	0	0	0	0	**178**

Site 33

I-26 James F. Byrnes Expy N/Bound On-Ramp,
north of Piney Grove Rd

Date

Wednesday, April 24, 2024

Lat/Long

34.068290°, -81.142560°

Weather

Fair
66°F

Click here for Detailed Weather

0000 - 2400 (Weekday 24h Session) (04-24-2024)

NB EB 60min

	Northbound (Movement 33.1)													
TIME	1	2	3	4	5	6	7	8	9	10	11	12	13	**Total**
0000 - 0100	0	25	8	0	0	0	0	0	0	0	1	0	0	**34**
0100 - 0200	0	9	0	0	0	0	0	0	0	0	0	0	0	**9**
0200 - 0300	0	13	0	0	0	0	0	0	0	0	0	0	0	**13**
0300 - 0400	0	13	1	0	0	0	0	0	3	0	0	0	0	**17**
0400 - 0500	0	10	1	0	0	0	0	0	2	0	0	0	0	**13**
0500 - 0600	0	37	4	0	0	0	0	0	0	0	0	0	0	**41**
0600 - 0700	0	77	18	0	3	1	0	0	1	0	0	0	0	**100**
0700 - 0800	0	155	47	0	7	0	0	0	1	0	0	0	0	**210**
0800 - 0900	0	132	36	0	4	0	0	0	1	0	0	0	0	**173**
0900 - 1000	0	131	46	2	4	1	0	0	0	0	0	0	0	**184**
1000 - 1100	1	168	47	2	5	0	0	0	4	0	0	0	0	**227**
1100 - 1200	0	182	49	0	3	0	0	1	1	0	0	0	0	**236**
1200 - 1300	0	217	70	2	3	1	0	1	0	0	0	0	0	**294**
1300 - 1400	1	233	49	0	5	0	0	0	0	0	0	0	0	**288**
1400 - 1500	0	226	52	0	5	1	0	0	1	0	0	0	0	**285**
1500 - 1600	0	215	52	0	3	2	0	2	0	0	0	0	0	**274**
1600 - 1700	1	437	61	0	4	0	0	0	4	0	0	0	0	**507**
1700 - 1800	1	284	62	0	4	0	0	0	1	0	0	0	0	**352**
1800 - 1900	1	227	25	0	1	0	0	0	1	0	0	0	0	**255**
1900 - 2000	0	154	32	0	3	0	0	0	0	0	0	0	0	**189**
2000 - 2100	1	122	24	0	0	0	0	0	1	0	0	0	0	**148**
2100 - 2200	1	58	18	0	0	0	0	0	1	0	0	0	0	**78**
2200 - 2300	0	33	11	0	0	0	0	0	0	0	0	0	0	**44**
2300 - 2400	0	20	8	0	0	0	0	0	1	0	0	0	0	**29**

Session Total	7	3178	721	6	54	6	0	4	23	0	1	0	0	**4000**
Session Average	0.29	132.42	30.04	0.25	2.25	0.25	0.00	0.17	0.96	0.00	0.04	0.00	0.00	**166.67**
Session Percentage	0.18	79.45	18.03	0.15	1.35	0.15	0.00	0.10	0.58	0.00	0.03	0.00	0.00	

AM Peak Hour	-	0700 - 0800	0700 - 0800	0900 - 1000	0700 - 0800	0600 - 0700	-	-	0600 - 0700	-	-	-	-	**0700 - 0800**
AM Peak Volume	0	155	47	2	7	1	0	0	1	0	0	0	0	**210**

Noon Peak Hour	1000 - 1100	1300 - 1400	1200 - 1300	1000 - 1100	1000 - 1100	1200 - 1300	-	1100 - 1200	1000 - 1100	-	-	-	-	**1200 - 1300**
Noon Peak Volume	1	233	70	2	5	1	0	1	4	0	0	0	0	**294**

PM Peak Hour	1600 - 1700	1600 - 1700	1700 - 1800	-	1600 - 1700	1500 - 1600	-	1500 - 1600	1600 - 1700	-	-	-	-	**1600 - 1700**
PM Peak Volume	1	437	62	0	4	2	0	2	4	0	0	0	0	**507**

Site 33

I-26 James F. Byrnes Expy N/Bound On-Ramp,
north of Piney Grove Rd

Date

Thursday, April 25, 2024

Lat/Long

34.068290°, -81.142560°

Weather

Fair
67°F

Click here for Detailed Weather

0000 - 2400 (Weekday 24h Session) (04-25-2024)

NB EB 60min

	Northbound (Movement 33.1)													
TIME	1	2	3	4	5	6	7	8	9	10	11	12	13	**Total**
0000 - 0100	0	25	9	0	1	0	0	0	0	0	0	0	0	**35**
0100 - 0200	0	14	1	0	0	0	0	0	0	0	0	0	0	**15**
0200 - 0300	0	10	3	0	0	0	0	0	2	0	0	0	0	**15**
0300 - 0400	0	3	1	0	0	0	0	0	1	0	0	0	0	**5**
0400 - 0500	0	9	1	0	1	0	0	0	3	0	0	0	0	**14**
0500 - 0600	0	47	17	0	2	0	0	0	0	0	0	0	0	**66**
0600 - 0700	1	83	17	0	4	1	0	0	0	0	0	0	0	**106**
0700 - 0800	0	181	49	0	6	1	1	2	3	0	0	0	0	**243**
0800 - 0900	0	149	30	0	5	1	0	0	0	0	0	0	0	**185**
0900 - 1000	0	126	45	0	6	1	0	1	4	0	0	0	0	**183**
1000 - 1100	0	154	55	0	4	0	1	0	0	0	0	0	0	**214**
1100 - 1200	0	236	50	0	6	0	0	0	1	0	0	0	0	**293**
1200 - 1300	1	234	55	1	2	1	0	2	2	0	0	0	0	**298**
1300 - 1400	1	252	56	0	4	2	0	0	0	0	0	0	0	**315**
1400 - 1500	1	250	68	0	4	0	0	0	0	0	0	0	0	**323**
1500 - 1600	1	228	60	0	0	0	0	0	0	0	0	0	0	**289**
1600 - 1700	1	286	78	0	3	2	0	0	3	0	0	0	0	**373**
1700 - 1800	0	303	48	0	3	0	0	0	0	0	0	0	0	**354**
1800 - 1900	2	246	42	0	0	0	0	0	0	0	0	0	0	**290**
1900 - 2000	0	0	0	0	0	0	0	0	0	0	0	0	0	**0**
2000 - 2100	0	0	0	0	0	0	0	0	0	0	0	0	0	**0**
2100 - 2200	0	0	0	0	0	0	0	0	0	0	0	0	0	**0**
2200 - 2300	0	0	0	0	0	0	0	0	0	0	0	0	0	**0**
2300 - 2400	0	0	0	0	0	0	0	0	0	0	0	0	0	**0**

Session Total	8	2836	685	1	51	9	2	5	19	0	0	0	0	**3616**
Session Average	0.33	118.17	28.54	0.04	2.13	0.38	0.08	0.21	0.79	0.00	0.00	0.00	0.00	**150.67**
Session Percentage	0.22	78.43	18.94	0.03	1.41	0.25	0.06	0.14	0.53	0.00	0.00	0.00	0.00	

AM Peak Hour	0600 - 0700	0700 - 0800	0700 - 0800	-	0700 - 0800	0600 - 0700	0700 - 0800	0700 - 0800	0900 - 1000	-	-	-	-	**0700 - 0800**
AM Peak Hour Volume	1	181	49	0	6	1	1	2	4	0	0	0	0	**243**

Noon Peak Hour	1200 - 1300	1300 - 1400	1400 - 1500	1200 - 1300	1100 - 1200	1300 - 1400	1000 - 1100	1200 - 1300	1200 - 1300	-	-	-	-	**1400 - 1500**
Noon Peak Hour Volume	1	252	68	1	6	2	1	2	2	0	0	0	0	**323**

PM Peak Hour	1800 - 1900	1700 - 1800	1600 - 1700	-	1600 - 1700	1600 - 1700	-	-	1600 - 1700	-	-	-	-	**1600 - 1700**
PM Peak Hour Volume	2	303	78	0	3	2	0	0	3	0	0	0	0	**373**

Bi-Directional Class Count || Volume Summary 60min

Columbia, SC

Marr Traffic DATA COLLECTION

www.marrtraffic.com

Site 33

I-26 James F. Byrnes Expy N/Bound On-Ramp,
north of Piney Grove Rd

Date

Tuesday, April 23, 2024

Lat/Long

34.068290°, -81.142560°

Weather

Fair
58°F

Click here for Detailed Weather

0000 - 2400 (Weekday 24h Session) (04-23-2024)

Volume Summary 60min

	Volume Summary 60min		
TIME	NB	SB	**Total**
0000 - 0100	0	0	**0**
0100 - 0200	0	0	**0**
0200 - 0300	0	0	**0**
0300 - 0400	0	0	**0**
0400 - 0500	0	0	**0**
0500 - 0600	0	0	**0**
0600 - 0700	0	0	**0**
0700 - 0800	0	0	**0**
0800 - 0900	0	0	**0**
0900 - 1000	0	0	**0**
1000 - 1100	0	0	**0**
1100 - 1200	0	0	**0**

	Volume Summary 60min		
Time	NB	SB	**Total**
1200 - 1300	0	0	**0**
1300 - 1400	0	0	**0**
1400 - 1500	0	0	**0**
1500 - 1600	0	0	**0**
1600 - 1700	0	0	**0**
1700 - 1800	0	0	**0**
1800 - 1900	0	0	**0**
1900 - 2000	178	0	**178**
2000 - 2100	143	0	**143**
2100 - 2200	70	0	**70**
2200 - 2300	44	0	**44**
2300 - 2400	30	0	**30**

Session Total	465	0	**465**
Session Average	19.38	0.00	**19.38**
Session Percentage	100.00	0.00	

Site 33

I-26 James F. Byrnes Expy N/Bound On-Ramp,
north of Piney Grove Rd

Date

Wednesday, April 24, 2024

Lat/Long

34.068290°, -81.142560°

Weather

Fair
66°F

Click here for Detailed Weather

0000 - 2400 (Weekday 24h Session) (04-24-2024)

Volume Summary 60min

	Volume Summary 60min		
TIME	NB	SB	**Total**
0000 - 0100	34	0	**34**
0100 - 0200	9	0	**9**
0200 - 0300	13	0	**13**
0300 - 0400	17	0	**17**
0400 - 0500	13	0	**13**
0500 - 0600	41	0	**41**
0600 - 0700	100	0	**100**
0700 - 0800	210	0	**210**
0800 - 0900	173	0	**173**
0900 - 1000	184	0	**184**
1000 - 1100	227	0	**227**
1100 - 1200	236	0	**236**

Session Total	4000	0	**4000**
Session Average	166.67	0.00	**166.67**
Session Percentage	100.00	0.00	

	Volume Summary 60min		
Time	NB	SB	**Total**
1200 - 1300	294	0	**294**
1300 - 1400	288	0	**288**
1400 - 1500	285	0	**285**
1500 - 1600	274	0	**274**
1600 - 1700	507	0	**507**
1700 - 1800	352	0	**352**
1800 - 1900	255	0	**255**
1900 - 2000	189	0	**189**
2000 - 2100	148	0	**148**
2100 - 2200	78	0	**78**
2200 - 2300	44	0	**44**
2300 - 2400	29	0	**29**

Site 33

I-26 James F. Byrnes Expy N/Bound On-Ramp,
north of Piney Grove Rd

Date

Thursday, April 25, 2024

Lat/Long

34.068290°, -81.142560°

Weather

Fair
67°F

Click here for Detailed Weather

0000 - 2400 (Weekday 24h Session) (04-25-2024)

Volume Summary 60min

	Volume Summary 60min		
TIME	NB	SB	**Total**
0000 - 0100	35	0	**35**
0100 - 0200	15	0	**15**
0200 - 0300	15	0	**15**
0300 - 0400	5	0	**5**
0400 - 0500	14	0	**14**
0500 - 0600	66	0	**66**
0600 - 0700	106	0	**106**
0700 - 0800	243	0	**243**
0800 - 0900	185	0	**185**
0900 - 1000	183	0	**183**
1000 - 1100	214	0	**214**
1100 - 1200	293	0	**293**

	Volume Summary 60min		
Time	NB	SB	**Total**
1200 - 1300	298	0	**298**
1300 - 1400	315	0	**315**
1400 - 1500	323	0	**323**
1500 - 1600	289	0	**289**
1600 - 1700	373	0	**373**
1700 - 1800	354	0	**354**
1800 - 1900	290	0	**290**
1900 - 2000	0	0	**0**
2000 - 2100	0	0	**0**
2100 - 2200	0	0	**0**
2200 - 2300	0	0	**0**
2300 - 2400	0	0	**0**

Session Total	3616	0	**3616**
Session Average	150.67	0.00	**150.67**
Session Percentage	100.00	0.00	

Bi-Directional Class Count || Graphical Analysis NB EB

Columbia, SC

Marr Traffic DATA COLLECTION

www.marrtraffic.com

Site 33

I-26 James F. Byrnes Expy N/Bound On-Ramp,
north of Piney Grove Rd

Lat/Long

34.068290°, -81.142560°

0000 - 2400 (Weekday 24h Session)

Graphical Analysis NB EB

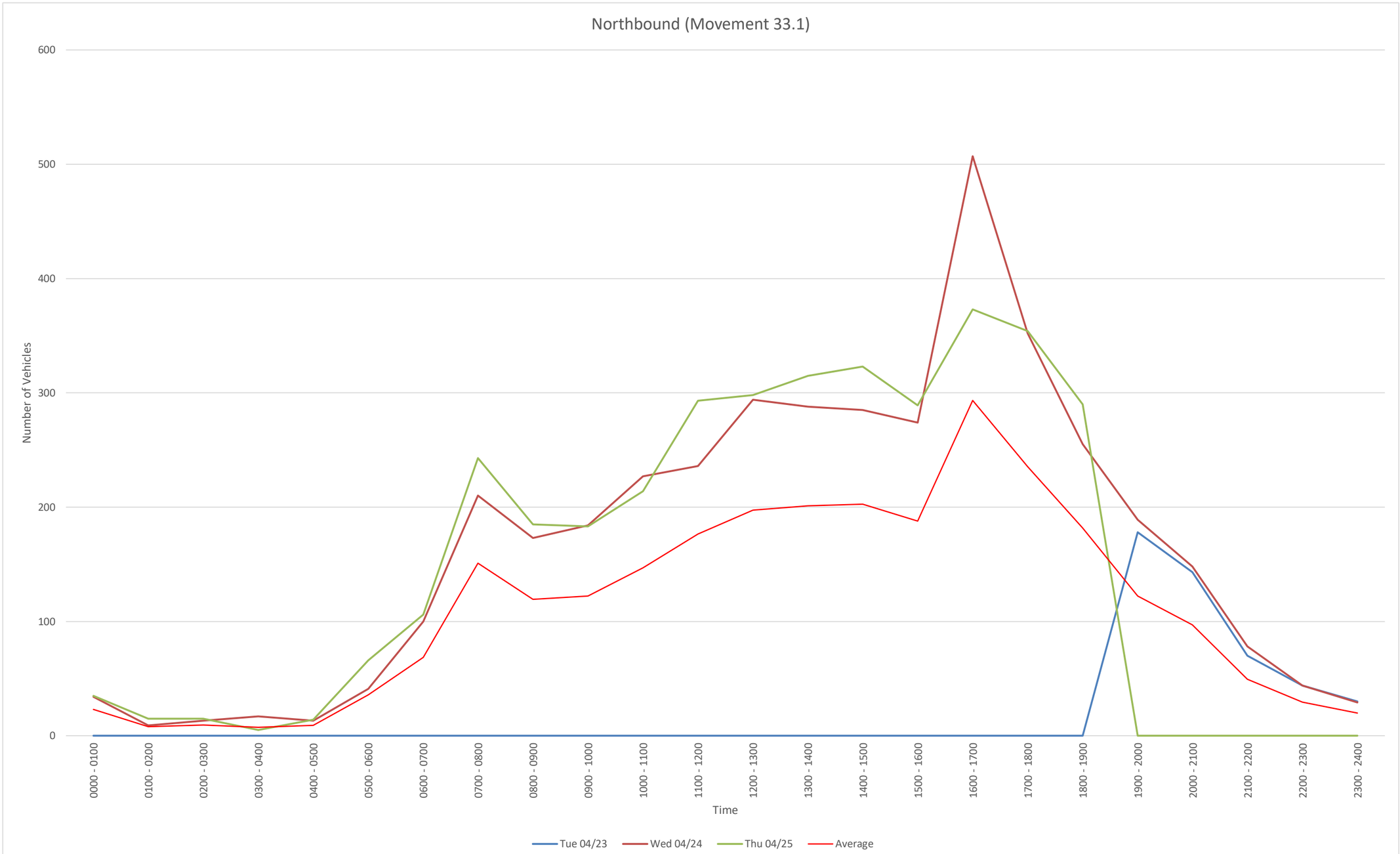

Time	Tue 04/23	Wed 04/24	Thu 04/25				
0000 - 0100	0	34	35				
0100 - 0200	0	9	15				
0200 - 0300	0	13	15				
0300 - 0400	0	17	5				
0400 - 0500	0	13	14				
0500 - 0600	0	41	66				
0600 - 0700	0	100	106				
0700 - 0800	0	210	243				
0800 - 0900	0	173	185				
0900 - 1000	0	184	183				
1000 - 1100	0	227	214				
1100 - 1200	0	236	293				
1200 - 1300	0	294	298				
1300 - 1400	0	288	315				
1400 - 1500	0	285	323				
1500 - 1600	0	274	289				
1600 - 1700	0	507	373				
1700 - 1800	0	352	354				
1800 - 1900	0	255	290				
1900 - 2000	178	189	0				
2000 - 2100	143	148	0				
2100 - 2200	70	78	0				
2200 - 2300	44	44	0				
2300 - 2400	30	29	0				
Daily Total	465	4000	3616				

NB
File Name:
Start Date: 4/23/2024
Start Time: 0
Site Code: 33
Station ID: 1
Location 1: I-26 James F. Byrnes Expy N/Bound On-Ramp, north of Piney Grove Rd
Location 2:

Date	Time	1	2	3	4	5	6	7	8	9	10	11	12	13
4/23/2024	12:00 AM	0	0	0	0	0	0	0	0	0	0	0	0	0
4/23/2024	12:15 AM	0	0	0	0	0	0	0	0	0	0	0	0	0
4/23/2024	12:30 AM	0	0	0	0	0	0	0	0	0	0	0	0	0
4/23/2024	12:45 AM	0	0	0	0	0	0	0	0	0	0	0	0	0
4/23/2024	1:00 AM	0	0	0	0	0	0	0	0	0	0	0	0	0
4/23/2024	1:15 AM	0	0	0	0	0	0	0	0	0	0	0	0	0
4/23/2024	1:30 AM	0	0	0	0	0	0	0	0	0	0	0	0	0
4/23/2024	1:45 AM	0	0	0	0	0	0	0	0	0	0	0	0	0
4/23/2024	2:00 AM	0	0	0	0	0	0	0	0	0	0	0	0	0
4/23/2024	2:15 AM	0	0	0	0	0	0	0	0	0	0	0	0	0
4/23/2024	2:30 AM	0	0	0	0	0	0	0	0	0	0	0	0	0
4/23/2024	2:45 AM	0	0	0	0	0	0	0	0	0	0	0	0	0
4/23/2024	3:00 AM	0	0	0	0	0	0	0	0	0	0	0	0	0
4/23/2024	3:15 AM	0	0	0	0	0	0	0	0	0	0	0	0	0
4/23/2024	3:30 AM	0	0	0	0	0	0	0	0	0	0	0	0	0
4/23/2024	3:45 AM	0	0	0	0	0	0	0	0	0	0	0	0	0
4/23/2024	4:00 AM	0	0	0	0	0	0	0	0	0	0	0	0	0
4/23/2024	4:15 AM	0	0	0	0	0	0	0	0	0	0	0	0	0
4/23/2024	4:30 AM	0	0	0	0	0	0	0	0	0	0	0	0	0
4/23/2024	4:45 AM	0	0	0	0	0	0	0	0	0	0	0	0	0
4/23/2024	5:00 AM	0	0	0	0	0	0	0	0	0	0	0	0	0
4/23/2024	5:15 AM	0	0	0	0	0	0	0	0	0	0	0	0	0
4/23/2024	5:30 AM	0	0	0	0	0	0	0	0	0	0	0	0	0
4/23/2024	5:45 AM	0	0	0	0	0	0	0	0	0	0	0	0	0
4/23/2024	6:00 AM	0	0	0	0	0	0	0	0	0	0	0	0	0
4/23/2024	6:15 AM	0	0	0	0	0	0	0	0	0	0	0	0	0
4/23/2024	6:30 AM	0	0	0	0	0	0	0	0	0	0	0	0	0
4/23/2024	6:45 AM	0	0	0	0	0	0	0	0	0	0	0	0	0
4/23/2024	7:00 AM	0	0	0	0	0	0	0	0	0	0	0	0	0
4/23/2024	7:15 AM	0	0	0	0	0	0	0	0	0	0	0	0	0
4/23/2024	7:30 AM	0	0	0	0	0	0	0	0	0	0	0	0	0
4/23/2024	7:45 AM	0	0	0	0	0	0	0	0	0	0	0	0	0
4/23/2024	8:00 AM	0	0	0	0	0	0	0	0	0	0	0	0	0
4/23/2024	8:15 AM	0	0	0	0	0	0	0	0	0	0	0	0	0
4/23/2024	8:30 AM	0	0	0	0	0	0	0	0	0	0	0	0	0
4/23/2024	8:45 AM	0	0	0	0	0	0	0	0	0	0	0	0	0
4/23/2024	9:00 AM	0	0	0	0	0	0	0	0	0	0	0	0	0
4/23/2024	9:15 AM	0	0	0	0	0	0	0	0	0	0	0	0	0
4/23/2024	9:30 AM	0	0	0	0	0	0	0	0	0	0	0	0	0
4/23/2024	9:45 AM	0	0	0	0	0	0	0	0	0	0	0	0	0
4/23/2024	10:00 AM	0	0	0	0	0	0	0	0	0	0	0	0	0
4/23/2024	10:15 AM	0	0	0	0	0	0	0	0	0	0	0	0	0
4/23/2024	10:30 AM	0	0	0	0	0	0	0	0	0	0	0	0	0
4/23/2024	10:45 AM	0	0	0	0	0	0	0	0	0	0	0	0	0
4/23/2024	11:00 AM	0	0	0	0	0	0	0	0	0	0	0	0	0
4/23/2024	11:15 AM	0	0	0	0	0	0	0	0	0	0	0	0	0
4/23/2024	11:30 AM	0	0	0	0	0	0	0	0	0	0	0	0	0
4/23/2024	11:45 AM	0	0	0	0	0	0	0	0	0	0	0	0	0
4/23/2024	12:00 PM	0	0	0	0	0	0	0	0	0	0	0	0	0
4/23/2024	12:15 PM	0	0	0	0	0	0	0	0	0	0	0	0	0
4/23/2024	12:30 PM	0	0	0	0	0	0	0	0	0	0	0	0	0
4/23/2024	12:45 PM	0	0	0	0	0	0	0	0	0	0	0	0	0
4/23/2024	1:00 PM	0	0	0	0	0	0	0	0	0	0	0	0	0
4/23/2024	1:15 PM	0	0	0	0	0	0	0	0	0	0	0	0	0
4/23/2024	1:30 PM	0	0	0	0	0	0	0	0	0	0	0	0	0
4/23/2024	1:45 PM	0	0	0	0	0	0	0	0	0	0	0	0	0
4/23/2024	2:00 PM	0	0	0	0	0	0	0	0	0	0	0	0	0
4/23/2024	2:15 PM	0	0	0	0	0	0	0	0	0	0	0	0	0
4/23/2024	2:30 PM	0	0	0	0	0	0	0	0	0	0	0	0	0
4/23/2024	2:45 PM	0	0	0	0	0	0	0	0	0	0	0	0	0
4/23/2024	3:00 PM	0	0	0	0	0	0	0	0	0	0	0	0	0
4/23/2024	3:15 PM	0	0	0	0	0	0	0	0	0	0	0	0	0
4/23/2024	3:30 PM	0	0	0	0	0	0	0	0	0	0	0	0	0
4/23/2024	3:45 PM	0	0	0	0	0	0	0	0	0	0	0	0	0
4/23/2024	4:00 PM	0	0	0	0	0	0	0	0	0	0	0	0	0
4/23/2024	4:15 PM	0	0	0	0	0	0	0	0	0	0	0	0	0
4/23/2024	4:30 PM	0	0	0	0	0	0	0	0	0	0	0	0	0
4/23/2024	4:45 PM	0	0	0	0	0	0	0	0	0	0	0	0	0
4/23/2024	5:00 PM	0	0	0	0	0	0	0	0	0	0	0	0	0
4/23/2024	5:15 PM	0	0	0	0	0	0	0	0	0	0	0	0	0
4/23/2024	5:30 PM	0	0	0	0	0	0	0	0	0	0	0	0	0
4/23/2024	5:45 PM	0	0	0	0	0	0	0	0	0	0	0	0	0
4/23/2024	6:00 PM	0	0	0	0	0	0	0	0	0	0	0	0	0
4/23/2024	6:15 PM	0	0	0	0	0	0	0	0	0	0	0	0	0
4/23/2024	6:30 PM	0	0	0	0	0	0	0	0	0	0	0	0	0
4/23/2024	6:45 PM	0	0	0	0	0	0	0	0	0	0	0	0	0
4/23/2024	7:00 PM	0	38	8	0	0	0	0	0	0	0	0	0	0
4/23/2024	7:15 PM	1	43	8	0	0	0	0	0	0	0	0	0	0
4/23/2024	7:30 PM	0	24	7	0	0	0	0	0	0	0	0	0	0
4/23/2024	7:45 PM	0	41	8	0	0	0	0	0	0	0	0	0	0
4/23/2024	8:00 PM	1	36	4	0	0	0	0	0	1	0	0	0	0
4/23/2024	8:15 PM	0	38	7	0	1	0	0	0	0	0	0	0	0
4/23/2024	8:30 PM	0	21	2	0	0	0	0	0	1	0	0	0	0
4/23/2024	8:45 PM	0	25	5	0	1	0	0	0	0	0	0	0	0
4/23/2024	9:00 PM	0	17	3	0	0	0	0	0	0	0	0	0	0
4/23/2024	9:15 PM	0	18	2	0	0	0	0	0	0	0	0	0	0
4/23/2024	9:30 PM	0	14	2	0	0	0	0	0	1	0	0	0	0
4/23/2024	9:45 PM	0	10	2	0	0	0	0	0	1	0	0	0	0
4/23/2024	10:00 PM	0	12	1	0	0	0	0	0	0	0	0	0	0
4/23/2024	10:15 PM	0	11	2	0	0	0	0	0	0	0	0	0	0
4/23/2024	10:30 PM	0	5	0	0	0	0	0	0	0	0	0	0	0
4/23/2024	10:45 PM	0	12	1	0	0	0	0	0	0	0	0	0	0
4/23/2024	11:00 PM	0	4	0	0	0	0	0	0	1	0	0	0	0
4/23/2024	11:15 PM	0	9	2	0	0	0	0	0	0	0	0	0	0
4/23/2024	11:30 PM	0	6	1	0	0	0	0	0	0	0	0	0	0
4/23/2024	11:45 PM	0	7	0	0	0	0	0	0	0	0	0	0	0

4/24/2024	12:00 AM	0	11	2	0	0	0	0	0	0	0	0	0
4/24/2024	12:15 AM	0	8	3	0	0	0	0	0	0	1	0	0
4/24/2024	12:30 AM	0	6	3	0	0	0	0	0	0	0	0	0
4/24/2024	12:45 AM	0	0	0	0	0	0	0	0	0	0	0	0
4/24/2024	1:00 AM	0	2	0	0	0	0	0	0	0	0	0	0
4/24/2024	1:15 AM	0	3	0	0	0	0	0	0	0	0	0	0
4/24/2024	1:30 AM	0	2	0	0	0	0	0	0	0	0	0	0
4/24/2024	1:45 AM	0	2	0	0	0	0	0	0	0	0	0	0
4/24/2024	2:00 AM	0	1	0	0	0	0	0	0	0	0	0	0
4/24/2024	2:15 AM	0	3	0	0	0	0	0	0	0	0	0	0
4/24/2024	2:30 AM	0	4	0	0	0	0	0	0	0	0	0	0
4/24/2024	2:45 AM	0	5	0	0	0	0	0	0	0	0	0	0
4/24/2024	3:00 AM	0	1	0	0	0	0	0	0	0	0	0	0
4/24/2024	3:15 AM	0	2	0	0	0	0	0	1	0	0	0	0
4/24/2024	3:30 AM	0	6	0	0	0	0	0	1	0	0	0	0
4/24/2024	3:45 AM	0	4	1	0	0	0	0	1	0	0	0	0
4/24/2024	4:00 AM	0	0	0	0	0	0	0	0	0	0	0	0
4/24/2024	4:15 AM	0	1	0	0	0	0	0	0	0	0	0	0
4/24/2024	4:30 AM	0	4	1	0	0	0	0	1	0	0	0	0
4/24/2024	4:45 AM	0	5	0	0	0	0	0	1	0	0	0	0
4/24/2024	5:00 AM	0	8	1	0	0	0	0	0	0	0	0	0
4/24/2024	5:15 AM	0	9	1	0	0	0	0	0	0	0	0	0
4/24/2024	5:30 AM	0	8	2	0	0	0	0	0	0	0	0	0
4/24/2024	5:45 AM	0	12	0	0	0	0	0	0	0	0	0	0
4/24/2024	6:00 AM	0	14	4	0	0	0	0	0	0	0	0	0
4/24/2024	6:15 AM	0	14	2	0	1	0	0	0	1	0	0	0
4/24/2024	6:30 AM	0	24	6	0	0	0	0	0	0	0	0	0
4/24/2024	6:45 AM	0	25	6	0	2	1	0	0	0	0	0	0
4/24/2024	7:00 AM	0	31	5	0	1	0	0	0	0	0	0	0
4/24/2024	7:15 AM	0	34	9	0	3	0	0	0	1	0	0	0
4/24/2024	7:30 AM	0	44	15	0	2	0	0	0	0	0	0	0
4/24/2024	7:45 AM	0	46	18	0	1	0	0	0	0	0	0	0
4/24/2024	8:00 AM	0	36	12	0	2	0	0	0	1	0	0	0
4/24/2024	8:15 AM	0	29	8	0	0	0	0	0	0	0	0	0
4/24/2024	8:30 AM	0	26	5	0	2	0	0	0	0	0	0	0
4/24/2024	8:45 AM	0	41	11	0	0	0	0	0	0	0	0	0
4/24/2024	9:00 AM	0	39	11	1	0	0	0	0	0	0	0	0
4/24/2024	9:15 AM	0	32	14	1	2	0	0	0	0	0	0	0
4/24/2024	9:30 AM	0	31	14	0	2	0	0	0	0	0	0	0
4/24/2024	9:45 AM	0	29	7	0	0	1	0	0	0	0	0	0
4/24/2024	10:00 AM	0	34	6	0	0	0	0	0	2	0	0	0
4/24/2024	10:15 AM	1	46	14	1	1	0	0	0	1	0	0	0
4/24/2024	10:30 AM	0	51	17	1	3	0	0	0	0	0	0	0
4/24/2024	10:45 AM	0	37	10	0	1	0	0	0	1	0	0	0
4/24/2024	11:00 AM	0	48	11	0	1	0	0	1	0	0	0	0
4/24/2024	11:15 AM	0	45	9	0	0	0	0	0	0	0	0	0
4/24/2024	11:30 AM	0	54	11	0	2	0	0	0	1	0	0	0
4/24/2024	11:45 AM	0	35	18	0	0	0	0	0	0	0	0	0
4/24/2024	12:00 PM	0	59	15	0	1	0	0	0	0	0	0	0
4/24/2024	12:15 PM	0	59	18	0	0	0	0	1	0	0	0	0
4/24/2024	12:30 PM	0	48	23	2	2	1	0	0	0	0	0	0
4/24/2024	12:45 PM	0	51	14	0	0	0	0	0	0	0	0	0
4/24/2024	1:00 PM	1	57	12	0	0	0	0	0	0	0	0	0
4/24/2024	1:15 PM	0	65	15	0	3	0	0	0	0	0	0	0
4/24/2024	1:30 PM	0	62	11	0	1	0	0	0	0	0	0	0
4/24/2024	1:45 PM	0	49	11	0	1	0	0	0	0	0	0	0
4/24/2024	2:00 PM	0	63	14	0	0	0	0	0	0	0	0	0
4/24/2024	2:15 PM	0	54	9	0	1	0	0	0	1	0	0	0
4/24/2024	2:30 PM	0	54	12	0	0	0	0	0	0	0	0	0
4/24/2024	2:45 PM	0	55	17	0	4	1	0	0	0	0	0	0
4/24/2024	3:00 PM	0	55	12	0	1	0	0	0	0	0	0	0
4/24/2024	3:15 PM	0	56	14	0	0	0	0	1	0	0	0	0
4/24/2024	3:30 PM	0	59	8	0	0	2	0	1	0	0	0	0
4/24/2024	3:45 PM	0	45	18	0	2	0	0	0	0	0	0	0
4/24/2024	4:00 PM	0	230	13	0	1	0	0	0	0	0	0	0
4/24/2024	4:15 PM	0	68	18	0	1	0	0	0	2	0	0	0
4/24/2024	4:30 PM	0	66	16	0	0	0	0	0	1	0	0	0
4/24/2024	4:45 PM	1	73	14	0	2	0	0	0	1	0	0	0
4/24/2024	5:00 PM	0	77	15	0	1	0	0	0	0	0	0	0
4/24/2024	5:15 PM	1	73	12	0	1	0	0	0	0	0	0	0
4/24/2024	5:30 PM	0	73	20	0	2	0	0	0	1	0	0	0
4/24/2024	5:45 PM	0	61	15	0	0	0	0	0	0	0	0	0
4/24/2024	6:00 PM	0	78	11	0	0	0	0	0	0	0	0	0
4/24/2024	6:15 PM	1	46	5	0	0	0	0	0	0	0	0	0
4/24/2024	6:30 PM	0	48	5	0	0	0	0	0	1	0	0	0
4/24/2024	6:45 PM	0	55	4	0	1	0	0	0	0	0	0	0
4/24/2024	7:00 PM	0	33	8	0	1	0	0	0	0	0	0	0
4/24/2024	7:15 PM	0	51	11	0	1	0	0	0	0	0	0	0
4/24/2024	7:30 PM	0	33	6	0	0	0	0	0	0	0	0	0
4/24/2024	7:45 PM	0	37	7	0	1	0	0	0	0	0	0	0
4/24/2024	8:00 PM	0	40	3	0	0	0	0	0	0	0	0	0
4/24/2024	8:15 PM	0	28	7	0	0	0	0	0	0	0	0	0
4/24/2024	8:30 PM	0	27	5	0	0	0	0	0	1	0	0	0
4/24/2024	8:45 PM	1	27	9	0	0	0	0	0	0	0	0	0
4/24/2024	9:00 PM	0	23	6	0	0	0	0	0	0	0	0	0
4/24/2024	9:15 PM	0	12	4	0	0	0	0	0	0	0	0	0
4/24/2024	9:30 PM	0	10	2	0	0	0	0	0	0	0	0	0
4/24/2024	9:45 PM	1	13	6	0	0	0	0	0	1	0	0	0
4/24/2024	10:00 PM	0	12	3	0	0	0	0	0	0	0	0	0
4/24/2024	10:15 PM	0	11	5	0	0	0	0	0	0	0	0	0
4/24/2024	10:30 PM	0	5	1	0	0	0	0	0	0	0	0	0
4/24/2024	10:45 PM	0	5	2	0	0	0	0	0	0	0	0	0
4/24/2024	11:00 PM	0	6	2	0	0	0	0	0	0	0	0	0
4/24/2024	11:15 PM	0	4	2	0	0	0	0	0	0	0	0	0
4/24/2024	11:30 PM	0	3	1	0	0	0	0	0	0	0	0	0
4/24/2024	11:45 PM	0	7	3	0	0	0	0	0	1	0	0	0

4/25/2024	12:00 AM	0	11	2	0	0	0	0	0	0	0	0	0
4/25/2024	12:15 AM	0	2	1	0	1	0	0	0	0	0	0	0
4/25/2024	12:30 AM	0	6	2	0	0	0	0	0	0	0	0	0
4/25/2024	12:45 AM	0	6	4	0	0	0	0	0	0	0	0	0
4/25/2024	1:00 AM	0	5	1	0	0	0	0	0	0	0	0	0
4/25/2024	1:15 AM	0	3	0	0	0	0	0	0	0	0	0	0
4/25/2024	1:30 AM	0	2	0	0	0	0	0	0	0	0	0	0
4/25/2024	1:45 AM	0	4	0	0	0	0	0	0	0	0	0	0
4/25/2024	2:00 AM	0	2	0	0	0	0	0	1	0	0	0	0
4/25/2024	2:15 AM	0	1	1	0	0	0	0	0	0	0	0	0
4/25/2024	2:30 AM	0	3	0	0	0	0	0	0	0	0	0	0
4/25/2024	2:45 AM	0	4	2	0	0	0	0	1	0	0	0	0
4/25/2024	3:00 AM	0	0	0	0	0	0	0	0	0	0	0	0
4/25/2024	3:15 AM	0	1	0	0	0	0	0	1	0	0	0	0
4/25/2024	3:30 AM	0	1	0	0	0	0	0	0	0	0	0	0
4/25/2024	3:45 AM	0	1	1	0	0	0	0	0	0	0	0	0
4/25/2024	4:00 AM	0	1	0	0	1	0	0	1	0	0	0	0
4/25/2024	4:15 AM	0	1	0	0	0	0	0	1	0	0	0	0
4/25/2024	4:30 AM	0	6	1	0	0	0	0	0	0	0	0	0
4/25/2024	4:45 AM	0	1	0	0	0	0	0	1	0	0	0	0
4/25/2024	5:00 AM	0	11	3	0	0	0	0	0	0	0	0	0
4/25/2024	5:15 AM	0	13	5	0	0	0	0	0	0	0	0	0
4/25/2024	5:30 AM	0	9	6	0	0	0	0	0	0	0	0	0
4/25/2024	5:45 AM	0	14	3	0	2	0	0	0	0	0	0	0
4/25/2024	6:00 AM	0	16	5	0	0	0	0	0	0	0	0	0
4/25/2024	6:15 AM	0	16	4	0	1	0	0	0	0	0	0	0
4/25/2024	6:30 AM	0	27	4	0	2	1	0	0	0	0	0	0
4/25/2024	6:45 AM	1	24	4	0	1	0	0	0	0	0	0	0
4/25/2024	7:00 AM	0	34	10	0	0	0	0	0	0	0	0	0
4/25/2024	7:15 AM	0	47	12	0	1	1	1	0	2	0	0	0
4/25/2024	7:30 AM	0	52	15	0	3	0	0	0	1	0	0	0
4/25/2024	7:45 AM	0	48	12	0	2	0	0	2	0	0	0	0
4/25/2024	8:00 AM	0	38	11	0	2	0	0	0	0	0	0	0
4/25/2024	8:15 AM	0	41	5	0	2	0	0	0	0	0	0	0
4/25/2024	8:30 AM	0	31	8	0	0	1	0	0	0	0	0	0
4/25/2024	8:45 AM	0	39	6	0	1	0	0	0	0	0	0	0
4/25/2024	9:00 AM	0	32	11	0	2	0	0	0	0	0	0	0
4/25/2024	9:15 AM	0	31	7	0	2	0	0	0	2	0	0	0
4/25/2024	9:30 AM	0	30	15	0	0	0	0	1	1	0	0	0
4/25/2024	9:45 AM	0	33	12	0	2	1	0	0	1	0	0	0
4/25/2024	10:00 AM	0	34	16	0	0	0	0	0	0	0	0	0
4/25/2024	10:15 AM	0	36	9	0	3	0	1	0	0	0	0	0
4/25/2024	10:30 AM	0	42	9	0	1	0	0	0	0	0	0	0
4/25/2024	10:45 AM	0	42	21	0	0	0	0	0	0	0	0	0
4/25/2024	11:00 AM	0	64	11	0	1	0	0	0	0	0	0	0
4/25/2024	11:15 AM	0	55	12	0	1	0	0	0	0	0	0	0
4/25/2024	11:30 AM	0	53	17	0	1	0	0	0	1	0	0	0
4/25/2024	11:45 AM	0	64	10	0	3	0	0	0	0	0	0	0
4/25/2024	12:00 PM	0	61	17	0	0	0	0	0	1	0	0	0
4/25/2024	12:15 PM	1	68	15	0	0	0	0	0	1	0	0	0
4/25/2024	12:30 PM	0	51	11	0	1	0	0	1	0	0	0	0
4/25/2024	12:45 PM	0	54	12	1	1	1	0	1	0	0	0	0
4/25/2024	1:00 PM	0	63	16	0	0	0	0	0	0	0	0	0
4/25/2024	1:15 PM	1	62	10	0	1	0	0	0	0	0	0	0
4/25/2024	1:30 PM	0	64	15	0	2	1	0	0	0	0	0	0
4/25/2024	1:45 PM	0	63	15	0	1	1	0	0	0	0	0	0
4/25/2024	2:00 PM	0	58	24	0	2	0	0	0	0	0	0	0
4/25/2024	2:15 PM	0	63	18	0	1	0	0	0	0	0	0	0
4/25/2024	2:30 PM	1	62	15	0	0	0	0	0	0	0	0	0
4/25/2024	2:45 PM	0	67	11	0	1	0	0	0	0	0	0	0
4/25/2024	3:00 PM	0	68	14	0	0	0	0	0	0	0	0	0
4/25/2024	3:15 PM	1	52	8	0	0	0	0	0	0	0	0	0
4/25/2024	3:30 PM	0	51	17	0	0	0	0	0	0	0	0	0
4/25/2024	3:45 PM	0	57	21	0	0	0	0	0	0	0	0	0
4/25/2024	4:00 PM	0	79	21	0	1	0	0	0	0	0	0	0
4/25/2024	4:15 PM	0	64	18	0	1	0	0	0	1	0	0	0
4/25/2024	4:30 PM	0	67	19	0	0	2	0	0	2	0	0	0
4/25/2024	4:45 PM	1	76	20	0	1	0	0	0	0	0	0	0
4/25/2024	5:00 PM	0	86	18	0	0	0	0	0	0	0	0	0
4/25/2024	5:15 PM	0	69	12	0	2	0	0	0	0	0	0	0
4/25/2024	5:30 PM	0	72	10	0	0	0	0	0	0	0	0	0
4/25/2024	5:45 PM	0	76	8	0	1	0	0	0	0	0	0	0
4/25/2024	6:00 PM	0	79	14	0	0	0	0	0	0	0	0	0
4/25/2024	6:15 PM	0	59	14	0	0	0	0	0	0	0	0	0
4/25/2024	6:30 PM	2	48	8	0	0	0	0	0	0	0	0	0
4/25/2024	6:45 PM	0	60	6	0	0	0	0	0	0	0	0	0
4/25/2024	7:00 PM	0	0	0	0	0	0	0	0	0	0	0	0
4/25/2024	7:15 PM	0	0	0	0	0	0	0	0	0	0	0	0
4/25/2024	7:30 PM	0	0	0	0	0	0	0	0	0	0	0	0
4/25/2024	7:45 PM	0	0	0	0	0	0	0	0	0	0	0	0
4/25/2024	8:00 PM	0	0	0	0	0	0	0	0	0	0	0	0
4/25/2024	8:15 PM	0	0	0	0	0	0	0	0	0	0	0	0
4/25/2024	8:30 PM	0	0	0	0	0	0	0	0	0	0	0	0
4/25/2024	8:45 PM	0	0	0	0	0	0	0	0	0	0	0	0
4/25/2024	9:00 PM	0	0	0	0	0	0	0	0	0	0	0	0
4/25/2024	9:15 PM	0	0	0	0	0	0	0	0	0	0	0	0
4/25/2024	9:30 PM	0	0	0	0	0	0	0	0	0	0	0	0
4/25/2024	9:45 PM	0	0	0	0	0	0	0	0	0	0	0	0
4/25/2024	10:00 PM	0	0	0	0	0	0	0	0	0	0	0	0
4/25/2024	10:15 PM	0	0	0	0	0	0	0	0	0	0	0	0
4/25/2024	10:30 PM	0	0	0	0	0	0	0	0	0	0	0	0
4/25/2024	10:45 PM	0	0	0	0	0	0	0	0	0	0	0	0
4/25/2024	11:00 PM	0	0	0	0	0	0	0	0	0	0	0	0
4/25/2024	11:15 PM	0	0	0	0	0	0	0	0	0	0	0	0
4/25/2024	11:30 PM	0	0	0	0	0	0	0	0	0	0	0	0
4/25/2024	11:45 PM	0	0	0	0	0	0	0	0	0	0	0	0

SB
File Name:
Start Date: 4/23/2024
Start Time: 0
Site Code: 33
Station ID: 1
Location 1: I-26 James F. Byrnes Expy N/Bound On-Ramp, north of Piney Grove Rd
Location 2:

Date	Time	1	2	3	4	5	6	7	8	9	10	11	12	13
4/23/2024	12:00 AM	0	0	0	0	0	0	0	0	0	0	0	0	0
4/23/2024	12:15 AM	0	0	0	0	0	0	0	0	0	0	0	0	0
4/23/2024	12:30 AM	0	0	0	0	0	0	0	0	0	0	0	0	0
4/23/2024	12:45 AM	0	0	0	0	0	0	0	0	0	0	0	0	0
4/23/2024	1:00 AM	0	0	0	0	0	0	0	0	0	0	0	0	0
4/23/2024	1:15 AM	0	0	0	0	0	0	0	0	0	0	0	0	0
4/23/2024	1:30 AM	0	0	0	0	0	0	0	0	0	0	0	0	0
4/23/2024	1:45 AM	0	0	0	0	0	0	0	0	0	0	0	0	0
4/23/2024	2:00 AM	0	0	0	0	0	0	0	0	0	0	0	0	0
4/23/2024	2:15 AM	0	0	0	0	0	0	0	0	0	0	0	0	0
4/23/2024	2:30 AM	0	0	0	0	0	0	0	0	0	0	0	0	0
4/23/2024	2:45 AM	0	0	0	0	0	0	0	0	0	0	0	0	0
4/23/2024	3:00 AM	0	0	0	0	0	0	0	0	0	0	0	0	0
4/23/2024	3:15 AM	0	0	0	0	0	0	0	0	0	0	0	0	0
4/23/2024	3:30 AM	0	0	0	0	0	0	0	0	0	0	0	0	0
4/23/2024	3:45 AM	0	0	0	0	0	0	0	0	0	0	0	0	0
4/23/2024	4:00 AM	0	0	0	0	0	0	0	0	0	0	0	0	0
4/23/2024	4:15 AM	0	0	0	0	0	0	0	0	0	0	0	0	0
4/23/2024	4:30 AM	0	0	0	0	0	0	0	0	0	0	0	0	0
4/23/2024	4:45 AM	0	0	0	0	0	0	0	0	0	0	0	0	0
4/23/2024	5:00 AM	0	0	0	0	0	0	0	0	0	0	0	0	0
4/23/2024	5:15 AM	0	0	0	0	0	0	0	0	0	0	0	0	0
4/23/2024	5:30 AM	0	0	0	0	0	0	0	0	0	0	0	0	0
4/23/2024	5:45 AM	0	0	0	0	0	0	0	0	0	0	0	0	0
4/23/2024	6:00 AM	0	0	0	0	0	0	0	0	0	0	0	0	0
4/23/2024	6:15 AM	0	0	0	0	0	0	0	0	0	0	0	0	0
4/23/2024	6:30 AM	0	0	0	0	0	0	0	0	0	0	0	0	0
4/23/2024	6:45 AM	0	0	0	0	0	0	0	0	0	0	0	0	0
4/23/2024	7:00 AM	0	0	0	0	0	0	0	0	0	0	0	0	0
4/23/2024	7:15 AM	0	0	0	0	0	0	0	0	0	0	0	0	0
4/23/2024	7:30 AM	0	0	0	0	0	0	0	0	0	0	0	0	0
4/23/2024	7:45 AM	0	0	0	0	0	0	0	0	0	0	0	0	0
4/23/2024	8:00 AM	0	0	0	0	0	0	0	0	0	0	0	0	0
4/23/2024	8:15 AM	0	0	0	0	0	0	0	0	0	0	0	0	0
4/23/2024	8:30 AM	0	0	0	0	0	0	0	0	0	0	0	0	0
4/23/2024	8:45 AM	0	0	0	0	0	0	0	0	0	0	0	0	0
4/23/2024	9:00 AM	0	0	0	0	0	0	0	0	0	0	0	0	0
4/23/2024	9:15 AM	0	0	0	0	0	0	0	0	0	0	0	0	0
4/23/2024	9:30 AM	0	0	0	0	0	0	0	0	0	0	0	0	0
4/23/2024	9:45 AM	0	0	0	0	0	0	0	0	0	0	0	0	0
4/23/2024	10:00 AM	0	0	0	0	0	0	0	0	0	0	0	0	0
4/23/2024	10:15 AM	0	0	0	0	0	0	0	0	0	0	0	0	0
4/23/2024	10:30 AM	0	0	0	0	0	0	0	0	0	0	0	0	0
4/23/2024	10:45 AM	0	0	0	0	0	0	0	0	0	0	0	0	0
4/23/2024	11:00 AM	0	0	0	0	0	0	0	0	0	0	0	0	0
4/23/2024	11:15 AM	0	0	0	0	0	0	0	0	0	0	0	0	0
4/23/2024	11:30 AM	0	0	0	0	0	0	0	0	0	0	0	0	0
4/23/2024	11:45 AM	0	0	0	0	0	0	0	0	0	0	0	0	0
4/23/2024	12:00 PM	0	0	0	0	0	0	0	0	0	0	0	0	0
4/23/2024	12:15 PM	0	0	0	0	0	0	0	0	0	0	0	0	0
4/23/2024	12:30 PM	0	0	0	0	0	0	0	0	0	0	0	0	0
4/23/2024	12:45 PM	0	0	0	0	0	0	0	0	0	0	0	0	0
4/23/2024	1:00 PM	0	0	0	0	0	0	0	0	0	0	0	0	0
4/23/2024	1:15 PM	0	0	0	0	0	0	0	0	0	0	0	0	0
4/23/2024	1:30 PM	0	0	0	0	0	0	0	0	0	0	0	0	0
4/23/2024	1:45 PM	0	0	0	0	0	0	0	0	0	0	0	0	0
4/23/2024	2:00 PM	0	0	0	0	0	0	0	0	0	0	0	0	0
4/23/2024	2:15 PM	0	0	0	0	0	0	0	0	0	0	0	0	0
4/23/2024	2:30 PM	0	0	0	0	0	0	0	0	0	0	0	0	0
4/23/2024	2:45 PM	0	0	0	0	0	0	0	0	0	0	0	0	0
4/23/2024	3:00 PM	0	0	0	0	0	0	0	0	0	0	0	0	0
4/23/2024	3:15 PM	0	0	0	0	0	0	0	0	0	0	0	0	0
4/23/2024	3:30 PM	0	0	0	0	0	0	0	0	0	0	0	0	0
4/23/2024	3:45 PM	0	0	0	0	0	0	0	0	0	0	0	0	0
4/23/2024	4:00 PM	0	0	0	0	0	0	0	0	0	0	0	0	0
4/23/2024	4:15 PM	0	0	0	0	0	0	0	0	0	0	0	0	0
4/23/2024	4:30 PM	0	0	0	0	0	0	0	0	0	0	0	0	0
4/23/2024	4:45 PM	0	0	0	0	0	0	0	0	0	0	0	0	0
4/23/2024	5:00 PM	0	0	0	0	0	0	0	0	0	0	0	0	0
4/23/2024	5:15 PM	0	0	0	0	0	0	0	0	0	0	0	0	0
4/23/2024	5:30 PM	0	0	0	0	0	0	0	0	0	0	0	0	0
4/23/2024	5:45 PM	0	0	0	0	0	0	0	0	0	0	0	0	0
4/23/2024	6:00 PM	0	0	0	0	0	0	0	0	0	0	0	0	0
4/23/2024	6:15 PM	0	0	0	0	0	0	0	0	0	0	0	0	0
4/23/2024	6:30 PM	0	0	0	0	0	0	0	0	0	0	0	0	0
4/23/2024	6:45 PM	0	0	0	0	0	0	0	0	0	0	0	0	0
4/23/2024	7:00 PM	0	0	0	0	0	0	0	0	0	0	0	0	0
4/23/2024	7:15 PM	0	0	0	0	0	0	0	0	0	0	0	0	0
4/23/2024	7:30 PM	0	0	0	0	0	0	0	0	0	0	0	0	0
4/23/2024	7:45 PM	0	0	0	0	0	0	0	0	0	0	0	0	0
4/23/2024	8:00 PM	0	0	0	0	0	0	0	0	0	0	0	0	0
4/23/2024	8:15 PM	0	0	0	0	0	0	0	0	0	0	0	0	0
4/23/2024	8:30 PM	0	0	0	0	0	0	0	0	0	0	0	0	0
4/23/2024	8:45 PM	0	0	0	0	0	0	0	0	0	0	0	0	0
4/23/2024	9:00 PM	0	0	0	0	0	0	0	0	0	0	0	0	0
4/23/2024	9:15 PM	0	0	0	0	0	0	0	0	0	0	0	0	0
4/23/2024	9:30 PM	0	0	0	0	0	0	0	0	0	0	0	0	0
4/23/2024	9:45 PM	0	0	0	0	0	0	0	0	0	0	0	0	0
4/23/2024	10:00 PM	0	0	0	0	0	0	0	0	0	0	0	0	0
4/23/2024	10:15 PM	0	0	0	0	0	0	0	0	0	0	0	0	0
4/23/2024	10:30 PM	0	0	0	0	0	0	0	0	0	0	0	0	0
4/23/2024	10:45 PM	0	0	0	0	0	0	0	0	0	0	0	0	0
4/23/2024	11:00 PM	0	0	0	0	0	0	0	0	0	0	0	0	0
4/23/2024	11:15 PM	0	0	0	0	0	0	0	0	0	0	0	0	0
4/23/2024	11:30 PM	0	0	0	0	0	0	0	0	0	0	0	0	0
4/23/2024	11:45 PM	0	0	0	0	0	0	0	0	0	0	0	0	0

4/24/2024	12:00 AM	0	0	0	0	0	0	0	0	0	0	0	0	0
4/24/2024	12:15 AM	0	0	0	0	0	0	0	0	0	0	0	0	0
4/24/2024	12:30 AM	0	0	0	0	0	0	0	0	0	0	0	0	0
4/24/2024	12:45 AM	0	0	0	0	0	0	0	0	0	0	0	0	0
4/24/2024	1:00 AM	0	0	0	0	0	0	0	0	0	0	0	0	0
4/24/2024	1:15 AM	0	0	0	0	0	0	0	0	0	0	0	0	0
4/24/2024	1:30 AM	0	0	0	0	0	0	0	0	0	0	0	0	0
4/24/2024	1:45 AM	0	0	0	0	0	0	0	0	0	0	0	0	0
4/24/2024	2:00 AM	0	0	0	0	0	0	0	0	0	0	0	0	0
4/24/2024	2:15 AM	0	0	0	0	0	0	0	0	0	0	0	0	0
4/24/2024	2:30 AM	0	0	0	0	0	0	0	0	0	0	0	0	0
4/24/2024	2:45 AM	0	0	0	0	0	0	0	0	0	0	0	0	0
4/24/2024	3:00 AM	0	0	0	0	0	0	0	0	0	0	0	0	0
4/24/2024	3:15 AM	0	0	0	0	0	0	0	0	0	0	0	0	0
4/24/2024	3:30 AM	0	0	0	0	0	0	0	0	0	0	0	0	0
4/24/2024	3:45 AM	0	0	0	0	0	0	0	0	0	0	0	0	0
4/24/2024	4:00 AM	0	0	0	0	0	0	0	0	0	0	0	0	0
4/24/2024	4:15 AM	0	0	0	0	0	0	0	0	0	0	0	0	0
4/24/2024	4:30 AM	0	0	0	0	0	0	0	0	0	0	0	0	0
4/24/2024	4:45 AM	0	0	0	0	0	0	0	0	0	0	0	0	0
4/24/2024	5:00 AM	0	0	0	0	0	0	0	0	0	0	0	0	0
4/24/2024	5:15 AM	0	0	0	0	0	0	0	0	0	0	0	0	0
4/24/2024	5:30 AM	0	0	0	0	0	0	0	0	0	0	0	0	0
4/24/2024	5:45 AM	0	0	0	0	0	0	0	0	0	0	0	0	0
4/24/2024	6:00 AM	0	0	0	0	0	0	0	0	0	0	0	0	0
4/24/2024	6:15 AM	0	0	0	0	0	0	0	0	0	0	0	0	0
4/24/2024	6:30 AM	0	0	0	0	0	0	0	0	0	0	0	0	0
4/24/2024	6:45 AM	0	0	0	0	0	0	0	0	0	0	0	0	0
4/24/2024	7:00 AM	0	0	0	0	0	0	0	0	0	0	0	0	0
4/24/2024	7:15 AM	0	0	0	0	0	0	0	0	0	0	0	0	0
4/24/2024	7:30 AM	0	0	0	0	0	0	0	0	0	0	0	0	0
4/24/2024	7:45 AM	0	0	0	0	0	0	0	0	0	0	0	0	0
4/24/2024	8:00 AM	0	0	0	0	0	0	0	0	0	0	0	0	0
4/24/2024	8:15 AM	0	0	0	0	0	0	0	0	0	0	0	0	0
4/24/2024	8:30 AM	0	0	0	0	0	0	0	0	0	0	0	0	0
4/24/2024	8:45 AM	0	0	0	0	0	0	0	0	0	0	0	0	0
4/24/2024	9:00 AM	0	0	0	0	0	0	0	0	0	0	0	0	0
4/24/2024	9:15 AM	0	0	0	0	0	0	0	0	0	0	0	0	0
4/24/2024	9:30 AM	0	0	0	0	0	0	0	0	0	0	0	0	0
4/24/2024	9:45 AM	0	0	0	0	0	0	0	0	0	0	0	0	0
4/24/2024	10:00 AM	0	0	0	0	0	0	0	0	0	0	0	0	0
4/24/2024	10:15 AM	0	0	0	0	0	0	0	0	0	0	0	0	0
4/24/2024	10:30 AM	0	0	0	0	0	0	0	0	0	0	0	0	0
4/24/2024	10:45 AM	0	0	0	0	0	0	0	0	0	0	0	0	0
4/24/2024	11:00 AM	0	0	0	0	0	0	0	0	0	0	0	0	0
4/24/2024	11:15 AM	0	0	0	0	0	0	0	0	0	0	0	0	0
4/24/2024	11:30 AM	0	0	0	0	0	0	0	0	0	0	0	0	0
4/24/2024	11:45 AM	0	0	0	0	0	0	0	0	0	0	0	0	0
4/24/2024	12:00 PM	0	0	0	0	0	0	0	0	0	0	0	0	0
4/24/2024	12:15 PM	0	0	0	0	0	0	0	0	0	0	0	0	0
4/24/2024	12:30 PM	0	0	0	0	0	0	0	0	0	0	0	0	0
4/24/2024	12:45 PM	0	0	0	0	0	0	0	0	0	0	0	0	0
4/24/2024	1:00 PM	0	0	0	0	0	0	0	0	0	0	0	0	0
4/24/2024	1:15 PM	0	0	0	0	0	0	0	0	0	0	0	0	0
4/24/2024	1:30 PM	0	0	0	0	0	0	0	0	0	0	0	0	0
4/24/2024	1:45 PM	0	0	0	0	0	0	0	0	0	0	0	0	0
4/24/2024	2:00 PM	0	0	0	0	0	0	0	0	0	0	0	0	0
4/24/2024	2:15 PM	0	0	0	0	0	0	0	0	0	0	0	0	0
4/24/2024	2:30 PM	0	0	0	0	0	0	0	0	0	0	0	0	0
4/24/2024	2:45 PM	0	0	0	0	0	0	0	0	0	0	0	0	0
4/24/2024	3:00 PM	0	0	0	0	0	0	0	0	0	0	0	0	0
4/24/2024	3:15 PM	0	0	0	0	0	0	0	0	0	0	0	0	0
4/24/2024	3:30 PM	0	0	0	0	0	0	0	0	0	0	0	0	0
4/24/2024	3:45 PM	0	0	0	0	0	0	0	0	0	0	0	0	0
4/24/2024	4:00 PM	0	0	0	0	0	0	0	0	0	0	0	0	0
4/24/2024	4:15 PM	0	0	0	0	0	0	0	0	0	0	0	0	0
4/24/2024	4:30 PM	0	0	0	0	0	0	0	0	0	0	0	0	0
4/24/2024	4:45 PM	0	0	0	0	0	0	0	0	0	0	0	0	0
4/24/2024	5:00 PM	0	0	0	0	0	0	0	0	0	0	0	0	0
4/24/2024	5:15 PM	0	0	0	0	0	0	0	0	0	0	0	0	0
4/24/2024	5:30 PM	0	0	0	0	0	0	0	0	0	0	0	0	0
4/24/2024	5:45 PM	0	0	0	0	0	0	0	0	0	0	0	0	0
4/24/2024	6:00 PM	0	0	0	0	0	0	0	0	0	0	0	0	0
4/24/2024	6:15 PM	0	0	0	0	0	0	0	0	0	0	0	0	0
4/24/2024	6:30 PM	0	0	0	0	0	0	0	0	0	0	0	0	0
4/24/2024	6:45 PM	0	0	0	0	0	0	0	0	0	0	0	0	0
4/24/2024	7:00 PM	0	0	0	0	0	0	0	0	0	0	0	0	0
4/24/2024	7:15 PM	0	0	0	0	0	0	0	0	0	0	0	0	0
4/24/2024	7:30 PM	0	0	0	0	0	0	0	0	0	0	0	0	0
4/24/2024	7:45 PM	0	0	0	0	0	0	0	0	0	0	0	0	0
4/24/2024	8:00 PM	0	0	0	0	0	0	0	0	0	0	0	0	0
4/24/2024	8:15 PM	0	0	0	0	0	0	0	0	0	0	0	0	0
4/24/2024	8:30 PM	0	0	0	0	0	0	0	0	0	0	0	0	0
4/24/2024	8:45 PM	0	0	0	0	0	0	0	0	0	0	0	0	0
4/24/2024	9:00 PM	0	0	0	0	0	0	0	0	0	0	0	0	0
4/24/2024	9:15 PM	0	0	0	0	0	0	0	0	0	0	0	0	0
4/24/2024	9:30 PM	0	0	0	0	0	0	0	0	0	0	0	0	0
4/24/2024	9:45 PM	0	0	0	0	0	0	0	0	0	0	0	0	0
4/24/2024	10:00 PM	0	0	0	0	0	0	0	0	0	0	0	0	0
4/24/2024	10:15 PM	0	0	0	0	0	0	0	0	0	0	0	0	0
4/24/2024	10:30 PM	0	0	0	0	0	0	0	0	0	0	0	0	0
4/24/2024	10:45 PM	0	0	0	0	0	0	0	0	0	0	0	0	0
4/24/2024	11:00 PM	0	0	0	0	0	0	0	0	0	0	0	0	0
4/24/2024	11:15 PM	0	0	0	0	0	0	0	0	0	0	0	0	0
4/24/2024	11:30 PM	0	0	0	0	0	0	0	0	0	0	0	0	0
4/24/2024	11:45 PM	0	0	0	0	0	0	0	0	0	0	0	0	0

4/25/2024	12:00 AM	0	0	0	0	0	0	0	0	0	0	0	0	0
4/25/2024	12:15 AM	0	0	0	0	0	0	0	0	0	0	0	0	0
4/25/2024	12:30 AM	0	0	0	0	0	0	0	0	0	0	0	0	0
4/25/2024	12:45 AM	0	0	0	0	0	0	0	0	0	0	0	0	0
4/25/2024	1:00 AM	0	0	0	0	0	0	0	0	0	0	0	0	0
4/25/2024	1:15 AM	0	0	0	0	0	0	0	0	0	0	0	0	0
4/25/2024	1:30 AM	0	0	0	0	0	0	0	0	0	0	0	0	0
4/25/2024	1:45 AM	0	0	0	0	0	0	0	0	0	0	0	0	0
4/25/2024	2:00 AM	0	0	0	0	0	0	0	0	0	0	0	0	0
4/25/2024	2:15 AM	0	0	0	0	0	0	0	0	0	0	0	0	0
4/25/2024	2:30 AM	0	0	0	0	0	0	0	0	0	0	0	0	0
4/25/2024	2:45 AM	0	0	0	0	0	0	0	0	0	0	0	0	0
4/25/2024	3:00 AM	0	0	0	0	0	0	0	0	0	0	0	0	0
4/25/2024	3:15 AM	0	0	0	0	0	0	0	0	0	0	0	0	0
4/25/2024	3:30 AM	0	0	0	0	0	0	0	0	0	0	0	0	0
4/25/2024	3:45 AM	0	0	0	0	0	0	0	0	0	0	0	0	0
4/25/2024	4:00 AM	0	0	0	0	0	0	0	0	0	0	0	0	0
4/25/2024	4:15 AM	0	0	0	0	0	0	0	0	0	0	0	0	0
4/25/2024	4:30 AM	0	0	0	0	0	0	0	0	0	0	0	0	0
4/25/2024	4:45 AM	0	0	0	0	0	0	0	0	0	0	0	0	0
4/25/2024	5:00 AM	0	0	0	0	0	0	0	0	0	0	0	0	0
4/25/2024	5:15 AM	0	0	0	0	0	0	0	0	0	0	0	0	0
4/25/2024	5:30 AM	0	0	0	0	0	0	0	0	0	0	0	0	0
4/25/2024	5:45 AM	0	0	0	0	0	0	0	0	0	0	0	0	0
4/25/2024	6:00 AM	0	0	0	0	0	0	0	0	0	0	0	0	0
4/25/2024	6:15 AM	0	0	0	0	0	0	0	0	0	0	0	0	0
4/25/2024	6:30 AM	0	0	0	0	0	0	0	0	0	0	0	0	0
4/25/2024	6:45 AM	0	0	0	0	0	0	0	0	0	0	0	0	0
4/25/2024	7:00 AM	0	0	0	0	0	0	0	0	0	0	0	0	0
4/25/2024	7:15 AM	0	0	0	0	0	0	0	0	0	0	0	0	0
4/25/2024	7:30 AM	0	0	0	0	0	0	0	0	0	0	0	0	0
4/25/2024	7:45 AM	0	0	0	0	0	0	0	0	0	0	0	0	0
4/25/2024	8:00 AM	0	0	0	0	0	0	0	0	0	0	0	0	0
4/25/2024	8:15 AM	0	0	0	0	0	0	0	0	0	0	0	0	0
4/25/2024	8:30 AM	0	0	0	0	0	0	0	0	0	0	0	0	0
4/25/2024	8:45 AM	0	0	0	0	0	0	0	0	0	0	0	0	0
4/25/2024	9:00 AM	0	0	0	0	0	0	0	0	0	0	0	0	0
4/25/2024	9:15 AM	0	0	0	0	0	0	0	0	0	0	0	0	0
4/25/2024	9:30 AM	0	0	0	0	0	0	0	0	0	0	0	0	0
4/25/2024	9:45 AM	0	0	0	0	0	0	0	0	0	0	0	0	0
4/25/2024	10:00 AM	0	0	0	0	0	0	0	0	0	0	0	0	0
4/25/2024	10:15 AM	0	0	0	0	0	0	0	0	0	0	0	0	0
4/25/2024	10:30 AM	0	0	0	0	0	0	0	0	0	0	0	0	0
4/25/2024	10:45 AM	0	0	0	0	0	0	0	0	0	0	0	0	0
4/25/2024	11:00 AM	0	0	0	0	0	0	0	0	0	0	0	0	0
4/25/2024	11:15 AM	0	0	0	0	0	0	0	0	0	0	0	0	0
4/25/2024	11:30 AM	0	0	0	0	0	0	0	0	0	0	0	0	0
4/25/2024	11:45 AM	0	0	0	0	0	0	0	0	0	0	0	0	0
4/25/2024	12:00 PM	0	0	0	0	0	0	0	0	0	0	0	0	0
4/25/2024	12:15 PM	0	0	0	0	0	0	0	0	0	0	0	0	0
4/25/2024	12:30 PM	0	0	0	0	0	0	0	0	0	0	0	0	0
4/25/2024	12:45 PM	0	0	0	0	0	0	0	0	0	0	0	0	0
4/25/2024	1:00 PM	0	0	0	0	0	0	0	0	0	0	0	0	0
4/25/2024	1:15 PM	0	0	0	0	0	0	0	0	0	0	0	0	0
4/25/2024	1:30 PM	0	0	0	0	0	0	0	0	0	0	0	0	0
4/25/2024	1:45 PM	0	0	0	0	0	0	0	0	0	0	0	0	0
4/25/2024	2:00 PM	0	0	0	0	0	0	0	0	0	0	0	0	0
4/25/2024	2:15 PM	0	0	0	0	0	0	0	0	0	0	0	0	0
4/25/2024	2:30 PM	0	0	0	0	0	0	0	0	0	0	0	0	0
4/25/2024	2:45 PM	0	0	0	0	0	0	0	0	0	0	0	0	0
4/25/2024	3:00 PM	0	0	0	0	0	0	0	0	0	0	0	0	0
4/25/2024	3:15 PM	0	0	0	0	0	0	0	0	0	0	0	0	0
4/25/2024	3:30 PM	0	0	0	0	0	0	0	0	0	0	0	0	0
4/25/2024	3:45 PM	0	0	0	0	0	0	0	0	0	0	0	0	0
4/25/2024	4:00 PM	0	0	0	0	0	0	0	0	0	0	0	0	0
4/25/2024	4:15 PM	0	0	0	0	0	0	0	0	0	0	0	0	0
4/25/2024	4:30 PM	0	0	0	0	0	0	0	0	0	0	0	0	0
4/25/2024	4:45 PM	0	0	0	0	0	0	0	0	0	0	0	0	0
4/25/2024	5:00 PM	0	0	0	0	0	0	0	0	0	0	0	0	0
4/25/2024	5:15 PM	0	0	0	0	0	0	0	0	0	0	0	0	0
4/25/2024	5:30 PM	0	0	0	0	0	0	0	0	0	0	0	0	0
4/25/2024	5:45 PM	0	0	0	0	0	0	0	0	0	0	0	0	0
4/25/2024	6:00 PM	0	0	0	0	0	0	0	0	0	0	0	0	0
4/25/2024	6:15 PM	0	0	0	0	0	0	0	0	0	0	0	0	0
4/25/2024	6:30 PM	0	0	0	0	0	0	0	0	0	0	0	0	0
4/25/2024	6:45 PM	0	0	0	0	0	0	0	0	0	0	0	0	0
4/25/2024	7:00 PM	0	0	0	0	0	0	0	0	0	0	0	0	0
4/25/2024	7:15 PM	0	0	0	0	0	0	0	0	0	0	0	0	0
4/25/2024	7:30 PM	0	0	0	0	0	0	0	0	0	0	0	0	0
4/25/2024	7:45 PM	0	0	0	0	0	0	0	0	0	0	0	0	0
4/25/2024	8:00 PM	0	0	0	0	0	0	0	0	0	0	0	0	0
4/25/2024	8:15 PM	0	0	0	0	0	0	0	0	0	0	0	0	0
4/25/2024	8:30 PM	0	0	0	0	0	0	0	0	0	0	0	0	0
4/25/2024	8:45 PM	0	0	0	0	0	0	0	0	0	0	0	0	0
4/25/2024	9:00 PM	0	0	0	0	0	0	0	0	0	0	0	0	0
4/25/2024	9:15 PM	0	0	0	0	0	0	0	0	0	0	0	0	0
4/25/2024	9:30 PM	0	0	0	0	0	0	0	0	0	0	0	0	0
4/25/2024	9:45 PM	0	0	0	0	0	0	0	0	0	0	0	0	0
4/25/2024	10:00 PM	0	0	0	0	0	0	0	0	0	0	0	0	0
4/25/2024	10:15 PM	0	0	0	0	0	0	0	0	0	0	0	0	0
4/25/2024	10:30 PM	0	0	0	0	0	0	0	0	0	0	0	0	0
4/25/2024	10:45 PM	0	0	0	0	0	0	0	0	0	0	0	0	0
4/25/2024	11:00 PM	0	0	0	0	0	0	0	0	0	0	0	0	0
4/25/2024	11:15 PM	0	0	0	0	0	0	0	0	0	0	0	0	0
4/25/2024	11:30 PM	0	0	0	0	0	0	0	0	0	0	0	0	0
4/25/2024	11:45 PM	0	0	0	0	0	0	0	0	0	0	0	0	0

NB
File Name:
Start Date: 4/23/2024
Start Time: 0
Site Code: 33
Station ID: 1
Location 1: I-26 James F. Byrnes Expy N/Bound On-Ramp, north of Piney Grove Rd
Location 2:

Date	Time	1	2	3	4	5	6	7	8	9	10	11	12	13
4/23/2024	12:00 AM	0	0	0	0	0	0	0	0	0	0	0	0	0
4/23/2024	12:15 AM	0	0	0	0	0	0	0	0	0	0	0	0	0
4/23/2024	12:30 AM	0	0	0	0	0	0	0	0	0	0	0	0	0
4/23/2024	12:45 AM	0	0	0	0	0	0	0	0	0	0	0	0	0
4/23/2024	1:00 AM	0	0	0	0	0	0	0	0	0	0	0	0	0
4/23/2024	1:15 AM	0	0	0	0	0	0	0	0	0	0	0	0	0
4/23/2024	1:30 AM	0	0	0	0	0	0	0	0	0	0	0	0	0
4/23/2024	1:45 AM	0	0	0	0	0	0	0	0	0	0	0	0	0
4/23/2024	2:00 AM	0	0	0	0	0	0	0	0	0	0	0	0	0
4/23/2024	2:15 AM	0	0	0	0	0	0	0	0	0	0	0	0	0
4/23/2024	2:30 AM	0	0	0	0	0	0	0	0	0	0	0	0	0
4/23/2024	2:45 AM	0	0	0	0	0	0	0	0	0	0	0	0	0
4/23/2024	3:00 AM	0	0	0	0	0	0	0	0	0	0	0	0	0
4/23/2024	3:15 AM	0	0	0	0	0	0	0	0	0	0	0	0	0
4/23/2024	3:30 AM	0	0	0	0	0	0	0	0	0	0	0	0	0
4/23/2024	3:45 AM	0	0	0	0	0	0	0	0	0	0	0	0	0
4/23/2024	4:00 AM	0	0	0	0	0	0	0	0	0	0	0	0	0
4/23/2024	4:15 AM	0	0	0	0	0	0	0	0	0	0	0	0	0
4/23/2024	4:30 AM	0	0	0	0	0	0	0	0	0	0	0	0	0
4/23/2024	4:45 AM	0	0	0	0	0	0	0	0	0	0	0	0	0
4/23/2024	5:00 AM	0	0	0	0	0	0	0	0	0	0	0	0	0
4/23/2024	5:15 AM	0	0	0	0	0	0	0	0	0	0	0	0	0
4/23/2024	5:30 AM	0	0	0	0	0	0	0	0	0	0	0	0	0
4/23/2024	5:45 AM	0	0	0	0	0	0	0	0	0	0	0	0	0
4/23/2024	6:00 AM	0	0	0	0	0	0	0	0	0	0	0	0	0
4/23/2024	6:15 AM	0	0	0	0	0	0	0	0	0	0	0	0	0
4/23/2024	6:30 AM	0	0	0	0	0	0	0	0	0	0	0	0	0
4/23/2024	6:45 AM	0	0	0	0	0	0	0	0	0	0	0	0	0
4/23/2024	7:00 AM	0	0	0	0	0	0	0	0	0	0	0	0	0
4/23/2024	7:15 AM	0	0	0	0	0	0	0	0	0	0	0	0	0
4/23/2024	7:30 AM	0	0	0	0	0	0	0	0	0	0	0	0	0
4/23/2024	7:45 AM	0	0	0	0	0	0	0	0	0	0	0	0	0
4/23/2024	8:00 AM	0	0	0	0	0	0	0	0	0	0	0	0	0
4/23/2024	8:15 AM	0	0	0	0	0	0	0	0	0	0	0	0	0
4/23/2024	8:30 AM	0	0	0	0	0	0	0	0	0	0	0	0	0
4/23/2024	8:45 AM	0	0	0	0	0	0	0	0	0	0	0	0	0
4/23/2024	9:00 AM	0	0	0	0	0	0	0	0	0	0	0	0	0
4/23/2024	9:15 AM	0	0	0	0	0	0	0	0	0	0	0	0	0
4/23/2024	9:30 AM	0	0	0	0	0	0	0	0	0	0	0	0	0
4/23/2024	9:45 AM	0	0	0	0	0	0	0	0	0	0	0	0	0
4/23/2024	10:00 AM	0	0	0	0	0	0	0	0	0	0	0	0	0
4/23/2024	10:15 AM	0	0	0	0	0	0	0	0	0	0	0	0	0
4/23/2024	10:30 AM	0	0	0	0	0	0	0	0	0	0	0	0	0
4/23/2024	10:45 AM	0	0	0	0	0	0	0	0	0	0	0	0	0
4/23/2024	11:00 AM	0	0	0	0	0	0	0	0	0	0	0	0	0
4/23/2024	11:15 AM	0	0	0	0	0	0	0	0	0	0	0	0	0
4/23/2024	11:30 AM	0	0	0	0	0	0	0	0	0	0	0	0	0
4/23/2024	11:45 AM	0	0	0	0	0	0	0	0	0	0	0	0	0
4/23/2024	12:00 PM	0	0	0	0	0	0	0	0	0	0	0	0	0
4/23/2024	12:15 PM	0	0	0	0	0	0	0	0	0	0	0	0	0
4/23/2024	12:30 PM	0	0	0	0	0	0	0	0	0	0	0	0	0
4/23/2024	12:45 PM	0	0	0	0	0	0	0	0	0	0	0	0	0
4/23/2024	1:00 PM	0	0	0	0	0	0	0	0	0	0	0	0	0
4/23/2024	1:15 PM	0	0	0	0	0	0	0	0	0	0	0	0	0
4/23/2024	1:30 PM	0	0	0	0	0	0	0	0	0	0	0	0	0
4/23/2024	1:45 PM	0	0	0	0	0	0	0	0	0	0	0	0	0
4/23/2024	2:00 PM	0	0	0	0	0	0	0	0	0	0	0	0	0
4/23/2024	2:15 PM	0	0	0	0	0	0	0	0	0	0	0	0	0
4/23/2024	2:30 PM	0	0	0	0	0	0	0	0	0	0	0	0	0
4/23/2024	2:45 PM	0	0	0	0	0	0	0	0	0	0	0	0	0
4/23/2024	3:00 PM	0	0	0	0	0	0	0	0	0	0	0	0	0
4/23/2024	3:15 PM	0	0	0	0	0	0	0	0	0	0	0	0	0
4/23/2024	3:30 PM	0	0	0	0	0	0	0	0	0	0	0	0	0
4/23/2024	3:45 PM	0	0	0	0	0	0	0	0	0	0	0	0	0
4/23/2024	4:00 PM	0	0	0	0	0	0	0	0	0	0	0	0	0
4/23/2024	4:15 PM	0	0	0	0	0	0	0	0	0	0	0	0	0
4/23/2024	4:30 PM	0	0	0	0	0	0	0	0	0	0	0	0	0
4/23/2024	4:45 PM	0	0	0	0	0	0	0	0	0	0	0	0	0
4/23/2024	5:00 PM	0	0	0	0	0	0	0	0	0	0	0	0	0
4/23/2024	5:15 PM	0	0	0	0	0	0	0	0	0	0	0	0	0
4/23/2024	5:30 PM	0	0	0	0	0	0	0	0	0	0	0	0	0
4/23/2024	5:45 PM	0	0	0	0	0	0	0	0	0	0	0	0	0
4/23/2024	6:00 PM	0	0	0	0	0	0	0	0	0	0	0	0	0
4/23/2024	6:15 PM	0	38	8	0	0	0	0	0	0	0	0	0	0
4/23/2024	6:30 PM	1	81	16	0	0	0	0	0	0	0	0	0	0
4/23/2024	6:45 PM	1	105	23	0	0	0	0	0	0	0	0	0	0
4/23/2024	7:00 PM	1	146	31	0	0	0	0	0	0	0	0	0	0
4/23/2024	7:15 PM	2	144	27	0	0	0	0	0	1	0	0	0	0
4/23/2024	7:30 PM	1	139	26	0	1	0	0	0	1	0	0	0	0
4/23/2024	7:45 PM	1	136	21	0	1	0	0	0	2	0	0	0	0
4/23/2024	8:00 PM	1	120	18	0	2	0	0	0	2	0	0	0	0
4/23/2024	8:15 PM	0	101	17	0	2	0	0	0	1	0	0	0	0
4/23/2024	8:30 PM	0	81	12	0	1	0	0	0	1	0	0	0	0
4/23/2024	8:45 PM	0	74	12	0	1	0	0	0	1	0	0	0	0
4/23/2024	9:00 PM	0	59	9	0	0	0	0	0	2	0	0	0	0
4/23/2024	9:15 PM	0	54	7	0	0	0	0	0	2	0	0	0	0
4/23/2024	9:30 PM	0	47	7	0	0	0	0	0	2	0	0	0	0
4/23/2024	9:45 PM	0	38	5	0	0	0	0	0	1	0	0	0	0
4/23/2024	10:00 PM	0	40	4	0	0	0	0	0	0	0	0	0	0
4/23/2024	10:15 PM	0	32	3	0	0	0	0	0	1	0	0	0	0
4/23/2024	10:30 PM	0	30	3	0	0	0	0	0	1	0	0	0	0
4/23/2024	10:45 PM	0	31	4	0	0	0	0	0	1	0	0	0	0
4/23/2024	11:00 PM	0	26	3	0	0	0	0	0	1	0	0	0	0
4/23/2024	11:15 PM	0	33	5	0	0	0	0	0	0	0	0	0	0
4/23/2024	11:30 PM	0	32	6	0	0	0	0	0	0	0	1	0	0
4/23/2024	11:45 PM	0	32	8	0	0	0	0	0	0	0	1	0	0

4/24/2024	12:00 AM	0	25	8	0	0	0	0	0	0	0	1	0	0
4/24/2024	12:15 AM	0	16	6	0	0	0	0	0	0	0	1	0	0
4/24/2024	12:30 AM	0	11	3	0	0	0	0	0	0	0	0	0	0
4/24/2024	12:45 AM	0	7	0	0	0	0	0	0	0	0	0	0	0
4/24/2024	1:00 AM	0	9	0	0	0	0	0	0	0	0	0	0	0
4/24/2024	1:15 AM	0	8	0	0	0	0	0	0	0	0	0	0	0
4/24/2024	1:30 AM	0	8	0	0	0	0	0	0	0	0	0	0	0
4/24/2024	1:45 AM	0	10	0	0	0	0	0	0	0	0	0	0	0
4/24/2024	2:00 AM	0	13	0	0	0	0	0	0	0	0	0	0	0
4/24/2024	2:15 AM	0	13	0	0	0	0	0	0	0	0	0	0	0
4/24/2024	2:30 AM	0	12	0	0	0	0	0	0	1	0	0	0	0
4/24/2024	2:45 AM	0	14	0	0	0	0	0	0	2	0	0	0	0
4/24/2024	3:00 AM	0	13	1	0	0	0	0	0	3	0	0	0	0
4/24/2024	3:15 AM	0	12	1	0	0	0	0	0	3	0	0	0	0
4/24/2024	3:30 AM	0	11	1	0	0	0	0	0	2	0	0	0	0
4/24/2024	3:45 AM	0	9	2	0	0	0	0	0	2	0	0	0	0
4/24/2024	4:00 AM	0	10	1	0	0	0	0	0	2	0	0	0	0
4/24/2024	4:15 AM	0	18	2	0	0	0	0	0	2	0	0	0	0
4/24/2024	4:30 AM	0	26	3	0	0	0	0	0	2	0	0	0	0
4/24/2024	4:45 AM	0	30	4	0	0	0	0	0	1	0	0	0	0
4/24/2024	5:00 AM	0	37	4	0	0	0	0	0	0	0	0	0	0
4/24/2024	5:15 AM	0	43	7	0	0	0	0	0	0	0	0	0	0
4/24/2024	5:30 AM	0	48	8	0	1	0	0	0	1	0	0	0	0
4/24/2024	5:45 AM	0	64	12	0	1	0	0	0	1	0	0	0	0
4/24/2024	6:00 AM	0	77	18	0	3	1	0	0	1	0	0	0	0
4/24/2024	6:15 AM	0	94	19	0	4	1	0	0	1	0	0	0	0
4/24/2024	6:30 AM	0	114	26	0	6	1	0	0	1	0	0	0	0
4/24/2024	6:45 AM	0	134	35	0	8	1	0	0	1	0	0	0	0
4/24/2024	7:00 AM	0	155	47	0	7	0	0	0	1	0	0	0	0
4/24/2024	7:15 AM	0	160	54	0	8	0	0	0	2	0	0	0	0
4/24/2024	7:30 AM	0	155	53	0	5	0	0	0	1	0	0	0	0
4/24/2024	7:45 AM	0	137	43	0	5	0	0	0	1	0	0	0	0
4/24/2024	8:00 AM	0	132	36	0	4	0	0	0	1	0	0	0	0
4/24/2024	8:15 AM	0	135	35	1	2	0	0	0	0	0	0	0	0
4/24/2024	8:30 AM	0	138	41	2	4	0	0	0	0	0	0	0	0
4/24/2024	8:45 AM	0	143	50	2	4	0	0	0	0	0	0	0	0
4/24/2024	9:00 AM	0	131	46	2	4	1	0	0	0	0	0	0	0
4/24/2024	9:15 AM	0	126	41	1	4	1	0	0	2	0	0	0	0
4/24/2024	9:30 AM	1	140	41	1	3	1	0	0	3	0	0	0	0
4/24/2024	9:45 AM	1	160	44	2	4	1	0	0	3	0	0	0	0
4/24/2024	10:00 AM	1	168	47	2	5	0	0	0	4	0	0	0	0
4/24/2024	10:15 AM	1	182	52	2	6	0	0	1	2	0	0	0	0
4/24/2024	10:30 AM	0	181	47	1	5	0	0	1	1	0	0	0	0
4/24/2024	10:45 AM	0	184	41	0	4	0	0	1	2	0	0	0	0
4/24/2024	11:00 AM	0	182	49	0	3	0	0	1	1	0	0	0	0
4/24/2024	11:15 AM	0	193	53	0	3	0	0	0	1	0	0	0	0
4/24/2024	11:30 AM	0	207	62	0	3	0	0	1	1	0	0	0	0
4/24/2024	11:45 AM	0	201	74	2	3	1	0	1	0	0	0	0	0
4/24/2024	12:00 PM	0	217	70	2	3	1	0	1	0	0	0	0	0
4/24/2024	12:15 PM	1	215	67	2	2	1	0	1	0	0	0	0	0
4/24/2024	12:30 PM	1	221	64	2	5	1	0	0	0	0	0	0	0
4/24/2024	12:45 PM	1	235	52	0	4	0	0	0	0	0	0	0	0
4/24/2024	1:00 PM	1	233	49	0	5	0	0	0	0	0	0	0	0
4/24/2024	1:15 PM	0	239	51	0	5	0	0	0	0	0	0	0	0
4/24/2024	1:30 PM	0	228	45	0	3	0	0	0	1	0	0	0	0
4/24/2024	1:45 PM	0	220	46	0	2	0	0	0	1	0	0	0	0
4/24/2024	2:00 PM	0	226	52	0	5	1	0	0	1	0	0	0	0
4/24/2024	2:15 PM	0	218	50	0	6	1	0	0	1	0	0	0	0
4/24/2024	2:30 PM	0	220	55	0	5	1	0	1	0	0	0	0	0
4/24/2024	2:45 PM	0	225	51	0	5	3	0	2	0	0	0	0	0
4/24/2024	3:00 PM	0	215	52	0	3	2	0	2	0	0	0	0	0
4/24/2024	3:15 PM	0	390	53	0	3	2	0	2	0	0	0	0	0
4/24/2024	3:30 PM	0	402	57	0	4	2	0	1	2	0	0	0	0
4/24/2024	3:45 PM	0	409	65	0	4	0	0	0	3	0	0	0	0
4/24/2024	4:00 PM	1	437	61	0	4	0	0	0	4	0	0	0	0
4/24/2024	4:15 PM	1	284	63	0	4	0	0	0	4	0	0	0	0
4/24/2024	4:30 PM	2	289	57	0	4	0	0	0	2	0	0	0	0
4/24/2024	4:45 PM	2	296	61	0	6	0	0	0	2	0	0	0	0
4/24/2024	5:00 PM	1	284	62	0	4	0	0	0	1	0	0	0	0
4/24/2024	5:15 PM	1	285	58	0	3	0	0	0	1	0	0	0	0
4/24/2024	5:30 PM	1	258	51	0	2	0	0	0	1	0	0	0	0
4/24/2024	5:45 PM	1	233	36	0	0	0	0	0	1	0	0	0	0
4/24/2024	6:00 PM	1	227	25	0	1	0	0	0	1	0	0	0	0
4/24/2024	6:15 PM	1	182	22	0	2	0	0	0	1	0	0	0	0
4/24/2024	6:30 PM	0	187	28	0	3	0	0	0	1	0	0	0	0
4/24/2024	6:45 PM	0	172	29	0	3	0	0	0	0	0	0	0	0
4/24/2024	7:00 PM	0	154	32	0	3	0	0	0	0	0	0	0	0
4/24/2024	7:15 PM	0	161	27	0	2	0	0	0	0	0	0	0	0
4/24/2024	7:30 PM	0	138	23	0	1	0	0	0	0	0	0	0	0
4/24/2024	7:45 PM	0	132	22	0	1	0	0	0	1	0	0	0	0
4/24/2024	8:00 PM	1	122	24	0	0	0	0	0	1	0	0	0	0
4/24/2024	8:15 PM	1	105	27	0	0	0	0	0	1	0	0	0	0
4/24/2024	8:30 PM	1	89	24	0	0	0	0	0	1	0	0	0	0
4/24/2024	8:45 PM	1	72	21	0	0	0	0	0	0	0	0	0	0
4/24/2024	9:00 PM	1	58	18	0	0	0	0	0	1	0	0	0	0
4/24/2024	9:15 PM	1	47	15	0	0	0	0	0	1	0	0	0	0
4/24/2024	9:30 PM	1	46	16	0	0	0	0	0	1	0	0	0	0
4/24/2024	9:45 PM	1	41	15	0	0	0	0	0	1	0	0	0	0
4/24/2024	10:00 PM	0	33	11	0	0	0	0	0	0	0	0	0	0
4/24/2024	10:15 PM	0	27	10	0	0	0	0	0	0	0	0	0	0
4/24/2024	10:30 PM	0	20	7	0	0	0	0	0	0	0	0	0	0
4/24/2024	10:45 PM	0	18	7	0	0	0	0	0	0	0	0	0	0
4/24/2024	11:00 PM	0	20	8	0	0	0	0	0	1	0	0	0	0
4/24/2024	11:15 PM	0	25	8	0	0	0	0	0	1	0	0	0	0
4/24/2024	11:30 PM	0	23	7	0	1	0	0	0	1	0	0	0	0
4/24/2024	11:45 PM	0	26	8	0	1	0	0	0	1	0	0	0	0

4/25/2024	12:00 AM	0	25	9	0	1	0	0	0	0	0	0	0
4/25/2024	12:15 AM	0	19	8	0	1	0	0	0	0	0	0	0
4/25/2024	12:30 AM	0	20	7	0	0	0	0	0	0	0	0	0
4/25/2024	12:45 AM	0	16	5	0	0	0	0	0	0	0	0	0
4/25/2024	1:00 AM	0	14	1	0	0	0	0	0	0	0	0	0
4/25/2024	1:15 AM	0	11	0	0	0	0	0	0	1	0	0	0
4/25/2024	1:30 AM	0	9	1	0	0	0	0	0	1	0	0	0
4/25/2024	1:45 AM	0	10	1	0	0	0	0	0	1	0	0	0
4/25/2024	2:00 AM	0	10	3	0	0	0	0	0	2	0	0	0
4/25/2024	2:15 AM	0	8	3	0	0	0	0	0	1	0	0	0
4/25/2024	2:30 AM	0	8	2	0	0	0	0	0	2	0	0	0
4/25/2024	2:45 AM	0	6	2	0	0	0	0	0	2	0	0	0
4/25/2024	3:00 AM	0	3	1	0	0	0	0	0	1	0	0	0
4/25/2024	3:15 AM	0	4	1	0	1	0	0	0	2	0	0	0
4/25/2024	3:30 AM	0	4	1	0	1	0	0	0	2	0	0	0
4/25/2024	3:45 AM	0	9	2	0	1	0	0	0	2	0	0	0
4/25/2024	4:00 AM	0	9	1	0	1	0	0	0	3	0	0	0
4/25/2024	4:15 AM	0	19	4	0	0	0	0	0	2	0	0	0
4/25/2024	4:30 AM	0	31	9	0	0	0	0	0	1	0	0	0
4/25/2024	4:45 AM	0	34	14	0	0	0	0	0	1	0	0	0
4/25/2024	5:00 AM	0	47	17	0	2	0	0	0	0	0	0	0
4/25/2024	5:15 AM	0	52	19	0	2	0	0	0	0	0	0	0
4/25/2024	5:30 AM	0	55	18	0	3	0	0	0	0	0	0	0
4/25/2024	5:45 AM	0	73	16	0	5	1	0	0	0	0	0	0
4/25/2024	6:00 AM	1	83	17	0	4	1	0	0	0	0	0	0
4/25/2024	6:15 AM	1	101	22	0	4	1	0	0	0	0	0	0
4/25/2024	6:30 AM	1	132	30	0	4	2	1	0	2	0	0	0
4/25/2024	6:45 AM	1	157	41	0	5	1	1	0	3	0	0	0
4/25/2024	7:00 AM	0	181	49	0	6	1	1	2	3	0	0	0
4/25/2024	7:15 AM	0	185	50	0	8	1	1	2	3	0	0	0
4/25/2024	7:30 AM	0	179	43	0	9	0	0	2	1	0	0	0
4/25/2024	7:45 AM	0	158	36	0	6	1	0	2	0	0	0	0
4/25/2024	8:00 AM	0	149	30	0	5	1	0	0	0	0	0	0
4/25/2024	8:15 AM	0	143	30	0	5	1	0	0	0	0	0	0
4/25/2024	8:30 AM	0	133	32	0	5	1	0	0	2	0	0	0
4/25/2024	8:45 AM	0	132	39	0	5	0	0	1	3	0	0	0
4/25/2024	9:00 AM	0	126	45	0	6	1	0	1	4	0	0	0
4/25/2024	9:15 AM	0	128	50	0	4	1	0	1	4	0	0	0
4/25/2024	9:30 AM	0	133	52	0	5	1	1	1	2	0	0	0
4/25/2024	9:45 AM	0	145	46	0	6	1	1	0	1	0	0	0
4/25/2024	10:00 AM	0	154	55	0	4	0	1	0	0	0	0	0
4/25/2024	10:15 AM	0	184	50	0	5	0	1	0	0	0	0	0
4/25/2024	10:30 AM	0	203	53	0	3	0	0	0	0	0	0	0
4/25/2024	10:45 AM	0	214	61	0	3	0	0	0	1	0	0	0
4/25/2024	11:00 AM	0	236	50	0	6	0	0	0	1	0	0	0
4/25/2024	11:15 AM	0	233	56	0	5	0	0	0	2	0	0	0
4/25/2024	11:30 AM	1	246	59	0	4	0	0	0	3	0	0	0
4/25/2024	11:45 AM	1	244	53	0	4	0	0	1	2	0	0	0
4/25/2024	12:00 PM	1	234	55	1	2	1	0	2	2	0	0	0
4/25/2024	12:15 PM	1	236	54	1	2	1	0	2	1	0	0	0
4/25/2024	12:30 PM	1	230	49	1	3	1	0	2	0	0	0	0
4/25/2024	12:45 PM	1	243	53	1	4	2	0	1	0	0	0	0
4/25/2024	1:00 PM	1	252	56	0	4	2	0	0	0	0	0	0
4/25/2024	1:15 PM	1	247	64	0	6	2	0	0	0	0	0	0
4/25/2024	1:30 PM	0	248	72	0	6	2	0	0	0	0	0	0
4/25/2024	1:45 PM	1	246	72	0	4	1	0	0	0	0	0	0
4/25/2024	2:00 PM	1	250	68	0	4	0	0	0	0	0	0	0
4/25/2024	2:15 PM	1	260	58	0	2	0	0	0	0	0	0	0
4/25/2024	2:30 PM	2	249	48	0	1	0	0	0	0	0	0	0
4/25/2024	2:45 PM	1	238	50	0	1	0	0	0	0	0	0	0
4/25/2024	3:00 PM	1	228	60	0	0	0	0	0	0	0	0	0
4/25/2024	3:15 PM	1	239	67	0	1	0	0	0	0	0	0	0
4/25/2024	3:30 PM	0	251	77	0	2	0	0	0	1	0	0	0
4/25/2024	3:45 PM	0	267	79	0	2	2	0	0	3	0	0	0
4/25/2024	4:00 PM	1	286	78	0	3	2	0	0	3	0	0	0
4/25/2024	4:15 PM	1	293	75	0	2	2	0	0	3	0	0	0
4/25/2024	4:30 PM	1	298	69	0	3	2	0	0	2	0	0	0
4/25/2024	4:45 PM	1	303	60	0	3	0	0	0	0	0	0	0
4/25/2024	5:00 PM	0	303	48	0	3	0	0	0	0	0	0	0
4/25/2024	5:15 PM	0	296	44	0	3	0	0	0	0	0	0	0
4/25/2024	5:30 PM	0	286	46	0	1	0	0	0	0	0	0	0
4/25/2024	5:45 PM	2	262	44	0	1	0	0	0	0	0	0	0
4/25/2024	6:00 PM	2	246	42	0	0	0	0	0	0	0	0	0
4/25/2024	6:15 PM	2	167	28	0	0	0	0	0	0	0	0	0
4/25/2024	6:30 PM	2	108	14	0	0	0	0	0	0	0	0	0
4/25/2024	6:45 PM	0	60	6	0	0	0	0	0	0	0	0	0
4/25/2024	7:00 PM	0	0	0	0	0	0	0	0	0	0	0	0
4/25/2024	7:15 PM	0	0	0	0	0	0	0	0	0	0	0	0
4/25/2024	7:30 PM	0	0	0	0	0	0	0	0	0	0	0	0
4/25/2024	7:45 PM	0	0	0	0	0	0	0	0	0	0	0	0
4/25/2024	8:00 PM	0	0	0	0	0	0	0	0	0	0	0	0
4/25/2024	8:15 PM	0	0	0	0	0	0	0	0	0	0	0	0
4/25/2024	8:30 PM	0	0	0	0	0	0	0	0	0	0	0	0
4/25/2024	8:45 PM	0	0	0	0	0	0	0	0	0	0	0	0
4/25/2024	9:00 PM	0	0	0	0	0	0	0	0	0	0	0	0
4/25/2024	9:15 PM	0	0	0	0	0	0	0	0	0	0	0	0
4/25/2024	9:30 PM	0	0	0	0	0	0	0	0	0	0	0	0
4/25/2024	9:45 PM	0	0	0	0	0	0	0	0	0	0	0	0
4/25/2024	10:00 PM	0	0	0	0	0	0	0	0	0	0	0	0
4/25/2024	10:15 PM	0	0	0	0	0	0	0	0	0	0	0	0
4/25/2024	10:30 PM	0	0	0	0	0	0	0	0	0	0	0	0
4/25/2024	10:45 PM	0	0	0	0	0	0	0	0	0	0	0	0
4/25/2024	11:00 PM	0	0	0	0	0	0	0	0	0	0	0	0
4/25/2024	11:15 PM	0	0	0	0	0	0	0	0	0	0	0	0
4/25/2024	11:30 PM	0	0	0	0	0	0	0	0	0	0	0	0
4/25/2024	11:45 PM	0	0	0	0	0	0	0	0	0	0	0	0

SB
File Name:
Start Date: 4/23/2024
Start Time: 0
Site Code: 33
Station ID: 1
Location 1: I-26 James F. Byrnes Expy N/Bound On-Ramp, north of Piney Grove Rd
Location 2:

Date	Time	1	2	3	4	5	6	7	8	9	10	11	12	13
4/23/2024	12:00 AM	0	0	0	0	0	0	0	0	0	0	0	0	0
4/23/2024	12:15 AM	0	0	0	0	0	0	0	0	0	0	0	0	0
4/23/2024	12:30 AM	0	0	0	0	0	0	0	0	0	0	0	0	0
4/23/2024	12:45 AM	0	0	0	0	0	0	0	0	0	0	0	0	0
4/23/2024	1:00 AM	0	0	0	0	0	0	0	0	0	0	0	0	0
4/23/2024	1:15 AM	0	0	0	0	0	0	0	0	0	0	0	0	0
4/23/2024	1:30 AM	0	0	0	0	0	0	0	0	0	0	0	0	0
4/23/2024	1:45 AM	0	0	0	0	0	0	0	0	0	0	0	0	0
4/23/2024	2:00 AM	0	0	0	0	0	0	0	0	0	0	0	0	0
4/23/2024	2:15 AM	0	0	0	0	0	0	0	0	0	0	0	0	0
4/23/2024	2:30 AM	0	0	0	0	0	0	0	0	0	0	0	0	0
4/23/2024	2:45 AM	0	0	0	0	0	0	0	0	0	0	0	0	0
4/23/2024	3:00 AM	0	0	0	0	0	0	0	0	0	0	0	0	0
4/23/2024	3:15 AM	0	0	0	0	0	0	0	0	0	0	0	0	0
4/23/2024	3:30 AM	0	0	0	0	0	0	0	0	0	0	0	0	0
4/23/2024	3:45 AM	0	0	0	0	0	0	0	0	0	0	0	0	0
4/23/2024	4:00 AM	0	0	0	0	0	0	0	0	0	0	0	0	0
4/23/2024	4:15 AM	0	0	0	0	0	0	0	0	0	0	0	0	0
4/23/2024	4:30 AM	0	0	0	0	0	0	0	0	0	0	0	0	0
4/23/2024	4:45 AM	0	0	0	0	0	0	0	0	0	0	0	0	0
4/23/2024	5:00 AM	0	0	0	0	0	0	0	0	0	0	0	0	0
4/23/2024	5:15 AM	0	0	0	0	0	0	0	0	0	0	0	0	0
4/23/2024	5:30 AM	0	0	0	0	0	0	0	0	0	0	0	0	0
4/23/2024	5:45 AM	0	0	0	0	0	0	0	0	0	0	0	0	0
4/23/2024	6:00 AM	0	0	0	0	0	0	0	0	0	0	0	0	0
4/23/2024	6:15 AM	0	0	0	0	0	0	0	0	0	0	0	0	0
4/23/2024	6:30 AM	0	0	0	0	0	0	0	0	0	0	0	0	0
4/23/2024	6:45 AM	0	0	0	0	0	0	0	0	0	0	0	0	0
4/23/2024	7:00 AM	0	0	0	0	0	0	0	0	0	0	0	0	0
4/23/2024	7:15 AM	0	0	0	0	0	0	0	0	0	0	0	0	0
4/23/2024	7:30 AM	0	0	0	0	0	0	0	0	0	0	0	0	0
4/23/2024	7:45 AM	0	0	0	0	0	0	0	0	0	0	0	0	0
4/23/2024	8:00 AM	0	0	0	0	0	0	0	0	0	0	0	0	0
4/23/2024	8:15 AM	0	0	0	0	0	0	0	0	0	0	0	0	0
4/23/2024	8:30 AM	0	0	0	0	0	0	0	0	0	0	0	0	0
4/23/2024	8:45 AM	0	0	0	0	0	0	0	0	0	0	0	0	0
4/23/2024	9:00 AM	0	0	0	0	0	0	0	0	0	0	0	0	0
4/23/2024	9:15 AM	0	0	0	0	0	0	0	0	0	0	0	0	0
4/23/2024	9:30 AM	0	0	0	0	0	0	0	0	0	0	0	0	0
4/23/2024	9:45 AM	0	0	0	0	0	0	0	0	0	0	0	0	0
4/23/2024	10:00 AM	0	0	0	0	0	0	0	0	0	0	0	0	0
4/23/2024	10:15 AM	0	0	0	0	0	0	0	0	0	0	0	0	0
4/23/2024	10:30 AM	0	0	0	0	0	0	0	0	0	0	0	0	0
4/23/2024	10:45 AM	0	0	0	0	0	0	0	0	0	0	0	0	0
4/23/2024	11:00 AM	0	0	0	0	0	0	0	0	0	0	0	0	0
4/23/2024	11:15 AM	0	0	0	0	0	0	0	0	0	0	0	0	0
4/23/2024	11:30 AM	0	0	0	0	0	0	0	0	0	0	0	0	0
4/23/2024	11:45 AM	0	0	0	0	0	0	0	0	0	0	0	0	0
4/23/2024	12:00 PM	0	0	0	0	0	0	0	0	0	0	0	0	0
4/23/2024	12:15 PM	0	0	0	0	0	0	0	0	0	0	0	0	0
4/23/2024	12:30 PM	0	0	0	0	0	0	0	0	0	0	0	0	0
4/23/2024	12:45 PM	0	0	0	0	0	0	0	0	0	0	0	0	0
4/23/2024	1:00 PM	0	0	0	0	0	0	0	0	0	0	0	0	0
4/23/2024	1:15 PM	0	0	0	0	0	0	0	0	0	0	0	0	0
4/23/2024	1:30 PM	0	0	0	0	0	0	0	0	0	0	0	0	0
4/23/2024	1:45 PM	0	0	0	0	0	0	0	0	0	0	0	0	0
4/23/2024	2:00 PM	0	0	0	0	0	0	0	0	0	0	0	0	0
4/23/2024	2:15 PM	0	0	0	0	0	0	0	0	0	0	0	0	0
4/23/2024	2:30 PM	0	0	0	0	0	0	0	0	0	0	0	0	0
4/23/2024	2:45 PM	0	0	0	0	0	0	0	0	0	0	0	0	0
4/23/2024	3:00 PM	0	0	0	0	0	0	0	0	0	0	0	0	0
4/23/2024	3:15 PM	0	0	0	0	0	0	0	0	0	0	0	0	0
4/23/2024	3:30 PM	0	0	0	0	0	0	0	0	0	0	0	0	0
4/23/2024	3:45 PM	0	0	0	0	0	0	0	0	0	0	0	0	0
4/23/2024	4:00 PM	0	0	0	0	0	0	0	0	0	0	0	0	0
4/23/2024	4:15 PM	0	0	0	0	0	0	0	0	0	0	0	0	0
4/23/2024	4:30 PM	0	0	0	0	0	0	0	0	0	0	0	0	0
4/23/2024	4:45 PM	0	0	0	0	0	0	0	0	0	0	0	0	0
4/23/2024	5:00 PM	0	0	0	0	0	0	0	0	0	0	0	0	0
4/23/2024	5:15 PM	0	0	0	0	0	0	0	0	0	0	0	0	0
4/23/2024	5:30 PM	0	0	0	0	0	0	0	0	0	0	0	0	0
4/23/2024	5:45 PM	0	0	0	0	0	0	0	0	0	0	0	0	0
4/23/2024	6:00 PM	0	0	0	0	0	0	0	0	0	0	0	0	0
4/23/2024	6:15 PM	0	0	0	0	0	0	0	0	0	0	0	0	0
4/23/2024	6:30 PM	0	0	0	0	0	0	0	0	0	0	0	0	0
4/23/2024	6:45 PM	0	0	0	0	0	0	0	0	0	0	0	0	0
4/23/2024	7:00 PM	0	0	0	0	0	0	0	0	0	0	0	0	0
4/23/2024	7:15 PM	0	0	0	0	0	0	0	0	0	0	0	0	0
4/23/2024	7:30 PM	0	0	0	0	0	0	0	0	0	0	0	0	0
4/23/2024	7:45 PM	0	0	0	0	0	0	0	0	0	0	0	0	0
4/23/2024	8:00 PM	0	0	0	0	0	0	0	0	0	0	0	0	0
4/23/2024	8:15 PM	0	0	0	0	0	0	0	0	0	0	0	0	0
4/23/2024	8:30 PM	0	0	0	0	0	0	0	0	0	0	0	0	0
4/23/2024	8:45 PM	0	0	0	0	0	0	0	0	0	0	0	0	0
4/23/2024	9:00 PM	0	0	0	0	0	0	0	0	0	0	0	0	0
4/23/2024	9:15 PM	0	0	0	0	0	0	0	0	0	0	0	0	0
4/23/2024	9:30 PM	0	0	0	0	0	0	0	0	0	0	0	0	0
4/23/2024	9:45 PM	0	0	0	0	0	0	0	0	0	0	0	0	0
4/23/2024	10:00 PM	0	0	0	0	0	0	0	0	0	0	0	0	0
4/23/2024	10:15 PM	0	0	0	0	0	0	0	0	0	0	0	0	0
4/23/2024	10:30 PM	0	0	0	0	0	0	0	0	0	0	0	0	0
4/23/2024	10:45 PM	0	0	0	0	0	0	0	0	0	0	0	0	0
4/23/2024	11:00 PM	0	0	0	0	0	0	0	0	0	0	0	0	0
4/23/2024	11:15 PM	0	0	0	0	0	0	0	0	0	0	0	0	0
4/23/2024	11:30 PM	0	0	0	0	0	0	0	0	0	0	0	0	0
4/23/2024	11:45 PM	0	0	0	0	0	0	0	0	0	0	0	0	0

4/24/2024	12:00 AM	0	0	0	0	0	0	0	0	0	0	0	0	0
4/24/2024	12:15 AM	0	0	0	0	0	0	0	0	0	0	0	0	0
4/24/2024	12:30 AM	0	0	0	0	0	0	0	0	0	0	0	0	0
4/24/2024	12:45 AM	0	0	0	0	0	0	0	0	0	0	0	0	0
4/24/2024	1:00 AM	0	0	0	0	0	0	0	0	0	0	0	0	0
4/24/2024	1:15 AM	0	0	0	0	0	0	0	0	0	0	0	0	0
4/24/2024	1:30 AM	0	0	0	0	0	0	0	0	0	0	0	0	0
4/24/2024	1:45 AM	0	0	0	0	0	0	0	0	0	0	0	0	0
4/24/2024	2:00 AM	0	0	0	0	0	0	0	0	0	0	0	0	0
4/24/2024	2:15 AM	0	0	0	0	0	0	0	0	0	0	0	0	0
4/24/2024	2:30 AM	0	0	0	0	0	0	0	0	0	0	0	0	0
4/24/2024	2:45 AM	0	0	0	0	0	0	0	0	0	0	0	0	0
4/24/2024	3:00 AM	0	0	0	0	0	0	0	0	0	0	0	0	0
4/24/2024	3:15 AM	0	0	0	0	0	0	0	0	0	0	0	0	0
4/24/2024	3:30 AM	0	0	0	0	0	0	0	0	0	0	0	0	0
4/24/2024	3:45 AM	0	0	0	0	0	0	0	0	0	0	0	0	0
4/24/2024	4:00 AM	0	0	0	0	0	0	0	0	0	0	0	0	0
4/24/2024	4:15 AM	0	0	0	0	0	0	0	0	0	0	0	0	0
4/24/2024	4:30 AM	0	0	0	0	0	0	0	0	0	0	0	0	0
4/24/2024	4:45 AM	0	0	0	0	0	0	0	0	0	0	0	0	0
4/24/2024	5:00 AM	0	0	0	0	0	0	0	0	0	0	0	0	0
4/24/2024	5:15 AM	0	0	0	0	0	0	0	0	0	0	0	0	0
4/24/2024	5:30 AM	0	0	0	0	0	0	0	0	0	0	0	0	0
4/24/2024	5:45 AM	0	0	0	0	0	0	0	0	0	0	0	0	0
4/24/2024	6:00 AM	0	0	0	0	0	0	0	0	0	0	0	0	0
4/24/2024	6:15 AM	0	0	0	0	0	0	0	0	0	0	0	0	0
4/24/2024	6:30 AM	0	0	0	0	0	0	0	0	0	0	0	0	0
4/24/2024	6:45 AM	0	0	0	0	0	0	0	0	0	0	0	0	0
4/24/2024	7:00 AM	0	0	0	0	0	0	0	0	0	0	0	0	0
4/24/2024	7:15 AM	0	0	0	0	0	0	0	0	0	0	0	0	0
4/24/2024	7:30 AM	0	0	0	0	0	0	0	0	0	0	0	0	0
4/24/2024	7:45 AM	0	0	0	0	0	0	0	0	0	0	0	0	0
4/24/2024	8:00 AM	0	0	0	0	0	0	0	0	0	0	0	0	0
4/24/2024	8:15 AM	0	0	0	0	0	0	0	0	0	0	0	0	0
4/24/2024	8:30 AM	0	0	0	0	0	0	0	0	0	0	0	0	0
4/24/2024	8:45 AM	0	0	0	0	0	0	0	0	0	0	0	0	0
4/24/2024	9:00 AM	0	0	0	0	0	0	0	0	0	0	0	0	0
4/24/2024	9:15 AM	0	0	0	0	0	0	0	0	0	0	0	0	0
4/24/2024	9:30 AM	0	0	0	0	0	0	0	0	0	0	0	0	0
4/24/2024	9:45 AM	0	0	0	0	0	0	0	0	0	0	0	0	0
4/24/2024	10:00 AM	0	0	0	0	0	0	0	0	0	0	0	0	0
4/24/2024	10:15 AM	0	0	0	0	0	0	0	0	0	0	0	0	0
4/24/2024	10:30 AM	0	0	0	0	0	0	0	0	0	0	0	0	0
4/24/2024	10:45 AM	0	0	0	0	0	0	0	0	0	0	0	0	0
4/24/2024	11:00 AM	0	0	0	0	0	0	0	0	0	0	0	0	0
4/24/2024	11:15 AM	0	0	0	0	0	0	0	0	0	0	0	0	0
4/24/2024	11:30 AM	0	0	0	0	0	0	0	0	0	0	0	0	0
4/24/2024	11:45 AM	0	0	0	0	0	0	0	0	0	0	0	0	0
4/24/2024	12:00 PM	0	0	0	0	0	0	0	0	0	0	0	0	0
4/24/2024	12:15 PM	0	0	0	0	0	0	0	0	0	0	0	0	0
4/24/2024	12:30 PM	0	0	0	0	0	0	0	0	0	0	0	0	0
4/24/2024	12:45 PM	0	0	0	0	0	0	0	0	0	0	0	0	0
4/24/2024	1:00 PM	0	0	0	0	0	0	0	0	0	0	0	0	0
4/24/2024	1:15 PM	0	0	0	0	0	0	0	0	0	0	0	0	0
4/24/2024	1:30 PM	0	0	0	0	0	0	0	0	0	0	0	0	0
4/24/2024	1:45 PM	0	0	0	0	0	0	0	0	0	0	0	0	0
4/24/2024	2:00 PM	0	0	0	0	0	0	0	0	0	0	0	0	0
4/24/2024	2:15 PM	0	0	0	0	0	0	0	0	0	0	0	0	0
4/24/2024	2:30 PM	0	0	0	0	0	0	0	0	0	0	0	0	0
4/24/2024	2:45 PM	0	0	0	0	0	0	0	0	0	0	0	0	0
4/24/2024	3:00 PM	0	0	0	0	0	0	0	0	0	0	0	0	0
4/24/2024	3:15 PM	0	0	0	0	0	0	0	0	0	0	0	0	0
4/24/2024	3:30 PM	0	0	0	0	0	0	0	0	0	0	0	0	0
4/24/2024	3:45 PM	0	0	0	0	0	0	0	0	0	0	0	0	0
4/24/2024	4:00 PM	0	0	0	0	0	0	0	0	0	0	0	0	0
4/24/2024	4:15 PM	0	0	0	0	0	0	0	0	0	0	0	0	0
4/24/2024	4:30 PM	0	0	0	0	0	0	0	0	0	0	0	0	0
4/24/2024	4:45 PM	0	0	0	0	0	0	0	0	0	0	0	0	0
4/24/2024	5:00 PM	0	0	0	0	0	0	0	0	0	0	0	0	0
4/24/2024	5:15 PM	0	0	0	0	0	0	0	0	0	0	0	0	0
4/24/2024	5:30 PM	0	0	0	0	0	0	0	0	0	0	0	0	0
4/24/2024	5:45 PM	0	0	0	0	0	0	0	0	0	0	0	0	0
4/24/2024	6:00 PM	0	0	0	0	0	0	0	0	0	0	0	0	0
4/24/2024	6:15 PM	0	0	0	0	0	0	0	0	0	0	0	0	0
4/24/2024	6:30 PM	0	0	0	0	0	0	0	0	0	0	0	0	0
4/24/2024	6:45 PM	0	0	0	0	0	0	0	0	0	0	0	0	0
4/24/2024	7:00 PM	0	0	0	0	0	0	0	0	0	0	0	0	0
4/24/2024	7:15 PM	0	0	0	0	0	0	0	0	0	0	0	0	0
4/24/2024	7:30 PM	0	0	0	0	0	0	0	0	0	0	0	0	0
4/24/2024	7:45 PM	0	0	0	0	0	0	0	0	0	0	0	0	0
4/24/2024	8:00 PM	0	0	0	0	0	0	0	0	0	0	0	0	0
4/24/2024	8:15 PM	0	0	0	0	0	0	0	0	0	0	0	0	0
4/24/2024	8:30 PM	0	0	0	0	0	0	0	0	0	0	0	0	0
4/24/2024	8:45 PM	0	0	0	0	0	0	0	0	0	0	0	0	0
4/24/2024	9:00 PM	0	0	0	0	0	0	0	0	0	0	0	0	0
4/24/2024	9:15 PM	0	0	0	0	0	0	0	0	0	0	0	0	0
4/24/2024	9:30 PM	0	0	0	0	0	0	0	0	0	0	0	0	0
4/24/2024	9:45 PM	0	0	0	0	0	0	0	0	0	0	0	0	0
4/24/2024	10:00 PM	0	0	0	0	0	0	0	0	0	0	0	0	0
4/24/2024	10:15 PM	0	0	0	0	0	0	0	0	0	0	0	0	0
4/24/2024	10:30 PM	0	0	0	0	0	0	0	0	0	0	0	0	0
4/24/2024	10:45 PM	0	0	0	0	0	0	0	0	0	0	0	0	0
4/24/2024	11:00 PM	0	0	0	0	0	0	0	0	0	0	0	0	0
4/24/2024	11:15 PM	0	0	0	0	0	0	0	0	0	0	0	0	0
4/24/2024	11:30 PM	0	0	0	0	0	0	0	0	0	0	0	0	0
4/24/2024	11:45 PM	0	0	0	0	0	0	0	0	0	0	0	0	0

4/25/2024	12:00 AM	0	0	0	0	0	0	0	0	0	0	0	0	0
4/25/2024	12:15 AM	0	0	0	0	0	0	0	0	0	0	0	0	0
4/25/2024	12:30 AM	0	0	0	0	0	0	0	0	0	0	0	0	0
4/25/2024	12:45 AM	0	0	0	0	0	0	0	0	0	0	0	0	0
4/25/2024	1:00 AM	0	0	0	0	0	0	0	0	0	0	0	0	0
4/25/2024	1:15 AM	0	0	0	0	0	0	0	0	0	0	0	0	0
4/25/2024	1:30 AM	0	0	0	0	0	0	0	0	0	0	0	0	0
4/25/2024	1:45 AM	0	0	0	0	0	0	0	0	0	0	0	0	0
4/25/2024	2:00 AM	0	0	0	0	0	0	0	0	0	0	0	0	0
4/25/2024	2:15 AM	0	0	0	0	0	0	0	0	0	0	0	0	0
4/25/2024	2:30 AM	0	0	0	0	0	0	0	0	0	0	0	0	0
4/25/2024	2:45 AM	0	0	0	0	0	0	0	0	0	0	0	0	0
4/25/2024	3:00 AM	0	0	0	0	0	0	0	0	0	0	0	0	0
4/25/2024	3:15 AM	0	0	0	0	0	0	0	0	0	0	0	0	0
4/25/2024	3:30 AM	0	0	0	0	0	0	0	0	0	0	0	0	0
4/25/2024	3:45 AM	0	0	0	0	0	0	0	0	0	0	0	0	0
4/25/2024	4:00 AM	0	0	0	0	0	0	0	0	0	0	0	0	0
4/25/2024	4:15 AM	0	0	0	0	0	0	0	0	0	0	0	0	0
4/25/2024	4:30 AM	0	0	0	0	0	0	0	0	0	0	0	0	0
4/25/2024	4:45 AM	0	0	0	0	0	0	0	0	0	0	0	0	0
4/25/2024	5:00 AM	0	0	0	0	0	0	0	0	0	0	0	0	0
4/25/2024	5:15 AM	0	0	0	0	0	0	0	0	0	0	0	0	0
4/25/2024	5:30 AM	0	0	0	0	0	0	0	0	0	0	0	0	0
4/25/2024	5:45 AM	0	0	0	0	0	0	0	0	0	0	0	0	0
4/25/2024	6:00 AM	0	0	0	0	0	0	0	0	0	0	0	0	0
4/25/2024	6:15 AM	0	0	0	0	0	0	0	0	0	0	0	0	0
4/25/2024	6:30 AM	0	0	0	0	0	0	0	0	0	0	0	0	0
4/25/2024	6:45 AM	0	0	0	0	0	0	0	0	0	0	0	0	0
4/25/2024	7:00 AM	0	0	0	0	0	0	0	0	0	0	0	0	0
4/25/2024	7:15 AM	0	0	0	0	0	0	0	0	0	0	0	0	0
4/25/2024	7:30 AM	0	0	0	0	0	0	0	0	0	0	0	0	0
4/25/2024	7:45 AM	0	0	0	0	0	0	0	0	0	0	0	0	0
4/25/2024	8:00 AM	0	0	0	0	0	0	0	0	0	0	0	0	0
4/25/2024	8:15 AM	0	0	0	0	0	0	0	0	0	0	0	0	0
4/25/2024	8:30 AM	0	0	0	0	0	0	0	0	0	0	0	0	0
4/25/2024	8:45 AM	0	0	0	0	0	0	0	0	0	0	0	0	0
4/25/2024	9:00 AM	0	0	0	0	0	0	0	0	0	0	0	0	0
4/25/2024	9:15 AM	0	0	0	0	0	0	0	0	0	0	0	0	0
4/25/2024	9:30 AM	0	0	0	0	0	0	0	0	0	0	0	0	0
4/25/2024	9:45 AM	0	0	0	0	0	0	0	0	0	0	0	0	0
4/25/2024	10:00 AM	0	0	0	0	0	0	0	0	0	0	0	0	0
4/25/2024	10:15 AM	0	0	0	0	0	0	0	0	0	0	0	0	0
4/25/2024	10:30 AM	0	0	0	0	0	0	0	0	0	0	0	0	0
4/25/2024	10:45 AM	0	0	0	0	0	0	0	0	0	0	0	0	0
4/25/2024	11:00 AM	0	0	0	0	0	0	0	0	0	0	0	0	0
4/25/2024	11:15 AM	0	0	0	0	0	0	0	0	0	0	0	0	0
4/25/2024	11:30 AM	0	0	0	0	0	0	0	0	0	0	0	0	0
4/25/2024	11:45 AM	0	0	0	0	0	0	0	0	0	0	0	0	0
4/25/2024	12:00 PM	0	0	0	0	0	0	0	0	0	0	0	0	0
4/25/2024	12:15 PM	0	0	0	0	0	0	0	0	0	0	0	0	0
4/25/2024	12:30 PM	0	0	0	0	0	0	0	0	0	0	0	0	0
4/25/2024	12:45 PM	0	0	0	0	0	0	0	0	0	0	0	0	0
4/25/2024	1:00 PM	0	0	0	0	0	0	0	0	0	0	0	0	0
4/25/2024	1:15 PM	0	0	0	0	0	0	0	0	0	0	0	0	0
4/25/2024	1:30 PM	0	0	0	0	0	0	0	0	0	0	0	0	0
4/25/2024	1:45 PM	0	0	0	0	0	0	0	0	0	0	0	0	0
4/25/2024	2:00 PM	0	0	0	0	0	0	0	0	0	0	0	0	0
4/25/2024	2:15 PM	0	0	0	0	0	0	0	0	0	0	0	0	0
4/25/2024	2:30 PM	0	0	0	0	0	0	0	0	0	0	0	0	0
4/25/2024	2:45 PM	0	0	0	0	0	0	0	0	0	0	0	0	0
4/25/2024	3:00 PM	0	0	0	0	0	0	0	0	0	0	0	0	0
4/25/2024	3:15 PM	0	0	0	0	0	0	0	0	0	0	0	0	0
4/25/2024	3:30 PM	0	0	0	0	0	0	0	0	0	0	0	0	0
4/25/2024	3:45 PM	0	0	0	0	0	0	0	0	0	0	0	0	0
4/25/2024	4:00 PM	0	0	0	0	0	0	0	0	0	0	0	0	0
4/25/2024	4:15 PM	0	0	0	0	0	0	0	0	0	0	0	0	0
4/25/2024	4:30 PM	0	0	0	0	0	0	0	0	0	0	0	0	0
4/25/2024	4:45 PM	0	0	0	0	0	0	0	0	0	0	0	0	0
4/25/2024	5:00 PM	0	0	0	0	0	0	0	0	0	0	0	0	0
4/25/2024	5:15 PM	0	0	0	0	0	0	0	0	0	0	0	0	0
4/25/2024	5:30 PM	0	0	0	0	0	0	0	0	0	0	0	0	0
4/25/2024	5:45 PM	0	0	0	0	0	0	0	0	0	0	0	0	0
4/25/2024	6:00 PM	0	0	0	0	0	0	0	0	0	0	0	0	0
4/25/2024	6:15 PM	0	0	0	0	0	0	0	0	0	0	0	0	0
4/25/2024	6:30 PM	0	0	0	0	0	0	0	0	0	0	0	0	0
4/25/2024	6:45 PM	0	0	0	0	0	0	0	0	0	0	0	0	0
4/25/2024	7:00 PM	0	0	0	0	0	0	0	0	0	0	0	0	0
4/25/2024	7:15 PM	0	0	0	0	0	0	0	0	0	0	0	0	0
4/25/2024	7:30 PM	0	0	0	0	0	0	0	0	0	0	0	0	0
4/25/2024	7:45 PM	0	0	0	0	0	0	0	0	0	0	0	0	0
4/25/2024	8:00 PM	0	0	0	0	0	0	0	0	0	0	0	0	0
4/25/2024	8:15 PM	0	0	0	0	0	0	0	0	0	0	0	0	0
4/25/2024	8:30 PM	0	0	0	0	0	0	0	0	0	0	0	0	0
4/25/2024	8:45 PM	0	0	0	0	0	0	0	0	0	0	0	0	0
4/25/2024	9:00 PM	0	0	0	0	0	0	0	0	0	0	0	0	0
4/25/2024	9:15 PM	0	0	0	0	0	0	0	0	0	0	0	0	0
4/25/2024	9:30 PM	0	0	0	0	0	0	0	0	0	0	0	0	0
4/25/2024	9:45 PM	0	0	0	0	0	0	0	0	0	0	0	0	0
4/25/2024	10:00 PM	0	0	0	0	0	0	0	0	0	0	0	0	0
4/25/2024	10:15 PM	0	0	0	0	0	0	0	0	0	0	0	0	0
4/25/2024	10:30 PM	0	0	0	0	0	0	0	0	0	0	0	0	0
4/25/2024	10:45 PM	0	0	0	0	0	0	0	0	0	0	0	0	0
4/25/2024	11:00 PM	0	0	0	0	0	0	0	0	0	0	0	0	0
4/25/2024	11:15 PM	0	0	0	0	0	0	0	0	0	0	0	0	0
4/25/2024	11:30 PM	0	0	0	0	0	0	0	0	0	0	0	0	0
4/25/2024	11:45 PM	0	0	0	0	0	0	0	0	0	0	0	0	0

Bi-Directional Class Count || SB WB 15min

Columbia, SC

Marr Traffic DATA COLLECTION
www.marrtraffic.com

Site 34
I-26 James F. Byrnes Expy S/Bound On-Ramp,
south of Piney Grove Rd

Date
Tuesday, April 23, 2024

Lat/Long
34.066199°, -81.141839°

Weather
Fair
58°F

Click here for Detailed Weather

Click here for Map

0000 - 2400 (Weekday 24h Session) (04-23-2024)
SB WB 15min

	Southbound (Movement 34.1)													15min	60min
Time	1	2	3	4	5	6	7	8	9	10	11	12	13	Total	Total
0000 - 0015	0	0	0	0	0	0	0	0	0	0	0	0	0	**0**	
0015 - 0030	0	0	0	0	0	0	0	0	0	0	0	0	0	**0**	
0030 - 0045	0	0	0	0	0	0	0	0	0	0	0	0	0	**0**	
0045 - 0100	0	0	0	0	0	0	0	0	0	0	0	0	0	**0**	**0**
0100 - 0115	0	0	0	0	0	0	0	0	0	0	0	0	0	**0**	
0115 - 0130	0	0	0	0	0	0	0	0	0	0	0	0	0	**0**	
0130 - 0145	0	0	0	0	0	0	0	0	0	0	0	0	0	**0**	
0145 - 0200	0	0	0	0	0	0	0	0	0	0	0	0	0	**0**	**0**
0200 - 0215	0	0	0	0	0	0	0	0	0	0	0	0	0	**0**	
0215 - 0230	0	0	0	0	0	0	0	0	0	0	0	0	0	**0**	
0230 - 0245	0	0	0	0	0	0	0	0	0	0	0	0	0	**0**	
0245 - 0300	0	0	0	0	0	0	0	0	0	0	0	0	0	**0**	**0**
0300 - 0315	0	0	0	0	0	0	0	0	0	0	0	0	0	**0**	
0315 - 0330	0	0	0	0	0	0	0	0	0	0	0	0	0	**0**	
0330 - 0345	0	0	0	0	0	0	0	0	0	0	0	0	0	**0**	
0345 - 0400	0	0	0	0	0	0	0	0	0	0	0	0	0	**0**	**0**
0400 - 0415	0	0	0	0	0	0	0	0	0	0	0	0	0	**0**	
0415 - 0430	0	0	0	0	0	0	0	0	0	0	0	0	0	**0**	
0430 - 0445	0	0	0	0	0	0	0	0	0	0	0	0	0	**0**	
0445 - 0500	0	0	0	0	0	0	0	0	0	0	0	0	0	**0**	**0**
0500 - 0515	0	0	0	0	0	0	0	0	0	0	0	0	0	**0**	
0515 - 0530	0	0	0	0	0	0	0	0	0	0	0	0	0	**0**	
0530 - 0545	0	0	0	0	0	0	0	0	0	0	0	0	0	**0**	
0545 - 0600	0	0	0	0	0	0	0	0	0	0	0	0	0	**0**	**0**
0600 - 0615	0	0	0	0	0	0	0	0	0	0	0	0	0	**0**	
0615 - 0630	0	0	0	0	0	0	0	0	0	0	0	0	0	**0**	
0630 - 0645	0	0	0	0	0	0	0	0	0	0	0	0	0	**0**	
0645 - 0700	0	0	0	0	0	0	0	0	0	0	0	0	0	**0**	**0**
0700 - 0715	0	0	0	0	0	0	0	0	0	0	0	0	0	**0**	
0715 - 0730	0	0	0	0	0	0	0	0	0	0	0	0	0	**0**	
0730 - 0745	0	0	0	0	0	0	0	0	0	0	0	0	0	**0**	
0745 - 0800	0	0	0	0	0	0	0	0	0	0	0	0	0	**0**	**0**
0800 - 0815	0	0	0	0	0	0	0	0	0	0	0	0	0	**0**	
0815 - 0830	0	0	0	0	0	0	0	0	0	0	0	0	0	**0**	
0830 - 0845	0	0	0	0	0	0	0	0	0	0	0	0	0	**0**	
0845 - 0900	0	0	0	0	0	0	0	0	0	0	0	0	0	**0**	**0**
0900 - 0915	0	0	0	0	0	0	0	0	0	0	0	0	0	**0**	
0915 - 0930	0	0	0	0	0	0	0	0	0	0	0	0	0	**0**	
0930 - 0945	0	0	0	0	0	0	0	0	0	0	0	0	0	**0**	
0945 - 1000	0	0	0	0	0	0	0	0	0	0	0	0	0	**0**	**0**
1000 - 1015	0	0	0	0	0	0	0	0	0	0	0	0	0	**0**	
1015 - 1030	0	0	0	0	0	0	0	0	0	0	0	0	0	**0**	
1030 - 1045	0	0	0	0	0	0	0	0	0	0	0	0	0	**0**	
1045 - 1100	0	0	0	0	0	0	0	0	0	0	0	0	0	**0**	**0**
1100 - 1115	0	0	0	0	0	0	0	0	0	0	0	0	0	**0**	
1115 - 1130	0	0	0	0	0	0	0	0	0	0	0	0	0	**0**	
1130 - 1145	0	0	0	0	0	0	0	0	0	0	0	0	0	**0**	
1145 - 1200	0	0	0	0	0	0	0	0	0	0	0	0	0	**0**	**0**
1200 - 1215	0	0	0	0	0	0	0	0	0	0	0	0	0	**0**	
1215 - 1230	0	0	0	0	0	0	0	0	0	0	0	0	0	**0**	
1230 - 1245	0	0	0	0	0	0	0	0	0	0	0	0	0	**0**	
1245 - 1300	0	0	0	0	0	0	0	0	0	0	0	0	0	**0**	**0**
1300 - 1315	0	0	0	0	0	0	0	0	0	0	0	0	0	**0**	
1315 - 1330	0	0	0	0	0	0	0	0	0	0	0	0	0	**0**	
1330 - 1345	0	0	0	0	0	0	0	0	0	0	0	0	0	**0**	
1345 - 1400	0	0	0	0	0	0	0	0	0	0	0	0	0	**0**	**0**
1400 - 1415	0	0	0	0	0	0	0	0	0	0	0	0	0	**0**	
1415 - 1430	0	0	0	0	0	0	0	0	0	0	0	0	0	**0**	
1430 - 1445	0	0	0	0	0	0	0	0	0	0	0	0	0	**0**	
1445 - 1500	0	0	0	0	0	0	0	0	0	0	0	0	0	**0**	**0**
1500 - 1515	0	0	0	0	0	0	0	0	0	0	0	0	0	**0**	
1515 - 1530	0	0	0	0	0	0	0	0	0	0	0	0	0	**0**	
1530 - 1545	0	0	0	0	0	0	0	0	0	0	0	0	0	**0**	
1545 - 1600	0	0	0	0	0	0	0	0	0	0	0	0	0	**0**	**0**
1600 - 1615	0	0	0	0	0	0	0	0	0	0	0	0	0	**0**	
1615 - 1630	0	0	0	0	0	0	0	0	0	0	0	0	0	**0**	
1630 - 1645	0	0	0	0	0	0	0	0	0	0	0	0	0	**0**	
1645 - 1700	0	0	0	0	0	0	0	0	0	0	0	0	0	**0**	**0**
1700 - 1715	0	0	0	0	0	0	0	0	0	0	0	0	0	**0**	
1715 - 1730	0	0	0	0	0	0	0	0	0	0	0	0	0	**0**	
1730 - 1745	0	0	0	0	0	0	0	0	0	0	0	0	0	**0**	
1745 - 1800	0	0	0	0	0	0	0	0	0	0	0	0	0	**0**	**0**
1800 - 1815	0	0	0	0	0	0	0	0	0	0	0	0	0	**0**	
1815 - 1830	0	0	0	0	0	0	0	0	0	0	0	0	0	**0**	
1830 - 1845	0	0	0	0	0	0	0	0	0	0	0	0	0	**0**	
1845 - 1900	0	0	0	0	0	0	0	0	0	0	0	0	0	**0**	**0**
1900 - 1915	0	125	19	0	0	0	0	0	0	0	0	0	0	**144**	
1915 - 1930	0	112	14	0	0	0	0	0	1	0	0	0	0	**127**	
1930 - 1945	0	103	14	0	1	0	0	0	1	0	0	0	0	**119**	
1945 - 2000	0	107	9	0	2	0	0	0	2	0	0	0	0	**120**	**510**
2000 - 2015	0	76	9	0	0	0	0	0	1	0	0	0	0	**86**	
2015 - 2030	0	74	18	0	0	0	0	0	1	0	0	0	0	**93**	
2030 - 2045	0	99	7	0	1	0	0	0	2	0	0	0	0	**109**	
2045 - 2100	0	65	5	0	0	0	0	0	0	0	0	0	0	**70**	**358**
2100 - 2115	0	57	6	0	0	0	0	0	0	0	0	0	0	**63**	
2115 - 2130	0	67	5	0	0	0	0	1	0	0	0	0	0	**73**	
2130 - 2145	0	68	8	0	0	0	0	0	0	0	0	0	0	**76**	
2145 - 2200	0	47	4	0	0	0	0	0	0	0	0	0	0	**51**	**263**
2200 - 2215	0	55	7	1	1	0	0	0	0	0	0	0	0	**64**	
2215 - 2230	0	44	6	0	0	0	0	0	0	0	0	0	0	**50**	
2230 - 2245	0	42	6	0	0	0	0	0	0	0	0	0	0	**48**	
2245 - 2300	0	22	5	0	1	1	0	0	0	0	0	0	0	**29**	**191**
2300 - 2315	0	22	5	0	0	0	0	0	1	0	0	0	0	**28**	
2315 - 2330	0	21	6	0	0	0	0	0	0	0	0	0	0	**27**	
2330 - 2345	0	21	3	0	0	0	0	0	0	0	0	0	0	**24**	
2345 - 0000	0	14	3	0	0	0	0	0	0	0	0	0	0	**17**	**96**

Session Total	0	1241	159	1	6	1	0	1	9	0	0	0	0	**1418**
Session Average	0.00	12.93	1.66	0.01	0.06	0.01	0.00	0.01	0.09	0.00	0.00	0.00	0.00	**14.77**
Session Percentage	0.00	87.52	11.21	0.07	0.42	0.07	0.00	0.07	0.63	0.00	0.00	0.00	0.00	

AM Peak Hour	-	-	-	-	-	-	-	-	-	-	-	-	-	**-**
AM Peak Volume	0	0	0	0	0	0	0	0	0	0	0	0	0	**0**

Noon Peak Hour	-	-	-	-	-	-	-	-	-	-	-	-	-	**-**
Noon Peak Volume	0	0	0	0	0	0	0	0	0	0	0	0	0	**0**

PM Peak Hour	-	1900 - 2000	1900 - 2000	-	1900 - 2000	-	-	-	1945 - 2045	-	-	-	-	**1900 - 2000**
PM Peak Volume	0	447	56	0	3	0	0	0	6	0	0	0	0	**510**

Site 34
I-26 James F. Byrnes Expy S/Bound On-Ramp, south of Piney Grove Rd

Date
Wednesday, April 24, 2024

Lat/Long
34.066199°, -81.141839°

Weather
Fair
66°F

Click here for Detailed Weather

0000 - 2400 (Weekday 24h Session) (04-24-2024)
SB WB 15min

	Southbound (Movement 34.1)														
Time	1	2	3	4	5	6	7	8	9	10	11	12	13	15min Total	60min Total
0000 - 0015	0	31	6	0	0	0	0	0	0	0	0	0	0	**37**	
0015 - 0030	0	10	5	0	0	0	0	0	0	0	0	0	0	**15**	
0030 - 0045	0	13	2	0	0	0	0	0	0	0	0	0	0	**15**	
0045 - 0100	0	9	1	0	0	0	0	0	1	0	0	0	0	**11**	**78**
0100 - 0115	0	12	1	0	0	0	0	0	1	0	0	0	0	**14**	
0115 - 0130	0	7	0	0	1	0	0	0	0	0	0	0	0	**8**	
0130 - 0145	0	8	0	0	0	0	0	0	0	0	0	0	0	**8**	
0145 - 0200	0	10	2	0	0	0	0	0	0	0	0	0	0	**12**	**42**
0200 - 0215	0	3	0	0	0	0	0	0	0	0	0	0	0	**3**	
0215 - 0230	0	7	1	0	1	0	0	0	0	0	0	0	0	**9**	
0230 - 0245	0	5	2	0	0	0	0	0	1	0	0	0	0	**8**	
0245 - 0300	0	2	3	0	0	0	0	0	1	0	0	0	0	**6**	**26**
0300 - 0315	0	6	0	0	0	0	0	0	0	0	0	0	0	**6**	
0315 - 0330	0	2	1	0	0	0	0	0	0	0	0	0	0	**3**	
0330 - 0345	0	13	2	0	0	0	0	0	0	0	0	0	0	**15**	
0345 - 0400	0	10	1	0	0	0	0	1	0	0	0	0	0	**12**	**36**
0400 - 0415	0	11	2	0	0	0	0	1	1	0	0	0	0	**15**	
0415 - 0430	0	12	1	0	0	0	0	0	1	0	0	0	0	**14**	
0430 - 0445	0	28	4	0	0	0	0	0	1	0	0	0	0	**33**	
0445 - 0500	0	16	1	0	0	0	0	0	0	0	0	0	0	**17**	**79**
0500 - 0515	0	25	3	0	0	0	0	0	1	0	0	0	0	**29**	
0515 - 0530	0	28	5	0	0	0	0	0	2	0	0	0	0	**35**	
0530 - 0545	0	49	7	0	0	0	0	0	0	0	0	0	0	**56**	
0545 - 0600	0	45	4	0	1	0	0	0	4	0	0	0	0	**54**	**174**
0600 - 0615	0	51	8	0	1	0	0	0	0	0	0	0	0	**60**	
0615 - 0630	0	76	6	1	3	1	0	1	0	0	0	0	0	**88**	
0630 - 0645	0	103	23	0	0	1	0	0	0	0	0	0	0	**127**	
0645 - 0700	0	115	24	0	1	0	0	0	0	0	0	0	0	**140**	**415**
0700 - 0715	0	138	25	0	1	1	0	0	1	0	0	0	0	**166**	
0715 - 0730	0	145	28	0	2	1	0	1	0	0	0	0	0	**177**	
0730 - 0745	1	171	24	0	1	0	0	0	0	0	0	0	0	**197**	
0745 - 0800	0	177	24	0	0	1	0	0	1	0	0	0	0	**203**	**743**
0800 - 0815	0	152	28	1	1	0	0	1	2	0	0	0	0	**185**	
0815 - 0830	0	164	33	0	2	0	0	0	1	0	0	0	0	**200**	
0830 - 0845	0	132	32	0	2	0	0	1	3	0	0	0	0	**170**	
0845 - 0900	0	110	20	0	1	1	0	0	2	0	0	0	0	**134**	**689**
0900 - 0915	0	113	30	0	2	0	0	0	3	0	0	0	0	**148**	
0915 - 0930	0	111	26	0	3	0	0	0	0	0	0	0	0	**140**	
0930 - 0945	0	90	32	2	2	0	0	0	1	0	0	0	0	**127**	
0945 - 1000	0	88	23	0	2	1	0	0	0	0	0	0	0	**114**	**529**
1000 - 1015	0	122	12	0	2	0	0	2	1	0	0	0	0	**139**	
1015 - 1030	0	113	22	0	3	2	0	0	1	0	0	0	0	**141**	
1030 - 1045	0	104	35	1	2	0	0	1	1	0	0	0	0	**144**	
1045 - 1100	1	135	29	0	2	0	0	0	0	0	0	0	0	**167**	**591**
1100 - 1115	0	104	21	0	1	2	0	0	1	0	0	0	0	**129**	
1115 - 1130	0	145	32	0	1	0	0	1	0	0	0	0	0	**179**	
1130 - 1145	0	130	31	0	4	2	0	0	1	0	0	0	0	**168**	
1145 - 1200	0	102	30	0	1	1	0	1	1	0	0	0	0	**136**	**612**
1200 - 1215	0	108	27	0	2	0	0	1	0	0	0	0	0	**138**	
1215 - 1230	0	153	40	0	3	1	0	0	1	0	0	0	0	**198**	
1230 - 1245	0	151	39	2	0	2	0	1	0	0	0	0	0	**195**	
1245 - 1300	0	156	36	0	5	0	0	0	0	0	0	0	0	**197**	**728**
1300 - 1315	0	145	26	0	1	0	0	0	0	0	0	0	0	**172**	
1315 - 1330	0	130	46	0	0	0	0	0	2	0	0	0	0	**178**	
1330 - 1345	0	176	37	0	3	0	0	0	2	0	0	0	0	**218**	
1345 - 1400	0	153	37	0	5	1	0	0	2	0	0	0	0	**198**	**766**
1400 - 1415	0	142	31	1	0	1	0	0	0	0	0	0	0	**175**	
1415 - 1430	0	155	40	1	2	0	0	0	0	0	0	0	0	**198**	
1430 - 1445	0	126	24	0	3	1	0	1	1	0	0	0	0	**156**	
1445 - 1500	0	136	27	0	2	0	0	0	1	0	0	0	0	**166**	**695**
1500 - 1515	0	169	34	1	3	0	0	1	0	0	0	0	0	**208**	
1515 - 1530	0	146	24	0	1	0	0	0	3	0	0	0	0	**174**	
1530 - 1545	2	152	30	0	3	1	0	0	0	0	0	0	0	**188**	
1545 - 1600	1	134	28	0	4	1	0	1	0	0	0	0	0	**169**	**739**
1600 - 1615	0	187	24	0	3	0	0	1	0	0	0	0	0	**215**	
1615 - 1630	0	148	37	0	2	0	0	1	1	0	0	0	0	**189**	
1630 - 1645	0	179	26	0	2	0	0	1	1	0	0	0	0	**209**	
1645 - 1700	0	137	26	0	5	0	0	1	0	0	0	0	0	**169**	**782**
1700 - 1715	0	189	42	0	1	0	0	0	1	0	0	0	0	**233**	
1715 - 1730	1	163	23	0	0	0	0	1	1	0	0	0	0	**189**	
1730 - 1745	0	121	28	0	2	0	0	0	1	0	0	0	0	**152**	
1745 - 1800	1	141	34	0	2	0	0	0	0	0	0	0	0	**178**	**752**
1800 - 1815	0	151	32	0	1	0	0	0	2	0	0	0	0	**186**	
1815 - 1830	0	135	31	0	3	0	0	1	1	0	0	0	0	**171**	
1830 - 1845	1	151	26	1	2	0	0	0	0	0	0	0	0	**181**	
1845 - 1900	0	124	24	0	0	0	0	0	1	0	0	0	0	**149**	**687**
1900 - 1915	0	113	18	0	0	0	0	0	0	0	0	0	0	**131**	
1915 - 1930	1	104	15	0	0	0	0	0	1	0	0	0	0	**121**	
1930 - 1945	0	91	22	0	2	0	0	0	1	0	0	0	0	**116**	
1945 - 2000	0	85	8	0	1	0	0	0	2	0	0	0	0	**96**	**464**
2000 - 2015	0	101	18	0	2	0	0	0	1	0	0	0	0	**122**	
2015 - 2030	0	100	15	0	0	1	0	0	0	0	0	0	0	**116**	
2030 - 2045	0	91	8	0	0	0	0	0	0	0	0	0	0	**99**	
2045 - 2100	2	99	8	0	0	0	0	0	1	0	0	0	0	**110**	**447**
2100 - 2115	0	50	7	0	0	0	0	0	0	0	0	0	0	**57**	
2115 - 2130	0	58	4	0	0	0	0	0	2	0	0	0	0	**64**	
2130 - 2145	0	60	11	1	0	0	0	0	0	0	0	0	0	**72**	
2145 - 2200	0	49	6	0	0	0	0	0	0	0	0	0	0	**55**	**248**
2200 - 2215	0	49	7	0	0	0	0	0	1	0	0	0	0	**57**	
2215 - 2230	0	36	5	0	0	0	0	0	2	0	0	0	0	**43**	
2230 - 2245	0	39	4	0	0	0	0	0	1	0	0	0	0	**44**	
2245 - 2300	0	27	3	0	0	0	0	0	0	0	0	0	0	**30**	**174**
2300 - 2315	0	23	4	0	1	0	0	0	0	0	0	0	0	**28**	
2315 - 2330	0	23	4	0	0	0	0	0	1	0	0	0	0	**28**	
2330 - 2345	0	17	3	0	1	0	0	0	0	0	0	0	0	**21**	
2345 - 0000	0	18	4	1	0	0	0	0	0	0	0	0	0	**23**	**100**

Session Total	11	8644	1705	13	110	23	0	22	68	0	0	0	0	**10596**
Session Average	0.11	90.04	17.76	0.14	1.15	0.24	0.00	0.23	0.71	0.00	0.00	0.00	0.00	**110.38**
Session Percentage	0.10	81.58	16.09	0.12	1.04	0.22	0.00	0.21	0.64	0.00	0.00	0.00	0.00	

AM Peak Hour	0645 - 0745	0730 - 0830	0745 - 0845	0845 - 0945	0900 - 1000	0615 - 0715	-	0945 - 1045	0815 - 0915	-	-	-	-	**0730 - 0830**
AM Peak Volume	1	664	117	2	9	3	0	3	9	0	0	0	0	**785**

Noon Peak Hour	1445 - 1545	1330 - 1430	1315 - 1415	1145 - 1245	1130 - 1230	1100 - 1200	-	1000 - 1100	1300 - 1400	-	-	-	-	**1330 - 1430**
Noon Peak Volume	2	626	151	2	10	5	0	3	6	0	0	0	0	**789**

PM Peak Hour	1500 - 1600	1630 - 1730	1615 - 1715	1500 - 1600	1530 - 1630	1500 - 1600	-	1545 - 1645	1915 - 2015	-	-	-	-	**1615 - 1715**
PM Peak Volume	3	668	131	1	12	2	0	4	5	0	0	0	0	**800**

Site 34
I-26 James F. Byrnes Expy S/Bound On-Ramp,
south of Piney Grove Rd

Date
Thursday, April 25, 2024

Lat/Long
34.066199°, -81.141839°

Weather
Fair
67°F

Click here for Detailed Weather

0000 - 2400 (Weekday 24h Session) (04-25-2024)
SB WB 15min

	Southbound (Movement 34.1)													15min	60min
TIME	1	2	3	4	5	6	7	8	9	10	11	12	13	Total	Total
0000 - 0015	0	24	7	0	0	0	0	0	0	0	0	0	0	**31**	
0015 - 0030	0	20	4	0	1	0	0	0	0	0	0	0	0	**25**	
0030 - 0045	0	8	3	0	0	0	0	0	0	0	0	0	0	**11**	
0045 - 0100	0	7	2	0	0	0	0	0	0	0	0	0	0	**9**	**76**
0100 - 0115	0	5	2	0	0	0	0	0	0	0	0	0	0	**7**	
0115 - 0130	0	4	1	0	0	0	0	0	0	0	0	0	0	**5**	
0130 - 0145	0	2	0	0	0	0	0	0	0	0	0	0	0	**2**	
0145 - 0200	0	5	1	0	0	0	0	0	0	0	0	0	0	**6**	**20**
0200 - 0215	0	4	0	0	0	0	0	0	0	0	0	0	0	**4**	
0215 - 0230	0	6	2	0	0	0	0	0	1	0	0	0	0	**9**	
0230 - 0245	0	10	2	0	0	0	0	0	1	0	0	0	0	**13**	
0245 - 0300	0	6	2	0	0	0	0	0	1	0	0	0	0	**9**	**35**
0300 - 0315	0	9	3	0	1	0	0	0	0	0	0	0	0	**13**	
0315 - 0330	0	7	2	0	0	0	0	0	0	0	0	0	0	**9**	
0330 - 0345	0	11	3	0	0	0	0	0	1	0	0	0	0	**15**	
0345 - 0400	0	9	3	0	0	0	0	0	0	0	0	0	0	**12**	**49**
0400 - 0415	0	12	3	0	0	0	0	0	1	0	0	0	0	**16**	
0415 - 0430	0	9	4	0	0	0	0	0	0	0	0	0	0	**13**	
0430 - 0445	0	14	3	0	0	0	0	0	1	0	0	0	0	**18**	
0445 - 0500	0	15	6	0	1	0	0	1	0	0	0	0	0	**23**	**70**
0500 - 0515	0	24	7	0	0	0	0	0	0	0	0	0	0	**31**	
0515 - 0530	0	29	6	0	1	0	0	0	0	0	0	0	0	**36**	
0530 - 0545	0	56	11	0	0	0	0	0	2	0	0	0	0	**69**	
0545 - 0600	0	40	9	0	3	0	0	2	1	0	0	0	0	**55**	**191**
0600 - 0615	0	33	5	0	1	1	0	0	0	0	0	0	0	**40**	
0615 - 0630	0	61	14	0	1	0	0	0	1	0	0	0	0	**77**	
0630 - 0645	0	101	19	0	1	0	0	0	1	0	0	0	0	**122**	
0645 - 0700	0	120	27	1	3	0	0	0	2	0	0	0	0	**153**	**392**
0700 - 0715	0	117	23	0	2	0	0	0	2	0	0	0	0	**144**	
0715 - 0730	0	163	33	0	3	0	0	0	2	0	0	0	0	**201**	
0730 - 0745	0	197	26	0	2	0	0	1	0	0	0	0	0	**226**	
0745 - 0800	0	174	33	0	6	0	0	0	0	0	0	0	0	**213**	**784**
0800 - 0815	1	187	25	0	2	1	0	0	3	0	0	0	0	**219**	
0815 - 0830	0	154	23	0	1	1	0	2	1	0	0	0	0	**182**	
0830 - 0845	0	142	27	0	1	1	0	1	1	0	0	0	0	**173**	
0845 - 0900	0	136	21	0	0	0	0	1	5	0	0	0	0	**163**	**737**
0900 - 0915	0	99	24	0	1	1	0	0	0	0	0	0	0	**125**	
0915 - 0930	0	105	23	0	3	1	0	0	2	0	0	0	0	**134**	
0930 - 0945	0	107	21	0	3	2	0	1	2	0	0	0	0	**136**	
0945 - 1000	0	85	20	0	3	0	0	1	3	0	0	0	0	**112**	**507**
1000 - 1015	0	102	24	1	2	0	0	0	1	0	0	0	0	**130**	
1015 - 1030	0	99	26	0	1	0	0	1	0	0	0	0	0	**127**	
1030 - 1045	0	124	29	0	4	0	0	1	0	0	0	0	0	**158**	
1045 - 1100	0	117	30	0	3	0	0	1	1	0	0	0	0	**152**	**567**
1100 - 1115	0	115	25	0	1	0	0	0	0	1	0	0	0	**142**	
1115 - 1130	0	135	32	0	2	0	0	1	2	2	0	0	0	**174**	
1130 - 1145	0	137	30	0	1	0	0	1	0	1	0	0	0	**170**	
1145 - 1200	0	135	36	0	4	0	0	0	2	0	0	0	0	**177**	**663**
1200 - 1215	0	142	31	0	2	0	0	1	1	0	0	0	0	**177**	
1215 - 1230	0	151	45	0	1	0	0	0	1	0	0	0	0	**198**	
1230 - 1245	0	136	25	0	1	1	0	1	5	0	0	0	0	**169**	
1245 - 1300	0	166	35	0	1	1	0	1	0	0	0	0	0	**204**	**748**
1300 - 1315	1	161	41	0	1	0	0	0	0	0	0	0	0	**204**	
1315 - 1330	0	164	28	0	3	0	0	1	1	0	0	0	0	**197**	
1330 - 1345	0	157	39	0	0	1	0	0	1	0	0	0	0	**198**	
1345 - 1400	0	158	42	0	0	2	0	0	2	0	0	0	0	**204**	**803**
1400 - 1415	0	161	26	1	5	0	0	0	1	0	0	0	0	**194**	
1415 - 1430	0	162	44	1	4	0	0	1	0	0	0	0	0	**212**	
1430 - 1445	0	145	26	0	1	0	0	0	3	0	0	0	0	**175**	
1445 - 1500	0	149	36	0	5	0	0	0	0	0	0	0	0	**190**	**771**
1500 - 1515	1	144	39	0	4	1	0	1	1	0	0	0	0	**191**	
1515 - 1530	0	149	33	0	1	0	0	2	0	0	0	0	0	**185**	
1530 - 1545	0	147	24	0	3	0	0	0	2	0	0	0	0	**176**	
1545 - 1600	1	133	26	0	3	0	0	1	2	0	0	0	0	**166**	**718**
1600 - 1615	0	162	33	1	2	0	0	0	0	0	0	0	0	**198**	
1615 - 1630	0	164	37	0	3	0	0	1	0	0	0	0	0	**205**	
1630 - 1645	0	159	27	0	0	0	0	0	2	0	0	0	0	**188**	
1645 - 1700	0	132	30	0	2	0	0	0	1	0	0	0	0	**165**	**756**
1700 - 1715	0	173	39	0	3	0	0	1	1	0	0	0	0	**217**	
1715 - 1730	0	132	31	0	3	0	0	0	1	0	0	0	0	**167**	
1730 - 1745	1	146	21	0	0	0	0	0	1	0	0	0	0	**169**	
1745 - 1800	0	117	29	0	1	0	0	0	0	0	0	0	0	**147**	**700**
1800 - 1815	1	159	23	0	1	0	0	0	0	0	0	0	0	**184**	
1815 - 1830	0	140	29	0	0	0	0	0	2	0	0	0	0	**171**	
1830 - 1845	1	142	24	0	1	0	0	0	1	0	0	0	0	**169**	
1845 - 1900	0	138	20	0	3	0	0	0	0	0	0	0	0	**161**	**685**
1900 - 1915	0	0	0	0	0	0	0	0	0	0	0	0	0	**0**	
1915 - 1930	0	0	0	0	0	0	0	0	0	0	0	0	0	**0**	
1930 - 1945	0	0	0	0	0	0	0	0	0	0	0	0	0	**0**	
1945 - 2000	0	0	0	0	0	0	0	0	0	0	0	0	0	**0**	**0**
2000 - 2015	0	0	0	0	0	0	0	0	0	0	0	0	0	**0**	
2015 - 2030	0	0	0	0	0	0	0	0	0	0	0	0	0	**0**	
2030 - 2045	0	0	0	0	0	0	0	0	0	0	0	0	0	**0**	
2045 - 2100	0	0	0	0	0	0	0	0	0	0	0	0	0	**0**	**0**
2100 - 2115	0	0	0	0	0	0	0	0	0	0	0	0	0	**0**	
2115 - 2130	0	0	0	0	0	0	0	0	0	0	0	0	0	**0**	
2130 - 2145	0	0	0	0	0	0	0	0	0	0	0	0	0	**0**	
2145 - 2200	0	0	0	0	0	0	0	0	0	0	0	0	0	**0**	**0**
2200 - 2215	0	0	0	0	0	0	0	0	0	0	0	0	0	**0**	
2215 - 2230	0	0	0	0	0	0	0	0	0	0	0	0	0	**0**	
2230 - 2245	0	0	0	0	0	0	0	0	0	0	0	0	0	**0**	
2245 - 2300	0	0	0	0	0	0	0	0	0	0	0	0	0	**0**	**0**
2300 - 2315	0	0	0	0	0	0	0	0	0	0	0	0	0	**0**	
2315 - 2330	0	0	0	0	0	0	0	0	0	0	0	0	0	**0**	
2330 - 2345	0	0	0	0	0	0	0	0	0	0	0	0	0	**0**	
2345 - 0000	0	0	0	0	0	0	0	0	0	0	0	0	0	**0**	**0**

Session Total	7	7470	1565	5	112	14	0	26	69	4	0	0	0	**9272**
Session Average	0.07	77.81	16.30	0.05	1.17	0.15	0.00	0.27	0.72	0.04	0.00	0.00	0.00	**96.58**
Session Percentage	0.08	80.57	16.88	0.05	1.21	0.15	0.00	0.28	0.74	0.04	0.00	0.00	0.00	

AM Peak Hour	0715 - 0815	0715 - 0815	0715 - 0815	0600 - 0700	0700 - 0800	0845 - 0945	-	0800 - 0900	0800 - 0900	-	-	-	-	**0715 - 0815**
AM Peak Hour Volume	1	721	117	1	13	4	0	4	10	0	0	0	0	**859**

Noon Peak Hour	1215 - 1315	1245 - 1345	1330 - 1430	1330 - 1430	1400 - 1500	1300 - 1400	-	1000 - 1100	1145 - 1245	1045 - 1145	-	-	-	**1330 - 1430**
Noon Peak Hour Volume	1	648	151	2	15	3	0	3	9	4	0	0	0	**808**

PM Peak Hour	1500 - 1600	1615 - 1715	1615 - 1715	1515 - 1615	1500 - 1600	1500 - 1600	-	1500 - 1600	1500 - 1600	-	-	-	-	**1615 - 1715**
PM Peak Hour Volume	2	628	133	1	11	1	0	4	5	0	0	0	0	**775**

Bi-Directional Class Count || SB WB Average 15min

Columbia, SC

Marr Traffic DATA COLLECTION
www.marrtraffic.com

Site 34
I-26 James F. Byrnes Expy S/Bound On-Ramp,
south of Piney Grove Rd

Date
Tuesday, April 23, 2024

Lat/Long
34.066199°, -81.141839°

Weather
Fair
58°F

0000 - 2400 (Weekday 24h Session) (All Dates)
SB WB Average 15min

	SB WB Average 15min													15min	60min
Time	1	2	3	4	5	6	7	8	9	10	11	12	13	Total	Total
0000 - 0015	0	18	4	0	0	0	0	0	0	0	0	0	0	**23**	
0015 - 0030	0	10	3	0	0	0	0	0	0	0	0	0	0	**13**	
0030 - 0045	0	7	2	0	0	0	0	0	0	0	0	0	0	**9**	
0045 - 0100	0	5	1	0	0	0	0	0	0	0	0	0	0	**7**	**51**
0100 - 0115	0	6	1	0	0	0	0	0	0	0	0	0	0	**7**	
0115 - 0130	0	4	0	0	0	0	0	0	0	0	0	0	0	**4**	
0130 - 0145	0	3	0	0	0	0	0	0	0	0	0	0	0	**3**	
0145 - 0200	0	5	1	0	0	0	0	0	0	0	0	0	0	**6**	**21**
0200 - 0215	0	2	0	0	0	0	0	0	0	0	0	0	0	**2**	
0215 - 0230	0	4	1	0	0	0	0	0	0	0	0	0	0	**6**	
0230 - 0245	0	5	1	0	0	0	0	0	1	0	0	0	0	**7**	
0245 - 0300	0	3	2	0	0	0	0	0	1	0	0	0	0	**5**	**20**
0300 - 0315	0	5	1	0	0	0	0	0	0	0	0	0	0	**6**	
0315 - 0330	0	3	1	0	0	0	0	0	0	0	0	0	0	**4**	
0330 - 0345	0	8	2	0	0	0	0	0	0	0	0	0	0	**10**	
0345 - 0400	0	6	1	0	0	0	0	0	0	0	0	0	0	**8**	**28**
0400 - 0415	0	8	2	0	0	0	0	0	1	0	0	0	0	**10**	
0415 - 0430	0	7	2	0	0	0	0	0	0	0	0	0	0	**9**	
0430 - 0445	0	14	2	0	0	0	0	0	1	0	0	0	0	**17**	
0445 - 0500	0	10	2	0	0	0	0	0	0	0	0	0	0	**13**	**50**
0500 - 0515	0	16	3	0	0	0	0	0	0	0	0	0	0	**20**	
0515 - 0530	0	19	4	0	0	0	0	0	1	0	0	0	0	**24**	
0530 - 0545	0	35	6	0	0	0	0	0	1	0	0	0	0	**42**	
0545 - 0600	0	28	4	0	1	0	0	1	2	0	0	0	0	**36**	**122**
0600 - 0615	0	28	4	0	1	0	0	0	0	0	0	0	0	**33**	
0615 - 0630	0	46	7	0	1	0	0	0	0	0	0	0	0	**55**	
0630 - 0645	0	68	14	0	0	0	0	0	0	0	0	0	0	**83**	
0645 - 0700	0	78	17	0	1	0	0	0	1	0	0	0	0	**98**	**269**
0700 - 0715	0	85	16	0	1	0	0	0	1	0	0	0	0	**103**	
0715 - 0730	0	103	20	0	2	0	0	0	1	0	0	0	0	**126**	
0730 - 0745	0	123	17	0	1	0	0	0	0	0	0	0	0	**141**	
0745 - 0800	0	117	19	0	2	0	0	0	0	0	0	0	0	**139**	**509**
0800 - 0815	0	113	18	0	1	0	0	0	2	0	0	0	0	**135**	
0815 - 0830	0	106	19	0	1	0	0	1	1	0	0	0	0	**127**	
0830 - 0845	0	91	20	0	1	0	0	1	1	0	0	0	0	**114**	
0845 - 0900	0	82	14	0	0	0	0	0	2	0	0	0	0	**99**	**475**
0900 - 0915	0	71	18	0	1	0	0	0	1	0	0	0	0	**91**	
0915 - 0930	0	72	16	0	2	0	0	0	1	0	0	0	0	**91**	
0930 - 0945	0	66	18	1	2	1	0	0	1	0	0	0	0	**88**	
0945 - 1000	0	58	14	0	2	0	0	0	1	0	0	0	0	**75**	**345**
1000 - 1015	0	75	12	0	1	0	0	1	1	0	0	0	0	**90**	
1015 - 1030	0	71	16	0	1	1	0	0	0	0	0	0	0	**89**	
1030 - 1045	0	76	21	0	2	0	0	1	0	0	0	0	0	**101**	
1045 - 1100	0	84	20	0	2	0	0	0	0	0	0	0	0	**106**	**386**
1100 - 1115	0	73	15	0	1	1	0	0	0	0	0	0	0	**90**	
1115 - 1130	0	93	21	0	1	0	0	1	1	1	0	0	0	**118**	
1130 - 1145	0	89	20	0	2	1	0	0	0	0	0	0	0	**113**	
1145 - 1200	0	79	22	0	2	0	0	0	1	0	0	0	0	**104**	**425**
1200 - 1215	0	83	19	0	1	0	0	1	0	0	0	0	0	**105**	
1215 - 1230	0	101	28	0	1	0	0	0	1	0	0	0	0	**132**	
1230 - 1245	0	96	21	1	0	1	0	1	2	0	0	0	0	**121**	
1245 - 1300	0	107	24	0	2	0	0	0	0	0	0	0	0	**134**	**492**
1300 - 1315	0	102	22	0	1	0	0	0	0	0	0	0	0	**125**	
1315 - 1330	0	98	25	0	1	0	0	0	1	0	0	0	0	**125**	
1330 - 1345	0	111	25	0	1	0	0	0	1	0	0	0	0	**139**	
1345 - 1400	0	104	26	0	2	1	0	0	1	0	0	0	0	**134**	**523**
1400 - 1415	0	101	19	1	2	0	0	0	0	0	0	0	0	**123**	
1415 - 1430	0	106	28	1	2	0	0	0	0	0	0	0	0	**137**	
1430 - 1445	0	90	17	0	1	0	0	0	1	0	0	0	0	**110**	
1445 - 1500	0	95	21	0	2	0	0	0	0	0	0	0	0	**119**	**489**
1500 - 1515	0	104	24	0	2	0	0	1	0	0	0	0	0	**133**	
1515 - 1530	0	98	19	0	1	0	0	1	1	0	0	0	0	**120**	
1530 - 1545	1	100	18	0	2	0	0	0	1	0	0	0	0	**121**	
1545 - 1600	1	89	18	0	2	0	0	1	1	0	0	0	0	**112**	**486**
1600 - 1615	0	116	19	0	2	0	0	0	0	0	0	0	0	**138**	
1615 - 1630	0	104	25	0	2	0	0	1	0	0	0	0	0	**131**	
1630 - 1645	0	113	18	0	1	0	0	0	1	0	0	0	0	**132**	
1645 - 1700	0	90	19	0	2	0	0	0	0	0	0	0	0	**111**	**513**
1700 - 1715	0	121	27	0	1	0	0	0	1	0	0	0	0	**150**	
1715 - 1730	0	98	18	0	1	0	0	0	1	0	0	0	0	**119**	
1730 - 1745	0	89	16	0	1	0	0	0	1	0	0	0	0	**107**	
1745 - 1800	0	86	21	0	1	0	0	0	0	0	0	0	0	**108**	**484**
1800 - 1815	0	103	18	0	1	0	0	0	1	0	0	0	0	**123**	
1815 - 1830	0	92	20	0	1	0	0	0	1	0	0	0	0	**114**	
1830 - 1845	1	98	17	0	1	0	0	0	0	0	0	0	0	**117**	
1845 - 1900	0	87	15	0	1	0	0	0	0	0	0	0	0	**103**	**457**
1900 - 1915	0	79	12	0	0	0	0	0	0	0	0	0	0	**92**	
1915 - 1930	0	72	10	0	0	0	0	0	1	0	0	0	0	**83**	
1930 - 1945	0	65	12	0	1	0	0	0	1	0	0	0	0	**78**	
1945 - 2000	0	64	6	0	1	0	0	0	1	0	0	0	0	**72**	**325**
2000 - 2015	0	59	9	0	1	0	0	0	1	0	0	0	0	**69**	
2015 - 2030	0	58	11	0	0	0	0	0	0	0	0	0	0	**70**	
2030 - 2045	0	63	5	0	0	0	0	0	1	0	0	0	0	**69**	
2045 - 2100	1	55	4	0	0	0	0	0	0	0	0	0	0	**60**	**268**
2100 - 2115	0	36	4	0	0	0	0	0	0	0	0	0	0	**40**	
2115 - 2130	0	42	3	0	0	0	0	0	1	0	0	0	0	**46**	
2130 - 2145	0	43	6	0	0	0	0	0	0	0	0	0	0	**49**	
2145 - 2200	0	32	3	0	0	0	0	0	0	0	0	0	0	**35**	**170**
2200 - 2215	0	35	5	0	0	0	0	0	0	0	0	0	0	**40**	
2215 - 2230	0	27	4	0	0	0	0	0	1	0	0	0	0	**31**	
2230 - 2245	0	27	3	0	0	0	0	0	0	0	0	0	0	**31**	
2245 - 2300	0	16	3	0	0	0	0	0	0	0	0	0	0	**20**	**122**
2300 - 2315	0	15	3	0	0	0	0	0	0	0	0	0	0	**19**	
2315 - 2330	0	15	3	0	0	0	0	0	0	0	0	0	0	**18**	
2330 - 2345	0	13	2	0	0	0	0	0	0	0	0	0	0	**15**	
2345 - 0000	0	11	2	0	0	0	0	0	0	0	0	0	0	**13**	**65**

Session Total	6	5785	1143	6	76	13	0	16	49	1	0	0	0	**7095**
Session Average	0.06	60.26	11.91	0.07	0.79	0.13	0.00	0.17	0.51	0.01	0.00	0.00	0.00	**73.91**
Session Percentage	0.08	81.53	16.11	0.09	1.07	0.18	0.00	0.23	0.69	0.02	0.00	0.00	0.00	

AM Peak Hour	0715 - 0815	0730 - 0830	0745 - 0845	0915 - 1015	0915 - 1015	0845 - 0945	-	0945 - 1045	0800 - 0900	-	-	-	-	**0730 - 0830**
AM Peak Volume	1	459	75	1	7	2	0	2	6	0	0	0	0	**542**

Noon Peak Hour	1445 - 1545	1330 - 1430	1300 - 1400	1330 - 1430	1415 - 1515	1100 - 1200	-	1115 - 1215	1145 - 1245	1045 - 1145	-	-	-	**1330 - 1430**
Noon Peak Volume	1	421	99	1	8	2	0	2	4	1	0	0	0	**532**

PM Peak Hour	1500 - 1600	1615 - 1715	1615 - 1715	1500 - 1600	1530 - 1630	1500 - 1600	-	1500 - 1600	1915 - 2015	-	-	-	-	**1615 - 1715**
PM Peak Volume	2	427	88	0	8	1	0	2	3	0	0	0	0	**525**

Bi-Directional Class Count || Volume Summary 15min

Columbia, SC

Marr Traffic DATA COLLECTION

www.marrtraffic.com

Site 34

I-26 James F. Byrnes Expy S/Bound On-Ramp,
south of Piney Grove Rd

Date

Tuesday, April 23, 2024

Lat/Long

34.066199°, -81.141839°

Weather

Fair
58°F

Click here for Detailed Weather

0000 - 2400 (Weekday 24h Session) (04-23-2024)

Volume Summary 15min

TIME	Volume Summary 15min		15min Total	60min Total
	NB	SB		
0000 - 0015	0	0	**0**	
0015 - 0030	0	0	**0**	
0030 - 0045	0	0	**0**	
0045 - 0100	0	0	**0**	**0**
0100 - 0115	0	0	**0**	
0115 - 0130	0	0	**0**	
0130 - 0145	0	0	**0**	
0145 - 0200	0	0	**0**	**0**
0200 - 0215	0	0	**0**	
0215 - 0230	0	0	**0**	
0230 - 0245	0	0	**0**	
0245 - 0300	0	0	**0**	**0**
0300 - 0315	0	0	**0**	
0315 - 0330	0	0	**0**	
0330 - 0345	0	0	**0**	
0345 - 0400	0	0	**0**	**0**
0400 - 0415	0	0	**0**	
0415 - 0430	0	0	**0**	
0430 - 0445	0	0	**0**	
0445 - 0500	0	0	**0**	**0**
0500 - 0515	0	0	**0**	
0515 - 0530	0	0	**0**	
0530 - 0545	0	0	**0**	
0545 - 0600	0	0	**0**	**0**
0600 - 0615	0	0	**0**	
0615 - 0630	0	0	**0**	
0630 - 0645	0	0	**0**	
0645 - 0700	0	0	**0**	**0**
0700 - 0715	0	0	**0**	
0715 - 0730	0	0	**0**	
0730 - 0745	0	0	**0**	
0745 - 0800	0	0	**0**	**0**
0800 - 0815	0	0	**0**	
0815 - 0830	0	0	**0**	
0830 - 0845	0	0	**0**	
0845 - 0900	0	0	**0**	**0**
0900 - 0915	0	0	**0**	
0915 - 0930	0	0	**0**	
0930 - 0945	0	0	**0**	
0945 - 1000	0	0	**0**	**0**
1000 - 1015	0	0	**0**	
1015 - 1030	0	0	**0**	
1030 - 1045	0	0	**0**	
1045 - 1100	0	0	**0**	**0**
1100 - 1115	0	0	**0**	
1115 - 1130	0	0	**0**	
1130 - 1145	0	0	**0**	
1145 - 1200	0	0	**0**	**0**

Time	Volume Summary 15min		15min Total	60min Total
	NB	SB		
1200 - 1215	0	0	**0**	
1215 - 1230	0	0	**0**	
1230 - 1245	0	0	**0**	
1245 - 1300	0	0	**0**	**0**
1300 - 1315	0	0	**0**	
1315 - 1330	0	0	**0**	
1330 - 1345	0	0	**0**	
1345 - 1400	0	0	**0**	**0**
1400 - 1415	0	0	**0**	
1415 - 1430	0	0	**0**	
1430 - 1445	0	0	**0**	
1445 - 1500	0	0	**0**	**0**
1500 - 1515	0	0	**0**	
1515 - 1530	0	0	**0**	
1530 - 1545	0	0	**0**	
1545 - 1600	0	0	**0**	**0**
1600 - 1615	0	0	**0**	
1615 - 1630	0	0	**0**	
1630 - 1645	0	0	**0**	
1645 - 1700	0	0	**0**	**0**
1700 - 1715	0	0	**0**	
1715 - 1730	0	0	**0**	
1730 - 1745	0	0	**0**	
1745 - 1800	0	0	**0**	**0**
1800 - 1815	0	0	**0**	
1815 - 1830	0	0	**0**	
1830 - 1845	0	0	**0**	
1845 - 1900	0	0	**0**	**0**
1900 - 1915	0	144	**144**	
1915 - 1930	0	127	**127**	
1930 - 1945	0	119	**119**	
1945 - 2000	0	120	**120**	**510**
2000 - 2015	0	86	**86**	
2015 - 2030	0	93	**93**	
2030 - 2045	0	109	**109**	
2045 - 2100	0	70	**70**	**358**
2100 - 2115	0	63	**63**	
2115 - 2130	0	73	**73**	
2130 - 2145	0	76	**76**	
2145 - 2200	0	51	**51**	**263**
2200 - 2215	0	64	**64**	
2215 - 2230	0	50	**50**	
2230 - 2245	0	48	**48**	
2245 - 2300	0	29	**29**	**191**
2300 - 2315	0	28	**28**	
2315 - 2330	0	27	**27**	
2330 - 2345	0	24	**24**	
2345 - 0000	0	17	**17**	**96**

Session Total	0	1418	**1418**
Session Average	0.00	14.77	**14.77**
Session Percentage	0.00	100.00	

Site 34

I-26 James F. Byrnes Expy S/Bound On-Ramp,
south of Piney Grove Rd

Date

Wednesday, April 24, 2024

Lat/Long

34.066199°, -81.141839°

Weather

Fair
66°F

Click here for Detailed Weather

0000 - 2400 (Weekday 24h Session) (04-24-2024)

Volume Summary 15min

TIME	Volume Summary 15min NB	Volume Summary 15min SB	15min Total	60min Total
0000 - 0015	0	37	**37**	
0015 - 0030	0	15	**15**	
0030 - 0045	0	15	**15**	
0045 - 0100	0	11	**11**	**78**
0100 - 0115	0	14	**14**	
0115 - 0130	0	8	**8**	
0130 - 0145	0	8	**8**	
0145 - 0200	0	12	**12**	**42**
0200 - 0215	0	3	**3**	
0215 - 0230	0	9	**9**	
0230 - 0245	0	8	**8**	
0245 - 0300	0	6	**6**	**26**
0300 - 0315	0	6	**6**	
0315 - 0330	0	3	**3**	
0330 - 0345	0	15	**15**	
0345 - 0400	0	12	**12**	**36**
0400 - 0415	0	15	**15**	
0415 - 0430	0	14	**14**	
0430 - 0445	0	33	**33**	
0445 - 0500	0	17	**17**	**79**
0500 - 0515	0	29	**29**	
0515 - 0530	0	35	**35**	
0530 - 0545	0	56	**56**	
0545 - 0600	0	54	**54**	**174**
0600 - 0615	0	60	**60**	
0615 - 0630	0	88	**88**	
0630 - 0645	0	127	**127**	
0645 - 0700	0	140	**140**	**415**
0700 - 0715	0	166	**166**	
0715 - 0730	0	177	**177**	
0730 - 0745	0	197	**197**	
0745 - 0800	0	203	**203**	**743**
0800 - 0815	0	185	**185**	
0815 - 0830	0	200	**200**	
0830 - 0845	0	170	**170**	
0845 - 0900	0	134	**134**	**689**
0900 - 0915	0	148	**148**	
0915 - 0930	0	140	**140**	
0930 - 0945	0	127	**127**	
0945 - 1000	0	114	**114**	**529**
1000 - 1015	0	139	**139**	
1015 - 1030	0	141	**141**	
1030 - 1045	0	144	**144**	
1045 - 1100	0	167	**167**	**591**
1100 - 1115	0	129	**129**	
1115 - 1130	0	179	**179**	
1130 - 1145	0	168	**168**	
1145 - 1200	0	136	**136**	**612**

Time	Volume Summary 15min NB	Volume Summary 15min SB	15min Total	60min Total
1200 - 1215	0	138	**138**	
1215 - 1230	0	198	**198**	
1230 - 1245	0	195	**195**	
1245 - 1300	0	197	**197**	**728**
1300 - 1315	0	172	**172**	
1315 - 1330	0	178	**178**	
1330 - 1345	0	218	**218**	
1345 - 1400	0	198	**198**	**766**
1400 - 1415	0	175	**175**	
1415 - 1430	0	198	**198**	
1430 - 1445	0	156	**156**	
1445 - 1500	0	166	**166**	**695**
1500 - 1515	0	208	**208**	
1515 - 1530	0	174	**174**	
1530 - 1545	0	188	**188**	
1545 - 1600	0	169	**169**	**739**
1600 - 1615	0	215	**215**	
1615 - 1630	0	189	**189**	
1630 - 1645	0	209	**209**	
1645 - 1700	0	169	**169**	**782**
1700 - 1715	0	233	**233**	
1715 - 1730	0	189	**189**	
1730 - 1745	0	152	**152**	
1745 - 1800	0	178	**178**	**752**
1800 - 1815	0	186	**186**	
1815 - 1830	0	171	**171**	
1830 - 1845	0	181	**181**	
1845 - 1900	0	149	**149**	**687**
1900 - 1915	0	131	**131**	
1915 - 1930	0	121	**121**	
1930 - 1945	0	116	**116**	
1945 - 2000	0	96	**96**	**464**
2000 - 2015	0	122	**122**	
2015 - 2030	0	116	**116**	
2030 - 2045	0	99	**99**	
2045 - 2100	0	110	**110**	**447**
2100 - 2115	0	57	**57**	
2115 - 2130	0	64	**64**	
2130 - 2145	0	72	**72**	
2145 - 2200	0	55	**55**	**248**
2200 - 2215	0	57	**57**	
2215 - 2230	0	43	**43**	
2230 - 2245	0	44	**44**	
2245 - 2300	0	30	**30**	**174**
2300 - 2315	0	28	**28**	
2315 - 2330	0	28	**28**	
2330 - 2345	0	21	**21**	
2345 - 0000	0	23	**23**	**100**

Session Total	0	10596	**10596**
Session Average	0.00	110.38	**110.38**
Session Percentage	0.00	100.00	

Site 34

I-26 James F. Byrnes Expy S/Bound On-Ramp,
south of Piney Grove Rd

Date

Thursday, April 25, 2024

Lat/Long

34.066199°, -81.141839°

Weather

Fair
67°F

Click here for Detailed Weather

0000 - 2400 (Weekday 24h Session) (04-25-2024)

Volume Summary 15min

TIME	Volume Summary 15min NB	SB	15min Total	60min Total
0000 - 0015	0	31	**31**	
0015 - 0030	0	25	**25**	
0030 - 0045	0	11	**11**	
0045 - 0100	0	9	**9**	**76**
0100 - 0115	0	7	**7**	
0115 - 0130	0	5	**5**	
0130 - 0145	0	2	**2**	
0145 - 0200	0	6	**6**	**20**
0200 - 0215	0	4	**4**	
0215 - 0230	0	9	**9**	
0230 - 0245	0	13	**13**	
0245 - 0300	0	9	**9**	**35**
0300 - 0315	0	13	**13**	
0315 - 0330	0	9	**9**	
0330 - 0345	0	15	**15**	
0345 - 0400	0	12	**12**	**49**
0400 - 0415	0	16	**16**	
0415 - 0430	0	13	**13**	
0430 - 0445	0	18	**18**	
0445 - 0500	0	23	**23**	**70**
0500 - 0515	0	31	**31**	
0515 - 0530	0	36	**36**	
0530 - 0545	0	69	**69**	
0545 - 0600	0	55	**55**	**191**
0600 - 0615	0	40	**40**	
0615 - 0630	0	77	**77**	
0630 - 0645	0	122	**122**	
0645 - 0700	0	153	**153**	**392**
0700 - 0715	0	144	**144**	
0715 - 0730	0	201	**201**	
0730 - 0745	0	226	**226**	
0745 - 0800	0	213	**213**	**784**
0800 - 0815	0	219	**219**	
0815 - 0830	0	182	**182**	
0830 - 0845	0	173	**173**	
0845 - 0900	0	163	**163**	**737**
0900 - 0915	0	125	**125**	
0915 - 0930	0	134	**134**	
0930 - 0945	0	136	**136**	
0945 - 1000	0	112	**112**	**507**
1000 - 1015	0	130	**130**	
1015 - 1030	0	127	**127**	
1030 - 1045	0	158	**158**	
1045 - 1100	0	152	**152**	**567**
1100 - 1115	0	142	**142**	
1115 - 1130	0	174	**174**	
1130 - 1145	0	170	**170**	
1145 - 1200	0	177	**177**	**663**

Time	Volume Summary 15min NB	SB	15min Total	60min Total
1200 - 1215	0	177	**177**	
1215 - 1230	0	198	**198**	
1230 - 1245	0	169	**169**	
1245 - 1300	0	204	**204**	**748**
1300 - 1315	0	204	**204**	
1315 - 1330	0	197	**197**	
1330 - 1345	0	198	**198**	
1345 - 1400	0	204	**204**	**803**
1400 - 1415	0	194	**194**	
1415 - 1430	0	212	**212**	
1430 - 1445	0	175	**175**	
1445 - 1500	0	190	**190**	**771**
1500 - 1515	0	191	**191**	
1515 - 1530	0	185	**185**	
1530 - 1545	0	176	**176**	
1545 - 1600	0	166	**166**	**718**
1600 - 1615	0	198	**198**	
1615 - 1630	0	205	**205**	
1630 - 1645	0	188	**188**	
1645 - 1700	0	165	**165**	**756**
1700 - 1715	0	217	**217**	
1715 - 1730	0	167	**167**	
1730 - 1745	0	169	**169**	
1745 - 1800	0	147	**147**	**700**
1800 - 1815	0	184	**184**	
1815 - 1830	0	171	**171**	
1830 - 1845	0	169	**169**	
1845 - 1900	0	161	**161**	**685**
1900 - 1915	0	0	**0**	
1915 - 1930	0	0	**0**	
1930 - 1945	0	0	**0**	
1945 - 2000	0	0	**0**	**0**
2000 - 2015	0	0	**0**	
2015 - 2030	0	0	**0**	
2030 - 2045	0	0	**0**	
2045 - 2100	0	0	**0**	**0**
2100 - 2115	0	0	**0**	
2115 - 2130	0	0	**0**	
2130 - 2145	0	0	**0**	
2145 - 2200	0	0	**0**	**0**
2200 - 2215	0	0	**0**	
2215 - 2230	0	0	**0**	
2230 - 2245	0	0	**0**	
2245 - 2300	0	0	**0**	**0**
2300 - 2315	0	0	**0**	
2315 - 2330	0	0	**0**	
2330 - 2345	0	0	**0**	
2345 - 0000	0	0	**0**	**0**

Session Total	0	9272	**9272**
Session Average	0.00	96.58	**96.58**
Session Percentage	0.00	100.00	

Bi-Directional Class Count || SB WB 60min

Columbia, SC

Marr Traffic DATA COLLECTION

www.marrtraffic.com

Site 34
I-26 James F. Byrnes Expy S/Bound On-Ramp,
south of Piney Grove Rd

Date
Tuesday, April 23, 2024

Lat/Long
34.066199°, -81.141839°

Weather
Fair
58°F

Click here for Detailed Weather

0000 - 2400 (Weekday 24h Session) (04-23-2024)
SB WB 60min

	Southbound (Movement 34.1)													
TIME	1	2	3	4	5	6	7	8	9	10	11	12	13	**Total**
0000 - 0100	0	0	0	0	0	0	0	0	0	0	0	0	0	**0**
0100 - 0200	0	0	0	0	0	0	0	0	0	0	0	0	0	**0**
0200 - 0300	0	0	0	0	0	0	0	0	0	0	0	0	0	**0**
0300 - 0400	0	0	0	0	0	0	0	0	0	0	0	0	0	**0**
0400 - 0500	0	0	0	0	0	0	0	0	0	0	0	0	0	**0**
0500 - 0600	0	0	0	0	0	0	0	0	0	0	0	0	0	**0**
0600 - 0700	0	0	0	0	0	0	0	0	0	0	0	0	0	**0**
0700 - 0800	0	0	0	0	0	0	0	0	0	0	0	0	0	**0**
0800 - 0900	0	0	0	0	0	0	0	0	0	0	0	0	0	**0**
0900 - 1000	0	0	0	0	0	0	0	0	0	0	0	0	0	**0**
1000 - 1100	0	0	0	0	0	0	0	0	0	0	0	0	0	**0**
1100 - 1200	0	0	0	0	0	0	0	0	0	0	0	0	0	**0**
1200 - 1300	0	0	0	0	0	0	0	0	0	0	0	0	0	**0**
1300 - 1400	0	0	0	0	0	0	0	0	0	0	0	0	0	**0**
1400 - 1500	0	0	0	0	0	0	0	0	0	0	0	0	0	**0**
1500 - 1600	0	0	0	0	0	0	0	0	0	0	0	0	0	**0**
1600 - 1700	0	0	0	0	0	0	0	0	0	0	0	0	0	**0**
1700 - 1800	0	0	0	0	0	0	0	0	0	0	0	0	0	**0**
1800 - 1900	0	0	0	0	0	0	0	0	0	0	0	0	0	**0**
1900 - 2000	0	447	56	0	3	0	0	0	4	0	0	0	0	**510**
2000 - 2100	0	314	39	0	1	0	0	0	4	0	0	0	0	**358**
2100 - 2200	0	239	23	0	0	0	0	1	0	0	0	0	0	**263**
2200 - 2300	0	163	24	1	2	1	0	0	0	0	0	0	0	**191**
2300 - 2400	0	78	17	0	0	0	0	0	1	0	0	0	0	**96**
Session Total	0	1241	159	1	6	1	0	1	9	0	0	0	0	**1418**
Session Average	0.00	51.71	6.63	0.04	0.25	0.04	0.00	0.04	0.38	0.00	0.00	0.00	0.00	**59.08**
Session Percentage	0.00	87.52	11.21	0.07	0.42	0.07	0.00	0.07	0.63	0.00	0.00	0.00	0.00	
AM Peak Hour	-	-	-	-	-	-	-	-	-	-	-	-	-	**-**
AM Peak Volume	0	0	0	0	0	0	0	0	0	0	0	0	0	**0**
Noon Peak Hour	-	-	-	-	-	-	-	-	-	-	-	-	-	**-**
Noon Peak Volume	0	0	0	0	0	0	0	0	0	0	0	0	0	**0**
PM Peak Hour	-	1900 - 2000	1900 - 2000	-	1900 - 2000	-	-	-	1900 - 2000	-	-	-	-	**1900 - 2000**
PM Peak Volume	0	447	56	0	3	0	0	0	4	0	0	0	0	**510**

Site 34

I-26 James F. Byrnes Expy S/Bound On-Ramp,
south of Piney Grove Rd

Date

Wednesday, April 24, 2024

Lat/Long

34.066199°, -81.141839°

Weather

Fair
66°F

Click here for Detailed Weather

0000 - 2400 (Weekday 24h Session) (04-24-2024)

SB WB 60min

	Southbound (Movement 34.1)													
TIME	1	2	3	4	5	6	7	8	9	10	11	12	13	**Total**
0000 - 0100	0	63	14	0	0	0	0	0	1	0	0	0	0	**78**
0100 - 0200	0	37	3	0	1	0	0	0	1	0	0	0	0	**42**
0200 - 0300	0	17	6	0	1	0	0	0	2	0	0	0	0	**26**
0300 - 0400	0	31	4	0	0	0	0	1	0	0	0	0	0	**36**
0400 - 0500	0	67	8	0	0	0	0	1	3	0	0	0	0	**79**
0500 - 0600	0	147	19	0	1	0	0	0	7	0	0	0	0	**174**
0600 - 0700	0	345	61	1	5	2	0	1	0	0	0	0	0	**415**
0700 - 0800	1	631	101	0	4	3	0	1	2	0	0	0	0	**743**
0800 - 0900	0	558	113	1	6	1	0	2	8	0	0	0	0	**689**
0900 - 1000	0	402	111	2	9	1	0	0	4	0	0	0	0	**529**
1000 - 1100	1	474	98	1	9	2	0	3	3	0	0	0	0	**591**
1100 - 1200	0	481	114	0	7	5	0	2	3	0	0	0	0	**612**
1200 - 1300	0	568	142	2	10	3	0	2	1	0	0	0	0	**728**
1300 - 1400	0	604	146	0	9	1	0	0	6	0	0	0	0	**766**
1400 - 1500	0	559	122	2	7	2	0	1	2	0	0	0	0	**695**
1500 - 1600	3	601	116	1	11	2	0	2	3	0	0	0	0	**739**
1600 - 1700	0	651	113	0	12	0	0	4	2	0	0	0	0	**782**
1700 - 1800	2	614	127	0	5	0	0	1	3	0	0	0	0	**752**
1800 - 1900	1	561	113	1	6	0	0	1	4	0	0	0	0	**687**
1900 - 2000	1	393	63	0	3	0	0	0	4	0	0	0	0	**464**
2000 - 2100	2	391	49	0	2	1	0	0	2	0	0	0	0	**447**
2100 - 2200	0	217	28	1	0	0	0	0	2	0	0	0	0	**248**
2200 - 2300	0	151	19	0	0	0	0	0	4	0	0	0	0	**174**
2300 - 2400	0	81	15	1	2	0	0	0	1	0	0	0	0	**100**

Session Total	11	8644	1705	13	110	23	0	22	68	0	0	0	0	**10596**
Session Average	0.46	360.17	71.04	0.54	4.58	0.96	0.00	0.92	2.83	0.00	0.00	0.00	0.00	**441.50**
Session Percentage	0.10	81.58	16.09	0.12	1.04	0.22	0.00	0.21	0.64	0.00	0.00	0.00	0.00	

AM Peak Hour	0700 - 0800	0700 - 0800	0800 - 0900	0900 - 1000	0900 - 1000	0700 - 0800	-	0800 - 0900	0800 - 0900	-	-	-	-	**0700 - 0800**
AM Peak Volume	1	631	113	2	9	3	0	2	8	0	0	0	0	**743**

Noon Peak Hour	1000 - 1100	1300 - 1400	1300 - 1400	1200 - 1300	1200 - 1300	1100 - 1200	-	1000 - 1100	1300 - 1400	-	-	-	-	**1300 - 1400**
Noon Peak Volume	1	604	146	2	10	5	0	3	6	0	0	0	0	**766**

PM Peak Hour	1500 - 1600	1600 - 1700	1700 - 1800	1500 - 1600	1600 - 1700	1500 - 1600	-	1600 - 1700	1800 - 1900	-	-	-	-	**1600 - 1700**
PM Peak Volume	3	651	127	1	12	2	0	4	4	0	0	0	0	**782**

Site 34
I-26 James F. Byrnes Expy S/Bound On-Ramp,
south of Piney Grove Rd

Date
Thursday, April 25, 2024

Weather
Fair
67°F

Lat/Long
34.066199°, -81.141839°

Click here for Detailed Weather

0000 - 2400 (Weekday 24h Session) (04-25-2024)
SB WB 60min

	Southbound (Movement 34.1)													
TIME	1	2	3	4	5	6	7	8	9	10	11	12	13	**Total**
0000 - 0100	0	59	16	0	1	0	0	0	0	0	0	0	0	**76**
0100 - 0200	0	16	4	0	0	0	0	0	0	0	0	0	0	**20**
0200 - 0300	0	26	6	0	0	0	0	0	3	0	0	0	0	**35**
0300 - 0400	0	36	11	0	1	0	0	0	1	0	0	0	0	**49**
0400 - 0500	0	50	16	0	1	0	0	1	2	0	0	0	0	**70**
0500 - 0600	0	149	33	0	4	0	0	2	3	0	0	0	0	**191**
0600 - 0700	0	315	65	1	6	1	0	0	4	0	0	0	0	**392**
0700 - 0800	0	651	115	0	13	0	0	1	4	0	0	0	0	**784**
0800 - 0900	1	619	96	0	4	3	0	4	10	0	0	0	0	**737**
0900 - 1000	0	396	88	0	10	4	0	2	7	0	0	0	0	**507**
1000 - 1100	0	442	109	1	10	0	0	3	2	0	0	0	0	**567**
1100 - 1200	0	522	123	0	8	0	0	2	4	4	0	0	0	**663**
1200 - 1300	0	595	136	0	5	2	0	3	7	0	0	0	0	**748**
1300 - 1400	1	640	150	0	4	3	0	1	4	0	0	0	0	**803**
1400 - 1500	0	617	132	2	15	0	0	1	4	0	0	0	0	**771**
1500 - 1600	2	573	122	0	11	1	0	4	5	0	0	0	0	**718**
1600 - 1700	0	617	127	1	7	0	0	1	3	0	0	0	0	**756**
1700 - 1800	1	568	120	0	7	0	0	1	3	0	0	0	0	**700**
1800 - 1900	2	579	96	0	5	0	0	0	3	0	0	0	0	**685**
1900 - 2000	0	0	0	0	0	0	0	0	0	0	0	0	0	**0**
2000 - 2100	0	0	0	0	0	0	0	0	0	0	0	0	0	**0**
2100 - 2200	0	0	0	0	0	0	0	0	0	0	0	0	0	**0**
2200 - 2300	0	0	0	0	0	0	0	0	0	0	0	0	0	**0**
2300 - 2400	0	0	0	0	0	0	0	0	0	0	0	0	0	**0**

Session Total	7	7470	1565	5	112	14	0	26	69	4	0	0	0	**9272**
Session Average	0.29	311.25	65.21	0.21	4.67	0.58	0.00	1.08	2.88	0.17	0.00	0.00	0.00	**386.33**
Session Percentage	0.08	80.57	16.88	0.05	1.21	0.15	0.00	0.28	0.74	0.04	0.00	0.00	0.00	

AM Peak Hour	0800 - 0900	0700 - 0800	0700 - 0800	0600 - 0700	0700 - 0800	0900 - 1000	-	0800 - 0900	0800 - 0900	-	-	-	-	**0700 - 0800**
AM Peak Hour Volume	1	651	115	1	13	4	0	4	10	0	0	0	0	**784**

Noon Peak Hour	1300 - 1400	1300 - 1400	1300 - 1400	1400 - 1500	1400 - 1500	1300 - 1400	-	1000 - 1100	1200 - 1300	1100 - 1200	-	-	-	**1300 - 1400**
Noon Peak Hour Volume	1	640	150	2	15	3	0	3	7	4	0	0	0	**803**

PM Peak Hour	1500 - 1600	1600 - 1700	1600 - 1700	1600 - 1700	1500 - 1600	1500 - 1600	-	1500 - 1600	1500 - 1600	-	-	-	-	**1600 - 1700**
PM Peak Hour Volume	2	617	127	1	11	1	0	4	5	0	0	0	0	**756**

Bi-Directional Class Count || Volume Summary 60min

Columbia, SC

Marr Traffic DATA COLLECTION

www.marrtraffic.com

Site 34

I-26 James F. Byrnes Expy S/Bound On-Ramp,
south of Piney Grove Rd

Date

Tuesday, April 23, 2024

Lat/Long

34.066199°, -81.141839°

Weather

Fair
58°F

Click here for Detailed Weather

0000 - 2400 (Weekday 24h Session) (04-23-2024)

Volume Summary 60min

	Volume Summary 60min		
TIME	NB	SB	**Total**
0000 - 0100	0	0	**0**
0100 - 0200	0	0	**0**
0200 - 0300	0	0	**0**
0300 - 0400	0	0	**0**
0400 - 0500	0	0	**0**
0500 - 0600	0	0	**0**
0600 - 0700	0	0	**0**
0700 - 0800	0	0	**0**
0800 - 0900	0	0	**0**
0900 - 1000	0	0	**0**
1000 - 1100	0	0	**0**
1100 - 1200	0	0	**0**

	Volume Summary 60min		
Time	NB	SB	**Total**
1200 - 1300	0	0	**0**
1300 - 1400	0	0	**0**
1400 - 1500	0	0	**0**
1500 - 1600	0	0	**0**
1600 - 1700	0	0	**0**
1700 - 1800	0	0	**0**
1800 - 1900	0	0	**0**
1900 - 2000	0	510	**510**
2000 - 2100	0	358	**358**
2100 - 2200	0	263	**263**
2200 - 2300	0	191	**191**
2300 - 2400	0	96	**96**

Session Total	0	1418	**1418**
Session Average	0.00	59.08	**59.08**
Session Percentage	0.00	100.00	

Site 34

I-26 James F. Byrnes Expy S/Bound On-Ramp,
south of Piney Grove Rd

Date

Wednesday, April 24, 2024

Lat/Long

34.066199°, -81.141839°

Weather

Fair
66°F

Click here for Detailed Weather

0000 - 2400 (Weekday 24h Session) (04-24-2024)

Volume Summary 60min

	Volume Summary 60min		
TIME	NB	SB	**Total**
0000 - 0100	0	78	**78**
0100 - 0200	0	42	**42**
0200 - 0300	0	26	**26**
0300 - 0400	0	36	**36**
0400 - 0500	0	79	**79**
0500 - 0600	0	174	**174**
0600 - 0700	0	415	**415**
0700 - 0800	0	743	**743**
0800 - 0900	0	689	**689**
0900 - 1000	0	529	**529**
1000 - 1100	0	591	**591**
1100 - 1200	0	612	**612**

Session Total	0	10596	**10596**
Session Average	0.00	441.50	**441.50**
Session Percentage	0.00	100.00	

	Volume Summary 60min		
Time	NB	SB	**Total**
1200 - 1300	0	728	**728**
1300 - 1400	0	766	**766**
1400 - 1500	0	695	**695**
1500 - 1600	0	739	**739**
1600 - 1700	0	782	**782**
1700 - 1800	0	752	**752**
1800 - 1900	0	687	**687**
1900 - 2000	0	464	**464**
2000 - 2100	0	447	**447**
2100 - 2200	0	248	**248**
2200 - 2300	0	174	**174**
2300 - 2400	0	100	**100**

Site 34

I-26 James F. Byrnes Expy S/Bound On-Ramp,
south of Piney Grove Rd

Date

Thursday, April 25, 2024

Lat/Long

34.066199°, -81.141839°

Weather

Fair
67°F

Click here for Detailed Weather

0000 - 2400 (Weekday 24h Session) (04-25-2024)

Volume Summary 60min

	Volume Summary 60min		
TIME	NB	SB	**Total**
0000 - 0100	0	76	**76**
0100 - 0200	0	20	**20**
0200 - 0300	0	35	**35**
0300 - 0400	0	49	**49**
0400 - 0500	0	70	**70**
0500 - 0600	0	191	**191**
0600 - 0700	0	392	**392**
0700 - 0800	0	784	**784**
0800 - 0900	0	737	**737**
0900 - 1000	0	507	**507**
1000 - 1100	0	567	**567**
1100 - 1200	0	663	**663**

	Volume Summary 60min		
Time	NB	SB	**Total**
1200 - 1300	0	748	**748**
1300 - 1400	0	803	**803**
1400 - 1500	0	771	**771**
1500 - 1600	0	718	**718**
1600 - 1700	0	756	**756**
1700 - 1800	0	700	**700**
1800 - 1900	0	685	**685**
1900 - 2000	0	0	**0**
2000 - 2100	0	0	**0**
2100 - 2200	0	0	**0**
2200 - 2300	0	0	**0**
2300 - 2400	0	0	**0**

Session Total	0	9272	**9272**
Session Average	0.00	386.33	**386.33**
Session Percentage	0.00	100.00	

Bi-Directional Class Count || Graphical Analysis SB WB

Columbia, SC

Marr Traffic DATA COLLECTION

www.marrtraffic.com

Site 34

I-26 James F. Byrnes Expy S/Bound On-Ramp,
south of Piney Grove Rd

Lat/Long

34.066199°, -81.141839°

0000 - 2400 (Weekday 24h Session)

Graphical Analysis SB WB

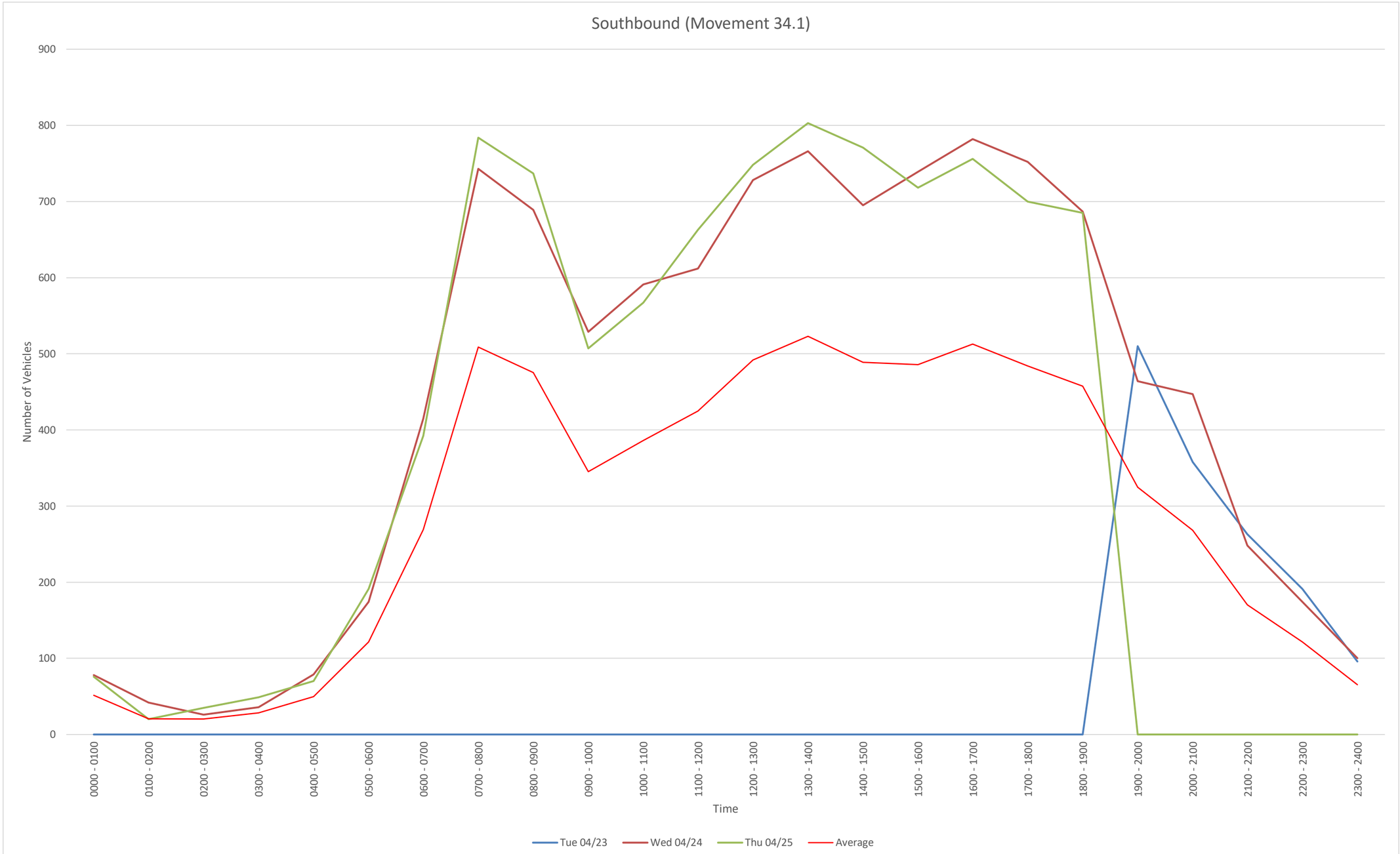

Time	Tue 04/23	Wed 04/24	Thu 04/25				
0000 - 0100	0	78	76				
0100 - 0200	0	42	20				
0200 - 0300	0	26	35				
0300 - 0400	0	36	49				
0400 - 0500	0	79	70				
0500 - 0600	0	174	191				
0600 - 0700	0	415	392				
0700 - 0800	0	743	784				
0800 - 0900	0	689	737				
0900 - 1000	0	529	507				
1000 - 1100	0	591	567				
1100 - 1200	0	612	663				
1200 - 1300	0	728	748				
1300 - 1400	0	766	803				
1400 - 1500	0	695	771				
1500 - 1600	0	739	718				
1600 - 1700	0	782	756				
1700 - 1800	0	752	700				
1800 - 1900	0	687	685				
1900 - 2000	510	464	0				
2000 - 2100	358	447	0				
2100 - 2200	263	248	0				
2200 - 2300	191	174	0				
2300 - 2400	96	100	0				
Daily Total	1418	10596	9272				

NB
File Name:
Start Date: 4/23/2024
Start Time: 0
Site Code: 34
Station ID: 1
Location 1: I-26 James F. Byrnes Expy S/Bound On-Ramp, south of Piney Grove Rd
Location 2:

Date	Time	1	2	3	4	5	6	7	8	9	10	11	12	13
4/23/2024	12:00 AM	0	0	0	0	0	0	0	0	0	0	0	0	0
4/23/2024	12:15 AM	0	0	0	0	0	0	0	0	0	0	0	0	0
4/23/2024	12:30 AM	0	0	0	0	0	0	0	0	0	0	0	0	0
4/23/2024	12:45 AM	0	0	0	0	0	0	0	0	0	0	0	0	0
4/23/2024	1:00 AM	0	0	0	0	0	0	0	0	0	0	0	0	0
4/23/2024	1:15 AM	0	0	0	0	0	0	0	0	0	0	0	0	0
4/23/2024	1:30 AM	0	0	0	0	0	0	0	0	0	0	0	0	0
4/23/2024	1:45 AM	0	0	0	0	0	0	0	0	0	0	0	0	0
4/23/2024	2:00 AM	0	0	0	0	0	0	0	0	0	0	0	0	0
4/23/2024	2:15 AM	0	0	0	0	0	0	0	0	0	0	0	0	0
4/23/2024	2:30 AM	0	0	0	0	0	0	0	0	0	0	0	0	0
4/23/2024	2:45 AM	0	0	0	0	0	0	0	0	0	0	0	0	0
4/23/2024	3:00 AM	0	0	0	0	0	0	0	0	0	0	0	0	0
4/23/2024	3:15 AM	0	0	0	0	0	0	0	0	0	0	0	0	0
4/23/2024	3:30 AM	0	0	0	0	0	0	0	0	0	0	0	0	0
4/23/2024	3:45 AM	0	0	0	0	0	0	0	0	0	0	0	0	0
4/23/2024	4:00 AM	0	0	0	0	0	0	0	0	0	0	0	0	0
4/23/2024	4:15 AM	0	0	0	0	0	0	0	0	0	0	0	0	0
4/23/2024	4:30 AM	0	0	0	0	0	0	0	0	0	0	0	0	0
4/23/2024	4:45 AM	0	0	0	0	0	0	0	0	0	0	0	0	0
4/23/2024	5:00 AM	0	0	0	0	0	0	0	0	0	0	0	0	0
4/23/2024	5:15 AM	0	0	0	0	0	0	0	0	0	0	0	0	0
4/23/2024	5:30 AM	0	0	0	0	0	0	0	0	0	0	0	0	0
4/23/2024	5:45 AM	0	0	0	0	0	0	0	0	0	0	0	0	0
4/23/2024	6:00 AM	0	0	0	0	0	0	0	0	0	0	0	0	0
4/23/2024	6:15 AM	0	0	0	0	0	0	0	0	0	0	0	0	0
4/23/2024	6:30 AM	0	0	0	0	0	0	0	0	0	0	0	0	0
4/23/2024	6:45 AM	0	0	0	0	0	0	0	0	0	0	0	0	0
4/23/2024	7:00 AM	0	0	0	0	0	0	0	0	0	0	0	0	0
4/23/2024	7:15 AM	0	0	0	0	0	0	0	0	0	0	0	0	0
4/23/2024	7:30 AM	0	0	0	0	0	0	0	0	0	0	0	0	0
4/23/2024	7:45 AM	0	0	0	0	0	0	0	0	0	0	0	0	0
4/23/2024	8:00 AM	0	0	0	0	0	0	0	0	0	0	0	0	0
4/23/2024	8:15 AM	0	0	0	0	0	0	0	0	0	0	0	0	0
4/23/2024	8:30 AM	0	0	0	0	0	0	0	0	0	0	0	0	0
4/23/2024	8:45 AM	0	0	0	0	0	0	0	0	0	0	0	0	0
4/23/2024	9:00 AM	0	0	0	0	0	0	0	0	0	0	0	0	0
4/23/2024	9:15 AM	0	0	0	0	0	0	0	0	0	0	0	0	0
4/23/2024	9:30 AM	0	0	0	0	0	0	0	0	0	0	0	0	0
4/23/2024	9:45 AM	0	0	0	0	0	0	0	0	0	0	0	0	0
4/23/2024	10:00 AM	0	0	0	0	0	0	0	0	0	0	0	0	0
4/23/2024	10:15 AM	0	0	0	0	0	0	0	0	0	0	0	0	0
4/23/2024	10:30 AM	0	0	0	0	0	0	0	0	0	0	0	0	0
4/23/2024	10:45 AM	0	0	0	0	0	0	0	0	0	0	0	0	0
4/23/2024	11:00 AM	0	0	0	0	0	0	0	0	0	0	0	0	0
4/23/2024	11:15 AM	0	0	0	0	0	0	0	0	0	0	0	0	0
4/23/2024	11:30 AM	0	0	0	0	0	0	0	0	0	0	0	0	0
4/23/2024	11:45 AM	0	0	0	0	0	0	0	0	0	0	0	0	0
4/23/2024	12:00 PM	0	0	0	0	0	0	0	0	0	0	0	0	0
4/23/2024	12:15 PM	0	0	0	0	0	0	0	0	0	0	0	0	0
4/23/2024	12:30 PM	0	0	0	0	0	0	0	0	0	0	0	0	0
4/23/2024	12:45 PM	0	0	0	0	0	0	0	0	0	0	0	0	0
4/23/2024	1:00 PM	0	0	0	0	0	0	0	0	0	0	0	0	0
4/23/2024	1:15 PM	0	0	0	0	0	0	0	0	0	0	0	0	0
4/23/2024	1:30 PM	0	0	0	0	0	0	0	0	0	0	0	0	0
4/23/2024	1:45 PM	0	0	0	0	0	0	0	0	0	0	0	0	0
4/23/2024	2:00 PM	0	0	0	0	0	0	0	0	0	0	0	0	0
4/23/2024	2:15 PM	0	0	0	0	0	0	0	0	0	0	0	0	0
4/23/2024	2:30 PM	0	0	0	0	0	0	0	0	0	0	0	0	0
4/23/2024	2:45 PM	0	0	0	0	0	0	0	0	0	0	0	0	0
4/23/2024	3:00 PM	0	0	0	0	0	0	0	0	0	0	0	0	0
4/23/2024	3:15 PM	0	0	0	0	0	0	0	0	0	0	0	0	0
4/23/2024	3:30 PM	0	0	0	0	0	0	0	0	0	0	0	0	0
4/23/2024	3:45 PM	0	0	0	0	0	0	0	0	0	0	0	0	0
4/23/2024	4:00 PM	0	0	0	0	0	0	0	0	0	0	0	0	0
4/23/2024	4:15 PM	0	0	0	0	0	0	0	0	0	0	0	0	0
4/23/2024	4:30 PM	0	0	0	0	0	0	0	0	0	0	0	0	0
4/23/2024	4:45 PM	0	0	0	0	0	0	0	0	0	0	0	0	0
4/23/2024	5:00 PM	0	0	0	0	0	0	0	0	0	0	0	0	0
4/23/2024	5:15 PM	0	0	0	0	0	0	0	0	0	0	0	0	0
4/23/2024	5:30 PM	0	0	0	0	0	0	0	0	0	0	0	0	0
4/23/2024	5:45 PM	0	0	0	0	0	0	0	0	0	0	0	0	0
4/23/2024	6:00 PM	0	0	0	0	0	0	0	0	0	0	0	0	0
4/23/2024	6:15 PM	0	0	0	0	0	0	0	0	0	0	0	0	0
4/23/2024	6:30 PM	0	0	0	0	0	0	0	0	0	0	0	0	0
4/23/2024	6:45 PM	0	0	0	0	0	0	0	0	0	0	0	0	0
4/23/2024	7:00 PM	0	0	0	0	0	0	0	0	0	0	0	0	0
4/23/2024	7:15 PM	0	0	0	0	0	0	0	0	0	0	0	0	0
4/23/2024	7:30 PM	0	0	0	0	0	0	0	0	0	0	0	0	0
4/23/2024	7:45 PM	0	0	0	0	0	0	0	0	0	0	0	0	0
4/23/2024	8:00 PM	0	0	0	0	0	0	0	0	0	0	0	0	0
4/23/2024	8:15 PM	0	0	0	0	0	0	0	0	0	0	0	0	0
4/23/2024	8:30 PM	0	0	0	0	0	0	0	0	0	0	0	0	0
4/23/2024	8:45 PM	0	0	0	0	0	0	0	0	0	0	0	0	0
4/23/2024	9:00 PM	0	0	0	0	0	0	0	0	0	0	0	0	0
4/23/2024	9:15 PM	0	0	0	0	0	0	0	0	0	0	0	0	0
4/23/2024	9:30 PM	0	0	0	0	0	0	0	0	0	0	0	0	0
4/23/2024	9:45 PM	0	0	0	0	0	0	0	0	0	0	0	0	0
4/23/2024	10:00 PM	0	0	0	0	0	0	0	0	0	0	0	0	0
4/23/2024	10:15 PM	0	0	0	0	0	0	0	0	0	0	0	0	0
4/23/2024	10:30 PM	0	0	0	0	0	0	0	0	0	0	0	0	0
4/23/2024	10:45 PM	0	0	0	0	0	0	0	0	0	0	0	0	0
4/23/2024	11:00 PM	0	0	0	0	0	0	0	0	0	0	0	0	0
4/23/2024	11:15 PM	0	0	0	0	0	0	0	0	0	0	0	0	0
4/23/2024	11:30 PM	0	0	0	0	0	0	0	0	0	0	0	0	0
4/23/2024	11:45 PM	0	0	0	0	0	0	0	0	0	0	0	0	0

4/24/2024	12:00 AM	0	0	0	0	0	0	0	0	0	0	0	0	0
4/24/2024	12:15 AM	0	0	0	0	0	0	0	0	0	0	0	0	0
4/24/2024	12:30 AM	0	0	0	0	0	0	0	0	0	0	0	0	0
4/24/2024	12:45 AM	0	0	0	0	0	0	0	0	0	0	0	0	0
4/24/2024	1:00 AM	0	0	0	0	0	0	0	0	0	0	0	0	0
4/24/2024	1:15 AM	0	0	0	0	0	0	0	0	0	0	0	0	0
4/24/2024	1:30 AM	0	0	0	0	0	0	0	0	0	0	0	0	0
4/24/2024	1:45 AM	0	0	0	0	0	0	0	0	0	0	0	0	0
4/24/2024	2:00 AM	0	0	0	0	0	0	0	0	0	0	0	0	0
4/24/2024	2:15 AM	0	0	0	0	0	0	0	0	0	0	0	0	0
4/24/2024	2:30 AM	0	0	0	0	0	0	0	0	0	0	0	0	0
4/24/2024	2:45 AM	0	0	0	0	0	0	0	0	0	0	0	0	0
4/24/2024	3:00 AM	0	0	0	0	0	0	0	0	0	0	0	0	0
4/24/2024	3:15 AM	0	0	0	0	0	0	0	0	0	0	0	0	0
4/24/2024	3:30 AM	0	0	0	0	0	0	0	0	0	0	0	0	0
4/24/2024	3:45 AM	0	0	0	0	0	0	0	0	0	0	0	0	0
4/24/2024	4:00 AM	0	0	0	0	0	0	0	0	0	0	0	0	0
4/24/2024	4:15 AM	0	0	0	0	0	0	0	0	0	0	0	0	0
4/24/2024	4:30 AM	0	0	0	0	0	0	0	0	0	0	0	0	0
4/24/2024	4:45 AM	0	0	0	0	0	0	0	0	0	0	0	0	0
4/24/2024	5:00 AM	0	0	0	0	0	0	0	0	0	0	0	0	0
4/24/2024	5:15 AM	0	0	0	0	0	0	0	0	0	0	0	0	0
4/24/2024	5:30 AM	0	0	0	0	0	0	0	0	0	0	0	0	0
4/24/2024	5:45 AM	0	0	0	0	0	0	0	0	0	0	0	0	0
4/24/2024	6:00 AM	0	0	0	0	0	0	0	0	0	0	0	0	0
4/24/2024	6:15 AM	0	0	0	0	0	0	0	0	0	0	0	0	0
4/24/2024	6:30 AM	0	0	0	0	0	0	0	0	0	0	0	0	0
4/24/2024	6:45 AM	0	0	0	0	0	0	0	0	0	0	0	0	0
4/24/2024	7:00 AM	0	0	0	0	0	0	0	0	0	0	0	0	0
4/24/2024	7:15 AM	0	0	0	0	0	0	0	0	0	0	0	0	0
4/24/2024	7:30 AM	0	0	0	0	0	0	0	0	0	0	0	0	0
4/24/2024	7:45 AM	0	0	0	0	0	0	0	0	0	0	0	0	0
4/24/2024	8:00 AM	0	0	0	0	0	0	0	0	0	0	0	0	0
4/24/2024	8:15 AM	0	0	0	0	0	0	0	0	0	0	0	0	0
4/24/2024	8:30 AM	0	0	0	0	0	0	0	0	0	0	0	0	0
4/24/2024	8:45 AM	0	0	0	0	0	0	0	0	0	0	0	0	0
4/24/2024	9:00 AM	0	0	0	0	0	0	0	0	0	0	0	0	0
4/24/2024	9:15 AM	0	0	0	0	0	0	0	0	0	0	0	0	0
4/24/2024	9:30 AM	0	0	0	0	0	0	0	0	0	0	0	0	0
4/24/2024	9:45 AM	0	0	0	0	0	0	0	0	0	0	0	0	0
4/24/2024	10:00 AM	0	0	0	0	0	0	0	0	0	0	0	0	0
4/24/2024	10:15 AM	0	0	0	0	0	0	0	0	0	0	0	0	0
4/24/2024	10:30 AM	0	0	0	0	0	0	0	0	0	0	0	0	0
4/24/2024	10:45 AM	0	0	0	0	0	0	0	0	0	0	0	0	0
4/24/2024	11:00 AM	0	0	0	0	0	0	0	0	0	0	0	0	0
4/24/2024	11:15 AM	0	0	0	0	0	0	0	0	0	0	0	0	0
4/24/2024	11:30 AM	0	0	0	0	0	0	0	0	0	0	0	0	0
4/24/2024	11:45 AM	0	0	0	0	0	0	0	0	0	0	0	0	0
4/24/2024	12:00 PM	0	0	0	0	0	0	0	0	0	0	0	0	0
4/24/2024	12:15 PM	0	0	0	0	0	0	0	0	0	0	0	0	0
4/24/2024	12:30 PM	0	0	0	0	0	0	0	0	0	0	0	0	0
4/24/2024	12:45 PM	0	0	0	0	0	0	0	0	0	0	0	0	0
4/24/2024	1:00 PM	0	0	0	0	0	0	0	0	0	0	0	0	0
4/24/2024	1:15 PM	0	0	0	0	0	0	0	0	0	0	0	0	0
4/24/2024	1:30 PM	0	0	0	0	0	0	0	0	0	0	0	0	0
4/24/2024	1:45 PM	0	0	0	0	0	0	0	0	0	0	0	0	0
4/24/2024	2:00 PM	0	0	0	0	0	0	0	0	0	0	0	0	0
4/24/2024	2:15 PM	0	0	0	0	0	0	0	0	0	0	0	0	0
4/24/2024	2:30 PM	0	0	0	0	0	0	0	0	0	0	0	0	0
4/24/2024	2:45 PM	0	0	0	0	0	0	0	0	0	0	0	0	0
4/24/2024	3:00 PM	0	0	0	0	0	0	0	0	0	0	0	0	0
4/24/2024	3:15 PM	0	0	0	0	0	0	0	0	0	0	0	0	0
4/24/2024	3:30 PM	0	0	0	0	0	0	0	0	0	0	0	0	0
4/24/2024	3:45 PM	0	0	0	0	0	0	0	0	0	0	0	0	0
4/24/2024	4:00 PM	0	0	0	0	0	0	0	0	0	0	0	0	0
4/24/2024	4:15 PM	0	0	0	0	0	0	0	0	0	0	0	0	0
4/24/2024	4:30 PM	0	0	0	0	0	0	0	0	0	0	0	0	0
4/24/2024	4:45 PM	0	0	0	0	0	0	0	0	0	0	0	0	0
4/24/2024	5:00 PM	0	0	0	0	0	0	0	0	0	0	0	0	0
4/24/2024	5:15 PM	0	0	0	0	0	0	0	0	0	0	0	0	0
4/24/2024	5:30 PM	0	0	0	0	0	0	0	0	0	0	0	0	0
4/24/2024	5:45 PM	0	0	0	0	0	0	0	0	0	0	0	0	0
4/24/2024	6:00 PM	0	0	0	0	0	0	0	0	0	0	0	0	0
4/24/2024	6:15 PM	0	0	0	0	0	0	0	0	0	0	0	0	0
4/24/2024	6:30 PM	0	0	0	0	0	0	0	0	0	0	0	0	0
4/24/2024	6:45 PM	0	0	0	0	0	0	0	0	0	0	0	0	0
4/24/2024	7:00 PM	0	0	0	0	0	0	0	0	0	0	0	0	0
4/24/2024	7:15 PM	0	0	0	0	0	0	0	0	0	0	0	0	0
4/24/2024	7:30 PM	0	0	0	0	0	0	0	0	0	0	0	0	0
4/24/2024	7:45 PM	0	0	0	0	0	0	0	0	0	0	0	0	0
4/24/2024	8:00 PM	0	0	0	0	0	0	0	0	0	0	0	0	0
4/24/2024	8:15 PM	0	0	0	0	0	0	0	0	0	0	0	0	0
4/24/2024	8:30 PM	0	0	0	0	0	0	0	0	0	0	0	0	0
4/24/2024	8:45 PM	0	0	0	0	0	0	0	0	0	0	0	0	0
4/24/2024	9:00 PM	0	0	0	0	0	0	0	0	0	0	0	0	0
4/24/2024	9:15 PM	0	0	0	0	0	0	0	0	0	0	0	0	0
4/24/2024	9:30 PM	0	0	0	0	0	0	0	0	0	0	0	0	0
4/24/2024	9:45 PM	0	0	0	0	0	0	0	0	0	0	0	0	0
4/24/2024	10:00 PM	0	0	0	0	0	0	0	0	0	0	0	0	0
4/24/2024	10:15 PM	0	0	0	0	0	0	0	0	0	0	0	0	0
4/24/2024	10:30 PM	0	0	0	0	0	0	0	0	0	0	0	0	0
4/24/2024	10:45 PM	0	0	0	0	0	0	0	0	0	0	0	0	0
4/24/2024	11:00 PM	0	0	0	0	0	0	0	0	0	0	0	0	0
4/24/2024	11:15 PM	0	0	0	0	0	0	0	0	0	0	0	0	0
4/24/2024	11:30 PM	0	0	0	0	0	0	0	0	0	0	0	0	0
4/24/2024	11:45 PM	0	0	0	0	0	0	0	0	0	0	0	0	0

4/25/2024	12:00 AM	0	0	0	0	0	0	0	0	0	0	0	0	0
4/25/2024	12:15 AM	0	0	0	0	0	0	0	0	0	0	0	0	0
4/25/2024	12:30 AM	0	0	0	0	0	0	0	0	0	0	0	0	0
4/25/2024	12:45 AM	0	0	0	0	0	0	0	0	0	0	0	0	0
4/25/2024	1:00 AM	0	0	0	0	0	0	0	0	0	0	0	0	0
4/25/2024	1:15 AM	0	0	0	0	0	0	0	0	0	0	0	0	0
4/25/2024	1:30 AM	0	0	0	0	0	0	0	0	0	0	0	0	0
4/25/2024	1:45 AM	0	0	0	0	0	0	0	0	0	0	0	0	0
4/25/2024	2:00 AM	0	0	0	0	0	0	0	0	0	0	0	0	0
4/25/2024	2:15 AM	0	0	0	0	0	0	0	0	0	0	0	0	0
4/25/2024	2:30 AM	0	0	0	0	0	0	0	0	0	0	0	0	0
4/25/2024	2:45 AM	0	0	0	0	0	0	0	0	0	0	0	0	0
4/25/2024	3:00 AM	0	0	0	0	0	0	0	0	0	0	0	0	0
4/25/2024	3:15 AM	0	0	0	0	0	0	0	0	0	0	0	0	0
4/25/2024	3:30 AM	0	0	0	0	0	0	0	0	0	0	0	0	0
4/25/2024	3:45 AM	0	0	0	0	0	0	0	0	0	0	0	0	0
4/25/2024	4:00 AM	0	0	0	0	0	0	0	0	0	0	0	0	0
4/25/2024	4:15 AM	0	0	0	0	0	0	0	0	0	0	0	0	0
4/25/2024	4:30 AM	0	0	0	0	0	0	0	0	0	0	0	0	0
4/25/2024	4:45 AM	0	0	0	0	0	0	0	0	0	0	0	0	0
4/25/2024	5:00 AM	0	0	0	0	0	0	0	0	0	0	0	0	0
4/25/2024	5:15 AM	0	0	0	0	0	0	0	0	0	0	0	0	0
4/25/2024	5:30 AM	0	0	0	0	0	0	0	0	0	0	0	0	0
4/25/2024	5:45 AM	0	0	0	0	0	0	0	0	0	0	0	0	0
4/25/2024	6:00 AM	0	0	0	0	0	0	0	0	0	0	0	0	0
4/25/2024	6:15 AM	0	0	0	0	0	0	0	0	0	0	0	0	0
4/25/2024	6:30 AM	0	0	0	0	0	0	0	0	0	0	0	0	0
4/25/2024	6:45 AM	0	0	0	0	0	0	0	0	0	0	0	0	0
4/25/2024	7:00 AM	0	0	0	0	0	0	0	0	0	0	0	0	0
4/25/2024	7:15 AM	0	0	0	0	0	0	0	0	0	0	0	0	0
4/25/2024	7:30 AM	0	0	0	0	0	0	0	0	0	0	0	0	0
4/25/2024	7:45 AM	0	0	0	0	0	0	0	0	0	0	0	0	0
4/25/2024	8:00 AM	0	0	0	0	0	0	0	0	0	0	0	0	0
4/25/2024	8:15 AM	0	0	0	0	0	0	0	0	0	0	0	0	0
4/25/2024	8:30 AM	0	0	0	0	0	0	0	0	0	0	0	0	0
4/25/2024	8:45 AM	0	0	0	0	0	0	0	0	0	0	0	0	0
4/25/2024	9:00 AM	0	0	0	0	0	0	0	0	0	0	0	0	0
4/25/2024	9:15 AM	0	0	0	0	0	0	0	0	0	0	0	0	0
4/25/2024	9:30 AM	0	0	0	0	0	0	0	0	0	0	0	0	0
4/25/2024	9:45 AM	0	0	0	0	0	0	0	0	0	0	0	0	0
4/25/2024	10:00 AM	0	0	0	0	0	0	0	0	0	0	0	0	0
4/25/2024	10:15 AM	0	0	0	0	0	0	0	0	0	0	0	0	0
4/25/2024	10:30 AM	0	0	0	0	0	0	0	0	0	0	0	0	0
4/25/2024	10:45 AM	0	0	0	0	0	0	0	0	0	0	0	0	0
4/25/2024	11:00 AM	0	0	0	0	0	0	0	0	0	0	0	0	0
4/25/2024	11:15 AM	0	0	0	0	0	0	0	0	0	0	0	0	0
4/25/2024	11:30 AM	0	0	0	0	0	0	0	0	0	0	0	0	0
4/25/2024	11:45 AM	0	0	0	0	0	0	0	0	0	0	0	0	0
4/25/2024	12:00 PM	0	0	0	0	0	0	0	0	0	0	0	0	0
4/25/2024	12:15 PM	0	0	0	0	0	0	0	0	0	0	0	0	0
4/25/2024	12:30 PM	0	0	0	0	0	0	0	0	0	0	0	0	0
4/25/2024	12:45 PM	0	0	0	0	0	0	0	0	0	0	0	0	0
4/25/2024	1:00 PM	0	0	0	0	0	0	0	0	0	0	0	0	0
4/25/2024	1:15 PM	0	0	0	0	0	0	0	0	0	0	0	0	0
4/25/2024	1:30 PM	0	0	0	0	0	0	0	0	0	0	0	0	0
4/25/2024	1:45 PM	0	0	0	0	0	0	0	0	0	0	0	0	0
4/25/2024	2:00 PM	0	0	0	0	0	0	0	0	0	0	0	0	0
4/25/2024	2:15 PM	0	0	0	0	0	0	0	0	0	0	0	0	0
4/25/2024	2:30 PM	0	0	0	0	0	0	0	0	0	0	0	0	0
4/25/2024	2:45 PM	0	0	0	0	0	0	0	0	0	0	0	0	0
4/25/2024	3:00 PM	0	0	0	0	0	0	0	0	0	0	0	0	0
4/25/2024	3:15 PM	0	0	0	0	0	0	0	0	0	0	0	0	0
4/25/2024	3:30 PM	0	0	0	0	0	0	0	0	0	0	0	0	0
4/25/2024	3:45 PM	0	0	0	0	0	0	0	0	0	0	0	0	0
4/25/2024	4:00 PM	0	0	0	0	0	0	0	0	0	0	0	0	0
4/25/2024	4:15 PM	0	0	0	0	0	0	0	0	0	0	0	0	0
4/25/2024	4:30 PM	0	0	0	0	0	0	0	0	0	0	0	0	0
4/25/2024	4:45 PM	0	0	0	0	0	0	0	0	0	0	0	0	0
4/25/2024	5:00 PM	0	0	0	0	0	0	0	0	0	0	0	0	0
4/25/2024	5:15 PM	0	0	0	0	0	0	0	0	0	0	0	0	0
4/25/2024	5:30 PM	0	0	0	0	0	0	0	0	0	0	0	0	0
4/25/2024	5:45 PM	0	0	0	0	0	0	0	0	0	0	0	0	0
4/25/2024	6:00 PM	0	0	0	0	0	0	0	0	0	0	0	0	0
4/25/2024	6:15 PM	0	0	0	0	0	0	0	0	0	0	0	0	0
4/25/2024	6:30 PM	0	0	0	0	0	0	0	0	0	0	0	0	0
4/25/2024	6:45 PM	0	0	0	0	0	0	0	0	0	0	0	0	0
4/25/2024	7:00 PM	0	0	0	0	0	0	0	0	0	0	0	0	0
4/25/2024	7:15 PM	0	0	0	0	0	0	0	0	0	0	0	0	0
4/25/2024	7:30 PM	0	0	0	0	0	0	0	0	0	0	0	0	0
4/25/2024	7:45 PM	0	0	0	0	0	0	0	0	0	0	0	0	0
4/25/2024	8:00 PM	0	0	0	0	0	0	0	0	0	0	0	0	0
4/25/2024	8:15 PM	0	0	0	0	0	0	0	0	0	0	0	0	0
4/25/2024	8:30 PM	0	0	0	0	0	0	0	0	0	0	0	0	0
4/25/2024	8:45 PM	0	0	0	0	0	0	0	0	0	0	0	0	0
4/25/2024	9:00 PM	0	0	0	0	0	0	0	0	0	0	0	0	0
4/25/2024	9:15 PM	0	0	0	0	0	0	0	0	0	0	0	0	0
4/25/2024	9:30 PM	0	0	0	0	0	0	0	0	0	0	0	0	0
4/25/2024	9:45 PM	0	0	0	0	0	0	0	0	0	0	0	0	0
4/25/2024	10:00 PM	0	0	0	0	0	0	0	0	0	0	0	0	0
4/25/2024	10:15 PM	0	0	0	0	0	0	0	0	0	0	0	0	0
4/25/2024	10:30 PM	0	0	0	0	0	0	0	0	0	0	0	0	0
4/25/2024	10:45 PM	0	0	0	0	0	0	0	0	0	0	0	0	0
4/25/2024	11:00 PM	0	0	0	0	0	0	0	0	0	0	0	0	0
4/25/2024	11:15 PM	0	0	0	0	0	0	0	0	0	0	0	0	0
4/25/2024	11:30 PM	0	0	0	0	0	0	0	0	0	0	0	0	0
4/25/2024	11:45 PM	0	0	0	0	0	0	0	0	0	0	0	0	0

SB
File Name:
Start Date: 4/23/2024
Start Time: 0
Site Code: 34
Station ID: 1
Location 1: I-26 James F. Byrnes Expy S/Bound On-Ramp, south of Piney Grove Rd
Location 2:

Date	Time	1	2	3	4	5	6	7	8	9	10	11	12	13
4/23/2024	12:00 AM	0	0	0	0	0	0	0	0	0	0	0	0	0
4/23/2024	12:15 AM	0	0	0	0	0	0	0	0	0	0	0	0	0
4/23/2024	12:30 AM	0	0	0	0	0	0	0	0	0	0	0	0	0
4/23/2024	12:45 AM	0	0	0	0	0	0	0	0	0	0	0	0	0
4/23/2024	1:00 AM	0	0	0	0	0	0	0	0	0	0	0	0	0
4/23/2024	1:15 AM	0	0	0	0	0	0	0	0	0	0	0	0	0
4/23/2024	1:30 AM	0	0	0	0	0	0	0	0	0	0	0	0	0
4/23/2024	1:45 AM	0	0	0	0	0	0	0	0	0	0	0	0	0
4/23/2024	2:00 AM	0	0	0	0	0	0	0	0	0	0	0	0	0
4/23/2024	2:15 AM	0	0	0	0	0	0	0	0	0	0	0	0	0
4/23/2024	2:30 AM	0	0	0	0	0	0	0	0	0	0	0	0	0
4/23/2024	2:45 AM	0	0	0	0	0	0	0	0	0	0	0	0	0
4/23/2024	3:00 AM	0	0	0	0	0	0	0	0	0	0	0	0	0
4/23/2024	3:15 AM	0	0	0	0	0	0	0	0	0	0	0	0	0
4/23/2024	3:30 AM	0	0	0	0	0	0	0	0	0	0	0	0	0
4/23/2024	3:45 AM	0	0	0	0	0	0	0	0	0	0	0	0	0
4/23/2024	4:00 AM	0	0	0	0	0	0	0	0	0	0	0	0	0
4/23/2024	4:15 AM	0	0	0	0	0	0	0	0	0	0	0	0	0
4/23/2024	4:30 AM	0	0	0	0	0	0	0	0	0	0	0	0	0
4/23/2024	4:45 AM	0	0	0	0	0	0	0	0	0	0	0	0	0
4/23/2024	5:00 AM	0	0	0	0	0	0	0	0	0	0	0	0	0
4/23/2024	5:15 AM	0	0	0	0	0	0	0	0	0	0	0	0	0
4/23/2024	5:30 AM	0	0	0	0	0	0	0	0	0	0	0	0	0
4/23/2024	5:45 AM	0	0	0	0	0	0	0	0	0	0	0	0	0
4/23/2024	6:00 AM	0	0	0	0	0	0	0	0	0	0	0	0	0
4/23/2024	6:15 AM	0	0	0	0	0	0	0	0	0	0	0	0	0
4/23/2024	6:30 AM	0	0	0	0	0	0	0	0	0	0	0	0	0
4/23/2024	6:45 AM	0	0	0	0	0	0	0	0	0	0	0	0	0
4/23/2024	7:00 AM	0	0	0	0	0	0	0	0	0	0	0	0	0
4/23/2024	7:15 AM	0	0	0	0	0	0	0	0	0	0	0	0	0
4/23/2024	7:30 AM	0	0	0	0	0	0	0	0	0	0	0	0	0
4/23/2024	7:45 AM	0	0	0	0	0	0	0	0	0	0	0	0	0
4/23/2024	8:00 AM	0	0	0	0	0	0	0	0	0	0	0	0	0
4/23/2024	8:15 AM	0	0	0	0	0	0	0	0	0	0	0	0	0
4/23/2024	8:30 AM	0	0	0	0	0	0	0	0	0	0	0	0	0
4/23/2024	8:45 AM	0	0	0	0	0	0	0	0	0	0	0	0	0
4/23/2024	9:00 AM	0	0	0	0	0	0	0	0	0	0	0	0	0
4/23/2024	9:15 AM	0	0	0	0	0	0	0	0	0	0	0	0	0
4/23/2024	9:30 AM	0	0	0	0	0	0	0	0	0	0	0	0	0
4/23/2024	9:45 AM	0	0	0	0	0	0	0	0	0	0	0	0	0
4/23/2024	10:00 AM	0	0	0	0	0	0	0	0	0	0	0	0	0
4/23/2024	10:15 AM	0	0	0	0	0	0	0	0	0	0	0	0	0
4/23/2024	10:30 AM	0	0	0	0	0	0	0	0	0	0	0	0	0
4/23/2024	10:45 AM	0	0	0	0	0	0	0	0	0	0	0	0	0
4/23/2024	11:00 AM	0	0	0	0	0	0	0	0	0	0	0	0	0
4/23/2024	11:15 AM	0	0	0	0	0	0	0	0	0	0	0	0	0
4/23/2024	11:30 AM	0	0	0	0	0	0	0	0	0	0	0	0	0
4/23/2024	11:45 AM	0	0	0	0	0	0	0	0	0	0	0	0	0
4/23/2024	12:00 PM	0	0	0	0	0	0	0	0	0	0	0	0	0
4/23/2024	12:15 PM	0	0	0	0	0	0	0	0	0	0	0	0	0
4/23/2024	12:30 PM	0	0	0	0	0	0	0	0	0	0	0	0	0
4/23/2024	12:45 PM	0	0	0	0	0	0	0	0	0	0	0	0	0
4/23/2024	1:00 PM	0	0	0	0	0	0	0	0	0	0	0	0	0
4/23/2024	1:15 PM	0	0	0	0	0	0	0	0	0	0	0	0	0
4/23/2024	1:30 PM	0	0	0	0	0	0	0	0	0	0	0	0	0
4/23/2024	1:45 PM	0	0	0	0	0	0	0	0	0	0	0	0	0
4/23/2024	2:00 PM	0	0	0	0	0	0	0	0	0	0	0	0	0
4/23/2024	2:15 PM	0	0	0	0	0	0	0	0	0	0	0	0	0
4/23/2024	2:30 PM	0	0	0	0	0	0	0	0	0	0	0	0	0
4/23/2024	2:45 PM	0	0	0	0	0	0	0	0	0	0	0	0	0
4/23/2024	3:00 PM	0	0	0	0	0	0	0	0	0	0	0	0	0
4/23/2024	3:15 PM	0	0	0	0	0	0	0	0	0	0	0	0	0
4/23/2024	3:30 PM	0	0	0	0	0	0	0	0	0	0	0	0	0
4/23/2024	3:45 PM	0	0	0	0	0	0	0	0	0	0	0	0	0
4/23/2024	4:00 PM	0	0	0	0	0	0	0	0	0	0	0	0	0
4/23/2024	4:15 PM	0	0	0	0	0	0	0	0	0	0	0	0	0
4/23/2024	4:30 PM	0	0	0	0	0	0	0	0	0	0	0	0	0
4/23/2024	4:45 PM	0	0	0	0	0	0	0	0	0	0	0	0	0
4/23/2024	5:00 PM	0	0	0	0	0	0	0	0	0	0	0	0	0
4/23/2024	5:15 PM	0	0	0	0	0	0	0	0	0	0	0	0	0
4/23/2024	5:30 PM	0	0	0	0	0	0	0	0	0	0	0	0	0
4/23/2024	5:45 PM	0	0	0	0	0	0	0	0	0	0	0	0	0
4/23/2024	6:00 PM	0	0	0	0	0	0	0	0	0	0	0	0	0
4/23/2024	6:15 PM	0	0	0	0	0	0	0	0	0	0	0	0	0
4/23/2024	6:30 PM	0	0	0	0	0	0	0	0	0	0	0	0	0
4/23/2024	6:45 PM	0	0	0	0	0	0	0	0	0	0	0	0	0
4/23/2024	7:00 PM	0	125	19	0	0	0	0	0	0	0	0	0	0
4/23/2024	7:15 PM	0	112	14	0	0	0	0	0	1	0	0	0	0
4/23/2024	7:30 PM	0	103	14	0	1	0	0	0	1	0	0	0	0
4/23/2024	7:45 PM	0	107	9	0	2	0	0	0	2	0	0	0	0
4/23/2024	8:00 PM	0	76	9	0	0	0	0	0	1	0	0	0	0
4/23/2024	8:15 PM	0	74	18	0	0	0	0	0	1	0	0	0	0
4/23/2024	8:30 PM	0	99	7	0	1	0	0	0	2	0	0	0	0
4/23/2024	8:45 PM	0	65	5	0	0	0	0	0	0	0	0	0	0
4/23/2024	9:00 PM	0	57	6	0	0	0	0	0	0	0	0	0	0
4/23/2024	9:15 PM	0	67	5	0	0	0	0	1	0	0	0	0	0
4/23/2024	9:30 PM	0	68	8	0	0	0	0	0	0	0	0	0	0
4/23/2024	9:45 PM	0	47	4	0	0	0	0	0	0	0	0	0	0
4/23/2024	10:00 PM	0	55	7	1	1	0	0	0	0	0	0	0	0
4/23/2024	10:15 PM	0	44	6	0	0	0	0	0	0	0	0	0	0
4/23/2024	10:30 PM	0	42	6	0	0	0	0	0	0	0	0	0	0
4/23/2024	10:45 PM	0	22	5	0	1	1	0	0	0	0	0	0	0
4/23/2024	11:00 PM	0	22	5	0	0	0	0	0	1	0	0	0	0
4/23/2024	11:15 PM	0	21	6	0	0	0	0	0	0	0	0	0	0
4/23/2024	11:30 PM	0	21	3	0	0	0	0	0	0	0	0	0	0
4/23/2024	11:45 PM	0	14	3	0	0	0	0	0	0	0	0	0	0

4/24/2024	12:00 AM	0	31	6	0	0	0	0	0	0	0	0	0
4/24/2024	12:15 AM	0	10	5	0	0	0	0	0	0	0	0	0
4/24/2024	12:30 AM	0	13	2	0	0	0	0	0	0	0	0	0
4/24/2024	12:45 AM	0	9	1	0	0	0	0	0	1	0	0	0
4/24/2024	1:00 AM	0	12	1	0	0	0	0	0	1	0	0	0
4/24/2024	1:15 AM	0	7	0	0	1	0	0	0	0	0	0	0
4/24/2024	1:30 AM	0	8	0	0	0	0	0	0	0	0	0	0
4/24/2024	1:45 AM	0	10	2	0	0	0	0	0	0	0	0	0
4/24/2024	2:00 AM	0	3	0	0	0	0	0	0	0	0	0	0
4/24/2024	2:15 AM	0	7	1	0	1	0	0	0	0	0	0	0
4/24/2024	2:30 AM	0	5	2	0	0	0	0	0	1	0	0	0
4/24/2024	2:45 AM	0	2	3	0	0	0	0	0	1	0	0	0
4/24/2024	3:00 AM	0	6	0	0	0	0	0	0	0	0	0	0
4/24/2024	3:15 AM	0	2	1	0	0	0	0	0	0	0	0	0
4/24/2024	3:30 AM	0	13	2	0	0	0	0	0	0	0	0	0
4/24/2024	3:45 AM	0	10	1	0	0	0	0	1	0	0	0	0
4/24/2024	4:00 AM	0	11	2	0	0	0	0	1	1	0	0	0
4/24/2024	4:15 AM	0	12	1	0	0	0	0	0	1	0	0	0
4/24/2024	4:30 AM	0	28	4	0	0	0	0	0	1	0	0	0
4/24/2024	4:45 AM	0	16	1	0	0	0	0	0	0	0	0	0
4/24/2024	5:00 AM	0	25	3	0	0	0	0	0	1	0	0	0
4/24/2024	5:15 AM	0	28	5	0	0	0	0	0	2	0	0	0
4/24/2024	5:30 AM	0	49	7	0	0	0	0	0	0	0	0	0
4/24/2024	5:45 AM	0	45	4	0	1	0	0	0	4	0	0	0
4/24/2024	6:00 AM	0	51	8	0	1	0	0	0	0	0	0	0
4/24/2024	6:15 AM	0	76	6	1	3	1	0	1	0	0	0	0
4/24/2024	6:30 AM	0	103	23	0	0	1	0	0	0	0	0	0
4/24/2024	6:45 AM	0	115	24	0	1	0	0	0	0	0	0	0
4/24/2024	7:00 AM	0	138	25	0	1	1	0	0	1	0	0	0
4/24/2024	7:15 AM	0	145	28	0	2	1	0	1	0	0	0	0
4/24/2024	7:30 AM	1	171	24	0	1	0	0	0	0	0	0	0
4/24/2024	7:45 AM	0	177	24	0	0	1	0	0	1	0	0	0
4/24/2024	8:00 AM	0	152	28	1	1	0	0	1	2	0	0	0
4/24/2024	8:15 AM	0	164	33	0	2	0	0	0	1	0	0	0
4/24/2024	8:30 AM	0	132	32	0	2	0	0	1	3	0	0	0
4/24/2024	8:45 AM	0	110	20	0	1	1	0	0	2	0	0	0
4/24/2024	9:00 AM	0	113	30	0	2	0	0	0	3	0	0	0
4/24/2024	9:15 AM	0	111	26	0	3	0	0	0	0	0	0	0
4/24/2024	9:30 AM	0	90	32	2	2	0	0	0	1	0	0	0
4/24/2024	9:45 AM	0	88	23	0	2	1	0	0	0	0	0	0
4/24/2024	10:00 AM	0	122	12	0	2	0	0	2	1	0	0	0
4/24/2024	10:15 AM	0	113	22	0	3	2	0	0	1	0	0	0
4/24/2024	10:30 AM	0	104	35	1	2	0	0	1	1	0	0	0
4/24/2024	10:45 AM	1	135	29	0	2	0	0	0	0	0	0	0
4/24/2024	11:00 AM	0	104	21	0	1	2	0	0	1	0	0	0
4/24/2024	11:15 AM	0	145	32	0	1	0	0	1	0	0	0	0
4/24/2024	11:30 AM	0	130	31	0	4	2	0	0	1	0	0	0
4/24/2024	11:45 AM	0	102	30	0	1	1	0	1	1	0	0	0
4/24/2024	12:00 PM	0	108	27	0	2	0	0	1	0	0	0	0
4/24/2024	12:15 PM	0	153	40	0	3	1	0	0	1	0	0	0
4/24/2024	12:30 PM	0	151	39	2	0	2	0	1	0	0	0	0
4/24/2024	12:45 PM	0	156	36	0	5	0	0	0	0	0	0	0
4/24/2024	1:00 PM	0	145	26	0	1	0	0	0	0	0	0	0
4/24/2024	1:15 PM	0	130	46	0	0	0	0	0	2	0	0	0
4/24/2024	1:30 PM	0	176	37	0	3	0	0	0	2	0	0	0
4/24/2024	1:45 PM	0	153	37	0	5	1	0	0	2	0	0	0
4/24/2024	2:00 PM	0	142	31	1	0	1	0	0	0	0	0	0
4/24/2024	2:15 PM	0	155	40	1	2	0	0	0	0	0	0	0
4/24/2024	2:30 PM	0	126	24	0	3	1	0	1	1	0	0	0
4/24/2024	2:45 PM	0	136	27	0	2	0	0	0	1	0	0	0
4/24/2024	3:00 PM	0	169	34	1	3	0	0	1	0	0	0	0
4/24/2024	3:15 PM	0	146	24	0	1	0	0	0	3	0	0	0
4/24/2024	3:30 PM	2	152	30	0	3	1	0	0	0	0	0	0
4/24/2024	3:45 PM	1	134	28	0	4	1	0	1	0	0	0	0
4/24/2024	4:00 PM	0	187	24	0	3	0	0	1	0	0	0	0
4/24/2024	4:15 PM	0	148	37	0	2	0	0	1	1	0	0	0
4/24/2024	4:30 PM	0	179	26	0	2	0	0	1	1	0	0	0
4/24/2024	4:45 PM	0	137	26	0	5	0	0	1	0	0	0	0
4/24/2024	5:00 PM	0	189	42	0	1	0	0	0	1	0	0	0
4/24/2024	5:15 PM	1	163	23	0	0	0	0	1	1	0	0	0
4/24/2024	5:30 PM	0	121	28	0	2	0	0	0	1	0	0	0
4/24/2024	5:45 PM	1	141	34	0	2	0	0	0	0	0	0	0
4/24/2024	6:00 PM	0	151	32	0	1	0	0	0	2	0	0	0
4/24/2024	6:15 PM	0	135	31	0	3	0	0	1	1	0	0	0
4/24/2024	6:30 PM	1	151	26	1	2	0	0	0	0	0	0	0
4/24/2024	6:45 PM	0	124	24	0	0	0	0	0	1	0	0	0
4/24/2024	7:00 PM	0	113	18	0	0	0	0	0	0	0	0	0
4/24/2024	7:15 PM	1	104	15	0	0	0	0	0	1	0	0	0
4/24/2024	7:30 PM	0	91	22	0	2	0	0	0	1	0	0	0
4/24/2024	7:45 PM	0	85	8	0	1	0	0	0	2	0	0	0
4/24/2024	8:00 PM	0	101	18	0	2	0	0	0	1	0	0	0
4/24/2024	8:15 PM	0	100	15	0	0	1	0	0	0	0	0	0
4/24/2024	8:30 PM	0	91	8	0	0	0	0	0	0	0	0	0
4/24/2024	8:45 PM	2	99	8	0	0	0	0	0	1	0	0	0
4/24/2024	9:00 PM	0	50	7	0	0	0	0	0	0	0	0	0
4/24/2024	9:15 PM	0	58	4	0	0	0	0	0	2	0	0	0
4/24/2024	9:30 PM	0	60	11	1	0	0	0	0	0	0	0	0
4/24/2024	9:45 PM	0	49	6	0	0	0	0	0	0	0	0	0
4/24/2024	10:00 PM	0	49	7	0	0	0	0	0	1	0	0	0
4/24/2024	10:15 PM	0	36	5	0	0	0	0	0	2	0	0	0
4/24/2024	10:30 PM	0	39	4	0	0	0	0	0	1	0	0	0
4/24/2024	10:45 PM	0	27	3	0	0	0	0	0	0	0	0	0
4/24/2024	11:00 PM	0	23	4	0	1	0	0	0	0	0	0	0
4/24/2024	11:15 PM	0	23	4	0	0	0	0	0	1	0	0	0
4/24/2024	11:30 PM	0	17	3	0	1	0	0	0	0	0	0	0
4/24/2024	11:45 PM	0	18	4	1	0	0	0	0	0	0	0	0

4/25/2024	12:00 AM	0	24	7	0	0	0	0	0	0	0	0	0
4/25/2024	12:15 AM	0	20	4	0	1	0	0	0	0	0	0	0
4/25/2024	12:30 AM	0	8	3	0	0	0	0	0	0	0	0	0
4/25/2024	12:45 AM	0	7	2	0	0	0	0	0	0	0	0	0
4/25/2024	1:00 AM	0	5	2	0	0	0	0	0	0	0	0	0
4/25/2024	1:15 AM	0	4	1	0	0	0	0	0	0	0	0	0
4/25/2024	1:30 AM	0	2	0	0	0	0	0	0	0	0	0	0
4/25/2024	1:45 AM	0	5	1	0	0	0	0	0	0	0	0	0
4/25/2024	2:00 AM	0	4	0	0	0	0	0	0	0	0	0	0
4/25/2024	2:15 AM	0	6	2	0	0	0	0	1	0	0	0	0
4/25/2024	2:30 AM	0	10	2	0	0	0	0	1	0	0	0	0
4/25/2024	2:45 AM	0	6	2	0	0	0	0	1	0	0	0	0
4/25/2024	3:00 AM	0	9	3	0	1	0	0	0	0	0	0	0
4/25/2024	3:15 AM	0	7	2	0	0	0	0	0	0	0	0	0
4/25/2024	3:30 AM	0	11	3	0	0	0	0	1	0	0	0	0
4/25/2024	3:45 AM	0	9	3	0	0	0	0	0	0	0	0	0
4/25/2024	4:00 AM	0	12	3	0	0	0	0	1	0	0	0	0
4/25/2024	4:15 AM	0	9	4	0	0	0	0	0	0	0	0	0
4/25/2024	4:30 AM	0	14	3	0	0	0	0	1	0	0	0	0
4/25/2024	4:45 AM	0	15	6	0	1	0	0	1	0	0	0	0
4/25/2024	5:00 AM	0	24	7	0	0	0	0	0	0	0	0	0
4/25/2024	5:15 AM	0	29	6	0	1	0	0	0	0	0	0	0
4/25/2024	5:30 AM	0	56	11	0	0	0	0	0	2	0	0	0
4/25/2024	5:45 AM	0	40	9	0	3	0	0	2	1	0	0	0
4/25/2024	6:00 AM	0	33	5	0	1	1	0	0	0	0	0	0
4/25/2024	6:15 AM	0	61	14	0	1	0	0	0	1	0	0	0
4/25/2024	6:30 AM	0	101	19	0	1	0	0	0	1	0	0	0
4/25/2024	6:45 AM	0	120	27	1	3	0	0	0	2	0	0	0
4/25/2024	7:00 AM	0	117	23	0	2	0	0	0	2	0	0	0
4/25/2024	7:15 AM	0	163	33	0	3	0	0	0	2	0	0	0
4/25/2024	7:30 AM	0	197	26	0	2	0	0	1	0	0	0	0
4/25/2024	7:45 AM	0	174	33	0	6	0	0	0	0	0	0	0
4/25/2024	8:00 AM	1	187	25	0	2	1	0	0	3	0	0	0
4/25/2024	8:15 AM	0	154	23	0	1	1	0	2	1	0	0	0
4/25/2024	8:30 AM	0	142	27	0	1	1	0	1	1	0	0	0
4/25/2024	8:45 AM	0	136	21	0	0	0	0	1	5	0	0	0
4/25/2024	9:00 AM	0	99	24	0	1	1	0	0	0	0	0	0
4/25/2024	9:15 AM	0	105	23	0	3	1	0	0	2	0	0	0
4/25/2024	9:30 AM	0	107	21	0	3	2	0	1	2	0	0	0
4/25/2024	9:45 AM	0	85	20	0	3	0	0	1	3	0	0	0
4/25/2024	10:00 AM	0	102	24	1	2	0	0	0	1	0	0	0
4/25/2024	10:15 AM	0	99	26	0	1	0	0	1	0	0	0	0
4/25/2024	10:30 AM	0	124	29	0	4	0	0	1	0	0	0	0
4/25/2024	10:45 AM	0	117	30	0	3	0	0	1	1	0	0	0
4/25/2024	11:00 AM	0	115	25	0	1	0	0	0	0	1	0	0
4/25/2024	11:15 AM	0	135	32	0	2	0	0	1	2	2	0	0
4/25/2024	11:30 AM	0	137	30	0	1	0	0	1	0	1	0	0
4/25/2024	11:45 AM	0	135	36	0	4	0	0	0	2	0	0	0
4/25/2024	12:00 PM	0	142	31	0	2	0	0	1	1	0	0	0
4/25/2024	12:15 PM	0	151	45	0	1	0	0	0	1	0	0	0
4/25/2024	12:30 PM	0	136	25	0	1	1	0	1	5	0	0	0
4/25/2024	12:45 PM	0	166	35	0	1	1	0	1	0	0	0	0
4/25/2024	1:00 PM	1	161	41	0	1	0	0	0	0	0	0	0
4/25/2024	1:15 PM	0	164	28	0	3	0	0	1	1	0	0	0
4/25/2024	1:30 PM	0	157	39	0	0	1	0	0	1	0	0	0
4/25/2024	1:45 PM	0	158	42	0	0	2	0	0	2	0	0	0
4/25/2024	2:00 PM	0	161	26	1	5	0	0	0	1	0	0	0
4/25/2024	2:15 PM	0	162	44	1	4	0	0	1	0	0	0	0
4/25/2024	2:30 PM	0	145	26	0	1	0	0	0	3	0	0	0
4/25/2024	2:45 PM	0	149	36	0	5	0	0	0	0	0	0	0
4/25/2024	3:00 PM	1	144	39	0	4	1	0	1	1	0	0	0
4/25/2024	3:15 PM	0	149	33	0	1	0	0	2	0	0	0	0
4/25/2024	3:30 PM	0	147	24	0	3	0	0	0	2	0	0	0
4/25/2024	3:45 PM	1	133	26	0	3	0	0	1	2	0	0	0
4/25/2024	4:00 PM	0	162	33	1	2	0	0	0	0	0	0	0
4/25/2024	4:15 PM	0	164	37	0	3	0	0	1	0	0	0	0
4/25/2024	4:30 PM	0	159	27	0	0	0	0	0	2	0	0	0
4/25/2024	4:45 PM	0	132	30	0	2	0	0	0	1	0	0	0
4/25/2024	5:00 PM	0	173	39	0	3	0	0	1	1	0	0	0
4/25/2024	5:15 PM	0	132	31	0	3	0	0	0	1	0	0	0
4/25/2024	5:30 PM	1	146	21	0	0	0	0	0	1	0	0	0
4/25/2024	5:45 PM	0	117	29	0	1	0	0	0	0	0	0	0
4/25/2024	6:00 PM	1	159	23	0	1	0	0	0	0	0	0	0
4/25/2024	6:15 PM	0	140	29	0	0	0	0	0	2	0	0	0
4/25/2024	6:30 PM	1	142	24	0	1	0	0	0	1	0	0	0
4/25/2024	6:45 PM	0	138	20	0	3	0	0	0	0	0	0	0
4/25/2024	7:00 PM	0	0	0	0	0	0	0	0	0	0	0	0
4/25/2024	7:15 PM	0	0	0	0	0	0	0	0	0	0	0	0
4/25/2024	7:30 PM	0	0	0	0	0	0	0	0	0	0	0	0
4/25/2024	7:45 PM	0	0	0	0	0	0	0	0	0	0	0	0
4/25/2024	8:00 PM	0	0	0	0	0	0	0	0	0	0	0	0
4/25/2024	8:15 PM	0	0	0	0	0	0	0	0	0	0	0	0
4/25/2024	8:30 PM	0	0	0	0	0	0	0	0	0	0	0	0
4/25/2024	8:45 PM	0	0	0	0	0	0	0	0	0	0	0	0
4/25/2024	9:00 PM	0	0	0	0	0	0	0	0	0	0	0	0
4/25/2024	9:15 PM	0	0	0	0	0	0	0	0	0	0	0	0
4/25/2024	9:30 PM	0	0	0	0	0	0	0	0	0	0	0	0
4/25/2024	9:45 PM	0	0	0	0	0	0	0	0	0	0	0	0
4/25/2024	10:00 PM	0	0	0	0	0	0	0	0	0	0	0	0
4/25/2024	10:15 PM	0	0	0	0	0	0	0	0	0	0	0	0
4/25/2024	10:30 PM	0	0	0	0	0	0	0	0	0	0	0	0
4/25/2024	10:45 PM	0	0	0	0	0	0	0	0	0	0	0	0
4/25/2024	11:00 PM	0	0	0	0	0	0	0	0	0	0	0	0
4/25/2024	11:15 PM	0	0	0	0	0	0	0	0	0	0	0	0
4/25/2024	11:30 PM	0	0	0	0	0	0	0	0	0	0	0	0
4/25/2024	11:45 PM	0	0	0	0	0	0	0	0	0	0	0	0

NB
File Name:
Start Date: 4/23/2024
Start Time: 0
Site Code: 34
Station ID: 1
Location 1: I-26 James F. Byrnes Expy S/Bound On-Ramp, south of Piney Grove Rd
Location 2:

Date	Time	1	2	3	4	5	6	7	8	9	10	11	12	13
4/23/2024	12:00 AM	0	0	0	0	0	0	0	0	0	0	0	0	0
4/23/2024	12:15 AM	0	0	0	0	0	0	0	0	0	0	0	0	0
4/23/2024	12:30 AM	0	0	0	0	0	0	0	0	0	0	0	0	0
4/23/2024	12:45 AM	0	0	0	0	0	0	0	0	0	0	0	0	0
4/23/2024	1:00 AM	0	0	0	0	0	0	0	0	0	0	0	0	0
4/23/2024	1:15 AM	0	0	0	0	0	0	0	0	0	0	0	0	0
4/23/2024	1:30 AM	0	0	0	0	0	0	0	0	0	0	0	0	0
4/23/2024	1:45 AM	0	0	0	0	0	0	0	0	0	0	0	0	0
4/23/2024	2:00 AM	0	0	0	0	0	0	0	0	0	0	0	0	0
4/23/2024	2:15 AM	0	0	0	0	0	0	0	0	0	0	0	0	0
4/23/2024	2:30 AM	0	0	0	0	0	0	0	0	0	0	0	0	0
4/23/2024	2:45 AM	0	0	0	0	0	0	0	0	0	0	0	0	0
4/23/2024	3:00 AM	0	0	0	0	0	0	0	0	0	0	0	0	0
4/23/2024	3:15 AM	0	0	0	0	0	0	0	0	0	0	0	0	0
4/23/2024	3:30 AM	0	0	0	0	0	0	0	0	0	0	0	0	0
4/23/2024	3:45 AM	0	0	0	0	0	0	0	0	0	0	0	0	0
4/23/2024	4:00 AM	0	0	0	0	0	0	0	0	0	0	0	0	0
4/23/2024	4:15 AM	0	0	0	0	0	0	0	0	0	0	0	0	0
4/23/2024	4:30 AM	0	0	0	0	0	0	0	0	0	0	0	0	0
4/23/2024	4:45 AM	0	0	0	0	0	0	0	0	0	0	0	0	0
4/23/2024	5:00 AM	0	0	0	0	0	0	0	0	0	0	0	0	0
4/23/2024	5:15 AM	0	0	0	0	0	0	0	0	0	0	0	0	0
4/23/2024	5:30 AM	0	0	0	0	0	0	0	0	0	0	0	0	0
4/23/2024	5:45 AM	0	0	0	0	0	0	0	0	0	0	0	0	0
4/23/2024	6:00 AM	0	0	0	0	0	0	0	0	0	0	0	0	0
4/23/2024	6:15 AM	0	0	0	0	0	0	0	0	0	0	0	0	0
4/23/2024	6:30 AM	0	0	0	0	0	0	0	0	0	0	0	0	0
4/23/2024	6:45 AM	0	0	0	0	0	0	0	0	0	0	0	0	0
4/23/2024	7:00 AM	0	0	0	0	0	0	0	0	0	0	0	0	0
4/23/2024	7:15 AM	0	0	0	0	0	0	0	0	0	0	0	0	0
4/23/2024	7:30 AM	0	0	0	0	0	0	0	0	0	0	0	0	0
4/23/2024	7:45 AM	0	0	0	0	0	0	0	0	0	0	0	0	0
4/23/2024	8:00 AM	0	0	0	0	0	0	0	0	0	0	0	0	0
4/23/2024	8:15 AM	0	0	0	0	0	0	0	0	0	0	0	0	0
4/23/2024	8:30 AM	0	0	0	0	0	0	0	0	0	0	0	0	0
4/23/2024	8:45 AM	0	0	0	0	0	0	0	0	0	0	0	0	0
4/23/2024	9:00 AM	0	0	0	0	0	0	0	0	0	0	0	0	0
4/23/2024	9:15 AM	0	0	0	0	0	0	0	0	0	0	0	0	0
4/23/2024	9:30 AM	0	0	0	0	0	0	0	0	0	0	0	0	0
4/23/2024	9:45 AM	0	0	0	0	0	0	0	0	0	0	0	0	0
4/23/2024	10:00 AM	0	0	0	0	0	0	0	0	0	0	0	0	0
4/23/2024	10:15 AM	0	0	0	0	0	0	0	0	0	0	0	0	0
4/23/2024	10:30 AM	0	0	0	0	0	0	0	0	0	0	0	0	0
4/23/2024	10:45 AM	0	0	0	0	0	0	0	0	0	0	0	0	0
4/23/2024	11:00 AM	0	0	0	0	0	0	0	0	0	0	0	0	0
4/23/2024	11:15 AM	0	0	0	0	0	0	0	0	0	0	0	0	0
4/23/2024	11:30 AM	0	0	0	0	0	0	0	0	0	0	0	0	0
4/23/2024	11:45 AM	0	0	0	0	0	0	0	0	0	0	0	0	0
4/23/2024	12:00 PM	0	0	0	0	0	0	0	0	0	0	0	0	0
4/23/2024	12:15 PM	0	0	0	0	0	0	0	0	0	0	0	0	0
4/23/2024	12:30 PM	0	0	0	0	0	0	0	0	0	0	0	0	0
4/23/2024	12:45 PM	0	0	0	0	0	0	0	0	0	0	0	0	0
4/23/2024	1:00 PM	0	0	0	0	0	0	0	0	0	0	0	0	0
4/23/2024	1:15 PM	0	0	0	0	0	0	0	0	0	0	0	0	0
4/23/2024	1:30 PM	0	0	0	0	0	0	0	0	0	0	0	0	0
4/23/2024	1:45 PM	0	0	0	0	0	0	0	0	0	0	0	0	0
4/23/2024	2:00 PM	0	0	0	0	0	0	0	0	0	0	0	0	0
4/23/2024	2:15 PM	0	0	0	0	0	0	0	0	0	0	0	0	0
4/23/2024	2:30 PM	0	0	0	0	0	0	0	0	0	0	0	0	0
4/23/2024	2:45 PM	0	0	0	0	0	0	0	0	0	0	0	0	0
4/23/2024	3:00 PM	0	0	0	0	0	0	0	0	0	0	0	0	0
4/23/2024	3:15 PM	0	0	0	0	0	0	0	0	0	0	0	0	0
4/23/2024	3:30 PM	0	0	0	0	0	0	0	0	0	0	0	0	0
4/23/2024	3:45 PM	0	0	0	0	0	0	0	0	0	0	0	0	0
4/23/2024	4:00 PM	0	0	0	0	0	0	0	0	0	0	0	0	0
4/23/2024	4:15 PM	0	0	0	0	0	0	0	0	0	0	0	0	0
4/23/2024	4:30 PM	0	0	0	0	0	0	0	0	0	0	0	0	0
4/23/2024	4:45 PM	0	0	0	0	0	0	0	0	0	0	0	0	0
4/23/2024	5:00 PM	0	0	0	0	0	0	0	0	0	0	0	0	0
4/23/2024	5:15 PM	0	0	0	0	0	0	0	0	0	0	0	0	0
4/23/2024	5:30 PM	0	0	0	0	0	0	0	0	0	0	0	0	0
4/23/2024	5:45 PM	0	0	0	0	0	0	0	0	0	0	0	0	0
4/23/2024	6:00 PM	0	0	0	0	0	0	0	0	0	0	0	0	0
4/23/2024	6:15 PM	0	0	0	0	0	0	0	0	0	0	0	0	0
4/23/2024	6:30 PM	0	0	0	0	0	0	0	0	0	0	0	0	0
4/23/2024	6:45 PM	0	0	0	0	0	0	0	0	0	0	0	0	0
4/23/2024	7:00 PM	0	0	0	0	0	0	0	0	0	0	0	0	0
4/23/2024	7:15 PM	0	0	0	0	0	0	0	0	0	0	0	0	0
4/23/2024	7:30 PM	0	0	0	0	0	0	0	0	0	0	0	0	0
4/23/2024	7:45 PM	0	0	0	0	0	0	0	0	0	0	0	0	0
4/23/2024	8:00 PM	0	0	0	0	0	0	0	0	0	0	0	0	0
4/23/2024	8:15 PM	0	0	0	0	0	0	0	0	0	0	0	0	0
4/23/2024	8:30 PM	0	0	0	0	0	0	0	0	0	0	0	0	0
4/23/2024	8:45 PM	0	0	0	0	0	0	0	0	0	0	0	0	0
4/23/2024	9:00 PM	0	0	0	0	0	0	0	0	0	0	0	0	0
4/23/2024	9:15 PM	0	0	0	0	0	0	0	0	0	0	0	0	0
4/23/2024	9:30 PM	0	0	0	0	0	0	0	0	0	0	0	0	0
4/23/2024	9:45 PM	0	0	0	0	0	0	0	0	0	0	0	0	0
4/23/2024	10:00 PM	0	0	0	0	0	0	0	0	0	0	0	0	0
4/23/2024	10:15 PM	0	0	0	0	0	0	0	0	0	0	0	0	0
4/23/2024	10:30 PM	0	0	0	0	0	0	0	0	0	0	0	0	0
4/23/2024	10:45 PM	0	0	0	0	0	0	0	0	0	0	0	0	0
4/23/2024	11:00 PM	0	0	0	0	0	0	0	0	0	0	0	0	0
4/23/2024	11:15 PM	0	0	0	0	0	0	0	0	0	0	0	0	0
4/23/2024	11:30 PM	0	0	0	0	0	0	0	0	0	0	0	0	0
4/23/2024	11:45 PM	0	0	0	0	0	0	0	0	0	0	0	0	0

4/24/2024	12:00 AM	0	0	0	0	0	0	0	0	0	0	0	0	0
4/24/2024	12:15 AM	0	0	0	0	0	0	0	0	0	0	0	0	0
4/24/2024	12:30 AM	0	0	0	0	0	0	0	0	0	0	0	0	0
4/24/2024	12:45 AM	0	0	0	0	0	0	0	0	0	0	0	0	0
4/24/2024	1:00 AM	0	0	0	0	0	0	0	0	0	0	0	0	0
4/24/2024	1:15 AM	0	0	0	0	0	0	0	0	0	0	0	0	0
4/24/2024	1:30 AM	0	0	0	0	0	0	0	0	0	0	0	0	0
4/24/2024	1:45 AM	0	0	0	0	0	0	0	0	0	0	0	0	0
4/24/2024	2:00 AM	0	0	0	0	0	0	0	0	0	0	0	0	0
4/24/2024	2:15 AM	0	0	0	0	0	0	0	0	0	0	0	0	0
4/24/2024	2:30 AM	0	0	0	0	0	0	0	0	0	0	0	0	0
4/24/2024	2:45 AM	0	0	0	0	0	0	0	0	0	0	0	0	0
4/24/2024	3:00 AM	0	0	0	0	0	0	0	0	0	0	0	0	0
4/24/2024	3:15 AM	0	0	0	0	0	0	0	0	0	0	0	0	0
4/24/2024	3:30 AM	0	0	0	0	0	0	0	0	0	0	0	0	0
4/24/2024	3:45 AM	0	0	0	0	0	0	0	0	0	0	0	0	0
4/24/2024	4:00 AM	0	0	0	0	0	0	0	0	0	0	0	0	0
4/24/2024	4:15 AM	0	0	0	0	0	0	0	0	0	0	0	0	0
4/24/2024	4:30 AM	0	0	0	0	0	0	0	0	0	0	0	0	0
4/24/2024	4:45 AM	0	0	0	0	0	0	0	0	0	0	0	0	0
4/24/2024	5:00 AM	0	0	0	0	0	0	0	0	0	0	0	0	0
4/24/2024	5:15 AM	0	0	0	0	0	0	0	0	0	0	0	0	0
4/24/2024	5:30 AM	0	0	0	0	0	0	0	0	0	0	0	0	0
4/24/2024	5:45 AM	0	0	0	0	0	0	0	0	0	0	0	0	0
4/24/2024	6:00 AM	0	0	0	0	0	0	0	0	0	0	0	0	0
4/24/2024	6:15 AM	0	0	0	0	0	0	0	0	0	0	0	0	0
4/24/2024	6:30 AM	0	0	0	0	0	0	0	0	0	0	0	0	0
4/24/2024	6:45 AM	0	0	0	0	0	0	0	0	0	0	0	0	0
4/24/2024	7:00 AM	0	0	0	0	0	0	0	0	0	0	0	0	0
4/24/2024	7:15 AM	0	0	0	0	0	0	0	0	0	0	0	0	0
4/24/2024	7:30 AM	0	0	0	0	0	0	0	0	0	0	0	0	0
4/24/2024	7:45 AM	0	0	0	0	0	0	0	0	0	0	0	0	0
4/24/2024	8:00 AM	0	0	0	0	0	0	0	0	0	0	0	0	0
4/24/2024	8:15 AM	0	0	0	0	0	0	0	0	0	0	0	0	0
4/24/2024	8:30 AM	0	0	0	0	0	0	0	0	0	0	0	0	0
4/24/2024	8:45 AM	0	0	0	0	0	0	0	0	0	0	0	0	0
4/24/2024	9:00 AM	0	0	0	0	0	0	0	0	0	0	0	0	0
4/24/2024	9:15 AM	0	0	0	0	0	0	0	0	0	0	0	0	0
4/24/2024	9:30 AM	0	0	0	0	0	0	0	0	0	0	0	0	0
4/24/2024	9:45 AM	0	0	0	0	0	0	0	0	0	0	0	0	0
4/24/2024	10:00 AM	0	0	0	0	0	0	0	0	0	0	0	0	0
4/24/2024	10:15 AM	0	0	0	0	0	0	0	0	0	0	0	0	0
4/24/2024	10:30 AM	0	0	0	0	0	0	0	0	0	0	0	0	0
4/24/2024	10:45 AM	0	0	0	0	0	0	0	0	0	0	0	0	0
4/24/2024	11:00 AM	0	0	0	0	0	0	0	0	0	0	0	0	0
4/24/2024	11:15 AM	0	0	0	0	0	0	0	0	0	0	0	0	0
4/24/2024	11:30 AM	0	0	0	0	0	0	0	0	0	0	0	0	0
4/24/2024	11:45 AM	0	0	0	0	0	0	0	0	0	0	0	0	0
4/24/2024	12:00 PM	0	0	0	0	0	0	0	0	0	0	0	0	0
4/24/2024	12:15 PM	0	0	0	0	0	0	0	0	0	0	0	0	0
4/24/2024	12:30 PM	0	0	0	0	0	0	0	0	0	0	0	0	0
4/24/2024	12:45 PM	0	0	0	0	0	0	0	0	0	0	0	0	0
4/24/2024	1:00 PM	0	0	0	0	0	0	0	0	0	0	0	0	0
4/24/2024	1:15 PM	0	0	0	0	0	0	0	0	0	0	0	0	0
4/24/2024	1:30 PM	0	0	0	0	0	0	0	0	0	0	0	0	0
4/24/2024	1:45 PM	0	0	0	0	0	0	0	0	0	0	0	0	0
4/24/2024	2:00 PM	0	0	0	0	0	0	0	0	0	0	0	0	0
4/24/2024	2:15 PM	0	0	0	0	0	0	0	0	0	0	0	0	0
4/24/2024	2:30 PM	0	0	0	0	0	0	0	0	0	0	0	0	0
4/24/2024	2:45 PM	0	0	0	0	0	0	0	0	0	0	0	0	0
4/24/2024	3:00 PM	0	0	0	0	0	0	0	0	0	0	0	0	0
4/24/2024	3:15 PM	0	0	0	0	0	0	0	0	0	0	0	0	0
4/24/2024	3:30 PM	0	0	0	0	0	0	0	0	0	0	0	0	0
4/24/2024	3:45 PM	0	0	0	0	0	0	0	0	0	0	0	0	0
4/24/2024	4:00 PM	0	0	0	0	0	0	0	0	0	0	0	0	0
4/24/2024	4:15 PM	0	0	0	0	0	0	0	0	0	0	0	0	0
4/24/2024	4:30 PM	0	0	0	0	0	0	0	0	0	0	0	0	0
4/24/2024	4:45 PM	0	0	0	0	0	0	0	0	0	0	0	0	0
4/24/2024	5:00 PM	0	0	0	0	0	0	0	0	0	0	0	0	0
4/24/2024	5:15 PM	0	0	0	0	0	0	0	0	0	0	0	0	0
4/24/2024	5:30 PM	0	0	0	0	0	0	0	0	0	0	0	0	0
4/24/2024	5:45 PM	0	0	0	0	0	0	0	0	0	0	0	0	0
4/24/2024	6:00 PM	0	0	0	0	0	0	0	0	0	0	0	0	0
4/24/2024	6:15 PM	0	0	0	0	0	0	0	0	0	0	0	0	0
4/24/2024	6:30 PM	0	0	0	0	0	0	0	0	0	0	0	0	0
4/24/2024	6:45 PM	0	0	0	0	0	0	0	0	0	0	0	0	0
4/24/2024	7:00 PM	0	0	0	0	0	0	0	0	0	0	0	0	0
4/24/2024	7:15 PM	0	0	0	0	0	0	0	0	0	0	0	0	0
4/24/2024	7:30 PM	0	0	0	0	0	0	0	0	0	0	0	0	0
4/24/2024	7:45 PM	0	0	0	0	0	0	0	0	0	0	0	0	0
4/24/2024	8:00 PM	0	0	0	0	0	0	0	0	0	0	0	0	0
4/24/2024	8:15 PM	0	0	0	0	0	0	0	0	0	0	0	0	0
4/24/2024	8:30 PM	0	0	0	0	0	0	0	0	0	0	0	0	0
4/24/2024	8:45 PM	0	0	0	0	0	0	0	0	0	0	0	0	0
4/24/2024	9:00 PM	0	0	0	0	0	0	0	0	0	0	0	0	0
4/24/2024	9:15 PM	0	0	0	0	0	0	0	0	0	0	0	0	0
4/24/2024	9:30 PM	0	0	0	0	0	0	0	0	0	0	0	0	0
4/24/2024	9:45 PM	0	0	0	0	0	0	0	0	0	0	0	0	0
4/24/2024	10:00 PM	0	0	0	0	0	0	0	0	0	0	0	0	0
4/24/2024	10:15 PM	0	0	0	0	0	0	0	0	0	0	0	0	0
4/24/2024	10:30 PM	0	0	0	0	0	0	0	0	0	0	0	0	0
4/24/2024	10:45 PM	0	0	0	0	0	0	0	0	0	0	0	0	0
4/24/2024	11:00 PM	0	0	0	0	0	0	0	0	0	0	0	0	0
4/24/2024	11:15 PM	0	0	0	0	0	0	0	0	0	0	0	0	0
4/24/2024	11:30 PM	0	0	0	0	0	0	0	0	0	0	0	0	0
4/24/2024	11:45 PM	0	0	0	0	0	0	0	0	0	0	0	0	0

4/25/2024	12:00 AM	0	0	0	0	0	0	0	0	0	0	0	0	0
4/25/2024	12:15 AM	0	0	0	0	0	0	0	0	0	0	0	0	0
4/25/2024	12:30 AM	0	0	0	0	0	0	0	0	0	0	0	0	0
4/25/2024	12:45 AM	0	0	0	0	0	0	0	0	0	0	0	0	0
4/25/2024	1:00 AM	0	0	0	0	0	0	0	0	0	0	0	0	0
4/25/2024	1:15 AM	0	0	0	0	0	0	0	0	0	0	0	0	0
4/25/2024	1:30 AM	0	0	0	0	0	0	0	0	0	0	0	0	0
4/25/2024	1:45 AM	0	0	0	0	0	0	0	0	0	0	0	0	0
4/25/2024	2:00 AM	0	0	0	0	0	0	0	0	0	0	0	0	0
4/25/2024	2:15 AM	0	0	0	0	0	0	0	0	0	0	0	0	0
4/25/2024	2:30 AM	0	0	0	0	0	0	0	0	0	0	0	0	0
4/25/2024	2:45 AM	0	0	0	0	0	0	0	0	0	0	0	0	0
4/25/2024	3:00 AM	0	0	0	0	0	0	0	0	0	0	0	0	0
4/25/2024	3:15 AM	0	0	0	0	0	0	0	0	0	0	0	0	0
4/25/2024	3:30 AM	0	0	0	0	0	0	0	0	0	0	0	0	0
4/25/2024	3:45 AM	0	0	0	0	0	0	0	0	0	0	0	0	0
4/25/2024	4:00 AM	0	0	0	0	0	0	0	0	0	0	0	0	0
4/25/2024	4:15 AM	0	0	0	0	0	0	0	0	0	0	0	0	0
4/25/2024	4:30 AM	0	0	0	0	0	0	0	0	0	0	0	0	0
4/25/2024	4:45 AM	0	0	0	0	0	0	0	0	0	0	0	0	0
4/25/2024	5:00 AM	0	0	0	0	0	0	0	0	0	0	0	0	0
4/25/2024	5:15 AM	0	0	0	0	0	0	0	0	0	0	0	0	0
4/25/2024	5:30 AM	0	0	0	0	0	0	0	0	0	0	0	0	0
4/25/2024	5:45 AM	0	0	0	0	0	0	0	0	0	0	0	0	0
4/25/2024	6:00 AM	0	0	0	0	0	0	0	0	0	0	0	0	0
4/25/2024	6:15 AM	0	0	0	0	0	0	0	0	0	0	0	0	0
4/25/2024	6:30 AM	0	0	0	0	0	0	0	0	0	0	0	0	0
4/25/2024	6:45 AM	0	0	0	0	0	0	0	0	0	0	0	0	0
4/25/2024	7:00 AM	0	0	0	0	0	0	0	0	0	0	0	0	0
4/25/2024	7:15 AM	0	0	0	0	0	0	0	0	0	0	0	0	0
4/25/2024	7:30 AM	0	0	0	0	0	0	0	0	0	0	0	0	0
4/25/2024	7:45 AM	0	0	0	0	0	0	0	0	0	0	0	0	0
4/25/2024	8:00 AM	0	0	0	0	0	0	0	0	0	0	0	0	0
4/25/2024	8:15 AM	0	0	0	0	0	0	0	0	0	0	0	0	0
4/25/2024	8:30 AM	0	0	0	0	0	0	0	0	0	0	0	0	0
4/25/2024	8:45 AM	0	0	0	0	0	0	0	0	0	0	0	0	0
4/25/2024	9:00 AM	0	0	0	0	0	0	0	0	0	0	0	0	0
4/25/2024	9:15 AM	0	0	0	0	0	0	0	0	0	0	0	0	0
4/25/2024	9:30 AM	0	0	0	0	0	0	0	0	0	0	0	0	0
4/25/2024	9:45 AM	0	0	0	0	0	0	0	0	0	0	0	0	0
4/25/2024	10:00 AM	0	0	0	0	0	0	0	0	0	0	0	0	0
4/25/2024	10:15 AM	0	0	0	0	0	0	0	0	0	0	0	0	0
4/25/2024	10:30 AM	0	0	0	0	0	0	0	0	0	0	0	0	0
4/25/2024	10:45 AM	0	0	0	0	0	0	0	0	0	0	0	0	0
4/25/2024	11:00 AM	0	0	0	0	0	0	0	0	0	0	0	0	0
4/25/2024	11:15 AM	0	0	0	0	0	0	0	0	0	0	0	0	0
4/25/2024	11:30 AM	0	0	0	0	0	0	0	0	0	0	0	0	0
4/25/2024	11:45 AM	0	0	0	0	0	0	0	0	0	0	0	0	0
4/25/2024	12:00 PM	0	0	0	0	0	0	0	0	0	0	0	0	0
4/25/2024	12:15 PM	0	0	0	0	0	0	0	0	0	0	0	0	0
4/25/2024	12:30 PM	0	0	0	0	0	0	0	0	0	0	0	0	0
4/25/2024	12:45 PM	0	0	0	0	0	0	0	0	0	0	0	0	0
4/25/2024	1:00 PM	0	0	0	0	0	0	0	0	0	0	0	0	0
4/25/2024	1:15 PM	0	0	0	0	0	0	0	0	0	0	0	0	0
4/25/2024	1:30 PM	0	0	0	0	0	0	0	0	0	0	0	0	0
4/25/2024	1:45 PM	0	0	0	0	0	0	0	0	0	0	0	0	0
4/25/2024	2:00 PM	0	0	0	0	0	0	0	0	0	0	0	0	0
4/25/2024	2:15 PM	0	0	0	0	0	0	0	0	0	0	0	0	0
4/25/2024	2:30 PM	0	0	0	0	0	0	0	0	0	0	0	0	0
4/25/2024	2:45 PM	0	0	0	0	0	0	0	0	0	0	0	0	0
4/25/2024	3:00 PM	0	0	0	0	0	0	0	0	0	0	0	0	0
4/25/2024	3:15 PM	0	0	0	0	0	0	0	0	0	0	0	0	0
4/25/2024	3:30 PM	0	0	0	0	0	0	0	0	0	0	0	0	0
4/25/2024	3:45 PM	0	0	0	0	0	0	0	0	0	0	0	0	0
4/25/2024	4:00 PM	0	0	0	0	0	0	0	0	0	0	0	0	0
4/25/2024	4:15 PM	0	0	0	0	0	0	0	0	0	0	0	0	0
4/25/2024	4:30 PM	0	0	0	0	0	0	0	0	0	0	0	0	0
4/25/2024	4:45 PM	0	0	0	0	0	0	0	0	0	0	0	0	0
4/25/2024	5:00 PM	0	0	0	0	0	0	0	0	0	0	0	0	0
4/25/2024	5:15 PM	0	0	0	0	0	0	0	0	0	0	0	0	0
4/25/2024	5:30 PM	0	0	0	0	0	0	0	0	0	0	0	0	0
4/25/2024	5:45 PM	0	0	0	0	0	0	0	0	0	0	0	0	0
4/25/2024	6:00 PM	0	0	0	0	0	0	0	0	0	0	0	0	0
4/25/2024	6:15 PM	0	0	0	0	0	0	0	0	0	0	0	0	0
4/25/2024	6:30 PM	0	0	0	0	0	0	0	0	0	0	0	0	0
4/25/2024	6:45 PM	0	0	0	0	0	0	0	0	0	0	0	0	0
4/25/2024	7:00 PM	0	0	0	0	0	0	0	0	0	0	0	0	0
4/25/2024	7:15 PM	0	0	0	0	0	0	0	0	0	0	0	0	0
4/25/2024	7:30 PM	0	0	0	0	0	0	0	0	0	0	0	0	0
4/25/2024	7:45 PM	0	0	0	0	0	0	0	0	0	0	0	0	0
4/25/2024	8:00 PM	0	0	0	0	0	0	0	0	0	0	0	0	0
4/25/2024	8:15 PM	0	0	0	0	0	0	0	0	0	0	0	0	0
4/25/2024	8:30 PM	0	0	0	0	0	0	0	0	0	0	0	0	0
4/25/2024	8:45 PM	0	0	0	0	0	0	0	0	0	0	0	0	0
4/25/2024	9:00 PM	0	0	0	0	0	0	0	0	0	0	0	0	0
4/25/2024	9:15 PM	0	0	0	0	0	0	0	0	0	0	0	0	0
4/25/2024	9:30 PM	0	0	0	0	0	0	0	0	0	0	0	0	0
4/25/2024	9:45 PM	0	0	0	0	0	0	0	0	0	0	0	0	0
4/25/2024	10:00 PM	0	0	0	0	0	0	0	0	0	0	0	0	0
4/25/2024	10:15 PM	0	0	0	0	0	0	0	0	0	0	0	0	0
4/25/2024	10:30 PM	0	0	0	0	0	0	0	0	0	0	0	0	0
4/25/2024	10:45 PM	0	0	0	0	0	0	0	0	0	0	0	0	0
4/25/2024	11:00 PM	0	0	0	0	0	0	0	0	0	0	0	0	0
4/25/2024	11:15 PM	0	0	0	0	0	0	0	0	0	0	0	0	0
4/25/2024	11:30 PM	0	0	0	0	0	0	0	0	0	0	0	0	0
4/25/2024	11:45 PM	0	0	0	0	0	0	0	0	0	0	0	0	0

SB
File Name:
Start Date: 4/23/2024
Start Time: 0
Site Code: 34
Station ID: 1
Location 1: I-26 James F. Byrnes Expy S/Bound On-Ramp, south of Piney Grove Rd
Location 2:

Date	Time	1	2	3	4	5	6	7	8	9	10	11	12	13
4/23/2024	12:00 AM	0	0	0	0	0	0	0	0	0	0	0	0	0
4/23/2024	12:15 AM	0	0	0	0	0	0	0	0	0	0	0	0	0
4/23/2024	12:30 AM	0	0	0	0	0	0	0	0	0	0	0	0	0
4/23/2024	12:45 AM	0	0	0	0	0	0	0	0	0	0	0	0	0
4/23/2024	1:00 AM	0	0	0	0	0	0	0	0	0	0	0	0	0
4/23/2024	1:15 AM	0	0	0	0	0	0	0	0	0	0	0	0	0
4/23/2024	1:30 AM	0	0	0	0	0	0	0	0	0	0	0	0	0
4/23/2024	1:45 AM	0	0	0	0	0	0	0	0	0	0	0	0	0
4/23/2024	2:00 AM	0	0	0	0	0	0	0	0	0	0	0	0	0
4/23/2024	2:15 AM	0	0	0	0	0	0	0	0	0	0	0	0	0
4/23/2024	2:30 AM	0	0	0	0	0	0	0	0	0	0	0	0	0
4/23/2024	2:45 AM	0	0	0	0	0	0	0	0	0	0	0	0	0
4/23/2024	3:00 AM	0	0	0	0	0	0	0	0	0	0	0	0	0
4/23/2024	3:15 AM	0	0	0	0	0	0	0	0	0	0	0	0	0
4/23/2024	3:30 AM	0	0	0	0	0	0	0	0	0	0	0	0	0
4/23/2024	3:45 AM	0	0	0	0	0	0	0	0	0	0	0	0	0
4/23/2024	4:00 AM	0	0	0	0	0	0	0	0	0	0	0	0	0
4/23/2024	4:15 AM	0	0	0	0	0	0	0	0	0	0	0	0	0
4/23/2024	4:30 AM	0	0	0	0	0	0	0	0	0	0	0	0	0
4/23/2024	4:45 AM	0	0	0	0	0	0	0	0	0	0	0	0	0
4/23/2024	5:00 AM	0	0	0	0	0	0	0	0	0	0	0	0	0
4/23/2024	5:15 AM	0	0	0	0	0	0	0	0	0	0	0	0	0
4/23/2024	5:30 AM	0	0	0	0	0	0	0	0	0	0	0	0	0
4/23/2024	5:45 AM	0	0	0	0	0	0	0	0	0	0	0	0	0
4/23/2024	6:00 AM	0	0	0	0	0	0	0	0	0	0	0	0	0
4/23/2024	6:15 AM	0	0	0	0	0	0	0	0	0	0	0	0	0
4/23/2024	6:30 AM	0	0	0	0	0	0	0	0	0	0	0	0	0
4/23/2024	6:45 AM	0	0	0	0	0	0	0	0	0	0	0	0	0
4/23/2024	7:00 AM	0	0	0	0	0	0	0	0	0	0	0	0	0
4/23/2024	7:15 AM	0	0	0	0	0	0	0	0	0	0	0	0	0
4/23/2024	7:30 AM	0	0	0	0	0	0	0	0	0	0	0	0	0
4/23/2024	7:45 AM	0	0	0	0	0	0	0	0	0	0	0	0	0
4/23/2024	8:00 AM	0	0	0	0	0	0	0	0	0	0	0	0	0
4/23/2024	8:15 AM	0	0	0	0	0	0	0	0	0	0	0	0	0
4/23/2024	8:30 AM	0	0	0	0	0	0	0	0	0	0	0	0	0
4/23/2024	8:45 AM	0	0	0	0	0	0	0	0	0	0	0	0	0
4/23/2024	9:00 AM	0	0	0	0	0	0	0	0	0	0	0	0	0
4/23/2024	9:15 AM	0	0	0	0	0	0	0	0	0	0	0	0	0
4/23/2024	9:30 AM	0	0	0	0	0	0	0	0	0	0	0	0	0
4/23/2024	9:45 AM	0	0	0	0	0	0	0	0	0	0	0	0	0
4/23/2024	10:00 AM	0	0	0	0	0	0	0	0	0	0	0	0	0
4/23/2024	10:15 AM	0	0	0	0	0	0	0	0	0	0	0	0	0
4/23/2024	10:30 AM	0	0	0	0	0	0	0	0	0	0	0	0	0
4/23/2024	10:45 AM	0	0	0	0	0	0	0	0	0	0	0	0	0
4/23/2024	11:00 AM	0	0	0	0	0	0	0	0	0	0	0	0	0
4/23/2024	11:15 AM	0	0	0	0	0	0	0	0	0	0	0	0	0
4/23/2024	11:30 AM	0	0	0	0	0	0	0	0	0	0	0	0	0
4/23/2024	11:45 AM	0	0	0	0	0	0	0	0	0	0	0	0	0
4/23/2024	12:00 PM	0	0	0	0	0	0	0	0	0	0	0	0	0
4/23/2024	12:15 PM	0	0	0	0	0	0	0	0	0	0	0	0	0
4/23/2024	12:30 PM	0	0	0	0	0	0	0	0	0	0	0	0	0
4/23/2024	12:45 PM	0	0	0	0	0	0	0	0	0	0	0	0	0
4/23/2024	1:00 PM	0	0	0	0	0	0	0	0	0	0	0	0	0
4/23/2024	1:15 PM	0	0	0	0	0	0	0	0	0	0	0	0	0
4/23/2024	1:30 PM	0	0	0	0	0	0	0	0	0	0	0	0	0
4/23/2024	1:45 PM	0	0	0	0	0	0	0	0	0	0	0	0	0
4/23/2024	2:00 PM	0	0	0	0	0	0	0	0	0	0	0	0	0
4/23/2024	2:15 PM	0	0	0	0	0	0	0	0	0	0	0	0	0
4/23/2024	2:30 PM	0	0	0	0	0	0	0	0	0	0	0	0	0
4/23/2024	2:45 PM	0	0	0	0	0	0	0	0	0	0	0	0	0
4/23/2024	3:00 PM	0	0	0	0	0	0	0	0	0	0	0	0	0
4/23/2024	3:15 PM	0	0	0	0	0	0	0	0	0	0	0	0	0
4/23/2024	3:30 PM	0	0	0	0	0	0	0	0	0	0	0	0	0
4/23/2024	3:45 PM	0	0	0	0	0	0	0	0	0	0	0	0	0
4/23/2024	4:00 PM	0	0	0	0	0	0	0	0	0	0	0	0	0
4/23/2024	4:15 PM	0	0	0	0	0	0	0	0	0	0	0	0	0
4/23/2024	4:30 PM	0	0	0	0	0	0	0	0	0	0	0	0	0
4/23/2024	4:45 PM	0	0	0	0	0	0	0	0	0	0	0	0	0
4/23/2024	5:00 PM	0	0	0	0	0	0	0	0	0	0	0	0	0
4/23/2024	5:15 PM	0	0	0	0	0	0	0	0	0	0	0	0	0
4/23/2024	5:30 PM	0	0	0	0	0	0	0	0	0	0	0	0	0
4/23/2024	5:45 PM	0	0	0	0	0	0	0	0	0	0	0	0	0
4/23/2024	6:00 PM	0	0	0	0	0	0	0	0	0	0	0	0	0
4/23/2024	6:15 PM	0	125	19	0	0	0	0	0	0	0	0	0	0
4/23/2024	6:30 PM	0	237	33	0	0	0	0	0	1	0	0	0	0
4/23/2024	6:45 PM	0	340	47	0	1	0	0	0	2	0	0	0	0
4/23/2024	7:00 PM	0	447	56	0	3	0	0	0	4	0	0	0	0
4/23/2024	7:15 PM	0	398	46	0	3	0	0	0	5	0	0	0	0
4/23/2024	7:30 PM	0	360	50	0	3	0	0	0	5	0	0	0	0
4/23/2024	7:45 PM	0	356	43	0	3	0	0	0	6	0	0	0	0
4/23/2024	8:00 PM	0	314	39	0	1	0	0	0	4	0	0	0	0
4/23/2024	8:15 PM	0	295	36	0	1	0	0	0	3	0	0	0	0
4/23/2024	8:30 PM	0	288	23	0	1	0	0	1	2	0	0	0	0
4/23/2024	8:45 PM	0	257	24	0	0	0	0	1	0	0	0	0	0
4/23/2024	9:00 PM	0	239	23	0	0	0	0	1	0	0	0	0	0
4/23/2024	9:15 PM	0	237	24	1	1	0	0	1	0	0	0	0	0
4/23/2024	9:30 PM	0	214	25	1	1	0	0	0	0	0	0	0	0
4/23/2024	9:45 PM	0	188	23	1	1	0	0	0	0	0	0	0	0
4/23/2024	10:00 PM	0	163	24	1	2	1	0	0	0	0	0	0	0
4/23/2024	10:15 PM	0	130	22	0	1	1	0	0	1	0	0	0	0
4/23/2024	10:30 PM	0	107	22	0	1	1	0	0	1	0	0	0	0
4/23/2024	10:45 PM	0	86	19	0	1	1	0	0	1	0	0	0	0
4/23/2024	11:00 PM	0	78	17	0	0	0	0	0	1	0	0	0	0
4/23/2024	11:15 PM	0	56	12	0	0	0	0	0	0	0	0	0	0
4/23/2024	11:30 PM	0	35	6	0	0	0	0	0	0	0	0	0	0
4/23/2024	11:45 PM	0	14	3	0	0	0	0	0	0	0	0	0	0

4/24/2024	12:00 AM	0	63	14	0	0	0	0	0	1	0	0	0	0
4/24/2024	12:15 AM	0	44	9	0	0	0	0	0	2	0	0	0	0
4/24/2024	12:30 AM	0	41	4	0	1	0	0	0	2	0	0	0	0
4/24/2024	12:45 AM	0	36	2	0	1	0	0	0	2	0	0	0	0
4/24/2024	1:00 AM	0	37	3	0	1	0	0	0	1	0	0	0	0
4/24/2024	1:15 AM	0	28	2	0	1	0	0	0	0	0	0	0	0
4/24/2024	1:30 AM	0	28	3	0	1	0	0	0	0	0	0	0	0
4/24/2024	1:45 AM	0	25	5	0	1	0	0	0	1	0	0	0	0
4/24/2024	2:00 AM	0	17	6	0	1	0	0	0	2	0	0	0	0
4/24/2024	2:15 AM	0	20	6	0	1	0	0	0	2	0	0	0	0
4/24/2024	2:30 AM	0	15	6	0	0	0	0	0	2	0	0	0	0
4/24/2024	2:45 AM	0	23	6	0	0	0	0	0	1	0	0	0	0
4/24/2024	3:00 AM	0	31	4	0	0	0	0	1	0	0	0	0	0
4/24/2024	3:15 AM	0	36	6	0	0	0	0	2	1	0	0	0	0
4/24/2024	3:30 AM	0	46	6	0	0	0	0	2	2	0	0	0	0
4/24/2024	3:45 AM	0	61	8	0	0	0	0	2	3	0	0	0	0
4/24/2024	4:00 AM	0	67	8	0	0	0	0	1	3	0	0	0	0
4/24/2024	4:15 AM	0	81	9	0	0	0	0	0	3	0	0	0	0
4/24/2024	4:30 AM	0	97	13	0	0	0	0	0	4	0	0	0	0
4/24/2024	4:45 AM	0	118	16	0	0	0	0	0	3	0	0	0	0
4/24/2024	5:00 AM	0	147	19	0	1	0	0	0	7	0	0	0	0
4/24/2024	5:15 AM	0	173	24	0	2	0	0	0	6	0	0	0	0
4/24/2024	5:30 AM	0	221	25	1	5	1	0	1	4	0	0	0	0
4/24/2024	5:45 AM	0	275	41	1	5	2	0	1	4	0	0	0	0
4/24/2024	6:00 AM	0	345	61	1	5	2	0	1	0	0	0	0	0
4/24/2024	6:15 AM	0	432	78	1	5	3	0	1	1	0	0	0	0
4/24/2024	6:30 AM	0	501	100	0	4	3	0	1	1	0	0	0	0
4/24/2024	6:45 AM	1	569	101	0	5	2	0	1	1	0	0	0	0
4/24/2024	7:00 AM	1	631	101	0	4	3	0	1	2	0	0	0	0
4/24/2024	7:15 AM	1	645	104	1	4	2	0	2	3	0	0	0	0
4/24/2024	7:30 AM	1	664	109	1	4	1	0	1	4	0	0	0	0
4/24/2024	7:45 AM	0	625	117	1	5	1	0	2	7	0	0	0	0
4/24/2024	8:00 AM	0	558	113	1	6	1	0	2	8	0	0	0	0
4/24/2024	8:15 AM	0	519	115	0	7	1	0	1	9	0	0	0	0
4/24/2024	8:30 AM	0	466	108	0	8	1	0	1	8	0	0	0	0
4/24/2024	8:45 AM	0	424	108	2	8	1	0	0	6	0	0	0	0
4/24/2024	9:00 AM	0	402	111	2	9	1	0	0	4	0	0	0	0
4/24/2024	9:15 AM	0	411	93	2	9	1	0	2	2	0	0	0	0
4/24/2024	9:30 AM	0	413	89	2	9	3	0	2	3	0	0	0	0
4/24/2024	9:45 AM	0	427	92	1	9	3	0	3	3	0	0	0	0
4/24/2024	10:00 AM	1	474	98	1	9	2	0	3	3	0	0	0	0
4/24/2024	10:15 AM	1	456	107	1	8	4	0	1	3	0	0	0	0
4/24/2024	10:30 AM	1	488	117	1	6	2	0	2	2	0	0	0	0
4/24/2024	10:45 AM	1	514	113	0	8	4	0	1	2	0	0	0	0
4/24/2024	11:00 AM	0	481	114	0	7	5	0	2	3	0	0	0	0
4/24/2024	11:15 AM	0	485	120	0	8	3	0	3	2	0	0	0	0
4/24/2024	11:30 AM	0	493	128	0	10	4	0	2	3	0	0	0	0
4/24/2024	11:45 AM	0	514	136	2	6	4	0	3	2	0	0	0	0
4/24/2024	12:00 PM	0	568	142	2	10	3	0	2	1	0	0	0	0
4/24/2024	12:15 PM	0	605	141	2	9	3	0	1	1	0	0	0	0
4/24/2024	12:30 PM	0	582	147	2	6	2	0	1	2	0	0	0	0
4/24/2024	12:45 PM	0	607	145	0	9	0	0	0	4	0	0	0	0
4/24/2024	1:00 PM	0	604	146	0	9	1	0	0	6	0	0	0	0
4/24/2024	1:15 PM	0	601	151	1	8	2	0	0	6	0	0	0	0
4/24/2024	1:30 PM	0	626	145	2	10	2	0	0	4	0	0	0	0
4/24/2024	1:45 PM	0	576	132	2	10	3	0	1	3	0	0	0	0
4/24/2024	2:00 PM	0	559	122	2	7	2	0	1	2	0	0	0	0
4/24/2024	2:15 PM	0	586	125	2	10	1	0	2	2	0	0	0	0
4/24/2024	2:30 PM	0	577	109	1	9	1	0	2	5	0	0	0	0
4/24/2024	2:45 PM	2	603	115	1	9	1	0	1	4	0	0	0	0
4/24/2024	3:00 PM	3	601	116	1	11	2	0	2	3	0	0	0	0
4/24/2024	3:15 PM	3	619	106	0	11	2	0	2	3	0	0	0	0
4/24/2024	3:30 PM	3	621	119	0	12	2	0	3	1	0	0	0	0
4/24/2024	3:45 PM	1	648	115	0	11	1	0	4	2	0	0	0	0
4/24/2024	4:00 PM	0	651	113	0	12	0	0	4	2	0	0	0	0
4/24/2024	4:15 PM	0	653	131	0	10	0	0	3	3	0	0	0	0
4/24/2024	4:30 PM	1	668	117	0	8	0	0	3	3	0	0	0	0
4/24/2024	4:45 PM	1	610	119	0	8	0	0	2	3	0	0	0	0
4/24/2024	5:00 PM	2	614	127	0	5	0	0	1	3	0	0	0	0
4/24/2024	5:15 PM	2	576	117	0	5	0	0	1	4	0	0	0	0
4/24/2024	5:30 PM	1	548	125	0	8	0	0	1	4	0	0	0	0
4/24/2024	5:45 PM	2	578	123	1	8	0	0	1	3	0	0	0	0
4/24/2024	6:00 PM	1	561	113	1	6	0	0	1	4	0	0	0	0
4/24/2024	6:15 PM	1	523	99	1	5	0	0	1	2	0	0	0	0
4/24/2024	6:30 PM	2	492	83	1	2	0	0	0	2	0	0	0	0
4/24/2024	6:45 PM	1	432	79	0	2	0	0	0	3	0	0	0	0
4/24/2024	7:00 PM	1	393	63	0	3	0	0	0	4	0	0	0	0
4/24/2024	7:15 PM	1	381	63	0	5	0	0	0	5	0	0	0	0
4/24/2024	7:30 PM	0	377	63	0	5	1	0	0	4	0	0	0	0
4/24/2024	7:45 PM	0	377	49	0	3	1	0	0	3	0	0	0	0
4/24/2024	8:00 PM	2	391	49	0	2	1	0	0	2	0	0	0	0
4/24/2024	8:15 PM	2	340	38	0	0	1	0	0	1	0	0	0	0
4/24/2024	8:30 PM	2	298	27	0	0	0	0	0	3	0	0	0	0
4/24/2024	8:45 PM	2	267	30	1	0	0	0	0	3	0	0	0	0
4/24/2024	9:00 PM	0	217	28	1	0	0	0	0	2	0	0	0	0
4/24/2024	9:15 PM	0	216	28	1	0	0	0	0	3	0	0	0	0
4/24/2024	9:30 PM	0	194	29	1	0	0	0	0	3	0	0	0	0
4/24/2024	9:45 PM	0	173	22	0	0	0	0	0	4	0	0	0	0
4/24/2024	10:00 PM	0	151	19	0	0	0	0	0	4	0	0	0	0
4/24/2024	10:15 PM	0	125	16	0	1	0	0	0	3	0	0	0	0
4/24/2024	10:30 PM	0	112	15	0	1	0	0	0	2	0	0	0	0
4/24/2024	10:45 PM	0	90	14	0	2	0	0	0	1	0	0	0	0
4/24/2024	11:00 PM	0	81	15	1	2	0	0	0	1	0	0	0	0
4/24/2024	11:15 PM	0	58	11	1	1	0	0	0	1	0	0	0	0
4/24/2024	11:30 PM	0	35	7	1	1	0	0	0	0	0	0	0	0
4/24/2024	11:45 PM	0	18	4	1	0	0	0	0	0	0	0	0	0

4/25/2024	12:00 AM	0	59	16	0	1	0	0	0	0	0	0	0	0
4/25/2024	12:15 AM	0	40	11	0	1	0	0	0	0	0	0	0	0
4/25/2024	12:30 AM	0	24	8	0	0	0	0	0	0	0	0	0	0
4/25/2024	12:45 AM	0	18	5	0	0	0	0	0	0	0	0	0	0
4/25/2024	1:00 AM	0	16	4	0	0	0	0	0	0	0	0	0	0
4/25/2024	1:15 AM	0	15	2	0	0	0	0	0	0	0	0	0	0
4/25/2024	1:30 AM	0	17	3	0	0	0	0	0	1	0	0	0	0
4/25/2024	1:45 AM	0	25	5	0	0	0	0	0	2	0	0	0	0
4/25/2024	2:00 AM	0	26	6	0	0	0	0	0	3	0	0	0	0
4/25/2024	2:15 AM	0	31	9	0	1	0	0	0	3	0	0	0	0
4/25/2024	2:30 AM	0	32	9	0	1	0	0	0	2	0	0	0	0
4/25/2024	2:45 AM	0	33	10	0	1	0	0	0	2	0	0	0	0
4/25/2024	3:00 AM	0	36	11	0	1	0	0	0	1	0	0	0	0
4/25/2024	3:15 AM	0	39	11	0	0	0	0	0	2	0	0	0	0
4/25/2024	3:30 AM	0	41	13	0	0	0	0	0	2	0	0	0	0
4/25/2024	3:45 AM	0	44	13	0	0	0	0	0	2	0	0	0	0
4/25/2024	4:00 AM	0	50	16	0	1	0	0	1	2	0	0	0	0
4/25/2024	4:15 AM	0	62	20	0	1	0	0	1	1	0	0	0	0
4/25/2024	4:30 AM	0	82	22	0	2	0	0	1	1	0	0	0	0
4/25/2024	4:45 AM	0	124	30	0	2	0	0	1	2	0	0	0	0
4/25/2024	5:00 AM	0	149	33	0	4	0	0	2	3	0	0	0	0
4/25/2024	5:15 AM	0	158	31	0	5	1	0	2	3	0	0	0	0
4/25/2024	5:30 AM	0	190	39	0	5	1	0	2	4	0	0	0	0
4/25/2024	5:45 AM	0	235	47	0	6	1	0	2	3	0	0	0	0
4/25/2024	6:00 AM	0	315	65	1	6	1	0	0	4	0	0	0	0
4/25/2024	6:15 AM	0	399	83	1	7	0	0	0	6	0	0	0	0
4/25/2024	6:30 AM	0	501	102	1	9	0	0	0	7	0	0	0	0
4/25/2024	6:45 AM	0	597	109	1	10	0	0	1	6	0	0	0	0
4/25/2024	7:00 AM	0	651	115	0	13	0	0	1	4	0	0	0	0
4/25/2024	7:15 AM	1	721	117	0	13	1	0	1	5	0	0	0	0
4/25/2024	7:30 AM	1	712	107	0	11	2	0	3	4	0	0	0	0
4/25/2024	7:45 AM	1	657	108	0	10	3	0	3	5	0	0	0	0
4/25/2024	8:00 AM	1	619	96	0	4	3	0	4	10	0	0	0	0
4/25/2024	8:15 AM	0	531	95	0	3	3	0	4	7	0	0	0	0
4/25/2024	8:30 AM	0	482	95	0	5	3	0	2	8	0	0	0	0
4/25/2024	8:45 AM	0	447	89	0	7	4	0	2	9	0	0	0	0
4/25/2024	9:00 AM	0	396	88	0	10	4	0	2	7	0	0	0	0
4/25/2024	9:15 AM	0	399	88	1	11	3	0	2	8	0	0	0	0
4/25/2024	9:30 AM	0	393	91	1	9	2	0	3	6	0	0	0	0
4/25/2024	9:45 AM	0	410	99	1	10	0	0	3	4	0	0	0	0
4/25/2024	10:00 AM	0	442	109	1	10	0	0	3	2	0	0	0	0
4/25/2024	10:15 AM	0	455	110	0	9	0	0	3	1	1	0	0	0
4/25/2024	10:30 AM	0	491	116	0	10	0	0	3	3	3	0	0	0
4/25/2024	10:45 AM	0	504	117	0	7	0	0	3	3	4	0	0	0
4/25/2024	11:00 AM	0	522	123	0	8	0	0	2	4	4	0	0	0
4/25/2024	11:15 AM	0	549	129	0	9	0	0	3	5	3	0	0	0
4/25/2024	11:30 AM	0	565	142	0	8	0	0	2	4	1	0	0	0
4/25/2024	11:45 AM	0	564	137	0	8	1	0	2	9	0	0	0	0
4/25/2024	12:00 PM	0	595	136	0	5	2	0	3	7	0	0	0	0
4/25/2024	12:15 PM	1	614	146	0	4	2	0	2	6	0	0	0	0
4/25/2024	12:30 PM	1	627	129	0	6	2	0	3	6	0	0	0	0
4/25/2024	12:45 PM	1	648	143	0	5	2	0	2	2	0	0	0	0
4/25/2024	1:00 PM	1	640	150	0	4	3	0	1	4	0	0	0	0
4/25/2024	1:15 PM	0	640	135	1	8	3	0	1	5	0	0	0	0
4/25/2024	1:30 PM	0	638	151	2	9	3	0	1	4	0	0	0	0
4/25/2024	1:45 PM	0	626	138	2	10	2	0	1	6	0	0	0	0
4/25/2024	2:00 PM	0	617	132	2	15	0	0	1	4	0	0	0	0
4/25/2024	2:15 PM	1	600	145	1	14	1	0	2	4	0	0	0	0
4/25/2024	2:30 PM	1	587	134	0	11	1	0	3	4	0	0	0	0
4/25/2024	2:45 PM	1	589	132	0	13	1	0	3	3	0	0	0	0
4/25/2024	3:00 PM	2	573	122	0	11	1	0	4	5	0	0	0	0
4/25/2024	3:15 PM	1	591	116	1	9	0	0	3	4	0	0	0	0
4/25/2024	3:30 PM	1	606	120	1	11	0	0	2	4	0	0	0	0
4/25/2024	3:45 PM	1	618	123	1	8	0	0	2	4	0	0	0	0
4/25/2024	4:00 PM	0	617	127	1	7	0	0	1	3	0	0	0	0
4/25/2024	4:15 PM	0	628	133	0	8	0	0	2	4	0	0	0	0
4/25/2024	4:30 PM	0	596	127	0	8	0	0	1	5	0	0	0	0
4/25/2024	4:45 PM	1	583	121	0	8	0	0	1	4	0	0	0	0
4/25/2024	5:00 PM	1	568	120	0	7	0	0	1	3	0	0	0	0
4/25/2024	5:15 PM	2	554	104	0	5	0	0	0	2	0	0	0	0
4/25/2024	5:30 PM	2	562	102	0	2	0	0	0	3	0	0	0	0
4/25/2024	5:45 PM	2	558	105	0	3	0	0	0	3	0	0	0	0
4/25/2024	6:00 PM	2	579	96	0	5	0	0	0	3	0	0	0	0
4/25/2024	6:15 PM	1	420	73	0	4	0	0	0	3	0	0	0	0
4/25/2024	6:30 PM	1	280	44	0	4	0	0	0	1	0	0	0	0
4/25/2024	6:45 PM	0	138	20	0	3	0	0	0	0	0	0	0	0
4/25/2024	7:00 PM	0	0	0	0	0	0	0	0	0	0	0	0	0
4/25/2024	7:15 PM	0	0	0	0	0	0	0	0	0	0	0	0	0
4/25/2024	7:30 PM	0	0	0	0	0	0	0	0	0	0	0	0	0
4/25/2024	7:45 PM	0	0	0	0	0	0	0	0	0	0	0	0	0
4/25/2024	8:00 PM	0	0	0	0	0	0	0	0	0	0	0	0	0
4/25/2024	8:15 PM	0	0	0	0	0	0	0	0	0	0	0	0	0
4/25/2024	8:30 PM	0	0	0	0	0	0	0	0	0	0	0	0	0
4/25/2024	8:45 PM	0	0	0	0	0	0	0	0	0	0	0	0	0
4/25/2024	9:00 PM	0	0	0	0	0	0	0	0	0	0	0	0	0
4/25/2024	9:15 PM	0	0	0	0	0	0	0	0	0	0	0	0	0
4/25/2024	9:30 PM	0	0	0	0	0	0	0	0	0	0	0	0	0
4/25/2024	9:45 PM	0	0	0	0	0	0	0	0	0	0	0	0	0
4/25/2024	10:00 PM	0	0	0	0	0	0	0	0	0	0	0	0	0
4/25/2024	10:15 PM	0	0	0	0	0	0	0	0	0	0	0	0	0
4/25/2024	10:30 PM	0	0	0	0	0	0	0	0	0	0	0	0	0
4/25/2024	10:45 PM	0	0	0	0	0	0	0	0	0	0	0	0	0
4/25/2024	11:00 PM	0	0	0	0	0	0	0	0	0	0	0	0	0
4/25/2024	11:15 PM	0	0	0	0	0	0	0	0	0	0	0	0	0
4/25/2024	11:30 PM	0	0	0	0	0	0	0	0	0	0	0	0	0
4/25/2024	11:45 PM	0	0	0	0	0	0	0	0	0	0	0	0	0

Bi-Directional Class Count || SB WB 15min

Columbia, SC

Marr Traffic DATA COLLECTION
www.marrtraffic.com

Site 35
I-26 On/Off-Ramp,
north of St Andrews Rd

Date
Tuesday, April 23, 2024

Lat/Long
34.045642°, -81.119613°

Weather
Fair
58°F

Click here for Detailed Weather

Click here for Map

0000 - 2400 (Weekday 24h Session) (04-23-2024)
SB WB 15min

	Southbound (Movement 35.1)													15min	60min
Time	1	2	3	4	5	6	7	8	9	10	11	12	13	Total	Total
0000 - 0015	0	0	0	0	0	0	0	0	0	0	0	0	0	**0**	
0015 - 0030	0	0	0	0	0	0	0	0	0	0	0	0	0	**0**	
0030 - 0045	0	0	0	0	0	0	0	0	0	0	0	0	0	**0**	
0045 - 0100	0	0	0	0	0	0	0	0	0	0	0	0	0	**0**	**0**
0100 - 0115	0	0	0	0	0	0	0	0	0	0	0	0	0	**0**	
0115 - 0130	0	0	0	0	0	0	0	0	0	0	0	0	0	**0**	
0130 - 0145	0	0	0	0	0	0	0	0	0	0	0	0	0	**0**	
0145 - 0200	0	0	0	0	0	0	0	0	0	0	0	0	0	**0**	**0**
0200 - 0215	0	0	0	0	0	0	0	0	0	0	0	0	0	**0**	
0215 - 0230	0	0	0	0	0	0	0	0	0	0	0	0	0	**0**	
0230 - 0245	0	0	0	0	0	0	0	0	0	0	0	0	0	**0**	
0245 - 0300	0	0	0	0	0	0	0	0	0	0	0	0	0	**0**	**0**
0300 - 0315	0	0	0	0	0	0	0	0	0	0	0	0	0	**0**	
0315 - 0330	0	0	0	0	0	0	0	0	0	0	0	0	0	**0**	
0330 - 0345	0	0	0	0	0	0	0	0	0	0	0	0	0	**0**	
0345 - 0400	0	0	0	0	0	0	0	0	0	0	0	0	0	**0**	**0**
0400 - 0415	0	0	0	0	0	0	0	0	0	0	0	0	0	**0**	
0415 - 0430	0	0	0	0	0	0	0	0	0	0	0	0	0	**0**	
0430 - 0445	0	0	0	0	0	0	0	0	0	0	0	0	0	**0**	
0445 - 0500	0	0	0	0	0	0	0	0	0	0	0	0	0	**0**	**0**
0500 - 0515	0	0	0	0	0	0	0	0	0	0	0	0	0	**0**	
0515 - 0530	0	0	0	0	0	0	0	0	0	0	0	0	0	**0**	
0530 - 0545	0	0	0	0	0	0	0	0	0	0	0	0	0	**0**	
0545 - 0600	0	0	0	0	0	0	0	0	0	0	0	0	0	**0**	**0**
0600 - 0615	0	0	0	0	0	0	0	0	0	0	0	0	0	**0**	
0615 - 0630	0	0	0	0	0	0	0	0	0	0	0	0	0	**0**	
0630 - 0645	0	0	0	0	0	0	0	0	0	0	0	0	0	**0**	
0645 - 0700	0	0	0	0	0	0	0	0	0	0	0	0	0	**0**	**0**
0700 - 0715	0	0	0	0	0	0	0	0	0	0	0	0	0	**0**	
0715 - 0730	0	0	0	0	0	0	0	0	0	0	0	0	0	**0**	
0730 - 0745	0	0	0	0	0	0	0	0	0	0	0	0	0	**0**	
0745 - 0800	0	0	0	0	0	0	0	0	0	0	0	0	0	**0**	**0**
0800 - 0815	0	0	0	0	0	0	0	0	0	0	0	0	0	**0**	
0815 - 0830	0	0	0	0	0	0	0	0	0	0	0	0	0	**0**	
0830 - 0845	0	0	0	0	0	0	0	0	0	0	0	0	0	**0**	
0845 - 0900	0	0	0	0	0	0	0	0	0	0	0	0	0	**0**	**0**
0900 - 0915	0	0	0	0	0	0	0	0	0	0	0	0	0	**0**	
0915 - 0930	0	0	0	0	0	0	0	0	0	0	0	0	0	**0**	
0930 - 0945	0	0	0	0	0	0	0	0	0	0	0	0	0	**0**	
0945 - 1000	0	0	0	0	0	0	0	0	0	0	0	0	0	**0**	**0**
1000 - 1015	0	0	0	0	0	0	0	0	0	0	0	0	0	**0**	
1015 - 1030	0	0	0	0	0	0	0	0	0	0	0	0	0	**0**	
1030 - 1045	0	0	0	0	0	0	0	0	0	0	0	0	0	**0**	
1045 - 1100	0	0	0	0	0	0	0	0	0	0	0	0	0	**0**	**0**
1100 - 1115	0	0	0	0	0	0	0	0	0	0	0	0	0	**0**	
1115 - 1130	0	0	0	0	0	0	0	0	0	0	0	0	0	**0**	
1130 - 1145	0	0	0	0	0	0	0	0	0	0	0	0	0	**0**	
1145 - 1200	0	0	0	0	0	0	0	0	0	0	0	0	0	**0**	**0**
1200 - 1215	0	0	0	0	0	0	0	0	0	0	0	0	0	**0**	
1215 - 1230	0	0	0	0	0	0	0	0	0	0	0	0	0	**0**	
1230 - 1245	0	0	0	0	0	0	0	0	0	0	0	0	0	**0**	
1245 - 1300	0	0	0	0	0	0	0	0	0	0	0	0	0	**0**	**0**
1300 - 1315	0	0	0	0	0	0	0	0	0	0	0	0	0	**0**	
1315 - 1330	0	0	0	0	0	0	0	0	0	0	0	0	0	**0**	
1330 - 1345	0	0	0	0	0	0	0	0	0	0	0	0	0	**0**	
1345 - 1400	0	0	0	0	0	0	0	0	0	0	0	0	0	**0**	**0**
1400 - 1415	0	0	0	0	0	0	0	0	0	0	0	0	0	**0**	
1415 - 1430	0	0	0	0	0	0	0	0	0	0	0	0	0	**0**	
1430 - 1445	0	0	0	0	0	0	0	0	0	0	0	0	0	**0**	
1445 - 1500	0	0	0	0	0	0	0	0	0	0	0	0	0	**0**	**0**
1500 - 1515	0	0	0	0	0	0	0	0	0	0	0	0	0	**0**	
1515 - 1530	0	0	0	0	0	0	0	0	0	0	0	0	0	**0**	
1530 - 1545	0	0	0	0	0	0	0	0	0	0	0	0	0	**0**	
1545 - 1600	0	0	0	0	0	0	0	0	0	0	0	0	0	**0**	**0**
1600 - 1615	0	0	0	0	0	0	0	0	0	0	0	0	0	**0**	
1615 - 1630	0	0	0	0	0	0	0	0	0	0	0	0	0	**0**	
1630 - 1645	0	0	0	0	0	0	0	0	0	0	0	0	0	**0**	
1645 - 1700	0	0	0	0	0	0	0	0	0	0	0	0	0	**0**	**0**
1700 - 1715	0	0	0	0	0	0	0	0	0	0	0	0	0	**0**	
1715 - 1730	0	0	0	0	0	0	0	0	0	0	0	0	0	**0**	
1730 - 1745	0	0	0	0	0	0	0	0	0	0	0	0	0	**0**	
1745 - 1800	0	0	0	0	0	0	0	0	0	0	0	0	0	**0**	**0**
1800 - 1815	0	0	0	0	0	0	0	0	0	0	0	0	0	**0**	
1815 - 1830	0	0	0	0	0	0	0	0	0	0	0	0	0	**0**	
1830 - 1845	0	0	0	0	0	0	0	0	0	0	0	0	0	**0**	
1845 - 1900	0	0	0	0	0	0	0	0	0	0	0	0	0	**0**	**0**
1900 - 1915	0	36	9	0	0	0	0	0	0	0	0	0	0	**45**	
1915 - 1930	0	24	1	0	0	0	0	0	0	0	0	0	0	**25**	
1930 - 1945	1	30	4	0	1	0	0	0	0	0	0	0	0	**36**	
1945 - 2000	0	39	6	0	0	0	0	0	0	0	0	0	0	**45**	**151**
2000 - 2015	0	34	2	0	0	0	0	0	1	0	0	0	0	**37**	
2015 - 2030	0	25	1	0	1	0	0	0	1	0	0	0	0	**28**	
2030 - 2045	0	32	3	0	0	0	0	0	0	0	0	0	0	**35**	
2045 - 2100	0	27	1	0	0	0	0	0	0	0	0	0	0	**28**	**128**
2100 - 2115	0	26	1	0	0	0	0	0	0	0	0	0	0	**27**	
2115 - 2130	1	22	2	0	0	0	0	0	1	0	0	0	0	**26**	
2130 - 2145	0	15	1	0	0	0	0	0	0	0	0	0	0	**16**	
2145 - 2200	0	23	2	0	0	0	0	0	0	0	0	0	0	**25**	**94**
2200 - 2215	0	21	0	0	0	0	0	0	0	0	0	0	0	**21**	
2215 - 2230	0	15	2	0	0	0	0	0	0	0	0	0	0	**17**	
2230 - 2245	0	16	1	0	0	0	0	0	0	0	0	0	0	**17**	
2245 - 2300	0	12	0	0	1	0	0	0	0	0	0	0	0	**13**	**68**
2300 - 2315	0	8	1	0	0	0	0	0	0	0	0	0	0	**9**	
2315 - 2330	0	12	0	0	0	0	0	0	0	0	0	0	0	**12**	
2330 - 2345	0	6	1	0	0	0	0	0	0	0	0	0	0	**7**	
2345 - 0000	0	13	0	0	0	0	0	0	0	0	0	0	0	**13**	**41**

Session Total	2	436	38	0	3	0	0	0	3	0	0	0	0	**482**
Session Average	0.02	4.54	0.40	0.00	0.03	0.00	0.00	0.00	0.03	0.00	0.00	0.00	0.00	**5.02**
Session Percentage	0.41	90.46	7.88	0.00	0.62	0.00	0.00	0.00	0.62	0.00	0.00	0.00	0.00	

AM Peak Hour	-	-	-	-	-	-	-	-	-	-	-	-	-	-
AM Peak Volume	0	0	0	0	0	0	0	0	0	0	0	0	0	**0**

Noon Peak Hour	-	-	-	-	-	-	-	-	-	-	-	-	-	-
Noon Peak Volume	0	0	0	0	0	0	0	0	0	0	0	0	0	**0**

PM Peak Hour	1845 - 1945	1945 - 2045	1900 - 2000	-	1930 - 2030	-	-	-	1930 - 2030	-	-	-	-	**1900 - 2000**
PM Peak Volume	1	130	20	0	2	0	0	0	2	0	0	0	0	**151**

Site 35
I-26 On/Off-Ramp,
north of St Andrews Rd

Date
Wednesday, April 24, 2024

Lat/Long
34.045642°, -81.119613°

Weather
Fair
66°F

Click here for Detailed Weather

0000 - 2400 (Weekday 24h Session) (04-24-2024)
SB WB 15min

	Southbound (Movement 35.1)													15min	60min
Time	1	2	3	4	5	6	7	8	9	10	11	12	13	Total	Total
0000 - 0015	0	7	0	0	0	0	0	0	0	0	0	0	0	**7**	
0015 - 0030	0	10	3	0	0	0	0	0	0	0	0	0	0	**13**	
0030 - 0045	0	6	0	0	0	0	0	0	0	0	0	0	0	**6**	
0045 - 0100	0	5	1	0	0	0	0	0	0	0	0	0	0	**6**	**32**
0100 - 0115	0	1	0	0	0	0	0	0	0	0	0	0	0	**1**	
0115 - 0130	0	4	0	0	0	0	0	0	0	0	0	0	0	**4**	
0130 - 0145	0	5	0	0	0	1	0	0	0	0	0	0	0	**6**	
0145 - 0200	0	6	1	0	0	0	0	0	0	0	0	0	0	**7**	**18**
0200 - 0215	0	3	0	0	0	0	0	0	0	0	0	0	0	**3**	
0215 - 0230	0	2	0	0	0	0	0	0	0	0	0	0	0	**2**	
0230 - 0245	0	2	1	0	2	0	0	0	0	0	0	0	0	**5**	
0245 - 0300	0	1	1	0	0	0	0	0	0	0	0	0	0	**2**	**12**
0300 - 0315	0	1	0	0	0	0	0	0	0	0	0	0	0	**1**	
0315 - 0330	0	0	0	0	0	0	0	0	0	0	0	0	0	**0**	
0330 - 0345	0	2	1	0	0	0	0	0	0	0	0	0	0	**3**	
0345 - 0400	0	1	0	0	0	0	0	0	0	0	0	0	0	**1**	**5**
0400 - 0415	0	3	0	0	0	0	0	0	0	0	0	0	0	**3**	
0415 - 0430	0	1	1	0	0	0	0	0	0	0	0	0	0	**2**	
0430 - 0445	0	1	0	0	0	0	0	0	0	0	0	0	0	**1**	
0445 - 0500	1	4	0	0	0	0	0	0	0	0	0	0	0	**5**	**11**
0500 - 0515	0	2	1	0	0	0	0	0	0	0	0	0	0	**3**	
0515 - 0530	0	5	2	0	0	0	0	0	0	0	0	0	0	**7**	
0530 - 0545	0	6	1	0	0	0	0	0	0	0	0	0	0	**7**	
0545 - 0600	0	9	0	0	0	0	0	0	1	0	0	0	0	**10**	**27**
0600 - 0615	0	8	1	0	1	0	0	0	0	0	0	0	0	**10**	
0615 - 0630	0	18	4	0	0	0	0	1	0	0	0	0	0	**23**	
0630 - 0645	0	15	7	0	0	0	0	0	1	0	0	0	0	**23**	
0645 - 0700	0	33	9	0	0	0	0	0	0	0	0	0	0	**42**	**98**
0700 - 0715	0	27	4	0	0	1	0	0	0	0	0	0	0	**32**	
0715 - 0730	0	35	11	0	0	1	0	0	0	0	0	0	0	**47**	
0730 - 0745	0	36	10	0	2	0	0	1	0	0	0	0	0	**49**	
0745 - 0800	0	29	14	0	0	0	0	0	0	0	0	0	0	**43**	**171**
0800 - 0815	0	35	6	0	1	0	0	0	0	0	0	0	0	**42**	
0815 - 0830	0	46	5	0	0	0	0	0	1	0	0	0	0	**52**	
0830 - 0845	0	43	9	0	0	1	0	1	1	0	0	0	0	**55**	
0845 - 0900	0	40	9	0	0	0	0	2	0	0	0	0	0	**51**	**200**
0900 - 0915	0	36	15	0	0	0	0	0	0	0	0	0	0	**51**	
0915 - 0930	0	37	11	0	0	1	0	0	0	0	0	0	0	**49**	
0930 - 0945	0	43	8	0	0	0	0	0	0	0	0	0	0	**51**	
0945 - 1000	0	31	5	1	0	0	0	0	0	0	0	0	0	**37**	**188**
1000 - 1015	0	37	4	0	2	0	0	0	0	0	0	0	0	**43**	
1015 - 1030	0	54	5	0	2	0	0	0	0	0	0	0	0	**61**	
1030 - 1045	0	30	5	0	0	0	0	0	0	0	0	0	0	**35**	
1045 - 1100	0	41	7	0	0	0	0	0	0	0	0	0	0	**48**	**187**
1100 - 1115	0	33	9	0	1	0	0	0	0	0	0	0	0	**43**	
1115 - 1130	0	26	5	0	1	0	0	2	0	0	0	0	0	**34**	
1130 - 1145	1	42	3	0	0	0	0	0	0	0	0	0	0	**46**	
1145 - 1200	0	54	8	0	0	0	0	0	0	0	0	0	0	**62**	**185**
1200 - 1215	0	38	14	0	3	0	0	0	0	0	0	0	0	**55**	
1215 - 1230	0	30	16	0	2	0	0	0	0	0	0	0	0	**48**	
1230 - 1245	0	46	5	0	0	2	0	0	0	0	0	0	0	**53**	
1245 - 1300	0	51	15	0	0	0	0	0	0	0	0	0	0	**66**	**222**
1300 - 1315	0	44	15	0	2	0	0	0	0	0	0	0	0	**61**	
1315 - 1330	1	35	13	0	1	0	0	0	0	0	0	0	0	**50**	
1330 - 1345	1	36	8	0	0	0	0	1	0	0	0	0	0	**46**	
1345 - 1400	0	38	7	0	0	1	0	0	2	0	0	0	0	**48**	**205**
1400 - 1415	0	40	11	0	2	0	0	0	0	0	0	0	0	**53**	
1415 - 1430	0	41	11	0	0	0	0	0	0	0	0	0	0	**52**	
1430 - 1445	0	40	9	0	0	0	0	0	0	0	0	0	0	**49**	
1445 - 1500	0	37	6	0	1	0	0	0	0	0	0	0	0	**44**	**198**
1500 - 1515	0	52	12	0	1	0	0	0	0	0	0	0	0	**65**	
1515 - 1530	0	37	4	0	1	0	0	0	0	0	0	0	0	**42**	
1530 - 1545	0	35	7	0	1	0	0	0	0	0	0	0	0	**43**	
1545 - 1600	0	36	7	0	0	0	0	0	0	0	0	0	0	**43**	**193**
1600 - 1615	0	50	12	0	0	0	0	0	1	0	0	0	0	**63**	
1615 - 1630	0	48	17	0	0	0	0	0	0	0	0	0	0	**65**	
1630 - 1645	0	34	11	0	0	0	0	0	1	0	0	0	0	**46**	
1645 - 1700	0	34	10	0	1	0	0	0	0	0	0	0	0	**45**	**219**
1700 - 1715	0	35	5	0	1	0	0	0	0	0	0	0	0	**41**	
1715 - 1730	0	47	8	0	0	0	0	0	0	0	0	0	0	**55**	
1730 - 1745	0	53	4	0	2	0	0	0	0	0	0	0	0	**59**	
1745 - 1800	1	49	6	0	0	0	0	0	0	0	0	0	0	**56**	**211**
1800 - 1815	0	43	5	0	2	0	0	0	0	0	0	0	0	**50**	
1815 - 1830	0	52	9	0	3	0	0	1	0	0	0	0	0	**65**	
1830 - 1845	1	55	8	0	0	0	0	0	0	0	0	0	0	**64**	
1845 - 1900	2	40	10	1	1	0	0	0	0	0	0	0	0	**54**	**233**
1900 - 1915	0	46	4	0	1	0	0	0	0	0	0	0	0	**51**	
1915 - 1930	0	27	1	1	0	0	0	1	1	0	0	0	0	**31**	
1930 - 1945	1	46	10	0	1	0	0	0	0	0	0	0	0	**58**	
1945 - 2000	0	21	4	0	0	0	0	0	0	0	0	0	0	**25**	**165**
2000 - 2015	0	38	2	0	2	0	0	0	0	0	0	0	0	**42**	
2015 - 2030	0	39	6	0	0	0	0	0	1	0	0	0	0	**46**	
2030 - 2045	0	30	4	0	0	0	0	0	0	0	0	0	0	**34**	
2045 - 2100	0	33	2	0	0	0	0	0	0	0	0	0	0	**35**	**157**
2100 - 2115	0	25	2	0	0	0	0	0	1	0	0	0	0	**28**	
2115 - 2130	0	35	1	0	0	0	0	0	0	0	0	0	0	**36**	
2130 - 2145	0	23	3	0	0	0	0	0	0	0	0	0	0	**26**	
2145 - 2200	0	26	1	0	0	0	0	0	0	0	0	0	0	**27**	**117**
2200 - 2215	0	22	1	0	0	0	0	0	0	0	0	0	0	**23**	
2215 - 2230	0	22	1	0	0	0	0	0	0	0	0	0	0	**23**	
2230 - 2245	0	11	0	0	0	0	0	0	0	0	0	0	0	**11**	
2245 - 2300	0	23	1	0	0	0	0	0	0	0	0	0	0	**24**	**81**
2300 - 2315	1	20	2	0	0	0	0	0	0	0	0	0	0	**23**	
2315 - 2330	0	7	0	0	0	0	0	0	0	0	0	0	0	**7**	
2330 - 2345	0	8	0	0	0	0	0	0	0	0	0	0	0	**8**	
2345 - 0000	0	7	0	0	0	0	0	0	0	0	0	0	0	**7**	**45**

Session Total	10	2601	497	3	40	8	0	10	11	0	0	0	0	**3180**
Session Average	0.10	27.09	5.18	0.03	0.42	0.08	0.00	0.10	0.11	0.00	0.00	0.00	0.00	**33.13**
Session Percentage	0.31	81.79	15.63	0.09	1.26	0.25	0.00	0.31	0.35	0.00	0.00	0.00	0.00	

AM Peak Hour	-	0815 - 0915	0830 - 0930	0900 - 1000	0930 - 1030	0630 - 0730	-	0800 - 0900	0545 - 0645	-	-	-	-	**0815 - 0915**
AM Peak Volume	0	165	44	1	4	2	0	3	2	0	0	0	0	**209**

Noon Peak Hour	1245 - 1345	1230 - 1330	1215 - 1315	-	1130 - 1230	1145 - 1245	-	1030 - 1130	1300 - 1400	-	-	-	-	**1230 - 1330**
Noon Peak Volume	2	176	51	0	5	2	0	2	2	0	0	0	0	**230**

PM Peak Hour	1800 - 1900	1745 - 1845	1600 - 1700	1830 - 1930	1730 - 1830	-	-	1730 - 1830	1545 - 1645	-	-	-	-	**1745 - 1845**
PM Peak Volume	3	199	50	2	7	0	0	1	2	0	0	0	0	**235**

Site 35
I-26 On/Off-Ramp,
north of St Andrews Rd

Date
Thursday, April 25, 2024

Lat/Long
34.045642°, -81.119613°

Weather
Fair
67°F

Click here for Detailed Weather

0000 - 2400 (Weekday 24h Session) (04-25-2024)
SB WB 15min

	Southbound (Movement 35.1)													15min	60min
TIME	1	2	3	4	5	6	7	8	9	10	11	12	13	Total	Total
0000 - 0015	0	9	0	0	0	0	0	0	0	0	0	0	0	**9**	
0015 - 0030	0	11	1	0	1	0	0	0	0	0	0	0	0	**13**	
0030 - 0045	0	10	1	0	0	0	0	0	0	0	0	0	0	**11**	
0045 - 0100	0	4	0	0	0	0	0	0	0	0	0	0	0	**4**	**37**
0100 - 0115	0	7	0	0	0	0	0	0	0	0	0	0	0	**7**	
0115 - 0130	0	7	0	0	0	0	0	0	0	0	0	0	0	**7**	
0130 - 0145	0	5	0	0	0	0	0	0	0	0	0	0	0	**5**	
0145 - 0200	0	3	0	0	0	0	0	0	2	0	0	0	0	**5**	**24**
0200 - 0215	0	3	0	0	1	0	0	0	0	0	0	0	0	**4**	
0215 - 0230	0	3	0	0	0	0	0	0	0	0	0	0	0	**3**	
0230 - 0245	0	4	0	0	0	0	0	0	0	0	0	0	0	**4**	
0245 - 0300	0	2	0	0	1	0	0	0	0	0	0	0	0	**3**	**14**
0300 - 0315	0	1	1	0	0	0	0	0	0	0	0	0	0	**2**	
0315 - 0330	0	1	0	0	0	0	0	0	0	0	0	0	0	**1**	
0330 - 0345	0	5	0	0	0	0	0	0	0	0	0	0	0	**5**	
0345 - 0400	0	5	1	0	0	0	0	0	0	0	0	0	0	**6**	**14**
0400 - 0415	0	1	0	0	0	0	0	0	0	0	0	0	0	**1**	
0415 - 0430	0	3	1	0	1	0	0	0	0	0	0	0	0	**5**	
0430 - 0445	0	4	0	0	0	0	0	0	0	0	0	0	0	**4**	
0445 - 0500	0	3	1	0	0	0	0	0	0	0	0	0	0	**4**	**14**
0500 - 0515	0	4	0	0	0	0	0	0	0	0	0	0	0	**4**	
0515 - 0530	0	7	0	0	0	0	0	0	0	0	0	0	0	**7**	
0530 - 0545	0	5	3	0	0	0	0	0	0	0	0	0	0	**8**	
0545 - 0600	0	10	0	0	0	0	0	0	0	0	0	0	0	**10**	**29**
0600 - 0615	0	8	0	0	0	0	0	0	0	0	0	0	0	**8**	
0615 - 0630	0	12	2	0	1	0	0	1	0	0	0	0	0	**16**	
0630 - 0645	1	22	5	0	1	0	0	0	0	0	0	0	0	**29**	
0645 - 0700	0	24	5	1	0	0	0	0	0	0	0	0	0	**30**	**83**
0700 - 0715	0	36	6	0	0	0	0	0	0	0	0	0	0	**42**	
0715 - 0730	0	40	3	0	0	0	0	0	0	0	0	0	0	**43**	
0730 - 0745	0	36	1	0	0	0	0	0	0	0	0	0	0	**37**	
0745 - 0800	0	21	5	0	1	0	0	0	0	0	0	0	0	**27**	**149**
0800 - 0815	0	29	1	0	0	0	0	0	0	0	0	0	0	**30**	
0815 - 0830	0	37	4	0	1	0	0	0	0	0	0	0	0	**42**	
0830 - 0845	0	39	9	0	0	0	0	0	0	0	0	0	0	**48**	
0845 - 0900	0	54	15	0	1	0	0	0	1	0	0	0	0	**71**	**191**
0900 - 0915	0	41	7	0	0	0	0	1	0	0	0	0	0	**49**	
0915 - 0930	0	32	6	0	1	0	0	0	0	0	0	0	0	**39**	
0930 - 0945	0	46	9	1	1	0	0	0	0	0	0	0	0	**57**	
0945 - 1000	1	41	8	0	0	0	0	0	0	0	0	0	0	**50**	**195**
1000 - 1015	0	24	10	1	2	0	0	0	0	0	0	0	0	**37**	
1015 - 1030	0	29	12	0	0	0	0	0	0	0	0	0	0	**41**	
1030 - 1045	2	41	8	0	2	0	0	1	0	0	0	0	0	**54**	
1045 - 1100	0	37	9	0	0	0	0	0	0	0	0	0	0	**46**	**178**
1100 - 1115	0	33	5	0	0	0	0	0	0	0	0	0	0	**38**	
1115 - 1130	0	55	13	0	0	1	0	1	0	0	0	0	0	**70**	
1130 - 1145	0	39	6	0	0	2	0	0	0	0	0	0	0	**47**	
1145 - 1200	0	39	7	0	2	0	0	0	0	0	0	0	0	**48**	**203**
1200 - 1215	0	49	10	0	1	0	0	0	0	0	0	0	0	**60**	
1215 - 1230	0	38	11	0	0	0	0	0	0	0	0	0	0	**49**	
1230 - 1245	0	47	9	0	1	0	0	0	0	0	0	0	0	**57**	
1245 - 1300	0	55	5	0	3	0	0	0	0	0	0	0	0	**63**	**229**
1300 - 1315	0	55	12	0	0	0	0	0	0	0	0	0	0	**67**	
1315 - 1330	0	40	14	0	0	0	0	0	1	0	0	0	0	**55**	
1330 - 1345	0	42	5	0	1	0	0	0	0	0	0	0	0	**48**	
1345 - 1400	0	45	8	0	1	0	0	0	1	0	0	0	0	**55**	**225**
1400 - 1415	0	30	11	0	0	0	0	0	0	0	0	0	0	**41**	
1415 - 1430	0	38	6	1	0	0	0	0	0	0	0	0	0	**45**	
1430 - 1445	0	46	10	0	0	0	0	1	1	0	0	0	0	**58**	
1445 - 1500	0	25	8	0	1	0	0	0	0	0	0	0	0	**34**	**178**
1500 - 1515	0	32	15	0	0	0	0	0	0	0	0	0	0	**47**	
1515 - 1530	0	46	10	0	0	0	0	0	0	0	0	0	0	**56**	
1530 - 1545	0	52	10	0	1	0	0	0	0	0	0	0	0	**63**	
1545 - 1600	0	62	7	0	0	0	0	0	0	0	0	0	0	**69**	**235**
1600 - 1615	0	46	11	0	0	0	0	0	0	0	0	0	0	**57**	
1615 - 1630	0	40	8	0	0	0	0	0	0	0	0	0	0	**48**	
1630 - 1645	0	53	9	0	0	0	0	0	0	0	0	0	0	**62**	
1645 - 1700	0	49	10	0	0	0	0	0	0	0	0	0	0	**59**	**226**
1700 - 1715	0	55	7	0	1	0	0	0	0	0	0	0	0	**63**	
1715 - 1730	0	37	3	0	0	0	0	0	0	0	0	0	0	**40**	
1730 - 1745	0	51	4	0	0	0	0	0	0	0	0	0	0	**55**	
1745 - 1800	0	42	7	0	0	0	0	0	0	0	0	0	0	**49**	**207**
1800 - 1815	0	43	6	0	0	0	0	0	0	0	0	0	0	**49**	
1815 - 1830	0	40	12	0	0	0	0	1	0	0	0	0	0	**53**	
1830 - 1845	0	54	6	0	0	0	0	0	0	0	0	0	0	**60**	
1845 - 1900	0	42	5	0	1	0	0	0	0	0	0	0	0	**48**	**210**
1900 - 1915	0	0	0	0	0	0	0	0	0	0	0	0	0	**0**	
1915 - 1930	0	0	0	0	0	0	0	0	0	0	0	0	0	**0**	
1930 - 1945	0	0	0	0	0	0	0	0	0	0	0	0	0	**0**	
1945 - 2000	0	0	0	0	0	0	0	0	0	0	0	0	0	**0**	**0**
2000 - 2015	0	0	0	0	0	0	0	0	0	0	0	0	0	**0**	
2015 - 2030	0	0	0	0	0	0	0	0	0	0	0	0	0	**0**	
2030 - 2045	0	0	0	0	0	0	0	0	0	0	0	0	0	**0**	
2045 - 2100	0	0	0	0	0	0	0	0	0	0	0	0	0	**0**	**0**
2100 - 2115	0	0	0	0	0	0	0	0	0	0	0	0	0	**0**	
2115 - 2130	0	0	0	0	0	0	0	0	0	0	0	0	0	**0**	
2130 - 2145	0	0	0	0	0	0	0	0	0	0	0	0	0	**0**	
2145 - 2200	0	0	0	0	0	0	0	0	0	0	0	0	0	**0**	**0**
2200 - 2215	0	0	0	0	0	0	0	0	0	0	0	0	0	**0**	
2215 - 2230	0	0	0	0	0	0	0	0	0	0	0	0	0	**0**	
2230 - 2245	0	0	0	0	0	0	0	0	0	0	0	0	0	**0**	
2245 - 2300	0	0	0	0	0	0	0	0	0	0	0	0	0	**0**	**0**
2300 - 2315	0	0	0	0	0	0	0	0	0	0	0	0	0	**0**	
2315 - 2330	0	0	0	0	0	0	0	0	0	0	0	0	0	**0**	
2330 - 2345	0	0	0	0	0	0	0	0	0	0	0	0	0	**0**	
2345 - 0000	0	0	0	0	0	0	0	0	0	0	0	0	0	**0**	**0**

Session Total	4	2186	404	4	28	3	0	6	6	0	0	0	0	**2641**
Session Average	0.04	22.77	4.21	0.04	0.29	0.03	0.00	0.06	0.06	0.00	0.00	0.00	0.00	**27.51**
Session Percentage	0.15	82.77	15.30	0.15	1.06	0.11	0.00	0.23	0.23	0.00	0.00	0.00	0.00	

AM Peak Hour	0945 - 1045	0845 - 0945	0930 - 1030	0915 - 1015	0915 - 1015	-	-	0530 - 0630	0800 - 0900	-	-	-	-	**0845 - 0945**
AM Peak Hour Volume	3	173	39	2	4	0	0	1	1	0	0	0	0	**216**

Noon Peak Hour	1000 - 1100	1230 - 1330	1430 - 1530	1000 - 1100	1200 - 1300	1045 - 1145	-	1030 - 1130	1300 - 1400	-	-	-	-	**1230 - 1330**
Noon Peak Hour Volume	2	197	43	1	5	3	0	2	2	0	0	0	0	**242**

PM Peak Hour	-	1515 - 1615	1500 - 1600	-	1500 - 1600	-	-	1730 - 1830	-	-	-	-	-	**1515 - 1615**
PM Peak Hour Volume	0	206	42	0	1	0	0	1	0	0	0	0	0	**245**

Bi-Directional Class Count || SB WB Average 15min

Columbia, SC

Marr Traffic DATA COLLECTION
www.marrtraffic.com

Site 35
I-26 On/Off-Ramp,
north of St Andrews Rd

Date
Tuesday, April 23, 2024

Lat/Long
34.045642°, -81.119613°

Weather
Fair
58°F

0000 - 2400 (Weekday 24h Session) (All Dates)
SB WB Average 15min

	SB WB Average 15min													15min	60min
Time	1	2	3	4	5	6	7	8	9	10	11	12	13	Total	Total
0000 - 0015	0	5	0	0	0	0	0	0	0	0	0	0	0	**5**	
0015 - 0030	0	7	1	0	0	0	0	0	0	0	0	0	0	**9**	
0030 - 0045	0	5	0	0	0	0	0	0	0	0	0	0	0	**6**	
0045 - 0100	0	3	0	0	0	0	0	0	0	0	0	0	0	**3**	**23**
0100 - 0115	0	3	0	0	0	0	0	0	0	0	0	0	0	**3**	
0115 - 0130	0	4	0	0	0	0	0	0	0	0	0	0	0	**4**	
0130 - 0145	0	3	0	0	0	0	0	0	0	0	0	0	0	**4**	
0145 - 0200	0	3	0	0	0	0	0	0	1	0	0	0	0	**4**	**14**
0200 - 0215	0	2	0	0	0	0	0	0	0	0	0	0	0	**2**	
0215 - 0230	0	2	0	0	0	0	0	0	0	0	0	0	0	**2**	
0230 - 0245	0	2	0	0	1	0	0	0	0	0	0	0	0	**3**	
0245 - 0300	0	1	0	0	0	0	0	0	0	0	0	0	0	**2**	**9**
0300 - 0315	0	1	0	0	0	0	0	0	0	0	0	0	0	**1**	
0315 - 0330	0	0	0	0	0	0	0	0	0	0	0	0	0	**0**	
0330 - 0345	0	2	0	0	0	0	0	0	0	0	0	0	0	**3**	
0345 - 0400	0	2	0	0	0	0	0	0	0	0	0	0	0	**2**	**6**
0400 - 0415	0	1	0	0	0	0	0	0	0	0	0	0	0	**1**	
0415 - 0430	0	1	1	0	0	0	0	0	0	0	0	0	0	**2**	
0430 - 0445	0	2	0	0	0	0	0	0	0	0	0	0	0	**2**	
0445 - 0500	0	2	0	0	0	0	0	0	0	0	0	0	0	**3**	**8**
0500 - 0515	0	2	0	0	0	0	0	0	0	0	0	0	0	**2**	
0515 - 0530	0	4	1	0	0	0	0	0	0	0	0	0	0	**5**	
0530 - 0545	0	4	1	0	0	0	0	0	0	0	0	0	0	**5**	
0545 - 0600	0	6	0	0	0	0	0	0	0	0	0	0	0	**7**	**19**
0600 - 0615	0	5	0	0	0	0	0	0	0	0	0	0	0	**6**	
0615 - 0630	0	10	2	0	0	0	0	1	0	0	0	0	0	**13**	
0630 - 0645	0	12	4	0	0	0	0	0	0	0	0	0	0	**17**	
0645 - 0700	0	19	5	0	0	0	0	0	0	0	0	0	0	**24**	**60**
0700 - 0715	0	21	3	0	0	0	0	0	0	0	0	0	0	**25**	
0715 - 0730	0	25	5	0	0	0	0	0	0	0	0	0	0	**30**	
0730 - 0745	0	24	4	0	1	0	0	0	0	0	0	0	0	**29**	
0745 - 0800	0	17	6	0	0	0	0	0	0	0	0	0	0	**23**	**107**
0800 - 0815	0	21	2	0	0	0	0	0	0	0	0	0	0	**24**	
0815 - 0830	0	28	3	0	0	0	0	0	0	0	0	0	0	**31**	
0830 - 0845	0	27	6	0	0	0	0	0	0	0	0	0	0	**34**	
0845 - 0900	0	31	8	0	0	0	0	1	0	0	0	0	0	**41**	**130**
0900 - 0915	0	26	7	0	0	0	0	0	0	0	0	0	0	**33**	
0915 - 0930	0	23	6	0	0	0	0	0	0	0	0	0	0	**29**	
0930 - 0945	0	30	6	0	0	0	0	0	0	0	0	0	0	**36**	
0945 - 1000	0	24	4	0	0	0	0	0	0	0	0	0	0	**29**	**128**
1000 - 1015	0	20	5	0	1	0	0	0	0	0	0	0	0	**27**	
1015 - 1030	0	28	6	0	1	0	0	0	0	0	0	0	0	**34**	
1030 - 1045	1	24	4	0	1	0	0	0	0	0	0	0	0	**30**	
1045 - 1100	0	26	5	0	0	0	0	0	0	0	0	0	0	**31**	**122**
1100 - 1115	0	22	5	0	0	0	0	0	0	0	0	0	0	**27**	
1115 - 1130	0	27	6	0	0	0	0	1	0	0	0	0	0	**35**	
1130 - 1145	0	27	3	0	0	1	0	0	0	0	0	0	0	**31**	
1145 - 1200	0	31	5	0	1	0	0	0	0	0	0	0	0	**37**	**129**
1200 - 1215	0	29	8	0	1	0	0	0	0	0	0	0	0	**38**	
1215 - 1230	0	23	9	0	1	0	0	0	0	0	0	0	0	**32**	
1230 - 1245	0	31	5	0	0	1	0	0	0	0	0	0	0	**37**	
1245 - 1300	0	35	7	0	1	0	0	0	0	0	0	0	0	**43**	**150**
1300 - 1315	0	33	9	0	1	0	0	0	0	0	0	0	0	**43**	
1315 - 1330	0	25	9	0	0	0	0	0	0	0	0	0	0	**35**	
1330 - 1345	0	26	4	0	0	0	0	0	0	0	0	0	0	**31**	
1345 - 1400	0	28	5	0	0	0	0	0	1	0	0	0	0	**34**	**143**
1400 - 1415	0	23	7	0	1	0	0	0	0	0	0	0	0	**31**	
1415 - 1430	0	26	6	0	0	0	0	0	0	0	0	0	0	**32**	
1430 - 1445	0	29	6	0	0	0	0	0	0	0	0	0	0	**36**	
1445 - 1500	0	21	5	0	1	0	0	0	0	0	0	0	0	**26**	**125**
1500 - 1515	0	28	9	0	0	0	0	0	0	0	0	0	0	**37**	
1515 - 1530	0	28	5	0	0	0	0	0	0	0	0	0	0	**33**	
1530 - 1545	0	29	6	0	1	0	0	0	0	0	0	0	0	**35**	
1545 - 1600	0	33	5	0	0	0	0	0	0	0	0	0	0	**37**	**143**
1600 - 1615	0	32	8	0	0	0	0	0	0	0	0	0	0	**40**	
1615 - 1630	0	29	8	0	0	0	0	0	0	0	0	0	0	**38**	
1630 - 1645	0	29	7	0	0	0	0	0	0	0	0	0	0	**36**	
1645 - 1700	0	28	7	0	0	0	0	0	0	0	0	0	0	**35**	**148**
1700 - 1715	0	30	4	0	1	0	0	0	0	0	0	0	0	**35**	
1715 - 1730	0	28	4	0	0	0	0	0	0	0	0	0	0	**32**	
1730 - 1745	0	35	3	0	1	0	0	0	0	0	0	0	0	**38**	
1745 - 1800	0	30	4	0	0	0	0	0	0	0	0	0	0	**35**	**139**
1800 - 1815	0	29	4	0	1	0	0	0	0	0	0	0	0	**33**	
1815 - 1830	0	31	7	0	1	0	0	1	0	0	0	0	0	**39**	
1830 - 1845	0	36	5	0	0	0	0	0	0	0	0	0	0	**41**	
1845 - 1900	1	27	5	0	1	0	0	0	0	0	0	0	0	**34**	**148**
1900 - 1915	0	27	4	0	0	0	0	0	0	0	0	0	0	**32**	
1915 - 1930	0	17	1	0	0	0	0	0	0	0	0	0	0	**19**	
1930 - 1945	1	25	5	0	1	0	0	0	0	0	0	0	0	**31**	
1945 - 2000	0	20	3	0	0	0	0	0	0	0	0	0	0	**23**	**105**
2000 - 2015	0	24	1	0	1	0	0	0	0	0	0	0	0	**26**	
2015 - 2030	0	21	2	0	0	0	0	0	1	0	0	0	0	**25**	
2030 - 2045	0	21	2	0	0	0	0	0	0	0	0	0	0	**23**	
2045 - 2100	0	20	1	0	0	0	0	0	0	0	0	0	0	**21**	**95**
2100 - 2115	0	17	1	0	0	0	0	0	0	0	0	0	0	**18**	
2115 - 2130	0	19	1	0	0	0	0	0	0	0	0	0	0	**21**	
2130 - 2145	0	13	1	0	0	0	0	0	0	0	0	0	0	**14**	
2145 - 2200	0	16	1	0	0	0	0	0	0	0	0	0	0	**17**	**70**
2200 - 2215	0	14	0	0	0	0	0	0	0	0	0	0	0	**15**	
2215 - 2230	0	12	1	0	0	0	0	0	0	0	0	0	0	**13**	
2230 - 2245	0	9	0	0	0	0	0	0	0	0	0	0	0	**9**	
2245 - 2300	0	12	0	0	0	0	0	0	0	0	0	0	0	**12**	**50**
2300 - 2315	0	9	1	0	0	0	0	0	0	0	0	0	0	**11**	
2315 - 2330	0	6	0	0	0	0	0	0	0	0	0	0	0	**6**	
2330 - 2345	0	5	0	0	0	0	0	0	0	0	0	0	0	**5**	
2345 - 0000	0	7	0	0	0	0	0	0	0	0	0	0	0	**7**	**29**

Session Total	5	1741	313	2	24	4	0	5	7	0	0	0	0	**2101**
Session Average	0.06	18.14	3.26	0.02	0.25	0.04	0.00	0.06	0.07	0.00	0.00	0.00	0.00	**21.89**
Session Percentage	0.25	82.87	14.90	0.11	1.13	0.17	0.00	0.25	0.32	0.00	0.00	0.00	0.00	

AM Peak Hour	0945 - 1045	0815 - 0915	0830 - 0930	0915 - 1015	0945 - 1045	0630 - 0730	-	0815 - 0915	0800 - 0900	-	-	-	-	**0815 - 0915**
AM Peak Volume	1	112	27	1	3	1	0	1	1	0	0	0	0	**140**

Noon Peak Hour	1000 - 1100	1230 - 1330	1215 - 1315	1000 - 1100	1200 - 1300	1045 - 1145	-	1030 - 1130	1300 - 1400	-	-	-	-	**1230 - 1330**
Noon Peak Volume	1	124	29	0	3	1	0	1	1	0	0	0	0	**157**

PM Peak Hour	1845 - 1945	1745 - 1845	1600 - 1700	1830 - 1930	1730 - 1830	-	-	1730 - 1830	1930 - 2030	-	-	-	-	**1545 - 1645**
PM Peak Volume	1	126	29	1	2	0	0	1	1	0	0	0	0	**151**

Bi-Directional Class Count || Volume Summary 15min

Columbia, SC

Marr Traffic DATA COLLECTION
www.marrtraffic.com

Site 35
I-26 On/Off-Ramp,
north of St Andrews Rd

Date
Tuesday, April 23, 2024

Lat/Long
34.045642°, -81.119613°

Weather
Fair
58°F

Click here for Detailed Weather

0000 - 2400 (Weekday 24h Session) (04-23-2024)

Volume Summary 15min

TIME	Volume Summary 15min NB	SB	15min Total	60min Total
0000 - 0015	0	0	**0**	
0015 - 0030	0	0	**0**	
0030 - 0045	0	0	**0**	
0045 - 0100	0	0	**0**	**0**
0100 - 0115	0	0	**0**	
0115 - 0130	0	0	**0**	
0130 - 0145	0	0	**0**	
0145 - 0200	0	0	**0**	**0**
0200 - 0215	0	0	**0**	
0215 - 0230	0	0	**0**	
0230 - 0245	0	0	**0**	
0245 - 0300	0	0	**0**	**0**
0300 - 0315	0	0	**0**	
0315 - 0330	0	0	**0**	
0330 - 0345	0	0	**0**	
0345 - 0400	0	0	**0**	**0**
0400 - 0415	0	0	**0**	
0415 - 0430	0	0	**0**	
0430 - 0445	0	0	**0**	
0445 - 0500	0	0	**0**	**0**
0500 - 0515	0	0	**0**	
0515 - 0530	0	0	**0**	
0530 - 0545	0	0	**0**	
0545 - 0600	0	0	**0**	**0**
0600 - 0615	0	0	**0**	
0615 - 0630	0	0	**0**	
0630 - 0645	0	0	**0**	
0645 - 0700	0	0	**0**	**0**
0700 - 0715	0	0	**0**	
0715 - 0730	0	0	**0**	
0730 - 0745	0	0	**0**	
0745 - 0800	0	0	**0**	**0**
0800 - 0815	0	0	**0**	
0815 - 0830	0	0	**0**	
0830 - 0845	0	0	**0**	
0845 - 0900	0	0	**0**	**0**
0900 - 0915	0	0	**0**	
0915 - 0930	0	0	**0**	
0930 - 0945	0	0	**0**	
0945 - 1000	0	0	**0**	**0**
1000 - 1015	0	0	**0**	
1015 - 1030	0	0	**0**	
1030 - 1045	0	0	**0**	
1045 - 1100	0	0	**0**	**0**
1100 - 1115	0	0	**0**	
1115 - 1130	0	0	**0**	
1130 - 1145	0	0	**0**	
1145 - 1200	0	0	**0**	**0**

Time	Volume Summary 15min NB	SB	15min Total	60min Total
1200 - 1215	0	0	**0**	
1215 - 1230	0	0	**0**	
1230 - 1245	0	0	**0**	
1245 - 1300	0	0	**0**	**0**
1300 - 1315	0	0	**0**	
1315 - 1330	0	0	**0**	
1330 - 1345	0	0	**0**	
1345 - 1400	0	0	**0**	**0**
1400 - 1415	0	0	**0**	
1415 - 1430	0	0	**0**	
1430 - 1445	0	0	**0**	
1445 - 1500	0	0	**0**	**0**
1500 - 1515	0	0	**0**	
1515 - 1530	0	0	**0**	
1530 - 1545	0	0	**0**	
1545 - 1600	0	0	**0**	**0**
1600 - 1615	0	0	**0**	
1615 - 1630	0	0	**0**	
1630 - 1645	0	0	**0**	
1645 - 1700	0	0	**0**	**0**
1700 - 1715	0	0	**0**	
1715 - 1730	0	0	**0**	
1730 - 1745	0	0	**0**	
1745 - 1800	0	0	**0**	**0**
1800 - 1815	0	0	**0**	
1815 - 1830	0	0	**0**	
1830 - 1845	0	0	**0**	
1845 - 1900	0	0	**0**	**0**
1900 - 1915	0	45	**45**	
1915 - 1930	0	25	**25**	
1930 - 1945	0	36	**36**	
1945 - 2000	0	45	**45**	**151**
2000 - 2015	0	37	**37**	
2015 - 2030	0	28	**28**	
2030 - 2045	0	35	**35**	
2045 - 2100	0	28	**28**	**128**
2100 - 2115	0	27	**27**	
2115 - 2130	0	26	**26**	
2130 - 2145	0	16	**16**	
2145 - 2200	0	25	**25**	**94**
2200 - 2215	0	21	**21**	
2215 - 2230	0	17	**17**	
2230 - 2245	0	17	**17**	
2245 - 2300	0	13	**13**	**68**
2300 - 2315	0	9	**9**	
2315 - 2330	0	12	**12**	
2330 - 2345	0	7	**7**	
2345 - 0000	0	13	**13**	**41**

Session Total	0	482	**482**
Session Average	0.00	5.02	**5.02**
Session Percentage	0.00	100.00	

Site 35

I-26 On/Off-Ramp,
north of St Andrews Rd

Date

Wednesday, April 24, 2024

Lat/Long

34.045642°, -81.119613°

Weather

Fair
66°F

Click here for Detailed Weather

0000 - 2400 (Weekday 24h Session) (04-24-2024)

Volume Summary 15min

TIME	Volume Summary 15min NB	Volume Summary 15min SB	15min Total	60min Total
0000 - 0015	0	7	**7**	
0015 - 0030	0	13	**13**	
0030 - 0045	0	6	**6**	
0045 - 0100	0	6	**6**	**32**
0100 - 0115	0	1	**1**	
0115 - 0130	0	4	**4**	
0130 - 0145	0	6	**6**	
0145 - 0200	0	7	**7**	**18**
0200 - 0215	0	3	**3**	
0215 - 0230	0	2	**2**	
0230 - 0245	0	5	**5**	
0245 - 0300	0	2	**2**	**12**
0300 - 0315	0	1	**1**	
0315 - 0330	0	0	**0**	
0330 - 0345	0	3	**3**	
0345 - 0400	0	1	**1**	**5**
0400 - 0415	0	3	**3**	
0415 - 0430	0	2	**2**	
0430 - 0445	0	1	**1**	
0445 - 0500	0	5	**5**	**11**
0500 - 0515	0	3	**3**	
0515 - 0530	0	7	**7**	
0530 - 0545	0	7	**7**	
0545 - 0600	0	10	**10**	**27**
0600 - 0615	0	10	**10**	
0615 - 0630	0	23	**23**	
0630 - 0645	0	23	**23**	
0645 - 0700	0	42	**42**	**98**
0700 - 0715	0	32	**32**	
0715 - 0730	0	47	**47**	
0730 - 0745	0	49	**49**	
0745 - 0800	0	43	**43**	**171**
0800 - 0815	0	42	**42**	
0815 - 0830	0	52	**52**	
0830 - 0845	0	55	**55**	
0845 - 0900	0	51	**51**	**200**
0900 - 0915	0	51	**51**	
0915 - 0930	0	49	**49**	
0930 - 0945	0	51	**51**	
0945 - 1000	0	37	**37**	**188**
1000 - 1015	0	43	**43**	
1015 - 1030	0	61	**61**	
1030 - 1045	0	35	**35**	
1045 - 1100	0	48	**48**	**187**
1100 - 1115	0	43	**43**	
1115 - 1130	0	34	**34**	
1130 - 1145	0	46	**46**	
1145 - 1200	0	62	**62**	**185**

Time	Volume Summary 15min NB	Volume Summary 15min SB	15min Total	60min Total
1200 - 1215	0	55	**55**	
1215 - 1230	0	48	**48**	
1230 - 1245	0	53	**53**	
1245 - 1300	0	66	**66**	**222**
1300 - 1315	0	61	**61**	
1315 - 1330	0	50	**50**	
1330 - 1345	0	46	**46**	
1345 - 1400	0	48	**48**	**205**
1400 - 1415	0	53	**53**	
1415 - 1430	0	52	**52**	
1430 - 1445	0	49	**49**	
1445 - 1500	0	44	**44**	**198**
1500 - 1515	0	65	**65**	
1515 - 1530	0	42	**42**	
1530 - 1545	0	43	**43**	
1545 - 1600	0	43	**43**	**193**
1600 - 1615	0	63	**63**	
1615 - 1630	0	65	**65**	
1630 - 1645	0	46	**46**	
1645 - 1700	0	45	**45**	**219**
1700 - 1715	0	41	**41**	
1715 - 1730	0	55	**55**	
1730 - 1745	0	59	**59**	
1745 - 1800	0	56	**56**	**211**
1800 - 1815	0	50	**50**	
1815 - 1830	0	65	**65**	
1830 - 1845	0	64	**64**	
1845 - 1900	0	54	**54**	**233**
1900 - 1915	0	51	**51**	
1915 - 1930	0	31	**31**	
1930 - 1945	0	58	**58**	
1945 - 2000	0	25	**25**	**165**
2000 - 2015	0	42	**42**	
2015 - 2030	0	46	**46**	
2030 - 2045	0	34	**34**	
2045 - 2100	0	35	**35**	**157**
2100 - 2115	0	28	**28**	
2115 - 2130	0	36	**36**	
2130 - 2145	0	26	**26**	
2145 - 2200	0	27	**27**	**117**
2200 - 2215	0	23	**23**	
2215 - 2230	0	23	**23**	
2230 - 2245	0	11	**11**	
2245 - 2300	0	24	**24**	**81**
2300 - 2315	0	23	**23**	
2315 - 2330	0	7	**7**	
2330 - 2345	0	8	**8**	
2345 - 0000	0	7	**7**	**45**

Session Total	0	3180	**3180**
Session Average	0.00	33.13	**33.13**
Session Percentage	0.00	100.00	

Site 35

I-26 On/Off-Ramp,
north of St Andrews Rd

Date

Thursday, April 25, 2024

Lat/Long

34.045642°, -81.119613°

Weather

Fair
67°F

Click here for Detailed Weather

0000 - 2400 (Weekday 24h Session) (04-25-2024)

Volume Summary 15min

TIME	Volume Summary 15min NB	Volume Summary 15min SB	15min Total	60min Total
0000 - 0015	0	9	**9**	
0015 - 0030	0	13	**13**	
0030 - 0045	0	11	**11**	
0045 - 0100	0	4	**4**	**37**
0100 - 0115	0	7	**7**	
0115 - 0130	0	7	**7**	
0130 - 0145	0	5	**5**	
0145 - 0200	0	5	**5**	**24**
0200 - 0215	0	4	**4**	
0215 - 0230	0	3	**3**	
0230 - 0245	0	4	**4**	
0245 - 0300	0	3	**3**	**14**
0300 - 0315	0	2	**2**	
0315 - 0330	0	1	**1**	
0330 - 0345	0	5	**5**	
0345 - 0400	0	6	**6**	**14**
0400 - 0415	0	1	**1**	
0415 - 0430	0	5	**5**	
0430 - 0445	0	4	**4**	
0445 - 0500	0	4	**4**	**14**
0500 - 0515	0	4	**4**	
0515 - 0530	0	7	**7**	
0530 - 0545	0	8	**8**	
0545 - 0600	0	10	**10**	**29**
0600 - 0615	0	8	**8**	
0615 - 0630	0	16	**16**	
0630 - 0645	0	29	**29**	
0645 - 0700	0	30	**30**	**83**
0700 - 0715	0	42	**42**	
0715 - 0730	0	43	**43**	
0730 - 0745	0	37	**37**	
0745 - 0800	0	27	**27**	**149**
0800 - 0815	0	30	**30**	
0815 - 0830	0	42	**42**	
0830 - 0845	0	48	**48**	
0845 - 0900	0	71	**71**	**191**
0900 - 0915	0	49	**49**	
0915 - 0930	0	39	**39**	
0930 - 0945	0	57	**57**	
0945 - 1000	0	50	**50**	**195**
1000 - 1015	0	37	**37**	
1015 - 1030	0	41	**41**	
1030 - 1045	0	54	**54**	
1045 - 1100	0	46	**46**	**178**
1100 - 1115	0	38	**38**	
1115 - 1130	0	70	**70**	
1130 - 1145	0	47	**47**	
1145 - 1200	0	48	**48**	**203**

Time	Volume Summary 15min NB	Volume Summary 15min SB	15min Total	60min Total
1200 - 1215	0	60	**60**	
1215 - 1230	0	49	**49**	
1230 - 1245	0	57	**57**	
1245 - 1300	0	63	**63**	**229**
1300 - 1315	0	67	**67**	
1315 - 1330	0	55	**55**	
1330 - 1345	0	48	**48**	
1345 - 1400	0	55	**55**	**225**
1400 - 1415	0	41	**41**	
1415 - 1430	0	45	**45**	
1430 - 1445	0	58	**58**	
1445 - 1500	0	34	**34**	**178**
1500 - 1515	0	47	**47**	
1515 - 1530	0	56	**56**	
1530 - 1545	0	63	**63**	
1545 - 1600	0	69	**69**	**235**
1600 - 1615	0	57	**57**	
1615 - 1630	0	48	**48**	
1630 - 1645	0	62	**62**	
1645 - 1700	0	59	**59**	**226**
1700 - 1715	0	63	**63**	
1715 - 1730	0	40	**40**	
1730 - 1745	0	55	**55**	
1745 - 1800	0	49	**49**	**207**
1800 - 1815	0	49	**49**	
1815 - 1830	0	53	**53**	
1830 - 1845	0	60	**60**	
1845 - 1900	0	48	**48**	**210**
1900 - 1915	0	0	**0**	
1915 - 1930	0	0	**0**	
1930 - 1945	0	0	**0**	
1945 - 2000	0	0	**0**	**0**
2000 - 2015	0	0	**0**	
2015 - 2030	0	0	**0**	
2030 - 2045	0	0	**0**	
2045 - 2100	0	0	**0**	**0**
2100 - 2115	0	0	**0**	
2115 - 2130	0	0	**0**	
2130 - 2145	0	0	**0**	
2145 - 2200	0	0	**0**	**0**
2200 - 2215	0	0	**0**	
2215 - 2230	0	0	**0**	
2230 - 2245	0	0	**0**	
2245 - 2300	0	0	**0**	**0**
2300 - 2315	0	0	**0**	
2315 - 2330	0	0	**0**	
2330 - 2345	0	0	**0**	
2345 - 0000	0	0	**0**	**0**

Session Total	0	2641	**2641**
Session Average	0.00	27.51	**27.51**
Session Percentage	0.00	100.00	

Bi-Directional Class Count || SB WB 60min

Columbia, SC

Marr Traffic DATA COLLECTION

www.marrtraffic.com

Site 35
I-26 On/Off-Ramp,
north of St Andrews Rd

Date
Tuesday, April 23, 2024

Lat/Long
34.045642°, -81.119613°

Weather
Fair
58°F

Click here for Detailed Weather

0000 - 2400 (Weekday 24h Session) (04-23-2024)
SB WB 60min

	Southbound (Movement 35.1)													
TIME	1	2	3	4	5	6	7	8	9	10	11	12	13	**Total**
0000 - 0100	0	0	0	0	0	0	0	0	0	0	0	0	0	**0**
0100 - 0200	0	0	0	0	0	0	0	0	0	0	0	0	0	**0**
0200 - 0300	0	0	0	0	0	0	0	0	0	0	0	0	0	**0**
0300 - 0400	0	0	0	0	0	0	0	0	0	0	0	0	0	**0**
0400 - 0500	0	0	0	0	0	0	0	0	0	0	0	0	0	**0**
0500 - 0600	0	0	0	0	0	0	0	0	0	0	0	0	0	**0**
0600 - 0700	0	0	0	0	0	0	0	0	0	0	0	0	0	**0**
0700 - 0800	0	0	0	0	0	0	0	0	0	0	0	0	0	**0**
0800 - 0900	0	0	0	0	0	0	0	0	0	0	0	0	0	**0**
0900 - 1000	0	0	0	0	0	0	0	0	0	0	0	0	0	**0**
1000 - 1100	0	0	0	0	0	0	0	0	0	0	0	0	0	**0**
1100 - 1200	0	0	0	0	0	0	0	0	0	0	0	0	0	**0**
1200 - 1300	0	0	0	0	0	0	0	0	0	0	0	0	0	**0**
1300 - 1400	0	0	0	0	0	0	0	0	0	0	0	0	0	**0**
1400 - 1500	0	0	0	0	0	0	0	0	0	0	0	0	0	**0**
1500 - 1600	0	0	0	0	0	0	0	0	0	0	0	0	0	**0**
1600 - 1700	0	0	0	0	0	0	0	0	0	0	0	0	0	**0**
1700 - 1800	0	0	0	0	0	0	0	0	0	0	0	0	0	**0**
1800 - 1900	0	0	0	0	0	0	0	0	0	0	0	0	0	**0**
1900 - 2000	1	129	20	0	1	0	0	0	0	0	0	0	0	**151**
2000 - 2100	0	118	7	0	1	0	0	0	2	0	0	0	0	**128**
2100 - 2200	1	86	6	0	0	0	0	0	1	0	0	0	0	**94**
2200 - 2300	0	64	3	0	1	0	0	0	0	0	0	0	0	**68**
2300 - 2400	0	39	2	0	0	0	0	0	0	0	0	0	0	**41**
Session Total	2	436	38	0	3	0	0	0	3	0	0	0	0	**482**
Session Average	0.08	18.17	1.58	0.00	0.13	0.00	0.00	0.00	0.13	0.00	0.00	0.00	0.00	**20.08**
Session Percentage	0.41	90.46	7.88	0.00	0.62	0.00	0.00	0.00	0.62	0.00	0.00	0.00	0.00	
AM Peak Hour	-	-	-	-	-	-	-	-	-	-	-	-	-	**-**
AM Peak Volume	0	0	0	0	0	0	0	0	0	0	0	0	0	**0**
Noon Peak Hour	-	-	-	-	-	-	-	-	-	-	-	-	-	**-**
Noon Peak Volume	0	0	0	0	0	0	0	0	0	0	0	0	0	**0**
PM Peak Hour	1900 - 2000	1900 - 2000	1900 - 2000	-	1900 - 2000	-	-	-	-	-	-	-	-	**1900 - 2000**
PM Peak Volume	1	129	20	0	1	0	0	0	0	0	0	0	0	**151**

Site 35
I-26 On/Off-Ramp,
north of St Andrews Rd

Date
Wednesday, April 24, 2024

Lat/Long
34.045642°, -81.119613°

Weather
Fair
66°F

Click here for Detailed Weather

0000 - 2400 (Weekday 24h Session) (04-24-2024)
SB WB 60min

	Southbound (Movement 35.1)													
TIME	1	2	3	4	5	6	7	8	9	10	11	12	13	**Total**
0000 - 0100	0	28	4	0	0	0	0	0	0	0	0	0	0	**32**
0100 - 0200	0	16	1	0	0	1	0	0	0	0	0	0	0	**18**
0200 - 0300	0	8	2	0	2	0	0	0	0	0	0	0	0	**12**
0300 - 0400	0	4	1	0	0	0	0	0	0	0	0	0	0	**5**
0400 - 0500	1	9	1	0	0	0	0	0	0	0	0	0	0	**11**
0500 - 0600	0	22	4	0	0	0	0	0	1	0	0	0	0	**27**
0600 - 0700	0	74	21	0	1	0	0	1	1	0	0	0	0	**98**
0700 - 0800	0	127	39	0	2	2	0	1	0	0	0	0	0	**171**
0800 - 0900	0	164	29	0	1	1	0	3	2	0	0	0	0	**200**
0900 - 1000	0	147	39	1	0	1	0	0	0	0	0	0	0	**188**
1000 - 1100	0	162	21	0	4	0	0	0	0	0	0	0	0	**187**
1100 - 1200	1	155	25	0	2	0	0	2	0	0	0	0	0	**185**
1200 - 1300	0	165	50	0	5	2	0	0	0	0	0	0	0	**222**
1300 - 1400	2	153	43	0	3	1	0	1	2	0	0	0	0	**205**
1400 - 1500	0	158	37	0	3	0	0	0	0	0	0	0	0	**198**
1500 - 1600	0	160	30	0	3	0	0	0	0	0	0	0	0	**193**
1600 - 1700	0	166	50	0	1	0	0	0	2	0	0	0	0	**219**
1700 - 1800	1	184	23	0	3	0	0	0	0	0	0	0	0	**211**
1800 - 1900	3	190	32	1	6	0	0	1	0	0	0	0	0	**233**
1900 - 2000	1	140	19	1	2	0	0	1	1	0	0	0	0	**165**
2000 - 2100	0	140	14	0	2	0	0	0	1	0	0	0	0	**157**
2100 - 2200	0	109	7	0	0	0	0	0	1	0	0	0	0	**117**
2200 - 2300	0	78	3	0	0	0	0	0	0	0	0	0	0	**81**
2300 - 2400	1	42	2	0	0	0	0	0	0	0	0	0	0	**45**

Session Total	10	2601	497	3	40	8	0	10	11	0	0	0	0	**3180**
Session Average	0.42	108.38	20.71	0.13	1.67	0.33	0.00	0.42	0.46	0.00	0.00	0.00	0.00	**132.50**
Session Percentage	0.31	81.79	15.63	0.09	1.26	0.25	0.00	0.31	0.35	0.00	0.00	0.00	0.00	

AM Peak Hour	-	0800 - 0900	0700 - 0800	0900 - 1000	0700 - 0800	0700 - 0800	-	0800 - 0900	0800 - 0900	-	-	-	-	**0800 - 0900**
AM Peak Volume	0	164	39	1	2	2	0	3	2	0	0	0	0	**200**

Noon Peak Hour	1300 - 1400	1200 - 1300	1200 - 1300	-	1200 - 1300	1200 - 1300	-	1100 - 1200	1300 - 1400	-	-	-	-	**1200 - 1300**
Noon Peak Volume	2	165	50	0	5	2	0	2	2	0	0	0	0	**222**

PM Peak Hour	1800 - 1900	1800 - 1900	1600 - 1700	1800 - 1900	1800 - 1900	-	-	1800 - 1900	1600 - 1700	-	-	-	-	**1800 - 1900**
PM Peak Volume	3	190	50	1	6	0	0	1	2	0	0	0	0	**233**

Site 35
I-26 On/Off-Ramp,
north of St Andrews Rd

Date
Thursday, April 25, 2024

Lat/Long
34.045642°, -81.119613°

Weather
Fair
67°F

Click here for Detailed Weather

0000 - 2400 (Weekday 24h Session) (04-25-2024)
SB WB 60min

	Southbound (Movement 35.1)													
TIME	1	2	3	4	5	6	7	8	9	10	11	12	13	**Total**
0000 - 0100	0	34	2	0	1	0	0	0	0	0	0	0	0	**37**
0100 - 0200	0	22	0	0	0	0	0	0	2	0	0	0	0	**24**
0200 - 0300	0	12	0	0	2	0	0	0	0	0	0	0	0	**14**
0300 - 0400	0	12	2	0	0	0	0	0	0	0	0	0	0	**14**
0400 - 0500	0	11	2	0	1	0	0	0	0	0	0	0	0	**14**
0500 - 0600	0	26	3	0	0	0	0	0	0	0	0	0	0	**29**
0600 - 0700	1	66	12	1	2	0	0	1	0	0	0	0	0	**83**
0700 - 0800	0	133	15	0	1	0	0	0	0	0	0	0	0	**149**
0800 - 0900	0	159	29	0	2	0	0	0	1	0	0	0	0	**191**
0900 - 1000	1	160	30	1	2	0	0	1	0	0	0	0	0	**195**
1000 - 1100	2	131	39	1	4	0	0	1	0	0	0	0	0	**178**
1100 - 1200	0	166	31	0	2	3	0	1	0	0	0	0	0	**203**
1200 - 1300	0	189	35	0	5	0	0	0	0	0	0	0	0	**229**
1300 - 1400	0	182	39	0	2	0	0	0	2	0	0	0	0	**225**
1400 - 1500	0	139	35	1	1	0	0	1	1	0	0	0	0	**178**
1500 - 1600	0	192	42	0	1	0	0	0	0	0	0	0	0	**235**
1600 - 1700	0	188	38	0	0	0	0	0	0	0	0	0	0	**226**
1700 - 1800	0	185	21	0	1	0	0	0	0	0	0	0	0	**207**
1800 - 1900	0	179	29	0	1	0	0	1	0	0	0	0	0	**210**
1900 - 2000	0	0	0	0	0	0	0	0	0	0	0	0	0	**0**
2000 - 2100	0	0	0	0	0	0	0	0	0	0	0	0	0	**0**
2100 - 2200	0	0	0	0	0	0	0	0	0	0	0	0	0	**0**
2200 - 2300	0	0	0	0	0	0	0	0	0	0	0	0	0	**0**
2300 - 2400	0	0	0	0	0	0	0	0	0	0	0	0	0	**0**

Session Total	4	2186	404	4	28	3	0	6	6	0	0	0	0	**2641**
Session Average	0.17	91.08	16.83	0.17	1.17	0.13	0.00	0.25	0.25	0.00	0.00	0.00	0.00	**110.04**
Session Percentage	0.15	82.77	15.30	0.15	1.06	0.11	0.00	0.23	0.23	0.00	0.00	0.00	0.00	

AM Peak Hour	0600 - 0700	0900 - 1000	0900 - 1000	0600 - 0700	0600 - 0700	-	-	0600 - 0700	0800 - 0900	-	-	-	-	**0900 - 1000**
AM Peak Hour Volume	1	160	30	1	2	0	0	1	1	0	0	0	0	**195**

Noon Peak Hour	1000 - 1100	1200 - 1300	1000 - 1100	1000 - 1100	1200 - 1300	1100 - 1200	-	1000 - 1100	1300 - 1400	-	-	-	-	**1200 - 1300**
Noon Peak Hour Volume	2	189	39	1	5	3	0	1	2	0	0	0	0	**229**

PM Peak Hour	-	1500 - 1600	1500 - 1600	-	1500 - 1600	-	-	1800 - 1900	-	-	-	-	-	**1500 - 1600**
PM Peak Hour Volume	0	192	42	0	1	0	0	1	0	0	0	0	0	**235**

Bi-Directional Class Count || Volume Summary 60min

Columbia, SC

Marr Traffic DATA COLLECTION

www.marrtraffic.com

Site 35

I-26 On/Off-Ramp,
north of St Andrews Rd

Date

Tuesday, April 23, 2024

Lat/Long

34.045642°, -81.119613°

Weather

Fair
58°F

Click here for Detailed Weather

0000 - 2400 (Weekday 24h Session) (04-23-2024)

Volume Summary 60min

	Volume Summary 60min		
TIME	NB	SB	**Total**
0000 - 0100	0	0	**0**
0100 - 0200	0	0	**0**
0200 - 0300	0	0	**0**
0300 - 0400	0	0	**0**
0400 - 0500	0	0	**0**
0500 - 0600	0	0	**0**
0600 - 0700	0	0	**0**
0700 - 0800	0	0	**0**
0800 - 0900	0	0	**0**
0900 - 1000	0	0	**0**
1000 - 1100	0	0	**0**
1100 - 1200	0	0	**0**

	Volume Summary 60min		
Time	NB	SB	**Total**
1200 - 1300	0	0	**0**
1300 - 1400	0	0	**0**
1400 - 1500	0	0	**0**
1500 - 1600	0	0	**0**
1600 - 1700	0	0	**0**
1700 - 1800	0	0	**0**
1800 - 1900	0	0	**0**
1900 - 2000	0	151	**151**
2000 - 2100	0	128	**128**
2100 - 2200	0	94	**94**
2200 - 2300	0	68	**68**
2300 - 2400	0	41	**41**

Session Total	0	482	**482**
Session Average	0.00	20.08	**20.08**
Session Percentage	0.00	100.00	

Site 35

I-26 On/Off-Ramp,
north of St Andrews Rd

Date

Wednesday, April 24, 2024

Lat/Long

34.045642°, -81.119613°

Weather

Fair
66°F

Click here for Detailed Weather

0000 - 2400 (Weekday 24h Session) (04-24-2024)

Volume Summary 60min

	Volume Summary 60min		
TIME	NB	SB	**Total**
0000 - 0100	0	32	**32**
0100 - 0200	0	18	**18**
0200 - 0300	0	12	**12**
0300 - 0400	0	5	**5**
0400 - 0500	0	11	**11**
0500 - 0600	0	27	**27**
0600 - 0700	0	98	**98**
0700 - 0800	0	171	**171**
0800 - 0900	0	200	**200**
0900 - 1000	0	188	**188**
1000 - 1100	0	187	**187**
1100 - 1200	0	185	**185**

Session Total	0	3180	**3180**
Session Average	0.00	132.50	**132.50**
Session Percentage	0.00	100.00	

	Volume Summary 60min		
Time	NB	SB	**Total**
1200 - 1300	0	222	**222**
1300 - 1400	0	205	**205**
1400 - 1500	0	198	**198**
1500 - 1600	0	193	**193**
1600 - 1700	0	219	**219**
1700 - 1800	0	211	**211**
1800 - 1900	0	233	**233**
1900 - 2000	0	165	**165**
2000 - 2100	0	157	**157**
2100 - 2200	0	117	**117**
2200 - 2300	0	81	**81**
2300 - 2400	0	45	**45**

Site 35

I-26 On/Off-Ramp,
north of St Andrews Rd

Date

Thursday, April 25, 2024

Lat/Long

34.045642°, -81.119613°

Weather

Fair
67°F

Click here for Detailed Weather

0000 - 2400 (Weekday 24h Session) (04-25-2024)

Volume Summary 60min

	Volume Summary 60min		
TIME	NB	SB	**Total**
0000 - 0100	0	37	**37**
0100 - 0200	0	24	**24**
0200 - 0300	0	14	**14**
0300 - 0400	0	14	**14**
0400 - 0500	0	14	**14**
0500 - 0600	0	29	**29**
0600 - 0700	0	83	**83**
0700 - 0800	0	149	**149**
0800 - 0900	0	191	**191**
0900 - 1000	0	195	**195**
1000 - 1100	0	178	**178**
1100 - 1200	0	203	**203**

	Volume Summary 60min		
Time	NB	SB	**Total**
1200 - 1300	0	229	**229**
1300 - 1400	0	225	**225**
1400 - 1500	0	178	**178**
1500 - 1600	0	235	**235**
1600 - 1700	0	226	**226**
1700 - 1800	0	207	**207**
1800 - 1900	0	210	**210**
1900 - 2000	0	0	**0**
2000 - 2100	0	0	**0**
2100 - 2200	0	0	**0**
2200 - 2300	0	0	**0**
2300 - 2400	0	0	**0**

Session Total	0	2641	**2641**
Session Average	0.00	110.04	**110.04**
Session Percentage	0.00	100.00	

Bi-Directional Class Count || Graphical Analysis SB WB

Columbia, SC

Marr Traffic DATA COLLECTION

www.marrtraffic.com

Site 35

I-26 On/Off-Ramp,
north of St Andrews Rd

Lat/Long

34.045642°, -81.119613°

0000 - 2400 (Weekday 24h Session)

Graphical Analysis SB WB

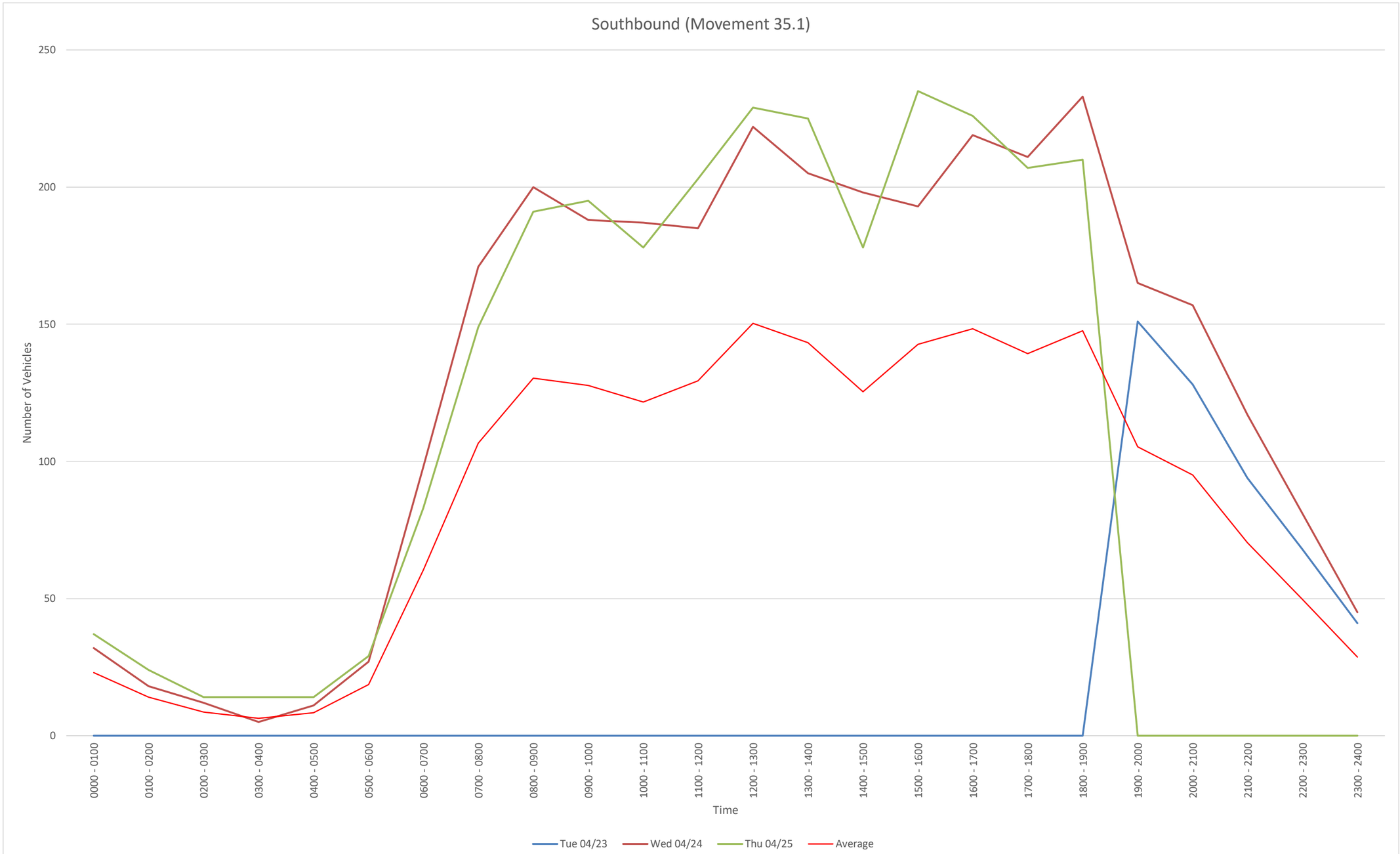

Time	Tue 04/23	Wed 04/24	Thu 04/25				
0000 - 0100	0	32	37				
0100 - 0200	0	18	24				
0200 - 0300	0	12	14				
0300 - 0400	0	5	14				
0400 - 0500	0	11	14				
0500 - 0600	0	27	29				
0600 - 0700	0	98	83				
0700 - 0800	0	171	149				
0800 - 0900	0	200	191				
0900 - 1000	0	188	195				
1000 - 1100	0	187	178				
1100 - 1200	0	185	203				
1200 - 1300	0	222	229				
1300 - 1400	0	205	225				
1400 - 1500	0	198	178				
1500 - 1600	0	193	235				
1600 - 1700	0	219	226				
1700 - 1800	0	211	207				
1800 - 1900	0	233	210				
1900 - 2000	151	165	0				
2000 - 2100	128	157	0				
2100 - 2200	94	117	0				
2200 - 2300	68	81	0				
2300 - 2400	41	45	0				
Daily Total	482	3180	2641				

NB
File Name:
Start Date: 4/23/2024
Start Time: 0
Site Code: 35
Station ID: 1
Location 1: I-26 On/Off-Ramp, north of St Andrews Rd
Location 2:

Date	Time	1	2	3	4	5	6	7	8	9	10	11	12	13
4/23/2024	12:00 AM	0	0	0	0	0	0	0	0	0	0	0	0	0
4/23/2024	12:15 AM	0	0	0	0	0	0	0	0	0	0	0	0	0
4/23/2024	12:30 AM	0	0	0	0	0	0	0	0	0	0	0	0	0
4/23/2024	12:45 AM	0	0	0	0	0	0	0	0	0	0	0	0	0
4/23/2024	1:00 AM	0	0	0	0	0	0	0	0	0	0	0	0	0
4/23/2024	1:15 AM	0	0	0	0	0	0	0	0	0	0	0	0	0
4/23/2024	1:30 AM	0	0	0	0	0	0	0	0	0	0	0	0	0
4/23/2024	1:45 AM	0	0	0	0	0	0	0	0	0	0	0	0	0
4/23/2024	2:00 AM	0	0	0	0	0	0	0	0	0	0	0	0	0
4/23/2024	2:15 AM	0	0	0	0	0	0	0	0	0	0	0	0	0
4/23/2024	2:30 AM	0	0	0	0	0	0	0	0	0	0	0	0	0
4/23/2024	2:45 AM	0	0	0	0	0	0	0	0	0	0	0	0	0
4/23/2024	3:00 AM	0	0	0	0	0	0	0	0	0	0	0	0	0
4/23/2024	3:15 AM	0	0	0	0	0	0	0	0	0	0	0	0	0
4/23/2024	3:30 AM	0	0	0	0	0	0	0	0	0	0	0	0	0
4/23/2024	3:45 AM	0	0	0	0	0	0	0	0	0	0	0	0	0
4/23/2024	4:00 AM	0	0	0	0	0	0	0	0	0	0	0	0	0
4/23/2024	4:15 AM	0	0	0	0	0	0	0	0	0	0	0	0	0
4/23/2024	4:30 AM	0	0	0	0	0	0	0	0	0	0	0	0	0
4/23/2024	4:45 AM	0	0	0	0	0	0	0	0	0	0	0	0	0
4/23/2024	5:00 AM	0	0	0	0	0	0	0	0	0	0	0	0	0
4/23/2024	5:15 AM	0	0	0	0	0	0	0	0	0	0	0	0	0
4/23/2024	5:30 AM	0	0	0	0	0	0	0	0	0	0	0	0	0
4/23/2024	5:45 AM	0	0	0	0	0	0	0	0	0	0	0	0	0
4/23/2024	6:00 AM	0	0	0	0	0	0	0	0	0	0	0	0	0
4/23/2024	6:15 AM	0	0	0	0	0	0	0	0	0	0	0	0	0
4/23/2024	6:30 AM	0	0	0	0	0	0	0	0	0	0	0	0	0
4/23/2024	6:45 AM	0	0	0	0	0	0	0	0	0	0	0	0	0
4/23/2024	7:00 AM	0	0	0	0	0	0	0	0	0	0	0	0	0
4/23/2024	7:15 AM	0	0	0	0	0	0	0	0	0	0	0	0	0
4/23/2024	7:30 AM	0	0	0	0	0	0	0	0	0	0	0	0	0
4/23/2024	7:45 AM	0	0	0	0	0	0	0	0	0	0	0	0	0
4/23/2024	8:00 AM	0	0	0	0	0	0	0	0	0	0	0	0	0
4/23/2024	8:15 AM	0	0	0	0	0	0	0	0	0	0	0	0	0
4/23/2024	8:30 AM	0	0	0	0	0	0	0	0	0	0	0	0	0
4/23/2024	8:45 AM	0	0	0	0	0	0	0	0	0	0	0	0	0
4/23/2024	9:00 AM	0	0	0	0	0	0	0	0	0	0	0	0	0
4/23/2024	9:15 AM	0	0	0	0	0	0	0	0	0	0	0	0	0
4/23/2024	9:30 AM	0	0	0	0	0	0	0	0	0	0	0	0	0
4/23/2024	9:45 AM	0	0	0	0	0	0	0	0	0	0	0	0	0
4/23/2024	10:00 AM	0	0	0	0	0	0	0	0	0	0	0	0	0
4/23/2024	10:15 AM	0	0	0	0	0	0	0	0	0	0	0	0	0
4/23/2024	10:30 AM	0	0	0	0	0	0	0	0	0	0	0	0	0
4/23/2024	10:45 AM	0	0	0	0	0	0	0	0	0	0	0	0	0
4/23/2024	11:00 AM	0	0	0	0	0	0	0	0	0	0	0	0	0
4/23/2024	11:15 AM	0	0	0	0	0	0	0	0	0	0	0	0	0
4/23/2024	11:30 AM	0	0	0	0	0	0	0	0	0	0	0	0	0
4/23/2024	11:45 AM	0	0	0	0	0	0	0	0	0	0	0	0	0
4/23/2024	12:00 PM	0	0	0	0	0	0	0	0	0	0	0	0	0
4/23/2024	12:15 PM	0	0	0	0	0	0	0	0	0	0	0	0	0
4/23/2024	12:30 PM	0	0	0	0	0	0	0	0	0	0	0	0	0
4/23/2024	12:45 PM	0	0	0	0	0	0	0	0	0	0	0	0	0
4/23/2024	1:00 PM	0	0	0	0	0	0	0	0	0	0	0	0	0
4/23/2024	1:15 PM	0	0	0	0	0	0	0	0	0	0	0	0	0
4/23/2024	1:30 PM	0	0	0	0	0	0	0	0	0	0	0	0	0
4/23/2024	1:45 PM	0	0	0	0	0	0	0	0	0	0	0	0	0
4/23/2024	2:00 PM	0	0	0	0	0	0	0	0	0	0	0	0	0
4/23/2024	2:15 PM	0	0	0	0	0	0	0	0	0	0	0	0	0
4/23/2024	2:30 PM	0	0	0	0	0	0	0	0	0	0	0	0	0
4/23/2024	2:45 PM	0	0	0	0	0	0	0	0	0	0	0	0	0
4/23/2024	3:00 PM	0	0	0	0	0	0	0	0	0	0	0	0	0
4/23/2024	3:15 PM	0	0	0	0	0	0	0	0	0	0	0	0	0
4/23/2024	3:30 PM	0	0	0	0	0	0	0	0	0	0	0	0	0
4/23/2024	3:45 PM	0	0	0	0	0	0	0	0	0	0	0	0	0
4/23/2024	4:00 PM	0	0	0	0	0	0	0	0	0	0	0	0	0
4/23/2024	4:15 PM	0	0	0	0	0	0	0	0	0	0	0	0	0
4/23/2024	4:30 PM	0	0	0	0	0	0	0	0	0	0	0	0	0
4/23/2024	4:45 PM	0	0	0	0	0	0	0	0	0	0	0	0	0
4/23/2024	5:00 PM	0	0	0	0	0	0	0	0	0	0	0	0	0
4/23/2024	5:15 PM	0	0	0	0	0	0	0	0	0	0	0	0	0
4/23/2024	5:30 PM	0	0	0	0	0	0	0	0	0	0	0	0	0
4/23/2024	5:45 PM	0	0	0	0	0	0	0	0	0	0	0	0	0
4/23/2024	6:00 PM	0	0	0	0	0	0	0	0	0	0	0	0	0
4/23/2024	6:15 PM	0	0	0	0	0	0	0	0	0	0	0	0	0
4/23/2024	6:30 PM	0	0	0	0	0	0	0	0	0	0	0	0	0
4/23/2024	6:45 PM	0	0	0	0	0	0	0	0	0	0	0	0	0
4/23/2024	7:00 PM	0	0	0	0	0	0	0	0	0	0	0	0	0
4/23/2024	7:15 PM	0	0	0	0	0	0	0	0	0	0	0	0	0
4/23/2024	7:30 PM	0	0	0	0	0	0	0	0	0	0	0	0	0
4/23/2024	7:45 PM	0	0	0	0	0	0	0	0	0	0	0	0	0
4/23/2024	8:00 PM	0	0	0	0	0	0	0	0	0	0	0	0	0
4/23/2024	8:15 PM	0	0	0	0	0	0	0	0	0	0	0	0	0
4/23/2024	8:30 PM	0	0	0	0	0	0	0	0	0	0	0	0	0
4/23/2024	8:45 PM	0	0	0	0	0	0	0	0	0	0	0	0	0
4/23/2024	9:00 PM	0	0	0	0	0	0	0	0	0	0	0	0	0
4/23/2024	9:15 PM	0	0	0	0	0	0	0	0	0	0	0	0	0
4/23/2024	9:30 PM	0	0	0	0	0	0	0	0	0	0	0	0	0
4/23/2024	9:45 PM	0	0	0	0	0	0	0	0	0	0	0	0	0
4/23/2024	10:00 PM	0	0	0	0	0	0	0	0	0	0	0	0	0
4/23/2024	10:15 PM	0	0	0	0	0	0	0	0	0	0	0	0	0
4/23/2024	10:30 PM	0	0	0	0	0	0	0	0	0	0	0	0	0
4/23/2024	10:45 PM	0	0	0	0	0	0	0	0	0	0	0	0	0
4/23/2024	11:00 PM	0	0	0	0	0	0	0	0	0	0	0	0	0
4/23/2024	11:15 PM	0	0	0	0	0	0	0	0	0	0	0	0	0
4/23/2024	11:30 PM	0	0	0	0	0	0	0	0	0	0	0	0	0
4/23/2024	11:45 PM	0	0	0	0	0	0	0	0	0	0	0	0	0

4/24/2024	12:00 AM	0	0	0	0	0	0	0	0	0	0	0	0	0
4/24/2024	12:15 AM	0	0	0	0	0	0	0	0	0	0	0	0	0
4/24/2024	12:30 AM	0	0	0	0	0	0	0	0	0	0	0	0	0
4/24/2024	12:45 AM	0	0	0	0	0	0	0	0	0	0	0	0	0
4/24/2024	1:00 AM	0	0	0	0	0	0	0	0	0	0	0	0	0
4/24/2024	1:15 AM	0	0	0	0	0	0	0	0	0	0	0	0	0
4/24/2024	1:30 AM	0	0	0	0	0	0	0	0	0	0	0	0	0
4/24/2024	1:45 AM	0	0	0	0	0	0	0	0	0	0	0	0	0
4/24/2024	2:00 AM	0	0	0	0	0	0	0	0	0	0	0	0	0
4/24/2024	2:15 AM	0	0	0	0	0	0	0	0	0	0	0	0	0
4/24/2024	2:30 AM	0	0	0	0	0	0	0	0	0	0	0	0	0
4/24/2024	2:45 AM	0	0	0	0	0	0	0	0	0	0	0	0	0
4/24/2024	3:00 AM	0	0	0	0	0	0	0	0	0	0	0	0	0
4/24/2024	3:15 AM	0	0	0	0	0	0	0	0	0	0	0	0	0
4/24/2024	3:30 AM	0	0	0	0	0	0	0	0	0	0	0	0	0
4/24/2024	3:45 AM	0	0	0	0	0	0	0	0	0	0	0	0	0
4/24/2024	4:00 AM	0	0	0	0	0	0	0	0	0	0	0	0	0
4/24/2024	4:15 AM	0	0	0	0	0	0	0	0	0	0	0	0	0
4/24/2024	4:30 AM	0	0	0	0	0	0	0	0	0	0	0	0	0
4/24/2024	4:45 AM	0	0	0	0	0	0	0	0	0	0	0	0	0
4/24/2024	5:00 AM	0	0	0	0	0	0	0	0	0	0	0	0	0
4/24/2024	5:15 AM	0	0	0	0	0	0	0	0	0	0	0	0	0
4/24/2024	5:30 AM	0	0	0	0	0	0	0	0	0	0	0	0	0
4/24/2024	5:45 AM	0	0	0	0	0	0	0	0	0	0	0	0	0
4/24/2024	6:00 AM	0	0	0	0	0	0	0	0	0	0	0	0	0
4/24/2024	6:15 AM	0	0	0	0	0	0	0	0	0	0	0	0	0
4/24/2024	6:30 AM	0	0	0	0	0	0	0	0	0	0	0	0	0
4/24/2024	6:45 AM	0	0	0	0	0	0	0	0	0	0	0	0	0
4/24/2024	7:00 AM	0	0	0	0	0	0	0	0	0	0	0	0	0
4/24/2024	7:15 AM	0	0	0	0	0	0	0	0	0	0	0	0	0
4/24/2024	7:30 AM	0	0	0	0	0	0	0	0	0	0	0	0	0
4/24/2024	7:45 AM	0	0	0	0	0	0	0	0	0	0	0	0	0
4/24/2024	8:00 AM	0	0	0	0	0	0	0	0	0	0	0	0	0
4/24/2024	8:15 AM	0	0	0	0	0	0	0	0	0	0	0	0	0
4/24/2024	8:30 AM	0	0	0	0	0	0	0	0	0	0	0	0	0
4/24/2024	8:45 AM	0	0	0	0	0	0	0	0	0	0	0	0	0
4/24/2024	9:00 AM	0	0	0	0	0	0	0	0	0	0	0	0	0
4/24/2024	9:15 AM	0	0	0	0	0	0	0	0	0	0	0	0	0
4/24/2024	9:30 AM	0	0	0	0	0	0	0	0	0	0	0	0	0
4/24/2024	9:45 AM	0	0	0	0	0	0	0	0	0	0	0	0	0
4/24/2024	10:00 AM	0	0	0	0	0	0	0	0	0	0	0	0	0
4/24/2024	10:15 AM	0	0	0	0	0	0	0	0	0	0	0	0	0
4/24/2024	10:30 AM	0	0	0	0	0	0	0	0	0	0	0	0	0
4/24/2024	10:45 AM	0	0	0	0	0	0	0	0	0	0	0	0	0
4/24/2024	11:00 AM	0	0	0	0	0	0	0	0	0	0	0	0	0
4/24/2024	11:15 AM	0	0	0	0	0	0	0	0	0	0	0	0	0
4/24/2024	11:30 AM	0	0	0	0	0	0	0	0	0	0	0	0	0
4/24/2024	11:45 AM	0	0	0	0	0	0	0	0	0	0	0	0	0
4/24/2024	12:00 PM	0	0	0	0	0	0	0	0	0	0	0	0	0
4/24/2024	12:15 PM	0	0	0	0	0	0	0	0	0	0	0	0	0
4/24/2024	12:30 PM	0	0	0	0	0	0	0	0	0	0	0	0	0
4/24/2024	12:45 PM	0	0	0	0	0	0	0	0	0	0	0	0	0
4/24/2024	1:00 PM	0	0	0	0	0	0	0	0	0	0	0	0	0
4/24/2024	1:15 PM	0	0	0	0	0	0	0	0	0	0	0	0	0
4/24/2024	1:30 PM	0	0	0	0	0	0	0	0	0	0	0	0	0
4/24/2024	1:45 PM	0	0	0	0	0	0	0	0	0	0	0	0	0
4/24/2024	2:00 PM	0	0	0	0	0	0	0	0	0	0	0	0	0
4/24/2024	2:15 PM	0	0	0	0	0	0	0	0	0	0	0	0	0
4/24/2024	2:30 PM	0	0	0	0	0	0	0	0	0	0	0	0	0
4/24/2024	2:45 PM	0	0	0	0	0	0	0	0	0	0	0	0	0
4/24/2024	3:00 PM	0	0	0	0	0	0	0	0	0	0	0	0	0
4/24/2024	3:15 PM	0	0	0	0	0	0	0	0	0	0	0	0	0
4/24/2024	3:30 PM	0	0	0	0	0	0	0	0	0	0	0	0	0
4/24/2024	3:45 PM	0	0	0	0	0	0	0	0	0	0	0	0	0
4/24/2024	4:00 PM	0	0	0	0	0	0	0	0	0	0	0	0	0
4/24/2024	4:15 PM	0	0	0	0	0	0	0	0	0	0	0	0	0
4/24/2024	4:30 PM	0	0	0	0	0	0	0	0	0	0	0	0	0
4/24/2024	4:45 PM	0	0	0	0	0	0	0	0	0	0	0	0	0
4/24/2024	5:00 PM	0	0	0	0	0	0	0	0	0	0	0	0	0
4/24/2024	5:15 PM	0	0	0	0	0	0	0	0	0	0	0	0	0
4/24/2024	5:30 PM	0	0	0	0	0	0	0	0	0	0	0	0	0
4/24/2024	5:45 PM	0	0	0	0	0	0	0	0	0	0	0	0	0
4/24/2024	6:00 PM	0	0	0	0	0	0	0	0	0	0	0	0	0
4/24/2024	6:15 PM	0	0	0	0	0	0	0	0	0	0	0	0	0
4/24/2024	6:30 PM	0	0	0	0	0	0	0	0	0	0	0	0	0
4/24/2024	6:45 PM	0	0	0	0	0	0	0	0	0	0	0	0	0
4/24/2024	7:00 PM	0	0	0	0	0	0	0	0	0	0	0	0	0
4/24/2024	7:15 PM	0	0	0	0	0	0	0	0	0	0	0	0	0
4/24/2024	7:30 PM	0	0	0	0	0	0	0	0	0	0	0	0	0
4/24/2024	7:45 PM	0	0	0	0	0	0	0	0	0	0	0	0	0
4/24/2024	8:00 PM	0	0	0	0	0	0	0	0	0	0	0	0	0
4/24/2024	8:15 PM	0	0	0	0	0	0	0	0	0	0	0	0	0
4/24/2024	8:30 PM	0	0	0	0	0	0	0	0	0	0	0	0	0
4/24/2024	8:45 PM	0	0	0	0	0	0	0	0	0	0	0	0	0
4/24/2024	9:00 PM	0	0	0	0	0	0	0	0	0	0	0	0	0
4/24/2024	9:15 PM	0	0	0	0	0	0	0	0	0	0	0	0	0
4/24/2024	9:30 PM	0	0	0	0	0	0	0	0	0	0	0	0	0
4/24/2024	9:45 PM	0	0	0	0	0	0	0	0	0	0	0	0	0
4/24/2024	10:00 PM	0	0	0	0	0	0	0	0	0	0	0	0	0
4/24/2024	10:15 PM	0	0	0	0	0	0	0	0	0	0	0	0	0
4/24/2024	10:30 PM	0	0	0	0	0	0	0	0	0	0	0	0	0
4/24/2024	10:45 PM	0	0	0	0	0	0	0	0	0	0	0	0	0
4/24/2024	11:00 PM	0	0	0	0	0	0	0	0	0	0	0	0	0
4/24/2024	11:15 PM	0	0	0	0	0	0	0	0	0	0	0	0	0
4/24/2024	11:30 PM	0	0	0	0	0	0	0	0	0	0	0	0	0
4/24/2024	11:45 PM	0	0	0	0	0	0	0	0	0	0	0	0	0

4/25/2024	12:00 AM	0	0	0	0	0	0	0	0	0	0	0	0	0
4/25/2024	12:15 AM	0	0	0	0	0	0	0	0	0	0	0	0	0
4/25/2024	12:30 AM	0	0	0	0	0	0	0	0	0	0	0	0	0
4/25/2024	12:45 AM	0	0	0	0	0	0	0	0	0	0	0	0	0
4/25/2024	1:00 AM	0	0	0	0	0	0	0	0	0	0	0	0	0
4/25/2024	1:15 AM	0	0	0	0	0	0	0	0	0	0	0	0	0
4/25/2024	1:30 AM	0	0	0	0	0	0	0	0	0	0	0	0	0
4/25/2024	1:45 AM	0	0	0	0	0	0	0	0	0	0	0	0	0
4/25/2024	2:00 AM	0	0	0	0	0	0	0	0	0	0	0	0	0
4/25/2024	2:15 AM	0	0	0	0	0	0	0	0	0	0	0	0	0
4/25/2024	2:30 AM	0	0	0	0	0	0	0	0	0	0	0	0	0
4/25/2024	2:45 AM	0	0	0	0	0	0	0	0	0	0	0	0	0
4/25/2024	3:00 AM	0	0	0	0	0	0	0	0	0	0	0	0	0
4/25/2024	3:15 AM	0	0	0	0	0	0	0	0	0	0	0	0	0
4/25/2024	3:30 AM	0	0	0	0	0	0	0	0	0	0	0	0	0
4/25/2024	3:45 AM	0	0	0	0	0	0	0	0	0	0	0	0	0
4/25/2024	4:00 AM	0	0	0	0	0	0	0	0	0	0	0	0	0
4/25/2024	4:15 AM	0	0	0	0	0	0	0	0	0	0	0	0	0
4/25/2024	4:30 AM	0	0	0	0	0	0	0	0	0	0	0	0	0
4/25/2024	4:45 AM	0	0	0	0	0	0	0	0	0	0	0	0	0
4/25/2024	5:00 AM	0	0	0	0	0	0	0	0	0	0	0	0	0
4/25/2024	5:15 AM	0	0	0	0	0	0	0	0	0	0	0	0	0
4/25/2024	5:30 AM	0	0	0	0	0	0	0	0	0	0	0	0	0
4/25/2024	5:45 AM	0	0	0	0	0	0	0	0	0	0	0	0	0
4/25/2024	6:00 AM	0	0	0	0	0	0	0	0	0	0	0	0	0
4/25/2024	6:15 AM	0	0	0	0	0	0	0	0	0	0	0	0	0
4/25/2024	6:30 AM	0	0	0	0	0	0	0	0	0	0	0	0	0
4/25/2024	6:45 AM	0	0	0	0	0	0	0	0	0	0	0	0	0
4/25/2024	7:00 AM	0	0	0	0	0	0	0	0	0	0	0	0	0
4/25/2024	7:15 AM	0	0	0	0	0	0	0	0	0	0	0	0	0
4/25/2024	7:30 AM	0	0	0	0	0	0	0	0	0	0	0	0	0
4/25/2024	7:45 AM	0	0	0	0	0	0	0	0	0	0	0	0	0
4/25/2024	8:00 AM	0	0	0	0	0	0	0	0	0	0	0	0	0
4/25/2024	8:15 AM	0	0	0	0	0	0	0	0	0	0	0	0	0
4/25/2024	8:30 AM	0	0	0	0	0	0	0	0	0	0	0	0	0
4/25/2024	8:45 AM	0	0	0	0	0	0	0	0	0	0	0	0	0
4/25/2024	9:00 AM	0	0	0	0	0	0	0	0	0	0	0	0	0
4/25/2024	9:15 AM	0	0	0	0	0	0	0	0	0	0	0	0	0
4/25/2024	9:30 AM	0	0	0	0	0	0	0	0	0	0	0	0	0
4/25/2024	9:45 AM	0	0	0	0	0	0	0	0	0	0	0	0	0
4/25/2024	10:00 AM	0	0	0	0	0	0	0	0	0	0	0	0	0
4/25/2024	10:15 AM	0	0	0	0	0	0	0	0	0	0	0	0	0
4/25/2024	10:30 AM	0	0	0	0	0	0	0	0	0	0	0	0	0
4/25/2024	10:45 AM	0	0	0	0	0	0	0	0	0	0	0	0	0
4/25/2024	11:00 AM	0	0	0	0	0	0	0	0	0	0	0	0	0
4/25/2024	11:15 AM	0	0	0	0	0	0	0	0	0	0	0	0	0
4/25/2024	11:30 AM	0	0	0	0	0	0	0	0	0	0	0	0	0
4/25/2024	11:45 AM	0	0	0	0	0	0	0	0	0	0	0	0	0
4/25/2024	12:00 PM	0	0	0	0	0	0	0	0	0	0	0	0	0
4/25/2024	12:15 PM	0	0	0	0	0	0	0	0	0	0	0	0	0
4/25/2024	12:30 PM	0	0	0	0	0	0	0	0	0	0	0	0	0
4/25/2024	12:45 PM	0	0	0	0	0	0	0	0	0	0	0	0	0
4/25/2024	1:00 PM	0	0	0	0	0	0	0	0	0	0	0	0	0
4/25/2024	1:15 PM	0	0	0	0	0	0	0	0	0	0	0	0	0
4/25/2024	1:30 PM	0	0	0	0	0	0	0	0	0	0	0	0	0
4/25/2024	1:45 PM	0	0	0	0	0	0	0	0	0	0	0	0	0
4/25/2024	2:00 PM	0	0	0	0	0	0	0	0	0	0	0	0	0
4/25/2024	2:15 PM	0	0	0	0	0	0	0	0	0	0	0	0	0
4/25/2024	2:30 PM	0	0	0	0	0	0	0	0	0	0	0	0	0
4/25/2024	2:45 PM	0	0	0	0	0	0	0	0	0	0	0	0	0
4/25/2024	3:00 PM	0	0	0	0	0	0	0	0	0	0	0	0	0
4/25/2024	3:15 PM	0	0	0	0	0	0	0	0	0	0	0	0	0
4/25/2024	3:30 PM	0	0	0	0	0	0	0	0	0	0	0	0	0
4/25/2024	3:45 PM	0	0	0	0	0	0	0	0	0	0	0	0	0
4/25/2024	4:00 PM	0	0	0	0	0	0	0	0	0	0	0	0	0
4/25/2024	4:15 PM	0	0	0	0	0	0	0	0	0	0	0	0	0
4/25/2024	4:30 PM	0	0	0	0	0	0	0	0	0	0	0	0	0
4/25/2024	4:45 PM	0	0	0	0	0	0	0	0	0	0	0	0	0
4/25/2024	5:00 PM	0	0	0	0	0	0	0	0	0	0	0	0	0
4/25/2024	5:15 PM	0	0	0	0	0	0	0	0	0	0	0	0	0
4/25/2024	5:30 PM	0	0	0	0	0	0	0	0	0	0	0	0	0
4/25/2024	5:45 PM	0	0	0	0	0	0	0	0	0	0	0	0	0
4/25/2024	6:00 PM	0	0	0	0	0	0	0	0	0	0	0	0	0
4/25/2024	6:15 PM	0	0	0	0	0	0	0	0	0	0	0	0	0
4/25/2024	6:30 PM	0	0	0	0	0	0	0	0	0	0	0	0	0
4/25/2024	6:45 PM	0	0	0	0	0	0	0	0	0	0	0	0	0
4/25/2024	7:00 PM	0	0	0	0	0	0	0	0	0	0	0	0	0
4/25/2024	7:15 PM	0	0	0	0	0	0	0	0	0	0	0	0	0
4/25/2024	7:30 PM	0	0	0	0	0	0	0	0	0	0	0	0	0
4/25/2024	7:45 PM	0	0	0	0	0	0	0	0	0	0	0	0	0
4/25/2024	8:00 PM	0	0	0	0	0	0	0	0	0	0	0	0	0
4/25/2024	8:15 PM	0	0	0	0	0	0	0	0	0	0	0	0	0
4/25/2024	8:30 PM	0	0	0	0	0	0	0	0	0	0	0	0	0
4/25/2024	8:45 PM	0	0	0	0	0	0	0	0	0	0	0	0	0
4/25/2024	9:00 PM	0	0	0	0	0	0	0	0	0	0	0	0	0
4/25/2024	9:15 PM	0	0	0	0	0	0	0	0	0	0	0	0	0
4/25/2024	9:30 PM	0	0	0	0	0	0	0	0	0	0	0	0	0
4/25/2024	9:45 PM	0	0	0	0	0	0	0	0	0	0	0	0	0
4/25/2024	10:00 PM	0	0	0	0	0	0	0	0	0	0	0	0	0
4/25/2024	10:15 PM	0	0	0	0	0	0	0	0	0	0	0	0	0
4/25/2024	10:30 PM	0	0	0	0	0	0	0	0	0	0	0	0	0
4/25/2024	10:45 PM	0	0	0	0	0	0	0	0	0	0	0	0	0
4/25/2024	11:00 PM	0	0	0	0	0	0	0	0	0	0	0	0	0
4/25/2024	11:15 PM	0	0	0	0	0	0	0	0	0	0	0	0	0
4/25/2024	11:30 PM	0	0	0	0	0	0	0	0	0	0	0	0	0
4/25/2024	11:45 PM	0	0	0	0	0	0	0	0	0	0	0	0	0

SB
File Name:
Start Date: 4/23/2024
Start Time: 0
Site Code: 35
Station ID: 1
Location 1: I-26 On/Off-Ramp, north of St Andrews Rd
Location 2:

Date	Time	1	2	3	4	5	6	7	8	9	10	11	12	13
4/23/2024	12:00 AM	0	0	0	0	0	0	0	0	0	0	0	0	0
4/23/2024	12:15 AM	0	0	0	0	0	0	0	0	0	0	0	0	0
4/23/2024	12:30 AM	0	0	0	0	0	0	0	0	0	0	0	0	0
4/23/2024	12:45 AM	0	0	0	0	0	0	0	0	0	0	0	0	0
4/23/2024	1:00 AM	0	0	0	0	0	0	0	0	0	0	0	0	0
4/23/2024	1:15 AM	0	0	0	0	0	0	0	0	0	0	0	0	0
4/23/2024	1:30 AM	0	0	0	0	0	0	0	0	0	0	0	0	0
4/23/2024	1:45 AM	0	0	0	0	0	0	0	0	0	0	0	0	0
4/23/2024	2:00 AM	0	0	0	0	0	0	0	0	0	0	0	0	0
4/23/2024	2:15 AM	0	0	0	0	0	0	0	0	0	0	0	0	0
4/23/2024	2:30 AM	0	0	0	0	0	0	0	0	0	0	0	0	0
4/23/2024	2:45 AM	0	0	0	0	0	0	0	0	0	0	0	0	0
4/23/2024	3:00 AM	0	0	0	0	0	0	0	0	0	0	0	0	0
4/23/2024	3:15 AM	0	0	0	0	0	0	0	0	0	0	0	0	0
4/23/2024	3:30 AM	0	0	0	0	0	0	0	0	0	0	0	0	0
4/23/2024	3:45 AM	0	0	0	0	0	0	0	0	0	0	0	0	0
4/23/2024	4:00 AM	0	0	0	0	0	0	0	0	0	0	0	0	0
4/23/2024	4:15 AM	0	0	0	0	0	0	0	0	0	0	0	0	0
4/23/2024	4:30 AM	0	0	0	0	0	0	0	0	0	0	0	0	0
4/23/2024	4:45 AM	0	0	0	0	0	0	0	0	0	0	0	0	0
4/23/2024	5:00 AM	0	0	0	0	0	0	0	0	0	0	0	0	0
4/23/2024	5:15 AM	0	0	0	0	0	0	0	0	0	0	0	0	0
4/23/2024	5:30 AM	0	0	0	0	0	0	0	0	0	0	0	0	0
4/23/2024	5:45 AM	0	0	0	0	0	0	0	0	0	0	0	0	0
4/23/2024	6:00 AM	0	0	0	0	0	0	0	0	0	0	0	0	0
4/23/2024	6:15 AM	0	0	0	0	0	0	0	0	0	0	0	0	0
4/23/2024	6:30 AM	0	0	0	0	0	0	0	0	0	0	0	0	0
4/23/2024	6:45 AM	0	0	0	0	0	0	0	0	0	0	0	0	0
4/23/2024	7:00 AM	0	0	0	0	0	0	0	0	0	0	0	0	0
4/23/2024	7:15 AM	0	0	0	0	0	0	0	0	0	0	0	0	0
4/23/2024	7:30 AM	0	0	0	0	0	0	0	0	0	0	0	0	0
4/23/2024	7:45 AM	0	0	0	0	0	0	0	0	0	0	0	0	0
4/23/2024	8:00 AM	0	0	0	0	0	0	0	0	0	0	0	0	0
4/23/2024	8:15 AM	0	0	0	0	0	0	0	0	0	0	0	0	0
4/23/2024	8:30 AM	0	0	0	0	0	0	0	0	0	0	0	0	0
4/23/2024	8:45 AM	0	0	0	0	0	0	0	0	0	0	0	0	0
4/23/2024	9:00 AM	0	0	0	0	0	0	0	0	0	0	0	0	0
4/23/2024	9:15 AM	0	0	0	0	0	0	0	0	0	0	0	0	0
4/23/2024	9:30 AM	0	0	0	0	0	0	0	0	0	0	0	0	0
4/23/2024	9:45 AM	0	0	0	0	0	0	0	0	0	0	0	0	0
4/23/2024	10:00 AM	0	0	0	0	0	0	0	0	0	0	0	0	0
4/23/2024	10:15 AM	0	0	0	0	0	0	0	0	0	0	0	0	0
4/23/2024	10:30 AM	0	0	0	0	0	0	0	0	0	0	0	0	0
4/23/2024	10:45 AM	0	0	0	0	0	0	0	0	0	0	0	0	0
4/23/2024	11:00 AM	0	0	0	0	0	0	0	0	0	0	0	0	0
4/23/2024	11:15 AM	0	0	0	0	0	0	0	0	0	0	0	0	0
4/23/2024	11:30 AM	0	0	0	0	0	0	0	0	0	0	0	0	0
4/23/2024	11:45 AM	0	0	0	0	0	0	0	0	0	0	0	0	0
4/23/2024	12:00 PM	0	0	0	0	0	0	0	0	0	0	0	0	0
4/23/2024	12:15 PM	0	0	0	0	0	0	0	0	0	0	0	0	0
4/23/2024	12:30 PM	0	0	0	0	0	0	0	0	0	0	0	0	0
4/23/2024	12:45 PM	0	0	0	0	0	0	0	0	0	0	0	0	0
4/23/2024	1:00 PM	0	0	0	0	0	0	0	0	0	0	0	0	0
4/23/2024	1:15 PM	0	0	0	0	0	0	0	0	0	0	0	0	0
4/23/2024	1:30 PM	0	0	0	0	0	0	0	0	0	0	0	0	0
4/23/2024	1:45 PM	0	0	0	0	0	0	0	0	0	0	0	0	0
4/23/2024	2:00 PM	0	0	0	0	0	0	0	0	0	0	0	0	0
4/23/2024	2:15 PM	0	0	0	0	0	0	0	0	0	0	0	0	0
4/23/2024	2:30 PM	0	0	0	0	0	0	0	0	0	0	0	0	0
4/23/2024	2:45 PM	0	0	0	0	0	0	0	0	0	0	0	0	0
4/23/2024	3:00 PM	0	0	0	0	0	0	0	0	0	0	0	0	0
4/23/2024	3:15 PM	0	0	0	0	0	0	0	0	0	0	0	0	0
4/23/2024	3:30 PM	0	0	0	0	0	0	0	0	0	0	0	0	0
4/23/2024	3:45 PM	0	0	0	0	0	0	0	0	0	0	0	0	0
4/23/2024	4:00 PM	0	0	0	0	0	0	0	0	0	0	0	0	0
4/23/2024	4:15 PM	0	0	0	0	0	0	0	0	0	0	0	0	0
4/23/2024	4:30 PM	0	0	0	0	0	0	0	0	0	0	0	0	0
4/23/2024	4:45 PM	0	0	0	0	0	0	0	0	0	0	0	0	0
4/23/2024	5:00 PM	0	0	0	0	0	0	0	0	0	0	0	0	0
4/23/2024	5:15 PM	0	0	0	0	0	0	0	0	0	0	0	0	0
4/23/2024	5:30 PM	0	0	0	0	0	0	0	0	0	0	0	0	0
4/23/2024	5:45 PM	0	0	0	0	0	0	0	0	0	0	0	0	0
4/23/2024	6:00 PM	0	0	0	0	0	0	0	0	0	0	0	0	0
4/23/2024	6:15 PM	0	0	0	0	0	0	0	0	0	0	0	0	0
4/23/2024	6:30 PM	0	0	0	0	0	0	0	0	0	0	0	0	0
4/23/2024	6:45 PM	0	0	0	0	0	0	0	0	0	0	0	0	0
4/23/2024	7:00 PM	0	36	9	0	0	0	0	0	0	0	0	0	0
4/23/2024	7:15 PM	0	24	1	0	0	0	0	0	0	0	0	0	0
4/23/2024	7:30 PM	1	30	4	0	1	0	0	0	0	0	0	0	0
4/23/2024	7:45 PM	0	39	6	0	0	0	0	0	0	0	0	0	0
4/23/2024	8:00 PM	0	34	2	0	0	0	0	0	1	0	0	0	0
4/23/2024	8:15 PM	0	25	1	0	1	0	0	0	1	0	0	0	0
4/23/2024	8:30 PM	0	32	3	0	0	0	0	0	0	0	0	0	0
4/23/2024	8:45 PM	0	27	1	0	0	0	0	0	0	0	0	0	0
4/23/2024	9:00 PM	0	26	1	0	0	0	0	0	0	0	0	0	0
4/23/2024	9:15 PM	1	22	2	0	0	0	0	0	1	0	0	0	0
4/23/2024	9:30 PM	0	15	1	0	0	0	0	0	0	0	0	0	0
4/23/2024	9:45 PM	0	23	2	0	0	0	0	0	0	0	0	0	0
4/23/2024	10:00 PM	0	21	0	0	0	0	0	0	0	0	0	0	0
4/23/2024	10:15 PM	0	15	2	0	0	0	0	0	0	0	0	0	0
4/23/2024	10:30 PM	0	16	1	0	0	0	0	0	0	0	0	0	0
4/23/2024	10:45 PM	0	12	0	0	1	0	0	0	0	0	0	0	0
4/23/2024	11:00 PM	0	8	1	0	0	0	0	0	0	0	0	0	0
4/23/2024	11:15 PM	0	12	0	0	0	0	0	0	0	0	0	0	0
4/23/2024	11:30 PM	0	6	1	0	0	0	0	0	0	0	0	0	0
4/23/2024	11:45 PM	0	13	0	0	0	0	0	0	0	0	0	0	0

4/24/2024	12:00 AM	0	7	0	0	0	0	0	0	0	0	0	0	0
4/24/2024	12:15 AM	0	10	3	0	0	0	0	0	0	0	0	0	0
4/24/2024	12:30 AM	0	6	0	0	0	0	0	0	0	0	0	0	0
4/24/2024	12:45 AM	0	5	1	0	0	0	0	0	0	0	0	0	0
4/24/2024	1:00 AM	0	1	0	0	0	0	0	0	0	0	0	0	0
4/24/2024	1:15 AM	0	4	0	0	0	0	0	0	0	0	0	0	0
4/24/2024	1:30 AM	0	5	0	0	0	1	0	0	0	0	0	0	0
4/24/2024	1:45 AM	0	6	1	0	0	0	0	0	0	0	0	0	0
4/24/2024	2:00 AM	0	3	0	0	0	0	0	0	0	0	0	0	0
4/24/2024	2:15 AM	0	2	0	0	0	0	0	0	0	0	0	0	0
4/24/2024	2:30 AM	0	2	1	0	2	0	0	0	0	0	0	0	0
4/24/2024	2:45 AM	0	1	1	0	0	0	0	0	0	0	0	0	0
4/24/2024	3:00 AM	0	1	0	0	0	0	0	0	0	0	0	0	0
4/24/2024	3:15 AM	0	0	0	0	0	0	0	0	0	0	0	0	0
4/24/2024	3:30 AM	0	2	1	0	0	0	0	0	0	0	0	0	0
4/24/2024	3:45 AM	0	1	0	0	0	0	0	0	0	0	0	0	0
4/24/2024	4:00 AM	0	3	0	0	0	0	0	0	0	0	0	0	0
4/24/2024	4:15 AM	0	1	1	0	0	0	0	0	0	0	0	0	0
4/24/2024	4:30 AM	0	1	0	0	0	0	0	0	0	0	0	0	0
4/24/2024	4:45 AM	1	4	0	0	0	0	0	0	0	0	0	0	0
4/24/2024	5:00 AM	0	2	1	0	0	0	0	0	0	0	0	0	0
4/24/2024	5:15 AM	0	5	2	0	0	0	0	0	0	0	0	0	0
4/24/2024	5:30 AM	0	6	1	0	0	0	0	0	0	0	0	0	0
4/24/2024	5:45 AM	0	9	0	0	0	0	0	0	1	0	0	0	0
4/24/2024	6:00 AM	0	8	1	0	1	0	0	0	0	0	0	0	0
4/24/2024	6:15 AM	0	18	4	0	0	0	0	1	0	0	0	0	0
4/24/2024	6:30 AM	0	15	7	0	0	0	0	0	1	0	0	0	0
4/24/2024	6:45 AM	0	33	9	0	0	0	0	0	0	0	0	0	0
4/24/2024	7:00 AM	0	27	4	0	0	1	0	0	0	0	0	0	0
4/24/2024	7:15 AM	0	35	11	0	0	1	0	0	0	0	0	0	0
4/24/2024	7:30 AM	0	36	10	0	2	0	0	1	0	0	0	0	0
4/24/2024	7:45 AM	0	29	14	0	0	0	0	0	0	0	0	0	0
4/24/2024	8:00 AM	0	35	6	0	1	0	0	0	0	0	0	0	0
4/24/2024	8:15 AM	0	46	5	0	0	0	0	0	1	0	0	0	0
4/24/2024	8:30 AM	0	43	9	0	0	1	0	1	1	0	0	0	0
4/24/2024	8:45 AM	0	40	9	0	0	0	0	2	0	0	0	0	0
4/24/2024	9:00 AM	0	36	15	0	0	0	0	0	0	0	0	0	0
4/24/2024	9:15 AM	0	37	11	0	0	1	0	0	0	0	0	0	0
4/24/2024	9:30 AM	0	43	8	0	0	0	0	0	0	0	0	0	0
4/24/2024	9:45 AM	0	31	5	1	0	0	0	0	0	0	0	0	0
4/24/2024	10:00 AM	0	37	4	0	2	0	0	0	0	0	0	0	0
4/24/2024	10:15 AM	0	54	5	0	2	0	0	0	0	0	0	0	0
4/24/2024	10:30 AM	0	30	5	0	0	0	0	0	0	0	0	0	0
4/24/2024	10:45 AM	0	41	7	0	0	0	0	0	0	0	0	0	0
4/24/2024	11:00 AM	0	33	9	0	1	0	0	0	0	0	0	0	0
4/24/2024	11:15 AM	0	26	5	0	1	0	0	2	0	0	0	0	0
4/24/2024	11:30 AM	1	42	3	0	0	0	0	0	0	0	0	0	0
4/24/2024	11:45 AM	0	54	8	0	0	0	0	0	0	0	0	0	0
4/24/2024	12:00 PM	0	38	14	0	3	0	0	0	0	0	0	0	0
4/24/2024	12:15 PM	0	30	16	0	2	0	0	0	0	0	0	0	0
4/24/2024	12:30 PM	0	46	5	0	0	2	0	0	0	0	0	0	0
4/24/2024	12:45 PM	0	51	15	0	0	0	0	0	0	0	0	0	0
4/24/2024	1:00 PM	0	44	15	0	2	0	0	0	0	0	0	0	0
4/24/2024	1:15 PM	1	35	13	0	1	0	0	0	0	0	0	0	0
4/24/2024	1:30 PM	1	36	8	0	0	0	0	1	0	0	0	0	0
4/24/2024	1:45 PM	0	38	7	0	0	1	0	0	2	0	0	0	0
4/24/2024	2:00 PM	0	40	11	0	2	0	0	0	0	0	0	0	0
4/24/2024	2:15 PM	0	41	11	0	0	0	0	0	0	0	0	0	0
4/24/2024	2:30 PM	0	40	9	0	0	0	0	0	0	0	0	0	0
4/24/2024	2:45 PM	0	37	6	0	1	0	0	0	0	0	0	0	0
4/24/2024	3:00 PM	0	52	12	0	1	0	0	0	0	0	0	0	0
4/24/2024	3:15 PM	0	37	4	0	1	0	0	0	0	0	0	0	0
4/24/2024	3:30 PM	0	35	7	0	1	0	0	0	0	0	0	0	0
4/24/2024	3:45 PM	0	36	7	0	0	0	0	0	0	0	0	0	0
4/24/2024	4:00 PM	0	50	12	0	0	0	0	0	1	0	0	0	0
4/24/2024	4:15 PM	0	48	17	0	0	0	0	0	0	0	0	0	0
4/24/2024	4:30 PM	0	34	11	0	0	0	0	0	1	0	0	0	0
4/24/2024	4:45 PM	0	34	10	0	1	0	0	0	0	0	0	0	0
4/24/2024	5:00 PM	0	35	5	0	1	0	0	0	0	0	0	0	0
4/24/2024	5:15 PM	0	47	8	0	0	0	0	0	0	0	0	0	0
4/24/2024	5:30 PM	0	53	4	0	2	0	0	0	0	0	0	0	0
4/24/2024	5:45 PM	1	49	6	0	0	0	0	0	0	0	0	0	0
4/24/2024	6:00 PM	0	43	5	0	2	0	0	0	0	0	0	0	0
4/24/2024	6:15 PM	0	52	9	0	3	0	0	1	0	0	0	0	0
4/24/2024	6:30 PM	1	55	8	0	0	0	0	0	0	0	0	0	0
4/24/2024	6:45 PM	2	40	10	1	1	0	0	0	0	0	0	0	0
4/24/2024	7:00 PM	0	46	4	0	1	0	0	0	0	0	0	0	0
4/24/2024	7:15 PM	0	27	1	1	0	0	0	1	1	0	0	0	0
4/24/2024	7:30 PM	1	46	10	0	1	0	0	0	0	0	0	0	0
4/24/2024	7:45 PM	0	21	4	0	0	0	0	0	0	0	0	0	0
4/24/2024	8:00 PM	0	38	2	0	2	0	0	0	0	0	0	0	0
4/24/2024	8:15 PM	0	39	6	0	0	0	0	0	1	0	0	0	0
4/24/2024	8:30 PM	0	30	4	0	0	0	0	0	0	0	0	0	0
4/24/2024	8:45 PM	0	33	2	0	0	0	0	0	0	0	0	0	0
4/24/2024	9:00 PM	0	25	2	0	0	0	0	0	1	0	0	0	0
4/24/2024	9:15 PM	0	35	1	0	0	0	0	0	0	0	0	0	0
4/24/2024	9:30 PM	0	23	3	0	0	0	0	0	0	0	0	0	0
4/24/2024	9:45 PM	0	26	1	0	0	0	0	0	0	0	0	0	0
4/24/2024	10:00 PM	0	22	1	0	0	0	0	0	0	0	0	0	0
4/24/2024	10:15 PM	0	22	1	0	0	0	0	0	0	0	0	0	0
4/24/2024	10:30 PM	0	11	0	0	0	0	0	0	0	0	0	0	0
4/24/2024	10:45 PM	0	23	1	0	0	0	0	0	0	0	0	0	0
4/24/2024	11:00 PM	1	20	2	0	0	0	0	0	0	0	0	0	0
4/24/2024	11:15 PM	0	7	0	0	0	0	0	0	0	0	0	0	0
4/24/2024	11:30 PM	0	8	0	0	0	0	0	0	0	0	0	0	0
4/24/2024	11:45 PM	0	7	0	0	0	0	0	0	0	0	0	0	0

4/25/2024	12:00 AM	0	9	0	0	0	0	0	0	0	0	0	0	0
4/25/2024	12:15 AM	0	11	1	0	1	0	0	0	0	0	0	0	0
4/25/2024	12:30 AM	0	10	1	0	0	0	0	0	0	0	0	0	0
4/25/2024	12:45 AM	0	4	0	0	0	0	0	0	0	0	0	0	0
4/25/2024	1:00 AM	0	7	0	0	0	0	0	0	0	0	0	0	0
4/25/2024	1:15 AM	0	7	0	0	0	0	0	0	0	0	0	0	0
4/25/2024	1:30 AM	0	5	0	0	0	0	0	0	0	0	0	0	0
4/25/2024	1:45 AM	0	3	0	0	0	0	0	0	2	0	0	0	0
4/25/2024	2:00 AM	0	3	0	0	1	0	0	0	0	0	0	0	0
4/25/2024	2:15 AM	0	3	0	0	0	0	0	0	0	0	0	0	0
4/25/2024	2:30 AM	0	4	0	0	0	0	0	0	0	0	0	0	0
4/25/2024	2:45 AM	0	2	0	0	1	0	0	0	0	0	0	0	0
4/25/2024	3:00 AM	0	1	1	0	0	0	0	0	0	0	0	0	0
4/25/2024	3:15 AM	0	1	0	0	0	0	0	0	0	0	0	0	0
4/25/2024	3:30 AM	0	5	0	0	0	0	0	0	0	0	0	0	0
4/25/2024	3:45 AM	0	5	1	0	0	0	0	0	0	0	0	0	0
4/25/2024	4:00 AM	0	1	0	0	0	0	0	0	0	0	0	0	0
4/25/2024	4:15 AM	0	3	1	0	1	0	0	0	0	0	0	0	0
4/25/2024	4:30 AM	0	4	0	0	0	0	0	0	0	0	0	0	0
4/25/2024	4:45 AM	0	3	1	0	0	0	0	0	0	0	0	0	0
4/25/2024	5:00 AM	0	4	0	0	0	0	0	0	0	0	0	0	0
4/25/2024	5:15 AM	0	7	0	0	0	0	0	0	0	0	0	0	0
4/25/2024	5:30 AM	0	5	3	0	0	0	0	0	0	0	0	0	0
4/25/2024	5:45 AM	0	10	0	0	0	0	0	0	0	0	0	0	0
4/25/2024	6:00 AM	0	8	0	0	0	0	0	0	0	0	0	0	0
4/25/2024	6:15 AM	0	12	2	0	1	0	0	1	0	0	0	0	0
4/25/2024	6:30 AM	1	22	5	0	1	0	0	0	0	0	0	0	0
4/25/2024	6:45 AM	0	24	5	1	0	0	0	0	0	0	0	0	0
4/25/2024	7:00 AM	0	36	6	0	0	0	0	0	0	0	0	0	0
4/25/2024	7:15 AM	0	40	3	0	0	0	0	0	0	0	0	0	0
4/25/2024	7:30 AM	0	36	1	0	0	0	0	0	0	0	0	0	0
4/25/2024	7:45 AM	0	21	5	0	1	0	0	0	0	0	0	0	0
4/25/2024	8:00 AM	0	29	1	0	0	0	0	0	0	0	0	0	0
4/25/2024	8:15 AM	0	37	4	0	1	0	0	0	0	0	0	0	0
4/25/2024	8:30 AM	0	39	9	0	0	0	0	0	0	0	0	0	0
4/25/2024	8:45 AM	0	54	15	0	1	0	0	0	1	0	0	0	0
4/25/2024	9:00 AM	0	41	7	0	0	0	0	1	0	0	0	0	0
4/25/2024	9:15 AM	0	32	6	0	1	0	0	0	0	0	0	0	0
4/25/2024	9:30 AM	0	46	9	1	1	0	0	0	0	0	0	0	0
4/25/2024	9:45 AM	1	41	8	0	0	0	0	0	0	0	0	0	0
4/25/2024	10:00 AM	0	24	10	1	2	0	0	0	0	0	0	0	0
4/25/2024	10:15 AM	0	29	12	0	0	0	0	0	0	0	0	0	0
4/25/2024	10:30 AM	2	41	8	0	2	0	0	1	0	0	0	0	0
4/25/2024	10:45 AM	0	37	9	0	0	0	0	0	0	0	0	0	0
4/25/2024	11:00 AM	0	33	5	0	0	0	0	0	0	0	0	0	0
4/25/2024	11:15 AM	0	55	13	0	0	1	0	1	0	0	0	0	0
4/25/2024	11:30 AM	0	39	6	0	0	2	0	0	0	0	0	0	0
4/25/2024	11:45 AM	0	39	7	0	2	0	0	0	0	0	0	0	0
4/25/2024	12:00 PM	0	49	10	0	1	0	0	0	0	0	0	0	0
4/25/2024	12:15 PM	0	38	11	0	0	0	0	0	0	0	0	0	0
4/25/2024	12:30 PM	0	47	9	0	1	0	0	0	0	0	0	0	0
4/25/2024	12:45 PM	0	55	5	0	3	0	0	0	0	0	0	0	0
4/25/2024	1:00 PM	0	55	12	0	0	0	0	0	0	0	0	0	0
4/25/2024	1:15 PM	0	40	14	0	0	0	0	0	1	0	0	0	0
4/25/2024	1:30 PM	0	42	5	0	1	0	0	0	0	0	0	0	0
4/25/2024	1:45 PM	0	45	8	0	1	0	0	0	1	0	0	0	0
4/25/2024	2:00 PM	0	30	11	0	0	0	0	0	0	0	0	0	0
4/25/2024	2:15 PM	0	38	6	1	0	0	0	0	0	0	0	0	0
4/25/2024	2:30 PM	0	46	10	0	0	0	0	1	1	0	0	0	0
4/25/2024	2:45 PM	0	25	8	0	1	0	0	0	0	0	0	0	0
4/25/2024	3:00 PM	0	32	15	0	0	0	0	0	0	0	0	0	0
4/25/2024	3:15 PM	0	46	10	0	0	0	0	0	0	0	0	0	0
4/25/2024	3:30 PM	0	52	10	0	1	0	0	0	0	0	0	0	0
4/25/2024	3:45 PM	0	62	7	0	0	0	0	0	0	0	0	0	0
4/25/2024	4:00 PM	0	46	11	0	0	0	0	0	0	0	0	0	0
4/25/2024	4:15 PM	0	40	8	0	0	0	0	0	0	0	0	0	0
4/25/2024	4:30 PM	0	53	9	0	0	0	0	0	0	0	0	0	0
4/25/2024	4:45 PM	0	49	10	0	0	0	0	0	0	0	0	0	0
4/25/2024	5:00 PM	0	55	7	0	1	0	0	0	0	0	0	0	0
4/25/2024	5:15 PM	0	37	3	0	0	0	0	0	0	0	0	0	0
4/25/2024	5:30 PM	0	51	4	0	0	0	0	0	0	0	0	0	0
4/25/2024	5:45 PM	0	42	7	0	0	0	0	0	0	0	0	0	0
4/25/2024	6:00 PM	0	43	6	0	0	0	0	0	0	0	0	0	0
4/25/2024	6:15 PM	0	40	12	0	0	0	0	1	0	0	0	0	0
4/25/2024	6:30 PM	0	54	6	0	0	0	0	0	0	0	0	0	0
4/25/2024	6:45 PM	0	42	5	0	1	0	0	0	0	0	0	0	0
4/25/2024	7:00 PM	0	0	0	0	0	0	0	0	0	0	0	0	0
4/25/2024	7:15 PM	0	0	0	0	0	0	0	0	0	0	0	0	0
4/25/2024	7:30 PM	0	0	0	0	0	0	0	0	0	0	0	0	0
4/25/2024	7:45 PM	0	0	0	0	0	0	0	0	0	0	0	0	0
4/25/2024	8:00 PM	0	0	0	0	0	0	0	0	0	0	0	0	0
4/25/2024	8:15 PM	0	0	0	0	0	0	0	0	0	0	0	0	0
4/25/2024	8:30 PM	0	0	0	0	0	0	0	0	0	0	0	0	0
4/25/2024	8:45 PM	0	0	0	0	0	0	0	0	0	0	0	0	0
4/25/2024	9:00 PM	0	0	0	0	0	0	0	0	0	0	0	0	0
4/25/2024	9:15 PM	0	0	0	0	0	0	0	0	0	0	0	0	0
4/25/2024	9:30 PM	0	0	0	0	0	0	0	0	0	0	0	0	0
4/25/2024	9:45 PM	0	0	0	0	0	0	0	0	0	0	0	0	0
4/25/2024	10:00 PM	0	0	0	0	0	0	0	0	0	0	0	0	0
4/25/2024	10:15 PM	0	0	0	0	0	0	0	0	0	0	0	0	0
4/25/2024	10:30 PM	0	0	0	0	0	0	0	0	0	0	0	0	0
4/25/2024	10:45 PM	0	0	0	0	0	0	0	0	0	0	0	0	0
4/25/2024	11:00 PM	0	0	0	0	0	0	0	0	0	0	0	0	0
4/25/2024	11:15 PM	0	0	0	0	0	0	0	0	0	0	0	0	0
4/25/2024	11:30 PM	0	0	0	0	0	0	0	0	0	0	0	0	0
4/25/2024	11:45 PM	0	0	0	0	0	0	0	0	0	0	0	0	0

NB
File Name:
Start Date: 4/23/2024
Start Time: 0
Site Code: 35
Station ID: 1
Location 1: I-26 On/Off-Ramp, north of St Andrews Rd
Location 2:

Date	Time	1	2	3	4	5	6	7	8	9	10	11	12	13
4/23/2024	12:00 AM	0	0	0	0	0	0	0	0	0	0	0	0	0
4/23/2024	12:15 AM	0	0	0	0	0	0	0	0	0	0	0	0	0
4/23/2024	12:30 AM	0	0	0	0	0	0	0	0	0	0	0	0	0
4/23/2024	12:45 AM	0	0	0	0	0	0	0	0	0	0	0	0	0
4/23/2024	1:00 AM	0	0	0	0	0	0	0	0	0	0	0	0	0
4/23/2024	1:15 AM	0	0	0	0	0	0	0	0	0	0	0	0	0
4/23/2024	1:30 AM	0	0	0	0	0	0	0	0	0	0	0	0	0
4/23/2024	1:45 AM	0	0	0	0	0	0	0	0	0	0	0	0	0
4/23/2024	2:00 AM	0	0	0	0	0	0	0	0	0	0	0	0	0
4/23/2024	2:15 AM	0	0	0	0	0	0	0	0	0	0	0	0	0
4/23/2024	2:30 AM	0	0	0	0	0	0	0	0	0	0	0	0	0
4/23/2024	2:45 AM	0	0	0	0	0	0	0	0	0	0	0	0	0
4/23/2024	3:00 AM	0	0	0	0	0	0	0	0	0	0	0	0	0
4/23/2024	3:15 AM	0	0	0	0	0	0	0	0	0	0	0	0	0
4/23/2024	3:30 AM	0	0	0	0	0	0	0	0	0	0	0	0	0
4/23/2024	3:45 AM	0	0	0	0	0	0	0	0	0	0	0	0	0
4/23/2024	4:00 AM	0	0	0	0	0	0	0	0	0	0	0	0	0
4/23/2024	4:15 AM	0	0	0	0	0	0	0	0	0	0	0	0	0
4/23/2024	4:30 AM	0	0	0	0	0	0	0	0	0	0	0	0	0
4/23/2024	4:45 AM	0	0	0	0	0	0	0	0	0	0	0	0	0
4/23/2024	5:00 AM	0	0	0	0	0	0	0	0	0	0	0	0	0
4/23/2024	5:15 AM	0	0	0	0	0	0	0	0	0	0	0	0	0
4/23/2024	5:30 AM	0	0	0	0	0	0	0	0	0	0	0	0	0
4/23/2024	5:45 AM	0	0	0	0	0	0	0	0	0	0	0	0	0
4/23/2024	6:00 AM	0	0	0	0	0	0	0	0	0	0	0	0	0
4/23/2024	6:15 AM	0	0	0	0	0	0	0	0	0	0	0	0	0
4/23/2024	6:30 AM	0	0	0	0	0	0	0	0	0	0	0	0	0
4/23/2024	6:45 AM	0	0	0	0	0	0	0	0	0	0	0	0	0
4/23/2024	7:00 AM	0	0	0	0	0	0	0	0	0	0	0	0	0
4/23/2024	7:15 AM	0	0	0	0	0	0	0	0	0	0	0	0	0
4/23/2024	7:30 AM	0	0	0	0	0	0	0	0	0	0	0	0	0
4/23/2024	7:45 AM	0	0	0	0	0	0	0	0	0	0	0	0	0
4/23/2024	8:00 AM	0	0	0	0	0	0	0	0	0	0	0	0	0
4/23/2024	8:15 AM	0	0	0	0	0	0	0	0	0	0	0	0	0
4/23/2024	8:30 AM	0	0	0	0	0	0	0	0	0	0	0	0	0
4/23/2024	8:45 AM	0	0	0	0	0	0	0	0	0	0	0	0	0
4/23/2024	9:00 AM	0	0	0	0	0	0	0	0	0	0	0	0	0
4/23/2024	9:15 AM	0	0	0	0	0	0	0	0	0	0	0	0	0
4/23/2024	9:30 AM	0	0	0	0	0	0	0	0	0	0	0	0	0
4/23/2024	9:45 AM	0	0	0	0	0	0	0	0	0	0	0	0	0
4/23/2024	10:00 AM	0	0	0	0	0	0	0	0	0	0	0	0	0
4/23/2024	10:15 AM	0	0	0	0	0	0	0	0	0	0	0	0	0
4/23/2024	10:30 AM	0	0	0	0	0	0	0	0	0	0	0	0	0
4/23/2024	10:45 AM	0	0	0	0	0	0	0	0	0	0	0	0	0
4/23/2024	11:00 AM	0	0	0	0	0	0	0	0	0	0	0	0	0
4/23/2024	11:15 AM	0	0	0	0	0	0	0	0	0	0	0	0	0
4/23/2024	11:30 AM	0	0	0	0	0	0	0	0	0	0	0	0	0
4/23/2024	11:45 AM	0	0	0	0	0	0	0	0	0	0	0	0	0
4/23/2024	12:00 PM	0	0	0	0	0	0	0	0	0	0	0	0	0
4/23/2024	12:15 PM	0	0	0	0	0	0	0	0	0	0	0	0	0
4/23/2024	12:30 PM	0	0	0	0	0	0	0	0	0	0	0	0	0
4/23/2024	12:45 PM	0	0	0	0	0	0	0	0	0	0	0	0	0
4/23/2024	1:00 PM	0	0	0	0	0	0	0	0	0	0	0	0	0
4/23/2024	1:15 PM	0	0	0	0	0	0	0	0	0	0	0	0	0
4/23/2024	1:30 PM	0	0	0	0	0	0	0	0	0	0	0	0	0
4/23/2024	1:45 PM	0	0	0	0	0	0	0	0	0	0	0	0	0
4/23/2024	2:00 PM	0	0	0	0	0	0	0	0	0	0	0	0	0
4/23/2024	2:15 PM	0	0	0	0	0	0	0	0	0	0	0	0	0
4/23/2024	2:30 PM	0	0	0	0	0	0	0	0	0	0	0	0	0
4/23/2024	2:45 PM	0	0	0	0	0	0	0	0	0	0	0	0	0
4/23/2024	3:00 PM	0	0	0	0	0	0	0	0	0	0	0	0	0
4/23/2024	3:15 PM	0	0	0	0	0	0	0	0	0	0	0	0	0
4/23/2024	3:30 PM	0	0	0	0	0	0	0	0	0	0	0	0	0
4/23/2024	3:45 PM	0	0	0	0	0	0	0	0	0	0	0	0	0
4/23/2024	4:00 PM	0	0	0	0	0	0	0	0	0	0	0	0	0
4/23/2024	4:15 PM	0	0	0	0	0	0	0	0	0	0	0	0	0
4/23/2024	4:30 PM	0	0	0	0	0	0	0	0	0	0	0	0	0
4/23/2024	4:45 PM	0	0	0	0	0	0	0	0	0	0	0	0	0
4/23/2024	5:00 PM	0	0	0	0	0	0	0	0	0	0	0	0	0
4/23/2024	5:15 PM	0	0	0	0	0	0	0	0	0	0	0	0	0
4/23/2024	5:30 PM	0	0	0	0	0	0	0	0	0	0	0	0	0
4/23/2024	5:45 PM	0	0	0	0	0	0	0	0	0	0	0	0	0
4/23/2024	6:00 PM	0	0	0	0	0	0	0	0	0	0	0	0	0
4/23/2024	6:15 PM	0	0	0	0	0	0	0	0	0	0	0	0	0
4/23/2024	6:30 PM	0	0	0	0	0	0	0	0	0	0	0	0	0
4/23/2024	6:45 PM	0	0	0	0	0	0	0	0	0	0	0	0	0
4/23/2024	7:00 PM	0	0	0	0	0	0	0	0	0	0	0	0	0
4/23/2024	7:15 PM	0	0	0	0	0	0	0	0	0	0	0	0	0
4/23/2024	7:30 PM	0	0	0	0	0	0	0	0	0	0	0	0	0
4/23/2024	7:45 PM	0	0	0	0	0	0	0	0	0	0	0	0	0
4/23/2024	8:00 PM	0	0	0	0	0	0	0	0	0	0	0	0	0
4/23/2024	8:15 PM	0	0	0	0	0	0	0	0	0	0	0	0	0
4/23/2024	8:30 PM	0	0	0	0	0	0	0	0	0	0	0	0	0
4/23/2024	8:45 PM	0	0	0	0	0	0	0	0	0	0	0	0	0
4/23/2024	9:00 PM	0	0	0	0	0	0	0	0	0	0	0	0	0
4/23/2024	9:15 PM	0	0	0	0	0	0	0	0	0	0	0	0	0
4/23/2024	9:30 PM	0	0	0	0	0	0	0	0	0	0	0	0	0
4/23/2024	9:45 PM	0	0	0	0	0	0	0	0	0	0	0	0	0
4/23/2024	10:00 PM	0	0	0	0	0	0	0	0	0	0	0	0	0
4/23/2024	10:15 PM	0	0	0	0	0	0	0	0	0	0	0	0	0
4/23/2024	10:30 PM	0	0	0	0	0	0	0	0	0	0	0	0	0
4/23/2024	10:45 PM	0	0	0	0	0	0	0	0	0	0	0	0	0
4/23/2024	11:00 PM	0	0	0	0	0	0	0	0	0	0	0	0	0
4/23/2024	11:15 PM	0	0	0	0	0	0	0	0	0	0	0	0	0
4/23/2024	11:30 PM	0	0	0	0	0	0	0	0	0	0	0	0	0
4/23/2024	11:45 PM	0	0	0	0	0	0	0	0	0	0	0	0	0

4/24/2024	12:00 AM	0	0	0	0	0	0	0	0	0	0	0	0	0
4/24/2024	12:15 AM	0	0	0	0	0	0	0	0	0	0	0	0	0
4/24/2024	12:30 AM	0	0	0	0	0	0	0	0	0	0	0	0	0
4/24/2024	12:45 AM	0	0	0	0	0	0	0	0	0	0	0	0	0
4/24/2024	1:00 AM	0	0	0	0	0	0	0	0	0	0	0	0	0
4/24/2024	1:15 AM	0	0	0	0	0	0	0	0	0	0	0	0	0
4/24/2024	1:30 AM	0	0	0	0	0	0	0	0	0	0	0	0	0
4/24/2024	1:45 AM	0	0	0	0	0	0	0	0	0	0	0	0	0
4/24/2024	2:00 AM	0	0	0	0	0	0	0	0	0	0	0	0	0
4/24/2024	2:15 AM	0	0	0	0	0	0	0	0	0	0	0	0	0
4/24/2024	2:30 AM	0	0	0	0	0	0	0	0	0	0	0	0	0
4/24/2024	2:45 AM	0	0	0	0	0	0	0	0	0	0	0	0	0
4/24/2024	3:00 AM	0	0	0	0	0	0	0	0	0	0	0	0	0
4/24/2024	3:15 AM	0	0	0	0	0	0	0	0	0	0	0	0	0
4/24/2024	3:30 AM	0	0	0	0	0	0	0	0	0	0	0	0	0
4/24/2024	3:45 AM	0	0	0	0	0	0	0	0	0	0	0	0	0
4/24/2024	4:00 AM	0	0	0	0	0	0	0	0	0	0	0	0	0
4/24/2024	4:15 AM	0	0	0	0	0	0	0	0	0	0	0	0	0
4/24/2024	4:30 AM	0	0	0	0	0	0	0	0	0	0	0	0	0
4/24/2024	4:45 AM	0	0	0	0	0	0	0	0	0	0	0	0	0
4/24/2024	5:00 AM	0	0	0	0	0	0	0	0	0	0	0	0	0
4/24/2024	5:15 AM	0	0	0	0	0	0	0	0	0	0	0	0	0
4/24/2024	5:30 AM	0	0	0	0	0	0	0	0	0	0	0	0	0
4/24/2024	5:45 AM	0	0	0	0	0	0	0	0	0	0	0	0	0
4/24/2024	6:00 AM	0	0	0	0	0	0	0	0	0	0	0	0	0
4/24/2024	6:15 AM	0	0	0	0	0	0	0	0	0	0	0	0	0
4/24/2024	6:30 AM	0	0	0	0	0	0	0	0	0	0	0	0	0
4/24/2024	6:45 AM	0	0	0	0	0	0	0	0	0	0	0	0	0
4/24/2024	7:00 AM	0	0	0	0	0	0	0	0	0	0	0	0	0
4/24/2024	7:15 AM	0	0	0	0	0	0	0	0	0	0	0	0	0
4/24/2024	7:30 AM	0	0	0	0	0	0	0	0	0	0	0	0	0
4/24/2024	7:45 AM	0	0	0	0	0	0	0	0	0	0	0	0	0
4/24/2024	8:00 AM	0	0	0	0	0	0	0	0	0	0	0	0	0
4/24/2024	8:15 AM	0	0	0	0	0	0	0	0	0	0	0	0	0
4/24/2024	8:30 AM	0	0	0	0	0	0	0	0	0	0	0	0	0
4/24/2024	8:45 AM	0	0	0	0	0	0	0	0	0	0	0	0	0
4/24/2024	9:00 AM	0	0	0	0	0	0	0	0	0	0	0	0	0
4/24/2024	9:15 AM	0	0	0	0	0	0	0	0	0	0	0	0	0
4/24/2024	9:30 AM	0	0	0	0	0	0	0	0	0	0	0	0	0
4/24/2024	9:45 AM	0	0	0	0	0	0	0	0	0	0	0	0	0
4/24/2024	10:00 AM	0	0	0	0	0	0	0	0	0	0	0	0	0
4/24/2024	10:15 AM	0	0	0	0	0	0	0	0	0	0	0	0	0
4/24/2024	10:30 AM	0	0	0	0	0	0	0	0	0	0	0	0	0
4/24/2024	10:45 AM	0	0	0	0	0	0	0	0	0	0	0	0	0
4/24/2024	11:00 AM	0	0	0	0	0	0	0	0	0	0	0	0	0
4/24/2024	11:15 AM	0	0	0	0	0	0	0	0	0	0	0	0	0
4/24/2024	11:30 AM	0	0	0	0	0	0	0	0	0	0	0	0	0
4/24/2024	11:45 AM	0	0	0	0	0	0	0	0	0	0	0	0	0
4/24/2024	12:00 PM	0	0	0	0	0	0	0	0	0	0	0	0	0
4/24/2024	12:15 PM	0	0	0	0	0	0	0	0	0	0	0	0	0
4/24/2024	12:30 PM	0	0	0	0	0	0	0	0	0	0	0	0	0
4/24/2024	12:45 PM	0	0	0	0	0	0	0	0	0	0	0	0	0
4/24/2024	1:00 PM	0	0	0	0	0	0	0	0	0	0	0	0	0
4/24/2024	1:15 PM	0	0	0	0	0	0	0	0	0	0	0	0	0
4/24/2024	1:30 PM	0	0	0	0	0	0	0	0	0	0	0	0	0
4/24/2024	1:45 PM	0	0	0	0	0	0	0	0	0	0	0	0	0
4/24/2024	2:00 PM	0	0	0	0	0	0	0	0	0	0	0	0	0
4/24/2024	2:15 PM	0	0	0	0	0	0	0	0	0	0	0	0	0
4/24/2024	2:30 PM	0	0	0	0	0	0	0	0	0	0	0	0	0
4/24/2024	2:45 PM	0	0	0	0	0	0	0	0	0	0	0	0	0
4/24/2024	3:00 PM	0	0	0	0	0	0	0	0	0	0	0	0	0
4/24/2024	3:15 PM	0	0	0	0	0	0	0	0	0	0	0	0	0
4/24/2024	3:30 PM	0	0	0	0	0	0	0	0	0	0	0	0	0
4/24/2024	3:45 PM	0	0	0	0	0	0	0	0	0	0	0	0	0
4/24/2024	4:00 PM	0	0	0	0	0	0	0	0	0	0	0	0	0
4/24/2024	4:15 PM	0	0	0	0	0	0	0	0	0	0	0	0	0
4/24/2024	4:30 PM	0	0	0	0	0	0	0	0	0	0	0	0	0
4/24/2024	4:45 PM	0	0	0	0	0	0	0	0	0	0	0	0	0
4/24/2024	5:00 PM	0	0	0	0	0	0	0	0	0	0	0	0	0
4/24/2024	5:15 PM	0	0	0	0	0	0	0	0	0	0	0	0	0
4/24/2024	5:30 PM	0	0	0	0	0	0	0	0	0	0	0	0	0
4/24/2024	5:45 PM	0	0	0	0	0	0	0	0	0	0	0	0	0
4/24/2024	6:00 PM	0	0	0	0	0	0	0	0	0	0	0	0	0
4/24/2024	6:15 PM	0	0	0	0	0	0	0	0	0	0	0	0	0
4/24/2024	6:30 PM	0	0	0	0	0	0	0	0	0	0	0	0	0
4/24/2024	6:45 PM	0	0	0	0	0	0	0	0	0	0	0	0	0
4/24/2024	7:00 PM	0	0	0	0	0	0	0	0	0	0	0	0	0
4/24/2024	7:15 PM	0	0	0	0	0	0	0	0	0	0	0	0	0
4/24/2024	7:30 PM	0	0	0	0	0	0	0	0	0	0	0	0	0
4/24/2024	7:45 PM	0	0	0	0	0	0	0	0	0	0	0	0	0
4/24/2024	8:00 PM	0	0	0	0	0	0	0	0	0	0	0	0	0
4/24/2024	8:15 PM	0	0	0	0	0	0	0	0	0	0	0	0	0
4/24/2024	8:30 PM	0	0	0	0	0	0	0	0	0	0	0	0	0
4/24/2024	8:45 PM	0	0	0	0	0	0	0	0	0	0	0	0	0
4/24/2024	9:00 PM	0	0	0	0	0	0	0	0	0	0	0	0	0
4/24/2024	9:15 PM	0	0	0	0	0	0	0	0	0	0	0	0	0
4/24/2024	9:30 PM	0	0	0	0	0	0	0	0	0	0	0	0	0
4/24/2024	9:45 PM	0	0	0	0	0	0	0	0	0	0	0	0	0
4/24/2024	10:00 PM	0	0	0	0	0	0	0	0	0	0	0	0	0
4/24/2024	10:15 PM	0	0	0	0	0	0	0	0	0	0	0	0	0
4/24/2024	10:30 PM	0	0	0	0	0	0	0	0	0	0	0	0	0
4/24/2024	10:45 PM	0	0	0	0	0	0	0	0	0	0	0	0	0
4/24/2024	11:00 PM	0	0	0	0	0	0	0	0	0	0	0	0	0
4/24/2024	11:15 PM	0	0	0	0	0	0	0	0	0	0	0	0	0
4/24/2024	11:30 PM	0	0	0	0	0	0	0	0	0	0	0	0	0
4/24/2024	11:45 PM	0	0	0	0	0	0	0	0	0	0	0	0	0

4/25/2024	12:00 AM	0	0	0	0	0	0	0	0	0	0	0	0	0
4/25/2024	12:15 AM	0	0	0	0	0	0	0	0	0	0	0	0	0
4/25/2024	12:30 AM	0	0	0	0	0	0	0	0	0	0	0	0	0
4/25/2024	12:45 AM	0	0	0	0	0	0	0	0	0	0	0	0	0
4/25/2024	1:00 AM	0	0	0	0	0	0	0	0	0	0	0	0	0
4/25/2024	1:15 AM	0	0	0	0	0	0	0	0	0	0	0	0	0
4/25/2024	1:30 AM	0	0	0	0	0	0	0	0	0	0	0	0	0
4/25/2024	1:45 AM	0	0	0	0	0	0	0	0	0	0	0	0	0
4/25/2024	2:00 AM	0	0	0	0	0	0	0	0	0	0	0	0	0
4/25/2024	2:15 AM	0	0	0	0	0	0	0	0	0	0	0	0	0
4/25/2024	2:30 AM	0	0	0	0	0	0	0	0	0	0	0	0	0
4/25/2024	2:45 AM	0	0	0	0	0	0	0	0	0	0	0	0	0
4/25/2024	3:00 AM	0	0	0	0	0	0	0	0	0	0	0	0	0
4/25/2024	3:15 AM	0	0	0	0	0	0	0	0	0	0	0	0	0
4/25/2024	3:30 AM	0	0	0	0	0	0	0	0	0	0	0	0	0
4/25/2024	3:45 AM	0	0	0	0	0	0	0	0	0	0	0	0	0
4/25/2024	4:00 AM	0	0	0	0	0	0	0	0	0	0	0	0	0
4/25/2024	4:15 AM	0	0	0	0	0	0	0	0	0	0	0	0	0
4/25/2024	4:30 AM	0	0	0	0	0	0	0	0	0	0	0	0	0
4/25/2024	4:45 AM	0	0	0	0	0	0	0	0	0	0	0	0	0
4/25/2024	5:00 AM	0	0	0	0	0	0	0	0	0	0	0	0	0
4/25/2024	5:15 AM	0	0	0	0	0	0	0	0	0	0	0	0	0
4/25/2024	5:30 AM	0	0	0	0	0	0	0	0	0	0	0	0	0
4/25/2024	5:45 AM	0	0	0	0	0	0	0	0	0	0	0	0	0
4/25/2024	6:00 AM	0	0	0	0	0	0	0	0	0	0	0	0	0
4/25/2024	6:15 AM	0	0	0	0	0	0	0	0	0	0	0	0	0
4/25/2024	6:30 AM	0	0	0	0	0	0	0	0	0	0	0	0	0
4/25/2024	6:45 AM	0	0	0	0	0	0	0	0	0	0	0	0	0
4/25/2024	7:00 AM	0	0	0	0	0	0	0	0	0	0	0	0	0
4/25/2024	7:15 AM	0	0	0	0	0	0	0	0	0	0	0	0	0
4/25/2024	7:30 AM	0	0	0	0	0	0	0	0	0	0	0	0	0
4/25/2024	7:45 AM	0	0	0	0	0	0	0	0	0	0	0	0	0
4/25/2024	8:00 AM	0	0	0	0	0	0	0	0	0	0	0	0	0
4/25/2024	8:15 AM	0	0	0	0	0	0	0	0	0	0	0	0	0
4/25/2024	8:30 AM	0	0	0	0	0	0	0	0	0	0	0	0	0
4/25/2024	8:45 AM	0	0	0	0	0	0	0	0	0	0	0	0	0
4/25/2024	9:00 AM	0	0	0	0	0	0	0	0	0	0	0	0	0
4/25/2024	9:15 AM	0	0	0	0	0	0	0	0	0	0	0	0	0
4/25/2024	9:30 AM	0	0	0	0	0	0	0	0	0	0	0	0	0
4/25/2024	9:45 AM	0	0	0	0	0	0	0	0	0	0	0	0	0
4/25/2024	10:00 AM	0	0	0	0	0	0	0	0	0	0	0	0	0
4/25/2024	10:15 AM	0	0	0	0	0	0	0	0	0	0	0	0	0
4/25/2024	10:30 AM	0	0	0	0	0	0	0	0	0	0	0	0	0
4/25/2024	10:45 AM	0	0	0	0	0	0	0	0	0	0	0	0	0
4/25/2024	11:00 AM	0	0	0	0	0	0	0	0	0	0	0	0	0
4/25/2024	11:15 AM	0	0	0	0	0	0	0	0	0	0	0	0	0
4/25/2024	11:30 AM	0	0	0	0	0	0	0	0	0	0	0	0	0
4/25/2024	11:45 AM	0	0	0	0	0	0	0	0	0	0	0	0	0
4/25/2024	12:00 PM	0	0	0	0	0	0	0	0	0	0	0	0	0
4/25/2024	12:15 PM	0	0	0	0	0	0	0	0	0	0	0	0	0
4/25/2024	12:30 PM	0	0	0	0	0	0	0	0	0	0	0	0	0
4/25/2024	12:45 PM	0	0	0	0	0	0	0	0	0	0	0	0	0
4/25/2024	1:00 PM	0	0	0	0	0	0	0	0	0	0	0	0	0
4/25/2024	1:15 PM	0	0	0	0	0	0	0	0	0	0	0	0	0
4/25/2024	1:30 PM	0	0	0	0	0	0	0	0	0	0	0	0	0
4/25/2024	1:45 PM	0	0	0	0	0	0	0	0	0	0	0	0	0
4/25/2024	2:00 PM	0	0	0	0	0	0	0	0	0	0	0	0	0
4/25/2024	2:15 PM	0	0	0	0	0	0	0	0	0	0	0	0	0
4/25/2024	2:30 PM	0	0	0	0	0	0	0	0	0	0	0	0	0
4/25/2024	2:45 PM	0	0	0	0	0	0	0	0	0	0	0	0	0
4/25/2024	3:00 PM	0	0	0	0	0	0	0	0	0	0	0	0	0
4/25/2024	3:15 PM	0	0	0	0	0	0	0	0	0	0	0	0	0
4/25/2024	3:30 PM	0	0	0	0	0	0	0	0	0	0	0	0	0
4/25/2024	3:45 PM	0	0	0	0	0	0	0	0	0	0	0	0	0
4/25/2024	4:00 PM	0	0	0	0	0	0	0	0	0	0	0	0	0
4/25/2024	4:15 PM	0	0	0	0	0	0	0	0	0	0	0	0	0
4/25/2024	4:30 PM	0	0	0	0	0	0	0	0	0	0	0	0	0
4/25/2024	4:45 PM	0	0	0	0	0	0	0	0	0	0	0	0	0
4/25/2024	5:00 PM	0	0	0	0	0	0	0	0	0	0	0	0	0
4/25/2024	5:15 PM	0	0	0	0	0	0	0	0	0	0	0	0	0
4/25/2024	5:30 PM	0	0	0	0	0	0	0	0	0	0	0	0	0
4/25/2024	5:45 PM	0	0	0	0	0	0	0	0	0	0	0	0	0
4/25/2024	6:00 PM	0	0	0	0	0	0	0	0	0	0	0	0	0
4/25/2024	6:15 PM	0	0	0	0	0	0	0	0	0	0	0	0	0
4/25/2024	6:30 PM	0	0	0	0	0	0	0	0	0	0	0	0	0
4/25/2024	6:45 PM	0	0	0	0	0	0	0	0	0	0	0	0	0
4/25/2024	7:00 PM	0	0	0	0	0	0	0	0	0	0	0	0	0
4/25/2024	7:15 PM	0	0	0	0	0	0	0	0	0	0	0	0	0
4/25/2024	7:30 PM	0	0	0	0	0	0	0	0	0	0	0	0	0
4/25/2024	7:45 PM	0	0	0	0	0	0	0	0	0	0	0	0	0
4/25/2024	8:00 PM	0	0	0	0	0	0	0	0	0	0	0	0	0
4/25/2024	8:15 PM	0	0	0	0	0	0	0	0	0	0	0	0	0
4/25/2024	8:30 PM	0	0	0	0	0	0	0	0	0	0	0	0	0
4/25/2024	8:45 PM	0	0	0	0	0	0	0	0	0	0	0	0	0
4/25/2024	9:00 PM	0	0	0	0	0	0	0	0	0	0	0	0	0
4/25/2024	9:15 PM	0	0	0	0	0	0	0	0	0	0	0	0	0
4/25/2024	9:30 PM	0	0	0	0	0	0	0	0	0	0	0	0	0
4/25/2024	9:45 PM	0	0	0	0	0	0	0	0	0	0	0	0	0
4/25/2024	10:00 PM	0	0	0	0	0	0	0	0	0	0	0	0	0
4/25/2024	10:15 PM	0	0	0	0	0	0	0	0	0	0	0	0	0
4/25/2024	10:30 PM	0	0	0	0	0	0	0	0	0	0	0	0	0
4/25/2024	10:45 PM	0	0	0	0	0	0	0	0	0	0	0	0	0
4/25/2024	11:00 PM	0	0	0	0	0	0	0	0	0	0	0	0	0
4/25/2024	11:15 PM	0	0	0	0	0	0	0	0	0	0	0	0	0
4/25/2024	11:30 PM	0	0	0	0	0	0	0	0	0	0	0	0	0
4/25/2024	11:45 PM	0	0	0	0	0	0	0	0	0	0	0	0	0

SB
File Name:
Start Date: 4/23/2024
Start Time: 0
Site Code: 35
Station ID: 1
Location 1: I-26 On/Off-Ramp, north of St Andrews Rd
Location 2:

Date	Time	1	2	3	4	5	6	7	8	9	10	11	12	13
4/23/2024	12:00 AM	0	0	0	0	0	0	0	0	0	0	0	0	0
4/23/2024	12:15 AM	0	0	0	0	0	0	0	0	0	0	0	0	0
4/23/2024	12:30 AM	0	0	0	0	0	0	0	0	0	0	0	0	0
4/23/2024	12:45 AM	0	0	0	0	0	0	0	0	0	0	0	0	0
4/23/2024	1:00 AM	0	0	0	0	0	0	0	0	0	0	0	0	0
4/23/2024	1:15 AM	0	0	0	0	0	0	0	0	0	0	0	0	0
4/23/2024	1:30 AM	0	0	0	0	0	0	0	0	0	0	0	0	0
4/23/2024	1:45 AM	0	0	0	0	0	0	0	0	0	0	0	0	0
4/23/2024	2:00 AM	0	0	0	0	0	0	0	0	0	0	0	0	0
4/23/2024	2:15 AM	0	0	0	0	0	0	0	0	0	0	0	0	0
4/23/2024	2:30 AM	0	0	0	0	0	0	0	0	0	0	0	0	0
4/23/2024	2:45 AM	0	0	0	0	0	0	0	0	0	0	0	0	0
4/23/2024	3:00 AM	0	0	0	0	0	0	0	0	0	0	0	0	0
4/23/2024	3:15 AM	0	0	0	0	0	0	0	0	0	0	0	0	0
4/23/2024	3:30 AM	0	0	0	0	0	0	0	0	0	0	0	0	0
4/23/2024	3:45 AM	0	0	0	0	0	0	0	0	0	0	0	0	0
4/23/2024	4:00 AM	0	0	0	0	0	0	0	0	0	0	0	0	0
4/23/2024	4:15 AM	0	0	0	0	0	0	0	0	0	0	0	0	0
4/23/2024	4:30 AM	0	0	0	0	0	0	0	0	0	0	0	0	0
4/23/2024	4:45 AM	0	0	0	0	0	0	0	0	0	0	0	0	0
4/23/2024	5:00 AM	0	0	0	0	0	0	0	0	0	0	0	0	0
4/23/2024	5:15 AM	0	0	0	0	0	0	0	0	0	0	0	0	0
4/23/2024	5:30 AM	0	0	0	0	0	0	0	0	0	0	0	0	0
4/23/2024	5:45 AM	0	0	0	0	0	0	0	0	0	0	0	0	0
4/23/2024	6:00 AM	0	0	0	0	0	0	0	0	0	0	0	0	0
4/23/2024	6:15 AM	0	0	0	0	0	0	0	0	0	0	0	0	0
4/23/2024	6:30 AM	0	0	0	0	0	0	0	0	0	0	0	0	0
4/23/2024	6:45 AM	0	0	0	0	0	0	0	0	0	0	0	0	0
4/23/2024	7:00 AM	0	0	0	0	0	0	0	0	0	0	0	0	0
4/23/2024	7:15 AM	0	0	0	0	0	0	0	0	0	0	0	0	0
4/23/2024	7:30 AM	0	0	0	0	0	0	0	0	0	0	0	0	0
4/23/2024	7:45 AM	0	0	0	0	0	0	0	0	0	0	0	0	0
4/23/2024	8:00 AM	0	0	0	0	0	0	0	0	0	0	0	0	0
4/23/2024	8:15 AM	0	0	0	0	0	0	0	0	0	0	0	0	0
4/23/2024	8:30 AM	0	0	0	0	0	0	0	0	0	0	0	0	0
4/23/2024	8:45 AM	0	0	0	0	0	0	0	0	0	0	0	0	0
4/23/2024	9:00 AM	0	0	0	0	0	0	0	0	0	0	0	0	0
4/23/2024	9:15 AM	0	0	0	0	0	0	0	0	0	0	0	0	0
4/23/2024	9:30 AM	0	0	0	0	0	0	0	0	0	0	0	0	0
4/23/2024	9:45 AM	0	0	0	0	0	0	0	0	0	0	0	0	0
4/23/2024	10:00 AM	0	0	0	0	0	0	0	0	0	0	0	0	0
4/23/2024	10:15 AM	0	0	0	0	0	0	0	0	0	0	0	0	0
4/23/2024	10:30 AM	0	0	0	0	0	0	0	0	0	0	0	0	0
4/23/2024	10:45 AM	0	0	0	0	0	0	0	0	0	0	0	0	0
4/23/2024	11:00 AM	0	0	0	0	0	0	0	0	0	0	0	0	0
4/23/2024	11:15 AM	0	0	0	0	0	0	0	0	0	0	0	0	0
4/23/2024	11:30 AM	0	0	0	0	0	0	0	0	0	0	0	0	0
4/23/2024	11:45 AM	0	0	0	0	0	0	0	0	0	0	0	0	0
4/23/2024	12:00 PM	0	0	0	0	0	0	0	0	0	0	0	0	0
4/23/2024	12:15 PM	0	0	0	0	0	0	0	0	0	0	0	0	0
4/23/2024	12:30 PM	0	0	0	0	0	0	0	0	0	0	0	0	0
4/23/2024	12:45 PM	0	0	0	0	0	0	0	0	0	0	0	0	0
4/23/2024	1:00 PM	0	0	0	0	0	0	0	0	0	0	0	0	0
4/23/2024	1:15 PM	0	0	0	0	0	0	0	0	0	0	0	0	0
4/23/2024	1:30 PM	0	0	0	0	0	0	0	0	0	0	0	0	0
4/23/2024	1:45 PM	0	0	0	0	0	0	0	0	0	0	0	0	0
4/23/2024	2:00 PM	0	0	0	0	0	0	0	0	0	0	0	0	0
4/23/2024	2:15 PM	0	0	0	0	0	0	0	0	0	0	0	0	0
4/23/2024	2:30 PM	0	0	0	0	0	0	0	0	0	0	0	0	0
4/23/2024	2:45 PM	0	0	0	0	0	0	0	0	0	0	0	0	0
4/23/2024	3:00 PM	0	0	0	0	0	0	0	0	0	0	0	0	0
4/23/2024	3:15 PM	0	0	0	0	0	0	0	0	0	0	0	0	0
4/23/2024	3:30 PM	0	0	0	0	0	0	0	0	0	0	0	0	0
4/23/2024	3:45 PM	0	0	0	0	0	0	0	0	0	0	0	0	0
4/23/2024	4:00 PM	0	0	0	0	0	0	0	0	0	0	0	0	0
4/23/2024	4:15 PM	0	0	0	0	0	0	0	0	0	0	0	0	0
4/23/2024	4:30 PM	0	0	0	0	0	0	0	0	0	0	0	0	0
4/23/2024	4:45 PM	0	0	0	0	0	0	0	0	0	0	0	0	0
4/23/2024	5:00 PM	0	0	0	0	0	0	0	0	0	0	0	0	0
4/23/2024	5:15 PM	0	0	0	0	0	0	0	0	0	0	0	0	0
4/23/2024	5:30 PM	0	0	0	0	0	0	0	0	0	0	0	0	0
4/23/2024	5:45 PM	0	0	0	0	0	0	0	0	0	0	0	0	0
4/23/2024	6:00 PM	0	0	0	0	0	0	0	0	0	0	0	0	0
4/23/2024	6:15 PM	0	36	9	0	0	0	0	0	0	0	0	0	0
4/23/2024	6:30 PM	0	60	10	0	0	0	0	0	0	0	0	0	0
4/23/2024	6:45 PM	1	90	14	0	1	0	0	0	0	0	0	0	0
4/23/2024	7:00 PM	1	129	20	0	1	0	0	0	0	0	0	0	0
4/23/2024	7:15 PM	1	127	13	0	1	0	0	0	1	0	0	0	0
4/23/2024	7:30 PM	1	128	13	0	2	0	0	0	2	0	0	0	0
4/23/2024	7:45 PM	0	130	12	0	1	0	0	0	2	0	0	0	0
4/23/2024	8:00 PM	0	118	7	0	1	0	0	0	2	0	0	0	0
4/23/2024	8:15 PM	0	110	6	0	1	0	0	0	1	0	0	0	0
4/23/2024	8:30 PM	1	107	7	0	0	0	0	0	1	0	0	0	0
4/23/2024	8:45 PM	1	90	5	0	0	0	0	0	1	0	0	0	0
4/23/2024	9:00 PM	1	86	6	0	0	0	0	0	1	0	0	0	0
4/23/2024	9:15 PM	1	81	5	0	0	0	0	0	1	0	0	0	0
4/23/2024	9:30 PM	0	74	5	0	0	0	0	0	0	0	0	0	0
4/23/2024	9:45 PM	0	75	5	0	0	0	0	0	0	0	0	0	0
4/23/2024	10:00 PM	0	64	3	0	1	0	0	0	0	0	0	0	0
4/23/2024	10:15 PM	0	51	4	0	1	0	0	0	0	0	0	0	0
4/23/2024	10:30 PM	0	48	2	0	1	0	0	0	0	0	0	0	0
4/23/2024	10:45 PM	0	38	2	0	1	0	0	0	0	0	0	0	0
4/23/2024	11:00 PM	0	39	2	0	0	0	0	0	0	0	0	0	0
4/23/2024	11:15 PM	0	31	1	0	0	0	0	0	0	0	0	0	0
4/23/2024	11:30 PM	0	19	1	0	0	0	0	0	0	0	0	0	0
4/23/2024	11:45 PM	0	13	0	0	0	0	0	0	0	0	0	0	0

4/24/2024	12:00 AM	0	28	4	0	0	0	0	0	0	0	0	0
4/24/2024	12:15 AM	0	22	4	0	0	0	0	0	0	0	0	0
4/24/2024	12:30 AM	0	16	1	0	0	0	0	0	0	0	0	0
4/24/2024	12:45 AM	0	15	1	0	0	1	0	0	0	0	0	0
4/24/2024	1:00 AM	0	16	1	0	0	1	0	0	0	0	0	0
4/24/2024	1:15 AM	0	18	1	0	0	1	0	0	0	0	0	0
4/24/2024	1:30 AM	0	16	1	0	0	1	0	0	0	0	0	0
4/24/2024	1:45 AM	0	13	2	0	2	0	0	0	0	0	0	0
4/24/2024	2:00 AM	0	8	2	0	2	0	0	0	0	0	0	0
4/24/2024	2:15 AM	0	6	2	0	2	0	0	0	0	0	0	0
4/24/2024	2:30 AM	0	4	2	0	2	0	0	0	0	0	0	0
4/24/2024	2:45 AM	0	4	2	0	0	0	0	0	0	0	0	0
4/24/2024	3:00 AM	0	4	1	0	0	0	0	0	0	0	0	0
4/24/2024	3:15 AM	0	6	1	0	0	0	0	0	0	0	0	0
4/24/2024	3:30 AM	0	7	2	0	0	0	0	0	0	0	0	0
4/24/2024	3:45 AM	0	6	1	0	0	0	0	0	0	0	0	0
4/24/2024	4:00 AM	1	9	1	0	0	0	0	0	0	0	0	0
4/24/2024	4:15 AM	1	8	2	0	0	0	0	0	0	0	0	0
4/24/2024	4:30 AM	1	12	3	0	0	0	0	0	0	0	0	0
4/24/2024	4:45 AM	1	17	4	0	0	0	0	0	0	0	0	0
4/24/2024	5:00 AM	0	22	4	0	0	0	0	0	1	0	0	0
4/24/2024	5:15 AM	0	28	4	0	1	0	0	0	1	0	0	0
4/24/2024	5:30 AM	0	41	6	0	1	0	0	1	1	0	0	0
4/24/2024	5:45 AM	0	50	12	0	1	0	0	1	2	0	0	0
4/24/2024	6:00 AM	0	74	21	0	1	0	0	1	1	0	0	0
4/24/2024	6:15 AM	0	93	24	0	0	1	0	1	1	0	0	0
4/24/2024	6:30 AM	0	110	31	0	0	2	0	0	1	0	0	0
4/24/2024	6:45 AM	0	131	34	0	2	2	0	1	0	0	0	0
4/24/2024	7:00 AM	0	127	39	0	2	2	0	1	0	0	0	0
4/24/2024	7:15 AM	0	135	41	0	3	1	0	1	0	0	0	0
4/24/2024	7:30 AM	0	146	35	0	3	0	0	1	1	0	0	0
4/24/2024	7:45 AM	0	153	34	0	1	1	0	1	2	0	0	0
4/24/2024	8:00 AM	0	164	29	0	1	1	0	3	2	0	0	0
4/24/2024	8:15 AM	0	165	38	0	0	1	0	3	2	0	0	0
4/24/2024	8:30 AM	0	156	44	0	0	2	0	3	1	0	0	0
4/24/2024	8:45 AM	0	156	43	0	0	1	0	2	0	0	0	0
4/24/2024	9:00 AM	0	147	39	1	0	1	0	0	0	0	0	0
4/24/2024	9:15 AM	0	148	28	1	2	1	0	0	0	0	0	0
4/24/2024	9:30 AM	0	165	22	1	4	0	0	0	0	0	0	0
4/24/2024	9:45 AM	0	152	19	1	4	0	0	0	0	0	0	0
4/24/2024	10:00 AM	0	162	21	0	4	0	0	0	0	0	0	0
4/24/2024	10:15 AM	0	158	26	0	3	0	0	0	0	0	0	0
4/24/2024	10:30 AM	0	130	26	0	2	0	0	2	0	0	0	0
4/24/2024	10:45 AM	1	142	24	0	2	0	0	2	0	0	0	0
4/24/2024	11:00 AM	1	155	25	0	2	0	0	2	0	0	0	0
4/24/2024	11:15 AM	1	160	30	0	4	0	0	2	0	0	0	0
4/24/2024	11:30 AM	1	164	41	0	5	0	0	0	0	0	0	0
4/24/2024	11:45 AM	0	168	43	0	5	2	0	0	0	0	0	0
4/24/2024	12:00 PM	0	165	50	0	5	2	0	0	0	0	0	0
4/24/2024	12:15 PM	0	171	51	0	4	2	0	0	0	0	0	0
4/24/2024	12:30 PM	1	176	48	0	3	2	0	0	0	0	0	0
4/24/2024	12:45 PM	2	166	51	0	3	0	0	1	0	0	0	0
4/24/2024	1:00 PM	2	153	43	0	3	1	0	1	2	0	0	0
4/24/2024	1:15 PM	2	149	39	0	3	1	0	1	2	0	0	0
4/24/2024	1:30 PM	1	155	37	0	2	1	0	1	2	0	0	0
4/24/2024	1:45 PM	0	159	38	0	2	1	0	0	2	0	0	0
4/24/2024	2:00 PM	0	158	37	0	3	0	0	0	0	0	0	0
4/24/2024	2:15 PM	0	170	38	0	2	0	0	0	0	0	0	0
4/24/2024	2:30 PM	0	166	31	0	3	0	0	0	0	0	0	0
4/24/2024	2:45 PM	0	161	29	0	4	0	0	0	0	0	0	0
4/24/2024	3:00 PM	0	160	30	0	3	0	0	0	0	0	0	0
4/24/2024	3:15 PM	0	158	30	0	2	0	0	0	1	0	0	0
4/24/2024	3:30 PM	0	169	43	0	1	0	0	0	1	0	0	0
4/24/2024	3:45 PM	0	168	47	0	0	0	0	0	2	0	0	0
4/24/2024	4:00 PM	0	166	50	0	1	0	0	0	2	0	0	0
4/24/2024	4:15 PM	0	151	43	0	2	0	0	0	1	0	0	0
4/24/2024	4:30 PM	0	150	34	0	2	0	0	0	1	0	0	0
4/24/2024	4:45 PM	0	169	27	0	4	0	0	0	0	0	0	0
4/24/2024	5:00 PM	1	184	23	0	3	0	0	0	0	0	0	0
4/24/2024	5:15 PM	1	192	23	0	4	0	0	0	0	0	0	0
4/24/2024	5:30 PM	1	197	24	0	7	0	0	1	0	0	0	0
4/24/2024	5:45 PM	2	199	28	0	5	0	0	1	0	0	0	0
4/24/2024	6:00 PM	3	190	32	1	6	0	0	1	0	0	0	0
4/24/2024	6:15 PM	3	193	31	1	5	0	0	1	0	0	0	0
4/24/2024	6:30 PM	3	168	23	2	2	0	0	1	1	0	0	0
4/24/2024	6:45 PM	3	159	25	2	3	0	0	1	1	0	0	0
4/24/2024	7:00 PM	1	140	19	1	2	0	0	1	1	0	0	0
4/24/2024	7:15 PM	1	132	17	1	3	0	0	1	1	0	0	0
4/24/2024	7:30 PM	1	144	22	0	3	0	0	0	1	0	0	0
4/24/2024	7:45 PM	0	128	16	0	2	0	0	0	1	0	0	0
4/24/2024	8:00 PM	0	140	14	0	2	0	0	0	1	0	0	0
4/24/2024	8:15 PM	0	127	14	0	0	0	0	0	2	0	0	0
4/24/2024	8:30 PM	0	123	9	0	0	0	0	0	1	0	0	0
4/24/2024	8:45 PM	0	116	8	0	0	0	0	0	1	0	0	0
4/24/2024	9:00 PM	0	109	7	0	0	0	0	0	1	0	0	0
4/24/2024	9:15 PM	0	106	6	0	0	0	0	0	0	0	0	0
4/24/2024	9:30 PM	0	93	6	0	0	0	0	0	0	0	0	0
4/24/2024	9:45 PM	0	81	3	0	0	0	0	0	0	0	0	0
4/24/2024	10:00 PM	0	78	3	0	0	0	0	0	0	0	0	0
4/24/2024	10:15 PM	1	76	4	0	0	0	0	0	0	0	0	0
4/24/2024	10:30 PM	1	61	3	0	0	0	0	0	0	0	0	0
4/24/2024	10:45 PM	1	58	3	0	0	0	0	0	0	0	0	0
4/24/2024	11:00 PM	1	42	2	0	0	0	0	0	0	0	0	0
4/24/2024	11:15 PM	0	22	0	0	0	0	0	0	0	0	0	0
4/24/2024	11:30 PM	0	15	0	0	0	0	0	0	0	0	0	0
4/24/2024	11:45 PM	0	7	0	0	0	0	0	0	0	0	0	0

4/25/2024	12:00 AM	0	34	2	0	1	0	0	0	0	0	0	0
4/25/2024	12:15 AM	0	32	2	0	1	0	0	0	0	0	0	0
4/25/2024	12:30 AM	0	28	1	0	0	0	0	0	0	0	0	0
4/25/2024	12:45 AM	0	23	0	0	0	0	0	0	0	0	0	0
4/25/2024	1:00 AM	0	22	0	0	0	0	0	0	2	0	0	0	0
4/25/2024	1:15 AM	0	18	0	0	1	0	0	0	2	0	0	0	0
4/25/2024	1:30 AM	0	14	0	0	1	0	0	0	2	0	0	0	0
4/25/2024	1:45 AM	0	13	0	0	1	0	0	0	2	0	0	0	0
4/25/2024	2:00 AM	0	12	0	0	2	0	0	0	0	0	0	0	0
4/25/2024	2:15 AM	0	10	1	0	1	0	0	0	0	0	0	0	0
4/25/2024	2:30 AM	0	8	1	0	1	0	0	0	0	0	0	0	0
4/25/2024	2:45 AM	0	9	1	0	1	0	0	0	0	0	0	0	0
4/25/2024	3:00 AM	0	12	2	0	0	0	0	0	0	0	0	0	0
4/25/2024	3:15 AM	0	12	1	0	0	0	0	0	0	0	0	0	0
4/25/2024	3:30 AM	0	14	2	0	1	0	0	0	0	0	0	0	0
4/25/2024	3:45 AM	0	13	2	0	1	0	0	0	0	0	0	0	0
4/25/2024	4:00 AM	0	11	2	0	1	0	0	0	0	0	0	0	0
4/25/2024	4:15 AM	0	14	2	0	1	0	0	0	0	0	0	0	0
4/25/2024	4:30 AM	0	18	1	0	0	0	0	0	0	0	0	0	0
4/25/2024	4:45 AM	0	19	4	0	0	0	0	0	0	0	0	0	0
4/25/2024	5:00 AM	0	26	3	0	0	0	0	0	0	0	0	0	0
4/25/2024	5:15 AM	0	30	3	0	0	0	0	0	0	0	0	0	0
4/25/2024	5:30 AM	0	35	5	0	1	0	0	1	0	0	0	0	0
4/25/2024	5:45 AM	1	52	7	0	2	0	0	1	0	0	0	0	0
4/25/2024	6:00 AM	1	66	12	1	2	0	0	1	0	0	0	0	0
4/25/2024	6:15 AM	1	94	18	1	2	0	0	1	0	0	0	0	0
4/25/2024	6:30 AM	1	122	19	1	1	0	0	0	0	0	0	0	0
4/25/2024	6:45 AM	0	136	15	1	0	0	0	0	0	0	0	0	0
4/25/2024	7:00 AM	0	133	15	0	1	0	0	0	0	0	0	0	0
4/25/2024	7:15 AM	0	126	10	0	1	0	0	0	0	0	0	0	0
4/25/2024	7:30 AM	0	123	11	0	2	0	0	0	0	0	0	0	0
4/25/2024	7:45 AM	0	126	19	0	2	0	0	0	0	0	0	0	0
4/25/2024	8:00 AM	0	159	29	0	2	0	0	0	1	0	0	0	0
4/25/2024	8:15 AM	0	171	35	0	2	0	0	1	1	0	0	0	0
4/25/2024	8:30 AM	0	166	37	0	2	0	0	1	1	0	0	0	0
4/25/2024	8:45 AM	0	173	37	1	3	0	0	1	1	0	0	0	0
4/25/2024	9:00 AM	1	160	30	1	2	0	0	1	0	0	0	0	0
4/25/2024	9:15 AM	1	143	33	2	4	0	0	0	0	0	0	0	0
4/25/2024	9:30 AM	1	140	39	2	3	0	0	0	0	0	0	0	0
4/25/2024	9:45 AM	3	135	38	1	4	0	0	1	0	0	0	0	0
4/25/2024	10:00 AM	2	131	39	1	4	0	0	1	0	0	0	0	0
4/25/2024	10:15 AM	2	140	34	0	2	0	0	1	0	0	0	0	0
4/25/2024	10:30 AM	2	166	35	0	2	1	0	2	0	0	0	0	0
4/25/2024	10:45 AM	0	164	33	0	0	3	0	1	0	0	0	0	0
4/25/2024	11:00 AM	0	166	31	0	2	3	0	1	0	0	0	0	0
4/25/2024	11:15 AM	0	182	36	0	3	3	0	1	0	0	0	0	0
4/25/2024	11:30 AM	0	165	34	0	3	2	0	0	0	0	0	0	0
4/25/2024	11:45 AM	0	173	37	0	4	0	0	0	0	0	0	0	0
4/25/2024	12:00 PM	0	189	35	0	5	0	0	0	0	0	0	0	0
4/25/2024	12:15 PM	0	195	37	0	4	0	0	0	0	0	0	0	0
4/25/2024	12:30 PM	0	197	40	0	4	0	0	0	1	0	0	0	0
4/25/2024	12:45 PM	0	192	36	0	4	0	0	0	1	0	0	0	0
4/25/2024	1:00 PM	0	182	39	0	2	0	0	0	2	0	0	0	0
4/25/2024	1:15 PM	0	157	38	0	2	0	0	0	2	0	0	0	0
4/25/2024	1:30 PM	0	155	30	1	2	0	0	0	1	0	0	0	0
4/25/2024	1:45 PM	0	159	35	1	1	0	0	1	2	0	0	0	0
4/25/2024	2:00 PM	0	139	35	1	1	0	0	1	1	0	0	0	0
4/25/2024	2:15 PM	0	141	39	1	1	0	0	1	1	0	0	0	0
4/25/2024	2:30 PM	0	149	43	0	1	0	0	1	1	0	0	0	0
4/25/2024	2:45 PM	0	155	43	0	2	0	0	0	0	0	0	0	0
4/25/2024	3:00 PM	0	192	42	0	1	0	0	0	0	0	0	0	0
4/25/2024	3:15 PM	0	206	38	0	1	0	0	0	0	0	0	0	0
4/25/2024	3:30 PM	0	200	36	0	1	0	0	0	0	0	0	0	0
4/25/2024	3:45 PM	0	201	35	0	0	0	0	0	0	0	0	0	0
4/25/2024	4:00 PM	0	188	38	0	0	0	0	0	0	0	0	0	0
4/25/2024	4:15 PM	0	197	34	0	1	0	0	0	0	0	0	0	0
4/25/2024	4:30 PM	0	194	29	0	1	0	0	0	0	0	0	0	0
4/25/2024	4:45 PM	0	192	24	0	1	0	0	0	0	0	0	0	0
4/25/2024	5:00 PM	0	185	21	0	1	0	0	0	0	0	0	0	0
4/25/2024	5:15 PM	0	173	20	0	0	0	0	0	0	0	0	0	0
4/25/2024	5:30 PM	0	176	29	0	0	0	0	1	0	0	0	0	0
4/25/2024	5:45 PM	0	179	31	0	0	0	0	1	0	0	0	0	0
4/25/2024	6:00 PM	0	179	29	0	1	0	0	1	0	0	0	0	0
4/25/2024	6:15 PM	0	136	23	0	1	0	0	1	0	0	0	0	0
4/25/2024	6:30 PM	0	96	11	0	1	0	0	0	0	0	0	0	0
4/25/2024	6:45 PM	0	42	5	0	1	0	0	0	0	0	0	0	0
4/25/2024	7:00 PM	0	0	0	0	0	0	0	0	0	0	0	0	0
4/25/2024	7:15 PM	0	0	0	0	0	0	0	0	0	0	0	0	0
4/25/2024	7:30 PM	0	0	0	0	0	0	0	0	0	0	0	0	0
4/25/2024	7:45 PM	0	0	0	0	0	0	0	0	0	0	0	0	0
4/25/2024	8:00 PM	0	0	0	0	0	0	0	0	0	0	0	0	0
4/25/2024	8:15 PM	0	0	0	0	0	0	0	0	0	0	0	0	0
4/25/2024	8:30 PM	0	0	0	0	0	0	0	0	0	0	0	0	0
4/25/2024	8:45 PM	0	0	0	0	0	0	0	0	0	0	0	0	0
4/25/2024	9:00 PM	0	0	0	0	0	0	0	0	0	0	0	0	0
4/25/2024	9:15 PM	0	0	0	0	0	0	0	0	0	0	0	0	0
4/25/2024	9:30 PM	0	0	0	0	0	0	0	0	0	0	0	0	0
4/25/2024	9:45 PM	0	0	0	0	0	0	0	0	0	0	0	0	0
4/25/2024	10:00 PM	0	0	0	0	0	0	0	0	0	0	0	0	0
4/25/2024	10:15 PM	0	0	0	0	0	0	0	0	0	0	0	0	0
4/25/2024	10:30 PM	0	0	0	0	0	0	0	0	0	0	0	0	0
4/25/2024	10:45 PM	0	0	0	0	0	0	0	0	0	0	0	0	0
4/25/2024	11:00 PM	0	0	0	0	0	0	0	0	0	0	0	0	0
4/25/2024	11:15 PM	0	0	0	0	0	0	0	0	0	0	0	0	0
4/25/2024	11:30 PM	0	0	0	0	0	0	0	0	0	0	0	0	0
4/25/2024	11:45 PM	0	0	0	0	0	0	0	0	0	0	0	0	0

Bi-Directional Class Count || NB EB 15min

Columbia, SC

Marr Traffic DATA COLLECTION
www.marrtraffic.com

Site 36
I-26 N/Bound Off-Ramp,
south of St Andrews Rd

Date
Tuesday, April 23, 2024

Lat/Long
34.043382°, -81.116208°

Weather
Fair
58°F

Click here for Detailed Weather

Click here for Map

0000 - 2400 (Weekday 24h Session) (04-23-2024)
NB EB 15min

	Northbound (Movement 36.1)													15min	60min
Time	1	2	3	4	5	6	7	8	9	10	11	12	13	Total	Total
0000 - 0015	0	0	0	0	0	0	0	0	0	0	0	0	0	**0**	
0015 - 0030	0	0	0	0	0	0	0	0	0	0	0	0	0	**0**	
0030 - 0045	0	0	0	0	0	0	0	0	0	0	0	0	0	**0**	
0045 - 0100	0	0	0	0	0	0	0	0	0	0	0	0	0	**0**	**0**
0100 - 0115	0	0	0	0	0	0	0	0	0	0	0	0	0	**0**	
0115 - 0130	0	0	0	0	0	0	0	0	0	0	0	0	0	**0**	
0130 - 0145	0	0	0	0	0	0	0	0	0	0	0	0	0	**0**	
0145 - 0200	0	0	0	0	0	0	0	0	0	0	0	0	0	**0**	**0**
0200 - 0215	0	0	0	0	0	0	0	0	0	0	0	0	0	**0**	
0215 - 0230	0	0	0	0	0	0	0	0	0	0	0	0	0	**0**	
0230 - 0245	0	0	0	0	0	0	0	0	0	0	0	0	0	**0**	
0245 - 0300	0	0	0	0	0	0	0	0	0	0	0	0	0	**0**	**0**
0300 - 0315	0	0	0	0	0	0	0	0	0	0	0	0	0	**0**	
0315 - 0330	0	0	0	0	0	0	0	0	0	0	0	0	0	**0**	
0330 - 0345	0	0	0	0	0	0	0	0	0	0	0	0	0	**0**	
0345 - 0400	0	0	0	0	0	0	0	0	0	0	0	0	0	**0**	**0**
0400 - 0415	0	0	0	0	0	0	0	0	0	0	0	0	0	**0**	
0415 - 0430	0	0	0	0	0	0	0	0	0	0	0	0	0	**0**	
0430 - 0445	0	0	0	0	0	0	0	0	0	0	0	0	0	**0**	
0445 - 0500	0	0	0	0	0	0	0	0	0	0	0	0	0	**0**	**0**
0500 - 0515	0	0	0	0	0	0	0	0	0	0	0	0	0	**0**	
0515 - 0530	0	0	0	0	0	0	0	0	0	0	0	0	0	**0**	
0530 - 0545	0	0	0	0	0	0	0	0	0	0	0	0	0	**0**	
0545 - 0600	0	0	0	0	0	0	0	0	0	0	0	0	0	**0**	**0**
0600 - 0615	0	0	0	0	0	0	0	0	0	0	0	0	0	**0**	
0615 - 0630	0	0	0	0	0	0	0	0	0	0	0	0	0	**0**	
0630 - 0645	0	0	0	0	0	0	0	0	0	0	0	0	0	**0**	
0645 - 0700	0	0	0	0	0	0	0	0	0	0	0	0	0	**0**	**0**
0700 - 0715	0	0	0	0	0	0	0	0	0	0	0	0	0	**0**	
0715 - 0730	0	0	0	0	0	0	0	0	0	0	0	0	0	**0**	
0730 - 0745	0	0	0	0	0	0	0	0	0	0	0	0	0	**0**	
0745 - 0800	0	0	0	0	0	0	0	0	0	0	0	0	0	**0**	**0**
0800 - 0815	0	0	0	0	0	0	0	0	0	0	0	0	0	**0**	
0815 - 0830	0	0	0	0	0	0	0	0	0	0	0	0	0	**0**	
0830 - 0845	0	0	0	0	0	0	0	0	0	0	0	0	0	**0**	
0845 - 0900	0	0	0	0	0	0	0	0	0	0	0	0	0	**0**	**0**
0900 - 0915	0	0	0	0	0	0	0	0	0	0	0	0	0	**0**	
0915 - 0930	0	0	0	0	0	0	0	0	0	0	0	0	0	**0**	
0930 - 0945	0	0	0	0	0	0	0	0	0	0	0	0	0	**0**	
0945 - 1000	0	0	0	0	0	0	0	0	0	0	0	0	0	**0**	**0**
1000 - 1015	0	0	0	0	0	0	0	0	0	0	0	0	0	**0**	
1015 - 1030	0	0	0	0	0	0	0	0	0	0	0	0	0	**0**	
1030 - 1045	0	0	0	0	0	0	0	0	0	0	0	0	0	**0**	
1045 - 1100	0	0	0	0	0	0	0	0	0	0	0	0	0	**0**	**0**
1100 - 1115	0	0	0	0	0	0	0	0	0	0	0	0	0	**0**	
1115 - 1130	0	0	0	0	0	0	0	0	0	0	0	0	0	**0**	
1130 - 1145	0	0	0	0	0	0	0	0	0	0	0	0	0	**0**	
1145 - 1200	0	0	0	0	0	0	0	0	0	0	0	0	0	**0**	**0**
1200 - 1215	0	0	0	0	0	0	0	0	0	0	0	0	0	**0**	
1215 - 1230	0	0	0	0	0	0	0	0	0	0	0	0	0	**0**	
1230 - 1245	0	0	0	0	0	0	0	0	0	0	0	0	0	**0**	
1245 - 1300	0	0	0	0	0	0	0	0	0	0	0	0	0	**0**	**0**
1300 - 1315	0	0	0	0	0	0	0	0	0	0	0	0	0	**0**	
1315 - 1330	0	0	0	0	0	0	0	0	0	0	0	0	0	**0**	
1330 - 1345	0	0	0	0	0	0	0	0	0	0	0	0	0	**0**	
1345 - 1400	0	0	0	0	0	0	0	0	0	0	0	0	0	**0**	**0**
1400 - 1415	0	0	0	0	0	0	0	0	0	0	0	0	0	**0**	
1415 - 1430	0	0	0	0	0	0	0	0	0	0	0	0	0	**0**	
1430 - 1445	0	0	0	0	0	0	0	0	0	0	0	0	0	**0**	
1445 - 1500	0	0	0	0	0	0	0	0	0	0	0	0	0	**0**	**0**
1500 - 1515	0	0	0	0	0	0	0	0	0	0	0	0	0	**0**	
1515 - 1530	0	0	0	0	0	0	0	0	0	0	0	0	0	**0**	
1530 - 1545	0	0	0	0	0	0	0	0	0	0	0	0	0	**0**	
1545 - 1600	0	0	0	0	0	0	0	0	0	0	0	0	0	**0**	**0**
1600 - 1615	0	0	0	0	0	0	0	0	0	0	0	0	0	**0**	
1615 - 1630	0	0	0	0	0	0	0	0	0	0	0	0	0	**0**	
1630 - 1645	0	0	0	0	0	0	0	0	0	0	0	0	0	**0**	
1645 - 1700	0	0	0	0	0	0	0	0	0	0	0	0	0	**0**	**0**
1700 - 1715	0	0	0	0	0	0	0	0	0	0	0	0	0	**0**	
1715 - 1730	0	0	0	0	0	0	0	0	0	0	0	0	0	**0**	
1730 - 1745	0	0	0	0	0	0	0	0	0	0	0	0	0	**0**	
1745 - 1800	0	0	0	0	0	0	0	0	0	0	0	0	0	**0**	**0**
1800 - 1815	0	0	0	0	0	0	0	0	0	0	0	0	0	**0**	
1815 - 1830	0	0	0	0	0	0	0	0	0	0	0	0	0	**0**	
1830 - 1845	0	0	0	0	0	0	0	0	0	0	0	0	0	**0**	
1845 - 1900	0	0	0	0	0	0	0	0	0	0	0	0	0	**0**	**0**
1900 - 1915	0	54	6	0	0	0	0	0	0	0	0	0	0	**60**	
1915 - 1930	0	42	3	0	0	0	0	0	0	0	0	0	0	**45**	
1930 - 1945	0	43	11	0	0	0	0	0	0	0	0	0	0	**54**	
1945 - 2000	0	35	5	0	0	0	0	0	0	0	0	0	0	**40**	**199**
2000 - 2015	0	48	1	0	1	0	0	0	0	0	0	0	0	**50**	
2015 - 2030	0	43	1	0	0	0	0	0	0	0	0	0	0	**44**	
2030 - 2045	0	37	0	0	1	0	0	0	0	0	0	0	0	**38**	
2045 - 2100	0	39	1	0	0	0	0	0	0	0	0	0	0	**40**	**172**
2100 - 2115	0	41	1	0	0	0	0	0	0	0	0	0	0	**42**	
2115 - 2130	0	35	1	0	0	0	0	0	0	0	0	0	0	**36**	
2130 - 2145	0	34	0	0	0	0	0	0	0	0	0	0	0	**34**	
2145 - 2200	0	34	1	0	1	0	0	0	0	0	0	0	0	**36**	**148**
2200 - 2215	0	33	1	0	0	0	0	0	0	0	0	0	0	**34**	
2215 - 2230	0	45	0	0	1	0	0	0	0	0	0	0	0	**46**	
2230 - 2245	0	30	0	0	0	0	0	0	0	0	0	0	0	**30**	
2245 - 2300	0	25	0	0	0	0	0	0	0	0	0	0	0	**25**	**135**
2300 - 2315	0	21	0	0	0	0	0	0	0	0	0	0	0	**21**	
2315 - 2330	0	26	0	0	0	0	0	0	0	0	0	0	0	**26**	
2330 - 2345	0	16	1	0	0	0	0	0	0	0	0	0	0	**17**	
2345 - 0000	0	18	0	0	0	0	0	0	0	0	0	0	0	**18**	**82**

Session Total	0	699	33	0	4	0	0	0	0	0	0	0	0	**736**
Session Average	0.00	7.28	0.34	0.00	0.04	0.00	0.00	0.00	0.00	0.00	0.00	0.00	0.00	**7.67**
Session Percentage	0.00	94.97	4.48	0.00	0.54	0.00	0.00	0.00	0.00	0.00	0.00	0.00	0.00	

AM Peak Hour	-	-	-	-	-	-	-	-	-	-	-	-	-	**-**
AM Peak Volume	0	0	0	0	0	0	0	0	0	0	0	0	0	**0**

Noon Peak Hour	-	-	-	-	-	-	-	-	-	-	-	-	-	**-**
Noon Peak Volume	0	0	0	0	0	0	0	0	0	0	0	0	0	**0**

PM Peak Hour	-	1900 - 2000	1900 - 2000	-	1945 - 2045	-	-	-	-	-	-	-	-	**1900 - 2000**
PM Peak Volume	0	174	25	0	2	0	0	0	0	0	0	0	0	**199**

Site 36
I-26 N/Bound Off-Ramp,
south of St Andrews Rd

Date
Wednesday, April 24, 2024

Lat/Long
34.043382°, -81.116208°

Weather
Fair
66°F

Click here for Detailed Weather

0000 - 2400 (Weekday 24h Session) (04-24-2024)
NB EB 15min

	Northbound (Movement 36.1)													15min	60min
Time	1	2	3	4	5	6	7	8	9	10	11	12	13	Total	Total
0000 - 0015	0	17	1	0	1	0	0	0	0	0	0	0	0	**19**	
0015 - 0030	0	11	0	0	0	0	0	0	0	0	0	0	0	**11**	
0030 - 0045	0	15	0	0	0	0	0	0	0	0	0	0	0	**15**	
0045 - 0100	0	7	0	0	0	0	0	0	1	0	0	0	0	**8**	**53**
0100 - 0115	0	10	0	0	1	0	0	0	0	0	0	0	0	**11**	
0115 - 0130	0	10	0	0	0	0	0	0	0	0	0	0	0	**10**	
0130 - 0145	0	9	0	0	0	0	0	0	0	0	0	0	0	**9**	
0145 - 0200	0	9	0	0	0	0	0	0	0	0	0	0	0	**9**	**39**
0200 - 0215	0	9	0	0	0	0	0	0	0	0	0	0	0	**9**	
0215 - 0230	0	13	0	0	0	0	0	0	0	0	0	0	0	**13**	
0230 - 0245	0	6	0	0	0	0	0	0	0	0	0	0	0	**6**	
0245 - 0300	0	4	0	0	0	0	0	0	0	0	0	0	0	**4**	**32**
0300 - 0315	0	5	0	0	0	0	0	0	0	0	0	0	0	**5**	
0315 - 0330	0	8	0	0	0	0	0	0	0	0	0	0	0	**8**	
0330 - 0345	0	7	0	0	0	0	0	0	0	0	0	0	0	**7**	
0345 - 0400	0	4	0	0	0	0	0	0	0	0	0	0	0	**4**	**24**
0400 - 0415	0	12	0	0	1	0	0	0	0	0	0	0	0	**13**	
0415 - 0430	0	5	0	0	0	0	0	0	0	0	0	0	0	**5**	
0430 - 0445	0	9	0	0	0	0	0	0	0	0	0	0	0	**9**	
0445 - 0500	0	9	1	0	0	0	0	0	0	0	0	0	0	**10**	**37**
0500 - 0515	0	14	1	0	1	0	0	0	0	0	0	0	0	**16**	
0515 - 0530	0	20	0	0	0	0	0	0	0	0	0	0	0	**20**	
0530 - 0545	0	23	0	0	0	0	0	0	0	0	0	0	0	**23**	
0545 - 0600	0	32	1	0	1	0	0	0	0	0	0	0	0	**34**	**93**
0600 - 0615	0	23	0	0	0	0	0	0	0	0	0	0	0	**23**	
0615 - 0630	0	30	5	0	0	0	0	0	0	0	0	0	0	**35**	
0630 - 0645	0	56	6	0	0	0	0	0	0	0	0	0	0	**62**	
0645 - 0700	0	63	23	0	0	0	0	0	0	0	0	0	0	**86**	**206**
0700 - 0715	1	76	25	0	0	0	0	0	0	0	0	0	0	**102**	
0715 - 0730	0	83	23	0	0	0	0	0	1	0	0	0	0	**107**	
0730 - 0745	0	96	33	0	3	0	0	0	0	0	0	0	0	**132**	
0745 - 0800	0	125	20	0	3	2	0	0	0	0	0	0	0	**150**	**491**
0800 - 0815	1	98	16	0	0	0	0	0	0	0	0	0	0	**115**	
0815 - 0830	0	97	19	0	1	0	0	0	0	0	0	0	0	**117**	
0830 - 0845	1	84	22	0	0	0	0	0	0	0	0	0	0	**107**	
0845 - 0900	1	95	20	0	0	0	0	0	0	0	0	0	0	**116**	**455**
0900 - 0915	0	64	15	0	4	0	0	0	0	0	0	0	0	**83**	
0915 - 0930	1	69	16	0	4	0	0	0	0	0	0	0	0	**90**	
0930 - 0945	0	64	22	0	3	2	0	0	0	0	0	0	0	**91**	
0945 - 1000	0	64	18	0	0	2	0	0	1	0	0	0	0	**85**	**349**
1000 - 1015	0	53	12	0	1	1	0	0	1	0	0	0	0	**68**	
1015 - 1030	0	54	16	0	1	0	0	0	0	0	0	0	0	**71**	
1030 - 1045	0	56	14	0	1	1	0	0	1	0	0	0	0	**73**	
1045 - 1100	0	56	17	0	1	1	0	0	0	0	0	0	0	**75**	**287**
1100 - 1115	0	50	13	0	1	1	0	0	0	0	0	0	0	**65**	
1115 - 1130	0	59	21	0	0	2	0	0	0	0	0	0	0	**82**	
1130 - 1145	0	46	19	0	2	1	0	0	0	0	0	0	0	**68**	
1145 - 1200	0	63	14	0	1	2	0	1	1	0	0	0	0	**82**	**297**
1200 - 1215	0	60	15	0	3	1	0	0	0	0	0	0	0	**79**	
1215 - 1230	0	65	15	0	2	0	0	0	0	0	0	0	0	**82**	
1230 - 1245	0	63	13	0	1	0	0	0	1	0	0	0	0	**78**	
1245 - 1300	0	64	9	0	1	0	0	0	0	0	0	0	0	**74**	**313**
1300 - 1315	0	47	14	2	0	0	0	0	0	0	0	0	0	**63**	
1315 - 1330	0	69	11	0	0	0	0	0	0	0	0	0	0	**80**	
1330 - 1345	0	57	20	0	2	1	0	0	0	0	0	0	0	**80**	
1345 - 1400	0	68	15	0	1	1	0	0	0	0	0	0	0	**85**	**308**
1400 - 1415	0	59	14	0	0	1	0	0	0	0	0	0	0	**74**	
1415 - 1430	0	53	13	0	0	1	0	0	0	0	0	0	0	**67**	
1430 - 1445	0	54	14	1	3	0	0	0	0	0	0	0	0	**72**	
1445 - 1500	0	63	15	2	1	0	0	0	0	0	0	0	0	**81**	**294**
1500 - 1515	0	68	24	0	0	2	0	0	1	0	0	0	0	**95**	
1515 - 1530	1	73	12	0	2	1	0	0	0	0	0	0	0	**89**	
1530 - 1545	1	58	11	0	1	0	0	0	0	0	0	0	0	**71**	
1545 - 1600	0	58	17	0	0	1	0	0	0	0	0	0	0	**76**	**331**
1600 - 1615	0	65	16	0	2	0	0	0	1	0	0	0	0	**84**	
1615 - 1630	0	72	16	0	0	0	0	0	0	0	0	0	0	**88**	
1630 - 1645	0	61	19	0	0	1	0	0	0	0	0	0	0	**81**	
1645 - 1700	0	71	12	0	0	0	0	0	0	0	0	0	0	**83**	**336**
1700 - 1715	0	79	7	0	0	0	0	0	0	0	0	0	0	**86**	
1715 - 1730	0	59	7	0	1	1	0	0	0	0	0	0	0	**68**	
1730 - 1745	0	67	12	0	1	0	0	0	0	0	0	0	0	**80**	
1745 - 1800	0	78	13	0	0	0	0	0	0	0	0	0	0	**91**	**325**
1800 - 1815	0	70	15	0	2	0	0	0	0	0	0	0	0	**87**	
1815 - 1830	0	50	10	0	1	0	0	0	0	0	0	0	0	**61**	
1830 - 1845	0	70	5	0	2	0	0	0	0	0	0	0	0	**77**	
1845 - 1900	0	64	15	0	0	0	0	0	0	0	0	0	0	**79**	**304**
1900 - 1915	0	56	4	0	0	0	0	0	1	0	0	0	0	**61**	
1915 - 1930	0	66	8	0	0	0	0	0	0	0	0	0	0	**74**	
1930 - 1945	0	50	4	0	0	0	0	0	0	0	0	0	0	**54**	
1945 - 2000	0	47	3	0	0	0	0	0	0	0	0	0	0	**50**	**239**
2000 - 2015	1	67	12	0	0	0	0	0	0	0	0	0	0	**80**	
2015 - 2030	0	50	4	0	0	0	0	0	0	0	0	0	0	**54**	
2030 - 2045	0	50	2	0	0	0	0	0	0	0	0	0	0	**52**	
2045 - 2100	0	44	1	0	0	0	0	0	0	0	0	0	0	**45**	**231**
2100 - 2115	0	26	2	0	0	0	0	0	0	0	0	0	0	**28**	
2115 - 2130	0	45	2	0	0	0	0	0	0	0	0	0	0	**47**	
2130 - 2145	0	37	2	0	1	0	0	0	0	0	0	0	0	**40**	
2145 - 2200	0	28	0	0	0	0	0	0	0	0	0	0	0	**28**	**143**
2200 - 2215	0	27	0	0	0	0	0	0	0	0	0	0	0	**27**	
2215 - 2230	0	33	1	0	0	0	0	0	0	0	0	0	0	**34**	
2230 - 2245	0	36	0	0	0	0	0	0	0	0	0	0	0	**36**	
2245 - 2300	0	33	1	0	0	0	0	0	0	0	0	0	0	**34**	**131**
2300 - 2315	0	37	0	0	0	0	0	0	0	0	0	0	0	**37**	
2315 - 2330	0	32	0	0	0	0	0	0	0	0	0	0	0	**32**	
2330 - 2345	0	25	0	0	0	0	0	0	0	0	0	0	0	**25**	
2345 - 0000	0	30	1	0	0	0	0	0	0	0	0	0	0	**31**	**125**

Session Total	8	4496	839	5	58	26	0	1	10	0	0	0	0	**5443**
Session Average	0.08	46.83	8.74	0.05	0.60	0.27	0.00	0.01	0.10	0.00	0.00	0.00	0.00	**56.70**
Session Percentage	0.15	82.60	15.41	0.09	1.07	0.48	0.00	0.02	0.18	0.00	0.00	0.00	0.00	

AM Peak Hour	0800 - 0900	0730 - 0830	0645 - 0745	-	0845 - 0945	0915 - 1015	-	-	0945 - 1045	-	-	-	-	**0730 - 0830**
AM Peak Volume	3	416	104	0	11	5	0	0	3	0	0	0	0	**514**

Noon Peak Hour	1445 - 1545	1445 - 1545	1045 - 1145	1400 - 1500	1130 - 1230	1100 - 1200	-	1100 - 1200	1000 - 1100	-	-	-	-	**1430 - 1530**
Noon Peak Volume	2	262	70	3	8	6	0	1	2	0	0	0	0	**337**

PM Peak Hour	1500 - 1600	1615 - 1715	1545 - 1645	-	1515 - 1615	1500 - 1600	-	-	1500 - 1600	-	-	-	-	**1615 - 1715**
PM Peak Volume	2	283	68	0	5	4	0	0	1	0	0	0	0	**338**

Site 36
I-26 N/Bound Off-Ramp,
south of St Andrews Rd

Date
Thursday, April 25, 2024

Lat/Long
34.043382°, -81.116208°

Weather
Fair
67°F

Click here for Detailed Weather

0000 - 2400 (Weekday 24h Session) (04-25-2024)
NB EB 15min

	Northbound (Movement 36.1)													15min	60min
TIME	1	2	3	4	5	6	7	8	9	10	11	12	13	Total	Total
0000 - 0015	0	21	1	0	0	0	0	0	0	0	0	0	0	**22**	
0015 - 0030	0	13	0	0	0	0	0	0	0	0	0	0	0	**13**	
0030 - 0045	0	11	1	0	0	0	0	0	0	0	0	0	0	**12**	
0045 - 0100	0	18	0	0	0	0	0	0	1	0	0	0	0	**19**	**66**
0100 - 0115	0	12	0	0	0	0	0	0	0	0	0	0	0	**12**	
0115 - 0130	0	10	1	0	0	0	0	0	0	0	0	0	0	**11**	
0130 - 0145	0	11	0	0	0	0	0	0	0	0	0	0	0	**11**	
0145 - 0200	0	10	2	0	0	0	0	0	0	0	0	0	0	**12**	**46**
0200 - 0215	0	20	2	0	0	0	0	0	0	0	0	0	0	**22**	
0215 - 0230	0	5	3	0	0	0	0	0	0	0	0	0	0	**8**	
0230 - 0245	0	2	1	0	0	0	0	0	0	0	0	0	0	**3**	
0245 - 0300	0	3	0	0	0	0	0	0	0	0	0	0	0	**3**	**36**
0300 - 0315	0	7	0	0	0	0	0	0	0	0	0	0	0	**7**	
0315 - 0330	0	7	0	0	0	0	0	0	0	0	0	0	0	**7**	
0330 - 0345	0	4	0	0	0	0	0	0	0	0	0	0	0	**4**	
0345 - 0400	0	5	0	0	0	0	0	0	0	0	0	0	0	**5**	**23**
0400 - 0415	0	7	2	0	0	0	0	0	0	0	0	0	0	**9**	
0415 - 0430	0	6	3	0	0	0	0	0	0	0	0	0	0	**9**	
0430 - 0445	0	8	1	0	0	0	0	0	0	0	0	0	0	**9**	
0445 - 0500	0	15	4	0	0	0	0	0	1	0	0	0	0	**20**	**47**
0500 - 0515	0	10	2	0	0	0	0	0	1	0	0	0	0	**13**	
0515 - 0530	0	13	3	0	0	0	0	0	0	0	0	0	0	**16**	
0530 - 0545	0	23	5	0	0	0	0	0	0	0	0	0	0	**28**	
0545 - 0600	0	27	4	0	0	0	0	0	1	0	0	0	0	**32**	**89**
0600 - 0615	0	20	2	0	0	0	0	0	1	0	0	0	0	**23**	
0615 - 0630	0	41	7	0	0	0	0	0	0	0	0	0	0	**48**	
0630 - 0645	0	50	7	0	0	0	1	0	0	0	0	0	0	**58**	
0645 - 0700	0	65	13	0	1	0	0	0	2	0	0	0	0	**81**	**210**
0700 - 0715	0	60	14	0	2	0	0	0	1	0	0	0	0	**77**	
0715 - 0730	0	85	23	0	1	0	0	0	0	0	0	0	0	**109**	
0730 - 0745	0	77	17	0	0	0	0	0	1	0	0	0	0	**95**	
0745 - 0800	0	119	23	0	2	0	0	0	0	0	0	0	0	**144**	**425**
0800 - 0815	0	105	18	0	1	0	0	0	1	0	0	0	0	**125**	
0815 - 0830	2	122	19	0	2	0	0	0	0	0	0	0	0	**145**	
0830 - 0845	0	74	22	0	2	0	0	0	0	0	0	0	0	**98**	
0845 - 0900	2	100	20	0	2	0	0	0	1	0	0	0	0	**125**	**493**
0900 - 0915	0	66	16	0	2	0	0	0	1	0	0	0	0	**85**	
0915 - 0930	0	59	16	0	1	0	0	0	1	0	0	0	0	**77**	
0930 - 0945	0	63	20	0	3	0	0	0	0	0	0	0	0	**86**	
0945 - 1000	0	46	16	0	3	0	0	1	0	0	0	0	0	**66**	**314**
1000 - 1015	0	57	11	0	1	0	0	0	1	0	0	0	0	**70**	
1015 - 1030	0	43	12	0	2	0	0	0	0	0	0	0	0	**57**	
1030 - 1045	0	57	10	0	1	0	0	0	2	0	0	0	0	**70**	
1045 - 1100	0	60	11	0	4	0	0	0	1	0	0	0	0	**76**	**273**
1100 - 1115	0	53	13	0	4	2	0	0	0	0	0	0	0	**72**	
1115 - 1130	0	45	8	0	3	0	0	0	0	0	0	0	0	**56**	
1130 - 1145	0	42	11	0	0	1	0	0	1	0	0	0	0	**55**	
1145 - 1200	0	41	9	0	1	0	0	1	2	0	0	0	0	**54**	**237**
1200 - 1215	0	68	11	0	1	0	0	1	3	0	0	0	0	**84**	
1215 - 1230	0	53	11	0	0	0	0	0	0	0	0	0	0	**64**	
1230 - 1245	0	54	14	0	0	0	0	0	0	0	0	0	0	**68**	
1245 - 1300	0	70	19	0	2	0	0	0	1	0	0	0	0	**92**	**308**
1300 - 1315	0	58	10	0	3	0	0	0	1	0	0	0	0	**72**	
1315 - 1330	0	65	16	0	3	0	0	0	0	0	0	0	0	**84**	
1330 - 1345	0	73	8	0	1	0	0	0	0	0	0	0	0	**82**	
1345 - 1400	0	79	12	1	4	0	0	0	0	0	0	0	0	**96**	**334**
1400 - 1415	0	77	16	0	1	0	0	0	0	0	0	0	0	**94**	
1415 - 1430	0	55	14	0	2	1	0	1	1	0	0	0	0	**74**	
1430 - 1445	0	65	19	0	0	0	0	0	0	0	0	0	0	**84**	
1445 - 1500	0	69	15	0	0	0	0	0	0	0	0	0	0	**84**	**336**
1500 - 1515	0	73	20	0	2	0	0	0	0	0	0	0	0	**95**	
1515 - 1530	0	72	14	0	2	0	0	0	0	0	0	0	0	**88**	
1530 - 1545	0	98	21	0	3	0	0	0	1	0	0	0	0	**123**	
1545 - 1600	0	83	19	0	1	1	0	1	1	0	0	0	0	**106**	**412**
1600 - 1615	0	65	12	0	2	0	0	0	1	0	0	0	0	**80**	
1615 - 1630	0	57	10	0	0	0	0	0	0	0	0	0	0	**67**	
1630 - 1645	0	65	12	0	1	1	0	0	0	0	0	0	0	**79**	
1645 - 1700	0	65	7	0	0	0	0	0	0	0	0	0	0	**72**	**298**
1700 - 1715	0	63	5	0	2	0	0	0	0	0	0	0	0	**70**	
1715 - 1730	0	76	13	0	0	0	0	0	0	0	0	0	0	**89**	
1730 - 1745	0	63	21	0	1	0	0	0	0	0	0	0	0	**85**	
1745 - 1800	0	61	9	0	0	1	0	0	0	0	0	0	0	**71**	**315**
1800 - 1815	0	67	10	0	0	0	0	1	0	0	0	0	0	**78**	
1815 - 1830	1	63	8	0	0	0	0	0	0	0	0	0	0	**72**	
1830 - 1845	1	62	13	0	1	0	0	0	1	0	0	0	0	**78**	
1845 - 1900	0	67	12	0	0	0	0	0	0	0	0	0	0	**79**	**307**
1900 - 1915	0	0	0	0	0	0	0	0	0	0	0	0	0	**0**	
1915 - 1930	0	0	0	0	0	0	0	0	0	0	0	0	0	**0**	
1930 - 1945	0	0	0	0	0	0	0	0	0	0	0	0	0	**0**	
1945 - 2000	0	0	0	0	0	0	0	0	0	0	0	0	0	**0**	**0**
2000 - 2015	0	0	0	0	0	0	0	0	0	0	0	0	0	**0**	
2015 - 2030	0	0	0	0	0	0	0	0	0	0	0	0	0	**0**	
2030 - 2045	0	0	0	0	0	0	0	0	0	0	0	0	0	**0**	
2045 - 2100	0	0	0	0	0	0	0	0	0	0	0	0	0	**0**	**0**
2100 - 2115	0	0	0	0	0	0	0	0	0	0	0	0	0	**0**	
2115 - 2130	0	0	0	0	0	0	0	0	0	0	0	0	0	**0**	
2130 - 2145	0	0	0	0	0	0	0	0	0	0	0	0	0	**0**	
2145 - 2200	0	0	0	0	0	0	0	0	0	0	0	0	0	**0**	**0**
2200 - 2215	0	0	0	0	0	0	0	0	0	0	0	0	0	**0**	
2215 - 2230	0	0	0	0	0	0	0	0	0	0	0	0	0	**0**	
2230 - 2245	0	0	0	0	0	0	0	0	0	0	0	0	0	**0**	
2245 - 2300	0	0	0	0	0	0	0	0	0	0	0	0	0	**0**	**0**
2300 - 2315	0	0	0	0	0	0	0	0	0	0	0	0	0	**0**	
2315 - 2330	0	0	0	0	0	0	0	0	0	0	0	0	0	**0**	
2330 - 2345	0	0	0	0	0	0	0	0	0	0	0	0	0	**0**	
2345 - 0000	0	0	0	0	0	0	0	0	0	0	0	0	0	**0**	**0**

Session Total	6	3704	744	1	70	7	1	6	30	0	0	0	0	**4569**
Session Average	0.06	38.58	7.75	0.01	0.73	0.07	0.01	0.06	0.31	0.00	0.00	0.00	0.00	**47.59**
Session Percentage	0.13	81.07	16.28	0.02	1.53	0.15	0.02	0.13	0.66	0.00	0.00	0.00	0.00	

AM Peak Hour	0800 - 0900	0730 - 0830	0745 - 0845	-	0900 - 1000	-	0545 - 0645	0900 - 1000	0645 - 0745	-	-	-	-	**0745 - 0845**
AM Peak Hour Volume	4	423	82	0	9	0	1	1	4	0	0	0	0	**512**

Noon Peak Hour	-	1445 - 1545	1445 - 1545	1300 - 1400	1030 - 1130	1045 - 1145	-	1115 - 1215	1115 - 1215	-	-	-	-	**1445 - 1545**
Noon Peak Hour Volume	0	312	70	1	12	3	0	2	6	0	0	0	0	**390**

PM Peak Hour	1745 - 1845	1500 - 1600	1500 - 1600	-	1500 - 1600	1545 - 1645	-	1500 - 1600	1515 - 1615	-	-	-	-	**1500 - 1600**
PM Peak Hour Volume	2	326	74	0	8	2	0	1	3	0	0	0	0	**412**

Bi-Directional Class Count || NB EB Average 15min

Columbia, SC

Marr Traffic DATA COLLECTION
www.marrtraffic.com

Site 36
I-26 N/Bound Off-Ramp,
south of St Andrews Rd

Date
Tuesday, April 23, 2024

Lat/Long
34.043382°, -81.116208°

Weather
Fair
58°F

0000 - 2400 (Weekday 24h Session) (All Dates)
NB EB Average 15min

	NB EB Average 15min													15min	60min
Time	1	2	3	4	5	6	7	8	9	10	11	12	13	Total	Total
0000 - 0015	0	13	1	0	0	0	0	0	0	0	0	0	0	**14**	
0015 - 0030	0	8	0	0	0	0	0	0	0	0	0	0	0	**8**	
0030 - 0045	0	9	0	0	0	0	0	0	0	0	0	0	0	**9**	
0045 - 0100	0	8	0	0	0	0	0	0	1	0	0	0	0	**9**	**40**
0100 - 0115	0	7	0	0	0	0	0	0	0	0	0	0	0	**8**	
0115 - 0130	0	7	0	0	0	0	0	0	0	0	0	0	0	**7**	
0130 - 0145	0	7	0	0	0	0	0	0	0	0	0	0	0	**7**	
0145 - 0200	0	6	1	0	0	0	0	0	0	0	0	0	0	**7**	**28**
0200 - 0215	0	10	1	0	0	0	0	0	0	0	0	0	0	**10**	
0215 - 0230	0	6	1	0	0	0	0	0	0	0	0	0	0	**7**	
0230 - 0245	0	3	0	0	0	0	0	0	0	0	0	0	0	**3**	
0245 - 0300	0	2	0	0	0	0	0	0	0	0	0	0	0	**2**	**23**
0300 - 0315	0	4	0	0	0	0	0	0	0	0	0	0	0	**4**	
0315 - 0330	0	5	0	0	0	0	0	0	0	0	0	0	0	**5**	
0330 - 0345	0	4	0	0	0	0	0	0	0	0	0	0	0	**4**	
0345 - 0400	0	3	0	0	0	0	0	0	0	0	0	0	0	**3**	**16**
0400 - 0415	0	6	1	0	0	0	0	0	0	0	0	0	0	**7**	
0415 - 0430	0	4	1	0	0	0	0	0	0	0	0	0	0	**5**	
0430 - 0445	0	6	0	0	0	0	0	0	0	0	0	0	0	**6**	
0445 - 0500	0	8	2	0	0	0	0	0	0	0	0	0	0	**10**	**28**
0500 - 0515	0	8	1	0	0	0	0	0	0	0	0	0	0	**10**	
0515 - 0530	0	11	1	0	0	0	0	0	0	0	0	0	0	**12**	
0530 - 0545	0	15	2	0	0	0	0	0	0	0	0	0	0	**17**	
0545 - 0600	0	20	2	0	0	0	0	0	0	0	0	0	0	**22**	**61**
0600 - 0615	0	14	1	0	0	0	0	0	0	0	0	0	0	**15**	
0615 - 0630	0	24	4	0	0	0	0	0	0	0	0	0	0	**28**	
0630 - 0645	0	35	4	0	0	0	0	0	0	0	0	0	0	**40**	
0645 - 0700	0	43	12	0	0	0	0	0	1	0	0	0	0	**56**	**139**
0700 - 0715	0	45	13	0	1	0	0	0	0	0	0	0	0	**60**	
0715 - 0730	0	56	15	0	0	0	0	0	0	0	0	0	0	**72**	
0730 - 0745	0	58	17	0	1	0	0	0	0	0	0	0	0	**76**	
0745 - 0800	0	81	14	0	2	1	0	0	0	0	0	0	0	**98**	**305**
0800 - 0815	0	68	11	0	0	0	0	0	0	0	0	0	0	**80**	
0815 - 0830	1	73	13	0	1	0	0	0	0	0	0	0	0	**87**	
0830 - 0845	0	53	15	0	1	0	0	0	0	0	0	0	0	**68**	
0845 - 0900	1	65	13	0	1	0	0	0	0	0	0	0	0	**80**	**316**
0900 - 0915	0	43	10	0	2	0	0	0	0	0	0	0	0	**56**	
0915 - 0930	0	43	11	0	2	0	0	0	0	0	0	0	0	**56**	
0930 - 0945	0	42	14	0	2	1	0	0	0	0	0	0	0	**59**	
0945 - 1000	0	37	11	0	1	1	0	0	0	0	0	0	0	**50**	**221**
1000 - 1015	0	37	8	0	1	0	0	0	1	0	0	0	0	**46**	
1015 - 1030	0	32	9	0	1	0	0	0	0	0	0	0	0	**43**	
1030 - 1045	0	38	8	0	1	0	0	0	1	0	0	0	0	**48**	
1045 - 1100	0	39	9	0	2	0	0	0	0	0	0	0	0	**50**	**187**
1100 - 1115	0	34	9	0	2	1	0	0	0	0	0	0	0	**46**	
1115 - 1130	0	35	10	0	1	1	0	0	0	0	0	0	0	**46**	
1130 - 1145	0	29	10	0	1	1	0	0	0	0	0	0	0	**41**	
1145 - 1200	0	35	8	0	1	1	0	1	1	0	0	0	0	**45**	**178**
1200 - 1215	0	43	9	0	1	0	0	0	1	0	0	0	0	**54**	
1215 - 1230	0	39	9	0	1	0	0	0	0	0	0	0	0	**49**	
1230 - 1245	0	39	9	0	0	0	0	0	0	0	0	0	0	**49**	
1245 - 1300	0	45	9	0	1	0	0	0	0	0	0	0	0	**55**	**207**
1300 - 1315	0	35	8	1	1	0	0	0	0	0	0	0	0	**45**	
1315 - 1330	0	45	9	0	1	0	0	0	0	0	0	0	0	**55**	
1330 - 1345	0	43	9	0	1	0	0	0	0	0	0	0	0	**54**	
1345 - 1400	0	49	9	0	2	0	0	0	0	0	0	0	0	**60**	**214**
1400 - 1415	0	45	10	0	0	0	0	0	0	0	0	0	0	**56**	
1415 - 1430	0	36	9	0	1	1	0	0	0	0	0	0	0	**47**	
1430 - 1445	0	40	11	0	1	0	0	0	0	0	0	0	0	**52**	
1445 - 1500	0	44	10	1	0	0	0	0	0	0	0	0	0	**55**	**210**
1500 - 1515	0	47	15	0	1	1	0	0	0	0	0	0	0	**63**	
1515 - 1530	0	48	9	0	1	0	0	0	0	0	0	0	0	**59**	
1530 - 1545	0	52	11	0	1	0	0	0	0	0	0	0	0	**65**	
1545 - 1600	0	47	12	0	0	1	0	0	0	0	0	0	0	**61**	**248**
1600 - 1615	0	43	9	0	1	0	0	0	1	0	0	0	0	**55**	
1615 - 1630	0	43	9	0	0	0	0	0	0	0	0	0	0	**52**	
1630 - 1645	0	42	10	0	0	1	0	0	0	0	0	0	0	**53**	
1645 - 1700	0	45	6	0	0	0	0	0	0	0	0	0	0	**52**	**211**
1700 - 1715	0	47	4	0	1	0	0	0	0	0	0	0	0	**52**	
1715 - 1730	0	45	7	0	0	0	0	0	0	0	0	0	0	**52**	
1730 - 1745	0	43	11	0	1	0	0	0	0	0	0	0	0	**55**	
1745 - 1800	0	46	7	0	0	0	0	0	0	0	0	0	0	**54**	**213**
1800 - 1815	0	46	8	0	1	0	0	0	0	0	0	0	0	**55**	
1815 - 1830	0	38	6	0	0	0	0	0	0	0	0	0	0	**44**	
1830 - 1845	0	44	6	0	1	0	0	0	0	0	0	0	0	**52**	
1845 - 1900	0	44	9	0	0	0	0	0	0	0	0	0	0	**53**	**204**
1900 - 1915	0	37	3	0	0	0	0	0	0	0	0	0	0	**40**	
1915 - 1930	0	36	4	0	0	0	0	0	0	0	0	0	0	**40**	
1930 - 1945	0	31	5	0	0	0	0	0	0	0	0	0	0	**36**	
1945 - 2000	0	27	3	0	0	0	0	0	0	0	0	0	0	**30**	**146**
2000 - 2015	0	38	4	0	0	0	0	0	0	0	0	0	0	**43**	
2015 - 2030	0	31	2	0	0	0	0	0	0	0	0	0	0	**33**	
2030 - 2045	0	29	1	0	0	0	0	0	0	0	0	0	0	**30**	
2045 - 2100	0	28	1	0	0	0	0	0	0	0	0	0	0	**28**	**134**
2100 - 2115	0	22	1	0	0	0	0	0	0	0	0	0	0	**23**	
2115 - 2130	0	27	1	0	0	0	0	0	0	0	0	0	0	**28**	
2130 - 2145	0	24	1	0	0	0	0	0	0	0	0	0	0	**25**	
2145 - 2200	0	21	0	0	0	0	0	0	0	0	0	0	0	**21**	**97**
2200 - 2215	0	20	0	0	0	0	0	0	0	0	0	0	0	**20**	
2215 - 2230	0	26	0	0	0	0	0	0	0	0	0	0	0	**27**	
2230 - 2245	0	22	0	0	0	0	0	0	0	0	0	0	0	**22**	
2245 - 2300	0	19	0	0	0	0	0	0	0	0	0	0	0	**20**	**89**
2300 - 2315	0	19	0	0	0	0	0	0	0	0	0	0	0	**19**	
2315 - 2330	0	19	0	0	0	0	0	0	0	0	0	0	0	**19**	
2330 - 2345	0	14	0	0	0	0	0	0	0	0	0	0	0	**14**	
2345 - 0000	0	16	0	0	0	0	0	0	0	0	0	0	0	**16**	**69**

Session Total	5	2966	539	2	44	11	0	2	13	0	0	0	0	**3583**
Session Average	0.05	30.90	5.61	0.02	0.46	0.11	0.00	0.02	0.14	0.00	0.00	0.00	0.00	**37.32**
Session Percentage	0.13	82.80	15.04	0.06	1.23	0.31	0.01	0.07	0.37	0.00	0.00	0.00	0.00	

AM Peak Hour	0800 - 0900	0730 - 0830	0700 - 0800	-	0900 - 1000	0915 - 1015	0545 - 0645	0900 - 1000	0945 - 1045	-	-	-	-	**0730 - 0830**
AM Peak Volume	2	280	59	0	7	2	0	0	2	0	0	0	0	**341**

Noon Peak Hour	1445 - 1545	1445 - 1545	1415 - 1515	1300 - 1400	1045 - 1145	1100 - 1200	-	1115 - 1215	1145 - 1245	-	-	-	-	**1445 - 1545**
Noon Peak Volume	1	191	45	1	5	3	0	1	2	0	0	0	0	**242**

PM Peak Hour	1500 - 1600	1500 - 1600	1500 - 1600	-	1515 - 1615	1500 - 1600	-	1500 - 1600	1515 - 1615	-	-	-	-	**1500 - 1600**
PM Peak Volume	1	194	46	0	4	2	0	0	1	0	0	0	0	**248**

Bi-Directional Class Count || Volume Summary 15min

Columbia, SC

Marr Traffic DATA COLLECTION

www.marrtraffic.com

Site 36

I-26 N/Bound Off-Ramp,
south of St Andrews Rd

Date

Tuesday, April 23, 2024

Lat/Long

34.043382°, -81.116208°

Weather

Fair
58°F

Click here for Detailed Weather

0000 - 2400 (Weekday 24h Session) (04-23-2024)

Volume Summary 15min

	Volume Summary 15min		15min	60min
TIME	NB	SB	Total	Total
0000 - 0015	0	0	**0**	
0015 - 0030	0	0	**0**	
0030 - 0045	0	0	**0**	
0045 - 0100	0	0	**0**	**0**
0100 - 0115	0	0	**0**	
0115 - 0130	0	0	**0**	
0130 - 0145	0	0	**0**	
0145 - 0200	0	0	**0**	**0**
0200 - 0215	0	0	**0**	
0215 - 0230	0	0	**0**	
0230 - 0245	0	0	**0**	
0245 - 0300	0	0	**0**	**0**
0300 - 0315	0	0	**0**	
0315 - 0330	0	0	**0**	
0330 - 0345	0	0	**0**	
0345 - 0400	0	0	**0**	**0**
0400 - 0415	0	0	**0**	
0415 - 0430	0	0	**0**	
0430 - 0445	0	0	**0**	
0445 - 0500	0	0	**0**	**0**
0500 - 0515	0	0	**0**	
0515 - 0530	0	0	**0**	
0530 - 0545	0	0	**0**	
0545 - 0600	0	0	**0**	**0**
0600 - 0615	0	0	**0**	
0615 - 0630	0	0	**0**	
0630 - 0645	0	0	**0**	
0645 - 0700	0	0	**0**	**0**
0700 - 0715	0	0	**0**	
0715 - 0730	0	0	**0**	
0730 - 0745	0	0	**0**	
0745 - 0800	0	0	**0**	**0**
0800 - 0815	0	0	**0**	
0815 - 0830	0	0	**0**	
0830 - 0845	0	0	**0**	
0845 - 0900	0	0	**0**	**0**
0900 - 0915	0	0	**0**	
0915 - 0930	0	0	**0**	
0930 - 0945	0	0	**0**	
0945 - 1000	0	0	**0**	**0**
1000 - 1015	0	0	**0**	
1015 - 1030	0	0	**0**	
1030 - 1045	0	0	**0**	
1045 - 1100	0	0	**0**	**0**
1100 - 1115	0	0	**0**	
1115 - 1130	0	0	**0**	
1130 - 1145	0	0	**0**	
1145 - 1200	0	0	**0**	**0**

	Volume Summary 15min		15min	60min
Time	NB	SB	Total	Total
1200 - 1215	0	0	**0**	
1215 - 1230	0	0	**0**	
1230 - 1245	0	0	**0**	
1245 - 1300	0	0	**0**	**0**
1300 - 1315	0	0	**0**	
1315 - 1330	0	0	**0**	
1330 - 1345	0	0	**0**	
1345 - 1400	0	0	**0**	**0**
1400 - 1415	0	0	**0**	
1415 - 1430	0	0	**0**	
1430 - 1445	0	0	**0**	
1445 - 1500	0	0	**0**	**0**
1500 - 1515	0	0	**0**	
1515 - 1530	0	0	**0**	
1530 - 1545	0	0	**0**	
1545 - 1600	0	0	**0**	**0**
1600 - 1615	0	0	**0**	
1615 - 1630	0	0	**0**	
1630 - 1645	0	0	**0**	
1645 - 1700	0	0	**0**	**0**
1700 - 1715	0	0	**0**	
1715 - 1730	0	0	**0**	
1730 - 1745	0	0	**0**	
1745 - 1800	0	0	**0**	**0**
1800 - 1815	0	0	**0**	
1815 - 1830	0	0	**0**	
1830 - 1845	0	0	**0**	
1845 - 1900	0	0	**0**	**0**
1900 - 1915	60	0	**60**	
1915 - 1930	45	0	**45**	
1930 - 1945	54	0	**54**	
1945 - 2000	40	0	**40**	**199**
2000 - 2015	50	0	**50**	
2015 - 2030	44	0	**44**	
2030 - 2045	38	0	**38**	
2045 - 2100	40	0	**40**	**172**
2100 - 2115	42	0	**42**	
2115 - 2130	36	0	**36**	
2130 - 2145	34	0	**34**	
2145 - 2200	36	0	**36**	**148**
2200 - 2215	34	0	**34**	
2215 - 2230	46	0	**46**	
2230 - 2245	30	0	**30**	
2245 - 2300	25	0	**25**	**135**
2300 - 2315	21	0	**21**	
2315 - 2330	26	0	**26**	
2330 - 2345	17	0	**17**	
2345 - 0000	18	0	**18**	**82**

Session Total	736	0	**736**
Session Average	7.67	0.00	**7.67**
Session Percentage	100.00	0.00	

Site 36

I-26 N/Bound Off-Ramp,
south of St Andrews Rd

Date

Wednesday, April 24, 2024

Lat/Long

34.043382°, -81.116208°

Weather

Fair
66°F

Click here for Detailed Weather

0000 - 2400 (Weekday 24h Session) (04-24-2024)

Volume Summary 15min

TIME	Volume Summary 15min NB	SB	15min Total	60min Total
0000 - 0015	19	0	**19**	
0015 - 0030	11	0	**11**	
0030 - 0045	15	0	**15**	
0045 - 0100	8	0	**8**	**53**
0100 - 0115	11	0	**11**	
0115 - 0130	10	0	**10**	
0130 - 0145	9	0	**9**	
0145 - 0200	9	0	**9**	**39**
0200 - 0215	9	0	**9**	
0215 - 0230	13	0	**13**	
0230 - 0245	6	0	**6**	
0245 - 0300	4	0	**4**	**32**
0300 - 0315	5	0	**5**	
0315 - 0330	8	0	**8**	
0330 - 0345	7	0	**7**	
0345 - 0400	4	0	**4**	**24**
0400 - 0415	13	0	**13**	
0415 - 0430	5	0	**5**	
0430 - 0445	9	0	**9**	
0445 - 0500	10	0	**10**	**37**
0500 - 0515	16	0	**16**	
0515 - 0530	20	0	**20**	
0530 - 0545	23	0	**23**	
0545 - 0600	34	0	**34**	**93**
0600 - 0615	23	0	**23**	
0615 - 0630	35	0	**35**	
0630 - 0645	62	0	**62**	
0645 - 0700	86	0	**86**	**206**
0700 - 0715	102	0	**102**	
0715 - 0730	107	0	**107**	
0730 - 0745	132	0	**132**	
0745 - 0800	150	0	**150**	**491**
0800 - 0815	115	0	**115**	
0815 - 0830	117	0	**117**	
0830 - 0845	107	0	**107**	
0845 - 0900	116	0	**116**	**455**
0900 - 0915	83	0	**83**	
0915 - 0930	90	0	**90**	
0930 - 0945	91	0	**91**	
0945 - 1000	85	0	**85**	**349**
1000 - 1015	68	0	**68**	
1015 - 1030	71	0	**71**	
1030 - 1045	73	0	**73**	
1045 - 1100	75	0	**75**	**287**
1100 - 1115	65	0	**65**	
1115 - 1130	82	0	**82**	
1130 - 1145	68	0	**68**	
1145 - 1200	82	0	**82**	**297**

Time	Volume Summary 15min NB	SB	15min Total	60min Total
1200 - 1215	79	0	**79**	
1215 - 1230	82	0	**82**	
1230 - 1245	78	0	**78**	
1245 - 1300	74	0	**74**	**313**
1300 - 1315	63	0	**63**	
1315 - 1330	80	0	**80**	
1330 - 1345	80	0	**80**	
1345 - 1400	85	0	**85**	**308**
1400 - 1415	74	0	**74**	
1415 - 1430	67	0	**67**	
1430 - 1445	72	0	**72**	
1445 - 1500	81	0	**81**	**294**
1500 - 1515	95	0	**95**	
1515 - 1530	89	0	**89**	
1530 - 1545	71	0	**71**	
1545 - 1600	76	0	**76**	**331**
1600 - 1615	84	0	**84**	
1615 - 1630	88	0	**88**	
1630 - 1645	81	0	**81**	
1645 - 1700	83	0	**83**	**336**
1700 - 1715	86	0	**86**	
1715 - 1730	68	0	**68**	
1730 - 1745	80	0	**80**	
1745 - 1800	91	0	**91**	**325**
1800 - 1815	87	0	**87**	
1815 - 1830	61	0	**61**	
1830 - 1845	77	0	**77**	
1845 - 1900	79	0	**79**	**304**
1900 - 1915	61	0	**61**	
1915 - 1930	74	0	**74**	
1930 - 1945	54	0	**54**	
1945 - 2000	50	0	**50**	**239**
2000 - 2015	80	0	**80**	
2015 - 2030	54	0	**54**	
2030 - 2045	52	0	**52**	
2045 - 2100	45	0	**45**	**231**
2100 - 2115	28	0	**28**	
2115 - 2130	47	0	**47**	
2130 - 2145	40	0	**40**	
2145 - 2200	28	0	**28**	**143**
2200 - 2215	27	0	**27**	
2215 - 2230	34	0	**34**	
2230 - 2245	36	0	**36**	
2245 - 2300	34	0	**34**	**131**
2300 - 2315	37	0	**37**	
2315 - 2330	32	0	**32**	
2330 - 2345	25	0	**25**	
2345 - 0000	31	0	**31**	**125**

Session Total	5443	0	**5443**
Session Average	56.70	0.00	**56.70**
Session Percentage	100.00	0.00	

Site 36
I-26 N/Bound Off-Ramp,
south of St Andrews Rd

Date
Thursday, April 25, 2024

Lat/Long
34.043382°, -81.116208°

Weather
Fair
67°F

Click here for Detailed Weather

0000 - 2400 (Weekday 24h Session) (04-25-2024)
Volume Summary 15min

TIME	Volume Summary 15min NB	SB	15min Total	60min Total
0000 - 0015	22	0	**22**	
0015 - 0030	13	0	**13**	
0030 - 0045	12	0	**12**	
0045 - 0100	19	0	**19**	**66**
0100 - 0115	12	0	**12**	
0115 - 0130	11	0	**11**	
0130 - 0145	11	0	**11**	
0145 - 0200	12	0	**12**	**46**
0200 - 0215	22	0	**22**	
0215 - 0230	8	0	**8**	
0230 - 0245	3	0	**3**	
0245 - 0300	3	0	**3**	**36**
0300 - 0315	7	0	**7**	
0315 - 0330	7	0	**7**	
0330 - 0345	4	0	**4**	
0345 - 0400	5	0	**5**	**23**
0400 - 0415	9	0	**9**	
0415 - 0430	9	0	**9**	
0430 - 0445	9	0	**9**	
0445 - 0500	20	0	**20**	**47**
0500 - 0515	13	0	**13**	
0515 - 0530	16	0	**16**	
0530 - 0545	28	0	**28**	
0545 - 0600	32	0	**32**	**89**
0600 - 0615	23	0	**23**	
0615 - 0630	48	0	**48**	
0630 - 0645	58	0	**58**	
0645 - 0700	81	0	**81**	**210**
0700 - 0715	77	0	**77**	
0715 - 0730	109	0	**109**	
0730 - 0745	95	0	**95**	
0745 - 0800	144	0	**144**	**425**
0800 - 0815	125	0	**125**	
0815 - 0830	145	0	**145**	
0830 - 0845	98	0	**98**	
0845 - 0900	125	0	**125**	**493**
0900 - 0915	85	0	**85**	
0915 - 0930	77	0	**77**	
0930 - 0945	86	0	**86**	
0945 - 1000	66	0	**66**	**314**
1000 - 1015	70	0	**70**	
1015 - 1030	57	0	**57**	
1030 - 1045	70	0	**70**	
1045 - 1100	76	0	**76**	**273**
1100 - 1115	72	0	**72**	
1115 - 1130	56	0	**56**	
1130 - 1145	55	0	**55**	
1145 - 1200	54	0	**54**	**237**

Time	Volume Summary 15min NB	SB	15min Total	60min Total
1200 - 1215	84	0	**84**	
1215 - 1230	64	0	**64**	
1230 - 1245	68	0	**68**	
1245 - 1300	92	0	**92**	**308**
1300 - 1315	72	0	**72**	
1315 - 1330	84	0	**84**	
1330 - 1345	82	0	**82**	
1345 - 1400	96	0	**96**	**334**
1400 - 1415	94	0	**94**	
1415 - 1430	74	0	**74**	
1430 - 1445	84	0	**84**	
1445 - 1500	84	0	**84**	**336**
1500 - 1515	95	0	**95**	
1515 - 1530	88	0	**88**	
1530 - 1545	123	0	**123**	
1545 - 1600	106	0	**106**	**412**
1600 - 1615	80	0	**80**	
1615 - 1630	67	0	**67**	
1630 - 1645	79	0	**79**	
1645 - 1700	72	0	**72**	**298**
1700 - 1715	70	0	**70**	
1715 - 1730	89	0	**89**	
1730 - 1745	85	0	**85**	
1745 - 1800	71	0	**71**	**315**
1800 - 1815	78	0	**78**	
1815 - 1830	72	0	**72**	
1830 - 1845	78	0	**78**	
1845 - 1900	79	0	**79**	**307**
1900 - 1915	0	0	**0**	
1915 - 1930	0	0	**0**	
1930 - 1945	0	0	**0**	
1945 - 2000	0	0	**0**	**0**
2000 - 2015	0	0	**0**	
2015 - 2030	0	0	**0**	
2030 - 2045	0	0	**0**	
2045 - 2100	0	0	**0**	**0**
2100 - 2115	0	0	**0**	
2115 - 2130	0	0	**0**	
2130 - 2145	0	0	**0**	
2145 - 2200	0	0	**0**	**0**
2200 - 2215	0	0	**0**	
2215 - 2230	0	0	**0**	
2230 - 2245	0	0	**0**	
2245 - 2300	0	0	**0**	**0**
2300 - 2315	0	0	**0**	
2315 - 2330	0	0	**0**	
2330 - 2345	0	0	**0**	
2345 - 0000	0	0	**0**	**0**

Session Total	4569	0	**4569**
Session Average	47.59	0.00	**47.59**
Session Percentage	100.00	0.00	

Bi-Directional Class Count || NB EB 60min

Columbia, SC

Marr Traffic DATA COLLECTION

www.marrtraffic.com

Site 36
I-26 N/Bound Off-Ramp,
south of St Andrews Rd

Date
Tuesday, April 23, 2024

Lat/Long
34.043382°, -81.116208°

Weather
Fair
58°F

Click here for Detailed Weather

0000 - 2400 (Weekday 24h Session) (04-23-2024)
NB EB 60min

	Northbound (Movement 36.1)													
TIME	1	2	3	4	5	6	7	8	9	10	11	12	13	**Total**
0000 - 0100	0	0	0	0	0	0	0	0	0	0	0	0	0	**0**
0100 - 0200	0	0	0	0	0	0	0	0	0	0	0	0	0	**0**
0200 - 0300	0	0	0	0	0	0	0	0	0	0	0	0	0	**0**
0300 - 0400	0	0	0	0	0	0	0	0	0	0	0	0	0	**0**
0400 - 0500	0	0	0	0	0	0	0	0	0	0	0	0	0	**0**
0500 - 0600	0	0	0	0	0	0	0	0	0	0	0	0	0	**0**
0600 - 0700	0	0	0	0	0	0	0	0	0	0	0	0	0	**0**
0700 - 0800	0	0	0	0	0	0	0	0	0	0	0	0	0	**0**
0800 - 0900	0	0	0	0	0	0	0	0	0	0	0	0	0	**0**
0900 - 1000	0	0	0	0	0	0	0	0	0	0	0	0	0	**0**
1000 - 1100	0	0	0	0	0	0	0	0	0	0	0	0	0	**0**
1100 - 1200	0	0	0	0	0	0	0	0	0	0	0	0	0	**0**
1200 - 1300	0	0	0	0	0	0	0	0	0	0	0	0	0	**0**
1300 - 1400	0	0	0	0	0	0	0	0	0	0	0	0	0	**0**
1400 - 1500	0	0	0	0	0	0	0	0	0	0	0	0	0	**0**
1500 - 1600	0	0	0	0	0	0	0	0	0	0	0	0	0	**0**
1600 - 1700	0	0	0	0	0	0	0	0	0	0	0	0	0	**0**
1700 - 1800	0	0	0	0	0	0	0	0	0	0	0	0	0	**0**
1800 - 1900	0	0	0	0	0	0	0	0	0	0	0	0	0	**0**
1900 - 2000	0	174	25	0	0	0	0	0	0	0	0	0	0	**199**
2000 - 2100	0	167	3	0	2	0	0	0	0	0	0	0	0	**172**
2100 - 2200	0	144	3	0	1	0	0	0	0	0	0	0	0	**148**
2200 - 2300	0	133	1	0	1	0	0	0	0	0	0	0	0	**135**
2300 - 2400	0	81	1	0	0	0	0	0	0	0	0	0	0	**82**
Session Total	0	699	33	0	4	0	0	0	0	0	0	0	0	**736**
Session Average	0.00	29.13	1.38	0.00	0.17	0.00	0.00	0.00	0.00	0.00	0.00	0.00	0.00	**30.67**
Session Percentage	0.00	94.97	4.48	0.00	0.54	0.00	0.00	0.00	0.00	0.00	0.00	0.00	0.00	
AM Peak Hour	-	-	-	-	-	-	-	-	-	-	-	-	-	**-**
AM Peak Volume	0	0	0	0	0	0	0	0	0	0	0	0	0	**0**
Noon Peak Hour	-	-	-	-	-	-	-	-	-	-	-	-	-	**-**
Noon Peak Volume	0	0	0	0	0	0	0	0	0	0	0	0	0	**0**
PM Peak Hour	-	1900 - 2000	1900 - 2000	-	-	-	-	-	-	-	-	-	-	**1900 - 2000**
PM Peak Volume	0	174	25	0	0	0	0	0	0	0	0	0	0	**199**

Site 36
I-26 N/Bound Off-Ramp,
south of St Andrews Rd

Date
Wednesday, April 24, 2024

Lat/Long
34.043382°, -81.116208°

Weather
Fair
66°F

Click here for Detailed Weather

0000 - 2400 (Weekday 24h Session) (04-24-2024)
NB EB 60min

	Northbound (Movement 36.1)													
TIME	1	2	3	4	5	6	7	8	9	10	11	12	13	**Total**
0000 - 0100	0	50	1	0	1	0	0	0	1	0	0	0	0	**53**
0100 - 0200	0	38	0	0	1	0	0	0	0	0	0	0	0	**39**
0200 - 0300	0	32	0	0	0	0	0	0	0	0	0	0	0	**32**
0300 - 0400	0	24	0	0	0	0	0	0	0	0	0	0	0	**24**
0400 - 0500	0	35	1	0	1	0	0	0	0	0	0	0	0	**37**
0500 - 0600	0	89	2	0	2	0	0	0	0	0	0	0	0	**93**
0600 - 0700	0	172	34	0	0	0	0	0	0	0	0	0	0	**206**
0700 - 0800	1	380	101	0	6	2	0	0	1	0	0	0	0	**491**
0800 - 0900	3	374	77	0	1	0	0	0	0	0	0	0	0	**455**
0900 - 1000	1	261	71	0	11	4	0	0	1	0	0	0	0	**349**
1000 - 1100	0	219	59	0	4	3	0	0	2	0	0	0	0	**287**
1100 - 1200	0	218	67	0	4	6	0	1	1	0	0	0	0	**297**
1200 - 1300	0	252	52	0	7	1	0	0	1	0	0	0	0	**313**
1300 - 1400	0	241	60	2	3	2	0	0	0	0	0	0	0	**308**
1400 - 1500	0	229	56	3	4	2	0	0	0	0	0	0	0	**294**
1500 - 1600	2	257	64	0	3	4	0	0	1	0	0	0	0	**331**
1600 - 1700	0	269	63	0	2	1	0	0	1	0	0	0	0	**336**
1700 - 1800	0	283	39	0	2	1	0	0	0	0	0	0	0	**325**
1800 - 1900	0	254	45	0	5	0	0	0	0	0	0	0	0	**304**
1900 - 2000	0	219	19	0	0	0	0	0	1	0	0	0	0	**239**
2000 - 2100	1	211	19	0	0	0	0	0	0	0	0	0	0	**231**
2100 - 2200	0	136	6	0	1	0	0	0	0	0	0	0	0	**143**
2200 - 2300	0	129	2	0	0	0	0	0	0	0	0	0	0	**131**
2300 - 2400	0	124	1	0	0	0	0	0	0	0	0	0	0	**125**

Session Total	8	4496	839	5	58	26	0	1	10	0	0	0	0	**5443**
Session Average	0.33	187.33	34.96	0.21	2.42	1.08	0.00	0.04	0.42	0.00	0.00	0.00	0.00	**226.79**
Session Percentage	0.15	82.60	15.41	0.09	1.07	0.48	0.00	0.02	0.18	0.00	0.00	0.00	0.00	

AM Peak Hour	0800 - 0900	0700 - 0800	0700 - 0800	-	0900 - 1000	0900 - 1000	-	-	0700 - 0800	-	-	-	-	**0700 - 0800**
AM Peak Volume	3	380	101	0	11	4	0	0	1	0	0	0	0	**491**

Noon Peak Hour	-	1200 - 1300	1100 - 1200	1400 - 1500	1200 - 1300	1100 - 1200	-	1100 - 1200	1000 - 1100	-	-	-	-	**1200 - 1300**
Noon Peak Volume	0	252	67	3	7	6	0	1	2	0	0	0	0	**313**

PM Peak Hour	1500 - 1600	1700 - 1800	1500 - 1600	-	1800 - 1900	1500 - 1600	-	-	1500 - 1600	-	-	-	-	**1600 - 1700**
PM Peak Volume	2	283	64	0	5	4	0	0	1	0	0	0	0	**336**

Site 36
I-26 N/Bound Off-Ramp,
south of St Andrews Rd

Date
Thursday, April 25, 2024

Weather
Fair
67°F

Lat/Long
34.043382°, -81.116208°

Click here for Detailed Weather

0000 - 2400 (Weekday 24h Session) (04-25-2024)
NB EB 60min

	Northbound (Movement 36.1)													
TIME	1	2	3	4	5	6	7	8	9	10	11	12	13	**Total**
0000 - 0100	0	63	2	0	0	0	0	0	1	0	0	0	0	**66**
0100 - 0200	0	43	3	0	0	0	0	0	0	0	0	0	0	**46**
0200 - 0300	0	30	6	0	0	0	0	0	0	0	0	0	0	**36**
0300 - 0400	0	23	0	0	0	0	0	0	0	0	0	0	0	**23**
0400 - 0500	0	36	10	0	0	0	0	0	1	0	0	0	0	**47**
0500 - 0600	0	73	14	0	0	0	0	0	2	0	0	0	0	**89**
0600 - 0700	0	176	29	0	1	0	1	0	3	0	0	0	0	**210**
0700 - 0800	0	341	77	0	5	0	0	0	2	0	0	0	0	**425**
0800 - 0900	4	401	79	0	7	0	0	0	2	0	0	0	0	**493**
0900 - 1000	0	234	68	0	9	0	0	1	2	0	0	0	0	**314**
1000 - 1100	0	217	44	0	8	0	0	0	4	0	0	0	0	**273**
1100 - 1200	0	181	41	0	8	3	0	1	3	0	0	0	0	**237**
1200 - 1300	0	245	55	0	3	0	0	1	4	0	0	0	0	**308**
1300 - 1400	0	275	46	1	11	0	0	0	1	0	0	0	0	**334**
1400 - 1500	0	266	64	0	3	1	0	1	1	0	0	0	0	**336**
1500 - 1600	0	326	74	0	8	1	0	1	2	0	0	0	0	**412**
1600 - 1700	0	252	41	0	3	1	0	0	1	0	0	0	0	**298**
1700 - 1800	0	263	48	0	3	1	0	0	0	0	0	0	0	**315**
1800 - 1900	2	259	43	0	1	0	0	1	1	0	0	0	0	**307**
1900 - 2000	0	0	0	0	0	0	0	0	0	0	0	0	0	**0**
2000 - 2100	0	0	0	0	0	0	0	0	0	0	0	0	0	**0**
2100 - 2200	0	0	0	0	0	0	0	0	0	0	0	0	0	**0**
2200 - 2300	0	0	0	0	0	0	0	0	0	0	0	0	0	**0**
2300 - 2400	0	0	0	0	0	0	0	0	0	0	0	0	0	**0**

Session Total	6	3704	744	1	70	7	1	6	30	0	0	0	0	**4569**
Session Average	0.25	154.33	31.00	0.04	2.92	0.29	0.04	0.25	1.25	0.00	0.00	0.00	0.00	**190.38**
Session Percentage	0.13	81.07	16.28	0.02	1.53	0.15	0.02	0.13	0.66	0.00	0.00	0.00	0.00	

AM Peak Hour	0800 - 0900	0800 - 0900	0800 - 0900	-	0900 - 1000	-	0600 - 0700	0900 - 1000	0600 - 0700	-	-	-	-	**0800 - 0900**
AM Peak Hour Volume	4	401	79	0	9	0	1	1	3	0	0	0	0	**493**

Noon Peak Hour	-	1300 - 1400	1400 - 1500	1300 - 1400	1300 - 1400	1100 - 1200	-	1100 - 1200	1000 - 1100	-	-	-	-	**1400 - 1500**
Noon Peak Hour Volume	0	275	64	1	11	3	0	1	4	0	0	0	0	**336**

PM Peak Hour	1800 - 1900	1500 - 1600	1500 - 1600	-	1500 - 1600	1500 - 1600	-	1500 - 1600	1500 - 1600	-	-	-	-	**1500 - 1600**
PM Peak Hour Volume	2	326	74	0	8	1	0	1	2	0	0	0	0	**412**

Bi-Directional Class Count || Volume Summary 60min

Columbia, SC

Marr Traffic DATA COLLECTION

www.marrtraffic.com

Site 36

I-26 N/Bound Off-Ramp,
south of St Andrews Rd

Date

Tuesday, April 23, 2024

Lat/Long

34.043382°, -81.116208°

Weather

Fair
58°F

Click here for Detailed Weather

0000 - 2400 (Weekday 24h Session) (04-23-2024)

Volume Summary 60min

	Volume Summary 60min		
TIME	NB	SB	**Total**
0000 - 0100	0	0	**0**
0100 - 0200	0	0	**0**
0200 - 0300	0	0	**0**
0300 - 0400	0	0	**0**
0400 - 0500	0	0	**0**
0500 - 0600	0	0	**0**
0600 - 0700	0	0	**0**
0700 - 0800	0	0	**0**
0800 - 0900	0	0	**0**
0900 - 1000	0	0	**0**
1000 - 1100	0	0	**0**
1100 - 1200	0	0	**0**

	Volume Summary 60min		
Time	NB	SB	**Total**
1200 - 1300	0	0	**0**
1300 - 1400	0	0	**0**
1400 - 1500	0	0	**0**
1500 - 1600	0	0	**0**
1600 - 1700	0	0	**0**
1700 - 1800	0	0	**0**
1800 - 1900	0	0	**0**
1900 - 2000	199	0	**199**
2000 - 2100	172	0	**172**
2100 - 2200	148	0	**148**
2200 - 2300	135	0	**135**
2300 - 2400	82	0	**82**

Session Total	736	0	**736**
Session Average	30.67	0.00	**30.67**
Session Percentage	100.00	0.00	

Site 36

I-26 N/Bound Off-Ramp,
south of St Andrews Rd

Date

Wednesday, April 24, 2024

Lat/Long

34.043382°, -81.116208°

Weather

Fair
66°F

Click here for Detailed Weather

0000 - 2400 (Weekday 24h Session) (04-24-2024)

Volume Summary 60min

	Volume Summary 60min		
TIME	NB	SB	**Total**
0000 - 0100	53	0	**53**
0100 - 0200	39	0	**39**
0200 - 0300	32	0	**32**
0300 - 0400	24	0	**24**
0400 - 0500	37	0	**37**
0500 - 0600	93	0	**93**
0600 - 0700	206	0	**206**
0700 - 0800	491	0	**491**
0800 - 0900	455	0	**455**
0900 - 1000	349	0	**349**
1000 - 1100	287	0	**287**
1100 - 1200	297	0	**297**

Session Total	5443	0	**5443**
Session Average	226.79	0.00	**226.79**
Session Percentage	100.00	0.00	

	Volume Summary 60min		
Time	NB	SB	**Total**
1200 - 1300	313	0	**313**
1300 - 1400	308	0	**308**
1400 - 1500	294	0	**294**
1500 - 1600	331	0	**331**
1600 - 1700	336	0	**336**
1700 - 1800	325	0	**325**
1800 - 1900	304	0	**304**
1900 - 2000	239	0	**239**
2000 - 2100	231	0	**231**
2100 - 2200	143	0	**143**
2200 - 2300	131	0	**131**
2300 - 2400	125	0	**125**

Site 36

I-26 N/Bound Off-Ramp,
south of St Andrews Rd

Date

Thursday, April 25, 2024

Lat/Long

34.043382°, -81.116208°

Weather

Fair
67°F

Click here for Detailed Weather

0000 - 2400 (Weekday 24h Session) (04-25-2024)

Volume Summary 60min

	Volume Summary 60min		
TIME	NB	SB	**Total**
0000 - 0100	66	0	**66**
0100 - 0200	46	0	**46**
0200 - 0300	36	0	**36**
0300 - 0400	23	0	**23**
0400 - 0500	47	0	**47**
0500 - 0600	89	0	**89**
0600 - 0700	210	0	**210**
0700 - 0800	425	0	**425**
0800 - 0900	493	0	**493**
0900 - 1000	314	0	**314**
1000 - 1100	273	0	**273**
1100 - 1200	237	0	**237**

Session Total	4569	0	**4569**
Session Average	190.38	0.00	**190.38**
Session Percentage	100.00	0.00	

	Volume Summary 60min		
Time	NB	SB	**Total**
1200 - 1300	308	0	**308**
1300 - 1400	334	0	**334**
1400 - 1500	336	0	**336**
1500 - 1600	412	0	**412**
1600 - 1700	298	0	**298**
1700 - 1800	315	0	**315**
1800 - 1900	307	0	**307**
1900 - 2000	0	0	**0**
2000 - 2100	0	0	**0**
2100 - 2200	0	0	**0**
2200 - 2300	0	0	**0**
2300 - 2400	0	0	**0**

Bi-Directional Class Count || Graphical Analysis NB EB

Columbia, SC

Marr Traffic DATA COLLECTION

www.marrtraffic.com

Site 36

I-26 N/Bound Off-Ramp,
south of St Andrews Rd

Lat/Long

34.043382°, -81.116208°

0000 - 2400 (Weekday 24h Session)

Graphical Analysis NB EB

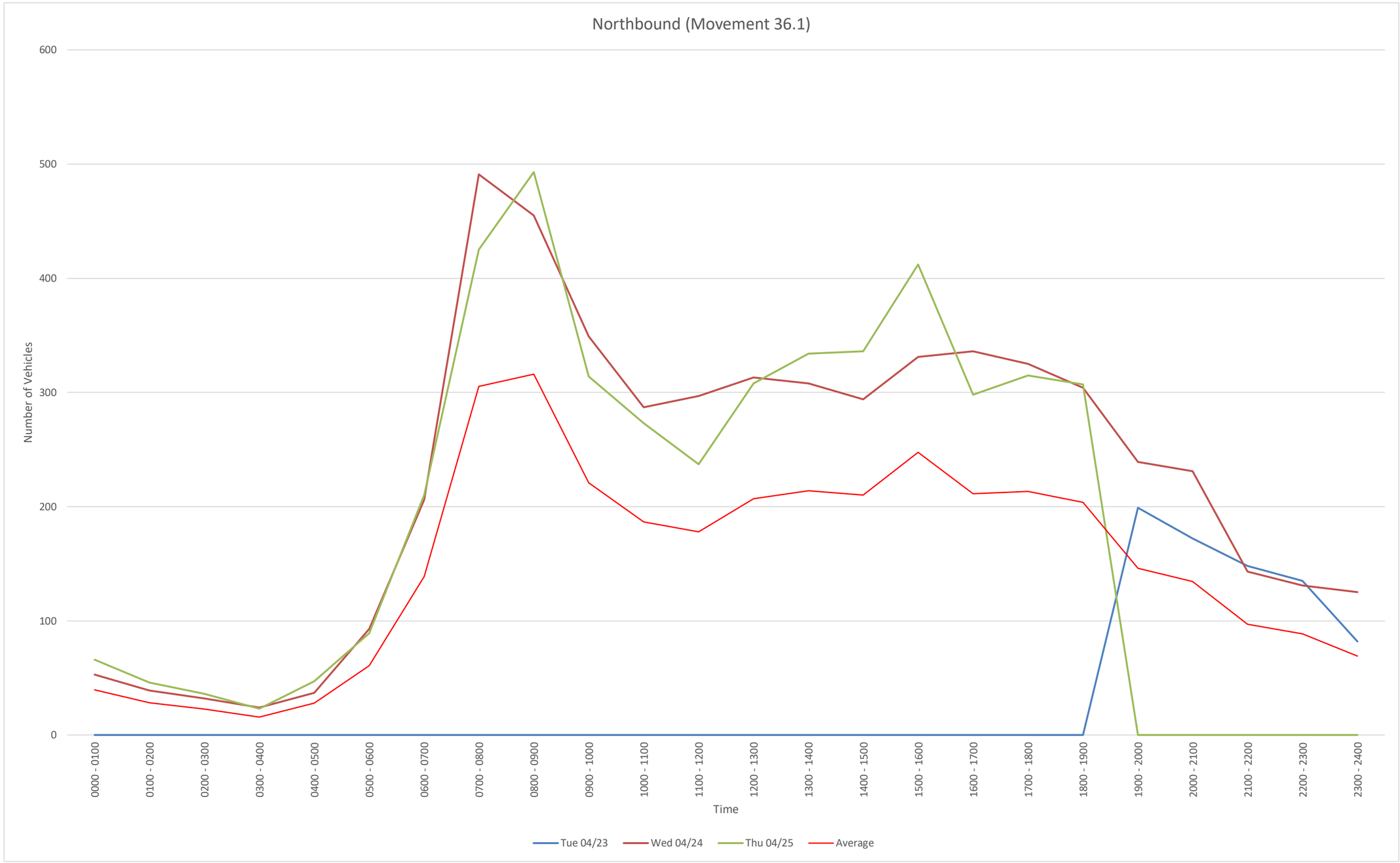

Time	Tue 04/23	Wed 04/24	Thu 04/25				
0000 - 0100	0	53	66				
0100 - 0200	0	39	46				
0200 - 0300	0	32	36				
0300 - 0400	0	24	23				
0400 - 0500	0	37	47				
0500 - 0600	0	93	89				
0600 - 0700	0	206	210				
0700 - 0800	0	491	425				
0800 - 0900	0	455	493				
0900 - 1000	0	349	314				
1000 - 1100	0	287	273				
1100 - 1200	0	297	237				
1200 - 1300	0	313	308				
1300 - 1400	0	308	334				
1400 - 1500	0	294	336				
1500 - 1600	0	331	412				
1600 - 1700	0	336	298				
1700 - 1800	0	325	315				
1800 - 1900	0	304	307				
1900 - 2000	199	239	0				
2000 - 2100	172	231	0				
2100 - 2200	148	143	0				
2200 - 2300	135	131	0				
2300 - 2400	82	125	0				
Daily Total	736	5443	4569				

NB
File Name:
Start Date: 4/23/2024
Start Time: 0
Site Code: 36
Station ID: 1
Location 1: I-26 N/Bound Off-Ramp, south of St Andrews Rd
Location 2:

Date	Time	1	2	3	4	5	6	7	8	9	10	11	12	13
4/23/2024	12:00 AM	0	0	0	0	0	0	0	0	0	0	0	0	0
4/23/2024	12:15 AM	0	0	0	0	0	0	0	0	0	0	0	0	0
4/23/2024	12:30 AM	0	0	0	0	0	0	0	0	0	0	0	0	0
4/23/2024	12:45 AM	0	0	0	0	0	0	0	0	0	0	0	0	0
4/23/2024	1:00 AM	0	0	0	0	0	0	0	0	0	0	0	0	0
4/23/2024	1:15 AM	0	0	0	0	0	0	0	0	0	0	0	0	0
4/23/2024	1:30 AM	0	0	0	0	0	0	0	0	0	0	0	0	0
4/23/2024	1:45 AM	0	0	0	0	0	0	0	0	0	0	0	0	0
4/23/2024	2:00 AM	0	0	0	0	0	0	0	0	0	0	0	0	0
4/23/2024	2:15 AM	0	0	0	0	0	0	0	0	0	0	0	0	0
4/23/2024	2:30 AM	0	0	0	0	0	0	0	0	0	0	0	0	0
4/23/2024	2:45 AM	0	0	0	0	0	0	0	0	0	0	0	0	0
4/23/2024	3:00 AM	0	0	0	0	0	0	0	0	0	0	0	0	0
4/23/2024	3:15 AM	0	0	0	0	0	0	0	0	0	0	0	0	0
4/23/2024	3:30 AM	0	0	0	0	0	0	0	0	0	0	0	0	0
4/23/2024	3:45 AM	0	0	0	0	0	0	0	0	0	0	0	0	0
4/23/2024	4:00 AM	0	0	0	0	0	0	0	0	0	0	0	0	0
4/23/2024	4:15 AM	0	0	0	0	0	0	0	0	0	0	0	0	0
4/23/2024	4:30 AM	0	0	0	0	0	0	0	0	0	0	0	0	0
4/23/2024	4:45 AM	0	0	0	0	0	0	0	0	0	0	0	0	0
4/23/2024	5:00 AM	0	0	0	0	0	0	0	0	0	0	0	0	0
4/23/2024	5:15 AM	0	0	0	0	0	0	0	0	0	0	0	0	0
4/23/2024	5:30 AM	0	0	0	0	0	0	0	0	0	0	0	0	0
4/23/2024	5:45 AM	0	0	0	0	0	0	0	0	0	0	0	0	0
4/23/2024	6:00 AM	0	0	0	0	0	0	0	0	0	0	0	0	0
4/23/2024	6:15 AM	0	0	0	0	0	0	0	0	0	0	0	0	0
4/23/2024	6:30 AM	0	0	0	0	0	0	0	0	0	0	0	0	0
4/23/2024	6:45 AM	0	0	0	0	0	0	0	0	0	0	0	0	0
4/23/2024	7:00 AM	0	0	0	0	0	0	0	0	0	0	0	0	0
4/23/2024	7:15 AM	0	0	0	0	0	0	0	0	0	0	0	0	0
4/23/2024	7:30 AM	0	0	0	0	0	0	0	0	0	0	0	0	0
4/23/2024	7:45 AM	0	0	0	0	0	0	0	0	0	0	0	0	0
4/23/2024	8:00 AM	0	0	0	0	0	0	0	0	0	0	0	0	0
4/23/2024	8:15 AM	0	0	0	0	0	0	0	0	0	0	0	0	0
4/23/2024	8:30 AM	0	0	0	0	0	0	0	0	0	0	0	0	0
4/23/2024	8:45 AM	0	0	0	0	0	0	0	0	0	0	0	0	0
4/23/2024	9:00 AM	0	0	0	0	0	0	0	0	0	0	0	0	0
4/23/2024	9:15 AM	0	0	0	0	0	0	0	0	0	0	0	0	0
4/23/2024	9:30 AM	0	0	0	0	0	0	0	0	0	0	0	0	0
4/23/2024	9:45 AM	0	0	0	0	0	0	0	0	0	0	0	0	0
4/23/2024	10:00 AM	0	0	0	0	0	0	0	0	0	0	0	0	0
4/23/2024	10:15 AM	0	0	0	0	0	0	0	0	0	0	0	0	0
4/23/2024	10:30 AM	0	0	0	0	0	0	0	0	0	0	0	0	0
4/23/2024	10:45 AM	0	0	0	0	0	0	0	0	0	0	0	0	0
4/23/2024	11:00 AM	0	0	0	0	0	0	0	0	0	0	0	0	0
4/23/2024	11:15 AM	0	0	0	0	0	0	0	0	0	0	0	0	0
4/23/2024	11:30 AM	0	0	0	0	0	0	0	0	0	0	0	0	0
4/23/2024	11:45 AM	0	0	0	0	0	0	0	0	0	0	0	0	0
4/23/2024	12:00 PM	0	0	0	0	0	0	0	0	0	0	0	0	0
4/23/2024	12:15 PM	0	0	0	0	0	0	0	0	0	0	0	0	0
4/23/2024	12:30 PM	0	0	0	0	0	0	0	0	0	0	0	0	0
4/23/2024	12:45 PM	0	0	0	0	0	0	0	0	0	0	0	0	0
4/23/2024	1:00 PM	0	0	0	0	0	0	0	0	0	0	0	0	0
4/23/2024	1:15 PM	0	0	0	0	0	0	0	0	0	0	0	0	0
4/23/2024	1:30 PM	0	0	0	0	0	0	0	0	0	0	0	0	0
4/23/2024	1:45 PM	0	0	0	0	0	0	0	0	0	0	0	0	0
4/23/2024	2:00 PM	0	0	0	0	0	0	0	0	0	0	0	0	0
4/23/2024	2:15 PM	0	0	0	0	0	0	0	0	0	0	0	0	0
4/23/2024	2:30 PM	0	0	0	0	0	0	0	0	0	0	0	0	0
4/23/2024	2:45 PM	0	0	0	0	0	0	0	0	0	0	0	0	0
4/23/2024	3:00 PM	0	0	0	0	0	0	0	0	0	0	0	0	0
4/23/2024	3:15 PM	0	0	0	0	0	0	0	0	0	0	0	0	0
4/23/2024	3:30 PM	0	0	0	0	0	0	0	0	0	0	0	0	0
4/23/2024	3:45 PM	0	0	0	0	0	0	0	0	0	0	0	0	0
4/23/2024	4:00 PM	0	0	0	0	0	0	0	0	0	0	0	0	0
4/23/2024	4:15 PM	0	0	0	0	0	0	0	0	0	0	0	0	0
4/23/2024	4:30 PM	0	0	0	0	0	0	0	0	0	0	0	0	0
4/23/2024	4:45 PM	0	0	0	0	0	0	0	0	0	0	0	0	0
4/23/2024	5:00 PM	0	0	0	0	0	0	0	0	0	0	0	0	0
4/23/2024	5:15 PM	0	0	0	0	0	0	0	0	0	0	0	0	0
4/23/2024	5:30 PM	0	0	0	0	0	0	0	0	0	0	0	0	0
4/23/2024	5:45 PM	0	0	0	0	0	0	0	0	0	0	0	0	0
4/23/2024	6:00 PM	0	0	0	0	0	0	0	0	0	0	0	0	0
4/23/2024	6:15 PM	0	0	0	0	0	0	0	0	0	0	0	0	0
4/23/2024	6:30 PM	0	0	0	0	0	0	0	0	0	0	0	0	0
4/23/2024	6:45 PM	0	0	0	0	0	0	0	0	0	0	0	0	0
4/23/2024	7:00 PM	0	54	6	0	0	0	0	0	0	0	0	0	0
4/23/2024	7:15 PM	0	42	3	0	0	0	0	0	0	0	0	0	0
4/23/2024	7:30 PM	0	43	11	0	0	0	0	0	0	0	0	0	0
4/23/2024	7:45 PM	0	35	5	0	0	0	0	0	0	0	0	0	0
4/23/2024	8:00 PM	0	48	1	0	1	0	0	0	0	0	0	0	0
4/23/2024	8:15 PM	0	43	1	0	0	0	0	0	0	0	0	0	0
4/23/2024	8:30 PM	0	37	0	0	1	0	0	0	0	0	0	0	0
4/23/2024	8:45 PM	0	39	1	0	0	0	0	0	0	0	0	0	0
4/23/2024	9:00 PM	0	41	1	0	0	0	0	0	0	0	0	0	0
4/23/2024	9:15 PM	0	35	1	0	0	0	0	0	0	0	0	0	0
4/23/2024	9:30 PM	0	34	0	0	0	0	0	0	0	0	0	0	0
4/23/2024	9:45 PM	0	34	1	0	1	0	0	0	0	0	0	0	0
4/23/2024	10:00 PM	0	33	1	0	0	0	0	0	0	0	0	0	0
4/23/2024	10:15 PM	0	45	0	0	1	0	0	0	0	0	0	0	0
4/23/2024	10:30 PM	0	30	0	0	0	0	0	0	0	0	0	0	0
4/23/2024	10:45 PM	0	25	0	0	0	0	0	0	0	0	0	0	0
4/23/2024	11:00 PM	0	21	0	0	0	0	0	0	0	0	0	0	0
4/23/2024	11:15 PM	0	26	0	0	0	0	0	0	0	0	0	0	0
4/23/2024	11:30 PM	0	16	1	0	0	0	0	0	0	0	0	0	0
4/23/2024	11:45 PM	0	18	0	0	0	0	0	0	0	0	0	0	0

4/24/2024	12:00 AM	0	17	1	0	1	0	0	0	0	0	0	0
4/24/2024	12:15 AM	0	11	0	0	0	0	0	0	0	0	0	0
4/24/2024	12:30 AM	0	15	0	0	0	0	0	0	0	0	0	0
4/24/2024	12:45 AM	0	7	0	0	0	0	0	0	1	0	0	0
4/24/2024	1:00 AM	0	10	0	0	1	0	0	0	0	0	0	0
4/24/2024	1:15 AM	0	10	0	0	0	0	0	0	0	0	0	0
4/24/2024	1:30 AM	0	9	0	0	0	0	0	0	0	0	0	0
4/24/2024	1:45 AM	0	9	0	0	0	0	0	0	0	0	0	0
4/24/2024	2:00 AM	0	9	0	0	0	0	0	0	0	0	0	0
4/24/2024	2:15 AM	0	13	0	0	0	0	0	0	0	0	0	0
4/24/2024	2:30 AM	0	6	0	0	0	0	0	0	0	0	0	0
4/24/2024	2:45 AM	0	4	0	0	0	0	0	0	0	0	0	0
4/24/2024	3:00 AM	0	5	0	0	0	0	0	0	0	0	0	0
4/24/2024	3:15 AM	0	8	0	0	0	0	0	0	0	0	0	0
4/24/2024	3:30 AM	0	7	0	0	0	0	0	0	0	0	0	0
4/24/2024	3:45 AM	0	4	0	0	0	0	0	0	0	0	0	0
4/24/2024	4:00 AM	0	12	0	0	1	0	0	0	0	0	0	0
4/24/2024	4:15 AM	0	5	0	0	0	0	0	0	0	0	0	0
4/24/2024	4:30 AM	0	9	0	0	0	0	0	0	0	0	0	0
4/24/2024	4:45 AM	0	9	1	0	0	0	0	0	0	0	0	0
4/24/2024	5:00 AM	0	14	1	0	1	0	0	0	0	0	0	0
4/24/2024	5:15 AM	0	20	0	0	0	0	0	0	0	0	0	0
4/24/2024	5:30 AM	0	23	0	0	0	0	0	0	0	0	0	0
4/24/2024	5:45 AM	0	32	1	0	1	0	0	0	0	0	0	0
4/24/2024	6:00 AM	0	23	0	0	0	0	0	0	0	0	0	0
4/24/2024	6:15 AM	0	30	5	0	0	0	0	0	0	0	0	0
4/24/2024	6:30 AM	0	56	6	0	0	0	0	0	0	0	0	0
4/24/2024	6:45 AM	0	63	23	0	0	0	0	0	0	0	0	0
4/24/2024	7:00 AM	1	76	25	0	0	0	0	0	0	0	0	0
4/24/2024	7:15 AM	0	83	23	0	0	0	0	0	1	0	0	0
4/24/2024	7:30 AM	0	96	33	0	3	0	0	0	0	0	0	0
4/24/2024	7:45 AM	0	125	20	0	3	2	0	0	0	0	0	0
4/24/2024	8:00 AM	1	98	16	0	0	0	0	0	0	0	0	0
4/24/2024	8:15 AM	0	97	19	0	1	0	0	0	0	0	0	0
4/24/2024	8:30 AM	1	84	22	0	0	0	0	0	0	0	0	0
4/24/2024	8:45 AM	1	95	20	0	0	0	0	0	0	0	0	0
4/24/2024	9:00 AM	0	64	15	0	4	0	0	0	0	0	0	0
4/24/2024	9:15 AM	1	69	16	0	4	0	0	0	0	0	0	0
4/24/2024	9:30 AM	0	64	22	0	3	2	0	0	0	0	0	0
4/24/2024	9:45 AM	0	64	18	0	0	2	0	0	1	0	0	0
4/24/2024	10:00 AM	0	53	12	0	1	1	0	0	1	0	0	0
4/24/2024	10:15 AM	0	54	16	0	1	0	0	0	0	0	0	0
4/24/2024	10:30 AM	0	56	14	0	1	1	0	0	1	0	0	0
4/24/2024	10:45 AM	0	56	17	0	1	1	0	0	0	0	0	0
4/24/2024	11:00 AM	0	50	13	0	1	1	0	0	0	0	0	0
4/24/2024	11:15 AM	0	59	21	0	0	2	0	0	0	0	0	0
4/24/2024	11:30 AM	0	46	19	0	2	1	0	0	0	0	0	0
4/24/2024	11:45 AM	0	63	14	0	1	2	0	1	1	0	0	0
4/24/2024	12:00 PM	0	60	15	0	3	1	0	0	0	0	0	0
4/24/2024	12:15 PM	0	65	15	0	2	0	0	0	0	0	0	0
4/24/2024	12:30 PM	0	63	13	0	1	0	0	0	1	0	0	0
4/24/2024	12:45 PM	0	64	9	0	1	0	0	0	0	0	0	0
4/24/2024	1:00 PM	0	47	14	2	0	0	0	0	0	0	0	0
4/24/2024	1:15 PM	0	69	11	0	0	0	0	0	0	0	0	0
4/24/2024	1:30 PM	0	57	20	0	2	1	0	0	0	0	0	0
4/24/2024	1:45 PM	0	68	15	0	1	1	0	0	0	0	0	0
4/24/2024	2:00 PM	0	59	14	0	0	1	0	0	0	0	0	0
4/24/2024	2:15 PM	0	53	13	0	0	1	0	0	0	0	0	0
4/24/2024	2:30 PM	0	54	14	1	3	0	0	0	0	0	0	0
4/24/2024	2:45 PM	0	63	15	2	1	0	0	0	0	0	0	0
4/24/2024	3:00 PM	0	68	24	0	0	2	0	0	1	0	0	0
4/24/2024	3:15 PM	1	73	12	0	2	1	0	0	0	0	0	0
4/24/2024	3:30 PM	1	58	11	0	1	0	0	0	0	0	0	0
4/24/2024	3:45 PM	0	58	17	0	0	1	0	0	0	0	0	0
4/24/2024	4:00 PM	0	65	16	0	2	0	0	0	1	0	0	0
4/24/2024	4:15 PM	0	72	16	0	0	0	0	0	0	0	0	0
4/24/2024	4:30 PM	0	61	19	0	0	1	0	0	0	0	0	0
4/24/2024	4:45 PM	0	71	12	0	0	0	0	0	0	0	0	0
4/24/2024	5:00 PM	0	79	7	0	0	0	0	0	0	0	0	0
4/24/2024	5:15 PM	0	59	7	0	1	1	0	0	0	0	0	0
4/24/2024	5:30 PM	0	67	12	0	1	0	0	0	0	0	0	0
4/24/2024	5:45 PM	0	78	13	0	0	0	0	0	0	0	0	0
4/24/2024	6:00 PM	0	70	15	0	2	0	0	0	0	0	0	0
4/24/2024	6:15 PM	0	50	10	0	1	0	0	0	0	0	0	0
4/24/2024	6:30 PM	0	70	5	0	2	0	0	0	0	0	0	0
4/24/2024	6:45 PM	0	64	15	0	0	0	0	0	0	0	0	0
4/24/2024	7:00 PM	0	56	4	0	0	0	0	0	1	0	0	0
4/24/2024	7:15 PM	0	66	8	0	0	0	0	0	0	0	0	0
4/24/2024	7:30 PM	0	50	4	0	0	0	0	0	0	0	0	0
4/24/2024	7:45 PM	0	47	3	0	0	0	0	0	0	0	0	0
4/24/2024	8:00 PM	1	67	12	0	0	0	0	0	0	0	0	0
4/24/2024	8:15 PM	0	50	4	0	0	0	0	0	0	0	0	0
4/24/2024	8:30 PM	0	50	2	0	0	0	0	0	0	0	0	0
4/24/2024	8:45 PM	0	44	1	0	0	0	0	0	0	0	0	0
4/24/2024	9:00 PM	0	26	2	0	0	0	0	0	0	0	0	0
4/24/2024	9:15 PM	0	45	2	0	0	0	0	0	0	0	0	0
4/24/2024	9:30 PM	0	37	2	0	1	0	0	0	0	0	0	0
4/24/2024	9:45 PM	0	28	0	0	0	0	0	0	0	0	0	0
4/24/2024	10:00 PM	0	27	0	0	0	0	0	0	0	0	0	0
4/24/2024	10:15 PM	0	33	1	0	0	0	0	0	0	0	0	0
4/24/2024	10:30 PM	0	36	0	0	0	0	0	0	0	0	0	0
4/24/2024	10:45 PM	0	33	1	0	0	0	0	0	0	0	0	0
4/24/2024	11:00 PM	0	37	0	0	0	0	0	0	0	0	0	0
4/24/2024	11:15 PM	0	32	0	0	0	0	0	0	0	0	0	0
4/24/2024	11:30 PM	0	25	0	0	0	0	0	0	0	0	0	0
4/24/2024	11:45 PM	0	30	1	0	0	0	0	0	0	0	0	0

4/25/2024	12:00 AM	0	21	1	0	0	0	0	0	0	0	0	0
4/25/2024	12:15 AM	0	13	0	0	0	0	0	0	0	0	0	0
4/25/2024	12:30 AM	0	11	1	0	0	0	0	0	0	0	0	0
4/25/2024	12:45 AM	0	18	0	0	0	0	0	0	1	0	0	0
4/25/2024	1:00 AM	0	12	0	0	0	0	0	0	0	0	0	0
4/25/2024	1:15 AM	0	10	1	0	0	0	0	0	0	0	0	0
4/25/2024	1:30 AM	0	11	0	0	0	0	0	0	0	0	0	0
4/25/2024	1:45 AM	0	10	2	0	0	0	0	0	0	0	0	0
4/25/2024	2:00 AM	0	20	2	0	0	0	0	0	0	0	0	0
4/25/2024	2:15 AM	0	5	3	0	0	0	0	0	0	0	0	0
4/25/2024	2:30 AM	0	2	1	0	0	0	0	0	0	0	0	0
4/25/2024	2:45 AM	0	3	0	0	0	0	0	0	0	0	0	0
4/25/2024	3:00 AM	0	7	0	0	0	0	0	0	0	0	0	0
4/25/2024	3:15 AM	0	7	0	0	0	0	0	0	0	0	0	0
4/25/2024	3:30 AM	0	4	0	0	0	0	0	0	0	0	0	0
4/25/2024	3:45 AM	0	5	0	0	0	0	0	0	0	0	0	0
4/25/2024	4:00 AM	0	7	2	0	0	0	0	0	0	0	0	0
4/25/2024	4:15 AM	0	6	3	0	0	0	0	0	0	0	0	0
4/25/2024	4:30 AM	0	8	1	0	0	0	0	0	0	0	0	0
4/25/2024	4:45 AM	0	15	4	0	0	0	0	0	1	0	0	0
4/25/2024	5:00 AM	0	10	2	0	0	0	0	0	1	0	0	0
4/25/2024	5:15 AM	0	13	3	0	0	0	0	0	0	0	0	0
4/25/2024	5:30 AM	0	23	5	0	0	0	0	0	0	0	0	0
4/25/2024	5:45 AM	0	27	4	0	0	0	0	0	1	0	0	0
4/25/2024	6:00 AM	0	20	2	0	0	0	0	0	1	0	0	0
4/25/2024	6:15 AM	0	41	7	0	0	0	0	0	0	0	0	0
4/25/2024	6:30 AM	0	50	7	0	0	0	1	0	0	0	0	0
4/25/2024	6:45 AM	0	65	13	0	1	0	0	0	2	0	0	0
4/25/2024	7:00 AM	0	60	14	0	2	0	0	0	1	0	0	0
4/25/2024	7:15 AM	0	85	23	0	1	0	0	0	0	0	0	0
4/25/2024	7:30 AM	0	77	17	0	0	0	0	0	1	0	0	0
4/25/2024	7:45 AM	0	119	23	0	2	0	0	0	0	0	0	0
4/25/2024	8:00 AM	0	105	18	0	1	0	0	0	1	0	0	0
4/25/2024	8:15 AM	2	122	19	0	2	0	0	0	0	0	0	0
4/25/2024	8:30 AM	0	74	22	0	2	0	0	0	0	0	0	0
4/25/2024	8:45 AM	2	100	20	0	2	0	0	0	1	0	0	0
4/25/2024	9:00 AM	0	66	16	0	2	0	0	0	1	0	0	0
4/25/2024	9:15 AM	0	59	16	0	1	0	0	0	1	0	0	0
4/25/2024	9:30 AM	0	63	20	0	3	0	0	0	0	0	0	0
4/25/2024	9:45 AM	0	46	16	0	3	0	0	1	0	0	0	0
4/25/2024	10:00 AM	0	57	11	0	1	0	0	0	1	0	0	0
4/25/2024	10:15 AM	0	43	12	0	2	0	0	0	0	0	0	0
4/25/2024	10:30 AM	0	57	10	0	1	0	0	0	2	0	0	0
4/25/2024	10:45 AM	0	60	11	0	4	0	0	0	1	0	0	0
4/25/2024	11:00 AM	0	53	13	0	4	2	0	0	0	0	0	0
4/25/2024	11:15 AM	0	45	8	0	3	0	0	0	0	0	0	0
4/25/2024	11:30 AM	0	42	11	0	0	1	0	0	1	0	0	0
4/25/2024	11:45 AM	0	41	9	0	1	0	0	1	2	0	0	0
4/25/2024	12:00 PM	0	68	11	0	1	0	0	1	3	0	0	0
4/25/2024	12:15 PM	0	53	11	0	0	0	0	0	0	0	0	0
4/25/2024	12:30 PM	0	54	14	0	0	0	0	0	0	0	0	0
4/25/2024	12:45 PM	0	70	19	0	2	0	0	0	1	0	0	0
4/25/2024	1:00 PM	0	58	10	0	3	0	0	0	1	0	0	0
4/25/2024	1:15 PM	0	65	16	0	3	0	0	0	0	0	0	0
4/25/2024	1:30 PM	0	73	8	0	1	0	0	0	0	0	0	0
4/25/2024	1:45 PM	0	79	12	1	4	0	0	0	0	0	0	0
4/25/2024	2:00 PM	0	77	16	0	1	0	0	0	0	0	0	0
4/25/2024	2:15 PM	0	55	14	0	2	1	0	1	1	0	0	0
4/25/2024	2:30 PM	0	65	19	0	0	0	0	0	0	0	0	0
4/25/2024	2:45 PM	0	69	15	0	0	0	0	0	0	0	0	0
4/25/2024	3:00 PM	0	73	20	0	2	0	0	0	0	0	0	0
4/25/2024	3:15 PM	0	72	14	0	2	0	0	0	0	0	0	0
4/25/2024	3:30 PM	0	98	21	0	3	0	0	0	1	0	0	0
4/25/2024	3:45 PM	0	83	19	0	1	1	0	1	1	0	0	0
4/25/2024	4:00 PM	0	65	12	0	2	0	0	0	1	0	0	0
4/25/2024	4:15 PM	0	57	10	0	0	0	0	0	0	0	0	0
4/25/2024	4:30 PM	0	65	12	0	1	1	0	0	0	0	0	0
4/25/2024	4:45 PM	0	65	7	0	0	0	0	0	0	0	0	0
4/25/2024	5:00 PM	0	63	5	0	2	0	0	0	0	0	0	0
4/25/2024	5:15 PM	0	76	13	0	0	0	0	0	0	0	0	0
4/25/2024	5:30 PM	0	63	21	0	1	0	0	0	0	0	0	0
4/25/2024	5:45 PM	0	61	9	0	0	1	0	0	0	0	0	0
4/25/2024	6:00 PM	0	67	10	0	0	0	0	1	0	0	0	0
4/25/2024	6:15 PM	1	63	8	0	0	0	0	0	0	0	0	0
4/25/2024	6:30 PM	1	62	13	0	1	0	0	0	1	0	0	0
4/25/2024	6:45 PM	0	67	12	0	0	0	0	0	0	0	0	0
4/25/2024	7:00 PM	0	0	0	0	0	0	0	0	0	0	0	0
4/25/2024	7:15 PM	0	0	0	0	0	0	0	0	0	0	0	0
4/25/2024	7:30 PM	0	0	0	0	0	0	0	0	0	0	0	0
4/25/2024	7:45 PM	0	0	0	0	0	0	0	0	0	0	0	0
4/25/2024	8:00 PM	0	0	0	0	0	0	0	0	0	0	0	0
4/25/2024	8:15 PM	0	0	0	0	0	0	0	0	0	0	0	0
4/25/2024	8:30 PM	0	0	0	0	0	0	0	0	0	0	0	0
4/25/2024	8:45 PM	0	0	0	0	0	0	0	0	0	0	0	0
4/25/2024	9:00 PM	0	0	0	0	0	0	0	0	0	0	0	0
4/25/2024	9:15 PM	0	0	0	0	0	0	0	0	0	0	0	0
4/25/2024	9:30 PM	0	0	0	0	0	0	0	0	0	0	0	0
4/25/2024	9:45 PM	0	0	0	0	0	0	0	0	0	0	0	0
4/25/2024	10:00 PM	0	0	0	0	0	0	0	0	0	0	0	0
4/25/2024	10:15 PM	0	0	0	0	0	0	0	0	0	0	0	0
4/25/2024	10:30 PM	0	0	0	0	0	0	0	0	0	0	0	0
4/25/2024	10:45 PM	0	0	0	0	0	0	0	0	0	0	0	0
4/25/2024	11:00 PM	0	0	0	0	0	0	0	0	0	0	0	0
4/25/2024	11:15 PM	0	0	0	0	0	0	0	0	0	0	0	0
4/25/2024	11:30 PM	0	0	0	0	0	0	0	0	0	0	0	0
4/25/2024	11:45 PM	0	0	0	0	0	0	0	0	0	0	0	0

SB
File Name:
Start Date: 4/23/2024
Start Time: 0
Site Code: 36
Station ID: 1
Location 1: I-26 N/Bound Off-Ramp, south of St Andrews Rd
Location 2:

Date	Time	1	2	3	4	5	6	7	8	9	10	11	12	13
4/23/2024	12:00 AM	0	0	0	0	0	0	0	0	0	0	0	0	0
4/23/2024	12:15 AM	0	0	0	0	0	0	0	0	0	0	0	0	0
4/23/2024	12:30 AM	0	0	0	0	0	0	0	0	0	0	0	0	0
4/23/2024	12:45 AM	0	0	0	0	0	0	0	0	0	0	0	0	0
4/23/2024	1:00 AM	0	0	0	0	0	0	0	0	0	0	0	0	0
4/23/2024	1:15 AM	0	0	0	0	0	0	0	0	0	0	0	0	0
4/23/2024	1:30 AM	0	0	0	0	0	0	0	0	0	0	0	0	0
4/23/2024	1:45 AM	0	0	0	0	0	0	0	0	0	0	0	0	0
4/23/2024	2:00 AM	0	0	0	0	0	0	0	0	0	0	0	0	0
4/23/2024	2:15 AM	0	0	0	0	0	0	0	0	0	0	0	0	0
4/23/2024	2:30 AM	0	0	0	0	0	0	0	0	0	0	0	0	0
4/23/2024	2:45 AM	0	0	0	0	0	0	0	0	0	0	0	0	0
4/23/2024	3:00 AM	0	0	0	0	0	0	0	0	0	0	0	0	0
4/23/2024	3:15 AM	0	0	0	0	0	0	0	0	0	0	0	0	0
4/23/2024	3:30 AM	0	0	0	0	0	0	0	0	0	0	0	0	0
4/23/2024	3:45 AM	0	0	0	0	0	0	0	0	0	0	0	0	0
4/23/2024	4:00 AM	0	0	0	0	0	0	0	0	0	0	0	0	0
4/23/2024	4:15 AM	0	0	0	0	0	0	0	0	0	0	0	0	0
4/23/2024	4:30 AM	0	0	0	0	0	0	0	0	0	0	0	0	0
4/23/2024	4:45 AM	0	0	0	0	0	0	0	0	0	0	0	0	0
4/23/2024	5:00 AM	0	0	0	0	0	0	0	0	0	0	0	0	0
4/23/2024	5:15 AM	0	0	0	0	0	0	0	0	0	0	0	0	0
4/23/2024	5:30 AM	0	0	0	0	0	0	0	0	0	0	0	0	0
4/23/2024	5:45 AM	0	0	0	0	0	0	0	0	0	0	0	0	0
4/23/2024	6:00 AM	0	0	0	0	0	0	0	0	0	0	0	0	0
4/23/2024	6:15 AM	0	0	0	0	0	0	0	0	0	0	0	0	0
4/23/2024	6:30 AM	0	0	0	0	0	0	0	0	0	0	0	0	0
4/23/2024	6:45 AM	0	0	0	0	0	0	0	0	0	0	0	0	0
4/23/2024	7:00 AM	0	0	0	0	0	0	0	0	0	0	0	0	0
4/23/2024	7:15 AM	0	0	0	0	0	0	0	0	0	0	0	0	0
4/23/2024	7:30 AM	0	0	0	0	0	0	0	0	0	0	0	0	0
4/23/2024	7:45 AM	0	0	0	0	0	0	0	0	0	0	0	0	0
4/23/2024	8:00 AM	0	0	0	0	0	0	0	0	0	0	0	0	0
4/23/2024	8:15 AM	0	0	0	0	0	0	0	0	0	0	0	0	0
4/23/2024	8:30 AM	0	0	0	0	0	0	0	0	0	0	0	0	0
4/23/2024	8:45 AM	0	0	0	0	0	0	0	0	0	0	0	0	0
4/23/2024	9:00 AM	0	0	0	0	0	0	0	0	0	0	0	0	0
4/23/2024	9:15 AM	0	0	0	0	0	0	0	0	0	0	0	0	0
4/23/2024	9:30 AM	0	0	0	0	0	0	0	0	0	0	0	0	0
4/23/2024	9:45 AM	0	0	0	0	0	0	0	0	0	0	0	0	0
4/23/2024	10:00 AM	0	0	0	0	0	0	0	0	0	0	0	0	0
4/23/2024	10:15 AM	0	0	0	0	0	0	0	0	0	0	0	0	0
4/23/2024	10:30 AM	0	0	0	0	0	0	0	0	0	0	0	0	0
4/23/2024	10:45 AM	0	0	0	0	0	0	0	0	0	0	0	0	0
4/23/2024	11:00 AM	0	0	0	0	0	0	0	0	0	0	0	0	0
4/23/2024	11:15 AM	0	0	0	0	0	0	0	0	0	0	0	0	0
4/23/2024	11:30 AM	0	0	0	0	0	0	0	0	0	0	0	0	0
4/23/2024	11:45 AM	0	0	0	0	0	0	0	0	0	0	0	0	0
4/23/2024	12:00 PM	0	0	0	0	0	0	0	0	0	0	0	0	0
4/23/2024	12:15 PM	0	0	0	0	0	0	0	0	0	0	0	0	0
4/23/2024	12:30 PM	0	0	0	0	0	0	0	0	0	0	0	0	0
4/23/2024	12:45 PM	0	0	0	0	0	0	0	0	0	0	0	0	0
4/23/2024	1:00 PM	0	0	0	0	0	0	0	0	0	0	0	0	0
4/23/2024	1:15 PM	0	0	0	0	0	0	0	0	0	0	0	0	0
4/23/2024	1:30 PM	0	0	0	0	0	0	0	0	0	0	0	0	0
4/23/2024	1:45 PM	0	0	0	0	0	0	0	0	0	0	0	0	0
4/23/2024	2:00 PM	0	0	0	0	0	0	0	0	0	0	0	0	0
4/23/2024	2:15 PM	0	0	0	0	0	0	0	0	0	0	0	0	0
4/23/2024	2:30 PM	0	0	0	0	0	0	0	0	0	0	0	0	0
4/23/2024	2:45 PM	0	0	0	0	0	0	0	0	0	0	0	0	0
4/23/2024	3:00 PM	0	0	0	0	0	0	0	0	0	0	0	0	0
4/23/2024	3:15 PM	0	0	0	0	0	0	0	0	0	0	0	0	0
4/23/2024	3:30 PM	0	0	0	0	0	0	0	0	0	0	0	0	0
4/23/2024	3:45 PM	0	0	0	0	0	0	0	0	0	0	0	0	0
4/23/2024	4:00 PM	0	0	0	0	0	0	0	0	0	0	0	0	0
4/23/2024	4:15 PM	0	0	0	0	0	0	0	0	0	0	0	0	0
4/23/2024	4:30 PM	0	0	0	0	0	0	0	0	0	0	0	0	0
4/23/2024	4:45 PM	0	0	0	0	0	0	0	0	0	0	0	0	0
4/23/2024	5:00 PM	0	0	0	0	0	0	0	0	0	0	0	0	0
4/23/2024	5:15 PM	0	0	0	0	0	0	0	0	0	0	0	0	0
4/23/2024	5:30 PM	0	0	0	0	0	0	0	0	0	0	0	0	0
4/23/2024	5:45 PM	0	0	0	0	0	0	0	0	0	0	0	0	0
4/23/2024	6:00 PM	0	0	0	0	0	0	0	0	0	0	0	0	0
4/23/2024	6:15 PM	0	0	0	0	0	0	0	0	0	0	0	0	0
4/23/2024	6:30 PM	0	0	0	0	0	0	0	0	0	0	0	0	0
4/23/2024	6:45 PM	0	0	0	0	0	0	0	0	0	0	0	0	0
4/23/2024	7:00 PM	0	0	0	0	0	0	0	0	0	0	0	0	0
4/23/2024	7:15 PM	0	0	0	0	0	0	0	0	0	0	0	0	0
4/23/2024	7:30 PM	0	0	0	0	0	0	0	0	0	0	0	0	0
4/23/2024	7:45 PM	0	0	0	0	0	0	0	0	0	0	0	0	0
4/23/2024	8:00 PM	0	0	0	0	0	0	0	0	0	0	0	0	0
4/23/2024	8:15 PM	0	0	0	0	0	0	0	0	0	0	0	0	0
4/23/2024	8:30 PM	0	0	0	0	0	0	0	0	0	0	0	0	0
4/23/2024	8:45 PM	0	0	0	0	0	0	0	0	0	0	0	0	0
4/23/2024	9:00 PM	0	0	0	0	0	0	0	0	0	0	0	0	0
4/23/2024	9:15 PM	0	0	0	0	0	0	0	0	0	0	0	0	0
4/23/2024	9:30 PM	0	0	0	0	0	0	0	0	0	0	0	0	0
4/23/2024	9:45 PM	0	0	0	0	0	0	0	0	0	0	0	0	0
4/23/2024	10:00 PM	0	0	0	0	0	0	0	0	0	0	0	0	0
4/23/2024	10:15 PM	0	0	0	0	0	0	0	0	0	0	0	0	0
4/23/2024	10:30 PM	0	0	0	0	0	0	0	0	0	0	0	0	0
4/23/2024	10:45 PM	0	0	0	0	0	0	0	0	0	0	0	0	0
4/23/2024	11:00 PM	0	0	0	0	0	0	0	0	0	0	0	0	0
4/23/2024	11:15 PM	0	0	0	0	0	0	0	0	0	0	0	0	0
4/23/2024	11:30 PM	0	0	0	0	0	0	0	0	0	0	0	0	0
4/23/2024	11:45 PM	0	0	0	0	0	0	0	0	0	0	0	0	0

4/24/2024	12:00 AM	0	0	0	0	0	0	0	0	0	0	0	0	0
4/24/2024	12:15 AM	0	0	0	0	0	0	0	0	0	0	0	0	0
4/24/2024	12:30 AM	0	0	0	0	0	0	0	0	0	0	0	0	0
4/24/2024	12:45 AM	0	0	0	0	0	0	0	0	0	0	0	0	0
4/24/2024	1:00 AM	0	0	0	0	0	0	0	0	0	0	0	0	0
4/24/2024	1:15 AM	0	0	0	0	0	0	0	0	0	0	0	0	0
4/24/2024	1:30 AM	0	0	0	0	0	0	0	0	0	0	0	0	0
4/24/2024	1:45 AM	0	0	0	0	0	0	0	0	0	0	0	0	0
4/24/2024	2:00 AM	0	0	0	0	0	0	0	0	0	0	0	0	0
4/24/2024	2:15 AM	0	0	0	0	0	0	0	0	0	0	0	0	0
4/24/2024	2:30 AM	0	0	0	0	0	0	0	0	0	0	0	0	0
4/24/2024	2:45 AM	0	0	0	0	0	0	0	0	0	0	0	0	0
4/24/2024	3:00 AM	0	0	0	0	0	0	0	0	0	0	0	0	0
4/24/2024	3:15 AM	0	0	0	0	0	0	0	0	0	0	0	0	0
4/24/2024	3:30 AM	0	0	0	0	0	0	0	0	0	0	0	0	0
4/24/2024	3:45 AM	0	0	0	0	0	0	0	0	0	0	0	0	0
4/24/2024	4:00 AM	0	0	0	0	0	0	0	0	0	0	0	0	0
4/24/2024	4:15 AM	0	0	0	0	0	0	0	0	0	0	0	0	0
4/24/2024	4:30 AM	0	0	0	0	0	0	0	0	0	0	0	0	0
4/24/2024	4:45 AM	0	0	0	0	0	0	0	0	0	0	0	0	0
4/24/2024	5:00 AM	0	0	0	0	0	0	0	0	0	0	0	0	0
4/24/2024	5:15 AM	0	0	0	0	0	0	0	0	0	0	0	0	0
4/24/2024	5:30 AM	0	0	0	0	0	0	0	0	0	0	0	0	0
4/24/2024	5:45 AM	0	0	0	0	0	0	0	0	0	0	0	0	0
4/24/2024	6:00 AM	0	0	0	0	0	0	0	0	0	0	0	0	0
4/24/2024	6:15 AM	0	0	0	0	0	0	0	0	0	0	0	0	0
4/24/2024	6:30 AM	0	0	0	0	0	0	0	0	0	0	0	0	0
4/24/2024	6:45 AM	0	0	0	0	0	0	0	0	0	0	0	0	0
4/24/2024	7:00 AM	0	0	0	0	0	0	0	0	0	0	0	0	0
4/24/2024	7:15 AM	0	0	0	0	0	0	0	0	0	0	0	0	0
4/24/2024	7:30 AM	0	0	0	0	0	0	0	0	0	0	0	0	0
4/24/2024	7:45 AM	0	0	0	0	0	0	0	0	0	0	0	0	0
4/24/2024	8:00 AM	0	0	0	0	0	0	0	0	0	0	0	0	0
4/24/2024	8:15 AM	0	0	0	0	0	0	0	0	0	0	0	0	0
4/24/2024	8:30 AM	0	0	0	0	0	0	0	0	0	0	0	0	0
4/24/2024	8:45 AM	0	0	0	0	0	0	0	0	0	0	0	0	0
4/24/2024	9:00 AM	0	0	0	0	0	0	0	0	0	0	0	0	0
4/24/2024	9:15 AM	0	0	0	0	0	0	0	0	0	0	0	0	0
4/24/2024	9:30 AM	0	0	0	0	0	0	0	0	0	0	0	0	0
4/24/2024	9:45 AM	0	0	0	0	0	0	0	0	0	0	0	0	0
4/24/2024	10:00 AM	0	0	0	0	0	0	0	0	0	0	0	0	0
4/24/2024	10:15 AM	0	0	0	0	0	0	0	0	0	0	0	0	0
4/24/2024	10:30 AM	0	0	0	0	0	0	0	0	0	0	0	0	0
4/24/2024	10:45 AM	0	0	0	0	0	0	0	0	0	0	0	0	0
4/24/2024	11:00 AM	0	0	0	0	0	0	0	0	0	0	0	0	0
4/24/2024	11:15 AM	0	0	0	0	0	0	0	0	0	0	0	0	0
4/24/2024	11:30 AM	0	0	0	0	0	0	0	0	0	0	0	0	0
4/24/2024	11:45 AM	0	0	0	0	0	0	0	0	0	0	0	0	0
4/24/2024	12:00 PM	0	0	0	0	0	0	0	0	0	0	0	0	0
4/24/2024	12:15 PM	0	0	0	0	0	0	0	0	0	0	0	0	0
4/24/2024	12:30 PM	0	0	0	0	0	0	0	0	0	0	0	0	0
4/24/2024	12:45 PM	0	0	0	0	0	0	0	0	0	0	0	0	0
4/24/2024	1:00 PM	0	0	0	0	0	0	0	0	0	0	0	0	0
4/24/2024	1:15 PM	0	0	0	0	0	0	0	0	0	0	0	0	0
4/24/2024	1:30 PM	0	0	0	0	0	0	0	0	0	0	0	0	0
4/24/2024	1:45 PM	0	0	0	0	0	0	0	0	0	0	0	0	0
4/24/2024	2:00 PM	0	0	0	0	0	0	0	0	0	0	0	0	0
4/24/2024	2:15 PM	0	0	0	0	0	0	0	0	0	0	0	0	0
4/24/2024	2:30 PM	0	0	0	0	0	0	0	0	0	0	0	0	0
4/24/2024	2:45 PM	0	0	0	0	0	0	0	0	0	0	0	0	0
4/24/2024	3:00 PM	0	0	0	0	0	0	0	0	0	0	0	0	0
4/24/2024	3:15 PM	0	0	0	0	0	0	0	0	0	0	0	0	0
4/24/2024	3:30 PM	0	0	0	0	0	0	0	0	0	0	0	0	0
4/24/2024	3:45 PM	0	0	0	0	0	0	0	0	0	0	0	0	0
4/24/2024	4:00 PM	0	0	0	0	0	0	0	0	0	0	0	0	0
4/24/2024	4:15 PM	0	0	0	0	0	0	0	0	0	0	0	0	0
4/24/2024	4:30 PM	0	0	0	0	0	0	0	0	0	0	0	0	0
4/24/2024	4:45 PM	0	0	0	0	0	0	0	0	0	0	0	0	0
4/24/2024	5:00 PM	0	0	0	0	0	0	0	0	0	0	0	0	0
4/24/2024	5:15 PM	0	0	0	0	0	0	0	0	0	0	0	0	0
4/24/2024	5:30 PM	0	0	0	0	0	0	0	0	0	0	0	0	0
4/24/2024	5:45 PM	0	0	0	0	0	0	0	0	0	0	0	0	0
4/24/2024	6:00 PM	0	0	0	0	0	0	0	0	0	0	0	0	0
4/24/2024	6:15 PM	0	0	0	0	0	0	0	0	0	0	0	0	0
4/24/2024	6:30 PM	0	0	0	0	0	0	0	0	0	0	0	0	0
4/24/2024	6:45 PM	0	0	0	0	0	0	0	0	0	0	0	0	0
4/24/2024	7:00 PM	0	0	0	0	0	0	0	0	0	0	0	0	0
4/24/2024	7:15 PM	0	0	0	0	0	0	0	0	0	0	0	0	0
4/24/2024	7:30 PM	0	0	0	0	0	0	0	0	0	0	0	0	0
4/24/2024	7:45 PM	0	0	0	0	0	0	0	0	0	0	0	0	0
4/24/2024	8:00 PM	0	0	0	0	0	0	0	0	0	0	0	0	0
4/24/2024	8:15 PM	0	0	0	0	0	0	0	0	0	0	0	0	0
4/24/2024	8:30 PM	0	0	0	0	0	0	0	0	0	0	0	0	0
4/24/2024	8:45 PM	0	0	0	0	0	0	0	0	0	0	0	0	0
4/24/2024	9:00 PM	0	0	0	0	0	0	0	0	0	0	0	0	0
4/24/2024	9:15 PM	0	0	0	0	0	0	0	0	0	0	0	0	0
4/24/2024	9:30 PM	0	0	0	0	0	0	0	0	0	0	0	0	0
4/24/2024	9:45 PM	0	0	0	0	0	0	0	0	0	0	0	0	0
4/24/2024	10:00 PM	0	0	0	0	0	0	0	0	0	0	0	0	0
4/24/2024	10:15 PM	0	0	0	0	0	0	0	0	0	0	0	0	0
4/24/2024	10:30 PM	0	0	0	0	0	0	0	0	0	0	0	0	0
4/24/2024	10:45 PM	0	0	0	0	0	0	0	0	0	0	0	0	0
4/24/2024	11:00 PM	0	0	0	0	0	0	0	0	0	0	0	0	0
4/24/2024	11:15 PM	0	0	0	0	0	0	0	0	0	0	0	0	0
4/24/2024	11:30 PM	0	0	0	0	0	0	0	0	0	0	0	0	0
4/24/2024	11:45 PM	0	0	0	0	0	0	0	0	0	0	0	0	0

4/25/2024	12:00 AM	0	0	0	0	0	0	0	0	0	0	0	0	0
4/25/2024	12:15 AM	0	0	0	0	0	0	0	0	0	0	0	0	0
4/25/2024	12:30 AM	0	0	0	0	0	0	0	0	0	0	0	0	0
4/25/2024	12:45 AM	0	0	0	0	0	0	0	0	0	0	0	0	0
4/25/2024	1:00 AM	0	0	0	0	0	0	0	0	0	0	0	0	0
4/25/2024	1:15 AM	0	0	0	0	0	0	0	0	0	0	0	0	0
4/25/2024	1:30 AM	0	0	0	0	0	0	0	0	0	0	0	0	0
4/25/2024	1:45 AM	0	0	0	0	0	0	0	0	0	0	0	0	0
4/25/2024	2:00 AM	0	0	0	0	0	0	0	0	0	0	0	0	0
4/25/2024	2:15 AM	0	0	0	0	0	0	0	0	0	0	0	0	0
4/25/2024	2:30 AM	0	0	0	0	0	0	0	0	0	0	0	0	0
4/25/2024	2:45 AM	0	0	0	0	0	0	0	0	0	0	0	0	0
4/25/2024	3:00 AM	0	0	0	0	0	0	0	0	0	0	0	0	0
4/25/2024	3:15 AM	0	0	0	0	0	0	0	0	0	0	0	0	0
4/25/2024	3:30 AM	0	0	0	0	0	0	0	0	0	0	0	0	0
4/25/2024	3:45 AM	0	0	0	0	0	0	0	0	0	0	0	0	0
4/25/2024	4:00 AM	0	0	0	0	0	0	0	0	0	0	0	0	0
4/25/2024	4:15 AM	0	0	0	0	0	0	0	0	0	0	0	0	0
4/25/2024	4:30 AM	0	0	0	0	0	0	0	0	0	0	0	0	0
4/25/2024	4:45 AM	0	0	0	0	0	0	0	0	0	0	0	0	0
4/25/2024	5:00 AM	0	0	0	0	0	0	0	0	0	0	0	0	0
4/25/2024	5:15 AM	0	0	0	0	0	0	0	0	0	0	0	0	0
4/25/2024	5:30 AM	0	0	0	0	0	0	0	0	0	0	0	0	0
4/25/2024	5:45 AM	0	0	0	0	0	0	0	0	0	0	0	0	0
4/25/2024	6:00 AM	0	0	0	0	0	0	0	0	0	0	0	0	0
4/25/2024	6:15 AM	0	0	0	0	0	0	0	0	0	0	0	0	0
4/25/2024	6:30 AM	0	0	0	0	0	0	0	0	0	0	0	0	0
4/25/2024	6:45 AM	0	0	0	0	0	0	0	0	0	0	0	0	0
4/25/2024	7:00 AM	0	0	0	0	0	0	0	0	0	0	0	0	0
4/25/2024	7:15 AM	0	0	0	0	0	0	0	0	0	0	0	0	0
4/25/2024	7:30 AM	0	0	0	0	0	0	0	0	0	0	0	0	0
4/25/2024	7:45 AM	0	0	0	0	0	0	0	0	0	0	0	0	0
4/25/2024	8:00 AM	0	0	0	0	0	0	0	0	0	0	0	0	0
4/25/2024	8:15 AM	0	0	0	0	0	0	0	0	0	0	0	0	0
4/25/2024	8:30 AM	0	0	0	0	0	0	0	0	0	0	0	0	0
4/25/2024	8:45 AM	0	0	0	0	0	0	0	0	0	0	0	0	0
4/25/2024	9:00 AM	0	0	0	0	0	0	0	0	0	0	0	0	0
4/25/2024	9:15 AM	0	0	0	0	0	0	0	0	0	0	0	0	0
4/25/2024	9:30 AM	0	0	0	0	0	0	0	0	0	0	0	0	0
4/25/2024	9:45 AM	0	0	0	0	0	0	0	0	0	0	0	0	0
4/25/2024	10:00 AM	0	0	0	0	0	0	0	0	0	0	0	0	0
4/25/2024	10:15 AM	0	0	0	0	0	0	0	0	0	0	0	0	0
4/25/2024	10:30 AM	0	0	0	0	0	0	0	0	0	0	0	0	0
4/25/2024	10:45 AM	0	0	0	0	0	0	0	0	0	0	0	0	0
4/25/2024	11:00 AM	0	0	0	0	0	0	0	0	0	0	0	0	0
4/25/2024	11:15 AM	0	0	0	0	0	0	0	0	0	0	0	0	0
4/25/2024	11:30 AM	0	0	0	0	0	0	0	0	0	0	0	0	0
4/25/2024	11:45 AM	0	0	0	0	0	0	0	0	0	0	0	0	0
4/25/2024	12:00 PM	0	0	0	0	0	0	0	0	0	0	0	0	0
4/25/2024	12:15 PM	0	0	0	0	0	0	0	0	0	0	0	0	0
4/25/2024	12:30 PM	0	0	0	0	0	0	0	0	0	0	0	0	0
4/25/2024	12:45 PM	0	0	0	0	0	0	0	0	0	0	0	0	0
4/25/2024	1:00 PM	0	0	0	0	0	0	0	0	0	0	0	0	0
4/25/2024	1:15 PM	0	0	0	0	0	0	0	0	0	0	0	0	0
4/25/2024	1:30 PM	0	0	0	0	0	0	0	0	0	0	0	0	0
4/25/2024	1:45 PM	0	0	0	0	0	0	0	0	0	0	0	0	0
4/25/2024	2:00 PM	0	0	0	0	0	0	0	0	0	0	0	0	0
4/25/2024	2:15 PM	0	0	0	0	0	0	0	0	0	0	0	0	0
4/25/2024	2:30 PM	0	0	0	0	0	0	0	0	0	0	0	0	0
4/25/2024	2:45 PM	0	0	0	0	0	0	0	0	0	0	0	0	0
4/25/2024	3:00 PM	0	0	0	0	0	0	0	0	0	0	0	0	0
4/25/2024	3:15 PM	0	0	0	0	0	0	0	0	0	0	0	0	0
4/25/2024	3:30 PM	0	0	0	0	0	0	0	0	0	0	0	0	0
4/25/2024	3:45 PM	0	0	0	0	0	0	0	0	0	0	0	0	0
4/25/2024	4:00 PM	0	0	0	0	0	0	0	0	0	0	0	0	0
4/25/2024	4:15 PM	0	0	0	0	0	0	0	0	0	0	0	0	0
4/25/2024	4:30 PM	0	0	0	0	0	0	0	0	0	0	0	0	0
4/25/2024	4:45 PM	0	0	0	0	0	0	0	0	0	0	0	0	0
4/25/2024	5:00 PM	0	0	0	0	0	0	0	0	0	0	0	0	0
4/25/2024	5:15 PM	0	0	0	0	0	0	0	0	0	0	0	0	0
4/25/2024	5:30 PM	0	0	0	0	0	0	0	0	0	0	0	0	0
4/25/2024	5:45 PM	0	0	0	0	0	0	0	0	0	0	0	0	0
4/25/2024	6:00 PM	0	0	0	0	0	0	0	0	0	0	0	0	0
4/25/2024	6:15 PM	0	0	0	0	0	0	0	0	0	0	0	0	0
4/25/2024	6:30 PM	0	0	0	0	0	0	0	0	0	0	0	0	0
4/25/2024	6:45 PM	0	0	0	0	0	0	0	0	0	0	0	0	0
4/25/2024	7:00 PM	0	0	0	0	0	0	0	0	0	0	0	0	0
4/25/2024	7:15 PM	0	0	0	0	0	0	0	0	0	0	0	0	0
4/25/2024	7:30 PM	0	0	0	0	0	0	0	0	0	0	0	0	0
4/25/2024	7:45 PM	0	0	0	0	0	0	0	0	0	0	0	0	0
4/25/2024	8:00 PM	0	0	0	0	0	0	0	0	0	0	0	0	0
4/25/2024	8:15 PM	0	0	0	0	0	0	0	0	0	0	0	0	0
4/25/2024	8:30 PM	0	0	0	0	0	0	0	0	0	0	0	0	0
4/25/2024	8:45 PM	0	0	0	0	0	0	0	0	0	0	0	0	0
4/25/2024	9:00 PM	0	0	0	0	0	0	0	0	0	0	0	0	0
4/25/2024	9:15 PM	0	0	0	0	0	0	0	0	0	0	0	0	0
4/25/2024	9:30 PM	0	0	0	0	0	0	0	0	0	0	0	0	0
4/25/2024	9:45 PM	0	0	0	0	0	0	0	0	0	0	0	0	0
4/25/2024	10:00 PM	0	0	0	0	0	0	0	0	0	0	0	0	0
4/25/2024	10:15 PM	0	0	0	0	0	0	0	0	0	0	0	0	0
4/25/2024	10:30 PM	0	0	0	0	0	0	0	0	0	0	0	0	0
4/25/2024	10:45 PM	0	0	0	0	0	0	0	0	0	0	0	0	0
4/25/2024	11:00 PM	0	0	0	0	0	0	0	0	0	0	0	0	0
4/25/2024	11:15 PM	0	0	0	0	0	0	0	0	0	0	0	0	0
4/25/2024	11:30 PM	0	0	0	0	0	0	0	0	0	0	0	0	0
4/25/2024	11:45 PM	0	0	0	0	0	0	0	0	0	0	0	0	0

NB
File Name:
Start Date: 4/23/2024
Start Time: 0
Site Code: 36
Station ID: 1
Location 1: I-26 N/Bound Off-Ramp, south of St Andrews Rd
Location 2:

Date	Time	1	2	3	4	5	6	7	8	9	10	11	12	13
4/23/2024	12:00 AM	0	0	0	0	0	0	0	0	0	0	0	0	0
4/23/2024	12:15 AM	0	0	0	0	0	0	0	0	0	0	0	0	0
4/23/2024	12:30 AM	0	0	0	0	0	0	0	0	0	0	0	0	0
4/23/2024	12:45 AM	0	0	0	0	0	0	0	0	0	0	0	0	0
4/23/2024	1:00 AM	0	0	0	0	0	0	0	0	0	0	0	0	0
4/23/2024	1:15 AM	0	0	0	0	0	0	0	0	0	0	0	0	0
4/23/2024	1:30 AM	0	0	0	0	0	0	0	0	0	0	0	0	0
4/23/2024	1:45 AM	0	0	0	0	0	0	0	0	0	0	0	0	0
4/23/2024	2:00 AM	0	0	0	0	0	0	0	0	0	0	0	0	0
4/23/2024	2:15 AM	0	0	0	0	0	0	0	0	0	0	0	0	0
4/23/2024	2:30 AM	0	0	0	0	0	0	0	0	0	0	0	0	0
4/23/2024	2:45 AM	0	0	0	0	0	0	0	0	0	0	0	0	0
4/23/2024	3:00 AM	0	0	0	0	0	0	0	0	0	0	0	0	0
4/23/2024	3:15 AM	0	0	0	0	0	0	0	0	0	0	0	0	0
4/23/2024	3:30 AM	0	0	0	0	0	0	0	0	0	0	0	0	0
4/23/2024	3:45 AM	0	0	0	0	0	0	0	0	0	0	0	0	0
4/23/2024	4:00 AM	0	0	0	0	0	0	0	0	0	0	0	0	0
4/23/2024	4:15 AM	0	0	0	0	0	0	0	0	0	0	0	0	0
4/23/2024	4:30 AM	0	0	0	0	0	0	0	0	0	0	0	0	0
4/23/2024	4:45 AM	0	0	0	0	0	0	0	0	0	0	0	0	0
4/23/2024	5:00 AM	0	0	0	0	0	0	0	0	0	0	0	0	0
4/23/2024	5:15 AM	0	0	0	0	0	0	0	0	0	0	0	0	0
4/23/2024	5:30 AM	0	0	0	0	0	0	0	0	0	0	0	0	0
4/23/2024	5:45 AM	0	0	0	0	0	0	0	0	0	0	0	0	0
4/23/2024	6:00 AM	0	0	0	0	0	0	0	0	0	0	0	0	0
4/23/2024	6:15 AM	0	0	0	0	0	0	0	0	0	0	0	0	0
4/23/2024	6:30 AM	0	0	0	0	0	0	0	0	0	0	0	0	0
4/23/2024	6:45 AM	0	0	0	0	0	0	0	0	0	0	0	0	0
4/23/2024	7:00 AM	0	0	0	0	0	0	0	0	0	0	0	0	0
4/23/2024	7:15 AM	0	0	0	0	0	0	0	0	0	0	0	0	0
4/23/2024	7:30 AM	0	0	0	0	0	0	0	0	0	0	0	0	0
4/23/2024	7:45 AM	0	0	0	0	0	0	0	0	0	0	0	0	0
4/23/2024	8:00 AM	0	0	0	0	0	0	0	0	0	0	0	0	0
4/23/2024	8:15 AM	0	0	0	0	0	0	0	0	0	0	0	0	0
4/23/2024	8:30 AM	0	0	0	0	0	0	0	0	0	0	0	0	0
4/23/2024	8:45 AM	0	0	0	0	0	0	0	0	0	0	0	0	0
4/23/2024	9:00 AM	0	0	0	0	0	0	0	0	0	0	0	0	0
4/23/2024	9:15 AM	0	0	0	0	0	0	0	0	0	0	0	0	0
4/23/2024	9:30 AM	0	0	0	0	0	0	0	0	0	0	0	0	0
4/23/2024	9:45 AM	0	0	0	0	0	0	0	0	0	0	0	0	0
4/23/2024	10:00 AM	0	0	0	0	0	0	0	0	0	0	0	0	0
4/23/2024	10:15 AM	0	0	0	0	0	0	0	0	0	0	0	0	0
4/23/2024	10:30 AM	0	0	0	0	0	0	0	0	0	0	0	0	0
4/23/2024	10:45 AM	0	0	0	0	0	0	0	0	0	0	0	0	0
4/23/2024	11:00 AM	0	0	0	0	0	0	0	0	0	0	0	0	0
4/23/2024	11:15 AM	0	0	0	0	0	0	0	0	0	0	0	0	0
4/23/2024	11:30 AM	0	0	0	0	0	0	0	0	0	0	0	0	0
4/23/2024	11:45 AM	0	0	0	0	0	0	0	0	0	0	0	0	0
4/23/2024	12:00 PM	0	0	0	0	0	0	0	0	0	0	0	0	0
4/23/2024	12:15 PM	0	0	0	0	0	0	0	0	0	0	0	0	0
4/23/2024	12:30 PM	0	0	0	0	0	0	0	0	0	0	0	0	0
4/23/2024	12:45 PM	0	0	0	0	0	0	0	0	0	0	0	0	0
4/23/2024	1:00 PM	0	0	0	0	0	0	0	0	0	0	0	0	0
4/23/2024	1:15 PM	0	0	0	0	0	0	0	0	0	0	0	0	0
4/23/2024	1:30 PM	0	0	0	0	0	0	0	0	0	0	0	0	0
4/23/2024	1:45 PM	0	0	0	0	0	0	0	0	0	0	0	0	0
4/23/2024	2:00 PM	0	0	0	0	0	0	0	0	0	0	0	0	0
4/23/2024	2:15 PM	0	0	0	0	0	0	0	0	0	0	0	0	0
4/23/2024	2:30 PM	0	0	0	0	0	0	0	0	0	0	0	0	0
4/23/2024	2:45 PM	0	0	0	0	0	0	0	0	0	0	0	0	0
4/23/2024	3:00 PM	0	0	0	0	0	0	0	0	0	0	0	0	0
4/23/2024	3:15 PM	0	0	0	0	0	0	0	0	0	0	0	0	0
4/23/2024	3:30 PM	0	0	0	0	0	0	0	0	0	0	0	0	0
4/23/2024	3:45 PM	0	0	0	0	0	0	0	0	0	0	0	0	0
4/23/2024	4:00 PM	0	0	0	0	0	0	0	0	0	0	0	0	0
4/23/2024	4:15 PM	0	0	0	0	0	0	0	0	0	0	0	0	0
4/23/2024	4:30 PM	0	0	0	0	0	0	0	0	0	0	0	0	0
4/23/2024	4:45 PM	0	0	0	0	0	0	0	0	0	0	0	0	0
4/23/2024	5:00 PM	0	0	0	0	0	0	0	0	0	0	0	0	0
4/23/2024	5:15 PM	0	0	0	0	0	0	0	0	0	0	0	0	0
4/23/2024	5:30 PM	0	0	0	0	0	0	0	0	0	0	0	0	0
4/23/2024	5:45 PM	0	0	0	0	0	0	0	0	0	0	0	0	0
4/23/2024	6:00 PM	0	0	0	0	0	0	0	0	0	0	0	0	0
4/23/2024	6:15 PM	0	54	6	0	0	0	0	0	0	0	0	0	0
4/23/2024	6:30 PM	0	96	9	0	0	0	0	0	0	0	0	0	0
4/23/2024	6:45 PM	0	139	20	0	0	0	0	0	0	0	0	0	0
4/23/2024	7:00 PM	0	174	25	0	0	0	0	0	0	0	0	0	0
4/23/2024	7:15 PM	0	168	20	0	1	0	0	0	0	0	0	0	0
4/23/2024	7:30 PM	0	169	18	0	1	0	0	0	0	0	0	0	0
4/23/2024	7:45 PM	0	163	7	0	2	0	0	0	0	0	0	0	0
4/23/2024	8:00 PM	0	167	3	0	2	0	0	0	0	0	0	0	0
4/23/2024	8:15 PM	0	160	3	0	1	0	0	0	0	0	0	0	0
4/23/2024	8:30 PM	0	152	3	0	1	0	0	0	0	0	0	0	0
4/23/2024	8:45 PM	0	149	3	0	0	0	0	0	0	0	0	0	0
4/23/2024	9:00 PM	0	144	3	0	1	0	0	0	0	0	0	0	0
4/23/2024	9:15 PM	0	136	3	0	1	0	0	0	0	0	0	0	0
4/23/2024	9:30 PM	0	146	2	0	2	0	0	0	0	0	0	0	0
4/23/2024	9:45 PM	0	142	2	0	2	0	0	0	0	0	0	0	0
4/23/2024	10:00 PM	0	133	1	0	1	0	0	0	0	0	0	0	0
4/23/2024	10:15 PM	0	121	0	0	1	0	0	0	0	0	0	0	0
4/23/2024	10:30 PM	0	102	0	0	0	0	0	0	0	0	0	0	0
4/23/2024	10:45 PM	0	88	1	0	0	0	0	0	0	0	0	0	0
4/23/2024	11:00 PM	0	81	1	0	0	0	0	0	0	0	0	0	0
4/23/2024	11:15 PM	0	77	2	0	1	0	0	0	0	0	0	0	0
4/23/2024	11:30 PM	0	62	2	0	1	0	0	0	0	0	0	0	0
4/23/2024	11:45 PM	0	61	1	0	1	0	0	0	0	0	0	0	0

4/24/2024	12:00 AM	0	50	1	0	1	0	0	0	1	0	0	0	0
4/24/2024	12:15 AM	0	43	0	0	1	0	0	0	1	0	0	0	0
4/24/2024	12:30 AM	0	42	0	0	1	0	0	0	1	0	0	0	0
4/24/2024	12:45 AM	0	36	0	0	1	0	0	0	1	0	0	0	0
4/24/2024	1:00 AM	0	38	0	0	1	0	0	0	0	0	0	0	0
4/24/2024	1:15 AM	0	37	0	0	0	0	0	0	0	0	0	0	0
4/24/2024	1:30 AM	0	40	0	0	0	0	0	0	0	0	0	0	0
4/24/2024	1:45 AM	0	37	0	0	0	0	0	0	0	0	0	0	0
4/24/2024	2:00 AM	0	32	0	0	0	0	0	0	0	0	0	0	0
4/24/2024	2:15 AM	0	28	0	0	0	0	0	0	0	0	0	0	0
4/24/2024	2:30 AM	0	23	0	0	0	0	0	0	0	0	0	0	0
4/24/2024	2:45 AM	0	24	0	0	0	0	0	0	0	0	0	0	0
4/24/2024	3:00 AM	0	24	0	0	0	0	0	0	0	0	0	0	0
4/24/2024	3:15 AM	0	31	0	0	1	0	0	0	0	0	0	0	0
4/24/2024	3:30 AM	0	28	0	0	1	0	0	0	0	0	0	0	0
4/24/2024	3:45 AM	0	30	0	0	1	0	0	0	0	0	0	0	0
4/24/2024	4:00 AM	0	35	1	0	1	0	0	0	0	0	0	0	0
4/24/2024	4:15 AM	0	37	2	0	1	0	0	0	0	0	0	0	0
4/24/2024	4:30 AM	0	52	2	0	1	0	0	0	0	0	0	0	0
4/24/2024	4:45 AM	0	66	2	0	1	0	0	0	0	0	0	0	0
4/24/2024	5:00 AM	0	89	2	0	2	0	0	0	0	0	0	0	0
4/24/2024	5:15 AM	0	98	1	0	1	0	0	0	0	0	0	0	0
4/24/2024	5:30 AM	0	108	6	0	1	0	0	0	0	0	0	0	0
4/24/2024	5:45 AM	0	141	12	0	1	0	0	0	0	0	0	0	0
4/24/2024	6:00 AM	0	172	34	0	0	0	0	0	0	0	0	0	0
4/24/2024	6:15 AM	1	225	59	0	0	0	0	0	0	0	0	0	0
4/24/2024	6:30 AM	1	278	77	0	0	0	0	0	1	0	0	0	0
4/24/2024	6:45 AM	1	318	104	0	3	0	0	0	1	0	0	0	0
4/24/2024	7:00 AM	1	380	101	0	6	2	0	0	1	0	0	0	0
4/24/2024	7:15 AM	1	402	92	0	6	2	0	0	1	0	0	0	0
4/24/2024	7:30 AM	1	416	88	0	7	2	0	0	0	0	0	0	0
4/24/2024	7:45 AM	2	404	77	0	4	2	0	0	0	0	0	0	0
4/24/2024	8:00 AM	3	374	77	0	1	0	0	0	0	0	0	0	0
4/24/2024	8:15 AM	2	340	76	0	5	0	0	0	0	0	0	0	0
4/24/2024	8:30 AM	3	312	73	0	8	0	0	0	0	0	0	0	0
4/24/2024	8:45 AM	2	292	73	0	11	2	0	0	0	0	0	0	0
4/24/2024	9:00 AM	1	261	71	0	11	4	0	0	1	0	0	0	0
4/24/2024	9:15 AM	1	250	68	0	8	5	0	0	2	0	0	0	0
4/24/2024	9:30 AM	0	235	68	0	5	5	0	0	2	0	0	0	0
4/24/2024	9:45 AM	0	227	60	0	3	4	0	0	3	0	0	0	0
4/24/2024	10:00 AM	0	219	59	0	4	3	0	0	2	0	0	0	0
4/24/2024	10:15 AM	0	216	60	0	4	3	0	0	1	0	0	0	0
4/24/2024	10:30 AM	0	221	65	0	3	5	0	0	1	0	0	0	0
4/24/2024	10:45 AM	0	211	70	0	4	5	0	0	0	0	0	0	0
4/24/2024	11:00 AM	0	218	67	0	4	6	0	1	1	0	0	0	0
4/24/2024	11:15 AM	0	228	69	0	6	6	0	1	1	0	0	0	0
4/24/2024	11:30 AM	0	234	63	0	8	4	0	1	1	0	0	0	0
4/24/2024	11:45 AM	0	251	57	0	7	3	0	1	2	0	0	0	0
4/24/2024	12:00 PM	0	252	52	0	7	1	0	0	1	0	0	0	0
4/24/2024	12:15 PM	0	239	51	2	4	0	0	0	1	0	0	0	0
4/24/2024	12:30 PM	0	243	47	2	2	0	0	0	1	0	0	0	0
4/24/2024	12:45 PM	0	237	54	2	3	1	0	0	0	0	0	0	0
4/24/2024	1:00 PM	0	241	60	2	3	2	0	0	0	0	0	0	0
4/24/2024	1:15 PM	0	253	60	0	3	3	0	0	0	0	0	0	0
4/24/2024	1:30 PM	0	237	62	0	3	4	0	0	0	0	0	0	0
4/24/2024	1:45 PM	0	234	56	1	4	3	0	0	0	0	0	0	0
4/24/2024	2:00 PM	0	229	56	3	4	2	0	0	0	0	0	0	0
4/24/2024	2:15 PM	0	238	66	3	4	3	0	0	1	0	0	0	0
4/24/2024	2:30 PM	1	258	65	3	6	3	0	0	1	0	0	0	0
4/24/2024	2:45 PM	2	262	62	2	4	3	0	0	1	0	0	0	0
4/24/2024	3:00 PM	2	257	64	0	3	4	0	0	1	0	0	0	0
4/24/2024	3:15 PM	2	254	56	0	5	2	0	0	1	0	0	0	0
4/24/2024	3:30 PM	1	253	60	0	3	1	0	0	1	0	0	0	0
4/24/2024	3:45 PM	0	256	68	0	2	2	0	0	1	0	0	0	0
4/24/2024	4:00 PM	0	269	63	0	2	1	0	0	1	0	0	0	0
4/24/2024	4:15 PM	0	283	54	0	0	1	0	0	0	0	0	0	0
4/24/2024	4:30 PM	0	270	45	0	1	2	0	0	0	0	0	0	0
4/24/2024	4:45 PM	0	276	38	0	2	1	0	0	0	0	0	0	0
4/24/2024	5:00 PM	0	283	39	0	2	1	0	0	0	0	0	0	0
4/24/2024	5:15 PM	0	274	47	0	4	1	0	0	0	0	0	0	0
4/24/2024	5:30 PM	0	265	50	0	4	0	0	0	0	0	0	0	0
4/24/2024	5:45 PM	0	268	43	0	5	0	0	0	0	0	0	0	0
4/24/2024	6:00 PM	0	254	45	0	5	0	0	0	0	0	0	0	0
4/24/2024	6:15 PM	0	240	34	0	3	0	0	0	1	0	0	0	0
4/24/2024	6:30 PM	0	256	32	0	2	0	0	0	1	0	0	0	0
4/24/2024	6:45 PM	0	236	31	0	0	0	0	0	1	0	0	0	0
4/24/2024	7:00 PM	0	219	19	0	0	0	0	0	1	0	0	0	0
4/24/2024	7:15 PM	1	230	27	0	0	0	0	0	0	0	0	0	0
4/24/2024	7:30 PM	1	214	23	0	0	0	0	0	0	0	0	0	0
4/24/2024	7:45 PM	1	214	21	0	0	0	0	0	0	0	0	0	0
4/24/2024	8:00 PM	1	211	19	0	0	0	0	0	0	0	0	0	0
4/24/2024	8:15 PM	0	170	9	0	0	0	0	0	0	0	0	0	0
4/24/2024	8:30 PM	0	165	7	0	0	0	0	0	0	0	0	0	0
4/24/2024	8:45 PM	0	152	7	0	1	0	0	0	0	0	0	0	0
4/24/2024	9:00 PM	0	136	6	0	1	0	0	0	0	0	0	0	0
4/24/2024	9:15 PM	0	137	4	0	1	0	0	0	0	0	0	0	0
4/24/2024	9:30 PM	0	125	3	0	1	0	0	0	0	0	0	0	0
4/24/2024	9:45 PM	0	124	1	0	0	0	0	0	0	0	0	0	0
4/24/2024	10:00 PM	0	129	2	0	0	0	0	0	0	0	0	0	0
4/24/2024	10:15 PM	0	139	2	0	0	0	0	0	0	0	0	0	0
4/24/2024	10:30 PM	0	138	1	0	0	0	0	0	0	0	0	0	0
4/24/2024	10:45 PM	0	127	1	0	0	0	0	0	0	0	0	0	0
4/24/2024	11:00 PM	0	124	1	0	0	0	0	0	0	0	0	0	0
4/24/2024	11:15 PM	0	108	2	0	0	0	0	0	0	0	0	0	0
4/24/2024	11:30 PM	0	89	2	0	0	0	0	0	0	0	0	0	0
4/24/2024	11:45 PM	0	75	3	0	0	0	0	0	0	0	0	0	0

4/25/2024	12:00 AM	0	63	2	0	0	0	0	0	1	0	0	0	0
4/25/2024	12:15 AM	0	54	1	0	0	0	0	0	1	0	0	0	0
4/25/2024	12:30 AM	0	51	2	0	0	0	0	0	1	0	0	0	0
4/25/2024	12:45 AM	0	51	1	0	0	0	0	0	1	0	0	0	0
4/25/2024	1:00 AM	0	43	3	0	0	0	0	0	0	0	0	0	0
4/25/2024	1:15 AM	0	51	5	0	0	0	0	0	0	0	0	0	0
4/25/2024	1:30 AM	0	46	7	0	0	0	0	0	0	0	0	0	0
4/25/2024	1:45 AM	0	37	8	0	0	0	0	0	0	0	0	0	0
4/25/2024	2:00 AM	0	30	6	0	0	0	0	0	0	0	0	0	0
4/25/2024	2:15 AM	0	17	4	0	0	0	0	0	0	0	0	0	0
4/25/2024	2:30 AM	0	19	1	0	0	0	0	0	0	0	0	0	0
4/25/2024	2:45 AM	0	21	0	0	0	0	0	0	0	0	0	0	0
4/25/2024	3:00 AM	0	23	0	0	0	0	0	0	0	0	0	0	0
4/25/2024	3:15 AM	0	23	2	0	0	0	0	0	0	0	0	0	0
4/25/2024	3:30 AM	0	22	5	0	0	0	0	0	0	0	0	0	0
4/25/2024	3:45 AM	0	26	6	0	0	0	0	0	0	0	0	0	0
4/25/2024	4:00 AM	0	36	10	0	0	0	0	0	1	0	0	0	0
4/25/2024	4:15 AM	0	39	10	0	0	0	0	0	2	0	0	0	0
4/25/2024	4:30 AM	0	46	10	0	0	0	0	0	2	0	0	0	0
4/25/2024	4:45 AM	0	61	14	0	0	0	0	0	2	0	0	0	0
4/25/2024	5:00 AM	0	73	14	0	0	0	0	0	2	0	0	0	0
4/25/2024	5:15 AM	0	83	14	0	0	0	0	0	2	0	0	0	0
4/25/2024	5:30 AM	0	111	18	0	0	0	0	0	2	0	0	0	0
4/25/2024	5:45 AM	0	138	20	0	0	0	1	0	2	0	0	0	0
4/25/2024	6:00 AM	0	176	29	0	1	0	1	0	3	0	0	0	0
4/25/2024	6:15 AM	0	216	41	0	3	0	1	0	3	0	0	0	0
4/25/2024	6:30 AM	0	260	57	0	4	0	1	0	3	0	0	0	0
4/25/2024	6:45 AM	0	287	67	0	4	0	0	0	4	0	0	0	0
4/25/2024	7:00 AM	0	341	77	0	5	0	0	0	2	0	0	0	0
4/25/2024	7:15 AM	0	386	81	0	4	0	0	0	2	0	0	0	0
4/25/2024	7:30 AM	2	423	77	0	5	0	0	0	2	0	0	0	0
4/25/2024	7:45 AM	2	420	82	0	7	0	0	0	1	0	0	0	0
4/25/2024	8:00 AM	4	401	79	0	7	0	0	0	2	0	0	0	0
4/25/2024	8:15 AM	4	362	77	0	8	0	0	0	2	0	0	0	0
4/25/2024	8:30 AM	2	299	74	0	7	0	0	0	3	0	0	0	0
4/25/2024	8:45 AM	2	288	72	0	8	0	0	0	3	0	0	0	0
4/25/2024	9:00 AM	0	234	68	0	9	0	0	1	2	0	0	0	0
4/25/2024	9:15 AM	0	225	63	0	8	0	0	1	2	0	0	0	0
4/25/2024	9:30 AM	0	209	59	0	9	0	0	1	1	0	0	0	0
4/25/2024	9:45 AM	0	203	49	0	7	0	0	1	3	0	0	0	0
4/25/2024	10:00 AM	0	217	44	0	8	0	0	0	4	0	0	0	0
4/25/2024	10:15 AM	0	213	46	0	11	2	0	0	3	0	0	0	0
4/25/2024	10:30 AM	0	215	42	0	12	2	0	0	3	0	0	0	0
4/25/2024	10:45 AM	0	200	43	0	11	3	0	0	2	0	0	0	0
4/25/2024	11:00 AM	0	181	41	0	8	3	0	1	3	0	0	0	0
4/25/2024	11:15 AM	0	196	39	0	5	1	0	2	6	0	0	0	0
4/25/2024	11:30 AM	0	204	42	0	2	1	0	2	6	0	0	0	0
4/25/2024	11:45 AM	0	216	45	0	2	0	0	2	5	0	0	0	0
4/25/2024	12:00 PM	0	245	55	0	3	0	0	1	4	0	0	0	0
4/25/2024	12:15 PM	0	235	54	0	5	0	0	0	2	0	0	0	0
4/25/2024	12:30 PM	0	247	59	0	8	0	0	0	2	0	0	0	0
4/25/2024	12:45 PM	0	266	53	0	9	0	0	0	2	0	0	0	0
4/25/2024	1:00 PM	0	275	46	1	11	0	0	0	1	0	0	0	0
4/25/2024	1:15 PM	0	294	52	1	9	0	0	0	0	0	0	0	0
4/25/2024	1:30 PM	0	284	50	1	8	1	0	1	1	0	0	0	0
4/25/2024	1:45 PM	0	276	61	1	7	1	0	1	1	0	0	0	0
4/25/2024	2:00 PM	0	266	64	0	3	1	0	1	1	0	0	0	0
4/25/2024	2:15 PM	0	262	68	0	4	1	0	1	1	0	0	0	0
4/25/2024	2:30 PM	0	279	68	0	4	0	0	0	0	0	0	0	0
4/25/2024	2:45 PM	0	312	70	0	7	0	0	0	1	0	0	0	0
4/25/2024	3:00 PM	0	326	74	0	8	1	0	1	2	0	0	0	0
4/25/2024	3:15 PM	0	318	66	0	8	1	0	1	3	0	0	0	0
4/25/2024	3:30 PM	0	303	62	0	6	1	0	1	3	0	0	0	0
4/25/2024	3:45 PM	0	270	53	0	4	2	0	1	2	0	0	0	0
4/25/2024	4:00 PM	0	252	41	0	3	1	0	0	1	0	0	0	0
4/25/2024	4:15 PM	0	250	34	0	3	1	0	0	0	0	0	0	0
4/25/2024	4:30 PM	0	269	37	0	3	1	0	0	0	0	0	0	0
4/25/2024	4:45 PM	0	267	46	0	3	0	0	0	0	0	0	0	0
4/25/2024	5:00 PM	0	263	48	0	3	1	0	0	0	0	0	0	0
4/25/2024	5:15 PM	0	267	53	0	1	1	0	1	0	0	0	0	0
4/25/2024	5:30 PM	1	254	48	0	1	1	0	1	0	0	0	0	0
4/25/2024	5:45 PM	2	253	40	0	1	1	0	1	1	0	0	0	0
4/25/2024	6:00 PM	2	259	43	0	1	0	0	1	1	0	0	0	0
4/25/2024	6:15 PM	2	192	33	0	1	0	0	0	1	0	0	0	0
4/25/2024	6:30 PM	1	129	25	0	1	0	0	0	1	0	0	0	0
4/25/2024	6:45 PM	0	67	12	0	0	0	0	0	0	0	0	0	0
4/25/2024	7:00 PM	0	0	0	0	0	0	0	0	0	0	0	0	0
4/25/2024	7:15 PM	0	0	0	0	0	0	0	0	0	0	0	0	0
4/25/2024	7:30 PM	0	0	0	0	0	0	0	0	0	0	0	0	0
4/25/2024	7:45 PM	0	0	0	0	0	0	0	0	0	0	0	0	0
4/25/2024	8:00 PM	0	0	0	0	0	0	0	0	0	0	0	0	0
4/25/2024	8:15 PM	0	0	0	0	0	0	0	0	0	0	0	0	0
4/25/2024	8:30 PM	0	0	0	0	0	0	0	0	0	0	0	0	0
4/25/2024	8:45 PM	0	0	0	0	0	0	0	0	0	0	0	0	0
4/25/2024	9:00 PM	0	0	0	0	0	0	0	0	0	0	0	0	0
4/25/2024	9:15 PM	0	0	0	0	0	0	0	0	0	0	0	0	0
4/25/2024	9:30 PM	0	0	0	0	0	0	0	0	0	0	0	0	0
4/25/2024	9:45 PM	0	0	0	0	0	0	0	0	0	0	0	0	0
4/25/2024	10:00 PM	0	0	0	0	0	0	0	0	0	0	0	0	0
4/25/2024	10:15 PM	0	0	0	0	0	0	0	0	0	0	0	0	0
4/25/2024	10:30 PM	0	0	0	0	0	0	0	0	0	0	0	0	0
4/25/2024	10:45 PM	0	0	0	0	0	0	0	0	0	0	0	0	0
4/25/2024	11:00 PM	0	0	0	0	0	0	0	0	0	0	0	0	0
4/25/2024	11:15 PM	0	0	0	0	0	0	0	0	0	0	0	0	0
4/25/2024	11:30 PM	0	0	0	0	0	0	0	0	0	0	0	0	0
4/25/2024	11:45 PM	0	0	0	0	0	0	0	0	0	0	0	0	0

SB
File Name:
Start Date: 4/23/2024
Start Time: 0
Site Code: 36
Station ID: 1
Location 1: I-26 N/Bound Off-Ramp, south of St Andrews Rd
Location 2:

Date	Time	1	2	3	4	5	6	7	8	9	10	11	12	13
4/23/2024	12:00 AM	0	0	0	0	0	0	0	0	0	0	0	0	0
4/23/2024	12:15 AM	0	0	0	0	0	0	0	0	0	0	0	0	0
4/23/2024	12:30 AM	0	0	0	0	0	0	0	0	0	0	0	0	0
4/23/2024	12:45 AM	0	0	0	0	0	0	0	0	0	0	0	0	0
4/23/2024	1:00 AM	0	0	0	0	0	0	0	0	0	0	0	0	0
4/23/2024	1:15 AM	0	0	0	0	0	0	0	0	0	0	0	0	0
4/23/2024	1:30 AM	0	0	0	0	0	0	0	0	0	0	0	0	0
4/23/2024	1:45 AM	0	0	0	0	0	0	0	0	0	0	0	0	0
4/23/2024	2:00 AM	0	0	0	0	0	0	0	0	0	0	0	0	0
4/23/2024	2:15 AM	0	0	0	0	0	0	0	0	0	0	0	0	0
4/23/2024	2:30 AM	0	0	0	0	0	0	0	0	0	0	0	0	0
4/23/2024	2:45 AM	0	0	0	0	0	0	0	0	0	0	0	0	0
4/23/2024	3:00 AM	0	0	0	0	0	0	0	0	0	0	0	0	0
4/23/2024	3:15 AM	0	0	0	0	0	0	0	0	0	0	0	0	0
4/23/2024	3:30 AM	0	0	0	0	0	0	0	0	0	0	0	0	0
4/23/2024	3:45 AM	0	0	0	0	0	0	0	0	0	0	0	0	0
4/23/2024	4:00 AM	0	0	0	0	0	0	0	0	0	0	0	0	0
4/23/2024	4:15 AM	0	0	0	0	0	0	0	0	0	0	0	0	0
4/23/2024	4:30 AM	0	0	0	0	0	0	0	0	0	0	0	0	0
4/23/2024	4:45 AM	0	0	0	0	0	0	0	0	0	0	0	0	0
4/23/2024	5:00 AM	0	0	0	0	0	0	0	0	0	0	0	0	0
4/23/2024	5:15 AM	0	0	0	0	0	0	0	0	0	0	0	0	0
4/23/2024	5:30 AM	0	0	0	0	0	0	0	0	0	0	0	0	0
4/23/2024	5:45 AM	0	0	0	0	0	0	0	0	0	0	0	0	0
4/23/2024	6:00 AM	0	0	0	0	0	0	0	0	0	0	0	0	0
4/23/2024	6:15 AM	0	0	0	0	0	0	0	0	0	0	0	0	0
4/23/2024	6:30 AM	0	0	0	0	0	0	0	0	0	0	0	0	0
4/23/2024	6:45 AM	0	0	0	0	0	0	0	0	0	0	0	0	0
4/23/2024	7:00 AM	0	0	0	0	0	0	0	0	0	0	0	0	0
4/23/2024	7:15 AM	0	0	0	0	0	0	0	0	0	0	0	0	0
4/23/2024	7:30 AM	0	0	0	0	0	0	0	0	0	0	0	0	0
4/23/2024	7:45 AM	0	0	0	0	0	0	0	0	0	0	0	0	0
4/23/2024	8:00 AM	0	0	0	0	0	0	0	0	0	0	0	0	0
4/23/2024	8:15 AM	0	0	0	0	0	0	0	0	0	0	0	0	0
4/23/2024	8:30 AM	0	0	0	0	0	0	0	0	0	0	0	0	0
4/23/2024	8:45 AM	0	0	0	0	0	0	0	0	0	0	0	0	0
4/23/2024	9:00 AM	0	0	0	0	0	0	0	0	0	0	0	0	0
4/23/2024	9:15 AM	0	0	0	0	0	0	0	0	0	0	0	0	0
4/23/2024	9:30 AM	0	0	0	0	0	0	0	0	0	0	0	0	0
4/23/2024	9:45 AM	0	0	0	0	0	0	0	0	0	0	0	0	0
4/23/2024	10:00 AM	0	0	0	0	0	0	0	0	0	0	0	0	0
4/23/2024	10:15 AM	0	0	0	0	0	0	0	0	0	0	0	0	0
4/23/2024	10:30 AM	0	0	0	0	0	0	0	0	0	0	0	0	0
4/23/2024	10:45 AM	0	0	0	0	0	0	0	0	0	0	0	0	0
4/23/2024	11:00 AM	0	0	0	0	0	0	0	0	0	0	0	0	0
4/23/2024	11:15 AM	0	0	0	0	0	0	0	0	0	0	0	0	0
4/23/2024	11:30 AM	0	0	0	0	0	0	0	0	0	0	0	0	0
4/23/2024	11:45 AM	0	0	0	0	0	0	0	0	0	0	0	0	0
4/23/2024	12:00 PM	0	0	0	0	0	0	0	0	0	0	0	0	0
4/23/2024	12:15 PM	0	0	0	0	0	0	0	0	0	0	0	0	0
4/23/2024	12:30 PM	0	0	0	0	0	0	0	0	0	0	0	0	0
4/23/2024	12:45 PM	0	0	0	0	0	0	0	0	0	0	0	0	0
4/23/2024	1:00 PM	0	0	0	0	0	0	0	0	0	0	0	0	0
4/23/2024	1:15 PM	0	0	0	0	0	0	0	0	0	0	0	0	0
4/23/2024	1:30 PM	0	0	0	0	0	0	0	0	0	0	0	0	0
4/23/2024	1:45 PM	0	0	0	0	0	0	0	0	0	0	0	0	0
4/23/2024	2:00 PM	0	0	0	0	0	0	0	0	0	0	0	0	0
4/23/2024	2:15 PM	0	0	0	0	0	0	0	0	0	0	0	0	0
4/23/2024	2:30 PM	0	0	0	0	0	0	0	0	0	0	0	0	0
4/23/2024	2:45 PM	0	0	0	0	0	0	0	0	0	0	0	0	0
4/23/2024	3:00 PM	0	0	0	0	0	0	0	0	0	0	0	0	0
4/23/2024	3:15 PM	0	0	0	0	0	0	0	0	0	0	0	0	0
4/23/2024	3:30 PM	0	0	0	0	0	0	0	0	0	0	0	0	0
4/23/2024	3:45 PM	0	0	0	0	0	0	0	0	0	0	0	0	0
4/23/2024	4:00 PM	0	0	0	0	0	0	0	0	0	0	0	0	0
4/23/2024	4:15 PM	0	0	0	0	0	0	0	0	0	0	0	0	0
4/23/2024	4:30 PM	0	0	0	0	0	0	0	0	0	0	0	0	0
4/23/2024	4:45 PM	0	0	0	0	0	0	0	0	0	0	0	0	0
4/23/2024	5:00 PM	0	0	0	0	0	0	0	0	0	0	0	0	0
4/23/2024	5:15 PM	0	0	0	0	0	0	0	0	0	0	0	0	0
4/23/2024	5:30 PM	0	0	0	0	0	0	0	0	0	0	0	0	0
4/23/2024	5:45 PM	0	0	0	0	0	0	0	0	0	0	0	0	0
4/23/2024	6:00 PM	0	0	0	0	0	0	0	0	0	0	0	0	0
4/23/2024	6:15 PM	0	0	0	0	0	0	0	0	0	0	0	0	0
4/23/2024	6:30 PM	0	0	0	0	0	0	0	0	0	0	0	0	0
4/23/2024	6:45 PM	0	0	0	0	0	0	0	0	0	0	0	0	0
4/23/2024	7:00 PM	0	0	0	0	0	0	0	0	0	0	0	0	0
4/23/2024	7:15 PM	0	0	0	0	0	0	0	0	0	0	0	0	0
4/23/2024	7:30 PM	0	0	0	0	0	0	0	0	0	0	0	0	0
4/23/2024	7:45 PM	0	0	0	0	0	0	0	0	0	0	0	0	0
4/23/2024	8:00 PM	0	0	0	0	0	0	0	0	0	0	0	0	0
4/23/2024	8:15 PM	0	0	0	0	0	0	0	0	0	0	0	0	0
4/23/2024	8:30 PM	0	0	0	0	0	0	0	0	0	0	0	0	0
4/23/2024	8:45 PM	0	0	0	0	0	0	0	0	0	0	0	0	0
4/23/2024	9:00 PM	0	0	0	0	0	0	0	0	0	0	0	0	0
4/23/2024	9:15 PM	0	0	0	0	0	0	0	0	0	0	0	0	0
4/23/2024	9:30 PM	0	0	0	0	0	0	0	0	0	0	0	0	0
4/23/2024	9:45 PM	0	0	0	0	0	0	0	0	0	0	0	0	0
4/23/2024	10:00 PM	0	0	0	0	0	0	0	0	0	0	0	0	0
4/23/2024	10:15 PM	0	0	0	0	0	0	0	0	0	0	0	0	0
4/23/2024	10:30 PM	0	0	0	0	0	0	0	0	0	0	0	0	0
4/23/2024	10:45 PM	0	0	0	0	0	0	0	0	0	0	0	0	0
4/23/2024	11:00 PM	0	0	0	0	0	0	0	0	0	0	0	0	0
4/23/2024	11:15 PM	0	0	0	0	0	0	0	0	0	0	0	0	0
4/23/2024	11:30 PM	0	0	0	0	0	0	0	0	0	0	0	0	0
4/23/2024	11:45 PM	0	0	0	0	0	0	0	0	0	0	0	0	0

4/24/2024	12:00 AM	0	0	0	0	0	0	0	0	0	0	0	0	0
4/24/2024	12:15 AM	0	0	0	0	0	0	0	0	0	0	0	0	0
4/24/2024	12:30 AM	0	0	0	0	0	0	0	0	0	0	0	0	0
4/24/2024	12:45 AM	0	0	0	0	0	0	0	0	0	0	0	0	0
4/24/2024	1:00 AM	0	0	0	0	0	0	0	0	0	0	0	0	0
4/24/2024	1:15 AM	0	0	0	0	0	0	0	0	0	0	0	0	0
4/24/2024	1:30 AM	0	0	0	0	0	0	0	0	0	0	0	0	0
4/24/2024	1:45 AM	0	0	0	0	0	0	0	0	0	0	0	0	0
4/24/2024	2:00 AM	0	0	0	0	0	0	0	0	0	0	0	0	0
4/24/2024	2:15 AM	0	0	0	0	0	0	0	0	0	0	0	0	0
4/24/2024	2:30 AM	0	0	0	0	0	0	0	0	0	0	0	0	0
4/24/2024	2:45 AM	0	0	0	0	0	0	0	0	0	0	0	0	0
4/24/2024	3:00 AM	0	0	0	0	0	0	0	0	0	0	0	0	0
4/24/2024	3:15 AM	0	0	0	0	0	0	0	0	0	0	0	0	0
4/24/2024	3:30 AM	0	0	0	0	0	0	0	0	0	0	0	0	0
4/24/2024	3:45 AM	0	0	0	0	0	0	0	0	0	0	0	0	0
4/24/2024	4:00 AM	0	0	0	0	0	0	0	0	0	0	0	0	0
4/24/2024	4:15 AM	0	0	0	0	0	0	0	0	0	0	0	0	0
4/24/2024	4:30 AM	0	0	0	0	0	0	0	0	0	0	0	0	0
4/24/2024	4:45 AM	0	0	0	0	0	0	0	0	0	0	0	0	0
4/24/2024	5:00 AM	0	0	0	0	0	0	0	0	0	0	0	0	0
4/24/2024	5:15 AM	0	0	0	0	0	0	0	0	0	0	0	0	0
4/24/2024	5:30 AM	0	0	0	0	0	0	0	0	0	0	0	0	0
4/24/2024	5:45 AM	0	0	0	0	0	0	0	0	0	0	0	0	0
4/24/2024	6:00 AM	0	0	0	0	0	0	0	0	0	0	0	0	0
4/24/2024	6:15 AM	0	0	0	0	0	0	0	0	0	0	0	0	0
4/24/2024	6:30 AM	0	0	0	0	0	0	0	0	0	0	0	0	0
4/24/2024	6:45 AM	0	0	0	0	0	0	0	0	0	0	0	0	0
4/24/2024	7:00 AM	0	0	0	0	0	0	0	0	0	0	0	0	0
4/24/2024	7:15 AM	0	0	0	0	0	0	0	0	0	0	0	0	0
4/24/2024	7:30 AM	0	0	0	0	0	0	0	0	0	0	0	0	0
4/24/2024	7:45 AM	0	0	0	0	0	0	0	0	0	0	0	0	0
4/24/2024	8:00 AM	0	0	0	0	0	0	0	0	0	0	0	0	0
4/24/2024	8:15 AM	0	0	0	0	0	0	0	0	0	0	0	0	0
4/24/2024	8:30 AM	0	0	0	0	0	0	0	0	0	0	0	0	0
4/24/2024	8:45 AM	0	0	0	0	0	0	0	0	0	0	0	0	0
4/24/2024	9:00 AM	0	0	0	0	0	0	0	0	0	0	0	0	0
4/24/2024	9:15 AM	0	0	0	0	0	0	0	0	0	0	0	0	0
4/24/2024	9:30 AM	0	0	0	0	0	0	0	0	0	0	0	0	0
4/24/2024	9:45 AM	0	0	0	0	0	0	0	0	0	0	0	0	0
4/24/2024	10:00 AM	0	0	0	0	0	0	0	0	0	0	0	0	0
4/24/2024	10:15 AM	0	0	0	0	0	0	0	0	0	0	0	0	0
4/24/2024	10:30 AM	0	0	0	0	0	0	0	0	0	0	0	0	0
4/24/2024	10:45 AM	0	0	0	0	0	0	0	0	0	0	0	0	0
4/24/2024	11:00 AM	0	0	0	0	0	0	0	0	0	0	0	0	0
4/24/2024	11:15 AM	0	0	0	0	0	0	0	0	0	0	0	0	0
4/24/2024	11:30 AM	0	0	0	0	0	0	0	0	0	0	0	0	0
4/24/2024	11:45 AM	0	0	0	0	0	0	0	0	0	0	0	0	0
4/24/2024	12:00 PM	0	0	0	0	0	0	0	0	0	0	0	0	0
4/24/2024	12:15 PM	0	0	0	0	0	0	0	0	0	0	0	0	0
4/24/2024	12:30 PM	0	0	0	0	0	0	0	0	0	0	0	0	0
4/24/2024	12:45 PM	0	0	0	0	0	0	0	0	0	0	0	0	0
4/24/2024	1:00 PM	0	0	0	0	0	0	0	0	0	0	0	0	0
4/24/2024	1:15 PM	0	0	0	0	0	0	0	0	0	0	0	0	0
4/24/2024	1:30 PM	0	0	0	0	0	0	0	0	0	0	0	0	0
4/24/2024	1:45 PM	0	0	0	0	0	0	0	0	0	0	0	0	0
4/24/2024	2:00 PM	0	0	0	0	0	0	0	0	0	0	0	0	0
4/24/2024	2:15 PM	0	0	0	0	0	0	0	0	0	0	0	0	0
4/24/2024	2:30 PM	0	0	0	0	0	0	0	0	0	0	0	0	0
4/24/2024	2:45 PM	0	0	0	0	0	0	0	0	0	0	0	0	0
4/24/2024	3:00 PM	0	0	0	0	0	0	0	0	0	0	0	0	0
4/24/2024	3:15 PM	0	0	0	0	0	0	0	0	0	0	0	0	0
4/24/2024	3:30 PM	0	0	0	0	0	0	0	0	0	0	0	0	0
4/24/2024	3:45 PM	0	0	0	0	0	0	0	0	0	0	0	0	0
4/24/2024	4:00 PM	0	0	0	0	0	0	0	0	0	0	0	0	0
4/24/2024	4:15 PM	0	0	0	0	0	0	0	0	0	0	0	0	0
4/24/2024	4:30 PM	0	0	0	0	0	0	0	0	0	0	0	0	0
4/24/2024	4:45 PM	0	0	0	0	0	0	0	0	0	0	0	0	0
4/24/2024	5:00 PM	0	0	0	0	0	0	0	0	0	0	0	0	0
4/24/2024	5:15 PM	0	0	0	0	0	0	0	0	0	0	0	0	0
4/24/2024	5:30 PM	0	0	0	0	0	0	0	0	0	0	0	0	0
4/24/2024	5:45 PM	0	0	0	0	0	0	0	0	0	0	0	0	0
4/24/2024	6:00 PM	0	0	0	0	0	0	0	0	0	0	0	0	0
4/24/2024	6:15 PM	0	0	0	0	0	0	0	0	0	0	0	0	0
4/24/2024	6:30 PM	0	0	0	0	0	0	0	0	0	0	0	0	0
4/24/2024	6:45 PM	0	0	0	0	0	0	0	0	0	0	0	0	0
4/24/2024	7:00 PM	0	0	0	0	0	0	0	0	0	0	0	0	0
4/24/2024	7:15 PM	0	0	0	0	0	0	0	0	0	0	0	0	0
4/24/2024	7:30 PM	0	0	0	0	0	0	0	0	0	0	0	0	0
4/24/2024	7:45 PM	0	0	0	0	0	0	0	0	0	0	0	0	0
4/24/2024	8:00 PM	0	0	0	0	0	0	0	0	0	0	0	0	0
4/24/2024	8:15 PM	0	0	0	0	0	0	0	0	0	0	0	0	0
4/24/2024	8:30 PM	0	0	0	0	0	0	0	0	0	0	0	0	0
4/24/2024	8:45 PM	0	0	0	0	0	0	0	0	0	0	0	0	0
4/24/2024	9:00 PM	0	0	0	0	0	0	0	0	0	0	0	0	0
4/24/2024	9:15 PM	0	0	0	0	0	0	0	0	0	0	0	0	0
4/24/2024	9:30 PM	0	0	0	0	0	0	0	0	0	0	0	0	0
4/24/2024	9:45 PM	0	0	0	0	0	0	0	0	0	0	0	0	0
4/24/2024	10:00 PM	0	0	0	0	0	0	0	0	0	0	0	0	0
4/24/2024	10:15 PM	0	0	0	0	0	0	0	0	0	0	0	0	0
4/24/2024	10:30 PM	0	0	0	0	0	0	0	0	0	0	0	0	0
4/24/2024	10:45 PM	0	0	0	0	0	0	0	0	0	0	0	0	0
4/24/2024	11:00 PM	0	0	0	0	0	0	0	0	0	0	0	0	0
4/24/2024	11:15 PM	0	0	0	0	0	0	0	0	0	0	0	0	0
4/24/2024	11:30 PM	0	0	0	0	0	0	0	0	0	0	0	0	0
4/24/2024	11:45 PM	0	0	0	0	0	0	0	0	0	0	0	0	0

4/25/2024	12:00 AM	0	0	0	0	0	0	0	0	0	0	0	0	0
4/25/2024	12:15 AM	0	0	0	0	0	0	0	0	0	0	0	0	0
4/25/2024	12:30 AM	0	0	0	0	0	0	0	0	0	0	0	0	0
4/25/2024	12:45 AM	0	0	0	0	0	0	0	0	0	0	0	0	0
4/25/2024	1:00 AM	0	0	0	0	0	0	0	0	0	0	0	0	0
4/25/2024	1:15 AM	0	0	0	0	0	0	0	0	0	0	0	0	0
4/25/2024	1:30 AM	0	0	0	0	0	0	0	0	0	0	0	0	0
4/25/2024	1:45 AM	0	0	0	0	0	0	0	0	0	0	0	0	0
4/25/2024	2:00 AM	0	0	0	0	0	0	0	0	0	0	0	0	0
4/25/2024	2:15 AM	0	0	0	0	0	0	0	0	0	0	0	0	0
4/25/2024	2:30 AM	0	0	0	0	0	0	0	0	0	0	0	0	0
4/25/2024	2:45 AM	0	0	0	0	0	0	0	0	0	0	0	0	0
4/25/2024	3:00 AM	0	0	0	0	0	0	0	0	0	0	0	0	0
4/25/2024	3:15 AM	0	0	0	0	0	0	0	0	0	0	0	0	0
4/25/2024	3:30 AM	0	0	0	0	0	0	0	0	0	0	0	0	0
4/25/2024	3:45 AM	0	0	0	0	0	0	0	0	0	0	0	0	0
4/25/2024	4:00 AM	0	0	0	0	0	0	0	0	0	0	0	0	0
4/25/2024	4:15 AM	0	0	0	0	0	0	0	0	0	0	0	0	0
4/25/2024	4:30 AM	0	0	0	0	0	0	0	0	0	0	0	0	0
4/25/2024	4:45 AM	0	0	0	0	0	0	0	0	0	0	0	0	0
4/25/2024	5:00 AM	0	0	0	0	0	0	0	0	0	0	0	0	0
4/25/2024	5:15 AM	0	0	0	0	0	0	0	0	0	0	0	0	0
4/25/2024	5:30 AM	0	0	0	0	0	0	0	0	0	0	0	0	0
4/25/2024	5:45 AM	0	0	0	0	0	0	0	0	0	0	0	0	0
4/25/2024	6:00 AM	0	0	0	0	0	0	0	0	0	0	0	0	0
4/25/2024	6:15 AM	0	0	0	0	0	0	0	0	0	0	0	0	0
4/25/2024	6:30 AM	0	0	0	0	0	0	0	0	0	0	0	0	0
4/25/2024	6:45 AM	0	0	0	0	0	0	0	0	0	0	0	0	0
4/25/2024	7:00 AM	0	0	0	0	0	0	0	0	0	0	0	0	0
4/25/2024	7:15 AM	0	0	0	0	0	0	0	0	0	0	0	0	0
4/25/2024	7:30 AM	0	0	0	0	0	0	0	0	0	0	0	0	0
4/25/2024	7:45 AM	0	0	0	0	0	0	0	0	0	0	0	0	0
4/25/2024	8:00 AM	0	0	0	0	0	0	0	0	0	0	0	0	0
4/25/2024	8:15 AM	0	0	0	0	0	0	0	0	0	0	0	0	0
4/25/2024	8:30 AM	0	0	0	0	0	0	0	0	0	0	0	0	0
4/25/2024	8:45 AM	0	0	0	0	0	0	0	0	0	0	0	0	0
4/25/2024	9:00 AM	0	0	0	0	0	0	0	0	0	0	0	0	0
4/25/2024	9:15 AM	0	0	0	0	0	0	0	0	0	0	0	0	0
4/25/2024	9:30 AM	0	0	0	0	0	0	0	0	0	0	0	0	0
4/25/2024	9:45 AM	0	0	0	0	0	0	0	0	0	0	0	0	0
4/25/2024	10:00 AM	0	0	0	0	0	0	0	0	0	0	0	0	0
4/25/2024	10:15 AM	0	0	0	0	0	0	0	0	0	0	0	0	0
4/25/2024	10:30 AM	0	0	0	0	0	0	0	0	0	0	0	0	0
4/25/2024	10:45 AM	0	0	0	0	0	0	0	0	0	0	0	0	0
4/25/2024	11:00 AM	0	0	0	0	0	0	0	0	0	0	0	0	0
4/25/2024	11:15 AM	0	0	0	0	0	0	0	0	0	0	0	0	0
4/25/2024	11:30 AM	0	0	0	0	0	0	0	0	0	0	0	0	0
4/25/2024	11:45 AM	0	0	0	0	0	0	0	0	0	0	0	0	0
4/25/2024	12:00 PM	0	0	0	0	0	0	0	0	0	0	0	0	0
4/25/2024	12:15 PM	0	0	0	0	0	0	0	0	0	0	0	0	0
4/25/2024	12:30 PM	0	0	0	0	0	0	0	0	0	0	0	0	0
4/25/2024	12:45 PM	0	0	0	0	0	0	0	0	0	0	0	0	0
4/25/2024	1:00 PM	0	0	0	0	0	0	0	0	0	0	0	0	0
4/25/2024	1:15 PM	0	0	0	0	0	0	0	0	0	0	0	0	0
4/25/2024	1:30 PM	0	0	0	0	0	0	0	0	0	0	0	0	0
4/25/2024	1:45 PM	0	0	0	0	0	0	0	0	0	0	0	0	0
4/25/2024	2:00 PM	0	0	0	0	0	0	0	0	0	0	0	0	0
4/25/2024	2:15 PM	0	0	0	0	0	0	0	0	0	0	0	0	0
4/25/2024	2:30 PM	0	0	0	0	0	0	0	0	0	0	0	0	0
4/25/2024	2:45 PM	0	0	0	0	0	0	0	0	0	0	0	0	0
4/25/2024	3:00 PM	0	0	0	0	0	0	0	0	0	0	0	0	0
4/25/2024	3:15 PM	0	0	0	0	0	0	0	0	0	0	0	0	0
4/25/2024	3:30 PM	0	0	0	0	0	0	0	0	0	0	0	0	0
4/25/2024	3:45 PM	0	0	0	0	0	0	0	0	0	0	0	0	0
4/25/2024	4:00 PM	0	0	0	0	0	0	0	0	0	0	0	0	0
4/25/2024	4:15 PM	0	0	0	0	0	0	0	0	0	0	0	0	0
4/25/2024	4:30 PM	0	0	0	0	0	0	0	0	0	0	0	0	0
4/25/2024	4:45 PM	0	0	0	0	0	0	0	0	0	0	0	0	0
4/25/2024	5:00 PM	0	0	0	0	0	0	0	0	0	0	0	0	0
4/25/2024	5:15 PM	0	0	0	0	0	0	0	0	0	0	0	0	0
4/25/2024	5:30 PM	0	0	0	0	0	0	0	0	0	0	0	0	0
4/25/2024	5:45 PM	0	0	0	0	0	0	0	0	0	0	0	0	0
4/25/2024	6:00 PM	0	0	0	0	0	0	0	0	0	0	0	0	0
4/25/2024	6:15 PM	0	0	0	0	0	0	0	0	0	0	0	0	0
4/25/2024	6:30 PM	0	0	0	0	0	0	0	0	0	0	0	0	0
4/25/2024	6:45 PM	0	0	0	0	0	0	0	0	0	0	0	0	0
4/25/2024	7:00 PM	0	0	0	0	0	0	0	0	0	0	0	0	0
4/25/2024	7:15 PM	0	0	0	0	0	0	0	0	0	0	0	0	0
4/25/2024	7:30 PM	0	0	0	0	0	0	0	0	0	0	0	0	0
4/25/2024	7:45 PM	0	0	0	0	0	0	0	0	0	0	0	0	0
4/25/2024	8:00 PM	0	0	0	0	0	0	0	0	0	0	0	0	0
4/25/2024	8:15 PM	0	0	0	0	0	0	0	0	0	0	0	0	0
4/25/2024	8:30 PM	0	0	0	0	0	0	0	0	0	0	0	0	0
4/25/2024	8:45 PM	0	0	0	0	0	0	0	0	0	0	0	0	0
4/25/2024	9:00 PM	0	0	0	0	0	0	0	0	0	0	0	0	0
4/25/2024	9:15 PM	0	0	0	0	0	0	0	0	0	0	0	0	0
4/25/2024	9:30 PM	0	0	0	0	0	0	0	0	0	0	0	0	0
4/25/2024	9:45 PM	0	0	0	0	0	0	0	0	0	0	0	0	0
4/25/2024	10:00 PM	0	0	0	0	0	0	0	0	0	0	0	0	0
4/25/2024	10:15 PM	0	0	0	0	0	0	0	0	0	0	0	0	0
4/25/2024	10:30 PM	0	0	0	0	0	0	0	0	0	0	0	0	0
4/25/2024	10:45 PM	0	0	0	0	0	0	0	0	0	0	0	0	0
4/25/2024	11:00 PM	0	0	0	0	0	0	0	0	0	0	0	0	0
4/25/2024	11:15 PM	0	0	0	0	0	0	0	0	0	0	0	0	0
4/25/2024	11:30 PM	0	0	0	0	0	0	0	0	0	0	0	0	0
4/25/2024	11:45 PM	0	0	0	0	0	0	0	0	0	0	0	0	0

Bi-Directional Class Count || SB WB 15min

Columbia, SC

Marr Traffic DATA COLLECTION
www.marrtraffic.com

Site 37
I-26 On/Off-Ramp,
north of St Andrews Rd

Date
Tuesday, April 23, 2024

Lat/Long
34.045338°, -81.118263°

Weather
Fair
58°F

Click here for Detailed Weather

Click here for Map

0000 - 2400 (Weekday 24h Session) (04-23-2024)
SB WB 15min

	Southbound (Movement 37.1)													15min	60min
Time	1	2	3	4	5	6	7	8	9	10	11	12	13	Total	Total
0000 - 0015	0	0	0	0	0	0	0	0	0	0	0	0	0	**0**	
0015 - 0030	0	0	0	0	0	0	0	0	0	0	0	0	0	**0**	
0030 - 0045	0	0	0	0	0	0	0	0	0	0	0	0	0	**0**	
0045 - 0100	0	0	0	0	0	0	0	0	0	0	0	0	0	**0**	**0**
0100 - 0115	0	0	0	0	0	0	0	0	0	0	0	0	0	**0**	
0115 - 0130	0	0	0	0	0	0	0	0	0	0	0	0	0	**0**	
0130 - 0145	0	0	0	0	0	0	0	0	0	0	0	0	0	**0**	
0145 - 0200	0	0	0	0	0	0	0	0	0	0	0	0	0	**0**	**0**
0200 - 0215	0	0	0	0	0	0	0	0	0	0	0	0	0	**0**	
0215 - 0230	0	0	0	0	0	0	0	0	0	0	0	0	0	**0**	
0230 - 0245	0	0	0	0	0	0	0	0	0	0	0	0	0	**0**	
0245 - 0300	0	0	0	0	0	0	0	0	0	0	0	0	0	**0**	**0**
0300 - 0315	0	0	0	0	0	0	0	0	0	0	0	0	0	**0**	
0315 - 0330	0	0	0	0	0	0	0	0	0	0	0	0	0	**0**	
0330 - 0345	0	0	0	0	0	0	0	0	0	0	0	0	0	**0**	
0345 - 0400	0	0	0	0	0	0	0	0	0	0	0	0	0	**0**	**0**
0400 - 0415	0	0	0	0	0	0	0	0	0	0	0	0	0	**0**	
0415 - 0430	0	0	0	0	0	0	0	0	0	0	0	0	0	**0**	
0430 - 0445	0	0	0	0	0	0	0	0	0	0	0	0	0	**0**	
0445 - 0500	0	0	0	0	0	0	0	0	0	0	0	0	0	**0**	**0**
0500 - 0515	0	0	0	0	0	0	0	0	0	0	0	0	0	**0**	
0515 - 0530	0	0	0	0	0	0	0	0	0	0	0	0	0	**0**	
0530 - 0545	0	0	0	0	0	0	0	0	0	0	0	0	0	**0**	
0545 - 0600	0	0	0	0	0	0	0	0	0	0	0	0	0	**0**	**0**
0600 - 0615	0	0	0	0	0	0	0	0	0	0	0	0	0	**0**	
0615 - 0630	0	0	0	0	0	0	0	0	0	0	0	0	0	**0**	
0630 - 0645	0	0	0	0	0	0	0	0	0	0	0	0	0	**0**	
0645 - 0700	0	0	0	0	0	0	0	0	0	0	0	0	0	**0**	**0**
0700 - 0715	0	0	0	0	0	0	0	0	0	0	0	0	0	**0**	
0715 - 0730	0	0	0	0	0	0	0	0	0	0	0	0	0	**0**	
0730 - 0745	0	0	0	0	0	0	0	0	0	0	0	0	0	**0**	
0745 - 0800	0	0	0	0	0	0	0	0	0	0	0	0	0	**0**	**0**
0800 - 0815	0	0	0	0	0	0	0	0	0	0	0	0	0	**0**	
0815 - 0830	0	0	0	0	0	0	0	0	0	0	0	0	0	**0**	
0830 - 0845	0	0	0	0	0	0	0	0	0	0	0	0	0	**0**	
0845 - 0900	0	0	0	0	0	0	0	0	0	0	0	0	0	**0**	**0**
0900 - 0915	0	0	0	0	0	0	0	0	0	0	0	0	0	**0**	
0915 - 0930	0	0	0	0	0	0	0	0	0	0	0	0	0	**0**	
0930 - 0945	0	0	0	0	0	0	0	0	0	0	0	0	0	**0**	
0945 - 1000	0	0	0	0	0	0	0	0	0	0	0	0	0	**0**	**0**
1000 - 1015	0	0	0	0	0	0	0	0	0	0	0	0	0	**0**	
1015 - 1030	0	0	0	0	0	0	0	0	0	0	0	0	0	**0**	
1030 - 1045	0	0	0	0	0	0	0	0	0	0	0	0	0	**0**	
1045 - 1100	0	0	0	0	0	0	0	0	0	0	0	0	0	**0**	**0**
1100 - 1115	0	0	0	0	0	0	0	0	0	0	0	0	0	**0**	
1115 - 1130	0	0	0	0	0	0	0	0	0	0	0	0	0	**0**	
1130 - 1145	0	0	0	0	0	0	0	0	0	0	0	0	0	**0**	
1145 - 1200	0	0	0	0	0	0	0	0	0	0	0	0	0	**0**	**0**
1200 - 1215	0	0	0	0	0	0	0	0	0	0	0	0	0	**0**	
1215 - 1230	0	0	0	0	0	0	0	0	0	0	0	0	0	**0**	
1230 - 1245	0	0	0	0	0	0	0	0	0	0	0	0	0	**0**	
1245 - 1300	0	0	0	0	0	0	0	0	0	0	0	0	0	**0**	**0**
1300 - 1315	0	0	0	0	0	0	0	0	0	0	0	0	0	**0**	
1315 - 1330	0	0	0	0	0	0	0	0	0	0	0	0	0	**0**	
1330 - 1345	0	0	0	0	0	0	0	0	0	0	0	0	0	**0**	
1345 - 1400	0	0	0	0	0	0	0	0	0	0	0	0	0	**0**	**0**
1400 - 1415	0	0	0	0	0	0	0	0	0	0	0	0	0	**0**	
1415 - 1430	0	0	0	0	0	0	0	0	0	0	0	0	0	**0**	
1430 - 1445	0	0	0	0	0	0	0	0	0	0	0	0	0	**0**	
1445 - 1500	0	0	0	0	0	0	0	0	0	0	0	0	0	**0**	**0**
1500 - 1515	0	0	0	0	0	0	0	0	0	0	0	0	0	**0**	
1515 - 1530	0	0	0	0	0	0	0	0	0	0	0	0	0	**0**	
1530 - 1545	0	0	0	0	0	0	0	0	0	0	0	0	0	**0**	
1545 - 1600	0	0	0	0	0	0	0	0	0	0	0	0	0	**0**	**0**
1600 - 1615	0	0	0	0	0	0	0	0	0	0	0	0	0	**0**	
1615 - 1630	0	0	0	0	0	0	0	0	0	0	0	0	0	**0**	
1630 - 1645	0	0	0	0	0	0	0	0	0	0	0	0	0	**0**	
1645 - 1700	0	0	0	0	0	0	0	0	0	0	0	0	0	**0**	**0**
1700 - 1715	0	0	0	0	0	0	0	0	0	0	0	0	0	**0**	
1715 - 1730	0	0	0	0	0	0	0	0	0	0	0	0	0	**0**	
1730 - 1745	0	0	0	0	0	0	0	0	0	0	0	0	0	**0**	
1745 - 1800	0	0	0	0	0	0	0	0	0	0	0	0	0	**0**	**0**
1800 - 1815	0	0	0	0	0	0	0	0	0	0	0	0	0	**0**	
1815 - 1830	0	0	0	0	0	0	0	0	0	0	0	0	0	**0**	
1830 - 1845	0	0	0	0	0	0	0	0	0	0	0	0	0	**0**	
1845 - 1900	0	0	0	0	0	0	0	0	0	0	0	0	0	**0**	**0**
1900 - 1915	0	110	11	0	0	1	0	1	1	0	0	0	0	**124**	
1915 - 1930	0	85	13	0	1	0	0	0	0	0	0	0	0	**99**	
1930 - 1945	1	92	13	0	0	0	0	0	0	0	0	0	0	**106**	
1945 - 2000	0	78	8	0	3	0	0	0	0	0	0	0	0	**89**	**418**
2000 - 2015	0	73	7	0	0	0	0	0	0	0	0	0	0	**80**	
2015 - 2030	0	62	6	0	0	0	0	0	0	0	0	0	0	**68**	
2030 - 2045	0	46	6	0	0	0	0	0	0	0	0	0	0	**52**	
2045 - 2100	0	46	5	0	2	0	0	0	0	0	0	0	0	**53**	**253**
2100 - 2115	0	40	6	0	1	0	0	0	0	0	0	0	0	**47**	
2115 - 2130	0	42	7	0	1	0	0	0	1	0	0	0	0	**51**	
2130 - 2145	0	40	7	1	0	0	0	0	0	0	0	0	0	**48**	
2145 - 2200	0	37	3	0	0	0	0	0	0	0	0	0	0	**40**	**186**
2200 - 2215	0	32	2	0	1	0	0	0	0	0	0	0	0	**35**	
2215 - 2230	0	31	5	0	0	0	0	0	1	0	0	0	0	**37**	
2230 - 2245	0	18	3	0	1	0	0	0	1	0	0	0	0	**23**	
2245 - 2300	0	20	4	0	0	0	0	0	0	0	0	0	0	**24**	**119**
2300 - 2315	0	26	5	0	0	0	0	0	0	0	0	0	0	**31**	
2315 - 2330	0	15	0	0	0	0	0	0	1	0	0	0	0	**16**	
2330 - 2345	0	14	2	0	0	0	0	0	1	0	0	0	0	**17**	
2345 - 0000	0	13	1	0	0	0	0	0	0	0	0	0	0	**14**	**78**

Session Total	1	920	114	1	10	1	0	1	6	0	0	0	0	**1054**
Session Average	0.01	9.58	1.19	0.01	0.10	0.01	0.00	0.01	0.06	0.00	0.00	0.00	0.00	**10.98**
Session Percentage	0.09	87.29	10.82	0.09	0.95	0.09	0.00	0.09	0.57	0.00	0.00	0.00	0.00	

AM Peak Hour	-	-	-	-	-	-	-	-	-	-	-	-	-	**-**
AM Peak Volume	0	0	0	0	0	0	0	0	0	0	0	0	0	**0**

Noon Peak Hour	-	-	-	-	-	-	-	-	-	-	-	-	-	**-**
Noon Peak Volume	0	0	0	0	0	0	0	0	0	0	0	0	0	**0**

PM Peak Hour	1845 - 1945	1900 - 2000	1900 - 2000	-	1900 - 2000	1815 - 1915	-	1815 - 1915	1815 - 1915	-	-	-	-	**1900 - 2000**
PM Peak Volume	1	365	45	0	4	1	0	1	1	0	0	0	0	**418**

Site 37
I-26 On/Off-Ramp,
north of St Andrews Rd

Date
Wednesday, April 24, 2024

Lat/Long
34.045338°, -81.118263°

Weather
Fair
66°F

Click here for Detailed Weather

0000 - 2400 (Weekday 24h Session) (04-24-2024)
SB WB 15min

	Southbound (Movement 37.1)													15min	60min
Time	1	2	3	4	5	6	7	8	9	10	11	12	13	Total	Total
0000 - 0015	0	11	1	0	0	0	0	0	0	0	0	0	0	**12**	
0015 - 0030	0	11	0	0	0	0	0	0	0	0	0	0	0	**11**	
0030 - 0045	0	12	1	0	0	0	0	0	0	0	0	0	0	**13**	
0045 - 0100	0	10	2	0	0	0	0	0	0	0	0	0	0	**12**	**48**
0100 - 0115	0	7	1	0	0	0	0	0	0	0	0	0	0	**8**	
0115 - 0130	0	8	2	0	0	0	0	0	1	0	0	0	0	**11**	
0130 - 0145	0	3	0	0	0	0	0	0	0	0	0	0	0	**3**	
0145 - 0200	0	8	2	0	0	0	0	0	1	0	0	0	0	**11**	**33**
0200 - 0215	0	3	2	0	0	0	0	0	0	0	0	0	0	**5**	
0215 - 0230	0	7	2	0	1	0	0	0	1	0	0	0	0	**11**	
0230 - 0245	0	6	1	0	0	0	0	1	0	0	0	0	0	**8**	
0245 - 0300	0	7	2	0	0	0	0	0	3	0	0	0	0	**12**	**36**
0300 - 0315	0	8	1	0	0	0	0	0	0	0	0	0	0	**9**	
0315 - 0330	0	4	1	0	0	0	0	0	0	0	0	0	0	**5**	
0330 - 0345	0	6	1	0	0	0	0	0	0	0	0	0	0	**7**	
0345 - 0400	0	1	0	0	0	0	0	0	0	0	0	0	0	**1**	**22**
0400 - 0415	0	9	2	0	0	0	0	0	1	0	0	0	0	**12**	
0415 - 0430	0	5	0	0	0	0	0	0	1	0	0	0	0	**6**	
0430 - 0445	0	11	4	0	0	0	0	0	1	0	0	0	0	**16**	
0445 - 0500	0	8	2	0	1	0	0	0	0	0	0	0	0	**11**	**45**
0500 - 0515	0	7	2	0	0	0	0	0	1	0	0	0	0	**10**	
0515 - 0530	0	16	3	0	0	0	0	0	1	0	0	0	0	**20**	
0530 - 0545	0	25	7	0	1	0	0	0	2	0	0	0	0	**35**	
0545 - 0600	0	18	5	0	0	0	0	0	0	0	0	0	0	**23**	**88**
0600 - 0615	0	15	5	0	2	0	0	0	1	0	0	0	0	**23**	
0615 - 0630	0	30	15	0	0	0	0	0	1	0	0	0	0	**46**	
0630 - 0645	0	41	27	0	0	0	0	1	0	0	0	0	0	**69**	
0645 - 0700	0	57	16	0	1	0	0	1	0	0	0	0	0	**75**	**213**
0700 - 0715	0	55	22	0	2	0	0	0	0	0	0	0	0	**79**	
0715 - 0730	0	90	18	1	3	0	0	1	1	0	0	0	0	**114**	
0730 - 0745	0	90	26	0	3	0	0	3	1	0	0	0	0	**123**	
0745 - 0800	0	99	34	0	1	0	0	1	0	0	0	0	0	**135**	**451**
0800 - 0815	0	95	23	1	1	0	0	2	2	0	0	0	0	**124**	
0815 - 0830	0	101	25	0	0	0	0	0	2	0	0	0	0	**128**	
0830 - 0845	0	105	25	0	2	0	0	0	0	0	0	0	0	**132**	
0845 - 0900	0	114	24	0	0	0	0	0	1	0	0	0	0	**139**	**523**
0900 - 0915	0	72	34	0	2	1	0	1	1	0	0	0	0	**111**	
0915 - 0930	0	71	23	0	3	0	0	1	0	0	0	0	0	**98**	
0930 - 0945	0	82	26	0	1	0	0	1	0	0	0	0	0	**110**	
0945 - 1000	0	97	25	1	3	0	0	0	1	0	0	0	0	**127**	**446**
1000 - 1015	1	80	31	0	2	1	0	0	3	0	0	0	0	**118**	
1015 - 1030	0	96	26	0	2	0	0	0	1	0	0	0	0	**125**	
1030 - 1045	0	77	34	0	2	0	0	0	0	0	0	0	0	**113**	
1045 - 1100	0	94	27	0	4	1	0	0	0	0	0	0	0	**126**	**482**
1100 - 1115	0	72	26	0	5	0	0	0	0	0	0	0	0	**103**	
1115 - 1130	0	87	19	0	1	2	0	0	0	0	0	0	0	**109**	
1130 - 1145	0	81	35	0	1	0	0	1	0	0	0	0	0	**118**	
1145 - 1200	0	99	22	2	1	1	0	2	0	0	0	0	0	**127**	**457**
1200 - 1215	0	93	26	0	1	0	0	0	0	0	0	0	0	**120**	
1215 - 1230	0	90	28	1	2	0	0	0	4	0	0	0	0	**125**	
1230 - 1245	0	88	34	0	3	0	0	0	0	0	0	0	0	**125**	
1245 - 1300	0	99	30	0	2	0	0	0	2	0	0	0	0	**133**	**503**
1300 - 1315	0	74	36	1	2	1	0	1	1	0	0	0	0	**116**	
1315 - 1330	0	94	28	0	3	0	0	2	2	0	0	0	0	**129**	
1330 - 1345	0	75	18	0	2	1	0	1	1	0	0	0	0	**98**	
1345 - 1400	1	82	23	0	2	0	0	0	3	0	0	0	0	**111**	**454**
1400 - 1415	1	98	19	0	3	0	0	0	0	0	0	0	0	**121**	
1415 - 1430	0	106	23	0	1	0	0	1	2	0	0	0	0	**133**	
1430 - 1445	0	105	25	1	1	0	0	0	1	0	0	0	0	**133**	
1445 - 1500	0	114	28	0	0	0	0	2	2	0	0	0	0	**146**	**533**
1500 - 1515	2	103	26	0	1	0	0	0	1	0	0	0	0	**133**	
1515 - 1530	1	125	30	0	1	0	0	1	2	0	0	0	0	**160**	
1530 - 1545	0	112	28	1	0	0	0	1	1	0	0	0	0	**143**	
1545 - 1600	0	131	38	0	2	1	0	1	1	0	0	0	0	**174**	**610**
1600 - 1615	0	116	32	0	1	1	0	0	1	0	0	0	0	**151**	
1615 - 1630	0	149	34	0	2	1	0	1	3	0	0	0	0	**190**	
1630 - 1645	2	136	38	0	2	0	0	0	0	0	0	0	0	**178**	
1645 - 1700	0	130	27	0	3	0	0	0	1	0	0	0	0	**161**	**680**
1700 - 1715	1	118	27	0	2	0	0	0	0	0	0	0	0	**148**	
1715 - 1730	0	116	34	0	2	0	0	1	0	0	0	0	0	**153**	
1730 - 1745	0	134	33	0	4	0	0	0	0	0	0	0	0	**171**	
1745 - 1800	1	141	37	0	2	0	0	0	0	0	0	0	0	**181**	**653**
1800 - 1815	0	125	32	0	2	0	0	0	0	0	0	0	0	**159**	
1815 - 1830	1	98	32	0	2	0	0	0	1	0	0	0	0	**134**	
1830 - 1845	1	79	18	0	1	0	0	0	1	0	0	0	0	**100**	
1845 - 1900	0	88	24	0	3	0	0	0	0	0	0	0	0	**115**	**508**
1900 - 1915	2	90	15	0	1	0	0	0	1	0	0	0	0	**109**	
1915 - 1930	0	91	14	0	1	1	0	1	0	0	0	0	0	**108**	
1930 - 1945	0	72	13	0	0	0	0	0	1	0	0	0	0	**86**	
1945 - 2000	0	60	10	0	2	0	0	0	0	0	0	0	0	**72**	**375**
2000 - 2015	0	75	12	0	0	0	0	0	1	0	0	0	0	**88**	
2015 - 2030	0	67	9	0	1	0	0	0	0	0	0	0	0	**77**	
2030 - 2045	0	58	8	0	0	0	0	0	0	0	0	0	0	**66**	
2045 - 2100	0	59	5	0	0	0	0	0	0	0	0	0	0	**64**	**295**
2100 - 2115	0	49	7	0	0	0	0	0	0	0	0	0	0	**56**	
2115 - 2130	0	39	4	0	0	0	0	0	0	0	0	0	0	**43**	
2130 - 2145	0	38	6	0	0	0	0	0	1	0	0	0	0	**45**	
2145 - 2200	0	42	7	0	0	0	0	0	0	0	0	0	0	**49**	**193**
2200 - 2215	0	36	5	0	0	0	0	0	0	0	0	0	0	**41**	
2215 - 2230	0	37	4	0	0	0	0	0	0	0	0	0	0	**41**	
2230 - 2245	0	28	3	0	0	0	0	0	1	0	0	0	0	**32**	
2245 - 2300	0	21	4	0	0	0	0	0	0	0	0	0	0	**25**	**139**
2300 - 2315	0	22	3	0	0	0	0	0	1	0	0	0	0	**26**	
2315 - 2330	0	17	2	0	1	0	0	0	1	0	0	0	0	**21**	
2330 - 2345	0	15	2	0	0	0	0	0	0	0	0	0	0	**17**	
2345 - 0000	0	21	4	0	1	0	0	0	0	0	0	0	0	**26**	**90**

Session Total	14	6067	1577	9	104	12	0	29	65	0	0	0	0	**7877**
Session Average	0.15	63.20	16.43	0.09	1.08	0.13	0.00	0.30	0.68	0.00	0.00	0.00	0.00	**82.05**
Session Percentage	0.18	77.02	20.02	0.11	1.32	0.15	0.00	0.37	0.83	0.00	0.00	0.00	0.00	

AM Peak Hour	0915 - 1015	0800 - 0900	0945 - 1045	0715 - 0815	0645 - 0745	0815 - 0915	-	0715 - 0815	0730 - 0830	-	-	-	-	**0800 - 0900**
AM Peak Volume	1	415	116	2	9	1	0	7	5	0	0	0	0	**523**

Noon Peak Hour	1430 - 1530	1445 - 1545	1215 - 1315	1130 - 1230	1015 - 1115	1030 - 1130	-	1245 - 1345	1215 - 1315	-	-	-	-	**1445 - 1545**
Noon Peak Volume	3	454	128	3	13	3	0	4	7	0	0	0	0	**582**

PM Peak Hour	1815 - 1915	1615 - 1715	1545 - 1645	1500 - 1600	1645 - 1745	1530 - 1630	-	1500 - 1600	1530 - 1630	-	-	-	-	**1545 - 1645**
PM Peak Volume	4	533	142	1	11	3	0	3	6	0	0	0	0	**693**

Site 37
I-26 On/Off-Ramp,
north of St Andrews Rd

Date
Thursday, April 25, 2024

Lat/Long
34.045338°, -81.118263°

Weather
Fair
67°F

Click here for Detailed Weather

0000 - 2400 (Weekday 24h Session) (04-25-2024)
SB WB 15min

	Southbound (Movement 37.1)													15min	60min
TIME	1	2	3	4	5	6	7	8	9	10	11	12	13	Total	Total
0000 - 0015	0	17	3	0	0	0	0	0	0	0	0	0	0	**20**	
0015 - 0030	0	14	2	0	0	0	0	0	0	0	0	0	0	**16**	
0030 - 0045	0	24	2	0	0	0	0	0	1	0	0	0	0	**27**	
0045 - 0100	0	12	1	0	0	0	0	0	0	0	0	0	0	**13**	**76**
0100 - 0115	0	12	2	0	0	0	0	0	0	0	0	0	0	**14**	
0115 - 0130	0	9	0	0	0	0	0	0	0	0	0	0	0	**9**	
0130 - 0145	0	8	1	0	0	0	0	0	0	0	0	0	0	**9**	
0145 - 0200	0	9	0	0	0	0	0	0	0	0	0	0	0	**9**	**41**
0200 - 0215	0	6	0	0	0	0	0	0	1	0	0	0	0	**7**	
0215 - 0230	0	11	2	0	0	0	0	0	0	0	0	0	0	**13**	
0230 - 0245	0	9	1	0	0	0	0	0	0	0	0	0	0	**10**	
0245 - 0300	0	5	0	0	0	0	0	0	0	0	0	0	0	**5**	**35**
0300 - 0315	0	9	0	0	0	0	0	0	1	0	0	0	0	**10**	
0315 - 0330	0	8	2	0	1	0	0	0	0	0	0	0	0	**11**	
0330 - 0345	0	9	0	0	1	0	0	0	1	0	0	0	0	**11**	
0345 - 0400	0	6	1	0	0	0	0	0	0	0	0	0	0	**7**	**39**
0400 - 0415	0	6	0	0	0	0	0	0	0	0	0	0	0	**6**	
0415 - 0430	0	5	0	0	1	0	0	0	0	0	0	0	0	**6**	
0430 - 0445	0	8	0	0	0	0	0	0	0	0	0	0	0	**8**	
0445 - 0500	0	7	0	0	1	0	0	0	0	0	0	0	0	**8**	**28**
0500 - 0515	0	11	3	0	1	0	0	0	1	0	0	0	0	**16**	
0515 - 0530	0	14	4	0	1	0	0	0	0	0	0	0	0	**19**	
0530 - 0545	0	20	6	0	0	0	0	0	0	0	0	0	0	**26**	
0545 - 0600	0	24	7	0	0	0	0	0	0	0	0	0	0	**31**	**92**
0600 - 0615	0	25	5	0	1	0	0	0	0	0	0	0	0	**31**	
0615 - 0630	0	35	9	0	1	0	0	0	0	0	0	0	0	**45**	
0630 - 0645	0	60	12	0	1	0	0	0	0	0	0	0	0	**73**	
0645 - 0700	0	73	13	0	0	1	0	0	0	0	0	0	0	**87**	**236**
0700 - 0715	0	57	11	0	0	1	0	0	2	0	0	0	0	**71**	
0715 - 0730	0	87	18	1	1	0	0	0	2	0	0	0	0	**109**	
0730 - 0745	0	113	26	0	1	1	0	0	1	0	0	0	0	**142**	
0745 - 0800	0	107	22	0	2	0	0	0	0	0	0	0	0	**131**	**453**
0800 - 0815	0	108	22	0	2	0	0	0	1	0	0	0	0	**133**	
0815 - 0830	1	96	20	1	3	0	0	1	0	0	0	0	0	**122**	
0830 - 0845	0	106	25	0	3	1	0	0	1	0	0	0	0	**136**	
0845 - 0900	0	107	29	0	4	0	0	0	1	0	0	0	0	**141**	**532**
0900 - 0915	0	87	20	0	2	1	0	0	3	0	0	0	0	**113**	
0915 - 0930	0	77	19	1	4	0	0	0	1	0	0	0	0	**102**	
0930 - 0945	0	89	21	0	1	0	0	0	0	0	0	0	0	**111**	
0945 - 1000	0	99	25	0	2	0	0	0	0	0	0	0	0	**126**	**452**
1000 - 1015	0	80	17	0	1	0	0	1	1	0	0	0	0	**100**	
1015 - 1030	0	92	20	0	1	0	0	0	0	0	0	0	0	**113**	
1030 - 1045	0	95	25	0	3	0	0	0	2	0	0	0	0	**125**	
1045 - 1100	0	79	20	0	1	0	0	0	1	0	0	0	0	**101**	**439**
1100 - 1115	0	96	24	0	2	1	0	0	1	0	0	0	0	**124**	
1115 - 1130	0	89	19	0	2	0	1	1	1	0	0	0	0	**113**	
1130 - 1145	0	94	21	0	0	0	0	0	0	0	0	0	0	**115**	
1145 - 1200	0	86	20	0	2	0	0	1	0	0	0	0	0	**109**	**461**
1200 - 1215	1	90	21	0	0	0	0	0	1	0	0	0	0	**113**	
1215 - 1230	0	95	24	0	3	2	0	0	0	0	0	0	0	**124**	
1230 - 1245	0	109	28	0	4	0	0	0	1	0	0	0	0	**142**	
1245 - 1300	0	94	23	0	1	0	0	1	1	0	0	0	0	**120**	**499**
1300 - 1315	0	108	26	0	1	0	0	0	2	0	0	0	0	**137**	
1315 - 1330	1	105	24	0	3	0	0	0	1	0	0	0	0	**134**	
1330 - 1345	0	80	19	0	2	0	0	0	3	0	0	0	0	**104**	
1345 - 1400	0	91	23	0	4	0	0	0	1	0	0	0	0	**119**	**494**
1400 - 1415	0	102	26	0	2	0	0	0	1	0	0	0	0	**131**	
1415 - 1430	0	101	23	1	0	0	0	0	0	0	0	0	0	**125**	
1430 - 1445	1	103	22	0	1	0	0	0	1	0	0	0	0	**128**	
1445 - 1500	2	119	27	0	3	0	0	1	0	0	0	0	0	**152**	**536**
1500 - 1515	0	109	26	0	4	1	0	0	3	0	0	0	0	**143**	
1515 - 1530	0	125	30	0	2	0	0	1	1	0	0	0	0	**159**	
1530 - 1545	0	150	34	1	1	0	0	0	0	0	0	0	0	**186**	
1545 - 1600	0	122	24	0	0	0	0	0	0	0	0	0	0	**146**	**634**
1600 - 1615	0	116	23	0	1	0	0	0	0	0	0	0	0	**140**	
1615 - 1630	1	145	31	0	2	0	0	0	2	0	0	0	0	**181**	
1630 - 1645	0	123	24	0	1	0	0	0	1	0	0	0	0	**149**	
1645 - 1700	0	143	30	0	2	0	0	0	0	0	0	0	0	**175**	**645**
1700 - 1715	0	132	27	0	2	0	0	0	1	0	0	0	0	**162**	
1715 - 1730	0	136	28	0	1	0	0	0	0	0	0	0	0	**165**	
1730 - 1745	0	128	27	0	0	0	0	0	3	0	0	0	0	**158**	
1745 - 1800	1	130	29	0	1	0	0	0	0	0	0	0	0	**161**	**646**
1800 - 1815	0	130	30	0	1	0	0	1	0	0	0	0	0	**162**	
1815 - 1830	0	149	32	0	2	0	0	0	1	0	0	0	0	**184**	
1830 - 1845	2	109	27	0	0	0	0	0	0	0	0	0	0	**138**	
1845 - 1900	0	91	19	0	2	0	0	0	0	0	0	0	0	**112**	**596**
1900 - 1915	0	0	0	0	0	0	0	0	0	0	0	0	0	**0**	
1915 - 1930	0	0	0	0	0	0	0	0	0	0	0	0	0	**0**	
1930 - 1945	0	0	0	0	0	0	0	0	0	0	0	0	0	**0**	
1945 - 2000	0	0	0	0	0	0	0	0	0	0	0	0	0	**0**	**0**
2000 - 2015	0	0	0	0	0	0	0	0	0	0	0	0	0	**0**	
2015 - 2030	0	0	0	0	0	0	0	0	0	0	0	0	0	**0**	
2030 - 2045	0	0	0	0	0	0	0	0	0	0	0	0	0	**0**	
2045 - 2100	0	0	0	0	0	0	0	0	0	0	0	0	0	**0**	**0**
2100 - 2115	0	0	0	0	0	0	0	0	0	0	0	0	0	**0**	
2115 - 2130	0	0	0	0	0	0	0	0	0	0	0	0	0	**0**	
2130 - 2145	0	0	0	0	0	0	0	0	0	0	0	0	0	**0**	
2145 - 2200	0	0	0	0	0	0	0	0	0	0	0	0	0	**0**	**0**
2200 - 2215	0	0	0	0	0	0	0	0	0	0	0	0	0	**0**	
2215 - 2230	0	0	0	0	0	0	0	0	0	0	0	0	0	**0**	
2230 - 2245	0	0	0	0	0	0	0	0	0	0	0	0	0	**0**	
2245 - 2300	0	0	0	0	0	0	0	0	0	0	0	0	0	**0**	**0**
2300 - 2315	0	0	0	0	0	0	0	0	0	0	0	0	0	**0**	
2315 - 2330	0	0	0	0	0	0	0	0	0	0	0	0	0	**0**	
2330 - 2345	0	0	0	0	0	0	0	0	0	0	0	0	0	**0**	
2345 - 0000	0	0	0	0	0	0	0	0	0	0	0	0	0	**0**	**0**

Session Total	10	5535	1227	5	92	9	1	8	47	0	0	0	0	**6934**
Session Average	0.10	57.66	12.78	0.05	0.96	0.09	0.01	0.08	0.49	0.00	0.00	0.00	0.00	**72.23**
Session Percentage	0.14	79.82	17.70	0.07	1.33	0.13	0.01	0.12	0.68	0.00	0.00	0.00	0.00	

AM Peak Hour	0730 - 0830	0730 - 0830	0800 - 0900	0630 - 0730	0830 - 0930	0645 - 0745	-	0730 - 0830	0830 - 0930	-	-	-	-	**0800 - 0900**
AM Peak Hour Volume	1	424	96	1	13	3	0	1	6	0	0	0	0	**532**

Noon Peak Hour	1400 - 1500	1445 - 1545	1445 - 1545	1330 - 1430	1315 - 1415	1130 - 1230	1030 - 1130	1100 - 1200	1245 - 1345	-	-	-	-	**1445 - 1545**
Noon Peak Hour Volume	3	503	117	1	11	2	1	2	7	0	0	0	0	**640**

PM Peak Hour	1745 - 1845	1615 - 1715	1730 - 1830	1500 - 1600	1500 - 1600	1500 - 1600	-	1500 - 1600	1500 - 1600	-	-	-	-	**1615 - 1715**
PM Peak Hour Volume	3	543	118	1	7	1	0	1	4	0	0	0	0	**667**

Bi-Directional Class Count || SB WB Average 15min

Columbia, SC

Marr Traffic DATA COLLECTION
www.marrtraffic.com

Site 37
I-26 On/Off-Ramp,
north of St Andrews Rd

Date
Tuesday, April 23, 2024

Lat/Long
34.045338°, -81.118263°

Weather
Fair
58°F

0000 - 2400 (Weekday 24h Session) (All Dates)
SB WB Average 15min

	SB WB Average 15min													15min	60min
Time	1	2	3	4	5	6	7	8	9	10	11	12	13	Total	Total
0000 - 0015	0	9	1	0	0	0	0	0	0	0	0	0	0	**11**	
0015 - 0030	0	8	1	0	0	0	0	0	0	0	0	0	0	**9**	
0030 - 0045	0	12	1	0	0	0	0	0	0	0	0	0	0	**13**	
0045 - 0100	0	7	1	0	0	0	0	0	0	0	0	0	0	**8**	**41**
0100 - 0115	0	6	1	0	0	0	0	0	0	0	0	0	0	**7**	
0115 - 0130	0	6	1	0	0	0	0	0	0	0	0	0	0	**7**	
0130 - 0145	0	4	0	0	0	0	0	0	0	0	0	0	0	**4**	
0145 - 0200	0	6	1	0	0	0	0	0	0	0	0	0	0	**7**	**25**
0200 - 0215	0	3	1	0	0	0	0	0	0	0	0	0	0	**4**	
0215 - 0230	0	6	1	0	0	0	0	0	0	0	0	0	0	**8**	
0230 - 0245	0	5	1	0	0	0	0	0	0	0	0	0	0	**6**	
0245 - 0300	0	4	1	0	0	0	0	0	1	0	0	0	0	**6**	**24**
0300 - 0315	0	6	0	0	0	0	0	0	0	0	0	0	0	**6**	
0315 - 0330	0	4	1	0	0	0	0	0	0	0	0	0	0	**5**	
0330 - 0345	0	5	0	0	0	0	0	0	0	0	0	0	0	**6**	
0345 - 0400	0	2	0	0	0	0	0	0	0	0	0	0	0	**3**	**20**
0400 - 0415	0	5	1	0	0	0	0	0	0	0	0	0	0	**6**	
0415 - 0430	0	3	0	0	0	0	0	0	0	0	0	0	0	**4**	
0430 - 0445	0	6	1	0	0	0	0	0	0	0	0	0	0	**8**	
0445 - 0500	0	5	1	0	1	0	0	0	0	0	0	0	0	**6**	**24**
0500 - 0515	0	6	2	0	0	0	0	0	1	0	0	0	0	**9**	
0515 - 0530	0	10	2	0	0	0	0	0	0	0	0	0	0	**13**	
0530 - 0545	0	15	4	0	0	0	0	0	1	0	0	0	0	**20**	
0545 - 0600	0	14	4	0	0	0	0	0	0	0	0	0	0	**18**	**60**
0600 - 0615	0	13	3	0	1	0	0	0	0	0	0	0	0	**18**	
0615 - 0630	0	22	8	0	0	0	0	0	0	0	0	0	0	**30**	
0630 - 0645	0	34	13	0	0	0	0	0	0	0	0	0	0	**47**	
0645 - 0700	0	43	10	0	0	0	0	0	0	0	0	0	0	**54**	**150**
0700 - 0715	0	37	11	0	1	0	0	0	1	0	0	0	0	**50**	
0715 - 0730	0	59	12	1	1	0	0	0	1	0	0	0	0	**74**	
0730 - 0745	0	68	17	0	1	0	0	1	1	0	0	0	0	**88**	
0745 - 0800	0	69	19	0	1	0	0	0	0	0	0	0	0	**89**	**301**
0800 - 0815	0	68	15	0	1	0	0	1	1	0	0	0	0	**86**	
0815 - 0830	0	66	15	0	1	0	0	0	1	0	0	0	0	**83**	
0830 - 0845	0	70	17	0	2	0	0	0	0	0	0	0	0	**89**	
0845 - 0900	0	74	18	0	1	0	0	0	1	0	0	0	0	**93**	**352**
0900 - 0915	0	53	18	0	1	1	0	0	1	0	0	0	0	**75**	
0915 - 0930	0	49	14	0	2	0	0	0	0	0	0	0	0	**67**	
0930 - 0945	0	57	16	0	1	0	0	0	0	0	0	0	0	**74**	
0945 - 1000	0	65	17	0	2	0	0	0	0	0	0	0	0	**84**	**299**
1000 - 1015	0	53	16	0	1	0	0	0	1	0	0	0	0	**73**	
1015 - 1030	0	63	15	0	1	0	0	0	0	0	0	0	0	**79**	
1030 - 1045	0	57	20	0	2	0	0	0	1	0	0	0	0	**79**	
1045 - 1100	0	58	16	0	2	0	0	0	0	0	0	0	0	**76**	**307**
1100 - 1115	0	56	17	0	2	0	0	0	0	0	0	0	0	**76**	
1115 - 1130	0	59	13	0	1	1	0	0	0	0	0	0	0	**74**	
1130 - 1145	0	58	19	0	0	0	0	0	0	0	0	0	0	**78**	
1145 - 1200	0	62	14	1	1	0	0	1	0	0	0	0	0	**79**	**306**
1200 - 1215	0	61	16	0	0	0	0	0	0	0	0	0	0	**78**	
1215 - 1230	0	62	17	0	2	1	0	0	1	0	0	0	0	**83**	
1230 - 1245	0	66	21	0	2	0	0	0	0	0	0	0	0	**89**	
1245 - 1300	0	64	18	0	1	0	0	0	1	0	0	0	0	**84**	**334**
1300 - 1315	0	61	21	0	1	0	0	0	1	0	0	0	0	**84**	
1315 - 1330	0	66	17	0	2	0	0	1	1	0	0	0	0	**88**	
1330 - 1345	0	52	12	0	1	0	0	0	1	0	0	0	0	**67**	
1345 - 1400	0	58	15	0	2	0	0	0	1	0	0	0	0	**77**	**316**
1400 - 1415	0	67	15	0	2	0	0	0	0	0	0	0	0	**84**	
1415 - 1430	0	69	15	0	0	0	0	0	1	0	0	0	0	**86**	
1430 - 1445	0	69	16	0	1	0	0	0	1	0	0	0	0	**87**	
1445 - 1500	1	78	18	0	1	0	0	1	1	0	0	0	0	**99**	**356**
1500 - 1515	1	71	17	0	2	0	0	0	1	0	0	0	0	**92**	
1515 - 1530	0	83	20	0	1	0	0	1	1	0	0	0	0	**106**	
1530 - 1545	0	87	21	1	0	0	0	0	0	0	0	0	0	**110**	
1545 - 1600	0	84	21	0	1	0	0	0	0	0	0	0	0	**107**	**415**
1600 - 1615	0	77	18	0	1	0	0	0	0	0	0	0	0	**97**	
1615 - 1630	0	98	22	0	1	0	0	0	2	0	0	0	0	**124**	
1630 - 1645	1	86	21	0	1	0	0	0	0	0	0	0	0	**109**	
1645 - 1700	0	91	19	0	2	0	0	0	0	0	0	0	0	**112**	**442**
1700 - 1715	0	83	18	0	1	0	0	0	0	0	0	0	0	**103**	
1715 - 1730	0	84	21	0	1	0	0	0	0	0	0	0	0	**106**	
1730 - 1745	0	87	20	0	1	0	0	0	1	0	0	0	0	**110**	
1745 - 1800	1	90	22	0	1	0	0	0	0	0	0	0	0	**114**	**433**
1800 - 1815	0	85	21	0	1	0	0	0	0	0	0	0	0	**107**	
1815 - 1830	0	82	21	0	1	0	0	0	1	0	0	0	0	**106**	
1830 - 1845	1	63	15	0	0	0	0	0	0	0	0	0	0	**79**	
1845 - 1900	0	60	14	0	2	0	0	0	0	0	0	0	0	**76**	**368**
1900 - 1915	1	67	9	0	0	0	0	0	1	0	0	0	0	**78**	
1915 - 1930	0	59	9	0	1	0	0	0	0	0	0	0	0	**69**	
1930 - 1945	0	55	9	0	0	0	0	0	0	0	0	0	0	**64**	
1945 - 2000	0	46	6	0	2	0	0	0	0	0	0	0	0	**54**	**264**
2000 - 2015	0	49	6	0	0	0	0	0	0	0	0	0	0	**56**	
2015 - 2030	0	43	5	0	0	0	0	0	0	0	0	0	0	**48**	
2030 - 2045	0	35	5	0	0	0	0	0	0	0	0	0	0	**39**	
2045 - 2100	0	35	3	0	1	0	0	0	0	0	0	0	0	**39**	**183**
2100 - 2115	0	30	4	0	0	0	0	0	0	0	0	0	0	**34**	
2115 - 2130	0	27	4	0	0	0	0	0	0	0	0	0	0	**31**	
2130 - 2145	0	26	4	0	0	0	0	0	0	0	0	0	0	**31**	
2145 - 2200	0	26	3	0	0	0	0	0	0	0	0	0	0	**30**	**126**
2200 - 2215	0	23	2	0	0	0	0	0	0	0	0	0	0	**25**	
2215 - 2230	0	23	3	0	0	0	0	0	0	0	0	0	0	**26**	
2230 - 2245	0	15	2	0	0	0	0	0	1	0	0	0	0	**18**	
2245 - 2300	0	14	3	0	0	0	0	0	0	0	0	0	0	**16**	**86**
2300 - 2315	0	16	3	0	0	0	0	0	0	0	0	0	0	**19**	
2315 - 2330	0	11	1	0	0	0	0	0	1	0	0	0	0	**12**	
2330 - 2345	0	10	1	0	0	0	0	0	0	0	0	0	0	**11**	
2345 - 0000	0	11	2	0	0	0	0	0	0	0	0	0	0	**13**	**56**

Session Total	8	4174	973	5	69	7	0	13	39	0	0	0	0	**5288**
Session Average	0.09	43.48	10.13	0.05	0.72	0.08	0.00	0.13	0.41	0.00	0.00	0.00	0.00	**55.09**
Session Percentage	0.16	78.93	18.39	0.09	1.30	0.14	0.01	0.24	0.74	0.00	0.00	0.00	0.00	

AM Peak Hour	0730 - 0830	0800 - 0900	0945 - 1045	0715 - 0815	0830 - 0930	0645 - 0745	-	0730 - 0830	0815 - 0915	-	-	-	-	**0800 - 0900**
AM Peak Volume	0	277	68	1	7	1	0	2	3	0	0	0	0	**352**

Noon Peak Hour	1430 - 1530	1445 - 1545	1215 - 1315	1130 - 1230	1315 - 1415	1030 - 1130	1030 - 1130	1445 - 1545	1300 - 1400	-	-	-	-	**1445 - 1545**
Noon Peak Volume	2	319	76	1	7	1	0	2	5	0	0	0	0	**407**

PM Peak Hour	1745 - 1845	1615 - 1715	1730 - 1830	1500 - 1600	1615 - 1715	1530 - 1630	-	1500 - 1600	1500 - 1600	-	-	-	-	**1615 - 1715**
PM Peak Volume	2	359	84	1	5	1	0	1	3	0	0	0	0	**448**

Bi-Directional Class Count || Volume Summary 15min

Columbia, SC

Marr Traffic DATA COLLECTION

www.marrtraffic.com

Site 37
I-26 On/Off-Ramp,
north of St Andrews Rd

Date
Tuesday, April 23, 2024

Lat/Long
34.045338°, -81.118263°

Weather
Fair
58°F

Click here for Detailed Weather

0000 - 2400 (Weekday 24h Session) (04-23-2024)

Volume Summary 15min

TIME	Volume Summary 15min NB	SB	15min Total	60min Total
0000 - 0015	0	0	**0**	
0015 - 0030	0	0	**0**	
0030 - 0045	0	0	**0**	
0045 - 0100	0	0	**0**	**0**
0100 - 0115	0	0	**0**	
0115 - 0130	0	0	**0**	
0130 - 0145	0	0	**0**	
0145 - 0200	0	0	**0**	**0**
0200 - 0215	0	0	**0**	
0215 - 0230	0	0	**0**	
0230 - 0245	0	0	**0**	
0245 - 0300	0	0	**0**	**0**
0300 - 0315	0	0	**0**	
0315 - 0330	0	0	**0**	
0330 - 0345	0	0	**0**	
0345 - 0400	0	0	**0**	**0**
0400 - 0415	0	0	**0**	
0415 - 0430	0	0	**0**	
0430 - 0445	0	0	**0**	
0445 - 0500	0	0	**0**	**0**
0500 - 0515	0	0	**0**	
0515 - 0530	0	0	**0**	
0530 - 0545	0	0	**0**	
0545 - 0600	0	0	**0**	**0**
0600 - 0615	0	0	**0**	
0615 - 0630	0	0	**0**	
0630 - 0645	0	0	**0**	
0645 - 0700	0	0	**0**	**0**
0700 - 0715	0	0	**0**	
0715 - 0730	0	0	**0**	
0730 - 0745	0	0	**0**	
0745 - 0800	0	0	**0**	**0**
0800 - 0815	0	0	**0**	
0815 - 0830	0	0	**0**	
0830 - 0845	0	0	**0**	
0845 - 0900	0	0	**0**	**0**
0900 - 0915	0	0	**0**	
0915 - 0930	0	0	**0**	
0930 - 0945	0	0	**0**	
0945 - 1000	0	0	**0**	**0**
1000 - 1015	0	0	**0**	
1015 - 1030	0	0	**0**	
1030 - 1045	0	0	**0**	
1045 - 1100	0	0	**0**	**0**
1100 - 1115	0	0	**0**	
1115 - 1130	0	0	**0**	
1130 - 1145	0	0	**0**	
1145 - 1200	0	0	**0**	**0**

Time	Volume Summary 15min NB	SB	15min Total	60min Total
1200 - 1215	0	0	**0**	
1215 - 1230	0	0	**0**	
1230 - 1245	0	0	**0**	
1245 - 1300	0	0	**0**	**0**
1300 - 1315	0	0	**0**	
1315 - 1330	0	0	**0**	
1330 - 1345	0	0	**0**	
1345 - 1400	0	0	**0**	**0**
1400 - 1415	0	0	**0**	
1415 - 1430	0	0	**0**	
1430 - 1445	0	0	**0**	
1445 - 1500	0	0	**0**	**0**
1500 - 1515	0	0	**0**	
1515 - 1530	0	0	**0**	
1530 - 1545	0	0	**0**	
1545 - 1600	0	0	**0**	**0**
1600 - 1615	0	0	**0**	
1615 - 1630	0	0	**0**	
1630 - 1645	0	0	**0**	
1645 - 1700	0	0	**0**	**0**
1700 - 1715	0	0	**0**	
1715 - 1730	0	0	**0**	
1730 - 1745	0	0	**0**	
1745 - 1800	0	0	**0**	**0**
1800 - 1815	0	0	**0**	
1815 - 1830	0	0	**0**	
1830 - 1845	0	0	**0**	
1845 - 1900	0	0	**0**	**0**
1900 - 1915	0	124	**124**	
1915 - 1930	0	99	**99**	
1930 - 1945	0	106	**106**	
1945 - 2000	0	89	**89**	**418**
2000 - 2015	0	80	**80**	
2015 - 2030	0	68	**68**	
2030 - 2045	0	52	**52**	
2045 - 2100	0	53	**53**	**253**
2100 - 2115	0	47	**47**	
2115 - 2130	0	51	**51**	
2130 - 2145	0	48	**48**	
2145 - 2200	0	40	**40**	**186**
2200 - 2215	0	35	**35**	
2215 - 2230	0	37	**37**	
2230 - 2245	0	23	**23**	
2245 - 2300	0	24	**24**	**119**
2300 - 2315	0	31	**31**	
2315 - 2330	0	16	**16**	
2330 - 2345	0	17	**17**	
2345 - 0000	0	14	**14**	**78**

Session Total	0	1054	**1054**
Session Average	0.00	10.98	**10.98**
Session Percentage	0.00	100.00	

Site 37

I-26 On/Off-Ramp,
north of St Andrews Rd

Date

Wednesday, April 24, 2024

Lat/Long

34.045338°, -81.118263°

Weather

Fair
66°F

Click here for Detailed Weather

0000 - 2400 (Weekday 24h Session) (04-24-2024)

Volume Summary 15min

TIME	Volume Summary 15min NB	SB	15min Total	60min Total
0000 - 0015	0	12	**12**	
0015 - 0030	0	11	**11**	
0030 - 0045	0	13	**13**	
0045 - 0100	0	12	**12**	**48**
0100 - 0115	0	8	**8**	
0115 - 0130	0	11	**11**	
0130 - 0145	0	3	**3**	
0145 - 0200	0	11	**11**	**33**
0200 - 0215	0	5	**5**	
0215 - 0230	0	11	**11**	
0230 - 0245	0	8	**8**	
0245 - 0300	0	12	**12**	**36**
0300 - 0315	0	9	**9**	
0315 - 0330	0	5	**5**	
0330 - 0345	0	7	**7**	
0345 - 0400	0	1	**1**	**22**
0400 - 0415	0	12	**12**	
0415 - 0430	0	6	**6**	
0430 - 0445	0	16	**16**	
0445 - 0500	0	11	**11**	**45**
0500 - 0515	0	10	**10**	
0515 - 0530	0	20	**20**	
0530 - 0545	0	35	**35**	
0545 - 0600	0	23	**23**	**88**
0600 - 0615	0	23	**23**	
0615 - 0630	0	46	**46**	
0630 - 0645	0	69	**69**	
0645 - 0700	0	75	**75**	**213**
0700 - 0715	0	79	**79**	
0715 - 0730	0	114	**114**	
0730 - 0745	0	123	**123**	
0745 - 0800	0	135	**135**	**451**
0800 - 0815	0	124	**124**	
0815 - 0830	0	128	**128**	
0830 - 0845	0	132	**132**	
0845 - 0900	0	139	**139**	**523**
0900 - 0915	0	111	**111**	
0915 - 0930	0	98	**98**	
0930 - 0945	0	110	**110**	
0945 - 1000	0	127	**127**	**446**
1000 - 1015	0	118	**118**	
1015 - 1030	0	125	**125**	
1030 - 1045	0	113	**113**	
1045 - 1100	0	126	**126**	**482**
1100 - 1115	0	103	**103**	
1115 - 1130	0	109	**109**	
1130 - 1145	0	118	**118**	
1145 - 1200	0	127	**127**	**457**

Time	Volume Summary 15min NB	SB	15min Total	60min Total
1200 - 1215	0	120	**120**	
1215 - 1230	0	125	**125**	
1230 - 1245	0	125	**125**	
1245 - 1300	0	133	**133**	**503**
1300 - 1315	0	116	**116**	
1315 - 1330	0	129	**129**	
1330 - 1345	0	98	**98**	
1345 - 1400	0	111	**111**	**454**
1400 - 1415	0	121	**121**	
1415 - 1430	0	133	**133**	
1430 - 1445	0	133	**133**	
1445 - 1500	0	146	**146**	**533**
1500 - 1515	0	133	**133**	
1515 - 1530	0	160	**160**	
1530 - 1545	0	143	**143**	
1545 - 1600	0	174	**174**	**610**
1600 - 1615	0	151	**151**	
1615 - 1630	0	190	**190**	
1630 - 1645	0	178	**178**	
1645 - 1700	0	161	**161**	**680**
1700 - 1715	0	148	**148**	
1715 - 1730	0	153	**153**	
1730 - 1745	0	171	**171**	
1745 - 1800	0	181	**181**	**653**
1800 - 1815	0	159	**159**	
1815 - 1830	0	134	**134**	
1830 - 1845	0	100	**100**	
1845 - 1900	0	115	**115**	**508**
1900 - 1915	0	109	**109**	
1915 - 1930	0	108	**108**	
1930 - 1945	0	86	**86**	
1945 - 2000	0	72	**72**	**375**
2000 - 2015	0	88	**88**	
2015 - 2030	0	77	**77**	
2030 - 2045	0	66	**66**	
2045 - 2100	0	64	**64**	**295**
2100 - 2115	0	56	**56**	
2115 - 2130	0	43	**43**	
2130 - 2145	0	45	**45**	
2145 - 2200	0	49	**49**	**193**
2200 - 2215	0	41	**41**	
2215 - 2230	0	41	**41**	
2230 - 2245	0	32	**32**	
2245 - 2300	0	25	**25**	**139**
2300 - 2315	0	26	**26**	
2315 - 2330	0	21	**21**	
2330 - 2345	0	17	**17**	
2345 - 0000	0	26	**26**	**90**

Session Total	0	7877	**7877**
Session Average	0.00	82.05	**82.05**
Session Percentage	0.00	100.00	

Site 37
I-26 On/Off-Ramp,
north of St Andrews Rd

Date
Thursday, April 25, 2024

Lat/Long
34.045338°, -81.118263°

Weather
Fair
67°F

Click here for Detailed Weather

0000 - 2400 (Weekday 24h Session) (04-25-2024)
Volume Summary 15min

TIME	Volume Summary 15min NB	SB	15min Total	60min Total
0000 - 0015	0	20	**20**	
0015 - 0030	0	16	**16**	
0030 - 0045	0	27	**27**	
0045 - 0100	0	13	**13**	**76**
0100 - 0115	0	14	**14**	
0115 - 0130	0	9	**9**	
0130 - 0145	0	9	**9**	
0145 - 0200	0	9	**9**	**41**
0200 - 0215	0	7	**7**	
0215 - 0230	0	13	**13**	
0230 - 0245	0	10	**10**	
0245 - 0300	0	5	**5**	**35**
0300 - 0315	0	10	**10**	
0315 - 0330	0	11	**11**	
0330 - 0345	0	11	**11**	
0345 - 0400	0	7	**7**	**39**
0400 - 0415	0	6	**6**	
0415 - 0430	0	6	**6**	
0430 - 0445	0	8	**8**	
0445 - 0500	0	8	**8**	**28**
0500 - 0515	0	16	**16**	
0515 - 0530	0	19	**19**	
0530 - 0545	0	26	**26**	
0545 - 0600	0	31	**31**	**92**
0600 - 0615	0	31	**31**	
0615 - 0630	0	45	**45**	
0630 - 0645	0	73	**73**	
0645 - 0700	0	87	**87**	**236**
0700 - 0715	0	71	**71**	
0715 - 0730	0	109	**109**	
0730 - 0745	0	142	**142**	
0745 - 0800	0	131	**131**	**453**
0800 - 0815	0	133	**133**	
0815 - 0830	0	122	**122**	
0830 - 0845	0	136	**136**	
0845 - 0900	0	141	**141**	**532**
0900 - 0915	0	113	**113**	
0915 - 0930	0	102	**102**	
0930 - 0945	0	111	**111**	
0945 - 1000	0	126	**126**	**452**
1000 - 1015	0	100	**100**	
1015 - 1030	0	113	**113**	
1030 - 1045	0	125	**125**	
1045 - 1100	0	101	**101**	**439**
1100 - 1115	0	124	**124**	
1115 - 1130	0	113	**113**	
1130 - 1145	0	115	**115**	
1145 - 1200	0	109	**109**	**461**

Time	Volume Summary 15min NB	SB	15min Total	60min Total
1200 - 1215	0	113	**113**	
1215 - 1230	0	124	**124**	
1230 - 1245	0	142	**142**	
1245 - 1300	0	120	**120**	**499**
1300 - 1315	0	137	**137**	
1315 - 1330	0	134	**134**	
1330 - 1345	0	104	**104**	
1345 - 1400	0	119	**119**	**494**
1400 - 1415	0	131	**131**	
1415 - 1430	0	125	**125**	
1430 - 1445	0	128	**128**	
1445 - 1500	0	152	**152**	**536**
1500 - 1515	0	143	**143**	
1515 - 1530	0	159	**159**	
1530 - 1545	0	186	**186**	
1545 - 1600	0	146	**146**	**634**
1600 - 1615	0	140	**140**	
1615 - 1630	0	181	**181**	
1630 - 1645	0	149	**149**	
1645 - 1700	0	175	**175**	**645**
1700 - 1715	0	162	**162**	
1715 - 1730	0	165	**165**	
1730 - 1745	0	158	**158**	
1745 - 1800	0	161	**161**	**646**
1800 - 1815	0	162	**162**	
1815 - 1830	0	184	**184**	
1830 - 1845	0	138	**138**	
1845 - 1900	0	112	**112**	**596**
1900 - 1915	0	0	**0**	
1915 - 1930	0	0	**0**	
1930 - 1945	0	0	**0**	
1945 - 2000	0	0	**0**	**0**
2000 - 2015	0	0	**0**	
2015 - 2030	0	0	**0**	
2030 - 2045	0	0	**0**	
2045 - 2100	0	0	**0**	**0**
2100 - 2115	0	0	**0**	
2115 - 2130	0	0	**0**	
2130 - 2145	0	0	**0**	
2145 - 2200	0	0	**0**	**0**
2200 - 2215	0	0	**0**	
2215 - 2230	0	0	**0**	
2230 - 2245	0	0	**0**	
2245 - 2300	0	0	**0**	**0**
2300 - 2315	0	0	**0**	
2315 - 2330	0	0	**0**	
2330 - 2345	0	0	**0**	
2345 - 0000	0	0	**0**	**0**

Session Total	0	6934	**6934**
Session Average	0.00	72.23	**72.23**
Session Percentage	0.00	100.00	

Bi-Directional Class Count || SB WB 60min

Columbia, SC

Marr Traffic DATA COLLECTION

www.marrtraffic.com

Site 37
I-26 On/Off-Ramp,
north of St Andrews Rd

Date
Tuesday, April 23, 2024

Lat/Long
34.045338°, -81.118263°

Weather
Fair
58°F

Click here for Detailed Weather

0000 - 2400 (Weekday 24h Session) (04-23-2024)
SB WB 60min

	Southbound (Movement 37.1)													
TIME	1	2	3	4	5	6	7	8	9	10	11	12	13	**Total**
0000 - 0100	0	0	0	0	0	0	0	0	0	0	0	0	0	**0**
0100 - 0200	0	0	0	0	0	0	0	0	0	0	0	0	0	**0**
0200 - 0300	0	0	0	0	0	0	0	0	0	0	0	0	0	**0**
0300 - 0400	0	0	0	0	0	0	0	0	0	0	0	0	0	**0**
0400 - 0500	0	0	0	0	0	0	0	0	0	0	0	0	0	**0**
0500 - 0600	0	0	0	0	0	0	0	0	0	0	0	0	0	**0**
0600 - 0700	0	0	0	0	0	0	0	0	0	0	0	0	0	**0**
0700 - 0800	0	0	0	0	0	0	0	0	0	0	0	0	0	**0**
0800 - 0900	0	0	0	0	0	0	0	0	0	0	0	0	0	**0**
0900 - 1000	0	0	0	0	0	0	0	0	0	0	0	0	0	**0**
1000 - 1100	0	0	0	0	0	0	0	0	0	0	0	0	0	**0**
1100 - 1200	0	0	0	0	0	0	0	0	0	0	0	0	0	**0**
1200 - 1300	0	0	0	0	0	0	0	0	0	0	0	0	0	**0**
1300 - 1400	0	0	0	0	0	0	0	0	0	0	0	0	0	**0**
1400 - 1500	0	0	0	0	0	0	0	0	0	0	0	0	0	**0**
1500 - 1600	0	0	0	0	0	0	0	0	0	0	0	0	0	**0**
1600 - 1700	0	0	0	0	0	0	0	0	0	0	0	0	0	**0**
1700 - 1800	0	0	0	0	0	0	0	0	0	0	0	0	0	**0**
1800 - 1900	0	0	0	0	0	0	0	0	0	0	0	0	0	**0**
1900 - 2000	1	365	45	0	4	1	0	1	1	0	0	0	0	**418**
2000 - 2100	0	227	24	0	2	0	0	0	0	0	0	0	0	**253**
2100 - 2200	0	159	23	1	2	0	0	0	1	0	0	0	0	**186**
2200 - 2300	0	101	14	0	2	0	0	0	2	0	0	0	0	**119**
2300 - 2400	0	68	8	0	0	0	0	0	2	0	0	0	0	**78**
Session Total	1	920	114	1	10	1	0	1	6	0	0	0	0	**1054**
Session Average	0.04	38.33	4.75	0.04	0.42	0.04	0.00	0.04	0.25	0.00	0.00	0.00	0.00	**43.92**
Session Percentage	0.09	87.29	10.82	0.09	0.95	0.09	0.00	0.09	0.57	0.00	0.00	0.00	0.00	
AM Peak Hour	-	-	-	-	-	-	-	-	-	-	-	-	-	**-**
AM Peak Volume	0	0	0	0	0	0	0	0	0	0	0	0	0	**0**
Noon Peak Hour	-	-	-	-	-	-	-	-	-	-	-	-	-	**-**
Noon Peak Volume	0	0	0	0	0	0	0	0	0	0	0	0	0	**0**
PM Peak Hour	1900 - 2000	1900 - 2000	1900 - 2000	-	1900 - 2000	1900 - 2000	-	1900 - 2000	1900 - 2000	-	-	-	-	**1900 - 2000**
PM Peak Volume	1	365	45	0	4	1	0	1	1	0	0	0	0	**418**

Site 37
I-26 On/Off-Ramp,
north of St Andrews Rd

Date
Wednesday, April 24, 2024

Lat/Long
34.045338°, -81.118263°

Weather
Fair
66°F

Click here for Detailed Weather

0000 - 2400 (Weekday 24h Session) (04-24-2024)
SB WB 60min

	Southbound (Movement 37.1)													
TIME	1	2	3	4	5	6	7	8	9	10	11	12	13	**Total**
0000 - 0100	0	44	4	0	0	0	0	0	0	0	0	0	0	**48**
0100 - 0200	0	26	5	0	0	0	0	0	2	0	0	0	0	**33**
0200 - 0300	0	23	7	0	1	0	0	1	4	0	0	0	0	**36**
0300 - 0400	0	19	3	0	0	0	0	0	0	0	0	0	0	**22**
0400 - 0500	0	33	8	0	1	0	0	0	3	0	0	0	0	**45**
0500 - 0600	0	66	17	0	1	0	0	0	4	0	0	0	0	**88**
0600 - 0700	0	143	63	0	3	0	0	2	2	0	0	0	0	**213**
0700 - 0800	0	334	100	1	9	0	0	5	2	0	0	0	0	**451**
0800 - 0900	0	415	97	1	3	0	0	2	5	0	0	0	0	**523**
0900 - 1000	0	322	108	1	9	1	0	3	2	0	0	0	0	**446**
1000 - 1100	1	347	118	0	10	2	0	0	4	0	0	0	0	**482**
1100 - 1200	0	339	102	2	8	3	0	3	0	0	0	0	0	**457**
1200 - 1300	0	370	118	1	8	0	0	0	6	0	0	0	0	**503**
1300 - 1400	1	325	105	1	9	2	0	4	7	0	0	0	0	**454**
1400 - 1500	1	423	95	1	5	0	0	3	5	0	0	0	0	**533**
1500 - 1600	3	471	122	1	4	1	0	3	5	0	0	0	0	**610**
1600 - 1700	2	531	131	0	8	2	0	1	5	0	0	0	0	**680**
1700 - 1800	2	509	131	0	10	0	0	1	0	0	0	0	0	**653**
1800 - 1900	2	390	106	0	8	0	0	0	2	0	0	0	0	**508**
1900 - 2000	2	313	52	0	4	1	0	1	2	0	0	0	0	**375**
2000 - 2100	0	259	34	0	1	0	0	0	1	0	0	0	0	**295**
2100 - 2200	0	168	24	0	0	0	0	0	1	0	0	0	0	**193**
2200 - 2300	0	122	16	0	0	0	0	0	1	0	0	0	0	**139**
2300 - 2400	0	75	11	0	2	0	0	0	2	0	0	0	0	**90**

Session Total	14	6067	1577	9	104	12	0	29	65	0	0	0	0	**7877**
Session Average	0.58	252.79	65.71	0.38	4.33	0.50	0.00	1.21	2.71	0.00	0.00	0.00	0.00	**328.21**
Session Percentage	0.18	77.02	20.02	0.11	1.32	0.15	0.00	0.37	0.83	0.00	0.00	0.00	0.00	

AM Peak Hour	-	0800 - 0900	0900 - 1000	0700 - 0800	0700 - 0800	0900 - 1000	-	0700 - 0800	0800 - 0900	-	-	-	-	**0800 - 0900**
AM Peak Volume	0	415	108	1	9	1	0	5	5	0	0	0	0	**523**

Noon Peak Hour	1000 - 1100	1400 - 1500	1000 - 1100	1100 - 1200	1000 - 1100	1100 - 1200	-	1300 - 1400	1300 - 1400	-	-	-	-	**1400 - 1500**
Noon Peak Volume	1	423	118	2	10	3	0	4	7	0	0	0	0	**533**

PM Peak Hour	1500 - 1600	1600 - 1700	1600 - 1700	1500 - 1600	1700 - 1800	1600 - 1700	-	1500 - 1600	1500 - 1600	-	-	-	-	**1600 - 1700**
PM Peak Volume	3	531	131	1	10	2	0	3	5	0	0	0	0	**680**

Site 37
I-26 On/Off-Ramp,
north of St Andrews Rd

Date
Thursday, April 25, 2024

Lat/Long
34.045338°, -81.118263°

Weather
Fair
67°F

Click here for Detailed Weather

0000 - 2400 (Weekday 24h Session) (04-25-2024)
SB WB 60min

	Southbound (Movement 37.1)													
TIME	1	2	3	4	5	6	7	8	9	10	11	12	13	**Total**
0000 - 0100	0	67	8	0	0	0	0	0	1	0	0	0	0	**76**
0100 - 0200	0	38	3	0	0	0	0	0	0	0	0	0	0	**41**
0200 - 0300	0	31	3	0	0	0	0	0	1	0	0	0	0	**35**
0300 - 0400	0	32	3	0	2	0	0	0	2	0	0	0	0	**39**
0400 - 0500	0	26	0	0	2	0	0	0	0	0	0	0	0	**28**
0500 - 0600	0	69	20	0	2	0	0	0	1	0	0	0	0	**92**
0600 - 0700	0	193	39	0	3	1	0	0	0	0	0	0	0	**236**
0700 - 0800	0	364	77	1	4	2	0	0	5	0	0	0	0	**453**
0800 - 0900	1	417	96	1	12	1	0	1	3	0	0	0	0	**532**
0900 - 1000	0	352	85	1	9	1	0	0	4	0	0	0	0	**452**
1000 - 1100	0	346	82	0	6	0	0	1	4	0	0	0	0	**439**
1100 - 1200	0	365	84	0	6	1	1	2	2	0	0	0	0	**461**
1200 - 1300	1	388	96	0	8	2	0	1	3	0	0	0	0	**499**
1300 - 1400	1	384	92	0	10	0	0	0	7	0	0	0	0	**494**
1400 - 1500	3	425	98	1	6	0	0	1	2	0	0	0	0	**536**
1500 - 1600	0	506	114	1	7	1	0	1	4	0	0	0	0	**634**
1600 - 1700	1	527	108	0	6	0	0	0	3	0	0	0	0	**645**
1700 - 1800	1	526	111	0	4	0	0	0	4	0	0	0	0	**646**
1800 - 1900	2	479	108	0	5	0	0	1	1	0	0	0	0	**596**
1900 - 2000	0	0	0	0	0	0	0	0	0	0	0	0	0	**0**
2000 - 2100	0	0	0	0	0	0	0	0	0	0	0	0	0	**0**
2100 - 2200	0	0	0	0	0	0	0	0	0	0	0	0	0	**0**
2200 - 2300	0	0	0	0	0	0	0	0	0	0	0	0	0	**0**
2300 - 2400	0	0	0	0	0	0	0	0	0	0	0	0	0	**0**

Session Total	10	5535	1227	5	92	9	1	8	47	0	0	0	0	**6934**
Session Average	0.42	230.63	51.13	0.21	3.83	0.38	0.04	0.33	1.96	0.00	0.00	0.00	0.00	**288.92**
Session Percentage	0.14	79.82	17.70	0.07	1.33	0.13	0.01	0.12	0.68	0.00	0.00	0.00	0.00	

AM Peak Hour	0800 - 0900	0800 - 0900	0800 - 0900	0700 - 0800	0800 - 0900	0700 - 0800	-	0800 - 0900	0700 - 0800	-	-	-	-	**0800 - 0900**
AM Peak Hour Volume	1	417	96	1	12	2	0	1	5	0	0	0	0	**532**

Noon Peak Hour	1400 - 1500	1400 - 1500	1400 - 1500	1400 - 1500	1300 - 1400	1200 - 1300	1100 - 1200	1100 - 1200	1300 - 1400	-	-	-	-	**1400 - 1500**
Noon Peak Hour Volume	3	425	98	1	10	2	1	2	7	0	0	0	0	**536**

PM Peak Hour	1800 - 1900	1600 - 1700	1500 - 1600	1500 - 1600	1500 - 1600	1500 - 1600	-	1500 - 1600	1500 - 1600	-	-	-	-	**1700 - 1800**
PM Peak Hour Volume	2	527	114	1	7	1	0	1	4	0	0	0	0	**646**

Bi-Directional Class Count || Volume Summary 60min

Columbia, SC

Marr Traffic DATA COLLECTION

www.marrtraffic.com

Site 37

I-26 On/Off-Ramp,
north of St Andrews Rd

Date

Tuesday, April 23, 2024

Lat/Long

34.045338°, -81.118263°

Weather

Fair
58°F

Click here for Detailed Weather

0000 - 2400 (Weekday 24h Session) (04-23-2024)

Volume Summary 60min

	Volume Summary 60min		
TIME	NB	SB	**Total**
0000 - 0100	0	0	**0**
0100 - 0200	0	0	**0**
0200 - 0300	0	0	**0**
0300 - 0400	0	0	**0**
0400 - 0500	0	0	**0**
0500 - 0600	0	0	**0**
0600 - 0700	0	0	**0**
0700 - 0800	0	0	**0**
0800 - 0900	0	0	**0**
0900 - 1000	0	0	**0**
1000 - 1100	0	0	**0**
1100 - 1200	0	0	**0**

	Volume Summary 60min		
Time	NB	SB	**Total**
1200 - 1300	0	0	**0**
1300 - 1400	0	0	**0**
1400 - 1500	0	0	**0**
1500 - 1600	0	0	**0**
1600 - 1700	0	0	**0**
1700 - 1800	0	0	**0**
1800 - 1900	0	0	**0**
1900 - 2000	0	418	**418**
2000 - 2100	0	253	**253**
2100 - 2200	0	186	**186**
2200 - 2300	0	119	**119**
2300 - 2400	0	78	**78**

Session Total	0	1054	**1054**
Session Average	0.00	43.92	**43.92**
Session Percentage	0.00	100.00	

Site 37

I-26 On/Off-Ramp,
north of St Andrews Rd

Date

Wednesday, April 24, 2024

Lat/Long

34.045338°, -81.118263°

Weather

Fair
66°F

Click here for Detailed Weather

0000 - 2400 (Weekday 24h Session) (04-24-2024)

Volume Summary 60min

	Volume Summary 60min		
TIME	NB	SB	**Total**
0000 - 0100	0	48	**48**
0100 - 0200	0	33	**33**
0200 - 0300	0	36	**36**
0300 - 0400	0	22	**22**
0400 - 0500	0	45	**45**
0500 - 0600	0	88	**88**
0600 - 0700	0	213	**213**
0700 - 0800	0	451	**451**
0800 - 0900	0	523	**523**
0900 - 1000	0	446	**446**
1000 - 1100	0	482	**482**
1100 - 1200	0	457	**457**

Session Total	0	7877	**7877**
Session Average	0.00	328.21	**328.21**
Session Percentage	0.00	100.00	

	Volume Summary 60min		
Time	NB	SB	**Total**
1200 - 1300	0	503	**503**
1300 - 1400	0	454	**454**
1400 - 1500	0	533	**533**
1500 - 1600	0	610	**610**
1600 - 1700	0	680	**680**
1700 - 1800	0	653	**653**
1800 - 1900	0	508	**508**
1900 - 2000	0	375	**375**
2000 - 2100	0	295	**295**
2100 - 2200	0	193	**193**
2200 - 2300	0	139	**139**
2300 - 2400	0	90	**90**

Site 37

I-26 On/Off-Ramp,
north of St Andrews Rd

Date

Thursday, April 25, 2024

Lat/Long

34.045338°, -81.118263°

Weather

Fair
67°F

Click here for Detailed Weather

0000 - 2400 (Weekday 24h Session) (04-25-2024)

Volume Summary 60min

	Volume Summary 60min		
TIME	NB	SB	**Total**
0000 - 0100	0	76	**76**
0100 - 0200	0	41	**41**
0200 - 0300	0	35	**35**
0300 - 0400	0	39	**39**
0400 - 0500	0	28	**28**
0500 - 0600	0	92	**92**
0600 - 0700	0	236	**236**
0700 - 0800	0	453	**453**
0800 - 0900	0	532	**532**
0900 - 1000	0	452	**452**
1000 - 1100	0	439	**439**
1100 - 1200	0	461	**461**

Session Total	0	6934	**6934**
Session Average	0.00	288.92	**288.92**
Session Percentage	0.00	100.00	

	Volume Summary 60min		
Time	NB	SB	**Total**
1200 - 1300	0	499	**499**
1300 - 1400	0	494	**494**
1400 - 1500	0	536	**536**
1500 - 1600	0	634	**634**
1600 - 1700	0	645	**645**
1700 - 1800	0	646	**646**
1800 - 1900	0	596	**596**
1900 - 2000	0	0	**0**
2000 - 2100	0	0	**0**
2100 - 2200	0	0	**0**
2200 - 2300	0	0	**0**
2300 - 2400	0	0	**0**

Bi-Directional Class Count || Graphical Analysis SB WB

Columbia, SC

Marr Traffic DATA COLLECTION

www.marrtraffic.com

Site 37

I-26 On/Off-Ramp,
north of St Andrews Rd

Lat/Long

34.045338°, -81.118263°

0000 - 2400 (Weekday 24h Session)

Graphical Analysis SB WB

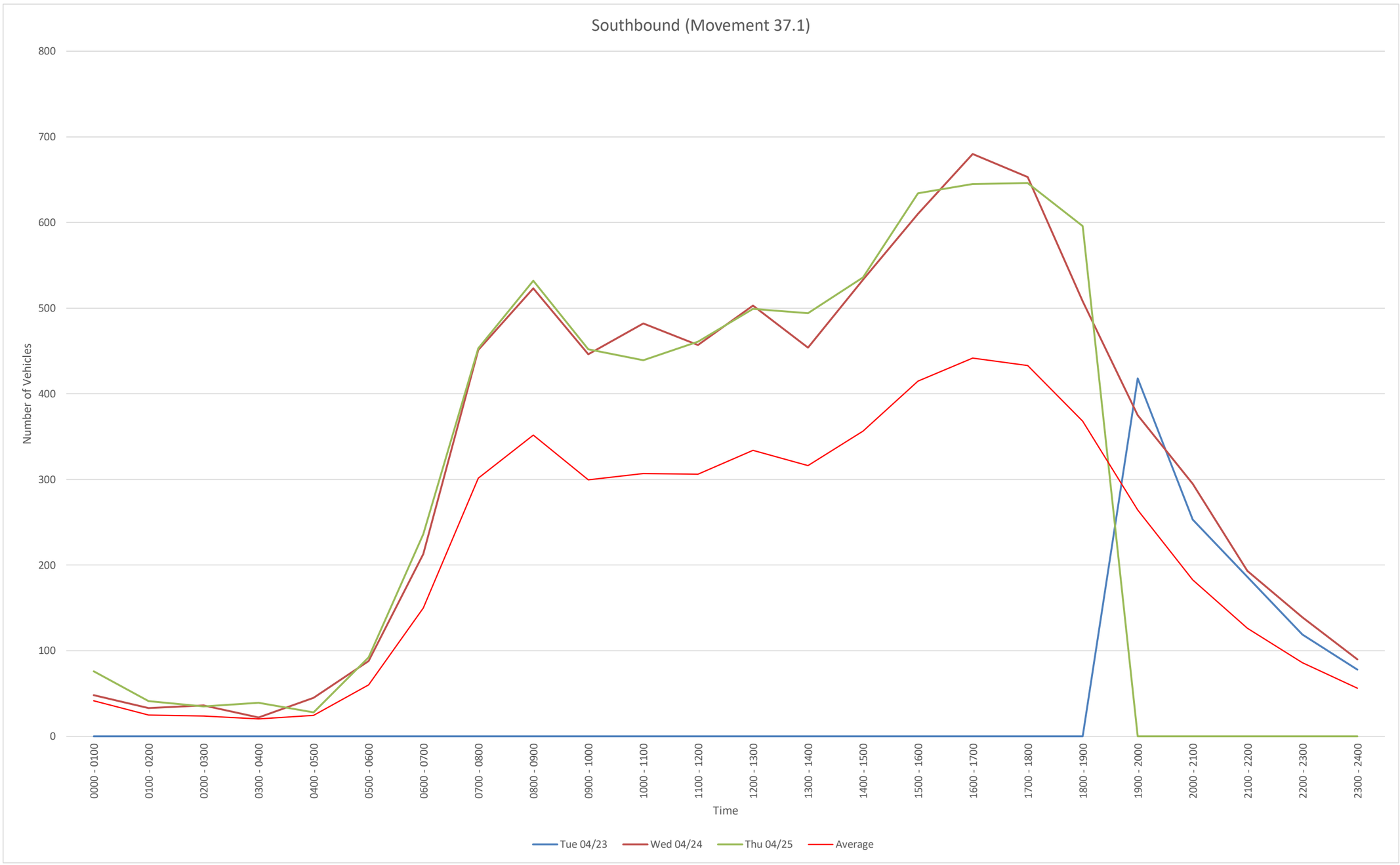

Time	Tue 04/23	Wed 04/24	Thu 04/25				
0000 - 0100	0	48	76				
0100 - 0200	0	33	41				
0200 - 0300	0	36	35				
0300 - 0400	0	22	39				
0400 - 0500	0	45	28				
0500 - 0600	0	88	92				
0600 - 0700	0	213	236				
0700 - 0800	0	451	453				
0800 - 0900	0	523	532				
0900 - 1000	0	446	452				
1000 - 1100	0	482	439				
1100 - 1200	0	457	461				
1200 - 1300	0	503	499				
1300 - 1400	0	454	494				
1400 - 1500	0	533	536				
1500 - 1600	0	610	634				
1600 - 1700	0	680	645				
1700 - 1800	0	653	646				
1800 - 1900	0	508	596				
1900 - 2000	418	375	0				
2000 - 2100	253	295	0				
2100 - 2200	186	193	0				
2200 - 2300	119	139	0				
2300 - 2400	78	90	0				
Daily Total	1054	7877	6934				

NB
File Name:
Start Date: 4/23/2024
Start Time: 0
Site Code: 37
Station ID: 1
Location 1: I-26 On/Off-Ramp, north of St Andrews Rd
Location 2:

Date	Time	1	2	3	4	5	6	7	8	9	10	11	12	13
4/23/2024	12:00 AM	0	0	0	0	0	0	0	0	0	0	0	0	0
4/23/2024	12:15 AM	0	0	0	0	0	0	0	0	0	0	0	0	0
4/23/2024	12:30 AM	0	0	0	0	0	0	0	0	0	0	0	0	0
4/23/2024	12:45 AM	0	0	0	0	0	0	0	0	0	0	0	0	0
4/23/2024	1:00 AM	0	0	0	0	0	0	0	0	0	0	0	0	0
4/23/2024	1:15 AM	0	0	0	0	0	0	0	0	0	0	0	0	0
4/23/2024	1:30 AM	0	0	0	0	0	0	0	0	0	0	0	0	0
4/23/2024	1:45 AM	0	0	0	0	0	0	0	0	0	0	0	0	0
4/23/2024	2:00 AM	0	0	0	0	0	0	0	0	0	0	0	0	0
4/23/2024	2:15 AM	0	0	0	0	0	0	0	0	0	0	0	0	0
4/23/2024	2:30 AM	0	0	0	0	0	0	0	0	0	0	0	0	0
4/23/2024	2:45 AM	0	0	0	0	0	0	0	0	0	0	0	0	0
4/23/2024	3:00 AM	0	0	0	0	0	0	0	0	0	0	0	0	0
4/23/2024	3:15 AM	0	0	0	0	0	0	0	0	0	0	0	0	0
4/23/2024	3:30 AM	0	0	0	0	0	0	0	0	0	0	0	0	0
4/23/2024	3:45 AM	0	0	0	0	0	0	0	0	0	0	0	0	0
4/23/2024	4:00 AM	0	0	0	0	0	0	0	0	0	0	0	0	0
4/23/2024	4:15 AM	0	0	0	0	0	0	0	0	0	0	0	0	0
4/23/2024	4:30 AM	0	0	0	0	0	0	0	0	0	0	0	0	0
4/23/2024	4:45 AM	0	0	0	0	0	0	0	0	0	0	0	0	0
4/23/2024	5:00 AM	0	0	0	0	0	0	0	0	0	0	0	0	0
4/23/2024	5:15 AM	0	0	0	0	0	0	0	0	0	0	0	0	0
4/23/2024	5:30 AM	0	0	0	0	0	0	0	0	0	0	0	0	0
4/23/2024	5:45 AM	0	0	0	0	0	0	0	0	0	0	0	0	0
4/23/2024	6:00 AM	0	0	0	0	0	0	0	0	0	0	0	0	0
4/23/2024	6:15 AM	0	0	0	0	0	0	0	0	0	0	0	0	0
4/23/2024	6:30 AM	0	0	0	0	0	0	0	0	0	0	0	0	0
4/23/2024	6:45 AM	0	0	0	0	0	0	0	0	0	0	0	0	0
4/23/2024	7:00 AM	0	0	0	0	0	0	0	0	0	0	0	0	0
4/23/2024	7:15 AM	0	0	0	0	0	0	0	0	0	0	0	0	0
4/23/2024	7:30 AM	0	0	0	0	0	0	0	0	0	0	0	0	0
4/23/2024	7:45 AM	0	0	0	0	0	0	0	0	0	0	0	0	0
4/23/2024	8:00 AM	0	0	0	0	0	0	0	0	0	0	0	0	0
4/23/2024	8:15 AM	0	0	0	0	0	0	0	0	0	0	0	0	0
4/23/2024	8:30 AM	0	0	0	0	0	0	0	0	0	0	0	0	0
4/23/2024	8:45 AM	0	0	0	0	0	0	0	0	0	0	0	0	0
4/23/2024	9:00 AM	0	0	0	0	0	0	0	0	0	0	0	0	0
4/23/2024	9:15 AM	0	0	0	0	0	0	0	0	0	0	0	0	0
4/23/2024	9:30 AM	0	0	0	0	0	0	0	0	0	0	0	0	0
4/23/2024	9:45 AM	0	0	0	0	0	0	0	0	0	0	0	0	0
4/23/2024	10:00 AM	0	0	0	0	0	0	0	0	0	0	0	0	0
4/23/2024	10:15 AM	0	0	0	0	0	0	0	0	0	0	0	0	0
4/23/2024	10:30 AM	0	0	0	0	0	0	0	0	0	0	0	0	0
4/23/2024	10:45 AM	0	0	0	0	0	0	0	0	0	0	0	0	0
4/23/2024	11:00 AM	0	0	0	0	0	0	0	0	0	0	0	0	0
4/23/2024	11:15 AM	0	0	0	0	0	0	0	0	0	0	0	0	0
4/23/2024	11:30 AM	0	0	0	0	0	0	0	0	0	0	0	0	0
4/23/2024	11:45 AM	0	0	0	0	0	0	0	0	0	0	0	0	0
4/23/2024	12:00 PM	0	0	0	0	0	0	0	0	0	0	0	0	0
4/23/2024	12:15 PM	0	0	0	0	0	0	0	0	0	0	0	0	0
4/23/2024	12:30 PM	0	0	0	0	0	0	0	0	0	0	0	0	0
4/23/2024	12:45 PM	0	0	0	0	0	0	0	0	0	0	0	0	0
4/23/2024	1:00 PM	0	0	0	0	0	0	0	0	0	0	0	0	0
4/23/2024	1:15 PM	0	0	0	0	0	0	0	0	0	0	0	0	0
4/23/2024	1:30 PM	0	0	0	0	0	0	0	0	0	0	0	0	0
4/23/2024	1:45 PM	0	0	0	0	0	0	0	0	0	0	0	0	0
4/23/2024	2:00 PM	0	0	0	0	0	0	0	0	0	0	0	0	0
4/23/2024	2:15 PM	0	0	0	0	0	0	0	0	0	0	0	0	0
4/23/2024	2:30 PM	0	0	0	0	0	0	0	0	0	0	0	0	0
4/23/2024	2:45 PM	0	0	0	0	0	0	0	0	0	0	0	0	0
4/23/2024	3:00 PM	0	0	0	0	0	0	0	0	0	0	0	0	0
4/23/2024	3:15 PM	0	0	0	0	0	0	0	0	0	0	0	0	0
4/23/2024	3:30 PM	0	0	0	0	0	0	0	0	0	0	0	0	0
4/23/2024	3:45 PM	0	0	0	0	0	0	0	0	0	0	0	0	0
4/23/2024	4:00 PM	0	0	0	0	0	0	0	0	0	0	0	0	0
4/23/2024	4:15 PM	0	0	0	0	0	0	0	0	0	0	0	0	0
4/23/2024	4:30 PM	0	0	0	0	0	0	0	0	0	0	0	0	0
4/23/2024	4:45 PM	0	0	0	0	0	0	0	0	0	0	0	0	0
4/23/2024	5:00 PM	0	0	0	0	0	0	0	0	0	0	0	0	0
4/23/2024	5:15 PM	0	0	0	0	0	0	0	0	0	0	0	0	0
4/23/2024	5:30 PM	0	0	0	0	0	0	0	0	0	0	0	0	0
4/23/2024	5:45 PM	0	0	0	0	0	0	0	0	0	0	0	0	0
4/23/2024	6:00 PM	0	0	0	0	0	0	0	0	0	0	0	0	0
4/23/2024	6:15 PM	0	0	0	0	0	0	0	0	0	0	0	0	0
4/23/2024	6:30 PM	0	0	0	0	0	0	0	0	0	0	0	0	0
4/23/2024	6:45 PM	0	0	0	0	0	0	0	0	0	0	0	0	0
4/23/2024	7:00 PM	0	0	0	0	0	0	0	0	0	0	0	0	0
4/23/2024	7:15 PM	0	0	0	0	0	0	0	0	0	0	0	0	0
4/23/2024	7:30 PM	0	0	0	0	0	0	0	0	0	0	0	0	0
4/23/2024	7:45 PM	0	0	0	0	0	0	0	0	0	0	0	0	0
4/23/2024	8:00 PM	0	0	0	0	0	0	0	0	0	0	0	0	0
4/23/2024	8:15 PM	0	0	0	0	0	0	0	0	0	0	0	0	0
4/23/2024	8:30 PM	0	0	0	0	0	0	0	0	0	0	0	0	0
4/23/2024	8:45 PM	0	0	0	0	0	0	0	0	0	0	0	0	0
4/23/2024	9:00 PM	0	0	0	0	0	0	0	0	0	0	0	0	0
4/23/2024	9:15 PM	0	0	0	0	0	0	0	0	0	0	0	0	0
4/23/2024	9:30 PM	0	0	0	0	0	0	0	0	0	0	0	0	0
4/23/2024	9:45 PM	0	0	0	0	0	0	0	0	0	0	0	0	0
4/23/2024	10:00 PM	0	0	0	0	0	0	0	0	0	0	0	0	0
4/23/2024	10:15 PM	0	0	0	0	0	0	0	0	0	0	0	0	0
4/23/2024	10:30 PM	0	0	0	0	0	0	0	0	0	0	0	0	0
4/23/2024	10:45 PM	0	0	0	0	0	0	0	0	0	0	0	0	0
4/23/2024	11:00 PM	0	0	0	0	0	0	0	0	0	0	0	0	0
4/23/2024	11:15 PM	0	0	0	0	0	0	0	0	0	0	0	0	0
4/23/2024	11:30 PM	0	0	0	0	0	0	0	0	0	0	0	0	0
4/23/2024	11:45 PM	0	0	0	0	0	0	0	0	0	0	0	0	0

4/24/2024	12:00 AM	0	0	0	0	0	0	0	0	0	0	0	0	0
4/24/2024	12:15 AM	0	0	0	0	0	0	0	0	0	0	0	0	0
4/24/2024	12:30 AM	0	0	0	0	0	0	0	0	0	0	0	0	0
4/24/2024	12:45 AM	0	0	0	0	0	0	0	0	0	0	0	0	0
4/24/2024	1:00 AM	0	0	0	0	0	0	0	0	0	0	0	0	0
4/24/2024	1:15 AM	0	0	0	0	0	0	0	0	0	0	0	0	0
4/24/2024	1:30 AM	0	0	0	0	0	0	0	0	0	0	0	0	0
4/24/2024	1:45 AM	0	0	0	0	0	0	0	0	0	0	0	0	0
4/24/2024	2:00 AM	0	0	0	0	0	0	0	0	0	0	0	0	0
4/24/2024	2:15 AM	0	0	0	0	0	0	0	0	0	0	0	0	0
4/24/2024	2:30 AM	0	0	0	0	0	0	0	0	0	0	0	0	0
4/24/2024	2:45 AM	0	0	0	0	0	0	0	0	0	0	0	0	0
4/24/2024	3:00 AM	0	0	0	0	0	0	0	0	0	0	0	0	0
4/24/2024	3:15 AM	0	0	0	0	0	0	0	0	0	0	0	0	0
4/24/2024	3:30 AM	0	0	0	0	0	0	0	0	0	0	0	0	0
4/24/2024	3:45 AM	0	0	0	0	0	0	0	0	0	0	0	0	0
4/24/2024	4:00 AM	0	0	0	0	0	0	0	0	0	0	0	0	0
4/24/2024	4:15 AM	0	0	0	0	0	0	0	0	0	0	0	0	0
4/24/2024	4:30 AM	0	0	0	0	0	0	0	0	0	0	0	0	0
4/24/2024	4:45 AM	0	0	0	0	0	0	0	0	0	0	0	0	0
4/24/2024	5:00 AM	0	0	0	0	0	0	0	0	0	0	0	0	0
4/24/2024	5:15 AM	0	0	0	0	0	0	0	0	0	0	0	0	0
4/24/2024	5:30 AM	0	0	0	0	0	0	0	0	0	0	0	0	0
4/24/2024	5:45 AM	0	0	0	0	0	0	0	0	0	0	0	0	0
4/24/2024	6:00 AM	0	0	0	0	0	0	0	0	0	0	0	0	0
4/24/2024	6:15 AM	0	0	0	0	0	0	0	0	0	0	0	0	0
4/24/2024	6:30 AM	0	0	0	0	0	0	0	0	0	0	0	0	0
4/24/2024	6:45 AM	0	0	0	0	0	0	0	0	0	0	0	0	0
4/24/2024	7:00 AM	0	0	0	0	0	0	0	0	0	0	0	0	0
4/24/2024	7:15 AM	0	0	0	0	0	0	0	0	0	0	0	0	0
4/24/2024	7:30 AM	0	0	0	0	0	0	0	0	0	0	0	0	0
4/24/2024	7:45 AM	0	0	0	0	0	0	0	0	0	0	0	0	0
4/24/2024	8:00 AM	0	0	0	0	0	0	0	0	0	0	0	0	0
4/24/2024	8:15 AM	0	0	0	0	0	0	0	0	0	0	0	0	0
4/24/2024	8:30 AM	0	0	0	0	0	0	0	0	0	0	0	0	0
4/24/2024	8:45 AM	0	0	0	0	0	0	0	0	0	0	0	0	0
4/24/2024	9:00 AM	0	0	0	0	0	0	0	0	0	0	0	0	0
4/24/2024	9:15 AM	0	0	0	0	0	0	0	0	0	0	0	0	0
4/24/2024	9:30 AM	0	0	0	0	0	0	0	0	0	0	0	0	0
4/24/2024	9:45 AM	0	0	0	0	0	0	0	0	0	0	0	0	0
4/24/2024	10:00 AM	0	0	0	0	0	0	0	0	0	0	0	0	0
4/24/2024	10:15 AM	0	0	0	0	0	0	0	0	0	0	0	0	0
4/24/2024	10:30 AM	0	0	0	0	0	0	0	0	0	0	0	0	0
4/24/2024	10:45 AM	0	0	0	0	0	0	0	0	0	0	0	0	0
4/24/2024	11:00 AM	0	0	0	0	0	0	0	0	0	0	0	0	0
4/24/2024	11:15 AM	0	0	0	0	0	0	0	0	0	0	0	0	0
4/24/2024	11:30 AM	0	0	0	0	0	0	0	0	0	0	0	0	0
4/24/2024	11:45 AM	0	0	0	0	0	0	0	0	0	0	0	0	0
4/24/2024	12:00 PM	0	0	0	0	0	0	0	0	0	0	0	0	0
4/24/2024	12:15 PM	0	0	0	0	0	0	0	0	0	0	0	0	0
4/24/2024	12:30 PM	0	0	0	0	0	0	0	0	0	0	0	0	0
4/24/2024	12:45 PM	0	0	0	0	0	0	0	0	0	0	0	0	0
4/24/2024	1:00 PM	0	0	0	0	0	0	0	0	0	0	0	0	0
4/24/2024	1:15 PM	0	0	0	0	0	0	0	0	0	0	0	0	0
4/24/2024	1:30 PM	0	0	0	0	0	0	0	0	0	0	0	0	0
4/24/2024	1:45 PM	0	0	0	0	0	0	0	0	0	0	0	0	0
4/24/2024	2:00 PM	0	0	0	0	0	0	0	0	0	0	0	0	0
4/24/2024	2:15 PM	0	0	0	0	0	0	0	0	0	0	0	0	0
4/24/2024	2:30 PM	0	0	0	0	0	0	0	0	0	0	0	0	0
4/24/2024	2:45 PM	0	0	0	0	0	0	0	0	0	0	0	0	0
4/24/2024	3:00 PM	0	0	0	0	0	0	0	0	0	0	0	0	0
4/24/2024	3:15 PM	0	0	0	0	0	0	0	0	0	0	0	0	0
4/24/2024	3:30 PM	0	0	0	0	0	0	0	0	0	0	0	0	0
4/24/2024	3:45 PM	0	0	0	0	0	0	0	0	0	0	0	0	0
4/24/2024	4:00 PM	0	0	0	0	0	0	0	0	0	0	0	0	0
4/24/2024	4:15 PM	0	0	0	0	0	0	0	0	0	0	0	0	0
4/24/2024	4:30 PM	0	0	0	0	0	0	0	0	0	0	0	0	0
4/24/2024	4:45 PM	0	0	0	0	0	0	0	0	0	0	0	0	0
4/24/2024	5:00 PM	0	0	0	0	0	0	0	0	0	0	0	0	0
4/24/2024	5:15 PM	0	0	0	0	0	0	0	0	0	0	0	0	0
4/24/2024	5:30 PM	0	0	0	0	0	0	0	0	0	0	0	0	0
4/24/2024	5:45 PM	0	0	0	0	0	0	0	0	0	0	0	0	0
4/24/2024	6:00 PM	0	0	0	0	0	0	0	0	0	0	0	0	0
4/24/2024	6:15 PM	0	0	0	0	0	0	0	0	0	0	0	0	0
4/24/2024	6:30 PM	0	0	0	0	0	0	0	0	0	0	0	0	0
4/24/2024	6:45 PM	0	0	0	0	0	0	0	0	0	0	0	0	0
4/24/2024	7:00 PM	0	0	0	0	0	0	0	0	0	0	0	0	0
4/24/2024	7:15 PM	0	0	0	0	0	0	0	0	0	0	0	0	0
4/24/2024	7:30 PM	0	0	0	0	0	0	0	0	0	0	0	0	0
4/24/2024	7:45 PM	0	0	0	0	0	0	0	0	0	0	0	0	0
4/24/2024	8:00 PM	0	0	0	0	0	0	0	0	0	0	0	0	0
4/24/2024	8:15 PM	0	0	0	0	0	0	0	0	0	0	0	0	0
4/24/2024	8:30 PM	0	0	0	0	0	0	0	0	0	0	0	0	0
4/24/2024	8:45 PM	0	0	0	0	0	0	0	0	0	0	0	0	0
4/24/2024	9:00 PM	0	0	0	0	0	0	0	0	0	0	0	0	0
4/24/2024	9:15 PM	0	0	0	0	0	0	0	0	0	0	0	0	0
4/24/2024	9:30 PM	0	0	0	0	0	0	0	0	0	0	0	0	0
4/24/2024	9:45 PM	0	0	0	0	0	0	0	0	0	0	0	0	0
4/24/2024	10:00 PM	0	0	0	0	0	0	0	0	0	0	0	0	0
4/24/2024	10:15 PM	0	0	0	0	0	0	0	0	0	0	0	0	0
4/24/2024	10:30 PM	0	0	0	0	0	0	0	0	0	0	0	0	0
4/24/2024	10:45 PM	0	0	0	0	0	0	0	0	0	0	0	0	0
4/24/2024	11:00 PM	0	0	0	0	0	0	0	0	0	0	0	0	0
4/24/2024	11:15 PM	0	0	0	0	0	0	0	0	0	0	0	0	0
4/24/2024	11:30 PM	0	0	0	0	0	0	0	0	0	0	0	0	0
4/24/2024	11:45 PM	0	0	0	0	0	0	0	0	0	0	0	0	0

4/25/2024	12:00 AM	0	0	0	0	0	0	0	0	0	0	0	0	0
4/25/2024	12:15 AM	0	0	0	0	0	0	0	0	0	0	0	0	0
4/25/2024	12:30 AM	0	0	0	0	0	0	0	0	0	0	0	0	0
4/25/2024	12:45 AM	0	0	0	0	0	0	0	0	0	0	0	0	0
4/25/2024	1:00 AM	0	0	0	0	0	0	0	0	0	0	0	0	0
4/25/2024	1:15 AM	0	0	0	0	0	0	0	0	0	0	0	0	0
4/25/2024	1:30 AM	0	0	0	0	0	0	0	0	0	0	0	0	0
4/25/2024	1:45 AM	0	0	0	0	0	0	0	0	0	0	0	0	0
4/25/2024	2:00 AM	0	0	0	0	0	0	0	0	0	0	0	0	0
4/25/2024	2:15 AM	0	0	0	0	0	0	0	0	0	0	0	0	0
4/25/2024	2:30 AM	0	0	0	0	0	0	0	0	0	0	0	0	0
4/25/2024	2:45 AM	0	0	0	0	0	0	0	0	0	0	0	0	0
4/25/2024	3:00 AM	0	0	0	0	0	0	0	0	0	0	0	0	0
4/25/2024	3:15 AM	0	0	0	0	0	0	0	0	0	0	0	0	0
4/25/2024	3:30 AM	0	0	0	0	0	0	0	0	0	0	0	0	0
4/25/2024	3:45 AM	0	0	0	0	0	0	0	0	0	0	0	0	0
4/25/2024	4:00 AM	0	0	0	0	0	0	0	0	0	0	0	0	0
4/25/2024	4:15 AM	0	0	0	0	0	0	0	0	0	0	0	0	0
4/25/2024	4:30 AM	0	0	0	0	0	0	0	0	0	0	0	0	0
4/25/2024	4:45 AM	0	0	0	0	0	0	0	0	0	0	0	0	0
4/25/2024	5:00 AM	0	0	0	0	0	0	0	0	0	0	0	0	0
4/25/2024	5:15 AM	0	0	0	0	0	0	0	0	0	0	0	0	0
4/25/2024	5:30 AM	0	0	0	0	0	0	0	0	0	0	0	0	0
4/25/2024	5:45 AM	0	0	0	0	0	0	0	0	0	0	0	0	0
4/25/2024	6:00 AM	0	0	0	0	0	0	0	0	0	0	0	0	0
4/25/2024	6:15 AM	0	0	0	0	0	0	0	0	0	0	0	0	0
4/25/2024	6:30 AM	0	0	0	0	0	0	0	0	0	0	0	0	0
4/25/2024	6:45 AM	0	0	0	0	0	0	0	0	0	0	0	0	0
4/25/2024	7:00 AM	0	0	0	0	0	0	0	0	0	0	0	0	0
4/25/2024	7:15 AM	0	0	0	0	0	0	0	0	0	0	0	0	0
4/25/2024	7:30 AM	0	0	0	0	0	0	0	0	0	0	0	0	0
4/25/2024	7:45 AM	0	0	0	0	0	0	0	0	0	0	0	0	0
4/25/2024	8:00 AM	0	0	0	0	0	0	0	0	0	0	0	0	0
4/25/2024	8:15 AM	0	0	0	0	0	0	0	0	0	0	0	0	0
4/25/2024	8:30 AM	0	0	0	0	0	0	0	0	0	0	0	0	0
4/25/2024	8:45 AM	0	0	0	0	0	0	0	0	0	0	0	0	0
4/25/2024	9:00 AM	0	0	0	0	0	0	0	0	0	0	0	0	0
4/25/2024	9:15 AM	0	0	0	0	0	0	0	0	0	0	0	0	0
4/25/2024	9:30 AM	0	0	0	0	0	0	0	0	0	0	0	0	0
4/25/2024	9:45 AM	0	0	0	0	0	0	0	0	0	0	0	0	0
4/25/2024	10:00 AM	0	0	0	0	0	0	0	0	0	0	0	0	0
4/25/2024	10:15 AM	0	0	0	0	0	0	0	0	0	0	0	0	0
4/25/2024	10:30 AM	0	0	0	0	0	0	0	0	0	0	0	0	0
4/25/2024	10:45 AM	0	0	0	0	0	0	0	0	0	0	0	0	0
4/25/2024	11:00 AM	0	0	0	0	0	0	0	0	0	0	0	0	0
4/25/2024	11:15 AM	0	0	0	0	0	0	0	0	0	0	0	0	0
4/25/2024	11:30 AM	0	0	0	0	0	0	0	0	0	0	0	0	0
4/25/2024	11:45 AM	0	0	0	0	0	0	0	0	0	0	0	0	0
4/25/2024	12:00 PM	0	0	0	0	0	0	0	0	0	0	0	0	0
4/25/2024	12:15 PM	0	0	0	0	0	0	0	0	0	0	0	0	0
4/25/2024	12:30 PM	0	0	0	0	0	0	0	0	0	0	0	0	0
4/25/2024	12:45 PM	0	0	0	0	0	0	0	0	0	0	0	0	0
4/25/2024	1:00 PM	0	0	0	0	0	0	0	0	0	0	0	0	0
4/25/2024	1:15 PM	0	0	0	0	0	0	0	0	0	0	0	0	0
4/25/2024	1:30 PM	0	0	0	0	0	0	0	0	0	0	0	0	0
4/25/2024	1:45 PM	0	0	0	0	0	0	0	0	0	0	0	0	0
4/25/2024	2:00 PM	0	0	0	0	0	0	0	0	0	0	0	0	0
4/25/2024	2:15 PM	0	0	0	0	0	0	0	0	0	0	0	0	0
4/25/2024	2:30 PM	0	0	0	0	0	0	0	0	0	0	0	0	0
4/25/2024	2:45 PM	0	0	0	0	0	0	0	0	0	0	0	0	0
4/25/2024	3:00 PM	0	0	0	0	0	0	0	0	0	0	0	0	0
4/25/2024	3:15 PM	0	0	0	0	0	0	0	0	0	0	0	0	0
4/25/2024	3:30 PM	0	0	0	0	0	0	0	0	0	0	0	0	0
4/25/2024	3:45 PM	0	0	0	0	0	0	0	0	0	0	0	0	0
4/25/2024	4:00 PM	0	0	0	0	0	0	0	0	0	0	0	0	0
4/25/2024	4:15 PM	0	0	0	0	0	0	0	0	0	0	0	0	0
4/25/2024	4:30 PM	0	0	0	0	0	0	0	0	0	0	0	0	0
4/25/2024	4:45 PM	0	0	0	0	0	0	0	0	0	0	0	0	0
4/25/2024	5:00 PM	0	0	0	0	0	0	0	0	0	0	0	0	0
4/25/2024	5:15 PM	0	0	0	0	0	0	0	0	0	0	0	0	0
4/25/2024	5:30 PM	0	0	0	0	0	0	0	0	0	0	0	0	0
4/25/2024	5:45 PM	0	0	0	0	0	0	0	0	0	0	0	0	0
4/25/2024	6:00 PM	0	0	0	0	0	0	0	0	0	0	0	0	0
4/25/2024	6:15 PM	0	0	0	0	0	0	0	0	0	0	0	0	0
4/25/2024	6:30 PM	0	0	0	0	0	0	0	0	0	0	0	0	0
4/25/2024	6:45 PM	0	0	0	0	0	0	0	0	0	0	0	0	0
4/25/2024	7:00 PM	0	0	0	0	0	0	0	0	0	0	0	0	0
4/25/2024	7:15 PM	0	0	0	0	0	0	0	0	0	0	0	0	0
4/25/2024	7:30 PM	0	0	0	0	0	0	0	0	0	0	0	0	0
4/25/2024	7:45 PM	0	0	0	0	0	0	0	0	0	0	0	0	0
4/25/2024	8:00 PM	0	0	0	0	0	0	0	0	0	0	0	0	0
4/25/2024	8:15 PM	0	0	0	0	0	0	0	0	0	0	0	0	0
4/25/2024	8:30 PM	0	0	0	0	0	0	0	0	0	0	0	0	0
4/25/2024	8:45 PM	0	0	0	0	0	0	0	0	0	0	0	0	0
4/25/2024	9:00 PM	0	0	0	0	0	0	0	0	0	0	0	0	0
4/25/2024	9:15 PM	0	0	0	0	0	0	0	0	0	0	0	0	0
4/25/2024	9:30 PM	0	0	0	0	0	0	0	0	0	0	0	0	0
4/25/2024	9:45 PM	0	0	0	0	0	0	0	0	0	0	0	0	0
4/25/2024	10:00 PM	0	0	0	0	0	0	0	0	0	0	0	0	0
4/25/2024	10:15 PM	0	0	0	0	0	0	0	0	0	0	0	0	0
4/25/2024	10:30 PM	0	0	0	0	0	0	0	0	0	0	0	0	0
4/25/2024	10:45 PM	0	0	0	0	0	0	0	0	0	0	0	0	0
4/25/2024	11:00 PM	0	0	0	0	0	0	0	0	0	0	0	0	0
4/25/2024	11:15 PM	0	0	0	0	0	0	0	0	0	0	0	0	0
4/25/2024	11:30 PM	0	0	0	0	0	0	0	0	0	0	0	0	0
4/25/2024	11:45 PM	0	0	0	0	0	0	0	0	0	0	0	0	0

SB
File Name:
Start Date: 4/23/2024
Start Time: 0
Site Code: 37
Station ID: 1
Location 1: I-26 On/Off-Ramp, north of St Andrews Rd
Location 2:

Date	Time	1	2	3	4	5	6	7	8	9	10	11	12	13
4/23/2024	12:00 AM	0	0	0	0	0	0	0	0	0	0	0	0	0
4/23/2024	12:15 AM	0	0	0	0	0	0	0	0	0	0	0	0	0
4/23/2024	12:30 AM	0	0	0	0	0	0	0	0	0	0	0	0	0
4/23/2024	12:45 AM	0	0	0	0	0	0	0	0	0	0	0	0	0
4/23/2024	1:00 AM	0	0	0	0	0	0	0	0	0	0	0	0	0
4/23/2024	1:15 AM	0	0	0	0	0	0	0	0	0	0	0	0	0
4/23/2024	1:30 AM	0	0	0	0	0	0	0	0	0	0	0	0	0
4/23/2024	1:45 AM	0	0	0	0	0	0	0	0	0	0	0	0	0
4/23/2024	2:00 AM	0	0	0	0	0	0	0	0	0	0	0	0	0
4/23/2024	2:15 AM	0	0	0	0	0	0	0	0	0	0	0	0	0
4/23/2024	2:30 AM	0	0	0	0	0	0	0	0	0	0	0	0	0
4/23/2024	2:45 AM	0	0	0	0	0	0	0	0	0	0	0	0	0
4/23/2024	3:00 AM	0	0	0	0	0	0	0	0	0	0	0	0	0
4/23/2024	3:15 AM	0	0	0	0	0	0	0	0	0	0	0	0	0
4/23/2024	3:30 AM	0	0	0	0	0	0	0	0	0	0	0	0	0
4/23/2024	3:45 AM	0	0	0	0	0	0	0	0	0	0	0	0	0
4/23/2024	4:00 AM	0	0	0	0	0	0	0	0	0	0	0	0	0
4/23/2024	4:15 AM	0	0	0	0	0	0	0	0	0	0	0	0	0
4/23/2024	4:30 AM	0	0	0	0	0	0	0	0	0	0	0	0	0
4/23/2024	4:45 AM	0	0	0	0	0	0	0	0	0	0	0	0	0
4/23/2024	5:00 AM	0	0	0	0	0	0	0	0	0	0	0	0	0
4/23/2024	5:15 AM	0	0	0	0	0	0	0	0	0	0	0	0	0
4/23/2024	5:30 AM	0	0	0	0	0	0	0	0	0	0	0	0	0
4/23/2024	5:45 AM	0	0	0	0	0	0	0	0	0	0	0	0	0
4/23/2024	6:00 AM	0	0	0	0	0	0	0	0	0	0	0	0	0
4/23/2024	6:15 AM	0	0	0	0	0	0	0	0	0	0	0	0	0
4/23/2024	6:30 AM	0	0	0	0	0	0	0	0	0	0	0	0	0
4/23/2024	6:45 AM	0	0	0	0	0	0	0	0	0	0	0	0	0
4/23/2024	7:00 AM	0	0	0	0	0	0	0	0	0	0	0	0	0
4/23/2024	7:15 AM	0	0	0	0	0	0	0	0	0	0	0	0	0
4/23/2024	7:30 AM	0	0	0	0	0	0	0	0	0	0	0	0	0
4/23/2024	7:45 AM	0	0	0	0	0	0	0	0	0	0	0	0	0
4/23/2024	8:00 AM	0	0	0	0	0	0	0	0	0	0	0	0	0
4/23/2024	8:15 AM	0	0	0	0	0	0	0	0	0	0	0	0	0
4/23/2024	8:30 AM	0	0	0	0	0	0	0	0	0	0	0	0	0
4/23/2024	8:45 AM	0	0	0	0	0	0	0	0	0	0	0	0	0
4/23/2024	9:00 AM	0	0	0	0	0	0	0	0	0	0	0	0	0
4/23/2024	9:15 AM	0	0	0	0	0	0	0	0	0	0	0	0	0
4/23/2024	9:30 AM	0	0	0	0	0	0	0	0	0	0	0	0	0
4/23/2024	9:45 AM	0	0	0	0	0	0	0	0	0	0	0	0	0
4/23/2024	10:00 AM	0	0	0	0	0	0	0	0	0	0	0	0	0
4/23/2024	10:15 AM	0	0	0	0	0	0	0	0	0	0	0	0	0
4/23/2024	10:30 AM	0	0	0	0	0	0	0	0	0	0	0	0	0
4/23/2024	10:45 AM	0	0	0	0	0	0	0	0	0	0	0	0	0
4/23/2024	11:00 AM	0	0	0	0	0	0	0	0	0	0	0	0	0
4/23/2024	11:15 AM	0	0	0	0	0	0	0	0	0	0	0	0	0
4/23/2024	11:30 AM	0	0	0	0	0	0	0	0	0	0	0	0	0
4/23/2024	11:45 AM	0	0	0	0	0	0	0	0	0	0	0	0	0
4/23/2024	12:00 PM	0	0	0	0	0	0	0	0	0	0	0	0	0
4/23/2024	12:15 PM	0	0	0	0	0	0	0	0	0	0	0	0	0
4/23/2024	12:30 PM	0	0	0	0	0	0	0	0	0	0	0	0	0
4/23/2024	12:45 PM	0	0	0	0	0	0	0	0	0	0	0	0	0
4/23/2024	1:00 PM	0	0	0	0	0	0	0	0	0	0	0	0	0
4/23/2024	1:15 PM	0	0	0	0	0	0	0	0	0	0	0	0	0
4/23/2024	1:30 PM	0	0	0	0	0	0	0	0	0	0	0	0	0
4/23/2024	1:45 PM	0	0	0	0	0	0	0	0	0	0	0	0	0
4/23/2024	2:00 PM	0	0	0	0	0	0	0	0	0	0	0	0	0
4/23/2024	2:15 PM	0	0	0	0	0	0	0	0	0	0	0	0	0
4/23/2024	2:30 PM	0	0	0	0	0	0	0	0	0	0	0	0	0
4/23/2024	2:45 PM	0	0	0	0	0	0	0	0	0	0	0	0	0
4/23/2024	3:00 PM	0	0	0	0	0	0	0	0	0	0	0	0	0
4/23/2024	3:15 PM	0	0	0	0	0	0	0	0	0	0	0	0	0
4/23/2024	3:30 PM	0	0	0	0	0	0	0	0	0	0	0	0	0
4/23/2024	3:45 PM	0	0	0	0	0	0	0	0	0	0	0	0	0
4/23/2024	4:00 PM	0	0	0	0	0	0	0	0	0	0	0	0	0
4/23/2024	4:15 PM	0	0	0	0	0	0	0	0	0	0	0	0	0
4/23/2024	4:30 PM	0	0	0	0	0	0	0	0	0	0	0	0	0
4/23/2024	4:45 PM	0	0	0	0	0	0	0	0	0	0	0	0	0
4/23/2024	5:00 PM	0	0	0	0	0	0	0	0	0	0	0	0	0
4/23/2024	5:15 PM	0	0	0	0	0	0	0	0	0	0	0	0	0
4/23/2024	5:30 PM	0	0	0	0	0	0	0	0	0	0	0	0	0
4/23/2024	5:45 PM	0	0	0	0	0	0	0	0	0	0	0	0	0
4/23/2024	6:00 PM	0	0	0	0	0	0	0	0	0	0	0	0	0
4/23/2024	6:15 PM	0	0	0	0	0	0	0	0	0	0	0	0	0
4/23/2024	6:30 PM	0	0	0	0	0	0	0	0	0	0	0	0	0
4/23/2024	6:45 PM	0	0	0	0	0	0	0	0	0	0	0	0	0
4/23/2024	7:00 PM	0	110	11	0	0	1	0	1	1	0	0	0	0
4/23/2024	7:15 PM	0	85	13	0	1	0	0	0	0	0	0	0	0
4/23/2024	7:30 PM	1	92	13	0	0	0	0	0	0	0	0	0	0
4/23/2024	7:45 PM	0	78	8	0	3	0	0	0	0	0	0	0	0
4/23/2024	8:00 PM	0	73	7	0	0	0	0	0	0	0	0	0	0
4/23/2024	8:15 PM	0	62	6	0	0	0	0	0	0	0	0	0	0
4/23/2024	8:30 PM	0	46	6	0	0	0	0	0	0	0	0	0	0
4/23/2024	8:45 PM	0	46	5	0	2	0	0	0	0	0	0	0	0
4/23/2024	9:00 PM	0	40	6	0	1	0	0	0	0	0	0	0	0
4/23/2024	9:15 PM	0	42	7	0	1	0	0	0	1	0	0	0	0
4/23/2024	9:30 PM	0	40	7	1	0	0	0	0	0	0	0	0	0
4/23/2024	9:45 PM	0	37	3	0	0	0	0	0	0	0	0	0	0
4/23/2024	10:00 PM	0	32	2	0	1	0	0	0	0	0	0	0	0
4/23/2024	10:15 PM	0	31	5	0	0	0	0	0	1	0	0	0	0
4/23/2024	10:30 PM	0	18	3	0	1	0	0	0	1	0	0	0	0
4/23/2024	10:45 PM	0	20	4	0	0	0	0	0	0	0	0	0	0
4/23/2024	11:00 PM	0	26	5	0	0	0	0	0	0	0	0	0	0
4/23/2024	11:15 PM	0	15	0	0	0	0	0	0	1	0	0	0	0
4/23/2024	11:30 PM	0	14	2	0	0	0	0	0	1	0	0	0	0
4/23/2024	11:45 PM	0	13	1	0	0	0	0	0	0	0	0	0	0

4/24/2024	12:00 AM	0	11	1	0	0	0	0	0	0	0	0	0
4/24/2024	12:15 AM	0	11	0	0	0	0	0	0	0	0	0	0
4/24/2024	12:30 AM	0	12	1	0	0	0	0	0	0	0	0	0
4/24/2024	12:45 AM	0	10	2	0	0	0	0	0	0	0	0	0
4/24/2024	1:00 AM	0	7	1	0	0	0	0	0	0	0	0	0
4/24/2024	1:15 AM	0	8	2	0	0	0	0	0	1	0	0	0
4/24/2024	1:30 AM	0	3	0	0	0	0	0	0	0	0	0	0
4/24/2024	1:45 AM	0	8	2	0	0	0	0	0	1	0	0	0
4/24/2024	2:00 AM	0	3	2	0	0	0	0	0	0	0	0	0
4/24/2024	2:15 AM	0	7	2	0	1	0	0	0	1	0	0	0
4/24/2024	2:30 AM	0	6	1	0	0	0	0	1	0	0	0	0
4/24/2024	2:45 AM	0	7	2	0	0	0	0	0	3	0	0	0
4/24/2024	3:00 AM	0	8	1	0	0	0	0	0	0	0	0	0
4/24/2024	3:15 AM	0	4	1	0	0	0	0	0	0	0	0	0
4/24/2024	3:30 AM	0	6	1	0	0	0	0	0	0	0	0	0
4/24/2024	3:45 AM	0	1	0	0	0	0	0	0	0	0	0	0
4/24/2024	4:00 AM	0	9	2	0	0	0	0	0	1	0	0	0
4/24/2024	4:15 AM	0	5	0	0	0	0	0	0	1	0	0	0
4/24/2024	4:30 AM	0	11	4	0	0	0	0	0	1	0	0	0
4/24/2024	4:45 AM	0	8	2	0	1	0	0	0	0	0	0	0
4/24/2024	5:00 AM	0	7	2	0	0	0	0	0	1	0	0	0
4/24/2024	5:15 AM	0	16	3	0	0	0	0	0	1	0	0	0
4/24/2024	5:30 AM	0	25	7	0	1	0	0	0	2	0	0	0
4/24/2024	5:45 AM	0	18	5	0	0	0	0	0	0	0	0	0
4/24/2024	6:00 AM	0	15	5	0	2	0	0	0	1	0	0	0
4/24/2024	6:15 AM	0	30	15	0	0	0	0	0	1	0	0	0
4/24/2024	6:30 AM	0	41	27	0	0	0	0	1	0	0	0	0
4/24/2024	6:45 AM	0	57	16	0	1	0	0	1	0	0	0	0
4/24/2024	7:00 AM	0	55	22	0	2	0	0	0	0	0	0	0
4/24/2024	7:15 AM	0	90	18	1	3	0	0	1	1	0	0	0
4/24/2024	7:30 AM	0	90	26	0	3	0	0	3	1	0	0	0
4/24/2024	7:45 AM	0	99	34	0	1	0	0	1	0	0	0	0
4/24/2024	8:00 AM	0	95	23	1	1	0	0	2	2	0	0	0
4/24/2024	8:15 AM	0	101	25	0	0	0	0	0	2	0	0	0
4/24/2024	8:30 AM	0	105	25	0	2	0	0	0	0	0	0	0
4/24/2024	8:45 AM	0	114	24	0	0	0	0	0	1	0	0	0
4/24/2024	9:00 AM	0	72	34	0	2	1	0	1	1	0	0	0
4/24/2024	9:15 AM	0	71	23	0	3	0	0	1	0	0	0	0
4/24/2024	9:30 AM	0	82	26	0	1	0	0	1	0	0	0	0
4/24/2024	9:45 AM	0	97	25	1	3	0	0	0	1	0	0	0
4/24/2024	10:00 AM	1	80	31	0	2	1	0	0	3	0	0	0
4/24/2024	10:15 AM	0	96	26	0	2	0	0	0	1	0	0	0
4/24/2024	10:30 AM	0	77	34	0	2	0	0	0	0	0	0	0
4/24/2024	10:45 AM	0	94	27	0	4	1	0	0	0	0	0	0
4/24/2024	11:00 AM	0	72	26	0	5	0	0	0	0	0	0	0
4/24/2024	11:15 AM	0	87	19	0	1	2	0	0	0	0	0	0
4/24/2024	11:30 AM	0	81	35	0	1	0	0	1	0	0	0	0
4/24/2024	11:45 AM	0	99	22	2	1	1	0	2	0	0	0	0
4/24/2024	12:00 PM	0	93	26	0	1	0	0	0	0	0	0	0
4/24/2024	12:15 PM	0	90	28	1	2	0	0	0	4	0	0	0
4/24/2024	12:30 PM	0	88	34	0	3	0	0	0	0	0	0	0
4/24/2024	12:45 PM	0	99	30	0	2	0	0	0	2	0	0	0
4/24/2024	1:00 PM	0	74	36	1	2	1	0	1	1	0	0	0
4/24/2024	1:15 PM	0	94	28	0	3	0	0	2	2	0	0	0
4/24/2024	1:30 PM	0	75	18	0	2	1	0	1	1	0	0	0
4/24/2024	1:45 PM	1	82	23	0	2	0	0	0	3	0	0	0
4/24/2024	2:00 PM	1	98	19	0	3	0	0	0	0	0	0	0
4/24/2024	2:15 PM	0	106	23	0	1	0	0	1	2	0	0	0
4/24/2024	2:30 PM	0	105	25	1	1	0	0	0	1	0	0	0
4/24/2024	2:45 PM	0	114	28	0	0	0	0	2	2	0	0	0
4/24/2024	3:00 PM	2	103	26	0	1	0	0	0	1	0	0	0
4/24/2024	3:15 PM	1	125	30	0	1	0	0	1	2	0	0	0
4/24/2024	3:30 PM	0	112	28	1	0	0	0	1	1	0	0	0
4/24/2024	3:45 PM	0	131	38	0	2	1	0	1	1	0	0	0
4/24/2024	4:00 PM	0	116	32	0	1	1	0	0	1	0	0	0
4/24/2024	4:15 PM	0	149	34	0	2	1	0	1	3	0	0	0
4/24/2024	4:30 PM	2	136	38	0	2	0	0	0	0	0	0	0
4/24/2024	4:45 PM	0	130	27	0	3	0	0	0	1	0	0	0
4/24/2024	5:00 PM	1	118	27	0	2	0	0	0	0	0	0	0
4/24/2024	5:15 PM	0	116	34	0	2	0	0	1	0	0	0	0
4/24/2024	5:30 PM	0	134	33	0	4	0	0	0	0	0	0	0
4/24/2024	5:45 PM	1	141	37	0	2	0	0	0	0	0	0	0
4/24/2024	6:00 PM	0	125	32	0	2	0	0	0	0	0	0	0
4/24/2024	6:15 PM	1	98	32	0	2	0	0	0	1	0	0	0
4/24/2024	6:30 PM	1	79	18	0	1	0	0	0	1	0	0	0
4/24/2024	6:45 PM	0	88	24	0	3	0	0	0	0	0	0	0
4/24/2024	7:00 PM	2	90	15	0	1	0	0	0	1	0	0	0
4/24/2024	7:15 PM	0	91	14	0	1	1	0	1	0	0	0	0
4/24/2024	7:30 PM	0	72	13	0	0	0	0	0	1	0	0	0
4/24/2024	7:45 PM	0	60	10	0	2	0	0	0	0	0	0	0
4/24/2024	8:00 PM	0	75	12	0	0	0	0	0	1	0	0	0
4/24/2024	8:15 PM	0	67	9	0	1	0	0	0	0	0	0	0
4/24/2024	8:30 PM	0	58	8	0	0	0	0	0	0	0	0	0
4/24/2024	8:45 PM	0	59	5	0	0	0	0	0	0	0	0	0
4/24/2024	9:00 PM	0	49	7	0	0	0	0	0	0	0	0	0
4/24/2024	9:15 PM	0	39	4	0	0	0	0	0	0	0	0	0
4/24/2024	9:30 PM	0	38	6	0	0	0	0	0	1	0	0	0
4/24/2024	9:45 PM	0	42	7	0	0	0	0	0	0	0	0	0
4/24/2024	10:00 PM	0	36	5	0	0	0	0	0	0	0	0	0
4/24/2024	10:15 PM	0	37	4	0	0	0	0	0	0	0	0	0
4/24/2024	10:30 PM	0	28	3	0	0	0	0	0	1	0	0	0
4/24/2024	10:45 PM	0	21	4	0	0	0	0	0	0	0	0	0
4/24/2024	11:00 PM	0	22	3	0	0	0	0	0	1	0	0	0
4/24/2024	11:15 PM	0	17	2	0	1	0	0	0	1	0	0	0
4/24/2024	11:30 PM	0	15	2	0	0	0	0	0	0	0	0	0
4/24/2024	11:45 PM	0	21	4	0	1	0	0	0	0	0	0	0

4/25/2024	12:00 AM	0	17	3	0	0	0	0	0	0	0	0	0
4/25/2024	12:15 AM	0	14	2	0	0	0	0	0	0	0	0	0
4/25/2024	12:30 AM	0	24	2	0	0	0	0	0	1	0	0	0
4/25/2024	12:45 AM	0	12	1	0	0	0	0	0	0	0	0	0
4/25/2024	1:00 AM	0	12	2	0	0	0	0	0	0	0	0	0
4/25/2024	1:15 AM	0	9	0	0	0	0	0	0	0	0	0	0
4/25/2024	1:30 AM	0	8	1	0	0	0	0	0	0	0	0	0
4/25/2024	1:45 AM	0	9	0	0	0	0	0	0	0	0	0	0
4/25/2024	2:00 AM	0	6	0	0	0	0	0	0	1	0	0	0
4/25/2024	2:15 AM	0	11	2	0	0	0	0	0	0	0	0	0
4/25/2024	2:30 AM	0	9	1	0	0	0	0	0	0	0	0	0
4/25/2024	2:45 AM	0	5	0	0	0	0	0	0	0	0	0	0
4/25/2024	3:00 AM	0	9	0	0	0	0	0	0	1	0	0	0
4/25/2024	3:15 AM	0	8	2	0	1	0	0	0	0	0	0	0
4/25/2024	3:30 AM	0	9	0	0	1	0	0	0	1	0	0	0
4/25/2024	3:45 AM	0	6	1	0	0	0	0	0	0	0	0	0
4/25/2024	4:00 AM	0	6	0	0	0	0	0	0	0	0	0	0
4/25/2024	4:15 AM	0	5	0	0	1	0	0	0	0	0	0	0
4/25/2024	4:30 AM	0	8	0	0	0	0	0	0	0	0	0	0
4/25/2024	4:45 AM	0	7	0	0	1	0	0	0	0	0	0	0
4/25/2024	5:00 AM	0	11	3	0	1	0	0	0	1	0	0	0
4/25/2024	5:15 AM	0	14	4	0	1	0	0	0	0	0	0	0
4/25/2024	5:30 AM	0	20	6	0	0	0	0	0	0	0	0	0
4/25/2024	5:45 AM	0	24	7	0	0	0	0	0	0	0	0	0
4/25/2024	6:00 AM	0	25	5	0	1	0	0	0	0	0	0	0
4/25/2024	6:15 AM	0	35	9	0	1	0	0	0	0	0	0	0
4/25/2024	6:30 AM	0	60	12	0	1	0	0	0	0	0	0	0
4/25/2024	6:45 AM	0	73	13	0	0	1	0	0	0	0	0	0
4/25/2024	7:00 AM	0	57	11	0	0	1	0	0	2	0	0	0
4/25/2024	7:15 AM	0	87	18	1	1	0	0	0	2	0	0	0
4/25/2024	7:30 AM	0	113	26	0	1	1	0	0	1	0	0	0
4/25/2024	7:45 AM	0	107	22	0	2	0	0	0	0	0	0	0
4/25/2024	8:00 AM	0	108	22	0	2	0	0	0	1	0	0	0
4/25/2024	8:15 AM	1	96	20	1	3	0	0	1	0	0	0	0
4/25/2024	8:30 AM	0	106	25	0	3	1	0	0	1	0	0	0
4/25/2024	8:45 AM	0	107	29	0	4	0	0	0	1	0	0	0
4/25/2024	9:00 AM	0	87	20	0	2	1	0	0	3	0	0	0
4/25/2024	9:15 AM	0	77	19	1	4	0	0	0	1	0	0	0
4/25/2024	9:30 AM	0	89	21	0	1	0	0	0	0	0	0	0
4/25/2024	9:45 AM	0	99	25	0	2	0	0	0	0	0	0	0
4/25/2024	10:00 AM	0	80	17	0	1	0	0	1	1	0	0	0
4/25/2024	10:15 AM	0	92	20	0	1	0	0	0	0	0	0	0
4/25/2024	10:30 AM	0	95	25	0	3	0	0	0	2	0	0	0
4/25/2024	10:45 AM	0	79	20	0	1	0	0	0	1	0	0	0
4/25/2024	11:00 AM	0	96	24	0	2	1	0	0	1	0	0	0
4/25/2024	11:15 AM	0	89	19	0	2	0	1	1	1	0	0	0
4/25/2024	11:30 AM	0	94	21	0	0	0	0	0	0	0	0	0
4/25/2024	11:45 AM	0	86	20	0	2	0	0	1	0	0	0	0
4/25/2024	12:00 PM	1	90	21	0	0	0	0	0	1	0	0	0
4/25/2024	12:15 PM	0	95	24	0	3	2	0	0	0	0	0	0
4/25/2024	12:30 PM	0	109	28	0	4	0	0	0	1	0	0	0
4/25/2024	12:45 PM	0	94	23	0	1	0	0	1	1	0	0	0
4/25/2024	1:00 PM	0	108	26	0	1	0	0	0	2	0	0	0
4/25/2024	1:15 PM	1	105	24	0	3	0	0	0	1	0	0	0
4/25/2024	1:30 PM	0	80	19	0	2	0	0	0	3	0	0	0
4/25/2024	1:45 PM	0	91	23	0	4	0	0	0	1	0	0	0
4/25/2024	2:00 PM	0	102	26	0	2	0	0	0	1	0	0	0
4/25/2024	2:15 PM	0	101	23	1	0	0	0	0	0	0	0	0
4/25/2024	2:30 PM	1	103	22	0	1	0	0	0	1	0	0	0
4/25/2024	2:45 PM	2	119	27	0	3	0	0	1	0	0	0	0
4/25/2024	3:00 PM	0	109	26	0	4	1	0	0	3	0	0	0
4/25/2024	3:15 PM	0	125	30	0	2	0	0	1	1	0	0	0
4/25/2024	3:30 PM	0	150	34	1	1	0	0	0	0	0	0	0
4/25/2024	3:45 PM	0	122	24	0	0	0	0	0	0	0	0	0
4/25/2024	4:00 PM	0	116	23	0	1	0	0	0	0	0	0	0
4/25/2024	4:15 PM	1	145	31	0	2	0	0	0	2	0	0	0
4/25/2024	4:30 PM	0	123	24	0	1	0	0	0	1	0	0	0
4/25/2024	4:45 PM	0	143	30	0	2	0	0	0	0	0	0	0
4/25/2024	5:00 PM	0	132	27	0	2	0	0	0	1	0	0	0
4/25/2024	5:15 PM	0	136	28	0	1	0	0	0	0	0	0	0
4/25/2024	5:30 PM	0	128	27	0	0	0	0	0	3	0	0	0
4/25/2024	5:45 PM	1	130	29	0	1	0	0	0	0	0	0	0
4/25/2024	6:00 PM	0	130	30	0	1	0	0	1	0	0	0	0
4/25/2024	6:15 PM	0	149	32	0	2	0	0	0	1	0	0	0
4/25/2024	6:30 PM	2	109	27	0	0	0	0	0	0	0	0	0
4/25/2024	6:45 PM	0	91	19	0	2	0	0	0	0	0	0	0
4/25/2024	7:00 PM	0	0	0	0	0	0	0	0	0	0	0	0
4/25/2024	7:15 PM	0	0	0	0	0	0	0	0	0	0	0	0
4/25/2024	7:30 PM	0	0	0	0	0	0	0	0	0	0	0	0
4/25/2024	7:45 PM	0	0	0	0	0	0	0	0	0	0	0	0
4/25/2024	8:00 PM	0	0	0	0	0	0	0	0	0	0	0	0
4/25/2024	8:15 PM	0	0	0	0	0	0	0	0	0	0	0	0
4/25/2024	8:30 PM	0	0	0	0	0	0	0	0	0	0	0	0
4/25/2024	8:45 PM	0	0	0	0	0	0	0	0	0	0	0	0
4/25/2024	9:00 PM	0	0	0	0	0	0	0	0	0	0	0	0
4/25/2024	9:15 PM	0	0	0	0	0	0	0	0	0	0	0	0
4/25/2024	9:30 PM	0	0	0	0	0	0	0	0	0	0	0	0
4/25/2024	9:45 PM	0	0	0	0	0	0	0	0	0	0	0	0
4/25/2024	10:00 PM	0	0	0	0	0	0	0	0	0	0	0	0
4/25/2024	10:15 PM	0	0	0	0	0	0	0	0	0	0	0	0
4/25/2024	10:30 PM	0	0	0	0	0	0	0	0	0	0	0	0
4/25/2024	10:45 PM	0	0	0	0	0	0	0	0	0	0	0	0
4/25/2024	11:00 PM	0	0	0	0	0	0	0	0	0	0	0	0
4/25/2024	11:15 PM	0	0	0	0	0	0	0	0	0	0	0	0
4/25/2024	11:30 PM	0	0	0	0	0	0	0	0	0	0	0	0
4/25/2024	11:45 PM	0	0	0	0	0	0	0	0	0	0	0	0

NB
File Name:
Start Date: 4/23/2024
Start Time: 0
Site Code: 37
Station ID: 1
Location 1: I-26 On/Off-Ramp, north of St Andrews Rd
Location 2:

Date	Time	1	2	3	4	5	6	7	8	9	10	11	12	13
4/23/2024	12:00 AM	0	0	0	0	0	0	0	0	0	0	0	0	0
4/23/2024	12:15 AM	0	0	0	0	0	0	0	0	0	0	0	0	0
4/23/2024	12:30 AM	0	0	0	0	0	0	0	0	0	0	0	0	0
4/23/2024	12:45 AM	0	0	0	0	0	0	0	0	0	0	0	0	0
4/23/2024	1:00 AM	0	0	0	0	0	0	0	0	0	0	0	0	0
4/23/2024	1:15 AM	0	0	0	0	0	0	0	0	0	0	0	0	0
4/23/2024	1:30 AM	0	0	0	0	0	0	0	0	0	0	0	0	0
4/23/2024	1:45 AM	0	0	0	0	0	0	0	0	0	0	0	0	0
4/23/2024	2:00 AM	0	0	0	0	0	0	0	0	0	0	0	0	0
4/23/2024	2:15 AM	0	0	0	0	0	0	0	0	0	0	0	0	0
4/23/2024	2:30 AM	0	0	0	0	0	0	0	0	0	0	0	0	0
4/23/2024	2:45 AM	0	0	0	0	0	0	0	0	0	0	0	0	0
4/23/2024	3:00 AM	0	0	0	0	0	0	0	0	0	0	0	0	0
4/23/2024	3:15 AM	0	0	0	0	0	0	0	0	0	0	0	0	0
4/23/2024	3:30 AM	0	0	0	0	0	0	0	0	0	0	0	0	0
4/23/2024	3:45 AM	0	0	0	0	0	0	0	0	0	0	0	0	0
4/23/2024	4:00 AM	0	0	0	0	0	0	0	0	0	0	0	0	0
4/23/2024	4:15 AM	0	0	0	0	0	0	0	0	0	0	0	0	0
4/23/2024	4:30 AM	0	0	0	0	0	0	0	0	0	0	0	0	0
4/23/2024	4:45 AM	0	0	0	0	0	0	0	0	0	0	0	0	0
4/23/2024	5:00 AM	0	0	0	0	0	0	0	0	0	0	0	0	0
4/23/2024	5:15 AM	0	0	0	0	0	0	0	0	0	0	0	0	0
4/23/2024	5:30 AM	0	0	0	0	0	0	0	0	0	0	0	0	0
4/23/2024	5:45 AM	0	0	0	0	0	0	0	0	0	0	0	0	0
4/23/2024	6:00 AM	0	0	0	0	0	0	0	0	0	0	0	0	0
4/23/2024	6:15 AM	0	0	0	0	0	0	0	0	0	0	0	0	0
4/23/2024	6:30 AM	0	0	0	0	0	0	0	0	0	0	0	0	0
4/23/2024	6:45 AM	0	0	0	0	0	0	0	0	0	0	0	0	0
4/23/2024	7:00 AM	0	0	0	0	0	0	0	0	0	0	0	0	0
4/23/2024	7:15 AM	0	0	0	0	0	0	0	0	0	0	0	0	0
4/23/2024	7:30 AM	0	0	0	0	0	0	0	0	0	0	0	0	0
4/23/2024	7:45 AM	0	0	0	0	0	0	0	0	0	0	0	0	0
4/23/2024	8:00 AM	0	0	0	0	0	0	0	0	0	0	0	0	0
4/23/2024	8:15 AM	0	0	0	0	0	0	0	0	0	0	0	0	0
4/23/2024	8:30 AM	0	0	0	0	0	0	0	0	0	0	0	0	0
4/23/2024	8:45 AM	0	0	0	0	0	0	0	0	0	0	0	0	0
4/23/2024	9:00 AM	0	0	0	0	0	0	0	0	0	0	0	0	0
4/23/2024	9:15 AM	0	0	0	0	0	0	0	0	0	0	0	0	0
4/23/2024	9:30 AM	0	0	0	0	0	0	0	0	0	0	0	0	0
4/23/2024	9:45 AM	0	0	0	0	0	0	0	0	0	0	0	0	0
4/23/2024	10:00 AM	0	0	0	0	0	0	0	0	0	0	0	0	0
4/23/2024	10:15 AM	0	0	0	0	0	0	0	0	0	0	0	0	0
4/23/2024	10:30 AM	0	0	0	0	0	0	0	0	0	0	0	0	0
4/23/2024	10:45 AM	0	0	0	0	0	0	0	0	0	0	0	0	0
4/23/2024	11:00 AM	0	0	0	0	0	0	0	0	0	0	0	0	0
4/23/2024	11:15 AM	0	0	0	0	0	0	0	0	0	0	0	0	0
4/23/2024	11:30 AM	0	0	0	0	0	0	0	0	0	0	0	0	0
4/23/2024	11:45 AM	0	0	0	0	0	0	0	0	0	0	0	0	0
4/23/2024	12:00 PM	0	0	0	0	0	0	0	0	0	0	0	0	0
4/23/2024	12:15 PM	0	0	0	0	0	0	0	0	0	0	0	0	0
4/23/2024	12:30 PM	0	0	0	0	0	0	0	0	0	0	0	0	0
4/23/2024	12:45 PM	0	0	0	0	0	0	0	0	0	0	0	0	0
4/23/2024	1:00 PM	0	0	0	0	0	0	0	0	0	0	0	0	0
4/23/2024	1:15 PM	0	0	0	0	0	0	0	0	0	0	0	0	0
4/23/2024	1:30 PM	0	0	0	0	0	0	0	0	0	0	0	0	0
4/23/2024	1:45 PM	0	0	0	0	0	0	0	0	0	0	0	0	0
4/23/2024	2:00 PM	0	0	0	0	0	0	0	0	0	0	0	0	0
4/23/2024	2:15 PM	0	0	0	0	0	0	0	0	0	0	0	0	0
4/23/2024	2:30 PM	0	0	0	0	0	0	0	0	0	0	0	0	0
4/23/2024	2:45 PM	0	0	0	0	0	0	0	0	0	0	0	0	0
4/23/2024	3:00 PM	0	0	0	0	0	0	0	0	0	0	0	0	0
4/23/2024	3:15 PM	0	0	0	0	0	0	0	0	0	0	0	0	0
4/23/2024	3:30 PM	0	0	0	0	0	0	0	0	0	0	0	0	0
4/23/2024	3:45 PM	0	0	0	0	0	0	0	0	0	0	0	0	0
4/23/2024	4:00 PM	0	0	0	0	0	0	0	0	0	0	0	0	0
4/23/2024	4:15 PM	0	0	0	0	0	0	0	0	0	0	0	0	0
4/23/2024	4:30 PM	0	0	0	0	0	0	0	0	0	0	0	0	0
4/23/2024	4:45 PM	0	0	0	0	0	0	0	0	0	0	0	0	0
4/23/2024	5:00 PM	0	0	0	0	0	0	0	0	0	0	0	0	0
4/23/2024	5:15 PM	0	0	0	0	0	0	0	0	0	0	0	0	0
4/23/2024	5:30 PM	0	0	0	0	0	0	0	0	0	0	0	0	0
4/23/2024	5:45 PM	0	0	0	0	0	0	0	0	0	0	0	0	0
4/23/2024	6:00 PM	0	0	0	0	0	0	0	0	0	0	0	0	0
4/23/2024	6:15 PM	0	0	0	0	0	0	0	0	0	0	0	0	0
4/23/2024	6:30 PM	0	0	0	0	0	0	0	0	0	0	0	0	0
4/23/2024	6:45 PM	0	0	0	0	0	0	0	0	0	0	0	0	0
4/23/2024	7:00 PM	0	0	0	0	0	0	0	0	0	0	0	0	0
4/23/2024	7:15 PM	0	0	0	0	0	0	0	0	0	0	0	0	0
4/23/2024	7:30 PM	0	0	0	0	0	0	0	0	0	0	0	0	0
4/23/2024	7:45 PM	0	0	0	0	0	0	0	0	0	0	0	0	0
4/23/2024	8:00 PM	0	0	0	0	0	0	0	0	0	0	0	0	0
4/23/2024	8:15 PM	0	0	0	0	0	0	0	0	0	0	0	0	0
4/23/2024	8:30 PM	0	0	0	0	0	0	0	0	0	0	0	0	0
4/23/2024	8:45 PM	0	0	0	0	0	0	0	0	0	0	0	0	0
4/23/2024	9:00 PM	0	0	0	0	0	0	0	0	0	0	0	0	0
4/23/2024	9:15 PM	0	0	0	0	0	0	0	0	0	0	0	0	0
4/23/2024	9:30 PM	0	0	0	0	0	0	0	0	0	0	0	0	0
4/23/2024	9:45 PM	0	0	0	0	0	0	0	0	0	0	0	0	0
4/23/2024	10:00 PM	0	0	0	0	0	0	0	0	0	0	0	0	0
4/23/2024	10:15 PM	0	0	0	0	0	0	0	0	0	0	0	0	0
4/23/2024	10:30 PM	0	0	0	0	0	0	0	0	0	0	0	0	0
4/23/2024	10:45 PM	0	0	0	0	0	0	0	0	0	0	0	0	0
4/23/2024	11:00 PM	0	0	0	0	0	0	0	0	0	0	0	0	0
4/23/2024	11:15 PM	0	0	0	0	0	0	0	0	0	0	0	0	0
4/23/2024	11:30 PM	0	0	0	0	0	0	0	0	0	0	0	0	0
4/23/2024	11:45 PM	0	0	0	0	0	0	0	0	0	0	0	0	0

4/24/2024	12:00 AM	0	0	0	0	0	0	0	0	0	0	0	0	0
4/24/2024	12:15 AM	0	0	0	0	0	0	0	0	0	0	0	0	0
4/24/2024	12:30 AM	0	0	0	0	0	0	0	0	0	0	0	0	0
4/24/2024	12:45 AM	0	0	0	0	0	0	0	0	0	0	0	0	0
4/24/2024	1:00 AM	0	0	0	0	0	0	0	0	0	0	0	0	0
4/24/2024	1:15 AM	0	0	0	0	0	0	0	0	0	0	0	0	0
4/24/2024	1:30 AM	0	0	0	0	0	0	0	0	0	0	0	0	0
4/24/2024	1:45 AM	0	0	0	0	0	0	0	0	0	0	0	0	0
4/24/2024	2:00 AM	0	0	0	0	0	0	0	0	0	0	0	0	0
4/24/2024	2:15 AM	0	0	0	0	0	0	0	0	0	0	0	0	0
4/24/2024	2:30 AM	0	0	0	0	0	0	0	0	0	0	0	0	0
4/24/2024	2:45 AM	0	0	0	0	0	0	0	0	0	0	0	0	0
4/24/2024	3:00 AM	0	0	0	0	0	0	0	0	0	0	0	0	0
4/24/2024	3:15 AM	0	0	0	0	0	0	0	0	0	0	0	0	0
4/24/2024	3:30 AM	0	0	0	0	0	0	0	0	0	0	0	0	0
4/24/2024	3:45 AM	0	0	0	0	0	0	0	0	0	0	0	0	0
4/24/2024	4:00 AM	0	0	0	0	0	0	0	0	0	0	0	0	0
4/24/2024	4:15 AM	0	0	0	0	0	0	0	0	0	0	0	0	0
4/24/2024	4:30 AM	0	0	0	0	0	0	0	0	0	0	0	0	0
4/24/2024	4:45 AM	0	0	0	0	0	0	0	0	0	0	0	0	0
4/24/2024	5:00 AM	0	0	0	0	0	0	0	0	0	0	0	0	0
4/24/2024	5:15 AM	0	0	0	0	0	0	0	0	0	0	0	0	0
4/24/2024	5:30 AM	0	0	0	0	0	0	0	0	0	0	0	0	0
4/24/2024	5:45 AM	0	0	0	0	0	0	0	0	0	0	0	0	0
4/24/2024	6:00 AM	0	0	0	0	0	0	0	0	0	0	0	0	0
4/24/2024	6:15 AM	0	0	0	0	0	0	0	0	0	0	0	0	0
4/24/2024	6:30 AM	0	0	0	0	0	0	0	0	0	0	0	0	0
4/24/2024	6:45 AM	0	0	0	0	0	0	0	0	0	0	0	0	0
4/24/2024	7:00 AM	0	0	0	0	0	0	0	0	0	0	0	0	0
4/24/2024	7:15 AM	0	0	0	0	0	0	0	0	0	0	0	0	0
4/24/2024	7:30 AM	0	0	0	0	0	0	0	0	0	0	0	0	0
4/24/2024	7:45 AM	0	0	0	0	0	0	0	0	0	0	0	0	0
4/24/2024	8:00 AM	0	0	0	0	0	0	0	0	0	0	0	0	0
4/24/2024	8:15 AM	0	0	0	0	0	0	0	0	0	0	0	0	0
4/24/2024	8:30 AM	0	0	0	0	0	0	0	0	0	0	0	0	0
4/24/2024	8:45 AM	0	0	0	0	0	0	0	0	0	0	0	0	0
4/24/2024	9:00 AM	0	0	0	0	0	0	0	0	0	0	0	0	0
4/24/2024	9:15 AM	0	0	0	0	0	0	0	0	0	0	0	0	0
4/24/2024	9:30 AM	0	0	0	0	0	0	0	0	0	0	0	0	0
4/24/2024	9:45 AM	0	0	0	0	0	0	0	0	0	0	0	0	0
4/24/2024	10:00 AM	0	0	0	0	0	0	0	0	0	0	0	0	0
4/24/2024	10:15 AM	0	0	0	0	0	0	0	0	0	0	0	0	0
4/24/2024	10:30 AM	0	0	0	0	0	0	0	0	0	0	0	0	0
4/24/2024	10:45 AM	0	0	0	0	0	0	0	0	0	0	0	0	0
4/24/2024	11:00 AM	0	0	0	0	0	0	0	0	0	0	0	0	0
4/24/2024	11:15 AM	0	0	0	0	0	0	0	0	0	0	0	0	0
4/24/2024	11:30 AM	0	0	0	0	0	0	0	0	0	0	0	0	0
4/24/2024	11:45 AM	0	0	0	0	0	0	0	0	0	0	0	0	0
4/24/2024	12:00 PM	0	0	0	0	0	0	0	0	0	0	0	0	0
4/24/2024	12:15 PM	0	0	0	0	0	0	0	0	0	0	0	0	0
4/24/2024	12:30 PM	0	0	0	0	0	0	0	0	0	0	0	0	0
4/24/2024	12:45 PM	0	0	0	0	0	0	0	0	0	0	0	0	0
4/24/2024	1:00 PM	0	0	0	0	0	0	0	0	0	0	0	0	0
4/24/2024	1:15 PM	0	0	0	0	0	0	0	0	0	0	0	0	0
4/24/2024	1:30 PM	0	0	0	0	0	0	0	0	0	0	0	0	0
4/24/2024	1:45 PM	0	0	0	0	0	0	0	0	0	0	0	0	0
4/24/2024	2:00 PM	0	0	0	0	0	0	0	0	0	0	0	0	0
4/24/2024	2:15 PM	0	0	0	0	0	0	0	0	0	0	0	0	0
4/24/2024	2:30 PM	0	0	0	0	0	0	0	0	0	0	0	0	0
4/24/2024	2:45 PM	0	0	0	0	0	0	0	0	0	0	0	0	0
4/24/2024	3:00 PM	0	0	0	0	0	0	0	0	0	0	0	0	0
4/24/2024	3:15 PM	0	0	0	0	0	0	0	0	0	0	0	0	0
4/24/2024	3:30 PM	0	0	0	0	0	0	0	0	0	0	0	0	0
4/24/2024	3:45 PM	0	0	0	0	0	0	0	0	0	0	0	0	0
4/24/2024	4:00 PM	0	0	0	0	0	0	0	0	0	0	0	0	0
4/24/2024	4:15 PM	0	0	0	0	0	0	0	0	0	0	0	0	0
4/24/2024	4:30 PM	0	0	0	0	0	0	0	0	0	0	0	0	0
4/24/2024	4:45 PM	0	0	0	0	0	0	0	0	0	0	0	0	0
4/24/2024	5:00 PM	0	0	0	0	0	0	0	0	0	0	0	0	0
4/24/2024	5:15 PM	0	0	0	0	0	0	0	0	0	0	0	0	0
4/24/2024	5:30 PM	0	0	0	0	0	0	0	0	0	0	0	0	0
4/24/2024	5:45 PM	0	0	0	0	0	0	0	0	0	0	0	0	0
4/24/2024	6:00 PM	0	0	0	0	0	0	0	0	0	0	0	0	0
4/24/2024	6:15 PM	0	0	0	0	0	0	0	0	0	0	0	0	0
4/24/2024	6:30 PM	0	0	0	0	0	0	0	0	0	0	0	0	0
4/24/2024	6:45 PM	0	0	0	0	0	0	0	0	0	0	0	0	0
4/24/2024	7:00 PM	0	0	0	0	0	0	0	0	0	0	0	0	0
4/24/2024	7:15 PM	0	0	0	0	0	0	0	0	0	0	0	0	0
4/24/2024	7:30 PM	0	0	0	0	0	0	0	0	0	0	0	0	0
4/24/2024	7:45 PM	0	0	0	0	0	0	0	0	0	0	0	0	0
4/24/2024	8:00 PM	0	0	0	0	0	0	0	0	0	0	0	0	0
4/24/2024	8:15 PM	0	0	0	0	0	0	0	0	0	0	0	0	0
4/24/2024	8:30 PM	0	0	0	0	0	0	0	0	0	0	0	0	0
4/24/2024	8:45 PM	0	0	0	0	0	0	0	0	0	0	0	0	0
4/24/2024	9:00 PM	0	0	0	0	0	0	0	0	0	0	0	0	0
4/24/2024	9:15 PM	0	0	0	0	0	0	0	0	0	0	0	0	0
4/24/2024	9:30 PM	0	0	0	0	0	0	0	0	0	0	0	0	0
4/24/2024	9:45 PM	0	0	0	0	0	0	0	0	0	0	0	0	0
4/24/2024	10:00 PM	0	0	0	0	0	0	0	0	0	0	0	0	0
4/24/2024	10:15 PM	0	0	0	0	0	0	0	0	0	0	0	0	0
4/24/2024	10:30 PM	0	0	0	0	0	0	0	0	0	0	0	0	0
4/24/2024	10:45 PM	0	0	0	0	0	0	0	0	0	0	0	0	0
4/24/2024	11:00 PM	0	0	0	0	0	0	0	0	0	0	0	0	0
4/24/2024	11:15 PM	0	0	0	0	0	0	0	0	0	0	0	0	0
4/24/2024	11:30 PM	0	0	0	0	0	0	0	0	0	0	0	0	0
4/24/2024	11:45 PM	0	0	0	0	0	0	0	0	0	0	0	0	0

4/25/2024	12:00 AM	0	0	0	0	0	0	0	0	0	0	0	0	0
4/25/2024	12:15 AM	0	0	0	0	0	0	0	0	0	0	0	0	0
4/25/2024	12:30 AM	0	0	0	0	0	0	0	0	0	0	0	0	0
4/25/2024	12:45 AM	0	0	0	0	0	0	0	0	0	0	0	0	0
4/25/2024	1:00 AM	0	0	0	0	0	0	0	0	0	0	0	0	0
4/25/2024	1:15 AM	0	0	0	0	0	0	0	0	0	0	0	0	0
4/25/2024	1:30 AM	0	0	0	0	0	0	0	0	0	0	0	0	0
4/25/2024	1:45 AM	0	0	0	0	0	0	0	0	0	0	0	0	0
4/25/2024	2:00 AM	0	0	0	0	0	0	0	0	0	0	0	0	0
4/25/2024	2:15 AM	0	0	0	0	0	0	0	0	0	0	0	0	0
4/25/2024	2:30 AM	0	0	0	0	0	0	0	0	0	0	0	0	0
4/25/2024	2:45 AM	0	0	0	0	0	0	0	0	0	0	0	0	0
4/25/2024	3:00 AM	0	0	0	0	0	0	0	0	0	0	0	0	0
4/25/2024	3:15 AM	0	0	0	0	0	0	0	0	0	0	0	0	0
4/25/2024	3:30 AM	0	0	0	0	0	0	0	0	0	0	0	0	0
4/25/2024	3:45 AM	0	0	0	0	0	0	0	0	0	0	0	0	0
4/25/2024	4:00 AM	0	0	0	0	0	0	0	0	0	0	0	0	0
4/25/2024	4:15 AM	0	0	0	0	0	0	0	0	0	0	0	0	0
4/25/2024	4:30 AM	0	0	0	0	0	0	0	0	0	0	0	0	0
4/25/2024	4:45 AM	0	0	0	0	0	0	0	0	0	0	0	0	0
4/25/2024	5:00 AM	0	0	0	0	0	0	0	0	0	0	0	0	0
4/25/2024	5:15 AM	0	0	0	0	0	0	0	0	0	0	0	0	0
4/25/2024	5:30 AM	0	0	0	0	0	0	0	0	0	0	0	0	0
4/25/2024	5:45 AM	0	0	0	0	0	0	0	0	0	0	0	0	0
4/25/2024	6:00 AM	0	0	0	0	0	0	0	0	0	0	0	0	0
4/25/2024	6:15 AM	0	0	0	0	0	0	0	0	0	0	0	0	0
4/25/2024	6:30 AM	0	0	0	0	0	0	0	0	0	0	0	0	0
4/25/2024	6:45 AM	0	0	0	0	0	0	0	0	0	0	0	0	0
4/25/2024	7:00 AM	0	0	0	0	0	0	0	0	0	0	0	0	0
4/25/2024	7:15 AM	0	0	0	0	0	0	0	0	0	0	0	0	0
4/25/2024	7:30 AM	0	0	0	0	0	0	0	0	0	0	0	0	0
4/25/2024	7:45 AM	0	0	0	0	0	0	0	0	0	0	0	0	0
4/25/2024	8:00 AM	0	0	0	0	0	0	0	0	0	0	0	0	0
4/25/2024	8:15 AM	0	0	0	0	0	0	0	0	0	0	0	0	0
4/25/2024	8:30 AM	0	0	0	0	0	0	0	0	0	0	0	0	0
4/25/2024	8:45 AM	0	0	0	0	0	0	0	0	0	0	0	0	0
4/25/2024	9:00 AM	0	0	0	0	0	0	0	0	0	0	0	0	0
4/25/2024	9:15 AM	0	0	0	0	0	0	0	0	0	0	0	0	0
4/25/2024	9:30 AM	0	0	0	0	0	0	0	0	0	0	0	0	0
4/25/2024	9:45 AM	0	0	0	0	0	0	0	0	0	0	0	0	0
4/25/2024	10:00 AM	0	0	0	0	0	0	0	0	0	0	0	0	0
4/25/2024	10:15 AM	0	0	0	0	0	0	0	0	0	0	0	0	0
4/25/2024	10:30 AM	0	0	0	0	0	0	0	0	0	0	0	0	0
4/25/2024	10:45 AM	0	0	0	0	0	0	0	0	0	0	0	0	0
4/25/2024	11:00 AM	0	0	0	0	0	0	0	0	0	0	0	0	0
4/25/2024	11:15 AM	0	0	0	0	0	0	0	0	0	0	0	0	0
4/25/2024	11:30 AM	0	0	0	0	0	0	0	0	0	0	0	0	0
4/25/2024	11:45 AM	0	0	0	0	0	0	0	0	0	0	0	0	0
4/25/2024	12:00 PM	0	0	0	0	0	0	0	0	0	0	0	0	0
4/25/2024	12:15 PM	0	0	0	0	0	0	0	0	0	0	0	0	0
4/25/2024	12:30 PM	0	0	0	0	0	0	0	0	0	0	0	0	0
4/25/2024	12:45 PM	0	0	0	0	0	0	0	0	0	0	0	0	0
4/25/2024	1:00 PM	0	0	0	0	0	0	0	0	0	0	0	0	0
4/25/2024	1:15 PM	0	0	0	0	0	0	0	0	0	0	0	0	0
4/25/2024	1:30 PM	0	0	0	0	0	0	0	0	0	0	0	0	0
4/25/2024	1:45 PM	0	0	0	0	0	0	0	0	0	0	0	0	0
4/25/2024	2:00 PM	0	0	0	0	0	0	0	0	0	0	0	0	0
4/25/2024	2:15 PM	0	0	0	0	0	0	0	0	0	0	0	0	0
4/25/2024	2:30 PM	0	0	0	0	0	0	0	0	0	0	0	0	0
4/25/2024	2:45 PM	0	0	0	0	0	0	0	0	0	0	0	0	0
4/25/2024	3:00 PM	0	0	0	0	0	0	0	0	0	0	0	0	0
4/25/2024	3:15 PM	0	0	0	0	0	0	0	0	0	0	0	0	0
4/25/2024	3:30 PM	0	0	0	0	0	0	0	0	0	0	0	0	0
4/25/2024	3:45 PM	0	0	0	0	0	0	0	0	0	0	0	0	0
4/25/2024	4:00 PM	0	0	0	0	0	0	0	0	0	0	0	0	0
4/25/2024	4:15 PM	0	0	0	0	0	0	0	0	0	0	0	0	0
4/25/2024	4:30 PM	0	0	0	0	0	0	0	0	0	0	0	0	0
4/25/2024	4:45 PM	0	0	0	0	0	0	0	0	0	0	0	0	0
4/25/2024	5:00 PM	0	0	0	0	0	0	0	0	0	0	0	0	0
4/25/2024	5:15 PM	0	0	0	0	0	0	0	0	0	0	0	0	0
4/25/2024	5:30 PM	0	0	0	0	0	0	0	0	0	0	0	0	0
4/25/2024	5:45 PM	0	0	0	0	0	0	0	0	0	0	0	0	0
4/25/2024	6:00 PM	0	0	0	0	0	0	0	0	0	0	0	0	0
4/25/2024	6:15 PM	0	0	0	0	0	0	0	0	0	0	0	0	0
4/25/2024	6:30 PM	0	0	0	0	0	0	0	0	0	0	0	0	0
4/25/2024	6:45 PM	0	0	0	0	0	0	0	0	0	0	0	0	0
4/25/2024	7:00 PM	0	0	0	0	0	0	0	0	0	0	0	0	0
4/25/2024	7:15 PM	0	0	0	0	0	0	0	0	0	0	0	0	0
4/25/2024	7:30 PM	0	0	0	0	0	0	0	0	0	0	0	0	0
4/25/2024	7:45 PM	0	0	0	0	0	0	0	0	0	0	0	0	0
4/25/2024	8:00 PM	0	0	0	0	0	0	0	0	0	0	0	0	0
4/25/2024	8:15 PM	0	0	0	0	0	0	0	0	0	0	0	0	0
4/25/2024	8:30 PM	0	0	0	0	0	0	0	0	0	0	0	0	0
4/25/2024	8:45 PM	0	0	0	0	0	0	0	0	0	0	0	0	0
4/25/2024	9:00 PM	0	0	0	0	0	0	0	0	0	0	0	0	0
4/25/2024	9:15 PM	0	0	0	0	0	0	0	0	0	0	0	0	0
4/25/2024	9:30 PM	0	0	0	0	0	0	0	0	0	0	0	0	0
4/25/2024	9:45 PM	0	0	0	0	0	0	0	0	0	0	0	0	0
4/25/2024	10:00 PM	0	0	0	0	0	0	0	0	0	0	0	0	0
4/25/2024	10:15 PM	0	0	0	0	0	0	0	0	0	0	0	0	0
4/25/2024	10:30 PM	0	0	0	0	0	0	0	0	0	0	0	0	0
4/25/2024	10:45 PM	0	0	0	0	0	0	0	0	0	0	0	0	0
4/25/2024	11:00 PM	0	0	0	0	0	0	0	0	0	0	0	0	0
4/25/2024	11:15 PM	0	0	0	0	0	0	0	0	0	0	0	0	0
4/25/2024	11:30 PM	0	0	0	0	0	0	0	0	0	0	0	0	0
4/25/2024	11:45 PM	0	0	0	0	0	0	0	0	0	0	0	0	0

SB
File Name:
Start Date: 4/23/2024
Start Time: 0
Site Code: 37
Station ID: 1
Location 1: I-26 On/Off-Ramp, north of St Andrews Rd
Location 2:

Date	Time	1	2	3	4	5	6	7	8	9	10	11	12	13
4/23/2024	12:00 AM	0	0	0	0	0	0	0	0	0	0	0	0	0
4/23/2024	12:15 AM	0	0	0	0	0	0	0	0	0	0	0	0	0
4/23/2024	12:30 AM	0	0	0	0	0	0	0	0	0	0	0	0	0
4/23/2024	12:45 AM	0	0	0	0	0	0	0	0	0	0	0	0	0
4/23/2024	1:00 AM	0	0	0	0	0	0	0	0	0	0	0	0	0
4/23/2024	1:15 AM	0	0	0	0	0	0	0	0	0	0	0	0	0
4/23/2024	1:30 AM	0	0	0	0	0	0	0	0	0	0	0	0	0
4/23/2024	1:45 AM	0	0	0	0	0	0	0	0	0	0	0	0	0
4/23/2024	2:00 AM	0	0	0	0	0	0	0	0	0	0	0	0	0
4/23/2024	2:15 AM	0	0	0	0	0	0	0	0	0	0	0	0	0
4/23/2024	2:30 AM	0	0	0	0	0	0	0	0	0	0	0	0	0
4/23/2024	2:45 AM	0	0	0	0	0	0	0	0	0	0	0	0	0
4/23/2024	3:00 AM	0	0	0	0	0	0	0	0	0	0	0	0	0
4/23/2024	3:15 AM	0	0	0	0	0	0	0	0	0	0	0	0	0
4/23/2024	3:30 AM	0	0	0	0	0	0	0	0	0	0	0	0	0
4/23/2024	3:45 AM	0	0	0	0	0	0	0	0	0	0	0	0	0
4/23/2024	4:00 AM	0	0	0	0	0	0	0	0	0	0	0	0	0
4/23/2024	4:15 AM	0	0	0	0	0	0	0	0	0	0	0	0	0
4/23/2024	4:30 AM	0	0	0	0	0	0	0	0	0	0	0	0	0
4/23/2024	4:45 AM	0	0	0	0	0	0	0	0	0	0	0	0	0
4/23/2024	5:00 AM	0	0	0	0	0	0	0	0	0	0	0	0	0
4/23/2024	5:15 AM	0	0	0	0	0	0	0	0	0	0	0	0	0
4/23/2024	5:30 AM	0	0	0	0	0	0	0	0	0	0	0	0	0
4/23/2024	5:45 AM	0	0	0	0	0	0	0	0	0	0	0	0	0
4/23/2024	6:00 AM	0	0	0	0	0	0	0	0	0	0	0	0	0
4/23/2024	6:15 AM	0	0	0	0	0	0	0	0	0	0	0	0	0
4/23/2024	6:30 AM	0	0	0	0	0	0	0	0	0	0	0	0	0
4/23/2024	6:45 AM	0	0	0	0	0	0	0	0	0	0	0	0	0
4/23/2024	7:00 AM	0	0	0	0	0	0	0	0	0	0	0	0	0
4/23/2024	7:15 AM	0	0	0	0	0	0	0	0	0	0	0	0	0
4/23/2024	7:30 AM	0	0	0	0	0	0	0	0	0	0	0	0	0
4/23/2024	7:45 AM	0	0	0	0	0	0	0	0	0	0	0	0	0
4/23/2024	8:00 AM	0	0	0	0	0	0	0	0	0	0	0	0	0
4/23/2024	8:15 AM	0	0	0	0	0	0	0	0	0	0	0	0	0
4/23/2024	8:30 AM	0	0	0	0	0	0	0	0	0	0	0	0	0
4/23/2024	8:45 AM	0	0	0	0	0	0	0	0	0	0	0	0	0
4/23/2024	9:00 AM	0	0	0	0	0	0	0	0	0	0	0	0	0
4/23/2024	9:15 AM	0	0	0	0	0	0	0	0	0	0	0	0	0
4/23/2024	9:30 AM	0	0	0	0	0	0	0	0	0	0	0	0	0
4/23/2024	9:45 AM	0	0	0	0	0	0	0	0	0	0	0	0	0
4/23/2024	10:00 AM	0	0	0	0	0	0	0	0	0	0	0	0	0
4/23/2024	10:15 AM	0	0	0	0	0	0	0	0	0	0	0	0	0
4/23/2024	10:30 AM	0	0	0	0	0	0	0	0	0	0	0	0	0
4/23/2024	10:45 AM	0	0	0	0	0	0	0	0	0	0	0	0	0
4/23/2024	11:00 AM	0	0	0	0	0	0	0	0	0	0	0	0	0
4/23/2024	11:15 AM	0	0	0	0	0	0	0	0	0	0	0	0	0
4/23/2024	11:30 AM	0	0	0	0	0	0	0	0	0	0	0	0	0
4/23/2024	11:45 AM	0	0	0	0	0	0	0	0	0	0	0	0	0
4/23/2024	12:00 PM	0	0	0	0	0	0	0	0	0	0	0	0	0
4/23/2024	12:15 PM	0	0	0	0	0	0	0	0	0	0	0	0	0
4/23/2024	12:30 PM	0	0	0	0	0	0	0	0	0	0	0	0	0
4/23/2024	12:45 PM	0	0	0	0	0	0	0	0	0	0	0	0	0
4/23/2024	1:00 PM	0	0	0	0	0	0	0	0	0	0	0	0	0
4/23/2024	1:15 PM	0	0	0	0	0	0	0	0	0	0	0	0	0
4/23/2024	1:30 PM	0	0	0	0	0	0	0	0	0	0	0	0	0
4/23/2024	1:45 PM	0	0	0	0	0	0	0	0	0	0	0	0	0
4/23/2024	2:00 PM	0	0	0	0	0	0	0	0	0	0	0	0	0
4/23/2024	2:15 PM	0	0	0	0	0	0	0	0	0	0	0	0	0
4/23/2024	2:30 PM	0	0	0	0	0	0	0	0	0	0	0	0	0
4/23/2024	2:45 PM	0	0	0	0	0	0	0	0	0	0	0	0	0
4/23/2024	3:00 PM	0	0	0	0	0	0	0	0	0	0	0	0	0
4/23/2024	3:15 PM	0	0	0	0	0	0	0	0	0	0	0	0	0
4/23/2024	3:30 PM	0	0	0	0	0	0	0	0	0	0	0	0	0
4/23/2024	3:45 PM	0	0	0	0	0	0	0	0	0	0	0	0	0
4/23/2024	4:00 PM	0	0	0	0	0	0	0	0	0	0	0	0	0
4/23/2024	4:15 PM	0	0	0	0	0	0	0	0	0	0	0	0	0
4/23/2024	4:30 PM	0	0	0	0	0	0	0	0	0	0	0	0	0
4/23/2024	4:45 PM	0	0	0	0	0	0	0	0	0	0	0	0	0
4/23/2024	5:00 PM	0	0	0	0	0	0	0	0	0	0	0	0	0
4/23/2024	5:15 PM	0	0	0	0	0	0	0	0	0	0	0	0	0
4/23/2024	5:30 PM	0	0	0	0	0	0	0	0	0	0	0	0	0
4/23/2024	5:45 PM	0	0	0	0	0	0	0	0	0	0	0	0	0
4/23/2024	6:00 PM	0	0	0	0	0	0	0	0	0	0	0	0	0
4/23/2024	6:15 PM	0	110	11	0	0	1	0	1	1	0	0	0	0
4/23/2024	6:30 PM	0	195	24	0	1	1	0	1	1	0	0	0	0
4/23/2024	6:45 PM	1	287	37	0	1	1	0	1	1	0	0	0	0
4/23/2024	7:00 PM	1	365	45	0	4	1	0	1	1	0	0	0	0
4/23/2024	7:15 PM	1	328	41	0	4	0	0	0	0	0	0	0	0
4/23/2024	7:30 PM	1	305	34	0	3	0	0	0	0	0	0	0	0
4/23/2024	7:45 PM	0	259	27	0	3	0	0	0	0	0	0	0	0
4/23/2024	8:00 PM	0	227	24	0	2	0	0	0	0	0	0	0	0
4/23/2024	8:15 PM	0	194	23	0	3	0	0	0	0	0	0	0	0
4/23/2024	8:30 PM	0	174	24	0	4	0	0	0	1	0	0	0	0
4/23/2024	8:45 PM	0	168	25	1	4	0	0	0	1	0	0	0	0
4/23/2024	9:00 PM	0	159	23	1	2	0	0	0	1	0	0	0	0
4/23/2024	9:15 PM	0	151	19	1	2	0	0	0	1	0	0	0	0
4/23/2024	9:30 PM	0	140	17	1	1	0	0	0	1	0	0	0	0
4/23/2024	9:45 PM	0	118	13	0	2	0	0	0	2	0	0	0	0
4/23/2024	10:00 PM	0	101	14	0	2	0	0	0	2	0	0	0	0
4/23/2024	10:15 PM	0	95	17	0	1	0	0	0	2	0	0	0	0
4/23/2024	10:30 PM	0	79	12	0	1	0	0	0	2	0	0	0	0
4/23/2024	10:45 PM	0	75	11	0	0	0	0	0	2	0	0	0	0
4/23/2024	11:00 PM	0	68	8	0	0	0	0	0	2	0	0	0	0
4/23/2024	11:15 PM	0	42	3	0	0	0	0	0	2	0	0	0	0
4/23/2024	11:30 PM	0	27	3	0	0	0	0	0	1	0	0	0	0
4/23/2024	11:45 PM	0	13	1	0	0	0	0	0	0	0	0	0	0

4/24/2024	12:00 AM	0	44	4	0	0	0	0	0	0	0	0	0
4/24/2024	12:15 AM	0	40	4	0	0	0	0	0	0	0	0	0
4/24/2024	12:30 AM	0	37	6	0	0	0	0	0	1	0	0	0
4/24/2024	12:45 AM	0	28	5	0	0	0	0	0	1	0	0	0
4/24/2024	1:00 AM	0	26	5	0	0	0	0	0	2	0	0	0
4/24/2024	1:15 AM	0	22	6	0	0	0	0	0	2	0	0	0
4/24/2024	1:30 AM	0	21	6	0	1	0	0	0	2	0	0	0
4/24/2024	1:45 AM	0	24	7	0	1	0	0	1	2	0	0	0
4/24/2024	2:00 AM	0	23	7	0	1	0	0	1	4	0	0	0
4/24/2024	2:15 AM	0	28	6	0	1	0	0	1	4	0	0	0
4/24/2024	2:30 AM	0	25	5	0	0	0	0	1	3	0	0	0
4/24/2024	2:45 AM	0	25	5	0	0	0	0	0	3	0	0	0
4/24/2024	3:00 AM	0	19	3	0	0	0	0	0	0	0	0	0
4/24/2024	3:15 AM	0	20	4	0	0	0	0	0	1	0	0	0
4/24/2024	3:30 AM	0	21	3	0	0	0	0	0	2	0	0	0
4/24/2024	3:45 AM	0	26	6	0	0	0	0	0	3	0	0	0
4/24/2024	4:00 AM	0	33	8	0	1	0	0	0	3	0	0	0
4/24/2024	4:15 AM	0	31	8	0	1	0	0	0	3	0	0	0
4/24/2024	4:30 AM	0	42	11	0	1	0	0	0	3	0	0	0
4/24/2024	4:45 AM	0	56	14	0	2	0	0	0	4	0	0	0
4/24/2024	5:00 AM	0	66	17	0	1	0	0	0	4	0	0	0
4/24/2024	5:15 AM	0	74	20	0	3	0	0	0	4	0	0	0
4/24/2024	5:30 AM	0	88	32	0	3	0	0	0	4	0	0	0
4/24/2024	5:45 AM	0	104	52	0	2	0	0	1	2	0	0	0
4/24/2024	6:00 AM	0	143	63	0	3	0	0	2	2	0	0	0
4/24/2024	6:15 AM	0	183	80	0	3	0	0	2	1	0	0	0
4/24/2024	6:30 AM	0	243	83	1	6	0	0	3	1	0	0	0
4/24/2024	6:45 AM	0	292	82	1	9	0	0	5	2	0	0	0
4/24/2024	7:00 AM	0	334	100	1	9	0	0	5	2	0	0	0
4/24/2024	7:15 AM	0	374	101	2	8	0	0	7	4	0	0	0
4/24/2024	7:30 AM	0	385	108	1	5	0	0	6	5	0	0	0
4/24/2024	7:45 AM	0	400	107	1	4	0	0	3	4	0	0	0
4/24/2024	8:00 AM	0	415	97	1	3	0	0	2	5	0	0	0
4/24/2024	8:15 AM	0	392	108	0	4	1	0	1	4	0	0	0
4/24/2024	8:30 AM	0	362	106	0	7	1	0	2	2	0	0	0
4/24/2024	8:45 AM	0	339	107	0	6	1	0	3	2	0	0	0
4/24/2024	9:00 AM	0	322	108	1	9	1	0	3	2	0	0	0
4/24/2024	9:15 AM	1	330	105	1	9	1	0	2	4	0	0	0
4/24/2024	9:30 AM	1	355	108	1	8	1	0	1	5	0	0	0
4/24/2024	9:45 AM	1	350	116	1	9	1	0	0	5	0	0	0
4/24/2024	10:00 AM	1	347	118	0	10	2	0	0	4	0	0	0
4/24/2024	10:15 AM	0	339	113	0	13	1	0	0	1	0	0	0
4/24/2024	10:30 AM	0	330	106	0	12	3	0	0	0	0	0	0
4/24/2024	10:45 AM	0	334	107	0	11	3	0	1	0	0	0	0
4/24/2024	11:00 AM	0	339	102	2	8	3	0	3	0	0	0	0
4/24/2024	11:15 AM	0	360	102	2	4	3	0	3	0	0	0	0
4/24/2024	11:30 AM	0	363	111	3	5	1	0	3	4	0	0	0
4/24/2024	11:45 AM	0	370	110	3	7	1	0	2	4	0	0	0
4/24/2024	12:00 PM	0	370	118	1	8	0	0	0	6	0	0	0
4/24/2024	12:15 PM	0	351	128	2	9	1	0	1	7	0	0	0
4/24/2024	12:30 PM	0	355	128	1	10	1	0	3	5	0	0	0
4/24/2024	12:45 PM	0	342	112	1	9	2	0	4	6	0	0	0
4/24/2024	1:00 PM	1	325	105	1	9	2	0	4	7	0	0	0
4/24/2024	1:15 PM	2	349	88	0	10	1	0	3	6	0	0	0
4/24/2024	1:30 PM	2	361	83	0	8	1	0	2	6	0	0	0
4/24/2024	1:45 PM	2	391	90	1	7	0	0	1	6	0	0	0
4/24/2024	2:00 PM	1	423	95	1	5	0	0	3	5	0	0	0
4/24/2024	2:15 PM	2	428	102	1	3	0	0	3	6	0	0	0
4/24/2024	2:30 PM	3	447	109	1	3	0	0	3	6	0	0	0
4/24/2024	2:45 PM	3	454	112	1	2	0	0	4	6	0	0	0
4/24/2024	3:00 PM	3	471	122	1	4	1	0	3	5	0	0	0
4/24/2024	3:15 PM	1	484	128	1	4	2	0	3	5	0	0	0
4/24/2024	3:30 PM	0	508	132	1	5	3	0	3	6	0	0	0
4/24/2024	3:45 PM	2	532	142	0	7	3	0	2	5	0	0	0
4/24/2024	4:00 PM	2	531	131	0	8	2	0	1	5	0	0	0
4/24/2024	4:15 PM	3	533	126	0	9	1	0	1	4	0	0	0
4/24/2024	4:30 PM	3	500	126	0	9	0	0	1	1	0	0	0
4/24/2024	4:45 PM	1	498	121	0	11	0	0	1	1	0	0	0
4/24/2024	5:00 PM	2	509	131	0	10	0	0	1	0	0	0	0
4/24/2024	5:15 PM	1	516	136	0	10	0	0	1	0	0	0	0
4/24/2024	5:30 PM	2	498	134	0	10	0	0	0	1	0	0	0
4/24/2024	5:45 PM	3	443	119	0	7	0	0	0	2	0	0	0
4/24/2024	6:00 PM	2	390	106	0	8	0	0	0	2	0	0	0
4/24/2024	6:15 PM	4	355	89	0	7	0	0	0	3	0	0	0
4/24/2024	6:30 PM	3	348	71	0	6	1	0	1	2	0	0	0
4/24/2024	6:45 PM	2	341	66	0	5	1	0	1	2	0	0	0
4/24/2024	7:00 PM	2	313	52	0	4	1	0	1	2	0	0	0
4/24/2024	7:15 PM	0	298	49	0	3	1	0	1	2	0	0	0
4/24/2024	7:30 PM	0	274	44	0	3	0	0	0	2	0	0	0
4/24/2024	7:45 PM	0	260	39	0	3	0	0	0	1	0	0	0
4/24/2024	8:00 PM	0	259	34	0	1	0	0	0	1	0	0	0
4/24/2024	8:15 PM	0	233	29	0	1	0	0	0	0	0	0	0
4/24/2024	8:30 PM	0	205	24	0	0	0	0	0	0	0	0	0
4/24/2024	8:45 PM	0	185	22	0	0	0	0	0	1	0	0	0
4/24/2024	9:00 PM	0	168	24	0	0	0	0	0	1	0	0	0
4/24/2024	9:15 PM	0	155	22	0	0	0	0	0	1	0	0	0
4/24/2024	9:30 PM	0	153	22	0	0	0	0	0	1	0	0	0
4/24/2024	9:45 PM	0	143	19	0	0	0	0	0	1	0	0	0
4/24/2024	10:00 PM	0	122	16	0	0	0	0	0	1	0	0	0
4/24/2024	10:15 PM	0	108	14	0	0	0	0	0	2	0	0	0
4/24/2024	10:30 PM	0	88	12	0	1	0	0	0	3	0	0	0
4/24/2024	10:45 PM	0	75	11	0	1	0	0	0	2	0	0	0
4/24/2024	11:00 PM	0	75	11	0	2	0	0	0	2	0	0	0
4/24/2024	11:15 PM	0	53	8	0	2	0	0	0	1	0	0	0
4/24/2024	11:30 PM	0	36	6	0	1	0	0	0	0	0	0	0
4/24/2024	11:45 PM	0	21	4	0	1	0	0	0	0	0	0	0

4/25/2024	12:00 AM	0	67	8	0	0	0	0	0	1	0	0	0	0
4/25/2024	12:15 AM	0	62	7	0	0	0	0	0	1	0	0	0	0
4/25/2024	12:30 AM	0	57	5	0	0	0	0	0	1	0	0	0	0
4/25/2024	12:45 AM	0	41	4	0	0	0	0	0	0	0	0	0	0
4/25/2024	1:00 AM	0	38	3	0	0	0	0	0	0	0	0	0	0
4/25/2024	1:15 AM	0	32	1	0	0	0	0	0	1	0	0	0	0
4/25/2024	1:30 AM	0	34	3	0	0	0	0	0	1	0	0	0	0
4/25/2024	1:45 AM	0	35	3	0	0	0	0	0	1	0	0	0	0
4/25/2024	2:00 AM	0	31	3	0	0	0	0	0	1	0	0	0	0
4/25/2024	2:15 AM	0	34	3	0	0	0	0	0	1	0	0	0	0
4/25/2024	2:30 AM	0	31	3	0	1	0	0	0	1	0	0	0	0
4/25/2024	2:45 AM	0	31	2	0	2	0	0	0	2	0	0	0	0
4/25/2024	3:00 AM	0	32	3	0	2	0	0	0	2	0	0	0	0
4/25/2024	3:15 AM	0	29	3	0	2	0	0	0	1	0	0	0	0
4/25/2024	3:30 AM	0	26	1	0	2	0	0	0	1	0	0	0	0
4/25/2024	3:45 AM	0	25	1	0	1	0	0	0	0	0	0	0	0
4/25/2024	4:00 AM	0	26	0	0	2	0	0	0	0	0	0	0	0
4/25/2024	4:15 AM	0	31	3	0	3	0	0	0	1	0	0	0	0
4/25/2024	4:30 AM	0	40	7	0	3	0	0	0	1	0	0	0	0
4/25/2024	4:45 AM	0	52	13	0	3	0	0	0	1	0	0	0	0
4/25/2024	5:00 AM	0	69	20	0	2	0	0	0	1	0	0	0	0
4/25/2024	5:15 AM	0	83	22	0	2	0	0	0	0	0	0	0	0
4/25/2024	5:30 AM	0	104	27	0	2	0	0	0	0	0	0	0	0
4/25/2024	5:45 AM	0	144	33	0	3	0	0	0	0	0	0	0	0
4/25/2024	6:00 AM	0	193	39	0	3	1	0	0	0	0	0	0	0
4/25/2024	6:15 AM	0	225	45	0	2	2	0	0	2	0	0	0	0
4/25/2024	6:30 AM	0	277	54	1	2	2	0	0	4	0	0	0	0
4/25/2024	6:45 AM	0	330	68	1	2	3	0	0	5	0	0	0	0
4/25/2024	7:00 AM	0	364	77	1	4	2	0	0	5	0	0	0	0
4/25/2024	7:15 AM	0	415	88	1	6	1	0	0	4	0	0	0	0
4/25/2024	7:30 AM	1	424	90	1	8	1	0	1	2	0	0	0	0
4/25/2024	7:45 AM	1	417	89	1	10	1	0	1	2	0	0	0	0
4/25/2024	8:00 AM	1	417	96	1	12	1	0	1	3	0	0	0	0
4/25/2024	8:15 AM	1	396	94	1	12	2	0	1	5	0	0	0	0
4/25/2024	8:30 AM	0	377	93	1	13	2	0	0	6	0	0	0	0
4/25/2024	8:45 AM	0	360	89	1	11	1	0	0	5	0	0	0	0
4/25/2024	9:00 AM	0	352	85	1	9	1	0	0	4	0	0	0	0
4/25/2024	9:15 AM	0	345	82	1	8	0	0	1	2	0	0	0	0
4/25/2024	9:30 AM	0	360	83	0	5	0	0	1	1	0	0	0	0
4/25/2024	9:45 AM	0	366	87	0	7	0	0	1	3	0	0	0	0
4/25/2024	10:00 AM	0	346	82	0	6	0	0	1	4	0	0	0	0
4/25/2024	10:15 AM	0	362	89	0	7	1	0	0	4	0	0	0	0
4/25/2024	10:30 AM	0	359	88	0	8	1	1	1	5	0	0	0	0
4/25/2024	10:45 AM	0	358	84	0	5	1	1	1	3	0	0	0	0
4/25/2024	11:00 AM	0	365	84	0	6	1	1	2	2	0	0	0	0
4/25/2024	11:15 AM	1	359	81	0	4	0	1	2	2	0	0	0	0
4/25/2024	11:30 AM	1	365	86	0	5	2	0	1	1	0	0	0	0
4/25/2024	11:45 AM	1	380	93	0	9	2	0	1	2	0	0	0	0
4/25/2024	12:00 PM	1	388	96	0	8	2	0	1	3	0	0	0	0
4/25/2024	12:15 PM	0	406	101	0	9	2	0	1	4	0	0	0	0
4/25/2024	12:30 PM	1	416	101	0	9	0	0	1	5	0	0	0	0
4/25/2024	12:45 PM	1	387	92	0	7	0	0	1	7	0	0	0	0
4/25/2024	1:00 PM	1	384	92	0	10	0	0	0	7	0	0	0	0
4/25/2024	1:15 PM	1	378	92	0	11	0	0	0	6	0	0	0	0
4/25/2024	1:30 PM	0	374	91	1	8	0	0	0	5	0	0	0	0
4/25/2024	1:45 PM	1	397	94	1	7	0	0	0	3	0	0	0	0
4/25/2024	2:00 PM	3	425	98	1	6	0	0	1	2	0	0	0	0
4/25/2024	2:15 PM	3	432	98	1	8	1	0	1	4	0	0	0	0
4/25/2024	2:30 PM	3	456	105	0	10	1	0	2	5	0	0	0	0
4/25/2024	2:45 PM	2	503	117	1	10	1	0	2	4	0	0	0	0
4/25/2024	3:00 PM	0	506	114	1	7	1	0	1	4	0	0	0	0
4/25/2024	3:15 PM	0	513	111	1	4	0	0	1	1	0	0	0	0
4/25/2024	3:30 PM	1	533	112	1	4	0	0	0	2	0	0	0	0
4/25/2024	3:45 PM	1	506	102	0	4	0	0	0	3	0	0	0	0
4/25/2024	4:00 PM	1	527	108	0	6	0	0	0	3	0	0	0	0
4/25/2024	4:15 PM	1	543	112	0	7	0	0	0	4	0	0	0	0
4/25/2024	4:30 PM	0	534	109	0	6	0	0	0	2	0	0	0	0
4/25/2024	4:45 PM	0	539	112	0	5	0	0	0	4	0	0	0	0
4/25/2024	5:00 PM	1	526	111	0	4	0	0	0	4	0	0	0	0
4/25/2024	5:15 PM	1	524	114	0	3	0	0	1	3	0	0	0	0
4/25/2024	5:30 PM	1	537	118	0	4	0	0	1	4	0	0	0	0
4/25/2024	5:45 PM	3	518	118	0	4	0	0	1	1	0	0	0	0
4/25/2024	6:00 PM	2	479	108	0	5	0	0	1	1	0	0	0	0
4/25/2024	6:15 PM	2	349	78	0	4	0	0	0	1	0	0	0	0
4/25/2024	6:30 PM	2	200	46	0	2	0	0	0	0	0	0	0	0
4/25/2024	6:45 PM	0	91	19	0	2	0	0	0	0	0	0	0	0
4/25/2024	7:00 PM	0	0	0	0	0	0	0	0	0	0	0	0	0
4/25/2024	7:15 PM	0	0	0	0	0	0	0	0	0	0	0	0	0
4/25/2024	7:30 PM	0	0	0	0	0	0	0	0	0	0	0	0	0
4/25/2024	7:45 PM	0	0	0	0	0	0	0	0	0	0	0	0	0
4/25/2024	8:00 PM	0	0	0	0	0	0	0	0	0	0	0	0	0
4/25/2024	8:15 PM	0	0	0	0	0	0	0	0	0	0	0	0	0
4/25/2024	8:30 PM	0	0	0	0	0	0	0	0	0	0	0	0	0
4/25/2024	8:45 PM	0	0	0	0	0	0	0	0	0	0	0	0	0
4/25/2024	9:00 PM	0	0	0	0	0	0	0	0	0	0	0	0	0
4/25/2024	9:15 PM	0	0	0	0	0	0	0	0	0	0	0	0	0
4/25/2024	9:30 PM	0	0	0	0	0	0	0	0	0	0	0	0	0
4/25/2024	9:45 PM	0	0	0	0	0	0	0	0	0	0	0	0	0
4/25/2024	10:00 PM	0	0	0	0	0	0	0	0	0	0	0	0	0
4/25/2024	10:15 PM	0	0	0	0	0	0	0	0	0	0	0	0	0
4/25/2024	10:30 PM	0	0	0	0	0	0	0	0	0	0	0	0	0
4/25/2024	10:45 PM	0	0	0	0	0	0	0	0	0	0	0	0	0
4/25/2024	11:00 PM	0	0	0	0	0	0	0	0	0	0	0	0	0
4/25/2024	11:15 PM	0	0	0	0	0	0	0	0	0	0	0	0	0
4/25/2024	11:30 PM	0	0	0	0	0	0	0	0	0	0	0	0	0
4/25/2024	11:45 PM	0	0	0	0	0	0	0	0	0	0	0	0	0

Bi-Directional Class Count || NB EB 15min

Columbia, SC

Marr Traffic DATA COLLECTION
www.marrtraffic.com

Site 38
I-26 On/Off-Ramp,
north of St Andrews Rd

Date
Tuesday, April 23, 2024

Lat/Long
34.045752°, -81.117379°

Weather
Fair
58°F

Click here for Detailed Weather

Click here for Map

0000 - 2400 (Weekday 24h Session) (04-23-2024)
NB EB 15min

	Northbound (Movement 38.1)													15min	60min
Time	1	2	3	4	5	6	7	8	9	10	11	12	13	Total	Total
0000 - 0015	0	0	0	0	0	0	0	0	0	0	0	0	0	**0**	
0015 - 0030	0	0	0	0	0	0	0	0	0	0	0	0	0	**0**	
0030 - 0045	0	0	0	0	0	0	0	0	0	0	0	0	0	**0**	
0045 - 0100	0	0	0	0	0	0	0	0	0	0	0	0	0	**0**	**0**
0100 - 0115	0	0	0	0	0	0	0	0	0	0	0	0	0	**0**	
0115 - 0130	0	0	0	0	0	0	0	0	0	0	0	0	0	**0**	
0130 - 0145	0	0	0	0	0	0	0	0	0	0	0	0	0	**0**	
0145 - 0200	0	0	0	0	0	0	0	0	0	0	0	0	0	**0**	**0**
0200 - 0215	0	0	0	0	0	0	0	0	0	0	0	0	0	**0**	
0215 - 0230	0	0	0	0	0	0	0	0	0	0	0	0	0	**0**	
0230 - 0245	0	0	0	0	0	0	0	0	0	0	0	0	0	**0**	
0245 - 0300	0	0	0	0	0	0	0	0	0	0	0	0	0	**0**	**0**
0300 - 0315	0	0	0	0	0	0	0	0	0	0	0	0	0	**0**	
0315 - 0330	0	0	0	0	0	0	0	0	0	0	0	0	0	**0**	
0330 - 0345	0	0	0	0	0	0	0	0	0	0	0	0	0	**0**	
0345 - 0400	0	0	0	0	0	0	0	0	0	0	0	0	0	**0**	**0**
0400 - 0415	0	0	0	0	0	0	0	0	0	0	0	0	0	**0**	
0415 - 0430	0	0	0	0	0	0	0	0	0	0	0	0	0	**0**	
0430 - 0445	0	0	0	0	0	0	0	0	0	0	0	0	0	**0**	
0445 - 0500	0	0	0	0	0	0	0	0	0	0	0	0	0	**0**	**0**
0500 - 0515	0	0	0	0	0	0	0	0	0	0	0	0	0	**0**	
0515 - 0530	0	0	0	0	0	0	0	0	0	0	0	0	0	**0**	
0530 - 0545	0	0	0	0	0	0	0	0	0	0	0	0	0	**0**	
0545 - 0600	0	0	0	0	0	0	0	0	0	0	0	0	0	**0**	**0**
0600 - 0615	0	0	0	0	0	0	0	0	0	0	0	0	0	**0**	
0615 - 0630	0	0	0	0	0	0	0	0	0	0	0	0	0	**0**	
0630 - 0645	0	0	0	0	0	0	0	0	0	0	0	0	0	**0**	
0645 - 0700	0	0	0	0	0	0	0	0	0	0	0	0	0	**0**	**0**
0700 - 0715	0	0	0	0	0	0	0	0	0	0	0	0	0	**0**	
0715 - 0730	0	0	0	0	0	0	0	0	0	0	0	0	0	**0**	
0730 - 0745	0	0	0	0	0	0	0	0	0	0	0	0	0	**0**	
0745 - 0800	0	0	0	0	0	0	0	0	0	0	0	0	0	**0**	**0**
0800 - 0815	0	0	0	0	0	0	0	0	0	0	0	0	0	**0**	
0815 - 0830	0	0	0	0	0	0	0	0	0	0	0	0	0	**0**	
0830 - 0845	0	0	0	0	0	0	0	0	0	0	0	0	0	**0**	
0845 - 0900	0	0	0	0	0	0	0	0	0	0	0	0	0	**0**	**0**
0900 - 0915	0	0	0	0	0	0	0	0	0	0	0	0	0	**0**	
0915 - 0930	0	0	0	0	0	0	0	0	0	0	0	0	0	**0**	
0930 - 0945	0	0	0	0	0	0	0	0	0	0	0	0	0	**0**	
0945 - 1000	0	0	0	0	0	0	0	0	0	0	0	0	0	**0**	**0**
1000 - 1015	0	0	0	0	0	0	0	0	0	0	0	0	0	**0**	
1015 - 1030	0	0	0	0	0	0	0	0	0	0	0	0	0	**0**	
1030 - 1045	0	0	0	0	0	0	0	0	0	0	0	0	0	**0**	
1045 - 1100	0	0	0	0	0	0	0	0	0	0	0	0	0	**0**	**0**
1100 - 1115	0	0	0	0	0	0	0	0	0	0	0	0	0	**0**	
1115 - 1130	0	0	0	0	0	0	0	0	0	0	0	0	0	**0**	
1130 - 1145	0	0	0	0	0	0	0	0	0	0	0	0	0	**0**	
1145 - 1200	0	0	0	0	0	0	0	0	0	0	0	0	0	**0**	**0**
1200 - 1215	0	0	0	0	0	0	0	0	0	0	0	0	0	**0**	
1215 - 1230	0	0	0	0	0	0	0	0	0	0	0	0	0	**0**	
1230 - 1245	0	0	0	0	0	0	0	0	0	0	0	0	0	**0**	
1245 - 1300	0	0	0	0	0	0	0	0	0	0	0	0	0	**0**	**0**
1300 - 1315	0	0	0	0	0	0	0	0	0	0	0	0	0	**0**	
1315 - 1330	0	0	0	0	0	0	0	0	0	0	0	0	0	**0**	
1330 - 1345	0	0	0	0	0	0	0	0	0	0	0	0	0	**0**	
1345 - 1400	0	0	0	0	0	0	0	0	0	0	0	0	0	**0**	**0**
1400 - 1415	0	0	0	0	0	0	0	0	0	0	0	0	0	**0**	
1415 - 1430	0	0	0	0	0	0	0	0	0	0	0	0	0	**0**	
1430 - 1445	0	0	0	0	0	0	0	0	0	0	0	0	0	**0**	
1445 - 1500	0	0	0	0	0	0	0	0	0	0	0	0	0	**0**	**0**
1500 - 1515	0	0	0	0	0	0	0	0	0	0	0	0	0	**0**	
1515 - 1530	0	0	0	0	0	0	0	0	0	0	0	0	0	**0**	
1530 - 1545	0	0	0	0	0	0	0	0	0	0	0	0	0	**0**	
1545 - 1600	0	0	0	0	0	0	0	0	0	0	0	0	0	**0**	**0**
1600 - 1615	0	0	0	0	0	0	0	0	0	0	0	0	0	**0**	
1615 - 1630	0	0	0	0	0	0	0	0	0	0	0	0	0	**0**	
1630 - 1645	0	0	0	0	0	0	0	0	0	0	0	0	0	**0**	
1645 - 1700	0	0	0	0	0	0	0	0	0	0	0	0	0	**0**	**0**
1700 - 1715	0	0	0	0	0	0	0	0	0	0	0	0	0	**0**	
1715 - 1730	0	0	0	0	0	0	0	0	0	0	0	0	0	**0**	
1730 - 1745	0	0	0	0	0	0	0	0	0	0	0	0	0	**0**	
1745 - 1800	0	0	0	0	0	0	0	0	0	0	0	0	0	**0**	**0**
1800 - 1815	0	0	0	0	0	0	0	0	0	0	0	0	0	**0**	
1815 - 1830	0	0	0	0	0	0	0	0	0	0	0	0	0	**0**	
1830 - 1845	0	0	0	0	0	0	0	0	0	0	0	0	0	**0**	
1845 - 1900	0	0	0	0	0	0	0	0	0	0	0	0	0	**0**	**0**
1900 - 1915	0	15	6	0	0	0	0	0	0	0	0	0	0	**21**	
1915 - 1930	0	25	5	0	0	0	0	0	0	0	0	0	0	**30**	
1930 - 1945	0	22	3	0	0	0	0	0	0	0	0	0	0	**25**	
1945 - 2000	0	27	3	0	0	0	0	1	0	0	0	0	0	**31**	**107**
2000 - 2015	0	26	1	0	0	0	0	0	0	0	0	0	0	**27**	
2015 - 2030	0	24	3	0	0	0	0	0	0	0	0	0	0	**27**	
2030 - 2045	0	27	2	0	0	0	0	0	0	0	0	0	0	**29**	
2045 - 2100	0	24	2	0	0	0	0	0	0	0	0	0	0	**26**	**109**
2100 - 2115	0	24	3	0	0	0	0	0	0	0	0	0	0	**27**	
2115 - 2130	0	19	1	0	0	0	0	0	0	0	0	0	0	**20**	
2130 - 2145	0	17	2	0	0	0	0	0	0	0	0	0	0	**19**	
2145 - 2200	0	22	3	0	0	0	0	0	0	0	0	0	0	**25**	**91**
2200 - 2215	0	8	2	0	0	0	0	0	0	0	0	0	0	**10**	
2215 - 2230	0	12	4	0	0	0	0	0	0	0	0	0	0	**16**	
2230 - 2245	1	19	4	0	0	0	0	0	0	0	0	0	0	**24**	
2245 - 2300	0	8	1	0	0	0	0	0	0	0	0	0	0	**9**	**59**
2300 - 2315	0	8	2	0	0	0	0	0	0	0	0	0	0	**10**	
2315 - 2330	0	5	0	0	0	0	0	0	0	0	0	0	0	**5**	
2330 - 2345	0	7	2	0	0	0	0	0	0	0	0	0	0	**9**	
2345 - 0000	0	8	1	0	0	0	0	0	0	0	0	0	0	**9**	**33**

Session Total	1	347	50	0	0	0	0	1	0	0	0	0	0	**399**
Session Average	0.01	3.61	0.52	0.00	0.00	0.00	0.00	0.01	0.00	0.00	0.00	0.00	0.00	**4.16**
Session Percentage	0.25	86.97	12.53	0.00	0.00	0.00	0.00	0.25	0.00	0.00	0.00	0.00	0.00	

AM Peak Hour	-	-	-	-	-	-	-	-	-	-	-	-	-	**-**
AM Peak Volume	0	0	0	0	0	0	0	0	0	0	0	0	0	**0**

Noon Peak Hour	-	-	-	-	-	-	-	-	-	-	-	-	-	**-**
Noon Peak Volume	0	0	0	0	0	0	0	0	0	0	0	0	0	**0**

PM Peak Hour	-	1945 - 2045	1900 - 2000	-	-	-	-	1900 - 2000	-	-	-	-	-	**1945 - 2045**
PM Peak Volume	0	104	17	0	0	0	0	1	0	0	0	0	0	**114**

Site 38
I-26 On/Off-Ramp,
north of St Andrews Rd

Date
Wednesday, April 24, 2024

Lat/Long
34.045752°, -81.117379°

Weather
Fair
66°F

Click here for Detailed Weather

0000 - 2400 (Weekday 24h Session) (04-24-2024)
NB EB 15min

	Northbound (Movement 38.1)													15min	60min
Time	1	2	3	4	5	6	7	8	9	10	11	12	13	Total	Total
0000 - 0015	0	4	2	0	0	0	0	0	0	0	0	0	0	**6**	
0015 - 0030	0	3	0	0	0	0	0	0	0	0	0	0	0	**3**	
0030 - 0045	0	5	1	0	0	0	0	0	0	0	0	0	0	**6**	
0045 - 0100	0	6	1	0	0	0	0	0	0	0	0	0	0	**7**	**22**
0100 - 0115	0	3	0	0	1	0	0	0	0	0	0	0	0	**4**	
0115 - 0130	0	3	1	0	0	0	0	0	0	0	0	0	0	**4**	
0130 - 0145	0	3	0	0	0	0	0	0	0	0	0	0	0	**3**	
0145 - 0200	0	2	0	0	0	0	0	0	0	0	0	0	0	**2**	**13**
0200 - 0215	0	2	0	0	0	0	0	0	0	0	0	0	0	**2**	
0215 - 0230	0	2	0	0	0	0	0	0	0	0	0	0	0	**2**	
0230 - 0245	0	3	0	0	0	0	0	0	0	0	0	0	0	**3**	
0245 - 0300	0	1	0	0	1	0	0	0	0	0	0	0	0	**2**	**9**
0300 - 0315	0	1	0	0	1	0	0	0	0	0	0	0	0	**2**	
0315 - 0330	0	1	0	0	0	0	0	0	0	0	0	0	0	**1**	
0330 - 0345	0	4	0	0	0	0	0	0	0	0	0	0	0	**4**	
0345 - 0400	0	2	0	0	0	0	0	0	0	0	0	0	0	**2**	**9**
0400 - 0415	0	3	1	0	0	0	0	0	0	0	0	0	0	**4**	
0415 - 0430	0	3	0	0	0	0	0	0	0	0	0	0	0	**3**	
0430 - 0445	0	6	0	0	0	0	0	0	0	0	0	0	0	**6**	
0445 - 0500	0	5	1	0	1	0	0	0	0	0	0	0	0	**7**	**20**
0500 - 0515	0	6	1	0	0	0	0	0	0	0	0	0	0	**7**	
0515 - 0530	0	2	1	0	0	0	0	0	0	0	0	0	0	**3**	
0530 - 0545	0	8	0	0	0	0	0	0	0	0	0	0	0	**8**	
0545 - 0600	0	12	3	0	0	0	0	0	0	0	0	0	0	**15**	**33**
0600 - 0615	0	9	2	0	0	0	0	0	0	0	0	0	0	**11**	
0615 - 0630	0	13	1	0	0	0	0	0	0	0	0	0	0	**14**	
0630 - 0645	0	12	4	0	0	0	0	0	2	0	0	0	0	**18**	
0645 - 0700	0	21	3	0	0	0	0	0	0	0	0	0	0	**24**	**67**
0700 - 0715	0	31	5	0	1	0	0	0	0	0	0	0	0	**37**	
0715 - 0730	0	29	9	0	0	0	0	0	1	0	0	0	0	**39**	
0730 - 0745	0	41	6	0	1	1	0	0	0	0	0	0	0	**49**	
0745 - 0800	0	48	5	0	0	0	0	0	1	0	0	0	0	**54**	**179**
0800 - 0815	0	26	6	0	1	0	0	0	0	0	0	0	0	**33**	
0815 - 0830	0	19	8	0	2	0	0	0	0	0	0	0	0	**29**	
0830 - 0845	1	27	5	0	0	0	0	1	0	0	0	0	0	**34**	
0845 - 0900	0	28	9	0	1	0	0	0	0	0	0	0	0	**38**	**134**
0900 - 0915	0	26	9	0	0	0	1	0	0	0	0	0	0	**36**	
0915 - 0930	0	14	3	0	1	0	0	1	1	0	0	0	0	**20**	
0930 - 0945	0	38	6	1	0	0	0	0	0	0	0	0	0	**45**	
0945 - 1000	0	29	7	0	0	0	0	0	1	0	0	0	0	**37**	**138**
1000 - 1015	0	31	8	1	0	0	0	0	0	0	0	0	0	**40**	
1015 - 1030	0	25	10	0	1	0	0	1	0	0	0	0	0	**37**	
1030 - 1045	0	32	3	0	0	0	0	0	0	0	0	0	0	**35**	
1045 - 1100	0	32	15	0	2	0	0	1	1	0	0	0	0	**51**	**163**
1100 - 1115	0	33	7	0	0	0	0	0	0	0	0	0	0	**40**	
1115 - 1130	0	42	10	0	2	0	0	0	0	0	0	0	0	**54**	
1130 - 1145	0	26	11	0	0	0	0	0	0	0	0	0	0	**37**	
1145 - 1200	0	49	6	0	2	0	0	1	1	0	0	0	0	**59**	**190**
1200 - 1215	0	48	5	0	0	0	0	0	0	0	0	0	0	**53**	
1215 - 1230	0	46	11	0	1	0	0	1	0	0	0	0	0	**59**	
1230 - 1245	0	40	5	0	0	0	0	0	0	0	0	0	0	**45**	
1245 - 1300	0	39	9	0	0	0	0	0	0	0	0	0	0	**48**	**205**
1300 - 1315	0	42	6	0	1	0	0	0	0	0	0	0	0	**49**	
1315 - 1330	0	35	12	0	0	0	0	0	0	0	0	0	0	**47**	
1330 - 1345	2	38	7	0	2	0	0	0	0	0	0	0	0	**49**	
1345 - 1400	0	40	7	0	0	0	0	1	0	0	0	0	0	**48**	**193**
1400 - 1415	1	45	10	0	0	0	0	0	0	0	0	0	0	**56**	
1415 - 1430	0	38	9	0	1	0	0	0	0	0	0	0	0	**48**	
1430 - 1445	0	50	13	0	2	0	0	0	0	0	0	0	0	**65**	
1445 - 1500	0	57	8	1	0	0	0	0	0	0	0	0	0	**66**	**235**
1500 - 1515	0	48	5	0	1	0	0	0	0	0	0	0	0	**54**	
1515 - 1530	0	43	7	0	0	0	0	0	0	0	0	0	0	**50**	
1530 - 1545	0	60	6	0	0	0	0	0	0	0	0	0	0	**66**	
1545 - 1600	0	43	4	0	0	0	0	0	0	0	0	0	0	**47**	**217**
1600 - 1615	1	53	10	0	0	0	0	0	1	0	0	0	0	**65**	
1615 - 1630	0	43	7	0	0	3	1	0	0	0	0	0	0	**54**	
1630 - 1645	0	43	8	0	0	0	0	0	0	0	0	0	0	**51**	
1645 - 1700	0	46	12	0	1	0	0	0	0	1	0	0	0	**60**	**230**
1700 - 1715	0	38	8	1	0	0	0	0	0	0	0	0	0	**47**	
1715 - 1730	0	40	7	0	1	0	0	0	0	0	0	0	0	**48**	
1730 - 1745	0	42	4	0	1	0	0	0	1	0	0	0	0	**48**	
1745 - 1800	0	31	5	0	0	0	0	0	0	0	0	0	0	**36**	**179**
1800 - 1815	1	48	6	0	0	0	0	0	0	0	0	0	0	**55**	
1815 - 1830	2	28	9	0	0	0	0	0	0	0	0	0	0	**39**	
1830 - 1845	0	29	6	0	3	0	0	0	0	0	0	0	0	**38**	
1845 - 1900	0	35	3	0	0	0	0	0	0	0	0	0	0	**38**	**170**
1900 - 1915	0	27	6	0	1	0	0	0	0	0	0	0	0	**34**	
1915 - 1930	0	28	4	0	0	0	0	0	0	0	0	0	0	**32**	
1930 - 1945	0	26	5	0	0	0	0	0	0	0	0	0	0	**31**	
1945 - 2000	0	26	8	0	0	0	0	0	0	0	0	0	0	**34**	**131**
2000 - 2015	0	24	5	0	1	0	0	0	0	0	0	0	0	**30**	
2015 - 2030	0	41	4	0	0	0	0	0	0	0	0	0	0	**45**	
2030 - 2045	0	33	0	0	0	0	0	0	0	0	0	0	0	**33**	
2045 - 2100	0	26	2	0	0	0	0	0	0	0	0	0	0	**28**	**136**
2100 - 2115	0	30	3	0	0	0	0	0	0	0	0	0	0	**33**	
2115 - 2130	0	21	1	0	0	0	0	0	0	0	0	0	0	**22**	
2130 - 2145	0	16	1	0	0	0	0	0	0	0	0	0	0	**17**	
2145 - 2200	0	14	0	0	0	0	0	0	0	0	0	0	0	**14**	**86**
2200 - 2215	0	13	1	0	0	0	0	0	0	0	0	0	0	**14**	
2215 - 2230	0	9	0	0	0	0	0	0	0	0	0	0	0	**9**	
2230 - 2245	0	6	1	1	1	0	0	0	0	0	0	0	0	**9**	
2245 - 2300	0	12	0	0	1	0	0	0	0	0	0	0	0	**13**	**45**
2300 - 2315	0	9	0	0	0	0	0	0	0	0	0	0	0	**9**	
2315 - 2330	0	5	0	0	0	0	0	0	0	0	0	0	0	**5**	
2330 - 2345	0	6	0	0	0	0	0	0	0	0	0	0	0	**6**	
2345 - 0000	0	1	0	0	0	0	0	0	0	0	0	0	0	**1**	**21**

Session Total	8	2332	420	5	36	4	2	7	10	1	0	0	0	**2825**
Session Average	0.08	24.29	4.38	0.05	0.38	0.04	0.02	0.07	0.10	0.01	0.00	0.00	0.00	**29.43**
Session Percentage	0.28	82.55	14.87	0.18	1.27	0.14	0.07	0.25	0.35	0.04	0.00	0.00	0.00	

AM Peak Hour	0745 - 0845	0700 - 0800	0815 - 0915	0915 - 1015	0730 - 0830	0645 - 0745	0815 - 0915	0830 - 0930	0630 - 0730	-	-	-	-	**0700 - 0800**
AM Peak Volume	1	149	31	2	4	1	1	2	3	0	0	0	0	**179**

Noon Peak Hour	1315 - 1415	1445 - 1545	1045 - 1145	1000 - 1100	1030 - 1130	-	-	1000 - 1100	1000 - 1100	-	-	-	-	**1445 - 1545**
Noon Peak Volume	3	208	43	1	4	0	0	2	1	0	0	0	0	**236**

PM Peak Hour	1730 - 1830	1515 - 1615	1600 - 1700	1615 - 1715	1815 - 1915	1530 - 1630	1530 - 1630	-	1515 - 1615	1600 - 1700	-	-	-	**1530 - 1630**
PM Peak Volume	3	199	37	1	4	3	1	0	1	1	0	0	0	**232**

Site 38
I-26 On/Off-Ramp,
north of St Andrews Rd

Date
Thursday, April 25, 2024

Lat/Long
34.045752°, -81.117379°

Weather
Fair
67°F

Click here for Detailed Weather

0000 - 2400 (Weekday 24h Session) (04-25-2024)
NB EB 15min

	Northbound (Movement 38.1)													15min	60min
TIME	1	2	3	4	5	6	7	8	9	10	11	12	13	Total	Total
0000 - 0015	0	5	0	0	0	0	0	0	0	0	0	0	0	**5**	
0015 - 0030	0	7	2	0	1	0	0	0	0	0	0	0	0	**10**	
0030 - 0045	0	5	0	0	0	0	0	0	0	0	0	0	0	**5**	
0045 - 0100	0	4	0	0	0	0	0	0	0	0	0	0	0	**4**	**24**
0100 - 0115	0	7	0	0	0	0	0	0	0	0	0	0	0	**7**	
0115 - 0130	0	6	0	0	0	0	0	0	0	0	0	0	0	**6**	
0130 - 0145	0	5	0	0	0	0	0	0	0	0	0	0	0	**5**	
0145 - 0200	0	0	0	0	0	0	0	0	0	0	0	0	0	**0**	**18**
0200 - 0215	0	1	0	0	0	0	0	0	0	0	0	0	0	**1**	
0215 - 0230	0	2	0	0	0	0	0	0	0	0	0	0	0	**2**	
0230 - 0245	0	1	0	0	0	0	0	0	0	0	0	0	0	**1**	
0245 - 0300	0	3	0	0	0	0	0	0	0	0	0	0	0	**3**	**7**
0300 - 0315	0	2	0	0	0	0	0	0	0	0	0	0	0	**2**	
0315 - 0330	0	4	0	0	0	0	0	0	0	0	0	0	0	**4**	
0330 - 0345	0	5	1	0	0	0	0	0	0	0	0	0	0	**6**	
0345 - 0400	0	6	0	0	0	0	0	0	0	0	0	0	0	**6**	**18**
0400 - 0415	0	3	0	0	0	0	0	0	0	0	0	0	0	**3**	
0415 - 0430	0	3	0	0	0	0	0	0	0	0	0	0	0	**3**	
0430 - 0445	0	3	0	0	0	0	0	0	0	0	0	0	0	**3**	
0445 - 0500	0	8	1	0	0	0	0	0	0	0	0	0	0	**9**	**18**
0500 - 0515	0	4	0	0	0	0	0	0	0	0	0	0	0	**4**	
0515 - 0530	0	5	0	0	1	0	0	0	0	0	0	0	0	**6**	
0530 - 0545	0	9	0	0	1	0	0	0	0	0	0	0	0	**10**	
0545 - 0600	0	14	0	0	0	0	0	0	1	0	0	0	0	**15**	**35**
0600 - 0615	0	13	1	0	0	0	0	0	0	0	0	0	0	**14**	
0615 - 0630	0	8	1	0	1	0	0	0	0	0	0	0	0	**10**	
0630 - 0645	0	16	3	0	0	0	0	0	0	0	0	0	0	**19**	
0645 - 0700	0	20	4	0	0	0	0	0	0	0	0	0	0	**24**	**67**
0700 - 0715	0	28	6	0	0	1	0	0	0	0	0	0	0	**35**	
0715 - 0730	0	28	4	0	0	0	0	0	0	0	0	0	0	**32**	
0730 - 0745	0	33	1	0	1	0	0	0	0	0	0	0	0	**35**	
0745 - 0800	0	41	8	0	0	0	0	0	0	0	0	0	0	**49**	**151**
0800 - 0815	0	34	7	0	0	0	0	1	0	0	0	0	0	**42**	
0815 - 0830	0	24	6	0	0	0	0	0	1	0	0	0	0	**31**	
0830 - 0845	0	22	4	0	0	0	0	0	0	0	0	0	0	**26**	
0845 - 0900	0	33	7	0	4	0	0	0	0	0	0	0	0	**44**	**143**
0900 - 0915	0	23	7	0	1	0	0	0	1	0	0	0	0	**32**	
0915 - 0930	0	28	8	0	1	0	0	1	0	0	0	0	0	**38**	
0930 - 0945	0	20	8	0	0	0	0	0	0	0	0	0	0	**28**	
0945 - 1000	0	33	8	0	2	0	0	0	1	0	0	0	0	**44**	**142**
1000 - 1015	0	33	9	0	0	0	0	0	1	0	0	0	0	**43**	
1015 - 1030	0	28	10	1	0	0	0	0	0	0	0	0	0	**39**	
1030 - 1045	0	42	6	0	0	0	0	0	0	0	0	0	0	**48**	
1045 - 1100	0	31	9	0	0	0	0	0	2	0	0	0	0	**42**	**172**
1100 - 1115	0	34	8	0	0	0	0	0	0	0	0	0	0	**42**	
1115 - 1130	0	43	16	0	1	0	0	0	0	0	0	0	0	**60**	
1130 - 1145	0	36	9	0	1	0	0	0	0	0	0	0	0	**46**	
1145 - 1200	0	43	5	0	0	0	0	0	0	0	0	0	0	**48**	**196**
1200 - 1215	0	45	9	0	0	0	0	0	0	0	0	0	0	**54**	
1215 - 1230	2	55	11	0	0	0	0	0	0	0	0	0	0	**68**	
1230 - 1245	0	46	9	0	0	0	0	0	0	0	0	0	0	**55**	
1245 - 1300	0	36	7	0	1	0	0	0	0	0	0	0	0	**44**	**221**
1300 - 1315	0	32	15	0	0	0	0	0	0	0	0	0	0	**47**	
1315 - 1330	0	38	13	0	1	0	0	0	0	0	0	0	0	**52**	
1330 - 1345	0	42	8	0	0	0	0	0	0	0	0	0	0	**50**	
1345 - 1400	0	44	7	0	1	0	0	0	0	0	0	0	0	**52**	**201**
1400 - 1415	0	38	12	0	1	0	0	0	0	0	0	0	0	**51**	
1415 - 1430	0	27	4	0	0	0	0	0	0	0	0	0	0	**31**	
1430 - 1445	0	35	8	0	2	0	0	0	0	0	0	0	0	**45**	
1445 - 1500	0	39	8	0	1	0	0	1	0	0	0	0	0	**49**	**176**
1500 - 1515	0	41	11	0	1	0	0	1	0	0	0	0	0	**54**	
1515 - 1530	0	39	5	0	1	0	0	0	0	0	0	0	0	**45**	
1530 - 1545	0	45	8	0	1	0	0	1	0	0	0	0	0	**55**	
1545 - 1600	0	44	7	0	0	0	0	0	0	0	0	0	0	**51**	**205**
1600 - 1615	0	45	7	0	0	0	0	0	0	0	0	0	0	**52**	
1615 - 1630	0	36	6	0	0	0	0	0	0	0	0	0	0	**42**	
1630 - 1645	0	50	7	0	0	0	0	0	0	0	0	0	0	**57**	
1645 - 1700	0	52	7	0	0	0	0	0	0	0	0	0	0	**59**	**210**
1700 - 1715	0	45	6	0	0	0	0	0	0	0	0	0	0	**51**	
1715 - 1730	0	47	9	1	0	0	0	0	0	0	0	0	0	**57**	
1730 - 1745	0	27	6	0	0	0	0	0	0	0	0	0	0	**33**	
1745 - 1800	0	44	4	0	0	0	0	0	0	0	0	0	0	**48**	**189**
1800 - 1815	0	37	5	0	0	0	0	0	0	0	0	0	0	**42**	
1815 - 1830	1	27	7	1	0	0	0	0	0	0	0	0	0	**36**	
1830 - 1845	0	28	5	0	0	0	0	0	0	0	0	0	0	**33**	
1845 - 1900	0	31	5	0	0	0	0	0	0	0	0	0	0	**36**	**147**
1900 - 1915	0	0	0	0	0	0	0	0	0	0	0	0	0	**0**	
1915 - 1930	0	0	0	0	0	0	0	0	0	0	0	0	0	**0**	
1930 - 1945	0	0	0	0	0	0	0	0	0	0	0	0	0	**0**	
1945 - 2000	0	0	0	0	0	0	0	0	0	0	0	0	0	**0**	**0**
2000 - 2015	0	0	0	0	0	0	0	0	0	0	0	0	0	**0**	
2015 - 2030	0	0	0	0	0	0	0	0	0	0	0	0	0	**0**	
2030 - 2045	0	0	0	0	0	0	0	0	0	0	0	0	0	**0**	
2045 - 2100	0	0	0	0	0	0	0	0	0	0	0	0	0	**0**	**0**
2100 - 2115	0	0	0	0	0	0	0	0	0	0	0	0	0	**0**	
2115 - 2130	0	0	0	0	0	0	0	0	0	0	0	0	0	**0**	
2130 - 2145	0	0	0	0	0	0	0	0	0	0	0	0	0	**0**	
2145 - 2200	0	0	0	0	0	0	0	0	0	0	0	0	0	**0**	**0**
2200 - 2215	0	0	0	0	0	0	0	0	0	0	0	0	0	**0**	
2215 - 2230	0	0	0	0	0	0	0	0	0	0	0	0	0	**0**	
2230 - 2245	0	0	0	0	0	0	0	0	0	0	0	0	0	**0**	
2245 - 2300	0	0	0	0	0	0	0	0	0	0	0	0	0	**0**	**0**
2300 - 2315	0	0	0	0	0	0	0	0	0	0	0	0	0	**0**	
2315 - 2330	0	0	0	0	0	0	0	0	0	0	0	0	0	**0**	
2330 - 2345	0	0	0	0	0	0	0	0	0	0	0	0	0	**0**	
2345 - 0000	0	0	0	0	0	0	0	0	0	0	0	0	0	**0**	**0**

Session Total	3	1921	375	3	25	1	0	5	7	0	0	0	0	**2340**
Session Average	0.03	20.01	3.91	0.03	0.26	0.01	0.00	0.05	0.07	0.00	0.00	0.00	0.00	**24.38**
Session Percentage	0.13	82.09	16.03	0.13	1.07	0.04	0.00	0.21	0.30	0.00	0.00	0.00	0.00	

AM Peak Hour	-	0715 - 0815	0930 - 1030	0930 - 1030	0830 - 0930	0615 - 0715	-	0715 - 0815	0815 - 0915	-	-	-	-	**0945 - 1045**
AM Peak Hour Volume	0	136	35	1	6	1	0	1	2	0	0	0	0	**174**

Noon Peak Hour	1130 - 1230	1145 - 1245	1230 - 1330	1000 - 1100	1430 - 1530	-	-	1445 - 1545	1000 - 1100	-	-	-	-	**1145 - 1245**
Noon Peak Hour Volume	2	189	44	1	5	0	0	3	3	0	0	0	0	**225**

PM Peak Hour	1730 - 1830	1630 - 1730	1500 - 1600	1630 - 1730	1500 - 1600	-	-	1500 - 1600	-	-	-	-	-	**1630 - 1730**
PM Peak Hour Volume	1	194	31	1	3	0	0	2	0	0	0	0	0	**224**

Bi-Directional Class Count || NB EB Average 15min

Columbia, SC

Marr Traffic DATA COLLECTION
www.marrtraffic.com

Site 38
I-26 On/Off-Ramp,
north of St Andrews Rd

Date
Tuesday, April 23, 2024

Lat/Long
34.045752°, -81.117379°

Weather
Fair
58°F

0000 - 2400 (Weekday 24h Session) (All Dates)
NB EB Average 15min

	NB EB Average 15min													15min	60min
Time	1	2	3	4	5	6	7	8	9	10	11	12	13	Total	Total
0000 - 0015	0	3	1	0	0	0	0	0	0	0	0	0	0	**4**	
0015 - 0030	0	3	1	0	0	0	0	0	0	0	0	0	0	**4**	
0030 - 0045	0	3	0	0	0	0	0	0	0	0	0	0	0	**4**	
0045 - 0100	0	3	0	0	0	0	0	0	0	0	0	0	0	**4**	**15**
0100 - 0115	0	3	0	0	0	0	0	0	0	0	0	0	0	**4**	
0115 - 0130	0	3	0	0	0	0	0	0	0	0	0	0	0	**3**	
0130 - 0145	0	3	0	0	0	0	0	0	0	0	0	0	0	**3**	
0145 - 0200	0	1	0	0	0	0	0	0	0	0	0	0	0	**1**	**10**
0200 - 0215	0	1	0	0	0	0	0	0	0	0	0	0	0	**1**	
0215 - 0230	0	1	0	0	0	0	0	0	0	0	0	0	0	**1**	
0230 - 0245	0	1	0	0	0	0	0	0	0	0	0	0	0	**1**	
0245 - 0300	0	1	0	0	0	0	0	0	0	0	0	0	0	**2**	**5**
0300 - 0315	0	1	0	0	0	0	0	0	0	0	0	0	0	**1**	
0315 - 0330	0	2	0	0	0	0	0	0	0	0	0	0	0	**2**	
0330 - 0345	0	3	0	0	0	0	0	0	0	0	0	0	0	**3**	
0345 - 0400	0	3	0	0	0	0	0	0	0	0	0	0	0	**3**	**9**
0400 - 0415	0	2	0	0	0	0	0	0	0	0	0	0	0	**2**	
0415 - 0430	0	2	0	0	0	0	0	0	0	0	0	0	0	**2**	
0430 - 0445	0	3	0	0	0	0	0	0	0	0	0	0	0	**3**	
0445 - 0500	0	4	1	0	0	0	0	0	0	0	0	0	0	**5**	**13**
0500 - 0515	0	3	0	0	0	0	0	0	0	0	0	0	0	**4**	
0515 - 0530	0	2	0	0	0	0	0	0	0	0	0	0	0	**3**	
0530 - 0545	0	6	0	0	0	0	0	0	0	0	0	0	0	**6**	
0545 - 0600	0	9	1	0	0	0	0	0	0	0	0	0	0	**10**	**23**
0600 - 0615	0	7	1	0	0	0	0	0	0	0	0	0	0	**8**	
0615 - 0630	0	7	1	0	0	0	0	0	0	0	0	0	0	**8**	
0630 - 0645	0	9	2	0	0	0	0	0	1	0	0	0	0	**12**	
0645 - 0700	0	14	2	0	0	0	0	0	0	0	0	0	0	**16**	**45**
0700 - 0715	0	20	4	0	0	0	0	0	0	0	0	0	0	**24**	
0715 - 0730	0	19	4	0	0	0	0	0	0	0	0	0	0	**24**	
0730 - 0745	0	25	2	0	1	0	0	0	0	0	0	0	0	**28**	
0745 - 0800	0	30	4	0	0	0	0	0	0	0	0	0	0	**34**	**110**
0800 - 0815	0	20	4	0	0	0	0	0	0	0	0	0	0	**25**	
0815 - 0830	0	14	5	0	1	0	0	0	0	0	0	0	0	**20**	
0830 - 0845	0	16	3	0	0	0	0	0	0	0	0	0	0	**20**	
0845 - 0900	0	20	5	0	2	0	0	0	0	0	0	0	0	**27**	**92**
0900 - 0915	0	16	5	0	0	0	0	0	0	0	0	0	0	**23**	
0915 - 0930	0	14	4	0	1	0	0	1	0	0	0	0	0	**19**	
0930 - 0945	0	19	5	0	0	0	0	0	0	0	0	0	0	**24**	
0945 - 1000	0	21	5	0	1	0	0	0	1	0	0	0	0	**27**	**93**
1000 - 1015	0	21	6	0	0	0	0	0	0	0	0	0	0	**28**	
1015 - 1030	0	18	7	0	0	0	0	0	0	0	0	0	0	**25**	
1030 - 1045	0	25	3	0	0	0	0	0	0	0	0	0	0	**28**	
1045 - 1100	0	21	8	0	1	0	0	0	1	0	0	0	0	**31**	**112**
1100 - 1115	0	22	5	0	0	0	0	0	0	0	0	0	0	**27**	
1115 - 1130	0	28	9	0	1	0	0	0	0	0	0	0	0	**38**	
1130 - 1145	0	21	7	0	0	0	0	0	0	0	0	0	0	**28**	
1145 - 1200	0	31	4	0	1	0	0	0	0	0	0	0	0	**36**	**129**
1200 - 1215	0	31	5	0	0	0	0	0	0	0	0	0	0	**36**	
1215 - 1230	1	34	7	0	0	0	0	0	0	0	0	0	0	**42**	
1230 - 1245	0	29	5	0	0	0	0	0	0	0	0	0	0	**33**	
1245 - 1300	0	25	5	0	0	0	0	0	0	0	0	0	0	**31**	**142**
1300 - 1315	0	25	7	0	0	0	0	0	0	0	0	0	0	**32**	
1315 - 1330	0	24	8	0	0	0	0	0	0	0	0	0	0	**33**	
1330 - 1345	1	27	5	0	1	0	0	0	0	0	0	0	0	**33**	
1345 - 1400	0	28	5	0	0	0	0	0	0	0	0	0	0	**33**	**131**
1400 - 1415	0	28	7	0	0	0	0	0	0	0	0	0	0	**36**	
1415 - 1430	0	22	4	0	0	0	0	0	0	0	0	0	0	**26**	
1430 - 1445	0	28	7	0	1	0	0	0	0	0	0	0	0	**37**	
1445 - 1500	0	32	5	0	0	0	0	0	0	0	0	0	0	**38**	**137**
1500 - 1515	0	30	5	0	1	0	0	0	0	0	0	0	0	**36**	
1515 - 1530	0	27	4	0	0	0	0	0	0	0	0	0	0	**32**	
1530 - 1545	0	35	5	0	0	0	0	0	0	0	0	0	0	**40**	
1545 - 1600	0	29	4	0	0	0	0	0	0	0	0	0	0	**33**	**141**
1600 - 1615	0	33	6	0	0	0	0	0	0	0	0	0	0	**39**	
1615 - 1630	0	26	4	0	0	1	0	0	0	0	0	0	0	**32**	
1630 - 1645	0	31	5	0	0	0	0	0	0	0	0	0	0	**36**	
1645 - 1700	0	33	6	0	0	0	0	0	0	0	0	0	0	**40**	**147**
1700 - 1715	0	28	5	0	0	0	0	0	0	0	0	0	0	**33**	
1715 - 1730	0	29	5	0	0	0	0	0	0	0	0	0	0	**35**	
1730 - 1745	0	23	3	0	0	0	0	0	0	0	0	0	0	**27**	
1745 - 1800	0	25	3	0	0	0	0	0	0	0	0	0	0	**28**	**123**
1800 - 1815	0	28	4	0	0	0	0	0	0	0	0	0	0	**32**	
1815 - 1830	1	18	5	0	0	0	0	0	0	0	0	0	0	**25**	
1830 - 1845	0	19	4	0	1	0	0	0	0	0	0	0	0	**24**	
1845 - 1900	0	22	3	0	0	0	0	0	0	0	0	0	0	**25**	**106**
1900 - 1915	0	14	4	0	0	0	0	0	0	0	0	0	0	**18**	
1915 - 1930	0	18	3	0	0	0	0	0	0	0	0	0	0	**21**	
1930 - 1945	0	16	3	0	0	0	0	0	0	0	0	0	0	**19**	
1945 - 2000	0	18	4	0	0	0	0	0	0	0	0	0	0	**22**	**79**
2000 - 2015	0	17	2	0	0	0	0	0	0	0	0	0	0	**19**	
2015 - 2030	0	22	2	0	0	0	0	0	0	0	0	0	0	**24**	
2030 - 2045	0	20	1	0	0	0	0	0	0	0	0	0	0	**21**	
2045 - 2100	0	17	1	0	0	0	0	0	0	0	0	0	0	**18**	**82**
2100 - 2115	0	18	2	0	0	0	0	0	0	0	0	0	0	**20**	
2115 - 2130	0	13	1	0	0	0	0	0	0	0	0	0	0	**14**	
2130 - 2145	0	11	1	0	0	0	0	0	0	0	0	0	0	**12**	
2145 - 2200	0	12	1	0	0	0	0	0	0	0	0	0	0	**13**	**59**
2200 - 2215	0	7	1	0	0	0	0	0	0	0	0	0	0	**8**	
2215 - 2230	0	7	1	0	0	0	0	0	0	0	0	0	0	**8**	
2230 - 2245	0	8	2	0	0	0	0	0	0	0	0	0	0	**11**	
2245 - 2300	0	7	0	0	0	0	0	0	0	0	0	0	0	**7**	**35**
2300 - 2315	0	6	1	0	0	0	0	0	0	0	0	0	0	**6**	
2315 - 2330	0	3	0	0	0	0	0	0	0	0	0	0	0	**3**	
2330 - 2345	0	4	1	0	0	0	0	0	0	0	0	0	0	**5**	
2345 - 0000	0	3	0	0	0	0	0	0	0	0	0	0	0	**3**	**18**

Session Total	4	1533	282	3	20	2	1	4	6	0	0	0	0	**1855**
Session Average	0.04	15.97	2.93	0.03	0.21	0.02	0.01	0.05	0.06	0.00	0.00	0.00	0.00	**19.32**
Session Percentage	0.22	82.67	15.19	0.14	1.10	0.09	0.04	0.23	0.31	0.02	0.00	0.00	0.00	

AM Peak Hour	0745 - 0845	0715 - 0815	0930 - 1030	0930 - 1030	0800 - 0900	0645 - 0745	0815 - 0915	0830 - 0930	0900 - 1000	-	-	-	-	**0715 - 0815**
AM Peak Volume	0	93	22	1	3	1	0	1	1	0	0	0	0	**111**

Noon Peak Hour	1315 - 1415	1145 - 1245	1045 - 1145	1000 - 1100	1415 - 1515	-	-	1445 - 1545	1000 - 1100	-	-	-	-	**1145 - 1245**
Noon Peak Volume	1	124	28	1	3	0	0	1	1	0	0	0	0	**147**

PM Peak Hour	1730 - 1830	1515 - 1615	1600 - 1700	1630 - 1730	1500 - 1600	1530 - 1630	1530 - 1630	1500 - 1600	1515 - 1615	1600 - 1700	-	-	-	**1600 - 1700**
PM Peak Volume	1	124	21	1	1	1	0	1	0	0	0	0	0	**147**

Bi-Directional Class Count || Volume Summary 15min

Columbia, SC

Marr Traffic DATA COLLECTION
www.marrtraffic.com

Site 38
I-26 On/Off-Ramp,
north of St Andrews Rd

Date
Tuesday, April 23, 2024

Lat/Long
34.045752°, -81.117379°

Weather
Fair
58°F

Click here for Detailed Weather

0000 - 2400 (Weekday 24h Session) (04-23-2024)

Volume Summary 15min

TIME	Volume Summary 15min NB	SB	15min Total	60min Total
0000 - 0015	0	0	**0**	
0015 - 0030	0	0	**0**	
0030 - 0045	0	0	**0**	
0045 - 0100	0	0	**0**	**0**
0100 - 0115	0	0	**0**	
0115 - 0130	0	0	**0**	
0130 - 0145	0	0	**0**	
0145 - 0200	0	0	**0**	**0**
0200 - 0215	0	0	**0**	
0215 - 0230	0	0	**0**	
0230 - 0245	0	0	**0**	
0245 - 0300	0	0	**0**	**0**
0300 - 0315	0	0	**0**	
0315 - 0330	0	0	**0**	
0330 - 0345	0	0	**0**	
0345 - 0400	0	0	**0**	**0**
0400 - 0415	0	0	**0**	
0415 - 0430	0	0	**0**	
0430 - 0445	0	0	**0**	
0445 - 0500	0	0	**0**	**0**
0500 - 0515	0	0	**0**	
0515 - 0530	0	0	**0**	
0530 - 0545	0	0	**0**	
0545 - 0600	0	0	**0**	**0**
0600 - 0615	0	0	**0**	
0615 - 0630	0	0	**0**	
0630 - 0645	0	0	**0**	
0645 - 0700	0	0	**0**	**0**
0700 - 0715	0	0	**0**	
0715 - 0730	0	0	**0**	
0730 - 0745	0	0	**0**	
0745 - 0800	0	0	**0**	**0**
0800 - 0815	0	0	**0**	
0815 - 0830	0	0	**0**	
0830 - 0845	0	0	**0**	
0845 - 0900	0	0	**0**	**0**
0900 - 0915	0	0	**0**	
0915 - 0930	0	0	**0**	
0930 - 0945	0	0	**0**	
0945 - 1000	0	0	**0**	**0**
1000 - 1015	0	0	**0**	
1015 - 1030	0	0	**0**	
1030 - 1045	0	0	**0**	
1045 - 1100	0	0	**0**	**0**
1100 - 1115	0	0	**0**	
1115 - 1130	0	0	**0**	
1130 - 1145	0	0	**0**	
1145 - 1200	0	0	**0**	**0**

Time	Volume Summary 15min NB	SB	15min Total	60min Total
1200 - 1215	0	0	**0**	
1215 - 1230	0	0	**0**	
1230 - 1245	0	0	**0**	
1245 - 1300	0	0	**0**	**0**
1300 - 1315	0	0	**0**	
1315 - 1330	0	0	**0**	
1330 - 1345	0	0	**0**	
1345 - 1400	0	0	**0**	**0**
1400 - 1415	0	0	**0**	
1415 - 1430	0	0	**0**	
1430 - 1445	0	0	**0**	
1445 - 1500	0	0	**0**	**0**
1500 - 1515	0	0	**0**	
1515 - 1530	0	0	**0**	
1530 - 1545	0	0	**0**	
1545 - 1600	0	0	**0**	**0**
1600 - 1615	0	0	**0**	
1615 - 1630	0	0	**0**	
1630 - 1645	0	0	**0**	
1645 - 1700	0	0	**0**	**0**
1700 - 1715	0	0	**0**	
1715 - 1730	0	0	**0**	
1730 - 1745	0	0	**0**	
1745 - 1800	0	0	**0**	**0**
1800 - 1815	0	0	**0**	
1815 - 1830	0	0	**0**	
1830 - 1845	0	0	**0**	
1845 - 1900	0	0	**0**	**0**
1900 - 1915	21	0	**21**	
1915 - 1930	30	0	**30**	
1930 - 1945	25	0	**25**	
1945 - 2000	31	0	**31**	**107**
2000 - 2015	27	0	**27**	
2015 - 2030	27	0	**27**	
2030 - 2045	29	0	**29**	
2045 - 2100	26	0	**26**	**109**
2100 - 2115	27	0	**27**	
2115 - 2130	20	0	**20**	
2130 - 2145	19	0	**19**	
2145 - 2200	25	0	**25**	**91**
2200 - 2215	10	0	**10**	
2215 - 2230	16	0	**16**	
2230 - 2245	24	0	**24**	
2245 - 2300	9	0	**9**	**59**
2300 - 2315	10	0	**10**	
2315 - 2330	5	0	**5**	
2330 - 2345	9	0	**9**	
2345 - 0000	9	0	**9**	**33**

Session Total	399	0	**399**
Session Average	4.16	0.00	**4.16**
Session Percentage	100.00	0.00	

Site 38

I-26 On/Off-Ramp,
north of St Andrews Rd

Date

Wednesday, April 24, 2024

Lat/Long

34.045752°, -81.117379°

Weather

Fair
66°F

Click here for Detailed Weather

0000 - 2400 (Weekday 24h Session) (04-24-2024)

Volume Summary 15min

TIME	Volume Summary 15min NB	SB	15min Total	60min Total
0000 - 0015	6	0	**6**	
0015 - 0030	3	0	**3**	
0030 - 0045	6	0	**6**	
0045 - 0100	7	0	**7**	**22**
0100 - 0115	4	0	**4**	
0115 - 0130	4	0	**4**	
0130 - 0145	3	0	**3**	
0145 - 0200	2	0	**2**	**13**
0200 - 0215	2	0	**2**	
0215 - 0230	2	0	**2**	
0230 - 0245	3	0	**3**	
0245 - 0300	2	0	**2**	**9**
0300 - 0315	2	0	**2**	
0315 - 0330	1	0	**1**	
0330 - 0345	4	0	**4**	
0345 - 0400	2	0	**2**	**9**
0400 - 0415	4	0	**4**	
0415 - 0430	3	0	**3**	
0430 - 0445	6	0	**6**	
0445 - 0500	7	0	**7**	**20**
0500 - 0515	7	0	**7**	
0515 - 0530	3	0	**3**	
0530 - 0545	8	0	**8**	
0545 - 0600	15	0	**15**	**33**
0600 - 0615	11	0	**11**	
0615 - 0630	14	0	**14**	
0630 - 0645	18	0	**18**	
0645 - 0700	24	0	**24**	**67**
0700 - 0715	37	0	**37**	
0715 - 0730	39	0	**39**	
0730 - 0745	49	0	**49**	
0745 - 0800	54	0	**54**	**179**
0800 - 0815	33	0	**33**	
0815 - 0830	29	0	**29**	
0830 - 0845	34	0	**34**	
0845 - 0900	38	0	**38**	**134**
0900 - 0915	36	0	**36**	
0915 - 0930	20	0	**20**	
0930 - 0945	45	0	**45**	
0945 - 1000	37	0	**37**	**138**
1000 - 1015	40	0	**40**	
1015 - 1030	37	0	**37**	
1030 - 1045	35	0	**35**	
1045 - 1100	51	0	**51**	**163**
1100 - 1115	40	0	**40**	
1115 - 1130	54	0	**54**	
1130 - 1145	37	0	**37**	
1145 - 1200	59	0	**59**	**190**

Time	Volume Summary 15min NB	SB	15min Total	60min Total
1200 - 1215	53	0	**53**	
1215 - 1230	59	0	**59**	
1230 - 1245	45	0	**45**	
1245 - 1300	48	0	**48**	**205**
1300 - 1315	49	0	**49**	
1315 - 1330	47	0	**47**	
1330 - 1345	49	0	**49**	
1345 - 1400	48	0	**48**	**193**
1400 - 1415	56	0	**56**	
1415 - 1430	48	0	**48**	
1430 - 1445	65	0	**65**	
1445 - 1500	66	0	**66**	**235**
1500 - 1515	54	0	**54**	
1515 - 1530	50	0	**50**	
1530 - 1545	66	0	**66**	
1545 - 1600	47	0	**47**	**217**
1600 - 1615	65	0	**65**	
1615 - 1630	54	0	**54**	
1630 - 1645	51	0	**51**	
1645 - 1700	60	0	**60**	**230**
1700 - 1715	47	0	**47**	
1715 - 1730	48	0	**48**	
1730 - 1745	48	0	**48**	
1745 - 1800	36	0	**36**	**179**
1800 - 1815	55	0	**55**	
1815 - 1830	39	0	**39**	
1830 - 1845	38	0	**38**	
1845 - 1900	38	0	**38**	**170**
1900 - 1915	34	0	**34**	
1915 - 1930	32	0	**32**	
1930 - 1945	31	0	**31**	
1945 - 2000	34	0	**34**	**131**
2000 - 2015	30	0	**30**	
2015 - 2030	45	0	**45**	
2030 - 2045	33	0	**33**	
2045 - 2100	28	0	**28**	**136**
2100 - 2115	33	0	**33**	
2115 - 2130	22	0	**22**	
2130 - 2145	17	0	**17**	
2145 - 2200	14	0	**14**	**86**
2200 - 2215	14	0	**14**	
2215 - 2230	9	0	**9**	
2230 - 2245	9	0	**9**	
2245 - 2300	13	0	**13**	**45**
2300 - 2315	9	0	**9**	
2315 - 2330	5	0	**5**	
2330 - 2345	6	0	**6**	
2345 - 0000	1	0	**1**	**21**

Session Total	2825	0	**2825**
Session Average	29.43	0.00	**29.43**
Session Percentage	100.00	0.00	

Site 38
I-26 On/Off-Ramp,
north of St Andrews Rd

Date
Thursday, April 25, 2024

Lat/Long
34.045752°, -81.117379°

Weather
Fair
67°F

Click here for Detailed Weather

0000 - 2400 (Weekday 24h Session) (04-25-2024)
Volume Summary 15min

TIME	Volume Summary 15min NB	SB	15min Total	60min Total
0000 - 0015	5	0	**5**	
0015 - 0030	10	0	**10**	
0030 - 0045	5	0	**5**	
0045 - 0100	4	0	**4**	**24**
0100 - 0115	7	0	**7**	
0115 - 0130	6	0	**6**	
0130 - 0145	5	0	**5**	
0145 - 0200	0	0	**0**	**18**
0200 - 0215	1	0	**1**	
0215 - 0230	2	0	**2**	
0230 - 0245	1	0	**1**	
0245 - 0300	3	0	**3**	**7**
0300 - 0315	2	0	**2**	
0315 - 0330	4	0	**4**	
0330 - 0345	6	0	**6**	
0345 - 0400	6	0	**6**	**18**
0400 - 0415	3	0	**3**	
0415 - 0430	3	0	**3**	
0430 - 0445	3	0	**3**	
0445 - 0500	9	0	**9**	**18**
0500 - 0515	4	0	**4**	
0515 - 0530	6	0	**6**	
0530 - 0545	10	0	**10**	
0545 - 0600	15	0	**15**	**35**
0600 - 0615	14	0	**14**	
0615 - 0630	10	0	**10**	
0630 - 0645	19	0	**19**	
0645 - 0700	24	0	**24**	**67**
0700 - 0715	35	0	**35**	
0715 - 0730	32	0	**32**	
0730 - 0745	35	0	**35**	
0745 - 0800	49	0	**49**	**151**
0800 - 0815	42	0	**42**	
0815 - 0830	31	0	**31**	
0830 - 0845	26	0	**26**	
0845 - 0900	44	0	**44**	**143**
0900 - 0915	32	0	**32**	
0915 - 0930	38	0	**38**	
0930 - 0945	28	0	**28**	
0945 - 1000	44	0	**44**	**142**
1000 - 1015	43	0	**43**	
1015 - 1030	39	0	**39**	
1030 - 1045	48	0	**48**	
1045 - 1100	42	0	**42**	**172**
1100 - 1115	42	0	**42**	
1115 - 1130	60	0	**60**	
1130 - 1145	46	0	**46**	
1145 - 1200	48	0	**48**	**196**

Time	Volume Summary 15min NB	SB	15min Total	60min Total
1200 - 1215	54	0	**54**	
1215 - 1230	68	0	**68**	
1230 - 1245	55	0	**55**	
1245 - 1300	44	0	**44**	**221**
1300 - 1315	47	0	**47**	
1315 - 1330	52	0	**52**	
1330 - 1345	50	0	**50**	
1345 - 1400	52	0	**52**	**201**
1400 - 1415	51	0	**51**	
1415 - 1430	31	0	**31**	
1430 - 1445	45	0	**45**	
1445 - 1500	49	0	**49**	**176**
1500 - 1515	54	0	**54**	
1515 - 1530	45	0	**45**	
1530 - 1545	55	0	**55**	
1545 - 1600	51	0	**51**	**205**
1600 - 1615	52	0	**52**	
1615 - 1630	42	0	**42**	
1630 - 1645	57	0	**57**	
1645 - 1700	59	0	**59**	**210**
1700 - 1715	51	0	**51**	
1715 - 1730	57	0	**57**	
1730 - 1745	33	0	**33**	
1745 - 1800	48	0	**48**	**189**
1800 - 1815	42	0	**42**	
1815 - 1830	36	0	**36**	
1830 - 1845	33	0	**33**	
1845 - 1900	36	0	**36**	**147**
1900 - 1915	0	0	**0**	
1915 - 1930	0	0	**0**	
1930 - 1945	0	0	**0**	
1945 - 2000	0	0	**0**	**0**
2000 - 2015	0	0	**0**	
2015 - 2030	0	0	**0**	
2030 - 2045	0	0	**0**	
2045 - 2100	0	0	**0**	**0**
2100 - 2115	0	0	**0**	
2115 - 2130	0	0	**0**	
2130 - 2145	0	0	**0**	
2145 - 2200	0	0	**0**	**0**
2200 - 2215	0	0	**0**	
2215 - 2230	0	0	**0**	
2230 - 2245	0	0	**0**	
2245 - 2300	0	0	**0**	**0**
2300 - 2315	0	0	**0**	
2315 - 2330	0	0	**0**	
2330 - 2345	0	0	**0**	
2345 - 0000	0	0	**0**	**0**

Session Total	2340	0	**2340**
Session Average	24.38	0.00	**24.38**
Session Percentage	100.00	0.00	

Bi-Directional Class Count || NB EB 60min

Columbia, SC

Marr Traffic DATA COLLECTION

www.marrtraffic.com

Site 38
I-26 On/Off-Ramp,
north of St Andrews Rd

Date
Tuesday, April 23, 2024

Lat/Long
34.045752°, -81.117379°

Weather
Fair
58°F

Click here for Detailed Weather

0000 - 2400 (Weekday 24h Session) (04-23-2024)
NB EB 60min

	Northbound (Movement 38.1)													
TIME	1	2	3	4	5	6	7	8	9	10	11	12	13	**Total**
0000 - 0100	0	0	0	0	0	0	0	0	0	0	0	0	0	**0**
0100 - 0200	0	0	0	0	0	0	0	0	0	0	0	0	0	**0**
0200 - 0300	0	0	0	0	0	0	0	0	0	0	0	0	0	**0**
0300 - 0400	0	0	0	0	0	0	0	0	0	0	0	0	0	**0**
0400 - 0500	0	0	0	0	0	0	0	0	0	0	0	0	0	**0**
0500 - 0600	0	0	0	0	0	0	0	0	0	0	0	0	0	**0**
0600 - 0700	0	0	0	0	0	0	0	0	0	0	0	0	0	**0**
0700 - 0800	0	0	0	0	0	0	0	0	0	0	0	0	0	**0**
0800 - 0900	0	0	0	0	0	0	0	0	0	0	0	0	0	**0**
0900 - 1000	0	0	0	0	0	0	0	0	0	0	0	0	0	**0**
1000 - 1100	0	0	0	0	0	0	0	0	0	0	0	0	0	**0**
1100 - 1200	0	0	0	0	0	0	0	0	0	0	0	0	0	**0**
1200 - 1300	0	0	0	0	0	0	0	0	0	0	0	0	0	**0**
1300 - 1400	0	0	0	0	0	0	0	0	0	0	0	0	0	**0**
1400 - 1500	0	0	0	0	0	0	0	0	0	0	0	0	0	**0**
1500 - 1600	0	0	0	0	0	0	0	0	0	0	0	0	0	**0**
1600 - 1700	0	0	0	0	0	0	0	0	0	0	0	0	0	**0**
1700 - 1800	0	0	0	0	0	0	0	0	0	0	0	0	0	**0**
1800 - 1900	0	0	0	0	0	0	0	0	0	0	0	0	0	**0**
1900 - 2000	0	89	17	0	0	0	0	1	0	0	0	0	0	**107**
2000 - 2100	0	101	8	0	0	0	0	0	0	0	0	0	0	**109**
2100 - 2200	0	82	9	0	0	0	0	0	0	0	0	0	0	**91**
2200 - 2300	1	47	11	0	0	0	0	0	0	0	0	0	0	**59**
2300 - 2400	0	28	5	0	0	0	0	0	0	0	0	0	0	**33**
Session Total	1	347	50	0	0	0	0	1	0	0	0	0	0	**399**
Session Average	0.04	14.46	2.08	0.00	0.00	0.00	0.00	0.04	0.00	0.00	0.00	0.00	0.00	**16.63**
Session Percentage	0.25	86.97	12.53	0.00	0.00	0.00	0.00	0.25	0.00	0.00	0.00	0.00	0.00	
AM Peak Hour	-	-	-	-	-	-	-	-	-	-	-	-	-	**-**
AM Peak Volume	0	0	0	0	0	0	0	0	0	0	0	0	0	**0**
Noon Peak Hour	-	-	-	-	-	-	-	-	-	-	-	-	-	**-**
Noon Peak Volume	0	0	0	0	0	0	0	0	0	0	0	0	0	**0**
PM Peak Hour	-	1900 - 2000	1900 - 2000	-	-	-	-	1900 - 2000	-	-	-	-	-	**1900 - 2000**
PM Peak Volume	0	89	17	0	0	0	0	1	0	0	0	0	0	**107**

Site 38
I-26 On/Off-Ramp,
north of St Andrews Rd

Date
Wednesday, April 24, 2024

Lat/Long
34.045752°, -81.117379°

Weather
Fair
66°F

Click here for Detailed Weather

0000 - 2400 (Weekday 24h Session) (04-24-2024)
NB EB 60min

	Northbound (Movement 38.1)													
TIME	1	2	3	4	5	6	7	8	9	10	11	12	13	**Total**
0000 - 0100	0	18	4	0	0	0	0	0	0	0	0	0	0	**22**
0100 - 0200	0	11	1	0	1	0	0	0	0	0	0	0	0	**13**
0200 - 0300	0	8	0	0	1	0	0	0	0	0	0	0	0	**9**
0300 - 0400	0	8	0	0	1	0	0	0	0	0	0	0	0	**9**
0400 - 0500	0	17	2	0	1	0	0	0	0	0	0	0	0	**20**
0500 - 0600	0	28	5	0	0	0	0	0	0	0	0	0	0	**33**
0600 - 0700	0	55	10	0	0	0	0	0	2	0	0	0	0	**67**
0700 - 0800	0	149	25	0	2	1	0	0	2	0	0	0	0	**179**
0800 - 0900	1	100	28	0	4	0	0	1	0	0	0	0	0	**134**
0900 - 1000	0	107	25	1	1	0	1	1	2	0	0	0	0	**138**
1000 - 1100	0	120	36	1	3	0	0	2	1	0	0	0	0	**163**
1100 - 1200	0	150	34	0	4	0	0	1	1	0	0	0	0	**190**
1200 - 1300	0	173	30	0	1	0	0	1	0	0	0	0	0	**205**
1300 - 1400	2	155	32	0	3	0	0	1	0	0	0	0	0	**193**
1400 - 1500	1	190	40	1	3	0	0	0	0	0	0	0	0	**235**
1500 - 1600	0	194	22	0	1	0	0	0	0	0	0	0	0	**217**
1600 - 1700	1	185	37	0	1	3	1	0	1	1	0	0	0	**230**
1700 - 1800	0	151	24	1	2	0	0	0	1	0	0	0	0	**179**
1800 - 1900	3	140	24	0	3	0	0	0	0	0	0	0	0	**170**
1900 - 2000	0	107	23	0	1	0	0	0	0	0	0	0	0	**131**
2000 - 2100	0	124	11	0	1	0	0	0	0	0	0	0	0	**136**
2100 - 2200	0	81	5	0	0	0	0	0	0	0	0	0	0	**86**
2200 - 2300	0	40	2	1	2	0	0	0	0	0	0	0	0	**45**
2300 - 2400	0	21	0	0	0	0	0	0	0	0	0	0	0	**21**

Session Total	8	2332	420	5	36	4	2	7	10	1	0	0	0	**2825**
Session Average	0.33	97.17	17.50	0.21	1.50	0.17	0.08	0.29	0.42	0.04	0.00	0.00	0.00	**117.71**
Session Percentage	0.28	82.55	14.87	0.18	1.27	0.14	0.07	0.25	0.35	0.04	0.00	0.00	0.00	

AM Peak Hour	0800 - 0900	0700 - 0800	0800 - 0900	0900 - 1000	0800 - 0900	0700 - 0800	0900 - 1000	0800 - 0900	0600 - 0700	-	-	-	-	**0700 - 0800**
AM Peak Volume	1	149	28	1	4	1	1	1	2	0	0	0	0	**179**

Noon Peak Hour	1300 - 1400	1400 - 1500	1400 - 1500	1000 - 1100	1100 - 1200	-	-	1000 - 1100	1000 - 1100	-	-	-	-	**1400 - 1500**
Noon Peak Volume	2	190	40	1	4	0	0	2	1	0	0	0	0	**235**

PM Peak Hour	1800 - 1900	1500 - 1600	1600 - 1700	1700 - 1800	1800 - 1900	1600 - 1700	1600 - 1700	-	1600 - 1700	1600 - 1700	-	-	-	**1600 - 1700**
PM Peak Volume	3	194	37	1	3	3	1	0	1	1	0	0	0	**230**

Site 38
I-26 On/Off-Ramp,
north of St Andrews Rd

Date
Thursday, April 25, 2024

Lat/Long
34.045752°, -81.117379°

Weather
Fair
67°F

Click here for Detailed Weather

0000 - 2400 (Weekday 24h Session) (04-25-2024)
NB EB 60min

	Northbound (Movement 38.1)													
TIME	1	2	3	4	5	6	7	8	9	10	11	12	13	**Total**
0000 - 0100	0	21	2	0	1	0	0	0	0	0	0	0	0	**24**
0100 - 0200	0	18	0	0	0	0	0	0	0	0	0	0	0	**18**
0200 - 0300	0	7	0	0	0	0	0	0	0	0	0	0	0	**7**
0300 - 0400	0	17	1	0	0	0	0	0	0	0	0	0	0	**18**
0400 - 0500	0	17	1	0	0	0	0	0	0	0	0	0	0	**18**
0500 - 0600	0	32	0	0	2	0	0	0	1	0	0	0	0	**35**
0600 - 0700	0	57	9	0	1	0	0	0	0	0	0	0	0	**67**
0700 - 0800	0	130	19	0	1	1	0	0	0	0	0	0	0	**151**
0800 - 0900	0	113	24	0	4	0	0	1	1	0	0	0	0	**143**
0900 - 1000	0	104	31	0	4	0	0	1	2	0	0	0	0	**142**
1000 - 1100	0	134	34	1	0	0	0	0	3	0	0	0	0	**172**
1100 - 1200	0	156	38	0	2	0	0	0	0	0	0	0	0	**196**
1200 - 1300	2	182	36	0	1	0	0	0	0	0	0	0	0	**221**
1300 - 1400	0	156	43	0	2	0	0	0	0	0	0	0	0	**201**
1400 - 1500	0	139	32	0	4	0	0	1	0	0	0	0	0	**176**
1500 - 1600	0	169	31	0	3	0	0	2	0	0	0	0	0	**205**
1600 - 1700	0	183	27	0	0	0	0	0	0	0	0	0	0	**210**
1700 - 1800	0	163	25	1	0	0	0	0	0	0	0	0	0	**189**
1800 - 1900	1	123	22	1	0	0	0	0	0	0	0	0	0	**147**
1900 - 2000	0	0	0	0	0	0	0	0	0	0	0	0	0	**0**
2000 - 2100	0	0	0	0	0	0	0	0	0	0	0	0	0	**0**
2100 - 2200	0	0	0	0	0	0	0	0	0	0	0	0	0	**0**
2200 - 2300	0	0	0	0	0	0	0	0	0	0	0	0	0	**0**
2300 - 2400	0	0	0	0	0	0	0	0	0	0	0	0	0	**0**

Session Total	3	1921	375	3	25	1	0	5	7	0	0	0	0	**2340**
Session Average	0.13	80.04	15.63	0.13	1.04	0.04	0.00	0.21	0.29	0.00	0.00	0.00	0.00	**97.50**
Session Percentage	0.13	82.09	16.03	0.13	1.07	0.04	0.00	0.21	0.30	0.00	0.00	0.00	0.00	

AM Peak Hour	-	0700 - 0800	0900 - 1000	-	0800 - 0900	0700 - 0800	-	0800 - 0900	0900 - 1000	-	-	-	-	**0700 - 0800**
AM Peak Hour Volume	0	130	31	0	4	1	0	1	2	0	0	0	0	**151**

Noon Peak Hour	1200 - 1300	1200 - 1300	1300 - 1400	1000 - 1100	1400 - 1500	-	-	1400 - 1500	1000 - 1100	-	-	-	-	**1200 - 1300**
Noon Peak Hour Volume	2	182	43	1	4	0	0	1	3	0	0	0	0	**221**

PM Peak Hour	1800 - 1900	1600 - 1700	1500 - 1600	1700 - 1800	1500 - 1600	-	-	1500 - 1600	-	-	-	-	-	**1600 - 1700**
PM Peak Hour Volume	1	183	31	1	3	0	0	2	0	0	0	0	0	**210**

Bi-Directional Class Count || Volume Summary 60min

Columbia, SC

Marr Traffic DATA COLLECTION

www.marrtraffic.com

Site 38

I-26 On/Off-Ramp,
north of St Andrews Rd

Date

Tuesday, April 23, 2024

Lat/Long

34.045752°, -81.117379°

Weather

Fair
58°F

Click here for Detailed Weather

0000 - 2400 (Weekday 24h Session) (04-23-2024)

Volume Summary 60min

	Volume Summary 60min		
TIME	NB	SB	**Total**
0000 - 0100	0	0	**0**
0100 - 0200	0	0	**0**
0200 - 0300	0	0	**0**
0300 - 0400	0	0	**0**
0400 - 0500	0	0	**0**
0500 - 0600	0	0	**0**
0600 - 0700	0	0	**0**
0700 - 0800	0	0	**0**
0800 - 0900	0	0	**0**
0900 - 1000	0	0	**0**
1000 - 1100	0	0	**0**
1100 - 1200	0	0	**0**

	Volume Summary 60min		
Time	NB	SB	**Total**
1200 - 1300	0	0	**0**
1300 - 1400	0	0	**0**
1400 - 1500	0	0	**0**
1500 - 1600	0	0	**0**
1600 - 1700	0	0	**0**
1700 - 1800	0	0	**0**
1800 - 1900	0	0	**0**
1900 - 2000	107	0	**107**
2000 - 2100	109	0	**109**
2100 - 2200	91	0	**91**
2200 - 2300	59	0	**59**
2300 - 2400	33	0	**33**

Session Total	399	0	**399**
Session Average	16.63	0.00	**16.63**
Session Percentage	100.00	0.00	

Site 38

I-26 On/Off-Ramp,
north of St Andrews Rd

Date

Wednesday, April 24, 2024

Lat/Long

34.045752°, -81.117379°

Weather

Fair
66°F

Click here for Detailed Weather

0000 - 2400 (Weekday 24h Session) (04-24-2024)

Volume Summary 60min

	Volume Summary 60min		
TIME	NB	SB	**Total**
0000 - 0100	22	0	**22**
0100 - 0200	13	0	**13**
0200 - 0300	9	0	**9**
0300 - 0400	9	0	**9**
0400 - 0500	20	0	**20**
0500 - 0600	33	0	**33**
0600 - 0700	67	0	**67**
0700 - 0800	179	0	**179**
0800 - 0900	134	0	**134**
0900 - 1000	138	0	**138**
1000 - 1100	163	0	**163**
1100 - 1200	190	0	**190**

	Volume Summary 60min		
Time	NB	SB	**Total**
1200 - 1300	205	0	**205**
1300 - 1400	193	0	**193**
1400 - 1500	235	0	**235**
1500 - 1600	217	0	**217**
1600 - 1700	230	0	**230**
1700 - 1800	179	0	**179**
1800 - 1900	170	0	**170**
1900 - 2000	131	0	**131**
2000 - 2100	136	0	**136**
2100 - 2200	86	0	**86**
2200 - 2300	45	0	**45**
2300 - 2400	21	0	**21**

Session Total	2825	0	**2825**
Session Average	117.71	0.00	**117.71**
Session Percentage	100.00	0.00	

Site 38

I-26 On/Off-Ramp,
north of St Andrews Rd

Date

Thursday, April 25, 2024

Lat/Long

34.045752°, -81.117379°

Weather

Fair
67°F

Click here for Detailed Weather

0000 - 2400 (Weekday 24h Session) (04-25-2024)

Volume Summary 60min

	Volume Summary 60min		
TIME	NB	SB	**Total**
0000 - 0100	24	0	**24**
0100 - 0200	18	0	**18**
0200 - 0300	7	0	**7**
0300 - 0400	18	0	**18**
0400 - 0500	18	0	**18**
0500 - 0600	35	0	**35**
0600 - 0700	67	0	**67**
0700 - 0800	151	0	**151**
0800 - 0900	143	0	**143**
0900 - 1000	142	0	**142**
1000 - 1100	172	0	**172**
1100 - 1200	196	0	**196**

	Volume Summary 60min		
Time	NB	SB	**Total**
1200 - 1300	221	0	**221**
1300 - 1400	201	0	**201**
1400 - 1500	176	0	**176**
1500 - 1600	205	0	**205**
1600 - 1700	210	0	**210**
1700 - 1800	189	0	**189**
1800 - 1900	147	0	**147**
1900 - 2000	0	0	**0**
2000 - 2100	0	0	**0**
2100 - 2200	0	0	**0**
2200 - 2300	0	0	**0**
2300 - 2400	0	0	**0**

Session Total	2340	0	**2340**
Session Average	97.50	0.00	**97.50**
Session Percentage	100.00	0.00	

Bi-Directional Class Count || Graphical Analysis NB EB

Columbia, SC

Marr Traffic DATA COLLECTION

www.marrtraffic.com

Site 38

I-26 On/Off-Ramp,
north of St Andrews Rd

Lat/Long

34.045752°, -81.117379°

0000 - 2400 (Weekday 24h Session)

Graphical Analysis NB EB

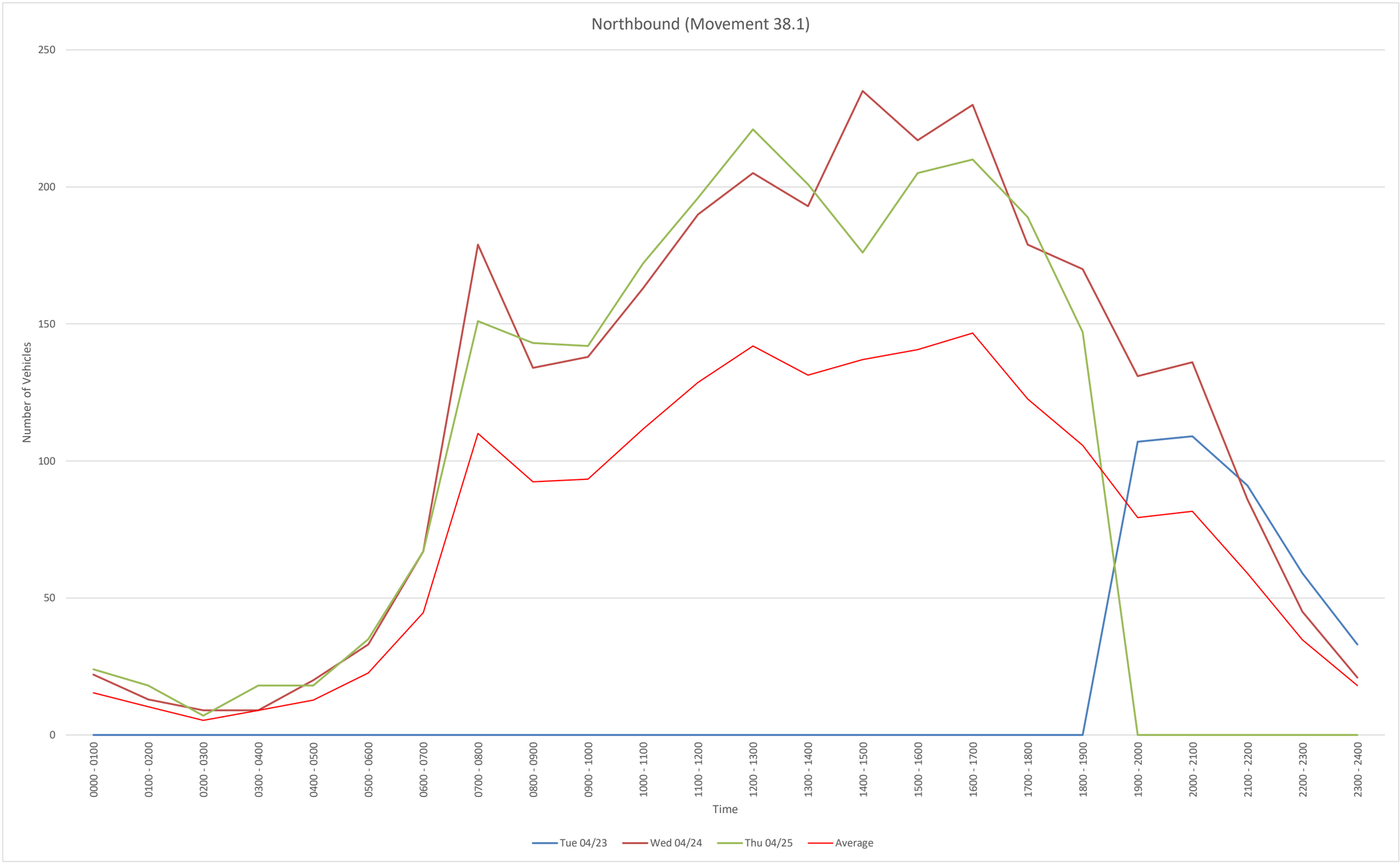

Time	Tue 04/23	Wed 04/24	Thu 04/25				
0000 - 0100	0	22	24				
0100 - 0200	0	13	18				
0200 - 0300	0	9	7				
0300 - 0400	0	9	18				
0400 - 0500	0	20	18				
0500 - 0600	0	33	35				
0600 - 0700	0	67	67				
0700 - 0800	0	179	151				
0800 - 0900	0	134	143				
0900 - 1000	0	138	142				
1000 - 1100	0	163	172				
1100 - 1200	0	190	196				
1200 - 1300	0	205	221				
1300 - 1400	0	193	201				
1400 - 1500	0	235	176				
1500 - 1600	0	217	205				
1600 - 1700	0	230	210				
1700 - 1800	0	179	189				
1800 - 1900	0	170	147				
1900 - 2000	107	131	0				
2000 - 2100	109	136	0				
2100 - 2200	91	86	0				
2200 - 2300	59	45	0				
2300 - 2400	33	21	0				
Daily Total	399	2825	2340				

NB
File Name:
Start Date: 4/23/2024
Start Time: 0
Site Code: 38
Station ID: 1
Location 1: I-26 On/Off-Ramp, north of St Andrews Rd
Location 2:

Date	Time	1	2	3	4	5	6	7	8	9	10	11	12	13
4/23/2024	12:00 AM	0	0	0	0	0	0	0	0	0	0	0	0	0
4/23/2024	12:15 AM	0	0	0	0	0	0	0	0	0	0	0	0	0
4/23/2024	12:30 AM	0	0	0	0	0	0	0	0	0	0	0	0	0
4/23/2024	12:45 AM	0	0	0	0	0	0	0	0	0	0	0	0	0
4/23/2024	1:00 AM	0	0	0	0	0	0	0	0	0	0	0	0	0
4/23/2024	1:15 AM	0	0	0	0	0	0	0	0	0	0	0	0	0
4/23/2024	1:30 AM	0	0	0	0	0	0	0	0	0	0	0	0	0
4/23/2024	1:45 AM	0	0	0	0	0	0	0	0	0	0	0	0	0
4/23/2024	2:00 AM	0	0	0	0	0	0	0	0	0	0	0	0	0
4/23/2024	2:15 AM	0	0	0	0	0	0	0	0	0	0	0	0	0
4/23/2024	2:30 AM	0	0	0	0	0	0	0	0	0	0	0	0	0
4/23/2024	2:45 AM	0	0	0	0	0	0	0	0	0	0	0	0	0
4/23/2024	3:00 AM	0	0	0	0	0	0	0	0	0	0	0	0	0
4/23/2024	3:15 AM	0	0	0	0	0	0	0	0	0	0	0	0	0
4/23/2024	3:30 AM	0	0	0	0	0	0	0	0	0	0	0	0	0
4/23/2024	3:45 AM	0	0	0	0	0	0	0	0	0	0	0	0	0
4/23/2024	4:00 AM	0	0	0	0	0	0	0	0	0	0	0	0	0
4/23/2024	4:15 AM	0	0	0	0	0	0	0	0	0	0	0	0	0
4/23/2024	4:30 AM	0	0	0	0	0	0	0	0	0	0	0	0	0
4/23/2024	4:45 AM	0	0	0	0	0	0	0	0	0	0	0	0	0
4/23/2024	5:00 AM	0	0	0	0	0	0	0	0	0	0	0	0	0
4/23/2024	5:15 AM	0	0	0	0	0	0	0	0	0	0	0	0	0
4/23/2024	5:30 AM	0	0	0	0	0	0	0	0	0	0	0	0	0
4/23/2024	5:45 AM	0	0	0	0	0	0	0	0	0	0	0	0	0
4/23/2024	6:00 AM	0	0	0	0	0	0	0	0	0	0	0	0	0
4/23/2024	6:15 AM	0	0	0	0	0	0	0	0	0	0	0	0	0
4/23/2024	6:30 AM	0	0	0	0	0	0	0	0	0	0	0	0	0
4/23/2024	6:45 AM	0	0	0	0	0	0	0	0	0	0	0	0	0
4/23/2024	7:00 AM	0	0	0	0	0	0	0	0	0	0	0	0	0
4/23/2024	7:15 AM	0	0	0	0	0	0	0	0	0	0	0	0	0
4/23/2024	7:30 AM	0	0	0	0	0	0	0	0	0	0	0	0	0
4/23/2024	7:45 AM	0	0	0	0	0	0	0	0	0	0	0	0	0
4/23/2024	8:00 AM	0	0	0	0	0	0	0	0	0	0	0	0	0
4/23/2024	8:15 AM	0	0	0	0	0	0	0	0	0	0	0	0	0
4/23/2024	8:30 AM	0	0	0	0	0	0	0	0	0	0	0	0	0
4/23/2024	8:45 AM	0	0	0	0	0	0	0	0	0	0	0	0	0
4/23/2024	9:00 AM	0	0	0	0	0	0	0	0	0	0	0	0	0
4/23/2024	9:15 AM	0	0	0	0	0	0	0	0	0	0	0	0	0
4/23/2024	9:30 AM	0	0	0	0	0	0	0	0	0	0	0	0	0
4/23/2024	9:45 AM	0	0	0	0	0	0	0	0	0	0	0	0	0
4/23/2024	10:00 AM	0	0	0	0	0	0	0	0	0	0	0	0	0
4/23/2024	10:15 AM	0	0	0	0	0	0	0	0	0	0	0	0	0
4/23/2024	10:30 AM	0	0	0	0	0	0	0	0	0	0	0	0	0
4/23/2024	10:45 AM	0	0	0	0	0	0	0	0	0	0	0	0	0
4/23/2024	11:00 AM	0	0	0	0	0	0	0	0	0	0	0	0	0
4/23/2024	11:15 AM	0	0	0	0	0	0	0	0	0	0	0	0	0
4/23/2024	11:30 AM	0	0	0	0	0	0	0	0	0	0	0	0	0
4/23/2024	11:45 AM	0	0	0	0	0	0	0	0	0	0	0	0	0
4/23/2024	12:00 PM	0	0	0	0	0	0	0	0	0	0	0	0	0
4/23/2024	12:15 PM	0	0	0	0	0	0	0	0	0	0	0	0	0
4/23/2024	12:30 PM	0	0	0	0	0	0	0	0	0	0	0	0	0
4/23/2024	12:45 PM	0	0	0	0	0	0	0	0	0	0	0	0	0
4/23/2024	1:00 PM	0	0	0	0	0	0	0	0	0	0	0	0	0
4/23/2024	1:15 PM	0	0	0	0	0	0	0	0	0	0	0	0	0
4/23/2024	1:30 PM	0	0	0	0	0	0	0	0	0	0	0	0	0
4/23/2024	1:45 PM	0	0	0	0	0	0	0	0	0	0	0	0	0
4/23/2024	2:00 PM	0	0	0	0	0	0	0	0	0	0	0	0	0
4/23/2024	2:15 PM	0	0	0	0	0	0	0	0	0	0	0	0	0
4/23/2024	2:30 PM	0	0	0	0	0	0	0	0	0	0	0	0	0
4/23/2024	2:45 PM	0	0	0	0	0	0	0	0	0	0	0	0	0
4/23/2024	3:00 PM	0	0	0	0	0	0	0	0	0	0	0	0	0
4/23/2024	3:15 PM	0	0	0	0	0	0	0	0	0	0	0	0	0
4/23/2024	3:30 PM	0	0	0	0	0	0	0	0	0	0	0	0	0
4/23/2024	3:45 PM	0	0	0	0	0	0	0	0	0	0	0	0	0
4/23/2024	4:00 PM	0	0	0	0	0	0	0	0	0	0	0	0	0
4/23/2024	4:15 PM	0	0	0	0	0	0	0	0	0	0	0	0	0
4/23/2024	4:30 PM	0	0	0	0	0	0	0	0	0	0	0	0	0
4/23/2024	4:45 PM	0	0	0	0	0	0	0	0	0	0	0	0	0
4/23/2024	5:00 PM	0	0	0	0	0	0	0	0	0	0	0	0	0
4/23/2024	5:15 PM	0	0	0	0	0	0	0	0	0	0	0	0	0
4/23/2024	5:30 PM	0	0	0	0	0	0	0	0	0	0	0	0	0
4/23/2024	5:45 PM	0	0	0	0	0	0	0	0	0	0	0	0	0
4/23/2024	6:00 PM	0	0	0	0	0	0	0	0	0	0	0	0	0
4/23/2024	6:15 PM	0	0	0	0	0	0	0	0	0	0	0	0	0
4/23/2024	6:30 PM	0	0	0	0	0	0	0	0	0	0	0	0	0
4/23/2024	6:45 PM	0	0	0	0	0	0	0	0	0	0	0	0	0
4/23/2024	7:00 PM	0	15	6	0	0	0	0	0	0	0	0	0	0
4/23/2024	7:15 PM	0	25	5	0	0	0	0	0	0	0	0	0	0
4/23/2024	7:30 PM	0	22	3	0	0	0	0	0	0	0	0	0	0
4/23/2024	7:45 PM	0	27	3	0	0	0	0	1	0	0	0	0	0
4/23/2024	8:00 PM	0	26	1	0	0	0	0	0	0	0	0	0	0
4/23/2024	8:15 PM	0	24	3	0	0	0	0	0	0	0	0	0	0
4/23/2024	8:30 PM	0	27	2	0	0	0	0	0	0	0	0	0	0
4/23/2024	8:45 PM	0	24	2	0	0	0	0	0	0	0	0	0	0
4/23/2024	9:00 PM	0	24	3	0	0	0	0	0	0	0	0	0	0
4/23/2024	9:15 PM	0	19	1	0	0	0	0	0	0	0	0	0	0
4/23/2024	9:30 PM	0	17	2	0	0	0	0	0	0	0	0	0	0
4/23/2024	9:45 PM	0	22	3	0	0	0	0	0	0	0	0	0	0
4/23/2024	10:00 PM	0	8	2	0	0	0	0	0	0	0	0	0	0
4/23/2024	10:15 PM	0	12	4	0	0	0	0	0	0	0	0	0	0
4/23/2024	10:30 PM	1	19	4	0	0	0	0	0	0	0	0	0	0
4/23/2024	10:45 PM	0	8	1	0	0	0	0	0	0	0	0	0	0
4/23/2024	11:00 PM	0	8	2	0	0	0	0	0	0	0	0	0	0
4/23/2024	11:15 PM	0	5	0	0	0	0	0	0	0	0	0	0	0
4/23/2024	11:30 PM	0	7	2	0	0	0	0	0	0	0	0	0	0
4/23/2024	11:45 PM	0	8	1	0	0	0	0	0	0	0	0	0	0

4/24/2024	12:00 AM	0	4	2	0	0	0	0	0	0	0	0	0
4/24/2024	12:15 AM	0	3	0	0	0	0	0	0	0	0	0	0
4/24/2024	12:30 AM	0	5	1	0	0	0	0	0	0	0	0	0
4/24/2024	12:45 AM	0	6	1	0	0	0	0	0	0	0	0	0
4/24/2024	1:00 AM	0	3	0	0	1	0	0	0	0	0	0	0
4/24/2024	1:15 AM	0	3	1	0	0	0	0	0	0	0	0	0
4/24/2024	1:30 AM	0	3	0	0	0	0	0	0	0	0	0	0
4/24/2024	1:45 AM	0	2	0	0	0	0	0	0	0	0	0	0
4/24/2024	2:00 AM	0	2	0	0	0	0	0	0	0	0	0	0
4/24/2024	2:15 AM	0	2	0	0	0	0	0	0	0	0	0	0
4/24/2024	2:30 AM	0	3	0	0	0	0	0	0	0	0	0	0
4/24/2024	2:45 AM	0	1	0	0	1	0	0	0	0	0	0	0
4/24/2024	3:00 AM	0	1	0	0	1	0	0	0	0	0	0	0
4/24/2024	3:15 AM	0	1	0	0	0	0	0	0	0	0	0	0
4/24/2024	3:30 AM	0	4	0	0	0	0	0	0	0	0	0	0
4/24/2024	3:45 AM	0	2	0	0	0	0	0	0	0	0	0	0
4/24/2024	4:00 AM	0	3	1	0	0	0	0	0	0	0	0	0
4/24/2024	4:15 AM	0	3	0	0	0	0	0	0	0	0	0	0
4/24/2024	4:30 AM	0	6	0	0	0	0	0	0	0	0	0	0
4/24/2024	4:45 AM	0	5	1	0	1	0	0	0	0	0	0	0
4/24/2024	5:00 AM	0	6	1	0	0	0	0	0	0	0	0	0
4/24/2024	5:15 AM	0	2	1	0	0	0	0	0	0	0	0	0
4/24/2024	5:30 AM	0	8	0	0	0	0	0	0	0	0	0	0
4/24/2024	5:45 AM	0	12	3	0	0	0	0	0	0	0	0	0
4/24/2024	6:00 AM	0	9	2	0	0	0	0	0	0	0	0	0
4/24/2024	6:15 AM	0	13	1	0	0	0	0	0	0	0	0	0
4/24/2024	6:30 AM	0	12	4	0	0	0	0	0	2	0	0	0
4/24/2024	6:45 AM	0	21	3	0	0	0	0	0	0	0	0	0
4/24/2024	7:00 AM	0	31	5	0	1	0	0	0	0	0	0	0
4/24/2024	7:15 AM	0	29	9	0	0	0	0	0	1	0	0	0
4/24/2024	7:30 AM	0	41	6	0	1	1	0	0	0	0	0	0
4/24/2024	7:45 AM	0	48	5	0	0	0	0	0	1	0	0	0
4/24/2024	8:00 AM	0	26	6	0	1	0	0	0	0	0	0	0
4/24/2024	8:15 AM	0	19	8	0	2	0	0	0	0	0	0	0
4/24/2024	8:30 AM	1	27	5	0	0	0	0	1	0	0	0	0
4/24/2024	8:45 AM	0	28	9	0	1	0	0	0	0	0	0	0
4/24/2024	9:00 AM	0	26	9	0	0	0	1	0	0	0	0	0
4/24/2024	9:15 AM	0	14	3	0	1	0	0	1	1	0	0	0
4/24/2024	9:30 AM	0	38	6	1	0	0	0	0	0	0	0	0
4/24/2024	9:45 AM	0	29	7	0	0	0	0	0	1	0	0	0
4/24/2024	10:00 AM	0	31	8	1	0	0	0	0	0	0	0	0
4/24/2024	10:15 AM	0	25	10	0	1	0	0	1	0	0	0	0
4/24/2024	10:30 AM	0	32	3	0	0	0	0	0	0	0	0	0
4/24/2024	10:45 AM	0	32	15	0	2	0	0	1	1	0	0	0
4/24/2024	11:00 AM	0	33	7	0	0	0	0	0	0	0	0	0
4/24/2024	11:15 AM	0	42	10	0	2	0	0	0	0	0	0	0
4/24/2024	11:30 AM	0	26	11	0	0	0	0	0	0	0	0	0
4/24/2024	11:45 AM	0	49	6	0	2	0	0	1	1	0	0	0
4/24/2024	12:00 PM	0	48	5	0	0	0	0	0	0	0	0	0
4/24/2024	12:15 PM	0	46	11	0	1	0	0	1	0	0	0	0
4/24/2024	12:30 PM	0	40	5	0	0	0	0	0	0	0	0	0
4/24/2024	12:45 PM	0	39	9	0	0	0	0	0	0	0	0	0
4/24/2024	1:00 PM	0	42	6	0	1	0	0	0	0	0	0	0
4/24/2024	1:15 PM	0	35	12	0	0	0	0	0	0	0	0	0
4/24/2024	1:30 PM	2	38	7	0	2	0	0	0	0	0	0	0
4/24/2024	1:45 PM	0	40	7	0	0	0	0	1	0	0	0	0
4/24/2024	2:00 PM	1	45	10	0	0	0	0	0	0	0	0	0
4/24/2024	2:15 PM	0	38	9	0	1	0	0	0	0	0	0	0
4/24/2024	2:30 PM	0	50	13	0	2	0	0	0	0	0	0	0
4/24/2024	2:45 PM	0	57	8	1	0	0	0	0	0	0	0	0
4/24/2024	3:00 PM	0	48	5	0	1	0	0	0	0	0	0	0
4/24/2024	3:15 PM	0	43	7	0	0	0	0	0	0	0	0	0
4/24/2024	3:30 PM	0	60	6	0	0	0	0	0	0	0	0	0
4/24/2024	3:45 PM	0	43	4	0	0	0	0	0	0	0	0	0
4/24/2024	4:00 PM	1	53	10	0	0	0	0	0	1	0	0	0
4/24/2024	4:15 PM	0	43	7	0	0	3	1	0	0	0	0	0
4/24/2024	4:30 PM	0	43	8	0	0	0	0	0	0	0	0	0
4/24/2024	4:45 PM	0	46	12	0	1	0	0	0	0	1	0	0
4/24/2024	5:00 PM	0	38	8	1	0	0	0	0	0	0	0	0
4/24/2024	5:15 PM	0	40	7	0	1	0	0	0	0	0	0	0
4/24/2024	5:30 PM	0	42	4	0	1	0	0	0	1	0	0	0
4/24/2024	5:45 PM	0	31	5	0	0	0	0	0	0	0	0	0
4/24/2024	6:00 PM	1	48	6	0	0	0	0	0	0	0	0	0
4/24/2024	6:15 PM	2	28	9	0	0	0	0	0	0	0	0	0
4/24/2024	6:30 PM	0	29	6	0	3	0	0	0	0	0	0	0
4/24/2024	6:45 PM	0	35	3	0	0	0	0	0	0	0	0	0
4/24/2024	7:00 PM	0	27	6	0	1	0	0	0	0	0	0	0
4/24/2024	7:15 PM	0	28	4	0	0	0	0	0	0	0	0	0
4/24/2024	7:30 PM	0	26	5	0	0	0	0	0	0	0	0	0
4/24/2024	7:45 PM	0	26	8	0	0	0	0	0	0	0	0	0
4/24/2024	8:00 PM	0	24	5	0	1	0	0	0	0	0	0	0
4/24/2024	8:15 PM	0	41	4	0	0	0	0	0	0	0	0	0
4/24/2024	8:30 PM	0	33	0	0	0	0	0	0	0	0	0	0
4/24/2024	8:45 PM	0	26	2	0	0	0	0	0	0	0	0	0
4/24/2024	9:00 PM	0	30	3	0	0	0	0	0	0	0	0	0
4/24/2024	9:15 PM	0	21	1	0	0	0	0	0	0	0	0	0
4/24/2024	9:30 PM	0	16	1	0	0	0	0	0	0	0	0	0
4/24/2024	9:45 PM	0	14	0	0	0	0	0	0	0	0	0	0
4/24/2024	10:00 PM	0	13	1	0	0	0	0	0	0	0	0	0
4/24/2024	10:15 PM	0	9	0	0	0	0	0	0	0	0	0	0
4/24/2024	10:30 PM	0	6	1	1	1	0	0	0	0	0	0	0
4/24/2024	10:45 PM	0	12	0	0	1	0	0	0	0	0	0	0
4/24/2024	11:00 PM	0	9	0	0	0	0	0	0	0	0	0	0
4/24/2024	11:15 PM	0	5	0	0	0	0	0	0	0	0	0	0
4/24/2024	11:30 PM	0	6	0	0	0	0	0	0	0	0	0	0
4/24/2024	11:45 PM	0	1	0	0	0	0	0	0	0	0	0	0

4/25/2024	12:00 AM	0	5	0	0	0	0	0	0	0	0	0	0	0
4/25/2024	12:15 AM	0	7	2	0	1	0	0	0	0	0	0	0	0
4/25/2024	12:30 AM	0	5	0	0	0	0	0	0	0	0	0	0	0
4/25/2024	12:45 AM	0	4	0	0	0	0	0	0	0	0	0	0	0
4/25/2024	1:00 AM	0	7	0	0	0	0	0	0	0	0	0	0	0
4/25/2024	1:15 AM	0	6	0	0	0	0	0	0	0	0	0	0	0
4/25/2024	1:30 AM	0	5	0	0	0	0	0	0	0	0	0	0	0
4/25/2024	1:45 AM	0	0	0	0	0	0	0	0	0	0	0	0	0
4/25/2024	2:00 AM	0	1	0	0	0	0	0	0	0	0	0	0	0
4/25/2024	2:15 AM	0	2	0	0	0	0	0	0	0	0	0	0	0
4/25/2024	2:30 AM	0	1	0	0	0	0	0	0	0	0	0	0	0
4/25/2024	2:45 AM	0	3	0	0	0	0	0	0	0	0	0	0	0
4/25/2024	3:00 AM	0	2	0	0	0	0	0	0	0	0	0	0	0
4/25/2024	3:15 AM	0	4	0	0	0	0	0	0	0	0	0	0	0
4/25/2024	3:30 AM	0	5	1	0	0	0	0	0	0	0	0	0	0
4/25/2024	3:45 AM	0	6	0	0	0	0	0	0	0	0	0	0	0
4/25/2024	4:00 AM	0	3	0	0	0	0	0	0	0	0	0	0	0
4/25/2024	4:15 AM	0	3	0	0	0	0	0	0	0	0	0	0	0
4/25/2024	4:30 AM	0	3	0	0	0	0	0	0	0	0	0	0	0
4/25/2024	4:45 AM	0	8	1	0	0	0	0	0	0	0	0	0	0
4/25/2024	5:00 AM	0	4	0	0	0	0	0	0	0	0	0	0	0
4/25/2024	5:15 AM	0	5	0	0	1	0	0	0	0	0	0	0	0
4/25/2024	5:30 AM	0	9	0	0	1	0	0	0	0	0	0	0	0
4/25/2024	5:45 AM	0	14	0	0	0	0	0	0	1	0	0	0	0
4/25/2024	6:00 AM	0	13	1	0	0	0	0	0	0	0	0	0	0
4/25/2024	6:15 AM	0	8	1	0	1	0	0	0	0	0	0	0	0
4/25/2024	6:30 AM	0	16	3	0	0	0	0	0	0	0	0	0	0
4/25/2024	6:45 AM	0	20	4	0	0	0	0	0	0	0	0	0	0
4/25/2024	7:00 AM	0	28	6	0	0	1	0	0	0	0	0	0	0
4/25/2024	7:15 AM	0	28	4	0	0	0	0	0	0	0	0	0	0
4/25/2024	7:30 AM	0	33	1	0	1	0	0	0	0	0	0	0	0
4/25/2024	7:45 AM	0	41	8	0	0	0	0	0	0	0	0	0	0
4/25/2024	8:00 AM	0	34	7	0	0	0	0	1	0	0	0	0	0
4/25/2024	8:15 AM	0	24	6	0	0	0	0	0	1	0	0	0	0
4/25/2024	8:30 AM	0	22	4	0	0	0	0	0	0	0	0	0	0
4/25/2024	8:45 AM	0	33	7	0	4	0	0	0	0	0	0	0	0
4/25/2024	9:00 AM	0	23	7	0	1	0	0	0	1	0	0	0	0
4/25/2024	9:15 AM	0	28	8	0	1	0	0	1	0	0	0	0	0
4/25/2024	9:30 AM	0	20	8	0	0	0	0	0	0	0	0	0	0
4/25/2024	9:45 AM	0	33	8	0	2	0	0	0	1	0	0	0	0
4/25/2024	10:00 AM	0	33	9	0	0	0	0	0	1	0	0	0	0
4/25/2024	10:15 AM	0	28	10	1	0	0	0	0	0	0	0	0	0
4/25/2024	10:30 AM	0	42	6	0	0	0	0	0	0	0	0	0	0
4/25/2024	10:45 AM	0	31	9	0	0	0	0	0	2	0	0	0	0
4/25/2024	11:00 AM	0	34	8	0	0	0	0	0	0	0	0	0	0
4/25/2024	11:15 AM	0	43	16	0	1	0	0	0	0	0	0	0	0
4/25/2024	11:30 AM	0	36	9	0	1	0	0	0	0	0	0	0	0
4/25/2024	11:45 AM	0	43	5	0	0	0	0	0	0	0	0	0	0
4/25/2024	12:00 PM	0	45	9	0	0	0	0	0	0	0	0	0	0
4/25/2024	12:15 PM	2	55	11	0	0	0	0	0	0	0	0	0	0
4/25/2024	12:30 PM	0	46	9	0	0	0	0	0	0	0	0	0	0
4/25/2024	12:45 PM	0	36	7	0	1	0	0	0	0	0	0	0	0
4/25/2024	1:00 PM	0	32	15	0	0	0	0	0	0	0	0	0	0
4/25/2024	1:15 PM	0	38	13	0	1	0	0	0	0	0	0	0	0
4/25/2024	1:30 PM	0	42	8	0	0	0	0	0	0	0	0	0	0
4/25/2024	1:45 PM	0	44	7	0	1	0	0	0	0	0	0	0	0
4/25/2024	2:00 PM	0	38	12	0	1	0	0	0	0	0	0	0	0
4/25/2024	2:15 PM	0	27	4	0	0	0	0	0	0	0	0	0	0
4/25/2024	2:30 PM	0	35	8	0	2	0	0	0	0	0	0	0	0
4/25/2024	2:45 PM	0	39	8	0	1	0	0	1	0	0	0	0	0
4/25/2024	3:00 PM	0	41	11	0	1	0	0	1	0	0	0	0	0
4/25/2024	3:15 PM	0	39	5	0	1	0	0	0	0	0	0	0	0
4/25/2024	3:30 PM	0	45	8	0	1	0	0	1	0	0	0	0	0
4/25/2024	3:45 PM	0	44	7	0	0	0	0	0	0	0	0	0	0
4/25/2024	4:00 PM	0	45	7	0	0	0	0	0	0	0	0	0	0
4/25/2024	4:15 PM	0	36	6	0	0	0	0	0	0	0	0	0	0
4/25/2024	4:30 PM	0	50	7	0	0	0	0	0	0	0	0	0	0
4/25/2024	4:45 PM	0	52	7	0	0	0	0	0	0	0	0	0	0
4/25/2024	5:00 PM	0	45	6	0	0	0	0	0	0	0	0	0	0
4/25/2024	5:15 PM	0	47	9	1	0	0	0	0	0	0	0	0	0
4/25/2024	5:30 PM	0	27	6	0	0	0	0	0	0	0	0	0	0
4/25/2024	5:45 PM	0	44	4	0	0	0	0	0	0	0	0	0	0
4/25/2024	6:00 PM	0	37	5	0	0	0	0	0	0	0	0	0	0
4/25/2024	6:15 PM	1	27	7	1	0	0	0	0	0	0	0	0	0
4/25/2024	6:30 PM	0	28	5	0	0	0	0	0	0	0	0	0	0
4/25/2024	6:45 PM	0	31	5	0	0	0	0	0	0	0	0	0	0
4/25/2024	7:00 PM	0	0	0	0	0	0	0	0	0	0	0	0	0
4/25/2024	7:15 PM	0	0	0	0	0	0	0	0	0	0	0	0	0
4/25/2024	7:30 PM	0	0	0	0	0	0	0	0	0	0	0	0	0
4/25/2024	7:45 PM	0	0	0	0	0	0	0	0	0	0	0	0	0
4/25/2024	8:00 PM	0	0	0	0	0	0	0	0	0	0	0	0	0
4/25/2024	8:15 PM	0	0	0	0	0	0	0	0	0	0	0	0	0
4/25/2024	8:30 PM	0	0	0	0	0	0	0	0	0	0	0	0	0
4/25/2024	8:45 PM	0	0	0	0	0	0	0	0	0	0	0	0	0
4/25/2024	9:00 PM	0	0	0	0	0	0	0	0	0	0	0	0	0
4/25/2024	9:15 PM	0	0	0	0	0	0	0	0	0	0	0	0	0
4/25/2024	9:30 PM	0	0	0	0	0	0	0	0	0	0	0	0	0
4/25/2024	9:45 PM	0	0	0	0	0	0	0	0	0	0	0	0	0
4/25/2024	10:00 PM	0	0	0	0	0	0	0	0	0	0	0	0	0
4/25/2024	10:15 PM	0	0	0	0	0	0	0	0	0	0	0	0	0
4/25/2024	10:30 PM	0	0	0	0	0	0	0	0	0	0	0	0	0
4/25/2024	10:45 PM	0	0	0	0	0	0	0	0	0	0	0	0	0
4/25/2024	11:00 PM	0	0	0	0	0	0	0	0	0	0	0	0	0
4/25/2024	11:15 PM	0	0	0	0	0	0	0	0	0	0	0	0	0
4/25/2024	11:30 PM	0	0	0	0	0	0	0	0	0	0	0	0	0
4/25/2024	11:45 PM	0	0	0	0	0	0	0	0	0	0	0	0	0

SB
File Name:
Start Date: 4/23/2024
Start Time: 0
Site Code: 38
Station ID: 1
Location 1: I-26 On/Off-Ramp, north of St Andrews Rd
Location 2:

Date	Time	1	2	3	4	5	6	7	8	9	10	11	12	13
4/23/2024	12:00 AM	0	0	0	0	0	0	0	0	0	0	0	0	0
4/23/2024	12:15 AM	0	0	0	0	0	0	0	0	0	0	0	0	0
4/23/2024	12:30 AM	0	0	0	0	0	0	0	0	0	0	0	0	0
4/23/2024	12:45 AM	0	0	0	0	0	0	0	0	0	0	0	0	0
4/23/2024	1:00 AM	0	0	0	0	0	0	0	0	0	0	0	0	0
4/23/2024	1:15 AM	0	0	0	0	0	0	0	0	0	0	0	0	0
4/23/2024	1:30 AM	0	0	0	0	0	0	0	0	0	0	0	0	0
4/23/2024	1:45 AM	0	0	0	0	0	0	0	0	0	0	0	0	0
4/23/2024	2:00 AM	0	0	0	0	0	0	0	0	0	0	0	0	0
4/23/2024	2:15 AM	0	0	0	0	0	0	0	0	0	0	0	0	0
4/23/2024	2:30 AM	0	0	0	0	0	0	0	0	0	0	0	0	0
4/23/2024	2:45 AM	0	0	0	0	0	0	0	0	0	0	0	0	0
4/23/2024	3:00 AM	0	0	0	0	0	0	0	0	0	0	0	0	0
4/23/2024	3:15 AM	0	0	0	0	0	0	0	0	0	0	0	0	0
4/23/2024	3:30 AM	0	0	0	0	0	0	0	0	0	0	0	0	0
4/23/2024	3:45 AM	0	0	0	0	0	0	0	0	0	0	0	0	0
4/23/2024	4:00 AM	0	0	0	0	0	0	0	0	0	0	0	0	0
4/23/2024	4:15 AM	0	0	0	0	0	0	0	0	0	0	0	0	0
4/23/2024	4:30 AM	0	0	0	0	0	0	0	0	0	0	0	0	0
4/23/2024	4:45 AM	0	0	0	0	0	0	0	0	0	0	0	0	0
4/23/2024	5:00 AM	0	0	0	0	0	0	0	0	0	0	0	0	0
4/23/2024	5:15 AM	0	0	0	0	0	0	0	0	0	0	0	0	0
4/23/2024	5:30 AM	0	0	0	0	0	0	0	0	0	0	0	0	0
4/23/2024	5:45 AM	0	0	0	0	0	0	0	0	0	0	0	0	0
4/23/2024	6:00 AM	0	0	0	0	0	0	0	0	0	0	0	0	0
4/23/2024	6:15 AM	0	0	0	0	0	0	0	0	0	0	0	0	0
4/23/2024	6:30 AM	0	0	0	0	0	0	0	0	0	0	0	0	0
4/23/2024	6:45 AM	0	0	0	0	0	0	0	0	0	0	0	0	0
4/23/2024	7:00 AM	0	0	0	0	0	0	0	0	0	0	0	0	0
4/23/2024	7:15 AM	0	0	0	0	0	0	0	0	0	0	0	0	0
4/23/2024	7:30 AM	0	0	0	0	0	0	0	0	0	0	0	0	0
4/23/2024	7:45 AM	0	0	0	0	0	0	0	0	0	0	0	0	0
4/23/2024	8:00 AM	0	0	0	0	0	0	0	0	0	0	0	0	0
4/23/2024	8:15 AM	0	0	0	0	0	0	0	0	0	0	0	0	0
4/23/2024	8:30 AM	0	0	0	0	0	0	0	0	0	0	0	0	0
4/23/2024	8:45 AM	0	0	0	0	0	0	0	0	0	0	0	0	0
4/23/2024	9:00 AM	0	0	0	0	0	0	0	0	0	0	0	0	0
4/23/2024	9:15 AM	0	0	0	0	0	0	0	0	0	0	0	0	0
4/23/2024	9:30 AM	0	0	0	0	0	0	0	0	0	0	0	0	0
4/23/2024	9:45 AM	0	0	0	0	0	0	0	0	0	0	0	0	0
4/23/2024	10:00 AM	0	0	0	0	0	0	0	0	0	0	0	0	0
4/23/2024	10:15 AM	0	0	0	0	0	0	0	0	0	0	0	0	0
4/23/2024	10:30 AM	0	0	0	0	0	0	0	0	0	0	0	0	0
4/23/2024	10:45 AM	0	0	0	0	0	0	0	0	0	0	0	0	0
4/23/2024	11:00 AM	0	0	0	0	0	0	0	0	0	0	0	0	0
4/23/2024	11:15 AM	0	0	0	0	0	0	0	0	0	0	0	0	0
4/23/2024	11:30 AM	0	0	0	0	0	0	0	0	0	0	0	0	0
4/23/2024	11:45 AM	0	0	0	0	0	0	0	0	0	0	0	0	0
4/23/2024	12:00 PM	0	0	0	0	0	0	0	0	0	0	0	0	0
4/23/2024	12:15 PM	0	0	0	0	0	0	0	0	0	0	0	0	0
4/23/2024	12:30 PM	0	0	0	0	0	0	0	0	0	0	0	0	0
4/23/2024	12:45 PM	0	0	0	0	0	0	0	0	0	0	0	0	0
4/23/2024	1:00 PM	0	0	0	0	0	0	0	0	0	0	0	0	0
4/23/2024	1:15 PM	0	0	0	0	0	0	0	0	0	0	0	0	0
4/23/2024	1:30 PM	0	0	0	0	0	0	0	0	0	0	0	0	0
4/23/2024	1:45 PM	0	0	0	0	0	0	0	0	0	0	0	0	0
4/23/2024	2:00 PM	0	0	0	0	0	0	0	0	0	0	0	0	0
4/23/2024	2:15 PM	0	0	0	0	0	0	0	0	0	0	0	0	0
4/23/2024	2:30 PM	0	0	0	0	0	0	0	0	0	0	0	0	0
4/23/2024	2:45 PM	0	0	0	0	0	0	0	0	0	0	0	0	0
4/23/2024	3:00 PM	0	0	0	0	0	0	0	0	0	0	0	0	0
4/23/2024	3:15 PM	0	0	0	0	0	0	0	0	0	0	0	0	0
4/23/2024	3:30 PM	0	0	0	0	0	0	0	0	0	0	0	0	0
4/23/2024	3:45 PM	0	0	0	0	0	0	0	0	0	0	0	0	0
4/23/2024	4:00 PM	0	0	0	0	0	0	0	0	0	0	0	0	0
4/23/2024	4:15 PM	0	0	0	0	0	0	0	0	0	0	0	0	0
4/23/2024	4:30 PM	0	0	0	0	0	0	0	0	0	0	0	0	0
4/23/2024	4:45 PM	0	0	0	0	0	0	0	0	0	0	0	0	0
4/23/2024	5:00 PM	0	0	0	0	0	0	0	0	0	0	0	0	0
4/23/2024	5:15 PM	0	0	0	0	0	0	0	0	0	0	0	0	0
4/23/2024	5:30 PM	0	0	0	0	0	0	0	0	0	0	0	0	0
4/23/2024	5:45 PM	0	0	0	0	0	0	0	0	0	0	0	0	0
4/23/2024	6:00 PM	0	0	0	0	0	0	0	0	0	0	0	0	0
4/23/2024	6:15 PM	0	0	0	0	0	0	0	0	0	0	0	0	0
4/23/2024	6:30 PM	0	0	0	0	0	0	0	0	0	0	0	0	0
4/23/2024	6:45 PM	0	0	0	0	0	0	0	0	0	0	0	0	0
4/23/2024	7:00 PM	0	0	0	0	0	0	0	0	0	0	0	0	0
4/23/2024	7:15 PM	0	0	0	0	0	0	0	0	0	0	0	0	0
4/23/2024	7:30 PM	0	0	0	0	0	0	0	0	0	0	0	0	0
4/23/2024	7:45 PM	0	0	0	0	0	0	0	0	0	0	0	0	0
4/23/2024	8:00 PM	0	0	0	0	0	0	0	0	0	0	0	0	0
4/23/2024	8:15 PM	0	0	0	0	0	0	0	0	0	0	0	0	0
4/23/2024	8:30 PM	0	0	0	0	0	0	0	0	0	0	0	0	0
4/23/2024	8:45 PM	0	0	0	0	0	0	0	0	0	0	0	0	0
4/23/2024	9:00 PM	0	0	0	0	0	0	0	0	0	0	0	0	0
4/23/2024	9:15 PM	0	0	0	0	0	0	0	0	0	0	0	0	0
4/23/2024	9:30 PM	0	0	0	0	0	0	0	0	0	0	0	0	0
4/23/2024	9:45 PM	0	0	0	0	0	0	0	0	0	0	0	0	0
4/23/2024	10:00 PM	0	0	0	0	0	0	0	0	0	0	0	0	0
4/23/2024	10:15 PM	0	0	0	0	0	0	0	0	0	0	0	0	0
4/23/2024	10:30 PM	0	0	0	0	0	0	0	0	0	0	0	0	0
4/23/2024	10:45 PM	0	0	0	0	0	0	0	0	0	0	0	0	0
4/23/2024	11:00 PM	0	0	0	0	0	0	0	0	0	0	0	0	0
4/23/2024	11:15 PM	0	0	0	0	0	0	0	0	0	0	0	0	0
4/23/2024	11:30 PM	0	0	0	0	0	0	0	0	0	0	0	0	0
4/23/2024	11:45 PM	0	0	0	0	0	0	0	0	0	0	0	0	0

4/24/2024	12:00 AM	0	0	0	0	0	0	0	0	0	0	0	0	0
4/24/2024	12:15 AM	0	0	0	0	0	0	0	0	0	0	0	0	0
4/24/2024	12:30 AM	0	0	0	0	0	0	0	0	0	0	0	0	0
4/24/2024	12:45 AM	0	0	0	0	0	0	0	0	0	0	0	0	0
4/24/2024	1:00 AM	0	0	0	0	0	0	0	0	0	0	0	0	0
4/24/2024	1:15 AM	0	0	0	0	0	0	0	0	0	0	0	0	0
4/24/2024	1:30 AM	0	0	0	0	0	0	0	0	0	0	0	0	0
4/24/2024	1:45 AM	0	0	0	0	0	0	0	0	0	0	0	0	0
4/24/2024	2:00 AM	0	0	0	0	0	0	0	0	0	0	0	0	0
4/24/2024	2:15 AM	0	0	0	0	0	0	0	0	0	0	0	0	0
4/24/2024	2:30 AM	0	0	0	0	0	0	0	0	0	0	0	0	0
4/24/2024	2:45 AM	0	0	0	0	0	0	0	0	0	0	0	0	0
4/24/2024	3:00 AM	0	0	0	0	0	0	0	0	0	0	0	0	0
4/24/2024	3:15 AM	0	0	0	0	0	0	0	0	0	0	0	0	0
4/24/2024	3:30 AM	0	0	0	0	0	0	0	0	0	0	0	0	0
4/24/2024	3:45 AM	0	0	0	0	0	0	0	0	0	0	0	0	0
4/24/2024	4:00 AM	0	0	0	0	0	0	0	0	0	0	0	0	0
4/24/2024	4:15 AM	0	0	0	0	0	0	0	0	0	0	0	0	0
4/24/2024	4:30 AM	0	0	0	0	0	0	0	0	0	0	0	0	0
4/24/2024	4:45 AM	0	0	0	0	0	0	0	0	0	0	0	0	0
4/24/2024	5:00 AM	0	0	0	0	0	0	0	0	0	0	0	0	0
4/24/2024	5:15 AM	0	0	0	0	0	0	0	0	0	0	0	0	0
4/24/2024	5:30 AM	0	0	0	0	0	0	0	0	0	0	0	0	0
4/24/2024	5:45 AM	0	0	0	0	0	0	0	0	0	0	0	0	0
4/24/2024	6:00 AM	0	0	0	0	0	0	0	0	0	0	0	0	0
4/24/2024	6:15 AM	0	0	0	0	0	0	0	0	0	0	0	0	0
4/24/2024	6:30 AM	0	0	0	0	0	0	0	0	0	0	0	0	0
4/24/2024	6:45 AM	0	0	0	0	0	0	0	0	0	0	0	0	0
4/24/2024	7:00 AM	0	0	0	0	0	0	0	0	0	0	0	0	0
4/24/2024	7:15 AM	0	0	0	0	0	0	0	0	0	0	0	0	0
4/24/2024	7:30 AM	0	0	0	0	0	0	0	0	0	0	0	0	0
4/24/2024	7:45 AM	0	0	0	0	0	0	0	0	0	0	0	0	0
4/24/2024	8:00 AM	0	0	0	0	0	0	0	0	0	0	0	0	0
4/24/2024	8:15 AM	0	0	0	0	0	0	0	0	0	0	0	0	0
4/24/2024	8:30 AM	0	0	0	0	0	0	0	0	0	0	0	0	0
4/24/2024	8:45 AM	0	0	0	0	0	0	0	0	0	0	0	0	0
4/24/2024	9:00 AM	0	0	0	0	0	0	0	0	0	0	0	0	0
4/24/2024	9:15 AM	0	0	0	0	0	0	0	0	0	0	0	0	0
4/24/2024	9:30 AM	0	0	0	0	0	0	0	0	0	0	0	0	0
4/24/2024	9:45 AM	0	0	0	0	0	0	0	0	0	0	0	0	0
4/24/2024	10:00 AM	0	0	0	0	0	0	0	0	0	0	0	0	0
4/24/2024	10:15 AM	0	0	0	0	0	0	0	0	0	0	0	0	0
4/24/2024	10:30 AM	0	0	0	0	0	0	0	0	0	0	0	0	0
4/24/2024	10:45 AM	0	0	0	0	0	0	0	0	0	0	0	0	0
4/24/2024	11:00 AM	0	0	0	0	0	0	0	0	0	0	0	0	0
4/24/2024	11:15 AM	0	0	0	0	0	0	0	0	0	0	0	0	0
4/24/2024	11:30 AM	0	0	0	0	0	0	0	0	0	0	0	0	0
4/24/2024	11:45 AM	0	0	0	0	0	0	0	0	0	0	0	0	0
4/24/2024	12:00 PM	0	0	0	0	0	0	0	0	0	0	0	0	0
4/24/2024	12:15 PM	0	0	0	0	0	0	0	0	0	0	0	0	0
4/24/2024	12:30 PM	0	0	0	0	0	0	0	0	0	0	0	0	0
4/24/2024	12:45 PM	0	0	0	0	0	0	0	0	0	0	0	0	0
4/24/2024	1:00 PM	0	0	0	0	0	0	0	0	0	0	0	0	0
4/24/2024	1:15 PM	0	0	0	0	0	0	0	0	0	0	0	0	0
4/24/2024	1:30 PM	0	0	0	0	0	0	0	0	0	0	0	0	0
4/24/2024	1:45 PM	0	0	0	0	0	0	0	0	0	0	0	0	0
4/24/2024	2:00 PM	0	0	0	0	0	0	0	0	0	0	0	0	0
4/24/2024	2:15 PM	0	0	0	0	0	0	0	0	0	0	0	0	0
4/24/2024	2:30 PM	0	0	0	0	0	0	0	0	0	0	0	0	0
4/24/2024	2:45 PM	0	0	0	0	0	0	0	0	0	0	0	0	0
4/24/2024	3:00 PM	0	0	0	0	0	0	0	0	0	0	0	0	0
4/24/2024	3:15 PM	0	0	0	0	0	0	0	0	0	0	0	0	0
4/24/2024	3:30 PM	0	0	0	0	0	0	0	0	0	0	0	0	0
4/24/2024	3:45 PM	0	0	0	0	0	0	0	0	0	0	0	0	0
4/24/2024	4:00 PM	0	0	0	0	0	0	0	0	0	0	0	0	0
4/24/2024	4:15 PM	0	0	0	0	0	0	0	0	0	0	0	0	0
4/24/2024	4:30 PM	0	0	0	0	0	0	0	0	0	0	0	0	0
4/24/2024	4:45 PM	0	0	0	0	0	0	0	0	0	0	0	0	0
4/24/2024	5:00 PM	0	0	0	0	0	0	0	0	0	0	0	0	0
4/24/2024	5:15 PM	0	0	0	0	0	0	0	0	0	0	0	0	0
4/24/2024	5:30 PM	0	0	0	0	0	0	0	0	0	0	0	0	0
4/24/2024	5:45 PM	0	0	0	0	0	0	0	0	0	0	0	0	0
4/24/2024	6:00 PM	0	0	0	0	0	0	0	0	0	0	0	0	0
4/24/2024	6:15 PM	0	0	0	0	0	0	0	0	0	0	0	0	0
4/24/2024	6:30 PM	0	0	0	0	0	0	0	0	0	0	0	0	0
4/24/2024	6:45 PM	0	0	0	0	0	0	0	0	0	0	0	0	0
4/24/2024	7:00 PM	0	0	0	0	0	0	0	0	0	0	0	0	0
4/24/2024	7:15 PM	0	0	0	0	0	0	0	0	0	0	0	0	0
4/24/2024	7:30 PM	0	0	0	0	0	0	0	0	0	0	0	0	0
4/24/2024	7:45 PM	0	0	0	0	0	0	0	0	0	0	0	0	0
4/24/2024	8:00 PM	0	0	0	0	0	0	0	0	0	0	0	0	0
4/24/2024	8:15 PM	0	0	0	0	0	0	0	0	0	0	0	0	0
4/24/2024	8:30 PM	0	0	0	0	0	0	0	0	0	0	0	0	0
4/24/2024	8:45 PM	0	0	0	0	0	0	0	0	0	0	0	0	0
4/24/2024	9:00 PM	0	0	0	0	0	0	0	0	0	0	0	0	0
4/24/2024	9:15 PM	0	0	0	0	0	0	0	0	0	0	0	0	0
4/24/2024	9:30 PM	0	0	0	0	0	0	0	0	0	0	0	0	0
4/24/2024	9:45 PM	0	0	0	0	0	0	0	0	0	0	0	0	0
4/24/2024	10:00 PM	0	0	0	0	0	0	0	0	0	0	0	0	0
4/24/2024	10:15 PM	0	0	0	0	0	0	0	0	0	0	0	0	0
4/24/2024	10:30 PM	0	0	0	0	0	0	0	0	0	0	0	0	0
4/24/2024	10:45 PM	0	0	0	0	0	0	0	0	0	0	0	0	0
4/24/2024	11:00 PM	0	0	0	0	0	0	0	0	0	0	0	0	0
4/24/2024	11:15 PM	0	0	0	0	0	0	0	0	0	0	0	0	0
4/24/2024	11:30 PM	0	0	0	0	0	0	0	0	0	0	0	0	0
4/24/2024	11:45 PM	0	0	0	0	0	0	0	0	0	0	0	0	0

4/25/2024	12:00 AM	0	0	0	0	0	0	0	0	0	0	0	0	0
4/25/2024	12:15 AM	0	0	0	0	0	0	0	0	0	0	0	0	0
4/25/2024	12:30 AM	0	0	0	0	0	0	0	0	0	0	0	0	0
4/25/2024	12:45 AM	0	0	0	0	0	0	0	0	0	0	0	0	0
4/25/2024	1:00 AM	0	0	0	0	0	0	0	0	0	0	0	0	0
4/25/2024	1:15 AM	0	0	0	0	0	0	0	0	0	0	0	0	0
4/25/2024	1:30 AM	0	0	0	0	0	0	0	0	0	0	0	0	0
4/25/2024	1:45 AM	0	0	0	0	0	0	0	0	0	0	0	0	0
4/25/2024	2:00 AM	0	0	0	0	0	0	0	0	0	0	0	0	0
4/25/2024	2:15 AM	0	0	0	0	0	0	0	0	0	0	0	0	0
4/25/2024	2:30 AM	0	0	0	0	0	0	0	0	0	0	0	0	0
4/25/2024	2:45 AM	0	0	0	0	0	0	0	0	0	0	0	0	0
4/25/2024	3:00 AM	0	0	0	0	0	0	0	0	0	0	0	0	0
4/25/2024	3:15 AM	0	0	0	0	0	0	0	0	0	0	0	0	0
4/25/2024	3:30 AM	0	0	0	0	0	0	0	0	0	0	0	0	0
4/25/2024	3:45 AM	0	0	0	0	0	0	0	0	0	0	0	0	0
4/25/2024	4:00 AM	0	0	0	0	0	0	0	0	0	0	0	0	0
4/25/2024	4:15 AM	0	0	0	0	0	0	0	0	0	0	0	0	0
4/25/2024	4:30 AM	0	0	0	0	0	0	0	0	0	0	0	0	0
4/25/2024	4:45 AM	0	0	0	0	0	0	0	0	0	0	0	0	0
4/25/2024	5:00 AM	0	0	0	0	0	0	0	0	0	0	0	0	0
4/25/2024	5:15 AM	0	0	0	0	0	0	0	0	0	0	0	0	0
4/25/2024	5:30 AM	0	0	0	0	0	0	0	0	0	0	0	0	0
4/25/2024	5:45 AM	0	0	0	0	0	0	0	0	0	0	0	0	0
4/25/2024	6:00 AM	0	0	0	0	0	0	0	0	0	0	0	0	0
4/25/2024	6:15 AM	0	0	0	0	0	0	0	0	0	0	0	0	0
4/25/2024	6:30 AM	0	0	0	0	0	0	0	0	0	0	0	0	0
4/25/2024	6:45 AM	0	0	0	0	0	0	0	0	0	0	0	0	0
4/25/2024	7:00 AM	0	0	0	0	0	0	0	0	0	0	0	0	0
4/25/2024	7:15 AM	0	0	0	0	0	0	0	0	0	0	0	0	0
4/25/2024	7:30 AM	0	0	0	0	0	0	0	0	0	0	0	0	0
4/25/2024	7:45 AM	0	0	0	0	0	0	0	0	0	0	0	0	0
4/25/2024	8:00 AM	0	0	0	0	0	0	0	0	0	0	0	0	0
4/25/2024	8:15 AM	0	0	0	0	0	0	0	0	0	0	0	0	0
4/25/2024	8:30 AM	0	0	0	0	0	0	0	0	0	0	0	0	0
4/25/2024	8:45 AM	0	0	0	0	0	0	0	0	0	0	0	0	0
4/25/2024	9:00 AM	0	0	0	0	0	0	0	0	0	0	0	0	0
4/25/2024	9:15 AM	0	0	0	0	0	0	0	0	0	0	0	0	0
4/25/2024	9:30 AM	0	0	0	0	0	0	0	0	0	0	0	0	0
4/25/2024	9:45 AM	0	0	0	0	0	0	0	0	0	0	0	0	0
4/25/2024	10:00 AM	0	0	0	0	0	0	0	0	0	0	0	0	0
4/25/2024	10:15 AM	0	0	0	0	0	0	0	0	0	0	0	0	0
4/25/2024	10:30 AM	0	0	0	0	0	0	0	0	0	0	0	0	0
4/25/2024	10:45 AM	0	0	0	0	0	0	0	0	0	0	0	0	0
4/25/2024	11:00 AM	0	0	0	0	0	0	0	0	0	0	0	0	0
4/25/2024	11:15 AM	0	0	0	0	0	0	0	0	0	0	0	0	0
4/25/2024	11:30 AM	0	0	0	0	0	0	0	0	0	0	0	0	0
4/25/2024	11:45 AM	0	0	0	0	0	0	0	0	0	0	0	0	0
4/25/2024	12:00 PM	0	0	0	0	0	0	0	0	0	0	0	0	0
4/25/2024	12:15 PM	0	0	0	0	0	0	0	0	0	0	0	0	0
4/25/2024	12:30 PM	0	0	0	0	0	0	0	0	0	0	0	0	0
4/25/2024	12:45 PM	0	0	0	0	0	0	0	0	0	0	0	0	0
4/25/2024	1:00 PM	0	0	0	0	0	0	0	0	0	0	0	0	0
4/25/2024	1:15 PM	0	0	0	0	0	0	0	0	0	0	0	0	0
4/25/2024	1:30 PM	0	0	0	0	0	0	0	0	0	0	0	0	0
4/25/2024	1:45 PM	0	0	0	0	0	0	0	0	0	0	0	0	0
4/25/2024	2:00 PM	0	0	0	0	0	0	0	0	0	0	0	0	0
4/25/2024	2:15 PM	0	0	0	0	0	0	0	0	0	0	0	0	0
4/25/2024	2:30 PM	0	0	0	0	0	0	0	0	0	0	0	0	0
4/25/2024	2:45 PM	0	0	0	0	0	0	0	0	0	0	0	0	0
4/25/2024	3:00 PM	0	0	0	0	0	0	0	0	0	0	0	0	0
4/25/2024	3:15 PM	0	0	0	0	0	0	0	0	0	0	0	0	0
4/25/2024	3:30 PM	0	0	0	0	0	0	0	0	0	0	0	0	0
4/25/2024	3:45 PM	0	0	0	0	0	0	0	0	0	0	0	0	0
4/25/2024	4:00 PM	0	0	0	0	0	0	0	0	0	0	0	0	0
4/25/2024	4:15 PM	0	0	0	0	0	0	0	0	0	0	0	0	0
4/25/2024	4:30 PM	0	0	0	0	0	0	0	0	0	0	0	0	0
4/25/2024	4:45 PM	0	0	0	0	0	0	0	0	0	0	0	0	0
4/25/2024	5:00 PM	0	0	0	0	0	0	0	0	0	0	0	0	0
4/25/2024	5:15 PM	0	0	0	0	0	0	0	0	0	0	0	0	0
4/25/2024	5:30 PM	0	0	0	0	0	0	0	0	0	0	0	0	0
4/25/2024	5:45 PM	0	0	0	0	0	0	0	0	0	0	0	0	0
4/25/2024	6:00 PM	0	0	0	0	0	0	0	0	0	0	0	0	0
4/25/2024	6:15 PM	0	0	0	0	0	0	0	0	0	0	0	0	0
4/25/2024	6:30 PM	0	0	0	0	0	0	0	0	0	0	0	0	0
4/25/2024	6:45 PM	0	0	0	0	0	0	0	0	0	0	0	0	0
4/25/2024	7:00 PM	0	0	0	0	0	0	0	0	0	0	0	0	0
4/25/2024	7:15 PM	0	0	0	0	0	0	0	0	0	0	0	0	0
4/25/2024	7:30 PM	0	0	0	0	0	0	0	0	0	0	0	0	0
4/25/2024	7:45 PM	0	0	0	0	0	0	0	0	0	0	0	0	0
4/25/2024	8:00 PM	0	0	0	0	0	0	0	0	0	0	0	0	0
4/25/2024	8:15 PM	0	0	0	0	0	0	0	0	0	0	0	0	0
4/25/2024	8:30 PM	0	0	0	0	0	0	0	0	0	0	0	0	0
4/25/2024	8:45 PM	0	0	0	0	0	0	0	0	0	0	0	0	0
4/25/2024	9:00 PM	0	0	0	0	0	0	0	0	0	0	0	0	0
4/25/2024	9:15 PM	0	0	0	0	0	0	0	0	0	0	0	0	0
4/25/2024	9:30 PM	0	0	0	0	0	0	0	0	0	0	0	0	0
4/25/2024	9:45 PM	0	0	0	0	0	0	0	0	0	0	0	0	0
4/25/2024	10:00 PM	0	0	0	0	0	0	0	0	0	0	0	0	0
4/25/2024	10:15 PM	0	0	0	0	0	0	0	0	0	0	0	0	0
4/25/2024	10:30 PM	0	0	0	0	0	0	0	0	0	0	0	0	0
4/25/2024	10:45 PM	0	0	0	0	0	0	0	0	0	0	0	0	0
4/25/2024	11:00 PM	0	0	0	0	0	0	0	0	0	0	0	0	0
4/25/2024	11:15 PM	0	0	0	0	0	0	0	0	0	0	0	0	0
4/25/2024	11:30 PM	0	0	0	0	0	0	0	0	0	0	0	0	0
4/25/2024	11:45 PM	0	0	0	0	0	0	0	0	0	0	0	0	0

NB
File Name:
Start Date: 4/23/2024
Start Time: 0
Site Code: 38
Station ID: 1
Location 1: I-26 On/Off-Ramp, north of St Andrews Rd
Location 2:

Date	Time	1	2	3	4	5	6	7	8	9	10	11	12	13
4/23/2024	12:00 AM	0	0	0	0	0	0	0	0	0	0	0	0	0
4/23/2024	12:15 AM	0	0	0	0	0	0	0	0	0	0	0	0	0
4/23/2024	12:30 AM	0	0	0	0	0	0	0	0	0	0	0	0	0
4/23/2024	12:45 AM	0	0	0	0	0	0	0	0	0	0	0	0	0
4/23/2024	1:00 AM	0	0	0	0	0	0	0	0	0	0	0	0	0
4/23/2024	1:15 AM	0	0	0	0	0	0	0	0	0	0	0	0	0
4/23/2024	1:30 AM	0	0	0	0	0	0	0	0	0	0	0	0	0
4/23/2024	1:45 AM	0	0	0	0	0	0	0	0	0	0	0	0	0
4/23/2024	2:00 AM	0	0	0	0	0	0	0	0	0	0	0	0	0
4/23/2024	2:15 AM	0	0	0	0	0	0	0	0	0	0	0	0	0
4/23/2024	2:30 AM	0	0	0	0	0	0	0	0	0	0	0	0	0
4/23/2024	2:45 AM	0	0	0	0	0	0	0	0	0	0	0	0	0
4/23/2024	3:00 AM	0	0	0	0	0	0	0	0	0	0	0	0	0
4/23/2024	3:15 AM	0	0	0	0	0	0	0	0	0	0	0	0	0
4/23/2024	3:30 AM	0	0	0	0	0	0	0	0	0	0	0	0	0
4/23/2024	3:45 AM	0	0	0	0	0	0	0	0	0	0	0	0	0
4/23/2024	4:00 AM	0	0	0	0	0	0	0	0	0	0	0	0	0
4/23/2024	4:15 AM	0	0	0	0	0	0	0	0	0	0	0	0	0
4/23/2024	4:30 AM	0	0	0	0	0	0	0	0	0	0	0	0	0
4/23/2024	4:45 AM	0	0	0	0	0	0	0	0	0	0	0	0	0
4/23/2024	5:00 AM	0	0	0	0	0	0	0	0	0	0	0	0	0
4/23/2024	5:15 AM	0	0	0	0	0	0	0	0	0	0	0	0	0
4/23/2024	5:30 AM	0	0	0	0	0	0	0	0	0	0	0	0	0
4/23/2024	5:45 AM	0	0	0	0	0	0	0	0	0	0	0	0	0
4/23/2024	6:00 AM	0	0	0	0	0	0	0	0	0	0	0	0	0
4/23/2024	6:15 AM	0	0	0	0	0	0	0	0	0	0	0	0	0
4/23/2024	6:30 AM	0	0	0	0	0	0	0	0	0	0	0	0	0
4/23/2024	6:45 AM	0	0	0	0	0	0	0	0	0	0	0	0	0
4/23/2024	7:00 AM	0	0	0	0	0	0	0	0	0	0	0	0	0
4/23/2024	7:15 AM	0	0	0	0	0	0	0	0	0	0	0	0	0
4/23/2024	7:30 AM	0	0	0	0	0	0	0	0	0	0	0	0	0
4/23/2024	7:45 AM	0	0	0	0	0	0	0	0	0	0	0	0	0
4/23/2024	8:00 AM	0	0	0	0	0	0	0	0	0	0	0	0	0
4/23/2024	8:15 AM	0	0	0	0	0	0	0	0	0	0	0	0	0
4/23/2024	8:30 AM	0	0	0	0	0	0	0	0	0	0	0	0	0
4/23/2024	8:45 AM	0	0	0	0	0	0	0	0	0	0	0	0	0
4/23/2024	9:00 AM	0	0	0	0	0	0	0	0	0	0	0	0	0
4/23/2024	9:15 AM	0	0	0	0	0	0	0	0	0	0	0	0	0
4/23/2024	9:30 AM	0	0	0	0	0	0	0	0	0	0	0	0	0
4/23/2024	9:45 AM	0	0	0	0	0	0	0	0	0	0	0	0	0
4/23/2024	10:00 AM	0	0	0	0	0	0	0	0	0	0	0	0	0
4/23/2024	10:15 AM	0	0	0	0	0	0	0	0	0	0	0	0	0
4/23/2024	10:30 AM	0	0	0	0	0	0	0	0	0	0	0	0	0
4/23/2024	10:45 AM	0	0	0	0	0	0	0	0	0	0	0	0	0
4/23/2024	11:00 AM	0	0	0	0	0	0	0	0	0	0	0	0	0
4/23/2024	11:15 AM	0	0	0	0	0	0	0	0	0	0	0	0	0
4/23/2024	11:30 AM	0	0	0	0	0	0	0	0	0	0	0	0	0
4/23/2024	11:45 AM	0	0	0	0	0	0	0	0	0	0	0	0	0
4/23/2024	12:00 PM	0	0	0	0	0	0	0	0	0	0	0	0	0
4/23/2024	12:15 PM	0	0	0	0	0	0	0	0	0	0	0	0	0
4/23/2024	12:30 PM	0	0	0	0	0	0	0	0	0	0	0	0	0
4/23/2024	12:45 PM	0	0	0	0	0	0	0	0	0	0	0	0	0
4/23/2024	1:00 PM	0	0	0	0	0	0	0	0	0	0	0	0	0
4/23/2024	1:15 PM	0	0	0	0	0	0	0	0	0	0	0	0	0
4/23/2024	1:30 PM	0	0	0	0	0	0	0	0	0	0	0	0	0
4/23/2024	1:45 PM	0	0	0	0	0	0	0	0	0	0	0	0	0
4/23/2024	2:00 PM	0	0	0	0	0	0	0	0	0	0	0	0	0
4/23/2024	2:15 PM	0	0	0	0	0	0	0	0	0	0	0	0	0
4/23/2024	2:30 PM	0	0	0	0	0	0	0	0	0	0	0	0	0
4/23/2024	2:45 PM	0	0	0	0	0	0	0	0	0	0	0	0	0
4/23/2024	3:00 PM	0	0	0	0	0	0	0	0	0	0	0	0	0
4/23/2024	3:15 PM	0	0	0	0	0	0	0	0	0	0	0	0	0
4/23/2024	3:30 PM	0	0	0	0	0	0	0	0	0	0	0	0	0
4/23/2024	3:45 PM	0	0	0	0	0	0	0	0	0	0	0	0	0
4/23/2024	4:00 PM	0	0	0	0	0	0	0	0	0	0	0	0	0
4/23/2024	4:15 PM	0	0	0	0	0	0	0	0	0	0	0	0	0
4/23/2024	4:30 PM	0	0	0	0	0	0	0	0	0	0	0	0	0
4/23/2024	4:45 PM	0	0	0	0	0	0	0	0	0	0	0	0	0
4/23/2024	5:00 PM	0	0	0	0	0	0	0	0	0	0	0	0	0
4/23/2024	5:15 PM	0	0	0	0	0	0	0	0	0	0	0	0	0
4/23/2024	5:30 PM	0	0	0	0	0	0	0	0	0	0	0	0	0
4/23/2024	5:45 PM	0	0	0	0	0	0	0	0	0	0	0	0	0
4/23/2024	6:00 PM	0	0	0	0	0	0	0	0	0	0	0	0	0
4/23/2024	6:15 PM	0	15	6	0	0	0	0	0	0	0	0	0	0
4/23/2024	6:30 PM	0	40	11	0	0	0	0	0	0	0	0	0	0
4/23/2024	6:45 PM	0	62	14	0	0	0	0	0	0	0	0	0	0
4/23/2024	7:00 PM	0	89	17	0	0	0	0	1	0	0	0	0	0
4/23/2024	7:15 PM	0	100	12	0	0	0	0	1	0	0	0	0	0
4/23/2024	7:30 PM	0	99	10	0	0	0	0	1	0	0	0	0	0
4/23/2024	7:45 PM	0	104	9	0	0	0	0	1	0	0	0	0	0
4/23/2024	8:00 PM	0	101	8	0	0	0	0	0	0	0	0	0	0
4/23/2024	8:15 PM	0	99	10	0	0	0	0	0	0	0	0	0	0
4/23/2024	8:30 PM	0	94	8	0	0	0	0	0	0	0	0	0	0
4/23/2024	8:45 PM	0	84	8	0	0	0	0	0	0	0	0	0	0
4/23/2024	9:00 PM	0	82	9	0	0	0	0	0	0	0	0	0	0
4/23/2024	9:15 PM	0	66	8	0	0	0	0	0	0	0	0	0	0
4/23/2024	9:30 PM	0	59	11	0	0	0	0	0	0	0	0	0	0
4/23/2024	9:45 PM	1	61	13	0	0	0	0	0	0	0	0	0	0
4/23/2024	10:00 PM	1	47	11	0	0	0	0	0	0	0	0	0	0
4/23/2024	10:15 PM	1	47	11	0	0	0	0	0	0	0	0	0	0
4/23/2024	10:30 PM	1	40	7	0	0	0	0	0	0	0	0	0	0
4/23/2024	10:45 PM	0	28	5	0	0	0	0	0	0	0	0	0	0
4/23/2024	11:00 PM	0	28	5	0	0	0	0	0	0	0	0	0	0
4/23/2024	11:15 PM	0	24	5	0	0	0	0	0	0	0	0	0	0
4/23/2024	11:30 PM	0	22	5	0	0	0	0	0	0	0	0	0	0
4/23/2024	11:45 PM	0	20	4	0	0	0	0	0	0	0	0	0	0

4/24/2024	12:00 AM	0	18	4	0	0	0	0	0	0	0	0	0
4/24/2024	12:15 AM	0	17	2	0	1	0	0	0	0	0	0	0
4/24/2024	12:30 AM	0	17	3	0	1	0	0	0	0	0	0	0
4/24/2024	12:45 AM	0	15	2	0	1	0	0	0	0	0	0	0
4/24/2024	1:00 AM	0	11	1	0	1	0	0	0	0	0	0	0
4/24/2024	1:15 AM	0	10	1	0	0	0	0	0	0	0	0	0
4/24/2024	1:30 AM	0	9	0	0	0	0	0	0	0	0	0	0
4/24/2024	1:45 AM	0	9	0	0	0	0	0	0	0	0	0	0
4/24/2024	2:00 AM	0	8	0	0	1	0	0	0	0	0	0	0
4/24/2024	2:15 AM	0	7	0	0	2	0	0	0	0	0	0	0
4/24/2024	2:30 AM	0	6	0	0	2	0	0	0	0	0	0	0
4/24/2024	2:45 AM	0	7	0	0	2	0	0	0	0	0	0	0
4/24/2024	3:00 AM	0	8	0	0	1	0	0	0	0	0	0	0
4/24/2024	3:15 AM	0	10	1	0	0	0	0	0	0	0	0	0
4/24/2024	3:30 AM	0	12	1	0	0	0	0	0	0	0	0	0
4/24/2024	3:45 AM	0	14	1	0	0	0	0	0	0	0	0	0
4/24/2024	4:00 AM	0	17	2	0	1	0	0	0	0	0	0	0
4/24/2024	4:15 AM	0	20	2	0	1	0	0	0	0	0	0	0
4/24/2024	4:30 AM	0	19	3	0	1	0	0	0	0	0	0	0
4/24/2024	4:45 AM	0	21	3	0	1	0	0	0	0	0	0	0
4/24/2024	5:00 AM	0	28	5	0	0	0	0	0	0	0	0	0
4/24/2024	5:15 AM	0	31	6	0	0	0	0	0	0	0	0	0
4/24/2024	5:30 AM	0	42	6	0	0	0	0	0	0	0	0	0
4/24/2024	5:45 AM	0	46	10	0	0	0	0	0	2	0	0	0
4/24/2024	6:00 AM	0	55	10	0	0	0	0	0	2	0	0	0
4/24/2024	6:15 AM	0	77	13	0	1	0	0	0	2	0	0	0
4/24/2024	6:30 AM	0	93	21	0	1	0	0	0	3	0	0	0
4/24/2024	6:45 AM	0	122	23	0	2	1	0	0	1	0	0	0
4/24/2024	7:00 AM	0	149	25	0	2	1	0	0	2	0	0	0
4/24/2024	7:15 AM	0	144	26	0	2	1	0	0	2	0	0	0
4/24/2024	7:30 AM	0	134	25	0	4	1	0	0	1	0	0	0
4/24/2024	7:45 AM	1	120	24	0	3	0	0	1	1	0	0	0
4/24/2024	8:00 AM	1	100	28	0	4	0	0	1	0	0	0	0
4/24/2024	8:15 AM	1	100	31	0	3	0	1	1	0	0	0	0
4/24/2024	8:30 AM	1	95	26	0	2	0	1	2	1	0	0	0
4/24/2024	8:45 AM	0	106	27	1	2	0	1	1	1	0	0	0
4/24/2024	9:00 AM	0	107	25	1	1	0	1	1	2	0	0	0
4/24/2024	9:15 AM	0	112	24	2	1	0	0	1	2	0	0	0
4/24/2024	9:30 AM	0	123	31	2	1	0	0	1	1	0	0	0
4/24/2024	9:45 AM	0	117	28	1	1	0	0	1	1	0	0	0
4/24/2024	10:00 AM	0	120	36	1	3	0	0	2	1	0	0	0
4/24/2024	10:15 AM	0	122	35	0	3	0	0	2	1	0	0	0
4/24/2024	10:30 AM	0	139	35	0	4	0	0	1	1	0	0	0
4/24/2024	10:45 AM	0	133	43	0	4	0	0	1	1	0	0	0
4/24/2024	11:00 AM	0	150	34	0	4	0	0	1	1	0	0	0
4/24/2024	11:15 AM	0	165	32	0	4	0	0	1	1	0	0	0
4/24/2024	11:30 AM	0	169	33	0	3	0	0	2	1	0	0	0
4/24/2024	11:45 AM	0	183	27	0	3	0	0	2	1	0	0	0
4/24/2024	12:00 PM	0	173	30	0	1	0	0	1	0	0	0	0
4/24/2024	12:15 PM	0	167	31	0	2	0	0	1	0	0	0	0
4/24/2024	12:30 PM	0	156	32	0	1	0	0	0	0	0	0	0
4/24/2024	12:45 PM	2	154	34	0	3	0	0	0	0	0	0	0
4/24/2024	1:00 PM	2	155	32	0	3	0	0	1	0	0	0	0
4/24/2024	1:15 PM	3	158	36	0	2	0	0	1	0	0	0	0
4/24/2024	1:30 PM	3	161	33	0	3	0	0	1	0	0	0	0
4/24/2024	1:45 PM	1	173	39	0	3	0	0	1	0	0	0	0
4/24/2024	2:00 PM	1	190	40	1	3	0	0	0	0	0	0	0
4/24/2024	2:15 PM	0	193	35	1	4	0	0	0	0	0	0	0
4/24/2024	2:30 PM	0	198	33	1	3	0	0	0	0	0	0	0
4/24/2024	2:45 PM	0	208	26	1	1	0	0	0	0	0	0	0
4/24/2024	3:00 PM	0	194	22	0	1	0	0	0	0	0	0	0
4/24/2024	3:15 PM	1	199	27	0	0	0	0	0	1	0	0	0
4/24/2024	3:30 PM	1	199	27	0	0	3	1	0	1	0	0	0
4/24/2024	3:45 PM	1	182	29	0	0	3	1	0	1	0	0	0
4/24/2024	4:00 PM	1	185	37	0	1	3	1	0	1	1	0	0
4/24/2024	4:15 PM	0	170	35	1	1	3	1	0	0	1	0	0
4/24/2024	4:30 PM	0	167	35	1	2	0	0	0	0	1	0	0
4/24/2024	4:45 PM	0	166	31	1	3	0	0	0	1	1	0	0
4/24/2024	5:00 PM	0	151	24	1	2	0	0	0	1	0	0	0
4/24/2024	5:15 PM	1	161	22	0	2	0	0	0	1	0	0	0
4/24/2024	5:30 PM	3	149	24	0	1	0	0	0	1	0	0	0
4/24/2024	5:45 PM	3	136	26	0	3	0	0	0	0	0	0	0
4/24/2024	6:00 PM	3	140	24	0	3	0	0	0	0	0	0	0
4/24/2024	6:15 PM	2	119	24	0	4	0	0	0	0	0	0	0
4/24/2024	6:30 PM	0	119	19	0	4	0	0	0	0	0	0	0
4/24/2024	6:45 PM	0	116	18	0	1	0	0	0	0	0	0	0
4/24/2024	7:00 PM	0	107	23	0	1	0	0	0	0	0	0	0
4/24/2024	7:15 PM	0	104	22	0	1	0	0	0	0	0	0	0
4/24/2024	7:30 PM	0	117	22	0	1	0	0	0	0	0	0	0
4/24/2024	7:45 PM	0	124	17	0	1	0	0	0	0	0	0	0
4/24/2024	8:00 PM	0	124	11	0	1	0	0	0	0	0	0	0
4/24/2024	8:15 PM	0	130	9	0	0	0	0	0	0	0	0	0
4/24/2024	8:30 PM	0	110	6	0	0	0	0	0	0	0	0	0
4/24/2024	8:45 PM	0	93	7	0	0	0	0	0	0	0	0	0
4/24/2024	9:00 PM	0	81	5	0	0	0	0	0	0	0	0	0
4/24/2024	9:15 PM	0	64	3	0	0	0	0	0	0	0	0	0
4/24/2024	9:30 PM	0	52	2	0	0	0	0	0	0	0	0	0
4/24/2024	9:45 PM	0	42	2	1	1	0	0	0	0	0	0	0
4/24/2024	10:00 PM	0	40	2	1	2	0	0	0	0	0	0	0
4/24/2024	10:15 PM	0	36	1	1	2	0	0	0	0	0	0	0
4/24/2024	10:30 PM	0	32	1	1	2	0	0	0	0	0	0	0
4/24/2024	10:45 PM	0	32	0	0	1	0	0	0	0	0	0	0
4/24/2024	11:00 PM	0	21	0	0	0	0	0	0	0	0	0	0
4/24/2024	11:15 PM	0	17	0	0	0	0	0	0	0	0	0	0
4/24/2024	11:30 PM	0	19	2	0	1	0	0	0	0	0	0	0
4/24/2024	11:45 PM	0	18	2	0	1	0	0	0	0	0	0	0

4/25/2024	12:00 AM	0	21	2	0	1	0	0	0	0	0	0	0
4/25/2024	12:15 AM	0	23	2	0	1	0	0	0	0	0	0	0
4/25/2024	12:30 AM	0	22	0	0	0	0	0	0	0	0	0	0
4/25/2024	12:45 AM	0	22	0	0	0	0	0	0	0	0	0	0
4/25/2024	1:00 AM	0	18	0	0	0	0	0	0	0	0	0	0
4/25/2024	1:15 AM	0	12	0	0	0	0	0	0	0	0	0	0
4/25/2024	1:30 AM	0	8	0	0	0	0	0	0	0	0	0	0
4/25/2024	1:45 AM	0	4	0	0	0	0	0	0	0	0	0	0
4/25/2024	2:00 AM	0	7	0	0	0	0	0	0	0	0	0	0
4/25/2024	2:15 AM	0	8	0	0	0	0	0	0	0	0	0	0
4/25/2024	2:30 AM	0	10	0	0	0	0	0	0	0	0	0	0
4/25/2024	2:45 AM	0	14	1	0	0	0	0	0	0	0	0	0
4/25/2024	3:00 AM	0	17	1	0	0	0	0	0	0	0	0	0
4/25/2024	3:15 AM	0	18	1	0	0	0	0	0	0	0	0	0
4/25/2024	3:30 AM	0	17	1	0	0	0	0	0	0	0	0	0
4/25/2024	3:45 AM	0	15	0	0	0	0	0	0	0	0	0	0
4/25/2024	4:00 AM	0	17	1	0	0	0	0	0	0	0	0	0
4/25/2024	4:15 AM	0	18	1	0	0	0	0	0	0	0	0	0
4/25/2024	4:30 AM	0	20	1	0	1	0	0	0	0	0	0	0
4/25/2024	4:45 AM	0	26	1	0	2	0	0	0	0	0	0	0
4/25/2024	5:00 AM	0	32	0	0	2	0	0	0	1	0	0	0
4/25/2024	5:15 AM	0	41	1	0	2	0	0	0	1	0	0	0
4/25/2024	5:30 AM	0	44	2	0	2	0	0	0	1	0	0	0
4/25/2024	5:45 AM	0	51	5	0	1	0	0	0	1	0	0	0
4/25/2024	6:00 AM	0	57	9	0	1	0	0	0	0	0	0	0
4/25/2024	6:15 AM	0	72	14	0	1	1	0	0	0	0	0	0
4/25/2024	6:30 AM	0	92	17	0	0	1	0	0	0	0	0	0
4/25/2024	6:45 AM	0	109	15	0	1	1	0	0	0	0	0	0
4/25/2024	7:00 AM	0	130	19	0	1	1	0	0	0	0	0	0
4/25/2024	7:15 AM	0	136	20	0	1	0	0	1	0	0	0	0
4/25/2024	7:30 AM	0	132	22	0	1	0	0	1	1	0	0	0
4/25/2024	7:45 AM	0	121	25	0	0	0	0	1	1	0	0	0
4/25/2024	8:00 AM	0	113	24	0	4	0	0	1	1	0	0	0
4/25/2024	8:15 AM	0	102	24	0	5	0	0	0	2	0	0	0
4/25/2024	8:30 AM	0	106	26	0	6	0	0	1	1	0	0	0
4/25/2024	8:45 AM	0	104	30	0	6	0	0	1	1	0	0	0
4/25/2024	9:00 AM	0	104	31	0	4	0	0	1	2	0	0	0
4/25/2024	9:15 AM	0	114	33	0	3	0	0	1	2	0	0	0
4/25/2024	9:30 AM	0	114	35	1	2	0	0	0	2	0	0	0
4/25/2024	9:45 AM	0	136	33	1	2	0	0	0	2	0	0	0
4/25/2024	10:00 AM	0	134	34	1	0	0	0	0	3	0	0	0
4/25/2024	10:15 AM	0	135	33	1	0	0	0	0	2	0	0	0
4/25/2024	10:30 AM	0	150	39	0	1	0	0	0	2	0	0	0
4/25/2024	10:45 AM	0	144	42	0	2	0	0	0	2	0	0	0
4/25/2024	11:00 AM	0	156	38	0	2	0	0	0	0	0	0	0
4/25/2024	11:15 AM	0	167	39	0	2	0	0	0	0	0	0	0
4/25/2024	11:30 AM	2	179	34	0	1	0	0	0	0	0	0	0
4/25/2024	11:45 AM	2	189	34	0	0	0	0	0	0	0	0	0
4/25/2024	12:00 PM	2	182	36	0	1	0	0	0	0	0	0	0
4/25/2024	12:15 PM	2	169	42	0	1	0	0	0	0	0	0	0
4/25/2024	12:30 PM	0	152	44	0	2	0	0	0	0	0	0	0
4/25/2024	12:45 PM	0	148	43	0	2	0	0	0	0	0	0	0
4/25/2024	1:00 PM	0	156	43	0	2	0	0	0	0	0	0	0
4/25/2024	1:15 PM	0	162	40	0	3	0	0	0	0	0	0	0
4/25/2024	1:30 PM	0	151	31	0	2	0	0	0	0	0	0	0
4/25/2024	1:45 PM	0	144	31	0	4	0	0	0	0	0	0	0
4/25/2024	2:00 PM	0	139	32	0	4	0	0	1	0	0	0	0
4/25/2024	2:15 PM	0	142	31	0	4	0	0	2	0	0	0	0
4/25/2024	2:30 PM	0	154	32	0	5	0	0	2	0	0	0	0
4/25/2024	2:45 PM	0	164	32	0	4	0	0	3	0	0	0	0
4/25/2024	3:00 PM	0	169	31	0	3	0	0	2	0	0	0	0
4/25/2024	3:15 PM	0	173	27	0	2	0	0	1	0	0	0	0
4/25/2024	3:30 PM	0	170	28	0	1	0	0	1	0	0	0	0
4/25/2024	3:45 PM	0	175	27	0	0	0	0	0	0	0	0	0
4/25/2024	4:00 PM	0	183	27	0	0	0	0	0	0	0	0	0
4/25/2024	4:15 PM	0	183	26	0	0	0	0	0	0	0	0	0
4/25/2024	4:30 PM	0	194	29	1	0	0	0	0	0	0	0	0
4/25/2024	4:45 PM	0	171	28	1	0	0	0	0	0	0	0	0
4/25/2024	5:00 PM	0	163	25	1	0	0	0	0	0	0	0	0
4/25/2024	5:15 PM	0	155	24	1	0	0	0	0	0	0	0	0
4/25/2024	5:30 PM	1	135	22	1	0	0	0	0	0	0	0	0
4/25/2024	5:45 PM	1	136	21	1	0	0	0	0	0	0	0	0
4/25/2024	6:00 PM	1	123	22	1	0	0	0	0	0	0	0	0
4/25/2024	6:15 PM	1	86	17	1	0	0	0	0	0	0	0	0
4/25/2024	6:30 PM	0	59	10	0	0	0	0	0	0	0	0	0
4/25/2024	6:45 PM	0	31	5	0	0	0	0	0	0	0	0	0
4/25/2024	7:00 PM	0	0	0	0	0	0	0	0	0	0	0	0
4/25/2024	7:15 PM	0	0	0	0	0	0	0	0	0	0	0	0
4/25/2024	7:30 PM	0	0	0	0	0	0	0	0	0	0	0	0
4/25/2024	7:45 PM	0	0	0	0	0	0	0	0	0	0	0	0
4/25/2024	8:00 PM	0	0	0	0	0	0	0	0	0	0	0	0
4/25/2024	8:15 PM	0	0	0	0	0	0	0	0	0	0	0	0
4/25/2024	8:30 PM	0	0	0	0	0	0	0	0	0	0	0	0
4/25/2024	8:45 PM	0	0	0	0	0	0	0	0	0	0	0	0
4/25/2024	9:00 PM	0	0	0	0	0	0	0	0	0	0	0	0
4/25/2024	9:15 PM	0	0	0	0	0	0	0	0	0	0	0	0
4/25/2024	9:30 PM	0	0	0	0	0	0	0	0	0	0	0	0
4/25/2024	9:45 PM	0	0	0	0	0	0	0	0	0	0	0	0
4/25/2024	10:00 PM	0	0	0	0	0	0	0	0	0	0	0	0
4/25/2024	10:15 PM	0	0	0	0	0	0	0	0	0	0	0	0
4/25/2024	10:30 PM	0	0	0	0	0	0	0	0	0	0	0	0
4/25/2024	10:45 PM	0	0	0	0	0	0	0	0	0	0	0	0
4/25/2024	11:00 PM	0	0	0	0	0	0	0	0	0	0	0	0
4/25/2024	11:15 PM	0	0	0	0	0	0	0	0	0	0	0	0
4/25/2024	11:30 PM	0	0	0	0	0	0	0	0	0	0	0	0
4/25/2024	11:45 PM	0	0	0	0	0	0	0	0	0	0	0	0

SB
File Name:
Start Date: 4/23/2024
Start Time: 0
Site Code: 38
Station ID: 1
Location 1: I-26 On/Off-Ramp, north of St Andrews Rd
Location 2:

Date	Time	1	2	3	4	5	6	7	8	9	10	11	12	13
4/23/2024	12:00 AM	0	0	0	0	0	0	0	0	0	0	0	0	0
4/23/2024	12:15 AM	0	0	0	0	0	0	0	0	0	0	0	0	0
4/23/2024	12:30 AM	0	0	0	0	0	0	0	0	0	0	0	0	0
4/23/2024	12:45 AM	0	0	0	0	0	0	0	0	0	0	0	0	0
4/23/2024	1:00 AM	0	0	0	0	0	0	0	0	0	0	0	0	0
4/23/2024	1:15 AM	0	0	0	0	0	0	0	0	0	0	0	0	0
4/23/2024	1:30 AM	0	0	0	0	0	0	0	0	0	0	0	0	0
4/23/2024	1:45 AM	0	0	0	0	0	0	0	0	0	0	0	0	0
4/23/2024	2:00 AM	0	0	0	0	0	0	0	0	0	0	0	0	0
4/23/2024	2:15 AM	0	0	0	0	0	0	0	0	0	0	0	0	0
4/23/2024	2:30 AM	0	0	0	0	0	0	0	0	0	0	0	0	0
4/23/2024	2:45 AM	0	0	0	0	0	0	0	0	0	0	0	0	0
4/23/2024	3:00 AM	0	0	0	0	0	0	0	0	0	0	0	0	0
4/23/2024	3:15 AM	0	0	0	0	0	0	0	0	0	0	0	0	0
4/23/2024	3:30 AM	0	0	0	0	0	0	0	0	0	0	0	0	0
4/23/2024	3:45 AM	0	0	0	0	0	0	0	0	0	0	0	0	0
4/23/2024	4:00 AM	0	0	0	0	0	0	0	0	0	0	0	0	0
4/23/2024	4:15 AM	0	0	0	0	0	0	0	0	0	0	0	0	0
4/23/2024	4:30 AM	0	0	0	0	0	0	0	0	0	0	0	0	0
4/23/2024	4:45 AM	0	0	0	0	0	0	0	0	0	0	0	0	0
4/23/2024	5:00 AM	0	0	0	0	0	0	0	0	0	0	0	0	0
4/23/2024	5:15 AM	0	0	0	0	0	0	0	0	0	0	0	0	0
4/23/2024	5:30 AM	0	0	0	0	0	0	0	0	0	0	0	0	0
4/23/2024	5:45 AM	0	0	0	0	0	0	0	0	0	0	0	0	0
4/23/2024	6:00 AM	0	0	0	0	0	0	0	0	0	0	0	0	0
4/23/2024	6:15 AM	0	0	0	0	0	0	0	0	0	0	0	0	0
4/23/2024	6:30 AM	0	0	0	0	0	0	0	0	0	0	0	0	0
4/23/2024	6:45 AM	0	0	0	0	0	0	0	0	0	0	0	0	0
4/23/2024	7:00 AM	0	0	0	0	0	0	0	0	0	0	0	0	0
4/23/2024	7:15 AM	0	0	0	0	0	0	0	0	0	0	0	0	0
4/23/2024	7:30 AM	0	0	0	0	0	0	0	0	0	0	0	0	0
4/23/2024	7:45 AM	0	0	0	0	0	0	0	0	0	0	0	0	0
4/23/2024	8:00 AM	0	0	0	0	0	0	0	0	0	0	0	0	0
4/23/2024	8:15 AM	0	0	0	0	0	0	0	0	0	0	0	0	0
4/23/2024	8:30 AM	0	0	0	0	0	0	0	0	0	0	0	0	0
4/23/2024	8:45 AM	0	0	0	0	0	0	0	0	0	0	0	0	0
4/23/2024	9:00 AM	0	0	0	0	0	0	0	0	0	0	0	0	0
4/23/2024	9:15 AM	0	0	0	0	0	0	0	0	0	0	0	0	0
4/23/2024	9:30 AM	0	0	0	0	0	0	0	0	0	0	0	0	0
4/23/2024	9:45 AM	0	0	0	0	0	0	0	0	0	0	0	0	0
4/23/2024	10:00 AM	0	0	0	0	0	0	0	0	0	0	0	0	0
4/23/2024	10:15 AM	0	0	0	0	0	0	0	0	0	0	0	0	0
4/23/2024	10:30 AM	0	0	0	0	0	0	0	0	0	0	0	0	0
4/23/2024	10:45 AM	0	0	0	0	0	0	0	0	0	0	0	0	0
4/23/2024	11:00 AM	0	0	0	0	0	0	0	0	0	0	0	0	0
4/23/2024	11:15 AM	0	0	0	0	0	0	0	0	0	0	0	0	0
4/23/2024	11:30 AM	0	0	0	0	0	0	0	0	0	0	0	0	0
4/23/2024	11:45 AM	0	0	0	0	0	0	0	0	0	0	0	0	0
4/23/2024	12:00 PM	0	0	0	0	0	0	0	0	0	0	0	0	0
4/23/2024	12:15 PM	0	0	0	0	0	0	0	0	0	0	0	0	0
4/23/2024	12:30 PM	0	0	0	0	0	0	0	0	0	0	0	0	0
4/23/2024	12:45 PM	0	0	0	0	0	0	0	0	0	0	0	0	0
4/23/2024	1:00 PM	0	0	0	0	0	0	0	0	0	0	0	0	0
4/23/2024	1:15 PM	0	0	0	0	0	0	0	0	0	0	0	0	0
4/23/2024	1:30 PM	0	0	0	0	0	0	0	0	0	0	0	0	0
4/23/2024	1:45 PM	0	0	0	0	0	0	0	0	0	0	0	0	0
4/23/2024	2:00 PM	0	0	0	0	0	0	0	0	0	0	0	0	0
4/23/2024	2:15 PM	0	0	0	0	0	0	0	0	0	0	0	0	0
4/23/2024	2:30 PM	0	0	0	0	0	0	0	0	0	0	0	0	0
4/23/2024	2:45 PM	0	0	0	0	0	0	0	0	0	0	0	0	0
4/23/2024	3:00 PM	0	0	0	0	0	0	0	0	0	0	0	0	0
4/23/2024	3:15 PM	0	0	0	0	0	0	0	0	0	0	0	0	0
4/23/2024	3:30 PM	0	0	0	0	0	0	0	0	0	0	0	0	0
4/23/2024	3:45 PM	0	0	0	0	0	0	0	0	0	0	0	0	0
4/23/2024	4:00 PM	0	0	0	0	0	0	0	0	0	0	0	0	0
4/23/2024	4:15 PM	0	0	0	0	0	0	0	0	0	0	0	0	0
4/23/2024	4:30 PM	0	0	0	0	0	0	0	0	0	0	0	0	0
4/23/2024	4:45 PM	0	0	0	0	0	0	0	0	0	0	0	0	0
4/23/2024	5:00 PM	0	0	0	0	0	0	0	0	0	0	0	0	0
4/23/2024	5:15 PM	0	0	0	0	0	0	0	0	0	0	0	0	0
4/23/2024	5:30 PM	0	0	0	0	0	0	0	0	0	0	0	0	0
4/23/2024	5:45 PM	0	0	0	0	0	0	0	0	0	0	0	0	0
4/23/2024	6:00 PM	0	0	0	0	0	0	0	0	0	0	0	0	0
4/23/2024	6:15 PM	0	0	0	0	0	0	0	0	0	0	0	0	0
4/23/2024	6:30 PM	0	0	0	0	0	0	0	0	0	0	0	0	0
4/23/2024	6:45 PM	0	0	0	0	0	0	0	0	0	0	0	0	0
4/23/2024	7:00 PM	0	0	0	0	0	0	0	0	0	0	0	0	0
4/23/2024	7:15 PM	0	0	0	0	0	0	0	0	0	0	0	0	0
4/23/2024	7:30 PM	0	0	0	0	0	0	0	0	0	0	0	0	0
4/23/2024	7:45 PM	0	0	0	0	0	0	0	0	0	0	0	0	0
4/23/2024	8:00 PM	0	0	0	0	0	0	0	0	0	0	0	0	0
4/23/2024	8:15 PM	0	0	0	0	0	0	0	0	0	0	0	0	0
4/23/2024	8:30 PM	0	0	0	0	0	0	0	0	0	0	0	0	0
4/23/2024	8:45 PM	0	0	0	0	0	0	0	0	0	0	0	0	0
4/23/2024	9:00 PM	0	0	0	0	0	0	0	0	0	0	0	0	0
4/23/2024	9:15 PM	0	0	0	0	0	0	0	0	0	0	0	0	0
4/23/2024	9:30 PM	0	0	0	0	0	0	0	0	0	0	0	0	0
4/23/2024	9:45 PM	0	0	0	0	0	0	0	0	0	0	0	0	0
4/23/2024	10:00 PM	0	0	0	0	0	0	0	0	0	0	0	0	0
4/23/2024	10:15 PM	0	0	0	0	0	0	0	0	0	0	0	0	0
4/23/2024	10:30 PM	0	0	0	0	0	0	0	0	0	0	0	0	0
4/23/2024	10:45 PM	0	0	0	0	0	0	0	0	0	0	0	0	0
4/23/2024	11:00 PM	0	0	0	0	0	0	0	0	0	0	0	0	0
4/23/2024	11:15 PM	0	0	0	0	0	0	0	0	0	0	0	0	0
4/23/2024	11:30 PM	0	0	0	0	0	0	0	0	0	0	0	0	0
4/23/2024	11:45 PM	0	0	0	0	0	0	0	0	0	0	0	0	0

4/24/2024	12:00 AM	0	0	0	0	0	0	0	0	0	0	0	0	0
4/24/2024	12:15 AM	0	0	0	0	0	0	0	0	0	0	0	0	0
4/24/2024	12:30 AM	0	0	0	0	0	0	0	0	0	0	0	0	0
4/24/2024	12:45 AM	0	0	0	0	0	0	0	0	0	0	0	0	0
4/24/2024	1:00 AM	0	0	0	0	0	0	0	0	0	0	0	0	0
4/24/2024	1:15 AM	0	0	0	0	0	0	0	0	0	0	0	0	0
4/24/2024	1:30 AM	0	0	0	0	0	0	0	0	0	0	0	0	0
4/24/2024	1:45 AM	0	0	0	0	0	0	0	0	0	0	0	0	0
4/24/2024	2:00 AM	0	0	0	0	0	0	0	0	0	0	0	0	0
4/24/2024	2:15 AM	0	0	0	0	0	0	0	0	0	0	0	0	0
4/24/2024	2:30 AM	0	0	0	0	0	0	0	0	0	0	0	0	0
4/24/2024	2:45 AM	0	0	0	0	0	0	0	0	0	0	0	0	0
4/24/2024	3:00 AM	0	0	0	0	0	0	0	0	0	0	0	0	0
4/24/2024	3:15 AM	0	0	0	0	0	0	0	0	0	0	0	0	0
4/24/2024	3:30 AM	0	0	0	0	0	0	0	0	0	0	0	0	0
4/24/2024	3:45 AM	0	0	0	0	0	0	0	0	0	0	0	0	0
4/24/2024	4:00 AM	0	0	0	0	0	0	0	0	0	0	0	0	0
4/24/2024	4:15 AM	0	0	0	0	0	0	0	0	0	0	0	0	0
4/24/2024	4:30 AM	0	0	0	0	0	0	0	0	0	0	0	0	0
4/24/2024	4:45 AM	0	0	0	0	0	0	0	0	0	0	0	0	0
4/24/2024	5:00 AM	0	0	0	0	0	0	0	0	0	0	0	0	0
4/24/2024	5:15 AM	0	0	0	0	0	0	0	0	0	0	0	0	0
4/24/2024	5:30 AM	0	0	0	0	0	0	0	0	0	0	0	0	0
4/24/2024	5:45 AM	0	0	0	0	0	0	0	0	0	0	0	0	0
4/24/2024	6:00 AM	0	0	0	0	0	0	0	0	0	0	0	0	0
4/24/2024	6:15 AM	0	0	0	0	0	0	0	0	0	0	0	0	0
4/24/2024	6:30 AM	0	0	0	0	0	0	0	0	0	0	0	0	0
4/24/2024	6:45 AM	0	0	0	0	0	0	0	0	0	0	0	0	0
4/24/2024	7:00 AM	0	0	0	0	0	0	0	0	0	0	0	0	0
4/24/2024	7:15 AM	0	0	0	0	0	0	0	0	0	0	0	0	0
4/24/2024	7:30 AM	0	0	0	0	0	0	0	0	0	0	0	0	0
4/24/2024	7:45 AM	0	0	0	0	0	0	0	0	0	0	0	0	0
4/24/2024	8:00 AM	0	0	0	0	0	0	0	0	0	0	0	0	0
4/24/2024	8:15 AM	0	0	0	0	0	0	0	0	0	0	0	0	0
4/24/2024	8:30 AM	0	0	0	0	0	0	0	0	0	0	0	0	0
4/24/2024	8:45 AM	0	0	0	0	0	0	0	0	0	0	0	0	0
4/24/2024	9:00 AM	0	0	0	0	0	0	0	0	0	0	0	0	0
4/24/2024	9:15 AM	0	0	0	0	0	0	0	0	0	0	0	0	0
4/24/2024	9:30 AM	0	0	0	0	0	0	0	0	0	0	0	0	0
4/24/2024	9:45 AM	0	0	0	0	0	0	0	0	0	0	0	0	0
4/24/2024	10:00 AM	0	0	0	0	0	0	0	0	0	0	0	0	0
4/24/2024	10:15 AM	0	0	0	0	0	0	0	0	0	0	0	0	0
4/24/2024	10:30 AM	0	0	0	0	0	0	0	0	0	0	0	0	0
4/24/2024	10:45 AM	0	0	0	0	0	0	0	0	0	0	0	0	0
4/24/2024	11:00 AM	0	0	0	0	0	0	0	0	0	0	0	0	0
4/24/2024	11:15 AM	0	0	0	0	0	0	0	0	0	0	0	0	0
4/24/2024	11:30 AM	0	0	0	0	0	0	0	0	0	0	0	0	0
4/24/2024	11:45 AM	0	0	0	0	0	0	0	0	0	0	0	0	0
4/24/2024	12:00 PM	0	0	0	0	0	0	0	0	0	0	0	0	0
4/24/2024	12:15 PM	0	0	0	0	0	0	0	0	0	0	0	0	0
4/24/2024	12:30 PM	0	0	0	0	0	0	0	0	0	0	0	0	0
4/24/2024	12:45 PM	0	0	0	0	0	0	0	0	0	0	0	0	0
4/24/2024	1:00 PM	0	0	0	0	0	0	0	0	0	0	0	0	0
4/24/2024	1:15 PM	0	0	0	0	0	0	0	0	0	0	0	0	0
4/24/2024	1:30 PM	0	0	0	0	0	0	0	0	0	0	0	0	0
4/24/2024	1:45 PM	0	0	0	0	0	0	0	0	0	0	0	0	0
4/24/2024	2:00 PM	0	0	0	0	0	0	0	0	0	0	0	0	0
4/24/2024	2:15 PM	0	0	0	0	0	0	0	0	0	0	0	0	0
4/24/2024	2:30 PM	0	0	0	0	0	0	0	0	0	0	0	0	0
4/24/2024	2:45 PM	0	0	0	0	0	0	0	0	0	0	0	0	0
4/24/2024	3:00 PM	0	0	0	0	0	0	0	0	0	0	0	0	0
4/24/2024	3:15 PM	0	0	0	0	0	0	0	0	0	0	0	0	0
4/24/2024	3:30 PM	0	0	0	0	0	0	0	0	0	0	0	0	0
4/24/2024	3:45 PM	0	0	0	0	0	0	0	0	0	0	0	0	0
4/24/2024	4:00 PM	0	0	0	0	0	0	0	0	0	0	0	0	0
4/24/2024	4:15 PM	0	0	0	0	0	0	0	0	0	0	0	0	0
4/24/2024	4:30 PM	0	0	0	0	0	0	0	0	0	0	0	0	0
4/24/2024	4:45 PM	0	0	0	0	0	0	0	0	0	0	0	0	0
4/24/2024	5:00 PM	0	0	0	0	0	0	0	0	0	0	0	0	0
4/24/2024	5:15 PM	0	0	0	0	0	0	0	0	0	0	0	0	0
4/24/2024	5:30 PM	0	0	0	0	0	0	0	0	0	0	0	0	0
4/24/2024	5:45 PM	0	0	0	0	0	0	0	0	0	0	0	0	0
4/24/2024	6:00 PM	0	0	0	0	0	0	0	0	0	0	0	0	0
4/24/2024	6:15 PM	0	0	0	0	0	0	0	0	0	0	0	0	0
4/24/2024	6:30 PM	0	0	0	0	0	0	0	0	0	0	0	0	0
4/24/2024	6:45 PM	0	0	0	0	0	0	0	0	0	0	0	0	0
4/24/2024	7:00 PM	0	0	0	0	0	0	0	0	0	0	0	0	0
4/24/2024	7:15 PM	0	0	0	0	0	0	0	0	0	0	0	0	0
4/24/2024	7:30 PM	0	0	0	0	0	0	0	0	0	0	0	0	0
4/24/2024	7:45 PM	0	0	0	0	0	0	0	0	0	0	0	0	0
4/24/2024	8:00 PM	0	0	0	0	0	0	0	0	0	0	0	0	0
4/24/2024	8:15 PM	0	0	0	0	0	0	0	0	0	0	0	0	0
4/24/2024	8:30 PM	0	0	0	0	0	0	0	0	0	0	0	0	0
4/24/2024	8:45 PM	0	0	0	0	0	0	0	0	0	0	0	0	0
4/24/2024	9:00 PM	0	0	0	0	0	0	0	0	0	0	0	0	0
4/24/2024	9:15 PM	0	0	0	0	0	0	0	0	0	0	0	0	0
4/24/2024	9:30 PM	0	0	0	0	0	0	0	0	0	0	0	0	0
4/24/2024	9:45 PM	0	0	0	0	0	0	0	0	0	0	0	0	0
4/24/2024	10:00 PM	0	0	0	0	0	0	0	0	0	0	0	0	0
4/24/2024	10:15 PM	0	0	0	0	0	0	0	0	0	0	0	0	0
4/24/2024	10:30 PM	0	0	0	0	0	0	0	0	0	0	0	0	0
4/24/2024	10:45 PM	0	0	0	0	0	0	0	0	0	0	0	0	0
4/24/2024	11:00 PM	0	0	0	0	0	0	0	0	0	0	0	0	0
4/24/2024	11:15 PM	0	0	0	0	0	0	0	0	0	0	0	0	0
4/24/2024	11:30 PM	0	0	0	0	0	0	0	0	0	0	0	0	0
4/24/2024	11:45 PM	0	0	0	0	0	0	0	0	0	0	0	0	0

4/25/2024	12:00 AM	0	0	0	0	0	0	0	0	0	0	0	0	0
4/25/2024	12:15 AM	0	0	0	0	0	0	0	0	0	0	0	0	0
4/25/2024	12:30 AM	0	0	0	0	0	0	0	0	0	0	0	0	0
4/25/2024	12:45 AM	0	0	0	0	0	0	0	0	0	0	0	0	0
4/25/2024	1:00 AM	0	0	0	0	0	0	0	0	0	0	0	0	0
4/25/2024	1:15 AM	0	0	0	0	0	0	0	0	0	0	0	0	0
4/25/2024	1:30 AM	0	0	0	0	0	0	0	0	0	0	0	0	0
4/25/2024	1:45 AM	0	0	0	0	0	0	0	0	0	0	0	0	0
4/25/2024	2:00 AM	0	0	0	0	0	0	0	0	0	0	0	0	0
4/25/2024	2:15 AM	0	0	0	0	0	0	0	0	0	0	0	0	0
4/25/2024	2:30 AM	0	0	0	0	0	0	0	0	0	0	0	0	0
4/25/2024	2:45 AM	0	0	0	0	0	0	0	0	0	0	0	0	0
4/25/2024	3:00 AM	0	0	0	0	0	0	0	0	0	0	0	0	0
4/25/2024	3:15 AM	0	0	0	0	0	0	0	0	0	0	0	0	0
4/25/2024	3:30 AM	0	0	0	0	0	0	0	0	0	0	0	0	0
4/25/2024	3:45 AM	0	0	0	0	0	0	0	0	0	0	0	0	0
4/25/2024	4:00 AM	0	0	0	0	0	0	0	0	0	0	0	0	0
4/25/2024	4:15 AM	0	0	0	0	0	0	0	0	0	0	0	0	0
4/25/2024	4:30 AM	0	0	0	0	0	0	0	0	0	0	0	0	0
4/25/2024	4:45 AM	0	0	0	0	0	0	0	0	0	0	0	0	0
4/25/2024	5:00 AM	0	0	0	0	0	0	0	0	0	0	0	0	0
4/25/2024	5:15 AM	0	0	0	0	0	0	0	0	0	0	0	0	0
4/25/2024	5:30 AM	0	0	0	0	0	0	0	0	0	0	0	0	0
4/25/2024	5:45 AM	0	0	0	0	0	0	0	0	0	0	0	0	0
4/25/2024	6:00 AM	0	0	0	0	0	0	0	0	0	0	0	0	0
4/25/2024	6:15 AM	0	0	0	0	0	0	0	0	0	0	0	0	0
4/25/2024	6:30 AM	0	0	0	0	0	0	0	0	0	0	0	0	0
4/25/2024	6:45 AM	0	0	0	0	0	0	0	0	0	0	0	0	0
4/25/2024	7:00 AM	0	0	0	0	0	0	0	0	0	0	0	0	0
4/25/2024	7:15 AM	0	0	0	0	0	0	0	0	0	0	0	0	0
4/25/2024	7:30 AM	0	0	0	0	0	0	0	0	0	0	0	0	0
4/25/2024	7:45 AM	0	0	0	0	0	0	0	0	0	0	0	0	0
4/25/2024	8:00 AM	0	0	0	0	0	0	0	0	0	0	0	0	0
4/25/2024	8:15 AM	0	0	0	0	0	0	0	0	0	0	0	0	0
4/25/2024	8:30 AM	0	0	0	0	0	0	0	0	0	0	0	0	0
4/25/2024	8:45 AM	0	0	0	0	0	0	0	0	0	0	0	0	0
4/25/2024	9:00 AM	0	0	0	0	0	0	0	0	0	0	0	0	0
4/25/2024	9:15 AM	0	0	0	0	0	0	0	0	0	0	0	0	0
4/25/2024	9:30 AM	0	0	0	0	0	0	0	0	0	0	0	0	0
4/25/2024	9:45 AM	0	0	0	0	0	0	0	0	0	0	0	0	0
4/25/2024	10:00 AM	0	0	0	0	0	0	0	0	0	0	0	0	0
4/25/2024	10:15 AM	0	0	0	0	0	0	0	0	0	0	0	0	0
4/25/2024	10:30 AM	0	0	0	0	0	0	0	0	0	0	0	0	0
4/25/2024	10:45 AM	0	0	0	0	0	0	0	0	0	0	0	0	0
4/25/2024	11:00 AM	0	0	0	0	0	0	0	0	0	0	0	0	0
4/25/2024	11:15 AM	0	0	0	0	0	0	0	0	0	0	0	0	0
4/25/2024	11:30 AM	0	0	0	0	0	0	0	0	0	0	0	0	0
4/25/2024	11:45 AM	0	0	0	0	0	0	0	0	0	0	0	0	0
4/25/2024	12:00 PM	0	0	0	0	0	0	0	0	0	0	0	0	0
4/25/2024	12:15 PM	0	0	0	0	0	0	0	0	0	0	0	0	0
4/25/2024	12:30 PM	0	0	0	0	0	0	0	0	0	0	0	0	0
4/25/2024	12:45 PM	0	0	0	0	0	0	0	0	0	0	0	0	0
4/25/2024	1:00 PM	0	0	0	0	0	0	0	0	0	0	0	0	0
4/25/2024	1:15 PM	0	0	0	0	0	0	0	0	0	0	0	0	0
4/25/2024	1:30 PM	0	0	0	0	0	0	0	0	0	0	0	0	0
4/25/2024	1:45 PM	0	0	0	0	0	0	0	0	0	0	0	0	0
4/25/2024	2:00 PM	0	0	0	0	0	0	0	0	0	0	0	0	0
4/25/2024	2:15 PM	0	0	0	0	0	0	0	0	0	0	0	0	0
4/25/2024	2:30 PM	0	0	0	0	0	0	0	0	0	0	0	0	0
4/25/2024	2:45 PM	0	0	0	0	0	0	0	0	0	0	0	0	0
4/25/2024	3:00 PM	0	0	0	0	0	0	0	0	0	0	0	0	0
4/25/2024	3:15 PM	0	0	0	0	0	0	0	0	0	0	0	0	0
4/25/2024	3:30 PM	0	0	0	0	0	0	0	0	0	0	0	0	0
4/25/2024	3:45 PM	0	0	0	0	0	0	0	0	0	0	0	0	0
4/25/2024	4:00 PM	0	0	0	0	0	0	0	0	0	0	0	0	0
4/25/2024	4:15 PM	0	0	0	0	0	0	0	0	0	0	0	0	0
4/25/2024	4:30 PM	0	0	0	0	0	0	0	0	0	0	0	0	0
4/25/2024	4:45 PM	0	0	0	0	0	0	0	0	0	0	0	0	0
4/25/2024	5:00 PM	0	0	0	0	0	0	0	0	0	0	0	0	0
4/25/2024	5:15 PM	0	0	0	0	0	0	0	0	0	0	0	0	0
4/25/2024	5:30 PM	0	0	0	0	0	0	0	0	0	0	0	0	0
4/25/2024	5:45 PM	0	0	0	0	0	0	0	0	0	0	0	0	0
4/25/2024	6:00 PM	0	0	0	0	0	0	0	0	0	0	0	0	0
4/25/2024	6:15 PM	0	0	0	0	0	0	0	0	0	0	0	0	0
4/25/2024	6:30 PM	0	0	0	0	0	0	0	0	0	0	0	0	0
4/25/2024	6:45 PM	0	0	0	0	0	0	0	0	0	0	0	0	0
4/25/2024	7:00 PM	0	0	0	0	0	0	0	0	0	0	0	0	0
4/25/2024	7:15 PM	0	0	0	0	0	0	0	0	0	0	0	0	0
4/25/2024	7:30 PM	0	0	0	0	0	0	0	0	0	0	0	0	0
4/25/2024	7:45 PM	0	0	0	0	0	0	0	0	0	0	0	0	0
4/25/2024	8:00 PM	0	0	0	0	0	0	0	0	0	0	0	0	0
4/25/2024	8:15 PM	0	0	0	0	0	0	0	0	0	0	0	0	0
4/25/2024	8:30 PM	0	0	0	0	0	0	0	0	0	0	0	0	0
4/25/2024	8:45 PM	0	0	0	0	0	0	0	0	0	0	0	0	0
4/25/2024	9:00 PM	0	0	0	0	0	0	0	0	0	0	0	0	0
4/25/2024	9:15 PM	0	0	0	0	0	0	0	0	0	0	0	0	0
4/25/2024	9:30 PM	0	0	0	0	0	0	0	0	0	0	0	0	0
4/25/2024	9:45 PM	0	0	0	0	0	0	0	0	0	0	0	0	0
4/25/2024	10:00 PM	0	0	0	0	0	0	0	0	0	0	0	0	0
4/25/2024	10:15 PM	0	0	0	0	0	0	0	0	0	0	0	0	0
4/25/2024	10:30 PM	0	0	0	0	0	0	0	0	0	0	0	0	0
4/25/2024	10:45 PM	0	0	0	0	0	0	0	0	0	0	0	0	0
4/25/2024	11:00 PM	0	0	0	0	0	0	0	0	0	0	0	0	0
4/25/2024	11:15 PM	0	0	0	0	0	0	0	0	0	0	0	0	0
4/25/2024	11:30 PM	0	0	0	0	0	0	0	0	0	0	0	0	0
4/25/2024	11:45 PM	0	0	0	0	0	0	0	0	0	0	0	0	0

Bi-Directional Class Count || SB WB 15min

Columbia, SC

Marr Traffic DATA COLLECTION
www.marrtraffic.com

Site 39
I-26 S/Bound On-Ramp,
south of St Andrews Rd

Date
Tuesday, April 23, 2024

Lat/Long
34.043974°, -81.118251°

Weather
Fair
58°F

Click here for Detailed Weather

Click here for Map

0000 - 2400 (Weekday 24h Session) (04-23-2024)
SB WB 15min

	Southbound (Movement 39.1)													15min	60min
Time	1	2	3	4	5	6	7	8	9	10	11	12	13	Total	Total
0000 - 0015	0	0	0	0	0	0	0	0	0	0	0	0	0	**0**	
0015 - 0030	0	0	0	0	0	0	0	0	0	0	0	0	0	**0**	
0030 - 0045	0	0	0	0	0	0	0	0	0	0	0	0	0	**0**	
0045 - 0100	0	0	0	0	0	0	0	0	0	0	0	0	0	**0**	**0**
0100 - 0115	0	0	0	0	0	0	0	0	0	0	0	0	0	**0**	
0115 - 0130	0	0	0	0	0	0	0	0	0	0	0	0	0	**0**	
0130 - 0145	0	0	0	0	0	0	0	0	0	0	0	0	0	**0**	
0145 - 0200	0	0	0	0	0	0	0	0	0	0	0	0	0	**0**	**0**
0200 - 0215	0	0	0	0	0	0	0	0	0	0	0	0	0	**0**	
0215 - 0230	0	0	0	0	0	0	0	0	0	0	0	0	0	**0**	
0230 - 0245	0	0	0	0	0	0	0	0	0	0	0	0	0	**0**	
0245 - 0300	0	0	0	0	0	0	0	0	0	0	0	0	0	**0**	**0**
0300 - 0315	0	0	0	0	0	0	0	0	0	0	0	0	0	**0**	
0315 - 0330	0	0	0	0	0	0	0	0	0	0	0	0	0	**0**	
0330 - 0345	0	0	0	0	0	0	0	0	0	0	0	0	0	**0**	
0345 - 0400	0	0	0	0	0	0	0	0	0	0	0	0	0	**0**	**0**
0400 - 0415	0	0	0	0	0	0	0	0	0	0	0	0	0	**0**	
0415 - 0430	0	0	0	0	0	0	0	0	0	0	0	0	0	**0**	
0430 - 0445	0	0	0	0	0	0	0	0	0	0	0	0	0	**0**	
0445 - 0500	0	0	0	0	0	0	0	0	0	0	0	0	0	**0**	**0**
0500 - 0515	0	0	0	0	0	0	0	0	0	0	0	0	0	**0**	
0515 - 0530	0	0	0	0	0	0	0	0	0	0	0	0	0	**0**	
0530 - 0545	0	0	0	0	0	0	0	0	0	0	0	0	0	**0**	
0545 - 0600	0	0	0	0	0	0	0	0	0	0	0	0	0	**0**	**0**
0600 - 0615	0	0	0	0	0	0	0	0	0	0	0	0	0	**0**	
0615 - 0630	0	0	0	0	0	0	0	0	0	0	0	0	0	**0**	
0630 - 0645	0	0	0	0	0	0	0	0	0	0	0	0	0	**0**	
0645 - 0700	0	0	0	0	0	0	0	0	0	0	0	0	0	**0**	**0**
0700 - 0715	0	0	0	0	0	0	0	0	0	0	0	0	0	**0**	
0715 - 0730	0	0	0	0	0	0	0	0	0	0	0	0	0	**0**	
0730 - 0745	0	0	0	0	0	0	0	0	0	0	0	0	0	**0**	
0745 - 0800	0	0	0	0	0	0	0	0	0	0	0	0	0	**0**	**0**
0800 - 0815	0	0	0	0	0	0	0	0	0	0	0	0	0	**0**	
0815 - 0830	0	0	0	0	0	0	0	0	0	0	0	0	0	**0**	
0830 - 0845	0	0	0	0	0	0	0	0	0	0	0	0	0	**0**	
0845 - 0900	0	0	0	0	0	0	0	0	0	0	0	0	0	**0**	**0**
0900 - 0915	0	0	0	0	0	0	0	0	0	0	0	0	0	**0**	
0915 - 0930	0	0	0	0	0	0	0	0	0	0	0	0	0	**0**	
0930 - 0945	0	0	0	0	0	0	0	0	0	0	0	0	0	**0**	
0945 - 1000	0	0	0	0	0	0	0	0	0	0	0	0	0	**0**	**0**
1000 - 1015	0	0	0	0	0	0	0	0	0	0	0	0	0	**0**	
1015 - 1030	0	0	0	0	0	0	0	0	0	0	0	0	0	**0**	
1030 - 1045	0	0	0	0	0	0	0	0	0	0	0	0	0	**0**	
1045 - 1100	0	0	0	0	0	0	0	0	0	0	0	0	0	**0**	**0**
1100 - 1115	0	0	0	0	0	0	0	0	0	0	0	0	0	**0**	
1115 - 1130	0	0	0	0	0	0	0	0	0	0	0	0	0	**0**	
1130 - 1145	0	0	0	0	0	0	0	0	0	0	0	0	0	**0**	
1145 - 1200	0	0	0	0	0	0	0	0	0	0	0	0	0	**0**	**0**
1200 - 1215	0	0	0	0	0	0	0	0	0	0	0	0	0	**0**	
1215 - 1230	0	0	0	0	0	0	0	0	0	0	0	0	0	**0**	
1230 - 1245	0	0	0	0	0	0	0	0	0	0	0	0	0	**0**	
1245 - 1300	0	0	0	0	0	0	0	0	0	0	0	0	0	**0**	**0**
1300 - 1315	0	0	0	0	0	0	0	0	0	0	0	0	0	**0**	
1315 - 1330	0	0	0	0	0	0	0	0	0	0	0	0	0	**0**	
1330 - 1345	0	0	0	0	0	0	0	0	0	0	0	0	0	**0**	
1345 - 1400	0	0	0	0	0	0	0	0	0	0	0	0	0	**0**	**0**
1400 - 1415	0	0	0	0	0	0	0	0	0	0	0	0	0	**0**	
1415 - 1430	0	0	0	0	0	0	0	0	0	0	0	0	0	**0**	
1430 - 1445	0	0	0	0	0	0	0	0	0	0	0	0	0	**0**	
1445 - 1500	0	0	0	0	0	0	0	0	0	0	0	0	0	**0**	**0**
1500 - 1515	0	0	0	0	0	0	0	0	0	0	0	0	0	**0**	
1515 - 1530	0	0	0	0	0	0	0	0	0	0	0	0	0	**0**	
1530 - 1545	0	0	0	0	0	0	0	0	0	0	0	0	0	**0**	
1545 - 1600	0	0	0	0	0	0	0	0	0	0	0	0	0	**0**	**0**
1600 - 1615	0	0	0	0	0	0	0	0	0	0	0	0	0	**0**	
1615 - 1630	0	0	0	0	0	0	0	0	0	0	0	0	0	**0**	
1630 - 1645	0	0	0	0	0	0	0	0	0	0	0	0	0	**0**	
1645 - 1700	0	0	0	0	0	0	0	0	0	0	0	0	0	**0**	**0**
1700 - 1715	0	0	0	0	0	0	0	0	0	0	0	0	0	**0**	
1715 - 1730	0	0	0	0	0	0	0	0	0	0	0	0	0	**0**	
1730 - 1745	0	0	0	0	0	0	0	0	0	0	0	0	0	**0**	
1745 - 1800	0	0	0	0	0	0	0	0	0	0	0	0	0	**0**	**0**
1800 - 1815	0	0	0	0	0	0	0	0	0	0	0	0	0	**0**	
1815 - 1830	0	0	0	0	0	0	0	0	0	0	0	0	0	**0**	
1830 - 1845	0	0	0	0	0	0	0	0	0	0	0	0	0	**0**	
1845 - 1900	0	0	0	0	0	0	0	0	0	0	0	0	0	**0**	**0**
1900 - 1915	0	91	17	0	2	0	0	0	0	0	0	0	0	**110**	
1915 - 1930	0	99	19	0	0	0	0	1	0	1	0	0	0	**120**	
1930 - 1945	0	62	13	0	0	1	0	0	0	0	0	0	0	**76**	
1945 - 2000	0	72	13	1	1	0	0	0	0	0	0	0	0	**87**	**393**
2000 - 2015	0	89	12	0	0	0	0	0	1	0	0	0	0	**102**	
2015 - 2030	0	88	10	0	1	0	0	0	0	0	0	0	0	**99**	
2030 - 2045	0	77	8	0	0	0	0	0	0	0	0	0	0	**85**	
2045 - 2100	2	80	9	0	0	0	0	0	0	0	0	0	0	**91**	**377**
2100 - 2115	0	71	10	0	0	0	0	0	0	0	0	0	0	**81**	
2115 - 2130	1	84	13	0	0	0	0	0	0	0	0	0	0	**98**	
2130 - 2145	0	51	7	0	0	0	0	0	0	0	0	0	0	**58**	
2145 - 2200	1	60	9	0	0	0	0	0	0	0	0	0	0	**70**	**307**
2200 - 2215	0	41	4	0	0	0	0	0	0	0	0	0	0	**45**	
2215 - 2230	0	39	4	0	0	0	0	0	0	0	0	0	0	**43**	
2230 - 2245	0	44	3	0	0	0	0	0	0	0	0	0	0	**47**	
2245 - 2300	0	31	3	0	0	0	0	0	0	0	0	0	0	**34**	**169**
2300 - 2315	0	18	4	0	0	0	0	0	0	0	0	0	0	**22**	
2315 - 2330	0	18	6	0	0	0	0	0	0	0	0	0	0	**24**	
2330 - 2345	0	19	2	0	0	0	0	0	0	0	0	0	0	**21**	
2345 - 0000	0	20	3	0	0	0	0	0	0	0	0	0	0	**23**	**90**

Session Total	4	1154	169	1	4	1	0	1	1	1	0	0	0	**1336**
Session Average	0.04	12.02	1.76	0.01	0.04	0.01	0.00	0.01	0.01	0.01	0.00	0.00	0.00	**13.92**
Session Percentage	0.30	86.38	12.65	0.07	0.30	0.07	0.00	0.07	0.07	0.07	0.00	0.00	0.00	

AM Peak Hour	-	-	-	-	-	-	-	-	-	-	-	-	-	**-**
AM Peak Volume	0	0	0	0	0	0	0	0	0	0	0	0	0	**0**

Noon Peak Hour	-	-	-	-	-	-	-	-	-	-	-	-	-	**-**
Noon Peak Volume	0	0	0	0	0	0	0	0	0	0	0	0	0	**0**

PM Peak Hour	-	1945 - 2045	1900 - 2000	1900 - 2000	1900 - 2000	1845 - 1945	-	1830 - 1930	1915 - 2015	1830 - 1930	-	-	-	**1900 - 2000**
PM Peak Volume	0	326	62	1	3	1	0	1	1	1	0	0	0	**393**

Site 39
I-26 S/Bound On-Ramp,
south of St Andrews Rd

Date
Wednesday, April 24, 2024

Lat/Long
34.043974°, -81.118251°

Weather
Fair
66°F

Click here for Detailed Weather

0000 - 2400 (Weekday 24h Session) (04-24-2024)
SB WB 15min

	Southbound (Movement 39.1)													15min	60min
Time	1	2	3	4	5	6	7	8	9	10	11	12	13	Total	Total
0000 - 0015	0	14	2	0	0	0	0	0	0	0	0	0	0	**16**	
0015 - 0030	0	7	0	0	0	0	0	0	0	0	0	0	0	**7**	
0030 - 0045	0	17	0	0	0	0	0	0	0	0	0	0	0	**17**	
0045 - 0100	0	11	1	0	0	0	0	0	0	0	0	0	0	**12**	**52**
0100 - 0115	0	10	1	0	0	0	0	0	1	0	0	0	0	**12**	
0115 - 0130	0	10	0	0	1	0	0	0	0	0	0	0	0	**11**	
0130 - 0145	0	6	0	0	1	0	0	0	0	0	0	0	0	**7**	
0145 - 0200	0	2	0	0	0	0	0	0	0	0	0	0	0	**2**	**32**
0200 - 0215	0	6	0	0	0	0	0	0	1	0	0	0	0	**7**	
0215 - 0230	0	5	0	0	0	0	0	0	1	0	0	0	0	**6**	
0230 - 0245	0	8	1	0	0	0	0	0	0	0	0	0	0	**9**	
0245 - 0300	0	10	0	0	0	0	0	0	0	0	0	0	0	**10**	**32**
0300 - 0315	0	3	0	0	0	0	0	0	0	0	0	0	0	**3**	
0315 - 0330	0	8	1	0	0	0	0	0	0	0	0	0	0	**9**	
0330 - 0345	0	7	1	0	0	0	0	0	1	0	0	0	0	**9**	
0345 - 0400	0	8	3	0	0	0	0	0	0	0	0	0	0	**11**	**32**
0400 - 0415	0	12	1	0	0	0	0	0	1	0	0	0	0	**14**	
0415 - 0430	0	20	0	0	0	0	0	0	0	0	0	0	0	**20**	
0430 - 0445	0	17	5	0	0	0	0	0	0	0	0	0	0	**22**	
0445 - 0500	0	13	4	0	0	0	0	0	1	0	0	0	0	**18**	**74**
0500 - 0515	0	31	6	0	0	0	0	0	0	0	0	0	0	**37**	
0515 - 0530	1	32	9	0	0	0	0	0	0	0	0	0	0	**42**	
0530 - 0545	0	48	12	0	0	0	0	0	0	0	0	0	0	**60**	
0545 - 0600	0	42	8	0	0	0	0	0	1	0	0	0	0	**51**	**190**
0600 - 0615	0	52	8	0	1	0	0	0	0	0	0	0	0	**61**	
0615 - 0630	0	58	16	0	0	0	0	0	3	0	0	0	0	**77**	
0630 - 0645	0	101	18	0	1	0	0	1	1	0	0	0	0	**122**	
0645 - 0700	0	104	26	0	1	1	0	0	0	0	0	0	0	**132**	**392**
0700 - 0715	0	128	30	0	0	1	0	1	0	0	0	0	0	**160**	
0715 - 0730	0	188	48	0	1	1	0	0	0	0	0	0	0	**238**	
0730 - 0745	1	231	42	1	2	0	0	0	0	0	0	0	0	**277**	
0745 - 0800	0	198	50	0	1	0	0	0	0	0	0	0	0	**249**	**924**
0800 - 0815	0	188	42	0	3	2	0	2	0	0	0	0	0	**237**	
0815 - 0830	0	199	42	1	3	1	0	0	0	0	0	0	0	**246**	
0830 - 0845	2	158	34	0	3	1	0	0	0	0	0	0	0	**198**	
0845 - 0900	1	132	27	0	1	0	0	0	1	0	0	0	0	**162**	**843**
0900 - 0915	0	113	34	0	3	1	0	0	2	0	0	0	0	**153**	
0915 - 0930	0	146	31	1	3	3	0	0	2	0	0	0	0	**186**	
0930 - 0945	0	95	27	0	1	0	0	0	0	0	0	0	0	**123**	
0945 - 1000	0	103	36	3	1	0	0	1	1	0	0	0	0	**145**	**607**
1000 - 1015	0	96	29	1	2	2	0	1	1	0	0	0	0	**132**	
1015 - 1030	0	89	30	0	4	1	0	0	0	0	0	0	0	**124**	
1030 - 1045	1	98	29	1	1	1	0	0	0	0	0	0	0	**131**	
1045 - 1100	1	103	34	0	3	0	0	2	1	0	0	0	0	**144**	**531**
1100 - 1115	1	109	33	0	5	0	0	0	0	1	0	0	0	**149**	
1115 - 1130	0	95	31	1	3	0	0	1	1	0	0	0	0	**132**	
1130 - 1145	2	94	29	0	4	0	0	0	1	0	0	0	0	**130**	
1145 - 1200	0	109	25	0	3	0	0	0	0	0	0	0	0	**137**	**548**
1200 - 1215	0	109	32	0	2	1	0	0	2	0	0	0	0	**146**	
1215 - 1230	0	99	38	2	3	1	0	0	1	0	0	0	0	**144**	
1230 - 1245	0	112	35	0	2	0	0	1	1	0	0	0	0	**151**	
1245 - 1300	0	108	33	0	1	0	1	0	1	0	0	0	0	**144**	**585**
1300 - 1315	0	132	35	0	0	0	0	1	1	0	0	0	0	**169**	
1315 - 1330	1	105	31	2	5	0	0	2	1	0	0	0	0	**147**	
1330 - 1345	1	114	35	1	3	1	0	1	0	0	0	0	0	**156**	
1345 - 1400	1	120	28	0	2	0	0	1	4	0	0	0	0	**156**	**628**
1400 - 1415	1	112	23	0	3	0	0	0	2	0	0	0	0	**141**	
1415 - 1430	0	97	32	0	3	0	0	1	0	0	0	0	0	**133**	
1430 - 1445	0	128	33	0	6	0	0	0	0	1	0	0	0	**168**	
1445 - 1500	0	120	30	0	0	0	0	1	0	0	0	0	0	**151**	**593**
1500 - 1515	1	135	25	1	4	0	0	0	1	0	0	0	0	**167**	
1515 - 1530	0	131	26	0	6	0	0	0	1	0	0	0	0	**164**	
1530 - 1545	0	148	27	1	0	0	0	1	0	0	0	0	0	**177**	
1545 - 1600	1	134	37	1	1	0	0	0	1	0	0	0	0	**175**	**683**
1600 - 1615	0	161	27	0	1	0	0	1	2	0	0	0	0	**192**	
1615 - 1630	0	149	32	0	2	0	0	0	1	0	0	0	0	**184**	
1630 - 1645	0	147	36	0	1	0	0	0	1	0	0	0	0	**185**	
1645 - 1700	0	146	36	0	1	0	0	0	1	0	0	0	0	**184**	**745**
1700 - 1715	0	139	32	0	4	0	0	1	1	0	0	0	0	**177**	
1715 - 1730	0	128	29	0	0	0	0	1	1	0	0	0	0	**159**	
1730 - 1745	0	109	15	0	3	0	0	0	0	0	0	0	0	**127**	
1745 - 1800	0	121	26	0	1	0	0	1	1	0	0	0	0	**150**	**613**
1800 - 1815	2	130	26	0	0	0	0	0	0	0	0	0	0	**158**	
1815 - 1830	0	125	26	1	3	0	0	2	0	0	0	0	0	**157**	
1830 - 1845	0	122	12	1	0	0	0	0	0	0	0	0	0	**135**	
1845 - 1900	0	107	17	0	2	0	0	0	0	0	0	0	0	**126**	**576**
1900 - 1915	0	97	23	0	2	0	0	0	1	0	0	0	0	**123**	
1915 - 1930	1	95	17	0	1	0	0	0	0	0	0	0	0	**114**	
1930 - 1945	0	71	15	0	2	0	0	0	0	0	0	0	0	**88**	
1945 - 2000	0	74	15	0	0	0	0	0	0	0	0	0	0	**89**	**414**
2000 - 2015	1	86	13	0	0	0	0	0	0	0	0	0	0	**100**	
2015 - 2030	2	88	11	0	1	0	0	0	0	0	0	0	0	**102**	
2030 - 2045	0	83	16	0	0	0	0	0	0	0	0	0	0	**99**	
2045 - 2100	0	89	14	1	0	0	0	1	1	0	0	0	0	**106**	**407**
2100 - 2115	0	58	8	0	0	0	0	0	0	0	0	0	0	**66**	
2115 - 2130	0	37	9	0	0	0	0	0	0	0	0	0	0	**46**	
2130 - 2145	0	51	5	0	1	0	0	0	1	0	0	0	0	**58**	
2145 - 2200	0	70	5	0	1	0	0	0	0	0	0	0	0	**76**	**246**
2200 - 2215	0	67	6	0	0	0	0	0	0	0	0	0	0	**73**	
2215 - 2230	0	50	3	0	0	0	0	0	1	0	0	0	0	**54**	
2230 - 2245	0	47	1	0	0	0	0	0	0	0	0	0	0	**48**	
2245 - 2300	0	40	2	0	0	0	0	0	0	0	0	0	0	**42**	**217**
2300 - 2315	1	24	2	0	0	0	0	0	1	0	0	0	0	**28**	
2315 - 2330	0	23	3	0	0	0	0	0	0	0	0	0	0	**26**	
2330 - 2345	1	19	2	0	0	0	0	0	1	0	0	0	0	**23**	
2345 - 0000	0	14	3	0	0	0	0	0	0	0	0	0	0	**17**	**94**

Session Total	24	8005	1793	20	119	18	1	25	51	2	0	0	0	**10058**
Session Average	0.25	83.39	18.68	0.21	1.24	0.19	0.01	0.26	0.53	0.02	0.00	0.00	0.00	**104.77**
Session Percentage	0.24	79.59	17.83	0.20	1.18	0.18	0.01	0.25	0.51	0.02	0.00	0.00	0.00	

AM Peak Hour	0800 - 0900	0730 - 0830	0715 - 0815	0915 - 1015	0745 - 0845	0830 - 0930	-	0615 - 0715	0545 - 0645	-	-	-	-	**0730 - 0830**
AM Peak Volume	3	816	182	5	10	5	0	2	5	0	0	0	0	**1009**

Noon Peak Hour	1045 - 1145	1445 - 1545	1215 - 1315	1245 - 1345	1430 - 1530	1000 - 1100	1200 - 1300	1300 - 1400	1315 - 1415	1015 - 1115	-	-	-	**1445 - 1545**
Noon Peak Volume	4	534	141	3	16	4	1	5	7	1	0	0	0	**659**

PM Peak Hour	1930 - 2030	1600 - 1700	1615 - 1715	1500 - 1600	1500 - 1600	-	-	1700 - 1800	1545 - 1645	-	-	-	-	**1600 - 1700**
PM Peak Volume	3	603	136	3	11	0	0	3	5	0	0	0	0	**745**

Site 39
I-26 S/Bound On-Ramp,
south of St Andrews Rd

Date
Thursday, April 25, 2024

Lat/Long
34.043974°, -81.118251°

Weather
Fair
67°F

Click here for Detailed Weather

0000 - 2400 (Weekday 24h Session) (04-25-2024)
SB WB 15min

	Southbound (Movement 39.1)													15min	60min
TIME	1	2	3	4	5	6	7	8	9	10	11	12	13	Total	Total
0000 - 0015	0	10	3	0	0	0	0	0	0	0	0	0	0	**13**	
0015 - 0030	0	14	4	0	0	0	0	0	0	0	0	0	0	**18**	
0030 - 0045	0	10	2	0	0	0	0	0	0	0	0	0	0	**12**	
0045 - 0100	0	5	3	0	0	0	0	0	0	0	0	0	0	**8**	**51**
0100 - 0115	0	10	4	0	0	0	0	0	0	0	0	0	0	**14**	
0115 - 0130	0	7	1	0	0	0	0	0	0	0	0	0	0	**8**	
0130 - 0145	0	6	1	0	0	0	0	0	0	0	0	0	0	**7**	
0145 - 0200	0	3	2	0	1	0	0	0	1	0	0	0	0	**7**	**36**
0200 - 0215	0	10	2	0	0	0	0	0	0	0	0	0	0	**12**	
0215 - 0230	0	9	1	0	0	0	0	0	0	0	0	0	0	**10**	
0230 - 0245	0	4	1	0	0	0	0	0	0	0	0	0	0	**5**	
0245 - 0300	0	6	2	0	0	0	0	0	0	0	0	0	0	**8**	**35**
0300 - 0315	0	3	1	0	0	0	0	0	0	0	0	0	0	**4**	
0315 - 0330	0	9	0	0	0	0	0	0	0	0	0	0	0	**9**	
0330 - 0345	0	19	0	0	0	0	0	0	0	0	0	0	0	**19**	
0345 - 0400	0	10	0	0	1	0	0	0	1	0	0	0	0	**12**	**44**
0400 - 0415	0	11	2	0	0	0	0	0	2	0	0	0	0	**15**	
0415 - 0430	0	12	2	0	1	0	0	0	0	0	0	0	0	**15**	
0430 - 0445	0	17	3	0	0	0	0	0	1	0	0	0	0	**21**	
0445 - 0500	0	18	4	0	0	0	0	0	0	0	0	0	0	**22**	**73**
0500 - 0515	0	28	9	0	0	0	0	0	0	0	0	0	0	**37**	
0515 - 0530	0	33	12	0	0	0	0	0	0	0	0	0	0	**45**	
0530 - 0545	0	45	11	0	0	0	0	0	1	0	0	0	0	**57**	
0545 - 0600	0	47	11	0	0	0	0	0	0	0	0	0	0	**58**	**197**
0600 - 0615	0	32	8	0	0	0	0	0	1	0	0	0	0	**41**	
0615 - 0630	0	50	17	0	1	0	0	0	1	0	0	0	0	**69**	
0630 - 0645	1	113	18	0	0	0	0	1	0	0	0	0	0	**133**	
0645 - 0700	0	121	22	0	4	0	0	0	0	0	0	0	0	**147**	**390**
0700 - 0715	0	142	23	0	0	1	0	1	1	0	0	0	0	**168**	
0715 - 0730	0	180	37	0	4	0	0	1	2	0	0	0	0	**224**	
0730 - 0745	0	225	43	1	5	0	0	0	2	0	0	0	0	**276**	
0745 - 0800	1	202	58	0	4	0	1	1	0	0	0	0	0	**267**	**935**
0800 - 0815	0	201	47	0	1	1	0	0	1	0	0	0	0	**251**	
0815 - 0830	1	187	46	0	5	0	0	0	1	0	0	0	0	**240**	
0830 - 0845	2	172	30	0	5	0	0	0	0	0	0	0	0	**209**	
0845 - 0900	1	158	40	0	2	0	0	0	2	0	0	0	0	**203**	**903**
0900 - 0915	0	122	26	0	2	0	0	0	0	1	0	0	0	**151**	
0915 - 0930	0	105	33	0	5	0	0	1	0	0	0	0	0	**144**	
0930 - 0945	0	128	29	1	4	0	0	1	0	0	0	0	0	**163**	
0945 - 1000	1	112	27	0	5	0	0	1	1	0	0	0	0	**147**	**605**
1000 - 1015	0	84	30	0	3	3	0	0	2	0	0	0	0	**122**	
1015 - 1030	0	89	30	0	3	0	0	1	0	0	0	0	0	**123**	
1030 - 1045	0	96	32	0	2	0	0	0	1	0	0	0	0	**131**	
1045 - 1100	0	87	39	0	0	0	0	0	3	0	0	0	0	**129**	**505**
1100 - 1115	0	90	35	0	3	0	0	1	1	0	0	0	0	**130**	
1115 - 1130	0	102	33	0	3	0	0	0	1	1	0	0	0	**140**	
1130 - 1145	0	100	28	0	5	0	0	1	2	0	0	0	0	**136**	
1145 - 1200	0	99	29	0	3	2	0	1	1	0	0	0	0	**135**	**541**
1200 - 1215	0	140	43	0	0	1	0	2	0	0	0	0	0	**186**	
1215 - 1230	0	145	35	1	1	0	0	1	2	0	0	0	0	**185**	
1230 - 1245	0	138	32	0	4	0	0	1	0	0	0	0	0	**175**	
1245 - 1300	0	119	25	0	5	0	0	0	1	0	0	0	0	**150**	**696**
1300 - 1315	1	121	45	0	2	1	0	1	2	0	0	0	0	**173**	
1315 - 1330	0	118	26	0	3	0	0	0	0	0	0	0	0	**147**	
1330 - 1345	0	119	21	1	4	0	0	2	0	0	0	0	0	**147**	
1345 - 1400	1	109	27	1	6	0	0	0	1	0	0	0	0	**145**	**612**
1400 - 1415	0	117	35	0	3	0	0	1	1	1	0	0	0	**158**	
1415 - 1430	0	121	33	0	3	1	0	0	2	0	0	0	0	**160**	
1430 - 1445	0	98	26	0	5	1	0	0	1	0	0	0	0	**131**	
1445 - 1500	0	141	22	0	3	0	0	0	0	0	0	0	0	**166**	**615**
1500 - 1515	1	116	33	1	1	1	0	0	0	0	0	0	0	**153**	
1515 - 1530	0	107	47	0	2	1	0	1	0	1	0	0	0	**159**	
1530 - 1545	0	118	40	0	2	0	0	0	0	0	0	0	0	**160**	
1545 - 1600	0	143	32	1	1	0	0	1	1	0	0	0	0	**179**	**651**
1600 - 1615	0	158	30	0	3	2	0	0	1	0	0	0	0	**194**	
1615 - 1630	0	142	26	0	3	0	0	0	1	0	0	0	0	**172**	
1630 - 1645	0	129	26	0	2	0	0	1	0	0	0	0	0	**158**	
1645 - 1700	2	136	32	0	5	0	0	0	1	0	0	0	0	**176**	**700**
1700 - 1715	0	152	29	0	2	0	0	2	1	0	0	0	0	**186**	
1715 - 1730	1	136	26	0	1	0	0	1	1	0	0	0	0	**166**	
1730 - 1745	0	119	28	0	2	1	0	0	1	0	0	0	0	**151**	
1745 - 1800	1	132	23	0	1	0	0	0	0	0	0	0	0	**157**	**660**
1800 - 1815	0	128	18	0	1	0	0	0	0	0	0	0	0	**147**	
1815 - 1830	1	132	25	0	4	0	0	0	1	0	0	0	0	**163**	
1830 - 1845	0	106	20	0	1	0	0	0	0	0	0	0	0	**127**	
1845 - 1900	0	91	19	0	2	0	0	0	0	0	0	0	0	**112**	**549**
1900 - 1915	0	0	0	0	0	0	0	0	0	0	0	0	0	**0**	
1915 - 1930	0	0	0	0	0	0	0	0	0	0	0	0	0	**0**	
1930 - 1945	0	0	0	0	0	0	0	0	0	0	0	0	0	**0**	
1945 - 2000	0	0	0	0	0	0	0	0	0	0	0	0	0	**0**	**0**
2000 - 2015	0	0	0	0	0	0	0	0	0	0	0	0	0	**0**	
2015 - 2030	0	0	0	0	0	0	0	0	0	0	0	0	0	**0**	
2030 - 2045	0	0	0	0	0	0	0	0	0	0	0	0	0	**0**	
2045 - 2100	0	0	0	0	0	0	0	0	0	0	0	0	0	**0**	**0**
2100 - 2115	0	0	0	0	0	0	0	0	0	0	0	0	0	**0**	
2115 - 2130	0	0	0	0	0	0	0	0	0	0	0	0	0	**0**	
2130 - 2145	0	0	0	0	0	0	0	0	0	0	0	0	0	**0**	
2145 - 2200	0	0	0	0	0	0	0	0	0	0	0	0	0	**0**	**0**
2200 - 2215	0	0	0	0	0	0	0	0	0	0	0	0	0	**0**	
2215 - 2230	0	0	0	0	0	0	0	0	0	0	0	0	0	**0**	
2230 - 2245	0	0	0	0	0	0	0	0	0	0	0	0	0	**0**	
2245 - 2300	0	0	0	0	0	0	0	0	0	0	0	0	0	**0**	**0**
2300 - 2315	0	0	0	0	0	0	0	0	0	0	0	0	0	**0**	
2315 - 2330	0	0	0	0	0	0	0	0	0	0	0	0	0	**0**	
2330 - 2345	0	0	0	0	0	0	0	0	0	0	0	0	0	**0**	
2345 - 0000	0	0	0	0	0	0	0	0	0	0	0	0	0	**0**	**0**

Session Total	15	6874	1665	7	144	16	1	25	47	4	0	0	0	**8798**
Session Average	0.16	71.60	17.34	0.07	1.50	0.17	0.01	0.26	0.49	0.04	0.00	0.00	0.00	**91.65**
Session Percentage	0.17	78.13	18.92	0.08	1.64	0.18	0.01	0.28	0.53	0.05	0.00	0.00	0.00	

AM Peak Hour	0745 - 0845	0730 - 0830	0730 - 0830	0645 - 0745	0915 - 1015	0915 - 1015	0700 - 0800	0630 - 0730	0645 - 0745	0815 - 0915	-	-	-	**0730 - 0830**
AM Peak Hour Volume	4	815	194	1	17	3	1	3	5	1	0	0	0	**1034**

Noon Peak Hour	1300 - 1400	1200 - 1300	1445 - 1545	1300 - 1400	1345 - 1445	1000 - 1100	-	1130 - 1230	1045 - 1145	1030 - 1130	-	-	-	**1200 - 1300**
Noon Peak Hour Volume	2	542	142	2	17	3	0	5	7	1	0	0	0	**696**

PM Peak Hour	1630 - 1730	1545 - 1645	1500 - 1600	1500 - 1600	1600 - 1700	1515 - 1615	-	1630 - 1730	1645 - 1745	1500 - 1600	-	-	-	**1530 - 1630**
PM Peak Hour Volume	3	572	152	2	13	3	0	4	4	1	0	0	0	**705**

Bi-Directional Class Count || SB WB Average 15min

Columbia, SC

Marr Traffic DATA COLLECTION
www.marrtraffic.com

Site 39
I-26 S/Bound On-Ramp,
south of St Andrews Rd

Date
Tuesday, April 23, 2024

Lat/Long
34.043974°, -81.118251°

Weather
Fair
58°F

0000 - 2400 (Weekday 24h Session) (All Dates)
SB WB Average 15min

	SB WB Average 15min													15min	60min
Time	1	2	3	4	5	6	7	8	9	10	11	12	13	Total	Total
0000 - 0015	0	8	2	0	0	0	0	0	0	0	0	0	0	**10**	
0015 - 0030	0	7	1	0	0	0	0	0	0	0	0	0	0	**8**	
0030 - 0045	0	9	1	0	0	0	0	0	0	0	0	0	0	**10**	
0045 - 0100	0	5	1	0	0	0	0	0	0	0	0	0	0	**7**	**34**
0100 - 0115	0	7	2	0	0	0	0	0	0	0	0	0	0	**9**	
0115 - 0130	0	6	0	0	0	0	0	0	0	0	0	0	0	**6**	
0130 - 0145	0	4	0	0	0	0	0	0	0	0	0	0	0	**5**	
0145 - 0200	0	2	1	0	0	0	0	0	0	0	0	0	0	**3**	**23**
0200 - 0215	0	5	1	0	0	0	0	0	0	0	0	0	0	**6**	
0215 - 0230	0	5	0	0	0	0	0	0	0	0	0	0	0	**5**	
0230 - 0245	0	4	1	0	0	0	0	0	0	0	0	0	0	**5**	
0245 - 0300	0	5	1	0	0	0	0	0	0	0	0	0	0	**6**	**22**
0300 - 0315	0	2	0	0	0	0	0	0	0	0	0	0	0	**2**	
0315 - 0330	0	6	0	0	0	0	0	0	0	0	0	0	0	**6**	
0330 - 0345	0	9	0	0	0	0	0	0	0	0	0	0	0	**9**	
0345 - 0400	0	6	1	0	0	0	0	0	0	0	0	0	0	**8**	**25**
0400 - 0415	0	8	1	0	0	0	0	0	1	0	0	0	0	**10**	
0415 - 0430	0	11	1	0	0	0	0	0	0	0	0	0	0	**12**	
0430 - 0445	0	11	3	0	0	0	0	0	0	0	0	0	0	**14**	
0445 - 0500	0	10	3	0	0	0	0	0	0	0	0	0	0	**13**	**49**
0500 - 0515	0	20	5	0	0	0	0	0	0	0	0	0	0	**25**	
0515 - 0530	0	22	7	0	0	0	0	0	0	0	0	0	0	**29**	
0530 - 0545	0	31	8	0	0	0	0	0	0	0	0	0	0	**39**	
0545 - 0600	0	30	6	0	0	0	0	0	0	0	0	0	0	**36**	**129**
0600 - 0615	0	28	5	0	0	0	0	0	0	0	0	0	0	**34**	
0615 - 0630	0	36	11	0	0	0	0	0	1	0	0	0	0	**49**	
0630 - 0645	0	71	12	0	0	0	0	1	0	0	0	0	0	**85**	
0645 - 0700	0	75	16	0	2	0	0	0	0	0	0	0	0	**93**	**261**
0700 - 0715	0	90	18	0	0	1	0	1	0	0	0	0	0	**109**	
0715 - 0730	0	123	28	0	2	0	0	0	1	0	0	0	0	**154**	
0730 - 0745	0	152	28	1	2	0	0	0	1	0	0	0	0	**184**	
0745 - 0800	0	133	36	0	2	0	0	0	0	0	0	0	0	**172**	**620**
0800 - 0815	0	130	30	0	1	1	0	1	0	0	0	0	0	**163**	
0815 - 0830	0	129	29	0	3	0	0	0	0	0	0	0	0	**162**	
0830 - 0845	1	110	21	0	3	0	0	0	0	0	0	0	0	**136**	
0845 - 0900	1	97	22	0	1	0	0	0	1	0	0	0	0	**122**	**582**
0900 - 0915	0	78	20	0	2	0	0	0	1	0	0	0	0	**101**	
0915 - 0930	0	84	21	0	3	1	0	0	1	0	0	0	0	**110**	
0930 - 0945	0	74	19	0	2	0	0	0	0	0	0	0	0	**95**	
0945 - 1000	0	72	21	1	2	0	0	1	1	0	0	0	0	**97**	**404**
1000 - 1015	0	60	20	0	2	2	0	0	1	0	0	0	0	**85**	
1015 - 1030	0	59	20	0	2	0	0	0	0	0	0	0	0	**82**	
1030 - 1045	0	65	20	0	1	0	0	0	0	0	0	0	0	**87**	
1045 - 1100	0	63	24	0	1	0	0	1	1	0	0	0	0	**91**	**345**
1100 - 1115	0	66	23	0	3	0	0	0	0	0	0	0	0	**93**	
1115 - 1130	0	66	21	0	2	0	0	0	1	0	0	0	0	**91**	
1130 - 1145	1	65	19	0	3	0	0	0	1	0	0	0	0	**89**	
1145 - 1200	0	69	18	0	2	1	0	0	0	0	0	0	0	**91**	**363**
1200 - 1215	0	83	25	0	1	1	0	1	1	0	0	0	0	**111**	
1215 - 1230	0	81	24	1	1	0	0	0	1	0	0	0	0	**110**	
1230 - 1245	0	83	22	0	2	0	0	1	0	0	0	0	0	**109**	
1245 - 1300	0	76	19	0	2	0	0	0	1	0	0	0	0	**98**	**427**
1300 - 1315	0	84	27	0	1	0	0	1	1	0	0	0	0	**114**	
1315 - 1330	0	74	19	1	3	0	0	1	0	0	0	0	0	**98**	
1330 - 1345	0	78	19	1	2	0	0	1	0	0	0	0	0	**101**	
1345 - 1400	1	76	18	0	3	0	0	0	2	0	0	0	0	**100**	**413**
1400 - 1415	0	76	19	0	2	0	0	0	1	0	0	0	0	**100**	
1415 - 1430	0	73	22	0	2	0	0	0	1	0	0	0	0	**98**	
1430 - 1445	0	75	20	0	4	0	0	0	0	0	0	0	0	**100**	
1445 - 1500	0	87	17	0	1	0	0	0	0	0	0	0	0	**106**	**403**
1500 - 1515	1	84	19	1	2	0	0	0	0	0	0	0	0	**107**	
1515 - 1530	0	79	24	0	3	0	0	0	0	0	0	0	0	**108**	
1530 - 1545	0	89	22	0	1	0	0	0	0	0	0	0	0	**112**	
1545 - 1600	0	92	23	1	1	0	0	0	1	0	0	0	0	**118**	**445**
1600 - 1615	0	106	19	0	1	1	0	0	1	0	0	0	0	**129**	
1615 - 1630	0	97	19	0	2	0	0	0	1	0	0	0	0	**119**	
1630 - 1645	0	92	21	0	1	0	0	0	0	0	0	0	0	**114**	
1645 - 1700	1	94	23	0	2	0	0	0	1	0	0	0	0	**120**	**482**
1700 - 1715	0	97	20	0	2	0	0	1	1	0	0	0	0	**121**	
1715 - 1730	0	88	18	0	0	0	0	1	1	0	0	0	0	**108**	
1730 - 1745	0	76	14	0	2	0	0	0	0	0	0	0	0	**93**	
1745 - 1800	0	84	16	0	1	0	0	0	0	0	0	0	0	**102**	**424**
1800 - 1815	1	86	15	0	0	0	0	0	0	0	0	0	0	**102**	
1815 - 1830	0	86	17	0	2	0	0	1	0	0	0	0	0	**107**	
1830 - 1845	0	76	11	0	0	0	0	0	0	0	0	0	0	**87**	
1845 - 1900	0	66	12	0	1	0	0	0	0	0	0	0	0	**79**	**375**
1900 - 1915	0	63	13	0	1	0	0	0	0	0	0	0	0	**78**	
1915 - 1930	0	65	12	0	0	0	0	0	0	0	0	0	0	**78**	
1930 - 1945	0	44	9	0	1	0	0	0	0	0	0	0	0	**55**	
1945 - 2000	0	49	9	0	0	0	0	0	0	0	0	0	0	**59**	**269**
2000 - 2015	0	58	8	0	0	0	0	0	0	0	0	0	0	**67**	
2015 - 2030	1	59	7	0	1	0	0	0	0	0	0	0	0	**67**	
2030 - 2045	0	53	8	0	0	0	0	0	0	0	0	0	0	**61**	
2045 - 2100	1	56	8	0	0	0	0	0	0	0	0	0	0	**66**	**261**
2100 - 2115	0	43	6	0	0	0	0	0	0	0	0	0	0	**49**	
2115 - 2130	0	40	7	0	0	0	0	0	0	0	0	0	0	**48**	
2130 - 2145	0	34	4	0	0	0	0	0	0	0	0	0	0	**39**	
2145 - 2200	0	43	5	0	0	0	0	0	0	0	0	0	0	**49**	**184**
2200 - 2215	0	36	3	0	0	0	0	0	0	0	0	0	0	**39**	
2215 - 2230	0	30	2	0	0	0	0	0	0	0	0	0	0	**32**	
2230 - 2245	0	30	1	0	0	0	0	0	0	0	0	0	0	**32**	
2245 - 2300	0	24	2	0	0	0	0	0	0	0	0	0	0	**25**	**129**
2300 - 2315	0	14	2	0	0	0	0	0	0	0	0	0	0	**17**	
2315 - 2330	0	14	3	0	0	0	0	0	0	0	0	0	0	**17**	
2330 - 2345	0	13	1	0	0	0	0	0	0	0	0	0	0	**15**	
2345 - 0000	0	11	2	0	0	0	0	0	0	0	0	0	0	**13**	**61**

Session Total	14	5344	1209	9	89	12	1	17	33	2	0	0	0	**6731**
Session Average	0.15	55.67	12.59	0.10	0.93	0.12	0.01	0.18	0.34	0.02	0.00	0.00	0.00	**70.11**
Session Percentage	0.21	79.40	17.96	0.14	1.32	0.17	0.01	0.25	0.49	0.03	0.00	0.00	0.00	

AM Peak Hour	0800 - 0900	0730 - 0830	0730 - 0830	0915 - 1015	0745 - 0845	0915 - 1015	0700 - 0800	0630 - 0730	0545 - 0645	0815 - 0915	-	-	-	**0730 - 0830**
AM Peak Volume	2	544	123	2	8	3	0	2	2	0	0	0	0	**681**

Noon Peak Hour	1300 - 1400	1445 - 1545	1215 - 1315	1300 - 1400	1345 - 1445	1000 - 1100	1200 - 1300	1300 - 1400	1345 - 1445	1030 - 1130	-	-	-	**1445 - 1545**
Noon Peak Volume	2	339	93	2	10	2	0	3	4	1	0	0	0	**432**

PM Peak Hour	1715 - 1815	1600 - 1700	1500 - 1600	1500 - 1600	1615 - 1715	1515 - 1615	-	1630 - 1730	1545 - 1645	1500 - 1600	-	-	-	**1600 - 1700**
PM Peak Volume	1	389	89	2	7	1	0	2	3	0	0	0	0	**482**

Bi-Directional Class Count || Volume Summary 15min

Columbia, SC

Marr Traffic DATA COLLECTION

www.marrtraffic.com

Site 39

I-26 S/Bound On-Ramp,
south of St Andrews Rd

Date

Tuesday, April 23, 2024

Lat/Long

34.043974°, -81.118251°

Weather

Fair
58°F

Click here for Detailed Weather

0000 - 2400 (Weekday 24h Session) (04-23-2024)

Volume Summary 15min

	Volume Summary 15min		15min	60min
TIME	NB	SB	Total	Total
0000 - 0015	0	0	**0**	
0015 - 0030	0	0	**0**	
0030 - 0045	0	0	**0**	
0045 - 0100	0	0	**0**	**0**
0100 - 0115	0	0	**0**	
0115 - 0130	0	0	**0**	
0130 - 0145	0	0	**0**	
0145 - 0200	0	0	**0**	**0**
0200 - 0215	0	0	**0**	
0215 - 0230	0	0	**0**	
0230 - 0245	0	0	**0**	
0245 - 0300	0	0	**0**	**0**
0300 - 0315	0	0	**0**	
0315 - 0330	0	0	**0**	
0330 - 0345	0	0	**0**	
0345 - 0400	0	0	**0**	**0**
0400 - 0415	0	0	**0**	
0415 - 0430	0	0	**0**	
0430 - 0445	0	0	**0**	
0445 - 0500	0	0	**0**	**0**
0500 - 0515	0	0	**0**	
0515 - 0530	0	0	**0**	
0530 - 0545	0	0	**0**	
0545 - 0600	0	0	**0**	**0**
0600 - 0615	0	0	**0**	
0615 - 0630	0	0	**0**	
0630 - 0645	0	0	**0**	
0645 - 0700	0	0	**0**	**0**
0700 - 0715	0	0	**0**	
0715 - 0730	0	0	**0**	
0730 - 0745	0	0	**0**	
0745 - 0800	0	0	**0**	**0**
0800 - 0815	0	0	**0**	
0815 - 0830	0	0	**0**	
0830 - 0845	0	0	**0**	
0845 - 0900	0	0	**0**	**0**
0900 - 0915	0	0	**0**	
0915 - 0930	0	0	**0**	
0930 - 0945	0	0	**0**	
0945 - 1000	0	0	**0**	**0**
1000 - 1015	0	0	**0**	
1015 - 1030	0	0	**0**	
1030 - 1045	0	0	**0**	
1045 - 1100	0	0	**0**	**0**
1100 - 1115	0	0	**0**	
1115 - 1130	0	0	**0**	
1130 - 1145	0	0	**0**	
1145 - 1200	0	0	**0**	**0**

	Volume Summary 15min		15min	60min
Time	NB	SB	Total	Total
1200 - 1215	0	0	**0**	
1215 - 1230	0	0	**0**	
1230 - 1245	0	0	**0**	
1245 - 1300	0	0	**0**	**0**
1300 - 1315	0	0	**0**	
1315 - 1330	0	0	**0**	
1330 - 1345	0	0	**0**	
1345 - 1400	0	0	**0**	**0**
1400 - 1415	0	0	**0**	
1415 - 1430	0	0	**0**	
1430 - 1445	0	0	**0**	
1445 - 1500	0	0	**0**	**0**
1500 - 1515	0	0	**0**	
1515 - 1530	0	0	**0**	
1530 - 1545	0	0	**0**	
1545 - 1600	0	0	**0**	**0**
1600 - 1615	0	0	**0**	
1615 - 1630	0	0	**0**	
1630 - 1645	0	0	**0**	
1645 - 1700	0	0	**0**	**0**
1700 - 1715	0	0	**0**	
1715 - 1730	0	0	**0**	
1730 - 1745	0	0	**0**	
1745 - 1800	0	0	**0**	**0**
1800 - 1815	0	0	**0**	
1815 - 1830	0	0	**0**	
1830 - 1845	0	0	**0**	
1845 - 1900	0	0	**0**	**0**
1900 - 1915	0	110	**110**	
1915 - 1930	0	120	**120**	
1930 - 1945	0	76	**76**	
1945 - 2000	0	87	**87**	**393**
2000 - 2015	0	102	**102**	
2015 - 2030	0	99	**99**	
2030 - 2045	0	85	**85**	
2045 - 2100	0	91	**91**	**377**
2100 - 2115	0	81	**81**	
2115 - 2130	0	98	**98**	
2130 - 2145	0	58	**58**	
2145 - 2200	0	70	**70**	**307**
2200 - 2215	0	45	**45**	
2215 - 2230	0	43	**43**	
2230 - 2245	0	47	**47**	
2245 - 2300	0	34	**34**	**169**
2300 - 2315	0	22	**22**	
2315 - 2330	0	24	**24**	
2330 - 2345	0	21	**21**	
2345 - 0000	0	23	**23**	**90**

Session Total	0	1336	**1336**
Session Average	0.00	13.92	**13.92**
Session Percentage	0.00	100.00	

Site 39

I-26 S/Bound On-Ramp,
south of St Andrews Rd

Date

Wednesday, April 24, 2024

Lat/Long

34.043974°, -81.118251°

Weather

Fair
66°F

Click here for Detailed Weather

0000 - 2400 (Weekday 24h Session) (04-24-2024)

Volume Summary 15min

TIME	Volume Summary 15min NB	SB	15min Total	60min Total
0000 - 0015	0	16	**16**	
0015 - 0030	0	7	**7**	
0030 - 0045	0	17	**17**	
0045 - 0100	0	12	**12**	**52**
0100 - 0115	0	12	**12**	
0115 - 0130	0	11	**11**	
0130 - 0145	0	7	**7**	
0145 - 0200	0	2	**2**	**32**
0200 - 0215	0	7	**7**	
0215 - 0230	0	6	**6**	
0230 - 0245	0	9	**9**	
0245 - 0300	0	10	**10**	**32**
0300 - 0315	0	3	**3**	
0315 - 0330	0	9	**9**	
0330 - 0345	0	9	**9**	
0345 - 0400	0	11	**11**	**32**
0400 - 0415	0	14	**14**	
0415 - 0430	0	20	**20**	
0430 - 0445	0	22	**22**	
0445 - 0500	0	18	**18**	**74**
0500 - 0515	0	37	**37**	
0515 - 0530	0	42	**42**	
0530 - 0545	0	60	**60**	
0545 - 0600	0	51	**51**	**190**
0600 - 0615	0	61	**61**	
0615 - 0630	0	77	**77**	
0630 - 0645	0	122	**122**	
0645 - 0700	0	132	**132**	**392**
0700 - 0715	0	160	**160**	
0715 - 0730	0	238	**238**	
0730 - 0745	0	277	**277**	
0745 - 0800	0	249	**249**	**924**
0800 - 0815	0	237	**237**	
0815 - 0830	0	246	**246**	
0830 - 0845	0	198	**198**	
0845 - 0900	0	162	**162**	**843**
0900 - 0915	0	153	**153**	
0915 - 0930	0	186	**186**	
0930 - 0945	0	123	**123**	
0945 - 1000	0	145	**145**	**607**
1000 - 1015	0	132	**132**	
1015 - 1030	0	124	**124**	
1030 - 1045	0	131	**131**	
1045 - 1100	0	144	**144**	**531**
1100 - 1115	0	149	**149**	
1115 - 1130	0	132	**132**	
1130 - 1145	0	130	**130**	
1145 - 1200	0	137	**137**	**548**

Time	Volume Summary 15min NB	SB	15min Total	60min Total
1200 - 1215	0	146	**146**	
1215 - 1230	0	144	**144**	
1230 - 1245	0	151	**151**	
1245 - 1300	0	144	**144**	**585**
1300 - 1315	0	169	**169**	
1315 - 1330	0	147	**147**	
1330 - 1345	0	156	**156**	
1345 - 1400	0	156	**156**	**628**
1400 - 1415	0	141	**141**	
1415 - 1430	0	133	**133**	
1430 - 1445	0	168	**168**	
1445 - 1500	0	151	**151**	**593**
1500 - 1515	0	167	**167**	
1515 - 1530	0	164	**164**	
1530 - 1545	0	177	**177**	
1545 - 1600	0	175	**175**	**683**
1600 - 1615	0	192	**192**	
1615 - 1630	0	184	**184**	
1630 - 1645	0	185	**185**	
1645 - 1700	0	184	**184**	**745**
1700 - 1715	0	177	**177**	
1715 - 1730	0	159	**159**	
1730 - 1745	0	127	**127**	
1745 - 1800	0	150	**150**	**613**
1800 - 1815	0	158	**158**	
1815 - 1830	0	157	**157**	
1830 - 1845	0	135	**135**	
1845 - 1900	0	126	**126**	**576**
1900 - 1915	0	123	**123**	
1915 - 1930	0	114	**114**	
1930 - 1945	0	88	**88**	
1945 - 2000	0	89	**89**	**414**
2000 - 2015	0	100	**100**	
2015 - 2030	0	102	**102**	
2030 - 2045	0	99	**99**	
2045 - 2100	0	106	**106**	**407**
2100 - 2115	0	66	**66**	
2115 - 2130	0	46	**46**	
2130 - 2145	0	58	**58**	
2145 - 2200	0	76	**76**	**246**
2200 - 2215	0	73	**73**	
2215 - 2230	0	54	**54**	
2230 - 2245	0	48	**48**	
2245 - 2300	0	42	**42**	**217**
2300 - 2315	0	28	**28**	
2315 - 2330	0	26	**26**	
2330 - 2345	0	23	**23**	
2345 - 0000	0	17	**17**	**94**

Session Total	0	10058	**10058**
Session Average	0.00	104.77	**104.77**
Session Percentage	0.00	100.00	

Site 39
I-26 S/Bound On-Ramp,
south of St Andrews Rd

Date
Thursday, April 25, 2024

Lat/Long
34.043974°, -81.118251°

Weather
Fair
67°F

Click here for Detailed Weather

0000 - 2400 (Weekday 24h Session) (04-25-2024)
Volume Summary 15min

TIME	Volume Summary 15min NB	SB	15min Total	60min Total
0000 - 0015	0	13	**13**	
0015 - 0030	0	18	**18**	
0030 - 0045	0	12	**12**	
0045 - 0100	0	8	**8**	**51**
0100 - 0115	0	14	**14**	
0115 - 0130	0	8	**8**	
0130 - 0145	0	7	**7**	
0145 - 0200	0	7	**7**	**36**
0200 - 0215	0	12	**12**	
0215 - 0230	0	10	**10**	
0230 - 0245	0	5	**5**	
0245 - 0300	0	8	**8**	**35**
0300 - 0315	0	4	**4**	
0315 - 0330	0	9	**9**	
0330 - 0345	0	19	**19**	
0345 - 0400	0	12	**12**	**44**
0400 - 0415	0	15	**15**	
0415 - 0430	0	15	**15**	
0430 - 0445	0	21	**21**	
0445 - 0500	0	22	**22**	**73**
0500 - 0515	0	37	**37**	
0515 - 0530	0	45	**45**	
0530 - 0545	0	57	**57**	
0545 - 0600	0	58	**58**	**197**
0600 - 0615	0	41	**41**	
0615 - 0630	0	69	**69**	
0630 - 0645	0	133	**133**	
0645 - 0700	0	147	**147**	**390**
0700 - 0715	0	168	**168**	
0715 - 0730	0	224	**224**	
0730 - 0745	0	276	**276**	
0745 - 0800	0	267	**267**	**935**
0800 - 0815	0	251	**251**	
0815 - 0830	0	240	**240**	
0830 - 0845	0	209	**209**	
0845 - 0900	0	203	**203**	**903**
0900 - 0915	0	151	**151**	
0915 - 0930	0	144	**144**	
0930 - 0945	0	163	**163**	
0945 - 1000	0	147	**147**	**605**
1000 - 1015	0	122	**122**	
1015 - 1030	0	123	**123**	
1030 - 1045	0	131	**131**	
1045 - 1100	0	129	**129**	**505**
1100 - 1115	0	130	**130**	
1115 - 1130	0	140	**140**	
1130 - 1145	0	136	**136**	
1145 - 1200	0	135	**135**	**541**

Time	Volume Summary 15min NB	SB	15min Total	60min Total
1200 - 1215	0	186	**186**	
1215 - 1230	0	185	**185**	
1230 - 1245	0	175	**175**	
1245 - 1300	0	150	**150**	**696**
1300 - 1315	0	173	**173**	
1315 - 1330	0	147	**147**	
1330 - 1345	0	147	**147**	
1345 - 1400	0	145	**145**	**612**
1400 - 1415	0	158	**158**	
1415 - 1430	0	160	**160**	
1430 - 1445	0	131	**131**	
1445 - 1500	0	166	**166**	**615**
1500 - 1515	0	153	**153**	
1515 - 1530	0	159	**159**	
1530 - 1545	0	160	**160**	
1545 - 1600	0	179	**179**	**651**
1600 - 1615	0	194	**194**	
1615 - 1630	0	172	**172**	
1630 - 1645	0	158	**158**	
1645 - 1700	0	176	**176**	**700**
1700 - 1715	0	186	**186**	
1715 - 1730	0	166	**166**	
1730 - 1745	0	151	**151**	
1745 - 1800	0	157	**157**	**660**
1800 - 1815	0	147	**147**	
1815 - 1830	0	163	**163**	
1830 - 1845	0	127	**127**	
1845 - 1900	0	112	**112**	**549**
1900 - 1915	0	0	**0**	
1915 - 1930	0	0	**0**	
1930 - 1945	0	0	**0**	
1945 - 2000	0	0	**0**	**0**
2000 - 2015	0	0	**0**	
2015 - 2030	0	0	**0**	
2030 - 2045	0	0	**0**	
2045 - 2100	0	0	**0**	**0**
2100 - 2115	0	0	**0**	
2115 - 2130	0	0	**0**	
2130 - 2145	0	0	**0**	
2145 - 2200	0	0	**0**	**0**
2200 - 2215	0	0	**0**	
2215 - 2230	0	0	**0**	
2230 - 2245	0	0	**0**	
2245 - 2300	0	0	**0**	**0**
2300 - 2315	0	0	**0**	
2315 - 2330	0	0	**0**	
2330 - 2345	0	0	**0**	
2345 - 0000	0	0	**0**	**0**

Session Total	0	8798	**8798**
Session Average	0.00	91.65	**91.65**
Session Percentage	0.00	100.00	

Bi-Directional Class Count || SB WB 60min

Columbia, SC

Marr Traffic DATA COLLECTION

www.marrtraffic.com

Site 39
I-26 S/Bound On-Ramp,
south of St Andrews Rd

Date
Tuesday, April 23, 2024

Lat/Long
34.043974°, -81.118251°

Weather
Fair
58°F

Click here for Detailed Weather

0000 - 2400 (Weekday 24h Session) (04-23-2024)
SB WB 60min

	Southbound (Movement 39.1)													
TIME	1	2	3	4	5	6	7	8	9	10	11	12	13	**Total**
0000 - 0100	0	0	0	0	0	0	0	0	0	0	0	0	0	**0**
0100 - 0200	0	0	0	0	0	0	0	0	0	0	0	0	0	**0**
0200 - 0300	0	0	0	0	0	0	0	0	0	0	0	0	0	**0**
0300 - 0400	0	0	0	0	0	0	0	0	0	0	0	0	0	**0**
0400 - 0500	0	0	0	0	0	0	0	0	0	0	0	0	0	**0**
0500 - 0600	0	0	0	0	0	0	0	0	0	0	0	0	0	**0**
0600 - 0700	0	0	0	0	0	0	0	0	0	0	0	0	0	**0**
0700 - 0800	0	0	0	0	0	0	0	0	0	0	0	0	0	**0**
0800 - 0900	0	0	0	0	0	0	0	0	0	0	0	0	0	**0**
0900 - 1000	0	0	0	0	0	0	0	0	0	0	0	0	0	**0**
1000 - 1100	0	0	0	0	0	0	0	0	0	0	0	0	0	**0**
1100 - 1200	0	0	0	0	0	0	0	0	0	0	0	0	0	**0**
1200 - 1300	0	0	0	0	0	0	0	0	0	0	0	0	0	**0**
1300 - 1400	0	0	0	0	0	0	0	0	0	0	0	0	0	**0**
1400 - 1500	0	0	0	0	0	0	0	0	0	0	0	0	0	**0**
1500 - 1600	0	0	0	0	0	0	0	0	0	0	0	0	0	**0**
1600 - 1700	0	0	0	0	0	0	0	0	0	0	0	0	0	**0**
1700 - 1800	0	0	0	0	0	0	0	0	0	0	0	0	0	**0**
1800 - 1900	0	0	0	0	0	0	0	0	0	0	0	0	0	**0**
1900 - 2000	0	324	62	1	3	1	0	1	0	1	0	0	0	**393**
2000 - 2100	2	334	39	0	1	0	0	0	1	0	0	0	0	**377**
2100 - 2200	2	266	39	0	0	0	0	0	0	0	0	0	0	**307**
2200 - 2300	0	155	14	0	0	0	0	0	0	0	0	0	0	**169**
2300 - 2400	0	75	15	0	0	0	0	0	0	0	0	0	0	**90**
Session Total	4	1154	169	1	4	1	0	1	1	1	0	0	0	**1336**
Session Average	0.17	48.08	7.04	0.04	0.17	0.04	0.00	0.04	0.04	0.04	0.00	0.00	0.00	**55.67**
Session Percentage	0.30	86.38	12.65	0.07	0.30	0.07	0.00	0.07	0.07	0.07	0.00	0.00	0.00	
AM Peak Hour	-	-	-	-	-	-	-	-	-	-	-	-	-	**-**
AM Peak Volume	0	0	0	0	0	0	0	0	0	0	0	0	0	**0**
Noon Peak Hour	-	-	-	-	-	-	-	-	-	-	-	-	-	**-**
Noon Peak Volume	0	0	0	0	0	0	0	0	0	0	0	0	0	**0**
PM Peak Hour	-	1900 - 2000	1900 - 2000	1900 - 2000	1900 - 2000	1900 - 2000	-	1900 - 2000	-	1900 - 2000	-	-	-	**1900 - 2000**
PM Peak Volume	0	324	62	1	3	1	0	1	0	1	0	0	0	**393**

Site 39
I-26 S/Bound On-Ramp,
south of St Andrews Rd

Date
Wednesday, April 24, 2024

Lat/Long
34.043974°, -81.118251°

Weather
Fair
66°F

Click here for Detailed Weather

0000 - 2400 (Weekday 24h Session) (04-24-2024)
SB WB 60min

	Southbound (Movement 39.1)													
TIME	1	2	3	4	5	6	7	8	9	10	11	12	13	**Total**
0000 - 0100	0	49	3	0	0	0	0	0	0	0	0	0	0	**52**
0100 - 0200	0	28	1	0	2	0	0	0	1	0	0	0	0	**32**
0200 - 0300	0	29	1	0	0	0	0	0	2	0	0	0	0	**32**
0300 - 0400	0	26	5	0	0	0	0	0	1	0	0	0	0	**32**
0400 - 0500	0	62	10	0	0	0	0	0	2	0	0	0	0	**74**
0500 - 0600	1	153	35	0	0	0	0	0	1	0	0	0	0	**190**
0600 - 0700	0	315	68	0	3	1	0	1	4	0	0	0	0	**392**
0700 - 0800	1	745	170	1	4	2	0	1	0	0	0	0	0	**924**
0800 - 0900	3	677	145	1	10	4	0	2	1	0	0	0	0	**843**
0900 - 1000	0	457	128	4	8	4	0	1	5	0	0	0	0	**607**
1000 - 1100	2	386	122	2	10	4	0	3	2	0	0	0	0	**531**
1100 - 1200	3	407	118	1	15	0	0	1	2	1	0	0	0	**548**
1200 - 1300	0	428	138	2	8	2	1	1	5	0	0	0	0	**585**
1300 - 1400	3	471	129	3	10	1	0	5	6	0	0	0	0	**628**
1400 - 1500	1	457	118	0	12	0	0	2	2	1	0	0	0	**593**
1500 - 1600	2	548	115	3	11	0	0	1	3	0	0	0	0	**683**
1600 - 1700	0	603	131	0	5	0	0	1	5	0	0	0	0	**745**
1700 - 1800	0	497	102	0	8	0	0	3	3	0	0	0	0	**613**
1800 - 1900	2	484	81	2	5	0	0	2	0	0	0	0	0	**576**
1900 - 2000	1	337	70	0	5	0	0	0	1	0	0	0	0	**414**
2000 - 2100	3	346	54	1	1	0	0	1	1	0	0	0	0	**407**
2100 - 2200	0	216	27	0	2	0	0	0	1	0	0	0	0	**246**
2200 - 2300	0	204	12	0	0	0	0	0	1	0	0	0	0	**217**
2300 - 2400	2	80	10	0	0	0	0	0	2	0	0	0	0	**94**

Session Total	24	8005	1793	20	119	18	1	25	51	2	0	0	0	**10058**
Session Average	1.00	333.54	74.71	0.83	4.96	0.75	0.04	1.04	2.13	0.08	0.00	0.00	0.00	**419.08**
Session Percentage	0.24	79.59	17.83	0.20	1.18	0.18	0.01	0.25	0.51	0.02	0.00	0.00	0.00	

AM Peak Hour	0800 - 0900	0700 - 0800	0700 - 0800	0900 - 1000	0800 - 0900	0800 - 0900	-	0800 - 0900	0900 - 1000	-	-	-	-	**0700 - 0800**
AM Peak Volume	3	745	170	4	10	4	0	2	5	0	0	0	0	**924**

Noon Peak Hour	1100 - 1200	1300 - 1400	1200 - 1300	1300 - 1400	1100 - 1200	1000 - 1100	1200 - 1300	1300 - 1400	1300 - 1400	1100 - 1200	-	-	-	**1300 - 1400**
Noon Peak Volume	3	471	138	3	15	4	1	5	6	1	0	0	0	**628**

PM Peak Hour	1500 - 1600	1600 - 1700	1600 - 1700	1500 - 1600	1500 - 1600	-	-	1700 - 1800	1600 - 1700	-	-	-	-	**1600 - 1700**
PM Peak Volume	2	603	131	3	11	0	0	3	5	0	0	0	0	**745**

Site 39
I-26 S/Bound On-Ramp,
south of St Andrews Rd

Date
Thursday, April 25, 2024

Lat/Long
34.043974°, -81.118251°

Weather
Fair
67°F

Click here for Detailed Weather

0000 - 2400 (Weekday 24h Session) (04-25-2024)
SB WB 60min

	Southbound (Movement 39.1)													
TIME	1	2	3	4	5	6	7	8	9	10	11	12	13	**Total**
0000 - 0100	0	39	12	0	0	0	0	0	0	0	0	0	0	**51**
0100 - 0200	0	26	8	0	1	0	0	0	1	0	0	0	0	**36**
0200 - 0300	0	29	6	0	0	0	0	0	0	0	0	0	0	**35**
0300 - 0400	0	41	1	0	1	0	0	0	1	0	0	0	0	**44**
0400 - 0500	0	58	11	0	1	0	0	0	3	0	0	0	0	**73**
0500 - 0600	0	153	43	0	0	0	0	0	1	0	0	0	0	**197**
0600 - 0700	1	316	65	0	5	0	0	1	2	0	0	0	0	**390**
0700 - 0800	1	749	161	1	13	1	1	3	5	0	0	0	0	**935**
0800 - 0900	4	718	163	0	13	1	0	0	4	0	0	0	0	**903**
0900 - 1000	1	467	115	1	16	0	0	3	1	1	0	0	0	**605**
1000 - 1100	0	356	131	0	8	3	0	1	6	0	0	0	0	**505**
1100 - 1200	0	391	125	0	14	2	0	3	5	1	0	0	0	**541**
1200 - 1300	0	542	135	1	10	1	0	4	3	0	0	0	0	**696**
1300 - 1400	2	467	119	2	15	1	0	3	3	0	0	0	0	**612**
1400 - 1500	0	477	116	0	14	2	0	1	4	1	0	0	0	**615**
1500 - 1600	1	484	152	2	6	2	0	2	1	1	0	0	0	**651**
1600 - 1700	2	565	114	0	13	2	0	1	3	0	0	0	0	**700**
1700 - 1800	2	539	106	0	6	1	0	3	3	0	0	0	0	**660**
1800 - 1900	1	457	82	0	8	0	0	0	1	0	0	0	0	**549**
1900 - 2000	0	0	0	0	0	0	0	0	0	0	0	0	0	**0**
2000 - 2100	0	0	0	0	0	0	0	0	0	0	0	0	0	**0**
2100 - 2200	0	0	0	0	0	0	0	0	0	0	0	0	0	**0**
2200 - 2300	0	0	0	0	0	0	0	0	0	0	0	0	0	**0**
2300 - 2400	0	0	0	0	0	0	0	0	0	0	0	0	0	**0**

Session Total	15	6874	1665	7	144	16	1	25	47	4	0	0	0	**8798**
Session Average	0.63	286.42	69.38	0.29	6.00	0.67	0.04	1.04	1.96	0.17	0.00	0.00	0.00	**366.58**
Session Percentage	0.17	78.13	18.92	0.08	1.64	0.18	0.01	0.28	0.53	0.05	0.00	0.00	0.00	

AM Peak Hour	0800 - 0900	0700 - 0800	0800 - 0900	0700 - 0800	0900 - 1000	0700 - 0800	0700 - 0800	0700 - 0800	0700 - 0800	0900 - 1000	-	-	-	**0700 - 0800**
AM Peak Hour Volume	4	749	163	1	16	1	1	3	5	1	0	0	0	**935**

Noon Peak Hour	1300 - 1400	1200 - 1300	1200 - 1300	1300 - 1400	1300 - 1400	1000 - 1100	-	1200 - 1300	1000 - 1100	1100 - 1200	-	-	-	**1200 - 1300**
Noon Peak Hour Volume	2	542	135	2	15	3	0	4	6	1	0	0	0	**696**

PM Peak Hour	1600 - 1700	1600 - 1700	1500 - 1600	1500 - 1600	1600 - 1700	1500 - 1600	-	1700 - 1800	1600 - 1700	1500 - 1600	-	-	-	**1600 - 1700**
PM Peak Hour Volume	2	565	152	2	13	2	0	3	3	1	0	0	0	**700**

Bi-Directional Class Count || Volume Summary 60min

Columbia, SC

Marr Traffic DATA COLLECTION

www.marrtraffic.com

Site 39

I-26 S/Bound On-Ramp,
south of St Andrews Rd

Date

Tuesday, April 23, 2024

Lat/Long

34.043974°, -81.118251°

Weather

Fair
58°F

Click here for Detailed Weather

0000 - 2400 (Weekday 24h Session) (04-23-2024)

Volume Summary 60min

	Volume Summary 60min		
TIME	NB	SB	**Total**
0000 - 0100	0	0	**0**
0100 - 0200	0	0	**0**
0200 - 0300	0	0	**0**
0300 - 0400	0	0	**0**
0400 - 0500	0	0	**0**
0500 - 0600	0	0	**0**
0600 - 0700	0	0	**0**
0700 - 0800	0	0	**0**
0800 - 0900	0	0	**0**
0900 - 1000	0	0	**0**
1000 - 1100	0	0	**0**
1100 - 1200	0	0	**0**

	Volume Summary 60min		
Time	NB	SB	**Total**
1200 - 1300	0	0	**0**
1300 - 1400	0	0	**0**
1400 - 1500	0	0	**0**
1500 - 1600	0	0	**0**
1600 - 1700	0	0	**0**
1700 - 1800	0	0	**0**
1800 - 1900	0	0	**0**
1900 - 2000	0	393	**393**
2000 - 2100	0	377	**377**
2100 - 2200	0	307	**307**
2200 - 2300	0	169	**169**
2300 - 2400	0	90	**90**

Session Total	0	1336	**1336**
Session Average	0.00	55.67	**55.67**
Session Percentage	0.00	100.00	

Site 39

I-26 S/Bound On-Ramp,
south of St Andrews Rd

Date

Wednesday, April 24, 2024

Lat/Long

34.043974°, -81.118251°

Weather

Fair
66°F

Click here for Detailed Weather

0000 - 2400 (Weekday 24h Session) (04-24-2024)

Volume Summary 60min

	Volume Summary 60min		
TIME	NB	SB	**Total**
0000 - 0100	0	52	**52**
0100 - 0200	0	32	**32**
0200 - 0300	0	32	**32**
0300 - 0400	0	32	**32**
0400 - 0500	0	74	**74**
0500 - 0600	0	190	**190**
0600 - 0700	0	392	**392**
0700 - 0800	0	924	**924**
0800 - 0900	0	843	**843**
0900 - 1000	0	607	**607**
1000 - 1100	0	531	**531**
1100 - 1200	0	548	**548**

Session Total	0	10058	**10058**
Session Average	0.00	419.08	**419.08**
Session Percentage	0.00	100.00	

	Volume Summary 60min		
Time	NB	SB	**Total**
1200 - 1300	0	585	**585**
1300 - 1400	0	628	**628**
1400 - 1500	0	593	**593**
1500 - 1600	0	683	**683**
1600 - 1700	0	745	**745**
1700 - 1800	0	613	**613**
1800 - 1900	0	576	**576**
1900 - 2000	0	414	**414**
2000 - 2100	0	407	**407**
2100 - 2200	0	246	**246**
2200 - 2300	0	217	**217**
2300 - 2400	0	94	**94**

Site 39

I-26 S/Bound On-Ramp,
south of St Andrews Rd

Date

Thursday, April 25, 2024

Lat/Long

34.043974°, -81.118251°

Weather

Fair
67°F

Click here for Detailed Weather

0000 - 2400 (Weekday 24h Session) (04-25-2024)

Volume Summary 60min

	Volume Summary 60min		
TIME	NB	SB	**Total**
0000 - 0100	0	51	**51**
0100 - 0200	0	36	**36**
0200 - 0300	0	35	**35**
0300 - 0400	0	44	**44**
0400 - 0500	0	73	**73**
0500 - 0600	0	197	**197**
0600 - 0700	0	390	**390**
0700 - 0800	0	935	**935**
0800 - 0900	0	903	**903**
0900 - 1000	0	605	**605**
1000 - 1100	0	505	**505**
1100 - 1200	0	541	**541**

	Volume Summary 60min		
Time	NB	SB	**Total**
1200 - 1300	0	696	**696**
1300 - 1400	0	612	**612**
1400 - 1500	0	615	**615**
1500 - 1600	0	651	**651**
1600 - 1700	0	700	**700**
1700 - 1800	0	660	**660**
1800 - 1900	0	549	**549**
1900 - 2000	0	0	**0**
2000 - 2100	0	0	**0**
2100 - 2200	0	0	**0**
2200 - 2300	0	0	**0**
2300 - 2400	0	0	**0**

Session Total	0	8798	**8798**
Session Average	0.00	366.58	**366.58**
Session Percentage	0.00	100.00	

Bi-Directional Class Count || Graphical Analysis SB WB

Columbia, SC

Marr Traffic DATA COLLECTION

www.marrtraffic.com

Site 39

I-26 S/Bound On-Ramp,
south of St Andrews Rd

Lat/Long

34.043974°, -81.118251°

0000 - 2400 (Weekday 24h Session)

Graphical Analysis SB WB

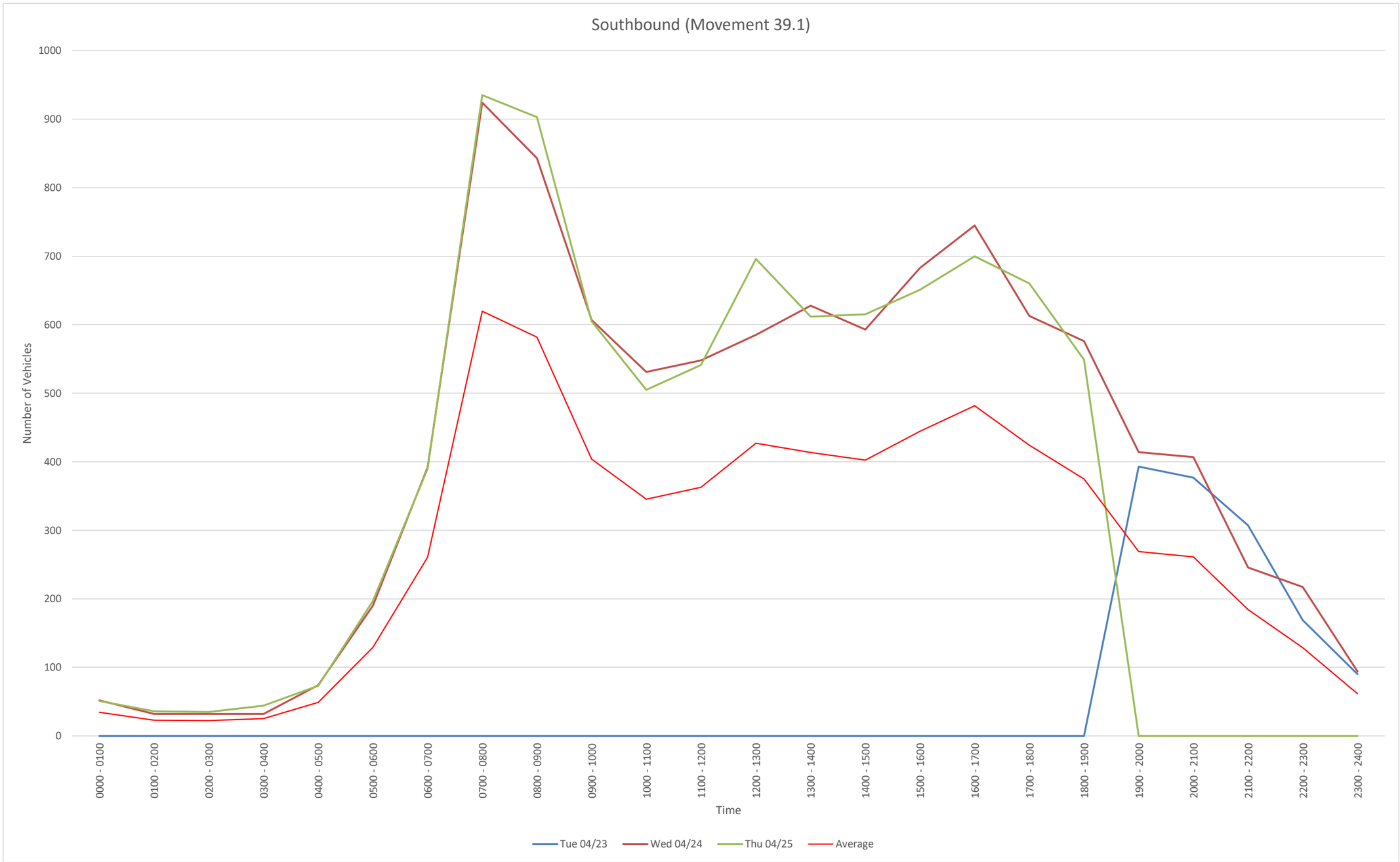

Time	Tue 04/23	Wed 04/24	Thu 04/25				
0000 - 0100	0	52	51				
0100 - 0200	0	32	36				
0200 - 0300	0	32	35				
0300 - 0400	0	32	44				
0400 - 0500	0	74	73				
0500 - 0600	0	190	197				
0600 - 0700	0	392	390				
0700 - 0800	0	924	935				
0800 - 0900	0	843	903				
0900 - 1000	0	607	605				
1000 - 1100	0	531	505				
1100 - 1200	0	548	541				
1200 - 1300	0	585	696				
1300 - 1400	0	628	612				
1400 - 1500	0	593	615				
1500 - 1600	0	683	651				
1600 - 1700	0	745	700				
1700 - 1800	0	613	660				
1800 - 1900	0	576	549				
1900 - 2000	393	414	0				
2000 - 2100	377	407	0				
2100 - 2200	307	246	0				
2200 - 2300	169	217	0				
2300 - 2400	90	94	0				
Daily Total	1336	10058	8798				

NB
File Name:
Start Date: 4/23/2024
Start Time: 0
Site Code: 39
Station ID: 1
Location 1: I-26 S/Bound On-Ramp, south of St Andrews Rd
Location 2:

Date	Time	1	2	3	4	5	6	7	8	9	10	11	12	13
4/23/2024	12:00 AM	0	0	0	0	0	0	0	0	0	0	0	0	0
4/23/2024	12:15 AM	0	0	0	0	0	0	0	0	0	0	0	0	0
4/23/2024	12:30 AM	0	0	0	0	0	0	0	0	0	0	0	0	0
4/23/2024	12:45 AM	0	0	0	0	0	0	0	0	0	0	0	0	0
4/23/2024	1:00 AM	0	0	0	0	0	0	0	0	0	0	0	0	0
4/23/2024	1:15 AM	0	0	0	0	0	0	0	0	0	0	0	0	0
4/23/2024	1:30 AM	0	0	0	0	0	0	0	0	0	0	0	0	0
4/23/2024	1:45 AM	0	0	0	0	0	0	0	0	0	0	0	0	0
4/23/2024	2:00 AM	0	0	0	0	0	0	0	0	0	0	0	0	0
4/23/2024	2:15 AM	0	0	0	0	0	0	0	0	0	0	0	0	0
4/23/2024	2:30 AM	0	0	0	0	0	0	0	0	0	0	0	0	0
4/23/2024	2:45 AM	0	0	0	0	0	0	0	0	0	0	0	0	0
4/23/2024	3:00 AM	0	0	0	0	0	0	0	0	0	0	0	0	0
4/23/2024	3:15 AM	0	0	0	0	0	0	0	0	0	0	0	0	0
4/23/2024	3:30 AM	0	0	0	0	0	0	0	0	0	0	0	0	0
4/23/2024	3:45 AM	0	0	0	0	0	0	0	0	0	0	0	0	0
4/23/2024	4:00 AM	0	0	0	0	0	0	0	0	0	0	0	0	0
4/23/2024	4:15 AM	0	0	0	0	0	0	0	0	0	0	0	0	0
4/23/2024	4:30 AM	0	0	0	0	0	0	0	0	0	0	0	0	0
4/23/2024	4:45 AM	0	0	0	0	0	0	0	0	0	0	0	0	0
4/23/2024	5:00 AM	0	0	0	0	0	0	0	0	0	0	0	0	0
4/23/2024	5:15 AM	0	0	0	0	0	0	0	0	0	0	0	0	0
4/23/2024	5:30 AM	0	0	0	0	0	0	0	0	0	0	0	0	0
4/23/2024	5:45 AM	0	0	0	0	0	0	0	0	0	0	0	0	0
4/23/2024	6:00 AM	0	0	0	0	0	0	0	0	0	0	0	0	0
4/23/2024	6:15 AM	0	0	0	0	0	0	0	0	0	0	0	0	0
4/23/2024	6:30 AM	0	0	0	0	0	0	0	0	0	0	0	0	0
4/23/2024	6:45 AM	0	0	0	0	0	0	0	0	0	0	0	0	0
4/23/2024	7:00 AM	0	0	0	0	0	0	0	0	0	0	0	0	0
4/23/2024	7:15 AM	0	0	0	0	0	0	0	0	0	0	0	0	0
4/23/2024	7:30 AM	0	0	0	0	0	0	0	0	0	0	0	0	0
4/23/2024	7:45 AM	0	0	0	0	0	0	0	0	0	0	0	0	0
4/23/2024	8:00 AM	0	0	0	0	0	0	0	0	0	0	0	0	0
4/23/2024	8:15 AM	0	0	0	0	0	0	0	0	0	0	0	0	0
4/23/2024	8:30 AM	0	0	0	0	0	0	0	0	0	0	0	0	0
4/23/2024	8:45 AM	0	0	0	0	0	0	0	0	0	0	0	0	0
4/23/2024	9:00 AM	0	0	0	0	0	0	0	0	0	0	0	0	0
4/23/2024	9:15 AM	0	0	0	0	0	0	0	0	0	0	0	0	0
4/23/2024	9:30 AM	0	0	0	0	0	0	0	0	0	0	0	0	0
4/23/2024	9:45 AM	0	0	0	0	0	0	0	0	0	0	0	0	0
4/23/2024	10:00 AM	0	0	0	0	0	0	0	0	0	0	0	0	0
4/23/2024	10:15 AM	0	0	0	0	0	0	0	0	0	0	0	0	0
4/23/2024	10:30 AM	0	0	0	0	0	0	0	0	0	0	0	0	0
4/23/2024	10:45 AM	0	0	0	0	0	0	0	0	0	0	0	0	0
4/23/2024	11:00 AM	0	0	0	0	0	0	0	0	0	0	0	0	0
4/23/2024	11:15 AM	0	0	0	0	0	0	0	0	0	0	0	0	0
4/23/2024	11:30 AM	0	0	0	0	0	0	0	0	0	0	0	0	0
4/23/2024	11:45 AM	0	0	0	0	0	0	0	0	0	0	0	0	0
4/23/2024	12:00 PM	0	0	0	0	0	0	0	0	0	0	0	0	0
4/23/2024	12:15 PM	0	0	0	0	0	0	0	0	0	0	0	0	0
4/23/2024	12:30 PM	0	0	0	0	0	0	0	0	0	0	0	0	0
4/23/2024	12:45 PM	0	0	0	0	0	0	0	0	0	0	0	0	0
4/23/2024	1:00 PM	0	0	0	0	0	0	0	0	0	0	0	0	0
4/23/2024	1:15 PM	0	0	0	0	0	0	0	0	0	0	0	0	0
4/23/2024	1:30 PM	0	0	0	0	0	0	0	0	0	0	0	0	0
4/23/2024	1:45 PM	0	0	0	0	0	0	0	0	0	0	0	0	0
4/23/2024	2:00 PM	0	0	0	0	0	0	0	0	0	0	0	0	0
4/23/2024	2:15 PM	0	0	0	0	0	0	0	0	0	0	0	0	0
4/23/2024	2:30 PM	0	0	0	0	0	0	0	0	0	0	0	0	0
4/23/2024	2:45 PM	0	0	0	0	0	0	0	0	0	0	0	0	0
4/23/2024	3:00 PM	0	0	0	0	0	0	0	0	0	0	0	0	0
4/23/2024	3:15 PM	0	0	0	0	0	0	0	0	0	0	0	0	0
4/23/2024	3:30 PM	0	0	0	0	0	0	0	0	0	0	0	0	0
4/23/2024	3:45 PM	0	0	0	0	0	0	0	0	0	0	0	0	0
4/23/2024	4:00 PM	0	0	0	0	0	0	0	0	0	0	0	0	0
4/23/2024	4:15 PM	0	0	0	0	0	0	0	0	0	0	0	0	0
4/23/2024	4:30 PM	0	0	0	0	0	0	0	0	0	0	0	0	0
4/23/2024	4:45 PM	0	0	0	0	0	0	0	0	0	0	0	0	0
4/23/2024	5:00 PM	0	0	0	0	0	0	0	0	0	0	0	0	0
4/23/2024	5:15 PM	0	0	0	0	0	0	0	0	0	0	0	0	0
4/23/2024	5:30 PM	0	0	0	0	0	0	0	0	0	0	0	0	0
4/23/2024	5:45 PM	0	0	0	0	0	0	0	0	0	0	0	0	0
4/23/2024	6:00 PM	0	0	0	0	0	0	0	0	0	0	0	0	0
4/23/2024	6:15 PM	0	0	0	0	0	0	0	0	0	0	0	0	0
4/23/2024	6:30 PM	0	0	0	0	0	0	0	0	0	0	0	0	0
4/23/2024	6:45 PM	0	0	0	0	0	0	0	0	0	0	0	0	0
4/23/2024	7:00 PM	0	0	0	0	0	0	0	0	0	0	0	0	0
4/23/2024	7:15 PM	0	0	0	0	0	0	0	0	0	0	0	0	0
4/23/2024	7:30 PM	0	0	0	0	0	0	0	0	0	0	0	0	0
4/23/2024	7:45 PM	0	0	0	0	0	0	0	0	0	0	0	0	0
4/23/2024	8:00 PM	0	0	0	0	0	0	0	0	0	0	0	0	0
4/23/2024	8:15 PM	0	0	0	0	0	0	0	0	0	0	0	0	0
4/23/2024	8:30 PM	0	0	0	0	0	0	0	0	0	0	0	0	0
4/23/2024	8:45 PM	0	0	0	0	0	0	0	0	0	0	0	0	0
4/23/2024	9:00 PM	0	0	0	0	0	0	0	0	0	0	0	0	0
4/23/2024	9:15 PM	0	0	0	0	0	0	0	0	0	0	0	0	0
4/23/2024	9:30 PM	0	0	0	0	0	0	0	0	0	0	0	0	0
4/23/2024	9:45 PM	0	0	0	0	0	0	0	0	0	0	0	0	0
4/23/2024	10:00 PM	0	0	0	0	0	0	0	0	0	0	0	0	0
4/23/2024	10:15 PM	0	0	0	0	0	0	0	0	0	0	0	0	0
4/23/2024	10:30 PM	0	0	0	0	0	0	0	0	0	0	0	0	0
4/23/2024	10:45 PM	0	0	0	0	0	0	0	0	0	0	0	0	0
4/23/2024	11:00 PM	0	0	0	0	0	0	0	0	0	0	0	0	0
4/23/2024	11:15 PM	0	0	0	0	0	0	0	0	0	0	0	0	0
4/23/2024	11:30 PM	0	0	0	0	0	0	0	0	0	0	0	0	0
4/23/2024	11:45 PM	0	0	0	0	0	0	0	0	0	0	0	0	0

4/24/2024	12:00 AM	0	0	0	0	0	0	0	0	0	0	0	0	0
4/24/2024	12:15 AM	0	0	0	0	0	0	0	0	0	0	0	0	0
4/24/2024	12:30 AM	0	0	0	0	0	0	0	0	0	0	0	0	0
4/24/2024	12:45 AM	0	0	0	0	0	0	0	0	0	0	0	0	0
4/24/2024	1:00 AM	0	0	0	0	0	0	0	0	0	0	0	0	0
4/24/2024	1:15 AM	0	0	0	0	0	0	0	0	0	0	0	0	0
4/24/2024	1:30 AM	0	0	0	0	0	0	0	0	0	0	0	0	0
4/24/2024	1:45 AM	0	0	0	0	0	0	0	0	0	0	0	0	0
4/24/2024	2:00 AM	0	0	0	0	0	0	0	0	0	0	0	0	0
4/24/2024	2:15 AM	0	0	0	0	0	0	0	0	0	0	0	0	0
4/24/2024	2:30 AM	0	0	0	0	0	0	0	0	0	0	0	0	0
4/24/2024	2:45 AM	0	0	0	0	0	0	0	0	0	0	0	0	0
4/24/2024	3:00 AM	0	0	0	0	0	0	0	0	0	0	0	0	0
4/24/2024	3:15 AM	0	0	0	0	0	0	0	0	0	0	0	0	0
4/24/2024	3:30 AM	0	0	0	0	0	0	0	0	0	0	0	0	0
4/24/2024	3:45 AM	0	0	0	0	0	0	0	0	0	0	0	0	0
4/24/2024	4:00 AM	0	0	0	0	0	0	0	0	0	0	0	0	0
4/24/2024	4:15 AM	0	0	0	0	0	0	0	0	0	0	0	0	0
4/24/2024	4:30 AM	0	0	0	0	0	0	0	0	0	0	0	0	0
4/24/2024	4:45 AM	0	0	0	0	0	0	0	0	0	0	0	0	0
4/24/2024	5:00 AM	0	0	0	0	0	0	0	0	0	0	0	0	0
4/24/2024	5:15 AM	0	0	0	0	0	0	0	0	0	0	0	0	0
4/24/2024	5:30 AM	0	0	0	0	0	0	0	0	0	0	0	0	0
4/24/2024	5:45 AM	0	0	0	0	0	0	0	0	0	0	0	0	0
4/24/2024	6:00 AM	0	0	0	0	0	0	0	0	0	0	0	0	0
4/24/2024	6:15 AM	0	0	0	0	0	0	0	0	0	0	0	0	0
4/24/2024	6:30 AM	0	0	0	0	0	0	0	0	0	0	0	0	0
4/24/2024	6:45 AM	0	0	0	0	0	0	0	0	0	0	0	0	0
4/24/2024	7:00 AM	0	0	0	0	0	0	0	0	0	0	0	0	0
4/24/2024	7:15 AM	0	0	0	0	0	0	0	0	0	0	0	0	0
4/24/2024	7:30 AM	0	0	0	0	0	0	0	0	0	0	0	0	0
4/24/2024	7:45 AM	0	0	0	0	0	0	0	0	0	0	0	0	0
4/24/2024	8:00 AM	0	0	0	0	0	0	0	0	0	0	0	0	0
4/24/2024	8:15 AM	0	0	0	0	0	0	0	0	0	0	0	0	0
4/24/2024	8:30 AM	0	0	0	0	0	0	0	0	0	0	0	0	0
4/24/2024	8:45 AM	0	0	0	0	0	0	0	0	0	0	0	0	0
4/24/2024	9:00 AM	0	0	0	0	0	0	0	0	0	0	0	0	0
4/24/2024	9:15 AM	0	0	0	0	0	0	0	0	0	0	0	0	0
4/24/2024	9:30 AM	0	0	0	0	0	0	0	0	0	0	0	0	0
4/24/2024	9:45 AM	0	0	0	0	0	0	0	0	0	0	0	0	0
4/24/2024	10:00 AM	0	0	0	0	0	0	0	0	0	0	0	0	0
4/24/2024	10:15 AM	0	0	0	0	0	0	0	0	0	0	0	0	0
4/24/2024	10:30 AM	0	0	0	0	0	0	0	0	0	0	0	0	0
4/24/2024	10:45 AM	0	0	0	0	0	0	0	0	0	0	0	0	0
4/24/2024	11:00 AM	0	0	0	0	0	0	0	0	0	0	0	0	0
4/24/2024	11:15 AM	0	0	0	0	0	0	0	0	0	0	0	0	0
4/24/2024	11:30 AM	0	0	0	0	0	0	0	0	0	0	0	0	0
4/24/2024	11:45 AM	0	0	0	0	0	0	0	0	0	0	0	0	0
4/24/2024	12:00 PM	0	0	0	0	0	0	0	0	0	0	0	0	0
4/24/2024	12:15 PM	0	0	0	0	0	0	0	0	0	0	0	0	0
4/24/2024	12:30 PM	0	0	0	0	0	0	0	0	0	0	0	0	0
4/24/2024	12:45 PM	0	0	0	0	0	0	0	0	0	0	0	0	0
4/24/2024	1:00 PM	0	0	0	0	0	0	0	0	0	0	0	0	0
4/24/2024	1:15 PM	0	0	0	0	0	0	0	0	0	0	0	0	0
4/24/2024	1:30 PM	0	0	0	0	0	0	0	0	0	0	0	0	0
4/24/2024	1:45 PM	0	0	0	0	0	0	0	0	0	0	0	0	0
4/24/2024	2:00 PM	0	0	0	0	0	0	0	0	0	0	0	0	0
4/24/2024	2:15 PM	0	0	0	0	0	0	0	0	0	0	0	0	0
4/24/2024	2:30 PM	0	0	0	0	0	0	0	0	0	0	0	0	0
4/24/2024	2:45 PM	0	0	0	0	0	0	0	0	0	0	0	0	0
4/24/2024	3:00 PM	0	0	0	0	0	0	0	0	0	0	0	0	0
4/24/2024	3:15 PM	0	0	0	0	0	0	0	0	0	0	0	0	0
4/24/2024	3:30 PM	0	0	0	0	0	0	0	0	0	0	0	0	0
4/24/2024	3:45 PM	0	0	0	0	0	0	0	0	0	0	0	0	0
4/24/2024	4:00 PM	0	0	0	0	0	0	0	0	0	0	0	0	0
4/24/2024	4:15 PM	0	0	0	0	0	0	0	0	0	0	0	0	0
4/24/2024	4:30 PM	0	0	0	0	0	0	0	0	0	0	0	0	0
4/24/2024	4:45 PM	0	0	0	0	0	0	0	0	0	0	0	0	0
4/24/2024	5:00 PM	0	0	0	0	0	0	0	0	0	0	0	0	0
4/24/2024	5:15 PM	0	0	0	0	0	0	0	0	0	0	0	0	0
4/24/2024	5:30 PM	0	0	0	0	0	0	0	0	0	0	0	0	0
4/24/2024	5:45 PM	0	0	0	0	0	0	0	0	0	0	0	0	0
4/24/2024	6:00 PM	0	0	0	0	0	0	0	0	0	0	0	0	0
4/24/2024	6:15 PM	0	0	0	0	0	0	0	0	0	0	0	0	0
4/24/2024	6:30 PM	0	0	0	0	0	0	0	0	0	0	0	0	0
4/24/2024	6:45 PM	0	0	0	0	0	0	0	0	0	0	0	0	0
4/24/2024	7:00 PM	0	0	0	0	0	0	0	0	0	0	0	0	0
4/24/2024	7:15 PM	0	0	0	0	0	0	0	0	0	0	0	0	0
4/24/2024	7:30 PM	0	0	0	0	0	0	0	0	0	0	0	0	0
4/24/2024	7:45 PM	0	0	0	0	0	0	0	0	0	0	0	0	0
4/24/2024	8:00 PM	0	0	0	0	0	0	0	0	0	0	0	0	0
4/24/2024	8:15 PM	0	0	0	0	0	0	0	0	0	0	0	0	0
4/24/2024	8:30 PM	0	0	0	0	0	0	0	0	0	0	0	0	0
4/24/2024	8:45 PM	0	0	0	0	0	0	0	0	0	0	0	0	0
4/24/2024	9:00 PM	0	0	0	0	0	0	0	0	0	0	0	0	0
4/24/2024	9:15 PM	0	0	0	0	0	0	0	0	0	0	0	0	0
4/24/2024	9:30 PM	0	0	0	0	0	0	0	0	0	0	0	0	0
4/24/2024	9:45 PM	0	0	0	0	0	0	0	0	0	0	0	0	0
4/24/2024	10:00 PM	0	0	0	0	0	0	0	0	0	0	0	0	0
4/24/2024	10:15 PM	0	0	0	0	0	0	0	0	0	0	0	0	0
4/24/2024	10:30 PM	0	0	0	0	0	0	0	0	0	0	0	0	0
4/24/2024	10:45 PM	0	0	0	0	0	0	0	0	0	0	0	0	0
4/24/2024	11:00 PM	0	0	0	0	0	0	0	0	0	0	0	0	0
4/24/2024	11:15 PM	0	0	0	0	0	0	0	0	0	0	0	0	0
4/24/2024	11:30 PM	0	0	0	0	0	0	0	0	0	0	0	0	0
4/24/2024	11:45 PM	0	0	0	0	0	0	0	0	0	0	0	0	0

4/25/2024	12:00 AM	0	0	0	0	0	0	0	0	0	0	0	0	0
4/25/2024	12:15 AM	0	0	0	0	0	0	0	0	0	0	0	0	0
4/25/2024	12:30 AM	0	0	0	0	0	0	0	0	0	0	0	0	0
4/25/2024	12:45 AM	0	0	0	0	0	0	0	0	0	0	0	0	0
4/25/2024	1:00 AM	0	0	0	0	0	0	0	0	0	0	0	0	0
4/25/2024	1:15 AM	0	0	0	0	0	0	0	0	0	0	0	0	0
4/25/2024	1:30 AM	0	0	0	0	0	0	0	0	0	0	0	0	0
4/25/2024	1:45 AM	0	0	0	0	0	0	0	0	0	0	0	0	0
4/25/2024	2:00 AM	0	0	0	0	0	0	0	0	0	0	0	0	0
4/25/2024	2:15 AM	0	0	0	0	0	0	0	0	0	0	0	0	0
4/25/2024	2:30 AM	0	0	0	0	0	0	0	0	0	0	0	0	0
4/25/2024	2:45 AM	0	0	0	0	0	0	0	0	0	0	0	0	0
4/25/2024	3:00 AM	0	0	0	0	0	0	0	0	0	0	0	0	0
4/25/2024	3:15 AM	0	0	0	0	0	0	0	0	0	0	0	0	0
4/25/2024	3:30 AM	0	0	0	0	0	0	0	0	0	0	0	0	0
4/25/2024	3:45 AM	0	0	0	0	0	0	0	0	0	0	0	0	0
4/25/2024	4:00 AM	0	0	0	0	0	0	0	0	0	0	0	0	0
4/25/2024	4:15 AM	0	0	0	0	0	0	0	0	0	0	0	0	0
4/25/2024	4:30 AM	0	0	0	0	0	0	0	0	0	0	0	0	0
4/25/2024	4:45 AM	0	0	0	0	0	0	0	0	0	0	0	0	0
4/25/2024	5:00 AM	0	0	0	0	0	0	0	0	0	0	0	0	0
4/25/2024	5:15 AM	0	0	0	0	0	0	0	0	0	0	0	0	0
4/25/2024	5:30 AM	0	0	0	0	0	0	0	0	0	0	0	0	0
4/25/2024	5:45 AM	0	0	0	0	0	0	0	0	0	0	0	0	0
4/25/2024	6:00 AM	0	0	0	0	0	0	0	0	0	0	0	0	0
4/25/2024	6:15 AM	0	0	0	0	0	0	0	0	0	0	0	0	0
4/25/2024	6:30 AM	0	0	0	0	0	0	0	0	0	0	0	0	0
4/25/2024	6:45 AM	0	0	0	0	0	0	0	0	0	0	0	0	0
4/25/2024	7:00 AM	0	0	0	0	0	0	0	0	0	0	0	0	0
4/25/2024	7:15 AM	0	0	0	0	0	0	0	0	0	0	0	0	0
4/25/2024	7:30 AM	0	0	0	0	0	0	0	0	0	0	0	0	0
4/25/2024	7:45 AM	0	0	0	0	0	0	0	0	0	0	0	0	0
4/25/2024	8:00 AM	0	0	0	0	0	0	0	0	0	0	0	0	0
4/25/2024	8:15 AM	0	0	0	0	0	0	0	0	0	0	0	0	0
4/25/2024	8:30 AM	0	0	0	0	0	0	0	0	0	0	0	0	0
4/25/2024	8:45 AM	0	0	0	0	0	0	0	0	0	0	0	0	0
4/25/2024	9:00 AM	0	0	0	0	0	0	0	0	0	0	0	0	0
4/25/2024	9:15 AM	0	0	0	0	0	0	0	0	0	0	0	0	0
4/25/2024	9:30 AM	0	0	0	0	0	0	0	0	0	0	0	0	0
4/25/2024	9:45 AM	0	0	0	0	0	0	0	0	0	0	0	0	0
4/25/2024	10:00 AM	0	0	0	0	0	0	0	0	0	0	0	0	0
4/25/2024	10:15 AM	0	0	0	0	0	0	0	0	0	0	0	0	0
4/25/2024	10:30 AM	0	0	0	0	0	0	0	0	0	0	0	0	0
4/25/2024	10:45 AM	0	0	0	0	0	0	0	0	0	0	0	0	0
4/25/2024	11:00 AM	0	0	0	0	0	0	0	0	0	0	0	0	0
4/25/2024	11:15 AM	0	0	0	0	0	0	0	0	0	0	0	0	0
4/25/2024	11:30 AM	0	0	0	0	0	0	0	0	0	0	0	0	0
4/25/2024	11:45 AM	0	0	0	0	0	0	0	0	0	0	0	0	0
4/25/2024	12:00 PM	0	0	0	0	0	0	0	0	0	0	0	0	0
4/25/2024	12:15 PM	0	0	0	0	0	0	0	0	0	0	0	0	0
4/25/2024	12:30 PM	0	0	0	0	0	0	0	0	0	0	0	0	0
4/25/2024	12:45 PM	0	0	0	0	0	0	0	0	0	0	0	0	0
4/25/2024	1:00 PM	0	0	0	0	0	0	0	0	0	0	0	0	0
4/25/2024	1:15 PM	0	0	0	0	0	0	0	0	0	0	0	0	0
4/25/2024	1:30 PM	0	0	0	0	0	0	0	0	0	0	0	0	0
4/25/2024	1:45 PM	0	0	0	0	0	0	0	0	0	0	0	0	0
4/25/2024	2:00 PM	0	0	0	0	0	0	0	0	0	0	0	0	0
4/25/2024	2:15 PM	0	0	0	0	0	0	0	0	0	0	0	0	0
4/25/2024	2:30 PM	0	0	0	0	0	0	0	0	0	0	0	0	0
4/25/2024	2:45 PM	0	0	0	0	0	0	0	0	0	0	0	0	0
4/25/2024	3:00 PM	0	0	0	0	0	0	0	0	0	0	0	0	0
4/25/2024	3:15 PM	0	0	0	0	0	0	0	0	0	0	0	0	0
4/25/2024	3:30 PM	0	0	0	0	0	0	0	0	0	0	0	0	0
4/25/2024	3:45 PM	0	0	0	0	0	0	0	0	0	0	0	0	0
4/25/2024	4:00 PM	0	0	0	0	0	0	0	0	0	0	0	0	0
4/25/2024	4:15 PM	0	0	0	0	0	0	0	0	0	0	0	0	0
4/25/2024	4:30 PM	0	0	0	0	0	0	0	0	0	0	0	0	0
4/25/2024	4:45 PM	0	0	0	0	0	0	0	0	0	0	0	0	0
4/25/2024	5:00 PM	0	0	0	0	0	0	0	0	0	0	0	0	0
4/25/2024	5:15 PM	0	0	0	0	0	0	0	0	0	0	0	0	0
4/25/2024	5:30 PM	0	0	0	0	0	0	0	0	0	0	0	0	0
4/25/2024	5:45 PM	0	0	0	0	0	0	0	0	0	0	0	0	0
4/25/2024	6:00 PM	0	0	0	0	0	0	0	0	0	0	0	0	0
4/25/2024	6:15 PM	0	0	0	0	0	0	0	0	0	0	0	0	0
4/25/2024	6:30 PM	0	0	0	0	0	0	0	0	0	0	0	0	0
4/25/2024	6:45 PM	0	0	0	0	0	0	0	0	0	0	0	0	0
4/25/2024	7:00 PM	0	0	0	0	0	0	0	0	0	0	0	0	0
4/25/2024	7:15 PM	0	0	0	0	0	0	0	0	0	0	0	0	0
4/25/2024	7:30 PM	0	0	0	0	0	0	0	0	0	0	0	0	0
4/25/2024	7:45 PM	0	0	0	0	0	0	0	0	0	0	0	0	0
4/25/2024	8:00 PM	0	0	0	0	0	0	0	0	0	0	0	0	0
4/25/2024	8:15 PM	0	0	0	0	0	0	0	0	0	0	0	0	0
4/25/2024	8:30 PM	0	0	0	0	0	0	0	0	0	0	0	0	0
4/25/2024	8:45 PM	0	0	0	0	0	0	0	0	0	0	0	0	0
4/25/2024	9:00 PM	0	0	0	0	0	0	0	0	0	0	0	0	0
4/25/2024	9:15 PM	0	0	0	0	0	0	0	0	0	0	0	0	0
4/25/2024	9:30 PM	0	0	0	0	0	0	0	0	0	0	0	0	0
4/25/2024	9:45 PM	0	0	0	0	0	0	0	0	0	0	0	0	0
4/25/2024	10:00 PM	0	0	0	0	0	0	0	0	0	0	0	0	0
4/25/2024	10:15 PM	0	0	0	0	0	0	0	0	0	0	0	0	0
4/25/2024	10:30 PM	0	0	0	0	0	0	0	0	0	0	0	0	0
4/25/2024	10:45 PM	0	0	0	0	0	0	0	0	0	0	0	0	0
4/25/2024	11:00 PM	0	0	0	0	0	0	0	0	0	0	0	0	0
4/25/2024	11:15 PM	0	0	0	0	0	0	0	0	0	0	0	0	0
4/25/2024	11:30 PM	0	0	0	0	0	0	0	0	0	0	0	0	0
4/25/2024	11:45 PM	0	0	0	0	0	0	0	0	0	0	0	0	0

SB
File Name:
Start Date: 4/23/2024
Start Time: 0
Site Code: 39
Station ID: 1
Location 1: I-26 S/Bound On-Ramp, south of St Andrews Rd
Location 2:

Date	Time	1	2	3	4	5	6	7	8	9	10	11	12	13
4/23/2024	12:00 AM	0	0	0	0	0	0	0	0	0	0	0	0	0
4/23/2024	12:15 AM	0	0	0	0	0	0	0	0	0	0	0	0	0
4/23/2024	12:30 AM	0	0	0	0	0	0	0	0	0	0	0	0	0
4/23/2024	12:45 AM	0	0	0	0	0	0	0	0	0	0	0	0	0
4/23/2024	1:00 AM	0	0	0	0	0	0	0	0	0	0	0	0	0
4/23/2024	1:15 AM	0	0	0	0	0	0	0	0	0	0	0	0	0
4/23/2024	1:30 AM	0	0	0	0	0	0	0	0	0	0	0	0	0
4/23/2024	1:45 AM	0	0	0	0	0	0	0	0	0	0	0	0	0
4/23/2024	2:00 AM	0	0	0	0	0	0	0	0	0	0	0	0	0
4/23/2024	2:15 AM	0	0	0	0	0	0	0	0	0	0	0	0	0
4/23/2024	2:30 AM	0	0	0	0	0	0	0	0	0	0	0	0	0
4/23/2024	2:45 AM	0	0	0	0	0	0	0	0	0	0	0	0	0
4/23/2024	3:00 AM	0	0	0	0	0	0	0	0	0	0	0	0	0
4/23/2024	3:15 AM	0	0	0	0	0	0	0	0	0	0	0	0	0
4/23/2024	3:30 AM	0	0	0	0	0	0	0	0	0	0	0	0	0
4/23/2024	3:45 AM	0	0	0	0	0	0	0	0	0	0	0	0	0
4/23/2024	4:00 AM	0	0	0	0	0	0	0	0	0	0	0	0	0
4/23/2024	4:15 AM	0	0	0	0	0	0	0	0	0	0	0	0	0
4/23/2024	4:30 AM	0	0	0	0	0	0	0	0	0	0	0	0	0
4/23/2024	4:45 AM	0	0	0	0	0	0	0	0	0	0	0	0	0
4/23/2024	5:00 AM	0	0	0	0	0	0	0	0	0	0	0	0	0
4/23/2024	5:15 AM	0	0	0	0	0	0	0	0	0	0	0	0	0
4/23/2024	5:30 AM	0	0	0	0	0	0	0	0	0	0	0	0	0
4/23/2024	5:45 AM	0	0	0	0	0	0	0	0	0	0	0	0	0
4/23/2024	6:00 AM	0	0	0	0	0	0	0	0	0	0	0	0	0
4/23/2024	6:15 AM	0	0	0	0	0	0	0	0	0	0	0	0	0
4/23/2024	6:30 AM	0	0	0	0	0	0	0	0	0	0	0	0	0
4/23/2024	6:45 AM	0	0	0	0	0	0	0	0	0	0	0	0	0
4/23/2024	7:00 AM	0	0	0	0	0	0	0	0	0	0	0	0	0
4/23/2024	7:15 AM	0	0	0	0	0	0	0	0	0	0	0	0	0
4/23/2024	7:30 AM	0	0	0	0	0	0	0	0	0	0	0	0	0
4/23/2024	7:45 AM	0	0	0	0	0	0	0	0	0	0	0	0	0
4/23/2024	8:00 AM	0	0	0	0	0	0	0	0	0	0	0	0	0
4/23/2024	8:15 AM	0	0	0	0	0	0	0	0	0	0	0	0	0
4/23/2024	8:30 AM	0	0	0	0	0	0	0	0	0	0	0	0	0
4/23/2024	8:45 AM	0	0	0	0	0	0	0	0	0	0	0	0	0
4/23/2024	9:00 AM	0	0	0	0	0	0	0	0	0	0	0	0	0
4/23/2024	9:15 AM	0	0	0	0	0	0	0	0	0	0	0	0	0
4/23/2024	9:30 AM	0	0	0	0	0	0	0	0	0	0	0	0	0
4/23/2024	9:45 AM	0	0	0	0	0	0	0	0	0	0	0	0	0
4/23/2024	10:00 AM	0	0	0	0	0	0	0	0	0	0	0	0	0
4/23/2024	10:15 AM	0	0	0	0	0	0	0	0	0	0	0	0	0
4/23/2024	10:30 AM	0	0	0	0	0	0	0	0	0	0	0	0	0
4/23/2024	10:45 AM	0	0	0	0	0	0	0	0	0	0	0	0	0
4/23/2024	11:00 AM	0	0	0	0	0	0	0	0	0	0	0	0	0
4/23/2024	11:15 AM	0	0	0	0	0	0	0	0	0	0	0	0	0
4/23/2024	11:30 AM	0	0	0	0	0	0	0	0	0	0	0	0	0
4/23/2024	11:45 AM	0	0	0	0	0	0	0	0	0	0	0	0	0
4/23/2024	12:00 PM	0	0	0	0	0	0	0	0	0	0	0	0	0
4/23/2024	12:15 PM	0	0	0	0	0	0	0	0	0	0	0	0	0
4/23/2024	12:30 PM	0	0	0	0	0	0	0	0	0	0	0	0	0
4/23/2024	12:45 PM	0	0	0	0	0	0	0	0	0	0	0	0	0
4/23/2024	1:00 PM	0	0	0	0	0	0	0	0	0	0	0	0	0
4/23/2024	1:15 PM	0	0	0	0	0	0	0	0	0	0	0	0	0
4/23/2024	1:30 PM	0	0	0	0	0	0	0	0	0	0	0	0	0
4/23/2024	1:45 PM	0	0	0	0	0	0	0	0	0	0	0	0	0
4/23/2024	2:00 PM	0	0	0	0	0	0	0	0	0	0	0	0	0
4/23/2024	2:15 PM	0	0	0	0	0	0	0	0	0	0	0	0	0
4/23/2024	2:30 PM	0	0	0	0	0	0	0	0	0	0	0	0	0
4/23/2024	2:45 PM	0	0	0	0	0	0	0	0	0	0	0	0	0
4/23/2024	3:00 PM	0	0	0	0	0	0	0	0	0	0	0	0	0
4/23/2024	3:15 PM	0	0	0	0	0	0	0	0	0	0	0	0	0
4/23/2024	3:30 PM	0	0	0	0	0	0	0	0	0	0	0	0	0
4/23/2024	3:45 PM	0	0	0	0	0	0	0	0	0	0	0	0	0
4/23/2024	4:00 PM	0	0	0	0	0	0	0	0	0	0	0	0	0
4/23/2024	4:15 PM	0	0	0	0	0	0	0	0	0	0	0	0	0
4/23/2024	4:30 PM	0	0	0	0	0	0	0	0	0	0	0	0	0
4/23/2024	4:45 PM	0	0	0	0	0	0	0	0	0	0	0	0	0
4/23/2024	5:00 PM	0	0	0	0	0	0	0	0	0	0	0	0	0
4/23/2024	5:15 PM	0	0	0	0	0	0	0	0	0	0	0	0	0
4/23/2024	5:30 PM	0	0	0	0	0	0	0	0	0	0	0	0	0
4/23/2024	5:45 PM	0	0	0	0	0	0	0	0	0	0	0	0	0
4/23/2024	6:00 PM	0	0	0	0	0	0	0	0	0	0	0	0	0
4/23/2024	6:15 PM	0	0	0	0	0	0	0	0	0	0	0	0	0
4/23/2024	6:30 PM	0	0	0	0	0	0	0	0	0	0	0	0	0
4/23/2024	6:45 PM	0	0	0	0	0	0	0	0	0	0	0	0	0
4/23/2024	7:00 PM	0	91	17	0	2	0	0	0	0	0	0	0	0
4/23/2024	7:15 PM	0	99	19	0	0	0	0	1	0	1	0	0	0
4/23/2024	7:30 PM	0	62	13	0	0	1	0	0	0	0	0	0	0
4/23/2024	7:45 PM	0	72	13	1	1	0	0	0	0	0	0	0	0
4/23/2024	8:00 PM	0	89	12	0	0	0	0	0	1	0	0	0	0
4/23/2024	8:15 PM	0	88	10	0	1	0	0	0	0	0	0	0	0
4/23/2024	8:30 PM	0	77	8	0	0	0	0	0	0	0	0	0	0
4/23/2024	8:45 PM	2	80	9	0	0	0	0	0	0	0	0	0	0
4/23/2024	9:00 PM	0	71	10	0	0	0	0	0	0	0	0	0	0
4/23/2024	9:15 PM	1	84	13	0	0	0	0	0	0	0	0	0	0
4/23/2024	9:30 PM	0	51	7	0	0	0	0	0	0	0	0	0	0
4/23/2024	9:45 PM	1	60	9	0	0	0	0	0	0	0	0	0	0
4/23/2024	10:00 PM	0	41	4	0	0	0	0	0	0	0	0	0	0
4/23/2024	10:15 PM	0	39	4	0	0	0	0	0	0	0	0	0	0
4/23/2024	10:30 PM	0	44	3	0	0	0	0	0	0	0	0	0	0
4/23/2024	10:45 PM	0	31	3	0	0	0	0	0	0	0	0	0	0
4/23/2024	11:00 PM	0	18	4	0	0	0	0	0	0	0	0	0	0
4/23/2024	11:15 PM	0	18	6	0	0	0	0	0	0	0	0	0	0
4/23/2024	11:30 PM	0	19	2	0	0	0	0	0	0	0	0	0	0
4/23/2024	11:45 PM	0	20	3	0	0	0	0	0	0	0	0	0	0

4/24/2024	12:00 AM	0	14	2	0	0	0	0	0	0	0	0	0
4/24/2024	12:15 AM	0	7	0	0	0	0	0	0	0	0	0	0
4/24/2024	12:30 AM	0	17	0	0	0	0	0	0	0	0	0	0
4/24/2024	12:45 AM	0	11	1	0	0	0	0	0	0	0	0	0
4/24/2024	1:00 AM	0	10	1	0	0	0	0	0	1	0	0	0
4/24/2024	1:15 AM	0	10	0	0	1	0	0	0	0	0	0	0
4/24/2024	1:30 AM	0	6	0	0	1	0	0	0	0	0	0	0
4/24/2024	1:45 AM	0	2	0	0	0	0	0	0	0	0	0	0
4/24/2024	2:00 AM	0	6	0	0	0	0	0	0	1	0	0	0
4/24/2024	2:15 AM	0	5	0	0	0	0	0	0	1	0	0	0
4/24/2024	2:30 AM	0	8	1	0	0	0	0	0	0	0	0	0
4/24/2024	2:45 AM	0	10	0	0	0	0	0	0	0	0	0	0
4/24/2024	3:00 AM	0	3	0	0	0	0	0	0	0	0	0	0
4/24/2024	3:15 AM	0	8	1	0	0	0	0	0	0	0	0	0
4/24/2024	3:30 AM	0	7	1	0	0	0	0	0	1	0	0	0
4/24/2024	3:45 AM	0	8	3	0	0	0	0	0	0	0	0	0
4/24/2024	4:00 AM	0	12	1	0	0	0	0	0	1	0	0	0
4/24/2024	4:15 AM	0	20	0	0	0	0	0	0	0	0	0	0
4/24/2024	4:30 AM	0	17	5	0	0	0	0	0	0	0	0	0
4/24/2024	4:45 AM	0	13	4	0	0	0	0	0	1	0	0	0
4/24/2024	5:00 AM	0	31	6	0	0	0	0	0	0	0	0	0
4/24/2024	5:15 AM	1	32	9	0	0	0	0	0	0	0	0	0
4/24/2024	5:30 AM	0	48	12	0	0	0	0	0	0	0	0	0
4/24/2024	5:45 AM	0	42	8	0	0	0	0	0	1	0	0	0
4/24/2024	6:00 AM	0	52	8	0	1	0	0	0	0	0	0	0
4/24/2024	6:15 AM	0	58	16	0	0	0	0	0	3	0	0	0
4/24/2024	6:30 AM	0	101	18	0	1	0	0	1	1	0	0	0
4/24/2024	6:45 AM	0	104	26	0	1	1	0	0	0	0	0	0
4/24/2024	7:00 AM	0	128	30	0	0	1	0	1	0	0	0	0
4/24/2024	7:15 AM	0	188	48	0	1	1	0	0	0	0	0	0
4/24/2024	7:30 AM	1	231	42	1	2	0	0	0	0	0	0	0
4/24/2024	7:45 AM	0	198	50	0	1	0	0	0	0	0	0	0
4/24/2024	8:00 AM	0	188	42	0	3	2	0	2	0	0	0	0
4/24/2024	8:15 AM	0	199	42	1	3	1	0	0	0	0	0	0
4/24/2024	8:30 AM	2	158	34	0	3	1	0	0	0	0	0	0
4/24/2024	8:45 AM	1	132	27	0	1	0	0	0	1	0	0	0
4/24/2024	9:00 AM	0	113	34	0	3	1	0	0	2	0	0	0
4/24/2024	9:15 AM	0	146	31	1	3	3	0	0	2	0	0	0
4/24/2024	9:30 AM	0	95	27	0	1	0	0	0	0	0	0	0
4/24/2024	9:45 AM	0	103	36	3	1	0	0	1	1	0	0	0
4/24/2024	10:00 AM	0	96	29	1	2	2	0	1	1	0	0	0
4/24/2024	10:15 AM	0	89	30	0	4	1	0	0	0	0	0	0
4/24/2024	10:30 AM	1	98	29	1	1	1	0	0	0	0	0	0
4/24/2024	10:45 AM	1	103	34	0	3	0	0	2	1	0	0	0
4/24/2024	11:00 AM	1	109	33	0	5	0	0	0	0	1	0	0
4/24/2024	11:15 AM	0	95	31	1	3	0	0	1	1	0	0	0
4/24/2024	11:30 AM	2	94	29	0	4	0	0	0	1	0	0	0
4/24/2024	11:45 AM	0	109	25	0	3	0	0	0	0	0	0	0
4/24/2024	12:00 PM	0	109	32	0	2	1	0	0	2	0	0	0
4/24/2024	12:15 PM	0	99	38	2	3	1	0	0	1	0	0	0
4/24/2024	12:30 PM	0	112	35	0	2	0	0	1	1	0	0	0
4/24/2024	12:45 PM	0	108	33	0	1	0	1	0	1	0	0	0
4/24/2024	1:00 PM	0	132	35	0	0	0	0	1	1	0	0	0
4/24/2024	1:15 PM	1	105	31	2	5	0	0	2	1	0	0	0
4/24/2024	1:30 PM	1	114	35	1	3	1	0	1	0	0	0	0
4/24/2024	1:45 PM	1	120	28	0	2	0	0	1	4	0	0	0
4/24/2024	2:00 PM	1	112	23	0	3	0	0	0	2	0	0	0
4/24/2024	2:15 PM	0	97	32	0	3	0	0	1	0	0	0	0
4/24/2024	2:30 PM	0	128	33	0	6	0	0	0	0	1	0	0
4/24/2024	2:45 PM	0	120	30	0	0	0	0	1	0	0	0	0
4/24/2024	3:00 PM	1	135	25	1	4	0	0	0	1	0	0	0
4/24/2024	3:15 PM	0	131	26	0	6	0	0	0	1	0	0	0
4/24/2024	3:30 PM	0	148	27	1	0	0	0	1	0	0	0	0
4/24/2024	3:45 PM	1	134	37	1	1	0	0	0	1	0	0	0
4/24/2024	4:00 PM	0	161	27	0	1	0	0	1	2	0	0	0
4/24/2024	4:15 PM	0	149	32	0	2	0	0	0	1	0	0	0
4/24/2024	4:30 PM	0	147	36	0	1	0	0	0	1	0	0	0
4/24/2024	4:45 PM	0	146	36	0	1	0	0	0	1	0	0	0
4/24/2024	5:00 PM	0	139	32	0	4	0	0	1	1	0	0	0
4/24/2024	5:15 PM	0	128	29	0	0	0	0	1	1	0	0	0
4/24/2024	5:30 PM	0	109	15	0	3	0	0	0	0	0	0	0
4/24/2024	5:45 PM	0	121	26	0	1	0	0	1	1	0	0	0
4/24/2024	6:00 PM	2	130	26	0	0	0	0	0	0	0	0	0
4/24/2024	6:15 PM	0	125	26	1	3	0	0	2	0	0	0	0
4/24/2024	6:30 PM	0	122	12	1	0	0	0	0	0	0	0	0
4/24/2024	6:45 PM	0	107	17	0	2	0	0	0	0	0	0	0
4/24/2024	7:00 PM	0	97	23	0	2	0	0	0	1	0	0	0
4/24/2024	7:15 PM	1	95	17	0	1	0	0	0	0	0	0	0
4/24/2024	7:30 PM	0	71	15	0	2	0	0	0	0	0	0	0
4/24/2024	7:45 PM	0	74	15	0	0	0	0	0	0	0	0	0
4/24/2024	8:00 PM	1	86	13	0	0	0	0	0	0	0	0	0
4/24/2024	8:15 PM	2	88	11	0	1	0	0	0	0	0	0	0
4/24/2024	8:30 PM	0	83	16	0	0	0	0	0	0	0	0	0
4/24/2024	8:45 PM	0	89	14	1	0	0	0	1	1	0	0	0
4/24/2024	9:00 PM	0	58	8	0	0	0	0	0	0	0	0	0
4/24/2024	9:15 PM	0	37	9	0	0	0	0	0	0	0	0	0
4/24/2024	9:30 PM	0	51	5	0	1	0	0	0	1	0	0	0
4/24/2024	9:45 PM	0	70	5	0	1	0	0	0	0	0	0	0
4/24/2024	10:00 PM	0	67	6	0	0	0	0	0	0	0	0	0
4/24/2024	10:15 PM	0	50	3	0	0	0	0	0	1	0	0	0
4/24/2024	10:30 PM	0	47	1	0	0	0	0	0	0	0	0	0
4/24/2024	10:45 PM	0	40	2	0	0	0	0	0	0	0	0	0
4/24/2024	11:00 PM	1	24	2	0	0	0	0	0	1	0	0	0
4/24/2024	11:15 PM	0	23	3	0	0	0	0	0	0	0	0	0
4/24/2024	11:30 PM	1	19	2	0	0	0	0	0	1	0	0	0
4/24/2024	11:45 PM	0	14	3	0	0	0	0	0	0	0	0	0

4/25/2024	12:00 AM	0	10	3	0	0	0	0	0	0	0	0	0
4/25/2024	12:15 AM	0	14	4	0	0	0	0	0	0	0	0	0
4/25/2024	12:30 AM	0	10	2	0	0	0	0	0	0	0	0	0
4/25/2024	12:45 AM	0	5	3	0	0	0	0	0	0	0	0	0
4/25/2024	1:00 AM	0	10	4	0	0	0	0	0	0	0	0	0
4/25/2024	1:15 AM	0	7	1	0	0	0	0	0	0	0	0	0
4/25/2024	1:30 AM	0	6	1	0	0	0	0	0	0	0	0	0
4/25/2024	1:45 AM	0	3	2	0	1	0	0	0	1	0	0	0
4/25/2024	2:00 AM	0	10	2	0	0	0	0	0	0	0	0	0
4/25/2024	2:15 AM	0	9	1	0	0	0	0	0	0	0	0	0
4/25/2024	2:30 AM	0	4	1	0	0	0	0	0	0	0	0	0
4/25/2024	2:45 AM	0	6	2	0	0	0	0	0	0	0	0	0
4/25/2024	3:00 AM	0	3	1	0	0	0	0	0	0	0	0	0
4/25/2024	3:15 AM	0	9	0	0	0	0	0	0	0	0	0	0
4/25/2024	3:30 AM	0	19	0	0	0	0	0	0	0	0	0	0
4/25/2024	3:45 AM	0	10	0	0	1	0	0	0	1	0	0	0
4/25/2024	4:00 AM	0	11	2	0	0	0	0	0	2	0	0	0
4/25/2024	4:15 AM	0	12	2	0	1	0	0	0	0	0	0	0
4/25/2024	4:30 AM	0	17	3	0	0	0	0	0	1	0	0	0
4/25/2024	4:45 AM	0	18	4	0	0	0	0	0	0	0	0	0
4/25/2024	5:00 AM	0	28	9	0	0	0	0	0	0	0	0	0
4/25/2024	5:15 AM	0	33	12	0	0	0	0	0	0	0	0	0
4/25/2024	5:30 AM	0	45	11	0	0	0	0	0	1	0	0	0
4/25/2024	5:45 AM	0	47	11	0	0	0	0	0	0	0	0	0
4/25/2024	6:00 AM	0	32	8	0	0	0	0	0	1	0	0	0
4/25/2024	6:15 AM	0	50	17	0	1	0	0	0	1	0	0	0
4/25/2024	6:30 AM	1	113	18	0	0	0	0	1	0	0	0	0
4/25/2024	6:45 AM	0	121	22	0	4	0	0	0	0	0	0	0
4/25/2024	7:00 AM	0	142	23	0	0	1	0	1	1	0	0	0
4/25/2024	7:15 AM	0	180	37	0	4	0	0	1	2	0	0	0
4/25/2024	7:30 AM	0	225	43	1	5	0	0	0	2	0	0	0
4/25/2024	7:45 AM	1	202	58	0	4	0	1	1	0	0	0	0
4/25/2024	8:00 AM	0	201	47	0	1	1	0	0	1	0	0	0
4/25/2024	8:15 AM	1	187	46	0	5	0	0	0	1	0	0	0
4/25/2024	8:30 AM	2	172	30	0	5	0	0	0	0	0	0	0
4/25/2024	8:45 AM	1	158	40	0	2	0	0	0	2	0	0	0
4/25/2024	9:00 AM	0	122	26	0	2	0	0	0	0	1	0	0
4/25/2024	9:15 AM	0	105	33	0	5	0	0	1	0	0	0	0
4/25/2024	9:30 AM	0	128	29	1	4	0	0	1	0	0	0	0
4/25/2024	9:45 AM	1	112	27	0	5	0	0	1	1	0	0	0
4/25/2024	10:00 AM	0	84	30	0	3	3	0	0	2	0	0	0
4/25/2024	10:15 AM	0	89	30	0	3	0	0	1	0	0	0	0
4/25/2024	10:30 AM	0	96	32	0	2	0	0	0	1	0	0	0
4/25/2024	10:45 AM	0	87	39	0	0	0	0	0	3	0	0	0
4/25/2024	11:00 AM	0	90	35	0	3	0	0	1	1	0	0	0
4/25/2024	11:15 AM	0	102	33	0	3	0	0	0	1	1	0	0
4/25/2024	11:30 AM	0	100	28	0	5	0	0	1	2	0	0	0
4/25/2024	11:45 AM	0	99	29	0	3	2	0	1	1	0	0	0
4/25/2024	12:00 PM	0	140	43	0	0	1	0	2	0	0	0	0
4/25/2024	12:15 PM	0	145	35	1	1	0	0	1	2	0	0	0
4/25/2024	12:30 PM	0	138	32	0	4	0	0	1	0	0	0	0
4/25/2024	12:45 PM	0	119	25	0	5	0	0	0	1	0	0	0
4/25/2024	1:00 PM	1	121	45	0	2	1	0	1	2	0	0	0
4/25/2024	1:15 PM	0	118	26	0	3	0	0	0	0	0	0	0
4/25/2024	1:30 PM	0	119	21	1	4	0	0	2	0	0	0	0
4/25/2024	1:45 PM	1	109	27	1	6	0	0	0	1	0	0	0
4/25/2024	2:00 PM	0	117	35	0	3	0	0	1	1	1	0	0
4/25/2024	2:15 PM	0	121	33	0	3	1	0	0	2	0	0	0
4/25/2024	2:30 PM	0	98	26	0	5	1	0	0	1	0	0	0
4/25/2024	2:45 PM	0	141	22	0	3	0	0	0	0	0	0	0
4/25/2024	3:00 PM	1	116	33	1	1	1	0	0	0	0	0	0
4/25/2024	3:15 PM	0	107	47	0	2	1	0	1	0	1	0	0
4/25/2024	3:30 PM	0	118	40	0	2	0	0	0	0	0	0	0
4/25/2024	3:45 PM	0	143	32	1	1	0	0	1	1	0	0	0
4/25/2024	4:00 PM	0	158	30	0	3	2	0	0	1	0	0	0
4/25/2024	4:15 PM	0	142	26	0	3	0	0	0	1	0	0	0
4/25/2024	4:30 PM	0	129	26	0	2	0	0	1	0	0	0	0
4/25/2024	4:45 PM	2	136	32	0	5	0	0	0	1	0	0	0
4/25/2024	5:00 PM	0	152	29	0	2	0	0	2	1	0	0	0
4/25/2024	5:15 PM	1	136	26	0	1	0	0	1	1	0	0	0
4/25/2024	5:30 PM	0	119	28	0	2	1	0	0	1	0	0	0
4/25/2024	5:45 PM	1	132	23	0	1	0	0	0	0	0	0	0
4/25/2024	6:00 PM	0	128	18	0	1	0	0	0	0	0	0	0
4/25/2024	6:15 PM	1	132	25	0	4	0	0	0	1	0	0	0
4/25/2024	6:30 PM	0	106	20	0	1	0	0	0	0	0	0	0
4/25/2024	6:45 PM	0	91	19	0	2	0	0	0	0	0	0	0
4/25/2024	7:00 PM	0	0	0	0	0	0	0	0	0	0	0	0
4/25/2024	7:15 PM	0	0	0	0	0	0	0	0	0	0	0	0
4/25/2024	7:30 PM	0	0	0	0	0	0	0	0	0	0	0	0
4/25/2024	7:45 PM	0	0	0	0	0	0	0	0	0	0	0	0
4/25/2024	8:00 PM	0	0	0	0	0	0	0	0	0	0	0	0
4/25/2024	8:15 PM	0	0	0	0	0	0	0	0	0	0	0	0
4/25/2024	8:30 PM	0	0	0	0	0	0	0	0	0	0	0	0
4/25/2024	8:45 PM	0	0	0	0	0	0	0	0	0	0	0	0
4/25/2024	9:00 PM	0	0	0	0	0	0	0	0	0	0	0	0
4/25/2024	9:15 PM	0	0	0	0	0	0	0	0	0	0	0	0
4/25/2024	9:30 PM	0	0	0	0	0	0	0	0	0	0	0	0
4/25/2024	9:45 PM	0	0	0	0	0	0	0	0	0	0	0	0
4/25/2024	10:00 PM	0	0	0	0	0	0	0	0	0	0	0	0
4/25/2024	10:15 PM	0	0	0	0	0	0	0	0	0	0	0	0
4/25/2024	10:30 PM	0	0	0	0	0	0	0	0	0	0	0	0
4/25/2024	10:45 PM	0	0	0	0	0	0	0	0	0	0	0	0
4/25/2024	11:00 PM	0	0	0	0	0	0	0	0	0	0	0	0
4/25/2024	11:15 PM	0	0	0	0	0	0	0	0	0	0	0	0
4/25/2024	11:30 PM	0	0	0	0	0	0	0	0	0	0	0	0
4/25/2024	11:45 PM	0	0	0	0	0	0	0	0	0	0	0	0

NB
File Name:
Start Date: 4/23/2024
Start Time: 0
Site Code: 39
Station ID: 1
Location 1: I-26 S/Bound On-Ramp, south of St Andrews Rd
Location 2:

Date	Time	1	2	3	4	5	6	7	8	9	10	11	12	13
4/23/2024	12:00 AM	0	0	0	0	0	0	0	0	0	0	0	0	0
4/23/2024	12:15 AM	0	0	0	0	0	0	0	0	0	0	0	0	0
4/23/2024	12:30 AM	0	0	0	0	0	0	0	0	0	0	0	0	0
4/23/2024	12:45 AM	0	0	0	0	0	0	0	0	0	0	0	0	0
4/23/2024	1:00 AM	0	0	0	0	0	0	0	0	0	0	0	0	0
4/23/2024	1:15 AM	0	0	0	0	0	0	0	0	0	0	0	0	0
4/23/2024	1:30 AM	0	0	0	0	0	0	0	0	0	0	0	0	0
4/23/2024	1:45 AM	0	0	0	0	0	0	0	0	0	0	0	0	0
4/23/2024	2:00 AM	0	0	0	0	0	0	0	0	0	0	0	0	0
4/23/2024	2:15 AM	0	0	0	0	0	0	0	0	0	0	0	0	0
4/23/2024	2:30 AM	0	0	0	0	0	0	0	0	0	0	0	0	0
4/23/2024	2:45 AM	0	0	0	0	0	0	0	0	0	0	0	0	0
4/23/2024	3:00 AM	0	0	0	0	0	0	0	0	0	0	0	0	0
4/23/2024	3:15 AM	0	0	0	0	0	0	0	0	0	0	0	0	0
4/23/2024	3:30 AM	0	0	0	0	0	0	0	0	0	0	0	0	0
4/23/2024	3:45 AM	0	0	0	0	0	0	0	0	0	0	0	0	0
4/23/2024	4:00 AM	0	0	0	0	0	0	0	0	0	0	0	0	0
4/23/2024	4:15 AM	0	0	0	0	0	0	0	0	0	0	0	0	0
4/23/2024	4:30 AM	0	0	0	0	0	0	0	0	0	0	0	0	0
4/23/2024	4:45 AM	0	0	0	0	0	0	0	0	0	0	0	0	0
4/23/2024	5:00 AM	0	0	0	0	0	0	0	0	0	0	0	0	0
4/23/2024	5:15 AM	0	0	0	0	0	0	0	0	0	0	0	0	0
4/23/2024	5:30 AM	0	0	0	0	0	0	0	0	0	0	0	0	0
4/23/2024	5:45 AM	0	0	0	0	0	0	0	0	0	0	0	0	0
4/23/2024	6:00 AM	0	0	0	0	0	0	0	0	0	0	0	0	0
4/23/2024	6:15 AM	0	0	0	0	0	0	0	0	0	0	0	0	0
4/23/2024	6:30 AM	0	0	0	0	0	0	0	0	0	0	0	0	0
4/23/2024	6:45 AM	0	0	0	0	0	0	0	0	0	0	0	0	0
4/23/2024	7:00 AM	0	0	0	0	0	0	0	0	0	0	0	0	0
4/23/2024	7:15 AM	0	0	0	0	0	0	0	0	0	0	0	0	0
4/23/2024	7:30 AM	0	0	0	0	0	0	0	0	0	0	0	0	0
4/23/2024	7:45 AM	0	0	0	0	0	0	0	0	0	0	0	0	0
4/23/2024	8:00 AM	0	0	0	0	0	0	0	0	0	0	0	0	0
4/23/2024	8:15 AM	0	0	0	0	0	0	0	0	0	0	0	0	0
4/23/2024	8:30 AM	0	0	0	0	0	0	0	0	0	0	0	0	0
4/23/2024	8:45 AM	0	0	0	0	0	0	0	0	0	0	0	0	0
4/23/2024	9:00 AM	0	0	0	0	0	0	0	0	0	0	0	0	0
4/23/2024	9:15 AM	0	0	0	0	0	0	0	0	0	0	0	0	0
4/23/2024	9:30 AM	0	0	0	0	0	0	0	0	0	0	0	0	0
4/23/2024	9:45 AM	0	0	0	0	0	0	0	0	0	0	0	0	0
4/23/2024	10:00 AM	0	0	0	0	0	0	0	0	0	0	0	0	0
4/23/2024	10:15 AM	0	0	0	0	0	0	0	0	0	0	0	0	0
4/23/2024	10:30 AM	0	0	0	0	0	0	0	0	0	0	0	0	0
4/23/2024	10:45 AM	0	0	0	0	0	0	0	0	0	0	0	0	0
4/23/2024	11:00 AM	0	0	0	0	0	0	0	0	0	0	0	0	0
4/23/2024	11:15 AM	0	0	0	0	0	0	0	0	0	0	0	0	0
4/23/2024	11:30 AM	0	0	0	0	0	0	0	0	0	0	0	0	0
4/23/2024	11:45 AM	0	0	0	0	0	0	0	0	0	0	0	0	0
4/23/2024	12:00 PM	0	0	0	0	0	0	0	0	0	0	0	0	0
4/23/2024	12:15 PM	0	0	0	0	0	0	0	0	0	0	0	0	0
4/23/2024	12:30 PM	0	0	0	0	0	0	0	0	0	0	0	0	0
4/23/2024	12:45 PM	0	0	0	0	0	0	0	0	0	0	0	0	0
4/23/2024	1:00 PM	0	0	0	0	0	0	0	0	0	0	0	0	0
4/23/2024	1:15 PM	0	0	0	0	0	0	0	0	0	0	0	0	0
4/23/2024	1:30 PM	0	0	0	0	0	0	0	0	0	0	0	0	0
4/23/2024	1:45 PM	0	0	0	0	0	0	0	0	0	0	0	0	0
4/23/2024	2:00 PM	0	0	0	0	0	0	0	0	0	0	0	0	0
4/23/2024	2:15 PM	0	0	0	0	0	0	0	0	0	0	0	0	0
4/23/2024	2:30 PM	0	0	0	0	0	0	0	0	0	0	0	0	0
4/23/2024	2:45 PM	0	0	0	0	0	0	0	0	0	0	0	0	0
4/23/2024	3:00 PM	0	0	0	0	0	0	0	0	0	0	0	0	0
4/23/2024	3:15 PM	0	0	0	0	0	0	0	0	0	0	0	0	0
4/23/2024	3:30 PM	0	0	0	0	0	0	0	0	0	0	0	0	0
4/23/2024	3:45 PM	0	0	0	0	0	0	0	0	0	0	0	0	0
4/23/2024	4:00 PM	0	0	0	0	0	0	0	0	0	0	0	0	0
4/23/2024	4:15 PM	0	0	0	0	0	0	0	0	0	0	0	0	0
4/23/2024	4:30 PM	0	0	0	0	0	0	0	0	0	0	0	0	0
4/23/2024	4:45 PM	0	0	0	0	0	0	0	0	0	0	0	0	0
4/23/2024	5:00 PM	0	0	0	0	0	0	0	0	0	0	0	0	0
4/23/2024	5:15 PM	0	0	0	0	0	0	0	0	0	0	0	0	0
4/23/2024	5:30 PM	0	0	0	0	0	0	0	0	0	0	0	0	0
4/23/2024	5:45 PM	0	0	0	0	0	0	0	0	0	0	0	0	0
4/23/2024	6:00 PM	0	0	0	0	0	0	0	0	0	0	0	0	0
4/23/2024	6:15 PM	0	0	0	0	0	0	0	0	0	0	0	0	0
4/23/2024	6:30 PM	0	0	0	0	0	0	0	0	0	0	0	0	0
4/23/2024	6:45 PM	0	0	0	0	0	0	0	0	0	0	0	0	0
4/23/2024	7:00 PM	0	0	0	0	0	0	0	0	0	0	0	0	0
4/23/2024	7:15 PM	0	0	0	0	0	0	0	0	0	0	0	0	0
4/23/2024	7:30 PM	0	0	0	0	0	0	0	0	0	0	0	0	0
4/23/2024	7:45 PM	0	0	0	0	0	0	0	0	0	0	0	0	0
4/23/2024	8:00 PM	0	0	0	0	0	0	0	0	0	0	0	0	0
4/23/2024	8:15 PM	0	0	0	0	0	0	0	0	0	0	0	0	0
4/23/2024	8:30 PM	0	0	0	0	0	0	0	0	0	0	0	0	0
4/23/2024	8:45 PM	0	0	0	0	0	0	0	0	0	0	0	0	0
4/23/2024	9:00 PM	0	0	0	0	0	0	0	0	0	0	0	0	0
4/23/2024	9:15 PM	0	0	0	0	0	0	0	0	0	0	0	0	0
4/23/2024	9:30 PM	0	0	0	0	0	0	0	0	0	0	0	0	0
4/23/2024	9:45 PM	0	0	0	0	0	0	0	0	0	0	0	0	0
4/23/2024	10:00 PM	0	0	0	0	0	0	0	0	0	0	0	0	0
4/23/2024	10:15 PM	0	0	0	0	0	0	0	0	0	0	0	0	0
4/23/2024	10:30 PM	0	0	0	0	0	0	0	0	0	0	0	0	0
4/23/2024	10:45 PM	0	0	0	0	0	0	0	0	0	0	0	0	0
4/23/2024	11:00 PM	0	0	0	0	0	0	0	0	0	0	0	0	0
4/23/2024	11:15 PM	0	0	0	0	0	0	0	0	0	0	0	0	0
4/23/2024	11:30 PM	0	0	0	0	0	0	0	0	0	0	0	0	0
4/23/2024	11:45 PM	0	0	0	0	0	0	0	0	0	0	0	0	0

4/24/2024	12:00 AM	0	0	0	0	0	0	0	0	0	0	0	0	0
4/24/2024	12:15 AM	0	0	0	0	0	0	0	0	0	0	0	0	0
4/24/2024	12:30 AM	0	0	0	0	0	0	0	0	0	0	0	0	0
4/24/2024	12:45 AM	0	0	0	0	0	0	0	0	0	0	0	0	0
4/24/2024	1:00 AM	0	0	0	0	0	0	0	0	0	0	0	0	0
4/24/2024	1:15 AM	0	0	0	0	0	0	0	0	0	0	0	0	0
4/24/2024	1:30 AM	0	0	0	0	0	0	0	0	0	0	0	0	0
4/24/2024	1:45 AM	0	0	0	0	0	0	0	0	0	0	0	0	0
4/24/2024	2:00 AM	0	0	0	0	0	0	0	0	0	0	0	0	0
4/24/2024	2:15 AM	0	0	0	0	0	0	0	0	0	0	0	0	0
4/24/2024	2:30 AM	0	0	0	0	0	0	0	0	0	0	0	0	0
4/24/2024	2:45 AM	0	0	0	0	0	0	0	0	0	0	0	0	0
4/24/2024	3:00 AM	0	0	0	0	0	0	0	0	0	0	0	0	0
4/24/2024	3:15 AM	0	0	0	0	0	0	0	0	0	0	0	0	0
4/24/2024	3:30 AM	0	0	0	0	0	0	0	0	0	0	0	0	0
4/24/2024	3:45 AM	0	0	0	0	0	0	0	0	0	0	0	0	0
4/24/2024	4:00 AM	0	0	0	0	0	0	0	0	0	0	0	0	0
4/24/2024	4:15 AM	0	0	0	0	0	0	0	0	0	0	0	0	0
4/24/2024	4:30 AM	0	0	0	0	0	0	0	0	0	0	0	0	0
4/24/2024	4:45 AM	0	0	0	0	0	0	0	0	0	0	0	0	0
4/24/2024	5:00 AM	0	0	0	0	0	0	0	0	0	0	0	0	0
4/24/2024	5:15 AM	0	0	0	0	0	0	0	0	0	0	0	0	0
4/24/2024	5:30 AM	0	0	0	0	0	0	0	0	0	0	0	0	0
4/24/2024	5:45 AM	0	0	0	0	0	0	0	0	0	0	0	0	0
4/24/2024	6:00 AM	0	0	0	0	0	0	0	0	0	0	0	0	0
4/24/2024	6:15 AM	0	0	0	0	0	0	0	0	0	0	0	0	0
4/24/2024	6:30 AM	0	0	0	0	0	0	0	0	0	0	0	0	0
4/24/2024	6:45 AM	0	0	0	0	0	0	0	0	0	0	0	0	0
4/24/2024	7:00 AM	0	0	0	0	0	0	0	0	0	0	0	0	0
4/24/2024	7:15 AM	0	0	0	0	0	0	0	0	0	0	0	0	0
4/24/2024	7:30 AM	0	0	0	0	0	0	0	0	0	0	0	0	0
4/24/2024	7:45 AM	0	0	0	0	0	0	0	0	0	0	0	0	0
4/24/2024	8:00 AM	0	0	0	0	0	0	0	0	0	0	0	0	0
4/24/2024	8:15 AM	0	0	0	0	0	0	0	0	0	0	0	0	0
4/24/2024	8:30 AM	0	0	0	0	0	0	0	0	0	0	0	0	0
4/24/2024	8:45 AM	0	0	0	0	0	0	0	0	0	0	0	0	0
4/24/2024	9:00 AM	0	0	0	0	0	0	0	0	0	0	0	0	0
4/24/2024	9:15 AM	0	0	0	0	0	0	0	0	0	0	0	0	0
4/24/2024	9:30 AM	0	0	0	0	0	0	0	0	0	0	0	0	0
4/24/2024	9:45 AM	0	0	0	0	0	0	0	0	0	0	0	0	0
4/24/2024	10:00 AM	0	0	0	0	0	0	0	0	0	0	0	0	0
4/24/2024	10:15 AM	0	0	0	0	0	0	0	0	0	0	0	0	0
4/24/2024	10:30 AM	0	0	0	0	0	0	0	0	0	0	0	0	0
4/24/2024	10:45 AM	0	0	0	0	0	0	0	0	0	0	0	0	0
4/24/2024	11:00 AM	0	0	0	0	0	0	0	0	0	0	0	0	0
4/24/2024	11:15 AM	0	0	0	0	0	0	0	0	0	0	0	0	0
4/24/2024	11:30 AM	0	0	0	0	0	0	0	0	0	0	0	0	0
4/24/2024	11:45 AM	0	0	0	0	0	0	0	0	0	0	0	0	0
4/24/2024	12:00 PM	0	0	0	0	0	0	0	0	0	0	0	0	0
4/24/2024	12:15 PM	0	0	0	0	0	0	0	0	0	0	0	0	0
4/24/2024	12:30 PM	0	0	0	0	0	0	0	0	0	0	0	0	0
4/24/2024	12:45 PM	0	0	0	0	0	0	0	0	0	0	0	0	0
4/24/2024	1:00 PM	0	0	0	0	0	0	0	0	0	0	0	0	0
4/24/2024	1:15 PM	0	0	0	0	0	0	0	0	0	0	0	0	0
4/24/2024	1:30 PM	0	0	0	0	0	0	0	0	0	0	0	0	0
4/24/2024	1:45 PM	0	0	0	0	0	0	0	0	0	0	0	0	0
4/24/2024	2:00 PM	0	0	0	0	0	0	0	0	0	0	0	0	0
4/24/2024	2:15 PM	0	0	0	0	0	0	0	0	0	0	0	0	0
4/24/2024	2:30 PM	0	0	0	0	0	0	0	0	0	0	0	0	0
4/24/2024	2:45 PM	0	0	0	0	0	0	0	0	0	0	0	0	0
4/24/2024	3:00 PM	0	0	0	0	0	0	0	0	0	0	0	0	0
4/24/2024	3:15 PM	0	0	0	0	0	0	0	0	0	0	0	0	0
4/24/2024	3:30 PM	0	0	0	0	0	0	0	0	0	0	0	0	0
4/24/2024	3:45 PM	0	0	0	0	0	0	0	0	0	0	0	0	0
4/24/2024	4:00 PM	0	0	0	0	0	0	0	0	0	0	0	0	0
4/24/2024	4:15 PM	0	0	0	0	0	0	0	0	0	0	0	0	0
4/24/2024	4:30 PM	0	0	0	0	0	0	0	0	0	0	0	0	0
4/24/2024	4:45 PM	0	0	0	0	0	0	0	0	0	0	0	0	0
4/24/2024	5:00 PM	0	0	0	0	0	0	0	0	0	0	0	0	0
4/24/2024	5:15 PM	0	0	0	0	0	0	0	0	0	0	0	0	0
4/24/2024	5:30 PM	0	0	0	0	0	0	0	0	0	0	0	0	0
4/24/2024	5:45 PM	0	0	0	0	0	0	0	0	0	0	0	0	0
4/24/2024	6:00 PM	0	0	0	0	0	0	0	0	0	0	0	0	0
4/24/2024	6:15 PM	0	0	0	0	0	0	0	0	0	0	0	0	0
4/24/2024	6:30 PM	0	0	0	0	0	0	0	0	0	0	0	0	0
4/24/2024	6:45 PM	0	0	0	0	0	0	0	0	0	0	0	0	0
4/24/2024	7:00 PM	0	0	0	0	0	0	0	0	0	0	0	0	0
4/24/2024	7:15 PM	0	0	0	0	0	0	0	0	0	0	0	0	0
4/24/2024	7:30 PM	0	0	0	0	0	0	0	0	0	0	0	0	0
4/24/2024	7:45 PM	0	0	0	0	0	0	0	0	0	0	0	0	0
4/24/2024	8:00 PM	0	0	0	0	0	0	0	0	0	0	0	0	0
4/24/2024	8:15 PM	0	0	0	0	0	0	0	0	0	0	0	0	0
4/24/2024	8:30 PM	0	0	0	0	0	0	0	0	0	0	0	0	0
4/24/2024	8:45 PM	0	0	0	0	0	0	0	0	0	0	0	0	0
4/24/2024	9:00 PM	0	0	0	0	0	0	0	0	0	0	0	0	0
4/24/2024	9:15 PM	0	0	0	0	0	0	0	0	0	0	0	0	0
4/24/2024	9:30 PM	0	0	0	0	0	0	0	0	0	0	0	0	0
4/24/2024	9:45 PM	0	0	0	0	0	0	0	0	0	0	0	0	0
4/24/2024	10:00 PM	0	0	0	0	0	0	0	0	0	0	0	0	0
4/24/2024	10:15 PM	0	0	0	0	0	0	0	0	0	0	0	0	0
4/24/2024	10:30 PM	0	0	0	0	0	0	0	0	0	0	0	0	0
4/24/2024	10:45 PM	0	0	0	0	0	0	0	0	0	0	0	0	0
4/24/2024	11:00 PM	0	0	0	0	0	0	0	0	0	0	0	0	0
4/24/2024	11:15 PM	0	0	0	0	0	0	0	0	0	0	0	0	0
4/24/2024	11:30 PM	0	0	0	0	0	0	0	0	0	0	0	0	0
4/24/2024	11:45 PM	0	0	0	0	0	0	0	0	0	0	0	0	0

4/25/2024	12:00 AM	0	0	0	0	0	0	0	0	0	0	0	0	0
4/25/2024	12:15 AM	0	0	0	0	0	0	0	0	0	0	0	0	0
4/25/2024	12:30 AM	0	0	0	0	0	0	0	0	0	0	0	0	0
4/25/2024	12:45 AM	0	0	0	0	0	0	0	0	0	0	0	0	0
4/25/2024	1:00 AM	0	0	0	0	0	0	0	0	0	0	0	0	0
4/25/2024	1:15 AM	0	0	0	0	0	0	0	0	0	0	0	0	0
4/25/2024	1:30 AM	0	0	0	0	0	0	0	0	0	0	0	0	0
4/25/2024	1:45 AM	0	0	0	0	0	0	0	0	0	0	0	0	0
4/25/2024	2:00 AM	0	0	0	0	0	0	0	0	0	0	0	0	0
4/25/2024	2:15 AM	0	0	0	0	0	0	0	0	0	0	0	0	0
4/25/2024	2:30 AM	0	0	0	0	0	0	0	0	0	0	0	0	0
4/25/2024	2:45 AM	0	0	0	0	0	0	0	0	0	0	0	0	0
4/25/2024	3:00 AM	0	0	0	0	0	0	0	0	0	0	0	0	0
4/25/2024	3:15 AM	0	0	0	0	0	0	0	0	0	0	0	0	0
4/25/2024	3:30 AM	0	0	0	0	0	0	0	0	0	0	0	0	0
4/25/2024	3:45 AM	0	0	0	0	0	0	0	0	0	0	0	0	0
4/25/2024	4:00 AM	0	0	0	0	0	0	0	0	0	0	0	0	0
4/25/2024	4:15 AM	0	0	0	0	0	0	0	0	0	0	0	0	0
4/25/2024	4:30 AM	0	0	0	0	0	0	0	0	0	0	0	0	0
4/25/2024	4:45 AM	0	0	0	0	0	0	0	0	0	0	0	0	0
4/25/2024	5:00 AM	0	0	0	0	0	0	0	0	0	0	0	0	0
4/25/2024	5:15 AM	0	0	0	0	0	0	0	0	0	0	0	0	0
4/25/2024	5:30 AM	0	0	0	0	0	0	0	0	0	0	0	0	0
4/25/2024	5:45 AM	0	0	0	0	0	0	0	0	0	0	0	0	0
4/25/2024	6:00 AM	0	0	0	0	0	0	0	0	0	0	0	0	0
4/25/2024	6:15 AM	0	0	0	0	0	0	0	0	0	0	0	0	0
4/25/2024	6:30 AM	0	0	0	0	0	0	0	0	0	0	0	0	0
4/25/2024	6:45 AM	0	0	0	0	0	0	0	0	0	0	0	0	0
4/25/2024	7:00 AM	0	0	0	0	0	0	0	0	0	0	0	0	0
4/25/2024	7:15 AM	0	0	0	0	0	0	0	0	0	0	0	0	0
4/25/2024	7:30 AM	0	0	0	0	0	0	0	0	0	0	0	0	0
4/25/2024	7:45 AM	0	0	0	0	0	0	0	0	0	0	0	0	0
4/25/2024	8:00 AM	0	0	0	0	0	0	0	0	0	0	0	0	0
4/25/2024	8:15 AM	0	0	0	0	0	0	0	0	0	0	0	0	0
4/25/2024	8:30 AM	0	0	0	0	0	0	0	0	0	0	0	0	0
4/25/2024	8:45 AM	0	0	0	0	0	0	0	0	0	0	0	0	0
4/25/2024	9:00 AM	0	0	0	0	0	0	0	0	0	0	0	0	0
4/25/2024	9:15 AM	0	0	0	0	0	0	0	0	0	0	0	0	0
4/25/2024	9:30 AM	0	0	0	0	0	0	0	0	0	0	0	0	0
4/25/2024	9:45 AM	0	0	0	0	0	0	0	0	0	0	0	0	0
4/25/2024	10:00 AM	0	0	0	0	0	0	0	0	0	0	0	0	0
4/25/2024	10:15 AM	0	0	0	0	0	0	0	0	0	0	0	0	0
4/25/2024	10:30 AM	0	0	0	0	0	0	0	0	0	0	0	0	0
4/25/2024	10:45 AM	0	0	0	0	0	0	0	0	0	0	0	0	0
4/25/2024	11:00 AM	0	0	0	0	0	0	0	0	0	0	0	0	0
4/25/2024	11:15 AM	0	0	0	0	0	0	0	0	0	0	0	0	0
4/25/2024	11:30 AM	0	0	0	0	0	0	0	0	0	0	0	0	0
4/25/2024	11:45 AM	0	0	0	0	0	0	0	0	0	0	0	0	0
4/25/2024	12:00 PM	0	0	0	0	0	0	0	0	0	0	0	0	0
4/25/2024	12:15 PM	0	0	0	0	0	0	0	0	0	0	0	0	0
4/25/2024	12:30 PM	0	0	0	0	0	0	0	0	0	0	0	0	0
4/25/2024	12:45 PM	0	0	0	0	0	0	0	0	0	0	0	0	0
4/25/2024	1:00 PM	0	0	0	0	0	0	0	0	0	0	0	0	0
4/25/2024	1:15 PM	0	0	0	0	0	0	0	0	0	0	0	0	0
4/25/2024	1:30 PM	0	0	0	0	0	0	0	0	0	0	0	0	0
4/25/2024	1:45 PM	0	0	0	0	0	0	0	0	0	0	0	0	0
4/25/2024	2:00 PM	0	0	0	0	0	0	0	0	0	0	0	0	0
4/25/2024	2:15 PM	0	0	0	0	0	0	0	0	0	0	0	0	0
4/25/2024	2:30 PM	0	0	0	0	0	0	0	0	0	0	0	0	0
4/25/2024	2:45 PM	0	0	0	0	0	0	0	0	0	0	0	0	0
4/25/2024	3:00 PM	0	0	0	0	0	0	0	0	0	0	0	0	0
4/25/2024	3:15 PM	0	0	0	0	0	0	0	0	0	0	0	0	0
4/25/2024	3:30 PM	0	0	0	0	0	0	0	0	0	0	0	0	0
4/25/2024	3:45 PM	0	0	0	0	0	0	0	0	0	0	0	0	0
4/25/2024	4:00 PM	0	0	0	0	0	0	0	0	0	0	0	0	0
4/25/2024	4:15 PM	0	0	0	0	0	0	0	0	0	0	0	0	0
4/25/2024	4:30 PM	0	0	0	0	0	0	0	0	0	0	0	0	0
4/25/2024	4:45 PM	0	0	0	0	0	0	0	0	0	0	0	0	0
4/25/2024	5:00 PM	0	0	0	0	0	0	0	0	0	0	0	0	0
4/25/2024	5:15 PM	0	0	0	0	0	0	0	0	0	0	0	0	0
4/25/2024	5:30 PM	0	0	0	0	0	0	0	0	0	0	0	0	0
4/25/2024	5:45 PM	0	0	0	0	0	0	0	0	0	0	0	0	0
4/25/2024	6:00 PM	0	0	0	0	0	0	0	0	0	0	0	0	0
4/25/2024	6:15 PM	0	0	0	0	0	0	0	0	0	0	0	0	0
4/25/2024	6:30 PM	0	0	0	0	0	0	0	0	0	0	0	0	0
4/25/2024	6:45 PM	0	0	0	0	0	0	0	0	0	0	0	0	0
4/25/2024	7:00 PM	0	0	0	0	0	0	0	0	0	0	0	0	0
4/25/2024	7:15 PM	0	0	0	0	0	0	0	0	0	0	0	0	0
4/25/2024	7:30 PM	0	0	0	0	0	0	0	0	0	0	0	0	0
4/25/2024	7:45 PM	0	0	0	0	0	0	0	0	0	0	0	0	0
4/25/2024	8:00 PM	0	0	0	0	0	0	0	0	0	0	0	0	0
4/25/2024	8:15 PM	0	0	0	0	0	0	0	0	0	0	0	0	0
4/25/2024	8:30 PM	0	0	0	0	0	0	0	0	0	0	0	0	0
4/25/2024	8:45 PM	0	0	0	0	0	0	0	0	0	0	0	0	0
4/25/2024	9:00 PM	0	0	0	0	0	0	0	0	0	0	0	0	0
4/25/2024	9:15 PM	0	0	0	0	0	0	0	0	0	0	0	0	0
4/25/2024	9:30 PM	0	0	0	0	0	0	0	0	0	0	0	0	0
4/25/2024	9:45 PM	0	0	0	0	0	0	0	0	0	0	0	0	0
4/25/2024	10:00 PM	0	0	0	0	0	0	0	0	0	0	0	0	0
4/25/2024	10:15 PM	0	0	0	0	0	0	0	0	0	0	0	0	0
4/25/2024	10:30 PM	0	0	0	0	0	0	0	0	0	0	0	0	0
4/25/2024	10:45 PM	0	0	0	0	0	0	0	0	0	0	0	0	0
4/25/2024	11:00 PM	0	0	0	0	0	0	0	0	0	0	0	0	0
4/25/2024	11:15 PM	0	0	0	0	0	0	0	0	0	0	0	0	0
4/25/2024	11:30 PM	0	0	0	0	0	0	0	0	0	0	0	0	0
4/25/2024	11:45 PM	0	0	0	0	0	0	0	0	0	0	0	0	0

SB
File Name:
Start Date: 4/23/2024
Start Time: 0
Site Code: 39
Station ID: 1
Location 1: I-26 S/Bound On-Ramp, south of St Andrews Rd
Location 2:

Date	Time	1	2	3	4	5	6	7	8	9	10	11	12	13
4/23/2024	12:00 AM	0	0	0	0	0	0	0	0	0	0	0	0	0
4/23/2024	12:15 AM	0	0	0	0	0	0	0	0	0	0	0	0	0
4/23/2024	12:30 AM	0	0	0	0	0	0	0	0	0	0	0	0	0
4/23/2024	12:45 AM	0	0	0	0	0	0	0	0	0	0	0	0	0
4/23/2024	1:00 AM	0	0	0	0	0	0	0	0	0	0	0	0	0
4/23/2024	1:15 AM	0	0	0	0	0	0	0	0	0	0	0	0	0
4/23/2024	1:30 AM	0	0	0	0	0	0	0	0	0	0	0	0	0
4/23/2024	1:45 AM	0	0	0	0	0	0	0	0	0	0	0	0	0
4/23/2024	2:00 AM	0	0	0	0	0	0	0	0	0	0	0	0	0
4/23/2024	2:15 AM	0	0	0	0	0	0	0	0	0	0	0	0	0
4/23/2024	2:30 AM	0	0	0	0	0	0	0	0	0	0	0	0	0
4/23/2024	2:45 AM	0	0	0	0	0	0	0	0	0	0	0	0	0
4/23/2024	3:00 AM	0	0	0	0	0	0	0	0	0	0	0	0	0
4/23/2024	3:15 AM	0	0	0	0	0	0	0	0	0	0	0	0	0
4/23/2024	3:30 AM	0	0	0	0	0	0	0	0	0	0	0	0	0
4/23/2024	3:45 AM	0	0	0	0	0	0	0	0	0	0	0	0	0
4/23/2024	4:00 AM	0	0	0	0	0	0	0	0	0	0	0	0	0
4/23/2024	4:15 AM	0	0	0	0	0	0	0	0	0	0	0	0	0
4/23/2024	4:30 AM	0	0	0	0	0	0	0	0	0	0	0	0	0
4/23/2024	4:45 AM	0	0	0	0	0	0	0	0	0	0	0	0	0
4/23/2024	5:00 AM	0	0	0	0	0	0	0	0	0	0	0	0	0
4/23/2024	5:15 AM	0	0	0	0	0	0	0	0	0	0	0	0	0
4/23/2024	5:30 AM	0	0	0	0	0	0	0	0	0	0	0	0	0
4/23/2024	5:45 AM	0	0	0	0	0	0	0	0	0	0	0	0	0
4/23/2024	6:00 AM	0	0	0	0	0	0	0	0	0	0	0	0	0
4/23/2024	6:15 AM	0	0	0	0	0	0	0	0	0	0	0	0	0
4/23/2024	6:30 AM	0	0	0	0	0	0	0	0	0	0	0	0	0
4/23/2024	6:45 AM	0	0	0	0	0	0	0	0	0	0	0	0	0
4/23/2024	7:00 AM	0	0	0	0	0	0	0	0	0	0	0	0	0
4/23/2024	7:15 AM	0	0	0	0	0	0	0	0	0	0	0	0	0
4/23/2024	7:30 AM	0	0	0	0	0	0	0	0	0	0	0	0	0
4/23/2024	7:45 AM	0	0	0	0	0	0	0	0	0	0	0	0	0
4/23/2024	8:00 AM	0	0	0	0	0	0	0	0	0	0	0	0	0
4/23/2024	8:15 AM	0	0	0	0	0	0	0	0	0	0	0	0	0
4/23/2024	8:30 AM	0	0	0	0	0	0	0	0	0	0	0	0	0
4/23/2024	8:45 AM	0	0	0	0	0	0	0	0	0	0	0	0	0
4/23/2024	9:00 AM	0	0	0	0	0	0	0	0	0	0	0	0	0
4/23/2024	9:15 AM	0	0	0	0	0	0	0	0	0	0	0	0	0
4/23/2024	9:30 AM	0	0	0	0	0	0	0	0	0	0	0	0	0
4/23/2024	9:45 AM	0	0	0	0	0	0	0	0	0	0	0	0	0
4/23/2024	10:00 AM	0	0	0	0	0	0	0	0	0	0	0	0	0
4/23/2024	10:15 AM	0	0	0	0	0	0	0	0	0	0	0	0	0
4/23/2024	10:30 AM	0	0	0	0	0	0	0	0	0	0	0	0	0
4/23/2024	10:45 AM	0	0	0	0	0	0	0	0	0	0	0	0	0
4/23/2024	11:00 AM	0	0	0	0	0	0	0	0	0	0	0	0	0
4/23/2024	11:15 AM	0	0	0	0	0	0	0	0	0	0	0	0	0
4/23/2024	11:30 AM	0	0	0	0	0	0	0	0	0	0	0	0	0
4/23/2024	11:45 AM	0	0	0	0	0	0	0	0	0	0	0	0	0
4/23/2024	12:00 PM	0	0	0	0	0	0	0	0	0	0	0	0	0
4/23/2024	12:15 PM	0	0	0	0	0	0	0	0	0	0	0	0	0
4/23/2024	12:30 PM	0	0	0	0	0	0	0	0	0	0	0	0	0
4/23/2024	12:45 PM	0	0	0	0	0	0	0	0	0	0	0	0	0
4/23/2024	1:00 PM	0	0	0	0	0	0	0	0	0	0	0	0	0
4/23/2024	1:15 PM	0	0	0	0	0	0	0	0	0	0	0	0	0
4/23/2024	1:30 PM	0	0	0	0	0	0	0	0	0	0	0	0	0
4/23/2024	1:45 PM	0	0	0	0	0	0	0	0	0	0	0	0	0
4/23/2024	2:00 PM	0	0	0	0	0	0	0	0	0	0	0	0	0
4/23/2024	2:15 PM	0	0	0	0	0	0	0	0	0	0	0	0	0
4/23/2024	2:30 PM	0	0	0	0	0	0	0	0	0	0	0	0	0
4/23/2024	2:45 PM	0	0	0	0	0	0	0	0	0	0	0	0	0
4/23/2024	3:00 PM	0	0	0	0	0	0	0	0	0	0	0	0	0
4/23/2024	3:15 PM	0	0	0	0	0	0	0	0	0	0	0	0	0
4/23/2024	3:30 PM	0	0	0	0	0	0	0	0	0	0	0	0	0
4/23/2024	3:45 PM	0	0	0	0	0	0	0	0	0	0	0	0	0
4/23/2024	4:00 PM	0	0	0	0	0	0	0	0	0	0	0	0	0
4/23/2024	4:15 PM	0	0	0	0	0	0	0	0	0	0	0	0	0
4/23/2024	4:30 PM	0	0	0	0	0	0	0	0	0	0	0	0	0
4/23/2024	4:45 PM	0	0	0	0	0	0	0	0	0	0	0	0	0
4/23/2024	5:00 PM	0	0	0	0	0	0	0	0	0	0	0	0	0
4/23/2024	5:15 PM	0	0	0	0	0	0	0	0	0	0	0	0	0
4/23/2024	5:30 PM	0	0	0	0	0	0	0	0	0	0	0	0	0
4/23/2024	5:45 PM	0	0	0	0	0	0	0	0	0	0	0	0	0
4/23/2024	6:00 PM	0	0	0	0	0	0	0	0	0	0	0	0	0
4/23/2024	6:15 PM	0	91	17	0	2	0	0	0	0	0	0	0	0
4/23/2024	6:30 PM	0	190	36	0	2	0	0	1	0	1	0	0	0
4/23/2024	6:45 PM	0	252	49	0	2	1	0	1	0	1	0	0	0
4/23/2024	7:00 PM	0	324	62	1	3	1	0	1	0	1	0	0	0
4/23/2024	7:15 PM	0	322	57	1	1	1	0	1	1	1	0	0	0
4/23/2024	7:30 PM	0	311	48	1	2	1	0	0	1	0	0	0	0
4/23/2024	7:45 PM	0	326	43	1	2	0	0	0	1	0	0	0	0
4/23/2024	8:00 PM	2	334	39	0	1	0	0	0	1	0	0	0	0
4/23/2024	8:15 PM	2	316	37	0	1	0	0	0	0	0	0	0	0
4/23/2024	8:30 PM	3	312	40	0	0	0	0	0	0	0	0	0	0
4/23/2024	8:45 PM	3	286	39	0	0	0	0	0	0	0	0	0	0
4/23/2024	9:00 PM	2	266	39	0	0	0	0	0	0	0	0	0	0
4/23/2024	9:15 PM	2	236	33	0	0	0	0	0	0	0	0	0	0
4/23/2024	9:30 PM	1	191	24	0	0	0	0	0	0	0	0	0	0
4/23/2024	9:45 PM	1	184	20	0	0	0	0	0	0	0	0	0	0
4/23/2024	10:00 PM	0	155	14	0	0	0	0	0	0	0	0	0	0
4/23/2024	10:15 PM	0	132	14	0	0	0	0	0	0	0	0	0	0
4/23/2024	10:30 PM	0	111	16	0	0	0	0	0	0	0	0	0	0
4/23/2024	10:45 PM	0	86	15	0	0	0	0	0	0	0	0	0	0
4/23/2024	11:00 PM	0	75	15	0	0	0	0	0	0	0	0	0	0
4/23/2024	11:15 PM	0	57	11	0	0	0	0	0	0	0	0	0	0
4/23/2024	11:30 PM	0	39	5	0	0	0	0	0	0	0	0	0	0
4/23/2024	11:45 PM	0	20	3	0	0	0	0	0	0	0	0	0	0

4/24/2024	12:00 AM	0	49	3	0	0	0	0	0	0	0	0	0
4/24/2024	12:15 AM	0	45	2	0	0	0	0	0	1	0	0	0
4/24/2024	12:30 AM	0	48	2	0	1	0	0	0	1	0	0	0
4/24/2024	12:45 AM	0	37	2	0	2	0	0	0	1	0	0	0
4/24/2024	1:00 AM	0	28	1	0	2	0	0	0	1	0	0	0
4/24/2024	1:15 AM	0	24	0	0	2	0	0	0	1	0	0	0
4/24/2024	1:30 AM	0	19	0	0	1	0	0	0	2	0	0	0
4/24/2024	1:45 AM	0	21	1	0	0	0	0	0	2	0	0	0
4/24/2024	2:00 AM	0	29	1	0	0	0	0	0	2	0	0	0
4/24/2024	2:15 AM	0	26	1	0	0	0	0	0	1	0	0	0
4/24/2024	2:30 AM	0	29	2	0	0	0	0	0	0	0	0	0
4/24/2024	2:45 AM	0	28	2	0	0	0	0	0	1	0	0	0
4/24/2024	3:00 AM	0	26	5	0	0	0	0	0	1	0	0	0
4/24/2024	3:15 AM	0	35	6	0	0	0	0	0	2	0	0	0
4/24/2024	3:30 AM	0	47	5	0	0	0	0	0	2	0	0	0
4/24/2024	3:45 AM	0	57	9	0	0	0	0	0	1	0	0	0
4/24/2024	4:00 AM	0	62	10	0	0	0	0	0	2	0	0	0
4/24/2024	4:15 AM	0	81	15	0	0	0	0	0	1	0	0	0
4/24/2024	4:30 AM	1	93	24	0	0	0	0	0	1	0	0	0
4/24/2024	4:45 AM	1	124	31	0	0	0	0	0	1	0	0	0
4/24/2024	5:00 AM	1	153	35	0	0	0	0	0	1	0	0	0
4/24/2024	5:15 AM	1	174	37	0	1	0	0	0	1	0	0	0
4/24/2024	5:30 AM	0	200	44	0	1	0	0	0	4	0	0	0
4/24/2024	5:45 AM	0	253	50	0	2	0	0	1	5	0	0	0
4/24/2024	6:00 AM	0	315	68	0	3	1	0	1	4	0	0	0
4/24/2024	6:15 AM	0	391	90	0	2	2	0	2	4	0	0	0
4/24/2024	6:30 AM	0	521	122	0	3	3	0	2	1	0	0	0
4/24/2024	6:45 AM	1	651	146	1	4	3	0	1	0	0	0	0
4/24/2024	7:00 AM	1	745	170	1	4	2	0	1	0	0	0	0
4/24/2024	7:15 AM	1	805	182	1	7	3	0	2	0	0	0	0
4/24/2024	7:30 AM	1	816	176	2	9	3	0	2	0	0	0	0
4/24/2024	7:45 AM	2	743	168	1	10	4	0	2	0	0	0	0
4/24/2024	8:00 AM	3	677	145	1	10	4	0	2	1	0	0	0
4/24/2024	8:15 AM	3	602	137	1	10	3	0	0	3	0	0	0
4/24/2024	8:30 AM	3	549	126	1	10	5	0	0	5	0	0	0
4/24/2024	8:45 AM	1	486	119	1	8	4	0	0	5	0	0	0
4/24/2024	9:00 AM	0	457	128	4	8	4	0	1	5	0	0	0
4/24/2024	9:15 AM	0	440	123	5	7	5	0	2	4	0	0	0
4/24/2024	9:30 AM	0	383	122	4	8	3	0	2	2	0	0	0
4/24/2024	9:45 AM	1	386	124	5	8	4	0	2	2	0	0	0
4/24/2024	10:00 AM	2	386	122	2	10	4	0	3	2	0	0	0
4/24/2024	10:15 AM	3	399	126	1	13	2	0	2	1	1	0	0
4/24/2024	10:30 AM	3	405	127	2	12	1	0	3	2	1	0	0
4/24/2024	10:45 AM	4	401	127	1	15	0	0	3	3	1	0	0
4/24/2024	11:00 AM	3	407	118	1	15	0	0	1	2	1	0	0
4/24/2024	11:15 AM	2	407	117	1	12	1	0	1	4	0	0	0
4/24/2024	11:30 AM	2	411	124	2	12	2	0	0	4	0	0	0
4/24/2024	11:45 AM	0	429	130	2	10	2	0	1	4	0	0	0
4/24/2024	12:00 PM	0	428	138	2	8	2	1	1	5	0	0	0
4/24/2024	12:15 PM	0	451	141	2	6	1	1	2	4	0	0	0
4/24/2024	12:30 PM	1	457	134	2	8	0	1	4	4	0	0	0
4/24/2024	12:45 PM	2	459	134	3	9	1	1	4	3	0	0	0
4/24/2024	1:00 PM	3	471	129	3	10	1	0	5	6	0	0	0
4/24/2024	1:15 PM	4	451	117	3	13	1	0	4	7	0	0	0
4/24/2024	1:30 PM	3	443	118	1	11	1	0	3	6	0	0	0
4/24/2024	1:45 PM	2	457	116	0	14	0	0	2	6	1	0	0
4/24/2024	2:00 PM	1	457	118	0	12	0	0	2	2	1	0	0
4/24/2024	2:15 PM	1	480	120	1	13	0	0	2	1	1	0	0
4/24/2024	2:30 PM	1	514	114	1	16	0	0	1	2	1	0	0
4/24/2024	2:45 PM	1	534	108	2	10	0	0	2	2	0	0	0
4/24/2024	3:00 PM	2	548	115	3	11	0	0	1	3	0	0	0
4/24/2024	3:15 PM	1	574	117	2	8	0	0	2	4	0	0	0
4/24/2024	3:30 PM	1	592	123	2	4	0	0	2	4	0	0	0
4/24/2024	3:45 PM	1	591	132	1	5	0	0	1	5	0	0	0
4/24/2024	4:00 PM	0	603	131	0	5	0	0	1	5	0	0	0
4/24/2024	4:15 PM	0	581	136	0	8	0	0	1	4	0	0	0
4/24/2024	4:30 PM	0	560	133	0	6	0	0	2	4	0	0	0
4/24/2024	4:45 PM	0	522	112	0	8	0	0	2	3	0	0	0
4/24/2024	5:00 PM	0	497	102	0	8	0	0	3	3	0	0	0
4/24/2024	5:15 PM	2	488	96	0	4	0	0	2	2	0	0	0
4/24/2024	5:30 PM	2	485	93	1	7	0	0	3	1	0	0	0
4/24/2024	5:45 PM	2	498	90	2	4	0	0	3	1	0	0	0
4/24/2024	6:00 PM	2	484	81	2	5	0	0	2	0	0	0	0
4/24/2024	6:15 PM	0	451	78	2	7	0	0	2	1	0	0	0
4/24/2024	6:30 PM	1	421	69	1	5	0	0	0	1	0	0	0
4/24/2024	6:45 PM	1	370	72	0	7	0	0	0	1	0	0	0
4/24/2024	7:00 PM	1	337	70	0	5	0	0	0	1	0	0	0
4/24/2024	7:15 PM	2	326	60	0	3	0	0	0	0	0	0	0
4/24/2024	7:30 PM	3	319	54	0	3	0	0	0	0	0	0	0
4/24/2024	7:45 PM	3	331	55	0	1	0	0	0	0	0	0	0
4/24/2024	8:00 PM	3	346	54	1	1	0	0	1	1	0	0	0
4/24/2024	8:15 PM	2	318	49	1	1	0	0	1	1	0	0	0
4/24/2024	8:30 PM	0	267	47	1	0	0	0	1	1	0	0	0
4/24/2024	8:45 PM	0	235	36	1	1	0	0	1	2	0	0	0
4/24/2024	9:00 PM	0	216	27	0	2	0	0	0	1	0	0	0
4/24/2024	9:15 PM	0	225	25	0	2	0	0	0	1	0	0	0
4/24/2024	9:30 PM	0	238	19	0	2	0	0	0	2	0	0	0
4/24/2024	9:45 PM	0	234	15	0	1	0	0	0	1	0	0	0
4/24/2024	10:00 PM	0	204	12	0	0	0	0	0	1	0	0	0
4/24/2024	10:15 PM	1	161	8	0	0	0	0	0	2	0	0	0
4/24/2024	10:30 PM	1	134	8	0	0	0	0	0	1	0	0	0
4/24/2024	10:45 PM	2	106	9	0	0	0	0	0	2	0	0	0
4/24/2024	11:00 PM	2	80	10	0	0	0	0	0	2	0	0	0
4/24/2024	11:15 PM	1	56	8	0	0	0	0	0	1	0	0	0
4/24/2024	11:30 PM	1	33	5	0	0	0	0	0	1	0	0	0
4/24/2024	11:45 PM	0	14	3	0	0	0	0	0	0	0	0	0

4/25/2024	12:00 AM	0	39	12	0	0	0	0	0	0	0	0	0
4/25/2024	12:15 AM	0	39	13	0	0	0	0	0	0	0	0	0
4/25/2024	12:30 AM	0	32	10	0	0	0	0	0	0	0	0	0
4/25/2024	12:45 AM	0	28	9	0	0	0	0	0	0	0	0	0
4/25/2024	1:00 AM	0	26	8	0	1	0	0	0	1	0	0	0	0
4/25/2024	1:15 AM	0	26	6	0	1	0	0	0	1	0	0	0	0
4/25/2024	1:30 AM	0	28	6	0	1	0	0	0	1	0	0	0	0
4/25/2024	1:45 AM	0	26	6	0	1	0	0	0	1	0	0	0	0
4/25/2024	2:00 AM	0	29	6	0	0	0	0	0	0	0	0	0	0
4/25/2024	2:15 AM	0	22	5	0	0	0	0	0	0	0	0	0	0
4/25/2024	2:30 AM	0	22	4	0	0	0	0	0	0	0	0	0	0
4/25/2024	2:45 AM	0	37	3	0	0	0	0	0	0	0	0	0	0
4/25/2024	3:00 AM	0	41	1	0	1	0	0	0	1	0	0	0	0
4/25/2024	3:15 AM	0	49	2	0	1	0	0	0	3	0	0	0	0
4/25/2024	3:30 AM	0	52	4	0	2	0	0	0	3	0	0	0	0
4/25/2024	3:45 AM	0	50	7	0	2	0	0	0	4	0	0	0	0
4/25/2024	4:00 AM	0	58	11	0	1	0	0	0	3	0	0	0	0
4/25/2024	4:15 AM	0	75	18	0	1	0	0	0	1	0	0	0	0
4/25/2024	4:30 AM	0	96	28	0	0	0	0	0	1	0	0	0	0
4/25/2024	4:45 AM	0	124	36	0	0	0	0	0	1	0	0	0	0
4/25/2024	5:00 AM	0	153	43	0	0	0	0	0	1	0	0	0	0
4/25/2024	5:15 AM	0	157	42	0	0	0	0	0	2	0	0	0	0
4/25/2024	5:30 AM	0	174	47	0	1	0	0	0	3	0	0	0	0
4/25/2024	5:45 AM	1	242	54	0	1	0	0	1	2	0	0	0	0
4/25/2024	6:00 AM	1	316	65	0	5	0	0	1	2	0	0	0	0
4/25/2024	6:15 AM	1	426	80	0	5	1	0	2	2	0	0	0	0
4/25/2024	6:30 AM	1	556	100	0	8	1	0	3	3	0	0	0	0
4/25/2024	6:45 AM	0	668	125	1	13	1	0	2	5	0	0	0	0
4/25/2024	7:00 AM	1	749	161	1	13	1	1	3	5	0	0	0	0
4/25/2024	7:15 AM	1	808	185	1	14	1	1	2	5	0	0	0	0
4/25/2024	7:30 AM	2	815	194	1	15	1	1	1	4	0	0	0	0
4/25/2024	7:45 AM	4	762	181	0	15	1	1	1	2	0	0	0	0
4/25/2024	8:00 AM	4	718	163	0	13	1	0	0	4	0	0	0	0
4/25/2024	8:15 AM	4	639	142	0	14	0	0	0	3	1	0	0	0
4/25/2024	8:30 AM	3	557	129	0	14	0	0	1	2	1	0	0	0
4/25/2024	8:45 AM	1	513	128	1	13	0	0	2	2	1	0	0	0
4/25/2024	9:00 AM	1	467	115	1	16	0	0	3	1	1	0	0	0
4/25/2024	9:15 AM	1	429	119	1	17	3	0	3	3	0	0	0	0
4/25/2024	9:30 AM	1	413	116	1	15	3	0	3	3	0	0	0	0
4/25/2024	9:45 AM	1	381	119	0	13	3	0	2	4	0	0	0	0
4/25/2024	10:00 AM	0	356	131	0	8	3	0	1	6	0	0	0	0
4/25/2024	10:15 AM	0	362	136	0	8	0	0	2	5	0	0	0	0
4/25/2024	10:30 AM	0	375	139	0	8	0	0	1	6	1	0	0	0
4/25/2024	10:45 AM	0	379	135	0	11	0	0	2	7	1	0	0	0
4/25/2024	11:00 AM	0	391	125	0	14	2	0	3	5	1	0	0	0
4/25/2024	11:15 AM	0	441	133	0	11	3	0	4	4	1	0	0	0
4/25/2024	11:30 AM	0	484	135	1	9	3	0	5	5	0	0	0	0
4/25/2024	11:45 AM	0	522	139	1	8	3	0	5	3	0	0	0	0
4/25/2024	12:00 PM	0	542	135	1	10	1	0	4	3	0	0	0	0
4/25/2024	12:15 PM	1	523	137	1	12	1	0	3	5	0	0	0	0
4/25/2024	12:30 PM	1	496	128	0	14	1	0	2	3	0	0	0	0
4/25/2024	12:45 PM	1	477	117	1	14	1	0	3	3	0	0	0	0
4/25/2024	1:00 PM	2	467	119	2	15	1	0	3	3	0	0	0	0
4/25/2024	1:15 PM	1	463	109	2	16	0	0	3	2	1	0	0	0
4/25/2024	1:30 PM	1	466	116	2	16	1	0	3	4	1	0	0	0
4/25/2024	1:45 PM	1	445	121	1	17	2	0	1	5	1	0	0	0
4/25/2024	2:00 PM	0	477	116	0	14	2	0	1	4	1	0	0	0
4/25/2024	2:15 PM	1	476	114	1	12	3	0	0	3	0	0	0	0
4/25/2024	2:30 PM	1	462	128	1	11	3	0	1	1	1	0	0	0
4/25/2024	2:45 PM	1	482	142	1	8	2	0	1	0	1	0	0	0
4/25/2024	3:00 PM	1	484	152	2	6	2	0	2	1	1	0	0	0
4/25/2024	3:15 PM	0	526	149	1	8	3	0	2	2	1	0	0	0
4/25/2024	3:30 PM	0	561	128	1	9	2	0	1	3	0	0	0	0
4/25/2024	3:45 PM	0	572	114	1	9	2	0	2	3	0	0	0	0
4/25/2024	4:00 PM	2	565	114	0	13	2	0	1	3	0	0	0	0
4/25/2024	4:15 PM	2	559	113	0	12	0	0	3	3	0	0	0	0
4/25/2024	4:30 PM	3	553	113	0	10	0	0	4	3	0	0	0	0
4/25/2024	4:45 PM	3	543	115	0	10	1	0	3	4	0	0	0	0
4/25/2024	5:00 PM	2	539	106	0	6	1	0	3	3	0	0	0	0
4/25/2024	5:15 PM	2	515	95	0	5	1	0	1	2	0	0	0	0
4/25/2024	5:30 PM	2	511	94	0	8	1	0	0	2	0	0	0	0
4/25/2024	5:45 PM	2	498	86	0	7	0	0	0	1	0	0	0	0
4/25/2024	6:00 PM	1	457	82	0	8	0	0	0	1	0	0	0	0
4/25/2024	6:15 PM	1	329	64	0	7	0	0	0	1	0	0	0	0
4/25/2024	6:30 PM	0	197	39	0	3	0	0	0	0	0	0	0	0
4/25/2024	6:45 PM	0	91	19	0	2	0	0	0	0	0	0	0	0
4/25/2024	7:00 PM	0	0	0	0	0	0	0	0	0	0	0	0	0
4/25/2024	7:15 PM	0	0	0	0	0	0	0	0	0	0	0	0	0
4/25/2024	7:30 PM	0	0	0	0	0	0	0	0	0	0	0	0	0
4/25/2024	7:45 PM	0	0	0	0	0	0	0	0	0	0	0	0	0
4/25/2024	8:00 PM	0	0	0	0	0	0	0	0	0	0	0	0	0
4/25/2024	8:15 PM	0	0	0	0	0	0	0	0	0	0	0	0	0
4/25/2024	8:30 PM	0	0	0	0	0	0	0	0	0	0	0	0	0
4/25/2024	8:45 PM	0	0	0	0	0	0	0	0	0	0	0	0	0
4/25/2024	9:00 PM	0	0	0	0	0	0	0	0	0	0	0	0	0
4/25/2024	9:15 PM	0	0	0	0	0	0	0	0	0	0	0	0	0
4/25/2024	9:30 PM	0	0	0	0	0	0	0	0	0	0	0	0	0
4/25/2024	9:45 PM	0	0	0	0	0	0	0	0	0	0	0	0	0
4/25/2024	10:00 PM	0	0	0	0	0	0	0	0	0	0	0	0	0
4/25/2024	10:15 PM	0	0	0	0	0	0	0	0	0	0	0	0	0
4/25/2024	10:30 PM	0	0	0	0	0	0	0	0	0	0	0	0	0
4/25/2024	10:45 PM	0	0	0	0	0	0	0	0	0	0	0	0	0
4/25/2024	11:00 PM	0	0	0	0	0	0	0	0	0	0	0	0	0
4/25/2024	11:15 PM	0	0	0	0	0	0	0	0	0	0	0	0	0
4/25/2024	11:30 PM	0	0	0	0	0	0	0	0	0	0	0	0	0
4/25/2024	11:45 PM	0	0	0	0	0	0	0	0	0	0	0	0	0

Bi-Directional Class Count || NB EB 15min

Columbia, SC

Marr Traffic DATA COLLECTION
www.marrtraffic.com

Site 40
I-26 On/Off-Ramp,
north of St Andrews Rd

Date
Tuesday, April 23, 2024

Lat/Long
34.044948°, -81.119728°

Weather
Fair
58°F

Click here for Detailed Weather

Click here for Map

0000 - 2400 (Weekday 24h Session) (04-23-2024)
NB EB 15min

	Northbound (Movement 40.1)													15min	60min
Time	1	2	3	4	5	6	7	8	9	10	11	12	13	Total	Total
0000 - 0015	0	0	0	0	0	0	0	0	0	0	0	0	0	**0**	
0015 - 0030	0	0	0	0	0	0	0	0	0	0	0	0	0	**0**	
0030 - 0045	0	0	0	0	0	0	0	0	0	0	0	0	0	**0**	
0045 - 0100	0	0	0	0	0	0	0	0	0	0	0	0	0	**0**	**0**
0100 - 0115	0	0	0	0	0	0	0	0	0	0	0	0	0	**0**	
0115 - 0130	0	0	0	0	0	0	0	0	0	0	0	0	0	**0**	
0130 - 0145	0	0	0	0	0	0	0	0	0	0	0	0	0	**0**	
0145 - 0200	0	0	0	0	0	0	0	0	0	0	0	0	0	**0**	**0**
0200 - 0215	0	0	0	0	0	0	0	0	0	0	0	0	0	**0**	
0215 - 0230	0	0	0	0	0	0	0	0	0	0	0	0	0	**0**	
0230 - 0245	0	0	0	0	0	0	0	0	0	0	0	0	0	**0**	
0245 - 0300	0	0	0	0	0	0	0	0	0	0	0	0	0	**0**	**0**
0300 - 0315	0	0	0	0	0	0	0	0	0	0	0	0	0	**0**	
0315 - 0330	0	0	0	0	0	0	0	0	0	0	0	0	0	**0**	
0330 - 0345	0	0	0	0	0	0	0	0	0	0	0	0	0	**0**	
0345 - 0400	0	0	0	0	0	0	0	0	0	0	0	0	0	**0**	**0**
0400 - 0415	0	0	0	0	0	0	0	0	0	0	0	0	0	**0**	
0415 - 0430	0	0	0	0	0	0	0	0	0	0	0	0	0	**0**	
0430 - 0445	0	0	0	0	0	0	0	0	0	0	0	0	0	**0**	
0445 - 0500	0	0	0	0	0	0	0	0	0	0	0	0	0	**0**	**0**
0500 - 0515	0	0	0	0	0	0	0	0	0	0	0	0	0	**0**	
0515 - 0530	0	0	0	0	0	0	0	0	0	0	0	0	0	**0**	
0530 - 0545	0	0	0	0	0	0	0	0	0	0	0	0	0	**0**	
0545 - 0600	0	0	0	0	0	0	0	0	0	0	0	0	0	**0**	**0**
0600 - 0615	0	0	0	0	0	0	0	0	0	0	0	0	0	**0**	
0615 - 0630	0	0	0	0	0	0	0	0	0	0	0	0	0	**0**	
0630 - 0645	0	0	0	0	0	0	0	0	0	0	0	0	0	**0**	
0645 - 0700	0	0	0	0	0	0	0	0	0	0	0	0	0	**0**	**0**
0700 - 0715	0	0	0	0	0	0	0	0	0	0	0	0	0	**0**	
0715 - 0730	0	0	0	0	0	0	0	0	0	0	0	0	0	**0**	
0730 - 0745	0	0	0	0	0	0	0	0	0	0	0	0	0	**0**	
0745 - 0800	0	0	0	0	0	0	0	0	0	0	0	0	0	**0**	**0**
0800 - 0815	0	0	0	0	0	0	0	0	0	0	0	0	0	**0**	
0815 - 0830	0	0	0	0	0	0	0	0	0	0	0	0	0	**0**	
0830 - 0845	0	0	0	0	0	0	0	0	0	0	0	0	0	**0**	
0845 - 0900	0	0	0	0	0	0	0	0	0	0	0	0	0	**0**	**0**
0900 - 0915	0	0	0	0	0	0	0	0	0	0	0	0	0	**0**	
0915 - 0930	0	0	0	0	0	0	0	0	0	0	0	0	0	**0**	
0930 - 0945	0	0	0	0	0	0	0	0	0	0	0	0	0	**0**	
0945 - 1000	0	0	0	0	0	0	0	0	0	0	0	0	0	**0**	**0**
1000 - 1015	0	0	0	0	0	0	0	0	0	0	0	0	0	**0**	
1015 - 1030	0	0	0	0	0	0	0	0	0	0	0	0	0	**0**	
1030 - 1045	0	0	0	0	0	0	0	0	0	0	0	0	0	**0**	
1045 - 1100	0	0	0	0	0	0	0	0	0	0	0	0	0	**0**	**0**
1100 - 1115	0	0	0	0	0	0	0	0	0	0	0	0	0	**0**	
1115 - 1130	0	0	0	0	0	0	0	0	0	0	0	0	0	**0**	
1130 - 1145	0	0	0	0	0	0	0	0	0	0	0	0	0	**0**	
1145 - 1200	0	0	0	0	0	0	0	0	0	0	0	0	0	**0**	**0**
1200 - 1215	0	0	0	0	0	0	0	0	0	0	0	0	0	**0**	
1215 - 1230	0	0	0	0	0	0	0	0	0	0	0	0	0	**0**	
1230 - 1245	0	0	0	0	0	0	0	0	0	0	0	0	0	**0**	
1245 - 1300	0	0	0	0	0	0	0	0	0	0	0	0	0	**0**	**0**
1300 - 1315	0	0	0	0	0	0	0	0	0	0	0	0	0	**0**	
1315 - 1330	0	0	0	0	0	0	0	0	0	0	0	0	0	**0**	
1330 - 1345	0	0	0	0	0	0	0	0	0	0	0	0	0	**0**	
1345 - 1400	0	0	0	0	0	0	0	0	0	0	0	0	0	**0**	**0**
1400 - 1415	0	0	0	0	0	0	0	0	0	0	0	0	0	**0**	
1415 - 1430	0	0	0	0	0	0	0	0	0	0	0	0	0	**0**	
1430 - 1445	0	0	0	0	0	0	0	0	0	0	0	0	0	**0**	
1445 - 1500	0	0	0	0	0	0	0	0	0	0	0	0	0	**0**	**0**
1500 - 1515	0	0	0	0	0	0	0	0	0	0	0	0	0	**0**	
1515 - 1530	0	0	0	0	0	0	0	0	0	0	0	0	0	**0**	
1530 - 1545	0	0	0	0	0	0	0	0	0	0	0	0	0	**0**	
1545 - 1600	0	0	0	0	0	0	0	0	0	0	0	0	0	**0**	**0**
1600 - 1615	0	0	0	0	0	0	0	0	0	0	0	0	0	**0**	
1615 - 1630	0	0	0	0	0	0	0	0	0	0	0	0	0	**0**	
1630 - 1645	0	0	0	0	0	0	0	0	0	0	0	0	0	**0**	
1645 - 1700	0	0	0	0	0	0	0	0	0	0	0	0	0	**0**	**0**
1700 - 1715	0	0	0	0	0	0	0	0	0	0	0	0	0	**0**	
1715 - 1730	0	0	0	0	0	0	0	0	0	0	0	0	0	**0**	
1730 - 1745	0	0	0	0	0	0	0	0	0	0	0	0	0	**0**	
1745 - 1800	0	0	0	0	0	0	0	0	0	0	0	0	0	**0**	**0**
1800 - 1815	0	0	0	0	0	0	0	0	0	0	0	0	0	**0**	
1815 - 1830	0	0	0	0	0	0	0	0	0	0	0	0	0	**0**	
1830 - 1845	0	0	0	0	0	0	0	0	0	0	0	0	0	**0**	
1845 - 1900	0	0	0	0	0	0	0	0	0	0	0	0	0	**0**	**0**
1900 - 1915	3	68	6	0	4	0	0	0	1	0	0	0	0	**82**	
1915 - 1930	1	63	9	0	0	0	0	0	0	0	0	0	0	**73**	
1930 - 1945	1	43	12	0	0	0	0	0	0	0	0	0	0	**56**	
1945 - 2000	1	51	3	0	0	0	0	0	1	0	0	0	0	**56**	**267**
2000 - 2015	0	55	9	0	1	0	0	0	0	0	0	0	0	**65**	
2015 - 2030	1	48	4	0	0	0	0	0	0	0	0	0	0	**53**	
2030 - 2045	0	39	2	0	2	0	0	1	1	0	0	0	0	**45**	
2045 - 2100	0	41	5	0	0	0	0	0	0	0	0	0	0	**46**	**209**
2100 - 2115	0	36	5	0	0	0	0	0	0	0	0	0	0	**41**	
2115 - 2130	0	24	3	0	1	0	0	0	1	0	0	0	0	**29**	
2130 - 2145	0	36	2	0	0	0	0	0	0	0	0	0	0	**38**	
2145 - 2200	0	37	3	0	0	0	0	0	0	0	0	0	0	**40**	**148**
2200 - 2215	0	29	3	0	0	0	0	0	0	0	0	0	0	**32**	
2215 - 2230	0	23	2	0	0	0	0	0	0	0	0	0	0	**25**	
2230 - 2245	0	24	3	0	0	0	0	0	0	0	0	0	0	**27**	
2245 - 2300	0	27	3	0	0	0	0	0	0	0	0	0	0	**30**	**114**
2300 - 2315	0	28	2	0	0	0	0	0	0	0	0	0	0	**30**	
2315 - 2330	0	12	2	0	0	0	0	0	0	0	0	0	0	**14**	
2330 - 2345	0	13	2	0	0	0	0	0	1	0	0	0	0	**16**	
2345 - 0000	0	15	1	0	1	0	0	0	0	0	0	0	0	**17**	**77**

Session Total	7	712	81	0	9	0	0	1	5	0	0	0	0	**815**
Session Average	0.07	7.42	0.84	0.00	0.09	0.00	0.00	0.01	0.05	0.00	0.00	0.00	0.00	**8.49**
Session Percentage	0.86	87.36	9.94	0.00	1.10	0.00	0.00	0.12	0.61	0.00	0.00	0.00	0.00	

AM Peak Hour	-	-	-	-	-	-	-	-	-	-	-	-	-	**-**
AM Peak Volume	0	0	0	0	0	0	0	0	0	0	0	0	0	**0**

Noon Peak Hour	-	-	-	-	-	-	-	-	-	-	-	-	-	**-**
Noon Peak Volume	0	0	0	0	0	0	0	0	0	0	0	0	0	**0**

PM Peak Hour	1900 - 2000	1900 - 2000	1915 - 2015	-	1815 - 1915	-	-	1945 - 2045	1900 - 2000	-	-	-	-	**1900 - 2000**
PM Peak Volume	6	225	33	0	4	0	0	1	2	0	0	0	0	**267**

Site 40
I-26 On/Off-Ramp,
north of St Andrews Rd

Date
Wednesday, April 24, 2024

Lat/Long
34.044948°, -81.119728°

Weather
Fair
66°F

Click here for Detailed Weather

0000 - 2400 (Weekday 24h Session) (04-24-2024)
NB EB 15min

	Northbound (Movement 40.1)													15min	60min
Time	1	2	3	4	5	6	7	8	9	10	11	12	13	Total	Total
0000 - 0015	0	13	1	0	0	0	0	0	0	0	0	0	0	**14**	
0015 - 0030	0	12	1	0	0	0	0	0	0	0	0	0	0	**13**	
0030 - 0045	0	13	2	0	0	0	0	0	0	0	0	0	0	**15**	
0045 - 0100	0	8	1	0	0	0	0	0	0	0	0	0	0	**9**	**51**
0100 - 0115	0	3	1	0	0	0	0	0	0	0	0	0	0	**4**	
0115 - 0130	0	6	2	0	0	0	0	0	0	0	0	0	0	**8**	
0130 - 0145	0	5	0	0	0	0	0	0	0	0	0	0	0	**5**	
0145 - 0200	0	3	0	0	0	0	0	0	0	0	0	0	0	**3**	**20**
0200 - 0215	0	9	2	0	0	0	0	0	0	0	0	0	0	**11**	
0215 - 0230	0	4	1	0	0	0	0	0	0	0	0	0	0	**5**	
0230 - 0245	0	10	2	0	0	0	0	0	0	0	0	0	0	**12**	
0245 - 0300	0	5	1	0	0	0	0	0	0	0	0	0	0	**6**	**34**
0300 - 0315	0	10	2	0	0	0	0	0	0	0	0	0	0	**12**	
0315 - 0330	0	9	2	0	0	0	0	0	0	0	0	0	0	**11**	
0330 - 0345	0	6	1	0	0	0	0	0	0	0	0	0	0	**7**	
0345 - 0400	0	11	2	0	0	0	0	0	0	0	0	0	0	**13**	**43**
0400 - 0415	0	6	2	0	0	0	0	0	0	0	0	0	0	**8**	
0415 - 0430	0	12	3	0	0	0	0	0	1	0	0	0	0	**16**	
0430 - 0445	0	15	5	0	0	0	0	0	0	0	0	0	0	**20**	
0445 - 0500	0	14	3	0	0	0	0	0	0	0	0	0	0	**17**	**61**
0500 - 0515	0	27	3	0	0	0	0	0	0	0	0	0	0	**30**	
0515 - 0530	0	19	2	0	0	0	0	0	0	0	0	0	0	**21**	
0530 - 0545	0	33	4	0	0	1	0	0	1	0	0	0	0	**39**	
0545 - 0600	0	34	3	0	1	0	0	0	0	0	0	0	0	**38**	**128**
0600 - 0615	0	33	5	0	0	0	0	0	1	0	0	0	0	**39**	
0615 - 0630	0	57	12	0	0	0	0	0	0	0	0	0	0	**69**	
0630 - 0645	0	74	14	0	1	0	0	0	0	0	0	0	0	**89**	
0645 - 0700	0	68	9	0	0	0	0	0	0	0	0	0	0	**77**	**274**
0700 - 0715	0	86	13	0	1	0	0	0	1	0	0	0	0	**101**	
0715 - 0730	0	90	12	0	0	0	0	0	0	0	0	0	0	**102**	
0730 - 0745	0	110	23	0	0	0	0	0	0	0	0	0	0	**133**	
0745 - 0800	0	117	18	0	1	0	0	0	0	0	0	0	0	**136**	**472**
0800 - 0815	0	103	14	0	2	0	0	1	1	0	0	0	0	**121**	
0815 - 0830	0	90	19	0	0	0	0	1	0	0	0	0	0	**110**	
0830 - 0845	0	70	13	1	3	1	0	0	0	0	0	0	0	**88**	
0845 - 0900	0	67	18	0	3	2	0	1	0	0	0	0	0	**91**	**410**
0900 - 0915	1	48	12	0	2	1	0	0	1	0	0	0	0	**65**	
0915 - 0930	0	69	18	0	2	0	0	1	0	0	0	0	0	**90**	
0930 - 0945	0	67	12	2	2	0	1	0	0	0	0	0	0	**84**	
0945 - 1000	1	68	17	0	3	1	0	0	0	0	0	0	0	**90**	**329**
1000 - 1015	0	60	15	0	0	0	1	1	0	0	0	0	0	**77**	
1015 - 1030	0	61	18	0	4	0	2	0	1	0	0	0	0	**86**	
1030 - 1045	1	76	22	0	0	0	0	1	0	0	0	0	0	**100**	
1045 - 1100	0	76	17	0	0	2	1	0	0	0	0	0	0	**96**	**359**
1100 - 1115	0	78	12	0	0	1	0	1	0	0	0	0	0	**92**	
1115 - 1130	0	64	21	0	3	0	1	2	0	0	0	0	0	**91**	
1130 - 1145	0	74	8	0	3	0	0	0	0	0	0	0	0	**85**	
1145 - 1200	0	73	26	0	2	2	0	0	0	0	0	0	0	**103**	**371**
1200 - 1215	0	82	24	0	2	0	0	0	0	0	0	0	0	**108**	
1215 - 1230	0	66	16	1	3	0	0	0	2	0	0	0	0	**88**	
1230 - 1245	1	79	36	0	3	0	0	0	0	0	0	0	0	**119**	
1245 - 1300	1	75	27	0	1	1	0	0	0	0	0	0	0	**105**	**420**
1300 - 1315	1	82	16	0	0	1	0	0	0	0	0	0	0	**100**	
1315 - 1330	0	78	19	0	3	0	0	1	1	0	0	0	0	**102**	
1330 - 1345	1	98	16	0	2	2	0	0	1	0	0	0	0	**120**	
1345 - 1400	1	68	22	1	1	0	0	0	1	0	0	0	0	**94**	**416**
1400 - 1415	1	80	19	0	2	0	0	0	0	0	0	0	0	**102**	
1415 - 1430	0	95	24	0	1	0	1	1	1	0	0	0	0	**123**	
1430 - 1445	0	109	23	0	1	0	0	0	0	0	0	0	0	**133**	
1445 - 1500	1	86	27	1	0	1	1	0	2	0	0	0	0	**119**	**477**
1500 - 1515	0	103	28	1	0	0	0	0	1	0	0	0	0	**133**	
1515 - 1530	1	126	17	1	2	1	0	0	0	0	0	0	0	**148**	
1530 - 1545	2	116	32	0	2	2	0	0	0	0	0	0	0	**154**	
1545 - 1600	1	119	13	1	0	0	0	1	1	0	0	0	0	**136**	**571**
1600 - 1615	1	182	25	0	3	1	0	1	0	0	0	0	0	**213**	
1615 - 1630	1	151	35	1	3	0	0	0	1	0	0	0	0	**192**	
1630 - 1645	1	177	31	0	4	0	0	1	0	0	0	0	0	**214**	
1645 - 1700	0	160	33	1	4	0	0	0	0	0	0	0	0	**198**	**817**
1700 - 1715	0	214	34	1	1	0	0	0	0	0	0	0	0	**250**	
1715 - 1730	0	122	29	0	3	0	0	0	0	0	0	0	0	**154**	
1730 - 1745	1	112	21	0	2	0	0	0	0	0	0	0	0	**136**	
1745 - 1800	0	97	13	0	1	0	0	0	0	0	0	0	0	**111**	**651**
1800 - 1815	1	98	21	0	0	0	0	0	1	0	0	0	0	**121**	
1815 - 1830	0	81	16	0	0	0	0	1	1	0	0	0	0	**99**	
1830 - 1845	0	84	13	0	2	0	0	0	0	0	0	0	0	**99**	
1845 - 1900	0	60	9	1	1	0	0	0	0	0	0	0	0	**71**	**390**
1900 - 1915	0	50	8	0	3	0	0	0	0	0	0	0	0	**61**	
1915 - 1930	0	53	9	0	0	0	0	0	0	0	0	0	0	**62**	
1930 - 1945	0	69	16	0	2	0	0	0	0	0	0	0	0	**87**	
1945 - 2000	0	54	14	0	1	0	0	0	0	0	0	0	0	**69**	**279**
2000 - 2015	4	57	12	0	0	0	0	0	0	0	0	0	0	**73**	
2015 - 2030	0	70	10	0	0	0	0	0	0	0	0	0	0	**80**	
2030 - 2045	0	41	7	0	0	0	0	0	1	0	0	0	0	**49**	
2045 - 2100	0	62	10	0	0	0	0	0	0	0	0	0	0	**72**	**274**
2100 - 2115	0	45	6	0	0	0	0	0	0	0	0	0	0	**51**	
2115 - 2130	0	36	5	0	0	0	0	0	0	0	0	0	0	**41**	
2130 - 2145	0	41	4	0	0	0	0	0	0	0	0	0	0	**45**	
2145 - 2200	0	31	3	0	0	0	0	0	0	0	0	0	0	**34**	**171**
2200 - 2215	0	27	2	0	0	0	0	1	0	0	0	0	0	**30**	
2215 - 2230	0	23	2	0	0	0	0	0	0	0	0	0	0	**25**	
2230 - 2245	0	32	4	0	0	0	0	0	0	0	1	0	0	**37**	
2245 - 2300	0	30	2	0	0	0	0	0	0	0	0	0	0	**32**	**124**
2300 - 2315	0	27	2	0	0	1	0	0	0	0	0	0	0	**30**	
2315 - 2330	0	25	2	0	0	0	0	0	0	0	0	0	0	**27**	
2330 - 2345	0	17	3	0	0	0	0	0	0	0	0	0	0	**20**	
2345 - 0000	0	23	4	1	0	0	0	0	0	0	0	0	0	**28**	**105**

Session Total	23	5879	1178	14	86	21	8	16	21	0	1	0	0	**7247**
Session Average	0.24	61.24	12.27	0.15	0.90	0.22	0.08	0.17	0.22	0.00	0.01	0.00	0.00	**75.49**
Session Percentage	0.32	81.12	16.26	0.19	1.19	0.29	0.11	0.22	0.29	0.00	0.01	0.00	0.00	

AM Peak Hour	0900 - 1000	0715 - 0815	0730 - 0830	0845 - 0945	0830 - 0930	0815 - 0915	0930 - 1030	0800 - 0900	0515 - 0615	-	-	-	-	**0730 - 0830**
AM Peak Volume	2	420	74	2	10	4	4	3	2	0	0	0	0	**500**

Noon Peak Hour	1445 - 1545	1445 - 1545	1445 - 1545	1430 - 1530	1115 - 1215	1245 - 1345	1000 - 1100	1030 - 1130	1415 - 1515	-	-	-	-	**1445 - 1545**
Noon Peak Volume	4	431	104	3	10	4	4	4	4	0	0	0	0	**554**

PM Peak Hour	1515 - 1615	1615 - 1715	1615 - 1715	1500 - 1600	1600 - 1700	1515 - 1615	-	1545 - 1645	1500 - 1600	-	-	-	-	**1615 - 1715**
PM Peak Volume	5	702	133	3	14	4	0	3	2	0	0	0	0	**854**

Site 40
I-26 On/Off-Ramp,
north of St Andrews Rd

Date
Thursday, April 25, 2024

Lat/Long
34.044948°, -81.119728°

Weather
Fair
67°F

Click here for Detailed Weather

0000 - 2400 (Weekday 24h Session) (04-25-2024)
NB EB 15min

	Northbound (Movement 40.1)													15min	60min
TIME	1	2	3	4	5	6	7	8	9	10	11	12	13	Total	Total
0000 - 0015	0	13	1	0	0	0	0	0	0	0	0	0	0	**14**	
0015 - 0030	0	19	2	0	0	0	0	0	0	0	0	0	0	**21**	
0030 - 0045	0	11	0	0	0	0	0	0	1	0	0	0	0	**12**	
0045 - 0100	0	10	2	0	0	0	0	0	0	0	0	0	0	**12**	**59**
0100 - 0115	0	10	1	0	0	0	0	0	0	0	0	0	0	**11**	
0115 - 0130	0	11	0	0	0	0	0	0	0	0	0	0	0	**11**	
0130 - 0145	0	13	2	0	0	0	0	0	0	0	0	0	0	**15**	
0145 - 0200	0	8	0	0	0	0	0	0	0	0	0	0	0	**8**	**45**
0200 - 0215	0	4	0	0	0	0	0	0	0	0	0	0	0	**4**	
0215 - 0230	0	4	1	0	0	0	0	0	0	0	0	0	0	**5**	
0230 - 0245	0	5	1	0	0	0	0	0	0	0	0	0	0	**6**	
0245 - 0300	0	5	0	0	0	0	0	0	0	0	0	0	0	**5**	**20**
0300 - 0315	0	6	1	0	0	0	0	0	1	0	0	0	0	**8**	
0315 - 0330	0	7	0	0	0	0	0	0	0	0	0	0	0	**7**	
0330 - 0345	0	11	3	0	0	0	0	0	0	0	0	0	0	**14**	
0345 - 0400	0	10	0	0	1	0	0	0	0	0	0	0	0	**11**	**40**
0400 - 0415	0	11	3	0	0	0	0	0	0	0	0	0	0	**14**	
0415 - 0430	0	10	2	0	0	0	0	0	0	0	0	0	0	**12**	
0430 - 0445	0	16	1	0	0	0	0	0	0	0	0	0	0	**17**	
0445 - 0500	0	19	2	0	0	0	0	0	0	0	0	0	0	**21**	**64**
0500 - 0515	0	17	1	0	0	0	0	0	1	0	0	0	0	**19**	
0515 - 0530	0	19	2	0	0	0	0	0	0	0	0	0	0	**21**	
0530 - 0545	0	31	4	0	0	0	0	0	0	0	0	0	0	**35**	
0545 - 0600	0	41	3	0	0	0	0	0	0	0	0	0	0	**44**	**119**
0600 - 0615	0	43	6	0	0	1	0	0	1	0	0	0	0	**51**	
0615 - 0630	0	40	7	0	0	0	0	0	0	0	0	0	0	**47**	
0630 - 0645	0	70	14	0	1	1	0	0	0	0	0	0	0	**86**	
0645 - 0700	0	77	15	0	0	0	0	0	1	0	0	0	0	**93**	**277**
0700 - 0715	0	80	15	0	1	0	0	0	1	0	0	0	0	**97**	
0715 - 0730	0	89	14	0	1	0	0	0	2	0	0	0	0	**106**	
0730 - 0745	0	125	17	0	1	0	0	0	1	0	0	0	0	**144**	
0745 - 0800	1	122	24	0	2	0	0	1	0	0	0	0	0	**150**	**497**
0800 - 0815	0	101	21	0	1	0	0	0	0	0	0	0	0	**123**	
0815 - 0830	0	99	25	0	0	0	0	1	1	0	0	0	0	**126**	
0830 - 0845	0	88	18	0	1	0	0	0	0	0	0	0	0	**107**	
0845 - 0900	0	67	11	0	0	2	0	0	0	0	0	0	0	**80**	**436**
0900 - 0915	0	50	14	0	1	0	0	1	1	0	0	0	0	**67**	
0915 - 0930	0	66	24	0	4	1	0	0	1	0	0	0	0	**96**	
0930 - 0945	0	63	20	0	0	0	1	0	0	0	0	0	0	**84**	
0945 - 1000	0	75	23	0	0	0	0	1	0	0	0	0	0	**99**	**346**
1000 - 1015	0	63	16	0	2	1	0	1	0	0	0	0	0	**83**	
1015 - 1030	1	58	16	0	1	1	0	0	0	0	0	0	0	**77**	
1030 - 1045	0	66	13	0	1	1	0	0	1	0	0	0	0	**82**	
1045 - 1100	1	77	17	0	0	1	0	1	0	0	0	0	0	**97**	**339**
1100 - 1115	0	66	15	0	5	1	0	0	2	0	0	0	0	**89**	
1115 - 1130	0	73	16	0	3	0	1	0	1	0	0	0	0	**94**	
1130 - 1145	0	79	18	0	4	3	0	0	0	0	0	0	0	**104**	
1145 - 1200	0	80	18	0	1	0	0	1	1	0	0	0	0	**101**	**388**
1200 - 1215	0	89	18	0	1	1	0	0	2	0	0	0	0	**111**	
1215 - 1230	1	72	15	1	0	1	0	0	0	0	0	0	0	**90**	
1230 - 1245	0	96	24	0	2	0	0	1	0	0	0	0	0	**123**	
1245 - 1300	0	75	16	0	2	1	0	0	0	0	0	0	0	**94**	**418**
1300 - 1315	0	77	27	0	0	2	0	0	1	0	0	0	0	**107**	
1315 - 1330	0	77	16	0	3	0	0	2	0	0	0	0	0	**98**	
1330 - 1345	1	84	19	0	4	0	0	0	1	0	0	0	0	**109**	
1345 - 1400	0	91	24	0	2	0	0	0	0	0	0	0	0	**117**	**431**
1400 - 1415	1	96	32	0	0	1	0	0	0	0	0	0	0	**130**	
1415 - 1430	0	95	18	1	2	0	0	0	0	0	0	0	0	**116**	
1430 - 1445	1	96	21	0	1	2	0	0	0	0	0	0	0	**121**	
1445 - 1500	2	80	21	0	1	1	0	1	0	0	0	0	0	**106**	**473**
1500 - 1515	0	119	28	1	3	0	0	0	3	0	0	0	0	**154**	
1515 - 1530	1	96	19	0	2	0	0	2	1	0	0	0	0	**121**	
1530 - 1545	1	137	33	0	4	0	0	0	0	0	0	0	0	**175**	
1545 - 1600	0	149	28	0	2	0	0	0	0	0	0	0	0	**179**	**629**
1600 - 1615	2	177	28	0	2	0	0	0	0	0	0	0	0	**209**	
1615 - 1630	0	133	27	0	5	0	0	1	1	0	0	0	0	**167**	
1630 - 1645	2	180	30	0	2	0	0	0	0	0	0	0	0	**214**	
1645 - 1700	0	148	30	1	0	0	0	0	0	0	0	0	0	**179**	**769**
1700 - 1715	0	198	37	0	0	0	0	1	0	0	0	0	0	**236**	
1715 - 1730	1	120	27	0	0	0	0	1	0	0	0	0	0	**149**	
1730 - 1745	0	114	21	0	0	1	0	1	2	0	0	0	0	**139**	
1745 - 1800	0	95	15	0	3	0	0	1	0	0	0	0	0	**114**	**638**
1800 - 1815	0	95	20	0	0	0	0	1	0	0	0	0	0	**116**	
1815 - 1830	0	96	12	0	1	0	0	0	0	0	0	0	0	**109**	
1830 - 1845	0	82	10	0	1	0	0	0	0	0	0	0	0	**93**	
1845 - 1900	0	63	8	0	3	0	0	0	0	0	0	0	0	**74**	**392**
1900 - 1915	0	0	0	0	0	0	0	0	0	0	0	0	0	**0**	
1915 - 1930	0	0	0	0	0	0	0	0	0	0	0	0	0	**0**	
1930 - 1945	0	0	0	0	0	0	0	0	0	0	0	0	0	**0**	
1945 - 2000	0	0	0	0	0	0	0	0	0	0	0	0	0	**0**	**0**
2000 - 2015	0	0	0	0	0	0	0	0	0	0	0	0	0	**0**	
2015 - 2030	0	0	0	0	0	0	0	0	0	0	0	0	0	**0**	
2030 - 2045	0	0	0	0	0	0	0	0	0	0	0	0	0	**0**	
2045 - 2100	0	0	0	0	0	0	0	0	0	0	0	0	0	**0**	**0**
2100 - 2115	0	0	0	0	0	0	0	0	0	0	0	0	0	**0**	
2115 - 2130	0	0	0	0	0	0	0	0	0	0	0	0	0	**0**	
2130 - 2145	0	0	0	0	0	0	0	0	0	0	0	0	0	**0**	
2145 - 2200	0	0	0	0	0	0	0	0	0	0	0	0	0	**0**	**0**
2200 - 2215	0	0	0	0	0	0	0	0	0	0	0	0	0	**0**	
2215 - 2230	0	0	0	0	0	0	0	0	0	0	0	0	0	**0**	
2230 - 2245	0	0	0	0	0	0	0	0	0	0	0	0	0	**0**	
2245 - 2300	0	0	0	0	0	0	0	0	0	0	0	0	0	**0**	**0**
2300 - 2315	0	0	0	0	0	0	0	0	0	0	0	0	0	**0**	
2315 - 2330	0	0	0	0	0	0	0	0	0	0	0	0	0	**0**	
2330 - 2345	0	0	0	0	0	0	0	0	0	0	0	0	0	**0**	
2345 - 0000	0	0	0	0	0	0	0	0	0	0	0	0	0	**0**	**0**

Session Total	16	5158	1053	4	77	23	2	19	28	0	0	0	0	**6380**
Session Average	0.17	53.73	10.97	0.04	0.80	0.24	0.02	0.20	0.29	0.00	0.00	0.00	0.00	**66.46**
Session Percentage	0.25	80.85	16.50	0.06	1.21	0.36	0.03	0.30	0.44	0.00	0.00	0.00	0.00	

AM Peak Hour	0700 - 0800	0730 - 0830	0745 - 0845	-	0830 - 0930	0830 - 0930	0845 - 0945	0730 - 0830	0645 - 0745	-	-	-	-	**0730 - 0830**
AM Peak Hour Volume	1	447	88	0	6	3	1	2	5	0	0	0	0	**543**

Noon Peak Hour	1400 - 1500	1445 - 1545	1445 - 1545	1415 - 1515	1100 - 1200	1045 - 1145	1030 - 1130	1230 - 1330	1030 - 1130	-	-	-	-	**1445 - 1545**
Noon Peak Hour Volume	4	432	101	2	13	5	1	3	4	0	0	0	0	**556**

PM Peak Hour	1515 - 1615	1615 - 1715	1615 - 1715	1500 - 1600	1530 - 1630	1645 - 1745	-	1700 - 1800	1500 - 1600	-	-	-	-	**1615 - 1715**
PM Peak Hour Volume	4	659	124	1	13	1	0	4	4	0	0	0	0	**796**

Bi-Directional Class Count || NB EB Average 15min

Columbia, SC

Marr Traffic DATA COLLECTION
www.marrtraffic.com

Site 40
I-26 On/Off-Ramp,
north of St Andrews Rd

Date
Tuesday, April 23, 2024

Lat/Long
34.044948°, -81.119728°

Weather
Fair
58°F

0000 - 2400 (Weekday 24h Session) (All Dates)
NB EB Average 15min

	NB EB Average 15min													15min	60min
Time	1	2	3	4	5	6	7	8	9	10	11	12	13	Total	Total
0000 - 0015	0	9	1	0	0	0	0	0	0	0	0	0	0	**9**	
0015 - 0030	0	10	1	0	0	0	0	0	0	0	0	0	0	**11**	
0030 - 0045	0	8	1	0	0	0	0	0	0	0	0	0	0	**9**	
0045 - 0100	0	6	1	0	0	0	0	0	0	0	0	0	0	**7**	**37**
0100 - 0115	0	4	1	0	0	0	0	0	0	0	0	0	0	**5**	
0115 - 0130	0	6	1	0	0	0	0	0	0	0	0	0	0	**6**	
0130 - 0145	0	6	1	0	0	0	0	0	0	0	0	0	0	**7**	
0145 - 0200	0	4	0	0	0	0	0	0	0	0	0	0	0	**4**	**22**
0200 - 0215	0	4	1	0	0	0	0	0	0	0	0	0	0	**5**	
0215 - 0230	0	3	1	0	0	0	0	0	0	0	0	0	0	**3**	
0230 - 0245	0	5	1	0	0	0	0	0	0	0	0	0	0	**6**	
0245 - 0300	0	3	0	0	0	0	0	0	0	0	0	0	0	**4**	**18**
0300 - 0315	0	5	1	0	0	0	0	0	0	0	0	0	0	**7**	
0315 - 0330	0	5	1	0	0	0	0	0	0	0	0	0	0	**6**	
0330 - 0345	0	6	1	0	0	0	0	0	0	0	0	0	0	**7**	
0345 - 0400	0	7	1	0	0	0	0	0	0	0	0	0	0	**8**	**28**
0400 - 0415	0	6	2	0	0	0	0	0	0	0	0	0	0	**7**	
0415 - 0430	0	7	2	0	0	0	0	0	0	0	0	0	0	**9**	
0430 - 0445	0	10	2	0	0	0	0	0	0	0	0	0	0	**12**	
0445 - 0500	0	11	2	0	0	0	0	0	0	0	0	0	0	**13**	**42**
0500 - 0515	0	15	1	0	0	0	0	0	0	0	0	0	0	**16**	
0515 - 0530	0	13	1	0	0	0	0	0	0	0	0	0	0	**14**	
0530 - 0545	0	21	3	0	0	0	0	0	0	0	0	0	0	**25**	
0545 - 0600	0	25	2	0	0	0	0	0	0	0	0	0	0	**27**	**82**
0600 - 0615	0	25	4	0	0	0	0	0	1	0	0	0	0	**30**	
0615 - 0630	0	32	6	0	0	0	0	0	0	0	0	0	0	**39**	
0630 - 0645	0	48	9	0	1	0	0	0	0	0	0	0	0	**58**	
0645 - 0700	0	48	8	0	0	0	0	0	0	0	0	0	0	**57**	**184**
0700 - 0715	0	55	9	0	1	0	0	0	1	0	0	0	0	**66**	
0715 - 0730	0	60	9	0	0	0	0	0	1	0	0	0	0	**69**	
0730 - 0745	0	78	13	0	0	0	0	0	0	0	0	0	0	**92**	
0745 - 0800	0	80	14	0	1	0	0	0	0	0	0	0	0	**95**	**323**
0800 - 0815	0	68	12	0	1	0	0	0	0	0	0	0	0	**81**	
0815 - 0830	0	63	15	0	0	0	0	1	0	0	0	0	0	**79**	
0830 - 0845	0	53	10	0	1	0	0	0	0	0	0	0	0	**65**	
0845 - 0900	0	45	10	0	1	1	0	0	0	0	0	0	0	**57**	**282**
0900 - 0915	0	33	9	0	1	0	0	0	1	0	0	0	0	**44**	
0915 - 0930	0	45	14	0	2	0	0	0	0	0	0	0	0	**62**	
0930 - 0945	0	43	11	1	1	0	1	0	0	0	0	0	0	**56**	
0945 - 1000	0	48	13	0	1	0	0	0	0	0	0	0	0	**63**	**225**
1000 - 1015	0	41	10	0	1	0	0	1	0	0	0	0	0	**53**	
1015 - 1030	0	40	11	0	2	0	1	0	0	0	0	0	0	**54**	
1030 - 1045	0	47	12	0	0	0	0	0	0	0	0	0	0	**61**	
1045 - 1100	0	51	11	0	0	1	0	0	0	0	0	0	0	**64**	**233**
1100 - 1115	0	48	9	0	2	1	0	0	1	0	0	0	0	**60**	
1115 - 1130	0	46	12	0	2	0	1	1	0	0	0	0	0	**62**	
1130 - 1145	0	51	9	0	2	1	0	0	0	0	0	0	0	**63**	
1145 - 1200	0	51	15	0	1	1	0	0	0	0	0	0	0	**68**	**253**
1200 - 1215	0	57	14	0	1	0	0	0	1	0	0	0	0	**73**	
1215 - 1230	0	46	10	1	1	0	0	0	1	0	0	0	0	**59**	
1230 - 1245	0	58	20	0	2	0	0	0	0	0	0	0	0	**81**	
1245 - 1300	0	50	14	0	1	1	0	0	0	0	0	0	0	**66**	**279**
1300 - 1315	0	53	14	0	0	1	0	0	0	0	0	0	0	**69**	
1315 - 1330	0	52	12	0	2	0	0	1	0	0	0	0	0	**67**	
1330 - 1345	1	61	12	0	2	1	0	0	1	0	0	0	0	**76**	
1345 - 1400	0	53	15	0	1	0	0	0	0	0	0	0	0	**70**	**282**
1400 - 1415	1	59	17	0	1	0	0	0	0	0	0	0	0	**77**	
1415 - 1430	0	63	14	0	1	0	0	0	0	0	0	0	0	**80**	
1430 - 1445	0	68	15	0	1	1	0	0	0	0	0	0	0	**85**	
1445 - 1500	1	55	16	0	0	1	0	0	1	0	0	0	0	**75**	**317**
1500 - 1515	0	74	19	1	1	0	0	0	1	0	0	0	0	**96**	
1515 - 1530	1	74	12	0	1	0	0	1	0	0	0	0	0	**90**	
1530 - 1545	1	84	22	0	2	1	0	0	0	0	0	0	0	**110**	
1545 - 1600	0	89	14	0	1	0	0	0	0	0	0	0	0	**105**	**400**
1600 - 1615	1	120	18	0	2	0	0	0	0	0	0	0	0	**141**	
1615 - 1630	0	95	21	0	3	0	0	0	1	0	0	0	0	**120**	
1630 - 1645	1	119	20	0	2	0	0	0	0	0	0	0	0	**143**	
1645 - 1700	0	103	21	1	1	0	0	0	0	0	0	0	0	**126**	**529**
1700 - 1715	0	137	24	0	0	0	0	0	0	0	0	0	0	**162**	
1715 - 1730	0	81	19	0	1	0	0	0	0	0	0	0	0	**101**	
1730 - 1745	0	75	14	0	1	0	0	0	1	0	0	0	0	**92**	
1745 - 1800	0	64	9	0	1	0	0	0	0	0	0	0	0	**75**	**430**
1800 - 1815	0	64	14	0	0	0	0	0	0	0	0	0	0	**79**	
1815 - 1830	0	59	9	0	0	0	0	0	0	0	0	0	0	**69**	
1830 - 1845	0	55	8	0	1	0	0	0	0	0	0	0	0	**64**	
1845 - 1900	0	41	6	0	1	0	0	0	0	0	0	0	0	**48**	**261**
1900 - 1915	1	39	5	0	2	0	0	0	0	0	0	0	0	**48**	
1915 - 1930	0	39	6	0	0	0	0	0	0	0	0	0	0	**45**	
1930 - 1945	0	37	9	0	1	0	0	0	0	0	0	0	0	**48**	
1945 - 2000	0	35	6	0	0	0	0	0	0	0	0	0	0	**42**	**182**
2000 - 2015	1	37	7	0	0	0	0	0	0	0	0	0	0	**46**	
2015 - 2030	0	39	5	0	0	0	0	0	0	0	0	0	0	**44**	
2030 - 2045	0	27	3	0	1	0	0	0	1	0	0	0	0	**31**	
2045 - 2100	0	34	5	0	0	0	0	0	0	0	0	0	0	**39**	**161**
2100 - 2115	0	27	4	0	0	0	0	0	0	0	0	0	0	**31**	
2115 - 2130	0	20	3	0	0	0	0	0	0	0	0	0	0	**23**	
2130 - 2145	0	26	2	0	0	0	0	0	0	0	0	0	0	**28**	
2145 - 2200	0	23	2	0	0	0	0	0	0	0	0	0	0	**25**	**106**
2200 - 2215	0	19	2	0	0	0	0	0	0	0	0	0	0	**21**	
2215 - 2230	0	15	1	0	0	0	0	0	0	0	0	0	0	**17**	
2230 - 2245	0	19	2	0	0	0	0	0	0	0	0	0	0	**21**	
2245 - 2300	0	19	2	0	0	0	0	0	0	0	0	0	0	**21**	**79**
2300 - 2315	0	18	1	0	0	0	0	0	0	0	0	0	0	**20**	
2315 - 2330	0	12	1	0	0	0	0	0	0	0	0	0	0	**14**	
2330 - 2345	0	10	2	0	0	0	0	0	0	0	0	0	0	**12**	
2345 - 0000	0	13	2	0	0	0	0	0	0	0	0	0	0	**15**	**61**

Session Total	15	3916	771	6	57	15	3	12	18	0	0	0	0	**4814**
Session Average	0.16	40.80	8.03	0.06	0.60	0.15	0.03	0.13	0.19	0.00	0.00	0.00	0.00	**50.15**
Session Percentage	0.32	81.35	16.01	0.12	1.19	0.30	0.07	0.25	0.37	0.00	0.01	0.00	0.00	

AM Peak Hour	0945 - 1045	0730 - 0830	0730 - 0830	0845 - 0945	0830 - 0930	0830 - 0930	0930 - 1030	0730 - 0830	0645 - 0745	-	-	-	-	**0730 - 0830**
AM Peak Volume	1	289	54	1	5	2	2	1	2	0	0	0	0	**348**

Noon Peak Hour	1445 - 1545	1445 - 1545	1445 - 1545	1415 - 1515	1100 - 1200	1045 - 1145	1000 - 1100	1030 - 1130	1430 - 1530	-	-	-	-	**1445 - 1545**
Noon Peak Volume	3	288	68	1	7	3	1	2	2	0	0	0	0	**370**

PM Peak Hour	1515 - 1615	1615 - 1715	1615 - 1715	1500 - 1600	1600 - 1700	1515 - 1615	-	1515 - 1615	1500 - 1600	-	-	-	-	**1615 - 1715**
PM Peak Volume	3	454	86	1	8	1	0	1	2	0	0	0	0	**550**

Bi-Directional Class Count || Volume Summary 15min

Columbia, SC

Marr Traffic DATA COLLECTION

www.marrtraffic.com

Site 40

I-26 On/Off-Ramp,
north of St Andrews Rd

Date

Tuesday, April 23, 2024

Lat/Long

34.044948°, -81.119728°

Weather

Fair
58°F

Click here for Detailed Weather

0000 - 2400 (Weekday 24h Session) (04-23-2024)

Volume Summary 15min

TIME	Volume Summary 15min NB	SB	15min Total	60min Total
0000 - 0015	0	0	**0**	
0015 - 0030	0	0	**0**	
0030 - 0045	0	0	**0**	
0045 - 0100	0	0	**0**	**0**
0100 - 0115	0	0	**0**	
0115 - 0130	0	0	**0**	
0130 - 0145	0	0	**0**	
0145 - 0200	0	0	**0**	**0**
0200 - 0215	0	0	**0**	
0215 - 0230	0	0	**0**	
0230 - 0245	0	0	**0**	
0245 - 0300	0	0	**0**	**0**
0300 - 0315	0	0	**0**	
0315 - 0330	0	0	**0**	
0330 - 0345	0	0	**0**	
0345 - 0400	0	0	**0**	**0**
0400 - 0415	0	0	**0**	
0415 - 0430	0	0	**0**	
0430 - 0445	0	0	**0**	
0445 - 0500	0	0	**0**	**0**
0500 - 0515	0	0	**0**	
0515 - 0530	0	0	**0**	
0530 - 0545	0	0	**0**	
0545 - 0600	0	0	**0**	**0**
0600 - 0615	0	0	**0**	
0615 - 0630	0	0	**0**	
0630 - 0645	0	0	**0**	
0645 - 0700	0	0	**0**	**0**
0700 - 0715	0	0	**0**	
0715 - 0730	0	0	**0**	
0730 - 0745	0	0	**0**	
0745 - 0800	0	0	**0**	**0**
0800 - 0815	0	0	**0**	
0815 - 0830	0	0	**0**	
0830 - 0845	0	0	**0**	
0845 - 0900	0	0	**0**	**0**
0900 - 0915	0	0	**0**	
0915 - 0930	0	0	**0**	
0930 - 0945	0	0	**0**	
0945 - 1000	0	0	**0**	**0**
1000 - 1015	0	0	**0**	
1015 - 1030	0	0	**0**	
1030 - 1045	0	0	**0**	
1045 - 1100	0	0	**0**	**0**
1100 - 1115	0	0	**0**	
1115 - 1130	0	0	**0**	
1130 - 1145	0	0	**0**	
1145 - 1200	0	0	**0**	**0**

Time	Volume Summary 15min NB	SB	15min Total	60min Total
1200 - 1215	0	0	**0**	
1215 - 1230	0	0	**0**	
1230 - 1245	0	0	**0**	
1245 - 1300	0	0	**0**	**0**
1300 - 1315	0	0	**0**	
1315 - 1330	0	0	**0**	
1330 - 1345	0	0	**0**	
1345 - 1400	0	0	**0**	**0**
1400 - 1415	0	0	**0**	
1415 - 1430	0	0	**0**	
1430 - 1445	0	0	**0**	
1445 - 1500	0	0	**0**	**0**
1500 - 1515	0	0	**0**	
1515 - 1530	0	0	**0**	
1530 - 1545	0	0	**0**	
1545 - 1600	0	0	**0**	**0**
1600 - 1615	0	0	**0**	
1615 - 1630	0	0	**0**	
1630 - 1645	0	0	**0**	
1645 - 1700	0	0	**0**	**0**
1700 - 1715	0	0	**0**	
1715 - 1730	0	0	**0**	
1730 - 1745	0	0	**0**	
1745 - 1800	0	0	**0**	**0**
1800 - 1815	0	0	**0**	
1815 - 1830	0	0	**0**	
1830 - 1845	0	0	**0**	
1845 - 1900	0	0	**0**	**0**
1900 - 1915	82	0	**82**	
1915 - 1930	73	0	**73**	
1930 - 1945	56	0	**56**	
1945 - 2000	56	0	**56**	**267**
2000 - 2015	65	0	**65**	
2015 - 2030	53	0	**53**	
2030 - 2045	45	0	**45**	
2045 - 2100	46	0	**46**	**209**
2100 - 2115	41	0	**41**	
2115 - 2130	29	0	**29**	
2130 - 2145	38	0	**38**	
2145 - 2200	40	0	**40**	**148**
2200 - 2215	32	0	**32**	
2215 - 2230	25	0	**25**	
2230 - 2245	27	0	**27**	
2245 - 2300	30	0	**30**	**114**
2300 - 2315	30	0	**30**	
2315 - 2330	14	0	**14**	
2330 - 2345	16	0	**16**	
2345 - 0000	17	0	**17**	**77**

Session Total	815	0	**815**
Session Average	8.49	0.00	**8.49**
Session Percentage	100.00	0.00	

Site 40

I-26 On/Off-Ramp,
north of St Andrews Rd

Date

Wednesday, April 24, 2024

Lat/Long

34.044948°, -81.119728°

Weather

Fair
66°F

Click here for Detailed Weather

0000 - 2400 (Weekday 24h Session) (04-24-2024)

Volume Summary 15min

TIME	Volume Summary 15min NB	SB	15min Total	60min Total
0000 - 0015	14	0	**14**	
0015 - 0030	13	0	**13**	
0030 - 0045	15	0	**15**	
0045 - 0100	9	0	**9**	**51**
0100 - 0115	4	0	**4**	
0115 - 0130	8	0	**8**	
0130 - 0145	5	0	**5**	
0145 - 0200	3	0	**3**	**20**
0200 - 0215	11	0	**11**	
0215 - 0230	5	0	**5**	
0230 - 0245	12	0	**12**	
0245 - 0300	6	0	**6**	**34**
0300 - 0315	12	0	**12**	
0315 - 0330	11	0	**11**	
0330 - 0345	7	0	**7**	
0345 - 0400	13	0	**13**	**43**
0400 - 0415	8	0	**8**	
0415 - 0430	16	0	**16**	
0430 - 0445	20	0	**20**	
0445 - 0500	17	0	**17**	**61**
0500 - 0515	30	0	**30**	
0515 - 0530	21	0	**21**	
0530 - 0545	39	0	**39**	
0545 - 0600	38	0	**38**	**128**
0600 - 0615	39	0	**39**	
0615 - 0630	69	0	**69**	
0630 - 0645	89	0	**89**	
0645 - 0700	77	0	**77**	**274**
0700 - 0715	101	0	**101**	
0715 - 0730	102	0	**102**	
0730 - 0745	133	0	**133**	
0745 - 0800	136	0	**136**	**472**
0800 - 0815	121	0	**121**	
0815 - 0830	110	0	**110**	
0830 - 0845	88	0	**88**	
0845 - 0900	91	0	**91**	**410**
0900 - 0915	65	0	**65**	
0915 - 0930	90	0	**90**	
0930 - 0945	84	0	**84**	
0945 - 1000	90	0	**90**	**329**
1000 - 1015	77	0	**77**	
1015 - 1030	86	0	**86**	
1030 - 1045	100	0	**100**	
1045 - 1100	96	0	**96**	**359**
1100 - 1115	92	0	**92**	
1115 - 1130	91	0	**91**	
1130 - 1145	85	0	**85**	
1145 - 1200	103	0	**103**	**371**

Time	Volume Summary 15min NB	SB	15min Total	60min Total
1200 - 1215	108	0	**108**	
1215 - 1230	88	0	**88**	
1230 - 1245	119	0	**119**	
1245 - 1300	105	0	**105**	**420**
1300 - 1315	100	0	**100**	
1315 - 1330	102	0	**102**	
1330 - 1345	120	0	**120**	
1345 - 1400	94	0	**94**	**416**
1400 - 1415	102	0	**102**	
1415 - 1430	123	0	**123**	
1430 - 1445	133	0	**133**	
1445 - 1500	119	0	**119**	**477**
1500 - 1515	133	0	**133**	
1515 - 1530	148	0	**148**	
1530 - 1545	154	0	**154**	
1545 - 1600	136	0	**136**	**571**
1600 - 1615	213	0	**213**	
1615 - 1630	192	0	**192**	
1630 - 1645	214	0	**214**	
1645 - 1700	198	0	**198**	**817**
1700 - 1715	250	0	**250**	
1715 - 1730	154	0	**154**	
1730 - 1745	136	0	**136**	
1745 - 1800	111	0	**111**	**651**
1800 - 1815	121	0	**121**	
1815 - 1830	99	0	**99**	
1830 - 1845	99	0	**99**	
1845 - 1900	71	0	**71**	**390**
1900 - 1915	61	0	**61**	
1915 - 1930	62	0	**62**	
1930 - 1945	87	0	**87**	
1945 - 2000	69	0	**69**	**279**
2000 - 2015	73	0	**73**	
2015 - 2030	80	0	**80**	
2030 - 2045	49	0	**49**	
2045 - 2100	72	0	**72**	**274**
2100 - 2115	51	0	**51**	
2115 - 2130	41	0	**41**	
2130 - 2145	45	0	**45**	
2145 - 2200	34	0	**34**	**171**
2200 - 2215	30	0	**30**	
2215 - 2230	25	0	**25**	
2230 - 2245	37	0	**37**	
2245 - 2300	32	0	**32**	**124**
2300 - 2315	30	0	**30**	
2315 - 2330	27	0	**27**	
2330 - 2345	20	0	**20**	
2345 - 0000	28	0	**28**	**105**

Session Total	7247	0	**7247**
Session Average	75.49	0.00	**75.49**
Session Percentage	100.00	0.00	

Site 40
I-26 On/Off-Ramp,
north of St Andrews Rd

Date
Thursday, April 25, 2024

Lat/Long
34.044948°, -81.119728°

Weather
Fair
67°F

Click here for Detailed Weather

0000 - 2400 (Weekday 24h Session) (04-25-2024)
Volume Summary 15min

TIME	Volume Summary 15min NB	SB	15min Total	60min Total
0000 - 0015	14	0	**14**	
0015 - 0030	21	0	**21**	
0030 - 0045	12	0	**12**	
0045 - 0100	12	0	**12**	**59**
0100 - 0115	11	0	**11**	
0115 - 0130	11	0	**11**	
0130 - 0145	15	0	**15**	
0145 - 0200	8	0	**8**	**45**
0200 - 0215	4	0	**4**	
0215 - 0230	5	0	**5**	
0230 - 0245	6	0	**6**	
0245 - 0300	5	0	**5**	**20**
0300 - 0315	8	0	**8**	
0315 - 0330	7	0	**7**	
0330 - 0345	14	0	**14**	
0345 - 0400	11	0	**11**	**40**
0400 - 0415	14	0	**14**	
0415 - 0430	12	0	**12**	
0430 - 0445	17	0	**17**	
0445 - 0500	21	0	**21**	**64**
0500 - 0515	19	0	**19**	
0515 - 0530	21	0	**21**	
0530 - 0545	35	0	**35**	
0545 - 0600	44	0	**44**	**119**
0600 - 0615	51	0	**51**	
0615 - 0630	47	0	**47**	
0630 - 0645	86	0	**86**	
0645 - 0700	93	0	**93**	**277**
0700 - 0715	97	0	**97**	
0715 - 0730	106	0	**106**	
0730 - 0745	144	0	**144**	
0745 - 0800	150	0	**150**	**497**
0800 - 0815	123	0	**123**	
0815 - 0830	126	0	**126**	
0830 - 0845	107	0	**107**	
0845 - 0900	80	0	**80**	**436**
0900 - 0915	67	0	**67**	
0915 - 0930	96	0	**96**	
0930 - 0945	84	0	**84**	
0945 - 1000	99	0	**99**	**346**
1000 - 1015	83	0	**83**	
1015 - 1030	77	0	**77**	
1030 - 1045	82	0	**82**	
1045 - 1100	97	0	**97**	**339**
1100 - 1115	89	0	**89**	
1115 - 1130	94	0	**94**	
1130 - 1145	104	0	**104**	
1145 - 1200	101	0	**101**	**388**

Time	Volume Summary 15min NB	SB	15min Total	60min Total
1200 - 1215	111	0	**111**	
1215 - 1230	90	0	**90**	
1230 - 1245	123	0	**123**	
1245 - 1300	94	0	**94**	**418**
1300 - 1315	107	0	**107**	
1315 - 1330	98	0	**98**	
1330 - 1345	109	0	**109**	
1345 - 1400	117	0	**117**	**431**
1400 - 1415	130	0	**130**	
1415 - 1430	116	0	**116**	
1430 - 1445	121	0	**121**	
1445 - 1500	106	0	**106**	**473**
1500 - 1515	154	0	**154**	
1515 - 1530	121	0	**121**	
1530 - 1545	175	0	**175**	
1545 - 1600	179	0	**179**	**629**
1600 - 1615	209	0	**209**	
1615 - 1630	167	0	**167**	
1630 - 1645	214	0	**214**	
1645 - 1700	179	0	**179**	**769**
1700 - 1715	236	0	**236**	
1715 - 1730	149	0	**149**	
1730 - 1745	139	0	**139**	
1745 - 1800	114	0	**114**	**638**
1800 - 1815	116	0	**116**	
1815 - 1830	109	0	**109**	
1830 - 1845	93	0	**93**	
1845 - 1900	74	0	**74**	**392**
1900 - 1915	0	0	**0**	
1915 - 1930	0	0	**0**	
1930 - 1945	0	0	**0**	
1945 - 2000	0	0	**0**	**0**
2000 - 2015	0	0	**0**	
2015 - 2030	0	0	**0**	
2030 - 2045	0	0	**0**	
2045 - 2100	0	0	**0**	**0**
2100 - 2115	0	0	**0**	
2115 - 2130	0	0	**0**	
2130 - 2145	0	0	**0**	
2145 - 2200	0	0	**0**	**0**
2200 - 2215	0	0	**0**	
2215 - 2230	0	0	**0**	
2230 - 2245	0	0	**0**	
2245 - 2300	0	0	**0**	**0**
2300 - 2315	0	0	**0**	
2315 - 2330	0	0	**0**	
2330 - 2345	0	0	**0**	
2345 - 0000	0	0	**0**	**0**

Session Total	6380	0	**6380**
Session Average	66.46	0.00	**66.46**
Session Percentage	100.00	0.00	

Bi-Directional Class Count || NB EB 60min

Columbia, SC

Marr Traffic DATA COLLECTION

www.marrtraffic.com

Site 40
I-26 On/Off-Ramp,
north of St Andrews Rd

Date
Tuesday, April 23, 2024

Lat/Long
34.044948°, -81.119728°

Weather
Fair
58°F

Click here for Detailed Weather

0000 - 2400 (Weekday 24h Session) (04-23-2024)
NB EB 60min

	Northbound (Movement 40.1)													
TIME	1	2	3	4	5	6	7	8	9	10	11	12	13	**Total**
0000 - 0100	0	0	0	0	0	0	0	0	0	0	0	0	0	**0**
0100 - 0200	0	0	0	0	0	0	0	0	0	0	0	0	0	**0**
0200 - 0300	0	0	0	0	0	0	0	0	0	0	0	0	0	**0**
0300 - 0400	0	0	0	0	0	0	0	0	0	0	0	0	0	**0**
0400 - 0500	0	0	0	0	0	0	0	0	0	0	0	0	0	**0**
0500 - 0600	0	0	0	0	0	0	0	0	0	0	0	0	0	**0**
0600 - 0700	0	0	0	0	0	0	0	0	0	0	0	0	0	**0**
0700 - 0800	0	0	0	0	0	0	0	0	0	0	0	0	0	**0**
0800 - 0900	0	0	0	0	0	0	0	0	0	0	0	0	0	**0**
0900 - 1000	0	0	0	0	0	0	0	0	0	0	0	0	0	**0**
1000 - 1100	0	0	0	0	0	0	0	0	0	0	0	0	0	**0**
1100 - 1200	0	0	0	0	0	0	0	0	0	0	0	0	0	**0**
1200 - 1300	0	0	0	0	0	0	0	0	0	0	0	0	0	**0**
1300 - 1400	0	0	0	0	0	0	0	0	0	0	0	0	0	**0**
1400 - 1500	0	0	0	0	0	0	0	0	0	0	0	0	0	**0**
1500 - 1600	0	0	0	0	0	0	0	0	0	0	0	0	0	**0**
1600 - 1700	0	0	0	0	0	0	0	0	0	0	0	0	0	**0**
1700 - 1800	0	0	0	0	0	0	0	0	0	0	0	0	0	**0**
1800 - 1900	0	0	0	0	0	0	0	0	0	0	0	0	0	**0**
1900 - 2000	6	225	30	0	4	0	0	0	2	0	0	0	0	**267**
2000 - 2100	1	183	20	0	3	0	0	1	1	0	0	0	0	**209**
2100 - 2200	0	133	13	0	1	0	0	0	1	0	0	0	0	**148**
2200 - 2300	0	103	11	0	0	0	0	0	0	0	0	0	0	**114**
2300 - 2400	0	68	7	0	1	0	0	0	1	0	0	0	0	**77**
Session Total	7	712	81	0	9	0	0	1	5	0	0	0	0	**815**
Session Average	0.29	29.67	3.38	0.00	0.38	0.00	0.00	0.04	0.21	0.00	0.00	0.00	0.00	**33.96**
Session Percentage	0.86	87.36	9.94	0.00	1.10	0.00	0.00	0.12	0.61	0.00	0.00	0.00	0.00	
AM Peak Hour	-	-	-	-	-	-	-	-	-	-	-	-	-	**-**
AM Peak Volume	0	0	0	0	0	0	0	0	0	0	0	0	0	**0**
Noon Peak Hour	-	-	-	-	-	-	-	-	-	-	-	-	-	**-**
Noon Peak Volume	0	0	0	0	0	0	0	0	0	0	0	0	0	**0**
PM Peak Hour	1900 - 2000	1900 - 2000	1900 - 2000	-	1900 - 2000	-	-	-	1900 - 2000	-	-	-	-	**1900 - 2000**
PM Peak Volume	6	225	30	0	4	0	0	0	2	0	0	0	0	**267**

Site 40
I-26 On/Off-Ramp,
north of St Andrews Rd

Date
Wednesday, April 24, 2024

Lat/Long
34.044948°, -81.119728°

Weather
Fair
66°F

Click here for Detailed Weather

0000 - 2400 (Weekday 24h Session) (04-24-2024)
NB EB 60min

	Northbound (Movement 40.1)													
TIME	1	2	3	4	5	6	7	8	9	10	11	12	13	**Total**
0000 - 0100	0	46	5	0	0	0	0	0	0	0	0	0	0	**51**
0100 - 0200	0	17	3	0	0	0	0	0	0	0	0	0	0	**20**
0200 - 0300	0	28	6	0	0	0	0	0	0	0	0	0	0	**34**
0300 - 0400	0	36	7	0	0	0	0	0	0	0	0	0	0	**43**
0400 - 0500	0	47	13	0	0	0	0	0	1	0	0	0	0	**61**
0500 - 0600	0	113	12	0	1	1	0	0	1	0	0	0	0	**128**
0600 - 0700	0	232	40	0	1	0	0	0	1	0	0	0	0	**274**
0700 - 0800	0	403	66	0	2	0	0	0	1	0	0	0	0	**472**
0800 - 0900	0	330	64	1	8	3	0	3	1	0	0	0	0	**410**
0900 - 1000	2	252	59	2	9	2	1	1	1	0	0	0	0	**329**
1000 - 1100	1	273	72	0	4	2	4	2	1	0	0	0	0	**359**
1100 - 1200	0	289	67	0	8	3	1	3	0	0	0	0	0	**371**
1200 - 1300	2	302	103	1	9	1	0	0	2	0	0	0	0	**420**
1300 - 1400	3	326	73	1	6	3	0	1	3	0	0	0	0	**416**
1400 - 1500	2	370	93	1	4	1	2	1	3	0	0	0	0	**477**
1500 - 1600	4	464	90	3	4	3	0	1	2	0	0	0	0	**571**
1600 - 1700	3	670	124	2	14	1	0	2	1	0	0	0	0	**817**
1700 - 1800	1	545	97	1	7	0	0	0	0	0	0	0	0	**651**
1800 - 1900	1	323	59	1	3	0	0	1	2	0	0	0	0	**390**
1900 - 2000	0	226	47	0	6	0	0	0	0	0	0	0	0	**279**
2000 - 2100	4	230	39	0	0	0	0	0	1	0	0	0	0	**274**
2100 - 2200	0	153	18	0	0	0	0	0	0	0	0	0	0	**171**
2200 - 2300	0	112	10	0	0	0	0	1	0	0	1	0	0	**124**
2300 - 2400	0	92	11	1	0	1	0	0	0	0	0	0	0	**105**

Session Total	23	5879	1178	14	86	21	8	16	21	0	1	0	0	**7247**
Session Average	0.96	244.96	49.08	0.58	3.58	0.88	0.33	0.67	0.88	0.00	0.04	0.00	0.00	**301.96**
Session Percentage	0.32	81.12	16.26	0.19	1.19	0.29	0.11	0.22	0.29	0.00	0.01	0.00	0.00	

AM Peak Hour	0900 - 1000	0700 - 0800	0700 - 0800	0900 - 1000	0900 - 1000	0800 - 0900	0900 - 1000	0800 - 0900	0500 - 0600	-	-	-	-	**0700 - 0800**
AM Peak Volume	2	403	66	2	9	3	1	3	1	0	0	0	0	**472**

Noon Peak Hour	1300 - 1400	1400 - 1500	1200 - 1300	1200 - 1300	1200 - 1300	1100 - 1200	1000 - 1100	1100 - 1200	1300 - 1400	-	-	-	-	**1400 - 1500**
Noon Peak Volume	3	370	103	1	9	3	4	3	3	0	0	0	0	**477**

PM Peak Hour	1500 - 1600	1600 - 1700	1600 - 1700	1500 - 1600	1600 - 1700	1500 - 1600	-	1600 - 1700	1500 - 1600	-	-	-	-	**1600 - 1700**
PM Peak Volume	4	670	124	3	14	3	0	2	2	0	0	0	0	**817**

Site 40
I-26 On/Off-Ramp,
north of St Andrews Rd

Date
Thursday, April 25, 2024

Lat/Long
34.044948°, -81.119728°

Weather
Fair
67°F

Click here for Detailed Weather

0000 - 2400 (Weekday 24h Session) (04-25-2024)
NB EB 60min

	Northbound (Movement 40.1)													
TIME	1	2	3	4	5	6	7	8	9	10	11	12	13	**Total**
0000 - 0100	0	53	5	0	0	0	0	0	1	0	0	0	0	**59**
0100 - 0200	0	42	3	0	0	0	0	0	0	0	0	0	0	**45**
0200 - 0300	0	18	2	0	0	0	0	0	0	0	0	0	0	**20**
0300 - 0400	0	34	4	0	1	0	0	0	1	0	0	0	0	**40**
0400 - 0500	0	56	8	0	0	0	0	0	0	0	0	0	0	**64**
0500 - 0600	0	108	10	0	0	0	0	0	1	0	0	0	0	**119**
0600 - 0700	0	230	42	0	1	2	0	0	2	0	0	0	0	**277**
0700 - 0800	1	416	70	0	5	0	0	1	4	0	0	0	0	**497**
0800 - 0900	0	355	75	0	2	2	0	1	1	0	0	0	0	**436**
0900 - 1000	0	254	81	0	5	1	1	2	2	0	0	0	0	**346**
1000 - 1100	2	264	62	0	4	4	0	2	1	0	0	0	0	**339**
1100 - 1200	0	298	67	0	13	4	1	1	4	0	0	0	0	**388**
1200 - 1300	1	332	73	1	5	3	0	1	2	0	0	0	0	**418**
1300 - 1400	1	329	86	0	9	2	0	2	2	0	0	0	0	**431**
1400 - 1500	4	367	92	1	4	4	0	1	0	0	0	0	0	**473**
1500 - 1600	2	501	108	1	11	0	0	2	4	0	0	0	0	**629**
1600 - 1700	4	638	115	1	9	0	0	1	1	0	0	0	0	**769**
1700 - 1800	1	527	100	0	3	1	0	4	2	0	0	0	0	**638**
1800 - 1900	0	336	50	0	5	0	0	1	0	0	0	0	0	**392**
1900 - 2000	0	0	0	0	0	0	0	0	0	0	0	0	0	**0**
2000 - 2100	0	0	0	0	0	0	0	0	0	0	0	0	0	**0**
2100 - 2200	0	0	0	0	0	0	0	0	0	0	0	0	0	**0**
2200 - 2300	0	0	0	0	0	0	0	0	0	0	0	0	0	**0**
2300 - 2400	0	0	0	0	0	0	0	0	0	0	0	0	0	**0**

Session Total	16	5158	1053	4	77	23	2	19	28	0	0	0	0	**6380**
Session Average	0.67	214.92	43.88	0.17	3.21	0.96	0.08	0.79	1.17	0.00	0.00	0.00	0.00	**265.83**
Session Percentage	0.25	80.85	16.50	0.06	1.21	0.36	0.03	0.30	0.44	0.00	0.00	0.00	0.00	

AM Peak Hour	0700 - 0800	0700 - 0800	0900 - 1000	-	0700 - 0800	0600 - 0700	0900 - 1000	0900 - 1000	0700 - 0800	-	-	-	-	**0700 - 0800**
AM Peak Hour Volume	1	416	81	0	5	2	1	2	4	0	0	0	0	**497**

Noon Peak Hour	1400 - 1500	1400 - 1500	1400 - 1500	1200 - 1300	1100 - 1200	1000 - 1100	1100 - 1200	1000 - 1100	1100 - 1200	-	-	-	-	**1400 - 1500**
Noon Peak Hour Volume	4	367	92	1	13	4	1	2	4	0	0	0	0	**473**

PM Peak Hour	1600 - 1700	1600 - 1700	1600 - 1700	1500 - 1600	1500 - 1600	1700 - 1800	-	1700 - 1800	1500 - 1600	-	-	-	-	**1600 - 1700**
PM Peak Hour Volume	4	638	115	1	11	1	0	4	4	0	0	0	0	**769**

Bi-Directional Class Count || Volume Summary 60min

Columbia, SC

Marr Traffic DATA COLLECTION

www.marrtraffic.com

Site 40

I-26 On/Off-Ramp,
north of St Andrews Rd

Date

Tuesday, April 23, 2024

Lat/Long

34.044948°, -81.119728°

Weather

Fair
58°F

Click here for Detailed Weather

0000 - 2400 (Weekday 24h Session) (04-23-2024)

Volume Summary 60min

	Volume Summary 60min		
TIME	NB	SB	**Total**
0000 - 0100	0	0	**0**
0100 - 0200	0	0	**0**
0200 - 0300	0	0	**0**
0300 - 0400	0	0	**0**
0400 - 0500	0	0	**0**
0500 - 0600	0	0	**0**
0600 - 0700	0	0	**0**
0700 - 0800	0	0	**0**
0800 - 0900	0	0	**0**
0900 - 1000	0	0	**0**
1000 - 1100	0	0	**0**
1100 - 1200	0	0	**0**

	Volume Summary 60min		
Time	NB	SB	**Total**
1200 - 1300	0	0	**0**
1300 - 1400	0	0	**0**
1400 - 1500	0	0	**0**
1500 - 1600	0	0	**0**
1600 - 1700	0	0	**0**
1700 - 1800	0	0	**0**
1800 - 1900	0	0	**0**
1900 - 2000	267	0	**267**
2000 - 2100	209	0	**209**
2100 - 2200	148	0	**148**
2200 - 2300	114	0	**114**
2300 - 2400	77	0	**77**

Session Total	815	0	**815**
Session Average	33.96	0.00	**33.96**
Session Percentage	100.00	0.00	

Site 40

I-26 On/Off-Ramp,
north of St Andrews Rd

Date

Wednesday, April 24, 2024

Lat/Long

34.044948°, -81.119728°

Weather

Fair
66°F

Click here for Detailed Weather

0000 - 2400 (Weekday 24h Session) (04-24-2024)

Volume Summary 60min

	Volume Summary 60min		
TIME	NB	SB	**Total**
0000 - 0100	51	0	**51**
0100 - 0200	20	0	**20**
0200 - 0300	34	0	**34**
0300 - 0400	43	0	**43**
0400 - 0500	61	0	**61**
0500 - 0600	128	0	**128**
0600 - 0700	274	0	**274**
0700 - 0800	472	0	**472**
0800 - 0900	410	0	**410**
0900 - 1000	329	0	**329**
1000 - 1100	359	0	**359**
1100 - 1200	371	0	**371**

	Volume Summary 60min		
Time	NB	SB	**Total**
1200 - 1300	420	0	**420**
1300 - 1400	416	0	**416**
1400 - 1500	477	0	**477**
1500 - 1600	571	0	**571**
1600 - 1700	817	0	**817**
1700 - 1800	651	0	**651**
1800 - 1900	390	0	**390**
1900 - 2000	279	0	**279**
2000 - 2100	274	0	**274**
2100 - 2200	171	0	**171**
2200 - 2300	124	0	**124**
2300 - 2400	105	0	**105**

Session Total	7247	0	**7247**
Session Average	301.96	0.00	**301.96**
Session Percentage	100.00	0.00	

Site 40

I-26 On/Off-Ramp,
north of St Andrews Rd

Date

Thursday, April 25, 2024

Lat/Long

34.044948°, -81.119728°

Weather

Fair
67°F

Click here for Detailed Weather

0000 - 2400 (Weekday 24h Session) (04-25-2024)

Volume Summary 60min

	Volume Summary 60min		
TIME	NB	SB	**Total**
0000 - 0100	59	0	**59**
0100 - 0200	45	0	**45**
0200 - 0300	20	0	**20**
0300 - 0400	40	0	**40**
0400 - 0500	64	0	**64**
0500 - 0600	119	0	**119**
0600 - 0700	277	0	**277**
0700 - 0800	497	0	**497**
0800 - 0900	436	0	**436**
0900 - 1000	346	0	**346**
1000 - 1100	339	0	**339**
1100 - 1200	388	0	**388**

Session Total	6380	0	**6380**
Session Average	265.83	0.00	**265.83**
Session Percentage	100.00	0.00	

	Volume Summary 60min		
Time	NB	SB	**Total**
1200 - 1300	418	0	**418**
1300 - 1400	431	0	**431**
1400 - 1500	473	0	**473**
1500 - 1600	629	0	**629**
1600 - 1700	769	0	**769**
1700 - 1800	638	0	**638**
1800 - 1900	392	0	**392**
1900 - 2000	0	0	**0**
2000 - 2100	0	0	**0**
2100 - 2200	0	0	**0**
2200 - 2300	0	0	**0**
2300 - 2400	0	0	**0**

Bi-Directional Class Count || Graphical Analysis NB EB

Columbia, SC

Marr Traffic DATA COLLECTION

www.marrtraffic.com

Site 40

I-26 On/Off-Ramp,
north of St Andrews Rd

Lat/Long

34.044948°, -81.119728°

0000 - 2400 (Weekday 24h Session)

Graphical Analysis NB EB

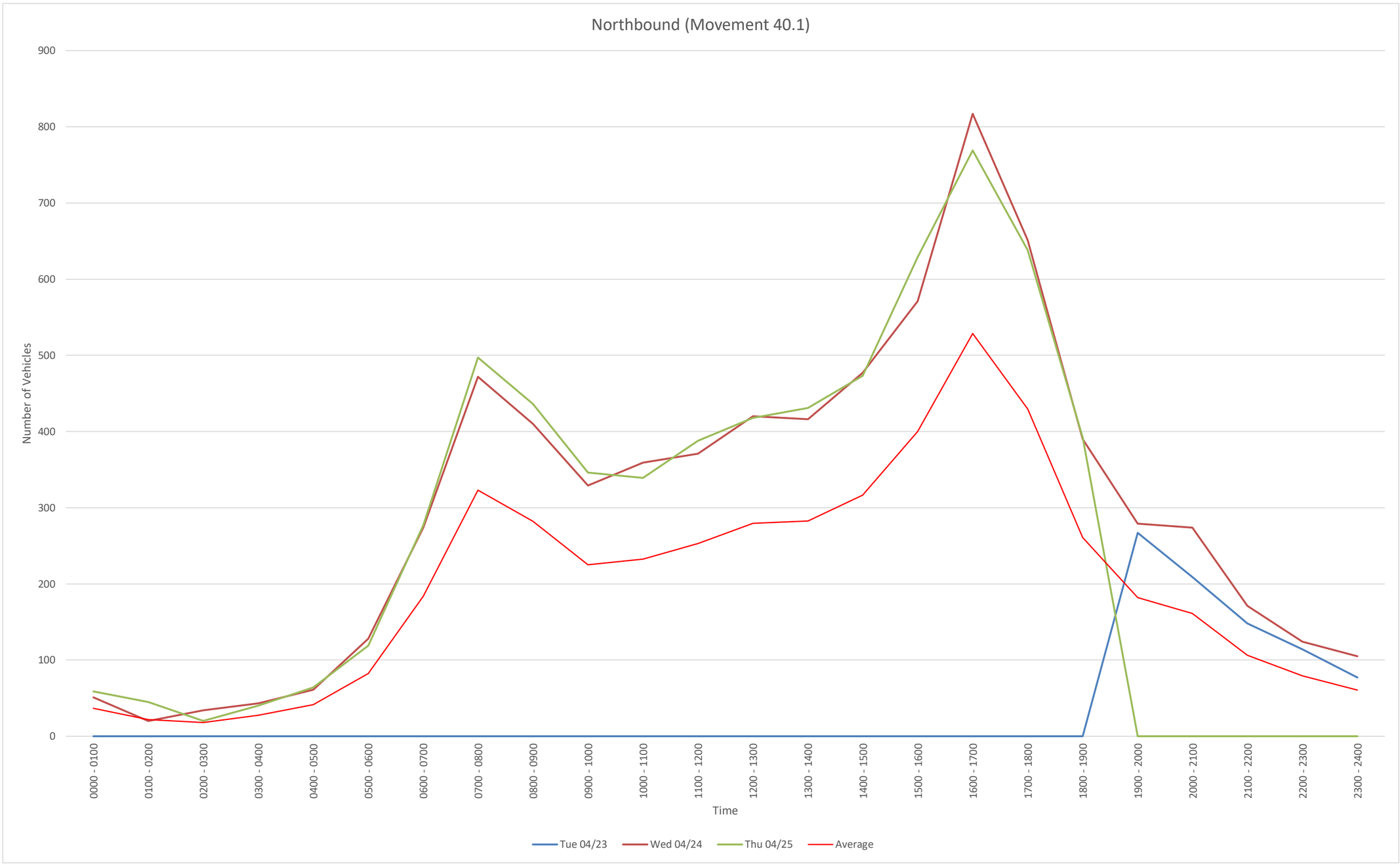

Time	Tue 04/23	Wed 04/24	Thu 04/25				
0000 - 0100	0	51	59				
0100 - 0200	0	20	45				
0200 - 0300	0	34	20				
0300 - 0400	0	43	40				
0400 - 0500	0	61	64				
0500 - 0600	0	128	119				
0600 - 0700	0	274	277				
0700 - 0800	0	472	497				
0800 - 0900	0	410	436				
0900 - 1000	0	329	346				
1000 - 1100	0	359	339				
1100 - 1200	0	371	388				
1200 - 1300	0	420	418				
1300 - 1400	0	416	431				
1400 - 1500	0	477	473				
1500 - 1600	0	571	629				
1600 - 1700	0	817	769				
1700 - 1800	0	651	638				
1800 - 1900	0	390	392				
1900 - 2000	267	279	0				
2000 - 2100	209	274	0				
2100 - 2200	148	171	0				
2200 - 2300	114	124	0				
2300 - 2400	77	105	0				
Daily Total	815	7247	6380				

NB
File Name:
Start Date: 4/23/2024
Start Time: 0
Site Code: 40
Station ID: 1
Location 1: I-26 On/Off-Ramp, north of St Andrews Rd
Location 2:

Date	Time	1	2	3	4	5	6	7	8	9	10	11	12	13
4/23/2024	12:00 AM	0	0	0	0	0	0	0	0	0	0	0	0	0
4/23/2024	12:15 AM	0	0	0	0	0	0	0	0	0	0	0	0	0
4/23/2024	12:30 AM	0	0	0	0	0	0	0	0	0	0	0	0	0
4/23/2024	12:45 AM	0	0	0	0	0	0	0	0	0	0	0	0	0
4/23/2024	1:00 AM	0	0	0	0	0	0	0	0	0	0	0	0	0
4/23/2024	1:15 AM	0	0	0	0	0	0	0	0	0	0	0	0	0
4/23/2024	1:30 AM	0	0	0	0	0	0	0	0	0	0	0	0	0
4/23/2024	1:45 AM	0	0	0	0	0	0	0	0	0	0	0	0	0
4/23/2024	2:00 AM	0	0	0	0	0	0	0	0	0	0	0	0	0
4/23/2024	2:15 AM	0	0	0	0	0	0	0	0	0	0	0	0	0
4/23/2024	2:30 AM	0	0	0	0	0	0	0	0	0	0	0	0	0
4/23/2024	2:45 AM	0	0	0	0	0	0	0	0	0	0	0	0	0
4/23/2024	3:00 AM	0	0	0	0	0	0	0	0	0	0	0	0	0
4/23/2024	3:15 AM	0	0	0	0	0	0	0	0	0	0	0	0	0
4/23/2024	3:30 AM	0	0	0	0	0	0	0	0	0	0	0	0	0
4/23/2024	3:45 AM	0	0	0	0	0	0	0	0	0	0	0	0	0
4/23/2024	4:00 AM	0	0	0	0	0	0	0	0	0	0	0	0	0
4/23/2024	4:15 AM	0	0	0	0	0	0	0	0	0	0	0	0	0
4/23/2024	4:30 AM	0	0	0	0	0	0	0	0	0	0	0	0	0
4/23/2024	4:45 AM	0	0	0	0	0	0	0	0	0	0	0	0	0
4/23/2024	5:00 AM	0	0	0	0	0	0	0	0	0	0	0	0	0
4/23/2024	5:15 AM	0	0	0	0	0	0	0	0	0	0	0	0	0
4/23/2024	5:30 AM	0	0	0	0	0	0	0	0	0	0	0	0	0
4/23/2024	5:45 AM	0	0	0	0	0	0	0	0	0	0	0	0	0
4/23/2024	6:00 AM	0	0	0	0	0	0	0	0	0	0	0	0	0
4/23/2024	6:15 AM	0	0	0	0	0	0	0	0	0	0	0	0	0
4/23/2024	6:30 AM	0	0	0	0	0	0	0	0	0	0	0	0	0
4/23/2024	6:45 AM	0	0	0	0	0	0	0	0	0	0	0	0	0
4/23/2024	7:00 AM	0	0	0	0	0	0	0	0	0	0	0	0	0
4/23/2024	7:15 AM	0	0	0	0	0	0	0	0	0	0	0	0	0
4/23/2024	7:30 AM	0	0	0	0	0	0	0	0	0	0	0	0	0
4/23/2024	7:45 AM	0	0	0	0	0	0	0	0	0	0	0	0	0
4/23/2024	8:00 AM	0	0	0	0	0	0	0	0	0	0	0	0	0
4/23/2024	8:15 AM	0	0	0	0	0	0	0	0	0	0	0	0	0
4/23/2024	8:30 AM	0	0	0	0	0	0	0	0	0	0	0	0	0
4/23/2024	8:45 AM	0	0	0	0	0	0	0	0	0	0	0	0	0
4/23/2024	9:00 AM	0	0	0	0	0	0	0	0	0	0	0	0	0
4/23/2024	9:15 AM	0	0	0	0	0	0	0	0	0	0	0	0	0
4/23/2024	9:30 AM	0	0	0	0	0	0	0	0	0	0	0	0	0
4/23/2024	9:45 AM	0	0	0	0	0	0	0	0	0	0	0	0	0
4/23/2024	10:00 AM	0	0	0	0	0	0	0	0	0	0	0	0	0
4/23/2024	10:15 AM	0	0	0	0	0	0	0	0	0	0	0	0	0
4/23/2024	10:30 AM	0	0	0	0	0	0	0	0	0	0	0	0	0
4/23/2024	10:45 AM	0	0	0	0	0	0	0	0	0	0	0	0	0
4/23/2024	11:00 AM	0	0	0	0	0	0	0	0	0	0	0	0	0
4/23/2024	11:15 AM	0	0	0	0	0	0	0	0	0	0	0	0	0
4/23/2024	11:30 AM	0	0	0	0	0	0	0	0	0	0	0	0	0
4/23/2024	11:45 AM	0	0	0	0	0	0	0	0	0	0	0	0	0
4/23/2024	12:00 PM	0	0	0	0	0	0	0	0	0	0	0	0	0
4/23/2024	12:15 PM	0	0	0	0	0	0	0	0	0	0	0	0	0
4/23/2024	12:30 PM	0	0	0	0	0	0	0	0	0	0	0	0	0
4/23/2024	12:45 PM	0	0	0	0	0	0	0	0	0	0	0	0	0
4/23/2024	1:00 PM	0	0	0	0	0	0	0	0	0	0	0	0	0
4/23/2024	1:15 PM	0	0	0	0	0	0	0	0	0	0	0	0	0
4/23/2024	1:30 PM	0	0	0	0	0	0	0	0	0	0	0	0	0
4/23/2024	1:45 PM	0	0	0	0	0	0	0	0	0	0	0	0	0
4/23/2024	2:00 PM	0	0	0	0	0	0	0	0	0	0	0	0	0
4/23/2024	2:15 PM	0	0	0	0	0	0	0	0	0	0	0	0	0
4/23/2024	2:30 PM	0	0	0	0	0	0	0	0	0	0	0	0	0
4/23/2024	2:45 PM	0	0	0	0	0	0	0	0	0	0	0	0	0
4/23/2024	3:00 PM	0	0	0	0	0	0	0	0	0	0	0	0	0
4/23/2024	3:15 PM	0	0	0	0	0	0	0	0	0	0	0	0	0
4/23/2024	3:30 PM	0	0	0	0	0	0	0	0	0	0	0	0	0
4/23/2024	3:45 PM	0	0	0	0	0	0	0	0	0	0	0	0	0
4/23/2024	4:00 PM	0	0	0	0	0	0	0	0	0	0	0	0	0
4/23/2024	4:15 PM	0	0	0	0	0	0	0	0	0	0	0	0	0
4/23/2024	4:30 PM	0	0	0	0	0	0	0	0	0	0	0	0	0
4/23/2024	4:45 PM	0	0	0	0	0	0	0	0	0	0	0	0	0
4/23/2024	5:00 PM	0	0	0	0	0	0	0	0	0	0	0	0	0
4/23/2024	5:15 PM	0	0	0	0	0	0	0	0	0	0	0	0	0
4/23/2024	5:30 PM	0	0	0	0	0	0	0	0	0	0	0	0	0
4/23/2024	5:45 PM	0	0	0	0	0	0	0	0	0	0	0	0	0
4/23/2024	6:00 PM	0	0	0	0	0	0	0	0	0	0	0	0	0
4/23/2024	6:15 PM	0	0	0	0	0	0	0	0	0	0	0	0	0
4/23/2024	6:30 PM	0	0	0	0	0	0	0	0	0	0	0	0	0
4/23/2024	6:45 PM	0	0	0	0	0	0	0	0	0	0	0	0	0
4/23/2024	7:00 PM	3	68	6	0	4	0	0	0	1	0	0	0	0
4/23/2024	7:15 PM	1	63	9	0	0	0	0	0	0	0	0	0	0
4/23/2024	7:30 PM	1	43	12	0	0	0	0	0	0	0	0	0	0
4/23/2024	7:45 PM	1	51	3	0	0	0	0	0	1	0	0	0	0
4/23/2024	8:00 PM	0	55	9	0	1	0	0	0	0	0	0	0	0
4/23/2024	8:15 PM	1	48	4	0	0	0	0	0	0	0	0	0	0
4/23/2024	8:30 PM	0	39	2	0	2	0	0	1	1	0	0	0	0
4/23/2024	8:45 PM	0	41	5	0	0	0	0	0	0	0	0	0	0
4/23/2024	9:00 PM	0	36	5	0	0	0	0	0	0	0	0	0	0
4/23/2024	9:15 PM	0	24	3	0	1	0	0	0	1	0	0	0	0
4/23/2024	9:30 PM	0	36	2	0	0	0	0	0	0	0	0	0	0
4/23/2024	9:45 PM	0	37	3	0	0	0	0	0	0	0	0	0	0
4/23/2024	10:00 PM	0	29	3	0	0	0	0	0	0	0	0	0	0
4/23/2024	10:15 PM	0	23	2	0	0	0	0	0	0	0	0	0	0
4/23/2024	10:30 PM	0	24	3	0	0	0	0	0	0	0	0	0	0
4/23/2024	10:45 PM	0	27	3	0	0	0	0	0	0	0	0	0	0
4/23/2024	11:00 PM	0	28	2	0	0	0	0	0	0	0	0	0	0
4/23/2024	11:15 PM	0	12	2	0	0	0	0	0	0	0	0	0	0
4/23/2024	11:30 PM	0	13	2	0	0	0	0	0	1	0	0	0	0
4/23/2024	11:45 PM	0	15	1	0	1	0	0	0	0	0	0	0	0

4/24/2024	12:00 AM	0	13	1	0	0	0	0	0	0	0	0	0
4/24/2024	12:15 AM	0	12	1	0	0	0	0	0	0	0	0	0
4/24/2024	12:30 AM	0	13	2	0	0	0	0	0	0	0	0	0
4/24/2024	12:45 AM	0	8	1	0	0	0	0	0	0	0	0	0
4/24/2024	1:00 AM	0	3	1	0	0	0	0	0	0	0	0	0
4/24/2024	1:15 AM	0	6	2	0	0	0	0	0	0	0	0	0
4/24/2024	1:30 AM	0	5	0	0	0	0	0	0	0	0	0	0
4/24/2024	1:45 AM	0	3	0	0	0	0	0	0	0	0	0	0
4/24/2024	2:00 AM	0	9	2	0	0	0	0	0	0	0	0	0
4/24/2024	2:15 AM	0	4	1	0	0	0	0	0	0	0	0	0
4/24/2024	2:30 AM	0	10	2	0	0	0	0	0	0	0	0	0
4/24/2024	2:45 AM	0	5	1	0	0	0	0	0	0	0	0	0
4/24/2024	3:00 AM	0	10	2	0	0	0	0	0	0	0	0	0
4/24/2024	3:15 AM	0	9	2	0	0	0	0	0	0	0	0	0
4/24/2024	3:30 AM	0	6	1	0	0	0	0	0	0	0	0	0
4/24/2024	3:45 AM	0	11	2	0	0	0	0	0	0	0	0	0
4/24/2024	4:00 AM	0	6	2	0	0	0	0	0	0	0	0	0
4/24/2024	4:15 AM	0	12	3	0	0	0	0	0	1	0	0	0
4/24/2024	4:30 AM	0	15	5	0	0	0	0	0	0	0	0	0
4/24/2024	4:45 AM	0	14	3	0	0	0	0	0	0	0	0	0
4/24/2024	5:00 AM	0	27	3	0	0	0	0	0	0	0	0	0
4/24/2024	5:15 AM	0	19	2	0	0	0	0	0	0	0	0	0
4/24/2024	5:30 AM	0	33	4	0	0	1	0	0	1	0	0	0
4/24/2024	5:45 AM	0	34	3	0	1	0	0	0	0	0	0	0
4/24/2024	6:00 AM	0	33	5	0	0	0	0	0	1	0	0	0
4/24/2024	6:15 AM	0	57	12	0	0	0	0	0	0	0	0	0
4/24/2024	6:30 AM	0	74	14	0	1	0	0	0	0	0	0	0
4/24/2024	6:45 AM	0	68	9	0	0	0	0	0	0	0	0	0
4/24/2024	7:00 AM	0	86	13	0	1	0	0	0	1	0	0	0
4/24/2024	7:15 AM	0	90	12	0	0	0	0	0	0	0	0	0
4/24/2024	7:30 AM	0	110	23	0	0	0	0	0	0	0	0	0
4/24/2024	7:45 AM	0	117	18	0	1	0	0	0	0	0	0	0
4/24/2024	8:00 AM	0	103	14	0	2	0	0	1	1	0	0	0
4/24/2024	8:15 AM	0	90	19	0	0	0	0	1	0	0	0	0
4/24/2024	8:30 AM	0	70	13	1	3	1	0	0	0	0	0	0
4/24/2024	8:45 AM	0	67	18	0	3	2	0	1	0	0	0	0
4/24/2024	9:00 AM	1	48	12	0	2	1	0	0	1	0	0	0
4/24/2024	9:15 AM	0	69	18	0	2	0	0	1	0	0	0	0
4/24/2024	9:30 AM	0	67	12	2	2	0	1	0	0	0	0	0
4/24/2024	9:45 AM	1	68	17	0	3	1	0	0	0	0	0	0
4/24/2024	10:00 AM	0	60	15	0	0	0	1	1	0	0	0	0
4/24/2024	10:15 AM	0	61	18	0	4	0	2	0	1	0	0	0
4/24/2024	10:30 AM	1	76	22	0	0	0	0	1	0	0	0	0
4/24/2024	10:45 AM	0	76	17	0	0	2	1	0	0	0	0	0
4/24/2024	11:00 AM	0	78	12	0	0	1	0	1	0	0	0	0
4/24/2024	11:15 AM	0	64	21	0	3	0	1	2	0	0	0	0
4/24/2024	11:30 AM	0	74	8	0	3	0	0	0	0	0	0	0
4/24/2024	11:45 AM	0	73	26	0	2	2	0	0	0	0	0	0
4/24/2024	12:00 PM	0	82	24	0	2	0	0	0	0	0	0	0
4/24/2024	12:15 PM	0	66	16	1	3	0	0	0	2	0	0	0
4/24/2024	12:30 PM	1	79	36	0	3	0	0	0	0	0	0	0
4/24/2024	12:45 PM	1	75	27	0	1	1	0	0	0	0	0	0
4/24/2024	1:00 PM	1	82	16	0	0	1	0	0	0	0	0	0
4/24/2024	1:15 PM	0	78	19	0	3	0	0	1	1	0	0	0
4/24/2024	1:30 PM	1	98	16	0	2	2	0	0	1	0	0	0
4/24/2024	1:45 PM	1	68	22	1	1	0	0	0	1	0	0	0
4/24/2024	2:00 PM	1	80	19	0	2	0	0	0	0	0	0	0
4/24/2024	2:15 PM	0	95	24	0	1	0	1	1	1	0	0	0
4/24/2024	2:30 PM	0	109	23	0	1	0	0	0	0	0	0	0
4/24/2024	2:45 PM	1	86	27	1	0	1	1	0	2	0	0	0
4/24/2024	3:00 PM	0	103	28	1	0	0	0	0	1	0	0	0
4/24/2024	3:15 PM	1	126	17	1	2	1	0	0	0	0	0	0
4/24/2024	3:30 PM	2	116	32	0	2	2	0	0	0	0	0	0
4/24/2024	3:45 PM	1	119	13	1	0	0	0	1	1	0	0	0
4/24/2024	4:00 PM	1	182	25	0	3	1	0	1	0	0	0	0
4/24/2024	4:15 PM	1	151	35	1	3	0	0	0	1	0	0	0
4/24/2024	4:30 PM	1	177	31	0	4	0	0	1	0	0	0	0
4/24/2024	4:45 PM	0	160	33	1	4	0	0	0	0	0	0	0
4/24/2024	5:00 PM	0	214	34	1	1	0	0	0	0	0	0	0
4/24/2024	5:15 PM	0	122	29	0	3	0	0	0	0	0	0	0
4/24/2024	5:30 PM	1	112	21	0	2	0	0	0	0	0	0	0
4/24/2024	5:45 PM	0	97	13	0	1	0	0	0	0	0	0	0
4/24/2024	6:00 PM	1	98	21	0	0	0	0	0	1	0	0	0
4/24/2024	6:15 PM	0	81	16	0	0	0	0	1	1	0	0	0
4/24/2024	6:30 PM	0	84	13	0	2	0	0	0	0	0	0	0
4/24/2024	6:45 PM	0	60	9	1	1	0	0	0	0	0	0	0
4/24/2024	7:00 PM	0	50	8	0	3	0	0	0	0	0	0	0
4/24/2024	7:15 PM	0	53	9	0	0	0	0	0	0	0	0	0
4/24/2024	7:30 PM	0	69	16	0	2	0	0	0	0	0	0	0
4/24/2024	7:45 PM	0	54	14	0	1	0	0	0	0	0	0	0
4/24/2024	8:00 PM	4	57	12	0	0	0	0	0	0	0	0	0
4/24/2024	8:15 PM	0	70	10	0	0	0	0	0	0	0	0	0
4/24/2024	8:30 PM	0	41	7	0	0	0	0	0	1	0	0	0
4/24/2024	8:45 PM	0	62	10	0	0	0	0	0	0	0	0	0
4/24/2024	9:00 PM	0	45	6	0	0	0	0	0	0	0	0	0
4/24/2024	9:15 PM	0	36	5	0	0	0	0	0	0	0	0	0
4/24/2024	9:30 PM	0	41	4	0	0	0	0	0	0	0	0	0
4/24/2024	9:45 PM	0	31	3	0	0	0	0	0	0	0	0	0
4/24/2024	10:00 PM	0	27	2	0	0	0	0	1	0	0	0	0
4/24/2024	10:15 PM	0	23	2	0	0	0	0	0	0	0	0	0
4/24/2024	10:30 PM	0	32	4	0	0	0	0	0	0	0	1	0	0
4/24/2024	10:45 PM	0	30	2	0	0	0	0	0	0	0	0	0	0
4/24/2024	11:00 PM	0	27	2	0	0	1	0	0	0	0	0	0	0
4/24/2024	11:15 PM	0	25	2	0	0	0	0	0	0	0	0	0	0
4/24/2024	11:30 PM	0	17	3	0	0	0	0	0	0	0	0	0	0
4/24/2024	11:45 PM	0	23	4	1	0	0	0	0	0	0	0	0	0

4/25/2024	12:00 AM	0	13	1	0	0	0	0	0	0	0	0	0
4/25/2024	12:15 AM	0	19	2	0	0	0	0	0	0	0	0	0
4/25/2024	12:30 AM	0	11	0	0	0	0	0	0	1	0	0	0
4/25/2024	12:45 AM	0	10	2	0	0	0	0	0	0	0	0	0
4/25/2024	1:00 AM	0	10	1	0	0	0	0	0	0	0	0	0
4/25/2024	1:15 AM	0	11	0	0	0	0	0	0	0	0	0	0
4/25/2024	1:30 AM	0	13	2	0	0	0	0	0	0	0	0	0
4/25/2024	1:45 AM	0	8	0	0	0	0	0	0	0	0	0	0
4/25/2024	2:00 AM	0	4	0	0	0	0	0	0	0	0	0	0
4/25/2024	2:15 AM	0	4	1	0	0	0	0	0	0	0	0	0
4/25/2024	2:30 AM	0	5	1	0	0	0	0	0	0	0	0	0
4/25/2024	2:45 AM	0	5	0	0	0	0	0	0	0	0	0	0
4/25/2024	3:00 AM	0	6	1	0	0	0	0	0	1	0	0	0
4/25/2024	3:15 AM	0	7	0	0	0	0	0	0	0	0	0	0
4/25/2024	3:30 AM	0	11	3	0	0	0	0	0	0	0	0	0
4/25/2024	3:45 AM	0	10	0	0	1	0	0	0	0	0	0	0
4/25/2024	4:00 AM	0	11	3	0	0	0	0	0	0	0	0	0
4/25/2024	4:15 AM	0	10	2	0	0	0	0	0	0	0	0	0
4/25/2024	4:30 AM	0	16	1	0	0	0	0	0	0	0	0	0
4/25/2024	4:45 AM	0	19	2	0	0	0	0	0	0	0	0	0
4/25/2024	5:00 AM	0	17	1	0	0	0	0	0	1	0	0	0
4/25/2024	5:15 AM	0	19	2	0	0	0	0	0	0	0	0	0
4/25/2024	5:30 AM	0	31	4	0	0	0	0	0	0	0	0	0
4/25/2024	5:45 AM	0	41	3	0	0	0	0	0	0	0	0	0
4/25/2024	6:00 AM	0	43	6	0	0	1	0	0	1	0	0	0
4/25/2024	6:15 AM	0	40	7	0	0	0	0	0	0	0	0	0
4/25/2024	6:30 AM	0	70	14	0	1	1	0	0	0	0	0	0
4/25/2024	6:45 AM	0	77	15	0	0	0	0	0	1	0	0	0
4/25/2024	7:00 AM	0	80	15	0	1	0	0	0	1	0	0	0
4/25/2024	7:15 AM	0	89	14	0	1	0	0	0	2	0	0	0
4/25/2024	7:30 AM	0	125	17	0	1	0	0	0	1	0	0	0
4/25/2024	7:45 AM	1	122	24	0	2	0	0	1	0	0	0	0
4/25/2024	8:00 AM	0	101	21	0	1	0	0	0	0	0	0	0
4/25/2024	8:15 AM	0	99	25	0	0	0	0	1	1	0	0	0
4/25/2024	8:30 AM	0	88	18	0	1	0	0	0	0	0	0	0
4/25/2024	8:45 AM	0	67	11	0	0	2	0	0	0	0	0	0
4/25/2024	9:00 AM	0	50	14	0	1	0	0	1	1	0	0	0
4/25/2024	9:15 AM	0	66	24	0	4	1	0	0	1	0	0	0
4/25/2024	9:30 AM	0	63	20	0	0	0	1	0	0	0	0	0
4/25/2024	9:45 AM	0	75	23	0	0	0	0	1	0	0	0	0
4/25/2024	10:00 AM	0	63	16	0	2	1	0	1	0	0	0	0
4/25/2024	10:15 AM	1	58	16	0	1	1	0	0	0	0	0	0
4/25/2024	10:30 AM	0	66	13	0	1	1	0	0	1	0	0	0
4/25/2024	10:45 AM	1	77	17	0	0	1	0	1	0	0	0	0
4/25/2024	11:00 AM	0	66	15	0	5	1	0	0	2	0	0	0
4/25/2024	11:15 AM	0	73	16	0	3	0	1	0	1	0	0	0
4/25/2024	11:30 AM	0	79	18	0	4	3	0	0	0	0	0	0
4/25/2024	11:45 AM	0	80	18	0	1	0	0	1	1	0	0	0
4/25/2024	12:00 PM	0	89	18	0	1	1	0	0	2	0	0	0
4/25/2024	12:15 PM	1	72	15	1	0	1	0	0	0	0	0	0
4/25/2024	12:30 PM	0	96	24	0	2	0	0	1	0	0	0	0
4/25/2024	12:45 PM	0	75	16	0	2	1	0	0	0	0	0	0
4/25/2024	1:00 PM	0	77	27	0	0	2	0	0	1	0	0	0
4/25/2024	1:15 PM	0	77	16	0	3	0	0	2	0	0	0	0
4/25/2024	1:30 PM	1	84	19	0	4	0	0	0	1	0	0	0
4/25/2024	1:45 PM	0	91	24	0	2	0	0	0	0	0	0	0
4/25/2024	2:00 PM	1	96	32	0	0	1	0	0	0	0	0	0
4/25/2024	2:15 PM	0	95	18	1	2	0	0	0	0	0	0	0
4/25/2024	2:30 PM	1	96	21	0	1	2	0	0	0	0	0	0
4/25/2024	2:45 PM	2	80	21	0	1	1	0	1	0	0	0	0
4/25/2024	3:00 PM	0	119	28	1	3	0	0	0	3	0	0	0
4/25/2024	3:15 PM	1	96	19	0	2	0	0	2	1	0	0	0
4/25/2024	3:30 PM	1	137	33	0	4	0	0	0	0	0	0	0
4/25/2024	3:45 PM	0	149	28	0	2	0	0	0	0	0	0	0
4/25/2024	4:00 PM	2	177	28	0	2	0	0	0	0	0	0	0
4/25/2024	4:15 PM	0	133	27	0	5	0	0	1	1	0	0	0
4/25/2024	4:30 PM	2	180	30	0	2	0	0	0	0	0	0	0
4/25/2024	4:45 PM	0	148	30	1	0	0	0	0	0	0	0	0
4/25/2024	5:00 PM	0	198	37	0	0	0	0	1	0	0	0	0
4/25/2024	5:15 PM	1	120	27	0	0	0	0	1	0	0	0	0
4/25/2024	5:30 PM	0	114	21	0	0	1	0	1	2	0	0	0
4/25/2024	5:45 PM	0	95	15	0	3	0	0	1	0	0	0	0
4/25/2024	6:00 PM	0	95	20	0	0	0	0	1	0	0	0	0
4/25/2024	6:15 PM	0	96	12	0	1	0	0	0	0	0	0	0
4/25/2024	6:30 PM	0	82	10	0	1	0	0	0	0	0	0	0
4/25/2024	6:45 PM	0	63	8	0	3	0	0	0	0	0	0	0
4/25/2024	7:00 PM	0	0	0	0	0	0	0	0	0	0	0	0
4/25/2024	7:15 PM	0	0	0	0	0	0	0	0	0	0	0	0
4/25/2024	7:30 PM	0	0	0	0	0	0	0	0	0	0	0	0
4/25/2024	7:45 PM	0	0	0	0	0	0	0	0	0	0	0	0
4/25/2024	8:00 PM	0	0	0	0	0	0	0	0	0	0	0	0
4/25/2024	8:15 PM	0	0	0	0	0	0	0	0	0	0	0	0
4/25/2024	8:30 PM	0	0	0	0	0	0	0	0	0	0	0	0
4/25/2024	8:45 PM	0	0	0	0	0	0	0	0	0	0	0	0
4/25/2024	9:00 PM	0	0	0	0	0	0	0	0	0	0	0	0
4/25/2024	9:15 PM	0	0	0	0	0	0	0	0	0	0	0	0
4/25/2024	9:30 PM	0	0	0	0	0	0	0	0	0	0	0	0
4/25/2024	9:45 PM	0	0	0	0	0	0	0	0	0	0	0	0
4/25/2024	10:00 PM	0	0	0	0	0	0	0	0	0	0	0	0
4/25/2024	10:15 PM	0	0	0	0	0	0	0	0	0	0	0	0
4/25/2024	10:30 PM	0	0	0	0	0	0	0	0	0	0	0	0
4/25/2024	10:45 PM	0	0	0	0	0	0	0	0	0	0	0	0
4/25/2024	11:00 PM	0	0	0	0	0	0	0	0	0	0	0	0
4/25/2024	11:15 PM	0	0	0	0	0	0	0	0	0	0	0	0
4/25/2024	11:30 PM	0	0	0	0	0	0	0	0	0	0	0	0
4/25/2024	11:45 PM	0	0	0	0	0	0	0	0	0	0	0	0

SB
File Name:
Start Date: 4/23/2024
Start Time: 0
Site Code: 40
Station ID: 1
Location 1: I-26 On/Off-Ramp, north of St Andrews Rd
Location 2:

Date	Time	1	2	3	4	5	6	7	8	9	10	11	12	13
4/23/2024	12:00 AM	0	0	0	0	0	0	0	0	0	0	0	0	0
4/23/2024	12:15 AM	0	0	0	0	0	0	0	0	0	0	0	0	0
4/23/2024	12:30 AM	0	0	0	0	0	0	0	0	0	0	0	0	0
4/23/2024	12:45 AM	0	0	0	0	0	0	0	0	0	0	0	0	0
4/23/2024	1:00 AM	0	0	0	0	0	0	0	0	0	0	0	0	0
4/23/2024	1:15 AM	0	0	0	0	0	0	0	0	0	0	0	0	0
4/23/2024	1:30 AM	0	0	0	0	0	0	0	0	0	0	0	0	0
4/23/2024	1:45 AM	0	0	0	0	0	0	0	0	0	0	0	0	0
4/23/2024	2:00 AM	0	0	0	0	0	0	0	0	0	0	0	0	0
4/23/2024	2:15 AM	0	0	0	0	0	0	0	0	0	0	0	0	0
4/23/2024	2:30 AM	0	0	0	0	0	0	0	0	0	0	0	0	0
4/23/2024	2:45 AM	0	0	0	0	0	0	0	0	0	0	0	0	0
4/23/2024	3:00 AM	0	0	0	0	0	0	0	0	0	0	0	0	0
4/23/2024	3:15 AM	0	0	0	0	0	0	0	0	0	0	0	0	0
4/23/2024	3:30 AM	0	0	0	0	0	0	0	0	0	0	0	0	0
4/23/2024	3:45 AM	0	0	0	0	0	0	0	0	0	0	0	0	0
4/23/2024	4:00 AM	0	0	0	0	0	0	0	0	0	0	0	0	0
4/23/2024	4:15 AM	0	0	0	0	0	0	0	0	0	0	0	0	0
4/23/2024	4:30 AM	0	0	0	0	0	0	0	0	0	0	0	0	0
4/23/2024	4:45 AM	0	0	0	0	0	0	0	0	0	0	0	0	0
4/23/2024	5:00 AM	0	0	0	0	0	0	0	0	0	0	0	0	0
4/23/2024	5:15 AM	0	0	0	0	0	0	0	0	0	0	0	0	0
4/23/2024	5:30 AM	0	0	0	0	0	0	0	0	0	0	0	0	0
4/23/2024	5:45 AM	0	0	0	0	0	0	0	0	0	0	0	0	0
4/23/2024	6:00 AM	0	0	0	0	0	0	0	0	0	0	0	0	0
4/23/2024	6:15 AM	0	0	0	0	0	0	0	0	0	0	0	0	0
4/23/2024	6:30 AM	0	0	0	0	0	0	0	0	0	0	0	0	0
4/23/2024	6:45 AM	0	0	0	0	0	0	0	0	0	0	0	0	0
4/23/2024	7:00 AM	0	0	0	0	0	0	0	0	0	0	0	0	0
4/23/2024	7:15 AM	0	0	0	0	0	0	0	0	0	0	0	0	0
4/23/2024	7:30 AM	0	0	0	0	0	0	0	0	0	0	0	0	0
4/23/2024	7:45 AM	0	0	0	0	0	0	0	0	0	0	0	0	0
4/23/2024	8:00 AM	0	0	0	0	0	0	0	0	0	0	0	0	0
4/23/2024	8:15 AM	0	0	0	0	0	0	0	0	0	0	0	0	0
4/23/2024	8:30 AM	0	0	0	0	0	0	0	0	0	0	0	0	0
4/23/2024	8:45 AM	0	0	0	0	0	0	0	0	0	0	0	0	0
4/23/2024	9:00 AM	0	0	0	0	0	0	0	0	0	0	0	0	0
4/23/2024	9:15 AM	0	0	0	0	0	0	0	0	0	0	0	0	0
4/23/2024	9:30 AM	0	0	0	0	0	0	0	0	0	0	0	0	0
4/23/2024	9:45 AM	0	0	0	0	0	0	0	0	0	0	0	0	0
4/23/2024	10:00 AM	0	0	0	0	0	0	0	0	0	0	0	0	0
4/23/2024	10:15 AM	0	0	0	0	0	0	0	0	0	0	0	0	0
4/23/2024	10:30 AM	0	0	0	0	0	0	0	0	0	0	0	0	0
4/23/2024	10:45 AM	0	0	0	0	0	0	0	0	0	0	0	0	0
4/23/2024	11:00 AM	0	0	0	0	0	0	0	0	0	0	0	0	0
4/23/2024	11:15 AM	0	0	0	0	0	0	0	0	0	0	0	0	0
4/23/2024	11:30 AM	0	0	0	0	0	0	0	0	0	0	0	0	0
4/23/2024	11:45 AM	0	0	0	0	0	0	0	0	0	0	0	0	0
4/23/2024	12:00 PM	0	0	0	0	0	0	0	0	0	0	0	0	0
4/23/2024	12:15 PM	0	0	0	0	0	0	0	0	0	0	0	0	0
4/23/2024	12:30 PM	0	0	0	0	0	0	0	0	0	0	0	0	0
4/23/2024	12:45 PM	0	0	0	0	0	0	0	0	0	0	0	0	0
4/23/2024	1:00 PM	0	0	0	0	0	0	0	0	0	0	0	0	0
4/23/2024	1:15 PM	0	0	0	0	0	0	0	0	0	0	0	0	0
4/23/2024	1:30 PM	0	0	0	0	0	0	0	0	0	0	0	0	0
4/23/2024	1:45 PM	0	0	0	0	0	0	0	0	0	0	0	0	0
4/23/2024	2:00 PM	0	0	0	0	0	0	0	0	0	0	0	0	0
4/23/2024	2:15 PM	0	0	0	0	0	0	0	0	0	0	0	0	0
4/23/2024	2:30 PM	0	0	0	0	0	0	0	0	0	0	0	0	0
4/23/2024	2:45 PM	0	0	0	0	0	0	0	0	0	0	0	0	0
4/23/2024	3:00 PM	0	0	0	0	0	0	0	0	0	0	0	0	0
4/23/2024	3:15 PM	0	0	0	0	0	0	0	0	0	0	0	0	0
4/23/2024	3:30 PM	0	0	0	0	0	0	0	0	0	0	0	0	0
4/23/2024	3:45 PM	0	0	0	0	0	0	0	0	0	0	0	0	0
4/23/2024	4:00 PM	0	0	0	0	0	0	0	0	0	0	0	0	0
4/23/2024	4:15 PM	0	0	0	0	0	0	0	0	0	0	0	0	0
4/23/2024	4:30 PM	0	0	0	0	0	0	0	0	0	0	0	0	0
4/23/2024	4:45 PM	0	0	0	0	0	0	0	0	0	0	0	0	0
4/23/2024	5:00 PM	0	0	0	0	0	0	0	0	0	0	0	0	0
4/23/2024	5:15 PM	0	0	0	0	0	0	0	0	0	0	0	0	0
4/23/2024	5:30 PM	0	0	0	0	0	0	0	0	0	0	0	0	0
4/23/2024	5:45 PM	0	0	0	0	0	0	0	0	0	0	0	0	0
4/23/2024	6:00 PM	0	0	0	0	0	0	0	0	0	0	0	0	0
4/23/2024	6:15 PM	0	0	0	0	0	0	0	0	0	0	0	0	0
4/23/2024	6:30 PM	0	0	0	0	0	0	0	0	0	0	0	0	0
4/23/2024	6:45 PM	0	0	0	0	0	0	0	0	0	0	0	0	0
4/23/2024	7:00 PM	0	0	0	0	0	0	0	0	0	0	0	0	0
4/23/2024	7:15 PM	0	0	0	0	0	0	0	0	0	0	0	0	0
4/23/2024	7:30 PM	0	0	0	0	0	0	0	0	0	0	0	0	0
4/23/2024	7:45 PM	0	0	0	0	0	0	0	0	0	0	0	0	0
4/23/2024	8:00 PM	0	0	0	0	0	0	0	0	0	0	0	0	0
4/23/2024	8:15 PM	0	0	0	0	0	0	0	0	0	0	0	0	0
4/23/2024	8:30 PM	0	0	0	0	0	0	0	0	0	0	0	0	0
4/23/2024	8:45 PM	0	0	0	0	0	0	0	0	0	0	0	0	0
4/23/2024	9:00 PM	0	0	0	0	0	0	0	0	0	0	0	0	0
4/23/2024	9:15 PM	0	0	0	0	0	0	0	0	0	0	0	0	0
4/23/2024	9:30 PM	0	0	0	0	0	0	0	0	0	0	0	0	0
4/23/2024	9:45 PM	0	0	0	0	0	0	0	0	0	0	0	0	0
4/23/2024	10:00 PM	0	0	0	0	0	0	0	0	0	0	0	0	0
4/23/2024	10:15 PM	0	0	0	0	0	0	0	0	0	0	0	0	0
4/23/2024	10:30 PM	0	0	0	0	0	0	0	0	0	0	0	0	0
4/23/2024	10:45 PM	0	0	0	0	0	0	0	0	0	0	0	0	0
4/23/2024	11:00 PM	0	0	0	0	0	0	0	0	0	0	0	0	0
4/23/2024	11:15 PM	0	0	0	0	0	0	0	0	0	0	0	0	0
4/23/2024	11:30 PM	0	0	0	0	0	0	0	0	0	0	0	0	0
4/23/2024	11:45 PM	0	0	0	0	0	0	0	0	0	0	0	0	0

4/24/2024	12:00 AM	0	0	0	0	0	0	0	0	0	0	0	0	0
4/24/2024	12:15 AM	0	0	0	0	0	0	0	0	0	0	0	0	0
4/24/2024	12:30 AM	0	0	0	0	0	0	0	0	0	0	0	0	0
4/24/2024	12:45 AM	0	0	0	0	0	0	0	0	0	0	0	0	0
4/24/2024	1:00 AM	0	0	0	0	0	0	0	0	0	0	0	0	0
4/24/2024	1:15 AM	0	0	0	0	0	0	0	0	0	0	0	0	0
4/24/2024	1:30 AM	0	0	0	0	0	0	0	0	0	0	0	0	0
4/24/2024	1:45 AM	0	0	0	0	0	0	0	0	0	0	0	0	0
4/24/2024	2:00 AM	0	0	0	0	0	0	0	0	0	0	0	0	0
4/24/2024	2:15 AM	0	0	0	0	0	0	0	0	0	0	0	0	0
4/24/2024	2:30 AM	0	0	0	0	0	0	0	0	0	0	0	0	0
4/24/2024	2:45 AM	0	0	0	0	0	0	0	0	0	0	0	0	0
4/24/2024	3:00 AM	0	0	0	0	0	0	0	0	0	0	0	0	0
4/24/2024	3:15 AM	0	0	0	0	0	0	0	0	0	0	0	0	0
4/24/2024	3:30 AM	0	0	0	0	0	0	0	0	0	0	0	0	0
4/24/2024	3:45 AM	0	0	0	0	0	0	0	0	0	0	0	0	0
4/24/2024	4:00 AM	0	0	0	0	0	0	0	0	0	0	0	0	0
4/24/2024	4:15 AM	0	0	0	0	0	0	0	0	0	0	0	0	0
4/24/2024	4:30 AM	0	0	0	0	0	0	0	0	0	0	0	0	0
4/24/2024	4:45 AM	0	0	0	0	0	0	0	0	0	0	0	0	0
4/24/2024	5:00 AM	0	0	0	0	0	0	0	0	0	0	0	0	0
4/24/2024	5:15 AM	0	0	0	0	0	0	0	0	0	0	0	0	0
4/24/2024	5:30 AM	0	0	0	0	0	0	0	0	0	0	0	0	0
4/24/2024	5:45 AM	0	0	0	0	0	0	0	0	0	0	0	0	0
4/24/2024	6:00 AM	0	0	0	0	0	0	0	0	0	0	0	0	0
4/24/2024	6:15 AM	0	0	0	0	0	0	0	0	0	0	0	0	0
4/24/2024	6:30 AM	0	0	0	0	0	0	0	0	0	0	0	0	0
4/24/2024	6:45 AM	0	0	0	0	0	0	0	0	0	0	0	0	0
4/24/2024	7:00 AM	0	0	0	0	0	0	0	0	0	0	0	0	0
4/24/2024	7:15 AM	0	0	0	0	0	0	0	0	0	0	0	0	0
4/24/2024	7:30 AM	0	0	0	0	0	0	0	0	0	0	0	0	0
4/24/2024	7:45 AM	0	0	0	0	0	0	0	0	0	0	0	0	0
4/24/2024	8:00 AM	0	0	0	0	0	0	0	0	0	0	0	0	0
4/24/2024	8:15 AM	0	0	0	0	0	0	0	0	0	0	0	0	0
4/24/2024	8:30 AM	0	0	0	0	0	0	0	0	0	0	0	0	0
4/24/2024	8:45 AM	0	0	0	0	0	0	0	0	0	0	0	0	0
4/24/2024	9:00 AM	0	0	0	0	0	0	0	0	0	0	0	0	0
4/24/2024	9:15 AM	0	0	0	0	0	0	0	0	0	0	0	0	0
4/24/2024	9:30 AM	0	0	0	0	0	0	0	0	0	0	0	0	0
4/24/2024	9:45 AM	0	0	0	0	0	0	0	0	0	0	0	0	0
4/24/2024	10:00 AM	0	0	0	0	0	0	0	0	0	0	0	0	0
4/24/2024	10:15 AM	0	0	0	0	0	0	0	0	0	0	0	0	0
4/24/2024	10:30 AM	0	0	0	0	0	0	0	0	0	0	0	0	0
4/24/2024	10:45 AM	0	0	0	0	0	0	0	0	0	0	0	0	0
4/24/2024	11:00 AM	0	0	0	0	0	0	0	0	0	0	0	0	0
4/24/2024	11:15 AM	0	0	0	0	0	0	0	0	0	0	0	0	0
4/24/2024	11:30 AM	0	0	0	0	0	0	0	0	0	0	0	0	0
4/24/2024	11:45 AM	0	0	0	0	0	0	0	0	0	0	0	0	0
4/24/2024	12:00 PM	0	0	0	0	0	0	0	0	0	0	0	0	0
4/24/2024	12:15 PM	0	0	0	0	0	0	0	0	0	0	0	0	0
4/24/2024	12:30 PM	0	0	0	0	0	0	0	0	0	0	0	0	0
4/24/2024	12:45 PM	0	0	0	0	0	0	0	0	0	0	0	0	0
4/24/2024	1:00 PM	0	0	0	0	0	0	0	0	0	0	0	0	0
4/24/2024	1:15 PM	0	0	0	0	0	0	0	0	0	0	0	0	0
4/24/2024	1:30 PM	0	0	0	0	0	0	0	0	0	0	0	0	0
4/24/2024	1:45 PM	0	0	0	0	0	0	0	0	0	0	0	0	0
4/24/2024	2:00 PM	0	0	0	0	0	0	0	0	0	0	0	0	0
4/24/2024	2:15 PM	0	0	0	0	0	0	0	0	0	0	0	0	0
4/24/2024	2:30 PM	0	0	0	0	0	0	0	0	0	0	0	0	0
4/24/2024	2:45 PM	0	0	0	0	0	0	0	0	0	0	0	0	0
4/24/2024	3:00 PM	0	0	0	0	0	0	0	0	0	0	0	0	0
4/24/2024	3:15 PM	0	0	0	0	0	0	0	0	0	0	0	0	0
4/24/2024	3:30 PM	0	0	0	0	0	0	0	0	0	0	0	0	0
4/24/2024	3:45 PM	0	0	0	0	0	0	0	0	0	0	0	0	0
4/24/2024	4:00 PM	0	0	0	0	0	0	0	0	0	0	0	0	0
4/24/2024	4:15 PM	0	0	0	0	0	0	0	0	0	0	0	0	0
4/24/2024	4:30 PM	0	0	0	0	0	0	0	0	0	0	0	0	0
4/24/2024	4:45 PM	0	0	0	0	0	0	0	0	0	0	0	0	0
4/24/2024	5:00 PM	0	0	0	0	0	0	0	0	0	0	0	0	0
4/24/2024	5:15 PM	0	0	0	0	0	0	0	0	0	0	0	0	0
4/24/2024	5:30 PM	0	0	0	0	0	0	0	0	0	0	0	0	0
4/24/2024	5:45 PM	0	0	0	0	0	0	0	0	0	0	0	0	0
4/24/2024	6:00 PM	0	0	0	0	0	0	0	0	0	0	0	0	0
4/24/2024	6:15 PM	0	0	0	0	0	0	0	0	0	0	0	0	0
4/24/2024	6:30 PM	0	0	0	0	0	0	0	0	0	0	0	0	0
4/24/2024	6:45 PM	0	0	0	0	0	0	0	0	0	0	0	0	0
4/24/2024	7:00 PM	0	0	0	0	0	0	0	0	0	0	0	0	0
4/24/2024	7:15 PM	0	0	0	0	0	0	0	0	0	0	0	0	0
4/24/2024	7:30 PM	0	0	0	0	0	0	0	0	0	0	0	0	0
4/24/2024	7:45 PM	0	0	0	0	0	0	0	0	0	0	0	0	0
4/24/2024	8:00 PM	0	0	0	0	0	0	0	0	0	0	0	0	0
4/24/2024	8:15 PM	0	0	0	0	0	0	0	0	0	0	0	0	0
4/24/2024	8:30 PM	0	0	0	0	0	0	0	0	0	0	0	0	0
4/24/2024	8:45 PM	0	0	0	0	0	0	0	0	0	0	0	0	0
4/24/2024	9:00 PM	0	0	0	0	0	0	0	0	0	0	0	0	0
4/24/2024	9:15 PM	0	0	0	0	0	0	0	0	0	0	0	0	0
4/24/2024	9:30 PM	0	0	0	0	0	0	0	0	0	0	0	0	0
4/24/2024	9:45 PM	0	0	0	0	0	0	0	0	0	0	0	0	0
4/24/2024	10:00 PM	0	0	0	0	0	0	0	0	0	0	0	0	0
4/24/2024	10:15 PM	0	0	0	0	0	0	0	0	0	0	0	0	0
4/24/2024	10:30 PM	0	0	0	0	0	0	0	0	0	0	0	0	0
4/24/2024	10:45 PM	0	0	0	0	0	0	0	0	0	0	0	0	0
4/24/2024	11:00 PM	0	0	0	0	0	0	0	0	0	0	0	0	0
4/24/2024	11:15 PM	0	0	0	0	0	0	0	0	0	0	0	0	0
4/24/2024	11:30 PM	0	0	0	0	0	0	0	0	0	0	0	0	0
4/24/2024	11:45 PM	0	0	0	0	0	0	0	0	0	0	0	0	0

4/25/2024	12:00 AM	0	0	0	0	0	0	0	0	0	0	0	0	0
4/25/2024	12:15 AM	0	0	0	0	0	0	0	0	0	0	0	0	0
4/25/2024	12:30 AM	0	0	0	0	0	0	0	0	0	0	0	0	0
4/25/2024	12:45 AM	0	0	0	0	0	0	0	0	0	0	0	0	0
4/25/2024	1:00 AM	0	0	0	0	0	0	0	0	0	0	0	0	0
4/25/2024	1:15 AM	0	0	0	0	0	0	0	0	0	0	0	0	0
4/25/2024	1:30 AM	0	0	0	0	0	0	0	0	0	0	0	0	0
4/25/2024	1:45 AM	0	0	0	0	0	0	0	0	0	0	0	0	0
4/25/2024	2:00 AM	0	0	0	0	0	0	0	0	0	0	0	0	0
4/25/2024	2:15 AM	0	0	0	0	0	0	0	0	0	0	0	0	0
4/25/2024	2:30 AM	0	0	0	0	0	0	0	0	0	0	0	0	0
4/25/2024	2:45 AM	0	0	0	0	0	0	0	0	0	0	0	0	0
4/25/2024	3:00 AM	0	0	0	0	0	0	0	0	0	0	0	0	0
4/25/2024	3:15 AM	0	0	0	0	0	0	0	0	0	0	0	0	0
4/25/2024	3:30 AM	0	0	0	0	0	0	0	0	0	0	0	0	0
4/25/2024	3:45 AM	0	0	0	0	0	0	0	0	0	0	0	0	0
4/25/2024	4:00 AM	0	0	0	0	0	0	0	0	0	0	0	0	0
4/25/2024	4:15 AM	0	0	0	0	0	0	0	0	0	0	0	0	0
4/25/2024	4:30 AM	0	0	0	0	0	0	0	0	0	0	0	0	0
4/25/2024	4:45 AM	0	0	0	0	0	0	0	0	0	0	0	0	0
4/25/2024	5:00 AM	0	0	0	0	0	0	0	0	0	0	0	0	0
4/25/2024	5:15 AM	0	0	0	0	0	0	0	0	0	0	0	0	0
4/25/2024	5:30 AM	0	0	0	0	0	0	0	0	0	0	0	0	0
4/25/2024	5:45 AM	0	0	0	0	0	0	0	0	0	0	0	0	0
4/25/2024	6:00 AM	0	0	0	0	0	0	0	0	0	0	0	0	0
4/25/2024	6:15 AM	0	0	0	0	0	0	0	0	0	0	0	0	0
4/25/2024	6:30 AM	0	0	0	0	0	0	0	0	0	0	0	0	0
4/25/2024	6:45 AM	0	0	0	0	0	0	0	0	0	0	0	0	0
4/25/2024	7:00 AM	0	0	0	0	0	0	0	0	0	0	0	0	0
4/25/2024	7:15 AM	0	0	0	0	0	0	0	0	0	0	0	0	0
4/25/2024	7:30 AM	0	0	0	0	0	0	0	0	0	0	0	0	0
4/25/2024	7:45 AM	0	0	0	0	0	0	0	0	0	0	0	0	0
4/25/2024	8:00 AM	0	0	0	0	0	0	0	0	0	0	0	0	0
4/25/2024	8:15 AM	0	0	0	0	0	0	0	0	0	0	0	0	0
4/25/2024	8:30 AM	0	0	0	0	0	0	0	0	0	0	0	0	0
4/25/2024	8:45 AM	0	0	0	0	0	0	0	0	0	0	0	0	0
4/25/2024	9:00 AM	0	0	0	0	0	0	0	0	0	0	0	0	0
4/25/2024	9:15 AM	0	0	0	0	0	0	0	0	0	0	0	0	0
4/25/2024	9:30 AM	0	0	0	0	0	0	0	0	0	0	0	0	0
4/25/2024	9:45 AM	0	0	0	0	0	0	0	0	0	0	0	0	0
4/25/2024	10:00 AM	0	0	0	0	0	0	0	0	0	0	0	0	0
4/25/2024	10:15 AM	0	0	0	0	0	0	0	0	0	0	0	0	0
4/25/2024	10:30 AM	0	0	0	0	0	0	0	0	0	0	0	0	0
4/25/2024	10:45 AM	0	0	0	0	0	0	0	0	0	0	0	0	0
4/25/2024	11:00 AM	0	0	0	0	0	0	0	0	0	0	0	0	0
4/25/2024	11:15 AM	0	0	0	0	0	0	0	0	0	0	0	0	0
4/25/2024	11:30 AM	0	0	0	0	0	0	0	0	0	0	0	0	0
4/25/2024	11:45 AM	0	0	0	0	0	0	0	0	0	0	0	0	0
4/25/2024	12:00 PM	0	0	0	0	0	0	0	0	0	0	0	0	0
4/25/2024	12:15 PM	0	0	0	0	0	0	0	0	0	0	0	0	0
4/25/2024	12:30 PM	0	0	0	0	0	0	0	0	0	0	0	0	0
4/25/2024	12:45 PM	0	0	0	0	0	0	0	0	0	0	0	0	0
4/25/2024	1:00 PM	0	0	0	0	0	0	0	0	0	0	0	0	0
4/25/2024	1:15 PM	0	0	0	0	0	0	0	0	0	0	0	0	0
4/25/2024	1:30 PM	0	0	0	0	0	0	0	0	0	0	0	0	0
4/25/2024	1:45 PM	0	0	0	0	0	0	0	0	0	0	0	0	0
4/25/2024	2:00 PM	0	0	0	0	0	0	0	0	0	0	0	0	0
4/25/2024	2:15 PM	0	0	0	0	0	0	0	0	0	0	0	0	0
4/25/2024	2:30 PM	0	0	0	0	0	0	0	0	0	0	0	0	0
4/25/2024	2:45 PM	0	0	0	0	0	0	0	0	0	0	0	0	0
4/25/2024	3:00 PM	0	0	0	0	0	0	0	0	0	0	0	0	0
4/25/2024	3:15 PM	0	0	0	0	0	0	0	0	0	0	0	0	0
4/25/2024	3:30 PM	0	0	0	0	0	0	0	0	0	0	0	0	0
4/25/2024	3:45 PM	0	0	0	0	0	0	0	0	0	0	0	0	0
4/25/2024	4:00 PM	0	0	0	0	0	0	0	0	0	0	0	0	0
4/25/2024	4:15 PM	0	0	0	0	0	0	0	0	0	0	0	0	0
4/25/2024	4:30 PM	0	0	0	0	0	0	0	0	0	0	0	0	0
4/25/2024	4:45 PM	0	0	0	0	0	0	0	0	0	0	0	0	0
4/25/2024	5:00 PM	0	0	0	0	0	0	0	0	0	0	0	0	0
4/25/2024	5:15 PM	0	0	0	0	0	0	0	0	0	0	0	0	0
4/25/2024	5:30 PM	0	0	0	0	0	0	0	0	0	0	0	0	0
4/25/2024	5:45 PM	0	0	0	0	0	0	0	0	0	0	0	0	0
4/25/2024	6:00 PM	0	0	0	0	0	0	0	0	0	0	0	0	0
4/25/2024	6:15 PM	0	0	0	0	0	0	0	0	0	0	0	0	0
4/25/2024	6:30 PM	0	0	0	0	0	0	0	0	0	0	0	0	0
4/25/2024	6:45 PM	0	0	0	0	0	0	0	0	0	0	0	0	0
4/25/2024	7:00 PM	0	0	0	0	0	0	0	0	0	0	0	0	0
4/25/2024	7:15 PM	0	0	0	0	0	0	0	0	0	0	0	0	0
4/25/2024	7:30 PM	0	0	0	0	0	0	0	0	0	0	0	0	0
4/25/2024	7:45 PM	0	0	0	0	0	0	0	0	0	0	0	0	0
4/25/2024	8:00 PM	0	0	0	0	0	0	0	0	0	0	0	0	0
4/25/2024	8:15 PM	0	0	0	0	0	0	0	0	0	0	0	0	0
4/25/2024	8:30 PM	0	0	0	0	0	0	0	0	0	0	0	0	0
4/25/2024	8:45 PM	0	0	0	0	0	0	0	0	0	0	0	0	0
4/25/2024	9:00 PM	0	0	0	0	0	0	0	0	0	0	0	0	0
4/25/2024	9:15 PM	0	0	0	0	0	0	0	0	0	0	0	0	0
4/25/2024	9:30 PM	0	0	0	0	0	0	0	0	0	0	0	0	0
4/25/2024	9:45 PM	0	0	0	0	0	0	0	0	0	0	0	0	0
4/25/2024	10:00 PM	0	0	0	0	0	0	0	0	0	0	0	0	0
4/25/2024	10:15 PM	0	0	0	0	0	0	0	0	0	0	0	0	0
4/25/2024	10:30 PM	0	0	0	0	0	0	0	0	0	0	0	0	0
4/25/2024	10:45 PM	0	0	0	0	0	0	0	0	0	0	0	0	0
4/25/2024	11:00 PM	0	0	0	0	0	0	0	0	0	0	0	0	0
4/25/2024	11:15 PM	0	0	0	0	0	0	0	0	0	0	0	0	0
4/25/2024	11:30 PM	0	0	0	0	0	0	0	0	0	0	0	0	0
4/25/2024	11:45 PM	0	0	0	0	0	0	0	0	0	0	0	0	0

NB
File Name:
Start Date: 4/23/2024
Start Time: 0
Site Code: 40
Station ID: 1
Location 1: I-26 On/Off-Ramp, north of St Andrews Rd
Location 2:

Date	Time	1	2	3	4	5	6	7	8	9	10	11	12	13
4/23/2024	12:00 AM	0	0	0	0	0	0	0	0	0	0	0	0	0
4/23/2024	12:15 AM	0	0	0	0	0	0	0	0	0	0	0	0	0
4/23/2024	12:30 AM	0	0	0	0	0	0	0	0	0	0	0	0	0
4/23/2024	12:45 AM	0	0	0	0	0	0	0	0	0	0	0	0	0
4/23/2024	1:00 AM	0	0	0	0	0	0	0	0	0	0	0	0	0
4/23/2024	1:15 AM	0	0	0	0	0	0	0	0	0	0	0	0	0
4/23/2024	1:30 AM	0	0	0	0	0	0	0	0	0	0	0	0	0
4/23/2024	1:45 AM	0	0	0	0	0	0	0	0	0	0	0	0	0
4/23/2024	2:00 AM	0	0	0	0	0	0	0	0	0	0	0	0	0
4/23/2024	2:15 AM	0	0	0	0	0	0	0	0	0	0	0	0	0
4/23/2024	2:30 AM	0	0	0	0	0	0	0	0	0	0	0	0	0
4/23/2024	2:45 AM	0	0	0	0	0	0	0	0	0	0	0	0	0
4/23/2024	3:00 AM	0	0	0	0	0	0	0	0	0	0	0	0	0
4/23/2024	3:15 AM	0	0	0	0	0	0	0	0	0	0	0	0	0
4/23/2024	3:30 AM	0	0	0	0	0	0	0	0	0	0	0	0	0
4/23/2024	3:45 AM	0	0	0	0	0	0	0	0	0	0	0	0	0
4/23/2024	4:00 AM	0	0	0	0	0	0	0	0	0	0	0	0	0
4/23/2024	4:15 AM	0	0	0	0	0	0	0	0	0	0	0	0	0
4/23/2024	4:30 AM	0	0	0	0	0	0	0	0	0	0	0	0	0
4/23/2024	4:45 AM	0	0	0	0	0	0	0	0	0	0	0	0	0
4/23/2024	5:00 AM	0	0	0	0	0	0	0	0	0	0	0	0	0
4/23/2024	5:15 AM	0	0	0	0	0	0	0	0	0	0	0	0	0
4/23/2024	5:30 AM	0	0	0	0	0	0	0	0	0	0	0	0	0
4/23/2024	5:45 AM	0	0	0	0	0	0	0	0	0	0	0	0	0
4/23/2024	6:00 AM	0	0	0	0	0	0	0	0	0	0	0	0	0
4/23/2024	6:15 AM	0	0	0	0	0	0	0	0	0	0	0	0	0
4/23/2024	6:30 AM	0	0	0	0	0	0	0	0	0	0	0	0	0
4/23/2024	6:45 AM	0	0	0	0	0	0	0	0	0	0	0	0	0
4/23/2024	7:00 AM	0	0	0	0	0	0	0	0	0	0	0	0	0
4/23/2024	7:15 AM	0	0	0	0	0	0	0	0	0	0	0	0	0
4/23/2024	7:30 AM	0	0	0	0	0	0	0	0	0	0	0	0	0
4/23/2024	7:45 AM	0	0	0	0	0	0	0	0	0	0	0	0	0
4/23/2024	8:00 AM	0	0	0	0	0	0	0	0	0	0	0	0	0
4/23/2024	8:15 AM	0	0	0	0	0	0	0	0	0	0	0	0	0
4/23/2024	8:30 AM	0	0	0	0	0	0	0	0	0	0	0	0	0
4/23/2024	8:45 AM	0	0	0	0	0	0	0	0	0	0	0	0	0
4/23/2024	9:00 AM	0	0	0	0	0	0	0	0	0	0	0	0	0
4/23/2024	9:15 AM	0	0	0	0	0	0	0	0	0	0	0	0	0
4/23/2024	9:30 AM	0	0	0	0	0	0	0	0	0	0	0	0	0
4/23/2024	9:45 AM	0	0	0	0	0	0	0	0	0	0	0	0	0
4/23/2024	10:00 AM	0	0	0	0	0	0	0	0	0	0	0	0	0
4/23/2024	10:15 AM	0	0	0	0	0	0	0	0	0	0	0	0	0
4/23/2024	10:30 AM	0	0	0	0	0	0	0	0	0	0	0	0	0
4/23/2024	10:45 AM	0	0	0	0	0	0	0	0	0	0	0	0	0
4/23/2024	11:00 AM	0	0	0	0	0	0	0	0	0	0	0	0	0
4/23/2024	11:15 AM	0	0	0	0	0	0	0	0	0	0	0	0	0
4/23/2024	11:30 AM	0	0	0	0	0	0	0	0	0	0	0	0	0
4/23/2024	11:45 AM	0	0	0	0	0	0	0	0	0	0	0	0	0
4/23/2024	12:00 PM	0	0	0	0	0	0	0	0	0	0	0	0	0
4/23/2024	12:15 PM	0	0	0	0	0	0	0	0	0	0	0	0	0
4/23/2024	12:30 PM	0	0	0	0	0	0	0	0	0	0	0	0	0
4/23/2024	12:45 PM	0	0	0	0	0	0	0	0	0	0	0	0	0
4/23/2024	1:00 PM	0	0	0	0	0	0	0	0	0	0	0	0	0
4/23/2024	1:15 PM	0	0	0	0	0	0	0	0	0	0	0	0	0
4/23/2024	1:30 PM	0	0	0	0	0	0	0	0	0	0	0	0	0
4/23/2024	1:45 PM	0	0	0	0	0	0	0	0	0	0	0	0	0
4/23/2024	2:00 PM	0	0	0	0	0	0	0	0	0	0	0	0	0
4/23/2024	2:15 PM	0	0	0	0	0	0	0	0	0	0	0	0	0
4/23/2024	2:30 PM	0	0	0	0	0	0	0	0	0	0	0	0	0
4/23/2024	2:45 PM	0	0	0	0	0	0	0	0	0	0	0	0	0
4/23/2024	3:00 PM	0	0	0	0	0	0	0	0	0	0	0	0	0
4/23/2024	3:15 PM	0	0	0	0	0	0	0	0	0	0	0	0	0
4/23/2024	3:30 PM	0	0	0	0	0	0	0	0	0	0	0	0	0
4/23/2024	3:45 PM	0	0	0	0	0	0	0	0	0	0	0	0	0
4/23/2024	4:00 PM	0	0	0	0	0	0	0	0	0	0	0	0	0
4/23/2024	4:15 PM	0	0	0	0	0	0	0	0	0	0	0	0	0
4/23/2024	4:30 PM	0	0	0	0	0	0	0	0	0	0	0	0	0
4/23/2024	4:45 PM	0	0	0	0	0	0	0	0	0	0	0	0	0
4/23/2024	5:00 PM	0	0	0	0	0	0	0	0	0	0	0	0	0
4/23/2024	5:15 PM	0	0	0	0	0	0	0	0	0	0	0	0	0
4/23/2024	5:30 PM	0	0	0	0	0	0	0	0	0	0	0	0	0
4/23/2024	5:45 PM	0	0	0	0	0	0	0	0	0	0	0	0	0
4/23/2024	6:00 PM	0	0	0	0	0	0	0	0	0	0	0	0	0
4/23/2024	6:15 PM	3	68	6	0	4	0	0	0	1	0	0	0	0
4/23/2024	6:30 PM	4	131	15	0	4	0	0	0	1	0	0	0	0
4/23/2024	6:45 PM	5	174	27	0	4	0	0	0	1	0	0	0	0
4/23/2024	7:00 PM	6	225	30	0	4	0	0	0	2	0	0	0	0
4/23/2024	7:15 PM	3	212	33	0	1	0	0	0	1	0	0	0	0
4/23/2024	7:30 PM	3	197	28	0	1	0	0	0	1	0	0	0	0
4/23/2024	7:45 PM	2	193	18	0	3	0	0	1	2	0	0	0	0
4/23/2024	8:00 PM	1	183	20	0	3	0	0	1	1	0	0	0	0
4/23/2024	8:15 PM	1	164	16	0	2	0	0	1	1	0	0	0	0
4/23/2024	8:30 PM	0	140	15	0	3	0	0	1	2	0	0	0	0
4/23/2024	8:45 PM	0	137	15	0	1	0	0	0	1	0	0	0	0
4/23/2024	9:00 PM	0	133	13	0	1	0	0	0	1	0	0	0	0
4/23/2024	9:15 PM	0	126	11	0	1	0	0	0	1	0	0	0	0
4/23/2024	9:30 PM	0	125	10	0	0	0	0	0	0	0	0	0	0
4/23/2024	9:45 PM	0	113	11	0	0	0	0	0	0	0	0	0	0
4/23/2024	10:00 PM	0	103	11	0	0	0	0	0	0	0	0	0	0
4/23/2024	10:15 PM	0	102	10	0	0	0	0	0	0	0	0	0	0
4/23/2024	10:30 PM	0	91	10	0	0	0	0	0	0	0	0	0	0
4/23/2024	10:45 PM	0	80	9	0	0	0	0	0	1	0	0	0	0
4/23/2024	11:00 PM	0	68	7	0	1	0	0	0	1	0	0	0	0
4/23/2024	11:15 PM	0	53	6	0	1	0	0	0	1	0	0	0	0
4/23/2024	11:30 PM	0	53	5	0	1	0	0	0	1	0	0	0	0
4/23/2024	11:45 PM	0	53	5	0	1	0	0	0	0	0	0	0	0

4/24/2024	12:00 AM	0	46	5	0	0	0	0	0	0	0	0	0
4/24/2024	12:15 AM	0	36	5	0	0	0	0	0	0	0	0	0
4/24/2024	12:30 AM	0	30	6	0	0	0	0	0	0	0	0	0
4/24/2024	12:45 AM	0	22	4	0	0	0	0	0	0	0	0	0
4/24/2024	1:00 AM	0	17	3	0	0	0	0	0	0	0	0	0
4/24/2024	1:15 AM	0	23	4	0	0	0	0	0	0	0	0	0
4/24/2024	1:30 AM	0	21	3	0	0	0	0	0	0	0	0	0
4/24/2024	1:45 AM	0	26	5	0	0	0	0	0	0	0	0	0
4/24/2024	2:00 AM	0	28	6	0	0	0	0	0	0	0	0	0
4/24/2024	2:15 AM	0	29	6	0	0	0	0	0	0	0	0	0
4/24/2024	2:30 AM	0	34	7	0	0	0	0	0	0	0	0	0
4/24/2024	2:45 AM	0	30	6	0	0	0	0	0	0	0	0	0
4/24/2024	3:00 AM	0	36	7	0	0	0	0	0	0	0	0	0
4/24/2024	3:15 AM	0	32	7	0	0	0	0	0	0	0	0	0
4/24/2024	3:30 AM	0	35	8	0	0	0	0	0	1	0	0	0
4/24/2024	3:45 AM	0	44	12	0	0	0	0	0	1	0	0	0
4/24/2024	4:00 AM	0	47	13	0	0	0	0	0	1	0	0	0
4/24/2024	4:15 AM	0	68	14	0	0	0	0	0	1	0	0	0
4/24/2024	4:30 AM	0	75	13	0	0	0	0	0	0	0	0	0
4/24/2024	4:45 AM	0	93	12	0	0	1	0	0	1	0	0	0
4/24/2024	5:00 AM	0	113	12	0	1	1	0	0	1	0	0	0
4/24/2024	5:15 AM	0	119	14	0	1	1	0	0	2	0	0	0
4/24/2024	5:30 AM	0	157	24	0	1	1	0	0	2	0	0	0
4/24/2024	5:45 AM	0	198	34	0	2	0	0	0	1	0	0	0
4/24/2024	6:00 AM	0	232	40	0	1	0	0	0	1	0	0	0
4/24/2024	6:15 AM	0	285	48	0	2	0	0	0	1	0	0	0
4/24/2024	6:30 AM	0	318	48	0	2	0	0	0	1	0	0	0
4/24/2024	6:45 AM	0	354	57	0	1	0	0	0	1	0	0	0
4/24/2024	7:00 AM	0	403	66	0	2	0	0	0	1	0	0	0
4/24/2024	7:15 AM	0	420	67	0	3	0	0	1	1	0	0	0
4/24/2024	7:30 AM	0	420	74	0	3	0	0	2	1	0	0	0
4/24/2024	7:45 AM	0	380	64	1	6	1	0	2	1	0	0	0
4/24/2024	8:00 AM	0	330	64	1	8	3	0	3	1	0	0	0
4/24/2024	8:15 AM	1	275	62	1	8	4	0	2	1	0	0	0
4/24/2024	8:30 AM	1	254	61	1	10	4	0	2	1	0	0	0
4/24/2024	8:45 AM	1	251	60	2	9	3	1	2	1	0	0	0
4/24/2024	9:00 AM	2	252	59	2	9	2	1	1	1	0	0	0
4/24/2024	9:15 AM	1	264	62	2	7	1	2	2	0	0	0	0
4/24/2024	9:30 AM	1	256	62	2	9	1	4	1	1	0	0	0
4/24/2024	9:45 AM	2	265	72	0	7	1	3	2	1	0	0	0
4/24/2024	10:00 AM	1	273	72	0	4	2	4	2	1	0	0	0
4/24/2024	10:15 AM	1	291	69	0	4	3	3	2	1	0	0	0
4/24/2024	10:30 AM	1	294	72	0	3	3	2	4	0	0	0	0
4/24/2024	10:45 AM	0	292	58	0	6	3	2	3	0	0	0	0
4/24/2024	11:00 AM	0	289	67	0	8	3	1	3	0	0	0	0
4/24/2024	11:15 AM	0	293	79	0	10	2	1	2	0	0	0	0
4/24/2024	11:30 AM	0	295	74	1	10	2	0	0	2	0	0	0
4/24/2024	11:45 AM	1	300	102	1	10	2	0	0	2	0	0	0
4/24/2024	12:00 PM	2	302	103	1	9	1	0	0	2	0	0	0
4/24/2024	12:15 PM	3	302	95	1	7	2	0	0	2	0	0	0
4/24/2024	12:30 PM	3	314	98	0	7	2	0	1	1	0	0	0
4/24/2024	12:45 PM	3	333	78	0	6	4	0	1	2	0	0	0
4/24/2024	1:00 PM	3	326	73	1	6	3	0	1	3	0	0	0
4/24/2024	1:15 PM	3	324	76	1	8	2	0	1	3	0	0	0
4/24/2024	1:30 PM	3	341	81	1	6	2	1	1	3	0	0	0
4/24/2024	1:45 PM	2	352	88	1	5	0	1	1	2	0	0	0
4/24/2024	2:00 PM	2	370	93	1	4	1	2	1	3	0	0	0
4/24/2024	2:15 PM	1	393	102	2	2	1	2	1	4	0	0	0
4/24/2024	2:30 PM	2	424	95	3	3	2	1	0	3	0	0	0
4/24/2024	2:45 PM	4	431	104	3	4	4	1	0	3	0	0	0
4/24/2024	3:00 PM	4	464	90	3	4	3	0	1	2	0	0	0
4/24/2024	3:15 PM	5	543	87	2	7	4	0	2	1	0	0	0
4/24/2024	3:30 PM	5	568	105	2	8	3	0	2	2	0	0	0
4/24/2024	3:45 PM	4	629	104	2	10	1	0	3	2	0	0	0
4/24/2024	4:00 PM	3	670	124	2	14	1	0	2	1	0	0	0
4/24/2024	4:15 PM	2	702	133	3	12	0	0	1	1	0	0	0
4/24/2024	4:30 PM	1	673	127	2	12	0	0	1	0	0	0	0
4/24/2024	4:45 PM	1	608	117	2	10	0	0	0	0	0	0	0
4/24/2024	5:00 PM	1	545	97	1	7	0	0	0	0	0	0	0
4/24/2024	5:15 PM	2	429	84	0	6	0	0	0	1	0	0	0
4/24/2024	5:30 PM	2	388	71	0	3	0	0	1	2	0	0	0
4/24/2024	5:45 PM	1	360	63	0	3	0	0	1	2	0	0	0
4/24/2024	6:00 PM	1	323	59	1	3	0	0	1	2	0	0	0
4/24/2024	6:15 PM	0	275	46	1	6	0	0	1	1	0	0	0
4/24/2024	6:30 PM	0	247	39	1	6	0	0	0	0	0	0	0
4/24/2024	6:45 PM	0	232	42	1	6	0	0	0	0	0	0	0
4/24/2024	7:00 PM	0	226	47	0	6	0	0	0	0	0	0	0
4/24/2024	7:15 PM	4	233	51	0	3	0	0	0	0	0	0	0
4/24/2024	7:30 PM	4	250	52	0	3	0	0	0	0	0	0	0
4/24/2024	7:45 PM	4	222	43	0	1	0	0	0	1	0	0	0
4/24/2024	8:00 PM	4	230	39	0	0	0	0	0	1	0	0	0
4/24/2024	8:15 PM	0	218	33	0	0	0	0	0	1	0	0	0
4/24/2024	8:30 PM	0	184	28	0	0	0	0	0	1	0	0	0
4/24/2024	8:45 PM	0	184	25	0	0	0	0	0	0	0	0	0
4/24/2024	9:00 PM	0	153	18	0	0	0	0	0	0	0	0	0
4/24/2024	9:15 PM	0	135	14	0	0	0	0	1	0	0	0	0
4/24/2024	9:30 PM	0	122	11	0	0	0	0	1	0	0	0	0
4/24/2024	9:45 PM	0	113	11	0	0	0	0	1	0	0	1	0
4/24/2024	10:00 PM	0	112	10	0	0	0	0	1	0	0	1	0
4/24/2024	10:15 PM	0	112	10	0	0	1	0	0	0	0	1	0
4/24/2024	10:30 PM	0	114	10	0	0	1	0	0	0	0	1	0
4/24/2024	10:45 PM	0	99	9	0	0	1	0	0	0	0	0	0
4/24/2024	11:00 PM	0	92	11	1	0	1	0	0	0	0	0	0
4/24/2024	11:15 PM	0	78	10	1	0	0	0	0	0	0	0	0
4/24/2024	11:30 PM	0	72	10	1	0	0	0	0	0	0	0	0
4/24/2024	11:45 PM	0	66	7	1	0	0	0	0	1	0	0	0

4/25/2024	12:00 AM	0	53	5	0	0	0	0	0	1	0	0	0	0
4/25/2024	12:15 AM	0	50	5	0	0	0	0	0	1	0	0	0	0
4/25/2024	12:30 AM	0	42	3	0	0	0	0	0	1	0	0	0	0
4/25/2024	12:45 AM	0	44	5	0	0	0	0	0	0	0	0	0	0
4/25/2024	1:00 AM	0	42	3	0	0	0	0	0	0	0	0	0	0
4/25/2024	1:15 AM	0	36	2	0	0	0	0	0	0	0	0	0	0
4/25/2024	1:30 AM	0	29	3	0	0	0	0	0	0	0	0	0	0
4/25/2024	1:45 AM	0	21	2	0	0	0	0	0	0	0	0	0	0
4/25/2024	2:00 AM	0	18	2	0	0	0	0	0	0	0	0	0	0
4/25/2024	2:15 AM	0	20	3	0	0	0	0	0	1	0	0	0	0
4/25/2024	2:30 AM	0	23	2	0	0	0	0	0	1	0	0	0	0
4/25/2024	2:45 AM	0	29	4	0	0	0	0	0	1	0	0	0	0
4/25/2024	3:00 AM	0	34	4	0	1	0	0	0	1	0	0	0	0
4/25/2024	3:15 AM	0	39	6	0	1	0	0	0	0	0	0	0	0
4/25/2024	3:30 AM	0	42	8	0	1	0	0	0	0	0	0	0	0
4/25/2024	3:45 AM	0	47	6	0	1	0	0	0	0	0	0	0	0
4/25/2024	4:00 AM	0	56	8	0	0	0	0	0	0	0	0	0	0
4/25/2024	4:15 AM	0	62	6	0	0	0	0	0	1	0	0	0	0
4/25/2024	4:30 AM	0	71	6	0	0	0	0	0	1	0	0	0	0
4/25/2024	4:45 AM	0	86	9	0	0	0	0	0	1	0	0	0	0
4/25/2024	5:00 AM	0	108	10	0	0	0	0	0	1	0	0	0	0
4/25/2024	5:15 AM	0	134	15	0	0	1	0	0	1	0	0	0	0
4/25/2024	5:30 AM	0	155	20	0	0	1	0	0	1	0	0	0	0
4/25/2024	5:45 AM	0	194	30	0	1	2	0	0	1	0	0	0	0
4/25/2024	6:00 AM	0	230	42	0	1	2	0	0	2	0	0	0	0
4/25/2024	6:15 AM	0	267	51	0	2	1	0	0	2	0	0	0	0
4/25/2024	6:30 AM	0	316	58	0	3	1	0	0	4	0	0	0	0
4/25/2024	6:45 AM	0	371	61	0	3	0	0	0	5	0	0	0	0
4/25/2024	7:00 AM	1	416	70	0	5	0	0	1	4	0	0	0	0
4/25/2024	7:15 AM	1	437	76	0	5	0	0	1	3	0	0	0	0
4/25/2024	7:30 AM	1	447	87	0	4	0	0	2	2	0	0	0	0
4/25/2024	7:45 AM	1	410	88	0	4	0	0	2	1	0	0	0	0
4/25/2024	8:00 AM	0	355	75	0	2	2	0	1	1	0	0	0	0
4/25/2024	8:15 AM	0	304	68	0	2	2	0	2	2	0	0	0	0
4/25/2024	8:30 AM	0	271	67	0	6	3	0	1	2	0	0	0	0
4/25/2024	8:45 AM	0	246	69	0	5	3	1	1	2	0	0	0	0
4/25/2024	9:00 AM	0	254	81	0	5	1	1	2	2	0	0	0	0
4/25/2024	9:15 AM	0	267	83	0	6	2	1	2	1	0	0	0	0
4/25/2024	9:30 AM	1	259	75	0	3	2	1	2	0	0	0	0	0
4/25/2024	9:45 AM	1	262	68	0	4	3	0	2	1	0	0	0	0
4/25/2024	10:00 AM	2	264	62	0	4	4	0	2	1	0	0	0	0
4/25/2024	10:15 AM	2	267	61	0	7	4	0	1	3	0	0	0	0
4/25/2024	10:30 AM	1	282	61	0	9	3	1	1	4	0	0	0	0
4/25/2024	10:45 AM	1	295	66	0	12	5	1	1	3	0	0	0	0
4/25/2024	11:00 AM	0	298	67	0	13	4	1	1	4	0	0	0	0
4/25/2024	11:15 AM	0	321	70	0	9	4	1	1	4	0	0	0	0
4/25/2024	11:30 AM	1	320	69	1	6	5	0	1	3	0	0	0	0
4/25/2024	11:45 AM	1	337	75	1	4	2	0	2	3	0	0	0	0
4/25/2024	12:00 PM	1	332	73	1	5	3	0	1	2	0	0	0	0
4/25/2024	12:15 PM	1	320	82	1	4	4	0	1	1	0	0	0	0
4/25/2024	12:30 PM	0	325	83	0	7	3	0	3	1	0	0	0	0
4/25/2024	12:45 PM	1	313	78	0	9	3	0	2	2	0	0	0	0
4/25/2024	1:00 PM	1	329	86	0	9	2	0	2	2	0	0	0	0
4/25/2024	1:15 PM	2	348	91	0	9	1	0	2	1	0	0	0	0
4/25/2024	1:30 PM	2	366	93	1	8	1	0	0	1	0	0	0	0
4/25/2024	1:45 PM	2	378	95	1	5	3	0	0	0	0	0	0	0
4/25/2024	2:00 PM	4	367	92	1	4	4	0	1	0	0	0	0	0
4/25/2024	2:15 PM	3	390	88	2	7	3	0	1	3	0	0	0	0
4/25/2024	2:30 PM	4	391	89	1	7	3	0	3	4	0	0	0	0
4/25/2024	2:45 PM	4	432	101	1	10	1	0	3	4	0	0	0	0
4/25/2024	3:00 PM	2	501	108	1	11	0	0	2	4	0	0	0	0
4/25/2024	3:15 PM	4	559	108	0	10	0	0	2	1	0	0	0	0
4/25/2024	3:30 PM	3	596	116	0	13	0	0	1	1	0	0	0	0
4/25/2024	3:45 PM	4	639	113	0	11	0	0	1	1	0	0	0	0
4/25/2024	4:00 PM	4	638	115	1	9	0	0	1	1	0	0	0	0
4/25/2024	4:15 PM	2	659	124	1	7	0	0	2	1	0	0	0	0
4/25/2024	4:30 PM	3	646	124	1	2	0	0	2	0	0	0	0	0
4/25/2024	4:45 PM	1	580	115	1	0	1	0	3	2	0	0	0	0
4/25/2024	5:00 PM	1	527	100	0	3	1	0	4	2	0	0	0	0
4/25/2024	5:15 PM	1	424	83	0	3	1	0	4	2	0	0	0	0
4/25/2024	5:30 PM	0	400	68	0	4	1	0	3	2	0	0	0	0
4/25/2024	5:45 PM	0	368	57	0	5	0	0	2	0	0	0	0	0
4/25/2024	6:00 PM	0	336	50	0	5	0	0	1	0	0	0	0	0
4/25/2024	6:15 PM	0	241	30	0	5	0	0	0	0	0	0	0	0
4/25/2024	6:30 PM	0	145	18	0	4	0	0	0	0	0	0	0	0
4/25/2024	6:45 PM	0	63	8	0	3	0	0	0	0	0	0	0	0
4/25/2024	7:00 PM	0	0	0	0	0	0	0	0	0	0	0	0	0
4/25/2024	7:15 PM	0	0	0	0	0	0	0	0	0	0	0	0	0
4/25/2024	7:30 PM	0	0	0	0	0	0	0	0	0	0	0	0	0
4/25/2024	7:45 PM	0	0	0	0	0	0	0	0	0	0	0	0	0
4/25/2024	8:00 PM	0	0	0	0	0	0	0	0	0	0	0	0	0
4/25/2024	8:15 PM	0	0	0	0	0	0	0	0	0	0	0	0	0
4/25/2024	8:30 PM	0	0	0	0	0	0	0	0	0	0	0	0	0
4/25/2024	8:45 PM	0	0	0	0	0	0	0	0	0	0	0	0	0
4/25/2024	9:00 PM	0	0	0	0	0	0	0	0	0	0	0	0	0
4/25/2024	9:15 PM	0	0	0	0	0	0	0	0	0	0	0	0	0
4/25/2024	9:30 PM	0	0	0	0	0	0	0	0	0	0	0	0	0
4/25/2024	9:45 PM	0	0	0	0	0	0	0	0	0	0	0	0	0
4/25/2024	10:00 PM	0	0	0	0	0	0	0	0	0	0	0	0	0
4/25/2024	10:15 PM	0	0	0	0	0	0	0	0	0	0	0	0	0
4/25/2024	10:30 PM	0	0	0	0	0	0	0	0	0	0	0	0	0
4/25/2024	10:45 PM	0	0	0	0	0	0	0	0	0	0	0	0	0
4/25/2024	11:00 PM	0	0	0	0	0	0	0	0	0	0	0	0	0
4/25/2024	11:15 PM	0	0	0	0	0	0	0	0	0	0	0	0	0
4/25/2024	11:30 PM	0	0	0	0	0	0	0	0	0	0	0	0	0
4/25/2024	11:45 PM	0	0	0	0	0	0	0	0	0	0	0	0	0

SB
File Name:
Start Date: 4/23/2024
Start Time: 0
Site Code: 40
Station ID: 1
Location 1: I-26 On/Off-Ramp, north of St Andrews Rd
Location 2:

Date	Time	1	2	3	4	5	6	7	8	9	10	11	12	13
4/23/2024	12:00 AM	0	0	0	0	0	0	0	0	0	0	0	0	0
4/23/2024	12:15 AM	0	0	0	0	0	0	0	0	0	0	0	0	0
4/23/2024	12:30 AM	0	0	0	0	0	0	0	0	0	0	0	0	0
4/23/2024	12:45 AM	0	0	0	0	0	0	0	0	0	0	0	0	0
4/23/2024	1:00 AM	0	0	0	0	0	0	0	0	0	0	0	0	0
4/23/2024	1:15 AM	0	0	0	0	0	0	0	0	0	0	0	0	0
4/23/2024	1:30 AM	0	0	0	0	0	0	0	0	0	0	0	0	0
4/23/2024	1:45 AM	0	0	0	0	0	0	0	0	0	0	0	0	0
4/23/2024	2:00 AM	0	0	0	0	0	0	0	0	0	0	0	0	0
4/23/2024	2:15 AM	0	0	0	0	0	0	0	0	0	0	0	0	0
4/23/2024	2:30 AM	0	0	0	0	0	0	0	0	0	0	0	0	0
4/23/2024	2:45 AM	0	0	0	0	0	0	0	0	0	0	0	0	0
4/23/2024	3:00 AM	0	0	0	0	0	0	0	0	0	0	0	0	0
4/23/2024	3:15 AM	0	0	0	0	0	0	0	0	0	0	0	0	0
4/23/2024	3:30 AM	0	0	0	0	0	0	0	0	0	0	0	0	0
4/23/2024	3:45 AM	0	0	0	0	0	0	0	0	0	0	0	0	0
4/23/2024	4:00 AM	0	0	0	0	0	0	0	0	0	0	0	0	0
4/23/2024	4:15 AM	0	0	0	0	0	0	0	0	0	0	0	0	0
4/23/2024	4:30 AM	0	0	0	0	0	0	0	0	0	0	0	0	0
4/23/2024	4:45 AM	0	0	0	0	0	0	0	0	0	0	0	0	0
4/23/2024	5:00 AM	0	0	0	0	0	0	0	0	0	0	0	0	0
4/23/2024	5:15 AM	0	0	0	0	0	0	0	0	0	0	0	0	0
4/23/2024	5:30 AM	0	0	0	0	0	0	0	0	0	0	0	0	0
4/23/2024	5:45 AM	0	0	0	0	0	0	0	0	0	0	0	0	0
4/23/2024	6:00 AM	0	0	0	0	0	0	0	0	0	0	0	0	0
4/23/2024	6:15 AM	0	0	0	0	0	0	0	0	0	0	0	0	0
4/23/2024	6:30 AM	0	0	0	0	0	0	0	0	0	0	0	0	0
4/23/2024	6:45 AM	0	0	0	0	0	0	0	0	0	0	0	0	0
4/23/2024	7:00 AM	0	0	0	0	0	0	0	0	0	0	0	0	0
4/23/2024	7:15 AM	0	0	0	0	0	0	0	0	0	0	0	0	0
4/23/2024	7:30 AM	0	0	0	0	0	0	0	0	0	0	0	0	0
4/23/2024	7:45 AM	0	0	0	0	0	0	0	0	0	0	0	0	0
4/23/2024	8:00 AM	0	0	0	0	0	0	0	0	0	0	0	0	0
4/23/2024	8:15 AM	0	0	0	0	0	0	0	0	0	0	0	0	0
4/23/2024	8:30 AM	0	0	0	0	0	0	0	0	0	0	0	0	0
4/23/2024	8:45 AM	0	0	0	0	0	0	0	0	0	0	0	0	0
4/23/2024	9:00 AM	0	0	0	0	0	0	0	0	0	0	0	0	0
4/23/2024	9:15 AM	0	0	0	0	0	0	0	0	0	0	0	0	0
4/23/2024	9:30 AM	0	0	0	0	0	0	0	0	0	0	0	0	0
4/23/2024	9:45 AM	0	0	0	0	0	0	0	0	0	0	0	0	0
4/23/2024	10:00 AM	0	0	0	0	0	0	0	0	0	0	0	0	0
4/23/2024	10:15 AM	0	0	0	0	0	0	0	0	0	0	0	0	0
4/23/2024	10:30 AM	0	0	0	0	0	0	0	0	0	0	0	0	0
4/23/2024	10:45 AM	0	0	0	0	0	0	0	0	0	0	0	0	0
4/23/2024	11:00 AM	0	0	0	0	0	0	0	0	0	0	0	0	0
4/23/2024	11:15 AM	0	0	0	0	0	0	0	0	0	0	0	0	0
4/23/2024	11:30 AM	0	0	0	0	0	0	0	0	0	0	0	0	0
4/23/2024	11:45 AM	0	0	0	0	0	0	0	0	0	0	0	0	0
4/23/2024	12:00 PM	0	0	0	0	0	0	0	0	0	0	0	0	0
4/23/2024	12:15 PM	0	0	0	0	0	0	0	0	0	0	0	0	0
4/23/2024	12:30 PM	0	0	0	0	0	0	0	0	0	0	0	0	0
4/23/2024	12:45 PM	0	0	0	0	0	0	0	0	0	0	0	0	0
4/23/2024	1:00 PM	0	0	0	0	0	0	0	0	0	0	0	0	0
4/23/2024	1:15 PM	0	0	0	0	0	0	0	0	0	0	0	0	0
4/23/2024	1:30 PM	0	0	0	0	0	0	0	0	0	0	0	0	0
4/23/2024	1:45 PM	0	0	0	0	0	0	0	0	0	0	0	0	0
4/23/2024	2:00 PM	0	0	0	0	0	0	0	0	0	0	0	0	0
4/23/2024	2:15 PM	0	0	0	0	0	0	0	0	0	0	0	0	0
4/23/2024	2:30 PM	0	0	0	0	0	0	0	0	0	0	0	0	0
4/23/2024	2:45 PM	0	0	0	0	0	0	0	0	0	0	0	0	0
4/23/2024	3:00 PM	0	0	0	0	0	0	0	0	0	0	0	0	0
4/23/2024	3:15 PM	0	0	0	0	0	0	0	0	0	0	0	0	0
4/23/2024	3:30 PM	0	0	0	0	0	0	0	0	0	0	0	0	0
4/23/2024	3:45 PM	0	0	0	0	0	0	0	0	0	0	0	0	0
4/23/2024	4:00 PM	0	0	0	0	0	0	0	0	0	0	0	0	0
4/23/2024	4:15 PM	0	0	0	0	0	0	0	0	0	0	0	0	0
4/23/2024	4:30 PM	0	0	0	0	0	0	0	0	0	0	0	0	0
4/23/2024	4:45 PM	0	0	0	0	0	0	0	0	0	0	0	0	0
4/23/2024	5:00 PM	0	0	0	0	0	0	0	0	0	0	0	0	0
4/23/2024	5:15 PM	0	0	0	0	0	0	0	0	0	0	0	0	0
4/23/2024	5:30 PM	0	0	0	0	0	0	0	0	0	0	0	0	0
4/23/2024	5:45 PM	0	0	0	0	0	0	0	0	0	0	0	0	0
4/23/2024	6:00 PM	0	0	0	0	0	0	0	0	0	0	0	0	0
4/23/2024	6:15 PM	0	0	0	0	0	0	0	0	0	0	0	0	0
4/23/2024	6:30 PM	0	0	0	0	0	0	0	0	0	0	0	0	0
4/23/2024	6:45 PM	0	0	0	0	0	0	0	0	0	0	0	0	0
4/23/2024	7:00 PM	0	0	0	0	0	0	0	0	0	0	0	0	0
4/23/2024	7:15 PM	0	0	0	0	0	0	0	0	0	0	0	0	0
4/23/2024	7:30 PM	0	0	0	0	0	0	0	0	0	0	0	0	0
4/23/2024	7:45 PM	0	0	0	0	0	0	0	0	0	0	0	0	0
4/23/2024	8:00 PM	0	0	0	0	0	0	0	0	0	0	0	0	0
4/23/2024	8:15 PM	0	0	0	0	0	0	0	0	0	0	0	0	0
4/23/2024	8:30 PM	0	0	0	0	0	0	0	0	0	0	0	0	0
4/23/2024	8:45 PM	0	0	0	0	0	0	0	0	0	0	0	0	0
4/23/2024	9:00 PM	0	0	0	0	0	0	0	0	0	0	0	0	0
4/23/2024	9:15 PM	0	0	0	0	0	0	0	0	0	0	0	0	0
4/23/2024	9:30 PM	0	0	0	0	0	0	0	0	0	0	0	0	0
4/23/2024	9:45 PM	0	0	0	0	0	0	0	0	0	0	0	0	0
4/23/2024	10:00 PM	0	0	0	0	0	0	0	0	0	0	0	0	0
4/23/2024	10:15 PM	0	0	0	0	0	0	0	0	0	0	0	0	0
4/23/2024	10:30 PM	0	0	0	0	0	0	0	0	0	0	0	0	0
4/23/2024	10:45 PM	0	0	0	0	0	0	0	0	0	0	0	0	0
4/23/2024	11:00 PM	0	0	0	0	0	0	0	0	0	0	0	0	0
4/23/2024	11:15 PM	0	0	0	0	0	0	0	0	0	0	0	0	0
4/23/2024	11:30 PM	0	0	0	0	0	0	0	0	0	0	0	0	0
4/23/2024	11:45 PM	0	0	0	0	0	0	0	0	0	0	0	0	0

4/24/2024	12:00 AM	0	0	0	0	0	0	0	0	0	0	0	0	0
4/24/2024	12:15 AM	0	0	0	0	0	0	0	0	0	0	0	0	0
4/24/2024	12:30 AM	0	0	0	0	0	0	0	0	0	0	0	0	0
4/24/2024	12:45 AM	0	0	0	0	0	0	0	0	0	0	0	0	0
4/24/2024	1:00 AM	0	0	0	0	0	0	0	0	0	0	0	0	0
4/24/2024	1:15 AM	0	0	0	0	0	0	0	0	0	0	0	0	0
4/24/2024	1:30 AM	0	0	0	0	0	0	0	0	0	0	0	0	0
4/24/2024	1:45 AM	0	0	0	0	0	0	0	0	0	0	0	0	0
4/24/2024	2:00 AM	0	0	0	0	0	0	0	0	0	0	0	0	0
4/24/2024	2:15 AM	0	0	0	0	0	0	0	0	0	0	0	0	0
4/24/2024	2:30 AM	0	0	0	0	0	0	0	0	0	0	0	0	0
4/24/2024	2:45 AM	0	0	0	0	0	0	0	0	0	0	0	0	0
4/24/2024	3:00 AM	0	0	0	0	0	0	0	0	0	0	0	0	0
4/24/2024	3:15 AM	0	0	0	0	0	0	0	0	0	0	0	0	0
4/24/2024	3:30 AM	0	0	0	0	0	0	0	0	0	0	0	0	0
4/24/2024	3:45 AM	0	0	0	0	0	0	0	0	0	0	0	0	0
4/24/2024	4:00 AM	0	0	0	0	0	0	0	0	0	0	0	0	0
4/24/2024	4:15 AM	0	0	0	0	0	0	0	0	0	0	0	0	0
4/24/2024	4:30 AM	0	0	0	0	0	0	0	0	0	0	0	0	0
4/24/2024	4:45 AM	0	0	0	0	0	0	0	0	0	0	0	0	0
4/24/2024	5:00 AM	0	0	0	0	0	0	0	0	0	0	0	0	0
4/24/2024	5:15 AM	0	0	0	0	0	0	0	0	0	0	0	0	0
4/24/2024	5:30 AM	0	0	0	0	0	0	0	0	0	0	0	0	0
4/24/2024	5:45 AM	0	0	0	0	0	0	0	0	0	0	0	0	0
4/24/2024	6:00 AM	0	0	0	0	0	0	0	0	0	0	0	0	0
4/24/2024	6:15 AM	0	0	0	0	0	0	0	0	0	0	0	0	0
4/24/2024	6:30 AM	0	0	0	0	0	0	0	0	0	0	0	0	0
4/24/2024	6:45 AM	0	0	0	0	0	0	0	0	0	0	0	0	0
4/24/2024	7:00 AM	0	0	0	0	0	0	0	0	0	0	0	0	0
4/24/2024	7:15 AM	0	0	0	0	0	0	0	0	0	0	0	0	0
4/24/2024	7:30 AM	0	0	0	0	0	0	0	0	0	0	0	0	0
4/24/2024	7:45 AM	0	0	0	0	0	0	0	0	0	0	0	0	0
4/24/2024	8:00 AM	0	0	0	0	0	0	0	0	0	0	0	0	0
4/24/2024	8:15 AM	0	0	0	0	0	0	0	0	0	0	0	0	0
4/24/2024	8:30 AM	0	0	0	0	0	0	0	0	0	0	0	0	0
4/24/2024	8:45 AM	0	0	0	0	0	0	0	0	0	0	0	0	0
4/24/2024	9:00 AM	0	0	0	0	0	0	0	0	0	0	0	0	0
4/24/2024	9:15 AM	0	0	0	0	0	0	0	0	0	0	0	0	0
4/24/2024	9:30 AM	0	0	0	0	0	0	0	0	0	0	0	0	0
4/24/2024	9:45 AM	0	0	0	0	0	0	0	0	0	0	0	0	0
4/24/2024	10:00 AM	0	0	0	0	0	0	0	0	0	0	0	0	0
4/24/2024	10:15 AM	0	0	0	0	0	0	0	0	0	0	0	0	0
4/24/2024	10:30 AM	0	0	0	0	0	0	0	0	0	0	0	0	0
4/24/2024	10:45 AM	0	0	0	0	0	0	0	0	0	0	0	0	0
4/24/2024	11:00 AM	0	0	0	0	0	0	0	0	0	0	0	0	0
4/24/2024	11:15 AM	0	0	0	0	0	0	0	0	0	0	0	0	0
4/24/2024	11:30 AM	0	0	0	0	0	0	0	0	0	0	0	0	0
4/24/2024	11:45 AM	0	0	0	0	0	0	0	0	0	0	0	0	0
4/24/2024	12:00 PM	0	0	0	0	0	0	0	0	0	0	0	0	0
4/24/2024	12:15 PM	0	0	0	0	0	0	0	0	0	0	0	0	0
4/24/2024	12:30 PM	0	0	0	0	0	0	0	0	0	0	0	0	0
4/24/2024	12:45 PM	0	0	0	0	0	0	0	0	0	0	0	0	0
4/24/2024	1:00 PM	0	0	0	0	0	0	0	0	0	0	0	0	0
4/24/2024	1:15 PM	0	0	0	0	0	0	0	0	0	0	0	0	0
4/24/2024	1:30 PM	0	0	0	0	0	0	0	0	0	0	0	0	0
4/24/2024	1:45 PM	0	0	0	0	0	0	0	0	0	0	0	0	0
4/24/2024	2:00 PM	0	0	0	0	0	0	0	0	0	0	0	0	0
4/24/2024	2:15 PM	0	0	0	0	0	0	0	0	0	0	0	0	0
4/24/2024	2:30 PM	0	0	0	0	0	0	0	0	0	0	0	0	0
4/24/2024	2:45 PM	0	0	0	0	0	0	0	0	0	0	0	0	0
4/24/2024	3:00 PM	0	0	0	0	0	0	0	0	0	0	0	0	0
4/24/2024	3:15 PM	0	0	0	0	0	0	0	0	0	0	0	0	0
4/24/2024	3:30 PM	0	0	0	0	0	0	0	0	0	0	0	0	0
4/24/2024	3:45 PM	0	0	0	0	0	0	0	0	0	0	0	0	0
4/24/2024	4:00 PM	0	0	0	0	0	0	0	0	0	0	0	0	0
4/24/2024	4:15 PM	0	0	0	0	0	0	0	0	0	0	0	0	0
4/24/2024	4:30 PM	0	0	0	0	0	0	0	0	0	0	0	0	0
4/24/2024	4:45 PM	0	0	0	0	0	0	0	0	0	0	0	0	0
4/24/2024	5:00 PM	0	0	0	0	0	0	0	0	0	0	0	0	0
4/24/2024	5:15 PM	0	0	0	0	0	0	0	0	0	0	0	0	0
4/24/2024	5:30 PM	0	0	0	0	0	0	0	0	0	0	0	0	0
4/24/2024	5:45 PM	0	0	0	0	0	0	0	0	0	0	0	0	0
4/24/2024	6:00 PM	0	0	0	0	0	0	0	0	0	0	0	0	0
4/24/2024	6:15 PM	0	0	0	0	0	0	0	0	0	0	0	0	0
4/24/2024	6:30 PM	0	0	0	0	0	0	0	0	0	0	0	0	0
4/24/2024	6:45 PM	0	0	0	0	0	0	0	0	0	0	0	0	0
4/24/2024	7:00 PM	0	0	0	0	0	0	0	0	0	0	0	0	0
4/24/2024	7:15 PM	0	0	0	0	0	0	0	0	0	0	0	0	0
4/24/2024	7:30 PM	0	0	0	0	0	0	0	0	0	0	0	0	0
4/24/2024	7:45 PM	0	0	0	0	0	0	0	0	0	0	0	0	0
4/24/2024	8:00 PM	0	0	0	0	0	0	0	0	0	0	0	0	0
4/24/2024	8:15 PM	0	0	0	0	0	0	0	0	0	0	0	0	0
4/24/2024	8:30 PM	0	0	0	0	0	0	0	0	0	0	0	0	0
4/24/2024	8:45 PM	0	0	0	0	0	0	0	0	0	0	0	0	0
4/24/2024	9:00 PM	0	0	0	0	0	0	0	0	0	0	0	0	0
4/24/2024	9:15 PM	0	0	0	0	0	0	0	0	0	0	0	0	0
4/24/2024	9:30 PM	0	0	0	0	0	0	0	0	0	0	0	0	0
4/24/2024	9:45 PM	0	0	0	0	0	0	0	0	0	0	0	0	0
4/24/2024	10:00 PM	0	0	0	0	0	0	0	0	0	0	0	0	0
4/24/2024	10:15 PM	0	0	0	0	0	0	0	0	0	0	0	0	0
4/24/2024	10:30 PM	0	0	0	0	0	0	0	0	0	0	0	0	0
4/24/2024	10:45 PM	0	0	0	0	0	0	0	0	0	0	0	0	0
4/24/2024	11:00 PM	0	0	0	0	0	0	0	0	0	0	0	0	0
4/24/2024	11:15 PM	0	0	0	0	0	0	0	0	0	0	0	0	0
4/24/2024	11:30 PM	0	0	0	0	0	0	0	0	0	0	0	0	0
4/24/2024	11:45 PM	0	0	0	0	0	0	0	0	0	0	0	0	0

4/25/2024	12:00 AM	0	0	0	0	0	0	0	0	0	0	0	0	0
4/25/2024	12:15 AM	0	0	0	0	0	0	0	0	0	0	0	0	0
4/25/2024	12:30 AM	0	0	0	0	0	0	0	0	0	0	0	0	0
4/25/2024	12:45 AM	0	0	0	0	0	0	0	0	0	0	0	0	0
4/25/2024	1:00 AM	0	0	0	0	0	0	0	0	0	0	0	0	0
4/25/2024	1:15 AM	0	0	0	0	0	0	0	0	0	0	0	0	0
4/25/2024	1:30 AM	0	0	0	0	0	0	0	0	0	0	0	0	0
4/25/2024	1:45 AM	0	0	0	0	0	0	0	0	0	0	0	0	0
4/25/2024	2:00 AM	0	0	0	0	0	0	0	0	0	0	0	0	0
4/25/2024	2:15 AM	0	0	0	0	0	0	0	0	0	0	0	0	0
4/25/2024	2:30 AM	0	0	0	0	0	0	0	0	0	0	0	0	0
4/25/2024	2:45 AM	0	0	0	0	0	0	0	0	0	0	0	0	0
4/25/2024	3:00 AM	0	0	0	0	0	0	0	0	0	0	0	0	0
4/25/2024	3:15 AM	0	0	0	0	0	0	0	0	0	0	0	0	0
4/25/2024	3:30 AM	0	0	0	0	0	0	0	0	0	0	0	0	0
4/25/2024	3:45 AM	0	0	0	0	0	0	0	0	0	0	0	0	0
4/25/2024	4:00 AM	0	0	0	0	0	0	0	0	0	0	0	0	0
4/25/2024	4:15 AM	0	0	0	0	0	0	0	0	0	0	0	0	0
4/25/2024	4:30 AM	0	0	0	0	0	0	0	0	0	0	0	0	0
4/25/2024	4:45 AM	0	0	0	0	0	0	0	0	0	0	0	0	0
4/25/2024	5:00 AM	0	0	0	0	0	0	0	0	0	0	0	0	0
4/25/2024	5:15 AM	0	0	0	0	0	0	0	0	0	0	0	0	0
4/25/2024	5:30 AM	0	0	0	0	0	0	0	0	0	0	0	0	0
4/25/2024	5:45 AM	0	0	0	0	0	0	0	0	0	0	0	0	0
4/25/2024	6:00 AM	0	0	0	0	0	0	0	0	0	0	0	0	0
4/25/2024	6:15 AM	0	0	0	0	0	0	0	0	0	0	0	0	0
4/25/2024	6:30 AM	0	0	0	0	0	0	0	0	0	0	0	0	0
4/25/2024	6:45 AM	0	0	0	0	0	0	0	0	0	0	0	0	0
4/25/2024	7:00 AM	0	0	0	0	0	0	0	0	0	0	0	0	0
4/25/2024	7:15 AM	0	0	0	0	0	0	0	0	0	0	0	0	0
4/25/2024	7:30 AM	0	0	0	0	0	0	0	0	0	0	0	0	0
4/25/2024	7:45 AM	0	0	0	0	0	0	0	0	0	0	0	0	0
4/25/2024	8:00 AM	0	0	0	0	0	0	0	0	0	0	0	0	0
4/25/2024	8:15 AM	0	0	0	0	0	0	0	0	0	0	0	0	0
4/25/2024	8:30 AM	0	0	0	0	0	0	0	0	0	0	0	0	0
4/25/2024	8:45 AM	0	0	0	0	0	0	0	0	0	0	0	0	0
4/25/2024	9:00 AM	0	0	0	0	0	0	0	0	0	0	0	0	0
4/25/2024	9:15 AM	0	0	0	0	0	0	0	0	0	0	0	0	0
4/25/2024	9:30 AM	0	0	0	0	0	0	0	0	0	0	0	0	0
4/25/2024	9:45 AM	0	0	0	0	0	0	0	0	0	0	0	0	0
4/25/2024	10:00 AM	0	0	0	0	0	0	0	0	0	0	0	0	0
4/25/2024	10:15 AM	0	0	0	0	0	0	0	0	0	0	0	0	0
4/25/2024	10:30 AM	0	0	0	0	0	0	0	0	0	0	0	0	0
4/25/2024	10:45 AM	0	0	0	0	0	0	0	0	0	0	0	0	0
4/25/2024	11:00 AM	0	0	0	0	0	0	0	0	0	0	0	0	0
4/25/2024	11:15 AM	0	0	0	0	0	0	0	0	0	0	0	0	0
4/25/2024	11:30 AM	0	0	0	0	0	0	0	0	0	0	0	0	0
4/25/2024	11:45 AM	0	0	0	0	0	0	0	0	0	0	0	0	0
4/25/2024	12:00 PM	0	0	0	0	0	0	0	0	0	0	0	0	0
4/25/2024	12:15 PM	0	0	0	0	0	0	0	0	0	0	0	0	0
4/25/2024	12:30 PM	0	0	0	0	0	0	0	0	0	0	0	0	0
4/25/2024	12:45 PM	0	0	0	0	0	0	0	0	0	0	0	0	0
4/25/2024	1:00 PM	0	0	0	0	0	0	0	0	0	0	0	0	0
4/25/2024	1:15 PM	0	0	0	0	0	0	0	0	0	0	0	0	0
4/25/2024	1:30 PM	0	0	0	0	0	0	0	0	0	0	0	0	0
4/25/2024	1:45 PM	0	0	0	0	0	0	0	0	0	0	0	0	0
4/25/2024	2:00 PM	0	0	0	0	0	0	0	0	0	0	0	0	0
4/25/2024	2:15 PM	0	0	0	0	0	0	0	0	0	0	0	0	0
4/25/2024	2:30 PM	0	0	0	0	0	0	0	0	0	0	0	0	0
4/25/2024	2:45 PM	0	0	0	0	0	0	0	0	0	0	0	0	0
4/25/2024	3:00 PM	0	0	0	0	0	0	0	0	0	0	0	0	0
4/25/2024	3:15 PM	0	0	0	0	0	0	0	0	0	0	0	0	0
4/25/2024	3:30 PM	0	0	0	0	0	0	0	0	0	0	0	0	0
4/25/2024	3:45 PM	0	0	0	0	0	0	0	0	0	0	0	0	0
4/25/2024	4:00 PM	0	0	0	0	0	0	0	0	0	0	0	0	0
4/25/2024	4:15 PM	0	0	0	0	0	0	0	0	0	0	0	0	0
4/25/2024	4:30 PM	0	0	0	0	0	0	0	0	0	0	0	0	0
4/25/2024	4:45 PM	0	0	0	0	0	0	0	0	0	0	0	0	0
4/25/2024	5:00 PM	0	0	0	0	0	0	0	0	0	0	0	0	0
4/25/2024	5:15 PM	0	0	0	0	0	0	0	0	0	0	0	0	0
4/25/2024	5:30 PM	0	0	0	0	0	0	0	0	0	0	0	0	0
4/25/2024	5:45 PM	0	0	0	0	0	0	0	0	0	0	0	0	0
4/25/2024	6:00 PM	0	0	0	0	0	0	0	0	0	0	0	0	0
4/25/2024	6:15 PM	0	0	0	0	0	0	0	0	0	0	0	0	0
4/25/2024	6:30 PM	0	0	0	0	0	0	0	0	0	0	0	0	0
4/25/2024	6:45 PM	0	0	0	0	0	0	0	0	0	0	0	0	0
4/25/2024	7:00 PM	0	0	0	0	0	0	0	0	0	0	0	0	0
4/25/2024	7:15 PM	0	0	0	0	0	0	0	0	0	0	0	0	0
4/25/2024	7:30 PM	0	0	0	0	0	0	0	0	0	0	0	0	0
4/25/2024	7:45 PM	0	0	0	0	0	0	0	0	0	0	0	0	0
4/25/2024	8:00 PM	0	0	0	0	0	0	0	0	0	0	0	0	0
4/25/2024	8:15 PM	0	0	0	0	0	0	0	0	0	0	0	0	0
4/25/2024	8:30 PM	0	0	0	0	0	0	0	0	0	0	0	0	0
4/25/2024	8:45 PM	0	0	0	0	0	0	0	0	0	0	0	0	0
4/25/2024	9:00 PM	0	0	0	0	0	0	0	0	0	0	0	0	0
4/25/2024	9:15 PM	0	0	0	0	0	0	0	0	0	0	0	0	0
4/25/2024	9:30 PM	0	0	0	0	0	0	0	0	0	0	0	0	0
4/25/2024	9:45 PM	0	0	0	0	0	0	0	0	0	0	0	0	0
4/25/2024	10:00 PM	0	0	0	0	0	0	0	0	0	0	0	0	0
4/25/2024	10:15 PM	0	0	0	0	0	0	0	0	0	0	0	0	0
4/25/2024	10:30 PM	0	0	0	0	0	0	0	0	0	0	0	0	0
4/25/2024	10:45 PM	0	0	0	0	0	0	0	0	0	0	0	0	0
4/25/2024	11:00 PM	0	0	0	0	0	0	0	0	0	0	0	0	0
4/25/2024	11:15 PM	0	0	0	0	0	0	0	0	0	0	0	0	0
4/25/2024	11:30 PM	0	0	0	0	0	0	0	0	0	0	0	0	0
4/25/2024	11:45 PM	0	0	0	0	0	0	0	0	0	0	0	0	0

Bi-Directional Class Count || NB EB 15min

Columbia, SC

Marr Traffic DATA COLLECTION
www.marrtraffic.com

Site 41
I-126 On/Off-Ramp,
south of W Colonial Life Rd

Date
Tuesday, April 23, 2024

Lat/Long
34.020359°, -81.093706°

Weather
Fair
58°F

Click here for Detailed Weather

Click here for Map

0000 - 2400 (Weekday 24h Session) (04-23-2024)
NB EB 15min

	Northbound (Movement 41.1)													15min	60min
Time	1	2	3	4	5	6	7	8	9	10	11	12	13	Total	Total
0000 - 0015	0	0	0	0	0	0	0	0	0	0	0	0	0	**0**	
0015 - 0030	0	0	0	0	0	0	0	0	0	0	0	0	0	**0**	
0030 - 0045	0	0	0	0	0	0	0	0	0	0	0	0	0	**0**	
0045 - 0100	0	0	0	0	0	0	0	0	0	0	0	0	0	**0**	**0**
0100 - 0115	0	0	0	0	0	0	0	0	0	0	0	0	0	**0**	
0115 - 0130	0	0	0	0	0	0	0	0	0	0	0	0	0	**0**	
0130 - 0145	0	0	0	0	0	0	0	0	0	0	0	0	0	**0**	
0145 - 0200	0	0	0	0	0	0	0	0	0	0	0	0	0	**0**	**0**
0200 - 0215	0	0	0	0	0	0	0	0	0	0	0	0	0	**0**	
0215 - 0230	0	0	0	0	0	0	0	0	0	0	0	0	0	**0**	
0230 - 0245	0	0	0	0	0	0	0	0	0	0	0	0	0	**0**	
0245 - 0300	0	0	0	0	0	0	0	0	0	0	0	0	0	**0**	**0**
0300 - 0315	0	0	0	0	0	0	0	0	0	0	0	0	0	**0**	
0315 - 0330	0	0	0	0	0	0	0	0	0	0	0	0	0	**0**	
0330 - 0345	0	0	0	0	0	0	0	0	0	0	0	0	0	**0**	
0345 - 0400	0	0	0	0	0	0	0	0	0	0	0	0	0	**0**	**0**
0400 - 0415	0	0	0	0	0	0	0	0	0	0	0	0	0	**0**	
0415 - 0430	0	0	0	0	0	0	0	0	0	0	0	0	0	**0**	
0430 - 0445	0	0	0	0	0	0	0	0	0	0	0	0	0	**0**	
0445 - 0500	0	0	0	0	0	0	0	0	0	0	0	0	0	**0**	**0**
0500 - 0515	0	0	0	0	0	0	0	0	0	0	0	0	0	**0**	
0515 - 0530	0	0	0	0	0	0	0	0	0	0	0	0	0	**0**	
0530 - 0545	0	0	0	0	0	0	0	0	0	0	0	0	0	**0**	
0545 - 0600	0	0	0	0	0	0	0	0	0	0	0	0	0	**0**	**0**
0600 - 0615	0	0	0	0	0	0	0	0	0	0	0	0	0	**0**	
0615 - 0630	0	0	0	0	0	0	0	0	0	0	0	0	0	**0**	
0630 - 0645	0	0	0	0	0	0	0	0	0	0	0	0	0	**0**	
0645 - 0700	0	0	0	0	0	0	0	0	0	0	0	0	0	**0**	**0**
0700 - 0715	0	0	0	0	0	0	0	0	0	0	0	0	0	**0**	
0715 - 0730	0	0	0	0	0	0	0	0	0	0	0	0	0	**0**	
0730 - 0745	0	0	0	0	0	0	0	0	0	0	0	0	0	**0**	
0745 - 0800	0	0	0	0	0	0	0	0	0	0	0	0	0	**0**	**0**
0800 - 0815	0	0	0	0	0	0	0	0	0	0	0	0	0	**0**	
0815 - 0830	0	0	0	0	0	0	0	0	0	0	0	0	0	**0**	
0830 - 0845	0	0	0	0	0	0	0	0	0	0	0	0	0	**0**	
0845 - 0900	0	0	0	0	0	0	0	0	0	0	0	0	0	**0**	**0**
0900 - 0915	0	0	0	0	0	0	0	0	0	0	0	0	0	**0**	
0915 - 0930	0	0	0	0	0	0	0	0	0	0	0	0	0	**0**	
0930 - 0945	0	0	0	0	0	0	0	0	0	0	0	0	0	**0**	
0945 - 1000	0	0	0	0	0	0	0	0	0	0	0	0	0	**0**	**0**
1000 - 1015	0	0	0	0	0	0	0	0	0	0	0	0	0	**0**	
1015 - 1030	0	0	0	0	0	0	0	0	0	0	0	0	0	**0**	
1030 - 1045	0	0	0	0	0	0	0	0	0	0	0	0	0	**0**	
1045 - 1100	0	0	0	0	0	0	0	0	0	0	0	0	0	**0**	**0**
1100 - 1115	0	0	0	0	0	0	0	0	0	0	0	0	0	**0**	
1115 - 1130	0	0	0	0	0	0	0	0	0	0	0	0	0	**0**	
1130 - 1145	0	0	0	0	0	0	0	0	0	0	0	0	0	**0**	
1145 - 1200	0	0	0	0	0	0	0	0	0	0	0	0	0	**0**	**0**
1200 - 1215	0	0	0	0	0	0	0	0	0	0	0	0	0	**0**	
1215 - 1230	0	0	0	0	0	0	0	0	0	0	0	0	0	**0**	
1230 - 1245	0	0	0	0	0	0	0	0	0	0	0	0	0	**0**	
1245 - 1300	0	0	0	0	0	0	0	0	0	0	0	0	0	**0**	**0**
1300 - 1315	0	0	0	0	0	0	0	0	0	0	0	0	0	**0**	
1315 - 1330	0	0	0	0	0	0	0	0	0	0	0	0	0	**0**	
1330 - 1345	0	0	0	0	0	0	0	0	0	0	0	0	0	**0**	
1345 - 1400	0	0	0	0	0	0	0	0	0	0	0	0	0	**0**	**0**
1400 - 1415	0	0	0	0	0	0	0	0	0	0	0	0	0	**0**	
1415 - 1430	0	0	0	0	0	0	0	0	0	0	0	0	0	**0**	
1430 - 1445	0	0	0	0	0	0	0	0	0	0	0	0	0	**0**	
1445 - 1500	0	0	0	0	0	0	0	0	0	0	0	0	0	**0**	**0**
1500 - 1515	0	0	0	0	0	0	0	0	0	0	0	0	0	**0**	
1515 - 1530	0	0	0	0	0	0	0	0	0	0	0	0	0	**0**	
1530 - 1545	0	0	0	0	0	0	0	0	0	0	0	0	0	**0**	
1545 - 1600	0	0	0	0	0	0	0	0	0	0	0	0	0	**0**	**0**
1600 - 1615	0	0	0	0	0	0	0	0	0	0	0	0	0	**0**	
1615 - 1630	0	0	0	0	0	0	0	0	0	0	0	0	0	**0**	
1630 - 1645	0	0	0	0	0	0	0	0	0	0	0	0	0	**0**	
1645 - 1700	0	0	0	0	0	0	0	0	0	0	0	0	0	**0**	**0**
1700 - 1715	0	0	0	0	0	0	0	0	0	0	0	0	0	**0**	
1715 - 1730	0	0	0	0	0	0	0	0	0	0	0	0	0	**0**	
1730 - 1745	0	0	0	0	0	0	0	0	0	0	0	0	0	**0**	
1745 - 1800	0	0	0	0	0	0	0	0	0	0	0	0	0	**0**	**0**
1800 - 1815	0	0	0	0	0	0	0	0	0	0	0	0	0	**0**	
1815 - 1830	0	0	0	0	0	0	0	0	0	0	0	0	0	**0**	
1830 - 1845	0	0	0	0	0	0	0	0	0	0	0	0	0	**0**	
1845 - 1900	0	0	0	0	0	0	0	0	0	0	0	0	0	**0**	**0**
1900 - 1915	0	8	4	0	0	0	0	0	0	0	0	0	0	**12**	
1915 - 1930	0	9	0	0	1	1	0	0	0	0	0	0	0	**11**	
1930 - 1945	0	6	1	0	0	0	0	0	0	0	0	0	0	**7**	
1945 - 2000	0	10	1	0	0	0	0	0	0	0	0	0	0	**11**	**41**
2000 - 2015	0	11	6	0	0	0	0	0	0	0	0	0	0	**17**	
2015 - 2030	0	6	3	0	2	1	0	0	0	0	0	0	0	**12**	
2030 - 2045	0	7	2	0	2	0	0	0	0	0	0	0	0	**11**	
2045 - 2100	0	9	3	0	0	0	0	0	0	0	0	0	0	**12**	**52**
2100 - 2115	0	8	3	0	0	1	0	0	0	0	0	0	0	**12**	
2115 - 2130	0	9	3	0	0	0	0	0	0	0	0	0	0	**12**	
2130 - 2145	0	3	1	0	0	0	0	0	0	0	0	0	0	**4**	
2145 - 2200	0	2	0	0	0	0	0	0	0	0	0	0	0	**2**	**30**
2200 - 2215	0	3	1	0	0	0	0	0	0	0	0	0	0	**4**	
2215 - 2230	0	2	1	0	0	1	0	0	0	0	0	0	0	**4**	
2230 - 2245	0	4	1	0	0	0	0	0	0	0	0	0	0	**5**	
2245 - 2300	0	9	3	0	0	0	0	0	0	0	0	0	0	**12**	**25**
2300 - 2315	0	6	2	0	0	0	0	0	0	0	0	0	0	**8**	
2315 - 2330	0	2	0	0	0	0	0	0	0	0	0	0	0	**2**	
2330 - 2345	0	4	1	0	0	0	0	0	0	0	0	0	0	**5**	
2345 - 0000	0	3	2	0	0	0	0	0	0	0	0	0	0	**5**	**20**

Session Total	0	121	38	0	5	4	0	0	0	0	0	0	0	**168**
Session Average	0.00	1.26	0.40	0.00	0.05	0.04	0.00	0.00	0.00	0.00	0.00	0.00	0.00	**1.75**
Session Percentage	0.00	72.02	22.62	0.00	2.98	2.38	0.00	0.00	0.00	0.00	0.00	0.00	0.00	

AM Peak Hour	-	-	-	-	-	-	-	-	-	-	-	-	-	-
AM Peak Volume	0	0	0	0	0	0	0	0	0	0	0	0	0	**0**

Noon Peak Hour	-	-	-	-	-	-	-	-	-	-	-	-	-	-
Noon Peak Volume	0	0	0	0	0	0	0	0	0	0	0	0	0	**0**

PM Peak Hour	-	1915 - 2015	1945 - 2045	-	1945 - 2045	1830 - 1930	-	-	-	-	-	-	-	**1945 - 2045**
PM Peak Volume	0	36	12	0	4	1	0	0	0	0	0	0	0	**51**

Site 41
I-126 On/Off-Ramp,
south of W Colonial Life Rd

Date
Wednesday, April 24, 2024

Lat/Long
34.020359°, -81.093706°

Weather
Fair
66°F

Click here for Detailed Weather

0000 - 2400 (Weekday 24h Session) (04-24-2024)
NB EB 15min

	Northbound (Movement 41.1)													15min	60min
Time	1	2	3	4	5	6	7	8	9	10	11	12	13	Total	Total
0000 - 0015	0	3	0	0	0	0	0	0	0	0	0	0	0	**3**	
0015 - 0030	0	3	0	0	0	2	0	0	0	0	0	0	0	**5**	
0030 - 0045	0	6	0	0	0	0	0	0	0	0	0	0	0	**6**	
0045 - 0100	0	0	0	0	0	1	0	0	0	0	0	0	0	**1**	**15**
0100 - 0115	0	1	0	0	0	0	0	0	0	0	0	0	0	**1**	
0115 - 0130	0	3	0	0	0	3	0	0	0	0	0	0	0	**6**	
0130 - 0145	0	0	0	0	0	1	0	0	0	0	0	0	0	**1**	
0145 - 0200	0	3	0	0	0	3	0	0	0	0	0	0	0	**6**	**14**
0200 - 0215	0	1	0	0	0	2	0	0	0	0	0	0	0	**3**	
0215 - 0230	0	0	0	0	0	3	0	0	0	0	0	0	0	**3**	
0230 - 0245	0	2	0	0	1	0	0	0	0	0	0	0	0	**3**	
0245 - 0300	0	3	0	0	1	2	0	0	0	0	0	0	0	**6**	**15**
0300 - 0315	0	2	0	0	0	2	0	0	0	0	0	0	0	**4**	
0315 - 0330	0	3	0	0	0	2	0	0	0	0	0	0	0	**5**	
0330 - 0345	0	4	0	0	0	0	0	0	0	0	0	0	0	**4**	
0345 - 0400	0	4	0	0	1	3	0	0	0	0	0	0	0	**8**	**21**
0400 - 0415	0	0	0	0	0	0	0	0	0	0	0	0	0	**0**	
0415 - 0430	0	3	0	0	0	1	0	0	0	0	0	0	0	**4**	
0430 - 0445	0	2	0	0	1	1	0	0	0	0	0	0	0	**4**	
0445 - 0500	0	4	0	0	2	0	0	0	0	0	0	0	0	**6**	**14**
0500 - 0515	0	1	0	0	1	0	0	0	0	0	0	0	0	**2**	
0515 - 0530	0	4	0	0	0	2	0	0	0	0	0	0	0	**6**	
0530 - 0545	0	1	0	0	0	0	0	0	0	0	0	0	0	**1**	
0545 - 0600	0	8	0	0	0	1	0	0	0	0	0	0	0	**9**	**18**
0600 - 0615	0	6	0	0	0	0	0	0	0	0	0	0	0	**6**	
0615 - 0630	0	7	0	0	0	1	0	0	0	0	0	0	0	**8**	
0630 - 0645	0	13	2	0	1	0	0	0	0	0	0	0	0	**16**	
0645 - 0700	0	16	4	0	1	0	0	0	0	0	0	0	0	**21**	**51**
0700 - 0715	0	24	0	0	0	0	0	0	0	0	0	0	0	**24**	
0715 - 0730	0	33	2	0	0	0	0	0	0	0	0	0	0	**35**	
0730 - 0745	0	46	7	0	0	0	0	0	0	0	0	0	0	**53**	
0745 - 0800	0	45	1	0	1	0	0	0	0	0	0	0	0	**47**	**159**
0800 - 0815	0	35	6	0	1	0	0	0	0	0	0	0	0	**42**	
0815 - 0830	0	44	5	0	0	0	0	0	0	0	0	0	0	**49**	
0830 - 0845	0	49	6	0	1	0	0	0	0	0	0	0	0	**56**	
0845 - 0900	0	30	5	0	1	0	0	0	0	0	0	0	0	**36**	**183**
0900 - 0915	0	35	4	1	1	0	0	0	0	0	0	0	0	**41**	
0915 - 0930	0	28	4	0	2	1	0	0	0	0	0	0	0	**35**	
0930 - 0945	0	24	4	1	0	0	0	0	0	0	0	0	0	**29**	
0945 - 1000	0	26	6	0	0	0	0	0	0	0	0	0	0	**32**	**137**
1000 - 1015	0	23	6	0	0	1	0	0	0	0	0	0	0	**30**	
1015 - 1030	0	31	2	0	0	0	0	0	0	0	0	0	0	**33**	
1030 - 1045	0	21	10	0	0	0	0	0	0	0	0	0	0	**31**	
1045 - 1100	0	24	5	0	0	0	0	0	0	0	0	0	0	**29**	**123**
1100 - 1115	0	17	9	0	0	0	0	1	0	0	0	0	0	**27**	
1115 - 1130	0	34	6	0	0	0	0	0	0	0	0	0	0	**40**	
1130 - 1145	0	37	11	0	0	0	0	0	0	0	0	0	0	**48**	
1145 - 1200	0	44	12	0	1	0	0	0	0	0	0	0	0	**57**	**172**
1200 - 1215	0	48	9	0	2	0	0	0	0	0	0	0	0	**59**	
1215 - 1230	0	37	12	0	0	0	0	0	0	0	0	0	0	**49**	
1230 - 1245	0	46	3	0	0	0	0	0	0	0	0	0	0	**49**	
1245 - 1300	1	49	11	0	2	0	0	0	0	0	0	0	0	**63**	**220**
1300 - 1315	0	47	8	0	0	0	0	0	0	0	0	0	0	**55**	
1315 - 1330	0	45	5	0	0	0	0	0	0	0	0	0	0	**50**	
1330 - 1345	0	47	8	0	1	0	0	0	0	0	0	0	0	**56**	
1345 - 1400	0	55	9	0	0	0	0	0	0	0	0	0	0	**64**	**225**
1400 - 1415	0	28	12	0	0	0	0	0	0	0	0	0	0	**40**	
1415 - 1430	0	39	10	0	0	0	0	0	0	0	0	0	0	**49**	
1430 - 1445	0	41	12	0	4	0	0	0	0	0	0	0	0	**57**	
1445 - 1500	0	37	4	1	1	0	0	0	0	0	0	0	0	**43**	**189**
1500 - 1515	0	42	13	0	0	1	0	0	0	0	0	0	0	**56**	
1515 - 1530	0	37	11	1	1	0	0	0	0	0	0	0	0	**50**	
1530 - 1545	0	47	6	0	0	1	0	0	0	0	0	0	0	**54**	
1545 - 1600	0	58	6	0	0	1	0	0	0	0	0	0	0	**65**	**225**
1600 - 1615	0	48	7	2	1	1	0	0	0	0	0	0	0	**59**	
1615 - 1630	0	62	10	0	1	0	0	0	0	0	0	0	0	**73**	
1630 - 1645	0	73	12	1	0	1	0	0	0	0	0	0	0	**87**	
1645 - 1700	0	89	12	0	0	1	0	0	0	0	0	0	0	**102**	**321**
1700 - 1715	0	104	18	0	0	0	0	0	0	0	0	0	0	**122**	
1715 - 1730	0	141	12	0	0	0	0	0	0	0	0	0	0	**153**	
1730 - 1745	0	112	15	0	0	0	0	0	0	0	0	0	0	**127**	
1745 - 1800	0	74	9	0	0	1	0	0	0	0	0	0	0	**84**	**486**
1800 - 1815	0	36	5	0	0	0	0	0	0	0	0	0	0	**41**	
1815 - 1830	0	38	4	0	0	0	0	0	0	0	0	0	0	**42**	
1830 - 1845	0	31	4	0	0	0	0	0	0	0	0	0	0	**35**	
1845 - 1900	0	33	4	0	0	0	0	0	0	0	0	0	0	**37**	**155**
1900 - 1915	0	30	4	0	0	1	0	0	0	0	0	0	0	**35**	
1915 - 1930	0	26	2	0	1	0	0	0	0	0	0	0	0	**29**	
1930 - 1945	0	30	2	0	0	0	0	0	0	0	0	0	0	**32**	
1945 - 2000	0	23	3	0	1	0	0	0	0	0	0	0	0	**27**	**123**
2000 - 2015	0	24	2	0	0	0	0	0	0	0	0	0	0	**26**	
2015 - 2030	0	20	5	0	1	1	0	0	0	0	0	0	0	**27**	
2030 - 2045	1	14	3	0	1	0	0	0	0	0	0	0	0	**19**	
2045 - 2100	0	10	0	0	1	0	0	0	0	0	0	0	0	**11**	**83**
2100 - 2115	0	14	3	0	0	0	0	0	0	0	0	0	0	**17**	
2115 - 2130	0	16	4	0	1	0	0	0	0	0	0	0	0	**21**	
2130 - 2145	0	10	2	0	2	0	0	0	0	0	0	0	0	**14**	
2145 - 2200	0	18	5	0	1	0	0	0	0	0	0	0	0	**24**	**76**
2200 - 2215	0	14	2	0	2	0	0	0	0	0	0	0	0	**18**	
2215 - 2230	0	8	0	0	2	0	0	0	0	0	0	0	0	**10**	
2230 - 2245	0	15	3	0	2	0	0	0	0	0	0	0	0	**20**	
2245 - 2300	0	8	0	0	0	0	0	0	0	0	0	0	0	**8**	**56**
2300 - 2315	0	11	0	0	0	0	0	0	0	0	0	0	0	**11**	
2315 - 2330	0	8	0	0	0	0	0	0	0	0	0	0	0	**8**	
2330 - 2345	1	10	0	0	2	1	0	0	0	0	0	0	0	**14**	
2345 - 0000	0	7	0	0	1	0	0	0	0	0	0	0	0	**8**	**41**

Session Total	3	2613	408	7	48	42	0	1	0	0	0	0	0	**3122**
Session Average	0.03	27.22	4.25	0.07	0.50	0.44	0.00	0.01	0.00	0.00	0.00	0.00	0.00	**32.52**
Session Percentage	0.10	83.70	13.07	0.22	1.54	1.35	0.00	0.03	0.00	0.00	0.00	0.00	0.00	

AM Peak Hour	-	0745 - 0845	0945 - 1045	0845 - 0945	0830 - 0930	0500 - 0600	-	-	-	-	-	-	-	**0745 - 0845**
AM Peak Volume	0	173	24	2	5	3	0	0	0	0	0	0	0	**194**

Noon Peak Hour	1200 - 1300	1300 - 1400	1130 - 1230	1430 - 1530	1430 - 1530	1445 - 1545	-	1015 - 1115	-	-	-	-	-	**1300 - 1400**
Noon Peak Volume	1	194	44	2	6	2	0	1	0	0	0	0	0	**225**

PM Peak Hour	1945 - 2045	1645 - 1745	1645 - 1745	1515 - 1615	1945 - 2045	1500 - 1600	-	-	-	-	-	-	-	**1645 - 1745**
PM Peak Volume	1	446	57	3	3	3	0	0	0	0	0	0	0	**504**

Site 41
I-126 On/Off-Ramp,
south of W Colonial Life Rd

Date
Thursday, April 25, 2024

Lat/Long
34.020359°, -81.093706°

Weather
Fair
67°F

Click here for Detailed Weather

0000 - 2400 (Weekday 24h Session) (04-25-2024)
NB EB 15min

	Northbound (Movement 41.1)													15min	60min
TIME	1	2	3	4	5	6	7	8	9	10	11	12	13	Total	Total
0000 - 0015	0	5	1	0	0	0	0	0	0	0	0	0	0	**6**	
0015 - 0030	0	5	2	0	2	1	0	0	0	0	0	0	0	**10**	
0030 - 0045	0	3	3	0	1	0	0	0	0	0	0	0	0	**7**	
0045 - 0100	0	3	1	0	1	0	0	0	0	0	0	0	0	**5**	**28**
0100 - 0115	0	6	1	0	1	1	0	0	1	0	0	0	0	**10**	
0115 - 0130	0	6	1	0	0	1	0	0	0	0	0	0	0	**8**	
0130 - 0145	0	2	1	0	0	0	0	0	0	0	0	0	0	**3**	
0145 - 0200	0	4	1	0	0	0	0	0	0	0	0	0	0	**5**	**26**
0200 - 0215	0	4	1	0	0	0	0	0	0	0	0	0	0	**5**	
0215 - 0230	0	2	1	0	0	0	0	0	0	0	0	0	0	**3**	
0230 - 0245	0	2	0	0	1	0	0	0	1	0	0	0	0	**4**	
0245 - 0300	0	2	0	0	0	1	0	0	0	0	0	0	0	**3**	**15**
0300 - 0315	0	1	0	0	0	0	0	0	0	0	0	0	0	**1**	
0315 - 0330	0	4	2	0	3	2	0	0	0	0	0	0	0	**11**	
0330 - 0345	0	2	1	0	1	2	0	0	0	0	0	0	0	**6**	
0345 - 0400	0	1	1	0	2	0	0	0	0	0	0	0	0	**4**	**22**
0400 - 0415	0	1	1	0	1	0	0	0	0	0	0	0	0	**3**	
0415 - 0430	0	2	0	0	1	0	0	0	0	0	0	0	0	**3**	
0430 - 0445	0	4	2	0	1	1	0	0	0	0	0	0	0	**8**	
0445 - 0500	0	2	0	0	0	0	0	0	0	0	0	0	0	**2**	**16**
0500 - 0515	0	5	1	0	0	1	0	0	0	0	0	0	0	**7**	
0515 - 0530	0	3	1	0	0	0	0	0	0	0	0	0	0	**4**	
0530 - 0545	0	2	0	0	0	0	0	0	0	0	0	0	0	**2**	
0545 - 0600	0	5	1	0	0	0	0	0	0	0	0	0	0	**6**	**19**
0600 - 0615	0	7	1	0	0	0	0	0	0	0	0	0	0	**8**	
0615 - 0630	0	6	3	0	0	0	0	0	0	0	0	0	0	**9**	
0630 - 0645	0	10	1	0	0	1	0	0	0	0	0	0	0	**12**	
0645 - 0700	0	16	5	0	1	0	0	0	0	0	0	0	0	**22**	**51**
0700 - 0715	0	21	2	0	0	0	0	0	0	0	0	0	0	**23**	
0715 - 0730	0	34	2	0	0	0	0	0	0	0	0	0	0	**36**	
0730 - 0745	0	37	4	0	0	0	0	0	0	0	0	0	0	**41**	
0745 - 0800	0	27	4	0	1	0	0	0	0	0	0	0	0	**32**	**132**
0800 - 0815	0	35	6	0	0	0	0	0	0	0	0	0	0	**41**	
0815 - 0830	0	39	3	0	1	0	0	0	0	0	0	0	0	**43**	
0830 - 0845	0	31	1	0	1	1	0	0	0	0	0	0	0	**34**	
0845 - 0900	0	34	5	0	2	0	0	0	0	0	0	0	0	**41**	**159**
0900 - 0915	0	32	5	0	0	0	0	0	1	0	0	0	0	**38**	
0915 - 0930	0	29	5	0	0	0	0	0	0	0	0	0	0	**34**	
0930 - 0945	0	23	7	0	1	0	0	0	0	0	0	0	0	**31**	
0945 - 1000	0	35	8	0	1	0	0	0	0	0	0	0	0	**44**	**147**
1000 - 1015	0	28	6	0	0	0	0	0	0	0	0	0	0	**34**	
1015 - 1030	0	21	7	0	1	1	0	1	0	1	0	0	0	**32**	
1030 - 1045	0	34	10	0	0	1	0	0	0	0	0	0	0	**45**	
1045 - 1100	0	38	8	0	0	1	0	0	0	0	0	0	0	**47**	**158**
1100 - 1115	0	43	7	0	1	0	0	0	0	0	0	0	0	**51**	
1115 - 1130	0	35	14	0	0	0	0	0	0	0	0	0	0	**49**	
1130 - 1145	0	41	9	0	0	2	0	0	0	0	0	0	0	**52**	
1145 - 1200	0	51	7	0	2	0	0	0	0	0	0	0	0	**60**	**212**
1200 - 1215	0	50	5	0	1	1	0	0	0	0	0	0	0	**57**	
1215 - 1230	0	51	6	0	1	0	0	0	0	0	0	0	0	**58**	
1230 - 1245	0	46	12	0	1	0	0	0	0	0	0	0	0	**59**	
1245 - 1300	0	47	5	0	0	2	0	0	0	0	0	0	0	**54**	**228**
1300 - 1315	0	57	9	0	1	0	0	0	0	0	0	0	0	**67**	
1315 - 1330	0	56	11	0	2	1	0	0	0	0	0	0	0	**70**	
1330 - 1345	0	51	5	0	3	0	0	0	0	0	0	0	0	**59**	
1345 - 1400	0	36	2	0	1	0	0	0	0	0	0	0	0	**39**	**235**
1400 - 1415	0	53	5	0	0	0	0	0	0	0	0	0	0	**58**	
1415 - 1430	0	53	6	0	0	1	0	0	0	0	0	0	0	**60**	
1430 - 1445	0	42	12	0	0	0	0	1	0	0	0	0	0	**55**	
1445 - 1500	0	39	11	0	1	0	0	2	0	0	0	0	0	**53**	**226**
1500 - 1515	0	48	2	0	0	1	0	0	0	0	0	0	0	**51**	
1515 - 1530	0	39	6	0	0	0	0	0	0	0	0	0	0	**45**	
1530 - 1545	0	55	11	0	1	0	0	0	0	0	0	0	0	**67**	
1545 - 1600	1	53	9	0	1	1	0	0	0	0	0	0	0	**65**	**228**
1600 - 1615	0	66	7	0	1	1	0	0	0	0	0	0	0	**75**	
1615 - 1630	0	58	4	0	0	0	0	0	0	0	0	0	0	**62**	
1630 - 1645	0	93	6	0	1	1	0	0	0	0	0	0	0	**101**	
1645 - 1700	0	92	15	0	0	0	0	0	0	0	0	0	0	**107**	**345**
1700 - 1715	1	105	15	0	0	0	0	0	0	0	0	0	0	**121**	
1715 - 1730	0	143	20	0	0	0	0	0	0	0	0	0	0	**163**	
1730 - 1745	0	107	16	0	0	0	0	0	0	0	0	0	0	**123**	
1745 - 1800	0	88	9	0	0	0	0	0	0	0	0	0	0	**97**	**504**
1800 - 1815	0	51	4	0	0	0	0	0	0	0	0	0	0	**55**	
1815 - 1830	0	46	6	0	1	0	0	0	0	0	0	0	0	**53**	
1830 - 1845	0	20	8	0	0	0	0	0	0	0	0	0	0	**28**	
1845 - 1900	0	28	2	0	1	0	0	0	0	0	0	0	0	**31**	**167**
1900 - 1915	0	0	0	0	0	0	0	0	0	0	0	0	0	**0**	
1915 - 1930	0	0	0	0	0	0	0	0	0	0	0	0	0	**0**	
1930 - 1945	0	0	0	0	0	0	0	0	0	0	0	0	0	**0**	
1945 - 2000	0	0	0	0	0	0	0	0	0	0	0	0	0	**0**	**0**
2000 - 2015	0	0	0	0	0	0	0	0	0	0	0	0	0	**0**	
2015 - 2030	0	0	0	0	0	0	0	0	0	0	0	0	0	**0**	
2030 - 2045	0	0	0	0	0	0	0	0	0	0	0	0	0	**0**	
2045 - 2100	0	0	0	0	0	0	0	0	0	0	0	0	0	**0**	**0**
2100 - 2115	0	0	0	0	0	0	0	0	0	0	0	0	0	**0**	
2115 - 2130	0	0	0	0	0	0	0	0	0	0	0	0	0	**0**	
2130 - 2145	0	0	0	0	0	0	0	0	0	0	0	0	0	**0**	
2145 - 2200	0	0	0	0	0	0	0	0	0	0	0	0	0	**0**	**0**
2200 - 2215	0	0	0	0	0	0	0	0	0	0	0	0	0	**0**	
2215 - 2230	0	0	0	0	0	0	0	0	0	0	0	0	0	**0**	
2230 - 2245	0	0	0	0	0	0	0	0	0	0	0	0	0	**0**	
2245 - 2300	0	0	0	0	0	0	0	0	0	0	0	0	0	**0**	**0**
2300 - 2315	0	0	0	0	0	0	0	0	0	0	0	0	0	**0**	
2315 - 2330	0	0	0	0	0	0	0	0	0	0	0	0	0	**0**	
2330 - 2345	0	0	0	0	0	0	0	0	0	0	0	0	0	**0**	
2345 - 0000	0	0	0	0	0	0	0	0	0	0	0	0	0	**0**	**0**

Session Total	2	2456	382	0	44	26	0	4	3	1	0	0	0	**2918**
Session Average	0.02	25.58	3.98	0.00	0.46	0.27	0.00	0.04	0.03	0.01	0.00	0.00	0.00	**30.40**
Session Percentage	0.07	84.17	13.09	0.00	1.51	0.89	0.00	0.14	0.10	0.03	0.00	0.00	0.00	

AM Peak Hour	-	0800 - 0900	0945 - 1045	-	0800 - 0900	0945 - 1045	-	0930 - 1030	0815 - 0915	0930 - 1030	-	-	-	**0800 - 0900**
AM Peak Hour Volume	0	139	31	0	4	2	0	1	1	1	0	0	0	**159**

Noon Peak Hour	-	1245 - 1345	1030 - 1130	-	1300 - 1400	1000 - 1100	-	1400 - 1500	-	1000 - 1100	-	-	-	**1230 - 1330**
Noon Peak Hour Volume	0	211	39	0	7	3	0	3	0	1	0	0	0	**250**

PM Peak Hour	1500 - 1600	1645 - 1745	1645 - 1745	-	1515 - 1615	1545 - 1645	-	-	-	-	-	-	-	**1645 - 1745**
PM Peak Hour Volume	1	447	66	0	3	3	0	0	0	0	0	0	0	**514**

Bi-Directional Class Count || NB EB Average 15min

Columbia, SC

Marr Traffic DATA COLLECTION
www.marrtraffic.com

Site 41
I-126 On/Off-Ramp,
south of W Colonial Life Rd

Date
Tuesday, April 23, 2024

Lat/Long
34.020359°, -81.093706°

Weather
Fair
58°F

0000 - 2400 (Weekday 24h Session) (All Dates)
NB EB Average 15min

	NB EB Average 15min													15min	60min
Time	1	2	3	4	5	6	7	8	9	10	11	12	13	Total	Total
0000 - 0015	0	3	0	0	0	0	0	0	0	0	0	0	0	**3**	
0015 - 0030	0	3	1	0	1	1	0	0	0	0	0	0	0	**5**	
0030 - 0045	0	3	1	0	0	0	0	0	0	0	0	0	0	**4**	
0045 - 0100	0	1	0	0	0	0	0	0	0	0	0	0	0	**2**	**14**
0100 - 0115	0	2	0	0	0	0	0	0	0	0	0	0	0	**4**	
0115 - 0130	0	3	0	0	0	1	0	0	0	0	0	0	0	**5**	
0130 - 0145	0	1	0	0	0	0	0	0	0	0	0	0	0	**1**	
0145 - 0200	0	2	0	0	0	1	0	0	0	0	0	0	0	**4**	**13**
0200 - 0215	0	2	0	0	0	1	0	0	0	0	0	0	0	**3**	
0215 - 0230	0	1	0	0	0	1	0	0	0	0	0	0	0	**2**	
0230 - 0245	0	1	0	0	1	0	0	0	0	0	0	0	0	**2**	
0245 - 0300	0	2	0	0	0	1	0	0	0	0	0	0	0	**3**	**10**
0300 - 0315	0	1	0	0	0	1	0	0	0	0	0	0	0	**2**	
0315 - 0330	0	2	1	0	1	1	0	0	0	0	0	0	0	**5**	
0330 - 0345	0	2	0	0	0	1	0	0	0	0	0	0	0	**3**	
0345 - 0400	0	2	0	0	1	1	0	0	0	0	0	0	0	**4**	**14**
0400 - 0415	0	0	0	0	0	0	0	0	0	0	0	0	0	**1**	
0415 - 0430	0	2	0	0	0	0	0	0	0	0	0	0	0	**2**	
0430 - 0445	0	2	1	0	1	1	0	0	0	0	0	0	0	**4**	
0445 - 0500	0	2	0	0	1	0	0	0	0	0	0	0	0	**3**	**10**
0500 - 0515	0	2	0	0	0	0	0	0	0	0	0	0	0	**3**	
0515 - 0530	0	2	0	0	0	1	0	0	0	0	0	0	0	**3**	
0530 - 0545	0	1	0	0	0	0	0	0	0	0	0	0	0	**1**	
0545 - 0600	0	4	0	0	0	0	0	0	0	0	0	0	0	**5**	**12**
0600 - 0615	0	4	0	0	0	0	0	0	0	0	0	0	0	**5**	
0615 - 0630	0	4	1	0	0	0	0	0	0	0	0	0	0	**6**	
0630 - 0645	0	8	1	0	0	0	0	0	0	0	0	0	0	**9**	
0645 - 0700	0	11	3	0	1	0	0	0	0	0	0	0	0	**14**	**34**
0700 - 0715	0	15	1	0	0	0	0	0	0	0	0	0	0	**16**	
0715 - 0730	0	22	1	0	0	0	0	0	0	0	0	0	0	**24**	
0730 - 0745	0	28	4	0	0	0	0	0	0	0	0	0	0	**31**	
0745 - 0800	0	24	2	0	1	0	0	0	0	0	0	0	0	**26**	**97**
0800 - 0815	0	23	4	0	0	0	0	0	0	0	0	0	0	**28**	
0815 - 0830	0	28	3	0	0	0	0	0	0	0	0	0	0	**31**	
0830 - 0845	0	27	2	0	1	0	0	0	0	0	0	0	0	**30**	
0845 - 0900	0	21	3	0	1	0	0	0	0	0	0	0	0	**26**	**114**
0900 - 0915	0	22	3	0	0	0	0	0	0	0	0	0	0	**26**	
0915 - 0930	0	19	3	0	1	0	0	0	0	0	0	0	0	**23**	
0930 - 0945	0	16	4	0	0	0	0	0	0	0	0	0	0	**20**	
0945 - 1000	0	20	5	0	0	0	0	0	0	0	0	0	0	**25**	**95**
1000 - 1015	0	17	4	0	0	0	0	0	0	0	0	0	0	**21**	
1015 - 1030	0	17	3	0	0	0	0	0	0	0	0	0	0	**22**	
1030 - 1045	0	18	7	0	0	0	0	0	0	0	0	0	0	**25**	
1045 - 1100	0	21	4	0	0	0	0	0	0	0	0	0	0	**25**	**94**
1100 - 1115	0	20	5	0	0	0	0	0	0	0	0	0	0	**26**	
1115 - 1130	0	23	7	0	0	0	0	0	0	0	0	0	0	**30**	
1130 - 1145	0	26	7	0	0	1	0	0	0	0	0	0	0	**33**	
1145 - 1200	0	32	6	0	1	0	0	0	0	0	0	0	0	**39**	**128**
1200 - 1215	0	33	5	0	1	0	0	0	0	0	0	0	0	**39**	
1215 - 1230	0	29	6	0	0	0	0	0	0	0	0	0	0	**36**	
1230 - 1245	0	31	5	0	0	0	0	0	0	0	0	0	0	**36**	
1245 - 1300	0	32	5	0	1	1	0	0	0	0	0	0	0	**39**	**149**
1300 - 1315	0	35	6	0	0	0	0	0	0	0	0	0	0	**41**	
1315 - 1330	0	34	5	0	1	0	0	0	0	0	0	0	0	**40**	
1330 - 1345	0	33	4	0	1	0	0	0	0	0	0	0	0	**38**	
1345 - 1400	0	30	4	0	0	0	0	0	0	0	0	0	0	**34**	**153**
1400 - 1415	0	27	6	0	0	0	0	0	0	0	0	0	0	**33**	
1415 - 1430	0	31	5	0	0	0	0	0	0	0	0	0	0	**36**	
1430 - 1445	0	28	8	0	1	0	0	0	0	0	0	0	0	**37**	
1445 - 1500	0	25	5	0	1	0	0	1	0	0	0	0	0	**32**	**138**
1500 - 1515	0	30	5	0	0	1	0	0	0	0	0	0	0	**36**	
1515 - 1530	0	25	6	0	0	0	0	0	0	0	0	0	0	**32**	
1530 - 1545	0	34	6	0	0	0	0	0	0	0	0	0	0	**40**	
1545 - 1600	0	37	5	0	0	1	0	0	0	0	0	0	0	**43**	**151**
1600 - 1615	0	38	5	1	1	1	0	0	0	0	0	0	0	**45**	
1615 - 1630	0	40	5	0	0	0	0	0	0	0	0	0	0	**45**	
1630 - 1645	0	55	6	0	0	1	0	0	0	0	0	0	0	**63**	
1645 - 1700	0	60	9	0	0	0	0	0	0	0	0	0	0	**70**	**222**
1700 - 1715	0	70	11	0	0	0	0	0	0	0	0	0	0	**81**	
1715 - 1730	0	95	11	0	0	0	0	0	0	0	0	0	0	**105**	
1730 - 1745	0	73	10	0	0	0	0	0	0	0	0	0	0	**83**	
1745 - 1800	0	54	6	0	0	0	0	0	0	0	0	0	0	**60**	**330**
1800 - 1815	0	29	3	0	0	0	0	0	0	0	0	0	0	**32**	
1815 - 1830	0	28	3	0	0	0	0	0	0	0	0	0	0	**32**	
1830 - 1845	0	17	4	0	0	0	0	0	0	0	0	0	0	**21**	
1845 - 1900	0	20	2	0	0	0	0	0	0	0	0	0	0	**23**	**107**
1900 - 1915	0	13	3	0	0	0	0	0	0	0	0	0	0	**16**	
1915 - 1930	0	12	1	0	1	0	0	0	0	0	0	0	0	**13**	
1930 - 1945	0	12	1	0	0	0	0	0	0	0	0	0	0	**13**	
1945 - 2000	0	11	1	0	0	0	0	0	0	0	0	0	0	**13**	**55**
2000 - 2015	0	12	3	0	0	0	0	0	0	0	0	0	0	**14**	
2015 - 2030	0	9	3	0	1	1	0	0	0	0	0	0	0	**13**	
2030 - 2045	0	7	2	0	1	0	0	0	0	0	0	0	0	**10**	
2045 - 2100	0	6	1	0	0	0	0	0	0	0	0	0	0	**8**	**45**
2100 - 2115	0	7	2	0	0	0	0	0	0	0	0	0	0	**10**	
2115 - 2130	0	8	2	0	0	0	0	0	0	0	0	0	0	**11**	
2130 - 2145	0	4	1	0	1	0	0	0	0	0	0	0	0	**6**	
2145 - 2200	0	7	2	0	0	0	0	0	0	0	0	0	0	**9**	**35**
2200 - 2215	0	6	1	0	1	0	0	0	0	0	0	0	0	**7**	
2215 - 2230	0	3	0	0	1	0	0	0	0	0	0	0	0	**5**	
2230 - 2245	0	6	1	0	1	0	0	0	0	0	0	0	0	**8**	
2245 - 2300	0	6	1	0	0	0	0	0	0	0	0	0	0	**7**	**27**
2300 - 2315	0	6	1	0	0	0	0	0	0	0	0	0	0	**6**	
2315 - 2330	0	3	0	0	0	0	0	0	0	0	0	0	0	**3**	
2330 - 2345	0	5	0	0	1	0	0	0	0	0	0	0	0	**6**	
2345 - 0000	0	3	1	0	0	0	0	0	0	0	0	0	0	**4**	**20**

Session Total	2	1730	276	2	32	24	0	2	1	0	0	0	0	**2069**
Session Average	0.02	18.02	2.88	0.02	0.34	0.25	0.00	0.02	0.01	0.00	0.00	0.00	0.00	**21.56**
Session Percentage	0.08	83.60	13.34	0.11	1.56	1.16	0.00	0.08	0.05	0.02	0.00	0.00	0.00	

AM Peak Hour	-	0730 - 0830	0945 - 1045	0845 - 0945	0830 - 0930	0500 - 0600	-	0930 - 1030	0815 - 0915	0930 - 1030	-	-	-	**0730 - 0830**
AM Peak Volume	0	103	18	1	3	1	0	0	0	0	0	0	0	**116**

Noon Peak Hour	1200 - 1300	1245 - 1345	1100 - 1200	1430 - 1530	1245 - 1345	1000 - 1100	-	1400 - 1500	-	1000 - 1100	-	-	-	**1245 - 1345**
Noon Peak Volume	0	133	25	1	3	1	0	1	0	0	0	0	0	**158**

PM Peak Hour	1500 - 1600	1645 - 1745	1645 - 1745	1515 - 1615	1945 - 2045	1545 - 1645	-	-	-	-	-	-	-	**1645 - 1745**
PM Peak Volume	0	298	41	1	2	2	0	0	0	0	0	0	0	**339**

Bi-Directional Class Count || Volume Summary 15min

Columbia, SC

Marr Traffic DATA COLLECTION

www.marrtraffic.com

Site 41
I-126 On/Off-Ramp,
south of W Colonial Life Rd

Date
Tuesday, April 23, 2024

Lat/Long
34.020359°, -81.093706°

Weather
Fair
58°F

Click here for Detailed Weather

0000 - 2400 (Weekday 24h Session) (04-23-2024)

Volume Summary 15min

TIME	Volume Summary 15min NB	SB	15min Total	60min Total
0000 - 0015	0	0	**0**	
0015 - 0030	0	0	**0**	
0030 - 0045	0	0	**0**	
0045 - 0100	0	0	**0**	**0**
0100 - 0115	0	0	**0**	
0115 - 0130	0	0	**0**	
0130 - 0145	0	0	**0**	
0145 - 0200	0	0	**0**	**0**
0200 - 0215	0	0	**0**	
0215 - 0230	0	0	**0**	
0230 - 0245	0	0	**0**	
0245 - 0300	0	0	**0**	**0**
0300 - 0315	0	0	**0**	
0315 - 0330	0	0	**0**	
0330 - 0345	0	0	**0**	
0345 - 0400	0	0	**0**	**0**
0400 - 0415	0	0	**0**	
0415 - 0430	0	0	**0**	
0430 - 0445	0	0	**0**	
0445 - 0500	0	0	**0**	**0**
0500 - 0515	0	0	**0**	
0515 - 0530	0	0	**0**	
0530 - 0545	0	0	**0**	
0545 - 0600	0	0	**0**	**0**
0600 - 0615	0	0	**0**	
0615 - 0630	0	0	**0**	
0630 - 0645	0	0	**0**	
0645 - 0700	0	0	**0**	**0**
0700 - 0715	0	0	**0**	
0715 - 0730	0	0	**0**	
0730 - 0745	0	0	**0**	
0745 - 0800	0	0	**0**	**0**
0800 - 0815	0	0	**0**	
0815 - 0830	0	0	**0**	
0830 - 0845	0	0	**0**	
0845 - 0900	0	0	**0**	**0**
0900 - 0915	0	0	**0**	
0915 - 0930	0	0	**0**	
0930 - 0945	0	0	**0**	
0945 - 1000	0	0	**0**	**0**
1000 - 1015	0	0	**0**	
1015 - 1030	0	0	**0**	
1030 - 1045	0	0	**0**	
1045 - 1100	0	0	**0**	**0**
1100 - 1115	0	0	**0**	
1115 - 1130	0	0	**0**	
1130 - 1145	0	0	**0**	
1145 - 1200	0	0	**0**	**0**

Time	Volume Summary 15min NB	SB	15min Total	60min Total
1200 - 1215	0	0	**0**	
1215 - 1230	0	0	**0**	
1230 - 1245	0	0	**0**	
1245 - 1300	0	0	**0**	**0**
1300 - 1315	0	0	**0**	
1315 - 1330	0	0	**0**	
1330 - 1345	0	0	**0**	
1345 - 1400	0	0	**0**	**0**
1400 - 1415	0	0	**0**	
1415 - 1430	0	0	**0**	
1430 - 1445	0	0	**0**	
1445 - 1500	0	0	**0**	**0**
1500 - 1515	0	0	**0**	
1515 - 1530	0	0	**0**	
1530 - 1545	0	0	**0**	
1545 - 1600	0	0	**0**	**0**
1600 - 1615	0	0	**0**	
1615 - 1630	0	0	**0**	
1630 - 1645	0	0	**0**	
1645 - 1700	0	0	**0**	**0**
1700 - 1715	0	0	**0**	
1715 - 1730	0	0	**0**	
1730 - 1745	0	0	**0**	
1745 - 1800	0	0	**0**	**0**
1800 - 1815	0	0	**0**	
1815 - 1830	0	0	**0**	
1830 - 1845	0	0	**0**	
1845 - 1900	0	0	**0**	**0**
1900 - 1915	12	0	**12**	
1915 - 1930	11	0	**11**	
1930 - 1945	7	0	**7**	
1945 - 2000	11	0	**11**	**41**
2000 - 2015	17	0	**17**	
2015 - 2030	12	0	**12**	
2030 - 2045	11	0	**11**	
2045 - 2100	12	0	**12**	**52**
2100 - 2115	12	0	**12**	
2115 - 2130	12	0	**12**	
2130 - 2145	4	0	**4**	
2145 - 2200	2	0	**2**	**30**
2200 - 2215	4	0	**4**	
2215 - 2230	4	0	**4**	
2230 - 2245	5	0	**5**	
2245 - 2300	12	0	**12**	**25**
2300 - 2315	8	0	**8**	
2315 - 2330	2	0	**2**	
2330 - 2345	5	0	**5**	
2345 - 0000	5	0	**5**	**20**

Session Total	168	0	**168**
Session Average	1.75	0.00	**1.75**
Session Percentage	100.00	0.00	

Site 41

I-126 On/Off-Ramp,
south of W Colonial Life Rd

Date

Wednesday, April 24, 2024

Lat/Long

34.020359°, -81.093706°

Weather

Fair
66°F

Click here for Detailed Weather

0000 - 2400 (Weekday 24h Session) (04-24-2024)

Volume Summary 15min

TIME	Volume Summary 15min NB	SB	15min Total	60min Total
0000 - 0015	3	0	**3**	
0015 - 0030	5	0	**5**	
0030 - 0045	6	0	**6**	
0045 - 0100	1	0	**1**	**15**
0100 - 0115	1	0	**1**	
0115 - 0130	6	0	**6**	
0130 - 0145	1	0	**1**	
0145 - 0200	6	0	**6**	**14**
0200 - 0215	3	0	**3**	
0215 - 0230	3	0	**3**	
0230 - 0245	3	0	**3**	
0245 - 0300	6	0	**6**	**15**
0300 - 0315	4	0	**4**	
0315 - 0330	5	0	**5**	
0330 - 0345	4	0	**4**	
0345 - 0400	8	0	**8**	**21**
0400 - 0415	0	0	**0**	
0415 - 0430	4	0	**4**	
0430 - 0445	4	0	**4**	
0445 - 0500	6	0	**6**	**14**
0500 - 0515	2	0	**2**	
0515 - 0530	6	0	**6**	
0530 - 0545	1	0	**1**	
0545 - 0600	9	0	**9**	**18**
0600 - 0615	6	0	**6**	
0615 - 0630	8	0	**8**	
0630 - 0645	16	0	**16**	
0645 - 0700	21	0	**21**	**51**
0700 - 0715	24	0	**24**	
0715 - 0730	35	0	**35**	
0730 - 0745	53	0	**53**	
0745 - 0800	47	0	**47**	**159**
0800 - 0815	42	0	**42**	
0815 - 0830	49	0	**49**	
0830 - 0845	56	0	**56**	
0845 - 0900	36	0	**36**	**183**
0900 - 0915	41	0	**41**	
0915 - 0930	35	0	**35**	
0930 - 0945	29	0	**29**	
0945 - 1000	32	0	**32**	**137**
1000 - 1015	30	0	**30**	
1015 - 1030	33	0	**33**	
1030 - 1045	31	0	**31**	
1045 - 1100	29	0	**29**	**123**
1100 - 1115	27	0	**27**	
1115 - 1130	40	0	**40**	
1130 - 1145	48	0	**48**	
1145 - 1200	57	0	**57**	**172**

Time	Volume Summary 15min NB	SB	15min Total	60min Total
1200 - 1215	59	0	**59**	
1215 - 1230	49	0	**49**	
1230 - 1245	49	0	**49**	
1245 - 1300	63	0	**63**	**220**
1300 - 1315	55	0	**55**	
1315 - 1330	50	0	**50**	
1330 - 1345	56	0	**56**	
1345 - 1400	64	0	**64**	**225**
1400 - 1415	40	0	**40**	
1415 - 1430	49	0	**49**	
1430 - 1445	57	0	**57**	
1445 - 1500	43	0	**43**	**189**
1500 - 1515	56	0	**56**	
1515 - 1530	50	0	**50**	
1530 - 1545	54	0	**54**	
1545 - 1600	65	0	**65**	**225**
1600 - 1615	59	0	**59**	
1615 - 1630	73	0	**73**	
1630 - 1645	87	0	**87**	
1645 - 1700	102	0	**102**	**321**
1700 - 1715	122	0	**122**	
1715 - 1730	153	0	**153**	
1730 - 1745	127	0	**127**	
1745 - 1800	84	0	**84**	**486**
1800 - 1815	41	0	**41**	
1815 - 1830	42	0	**42**	
1830 - 1845	35	0	**35**	
1845 - 1900	37	0	**37**	**155**
1900 - 1915	35	0	**35**	
1915 - 1930	29	0	**29**	
1930 - 1945	32	0	**32**	
1945 - 2000	27	0	**27**	**123**
2000 - 2015	26	0	**26**	
2015 - 2030	27	0	**27**	
2030 - 2045	19	0	**19**	
2045 - 2100	11	0	**11**	**83**
2100 - 2115	17	0	**17**	
2115 - 2130	21	0	**21**	
2130 - 2145	14	0	**14**	
2145 - 2200	24	0	**24**	**76**
2200 - 2215	18	0	**18**	
2215 - 2230	10	0	**10**	
2230 - 2245	20	0	**20**	
2245 - 2300	8	0	**8**	**56**
2300 - 2315	11	0	**11**	
2315 - 2330	8	0	**8**	
2330 - 2345	14	0	**14**	
2345 - 0000	8	0	**8**	**41**

Session Total	3122	0	**3122**
Session Average	32.52	0.00	**32.52**
Session Percentage	100.00	0.00	

Site 41
I-126 On/Off-Ramp,
south of W Colonial Life Rd

Date
Thursday, April 25, 2024

Lat/Long
34.020359°, -81.093706°

Weather
Fair
67°F

Click here for Detailed Weather

0000 - 2400 (Weekday 24h Session) (04-25-2024)
Volume Summary 15min

TIME	Volume Summary 15min NB	SB	15min Total	60min Total
0000 - 0015	6	0	**6**	
0015 - 0030	10	0	**10**	
0030 - 0045	7	0	**7**	
0045 - 0100	5	0	**5**	**28**
0100 - 0115	10	0	**10**	
0115 - 0130	8	0	**8**	
0130 - 0145	3	0	**3**	
0145 - 0200	5	0	**5**	**26**
0200 - 0215	5	0	**5**	
0215 - 0230	3	0	**3**	
0230 - 0245	4	0	**4**	
0245 - 0300	3	0	**3**	**15**
0300 - 0315	1	0	**1**	
0315 - 0330	11	0	**11**	
0330 - 0345	6	0	**6**	
0345 - 0400	4	0	**4**	**22**
0400 - 0415	3	0	**3**	
0415 - 0430	3	0	**3**	
0430 - 0445	8	0	**8**	
0445 - 0500	2	0	**2**	**16**
0500 - 0515	7	0	**7**	
0515 - 0530	4	0	**4**	
0530 - 0545	2	0	**2**	
0545 - 0600	6	0	**6**	**19**
0600 - 0615	8	0	**8**	
0615 - 0630	9	0	**9**	
0630 - 0645	12	0	**12**	
0645 - 0700	22	0	**22**	**51**
0700 - 0715	23	0	**23**	
0715 - 0730	36	0	**36**	
0730 - 0745	41	0	**41**	
0745 - 0800	32	0	**32**	**132**
0800 - 0815	41	0	**41**	
0815 - 0830	43	0	**43**	
0830 - 0845	34	0	**34**	
0845 - 0900	41	0	**41**	**159**
0900 - 0915	38	0	**38**	
0915 - 0930	34	0	**34**	
0930 - 0945	31	0	**31**	
0945 - 1000	44	0	**44**	**147**
1000 - 1015	34	0	**34**	
1015 - 1030	32	0	**32**	
1030 - 1045	45	0	**45**	
1045 - 1100	47	0	**47**	**158**
1100 - 1115	51	0	**51**	
1115 - 1130	49	0	**49**	
1130 - 1145	52	0	**52**	
1145 - 1200	60	0	**60**	**212**

Time	Volume Summary 15min NB	SB	15min Total	60min Total
1200 - 1215	57	0	**57**	
1215 - 1230	58	0	**58**	
1230 - 1245	59	0	**59**	
1245 - 1300	54	0	**54**	**228**
1300 - 1315	67	0	**67**	
1315 - 1330	70	0	**70**	
1330 - 1345	59	0	**59**	
1345 - 1400	39	0	**39**	**235**
1400 - 1415	58	0	**58**	
1415 - 1430	60	0	**60**	
1430 - 1445	55	0	**55**	
1445 - 1500	53	0	**53**	**226**
1500 - 1515	51	0	**51**	
1515 - 1530	45	0	**45**	
1530 - 1545	67	0	**67**	
1545 - 1600	65	0	**65**	**228**
1600 - 1615	75	0	**75**	
1615 - 1630	62	0	**62**	
1630 - 1645	101	0	**101**	
1645 - 1700	107	0	**107**	**345**
1700 - 1715	121	0	**121**	
1715 - 1730	163	0	**163**	
1730 - 1745	123	0	**123**	
1745 - 1800	97	0	**97**	**504**
1800 - 1815	55	0	**55**	
1815 - 1830	53	0	**53**	
1830 - 1845	28	0	**28**	
1845 - 1900	31	0	**31**	**167**
1900 - 1915	0	0	**0**	
1915 - 1930	0	0	**0**	
1930 - 1945	0	0	**0**	
1945 - 2000	0	0	**0**	**0**
2000 - 2015	0	0	**0**	
2015 - 2030	0	0	**0**	
2030 - 2045	0	0	**0**	
2045 - 2100	0	0	**0**	**0**
2100 - 2115	0	0	**0**	
2115 - 2130	0	0	**0**	
2130 - 2145	0	0	**0**	
2145 - 2200	0	0	**0**	**0**
2200 - 2215	0	0	**0**	
2215 - 2230	0	0	**0**	
2230 - 2245	0	0	**0**	
2245 - 2300	0	0	**0**	**0**
2300 - 2315	0	0	**0**	
2315 - 2330	0	0	**0**	
2330 - 2345	0	0	**0**	
2345 - 0000	0	0	**0**	**0**

Session Total	2918	0	**2918**
Session Average	30.40	0.00	**30.40**
Session Percentage	100.00	0.00	

Bi-Directional Class Count || NB EB 60min

Columbia, SC

Marr Traffic DATA COLLECTION

www.marrtraffic.com

Site 41
I-126 On/Off-Ramp,
south of W Colonial Life Rd

Date
Tuesday, April 23, 2024

Lat/Long
34.020359°, -81.093706°

Weather
Fair
58°F

Click here for Detailed Weather

0000 - 2400 (Weekday 24h Session) (04-23-2024)
NB EB 60min

	Northbound (Movement 41.1)													
TIME	1	2	3	4	5	6	7	8	9	10	11	12	13	**Total**
0000 - 0100	0	0	0	0	0	0	0	0	0	0	0	0	0	**0**
0100 - 0200	0	0	0	0	0	0	0	0	0	0	0	0	0	**0**
0200 - 0300	0	0	0	0	0	0	0	0	0	0	0	0	0	**0**
0300 - 0400	0	0	0	0	0	0	0	0	0	0	0	0	0	**0**
0400 - 0500	0	0	0	0	0	0	0	0	0	0	0	0	0	**0**
0500 - 0600	0	0	0	0	0	0	0	0	0	0	0	0	0	**0**
0600 - 0700	0	0	0	0	0	0	0	0	0	0	0	0	0	**0**
0700 - 0800	0	0	0	0	0	0	0	0	0	0	0	0	0	**0**
0800 - 0900	0	0	0	0	0	0	0	0	0	0	0	0	0	**0**
0900 - 1000	0	0	0	0	0	0	0	0	0	0	0	0	0	**0**
1000 - 1100	0	0	0	0	0	0	0	0	0	0	0	0	0	**0**
1100 - 1200	0	0	0	0	0	0	0	0	0	0	0	0	0	**0**
1200 - 1300	0	0	0	0	0	0	0	0	0	0	0	0	0	**0**
1300 - 1400	0	0	0	0	0	0	0	0	0	0	0	0	0	**0**
1400 - 1500	0	0	0	0	0	0	0	0	0	0	0	0	0	**0**
1500 - 1600	0	0	0	0	0	0	0	0	0	0	0	0	0	**0**
1600 - 1700	0	0	0	0	0	0	0	0	0	0	0	0	0	**0**
1700 - 1800	0	0	0	0	0	0	0	0	0	0	0	0	0	**0**
1800 - 1900	0	0	0	0	0	0	0	0	0	0	0	0	0	**0**
1900 - 2000	0	33	6	0	1	1	0	0	0	0	0	0	0	**41**
2000 - 2100	0	33	14	0	4	1	0	0	0	0	0	0	0	**52**
2100 - 2200	0	22	7	0	0	1	0	0	0	0	0	0	0	**30**
2200 - 2300	0	18	6	0	0	1	0	0	0	0	0	0	0	**25**
2300 - 2400	0	15	5	0	0	0	0	0	0	0	0	0	0	**20**
Session Total	0	121	38	0	5	4	0	0	0	0	0	0	0	**168**
Session Average	0.00	5.04	1.58	0.00	0.21	0.17	0.00	0.00	0.00	0.00	0.00	0.00	0.00	**7.00**
Session Percentage	0.00	72.02	22.62	0.00	2.98	2.38	0.00	0.00	0.00	0.00	0.00	0.00	0.00	
AM Peak Hour	-	-	-	-	-	-	-	-	-	-	-	-	-	**-**
AM Peak Volume	0	0	0	0	0	0	0	0	0	0	0	0	0	**0**
Noon Peak Hour	-	-	-	-	-	-	-	-	-	-	-	-	-	**-**
Noon Peak Volume	0	0	0	0	0	0	0	0	0	0	0	0	0	**0**
PM Peak Hour	-	1900 - 2000	1900 - 2000	-	1900 - 2000	1900 - 2000	-	-	-	-	-	-	-	**1900 - 2000**
PM Peak Volume	0	33	6	0	1	1	0	0	0	0	0	0	0	**41**

Site 41
I-126 On/Off-Ramp,
south of W Colonial Life Rd

Date
Wednesday, April 24, 2024

Lat/Long
34.020359°, -81.093706°

Weather
Fair
66°F

Click here for Detailed Weather

0000 - 2400 (Weekday 24h Session) (04-24-2024)
NB EB 60min

	Northbound (Movement 41.1)													
TIME	1	2	3	4	5	6	7	8	9	10	11	12	13	**Total**
0000 - 0100	0	12	0	0	0	3	0	0	0	0	0	0	0	**15**
0100 - 0200	0	7	0	0	0	7	0	0	0	0	0	0	0	**14**
0200 - 0300	0	6	0	0	2	7	0	0	0	0	0	0	0	**15**
0300 - 0400	0	13	0	0	1	7	0	0	0	0	0	0	0	**21**
0400 - 0500	0	9	0	0	3	2	0	0	0	0	0	0	0	**14**
0500 - 0600	0	14	0	0	1	3	0	0	0	0	0	0	0	**18**
0600 - 0700	0	42	6	0	2	1	0	0	0	0	0	0	0	**51**
0700 - 0800	0	148	10	0	1	0	0	0	0	0	0	0	0	**159**
0800 - 0900	0	158	22	0	3	0	0	0	0	0	0	0	0	**183**
0900 - 1000	0	113	18	2	3	1	0	0	0	0	0	0	0	**137**
1000 - 1100	0	99	23	0	0	1	0	0	0	0	0	0	0	**123**
1100 - 1200	0	132	38	0	1	0	0	1	0	0	0	0	0	**172**
1200 - 1300	1	180	35	0	4	0	0	0	0	0	0	0	0	**220**
1300 - 1400	0	194	30	0	1	0	0	0	0	0	0	0	0	**225**
1400 - 1500	0	145	38	1	5	0	0	0	0	0	0	0	0	**189**
1500 - 1600	0	184	36	1	1	3	0	0	0	0	0	0	0	**225**
1600 - 1700	0	272	41	3	2	3	0	0	0	0	0	0	0	**321**
1700 - 1800	0	431	54	0	0	1	0	0	0	0	0	0	0	**486**
1800 - 1900	0	138	17	0	0	0	0	0	0	0	0	0	0	**155**
1900 - 2000	0	109	11	0	2	1	0	0	0	0	0	0	0	**123**
2000 - 2100	1	68	10	0	3	1	0	0	0	0	0	0	0	**83**
2100 - 2200	0	58	14	0	4	0	0	0	0	0	0	0	0	**76**
2200 - 2300	0	45	5	0	6	0	0	0	0	0	0	0	0	**56**
2300 - 2400	1	36	0	0	3	1	0	0	0	0	0	0	0	**41**

Session Total	3	2613	408	7	48	42	0	1	0	0	0	0	0	**3122**
Session Average	0.13	108.88	17.00	0.29	2.00	1.75	0.00	0.04	0.00	0.00	0.00	0.00	0.00	**130.08**
Session Percentage	0.10	83.70	13.07	0.22	1.54	1.35	0.00	0.03	0.00	0.00	0.00	0.00	0.00	

AM Peak Hour	-	0800 - 0900	0800 - 0900	0900 - 1000	0800 - 0900	0500 - 0600	-	-	-	-	-	-	-	**0800 - 0900**
AM Peak Volume	0	158	22	2	3	3	0	0	0	0	0	0	0	**183**

Noon Peak Hour	1200 - 1300	1300 - 1400	1100 - 1200	1400 - 1500	1400 - 1500	1000 - 1100	-	1100 - 1200	-	-	-	-	-	**1300 - 1400**
Noon Peak Volume	1	194	38	1	5	1	0	1	0	0	0	0	0	**225**

PM Peak Hour	-	1700 - 1800	1700 - 1800	1600 - 1700	1600 - 1700	1500 - 1600	-	-	-	-	-	-	-	**1700 - 1800**
PM Peak Volume	0	431	54	3	2	3	0	0	0	0	0	0	0	**486**

Site 41
I-126 On/Off-Ramp,
south of W Colonial Life Rd

Date
Thursday, April 25, 2024

Lat/Long
34.020359°, -81.093706°

Weather
Fair
67°F

Click here for Detailed Weather

0000 - 2400 (Weekday 24h Session) (04-25-2024)
NB EB 60min

	Northbound (Movement 41.1)													
TIME	1	2	3	4	5	6	7	8	9	10	11	12	13	**Total**
0000 - 0100	0	16	7	0	4	1	0	0	0	0	0	0	0	**28**
0100 - 0200	0	18	4	0	1	2	0	0	1	0	0	0	0	**26**
0200 - 0300	0	10	2	0	1	1	0	0	1	0	0	0	0	**15**
0300 - 0400	0	8	4	0	6	4	0	0	0	0	0	0	0	**22**
0400 - 0500	0	9	3	0	3	1	0	0	0	0	0	0	0	**16**
0500 - 0600	0	15	3	0	0	1	0	0	0	0	0	0	0	**19**
0600 - 0700	0	39	10	0	1	1	0	0	0	0	0	0	0	**51**
0700 - 0800	0	119	12	0	1	0	0	0	0	0	0	0	0	**132**
0800 - 0900	0	139	15	0	4	1	0	0	0	0	0	0	0	**159**
0900 - 1000	0	119	25	0	2	0	0	0	1	0	0	0	0	**147**
1000 - 1100	0	121	31	0	1	3	0	1	0	1	0	0	0	**158**
1100 - 1200	0	170	37	0	3	2	0	0	0	0	0	0	0	**212**
1200 - 1300	0	194	28	0	3	3	0	0	0	0	0	0	0	**228**
1300 - 1400	0	200	27	0	7	1	0	0	0	0	0	0	0	**235**
1400 - 1500	0	187	34	0	1	1	0	3	0	0	0	0	0	**226**
1500 - 1600	1	195	28	0	2	2	0	0	0	0	0	0	0	**228**
1600 - 1700	0	309	32	0	2	2	0	0	0	0	0	0	0	**345**
1700 - 1800	1	443	60	0	0	0	0	0	0	0	0	0	0	**504**
1800 - 1900	0	145	20	0	2	0	0	0	0	0	0	0	0	**167**
1900 - 2000	0	0	0	0	0	0	0	0	0	0	0	0	0	**0**
2000 - 2100	0	0	0	0	0	0	0	0	0	0	0	0	0	**0**
2100 - 2200	0	0	0	0	0	0	0	0	0	0	0	0	0	**0**
2200 - 2300	0	0	0	0	0	0	0	0	0	0	0	0	0	**0**
2300 - 2400	0	0	0	0	0	0	0	0	0	0	0	0	0	**0**

Session Total	2	2456	382	0	44	26	0	4	3	1	0	0	0	**2918**
Session Average	0.08	102.33	15.92	0.00	1.83	1.08	0.00	0.17	0.13	0.04	0.00	0.00	0.00	**121.58**
Session Percentage	0.07	84.17	13.09	0.00	1.51	0.89	0.00	0.14	0.10	0.03	0.00	0.00	0.00	

AM Peak Hour	-	0800 - 0900	0900 - 1000	-	0800 - 0900	0500 - 0600	-	-	0900 - 1000	-	-	-	-	**0800 - 0900**
AM Peak Hour Volume	0	139	25	0	4	1	0	0	1	0	0	0	0	**159**

Noon Peak Hour	-	1300 - 1400	1100 - 1200	-	1300 - 1400	1000 - 1100	-	1400 - 1500	-	1000 - 1100	-	-	-	**1300 - 1400**
Noon Peak Hour Volume	0	200	37	0	7	3	0	3	0	1	0	0	0	**235**

PM Peak Hour	1500 - 1600	1700 - 1800	1700 - 1800	-	1500 - 1600	1500 - 1600	-	-	-	-	-	-	-	**1700 - 1800**
PM Peak Hour Volume	1	443	60	0	2	2	0	0	0	0	0	0	0	**504**

Bi-Directional Class Count || Volume Summary 60min

Columbia, SC

Marr Traffic DATA COLLECTION

www.marrtraffic.com

Site 41

I-126 On/Off-Ramp,
south of W Colonial Life Rd

Date

Tuesday, April 23, 2024

Lat/Long

34.020359°, -81.093706°

Weather

Fair
58°F

Click here for Detailed Weather

0000 - 2400 (Weekday 24h Session) (04-23-2024)

Volume Summary 60min

	Volume Summary 60min		
TIME	NB	SB	**Total**
0000 - 0100	0	0	**0**
0100 - 0200	0	0	**0**
0200 - 0300	0	0	**0**
0300 - 0400	0	0	**0**
0400 - 0500	0	0	**0**
0500 - 0600	0	0	**0**
0600 - 0700	0	0	**0**
0700 - 0800	0	0	**0**
0800 - 0900	0	0	**0**
0900 - 1000	0	0	**0**
1000 - 1100	0	0	**0**
1100 - 1200	0	0	**0**

	Volume Summary 60min		
Time	NB	SB	**Total**
1200 - 1300	0	0	**0**
1300 - 1400	0	0	**0**
1400 - 1500	0	0	**0**
1500 - 1600	0	0	**0**
1600 - 1700	0	0	**0**
1700 - 1800	0	0	**0**
1800 - 1900	0	0	**0**
1900 - 2000	41	0	**41**
2000 - 2100	52	0	**52**
2100 - 2200	30	0	**30**
2200 - 2300	25	0	**25**
2300 - 2400	20	0	**20**

Session Total	168	0	**168**
Session Average	7.00	0.00	**7.00**
Session Percentage	100.00	0.00	

Site 41

I-126 On/Off-Ramp,
south of W Colonial Life Rd

Date

Wednesday, April 24, 2024

Lat/Long

34.020359°, -81.093706°

Weather

Fair
66°F

Click here for Detailed Weather

0000 - 2400 (Weekday 24h Session) (04-24-2024)

Volume Summary 60min

	Volume Summary 60min		
TIME	NB	SB	**Total**
0000 - 0100	15	0	**15**
0100 - 0200	14	0	**14**
0200 - 0300	15	0	**15**
0300 - 0400	21	0	**21**
0400 - 0500	14	0	**14**
0500 - 0600	18	0	**18**
0600 - 0700	51	0	**51**
0700 - 0800	159	0	**159**
0800 - 0900	183	0	**183**
0900 - 1000	137	0	**137**
1000 - 1100	123	0	**123**
1100 - 1200	172	0	**172**

Session Total	3122	0	**3122**
Session Average	130.08	0.00	**130.08**
Session Percentage	100.00	0.00	

	Volume Summary 60min		
Time	NB	SB	**Total**
1200 - 1300	220	0	**220**
1300 - 1400	225	0	**225**
1400 - 1500	189	0	**189**
1500 - 1600	225	0	**225**
1600 - 1700	321	0	**321**
1700 - 1800	486	0	**486**
1800 - 1900	155	0	**155**
1900 - 2000	123	0	**123**
2000 - 2100	83	0	**83**
2100 - 2200	76	0	**76**
2200 - 2300	56	0	**56**
2300 - 2400	41	0	**41**

Site 41

I-126 On/Off-Ramp,
south of W Colonial Life Rd

Date

Thursday, April 25, 2024

Lat/Long

34.020359°, -81.093706°

Weather

Fair
67°F

Click here for Detailed Weather

0000 - 2400 (Weekday 24h Session) (04-25-2024)

Volume Summary 60min

	Volume Summary 60min		
TIME	NB	SB	**Total**
0000 - 0100	28	0	**28**
0100 - 0200	26	0	**26**
0200 - 0300	15	0	**15**
0300 - 0400	22	0	**22**
0400 - 0500	16	0	**16**
0500 - 0600	19	0	**19**
0600 - 0700	51	0	**51**
0700 - 0800	132	0	**132**
0800 - 0900	159	0	**159**
0900 - 1000	147	0	**147**
1000 - 1100	158	0	**158**
1100 - 1200	212	0	**212**

Session Total	2918	0	**2918**
Session Average	121.58	0.00	**121.58**
Session Percentage	100.00	0.00	

	Volume Summary 60min		
Time	NB	SB	**Total**
1200 - 1300	228	0	**228**
1300 - 1400	235	0	**235**
1400 - 1500	226	0	**226**
1500 - 1600	228	0	**228**
1600 - 1700	345	0	**345**
1700 - 1800	504	0	**504**
1800 - 1900	167	0	**167**
1900 - 2000	0	0	**0**
2000 - 2100	0	0	**0**
2100 - 2200	0	0	**0**
2200 - 2300	0	0	**0**
2300 - 2400	0	0	**0**

Bi-Directional Class Count || Graphical Analysis NB EB

Columbia, SC

Marr Traffic DATA COLLECTION

www.marrtraffic.com

Site 41

I-126 On/Off-Ramp,
south of W Colonial Life Rd

Lat/Long

34.020359°, -81.093706°

0000 - 2400 (Weekday 24h Session)

Graphical Analysis NB EB

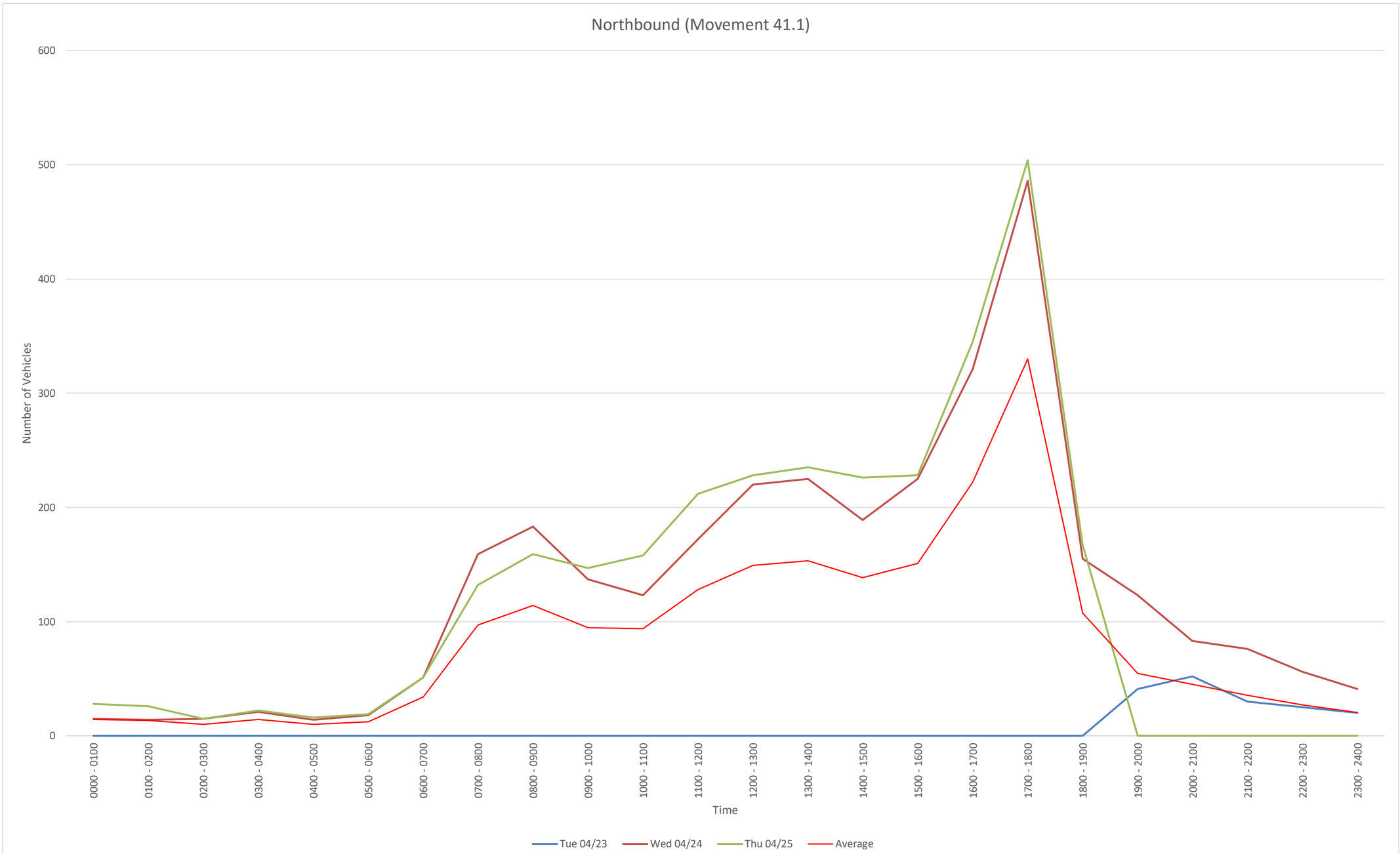

Time	Tue 04/23	Wed 04/24	Thu 04/25				
0000 - 0100	0	15	28				
0100 - 0200	0	14	26				
0200 - 0300	0	15	15				
0300 - 0400	0	21	22				
0400 - 0500	0	14	16				
0500 - 0600	0	18	19				
0600 - 0700	0	51	51				
0700 - 0800	0	159	132				
0800 - 0900	0	183	159				
0900 - 1000	0	137	147				
1000 - 1100	0	123	158				
1100 - 1200	0	172	212				
1200 - 1300	0	220	228				
1300 - 1400	0	225	235				
1400 - 1500	0	189	226				
1500 - 1600	0	225	228				
1600 - 1700	0	321	345				
1700 - 1800	0	486	504				
1800 - 1900	0	155	167				
1900 - 2000	41	123	0				
2000 - 2100	52	83	0				
2100 - 2200	30	76	0				
2200 - 2300	25	56	0				
2300 - 2400	20	41	0				
Daily Total	168	3122	2918				

NB
File Name:
Start Date: 4/23/2024
Start Time: 0
Site Code: 41
Station ID: 1
Location 1: I-126 On/Off-Ramp, south of W Colonial Life Rd
Location 2:

Date	Time	1	2	3	4	5	6	7	8	9	10	11	12	13
4/23/2024	12:00 AM	0	0	0	0	0	0	0	0	0	0	0	0	0
4/23/2024	12:15 AM	0	0	0	0	0	0	0	0	0	0	0	0	0
4/23/2024	12:30 AM	0	0	0	0	0	0	0	0	0	0	0	0	0
4/23/2024	12:45 AM	0	0	0	0	0	0	0	0	0	0	0	0	0
4/23/2024	1:00 AM	0	0	0	0	0	0	0	0	0	0	0	0	0
4/23/2024	1:15 AM	0	0	0	0	0	0	0	0	0	0	0	0	0
4/23/2024	1:30 AM	0	0	0	0	0	0	0	0	0	0	0	0	0
4/23/2024	1:45 AM	0	0	0	0	0	0	0	0	0	0	0	0	0
4/23/2024	2:00 AM	0	0	0	0	0	0	0	0	0	0	0	0	0
4/23/2024	2:15 AM	0	0	0	0	0	0	0	0	0	0	0	0	0
4/23/2024	2:30 AM	0	0	0	0	0	0	0	0	0	0	0	0	0
4/23/2024	2:45 AM	0	0	0	0	0	0	0	0	0	0	0	0	0
4/23/2024	3:00 AM	0	0	0	0	0	0	0	0	0	0	0	0	0
4/23/2024	3:15 AM	0	0	0	0	0	0	0	0	0	0	0	0	0
4/23/2024	3:30 AM	0	0	0	0	0	0	0	0	0	0	0	0	0
4/23/2024	3:45 AM	0	0	0	0	0	0	0	0	0	0	0	0	0
4/23/2024	4:00 AM	0	0	0	0	0	0	0	0	0	0	0	0	0
4/23/2024	4:15 AM	0	0	0	0	0	0	0	0	0	0	0	0	0
4/23/2024	4:30 AM	0	0	0	0	0	0	0	0	0	0	0	0	0
4/23/2024	4:45 AM	0	0	0	0	0	0	0	0	0	0	0	0	0
4/23/2024	5:00 AM	0	0	0	0	0	0	0	0	0	0	0	0	0
4/23/2024	5:15 AM	0	0	0	0	0	0	0	0	0	0	0	0	0
4/23/2024	5:30 AM	0	0	0	0	0	0	0	0	0	0	0	0	0
4/23/2024	5:45 AM	0	0	0	0	0	0	0	0	0	0	0	0	0
4/23/2024	6:00 AM	0	0	0	0	0	0	0	0	0	0	0	0	0
4/23/2024	6:15 AM	0	0	0	0	0	0	0	0	0	0	0	0	0
4/23/2024	6:30 AM	0	0	0	0	0	0	0	0	0	0	0	0	0
4/23/2024	6:45 AM	0	0	0	0	0	0	0	0	0	0	0	0	0
4/23/2024	7:00 AM	0	0	0	0	0	0	0	0	0	0	0	0	0
4/23/2024	7:15 AM	0	0	0	0	0	0	0	0	0	0	0	0	0
4/23/2024	7:30 AM	0	0	0	0	0	0	0	0	0	0	0	0	0
4/23/2024	7:45 AM	0	0	0	0	0	0	0	0	0	0	0	0	0
4/23/2024	8:00 AM	0	0	0	0	0	0	0	0	0	0	0	0	0
4/23/2024	8:15 AM	0	0	0	0	0	0	0	0	0	0	0	0	0
4/23/2024	8:30 AM	0	0	0	0	0	0	0	0	0	0	0	0	0
4/23/2024	8:45 AM	0	0	0	0	0	0	0	0	0	0	0	0	0
4/23/2024	9:00 AM	0	0	0	0	0	0	0	0	0	0	0	0	0
4/23/2024	9:15 AM	0	0	0	0	0	0	0	0	0	0	0	0	0
4/23/2024	9:30 AM	0	0	0	0	0	0	0	0	0	0	0	0	0
4/23/2024	9:45 AM	0	0	0	0	0	0	0	0	0	0	0	0	0
4/23/2024	10:00 AM	0	0	0	0	0	0	0	0	0	0	0	0	0
4/23/2024	10:15 AM	0	0	0	0	0	0	0	0	0	0	0	0	0
4/23/2024	10:30 AM	0	0	0	0	0	0	0	0	0	0	0	0	0
4/23/2024	10:45 AM	0	0	0	0	0	0	0	0	0	0	0	0	0
4/23/2024	11:00 AM	0	0	0	0	0	0	0	0	0	0	0	0	0
4/23/2024	11:15 AM	0	0	0	0	0	0	0	0	0	0	0	0	0
4/23/2024	11:30 AM	0	0	0	0	0	0	0	0	0	0	0	0	0
4/23/2024	11:45 AM	0	0	0	0	0	0	0	0	0	0	0	0	0
4/23/2024	12:00 PM	0	0	0	0	0	0	0	0	0	0	0	0	0
4/23/2024	12:15 PM	0	0	0	0	0	0	0	0	0	0	0	0	0
4/23/2024	12:30 PM	0	0	0	0	0	0	0	0	0	0	0	0	0
4/23/2024	12:45 PM	0	0	0	0	0	0	0	0	0	0	0	0	0
4/23/2024	1:00 PM	0	0	0	0	0	0	0	0	0	0	0	0	0
4/23/2024	1:15 PM	0	0	0	0	0	0	0	0	0	0	0	0	0
4/23/2024	1:30 PM	0	0	0	0	0	0	0	0	0	0	0	0	0
4/23/2024	1:45 PM	0	0	0	0	0	0	0	0	0	0	0	0	0
4/23/2024	2:00 PM	0	0	0	0	0	0	0	0	0	0	0	0	0
4/23/2024	2:15 PM	0	0	0	0	0	0	0	0	0	0	0	0	0
4/23/2024	2:30 PM	0	0	0	0	0	0	0	0	0	0	0	0	0
4/23/2024	2:45 PM	0	0	0	0	0	0	0	0	0	0	0	0	0
4/23/2024	3:00 PM	0	0	0	0	0	0	0	0	0	0	0	0	0
4/23/2024	3:15 PM	0	0	0	0	0	0	0	0	0	0	0	0	0
4/23/2024	3:30 PM	0	0	0	0	0	0	0	0	0	0	0	0	0
4/23/2024	3:45 PM	0	0	0	0	0	0	0	0	0	0	0	0	0
4/23/2024	4:00 PM	0	0	0	0	0	0	0	0	0	0	0	0	0
4/23/2024	4:15 PM	0	0	0	0	0	0	0	0	0	0	0	0	0
4/23/2024	4:30 PM	0	0	0	0	0	0	0	0	0	0	0	0	0
4/23/2024	4:45 PM	0	0	0	0	0	0	0	0	0	0	0	0	0
4/23/2024	5:00 PM	0	0	0	0	0	0	0	0	0	0	0	0	0
4/23/2024	5:15 PM	0	0	0	0	0	0	0	0	0	0	0	0	0
4/23/2024	5:30 PM	0	0	0	0	0	0	0	0	0	0	0	0	0
4/23/2024	5:45 PM	0	0	0	0	0	0	0	0	0	0	0	0	0
4/23/2024	6:00 PM	0	0	0	0	0	0	0	0	0	0	0	0	0
4/23/2024	6:15 PM	0	0	0	0	0	0	0	0	0	0	0	0	0
4/23/2024	6:30 PM	0	0	0	0	0	0	0	0	0	0	0	0	0
4/23/2024	6:45 PM	0	0	0	0	0	0	0	0	0	0	0	0	0
4/23/2024	7:00 PM	0	8	4	0	0	0	0	0	0	0	0	0	0
4/23/2024	7:15 PM	0	9	0	0	1	1	0	0	0	0	0	0	0
4/23/2024	7:30 PM	0	6	1	0	0	0	0	0	0	0	0	0	0
4/23/2024	7:45 PM	0	10	1	0	0	0	0	0	0	0	0	0	0
4/23/2024	8:00 PM	0	11	6	0	0	0	0	0	0	0	0	0	0
4/23/2024	8:15 PM	0	6	3	0	2	1	0	0	0	0	0	0	0
4/23/2024	8:30 PM	0	7	2	0	2	0	0	0	0	0	0	0	0
4/23/2024	8:45 PM	0	9	3	0	0	0	0	0	0	0	0	0	0
4/23/2024	9:00 PM	0	8	3	0	0	1	0	0	0	0	0	0	0
4/23/2024	9:15 PM	0	9	3	0	0	0	0	0	0	0	0	0	0
4/23/2024	9:30 PM	0	3	1	0	0	0	0	0	0	0	0	0	0
4/23/2024	9:45 PM	0	2	0	0	0	0	0	0	0	0	0	0	0
4/23/2024	10:00 PM	0	3	1	0	0	0	0	0	0	0	0	0	0
4/23/2024	10:15 PM	0	2	1	0	0	1	0	0	0	0	0	0	0
4/23/2024	10:30 PM	0	4	1	0	0	0	0	0	0	0	0	0	0
4/23/2024	10:45 PM	0	9	3	0	0	0	0	0	0	0	0	0	0
4/23/2024	11:00 PM	0	6	2	0	0	0	0	0	0	0	0	0	0
4/23/2024	11:15 PM	0	2	0	0	0	0	0	0	0	0	0	0	0
4/23/2024	11:30 PM	0	4	1	0	0	0	0	0	0	0	0	0	0
4/23/2024	11:45 PM	0	3	2	0	0	0	0	0	0	0	0	0	0

4/24/2024	12:00 AM	0	3	0	0	0	0	0	0	0	0	0	0	0
4/24/2024	12:15 AM	0	3	0	0	0	2	0	0	0	0	0	0	0
4/24/2024	12:30 AM	0	6	0	0	0	0	0	0	0	0	0	0	0
4/24/2024	12:45 AM	0	0	0	0	0	1	0	0	0	0	0	0	0
4/24/2024	1:00 AM	0	1	0	0	0	0	0	0	0	0	0	0	0
4/24/2024	1:15 AM	0	3	0	0	0	3	0	0	0	0	0	0	0
4/24/2024	1:30 AM	0	0	0	0	0	1	0	0	0	0	0	0	0
4/24/2024	1:45 AM	0	3	0	0	0	3	0	0	0	0	0	0	0
4/24/2024	2:00 AM	0	1	0	0	0	2	0	0	0	0	0	0	0
4/24/2024	2:15 AM	0	0	0	0	0	3	0	0	0	0	0	0	0
4/24/2024	2:30 AM	0	2	0	0	1	0	0	0	0	0	0	0	0
4/24/2024	2:45 AM	0	3	0	0	1	2	0	0	0	0	0	0	0
4/24/2024	3:00 AM	0	2	0	0	0	2	0	0	0	0	0	0	0
4/24/2024	3:15 AM	0	3	0	0	0	2	0	0	0	0	0	0	0
4/24/2024	3:30 AM	0	4	0	0	0	0	0	0	0	0	0	0	0
4/24/2024	3:45 AM	0	4	0	0	1	3	0	0	0	0	0	0	0
4/24/2024	4:00 AM	0	0	0	0	0	0	0	0	0	0	0	0	0
4/24/2024	4:15 AM	0	3	0	0	0	1	0	0	0	0	0	0	0
4/24/2024	4:30 AM	0	2	0	0	1	1	0	0	0	0	0	0	0
4/24/2024	4:45 AM	0	4	0	0	2	0	0	0	0	0	0	0	0
4/24/2024	5:00 AM	0	1	0	0	1	0	0	0	0	0	0	0	0
4/24/2024	5:15 AM	0	4	0	0	0	2	0	0	0	0	0	0	0
4/24/2024	5:30 AM	0	1	0	0	0	0	0	0	0	0	0	0	0
4/24/2024	5:45 AM	0	8	0	0	0	1	0	0	0	0	0	0	0
4/24/2024	6:00 AM	0	6	0	0	0	0	0	0	0	0	0	0	0
4/24/2024	6:15 AM	0	7	0	0	0	1	0	0	0	0	0	0	0
4/24/2024	6:30 AM	0	13	2	0	1	0	0	0	0	0	0	0	0
4/24/2024	6:45 AM	0	16	4	0	1	0	0	0	0	0	0	0	0
4/24/2024	7:00 AM	0	24	0	0	0	0	0	0	0	0	0	0	0
4/24/2024	7:15 AM	0	33	2	0	0	0	0	0	0	0	0	0	0
4/24/2024	7:30 AM	0	46	7	0	0	0	0	0	0	0	0	0	0
4/24/2024	7:45 AM	0	45	1	0	1	0	0	0	0	0	0	0	0
4/24/2024	8:00 AM	0	35	6	0	1	0	0	0	0	0	0	0	0
4/24/2024	8:15 AM	0	44	5	0	0	0	0	0	0	0	0	0	0
4/24/2024	8:30 AM	0	49	6	0	1	0	0	0	0	0	0	0	0
4/24/2024	8:45 AM	0	30	5	0	1	0	0	0	0	0	0	0	0
4/24/2024	9:00 AM	0	35	4	1	1	0	0	0	0	0	0	0	0
4/24/2024	9:15 AM	0	28	4	0	2	1	0	0	0	0	0	0	0
4/24/2024	9:30 AM	0	24	4	1	0	0	0	0	0	0	0	0	0
4/24/2024	9:45 AM	0	26	6	0	0	0	0	0	0	0	0	0	0
4/24/2024	10:00 AM	0	23	6	0	0	1	0	0	0	0	0	0	0
4/24/2024	10:15 AM	0	31	2	0	0	0	0	0	0	0	0	0	0
4/24/2024	10:30 AM	0	21	10	0	0	0	0	0	0	0	0	0	0
4/24/2024	10:45 AM	0	24	5	0	0	0	0	0	0	0	0	0	0
4/24/2024	11:00 AM	0	17	9	0	0	0	0	1	0	0	0	0	0
4/24/2024	11:15 AM	0	34	6	0	0	0	0	0	0	0	0	0	0
4/24/2024	11:30 AM	0	37	11	0	0	0	0	0	0	0	0	0	0
4/24/2024	11:45 AM	0	44	12	0	1	0	0	0	0	0	0	0	0
4/24/2024	12:00 PM	0	48	9	0	2	0	0	0	0	0	0	0	0
4/24/2024	12:15 PM	0	37	12	0	0	0	0	0	0	0	0	0	0
4/24/2024	12:30 PM	0	46	3	0	0	0	0	0	0	0	0	0	0
4/24/2024	12:45 PM	1	49	11	0	2	0	0	0	0	0	0	0	0
4/24/2024	1:00 PM	0	47	8	0	0	0	0	0	0	0	0	0	0
4/24/2024	1:15 PM	0	45	5	0	0	0	0	0	0	0	0	0	0
4/24/2024	1:30 PM	0	47	8	0	1	0	0	0	0	0	0	0	0
4/24/2024	1:45 PM	0	55	9	0	0	0	0	0	0	0	0	0	0
4/24/2024	2:00 PM	0	28	12	0	0	0	0	0	0	0	0	0	0
4/24/2024	2:15 PM	0	39	10	0	0	0	0	0	0	0	0	0	0
4/24/2024	2:30 PM	0	41	12	0	4	0	0	0	0	0	0	0	0
4/24/2024	2:45 PM	0	37	4	1	1	0	0	0	0	0	0	0	0
4/24/2024	3:00 PM	0	42	13	0	0	1	0	0	0	0	0	0	0
4/24/2024	3:15 PM	0	37	11	1	1	0	0	0	0	0	0	0	0
4/24/2024	3:30 PM	0	47	6	0	0	1	0	0	0	0	0	0	0
4/24/2024	3:45 PM	0	58	6	0	0	1	0	0	0	0	0	0	0
4/24/2024	4:00 PM	0	48	7	2	1	1	0	0	0	0	0	0	0
4/24/2024	4:15 PM	0	62	10	0	1	0	0	0	0	0	0	0	0
4/24/2024	4:30 PM	0	73	12	1	0	1	0	0	0	0	0	0	0
4/24/2024	4:45 PM	0	89	12	0	0	1	0	0	0	0	0	0	0
4/24/2024	5:00 PM	0	104	18	0	0	0	0	0	0	0	0	0	0
4/24/2024	5:15 PM	0	141	12	0	0	0	0	0	0	0	0	0	0
4/24/2024	5:30 PM	0	112	15	0	0	0	0	0	0	0	0	0	0
4/24/2024	5:45 PM	0	74	9	0	0	1	0	0	0	0	0	0	0
4/24/2024	6:00 PM	0	36	5	0	0	0	0	0	0	0	0	0	0
4/24/2024	6:15 PM	0	38	4	0	0	0	0	0	0	0	0	0	0
4/24/2024	6:30 PM	0	31	4	0	0	0	0	0	0	0	0	0	0
4/24/2024	6:45 PM	0	33	4	0	0	0	0	0	0	0	0	0	0
4/24/2024	7:00 PM	0	30	4	0	0	1	0	0	0	0	0	0	0
4/24/2024	7:15 PM	0	26	2	0	1	0	0	0	0	0	0	0	0
4/24/2024	7:30 PM	0	30	2	0	0	0	0	0	0	0	0	0	0
4/24/2024	7:45 PM	0	23	3	0	1	0	0	0	0	0	0	0	0
4/24/2024	8:00 PM	0	24	2	0	0	0	0	0	0	0	0	0	0
4/24/2024	8:15 PM	0	20	5	0	1	1	0	0	0	0	0	0	0
4/24/2024	8:30 PM	1	14	3	0	1	0	0	0	0	0	0	0	0
4/24/2024	8:45 PM	0	10	0	0	1	0	0	0	0	0	0	0	0
4/24/2024	9:00 PM	0	14	3	0	0	0	0	0	0	0	0	0	0
4/24/2024	9:15 PM	0	16	4	0	1	0	0	0	0	0	0	0	0
4/24/2024	9:30 PM	0	10	2	0	2	0	0	0	0	0	0	0	0
4/24/2024	9:45 PM	0	18	5	0	1	0	0	0	0	0	0	0	0
4/24/2024	10:00 PM	0	14	2	0	2	0	0	0	0	0	0	0	0
4/24/2024	10:15 PM	0	8	0	0	2	0	0	0	0	0	0	0	0
4/24/2024	10:30 PM	0	15	3	0	2	0	0	0	0	0	0	0	0
4/24/2024	10:45 PM	0	8	0	0	0	0	0	0	0	0	0	0	0
4/24/2024	11:00 PM	0	11	0	0	0	0	0	0	0	0	0	0	0
4/24/2024	11:15 PM	0	8	0	0	0	0	0	0	0	0	0	0	0
4/24/2024	11:30 PM	1	10	0	0	2	1	0	0	0	0	0	0	0
4/24/2024	11:45 PM	0	7	0	0	1	0	0	0	0	0	0	0	0

4/25/2024	12:00 AM	0	5	1	0	0	0	0	0	0	0	0	0	0
4/25/2024	12:15 AM	0	5	2	0	2	1	0	0	0	0	0	0	0
4/25/2024	12:30 AM	0	3	3	0	1	0	0	0	0	0	0	0	0
4/25/2024	12:45 AM	0	3	1	0	1	0	0	0	0	0	0	0	0
4/25/2024	1:00 AM	0	6	1	0	1	1	0	0	1	0	0	0	0
4/25/2024	1:15 AM	0	6	1	0	0	1	0	0	0	0	0	0	0
4/25/2024	1:30 AM	0	2	1	0	0	0	0	0	0	0	0	0	0
4/25/2024	1:45 AM	0	4	1	0	0	0	0	0	0	0	0	0	0
4/25/2024	2:00 AM	0	4	1	0	0	0	0	0	0	0	0	0	0
4/25/2024	2:15 AM	0	2	1	0	0	0	0	0	0	0	0	0	0
4/25/2024	2:30 AM	0	2	0	0	1	0	0	0	1	0	0	0	0
4/25/2024	2:45 AM	0	2	0	0	0	1	0	0	0	0	0	0	0
4/25/2024	3:00 AM	0	1	0	0	0	0	0	0	0	0	0	0	0
4/25/2024	3:15 AM	0	4	2	0	3	2	0	0	0	0	0	0	0
4/25/2024	3:30 AM	0	2	1	0	1	2	0	0	0	0	0	0	0
4/25/2024	3:45 AM	0	1	1	0	2	0	0	0	0	0	0	0	0
4/25/2024	4:00 AM	0	1	1	0	1	0	0	0	0	0	0	0	0
4/25/2024	4:15 AM	0	2	0	0	1	0	0	0	0	0	0	0	0
4/25/2024	4:30 AM	0	4	2	0	1	1	0	0	0	0	0	0	0
4/25/2024	4:45 AM	0	2	0	0	0	0	0	0	0	0	0	0	0
4/25/2024	5:00 AM	0	5	1	0	0	1	0	0	0	0	0	0	0
4/25/2024	5:15 AM	0	3	1	0	0	0	0	0	0	0	0	0	0
4/25/2024	5:30 AM	0	2	0	0	0	0	0	0	0	0	0	0	0
4/25/2024	5:45 AM	0	5	1	0	0	0	0	0	0	0	0	0	0
4/25/2024	6:00 AM	0	7	1	0	0	0	0	0	0	0	0	0	0
4/25/2024	6:15 AM	0	6	3	0	0	0	0	0	0	0	0	0	0
4/25/2024	6:30 AM	0	10	1	0	0	1	0	0	0	0	0	0	0
4/25/2024	6:45 AM	0	16	5	0	1	0	0	0	0	0	0	0	0
4/25/2024	7:00 AM	0	21	2	0	0	0	0	0	0	0	0	0	0
4/25/2024	7:15 AM	0	34	2	0	0	0	0	0	0	0	0	0	0
4/25/2024	7:30 AM	0	37	4	0	0	0	0	0	0	0	0	0	0
4/25/2024	7:45 AM	0	27	4	0	1	0	0	0	0	0	0	0	0
4/25/2024	8:00 AM	0	35	6	0	0	0	0	0	0	0	0	0	0
4/25/2024	8:15 AM	0	39	3	0	1	0	0	0	0	0	0	0	0
4/25/2024	8:30 AM	0	31	1	0	1	1	0	0	0	0	0	0	0
4/25/2024	8:45 AM	0	34	5	0	2	0	0	0	0	0	0	0	0
4/25/2024	9:00 AM	0	32	5	0	0	0	0	0	1	0	0	0	0
4/25/2024	9:15 AM	0	29	5	0	0	0	0	0	0	0	0	0	0
4/25/2024	9:30 AM	0	23	7	0	1	0	0	0	0	0	0	0	0
4/25/2024	9:45 AM	0	35	8	0	1	0	0	0	0	0	0	0	0
4/25/2024	10:00 AM	0	28	6	0	0	0	0	0	0	0	0	0	0
4/25/2024	10:15 AM	0	21	7	0	1	1	0	1	0	1	0	0	0
4/25/2024	10:30 AM	0	34	10	0	0	1	0	0	0	0	0	0	0
4/25/2024	10:45 AM	0	38	8	0	0	1	0	0	0	0	0	0	0
4/25/2024	11:00 AM	0	43	7	0	1	0	0	0	0	0	0	0	0
4/25/2024	11:15 AM	0	35	14	0	0	0	0	0	0	0	0	0	0
4/25/2024	11:30 AM	0	41	9	0	0	2	0	0	0	0	0	0	0
4/25/2024	11:45 AM	0	51	7	0	2	0	0	0	0	0	0	0	0
4/25/2024	12:00 PM	0	50	5	0	1	1	0	0	0	0	0	0	0
4/25/2024	12:15 PM	0	51	6	0	1	0	0	0	0	0	0	0	0
4/25/2024	12:30 PM	0	46	12	0	1	0	0	0	0	0	0	0	0
4/25/2024	12:45 PM	0	47	5	0	0	2	0	0	0	0	0	0	0
4/25/2024	1:00 PM	0	57	9	0	1	0	0	0	0	0	0	0	0
4/25/2024	1:15 PM	0	56	11	0	2	1	0	0	0	0	0	0	0
4/25/2024	1:30 PM	0	51	5	0	3	0	0	0	0	0	0	0	0
4/25/2024	1:45 PM	0	36	2	0	1	0	0	0	0	0	0	0	0
4/25/2024	2:00 PM	0	53	5	0	0	0	0	0	0	0	0	0	0
4/25/2024	2:15 PM	0	53	6	0	0	1	0	0	0	0	0	0	0
4/25/2024	2:30 PM	0	42	12	0	0	0	0	1	0	0	0	0	0
4/25/2024	2:45 PM	0	39	11	0	1	0	0	2	0	0	0	0	0
4/25/2024	3:00 PM	0	48	2	0	0	1	0	0	0	0	0	0	0
4/25/2024	3:15 PM	0	39	6	0	0	0	0	0	0	0	0	0	0
4/25/2024	3:30 PM	0	55	11	0	1	0	0	0	0	0	0	0	0
4/25/2024	3:45 PM	1	53	9	0	1	1	0	0	0	0	0	0	0
4/25/2024	4:00 PM	0	66	7	0	1	1	0	0	0	0	0	0	0
4/25/2024	4:15 PM	0	58	4	0	0	0	0	0	0	0	0	0	0
4/25/2024	4:30 PM	0	93	6	0	1	1	0	0	0	0	0	0	0
4/25/2024	4:45 PM	0	92	15	0	0	0	0	0	0	0	0	0	0
4/25/2024	5:00 PM	1	105	15	0	0	0	0	0	0	0	0	0	0
4/25/2024	5:15 PM	0	143	20	0	0	0	0	0	0	0	0	0	0
4/25/2024	5:30 PM	0	107	16	0	0	0	0	0	0	0	0	0	0
4/25/2024	5:45 PM	0	88	9	0	0	0	0	0	0	0	0	0	0
4/25/2024	6:00 PM	0	51	4	0	0	0	0	0	0	0	0	0	0
4/25/2024	6:15 PM	0	46	6	0	1	0	0	0	0	0	0	0	0
4/25/2024	6:30 PM	0	20	8	0	0	0	0	0	0	0	0	0	0
4/25/2024	6:45 PM	0	28	2	0	1	0	0	0	0	0	0	0	0
4/25/2024	7:00 PM	0	0	0	0	0	0	0	0	0	0	0	0	0
4/25/2024	7:15 PM	0	0	0	0	0	0	0	0	0	0	0	0	0
4/25/2024	7:30 PM	0	0	0	0	0	0	0	0	0	0	0	0	0
4/25/2024	7:45 PM	0	0	0	0	0	0	0	0	0	0	0	0	0
4/25/2024	8:00 PM	0	0	0	0	0	0	0	0	0	0	0	0	0
4/25/2024	8:15 PM	0	0	0	0	0	0	0	0	0	0	0	0	0
4/25/2024	8:30 PM	0	0	0	0	0	0	0	0	0	0	0	0	0
4/25/2024	8:45 PM	0	0	0	0	0	0	0	0	0	0	0	0	0
4/25/2024	9:00 PM	0	0	0	0	0	0	0	0	0	0	0	0	0
4/25/2024	9:15 PM	0	0	0	0	0	0	0	0	0	0	0	0	0
4/25/2024	9:30 PM	0	0	0	0	0	0	0	0	0	0	0	0	0
4/25/2024	9:45 PM	0	0	0	0	0	0	0	0	0	0	0	0	0
4/25/2024	10:00 PM	0	0	0	0	0	0	0	0	0	0	0	0	0
4/25/2024	10:15 PM	0	0	0	0	0	0	0	0	0	0	0	0	0
4/25/2024	10:30 PM	0	0	0	0	0	0	0	0	0	0	0	0	0
4/25/2024	10:45 PM	0	0	0	0	0	0	0	0	0	0	0	0	0
4/25/2024	11:00 PM	0	0	0	0	0	0	0	0	0	0	0	0	0
4/25/2024	11:15 PM	0	0	0	0	0	0	0	0	0	0	0	0	0
4/25/2024	11:30 PM	0	0	0	0	0	0	0	0	0	0	0	0	0
4/25/2024	11:45 PM	0	0	0	0	0	0	0	0	0	0	0	0	0

SB
File Name:
Start Date: 4/23/2024
Start Time: 0
Site Code: 41
Station ID: 1
Location 1: I-126 On/Off-Ramp, south of W Colonial Life Rd
Location 2:

Date	Time	1	2	3	4	5	6	7	8	9	10	11	12	13
4/23/2024	12:00 AM	0	0	0	0	0	0	0	0	0	0	0	0	0
4/23/2024	12:15 AM	0	0	0	0	0	0	0	0	0	0	0	0	0
4/23/2024	12:30 AM	0	0	0	0	0	0	0	0	0	0	0	0	0
4/23/2024	12:45 AM	0	0	0	0	0	0	0	0	0	0	0	0	0
4/23/2024	1:00 AM	0	0	0	0	0	0	0	0	0	0	0	0	0
4/23/2024	1:15 AM	0	0	0	0	0	0	0	0	0	0	0	0	0
4/23/2024	1:30 AM	0	0	0	0	0	0	0	0	0	0	0	0	0
4/23/2024	1:45 AM	0	0	0	0	0	0	0	0	0	0	0	0	0
4/23/2024	2:00 AM	0	0	0	0	0	0	0	0	0	0	0	0	0
4/23/2024	2:15 AM	0	0	0	0	0	0	0	0	0	0	0	0	0
4/23/2024	2:30 AM	0	0	0	0	0	0	0	0	0	0	0	0	0
4/23/2024	2:45 AM	0	0	0	0	0	0	0	0	0	0	0	0	0
4/23/2024	3:00 AM	0	0	0	0	0	0	0	0	0	0	0	0	0
4/23/2024	3:15 AM	0	0	0	0	0	0	0	0	0	0	0	0	0
4/23/2024	3:30 AM	0	0	0	0	0	0	0	0	0	0	0	0	0
4/23/2024	3:45 AM	0	0	0	0	0	0	0	0	0	0	0	0	0
4/23/2024	4:00 AM	0	0	0	0	0	0	0	0	0	0	0	0	0
4/23/2024	4:15 AM	0	0	0	0	0	0	0	0	0	0	0	0	0
4/23/2024	4:30 AM	0	0	0	0	0	0	0	0	0	0	0	0	0
4/23/2024	4:45 AM	0	0	0	0	0	0	0	0	0	0	0	0	0
4/23/2024	5:00 AM	0	0	0	0	0	0	0	0	0	0	0	0	0
4/23/2024	5:15 AM	0	0	0	0	0	0	0	0	0	0	0	0	0
4/23/2024	5:30 AM	0	0	0	0	0	0	0	0	0	0	0	0	0
4/23/2024	5:45 AM	0	0	0	0	0	0	0	0	0	0	0	0	0
4/23/2024	6:00 AM	0	0	0	0	0	0	0	0	0	0	0	0	0
4/23/2024	6:15 AM	0	0	0	0	0	0	0	0	0	0	0	0	0
4/23/2024	6:30 AM	0	0	0	0	0	0	0	0	0	0	0	0	0
4/23/2024	6:45 AM	0	0	0	0	0	0	0	0	0	0	0	0	0
4/23/2024	7:00 AM	0	0	0	0	0	0	0	0	0	0	0	0	0
4/23/2024	7:15 AM	0	0	0	0	0	0	0	0	0	0	0	0	0
4/23/2024	7:30 AM	0	0	0	0	0	0	0	0	0	0	0	0	0
4/23/2024	7:45 AM	0	0	0	0	0	0	0	0	0	0	0	0	0
4/23/2024	8:00 AM	0	0	0	0	0	0	0	0	0	0	0	0	0
4/23/2024	8:15 AM	0	0	0	0	0	0	0	0	0	0	0	0	0
4/23/2024	8:30 AM	0	0	0	0	0	0	0	0	0	0	0	0	0
4/23/2024	8:45 AM	0	0	0	0	0	0	0	0	0	0	0	0	0
4/23/2024	9:00 AM	0	0	0	0	0	0	0	0	0	0	0	0	0
4/23/2024	9:15 AM	0	0	0	0	0	0	0	0	0	0	0	0	0
4/23/2024	9:30 AM	0	0	0	0	0	0	0	0	0	0	0	0	0
4/23/2024	9:45 AM	0	0	0	0	0	0	0	0	0	0	0	0	0
4/23/2024	10:00 AM	0	0	0	0	0	0	0	0	0	0	0	0	0
4/23/2024	10:15 AM	0	0	0	0	0	0	0	0	0	0	0	0	0
4/23/2024	10:30 AM	0	0	0	0	0	0	0	0	0	0	0	0	0
4/23/2024	10:45 AM	0	0	0	0	0	0	0	0	0	0	0	0	0
4/23/2024	11:00 AM	0	0	0	0	0	0	0	0	0	0	0	0	0
4/23/2024	11:15 AM	0	0	0	0	0	0	0	0	0	0	0	0	0
4/23/2024	11:30 AM	0	0	0	0	0	0	0	0	0	0	0	0	0
4/23/2024	11:45 AM	0	0	0	0	0	0	0	0	0	0	0	0	0
4/23/2024	12:00 PM	0	0	0	0	0	0	0	0	0	0	0	0	0
4/23/2024	12:15 PM	0	0	0	0	0	0	0	0	0	0	0	0	0
4/23/2024	12:30 PM	0	0	0	0	0	0	0	0	0	0	0	0	0
4/23/2024	12:45 PM	0	0	0	0	0	0	0	0	0	0	0	0	0
4/23/2024	1:00 PM	0	0	0	0	0	0	0	0	0	0	0	0	0
4/23/2024	1:15 PM	0	0	0	0	0	0	0	0	0	0	0	0	0
4/23/2024	1:30 PM	0	0	0	0	0	0	0	0	0	0	0	0	0
4/23/2024	1:45 PM	0	0	0	0	0	0	0	0	0	0	0	0	0
4/23/2024	2:00 PM	0	0	0	0	0	0	0	0	0	0	0	0	0
4/23/2024	2:15 PM	0	0	0	0	0	0	0	0	0	0	0	0	0
4/23/2024	2:30 PM	0	0	0	0	0	0	0	0	0	0	0	0	0
4/23/2024	2:45 PM	0	0	0	0	0	0	0	0	0	0	0	0	0
4/23/2024	3:00 PM	0	0	0	0	0	0	0	0	0	0	0	0	0
4/23/2024	3:15 PM	0	0	0	0	0	0	0	0	0	0	0	0	0
4/23/2024	3:30 PM	0	0	0	0	0	0	0	0	0	0	0	0	0
4/23/2024	3:45 PM	0	0	0	0	0	0	0	0	0	0	0	0	0
4/23/2024	4:00 PM	0	0	0	0	0	0	0	0	0	0	0	0	0
4/23/2024	4:15 PM	0	0	0	0	0	0	0	0	0	0	0	0	0
4/23/2024	4:30 PM	0	0	0	0	0	0	0	0	0	0	0	0	0
4/23/2024	4:45 PM	0	0	0	0	0	0	0	0	0	0	0	0	0
4/23/2024	5:00 PM	0	0	0	0	0	0	0	0	0	0	0	0	0
4/23/2024	5:15 PM	0	0	0	0	0	0	0	0	0	0	0	0	0
4/23/2024	5:30 PM	0	0	0	0	0	0	0	0	0	0	0	0	0
4/23/2024	5:45 PM	0	0	0	0	0	0	0	0	0	0	0	0	0
4/23/2024	6:00 PM	0	0	0	0	0	0	0	0	0	0	0	0	0
4/23/2024	6:15 PM	0	0	0	0	0	0	0	0	0	0	0	0	0
4/23/2024	6:30 PM	0	0	0	0	0	0	0	0	0	0	0	0	0
4/23/2024	6:45 PM	0	0	0	0	0	0	0	0	0	0	0	0	0
4/23/2024	7:00 PM	0	0	0	0	0	0	0	0	0	0	0	0	0
4/23/2024	7:15 PM	0	0	0	0	0	0	0	0	0	0	0	0	0
4/23/2024	7:30 PM	0	0	0	0	0	0	0	0	0	0	0	0	0
4/23/2024	7:45 PM	0	0	0	0	0	0	0	0	0	0	0	0	0
4/23/2024	8:00 PM	0	0	0	0	0	0	0	0	0	0	0	0	0
4/23/2024	8:15 PM	0	0	0	0	0	0	0	0	0	0	0	0	0
4/23/2024	8:30 PM	0	0	0	0	0	0	0	0	0	0	0	0	0
4/23/2024	8:45 PM	0	0	0	0	0	0	0	0	0	0	0	0	0
4/23/2024	9:00 PM	0	0	0	0	0	0	0	0	0	0	0	0	0
4/23/2024	9:15 PM	0	0	0	0	0	0	0	0	0	0	0	0	0
4/23/2024	9:30 PM	0	0	0	0	0	0	0	0	0	0	0	0	0
4/23/2024	9:45 PM	0	0	0	0	0	0	0	0	0	0	0	0	0
4/23/2024	10:00 PM	0	0	0	0	0	0	0	0	0	0	0	0	0
4/23/2024	10:15 PM	0	0	0	0	0	0	0	0	0	0	0	0	0
4/23/2024	10:30 PM	0	0	0	0	0	0	0	0	0	0	0	0	0
4/23/2024	10:45 PM	0	0	0	0	0	0	0	0	0	0	0	0	0
4/23/2024	11:00 PM	0	0	0	0	0	0	0	0	0	0	0	0	0
4/23/2024	11:15 PM	0	0	0	0	0	0	0	0	0	0	0	0	0
4/23/2024	11:30 PM	0	0	0	0	0	0	0	0	0	0	0	0	0
4/23/2024	11:45 PM	0	0	0	0	0	0	0	0	0	0	0	0	0

4/24/2024	12:00 AM	0	0	0	0	0	0	0	0	0	0	0	0	0
4/24/2024	12:15 AM	0	0	0	0	0	0	0	0	0	0	0	0	0
4/24/2024	12:30 AM	0	0	0	0	0	0	0	0	0	0	0	0	0
4/24/2024	12:45 AM	0	0	0	0	0	0	0	0	0	0	0	0	0
4/24/2024	1:00 AM	0	0	0	0	0	0	0	0	0	0	0	0	0
4/24/2024	1:15 AM	0	0	0	0	0	0	0	0	0	0	0	0	0
4/24/2024	1:30 AM	0	0	0	0	0	0	0	0	0	0	0	0	0
4/24/2024	1:45 AM	0	0	0	0	0	0	0	0	0	0	0	0	0
4/24/2024	2:00 AM	0	0	0	0	0	0	0	0	0	0	0	0	0
4/24/2024	2:15 AM	0	0	0	0	0	0	0	0	0	0	0	0	0
4/24/2024	2:30 AM	0	0	0	0	0	0	0	0	0	0	0	0	0
4/24/2024	2:45 AM	0	0	0	0	0	0	0	0	0	0	0	0	0
4/24/2024	3:00 AM	0	0	0	0	0	0	0	0	0	0	0	0	0
4/24/2024	3:15 AM	0	0	0	0	0	0	0	0	0	0	0	0	0
4/24/2024	3:30 AM	0	0	0	0	0	0	0	0	0	0	0	0	0
4/24/2024	3:45 AM	0	0	0	0	0	0	0	0	0	0	0	0	0
4/24/2024	4:00 AM	0	0	0	0	0	0	0	0	0	0	0	0	0
4/24/2024	4:15 AM	0	0	0	0	0	0	0	0	0	0	0	0	0
4/24/2024	4:30 AM	0	0	0	0	0	0	0	0	0	0	0	0	0
4/24/2024	4:45 AM	0	0	0	0	0	0	0	0	0	0	0	0	0
4/24/2024	5:00 AM	0	0	0	0	0	0	0	0	0	0	0	0	0
4/24/2024	5:15 AM	0	0	0	0	0	0	0	0	0	0	0	0	0
4/24/2024	5:30 AM	0	0	0	0	0	0	0	0	0	0	0	0	0
4/24/2024	5:45 AM	0	0	0	0	0	0	0	0	0	0	0	0	0
4/24/2024	6:00 AM	0	0	0	0	0	0	0	0	0	0	0	0	0
4/24/2024	6:15 AM	0	0	0	0	0	0	0	0	0	0	0	0	0
4/24/2024	6:30 AM	0	0	0	0	0	0	0	0	0	0	0	0	0
4/24/2024	6:45 AM	0	0	0	0	0	0	0	0	0	0	0	0	0
4/24/2024	7:00 AM	0	0	0	0	0	0	0	0	0	0	0	0	0
4/24/2024	7:15 AM	0	0	0	0	0	0	0	0	0	0	0	0	0
4/24/2024	7:30 AM	0	0	0	0	0	0	0	0	0	0	0	0	0
4/24/2024	7:45 AM	0	0	0	0	0	0	0	0	0	0	0	0	0
4/24/2024	8:00 AM	0	0	0	0	0	0	0	0	0	0	0	0	0
4/24/2024	8:15 AM	0	0	0	0	0	0	0	0	0	0	0	0	0
4/24/2024	8:30 AM	0	0	0	0	0	0	0	0	0	0	0	0	0
4/24/2024	8:45 AM	0	0	0	0	0	0	0	0	0	0	0	0	0
4/24/2024	9:00 AM	0	0	0	0	0	0	0	0	0	0	0	0	0
4/24/2024	9:15 AM	0	0	0	0	0	0	0	0	0	0	0	0	0
4/24/2024	9:30 AM	0	0	0	0	0	0	0	0	0	0	0	0	0
4/24/2024	9:45 AM	0	0	0	0	0	0	0	0	0	0	0	0	0
4/24/2024	10:00 AM	0	0	0	0	0	0	0	0	0	0	0	0	0
4/24/2024	10:15 AM	0	0	0	0	0	0	0	0	0	0	0	0	0
4/24/2024	10:30 AM	0	0	0	0	0	0	0	0	0	0	0	0	0
4/24/2024	10:45 AM	0	0	0	0	0	0	0	0	0	0	0	0	0
4/24/2024	11:00 AM	0	0	0	0	0	0	0	0	0	0	0	0	0
4/24/2024	11:15 AM	0	0	0	0	0	0	0	0	0	0	0	0	0
4/24/2024	11:30 AM	0	0	0	0	0	0	0	0	0	0	0	0	0
4/24/2024	11:45 AM	0	0	0	0	0	0	0	0	0	0	0	0	0
4/24/2024	12:00 PM	0	0	0	0	0	0	0	0	0	0	0	0	0
4/24/2024	12:15 PM	0	0	0	0	0	0	0	0	0	0	0	0	0
4/24/2024	12:30 PM	0	0	0	0	0	0	0	0	0	0	0	0	0
4/24/2024	12:45 PM	0	0	0	0	0	0	0	0	0	0	0	0	0
4/24/2024	1:00 PM	0	0	0	0	0	0	0	0	0	0	0	0	0
4/24/2024	1:15 PM	0	0	0	0	0	0	0	0	0	0	0	0	0
4/24/2024	1:30 PM	0	0	0	0	0	0	0	0	0	0	0	0	0
4/24/2024	1:45 PM	0	0	0	0	0	0	0	0	0	0	0	0	0
4/24/2024	2:00 PM	0	0	0	0	0	0	0	0	0	0	0	0	0
4/24/2024	2:15 PM	0	0	0	0	0	0	0	0	0	0	0	0	0
4/24/2024	2:30 PM	0	0	0	0	0	0	0	0	0	0	0	0	0
4/24/2024	2:45 PM	0	0	0	0	0	0	0	0	0	0	0	0	0
4/24/2024	3:00 PM	0	0	0	0	0	0	0	0	0	0	0	0	0
4/24/2024	3:15 PM	0	0	0	0	0	0	0	0	0	0	0	0	0
4/24/2024	3:30 PM	0	0	0	0	0	0	0	0	0	0	0	0	0
4/24/2024	3:45 PM	0	0	0	0	0	0	0	0	0	0	0	0	0
4/24/2024	4:00 PM	0	0	0	0	0	0	0	0	0	0	0	0	0
4/24/2024	4:15 PM	0	0	0	0	0	0	0	0	0	0	0	0	0
4/24/2024	4:30 PM	0	0	0	0	0	0	0	0	0	0	0	0	0
4/24/2024	4:45 PM	0	0	0	0	0	0	0	0	0	0	0	0	0
4/24/2024	5:00 PM	0	0	0	0	0	0	0	0	0	0	0	0	0
4/24/2024	5:15 PM	0	0	0	0	0	0	0	0	0	0	0	0	0
4/24/2024	5:30 PM	0	0	0	0	0	0	0	0	0	0	0	0	0
4/24/2024	5:45 PM	0	0	0	0	0	0	0	0	0	0	0	0	0
4/24/2024	6:00 PM	0	0	0	0	0	0	0	0	0	0	0	0	0
4/24/2024	6:15 PM	0	0	0	0	0	0	0	0	0	0	0	0	0
4/24/2024	6:30 PM	0	0	0	0	0	0	0	0	0	0	0	0	0
4/24/2024	6:45 PM	0	0	0	0	0	0	0	0	0	0	0	0	0
4/24/2024	7:00 PM	0	0	0	0	0	0	0	0	0	0	0	0	0
4/24/2024	7:15 PM	0	0	0	0	0	0	0	0	0	0	0	0	0
4/24/2024	7:30 PM	0	0	0	0	0	0	0	0	0	0	0	0	0
4/24/2024	7:45 PM	0	0	0	0	0	0	0	0	0	0	0	0	0
4/24/2024	8:00 PM	0	0	0	0	0	0	0	0	0	0	0	0	0
4/24/2024	8:15 PM	0	0	0	0	0	0	0	0	0	0	0	0	0
4/24/2024	8:30 PM	0	0	0	0	0	0	0	0	0	0	0	0	0
4/24/2024	8:45 PM	0	0	0	0	0	0	0	0	0	0	0	0	0
4/24/2024	9:00 PM	0	0	0	0	0	0	0	0	0	0	0	0	0
4/24/2024	9:15 PM	0	0	0	0	0	0	0	0	0	0	0	0	0
4/24/2024	9:30 PM	0	0	0	0	0	0	0	0	0	0	0	0	0
4/24/2024	9:45 PM	0	0	0	0	0	0	0	0	0	0	0	0	0
4/24/2024	10:00 PM	0	0	0	0	0	0	0	0	0	0	0	0	0
4/24/2024	10:15 PM	0	0	0	0	0	0	0	0	0	0	0	0	0
4/24/2024	10:30 PM	0	0	0	0	0	0	0	0	0	0	0	0	0
4/24/2024	10:45 PM	0	0	0	0	0	0	0	0	0	0	0	0	0
4/24/2024	11:00 PM	0	0	0	0	0	0	0	0	0	0	0	0	0
4/24/2024	11:15 PM	0	0	0	0	0	0	0	0	0	0	0	0	0
4/24/2024	11:30 PM	0	0	0	0	0	0	0	0	0	0	0	0	0
4/24/2024	11:45 PM	0	0	0	0	0	0	0	0	0	0	0	0	0

4/25/2024	12:00 AM	0	0	0	0	0	0	0	0	0	0	0	0	0
4/25/2024	12:15 AM	0	0	0	0	0	0	0	0	0	0	0	0	0
4/25/2024	12:30 AM	0	0	0	0	0	0	0	0	0	0	0	0	0
4/25/2024	12:45 AM	0	0	0	0	0	0	0	0	0	0	0	0	0
4/25/2024	1:00 AM	0	0	0	0	0	0	0	0	0	0	0	0	0
4/25/2024	1:15 AM	0	0	0	0	0	0	0	0	0	0	0	0	0
4/25/2024	1:30 AM	0	0	0	0	0	0	0	0	0	0	0	0	0
4/25/2024	1:45 AM	0	0	0	0	0	0	0	0	0	0	0	0	0
4/25/2024	2:00 AM	0	0	0	0	0	0	0	0	0	0	0	0	0
4/25/2024	2:15 AM	0	0	0	0	0	0	0	0	0	0	0	0	0
4/25/2024	2:30 AM	0	0	0	0	0	0	0	0	0	0	0	0	0
4/25/2024	2:45 AM	0	0	0	0	0	0	0	0	0	0	0	0	0
4/25/2024	3:00 AM	0	0	0	0	0	0	0	0	0	0	0	0	0
4/25/2024	3:15 AM	0	0	0	0	0	0	0	0	0	0	0	0	0
4/25/2024	3:30 AM	0	0	0	0	0	0	0	0	0	0	0	0	0
4/25/2024	3:45 AM	0	0	0	0	0	0	0	0	0	0	0	0	0
4/25/2024	4:00 AM	0	0	0	0	0	0	0	0	0	0	0	0	0
4/25/2024	4:15 AM	0	0	0	0	0	0	0	0	0	0	0	0	0
4/25/2024	4:30 AM	0	0	0	0	0	0	0	0	0	0	0	0	0
4/25/2024	4:45 AM	0	0	0	0	0	0	0	0	0	0	0	0	0
4/25/2024	5:00 AM	0	0	0	0	0	0	0	0	0	0	0	0	0
4/25/2024	5:15 AM	0	0	0	0	0	0	0	0	0	0	0	0	0
4/25/2024	5:30 AM	0	0	0	0	0	0	0	0	0	0	0	0	0
4/25/2024	5:45 AM	0	0	0	0	0	0	0	0	0	0	0	0	0
4/25/2024	6:00 AM	0	0	0	0	0	0	0	0	0	0	0	0	0
4/25/2024	6:15 AM	0	0	0	0	0	0	0	0	0	0	0	0	0
4/25/2024	6:30 AM	0	0	0	0	0	0	0	0	0	0	0	0	0
4/25/2024	6:45 AM	0	0	0	0	0	0	0	0	0	0	0	0	0
4/25/2024	7:00 AM	0	0	0	0	0	0	0	0	0	0	0	0	0
4/25/2024	7:15 AM	0	0	0	0	0	0	0	0	0	0	0	0	0
4/25/2024	7:30 AM	0	0	0	0	0	0	0	0	0	0	0	0	0
4/25/2024	7:45 AM	0	0	0	0	0	0	0	0	0	0	0	0	0
4/25/2024	8:00 AM	0	0	0	0	0	0	0	0	0	0	0	0	0
4/25/2024	8:15 AM	0	0	0	0	0	0	0	0	0	0	0	0	0
4/25/2024	8:30 AM	0	0	0	0	0	0	0	0	0	0	0	0	0
4/25/2024	8:45 AM	0	0	0	0	0	0	0	0	0	0	0	0	0
4/25/2024	9:00 AM	0	0	0	0	0	0	0	0	0	0	0	0	0
4/25/2024	9:15 AM	0	0	0	0	0	0	0	0	0	0	0	0	0
4/25/2024	9:30 AM	0	0	0	0	0	0	0	0	0	0	0	0	0
4/25/2024	9:45 AM	0	0	0	0	0	0	0	0	0	0	0	0	0
4/25/2024	10:00 AM	0	0	0	0	0	0	0	0	0	0	0	0	0
4/25/2024	10:15 AM	0	0	0	0	0	0	0	0	0	0	0	0	0
4/25/2024	10:30 AM	0	0	0	0	0	0	0	0	0	0	0	0	0
4/25/2024	10:45 AM	0	0	0	0	0	0	0	0	0	0	0	0	0
4/25/2024	11:00 AM	0	0	0	0	0	0	0	0	0	0	0	0	0
4/25/2024	11:15 AM	0	0	0	0	0	0	0	0	0	0	0	0	0
4/25/2024	11:30 AM	0	0	0	0	0	0	0	0	0	0	0	0	0
4/25/2024	11:45 AM	0	0	0	0	0	0	0	0	0	0	0	0	0
4/25/2024	12:00 PM	0	0	0	0	0	0	0	0	0	0	0	0	0
4/25/2024	12:15 PM	0	0	0	0	0	0	0	0	0	0	0	0	0
4/25/2024	12:30 PM	0	0	0	0	0	0	0	0	0	0	0	0	0
4/25/2024	12:45 PM	0	0	0	0	0	0	0	0	0	0	0	0	0
4/25/2024	1:00 PM	0	0	0	0	0	0	0	0	0	0	0	0	0
4/25/2024	1:15 PM	0	0	0	0	0	0	0	0	0	0	0	0	0
4/25/2024	1:30 PM	0	0	0	0	0	0	0	0	0	0	0	0	0
4/25/2024	1:45 PM	0	0	0	0	0	0	0	0	0	0	0	0	0
4/25/2024	2:00 PM	0	0	0	0	0	0	0	0	0	0	0	0	0
4/25/2024	2:15 PM	0	0	0	0	0	0	0	0	0	0	0	0	0
4/25/2024	2:30 PM	0	0	0	0	0	0	0	0	0	0	0	0	0
4/25/2024	2:45 PM	0	0	0	0	0	0	0	0	0	0	0	0	0
4/25/2024	3:00 PM	0	0	0	0	0	0	0	0	0	0	0	0	0
4/25/2024	3:15 PM	0	0	0	0	0	0	0	0	0	0	0	0	0
4/25/2024	3:30 PM	0	0	0	0	0	0	0	0	0	0	0	0	0
4/25/2024	3:45 PM	0	0	0	0	0	0	0	0	0	0	0	0	0
4/25/2024	4:00 PM	0	0	0	0	0	0	0	0	0	0	0	0	0
4/25/2024	4:15 PM	0	0	0	0	0	0	0	0	0	0	0	0	0
4/25/2024	4:30 PM	0	0	0	0	0	0	0	0	0	0	0	0	0
4/25/2024	4:45 PM	0	0	0	0	0	0	0	0	0	0	0	0	0
4/25/2024	5:00 PM	0	0	0	0	0	0	0	0	0	0	0	0	0
4/25/2024	5:15 PM	0	0	0	0	0	0	0	0	0	0	0	0	0
4/25/2024	5:30 PM	0	0	0	0	0	0	0	0	0	0	0	0	0
4/25/2024	5:45 PM	0	0	0	0	0	0	0	0	0	0	0	0	0
4/25/2024	6:00 PM	0	0	0	0	0	0	0	0	0	0	0	0	0
4/25/2024	6:15 PM	0	0	0	0	0	0	0	0	0	0	0	0	0
4/25/2024	6:30 PM	0	0	0	0	0	0	0	0	0	0	0	0	0
4/25/2024	6:45 PM	0	0	0	0	0	0	0	0	0	0	0	0	0
4/25/2024	7:00 PM	0	0	0	0	0	0	0	0	0	0	0	0	0
4/25/2024	7:15 PM	0	0	0	0	0	0	0	0	0	0	0	0	0
4/25/2024	7:30 PM	0	0	0	0	0	0	0	0	0	0	0	0	0
4/25/2024	7:45 PM	0	0	0	0	0	0	0	0	0	0	0	0	0
4/25/2024	8:00 PM	0	0	0	0	0	0	0	0	0	0	0	0	0
4/25/2024	8:15 PM	0	0	0	0	0	0	0	0	0	0	0	0	0
4/25/2024	8:30 PM	0	0	0	0	0	0	0	0	0	0	0	0	0
4/25/2024	8:45 PM	0	0	0	0	0	0	0	0	0	0	0	0	0
4/25/2024	9:00 PM	0	0	0	0	0	0	0	0	0	0	0	0	0
4/25/2024	9:15 PM	0	0	0	0	0	0	0	0	0	0	0	0	0
4/25/2024	9:30 PM	0	0	0	0	0	0	0	0	0	0	0	0	0
4/25/2024	9:45 PM	0	0	0	0	0	0	0	0	0	0	0	0	0
4/25/2024	10:00 PM	0	0	0	0	0	0	0	0	0	0	0	0	0
4/25/2024	10:15 PM	0	0	0	0	0	0	0	0	0	0	0	0	0
4/25/2024	10:30 PM	0	0	0	0	0	0	0	0	0	0	0	0	0
4/25/2024	10:45 PM	0	0	0	0	0	0	0	0	0	0	0	0	0
4/25/2024	11:00 PM	0	0	0	0	0	0	0	0	0	0	0	0	0
4/25/2024	11:15 PM	0	0	0	0	0	0	0	0	0	0	0	0	0
4/25/2024	11:30 PM	0	0	0	0	0	0	0	0	0	0	0	0	0
4/25/2024	11:45 PM	0	0	0	0	0	0	0	0	0	0	0	0	0

NB
File Name:
Start Date: 4/23/2024
Start Time: 0
Site Code: 41
Station ID: 1
Location 1: I-126 On/Off-Ramp, south of W Colonial Life Rd
Location 2:

Date	Time	1	2	3	4	5	6	7	8	9	10	11	12	13
4/23/2024	12:00 AM	0	0	0	0	0	0	0	0	0	0	0	0	0
4/23/2024	12:15 AM	0	0	0	0	0	0	0	0	0	0	0	0	0
4/23/2024	12:30 AM	0	0	0	0	0	0	0	0	0	0	0	0	0
4/23/2024	12:45 AM	0	0	0	0	0	0	0	0	0	0	0	0	0
4/23/2024	1:00 AM	0	0	0	0	0	0	0	0	0	0	0	0	0
4/23/2024	1:15 AM	0	0	0	0	0	0	0	0	0	0	0	0	0
4/23/2024	1:30 AM	0	0	0	0	0	0	0	0	0	0	0	0	0
4/23/2024	1:45 AM	0	0	0	0	0	0	0	0	0	0	0	0	0
4/23/2024	2:00 AM	0	0	0	0	0	0	0	0	0	0	0	0	0
4/23/2024	2:15 AM	0	0	0	0	0	0	0	0	0	0	0	0	0
4/23/2024	2:30 AM	0	0	0	0	0	0	0	0	0	0	0	0	0
4/23/2024	2:45 AM	0	0	0	0	0	0	0	0	0	0	0	0	0
4/23/2024	3:00 AM	0	0	0	0	0	0	0	0	0	0	0	0	0
4/23/2024	3:15 AM	0	0	0	0	0	0	0	0	0	0	0	0	0
4/23/2024	3:30 AM	0	0	0	0	0	0	0	0	0	0	0	0	0
4/23/2024	3:45 AM	0	0	0	0	0	0	0	0	0	0	0	0	0
4/23/2024	4:00 AM	0	0	0	0	0	0	0	0	0	0	0	0	0
4/23/2024	4:15 AM	0	0	0	0	0	0	0	0	0	0	0	0	0
4/23/2024	4:30 AM	0	0	0	0	0	0	0	0	0	0	0	0	0
4/23/2024	4:45 AM	0	0	0	0	0	0	0	0	0	0	0	0	0
4/23/2024	5:00 AM	0	0	0	0	0	0	0	0	0	0	0	0	0
4/23/2024	5:15 AM	0	0	0	0	0	0	0	0	0	0	0	0	0
4/23/2024	5:30 AM	0	0	0	0	0	0	0	0	0	0	0	0	0
4/23/2024	5:45 AM	0	0	0	0	0	0	0	0	0	0	0	0	0
4/23/2024	6:00 AM	0	0	0	0	0	0	0	0	0	0	0	0	0
4/23/2024	6:15 AM	0	0	0	0	0	0	0	0	0	0	0	0	0
4/23/2024	6:30 AM	0	0	0	0	0	0	0	0	0	0	0	0	0
4/23/2024	6:45 AM	0	0	0	0	0	0	0	0	0	0	0	0	0
4/23/2024	7:00 AM	0	0	0	0	0	0	0	0	0	0	0	0	0
4/23/2024	7:15 AM	0	0	0	0	0	0	0	0	0	0	0	0	0
4/23/2024	7:30 AM	0	0	0	0	0	0	0	0	0	0	0	0	0
4/23/2024	7:45 AM	0	0	0	0	0	0	0	0	0	0	0	0	0
4/23/2024	8:00 AM	0	0	0	0	0	0	0	0	0	0	0	0	0
4/23/2024	8:15 AM	0	0	0	0	0	0	0	0	0	0	0	0	0
4/23/2024	8:30 AM	0	0	0	0	0	0	0	0	0	0	0	0	0
4/23/2024	8:45 AM	0	0	0	0	0	0	0	0	0	0	0	0	0
4/23/2024	9:00 AM	0	0	0	0	0	0	0	0	0	0	0	0	0
4/23/2024	9:15 AM	0	0	0	0	0	0	0	0	0	0	0	0	0
4/23/2024	9:30 AM	0	0	0	0	0	0	0	0	0	0	0	0	0
4/23/2024	9:45 AM	0	0	0	0	0	0	0	0	0	0	0	0	0
4/23/2024	10:00 AM	0	0	0	0	0	0	0	0	0	0	0	0	0
4/23/2024	10:15 AM	0	0	0	0	0	0	0	0	0	0	0	0	0
4/23/2024	10:30 AM	0	0	0	0	0	0	0	0	0	0	0	0	0
4/23/2024	10:45 AM	0	0	0	0	0	0	0	0	0	0	0	0	0
4/23/2024	11:00 AM	0	0	0	0	0	0	0	0	0	0	0	0	0
4/23/2024	11:15 AM	0	0	0	0	0	0	0	0	0	0	0	0	0
4/23/2024	11:30 AM	0	0	0	0	0	0	0	0	0	0	0	0	0
4/23/2024	11:45 AM	0	0	0	0	0	0	0	0	0	0	0	0	0
4/23/2024	12:00 PM	0	0	0	0	0	0	0	0	0	0	0	0	0
4/23/2024	12:15 PM	0	0	0	0	0	0	0	0	0	0	0	0	0
4/23/2024	12:30 PM	0	0	0	0	0	0	0	0	0	0	0	0	0
4/23/2024	12:45 PM	0	0	0	0	0	0	0	0	0	0	0	0	0
4/23/2024	1:00 PM	0	0	0	0	0	0	0	0	0	0	0	0	0
4/23/2024	1:15 PM	0	0	0	0	0	0	0	0	0	0	0	0	0
4/23/2024	1:30 PM	0	0	0	0	0	0	0	0	0	0	0	0	0
4/23/2024	1:45 PM	0	0	0	0	0	0	0	0	0	0	0	0	0
4/23/2024	2:00 PM	0	0	0	0	0	0	0	0	0	0	0	0	0
4/23/2024	2:15 PM	0	0	0	0	0	0	0	0	0	0	0	0	0
4/23/2024	2:30 PM	0	0	0	0	0	0	0	0	0	0	0	0	0
4/23/2024	2:45 PM	0	0	0	0	0	0	0	0	0	0	0	0	0
4/23/2024	3:00 PM	0	0	0	0	0	0	0	0	0	0	0	0	0
4/23/2024	3:15 PM	0	0	0	0	0	0	0	0	0	0	0	0	0
4/23/2024	3:30 PM	0	0	0	0	0	0	0	0	0	0	0	0	0
4/23/2024	3:45 PM	0	0	0	0	0	0	0	0	0	0	0	0	0
4/23/2024	4:00 PM	0	0	0	0	0	0	0	0	0	0	0	0	0
4/23/2024	4:15 PM	0	0	0	0	0	0	0	0	0	0	0	0	0
4/23/2024	4:30 PM	0	0	0	0	0	0	0	0	0	0	0	0	0
4/23/2024	4:45 PM	0	0	0	0	0	0	0	0	0	0	0	0	0
4/23/2024	5:00 PM	0	0	0	0	0	0	0	0	0	0	0	0	0
4/23/2024	5:15 PM	0	0	0	0	0	0	0	0	0	0	0	0	0
4/23/2024	5:30 PM	0	0	0	0	0	0	0	0	0	0	0	0	0
4/23/2024	5:45 PM	0	0	0	0	0	0	0	0	0	0	0	0	0
4/23/2024	6:00 PM	0	0	0	0	0	0	0	0	0	0	0	0	0
4/23/2024	6:15 PM	0	8	4	0	0	0	0	0	0	0	0	0	0
4/23/2024	6:30 PM	0	17	4	0	1	1	0	0	0	0	0	0	0
4/23/2024	6:45 PM	0	23	5	0	1	1	0	0	0	0	0	0	0
4/23/2024	7:00 PM	0	33	6	0	1	1	0	0	0	0	0	0	0
4/23/2024	7:15 PM	0	36	8	0	1	1	0	0	0	0	0	0	0
4/23/2024	7:30 PM	0	33	11	0	2	1	0	0	0	0	0	0	0
4/23/2024	7:45 PM	0	34	12	0	4	1	0	0	0	0	0	0	0
4/23/2024	8:00 PM	0	33	14	0	4	1	0	0	0	0	0	0	0
4/23/2024	8:15 PM	0	30	11	0	4	2	0	0	0	0	0	0	0
4/23/2024	8:30 PM	0	33	11	0	2	1	0	0	0	0	0	0	0
4/23/2024	8:45 PM	0	29	10	0	0	1	0	0	0	0	0	0	0
4/23/2024	9:00 PM	0	22	7	0	0	1	0	0	0	0	0	0	0
4/23/2024	9:15 PM	0	17	5	0	0	0	0	0	0	0	0	0	0
4/23/2024	9:30 PM	0	10	3	0	0	1	0	0	0	0	0	0	0
4/23/2024	9:45 PM	0	11	3	0	0	1	0	0	0	0	0	0	0
4/23/2024	10:00 PM	0	18	6	0	0	1	0	0	0	0	0	0	0
4/23/2024	10:15 PM	0	21	7	0	0	1	0	0	0	0	0	0	0
4/23/2024	10:30 PM	0	21	6	0	0	0	0	0	0	0	0	0	0
4/23/2024	10:45 PM	0	21	6	0	0	0	0	0	0	0	0	0	0
4/23/2024	11:00 PM	0	15	5	0	0	0	0	0	0	0	0	0	0
4/23/2024	11:15 PM	0	12	3	0	0	0	0	0	0	0	0	0	0
4/23/2024	11:30 PM	0	13	3	0	0	2	0	0	0	0	0	0	0
4/23/2024	11:45 PM	0	15	2	0	0	2	0	0	0	0	0	0	0

4/24/2024	12:00 AM	0	12	0	0	0	3	0	0	0	0	0	0	0
4/24/2024	12:15 AM	0	10	0	0	0	3	0	0	0	0	0	0	0
4/24/2024	12:30 AM	0	10	0	0	0	4	0	0	0	0	0	0	0
4/24/2024	12:45 AM	0	4	0	0	0	5	0	0	0	0	0	0	0
4/24/2024	1:00 AM	0	7	0	0	0	7	0	0	0	0	0	0	0
4/24/2024	1:15 AM	0	7	0	0	0	9	0	0	0	0	0	0	0
4/24/2024	1:30 AM	0	4	0	0	0	9	0	0	0	0	0	0	0
4/24/2024	1:45 AM	0	6	0	0	1	8	0	0	0	0	0	0	0
4/24/2024	2:00 AM	0	6	0	0	2	7	0	0	0	0	0	0	0
4/24/2024	2:15 AM	0	7	0	0	2	7	0	0	0	0	0	0	0
4/24/2024	2:30 AM	0	10	0	0	2	6	0	0	0	0	0	0	0
4/24/2024	2:45 AM	0	12	0	0	1	6	0	0	0	0	0	0	0
4/24/2024	3:00 AM	0	13	0	0	1	7	0	0	0	0	0	0	0
4/24/2024	3:15 AM	0	11	0	0	1	5	0	0	0	0	0	0	0
4/24/2024	3:30 AM	0	11	0	0	1	4	0	0	0	0	0	0	0
4/24/2024	3:45 AM	0	9	0	0	2	5	0	0	0	0	0	0	0
4/24/2024	4:00 AM	0	9	0	0	3	2	0	0	0	0	0	0	0
4/24/2024	4:15 AM	0	10	0	0	4	2	0	0	0	0	0	0	0
4/24/2024	4:30 AM	0	11	0	0	4	3	0	0	0	0	0	0	0
4/24/2024	4:45 AM	0	10	0	0	3	2	0	0	0	0	0	0	0
4/24/2024	5:00 AM	0	14	0	0	1	3	0	0	0	0	0	0	0
4/24/2024	5:15 AM	0	19	0	0	0	3	0	0	0	0	0	0	0
4/24/2024	5:30 AM	0	22	0	0	0	2	0	0	0	0	0	0	0
4/24/2024	5:45 AM	0	34	2	0	1	2	0	0	0	0	0	0	0
4/24/2024	6:00 AM	0	42	6	0	2	1	0	0	0	0	0	0	0
4/24/2024	6:15 AM	0	60	6	0	2	1	0	0	0	0	0	0	0
4/24/2024	6:30 AM	0	86	8	0	2	0	0	0	0	0	0	0	0
4/24/2024	6:45 AM	0	119	13	0	1	0	0	0	0	0	0	0	0
4/24/2024	7:00 AM	0	148	10	0	1	0	0	0	0	0	0	0	0
4/24/2024	7:15 AM	0	159	16	0	2	0	0	0	0	0	0	0	0
4/24/2024	7:30 AM	0	170	19	0	2	0	0	0	0	0	0	0	0
4/24/2024	7:45 AM	0	173	18	0	3	0	0	0	0	0	0	0	0
4/24/2024	8:00 AM	0	158	22	0	3	0	0	0	0	0	0	0	0
4/24/2024	8:15 AM	0	158	20	1	3	0	0	0	0	0	0	0	0
4/24/2024	8:30 AM	0	142	19	1	5	1	0	0	0	0	0	0	0
4/24/2024	8:45 AM	0	117	17	2	4	1	0	0	0	0	0	0	0
4/24/2024	9:00 AM	0	113	18	2	3	1	0	0	0	0	0	0	0
4/24/2024	9:15 AM	0	101	20	1	2	2	0	0	0	0	0	0	0
4/24/2024	9:30 AM	0	104	18	1	0	1	0	0	0	0	0	0	0
4/24/2024	9:45 AM	0	101	24	0	0	1	0	0	0	0	0	0	0
4/24/2024	10:00 AM	0	99	23	0	0	1	0	0	0	0	0	0	0
4/24/2024	10:15 AM	0	93	26	0	0	0	0	1	0	0	0	0	0
4/24/2024	10:30 AM	0	96	30	0	0	0	0	1	0	0	0	0	0
4/24/2024	10:45 AM	0	112	31	0	0	0	0	1	0	0	0	0	0
4/24/2024	11:00 AM	0	132	38	0	1	0	0	1	0	0	0	0	0
4/24/2024	11:15 AM	0	163	38	0	3	0	0	0	0	0	0	0	0
4/24/2024	11:30 AM	0	166	44	0	3	0	0	0	0	0	0	0	0
4/24/2024	11:45 AM	0	175	36	0	3	0	0	0	0	0	0	0	0
4/24/2024	12:00 PM	1	180	35	0	4	0	0	0	0	0	0	0	0
4/24/2024	12:15 PM	1	179	34	0	2	0	0	0	0	0	0	0	0
4/24/2024	12:30 PM	1	187	27	0	2	0	0	0	0	0	0	0	0
4/24/2024	12:45 PM	1	188	32	0	3	0	0	0	0	0	0	0	0
4/24/2024	1:00 PM	0	194	30	0	1	0	0	0	0	0	0	0	0
4/24/2024	1:15 PM	0	175	34	0	1	0	0	0	0	0	0	0	0
4/24/2024	1:30 PM	0	169	39	0	1	0	0	0	0	0	0	0	0
4/24/2024	1:45 PM	0	163	43	0	4	0	0	0	0	0	0	0	0
4/24/2024	2:00 PM	0	145	38	1	5	0	0	0	0	0	0	0	0
4/24/2024	2:15 PM	0	159	39	1	5	1	0	0	0	0	0	0	0
4/24/2024	2:30 PM	0	157	40	2	6	1	0	0	0	0	0	0	0
4/24/2024	2:45 PM	0	163	34	2	2	2	0	0	0	0	0	0	0
4/24/2024	3:00 PM	0	184	36	1	1	3	0	0	0	0	0	0	0
4/24/2024	3:15 PM	0	190	30	3	2	3	0	0	0	0	0	0	0
4/24/2024	3:30 PM	0	215	29	2	2	3	0	0	0	0	0	0	0
4/24/2024	3:45 PM	0	241	35	3	2	3	0	0	0	0	0	0	0
4/24/2024	4:00 PM	0	272	41	3	2	3	0	0	0	0	0	0	0
4/24/2024	4:15 PM	0	328	52	1	1	2	0	0	0	0	0	0	0
4/24/2024	4:30 PM	0	407	54	1	0	2	0	0	0	0	0	0	0
4/24/2024	4:45 PM	0	446	57	0	0	1	0	0	0	0	0	0	0
4/24/2024	5:00 PM	0	431	54	0	0	1	0	0	0	0	0	0	0
4/24/2024	5:15 PM	0	363	41	0	0	1	0	0	0	0	0	0	0
4/24/2024	5:30 PM	0	260	33	0	0	1	0	0	0	0	0	0	0
4/24/2024	5:45 PM	0	179	22	0	0	1	0	0	0	0	0	0	0
4/24/2024	6:00 PM	0	138	17	0	0	0	0	0	0	0	0	0	0
4/24/2024	6:15 PM	0	132	16	0	0	1	0	0	0	0	0	0	0
4/24/2024	6:30 PM	0	120	14	0	1	1	0	0	0	0	0	0	0
4/24/2024	6:45 PM	0	119	12	0	1	1	0	0	0	0	0	0	0
4/24/2024	7:00 PM	0	109	11	0	2	1	0	0	0	0	0	0	0
4/24/2024	7:15 PM	0	103	9	0	2	0	0	0	0	0	0	0	0
4/24/2024	7:30 PM	0	97	12	0	2	1	0	0	0	0	0	0	0
4/24/2024	7:45 PM	1	81	13	0	3	1	0	0	0	0	0	0	0
4/24/2024	8:00 PM	1	68	10	0	3	1	0	0	0	0	0	0	0
4/24/2024	8:15 PM	1	58	11	0	3	1	0	0	0	0	0	0	0
4/24/2024	8:30 PM	1	54	10	0	3	0	0	0	0	0	0	0	0
4/24/2024	8:45 PM	0	50	9	0	4	0	0	0	0	0	0	0	0
4/24/2024	9:00 PM	0	58	14	0	4	0	0	0	0	0	0	0	0
4/24/2024	9:15 PM	0	58	13	0	6	0	0	0	0	0	0	0	0
4/24/2024	9:30 PM	0	50	9	0	7	0	0	0	0	0	0	0	0
4/24/2024	9:45 PM	0	55	10	0	7	0	0	0	0	0	0	0	0
4/24/2024	10:00 PM	0	45	5	0	6	0	0	0	0	0	0	0	0
4/24/2024	10:15 PM	0	42	3	0	4	0	0	0	0	0	0	0	0
4/24/2024	10:30 PM	0	42	3	0	2	0	0	0	0	0	0	0	0
4/24/2024	10:45 PM	1	37	0	0	2	1	0	0	0	0	0	0	0
4/24/2024	11:00 PM	1	36	0	0	3	1	0	0	0	0	0	0	0
4/24/2024	11:15 PM	1	30	1	0	3	1	0	0	0	0	0	0	0
4/24/2024	11:30 PM	1	27	3	0	5	2	0	0	0	0	0	0	0
4/24/2024	11:45 PM	0	20	6	0	4	1	0	0	0	0	0	0	0

4/25/2024	12:00 AM	0	16	7	0	4	1	0	0	0	0	0	0	0
4/25/2024	12:15 AM	0	17	7	0	5	2	0	0	1	0	0	0	0
4/25/2024	12:30 AM	0	18	6	0	3	2	0	0	1	0	0	0	0
4/25/2024	12:45 AM	0	17	4	0	2	2	0	0	1	0	0	0	0
4/25/2024	1:00 AM	0	18	4	0	1	2	0	0	1	0	0	0	0
4/25/2024	1:15 AM	0	16	4	0	0	1	0	0	0	0	0	0	0
4/25/2024	1:30 AM	0	12	4	0	0	0	0	0	0	0	0	0	0
4/25/2024	1:45 AM	0	12	3	0	1	0	0	0	1	0	0	0	0
4/25/2024	2:00 AM	0	10	2	0	1	1	0	0	1	0	0	0	0
4/25/2024	2:15 AM	0	7	1	0	1	1	0	0	1	0	0	0	0
4/25/2024	2:30 AM	0	9	2	0	4	3	0	0	1	0	0	0	0
4/25/2024	2:45 AM	0	9	3	0	4	5	0	0	0	0	0	0	0
4/25/2024	3:00 AM	0	8	4	0	6	4	0	0	0	0	0	0	0
4/25/2024	3:15 AM	0	8	5	0	7	4	0	0	0	0	0	0	0
4/25/2024	3:30 AM	0	6	3	0	5	2	0	0	0	0	0	0	0
4/25/2024	3:45 AM	0	8	4	0	5	1	0	0	0	0	0	0	0
4/25/2024	4:00 AM	0	9	3	0	3	1	0	0	0	0	0	0	0
4/25/2024	4:15 AM	0	13	3	0	2	2	0	0	0	0	0	0	0
4/25/2024	4:30 AM	0	14	4	0	1	2	0	0	0	0	0	0	0
4/25/2024	4:45 AM	0	12	2	0	0	1	0	0	0	0	0	0	0
4/25/2024	5:00 AM	0	15	3	0	0	1	0	0	0	0	0	0	0
4/25/2024	5:15 AM	0	17	3	0	0	0	0	0	0	0	0	0	0
4/25/2024	5:30 AM	0	20	5	0	0	0	0	0	0	0	0	0	0
4/25/2024	5:45 AM	0	28	6	0	0	1	0	0	0	0	0	0	0
4/25/2024	6:00 AM	0	39	10	0	1	1	0	0	0	0	0	0	0
4/25/2024	6:15 AM	0	53	11	0	1	1	0	0	0	0	0	0	0
4/25/2024	6:30 AM	0	81	10	0	1	1	0	0	0	0	0	0	0
4/25/2024	6:45 AM	0	108	13	0	1	0	0	0	0	0	0	0	0
4/25/2024	7:00 AM	0	119	12	0	1	0	0	0	0	0	0	0	0
4/25/2024	7:15 AM	0	133	16	0	1	0	0	0	0	0	0	0	0
4/25/2024	7:30 AM	0	138	17	0	2	0	0	0	0	0	0	0	0
4/25/2024	7:45 AM	0	132	14	0	3	1	0	0	0	0	0	0	0
4/25/2024	8:00 AM	0	139	15	0	4	1	0	0	0	0	0	0	0
4/25/2024	8:15 AM	0	136	14	0	4	1	0	0	1	0	0	0	0
4/25/2024	8:30 AM	0	126	16	0	3	1	0	0	1	0	0	0	0
4/25/2024	8:45 AM	0	118	22	0	3	0	0	0	1	0	0	0	0
4/25/2024	9:00 AM	0	119	25	0	2	0	0	0	1	0	0	0	0
4/25/2024	9:15 AM	0	115	26	0	2	0	0	0	0	0	0	0	0
4/25/2024	9:30 AM	0	107	28	0	3	1	0	1	0	1	0	0	0
4/25/2024	9:45 AM	0	118	31	0	2	2	0	1	0	1	0	0	0
4/25/2024	10:00 AM	0	121	31	0	1	3	0	1	0	1	0	0	0
4/25/2024	10:15 AM	0	136	32	0	2	3	0	1	0	1	0	0	0
4/25/2024	10:30 AM	0	150	39	0	1	2	0	0	0	0	0	0	0
4/25/2024	10:45 AM	0	157	38	0	1	3	0	0	0	0	0	0	0
4/25/2024	11:00 AM	0	170	37	0	3	2	0	0	0	0	0	0	0
4/25/2024	11:15 AM	0	177	35	0	3	3	0	0	0	0	0	0	0
4/25/2024	11:30 AM	0	193	27	0	4	3	0	0	0	0	0	0	0
4/25/2024	11:45 AM	0	198	30	0	5	1	0	0	0	0	0	0	0
4/25/2024	12:00 PM	0	194	28	0	3	3	0	0	0	0	0	0	0
4/25/2024	12:15 PM	0	201	32	0	3	2	0	0	0	0	0	0	0
4/25/2024	12:30 PM	0	206	37	0	4	3	0	0	0	0	0	0	0
4/25/2024	12:45 PM	0	211	30	0	6	3	0	0	0	0	0	0	0
4/25/2024	1:00 PM	0	200	27	0	7	1	0	0	0	0	0	0	0
4/25/2024	1:15 PM	0	196	23	0	6	1	0	0	0	0	0	0	0
4/25/2024	1:30 PM	0	193	18	0	4	1	0	0	0	0	0	0	0
4/25/2024	1:45 PM	0	184	25	0	1	1	0	1	0	0	0	0	0
4/25/2024	2:00 PM	0	187	34	0	1	1	0	3	0	0	0	0	0
4/25/2024	2:15 PM	0	182	31	0	1	2	0	3	0	0	0	0	0
4/25/2024	2:30 PM	0	168	31	0	1	1	0	3	0	0	0	0	0
4/25/2024	2:45 PM	0	181	30	0	2	1	0	2	0	0	0	0	0
4/25/2024	3:00 PM	1	195	28	0	2	2	0	0	0	0	0	0	0
4/25/2024	3:15 PM	1	213	33	0	3	2	0	0	0	0	0	0	0
4/25/2024	3:30 PM	1	232	31	0	3	2	0	0	0	0	0	0	0
4/25/2024	3:45 PM	1	270	26	0	3	3	0	0	0	0	0	0	0
4/25/2024	4:00 PM	0	309	32	0	2	2	0	0	0	0	0	0	0
4/25/2024	4:15 PM	1	348	40	0	1	1	0	0	0	0	0	0	0
4/25/2024	4:30 PM	1	433	56	0	1	1	0	0	0	0	0	0	0
4/25/2024	4:45 PM	1	447	66	0	0	0	0	0	0	0	0	0	0
4/25/2024	5:00 PM	1	443	60	0	0	0	0	0	0	0	0	0	0
4/25/2024	5:15 PM	0	389	49	0	0	0	0	0	0	0	0	0	0
4/25/2024	5:30 PM	0	292	35	0	1	0	0	0	0	0	0	0	0
4/25/2024	5:45 PM	0	205	27	0	1	0	0	0	0	0	0	0	0
4/25/2024	6:00 PM	0	145	20	0	2	0	0	0	0	0	0	0	0
4/25/2024	6:15 PM	0	94	16	0	2	0	0	0	0	0	0	0	0
4/25/2024	6:30 PM	0	48	10	0	1	0	0	0	0	0	0	0	0
4/25/2024	6:45 PM	0	28	2	0	1	0	0	0	0	0	0	0	0
4/25/2024	7:00 PM	0	0	0	0	0	0	0	0	0	0	0	0	0
4/25/2024	7:15 PM	0	0	0	0	0	0	0	0	0	0	0	0	0
4/25/2024	7:30 PM	0	0	0	0	0	0	0	0	0	0	0	0	0
4/25/2024	7:45 PM	0	0	0	0	0	0	0	0	0	0	0	0	0
4/25/2024	8:00 PM	0	0	0	0	0	0	0	0	0	0	0	0	0
4/25/2024	8:15 PM	0	0	0	0	0	0	0	0	0	0	0	0	0
4/25/2024	8:30 PM	0	0	0	0	0	0	0	0	0	0	0	0	0
4/25/2024	8:45 PM	0	0	0	0	0	0	0	0	0	0	0	0	0
4/25/2024	9:00 PM	0	0	0	0	0	0	0	0	0	0	0	0	0
4/25/2024	9:15 PM	0	0	0	0	0	0	0	0	0	0	0	0	0
4/25/2024	9:30 PM	0	0	0	0	0	0	0	0	0	0	0	0	0
4/25/2024	9:45 PM	0	0	0	0	0	0	0	0	0	0	0	0	0
4/25/2024	10:00 PM	0	0	0	0	0	0	0	0	0	0	0	0	0
4/25/2024	10:15 PM	0	0	0	0	0	0	0	0	0	0	0	0	0
4/25/2024	10:30 PM	0	0	0	0	0	0	0	0	0	0	0	0	0
4/25/2024	10:45 PM	0	0	0	0	0	0	0	0	0	0	0	0	0
4/25/2024	11:00 PM	0	0	0	0	0	0	0	0	0	0	0	0	0
4/25/2024	11:15 PM	0	0	0	0	0	0	0	0	0	0	0	0	0
4/25/2024	11:30 PM	0	0	0	0	0	0	0	0	0	0	0	0	0
4/25/2024	11:45 PM	0	0	0	0	0	0	0	0	0	0	0	0	0

SB
File Name:
Start Date: 4/23/2024
Start Time: 0
Site Code: 41
Station ID: 1
Location 1: I-126 On/Off-Ramp, south of W Colonial Life Rd
Location 2:

Date	Time	1	2	3	4	5	6	7	8	9	10	11	12	13
4/23/2024	12:00 AM	0	0	0	0	0	0	0	0	0	0	0	0	0
4/23/2024	12:15 AM	0	0	0	0	0	0	0	0	0	0	0	0	0
4/23/2024	12:30 AM	0	0	0	0	0	0	0	0	0	0	0	0	0
4/23/2024	12:45 AM	0	0	0	0	0	0	0	0	0	0	0	0	0
4/23/2024	1:00 AM	0	0	0	0	0	0	0	0	0	0	0	0	0
4/23/2024	1:15 AM	0	0	0	0	0	0	0	0	0	0	0	0	0
4/23/2024	1:30 AM	0	0	0	0	0	0	0	0	0	0	0	0	0
4/23/2024	1:45 AM	0	0	0	0	0	0	0	0	0	0	0	0	0
4/23/2024	2:00 AM	0	0	0	0	0	0	0	0	0	0	0	0	0
4/23/2024	2:15 AM	0	0	0	0	0	0	0	0	0	0	0	0	0
4/23/2024	2:30 AM	0	0	0	0	0	0	0	0	0	0	0	0	0
4/23/2024	2:45 AM	0	0	0	0	0	0	0	0	0	0	0	0	0
4/23/2024	3:00 AM	0	0	0	0	0	0	0	0	0	0	0	0	0
4/23/2024	3:15 AM	0	0	0	0	0	0	0	0	0	0	0	0	0
4/23/2024	3:30 AM	0	0	0	0	0	0	0	0	0	0	0	0	0
4/23/2024	3:45 AM	0	0	0	0	0	0	0	0	0	0	0	0	0
4/23/2024	4:00 AM	0	0	0	0	0	0	0	0	0	0	0	0	0
4/23/2024	4:15 AM	0	0	0	0	0	0	0	0	0	0	0	0	0
4/23/2024	4:30 AM	0	0	0	0	0	0	0	0	0	0	0	0	0
4/23/2024	4:45 AM	0	0	0	0	0	0	0	0	0	0	0	0	0
4/23/2024	5:00 AM	0	0	0	0	0	0	0	0	0	0	0	0	0
4/23/2024	5:15 AM	0	0	0	0	0	0	0	0	0	0	0	0	0
4/23/2024	5:30 AM	0	0	0	0	0	0	0	0	0	0	0	0	0
4/23/2024	5:45 AM	0	0	0	0	0	0	0	0	0	0	0	0	0
4/23/2024	6:00 AM	0	0	0	0	0	0	0	0	0	0	0	0	0
4/23/2024	6:15 AM	0	0	0	0	0	0	0	0	0	0	0	0	0
4/23/2024	6:30 AM	0	0	0	0	0	0	0	0	0	0	0	0	0
4/23/2024	6:45 AM	0	0	0	0	0	0	0	0	0	0	0	0	0
4/23/2024	7:00 AM	0	0	0	0	0	0	0	0	0	0	0	0	0
4/23/2024	7:15 AM	0	0	0	0	0	0	0	0	0	0	0	0	0
4/23/2024	7:30 AM	0	0	0	0	0	0	0	0	0	0	0	0	0
4/23/2024	7:45 AM	0	0	0	0	0	0	0	0	0	0	0	0	0
4/23/2024	8:00 AM	0	0	0	0	0	0	0	0	0	0	0	0	0
4/23/2024	8:15 AM	0	0	0	0	0	0	0	0	0	0	0	0	0
4/23/2024	8:30 AM	0	0	0	0	0	0	0	0	0	0	0	0	0
4/23/2024	8:45 AM	0	0	0	0	0	0	0	0	0	0	0	0	0
4/23/2024	9:00 AM	0	0	0	0	0	0	0	0	0	0	0	0	0
4/23/2024	9:15 AM	0	0	0	0	0	0	0	0	0	0	0	0	0
4/23/2024	9:30 AM	0	0	0	0	0	0	0	0	0	0	0	0	0
4/23/2024	9:45 AM	0	0	0	0	0	0	0	0	0	0	0	0	0
4/23/2024	10:00 AM	0	0	0	0	0	0	0	0	0	0	0	0	0
4/23/2024	10:15 AM	0	0	0	0	0	0	0	0	0	0	0	0	0
4/23/2024	10:30 AM	0	0	0	0	0	0	0	0	0	0	0	0	0
4/23/2024	10:45 AM	0	0	0	0	0	0	0	0	0	0	0	0	0
4/23/2024	11:00 AM	0	0	0	0	0	0	0	0	0	0	0	0	0
4/23/2024	11:15 AM	0	0	0	0	0	0	0	0	0	0	0	0	0
4/23/2024	11:30 AM	0	0	0	0	0	0	0	0	0	0	0	0	0
4/23/2024	11:45 AM	0	0	0	0	0	0	0	0	0	0	0	0	0
4/23/2024	12:00 PM	0	0	0	0	0	0	0	0	0	0	0	0	0
4/23/2024	12:15 PM	0	0	0	0	0	0	0	0	0	0	0	0	0
4/23/2024	12:30 PM	0	0	0	0	0	0	0	0	0	0	0	0	0
4/23/2024	12:45 PM	0	0	0	0	0	0	0	0	0	0	0	0	0
4/23/2024	1:00 PM	0	0	0	0	0	0	0	0	0	0	0	0	0
4/23/2024	1:15 PM	0	0	0	0	0	0	0	0	0	0	0	0	0
4/23/2024	1:30 PM	0	0	0	0	0	0	0	0	0	0	0	0	0
4/23/2024	1:45 PM	0	0	0	0	0	0	0	0	0	0	0	0	0
4/23/2024	2:00 PM	0	0	0	0	0	0	0	0	0	0	0	0	0
4/23/2024	2:15 PM	0	0	0	0	0	0	0	0	0	0	0	0	0
4/23/2024	2:30 PM	0	0	0	0	0	0	0	0	0	0	0	0	0
4/23/2024	2:45 PM	0	0	0	0	0	0	0	0	0	0	0	0	0
4/23/2024	3:00 PM	0	0	0	0	0	0	0	0	0	0	0	0	0
4/23/2024	3:15 PM	0	0	0	0	0	0	0	0	0	0	0	0	0
4/23/2024	3:30 PM	0	0	0	0	0	0	0	0	0	0	0	0	0
4/23/2024	3:45 PM	0	0	0	0	0	0	0	0	0	0	0	0	0
4/23/2024	4:00 PM	0	0	0	0	0	0	0	0	0	0	0	0	0
4/23/2024	4:15 PM	0	0	0	0	0	0	0	0	0	0	0	0	0
4/23/2024	4:30 PM	0	0	0	0	0	0	0	0	0	0	0	0	0
4/23/2024	4:45 PM	0	0	0	0	0	0	0	0	0	0	0	0	0
4/23/2024	5:00 PM	0	0	0	0	0	0	0	0	0	0	0	0	0
4/23/2024	5:15 PM	0	0	0	0	0	0	0	0	0	0	0	0	0
4/23/2024	5:30 PM	0	0	0	0	0	0	0	0	0	0	0	0	0
4/23/2024	5:45 PM	0	0	0	0	0	0	0	0	0	0	0	0	0
4/23/2024	6:00 PM	0	0	0	0	0	0	0	0	0	0	0	0	0
4/23/2024	6:15 PM	0	0	0	0	0	0	0	0	0	0	0	0	0
4/23/2024	6:30 PM	0	0	0	0	0	0	0	0	0	0	0	0	0
4/23/2024	6:45 PM	0	0	0	0	0	0	0	0	0	0	0	0	0
4/23/2024	7:00 PM	0	0	0	0	0	0	0	0	0	0	0	0	0
4/23/2024	7:15 PM	0	0	0	0	0	0	0	0	0	0	0	0	0
4/23/2024	7:30 PM	0	0	0	0	0	0	0	0	0	0	0	0	0
4/23/2024	7:45 PM	0	0	0	0	0	0	0	0	0	0	0	0	0
4/23/2024	8:00 PM	0	0	0	0	0	0	0	0	0	0	0	0	0
4/23/2024	8:15 PM	0	0	0	0	0	0	0	0	0	0	0	0	0
4/23/2024	8:30 PM	0	0	0	0	0	0	0	0	0	0	0	0	0
4/23/2024	8:45 PM	0	0	0	0	0	0	0	0	0	0	0	0	0
4/23/2024	9:00 PM	0	0	0	0	0	0	0	0	0	0	0	0	0
4/23/2024	9:15 PM	0	0	0	0	0	0	0	0	0	0	0	0	0
4/23/2024	9:30 PM	0	0	0	0	0	0	0	0	0	0	0	0	0
4/23/2024	9:45 PM	0	0	0	0	0	0	0	0	0	0	0	0	0
4/23/2024	10:00 PM	0	0	0	0	0	0	0	0	0	0	0	0	0
4/23/2024	10:15 PM	0	0	0	0	0	0	0	0	0	0	0	0	0
4/23/2024	10:30 PM	0	0	0	0	0	0	0	0	0	0	0	0	0
4/23/2024	10:45 PM	0	0	0	0	0	0	0	0	0	0	0	0	0
4/23/2024	11:00 PM	0	0	0	0	0	0	0	0	0	0	0	0	0
4/23/2024	11:15 PM	0	0	0	0	0	0	0	0	0	0	0	0	0
4/23/2024	11:30 PM	0	0	0	0	0	0	0	0	0	0	0	0	0
4/23/2024	11:45 PM	0	0	0	0	0	0	0	0	0	0	0	0	0

4/24/2024	12:00 AM	0	0	0	0	0	0	0	0	0	0	0	0	0
4/24/2024	12:15 AM	0	0	0	0	0	0	0	0	0	0	0	0	0
4/24/2024	12:30 AM	0	0	0	0	0	0	0	0	0	0	0	0	0
4/24/2024	12:45 AM	0	0	0	0	0	0	0	0	0	0	0	0	0
4/24/2024	1:00 AM	0	0	0	0	0	0	0	0	0	0	0	0	0
4/24/2024	1:15 AM	0	0	0	0	0	0	0	0	0	0	0	0	0
4/24/2024	1:30 AM	0	0	0	0	0	0	0	0	0	0	0	0	0
4/24/2024	1:45 AM	0	0	0	0	0	0	0	0	0	0	0	0	0
4/24/2024	2:00 AM	0	0	0	0	0	0	0	0	0	0	0	0	0
4/24/2024	2:15 AM	0	0	0	0	0	0	0	0	0	0	0	0	0
4/24/2024	2:30 AM	0	0	0	0	0	0	0	0	0	0	0	0	0
4/24/2024	2:45 AM	0	0	0	0	0	0	0	0	0	0	0	0	0
4/24/2024	3:00 AM	0	0	0	0	0	0	0	0	0	0	0	0	0
4/24/2024	3:15 AM	0	0	0	0	0	0	0	0	0	0	0	0	0
4/24/2024	3:30 AM	0	0	0	0	0	0	0	0	0	0	0	0	0
4/24/2024	3:45 AM	0	0	0	0	0	0	0	0	0	0	0	0	0
4/24/2024	4:00 AM	0	0	0	0	0	0	0	0	0	0	0	0	0
4/24/2024	4:15 AM	0	0	0	0	0	0	0	0	0	0	0	0	0
4/24/2024	4:30 AM	0	0	0	0	0	0	0	0	0	0	0	0	0
4/24/2024	4:45 AM	0	0	0	0	0	0	0	0	0	0	0	0	0
4/24/2024	5:00 AM	0	0	0	0	0	0	0	0	0	0	0	0	0
4/24/2024	5:15 AM	0	0	0	0	0	0	0	0	0	0	0	0	0
4/24/2024	5:30 AM	0	0	0	0	0	0	0	0	0	0	0	0	0
4/24/2024	5:45 AM	0	0	0	0	0	0	0	0	0	0	0	0	0
4/24/2024	6:00 AM	0	0	0	0	0	0	0	0	0	0	0	0	0
4/24/2024	6:15 AM	0	0	0	0	0	0	0	0	0	0	0	0	0
4/24/2024	6:30 AM	0	0	0	0	0	0	0	0	0	0	0	0	0
4/24/2024	6:45 AM	0	0	0	0	0	0	0	0	0	0	0	0	0
4/24/2024	7:00 AM	0	0	0	0	0	0	0	0	0	0	0	0	0
4/24/2024	7:15 AM	0	0	0	0	0	0	0	0	0	0	0	0	0
4/24/2024	7:30 AM	0	0	0	0	0	0	0	0	0	0	0	0	0
4/24/2024	7:45 AM	0	0	0	0	0	0	0	0	0	0	0	0	0
4/24/2024	8:00 AM	0	0	0	0	0	0	0	0	0	0	0	0	0
4/24/2024	8:15 AM	0	0	0	0	0	0	0	0	0	0	0	0	0
4/24/2024	8:30 AM	0	0	0	0	0	0	0	0	0	0	0	0	0
4/24/2024	8:45 AM	0	0	0	0	0	0	0	0	0	0	0	0	0
4/24/2024	9:00 AM	0	0	0	0	0	0	0	0	0	0	0	0	0
4/24/2024	9:15 AM	0	0	0	0	0	0	0	0	0	0	0	0	0
4/24/2024	9:30 AM	0	0	0	0	0	0	0	0	0	0	0	0	0
4/24/2024	9:45 AM	0	0	0	0	0	0	0	0	0	0	0	0	0
4/24/2024	10:00 AM	0	0	0	0	0	0	0	0	0	0	0	0	0
4/24/2024	10:15 AM	0	0	0	0	0	0	0	0	0	0	0	0	0
4/24/2024	10:30 AM	0	0	0	0	0	0	0	0	0	0	0	0	0
4/24/2024	10:45 AM	0	0	0	0	0	0	0	0	0	0	0	0	0
4/24/2024	11:00 AM	0	0	0	0	0	0	0	0	0	0	0	0	0
4/24/2024	11:15 AM	0	0	0	0	0	0	0	0	0	0	0	0	0
4/24/2024	11:30 AM	0	0	0	0	0	0	0	0	0	0	0	0	0
4/24/2024	11:45 AM	0	0	0	0	0	0	0	0	0	0	0	0	0
4/24/2024	12:00 PM	0	0	0	0	0	0	0	0	0	0	0	0	0
4/24/2024	12:15 PM	0	0	0	0	0	0	0	0	0	0	0	0	0
4/24/2024	12:30 PM	0	0	0	0	0	0	0	0	0	0	0	0	0
4/24/2024	12:45 PM	0	0	0	0	0	0	0	0	0	0	0	0	0
4/24/2024	1:00 PM	0	0	0	0	0	0	0	0	0	0	0	0	0
4/24/2024	1:15 PM	0	0	0	0	0	0	0	0	0	0	0	0	0
4/24/2024	1:30 PM	0	0	0	0	0	0	0	0	0	0	0	0	0
4/24/2024	1:45 PM	0	0	0	0	0	0	0	0	0	0	0	0	0
4/24/2024	2:00 PM	0	0	0	0	0	0	0	0	0	0	0	0	0
4/24/2024	2:15 PM	0	0	0	0	0	0	0	0	0	0	0	0	0
4/24/2024	2:30 PM	0	0	0	0	0	0	0	0	0	0	0	0	0
4/24/2024	2:45 PM	0	0	0	0	0	0	0	0	0	0	0	0	0
4/24/2024	3:00 PM	0	0	0	0	0	0	0	0	0	0	0	0	0
4/24/2024	3:15 PM	0	0	0	0	0	0	0	0	0	0	0	0	0
4/24/2024	3:30 PM	0	0	0	0	0	0	0	0	0	0	0	0	0
4/24/2024	3:45 PM	0	0	0	0	0	0	0	0	0	0	0	0	0
4/24/2024	4:00 PM	0	0	0	0	0	0	0	0	0	0	0	0	0
4/24/2024	4:15 PM	0	0	0	0	0	0	0	0	0	0	0	0	0
4/24/2024	4:30 PM	0	0	0	0	0	0	0	0	0	0	0	0	0
4/24/2024	4:45 PM	0	0	0	0	0	0	0	0	0	0	0	0	0
4/24/2024	5:00 PM	0	0	0	0	0	0	0	0	0	0	0	0	0
4/24/2024	5:15 PM	0	0	0	0	0	0	0	0	0	0	0	0	0
4/24/2024	5:30 PM	0	0	0	0	0	0	0	0	0	0	0	0	0
4/24/2024	5:45 PM	0	0	0	0	0	0	0	0	0	0	0	0	0
4/24/2024	6:00 PM	0	0	0	0	0	0	0	0	0	0	0	0	0
4/24/2024	6:15 PM	0	0	0	0	0	0	0	0	0	0	0	0	0
4/24/2024	6:30 PM	0	0	0	0	0	0	0	0	0	0	0	0	0
4/24/2024	6:45 PM	0	0	0	0	0	0	0	0	0	0	0	0	0
4/24/2024	7:00 PM	0	0	0	0	0	0	0	0	0	0	0	0	0
4/24/2024	7:15 PM	0	0	0	0	0	0	0	0	0	0	0	0	0
4/24/2024	7:30 PM	0	0	0	0	0	0	0	0	0	0	0	0	0
4/24/2024	7:45 PM	0	0	0	0	0	0	0	0	0	0	0	0	0
4/24/2024	8:00 PM	0	0	0	0	0	0	0	0	0	0	0	0	0
4/24/2024	8:15 PM	0	0	0	0	0	0	0	0	0	0	0	0	0
4/24/2024	8:30 PM	0	0	0	0	0	0	0	0	0	0	0	0	0
4/24/2024	8:45 PM	0	0	0	0	0	0	0	0	0	0	0	0	0
4/24/2024	9:00 PM	0	0	0	0	0	0	0	0	0	0	0	0	0
4/24/2024	9:15 PM	0	0	0	0	0	0	0	0	0	0	0	0	0
4/24/2024	9:30 PM	0	0	0	0	0	0	0	0	0	0	0	0	0
4/24/2024	9:45 PM	0	0	0	0	0	0	0	0	0	0	0	0	0
4/24/2024	10:00 PM	0	0	0	0	0	0	0	0	0	0	0	0	0
4/24/2024	10:15 PM	0	0	0	0	0	0	0	0	0	0	0	0	0
4/24/2024	10:30 PM	0	0	0	0	0	0	0	0	0	0	0	0	0
4/24/2024	10:45 PM	0	0	0	0	0	0	0	0	0	0	0	0	0
4/24/2024	11:00 PM	0	0	0	0	0	0	0	0	0	0	0	0	0
4/24/2024	11:15 PM	0	0	0	0	0	0	0	0	0	0	0	0	0
4/24/2024	11:30 PM	0	0	0	0	0	0	0	0	0	0	0	0	0
4/24/2024	11:45 PM	0	0	0	0	0	0	0	0	0	0	0	0	0

4/25/2024	12:00 AM	0	0	0	0	0	0	0	0	0	0	0	0	0
4/25/2024	12:15 AM	0	0	0	0	0	0	0	0	0	0	0	0	0
4/25/2024	12:30 AM	0	0	0	0	0	0	0	0	0	0	0	0	0
4/25/2024	12:45 AM	0	0	0	0	0	0	0	0	0	0	0	0	0
4/25/2024	1:00 AM	0	0	0	0	0	0	0	0	0	0	0	0	0
4/25/2024	1:15 AM	0	0	0	0	0	0	0	0	0	0	0	0	0
4/25/2024	1:30 AM	0	0	0	0	0	0	0	0	0	0	0	0	0
4/25/2024	1:45 AM	0	0	0	0	0	0	0	0	0	0	0	0	0
4/25/2024	2:00 AM	0	0	0	0	0	0	0	0	0	0	0	0	0
4/25/2024	2:15 AM	0	0	0	0	0	0	0	0	0	0	0	0	0
4/25/2024	2:30 AM	0	0	0	0	0	0	0	0	0	0	0	0	0
4/25/2024	2:45 AM	0	0	0	0	0	0	0	0	0	0	0	0	0
4/25/2024	3:00 AM	0	0	0	0	0	0	0	0	0	0	0	0	0
4/25/2024	3:15 AM	0	0	0	0	0	0	0	0	0	0	0	0	0
4/25/2024	3:30 AM	0	0	0	0	0	0	0	0	0	0	0	0	0
4/25/2024	3:45 AM	0	0	0	0	0	0	0	0	0	0	0	0	0
4/25/2024	4:00 AM	0	0	0	0	0	0	0	0	0	0	0	0	0
4/25/2024	4:15 AM	0	0	0	0	0	0	0	0	0	0	0	0	0
4/25/2024	4:30 AM	0	0	0	0	0	0	0	0	0	0	0	0	0
4/25/2024	4:45 AM	0	0	0	0	0	0	0	0	0	0	0	0	0
4/25/2024	5:00 AM	0	0	0	0	0	0	0	0	0	0	0	0	0
4/25/2024	5:15 AM	0	0	0	0	0	0	0	0	0	0	0	0	0
4/25/2024	5:30 AM	0	0	0	0	0	0	0	0	0	0	0	0	0
4/25/2024	5:45 AM	0	0	0	0	0	0	0	0	0	0	0	0	0
4/25/2024	6:00 AM	0	0	0	0	0	0	0	0	0	0	0	0	0
4/25/2024	6:15 AM	0	0	0	0	0	0	0	0	0	0	0	0	0
4/25/2024	6:30 AM	0	0	0	0	0	0	0	0	0	0	0	0	0
4/25/2024	6:45 AM	0	0	0	0	0	0	0	0	0	0	0	0	0
4/25/2024	7:00 AM	0	0	0	0	0	0	0	0	0	0	0	0	0
4/25/2024	7:15 AM	0	0	0	0	0	0	0	0	0	0	0	0	0
4/25/2024	7:30 AM	0	0	0	0	0	0	0	0	0	0	0	0	0
4/25/2024	7:45 AM	0	0	0	0	0	0	0	0	0	0	0	0	0
4/25/2024	8:00 AM	0	0	0	0	0	0	0	0	0	0	0	0	0
4/25/2024	8:15 AM	0	0	0	0	0	0	0	0	0	0	0	0	0
4/25/2024	8:30 AM	0	0	0	0	0	0	0	0	0	0	0	0	0
4/25/2024	8:45 AM	0	0	0	0	0	0	0	0	0	0	0	0	0
4/25/2024	9:00 AM	0	0	0	0	0	0	0	0	0	0	0	0	0
4/25/2024	9:15 AM	0	0	0	0	0	0	0	0	0	0	0	0	0
4/25/2024	9:30 AM	0	0	0	0	0	0	0	0	0	0	0	0	0
4/25/2024	9:45 AM	0	0	0	0	0	0	0	0	0	0	0	0	0
4/25/2024	10:00 AM	0	0	0	0	0	0	0	0	0	0	0	0	0
4/25/2024	10:15 AM	0	0	0	0	0	0	0	0	0	0	0	0	0
4/25/2024	10:30 AM	0	0	0	0	0	0	0	0	0	0	0	0	0
4/25/2024	10:45 AM	0	0	0	0	0	0	0	0	0	0	0	0	0
4/25/2024	11:00 AM	0	0	0	0	0	0	0	0	0	0	0	0	0
4/25/2024	11:15 AM	0	0	0	0	0	0	0	0	0	0	0	0	0
4/25/2024	11:30 AM	0	0	0	0	0	0	0	0	0	0	0	0	0
4/25/2024	11:45 AM	0	0	0	0	0	0	0	0	0	0	0	0	0
4/25/2024	12:00 PM	0	0	0	0	0	0	0	0	0	0	0	0	0
4/25/2024	12:15 PM	0	0	0	0	0	0	0	0	0	0	0	0	0
4/25/2024	12:30 PM	0	0	0	0	0	0	0	0	0	0	0	0	0
4/25/2024	12:45 PM	0	0	0	0	0	0	0	0	0	0	0	0	0
4/25/2024	1:00 PM	0	0	0	0	0	0	0	0	0	0	0	0	0
4/25/2024	1:15 PM	0	0	0	0	0	0	0	0	0	0	0	0	0
4/25/2024	1:30 PM	0	0	0	0	0	0	0	0	0	0	0	0	0
4/25/2024	1:45 PM	0	0	0	0	0	0	0	0	0	0	0	0	0
4/25/2024	2:00 PM	0	0	0	0	0	0	0	0	0	0	0	0	0
4/25/2024	2:15 PM	0	0	0	0	0	0	0	0	0	0	0	0	0
4/25/2024	2:30 PM	0	0	0	0	0	0	0	0	0	0	0	0	0
4/25/2024	2:45 PM	0	0	0	0	0	0	0	0	0	0	0	0	0
4/25/2024	3:00 PM	0	0	0	0	0	0	0	0	0	0	0	0	0
4/25/2024	3:15 PM	0	0	0	0	0	0	0	0	0	0	0	0	0
4/25/2024	3:30 PM	0	0	0	0	0	0	0	0	0	0	0	0	0
4/25/2024	3:45 PM	0	0	0	0	0	0	0	0	0	0	0	0	0
4/25/2024	4:00 PM	0	0	0	0	0	0	0	0	0	0	0	0	0
4/25/2024	4:15 PM	0	0	0	0	0	0	0	0	0	0	0	0	0
4/25/2024	4:30 PM	0	0	0	0	0	0	0	0	0	0	0	0	0
4/25/2024	4:45 PM	0	0	0	0	0	0	0	0	0	0	0	0	0
4/25/2024	5:00 PM	0	0	0	0	0	0	0	0	0	0	0	0	0
4/25/2024	5:15 PM	0	0	0	0	0	0	0	0	0	0	0	0	0
4/25/2024	5:30 PM	0	0	0	0	0	0	0	0	0	0	0	0	0
4/25/2024	5:45 PM	0	0	0	0	0	0	0	0	0	0	0	0	0
4/25/2024	6:00 PM	0	0	0	0	0	0	0	0	0	0	0	0	0
4/25/2024	6:15 PM	0	0	0	0	0	0	0	0	0	0	0	0	0
4/25/2024	6:30 PM	0	0	0	0	0	0	0	0	0	0	0	0	0
4/25/2024	6:45 PM	0	0	0	0	0	0	0	0	0	0	0	0	0
4/25/2024	7:00 PM	0	0	0	0	0	0	0	0	0	0	0	0	0
4/25/2024	7:15 PM	0	0	0	0	0	0	0	0	0	0	0	0	0
4/25/2024	7:30 PM	0	0	0	0	0	0	0	0	0	0	0	0	0
4/25/2024	7:45 PM	0	0	0	0	0	0	0	0	0	0	0	0	0
4/25/2024	8:00 PM	0	0	0	0	0	0	0	0	0	0	0	0	0
4/25/2024	8:15 PM	0	0	0	0	0	0	0	0	0	0	0	0	0
4/25/2024	8:30 PM	0	0	0	0	0	0	0	0	0	0	0	0	0
4/25/2024	8:45 PM	0	0	0	0	0	0	0	0	0	0	0	0	0
4/25/2024	9:00 PM	0	0	0	0	0	0	0	0	0	0	0	0	0
4/25/2024	9:15 PM	0	0	0	0	0	0	0	0	0	0	0	0	0
4/25/2024	9:30 PM	0	0	0	0	0	0	0	0	0	0	0	0	0
4/25/2024	9:45 PM	0	0	0	0	0	0	0	0	0	0	0	0	0
4/25/2024	10:00 PM	0	0	0	0	0	0	0	0	0	0	0	0	0
4/25/2024	10:15 PM	0	0	0	0	0	0	0	0	0	0	0	0	0
4/25/2024	10:30 PM	0	0	0	0	0	0	0	0	0	0	0	0	0
4/25/2024	10:45 PM	0	0	0	0	0	0	0	0	0	0	0	0	0
4/25/2024	11:00 PM	0	0	0	0	0	0	0	0	0	0	0	0	0
4/25/2024	11:15 PM	0	0	0	0	0	0	0	0	0	0	0	0	0
4/25/2024	11:30 PM	0	0	0	0	0	0	0	0	0	0	0	0	0
4/25/2024	11:45 PM	0	0	0	0	0	0	0	0	0	0	0	0	0

Bi-Directional Class Count || SB WB 15min

Columbia, SC

Marr Traffic DATA COLLECTION
www.marrtraffic.com

Site 42
I-126 On/Off-Ramp,
south of W Colonial Life Rd

Date
Tuesday, April 23, 2024

Lat/Long
34.020236°, -81.094372°

Weather
Fair
58°F

Click here for Detailed Weather

Click here for Map

0000 - 2400 (Weekday 24h Session) (04-23-2024)
SB WB 15min

	Southbound (Movement 42.1)													15min	60min
Time	1	2	3	4	5	6	7	8	9	10	11	12	13	Total	Total
0000 - 0015	0	0	0	0	0	0	0	0	0	0	0	0	0	**0**	
0015 - 0030	0	0	0	0	0	0	0	0	0	0	0	0	0	**0**	
0030 - 0045	0	0	0	0	0	0	0	0	0	0	0	0	0	**0**	
0045 - 0100	0	0	0	0	0	0	0	0	0	0	0	0	0	**0**	**0**
0100 - 0115	0	0	0	0	0	0	0	0	0	0	0	0	0	**0**	
0115 - 0130	0	0	0	0	0	0	0	0	0	0	0	0	0	**0**	
0130 - 0145	0	0	0	0	0	0	0	0	0	0	0	0	0	**0**	
0145 - 0200	0	0	0	0	0	0	0	0	0	0	0	0	0	**0**	**0**
0200 - 0215	0	0	0	0	0	0	0	0	0	0	0	0	0	**0**	
0215 - 0230	0	0	0	0	0	0	0	0	0	0	0	0	0	**0**	
0230 - 0245	0	0	0	0	0	0	0	0	0	0	0	0	0	**0**	
0245 - 0300	0	0	0	0	0	0	0	0	0	0	0	0	0	**0**	**0**
0300 - 0315	0	0	0	0	0	0	0	0	0	0	0	0	0	**0**	
0315 - 0330	0	0	0	0	0	0	0	0	0	0	0	0	0	**0**	
0330 - 0345	0	0	0	0	0	0	0	0	0	0	0	0	0	**0**	
0345 - 0400	0	0	0	0	0	0	0	0	0	0	0	0	0	**0**	**0**
0400 - 0415	0	0	0	0	0	0	0	0	0	0	0	0	0	**0**	
0415 - 0430	0	0	0	0	0	0	0	0	0	0	0	0	0	**0**	
0430 - 0445	0	0	0	0	0	0	0	0	0	0	0	0	0	**0**	
0445 - 0500	0	0	0	0	0	0	0	0	0	0	0	0	0	**0**	**0**
0500 - 0515	0	0	0	0	0	0	0	0	0	0	0	0	0	**0**	
0515 - 0530	0	0	0	0	0	0	0	0	0	0	0	0	0	**0**	
0530 - 0545	0	0	0	0	0	0	0	0	0	0	0	0	0	**0**	
0545 - 0600	0	0	0	0	0	0	0	0	0	0	0	0	0	**0**	**0**
0600 - 0615	0	0	0	0	0	0	0	0	0	0	0	0	0	**0**	
0615 - 0630	0	0	0	0	0	0	0	0	0	0	0	0	0	**0**	
0630 - 0645	0	0	0	0	0	0	0	0	0	0	0	0	0	**0**	
0645 - 0700	0	0	0	0	0	0	0	0	0	0	0	0	0	**0**	**0**
0700 - 0715	0	0	0	0	0	0	0	0	0	0	0	0	0	**0**	
0715 - 0730	0	0	0	0	0	0	0	0	0	0	0	0	0	**0**	
0730 - 0745	0	0	0	0	0	0	0	0	0	0	0	0	0	**0**	
0745 - 0800	0	0	0	0	0	0	0	0	0	0	0	0	0	**0**	**0**
0800 - 0815	0	0	0	0	0	0	0	0	0	0	0	0	0	**0**	
0815 - 0830	0	0	0	0	0	0	0	0	0	0	0	0	0	**0**	
0830 - 0845	0	0	0	0	0	0	0	0	0	0	0	0	0	**0**	
0845 - 0900	0	0	0	0	0	0	0	0	0	0	0	0	0	**0**	**0**
0900 - 0915	0	0	0	0	0	0	0	0	0	0	0	0	0	**0**	
0915 - 0930	0	0	0	0	0	0	0	0	0	0	0	0	0	**0**	
0930 - 0945	0	0	0	0	0	0	0	0	0	0	0	0	0	**0**	
0945 - 1000	0	0	0	0	0	0	0	0	0	0	0	0	0	**0**	**0**
1000 - 1015	0	0	0	0	0	0	0	0	0	0	0	0	0	**0**	
1015 - 1030	0	0	0	0	0	0	0	0	0	0	0	0	0	**0**	
1030 - 1045	0	0	0	0	0	0	0	0	0	0	0	0	0	**0**	
1045 - 1100	0	0	0	0	0	0	0	0	0	0	0	0	0	**0**	**0**
1100 - 1115	0	0	0	0	0	0	0	0	0	0	0	0	0	**0**	
1115 - 1130	0	0	0	0	0	0	0	0	0	0	0	0	0	**0**	
1130 - 1145	0	0	0	0	0	0	0	0	0	0	0	0	0	**0**	
1145 - 1200	0	0	0	0	0	0	0	0	0	0	0	0	0	**0**	**0**
1200 - 1215	0	0	0	0	0	0	0	0	0	0	0	0	0	**0**	
1215 - 1230	0	0	0	0	0	0	0	0	0	0	0	0	0	**0**	
1230 - 1245	0	0	0	0	0	0	0	0	0	0	0	0	0	**0**	
1245 - 1300	0	0	0	0	0	0	0	0	0	0	0	0	0	**0**	**0**
1300 - 1315	0	0	0	0	0	0	0	0	0	0	0	0	0	**0**	
1315 - 1330	0	0	0	0	0	0	0	0	0	0	0	0	0	**0**	
1330 - 1345	0	0	0	0	0	0	0	0	0	0	0	0	0	**0**	
1345 - 1400	0	0	0	0	0	0	0	0	0	0	0	0	0	**0**	**0**
1400 - 1415	0	0	0	0	0	0	0	0	0	0	0	0	0	**0**	
1415 - 1430	0	0	0	0	0	0	0	0	0	0	0	0	0	**0**	
1430 - 1445	0	0	0	0	0	0	0	0	0	0	0	0	0	**0**	
1445 - 1500	0	0	0	0	0	0	0	0	0	0	0	0	0	**0**	**0**
1500 - 1515	0	0	0	0	0	0	0	0	0	0	0	0	0	**0**	
1515 - 1530	0	0	0	0	0	0	0	0	0	0	0	0	0	**0**	
1530 - 1545	0	0	0	0	0	0	0	0	0	0	0	0	0	**0**	
1545 - 1600	0	0	0	0	0	0	0	0	0	0	0	0	0	**0**	**0**
1600 - 1615	0	0	0	0	0	0	0	0	0	0	0	0	0	**0**	
1615 - 1630	0	0	0	0	0	0	0	0	0	0	0	0	0	**0**	
1630 - 1645	0	0	0	0	0	0	0	0	0	0	0	0	0	**0**	
1645 - 1700	0	0	0	0	0	0	0	0	0	0	0	0	0	**0**	**0**
1700 - 1715	0	0	0	0	0	0	0	0	0	0	0	0	0	**0**	
1715 - 1730	0	0	0	0	0	0	0	0	0	0	0	0	0	**0**	
1730 - 1745	0	0	0	0	0	0	0	0	0	0	0	0	0	**0**	
1745 - 1800	0	0	0	0	0	0	0	0	0	0	0	0	0	**0**	**0**
1800 - 1815	0	0	0	0	0	0	0	0	0	0	0	0	0	**0**	
1815 - 1830	0	0	0	0	0	0	0	0	0	0	0	0	0	**0**	
1830 - 1845	0	0	0	0	0	0	0	0	0	0	0	0	0	**0**	
1845 - 1900	0	0	0	0	0	0	0	0	0	0	0	0	0	**0**	**0**
1900 - 1915	0	15	5	0	0	0	0	0	0	0	0	0	0	**20**	
1915 - 1930	0	24	4	0	0	0	0	0	0	0	0	0	0	**28**	
1930 - 1945	0	11	4	0	0	0	0	0	0	0	0	0	0	**15**	
1945 - 2000	1	17	5	0	0	0	0	0	0	0	0	0	0	**23**	**86**
2000 - 2015	0	22	3	0	0	0	0	0	0	0	0	0	0	**25**	
2015 - 2030	0	12	2	0	0	0	0	0	0	0	0	0	0	**14**	
2030 - 2045	0	18	8	0	2	0	0	0	0	0	0	0	0	**28**	
2045 - 2100	0	13	3	0	0	0	0	0	0	0	0	0	0	**16**	**83**
2100 - 2115	0	11	4	0	0	0	0	0	0	0	0	0	0	**15**	
2115 - 2130	0	19	3	0	0	0	0	0	0	0	0	0	0	**22**	
2130 - 2145	0	9	2	0	0	0	0	0	0	0	0	0	0	**11**	
2145 - 2200	0	8	3	0	0	0	0	0	0	0	0	0	0	**11**	**59**
2200 - 2215	0	3	2	0	0	0	0	0	0	0	0	0	0	**5**	
2215 - 2230	0	6	2	0	0	0	0	0	0	0	0	0	0	**8**	
2230 - 2245	0	8	3	0	0	0	0	0	0	0	0	0	0	**11**	
2245 - 2300	0	4	2	0	0	0	0	0	0	0	0	0	0	**6**	**30**
2300 - 2315	0	5	3	0	0	0	0	0	0	0	0	0	0	**8**	
2315 - 2330	0	4	2	0	0	0	0	0	0	0	0	0	0	**6**	
2330 - 2345	0	5	3	0	0	0	0	0	0	0	0	0	0	**8**	
2345 - 0000	0	6	2	0	0	0	0	0	0	0	0	0	0	**8**	**30**

Session Total	1	220	65	0	2	0	0	0	0	0	0	0	0	**288**
Session Average	0.01	2.29	0.68	0.00	0.02	0.00	0.00	0.00	0.00	0.00	0.00	0.00	0.00	**3.00**
Session Percentage	0.35	76.39	22.57	0.00	0.69	0.00	0.00	0.00	0.00	0.00	0.00	0.00	0.00	

AM Peak Hour	-	-	-	-	-	-	-	-	-	-	-	-	-	-
AM Peak Volume	0	0	0	0	0	0	0	0	0	0	0	0	0	**0**

Noon Peak Hour	-	-	-	-	-	-	-	-	-	-	-	-	-	-
Noon Peak Volume	0	0	0	0	0	0	0	0	0	0	0	0	0	**0**

PM Peak Hour	1900 - 2000	1915 - 2015	1900 - 2000	-	1945 - 2045	-	-	-	-	-	-	-	-	**1915 - 2015**
PM Peak Volume	1	74	18	0	2	0	0	0	0	0	0	0	0	**91**

Site 42
I-126 On/Off-Ramp,
south of W Colonial Life Rd

Date
Wednesday, April 24, 2024

Lat/Long
34.020236°, -81.094372°

Weather
Fair
66°F

Click here for Detailed Weather

0000 - 2400 (Weekday 24h Session) (04-24-2024)
SB WB 15min

	Southbound (Movement 42.1)													15min	60min
Time	1	2	3	4	5	6	7	8	9	10	11	12	13	Total	Total
0000 - 0015	0	5	2	0	0	0	0	0	0	0	0	0	0	**7**	
0015 - 0030	0	4	1	0	0	0	0	0	0	0	0	0	0	**5**	
0030 - 0045	0	3	1	0	0	0	0	0	0	0	0	0	0	**4**	
0045 - 0100	0	6	1	0	0	0	0	0	0	0	0	0	0	**7**	**23**
0100 - 0115	0	4	1	0	0	0	0	0	0	0	0	0	0	**5**	
0115 - 0130	0	2	1	0	0	0	0	0	0	0	0	0	0	**3**	
0130 - 0145	0	5	1	0	0	0	0	0	0	0	0	0	0	**6**	
0145 - 0200	0	4	2	0	0	0	0	0	0	0	0	0	0	**6**	**20**
0200 - 0215	0	6	1	0	0	0	0	0	0	0	0	0	0	**7**	
0215 - 0230	0	4	1	0	0	0	0	0	0	0	0	0	0	**5**	
0230 - 0245	0	3	1	0	0	0	0	0	0	0	0	0	0	**4**	
0245 - 0300	0	2	1	0	0	0	0	0	0	0	0	0	0	**3**	**19**
0300 - 0315	0	4	1	0	0	0	0	0	0	0	0	0	0	**5**	
0315 - 0330	0	2	1	0	0	0	0	0	0	0	0	0	0	**3**	
0330 - 0345	0	2	1	0	0	0	0	0	0	0	0	0	0	**3**	
0345 - 0400	0	2	1	0	0	0	0	0	0	0	0	0	0	**3**	**14**
0400 - 0415	0	2	1	0	0	0	0	0	0	0	0	0	0	**3**	
0415 - 0430	0	1	1	0	0	0	0	0	0	0	0	0	0	**2**	
0430 - 0445	0	3	1	0	0	0	0	0	0	0	0	0	0	**4**	
0445 - 0500	0	5	1	0	0	0	0	0	0	0	0	0	0	**6**	**15**
0500 - 0515	0	8	1	0	0	0	0	0	0	0	0	0	0	**9**	
0515 - 0530	0	10	1	0	0	0	0	0	0	0	0	0	0	**11**	
0530 - 0545	0	9	1	0	0	0	0	0	0	0	0	0	0	**10**	
0545 - 0600	0	11	1	0	0	0	0	0	0	0	0	0	0	**12**	**42**
0600 - 0615	0	15	2	0	1	0	0	0	0	0	0	0	0	**18**	
0615 - 0630	0	17	3	0	0	0	0	0	0	0	0	0	0	**20**	
0630 - 0645	0	20	5	0	0	0	0	0	0	0	0	0	0	**25**	
0645 - 0700	0	22	7	0	0	3	0	0	0	0	0	0	0	**32**	**95**
0700 - 0715	0	39	10	1	0	0	0	0	0	0	0	0	0	**50**	
0715 - 0730	0	42	17	0	0	1	0	0	0	0	0	0	0	**60**	
0730 - 0745	0	55	22	0	0	0	0	0	0	0	0	0	0	**77**	
0745 - 0800	0	75	22	0	0	0	0	0	0	0	0	0	0	**97**	**284**
0800 - 0815	0	72	13	0	0	0	0	0	0	0	0	0	0	**85**	
0815 - 0830	0	79	15	0	1	0	0	0	0	0	0	0	0	**95**	
0830 - 0845	0	69	14	0	0	0	0	0	0	0	0	0	0	**83**	
0845 - 0900	0	61	12	0	0	0	1	0	1	0	0	0	0	**75**	**338**
0900 - 0915	0	45	7	0	0	0	0	0	0	0	0	0	0	**52**	
0915 - 0930	0	41	9	0	0	0	0	0	0	0	0	0	0	**50**	
0930 - 0945	0	40	11	0	0	0	0	0	0	0	0	0	0	**51**	
0945 - 1000	0	39	8	0	0	0	1	0	1	0	0	0	0	**49**	**202**
1000 - 1015	0	39	10	0	0	0	0	0	0	0	0	0	0	**49**	
1015 - 1030	0	36	9	2	0	0	0	0	1	0	0	0	0	**48**	
1030 - 1045	1	38	7	0	1	0	0	0	0	0	0	0	0	**47**	
1045 - 1100	0	45	11	0	0	0	1	0	0	0	0	0	0	**57**	**201**
1100 - 1115	0	45	9	1	1	0	0	0	0	0	0	0	0	**56**	
1115 - 1130	0	42	9	0	0	1	1	0	0	0	0	0	0	**53**	
1130 - 1145	0	45	7	0	0	1	0	0	1	0	0	0	0	**54**	
1145 - 1200	0	44	9	0	0	0	1	0	0	0	0	0	0	**54**	**217**
1200 - 1215	0	45	5	0	0	0	0	1	1	0	0	0	0	**52**	
1215 - 1230	0	44	6	0	0	0	1	0	0	0	0	0	0	**51**	
1230 - 1245	0	42	5	0	0	1	0	0	0	1	0	0	0	**49**	
1245 - 1300	1	41	5	0	0	0	1	0	1	0	0	0	0	**49**	**201**
1300 - 1315	0	49	7	0	0	0	0	1	0	0	0	0	0	**57**	
1315 - 1330	1	47	7	0	0	1	0	0	1	0	0	0	0	**57**	
1330 - 1345	0	45	6	2	0	0	1	0	0	0	0	0	0	**54**	
1345 - 1400	1	44	7	1	0	0	1	0	0	0	0	0	0	**54**	**222**
1400 - 1415	0	46	7	0	0	0	0	0	1	0	0	0	0	**54**	
1415 - 1430	0	44	6	1	0	1	0	0	0	0	0	0	0	**52**	
1430 - 1445	0	41	8	0	0	0	0	0	0	0	0	0	0	**49**	
1445 - 1500	0	39	6	1	0	0	0	0	0	0	0	0	0	**46**	**201**
1500 - 1515	0	49	6	1	1	0	0	0	0	0	0	0	0	**57**	
1515 - 1530	0	47	9	0	0	0	0	0	0	0	0	0	0	**56**	
1530 - 1545	0	48	4	0	1	0	0	0	0	0	0	0	0	**53**	
1545 - 1600	0	44	6	1	0	0	0	0	0	0	0	0	0	**51**	**217**
1600 - 1615	0	49	8	0	2	1	0	0	0	0	0	0	0	**60**	
1615 - 1630	0	45	6	1	0	0	0	0	1	0	0	0	0	**53**	
1630 - 1645	0	47	7	0	1	0	0	0	0	0	0	0	0	**55**	
1645 - 1700	1	41	9	0	0	1	0	0	0	0	0	0	0	**52**	**220**
1700 - 1715	0	52	10	0	0	0	0	0	0	0	0	0	0	**62**	
1715 - 1730	0	62	9	1	2	0	0	0	0	0	0	0	0	**74**	
1730 - 1745	0	59	7	0	1	0	0	0	0	0	0	0	0	**67**	
1745 - 1800	0	50	6	0	0	0	0	0	0	0	0	0	0	**56**	**259**
1800 - 1815	0	49	7	0	0	0	0	0	0	0	0	0	0	**56**	
1815 - 1830	0	45	6	0	1	0	0	0	0	0	0	0	0	**52**	
1830 - 1845	0	41	6	1	0	0	0	0	0	0	0	0	0	**48**	
1845 - 1900	0	35	12	0	0	0	1	0	0	0	0	0	0	**48**	**204**
1900 - 1915	0	21	6	0	0	0	0	0	0	0	0	0	0	**27**	
1915 - 1930	0	25	5	0	1	0	0	1	0	0	0	0	0	**32**	
1930 - 1945	0	23	3	0	2	0	0	0	0	0	0	0	0	**28**	
1945 - 2000	0	29	7	1	0	0	0	1	0	0	0	0	0	**38**	**125**
2000 - 2015	0	26	7	0	0	0	0	0	0	0	0	0	0	**33**	
2015 - 2030	0	24	4	0	1	0	0	0	0	0	0	0	0	**29**	
2030 - 2045	0	29	3	0	2	0	0	0	0	0	0	0	0	**34**	
2045 - 2100	0	30	6	0	0	0	0	0	0	0	0	0	0	**36**	**132**
2100 - 2115	0	21	5	0	0	0	0	0	0	0	0	0	0	**26**	
2115 - 2130	0	19	3	0	0	0	0	0	0	0	0	0	0	**22**	
2130 - 2145	0	10	3	0	0	0	0	0	0	0	0	0	0	**13**	
2145 - 2200	0	11	2	0	0	0	0	0	0	0	0	0	0	**13**	**74**
2200 - 2215	0	15	3	0	0	0	0	0	0	0	0	0	0	**18**	
2215 - 2230	0	11	2	0	0	0	0	0	0	0	0	0	0	**13**	
2230 - 2245	0	10	2	0	0	0	0	0	0	0	0	0	0	**12**	
2245 - 2300	0	10	1	0	0	0	0	0	0	0	0	0	0	**11**	**54**
2300 - 2315	0	10	1	0	0	0	0	0	0	0	0	0	0	**11**	
2315 - 2330	0	8	1	0	0	0	0	0	0	0	0	0	0	**9**	
2330 - 2345	0	9	1	0	0	0	0	0	0	0	0	0	0	**10**	
2345 - 0000	0	9	1	0	1	0	0	0	0	0	0	0	0	**11**	**41**

Session Total	5	2812	533	15	20	11	10	4	9	1	0	0	0	**3420**
Session Average	0.05	29.29	5.55	0.16	0.21	0.11	0.10	0.04	0.09	0.01	0.00	0.00	0.00	**35.63**
Session Percentage	0.15	82.22	15.58	0.44	0.58	0.32	0.29	0.12	0.26	0.03	0.00	0.00	0.00	

AM Peak Hour	0945 - 1045	0745 - 0845	0715 - 0815	0930 - 1030	0515 - 0615	0630 - 0730	0800 - 0900	-	0930 - 1030	-	-	-	-	**0745 - 0845**
AM Peak Volume	1	295	74	2	1	4	1	0	2	0	0	0	0	**360**

Noon Peak Hour	1230 - 1330	1300 - 1400	1000 - 1100	1330 - 1430	1015 - 1115	1045 - 1145	1030 - 1130	1115 - 1215	1115 - 1215	1145 - 1245	-	-	-	**1300 - 1400**
Noon Peak Volume	2	185	37	4	2	2	2	1	2	1	0	0	0	**222**

PM Peak Hour	1600 - 1700	1700 - 1800	1630 - 1730	1500 - 1600	1515 - 1615	1600 - 1700	1800 - 1900	1900 - 2000	1530 - 1630	-	-	-	-	**1700 - 1800**
PM Peak Volume	1	223	35	2	3	2	1	2	1	0	0	0	0	**259**

Site 42
I-126 On/Off-Ramp,
south of W Colonial Life Rd

Date
Thursday, April 25, 2024

Lat/Long
34.020236°, -81.094372°

Weather
Fair
67°F

Click here for Detailed Weather

0000 - 2400 (Weekday 24h Session) (04-25-2024)
SB WB 15min

	Southbound (Movement 42.1)													15min	60min
TIME	1	2	3	4	5	6	7	8	9	10	11	12	13	Total	Total
0000 - 0015	0	2	0	0	0	0	0	0	0	0	0	0	0	**2**	
0015 - 0030	0	4	0	0	0	0	0	0	0	0	0	0	0	**4**	
0030 - 0045	0	2	0	0	0	0	0	0	0	0	0	0	0	**2**	
0045 - 0100	0	5	0	0	0	0	0	0	0	0	0	0	0	**5**	**13**
0100 - 0115	0	7	0	0	0	0	0	0	0	0	0	0	0	**7**	
0115 - 0130	0	1	0	0	0	0	0	0	0	0	0	0	0	**1**	
0130 - 0145	0	1	0	0	0	0	0	0	0	0	0	0	0	**1**	
0145 - 0200	0	2	0	0	0	0	0	0	0	0	0	0	0	**2**	**11**
0200 - 0215	0	1	0	0	0	0	0	0	0	0	0	0	0	**1**	
0215 - 0230	0	0	0	0	1	0	0	0	0	0	0	0	0	**1**	
0230 - 0245	0	1	0	0	0	0	0	0	0	0	0	0	0	**1**	
0245 - 0300	0	2	0	0	0	0	0	0	0	0	0	0	0	**2**	**5**
0300 - 0315	0	2	0	0	0	0	0	0	0	0	0	0	0	**2**	
0315 - 0330	0	5	0	0	0	0	0	0	0	0	0	0	0	**5**	
0330 - 0345	0	2	0	0	0	0	0	0	0	0	0	0	0	**2**	
0345 - 0400	0	5	0	0	0	0	0	0	0	0	0	0	0	**5**	**14**
0400 - 0415	0	1	0	0	0	0	0	0	0	0	0	0	0	**1**	
0415 - 0430	0	5	0	0	0	0	0	0	0	0	0	0	0	**5**	
0430 - 0445	0	4	0	0	0	0	0	0	0	0	0	0	0	**4**	
0445 - 0500	0	3	0	0	0	0	0	0	0	0	0	0	0	**3**	**13**
0500 - 0515	0	0	0	0	0	0	0	0	0	0	0	0	0	**0**	
0515 - 0530	0	8	0	0	0	0	0	0	0	0	0	0	0	**8**	
0530 - 0545	0	8	0	0	0	0	0	0	0	0	0	0	0	**8**	
0545 - 0600	0	6	0	0	0	0	0	0	0	0	0	0	0	**6**	**22**
0600 - 0615	0	5	0	0	0	0	0	0	0	0	0	0	0	**5**	
0615 - 0630	0	14	4	0	0	0	0	0	0	0	0	0	0	**18**	
0630 - 0645	1	20	5	0	0	0	0	0	0	0	0	0	0	**26**	
0645 - 0700	0	24	6	0	0	0	0	0	0	0	0	0	0	**30**	**79**
0700 - 0715	1	41	4	1	1	0	0	0	0	0	0	0	0	**48**	
0715 - 0730	0	65	8	0	0	1	1	0	0	0	0	0	0	**75**	
0730 - 0745	0	80	9	0	1	0	0	0	0	0	0	0	0	**90**	
0745 - 0800	0	80	20	0	0	0	0	0	0	0	0	0	0	**100**	**313**
0800 - 0815	0	61	17	0	0	5	0	0	0	0	0	0	0	**83**	
0815 - 0830	0	63	8	0	0	0	0	0	0	0	0	0	0	**71**	
0830 - 0845	0	49	10	0	1	0	0	0	0	0	0	0	0	**60**	
0845 - 0900	0	41	7	0	0	0	0	0	0	0	0	0	0	**48**	**262**
0900 - 0915	0	20	5	0	0	2	0	0	0	0	0	0	0	**27**	
0915 - 0930	0	26	3	0	0	1	0	0	0	0	0	0	0	**30**	
0930 - 0945	0	20	7	0	0	0	0	0	0	0	0	0	0	**27**	
0945 - 1000	0	28	3	0	0	0	1	0	0	0	0	0	0	**32**	**116**
1000 - 1015	0	24	8	0	0	1	0	0	1	0	0	0	0	**34**	
1015 - 1030	0	18	2	0	1	5	0	0	0	0	0	0	0	**26**	
1030 - 1045	0	25	11	0	0	3	0	0	0	0	0	0	0	**39**	
1045 - 1100	0	21	12	0	0	0	0	0	0	0	0	0	0	**33**	**132**
1100 - 1115	0	37	4	0	0	0	0	0	0	0	0	0	0	**41**	
1115 - 1130	0	25	7	0	0	0	0	0	0	0	0	0	0	**32**	
1130 - 1145	0	45	8	0	0	0	0	0	0	0	0	0	0	**53**	
1145 - 1200	0	40	9	0	0	0	0	0	1	0	0	0	0	**50**	**176**
1200 - 1215	0	34	8	0	0	0	0	0	1	0	0	0	0	**43**	
1215 - 1230	0	41	3	0	1	0	0	1	0	0	0	0	0	**46**	
1230 - 1245	0	33	11	0	0	0	0	0	0	0	0	0	0	**44**	
1245 - 1300	0	37	4	0	0	0	0	0	0	0	0	0	0	**41**	**174**
1300 - 1315	0	41	8	0	0	0	0	0	0	0	0	0	0	**49**	
1315 - 1330	0	45	11	0	0	0	0	0	0	0	0	0	0	**56**	
1330 - 1345	0	45	10	0	1	0	0	0	0	0	0	0	0	**56**	
1345 - 1400	0	48	4	0	2	0	0	0	0	0	0	0	0	**54**	**215**
1400 - 1415	0	40	6	0	0	0	0	0	0	0	0	0	0	**46**	
1415 - 1430	0	41	4	0	0	0	0	0	0	0	0	0	0	**45**	
1430 - 1445	0	30	5	0	0	0	0	0	0	0	0	0	0	**35**	
1445 - 1500	0	33	8	0	0	0	0	0	0	0	0	0	0	**41**	**167**
1500 - 1515	0	42	8	0	0	0	0	0	0	0	0	0	0	**50**	
1515 - 1530	0	40	9	0	0	0	0	0	0	0	0	0	0	**49**	
1530 - 1545	0	48	7	0	2	0	0	0	0	0	0	0	0	**57**	
1545 - 1600	0	34	8	0	0	0	0	0	0	0	0	0	0	**42**	**198**
1600 - 1615	0	31	7	0	0	0	0	0	0	0	0	0	0	**38**	
1615 - 1630	1	51	6	0	1	0	0	0	0	0	0	0	0	**59**	
1630 - 1645	0	56	5	0	1	0	0	0	0	0	0	0	0	**62**	
1645 - 1700	0	58	9	0	1	0	0	0	0	0	0	0	0	**68**	**227**
1700 - 1715	0	62	5	0	0	0	0	0	0	0	0	0	0	**67**	
1715 - 1730	0	53	8	0	0	0	0	0	0	0	0	0	0	**61**	
1730 - 1745	1	51	5	0	2	0	0	0	0	0	0	0	0	**59**	
1745 - 1800	0	33	3	0	0	0	0	0	0	0	0	0	0	**36**	**223**
1800 - 1815	0	34	4	0	0	0	0	0	0	0	0	0	0	**38**	
1815 - 1830	0	29	4	0	0	0	0	0	0	0	0	0	0	**33**	
1830 - 1845	0	28	4	0	1	0	0	0	0	0	0	0	0	**33**	
1845 - 1900	0	20	5	0	0	0	0	0	0	0	0	0	0	**25**	**129**
1900 - 1915	0	0	0	0	0	0	0	0	0	0	0	0	0	**0**	
1915 - 1930	0	0	0	0	0	0	0	0	0	0	0	0	0	**0**	
1930 - 1945	0	0	0	0	0	0	0	0	0	0	0	0	0	**0**	
1945 - 2000	0	0	0	0	0	0	0	0	0	0	0	0	0	**0**	**0**
2000 - 2015	0	0	0	0	0	0	0	0	0	0	0	0	0	**0**	
2015 - 2030	0	0	0	0	0	0	0	0	0	0	0	0	0	**0**	
2030 - 2045	0	0	0	0	0	0	0	0	0	0	0	0	0	**0**	
2045 - 2100	0	0	0	0	0	0	0	0	0	0	0	0	0	**0**	**0**
2100 - 2115	0	0	0	0	0	0	0	0	0	0	0	0	0	**0**	
2115 - 2130	0	0	0	0	0	0	0	0	0	0	0	0	0	**0**	
2130 - 2145	0	0	0	0	0	0	0	0	0	0	0	0	0	**0**	
2145 - 2200	0	0	0	0	0	0	0	0	0	0	0	0	0	**0**	**0**
2200 - 2215	0	0	0	0	0	0	0	0	0	0	0	0	0	**0**	
2215 - 2230	0	0	0	0	0	0	0	0	0	0	0	0	0	**0**	
2230 - 2245	0	0	0	0	0	0	0	0	0	0	0	0	0	**0**	
2245 - 2300	0	0	0	0	0	0	0	0	0	0	0	0	0	**0**	**0**
2300 - 2315	0	0	0	0	0	0	0	0	0	0	0	0	0	**0**	
2315 - 2330	0	0	0	0	0	0	0	0	0	0	0	0	0	**0**	
2330 - 2345	0	0	0	0	0	0	0	0	0	0	0	0	0	**0**	
2345 - 0000	0	0	0	0	0	0	0	0	0	0	0	0	0	**0**	**0**

Session Total	4	2087	356	1	17	18	2	1	3	0	0	0	0	**2489**
Session Average	0.04	21.74	3.71	0.01	0.18	0.19	0.02	0.01	0.03	0.00	0.00	0.00	0.00	**25.93**
Session Percentage	0.16	83.85	14.30	0.04	0.68	0.72	0.08	0.04	0.12	0.00	0.00	0.00	0.00	

AM Peak Hour	0615 - 0715	0715 - 0815	0745 - 0845	0615 - 0715	0645 - 0745	0945 - 1045	0630 - 0730	-	0915 - 1015	-	-	-	-	**0715 - 0815**
AM Peak Hour Volume	2	286	55	1	2	9	1	0	1	0	0	0	0	**348**

Noon Peak Hour	-	1300 - 1400	1030 - 1130	-	1300 - 1400	1000 - 1100	-	1130 - 1230	1115 - 1215	-	-	-	-	**1300 - 1400**
Noon Peak Hour Volume	0	179	34	0	3	9	0	1	2	0	0	0	0	**215**

PM Peak Hour	1530 - 1630	1630 - 1730	1500 - 1600	-	1530 - 1630	-	-	-	-	-	-	-	-	**1630 - 1730**
PM Peak Hour Volume	1	229	32	0	3	0	0	0	0	0	0	0	0	**258**

Bi-Directional Class Count || SB WB Average 15min

Columbia, SC

Marr Traffic DATA COLLECTION
www.marrtraffic.com

Site 42
I-126 On/Off-Ramp,
south of W Colonial Life Rd

Date
Tuesday, April 23, 2024

Lat/Long
34.020236°, -81.094372°

Weather
Fair
58°F

0000 - 2400 (Weekday 24h Session) (All Dates)
SB WB Average 15min

	SB WB Average 15min													15min	60min
Time	1	2	3	4	5	6	7	8	9	10	11	12	13	Total	Total
0000 - 0015	0	2	1	0	0	0	0	0	0	0	0	0	0	**3**	
0015 - 0030	0	3	0	0	0	0	0	0	0	0	0	0	0	**3**	
0030 - 0045	0	2	0	0	0	0	0	0	0	0	0	0	0	**2**	
0045 - 0100	0	4	0	0	0	0	0	0	0	0	0	0	0	**4**	**12**
0100 - 0115	0	4	0	0	0	0	0	0	0	0	0	0	0	**4**	
0115 - 0130	0	1	0	0	0	0	0	0	0	0	0	0	0	**1**	
0130 - 0145	0	2	0	0	0	0	0	0	0	0	0	0	0	**2**	
0145 - 0200	0	2	1	0	0	0	0	0	0	0	0	0	0	**3**	**10**
0200 - 0215	0	2	0	0	0	0	0	0	0	0	0	0	0	**3**	
0215 - 0230	0	1	0	0	0	0	0	0	0	0	0	0	0	**2**	
0230 - 0245	0	1	0	0	0	0	0	0	0	0	0	0	0	**2**	
0245 - 0300	0	1	0	0	0	0	0	0	0	0	0	0	0	**2**	**8**
0300 - 0315	0	2	0	0	0	0	0	0	0	0	0	0	0	**2**	
0315 - 0330	0	2	0	0	0	0	0	0	0	0	0	0	0	**3**	
0330 - 0345	0	1	0	0	0	0	0	0	0	0	0	0	0	**2**	
0345 - 0400	0	2	0	0	0	0	0	0	0	0	0	0	0	**3**	**9**
0400 - 0415	0	1	0	0	0	0	0	0	0	0	0	0	0	**1**	
0415 - 0430	0	2	0	0	0	0	0	0	0	0	0	0	0	**2**	
0430 - 0445	0	2	0	0	0	0	0	0	0	0	0	0	0	**3**	
0445 - 0500	0	3	0	0	0	0	0	0	0	0	0	0	0	**3**	**9**
0500 - 0515	0	3	0	0	0	0	0	0	0	0	0	0	0	**3**	
0515 - 0530	0	6	0	0	0	0	0	0	0	0	0	0	0	**6**	
0530 - 0545	0	6	0	0	0	0	0	0	0	0	0	0	0	**6**	
0545 - 0600	0	6	0	0	0	0	0	0	0	0	0	0	0	**6**	**21**
0600 - 0615	0	7	1	0	0	0	0	0	0	0	0	0	0	**8**	
0615 - 0630	0	10	2	0	0	0	0	0	0	0	0	0	0	**13**	
0630 - 0645	0	13	3	0	0	0	0	0	0	0	0	0	0	**17**	
0645 - 0700	0	15	4	0	0	1	0	0	0	0	0	0	0	**21**	**58**
0700 - 0715	0	27	5	1	0	0	0	0	0	0	0	0	0	**33**	
0715 - 0730	0	36	8	0	0	1	0	0	0	0	0	0	0	**45**	
0730 - 0745	0	45	10	0	0	0	0	0	0	0	0	0	0	**56**	
0745 - 0800	0	52	14	0	0	0	0	0	0	0	0	0	0	**66**	**199**
0800 - 0815	0	44	10	0	0	2	0	0	0	0	0	0	0	**56**	
0815 - 0830	0	47	8	0	0	0	0	0	0	0	0	0	0	**55**	
0830 - 0845	0	39	8	0	0	0	0	0	0	0	0	0	0	**48**	
0845 - 0900	0	34	6	0	0	0	0	0	0	0	0	0	0	**41**	**200**
0900 - 0915	0	22	4	0	0	1	0	0	0	0	0	0	0	**26**	
0915 - 0930	0	22	4	0	0	0	0	0	0	0	0	0	0	**27**	
0930 - 0945	0	20	6	0	0	0	0	0	0	0	0	0	0	**26**	
0945 - 1000	0	22	4	0	0	0	1	0	0	0	0	0	0	**27**	**106**
1000 - 1015	0	21	6	0	0	0	0	0	0	0	0	0	0	**28**	
1015 - 1030	0	18	4	1	0	2	0	0	0	0	0	0	0	**25**	
1030 - 1045	0	21	6	0	0	1	0	0	0	0	0	0	0	**29**	
1045 - 1100	0	22	8	0	0	0	0	0	0	0	0	0	0	**30**	**111**
1100 - 1115	0	27	4	0	0	0	0	0	0	0	0	0	0	**32**	
1115 - 1130	0	22	5	0	0	0	0	0	0	0	0	0	0	**28**	
1130 - 1145	0	30	5	0	0	0	0	0	0	0	0	0	0	**36**	
1145 - 1200	0	28	6	0	0	0	0	0	0	0	0	0	0	**35**	**131**
1200 - 1215	0	26	4	0	0	0	0	0	1	0	0	0	0	**32**	
1215 - 1230	0	28	3	0	0	0	0	0	0	0	0	0	0	**32**	
1230 - 1245	0	25	5	0	0	0	0	0	0	0	0	0	0	**31**	
1245 - 1300	0	26	3	0	0	0	0	0	0	0	0	0	0	**30**	**125**
1300 - 1315	0	30	5	0	0	0	0	0	0	0	0	0	0	**35**	
1315 - 1330	0	31	6	0	0	0	0	0	0	0	0	0	0	**38**	
1330 - 1345	0	30	5	1	0	0	0	0	0	0	0	0	0	**37**	
1345 - 1400	0	31	4	0	1	0	0	0	0	0	0	0	0	**36**	**146**
1400 - 1415	0	29	4	0	0	0	0	0	0	0	0	0	0	**33**	
1415 - 1430	0	28	3	0	0	0	0	0	0	0	0	0	0	**32**	
1430 - 1445	0	24	4	0	0	0	0	0	0	0	0	0	0	**28**	
1445 - 1500	0	24	5	0	0	0	0	0	0	0	0	0	0	**29**	**123**
1500 - 1515	0	30	5	0	0	0	0	0	0	0	0	0	0	**36**	
1515 - 1530	0	29	6	0	0	0	0	0	0	0	0	0	0	**35**	
1530 - 1545	0	32	4	0	1	0	0	0	0	0	0	0	0	**37**	
1545 - 1600	0	26	5	0	0	0	0	0	0	0	0	0	0	**31**	**138**
1600 - 1615	0	27	5	0	1	0	0	0	0	0	0	0	0	**33**	
1615 - 1630	0	32	4	0	0	0	0	0	0	0	0	0	0	**37**	
1630 - 1645	0	34	4	0	1	0	0	0	0	0	0	0	0	**39**	
1645 - 1700	0	33	6	0	0	0	0	0	0	0	0	0	0	**40**	**149**
1700 - 1715	0	38	5	0	0	0	0	0	0	0	0	0	0	**43**	
1715 - 1730	0	38	6	0	1	0	0	0	0	0	0	0	0	**45**	
1730 - 1745	0	37	4	0	1	0	0	0	0	0	0	0	0	**42**	
1745 - 1800	0	28	3	0	0	0	0	0	0	0	0	0	0	**31**	**161**
1800 - 1815	0	28	4	0	0	0	0	0	0	0	0	0	0	**31**	
1815 - 1830	0	25	3	0	0	0	0	0	0	0	0	0	0	**28**	
1830 - 1845	0	23	3	0	0	0	0	0	0	0	0	0	0	**27**	
1845 - 1900	0	18	6	0	0	0	0	0	0	0	0	0	0	**24**	**111**
1900 - 1915	0	12	4	0	0	0	0	0	0	0	0	0	0	**16**	
1915 - 1930	0	16	3	0	0	0	0	0	0	0	0	0	0	**20**	
1930 - 1945	0	11	2	0	1	0	0	0	0	0	0	0	0	**14**	
1945 - 2000	0	15	4	0	0	0	0	0	0	0	0	0	0	**20**	**70**
2000 - 2015	0	16	3	0	0	0	0	0	0	0	0	0	0	**19**	
2015 - 2030	0	12	2	0	0	0	0	0	0	0	0	0	0	**14**	
2030 - 2045	0	16	4	0	1	0	0	0	0	0	0	0	0	**21**	
2045 - 2100	0	14	3	0	0	0	0	0	0	0	0	0	0	**17**	**72**
2100 - 2115	0	11	3	0	0	0	0	0	0	0	0	0	0	**14**	
2115 - 2130	0	13	2	0	0	0	0	0	0	0	0	0	0	**15**	
2130 - 2145	0	6	2	0	0	0	0	0	0	0	0	0	0	**8**	
2145 - 2200	0	6	2	0	0	0	0	0	0	0	0	0	0	**8**	**44**
2200 - 2215	0	6	2	0	0	0	0	0	0	0	0	0	0	**8**	
2215 - 2230	0	6	1	0	0	0	0	0	0	0	0	0	0	**7**	
2230 - 2245	0	6	2	0	0	0	0	0	0	0	0	0	0	**8**	
2245 - 2300	0	5	1	0	0	0	0	0	0	0	0	0	0	**6**	**28**
2300 - 2315	0	5	1	0	0	0	0	0	0	0	0	0	0	**6**	
2315 - 2330	0	4	1	0	0	0	0	0	0	0	0	0	0	**5**	
2330 - 2345	0	5	1	0	0	0	0	0	0	0	0	0	0	**6**	
2345 - 0000	0	5	1	0	0	0	0	0	0	0	0	0	0	**6**	**24**

Session Total	3	1706	318	5	13	10	4	2	4	0	0	0	0	**2066**
Session Average	0.03	17.77	3.31	0.06	0.14	0.10	0.04	0.02	0.04	0.00	0.00	0.00	0.00	**21.52**
Session Percentage	0.16	82.60	15.39	0.26	0.63	0.47	0.19	0.08	0.19	0.02	0.00	0.00	0.00	

AM Peak Hour	0615 - 0715	0730 - 0830	0715 - 0815	0615 - 0715	0645 - 0745	0945 - 1045	0900 - 1000	-	0930 - 1030	-	-	-	-	**0730 - 0830**
AM Peak Volume	1	188	43	1	1	3	1	0	1	0	0	0	0	**233**

Noon Peak Hour	1230 - 1330	1300 - 1400	1000 - 1100	1330 - 1430	1445 - 1545	1000 - 1100	1030 - 1130	1130 - 1230	1115 - 1215	1145 - 1245	-	-	-	**1300 - 1400**
Noon Peak Volume	1	121	23	1	1	3	1	1	1	0	0	0	0	**146**

PM Peak Hour	1600 - 1700	1645 - 1745	1630 - 1730	1500 - 1600	1645 - 1745	1600 - 1700	1800 - 1900	1900 - 2000	1530 - 1630	-	-	-	-	**1645 - 1745**
PM Peak Volume	1	146	21	1	2	1	0	1	0	0	0	0	0	**170**

Bi-Directional Class Count || Volume Summary 15min

Columbia, SC

Marr Traffic DATA COLLECTION

www.marrtraffic.com

Site 42

I-126 On/Off-Ramp,
south of W Colonial Life Rd

Date

Tuesday, April 23, 2024

Lat/Long

34.020236°, -81.094372°

Weather

Fair
58°F

Click here for Detailed Weather

0000 - 2400 (Weekday 24h Session) (04-23-2024)

Volume Summary 15min

TIME	Volume Summary 15min NB	Volume Summary 15min SB	15min Total	60min Total
0000 - 0015	0	0	**0**	
0015 - 0030	0	0	**0**	
0030 - 0045	0	0	**0**	
0045 - 0100	0	0	**0**	**0**
0100 - 0115	0	0	**0**	
0115 - 0130	0	0	**0**	
0130 - 0145	0	0	**0**	
0145 - 0200	0	0	**0**	**0**
0200 - 0215	0	0	**0**	
0215 - 0230	0	0	**0**	
0230 - 0245	0	0	**0**	
0245 - 0300	0	0	**0**	**0**
0300 - 0315	0	0	**0**	
0315 - 0330	0	0	**0**	
0330 - 0345	0	0	**0**	
0345 - 0400	0	0	**0**	**0**
0400 - 0415	0	0	**0**	
0415 - 0430	0	0	**0**	
0430 - 0445	0	0	**0**	
0445 - 0500	0	0	**0**	**0**
0500 - 0515	0	0	**0**	
0515 - 0530	0	0	**0**	
0530 - 0545	0	0	**0**	
0545 - 0600	0	0	**0**	**0**
0600 - 0615	0	0	**0**	
0615 - 0630	0	0	**0**	
0630 - 0645	0	0	**0**	
0645 - 0700	0	0	**0**	**0**
0700 - 0715	0	0	**0**	
0715 - 0730	0	0	**0**	
0730 - 0745	0	0	**0**	
0745 - 0800	0	0	**0**	**0**
0800 - 0815	0	0	**0**	
0815 - 0830	0	0	**0**	
0830 - 0845	0	0	**0**	
0845 - 0900	0	0	**0**	**0**
0900 - 0915	0	0	**0**	
0915 - 0930	0	0	**0**	
0930 - 0945	0	0	**0**	
0945 - 1000	0	0	**0**	**0**
1000 - 1015	0	0	**0**	
1015 - 1030	0	0	**0**	
1030 - 1045	0	0	**0**	
1045 - 1100	0	0	**0**	**0**
1100 - 1115	0	0	**0**	
1115 - 1130	0	0	**0**	
1130 - 1145	0	0	**0**	
1145 - 1200	0	0	**0**	**0**

Time	Volume Summary 15min NB	Volume Summary 15min SB	15min Total	60min Total
1200 - 1215	0	0	**0**	
1215 - 1230	0	0	**0**	
1230 - 1245	0	0	**0**	
1245 - 1300	0	0	**0**	**0**
1300 - 1315	0	0	**0**	
1315 - 1330	0	0	**0**	
1330 - 1345	0	0	**0**	
1345 - 1400	0	0	**0**	**0**
1400 - 1415	0	0	**0**	
1415 - 1430	0	0	**0**	
1430 - 1445	0	0	**0**	
1445 - 1500	0	0	**0**	**0**
1500 - 1515	0	0	**0**	
1515 - 1530	0	0	**0**	
1530 - 1545	0	0	**0**	
1545 - 1600	0	0	**0**	**0**
1600 - 1615	0	0	**0**	
1615 - 1630	0	0	**0**	
1630 - 1645	0	0	**0**	
1645 - 1700	0	0	**0**	**0**
1700 - 1715	0	0	**0**	
1715 - 1730	0	0	**0**	
1730 - 1745	0	0	**0**	
1745 - 1800	0	0	**0**	**0**
1800 - 1815	0	0	**0**	
1815 - 1830	0	0	**0**	
1830 - 1845	0	0	**0**	
1845 - 1900	0	0	**0**	**0**
1900 - 1915	0	20	**20**	
1915 - 1930	0	28	**28**	
1930 - 1945	0	15	**15**	
1945 - 2000	0	23	**23**	**86**
2000 - 2015	0	25	**25**	
2015 - 2030	0	14	**14**	
2030 - 2045	0	28	**28**	
2045 - 2100	0	16	**16**	**83**
2100 - 2115	0	15	**15**	
2115 - 2130	0	22	**22**	
2130 - 2145	0	11	**11**	
2145 - 2200	0	11	**11**	**59**
2200 - 2215	0	5	**5**	
2215 - 2230	0	8	**8**	
2230 - 2245	0	11	**11**	
2245 - 2300	0	6	**6**	**30**
2300 - 2315	0	8	**8**	
2315 - 2330	0	6	**6**	
2330 - 2345	0	8	**8**	
2345 - 0000	0	8	**8**	**30**

Session Total	0	288	**288**
Session Average	0.00	3.00	**3.00**
Session Percentage	0.00	100.00	

Site 42

I-126 On/Off-Ramp,
south of W Colonial Life Rd

Date

Wednesday, April 24, 2024

Lat/Long

34.020236°, -81.094372°

Weather

Fair
66°F

Click here for Detailed Weather

0000 - 2400 (Weekday 24h Session) (04-24-2024)

Volume Summary 15min

TIME	Volume Summary 15min NB	Volume Summary 15min SB	15min Total	60min Total
0000 - 0015	0	7	**7**	
0015 - 0030	0	5	**5**	
0030 - 0045	0	4	**4**	
0045 - 0100	0	7	**7**	**23**
0100 - 0115	0	5	**5**	
0115 - 0130	0	3	**3**	
0130 - 0145	0	6	**6**	
0145 - 0200	0	6	**6**	**20**
0200 - 0215	0	7	**7**	
0215 - 0230	0	5	**5**	
0230 - 0245	0	4	**4**	
0245 - 0300	0	3	**3**	**19**
0300 - 0315	0	5	**5**	
0315 - 0330	0	3	**3**	
0330 - 0345	0	3	**3**	
0345 - 0400	0	3	**3**	**14**
0400 - 0415	0	3	**3**	
0415 - 0430	0	2	**2**	
0430 - 0445	0	4	**4**	
0445 - 0500	0	6	**6**	**15**
0500 - 0515	0	9	**9**	
0515 - 0530	0	11	**11**	
0530 - 0545	0	10	**10**	
0545 - 0600	0	12	**12**	**42**
0600 - 0615	0	18	**18**	
0615 - 0630	0	20	**20**	
0630 - 0645	0	25	**25**	
0645 - 0700	0	32	**32**	**95**
0700 - 0715	0	50	**50**	
0715 - 0730	0	60	**60**	
0730 - 0745	0	77	**77**	
0745 - 0800	0	97	**97**	**284**
0800 - 0815	0	85	**85**	
0815 - 0830	0	95	**95**	
0830 - 0845	0	83	**83**	
0845 - 0900	0	75	**75**	**338**
0900 - 0915	0	52	**52**	
0915 - 0930	0	50	**50**	
0930 - 0945	0	51	**51**	
0945 - 1000	0	49	**49**	**202**
1000 - 1015	0	49	**49**	
1015 - 1030	0	48	**48**	
1030 - 1045	0	47	**47**	
1045 - 1100	0	57	**57**	**201**
1100 - 1115	0	56	**56**	
1115 - 1130	0	53	**53**	
1130 - 1145	0	54	**54**	
1145 - 1200	0	54	**54**	**217**

Time	Volume Summary 15min NB	Volume Summary 15min SB	15min Total	60min Total
1200 - 1215	0	52	**52**	
1215 - 1230	0	51	**51**	
1230 - 1245	0	49	**49**	
1245 - 1300	0	49	**49**	**201**
1300 - 1315	0	57	**57**	
1315 - 1330	0	57	**57**	
1330 - 1345	0	54	**54**	
1345 - 1400	0	54	**54**	**222**
1400 - 1415	0	54	**54**	
1415 - 1430	0	52	**52**	
1430 - 1445	0	49	**49**	
1445 - 1500	0	46	**46**	**201**
1500 - 1515	0	57	**57**	
1515 - 1530	0	56	**56**	
1530 - 1545	0	53	**53**	
1545 - 1600	0	51	**51**	**217**
1600 - 1615	0	60	**60**	
1615 - 1630	0	53	**53**	
1630 - 1645	0	55	**55**	
1645 - 1700	0	52	**52**	**220**
1700 - 1715	0	62	**62**	
1715 - 1730	0	74	**74**	
1730 - 1745	0	67	**67**	
1745 - 1800	0	56	**56**	**259**
1800 - 1815	0	56	**56**	
1815 - 1830	0	52	**52**	
1830 - 1845	0	48	**48**	
1845 - 1900	0	48	**48**	**204**
1900 - 1915	0	27	**27**	
1915 - 1930	0	32	**32**	
1930 - 1945	0	28	**28**	
1945 - 2000	0	38	**38**	**125**
2000 - 2015	0	33	**33**	
2015 - 2030	0	29	**29**	
2030 - 2045	0	34	**34**	
2045 - 2100	0	36	**36**	**132**
2100 - 2115	0	26	**26**	
2115 - 2130	0	22	**22**	
2130 - 2145	0	13	**13**	
2145 - 2200	0	13	**13**	**74**
2200 - 2215	0	18	**18**	
2215 - 2230	0	13	**13**	
2230 - 2245	0	12	**12**	
2245 - 2300	0	11	**11**	**54**
2300 - 2315	0	11	**11**	
2315 - 2330	0	9	**9**	
2330 - 2345	0	10	**10**	
2345 - 0000	0	11	**11**	**41**

Session Total	0	3420	**3420**
Session Average	0.00	35.63	**35.63**
Session Percentage	0.00	100.00	

Site 42
I-126 On/Off-Ramp,
south of W Colonial Life Rd

Date
Thursday, April 25, 2024

Lat/Long
34.020236°, -81.094372°

Weather
Fair
67°F

Click here for Detailed Weather

0000 - 2400 (Weekday 24h Session) (04-25-2024)
Volume Summary 15min

TIME	Volume Summary 15min NB	SB	15min Total	60min Total
0000 - 0015	0	2	**2**	
0015 - 0030	0	4	**4**	
0030 - 0045	0	2	**2**	
0045 - 0100	0	5	**5**	**13**
0100 - 0115	0	7	**7**	
0115 - 0130	0	1	**1**	
0130 - 0145	0	1	**1**	
0145 - 0200	0	2	**2**	**11**
0200 - 0215	0	1	**1**	
0215 - 0230	0	1	**1**	
0230 - 0245	0	1	**1**	
0245 - 0300	0	2	**2**	**5**
0300 - 0315	0	2	**2**	
0315 - 0330	0	5	**5**	
0330 - 0345	0	2	**2**	
0345 - 0400	0	5	**5**	**14**
0400 - 0415	0	1	**1**	
0415 - 0430	0	5	**5**	
0430 - 0445	0	4	**4**	
0445 - 0500	0	3	**3**	**13**
0500 - 0515	0	0	**0**	
0515 - 0530	0	8	**8**	
0530 - 0545	0	8	**8**	
0545 - 0600	0	6	**6**	**22**
0600 - 0615	0	5	**5**	
0615 - 0630	0	18	**18**	
0630 - 0645	0	26	**26**	
0645 - 0700	0	30	**30**	**79**
0700 - 0715	0	48	**48**	
0715 - 0730	0	75	**75**	
0730 - 0745	0	90	**90**	
0745 - 0800	0	100	**100**	**313**
0800 - 0815	0	83	**83**	
0815 - 0830	0	71	**71**	
0830 - 0845	0	60	**60**	
0845 - 0900	0	48	**48**	**262**
0900 - 0915	0	27	**27**	
0915 - 0930	0	30	**30**	
0930 - 0945	0	27	**27**	
0945 - 1000	0	32	**32**	**116**
1000 - 1015	0	34	**34**	
1015 - 1030	0	26	**26**	
1030 - 1045	0	39	**39**	
1045 - 1100	0	33	**33**	**132**
1100 - 1115	0	41	**41**	
1115 - 1130	0	32	**32**	
1130 - 1145	0	53	**53**	
1145 - 1200	0	50	**50**	**176**

Time	Volume Summary 15min NB	SB	15min Total	60min Total
1200 - 1215	0	43	**43**	
1215 - 1230	0	46	**46**	
1230 - 1245	0	44	**44**	
1245 - 1300	0	41	**41**	**174**
1300 - 1315	0	49	**49**	
1315 - 1330	0	56	**56**	
1330 - 1345	0	56	**56**	
1345 - 1400	0	54	**54**	**215**
1400 - 1415	0	46	**46**	
1415 - 1430	0	45	**45**	
1430 - 1445	0	35	**35**	
1445 - 1500	0	41	**41**	**167**
1500 - 1515	0	50	**50**	
1515 - 1530	0	49	**49**	
1530 - 1545	0	57	**57**	
1545 - 1600	0	42	**42**	**198**
1600 - 1615	0	38	**38**	
1615 - 1630	0	59	**59**	
1630 - 1645	0	62	**62**	
1645 - 1700	0	68	**68**	**227**
1700 - 1715	0	67	**67**	
1715 - 1730	0	61	**61**	
1730 - 1745	0	59	**59**	
1745 - 1800	0	36	**36**	**223**
1800 - 1815	0	38	**38**	
1815 - 1830	0	33	**33**	
1830 - 1845	0	33	**33**	
1845 - 1900	0	25	**25**	**129**
1900 - 1915	0	0	**0**	
1915 - 1930	0	0	**0**	
1930 - 1945	0	0	**0**	
1945 - 2000	0	0	**0**	**0**
2000 - 2015	0	0	**0**	
2015 - 2030	0	0	**0**	
2030 - 2045	0	0	**0**	
2045 - 2100	0	0	**0**	**0**
2100 - 2115	0	0	**0**	
2115 - 2130	0	0	**0**	
2130 - 2145	0	0	**0**	
2145 - 2200	0	0	**0**	**0**
2200 - 2215	0	0	**0**	
2215 - 2230	0	0	**0**	
2230 - 2245	0	0	**0**	
2245 - 2300	0	0	**0**	**0**
2300 - 2315	0	0	**0**	
2315 - 2330	0	0	**0**	
2330 - 2345	0	0	**0**	
2345 - 0000	0	0	**0**	**0**

Session Total	0	2489	**2489**
Session Average	0.00	25.93	**25.93**
Session Percentage	0.00	100.00	

Bi-Directional Class Count || SB WB 60min

Columbia, SC

Marr Traffic DATA COLLECTION

www.marrtraffic.com

Site 42
I-126 On/Off-Ramp,
south of W Colonial Life Rd

Date
Tuesday, April 23, 2024

Lat/Long
34.020236°, -81.094372°

Weather
Fair
58°F

Click here for Detailed Weather

0000 - 2400 (Weekday 24h Session) (04-23-2024)
SB WB 60min

	Southbound (Movement 42.1)													
TIME	1	2	3	4	5	6	7	8	9	10	11	12	13	**Total**
0000 - 0100	0	0	0	0	0	0	0	0	0	0	0	0	0	**0**
0100 - 0200	0	0	0	0	0	0	0	0	0	0	0	0	0	**0**
0200 - 0300	0	0	0	0	0	0	0	0	0	0	0	0	0	**0**
0300 - 0400	0	0	0	0	0	0	0	0	0	0	0	0	0	**0**
0400 - 0500	0	0	0	0	0	0	0	0	0	0	0	0	0	**0**
0500 - 0600	0	0	0	0	0	0	0	0	0	0	0	0	0	**0**
0600 - 0700	0	0	0	0	0	0	0	0	0	0	0	0	0	**0**
0700 - 0800	0	0	0	0	0	0	0	0	0	0	0	0	0	**0**
0800 - 0900	0	0	0	0	0	0	0	0	0	0	0	0	0	**0**
0900 - 1000	0	0	0	0	0	0	0	0	0	0	0	0	0	**0**
1000 - 1100	0	0	0	0	0	0	0	0	0	0	0	0	0	**0**
1100 - 1200	0	0	0	0	0	0	0	0	0	0	0	0	0	**0**
1200 - 1300	0	0	0	0	0	0	0	0	0	0	0	0	0	**0**
1300 - 1400	0	0	0	0	0	0	0	0	0	0	0	0	0	**0**
1400 - 1500	0	0	0	0	0	0	0	0	0	0	0	0	0	**0**
1500 - 1600	0	0	0	0	0	0	0	0	0	0	0	0	0	**0**
1600 - 1700	0	0	0	0	0	0	0	0	0	0	0	0	0	**0**
1700 - 1800	0	0	0	0	0	0	0	0	0	0	0	0	0	**0**
1800 - 1900	0	0	0	0	0	0	0	0	0	0	0	0	0	**0**
1900 - 2000	1	67	18	0	0	0	0	0	0	0	0	0	0	**86**
2000 - 2100	0	65	16	0	2	0	0	0	0	0	0	0	0	**83**
2100 - 2200	0	47	12	0	0	0	0	0	0	0	0	0	0	**59**
2200 - 2300	0	21	9	0	0	0	0	0	0	0	0	0	0	**30**
2300 - 2400	0	20	10	0	0	0	0	0	0	0	0	0	0	**30**

Session Total	1	220	65	0	2	0	0	0	0	0	0	0	0	**288**
Session Average	0.04	9.17	2.71	0.00	0.08	0.00	0.00	0.00	0.00	0.00	0.00	0.00	0.00	**12.00**
Session Percentage	0.35	76.39	22.57	0.00	0.69	0.00	0.00	0.00	0.00	0.00	0.00	0.00	0.00	

AM Peak Hour	-	-	-	-	-	-	-	-	-	-	-	-	-	-
AM Peak Volume	0	0	0	0	0	0	0	0	0	0	0	0	0	**0**

Noon Peak Hour	-	-	-	-	-	-	-	-	-	-	-	-	-	-
Noon Peak Volume	0	0	0	0	0	0	0	0	0	0	0	0	0	**0**

PM Peak Hour	1900 - 2000	1900 - 2000	1900 - 2000	-	-	-	-	-	-	-	-	-	-	**1900 - 2000**
PM Peak Volume	1	67	18	0	0	0	0	0	0	0	0	0	0	**86**

Site 42
I-126 On/Off-Ramp,
south of W Colonial Life Rd

Date
Wednesday, April 24, 2024

Lat/Long
34.020236°, -81.094372°

Weather
Fair
66°F

Click here for Detailed Weather

0000 - 2400 (Weekday 24h Session) (04-24-2024)
SB WB 60min

	Southbound (Movement 42.1)													
TIME	1	2	3	4	5	6	7	8	9	10	11	12	13	**Total**
0000 - 0100	0	18	5	0	0	0	0	0	0	0	0	0	0	**23**
0100 - 0200	0	15	5	0	0	0	0	0	0	0	0	0	0	**20**
0200 - 0300	0	15	4	0	0	0	0	0	0	0	0	0	0	**19**
0300 - 0400	0	10	4	0	0	0	0	0	0	0	0	0	0	**14**
0400 - 0500	0	11	4	0	0	0	0	0	0	0	0	0	0	**15**
0500 - 0600	0	38	4	0	0	0	0	0	0	0	0	0	0	**42**
0600 - 0700	0	74	17	0	1	3	0	0	0	0	0	0	0	**95**
0700 - 0800	0	211	71	1	0	1	0	0	0	0	0	0	0	**284**
0800 - 0900	0	281	54	0	1	0	1	0	1	0	0	0	0	**338**
0900 - 1000	0	165	35	0	0	0	1	0	1	0	0	0	0	**202**
1000 - 1100	1	158	37	2	1	0	1	0	1	0	0	0	0	**201**
1100 - 1200	0	176	34	1	1	2	2	0	1	0	0	0	0	**217**
1200 - 1300	1	172	21	0	0	1	2	1	2	1	0	0	0	**201**
1300 - 1400	2	185	27	3	0	1	2	1	1	0	0	0	0	**222**
1400 - 1500	0	170	27	2	0	1	0	0	1	0	0	0	0	**201**
1500 - 1600	0	188	25	2	2	0	0	0	0	0	0	0	0	**217**
1600 - 1700	1	182	30	1	3	2	0	0	1	0	0	0	0	**220**
1700 - 1800	0	223	32	1	3	0	0	0	0	0	0	0	0	**259**
1800 - 1900	0	170	31	1	1	0	1	0	0	0	0	0	0	**204**
1900 - 2000	0	98	21	1	3	0	0	2	0	0	0	0	0	**125**
2000 - 2100	0	109	20	0	3	0	0	0	0	0	0	0	0	**132**
2100 - 2200	0	61	13	0	0	0	0	0	0	0	0	0	0	**74**
2200 - 2300	0	46	8	0	0	0	0	0	0	0	0	0	0	**54**
2300 - 2400	0	36	4	0	1	0	0	0	0	0	0	0	0	**41**

Session Total	5	2812	533	15	20	11	10	4	9	1	0	0	0	**3420**
Session Average	0.21	117.17	22.21	0.63	0.83	0.46	0.42	0.17	0.38	0.04	0.00	0.00	0.00	**142.50**
Session Percentage	0.15	82.22	15.58	0.44	0.58	0.32	0.29	0.12	0.26	0.03	0.00	0.00	0.00	

AM Peak Hour	-	0800 - 0900	0700 - 0800	0700 - 0800	0600 - 0700	0600 - 0700	0800 - 0900	-	0800 - 0900	-	-	-	-	**0800 - 0900**
AM Peak Volume	0	281	71	1	1	3	1	0	1	0	0	0	0	**338**

Noon Peak Hour	1300 - 1400	1300 - 1400	1000 - 1100	1300 - 1400	1000 - 1100	1100 - 1200	1100 - 1200	1200 - 1300	1200 - 1300	1200 - 1300	-	-	-	**1300 - 1400**
Noon Peak Volume	2	185	37	3	1	2	2	1	2	1	0	0	0	**222**

PM Peak Hour	1600 - 1700	1700 - 1800	1700 - 1800	1500 - 1600	1600 - 1700	1600 - 1700	1800 - 1900	1900 - 2000	1600 - 1700	-	-	-	-	**1700 - 1800**
PM Peak Volume	1	223	32	2	3	2	1	2	1	0	0	0	0	**259**

Site 42
I-126 On/Off-Ramp,
south of W Colonial Life Rd

Date
Thursday, April 25, 2024

Lat/Long
34.020236°, -81.094372°

Weather
Fair
67°F

Click here for Detailed Weather

0000 - 2400 (Weekday 24h Session) (04-25-2024)
SB WB 60min

	Southbound (Movement 42.1)													
TIME	1	2	3	4	5	6	7	8	9	10	11	12	13	**Total**
0000 - 0100	0	13	0	0	0	0	0	0	0	0	0	0	0	**13**
0100 - 0200	0	11	0	0	0	0	0	0	0	0	0	0	0	**11**
0200 - 0300	0	4	0	0	1	0	0	0	0	0	0	0	0	**5**
0300 - 0400	0	14	0	0	0	0	0	0	0	0	0	0	0	**14**
0400 - 0500	0	13	0	0	0	0	0	0	0	0	0	0	0	**13**
0500 - 0600	0	22	0	0	0	0	0	0	0	0	0	0	0	**22**
0600 - 0700	1	63	15	0	0	0	0	0	0	0	0	0	0	**79**
0700 - 0800	1	266	41	1	2	1	1	0	0	0	0	0	0	**313**
0800 - 0900	0	214	42	0	1	5	0	0	0	0	0	0	0	**262**
0900 - 1000	0	94	18	0	0	3	1	0	0	0	0	0	0	**116**
1000 - 1100	0	88	33	0	1	9	0	0	1	0	0	0	0	**132**
1100 - 1200	0	147	28	0	0	0	0	0	1	0	0	0	0	**176**
1200 - 1300	0	145	26	0	1	0	0	1	1	0	0	0	0	**174**
1300 - 1400	0	179	33	0	3	0	0	0	0	0	0	0	0	**215**
1400 - 1500	0	144	23	0	0	0	0	0	0	0	0	0	0	**167**
1500 - 1600	0	164	32	0	2	0	0	0	0	0	0	0	0	**198**
1600 - 1700	1	196	27	0	3	0	0	0	0	0	0	0	0	**227**
1700 - 1800	1	199	21	0	2	0	0	0	0	0	0	0	0	**223**
1800 - 1900	0	111	17	0	1	0	0	0	0	0	0	0	0	**129**
1900 - 2000	0	0	0	0	0	0	0	0	0	0	0	0	0	**0**
2000 - 2100	0	0	0	0	0	0	0	0	0	0	0	0	0	**0**
2100 - 2200	0	0	0	0	0	0	0	0	0	0	0	0	0	**0**
2200 - 2300	0	0	0	0	0	0	0	0	0	0	0	0	0	**0**
2300 - 2400	0	0	0	0	0	0	0	0	0	0	0	0	0	**0**

Session Total	4	2087	356	1	17	18	2	1	3	0	0	0	0	**2489**
Session Average	0.17	86.96	14.83	0.04	0.71	0.75	0.08	0.04	0.13	0.00	0.00	0.00	0.00	**103.71**
Session Percentage	0.16	83.85	14.30	0.04	0.68	0.72	0.08	0.04	0.12	0.00	0.00	0.00	0.00	

AM Peak Hour	0600 - 0700	0700 - 0800	0800 - 0900	0700 - 0800	0700 - 0800	0800 - 0900	0700 - 0800	-	-	-	-	-	-	**0700 - 0800**
AM Peak Hour Volume	1	266	42	1	2	5	1	0	0	0	0	0	0	**313**

Noon Peak Hour	-	1300 - 1400	1000 - 1100	-	1300 - 1400	1000 - 1100	-	1200 - 1300	1000 - 1100	-	-	-	-	**1300 - 1400**
Noon Peak Hour Volume	0	179	33	0	3	9	0	1	1	0	0	0	0	**215**

PM Peak Hour	1600 - 1700	1700 - 1800	1500 - 1600	-	1600 - 1700	-	-	-	-	-	-	-	-	**1600 - 1700**
PM Peak Hour Volume	1	199	32	0	3	0	0	0	0	0	0	0	0	**227**

Bi-Directional Class Count || Volume Summary 60min

Columbia, SC

Marr Traffic DATA COLLECTION

www.marrtraffic.com

Site 42

I-126 On/Off-Ramp,
south of W Colonial Life Rd

Date

Tuesday, April 23, 2024

Lat/Long

34.020236°, -81.094372°

Weather

Fair
58°F

Click here for Detailed Weather

0000 - 2400 (Weekday 24h Session) (04-23-2024)

Volume Summary 60min

	Volume Summary 60min		
TIME	NB	SB	**Total**
0000 - 0100	0	0	**0**
0100 - 0200	0	0	**0**
0200 - 0300	0	0	**0**
0300 - 0400	0	0	**0**
0400 - 0500	0	0	**0**
0500 - 0600	0	0	**0**
0600 - 0700	0	0	**0**
0700 - 0800	0	0	**0**
0800 - 0900	0	0	**0**
0900 - 1000	0	0	**0**
1000 - 1100	0	0	**0**
1100 - 1200	0	0	**0**

	Volume Summary 60min		
Time	NB	SB	**Total**
1200 - 1300	0	0	**0**
1300 - 1400	0	0	**0**
1400 - 1500	0	0	**0**
1500 - 1600	0	0	**0**
1600 - 1700	0	0	**0**
1700 - 1800	0	0	**0**
1800 - 1900	0	0	**0**
1900 - 2000	0	86	**86**
2000 - 2100	0	83	**83**
2100 - 2200	0	59	**59**
2200 - 2300	0	30	**30**
2300 - 2400	0	30	**30**

Session Total	0	288	**288**
Session Average	0.00	12.00	**12.00**
Session Percentage	0.00	100.00	

Site 42

I-126 On/Off-Ramp,
south of W Colonial Life Rd

Date

Wednesday, April 24, 2024

Lat/Long

34.020236°, -81.094372°

Weather

Fair
66°F

Click here for Detailed Weather

0000 - 2400 (Weekday 24h Session) (04-24-2024)

Volume Summary 60min

	Volume Summary 60min		
TIME	NB	SB	**Total**
0000 - 0100	0	23	**23**
0100 - 0200	0	20	**20**
0200 - 0300	0	19	**19**
0300 - 0400	0	14	**14**
0400 - 0500	0	15	**15**
0500 - 0600	0	42	**42**
0600 - 0700	0	95	**95**
0700 - 0800	0	284	**284**
0800 - 0900	0	338	**338**
0900 - 1000	0	202	**202**
1000 - 1100	0	201	**201**
1100 - 1200	0	217	**217**

Session Total	0	3420	**3420**
Session Average	0.00	142.50	**142.50**
Session Percentage	0.00	100.00	

	Volume Summary 60min		
Time	NB	SB	**Total**
1200 - 1300	0	201	**201**
1300 - 1400	0	222	**222**
1400 - 1500	0	201	**201**
1500 - 1600	0	217	**217**
1600 - 1700	0	220	**220**
1700 - 1800	0	259	**259**
1800 - 1900	0	204	**204**
1900 - 2000	0	125	**125**
2000 - 2100	0	132	**132**
2100 - 2200	0	74	**74**
2200 - 2300	0	54	**54**
2300 - 2400	0	41	**41**

Site 42

I-126 On/Off-Ramp,
south of W Colonial Life Rd

Date

Thursday, April 25, 2024

Lat/Long

34.020236°, -81.094372°

Weather

Fair
67°F

Click here for Detailed Weather

0000 - 2400 (Weekday 24h Session) (04-25-2024)

Volume Summary 60min

	Volume Summary 60min		
TIME	NB	SB	**Total**
0000 - 0100	0	13	**13**
0100 - 0200	0	11	**11**
0200 - 0300	0	5	**5**
0300 - 0400	0	14	**14**
0400 - 0500	0	13	**13**
0500 - 0600	0	22	**22**
0600 - 0700	0	79	**79**
0700 - 0800	0	313	**313**
0800 - 0900	0	262	**262**
0900 - 1000	0	116	**116**
1000 - 1100	0	132	**132**
1100 - 1200	0	176	**176**

Session Total	0	2489	**2489**
Session Average	0.00	103.71	**103.71**
Session Percentage	0.00	100.00	

	Volume Summary 60min		
Time	NB	SB	**Total**
1200 - 1300	0	174	**174**
1300 - 1400	0	215	**215**
1400 - 1500	0	167	**167**
1500 - 1600	0	198	**198**
1600 - 1700	0	227	**227**
1700 - 1800	0	223	**223**
1800 - 1900	0	129	**129**
1900 - 2000	0	0	**0**
2000 - 2100	0	0	**0**
2100 - 2200	0	0	**0**
2200 - 2300	0	0	**0**
2300 - 2400	0	0	**0**

Bi-Directional Class Count || Graphical Analysis SB WB

Columbia, SC

Marr Traffic DATA COLLECTION

www.marrtraffic.com

Site 42

I-126 On/Off-Ramp,
south of W Colonial Life Rd

Lat/Long

34.020236°, -81.094372°

0000 - 2400 (Weekday 24h Session)

Graphical Analysis SB WB

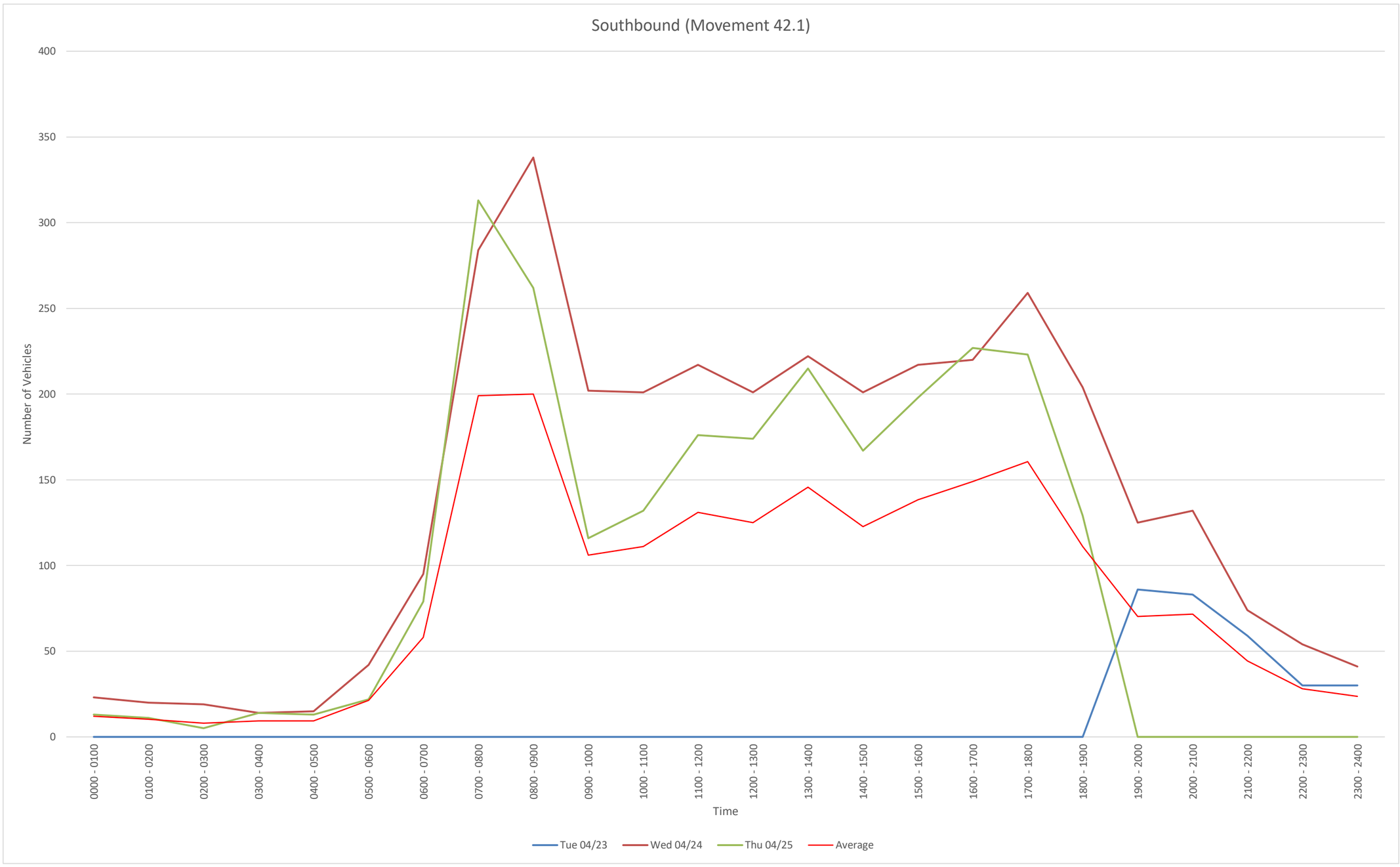

Time	Tue 04/23	Wed 04/24	Thu 04/25				
0000 - 0100	0	23	13				
0100 - 0200	0	20	11				
0200 - 0300	0	19	5				
0300 - 0400	0	14	14				
0400 - 0500	0	15	13				
0500 - 0600	0	42	22				
0600 - 0700	0	95	79				
0700 - 0800	0	284	313				
0800 - 0900	0	338	262				
0900 - 1000	0	202	116				
1000 - 1100	0	201	132				
1100 - 1200	0	217	176				
1200 - 1300	0	201	174				
1300 - 1400	0	222	215				
1400 - 1500	0	201	167				
1500 - 1600	0	217	198				
1600 - 1700	0	220	227				
1700 - 1800	0	259	223				
1800 - 1900	0	204	129				
1900 - 2000	86	125	0				
2000 - 2100	83	132	0				
2100 - 2200	59	74	0				
2200 - 2300	30	54	0				
2300 - 2400	30	41	0				
Daily Total	288	3420	2489				

NB
File Name:
Start Date: 4/23/2024
Start Time: 0
Site Code: 42
Station ID: 1
Location 1: I-126 On/Off-Ramp, south of W Colonial Life Rd
Location 2:

Date	Time	1	2	3	4	5	6	7	8	9	10	11	12	13
4/23/2024	12:00 AM	0	0	0	0	0	0	0	0	0	0	0	0	0
4/23/2024	12:15 AM	0	0	0	0	0	0	0	0	0	0	0	0	0
4/23/2024	12:30 AM	0	0	0	0	0	0	0	0	0	0	0	0	0
4/23/2024	12:45 AM	0	0	0	0	0	0	0	0	0	0	0	0	0
4/23/2024	1:00 AM	0	0	0	0	0	0	0	0	0	0	0	0	0
4/23/2024	1:15 AM	0	0	0	0	0	0	0	0	0	0	0	0	0
4/23/2024	1:30 AM	0	0	0	0	0	0	0	0	0	0	0	0	0
4/23/2024	1:45 AM	0	0	0	0	0	0	0	0	0	0	0	0	0
4/23/2024	2:00 AM	0	0	0	0	0	0	0	0	0	0	0	0	0
4/23/2024	2:15 AM	0	0	0	0	0	0	0	0	0	0	0	0	0
4/23/2024	2:30 AM	0	0	0	0	0	0	0	0	0	0	0	0	0
4/23/2024	2:45 AM	0	0	0	0	0	0	0	0	0	0	0	0	0
4/23/2024	3:00 AM	0	0	0	0	0	0	0	0	0	0	0	0	0
4/23/2024	3:15 AM	0	0	0	0	0	0	0	0	0	0	0	0	0
4/23/2024	3:30 AM	0	0	0	0	0	0	0	0	0	0	0	0	0
4/23/2024	3:45 AM	0	0	0	0	0	0	0	0	0	0	0	0	0
4/23/2024	4:00 AM	0	0	0	0	0	0	0	0	0	0	0	0	0
4/23/2024	4:15 AM	0	0	0	0	0	0	0	0	0	0	0	0	0
4/23/2024	4:30 AM	0	0	0	0	0	0	0	0	0	0	0	0	0
4/23/2024	4:45 AM	0	0	0	0	0	0	0	0	0	0	0	0	0
4/23/2024	5:00 AM	0	0	0	0	0	0	0	0	0	0	0	0	0
4/23/2024	5:15 AM	0	0	0	0	0	0	0	0	0	0	0	0	0
4/23/2024	5:30 AM	0	0	0	0	0	0	0	0	0	0	0	0	0
4/23/2024	5:45 AM	0	0	0	0	0	0	0	0	0	0	0	0	0
4/23/2024	6:00 AM	0	0	0	0	0	0	0	0	0	0	0	0	0
4/23/2024	6:15 AM	0	0	0	0	0	0	0	0	0	0	0	0	0
4/23/2024	6:30 AM	0	0	0	0	0	0	0	0	0	0	0	0	0
4/23/2024	6:45 AM	0	0	0	0	0	0	0	0	0	0	0	0	0
4/23/2024	7:00 AM	0	0	0	0	0	0	0	0	0	0	0	0	0
4/23/2024	7:15 AM	0	0	0	0	0	0	0	0	0	0	0	0	0
4/23/2024	7:30 AM	0	0	0	0	0	0	0	0	0	0	0	0	0
4/23/2024	7:45 AM	0	0	0	0	0	0	0	0	0	0	0	0	0
4/23/2024	8:00 AM	0	0	0	0	0	0	0	0	0	0	0	0	0
4/23/2024	8:15 AM	0	0	0	0	0	0	0	0	0	0	0	0	0
4/23/2024	8:30 AM	0	0	0	0	0	0	0	0	0	0	0	0	0
4/23/2024	8:45 AM	0	0	0	0	0	0	0	0	0	0	0	0	0
4/23/2024	9:00 AM	0	0	0	0	0	0	0	0	0	0	0	0	0
4/23/2024	9:15 AM	0	0	0	0	0	0	0	0	0	0	0	0	0
4/23/2024	9:30 AM	0	0	0	0	0	0	0	0	0	0	0	0	0
4/23/2024	9:45 AM	0	0	0	0	0	0	0	0	0	0	0	0	0
4/23/2024	10:00 AM	0	0	0	0	0	0	0	0	0	0	0	0	0
4/23/2024	10:15 AM	0	0	0	0	0	0	0	0	0	0	0	0	0
4/23/2024	10:30 AM	0	0	0	0	0	0	0	0	0	0	0	0	0
4/23/2024	10:45 AM	0	0	0	0	0	0	0	0	0	0	0	0	0
4/23/2024	11:00 AM	0	0	0	0	0	0	0	0	0	0	0	0	0
4/23/2024	11:15 AM	0	0	0	0	0	0	0	0	0	0	0	0	0
4/23/2024	11:30 AM	0	0	0	0	0	0	0	0	0	0	0	0	0
4/23/2024	11:45 AM	0	0	0	0	0	0	0	0	0	0	0	0	0
4/23/2024	12:00 PM	0	0	0	0	0	0	0	0	0	0	0	0	0
4/23/2024	12:15 PM	0	0	0	0	0	0	0	0	0	0	0	0	0
4/23/2024	12:30 PM	0	0	0	0	0	0	0	0	0	0	0	0	0
4/23/2024	12:45 PM	0	0	0	0	0	0	0	0	0	0	0	0	0
4/23/2024	1:00 PM	0	0	0	0	0	0	0	0	0	0	0	0	0
4/23/2024	1:15 PM	0	0	0	0	0	0	0	0	0	0	0	0	0
4/23/2024	1:30 PM	0	0	0	0	0	0	0	0	0	0	0	0	0
4/23/2024	1:45 PM	0	0	0	0	0	0	0	0	0	0	0	0	0
4/23/2024	2:00 PM	0	0	0	0	0	0	0	0	0	0	0	0	0
4/23/2024	2:15 PM	0	0	0	0	0	0	0	0	0	0	0	0	0
4/23/2024	2:30 PM	0	0	0	0	0	0	0	0	0	0	0	0	0
4/23/2024	2:45 PM	0	0	0	0	0	0	0	0	0	0	0	0	0
4/23/2024	3:00 PM	0	0	0	0	0	0	0	0	0	0	0	0	0
4/23/2024	3:15 PM	0	0	0	0	0	0	0	0	0	0	0	0	0
4/23/2024	3:30 PM	0	0	0	0	0	0	0	0	0	0	0	0	0
4/23/2024	3:45 PM	0	0	0	0	0	0	0	0	0	0	0	0	0
4/23/2024	4:00 PM	0	0	0	0	0	0	0	0	0	0	0	0	0
4/23/2024	4:15 PM	0	0	0	0	0	0	0	0	0	0	0	0	0
4/23/2024	4:30 PM	0	0	0	0	0	0	0	0	0	0	0	0	0
4/23/2024	4:45 PM	0	0	0	0	0	0	0	0	0	0	0	0	0
4/23/2024	5:00 PM	0	0	0	0	0	0	0	0	0	0	0	0	0
4/23/2024	5:15 PM	0	0	0	0	0	0	0	0	0	0	0	0	0
4/23/2024	5:30 PM	0	0	0	0	0	0	0	0	0	0	0	0	0
4/23/2024	5:45 PM	0	0	0	0	0	0	0	0	0	0	0	0	0
4/23/2024	6:00 PM	0	0	0	0	0	0	0	0	0	0	0	0	0
4/23/2024	6:15 PM	0	0	0	0	0	0	0	0	0	0	0	0	0
4/23/2024	6:30 PM	0	0	0	0	0	0	0	0	0	0	0	0	0
4/23/2024	6:45 PM	0	0	0	0	0	0	0	0	0	0	0	0	0
4/23/2024	7:00 PM	0	0	0	0	0	0	0	0	0	0	0	0	0
4/23/2024	7:15 PM	0	0	0	0	0	0	0	0	0	0	0	0	0
4/23/2024	7:30 PM	0	0	0	0	0	0	0	0	0	0	0	0	0
4/23/2024	7:45 PM	0	0	0	0	0	0	0	0	0	0	0	0	0
4/23/2024	8:00 PM	0	0	0	0	0	0	0	0	0	0	0	0	0
4/23/2024	8:15 PM	0	0	0	0	0	0	0	0	0	0	0	0	0
4/23/2024	8:30 PM	0	0	0	0	0	0	0	0	0	0	0	0	0
4/23/2024	8:45 PM	0	0	0	0	0	0	0	0	0	0	0	0	0
4/23/2024	9:00 PM	0	0	0	0	0	0	0	0	0	0	0	0	0
4/23/2024	9:15 PM	0	0	0	0	0	0	0	0	0	0	0	0	0
4/23/2024	9:30 PM	0	0	0	0	0	0	0	0	0	0	0	0	0
4/23/2024	9:45 PM	0	0	0	0	0	0	0	0	0	0	0	0	0
4/23/2024	10:00 PM	0	0	0	0	0	0	0	0	0	0	0	0	0
4/23/2024	10:15 PM	0	0	0	0	0	0	0	0	0	0	0	0	0
4/23/2024	10:30 PM	0	0	0	0	0	0	0	0	0	0	0	0	0
4/23/2024	10:45 PM	0	0	0	0	0	0	0	0	0	0	0	0	0
4/23/2024	11:00 PM	0	0	0	0	0	0	0	0	0	0	0	0	0
4/23/2024	11:15 PM	0	0	0	0	0	0	0	0	0	0	0	0	0
4/23/2024	11:30 PM	0	0	0	0	0	0	0	0	0	0	0	0	0
4/23/2024	11:45 PM	0	0	0	0	0	0	0	0	0	0	0	0	0

4/24/2024	12:00 AM	0	0	0	0	0	0	0	0	0	0	0	0	0
4/24/2024	12:15 AM	0	0	0	0	0	0	0	0	0	0	0	0	0
4/24/2024	12:30 AM	0	0	0	0	0	0	0	0	0	0	0	0	0
4/24/2024	12:45 AM	0	0	0	0	0	0	0	0	0	0	0	0	0
4/24/2024	1:00 AM	0	0	0	0	0	0	0	0	0	0	0	0	0
4/24/2024	1:15 AM	0	0	0	0	0	0	0	0	0	0	0	0	0
4/24/2024	1:30 AM	0	0	0	0	0	0	0	0	0	0	0	0	0
4/24/2024	1:45 AM	0	0	0	0	0	0	0	0	0	0	0	0	0
4/24/2024	2:00 AM	0	0	0	0	0	0	0	0	0	0	0	0	0
4/24/2024	2:15 AM	0	0	0	0	0	0	0	0	0	0	0	0	0
4/24/2024	2:30 AM	0	0	0	0	0	0	0	0	0	0	0	0	0
4/24/2024	2:45 AM	0	0	0	0	0	0	0	0	0	0	0	0	0
4/24/2024	3:00 AM	0	0	0	0	0	0	0	0	0	0	0	0	0
4/24/2024	3:15 AM	0	0	0	0	0	0	0	0	0	0	0	0	0
4/24/2024	3:30 AM	0	0	0	0	0	0	0	0	0	0	0	0	0
4/24/2024	3:45 AM	0	0	0	0	0	0	0	0	0	0	0	0	0
4/24/2024	4:00 AM	0	0	0	0	0	0	0	0	0	0	0	0	0
4/24/2024	4:15 AM	0	0	0	0	0	0	0	0	0	0	0	0	0
4/24/2024	4:30 AM	0	0	0	0	0	0	0	0	0	0	0	0	0
4/24/2024	4:45 AM	0	0	0	0	0	0	0	0	0	0	0	0	0
4/24/2024	5:00 AM	0	0	0	0	0	0	0	0	0	0	0	0	0
4/24/2024	5:15 AM	0	0	0	0	0	0	0	0	0	0	0	0	0
4/24/2024	5:30 AM	0	0	0	0	0	0	0	0	0	0	0	0	0
4/24/2024	5:45 AM	0	0	0	0	0	0	0	0	0	0	0	0	0
4/24/2024	6:00 AM	0	0	0	0	0	0	0	0	0	0	0	0	0
4/24/2024	6:15 AM	0	0	0	0	0	0	0	0	0	0	0	0	0
4/24/2024	6:30 AM	0	0	0	0	0	0	0	0	0	0	0	0	0
4/24/2024	6:45 AM	0	0	0	0	0	0	0	0	0	0	0	0	0
4/24/2024	7:00 AM	0	0	0	0	0	0	0	0	0	0	0	0	0
4/24/2024	7:15 AM	0	0	0	0	0	0	0	0	0	0	0	0	0
4/24/2024	7:30 AM	0	0	0	0	0	0	0	0	0	0	0	0	0
4/24/2024	7:45 AM	0	0	0	0	0	0	0	0	0	0	0	0	0
4/24/2024	8:00 AM	0	0	0	0	0	0	0	0	0	0	0	0	0
4/24/2024	8:15 AM	0	0	0	0	0	0	0	0	0	0	0	0	0
4/24/2024	8:30 AM	0	0	0	0	0	0	0	0	0	0	0	0	0
4/24/2024	8:45 AM	0	0	0	0	0	0	0	0	0	0	0	0	0
4/24/2024	9:00 AM	0	0	0	0	0	0	0	0	0	0	0	0	0
4/24/2024	9:15 AM	0	0	0	0	0	0	0	0	0	0	0	0	0
4/24/2024	9:30 AM	0	0	0	0	0	0	0	0	0	0	0	0	0
4/24/2024	9:45 AM	0	0	0	0	0	0	0	0	0	0	0	0	0
4/24/2024	10:00 AM	0	0	0	0	0	0	0	0	0	0	0	0	0
4/24/2024	10:15 AM	0	0	0	0	0	0	0	0	0	0	0	0	0
4/24/2024	10:30 AM	0	0	0	0	0	0	0	0	0	0	0	0	0
4/24/2024	10:45 AM	0	0	0	0	0	0	0	0	0	0	0	0	0
4/24/2024	11:00 AM	0	0	0	0	0	0	0	0	0	0	0	0	0
4/24/2024	11:15 AM	0	0	0	0	0	0	0	0	0	0	0	0	0
4/24/2024	11:30 AM	0	0	0	0	0	0	0	0	0	0	0	0	0
4/24/2024	11:45 AM	0	0	0	0	0	0	0	0	0	0	0	0	0
4/24/2024	12:00 PM	0	0	0	0	0	0	0	0	0	0	0	0	0
4/24/2024	12:15 PM	0	0	0	0	0	0	0	0	0	0	0	0	0
4/24/2024	12:30 PM	0	0	0	0	0	0	0	0	0	0	0	0	0
4/24/2024	12:45 PM	0	0	0	0	0	0	0	0	0	0	0	0	0
4/24/2024	1:00 PM	0	0	0	0	0	0	0	0	0	0	0	0	0
4/24/2024	1:15 PM	0	0	0	0	0	0	0	0	0	0	0	0	0
4/24/2024	1:30 PM	0	0	0	0	0	0	0	0	0	0	0	0	0
4/24/2024	1:45 PM	0	0	0	0	0	0	0	0	0	0	0	0	0
4/24/2024	2:00 PM	0	0	0	0	0	0	0	0	0	0	0	0	0
4/24/2024	2:15 PM	0	0	0	0	0	0	0	0	0	0	0	0	0
4/24/2024	2:30 PM	0	0	0	0	0	0	0	0	0	0	0	0	0
4/24/2024	2:45 PM	0	0	0	0	0	0	0	0	0	0	0	0	0
4/24/2024	3:00 PM	0	0	0	0	0	0	0	0	0	0	0	0	0
4/24/2024	3:15 PM	0	0	0	0	0	0	0	0	0	0	0	0	0
4/24/2024	3:30 PM	0	0	0	0	0	0	0	0	0	0	0	0	0
4/24/2024	3:45 PM	0	0	0	0	0	0	0	0	0	0	0	0	0
4/24/2024	4:00 PM	0	0	0	0	0	0	0	0	0	0	0	0	0
4/24/2024	4:15 PM	0	0	0	0	0	0	0	0	0	0	0	0	0
4/24/2024	4:30 PM	0	0	0	0	0	0	0	0	0	0	0	0	0
4/24/2024	4:45 PM	0	0	0	0	0	0	0	0	0	0	0	0	0
4/24/2024	5:00 PM	0	0	0	0	0	0	0	0	0	0	0	0	0
4/24/2024	5:15 PM	0	0	0	0	0	0	0	0	0	0	0	0	0
4/24/2024	5:30 PM	0	0	0	0	0	0	0	0	0	0	0	0	0
4/24/2024	5:45 PM	0	0	0	0	0	0	0	0	0	0	0	0	0
4/24/2024	6:00 PM	0	0	0	0	0	0	0	0	0	0	0	0	0
4/24/2024	6:15 PM	0	0	0	0	0	0	0	0	0	0	0	0	0
4/24/2024	6:30 PM	0	0	0	0	0	0	0	0	0	0	0	0	0
4/24/2024	6:45 PM	0	0	0	0	0	0	0	0	0	0	0	0	0
4/24/2024	7:00 PM	0	0	0	0	0	0	0	0	0	0	0	0	0
4/24/2024	7:15 PM	0	0	0	0	0	0	0	0	0	0	0	0	0
4/24/2024	7:30 PM	0	0	0	0	0	0	0	0	0	0	0	0	0
4/24/2024	7:45 PM	0	0	0	0	0	0	0	0	0	0	0	0	0
4/24/2024	8:00 PM	0	0	0	0	0	0	0	0	0	0	0	0	0
4/24/2024	8:15 PM	0	0	0	0	0	0	0	0	0	0	0	0	0
4/24/2024	8:30 PM	0	0	0	0	0	0	0	0	0	0	0	0	0
4/24/2024	8:45 PM	0	0	0	0	0	0	0	0	0	0	0	0	0
4/24/2024	9:00 PM	0	0	0	0	0	0	0	0	0	0	0	0	0
4/24/2024	9:15 PM	0	0	0	0	0	0	0	0	0	0	0	0	0
4/24/2024	9:30 PM	0	0	0	0	0	0	0	0	0	0	0	0	0
4/24/2024	9:45 PM	0	0	0	0	0	0	0	0	0	0	0	0	0
4/24/2024	10:00 PM	0	0	0	0	0	0	0	0	0	0	0	0	0
4/24/2024	10:15 PM	0	0	0	0	0	0	0	0	0	0	0	0	0
4/24/2024	10:30 PM	0	0	0	0	0	0	0	0	0	0	0	0	0
4/24/2024	10:45 PM	0	0	0	0	0	0	0	0	0	0	0	0	0
4/24/2024	11:00 PM	0	0	0	0	0	0	0	0	0	0	0	0	0
4/24/2024	11:15 PM	0	0	0	0	0	0	0	0	0	0	0	0	0
4/24/2024	11:30 PM	0	0	0	0	0	0	0	0	0	0	0	0	0
4/24/2024	11:45 PM	0	0	0	0	0	0	0	0	0	0	0	0	0

4/25/2024	12:00 AM	0	0	0	0	0	0	0	0	0	0	0	0	0
4/25/2024	12:15 AM	0	0	0	0	0	0	0	0	0	0	0	0	0
4/25/2024	12:30 AM	0	0	0	0	0	0	0	0	0	0	0	0	0
4/25/2024	12:45 AM	0	0	0	0	0	0	0	0	0	0	0	0	0
4/25/2024	1:00 AM	0	0	0	0	0	0	0	0	0	0	0	0	0
4/25/2024	1:15 AM	0	0	0	0	0	0	0	0	0	0	0	0	0
4/25/2024	1:30 AM	0	0	0	0	0	0	0	0	0	0	0	0	0
4/25/2024	1:45 AM	0	0	0	0	0	0	0	0	0	0	0	0	0
4/25/2024	2:00 AM	0	0	0	0	0	0	0	0	0	0	0	0	0
4/25/2024	2:15 AM	0	0	0	0	0	0	0	0	0	0	0	0	0
4/25/2024	2:30 AM	0	0	0	0	0	0	0	0	0	0	0	0	0
4/25/2024	2:45 AM	0	0	0	0	0	0	0	0	0	0	0	0	0
4/25/2024	3:00 AM	0	0	0	0	0	0	0	0	0	0	0	0	0
4/25/2024	3:15 AM	0	0	0	0	0	0	0	0	0	0	0	0	0
4/25/2024	3:30 AM	0	0	0	0	0	0	0	0	0	0	0	0	0
4/25/2024	3:45 AM	0	0	0	0	0	0	0	0	0	0	0	0	0
4/25/2024	4:00 AM	0	0	0	0	0	0	0	0	0	0	0	0	0
4/25/2024	4:15 AM	0	0	0	0	0	0	0	0	0	0	0	0	0
4/25/2024	4:30 AM	0	0	0	0	0	0	0	0	0	0	0	0	0
4/25/2024	4:45 AM	0	0	0	0	0	0	0	0	0	0	0	0	0
4/25/2024	5:00 AM	0	0	0	0	0	0	0	0	0	0	0	0	0
4/25/2024	5:15 AM	0	0	0	0	0	0	0	0	0	0	0	0	0
4/25/2024	5:30 AM	0	0	0	0	0	0	0	0	0	0	0	0	0
4/25/2024	5:45 AM	0	0	0	0	0	0	0	0	0	0	0	0	0
4/25/2024	6:00 AM	0	0	0	0	0	0	0	0	0	0	0	0	0
4/25/2024	6:15 AM	0	0	0	0	0	0	0	0	0	0	0	0	0
4/25/2024	6:30 AM	0	0	0	0	0	0	0	0	0	0	0	0	0
4/25/2024	6:45 AM	0	0	0	0	0	0	0	0	0	0	0	0	0
4/25/2024	7:00 AM	0	0	0	0	0	0	0	0	0	0	0	0	0
4/25/2024	7:15 AM	0	0	0	0	0	0	0	0	0	0	0	0	0
4/25/2024	7:30 AM	0	0	0	0	0	0	0	0	0	0	0	0	0
4/25/2024	7:45 AM	0	0	0	0	0	0	0	0	0	0	0	0	0
4/25/2024	8:00 AM	0	0	0	0	0	0	0	0	0	0	0	0	0
4/25/2024	8:15 AM	0	0	0	0	0	0	0	0	0	0	0	0	0
4/25/2024	8:30 AM	0	0	0	0	0	0	0	0	0	0	0	0	0
4/25/2024	8:45 AM	0	0	0	0	0	0	0	0	0	0	0	0	0
4/25/2024	9:00 AM	0	0	0	0	0	0	0	0	0	0	0	0	0
4/25/2024	9:15 AM	0	0	0	0	0	0	0	0	0	0	0	0	0
4/25/2024	9:30 AM	0	0	0	0	0	0	0	0	0	0	0	0	0
4/25/2024	9:45 AM	0	0	0	0	0	0	0	0	0	0	0	0	0
4/25/2024	10:00 AM	0	0	0	0	0	0	0	0	0	0	0	0	0
4/25/2024	10:15 AM	0	0	0	0	0	0	0	0	0	0	0	0	0
4/25/2024	10:30 AM	0	0	0	0	0	0	0	0	0	0	0	0	0
4/25/2024	10:45 AM	0	0	0	0	0	0	0	0	0	0	0	0	0
4/25/2024	11:00 AM	0	0	0	0	0	0	0	0	0	0	0	0	0
4/25/2024	11:15 AM	0	0	0	0	0	0	0	0	0	0	0	0	0
4/25/2024	11:30 AM	0	0	0	0	0	0	0	0	0	0	0	0	0
4/25/2024	11:45 AM	0	0	0	0	0	0	0	0	0	0	0	0	0
4/25/2024	12:00 PM	0	0	0	0	0	0	0	0	0	0	0	0	0
4/25/2024	12:15 PM	0	0	0	0	0	0	0	0	0	0	0	0	0
4/25/2024	12:30 PM	0	0	0	0	0	0	0	0	0	0	0	0	0
4/25/2024	12:45 PM	0	0	0	0	0	0	0	0	0	0	0	0	0
4/25/2024	1:00 PM	0	0	0	0	0	0	0	0	0	0	0	0	0
4/25/2024	1:15 PM	0	0	0	0	0	0	0	0	0	0	0	0	0
4/25/2024	1:30 PM	0	0	0	0	0	0	0	0	0	0	0	0	0
4/25/2024	1:45 PM	0	0	0	0	0	0	0	0	0	0	0	0	0
4/25/2024	2:00 PM	0	0	0	0	0	0	0	0	0	0	0	0	0
4/25/2024	2:15 PM	0	0	0	0	0	0	0	0	0	0	0	0	0
4/25/2024	2:30 PM	0	0	0	0	0	0	0	0	0	0	0	0	0
4/25/2024	2:45 PM	0	0	0	0	0	0	0	0	0	0	0	0	0
4/25/2024	3:00 PM	0	0	0	0	0	0	0	0	0	0	0	0	0
4/25/2024	3:15 PM	0	0	0	0	0	0	0	0	0	0	0	0	0
4/25/2024	3:30 PM	0	0	0	0	0	0	0	0	0	0	0	0	0
4/25/2024	3:45 PM	0	0	0	0	0	0	0	0	0	0	0	0	0
4/25/2024	4:00 PM	0	0	0	0	0	0	0	0	0	0	0	0	0
4/25/2024	4:15 PM	0	0	0	0	0	0	0	0	0	0	0	0	0
4/25/2024	4:30 PM	0	0	0	0	0	0	0	0	0	0	0	0	0
4/25/2024	4:45 PM	0	0	0	0	0	0	0	0	0	0	0	0	0
4/25/2024	5:00 PM	0	0	0	0	0	0	0	0	0	0	0	0	0
4/25/2024	5:15 PM	0	0	0	0	0	0	0	0	0	0	0	0	0
4/25/2024	5:30 PM	0	0	0	0	0	0	0	0	0	0	0	0	0
4/25/2024	5:45 PM	0	0	0	0	0	0	0	0	0	0	0	0	0
4/25/2024	6:00 PM	0	0	0	0	0	0	0	0	0	0	0	0	0
4/25/2024	6:15 PM	0	0	0	0	0	0	0	0	0	0	0	0	0
4/25/2024	6:30 PM	0	0	0	0	0	0	0	0	0	0	0	0	0
4/25/2024	6:45 PM	0	0	0	0	0	0	0	0	0	0	0	0	0
4/25/2024	7:00 PM	0	0	0	0	0	0	0	0	0	0	0	0	0
4/25/2024	7:15 PM	0	0	0	0	0	0	0	0	0	0	0	0	0
4/25/2024	7:30 PM	0	0	0	0	0	0	0	0	0	0	0	0	0
4/25/2024	7:45 PM	0	0	0	0	0	0	0	0	0	0	0	0	0
4/25/2024	8:00 PM	0	0	0	0	0	0	0	0	0	0	0	0	0
4/25/2024	8:15 PM	0	0	0	0	0	0	0	0	0	0	0	0	0
4/25/2024	8:30 PM	0	0	0	0	0	0	0	0	0	0	0	0	0
4/25/2024	8:45 PM	0	0	0	0	0	0	0	0	0	0	0	0	0
4/25/2024	9:00 PM	0	0	0	0	0	0	0	0	0	0	0	0	0
4/25/2024	9:15 PM	0	0	0	0	0	0	0	0	0	0	0	0	0
4/25/2024	9:30 PM	0	0	0	0	0	0	0	0	0	0	0	0	0
4/25/2024	9:45 PM	0	0	0	0	0	0	0	0	0	0	0	0	0
4/25/2024	10:00 PM	0	0	0	0	0	0	0	0	0	0	0	0	0
4/25/2024	10:15 PM	0	0	0	0	0	0	0	0	0	0	0	0	0
4/25/2024	10:30 PM	0	0	0	0	0	0	0	0	0	0	0	0	0
4/25/2024	10:45 PM	0	0	0	0	0	0	0	0	0	0	0	0	0
4/25/2024	11:00 PM	0	0	0	0	0	0	0	0	0	0	0	0	0
4/25/2024	11:15 PM	0	0	0	0	0	0	0	0	0	0	0	0	0
4/25/2024	11:30 PM	0	0	0	0	0	0	0	0	0	0	0	0	0
4/25/2024	11:45 PM	0	0	0	0	0	0	0	0	0	0	0	0	0

SB
File Name:
Start Date: 4/23/2024
Start Time: 0
Site Code: 42
Station ID: 1
Location 1: I-126 On/Off-Ramp, south of W Colonial Life Rd
Location 2:

Date	Time	1	2	3	4	5	6	7	8	9	10	11	12	13
4/23/2024	12:00 AM	0	0	0	0	0	0	0	0	0	0	0	0	0
4/23/2024	12:15 AM	0	0	0	0	0	0	0	0	0	0	0	0	0
4/23/2024	12:30 AM	0	0	0	0	0	0	0	0	0	0	0	0	0
4/23/2024	12:45 AM	0	0	0	0	0	0	0	0	0	0	0	0	0
4/23/2024	1:00 AM	0	0	0	0	0	0	0	0	0	0	0	0	0
4/23/2024	1:15 AM	0	0	0	0	0	0	0	0	0	0	0	0	0
4/23/2024	1:30 AM	0	0	0	0	0	0	0	0	0	0	0	0	0
4/23/2024	1:45 AM	0	0	0	0	0	0	0	0	0	0	0	0	0
4/23/2024	2:00 AM	0	0	0	0	0	0	0	0	0	0	0	0	0
4/23/2024	2:15 AM	0	0	0	0	0	0	0	0	0	0	0	0	0
4/23/2024	2:30 AM	0	0	0	0	0	0	0	0	0	0	0	0	0
4/23/2024	2:45 AM	0	0	0	0	0	0	0	0	0	0	0	0	0
4/23/2024	3:00 AM	0	0	0	0	0	0	0	0	0	0	0	0	0
4/23/2024	3:15 AM	0	0	0	0	0	0	0	0	0	0	0	0	0
4/23/2024	3:30 AM	0	0	0	0	0	0	0	0	0	0	0	0	0
4/23/2024	3:45 AM	0	0	0	0	0	0	0	0	0	0	0	0	0
4/23/2024	4:00 AM	0	0	0	0	0	0	0	0	0	0	0	0	0
4/23/2024	4:15 AM	0	0	0	0	0	0	0	0	0	0	0	0	0
4/23/2024	4:30 AM	0	0	0	0	0	0	0	0	0	0	0	0	0
4/23/2024	4:45 AM	0	0	0	0	0	0	0	0	0	0	0	0	0
4/23/2024	5:00 AM	0	0	0	0	0	0	0	0	0	0	0	0	0
4/23/2024	5:15 AM	0	0	0	0	0	0	0	0	0	0	0	0	0
4/23/2024	5:30 AM	0	0	0	0	0	0	0	0	0	0	0	0	0
4/23/2024	5:45 AM	0	0	0	0	0	0	0	0	0	0	0	0	0
4/23/2024	6:00 AM	0	0	0	0	0	0	0	0	0	0	0	0	0
4/23/2024	6:15 AM	0	0	0	0	0	0	0	0	0	0	0	0	0
4/23/2024	6:30 AM	0	0	0	0	0	0	0	0	0	0	0	0	0
4/23/2024	6:45 AM	0	0	0	0	0	0	0	0	0	0	0	0	0
4/23/2024	7:00 AM	0	0	0	0	0	0	0	0	0	0	0	0	0
4/23/2024	7:15 AM	0	0	0	0	0	0	0	0	0	0	0	0	0
4/23/2024	7:30 AM	0	0	0	0	0	0	0	0	0	0	0	0	0
4/23/2024	7:45 AM	0	0	0	0	0	0	0	0	0	0	0	0	0
4/23/2024	8:00 AM	0	0	0	0	0	0	0	0	0	0	0	0	0
4/23/2024	8:15 AM	0	0	0	0	0	0	0	0	0	0	0	0	0
4/23/2024	8:30 AM	0	0	0	0	0	0	0	0	0	0	0	0	0
4/23/2024	8:45 AM	0	0	0	0	0	0	0	0	0	0	0	0	0
4/23/2024	9:00 AM	0	0	0	0	0	0	0	0	0	0	0	0	0
4/23/2024	9:15 AM	0	0	0	0	0	0	0	0	0	0	0	0	0
4/23/2024	9:30 AM	0	0	0	0	0	0	0	0	0	0	0	0	0
4/23/2024	9:45 AM	0	0	0	0	0	0	0	0	0	0	0	0	0
4/23/2024	10:00 AM	0	0	0	0	0	0	0	0	0	0	0	0	0
4/23/2024	10:15 AM	0	0	0	0	0	0	0	0	0	0	0	0	0
4/23/2024	10:30 AM	0	0	0	0	0	0	0	0	0	0	0	0	0
4/23/2024	10:45 AM	0	0	0	0	0	0	0	0	0	0	0	0	0
4/23/2024	11:00 AM	0	0	0	0	0	0	0	0	0	0	0	0	0
4/23/2024	11:15 AM	0	0	0	0	0	0	0	0	0	0	0	0	0
4/23/2024	11:30 AM	0	0	0	0	0	0	0	0	0	0	0	0	0
4/23/2024	11:45 AM	0	0	0	0	0	0	0	0	0	0	0	0	0
4/23/2024	12:00 PM	0	0	0	0	0	0	0	0	0	0	0	0	0
4/23/2024	12:15 PM	0	0	0	0	0	0	0	0	0	0	0	0	0
4/23/2024	12:30 PM	0	0	0	0	0	0	0	0	0	0	0	0	0
4/23/2024	12:45 PM	0	0	0	0	0	0	0	0	0	0	0	0	0
4/23/2024	1:00 PM	0	0	0	0	0	0	0	0	0	0	0	0	0
4/23/2024	1:15 PM	0	0	0	0	0	0	0	0	0	0	0	0	0
4/23/2024	1:30 PM	0	0	0	0	0	0	0	0	0	0	0	0	0
4/23/2024	1:45 PM	0	0	0	0	0	0	0	0	0	0	0	0	0
4/23/2024	2:00 PM	0	0	0	0	0	0	0	0	0	0	0	0	0
4/23/2024	2:15 PM	0	0	0	0	0	0	0	0	0	0	0	0	0
4/23/2024	2:30 PM	0	0	0	0	0	0	0	0	0	0	0	0	0
4/23/2024	2:45 PM	0	0	0	0	0	0	0	0	0	0	0	0	0
4/23/2024	3:00 PM	0	0	0	0	0	0	0	0	0	0	0	0	0
4/23/2024	3:15 PM	0	0	0	0	0	0	0	0	0	0	0	0	0
4/23/2024	3:30 PM	0	0	0	0	0	0	0	0	0	0	0	0	0
4/23/2024	3:45 PM	0	0	0	0	0	0	0	0	0	0	0	0	0
4/23/2024	4:00 PM	0	0	0	0	0	0	0	0	0	0	0	0	0
4/23/2024	4:15 PM	0	0	0	0	0	0	0	0	0	0	0	0	0
4/23/2024	4:30 PM	0	0	0	0	0	0	0	0	0	0	0	0	0
4/23/2024	4:45 PM	0	0	0	0	0	0	0	0	0	0	0	0	0
4/23/2024	5:00 PM	0	0	0	0	0	0	0	0	0	0	0	0	0
4/23/2024	5:15 PM	0	0	0	0	0	0	0	0	0	0	0	0	0
4/23/2024	5:30 PM	0	0	0	0	0	0	0	0	0	0	0	0	0
4/23/2024	5:45 PM	0	0	0	0	0	0	0	0	0	0	0	0	0
4/23/2024	6:00 PM	0	0	0	0	0	0	0	0	0	0	0	0	0
4/23/2024	6:15 PM	0	0	0	0	0	0	0	0	0	0	0	0	0
4/23/2024	6:30 PM	0	0	0	0	0	0	0	0	0	0	0	0	0
4/23/2024	6:45 PM	0	0	0	0	0	0	0	0	0	0	0	0	0
4/23/2024	7:00 PM	0	15	5	0	0	0	0	0	0	0	0	0	0
4/23/2024	7:15 PM	0	24	4	0	0	0	0	0	0	0	0	0	0
4/23/2024	7:30 PM	0	11	4	0	0	0	0	0	0	0	0	0	0
4/23/2024	7:45 PM	1	17	5	0	0	0	0	0	0	0	0	0	0
4/23/2024	8:00 PM	0	22	3	0	0	0	0	0	0	0	0	0	0
4/23/2024	8:15 PM	0	12	2	0	0	0	0	0	0	0	0	0	0
4/23/2024	8:30 PM	0	18	8	0	2	0	0	0	0	0	0	0	0
4/23/2024	8:45 PM	0	13	3	0	0	0	0	0	0	0	0	0	0
4/23/2024	9:00 PM	0	11	4	0	0	0	0	0	0	0	0	0	0
4/23/2024	9:15 PM	0	19	3	0	0	0	0	0	0	0	0	0	0
4/23/2024	9:30 PM	0	9	2	0	0	0	0	0	0	0	0	0	0
4/23/2024	9:45 PM	0	8	3	0	0	0	0	0	0	0	0	0	0
4/23/2024	10:00 PM	0	3	2	0	0	0	0	0	0	0	0	0	0
4/23/2024	10:15 PM	0	6	2	0	0	0	0	0	0	0	0	0	0
4/23/2024	10:30 PM	0	8	3	0	0	0	0	0	0	0	0	0	0
4/23/2024	10:45 PM	0	4	2	0	0	0	0	0	0	0	0	0	0
4/23/2024	11:00 PM	0	5	3	0	0	0	0	0	0	0	0	0	0
4/23/2024	11:15 PM	0	4	2	0	0	0	0	0	0	0	0	0	0
4/23/2024	11:30 PM	0	5	3	0	0	0	0	0	0	0	0	0	0
4/23/2024	11:45 PM	0	6	2	0	0	0	0	0	0	0	0	0	0

4/24/2024	12:00 AM	0	5	2	0	0	0	0	0	0	0	0	0
4/24/2024	12:15 AM	0	4	1	0	0	0	0	0	0	0	0	0
4/24/2024	12:30 AM	0	3	1	0	0	0	0	0	0	0	0	0
4/24/2024	12:45 AM	0	6	1	0	0	0	0	0	0	0	0	0
4/24/2024	1:00 AM	0	4	1	0	0	0	0	0	0	0	0	0
4/24/2024	1:15 AM	0	2	1	0	0	0	0	0	0	0	0	0
4/24/2024	1:30 AM	0	5	1	0	0	0	0	0	0	0	0	0
4/24/2024	1:45 AM	0	4	2	0	0	0	0	0	0	0	0	0
4/24/2024	2:00 AM	0	6	1	0	0	0	0	0	0	0	0	0
4/24/2024	2:15 AM	0	4	1	0	0	0	0	0	0	0	0	0
4/24/2024	2:30 AM	0	3	1	0	0	0	0	0	0	0	0	0
4/24/2024	2:45 AM	0	2	1	0	0	0	0	0	0	0	0	0
4/24/2024	3:00 AM	0	4	1	0	0	0	0	0	0	0	0	0
4/24/2024	3:15 AM	0	2	1	0	0	0	0	0	0	0	0	0
4/24/2024	3:30 AM	0	2	1	0	0	0	0	0	0	0	0	0
4/24/2024	3:45 AM	0	2	1	0	0	0	0	0	0	0	0	0
4/24/2024	4:00 AM	0	2	1	0	0	0	0	0	0	0	0	0
4/24/2024	4:15 AM	0	1	1	0	0	0	0	0	0	0	0	0
4/24/2024	4:30 AM	0	3	1	0	0	0	0	0	0	0	0	0
4/24/2024	4:45 AM	0	5	1	0	0	0	0	0	0	0	0	0
4/24/2024	5:00 AM	0	8	1	0	0	0	0	0	0	0	0	0
4/24/2024	5:15 AM	0	10	1	0	0	0	0	0	0	0	0	0
4/24/2024	5:30 AM	0	9	1	0	0	0	0	0	0	0	0	0
4/24/2024	5:45 AM	0	11	1	0	0	0	0	0	0	0	0	0
4/24/2024	6:00 AM	0	15	2	0	1	0	0	0	0	0	0	0
4/24/2024	6:15 AM	0	17	3	0	0	0	0	0	0	0	0	0
4/24/2024	6:30 AM	0	20	5	0	0	0	0	0	0	0	0	0
4/24/2024	6:45 AM	0	22	7	0	0	3	0	0	0	0	0	0
4/24/2024	7:00 AM	0	39	10	1	0	0	0	0	0	0	0	0
4/24/2024	7:15 AM	0	42	17	0	0	1	0	0	0	0	0	0
4/24/2024	7:30 AM	0	55	22	0	0	0	0	0	0	0	0	0
4/24/2024	7:45 AM	0	75	22	0	0	0	0	0	0	0	0	0
4/24/2024	8:00 AM	0	72	13	0	0	0	0	0	0	0	0	0
4/24/2024	8:15 AM	0	79	15	0	1	0	0	0	0	0	0	0
4/24/2024	8:30 AM	0	69	14	0	0	0	0	0	0	0	0	0
4/24/2024	8:45 AM	0	61	12	0	0	0	1	0	1	0	0	0
4/24/2024	9:00 AM	0	45	7	0	0	0	0	0	0	0	0	0
4/24/2024	9:15 AM	0	41	9	0	0	0	0	0	0	0	0	0
4/24/2024	9:30 AM	0	40	11	0	0	0	0	0	0	0	0	0
4/24/2024	9:45 AM	0	39	8	0	0	0	1	0	1	0	0	0
4/24/2024	10:00 AM	0	39	10	0	0	0	0	0	0	0	0	0
4/24/2024	10:15 AM	0	36	9	2	0	0	0	0	1	0	0	0
4/24/2024	10:30 AM	1	38	7	0	1	0	0	0	0	0	0	0
4/24/2024	10:45 AM	0	45	11	0	0	0	1	0	0	0	0	0
4/24/2024	11:00 AM	0	45	9	1	1	0	0	0	0	0	0	0
4/24/2024	11:15 AM	0	42	9	0	0	1	1	0	0	0	0	0
4/24/2024	11:30 AM	0	45	7	0	0	1	0	0	1	0	0	0
4/24/2024	11:45 AM	0	44	9	0	0	0	1	0	0	0	0	0
4/24/2024	12:00 PM	0	45	5	0	0	0	0	1	1	0	0	0
4/24/2024	12:15 PM	0	44	6	0	0	0	1	0	0	0	0	0
4/24/2024	12:30 PM	0	42	5	0	0	1	0	0	0	1	0	0
4/24/2024	12:45 PM	1	41	5	0	0	0	1	0	1	0	0	0
4/24/2024	1:00 PM	0	49	7	0	0	0	0	1	0	0	0	0
4/24/2024	1:15 PM	1	47	7	0	0	1	0	0	1	0	0	0
4/24/2024	1:30 PM	0	45	6	2	0	0	1	0	0	0	0	0
4/24/2024	1:45 PM	1	44	7	1	0	0	1	0	0	0	0	0
4/24/2024	2:00 PM	0	46	7	0	0	0	0	0	1	0	0	0
4/24/2024	2:15 PM	0	44	6	1	0	1	0	0	0	0	0	0
4/24/2024	2:30 PM	0	41	8	0	0	0	0	0	0	0	0	0
4/24/2024	2:45 PM	0	39	6	1	0	0	0	0	0	0	0	0
4/24/2024	3:00 PM	0	49	6	1	1	0	0	0	0	0	0	0
4/24/2024	3:15 PM	0	47	9	0	0	0	0	0	0	0	0	0
4/24/2024	3:30 PM	0	48	4	0	1	0	0	0	0	0	0	0
4/24/2024	3:45 PM	0	44	6	1	0	0	0	0	0	0	0	0
4/24/2024	4:00 PM	0	49	8	0	2	1	0	0	0	0	0	0
4/24/2024	4:15 PM	0	45	6	1	0	0	0	0	1	0	0	0
4/24/2024	4:30 PM	0	47	7	0	1	0	0	0	0	0	0	0
4/24/2024	4:45 PM	1	41	9	0	0	1	0	0	0	0	0	0
4/24/2024	5:00 PM	0	52	10	0	0	0	0	0	0	0	0	0
4/24/2024	5:15 PM	0	62	9	1	2	0	0	0	0	0	0	0
4/24/2024	5:30 PM	0	59	7	0	1	0	0	0	0	0	0	0
4/24/2024	5:45 PM	0	50	6	0	0	0	0	0	0	0	0	0
4/24/2024	6:00 PM	0	49	7	0	0	0	0	0	0	0	0	0
4/24/2024	6:15 PM	0	45	6	0	1	0	0	0	0	0	0	0
4/24/2024	6:30 PM	0	41	6	1	0	0	0	0	0	0	0	0
4/24/2024	6:45 PM	0	35	12	0	0	0	1	0	0	0	0	0
4/24/2024	7:00 PM	0	21	6	0	0	0	0	0	0	0	0	0
4/24/2024	7:15 PM	0	25	5	0	1	0	0	1	0	0	0	0
4/24/2024	7:30 PM	0	23	3	0	2	0	0	0	0	0	0	0
4/24/2024	7:45 PM	0	29	7	1	0	0	0	1	0	0	0	0
4/24/2024	8:00 PM	0	26	7	0	0	0	0	0	0	0	0	0
4/24/2024	8:15 PM	0	24	4	0	1	0	0	0	0	0	0	0
4/24/2024	8:30 PM	0	29	3	0	2	0	0	0	0	0	0	0
4/24/2024	8:45 PM	0	30	6	0	0	0	0	0	0	0	0	0
4/24/2024	9:00 PM	0	21	5	0	0	0	0	0	0	0	0	0
4/24/2024	9:15 PM	0	19	3	0	0	0	0	0	0	0	0	0
4/24/2024	9:30 PM	0	10	3	0	0	0	0	0	0	0	0	0
4/24/2024	9:45 PM	0	11	2	0	0	0	0	0	0	0	0	0
4/24/2024	10:00 PM	0	15	3	0	0	0	0	0	0	0	0	0
4/24/2024	10:15 PM	0	11	2	0	0	0	0	0	0	0	0	0
4/24/2024	10:30 PM	0	10	2	0	0	0	0	0	0	0	0	0
4/24/2024	10:45 PM	0	10	1	0	0	0	0	0	0	0	0	0
4/24/2024	11:00 PM	0	10	1	0	0	0	0	0	0	0	0	0
4/24/2024	11:15 PM	0	8	1	0	0	0	0	0	0	0	0	0
4/24/2024	11:30 PM	0	9	1	0	0	0	0	0	0	0	0	0
4/24/2024	11:45 PM	0	9	1	0	1	0	0	0	0	0	0	0

4/25/2024	12:00 AM	0	2	0	0	0	0	0	0	0	0	0	0
4/25/2024	12:15 AM	0	4	0	0	0	0	0	0	0	0	0	0
4/25/2024	12:30 AM	0	2	0	0	0	0	0	0	0	0	0	0
4/25/2024	12:45 AM	0	5	0	0	0	0	0	0	0	0	0	0
4/25/2024	1:00 AM	0	7	0	0	0	0	0	0	0	0	0	0
4/25/2024	1:15 AM	0	1	0	0	0	0	0	0	0	0	0	0
4/25/2024	1:30 AM	0	1	0	0	0	0	0	0	0	0	0	0
4/25/2024	1:45 AM	0	2	0	0	0	0	0	0	0	0	0	0
4/25/2024	2:00 AM	0	1	0	0	0	0	0	0	0	0	0	0
4/25/2024	2:15 AM	0	0	0	0	1	0	0	0	0	0	0	0
4/25/2024	2:30 AM	0	1	0	0	0	0	0	0	0	0	0	0
4/25/2024	2:45 AM	0	2	0	0	0	0	0	0	0	0	0	0
4/25/2024	3:00 AM	0	2	0	0	0	0	0	0	0	0	0	0
4/25/2024	3:15 AM	0	5	0	0	0	0	0	0	0	0	0	0
4/25/2024	3:30 AM	0	2	0	0	0	0	0	0	0	0	0	0
4/25/2024	3:45 AM	0	5	0	0	0	0	0	0	0	0	0	0
4/25/2024	4:00 AM	0	1	0	0	0	0	0	0	0	0	0	0
4/25/2024	4:15 AM	0	5	0	0	0	0	0	0	0	0	0	0
4/25/2024	4:30 AM	0	4	0	0	0	0	0	0	0	0	0	0
4/25/2024	4:45 AM	0	3	0	0	0	0	0	0	0	0	0	0
4/25/2024	5:00 AM	0	0	0	0	0	0	0	0	0	0	0	0
4/25/2024	5:15 AM	0	8	0	0	0	0	0	0	0	0	0	0
4/25/2024	5:30 AM	0	8	0	0	0	0	0	0	0	0	0	0
4/25/2024	5:45 AM	0	6	0	0	0	0	0	0	0	0	0	0
4/25/2024	6:00 AM	0	5	0	0	0	0	0	0	0	0	0	0
4/25/2024	6:15 AM	0	14	4	0	0	0	0	0	0	0	0	0
4/25/2024	6:30 AM	1	20	5	0	0	0	0	0	0	0	0	0
4/25/2024	6:45 AM	0	24	6	0	0	0	0	0	0	0	0	0
4/25/2024	7:00 AM	1	41	4	1	1	0	0	0	0	0	0	0
4/25/2024	7:15 AM	0	65	8	0	0	1	1	0	0	0	0	0
4/25/2024	7:30 AM	0	80	9	0	1	0	0	0	0	0	0	0
4/25/2024	7:45 AM	0	80	20	0	0	0	0	0	0	0	0	0
4/25/2024	8:00 AM	0	61	17	0	0	5	0	0	0	0	0	0
4/25/2024	8:15 AM	0	63	8	0	0	0	0	0	0	0	0	0
4/25/2024	8:30 AM	0	49	10	0	1	0	0	0	0	0	0	0
4/25/2024	8:45 AM	0	41	7	0	0	0	0	0	0	0	0	0
4/25/2024	9:00 AM	0	20	5	0	0	2	0	0	0	0	0	0
4/25/2024	9:15 AM	0	26	3	0	0	1	0	0	0	0	0	0
4/25/2024	9:30 AM	0	20	7	0	0	0	0	0	0	0	0	0
4/25/2024	9:45 AM	0	28	3	0	0	0	1	0	0	0	0	0
4/25/2024	10:00 AM	0	24	8	0	0	1	0	0	1	0	0	0
4/25/2024	10:15 AM	0	18	2	0	1	5	0	0	0	0	0	0
4/25/2024	10:30 AM	0	25	11	0	0	3	0	0	0	0	0	0
4/25/2024	10:45 AM	0	21	12	0	0	0	0	0	0	0	0	0
4/25/2024	11:00 AM	0	37	4	0	0	0	0	0	0	0	0	0
4/25/2024	11:15 AM	0	25	7	0	0	0	0	0	0	0	0	0
4/25/2024	11:30 AM	0	45	8	0	0	0	0	0	0	0	0	0
4/25/2024	11:45 AM	0	40	9	0	0	0	0	0	1	0	0	0
4/25/2024	12:00 PM	0	34	8	0	0	0	0	0	1	0	0	0
4/25/2024	12:15 PM	0	41	3	0	1	0	0	1	0	0	0	0
4/25/2024	12:30 PM	0	33	11	0	0	0	0	0	0	0	0	0
4/25/2024	12:45 PM	0	37	4	0	0	0	0	0	0	0	0	0
4/25/2024	1:00 PM	0	41	8	0	0	0	0	0	0	0	0	0
4/25/2024	1:15 PM	0	45	11	0	0	0	0	0	0	0	0	0
4/25/2024	1:30 PM	0	45	10	0	1	0	0	0	0	0	0	0
4/25/2024	1:45 PM	0	48	4	0	2	0	0	0	0	0	0	0
4/25/2024	2:00 PM	0	40	6	0	0	0	0	0	0	0	0	0
4/25/2024	2:15 PM	0	41	4	0	0	0	0	0	0	0	0	0
4/25/2024	2:30 PM	0	30	5	0	0	0	0	0	0	0	0	0
4/25/2024	2:45 PM	0	33	8	0	0	0	0	0	0	0	0	0
4/25/2024	3:00 PM	0	42	8	0	0	0	0	0	0	0	0	0
4/25/2024	3:15 PM	0	40	9	0	0	0	0	0	0	0	0	0
4/25/2024	3:30 PM	0	48	7	0	2	0	0	0	0	0	0	0
4/25/2024	3:45 PM	0	34	8	0	0	0	0	0	0	0	0	0
4/25/2024	4:00 PM	0	31	7	0	0	0	0	0	0	0	0	0
4/25/2024	4:15 PM	1	51	6	0	1	0	0	0	0	0	0	0
4/25/2024	4:30 PM	0	56	5	0	1	0	0	0	0	0	0	0
4/25/2024	4:45 PM	0	58	9	0	1	0	0	0	0	0	0	0
4/25/2024	5:00 PM	0	62	5	0	0	0	0	0	0	0	0	0
4/25/2024	5:15 PM	0	53	8	0	0	0	0	0	0	0	0	0
4/25/2024	5:30 PM	1	51	5	0	2	0	0	0	0	0	0	0
4/25/2024	5:45 PM	0	33	3	0	0	0	0	0	0	0	0	0
4/25/2024	6:00 PM	0	34	4	0	0	0	0	0	0	0	0	0
4/25/2024	6:15 PM	0	29	4	0	0	0	0	0	0	0	0	0
4/25/2024	6:30 PM	0	28	4	0	1	0	0	0	0	0	0	0
4/25/2024	6:45 PM	0	20	5	0	0	0	0	0	0	0	0	0
4/25/2024	7:00 PM	0	0	0	0	0	0	0	0	0	0	0	0
4/25/2024	7:15 PM	0	0	0	0	0	0	0	0	0	0	0	0
4/25/2024	7:30 PM	0	0	0	0	0	0	0	0	0	0	0	0
4/25/2024	7:45 PM	0	0	0	0	0	0	0	0	0	0	0	0
4/25/2024	8:00 PM	0	0	0	0	0	0	0	0	0	0	0	0
4/25/2024	8:15 PM	0	0	0	0	0	0	0	0	0	0	0	0
4/25/2024	8:30 PM	0	0	0	0	0	0	0	0	0	0	0	0
4/25/2024	8:45 PM	0	0	0	0	0	0	0	0	0	0	0	0
4/25/2024	9:00 PM	0	0	0	0	0	0	0	0	0	0	0	0
4/25/2024	9:15 PM	0	0	0	0	0	0	0	0	0	0	0	0
4/25/2024	9:30 PM	0	0	0	0	0	0	0	0	0	0	0	0
4/25/2024	9:45 PM	0	0	0	0	0	0	0	0	0	0	0	0
4/25/2024	10:00 PM	0	0	0	0	0	0	0	0	0	0	0	0
4/25/2024	10:15 PM	0	0	0	0	0	0	0	0	0	0	0	0
4/25/2024	10:30 PM	0	0	0	0	0	0	0	0	0	0	0	0
4/25/2024	10:45 PM	0	0	0	0	0	0	0	0	0	0	0	0
4/25/2024	11:00 PM	0	0	0	0	0	0	0	0	0	0	0	0
4/25/2024	11:15 PM	0	0	0	0	0	0	0	0	0	0	0	0
4/25/2024	11:30 PM	0	0	0	0	0	0	0	0	0	0	0	0
4/25/2024	11:45 PM	0	0	0	0	0	0	0	0	0	0	0	0

NB
File Name:
Start Date: 4/23/2024
Start Time: 0
Site Code: 42
Station ID: 1
Location 1: I-126 On/Off-Ramp, south of W Colonial Life Rd
Location 2:

Date	Time	1	2	3	4	5	6	7	8	9	10	11	12	13
4/23/2024	12:00 AM	0	0	0	0	0	0	0	0	0	0	0	0	0
4/23/2024	12:15 AM	0	0	0	0	0	0	0	0	0	0	0	0	0
4/23/2024	12:30 AM	0	0	0	0	0	0	0	0	0	0	0	0	0
4/23/2024	12:45 AM	0	0	0	0	0	0	0	0	0	0	0	0	0
4/23/2024	1:00 AM	0	0	0	0	0	0	0	0	0	0	0	0	0
4/23/2024	1:15 AM	0	0	0	0	0	0	0	0	0	0	0	0	0
4/23/2024	1:30 AM	0	0	0	0	0	0	0	0	0	0	0	0	0
4/23/2024	1:45 AM	0	0	0	0	0	0	0	0	0	0	0	0	0
4/23/2024	2:00 AM	0	0	0	0	0	0	0	0	0	0	0	0	0
4/23/2024	2:15 AM	0	0	0	0	0	0	0	0	0	0	0	0	0
4/23/2024	2:30 AM	0	0	0	0	0	0	0	0	0	0	0	0	0
4/23/2024	2:45 AM	0	0	0	0	0	0	0	0	0	0	0	0	0
4/23/2024	3:00 AM	0	0	0	0	0	0	0	0	0	0	0	0	0
4/23/2024	3:15 AM	0	0	0	0	0	0	0	0	0	0	0	0	0
4/23/2024	3:30 AM	0	0	0	0	0	0	0	0	0	0	0	0	0
4/23/2024	3:45 AM	0	0	0	0	0	0	0	0	0	0	0	0	0
4/23/2024	4:00 AM	0	0	0	0	0	0	0	0	0	0	0	0	0
4/23/2024	4:15 AM	0	0	0	0	0	0	0	0	0	0	0	0	0
4/23/2024	4:30 AM	0	0	0	0	0	0	0	0	0	0	0	0	0
4/23/2024	4:45 AM	0	0	0	0	0	0	0	0	0	0	0	0	0
4/23/2024	5:00 AM	0	0	0	0	0	0	0	0	0	0	0	0	0
4/23/2024	5:15 AM	0	0	0	0	0	0	0	0	0	0	0	0	0
4/23/2024	5:30 AM	0	0	0	0	0	0	0	0	0	0	0	0	0
4/23/2024	5:45 AM	0	0	0	0	0	0	0	0	0	0	0	0	0
4/23/2024	6:00 AM	0	0	0	0	0	0	0	0	0	0	0	0	0
4/23/2024	6:15 AM	0	0	0	0	0	0	0	0	0	0	0	0	0
4/23/2024	6:30 AM	0	0	0	0	0	0	0	0	0	0	0	0	0
4/23/2024	6:45 AM	0	0	0	0	0	0	0	0	0	0	0	0	0
4/23/2024	7:00 AM	0	0	0	0	0	0	0	0	0	0	0	0	0
4/23/2024	7:15 AM	0	0	0	0	0	0	0	0	0	0	0	0	0
4/23/2024	7:30 AM	0	0	0	0	0	0	0	0	0	0	0	0	0
4/23/2024	7:45 AM	0	0	0	0	0	0	0	0	0	0	0	0	0
4/23/2024	8:00 AM	0	0	0	0	0	0	0	0	0	0	0	0	0
4/23/2024	8:15 AM	0	0	0	0	0	0	0	0	0	0	0	0	0
4/23/2024	8:30 AM	0	0	0	0	0	0	0	0	0	0	0	0	0
4/23/2024	8:45 AM	0	0	0	0	0	0	0	0	0	0	0	0	0
4/23/2024	9:00 AM	0	0	0	0	0	0	0	0	0	0	0	0	0
4/23/2024	9:15 AM	0	0	0	0	0	0	0	0	0	0	0	0	0
4/23/2024	9:30 AM	0	0	0	0	0	0	0	0	0	0	0	0	0
4/23/2024	9:45 AM	0	0	0	0	0	0	0	0	0	0	0	0	0
4/23/2024	10:00 AM	0	0	0	0	0	0	0	0	0	0	0	0	0
4/23/2024	10:15 AM	0	0	0	0	0	0	0	0	0	0	0	0	0
4/23/2024	10:30 AM	0	0	0	0	0	0	0	0	0	0	0	0	0
4/23/2024	10:45 AM	0	0	0	0	0	0	0	0	0	0	0	0	0
4/23/2024	11:00 AM	0	0	0	0	0	0	0	0	0	0	0	0	0
4/23/2024	11:15 AM	0	0	0	0	0	0	0	0	0	0	0	0	0
4/23/2024	11:30 AM	0	0	0	0	0	0	0	0	0	0	0	0	0
4/23/2024	11:45 AM	0	0	0	0	0	0	0	0	0	0	0	0	0
4/23/2024	12:00 PM	0	0	0	0	0	0	0	0	0	0	0	0	0
4/23/2024	12:15 PM	0	0	0	0	0	0	0	0	0	0	0	0	0
4/23/2024	12:30 PM	0	0	0	0	0	0	0	0	0	0	0	0	0
4/23/2024	12:45 PM	0	0	0	0	0	0	0	0	0	0	0	0	0
4/23/2024	1:00 PM	0	0	0	0	0	0	0	0	0	0	0	0	0
4/23/2024	1:15 PM	0	0	0	0	0	0	0	0	0	0	0	0	0
4/23/2024	1:30 PM	0	0	0	0	0	0	0	0	0	0	0	0	0
4/23/2024	1:45 PM	0	0	0	0	0	0	0	0	0	0	0	0	0
4/23/2024	2:00 PM	0	0	0	0	0	0	0	0	0	0	0	0	0
4/23/2024	2:15 PM	0	0	0	0	0	0	0	0	0	0	0	0	0
4/23/2024	2:30 PM	0	0	0	0	0	0	0	0	0	0	0	0	0
4/23/2024	2:45 PM	0	0	0	0	0	0	0	0	0	0	0	0	0
4/23/2024	3:00 PM	0	0	0	0	0	0	0	0	0	0	0	0	0
4/23/2024	3:15 PM	0	0	0	0	0	0	0	0	0	0	0	0	0
4/23/2024	3:30 PM	0	0	0	0	0	0	0	0	0	0	0	0	0
4/23/2024	3:45 PM	0	0	0	0	0	0	0	0	0	0	0	0	0
4/23/2024	4:00 PM	0	0	0	0	0	0	0	0	0	0	0	0	0
4/23/2024	4:15 PM	0	0	0	0	0	0	0	0	0	0	0	0	0
4/23/2024	4:30 PM	0	0	0	0	0	0	0	0	0	0	0	0	0
4/23/2024	4:45 PM	0	0	0	0	0	0	0	0	0	0	0	0	0
4/23/2024	5:00 PM	0	0	0	0	0	0	0	0	0	0	0	0	0
4/23/2024	5:15 PM	0	0	0	0	0	0	0	0	0	0	0	0	0
4/23/2024	5:30 PM	0	0	0	0	0	0	0	0	0	0	0	0	0
4/23/2024	5:45 PM	0	0	0	0	0	0	0	0	0	0	0	0	0
4/23/2024	6:00 PM	0	0	0	0	0	0	0	0	0	0	0	0	0
4/23/2024	6:15 PM	0	0	0	0	0	0	0	0	0	0	0	0	0
4/23/2024	6:30 PM	0	0	0	0	0	0	0	0	0	0	0	0	0
4/23/2024	6:45 PM	0	0	0	0	0	0	0	0	0	0	0	0	0
4/23/2024	7:00 PM	0	0	0	0	0	0	0	0	0	0	0	0	0
4/23/2024	7:15 PM	0	0	0	0	0	0	0	0	0	0	0	0	0
4/23/2024	7:30 PM	0	0	0	0	0	0	0	0	0	0	0	0	0
4/23/2024	7:45 PM	0	0	0	0	0	0	0	0	0	0	0	0	0
4/23/2024	8:00 PM	0	0	0	0	0	0	0	0	0	0	0	0	0
4/23/2024	8:15 PM	0	0	0	0	0	0	0	0	0	0	0	0	0
4/23/2024	8:30 PM	0	0	0	0	0	0	0	0	0	0	0	0	0
4/23/2024	8:45 PM	0	0	0	0	0	0	0	0	0	0	0	0	0
4/23/2024	9:00 PM	0	0	0	0	0	0	0	0	0	0	0	0	0
4/23/2024	9:15 PM	0	0	0	0	0	0	0	0	0	0	0	0	0
4/23/2024	9:30 PM	0	0	0	0	0	0	0	0	0	0	0	0	0
4/23/2024	9:45 PM	0	0	0	0	0	0	0	0	0	0	0	0	0
4/23/2024	10:00 PM	0	0	0	0	0	0	0	0	0	0	0	0	0
4/23/2024	10:15 PM	0	0	0	0	0	0	0	0	0	0	0	0	0
4/23/2024	10:30 PM	0	0	0	0	0	0	0	0	0	0	0	0	0
4/23/2024	10:45 PM	0	0	0	0	0	0	0	0	0	0	0	0	0
4/23/2024	11:00 PM	0	0	0	0	0	0	0	0	0	0	0	0	0
4/23/2024	11:15 PM	0	0	0	0	0	0	0	0	0	0	0	0	0
4/23/2024	11:30 PM	0	0	0	0	0	0	0	0	0	0	0	0	0
4/23/2024	11:45 PM	0	0	0	0	0	0	0	0	0	0	0	0	0

4/24/2024	12:00 AM	0	0	0	0	0	0	0	0	0	0	0	0	0
4/24/2024	12:15 AM	0	0	0	0	0	0	0	0	0	0	0	0	0
4/24/2024	12:30 AM	0	0	0	0	0	0	0	0	0	0	0	0	0
4/24/2024	12:45 AM	0	0	0	0	0	0	0	0	0	0	0	0	0
4/24/2024	1:00 AM	0	0	0	0	0	0	0	0	0	0	0	0	0
4/24/2024	1:15 AM	0	0	0	0	0	0	0	0	0	0	0	0	0
4/24/2024	1:30 AM	0	0	0	0	0	0	0	0	0	0	0	0	0
4/24/2024	1:45 AM	0	0	0	0	0	0	0	0	0	0	0	0	0
4/24/2024	2:00 AM	0	0	0	0	0	0	0	0	0	0	0	0	0
4/24/2024	2:15 AM	0	0	0	0	0	0	0	0	0	0	0	0	0
4/24/2024	2:30 AM	0	0	0	0	0	0	0	0	0	0	0	0	0
4/24/2024	2:45 AM	0	0	0	0	0	0	0	0	0	0	0	0	0
4/24/2024	3:00 AM	0	0	0	0	0	0	0	0	0	0	0	0	0
4/24/2024	3:15 AM	0	0	0	0	0	0	0	0	0	0	0	0	0
4/24/2024	3:30 AM	0	0	0	0	0	0	0	0	0	0	0	0	0
4/24/2024	3:45 AM	0	0	0	0	0	0	0	0	0	0	0	0	0
4/24/2024	4:00 AM	0	0	0	0	0	0	0	0	0	0	0	0	0
4/24/2024	4:15 AM	0	0	0	0	0	0	0	0	0	0	0	0	0
4/24/2024	4:30 AM	0	0	0	0	0	0	0	0	0	0	0	0	0
4/24/2024	4:45 AM	0	0	0	0	0	0	0	0	0	0	0	0	0
4/24/2024	5:00 AM	0	0	0	0	0	0	0	0	0	0	0	0	0
4/24/2024	5:15 AM	0	0	0	0	0	0	0	0	0	0	0	0	0
4/24/2024	5:30 AM	0	0	0	0	0	0	0	0	0	0	0	0	0
4/24/2024	5:45 AM	0	0	0	0	0	0	0	0	0	0	0	0	0
4/24/2024	6:00 AM	0	0	0	0	0	0	0	0	0	0	0	0	0
4/24/2024	6:15 AM	0	0	0	0	0	0	0	0	0	0	0	0	0
4/24/2024	6:30 AM	0	0	0	0	0	0	0	0	0	0	0	0	0
4/24/2024	6:45 AM	0	0	0	0	0	0	0	0	0	0	0	0	0
4/24/2024	7:00 AM	0	0	0	0	0	0	0	0	0	0	0	0	0
4/24/2024	7:15 AM	0	0	0	0	0	0	0	0	0	0	0	0	0
4/24/2024	7:30 AM	0	0	0	0	0	0	0	0	0	0	0	0	0
4/24/2024	7:45 AM	0	0	0	0	0	0	0	0	0	0	0	0	0
4/24/2024	8:00 AM	0	0	0	0	0	0	0	0	0	0	0	0	0
4/24/2024	8:15 AM	0	0	0	0	0	0	0	0	0	0	0	0	0
4/24/2024	8:30 AM	0	0	0	0	0	0	0	0	0	0	0	0	0
4/24/2024	8:45 AM	0	0	0	0	0	0	0	0	0	0	0	0	0
4/24/2024	9:00 AM	0	0	0	0	0	0	0	0	0	0	0	0	0
4/24/2024	9:15 AM	0	0	0	0	0	0	0	0	0	0	0	0	0
4/24/2024	9:30 AM	0	0	0	0	0	0	0	0	0	0	0	0	0
4/24/2024	9:45 AM	0	0	0	0	0	0	0	0	0	0	0	0	0
4/24/2024	10:00 AM	0	0	0	0	0	0	0	0	0	0	0	0	0
4/24/2024	10:15 AM	0	0	0	0	0	0	0	0	0	0	0	0	0
4/24/2024	10:30 AM	0	0	0	0	0	0	0	0	0	0	0	0	0
4/24/2024	10:45 AM	0	0	0	0	0	0	0	0	0	0	0	0	0
4/24/2024	11:00 AM	0	0	0	0	0	0	0	0	0	0	0	0	0
4/24/2024	11:15 AM	0	0	0	0	0	0	0	0	0	0	0	0	0
4/24/2024	11:30 AM	0	0	0	0	0	0	0	0	0	0	0	0	0
4/24/2024	11:45 AM	0	0	0	0	0	0	0	0	0	0	0	0	0
4/24/2024	12:00 PM	0	0	0	0	0	0	0	0	0	0	0	0	0
4/24/2024	12:15 PM	0	0	0	0	0	0	0	0	0	0	0	0	0
4/24/2024	12:30 PM	0	0	0	0	0	0	0	0	0	0	0	0	0
4/24/2024	12:45 PM	0	0	0	0	0	0	0	0	0	0	0	0	0
4/24/2024	1:00 PM	0	0	0	0	0	0	0	0	0	0	0	0	0
4/24/2024	1:15 PM	0	0	0	0	0	0	0	0	0	0	0	0	0
4/24/2024	1:30 PM	0	0	0	0	0	0	0	0	0	0	0	0	0
4/24/2024	1:45 PM	0	0	0	0	0	0	0	0	0	0	0	0	0
4/24/2024	2:00 PM	0	0	0	0	0	0	0	0	0	0	0	0	0
4/24/2024	2:15 PM	0	0	0	0	0	0	0	0	0	0	0	0	0
4/24/2024	2:30 PM	0	0	0	0	0	0	0	0	0	0	0	0	0
4/24/2024	2:45 PM	0	0	0	0	0	0	0	0	0	0	0	0	0
4/24/2024	3:00 PM	0	0	0	0	0	0	0	0	0	0	0	0	0
4/24/2024	3:15 PM	0	0	0	0	0	0	0	0	0	0	0	0	0
4/24/2024	3:30 PM	0	0	0	0	0	0	0	0	0	0	0	0	0
4/24/2024	3:45 PM	0	0	0	0	0	0	0	0	0	0	0	0	0
4/24/2024	4:00 PM	0	0	0	0	0	0	0	0	0	0	0	0	0
4/24/2024	4:15 PM	0	0	0	0	0	0	0	0	0	0	0	0	0
4/24/2024	4:30 PM	0	0	0	0	0	0	0	0	0	0	0	0	0
4/24/2024	4:45 PM	0	0	0	0	0	0	0	0	0	0	0	0	0
4/24/2024	5:00 PM	0	0	0	0	0	0	0	0	0	0	0	0	0
4/24/2024	5:15 PM	0	0	0	0	0	0	0	0	0	0	0	0	0
4/24/2024	5:30 PM	0	0	0	0	0	0	0	0	0	0	0	0	0
4/24/2024	5:45 PM	0	0	0	0	0	0	0	0	0	0	0	0	0
4/24/2024	6:00 PM	0	0	0	0	0	0	0	0	0	0	0	0	0
4/24/2024	6:15 PM	0	0	0	0	0	0	0	0	0	0	0	0	0
4/24/2024	6:30 PM	0	0	0	0	0	0	0	0	0	0	0	0	0
4/24/2024	6:45 PM	0	0	0	0	0	0	0	0	0	0	0	0	0
4/24/2024	7:00 PM	0	0	0	0	0	0	0	0	0	0	0	0	0
4/24/2024	7:15 PM	0	0	0	0	0	0	0	0	0	0	0	0	0
4/24/2024	7:30 PM	0	0	0	0	0	0	0	0	0	0	0	0	0
4/24/2024	7:45 PM	0	0	0	0	0	0	0	0	0	0	0	0	0
4/24/2024	8:00 PM	0	0	0	0	0	0	0	0	0	0	0	0	0
4/24/2024	8:15 PM	0	0	0	0	0	0	0	0	0	0	0	0	0
4/24/2024	8:30 PM	0	0	0	0	0	0	0	0	0	0	0	0	0
4/24/2024	8:45 PM	0	0	0	0	0	0	0	0	0	0	0	0	0
4/24/2024	9:00 PM	0	0	0	0	0	0	0	0	0	0	0	0	0
4/24/2024	9:15 PM	0	0	0	0	0	0	0	0	0	0	0	0	0
4/24/2024	9:30 PM	0	0	0	0	0	0	0	0	0	0	0	0	0
4/24/2024	9:45 PM	0	0	0	0	0	0	0	0	0	0	0	0	0
4/24/2024	10:00 PM	0	0	0	0	0	0	0	0	0	0	0	0	0
4/24/2024	10:15 PM	0	0	0	0	0	0	0	0	0	0	0	0	0
4/24/2024	10:30 PM	0	0	0	0	0	0	0	0	0	0	0	0	0
4/24/2024	10:45 PM	0	0	0	0	0	0	0	0	0	0	0	0	0
4/24/2024	11:00 PM	0	0	0	0	0	0	0	0	0	0	0	0	0
4/24/2024	11:15 PM	0	0	0	0	0	0	0	0	0	0	0	0	0
4/24/2024	11:30 PM	0	0	0	0	0	0	0	0	0	0	0	0	0
4/24/2024	11:45 PM	0	0	0	0	0	0	0	0	0	0	0	0	0

4/25/2024	12:00 AM	0	0	0	0	0	0	0	0	0	0	0	0	0
4/25/2024	12:15 AM	0	0	0	0	0	0	0	0	0	0	0	0	0
4/25/2024	12:30 AM	0	0	0	0	0	0	0	0	0	0	0	0	0
4/25/2024	12:45 AM	0	0	0	0	0	0	0	0	0	0	0	0	0
4/25/2024	1:00 AM	0	0	0	0	0	0	0	0	0	0	0	0	0
4/25/2024	1:15 AM	0	0	0	0	0	0	0	0	0	0	0	0	0
4/25/2024	1:30 AM	0	0	0	0	0	0	0	0	0	0	0	0	0
4/25/2024	1:45 AM	0	0	0	0	0	0	0	0	0	0	0	0	0
4/25/2024	2:00 AM	0	0	0	0	0	0	0	0	0	0	0	0	0
4/25/2024	2:15 AM	0	0	0	0	0	0	0	0	0	0	0	0	0
4/25/2024	2:30 AM	0	0	0	0	0	0	0	0	0	0	0	0	0
4/25/2024	2:45 AM	0	0	0	0	0	0	0	0	0	0	0	0	0
4/25/2024	3:00 AM	0	0	0	0	0	0	0	0	0	0	0	0	0
4/25/2024	3:15 AM	0	0	0	0	0	0	0	0	0	0	0	0	0
4/25/2024	3:30 AM	0	0	0	0	0	0	0	0	0	0	0	0	0
4/25/2024	3:45 AM	0	0	0	0	0	0	0	0	0	0	0	0	0
4/25/2024	4:00 AM	0	0	0	0	0	0	0	0	0	0	0	0	0
4/25/2024	4:15 AM	0	0	0	0	0	0	0	0	0	0	0	0	0
4/25/2024	4:30 AM	0	0	0	0	0	0	0	0	0	0	0	0	0
4/25/2024	4:45 AM	0	0	0	0	0	0	0	0	0	0	0	0	0
4/25/2024	5:00 AM	0	0	0	0	0	0	0	0	0	0	0	0	0
4/25/2024	5:15 AM	0	0	0	0	0	0	0	0	0	0	0	0	0
4/25/2024	5:30 AM	0	0	0	0	0	0	0	0	0	0	0	0	0
4/25/2024	5:45 AM	0	0	0	0	0	0	0	0	0	0	0	0	0
4/25/2024	6:00 AM	0	0	0	0	0	0	0	0	0	0	0	0	0
4/25/2024	6:15 AM	0	0	0	0	0	0	0	0	0	0	0	0	0
4/25/2024	6:30 AM	0	0	0	0	0	0	0	0	0	0	0	0	0
4/25/2024	6:45 AM	0	0	0	0	0	0	0	0	0	0	0	0	0
4/25/2024	7:00 AM	0	0	0	0	0	0	0	0	0	0	0	0	0
4/25/2024	7:15 AM	0	0	0	0	0	0	0	0	0	0	0	0	0
4/25/2024	7:30 AM	0	0	0	0	0	0	0	0	0	0	0	0	0
4/25/2024	7:45 AM	0	0	0	0	0	0	0	0	0	0	0	0	0
4/25/2024	8:00 AM	0	0	0	0	0	0	0	0	0	0	0	0	0
4/25/2024	8:15 AM	0	0	0	0	0	0	0	0	0	0	0	0	0
4/25/2024	8:30 AM	0	0	0	0	0	0	0	0	0	0	0	0	0
4/25/2024	8:45 AM	0	0	0	0	0	0	0	0	0	0	0	0	0
4/25/2024	9:00 AM	0	0	0	0	0	0	0	0	0	0	0	0	0
4/25/2024	9:15 AM	0	0	0	0	0	0	0	0	0	0	0	0	0
4/25/2024	9:30 AM	0	0	0	0	0	0	0	0	0	0	0	0	0
4/25/2024	9:45 AM	0	0	0	0	0	0	0	0	0	0	0	0	0
4/25/2024	10:00 AM	0	0	0	0	0	0	0	0	0	0	0	0	0
4/25/2024	10:15 AM	0	0	0	0	0	0	0	0	0	0	0	0	0
4/25/2024	10:30 AM	0	0	0	0	0	0	0	0	0	0	0	0	0
4/25/2024	10:45 AM	0	0	0	0	0	0	0	0	0	0	0	0	0
4/25/2024	11:00 AM	0	0	0	0	0	0	0	0	0	0	0	0	0
4/25/2024	11:15 AM	0	0	0	0	0	0	0	0	0	0	0	0	0
4/25/2024	11:30 AM	0	0	0	0	0	0	0	0	0	0	0	0	0
4/25/2024	11:45 AM	0	0	0	0	0	0	0	0	0	0	0	0	0
4/25/2024	12:00 PM	0	0	0	0	0	0	0	0	0	0	0	0	0
4/25/2024	12:15 PM	0	0	0	0	0	0	0	0	0	0	0	0	0
4/25/2024	12:30 PM	0	0	0	0	0	0	0	0	0	0	0	0	0
4/25/2024	12:45 PM	0	0	0	0	0	0	0	0	0	0	0	0	0
4/25/2024	1:00 PM	0	0	0	0	0	0	0	0	0	0	0	0	0
4/25/2024	1:15 PM	0	0	0	0	0	0	0	0	0	0	0	0	0
4/25/2024	1:30 PM	0	0	0	0	0	0	0	0	0	0	0	0	0
4/25/2024	1:45 PM	0	0	0	0	0	0	0	0	0	0	0	0	0
4/25/2024	2:00 PM	0	0	0	0	0	0	0	0	0	0	0	0	0
4/25/2024	2:15 PM	0	0	0	0	0	0	0	0	0	0	0	0	0
4/25/2024	2:30 PM	0	0	0	0	0	0	0	0	0	0	0	0	0
4/25/2024	2:45 PM	0	0	0	0	0	0	0	0	0	0	0	0	0
4/25/2024	3:00 PM	0	0	0	0	0	0	0	0	0	0	0	0	0
4/25/2024	3:15 PM	0	0	0	0	0	0	0	0	0	0	0	0	0
4/25/2024	3:30 PM	0	0	0	0	0	0	0	0	0	0	0	0	0
4/25/2024	3:45 PM	0	0	0	0	0	0	0	0	0	0	0	0	0
4/25/2024	4:00 PM	0	0	0	0	0	0	0	0	0	0	0	0	0
4/25/2024	4:15 PM	0	0	0	0	0	0	0	0	0	0	0	0	0
4/25/2024	4:30 PM	0	0	0	0	0	0	0	0	0	0	0	0	0
4/25/2024	4:45 PM	0	0	0	0	0	0	0	0	0	0	0	0	0
4/25/2024	5:00 PM	0	0	0	0	0	0	0	0	0	0	0	0	0
4/25/2024	5:15 PM	0	0	0	0	0	0	0	0	0	0	0	0	0
4/25/2024	5:30 PM	0	0	0	0	0	0	0	0	0	0	0	0	0
4/25/2024	5:45 PM	0	0	0	0	0	0	0	0	0	0	0	0	0
4/25/2024	6:00 PM	0	0	0	0	0	0	0	0	0	0	0	0	0
4/25/2024	6:15 PM	0	0	0	0	0	0	0	0	0	0	0	0	0
4/25/2024	6:30 PM	0	0	0	0	0	0	0	0	0	0	0	0	0
4/25/2024	6:45 PM	0	0	0	0	0	0	0	0	0	0	0	0	0
4/25/2024	7:00 PM	0	0	0	0	0	0	0	0	0	0	0	0	0
4/25/2024	7:15 PM	0	0	0	0	0	0	0	0	0	0	0	0	0
4/25/2024	7:30 PM	0	0	0	0	0	0	0	0	0	0	0	0	0
4/25/2024	7:45 PM	0	0	0	0	0	0	0	0	0	0	0	0	0
4/25/2024	8:00 PM	0	0	0	0	0	0	0	0	0	0	0	0	0
4/25/2024	8:15 PM	0	0	0	0	0	0	0	0	0	0	0	0	0
4/25/2024	8:30 PM	0	0	0	0	0	0	0	0	0	0	0	0	0
4/25/2024	8:45 PM	0	0	0	0	0	0	0	0	0	0	0	0	0
4/25/2024	9:00 PM	0	0	0	0	0	0	0	0	0	0	0	0	0
4/25/2024	9:15 PM	0	0	0	0	0	0	0	0	0	0	0	0	0
4/25/2024	9:30 PM	0	0	0	0	0	0	0	0	0	0	0	0	0
4/25/2024	9:45 PM	0	0	0	0	0	0	0	0	0	0	0	0	0
4/25/2024	10:00 PM	0	0	0	0	0	0	0	0	0	0	0	0	0
4/25/2024	10:15 PM	0	0	0	0	0	0	0	0	0	0	0	0	0
4/25/2024	10:30 PM	0	0	0	0	0	0	0	0	0	0	0	0	0
4/25/2024	10:45 PM	0	0	0	0	0	0	0	0	0	0	0	0	0
4/25/2024	11:00 PM	0	0	0	0	0	0	0	0	0	0	0	0	0
4/25/2024	11:15 PM	0	0	0	0	0	0	0	0	0	0	0	0	0
4/25/2024	11:30 PM	0	0	0	0	0	0	0	0	0	0	0	0	0
4/25/2024	11:45 PM	0	0	0	0	0	0	0	0	0	0	0	0	0

SB
File Name:
Start Date: 4/23/2024
Start Time: 0
Site Code: 42
Station ID: 1
Location 1: I-126 On/Off-Ramp, south of W Colonial Life Rd
Location 2:

Date	Time	1	2	3	4	5	6	7	8	9	10	11	12	13
4/23/2024	12:00 AM	0	0	0	0	0	0	0	0	0	0	0	0	0
4/23/2024	12:15 AM	0	0	0	0	0	0	0	0	0	0	0	0	0
4/23/2024	12:30 AM	0	0	0	0	0	0	0	0	0	0	0	0	0
4/23/2024	12:45 AM	0	0	0	0	0	0	0	0	0	0	0	0	0
4/23/2024	1:00 AM	0	0	0	0	0	0	0	0	0	0	0	0	0
4/23/2024	1:15 AM	0	0	0	0	0	0	0	0	0	0	0	0	0
4/23/2024	1:30 AM	0	0	0	0	0	0	0	0	0	0	0	0	0
4/23/2024	1:45 AM	0	0	0	0	0	0	0	0	0	0	0	0	0
4/23/2024	2:00 AM	0	0	0	0	0	0	0	0	0	0	0	0	0
4/23/2024	2:15 AM	0	0	0	0	0	0	0	0	0	0	0	0	0
4/23/2024	2:30 AM	0	0	0	0	0	0	0	0	0	0	0	0	0
4/23/2024	2:45 AM	0	0	0	0	0	0	0	0	0	0	0	0	0
4/23/2024	3:00 AM	0	0	0	0	0	0	0	0	0	0	0	0	0
4/23/2024	3:15 AM	0	0	0	0	0	0	0	0	0	0	0	0	0
4/23/2024	3:30 AM	0	0	0	0	0	0	0	0	0	0	0	0	0
4/23/2024	3:45 AM	0	0	0	0	0	0	0	0	0	0	0	0	0
4/23/2024	4:00 AM	0	0	0	0	0	0	0	0	0	0	0	0	0
4/23/2024	4:15 AM	0	0	0	0	0	0	0	0	0	0	0	0	0
4/23/2024	4:30 AM	0	0	0	0	0	0	0	0	0	0	0	0	0
4/23/2024	4:45 AM	0	0	0	0	0	0	0	0	0	0	0	0	0
4/23/2024	5:00 AM	0	0	0	0	0	0	0	0	0	0	0	0	0
4/23/2024	5:15 AM	0	0	0	0	0	0	0	0	0	0	0	0	0
4/23/2024	5:30 AM	0	0	0	0	0	0	0	0	0	0	0	0	0
4/23/2024	5:45 AM	0	0	0	0	0	0	0	0	0	0	0	0	0
4/23/2024	6:00 AM	0	0	0	0	0	0	0	0	0	0	0	0	0
4/23/2024	6:15 AM	0	0	0	0	0	0	0	0	0	0	0	0	0
4/23/2024	6:30 AM	0	0	0	0	0	0	0	0	0	0	0	0	0
4/23/2024	6:45 AM	0	0	0	0	0	0	0	0	0	0	0	0	0
4/23/2024	7:00 AM	0	0	0	0	0	0	0	0	0	0	0	0	0
4/23/2024	7:15 AM	0	0	0	0	0	0	0	0	0	0	0	0	0
4/23/2024	7:30 AM	0	0	0	0	0	0	0	0	0	0	0	0	0
4/23/2024	7:45 AM	0	0	0	0	0	0	0	0	0	0	0	0	0
4/23/2024	8:00 AM	0	0	0	0	0	0	0	0	0	0	0	0	0
4/23/2024	8:15 AM	0	0	0	0	0	0	0	0	0	0	0	0	0
4/23/2024	8:30 AM	0	0	0	0	0	0	0	0	0	0	0	0	0
4/23/2024	8:45 AM	0	0	0	0	0	0	0	0	0	0	0	0	0
4/23/2024	9:00 AM	0	0	0	0	0	0	0	0	0	0	0	0	0
4/23/2024	9:15 AM	0	0	0	0	0	0	0	0	0	0	0	0	0
4/23/2024	9:30 AM	0	0	0	0	0	0	0	0	0	0	0	0	0
4/23/2024	9:45 AM	0	0	0	0	0	0	0	0	0	0	0	0	0
4/23/2024	10:00 AM	0	0	0	0	0	0	0	0	0	0	0	0	0
4/23/2024	10:15 AM	0	0	0	0	0	0	0	0	0	0	0	0	0
4/23/2024	10:30 AM	0	0	0	0	0	0	0	0	0	0	0	0	0
4/23/2024	10:45 AM	0	0	0	0	0	0	0	0	0	0	0	0	0
4/23/2024	11:00 AM	0	0	0	0	0	0	0	0	0	0	0	0	0
4/23/2024	11:15 AM	0	0	0	0	0	0	0	0	0	0	0	0	0
4/23/2024	11:30 AM	0	0	0	0	0	0	0	0	0	0	0	0	0
4/23/2024	11:45 AM	0	0	0	0	0	0	0	0	0	0	0	0	0
4/23/2024	12:00 PM	0	0	0	0	0	0	0	0	0	0	0	0	0
4/23/2024	12:15 PM	0	0	0	0	0	0	0	0	0	0	0	0	0
4/23/2024	12:30 PM	0	0	0	0	0	0	0	0	0	0	0	0	0
4/23/2024	12:45 PM	0	0	0	0	0	0	0	0	0	0	0	0	0
4/23/2024	1:00 PM	0	0	0	0	0	0	0	0	0	0	0	0	0
4/23/2024	1:15 PM	0	0	0	0	0	0	0	0	0	0	0	0	0
4/23/2024	1:30 PM	0	0	0	0	0	0	0	0	0	0	0	0	0
4/23/2024	1:45 PM	0	0	0	0	0	0	0	0	0	0	0	0	0
4/23/2024	2:00 PM	0	0	0	0	0	0	0	0	0	0	0	0	0
4/23/2024	2:15 PM	0	0	0	0	0	0	0	0	0	0	0	0	0
4/23/2024	2:30 PM	0	0	0	0	0	0	0	0	0	0	0	0	0
4/23/2024	2:45 PM	0	0	0	0	0	0	0	0	0	0	0	0	0
4/23/2024	3:00 PM	0	0	0	0	0	0	0	0	0	0	0	0	0
4/23/2024	3:15 PM	0	0	0	0	0	0	0	0	0	0	0	0	0
4/23/2024	3:30 PM	0	0	0	0	0	0	0	0	0	0	0	0	0
4/23/2024	3:45 PM	0	0	0	0	0	0	0	0	0	0	0	0	0
4/23/2024	4:00 PM	0	0	0	0	0	0	0	0	0	0	0	0	0
4/23/2024	4:15 PM	0	0	0	0	0	0	0	0	0	0	0	0	0
4/23/2024	4:30 PM	0	0	0	0	0	0	0	0	0	0	0	0	0
4/23/2024	4:45 PM	0	0	0	0	0	0	0	0	0	0	0	0	0
4/23/2024	5:00 PM	0	0	0	0	0	0	0	0	0	0	0	0	0
4/23/2024	5:15 PM	0	0	0	0	0	0	0	0	0	0	0	0	0
4/23/2024	5:30 PM	0	0	0	0	0	0	0	0	0	0	0	0	0
4/23/2024	5:45 PM	0	0	0	0	0	0	0	0	0	0	0	0	0
4/23/2024	6:00 PM	0	0	0	0	0	0	0	0	0	0	0	0	0
4/23/2024	6:15 PM	0	15	5	0	0	0	0	0	0	0	0	0	0
4/23/2024	6:30 PM	0	39	9	0	0	0	0	0	0	0	0	0	0
4/23/2024	6:45 PM	0	50	13	0	0	0	0	0	0	0	0	0	0
4/23/2024	7:00 PM	1	67	18	0	0	0	0	0	0	0	0	0	0
4/23/2024	7:15 PM	1	74	16	0	0	0	0	0	0	0	0	0	0
4/23/2024	7:30 PM	1	62	14	0	0	0	0	0	0	0	0	0	0
4/23/2024	7:45 PM	1	69	18	0	2	0	0	0	0	0	0	0	0
4/23/2024	8:00 PM	0	65	16	0	2	0	0	0	0	0	0	0	0
4/23/2024	8:15 PM	0	54	17	0	2	0	0	0	0	0	0	0	0
4/23/2024	8:30 PM	0	61	18	0	2	0	0	0	0	0	0	0	0
4/23/2024	8:45 PM	0	52	12	0	0	0	0	0	0	0	0	0	0
4/23/2024	9:00 PM	0	47	12	0	0	0	0	0	0	0	0	0	0
4/23/2024	9:15 PM	0	39	10	0	0	0	0	0	0	0	0	0	0
4/23/2024	9:30 PM	0	26	9	0	0	0	0	0	0	0	0	0	0
4/23/2024	9:45 PM	0	25	10	0	0	0	0	0	0	0	0	0	0
4/23/2024	10:00 PM	0	21	9	0	0	0	0	0	0	0	0	0	0
4/23/2024	10:15 PM	0	23	10	0	0	0	0	0	0	0	0	0	0
4/23/2024	10:30 PM	0	21	10	0	0	0	0	0	0	0	0	0	0
4/23/2024	10:45 PM	0	18	10	0	0	0	0	0	0	0	0	0	0
4/23/2024	11:00 PM	0	20	10	0	0	0	0	0	0	0	0	0	0
4/23/2024	11:15 PM	0	15	7	0	0	0	0	0	0	0	0	0	0
4/23/2024	11:30 PM	0	11	5	0	0	0	0	0	0	0	0	0	0
4/23/2024	11:45 PM	0	6	2	0	0	0	0	0	0	0	0	0	0

4/24/2024	12:00 AM	0	18	5	0	0	0	0	0	0	0	0	0
4/24/2024	12:15 AM	0	17	4	0	0	0	0	0	0	0	0	0
4/24/2024	12:30 AM	0	15	4	0	0	0	0	0	0	0	0	0
4/24/2024	12:45 AM	0	17	4	0	0	0	0	0	0	0	0	0
4/24/2024	1:00 AM	0	15	5	0	0	0	0	0	0	0	0	0
4/24/2024	1:15 AM	0	17	5	0	0	0	0	0	0	0	0	0
4/24/2024	1:30 AM	0	19	5	0	0	0	0	0	0	0	0	0
4/24/2024	1:45 AM	0	17	5	0	0	0	0	0	0	0	0	0
4/24/2024	2:00 AM	0	15	4	0	0	0	0	0	0	0	0	0
4/24/2024	2:15 AM	0	13	4	0	0	0	0	0	0	0	0	0
4/24/2024	2:30 AM	0	11	4	0	0	0	0	0	0	0	0	0
4/24/2024	2:45 AM	0	10	4	0	0	0	0	0	0	0	0	0
4/24/2024	3:00 AM	0	10	4	0	0	0	0	0	0	0	0	0
4/24/2024	3:15 AM	0	8	4	0	0	0	0	0	0	0	0	0
4/24/2024	3:30 AM	0	7	4	0	0	0	0	0	0	0	0	0
4/24/2024	3:45 AM	0	8	4	0	0	0	0	0	0	0	0	0
4/24/2024	4:00 AM	0	11	4	0	0	0	0	0	0	0	0	0
4/24/2024	4:15 AM	0	17	4	0	0	0	0	0	0	0	0	0
4/24/2024	4:30 AM	0	26	4	0	0	0	0	0	0	0	0	0
4/24/2024	4:45 AM	0	32	4	0	0	0	0	0	0	0	0	0
4/24/2024	5:00 AM	0	38	4	0	0	0	0	0	0	0	0	0
4/24/2024	5:15 AM	0	45	5	0	1	0	0	0	0	0	0	0
4/24/2024	5:30 AM	0	52	7	0	1	0	0	0	0	0	0	0
4/24/2024	5:45 AM	0	63	11	0	1	0	0	0	0	0	0	0
4/24/2024	6:00 AM	0	74	17	0	1	3	0	0	0	0	0	0
4/24/2024	6:15 AM	0	98	25	1	0	3	0	0	0	0	0	0
4/24/2024	6:30 AM	0	123	39	1	0	4	0	0	0	0	0	0
4/24/2024	6:45 AM	0	158	56	1	0	4	0	0	0	0	0	0
4/24/2024	7:00 AM	0	211	71	1	0	1	0	0	0	0	0	0
4/24/2024	7:15 AM	0	244	74	0	0	1	0	0	0	0	0	0
4/24/2024	7:30 AM	0	281	72	0	1	0	0	0	0	0	0	0
4/24/2024	7:45 AM	0	295	64	0	1	0	0	0	0	0	0	0
4/24/2024	8:00 AM	0	281	54	0	1	0	1	0	1	0	0	0
4/24/2024	8:15 AM	0	254	48	0	1	0	1	0	1	0	0	0
4/24/2024	8:30 AM	0	216	42	0	0	0	1	0	1	0	0	0
4/24/2024	8:45 AM	0	187	39	0	0	0	1	0	1	0	0	0
4/24/2024	9:00 AM	0	165	35	0	0	0	1	0	1	0	0	0
4/24/2024	9:15 AM	0	159	38	0	0	0	1	0	1	0	0	0
4/24/2024	9:30 AM	0	154	38	2	0	0	1	0	2	0	0	0
4/24/2024	9:45 AM	1	152	34	2	1	0	1	0	2	0	0	0
4/24/2024	10:00 AM	1	158	37	2	1	0	1	0	1	0	0	0
4/24/2024	10:15 AM	1	164	36	3	2	0	1	0	1	0	0	0
4/24/2024	10:30 AM	1	170	36	1	2	1	2	0	0	0	0	0
4/24/2024	10:45 AM	0	177	36	1	1	2	2	0	1	0	0	0
4/24/2024	11:00 AM	0	176	34	1	1	2	2	0	1	0	0	0
4/24/2024	11:15 AM	0	176	30	0	0	2	2	1	2	0	0	0
4/24/2024	11:30 AM	0	178	27	0	0	1	2	1	2	0	0	0
4/24/2024	11:45 AM	0	175	25	0	0	1	2	1	1	1	0	0
4/24/2024	12:00 PM	1	172	21	0	0	1	2	1	2	1	0	0
4/24/2024	12:15 PM	1	176	23	0	0	1	2	1	1	1	0	0
4/24/2024	12:30 PM	2	179	24	0	0	2	1	1	2	1	0	0
4/24/2024	12:45 PM	2	182	25	2	0	1	2	1	2	0	0	0
4/24/2024	1:00 PM	2	185	27	3	0	1	2	1	1	0	0	0
4/24/2024	1:15 PM	2	182	27	3	0	1	2	0	2	0	0	0
4/24/2024	1:30 PM	1	179	26	4	0	1	2	0	1	0	0	0
4/24/2024	1:45 PM	1	175	28	2	0	1	1	0	1	0	0	0
4/24/2024	2:00 PM	0	170	27	2	0	1	0	0	1	0	0	0
4/24/2024	2:15 PM	0	173	26	3	1	1	0	0	0	0	0	0
4/24/2024	2:30 PM	0	176	29	2	1	0	0	0	0	0	0	0
4/24/2024	2:45 PM	0	183	25	2	2	0	0	0	0	0	0	0
4/24/2024	3:00 PM	0	188	25	2	2	0	0	0	0	0	0	0
4/24/2024	3:15 PM	0	188	27	1	3	1	0	0	0	0	0	0
4/24/2024	3:30 PM	0	186	24	2	3	1	0	0	1	0	0	0
4/24/2024	3:45 PM	0	185	27	2	3	1	0	0	1	0	0	0
4/24/2024	4:00 PM	1	182	30	1	3	2	0	0	1	0	0	0
4/24/2024	4:15 PM	1	185	32	1	1	1	0	0	1	0	0	0
4/24/2024	4:30 PM	1	202	35	1	3	1	0	0	0	0	0	0
4/24/2024	4:45 PM	1	214	35	1	3	1	0	0	0	0	0	0
4/24/2024	5:00 PM	0	223	32	1	3	0	0	0	0	0	0	0
4/24/2024	5:15 PM	0	220	29	1	3	0	0	0	0	0	0	0
4/24/2024	5:30 PM	0	203	26	0	2	0	0	0	0	0	0	0
4/24/2024	5:45 PM	0	185	25	1	1	0	0	0	0	0	0	0
4/24/2024	6:00 PM	0	170	31	1	1	0	1	0	0	0	0	0
4/24/2024	6:15 PM	0	142	30	1	1	0	1	0	0	0	0	0
4/24/2024	6:30 PM	0	122	29	1	1	0	1	1	0	0	0	0
4/24/2024	6:45 PM	0	104	26	0	3	0	1	1	0	0	0	0
4/24/2024	7:00 PM	0	98	21	1	3	0	0	2	0	0	0	0
4/24/2024	7:15 PM	0	103	22	1	3	0	0	2	0	0	0	0
4/24/2024	7:30 PM	0	102	21	1	3	0	0	1	0	0	0	0
4/24/2024	7:45 PM	0	108	21	1	3	0	0	1	0	0	0	0
4/24/2024	8:00 PM	0	109	20	0	3	0	0	0	0	0	0	0
4/24/2024	8:15 PM	0	104	18	0	3	0	0	0	0	0	0	0
4/24/2024	8:30 PM	0	99	17	0	2	0	0	0	0	0	0	0
4/24/2024	8:45 PM	0	80	17	0	0	0	0	0	0	0	0	0
4/24/2024	9:00 PM	0	61	13	0	0	0	0	0	0	0	0	0
4/24/2024	9:15 PM	0	55	11	0	0	0	0	0	0	0	0	0
4/24/2024	9:30 PM	0	47	10	0	0	0	0	0	0	0	0	0
4/24/2024	9:45 PM	0	47	9	0	0	0	0	0	0	0	0	0
4/24/2024	10:00 PM	0	46	8	0	0	0	0	0	0	0	0	0
4/24/2024	10:15 PM	0	41	6	0	0	0	0	0	0	0	0	0
4/24/2024	10:30 PM	0	38	5	0	0	0	0	0	0	0	0	0
4/24/2024	10:45 PM	0	37	4	0	0	0	0	0	0	0	0	0
4/24/2024	11:00 PM	0	36	4	0	1	0	0	0	0	0	0	0
4/24/2024	11:15 PM	0	26	3	0	1	0	0	0	0	0	0	0
4/24/2024	11:30 PM	0	18	2	0	1	0	0	0	0	0	0	0
4/24/2024	11:45 PM	0	9	1	0	1	0	0	0	0	0	0	0

4/25/2024	12:00 AM	0	13	0	0	0	0	0	0	0	0	0	0
4/25/2024	12:15 AM	0	18	0	0	0	0	0	0	0	0	0	0
4/25/2024	12:30 AM	0	15	0	0	0	0	0	0	0	0	0	0
4/25/2024	12:45 AM	0	14	0	0	0	0	0	0	0	0	0	0
4/25/2024	1:00 AM	0	11	0	0	0	0	0	0	0	0	0	0
4/25/2024	1:15 AM	0	5	0	0	0	0	0	0	0	0	0	0
4/25/2024	1:30 AM	0	4	0	0	1	0	0	0	0	0	0	0
4/25/2024	1:45 AM	0	4	0	0	1	0	0	0	0	0	0	0
4/25/2024	2:00 AM	0	4	0	0	1	0	0	0	0	0	0	0
4/25/2024	2:15 AM	0	5	0	0	1	0	0	0	0	0	0	0
4/25/2024	2:30 AM	0	10	0	0	0	0	0	0	0	0	0	0
4/25/2024	2:45 AM	0	11	0	0	0	0	0	0	0	0	0	0
4/25/2024	3:00 AM	0	14	0	0	0	0	0	0	0	0	0	0
4/25/2024	3:15 AM	0	13	0	0	0	0	0	0	0	0	0	0
4/25/2024	3:30 AM	0	13	0	0	0	0	0	0	0	0	0	0
4/25/2024	3:45 AM	0	15	0	0	0	0	0	0	0	0	0	0
4/25/2024	4:00 AM	0	13	0	0	0	0	0	0	0	0	0	0
4/25/2024	4:15 AM	0	12	0	0	0	0	0	0	0	0	0	0
4/25/2024	4:30 AM	0	15	0	0	0	0	0	0	0	0	0	0
4/25/2024	4:45 AM	0	19	0	0	0	0	0	0	0	0	0	0
4/25/2024	5:00 AM	0	22	0	0	0	0	0	0	0	0	0	0
4/25/2024	5:15 AM	0	27	0	0	0	0	0	0	0	0	0	0
4/25/2024	5:30 AM	0	33	4	0	0	0	0	0	0	0	0	0
4/25/2024	5:45 AM	1	45	9	0	0	0	0	0	0	0	0	0
4/25/2024	6:00 AM	1	63	15	0	0	0	0	0	0	0	0	0
4/25/2024	6:15 AM	2	99	19	1	1	0	0	0	0	0	0	0
4/25/2024	6:30 AM	2	150	23	1	1	1	1	0	0	0	0	0
4/25/2024	6:45 AM	1	210	27	1	2	1	1	0	0	0	0	0
4/25/2024	7:00 AM	1	266	41	1	2	1	1	0	0	0	0	0
4/25/2024	7:15 AM	0	286	54	0	1	6	1	0	0	0	0	0
4/25/2024	7:30 AM	0	284	54	0	1	5	0	0	0	0	0	0
4/25/2024	7:45 AM	0	253	55	0	1	5	0	0	0	0	0	0
4/25/2024	8:00 AM	0	214	42	0	1	5	0	0	0	0	0	0
4/25/2024	8:15 AM	0	173	30	0	1	2	0	0	0	0	0	0
4/25/2024	8:30 AM	0	136	25	0	1	3	0	0	0	0	0	0
4/25/2024	8:45 AM	0	107	22	0	0	3	0	0	0	0	0	0
4/25/2024	9:00 AM	0	94	18	0	0	3	1	0	0	0	0	0
4/25/2024	9:15 AM	0	98	21	0	0	2	1	0	1	0	0	0
4/25/2024	9:30 AM	0	90	20	0	1	6	1	0	1	0	0	0
4/25/2024	9:45 AM	0	95	24	0	1	9	1	0	1	0	0	0
4/25/2024	10:00 AM	0	88	33	0	1	9	0	0	1	0	0	0
4/25/2024	10:15 AM	0	101	29	0	1	8	0	0	0	0	0	0
4/25/2024	10:30 AM	0	108	34	0	0	3	0	0	0	0	0	0
4/25/2024	10:45 AM	0	128	31	0	0	0	0	0	0	0	0	0
4/25/2024	11:00 AM	0	147	28	0	0	0	0	0	1	0	0	0
4/25/2024	11:15 AM	0	144	32	0	0	0	0	0	2	0	0	0
4/25/2024	11:30 AM	0	160	28	0	1	0	0	1	2	0	0	0
4/25/2024	11:45 AM	0	148	31	0	1	0	0	1	2	0	0	0
4/25/2024	12:00 PM	0	145	26	0	1	0	0	1	1	0	0	0
4/25/2024	12:15 PM	0	152	26	0	1	0	0	1	0	0	0	0
4/25/2024	12:30 PM	0	156	34	0	0	0	0	0	0	0	0	0
4/25/2024	12:45 PM	0	168	33	0	1	0	0	0	0	0	0	0
4/25/2024	1:00 PM	0	179	33	0	3	0	0	0	0	0	0	0
4/25/2024	1:15 PM	0	178	31	0	3	0	0	0	0	0	0	0
4/25/2024	1:30 PM	0	174	24	0	3	0	0	0	0	0	0	0
4/25/2024	1:45 PM	0	159	19	0	2	0	0	0	0	0	0	0
4/25/2024	2:00 PM	0	144	23	0	0	0	0	0	0	0	0	0
4/25/2024	2:15 PM	0	146	25	0	0	0	0	0	0	0	0	0
4/25/2024	2:30 PM	0	145	30	0	0	0	0	0	0	0	0	0
4/25/2024	2:45 PM	0	163	32	0	2	0	0	0	0	0	0	0
4/25/2024	3:00 PM	0	164	32	0	2	0	0	0	0	0	0	0
4/25/2024	3:15 PM	0	153	31	0	2	0	0	0	0	0	0	0
4/25/2024	3:30 PM	1	164	28	0	3	0	0	0	0	0	0	0
4/25/2024	3:45 PM	1	172	26	0	2	0	0	0	0	0	0	0
4/25/2024	4:00 PM	1	196	27	0	3	0	0	0	0	0	0	0
4/25/2024	4:15 PM	1	227	25	0	3	0	0	0	0	0	0	0
4/25/2024	4:30 PM	0	229	27	0	2	0	0	0	0	0	0	0
4/25/2024	4:45 PM	1	224	27	0	3	0	0	0	0	0	0	0
4/25/2024	5:00 PM	1	199	21	0	2	0	0	0	0	0	0	0
4/25/2024	5:15 PM	1	171	20	0	2	0	0	0	0	0	0	0
4/25/2024	5:30 PM	1	147	16	0	2	0	0	0	0	0	0	0
4/25/2024	5:45 PM	0	124	15	0	1	0	0	0	0	0	0	0
4/25/2024	6:00 PM	0	111	17	0	1	0	0	0	0	0	0	0
4/25/2024	6:15 PM	0	77	13	0	1	0	0	0	0	0	0	0
4/25/2024	6:30 PM	0	48	9	0	1	0	0	0	0	0	0	0
4/25/2024	6:45 PM	0	20	5	0	0	0	0	0	0	0	0	0
4/25/2024	7:00 PM	0	0	0	0	0	0	0	0	0	0	0	0
4/25/2024	7:15 PM	0	0	0	0	0	0	0	0	0	0	0	0
4/25/2024	7:30 PM	0	0	0	0	0	0	0	0	0	0	0	0
4/25/2024	7:45 PM	0	0	0	0	0	0	0	0	0	0	0	0
4/25/2024	8:00 PM	0	0	0	0	0	0	0	0	0	0	0	0
4/25/2024	8:15 PM	0	0	0	0	0	0	0	0	0	0	0	0
4/25/2024	8:30 PM	0	0	0	0	0	0	0	0	0	0	0	0
4/25/2024	8:45 PM	0	0	0	0	0	0	0	0	0	0	0	0
4/25/2024	9:00 PM	0	0	0	0	0	0	0	0	0	0	0	0
4/25/2024	9:15 PM	0	0	0	0	0	0	0	0	0	0	0	0
4/25/2024	9:30 PM	0	0	0	0	0	0	0	0	0	0	0	0
4/25/2024	9:45 PM	0	0	0	0	0	0	0	0	0	0	0	0
4/25/2024	10:00 PM	0	0	0	0	0	0	0	0	0	0	0	0
4/25/2024	10:15 PM	0	0	0	0	0	0	0	0	0	0	0	0
4/25/2024	10:30 PM	0	0	0	0	0	0	0	0	0	0	0	0
4/25/2024	10:45 PM	0	0	0	0	0	0	0	0	0	0	0	0
4/25/2024	11:00 PM	0	0	0	0	0	0	0	0	0	0	0	0
4/25/2024	11:15 PM	0	0	0	0	0	0	0	0	0	0	0	0
4/25/2024	11:30 PM	0	0	0	0	0	0	0	0	0	0	0	0
4/25/2024	11:45 PM	0	0	0	0	0	0	0	0	0	0	0	0

Bi-Directional Class Count || NB EB 15min

Columbia, SC

Marr Traffic DATA COLLECTION
www.marrtraffic.com

Site 43
I-26 On/Off-Ramp,
south of Bush River Rd

Date
Tuesday, April 23, 2024

Lat/Long
34.027518°, -81.101448°

Weather
Fair
58°F

Click here for Detailed Weather

Click here for Map

0000 - 2400 (Weekday 24h Session) (04-23-2024)
NB EB 15min

	Northbound (Movement 43.1)													15min	60min
Time	1	2	3	4	5	6	7	8	9	10	11	12	13	Total	Total
0000 - 0015	0	0	0	0	0	0	0	0	0	0	0	0	0	**0**	
0015 - 0030	0	0	0	0	0	0	0	0	0	0	0	0	0	**0**	
0030 - 0045	0	0	0	0	0	0	0	0	0	0	0	0	0	**0**	
0045 - 0100	0	0	0	0	0	0	0	0	0	0	0	0	0	**0**	**0**
0100 - 0115	0	0	0	0	0	0	0	0	0	0	0	0	0	**0**	
0115 - 0130	0	0	0	0	0	0	0	0	0	0	0	0	0	**0**	
0130 - 0145	0	0	0	0	0	0	0	0	0	0	0	0	0	**0**	
0145 - 0200	0	0	0	0	0	0	0	0	0	0	0	0	0	**0**	**0**
0200 - 0215	0	0	0	0	0	0	0	0	0	0	0	0	0	**0**	
0215 - 0230	0	0	0	0	0	0	0	0	0	0	0	0	0	**0**	
0230 - 0245	0	0	0	0	0	0	0	0	0	0	0	0	0	**0**	
0245 - 0300	0	0	0	0	0	0	0	0	0	0	0	0	0	**0**	**0**
0300 - 0315	0	0	0	0	0	0	0	0	0	0	0	0	0	**0**	
0315 - 0330	0	0	0	0	0	0	0	0	0	0	0	0	0	**0**	
0330 - 0345	0	0	0	0	0	0	0	0	0	0	0	0	0	**0**	
0345 - 0400	0	0	0	0	0	0	0	0	0	0	0	0	0	**0**	**0**
0400 - 0415	0	0	0	0	0	0	0	0	0	0	0	0	0	**0**	
0415 - 0430	0	0	0	0	0	0	0	0	0	0	0	0	0	**0**	
0430 - 0445	0	0	0	0	0	0	0	0	0	0	0	0	0	**0**	
0445 - 0500	0	0	0	0	0	0	0	0	0	0	0	0	0	**0**	**0**
0500 - 0515	0	0	0	0	0	0	0	0	0	0	0	0	0	**0**	
0515 - 0530	0	0	0	0	0	0	0	0	0	0	0	0	0	**0**	
0530 - 0545	0	0	0	0	0	0	0	0	0	0	0	0	0	**0**	
0545 - 0600	0	0	0	0	0	0	0	0	0	0	0	0	0	**0**	**0**
0600 - 0615	0	0	0	0	0	0	0	0	0	0	0	0	0	**0**	
0615 - 0630	0	0	0	0	0	0	0	0	0	0	0	0	0	**0**	
0630 - 0645	0	0	0	0	0	0	0	0	0	0	0	0	0	**0**	
0645 - 0700	0	0	0	0	0	0	0	0	0	0	0	0	0	**0**	**0**
0700 - 0715	0	0	0	0	0	0	0	0	0	0	0	0	0	**0**	
0715 - 0730	0	0	0	0	0	0	0	0	0	0	0	0	0	**0**	
0730 - 0745	0	0	0	0	0	0	0	0	0	0	0	0	0	**0**	
0745 - 0800	0	0	0	0	0	0	0	0	0	0	0	0	0	**0**	**0**
0800 - 0815	0	0	0	0	0	0	0	0	0	0	0	0	0	**0**	
0815 - 0830	0	0	0	0	0	0	0	0	0	0	0	0	0	**0**	
0830 - 0845	0	0	0	0	0	0	0	0	0	0	0	0	0	**0**	
0845 - 0900	0	0	0	0	0	0	0	0	0	0	0	0	0	**0**	**0**
0900 - 0915	0	0	0	0	0	0	0	0	0	0	0	0	0	**0**	
0915 - 0930	0	0	0	0	0	0	0	0	0	0	0	0	0	**0**	
0930 - 0945	0	0	0	0	0	0	0	0	0	0	0	0	0	**0**	
0945 - 1000	0	0	0	0	0	0	0	0	0	0	0	0	0	**0**	**0**
1000 - 1015	0	0	0	0	0	0	0	0	0	0	0	0	0	**0**	
1015 - 1030	0	0	0	0	0	0	0	0	0	0	0	0	0	**0**	
1030 - 1045	0	0	0	0	0	0	0	0	0	0	0	0	0	**0**	
1045 - 1100	0	0	0	0	0	0	0	0	0	0	0	0	0	**0**	**0**
1100 - 1115	0	0	0	0	0	0	0	0	0	0	0	0	0	**0**	
1115 - 1130	0	0	0	0	0	0	0	0	0	0	0	0	0	**0**	
1130 - 1145	0	0	0	0	0	0	0	0	0	0	0	0	0	**0**	
1145 - 1200	0	0	0	0	0	0	0	0	0	0	0	0	0	**0**	**0**
1200 - 1215	0	0	0	0	0	0	0	0	0	0	0	0	0	**0**	
1215 - 1230	0	0	0	0	0	0	0	0	0	0	0	0	0	**0**	
1230 - 1245	0	0	0	0	0	0	0	0	0	0	0	0	0	**0**	
1245 - 1300	0	0	0	0	0	0	0	0	0	0	0	0	0	**0**	**0**
1300 - 1315	0	0	0	0	0	0	0	0	0	0	0	0	0	**0**	
1315 - 1330	0	0	0	0	0	0	0	0	0	0	0	0	0	**0**	
1330 - 1345	0	0	0	0	0	0	0	0	0	0	0	0	0	**0**	
1345 - 1400	0	0	0	0	0	0	0	0	0	0	0	0	0	**0**	**0**
1400 - 1415	0	0	0	0	0	0	0	0	0	0	0	0	0	**0**	
1415 - 1430	0	0	0	0	0	0	0	0	0	0	0	0	0	**0**	
1430 - 1445	0	0	0	0	0	0	0	0	0	0	0	0	0	**0**	
1445 - 1500	0	0	0	0	0	0	0	0	0	0	0	0	0	**0**	**0**
1500 - 1515	0	0	0	0	0	0	0	0	0	0	0	0	0	**0**	
1515 - 1530	0	0	0	0	0	0	0	0	0	0	0	0	0	**0**	
1530 - 1545	0	0	0	0	0	0	0	0	0	0	0	0	0	**0**	
1545 - 1600	0	0	0	0	0	0	0	0	0	0	0	0	0	**0**	**0**
1600 - 1615	0	0	0	0	0	0	0	0	0	0	0	0	0	**0**	
1615 - 1630	0	0	0	0	0	0	0	0	0	0	0	0	0	**0**	
1630 - 1645	0	0	0	0	0	0	0	0	0	0	0	0	0	**0**	
1645 - 1700	0	0	0	0	0	0	0	0	0	0	0	0	0	**0**	**0**
1700 - 1715	0	0	0	0	0	0	0	0	0	0	0	0	0	**0**	
1715 - 1730	0	0	0	0	0	0	0	0	0	0	0	0	0	**0**	
1730 - 1745	0	0	0	0	0	0	0	0	0	0	0	0	0	**0**	
1745 - 1800	0	0	0	0	0	0	0	0	0	0	0	0	0	**0**	**0**
1800 - 1815	0	0	0	0	0	0	0	0	0	0	0	0	0	**0**	
1815 - 1830	0	0	0	0	0	0	0	0	0	0	0	0	0	**0**	
1830 - 1845	0	0	0	0	0	0	0	0	0	0	0	0	0	**0**	
1845 - 1900	0	0	0	0	0	0	0	0	0	0	0	0	0	**0**	**0**
1900 - 1915	0	71	10	0	1	0	0	0	0	0	0	0	0	**82**	
1915 - 1930	0	77	9	0	2	0	0	0	0	0	0	0	0	**88**	
1930 - 1945	0	79	7	0	1	0	0	0	1	0	0	0	0	**88**	
1945 - 2000	0	53	8	0	1	0	0	0	0	0	0	0	0	**62**	**320**
2000 - 2015	0	47	6	0	0	1	0	0	0	0	0	0	0	**54**	
2015 - 2030	0	52	11	0	1	0	0	0	0	0	0	0	0	**64**	
2030 - 2045	0	33	9	0	0	0	0	0	0	0	0	0	0	**42**	
2045 - 2100	0	45	10	0	0	0	0	0	0	0	0	0	0	**55**	**215**
2100 - 2115	0	38	7	0	0	0	0	0	1	0	0	0	0	**46**	
2115 - 2130	0	37	8	0	0	0	0	0	0	0	0	0	0	**45**	
2130 - 2145	0	33	7	0	0	0	0	0	0	0	0	0	0	**40**	
2145 - 2200	0	25	6	0	1	0	0	0	0	0	0	0	0	**32**	**163**
2200 - 2215	0	24	6	0	0	0	0	0	0	0	0	0	0	**30**	
2215 - 2230	0	26	6	0	0	0	0	0	0	0	0	0	0	**32**	
2230 - 2245	0	21	5	0	0	0	0	0	1	0	0	0	0	**27**	
2245 - 2300	0	17	3	0	0	1	0	0	0	0	0	0	0	**21**	**110**
2300 - 2315	0	22	4	0	0	0	0	0	0	0	0	0	0	**26**	
2315 - 2330	0	28	7	0	0	0	0	0	0	0	0	0	0	**35**	
2330 - 2345	0	19	3	0	0	0	0	0	0	0	0	0	0	**22**	
2345 - 0000	0	18	3	0	0	0	0	0	0	0	0	0	0	**21**	**104**

Session Total	0	765	135	0	7	2	0	0	3	0	0	0	0	**912**
Session Average	0.00	7.97	1.41	0.00	0.07	0.02	0.00	0.00	0.03	0.00	0.00	0.00	0.00	**9.50**
Session Percentage	0.00	83.88	14.80	0.00	0.77	0.22	0.00	0.00	0.33	0.00	0.00	0.00	0.00	

AM Peak Hour	-	-	-	-	-	-	-	-	-	-	-	-	-	**-**
AM Peak Volume	0	0	0	0	0	0	0	0	0	0	0	0	0	**0**

Noon Peak Hour	-	-	-	-	-	-	-	-	-	-	-	-	-	**-**
Noon Peak Volume	0	0	0	0	0	0	0	0	0	0	0	0	0	**0**

PM Peak Hour	-	1900 - 2000	1900 - 2000	-	1900 - 2000	1915 - 2015	-	-	1845 - 1945	-	-	-	-	**1900 - 2000**
PM Peak Volume	0	280	34	0	5	1	0	0	1	0	0	0	0	**320**

Site 43
I-26 On/Off-Ramp,
south of Bush River Rd

Date
Wednesday, April 24, 2024

Lat/Long
34.027518°, -81.101448°

Weather
Fair
66°F

Click here for Detailed Weather

0000 - 2400 (Weekday 24h Session) (04-24-2024)
NB EB 15min

	Northbound (Movement 43.1)													15min	60min
Time	1	2	3	4	5	6	7	8	9	10	11	12	13	Total	Total
0000 - 0015	0	8	4	0	0	0	0	0	0	0	0	0	0	**12**	
0015 - 0030	0	9	3	0	0	0	0	0	0	0	0	0	0	**12**	
0030 - 0045	0	4	2	0	1	0	0	0	0	0	0	0	0	**7**	
0045 - 0100	0	3	1	0	0	0	0	0	1	0	0	0	0	**5**	**36**
0100 - 0115	0	9	4	0	0	0	0	0	0	0	0	0	0	**13**	
0115 - 0130	0	7	3	0	1	0	0	0	0	0	0	0	0	**11**	
0130 - 0145	0	6	2	0	0	0	0	0	0	0	0	0	0	**8**	
0145 - 0200	0	11	1	0	0	1	0	0	0	0	0	0	0	**13**	**45**
0200 - 0215	0	6	1	0	0	0	0	0	0	0	0	0	0	**7**	
0215 - 0230	0	5	3	0	0	0	0	0	0	0	0	0	0	**8**	
0230 - 0245	0	6	4	0	0	0	0	0	0	0	0	0	0	**10**	
0245 - 0300	0	6	2	0	0	0	0	0	0	0	0	0	0	**8**	**33**
0300 - 0315	0	7	3	0	0	0	0	0	0	0	0	0	0	**10**	
0315 - 0330	0	3	2	0	0	0	0	0	0	0	0	0	0	**5**	
0330 - 0345	0	2	2	0	0	0	0	0	0	0	0	0	0	**4**	
0345 - 0400	0	4	2	0	0	1	0	0	0	0	0	0	0	**7**	**26**
0400 - 0415	0	8	5	0	0	0	0	0	0	0	0	0	0	**13**	
0415 - 0430	0	8	1	0	2	1	0	0	0	0	0	0	0	**12**	
0430 - 0445	0	10	3	0	1	0	0	0	0	0	0	0	0	**14**	
0445 - 0500	0	10	2	0	0	0	0	0	0	0	0	0	0	**12**	**51**
0500 - 0515	0	6	2	0	0	0	0	0	0	0	0	0	0	**8**	
0515 - 0530	0	18	4	0	1	0	0	0	0	0	0	0	0	**23**	
0530 - 0545	0	25	8	0	0	0	0	0	0	0	0	0	0	**33**	
0545 - 0600	0	27	6	0	1	1	0	0	3	0	0	0	0	**38**	**102**
0600 - 0615	0	41	8	0	0	0	0	0	0	0	0	0	0	**49**	
0615 - 0630	0	33	9	0	0	2	0	0	0	0	0	0	0	**44**	
0630 - 0645	0	50	5	0	0	0	0	0	1	0	0	0	0	**56**	
0645 - 0700	0	62	6	0	1	0	0	0	2	2	0	0	0	**73**	**222**
0700 - 0715	0	76	11	0	3	1	0	0	0	0	0	0	0	**91**	
0715 - 0730	1	92	13	0	0	2	0	0	0	0	0	0	0	**108**	
0730 - 0745	0	110	15	0	3	0	0	2	0	0	0	0	0	**130**	
0745 - 0800	1	136	16	0	1	1	0	0	0	0	0	0	0	**155**	**484**
0800 - 0815	0	134	13	0	2	1	0	0	1	0	0	0	0	**151**	
0815 - 0830	0	124	16	0	2	5	0	0	0	0	0	0	0	**147**	
0830 - 0845	0	117	15	1	1	1	0	0	0	0	0	0	0	**135**	
0845 - 0900	0	100	17	0	4	0	0	1	0	0	0	0	0	**122**	**555**
0900 - 0915	0	80	18	0	1	5	1	1	1	0	0	0	0	**107**	
0915 - 0930	0	55	12	0	9	1	0	0	0	0	0	0	0	**77**	
0930 - 0945	0	60	21	0	1	0	0	0	0	0	0	0	0	**82**	
0945 - 1000	0	58	15	0	1	2	0	1	1	0	0	0	0	**78**	**344**
1000 - 1015	1	74	10	0	3	0	0	0	0	0	0	0	0	**88**	
1015 - 1030	0	68	13	0	3	0	0	0	0	0	0	0	0	**84**	
1030 - 1045	0	50	12	0	2	0	0	1	0	0	0	0	0	**65**	
1045 - 1100	0	78	21	0	3	0	0	0	2	0	0	0	0	**104**	**341**
1100 - 1115	0	62	15	0	2	1	0	1	2	0	0	0	0	**83**	
1115 - 1130	0	65	18	1	1	1	0	1	0	0	0	0	0	**87**	
1130 - 1145	0	74	19	1	2	0	0	1	0	0	0	0	0	**97**	
1145 - 1200	0	90	19	0	5	1	0	1	2	0	0	0	0	**118**	**385**
1200 - 1215	1	84	10	0	1	0	1	0	0	0	0	0	0	**97**	
1215 - 1230	0	75	28	0	1	0	0	0	1	0	0	0	0	**105**	
1230 - 1245	0	93	14	0	1	1	1	0	0	1	0	0	0	**111**	
1245 - 1300	1	83	12	0	2	1	0	0	0	0	0	0	0	**99**	**412**
1300 - 1315	0	71	17	0	1	0	0	0	1	0	0	0	0	**90**	
1315 - 1330	0	81	13	0	4	1	0	1	0	0	0	0	0	**100**	
1330 - 1345	0	93	15	0	1	0	0	0	0	1	0	0	0	**110**	
1345 - 1400	1	72	17	0	0	1	0	0	0	0	0	0	0	**91**	**391**
1400 - 1415	0	62	24	0	4	0	0	0	1	0	0	0	0	**91**	
1415 - 1430	0	79	15	0	0	3	1	0	0	0	0	0	0	**98**	
1430 - 1445	0	90	18	1	2	1	0	0	1	0	0	0	0	**113**	
1445 - 1500	0	96	25	0	0	1	0	0	1	0	0	0	0	**123**	**425**
1500 - 1515	0	100	18	0	3	0	0	0	1	0	0	0	0	**122**	
1515 - 1530	0	110	20	0	0	2	0	0	0	0	0	0	0	**132**	
1530 - 1545	0	110	12	0	0	3	0	1	0	0	0	0	0	**126**	
1545 - 1600	0	152	14	0	2	4	0	0	0	0	0	0	0	**172**	**552**
1600 - 1615	0	108	21	1	0	1	0	1	1	0	0	0	0	**133**	
1615 - 1630	0	146	31	0	2	1	0	0	0	0	0	0	0	**180**	
1630 - 1645	0	143	33	0	1	0	0	0	1	0	0	0	0	**178**	
1645 - 1700	0	185	36	1	2	1	0	0	2	0	0	0	0	**227**	**718**
1700 - 1715	0	189	34	0	1	0	0	0	2	0	0	0	0	**226**	
1715 - 1730	1	196	25	0	2	1	0	1	1	0	0	0	0	**227**	
1730 - 1745	0	152	23	0	0	1	0	1	0	0	0	0	0	**177**	
1745 - 1800	0	170	32	0	0	1	0	0	1	0	0	0	0	**204**	**834**
1800 - 1815	0	116	17	0	2	1	0	0	0	0	0	0	0	**136**	
1815 - 1830	0	95	14	0	1	0	0	0	0	0	0	0	0	**110**	
1830 - 1845	0	102	7	0	1	0	0	0	0	0	0	0	0	**110**	
1845 - 1900	0	70	12	0	0	0	0	0	0	0	0	0	0	**82**	**438**
1900 - 1915	0	72	11	0	1	0	0	0	1	0	0	0	0	**85**	
1915 - 1930	0	58	10	1	0	0	0	0	1	0	0	0	0	**70**	
1930 - 1945	0	57	10	0	0	0	0	0	0	0	0	0	0	**67**	
1945 - 2000	0	62	9	0	0	0	0	0	0	0	0	0	0	**71**	**293**
2000 - 2015	0	51	7	0	0	0	0	0	0	0	0	0	0	**58**	
2015 - 2030	0	46	6	0	1	0	0	0	0	0	0	0	0	**53**	
2030 - 2045	0	44	5	0	0	0	0	0	0	0	0	0	0	**49**	
2045 - 2100	0	48	6	0	0	0	0	0	0	0	0	0	0	**54**	**214**
2100 - 2115	0	48	7	0	1	0	0	0	0	0	0	0	0	**56**	
2115 - 2130	0	38	5	0	0	0	0	0	0	0	0	0	0	**43**	
2130 - 2145	0	35	4	0	0	0	0	0	0	0	0	0	0	**39**	
2145 - 2200	0	34	5	0	0	0	0	0	0	0	0	0	0	**39**	**177**
2200 - 2215	0	29	4	0	1	0	0	0	0	0	0	0	0	**34**	
2215 - 2230	0	26	5	0	0	0	0	0	0	0	0	0	0	**31**	
2230 - 2245	0	23	3	0	0	0	0	0	0	0	0	0	0	**26**	
2245 - 2300	0	9	2	0	0	0	0	0	0	0	0	0	0	**11**	**102**
2300 - 2315	0	21	3	0	0	0	0	0	0	0	0	0	0	**24**	
2315 - 2330	0	26	4	0	0	0	0	0	0	0	0	0	0	**30**	
2330 - 2345	0	27	5	0	0	0	0	0	0	0	0	0	0	**32**	
2345 - 0000	0	18	3	0	0	0	0	0	0	0	0	0	0	**21**	**107**

Session Total	7	5992	1078	7	95	53	4	15	32	4	0	0	0	**7287**
Session Average	0.07	62.42	11.23	0.07	0.99	0.55	0.04	0.16	0.33	0.04	0.00	0.00	0.00	**75.91**
Session Percentage	0.10	82.23	14.79	0.10	1.30	0.73	0.05	0.21	0.44	0.05	0.00	0.00	0.00	

AM Peak Hour	0700 - 0800	0745 - 0845	0845 - 0945	0745 - 0845	0830 - 0930	0815 - 0915	0815 - 0915	0645 - 0745	0545 - 0645	0600 - 0700	-	-	-	**0745 - 0845**
AM Peak Volume	2	511	68	1	15	11	1	2	4	2	0	0	0	**588**

Noon Peak Hour	1200 - 1300	1445 - 1545	1400 - 1500	1045 - 1145	1000 - 1100	1445 - 1545	1145 - 1245	1100 - 1200	1015 - 1115	1145 - 1245	-	-	-	**1445 - 1545**
Noon Peak Volume	2	416	82	2	11	6	2	4	4	1	0	0	0	**503**

PM Peak Hour	1630 - 1730	1645 - 1745	1615 - 1715	1600 - 1700	1615 - 1715	1515 - 1615	-	1515 - 1615	1630 - 1730	-	-	-	-	**1630 - 1730**
PM Peak Volume	1	722	134	2	6	10	0	2	6	0	0	0	0	**858**

Site 43
I-26 On/Off-Ramp,
south of Bush River Rd

Date
Thursday, April 25, 2024

Lat/Long
34.027518°, -81.101448°

Weather
Fair
67°F

Click here for Detailed Weather

0000 - 2400 (Weekday 24h Session) (04-25-2024)
NB EB 15min

	Northbound (Movement 43.1)													15min	60min
TIME	1	2	3	4	5	6	7	8	9	10	11	12	13	Total	Total
0000 - 0015	0	16	2	0	1	0	0	0	0	0	0	0	0	**19**	
0015 - 0030	0	16	0	0	0	0	0	0	0	0	0	0	0	**16**	
0030 - 0045	0	19	0	0	0	1	0	0	0	0	0	0	0	**20**	
0045 - 0100	0	10	0	0	0	0	0	0	0	0	0	0	0	**10**	**65**
0100 - 0115	0	17	0	0	0	0	0	0	0	0	0	0	0	**17**	
0115 - 0130	0	11	2	0	0	0	0	0	1	0	0	0	0	**14**	
0130 - 0145	0	4	0	0	1	0	0	0	0	0	0	0	0	**5**	
0145 - 0200	0	10	1	0	0	0	0	0	0	0	0	0	0	**11**	**47**
0200 - 0215	0	11	0	0	0	0	0	0	0	0	0	0	0	**11**	
0215 - 0230	0	7	1	0	0	0	0	0	0	0	0	0	0	**8**	
0230 - 0245	0	9	1	0	0	0	0	0	0	0	0	0	0	**10**	
0245 - 0300	0	3	0	0	0	0	0	0	0	0	0	0	0	**3**	**32**
0300 - 0315	0	11	0	0	0	0	0	0	0	0	0	0	0	**11**	
0315 - 0330	0	9	1	0	0	0	0	0	0	0	0	0	0	**10**	
0330 - 0345	0	4	0	0	0	0	0	0	0	0	0	0	0	**4**	
0345 - 0400	0	10	1	0	0	1	0	0	0	0	0	0	0	**12**	**37**
0400 - 0415	0	9	1	0	0	0	0	0	0	0	0	0	0	**10**	
0415 - 0430	0	10	1	0	0	0	0	0	0	0	0	0	0	**11**	
0430 - 0445	0	10	2	0	0	0	0	0	0	0	0	0	0	**12**	
0445 - 0500	0	14	0	0	0	0	0	0	0	0	0	0	0	**14**	**47**
0500 - 0515	0	14	1	0	0	0	0	0	0	0	0	0	0	**15**	
0515 - 0530	0	15	1	0	0	0	0	0	0	0	0	0	0	**16**	
0530 - 0545	0	24	2	0	0	0	0	0	0	0	0	0	0	**26**	
0545 - 0600	0	24	1	0	0	0	0	0	0	0	0	0	0	**25**	**82**
0600 - 0615	0	32	3	0	1	0	0	0	0	0	0	0	0	**36**	
0615 - 0630	0	37	6	0	1	0	0	0	0	0	0	0	0	**44**	
0630 - 0645	0	43	10	0	0	1	0	0	0	0	0	0	0	**54**	
0645 - 0700	0	53	12	0	1	0	0	0	0	0	0	0	0	**66**	**200**
0700 - 0715	0	60	9	0	0	0	0	0	0	0	0	0	0	**69**	
0715 - 0730	0	91	12	0	1	0	0	1	0	0	0	0	0	**105**	
0730 - 0745	1	117	26	0	1	2	0	1	0	0	0	0	0	**148**	
0745 - 0800	0	123	22	0	1	1	0	1	0	0	0	0	0	**148**	**470**
0800 - 0815	0	130	16	0	0	0	0	0	1	0	0	0	0	**147**	
0815 - 0830	0	86	19	0	3	1	0	0	0	0	0	0	0	**109**	
0830 - 0845	0	74	18	0	6	2	0	1	1	0	0	0	0	**102**	
0845 - 0900	0	56	15	0	2	1	0	0	1	0	0	0	0	**75**	**433**
0900 - 0915	0	49	13	1	3	0	1	1	1	0	0	0	0	**69**	
0915 - 0930	0	62	19	0	3	0	0	0	1	2	0	0	0	**87**	
0930 - 0945	0	63	16	0	3	3	0	0	3	1	0	0	0	**89**	
0945 - 1000	0	56	16	0	2	3	0	0	1	0	0	0	0	**78**	**323**
1000 - 1015	0	59	10	0	2	0	1	2	1	0	0	0	0	**75**	
1015 - 1030	1	52	13	0	3	2	0	2	0	0	0	0	0	**73**	
1030 - 1045	0	62	13	1	1	2	1	0	0	0	0	0	0	**80**	
1045 - 1100	0	66	13	0	0	1	0	0	0	0	0	0	0	**80**	**308**
1100 - 1115	0	68	24	0	1	2	1	0	0	0	0	0	0	**96**	
1115 - 1130	0	70	13	0	1	2	0	0	1	0	0	0	0	**87**	
1130 - 1145	0	66	21	0	2	1	0	0	0	0	0	0	0	**90**	
1145 - 1200	0	71	13	0	0	1	0	0	1	0	0	0	0	**86**	**359**
1200 - 1215	0	76	20	1	3	4	0	0	1	0	0	0	0	**105**	
1215 - 1230	0	65	19	0	3	2	0	1	0	0	0	0	0	**90**	
1230 - 1245	0	71	16	0	1	1	0	0	1	0	0	0	0	**90**	
1245 - 1300	2	64	17	0	2	1	0	0	1	0	0	0	0	**87**	**372**
1300 - 1315	1	75	19	0	1	0	0	0	0	0	0	0	0	**96**	
1315 - 1330	0	82	14	0	1	0	0	0	2	0	0	0	0	**99**	
1330 - 1345	0	68	16	0	0	0	0	0	0	0	0	0	0	**84**	
1345 - 1400	0	75	20	0	2	2	0	1	1	0	0	0	0	**101**	**380**
1400 - 1415	1	70	17	0	3	1	0	0	0	0	0	0	0	**92**	
1415 - 1430	0	85	15	0	1	0	0	0	0	0	0	0	0	**101**	
1430 - 1445	0	95	18	0	3	1	0	0	1	0	0	0	0	**118**	
1445 - 1500	0	84	18	0	2	1	0	0	3	0	0	0	0	**108**	**419**
1500 - 1515	0	93	20	0	2	0	0	0	0	0	0	0	0	**115**	
1515 - 1530	1	117	10	0	0	2	0	0	0	0	0	0	0	**130**	
1530 - 1545	1	98	25	0	1	0	0	0	1	0	0	0	0	**126**	
1545 - 1600	0	133	20	0	0	2	0	0	0	0	0	0	0	**155**	**526**
1600 - 1615	0	163	23	0	0	1	0	0	1	0	0	0	0	**188**	
1615 - 1630	0	153	32	0	3	1	0	0	0	0	0	0	0	**189**	
1630 - 1645	0	182	35	0	3	2	0	0	2	0	0	0	0	**224**	
1645 - 1700	0	151	26	0	0	0	0	0	0	0	0	0	0	**177**	**778**
1700 - 1715	0	152	32	0	2	0	0	0	1	0	0	0	0	**187**	
1715 - 1730	0	188	24	0	1	1	0	0	0	0	0	0	0	**214**	
1730 - 1745	0	183	32	0	2	1	0	0	0	0	0	0	0	**218**	
1745 - 1800	0	169	31	1	0	0	0	0	1	0	0	0	0	**202**	**821**
1800 - 1815	0	168	19	0	1	0	0	0	0	0	0	0	0	**188**	
1815 - 1830	0	100	13	0	1	1	0	0	1	0	0	0	0	**116**	
1830 - 1845	0	85	12	0	0	0	0	0	1	0	0	0	0	**98**	
1845 - 1900	0	72	11	0	0	0	0	0	1	0	0	0	0	**84**	**486**
1900 - 1915	0	0	0	0	0	0	0	0	0	0	0	0	0	**0**	
1915 - 1930	0	0	0	0	0	0	0	0	0	0	0	0	0	**0**	
1930 - 1945	0	0	0	0	0	0	0	0	0	0	0	0	0	**0**	
1945 - 2000	0	0	0	0	0	0	0	0	0	0	0	0	0	**0**	**0**
2000 - 2015	0	0	0	0	0	0	0	0	0	0	0	0	0	**0**	
2015 - 2030	0	0	0	0	0	0	0	0	0	0	0	0	0	**0**	
2030 - 2045	0	0	0	0	0	0	0	0	0	0	0	0	0	**0**	
2045 - 2100	0	0	0	0	0	0	0	0	0	0	0	0	0	**0**	**0**
2100 - 2115	0	0	0	0	0	0	0	0	0	0	0	0	0	**0**	
2115 - 2130	0	0	0	0	0	0	0	0	0	0	0	0	0	**0**	
2130 - 2145	0	0	0	0	0	0	0	0	0	0	0	0	0	**0**	
2145 - 2200	0	0	0	0	0	0	0	0	0	0	0	0	0	**0**	**0**
2200 - 2215	0	0	0	0	0	0	0	0	0	0	0	0	0	**0**	
2215 - 2230	0	0	0	0	0	0	0	0	0	0	0	0	0	**0**	
2230 - 2245	0	0	0	0	0	0	0	0	0	0	0	0	0	**0**	
2245 - 2300	0	0	0	0	0	0	0	0	0	0	0	0	0	**0**	**0**
2300 - 2315	0	0	0	0	0	0	0	0	0	0	0	0	0	**0**	
2315 - 2330	0	0	0	0	0	0	0	0	0	0	0	0	0	**0**	
2330 - 2345	0	0	0	0	0	0	0	0	0	0	0	0	0	**0**	
2345 - 0000	0	0	0	0	0	0	0	0	0	0	0	0	0	**0**	**0**

Session Total	8	5050	944	4	78	51	4	11	32	3	0	0	0	**6185**
Session Average	0.08	52.60	9.83	0.04	0.81	0.53	0.04	0.11	0.33	0.03	0.00	0.00	0.00	**64.43**
Session Percentage	0.13	81.65	15.26	0.06	1.26	0.82	0.06	0.18	0.52	0.05	0.00	0.00	0.00	

AM Peak Hour	0645 - 0745	0715 - 0815	0730 - 0830	0815 - 0915	0815 - 0915	0930 - 1030	0945 - 1045	0930 - 1030	0845 - 0945	0845 - 0945	-	-	-	**0730 - 0830**
AM Peak Hour Volume	1	461	83	1	14	8	2	4	6	3	0	0	0	**552**

Noon Peak Hour	1215 - 1315	1445 - 1545	1130 - 1230	1000 - 1100	1200 - 1300	1115 - 1215	1000 - 1100	1000 - 1100	1230 - 1330	-	-	-	-	**1445 - 1545**
Noon Peak Hour Volume	3	392	73	1	9	8	2	4	4	0	0	0	0	**479**

PM Peak Hour	1500 - 1600	1715 - 1815	1615 - 1715	1700 - 1800	1615 - 1715	1545 - 1645	-	-	1545 - 1645	-	-	-	-	**1715 - 1815**
PM Peak Hour Volume	2	708	125	1	8	6	0	0	3	0	0	0	0	**822**

Bi-Directional Class Count || NB EB Average 15min

Columbia, SC

Marr Traffic DATA COLLECTION
www.marrtraffic.com

Site 43
I-26 On/Off-Ramp,
south of Bush River Rd

Date
Tuesday, April 23, 2024

Lat/Long
34.027518°, -81.101448°

Weather
Fair
58°F

0000 - 2400 (Weekday 24h Session) (All Dates)
NB EB Average 15min

	NB EB Average 15min													15min	60min
Time	1	2	3	4	5	6	7	8	9	10	11	12	13	Total	Total
0000 - 0015	0	8	2	0	0	0	0	0	0	0	0	0	0	**10**	
0015 - 0030	0	8	1	0	0	0	0	0	0	0	0	0	0	**9**	
0030 - 0045	0	8	1	0	0	0	0	0	0	0	0	0	0	**9**	
0045 - 0100	0	4	0	0	0	0	0	0	0	0	0	0	0	**5**	**34**
0100 - 0115	0	9	1	0	0	0	0	0	0	0	0	0	0	**10**	
0115 - 0130	0	6	2	0	0	0	0	0	0	0	0	0	0	**8**	
0130 - 0145	0	3	1	0	0	0	0	0	0	0	0	0	0	**4**	
0145 - 0200	0	7	1	0	0	0	0	0	0	0	0	0	0	**8**	**31**
0200 - 0215	0	6	0	0	0	0	0	0	0	0	0	0	0	**6**	
0215 - 0230	0	4	1	0	0	0	0	0	0	0	0	0	0	**5**	
0230 - 0245	0	5	2	0	0	0	0	0	0	0	0	0	0	**7**	
0245 - 0300	0	3	1	0	0	0	0	0	0	0	0	0	0	**4**	**22**
0300 - 0315	0	6	1	0	0	0	0	0	0	0	0	0	0	**7**	
0315 - 0330	0	4	1	0	0	0	0	0	0	0	0	0	0	**5**	
0330 - 0345	0	2	1	0	0	0	0	0	0	0	0	0	0	**3**	
0345 - 0400	0	5	1	0	0	1	0	0	0	0	0	0	0	**6**	**21**
0400 - 0415	0	6	2	0	0	0	0	0	0	0	0	0	0	**8**	
0415 - 0430	0	6	1	0	1	0	0	0	0	0	0	0	0	**8**	
0430 - 0445	0	7	2	0	0	0	0	0	0	0	0	0	0	**9**	
0445 - 0500	0	8	1	0	0	0	0	0	0	0	0	0	0	**9**	**33**
0500 - 0515	0	7	1	0	0	0	0	0	0	0	0	0	0	**8**	
0515 - 0530	0	11	2	0	0	0	0	0	0	0	0	0	0	**13**	
0530 - 0545	0	16	3	0	0	0	0	0	0	0	0	0	0	**20**	
0545 - 0600	0	17	2	0	0	0	0	0	1	0	0	0	0	**21**	**61**
0600 - 0615	0	24	4	0	0	0	0	0	0	0	0	0	0	**28**	
0615 - 0630	0	23	5	0	0	1	0	0	0	0	0	0	0	**29**	
0630 - 0645	0	31	5	0	0	0	0	0	0	0	0	0	0	**37**	
0645 - 0700	0	38	6	0	1	0	0	0	1	1	0	0	0	**46**	**141**
0700 - 0715	0	45	7	0	1	0	0	0	0	0	0	0	0	**53**	
0715 - 0730	0	61	8	0	0	1	0	0	0	0	0	0	0	**71**	
0730 - 0745	0	76	14	0	1	1	0	1	0	0	0	0	0	**93**	
0745 - 0800	0	86	13	0	1	1	0	0	0	0	0	0	0	**101**	**318**
0800 - 0815	0	88	10	0	1	0	0	0	1	0	0	0	0	**99**	
0815 - 0830	0	70	12	0	2	2	0	0	0	0	0	0	0	**85**	
0830 - 0845	0	64	11	0	2	1	0	0	0	0	0	0	0	**79**	
0845 - 0900	0	52	11	0	2	0	0	0	0	0	0	0	0	**66**	**329**
0900 - 0915	0	43	10	0	1	2	1	1	1	0	0	0	0	**59**	
0915 - 0930	0	39	10	0	4	0	0	0	0	1	0	0	0	**55**	
0930 - 0945	0	41	12	0	1	1	0	0	1	0	0	0	0	**57**	
0945 - 1000	0	38	10	0	1	2	0	0	1	0	0	0	0	**52**	**222**
1000 - 1015	0	44	7	0	2	0	0	1	0	0	0	0	0	**54**	
1015 - 1030	0	40	9	0	2	1	0	1	0	0	0	0	0	**52**	
1030 - 1045	0	37	8	0	1	1	0	0	0	0	0	0	0	**48**	
1045 - 1100	0	48	11	0	1	0	0	0	1	0	0	0	0	**61**	**216**
1100 - 1115	0	43	13	0	1	1	0	0	1	0	0	0	0	**60**	
1115 - 1130	0	45	10	0	1	1	0	0	0	0	0	0	0	**58**	
1130 - 1145	0	47	13	0	1	0	0	0	0	0	0	0	0	**62**	
1145 - 1200	0	54	11	0	2	1	0	0	1	0	0	0	0	**68**	**248**
1200 - 1215	0	53	10	0	1	1	0	0	0	0	0	0	0	**67**	
1215 - 1230	0	47	16	0	1	1	0	0	0	0	0	0	0	**65**	
1230 - 1245	0	55	10	0	1	1	0	0	0	0	0	0	0	**67**	
1245 - 1300	1	49	10	0	1	1	0	0	0	0	0	0	0	**62**	**261**
1300 - 1315	0	49	12	0	1	0	0	0	0	0	0	0	0	**62**	
1315 - 1330	0	54	9	0	2	0	0	0	1	0	0	0	0	**66**	
1330 - 1345	0	54	10	0	0	0	0	0	0	0	0	0	0	**65**	
1345 - 1400	0	49	12	0	1	1	0	0	0	0	0	0	0	**64**	**257**
1400 - 1415	0	44	14	0	2	0	0	0	0	0	0	0	0	**61**	
1415 - 1430	0	55	10	0	0	1	0	0	0	0	0	0	0	**66**	
1430 - 1445	0	62	12	0	2	1	0	0	1	0	0	0	0	**77**	
1445 - 1500	0	60	14	0	1	1	0	0	1	0	0	0	0	**77**	**281**
1500 - 1515	0	64	13	0	2	0	0	0	0	0	0	0	0	**79**	
1515 - 1530	0	76	10	0	0	1	0	0	0	0	0	0	0	**87**	
1530 - 1545	0	69	12	0	0	1	0	0	0	0	0	0	0	**84**	
1545 - 1600	0	95	11	0	1	2	0	0	0	0	0	0	0	**109**	**359**
1600 - 1615	0	90	15	0	0	1	0	0	1	0	0	0	0	**107**	
1615 - 1630	0	100	21	0	2	1	0	0	0	0	0	0	0	**123**	
1630 - 1645	0	108	23	0	1	1	0	0	1	0	0	0	0	**134**	
1645 - 1700	0	112	21	0	1	0	0	0	1	0	0	0	0	**135**	**499**
1700 - 1715	0	114	22	0	1	0	0	0	1	0	0	0	0	**138**	
1715 - 1730	0	128	16	0	1	1	0	0	0	0	0	0	0	**147**	
1730 - 1745	0	112	18	0	1	1	0	0	0	0	0	0	0	**132**	
1745 - 1800	0	113	21	0	0	0	0	0	1	0	0	0	0	**135**	**552**
1800 - 1815	0	95	12	0	1	0	0	0	0	0	0	0	0	**108**	
1815 - 1830	0	65	9	0	1	0	0	0	0	0	0	0	0	**75**	
1830 - 1845	0	62	6	0	0	0	0	0	0	0	0	0	0	**69**	
1845 - 1900	0	47	8	0	0	0	0	0	0	0	0	0	0	**55**	**308**
1900 - 1915	0	48	7	0	1	0	0	0	0	0	0	0	0	**56**	
1915 - 1930	0	45	6	0	1	0	0	0	0	0	0	0	0	**53**	
1930 - 1945	0	45	6	0	0	0	0	0	0	0	0	0	0	**52**	
1945 - 2000	0	38	6	0	0	0	0	0	0	0	0	0	0	**44**	**204**
2000 - 2015	0	33	4	0	0	0	0	0	0	0	0	0	0	**37**	
2015 - 2030	0	33	6	0	1	0	0	0	0	0	0	0	0	**39**	
2030 - 2045	0	26	5	0	0	0	0	0	0	0	0	0	0	**30**	
2045 - 2100	0	31	5	0	0	0	0	0	0	0	0	0	0	**36**	**143**
2100 - 2115	0	29	5	0	0	0	0	0	0	0	0	0	0	**34**	
2115 - 2130	0	25	4	0	0	0	0	0	0	0	0	0	0	**29**	
2130 - 2145	0	23	4	0	0	0	0	0	0	0	0	0	0	**26**	
2145 - 2200	0	20	4	0	0	0	0	0	0	0	0	0	0	**24**	**113**
2200 - 2215	0	18	3	0	0	0	0	0	0	0	0	0	0	**21**	
2215 - 2230	0	17	4	0	0	0	0	0	0	0	0	0	0	**21**	
2230 - 2245	0	15	3	0	0	0	0	0	0	0	0	0	0	**18**	
2245 - 2300	0	9	2	0	0	0	0	0	0	0	0	0	0	**11**	**71**
2300 - 2315	0	14	2	0	0	0	0	0	0	0	0	0	0	**17**	
2315 - 2330	0	18	4	0	0	0	0	0	0	0	0	0	0	**22**	
2330 - 2345	0	15	3	0	0	0	0	0	0	0	0	0	0	**18**	
2345 - 0000	0	12	2	0	0	0	0	0	0	0	0	0	0	**14**	**70**

Session Total	5	3936	719	4	60	35	3	9	22	2	0	0	0	**4795**
Session Average	0.05	41.00	7.49	0.04	0.63	0.37	0.03	0.09	0.23	0.02	0.00	0.00	0.00	**49.94**
Session Percentage	0.10	82.08	15.00	0.08	1.25	0.74	0.06	0.18	0.47	0.05	0.00	0.00	0.00	

AM Peak Hour	0700 - 0800	0730 - 0830	0730 - 0830	0815 - 0915	0830 - 0930	0815 - 0915	0815 - 0915	0945 - 1045	0900 - 1000	0845 - 0945	-	-	-	**0730 - 0830**
AM Peak Volume	1	320	48	1	10	5	1	2	3	1	0	0	0	**378**

Noon Peak Hour	1200 - 1300	1445 - 1545	1400 - 1500	1115 - 1215	1000 - 1100	1115 - 1215	1000 - 1100	1000 - 1100	1415 - 1515	1145 - 1245	-	-	-	**1445 - 1545**
Noon Peak Volume	1	269	50	1	6	3	1	2	2	0	0	0	0	**327**

PM Peak Hour	1500 - 1600	1700 - 1800	1615 - 1715	1600 - 1700	1615 - 1715	1515 - 1615	-	1515 - 1615	1630 - 1730	-	-	-	-	**1630 - 1730**
PM Peak Volume	1	466	86	1	5	5	0	1	3	0	0	0	0	**553**

Bi-Directional Class Count || Volume Summary 15min

Columbia, SC

Marr Traffic DATA COLLECTION

www.marrtraffic.com

Site 43

I-26 On/Off-Ramp,
south of Bush River Rd

Date

Tuesday, April 23, 2024

Lat/Long

34.027518°, -81.101448°

Weather

Fair
58°F

Click here for Detailed Weather

0000 - 2400 (Weekday 24h Session) (04-23-2024)

Volume Summary 15min

TIME	Volume Summary 15min NB	SB	15min Total	60min Total
0000 - 0015	0	0	**0**	
0015 - 0030	0	0	**0**	
0030 - 0045	0	0	**0**	
0045 - 0100	0	0	**0**	**0**
0100 - 0115	0	0	**0**	
0115 - 0130	0	0	**0**	
0130 - 0145	0	0	**0**	
0145 - 0200	0	0	**0**	**0**
0200 - 0215	0	0	**0**	
0215 - 0230	0	0	**0**	
0230 - 0245	0	0	**0**	
0245 - 0300	0	0	**0**	**0**
0300 - 0315	0	0	**0**	
0315 - 0330	0	0	**0**	
0330 - 0345	0	0	**0**	
0345 - 0400	0	0	**0**	**0**
0400 - 0415	0	0	**0**	
0415 - 0430	0	0	**0**	
0430 - 0445	0	0	**0**	
0445 - 0500	0	0	**0**	**0**
0500 - 0515	0	0	**0**	
0515 - 0530	0	0	**0**	
0530 - 0545	0	0	**0**	
0545 - 0600	0	0	**0**	**0**
0600 - 0615	0	0	**0**	
0615 - 0630	0	0	**0**	
0630 - 0645	0	0	**0**	
0645 - 0700	0	0	**0**	**0**
0700 - 0715	0	0	**0**	
0715 - 0730	0	0	**0**	
0730 - 0745	0	0	**0**	
0745 - 0800	0	0	**0**	**0**
0800 - 0815	0	0	**0**	
0815 - 0830	0	0	**0**	
0830 - 0845	0	0	**0**	
0845 - 0900	0	0	**0**	**0**
0900 - 0915	0	0	**0**	
0915 - 0930	0	0	**0**	
0930 - 0945	0	0	**0**	
0945 - 1000	0	0	**0**	**0**
1000 - 1015	0	0	**0**	
1015 - 1030	0	0	**0**	
1030 - 1045	0	0	**0**	
1045 - 1100	0	0	**0**	**0**
1100 - 1115	0	0	**0**	
1115 - 1130	0	0	**0**	
1130 - 1145	0	0	**0**	
1145 - 1200	0	0	**0**	**0**

Time	Volume Summary 15min NB	SB	15min Total	60min Total
1200 - 1215	0	0	**0**	
1215 - 1230	0	0	**0**	
1230 - 1245	0	0	**0**	
1245 - 1300	0	0	**0**	**0**
1300 - 1315	0	0	**0**	
1315 - 1330	0	0	**0**	
1330 - 1345	0	0	**0**	
1345 - 1400	0	0	**0**	**0**
1400 - 1415	0	0	**0**	
1415 - 1430	0	0	**0**	
1430 - 1445	0	0	**0**	
1445 - 1500	0	0	**0**	**0**
1500 - 1515	0	0	**0**	
1515 - 1530	0	0	**0**	
1530 - 1545	0	0	**0**	
1545 - 1600	0	0	**0**	**0**
1600 - 1615	0	0	**0**	
1615 - 1630	0	0	**0**	
1630 - 1645	0	0	**0**	
1645 - 1700	0	0	**0**	**0**
1700 - 1715	0	0	**0**	
1715 - 1730	0	0	**0**	
1730 - 1745	0	0	**0**	
1745 - 1800	0	0	**0**	**0**
1800 - 1815	0	0	**0**	
1815 - 1830	0	0	**0**	
1830 - 1845	0	0	**0**	
1845 - 1900	0	0	**0**	**0**
1900 - 1915	82	0	**82**	
1915 - 1930	88	0	**88**	
1930 - 1945	88	0	**88**	
1945 - 2000	62	0	**62**	**320**
2000 - 2015	54	0	**54**	
2015 - 2030	64	0	**64**	
2030 - 2045	42	0	**42**	
2045 - 2100	55	0	**55**	**215**
2100 - 2115	46	0	**46**	
2115 - 2130	45	0	**45**	
2130 - 2145	40	0	**40**	
2145 - 2200	32	0	**32**	**163**
2200 - 2215	30	0	**30**	
2215 - 2230	32	0	**32**	
2230 - 2245	27	0	**27**	
2245 - 2300	21	0	**21**	**110**
2300 - 2315	26	0	**26**	
2315 - 2330	35	0	**35**	
2330 - 2345	22	0	**22**	
2345 - 0000	21	0	**21**	**104**

Session Total	912	0	**912**
Session Average	9.50	0.00	**9.50**
Session Percentage	100.00	0.00	

Site 43

I-26 On/Off-Ramp,
south of Bush River Rd

Date

Wednesday, April 24, 2024

Lat/Long

34.027518°, -81.101448°

Weather

Fair
66°F

Click here for Detailed Weather

0000 - 2400 (Weekday 24h Session) (04-24-2024)

Volume Summary 15min

TIME	Volume Summary 15min NB	SB	15min Total	60min Total
0000 - 0015	12	0	**12**	
0015 - 0030	12	0	**12**	
0030 - 0045	7	0	**7**	
0045 - 0100	5	0	**5**	**36**
0100 - 0115	13	0	**13**	
0115 - 0130	11	0	**11**	
0130 - 0145	8	0	**8**	
0145 - 0200	13	0	**13**	**45**
0200 - 0215	7	0	**7**	
0215 - 0230	8	0	**8**	
0230 - 0245	10	0	**10**	
0245 - 0300	8	0	**8**	**33**
0300 - 0315	10	0	**10**	
0315 - 0330	5	0	**5**	
0330 - 0345	4	0	**4**	
0345 - 0400	7	0	**7**	**26**
0400 - 0415	13	0	**13**	
0415 - 0430	12	0	**12**	
0430 - 0445	14	0	**14**	
0445 - 0500	12	0	**12**	**51**
0500 - 0515	8	0	**8**	
0515 - 0530	23	0	**23**	
0530 - 0545	33	0	**33**	
0545 - 0600	38	0	**38**	**102**
0600 - 0615	49	0	**49**	
0615 - 0630	44	0	**44**	
0630 - 0645	56	0	**56**	
0645 - 0700	73	0	**73**	**222**
0700 - 0715	91	0	**91**	
0715 - 0730	108	0	**108**	
0730 - 0745	130	0	**130**	
0745 - 0800	155	0	**155**	**484**
0800 - 0815	151	0	**151**	
0815 - 0830	147	0	**147**	
0830 - 0845	135	0	**135**	
0845 - 0900	122	0	**122**	**555**
0900 - 0915	107	0	**107**	
0915 - 0930	77	0	**77**	
0930 - 0945	82	0	**82**	
0945 - 1000	78	0	**78**	**344**
1000 - 1015	88	0	**88**	
1015 - 1030	84	0	**84**	
1030 - 1045	65	0	**65**	
1045 - 1100	104	0	**104**	**341**
1100 - 1115	83	0	**83**	
1115 - 1130	87	0	**87**	
1130 - 1145	97	0	**97**	
1145 - 1200	118	0	**118**	**385**

Time	Volume Summary 15min NB	SB	15min Total	60min Total
1200 - 1215	97	0	**97**	
1215 - 1230	105	0	**105**	
1230 - 1245	111	0	**111**	
1245 - 1300	99	0	**99**	**412**
1300 - 1315	90	0	**90**	
1315 - 1330	100	0	**100**	
1330 - 1345	110	0	**110**	
1345 - 1400	91	0	**91**	**391**
1400 - 1415	91	0	**91**	
1415 - 1430	98	0	**98**	
1430 - 1445	113	0	**113**	
1445 - 1500	123	0	**123**	**425**
1500 - 1515	122	0	**122**	
1515 - 1530	132	0	**132**	
1530 - 1545	126	0	**126**	
1545 - 1600	172	0	**172**	**552**
1600 - 1615	133	0	**133**	
1615 - 1630	180	0	**180**	
1630 - 1645	178	0	**178**	
1645 - 1700	227	0	**227**	**718**
1700 - 1715	226	0	**226**	
1715 - 1730	227	0	**227**	
1730 - 1745	177	0	**177**	
1745 - 1800	204	0	**204**	**834**
1800 - 1815	136	0	**136**	
1815 - 1830	110	0	**110**	
1830 - 1845	110	0	**110**	
1845 - 1900	82	0	**82**	**438**
1900 - 1915	85	0	**85**	
1915 - 1930	70	0	**70**	
1930 - 1945	67	0	**67**	
1945 - 2000	71	0	**71**	**293**
2000 - 2015	58	0	**58**	
2015 - 2030	53	0	**53**	
2030 - 2045	49	0	**49**	
2045 - 2100	54	0	**54**	**214**
2100 - 2115	56	0	**56**	
2115 - 2130	43	0	**43**	
2130 - 2145	39	0	**39**	
2145 - 2200	39	0	**39**	**177**
2200 - 2215	34	0	**34**	
2215 - 2230	31	0	**31**	
2230 - 2245	26	0	**26**	
2245 - 2300	11	0	**11**	**102**
2300 - 2315	24	0	**24**	
2315 - 2330	30	0	**30**	
2330 - 2345	32	0	**32**	
2345 - 0000	21	0	**21**	**107**

Session Total	7287	0	**7287**
Session Average	75.91	0.00	**75.91**
Session Percentage	100.00	0.00	

Site 43

I-26 On/Off-Ramp,
south of Bush River Rd

Date

Thursday, April 25, 2024

Lat/Long

34.027518°, -81.101448°

Weather

Fair
67°F

Click here for Detailed Weather

0000 - 2400 (Weekday 24h Session) (04-25-2024)

Volume Summary 15min

TIME	Volume Summary 15min NB	SB	15min Total	60min Total
0000 - 0015	19	0	**19**	
0015 - 0030	16	0	**16**	
0030 - 0045	20	0	**20**	
0045 - 0100	10	0	**10**	**65**
0100 - 0115	17	0	**17**	
0115 - 0130	14	0	**14**	
0130 - 0145	5	0	**5**	
0145 - 0200	11	0	**11**	**47**
0200 - 0215	11	0	**11**	
0215 - 0230	8	0	**8**	
0230 - 0245	10	0	**10**	
0245 - 0300	3	0	**3**	**32**
0300 - 0315	11	0	**11**	
0315 - 0330	10	0	**10**	
0330 - 0345	4	0	**4**	
0345 - 0400	12	0	**12**	**37**
0400 - 0415	10	0	**10**	
0415 - 0430	11	0	**11**	
0430 - 0445	12	0	**12**	
0445 - 0500	14	0	**14**	**47**
0500 - 0515	15	0	**15**	
0515 - 0530	16	0	**16**	
0530 - 0545	26	0	**26**	
0545 - 0600	25	0	**25**	**82**
0600 - 0615	36	0	**36**	
0615 - 0630	44	0	**44**	
0630 - 0645	54	0	**54**	
0645 - 0700	66	0	**66**	**200**
0700 - 0715	69	0	**69**	
0715 - 0730	105	0	**105**	
0730 - 0745	148	0	**148**	
0745 - 0800	148	0	**148**	**470**
0800 - 0815	147	0	**147**	
0815 - 0830	109	0	**109**	
0830 - 0845	102	0	**102**	
0845 - 0900	75	0	**75**	**433**
0900 - 0915	69	0	**69**	
0915 - 0930	87	0	**87**	
0930 - 0945	89	0	**89**	
0945 - 1000	78	0	**78**	**323**
1000 - 1015	75	0	**75**	
1015 - 1030	73	0	**73**	
1030 - 1045	80	0	**80**	
1045 - 1100	80	0	**80**	**308**
1100 - 1115	96	0	**96**	
1115 - 1130	87	0	**87**	
1130 - 1145	90	0	**90**	
1145 - 1200	86	0	**86**	**359**

Time	Volume Summary 15min NB	SB	15min Total	60min Total
1200 - 1215	105	0	**105**	
1215 - 1230	90	0	**90**	
1230 - 1245	90	0	**90**	
1245 - 1300	87	0	**87**	**372**
1300 - 1315	96	0	**96**	
1315 - 1330	99	0	**99**	
1330 - 1345	84	0	**84**	
1345 - 1400	101	0	**101**	**380**
1400 - 1415	92	0	**92**	
1415 - 1430	101	0	**101**	
1430 - 1445	118	0	**118**	
1445 - 1500	108	0	**108**	**419**
1500 - 1515	115	0	**115**	
1515 - 1530	130	0	**130**	
1530 - 1545	126	0	**126**	
1545 - 1600	155	0	**155**	**526**
1600 - 1615	188	0	**188**	
1615 - 1630	189	0	**189**	
1630 - 1645	224	0	**224**	
1645 - 1700	177	0	**177**	**778**
1700 - 1715	187	0	**187**	
1715 - 1730	214	0	**214**	
1730 - 1745	218	0	**218**	
1745 - 1800	202	0	**202**	**821**
1800 - 1815	188	0	**188**	
1815 - 1830	116	0	**116**	
1830 - 1845	98	0	**98**	
1845 - 1900	84	0	**84**	**486**
1900 - 1915	0	0	**0**	
1915 - 1930	0	0	**0**	
1930 - 1945	0	0	**0**	
1945 - 2000	0	0	**0**	**0**
2000 - 2015	0	0	**0**	
2015 - 2030	0	0	**0**	
2030 - 2045	0	0	**0**	
2045 - 2100	0	0	**0**	**0**
2100 - 2115	0	0	**0**	
2115 - 2130	0	0	**0**	
2130 - 2145	0	0	**0**	
2145 - 2200	0	0	**0**	**0**
2200 - 2215	0	0	**0**	
2215 - 2230	0	0	**0**	
2230 - 2245	0	0	**0**	
2245 - 2300	0	0	**0**	**0**
2300 - 2315	0	0	**0**	
2315 - 2330	0	0	**0**	
2330 - 2345	0	0	**0**	
2345 - 0000	0	0	**0**	**0**

Session Total	6185	0	**6185**
Session Average	64.43	0.00	**64.43**
Session Percentage	100.00	0.00	

Bi-Directional Class Count || NB EB 60min

Columbia, SC

Marr Traffic DATA COLLECTION

www.marrtraffic.com

Site 43
I-26 On/Off-Ramp,
south of Bush River Rd

Date
Tuesday, April 23, 2024

Lat/Long
34.027518°, -81.101448°

Weather
Fair
58°F

Click here for Detailed Weather

0000 - 2400 (Weekday 24h Session) (04-23-2024)
NB EB 60min

	Northbound (Movement 43.1)													
TIME	1	2	3	4	5	6	7	8	9	10	11	12	13	**Total**
0000 - 0100	0	0	0	0	0	0	0	0	0	0	0	0	0	**0**
0100 - 0200	0	0	0	0	0	0	0	0	0	0	0	0	0	**0**
0200 - 0300	0	0	0	0	0	0	0	0	0	0	0	0	0	**0**
0300 - 0400	0	0	0	0	0	0	0	0	0	0	0	0	0	**0**
0400 - 0500	0	0	0	0	0	0	0	0	0	0	0	0	0	**0**
0500 - 0600	0	0	0	0	0	0	0	0	0	0	0	0	0	**0**
0600 - 0700	0	0	0	0	0	0	0	0	0	0	0	0	0	**0**
0700 - 0800	0	0	0	0	0	0	0	0	0	0	0	0	0	**0**
0800 - 0900	0	0	0	0	0	0	0	0	0	0	0	0	0	**0**
0900 - 1000	0	0	0	0	0	0	0	0	0	0	0	0	0	**0**
1000 - 1100	0	0	0	0	0	0	0	0	0	0	0	0	0	**0**
1100 - 1200	0	0	0	0	0	0	0	0	0	0	0	0	0	**0**
1200 - 1300	0	0	0	0	0	0	0	0	0	0	0	0	0	**0**
1300 - 1400	0	0	0	0	0	0	0	0	0	0	0	0	0	**0**
1400 - 1500	0	0	0	0	0	0	0	0	0	0	0	0	0	**0**
1500 - 1600	0	0	0	0	0	0	0	0	0	0	0	0	0	**0**
1600 - 1700	0	0	0	0	0	0	0	0	0	0	0	0	0	**0**
1700 - 1800	0	0	0	0	0	0	0	0	0	0	0	0	0	**0**
1800 - 1900	0	0	0	0	0	0	0	0	0	0	0	0	0	**0**
1900 - 2000	0	280	34	0	5	0	0	0	1	0	0	0	0	**320**
2000 - 2100	0	177	36	0	1	1	0	0	0	0	0	0	0	**215**
2100 - 2200	0	133	28	0	1	0	0	0	1	0	0	0	0	**163**
2200 - 2300	0	88	20	0	0	1	0	0	1	0	0	0	0	**110**
2300 - 2400	0	87	17	0	0	0	0	0	0	0	0	0	0	**104**
Session Total	0	765	135	0	7	2	0	0	3	0	0	0	0	**912**
Session Average	0.00	31.88	5.63	0.00	0.29	0.08	0.00	0.00	0.13	0.00	0.00	0.00	0.00	**38.00**
Session Percentage	0.00	83.88	14.80	0.00	0.77	0.22	0.00	0.00	0.33	0.00	0.00	0.00	0.00	
AM Peak Hour	-	-	-	-	-	-	-	-	-	-	-	-	-	**-**
AM Peak Volume	0	0	0	0	0	0	0	0	0	0	0	0	0	**0**
Noon Peak Hour	-	-	-	-	-	-	-	-	-	-	-	-	-	**-**
Noon Peak Volume	0	0	0	0	0	0	0	0	0	0	0	0	0	**0**
PM Peak Hour	-	1900 - 2000	1900 - 2000	-	1900 - 2000	-	-	-	1900 - 2000	-	-	-	-	**1900 - 2000**
PM Peak Volume	0	280	34	0	5	0	0	0	1	0	0	0	0	**320**

Site 43
I-26 On/Off-Ramp,
south of Bush River Rd

Date
Wednesday, April 24, 2024

Lat/Long
34.027518°, -81.101448°

Weather
Fair
66°F

Click here for Detailed Weather

0000 - 2400 (Weekday 24h Session) (04-24-2024)
NB EB 60min

	Northbound (Movement 43.1)													
TIME	1	2	3	4	5	6	7	8	9	10	11	12	13	**Total**
0000 - 0100	0	24	10	0	1	0	0	0	1	0	0	0	0	**36**
0100 - 0200	0	33	10	0	1	1	0	0	0	0	0	0	0	**45**
0200 - 0300	0	23	10	0	0	0	0	0	0	0	0	0	0	**33**
0300 - 0400	0	16	9	0	0	1	0	0	0	0	0	0	0	**26**
0400 - 0500	0	36	11	0	3	1	0	0	0	0	0	0	0	**51**
0500 - 0600	0	76	20	0	2	1	0	0	3	0	0	0	0	**102**
0600 - 0700	0	186	28	0	1	2	0	0	3	2	0	0	0	**222**
0700 - 0800	2	414	55	0	7	4	0	2	0	0	0	0	0	**484**
0800 - 0900	0	475	61	1	9	7	0	1	1	0	0	0	0	**555**
0900 - 1000	0	253	66	0	12	8	1	2	2	0	0	0	0	**344**
1000 - 1100	1	270	56	0	11	0	0	1	2	0	0	0	0	**341**
1100 - 1200	0	291	71	2	10	3	0	4	4	0	0	0	0	**385**
1200 - 1300	2	335	64	0	5	2	2	0	1	1	0	0	0	**412**
1300 - 1400	1	317	62	0	6	2	0	1	1	1	0	0	0	**391**
1400 - 1500	0	327	82	1	6	5	1	0	3	0	0	0	0	**425**
1500 - 1600	0	472	64	0	5	9	0	1	1	0	0	0	0	**552**
1600 - 1700	0	582	121	2	5	3	0	1	4	0	0	0	0	**718**
1700 - 1800	1	707	114	0	3	3	0	2	4	0	0	0	0	**834**
1800 - 1900	0	383	50	0	4	1	0	0	0	0	0	0	0	**438**
1900 - 2000	0	249	40	1	1	0	0	0	2	0	0	0	0	**293**
2000 - 2100	0	189	24	0	1	0	0	0	0	0	0	0	0	**214**
2100 - 2200	0	155	21	0	1	0	0	0	0	0	0	0	0	**177**
2200 - 2300	0	87	14	0	1	0	0	0	0	0	0	0	0	**102**
2300 - 2400	0	92	15	0	0	0	0	0	0	0	0	0	0	**107**

Session Total	7	5992	1078	7	95	53	4	15	32	4	0	0	0	**7287**
Session Average	0.29	249.67	44.92	0.29	3.96	2.21	0.17	0.63	1.33	0.17	0.00	0.00	0.00	**303.63**
Session Percentage	0.10	82.23	14.79	0.10	1.30	0.73	0.05	0.21	0.44	0.05	0.00	0.00	0.00	

AM Peak Hour	0700 - 0800	0800 - 0900	0900 - 1000	0800 - 0900	0900 - 1000	0900 - 1000	0900 - 1000	0700 - 0800	0500 - 0600	0600 - 0700	-	-	-	**0800 - 0900**
AM Peak Volume	2	475	66	1	12	8	1	2	3	2	0	0	0	**555**

Noon Peak Hour	1200 - 1300	1200 - 1300	1400 - 1500	1100 - 1200	1000 - 1100	1400 - 1500	1200 - 1300	1100 - 1200	1100 - 1200	1200 - 1300	-	-	-	**1400 - 1500**
Noon Peak Volume	2	335	82	2	11	5	2	4	4	1	0	0	0	**425**

PM Peak Hour	1700 - 1800	1700 - 1800	1600 - 1700	1600 - 1700	1500 - 1600	1500 - 1600	-	1700 - 1800	1600 - 1700	-	-	-	-	**1700 - 1800**
PM Peak Volume	1	707	121	2	5	9	0	2	4	0	0	0	0	**834**

Site 43
I-26 On/Off-Ramp,
south of Bush River Rd

Date
Thursday, April 25, 2024

Weather
Fair
67°F

Lat/Long
34.027518°, -81.101448°

Click here for Detailed Weather

0000 - 2400 (Weekday 24h Session) (04-25-2024)
NB EB 60min

	Northbound (Movement 43.1)													
TIME	1	2	3	4	5	6	7	8	9	10	11	12	13	**Total**
0000 - 0100	0	61	2	0	1	1	0	0	0	0	0	0	0	**65**
0100 - 0200	0	42	3	0	1	0	0	0	1	0	0	0	0	**47**
0200 - 0300	0	30	2	0	0	0	0	0	0	0	0	0	0	**32**
0300 - 0400	0	34	2	0	0	1	0	0	0	0	0	0	0	**37**
0400 - 0500	0	43	4	0	0	0	0	0	0	0	0	0	0	**47**
0500 - 0600	0	77	5	0	0	0	0	0	0	0	0	0	0	**82**
0600 - 0700	0	165	31	0	3	1	0	0	0	0	0	0	0	**200**
0700 - 0800	1	391	69	0	3	3	0	3	0	0	0	0	0	**470**
0800 - 0900	0	346	68	0	11	4	0	1	3	0	0	0	0	**433**
0900 - 1000	0	230	64	1	11	6	1	1	6	3	0	0	0	**323**
1000 - 1100	1	239	49	1	6	5	2	4	1	0	0	0	0	**308**
1100 - 1200	0	275	71	0	4	6	1	0	2	0	0	0	0	**359**
1200 - 1300	2	276	72	1	9	8	0	1	3	0	0	0	0	**372**
1300 - 1400	1	300	69	0	4	2	0	1	3	0	0	0	0	**380**
1400 - 1500	1	334	68	0	9	3	0	0	4	0	0	0	0	**419**
1500 - 1600	2	441	75	0	3	4	0	0	1	0	0	0	0	**526**
1600 - 1700	0	649	116	0	6	4	0	0	3	0	0	0	0	**778**
1700 - 1800	0	692	119	1	5	2	0	0	2	0	0	0	0	**821**
1800 - 1900	0	425	55	0	2	1	0	0	3	0	0	0	0	**486**
1900 - 2000	0	0	0	0	0	0	0	0	0	0	0	0	0	**0**
2000 - 2100	0	0	0	0	0	0	0	0	0	0	0	0	0	**0**
2100 - 2200	0	0	0	0	0	0	0	0	0	0	0	0	0	**0**
2200 - 2300	0	0	0	0	0	0	0	0	0	0	0	0	0	**0**
2300 - 2400	0	0	0	0	0	0	0	0	0	0	0	0	0	**0**

Session Total	8	5050	944	4	78	51	4	11	32	3	0	0	0	**6185**
Session Average	0.33	210.42	39.33	0.17	3.25	2.13	0.17	0.46	1.33	0.13	0.00	0.00	0.00	**257.71**
Session Percentage	0.13	81.65	15.26	0.06	1.26	0.82	0.06	0.18	0.52	0.05	0.00	0.00	0.00	

AM Peak Hour	0700 - 0800	0700 - 0800	0700 - 0800	0900 - 1000	0800 - 0900	0900 - 1000	0900 - 1000	0700 - 0800	0900 - 1000	0900 - 1000	-	-	-	**0700 - 0800**
AM Peak Hour Volume	1	391	69	1	11	6	1	3	6	3	0	0	0	**470**

Noon Peak Hour	1200 - 1300	1400 - 1500	1200 - 1300	1000 - 1100	1200 - 1300	1200 - 1300	1000 - 1100	1000 - 1100	1400 - 1500	-	-	-	-	**1400 - 1500**
Noon Peak Hour Volume	2	334	72	1	9	8	2	4	4	0	0	0	0	**419**

PM Peak Hour	1500 - 1600	1700 - 1800	1700 - 1800	1700 - 1800	1600 - 1700	1500 - 1600	-	-	1600 - 1700	-	-	-	-	**1700 - 1800**
PM Peak Hour Volume	2	692	119	1	6	4	0	0	3	0	0	0	0	**821**

Bi-Directional Class Count || Volume Summary 60min

Columbia, SC

Marr Traffic DATA COLLECTION

www.marrtraffic.com

Site 43

I-26 On/Off-Ramp,
south of Bush River Rd

Date

Tuesday, April 23, 2024

Lat/Long

34.027518°, -81.101448°

Weather

Fair
58°F

Click here for Detailed Weather

0000 - 2400 (Weekday 24h Session) (04-23-2024)

Volume Summary 60min

	Volume Summary 60min		
TIME	NB	SB	**Total**
0000 - 0100	0	0	**0**
0100 - 0200	0	0	**0**
0200 - 0300	0	0	**0**
0300 - 0400	0	0	**0**
0400 - 0500	0	0	**0**
0500 - 0600	0	0	**0**
0600 - 0700	0	0	**0**
0700 - 0800	0	0	**0**
0800 - 0900	0	0	**0**
0900 - 1000	0	0	**0**
1000 - 1100	0	0	**0**
1100 - 1200	0	0	**0**

	Volume Summary 60min		
Time	NB	SB	**Total**
1200 - 1300	0	0	**0**
1300 - 1400	0	0	**0**
1400 - 1500	0	0	**0**
1500 - 1600	0	0	**0**
1600 - 1700	0	0	**0**
1700 - 1800	0	0	**0**
1800 - 1900	0	0	**0**
1900 - 2000	320	0	**320**
2000 - 2100	215	0	**215**
2100 - 2200	163	0	**163**
2200 - 2300	110	0	**110**
2300 - 2400	104	0	**104**

Session Total	912	0	**912**
Session Average	38.00	0.00	**38.00**
Session Percentage	100.00	0.00	

Site 43

I-26 On/Off-Ramp,
south of Bush River Rd

Date

Wednesday, April 24, 2024

Lat/Long

34.027518°, -81.101448°

Weather

Fair
66°F

Click here for Detailed Weather

0000 - 2400 (Weekday 24h Session) (04-24-2024)

Volume Summary 60min

	Volume Summary 60min		
TIME	NB	SB	**Total**
0000 - 0100	36	0	**36**
0100 - 0200	45	0	**45**
0200 - 0300	33	0	**33**
0300 - 0400	26	0	**26**
0400 - 0500	51	0	**51**
0500 - 0600	102	0	**102**
0600 - 0700	222	0	**222**
0700 - 0800	484	0	**484**
0800 - 0900	555	0	**555**
0900 - 1000	344	0	**344**
1000 - 1100	341	0	**341**
1100 - 1200	385	0	**385**

Session Total	7287	0	**7287**
Session Average	303.63	0.00	**303.63**
Session Percentage	100.00	0.00	

	Volume Summary 60min		
Time	NB	SB	**Total**
1200 - 1300	412	0	**412**
1300 - 1400	391	0	**391**
1400 - 1500	425	0	**425**
1500 - 1600	552	0	**552**
1600 - 1700	718	0	**718**
1700 - 1800	834	0	**834**
1800 - 1900	438	0	**438**
1900 - 2000	293	0	**293**
2000 - 2100	214	0	**214**
2100 - 2200	177	0	**177**
2200 - 2300	102	0	**102**
2300 - 2400	107	0	**107**

Site 43

I-26 On/Off-Ramp,
south of Bush River Rd

Date

Thursday, April 25, 2024

Lat/Long

34.027518°, -81.101448°

Weather

Fair
67°F

Click here for Detailed Weather

0000 - 2400 (Weekday 24h Session) (04-25-2024)

Volume Summary 60min

	Volume Summary 60min		
TIME	NB	SB	**Total**
0000 - 0100	65	0	**65**
0100 - 0200	47	0	**47**
0200 - 0300	32	0	**32**
0300 - 0400	37	0	**37**
0400 - 0500	47	0	**47**
0500 - 0600	82	0	**82**
0600 - 0700	200	0	**200**
0700 - 0800	470	0	**470**
0800 - 0900	433	0	**433**
0900 - 1000	323	0	**323**
1000 - 1100	308	0	**308**
1100 - 1200	359	0	**359**

Session Total	6185	0	**6185**
Session Average	257.71	0.00	**257.71**
Session Percentage	100.00	0.00	

	Volume Summary 60min		
Time	NB	SB	**Total**
1200 - 1300	372	0	**372**
1300 - 1400	380	0	**380**
1400 - 1500	419	0	**419**
1500 - 1600	526	0	**526**
1600 - 1700	778	0	**778**
1700 - 1800	821	0	**821**
1800 - 1900	486	0	**486**
1900 - 2000	0	0	**0**
2000 - 2100	0	0	**0**
2100 - 2200	0	0	**0**
2200 - 2300	0	0	**0**
2300 - 2400	0	0	**0**

Bi-Directional Class Count || Graphical Analysis NB EB

Columbia, SC

Marr Traffic DATA COLLECTION

www.marrtraffic.com

Site 43

I-26 On/Off-Ramp,
south of Bush River Rd

Lat/Long

34.027518°, -81.101448°

0000 - 2400 (Weekday 24h Session)

Graphical Analysis NB EB

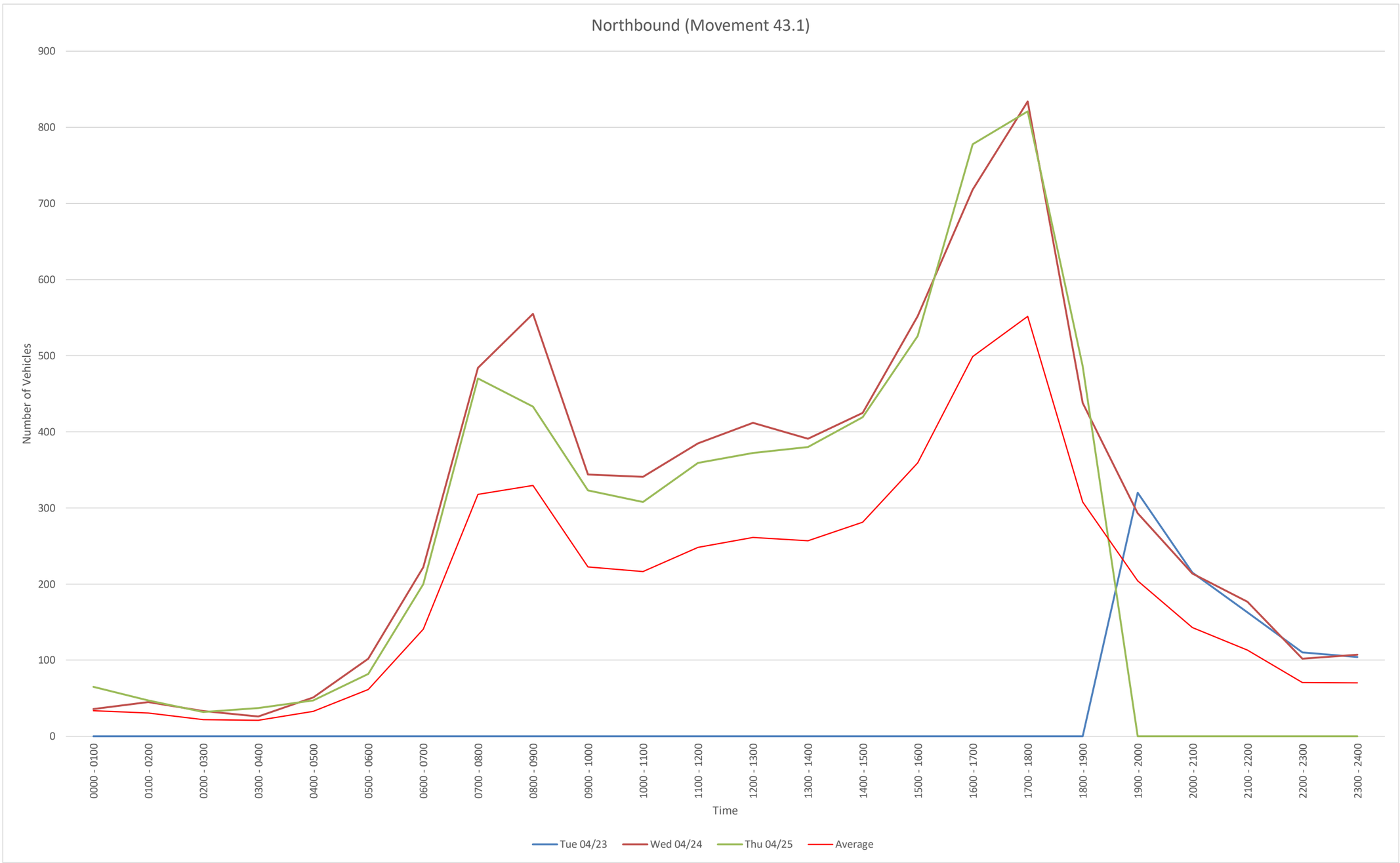

Time	Tue 04/23	Wed 04/24	Thu 04/25				
0000 - 0100	0	36	65				
0100 - 0200	0	45	47				
0200 - 0300	0	33	32				
0300 - 0400	0	26	37				
0400 - 0500	0	51	47				
0500 - 0600	0	102	82				
0600 - 0700	0	222	200				
0700 - 0800	0	484	470				
0800 - 0900	0	555	433				
0900 - 1000	0	344	323				
1000 - 1100	0	341	308				
1100 - 1200	0	385	359				
1200 - 1300	0	412	372				
1300 - 1400	0	391	380				
1400 - 1500	0	425	419				
1500 - 1600	0	552	526				
1600 - 1700	0	718	778				
1700 - 1800	0	834	821				
1800 - 1900	0	438	486				
1900 - 2000	320	293	0				
2000 - 2100	215	214	0				
2100 - 2200	163	177	0				
2200 - 2300	110	102	0				
2300 - 2400	104	107	0				
Daily Total	912	7287	6185				

NB
File Name:
Start Date: 4/23/2024
Start Time: 0
Site Code: 43
Station ID: 1
Location 1: I-26 On/Off-Ramp, south of Bush River Rd
Location 2:

Date	Time	1	2	3	4	5	6	7	8	9	10	11	12	13
4/23/2024	12:00 AM	0	0	0	0	0	0	0	0	0	0	0	0	0
4/23/2024	12:15 AM	0	0	0	0	0	0	0	0	0	0	0	0	0
4/23/2024	12:30 AM	0	0	0	0	0	0	0	0	0	0	0	0	0
4/23/2024	12:45 AM	0	0	0	0	0	0	0	0	0	0	0	0	0
4/23/2024	1:00 AM	0	0	0	0	0	0	0	0	0	0	0	0	0
4/23/2024	1:15 AM	0	0	0	0	0	0	0	0	0	0	0	0	0
4/23/2024	1:30 AM	0	0	0	0	0	0	0	0	0	0	0	0	0
4/23/2024	1:45 AM	0	0	0	0	0	0	0	0	0	0	0	0	0
4/23/2024	2:00 AM	0	0	0	0	0	0	0	0	0	0	0	0	0
4/23/2024	2:15 AM	0	0	0	0	0	0	0	0	0	0	0	0	0
4/23/2024	2:30 AM	0	0	0	0	0	0	0	0	0	0	0	0	0
4/23/2024	2:45 AM	0	0	0	0	0	0	0	0	0	0	0	0	0
4/23/2024	3:00 AM	0	0	0	0	0	0	0	0	0	0	0	0	0
4/23/2024	3:15 AM	0	0	0	0	0	0	0	0	0	0	0	0	0
4/23/2024	3:30 AM	0	0	0	0	0	0	0	0	0	0	0	0	0
4/23/2024	3:45 AM	0	0	0	0	0	0	0	0	0	0	0	0	0
4/23/2024	4:00 AM	0	0	0	0	0	0	0	0	0	0	0	0	0
4/23/2024	4:15 AM	0	0	0	0	0	0	0	0	0	0	0	0	0
4/23/2024	4:30 AM	0	0	0	0	0	0	0	0	0	0	0	0	0
4/23/2024	4:45 AM	0	0	0	0	0	0	0	0	0	0	0	0	0
4/23/2024	5:00 AM	0	0	0	0	0	0	0	0	0	0	0	0	0
4/23/2024	5:15 AM	0	0	0	0	0	0	0	0	0	0	0	0	0
4/23/2024	5:30 AM	0	0	0	0	0	0	0	0	0	0	0	0	0
4/23/2024	5:45 AM	0	0	0	0	0	0	0	0	0	0	0	0	0
4/23/2024	6:00 AM	0	0	0	0	0	0	0	0	0	0	0	0	0
4/23/2024	6:15 AM	0	0	0	0	0	0	0	0	0	0	0	0	0
4/23/2024	6:30 AM	0	0	0	0	0	0	0	0	0	0	0	0	0
4/23/2024	6:45 AM	0	0	0	0	0	0	0	0	0	0	0	0	0
4/23/2024	7:00 AM	0	0	0	0	0	0	0	0	0	0	0	0	0
4/23/2024	7:15 AM	0	0	0	0	0	0	0	0	0	0	0	0	0
4/23/2024	7:30 AM	0	0	0	0	0	0	0	0	0	0	0	0	0
4/23/2024	7:45 AM	0	0	0	0	0	0	0	0	0	0	0	0	0
4/23/2024	8:00 AM	0	0	0	0	0	0	0	0	0	0	0	0	0
4/23/2024	8:15 AM	0	0	0	0	0	0	0	0	0	0	0	0	0
4/23/2024	8:30 AM	0	0	0	0	0	0	0	0	0	0	0	0	0
4/23/2024	8:45 AM	0	0	0	0	0	0	0	0	0	0	0	0	0
4/23/2024	9:00 AM	0	0	0	0	0	0	0	0	0	0	0	0	0
4/23/2024	9:15 AM	0	0	0	0	0	0	0	0	0	0	0	0	0
4/23/2024	9:30 AM	0	0	0	0	0	0	0	0	0	0	0	0	0
4/23/2024	9:45 AM	0	0	0	0	0	0	0	0	0	0	0	0	0
4/23/2024	10:00 AM	0	0	0	0	0	0	0	0	0	0	0	0	0
4/23/2024	10:15 AM	0	0	0	0	0	0	0	0	0	0	0	0	0
4/23/2024	10:30 AM	0	0	0	0	0	0	0	0	0	0	0	0	0
4/23/2024	10:45 AM	0	0	0	0	0	0	0	0	0	0	0	0	0
4/23/2024	11:00 AM	0	0	0	0	0	0	0	0	0	0	0	0	0
4/23/2024	11:15 AM	0	0	0	0	0	0	0	0	0	0	0	0	0
4/23/2024	11:30 AM	0	0	0	0	0	0	0	0	0	0	0	0	0
4/23/2024	11:45 AM	0	0	0	0	0	0	0	0	0	0	0	0	0
4/23/2024	12:00 PM	0	0	0	0	0	0	0	0	0	0	0	0	0
4/23/2024	12:15 PM	0	0	0	0	0	0	0	0	0	0	0	0	0
4/23/2024	12:30 PM	0	0	0	0	0	0	0	0	0	0	0	0	0
4/23/2024	12:45 PM	0	0	0	0	0	0	0	0	0	0	0	0	0
4/23/2024	1:00 PM	0	0	0	0	0	0	0	0	0	0	0	0	0
4/23/2024	1:15 PM	0	0	0	0	0	0	0	0	0	0	0	0	0
4/23/2024	1:30 PM	0	0	0	0	0	0	0	0	0	0	0	0	0
4/23/2024	1:45 PM	0	0	0	0	0	0	0	0	0	0	0	0	0
4/23/2024	2:00 PM	0	0	0	0	0	0	0	0	0	0	0	0	0
4/23/2024	2:15 PM	0	0	0	0	0	0	0	0	0	0	0	0	0
4/23/2024	2:30 PM	0	0	0	0	0	0	0	0	0	0	0	0	0
4/23/2024	2:45 PM	0	0	0	0	0	0	0	0	0	0	0	0	0
4/23/2024	3:00 PM	0	0	0	0	0	0	0	0	0	0	0	0	0
4/23/2024	3:15 PM	0	0	0	0	0	0	0	0	0	0	0	0	0
4/23/2024	3:30 PM	0	0	0	0	0	0	0	0	0	0	0	0	0
4/23/2024	3:45 PM	0	0	0	0	0	0	0	0	0	0	0	0	0
4/23/2024	4:00 PM	0	0	0	0	0	0	0	0	0	0	0	0	0
4/23/2024	4:15 PM	0	0	0	0	0	0	0	0	0	0	0	0	0
4/23/2024	4:30 PM	0	0	0	0	0	0	0	0	0	0	0	0	0
4/23/2024	4:45 PM	0	0	0	0	0	0	0	0	0	0	0	0	0
4/23/2024	5:00 PM	0	0	0	0	0	0	0	0	0	0	0	0	0
4/23/2024	5:15 PM	0	0	0	0	0	0	0	0	0	0	0	0	0
4/23/2024	5:30 PM	0	0	0	0	0	0	0	0	0	0	0	0	0
4/23/2024	5:45 PM	0	0	0	0	0	0	0	0	0	0	0	0	0
4/23/2024	6:00 PM	0	0	0	0	0	0	0	0	0	0	0	0	0
4/23/2024	6:15 PM	0	0	0	0	0	0	0	0	0	0	0	0	0
4/23/2024	6:30 PM	0	0	0	0	0	0	0	0	0	0	0	0	0
4/23/2024	6:45 PM	0	0	0	0	0	0	0	0	0	0	0	0	0
4/23/2024	7:00 PM	0	71	10	0	1	0	0	0	0	0	0	0	0
4/23/2024	7:15 PM	0	77	9	0	2	0	0	0	0	0	0	0	0
4/23/2024	7:30 PM	0	79	7	0	1	0	0	0	1	0	0	0	0
4/23/2024	7:45 PM	0	53	8	0	1	0	0	0	0	0	0	0	0
4/23/2024	8:00 PM	0	47	6	0	0	1	0	0	0	0	0	0	0
4/23/2024	8:15 PM	0	52	11	0	1	0	0	0	0	0	0	0	0
4/23/2024	8:30 PM	0	33	9	0	0	0	0	0	0	0	0	0	0
4/23/2024	8:45 PM	0	45	10	0	0	0	0	0	0	0	0	0	0
4/23/2024	9:00 PM	0	38	7	0	0	0	0	0	1	0	0	0	0
4/23/2024	9:15 PM	0	37	8	0	0	0	0	0	0	0	0	0	0
4/23/2024	9:30 PM	0	33	7	0	0	0	0	0	0	0	0	0	0
4/23/2024	9:45 PM	0	25	6	0	1	0	0	0	0	0	0	0	0
4/23/2024	10:00 PM	0	24	6	0	0	0	0	0	0	0	0	0	0
4/23/2024	10:15 PM	0	26	6	0	0	0	0	0	0	0	0	0	0
4/23/2024	10:30 PM	0	21	5	0	0	0	0	0	1	0	0	0	0
4/23/2024	10:45 PM	0	17	3	0	0	1	0	0	0	0	0	0	0
4/23/2024	11:00 PM	0	22	4	0	0	0	0	0	0	0	0	0	0
4/23/2024	11:15 PM	0	28	7	0	0	0	0	0	0	0	0	0	0
4/23/2024	11:30 PM	0	19	3	0	0	0	0	0	0	0	0	0	0
4/23/2024	11:45 PM	0	18	3	0	0	0	0	0	0	0	0	0	0

4/24/2024	12:00 AM	0	8	4	0	0	0	0	0	0	0	0	0
4/24/2024	12:15 AM	0	9	3	0	0	0	0	0	0	0	0	0
4/24/2024	12:30 AM	0	4	2	0	1	0	0	0	0	0	0	0
4/24/2024	12:45 AM	0	3	1	0	0	0	0	0	1	0	0	0
4/24/2024	1:00 AM	0	9	4	0	0	0	0	0	0	0	0	0
4/24/2024	1:15 AM	0	7	3	0	1	0	0	0	0	0	0	0
4/24/2024	1:30 AM	0	6	2	0	0	0	0	0	0	0	0	0
4/24/2024	1:45 AM	0	11	1	0	0	1	0	0	0	0	0	0
4/24/2024	2:00 AM	0	6	1	0	0	0	0	0	0	0	0	0
4/24/2024	2:15 AM	0	5	3	0	0	0	0	0	0	0	0	0
4/24/2024	2:30 AM	0	6	4	0	0	0	0	0	0	0	0	0
4/24/2024	2:45 AM	0	6	2	0	0	0	0	0	0	0	0	0
4/24/2024	3:00 AM	0	7	3	0	0	0	0	0	0	0	0	0
4/24/2024	3:15 AM	0	3	2	0	0	0	0	0	0	0	0	0
4/24/2024	3:30 AM	0	2	2	0	0	0	0	0	0	0	0	0
4/24/2024	3:45 AM	0	4	2	0	0	1	0	0	0	0	0	0
4/24/2024	4:00 AM	0	8	5	0	0	0	0	0	0	0	0	0
4/24/2024	4:15 AM	0	8	1	0	2	1	0	0	0	0	0	0
4/24/2024	4:30 AM	0	10	3	0	1	0	0	0	0	0	0	0
4/24/2024	4:45 AM	0	10	2	0	0	0	0	0	0	0	0	0
4/24/2024	5:00 AM	0	6	2	0	0	0	0	0	0	0	0	0
4/24/2024	5:15 AM	0	18	4	0	1	0	0	0	0	0	0	0
4/24/2024	5:30 AM	0	25	8	0	0	0	0	0	0	0	0	0
4/24/2024	5:45 AM	0	27	6	0	1	1	0	0	3	0	0	0
4/24/2024	6:00 AM	0	41	8	0	0	0	0	0	0	0	0	0
4/24/2024	6:15 AM	0	33	9	0	0	2	0	0	0	0	0	0
4/24/2024	6:30 AM	0	50	5	0	0	0	0	0	1	0	0	0
4/24/2024	6:45 AM	0	62	6	0	1	0	0	0	2	2	0	0
4/24/2024	7:00 AM	0	76	11	0	3	1	0	0	0	0	0	0
4/24/2024	7:15 AM	1	92	13	0	0	2	0	0	0	0	0	0
4/24/2024	7:30 AM	0	110	15	0	3	0	0	2	0	0	0	0
4/24/2024	7:45 AM	1	136	16	0	1	1	0	0	0	0	0	0
4/24/2024	8:00 AM	0	134	13	0	2	1	0	0	1	0	0	0
4/24/2024	8:15 AM	0	124	16	0	2	5	0	0	0	0	0	0
4/24/2024	8:30 AM	0	117	15	1	1	1	0	0	0	0	0	0
4/24/2024	8:45 AM	0	100	17	0	4	0	0	1	0	0	0	0
4/24/2024	9:00 AM	0	80	18	0	1	5	1	1	1	0	0	0
4/24/2024	9:15 AM	0	55	12	0	9	1	0	0	0	0	0	0
4/24/2024	9:30 AM	0	60	21	0	1	0	0	0	0	0	0	0
4/24/2024	9:45 AM	0	58	15	0	1	2	0	1	1	0	0	0
4/24/2024	10:00 AM	1	74	10	0	3	0	0	0	0	0	0	0
4/24/2024	10:15 AM	0	68	13	0	3	0	0	0	0	0	0	0
4/24/2024	10:30 AM	0	50	12	0	2	0	0	1	0	0	0	0
4/24/2024	10:45 AM	0	78	21	0	3	0	0	0	2	0	0	0
4/24/2024	11:00 AM	0	62	15	0	2	1	0	1	2	0	0	0
4/24/2024	11:15 AM	0	65	18	1	1	1	0	1	0	0	0	0
4/24/2024	11:30 AM	0	74	19	1	2	0	0	1	0	0	0	0
4/24/2024	11:45 AM	0	90	19	0	5	1	0	1	2	0	0	0
4/24/2024	12:00 PM	1	84	10	0	1	0	1	0	0	0	0	0
4/24/2024	12:15 PM	0	75	28	0	1	0	0	0	1	0	0	0
4/24/2024	12:30 PM	0	93	14	0	1	1	1	0	0	1	0	0
4/24/2024	12:45 PM	1	83	12	0	2	1	0	0	0	0	0	0
4/24/2024	1:00 PM	0	71	17	0	1	0	0	0	1	0	0	0
4/24/2024	1:15 PM	0	81	13	0	4	1	0	1	0	0	0	0
4/24/2024	1:30 PM	0	93	15	0	1	0	0	0	0	1	0	0
4/24/2024	1:45 PM	1	72	17	0	0	1	0	0	0	0	0	0
4/24/2024	2:00 PM	0	62	24	0	4	0	0	0	1	0	0	0
4/24/2024	2:15 PM	0	79	15	0	0	3	1	0	0	0	0	0
4/24/2024	2:30 PM	0	90	18	1	2	1	0	0	1	0	0	0
4/24/2024	2:45 PM	0	96	25	0	0	1	0	0	1	0	0	0
4/24/2024	3:00 PM	0	100	18	0	3	0	0	0	1	0	0	0
4/24/2024	3:15 PM	0	110	20	0	0	2	0	0	0	0	0	0
4/24/2024	3:30 PM	0	110	12	0	0	3	0	1	0	0	0	0
4/24/2024	3:45 PM	0	152	14	0	2	4	0	0	0	0	0	0
4/24/2024	4:00 PM	0	108	21	1	0	1	0	1	1	0	0	0
4/24/2024	4:15 PM	0	146	31	0	2	1	0	0	0	0	0	0
4/24/2024	4:30 PM	0	143	33	0	1	0	0	0	1	0	0	0
4/24/2024	4:45 PM	0	185	36	1	2	1	0	0	2	0	0	0
4/24/2024	5:00 PM	0	189	34	0	1	0	0	0	2	0	0	0
4/24/2024	5:15 PM	1	196	25	0	2	1	0	1	1	0	0	0
4/24/2024	5:30 PM	0	152	23	0	0	1	0	1	0	0	0	0
4/24/2024	5:45 PM	0	170	32	0	0	1	0	0	1	0	0	0
4/24/2024	6:00 PM	0	116	17	0	2	1	0	0	0	0	0	0
4/24/2024	6:15 PM	0	95	14	0	1	0	0	0	0	0	0	0
4/24/2024	6:30 PM	0	102	7	0	1	0	0	0	0	0	0	0
4/24/2024	6:45 PM	0	70	12	0	0	0	0	0	0	0	0	0
4/24/2024	7:00 PM	0	72	11	0	1	0	0	0	1	0	0	0
4/24/2024	7:15 PM	0	58	10	1	0	0	0	0	1	0	0	0
4/24/2024	7:30 PM	0	57	10	0	0	0	0	0	0	0	0	0
4/24/2024	7:45 PM	0	62	9	0	0	0	0	0	0	0	0	0
4/24/2024	8:00 PM	0	51	7	0	0	0	0	0	0	0	0	0
4/24/2024	8:15 PM	0	46	6	0	1	0	0	0	0	0	0	0
4/24/2024	8:30 PM	0	44	5	0	0	0	0	0	0	0	0	0
4/24/2024	8:45 PM	0	48	6	0	0	0	0	0	0	0	0	0
4/24/2024	9:00 PM	0	48	7	0	1	0	0	0	0	0	0	0
4/24/2024	9:15 PM	0	38	5	0	0	0	0	0	0	0	0	0
4/24/2024	9:30 PM	0	35	4	0	0	0	0	0	0	0	0	0
4/24/2024	9:45 PM	0	34	5	0	0	0	0	0	0	0	0	0
4/24/2024	10:00 PM	0	29	4	0	1	0	0	0	0	0	0	0
4/24/2024	10:15 PM	0	26	5	0	0	0	0	0	0	0	0	0
4/24/2024	10:30 PM	0	23	3	0	0	0	0	0	0	0	0	0
4/24/2024	10:45 PM	0	9	2	0	0	0	0	0	0	0	0	0
4/24/2024	11:00 PM	0	21	3	0	0	0	0	0	0	0	0	0
4/24/2024	11:15 PM	0	26	4	0	0	0	0	0	0	0	0	0
4/24/2024	11:30 PM	0	27	5	0	0	0	0	0	0	0	0	0
4/24/2024	11:45 PM	0	18	3	0	0	0	0	0	0	0	0	0

4/25/2024	12:00 AM	0	16	2	0	1	0	0	0	0	0	0	0
4/25/2024	12:15 AM	0	16	0	0	0	0	0	0	0	0	0	0
4/25/2024	12:30 AM	0	19	0	0	0	1	0	0	0	0	0	0
4/25/2024	12:45 AM	0	10	0	0	0	0	0	0	0	0	0	0
4/25/2024	1:00 AM	0	17	0	0	0	0	0	0	0	0	0	0
4/25/2024	1:15 AM	0	11	2	0	0	0	0	0	1	0	0	0
4/25/2024	1:30 AM	0	4	0	0	1	0	0	0	0	0	0	0
4/25/2024	1:45 AM	0	10	1	0	0	0	0	0	0	0	0	0
4/25/2024	2:00 AM	0	11	0	0	0	0	0	0	0	0	0	0
4/25/2024	2:15 AM	0	7	1	0	0	0	0	0	0	0	0	0
4/25/2024	2:30 AM	0	9	1	0	0	0	0	0	0	0	0	0
4/25/2024	2:45 AM	0	3	0	0	0	0	0	0	0	0	0	0
4/25/2024	3:00 AM	0	11	0	0	0	0	0	0	0	0	0	0
4/25/2024	3:15 AM	0	9	1	0	0	0	0	0	0	0	0	0
4/25/2024	3:30 AM	0	4	0	0	0	0	0	0	0	0	0	0
4/25/2024	3:45 AM	0	10	1	0	0	1	0	0	0	0	0	0
4/25/2024	4:00 AM	0	9	1	0	0	0	0	0	0	0	0	0
4/25/2024	4:15 AM	0	10	1	0	0	0	0	0	0	0	0	0
4/25/2024	4:30 AM	0	10	2	0	0	0	0	0	0	0	0	0
4/25/2024	4:45 AM	0	14	0	0	0	0	0	0	0	0	0	0
4/25/2024	5:00 AM	0	14	1	0	0	0	0	0	0	0	0	0
4/25/2024	5:15 AM	0	15	1	0	0	0	0	0	0	0	0	0
4/25/2024	5:30 AM	0	24	2	0	0	0	0	0	0	0	0	0
4/25/2024	5:45 AM	0	24	1	0	0	0	0	0	0	0	0	0
4/25/2024	6:00 AM	0	32	3	0	1	0	0	0	0	0	0	0
4/25/2024	6:15 AM	0	37	6	0	1	0	0	0	0	0	0	0
4/25/2024	6:30 AM	0	43	10	0	0	1	0	0	0	0	0	0
4/25/2024	6:45 AM	0	53	12	0	1	0	0	0	0	0	0	0
4/25/2024	7:00 AM	0	60	9	0	0	0	0	0	0	0	0	0
4/25/2024	7:15 AM	0	91	12	0	1	0	0	1	0	0	0	0
4/25/2024	7:30 AM	1	117	26	0	1	2	0	1	0	0	0	0
4/25/2024	7:45 AM	0	123	22	0	1	1	0	1	0	0	0	0
4/25/2024	8:00 AM	0	130	16	0	0	0	0	0	1	0	0	0
4/25/2024	8:15 AM	0	86	19	0	3	1	0	0	0	0	0	0
4/25/2024	8:30 AM	0	74	18	0	6	2	0	1	1	0	0	0
4/25/2024	8:45 AM	0	56	15	0	2	1	0	0	1	0	0	0
4/25/2024	9:00 AM	0	49	13	1	3	0	1	1	1	0	0	0
4/25/2024	9:15 AM	0	62	19	0	3	0	0	0	1	2	0	0
4/25/2024	9:30 AM	0	63	16	0	3	3	0	0	3	1	0	0
4/25/2024	9:45 AM	0	56	16	0	2	3	0	0	1	0	0	0
4/25/2024	10:00 AM	0	59	10	0	2	0	1	2	1	0	0	0
4/25/2024	10:15 AM	1	52	13	0	3	2	0	2	0	0	0	0
4/25/2024	10:30 AM	0	62	13	1	1	2	1	0	0	0	0	0
4/25/2024	10:45 AM	0	66	13	0	0	1	0	0	0	0	0	0
4/25/2024	11:00 AM	0	68	24	0	1	2	1	0	0	0	0	0
4/25/2024	11:15 AM	0	70	13	0	1	2	0	0	1	0	0	0
4/25/2024	11:30 AM	0	66	21	0	2	1	0	0	0	0	0	0
4/25/2024	11:45 AM	0	71	13	0	0	1	0	0	1	0	0	0
4/25/2024	12:00 PM	0	76	20	1	3	4	0	0	1	0	0	0
4/25/2024	12:15 PM	0	65	19	0	3	2	0	1	0	0	0	0
4/25/2024	12:30 PM	0	71	16	0	1	1	0	0	1	0	0	0
4/25/2024	12:45 PM	2	64	17	0	2	1	0	0	1	0	0	0
4/25/2024	1:00 PM	1	75	19	0	1	0	0	0	0	0	0	0
4/25/2024	1:15 PM	0	82	14	0	1	0	0	0	2	0	0	0
4/25/2024	1:30 PM	0	68	16	0	0	0	0	0	0	0	0	0
4/25/2024	1:45 PM	0	75	20	0	2	2	0	1	1	0	0	0
4/25/2024	2:00 PM	1	70	17	0	3	1	0	0	0	0	0	0
4/25/2024	2:15 PM	0	85	15	0	1	0	0	0	0	0	0	0
4/25/2024	2:30 PM	0	95	18	0	3	1	0	0	1	0	0	0
4/25/2024	2:45 PM	0	84	18	0	2	1	0	0	3	0	0	0
4/25/2024	3:00 PM	0	93	20	0	2	0	0	0	0	0	0	0
4/25/2024	3:15 PM	1	117	10	0	0	2	0	0	0	0	0	0
4/25/2024	3:30 PM	1	98	25	0	1	0	0	0	1	0	0	0
4/25/2024	3:45 PM	0	133	20	0	0	2	0	0	0	0	0	0
4/25/2024	4:00 PM	0	163	23	0	0	1	0	0	1	0	0	0
4/25/2024	4:15 PM	0	153	32	0	3	1	0	0	0	0	0	0
4/25/2024	4:30 PM	0	182	35	0	3	2	0	0	2	0	0	0
4/25/2024	4:45 PM	0	151	26	0	0	0	0	0	0	0	0	0
4/25/2024	5:00 PM	0	152	32	0	2	0	0	0	1	0	0	0
4/25/2024	5:15 PM	0	188	24	0	1	1	0	0	0	0	0	0
4/25/2024	5:30 PM	0	183	32	0	2	1	0	0	0	0	0	0
4/25/2024	5:45 PM	0	169	31	1	0	0	0	0	1	0	0	0
4/25/2024	6:00 PM	0	168	19	0	1	0	0	0	0	0	0	0
4/25/2024	6:15 PM	0	100	13	0	1	1	0	0	1	0	0	0
4/25/2024	6:30 PM	0	85	12	0	0	0	0	0	1	0	0	0
4/25/2024	6:45 PM	0	72	11	0	0	0	0	0	1	0	0	0
4/25/2024	7:00 PM	0	0	0	0	0	0	0	0	0	0	0	0
4/25/2024	7:15 PM	0	0	0	0	0	0	0	0	0	0	0	0
4/25/2024	7:30 PM	0	0	0	0	0	0	0	0	0	0	0	0
4/25/2024	7:45 PM	0	0	0	0	0	0	0	0	0	0	0	0
4/25/2024	8:00 PM	0	0	0	0	0	0	0	0	0	0	0	0
4/25/2024	8:15 PM	0	0	0	0	0	0	0	0	0	0	0	0
4/25/2024	8:30 PM	0	0	0	0	0	0	0	0	0	0	0	0
4/25/2024	8:45 PM	0	0	0	0	0	0	0	0	0	0	0	0
4/25/2024	9:00 PM	0	0	0	0	0	0	0	0	0	0	0	0
4/25/2024	9:15 PM	0	0	0	0	0	0	0	0	0	0	0	0
4/25/2024	9:30 PM	0	0	0	0	0	0	0	0	0	0	0	0
4/25/2024	9:45 PM	0	0	0	0	0	0	0	0	0	0	0	0
4/25/2024	10:00 PM	0	0	0	0	0	0	0	0	0	0	0	0
4/25/2024	10:15 PM	0	0	0	0	0	0	0	0	0	0	0	0
4/25/2024	10:30 PM	0	0	0	0	0	0	0	0	0	0	0	0
4/25/2024	10:45 PM	0	0	0	0	0	0	0	0	0	0	0	0
4/25/2024	11:00 PM	0	0	0	0	0	0	0	0	0	0	0	0
4/25/2024	11:15 PM	0	0	0	0	0	0	0	0	0	0	0	0
4/25/2024	11:30 PM	0	0	0	0	0	0	0	0	0	0	0	0
4/25/2024	11:45 PM	0	0	0	0	0	0	0	0	0	0	0	0

SB
File Name:
Start Date: 4/23/2024
Start Time: 0
Site Code: 43
Station ID: 1
Location 1: I-26 On/Off-Ramp, south of Bush River Rd
Location 2:

Date	Time	1	2	3	4	5	6	7	8	9	10	11	12	13
4/23/2024	12:00 AM	0	0	0	0	0	0	0	0	0	0	0	0	0
4/23/2024	12:15 AM	0	0	0	0	0	0	0	0	0	0	0	0	0
4/23/2024	12:30 AM	0	0	0	0	0	0	0	0	0	0	0	0	0
4/23/2024	12:45 AM	0	0	0	0	0	0	0	0	0	0	0	0	0
4/23/2024	1:00 AM	0	0	0	0	0	0	0	0	0	0	0	0	0
4/23/2024	1:15 AM	0	0	0	0	0	0	0	0	0	0	0	0	0
4/23/2024	1:30 AM	0	0	0	0	0	0	0	0	0	0	0	0	0
4/23/2024	1:45 AM	0	0	0	0	0	0	0	0	0	0	0	0	0
4/23/2024	2:00 AM	0	0	0	0	0	0	0	0	0	0	0	0	0
4/23/2024	2:15 AM	0	0	0	0	0	0	0	0	0	0	0	0	0
4/23/2024	2:30 AM	0	0	0	0	0	0	0	0	0	0	0	0	0
4/23/2024	2:45 AM	0	0	0	0	0	0	0	0	0	0	0	0	0
4/23/2024	3:00 AM	0	0	0	0	0	0	0	0	0	0	0	0	0
4/23/2024	3:15 AM	0	0	0	0	0	0	0	0	0	0	0	0	0
4/23/2024	3:30 AM	0	0	0	0	0	0	0	0	0	0	0	0	0
4/23/2024	3:45 AM	0	0	0	0	0	0	0	0	0	0	0	0	0
4/23/2024	4:00 AM	0	0	0	0	0	0	0	0	0	0	0	0	0
4/23/2024	4:15 AM	0	0	0	0	0	0	0	0	0	0	0	0	0
4/23/2024	4:30 AM	0	0	0	0	0	0	0	0	0	0	0	0	0
4/23/2024	4:45 AM	0	0	0	0	0	0	0	0	0	0	0	0	0
4/23/2024	5:00 AM	0	0	0	0	0	0	0	0	0	0	0	0	0
4/23/2024	5:15 AM	0	0	0	0	0	0	0	0	0	0	0	0	0
4/23/2024	5:30 AM	0	0	0	0	0	0	0	0	0	0	0	0	0
4/23/2024	5:45 AM	0	0	0	0	0	0	0	0	0	0	0	0	0
4/23/2024	6:00 AM	0	0	0	0	0	0	0	0	0	0	0	0	0
4/23/2024	6:15 AM	0	0	0	0	0	0	0	0	0	0	0	0	0
4/23/2024	6:30 AM	0	0	0	0	0	0	0	0	0	0	0	0	0
4/23/2024	6:45 AM	0	0	0	0	0	0	0	0	0	0	0	0	0
4/23/2024	7:00 AM	0	0	0	0	0	0	0	0	0	0	0	0	0
4/23/2024	7:15 AM	0	0	0	0	0	0	0	0	0	0	0	0	0
4/23/2024	7:30 AM	0	0	0	0	0	0	0	0	0	0	0	0	0
4/23/2024	7:45 AM	0	0	0	0	0	0	0	0	0	0	0	0	0
4/23/2024	8:00 AM	0	0	0	0	0	0	0	0	0	0	0	0	0
4/23/2024	8:15 AM	0	0	0	0	0	0	0	0	0	0	0	0	0
4/23/2024	8:30 AM	0	0	0	0	0	0	0	0	0	0	0	0	0
4/23/2024	8:45 AM	0	0	0	0	0	0	0	0	0	0	0	0	0
4/23/2024	9:00 AM	0	0	0	0	0	0	0	0	0	0	0	0	0
4/23/2024	9:15 AM	0	0	0	0	0	0	0	0	0	0	0	0	0
4/23/2024	9:30 AM	0	0	0	0	0	0	0	0	0	0	0	0	0
4/23/2024	9:45 AM	0	0	0	0	0	0	0	0	0	0	0	0	0
4/23/2024	10:00 AM	0	0	0	0	0	0	0	0	0	0	0	0	0
4/23/2024	10:15 AM	0	0	0	0	0	0	0	0	0	0	0	0	0
4/23/2024	10:30 AM	0	0	0	0	0	0	0	0	0	0	0	0	0
4/23/2024	10:45 AM	0	0	0	0	0	0	0	0	0	0	0	0	0
4/23/2024	11:00 AM	0	0	0	0	0	0	0	0	0	0	0	0	0
4/23/2024	11:15 AM	0	0	0	0	0	0	0	0	0	0	0	0	0
4/23/2024	11:30 AM	0	0	0	0	0	0	0	0	0	0	0	0	0
4/23/2024	11:45 AM	0	0	0	0	0	0	0	0	0	0	0	0	0
4/23/2024	12:00 PM	0	0	0	0	0	0	0	0	0	0	0	0	0
4/23/2024	12:15 PM	0	0	0	0	0	0	0	0	0	0	0	0	0
4/23/2024	12:30 PM	0	0	0	0	0	0	0	0	0	0	0	0	0
4/23/2024	12:45 PM	0	0	0	0	0	0	0	0	0	0	0	0	0
4/23/2024	1:00 PM	0	0	0	0	0	0	0	0	0	0	0	0	0
4/23/2024	1:15 PM	0	0	0	0	0	0	0	0	0	0	0	0	0
4/23/2024	1:30 PM	0	0	0	0	0	0	0	0	0	0	0	0	0
4/23/2024	1:45 PM	0	0	0	0	0	0	0	0	0	0	0	0	0
4/23/2024	2:00 PM	0	0	0	0	0	0	0	0	0	0	0	0	0
4/23/2024	2:15 PM	0	0	0	0	0	0	0	0	0	0	0	0	0
4/23/2024	2:30 PM	0	0	0	0	0	0	0	0	0	0	0	0	0
4/23/2024	2:45 PM	0	0	0	0	0	0	0	0	0	0	0	0	0
4/23/2024	3:00 PM	0	0	0	0	0	0	0	0	0	0	0	0	0
4/23/2024	3:15 PM	0	0	0	0	0	0	0	0	0	0	0	0	0
4/23/2024	3:30 PM	0	0	0	0	0	0	0	0	0	0	0	0	0
4/23/2024	3:45 PM	0	0	0	0	0	0	0	0	0	0	0	0	0
4/23/2024	4:00 PM	0	0	0	0	0	0	0	0	0	0	0	0	0
4/23/2024	4:15 PM	0	0	0	0	0	0	0	0	0	0	0	0	0
4/23/2024	4:30 PM	0	0	0	0	0	0	0	0	0	0	0	0	0
4/23/2024	4:45 PM	0	0	0	0	0	0	0	0	0	0	0	0	0
4/23/2024	5:00 PM	0	0	0	0	0	0	0	0	0	0	0	0	0
4/23/2024	5:15 PM	0	0	0	0	0	0	0	0	0	0	0	0	0
4/23/2024	5:30 PM	0	0	0	0	0	0	0	0	0	0	0	0	0
4/23/2024	5:45 PM	0	0	0	0	0	0	0	0	0	0	0	0	0
4/23/2024	6:00 PM	0	0	0	0	0	0	0	0	0	0	0	0	0
4/23/2024	6:15 PM	0	0	0	0	0	0	0	0	0	0	0	0	0
4/23/2024	6:30 PM	0	0	0	0	0	0	0	0	0	0	0	0	0
4/23/2024	6:45 PM	0	0	0	0	0	0	0	0	0	0	0	0	0
4/23/2024	7:00 PM	0	0	0	0	0	0	0	0	0	0	0	0	0
4/23/2024	7:15 PM	0	0	0	0	0	0	0	0	0	0	0	0	0
4/23/2024	7:30 PM	0	0	0	0	0	0	0	0	0	0	0	0	0
4/23/2024	7:45 PM	0	0	0	0	0	0	0	0	0	0	0	0	0
4/23/2024	8:00 PM	0	0	0	0	0	0	0	0	0	0	0	0	0
4/23/2024	8:15 PM	0	0	0	0	0	0	0	0	0	0	0	0	0
4/23/2024	8:30 PM	0	0	0	0	0	0	0	0	0	0	0	0	0
4/23/2024	8:45 PM	0	0	0	0	0	0	0	0	0	0	0	0	0
4/23/2024	9:00 PM	0	0	0	0	0	0	0	0	0	0	0	0	0
4/23/2024	9:15 PM	0	0	0	0	0	0	0	0	0	0	0	0	0
4/23/2024	9:30 PM	0	0	0	0	0	0	0	0	0	0	0	0	0
4/23/2024	9:45 PM	0	0	0	0	0	0	0	0	0	0	0	0	0
4/23/2024	10:00 PM	0	0	0	0	0	0	0	0	0	0	0	0	0
4/23/2024	10:15 PM	0	0	0	0	0	0	0	0	0	0	0	0	0
4/23/2024	10:30 PM	0	0	0	0	0	0	0	0	0	0	0	0	0
4/23/2024	10:45 PM	0	0	0	0	0	0	0	0	0	0	0	0	0
4/23/2024	11:00 PM	0	0	0	0	0	0	0	0	0	0	0	0	0
4/23/2024	11:15 PM	0	0	0	0	0	0	0	0	0	0	0	0	0
4/23/2024	11:30 PM	0	0	0	0	0	0	0	0	0	0	0	0	0
4/23/2024	11:45 PM	0	0	0	0	0	0	0	0	0	0	0	0	0

4/24/2024	12:00 AM	0	0	0	0	0	0	0	0	0	0	0	0	0
4/24/2024	12:15 AM	0	0	0	0	0	0	0	0	0	0	0	0	0
4/24/2024	12:30 AM	0	0	0	0	0	0	0	0	0	0	0	0	0
4/24/2024	12:45 AM	0	0	0	0	0	0	0	0	0	0	0	0	0
4/24/2024	1:00 AM	0	0	0	0	0	0	0	0	0	0	0	0	0
4/24/2024	1:15 AM	0	0	0	0	0	0	0	0	0	0	0	0	0
4/24/2024	1:30 AM	0	0	0	0	0	0	0	0	0	0	0	0	0
4/24/2024	1:45 AM	0	0	0	0	0	0	0	0	0	0	0	0	0
4/24/2024	2:00 AM	0	0	0	0	0	0	0	0	0	0	0	0	0
4/24/2024	2:15 AM	0	0	0	0	0	0	0	0	0	0	0	0	0
4/24/2024	2:30 AM	0	0	0	0	0	0	0	0	0	0	0	0	0
4/24/2024	2:45 AM	0	0	0	0	0	0	0	0	0	0	0	0	0
4/24/2024	3:00 AM	0	0	0	0	0	0	0	0	0	0	0	0	0
4/24/2024	3:15 AM	0	0	0	0	0	0	0	0	0	0	0	0	0
4/24/2024	3:30 AM	0	0	0	0	0	0	0	0	0	0	0	0	0
4/24/2024	3:45 AM	0	0	0	0	0	0	0	0	0	0	0	0	0
4/24/2024	4:00 AM	0	0	0	0	0	0	0	0	0	0	0	0	0
4/24/2024	4:15 AM	0	0	0	0	0	0	0	0	0	0	0	0	0
4/24/2024	4:30 AM	0	0	0	0	0	0	0	0	0	0	0	0	0
4/24/2024	4:45 AM	0	0	0	0	0	0	0	0	0	0	0	0	0
4/24/2024	5:00 AM	0	0	0	0	0	0	0	0	0	0	0	0	0
4/24/2024	5:15 AM	0	0	0	0	0	0	0	0	0	0	0	0	0
4/24/2024	5:30 AM	0	0	0	0	0	0	0	0	0	0	0	0	0
4/24/2024	5:45 AM	0	0	0	0	0	0	0	0	0	0	0	0	0
4/24/2024	6:00 AM	0	0	0	0	0	0	0	0	0	0	0	0	0
4/24/2024	6:15 AM	0	0	0	0	0	0	0	0	0	0	0	0	0
4/24/2024	6:30 AM	0	0	0	0	0	0	0	0	0	0	0	0	0
4/24/2024	6:45 AM	0	0	0	0	0	0	0	0	0	0	0	0	0
4/24/2024	7:00 AM	0	0	0	0	0	0	0	0	0	0	0	0	0
4/24/2024	7:15 AM	0	0	0	0	0	0	0	0	0	0	0	0	0
4/24/2024	7:30 AM	0	0	0	0	0	0	0	0	0	0	0	0	0
4/24/2024	7:45 AM	0	0	0	0	0	0	0	0	0	0	0	0	0
4/24/2024	8:00 AM	0	0	0	0	0	0	0	0	0	0	0	0	0
4/24/2024	8:15 AM	0	0	0	0	0	0	0	0	0	0	0	0	0
4/24/2024	8:30 AM	0	0	0	0	0	0	0	0	0	0	0	0	0
4/24/2024	8:45 AM	0	0	0	0	0	0	0	0	0	0	0	0	0
4/24/2024	9:00 AM	0	0	0	0	0	0	0	0	0	0	0	0	0
4/24/2024	9:15 AM	0	0	0	0	0	0	0	0	0	0	0	0	0
4/24/2024	9:30 AM	0	0	0	0	0	0	0	0	0	0	0	0	0
4/24/2024	9:45 AM	0	0	0	0	0	0	0	0	0	0	0	0	0
4/24/2024	10:00 AM	0	0	0	0	0	0	0	0	0	0	0	0	0
4/24/2024	10:15 AM	0	0	0	0	0	0	0	0	0	0	0	0	0
4/24/2024	10:30 AM	0	0	0	0	0	0	0	0	0	0	0	0	0
4/24/2024	10:45 AM	0	0	0	0	0	0	0	0	0	0	0	0	0
4/24/2024	11:00 AM	0	0	0	0	0	0	0	0	0	0	0	0	0
4/24/2024	11:15 AM	0	0	0	0	0	0	0	0	0	0	0	0	0
4/24/2024	11:30 AM	0	0	0	0	0	0	0	0	0	0	0	0	0
4/24/2024	11:45 AM	0	0	0	0	0	0	0	0	0	0	0	0	0
4/24/2024	12:00 PM	0	0	0	0	0	0	0	0	0	0	0	0	0
4/24/2024	12:15 PM	0	0	0	0	0	0	0	0	0	0	0	0	0
4/24/2024	12:30 PM	0	0	0	0	0	0	0	0	0	0	0	0	0
4/24/2024	12:45 PM	0	0	0	0	0	0	0	0	0	0	0	0	0
4/24/2024	1:00 PM	0	0	0	0	0	0	0	0	0	0	0	0	0
4/24/2024	1:15 PM	0	0	0	0	0	0	0	0	0	0	0	0	0
4/24/2024	1:30 PM	0	0	0	0	0	0	0	0	0	0	0	0	0
4/24/2024	1:45 PM	0	0	0	0	0	0	0	0	0	0	0	0	0
4/24/2024	2:00 PM	0	0	0	0	0	0	0	0	0	0	0	0	0
4/24/2024	2:15 PM	0	0	0	0	0	0	0	0	0	0	0	0	0
4/24/2024	2:30 PM	0	0	0	0	0	0	0	0	0	0	0	0	0
4/24/2024	2:45 PM	0	0	0	0	0	0	0	0	0	0	0	0	0
4/24/2024	3:00 PM	0	0	0	0	0	0	0	0	0	0	0	0	0
4/24/2024	3:15 PM	0	0	0	0	0	0	0	0	0	0	0	0	0
4/24/2024	3:30 PM	0	0	0	0	0	0	0	0	0	0	0	0	0
4/24/2024	3:45 PM	0	0	0	0	0	0	0	0	0	0	0	0	0
4/24/2024	4:00 PM	0	0	0	0	0	0	0	0	0	0	0	0	0
4/24/2024	4:15 PM	0	0	0	0	0	0	0	0	0	0	0	0	0
4/24/2024	4:30 PM	0	0	0	0	0	0	0	0	0	0	0	0	0
4/24/2024	4:45 PM	0	0	0	0	0	0	0	0	0	0	0	0	0
4/24/2024	5:00 PM	0	0	0	0	0	0	0	0	0	0	0	0	0
4/24/2024	5:15 PM	0	0	0	0	0	0	0	0	0	0	0	0	0
4/24/2024	5:30 PM	0	0	0	0	0	0	0	0	0	0	0	0	0
4/24/2024	5:45 PM	0	0	0	0	0	0	0	0	0	0	0	0	0
4/24/2024	6:00 PM	0	0	0	0	0	0	0	0	0	0	0	0	0
4/24/2024	6:15 PM	0	0	0	0	0	0	0	0	0	0	0	0	0
4/24/2024	6:30 PM	0	0	0	0	0	0	0	0	0	0	0	0	0
4/24/2024	6:45 PM	0	0	0	0	0	0	0	0	0	0	0	0	0
4/24/2024	7:00 PM	0	0	0	0	0	0	0	0	0	0	0	0	0
4/24/2024	7:15 PM	0	0	0	0	0	0	0	0	0	0	0	0	0
4/24/2024	7:30 PM	0	0	0	0	0	0	0	0	0	0	0	0	0
4/24/2024	7:45 PM	0	0	0	0	0	0	0	0	0	0	0	0	0
4/24/2024	8:00 PM	0	0	0	0	0	0	0	0	0	0	0	0	0
4/24/2024	8:15 PM	0	0	0	0	0	0	0	0	0	0	0	0	0
4/24/2024	8:30 PM	0	0	0	0	0	0	0	0	0	0	0	0	0
4/24/2024	8:45 PM	0	0	0	0	0	0	0	0	0	0	0	0	0
4/24/2024	9:00 PM	0	0	0	0	0	0	0	0	0	0	0	0	0
4/24/2024	9:15 PM	0	0	0	0	0	0	0	0	0	0	0	0	0
4/24/2024	9:30 PM	0	0	0	0	0	0	0	0	0	0	0	0	0
4/24/2024	9:45 PM	0	0	0	0	0	0	0	0	0	0	0	0	0
4/24/2024	10:00 PM	0	0	0	0	0	0	0	0	0	0	0	0	0
4/24/2024	10:15 PM	0	0	0	0	0	0	0	0	0	0	0	0	0
4/24/2024	10:30 PM	0	0	0	0	0	0	0	0	0	0	0	0	0
4/24/2024	10:45 PM	0	0	0	0	0	0	0	0	0	0	0	0	0
4/24/2024	11:00 PM	0	0	0	0	0	0	0	0	0	0	0	0	0
4/24/2024	11:15 PM	0	0	0	0	0	0	0	0	0	0	0	0	0
4/24/2024	11:30 PM	0	0	0	0	0	0	0	0	0	0	0	0	0
4/24/2024	11:45 PM	0	0	0	0	0	0	0	0	0	0	0	0	0

4/25/2024	12:00 AM	0	0	0	0	0	0	0	0	0	0	0	0	0
4/25/2024	12:15 AM	0	0	0	0	0	0	0	0	0	0	0	0	0
4/25/2024	12:30 AM	0	0	0	0	0	0	0	0	0	0	0	0	0
4/25/2024	12:45 AM	0	0	0	0	0	0	0	0	0	0	0	0	0
4/25/2024	1:00 AM	0	0	0	0	0	0	0	0	0	0	0	0	0
4/25/2024	1:15 AM	0	0	0	0	0	0	0	0	0	0	0	0	0
4/25/2024	1:30 AM	0	0	0	0	0	0	0	0	0	0	0	0	0
4/25/2024	1:45 AM	0	0	0	0	0	0	0	0	0	0	0	0	0
4/25/2024	2:00 AM	0	0	0	0	0	0	0	0	0	0	0	0	0
4/25/2024	2:15 AM	0	0	0	0	0	0	0	0	0	0	0	0	0
4/25/2024	2:30 AM	0	0	0	0	0	0	0	0	0	0	0	0	0
4/25/2024	2:45 AM	0	0	0	0	0	0	0	0	0	0	0	0	0
4/25/2024	3:00 AM	0	0	0	0	0	0	0	0	0	0	0	0	0
4/25/2024	3:15 AM	0	0	0	0	0	0	0	0	0	0	0	0	0
4/25/2024	3:30 AM	0	0	0	0	0	0	0	0	0	0	0	0	0
4/25/2024	3:45 AM	0	0	0	0	0	0	0	0	0	0	0	0	0
4/25/2024	4:00 AM	0	0	0	0	0	0	0	0	0	0	0	0	0
4/25/2024	4:15 AM	0	0	0	0	0	0	0	0	0	0	0	0	0
4/25/2024	4:30 AM	0	0	0	0	0	0	0	0	0	0	0	0	0
4/25/2024	4:45 AM	0	0	0	0	0	0	0	0	0	0	0	0	0
4/25/2024	5:00 AM	0	0	0	0	0	0	0	0	0	0	0	0	0
4/25/2024	5:15 AM	0	0	0	0	0	0	0	0	0	0	0	0	0
4/25/2024	5:30 AM	0	0	0	0	0	0	0	0	0	0	0	0	0
4/25/2024	5:45 AM	0	0	0	0	0	0	0	0	0	0	0	0	0
4/25/2024	6:00 AM	0	0	0	0	0	0	0	0	0	0	0	0	0
4/25/2024	6:15 AM	0	0	0	0	0	0	0	0	0	0	0	0	0
4/25/2024	6:30 AM	0	0	0	0	0	0	0	0	0	0	0	0	0
4/25/2024	6:45 AM	0	0	0	0	0	0	0	0	0	0	0	0	0
4/25/2024	7:00 AM	0	0	0	0	0	0	0	0	0	0	0	0	0
4/25/2024	7:15 AM	0	0	0	0	0	0	0	0	0	0	0	0	0
4/25/2024	7:30 AM	0	0	0	0	0	0	0	0	0	0	0	0	0
4/25/2024	7:45 AM	0	0	0	0	0	0	0	0	0	0	0	0	0
4/25/2024	8:00 AM	0	0	0	0	0	0	0	0	0	0	0	0	0
4/25/2024	8:15 AM	0	0	0	0	0	0	0	0	0	0	0	0	0
4/25/2024	8:30 AM	0	0	0	0	0	0	0	0	0	0	0	0	0
4/25/2024	8:45 AM	0	0	0	0	0	0	0	0	0	0	0	0	0
4/25/2024	9:00 AM	0	0	0	0	0	0	0	0	0	0	0	0	0
4/25/2024	9:15 AM	0	0	0	0	0	0	0	0	0	0	0	0	0
4/25/2024	9:30 AM	0	0	0	0	0	0	0	0	0	0	0	0	0
4/25/2024	9:45 AM	0	0	0	0	0	0	0	0	0	0	0	0	0
4/25/2024	10:00 AM	0	0	0	0	0	0	0	0	0	0	0	0	0
4/25/2024	10:15 AM	0	0	0	0	0	0	0	0	0	0	0	0	0
4/25/2024	10:30 AM	0	0	0	0	0	0	0	0	0	0	0	0	0
4/25/2024	10:45 AM	0	0	0	0	0	0	0	0	0	0	0	0	0
4/25/2024	11:00 AM	0	0	0	0	0	0	0	0	0	0	0	0	0
4/25/2024	11:15 AM	0	0	0	0	0	0	0	0	0	0	0	0	0
4/25/2024	11:30 AM	0	0	0	0	0	0	0	0	0	0	0	0	0
4/25/2024	11:45 AM	0	0	0	0	0	0	0	0	0	0	0	0	0
4/25/2024	12:00 PM	0	0	0	0	0	0	0	0	0	0	0	0	0
4/25/2024	12:15 PM	0	0	0	0	0	0	0	0	0	0	0	0	0
4/25/2024	12:30 PM	0	0	0	0	0	0	0	0	0	0	0	0	0
4/25/2024	12:45 PM	0	0	0	0	0	0	0	0	0	0	0	0	0
4/25/2024	1:00 PM	0	0	0	0	0	0	0	0	0	0	0	0	0
4/25/2024	1:15 PM	0	0	0	0	0	0	0	0	0	0	0	0	0
4/25/2024	1:30 PM	0	0	0	0	0	0	0	0	0	0	0	0	0
4/25/2024	1:45 PM	0	0	0	0	0	0	0	0	0	0	0	0	0
4/25/2024	2:00 PM	0	0	0	0	0	0	0	0	0	0	0	0	0
4/25/2024	2:15 PM	0	0	0	0	0	0	0	0	0	0	0	0	0
4/25/2024	2:30 PM	0	0	0	0	0	0	0	0	0	0	0	0	0
4/25/2024	2:45 PM	0	0	0	0	0	0	0	0	0	0	0	0	0
4/25/2024	3:00 PM	0	0	0	0	0	0	0	0	0	0	0	0	0
4/25/2024	3:15 PM	0	0	0	0	0	0	0	0	0	0	0	0	0
4/25/2024	3:30 PM	0	0	0	0	0	0	0	0	0	0	0	0	0
4/25/2024	3:45 PM	0	0	0	0	0	0	0	0	0	0	0	0	0
4/25/2024	4:00 PM	0	0	0	0	0	0	0	0	0	0	0	0	0
4/25/2024	4:15 PM	0	0	0	0	0	0	0	0	0	0	0	0	0
4/25/2024	4:30 PM	0	0	0	0	0	0	0	0	0	0	0	0	0
4/25/2024	4:45 PM	0	0	0	0	0	0	0	0	0	0	0	0	0
4/25/2024	5:00 PM	0	0	0	0	0	0	0	0	0	0	0	0	0
4/25/2024	5:15 PM	0	0	0	0	0	0	0	0	0	0	0	0	0
4/25/2024	5:30 PM	0	0	0	0	0	0	0	0	0	0	0	0	0
4/25/2024	5:45 PM	0	0	0	0	0	0	0	0	0	0	0	0	0
4/25/2024	6:00 PM	0	0	0	0	0	0	0	0	0	0	0	0	0
4/25/2024	6:15 PM	0	0	0	0	0	0	0	0	0	0	0	0	0
4/25/2024	6:30 PM	0	0	0	0	0	0	0	0	0	0	0	0	0
4/25/2024	6:45 PM	0	0	0	0	0	0	0	0	0	0	0	0	0
4/25/2024	7:00 PM	0	0	0	0	0	0	0	0	0	0	0	0	0
4/25/2024	7:15 PM	0	0	0	0	0	0	0	0	0	0	0	0	0
4/25/2024	7:30 PM	0	0	0	0	0	0	0	0	0	0	0	0	0
4/25/2024	7:45 PM	0	0	0	0	0	0	0	0	0	0	0	0	0
4/25/2024	8:00 PM	0	0	0	0	0	0	0	0	0	0	0	0	0
4/25/2024	8:15 PM	0	0	0	0	0	0	0	0	0	0	0	0	0
4/25/2024	8:30 PM	0	0	0	0	0	0	0	0	0	0	0	0	0
4/25/2024	8:45 PM	0	0	0	0	0	0	0	0	0	0	0	0	0
4/25/2024	9:00 PM	0	0	0	0	0	0	0	0	0	0	0	0	0
4/25/2024	9:15 PM	0	0	0	0	0	0	0	0	0	0	0	0	0
4/25/2024	9:30 PM	0	0	0	0	0	0	0	0	0	0	0	0	0
4/25/2024	9:45 PM	0	0	0	0	0	0	0	0	0	0	0	0	0
4/25/2024	10:00 PM	0	0	0	0	0	0	0	0	0	0	0	0	0
4/25/2024	10:15 PM	0	0	0	0	0	0	0	0	0	0	0	0	0
4/25/2024	10:30 PM	0	0	0	0	0	0	0	0	0	0	0	0	0
4/25/2024	10:45 PM	0	0	0	0	0	0	0	0	0	0	0	0	0
4/25/2024	11:00 PM	0	0	0	0	0	0	0	0	0	0	0	0	0
4/25/2024	11:15 PM	0	0	0	0	0	0	0	0	0	0	0	0	0
4/25/2024	11:30 PM	0	0	0	0	0	0	0	0	0	0	0	0	0
4/25/2024	11:45 PM	0	0	0	0	0	0	0	0	0	0	0	0	0

NB
File Name:
Start Date: 4/23/2024
Start Time: 0
Site Code: 43
Station ID: 1
Location 1: I-26 On/Off-Ramp, south of Bush River Rd
Location 2:

Date	Time	1	2	3	4	5	6	7	8	9	10	11	12	13
4/23/2024	12:00 AM	0	0	0	0	0	0	0	0	0	0	0	0	0
4/23/2024	12:15 AM	0	0	0	0	0	0	0	0	0	0	0	0	0
4/23/2024	12:30 AM	0	0	0	0	0	0	0	0	0	0	0	0	0
4/23/2024	12:45 AM	0	0	0	0	0	0	0	0	0	0	0	0	0
4/23/2024	1:00 AM	0	0	0	0	0	0	0	0	0	0	0	0	0
4/23/2024	1:15 AM	0	0	0	0	0	0	0	0	0	0	0	0	0
4/23/2024	1:30 AM	0	0	0	0	0	0	0	0	0	0	0	0	0
4/23/2024	1:45 AM	0	0	0	0	0	0	0	0	0	0	0	0	0
4/23/2024	2:00 AM	0	0	0	0	0	0	0	0	0	0	0	0	0
4/23/2024	2:15 AM	0	0	0	0	0	0	0	0	0	0	0	0	0
4/23/2024	2:30 AM	0	0	0	0	0	0	0	0	0	0	0	0	0
4/23/2024	2:45 AM	0	0	0	0	0	0	0	0	0	0	0	0	0
4/23/2024	3:00 AM	0	0	0	0	0	0	0	0	0	0	0	0	0
4/23/2024	3:15 AM	0	0	0	0	0	0	0	0	0	0	0	0	0
4/23/2024	3:30 AM	0	0	0	0	0	0	0	0	0	0	0	0	0
4/23/2024	3:45 AM	0	0	0	0	0	0	0	0	0	0	0	0	0
4/23/2024	4:00 AM	0	0	0	0	0	0	0	0	0	0	0	0	0
4/23/2024	4:15 AM	0	0	0	0	0	0	0	0	0	0	0	0	0
4/23/2024	4:30 AM	0	0	0	0	0	0	0	0	0	0	0	0	0
4/23/2024	4:45 AM	0	0	0	0	0	0	0	0	0	0	0	0	0
4/23/2024	5:00 AM	0	0	0	0	0	0	0	0	0	0	0	0	0
4/23/2024	5:15 AM	0	0	0	0	0	0	0	0	0	0	0	0	0
4/23/2024	5:30 AM	0	0	0	0	0	0	0	0	0	0	0	0	0
4/23/2024	5:45 AM	0	0	0	0	0	0	0	0	0	0	0	0	0
4/23/2024	6:00 AM	0	0	0	0	0	0	0	0	0	0	0	0	0
4/23/2024	6:15 AM	0	0	0	0	0	0	0	0	0	0	0	0	0
4/23/2024	6:30 AM	0	0	0	0	0	0	0	0	0	0	0	0	0
4/23/2024	6:45 AM	0	0	0	0	0	0	0	0	0	0	0	0	0
4/23/2024	7:00 AM	0	0	0	0	0	0	0	0	0	0	0	0	0
4/23/2024	7:15 AM	0	0	0	0	0	0	0	0	0	0	0	0	0
4/23/2024	7:30 AM	0	0	0	0	0	0	0	0	0	0	0	0	0
4/23/2024	7:45 AM	0	0	0	0	0	0	0	0	0	0	0	0	0
4/23/2024	8:00 AM	0	0	0	0	0	0	0	0	0	0	0	0	0
4/23/2024	8:15 AM	0	0	0	0	0	0	0	0	0	0	0	0	0
4/23/2024	8:30 AM	0	0	0	0	0	0	0	0	0	0	0	0	0
4/23/2024	8:45 AM	0	0	0	0	0	0	0	0	0	0	0	0	0
4/23/2024	9:00 AM	0	0	0	0	0	0	0	0	0	0	0	0	0
4/23/2024	9:15 AM	0	0	0	0	0	0	0	0	0	0	0	0	0
4/23/2024	9:30 AM	0	0	0	0	0	0	0	0	0	0	0	0	0
4/23/2024	9:45 AM	0	0	0	0	0	0	0	0	0	0	0	0	0
4/23/2024	10:00 AM	0	0	0	0	0	0	0	0	0	0	0	0	0
4/23/2024	10:15 AM	0	0	0	0	0	0	0	0	0	0	0	0	0
4/23/2024	10:30 AM	0	0	0	0	0	0	0	0	0	0	0	0	0
4/23/2024	10:45 AM	0	0	0	0	0	0	0	0	0	0	0	0	0
4/23/2024	11:00 AM	0	0	0	0	0	0	0	0	0	0	0	0	0
4/23/2024	11:15 AM	0	0	0	0	0	0	0	0	0	0	0	0	0
4/23/2024	11:30 AM	0	0	0	0	0	0	0	0	0	0	0	0	0
4/23/2024	11:45 AM	0	0	0	0	0	0	0	0	0	0	0	0	0
4/23/2024	12:00 PM	0	0	0	0	0	0	0	0	0	0	0	0	0
4/23/2024	12:15 PM	0	0	0	0	0	0	0	0	0	0	0	0	0
4/23/2024	12:30 PM	0	0	0	0	0	0	0	0	0	0	0	0	0
4/23/2024	12:45 PM	0	0	0	0	0	0	0	0	0	0	0	0	0
4/23/2024	1:00 PM	0	0	0	0	0	0	0	0	0	0	0	0	0
4/23/2024	1:15 PM	0	0	0	0	0	0	0	0	0	0	0	0	0
4/23/2024	1:30 PM	0	0	0	0	0	0	0	0	0	0	0	0	0
4/23/2024	1:45 PM	0	0	0	0	0	0	0	0	0	0	0	0	0
4/23/2024	2:00 PM	0	0	0	0	0	0	0	0	0	0	0	0	0
4/23/2024	2:15 PM	0	0	0	0	0	0	0	0	0	0	0	0	0
4/23/2024	2:30 PM	0	0	0	0	0	0	0	0	0	0	0	0	0
4/23/2024	2:45 PM	0	0	0	0	0	0	0	0	0	0	0	0	0
4/23/2024	3:00 PM	0	0	0	0	0	0	0	0	0	0	0	0	0
4/23/2024	3:15 PM	0	0	0	0	0	0	0	0	0	0	0	0	0
4/23/2024	3:30 PM	0	0	0	0	0	0	0	0	0	0	0	0	0
4/23/2024	3:45 PM	0	0	0	0	0	0	0	0	0	0	0	0	0
4/23/2024	4:00 PM	0	0	0	0	0	0	0	0	0	0	0	0	0
4/23/2024	4:15 PM	0	0	0	0	0	0	0	0	0	0	0	0	0
4/23/2024	4:30 PM	0	0	0	0	0	0	0	0	0	0	0	0	0
4/23/2024	4:45 PM	0	0	0	0	0	0	0	0	0	0	0	0	0
4/23/2024	5:00 PM	0	0	0	0	0	0	0	0	0	0	0	0	0
4/23/2024	5:15 PM	0	0	0	0	0	0	0	0	0	0	0	0	0
4/23/2024	5:30 PM	0	0	0	0	0	0	0	0	0	0	0	0	0
4/23/2024	5:45 PM	0	0	0	0	0	0	0	0	0	0	0	0	0
4/23/2024	6:00 PM	0	0	0	0	0	0	0	0	0	0	0	0	0
4/23/2024	6:15 PM	0	71	10	0	1	0	0	0	0	0	0	0	0
4/23/2024	6:30 PM	0	148	19	0	3	0	0	0	0	0	0	0	0
4/23/2024	6:45 PM	0	227	26	0	4	0	0	0	1	0	0	0	0
4/23/2024	7:00 PM	0	280	34	0	5	0	0	0	1	0	0	0	0
4/23/2024	7:15 PM	0	256	30	0	4	1	0	0	1	0	0	0	0
4/23/2024	7:30 PM	0	231	32	0	3	1	0	0	1	0	0	0	0
4/23/2024	7:45 PM	0	185	34	0	2	1	0	0	0	0	0	0	0
4/23/2024	8:00 PM	0	177	36	0	1	1	0	0	0	0	0	0	0
4/23/2024	8:15 PM	0	168	37	0	1	0	0	0	1	0	0	0	0
4/23/2024	8:30 PM	0	153	34	0	0	0	0	0	1	0	0	0	0
4/23/2024	8:45 PM	0	153	32	0	0	0	0	0	1	0	0	0	0
4/23/2024	9:00 PM	0	133	28	0	1	0	0	0	1	0	0	0	0
4/23/2024	9:15 PM	0	119	27	0	1	0	0	0	0	0	0	0	0
4/23/2024	9:30 PM	0	108	25	0	1	0	0	0	0	0	0	0	0
4/23/2024	9:45 PM	0	96	23	0	1	0	0	0	1	0	0	0	0
4/23/2024	10:00 PM	0	88	20	0	0	1	0	0	1	0	0	0	0
4/23/2024	10:15 PM	0	86	18	0	0	1	0	0	1	0	0	0	0
4/23/2024	10:30 PM	0	88	19	0	0	1	0	0	1	0	0	0	0
4/23/2024	10:45 PM	0	86	17	0	0	1	0	0	0	0	0	0	0
4/23/2024	11:00 PM	0	87	17	0	0	0	0	0	0	0	0	0	0
4/23/2024	11:15 PM	0	73	17	0	0	0	0	0	0	0	0	0	0
4/23/2024	11:30 PM	0	54	13	0	0	0	0	0	0	0	0	0	0
4/23/2024	11:45 PM	0	39	12	0	1	0	0	0	0	0	0	0	0

4/24/2024	12:00 AM	0	24	10	0	1	0	0	0	1	0	0	0	0
4/24/2024	12:15 AM	0	25	10	0	1	0	0	0	1	0	0	0	0
4/24/2024	12:30 AM	0	23	10	0	2	0	0	0	1	0	0	0	0
4/24/2024	12:45 AM	0	25	10	0	1	0	0	0	1	0	0	0	0
4/24/2024	1:00 AM	0	33	10	0	1	1	0	0	0	0	0	0	0
4/24/2024	1:15 AM	0	30	7	0	1	1	0	0	0	0	0	0	0
4/24/2024	1:30 AM	0	28	7	0	0	1	0	0	0	0	0	0	0
4/24/2024	1:45 AM	0	28	9	0	0	1	0	0	0	0	0	0	0
4/24/2024	2:00 AM	0	23	10	0	0	0	0	0	0	0	0	0	0
4/24/2024	2:15 AM	0	24	12	0	0	0	0	0	0	0	0	0	0
4/24/2024	2:30 AM	0	22	11	0	0	0	0	0	0	0	0	0	0
4/24/2024	2:45 AM	0	18	9	0	0	0	0	0	0	0	0	0	0
4/24/2024	3:00 AM	0	16	9	0	0	1	0	0	0	0	0	0	0
4/24/2024	3:15 AM	0	17	11	0	0	1	0	0	0	0	0	0	0
4/24/2024	3:30 AM	0	22	10	0	2	2	0	0	0	0	0	0	0
4/24/2024	3:45 AM	0	30	11	0	3	2	0	0	0	0	0	0	0
4/24/2024	4:00 AM	0	36	11	0	3	1	0	0	0	0	0	0	0
4/24/2024	4:15 AM	0	34	8	0	3	1	0	0	0	0	0	0	0
4/24/2024	4:30 AM	0	44	11	0	2	0	0	0	0	0	0	0	0
4/24/2024	4:45 AM	0	59	16	0	1	0	0	0	0	0	0	0	0
4/24/2024	5:00 AM	0	76	20	0	2	1	0	0	3	0	0	0	0
4/24/2024	5:15 AM	0	111	26	0	2	1	0	0	3	0	0	0	0
4/24/2024	5:30 AM	0	126	31	0	1	3	0	0	3	0	0	0	0
4/24/2024	5:45 AM	0	151	28	0	1	3	0	0	4	0	0	0	0
4/24/2024	6:00 AM	0	186	28	0	1	2	0	0	3	2	0	0	0
4/24/2024	6:15 AM	0	221	31	0	4	3	0	0	3	2	0	0	0
4/24/2024	6:30 AM	1	280	35	0	4	3	0	0	3	2	0	0	0
4/24/2024	6:45 AM	1	340	45	0	7	3	0	2	2	2	0	0	0
4/24/2024	7:00 AM	2	414	55	0	7	4	0	2	0	0	0	0	0
4/24/2024	7:15 AM	2	472	57	0	6	4	0	2	1	0	0	0	0
4/24/2024	7:30 AM	1	504	60	0	8	7	0	2	1	0	0	0	0
4/24/2024	7:45 AM	1	511	60	1	6	8	0	0	1	0	0	0	0
4/24/2024	8:00 AM	0	475	61	1	9	7	0	1	1	0	0	0	0
4/24/2024	8:15 AM	0	421	66	1	8	11	1	2	1	0	0	0	0
4/24/2024	8:30 AM	0	352	62	1	15	7	1	2	1	0	0	0	0
4/24/2024	8:45 AM	0	295	68	0	15	6	1	2	1	0	0	0	0
4/24/2024	9:00 AM	0	253	66	0	12	8	1	2	2	0	0	0	0
4/24/2024	9:15 AM	1	247	58	0	14	3	0	1	1	0	0	0	0
4/24/2024	9:30 AM	1	260	59	0	8	2	0	1	1	0	0	0	0
4/24/2024	9:45 AM	1	250	50	0	9	2	0	2	1	0	0	0	0
4/24/2024	10:00 AM	1	270	56	0	11	0	0	1	2	0	0	0	0
4/24/2024	10:15 AM	0	258	61	0	10	1	0	2	4	0	0	0	0
4/24/2024	10:30 AM	0	255	66	1	8	2	0	3	4	0	0	0	0
4/24/2024	10:45 AM	0	279	73	2	8	2	0	3	4	0	0	0	0
4/24/2024	11:00 AM	0	291	71	2	10	3	0	4	4	0	0	0	0
4/24/2024	11:15 AM	1	313	66	2	9	2	1	3	2	0	0	0	0
4/24/2024	11:30 AM	1	323	76	1	9	1	1	2	3	0	0	0	0
4/24/2024	11:45 AM	1	342	71	0	8	2	2	1	3	1	0	0	0
4/24/2024	12:00 PM	2	335	64	0	5	2	2	0	1	1	0	0	0
4/24/2024	12:15 PM	1	322	71	0	5	2	1	0	2	1	0	0	0
4/24/2024	12:30 PM	1	328	56	0	8	3	1	1	1	1	0	0	0
4/24/2024	12:45 PM	1	328	57	0	8	2	0	1	1	1	0	0	0
4/24/2024	1:00 PM	1	317	62	0	6	2	0	1	1	1	0	0	0
4/24/2024	1:15 PM	1	308	69	0	9	2	0	1	1	1	0	0	0
4/24/2024	1:30 PM	1	306	71	0	5	4	1	0	1	1	0	0	0
4/24/2024	1:45 PM	1	303	74	1	6	5	1	0	2	0	0	0	0
4/24/2024	2:00 PM	0	327	82	1	6	5	1	0	3	0	0	0	0
4/24/2024	2:15 PM	0	365	76	1	5	5	1	0	3	0	0	0	0
4/24/2024	2:30 PM	0	396	81	1	5	4	0	0	3	0	0	0	0
4/24/2024	2:45 PM	0	416	75	0	3	6	0	1	2	0	0	0	0
4/24/2024	3:00 PM	0	472	64	0	5	9	0	1	1	0	0	0	0
4/24/2024	3:15 PM	0	480	67	1	2	10	0	2	1	0	0	0	0
4/24/2024	3:30 PM	0	516	78	1	4	9	0	2	1	0	0	0	0
4/24/2024	3:45 PM	0	549	99	1	5	6	0	1	2	0	0	0	0
4/24/2024	4:00 PM	0	582	121	2	5	3	0	1	4	0	0	0	0
4/24/2024	4:15 PM	0	663	134	1	6	2	0	0	5	0	0	0	0
4/24/2024	4:30 PM	1	713	128	1	6	2	0	1	6	0	0	0	0
4/24/2024	4:45 PM	1	722	118	1	5	3	0	2	5	0	0	0	0
4/24/2024	5:00 PM	1	707	114	0	3	3	0	2	4	0	0	0	0
4/24/2024	5:15 PM	1	634	97	0	4	4	0	2	2	0	0	0	0
4/24/2024	5:30 PM	0	533	86	0	3	3	0	1	1	0	0	0	0
4/24/2024	5:45 PM	0	483	70	0	4	2	0	0	1	0	0	0	0
4/24/2024	6:00 PM	0	383	50	0	4	1	0	0	0	0	0	0	0
4/24/2024	6:15 PM	0	339	44	0	3	0	0	0	1	0	0	0	0
4/24/2024	6:30 PM	0	302	40	1	2	0	0	0	2	0	0	0	0
4/24/2024	6:45 PM	0	257	43	1	1	0	0	0	2	0	0	0	0
4/24/2024	7:00 PM	0	249	40	1	1	0	0	0	2	0	0	0	0
4/24/2024	7:15 PM	0	228	36	1	0	0	0	0	1	0	0	0	0
4/24/2024	7:30 PM	0	216	32	0	1	0	0	0	0	0	0	0	0
4/24/2024	7:45 PM	0	203	27	0	1	0	0	0	0	0	0	0	0
4/24/2024	8:00 PM	0	189	24	0	1	0	0	0	0	0	0	0	0
4/24/2024	8:15 PM	0	186	24	0	2	0	0	0	0	0	0	0	0
4/24/2024	8:30 PM	0	178	23	0	1	0	0	0	0	0	0	0	0
4/24/2024	8:45 PM	0	169	22	0	1	0	0	0	0	0	0	0	0
4/24/2024	9:00 PM	0	155	21	0	1	0	0	0	0	0	0	0	0
4/24/2024	9:15 PM	0	136	18	0	1	0	0	0	0	0	0	0	0
4/24/2024	9:30 PM	0	124	18	0	1	0	0	0	0	0	0	0	0
4/24/2024	9:45 PM	0	112	17	0	1	0	0	0	0	0	0	0	0
4/24/2024	10:00 PM	0	87	14	0	1	0	0	0	0	0	0	0	0
4/24/2024	10:15 PM	0	79	13	0	0	0	0	0	0	0	0	0	0
4/24/2024	10:30 PM	0	79	12	0	0	0	0	0	0	0	0	0	0
4/24/2024	10:45 PM	0	83	14	0	0	0	0	0	0	0	0	0	0
4/24/2024	11:00 PM	0	92	15	0	0	0	0	0	0	0	0	0	0
4/24/2024	11:15 PM	0	87	14	0	1	0	0	0	0	0	0	0	0
4/24/2024	11:30 PM	0	77	10	0	1	0	0	0	0	0	0	0	0
4/24/2024	11:45 PM	0	69	5	0	1	1	0	0	0	0	0	0	0

4/25/2024	12:00 AM	0	61	2	0	1	1	0	0	0	0	0	0	0
4/25/2024	12:15 AM	0	62	0	0	0	1	0	0	0	0	0	0	0
4/25/2024	12:30 AM	0	57	2	0	0	1	0	0	1	0	0	0	0
4/25/2024	12:45 AM	0	42	2	0	1	0	0	0	1	0	0	0	0
4/25/2024	1:00 AM	0	42	3	0	1	0	0	0	1	0	0	0	0
4/25/2024	1:15 AM	0	36	3	0	1	0	0	0	1	0	0	0	0
4/25/2024	1:30 AM	0	32	2	0	1	0	0	0	0	0	0	0	0
4/25/2024	1:45 AM	0	37	3	0	0	0	0	0	0	0	0	0	0
4/25/2024	2:00 AM	0	30	2	0	0	0	0	0	0	0	0	0	0
4/25/2024	2:15 AM	0	30	2	0	0	0	0	0	0	0	0	0	0
4/25/2024	2:30 AM	0	32	2	0	0	0	0	0	0	0	0	0	0
4/25/2024	2:45 AM	0	27	1	0	0	0	0	0	0	0	0	0	0
4/25/2024	3:00 AM	0	34	2	0	0	1	0	0	0	0	0	0	0
4/25/2024	3:15 AM	0	32	3	0	0	1	0	0	0	0	0	0	0
4/25/2024	3:30 AM	0	33	3	0	0	1	0	0	0	0	0	0	0
4/25/2024	3:45 AM	0	39	5	0	0	1	0	0	0	0	0	0	0
4/25/2024	4:00 AM	0	43	4	0	0	0	0	0	0	0	0	0	0
4/25/2024	4:15 AM	0	48	4	0	0	0	0	0	0	0	0	0	0
4/25/2024	4:30 AM	0	53	4	0	0	0	0	0	0	0	0	0	0
4/25/2024	4:45 AM	0	67	4	0	0	0	0	0	0	0	0	0	0
4/25/2024	5:00 AM	0	77	5	0	0	0	0	0	0	0	0	0	0
4/25/2024	5:15 AM	0	95	7	0	1	0	0	0	0	0	0	0	0
4/25/2024	5:30 AM	0	117	12	0	2	0	0	0	0	0	0	0	0
4/25/2024	5:45 AM	0	136	20	0	2	1	0	0	0	0	0	0	0
4/25/2024	6:00 AM	0	165	31	0	3	1	0	0	0	0	0	0	0
4/25/2024	6:15 AM	0	193	37	0	2	1	0	0	0	0	0	0	0
4/25/2024	6:30 AM	0	247	43	0	2	1	0	1	0	0	0	0	0
4/25/2024	6:45 AM	1	321	59	0	3	2	0	2	0	0	0	0	0
4/25/2024	7:00 AM	1	391	69	0	3	3	0	3	0	0	0	0	0
4/25/2024	7:15 AM	1	461	76	0	3	3	0	3	1	0	0	0	0
4/25/2024	7:30 AM	1	456	83	0	5	4	0	2	1	0	0	0	0
4/25/2024	7:45 AM	0	413	75	0	10	4	0	2	2	0	0	0	0
4/25/2024	8:00 AM	0	346	68	0	11	4	0	1	3	0	0	0	0
4/25/2024	8:15 AM	0	265	65	1	14	4	1	2	3	0	0	0	0
4/25/2024	8:30 AM	0	241	65	1	14	3	1	2	4	2	0	0	0
4/25/2024	8:45 AM	0	230	63	1	11	4	1	1	6	3	0	0	0
4/25/2024	9:00 AM	0	230	64	1	11	6	1	1	6	3	0	0	0
4/25/2024	9:15 AM	0	240	61	0	10	6	1	2	6	3	0	0	0
4/25/2024	9:30 AM	1	230	55	0	10	8	1	4	5	1	0	0	0
4/25/2024	9:45 AM	1	229	52	1	8	7	2	4	2	0	0	0	0
4/25/2024	10:00 AM	1	239	49	1	6	5	2	4	1	0	0	0	0
4/25/2024	10:15 AM	1	248	63	1	5	7	2	2	0	0	0	0	0
4/25/2024	10:30 AM	0	266	63	1	3	7	2	0	1	0	0	0	0
4/25/2024	10:45 AM	0	270	71	0	4	6	1	0	1	0	0	0	0
4/25/2024	11:00 AM	0	275	71	0	4	6	1	0	2	0	0	0	0
4/25/2024	11:15 AM	0	283	67	1	6	8	0	0	3	0	0	0	0
4/25/2024	11:30 AM	0	278	73	1	8	8	0	1	2	0	0	0	0
4/25/2024	11:45 AM	0	283	68	1	7	8	0	1	3	0	0	0	0
4/25/2024	12:00 PM	2	276	72	1	9	8	0	1	3	0	0	0	0
4/25/2024	12:15 PM	3	275	71	0	7	4	0	1	2	0	0	0	0
4/25/2024	12:30 PM	3	292	66	0	5	2	0	0	4	0	0	0	0
4/25/2024	12:45 PM	3	289	66	0	4	1	0	0	3	0	0	0	0
4/25/2024	1:00 PM	1	300	69	0	4	2	0	1	3	0	0	0	0
4/25/2024	1:15 PM	1	295	67	0	6	3	0	1	3	0	0	0	0
4/25/2024	1:30 PM	1	298	68	0	6	3	0	1	1	0	0	0	0
4/25/2024	1:45 PM	1	325	70	0	9	4	0	1	2	0	0	0	0
4/25/2024	2:00 PM	1	334	68	0	9	3	0	0	4	0	0	0	0
4/25/2024	2:15 PM	0	357	71	0	8	2	0	0	4	0	0	0	0
4/25/2024	2:30 PM	1	389	66	0	7	4	0	0	4	0	0	0	0
4/25/2024	2:45 PM	2	392	73	0	5	3	0	0	4	0	0	0	0
4/25/2024	3:00 PM	2	441	75	0	3	4	0	0	1	0	0	0	0
4/25/2024	3:15 PM	2	511	78	0	1	5	0	0	2	0	0	0	0
4/25/2024	3:30 PM	1	547	100	0	4	4	0	0	2	0	0	0	0
4/25/2024	3:45 PM	0	631	110	0	6	6	0	0	3	0	0	0	0
4/25/2024	4:00 PM	0	649	116	0	6	4	0	0	3	0	0	0	0
4/25/2024	4:15 PM	0	638	125	0	8	3	0	0	3	0	0	0	0
4/25/2024	4:30 PM	0	673	117	0	6	3	0	0	3	0	0	0	0
4/25/2024	4:45 PM	0	674	114	0	5	2	0	0	1	0	0	0	0
4/25/2024	5:00 PM	0	692	119	1	5	2	0	0	2	0	0	0	0
4/25/2024	5:15 PM	0	708	106	1	4	2	0	0	1	0	0	0	0
4/25/2024	5:30 PM	0	620	95	1	4	2	0	0	2	0	0	0	0
4/25/2024	5:45 PM	0	522	75	1	2	1	0	0	3	0	0	0	0
4/25/2024	6:00 PM	0	425	55	0	2	1	0	0	3	0	0	0	0
4/25/2024	6:15 PM	0	257	36	0	1	1	0	0	3	0	0	0	0
4/25/2024	6:30 PM	0	157	23	0	0	0	0	0	2	0	0	0	0
4/25/2024	6:45 PM	0	72	11	0	0	0	0	0	1	0	0	0	0
4/25/2024	7:00 PM	0	0	0	0	0	0	0	0	0	0	0	0	0
4/25/2024	7:15 PM	0	0	0	0	0	0	0	0	0	0	0	0	0
4/25/2024	7:30 PM	0	0	0	0	0	0	0	0	0	0	0	0	0
4/25/2024	7:45 PM	0	0	0	0	0	0	0	0	0	0	0	0	0
4/25/2024	8:00 PM	0	0	0	0	0	0	0	0	0	0	0	0	0
4/25/2024	8:15 PM	0	0	0	0	0	0	0	0	0	0	0	0	0
4/25/2024	8:30 PM	0	0	0	0	0	0	0	0	0	0	0	0	0
4/25/2024	8:45 PM	0	0	0	0	0	0	0	0	0	0	0	0	0
4/25/2024	9:00 PM	0	0	0	0	0	0	0	0	0	0	0	0	0
4/25/2024	9:15 PM	0	0	0	0	0	0	0	0	0	0	0	0	0
4/25/2024	9:30 PM	0	0	0	0	0	0	0	0	0	0	0	0	0
4/25/2024	9:45 PM	0	0	0	0	0	0	0	0	0	0	0	0	0
4/25/2024	10:00 PM	0	0	0	0	0	0	0	0	0	0	0	0	0
4/25/2024	10:15 PM	0	0	0	0	0	0	0	0	0	0	0	0	0
4/25/2024	10:30 PM	0	0	0	0	0	0	0	0	0	0	0	0	0
4/25/2024	10:45 PM	0	0	0	0	0	0	0	0	0	0	0	0	0
4/25/2024	11:00 PM	0	0	0	0	0	0	0	0	0	0	0	0	0
4/25/2024	11:15 PM	0	0	0	0	0	0	0	0	0	0	0	0	0
4/25/2024	11:30 PM	0	0	0	0	0	0	0	0	0	0	0	0	0
4/25/2024	11:45 PM	0	0	0	0	0	0	0	0	0	0	0	0	0

SB
File Name:
Start Date: 4/23/2024
Start Time: 0
Site Code: 43
Station ID: 1
Location 1: I-26 On/Off-Ramp, south of Bush River Rd
Location 2:

Date	Time	1	2	3	4	5	6	7	8	9	10	11	12	13
4/23/2024	12:00 AM	0	0	0	0	0	0	0	0	0	0	0	0	0
4/23/2024	12:15 AM	0	0	0	0	0	0	0	0	0	0	0	0	0
4/23/2024	12:30 AM	0	0	0	0	0	0	0	0	0	0	0	0	0
4/23/2024	12:45 AM	0	0	0	0	0	0	0	0	0	0	0	0	0
4/23/2024	1:00 AM	0	0	0	0	0	0	0	0	0	0	0	0	0
4/23/2024	1:15 AM	0	0	0	0	0	0	0	0	0	0	0	0	0
4/23/2024	1:30 AM	0	0	0	0	0	0	0	0	0	0	0	0	0
4/23/2024	1:45 AM	0	0	0	0	0	0	0	0	0	0	0	0	0
4/23/2024	2:00 AM	0	0	0	0	0	0	0	0	0	0	0	0	0
4/23/2024	2:15 AM	0	0	0	0	0	0	0	0	0	0	0	0	0
4/23/2024	2:30 AM	0	0	0	0	0	0	0	0	0	0	0	0	0
4/23/2024	2:45 AM	0	0	0	0	0	0	0	0	0	0	0	0	0
4/23/2024	3:00 AM	0	0	0	0	0	0	0	0	0	0	0	0	0
4/23/2024	3:15 AM	0	0	0	0	0	0	0	0	0	0	0	0	0
4/23/2024	3:30 AM	0	0	0	0	0	0	0	0	0	0	0	0	0
4/23/2024	3:45 AM	0	0	0	0	0	0	0	0	0	0	0	0	0
4/23/2024	4:00 AM	0	0	0	0	0	0	0	0	0	0	0	0	0
4/23/2024	4:15 AM	0	0	0	0	0	0	0	0	0	0	0	0	0
4/23/2024	4:30 AM	0	0	0	0	0	0	0	0	0	0	0	0	0
4/23/2024	4:45 AM	0	0	0	0	0	0	0	0	0	0	0	0	0
4/23/2024	5:00 AM	0	0	0	0	0	0	0	0	0	0	0	0	0
4/23/2024	5:15 AM	0	0	0	0	0	0	0	0	0	0	0	0	0
4/23/2024	5:30 AM	0	0	0	0	0	0	0	0	0	0	0	0	0
4/23/2024	5:45 AM	0	0	0	0	0	0	0	0	0	0	0	0	0
4/23/2024	6:00 AM	0	0	0	0	0	0	0	0	0	0	0	0	0
4/23/2024	6:15 AM	0	0	0	0	0	0	0	0	0	0	0	0	0
4/23/2024	6:30 AM	0	0	0	0	0	0	0	0	0	0	0	0	0
4/23/2024	6:45 AM	0	0	0	0	0	0	0	0	0	0	0	0	0
4/23/2024	7:00 AM	0	0	0	0	0	0	0	0	0	0	0	0	0
4/23/2024	7:15 AM	0	0	0	0	0	0	0	0	0	0	0	0	0
4/23/2024	7:30 AM	0	0	0	0	0	0	0	0	0	0	0	0	0
4/23/2024	7:45 AM	0	0	0	0	0	0	0	0	0	0	0	0	0
4/23/2024	8:00 AM	0	0	0	0	0	0	0	0	0	0	0	0	0
4/23/2024	8:15 AM	0	0	0	0	0	0	0	0	0	0	0	0	0
4/23/2024	8:30 AM	0	0	0	0	0	0	0	0	0	0	0	0	0
4/23/2024	8:45 AM	0	0	0	0	0	0	0	0	0	0	0	0	0
4/23/2024	9:00 AM	0	0	0	0	0	0	0	0	0	0	0	0	0
4/23/2024	9:15 AM	0	0	0	0	0	0	0	0	0	0	0	0	0
4/23/2024	9:30 AM	0	0	0	0	0	0	0	0	0	0	0	0	0
4/23/2024	9:45 AM	0	0	0	0	0	0	0	0	0	0	0	0	0
4/23/2024	10:00 AM	0	0	0	0	0	0	0	0	0	0	0	0	0
4/23/2024	10:15 AM	0	0	0	0	0	0	0	0	0	0	0	0	0
4/23/2024	10:30 AM	0	0	0	0	0	0	0	0	0	0	0	0	0
4/23/2024	10:45 AM	0	0	0	0	0	0	0	0	0	0	0	0	0
4/23/2024	11:00 AM	0	0	0	0	0	0	0	0	0	0	0	0	0
4/23/2024	11:15 AM	0	0	0	0	0	0	0	0	0	0	0	0	0
4/23/2024	11:30 AM	0	0	0	0	0	0	0	0	0	0	0	0	0
4/23/2024	11:45 AM	0	0	0	0	0	0	0	0	0	0	0	0	0
4/23/2024	12:00 PM	0	0	0	0	0	0	0	0	0	0	0	0	0
4/23/2024	12:15 PM	0	0	0	0	0	0	0	0	0	0	0	0	0
4/23/2024	12:30 PM	0	0	0	0	0	0	0	0	0	0	0	0	0
4/23/2024	12:45 PM	0	0	0	0	0	0	0	0	0	0	0	0	0
4/23/2024	1:00 PM	0	0	0	0	0	0	0	0	0	0	0	0	0
4/23/2024	1:15 PM	0	0	0	0	0	0	0	0	0	0	0	0	0
4/23/2024	1:30 PM	0	0	0	0	0	0	0	0	0	0	0	0	0
4/23/2024	1:45 PM	0	0	0	0	0	0	0	0	0	0	0	0	0
4/23/2024	2:00 PM	0	0	0	0	0	0	0	0	0	0	0	0	0
4/23/2024	2:15 PM	0	0	0	0	0	0	0	0	0	0	0	0	0
4/23/2024	2:30 PM	0	0	0	0	0	0	0	0	0	0	0	0	0
4/23/2024	2:45 PM	0	0	0	0	0	0	0	0	0	0	0	0	0
4/23/2024	3:00 PM	0	0	0	0	0	0	0	0	0	0	0	0	0
4/23/2024	3:15 PM	0	0	0	0	0	0	0	0	0	0	0	0	0
4/23/2024	3:30 PM	0	0	0	0	0	0	0	0	0	0	0	0	0
4/23/2024	3:45 PM	0	0	0	0	0	0	0	0	0	0	0	0	0
4/23/2024	4:00 PM	0	0	0	0	0	0	0	0	0	0	0	0	0
4/23/2024	4:15 PM	0	0	0	0	0	0	0	0	0	0	0	0	0
4/23/2024	4:30 PM	0	0	0	0	0	0	0	0	0	0	0	0	0
4/23/2024	4:45 PM	0	0	0	0	0	0	0	0	0	0	0	0	0
4/23/2024	5:00 PM	0	0	0	0	0	0	0	0	0	0	0	0	0
4/23/2024	5:15 PM	0	0	0	0	0	0	0	0	0	0	0	0	0
4/23/2024	5:30 PM	0	0	0	0	0	0	0	0	0	0	0	0	0
4/23/2024	5:45 PM	0	0	0	0	0	0	0	0	0	0	0	0	0
4/23/2024	6:00 PM	0	0	0	0	0	0	0	0	0	0	0	0	0
4/23/2024	6:15 PM	0	0	0	0	0	0	0	0	0	0	0	0	0
4/23/2024	6:30 PM	0	0	0	0	0	0	0	0	0	0	0	0	0
4/23/2024	6:45 PM	0	0	0	0	0	0	0	0	0	0	0	0	0
4/23/2024	7:00 PM	0	0	0	0	0	0	0	0	0	0	0	0	0
4/23/2024	7:15 PM	0	0	0	0	0	0	0	0	0	0	0	0	0
4/23/2024	7:30 PM	0	0	0	0	0	0	0	0	0	0	0	0	0
4/23/2024	7:45 PM	0	0	0	0	0	0	0	0	0	0	0	0	0
4/23/2024	8:00 PM	0	0	0	0	0	0	0	0	0	0	0	0	0
4/23/2024	8:15 PM	0	0	0	0	0	0	0	0	0	0	0	0	0
4/23/2024	8:30 PM	0	0	0	0	0	0	0	0	0	0	0	0	0
4/23/2024	8:45 PM	0	0	0	0	0	0	0	0	0	0	0	0	0
4/23/2024	9:00 PM	0	0	0	0	0	0	0	0	0	0	0	0	0
4/23/2024	9:15 PM	0	0	0	0	0	0	0	0	0	0	0	0	0
4/23/2024	9:30 PM	0	0	0	0	0	0	0	0	0	0	0	0	0
4/23/2024	9:45 PM	0	0	0	0	0	0	0	0	0	0	0	0	0
4/23/2024	10:00 PM	0	0	0	0	0	0	0	0	0	0	0	0	0
4/23/2024	10:15 PM	0	0	0	0	0	0	0	0	0	0	0	0	0
4/23/2024	10:30 PM	0	0	0	0	0	0	0	0	0	0	0	0	0
4/23/2024	10:45 PM	0	0	0	0	0	0	0	0	0	0	0	0	0
4/23/2024	11:00 PM	0	0	0	0	0	0	0	0	0	0	0	0	0
4/23/2024	11:15 PM	0	0	0	0	0	0	0	0	0	0	0	0	0
4/23/2024	11:30 PM	0	0	0	0	0	0	0	0	0	0	0	0	0
4/23/2024	11:45 PM	0	0	0	0	0	0	0	0	0	0	0	0	0

4/24/2024	12:00 AM	0	0	0	0	0	0	0	0	0	0	0	0	0
4/24/2024	12:15 AM	0	0	0	0	0	0	0	0	0	0	0	0	0
4/24/2024	12:30 AM	0	0	0	0	0	0	0	0	0	0	0	0	0
4/24/2024	12:45 AM	0	0	0	0	0	0	0	0	0	0	0	0	0
4/24/2024	1:00 AM	0	0	0	0	0	0	0	0	0	0	0	0	0
4/24/2024	1:15 AM	0	0	0	0	0	0	0	0	0	0	0	0	0
4/24/2024	1:30 AM	0	0	0	0	0	0	0	0	0	0	0	0	0
4/24/2024	1:45 AM	0	0	0	0	0	0	0	0	0	0	0	0	0
4/24/2024	2:00 AM	0	0	0	0	0	0	0	0	0	0	0	0	0
4/24/2024	2:15 AM	0	0	0	0	0	0	0	0	0	0	0	0	0
4/24/2024	2:30 AM	0	0	0	0	0	0	0	0	0	0	0	0	0
4/24/2024	2:45 AM	0	0	0	0	0	0	0	0	0	0	0	0	0
4/24/2024	3:00 AM	0	0	0	0	0	0	0	0	0	0	0	0	0
4/24/2024	3:15 AM	0	0	0	0	0	0	0	0	0	0	0	0	0
4/24/2024	3:30 AM	0	0	0	0	0	0	0	0	0	0	0	0	0
4/24/2024	3:45 AM	0	0	0	0	0	0	0	0	0	0	0	0	0
4/24/2024	4:00 AM	0	0	0	0	0	0	0	0	0	0	0	0	0
4/24/2024	4:15 AM	0	0	0	0	0	0	0	0	0	0	0	0	0
4/24/2024	4:30 AM	0	0	0	0	0	0	0	0	0	0	0	0	0
4/24/2024	4:45 AM	0	0	0	0	0	0	0	0	0	0	0	0	0
4/24/2024	5:00 AM	0	0	0	0	0	0	0	0	0	0	0	0	0
4/24/2024	5:15 AM	0	0	0	0	0	0	0	0	0	0	0	0	0
4/24/2024	5:30 AM	0	0	0	0	0	0	0	0	0	0	0	0	0
4/24/2024	5:45 AM	0	0	0	0	0	0	0	0	0	0	0	0	0
4/24/2024	6:00 AM	0	0	0	0	0	0	0	0	0	0	0	0	0
4/24/2024	6:15 AM	0	0	0	0	0	0	0	0	0	0	0	0	0
4/24/2024	6:30 AM	0	0	0	0	0	0	0	0	0	0	0	0	0
4/24/2024	6:45 AM	0	0	0	0	0	0	0	0	0	0	0	0	0
4/24/2024	7:00 AM	0	0	0	0	0	0	0	0	0	0	0	0	0
4/24/2024	7:15 AM	0	0	0	0	0	0	0	0	0	0	0	0	0
4/24/2024	7:30 AM	0	0	0	0	0	0	0	0	0	0	0	0	0
4/24/2024	7:45 AM	0	0	0	0	0	0	0	0	0	0	0	0	0
4/24/2024	8:00 AM	0	0	0	0	0	0	0	0	0	0	0	0	0
4/24/2024	8:15 AM	0	0	0	0	0	0	0	0	0	0	0	0	0
4/24/2024	8:30 AM	0	0	0	0	0	0	0	0	0	0	0	0	0
4/24/2024	8:45 AM	0	0	0	0	0	0	0	0	0	0	0	0	0
4/24/2024	9:00 AM	0	0	0	0	0	0	0	0	0	0	0	0	0
4/24/2024	9:15 AM	0	0	0	0	0	0	0	0	0	0	0	0	0
4/24/2024	9:30 AM	0	0	0	0	0	0	0	0	0	0	0	0	0
4/24/2024	9:45 AM	0	0	0	0	0	0	0	0	0	0	0	0	0
4/24/2024	10:00 AM	0	0	0	0	0	0	0	0	0	0	0	0	0
4/24/2024	10:15 AM	0	0	0	0	0	0	0	0	0	0	0	0	0
4/24/2024	10:30 AM	0	0	0	0	0	0	0	0	0	0	0	0	0
4/24/2024	10:45 AM	0	0	0	0	0	0	0	0	0	0	0	0	0
4/24/2024	11:00 AM	0	0	0	0	0	0	0	0	0	0	0	0	0
4/24/2024	11:15 AM	0	0	0	0	0	0	0	0	0	0	0	0	0
4/24/2024	11:30 AM	0	0	0	0	0	0	0	0	0	0	0	0	0
4/24/2024	11:45 AM	0	0	0	0	0	0	0	0	0	0	0	0	0
4/24/2024	12:00 PM	0	0	0	0	0	0	0	0	0	0	0	0	0
4/24/2024	12:15 PM	0	0	0	0	0	0	0	0	0	0	0	0	0
4/24/2024	12:30 PM	0	0	0	0	0	0	0	0	0	0	0	0	0
4/24/2024	12:45 PM	0	0	0	0	0	0	0	0	0	0	0	0	0
4/24/2024	1:00 PM	0	0	0	0	0	0	0	0	0	0	0	0	0
4/24/2024	1:15 PM	0	0	0	0	0	0	0	0	0	0	0	0	0
4/24/2024	1:30 PM	0	0	0	0	0	0	0	0	0	0	0	0	0
4/24/2024	1:45 PM	0	0	0	0	0	0	0	0	0	0	0	0	0
4/24/2024	2:00 PM	0	0	0	0	0	0	0	0	0	0	0	0	0
4/24/2024	2:15 PM	0	0	0	0	0	0	0	0	0	0	0	0	0
4/24/2024	2:30 PM	0	0	0	0	0	0	0	0	0	0	0	0	0
4/24/2024	2:45 PM	0	0	0	0	0	0	0	0	0	0	0	0	0
4/24/2024	3:00 PM	0	0	0	0	0	0	0	0	0	0	0	0	0
4/24/2024	3:15 PM	0	0	0	0	0	0	0	0	0	0	0	0	0
4/24/2024	3:30 PM	0	0	0	0	0	0	0	0	0	0	0	0	0
4/24/2024	3:45 PM	0	0	0	0	0	0	0	0	0	0	0	0	0
4/24/2024	4:00 PM	0	0	0	0	0	0	0	0	0	0	0	0	0
4/24/2024	4:15 PM	0	0	0	0	0	0	0	0	0	0	0	0	0
4/24/2024	4:30 PM	0	0	0	0	0	0	0	0	0	0	0	0	0
4/24/2024	4:45 PM	0	0	0	0	0	0	0	0	0	0	0	0	0
4/24/2024	5:00 PM	0	0	0	0	0	0	0	0	0	0	0	0	0
4/24/2024	5:15 PM	0	0	0	0	0	0	0	0	0	0	0	0	0
4/24/2024	5:30 PM	0	0	0	0	0	0	0	0	0	0	0	0	0
4/24/2024	5:45 PM	0	0	0	0	0	0	0	0	0	0	0	0	0
4/24/2024	6:00 PM	0	0	0	0	0	0	0	0	0	0	0	0	0
4/24/2024	6:15 PM	0	0	0	0	0	0	0	0	0	0	0	0	0
4/24/2024	6:30 PM	0	0	0	0	0	0	0	0	0	0	0	0	0
4/24/2024	6:45 PM	0	0	0	0	0	0	0	0	0	0	0	0	0
4/24/2024	7:00 PM	0	0	0	0	0	0	0	0	0	0	0	0	0
4/24/2024	7:15 PM	0	0	0	0	0	0	0	0	0	0	0	0	0
4/24/2024	7:30 PM	0	0	0	0	0	0	0	0	0	0	0	0	0
4/24/2024	7:45 PM	0	0	0	0	0	0	0	0	0	0	0	0	0
4/24/2024	8:00 PM	0	0	0	0	0	0	0	0	0	0	0	0	0
4/24/2024	8:15 PM	0	0	0	0	0	0	0	0	0	0	0	0	0
4/24/2024	8:30 PM	0	0	0	0	0	0	0	0	0	0	0	0	0
4/24/2024	8:45 PM	0	0	0	0	0	0	0	0	0	0	0	0	0
4/24/2024	9:00 PM	0	0	0	0	0	0	0	0	0	0	0	0	0
4/24/2024	9:15 PM	0	0	0	0	0	0	0	0	0	0	0	0	0
4/24/2024	9:30 PM	0	0	0	0	0	0	0	0	0	0	0	0	0
4/24/2024	9:45 PM	0	0	0	0	0	0	0	0	0	0	0	0	0
4/24/2024	10:00 PM	0	0	0	0	0	0	0	0	0	0	0	0	0
4/24/2024	10:15 PM	0	0	0	0	0	0	0	0	0	0	0	0	0
4/24/2024	10:30 PM	0	0	0	0	0	0	0	0	0	0	0	0	0
4/24/2024	10:45 PM	0	0	0	0	0	0	0	0	0	0	0	0	0
4/24/2024	11:00 PM	0	0	0	0	0	0	0	0	0	0	0	0	0
4/24/2024	11:15 PM	0	0	0	0	0	0	0	0	0	0	0	0	0
4/24/2024	11:30 PM	0	0	0	0	0	0	0	0	0	0	0	0	0
4/24/2024	11:45 PM	0	0	0	0	0	0	0	0	0	0	0	0	0

4/25/2024	12:00 AM	0	0	0	0	0	0	0	0	0	0	0	0	0
4/25/2024	12:15 AM	0	0	0	0	0	0	0	0	0	0	0	0	0
4/25/2024	12:30 AM	0	0	0	0	0	0	0	0	0	0	0	0	0
4/25/2024	12:45 AM	0	0	0	0	0	0	0	0	0	0	0	0	0
4/25/2024	1:00 AM	0	0	0	0	0	0	0	0	0	0	0	0	0
4/25/2024	1:15 AM	0	0	0	0	0	0	0	0	0	0	0	0	0
4/25/2024	1:30 AM	0	0	0	0	0	0	0	0	0	0	0	0	0
4/25/2024	1:45 AM	0	0	0	0	0	0	0	0	0	0	0	0	0
4/25/2024	2:00 AM	0	0	0	0	0	0	0	0	0	0	0	0	0
4/25/2024	2:15 AM	0	0	0	0	0	0	0	0	0	0	0	0	0
4/25/2024	2:30 AM	0	0	0	0	0	0	0	0	0	0	0	0	0
4/25/2024	2:45 AM	0	0	0	0	0	0	0	0	0	0	0	0	0
4/25/2024	3:00 AM	0	0	0	0	0	0	0	0	0	0	0	0	0
4/25/2024	3:15 AM	0	0	0	0	0	0	0	0	0	0	0	0	0
4/25/2024	3:30 AM	0	0	0	0	0	0	0	0	0	0	0	0	0
4/25/2024	3:45 AM	0	0	0	0	0	0	0	0	0	0	0	0	0
4/25/2024	4:00 AM	0	0	0	0	0	0	0	0	0	0	0	0	0
4/25/2024	4:15 AM	0	0	0	0	0	0	0	0	0	0	0	0	0
4/25/2024	4:30 AM	0	0	0	0	0	0	0	0	0	0	0	0	0
4/25/2024	4:45 AM	0	0	0	0	0	0	0	0	0	0	0	0	0
4/25/2024	5:00 AM	0	0	0	0	0	0	0	0	0	0	0	0	0
4/25/2024	5:15 AM	0	0	0	0	0	0	0	0	0	0	0	0	0
4/25/2024	5:30 AM	0	0	0	0	0	0	0	0	0	0	0	0	0
4/25/2024	5:45 AM	0	0	0	0	0	0	0	0	0	0	0	0	0
4/25/2024	6:00 AM	0	0	0	0	0	0	0	0	0	0	0	0	0
4/25/2024	6:15 AM	0	0	0	0	0	0	0	0	0	0	0	0	0
4/25/2024	6:30 AM	0	0	0	0	0	0	0	0	0	0	0	0	0
4/25/2024	6:45 AM	0	0	0	0	0	0	0	0	0	0	0	0	0
4/25/2024	7:00 AM	0	0	0	0	0	0	0	0	0	0	0	0	0
4/25/2024	7:15 AM	0	0	0	0	0	0	0	0	0	0	0	0	0
4/25/2024	7:30 AM	0	0	0	0	0	0	0	0	0	0	0	0	0
4/25/2024	7:45 AM	0	0	0	0	0	0	0	0	0	0	0	0	0
4/25/2024	8:00 AM	0	0	0	0	0	0	0	0	0	0	0	0	0
4/25/2024	8:15 AM	0	0	0	0	0	0	0	0	0	0	0	0	0
4/25/2024	8:30 AM	0	0	0	0	0	0	0	0	0	0	0	0	0
4/25/2024	8:45 AM	0	0	0	0	0	0	0	0	0	0	0	0	0
4/25/2024	9:00 AM	0	0	0	0	0	0	0	0	0	0	0	0	0
4/25/2024	9:15 AM	0	0	0	0	0	0	0	0	0	0	0	0	0
4/25/2024	9:30 AM	0	0	0	0	0	0	0	0	0	0	0	0	0
4/25/2024	9:45 AM	0	0	0	0	0	0	0	0	0	0	0	0	0
4/25/2024	10:00 AM	0	0	0	0	0	0	0	0	0	0	0	0	0
4/25/2024	10:15 AM	0	0	0	0	0	0	0	0	0	0	0	0	0
4/25/2024	10:30 AM	0	0	0	0	0	0	0	0	0	0	0	0	0
4/25/2024	10:45 AM	0	0	0	0	0	0	0	0	0	0	0	0	0
4/25/2024	11:00 AM	0	0	0	0	0	0	0	0	0	0	0	0	0
4/25/2024	11:15 AM	0	0	0	0	0	0	0	0	0	0	0	0	0
4/25/2024	11:30 AM	0	0	0	0	0	0	0	0	0	0	0	0	0
4/25/2024	11:45 AM	0	0	0	0	0	0	0	0	0	0	0	0	0
4/25/2024	12:00 PM	0	0	0	0	0	0	0	0	0	0	0	0	0
4/25/2024	12:15 PM	0	0	0	0	0	0	0	0	0	0	0	0	0
4/25/2024	12:30 PM	0	0	0	0	0	0	0	0	0	0	0	0	0
4/25/2024	12:45 PM	0	0	0	0	0	0	0	0	0	0	0	0	0
4/25/2024	1:00 PM	0	0	0	0	0	0	0	0	0	0	0	0	0
4/25/2024	1:15 PM	0	0	0	0	0	0	0	0	0	0	0	0	0
4/25/2024	1:30 PM	0	0	0	0	0	0	0	0	0	0	0	0	0
4/25/2024	1:45 PM	0	0	0	0	0	0	0	0	0	0	0	0	0
4/25/2024	2:00 PM	0	0	0	0	0	0	0	0	0	0	0	0	0
4/25/2024	2:15 PM	0	0	0	0	0	0	0	0	0	0	0	0	0
4/25/2024	2:30 PM	0	0	0	0	0	0	0	0	0	0	0	0	0
4/25/2024	2:45 PM	0	0	0	0	0	0	0	0	0	0	0	0	0
4/25/2024	3:00 PM	0	0	0	0	0	0	0	0	0	0	0	0	0
4/25/2024	3:15 PM	0	0	0	0	0	0	0	0	0	0	0	0	0
4/25/2024	3:30 PM	0	0	0	0	0	0	0	0	0	0	0	0	0
4/25/2024	3:45 PM	0	0	0	0	0	0	0	0	0	0	0	0	0
4/25/2024	4:00 PM	0	0	0	0	0	0	0	0	0	0	0	0	0
4/25/2024	4:15 PM	0	0	0	0	0	0	0	0	0	0	0	0	0
4/25/2024	4:30 PM	0	0	0	0	0	0	0	0	0	0	0	0	0
4/25/2024	4:45 PM	0	0	0	0	0	0	0	0	0	0	0	0	0
4/25/2024	5:00 PM	0	0	0	0	0	0	0	0	0	0	0	0	0
4/25/2024	5:15 PM	0	0	0	0	0	0	0	0	0	0	0	0	0
4/25/2024	5:30 PM	0	0	0	0	0	0	0	0	0	0	0	0	0
4/25/2024	5:45 PM	0	0	0	0	0	0	0	0	0	0	0	0	0
4/25/2024	6:00 PM	0	0	0	0	0	0	0	0	0	0	0	0	0
4/25/2024	6:15 PM	0	0	0	0	0	0	0	0	0	0	0	0	0
4/25/2024	6:30 PM	0	0	0	0	0	0	0	0	0	0	0	0	0
4/25/2024	6:45 PM	0	0	0	0	0	0	0	0	0	0	0	0	0
4/25/2024	7:00 PM	0	0	0	0	0	0	0	0	0	0	0	0	0
4/25/2024	7:15 PM	0	0	0	0	0	0	0	0	0	0	0	0	0
4/25/2024	7:30 PM	0	0	0	0	0	0	0	0	0	0	0	0	0
4/25/2024	7:45 PM	0	0	0	0	0	0	0	0	0	0	0	0	0
4/25/2024	8:00 PM	0	0	0	0	0	0	0	0	0	0	0	0	0
4/25/2024	8:15 PM	0	0	0	0	0	0	0	0	0	0	0	0	0
4/25/2024	8:30 PM	0	0	0	0	0	0	0	0	0	0	0	0	0
4/25/2024	8:45 PM	0	0	0	0	0	0	0	0	0	0	0	0	0
4/25/2024	9:00 PM	0	0	0	0	0	0	0	0	0	0	0	0	0
4/25/2024	9:15 PM	0	0	0	0	0	0	0	0	0	0	0	0	0
4/25/2024	9:30 PM	0	0	0	0	0	0	0	0	0	0	0	0	0
4/25/2024	9:45 PM	0	0	0	0	0	0	0	0	0	0	0	0	0
4/25/2024	10:00 PM	0	0	0	0	0	0	0	0	0	0	0	0	0
4/25/2024	10:15 PM	0	0	0	0	0	0	0	0	0	0	0	0	0
4/25/2024	10:30 PM	0	0	0	0	0	0	0	0	0	0	0	0	0
4/25/2024	10:45 PM	0	0	0	0	0	0	0	0	0	0	0	0	0
4/25/2024	11:00 PM	0	0	0	0	0	0	0	0	0	0	0	0	0
4/25/2024	11:15 PM	0	0	0	0	0	0	0	0	0	0	0	0	0
4/25/2024	11:30 PM	0	0	0	0	0	0	0	0	0	0	0	0	0
4/25/2024	11:45 PM	0	0	0	0	0	0	0	0	0	0	0	0	0

Bi-Directional Class Count || SB WB 15min

Columbia, SC

Marr Traffic DATA COLLECTION
www.marrtraffic.com

Site 44
I-26 On/Off-Ramp,
north of Bush River Rd

Date
Tuesday, April 23, 2024

Lat/Long
34.031716°, -81.106312°

Weather
Fair
58°F

Click here for Detailed Weather

Click here for Map

0000 - 2400 (Weekday 24h Session) (04-23-2024)
SB WB 15min

	Southbound (Movement 44.1)													15min	60min
Time	1	2	3	4	5	6	7	8	9	10	11	12	13	Total	Total
0000 - 0015	0	0	0	0	0	0	0	0	0	0	0	0	0	**0**	
0015 - 0030	0	0	0	0	0	0	0	0	0	0	0	0	0	**0**	
0030 - 0045	0	0	0	0	0	0	0	0	0	0	0	0	0	**0**	
0045 - 0100	0	0	0	0	0	0	0	0	0	0	0	0	0	**0**	**0**
0100 - 0115	0	0	0	0	0	0	0	0	0	0	0	0	0	**0**	
0115 - 0130	0	0	0	0	0	0	0	0	0	0	0	0	0	**0**	
0130 - 0145	0	0	0	0	0	0	0	0	0	0	0	0	0	**0**	
0145 - 0200	0	0	0	0	0	0	0	0	0	0	0	0	0	**0**	**0**
0200 - 0215	0	0	0	0	0	0	0	0	0	0	0	0	0	**0**	
0215 - 0230	0	0	0	0	0	0	0	0	0	0	0	0	0	**0**	
0230 - 0245	0	0	0	0	0	0	0	0	0	0	0	0	0	**0**	
0245 - 0300	0	0	0	0	0	0	0	0	0	0	0	0	0	**0**	**0**
0300 - 0315	0	0	0	0	0	0	0	0	0	0	0	0	0	**0**	
0315 - 0330	0	0	0	0	0	0	0	0	0	0	0	0	0	**0**	
0330 - 0345	0	0	0	0	0	0	0	0	0	0	0	0	0	**0**	
0345 - 0400	0	0	0	0	0	0	0	0	0	0	0	0	0	**0**	**0**
0400 - 0415	0	0	0	0	0	0	0	0	0	0	0	0	0	**0**	
0415 - 0430	0	0	0	0	0	0	0	0	0	0	0	0	0	**0**	
0430 - 0445	0	0	0	0	0	0	0	0	0	0	0	0	0	**0**	
0445 - 0500	0	0	0	0	0	0	0	0	0	0	0	0	0	**0**	**0**
0500 - 0515	0	0	0	0	0	0	0	0	0	0	0	0	0	**0**	
0515 - 0530	0	0	0	0	0	0	0	0	0	0	0	0	0	**0**	
0530 - 0545	0	0	0	0	0	0	0	0	0	0	0	0	0	**0**	
0545 - 0600	0	0	0	0	0	0	0	0	0	0	0	0	0	**0**	**0**
0600 - 0615	0	0	0	0	0	0	0	0	0	0	0	0	0	**0**	
0615 - 0630	0	0	0	0	0	0	0	0	0	0	0	0	0	**0**	
0630 - 0645	0	0	0	0	0	0	0	0	0	0	0	0	0	**0**	
0645 - 0700	0	0	0	0	0	0	0	0	0	0	0	0	0	**0**	**0**
0700 - 0715	0	0	0	0	0	0	0	0	0	0	0	0	0	**0**	
0715 - 0730	0	0	0	0	0	0	0	0	0	0	0	0	0	**0**	
0730 - 0745	0	0	0	0	0	0	0	0	0	0	0	0	0	**0**	
0745 - 0800	0	0	0	0	0	0	0	0	0	0	0	0	0	**0**	**0**
0800 - 0815	0	0	0	0	0	0	0	0	0	0	0	0	0	**0**	
0815 - 0830	0	0	0	0	0	0	0	0	0	0	0	0	0	**0**	
0830 - 0845	0	0	0	0	0	0	0	0	0	0	0	0	0	**0**	
0845 - 0900	0	0	0	0	0	0	0	0	0	0	0	0	0	**0**	**0**
0900 - 0915	0	0	0	0	0	0	0	0	0	0	0	0	0	**0**	
0915 - 0930	0	0	0	0	0	0	0	0	0	0	0	0	0	**0**	
0930 - 0945	0	0	0	0	0	0	0	0	0	0	0	0	0	**0**	
0945 - 1000	0	0	0	0	0	0	0	0	0	0	0	0	0	**0**	**0**
1000 - 1015	0	0	0	0	0	0	0	0	0	0	0	0	0	**0**	
1015 - 1030	0	0	0	0	0	0	0	0	0	0	0	0	0	**0**	
1030 - 1045	0	0	0	0	0	0	0	0	0	0	0	0	0	**0**	
1045 - 1100	0	0	0	0	0	0	0	0	0	0	0	0	0	**0**	**0**
1100 - 1115	0	0	0	0	0	0	0	0	0	0	0	0	0	**0**	
1115 - 1130	0	0	0	0	0	0	0	0	0	0	0	0	0	**0**	
1130 - 1145	0	0	0	0	0	0	0	0	0	0	0	0	0	**0**	
1145 - 1200	0	0	0	0	0	0	0	0	0	0	0	0	0	**0**	**0**
1200 - 1215	0	0	0	0	0	0	0	0	0	0	0	0	0	**0**	
1215 - 1230	0	0	0	0	0	0	0	0	0	0	0	0	0	**0**	
1230 - 1245	0	0	0	0	0	0	0	0	0	0	0	0	0	**0**	
1245 - 1300	0	0	0	0	0	0	0	0	0	0	0	0	0	**0**	**0**
1300 - 1315	0	0	0	0	0	0	0	0	0	0	0	0	0	**0**	
1315 - 1330	0	0	0	0	0	0	0	0	0	0	0	0	0	**0**	
1330 - 1345	0	0	0	0	0	0	0	0	0	0	0	0	0	**0**	
1345 - 1400	0	0	0	0	0	0	0	0	0	0	0	0	0	**0**	**0**
1400 - 1415	0	0	0	0	0	0	0	0	0	0	0	0	0	**0**	
1415 - 1430	0	0	0	0	0	0	0	0	0	0	0	0	0	**0**	
1430 - 1445	0	0	0	0	0	0	0	0	0	0	0	0	0	**0**	
1445 - 1500	0	0	0	0	0	0	0	0	0	0	0	0	0	**0**	**0**
1500 - 1515	0	0	0	0	0	0	0	0	0	0	0	0	0	**0**	
1515 - 1530	0	0	0	0	0	0	0	0	0	0	0	0	0	**0**	
1530 - 1545	0	0	0	0	0	0	0	0	0	0	0	0	0	**0**	
1545 - 1600	0	0	0	0	0	0	0	0	0	0	0	0	0	**0**	**0**
1600 - 1615	0	0	0	0	0	0	0	0	0	0	0	0	0	**0**	
1615 - 1630	0	0	0	0	0	0	0	0	0	0	0	0	0	**0**	
1630 - 1645	0	0	0	0	0	0	0	0	0	0	0	0	0	**0**	
1645 - 1700	0	0	0	0	0	0	0	0	0	0	0	0	0	**0**	**0**
1700 - 1715	0	0	0	0	0	0	0	0	0	0	0	0	0	**0**	
1715 - 1730	0	0	0	0	0	0	0	0	0	0	0	0	0	**0**	
1730 - 1745	0	0	0	0	0	0	0	0	0	0	0	0	0	**0**	
1745 - 1800	0	0	0	0	0	0	0	0	0	0	0	0	0	**0**	**0**
1800 - 1815	0	0	0	0	0	0	0	0	0	0	0	0	0	**0**	
1815 - 1830	0	0	0	0	0	0	0	0	0	0	0	0	0	**0**	
1830 - 1845	0	0	0	0	0	0	0	0	0	0	0	0	0	**0**	
1845 - 1900	0	0	0	0	0	0	0	0	0	0	0	0	0	**0**	**0**
1900 - 1915	0	39	3	0	1	0	0	0	0	0	0	0	0	**43**	
1915 - 1930	0	38	8	0	0	0	0	0	0	0	0	0	0	**46**	
1930 - 1945	0	34	2	0	0	0	0	0	0	0	0	0	0	**36**	
1945 - 2000	0	39	5	0	1	0	0	0	0	0	0	0	0	**45**	**170**
2000 - 2015	0	32	1	0	1	0	0	0	0	0	0	0	0	**34**	
2015 - 2030	0	26	9	0	0	0	0	0	0	0	0	0	0	**35**	
2030 - 2045	0	28	2	0	0	0	0	0	0	0	0	0	0	**30**	
2045 - 2100	0	28	2	0	0	0	0	0	0	0	0	0	0	**30**	**129**
2100 - 2115	0	22	2	0	0	0	0	0	1	0	0	0	0	**25**	
2115 - 2130	0	30	0	0	0	0	0	0	0	0	0	0	0	**30**	
2130 - 2145	0	30	2	0	0	0	0	0	0	0	0	0	0	**32**	
2145 - 2200	0	29	3	0	0	0	0	0	1	0	0	0	0	**33**	**120**
2200 - 2215	0	23	2	0	0	0	0	0	0	0	0	0	0	**25**	
2215 - 2230	0	22	1	0	0	0	0	0	0	0	0	0	0	**23**	
2230 - 2245	0	21	1	0	0	0	0	0	0	0	0	0	0	**22**	
2245 - 2300	0	19	0	0	0	0	0	0	0	0	0	0	0	**19**	**89**
2300 - 2315	0	19	2	0	0	0	0	0	0	0	0	0	0	**21**	
2315 - 2330	0	10	1	0	0	0	0	0	0	0	0	0	0	**11**	
2330 - 2345	0	5	1	0	0	0	0	0	0	0	0	0	0	**6**	
2345 - 0000	0	3	1	0	0	0	0	0	0	0	0	0	0	**4**	**42**

Session Total	0	497	48	0	3	0	0	0	2	0	0	0	0	**550**
Session Average	0.00	5.18	0.50	0.00	0.03	0.00	0.00	0.00	0.02	0.00	0.00	0.00	0.00	**5.73**
Session Percentage	0.00	90.36	8.73	0.00	0.55	0.00	0.00	0.00	0.36	0.00	0.00	0.00	0.00	

AM Peak Hour	-	-	-	-	-	-	-	-	-	-	-	-	-	-
AM Peak Volume	0	0	0	0	0	0	0	0	0	0	0	0	0	**0**

Noon Peak Hour	-	-	-	-	-	-	-	-	-	-	-	-	-	-
Noon Peak Volume	0	0	0	0	0	0	0	0	0	0	0	0	0	**0**

PM Peak Hour	-	1900 - 2000	1900 - 2000	-	1900 - 2000	-	-	-	-	-	-	-	-	**1900 - 2000**
PM Peak Volume	0	150	18	0	2	0	0	0	0	0	0	0	0	**170**

Site 44
I-26 On/Off-Ramp,
north of Bush River Rd

Date
Wednesday, April 24, 2024

Lat/Long
34.031716°, -81.106312°

Weather
Fair
66°F

Click here for Detailed Weather

0000 - 2400 (Weekday 24h Session) (04-24-2024)
SB WB 15min

	Southbound (Movement 44.1)													15min	60min
Time	1	2	3	4	5	6	7	8	9	10	11	12	13	Total	Total
0000 - 0015	0	8	1	0	0	0	0	0	0	0	0	0	0	**9**	
0015 - 0030	0	11	0	0	0	0	0	0	0	1	0	0	0	**12**	
0030 - 0045	0	5	2	0	0	0	0	0	0	0	0	0	0	**7**	
0045 - 0100	0	9	1	0	0	0	0	0	0	0	0	0	0	**10**	**38**
0100 - 0115	0	1	1	0	0	0	0	0	0	0	0	0	0	**2**	
0115 - 0130	0	7	2	0	0	0	0	0	0	0	0	0	0	**9**	
0130 - 0145	0	7	0	0	0	0	0	0	0	0	0	0	0	**7**	
0145 - 0200	0	1	0	0	0	0	0	0	0	0	0	0	0	**1**	**19**
0200 - 0215	0	4	0	0	0	0	0	0	0	0	0	0	0	**4**	
0215 - 0230	0	1	0	0	0	0	0	0	0	0	0	0	0	**1**	
0230 - 0245	0	5	1	0	0	0	0	0	0	0	0	0	0	**6**	
0245 - 0300	0	4	0	0	0	0	0	0	0	0	0	0	0	**4**	**15**
0300 - 0315	0	0	0	0	0	0	0	0	0	0	0	0	0	**0**	
0315 - 0330	0	3	1	0	0	0	0	0	0	0	0	0	0	**4**	
0330 - 0345	0	1	0	0	0	0	0	0	0	0	0	0	0	**1**	
0345 - 0400	0	0	1	0	0	0	0	0	0	0	0	0	0	**1**	**6**
0400 - 0415	0	3	1	0	0	0	0	1	1	0	0	0	0	**6**	
0415 - 0430	0	1	1	0	0	0	0	0	0	0	0	0	0	**2**	
0430 - 0445	0	2	0	0	0	0	0	0	0	0	0	0	0	**2**	
0445 - 0500	0	3	2	0	0	0	0	0	0	0	0	0	0	**5**	**15**
0500 - 0515	0	3	1	0	0	0	0	0	0	0	0	0	0	**4**	
0515 - 0530	0	4	1	0	0	0	0	0	0	0	0	0	0	**5**	
0530 - 0545	0	10	0	0	0	0	0	0	0	0	0	0	0	**10**	
0545 - 0600	0	7	0	0	0	0	0	0	1	0	0	0	0	**8**	**27**
0600 - 0615	0	9	5	0	0	0	0	0	1	0	0	0	0	**15**	
0615 - 0630	0	12	4	0	0	0	0	0	1	0	0	0	0	**17**	
0630 - 0645	0	9	8	0	1	1	0	0	0	0	0	0	0	**19**	
0645 - 0700	0	20	2	0	1	0	0	0	0	0	0	0	0	**23**	**74**
0700 - 0715	1	16	3	0	0	1	0	0	1	0	0	0	0	**22**	
0715 - 0730	0	22	6	0	0	0	0	0	0	0	0	0	0	**28**	
0730 - 0745	0	18	6	0	0	0	0	0	0	0	0	0	0	**24**	
0745 - 0800	0	32	10	0	0	1	0	0	0	0	0	0	0	**43**	**117**
0800 - 0815	0	42	7	0	0	0	0	0	0	0	0	0	0	**49**	
0815 - 0830	1	41	5	0	0	0	0	0	0	0	0	0	0	**47**	
0830 - 0845	0	30	4	0	2	0	0	0	2	0	0	0	0	**38**	
0845 - 0900	0	42	5	0	0	1	0	1	0	0	0	0	0	**49**	**183**
0900 - 0915	0	18	5	0	0	0	0	0	1	0	0	0	0	**24**	
0915 - 0930	0	33	7	0	0	0	0	0	0	0	0	0	0	**40**	
0930 - 0945	0	20	5	0	0	1	0	1	0	0	0	0	0	**27**	
0945 - 1000	0	38	7	0	1	1	0	0	0	0	0	0	0	**47**	**138**
1000 - 1015	0	29	10	0	0	0	0	0	0	0	0	0	0	**39**	
1015 - 1030	0	29	13	0	3	0	2	0	0	0	0	0	0	**47**	
1030 - 1045	0	37	6	0	0	1	0	0	0	0	0	0	0	**44**	
1045 - 1100	0	29	10	1	0	1	0	0	1	0	0	0	0	**42**	**172**
1100 - 1115	0	23	8	0	1	0	0	0	0	0	0	0	0	**32**	
1115 - 1130	0	22	10	0	0	0	0	0	0	0	0	0	0	**32**	
1130 - 1145	1	36	9	0	1	0	0	0	2	0	0	0	0	**49**	
1145 - 1200	0	33	7	0	0	2	0	0	3	0	0	0	0	**45**	**158**
1200 - 1215	0	29	4	0	3	1	0	0	1	0	0	0	0	**38**	
1215 - 1230	0	30	4	0	0	0	0	0	0	1	0	0	0	**35**	
1230 - 1245	0	46	12	0	0	1	0	0	0	0	0	0	0	**59**	
1245 - 1300	0	21	11	0	1	0	0	0	1	0	0	0	0	**34**	**166**
1300 - 1315	0	43	8	0	1	0	0	0	1	0	0	0	0	**53**	
1315 - 1330	0	42	7	0	2	0	0	0	0	0	0	0	0	**51**	
1330 - 1345	0	32	9	0	2	1	0	1	1	0	0	0	0	**46**	
1345 - 1400	0	40	5	0	1	0	1	0	0	0	0	0	0	**47**	**197**
1400 - 1415	0	35	7	0	1	0	0	1	1	0	0	0	0	**45**	
1415 - 1430	0	30	12	0	1	2	0	3	1	0	0	0	0	**49**	
1430 - 1445	0	43	5	0	1	0	0	0	0	0	0	0	0	**49**	
1445 - 1500	0	27	14	0	11	0	0	0	0	0	0	0	0	**52**	**195**
1500 - 1515	0	38	5	0	1	0	0	0	0	0	0	0	0	**44**	
1515 - 1530	0	26	5	0	1	0	0	0	3	0	0	0	0	**35**	
1530 - 1545	0	20	2	0	0	0	0	0	2	0	0	0	0	**24**	
1545 - 1600	1	38	4	1	0	1	0	0	1	0	0	0	0	**46**	**149**
1600 - 1615	0	41	10	0	1	1	0	0	3	0	0	0	0	**56**	
1615 - 1630	0	39	7	0	1	1	0	0	2	0	0	0	0	**50**	
1630 - 1645	0	36	13	0	0	0	0	0	0	0	0	0	0	**49**	
1645 - 1700	0	47	7	0	1	2	0	0	3	0	0	0	0	**60**	**215**
1700 - 1715	0	35	11	0	0	1	0	0	0	0	0	0	0	**47**	
1715 - 1730	1	31	5	0	1	1	0	0	2	0	0	0	0	**41**	
1730 - 1745	0	44	10	0	0	0	0	0	0	0	0	0	0	**54**	
1745 - 1800	0	39	11	0	1	0	0	0	0	0	0	0	0	**51**	**193**
1800 - 1815	2	56	9	0	1	0	0	0	2	0	0	0	0	**70**	
1815 - 1830	0	42	6	0	1	0	0	1	1	0	0	0	0	**51**	
1830 - 1845	0	40	11	1	1	0	0	0	0	0	0	0	0	**53**	
1845 - 1900	0	33	8	0	1	1	0	0	0	0	0	0	0	**43**	**217**
1900 - 1915	0	27	10	0	0	0	0	0	1	0	0	0	0	**38**	
1915 - 1930	0	29	7	0	0	0	0	0	0	0	0	0	0	**36**	
1930 - 1945	0	28	1	0	0	0	0	0	0	0	0	0	0	**29**	
1945 - 2000	0	17	4	0	0	0	0	0	0	0	0	0	0	**21**	**124**
2000 - 2015	0	39	7	0	0	1	0	1	0	0	0	0	0	**48**	
2015 - 2030	2	51	9	0	1	0	0	0	0	0	0	0	0	**63**	
2030 - 2045	0	30	2	0	0	0	0	0	1	0	0	0	0	**33**	
2045 - 2100	0	30	4	0	0	0	0	0	0	0	0	0	0	**34**	**178**
2100 - 2115	0	18	3	0	0	0	0	0	0	0	0	0	0	**21**	
2115 - 2130	0	22	6	0	0	0	0	0	1	0	0	0	0	**29**	
2130 - 2145	0	16	0	0	0	1	0	0	0	0	0	0	0	**17**	
2145 - 2200	2	20	0	0	0	0	0	0	0	0	0	0	0	**22**	**89**
2200 - 2215	0	17	1	0	0	0	0	0	0	0	0	0	0	**18**	
2215 - 2230	0	17	2	0	1	0	0	0	0	0	0	0	0	**20**	
2230 - 2245	0	18	3	0	0	0	0	0	0	0	0	0	0	**21**	
2245 - 2300	0	15	3	0	0	0	0	0	0	0	0	0	0	**18**	**77**
2300 - 2315	0	13	0	0	0	0	0	0	0	0	0	0	0	**13**	
2315 - 2330	0	25	1	0	0	0	0	0	0	0	0	0	0	**26**	
2330 - 2345	0	12	0	0	0	0	0	0	0	0	0	0	0	**12**	
2345 - 0000	0	8	0	0	0	0	0	0	0	0	0	0	0	**8**	**59**

Session Total	11	2215	463	3	47	25	3	10	42	2	0	0	0	**2821**
Session Average	0.11	23.07	4.82	0.03	0.49	0.26	0.03	0.10	0.44	0.02	0.00	0.00	0.00	**29.39**
Session Percentage	0.39	78.52	16.41	0.11	1.67	0.89	0.11	0.35	1.49	0.07	0.00	0.00	0.00	

AM Peak Hour	0615 - 0715	0800 - 0900	0945 - 1045	-	0930 - 1030	0615 - 0715	0930 - 1030	0845 - 0945	0530 - 0630	-	-	-	-	**0800 - 0900**
AM Peak Volume	1	155	36	0	4	2	2	2	3	0	0	0	0	**183**

Noon Peak Hour	1045 - 1145	1300 - 1400	1000 - 1100	1000 - 1100	1400 - 1500	1145 - 1245	1000 - 1100	1330 - 1430	1115 - 1215	1130 - 1230	-	-	-	**1230 - 1330**
Noon Peak Volume	1	157	39	1	14	4	2	5	6	1	0	0	0	**197**

PM Peak Hour	1715 - 1815	1730 - 1830	1615 - 1715	1500 - 1600	1745 - 1845	1600 - 1700	-	1730 - 1830	1515 - 1615	-	-	-	-	**1730 - 1830**
PM Peak Volume	3	181	38	1	4	4	0	1	9	0	0	0	0	**226**

Site 44
I-26 On/Off-Ramp,
north of Bush River Rd

Date
Thursday, April 25, 2024

Lat/Long
34.031716°, -81.106312°

Weather
Fair
67°F

Click here for Detailed Weather

0000 - 2400 (Weekday 24h Session) (04-25-2024)
SB WB 15min

	Southbound (Movement 44.1)													15min	60min
TIME	1	2	3	4	5	6	7	8	9	10	11	12	13	Total	Total
0000 - 0015	0	10	2	0	0	0	0	0	0	0	0	0	0	**12**	
0015 - 0030	0	10	2	0	0	0	0	0	0	0	0	0	0	**12**	
0030 - 0045	0	5	0	0	1	0	0	0	0	0	0	0	0	**6**	
0045 - 0100	0	6	1	0	0	0	0	0	0	0	0	0	0	**7**	**37**
0100 - 0115	0	11	0	0	0	0	0	0	0	0	0	0	0	**11**	
0115 - 0130	0	4	0	0	0	0	0	0	0	0	0	0	0	**4**	
0130 - 0145	0	5	1	0	0	0	0	0	0	0	0	0	0	**6**	
0145 - 0200	0	4	3	0	0	0	0	0	1	0	0	0	0	**8**	**29**
0200 - 0215	0	3	1	0	0	0	0	0	0	1	0	0	0	**5**	
0215 - 0230	0	5	0	0	0	0	0	0	0	0	0	0	0	**5**	
0230 - 0245	0	2	1	0	0	0	0	0	0	0	0	0	0	**3**	
0245 - 0300	0	3	0	0	0	0	0	0	0	1	0	0	0	**4**	**17**
0300 - 0315	0	4	0	0	0	0	0	0	0	0	0	0	0	**4**	
0315 - 0330	0	3	0	0	0	0	0	0	1	0	0	0	0	**4**	
0330 - 0345	0	4	0	0	0	0	0	0	0	0	0	0	0	**4**	
0345 - 0400	0	2	0	0	0	0	0	0	1	0	0	0	0	**3**	**15**
0400 - 0415	0	2	3	0	0	0	0	0	1	0	0	0	0	**6**	
0415 - 0430	0	2	1	0	0	0	0	0	1	0	0	0	0	**4**	
0430 - 0445	0	2	1	0	0	0	0	0	0	0	0	0	0	**3**	
0445 - 0500	0	9	0	0	0	0	0	0	0	0	0	0	0	**9**	**22**
0500 - 0515	0	6	0	0	0	0	0	0	0	0	0	0	0	**6**	
0515 - 0530	0	7	5	0	1	0	0	0	0	0	0	0	0	**13**	
0530 - 0545	0	8	0	0	0	0	0	0	0	0	0	0	0	**8**	
0545 - 0600	0	7	1	0	0	0	0	0	0	0	0	0	0	**8**	**35**
0600 - 0615	0	5	4	0	0	0	0	0	0	0	0	0	0	**9**	
0615 - 0630	0	8	2	0	2	0	0	0	1	0	0	0	0	**13**	
0630 - 0645	0	17	1	0	0	0	0	0	0	0	0	0	0	**18**	
0645 - 0700	0	20	4	0	0	1	0	0	1	0	0	0	0	**26**	**66**
0700 - 0715	0	20	3	0	0	2	0	0	0	0	0	0	0	**25**	
0715 - 0730	0	17	4	0	0	0	0	0	0	0	0	0	0	**21**	
0730 - 0745	0	25	3	0	0	0	0	0	1	0	0	0	0	**29**	
0745 - 0800	0	22	6	0	1	0	0	0	0	0	0	0	0	**29**	**104**
0800 - 0815	0	25	11	0	1	0	0	0	0	0	0	0	0	**37**	
0815 - 0830	0	34	8	0	0	0	0	0	0	0	0	0	0	**42**	
0830 - 0845	0	47	11	0	0	1	0	0	0	0	0	0	0	**59**	
0845 - 0900	0	42	8	0	3	1	0	0	0	0	0	0	0	**54**	**192**
0900 - 0915	0	30	5	0	0	0	0	0	2	0	0	0	0	**37**	
0915 - 0930	0	27	8	0	1	0	0	0	0	0	0	0	0	**36**	
0930 - 0945	0	19	5	0	2	1	0	0	0	0	0	0	0	**27**	
0945 - 1000	0	23	12	0	1	1	0	0	1	0	0	0	0	**38**	**138**
1000 - 1015	0	23	7	0	0	1	0	0	0	0	0	0	0	**31**	
1015 - 1030	1	23	5	0	1	0	1	0	0	0	0	0	0	**31**	
1030 - 1045	0	24	6	0	1	0	0	1	0	0	0	0	0	**32**	
1045 - 1100	0	29	7	0	1	1	0	0	0	0	0	0	0	**38**	**132**
1100 - 1115	0	24	12	0	0	0	0	1	0	0	0	0	0	**37**	
1115 - 1130	0	29	12	0	1	1	0	1	3	0	0	0	0	**47**	
1130 - 1145	0	38	4	0	0	2	0	0	0	0	0	0	0	**44**	
1145 - 1200	0	33	10	0	1	0	0	0	3	0	0	0	0	**47**	**175**
1200 - 1215	1	47	3	0	0	0	1	0	0	0	0	0	0	**52**	
1215 - 1230	0	37	6	0	0	0	0	0	0	0	0	0	0	**43**	
1230 - 1245	0	37	13	0	1	1	0	0	0	0	0	0	0	**52**	
1245 - 1300	0	55	8	0	0	2	0	0	0	0	0	0	0	**65**	**212**
1300 - 1315	0	33	8	0	3	0	0	1	1	0	0	0	0	**46**	
1315 - 1330	0	35	14	0	1	1	0	2	0	0	0	0	0	**53**	
1330 - 1345	0	35	11	0	3	0	0	1	0	0	0	0	0	**50**	
1345 - 1400	1	53	6	0	0	0	0	0	0	0	0	0	0	**60**	**209**
1400 - 1415	0	28	14	0	1	3	0	0	1	0	0	0	0	**47**	
1415 - 1430	0	47	10	0	1	0	0	1	1	0	0	0	0	**60**	
1430 - 1445	0	35	6	0	1	2	0	0	0	0	0	0	0	**44**	
1445 - 1500	0	37	4	0	0	0	0	0	0	0	0	0	0	**41**	**192**
1500 - 1515	0	35	7	0	0	1	0	0	0	0	0	0	0	**43**	
1515 - 1530	0	39	5	0	3	1	0	0	1	0	0	0	0	**49**	
1530 - 1545	0	46	10	0	0	0	0	0	1	0	0	0	0	**57**	
1545 - 1600	0	52	8	0	0	0	0	1	2	0	0	0	0	**63**	**212**
1600 - 1615	0	29	3	0	1	0	0	1	0	0	0	0	0	**34**	
1615 - 1630	0	36	4	0	0	0	0	0	0	0	0	0	0	**40**	
1630 - 1645	0	41	10	0	2	0	0	0	3	0	0	0	0	**56**	
1645 - 1700	0	31	8	1	0	0	0	0	0	0	0	0	0	**40**	**170**
1700 - 1715	0	36	9	0	0	0	0	0	0	0	0	0	0	**45**	
1715 - 1730	0	38	6	0	0	1	0	0	0	0	0	0	0	**45**	
1730 - 1745	0	22	6	0	0	0	0	0	1	0	0	0	0	**29**	
1745 - 1800	0	33	9	0	1	0	0	0	0	0	0	0	0	**43**	**162**
1800 - 1815	0	38	4	0	0	0	0	0	1	0	0	0	0	**43**	
1815 - 1830	0	31	8	0	1	0	0	0	0	0	0	0	0	**40**	
1830 - 1845	0	28	10	0	1	0	0	0	0	0	0	0	0	**39**	
1845 - 1900	0	29	5	0	1	0	0	0	0	0	0	0	0	**35**	**157**
1900 - 1915	0	0	0	0	0	0	0	0	0	0	0	0	0	**0**	
1915 - 1930	0	0	0	0	0	0	0	0	0	0	0	0	0	**0**	
1930 - 1945	0	0	0	0	0	0	0	0	0	0	0	0	0	**0**	
1945 - 2000	0	0	0	0	0	0	0	0	0	0	0	0	0	**0**	**0**
2000 - 2015	0	0	0	0	0	0	0	0	0	0	0	0	0	**0**	
2015 - 2030	0	0	0	0	0	0	0	0	0	0	0	0	0	**0**	
2030 - 2045	0	0	0	0	0	0	0	0	0	0	0	0	0	**0**	
2045 - 2100	0	0	0	0	0	0	0	0	0	0	0	0	0	**0**	**0**
2100 - 2115	0	0	0	0	0	0	0	0	0	0	0	0	0	**0**	
2115 - 2130	0	0	0	0	0	0	0	0	0	0	0	0	0	**0**	
2130 - 2145	0	0	0	0	0	0	0	0	0	0	0	0	0	**0**	
2145 - 2200	0	0	0	0	0	0	0	0	0	0	0	0	0	**0**	**0**
2200 - 2215	0	0	0	0	0	0	0	0	0	0	0	0	0	**0**	
2215 - 2230	0	0	0	0	0	0	0	0	0	0	0	0	0	**0**	
2230 - 2245	0	0	0	0	0	0	0	0	0	0	0	0	0	**0**	
2245 - 2300	0	0	0	0	0	0	0	0	0	0	0	0	0	**0**	**0**
2300 - 2315	0	0	0	0	0	0	0	0	0	0	0	0	0	**0**	
2315 - 2330	0	0	0	0	0	0	0	0	0	0	0	0	0	**0**	
2330 - 2345	0	0	0	0	0	0	0	0	0	0	0	0	0	**0**	
2345 - 0000	0	0	0	0	0	0	0	0	0	0	0	0	0	**0**	**0**

Session Total	3	1771	395	1	39	24	2	10	29	2	0	0	0	**2276**
Session Average	0.03	18.45	4.11	0.01	0.41	0.25	0.02	0.10	0.30	0.02	0.00	0.00	0.00	**23.71**
Session Percentage	0.13	77.81	17.36	0.04	1.71	1.05	0.09	0.44	1.27	0.09	0.00	0.00	0.00	

AM Peak Hour	0930 - 1030	0815 - 0915	0800 - 0900	-	0845 - 0945	0615 - 0715	0930 - 1030	0945 - 1045	0900 - 1000	-	-	-	-	**0800 - 0900**
AM Peak Hour Volume	1	153	38	0	6	3	1	1	3	0	0	0	0	**192**

Noon Peak Hour	1000 - 1100	1200 - 1300	1315 - 1415	-	1245 - 1345	1345 - 1445	1000 - 1100	1245 - 1345	1100 - 1200	-	-	-	-	**1330 - 1430**
Noon Peak Hour Volume	1	176	45	0	7	5	1	4	6	0	0	0	0	**217**

PM Peak Hour	-	1500 - 1600	1630 - 1730	1600 - 1700	1515 - 1615	1500 - 1600	-	1515 - 1615	1545 - 1645	-	-	-	-	**1500 - 1600**
PM Peak Hour Volume	0	172	33	1	4	2	0	2	5	0	0	0	0	**212**

Bi-Directional Class Count || SB WB Average 15min

Columbia, SC

Marr Traffic DATA COLLECTION
www.marrtraffic.com

Site 44
I-26 On/Off-Ramp,
north of Bush River Rd

Date
Tuesday, April 23, 2024

Lat/Long
34.031716°, -81.106312°

Weather
Fair
58°F

0000 - 2400 (Weekday 24h Session) (All Dates)
SB WB Average 15min

	SB WB Average 15min													15min	60min
Time	1	2	3	4	5	6	7	8	9	10	11	12	13	Total	Total
0000 - 0015	0	6	1	0	0	0	0	0	0	0	0	0	0	**7**	
0015 - 0030	0	7	1	0	0	0	0	0	0	0	0	0	0	**8**	
0030 - 0045	0	3	1	0	0	0	0	0	0	0	0	0	0	**4**	
0045 - 0100	0	5	1	0	0	0	0	0	0	0	0	0	0	**6**	**25**
0100 - 0115	0	4	0	0	0	0	0	0	0	0	0	0	0	**4**	
0115 - 0130	0	4	1	0	0	0	0	0	0	0	0	0	0	**4**	
0130 - 0145	0	4	0	0	0	0	0	0	0	0	0	0	0	**4**	
0145 - 0200	0	2	1	0	0	0	0	0	0	0	0	0	0	**3**	**16**
0200 - 0215	0	2	0	0	0	0	0	0	0	0	0	0	0	**3**	
0215 - 0230	0	2	0	0	0	0	0	0	0	0	0	0	0	**2**	
0230 - 0245	0	2	1	0	0	0	0	0	0	0	0	0	0	**3**	
0245 - 0300	0	2	0	0	0	0	0	0	0	0	0	0	0	**3**	**11**
0300 - 0315	0	1	0	0	0	0	0	0	0	0	0	0	0	**1**	
0315 - 0330	0	2	0	0	0	0	0	0	0	0	0	0	0	**3**	
0330 - 0345	0	2	0	0	0	0	0	0	0	0	0	0	0	**2**	
0345 - 0400	0	1	0	0	0	0	0	0	0	0	0	0	0	**1**	**7**
0400 - 0415	0	2	1	0	0	0	0	0	1	0	0	0	0	**4**	
0415 - 0430	0	1	1	0	0	0	0	0	0	0	0	0	0	**2**	
0430 - 0445	0	1	0	0	0	0	0	0	0	0	0	0	0	**2**	
0445 - 0500	0	4	1	0	0	0	0	0	0	0	0	0	0	**5**	**12**
0500 - 0515	0	3	0	0	0	0	0	0	0	0	0	0	0	**3**	
0515 - 0530	0	4	2	0	0	0	0	0	0	0	0	0	0	**6**	
0530 - 0545	0	6	0	0	0	0	0	0	0	0	0	0	0	**6**	
0545 - 0600	0	5	0	0	0	0	0	0	0	0	0	0	0	**5**	**21**
0600 - 0615	0	5	3	0	0	0	0	0	0	0	0	0	0	**8**	
0615 - 0630	0	7	2	0	1	0	0	0	1	0	0	0	0	**10**	
0630 - 0645	0	9	3	0	0	0	0	0	0	0	0	0	0	**12**	
0645 - 0700	0	13	2	0	0	0	0	0	0	0	0	0	0	**16**	**47**
0700 - 0715	0	12	2	0	0	1	0	0	0	0	0	0	0	**16**	
0715 - 0730	0	13	3	0	0	0	0	0	0	0	0	0	0	**16**	
0730 - 0745	0	14	3	0	0	0	0	0	0	0	0	0	0	**18**	
0745 - 0800	0	18	5	0	0	0	0	0	0	0	0	0	0	**24**	**74**
0800 - 0815	0	22	6	0	0	0	0	0	0	0	0	0	0	**29**	
0815 - 0830	0	25	4	0	0	0	0	0	0	0	0	0	0	**30**	
0830 - 0845	0	26	5	0	1	0	0	0	1	0	0	0	0	**32**	
0845 - 0900	0	28	4	0	1	1	0	0	0	0	0	0	0	**34**	**125**
0900 - 0915	0	16	3	0	0	0	0	0	1	0	0	0	0	**20**	
0915 - 0930	0	20	5	0	0	0	0	0	0	0	0	0	0	**25**	
0930 - 0945	0	13	3	0	1	1	0	0	0	0	0	0	0	**18**	
0945 - 1000	0	20	6	0	1	1	0	0	0	0	0	0	0	**28**	**92**
1000 - 1015	0	17	6	0	0	0	0	0	0	0	0	0	0	**23**	
1015 - 1030	0	17	6	0	1	0	1	0	0	0	0	0	0	**26**	
1030 - 1045	0	20	4	0	0	0	0	0	0	0	0	0	0	**25**	
1045 - 1100	0	19	6	0	0	1	0	0	0	0	0	0	0	**27**	**101**
1100 - 1115	0	16	7	0	0	0	0	0	0	0	0	0	0	**23**	
1115 - 1130	0	17	7	0	0	0	0	0	1	0	0	0	0	**26**	
1130 - 1145	0	25	4	0	0	1	0	0	1	0	0	0	0	**31**	
1145 - 1200	0	22	6	0	0	1	0	0	2	0	0	0	0	**31**	**111**
1200 - 1215	0	25	2	0	1	0	0	0	0	0	0	0	0	**30**	
1215 - 1230	0	22	3	0	0	0	0	0	0	0	0	0	0	**26**	
1230 - 1245	0	28	8	0	0	1	0	0	0	0	0	0	0	**37**	
1245 - 1300	0	25	6	0	0	1	0	0	0	0	0	0	0	**33**	**126**
1300 - 1315	0	25	5	0	1	0	0	0	1	0	0	0	0	**33**	
1315 - 1330	0	26	7	0	1	0	0	1	0	0	0	0	0	**35**	
1330 - 1345	0	22	7	0	2	0	0	1	0	0	0	0	0	**32**	
1345 - 1400	0	31	4	0	0	0	0	0	0	0	0	0	0	**36**	**135**
1400 - 1415	0	21	7	0	1	1	0	0	1	0	0	0	0	**31**	
1415 - 1430	0	26	7	0	1	1	0	1	1	0	0	0	0	**36**	
1430 - 1445	0	26	4	0	1	1	0	0	0	0	0	0	0	**31**	
1445 - 1500	0	21	6	0	4	0	0	0	0	0	0	0	0	**31**	**129**
1500 - 1515	0	24	4	0	0	0	0	0	0	0	0	0	0	**29**	
1515 - 1530	0	22	3	0	1	0	0	0	1	0	0	0	0	**28**	
1530 - 1545	0	22	4	0	0	0	0	0	1	0	0	0	0	**27**	
1545 - 1600	0	30	4	0	0	0	0	0	1	0	0	0	0	**36**	**120**
1600 - 1615	0	23	4	0	1	0	0	0	1	0	0	0	0	**30**	
1615 - 1630	0	25	4	0	0	0	0	0	1	0	0	0	0	**30**	
1630 - 1645	0	26	8	0	1	0	0	0	1	0	0	0	0	**35**	
1645 - 1700	0	26	5	0	0	1	0	0	1	0	0	0	0	**33**	**128**
1700 - 1715	0	24	7	0	0	0	0	0	0	0	0	0	0	**31**	
1715 - 1730	0	23	4	0	0	1	0	0	1	0	0	0	0	**29**	
1730 - 1745	0	22	5	0	0	0	0	0	0	0	0	0	0	**28**	
1745 - 1800	0	24	7	0	1	0	0	0	0	0	0	0	0	**31**	**118**
1800 - 1815	1	31	4	0	0	0	0	0	1	0	0	0	0	**38**	
1815 - 1830	0	24	5	0	1	0	0	0	0	0	0	0	0	**30**	
1830 - 1845	0	23	7	0	1	0	0	0	0	0	0	0	0	**31**	
1845 - 1900	0	21	4	0	1	0	0	0	0	0	0	0	0	**26**	**125**
1900 - 1915	0	22	4	0	0	0	0	0	0	0	0	0	0	**27**	
1915 - 1930	0	22	5	0	0	0	0	0	0	0	0	0	0	**27**	
1930 - 1945	0	21	1	0	0	0	0	0	0	0	0	0	0	**22**	
1945 - 2000	0	19	3	0	0	0	0	0	0	0	0	0	0	**22**	**98**
2000 - 2015	0	24	3	0	0	0	0	0	0	0	0	0	0	**27**	
2015 - 2030	1	26	6	0	0	0	0	0	0	0	0	0	0	**33**	
2030 - 2045	0	19	1	0	0	0	0	0	0	0	0	0	0	**21**	
2045 - 2100	0	19	2	0	0	0	0	0	0	0	0	0	0	**21**	**102**
2100 - 2115	0	13	2	0	0	0	0	0	0	0	0	0	0	**15**	
2115 - 2130	0	17	2	0	0	0	0	0	0	0	0	0	0	**20**	
2130 - 2145	0	15	1	0	0	0	0	0	0	0	0	0	0	**16**	
2145 - 2200	1	16	1	0	0	0	0	0	0	0	0	0	0	**18**	**70**
2200 - 2215	0	13	1	0	0	0	0	0	0	0	0	0	0	**14**	
2215 - 2230	0	13	1	0	0	0	0	0	0	0	0	0	0	**14**	
2230 - 2245	0	13	1	0	0	0	0	0	0	0	0	0	0	**14**	
2245 - 2300	0	11	1	0	0	0	0	0	0	0	0	0	0	**12**	**55**
2300 - 2315	0	11	1	0	0	0	0	0	0	0	0	0	0	**11**	
2315 - 2330	0	12	1	0	0	0	0	0	0	0	0	0	0	**12**	
2330 - 2345	0	6	0	0	0	0	0	0	0	0	0	0	0	**6**	
2345 - 0000	0	4	0	0	0	0	0	0	0	0	0	0	0	**4**	**34**

Session Total	5	1494	302	1	30	16	2	7	24	1	0	0	0	**1882**
Session Average	0.05	15.57	3.15	0.01	0.31	0.17	0.02	0.07	0.25	0.01	0.00	0.00	0.00	**19.61**
Session Percentage	0.25	79.39	16.04	0.07	1.58	0.87	0.09	0.35	1.29	0.07	0.00	0.00	0.00	

AM Peak Hour	0615 - 0715	0800 - 0900	0945 - 1045	-	0930 - 1030	0615 - 0715	0930 - 1030	0845 - 0945	0815 - 0915	-	-	-	-	**0800 - 0900**
AM Peak Volume	0	101	22	0	3	2	1	1	2	0	0	0	0	**125**

Noon Peak Hour	1115 - 1215	1300 - 1400	1230 - 1330	1000 - 1100	1430 - 1530	1345 - 1445	1000 - 1100	1330 - 1430	1115 - 1215	1130 - 1230	-	-	-	**1230 - 1330**
Noon Peak Volume	1	104	27	0	6	2	1	2	4	0	0	0	0	**138**

PM Peak Hour	1715 - 1815	1545 - 1645	1615 - 1715	1500 - 1600	1815 - 1915	1630 - 1730	-	1515 - 1615	1515 - 1615	-	-	-	-	**1545 - 1645**
PM Peak Volume	1	104	23	0	2	2	0	1	4	0	0	0	0	**131**

Bi-Directional Class Count || Volume Summary 15min

Columbia, SC

Marr Traffic DATA COLLECTION

www.marrtraffic.com

Site 44

I-26 On/Off-Ramp,
north of Bush River Rd

Date

Tuesday, April 23, 2024

Lat/Long

34.031716°, -81.106312°

Weather

Fair
58°F

Click here for Detailed Weather

0000 - 2400 (Weekday 24h Session) (04-23-2024)

Volume Summary 15min

TIME	Volume Summary 15min NB	Volume Summary 15min SB	15min Total	60min Total
0000 - 0015	0	0	**0**	
0015 - 0030	0	0	**0**	
0030 - 0045	0	0	**0**	
0045 - 0100	0	0	**0**	**0**
0100 - 0115	0	0	**0**	
0115 - 0130	0	0	**0**	
0130 - 0145	0	0	**0**	
0145 - 0200	0	0	**0**	**0**
0200 - 0215	0	0	**0**	
0215 - 0230	0	0	**0**	
0230 - 0245	0	0	**0**	
0245 - 0300	0	0	**0**	**0**
0300 - 0315	0	0	**0**	
0315 - 0330	0	0	**0**	
0330 - 0345	0	0	**0**	
0345 - 0400	0	0	**0**	**0**
0400 - 0415	0	0	**0**	
0415 - 0430	0	0	**0**	
0430 - 0445	0	0	**0**	
0445 - 0500	0	0	**0**	**0**
0500 - 0515	0	0	**0**	
0515 - 0530	0	0	**0**	
0530 - 0545	0	0	**0**	
0545 - 0600	0	0	**0**	**0**
0600 - 0615	0	0	**0**	
0615 - 0630	0	0	**0**	
0630 - 0645	0	0	**0**	
0645 - 0700	0	0	**0**	**0**
0700 - 0715	0	0	**0**	
0715 - 0730	0	0	**0**	
0730 - 0745	0	0	**0**	
0745 - 0800	0	0	**0**	**0**
0800 - 0815	0	0	**0**	
0815 - 0830	0	0	**0**	
0830 - 0845	0	0	**0**	
0845 - 0900	0	0	**0**	**0**
0900 - 0915	0	0	**0**	
0915 - 0930	0	0	**0**	
0930 - 0945	0	0	**0**	
0945 - 1000	0	0	**0**	**0**
1000 - 1015	0	0	**0**	
1015 - 1030	0	0	**0**	
1030 - 1045	0	0	**0**	
1045 - 1100	0	0	**0**	**0**
1100 - 1115	0	0	**0**	
1115 - 1130	0	0	**0**	
1130 - 1145	0	0	**0**	
1145 - 1200	0	0	**0**	**0**

Time	Volume Summary 15min NB	Volume Summary 15min SB	15min Total	60min Total
1200 - 1215	0	0	**0**	
1215 - 1230	0	0	**0**	
1230 - 1245	0	0	**0**	
1245 - 1300	0	0	**0**	**0**
1300 - 1315	0	0	**0**	
1315 - 1330	0	0	**0**	
1330 - 1345	0	0	**0**	
1345 - 1400	0	0	**0**	**0**
1400 - 1415	0	0	**0**	
1415 - 1430	0	0	**0**	
1430 - 1445	0	0	**0**	
1445 - 1500	0	0	**0**	**0**
1500 - 1515	0	0	**0**	
1515 - 1530	0	0	**0**	
1530 - 1545	0	0	**0**	
1545 - 1600	0	0	**0**	**0**
1600 - 1615	0	0	**0**	
1615 - 1630	0	0	**0**	
1630 - 1645	0	0	**0**	
1645 - 1700	0	0	**0**	**0**
1700 - 1715	0	0	**0**	
1715 - 1730	0	0	**0**	
1730 - 1745	0	0	**0**	
1745 - 1800	0	0	**0**	**0**
1800 - 1815	0	0	**0**	
1815 - 1830	0	0	**0**	
1830 - 1845	0	0	**0**	
1845 - 1900	0	0	**0**	**0**
1900 - 1915	0	43	**43**	
1915 - 1930	0	46	**46**	
1930 - 1945	0	36	**36**	
1945 - 2000	0	45	**45**	**170**
2000 - 2015	0	34	**34**	
2015 - 2030	0	35	**35**	
2030 - 2045	0	30	**30**	
2045 - 2100	0	30	**30**	**129**
2100 - 2115	0	25	**25**	
2115 - 2130	0	30	**30**	
2130 - 2145	0	32	**32**	
2145 - 2200	0	33	**33**	**120**
2200 - 2215	0	25	**25**	
2215 - 2230	0	23	**23**	
2230 - 2245	0	22	**22**	
2245 - 2300	0	19	**19**	**89**
2300 - 2315	0	21	**21**	
2315 - 2330	0	11	**11**	
2330 - 2345	0	6	**6**	
2345 - 0000	0	4	**4**	**42**

Session Total	0	550	**550**
Session Average	0.00	5.73	**5.73**
Session Percentage	0.00	100.00	

Site 44

I-26 On/Off-Ramp,
north of Bush River Rd

Date

Wednesday, April 24, 2024

Lat/Long

34.031716°, -81.106312°

Weather

Fair
66°F

Click here for Detailed Weather

0000 - 2400 (Weekday 24h Session) (04-24-2024)

Volume Summary 15min

TIME	Volume Summary 15min NB	Volume Summary 15min SB	15min Total	60min Total
0000 - 0015	0	9	**9**	
0015 - 0030	0	12	**12**	
0030 - 0045	0	7	**7**	
0045 - 0100	0	10	**10**	**38**
0100 - 0115	0	2	**2**	
0115 - 0130	0	9	**9**	
0130 - 0145	0	7	**7**	
0145 - 0200	0	1	**1**	**19**
0200 - 0215	0	4	**4**	
0215 - 0230	0	1	**1**	
0230 - 0245	0	6	**6**	
0245 - 0300	0	4	**4**	**15**
0300 - 0315	0	0	**0**	
0315 - 0330	0	4	**4**	
0330 - 0345	0	1	**1**	
0345 - 0400	0	1	**1**	**6**
0400 - 0415	0	6	**6**	
0415 - 0430	0	2	**2**	
0430 - 0445	0	2	**2**	
0445 - 0500	0	5	**5**	**15**
0500 - 0515	0	4	**4**	
0515 - 0530	0	5	**5**	
0530 - 0545	0	10	**10**	
0545 - 0600	0	8	**8**	**27**
0600 - 0615	0	15	**15**	
0615 - 0630	0	17	**17**	
0630 - 0645	0	19	**19**	
0645 - 0700	0	23	**23**	**74**
0700 - 0715	0	22	**22**	
0715 - 0730	0	28	**28**	
0730 - 0745	0	24	**24**	
0745 - 0800	0	43	**43**	**117**
0800 - 0815	0	49	**49**	
0815 - 0830	0	47	**47**	
0830 - 0845	0	38	**38**	
0845 - 0900	0	49	**49**	**183**
0900 - 0915	0	24	**24**	
0915 - 0930	0	40	**40**	
0930 - 0945	0	27	**27**	
0945 - 1000	0	47	**47**	**138**
1000 - 1015	0	39	**39**	
1015 - 1030	0	47	**47**	
1030 - 1045	0	44	**44**	
1045 - 1100	0	42	**42**	**172**
1100 - 1115	0	32	**32**	
1115 - 1130	0	32	**32**	
1130 - 1145	0	49	**49**	
1145 - 1200	0	45	**45**	**158**

Time	Volume Summary 15min NB	Volume Summary 15min SB	15min Total	60min Total
1200 - 1215	0	38	**38**	
1215 - 1230	0	35	**35**	
1230 - 1245	0	59	**59**	
1245 - 1300	0	34	**34**	**166**
1300 - 1315	0	53	**53**	
1315 - 1330	0	51	**51**	
1330 - 1345	0	46	**46**	
1345 - 1400	0	47	**47**	**197**
1400 - 1415	0	45	**45**	
1415 - 1430	0	49	**49**	
1430 - 1445	0	49	**49**	
1445 - 1500	0	52	**52**	**195**
1500 - 1515	0	44	**44**	
1515 - 1530	0	35	**35**	
1530 - 1545	0	24	**24**	
1545 - 1600	0	46	**46**	**149**
1600 - 1615	0	56	**56**	
1615 - 1630	0	50	**50**	
1630 - 1645	0	49	**49**	
1645 - 1700	0	60	**60**	**215**
1700 - 1715	0	47	**47**	
1715 - 1730	0	41	**41**	
1730 - 1745	0	54	**54**	
1745 - 1800	0	51	**51**	**193**
1800 - 1815	0	70	**70**	
1815 - 1830	0	51	**51**	
1830 - 1845	0	53	**53**	
1845 - 1900	0	43	**43**	**217**
1900 - 1915	0	38	**38**	
1915 - 1930	0	36	**36**	
1930 - 1945	0	29	**29**	
1945 - 2000	0	21	**21**	**124**
2000 - 2015	0	48	**48**	
2015 - 2030	0	63	**63**	
2030 - 2045	0	33	**33**	
2045 - 2100	0	34	**34**	**178**
2100 - 2115	0	21	**21**	
2115 - 2130	0	29	**29**	
2130 - 2145	0	17	**17**	
2145 - 2200	0	22	**22**	**89**
2200 - 2215	0	18	**18**	
2215 - 2230	0	20	**20**	
2230 - 2245	0	21	**21**	
2245 - 2300	0	18	**18**	**77**
2300 - 2315	0	13	**13**	
2315 - 2330	0	26	**26**	
2330 - 2345	0	12	**12**	
2345 - 0000	0	8	**8**	**59**

Session Total	0	2821	**2821**
Session Average	0.00	29.39	**29.39**
Session Percentage	0.00	100.00	

Site 44
I-26 On/Off-Ramp,
north of Bush River Rd

Date
Thursday, April 25, 2024

Lat/Long
34.031716°, -81.106312°

Weather
Fair
67°F

Click here for Detailed Weather

0000 - 2400 (Weekday 24h Session) (04-25-2024)
Volume Summary 15min

TIME	Volume Summary 15min NB	SB	15min Total	60min Total
0000 - 0015	0	12	**12**	
0015 - 0030	0	12	**12**	
0030 - 0045	0	6	**6**	
0045 - 0100	0	7	**7**	**37**
0100 - 0115	0	11	**11**	
0115 - 0130	0	4	**4**	
0130 - 0145	0	6	**6**	
0145 - 0200	0	8	**8**	**29**
0200 - 0215	0	5	**5**	
0215 - 0230	0	5	**5**	
0230 - 0245	0	3	**3**	
0245 - 0300	0	4	**4**	**17**
0300 - 0315	0	4	**4**	
0315 - 0330	0	4	**4**	
0330 - 0345	0	4	**4**	
0345 - 0400	0	3	**3**	**15**
0400 - 0415	0	6	**6**	
0415 - 0430	0	4	**4**	
0430 - 0445	0	3	**3**	
0445 - 0500	0	9	**9**	**22**
0500 - 0515	0	6	**6**	
0515 - 0530	0	13	**13**	
0530 - 0545	0	8	**8**	
0545 - 0600	0	8	**8**	**35**
0600 - 0615	0	9	**9**	
0615 - 0630	0	13	**13**	
0630 - 0645	0	18	**18**	
0645 - 0700	0	26	**26**	**66**
0700 - 0715	0	25	**25**	
0715 - 0730	0	21	**21**	
0730 - 0745	0	29	**29**	
0745 - 0800	0	29	**29**	**104**
0800 - 0815	0	37	**37**	
0815 - 0830	0	42	**42**	
0830 - 0845	0	59	**59**	
0845 - 0900	0	54	**54**	**192**
0900 - 0915	0	37	**37**	
0915 - 0930	0	36	**36**	
0930 - 0945	0	27	**27**	
0945 - 1000	0	38	**38**	**138**
1000 - 1015	0	31	**31**	
1015 - 1030	0	31	**31**	
1030 - 1045	0	32	**32**	
1045 - 1100	0	38	**38**	**132**
1100 - 1115	0	37	**37**	
1115 - 1130	0	47	**47**	
1130 - 1145	0	44	**44**	
1145 - 1200	0	47	**47**	**175**

Time	Volume Summary 15min NB	SB	15min Total	60min Total
1200 - 1215	0	52	**52**	
1215 - 1230	0	43	**43**	
1230 - 1245	0	52	**52**	
1245 - 1300	0	65	**65**	**212**
1300 - 1315	0	46	**46**	
1315 - 1330	0	53	**53**	
1330 - 1345	0	50	**50**	
1345 - 1400	0	60	**60**	**209**
1400 - 1415	0	47	**47**	
1415 - 1430	0	60	**60**	
1430 - 1445	0	44	**44**	
1445 - 1500	0	41	**41**	**192**
1500 - 1515	0	43	**43**	
1515 - 1530	0	49	**49**	
1530 - 1545	0	57	**57**	
1545 - 1600	0	63	**63**	**212**
1600 - 1615	0	34	**34**	
1615 - 1630	0	40	**40**	
1630 - 1645	0	56	**56**	
1645 - 1700	0	40	**40**	**170**
1700 - 1715	0	45	**45**	
1715 - 1730	0	45	**45**	
1730 - 1745	0	29	**29**	
1745 - 1800	0	43	**43**	**162**
1800 - 1815	0	43	**43**	
1815 - 1830	0	40	**40**	
1830 - 1845	0	39	**39**	
1845 - 1900	0	35	**35**	**157**
1900 - 1915	0	0	**0**	
1915 - 1930	0	0	**0**	
1930 - 1945	0	0	**0**	
1945 - 2000	0	0	**0**	**0**
2000 - 2015	0	0	**0**	
2015 - 2030	0	0	**0**	
2030 - 2045	0	0	**0**	
2045 - 2100	0	0	**0**	**0**
2100 - 2115	0	0	**0**	
2115 - 2130	0	0	**0**	
2130 - 2145	0	0	**0**	
2145 - 2200	0	0	**0**	**0**
2200 - 2215	0	0	**0**	
2215 - 2230	0	0	**0**	
2230 - 2245	0	0	**0**	
2245 - 2300	0	0	**0**	**0**
2300 - 2315	0	0	**0**	
2315 - 2330	0	0	**0**	
2330 - 2345	0	0	**0**	
2345 - 0000	0	0	**0**	**0**

Session Total	0	2276	**2276**
Session Average	0.00	23.71	**23.71**
Session Percentage	0.00	100.00	

Bi-Directional Class Count || SB WB 60min

Columbia, SC

Marr Traffic DATA COLLECTION

www.marrtraffic.com

Site 44
I-26 On/Off-Ramp,
north of Bush River Rd

Date
Tuesday, April 23, 2024

Lat/Long
34.031716°, -81.106312°

Weather
Fair
58°F

Click here for Detailed Weather

0000 - 2400 (Weekday 24h Session) (04-23-2024)
SB WB 60min

	Southbound (Movement 44.1)													
TIME	1	2	3	4	5	6	7	8	9	10	11	12	13	**Total**
0000 - 0100	0	0	0	0	0	0	0	0	0	0	0	0	0	**0**
0100 - 0200	0	0	0	0	0	0	0	0	0	0	0	0	0	**0**
0200 - 0300	0	0	0	0	0	0	0	0	0	0	0	0	0	**0**
0300 - 0400	0	0	0	0	0	0	0	0	0	0	0	0	0	**0**
0400 - 0500	0	0	0	0	0	0	0	0	0	0	0	0	0	**0**
0500 - 0600	0	0	0	0	0	0	0	0	0	0	0	0	0	**0**
0600 - 0700	0	0	0	0	0	0	0	0	0	0	0	0	0	**0**
0700 - 0800	0	0	0	0	0	0	0	0	0	0	0	0	0	**0**
0800 - 0900	0	0	0	0	0	0	0	0	0	0	0	0	0	**0**
0900 - 1000	0	0	0	0	0	0	0	0	0	0	0	0	0	**0**
1000 - 1100	0	0	0	0	0	0	0	0	0	0	0	0	0	**0**
1100 - 1200	0	0	0	0	0	0	0	0	0	0	0	0	0	**0**
1200 - 1300	0	0	0	0	0	0	0	0	0	0	0	0	0	**0**
1300 - 1400	0	0	0	0	0	0	0	0	0	0	0	0	0	**0**
1400 - 1500	0	0	0	0	0	0	0	0	0	0	0	0	0	**0**
1500 - 1600	0	0	0	0	0	0	0	0	0	0	0	0	0	**0**
1600 - 1700	0	0	0	0	0	0	0	0	0	0	0	0	0	**0**
1700 - 1800	0	0	0	0	0	0	0	0	0	0	0	0	0	**0**
1800 - 1900	0	0	0	0	0	0	0	0	0	0	0	0	0	**0**
1900 - 2000	0	150	18	0	2	0	0	0	0	0	0	0	0	**170**
2000 - 2100	0	114	14	0	1	0	0	0	0	0	0	0	0	**129**
2100 - 2200	0	111	7	0	0	0	0	0	2	0	0	0	0	**120**
2200 - 2300	0	85	4	0	0	0	0	0	0	0	0	0	0	**89**
2300 - 2400	0	37	5	0	0	0	0	0	0	0	0	0	0	**42**
Session Total	0	497	48	0	3	0	0	0	2	0	0	0	0	**550**
Session Average	0.00	20.71	2.00	0.00	0.13	0.00	0.00	0.00	0.08	0.00	0.00	0.00	0.00	**22.92**
Session Percentage	0.00	90.36	8.73	0.00	0.55	0.00	0.00	0.00	0.36	0.00	0.00	0.00	0.00	
AM Peak Hour	-	-	-	-	-	-	-	-	-	-	-	-	-	**-**
AM Peak Volume	0	0	0	0	0	0	0	0	0	0	0	0	0	**0**
Noon Peak Hour	-	-	-	-	-	-	-	-	-	-	-	-	-	**-**
Noon Peak Volume	0	0	0	0	0	0	0	0	0	0	0	0	0	**0**
PM Peak Hour	-	1900 - 2000	1900 - 2000	-	1900 - 2000	-	-	-	-	-	-	-	-	**1900 - 2000**
PM Peak Volume	0	150	18	0	2	0	0	0	0	0	0	0	0	**170**

Site 44
I-26 On/Off-Ramp,
north of Bush River Rd

Date
Wednesday, April 24, 2024

Lat/Long
34.031716°, -81.106312°

Weather
Fair
66°F

Click here for Detailed Weather

0000 - 2400 (Weekday 24h Session) (04-24-2024)
SB WB 60min

	Southbound (Movement 44.1)													
TIME	1	2	3	4	5	6	7	8	9	10	11	12	13	**Total**
0000 - 0100	0	33	4	0	0	0	0	0	0	1	0	0	0	**38**
0100 - 0200	0	16	3	0	0	0	0	0	0	0	0	0	0	**19**
0200 - 0300	0	14	1	0	0	0	0	0	0	0	0	0	0	**15**
0300 - 0400	0	4	2	0	0	0	0	0	0	0	0	0	0	**6**
0400 - 0500	0	9	4	0	0	0	0	1	1	0	0	0	0	**15**
0500 - 0600	0	24	2	0	0	0	0	0	1	0	0	0	0	**27**
0600 - 0700	0	50	19	0	2	1	0	0	2	0	0	0	0	**74**
0700 - 0800	1	88	25	0	0	2	0	0	1	0	0	0	0	**117**
0800 - 0900	1	155	21	0	2	1	0	1	2	0	0	0	0	**183**
0900 - 1000	0	109	24	0	1	2	0	1	1	0	0	0	0	**138**
1000 - 1100	0	124	39	1	3	2	2	0	1	0	0	0	0	**172**
1100 - 1200	1	114	34	0	2	2	0	0	5	0	0	0	0	**158**
1200 - 1300	0	126	31	0	4	2	0	0	2	1	0	0	0	**166**
1300 - 1400	0	157	29	0	6	1	1	1	2	0	0	0	0	**197**
1400 - 1500	0	135	38	0	14	2	0	4	2	0	0	0	0	**195**
1500 - 1600	1	122	16	1	2	1	0	0	6	0	0	0	0	**149**
1600 - 1700	0	163	37	0	3	4	0	0	8	0	0	0	0	**215**
1700 - 1800	1	149	37	0	2	2	0	0	2	0	0	0	0	**193**
1800 - 1900	2	171	34	1	4	1	0	1	3	0	0	0	0	**217**
1900 - 2000	0	101	22	0	0	0	0	0	1	0	0	0	0	**124**
2000 - 2100	2	150	22	0	1	1	0	1	1	0	0	0	0	**178**
2100 - 2200	2	76	9	0	0	1	0	0	1	0	0	0	0	**89**
2200 - 2300	0	67	9	0	1	0	0	0	0	0	0	0	0	**77**
2300 - 2400	0	58	1	0	0	0	0	0	0	0	0	0	0	**59**

Session Total	11	2215	463	3	47	25	3	10	42	2	0	0	0	**2821**
Session Average	0.46	92.29	19.29	0.13	1.96	1.04	0.13	0.42	1.75	0.08	0.00	0.00	0.00	**117.54**
Session Percentage	0.39	78.52	16.41	0.11	1.67	0.89	0.11	0.35	1.49	0.07	0.00	0.00	0.00	

AM Peak Hour	0700 - 0800	0800 - 0900	0700 - 0800	-	0600 - 0700	0700 - 0800	-	0800 - 0900	0600 - 0700	-	-	-	-	**0800 - 0900**
AM Peak Volume	1	155	25	0	2	2	0	1	2	0	0	0	0	**183**

Noon Peak Hour	1100 - 1200	1300 - 1400	1000 - 1100	1000 - 1100	1400 - 1500	1000 - 1100	1000 - 1100	1400 - 1500	1100 - 1200	1200 - 1300	-	-	-	**1300 - 1400**
Noon Peak Volume	1	157	39	1	14	2	2	4	5	1	0	0	0	**197**

PM Peak Hour	1800 - 1900	1800 - 1900	1600 - 1700	1500 - 1600	1800 - 1900	1600 - 1700	-	1800 - 1900	1600 - 1700	-	-	-	-	**1800 - 1900**
PM Peak Volume	2	171	37	1	4	4	0	1	8	0	0	0	0	**217**

Site 44
I-26 On/Off-Ramp,
north of Bush River Rd

Date
Thursday, April 25, 2024

Lat/Long
34.031716°, -81.106312°

Weather
Fair
67°F

Click here for Detailed Weather

0000 - 2400 (Weekday 24h Session) (04-25-2024)
SB WB 60min

	Southbound (Movement 44.1)													
TIME	1	2	3	4	5	6	7	8	9	10	11	12	13	**Total**
0000 - 0100	0	31	5	0	1	0	0	0	0	0	0	0	0	**37**
0100 - 0200	0	24	4	0	0	0	0	0	1	0	0	0	0	**29**
0200 - 0300	0	13	2	0	0	0	0	0	0	2	0	0	0	**17**
0300 - 0400	0	13	0	0	0	0	0	0	2	0	0	0	0	**15**
0400 - 0500	0	15	5	0	0	0	0	0	2	0	0	0	0	**22**
0500 - 0600	0	28	6	0	1	0	0	0	0	0	0	0	0	**35**
0600 - 0700	0	50	11	0	2	1	0	0	2	0	0	0	0	**66**
0700 - 0800	0	84	16	0	1	2	0	0	1	0	0	0	0	**104**
0800 - 0900	0	148	38	0	4	2	0	0	0	0	0	0	0	**192**
0900 - 1000	0	99	30	0	4	2	0	0	3	0	0	0	0	**138**
1000 - 1100	1	99	25	0	3	2	1	1	0	0	0	0	0	**132**
1100 - 1200	0	124	38	0	2	3	0	2	6	0	0	0	0	**175**
1200 - 1300	1	176	30	0	1	3	1	0	0	0	0	0	0	**212**
1300 - 1400	1	156	39	0	7	1	0	4	1	0	0	0	0	**209**
1400 - 1500	0	147	34	0	3	5	0	1	2	0	0	0	0	**192**
1500 - 1600	0	172	30	0	3	2	0	1	4	0	0	0	0	**212**
1600 - 1700	0	137	25	1	3	0	0	1	3	0	0	0	0	**170**
1700 - 1800	0	129	30	0	1	1	0	0	1	0	0	0	0	**162**
1800 - 1900	0	126	27	0	3	0	0	0	1	0	0	0	0	**157**
1900 - 2000	0	0	0	0	0	0	0	0	0	0	0	0	0	**0**
2000 - 2100	0	0	0	0	0	0	0	0	0	0	0	0	0	**0**
2100 - 2200	0	0	0	0	0	0	0	0	0	0	0	0	0	**0**
2200 - 2300	0	0	0	0	0	0	0	0	0	0	0	0	0	**0**
2300 - 2400	0	0	0	0	0	0	0	0	0	0	0	0	0	**0**

Session Total	3	1771	395	1	39	24	2	10	29	2	0	0	0	**2276**
Session Average	0.13	73.79	16.46	0.04	1.63	1.00	0.08	0.42	1.21	0.08	0.00	0.00	0.00	**94.83**
Session Percentage	0.13	77.81	17.36	0.04	1.71	1.05	0.09	0.44	1.27	0.09	0.00	0.00	0.00	

AM Peak Hour	-	0800 - 0900	0800 - 0900	-	0800 - 0900	0700 - 0800	-	-	0900 - 1000	-	-	-	-	**0800 - 0900**
AM Peak Hour Volume	0	148	38	0	4	2	0	0	3	0	0	0	0	**192**

Noon Peak Hour	1000 - 1100	1200 - 1300	1300 - 1400	-	1300 - 1400	1400 - 1500	1000 - 1100	1300 - 1400	1100 - 1200	-	-	-	-	**1200 - 1300**
Noon Peak Hour Volume	1	176	39	0	7	5	1	4	6	0	0	0	0	**212**

PM Peak Hour	-	1500 - 1600	1500 - 1600	1600 - 1700	1500 - 1600	1500 - 1600	-	1500 - 1600	1500 - 1600	-	-	-	-	**1500 - 1600**
PM Peak Hour Volume	0	172	30	1	3	2	0	1	4	0	0	0	0	**212**

Bi-Directional Class Count || Volume Summary 60min

Columbia, SC

Marr Traffic DATA COLLECTION

www.marrtraffic.com

Site 44

I-26 On/Off-Ramp,
north of Bush River Rd

Date

Tuesday, April 23, 2024

Lat/Long

34.031716°, -81.106312°

Weather

Fair
58°F

Click here for Detailed Weather

0000 - 2400 (Weekday 24h Session) (04-23-2024)

Volume Summary 60min

	Volume Summary 60min		
TIME	NB	SB	**Total**
0000 - 0100	0	0	**0**
0100 - 0200	0	0	**0**
0200 - 0300	0	0	**0**
0300 - 0400	0	0	**0**
0400 - 0500	0	0	**0**
0500 - 0600	0	0	**0**
0600 - 0700	0	0	**0**
0700 - 0800	0	0	**0**
0800 - 0900	0	0	**0**
0900 - 1000	0	0	**0**
1000 - 1100	0	0	**0**
1100 - 1200	0	0	**0**

	Volume Summary 60min		
Time	NB	SB	**Total**
1200 - 1300	0	0	**0**
1300 - 1400	0	0	**0**
1400 - 1500	0	0	**0**
1500 - 1600	0	0	**0**
1600 - 1700	0	0	**0**
1700 - 1800	0	0	**0**
1800 - 1900	0	0	**0**
1900 - 2000	0	170	**170**
2000 - 2100	0	129	**129**
2100 - 2200	0	120	**120**
2200 - 2300	0	89	**89**
2300 - 2400	0	42	**42**

Session Total	0	550	**550**
Session Average	0.00	22.92	**22.92**
Session Percentage	0.00	100.00	

Site 44

I-26 On/Off-Ramp,
north of Bush River Rd

Date

Wednesday, April 24, 2024

Lat/Long

34.031716°, -81.106312°

Weather

Fair
66°F

Click here for Detailed Weather

0000 - 2400 (Weekday 24h Session) (04-24-2024)

Volume Summary 60min

	Volume Summary 60min		
TIME	NB	SB	**Total**
0000 - 0100	0	38	**38**
0100 - 0200	0	19	**19**
0200 - 0300	0	15	**15**
0300 - 0400	0	6	**6**
0400 - 0500	0	15	**15**
0500 - 0600	0	27	**27**
0600 - 0700	0	74	**74**
0700 - 0800	0	117	**117**
0800 - 0900	0	183	**183**
0900 - 1000	0	138	**138**
1000 - 1100	0	172	**172**
1100 - 1200	0	158	**158**

Session Total	0	2821	**2821**
Session Average	0.00	117.54	**117.54**
Session Percentage	0.00	100.00	

	Volume Summary 60min		
Time	NB	SB	**Total**
1200 - 1300	0	166	**166**
1300 - 1400	0	197	**197**
1400 - 1500	0	195	**195**
1500 - 1600	0	149	**149**
1600 - 1700	0	215	**215**
1700 - 1800	0	193	**193**
1800 - 1900	0	217	**217**
1900 - 2000	0	124	**124**
2000 - 2100	0	178	**178**
2100 - 2200	0	89	**89**
2200 - 2300	0	77	**77**
2300 - 2400	0	59	**59**

Site 44

I-26 On/Off-Ramp,
north of Bush River Rd

Date

Thursday, April 25, 2024

Lat/Long

34.031716°, -81.106312°

Weather

Fair
67°F

Click here for Detailed Weather

0000 - 2400 (Weekday 24h Session) (04-25-2024)

Volume Summary 60min

	Volume Summary 60min		
TIME	NB	SB	**Total**
0000 - 0100	0	37	**37**
0100 - 0200	0	29	**29**
0200 - 0300	0	17	**17**
0300 - 0400	0	15	**15**
0400 - 0500	0	22	**22**
0500 - 0600	0	35	**35**
0600 - 0700	0	66	**66**
0700 - 0800	0	104	**104**
0800 - 0900	0	192	**192**
0900 - 1000	0	138	**138**
1000 - 1100	0	132	**132**
1100 - 1200	0	175	**175**

Session Total	0	2276	**2276**
Session Average	0.00	94.83	**94.83**
Session Percentage	0.00	100.00	

	Volume Summary 60min		
Time	NB	SB	**Total**
1200 - 1300	0	212	**212**
1300 - 1400	0	209	**209**
1400 - 1500	0	192	**192**
1500 - 1600	0	212	**212**
1600 - 1700	0	170	**170**
1700 - 1800	0	162	**162**
1800 - 1900	0	157	**157**
1900 - 2000	0	0	**0**
2000 - 2100	0	0	**0**
2100 - 2200	0	0	**0**
2200 - 2300	0	0	**0**
2300 - 2400	0	0	**0**

Bi-Directional Class Count || Graphical Analysis SB WB

Columbia, SC

Marr Traffic DATA COLLECTION

www.marrtraffic.com

Site 44

I-26 On/Off-Ramp,
north of Bush River Rd

Lat/Long

34.031716°, -81.106312°

0000 - 2400 (Weekday 24h Session)

Graphical Analysis SB WB

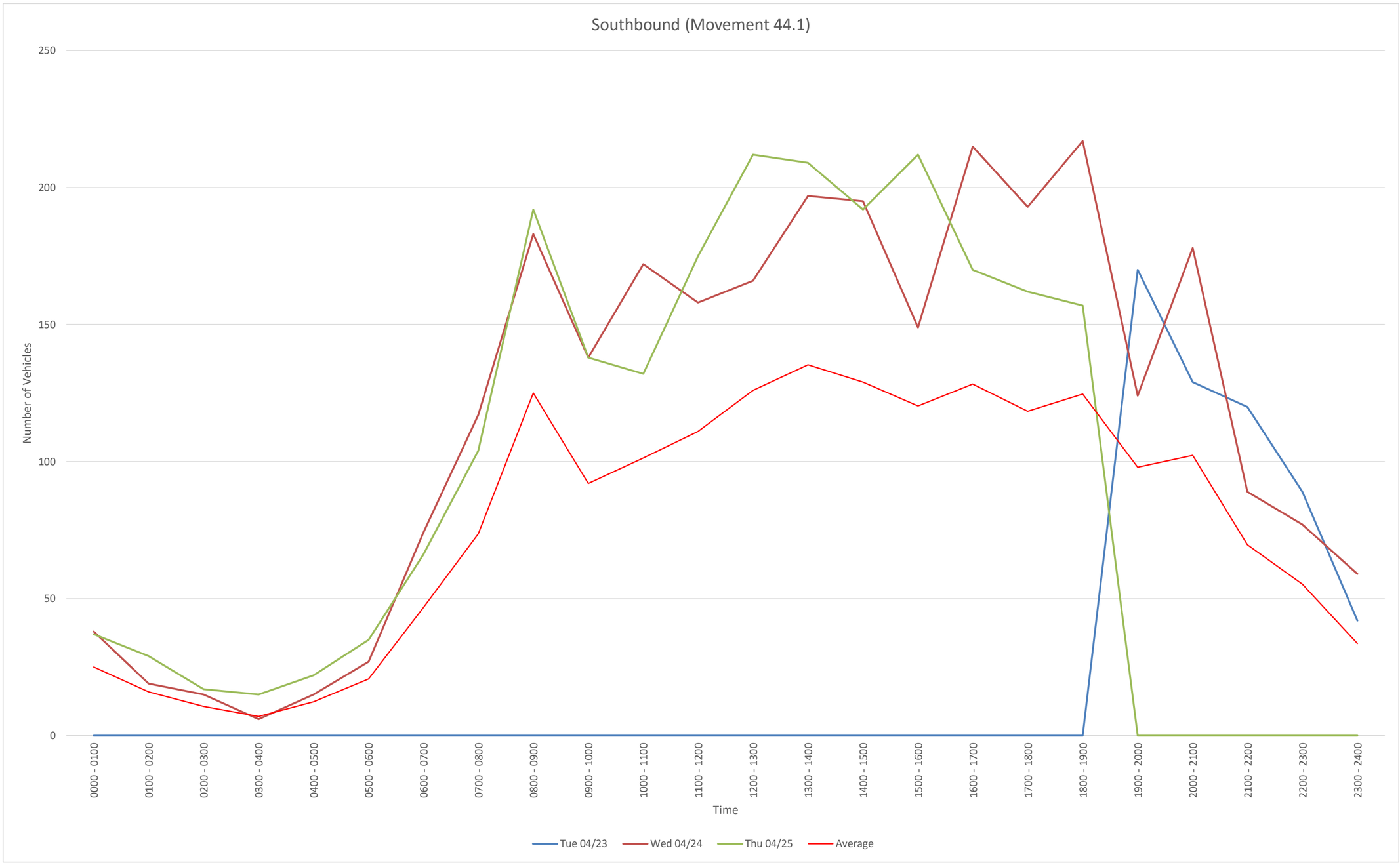

Time	Tue 04/23	Wed 04/24	Thu 04/25				
0000 - 0100	0	38	37				
0100 - 0200	0	19	29				
0200 - 0300	0	15	17				
0300 - 0400	0	6	15				
0400 - 0500	0	15	22				
0500 - 0600	0	27	35				
0600 - 0700	0	74	66				
0700 - 0800	0	117	104				
0800 - 0900	0	183	192				
0900 - 1000	0	138	138				
1000 - 1100	0	172	132				
1100 - 1200	0	158	175				
1200 - 1300	0	166	212				
1300 - 1400	0	197	209				
1400 - 1500	0	195	192				
1500 - 1600	0	149	212				
1600 - 1700	0	215	170				
1700 - 1800	0	193	162				
1800 - 1900	0	217	157				
1900 - 2000	170	124	0				
2000 - 2100	129	178	0				
2100 - 2200	120	89	0				
2200 - 2300	89	77	0				
2300 - 2400	42	59	0				
Daily Total	550	2821	2276				

NB
File Name:
Start Date: 4/23/2024
Start Time: 0
Site Code: 44
Station ID: 1
Location 1: I-26 On/Off-Ramp, north of Bush River Rd
Location 2:

Date	Time	1	2	3	4	5	6	7	8	9	10	11	12	13
4/23/2024	12:00 AM	0	0	0	0	0	0	0	0	0	0	0	0	0
4/23/2024	12:15 AM	0	0	0	0	0	0	0	0	0	0	0	0	0
4/23/2024	12:30 AM	0	0	0	0	0	0	0	0	0	0	0	0	0
4/23/2024	12:45 AM	0	0	0	0	0	0	0	0	0	0	0	0	0
4/23/2024	1:00 AM	0	0	0	0	0	0	0	0	0	0	0	0	0
4/23/2024	1:15 AM	0	0	0	0	0	0	0	0	0	0	0	0	0
4/23/2024	1:30 AM	0	0	0	0	0	0	0	0	0	0	0	0	0
4/23/2024	1:45 AM	0	0	0	0	0	0	0	0	0	0	0	0	0
4/23/2024	2:00 AM	0	0	0	0	0	0	0	0	0	0	0	0	0
4/23/2024	2:15 AM	0	0	0	0	0	0	0	0	0	0	0	0	0
4/23/2024	2:30 AM	0	0	0	0	0	0	0	0	0	0	0	0	0
4/23/2024	2:45 AM	0	0	0	0	0	0	0	0	0	0	0	0	0
4/23/2024	3:00 AM	0	0	0	0	0	0	0	0	0	0	0	0	0
4/23/2024	3:15 AM	0	0	0	0	0	0	0	0	0	0	0	0	0
4/23/2024	3:30 AM	0	0	0	0	0	0	0	0	0	0	0	0	0
4/23/2024	3:45 AM	0	0	0	0	0	0	0	0	0	0	0	0	0
4/23/2024	4:00 AM	0	0	0	0	0	0	0	0	0	0	0	0	0
4/23/2024	4:15 AM	0	0	0	0	0	0	0	0	0	0	0	0	0
4/23/2024	4:30 AM	0	0	0	0	0	0	0	0	0	0	0	0	0
4/23/2024	4:45 AM	0	0	0	0	0	0	0	0	0	0	0	0	0
4/23/2024	5:00 AM	0	0	0	0	0	0	0	0	0	0	0	0	0
4/23/2024	5:15 AM	0	0	0	0	0	0	0	0	0	0	0	0	0
4/23/2024	5:30 AM	0	0	0	0	0	0	0	0	0	0	0	0	0
4/23/2024	5:45 AM	0	0	0	0	0	0	0	0	0	0	0	0	0
4/23/2024	6:00 AM	0	0	0	0	0	0	0	0	0	0	0	0	0
4/23/2024	6:15 AM	0	0	0	0	0	0	0	0	0	0	0	0	0
4/23/2024	6:30 AM	0	0	0	0	0	0	0	0	0	0	0	0	0
4/23/2024	6:45 AM	0	0	0	0	0	0	0	0	0	0	0	0	0
4/23/2024	7:00 AM	0	0	0	0	0	0	0	0	0	0	0	0	0
4/23/2024	7:15 AM	0	0	0	0	0	0	0	0	0	0	0	0	0
4/23/2024	7:30 AM	0	0	0	0	0	0	0	0	0	0	0	0	0
4/23/2024	7:45 AM	0	0	0	0	0	0	0	0	0	0	0	0	0
4/23/2024	8:00 AM	0	0	0	0	0	0	0	0	0	0	0	0	0
4/23/2024	8:15 AM	0	0	0	0	0	0	0	0	0	0	0	0	0
4/23/2024	8:30 AM	0	0	0	0	0	0	0	0	0	0	0	0	0
4/23/2024	8:45 AM	0	0	0	0	0	0	0	0	0	0	0	0	0
4/23/2024	9:00 AM	0	0	0	0	0	0	0	0	0	0	0	0	0
4/23/2024	9:15 AM	0	0	0	0	0	0	0	0	0	0	0	0	0
4/23/2024	9:30 AM	0	0	0	0	0	0	0	0	0	0	0	0	0
4/23/2024	9:45 AM	0	0	0	0	0	0	0	0	0	0	0	0	0
4/23/2024	10:00 AM	0	0	0	0	0	0	0	0	0	0	0	0	0
4/23/2024	10:15 AM	0	0	0	0	0	0	0	0	0	0	0	0	0
4/23/2024	10:30 AM	0	0	0	0	0	0	0	0	0	0	0	0	0
4/23/2024	10:45 AM	0	0	0	0	0	0	0	0	0	0	0	0	0
4/23/2024	11:00 AM	0	0	0	0	0	0	0	0	0	0	0	0	0
4/23/2024	11:15 AM	0	0	0	0	0	0	0	0	0	0	0	0	0
4/23/2024	11:30 AM	0	0	0	0	0	0	0	0	0	0	0	0	0
4/23/2024	11:45 AM	0	0	0	0	0	0	0	0	0	0	0	0	0
4/23/2024	12:00 PM	0	0	0	0	0	0	0	0	0	0	0	0	0
4/23/2024	12:15 PM	0	0	0	0	0	0	0	0	0	0	0	0	0
4/23/2024	12:30 PM	0	0	0	0	0	0	0	0	0	0	0	0	0
4/23/2024	12:45 PM	0	0	0	0	0	0	0	0	0	0	0	0	0
4/23/2024	1:00 PM	0	0	0	0	0	0	0	0	0	0	0	0	0
4/23/2024	1:15 PM	0	0	0	0	0	0	0	0	0	0	0	0	0
4/23/2024	1:30 PM	0	0	0	0	0	0	0	0	0	0	0	0	0
4/23/2024	1:45 PM	0	0	0	0	0	0	0	0	0	0	0	0	0
4/23/2024	2:00 PM	0	0	0	0	0	0	0	0	0	0	0	0	0
4/23/2024	2:15 PM	0	0	0	0	0	0	0	0	0	0	0	0	0
4/23/2024	2:30 PM	0	0	0	0	0	0	0	0	0	0	0	0	0
4/23/2024	2:45 PM	0	0	0	0	0	0	0	0	0	0	0	0	0
4/23/2024	3:00 PM	0	0	0	0	0	0	0	0	0	0	0	0	0
4/23/2024	3:15 PM	0	0	0	0	0	0	0	0	0	0	0	0	0
4/23/2024	3:30 PM	0	0	0	0	0	0	0	0	0	0	0	0	0
4/23/2024	3:45 PM	0	0	0	0	0	0	0	0	0	0	0	0	0
4/23/2024	4:00 PM	0	0	0	0	0	0	0	0	0	0	0	0	0
4/23/2024	4:15 PM	0	0	0	0	0	0	0	0	0	0	0	0	0
4/23/2024	4:30 PM	0	0	0	0	0	0	0	0	0	0	0	0	0
4/23/2024	4:45 PM	0	0	0	0	0	0	0	0	0	0	0	0	0
4/23/2024	5:00 PM	0	0	0	0	0	0	0	0	0	0	0	0	0
4/23/2024	5:15 PM	0	0	0	0	0	0	0	0	0	0	0	0	0
4/23/2024	5:30 PM	0	0	0	0	0	0	0	0	0	0	0	0	0
4/23/2024	5:45 PM	0	0	0	0	0	0	0	0	0	0	0	0	0
4/23/2024	6:00 PM	0	0	0	0	0	0	0	0	0	0	0	0	0
4/23/2024	6:15 PM	0	0	0	0	0	0	0	0	0	0	0	0	0
4/23/2024	6:30 PM	0	0	0	0	0	0	0	0	0	0	0	0	0
4/23/2024	6:45 PM	0	0	0	0	0	0	0	0	0	0	0	0	0
4/23/2024	7:00 PM	0	0	0	0	0	0	0	0	0	0	0	0	0
4/23/2024	7:15 PM	0	0	0	0	0	0	0	0	0	0	0	0	0
4/23/2024	7:30 PM	0	0	0	0	0	0	0	0	0	0	0	0	0
4/23/2024	7:45 PM	0	0	0	0	0	0	0	0	0	0	0	0	0
4/23/2024	8:00 PM	0	0	0	0	0	0	0	0	0	0	0	0	0
4/23/2024	8:15 PM	0	0	0	0	0	0	0	0	0	0	0	0	0
4/23/2024	8:30 PM	0	0	0	0	0	0	0	0	0	0	0	0	0
4/23/2024	8:45 PM	0	0	0	0	0	0	0	0	0	0	0	0	0
4/23/2024	9:00 PM	0	0	0	0	0	0	0	0	0	0	0	0	0
4/23/2024	9:15 PM	0	0	0	0	0	0	0	0	0	0	0	0	0
4/23/2024	9:30 PM	0	0	0	0	0	0	0	0	0	0	0	0	0
4/23/2024	9:45 PM	0	0	0	0	0	0	0	0	0	0	0	0	0
4/23/2024	10:00 PM	0	0	0	0	0	0	0	0	0	0	0	0	0
4/23/2024	10:15 PM	0	0	0	0	0	0	0	0	0	0	0	0	0
4/23/2024	10:30 PM	0	0	0	0	0	0	0	0	0	0	0	0	0
4/23/2024	10:45 PM	0	0	0	0	0	0	0	0	0	0	0	0	0
4/23/2024	11:00 PM	0	0	0	0	0	0	0	0	0	0	0	0	0
4/23/2024	11:15 PM	0	0	0	0	0	0	0	0	0	0	0	0	0
4/23/2024	11:30 PM	0	0	0	0	0	0	0	0	0	0	0	0	0
4/23/2024	11:45 PM	0	0	0	0	0	0	0	0	0	0	0	0	0

4/24/2024	12:00 AM	0	0	0	0	0	0	0	0	0	0	0	0	0
4/24/2024	12:15 AM	0	0	0	0	0	0	0	0	0	0	0	0	0
4/24/2024	12:30 AM	0	0	0	0	0	0	0	0	0	0	0	0	0
4/24/2024	12:45 AM	0	0	0	0	0	0	0	0	0	0	0	0	0
4/24/2024	1:00 AM	0	0	0	0	0	0	0	0	0	0	0	0	0
4/24/2024	1:15 AM	0	0	0	0	0	0	0	0	0	0	0	0	0
4/24/2024	1:30 AM	0	0	0	0	0	0	0	0	0	0	0	0	0
4/24/2024	1:45 AM	0	0	0	0	0	0	0	0	0	0	0	0	0
4/24/2024	2:00 AM	0	0	0	0	0	0	0	0	0	0	0	0	0
4/24/2024	2:15 AM	0	0	0	0	0	0	0	0	0	0	0	0	0
4/24/2024	2:30 AM	0	0	0	0	0	0	0	0	0	0	0	0	0
4/24/2024	2:45 AM	0	0	0	0	0	0	0	0	0	0	0	0	0
4/24/2024	3:00 AM	0	0	0	0	0	0	0	0	0	0	0	0	0
4/24/2024	3:15 AM	0	0	0	0	0	0	0	0	0	0	0	0	0
4/24/2024	3:30 AM	0	0	0	0	0	0	0	0	0	0	0	0	0
4/24/2024	3:45 AM	0	0	0	0	0	0	0	0	0	0	0	0	0
4/24/2024	4:00 AM	0	0	0	0	0	0	0	0	0	0	0	0	0
4/24/2024	4:15 AM	0	0	0	0	0	0	0	0	0	0	0	0	0
4/24/2024	4:30 AM	0	0	0	0	0	0	0	0	0	0	0	0	0
4/24/2024	4:45 AM	0	0	0	0	0	0	0	0	0	0	0	0	0
4/24/2024	5:00 AM	0	0	0	0	0	0	0	0	0	0	0	0	0
4/24/2024	5:15 AM	0	0	0	0	0	0	0	0	0	0	0	0	0
4/24/2024	5:30 AM	0	0	0	0	0	0	0	0	0	0	0	0	0
4/24/2024	5:45 AM	0	0	0	0	0	0	0	0	0	0	0	0	0
4/24/2024	6:00 AM	0	0	0	0	0	0	0	0	0	0	0	0	0
4/24/2024	6:15 AM	0	0	0	0	0	0	0	0	0	0	0	0	0
4/24/2024	6:30 AM	0	0	0	0	0	0	0	0	0	0	0	0	0
4/24/2024	6:45 AM	0	0	0	0	0	0	0	0	0	0	0	0	0
4/24/2024	7:00 AM	0	0	0	0	0	0	0	0	0	0	0	0	0
4/24/2024	7:15 AM	0	0	0	0	0	0	0	0	0	0	0	0	0
4/24/2024	7:30 AM	0	0	0	0	0	0	0	0	0	0	0	0	0
4/24/2024	7:45 AM	0	0	0	0	0	0	0	0	0	0	0	0	0
4/24/2024	8:00 AM	0	0	0	0	0	0	0	0	0	0	0	0	0
4/24/2024	8:15 AM	0	0	0	0	0	0	0	0	0	0	0	0	0
4/24/2024	8:30 AM	0	0	0	0	0	0	0	0	0	0	0	0	0
4/24/2024	8:45 AM	0	0	0	0	0	0	0	0	0	0	0	0	0
4/24/2024	9:00 AM	0	0	0	0	0	0	0	0	0	0	0	0	0
4/24/2024	9:15 AM	0	0	0	0	0	0	0	0	0	0	0	0	0
4/24/2024	9:30 AM	0	0	0	0	0	0	0	0	0	0	0	0	0
4/24/2024	9:45 AM	0	0	0	0	0	0	0	0	0	0	0	0	0
4/24/2024	10:00 AM	0	0	0	0	0	0	0	0	0	0	0	0	0
4/24/2024	10:15 AM	0	0	0	0	0	0	0	0	0	0	0	0	0
4/24/2024	10:30 AM	0	0	0	0	0	0	0	0	0	0	0	0	0
4/24/2024	10:45 AM	0	0	0	0	0	0	0	0	0	0	0	0	0
4/24/2024	11:00 AM	0	0	0	0	0	0	0	0	0	0	0	0	0
4/24/2024	11:15 AM	0	0	0	0	0	0	0	0	0	0	0	0	0
4/24/2024	11:30 AM	0	0	0	0	0	0	0	0	0	0	0	0	0
4/24/2024	11:45 AM	0	0	0	0	0	0	0	0	0	0	0	0	0
4/24/2024	12:00 PM	0	0	0	0	0	0	0	0	0	0	0	0	0
4/24/2024	12:15 PM	0	0	0	0	0	0	0	0	0	0	0	0	0
4/24/2024	12:30 PM	0	0	0	0	0	0	0	0	0	0	0	0	0
4/24/2024	12:45 PM	0	0	0	0	0	0	0	0	0	0	0	0	0
4/24/2024	1:00 PM	0	0	0	0	0	0	0	0	0	0	0	0	0
4/24/2024	1:15 PM	0	0	0	0	0	0	0	0	0	0	0	0	0
4/24/2024	1:30 PM	0	0	0	0	0	0	0	0	0	0	0	0	0
4/24/2024	1:45 PM	0	0	0	0	0	0	0	0	0	0	0	0	0
4/24/2024	2:00 PM	0	0	0	0	0	0	0	0	0	0	0	0	0
4/24/2024	2:15 PM	0	0	0	0	0	0	0	0	0	0	0	0	0
4/24/2024	2:30 PM	0	0	0	0	0	0	0	0	0	0	0	0	0
4/24/2024	2:45 PM	0	0	0	0	0	0	0	0	0	0	0	0	0
4/24/2024	3:00 PM	0	0	0	0	0	0	0	0	0	0	0	0	0
4/24/2024	3:15 PM	0	0	0	0	0	0	0	0	0	0	0	0	0
4/24/2024	3:30 PM	0	0	0	0	0	0	0	0	0	0	0	0	0
4/24/2024	3:45 PM	0	0	0	0	0	0	0	0	0	0	0	0	0
4/24/2024	4:00 PM	0	0	0	0	0	0	0	0	0	0	0	0	0
4/24/2024	4:15 PM	0	0	0	0	0	0	0	0	0	0	0	0	0
4/24/2024	4:30 PM	0	0	0	0	0	0	0	0	0	0	0	0	0
4/24/2024	4:45 PM	0	0	0	0	0	0	0	0	0	0	0	0	0
4/24/2024	5:00 PM	0	0	0	0	0	0	0	0	0	0	0	0	0
4/24/2024	5:15 PM	0	0	0	0	0	0	0	0	0	0	0	0	0
4/24/2024	5:30 PM	0	0	0	0	0	0	0	0	0	0	0	0	0
4/24/2024	5:45 PM	0	0	0	0	0	0	0	0	0	0	0	0	0
4/24/2024	6:00 PM	0	0	0	0	0	0	0	0	0	0	0	0	0
4/24/2024	6:15 PM	0	0	0	0	0	0	0	0	0	0	0	0	0
4/24/2024	6:30 PM	0	0	0	0	0	0	0	0	0	0	0	0	0
4/24/2024	6:45 PM	0	0	0	0	0	0	0	0	0	0	0	0	0
4/24/2024	7:00 PM	0	0	0	0	0	0	0	0	0	0	0	0	0
4/24/2024	7:15 PM	0	0	0	0	0	0	0	0	0	0	0	0	0
4/24/2024	7:30 PM	0	0	0	0	0	0	0	0	0	0	0	0	0
4/24/2024	7:45 PM	0	0	0	0	0	0	0	0	0	0	0	0	0
4/24/2024	8:00 PM	0	0	0	0	0	0	0	0	0	0	0	0	0
4/24/2024	8:15 PM	0	0	0	0	0	0	0	0	0	0	0	0	0
4/24/2024	8:30 PM	0	0	0	0	0	0	0	0	0	0	0	0	0
4/24/2024	8:45 PM	0	0	0	0	0	0	0	0	0	0	0	0	0
4/24/2024	9:00 PM	0	0	0	0	0	0	0	0	0	0	0	0	0
4/24/2024	9:15 PM	0	0	0	0	0	0	0	0	0	0	0	0	0
4/24/2024	9:30 PM	0	0	0	0	0	0	0	0	0	0	0	0	0
4/24/2024	9:45 PM	0	0	0	0	0	0	0	0	0	0	0	0	0
4/24/2024	10:00 PM	0	0	0	0	0	0	0	0	0	0	0	0	0
4/24/2024	10:15 PM	0	0	0	0	0	0	0	0	0	0	0	0	0
4/24/2024	10:30 PM	0	0	0	0	0	0	0	0	0	0	0	0	0
4/24/2024	10:45 PM	0	0	0	0	0	0	0	0	0	0	0	0	0
4/24/2024	11:00 PM	0	0	0	0	0	0	0	0	0	0	0	0	0
4/24/2024	11:15 PM	0	0	0	0	0	0	0	0	0	0	0	0	0
4/24/2024	11:30 PM	0	0	0	0	0	0	0	0	0	0	0	0	0
4/24/2024	11:45 PM	0	0	0	0	0	0	0	0	0	0	0	0	0

4/25/2024	12:00 AM	0	0	0	0	0	0	0	0	0	0	0	0	0
4/25/2024	12:15 AM	0	0	0	0	0	0	0	0	0	0	0	0	0
4/25/2024	12:30 AM	0	0	0	0	0	0	0	0	0	0	0	0	0
4/25/2024	12:45 AM	0	0	0	0	0	0	0	0	0	0	0	0	0
4/25/2024	1:00 AM	0	0	0	0	0	0	0	0	0	0	0	0	0
4/25/2024	1:15 AM	0	0	0	0	0	0	0	0	0	0	0	0	0
4/25/2024	1:30 AM	0	0	0	0	0	0	0	0	0	0	0	0	0
4/25/2024	1:45 AM	0	0	0	0	0	0	0	0	0	0	0	0	0
4/25/2024	2:00 AM	0	0	0	0	0	0	0	0	0	0	0	0	0
4/25/2024	2:15 AM	0	0	0	0	0	0	0	0	0	0	0	0	0
4/25/2024	2:30 AM	0	0	0	0	0	0	0	0	0	0	0	0	0
4/25/2024	2:45 AM	0	0	0	0	0	0	0	0	0	0	0	0	0
4/25/2024	3:00 AM	0	0	0	0	0	0	0	0	0	0	0	0	0
4/25/2024	3:15 AM	0	0	0	0	0	0	0	0	0	0	0	0	0
4/25/2024	3:30 AM	0	0	0	0	0	0	0	0	0	0	0	0	0
4/25/2024	3:45 AM	0	0	0	0	0	0	0	0	0	0	0	0	0
4/25/2024	4:00 AM	0	0	0	0	0	0	0	0	0	0	0	0	0
4/25/2024	4:15 AM	0	0	0	0	0	0	0	0	0	0	0	0	0
4/25/2024	4:30 AM	0	0	0	0	0	0	0	0	0	0	0	0	0
4/25/2024	4:45 AM	0	0	0	0	0	0	0	0	0	0	0	0	0
4/25/2024	5:00 AM	0	0	0	0	0	0	0	0	0	0	0	0	0
4/25/2024	5:15 AM	0	0	0	0	0	0	0	0	0	0	0	0	0
4/25/2024	5:30 AM	0	0	0	0	0	0	0	0	0	0	0	0	0
4/25/2024	5:45 AM	0	0	0	0	0	0	0	0	0	0	0	0	0
4/25/2024	6:00 AM	0	0	0	0	0	0	0	0	0	0	0	0	0
4/25/2024	6:15 AM	0	0	0	0	0	0	0	0	0	0	0	0	0
4/25/2024	6:30 AM	0	0	0	0	0	0	0	0	0	0	0	0	0
4/25/2024	6:45 AM	0	0	0	0	0	0	0	0	0	0	0	0	0
4/25/2024	7:00 AM	0	0	0	0	0	0	0	0	0	0	0	0	0
4/25/2024	7:15 AM	0	0	0	0	0	0	0	0	0	0	0	0	0
4/25/2024	7:30 AM	0	0	0	0	0	0	0	0	0	0	0	0	0
4/25/2024	7:45 AM	0	0	0	0	0	0	0	0	0	0	0	0	0
4/25/2024	8:00 AM	0	0	0	0	0	0	0	0	0	0	0	0	0
4/25/2024	8:15 AM	0	0	0	0	0	0	0	0	0	0	0	0	0
4/25/2024	8:30 AM	0	0	0	0	0	0	0	0	0	0	0	0	0
4/25/2024	8:45 AM	0	0	0	0	0	0	0	0	0	0	0	0	0
4/25/2024	9:00 AM	0	0	0	0	0	0	0	0	0	0	0	0	0
4/25/2024	9:15 AM	0	0	0	0	0	0	0	0	0	0	0	0	0
4/25/2024	9:30 AM	0	0	0	0	0	0	0	0	0	0	0	0	0
4/25/2024	9:45 AM	0	0	0	0	0	0	0	0	0	0	0	0	0
4/25/2024	10:00 AM	0	0	0	0	0	0	0	0	0	0	0	0	0
4/25/2024	10:15 AM	0	0	0	0	0	0	0	0	0	0	0	0	0
4/25/2024	10:30 AM	0	0	0	0	0	0	0	0	0	0	0	0	0
4/25/2024	10:45 AM	0	0	0	0	0	0	0	0	0	0	0	0	0
4/25/2024	11:00 AM	0	0	0	0	0	0	0	0	0	0	0	0	0
4/25/2024	11:15 AM	0	0	0	0	0	0	0	0	0	0	0	0	0
4/25/2024	11:30 AM	0	0	0	0	0	0	0	0	0	0	0	0	0
4/25/2024	11:45 AM	0	0	0	0	0	0	0	0	0	0	0	0	0
4/25/2024	12:00 PM	0	0	0	0	0	0	0	0	0	0	0	0	0
4/25/2024	12:15 PM	0	0	0	0	0	0	0	0	0	0	0	0	0
4/25/2024	12:30 PM	0	0	0	0	0	0	0	0	0	0	0	0	0
4/25/2024	12:45 PM	0	0	0	0	0	0	0	0	0	0	0	0	0
4/25/2024	1:00 PM	0	0	0	0	0	0	0	0	0	0	0	0	0
4/25/2024	1:15 PM	0	0	0	0	0	0	0	0	0	0	0	0	0
4/25/2024	1:30 PM	0	0	0	0	0	0	0	0	0	0	0	0	0
4/25/2024	1:45 PM	0	0	0	0	0	0	0	0	0	0	0	0	0
4/25/2024	2:00 PM	0	0	0	0	0	0	0	0	0	0	0	0	0
4/25/2024	2:15 PM	0	0	0	0	0	0	0	0	0	0	0	0	0
4/25/2024	2:30 PM	0	0	0	0	0	0	0	0	0	0	0	0	0
4/25/2024	2:45 PM	0	0	0	0	0	0	0	0	0	0	0	0	0
4/25/2024	3:00 PM	0	0	0	0	0	0	0	0	0	0	0	0	0
4/25/2024	3:15 PM	0	0	0	0	0	0	0	0	0	0	0	0	0
4/25/2024	3:30 PM	0	0	0	0	0	0	0	0	0	0	0	0	0
4/25/2024	3:45 PM	0	0	0	0	0	0	0	0	0	0	0	0	0
4/25/2024	4:00 PM	0	0	0	0	0	0	0	0	0	0	0	0	0
4/25/2024	4:15 PM	0	0	0	0	0	0	0	0	0	0	0	0	0
4/25/2024	4:30 PM	0	0	0	0	0	0	0	0	0	0	0	0	0
4/25/2024	4:45 PM	0	0	0	0	0	0	0	0	0	0	0	0	0
4/25/2024	5:00 PM	0	0	0	0	0	0	0	0	0	0	0	0	0
4/25/2024	5:15 PM	0	0	0	0	0	0	0	0	0	0	0	0	0
4/25/2024	5:30 PM	0	0	0	0	0	0	0	0	0	0	0	0	0
4/25/2024	5:45 PM	0	0	0	0	0	0	0	0	0	0	0	0	0
4/25/2024	6:00 PM	0	0	0	0	0	0	0	0	0	0	0	0	0
4/25/2024	6:15 PM	0	0	0	0	0	0	0	0	0	0	0	0	0
4/25/2024	6:30 PM	0	0	0	0	0	0	0	0	0	0	0	0	0
4/25/2024	6:45 PM	0	0	0	0	0	0	0	0	0	0	0	0	0
4/25/2024	7:00 PM	0	0	0	0	0	0	0	0	0	0	0	0	0
4/25/2024	7:15 PM	0	0	0	0	0	0	0	0	0	0	0	0	0
4/25/2024	7:30 PM	0	0	0	0	0	0	0	0	0	0	0	0	0
4/25/2024	7:45 PM	0	0	0	0	0	0	0	0	0	0	0	0	0
4/25/2024	8:00 PM	0	0	0	0	0	0	0	0	0	0	0	0	0
4/25/2024	8:15 PM	0	0	0	0	0	0	0	0	0	0	0	0	0
4/25/2024	8:30 PM	0	0	0	0	0	0	0	0	0	0	0	0	0
4/25/2024	8:45 PM	0	0	0	0	0	0	0	0	0	0	0	0	0
4/25/2024	9:00 PM	0	0	0	0	0	0	0	0	0	0	0	0	0
4/25/2024	9:15 PM	0	0	0	0	0	0	0	0	0	0	0	0	0
4/25/2024	9:30 PM	0	0	0	0	0	0	0	0	0	0	0	0	0
4/25/2024	9:45 PM	0	0	0	0	0	0	0	0	0	0	0	0	0
4/25/2024	10:00 PM	0	0	0	0	0	0	0	0	0	0	0	0	0
4/25/2024	10:15 PM	0	0	0	0	0	0	0	0	0	0	0	0	0
4/25/2024	10:30 PM	0	0	0	0	0	0	0	0	0	0	0	0	0
4/25/2024	10:45 PM	0	0	0	0	0	0	0	0	0	0	0	0	0
4/25/2024	11:00 PM	0	0	0	0	0	0	0	0	0	0	0	0	0
4/25/2024	11:15 PM	0	0	0	0	0	0	0	0	0	0	0	0	0
4/25/2024	11:30 PM	0	0	0	0	0	0	0	0	0	0	0	0	0
4/25/2024	11:45 PM	0	0	0	0	0	0	0	0	0	0	0	0	0

SB
File Name:
Start Date: 4/23/2024
Start Time: 0
Site Code: 44
Station ID: 1
Location 1: I-26 On/Off-Ramp, north of Bush River Rd
Location 2:

Date	Time	1	2	3	4	5	6	7	8	9	10	11	12	13
4/23/2024	12:00 AM	0	0	0	0	0	0	0	0	0	0	0	0	0
4/23/2024	12:15 AM	0	0	0	0	0	0	0	0	0	0	0	0	0
4/23/2024	12:30 AM	0	0	0	0	0	0	0	0	0	0	0	0	0
4/23/2024	12:45 AM	0	0	0	0	0	0	0	0	0	0	0	0	0
4/23/2024	1:00 AM	0	0	0	0	0	0	0	0	0	0	0	0	0
4/23/2024	1:15 AM	0	0	0	0	0	0	0	0	0	0	0	0	0
4/23/2024	1:30 AM	0	0	0	0	0	0	0	0	0	0	0	0	0
4/23/2024	1:45 AM	0	0	0	0	0	0	0	0	0	0	0	0	0
4/23/2024	2:00 AM	0	0	0	0	0	0	0	0	0	0	0	0	0
4/23/2024	2:15 AM	0	0	0	0	0	0	0	0	0	0	0	0	0
4/23/2024	2:30 AM	0	0	0	0	0	0	0	0	0	0	0	0	0
4/23/2024	2:45 AM	0	0	0	0	0	0	0	0	0	0	0	0	0
4/23/2024	3:00 AM	0	0	0	0	0	0	0	0	0	0	0	0	0
4/23/2024	3:15 AM	0	0	0	0	0	0	0	0	0	0	0	0	0
4/23/2024	3:30 AM	0	0	0	0	0	0	0	0	0	0	0	0	0
4/23/2024	3:45 AM	0	0	0	0	0	0	0	0	0	0	0	0	0
4/23/2024	4:00 AM	0	0	0	0	0	0	0	0	0	0	0	0	0
4/23/2024	4:15 AM	0	0	0	0	0	0	0	0	0	0	0	0	0
4/23/2024	4:30 AM	0	0	0	0	0	0	0	0	0	0	0	0	0
4/23/2024	4:45 AM	0	0	0	0	0	0	0	0	0	0	0	0	0
4/23/2024	5:00 AM	0	0	0	0	0	0	0	0	0	0	0	0	0
4/23/2024	5:15 AM	0	0	0	0	0	0	0	0	0	0	0	0	0
4/23/2024	5:30 AM	0	0	0	0	0	0	0	0	0	0	0	0	0
4/23/2024	5:45 AM	0	0	0	0	0	0	0	0	0	0	0	0	0
4/23/2024	6:00 AM	0	0	0	0	0	0	0	0	0	0	0	0	0
4/23/2024	6:15 AM	0	0	0	0	0	0	0	0	0	0	0	0	0
4/23/2024	6:30 AM	0	0	0	0	0	0	0	0	0	0	0	0	0
4/23/2024	6:45 AM	0	0	0	0	0	0	0	0	0	0	0	0	0
4/23/2024	7:00 AM	0	0	0	0	0	0	0	0	0	0	0	0	0
4/23/2024	7:15 AM	0	0	0	0	0	0	0	0	0	0	0	0	0
4/23/2024	7:30 AM	0	0	0	0	0	0	0	0	0	0	0	0	0
4/23/2024	7:45 AM	0	0	0	0	0	0	0	0	0	0	0	0	0
4/23/2024	8:00 AM	0	0	0	0	0	0	0	0	0	0	0	0	0
4/23/2024	8:15 AM	0	0	0	0	0	0	0	0	0	0	0	0	0
4/23/2024	8:30 AM	0	0	0	0	0	0	0	0	0	0	0	0	0
4/23/2024	8:45 AM	0	0	0	0	0	0	0	0	0	0	0	0	0
4/23/2024	9:00 AM	0	0	0	0	0	0	0	0	0	0	0	0	0
4/23/2024	9:15 AM	0	0	0	0	0	0	0	0	0	0	0	0	0
4/23/2024	9:30 AM	0	0	0	0	0	0	0	0	0	0	0	0	0
4/23/2024	9:45 AM	0	0	0	0	0	0	0	0	0	0	0	0	0
4/23/2024	10:00 AM	0	0	0	0	0	0	0	0	0	0	0	0	0
4/23/2024	10:15 AM	0	0	0	0	0	0	0	0	0	0	0	0	0
4/23/2024	10:30 AM	0	0	0	0	0	0	0	0	0	0	0	0	0
4/23/2024	10:45 AM	0	0	0	0	0	0	0	0	0	0	0	0	0
4/23/2024	11:00 AM	0	0	0	0	0	0	0	0	0	0	0	0	0
4/23/2024	11:15 AM	0	0	0	0	0	0	0	0	0	0	0	0	0
4/23/2024	11:30 AM	0	0	0	0	0	0	0	0	0	0	0	0	0
4/23/2024	11:45 AM	0	0	0	0	0	0	0	0	0	0	0	0	0
4/23/2024	12:00 PM	0	0	0	0	0	0	0	0	0	0	0	0	0
4/23/2024	12:15 PM	0	0	0	0	0	0	0	0	0	0	0	0	0
4/23/2024	12:30 PM	0	0	0	0	0	0	0	0	0	0	0	0	0
4/23/2024	12:45 PM	0	0	0	0	0	0	0	0	0	0	0	0	0
4/23/2024	1:00 PM	0	0	0	0	0	0	0	0	0	0	0	0	0
4/23/2024	1:15 PM	0	0	0	0	0	0	0	0	0	0	0	0	0
4/23/2024	1:30 PM	0	0	0	0	0	0	0	0	0	0	0	0	0
4/23/2024	1:45 PM	0	0	0	0	0	0	0	0	0	0	0	0	0
4/23/2024	2:00 PM	0	0	0	0	0	0	0	0	0	0	0	0	0
4/23/2024	2:15 PM	0	0	0	0	0	0	0	0	0	0	0	0	0
4/23/2024	2:30 PM	0	0	0	0	0	0	0	0	0	0	0	0	0
4/23/2024	2:45 PM	0	0	0	0	0	0	0	0	0	0	0	0	0
4/23/2024	3:00 PM	0	0	0	0	0	0	0	0	0	0	0	0	0
4/23/2024	3:15 PM	0	0	0	0	0	0	0	0	0	0	0	0	0
4/23/2024	3:30 PM	0	0	0	0	0	0	0	0	0	0	0	0	0
4/23/2024	3:45 PM	0	0	0	0	0	0	0	0	0	0	0	0	0
4/23/2024	4:00 PM	0	0	0	0	0	0	0	0	0	0	0	0	0
4/23/2024	4:15 PM	0	0	0	0	0	0	0	0	0	0	0	0	0
4/23/2024	4:30 PM	0	0	0	0	0	0	0	0	0	0	0	0	0
4/23/2024	4:45 PM	0	0	0	0	0	0	0	0	0	0	0	0	0
4/23/2024	5:00 PM	0	0	0	0	0	0	0	0	0	0	0	0	0
4/23/2024	5:15 PM	0	0	0	0	0	0	0	0	0	0	0	0	0
4/23/2024	5:30 PM	0	0	0	0	0	0	0	0	0	0	0	0	0
4/23/2024	5:45 PM	0	0	0	0	0	0	0	0	0	0	0	0	0
4/23/2024	6:00 PM	0	0	0	0	0	0	0	0	0	0	0	0	0
4/23/2024	6:15 PM	0	0	0	0	0	0	0	0	0	0	0	0	0
4/23/2024	6:30 PM	0	0	0	0	0	0	0	0	0	0	0	0	0
4/23/2024	6:45 PM	0	0	0	0	0	0	0	0	0	0	0	0	0
4/23/2024	7:00 PM	0	39	3	0	1	0	0	0	0	0	0	0	0
4/23/2024	7:15 PM	0	38	8	0	0	0	0	0	0	0	0	0	0
4/23/2024	7:30 PM	0	34	2	0	0	0	0	0	0	0	0	0	0
4/23/2024	7:45 PM	0	39	5	0	1	0	0	0	0	0	0	0	0
4/23/2024	8:00 PM	0	32	1	0	1	0	0	0	0	0	0	0	0
4/23/2024	8:15 PM	0	26	9	0	0	0	0	0	0	0	0	0	0
4/23/2024	8:30 PM	0	28	2	0	0	0	0	0	0	0	0	0	0
4/23/2024	8:45 PM	0	28	2	0	0	0	0	0	0	0	0	0	0
4/23/2024	9:00 PM	0	22	2	0	0	0	0	0	1	0	0	0	0
4/23/2024	9:15 PM	0	30	0	0	0	0	0	0	0	0	0	0	0
4/23/2024	9:30 PM	0	30	2	0	0	0	0	0	0	0	0	0	0
4/23/2024	9:45 PM	0	29	3	0	0	0	0	0	1	0	0	0	0
4/23/2024	10:00 PM	0	23	2	0	0	0	0	0	0	0	0	0	0
4/23/2024	10:15 PM	0	22	1	0	0	0	0	0	0	0	0	0	0
4/23/2024	10:30 PM	0	21	1	0	0	0	0	0	0	0	0	0	0
4/23/2024	10:45 PM	0	19	0	0	0	0	0	0	0	0	0	0	0
4/23/2024	11:00 PM	0	19	2	0	0	0	0	0	0	0	0	0	0
4/23/2024	11:15 PM	0	10	1	0	0	0	0	0	0	0	0	0	0
4/23/2024	11:30 PM	0	5	1	0	0	0	0	0	0	0	0	0	0
4/23/2024	11:45 PM	0	3	1	0	0	0	0	0	0	0	0	0	0

4/24/2024	12:00 AM	0	8	1	0	0	0	0	0	0	0	0	0
4/24/2024	12:15 AM	0	11	0	0	0	0	0	0	0	1	0	0
4/24/2024	12:30 AM	0	5	2	0	0	0	0	0	0	0	0	0
4/24/2024	12:45 AM	0	9	1	0	0	0	0	0	0	0	0	0
4/24/2024	1:00 AM	0	1	1	0	0	0	0	0	0	0	0	0
4/24/2024	1:15 AM	0	7	2	0	0	0	0	0	0	0	0	0
4/24/2024	1:30 AM	0	7	0	0	0	0	0	0	0	0	0	0
4/24/2024	1:45 AM	0	1	0	0	0	0	0	0	0	0	0	0
4/24/2024	2:00 AM	0	4	0	0	0	0	0	0	0	0	0	0
4/24/2024	2:15 AM	0	1	0	0	0	0	0	0	0	0	0	0
4/24/2024	2:30 AM	0	5	1	0	0	0	0	0	0	0	0	0
4/24/2024	2:45 AM	0	4	0	0	0	0	0	0	0	0	0	0
4/24/2024	3:00 AM	0	0	0	0	0	0	0	0	0	0	0	0
4/24/2024	3:15 AM	0	3	1	0	0	0	0	0	0	0	0	0
4/24/2024	3:30 AM	0	1	0	0	0	0	0	0	0	0	0	0
4/24/2024	3:45 AM	0	0	1	0	0	0	0	0	0	0	0	0
4/24/2024	4:00 AM	0	3	1	0	0	0	0	1	1	0	0	0
4/24/2024	4:15 AM	0	1	1	0	0	0	0	0	0	0	0	0
4/24/2024	4:30 AM	0	2	0	0	0	0	0	0	0	0	0	0
4/24/2024	4:45 AM	0	3	2	0	0	0	0	0	0	0	0	0
4/24/2024	5:00 AM	0	3	1	0	0	0	0	0	0	0	0	0
4/24/2024	5:15 AM	0	4	1	0	0	0	0	0	0	0	0	0
4/24/2024	5:30 AM	0	10	0	0	0	0	0	0	0	0	0	0
4/24/2024	5:45 AM	0	7	0	0	0	0	0	0	1	0	0	0
4/24/2024	6:00 AM	0	9	5	0	0	0	0	0	1	0	0	0
4/24/2024	6:15 AM	0	12	4	0	0	0	0	0	1	0	0	0
4/24/2024	6:30 AM	0	9	8	0	1	1	0	0	0	0	0	0
4/24/2024	6:45 AM	0	20	2	0	1	0	0	0	0	0	0	0
4/24/2024	7:00 AM	1	16	3	0	0	1	0	0	1	0	0	0
4/24/2024	7:15 AM	0	22	6	0	0	0	0	0	0	0	0	0
4/24/2024	7:30 AM	0	18	6	0	0	0	0	0	0	0	0	0
4/24/2024	7:45 AM	0	32	10	0	0	1	0	0	0	0	0	0
4/24/2024	8:00 AM	0	42	7	0	0	0	0	0	0	0	0	0
4/24/2024	8:15 AM	1	41	5	0	0	0	0	0	0	0	0	0
4/24/2024	8:30 AM	0	30	4	0	2	0	0	0	2	0	0	0
4/24/2024	8:45 AM	0	42	5	0	0	1	0	1	0	0	0	0
4/24/2024	9:00 AM	0	18	5	0	0	0	0	0	1	0	0	0
4/24/2024	9:15 AM	0	33	7	0	0	0	0	0	0	0	0	0
4/24/2024	9:30 AM	0	20	5	0	0	1	0	1	0	0	0	0
4/24/2024	9:45 AM	0	38	7	0	1	1	0	0	0	0	0	0
4/24/2024	10:00 AM	0	29	10	0	0	0	0	0	0	0	0	0
4/24/2024	10:15 AM	0	29	13	0	3	0	2	0	0	0	0	0
4/24/2024	10:30 AM	0	37	6	0	0	1	0	0	0	0	0	0
4/24/2024	10:45 AM	0	29	10	1	0	1	0	0	1	0	0	0
4/24/2024	11:00 AM	0	23	8	0	1	0	0	0	0	0	0	0
4/24/2024	11:15 AM	0	22	10	0	0	0	0	0	0	0	0	0
4/24/2024	11:30 AM	1	36	9	0	1	0	0	0	2	0	0	0
4/24/2024	11:45 AM	0	33	7	0	0	2	0	0	3	0	0	0
4/24/2024	12:00 PM	0	29	4	0	3	1	0	0	1	0	0	0
4/24/2024	12:15 PM	0	30	4	0	0	0	0	0	0	1	0	0
4/24/2024	12:30 PM	0	46	12	0	0	1	0	0	0	0	0	0
4/24/2024	12:45 PM	0	21	11	0	1	0	0	0	1	0	0	0
4/24/2024	1:00 PM	0	43	8	0	1	0	0	0	1	0	0	0
4/24/2024	1:15 PM	0	42	7	0	2	0	0	0	0	0	0	0
4/24/2024	1:30 PM	0	32	9	0	2	1	0	1	1	0	0	0
4/24/2024	1:45 PM	0	40	5	0	1	0	1	0	0	0	0	0
4/24/2024	2:00 PM	0	35	7	0	1	0	0	1	1	0	0	0
4/24/2024	2:15 PM	0	30	12	0	1	2	0	3	1	0	0	0
4/24/2024	2:30 PM	0	43	5	0	1	0	0	0	0	0	0	0
4/24/2024	2:45 PM	0	27	14	0	11	0	0	0	0	0	0	0
4/24/2024	3:00 PM	0	38	5	0	1	0	0	0	0	0	0	0
4/24/2024	3:15 PM	0	26	5	0	1	0	0	0	3	0	0	0
4/24/2024	3:30 PM	0	20	2	0	0	0	0	0	2	0	0	0
4/24/2024	3:45 PM	1	38	4	1	0	1	0	0	1	0	0	0
4/24/2024	4:00 PM	0	41	10	0	1	1	0	0	3	0	0	0
4/24/2024	4:15 PM	0	39	7	0	1	1	0	0	2	0	0	0
4/24/2024	4:30 PM	0	36	13	0	0	0	0	0	0	0	0	0
4/24/2024	4:45 PM	0	47	7	0	1	2	0	0	3	0	0	0
4/24/2024	5:00 PM	0	35	11	0	0	1	0	0	0	0	0	0
4/24/2024	5:15 PM	1	31	5	0	1	1	0	0	2	0	0	0
4/24/2024	5:30 PM	0	44	10	0	0	0	0	0	0	0	0	0
4/24/2024	5:45 PM	0	39	11	0	1	0	0	0	0	0	0	0
4/24/2024	6:00 PM	2	56	9	0	1	0	0	0	2	0	0	0
4/24/2024	6:15 PM	0	42	6	0	1	0	0	1	1	0	0	0
4/24/2024	6:30 PM	0	40	11	1	1	0	0	0	0	0	0	0
4/24/2024	6:45 PM	0	33	8	0	1	1	0	0	0	0	0	0
4/24/2024	7:00 PM	0	27	10	0	0	0	0	0	1	0	0	0
4/24/2024	7:15 PM	0	29	7	0	0	0	0	0	0	0	0	0
4/24/2024	7:30 PM	0	28	1	0	0	0	0	0	0	0	0	0
4/24/2024	7:45 PM	0	17	4	0	0	0	0	0	0	0	0	0
4/24/2024	8:00 PM	0	39	7	0	0	1	0	1	0	0	0	0
4/24/2024	8:15 PM	2	51	9	0	1	0	0	0	0	0	0	0
4/24/2024	8:30 PM	0	30	2	0	0	0	0	0	1	0	0	0
4/24/2024	8:45 PM	0	30	4	0	0	0	0	0	0	0	0	0
4/24/2024	9:00 PM	0	18	3	0	0	0	0	0	0	0	0	0
4/24/2024	9:15 PM	0	22	6	0	0	0	0	0	1	0	0	0
4/24/2024	9:30 PM	0	16	0	0	0	1	0	0	0	0	0	0
4/24/2024	9:45 PM	2	20	0	0	0	0	0	0	0	0	0	0
4/24/2024	10:00 PM	0	17	1	0	0	0	0	0	0	0	0	0
4/24/2024	10:15 PM	0	17	2	0	1	0	0	0	0	0	0	0
4/24/2024	10:30 PM	0	18	3	0	0	0	0	0	0	0	0	0
4/24/2024	10:45 PM	0	15	3	0	0	0	0	0	0	0	0	0
4/24/2024	11:00 PM	0	13	0	0	0	0	0	0	0	0	0	0
4/24/2024	11:15 PM	0	25	1	0	0	0	0	0	0	0	0	0
4/24/2024	11:30 PM	0	12	0	0	0	0	0	0	0	0	0	0
4/24/2024	11:45 PM	0	8	0	0	0	0	0	0	0	0	0	0

4/25/2024	12:00 AM	0	10	2	0	0	0	0	0	0	0	0	0	0
4/25/2024	12:15 AM	0	10	2	0	0	0	0	0	0	0	0	0	0
4/25/2024	12:30 AM	0	5	0	0	1	0	0	0	0	0	0	0	0
4/25/2024	12:45 AM	0	6	1	0	0	0	0	0	0	0	0	0	0
4/25/2024	1:00 AM	0	11	0	0	0	0	0	0	0	0	0	0	0
4/25/2024	1:15 AM	0	4	0	0	0	0	0	0	0	0	0	0	0
4/25/2024	1:30 AM	0	5	1	0	0	0	0	0	0	0	0	0	0
4/25/2024	1:45 AM	0	4	3	0	0	0	0	0	1	0	0	0	0
4/25/2024	2:00 AM	0	3	1	0	0	0	0	0	0	1	0	0	0
4/25/2024	2:15 AM	0	5	0	0	0	0	0	0	0	0	0	0	0
4/25/2024	2:30 AM	0	2	1	0	0	0	0	0	0	0	0	0	0
4/25/2024	2:45 AM	0	3	0	0	0	0	0	0	0	1	0	0	0
4/25/2024	3:00 AM	0	4	0	0	0	0	0	0	0	0	0	0	0
4/25/2024	3:15 AM	0	3	0	0	0	0	0	0	1	0	0	0	0
4/25/2024	3:30 AM	0	4	0	0	0	0	0	0	0	0	0	0	0
4/25/2024	3:45 AM	0	2	0	0	0	0	0	0	1	0	0	0	0
4/25/2024	4:00 AM	0	2	3	0	0	0	0	0	1	0	0	0	0
4/25/2024	4:15 AM	0	2	1	0	0	0	0	0	1	0	0	0	0
4/25/2024	4:30 AM	0	2	1	0	0	0	0	0	0	0	0	0	0
4/25/2024	4:45 AM	0	9	0	0	0	0	0	0	0	0	0	0	0
4/25/2024	5:00 AM	0	6	0	0	0	0	0	0	0	0	0	0	0
4/25/2024	5:15 AM	0	7	5	0	1	0	0	0	0	0	0	0	0
4/25/2024	5:30 AM	0	8	0	0	0	0	0	0	0	0	0	0	0
4/25/2024	5:45 AM	0	7	1	0	0	0	0	0	0	0	0	0	0
4/25/2024	6:00 AM	0	5	4	0	0	0	0	0	0	0	0	0	0
4/25/2024	6:15 AM	0	8	2	0	2	0	0	0	1	0	0	0	0
4/25/2024	6:30 AM	0	17	1	0	0	0	0	0	0	0	0	0	0
4/25/2024	6:45 AM	0	20	4	0	0	1	0	0	1	0	0	0	0
4/25/2024	7:00 AM	0	20	3	0	0	2	0	0	0	0	0	0	0
4/25/2024	7:15 AM	0	17	4	0	0	0	0	0	0	0	0	0	0
4/25/2024	7:30 AM	0	25	3	0	0	0	0	0	1	0	0	0	0
4/25/2024	7:45 AM	0	22	6	0	1	0	0	0	0	0	0	0	0
4/25/2024	8:00 AM	0	25	11	0	1	0	0	0	0	0	0	0	0
4/25/2024	8:15 AM	0	34	8	0	0	0	0	0	0	0	0	0	0
4/25/2024	8:30 AM	0	47	11	0	0	1	0	0	0	0	0	0	0
4/25/2024	8:45 AM	0	42	8	0	3	1	0	0	0	0	0	0	0
4/25/2024	9:00 AM	0	30	5	0	0	0	0	0	2	0	0	0	0
4/25/2024	9:15 AM	0	27	8	0	1	0	0	0	0	0	0	0	0
4/25/2024	9:30 AM	0	19	5	0	2	1	0	0	0	0	0	0	0
4/25/2024	9:45 AM	0	23	12	0	1	1	0	0	1	0	0	0	0
4/25/2024	10:00 AM	0	23	7	0	0	1	0	0	0	0	0	0	0
4/25/2024	10:15 AM	1	23	5	0	1	0	1	0	0	0	0	0	0
4/25/2024	10:30 AM	0	24	6	0	1	0	0	1	0	0	0	0	0
4/25/2024	10:45 AM	0	29	7	0	1	1	0	0	0	0	0	0	0
4/25/2024	11:00 AM	0	24	12	0	0	0	0	1	0	0	0	0	0
4/25/2024	11:15 AM	0	29	12	0	1	1	0	1	3	0	0	0	0
4/25/2024	11:30 AM	0	38	4	0	0	2	0	0	0	0	0	0	0
4/25/2024	11:45 AM	0	33	10	0	1	0	0	0	3	0	0	0	0
4/25/2024	12:00 PM	1	47	3	0	0	0	1	0	0	0	0	0	0
4/25/2024	12:15 PM	0	37	6	0	0	0	0	0	0	0	0	0	0
4/25/2024	12:30 PM	0	37	13	0	1	1	0	0	0	0	0	0	0
4/25/2024	12:45 PM	0	55	8	0	0	2	0	0	0	0	0	0	0
4/25/2024	1:00 PM	0	33	8	0	3	0	0	1	1	0	0	0	0
4/25/2024	1:15 PM	0	35	14	0	1	1	0	2	0	0	0	0	0
4/25/2024	1:30 PM	0	35	11	0	3	0	0	1	0	0	0	0	0
4/25/2024	1:45 PM	1	53	6	0	0	0	0	0	0	0	0	0	0
4/25/2024	2:00 PM	0	28	14	0	1	3	0	0	1	0	0	0	0
4/25/2024	2:15 PM	0	47	10	0	1	0	0	1	1	0	0	0	0
4/25/2024	2:30 PM	0	35	6	0	1	2	0	0	0	0	0	0	0
4/25/2024	2:45 PM	0	37	4	0	0	0	0	0	0	0	0	0	0
4/25/2024	3:00 PM	0	35	7	0	0	1	0	0	0	0	0	0	0
4/25/2024	3:15 PM	0	39	5	0	3	1	0	0	1	0	0	0	0
4/25/2024	3:30 PM	0	46	10	0	0	0	0	0	1	0	0	0	0
4/25/2024	3:45 PM	0	52	8	0	0	0	0	1	2	0	0	0	0
4/25/2024	4:00 PM	0	29	3	0	1	0	0	1	0	0	0	0	0
4/25/2024	4:15 PM	0	36	4	0	0	0	0	0	0	0	0	0	0
4/25/2024	4:30 PM	0	41	10	0	2	0	0	0	3	0	0	0	0
4/25/2024	4:45 PM	0	31	8	1	0	0	0	0	0	0	0	0	0
4/25/2024	5:00 PM	0	36	9	0	0	0	0	0	0	0	0	0	0
4/25/2024	5:15 PM	0	38	6	0	0	1	0	0	0	0	0	0	0
4/25/2024	5:30 PM	0	22	6	0	0	0	0	0	1	0	0	0	0
4/25/2024	5:45 PM	0	33	9	0	1	0	0	0	0	0	0	0	0
4/25/2024	6:00 PM	0	38	4	0	0	0	0	0	1	0	0	0	0
4/25/2024	6:15 PM	0	31	8	0	1	0	0	0	0	0	0	0	0
4/25/2024	6:30 PM	0	28	10	0	1	0	0	0	0	0	0	0	0
4/25/2024	6:45 PM	0	29	5	0	1	0	0	0	0	0	0	0	0
4/25/2024	7:00 PM	0	0	0	0	0	0	0	0	0	0	0	0	0
4/25/2024	7:15 PM	0	0	0	0	0	0	0	0	0	0	0	0	0
4/25/2024	7:30 PM	0	0	0	0	0	0	0	0	0	0	0	0	0
4/25/2024	7:45 PM	0	0	0	0	0	0	0	0	0	0	0	0	0
4/25/2024	8:00 PM	0	0	0	0	0	0	0	0	0	0	0	0	0
4/25/2024	8:15 PM	0	0	0	0	0	0	0	0	0	0	0	0	0
4/25/2024	8:30 PM	0	0	0	0	0	0	0	0	0	0	0	0	0
4/25/2024	8:45 PM	0	0	0	0	0	0	0	0	0	0	0	0	0
4/25/2024	9:00 PM	0	0	0	0	0	0	0	0	0	0	0	0	0
4/25/2024	9:15 PM	0	0	0	0	0	0	0	0	0	0	0	0	0
4/25/2024	9:30 PM	0	0	0	0	0	0	0	0	0	0	0	0	0
4/25/2024	9:45 PM	0	0	0	0	0	0	0	0	0	0	0	0	0
4/25/2024	10:00 PM	0	0	0	0	0	0	0	0	0	0	0	0	0
4/25/2024	10:15 PM	0	0	0	0	0	0	0	0	0	0	0	0	0
4/25/2024	10:30 PM	0	0	0	0	0	0	0	0	0	0	0	0	0
4/25/2024	10:45 PM	0	0	0	0	0	0	0	0	0	0	0	0	0
4/25/2024	11:00 PM	0	0	0	0	0	0	0	0	0	0	0	0	0
4/25/2024	11:15 PM	0	0	0	0	0	0	0	0	0	0	0	0	0
4/25/2024	11:30 PM	0	0	0	0	0	0	0	0	0	0	0	0	0
4/25/2024	11:45 PM	0	0	0	0	0	0	0	0	0	0	0	0	0

NB
File Name:
Start Date: 4/23/2024
Start Time: 0
Site Code: 44
Station ID: 1
Location 1: I-26 On/Off-Ramp, north of Bush River Rd
Location 2:

Date	Time	1	2	3	4	5	6	7	8	9	10	11	12	13
4/23/2024	12:00 AM	0	0	0	0	0	0	0	0	0	0	0	0	0
4/23/2024	12:15 AM	0	0	0	0	0	0	0	0	0	0	0	0	0
4/23/2024	12:30 AM	0	0	0	0	0	0	0	0	0	0	0	0	0
4/23/2024	12:45 AM	0	0	0	0	0	0	0	0	0	0	0	0	0
4/23/2024	1:00 AM	0	0	0	0	0	0	0	0	0	0	0	0	0
4/23/2024	1:15 AM	0	0	0	0	0	0	0	0	0	0	0	0	0
4/23/2024	1:30 AM	0	0	0	0	0	0	0	0	0	0	0	0	0
4/23/2024	1:45 AM	0	0	0	0	0	0	0	0	0	0	0	0	0
4/23/2024	2:00 AM	0	0	0	0	0	0	0	0	0	0	0	0	0
4/23/2024	2:15 AM	0	0	0	0	0	0	0	0	0	0	0	0	0
4/23/2024	2:30 AM	0	0	0	0	0	0	0	0	0	0	0	0	0
4/23/2024	2:45 AM	0	0	0	0	0	0	0	0	0	0	0	0	0
4/23/2024	3:00 AM	0	0	0	0	0	0	0	0	0	0	0	0	0
4/23/2024	3:15 AM	0	0	0	0	0	0	0	0	0	0	0	0	0
4/23/2024	3:30 AM	0	0	0	0	0	0	0	0	0	0	0	0	0
4/23/2024	3:45 AM	0	0	0	0	0	0	0	0	0	0	0	0	0
4/23/2024	4:00 AM	0	0	0	0	0	0	0	0	0	0	0	0	0
4/23/2024	4:15 AM	0	0	0	0	0	0	0	0	0	0	0	0	0
4/23/2024	4:30 AM	0	0	0	0	0	0	0	0	0	0	0	0	0
4/23/2024	4:45 AM	0	0	0	0	0	0	0	0	0	0	0	0	0
4/23/2024	5:00 AM	0	0	0	0	0	0	0	0	0	0	0	0	0
4/23/2024	5:15 AM	0	0	0	0	0	0	0	0	0	0	0	0	0
4/23/2024	5:30 AM	0	0	0	0	0	0	0	0	0	0	0	0	0
4/23/2024	5:45 AM	0	0	0	0	0	0	0	0	0	0	0	0	0
4/23/2024	6:00 AM	0	0	0	0	0	0	0	0	0	0	0	0	0
4/23/2024	6:15 AM	0	0	0	0	0	0	0	0	0	0	0	0	0
4/23/2024	6:30 AM	0	0	0	0	0	0	0	0	0	0	0	0	0
4/23/2024	6:45 AM	0	0	0	0	0	0	0	0	0	0	0	0	0
4/23/2024	7:00 AM	0	0	0	0	0	0	0	0	0	0	0	0	0
4/23/2024	7:15 AM	0	0	0	0	0	0	0	0	0	0	0	0	0
4/23/2024	7:30 AM	0	0	0	0	0	0	0	0	0	0	0	0	0
4/23/2024	7:45 AM	0	0	0	0	0	0	0	0	0	0	0	0	0
4/23/2024	8:00 AM	0	0	0	0	0	0	0	0	0	0	0	0	0
4/23/2024	8:15 AM	0	0	0	0	0	0	0	0	0	0	0	0	0
4/23/2024	8:30 AM	0	0	0	0	0	0	0	0	0	0	0	0	0
4/23/2024	8:45 AM	0	0	0	0	0	0	0	0	0	0	0	0	0
4/23/2024	9:00 AM	0	0	0	0	0	0	0	0	0	0	0	0	0
4/23/2024	9:15 AM	0	0	0	0	0	0	0	0	0	0	0	0	0
4/23/2024	9:30 AM	0	0	0	0	0	0	0	0	0	0	0	0	0
4/23/2024	9:45 AM	0	0	0	0	0	0	0	0	0	0	0	0	0
4/23/2024	10:00 AM	0	0	0	0	0	0	0	0	0	0	0	0	0
4/23/2024	10:15 AM	0	0	0	0	0	0	0	0	0	0	0	0	0
4/23/2024	10:30 AM	0	0	0	0	0	0	0	0	0	0	0	0	0
4/23/2024	10:45 AM	0	0	0	0	0	0	0	0	0	0	0	0	0
4/23/2024	11:00 AM	0	0	0	0	0	0	0	0	0	0	0	0	0
4/23/2024	11:15 AM	0	0	0	0	0	0	0	0	0	0	0	0	0
4/23/2024	11:30 AM	0	0	0	0	0	0	0	0	0	0	0	0	0
4/23/2024	11:45 AM	0	0	0	0	0	0	0	0	0	0	0	0	0
4/23/2024	12:00 PM	0	0	0	0	0	0	0	0	0	0	0	0	0
4/23/2024	12:15 PM	0	0	0	0	0	0	0	0	0	0	0	0	0
4/23/2024	12:30 PM	0	0	0	0	0	0	0	0	0	0	0	0	0
4/23/2024	12:45 PM	0	0	0	0	0	0	0	0	0	0	0	0	0
4/23/2024	1:00 PM	0	0	0	0	0	0	0	0	0	0	0	0	0
4/23/2024	1:15 PM	0	0	0	0	0	0	0	0	0	0	0	0	0
4/23/2024	1:30 PM	0	0	0	0	0	0	0	0	0	0	0	0	0
4/23/2024	1:45 PM	0	0	0	0	0	0	0	0	0	0	0	0	0
4/23/2024	2:00 PM	0	0	0	0	0	0	0	0	0	0	0	0	0
4/23/2024	2:15 PM	0	0	0	0	0	0	0	0	0	0	0	0	0
4/23/2024	2:30 PM	0	0	0	0	0	0	0	0	0	0	0	0	0
4/23/2024	2:45 PM	0	0	0	0	0	0	0	0	0	0	0	0	0
4/23/2024	3:00 PM	0	0	0	0	0	0	0	0	0	0	0	0	0
4/23/2024	3:15 PM	0	0	0	0	0	0	0	0	0	0	0	0	0
4/23/2024	3:30 PM	0	0	0	0	0	0	0	0	0	0	0	0	0
4/23/2024	3:45 PM	0	0	0	0	0	0	0	0	0	0	0	0	0
4/23/2024	4:00 PM	0	0	0	0	0	0	0	0	0	0	0	0	0
4/23/2024	4:15 PM	0	0	0	0	0	0	0	0	0	0	0	0	0
4/23/2024	4:30 PM	0	0	0	0	0	0	0	0	0	0	0	0	0
4/23/2024	4:45 PM	0	0	0	0	0	0	0	0	0	0	0	0	0
4/23/2024	5:00 PM	0	0	0	0	0	0	0	0	0	0	0	0	0
4/23/2024	5:15 PM	0	0	0	0	0	0	0	0	0	0	0	0	0
4/23/2024	5:30 PM	0	0	0	0	0	0	0	0	0	0	0	0	0
4/23/2024	5:45 PM	0	0	0	0	0	0	0	0	0	0	0	0	0
4/23/2024	6:00 PM	0	0	0	0	0	0	0	0	0	0	0	0	0
4/23/2024	6:15 PM	0	0	0	0	0	0	0	0	0	0	0	0	0
4/23/2024	6:30 PM	0	0	0	0	0	0	0	0	0	0	0	0	0
4/23/2024	6:45 PM	0	0	0	0	0	0	0	0	0	0	0	0	0
4/23/2024	7:00 PM	0	0	0	0	0	0	0	0	0	0	0	0	0
4/23/2024	7:15 PM	0	0	0	0	0	0	0	0	0	0	0	0	0
4/23/2024	7:30 PM	0	0	0	0	0	0	0	0	0	0	0	0	0
4/23/2024	7:45 PM	0	0	0	0	0	0	0	0	0	0	0	0	0
4/23/2024	8:00 PM	0	0	0	0	0	0	0	0	0	0	0	0	0
4/23/2024	8:15 PM	0	0	0	0	0	0	0	0	0	0	0	0	0
4/23/2024	8:30 PM	0	0	0	0	0	0	0	0	0	0	0	0	0
4/23/2024	8:45 PM	0	0	0	0	0	0	0	0	0	0	0	0	0
4/23/2024	9:00 PM	0	0	0	0	0	0	0	0	0	0	0	0	0
4/23/2024	9:15 PM	0	0	0	0	0	0	0	0	0	0	0	0	0
4/23/2024	9:30 PM	0	0	0	0	0	0	0	0	0	0	0	0	0
4/23/2024	9:45 PM	0	0	0	0	0	0	0	0	0	0	0	0	0
4/23/2024	10:00 PM	0	0	0	0	0	0	0	0	0	0	0	0	0
4/23/2024	10:15 PM	0	0	0	0	0	0	0	0	0	0	0	0	0
4/23/2024	10:30 PM	0	0	0	0	0	0	0	0	0	0	0	0	0
4/23/2024	10:45 PM	0	0	0	0	0	0	0	0	0	0	0	0	0
4/23/2024	11:00 PM	0	0	0	0	0	0	0	0	0	0	0	0	0
4/23/2024	11:15 PM	0	0	0	0	0	0	0	0	0	0	0	0	0
4/23/2024	11:30 PM	0	0	0	0	0	0	0	0	0	0	0	0	0
4/23/2024	11:45 PM	0	0	0	0	0	0	0	0	0	0	0	0	0

4/24/2024	12:00 AM	0	0	0	0	0	0	0	0	0	0	0	0	0
4/24/2024	12:15 AM	0	0	0	0	0	0	0	0	0	0	0	0	0
4/24/2024	12:30 AM	0	0	0	0	0	0	0	0	0	0	0	0	0
4/24/2024	12:45 AM	0	0	0	0	0	0	0	0	0	0	0	0	0
4/24/2024	1:00 AM	0	0	0	0	0	0	0	0	0	0	0	0	0
4/24/2024	1:15 AM	0	0	0	0	0	0	0	0	0	0	0	0	0
4/24/2024	1:30 AM	0	0	0	0	0	0	0	0	0	0	0	0	0
4/24/2024	1:45 AM	0	0	0	0	0	0	0	0	0	0	0	0	0
4/24/2024	2:00 AM	0	0	0	0	0	0	0	0	0	0	0	0	0
4/24/2024	2:15 AM	0	0	0	0	0	0	0	0	0	0	0	0	0
4/24/2024	2:30 AM	0	0	0	0	0	0	0	0	0	0	0	0	0
4/24/2024	2:45 AM	0	0	0	0	0	0	0	0	0	0	0	0	0
4/24/2024	3:00 AM	0	0	0	0	0	0	0	0	0	0	0	0	0
4/24/2024	3:15 AM	0	0	0	0	0	0	0	0	0	0	0	0	0
4/24/2024	3:30 AM	0	0	0	0	0	0	0	0	0	0	0	0	0
4/24/2024	3:45 AM	0	0	0	0	0	0	0	0	0	0	0	0	0
4/24/2024	4:00 AM	0	0	0	0	0	0	0	0	0	0	0	0	0
4/24/2024	4:15 AM	0	0	0	0	0	0	0	0	0	0	0	0	0
4/24/2024	4:30 AM	0	0	0	0	0	0	0	0	0	0	0	0	0
4/24/2024	4:45 AM	0	0	0	0	0	0	0	0	0	0	0	0	0
4/24/2024	5:00 AM	0	0	0	0	0	0	0	0	0	0	0	0	0
4/24/2024	5:15 AM	0	0	0	0	0	0	0	0	0	0	0	0	0
4/24/2024	5:30 AM	0	0	0	0	0	0	0	0	0	0	0	0	0
4/24/2024	5:45 AM	0	0	0	0	0	0	0	0	0	0	0	0	0
4/24/2024	6:00 AM	0	0	0	0	0	0	0	0	0	0	0	0	0
4/24/2024	6:15 AM	0	0	0	0	0	0	0	0	0	0	0	0	0
4/24/2024	6:30 AM	0	0	0	0	0	0	0	0	0	0	0	0	0
4/24/2024	6:45 AM	0	0	0	0	0	0	0	0	0	0	0	0	0
4/24/2024	7:00 AM	0	0	0	0	0	0	0	0	0	0	0	0	0
4/24/2024	7:15 AM	0	0	0	0	0	0	0	0	0	0	0	0	0
4/24/2024	7:30 AM	0	0	0	0	0	0	0	0	0	0	0	0	0
4/24/2024	7:45 AM	0	0	0	0	0	0	0	0	0	0	0	0	0
4/24/2024	8:00 AM	0	0	0	0	0	0	0	0	0	0	0	0	0
4/24/2024	8:15 AM	0	0	0	0	0	0	0	0	0	0	0	0	0
4/24/2024	8:30 AM	0	0	0	0	0	0	0	0	0	0	0	0	0
4/24/2024	8:45 AM	0	0	0	0	0	0	0	0	0	0	0	0	0
4/24/2024	9:00 AM	0	0	0	0	0	0	0	0	0	0	0	0	0
4/24/2024	9:15 AM	0	0	0	0	0	0	0	0	0	0	0	0	0
4/24/2024	9:30 AM	0	0	0	0	0	0	0	0	0	0	0	0	0
4/24/2024	9:45 AM	0	0	0	0	0	0	0	0	0	0	0	0	0
4/24/2024	10:00 AM	0	0	0	0	0	0	0	0	0	0	0	0	0
4/24/2024	10:15 AM	0	0	0	0	0	0	0	0	0	0	0	0	0
4/24/2024	10:30 AM	0	0	0	0	0	0	0	0	0	0	0	0	0
4/24/2024	10:45 AM	0	0	0	0	0	0	0	0	0	0	0	0	0
4/24/2024	11:00 AM	0	0	0	0	0	0	0	0	0	0	0	0	0
4/24/2024	11:15 AM	0	0	0	0	0	0	0	0	0	0	0	0	0
4/24/2024	11:30 AM	0	0	0	0	0	0	0	0	0	0	0	0	0
4/24/2024	11:45 AM	0	0	0	0	0	0	0	0	0	0	0	0	0
4/24/2024	12:00 PM	0	0	0	0	0	0	0	0	0	0	0	0	0
4/24/2024	12:15 PM	0	0	0	0	0	0	0	0	0	0	0	0	0
4/24/2024	12:30 PM	0	0	0	0	0	0	0	0	0	0	0	0	0
4/24/2024	12:45 PM	0	0	0	0	0	0	0	0	0	0	0	0	0
4/24/2024	1:00 PM	0	0	0	0	0	0	0	0	0	0	0	0	0
4/24/2024	1:15 PM	0	0	0	0	0	0	0	0	0	0	0	0	0
4/24/2024	1:30 PM	0	0	0	0	0	0	0	0	0	0	0	0	0
4/24/2024	1:45 PM	0	0	0	0	0	0	0	0	0	0	0	0	0
4/24/2024	2:00 PM	0	0	0	0	0	0	0	0	0	0	0	0	0
4/24/2024	2:15 PM	0	0	0	0	0	0	0	0	0	0	0	0	0
4/24/2024	2:30 PM	0	0	0	0	0	0	0	0	0	0	0	0	0
4/24/2024	2:45 PM	0	0	0	0	0	0	0	0	0	0	0	0	0
4/24/2024	3:00 PM	0	0	0	0	0	0	0	0	0	0	0	0	0
4/24/2024	3:15 PM	0	0	0	0	0	0	0	0	0	0	0	0	0
4/24/2024	3:30 PM	0	0	0	0	0	0	0	0	0	0	0	0	0
4/24/2024	3:45 PM	0	0	0	0	0	0	0	0	0	0	0	0	0
4/24/2024	4:00 PM	0	0	0	0	0	0	0	0	0	0	0	0	0
4/24/2024	4:15 PM	0	0	0	0	0	0	0	0	0	0	0	0	0
4/24/2024	4:30 PM	0	0	0	0	0	0	0	0	0	0	0	0	0
4/24/2024	4:45 PM	0	0	0	0	0	0	0	0	0	0	0	0	0
4/24/2024	5:00 PM	0	0	0	0	0	0	0	0	0	0	0	0	0
4/24/2024	5:15 PM	0	0	0	0	0	0	0	0	0	0	0	0	0
4/24/2024	5:30 PM	0	0	0	0	0	0	0	0	0	0	0	0	0
4/24/2024	5:45 PM	0	0	0	0	0	0	0	0	0	0	0	0	0
4/24/2024	6:00 PM	0	0	0	0	0	0	0	0	0	0	0	0	0
4/24/2024	6:15 PM	0	0	0	0	0	0	0	0	0	0	0	0	0
4/24/2024	6:30 PM	0	0	0	0	0	0	0	0	0	0	0	0	0
4/24/2024	6:45 PM	0	0	0	0	0	0	0	0	0	0	0	0	0
4/24/2024	7:00 PM	0	0	0	0	0	0	0	0	0	0	0	0	0
4/24/2024	7:15 PM	0	0	0	0	0	0	0	0	0	0	0	0	0
4/24/2024	7:30 PM	0	0	0	0	0	0	0	0	0	0	0	0	0
4/24/2024	7:45 PM	0	0	0	0	0	0	0	0	0	0	0	0	0
4/24/2024	8:00 PM	0	0	0	0	0	0	0	0	0	0	0	0	0
4/24/2024	8:15 PM	0	0	0	0	0	0	0	0	0	0	0	0	0
4/24/2024	8:30 PM	0	0	0	0	0	0	0	0	0	0	0	0	0
4/24/2024	8:45 PM	0	0	0	0	0	0	0	0	0	0	0	0	0
4/24/2024	9:00 PM	0	0	0	0	0	0	0	0	0	0	0	0	0
4/24/2024	9:15 PM	0	0	0	0	0	0	0	0	0	0	0	0	0
4/24/2024	9:30 PM	0	0	0	0	0	0	0	0	0	0	0	0	0
4/24/2024	9:45 PM	0	0	0	0	0	0	0	0	0	0	0	0	0
4/24/2024	10:00 PM	0	0	0	0	0	0	0	0	0	0	0	0	0
4/24/2024	10:15 PM	0	0	0	0	0	0	0	0	0	0	0	0	0
4/24/2024	10:30 PM	0	0	0	0	0	0	0	0	0	0	0	0	0
4/24/2024	10:45 PM	0	0	0	0	0	0	0	0	0	0	0	0	0
4/24/2024	11:00 PM	0	0	0	0	0	0	0	0	0	0	0	0	0
4/24/2024	11:15 PM	0	0	0	0	0	0	0	0	0	0	0	0	0
4/24/2024	11:30 PM	0	0	0	0	0	0	0	0	0	0	0	0	0
4/24/2024	11:45 PM	0	0	0	0	0	0	0	0	0	0	0	0	0

4/25/2024	12:00 AM	0	0	0	0	0	0	0	0	0	0	0	0	0
4/25/2024	12:15 AM	0	0	0	0	0	0	0	0	0	0	0	0	0
4/25/2024	12:30 AM	0	0	0	0	0	0	0	0	0	0	0	0	0
4/25/2024	12:45 AM	0	0	0	0	0	0	0	0	0	0	0	0	0
4/25/2024	1:00 AM	0	0	0	0	0	0	0	0	0	0	0	0	0
4/25/2024	1:15 AM	0	0	0	0	0	0	0	0	0	0	0	0	0
4/25/2024	1:30 AM	0	0	0	0	0	0	0	0	0	0	0	0	0
4/25/2024	1:45 AM	0	0	0	0	0	0	0	0	0	0	0	0	0
4/25/2024	2:00 AM	0	0	0	0	0	0	0	0	0	0	0	0	0
4/25/2024	2:15 AM	0	0	0	0	0	0	0	0	0	0	0	0	0
4/25/2024	2:30 AM	0	0	0	0	0	0	0	0	0	0	0	0	0
4/25/2024	2:45 AM	0	0	0	0	0	0	0	0	0	0	0	0	0
4/25/2024	3:00 AM	0	0	0	0	0	0	0	0	0	0	0	0	0
4/25/2024	3:15 AM	0	0	0	0	0	0	0	0	0	0	0	0	0
4/25/2024	3:30 AM	0	0	0	0	0	0	0	0	0	0	0	0	0
4/25/2024	3:45 AM	0	0	0	0	0	0	0	0	0	0	0	0	0
4/25/2024	4:00 AM	0	0	0	0	0	0	0	0	0	0	0	0	0
4/25/2024	4:15 AM	0	0	0	0	0	0	0	0	0	0	0	0	0
4/25/2024	4:30 AM	0	0	0	0	0	0	0	0	0	0	0	0	0
4/25/2024	4:45 AM	0	0	0	0	0	0	0	0	0	0	0	0	0
4/25/2024	5:00 AM	0	0	0	0	0	0	0	0	0	0	0	0	0
4/25/2024	5:15 AM	0	0	0	0	0	0	0	0	0	0	0	0	0
4/25/2024	5:30 AM	0	0	0	0	0	0	0	0	0	0	0	0	0
4/25/2024	5:45 AM	0	0	0	0	0	0	0	0	0	0	0	0	0
4/25/2024	6:00 AM	0	0	0	0	0	0	0	0	0	0	0	0	0
4/25/2024	6:15 AM	0	0	0	0	0	0	0	0	0	0	0	0	0
4/25/2024	6:30 AM	0	0	0	0	0	0	0	0	0	0	0	0	0
4/25/2024	6:45 AM	0	0	0	0	0	0	0	0	0	0	0	0	0
4/25/2024	7:00 AM	0	0	0	0	0	0	0	0	0	0	0	0	0
4/25/2024	7:15 AM	0	0	0	0	0	0	0	0	0	0	0	0	0
4/25/2024	7:30 AM	0	0	0	0	0	0	0	0	0	0	0	0	0
4/25/2024	7:45 AM	0	0	0	0	0	0	0	0	0	0	0	0	0
4/25/2024	8:00 AM	0	0	0	0	0	0	0	0	0	0	0	0	0
4/25/2024	8:15 AM	0	0	0	0	0	0	0	0	0	0	0	0	0
4/25/2024	8:30 AM	0	0	0	0	0	0	0	0	0	0	0	0	0
4/25/2024	8:45 AM	0	0	0	0	0	0	0	0	0	0	0	0	0
4/25/2024	9:00 AM	0	0	0	0	0	0	0	0	0	0	0	0	0
4/25/2024	9:15 AM	0	0	0	0	0	0	0	0	0	0	0	0	0
4/25/2024	9:30 AM	0	0	0	0	0	0	0	0	0	0	0	0	0
4/25/2024	9:45 AM	0	0	0	0	0	0	0	0	0	0	0	0	0
4/25/2024	10:00 AM	0	0	0	0	0	0	0	0	0	0	0	0	0
4/25/2024	10:15 AM	0	0	0	0	0	0	0	0	0	0	0	0	0
4/25/2024	10:30 AM	0	0	0	0	0	0	0	0	0	0	0	0	0
4/25/2024	10:45 AM	0	0	0	0	0	0	0	0	0	0	0	0	0
4/25/2024	11:00 AM	0	0	0	0	0	0	0	0	0	0	0	0	0
4/25/2024	11:15 AM	0	0	0	0	0	0	0	0	0	0	0	0	0
4/25/2024	11:30 AM	0	0	0	0	0	0	0	0	0	0	0	0	0
4/25/2024	11:45 AM	0	0	0	0	0	0	0	0	0	0	0	0	0
4/25/2024	12:00 PM	0	0	0	0	0	0	0	0	0	0	0	0	0
4/25/2024	12:15 PM	0	0	0	0	0	0	0	0	0	0	0	0	0
4/25/2024	12:30 PM	0	0	0	0	0	0	0	0	0	0	0	0	0
4/25/2024	12:45 PM	0	0	0	0	0	0	0	0	0	0	0	0	0
4/25/2024	1:00 PM	0	0	0	0	0	0	0	0	0	0	0	0	0
4/25/2024	1:15 PM	0	0	0	0	0	0	0	0	0	0	0	0	0
4/25/2024	1:30 PM	0	0	0	0	0	0	0	0	0	0	0	0	0
4/25/2024	1:45 PM	0	0	0	0	0	0	0	0	0	0	0	0	0
4/25/2024	2:00 PM	0	0	0	0	0	0	0	0	0	0	0	0	0
4/25/2024	2:15 PM	0	0	0	0	0	0	0	0	0	0	0	0	0
4/25/2024	2:30 PM	0	0	0	0	0	0	0	0	0	0	0	0	0
4/25/2024	2:45 PM	0	0	0	0	0	0	0	0	0	0	0	0	0
4/25/2024	3:00 PM	0	0	0	0	0	0	0	0	0	0	0	0	0
4/25/2024	3:15 PM	0	0	0	0	0	0	0	0	0	0	0	0	0
4/25/2024	3:30 PM	0	0	0	0	0	0	0	0	0	0	0	0	0
4/25/2024	3:45 PM	0	0	0	0	0	0	0	0	0	0	0	0	0
4/25/2024	4:00 PM	0	0	0	0	0	0	0	0	0	0	0	0	0
4/25/2024	4:15 PM	0	0	0	0	0	0	0	0	0	0	0	0	0
4/25/2024	4:30 PM	0	0	0	0	0	0	0	0	0	0	0	0	0
4/25/2024	4:45 PM	0	0	0	0	0	0	0	0	0	0	0	0	0
4/25/2024	5:00 PM	0	0	0	0	0	0	0	0	0	0	0	0	0
4/25/2024	5:15 PM	0	0	0	0	0	0	0	0	0	0	0	0	0
4/25/2024	5:30 PM	0	0	0	0	0	0	0	0	0	0	0	0	0
4/25/2024	5:45 PM	0	0	0	0	0	0	0	0	0	0	0	0	0
4/25/2024	6:00 PM	0	0	0	0	0	0	0	0	0	0	0	0	0
4/25/2024	6:15 PM	0	0	0	0	0	0	0	0	0	0	0	0	0
4/25/2024	6:30 PM	0	0	0	0	0	0	0	0	0	0	0	0	0
4/25/2024	6:45 PM	0	0	0	0	0	0	0	0	0	0	0	0	0
4/25/2024	7:00 PM	0	0	0	0	0	0	0	0	0	0	0	0	0
4/25/2024	7:15 PM	0	0	0	0	0	0	0	0	0	0	0	0	0
4/25/2024	7:30 PM	0	0	0	0	0	0	0	0	0	0	0	0	0
4/25/2024	7:45 PM	0	0	0	0	0	0	0	0	0	0	0	0	0
4/25/2024	8:00 PM	0	0	0	0	0	0	0	0	0	0	0	0	0
4/25/2024	8:15 PM	0	0	0	0	0	0	0	0	0	0	0	0	0
4/25/2024	8:30 PM	0	0	0	0	0	0	0	0	0	0	0	0	0
4/25/2024	8:45 PM	0	0	0	0	0	0	0	0	0	0	0	0	0
4/25/2024	9:00 PM	0	0	0	0	0	0	0	0	0	0	0	0	0
4/25/2024	9:15 PM	0	0	0	0	0	0	0	0	0	0	0	0	0
4/25/2024	9:30 PM	0	0	0	0	0	0	0	0	0	0	0	0	0
4/25/2024	9:45 PM	0	0	0	0	0	0	0	0	0	0	0	0	0
4/25/2024	10:00 PM	0	0	0	0	0	0	0	0	0	0	0	0	0
4/25/2024	10:15 PM	0	0	0	0	0	0	0	0	0	0	0	0	0
4/25/2024	10:30 PM	0	0	0	0	0	0	0	0	0	0	0	0	0
4/25/2024	10:45 PM	0	0	0	0	0	0	0	0	0	0	0	0	0
4/25/2024	11:00 PM	0	0	0	0	0	0	0	0	0	0	0	0	0
4/25/2024	11:15 PM	0	0	0	0	0	0	0	0	0	0	0	0	0
4/25/2024	11:30 PM	0	0	0	0	0	0	0	0	0	0	0	0	0
4/25/2024	11:45 PM	0	0	0	0	0	0	0	0	0	0	0	0	0

SB
File Name:
Start Date: 4/23/2024
Start Time: 0
Site Code: 44
Station ID: 1
Location 1: I-26 On/Off-Ramp, north of Bush River Rd
Location 2:

Date	Time	1	2	3	4	5	6	7	8	9	10	11	12	13
4/23/2024	12:00 AM	0	0	0	0	0	0	0	0	0	0	0	0	0
4/23/2024	12:15 AM	0	0	0	0	0	0	0	0	0	0	0	0	0
4/23/2024	12:30 AM	0	0	0	0	0	0	0	0	0	0	0	0	0
4/23/2024	12:45 AM	0	0	0	0	0	0	0	0	0	0	0	0	0
4/23/2024	1:00 AM	0	0	0	0	0	0	0	0	0	0	0	0	0
4/23/2024	1:15 AM	0	0	0	0	0	0	0	0	0	0	0	0	0
4/23/2024	1:30 AM	0	0	0	0	0	0	0	0	0	0	0	0	0
4/23/2024	1:45 AM	0	0	0	0	0	0	0	0	0	0	0	0	0
4/23/2024	2:00 AM	0	0	0	0	0	0	0	0	0	0	0	0	0
4/23/2024	2:15 AM	0	0	0	0	0	0	0	0	0	0	0	0	0
4/23/2024	2:30 AM	0	0	0	0	0	0	0	0	0	0	0	0	0
4/23/2024	2:45 AM	0	0	0	0	0	0	0	0	0	0	0	0	0
4/23/2024	3:00 AM	0	0	0	0	0	0	0	0	0	0	0	0	0
4/23/2024	3:15 AM	0	0	0	0	0	0	0	0	0	0	0	0	0
4/23/2024	3:30 AM	0	0	0	0	0	0	0	0	0	0	0	0	0
4/23/2024	3:45 AM	0	0	0	0	0	0	0	0	0	0	0	0	0
4/23/2024	4:00 AM	0	0	0	0	0	0	0	0	0	0	0	0	0
4/23/2024	4:15 AM	0	0	0	0	0	0	0	0	0	0	0	0	0
4/23/2024	4:30 AM	0	0	0	0	0	0	0	0	0	0	0	0	0
4/23/2024	4:45 AM	0	0	0	0	0	0	0	0	0	0	0	0	0
4/23/2024	5:00 AM	0	0	0	0	0	0	0	0	0	0	0	0	0
4/23/2024	5:15 AM	0	0	0	0	0	0	0	0	0	0	0	0	0
4/23/2024	5:30 AM	0	0	0	0	0	0	0	0	0	0	0	0	0
4/23/2024	5:45 AM	0	0	0	0	0	0	0	0	0	0	0	0	0
4/23/2024	6:00 AM	0	0	0	0	0	0	0	0	0	0	0	0	0
4/23/2024	6:15 AM	0	0	0	0	0	0	0	0	0	0	0	0	0
4/23/2024	6:30 AM	0	0	0	0	0	0	0	0	0	0	0	0	0
4/23/2024	6:45 AM	0	0	0	0	0	0	0	0	0	0	0	0	0
4/23/2024	7:00 AM	0	0	0	0	0	0	0	0	0	0	0	0	0
4/23/2024	7:15 AM	0	0	0	0	0	0	0	0	0	0	0	0	0
4/23/2024	7:30 AM	0	0	0	0	0	0	0	0	0	0	0	0	0
4/23/2024	7:45 AM	0	0	0	0	0	0	0	0	0	0	0	0	0
4/23/2024	8:00 AM	0	0	0	0	0	0	0	0	0	0	0	0	0
4/23/2024	8:15 AM	0	0	0	0	0	0	0	0	0	0	0	0	0
4/23/2024	8:30 AM	0	0	0	0	0	0	0	0	0	0	0	0	0
4/23/2024	8:45 AM	0	0	0	0	0	0	0	0	0	0	0	0	0
4/23/2024	9:00 AM	0	0	0	0	0	0	0	0	0	0	0	0	0
4/23/2024	9:15 AM	0	0	0	0	0	0	0	0	0	0	0	0	0
4/23/2024	9:30 AM	0	0	0	0	0	0	0	0	0	0	0	0	0
4/23/2024	9:45 AM	0	0	0	0	0	0	0	0	0	0	0	0	0
4/23/2024	10:00 AM	0	0	0	0	0	0	0	0	0	0	0	0	0
4/23/2024	10:15 AM	0	0	0	0	0	0	0	0	0	0	0	0	0
4/23/2024	10:30 AM	0	0	0	0	0	0	0	0	0	0	0	0	0
4/23/2024	10:45 AM	0	0	0	0	0	0	0	0	0	0	0	0	0
4/23/2024	11:00 AM	0	0	0	0	0	0	0	0	0	0	0	0	0
4/23/2024	11:15 AM	0	0	0	0	0	0	0	0	0	0	0	0	0
4/23/2024	11:30 AM	0	0	0	0	0	0	0	0	0	0	0	0	0
4/23/2024	11:45 AM	0	0	0	0	0	0	0	0	0	0	0	0	0
4/23/2024	12:00 PM	0	0	0	0	0	0	0	0	0	0	0	0	0
4/23/2024	12:15 PM	0	0	0	0	0	0	0	0	0	0	0	0	0
4/23/2024	12:30 PM	0	0	0	0	0	0	0	0	0	0	0	0	0
4/23/2024	12:45 PM	0	0	0	0	0	0	0	0	0	0	0	0	0
4/23/2024	1:00 PM	0	0	0	0	0	0	0	0	0	0	0	0	0
4/23/2024	1:15 PM	0	0	0	0	0	0	0	0	0	0	0	0	0
4/23/2024	1:30 PM	0	0	0	0	0	0	0	0	0	0	0	0	0
4/23/2024	1:45 PM	0	0	0	0	0	0	0	0	0	0	0	0	0
4/23/2024	2:00 PM	0	0	0	0	0	0	0	0	0	0	0	0	0
4/23/2024	2:15 PM	0	0	0	0	0	0	0	0	0	0	0	0	0
4/23/2024	2:30 PM	0	0	0	0	0	0	0	0	0	0	0	0	0
4/23/2024	2:45 PM	0	0	0	0	0	0	0	0	0	0	0	0	0
4/23/2024	3:00 PM	0	0	0	0	0	0	0	0	0	0	0	0	0
4/23/2024	3:15 PM	0	0	0	0	0	0	0	0	0	0	0	0	0
4/23/2024	3:30 PM	0	0	0	0	0	0	0	0	0	0	0	0	0
4/23/2024	3:45 PM	0	0	0	0	0	0	0	0	0	0	0	0	0
4/23/2024	4:00 PM	0	0	0	0	0	0	0	0	0	0	0	0	0
4/23/2024	4:15 PM	0	0	0	0	0	0	0	0	0	0	0	0	0
4/23/2024	4:30 PM	0	0	0	0	0	0	0	0	0	0	0	0	0
4/23/2024	4:45 PM	0	0	0	0	0	0	0	0	0	0	0	0	0
4/23/2024	5:00 PM	0	0	0	0	0	0	0	0	0	0	0	0	0
4/23/2024	5:15 PM	0	0	0	0	0	0	0	0	0	0	0	0	0
4/23/2024	5:30 PM	0	0	0	0	0	0	0	0	0	0	0	0	0
4/23/2024	5:45 PM	0	0	0	0	0	0	0	0	0	0	0	0	0
4/23/2024	6:00 PM	0	0	0	0	0	0	0	0	0	0	0	0	0
4/23/2024	6:15 PM	0	39	3	0	1	0	0	0	0	0	0	0	0
4/23/2024	6:30 PM	0	77	11	0	1	0	0	0	0	0	0	0	0
4/23/2024	6:45 PM	0	111	13	0	1	0	0	0	0	0	0	0	0
4/23/2024	7:00 PM	0	150	18	0	2	0	0	0	0	0	0	0	0
4/23/2024	7:15 PM	0	143	16	0	2	0	0	0	0	0	0	0	0
4/23/2024	7:30 PM	0	131	17	0	2	0	0	0	0	0	0	0	0
4/23/2024	7:45 PM	0	125	17	0	2	0	0	0	0	0	0	0	0
4/23/2024	8:00 PM	0	114	14	0	1	0	0	0	0	0	0	0	0
4/23/2024	8:15 PM	0	104	15	0	0	0	0	0	1	0	0	0	0
4/23/2024	8:30 PM	0	108	6	0	0	0	0	0	1	0	0	0	0
4/23/2024	8:45 PM	0	110	6	0	0	0	0	0	1	0	0	0	0
4/23/2024	9:00 PM	0	111	7	0	0	0	0	0	2	0	0	0	0
4/23/2024	9:15 PM	0	112	7	0	0	0	0	0	1	0	0	0	0
4/23/2024	9:30 PM	0	104	8	0	0	0	0	0	1	0	0	0	0
4/23/2024	9:45 PM	0	95	7	0	0	0	0	0	1	0	0	0	0
4/23/2024	10:00 PM	0	85	4	0	0	0	0	0	0	0	0	0	0
4/23/2024	10:15 PM	0	81	4	0	0	0	0	0	0	0	0	0	0
4/23/2024	10:30 PM	0	69	4	0	0	0	0	0	0	0	0	0	0
4/23/2024	10:45 PM	0	53	4	0	0	0	0	0	0	0	0	0	0
4/23/2024	11:00 PM	0	37	5	0	0	0	0	0	0	0	0	0	0
4/23/2024	11:15 PM	0	18	3	0	0	0	0	0	0	0	0	0	0
4/23/2024	11:30 PM	0	8	2	0	0	0	0	0	0	0	0	0	0
4/23/2024	11:45 PM	0	3	1	0	0	0	0	0	0	0	0	0	0

4/24/2024	12:00 AM	0	33	4	0	0	0	0	0	0	1	0	0	0
4/24/2024	12:15 AM	0	26	4	0	0	0	0	0	0	1	0	0	0
4/24/2024	12:30 AM	0	22	6	0	0	0	0	0	0	0	0	0	0
4/24/2024	12:45 AM	0	24	4	0	0	0	0	0	0	0	0	0	0
4/24/2024	1:00 AM	0	16	3	0	0	0	0	0	0	0	0	0	0
4/24/2024	1:15 AM	0	19	2	0	0	0	0	0	0	0	0	0	0
4/24/2024	1:30 AM	0	13	0	0	0	0	0	0	0	0	0	0	0
4/24/2024	1:45 AM	0	11	1	0	0	0	0	0	0	0	0	0	0
4/24/2024	2:00 AM	0	14	1	0	0	0	0	0	0	0	0	0	0
4/24/2024	2:15 AM	0	10	1	0	0	0	0	0	0	0	0	0	0
4/24/2024	2:30 AM	0	12	2	0	0	0	0	0	0	0	0	0	0
4/24/2024	2:45 AM	0	8	1	0	0	0	0	0	0	0	0	0	0
4/24/2024	3:00 AM	0	4	2	0	0	0	0	0	0	0	0	0	0
4/24/2024	3:15 AM	0	7	3	0	0	0	0	1	1	0	0	0	0
4/24/2024	3:30 AM	0	5	3	0	0	0	0	1	1	0	0	0	0
4/24/2024	3:45 AM	0	6	3	0	0	0	0	1	1	0	0	0	0
4/24/2024	4:00 AM	0	9	4	0	0	0	0	1	1	0	0	0	0
4/24/2024	4:15 AM	0	9	4	0	0	0	0	0	0	0	0	0	0
4/24/2024	4:30 AM	0	12	4	0	0	0	0	0	0	0	0	0	0
4/24/2024	4:45 AM	0	20	4	0	0	0	0	0	0	0	0	0	0
4/24/2024	5:00 AM	0	24	2	0	0	0	0	0	1	0	0	0	0
4/24/2024	5:15 AM	0	30	6	0	0	0	0	0	2	0	0	0	0
4/24/2024	5:30 AM	0	38	9	0	0	0	0	0	3	0	0	0	0
4/24/2024	5:45 AM	0	37	17	0	1	1	0	0	3	0	0	0	0
4/24/2024	6:00 AM	0	50	19	0	2	1	0	0	2	0	0	0	0
4/24/2024	6:15 AM	1	57	17	0	2	2	0	0	2	0	0	0	0
4/24/2024	6:30 AM	1	67	19	0	2	2	0	0	1	0	0	0	0
4/24/2024	6:45 AM	1	76	17	0	1	1	0	0	1	0	0	0	0
4/24/2024	7:00 AM	1	88	25	0	0	2	0	0	1	0	0	0	0
4/24/2024	7:15 AM	0	114	29	0	0	1	0	0	0	0	0	0	0
4/24/2024	7:30 AM	1	133	28	0	0	1	0	0	0	0	0	0	0
4/24/2024	7:45 AM	1	145	26	0	2	1	0	0	2	0	0	0	0
4/24/2024	8:00 AM	1	155	21	0	2	1	0	1	2	0	0	0	0
4/24/2024	8:15 AM	1	131	19	0	2	1	0	1	3	0	0	0	0
4/24/2024	8:30 AM	0	123	21	0	2	1	0	1	3	0	0	0	0
4/24/2024	8:45 AM	0	113	22	0	0	2	0	2	1	0	0	0	0
4/24/2024	9:00 AM	0	109	24	0	1	2	0	1	1	0	0	0	0
4/24/2024	9:15 AM	0	120	29	0	1	2	0	1	0	0	0	0	0
4/24/2024	9:30 AM	0	116	35	0	4	2	2	1	0	0	0	0	0
4/24/2024	9:45 AM	0	133	36	0	4	2	2	0	0	0	0	0	0
4/24/2024	10:00 AM	0	124	39	1	3	2	2	0	1	0	0	0	0
4/24/2024	10:15 AM	0	118	37	1	4	2	2	0	1	0	0	0	0
4/24/2024	10:30 AM	0	111	34	1	1	2	0	0	1	0	0	0	0
4/24/2024	10:45 AM	1	110	37	1	2	1	0	0	3	0	0	0	0
4/24/2024	11:00 AM	1	114	34	0	2	2	0	0	5	0	0	0	0
4/24/2024	11:15 AM	1	120	30	0	4	3	0	0	6	0	0	0	0
4/24/2024	11:30 AM	1	128	24	0	4	3	0	0	6	1	0	0	0
4/24/2024	11:45 AM	0	138	27	0	3	4	0	0	4	1	0	0	0
4/24/2024	12:00 PM	0	126	31	0	4	2	0	0	2	1	0	0	0
4/24/2024	12:15 PM	0	140	35	0	2	1	0	0	2	1	0	0	0
4/24/2024	12:30 PM	0	152	38	0	4	1	0	0	2	0	0	0	0
4/24/2024	12:45 PM	0	138	35	0	6	1	0	1	3	0	0	0	0
4/24/2024	1:00 PM	0	157	29	0	6	1	1	1	2	0	0	0	0
4/24/2024	1:15 PM	0	149	28	0	6	1	1	2	2	0	0	0	0
4/24/2024	1:30 PM	0	137	33	0	5	3	1	5	3	0	0	0	0
4/24/2024	1:45 PM	0	148	29	0	4	2	1	4	2	0	0	0	0
4/24/2024	2:00 PM	0	135	38	0	14	2	0	4	2	0	0	0	0
4/24/2024	2:15 PM	0	138	36	0	14	2	0	3	1	0	0	0	0
4/24/2024	2:30 PM	0	134	29	0	14	0	0	0	3	0	0	0	0
4/24/2024	2:45 PM	0	111	26	0	13	0	0	0	5	0	0	0	0
4/24/2024	3:00 PM	1	122	16	1	2	1	0	0	6	0	0	0	0
4/24/2024	3:15 PM	1	125	21	1	2	2	0	0	9	0	0	0	0
4/24/2024	3:30 PM	1	138	23	1	2	3	0	0	8	0	0	0	0
4/24/2024	3:45 PM	1	154	34	1	2	3	0	0	6	0	0	0	0
4/24/2024	4:00 PM	0	163	37	0	3	4	0	0	8	0	0	0	0
4/24/2024	4:15 PM	0	157	38	0	2	4	0	0	5	0	0	0	0
4/24/2024	4:30 PM	1	149	36	0	2	4	0	0	5	0	0	0	0
4/24/2024	4:45 PM	1	157	33	0	2	4	0	0	5	0	0	0	0
4/24/2024	5:00 PM	1	149	37	0	2	2	0	0	2	0	0	0	0
4/24/2024	5:15 PM	3	170	35	0	3	1	0	0	4	0	0	0	0
4/24/2024	5:30 PM	2	181	36	0	3	0	0	1	3	0	0	0	0
4/24/2024	5:45 PM	2	177	37	1	4	0	0	1	3	0	0	0	0
4/24/2024	6:00 PM	2	171	34	1	4	1	0	1	3	0	0	0	0
4/24/2024	6:15 PM	0	142	35	1	3	1	0	1	2	0	0	0	0
4/24/2024	6:30 PM	0	129	36	1	2	1	0	0	1	0	0	0	0
4/24/2024	6:45 PM	0	117	26	0	1	1	0	0	1	0	0	0	0
4/24/2024	7:00 PM	0	101	22	0	0	0	0	0	1	0	0	0	0
4/24/2024	7:15 PM	0	113	19	0	0	1	0	1	0	0	0	0	0
4/24/2024	7:30 PM	2	135	21	0	1	1	0	1	0	0	0	0	0
4/24/2024	7:45 PM	2	137	22	0	1	1	0	1	1	0	0	0	0
4/24/2024	8:00 PM	2	150	22	0	1	1	0	1	1	0	0	0	0
4/24/2024	8:15 PM	2	129	18	0	1	0	0	0	1	0	0	0	0
4/24/2024	8:30 PM	0	100	15	0	0	0	0	0	2	0	0	0	0
4/24/2024	8:45 PM	0	86	13	0	0	1	0	0	1	0	0	0	0
4/24/2024	9:00 PM	2	76	9	0	0	1	0	0	1	0	0	0	0
4/24/2024	9:15 PM	2	75	7	0	0	1	0	0	1	0	0	0	0
4/24/2024	9:30 PM	2	70	3	0	1	1	0	0	0	0	0	0	0
4/24/2024	9:45 PM	2	72	6	0	1	0	0	0	0	0	0	0	0
4/24/2024	10:00 PM	0	67	9	0	1	0	0	0	0	0	0	0	0
4/24/2024	10:15 PM	0	63	8	0	1	0	0	0	0	0	0	0	0
4/24/2024	10:30 PM	0	71	7	0	0	0	0	0	0	0	0	0	0
4/24/2024	10:45 PM	0	65	4	0	0	0	0	0	0	0	0	0	0
4/24/2024	11:00 PM	0	58	1	0	0	0	0	0	0	0	0	0	0
4/24/2024	11:15 PM	0	45	1	0	0	0	0	0	0	0	0	0	0
4/24/2024	11:30 PM	0	20	0	0	0	0	0	0	0	0	0	0	0
4/24/2024	11:45 PM	0	8	0	0	0	0	0	0	0	0	0	0	0

4/25/2024	12:00 AM	0	31	5	0	1	0	0	0	0	0	0	0	0
4/25/2024	12:15 AM	0	32	3	0	1	0	0	0	0	0	0	0	0
4/25/2024	12:30 AM	0	26	1	0	1	0	0	0	0	0	0	0	0
4/25/2024	12:45 AM	0	26	2	0	0	0	0	0	0	0	0	0	0
4/25/2024	1:00 AM	0	24	4	0	0	0	0	0	1	0	0	0	0
4/25/2024	1:15 AM	0	16	5	0	0	0	0	0	1	1	0	0	0
4/25/2024	1:30 AM	0	17	5	0	0	0	0	0	1	1	0	0	0
4/25/2024	1:45 AM	0	14	5	0	0	0	0	0	1	1	0	0	0
4/25/2024	2:00 AM	0	13	2	0	0	0	0	0	0	2	0	0	0
4/25/2024	2:15 AM	0	14	1	0	0	0	0	0	0	1	0	0	0
4/25/2024	2:30 AM	0	12	1	0	0	0	0	0	1	1	0	0	0
4/25/2024	2:45 AM	0	14	0	0	0	0	0	0	1	1	0	0	0
4/25/2024	3:00 AM	0	13	0	0	0	0	0	0	2	0	0	0	0
4/25/2024	3:15 AM	0	11	3	0	0	0	0	0	3	0	0	0	0
4/25/2024	3:30 AM	0	10	4	0	0	0	0	0	3	0	0	0	0
4/25/2024	3:45 AM	0	8	5	0	0	0	0	0	3	0	0	0	0
4/25/2024	4:00 AM	0	15	5	0	0	0	0	0	2	0	0	0	0
4/25/2024	4:15 AM	0	19	2	0	0	0	0	0	1	0	0	0	0
4/25/2024	4:30 AM	0	24	6	0	1	0	0	0	0	0	0	0	0
4/25/2024	4:45 AM	0	30	5	0	1	0	0	0	0	0	0	0	0
4/25/2024	5:00 AM	0	28	6	0	1	0	0	0	0	0	0	0	0
4/25/2024	5:15 AM	0	27	10	0	1	0	0	0	0	0	0	0	0
4/25/2024	5:30 AM	0	28	7	0	2	0	0	0	1	0	0	0	0
4/25/2024	5:45 AM	0	37	8	0	2	0	0	0	1	0	0	0	0
4/25/2024	6:00 AM	0	50	11	0	2	1	0	0	2	0	0	0	0
4/25/2024	6:15 AM	0	65	10	0	2	3	0	0	2	0	0	0	0
4/25/2024	6:30 AM	0	74	12	0	0	3	0	0	1	0	0	0	0
4/25/2024	6:45 AM	0	82	14	0	0	3	0	0	2	0	0	0	0
4/25/2024	7:00 AM	0	84	16	0	1	2	0	0	1	0	0	0	0
4/25/2024	7:15 AM	0	89	24	0	2	0	0	0	1	0	0	0	0
4/25/2024	7:30 AM	0	106	28	0	2	0	0	0	1	0	0	0	0
4/25/2024	7:45 AM	0	128	36	0	2	1	0	0	0	0	0	0	0
4/25/2024	8:00 AM	0	148	38	0	4	2	0	0	0	0	0	0	0
4/25/2024	8:15 AM	0	153	32	0	3	2	0	0	2	0	0	0	0
4/25/2024	8:30 AM	0	146	32	0	4	2	0	0	2	0	0	0	0
4/25/2024	8:45 AM	0	118	26	0	6	2	0	0	2	0	0	0	0
4/25/2024	9:00 AM	0	99	30	0	4	2	0	0	3	0	0	0	0
4/25/2024	9:15 AM	0	92	32	0	4	3	0	0	1	0	0	0	0
4/25/2024	9:30 AM	1	88	29	0	4	3	1	0	1	0	0	0	0
4/25/2024	9:45 AM	1	93	30	0	3	2	1	1	1	0	0	0	0
4/25/2024	10:00 AM	1	99	25	0	3	2	1	1	0	0	0	0	0
4/25/2024	10:15 AM	1	100	30	0	3	1	1	2	0	0	0	0	0
4/25/2024	10:30 AM	0	106	37	0	3	2	0	3	3	0	0	0	0
4/25/2024	10:45 AM	0	120	35	0	2	4	0	2	3	0	0	0	0
4/25/2024	11:00 AM	0	124	38	0	2	3	0	2	6	0	0	0	0
4/25/2024	11:15 AM	1	147	29	0	2	3	1	1	6	0	0	0	0
4/25/2024	11:30 AM	1	155	23	0	1	2	1	0	3	0	0	0	0
4/25/2024	11:45 AM	1	154	32	0	2	1	1	0	3	0	0	0	0
4/25/2024	12:00 PM	1	176	30	0	1	3	1	0	0	0	0	0	0
4/25/2024	12:15 PM	0	162	35	0	4	3	0	1	1	0	0	0	0
4/25/2024	12:30 PM	0	160	43	0	5	4	0	3	1	0	0	0	0
4/25/2024	12:45 PM	0	158	41	0	7	3	0	4	1	0	0	0	0
4/25/2024	1:00 PM	1	156	39	0	7	1	0	4	1	0	0	0	0
4/25/2024	1:15 PM	1	151	45	0	5	4	0	3	1	0	0	0	0
4/25/2024	1:30 PM	1	163	41	0	5	3	0	2	2	0	0	0	0
4/25/2024	1:45 PM	1	163	36	0	3	5	0	1	2	0	0	0	0
4/25/2024	2:00 PM	0	147	34	0	3	5	0	1	2	0	0	0	0
4/25/2024	2:15 PM	0	154	27	0	2	3	0	1	1	0	0	0	0
4/25/2024	2:30 PM	0	146	22	0	4	4	0	0	1	0	0	0	0
4/25/2024	2:45 PM	0	157	26	0	3	2	0	0	2	0	0	0	0
4/25/2024	3:00 PM	0	172	30	0	3	2	0	1	4	0	0	0	0
4/25/2024	3:15 PM	0	166	26	0	4	1	0	2	4	0	0	0	0
4/25/2024	3:30 PM	0	163	25	0	1	0	0	2	3	0	0	0	0
4/25/2024	3:45 PM	0	158	25	0	3	0	0	2	5	0	0	0	0
4/25/2024	4:00 PM	0	137	25	1	3	0	0	1	3	0	0	0	0
4/25/2024	4:15 PM	0	144	31	1	2	0	0	0	3	0	0	0	0
4/25/2024	4:30 PM	0	146	33	1	2	1	0	0	3	0	0	0	0
4/25/2024	4:45 PM	0	127	29	1	0	1	0	0	1	0	0	0	0
4/25/2024	5:00 PM	0	129	30	0	1	1	0	0	1	0	0	0	0
4/25/2024	5:15 PM	0	131	25	0	1	1	0	0	2	0	0	0	0
4/25/2024	5:30 PM	0	124	27	0	2	0	0	0	2	0	0	0	0
4/25/2024	5:45 PM	0	130	31	0	3	0	0	0	1	0	0	0	0
4/25/2024	6:00 PM	0	126	27	0	3	0	0	0	1	0	0	0	0
4/25/2024	6:15 PM	0	88	23	0	3	0	0	0	0	0	0	0	0
4/25/2024	6:30 PM	0	57	15	0	2	0	0	0	0	0	0	0	0
4/25/2024	6:45 PM	0	29	5	0	1	0	0	0	0	0	0	0	0
4/25/2024	7:00 PM	0	0	0	0	0	0	0	0	0	0	0	0	0
4/25/2024	7:15 PM	0	0	0	0	0	0	0	0	0	0	0	0	0
4/25/2024	7:30 PM	0	0	0	0	0	0	0	0	0	0	0	0	0
4/25/2024	7:45 PM	0	0	0	0	0	0	0	0	0	0	0	0	0
4/25/2024	8:00 PM	0	0	0	0	0	0	0	0	0	0	0	0	0
4/25/2024	8:15 PM	0	0	0	0	0	0	0	0	0	0	0	0	0
4/25/2024	8:30 PM	0	0	0	0	0	0	0	0	0	0	0	0	0
4/25/2024	8:45 PM	0	0	0	0	0	0	0	0	0	0	0	0	0
4/25/2024	9:00 PM	0	0	0	0	0	0	0	0	0	0	0	0	0
4/25/2024	9:15 PM	0	0	0	0	0	0	0	0	0	0	0	0	0
4/25/2024	9:30 PM	0	0	0	0	0	0	0	0	0	0	0	0	0
4/25/2024	9:45 PM	0	0	0	0	0	0	0	0	0	0	0	0	0
4/25/2024	10:00 PM	0	0	0	0	0	0	0	0	0	0	0	0	0
4/25/2024	10:15 PM	0	0	0	0	0	0	0	0	0	0	0	0	0
4/25/2024	10:30 PM	0	0	0	0	0	0	0	0	0	0	0	0	0
4/25/2024	10:45 PM	0	0	0	0	0	0	0	0	0	0	0	0	0
4/25/2024	11:00 PM	0	0	0	0	0	0	0	0	0	0	0	0	0
4/25/2024	11:15 PM	0	0	0	0	0	0	0	0	0	0	0	0	0
4/25/2024	11:30 PM	0	0	0	0	0	0	0	0	0	0	0	0	0
4/25/2024	11:45 PM	0	0	0	0	0	0	0	0	0	0	0	0	0

Bi-Directional Class Count || NB EB 15min

Columbia, SC

Marr Traffic DATA COLLECTION
www.marrtraffic.com

Site 45
I-26 On/Off-Ramp,
north of Bush River Rd

Date
Tuesday, April 23, 2024

Lat/Long
34.028994°, -81.103003°

Weather
Fair
58°F

Click here for Detailed Weather

Click here for Map

0000 - 2400 (Weekday 24h Session) (04-23-2024)
NB EB 15min

	Northbound (Movement 45.1)													15min	60min
Time	1	2	3	4	5	6	7	8	9	10	11	12	13	Total	Total
0000 - 0015	0	0	0	0	0	0	0	0	0	0	0	0	0	**0**	
0015 - 0030	0	0	0	0	0	0	0	0	0	0	0	0	0	**0**	
0030 - 0045	0	0	0	0	0	0	0	0	0	0	0	0	0	**0**	
0045 - 0100	0	0	0	0	0	0	0	0	0	0	0	0	0	**0**	**0**
0100 - 0115	0	0	0	0	0	0	0	0	0	0	0	0	0	**0**	
0115 - 0130	0	0	0	0	0	0	0	0	0	0	0	0	0	**0**	
0130 - 0145	0	0	0	0	0	0	0	0	0	0	0	0	0	**0**	
0145 - 0200	0	0	0	0	0	0	0	0	0	0	0	0	0	**0**	**0**
0200 - 0215	0	0	0	0	0	0	0	0	0	0	0	0	0	**0**	
0215 - 0230	0	0	0	0	0	0	0	0	0	0	0	0	0	**0**	
0230 - 0245	0	0	0	0	0	0	0	0	0	0	0	0	0	**0**	
0245 - 0300	0	0	0	0	0	0	0	0	0	0	0	0	0	**0**	**0**
0300 - 0315	0	0	0	0	0	0	0	0	0	0	0	0	0	**0**	
0315 - 0330	0	0	0	0	0	0	0	0	0	0	0	0	0	**0**	
0330 - 0345	0	0	0	0	0	0	0	0	0	0	0	0	0	**0**	
0345 - 0400	0	0	0	0	0	0	0	0	0	0	0	0	0	**0**	**0**
0400 - 0415	0	0	0	0	0	0	0	0	0	0	0	0	0	**0**	
0415 - 0430	0	0	0	0	0	0	0	0	0	0	0	0	0	**0**	
0430 - 0445	0	0	0	0	0	0	0	0	0	0	0	0	0	**0**	
0445 - 0500	0	0	0	0	0	0	0	0	0	0	0	0	0	**0**	**0**
0500 - 0515	0	0	0	0	0	0	0	0	0	0	0	0	0	**0**	
0515 - 0530	0	0	0	0	0	0	0	0	0	0	0	0	0	**0**	
0530 - 0545	0	0	0	0	0	0	0	0	0	0	0	0	0	**0**	
0545 - 0600	0	0	0	0	0	0	0	0	0	0	0	0	0	**0**	**0**
0600 - 0615	0	0	0	0	0	0	0	0	0	0	0	0	0	**0**	
0615 - 0630	0	0	0	0	0	0	0	0	0	0	0	0	0	**0**	
0630 - 0645	0	0	0	0	0	0	0	0	0	0	0	0	0	**0**	
0645 - 0700	0	0	0	0	0	0	0	0	0	0	0	0	0	**0**	**0**
0700 - 0715	0	0	0	0	0	0	0	0	0	0	0	0	0	**0**	
0715 - 0730	0	0	0	0	0	0	0	0	0	0	0	0	0	**0**	
0730 - 0745	0	0	0	0	0	0	0	0	0	0	0	0	0	**0**	
0745 - 0800	0	0	0	0	0	0	0	0	0	0	0	0	0	**0**	**0**
0800 - 0815	0	0	0	0	0	0	0	0	0	0	0	0	0	**0**	
0815 - 0830	0	0	0	0	0	0	0	0	0	0	0	0	0	**0**	
0830 - 0845	0	0	0	0	0	0	0	0	0	0	0	0	0	**0**	
0845 - 0900	0	0	0	0	0	0	0	0	0	0	0	0	0	**0**	**0**
0900 - 0915	0	0	0	0	0	0	0	0	0	0	0	0	0	**0**	
0915 - 0930	0	0	0	0	0	0	0	0	0	0	0	0	0	**0**	
0930 - 0945	0	0	0	0	0	0	0	0	0	0	0	0	0	**0**	
0945 - 1000	0	0	0	0	0	0	0	0	0	0	0	0	0	**0**	**0**
1000 - 1015	0	0	0	0	0	0	0	0	0	0	0	0	0	**0**	
1015 - 1030	0	0	0	0	0	0	0	0	0	0	0	0	0	**0**	
1030 - 1045	0	0	0	0	0	0	0	0	0	0	0	0	0	**0**	
1045 - 1100	0	0	0	0	0	0	0	0	0	0	0	0	0	**0**	**0**
1100 - 1115	0	0	0	0	0	0	0	0	0	0	0	0	0	**0**	
1115 - 1130	0	0	0	0	0	0	0	0	0	0	0	0	0	**0**	
1130 - 1145	0	0	0	0	0	0	0	0	0	0	0	0	0	**0**	
1145 - 1200	0	0	0	0	0	0	0	0	0	0	0	0	0	**0**	**0**
1200 - 1215	0	0	0	0	0	0	0	0	0	0	0	0	0	**0**	
1215 - 1230	0	0	0	0	0	0	0	0	0	0	0	0	0	**0**	
1230 - 1245	0	0	0	0	0	0	0	0	0	0	0	0	0	**0**	
1245 - 1300	0	0	0	0	0	0	0	0	0	0	0	0	0	**0**	**0**
1300 - 1315	0	0	0	0	0	0	0	0	0	0	0	0	0	**0**	
1315 - 1330	0	0	0	0	0	0	0	0	0	0	0	0	0	**0**	
1330 - 1345	0	0	0	0	0	0	0	0	0	0	0	0	0	**0**	
1345 - 1400	0	0	0	0	0	0	0	0	0	0	0	0	0	**0**	**0**
1400 - 1415	0	0	0	0	0	0	0	0	0	0	0	0	0	**0**	
1415 - 1430	0	0	0	0	0	0	0	0	0	0	0	0	0	**0**	
1430 - 1445	0	0	0	0	0	0	0	0	0	0	0	0	0	**0**	
1445 - 1500	0	0	0	0	0	0	0	0	0	0	0	0	0	**0**	**0**
1500 - 1515	0	0	0	0	0	0	0	0	0	0	0	0	0	**0**	
1515 - 1530	0	0	0	0	0	0	0	0	0	0	0	0	0	**0**	
1530 - 1545	0	0	0	0	0	0	0	0	0	0	0	0	0	**0**	
1545 - 1600	0	0	0	0	0	0	0	0	0	0	0	0	0	**0**	**0**
1600 - 1615	0	0	0	0	0	0	0	0	0	0	0	0	0	**0**	
1615 - 1630	0	0	0	0	0	0	0	0	0	0	0	0	0	**0**	
1630 - 1645	0	0	0	0	0	0	0	0	0	0	0	0	0	**0**	
1645 - 1700	0	0	0	0	0	0	0	0	0	0	0	0	0	**0**	**0**
1700 - 1715	0	0	0	0	0	0	0	0	0	0	0	0	0	**0**	
1715 - 1730	0	0	0	0	0	0	0	0	0	0	0	0	0	**0**	
1730 - 1745	0	0	0	0	0	0	0	0	0	0	0	0	0	**0**	
1745 - 1800	0	0	0	0	0	0	0	0	0	0	0	0	0	**0**	**0**
1800 - 1815	0	0	0	0	0	0	0	0	0	0	0	0	0	**0**	
1815 - 1830	0	0	0	0	0	0	0	0	0	0	0	0	0	**0**	
1830 - 1845	0	0	0	0	0	0	0	0	0	0	0	0	0	**0**	
1845 - 1900	0	0	0	0	0	0	0	0	0	0	0	0	0	**0**	**0**
1900 - 1915	0	52	8	0	2	0	0	0	0	0	0	0	0	**62**	
1915 - 1930	0	43	4	0	1	0	0	0	0	0	0	0	0	**48**	
1930 - 1945	0	37	5	0	1	0	0	0	0	0	0	0	0	**43**	
1945 - 2000	0	34	7	0	1	0	0	0	0	0	0	0	0	**42**	**195**
2000 - 2015	0	34	5	0	2	0	0	0	0	0	0	0	0	**41**	
2015 - 2030	1	30	4	0	2	0	0	0	0	0	0	0	0	**37**	
2030 - 2045	0	40	8	0	1	0	0	0	0	0	0	0	0	**49**	
2045 - 2100	0	32	3	0	0	0	0	0	0	0	0	0	0	**35**	**162**
2100 - 2115	0	25	1	0	0	1	0	0	0	0	0	0	0	**27**	
2115 - 2130	0	38	3	0	0	1	0	0	0	0	0	0	0	**42**	
2130 - 2145	0	33	4	0	0	0	0	0	0	0	0	0	0	**37**	
2145 - 2200	0	23	7	0	0	0	0	0	0	0	0	0	0	**30**	**136**
2200 - 2215	0	22	2	0	0	0	0	0	0	0	0	0	0	**24**	
2215 - 2230	0	19	1	0	0	0	0	0	0	0	0	0	0	**20**	
2230 - 2245	0	23	3	0	0	0	0	0	0	0	0	0	0	**26**	
2245 - 2300	0	18	1	0	0	0	0	0	0	0	0	0	0	**19**	**89**
2300 - 2315	0	18	0	0	0	0	0	0	0	0	0	0	0	**18**	
2315 - 2330	0	13	1	0	0	1	0	0	0	0	0	0	0	**15**	
2330 - 2345	0	6	2	0	0	0	0	0	0	0	0	0	0	**8**	
2345 - 0000	0	13	1	0	0	0	0	0	0	0	0	0	0	**14**	**55**

Session Total	1	553	70	0	10	3	0	0	0	0	0	0	0	**637**
Session Average	0.01	5.76	0.73	0.00	0.10	0.03	0.00	0.00	0.00	0.00	0.00	0.00	0.00	**6.64**
Session Percentage	0.16	86.81	10.99	0.00	1.57	0.47	0.00	0.00	0.00	0.00	0.00	0.00	0.00	

AM Peak Hour	-	-	-	-	-	-	-	-	-	-	-	-	-	**-**
AM Peak Volume	0	0	0	0	0	0	0	0	0	0	0	0	0	**0**

Noon Peak Hour	-	-	-	-	-	-	-	-	-	-	-	-	-	**-**
Noon Peak Volume	0	0	0	0	0	0	0	0	0	0	0	0	0	**0**

PM Peak Hour	1930 - 2030	1900 - 2000	1900 - 2000	-	1930 - 2030	-	-	-	-	-	-	-	-	**1900 - 2000**
PM Peak Volume	1	166	24	0	6	0	0	0	0	0	0	0	0	**195**

Site 45
I-26 On/Off-Ramp,
north of Bush River Rd

Date
Wednesday, April 24, 2024

Lat/Long
34.028994°, -81.103003°

Weather
Fair
66°F

Click here for Detailed Weather

0000 - 2400 (Weekday 24h Session) (04-24-2024)
NB EB 15min

	Northbound (Movement 45.1)													15min	60min
Time	1	2	3	4	5	6	7	8	9	10	11	12	13	Total	Total
0000 - 0015	0	12	1	0	0	0	0	0	0	0	0	0	0	**13**	
0015 - 0030	0	6	0	0	0	0	0	0	0	0	0	0	0	**6**	
0030 - 0045	0	7	0	0	0	0	0	0	1	0	0	0	0	**8**	
0045 - 0100	0	8	1	0	0	0	0	0	0	0	0	0	0	**9**	**36**
0100 - 0115	0	7	1	0	0	1	0	0	0	0	0	0	0	**9**	
0115 - 0130	0	7	1	0	0	0	0	0	1	0	0	0	0	**9**	
0130 - 0145	0	7	0	0	0	0	0	0	0	0	0	0	0	**7**	
0145 - 0200	0	7	1	0	0	0	0	0	0	0	0	0	0	**8**	**33**
0200 - 0215	0	6	0	0	0	1	0	0	0	0	0	0	0	**7**	
0215 - 0230	0	5	1	0	0	0	0	0	0	0	0	0	0	**6**	
0230 - 0245	0	5	1	0	0	1	0	0	0	0	0	0	0	**7**	
0245 - 0300	0	3	1	0	0	0	0	0	0	0	0	0	0	**4**	**24**
0300 - 0315	0	6	1	0	0	0	0	0	0	0	0	0	0	**7**	
0315 - 0330	0	4	0	0	0	0	0	0	0	0	0	0	0	**4**	
0330 - 0345	0	5	0	0	0	0	0	0	0	0	0	0	0	**5**	
0345 - 0400	0	9	2	0	1	0	0	0	0	0	0	0	0	**12**	**28**
0400 - 0415	0	4	1	0	0	0	0	0	0	0	0	0	0	**5**	
0415 - 0430	0	12	0	0	0	0	0	0	0	0	0	0	0	**12**	
0430 - 0445	0	12	2	0	0	1	0	0	1	0	0	0	0	**16**	
0445 - 0500	0	16	2	0	0	0	1	0	0	0	0	0	0	**19**	**52**
0500 - 0515	0	7	2	0	0	0	0	0	0	0	0	0	0	**9**	
0515 - 0530	0	21	3	0	0	1	0	0	0	0	0	0	0	**25**	
0530 - 0545	0	25	4	0	1	0	0	0	2	0	0	0	0	**32**	
0545 - 0600	0	27	3	0	0	0	0	0	0	1	0	0	0	**31**	**97**
0600 - 0615	0	23	2	0	0	1	0	0	1	0	0	0	0	**27**	
0615 - 0630	0	32	7	0	0	0	0	0	0	0	0	0	0	**39**	
0630 - 0645	0	40	8	0	0	2	0	1	0	0	0	0	0	**51**	
0645 - 0700	0	61	8	0	1	0	0	0	2	1	0	0	0	**73**	**190**
0700 - 0715	0	60	9	0	0	1	0	0	2	0	0	0	0	**72**	
0715 - 0730	0	76	19	0	2	2	0	1	4	0	0	0	0	**104**	
0730 - 0745	0	67	16	0	1	1	0	0	1	0	0	0	0	**86**	
0745 - 0800	0	92	24	0	1	2	0	0	1	0	0	0	0	**120**	**382**
0800 - 0815	0	81	12	0	3	4	0	0	0	0	0	0	0	**100**	
0815 - 0830	0	57	12	1	2	0	0	0	0	0	0	0	0	**72**	
0830 - 0845	0	56	10	1	0	2	0	0	1	0	0	0	0	**70**	
0845 - 0900	0	47	14	0	4	3	1	0	0	0	0	0	0	**69**	**311**
0900 - 0915	0	41	11	0	1	0	0	0	0	0	0	0	0	**53**	
0915 - 0930	0	26	9	1	0	0	0	2	0	0	0	0	0	**38**	
0930 - 0945	0	34	6	1	0	0	0	0	1	0	0	0	0	**42**	
0945 - 1000	0	48	12	0	0	0	0	0	0	0	0	0	0	**60**	**193**
1000 - 1015	0	36	14	0	1	0	0	0	4	0	0	0	0	**55**	
1015 - 1030	0	48	6	0	2	1	0	0	2	0	0	0	0	**59**	
1030 - 1045	0	50	7	0	1	0	0	0	0	0	0	0	0	**58**	
1045 - 1100	0	37	16	0	1	0	0	0	0	0	0	0	0	**54**	**226**
1100 - 1115	0	42	13	0	0	0	0	1	1	0	0	0	0	**57**	
1115 - 1130	0	59	12	1	1	1	0	1	0	0	0	0	0	**75**	
1130 - 1145	1	59	14	0	1	0	0	0	0	0	0	0	0	**75**	
1145 - 1200	1	58	16	0	1	0	0	1	1	0	0	0	0	**78**	**285**
1200 - 1215	0	53	18	0	1	0	0	1	0	0	0	0	0	**73**	
1215 - 1230	0	47	17	0	1	0	0	0	1	0	0	0	0	**66**	
1230 - 1245	0	63	14	0	0	1	1	2	0	0	0	0	0	**81**	
1245 - 1300	0	55	15	0	3	0	0	2	1	0	0	0	0	**76**	**296**
1300 - 1315	2	65	15	0	2	0	0	0	1	1	0	0	0	**86**	
1315 - 1330	0	57	12	1	4	0	0	1	1	0	0	0	0	**76**	
1330 - 1345	0	43	16	0	3	0	0	0	0	0	0	0	0	**62**	
1345 - 1400	0	57	9	0	2	1	0	0	0	0	0	0	0	**69**	**293**
1400 - 1415	0	80	19	0	4	0	0	1	0	0	0	0	0	**104**	
1415 - 1430	0	66	9	0	2	0	0	0	1	0	0	0	0	**78**	
1430 - 1445	0	53	17	0	0	2	0	0	4	0	0	0	0	**76**	
1445 - 1500	0	62	11	0	1	1	0	0	0	0	0	0	0	**75**	**333**
1500 - 1515	1	93	11	0	2	0	0	0	1	1	0	0	0	**109**	
1515 - 1530	0	67	14	0	0	0	0	0	2	0	0	0	0	**83**	
1530 - 1545	0	85	10	0	2	0	0	0	1	0	0	0	0	**98**	
1545 - 1600	1	71	14	0	1	0	0	1	1	0	0	0	0	**89**	**379**
1600 - 1615	0	88	26	0	1	0	0	0	0	0	0	0	0	**115**	
1615 - 1630	0	71	14	1	0	1	0	0	0	0	0	0	0	**87**	
1630 - 1645	1	92	15	0	1	1	0	0	0	0	0	0	0	**110**	
1645 - 1700	0	80	26	0	0	0	0	0	0	0	0	0	0	**106**	**418**
1700 - 1715	0	113	13	0	1	0	0	2	1	0	0	0	0	**130**	
1715 - 1730	0	141	16	0	3	0	0	0	0	0	0	0	0	**160**	
1730 - 1745	0	109	17	0	0	0	0	0	1	0	0	0	0	**127**	
1745 - 1800	0	69	5	0	1	0	0	0	0	0	0	0	0	**75**	**492**
1800 - 1815	0	67	9	0	2	0	0	1	0	0	0	0	0	**79**	
1815 - 1830	0	71	9	0	2	0	0	0	0	0	0	0	0	**82**	
1830 - 1845	1	49	12	0	0	0	0	0	0	0	0	0	0	**62**	
1845 - 1900	0	51	8	0	0	0	0	0	0	0	0	0	0	**59**	**282**
1900 - 1915	0	56	9	0	0	0	0	0	0	0	0	0	0	**65**	
1915 - 1930	0	43	6	0	0	0	0	0	0	0	0	0	0	**49**	
1930 - 1945	0	41	3	0	0	0	0	0	0	0	0	0	0	**44**	
1945 - 2000	0	31	9	0	1	0	0	0	0	0	0	0	0	**41**	**199**
2000 - 2015	0	40	10	0	0	0	0	0	0	0	0	0	0	**50**	
2015 - 2030	0	41	9	0	1	0	0	0	0	0	0	0	0	**51**	
2030 - 2045	0	43	8	0	0	0	0	0	1	0	0	0	0	**52**	
2045 - 2100	0	44	4	0	0	1	0	0	0	0	0	0	0	**49**	**202**
2100 - 2115	0	35	1	0	1	0	0	0	0	0	0	0	0	**37**	
2115 - 2130	0	34	4	0	0	0	0	0	0	0	0	0	0	**38**	
2130 - 2145	0	29	5	0	0	0	0	0	0	0	0	0	0	**34**	
2145 - 2200	0	22	2	0	0	0	0	0	0	0	0	0	0	**24**	**133**
2200 - 2215	0	14	4	1	1	0	0	0	0	0	0	0	0	**20**	
2215 - 2230	0	15	5	0	0	1	0	0	0	0	0	0	0	**21**	
2230 - 2245	0	19	3	0	0	0	0	0	0	0	0	0	0	**22**	
2245 - 2300	0	17	3	0	0	0	0	0	0	0	0	0	0	**20**	**83**
2300 - 2315	0	17	2	0	0	0	0	0	0	0	0	0	0	**19**	
2315 - 2330	0	12	0	0	0	0	0	0	0	0	0	0	0	**12**	
2330 - 2345	0	15	2	0	0	0	0	0	0	0	0	0	0	**17**	
2345 - 0000	0	17	0	0	0	0	0	0	0	0	0	0	0	**17**	**65**

Session Total	8	4061	785	8	68	34	3	18	43	4	0	0	0	**5032**
Session Average	0.08	42.30	8.18	0.08	0.71	0.35	0.03	0.19	0.45	0.04	0.00	0.00	0.00	**52.42**
Session Percentage	0.16	80.70	15.60	0.16	1.35	0.68	0.06	0.36	0.85	0.08	0.00	0.00	0.00	

AM Peak Hour	-	0715 - 0815	0715 - 0815	0745 - 0845	0800 - 0900	0715 - 0815	0800 - 0900	0630 - 0730	0645 - 0745	0500 - 0600	-	-	-	**0715 - 0815**
AM Peak Volume	0	316	71	2	9	9	1	2	9	1	0	0	0	**410**

Noon Peak Hour	1100 - 1200	1445 - 1545	1130 - 1230	1030 - 1130	1315 - 1415	1345 - 1445	1145 - 1245	1200 - 1300	1430 - 1530	1215 - 1315	-	-	-	**1445 - 1545**
Noon Peak Volume	2	307	65	1	13	3	1	5	7	1	0	0	0	**365**

PM Peak Hour	1500 - 1600	1645 - 1745	1600 - 1700	1530 - 1630	1715 - 1815	1545 - 1645	-	1615 - 1715	1500 - 1600	1500 - 1600	-	-	-	**1645 - 1745**
PM Peak Volume	2	443	81	1	6	2	0	2	5	1	0	0	0	**523**

Site 45
I-26 On/Off-Ramp,
north of Bush River Rd

Date
Thursday, April 25, 2024

Lat/Long
34.028994°, -81.103003°

Weather
Fair
67°F

Click here for Detailed Weather

0000 - 2400 (Weekday 24h Session) (04-25-2024)
NB EB 15min

	Northbound (Movement 45.1)													15min	60min
TIME	1	2	3	4	5	6	7	8	9	10	11	12	13	Total	Total
0000 - 0015	0	18	6	0	0	0	0	0	1	0	0	0	0	**25**	
0015 - 0030	0	12	1	0	0	0	0	0	0	0	0	0	0	**13**	
0030 - 0045	0	6	1	0	0	0	0	0	0	0	0	0	0	**7**	
0045 - 0100	0	8	0	0	0	0	0	0	0	0	0	0	0	**8**	**53**
0100 - 0115	0	7	0	0	0	0	0	0	0	0	0	0	0	**7**	
0115 - 0130	0	10	0	0	0	0	0	0	0	0	0	0	0	**10**	
0130 - 0145	0	2	0	0	0	0	0	0	0	0	0	0	0	**2**	
0145 - 0200	0	4	1	0	0	0	0	0	0	0	0	0	0	**5**	**24**
0200 - 0215	0	5	0	0	0	0	0	0	0	0	0	0	0	**5**	
0215 - 0230	0	5	0	0	0	0	0	0	0	0	0	0	0	**5**	
0230 - 0245	0	5	2	0	0	0	0	0	0	0	0	0	0	**7**	
0245 - 0300	0	2	0	0	0	0	0	0	0	0	0	0	0	**2**	**19**
0300 - 0315	0	7	0	0	0	0	0	0	0	0	0	0	0	**7**	
0315 - 0330	0	6	0	0	0	0	0	0	1	0	0	0	0	**7**	
0330 - 0345	0	4	2	0	0	1	0	0	1	0	0	0	0	**8**	
0345 - 0400	0	6	1	0	1	1	0	0	0	0	0	0	0	**9**	**31**
0400 - 0415	0	6	4	0	0	0	0	0	1	0	0	0	0	**11**	
0415 - 0430	0	9	1	0	0	0	0	0	3	0	0	0	0	**13**	
0430 - 0445	0	10	4	0	0	0	0	0	2	0	0	0	0	**16**	
0445 - 0500	0	10	0	0	0	0	0	0	1	0	0	0	0	**11**	**51**
0500 - 0515	0	15	2	0	1	1	0	0	0	0	0	0	0	**19**	
0515 - 0530	0	15	0	0	1	1	0	0	0	0	0	0	0	**17**	
0530 - 0545	0	28	5	0	0	0	0	0	0	0	0	0	0	**33**	
0545 - 0600	0	22	4	0	0	0	0	0	0	0	0	0	0	**26**	**95**
0600 - 0615	0	22	7	0	0	0	0	0	1	0	0	0	0	**30**	
0615 - 0630	0	32	6	0	0	0	0	0	1	0	0	0	0	**39**	
0630 - 0645	0	56	4	0	0	0	0	0	0	0	0	0	0	**60**	
0645 - 0700	0	50	10	0	0	0	0	0	2	0	0	0	0	**62**	**191**
0700 - 0715	1	53	17	0	1	0	0	0	0	0	0	0	0	**72**	
0715 - 0730	0	63	16	0	0	0	0	0	1	0	0	0	0	**80**	
0730 - 0745	0	98	14	0	0	2	1	0	1	0	0	0	0	**116**	
0745 - 0800	0	84	6	0	3	5	0	0	1	0	0	0	0	**99**	**367**
0800 - 0815	0	62	13	0	1	2	0	0	2	0	0	0	0	**80**	
0815 - 0830	0	65	13	0	0	0	3	0	0	0	0	0	0	**81**	
0830 - 0845	0	56	14	1	5	0	0	0	1	0	0	0	0	**77**	
0845 - 0900	0	39	13	0	2	0	0	0	0	0	0	0	0	**54**	**292**
0900 - 0915	0	52	7	0	0	0	0	0	1	0	0	0	0	**60**	
0915 - 0930	0	33	15	0	1	2	1	0	2	0	0	0	0	**54**	
0930 - 0945	0	38	8	0	1	3	0	0	0	0	0	0	0	**50**	
0945 - 1000	0	35	8	1	2	1	0	0	1	0	0	0	0	**48**	**212**
1000 - 1015	0	36	14	0	3	1	0	0	1	0	0	0	0	**55**	
1015 - 1030	0	38	13	0	0	2	0	1	2	0	0	0	0	**56**	
1030 - 1045	0	44	9	0	1	0	0	0	1	0	0	0	0	**55**	
1045 - 1100	0	35	13	0	3	2	0	0	1	1	0	0	0	**55**	**221**
1100 - 1115	0	48	9	1	2	1	2	0	1	0	0	0	0	**64**	
1115 - 1130	0	51	22	0	0	1	1	0	0	0	0	0	0	**75**	
1130 - 1145	0	55	13	0	1	1	1	0	0	0	0	0	0	**71**	
1145 - 1200	0	56	15	0	0	3	2	0	1	0	0	0	0	**77**	**287**
1200 - 1215	0	59	12	0	1	2	2	0	3	0	0	0	0	**79**	
1215 - 1230	1	59	13	1	2	1	2	1	1	0	0	0	0	**81**	
1230 - 1245	0	69	14	0	1	2	1	0	0	0	0	0	0	**87**	
1245 - 1300	0	67	11	0	2	0	0	1	1	0	0	0	0	**82**	**329**
1300 - 1315	1	65	14	0	3	1	0	0	0	0	0	0	0	**84**	
1315 - 1330	0	59	9	0	1	0	0	0	0	2	0	0	0	**71**	
1330 - 1345	0	69	18	0	0	1	0	1	1	0	0	0	0	**90**	
1345 - 1400	0	48	13	0	2	1	0	0	0	0	0	0	0	**64**	**309**
1400 - 1415	1	61	11	0	2	0	2	0	0	0	0	0	0	**77**	
1415 - 1430	0	63	12	0	4	0	0	0	0	0	0	0	0	**79**	
1430 - 1445	0	81	13	0	1	0	1	0	1	0	0	0	0	**97**	
1445 - 1500	0	68	18	0	3	0	0	0	0	0	0	0	0	**89**	**342**
1500 - 1515	1	70	12	0	0	1	1	1	0	0	0	0	0	**86**	
1515 - 1530	1	76	12	0	4	0	0	0	0	0	0	0	0	**93**	
1530 - 1545	0	90	13	0	3	0	0	0	0	0	0	0	0	**106**	
1545 - 1600	0	77	15	0	1	0	0	1	1	0	0	0	0	**95**	**380**
1600 - 1615	0	84	11	0	1	0	0	0	1	0	0	0	0	**97**	
1615 - 1630	0	70	21	0	1	0	0	2	0	0	0	0	0	**94**	
1630 - 1645	0	95	22	0	1	4	0	0	0	0	0	0	0	**122**	
1645 - 1700	0	104	16	0	2	1	1	0	0	0	0	0	0	**124**	**437**
1700 - 1715	0	111	19	0	0	2	0	0	2	0	0	0	0	**134**	
1715 - 1730	0	111	17	0	2	0	0	0	0	0	0	0	0	**130**	
1730 - 1745	0	90	11	0	0	0	0	0	0	0	0	0	0	**101**	
1745 - 1800	0	74	10	0	1	0	0	0	0	0	0	0	0	**85**	**450**
1800 - 1815	0	70	11	0	5	1	0	0	1	0	0	0	0	**88**	
1815 - 1830	0	66	16	0	2	0	0	0	0	0	0	0	0	**84**	
1830 - 1845	1	57	8	0	1	0	0	0	1	0	0	0	0	**68**	
1845 - 1900	1	50	17	0	3	0	0	0	0	0	0	0	0	**71**	**311**
1900 - 1915	0	0	0	0	0	0	0	0	0	0	0	0	0	**0**	
1915 - 1930	0	0	0	0	0	0	0	0	0	0	0	0	0	**0**	
1930 - 1945	0	0	0	0	0	0	0	0	0	0	0	0	0	**0**	
1945 - 2000	0	0	0	0	0	0	0	0	0	0	0	0	0	**0**	**0**
2000 - 2015	0	0	0	0	0	0	0	0	0	0	0	0	0	**0**	
2015 - 2030	0	0	0	0	0	0	0	0	0	0	0	0	0	**0**	
2030 - 2045	0	0	0	0	0	0	0	0	0	0	0	0	0	**0**	
2045 - 2100	0	0	0	0	0	0	0	0	0	0	0	0	0	**0**	**0**
2100 - 2115	0	0	0	0	0	0	0	0	0	0	0	0	0	**0**	
2115 - 2130	0	0	0	0	0	0	0	0	0	0	0	0	0	**0**	
2130 - 2145	0	0	0	0	0	0	0	0	0	0	0	0	0	**0**	
2145 - 2200	0	0	0	0	0	0	0	0	0	0	0	0	0	**0**	**0**
2200 - 2215	0	0	0	0	0	0	0	0	0	0	0	0	0	**0**	
2215 - 2230	0	0	0	0	0	0	0	0	0	0	0	0	0	**0**	
2230 - 2245	0	0	0	0	0	0	0	0	0	0	0	0	0	**0**	
2245 - 2300	0	0	0	0	0	0	0	0	0	0	0	0	0	**0**	**0**
2300 - 2315	0	0	0	0	0	0	0	0	0	0	0	0	0	**0**	
2315 - 2330	0	0	0	0	0	0	0	0	0	0	0	0	0	**0**	
2330 - 2345	0	0	0	0	0	0	0	0	0	0	0	0	0	**0**	
2345 - 0000	0	0	0	0	0	0	0	0	0	0	0	0	0	**0**	**0**

Session Total	8	3486	702	4	78	47	21	8	44	3	0	0	0	**4401**
Session Average	0.08	36.31	7.31	0.04	0.81	0.49	0.22	0.08	0.46	0.03	0.00	0.00	0.00	**45.84**
Session Percentage	0.18	79.21	15.95	0.09	1.77	1.07	0.48	0.18	1.00	0.07	0.00	0.00	0.00	

AM Peak Hour	0615 - 0715	0730 - 0830	0645 - 0745	0745 - 0845	0745 - 0845	0715 - 0815	0730 - 0830	0930 - 1030	0715 - 0815	-	-	-	-	**0730 - 0830**
AM Peak Hour Volume	1	309	57	1	9	9	4	1	5	0	0	0	0	**376**

Noon Peak Hour	1215 - 1315	1445 - 1545	1115 - 1215	1015 - 1115	1400 - 1500	1145 - 1245	1130 - 1230	1200 - 1300	1000 - 1100	1230 - 1330	-	-	-	**1445 - 1545**
Noon Peak Hour Volume	2	304	62	1	10	8	7	2	5	2	0	0	0	**374**

PM Peak Hour	1500 - 1600	1630 - 1730	1615 - 1715	-	1800 - 1900	1615 - 1715	1500 - 1600	1530 - 1630	1515 - 1615	-	-	-	-	**1630 - 1730**
PM Peak Hour Volume	2	421	78	0	11	7	1	3	2	0	0	0	0	**510**

Bi-Directional Class Count || NB EB Average 15min

Columbia, SC

Marr Traffic DATA COLLECTION
www.marrtraffic.com

Site 45
I-26 On/Off-Ramp,
north of Bush River Rd

Date
Tuesday, April 23, 2024

Lat/Long
34.028994°, -81.103003°

Weather
Fair
58°F

0000 - 2400 (Weekday 24h Session) (All Dates)
NB EB Average 15min

	NB EB Average 15min													15min	60min
Time	1	2	3	4	5	6	7	8	9	10	11	12	13	Total	Total
0000 - 0015	0	10	2	0	0	0	0	0	0	0	0	0	0	**13**	
0015 - 0030	0	6	0	0	0	0	0	0	0	0	0	0	0	**6**	
0030 - 0045	0	4	0	0	0	0	0	0	0	0	0	0	0	**5**	
0045 - 0100	0	5	0	0	0	0	0	0	0	0	0	0	0	**6**	**30**
0100 - 0115	0	5	0	0	0	0	0	0	0	0	0	0	0	**5**	
0115 - 0130	0	6	0	0	0	0	0	0	0	0	0	0	0	**6**	
0130 - 0145	0	3	0	0	0	0	0	0	0	0	0	0	0	**3**	
0145 - 0200	0	4	1	0	0	0	0	0	0	0	0	0	0	**4**	**19**
0200 - 0215	0	4	0	0	0	0	0	0	0	0	0	0	0	**4**	
0215 - 0230	0	3	0	0	0	0	0	0	0	0	0	0	0	**4**	
0230 - 0245	0	3	1	0	0	0	0	0	0	0	0	0	0	**5**	
0245 - 0300	0	2	0	0	0	0	0	0	0	0	0	0	0	**2**	**14**
0300 - 0315	0	4	0	0	0	0	0	0	0	0	0	0	0	**5**	
0315 - 0330	0	3	0	0	0	0	0	0	0	0	0	0	0	**4**	
0330 - 0345	0	3	1	0	0	0	0	0	0	0	0	0	0	**4**	
0345 - 0400	0	5	1	0	1	0	0	0	0	0	0	0	0	**7**	**20**
0400 - 0415	0	3	2	0	0	0	0	0	0	0	0	0	0	**5**	
0415 - 0430	0	7	0	0	0	0	0	0	1	0	0	0	0	**8**	
0430 - 0445	0	7	2	0	0	0	0	0	1	0	0	0	0	**11**	
0445 - 0500	0	9	1	0	0	0	0	0	0	0	0	0	0	**10**	**34**
0500 - 0515	0	7	1	0	0	0	0	0	0	0	0	0	0	**9**	
0515 - 0530	0	12	1	0	0	1	0	0	0	0	0	0	0	**14**	
0530 - 0545	0	18	3	0	0	0	0	0	1	0	0	0	0	**22**	
0545 - 0600	0	16	2	0	0	0	0	0	0	0	0	0	0	**19**	**64**
0600 - 0615	0	15	3	0	0	0	0	0	1	0	0	0	0	**19**	
0615 - 0630	0	21	4	0	0	0	0	0	0	0	0	0	0	**26**	
0630 - 0645	0	32	4	0	0	1	0	0	0	0	0	0	0	**37**	
0645 - 0700	0	37	6	0	0	0	0	0	1	0	0	0	0	**45**	**127**
0700 - 0715	0	38	9	0	0	0	0	0	1	0	0	0	0	**48**	
0715 - 0730	0	46	12	0	1	1	0	0	2	0	0	0	0	**61**	
0730 - 0745	0	55	10	0	0	1	0	0	1	0	0	0	0	**67**	
0745 - 0800	0	59	10	0	1	2	0	0	1	0	0	0	0	**73**	**250**
0800 - 0815	0	48	8	0	1	2	0	0	1	0	0	0	0	**60**	
0815 - 0830	0	41	8	0	1	0	1	0	0	0	0	0	0	**51**	
0830 - 0845	0	37	8	1	2	1	0	0	1	0	0	0	0	**49**	
0845 - 0900	0	29	9	0	2	1	0	0	0	0	0	0	0	**41**	**201**
0900 - 0915	0	31	6	0	0	0	0	0	0	0	0	0	0	**38**	
0915 - 0930	0	20	8	0	0	1	0	1	1	0	0	0	0	**31**	
0930 - 0945	0	24	5	0	0	1	0	0	0	0	0	0	0	**31**	
0945 - 1000	0	28	7	0	1	0	0	0	0	0	0	0	0	**36**	**135**
1000 - 1015	0	24	9	0	1	0	0	0	2	0	0	0	0	**37**	
1015 - 1030	0	29	6	0	1	1	0	0	1	0	0	0	0	**38**	
1030 - 1045	0	31	5	0	1	0	0	0	0	0	0	0	0	**38**	
1045 - 1100	0	24	10	0	1	1	0	0	0	0	0	0	0	**36**	**149**
1100 - 1115	0	30	7	0	1	0	1	0	1	0	0	0	0	**40**	
1115 - 1130	0	37	11	0	0	1	0	0	0	0	0	0	0	**50**	
1130 - 1145	0	38	9	0	1	0	0	0	0	0	0	0	0	**49**	
1145 - 1200	0	38	10	0	0	1	1	0	1	0	0	0	0	**52**	**191**
1200 - 1215	0	37	10	0	1	1	1	0	1	0	0	0	0	**51**	
1215 - 1230	0	35	10	0	1	0	1	0	1	0	0	0	0	**49**	
1230 - 1245	0	44	9	0	0	1	1	1	0	0	0	0	0	**56**	
1245 - 1300	0	41	9	0	2	0	0	1	1	0	0	0	0	**53**	**208**
1300 - 1315	1	43	10	0	2	0	0	0	0	0	0	0	0	**57**	
1315 - 1330	0	39	7	0	2	0	0	0	0	1	0	0	0	**49**	
1330 - 1345	0	37	11	0	1	0	0	0	0	0	0	0	0	**51**	
1345 - 1400	0	35	7	0	1	1	0	0	0	0	0	0	0	**44**	**201**
1400 - 1415	0	47	10	0	2	0	1	0	0	0	0	0	0	**60**	
1415 - 1430	0	43	7	0	2	0	0	0	0	0	0	0	0	**52**	
1430 - 1445	0	45	10	0	0	1	0	0	2	0	0	0	0	**58**	
1445 - 1500	0	43	10	0	1	0	0	0	0	0	0	0	0	**55**	**225**
1500 - 1515	1	54	8	0	1	0	0	0	0	0	0	0	0	**65**	
1515 - 1530	0	48	9	0	1	0	0	0	1	0	0	0	0	**59**	
1530 - 1545	0	58	8	0	2	0	0	0	0	0	0	0	0	**68**	
1545 - 1600	0	49	10	0	1	0	0	1	1	0	0	0	0	**61**	**253**
1600 - 1615	0	57	12	0	1	0	0	0	0	0	0	0	0	**71**	
1615 - 1630	0	47	12	0	0	0	0	1	0	0	0	0	0	**60**	
1630 - 1645	0	62	12	0	1	2	0	0	0	0	0	0	0	**77**	
1645 - 1700	0	61	14	0	1	0	0	0	0	0	0	0	0	**77**	**285**
1700 - 1715	0	75	11	0	0	1	0	1	1	0	0	0	0	**88**	
1715 - 1730	0	84	11	0	2	0	0	0	0	0	0	0	0	**97**	
1730 - 1745	0	66	9	0	0	0	0	0	0	0	0	0	0	**76**	
1745 - 1800	0	48	5	0	1	0	0	0	0	0	0	0	0	**53**	**314**
1800 - 1815	0	46	7	0	2	0	0	0	0	0	0	0	0	**56**	
1815 - 1830	0	46	8	0	1	0	0	0	0	0	0	0	0	**55**	
1830 - 1845	1	35	7	0	0	0	0	0	0	0	0	0	0	**43**	
1845 - 1900	0	34	8	0	1	0	0	0	0	0	0	0	0	**43**	**198**
1900 - 1915	0	36	6	0	1	0	0	0	0	0	0	0	0	**42**	
1915 - 1930	0	29	3	0	0	0	0	0	0	0	0	0	0	**32**	
1930 - 1945	0	26	3	0	0	0	0	0	0	0	0	0	0	**29**	
1945 - 2000	0	22	5	0	1	0	0	0	0	0	0	0	0	**28**	**131**
2000 - 2015	0	25	5	0	1	0	0	0	0	0	0	0	0	**30**	
2015 - 2030	0	24	4	0	1	0	0	0	0	0	0	0	0	**29**	
2030 - 2045	0	28	5	0	0	0	0	0	0	0	0	0	0	**34**	
2045 - 2100	0	25	2	0	0	0	0	0	0	0	0	0	0	**28**	**121**
2100 - 2115	0	20	1	0	0	0	0	0	0	0	0	0	0	**21**	
2115 - 2130	0	24	2	0	0	0	0	0	0	0	0	0	0	**27**	
2130 - 2145	0	21	3	0	0	0	0	0	0	0	0	0	0	**24**	
2145 - 2200	0	15	3	0	0	0	0	0	0	0	0	0	0	**18**	**90**
2200 - 2215	0	12	2	0	0	0	0	0	0	0	0	0	0	**15**	
2215 - 2230	0	11	2	0	0	0	0	0	0	0	0	0	0	**14**	
2230 - 2245	0	14	2	0	0	0	0	0	0	0	0	0	0	**16**	
2245 - 2300	0	12	1	0	0	0	0	0	0	0	0	0	0	**13**	**57**
2300 - 2315	0	12	1	0	0	0	0	0	0	0	0	0	0	**12**	
2315 - 2330	0	8	0	0	0	0	0	0	0	0	0	0	0	**9**	
2330 - 2345	0	7	1	0	0	0	0	0	0	0	0	0	0	**8**	
2345 - 0000	0	10	0	0	0	0	0	0	0	0	0	0	0	**10**	**40**

Session Total	6	2700	519	4	52	28	8	9	29	2	0	0	0	**3357**
Session Average	0.06	28.13	5.41	0.04	0.54	0.29	0.08	0.09	0.30	0.02	0.00	0.00	0.00	**34.97**
Session Percentage	0.17	80.44	15.46	0.12	1.55	0.83	0.24	0.26	0.86	0.07	0.00	0.00	0.00	

AM Peak Hour	0615 - 0715	0715 - 0815	0700 - 0800	0745 - 0845	0800 - 0900	0715 - 0815	0730 - 0830	0630 - 0730	0645 - 0745	0500 - 0600	-	-	-	**0715 - 0815**
AM Peak Volume	0	208	40	1	6	6	1	1	4	0	0	0	0	**262**

Noon Peak Hour	1215 - 1315	1445 - 1545	1115 - 1215	1030 - 1130	1330 - 1430	1145 - 1245	1145 - 1245	1200 - 1300	1000 - 1100	1230 - 1330	-	-	-	**1445 - 1545**
Noon Peak Volume	1	204	41	1	6	3	3	2	4	1	0	0	0	**246**

PM Peak Hour	1500 - 1600	1645 - 1745	1600 - 1700	1530 - 1630	1800 - 1900	1615 - 1715	1500 - 1600	1530 - 1630	1500 - 1600	1500 - 1600	-	-	-	**1630 - 1730**
PM Peak Volume	1	286	50	0	5	3	0	1	2	0	0	0	0	**339**

Bi-Directional Class Count || Volume Summary 15min

Columbia, SC

Marr Traffic DATA COLLECTION

www.marrtraffic.com

Site 45

I-26 On/Off-Ramp,
north of Bush River Rd

Date

Tuesday, April 23, 2024

Lat/Long

34.028994°, -81.103003°

Weather

Fair
58°F

Click here for Detailed Weather

0000 - 2400 (Weekday 24h Session) (04-23-2024)

Volume Summary 15min

TIME	Volume Summary 15min NB	SB	15min Total	60min Total
0000 - 0015	0	0	**0**	
0015 - 0030	0	0	**0**	
0030 - 0045	0	0	**0**	
0045 - 0100	0	0	**0**	**0**
0100 - 0115	0	0	**0**	
0115 - 0130	0	0	**0**	
0130 - 0145	0	0	**0**	
0145 - 0200	0	0	**0**	**0**
0200 - 0215	0	0	**0**	
0215 - 0230	0	0	**0**	
0230 - 0245	0	0	**0**	
0245 - 0300	0	0	**0**	**0**
0300 - 0315	0	0	**0**	
0315 - 0330	0	0	**0**	
0330 - 0345	0	0	**0**	
0345 - 0400	0	0	**0**	**0**
0400 - 0415	0	0	**0**	
0415 - 0430	0	0	**0**	
0430 - 0445	0	0	**0**	
0445 - 0500	0	0	**0**	**0**
0500 - 0515	0	0	**0**	
0515 - 0530	0	0	**0**	
0530 - 0545	0	0	**0**	
0545 - 0600	0	0	**0**	**0**
0600 - 0615	0	0	**0**	
0615 - 0630	0	0	**0**	
0630 - 0645	0	0	**0**	
0645 - 0700	0	0	**0**	**0**
0700 - 0715	0	0	**0**	
0715 - 0730	0	0	**0**	
0730 - 0745	0	0	**0**	
0745 - 0800	0	0	**0**	**0**
0800 - 0815	0	0	**0**	
0815 - 0830	0	0	**0**	
0830 - 0845	0	0	**0**	
0845 - 0900	0	0	**0**	**0**
0900 - 0915	0	0	**0**	
0915 - 0930	0	0	**0**	
0930 - 0945	0	0	**0**	
0945 - 1000	0	0	**0**	**0**
1000 - 1015	0	0	**0**	
1015 - 1030	0	0	**0**	
1030 - 1045	0	0	**0**	
1045 - 1100	0	0	**0**	**0**
1100 - 1115	0	0	**0**	
1115 - 1130	0	0	**0**	
1130 - 1145	0	0	**0**	
1145 - 1200	0	0	**0**	**0**

Time	Volume Summary 15min NB	SB	15min Total	60min Total
1200 - 1215	0	0	**0**	
1215 - 1230	0	0	**0**	
1230 - 1245	0	0	**0**	
1245 - 1300	0	0	**0**	**0**
1300 - 1315	0	0	**0**	
1315 - 1330	0	0	**0**	
1330 - 1345	0	0	**0**	
1345 - 1400	0	0	**0**	**0**
1400 - 1415	0	0	**0**	
1415 - 1430	0	0	**0**	
1430 - 1445	0	0	**0**	
1445 - 1500	0	0	**0**	**0**
1500 - 1515	0	0	**0**	
1515 - 1530	0	0	**0**	
1530 - 1545	0	0	**0**	
1545 - 1600	0	0	**0**	**0**
1600 - 1615	0	0	**0**	
1615 - 1630	0	0	**0**	
1630 - 1645	0	0	**0**	
1645 - 1700	0	0	**0**	**0**
1700 - 1715	0	0	**0**	
1715 - 1730	0	0	**0**	
1730 - 1745	0	0	**0**	
1745 - 1800	0	0	**0**	**0**
1800 - 1815	0	0	**0**	
1815 - 1830	0	0	**0**	
1830 - 1845	0	0	**0**	
1845 - 1900	0	0	**0**	**0**
1900 - 1915	62	0	**62**	
1915 - 1930	48	0	**48**	
1930 - 1945	43	0	**43**	
1945 - 2000	42	0	**42**	**195**
2000 - 2015	41	0	**41**	
2015 - 2030	37	0	**37**	
2030 - 2045	49	0	**49**	
2045 - 2100	35	0	**35**	**162**
2100 - 2115	27	0	**27**	
2115 - 2130	42	0	**42**	
2130 - 2145	37	0	**37**	
2145 - 2200	30	0	**30**	**136**
2200 - 2215	24	0	**24**	
2215 - 2230	20	0	**20**	
2230 - 2245	26	0	**26**	
2245 - 2300	19	0	**19**	**89**
2300 - 2315	18	0	**18**	
2315 - 2330	15	0	**15**	
2330 - 2345	8	0	**8**	
2345 - 0000	14	0	**14**	**55**

Session Total	637	0	**637**
Session Average	6.64	0.00	**6.64**
Session Percentage	100.00	0.00	

Site 45

I-26 On/Off-Ramp,
north of Bush River Rd

Date

Wednesday, April 24, 2024

Lat/Long

34.028994°, -81.103003°

Weather

Fair
66°F

Click here for Detailed Weather

0000 - 2400 (Weekday 24h Session) (04-24-2024)

Volume Summary 15min

TIME	Volume Summary 15min NB	SB	15min Total	60min Total
0000 - 0015	13	0	**13**	
0015 - 0030	6	0	**6**	
0030 - 0045	8	0	**8**	
0045 - 0100	9	0	**9**	**36**
0100 - 0115	9	0	**9**	
0115 - 0130	9	0	**9**	
0130 - 0145	7	0	**7**	
0145 - 0200	8	0	**8**	**33**
0200 - 0215	7	0	**7**	
0215 - 0230	6	0	**6**	
0230 - 0245	7	0	**7**	
0245 - 0300	4	0	**4**	**24**
0300 - 0315	7	0	**7**	
0315 - 0330	4	0	**4**	
0330 - 0345	5	0	**5**	
0345 - 0400	12	0	**12**	**28**
0400 - 0415	5	0	**5**	
0415 - 0430	12	0	**12**	
0430 - 0445	16	0	**16**	
0445 - 0500	19	0	**19**	**52**
0500 - 0515	9	0	**9**	
0515 - 0530	25	0	**25**	
0530 - 0545	32	0	**32**	
0545 - 0600	31	0	**31**	**97**
0600 - 0615	27	0	**27**	
0615 - 0630	39	0	**39**	
0630 - 0645	51	0	**51**	
0645 - 0700	73	0	**73**	**190**
0700 - 0715	72	0	**72**	
0715 - 0730	104	0	**104**	
0730 - 0745	86	0	**86**	
0745 - 0800	120	0	**120**	**382**
0800 - 0815	100	0	**100**	
0815 - 0830	72	0	**72**	
0830 - 0845	70	0	**70**	
0845 - 0900	69	0	**69**	**311**
0900 - 0915	53	0	**53**	
0915 - 0930	38	0	**38**	
0930 - 0945	42	0	**42**	
0945 - 1000	60	0	**60**	**193**
1000 - 1015	55	0	**55**	
1015 - 1030	59	0	**59**	
1030 - 1045	58	0	**58**	
1045 - 1100	54	0	**54**	**226**
1100 - 1115	57	0	**57**	
1115 - 1130	75	0	**75**	
1130 - 1145	75	0	**75**	
1145 - 1200	78	0	**78**	**285**

Time	Volume Summary 15min NB	SB	15min Total	60min Total
1200 - 1215	73	0	**73**	
1215 - 1230	66	0	**66**	
1230 - 1245	81	0	**81**	
1245 - 1300	76	0	**76**	**296**
1300 - 1315	86	0	**86**	
1315 - 1330	76	0	**76**	
1330 - 1345	62	0	**62**	
1345 - 1400	69	0	**69**	**293**
1400 - 1415	104	0	**104**	
1415 - 1430	78	0	**78**	
1430 - 1445	76	0	**76**	
1445 - 1500	75	0	**75**	**333**
1500 - 1515	109	0	**109**	
1515 - 1530	83	0	**83**	
1530 - 1545	98	0	**98**	
1545 - 1600	89	0	**89**	**379**
1600 - 1615	115	0	**115**	
1615 - 1630	87	0	**87**	
1630 - 1645	110	0	**110**	
1645 - 1700	106	0	**106**	**418**
1700 - 1715	130	0	**130**	
1715 - 1730	160	0	**160**	
1730 - 1745	127	0	**127**	
1745 - 1800	75	0	**75**	**492**
1800 - 1815	79	0	**79**	
1815 - 1830	82	0	**82**	
1830 - 1845	62	0	**62**	
1845 - 1900	59	0	**59**	**282**
1900 - 1915	65	0	**65**	
1915 - 1930	49	0	**49**	
1930 - 1945	44	0	**44**	
1945 - 2000	41	0	**41**	**199**
2000 - 2015	50	0	**50**	
2015 - 2030	51	0	**51**	
2030 - 2045	52	0	**52**	
2045 - 2100	49	0	**49**	**202**
2100 - 2115	37	0	**37**	
2115 - 2130	38	0	**38**	
2130 - 2145	34	0	**34**	
2145 - 2200	24	0	**24**	**133**
2200 - 2215	20	0	**20**	
2215 - 2230	21	0	**21**	
2230 - 2245	22	0	**22**	
2245 - 2300	20	0	**20**	**83**
2300 - 2315	19	0	**19**	
2315 - 2330	12	0	**12**	
2330 - 2345	17	0	**17**	
2345 - 0000	17	0	**17**	**65**

Session Total	5032	0	**5032**
Session Average	52.42	0.00	**52.42**
Session Percentage	100.00	0.00	

Site 45
I-26 On/Off-Ramp,
north of Bush River Rd

Date
Thursday, April 25, 2024

Lat/Long
34.028994°, -81.103003°

Weather
Fair
67°F

Click here for Detailed Weather

0000 - 2400 (Weekday 24h Session) (04-25-2024)
Volume Summary 15min

TIME	Volume Summary 15min NB	SB	15min Total	60min Total
0000 - 0015	25	0	**25**	
0015 - 0030	13	0	**13**	
0030 - 0045	7	0	**7**	
0045 - 0100	8	0	**8**	**53**
0100 - 0115	7	0	**7**	
0115 - 0130	10	0	**10**	
0130 - 0145	2	0	**2**	
0145 - 0200	5	0	**5**	**24**
0200 - 0215	5	0	**5**	
0215 - 0230	5	0	**5**	
0230 - 0245	7	0	**7**	
0245 - 0300	2	0	**2**	**19**
0300 - 0315	7	0	**7**	
0315 - 0330	7	0	**7**	
0330 - 0345	8	0	**8**	
0345 - 0400	9	0	**9**	**31**
0400 - 0415	11	0	**11**	
0415 - 0430	13	0	**13**	
0430 - 0445	16	0	**16**	
0445 - 0500	11	0	**11**	**51**
0500 - 0515	19	0	**19**	
0515 - 0530	17	0	**17**	
0530 - 0545	33	0	**33**	
0545 - 0600	26	0	**26**	**95**
0600 - 0615	30	0	**30**	
0615 - 0630	39	0	**39**	
0630 - 0645	60	0	**60**	
0645 - 0700	62	0	**62**	**191**
0700 - 0715	72	0	**72**	
0715 - 0730	80	0	**80**	
0730 - 0745	116	0	**116**	
0745 - 0800	99	0	**99**	**367**
0800 - 0815	80	0	**80**	
0815 - 0830	81	0	**81**	
0830 - 0845	77	0	**77**	
0845 - 0900	54	0	**54**	**292**
0900 - 0915	60	0	**60**	
0915 - 0930	54	0	**54**	
0930 - 0945	50	0	**50**	
0945 - 1000	48	0	**48**	**212**
1000 - 1015	55	0	**55**	
1015 - 1030	56	0	**56**	
1030 - 1045	55	0	**55**	
1045 - 1100	55	0	**55**	**221**
1100 - 1115	64	0	**64**	
1115 - 1130	75	0	**75**	
1130 - 1145	71	0	**71**	
1145 - 1200	77	0	**77**	**287**

Time	Volume Summary 15min NB	SB	15min Total	60min Total
1200 - 1215	79	0	**79**	
1215 - 1230	81	0	**81**	
1230 - 1245	87	0	**87**	
1245 - 1300	82	0	**82**	**329**
1300 - 1315	84	0	**84**	
1315 - 1330	71	0	**71**	
1330 - 1345	90	0	**90**	
1345 - 1400	64	0	**64**	**309**
1400 - 1415	77	0	**77**	
1415 - 1430	79	0	**79**	
1430 - 1445	97	0	**97**	
1445 - 1500	89	0	**89**	**342**
1500 - 1515	86	0	**86**	
1515 - 1530	93	0	**93**	
1530 - 1545	106	0	**106**	
1545 - 1600	95	0	**95**	**380**
1600 - 1615	97	0	**97**	
1615 - 1630	94	0	**94**	
1630 - 1645	122	0	**122**	
1645 - 1700	124	0	**124**	**437**
1700 - 1715	134	0	**134**	
1715 - 1730	130	0	**130**	
1730 - 1745	101	0	**101**	
1745 - 1800	85	0	**85**	**450**
1800 - 1815	88	0	**88**	
1815 - 1830	84	0	**84**	
1830 - 1845	68	0	**68**	
1845 - 1900	71	0	**71**	**311**
1900 - 1915	0	0	**0**	
1915 - 1930	0	0	**0**	
1930 - 1945	0	0	**0**	
1945 - 2000	0	0	**0**	**0**
2000 - 2015	0	0	**0**	
2015 - 2030	0	0	**0**	
2030 - 2045	0	0	**0**	
2045 - 2100	0	0	**0**	**0**
2100 - 2115	0	0	**0**	
2115 - 2130	0	0	**0**	
2130 - 2145	0	0	**0**	
2145 - 2200	0	0	**0**	**0**
2200 - 2215	0	0	**0**	
2215 - 2230	0	0	**0**	
2230 - 2245	0	0	**0**	
2245 - 2300	0	0	**0**	**0**
2300 - 2315	0	0	**0**	
2315 - 2330	0	0	**0**	
2330 - 2345	0	0	**0**	
2345 - 0000	0	0	**0**	**0**

Session Total	4401	0	**4401**
Session Average	45.84	0.00	**45.84**
Session Percentage	100.00	0.00	

Bi-Directional Class Count || NB EB 60min

Columbia, SC

Marr Traffic DATA COLLECTION

www.marrtraffic.com

Site 45
I-26 On/Off-Ramp,
north of Bush River Rd

Date
Tuesday, April 23, 2024

Lat/Long
34.028994°, -81.103003°

Weather
Fair
58°F

Click here for Detailed Weather

0000 - 2400 (Weekday 24h Session) (04-23-2024)
NB EB 60min

	Northbound (Movement 45.1)													
TIME	1	2	3	4	5	6	7	8	9	10	11	12	13	**Total**
0000 - 0100	0	0	0	0	0	0	0	0	0	0	0	0	0	**0**
0100 - 0200	0	0	0	0	0	0	0	0	0	0	0	0	0	**0**
0200 - 0300	0	0	0	0	0	0	0	0	0	0	0	0	0	**0**
0300 - 0400	0	0	0	0	0	0	0	0	0	0	0	0	0	**0**
0400 - 0500	0	0	0	0	0	0	0	0	0	0	0	0	0	**0**
0500 - 0600	0	0	0	0	0	0	0	0	0	0	0	0	0	**0**
0600 - 0700	0	0	0	0	0	0	0	0	0	0	0	0	0	**0**
0700 - 0800	0	0	0	0	0	0	0	0	0	0	0	0	0	**0**
0800 - 0900	0	0	0	0	0	0	0	0	0	0	0	0	0	**0**
0900 - 1000	0	0	0	0	0	0	0	0	0	0	0	0	0	**0**
1000 - 1100	0	0	0	0	0	0	0	0	0	0	0	0	0	**0**
1100 - 1200	0	0	0	0	0	0	0	0	0	0	0	0	0	**0**
1200 - 1300	0	0	0	0	0	0	0	0	0	0	0	0	0	**0**
1300 - 1400	0	0	0	0	0	0	0	0	0	0	0	0	0	**0**
1400 - 1500	0	0	0	0	0	0	0	0	0	0	0	0	0	**0**
1500 - 1600	0	0	0	0	0	0	0	0	0	0	0	0	0	**0**
1600 - 1700	0	0	0	0	0	0	0	0	0	0	0	0	0	**0**
1700 - 1800	0	0	0	0	0	0	0	0	0	0	0	0	0	**0**
1800 - 1900	0	0	0	0	0	0	0	0	0	0	0	0	0	**0**
1900 - 2000	0	166	24	0	5	0	0	0	0	0	0	0	0	**195**
2000 - 2100	1	136	20	0	5	0	0	0	0	0	0	0	0	**162**
2100 - 2200	0	119	15	0	0	2	0	0	0	0	0	0	0	**136**
2200 - 2300	0	82	7	0	0	0	0	0	0	0	0	0	0	**89**
2300 - 2400	0	50	4	0	0	1	0	0	0	0	0	0	0	**55**

Session Total	1	553	70	0	10	3	0	0	0	0	0	0	0	**637**
Session Average	0.04	23.04	2.92	0.00	0.42	0.13	0.00	0.00	0.00	0.00	0.00	0.00	0.00	**26.54**
Session Percentage	0.16	86.81	10.99	0.00	1.57	0.47	0.00	0.00	0.00	0.00	0.00	0.00	0.00	

AM Peak Hour	-	-	-	-	-	-	-	-	-	-	-	-	-	**-**
AM Peak Volume	0	0	0	0	0	0	0	0	0	0	0	0	0	**0**

Noon Peak Hour	-	-	-	-	-	-	-	-	-	-	-	-	-	**-**
Noon Peak Volume	0	0	0	0	0	0	0	0	0	0	0	0	0	**0**

PM Peak Hour	-	1900 - 2000	1900 - 2000	-	1900 - 2000	-	-	-	-	-	-	-	-	**1900 - 2000**
PM Peak Volume	0	166	24	0	5	0	0	0	0	0	0	0	0	**195**

Site 45
I-26 On/Off-Ramp,
north of Bush River Rd

Date
Wednesday, April 24, 2024

Lat/Long
34.028994°, -81.103003°

Weather
Fair
66°F

Click here for Detailed Weather

0000 - 2400 (Weekday 24h Session) (04-24-2024)
NB EB 60min

	Northbound (Movement 45.1)													
TIME	1	2	3	4	5	6	7	8	9	10	11	12	13	**Total**
0000 - 0100	0	33	2	0	0	0	0	0	1	0	0	0	0	**36**
0100 - 0200	0	28	3	0	0	1	0	0	1	0	0	0	0	**33**
0200 - 0300	0	19	3	0	0	2	0	0	0	0	0	0	0	**24**
0300 - 0400	0	24	3	0	1	0	0	0	0	0	0	0	0	**28**
0400 - 0500	0	44	5	0	0	1	1	0	1	0	0	0	0	**52**
0500 - 0600	0	80	12	0	1	1	0	0	2	1	0	0	0	**97**
0600 - 0700	0	156	25	0	1	3	0	1	3	1	0	0	0	**190**
0700 - 0800	0	295	68	0	4	6	0	1	8	0	0	0	0	**382**
0800 - 0900	0	241	48	2	9	9	1	0	1	0	0	0	0	**311**
0900 - 1000	0	149	38	2	1	0	0	2	1	0	0	0	0	**193**
1000 - 1100	0	171	43	0	5	1	0	0	6	0	0	0	0	**226**
1100 - 1200	2	218	55	1	3	1	0	3	2	0	0	0	0	**285**
1200 - 1300	0	218	64	0	5	1	1	5	2	0	0	0	0	**296**
1300 - 1400	2	222	52	1	11	1	0	1	2	1	0	0	0	**293**
1400 - 1500	0	261	56	0	7	3	0	1	5	0	0	0	0	**333**
1500 - 1600	2	316	49	0	5	0	0	1	5	1	0	0	0	**379**
1600 - 1700	1	331	81	1	2	2	0	0	0	0	0	0	0	**418**
1700 - 1800	0	432	51	0	5	0	0	2	2	0	0	0	0	**492**
1800 - 1900	1	238	38	0	4	0	0	1	0	0	0	0	0	**282**
1900 - 2000	0	171	27	0	1	0	0	0	0	0	0	0	0	**199**
2000 - 2100	0	168	31	0	1	1	0	0	1	0	0	0	0	**202**
2100 - 2200	0	120	12	0	1	0	0	0	0	0	0	0	0	**133**
2200 - 2300	0	65	15	1	1	1	0	0	0	0	0	0	0	**83**
2300 - 2400	0	61	4	0	0	0	0	0	0	0	0	0	0	**65**

Session Total	8	4061	785	8	68	34	3	18	43	4	0	0	0	**5032**
Session Average	0.33	169.21	32.71	0.33	2.83	1.42	0.13	0.75	1.79	0.17	0.00	0.00	0.00	**209.67**
Session Percentage	0.16	80.70	15.60	0.16	1.35	0.68	0.06	0.36	0.85	0.08	0.00	0.00	0.00	

AM Peak Hour	-	0700 - 0800	0700 - 0800	0800 - 0900	0800 - 0900	0800 - 0900	0800 - 0900	0900 - 1000	0700 - 0800	0500 - 0600	-	-	-	**0700 - 0800**
AM Peak Volume	0	295	68	2	9	9	1	2	8	1	0	0	0	**382**

Noon Peak Hour	1100 - 1200	1400 - 1500	1200 - 1300	1100 - 1200	1300 - 1400	1400 - 1500	1200 - 1300	1200 - 1300	1000 - 1100	1300 - 1400	-	-	-	**1400 - 1500**
Noon Peak Volume	2	261	64	1	11	3	1	5	6	1	0	0	0	**333**

PM Peak Hour	1500 - 1600	1700 - 1800	1600 - 1700	1600 - 1700	1500 - 1600	1600 - 1700	-	1700 - 1800	1500 - 1600	1500 - 1600	-	-	-	**1700 - 1800**
PM Peak Volume	2	432	81	1	5	2	0	2	5	1	0	0	0	**492**

Site 45
I-26 On/Off-Ramp,
north of Bush River Rd

Date
Thursday, April 25, 2024

Lat/Long
34.028994°, -81.103003°

Weather
Fair
67°F

Click here for Detailed Weather

0000 - 2400 (Weekday 24h Session) (04-25-2024)
NB EB 60min

	Northbound (Movement 45.1)													
TIME	1	2	3	4	5	6	7	8	9	10	11	12	13	**Total**
0000 - 0100	0	44	8	0	0	0	0	0	1	0	0	0	0	**53**
0100 - 0200	0	23	1	0	0	0	0	0	0	0	0	0	0	**24**
0200 - 0300	0	17	2	0	0	0	0	0	0	0	0	0	0	**19**
0300 - 0400	0	23	3	0	1	2	0	0	2	0	0	0	0	**31**
0400 - 0500	0	35	9	0	0	0	0	0	7	0	0	0	0	**51**
0500 - 0600	0	80	11	0	2	2	0	0	0	0	0	0	0	**95**
0600 - 0700	0	160	27	0	0	0	0	0	4	0	0	0	0	**191**
0700 - 0800	1	298	53	0	4	7	1	0	3	0	0	0	0	**367**
0800 - 0900	0	222	53	1	8	2	3	0	3	0	0	0	0	**292**
0900 - 1000	0	158	38	1	4	6	1	0	4	0	0	0	0	**212**
1000 - 1100	0	153	49	0	7	5	0	1	5	1	0	0	0	**221**
1100 - 1200	0	210	59	1	3	6	6	0	2	0	0	0	0	**287**
1200 - 1300	1	254	50	1	6	5	5	2	5	0	0	0	0	**329**
1300 - 1400	1	241	54	0	6	3	0	1	1	2	0	0	0	**309**
1400 - 1500	1	273	54	0	10	0	3	0	1	0	0	0	0	**342**
1500 - 1600	2	313	52	0	8	1	1	2	1	0	0	0	0	**380**
1600 - 1700	0	353	70	0	5	5	1	2	1	0	0	0	0	**437**
1700 - 1800	0	386	57	0	3	2	0	0	2	0	0	0	0	**450**
1800 - 1900	2	243	52	0	11	1	0	0	2	0	0	0	0	**311**
1900 - 2000	0	0	0	0	0	0	0	0	0	0	0	0	0	**0**
2000 - 2100	0	0	0	0	0	0	0	0	0	0	0	0	0	**0**
2100 - 2200	0	0	0	0	0	0	0	0	0	0	0	0	0	**0**
2200 - 2300	0	0	0	0	0	0	0	0	0	0	0	0	0	**0**
2300 - 2400	0	0	0	0	0	0	0	0	0	0	0	0	0	**0**

Session Total	8	3486	702	4	78	47	21	8	44	3	0	0	0	**4401**
Session Average	0.33	145.25	29.25	0.17	3.25	1.96	0.88	0.33	1.83	0.13	0.00	0.00	0.00	**183.38**
Session Percentage	0.18	79.21	15.95	0.09	1.77	1.07	0.48	0.18	1.00	0.07	0.00	0.00	0.00	

AM Peak Hour	0700 - 0800	0700 - 0800	0700 - 0800	0800 - 0900	0800 - 0900	0700 - 0800	0800 - 0900	-	0600 - 0700	-	-	-	-	**0700 - 0800**
AM Peak Hour Volume	1	298	53	1	8	7	3	0	4	0	0	0	0	**367**

Noon Peak Hour	1200 - 1300	1400 - 1500	1100 - 1200	1100 - 1200	1400 - 1500	1100 - 1200	1100 - 1200	1200 - 1300	1000 - 1100	1300 - 1400	-	-	-	**1400 - 1500**
Noon Peak Hour Volume	1	273	59	1	10	6	6	2	5	2	0	0	0	**342**

PM Peak Hour	1500 - 1600	1700 - 1800	1600 - 1700	-	1800 - 1900	1600 - 1700	1500 - 1600	1500 - 1600	1700 - 1800	-	-	-	-	**1700 - 1800**
PM Peak Hour Volume	2	386	70	0	11	5	1	2	2	0	0	0	0	**450**

Bi-Directional Class Count || Volume Summary 60min

Columbia, SC

Marr Traffic DATA COLLECTION

www.marrtraffic.com

Site 45

I-26 On/Off-Ramp,
north of Bush River Rd

Date

Tuesday, April 23, 2024

Lat/Long

34.028994°, -81.103003°

Weather

Fair
58°F

Click here for Detailed Weather

0000 - 2400 (Weekday 24h Session) (04-23-2024)

Volume Summary 60min

	Volume Summary 60min		
TIME	NB	SB	**Total**
0000 - 0100	0	0	**0**
0100 - 0200	0	0	**0**
0200 - 0300	0	0	**0**
0300 - 0400	0	0	**0**
0400 - 0500	0	0	**0**
0500 - 0600	0	0	**0**
0600 - 0700	0	0	**0**
0700 - 0800	0	0	**0**
0800 - 0900	0	0	**0**
0900 - 1000	0	0	**0**
1000 - 1100	0	0	**0**
1100 - 1200	0	0	**0**

	Volume Summary 60min		
Time	NB	SB	**Total**
1200 - 1300	0	0	**0**
1300 - 1400	0	0	**0**
1400 - 1500	0	0	**0**
1500 - 1600	0	0	**0**
1600 - 1700	0	0	**0**
1700 - 1800	0	0	**0**
1800 - 1900	0	0	**0**
1900 - 2000	195	0	**195**
2000 - 2100	162	0	**162**
2100 - 2200	136	0	**136**
2200 - 2300	89	0	**89**
2300 - 2400	55	0	**55**

Session Total	637	0	**637**
Session Average	26.54	0.00	**26.54**
Session Percentage	100.00	0.00	

Site 45

I-26 On/Off-Ramp,
north of Bush River Rd

Date

Wednesday, April 24, 2024

Lat/Long

34.028994°, -81.103003°

Weather

Fair
66°F

Click here for Detailed Weather

0000 - 2400 (Weekday 24h Session) (04-24-2024)

Volume Summary 60min

	Volume Summary 60min		
TIME	NB	SB	**Total**
0000 - 0100	36	0	**36**
0100 - 0200	33	0	**33**
0200 - 0300	24	0	**24**
0300 - 0400	28	0	**28**
0400 - 0500	52	0	**52**
0500 - 0600	97	0	**97**
0600 - 0700	190	0	**190**
0700 - 0800	382	0	**382**
0800 - 0900	311	0	**311**
0900 - 1000	193	0	**193**
1000 - 1100	226	0	**226**
1100 - 1200	285	0	**285**

	Volume Summary 60min		
Time	NB	SB	**Total**
1200 - 1300	296	0	**296**
1300 - 1400	293	0	**293**
1400 - 1500	333	0	**333**
1500 - 1600	379	0	**379**
1600 - 1700	418	0	**418**
1700 - 1800	492	0	**492**
1800 - 1900	282	0	**282**
1900 - 2000	199	0	**199**
2000 - 2100	202	0	**202**
2100 - 2200	133	0	**133**
2200 - 2300	83	0	**83**
2300 - 2400	65	0	**65**

Session Total	5032	0	**5032**
Session Average	209.67	0.00	**209.67**
Session Percentage	100.00	0.00	

Site 45

I-26 On/Off-Ramp,
north of Bush River Rd

Date

Thursday, April 25, 2024

Lat/Long

34.028994°, -81.103003°

Weather

Fair
67°F

Click here for Detailed Weather

0000 - 2400 (Weekday 24h Session) (04-25-2024)

Volume Summary 60min

	Volume Summary 60min		
TIME	NB	SB	**Total**
0000 - 0100	53	0	**53**
0100 - 0200	24	0	**24**
0200 - 0300	19	0	**19**
0300 - 0400	31	0	**31**
0400 - 0500	51	0	**51**
0500 - 0600	95	0	**95**
0600 - 0700	191	0	**191**
0700 - 0800	367	0	**367**
0800 - 0900	292	0	**292**
0900 - 1000	212	0	**212**
1000 - 1100	221	0	**221**
1100 - 1200	287	0	**287**

Session Total	4401	0	**4401**
Session Average	183.38	0.00	**183.38**
Session Percentage	100.00	0.00	

	Volume Summary 60min		
Time	NB	SB	**Total**
1200 - 1300	329	0	**329**
1300 - 1400	309	0	**309**
1400 - 1500	342	0	**342**
1500 - 1600	380	0	**380**
1600 - 1700	437	0	**437**
1700 - 1800	450	0	**450**
1800 - 1900	311	0	**311**
1900 - 2000	0	0	**0**
2000 - 2100	0	0	**0**
2100 - 2200	0	0	**0**
2200 - 2300	0	0	**0**
2300 - 2400	0	0	**0**

Bi-Directional Class Count || Graphical Analysis NB EB

Columbia, SC

Marr Traffic DATA COLLECTION

www.marrtraffic.com

Site 45

I-26 On/Off-Ramp,
north of Bush River Rd

Lat/Long

34.028994°, -81.103003°

0000 - 2400 (Weekday 24h Session)

Graphical Analysis NB EB



Time	Tue 04/23	Wed 04/24	Thu 04/25				
0000 - 0100	0	36	53				
0100 - 0200	0	33	24				
0200 - 0300	0	24	19				
0300 - 0400	0	28	31				
0400 - 0500	0	52	51				
0500 - 0600	0	97	95				
0600 - 0700	0	190	191				
0700 - 0800	0	382	367				
0800 - 0900	0	311	292				
0900 - 1000	0	193	212				
1000 - 1100	0	226	221				
1100 - 1200	0	285	287				
1200 - 1300	0	296	329				
1300 - 1400	0	293	309				
1400 - 1500	0	333	342				
1500 - 1600	0	379	380				
1600 - 1700	0	418	437				
1700 - 1800	0	492	450				
1800 - 1900	0	282	311				
1900 - 2000	195	199	0				
2000 - 2100	162	202	0				
2100 - 2200	136	133	0				
2200 - 2300	89	83	0				
2300 - 2400	55	65	0				
Daily Total	637	5032	4401				

NB
File Name:
Start Date: 4/23/2024
Start Time: 0
Site Code: 45
Station ID: 1
Location 1: I-26 On/Off-Ramp, north of Bush River Rd
Location 2:

Date	Time	1	2	3	4	5	6	7	8	9	10	11	12	13
4/23/2024	12:00 AM	0	0	0	0	0	0	0	0	0	0	0	0	0
4/23/2024	12:15 AM	0	0	0	0	0	0	0	0	0	0	0	0	0
4/23/2024	12:30 AM	0	0	0	0	0	0	0	0	0	0	0	0	0
4/23/2024	12:45 AM	0	0	0	0	0	0	0	0	0	0	0	0	0
4/23/2024	1:00 AM	0	0	0	0	0	0	0	0	0	0	0	0	0
4/23/2024	1:15 AM	0	0	0	0	0	0	0	0	0	0	0	0	0
4/23/2024	1:30 AM	0	0	0	0	0	0	0	0	0	0	0	0	0
4/23/2024	1:45 AM	0	0	0	0	0	0	0	0	0	0	0	0	0
4/23/2024	2:00 AM	0	0	0	0	0	0	0	0	0	0	0	0	0
4/23/2024	2:15 AM	0	0	0	0	0	0	0	0	0	0	0	0	0
4/23/2024	2:30 AM	0	0	0	0	0	0	0	0	0	0	0	0	0
4/23/2024	2:45 AM	0	0	0	0	0	0	0	0	0	0	0	0	0
4/23/2024	3:00 AM	0	0	0	0	0	0	0	0	0	0	0	0	0
4/23/2024	3:15 AM	0	0	0	0	0	0	0	0	0	0	0	0	0
4/23/2024	3:30 AM	0	0	0	0	0	0	0	0	0	0	0	0	0
4/23/2024	3:45 AM	0	0	0	0	0	0	0	0	0	0	0	0	0
4/23/2024	4:00 AM	0	0	0	0	0	0	0	0	0	0	0	0	0
4/23/2024	4:15 AM	0	0	0	0	0	0	0	0	0	0	0	0	0
4/23/2024	4:30 AM	0	0	0	0	0	0	0	0	0	0	0	0	0
4/23/2024	4:45 AM	0	0	0	0	0	0	0	0	0	0	0	0	0
4/23/2024	5:00 AM	0	0	0	0	0	0	0	0	0	0	0	0	0
4/23/2024	5:15 AM	0	0	0	0	0	0	0	0	0	0	0	0	0
4/23/2024	5:30 AM	0	0	0	0	0	0	0	0	0	0	0	0	0
4/23/2024	5:45 AM	0	0	0	0	0	0	0	0	0	0	0	0	0
4/23/2024	6:00 AM	0	0	0	0	0	0	0	0	0	0	0	0	0
4/23/2024	6:15 AM	0	0	0	0	0	0	0	0	0	0	0	0	0
4/23/2024	6:30 AM	0	0	0	0	0	0	0	0	0	0	0	0	0
4/23/2024	6:45 AM	0	0	0	0	0	0	0	0	0	0	0	0	0
4/23/2024	7:00 AM	0	0	0	0	0	0	0	0	0	0	0	0	0
4/23/2024	7:15 AM	0	0	0	0	0	0	0	0	0	0	0	0	0
4/23/2024	7:30 AM	0	0	0	0	0	0	0	0	0	0	0	0	0
4/23/2024	7:45 AM	0	0	0	0	0	0	0	0	0	0	0	0	0
4/23/2024	8:00 AM	0	0	0	0	0	0	0	0	0	0	0	0	0
4/23/2024	8:15 AM	0	0	0	0	0	0	0	0	0	0	0	0	0
4/23/2024	8:30 AM	0	0	0	0	0	0	0	0	0	0	0	0	0
4/23/2024	8:45 AM	0	0	0	0	0	0	0	0	0	0	0	0	0
4/23/2024	9:00 AM	0	0	0	0	0	0	0	0	0	0	0	0	0
4/23/2024	9:15 AM	0	0	0	0	0	0	0	0	0	0	0	0	0
4/23/2024	9:30 AM	0	0	0	0	0	0	0	0	0	0	0	0	0
4/23/2024	9:45 AM	0	0	0	0	0	0	0	0	0	0	0	0	0
4/23/2024	10:00 AM	0	0	0	0	0	0	0	0	0	0	0	0	0
4/23/2024	10:15 AM	0	0	0	0	0	0	0	0	0	0	0	0	0
4/23/2024	10:30 AM	0	0	0	0	0	0	0	0	0	0	0	0	0
4/23/2024	10:45 AM	0	0	0	0	0	0	0	0	0	0	0	0	0
4/23/2024	11:00 AM	0	0	0	0	0	0	0	0	0	0	0	0	0
4/23/2024	11:15 AM	0	0	0	0	0	0	0	0	0	0	0	0	0
4/23/2024	11:30 AM	0	0	0	0	0	0	0	0	0	0	0	0	0
4/23/2024	11:45 AM	0	0	0	0	0	0	0	0	0	0	0	0	0
4/23/2024	12:00 PM	0	0	0	0	0	0	0	0	0	0	0	0	0
4/23/2024	12:15 PM	0	0	0	0	0	0	0	0	0	0	0	0	0
4/23/2024	12:30 PM	0	0	0	0	0	0	0	0	0	0	0	0	0
4/23/2024	12:45 PM	0	0	0	0	0	0	0	0	0	0	0	0	0
4/23/2024	1:00 PM	0	0	0	0	0	0	0	0	0	0	0	0	0
4/23/2024	1:15 PM	0	0	0	0	0	0	0	0	0	0	0	0	0
4/23/2024	1:30 PM	0	0	0	0	0	0	0	0	0	0	0	0	0
4/23/2024	1:45 PM	0	0	0	0	0	0	0	0	0	0	0	0	0
4/23/2024	2:00 PM	0	0	0	0	0	0	0	0	0	0	0	0	0
4/23/2024	2:15 PM	0	0	0	0	0	0	0	0	0	0	0	0	0
4/23/2024	2:30 PM	0	0	0	0	0	0	0	0	0	0	0	0	0
4/23/2024	2:45 PM	0	0	0	0	0	0	0	0	0	0	0	0	0
4/23/2024	3:00 PM	0	0	0	0	0	0	0	0	0	0	0	0	0
4/23/2024	3:15 PM	0	0	0	0	0	0	0	0	0	0	0	0	0
4/23/2024	3:30 PM	0	0	0	0	0	0	0	0	0	0	0	0	0
4/23/2024	3:45 PM	0	0	0	0	0	0	0	0	0	0	0	0	0
4/23/2024	4:00 PM	0	0	0	0	0	0	0	0	0	0	0	0	0
4/23/2024	4:15 PM	0	0	0	0	0	0	0	0	0	0	0	0	0
4/23/2024	4:30 PM	0	0	0	0	0	0	0	0	0	0	0	0	0
4/23/2024	4:45 PM	0	0	0	0	0	0	0	0	0	0	0	0	0
4/23/2024	5:00 PM	0	0	0	0	0	0	0	0	0	0	0	0	0
4/23/2024	5:15 PM	0	0	0	0	0	0	0	0	0	0	0	0	0
4/23/2024	5:30 PM	0	0	0	0	0	0	0	0	0	0	0	0	0
4/23/2024	5:45 PM	0	0	0	0	0	0	0	0	0	0	0	0	0
4/23/2024	6:00 PM	0	0	0	0	0	0	0	0	0	0	0	0	0
4/23/2024	6:15 PM	0	0	0	0	0	0	0	0	0	0	0	0	0
4/23/2024	6:30 PM	0	0	0	0	0	0	0	0	0	0	0	0	0
4/23/2024	6:45 PM	0	0	0	0	0	0	0	0	0	0	0	0	0
4/23/2024	7:00 PM	0	52	8	0	2	0	0	0	0	0	0	0	0
4/23/2024	7:15 PM	0	43	4	0	1	0	0	0	0	0	0	0	0
4/23/2024	7:30 PM	0	37	5	0	1	0	0	0	0	0	0	0	0
4/23/2024	7:45 PM	0	34	7	0	1	0	0	0	0	0	0	0	0
4/23/2024	8:00 PM	0	34	5	0	2	0	0	0	0	0	0	0	0
4/23/2024	8:15 PM	1	30	4	0	2	0	0	0	0	0	0	0	0
4/23/2024	8:30 PM	0	40	8	0	1	0	0	0	0	0	0	0	0
4/23/2024	8:45 PM	0	32	3	0	0	0	0	0	0	0	0	0	0
4/23/2024	9:00 PM	0	25	1	0	0	1	0	0	0	0	0	0	0
4/23/2024	9:15 PM	0	38	3	0	0	1	0	0	0	0	0	0	0
4/23/2024	9:30 PM	0	33	4	0	0	0	0	0	0	0	0	0	0
4/23/2024	9:45 PM	0	23	7	0	0	0	0	0	0	0	0	0	0
4/23/2024	10:00 PM	0	22	2	0	0	0	0	0	0	0	0	0	0
4/23/2024	10:15 PM	0	19	1	0	0	0	0	0	0	0	0	0	0
4/23/2024	10:30 PM	0	23	3	0	0	0	0	0	0	0	0	0	0
4/23/2024	10:45 PM	0	18	1	0	0	0	0	0	0	0	0	0	0
4/23/2024	11:00 PM	0	18	0	0	0	0	0	0	0	0	0	0	0
4/23/2024	11:15 PM	0	13	1	0	0	1	0	0	0	0	0	0	0
4/23/2024	11:30 PM	0	6	2	0	0	0	0	0	0	0	0	0	0
4/23/2024	11:45 PM	0	13	1	0	0	0	0	0	0	0	0	0	0

4/24/2024	12:00 AM	0	12	1	0	0	0	0	0	0	0	0	0	0
4/24/2024	12:15 AM	0	6	0	0	0	0	0	0	0	0	0	0	0
4/24/2024	12:30 AM	0	7	0	0	0	0	0	0	1	0	0	0	0
4/24/2024	12:45 AM	0	8	1	0	0	0	0	0	0	0	0	0	0
4/24/2024	1:00 AM	0	7	1	0	0	1	0	0	0	0	0	0	0
4/24/2024	1:15 AM	0	7	1	0	0	0	0	0	1	0	0	0	0
4/24/2024	1:30 AM	0	7	0	0	0	0	0	0	0	0	0	0	0
4/24/2024	1:45 AM	0	7	1	0	0	0	0	0	0	0	0	0	0
4/24/2024	2:00 AM	0	6	0	0	0	1	0	0	0	0	0	0	0
4/24/2024	2:15 AM	0	5	1	0	0	0	0	0	0	0	0	0	0
4/24/2024	2:30 AM	0	5	1	0	0	1	0	0	0	0	0	0	0
4/24/2024	2:45 AM	0	3	1	0	0	0	0	0	0	0	0	0	0
4/24/2024	3:00 AM	0	6	1	0	0	0	0	0	0	0	0	0	0
4/24/2024	3:15 AM	0	4	0	0	0	0	0	0	0	0	0	0	0
4/24/2024	3:30 AM	0	5	0	0	0	0	0	0	0	0	0	0	0
4/24/2024	3:45 AM	0	9	2	0	1	0	0	0	0	0	0	0	0
4/24/2024	4:00 AM	0	4	1	0	0	0	0	0	0	0	0	0	0
4/24/2024	4:15 AM	0	12	0	0	0	0	0	0	0	0	0	0	0
4/24/2024	4:30 AM	0	12	2	0	0	1	0	0	1	0	0	0	0
4/24/2024	4:45 AM	0	16	2	0	0	0	1	0	0	0	0	0	0
4/24/2024	5:00 AM	0	7	2	0	0	0	0	0	0	0	0	0	0
4/24/2024	5:15 AM	0	21	3	0	0	1	0	0	0	0	0	0	0
4/24/2024	5:30 AM	0	25	4	0	1	0	0	0	2	0	0	0	0
4/24/2024	5:45 AM	0	27	3	0	0	0	0	0	0	1	0	0	0
4/24/2024	6:00 AM	0	23	2	0	0	1	0	0	1	0	0	0	0
4/24/2024	6:15 AM	0	32	7	0	0	0	0	0	0	0	0	0	0
4/24/2024	6:30 AM	0	40	8	0	0	2	0	1	0	0	0	0	0
4/24/2024	6:45 AM	0	61	8	0	1	0	0	0	2	1	0	0	0
4/24/2024	7:00 AM	0	60	9	0	0	1	0	0	2	0	0	0	0
4/24/2024	7:15 AM	0	76	19	0	2	2	0	1	4	0	0	0	0
4/24/2024	7:30 AM	0	67	16	0	1	1	0	0	1	0	0	0	0
4/24/2024	7:45 AM	0	92	24	0	1	2	0	0	1	0	0	0	0
4/24/2024	8:00 AM	0	81	12	0	3	4	0	0	0	0	0	0	0
4/24/2024	8:15 AM	0	57	12	1	2	0	0	0	0	0	0	0	0
4/24/2024	8:30 AM	0	56	10	1	0	2	0	0	1	0	0	0	0
4/24/2024	8:45 AM	0	47	14	0	4	3	1	0	0	0	0	0	0
4/24/2024	9:00 AM	0	41	11	0	1	0	0	0	0	0	0	0	0
4/24/2024	9:15 AM	0	26	9	1	0	0	0	2	0	0	0	0	0
4/24/2024	9:30 AM	0	34	6	1	0	0	0	0	1	0	0	0	0
4/24/2024	9:45 AM	0	48	12	0	0	0	0	0	0	0	0	0	0
4/24/2024	10:00 AM	0	36	14	0	1	0	0	0	4	0	0	0	0
4/24/2024	10:15 AM	0	48	6	0	2	1	0	0	2	0	0	0	0
4/24/2024	10:30 AM	0	50	7	0	1	0	0	0	0	0	0	0	0
4/24/2024	10:45 AM	0	37	16	0	1	0	0	0	0	0	0	0	0
4/24/2024	11:00 AM	0	42	13	0	0	0	0	1	1	0	0	0	0
4/24/2024	11:15 AM	0	59	12	1	1	1	0	1	0	0	0	0	0
4/24/2024	11:30 AM	1	59	14	0	1	0	0	0	0	0	0	0	0
4/24/2024	11:45 AM	1	58	16	0	1	0	0	1	1	0	0	0	0
4/24/2024	12:00 PM	0	53	18	0	1	0	0	1	0	0	0	0	0
4/24/2024	12:15 PM	0	47	17	0	1	0	0	0	1	0	0	0	0
4/24/2024	12:30 PM	0	63	14	0	0	1	1	2	0	0	0	0	0
4/24/2024	12:45 PM	0	55	15	0	3	0	0	2	1	0	0	0	0
4/24/2024	1:00 PM	2	65	15	0	2	0	0	0	1	1	0	0	0
4/24/2024	1:15 PM	0	57	12	1	4	0	0	1	1	0	0	0	0
4/24/2024	1:30 PM	0	43	16	0	3	0	0	0	0	0	0	0	0
4/24/2024	1:45 PM	0	57	9	0	2	1	0	0	0	0	0	0	0
4/24/2024	2:00 PM	0	80	19	0	4	0	0	1	0	0	0	0	0
4/24/2024	2:15 PM	0	66	9	0	2	0	0	0	1	0	0	0	0
4/24/2024	2:30 PM	0	53	17	0	0	2	0	0	4	0	0	0	0
4/24/2024	2:45 PM	0	62	11	0	1	1	0	0	0	0	0	0	0
4/24/2024	3:00 PM	1	93	11	0	2	0	0	0	1	1	0	0	0
4/24/2024	3:15 PM	0	67	14	0	0	0	0	0	2	0	0	0	0
4/24/2024	3:30 PM	0	85	10	0	2	0	0	0	1	0	0	0	0
4/24/2024	3:45 PM	1	71	14	0	1	0	0	1	1	0	0	0	0
4/24/2024	4:00 PM	0	88	26	0	1	0	0	0	0	0	0	0	0
4/24/2024	4:15 PM	0	71	14	1	0	1	0	0	0	0	0	0	0
4/24/2024	4:30 PM	1	92	15	0	1	1	0	0	0	0	0	0	0
4/24/2024	4:45 PM	0	80	26	0	0	0	0	0	0	0	0	0	0
4/24/2024	5:00 PM	0	113	13	0	1	0	0	2	1	0	0	0	0
4/24/2024	5:15 PM	0	141	16	0	3	0	0	0	0	0	0	0	0
4/24/2024	5:30 PM	0	109	17	0	0	0	0	0	1	0	0	0	0
4/24/2024	5:45 PM	0	69	5	0	1	0	0	0	0	0	0	0	0
4/24/2024	6:00 PM	0	67	9	0	2	0	0	1	0	0	0	0	0
4/24/2024	6:15 PM	0	71	9	0	2	0	0	0	0	0	0	0	0
4/24/2024	6:30 PM	1	49	12	0	0	0	0	0	0	0	0	0	0
4/24/2024	6:45 PM	0	51	8	0	0	0	0	0	0	0	0	0	0
4/24/2024	7:00 PM	0	56	9	0	0	0	0	0	0	0	0	0	0
4/24/2024	7:15 PM	0	43	6	0	0	0	0	0	0	0	0	0	0
4/24/2024	7:30 PM	0	41	3	0	0	0	0	0	0	0	0	0	0
4/24/2024	7:45 PM	0	31	9	0	1	0	0	0	0	0	0	0	0
4/24/2024	8:00 PM	0	40	10	0	0	0	0	0	0	0	0	0	0
4/24/2024	8:15 PM	0	41	9	0	1	0	0	0	0	0	0	0	0
4/24/2024	8:30 PM	0	43	8	0	0	0	0	0	1	0	0	0	0
4/24/2024	8:45 PM	0	44	4	0	0	1	0	0	0	0	0	0	0
4/24/2024	9:00 PM	0	35	1	0	1	0	0	0	0	0	0	0	0
4/24/2024	9:15 PM	0	34	4	0	0	0	0	0	0	0	0	0	0
4/24/2024	9:30 PM	0	29	5	0	0	0	0	0	0	0	0	0	0
4/24/2024	9:45 PM	0	22	2	0	0	0	0	0	0	0	0	0	0
4/24/2024	10:00 PM	0	14	4	1	1	0	0	0	0	0	0	0	0
4/24/2024	10:15 PM	0	15	5	0	0	1	0	0	0	0	0	0	0
4/24/2024	10:30 PM	0	19	3	0	0	0	0	0	0	0	0	0	0
4/24/2024	10:45 PM	0	17	3	0	0	0	0	0	0	0	0	0	0
4/24/2024	11:00 PM	0	17	2	0	0	0	0	0	0	0	0	0	0
4/24/2024	11:15 PM	0	12	0	0	0	0	0	0	0	0	0	0	0
4/24/2024	11:30 PM	0	15	2	0	0	0	0	0	0	0	0	0	0
4/24/2024	11:45 PM	0	17	0	0	0	0	0	0	0	0	0	0	0

4/25/2024	12:00 AM	0	18	6	0	0	0	0	0	1	0	0	0	0
4/25/2024	12:15 AM	0	12	1	0	0	0	0	0	0	0	0	0	0
4/25/2024	12:30 AM	0	6	1	0	0	0	0	0	0	0	0	0	0
4/25/2024	12:45 AM	0	8	0	0	0	0	0	0	0	0	0	0	0
4/25/2024	1:00 AM	0	7	0	0	0	0	0	0	0	0	0	0	0
4/25/2024	1:15 AM	0	10	0	0	0	0	0	0	0	0	0	0	0
4/25/2024	1:30 AM	0	2	0	0	0	0	0	0	0	0	0	0	0
4/25/2024	1:45 AM	0	4	1	0	0	0	0	0	0	0	0	0	0
4/25/2024	2:00 AM	0	5	0	0	0	0	0	0	0	0	0	0	0
4/25/2024	2:15 AM	0	5	0	0	0	0	0	0	0	0	0	0	0
4/25/2024	2:30 AM	0	5	2	0	0	0	0	0	0	0	0	0	0
4/25/2024	2:45 AM	0	2	0	0	0	0	0	0	0	0	0	0	0
4/25/2024	3:00 AM	0	7	0	0	0	0	0	0	0	0	0	0	0
4/25/2024	3:15 AM	0	6	0	0	0	0	0	0	1	0	0	0	0
4/25/2024	3:30 AM	0	4	2	0	0	1	0	0	1	0	0	0	0
4/25/2024	3:45 AM	0	6	1	0	1	1	0	0	0	0	0	0	0
4/25/2024	4:00 AM	0	6	4	0	0	0	0	0	1	0	0	0	0
4/25/2024	4:15 AM	0	9	1	0	0	0	0	0	3	0	0	0	0
4/25/2024	4:30 AM	0	10	4	0	0	0	0	0	2	0	0	0	0
4/25/2024	4:45 AM	0	10	0	0	0	0	0	0	1	0	0	0	0
4/25/2024	5:00 AM	0	15	2	0	1	1	0	0	0	0	0	0	0
4/25/2024	5:15 AM	0	15	0	0	1	1	0	0	0	0	0	0	0
4/25/2024	5:30 AM	0	28	5	0	0	0	0	0	0	0	0	0	0
4/25/2024	5:45 AM	0	22	4	0	0	0	0	0	0	0	0	0	0
4/25/2024	6:00 AM	0	22	7	0	0	0	0	0	1	0	0	0	0
4/25/2024	6:15 AM	0	32	6	0	0	0	0	0	1	0	0	0	0
4/25/2024	6:30 AM	0	56	4	0	0	0	0	0	0	0	0	0	0
4/25/2024	6:45 AM	0	50	10	0	0	0	0	0	2	0	0	0	0
4/25/2024	7:00 AM	1	53	17	0	1	0	0	0	0	0	0	0	0
4/25/2024	7:15 AM	0	63	16	0	0	0	0	0	1	0	0	0	0
4/25/2024	7:30 AM	0	98	14	0	0	2	1	0	1	0	0	0	0
4/25/2024	7:45 AM	0	84	6	0	3	5	0	0	1	0	0	0	0
4/25/2024	8:00 AM	0	62	13	0	1	2	0	0	2	0	0	0	0
4/25/2024	8:15 AM	0	65	13	0	0	0	3	0	0	0	0	0	0
4/25/2024	8:30 AM	0	56	14	1	5	0	0	0	1	0	0	0	0
4/25/2024	8:45 AM	0	39	13	0	2	0	0	0	0	0	0	0	0
4/25/2024	9:00 AM	0	52	7	0	0	0	0	0	1	0	0	0	0
4/25/2024	9:15 AM	0	33	15	0	1	2	1	0	2	0	0	0	0
4/25/2024	9:30 AM	0	38	8	0	1	3	0	0	0	0	0	0	0
4/25/2024	9:45 AM	0	35	8	1	2	1	0	0	1	0	0	0	0
4/25/2024	10:00 AM	0	36	14	0	3	1	0	0	1	0	0	0	0
4/25/2024	10:15 AM	0	38	13	0	0	2	0	1	2	0	0	0	0
4/25/2024	10:30 AM	0	44	9	0	1	0	0	0	1	0	0	0	0
4/25/2024	10:45 AM	0	35	13	0	3	2	0	0	1	1	0	0	0
4/25/2024	11:00 AM	0	48	9	1	2	1	2	0	1	0	0	0	0
4/25/2024	11:15 AM	0	51	22	0	0	1	1	0	0	0	0	0	0
4/25/2024	11:30 AM	0	55	13	0	1	1	1	0	0	0	0	0	0
4/25/2024	11:45 AM	0	56	15	0	0	3	2	0	1	0	0	0	0
4/25/2024	12:00 PM	0	59	12	0	1	2	2	0	3	0	0	0	0
4/25/2024	12:15 PM	1	59	13	1	2	1	2	1	1	0	0	0	0
4/25/2024	12:30 PM	0	69	14	0	1	2	1	0	0	0	0	0	0
4/25/2024	12:45 PM	0	67	11	0	2	0	0	1	1	0	0	0	0
4/25/2024	1:00 PM	1	65	14	0	3	1	0	0	0	0	0	0	0
4/25/2024	1:15 PM	0	59	9	0	1	0	0	0	0	2	0	0	0
4/25/2024	1:30 PM	0	69	18	0	0	1	0	1	1	0	0	0	0
4/25/2024	1:45 PM	0	48	13	0	2	1	0	0	0	0	0	0	0
4/25/2024	2:00 PM	1	61	11	0	2	0	2	0	0	0	0	0	0
4/25/2024	2:15 PM	0	63	12	0	4	0	0	0	0	0	0	0	0
4/25/2024	2:30 PM	0	81	13	0	1	0	1	0	1	0	0	0	0
4/25/2024	2:45 PM	0	68	18	0	3	0	0	0	0	0	0	0	0
4/25/2024	3:00 PM	1	70	12	0	0	1	1	1	0	0	0	0	0
4/25/2024	3:15 PM	1	76	12	0	4	0	0	0	0	0	0	0	0
4/25/2024	3:30 PM	0	90	13	0	3	0	0	0	0	0	0	0	0
4/25/2024	3:45 PM	0	77	15	0	1	0	0	1	1	0	0	0	0
4/25/2024	4:00 PM	0	84	11	0	1	0	0	0	1	0	0	0	0
4/25/2024	4:15 PM	0	70	21	0	1	0	0	2	0	0	0	0	0
4/25/2024	4:30 PM	0	95	22	0	1	4	0	0	0	0	0	0	0
4/25/2024	4:45 PM	0	104	16	0	2	1	1	0	0	0	0	0	0
4/25/2024	5:00 PM	0	111	19	0	0	2	0	0	2	0	0	0	0
4/25/2024	5:15 PM	0	111	17	0	2	0	0	0	0	0	0	0	0
4/25/2024	5:30 PM	0	90	11	0	0	0	0	0	0	0	0	0	0
4/25/2024	5:45 PM	0	74	10	0	1	0	0	0	0	0	0	0	0
4/25/2024	6:00 PM	0	70	11	0	5	1	0	0	1	0	0	0	0
4/25/2024	6:15 PM	0	66	16	0	2	0	0	0	0	0	0	0	0
4/25/2024	6:30 PM	1	57	8	0	1	0	0	0	1	0	0	0	0
4/25/2024	6:45 PM	1	50	17	0	3	0	0	0	0	0	0	0	0
4/25/2024	7:00 PM	0	0	0	0	0	0	0	0	0	0	0	0	0
4/25/2024	7:15 PM	0	0	0	0	0	0	0	0	0	0	0	0	0
4/25/2024	7:30 PM	0	0	0	0	0	0	0	0	0	0	0	0	0
4/25/2024	7:45 PM	0	0	0	0	0	0	0	0	0	0	0	0	0
4/25/2024	8:00 PM	0	0	0	0	0	0	0	0	0	0	0	0	0
4/25/2024	8:15 PM	0	0	0	0	0	0	0	0	0	0	0	0	0
4/25/2024	8:30 PM	0	0	0	0	0	0	0	0	0	0	0	0	0
4/25/2024	8:45 PM	0	0	0	0	0	0	0	0	0	0	0	0	0
4/25/2024	9:00 PM	0	0	0	0	0	0	0	0	0	0	0	0	0
4/25/2024	9:15 PM	0	0	0	0	0	0	0	0	0	0	0	0	0
4/25/2024	9:30 PM	0	0	0	0	0	0	0	0	0	0	0	0	0
4/25/2024	9:45 PM	0	0	0	0	0	0	0	0	0	0	0	0	0
4/25/2024	10:00 PM	0	0	0	0	0	0	0	0	0	0	0	0	0
4/25/2024	10:15 PM	0	0	0	0	0	0	0	0	0	0	0	0	0
4/25/2024	10:30 PM	0	0	0	0	0	0	0	0	0	0	0	0	0
4/25/2024	10:45 PM	0	0	0	0	0	0	0	0	0	0	0	0	0
4/25/2024	11:00 PM	0	0	0	0	0	0	0	0	0	0	0	0	0
4/25/2024	11:15 PM	0	0	0	0	0	0	0	0	0	0	0	0	0
4/25/2024	11:30 PM	0	0	0	0	0	0	0	0	0	0	0	0	0
4/25/2024	11:45 PM	0	0	0	0	0	0	0	0	0	0	0	0	0

SB
File Name:
Start Date: 4/23/2024
Start Time: 0
Site Code: 45
Station ID: 1
Location 1: I-26 On/Off-Ramp, north of Bush River Rd
Location 2:

Date	Time	1	2	3	4	5	6	7	8	9	10	11	12	13
4/23/2024	12:00 AM	0	0	0	0	0	0	0	0	0	0	0	0	0
4/23/2024	12:15 AM	0	0	0	0	0	0	0	0	0	0	0	0	0
4/23/2024	12:30 AM	0	0	0	0	0	0	0	0	0	0	0	0	0
4/23/2024	12:45 AM	0	0	0	0	0	0	0	0	0	0	0	0	0
4/23/2024	1:00 AM	0	0	0	0	0	0	0	0	0	0	0	0	0
4/23/2024	1:15 AM	0	0	0	0	0	0	0	0	0	0	0	0	0
4/23/2024	1:30 AM	0	0	0	0	0	0	0	0	0	0	0	0	0
4/23/2024	1:45 AM	0	0	0	0	0	0	0	0	0	0	0	0	0
4/23/2024	2:00 AM	0	0	0	0	0	0	0	0	0	0	0	0	0
4/23/2024	2:15 AM	0	0	0	0	0	0	0	0	0	0	0	0	0
4/23/2024	2:30 AM	0	0	0	0	0	0	0	0	0	0	0	0	0
4/23/2024	2:45 AM	0	0	0	0	0	0	0	0	0	0	0	0	0
4/23/2024	3:00 AM	0	0	0	0	0	0	0	0	0	0	0	0	0
4/23/2024	3:15 AM	0	0	0	0	0	0	0	0	0	0	0	0	0
4/23/2024	3:30 AM	0	0	0	0	0	0	0	0	0	0	0	0	0
4/23/2024	3:45 AM	0	0	0	0	0	0	0	0	0	0	0	0	0
4/23/2024	4:00 AM	0	0	0	0	0	0	0	0	0	0	0	0	0
4/23/2024	4:15 AM	0	0	0	0	0	0	0	0	0	0	0	0	0
4/23/2024	4:30 AM	0	0	0	0	0	0	0	0	0	0	0	0	0
4/23/2024	4:45 AM	0	0	0	0	0	0	0	0	0	0	0	0	0
4/23/2024	5:00 AM	0	0	0	0	0	0	0	0	0	0	0	0	0
4/23/2024	5:15 AM	0	0	0	0	0	0	0	0	0	0	0	0	0
4/23/2024	5:30 AM	0	0	0	0	0	0	0	0	0	0	0	0	0
4/23/2024	5:45 AM	0	0	0	0	0	0	0	0	0	0	0	0	0
4/23/2024	6:00 AM	0	0	0	0	0	0	0	0	0	0	0	0	0
4/23/2024	6:15 AM	0	0	0	0	0	0	0	0	0	0	0	0	0
4/23/2024	6:30 AM	0	0	0	0	0	0	0	0	0	0	0	0	0
4/23/2024	6:45 AM	0	0	0	0	0	0	0	0	0	0	0	0	0
4/23/2024	7:00 AM	0	0	0	0	0	0	0	0	0	0	0	0	0
4/23/2024	7:15 AM	0	0	0	0	0	0	0	0	0	0	0	0	0
4/23/2024	7:30 AM	0	0	0	0	0	0	0	0	0	0	0	0	0
4/23/2024	7:45 AM	0	0	0	0	0	0	0	0	0	0	0	0	0
4/23/2024	8:00 AM	0	0	0	0	0	0	0	0	0	0	0	0	0
4/23/2024	8:15 AM	0	0	0	0	0	0	0	0	0	0	0	0	0
4/23/2024	8:30 AM	0	0	0	0	0	0	0	0	0	0	0	0	0
4/23/2024	8:45 AM	0	0	0	0	0	0	0	0	0	0	0	0	0
4/23/2024	9:00 AM	0	0	0	0	0	0	0	0	0	0	0	0	0
4/23/2024	9:15 AM	0	0	0	0	0	0	0	0	0	0	0	0	0
4/23/2024	9:30 AM	0	0	0	0	0	0	0	0	0	0	0	0	0
4/23/2024	9:45 AM	0	0	0	0	0	0	0	0	0	0	0	0	0
4/23/2024	10:00 AM	0	0	0	0	0	0	0	0	0	0	0	0	0
4/23/2024	10:15 AM	0	0	0	0	0	0	0	0	0	0	0	0	0
4/23/2024	10:30 AM	0	0	0	0	0	0	0	0	0	0	0	0	0
4/23/2024	10:45 AM	0	0	0	0	0	0	0	0	0	0	0	0	0
4/23/2024	11:00 AM	0	0	0	0	0	0	0	0	0	0	0	0	0
4/23/2024	11:15 AM	0	0	0	0	0	0	0	0	0	0	0	0	0
4/23/2024	11:30 AM	0	0	0	0	0	0	0	0	0	0	0	0	0
4/23/2024	11:45 AM	0	0	0	0	0	0	0	0	0	0	0	0	0
4/23/2024	12:00 PM	0	0	0	0	0	0	0	0	0	0	0	0	0
4/23/2024	12:15 PM	0	0	0	0	0	0	0	0	0	0	0	0	0
4/23/2024	12:30 PM	0	0	0	0	0	0	0	0	0	0	0	0	0
4/23/2024	12:45 PM	0	0	0	0	0	0	0	0	0	0	0	0	0
4/23/2024	1:00 PM	0	0	0	0	0	0	0	0	0	0	0	0	0
4/23/2024	1:15 PM	0	0	0	0	0	0	0	0	0	0	0	0	0
4/23/2024	1:30 PM	0	0	0	0	0	0	0	0	0	0	0	0	0
4/23/2024	1:45 PM	0	0	0	0	0	0	0	0	0	0	0	0	0
4/23/2024	2:00 PM	0	0	0	0	0	0	0	0	0	0	0	0	0
4/23/2024	2:15 PM	0	0	0	0	0	0	0	0	0	0	0	0	0
4/23/2024	2:30 PM	0	0	0	0	0	0	0	0	0	0	0	0	0
4/23/2024	2:45 PM	0	0	0	0	0	0	0	0	0	0	0	0	0
4/23/2024	3:00 PM	0	0	0	0	0	0	0	0	0	0	0	0	0
4/23/2024	3:15 PM	0	0	0	0	0	0	0	0	0	0	0	0	0
4/23/2024	3:30 PM	0	0	0	0	0	0	0	0	0	0	0	0	0
4/23/2024	3:45 PM	0	0	0	0	0	0	0	0	0	0	0	0	0
4/23/2024	4:00 PM	0	0	0	0	0	0	0	0	0	0	0	0	0
4/23/2024	4:15 PM	0	0	0	0	0	0	0	0	0	0	0	0	0
4/23/2024	4:30 PM	0	0	0	0	0	0	0	0	0	0	0	0	0
4/23/2024	4:45 PM	0	0	0	0	0	0	0	0	0	0	0	0	0
4/23/2024	5:00 PM	0	0	0	0	0	0	0	0	0	0	0	0	0
4/23/2024	5:15 PM	0	0	0	0	0	0	0	0	0	0	0	0	0
4/23/2024	5:30 PM	0	0	0	0	0	0	0	0	0	0	0	0	0
4/23/2024	5:45 PM	0	0	0	0	0	0	0	0	0	0	0	0	0
4/23/2024	6:00 PM	0	0	0	0	0	0	0	0	0	0	0	0	0
4/23/2024	6:15 PM	0	0	0	0	0	0	0	0	0	0	0	0	0
4/23/2024	6:30 PM	0	0	0	0	0	0	0	0	0	0	0	0	0
4/23/2024	6:45 PM	0	0	0	0	0	0	0	0	0	0	0	0	0
4/23/2024	7:00 PM	0	0	0	0	0	0	0	0	0	0	0	0	0
4/23/2024	7:15 PM	0	0	0	0	0	0	0	0	0	0	0	0	0
4/23/2024	7:30 PM	0	0	0	0	0	0	0	0	0	0	0	0	0
4/23/2024	7:45 PM	0	0	0	0	0	0	0	0	0	0	0	0	0
4/23/2024	8:00 PM	0	0	0	0	0	0	0	0	0	0	0	0	0
4/23/2024	8:15 PM	0	0	0	0	0	0	0	0	0	0	0	0	0
4/23/2024	8:30 PM	0	0	0	0	0	0	0	0	0	0	0	0	0
4/23/2024	8:45 PM	0	0	0	0	0	0	0	0	0	0	0	0	0
4/23/2024	9:00 PM	0	0	0	0	0	0	0	0	0	0	0	0	0
4/23/2024	9:15 PM	0	0	0	0	0	0	0	0	0	0	0	0	0
4/23/2024	9:30 PM	0	0	0	0	0	0	0	0	0	0	0	0	0
4/23/2024	9:45 PM	0	0	0	0	0	0	0	0	0	0	0	0	0
4/23/2024	10:00 PM	0	0	0	0	0	0	0	0	0	0	0	0	0
4/23/2024	10:15 PM	0	0	0	0	0	0	0	0	0	0	0	0	0
4/23/2024	10:30 PM	0	0	0	0	0	0	0	0	0	0	0	0	0
4/23/2024	10:45 PM	0	0	0	0	0	0	0	0	0	0	0	0	0
4/23/2024	11:00 PM	0	0	0	0	0	0	0	0	0	0	0	0	0
4/23/2024	11:15 PM	0	0	0	0	0	0	0	0	0	0	0	0	0
4/23/2024	11:30 PM	0	0	0	0	0	0	0	0	0	0	0	0	0
4/23/2024	11:45 PM	0	0	0	0	0	0	0	0	0	0	0	0	0

4/24/2024	12:00 AM	0	0	0	0	0	0	0	0	0	0	0	0	0
4/24/2024	12:15 AM	0	0	0	0	0	0	0	0	0	0	0	0	0
4/24/2024	12:30 AM	0	0	0	0	0	0	0	0	0	0	0	0	0
4/24/2024	12:45 AM	0	0	0	0	0	0	0	0	0	0	0	0	0
4/24/2024	1:00 AM	0	0	0	0	0	0	0	0	0	0	0	0	0
4/24/2024	1:15 AM	0	0	0	0	0	0	0	0	0	0	0	0	0
4/24/2024	1:30 AM	0	0	0	0	0	0	0	0	0	0	0	0	0
4/24/2024	1:45 AM	0	0	0	0	0	0	0	0	0	0	0	0	0
4/24/2024	2:00 AM	0	0	0	0	0	0	0	0	0	0	0	0	0
4/24/2024	2:15 AM	0	0	0	0	0	0	0	0	0	0	0	0	0
4/24/2024	2:30 AM	0	0	0	0	0	0	0	0	0	0	0	0	0
4/24/2024	2:45 AM	0	0	0	0	0	0	0	0	0	0	0	0	0
4/24/2024	3:00 AM	0	0	0	0	0	0	0	0	0	0	0	0	0
4/24/2024	3:15 AM	0	0	0	0	0	0	0	0	0	0	0	0	0
4/24/2024	3:30 AM	0	0	0	0	0	0	0	0	0	0	0	0	0
4/24/2024	3:45 AM	0	0	0	0	0	0	0	0	0	0	0	0	0
4/24/2024	4:00 AM	0	0	0	0	0	0	0	0	0	0	0	0	0
4/24/2024	4:15 AM	0	0	0	0	0	0	0	0	0	0	0	0	0
4/24/2024	4:30 AM	0	0	0	0	0	0	0	0	0	0	0	0	0
4/24/2024	4:45 AM	0	0	0	0	0	0	0	0	0	0	0	0	0
4/24/2024	5:00 AM	0	0	0	0	0	0	0	0	0	0	0	0	0
4/24/2024	5:15 AM	0	0	0	0	0	0	0	0	0	0	0	0	0
4/24/2024	5:30 AM	0	0	0	0	0	0	0	0	0	0	0	0	0
4/24/2024	5:45 AM	0	0	0	0	0	0	0	0	0	0	0	0	0
4/24/2024	6:00 AM	0	0	0	0	0	0	0	0	0	0	0	0	0
4/24/2024	6:15 AM	0	0	0	0	0	0	0	0	0	0	0	0	0
4/24/2024	6:30 AM	0	0	0	0	0	0	0	0	0	0	0	0	0
4/24/2024	6:45 AM	0	0	0	0	0	0	0	0	0	0	0	0	0
4/24/2024	7:00 AM	0	0	0	0	0	0	0	0	0	0	0	0	0
4/24/2024	7:15 AM	0	0	0	0	0	0	0	0	0	0	0	0	0
4/24/2024	7:30 AM	0	0	0	0	0	0	0	0	0	0	0	0	0
4/24/2024	7:45 AM	0	0	0	0	0	0	0	0	0	0	0	0	0
4/24/2024	8:00 AM	0	0	0	0	0	0	0	0	0	0	0	0	0
4/24/2024	8:15 AM	0	0	0	0	0	0	0	0	0	0	0	0	0
4/24/2024	8:30 AM	0	0	0	0	0	0	0	0	0	0	0	0	0
4/24/2024	8:45 AM	0	0	0	0	0	0	0	0	0	0	0	0	0
4/24/2024	9:00 AM	0	0	0	0	0	0	0	0	0	0	0	0	0
4/24/2024	9:15 AM	0	0	0	0	0	0	0	0	0	0	0	0	0
4/24/2024	9:30 AM	0	0	0	0	0	0	0	0	0	0	0	0	0
4/24/2024	9:45 AM	0	0	0	0	0	0	0	0	0	0	0	0	0
4/24/2024	10:00 AM	0	0	0	0	0	0	0	0	0	0	0	0	0
4/24/2024	10:15 AM	0	0	0	0	0	0	0	0	0	0	0	0	0
4/24/2024	10:30 AM	0	0	0	0	0	0	0	0	0	0	0	0	0
4/24/2024	10:45 AM	0	0	0	0	0	0	0	0	0	0	0	0	0
4/24/2024	11:00 AM	0	0	0	0	0	0	0	0	0	0	0	0	0
4/24/2024	11:15 AM	0	0	0	0	0	0	0	0	0	0	0	0	0
4/24/2024	11:30 AM	0	0	0	0	0	0	0	0	0	0	0	0	0
4/24/2024	11:45 AM	0	0	0	0	0	0	0	0	0	0	0	0	0
4/24/2024	12:00 PM	0	0	0	0	0	0	0	0	0	0	0	0	0
4/24/2024	12:15 PM	0	0	0	0	0	0	0	0	0	0	0	0	0
4/24/2024	12:30 PM	0	0	0	0	0	0	0	0	0	0	0	0	0
4/24/2024	12:45 PM	0	0	0	0	0	0	0	0	0	0	0	0	0
4/24/2024	1:00 PM	0	0	0	0	0	0	0	0	0	0	0	0	0
4/24/2024	1:15 PM	0	0	0	0	0	0	0	0	0	0	0	0	0
4/24/2024	1:30 PM	0	0	0	0	0	0	0	0	0	0	0	0	0
4/24/2024	1:45 PM	0	0	0	0	0	0	0	0	0	0	0	0	0
4/24/2024	2:00 PM	0	0	0	0	0	0	0	0	0	0	0	0	0
4/24/2024	2:15 PM	0	0	0	0	0	0	0	0	0	0	0	0	0
4/24/2024	2:30 PM	0	0	0	0	0	0	0	0	0	0	0	0	0
4/24/2024	2:45 PM	0	0	0	0	0	0	0	0	0	0	0	0	0
4/24/2024	3:00 PM	0	0	0	0	0	0	0	0	0	0	0	0	0
4/24/2024	3:15 PM	0	0	0	0	0	0	0	0	0	0	0	0	0
4/24/2024	3:30 PM	0	0	0	0	0	0	0	0	0	0	0	0	0
4/24/2024	3:45 PM	0	0	0	0	0	0	0	0	0	0	0	0	0
4/24/2024	4:00 PM	0	0	0	0	0	0	0	0	0	0	0	0	0
4/24/2024	4:15 PM	0	0	0	0	0	0	0	0	0	0	0	0	0
4/24/2024	4:30 PM	0	0	0	0	0	0	0	0	0	0	0	0	0
4/24/2024	4:45 PM	0	0	0	0	0	0	0	0	0	0	0	0	0
4/24/2024	5:00 PM	0	0	0	0	0	0	0	0	0	0	0	0	0
4/24/2024	5:15 PM	0	0	0	0	0	0	0	0	0	0	0	0	0
4/24/2024	5:30 PM	0	0	0	0	0	0	0	0	0	0	0	0	0
4/24/2024	5:45 PM	0	0	0	0	0	0	0	0	0	0	0	0	0
4/24/2024	6:00 PM	0	0	0	0	0	0	0	0	0	0	0	0	0
4/24/2024	6:15 PM	0	0	0	0	0	0	0	0	0	0	0	0	0
4/24/2024	6:30 PM	0	0	0	0	0	0	0	0	0	0	0	0	0
4/24/2024	6:45 PM	0	0	0	0	0	0	0	0	0	0	0	0	0
4/24/2024	7:00 PM	0	0	0	0	0	0	0	0	0	0	0	0	0
4/24/2024	7:15 PM	0	0	0	0	0	0	0	0	0	0	0	0	0
4/24/2024	7:30 PM	0	0	0	0	0	0	0	0	0	0	0	0	0
4/24/2024	7:45 PM	0	0	0	0	0	0	0	0	0	0	0	0	0
4/24/2024	8:00 PM	0	0	0	0	0	0	0	0	0	0	0	0	0
4/24/2024	8:15 PM	0	0	0	0	0	0	0	0	0	0	0	0	0
4/24/2024	8:30 PM	0	0	0	0	0	0	0	0	0	0	0	0	0
4/24/2024	8:45 PM	0	0	0	0	0	0	0	0	0	0	0	0	0
4/24/2024	9:00 PM	0	0	0	0	0	0	0	0	0	0	0	0	0
4/24/2024	9:15 PM	0	0	0	0	0	0	0	0	0	0	0	0	0
4/24/2024	9:30 PM	0	0	0	0	0	0	0	0	0	0	0	0	0
4/24/2024	9:45 PM	0	0	0	0	0	0	0	0	0	0	0	0	0
4/24/2024	10:00 PM	0	0	0	0	0	0	0	0	0	0	0	0	0
4/24/2024	10:15 PM	0	0	0	0	0	0	0	0	0	0	0	0	0
4/24/2024	10:30 PM	0	0	0	0	0	0	0	0	0	0	0	0	0
4/24/2024	10:45 PM	0	0	0	0	0	0	0	0	0	0	0	0	0
4/24/2024	11:00 PM	0	0	0	0	0	0	0	0	0	0	0	0	0
4/24/2024	11:15 PM	0	0	0	0	0	0	0	0	0	0	0	0	0
4/24/2024	11:30 PM	0	0	0	0	0	0	0	0	0	0	0	0	0
4/24/2024	11:45 PM	0	0	0	0	0	0	0	0	0	0	0	0	0

4/25/2024	12:00 AM	0	0	0	0	0	0	0	0	0	0	0	0	0
4/25/2024	12:15 AM	0	0	0	0	0	0	0	0	0	0	0	0	0
4/25/2024	12:30 AM	0	0	0	0	0	0	0	0	0	0	0	0	0
4/25/2024	12:45 AM	0	0	0	0	0	0	0	0	0	0	0	0	0
4/25/2024	1:00 AM	0	0	0	0	0	0	0	0	0	0	0	0	0
4/25/2024	1:15 AM	0	0	0	0	0	0	0	0	0	0	0	0	0
4/25/2024	1:30 AM	0	0	0	0	0	0	0	0	0	0	0	0	0
4/25/2024	1:45 AM	0	0	0	0	0	0	0	0	0	0	0	0	0
4/25/2024	2:00 AM	0	0	0	0	0	0	0	0	0	0	0	0	0
4/25/2024	2:15 AM	0	0	0	0	0	0	0	0	0	0	0	0	0
4/25/2024	2:30 AM	0	0	0	0	0	0	0	0	0	0	0	0	0
4/25/2024	2:45 AM	0	0	0	0	0	0	0	0	0	0	0	0	0
4/25/2024	3:00 AM	0	0	0	0	0	0	0	0	0	0	0	0	0
4/25/2024	3:15 AM	0	0	0	0	0	0	0	0	0	0	0	0	0
4/25/2024	3:30 AM	0	0	0	0	0	0	0	0	0	0	0	0	0
4/25/2024	3:45 AM	0	0	0	0	0	0	0	0	0	0	0	0	0
4/25/2024	4:00 AM	0	0	0	0	0	0	0	0	0	0	0	0	0
4/25/2024	4:15 AM	0	0	0	0	0	0	0	0	0	0	0	0	0
4/25/2024	4:30 AM	0	0	0	0	0	0	0	0	0	0	0	0	0
4/25/2024	4:45 AM	0	0	0	0	0	0	0	0	0	0	0	0	0
4/25/2024	5:00 AM	0	0	0	0	0	0	0	0	0	0	0	0	0
4/25/2024	5:15 AM	0	0	0	0	0	0	0	0	0	0	0	0	0
4/25/2024	5:30 AM	0	0	0	0	0	0	0	0	0	0	0	0	0
4/25/2024	5:45 AM	0	0	0	0	0	0	0	0	0	0	0	0	0
4/25/2024	6:00 AM	0	0	0	0	0	0	0	0	0	0	0	0	0
4/25/2024	6:15 AM	0	0	0	0	0	0	0	0	0	0	0	0	0
4/25/2024	6:30 AM	0	0	0	0	0	0	0	0	0	0	0	0	0
4/25/2024	6:45 AM	0	0	0	0	0	0	0	0	0	0	0	0	0
4/25/2024	7:00 AM	0	0	0	0	0	0	0	0	0	0	0	0	0
4/25/2024	7:15 AM	0	0	0	0	0	0	0	0	0	0	0	0	0
4/25/2024	7:30 AM	0	0	0	0	0	0	0	0	0	0	0	0	0
4/25/2024	7:45 AM	0	0	0	0	0	0	0	0	0	0	0	0	0
4/25/2024	8:00 AM	0	0	0	0	0	0	0	0	0	0	0	0	0
4/25/2024	8:15 AM	0	0	0	0	0	0	0	0	0	0	0	0	0
4/25/2024	8:30 AM	0	0	0	0	0	0	0	0	0	0	0	0	0
4/25/2024	8:45 AM	0	0	0	0	0	0	0	0	0	0	0	0	0
4/25/2024	9:00 AM	0	0	0	0	0	0	0	0	0	0	0	0	0
4/25/2024	9:15 AM	0	0	0	0	0	0	0	0	0	0	0	0	0
4/25/2024	9:30 AM	0	0	0	0	0	0	0	0	0	0	0	0	0
4/25/2024	9:45 AM	0	0	0	0	0	0	0	0	0	0	0	0	0
4/25/2024	10:00 AM	0	0	0	0	0	0	0	0	0	0	0	0	0
4/25/2024	10:15 AM	0	0	0	0	0	0	0	0	0	0	0	0	0
4/25/2024	10:30 AM	0	0	0	0	0	0	0	0	0	0	0	0	0
4/25/2024	10:45 AM	0	0	0	0	0	0	0	0	0	0	0	0	0
4/25/2024	11:00 AM	0	0	0	0	0	0	0	0	0	0	0	0	0
4/25/2024	11:15 AM	0	0	0	0	0	0	0	0	0	0	0	0	0
4/25/2024	11:30 AM	0	0	0	0	0	0	0	0	0	0	0	0	0
4/25/2024	11:45 AM	0	0	0	0	0	0	0	0	0	0	0	0	0
4/25/2024	12:00 PM	0	0	0	0	0	0	0	0	0	0	0	0	0
4/25/2024	12:15 PM	0	0	0	0	0	0	0	0	0	0	0	0	0
4/25/2024	12:30 PM	0	0	0	0	0	0	0	0	0	0	0	0	0
4/25/2024	12:45 PM	0	0	0	0	0	0	0	0	0	0	0	0	0
4/25/2024	1:00 PM	0	0	0	0	0	0	0	0	0	0	0	0	0
4/25/2024	1:15 PM	0	0	0	0	0	0	0	0	0	0	0	0	0
4/25/2024	1:30 PM	0	0	0	0	0	0	0	0	0	0	0	0	0
4/25/2024	1:45 PM	0	0	0	0	0	0	0	0	0	0	0	0	0
4/25/2024	2:00 PM	0	0	0	0	0	0	0	0	0	0	0	0	0
4/25/2024	2:15 PM	0	0	0	0	0	0	0	0	0	0	0	0	0
4/25/2024	2:30 PM	0	0	0	0	0	0	0	0	0	0	0	0	0
4/25/2024	2:45 PM	0	0	0	0	0	0	0	0	0	0	0	0	0
4/25/2024	3:00 PM	0	0	0	0	0	0	0	0	0	0	0	0	0
4/25/2024	3:15 PM	0	0	0	0	0	0	0	0	0	0	0	0	0
4/25/2024	3:30 PM	0	0	0	0	0	0	0	0	0	0	0	0	0
4/25/2024	3:45 PM	0	0	0	0	0	0	0	0	0	0	0	0	0
4/25/2024	4:00 PM	0	0	0	0	0	0	0	0	0	0	0	0	0
4/25/2024	4:15 PM	0	0	0	0	0	0	0	0	0	0	0	0	0
4/25/2024	4:30 PM	0	0	0	0	0	0	0	0	0	0	0	0	0
4/25/2024	4:45 PM	0	0	0	0	0	0	0	0	0	0	0	0	0
4/25/2024	5:00 PM	0	0	0	0	0	0	0	0	0	0	0	0	0
4/25/2024	5:15 PM	0	0	0	0	0	0	0	0	0	0	0	0	0
4/25/2024	5:30 PM	0	0	0	0	0	0	0	0	0	0	0	0	0
4/25/2024	5:45 PM	0	0	0	0	0	0	0	0	0	0	0	0	0
4/25/2024	6:00 PM	0	0	0	0	0	0	0	0	0	0	0	0	0
4/25/2024	6:15 PM	0	0	0	0	0	0	0	0	0	0	0	0	0
4/25/2024	6:30 PM	0	0	0	0	0	0	0	0	0	0	0	0	0
4/25/2024	6:45 PM	0	0	0	0	0	0	0	0	0	0	0	0	0
4/25/2024	7:00 PM	0	0	0	0	0	0	0	0	0	0	0	0	0
4/25/2024	7:15 PM	0	0	0	0	0	0	0	0	0	0	0	0	0
4/25/2024	7:30 PM	0	0	0	0	0	0	0	0	0	0	0	0	0
4/25/2024	7:45 PM	0	0	0	0	0	0	0	0	0	0	0	0	0
4/25/2024	8:00 PM	0	0	0	0	0	0	0	0	0	0	0	0	0
4/25/2024	8:15 PM	0	0	0	0	0	0	0	0	0	0	0	0	0
4/25/2024	8:30 PM	0	0	0	0	0	0	0	0	0	0	0	0	0
4/25/2024	8:45 PM	0	0	0	0	0	0	0	0	0	0	0	0	0
4/25/2024	9:00 PM	0	0	0	0	0	0	0	0	0	0	0	0	0
4/25/2024	9:15 PM	0	0	0	0	0	0	0	0	0	0	0	0	0
4/25/2024	9:30 PM	0	0	0	0	0	0	0	0	0	0	0	0	0
4/25/2024	9:45 PM	0	0	0	0	0	0	0	0	0	0	0	0	0
4/25/2024	10:00 PM	0	0	0	0	0	0	0	0	0	0	0	0	0
4/25/2024	10:15 PM	0	0	0	0	0	0	0	0	0	0	0	0	0
4/25/2024	10:30 PM	0	0	0	0	0	0	0	0	0	0	0	0	0
4/25/2024	10:45 PM	0	0	0	0	0	0	0	0	0	0	0	0	0
4/25/2024	11:00 PM	0	0	0	0	0	0	0	0	0	0	0	0	0
4/25/2024	11:15 PM	0	0	0	0	0	0	0	0	0	0	0	0	0
4/25/2024	11:30 PM	0	0	0	0	0	0	0	0	0	0	0	0	0
4/25/2024	11:45 PM	0	0	0	0	0	0	0	0	0	0	0	0	0

NB
File Name:
Start Date: 4/23/2024
Start Time: 0
Site Code: 45
Station ID: 1
Location 1: I-26 On/Off-Ramp, north of Bush River Rd
Location 2:

Date	Time	1	2	3	4	5	6	7	8	9	10	11	12	13
4/23/2024	12:00 AM	0	0	0	0	0	0	0	0	0	0	0	0	0
4/23/2024	12:15 AM	0	0	0	0	0	0	0	0	0	0	0	0	0
4/23/2024	12:30 AM	0	0	0	0	0	0	0	0	0	0	0	0	0
4/23/2024	12:45 AM	0	0	0	0	0	0	0	0	0	0	0	0	0
4/23/2024	1:00 AM	0	0	0	0	0	0	0	0	0	0	0	0	0
4/23/2024	1:15 AM	0	0	0	0	0	0	0	0	0	0	0	0	0
4/23/2024	1:30 AM	0	0	0	0	0	0	0	0	0	0	0	0	0
4/23/2024	1:45 AM	0	0	0	0	0	0	0	0	0	0	0	0	0
4/23/2024	2:00 AM	0	0	0	0	0	0	0	0	0	0	0	0	0
4/23/2024	2:15 AM	0	0	0	0	0	0	0	0	0	0	0	0	0
4/23/2024	2:30 AM	0	0	0	0	0	0	0	0	0	0	0	0	0
4/23/2024	2:45 AM	0	0	0	0	0	0	0	0	0	0	0	0	0
4/23/2024	3:00 AM	0	0	0	0	0	0	0	0	0	0	0	0	0
4/23/2024	3:15 AM	0	0	0	0	0	0	0	0	0	0	0	0	0
4/23/2024	3:30 AM	0	0	0	0	0	0	0	0	0	0	0	0	0
4/23/2024	3:45 AM	0	0	0	0	0	0	0	0	0	0	0	0	0
4/23/2024	4:00 AM	0	0	0	0	0	0	0	0	0	0	0	0	0
4/23/2024	4:15 AM	0	0	0	0	0	0	0	0	0	0	0	0	0
4/23/2024	4:30 AM	0	0	0	0	0	0	0	0	0	0	0	0	0
4/23/2024	4:45 AM	0	0	0	0	0	0	0	0	0	0	0	0	0
4/23/2024	5:00 AM	0	0	0	0	0	0	0	0	0	0	0	0	0
4/23/2024	5:15 AM	0	0	0	0	0	0	0	0	0	0	0	0	0
4/23/2024	5:30 AM	0	0	0	0	0	0	0	0	0	0	0	0	0
4/23/2024	5:45 AM	0	0	0	0	0	0	0	0	0	0	0	0	0
4/23/2024	6:00 AM	0	0	0	0	0	0	0	0	0	0	0	0	0
4/23/2024	6:15 AM	0	0	0	0	0	0	0	0	0	0	0	0	0
4/23/2024	6:30 AM	0	0	0	0	0	0	0	0	0	0	0	0	0
4/23/2024	6:45 AM	0	0	0	0	0	0	0	0	0	0	0	0	0
4/23/2024	7:00 AM	0	0	0	0	0	0	0	0	0	0	0	0	0
4/23/2024	7:15 AM	0	0	0	0	0	0	0	0	0	0	0	0	0
4/23/2024	7:30 AM	0	0	0	0	0	0	0	0	0	0	0	0	0
4/23/2024	7:45 AM	0	0	0	0	0	0	0	0	0	0	0	0	0
4/23/2024	8:00 AM	0	0	0	0	0	0	0	0	0	0	0	0	0
4/23/2024	8:15 AM	0	0	0	0	0	0	0	0	0	0	0	0	0
4/23/2024	8:30 AM	0	0	0	0	0	0	0	0	0	0	0	0	0
4/23/2024	8:45 AM	0	0	0	0	0	0	0	0	0	0	0	0	0
4/23/2024	9:00 AM	0	0	0	0	0	0	0	0	0	0	0	0	0
4/23/2024	9:15 AM	0	0	0	0	0	0	0	0	0	0	0	0	0
4/23/2024	9:30 AM	0	0	0	0	0	0	0	0	0	0	0	0	0
4/23/2024	9:45 AM	0	0	0	0	0	0	0	0	0	0	0	0	0
4/23/2024	10:00 AM	0	0	0	0	0	0	0	0	0	0	0	0	0
4/23/2024	10:15 AM	0	0	0	0	0	0	0	0	0	0	0	0	0
4/23/2024	10:30 AM	0	0	0	0	0	0	0	0	0	0	0	0	0
4/23/2024	10:45 AM	0	0	0	0	0	0	0	0	0	0	0	0	0
4/23/2024	11:00 AM	0	0	0	0	0	0	0	0	0	0	0	0	0
4/23/2024	11:15 AM	0	0	0	0	0	0	0	0	0	0	0	0	0
4/23/2024	11:30 AM	0	0	0	0	0	0	0	0	0	0	0	0	0
4/23/2024	11:45 AM	0	0	0	0	0	0	0	0	0	0	0	0	0
4/23/2024	12:00 PM	0	0	0	0	0	0	0	0	0	0	0	0	0
4/23/2024	12:15 PM	0	0	0	0	0	0	0	0	0	0	0	0	0
4/23/2024	12:30 PM	0	0	0	0	0	0	0	0	0	0	0	0	0
4/23/2024	12:45 PM	0	0	0	0	0	0	0	0	0	0	0	0	0
4/23/2024	1:00 PM	0	0	0	0	0	0	0	0	0	0	0	0	0
4/23/2024	1:15 PM	0	0	0	0	0	0	0	0	0	0	0	0	0
4/23/2024	1:30 PM	0	0	0	0	0	0	0	0	0	0	0	0	0
4/23/2024	1:45 PM	0	0	0	0	0	0	0	0	0	0	0	0	0
4/23/2024	2:00 PM	0	0	0	0	0	0	0	0	0	0	0	0	0
4/23/2024	2:15 PM	0	0	0	0	0	0	0	0	0	0	0	0	0
4/23/2024	2:30 PM	0	0	0	0	0	0	0	0	0	0	0	0	0
4/23/2024	2:45 PM	0	0	0	0	0	0	0	0	0	0	0	0	0
4/23/2024	3:00 PM	0	0	0	0	0	0	0	0	0	0	0	0	0
4/23/2024	3:15 PM	0	0	0	0	0	0	0	0	0	0	0	0	0
4/23/2024	3:30 PM	0	0	0	0	0	0	0	0	0	0	0	0	0
4/23/2024	3:45 PM	0	0	0	0	0	0	0	0	0	0	0	0	0
4/23/2024	4:00 PM	0	0	0	0	0	0	0	0	0	0	0	0	0
4/23/2024	4:15 PM	0	0	0	0	0	0	0	0	0	0	0	0	0
4/23/2024	4:30 PM	0	0	0	0	0	0	0	0	0	0	0	0	0
4/23/2024	4:45 PM	0	0	0	0	0	0	0	0	0	0	0	0	0
4/23/2024	5:00 PM	0	0	0	0	0	0	0	0	0	0	0	0	0
4/23/2024	5:15 PM	0	0	0	0	0	0	0	0	0	0	0	0	0
4/23/2024	5:30 PM	0	0	0	0	0	0	0	0	0	0	0	0	0
4/23/2024	5:45 PM	0	0	0	0	0	0	0	0	0	0	0	0	0
4/23/2024	6:00 PM	0	0	0	0	0	0	0	0	0	0	0	0	0
4/23/2024	6:15 PM	0	52	8	0	2	0	0	0	0	0	0	0	0
4/23/2024	6:30 PM	0	95	12	0	3	0	0	0	0	0	0	0	0
4/23/2024	6:45 PM	0	132	17	0	4	0	0	0	0	0	0	0	0
4/23/2024	7:00 PM	0	166	24	0	5	0	0	0	0	0	0	0	0
4/23/2024	7:15 PM	0	148	21	0	5	0	0	0	0	0	0	0	0
4/23/2024	7:30 PM	1	135	21	0	6	0	0	0	0	0	0	0	0
4/23/2024	7:45 PM	1	138	24	0	6	0	0	0	0	0	0	0	0
4/23/2024	8:00 PM	1	136	20	0	5	0	0	0	0	0	0	0	0
4/23/2024	8:15 PM	1	127	16	0	3	1	0	0	0	0	0	0	0
4/23/2024	8:30 PM	0	135	15	0	1	2	0	0	0	0	0	0	0
4/23/2024	8:45 PM	0	128	11	0	0	2	0	0	0	0	0	0	0
4/23/2024	9:00 PM	0	119	15	0	0	2	0	0	0	0	0	0	0
4/23/2024	9:15 PM	0	116	16	0	0	1	0	0	0	0	0	0	0
4/23/2024	9:30 PM	0	97	14	0	0	0	0	0	0	0	0	0	0
4/23/2024	9:45 PM	0	87	13	0	0	0	0	0	0	0	0	0	0
4/23/2024	10:00 PM	0	82	7	0	0	0	0	0	0	0	0	0	0
4/23/2024	10:15 PM	0	78	5	0	0	0	0	0	0	0	0	0	0
4/23/2024	10:30 PM	0	72	5	0	0	1	0	0	0	0	0	0	0
4/23/2024	10:45 PM	0	55	4	0	0	1	0	0	0	0	0	0	0
4/23/2024	11:00 PM	0	50	4	0	0	1	0	0	0	0	0	0	0
4/23/2024	11:15 PM	0	44	5	0	0	1	0	0	0	0	0	0	0
4/23/2024	11:30 PM	0	37	4	0	0	0	0	0	0	0	0	0	0
4/23/2024	11:45 PM	0	38	2	0	0	0	0	0	1	0	0	0	0

4/24/2024	12:00 AM	0	33	2	0	0	0	0	0	1	0	0	0	0
4/24/2024	12:15 AM	0	28	2	0	0	1	0	0	1	0	0	0	0
4/24/2024	12:30 AM	0	29	3	0	0	1	0	0	2	0	0	0	0
4/24/2024	12:45 AM	0	29	3	0	0	1	0	0	1	0	0	0	0
4/24/2024	1:00 AM	0	28	3	0	0	1	0	0	1	0	0	0	0
4/24/2024	1:15 AM	0	27	2	0	0	1	0	0	1	0	0	0	0
4/24/2024	1:30 AM	0	25	2	0	0	1	0	0	0	0	0	0	0
4/24/2024	1:45 AM	0	23	3	0	0	2	0	0	0	0	0	0	0
4/24/2024	2:00 AM	0	19	3	0	0	2	0	0	0	0	0	0	0
4/24/2024	2:15 AM	0	19	4	0	0	1	0	0	0	0	0	0	0
4/24/2024	2:30 AM	0	18	3	0	0	1	0	0	0	0	0	0	0
4/24/2024	2:45 AM	0	18	2	0	0	0	0	0	0	0	0	0	0
4/24/2024	3:00 AM	0	24	3	0	1	0	0	0	0	0	0	0	0
4/24/2024	3:15 AM	0	22	3	0	1	0	0	0	0	0	0	0	0
4/24/2024	3:30 AM	0	30	3	0	1	0	0	0	0	0	0	0	0
4/24/2024	3:45 AM	0	37	5	0	1	1	0	0	1	0	0	0	0
4/24/2024	4:00 AM	0	44	5	0	0	1	1	0	1	0	0	0	0
4/24/2024	4:15 AM	0	47	6	0	0	1	1	0	1	0	0	0	0
4/24/2024	4:30 AM	0	56	9	0	0	2	1	0	1	0	0	0	0
4/24/2024	4:45 AM	0	69	11	0	1	1	1	0	2	0	0	0	0
4/24/2024	5:00 AM	0	80	12	0	1	1	0	0	2	1	0	0	0
4/24/2024	5:15 AM	0	96	12	0	1	2	0	0	3	1	0	0	0
4/24/2024	5:30 AM	0	107	16	0	1	1	0	0	3	1	0	0	0
4/24/2024	5:45 AM	0	122	20	0	0	3	0	1	1	1	0	0	0
4/24/2024	6:00 AM	0	156	25	0	1	3	0	1	3	1	0	0	0
4/24/2024	6:15 AM	0	193	32	0	1	3	0	1	4	1	0	0	0
4/24/2024	6:30 AM	0	237	44	0	3	5	0	2	8	1	0	0	0
4/24/2024	6:45 AM	0	264	52	0	4	4	0	1	9	1	0	0	0
4/24/2024	7:00 AM	0	295	68	0	4	6	0	1	8	0	0	0	0
4/24/2024	7:15 AM	0	316	71	0	7	9	0	1	6	0	0	0	0
4/24/2024	7:30 AM	0	297	64	1	7	7	0	0	2	0	0	0	0
4/24/2024	7:45 AM	0	286	58	2	6	8	0	0	2	0	0	0	0
4/24/2024	8:00 AM	0	241	48	2	9	9	1	0	1	0	0	0	0
4/24/2024	8:15 AM	0	201	47	2	7	5	1	0	1	0	0	0	0
4/24/2024	8:30 AM	0	170	44	2	5	5	1	2	1	0	0	0	0
4/24/2024	8:45 AM	0	148	40	2	5	3	1	2	1	0	0	0	0
4/24/2024	9:00 AM	0	149	38	2	1	0	0	2	1	0	0	0	0
4/24/2024	9:15 AM	0	144	41	2	1	0	0	2	5	0	0	0	0
4/24/2024	9:30 AM	0	166	38	1	3	1	0	0	7	0	0	0	0
4/24/2024	9:45 AM	0	182	39	0	4	1	0	0	6	0	0	0	0
4/24/2024	10:00 AM	0	171	43	0	5	1	0	0	6	0	0	0	0
4/24/2024	10:15 AM	0	177	42	0	4	1	0	1	3	0	0	0	0
4/24/2024	10:30 AM	0	188	48	1	3	1	0	2	1	0	0	0	0
4/24/2024	10:45 AM	1	197	55	1	3	1	0	2	1	0	0	0	0
4/24/2024	11:00 AM	2	218	55	1	3	1	0	3	2	0	0	0	0
4/24/2024	11:15 AM	2	229	60	1	4	1	0	3	1	0	0	0	0
4/24/2024	11:30 AM	2	217	65	0	4	0	0	2	2	0	0	0	0
4/24/2024	11:45 AM	1	221	65	0	3	1	1	4	2	0	0	0	0
4/24/2024	12:00 PM	0	218	64	0	5	1	1	5	2	0	0	0	0
4/24/2024	12:15 PM	2	230	61	0	6	1	1	4	3	1	0	0	0
4/24/2024	12:30 PM	2	240	56	1	9	1	1	5	3	1	0	0	0
4/24/2024	12:45 PM	2	220	58	1	12	0	0	3	3	1	0	0	0
4/24/2024	1:00 PM	2	222	52	1	11	1	0	1	2	1	0	0	0
4/24/2024	1:15 PM	0	237	56	1	13	1	0	2	1	0	0	0	0
4/24/2024	1:30 PM	0	246	53	0	11	1	0	1	1	0	0	0	0
4/24/2024	1:45 PM	0	256	54	0	8	3	0	1	5	0	0	0	0
4/24/2024	2:00 PM	0	261	56	0	7	3	0	1	5	0	0	0	0
4/24/2024	2:15 PM	1	274	48	0	5	3	0	0	6	1	0	0	0
4/24/2024	2:30 PM	1	275	53	0	3	3	0	0	7	1	0	0	0
4/24/2024	2:45 PM	1	307	46	0	5	1	0	0	4	1	0	0	0
4/24/2024	3:00 PM	2	316	49	0	5	0	0	1	5	1	0	0	0
4/24/2024	3:15 PM	1	311	64	0	4	0	0	1	4	0	0	0	0
4/24/2024	3:30 PM	1	315	64	1	4	1	0	1	2	0	0	0	0
4/24/2024	3:45 PM	2	322	69	1	3	2	0	1	1	0	0	0	0
4/24/2024	4:00 PM	1	331	81	1	2	2	0	0	0	0	0	0	0
4/24/2024	4:15 PM	1	356	68	1	2	2	0	2	1	0	0	0	0
4/24/2024	4:30 PM	1	426	70	0	5	1	0	2	1	0	0	0	0
4/24/2024	4:45 PM	0	443	72	0	4	0	0	2	2	0	0	0	0
4/24/2024	5:00 PM	0	432	51	0	5	0	0	2	2	0	0	0	0
4/24/2024	5:15 PM	0	386	47	0	6	0	0	1	1	0	0	0	0
4/24/2024	5:30 PM	0	316	40	0	5	0	0	1	1	0	0	0	0
4/24/2024	5:45 PM	1	256	35	0	5	0	0	1	0	0	0	0	0
4/24/2024	6:00 PM	1	238	38	0	4	0	0	1	0	0	0	0	0
4/24/2024	6:15 PM	1	227	38	0	2	0	0	0	0	0	0	0	0
4/24/2024	6:30 PM	1	199	35	0	0	0	0	0	0	0	0	0	0
4/24/2024	6:45 PM	0	191	26	0	0	0	0	0	0	0	0	0	0
4/24/2024	7:00 PM	0	171	27	0	1	0	0	0	0	0	0	0	0
4/24/2024	7:15 PM	0	155	28	0	1	0	0	0	0	0	0	0	0
4/24/2024	7:30 PM	0	153	31	0	2	0	0	0	0	0	0	0	0
4/24/2024	7:45 PM	0	155	36	0	2	0	0	0	1	0	0	0	0
4/24/2024	8:00 PM	0	168	31	0	1	1	0	0	1	0	0	0	0
4/24/2024	8:15 PM	0	163	22	0	2	1	0	0	1	0	0	0	0
4/24/2024	8:30 PM	0	156	17	0	1	1	0	0	1	0	0	0	0
4/24/2024	8:45 PM	0	142	14	0	1	1	0	0	0	0	0	0	0
4/24/2024	9:00 PM	0	120	12	0	1	0	0	0	0	0	0	0	0
4/24/2024	9:15 PM	0	99	15	1	1	0	0	0	0	0	0	0	0
4/24/2024	9:30 PM	0	80	16	1	1	1	0	0	0	0	0	0	0
4/24/2024	9:45 PM	0	70	14	1	1	1	0	0	0	0	0	0	0
4/24/2024	10:00 PM	0	65	15	1	1	1	0	0	0	0	0	0	0
4/24/2024	10:15 PM	0	68	13	0	0	1	0	0	0	0	0	0	0
4/24/2024	10:30 PM	0	65	8	0	0	0	0	0	0	0	0	0	0
4/24/2024	10:45 PM	0	61	7	0	0	0	0	0	0	0	0	0	0
4/24/2024	11:00 PM	0	61	4	0	0	0	0	0	0	0	0	0	0
4/24/2024	11:15 PM	0	62	8	0	0	0	0	0	1	0	0	0	0
4/24/2024	11:30 PM	0	62	9	0	0	0	0	0	1	0	0	0	0
4/24/2024	11:45 PM	0	53	8	0	0	0	0	0	1	0	0	0	0

4/25/2024	12:00 AM	0	44	8	0	0	0	0	0	1	0	0	0	0
4/25/2024	12:15 AM	0	33	2	0	0	0	0	0	0	0	0	0	0
4/25/2024	12:30 AM	0	31	1	0	0	0	0	0	0	0	0	0	0
4/25/2024	12:45 AM	0	27	0	0	0	0	0	0	0	0	0	0	0
4/25/2024	1:00 AM	0	23	1	0	0	0	0	0	0	0	0	0	0
4/25/2024	1:15 AM	0	21	1	0	0	0	0	0	0	0	0	0	0
4/25/2024	1:30 AM	0	16	1	0	0	0	0	0	0	0	0	0	0
4/25/2024	1:45 AM	0	19	3	0	0	0	0	0	0	0	0	0	0
4/25/2024	2:00 AM	0	17	2	0	0	0	0	0	0	0	0	0	0
4/25/2024	2:15 AM	0	19	2	0	0	0	0	0	0	0	0	0	0
4/25/2024	2:30 AM	0	20	2	0	0	0	0	0	1	0	0	0	0
4/25/2024	2:45 AM	0	19	2	0	0	1	0	0	2	0	0	0	0
4/25/2024	3:00 AM	0	23	3	0	1	2	0	0	2	0	0	0	0
4/25/2024	3:15 AM	0	22	7	0	1	2	0	0	3	0	0	0	0
4/25/2024	3:30 AM	0	25	8	0	1	2	0	0	5	0	0	0	0
4/25/2024	3:45 AM	0	31	10	0	1	1	0	0	6	0	0	0	0
4/25/2024	4:00 AM	0	35	9	0	0	0	0	0	7	0	0	0	0
4/25/2024	4:15 AM	0	44	7	0	1	1	0	0	6	0	0	0	0
4/25/2024	4:30 AM	0	50	6	0	2	2	0	0	3	0	0	0	0
4/25/2024	4:45 AM	0	68	7	0	2	2	0	0	1	0	0	0	0
4/25/2024	5:00 AM	0	80	11	0	2	2	0	0	0	0	0	0	0
4/25/2024	5:15 AM	0	87	16	0	1	1	0	0	1	0	0	0	0
4/25/2024	5:30 AM	0	104	22	0	0	0	0	0	2	0	0	0	0
4/25/2024	5:45 AM	0	132	21	0	0	0	0	0	2	0	0	0	0
4/25/2024	6:00 AM	0	160	27	0	0	0	0	0	4	0	0	0	0
4/25/2024	6:15 AM	1	191	37	0	1	0	0	0	3	0	0	0	0
4/25/2024	6:30 AM	1	222	47	0	1	0	0	0	3	0	0	0	0
4/25/2024	6:45 AM	1	264	57	0	1	2	1	0	4	0	0	0	0
4/25/2024	7:00 AM	1	298	53	0	4	7	1	0	3	0	0	0	0
4/25/2024	7:15 AM	0	307	49	0	4	9	1	0	5	0	0	0	0
4/25/2024	7:30 AM	0	309	46	0	4	9	4	0	4	0	0	0	0
4/25/2024	7:45 AM	0	267	46	1	9	7	3	0	4	0	0	0	0
4/25/2024	8:00 AM	0	222	53	1	8	2	3	0	3	0	0	0	0
4/25/2024	8:15 AM	0	212	47	1	7	0	3	0	2	0	0	0	0
4/25/2024	8:30 AM	0	180	49	1	8	2	1	0	4	0	0	0	0
4/25/2024	8:45 AM	0	162	43	0	4	5	1	0	3	0	0	0	0
4/25/2024	9:00 AM	0	158	38	1	4	6	1	0	4	0	0	0	0
4/25/2024	9:15 AM	0	142	45	1	7	7	1	0	4	0	0	0	0
4/25/2024	9:30 AM	0	147	43	1	6	7	0	1	4	0	0	0	0
4/25/2024	9:45 AM	0	153	44	1	6	4	0	1	5	0	0	0	0
4/25/2024	10:00 AM	0	153	49	0	7	5	0	1	5	1	0	0	0
4/25/2024	10:15 AM	0	165	44	1	6	5	2	1	5	1	0	0	0
4/25/2024	10:30 AM	0	178	53	1	6	4	3	0	3	1	0	0	0
4/25/2024	10:45 AM	0	189	57	1	6	5	4	0	2	1	0	0	0
4/25/2024	11:00 AM	0	210	59	1	3	6	6	0	2	0	0	0	0
4/25/2024	11:15 AM	0	221	62	0	2	7	6	0	4	0	0	0	0
4/25/2024	11:30 AM	1	229	53	1	4	7	7	1	5	0	0	0	0
4/25/2024	11:45 AM	1	243	54	1	4	8	7	1	5	0	0	0	0
4/25/2024	12:00 PM	1	254	50	1	6	5	5	2	5	0	0	0	0
4/25/2024	12:15 PM	2	260	52	1	8	4	3	2	2	0	0	0	0
4/25/2024	12:30 PM	1	260	48	0	7	3	1	1	1	2	0	0	0
4/25/2024	12:45 PM	1	260	52	0	6	2	0	2	2	2	0	0	0
4/25/2024	1:00 PM	1	241	54	0	6	3	0	1	1	2	0	0	0
4/25/2024	1:15 PM	1	237	51	0	5	2	2	1	1	2	0	0	0
4/25/2024	1:30 PM	1	241	54	0	8	2	2	1	1	0	0	0	0
4/25/2024	1:45 PM	1	253	49	0	9	1	3	0	1	0	0	0	0
4/25/2024	2:00 PM	1	273	54	0	10	0	3	0	1	0	0	0	0
4/25/2024	2:15 PM	1	282	55	0	8	1	2	1	1	0	0	0	0
4/25/2024	2:30 PM	2	295	55	0	8	1	2	1	1	0	0	0	0
4/25/2024	2:45 PM	2	304	55	0	10	1	1	1	0	0	0	0	0
4/25/2024	3:00 PM	2	313	52	0	8	1	1	2	1	0	0	0	0
4/25/2024	3:15 PM	1	327	51	0	9	0	0	1	2	0	0	0	0
4/25/2024	3:30 PM	0	321	60	0	6	0	0	3	2	0	0	0	0
4/25/2024	3:45 PM	0	326	69	0	4	4	0	3	2	0	0	0	0
4/25/2024	4:00 PM	0	353	70	0	5	5	1	2	1	0	0	0	0
4/25/2024	4:15 PM	0	380	78	0	4	7	1	2	2	0	0	0	0
4/25/2024	4:30 PM	0	421	74	0	5	7	1	0	2	0	0	0	0
4/25/2024	4:45 PM	0	416	63	0	4	3	1	0	2	0	0	0	0
4/25/2024	5:00 PM	0	386	57	0	3	2	0	0	2	0	0	0	0
4/25/2024	5:15 PM	0	345	49	0	8	1	0	0	1	0	0	0	0
4/25/2024	5:30 PM	0	300	48	0	8	1	0	0	1	0	0	0	0
4/25/2024	5:45 PM	1	267	45	0	9	1	0	0	2	0	0	0	0
4/25/2024	6:00 PM	2	243	52	0	11	1	0	0	2	0	0	0	0
4/25/2024	6:15 PM	2	173	41	0	6	0	0	0	1	0	0	0	0
4/25/2024	6:30 PM	2	107	25	0	4	0	0	0	1	0	0	0	0
4/25/2024	6:45 PM	1	50	17	0	3	0	0	0	0	0	0	0	0
4/25/2024	7:00 PM	0	0	0	0	0	0	0	0	0	0	0	0	0
4/25/2024	7:15 PM	0	0	0	0	0	0	0	0	0	0	0	0	0
4/25/2024	7:30 PM	0	0	0	0	0	0	0	0	0	0	0	0	0
4/25/2024	7:45 PM	0	0	0	0	0	0	0	0	0	0	0	0	0
4/25/2024	8:00 PM	0	0	0	0	0	0	0	0	0	0	0	0	0
4/25/2024	8:15 PM	0	0	0	0	0	0	0	0	0	0	0	0	0
4/25/2024	8:30 PM	0	0	0	0	0	0	0	0	0	0	0	0	0
4/25/2024	8:45 PM	0	0	0	0	0	0	0	0	0	0	0	0	0
4/25/2024	9:00 PM	0	0	0	0	0	0	0	0	0	0	0	0	0
4/25/2024	9:15 PM	0	0	0	0	0	0	0	0	0	0	0	0	0
4/25/2024	9:30 PM	0	0	0	0	0	0	0	0	0	0	0	0	0
4/25/2024	9:45 PM	0	0	0	0	0	0	0	0	0	0	0	0	0
4/25/2024	10:00 PM	0	0	0	0	0	0	0	0	0	0	0	0	0
4/25/2024	10:15 PM	0	0	0	0	0	0	0	0	0	0	0	0	0
4/25/2024	10:30 PM	0	0	0	0	0	0	0	0	0	0	0	0	0
4/25/2024	10:45 PM	0	0	0	0	0	0	0	0	0	0	0	0	0
4/25/2024	11:00 PM	0	0	0	0	0	0	0	0	0	0	0	0	0
4/25/2024	11:15 PM	0	0	0	0	0	0	0	0	0	0	0	0	0
4/25/2024	11:30 PM	0	0	0	0	0	0	0	0	0	0	0	0	0
4/25/2024	11:45 PM	0	0	0	0	0	0	0	0	0	0	0	0	0

SB
File Name:
Start Date: 4/23/2024
Start Time: 0
Site Code: 45
Station ID: 1
Location 1: I-26 On/Off-Ramp, north of Bush River Rd
Location 2:

Date	Time	1	2	3	4	5	6	7	8	9	10	11	12	13
4/23/2024	12:00 AM	0	0	0	0	0	0	0	0	0	0	0	0	0
4/23/2024	12:15 AM	0	0	0	0	0	0	0	0	0	0	0	0	0
4/23/2024	12:30 AM	0	0	0	0	0	0	0	0	0	0	0	0	0
4/23/2024	12:45 AM	0	0	0	0	0	0	0	0	0	0	0	0	0
4/23/2024	1:00 AM	0	0	0	0	0	0	0	0	0	0	0	0	0
4/23/2024	1:15 AM	0	0	0	0	0	0	0	0	0	0	0	0	0
4/23/2024	1:30 AM	0	0	0	0	0	0	0	0	0	0	0	0	0
4/23/2024	1:45 AM	0	0	0	0	0	0	0	0	0	0	0	0	0
4/23/2024	2:00 AM	0	0	0	0	0	0	0	0	0	0	0	0	0
4/23/2024	2:15 AM	0	0	0	0	0	0	0	0	0	0	0	0	0
4/23/2024	2:30 AM	0	0	0	0	0	0	0	0	0	0	0	0	0
4/23/2024	2:45 AM	0	0	0	0	0	0	0	0	0	0	0	0	0
4/23/2024	3:00 AM	0	0	0	0	0	0	0	0	0	0	0	0	0
4/23/2024	3:15 AM	0	0	0	0	0	0	0	0	0	0	0	0	0
4/23/2024	3:30 AM	0	0	0	0	0	0	0	0	0	0	0	0	0
4/23/2024	3:45 AM	0	0	0	0	0	0	0	0	0	0	0	0	0
4/23/2024	4:00 AM	0	0	0	0	0	0	0	0	0	0	0	0	0
4/23/2024	4:15 AM	0	0	0	0	0	0	0	0	0	0	0	0	0
4/23/2024	4:30 AM	0	0	0	0	0	0	0	0	0	0	0	0	0
4/23/2024	4:45 AM	0	0	0	0	0	0	0	0	0	0	0	0	0
4/23/2024	5:00 AM	0	0	0	0	0	0	0	0	0	0	0	0	0
4/23/2024	5:15 AM	0	0	0	0	0	0	0	0	0	0	0	0	0
4/23/2024	5:30 AM	0	0	0	0	0	0	0	0	0	0	0	0	0
4/23/2024	5:45 AM	0	0	0	0	0	0	0	0	0	0	0	0	0
4/23/2024	6:00 AM	0	0	0	0	0	0	0	0	0	0	0	0	0
4/23/2024	6:15 AM	0	0	0	0	0	0	0	0	0	0	0	0	0
4/23/2024	6:30 AM	0	0	0	0	0	0	0	0	0	0	0	0	0
4/23/2024	6:45 AM	0	0	0	0	0	0	0	0	0	0	0	0	0
4/23/2024	7:00 AM	0	0	0	0	0	0	0	0	0	0	0	0	0
4/23/2024	7:15 AM	0	0	0	0	0	0	0	0	0	0	0	0	0
4/23/2024	7:30 AM	0	0	0	0	0	0	0	0	0	0	0	0	0
4/23/2024	7:45 AM	0	0	0	0	0	0	0	0	0	0	0	0	0
4/23/2024	8:00 AM	0	0	0	0	0	0	0	0	0	0	0	0	0
4/23/2024	8:15 AM	0	0	0	0	0	0	0	0	0	0	0	0	0
4/23/2024	8:30 AM	0	0	0	0	0	0	0	0	0	0	0	0	0
4/23/2024	8:45 AM	0	0	0	0	0	0	0	0	0	0	0	0	0
4/23/2024	9:00 AM	0	0	0	0	0	0	0	0	0	0	0	0	0
4/23/2024	9:15 AM	0	0	0	0	0	0	0	0	0	0	0	0	0
4/23/2024	9:30 AM	0	0	0	0	0	0	0	0	0	0	0	0	0
4/23/2024	9:45 AM	0	0	0	0	0	0	0	0	0	0	0	0	0
4/23/2024	10:00 AM	0	0	0	0	0	0	0	0	0	0	0	0	0
4/23/2024	10:15 AM	0	0	0	0	0	0	0	0	0	0	0	0	0
4/23/2024	10:30 AM	0	0	0	0	0	0	0	0	0	0	0	0	0
4/23/2024	10:45 AM	0	0	0	0	0	0	0	0	0	0	0	0	0
4/23/2024	11:00 AM	0	0	0	0	0	0	0	0	0	0	0	0	0
4/23/2024	11:15 AM	0	0	0	0	0	0	0	0	0	0	0	0	0
4/23/2024	11:30 AM	0	0	0	0	0	0	0	0	0	0	0	0	0
4/23/2024	11:45 AM	0	0	0	0	0	0	0	0	0	0	0	0	0
4/23/2024	12:00 PM	0	0	0	0	0	0	0	0	0	0	0	0	0
4/23/2024	12:15 PM	0	0	0	0	0	0	0	0	0	0	0	0	0
4/23/2024	12:30 PM	0	0	0	0	0	0	0	0	0	0	0	0	0
4/23/2024	12:45 PM	0	0	0	0	0	0	0	0	0	0	0	0	0
4/23/2024	1:00 PM	0	0	0	0	0	0	0	0	0	0	0	0	0
4/23/2024	1:15 PM	0	0	0	0	0	0	0	0	0	0	0	0	0
4/23/2024	1:30 PM	0	0	0	0	0	0	0	0	0	0	0	0	0
4/23/2024	1:45 PM	0	0	0	0	0	0	0	0	0	0	0	0	0
4/23/2024	2:00 PM	0	0	0	0	0	0	0	0	0	0	0	0	0
4/23/2024	2:15 PM	0	0	0	0	0	0	0	0	0	0	0	0	0
4/23/2024	2:30 PM	0	0	0	0	0	0	0	0	0	0	0	0	0
4/23/2024	2:45 PM	0	0	0	0	0	0	0	0	0	0	0	0	0
4/23/2024	3:00 PM	0	0	0	0	0	0	0	0	0	0	0	0	0
4/23/2024	3:15 PM	0	0	0	0	0	0	0	0	0	0	0	0	0
4/23/2024	3:30 PM	0	0	0	0	0	0	0	0	0	0	0	0	0
4/23/2024	3:45 PM	0	0	0	0	0	0	0	0	0	0	0	0	0
4/23/2024	4:00 PM	0	0	0	0	0	0	0	0	0	0	0	0	0
4/23/2024	4:15 PM	0	0	0	0	0	0	0	0	0	0	0	0	0
4/23/2024	4:30 PM	0	0	0	0	0	0	0	0	0	0	0	0	0
4/23/2024	4:45 PM	0	0	0	0	0	0	0	0	0	0	0	0	0
4/23/2024	5:00 PM	0	0	0	0	0	0	0	0	0	0	0	0	0
4/23/2024	5:15 PM	0	0	0	0	0	0	0	0	0	0	0	0	0
4/23/2024	5:30 PM	0	0	0	0	0	0	0	0	0	0	0	0	0
4/23/2024	5:45 PM	0	0	0	0	0	0	0	0	0	0	0	0	0
4/23/2024	6:00 PM	0	0	0	0	0	0	0	0	0	0	0	0	0
4/23/2024	6:15 PM	0	0	0	0	0	0	0	0	0	0	0	0	0
4/23/2024	6:30 PM	0	0	0	0	0	0	0	0	0	0	0	0	0
4/23/2024	6:45 PM	0	0	0	0	0	0	0	0	0	0	0	0	0
4/23/2024	7:00 PM	0	0	0	0	0	0	0	0	0	0	0	0	0
4/23/2024	7:15 PM	0	0	0	0	0	0	0	0	0	0	0	0	0
4/23/2024	7:30 PM	0	0	0	0	0	0	0	0	0	0	0	0	0
4/23/2024	7:45 PM	0	0	0	0	0	0	0	0	0	0	0	0	0
4/23/2024	8:00 PM	0	0	0	0	0	0	0	0	0	0	0	0	0
4/23/2024	8:15 PM	0	0	0	0	0	0	0	0	0	0	0	0	0
4/23/2024	8:30 PM	0	0	0	0	0	0	0	0	0	0	0	0	0
4/23/2024	8:45 PM	0	0	0	0	0	0	0	0	0	0	0	0	0
4/23/2024	9:00 PM	0	0	0	0	0	0	0	0	0	0	0	0	0
4/23/2024	9:15 PM	0	0	0	0	0	0	0	0	0	0	0	0	0
4/23/2024	9:30 PM	0	0	0	0	0	0	0	0	0	0	0	0	0
4/23/2024	9:45 PM	0	0	0	0	0	0	0	0	0	0	0	0	0
4/23/2024	10:00 PM	0	0	0	0	0	0	0	0	0	0	0	0	0
4/23/2024	10:15 PM	0	0	0	0	0	0	0	0	0	0	0	0	0
4/23/2024	10:30 PM	0	0	0	0	0	0	0	0	0	0	0	0	0
4/23/2024	10:45 PM	0	0	0	0	0	0	0	0	0	0	0	0	0
4/23/2024	11:00 PM	0	0	0	0	0	0	0	0	0	0	0	0	0
4/23/2024	11:15 PM	0	0	0	0	0	0	0	0	0	0	0	0	0
4/23/2024	11:30 PM	0	0	0	0	0	0	0	0	0	0	0	0	0
4/23/2024	11:45 PM	0	0	0	0	0	0	0	0	0	0	0	0	0

4/24/2024	12:00 AM	0	0	0	0	0	0	0	0	0	0	0	0	0
4/24/2024	12:15 AM	0	0	0	0	0	0	0	0	0	0	0	0	0
4/24/2024	12:30 AM	0	0	0	0	0	0	0	0	0	0	0	0	0
4/24/2024	12:45 AM	0	0	0	0	0	0	0	0	0	0	0	0	0
4/24/2024	1:00 AM	0	0	0	0	0	0	0	0	0	0	0	0	0
4/24/2024	1:15 AM	0	0	0	0	0	0	0	0	0	0	0	0	0
4/24/2024	1:30 AM	0	0	0	0	0	0	0	0	0	0	0	0	0
4/24/2024	1:45 AM	0	0	0	0	0	0	0	0	0	0	0	0	0
4/24/2024	2:00 AM	0	0	0	0	0	0	0	0	0	0	0	0	0
4/24/2024	2:15 AM	0	0	0	0	0	0	0	0	0	0	0	0	0
4/24/2024	2:30 AM	0	0	0	0	0	0	0	0	0	0	0	0	0
4/24/2024	2:45 AM	0	0	0	0	0	0	0	0	0	0	0	0	0
4/24/2024	3:00 AM	0	0	0	0	0	0	0	0	0	0	0	0	0
4/24/2024	3:15 AM	0	0	0	0	0	0	0	0	0	0	0	0	0
4/24/2024	3:30 AM	0	0	0	0	0	0	0	0	0	0	0	0	0
4/24/2024	3:45 AM	0	0	0	0	0	0	0	0	0	0	0	0	0
4/24/2024	4:00 AM	0	0	0	0	0	0	0	0	0	0	0	0	0
4/24/2024	4:15 AM	0	0	0	0	0	0	0	0	0	0	0	0	0
4/24/2024	4:30 AM	0	0	0	0	0	0	0	0	0	0	0	0	0
4/24/2024	4:45 AM	0	0	0	0	0	0	0	0	0	0	0	0	0
4/24/2024	5:00 AM	0	0	0	0	0	0	0	0	0	0	0	0	0
4/24/2024	5:15 AM	0	0	0	0	0	0	0	0	0	0	0	0	0
4/24/2024	5:30 AM	0	0	0	0	0	0	0	0	0	0	0	0	0
4/24/2024	5:45 AM	0	0	0	0	0	0	0	0	0	0	0	0	0
4/24/2024	6:00 AM	0	0	0	0	0	0	0	0	0	0	0	0	0
4/24/2024	6:15 AM	0	0	0	0	0	0	0	0	0	0	0	0	0
4/24/2024	6:30 AM	0	0	0	0	0	0	0	0	0	0	0	0	0
4/24/2024	6:45 AM	0	0	0	0	0	0	0	0	0	0	0	0	0
4/24/2024	7:00 AM	0	0	0	0	0	0	0	0	0	0	0	0	0
4/24/2024	7:15 AM	0	0	0	0	0	0	0	0	0	0	0	0	0
4/24/2024	7:30 AM	0	0	0	0	0	0	0	0	0	0	0	0	0
4/24/2024	7:45 AM	0	0	0	0	0	0	0	0	0	0	0	0	0
4/24/2024	8:00 AM	0	0	0	0	0	0	0	0	0	0	0	0	0
4/24/2024	8:15 AM	0	0	0	0	0	0	0	0	0	0	0	0	0
4/24/2024	8:30 AM	0	0	0	0	0	0	0	0	0	0	0	0	0
4/24/2024	8:45 AM	0	0	0	0	0	0	0	0	0	0	0	0	0
4/24/2024	9:00 AM	0	0	0	0	0	0	0	0	0	0	0	0	0
4/24/2024	9:15 AM	0	0	0	0	0	0	0	0	0	0	0	0	0
4/24/2024	9:30 AM	0	0	0	0	0	0	0	0	0	0	0	0	0
4/24/2024	9:45 AM	0	0	0	0	0	0	0	0	0	0	0	0	0
4/24/2024	10:00 AM	0	0	0	0	0	0	0	0	0	0	0	0	0
4/24/2024	10:15 AM	0	0	0	0	0	0	0	0	0	0	0	0	0
4/24/2024	10:30 AM	0	0	0	0	0	0	0	0	0	0	0	0	0
4/24/2024	10:45 AM	0	0	0	0	0	0	0	0	0	0	0	0	0
4/24/2024	11:00 AM	0	0	0	0	0	0	0	0	0	0	0	0	0
4/24/2024	11:15 AM	0	0	0	0	0	0	0	0	0	0	0	0	0
4/24/2024	11:30 AM	0	0	0	0	0	0	0	0	0	0	0	0	0
4/24/2024	11:45 AM	0	0	0	0	0	0	0	0	0	0	0	0	0
4/24/2024	12:00 PM	0	0	0	0	0	0	0	0	0	0	0	0	0
4/24/2024	12:15 PM	0	0	0	0	0	0	0	0	0	0	0	0	0
4/24/2024	12:30 PM	0	0	0	0	0	0	0	0	0	0	0	0	0
4/24/2024	12:45 PM	0	0	0	0	0	0	0	0	0	0	0	0	0
4/24/2024	1:00 PM	0	0	0	0	0	0	0	0	0	0	0	0	0
4/24/2024	1:15 PM	0	0	0	0	0	0	0	0	0	0	0	0	0
4/24/2024	1:30 PM	0	0	0	0	0	0	0	0	0	0	0	0	0
4/24/2024	1:45 PM	0	0	0	0	0	0	0	0	0	0	0	0	0
4/24/2024	2:00 PM	0	0	0	0	0	0	0	0	0	0	0	0	0
4/24/2024	2:15 PM	0	0	0	0	0	0	0	0	0	0	0	0	0
4/24/2024	2:30 PM	0	0	0	0	0	0	0	0	0	0	0	0	0
4/24/2024	2:45 PM	0	0	0	0	0	0	0	0	0	0	0	0	0
4/24/2024	3:00 PM	0	0	0	0	0	0	0	0	0	0	0	0	0
4/24/2024	3:15 PM	0	0	0	0	0	0	0	0	0	0	0	0	0
4/24/2024	3:30 PM	0	0	0	0	0	0	0	0	0	0	0	0	0
4/24/2024	3:45 PM	0	0	0	0	0	0	0	0	0	0	0	0	0
4/24/2024	4:00 PM	0	0	0	0	0	0	0	0	0	0	0	0	0
4/24/2024	4:15 PM	0	0	0	0	0	0	0	0	0	0	0	0	0
4/24/2024	4:30 PM	0	0	0	0	0	0	0	0	0	0	0	0	0
4/24/2024	4:45 PM	0	0	0	0	0	0	0	0	0	0	0	0	0
4/24/2024	5:00 PM	0	0	0	0	0	0	0	0	0	0	0	0	0
4/24/2024	5:15 PM	0	0	0	0	0	0	0	0	0	0	0	0	0
4/24/2024	5:30 PM	0	0	0	0	0	0	0	0	0	0	0	0	0
4/24/2024	5:45 PM	0	0	0	0	0	0	0	0	0	0	0	0	0
4/24/2024	6:00 PM	0	0	0	0	0	0	0	0	0	0	0	0	0
4/24/2024	6:15 PM	0	0	0	0	0	0	0	0	0	0	0	0	0
4/24/2024	6:30 PM	0	0	0	0	0	0	0	0	0	0	0	0	0
4/24/2024	6:45 PM	0	0	0	0	0	0	0	0	0	0	0	0	0
4/24/2024	7:00 PM	0	0	0	0	0	0	0	0	0	0	0	0	0
4/24/2024	7:15 PM	0	0	0	0	0	0	0	0	0	0	0	0	0
4/24/2024	7:30 PM	0	0	0	0	0	0	0	0	0	0	0	0	0
4/24/2024	7:45 PM	0	0	0	0	0	0	0	0	0	0	0	0	0
4/24/2024	8:00 PM	0	0	0	0	0	0	0	0	0	0	0	0	0
4/24/2024	8:15 PM	0	0	0	0	0	0	0	0	0	0	0	0	0
4/24/2024	8:30 PM	0	0	0	0	0	0	0	0	0	0	0	0	0
4/24/2024	8:45 PM	0	0	0	0	0	0	0	0	0	0	0	0	0
4/24/2024	9:00 PM	0	0	0	0	0	0	0	0	0	0	0	0	0
4/24/2024	9:15 PM	0	0	0	0	0	0	0	0	0	0	0	0	0
4/24/2024	9:30 PM	0	0	0	0	0	0	0	0	0	0	0	0	0
4/24/2024	9:45 PM	0	0	0	0	0	0	0	0	0	0	0	0	0
4/24/2024	10:00 PM	0	0	0	0	0	0	0	0	0	0	0	0	0
4/24/2024	10:15 PM	0	0	0	0	0	0	0	0	0	0	0	0	0
4/24/2024	10:30 PM	0	0	0	0	0	0	0	0	0	0	0	0	0
4/24/2024	10:45 PM	0	0	0	0	0	0	0	0	0	0	0	0	0
4/24/2024	11:00 PM	0	0	0	0	0	0	0	0	0	0	0	0	0
4/24/2024	11:15 PM	0	0	0	0	0	0	0	0	0	0	0	0	0
4/24/2024	11:30 PM	0	0	0	0	0	0	0	0	0	0	0	0	0
4/24/2024	11:45 PM	0	0	0	0	0	0	0	0	0	0	0	0	0

4/25/2024	12:00 AM	0	0	0	0	0	0	0	0	0	0	0	0	0
4/25/2024	12:15 AM	0	0	0	0	0	0	0	0	0	0	0	0	0
4/25/2024	12:30 AM	0	0	0	0	0	0	0	0	0	0	0	0	0
4/25/2024	12:45 AM	0	0	0	0	0	0	0	0	0	0	0	0	0
4/25/2024	1:00 AM	0	0	0	0	0	0	0	0	0	0	0	0	0
4/25/2024	1:15 AM	0	0	0	0	0	0	0	0	0	0	0	0	0
4/25/2024	1:30 AM	0	0	0	0	0	0	0	0	0	0	0	0	0
4/25/2024	1:45 AM	0	0	0	0	0	0	0	0	0	0	0	0	0
4/25/2024	2:00 AM	0	0	0	0	0	0	0	0	0	0	0	0	0
4/25/2024	2:15 AM	0	0	0	0	0	0	0	0	0	0	0	0	0
4/25/2024	2:30 AM	0	0	0	0	0	0	0	0	0	0	0	0	0
4/25/2024	2:45 AM	0	0	0	0	0	0	0	0	0	0	0	0	0
4/25/2024	3:00 AM	0	0	0	0	0	0	0	0	0	0	0	0	0
4/25/2024	3:15 AM	0	0	0	0	0	0	0	0	0	0	0	0	0
4/25/2024	3:30 AM	0	0	0	0	0	0	0	0	0	0	0	0	0
4/25/2024	3:45 AM	0	0	0	0	0	0	0	0	0	0	0	0	0
4/25/2024	4:00 AM	0	0	0	0	0	0	0	0	0	0	0	0	0
4/25/2024	4:15 AM	0	0	0	0	0	0	0	0	0	0	0	0	0
4/25/2024	4:30 AM	0	0	0	0	0	0	0	0	0	0	0	0	0
4/25/2024	4:45 AM	0	0	0	0	0	0	0	0	0	0	0	0	0
4/25/2024	5:00 AM	0	0	0	0	0	0	0	0	0	0	0	0	0
4/25/2024	5:15 AM	0	0	0	0	0	0	0	0	0	0	0	0	0
4/25/2024	5:30 AM	0	0	0	0	0	0	0	0	0	0	0	0	0
4/25/2024	5:45 AM	0	0	0	0	0	0	0	0	0	0	0	0	0
4/25/2024	6:00 AM	0	0	0	0	0	0	0	0	0	0	0	0	0
4/25/2024	6:15 AM	0	0	0	0	0	0	0	0	0	0	0	0	0
4/25/2024	6:30 AM	0	0	0	0	0	0	0	0	0	0	0	0	0
4/25/2024	6:45 AM	0	0	0	0	0	0	0	0	0	0	0	0	0
4/25/2024	7:00 AM	0	0	0	0	0	0	0	0	0	0	0	0	0
4/25/2024	7:15 AM	0	0	0	0	0	0	0	0	0	0	0	0	0
4/25/2024	7:30 AM	0	0	0	0	0	0	0	0	0	0	0	0	0
4/25/2024	7:45 AM	0	0	0	0	0	0	0	0	0	0	0	0	0
4/25/2024	8:00 AM	0	0	0	0	0	0	0	0	0	0	0	0	0
4/25/2024	8:15 AM	0	0	0	0	0	0	0	0	0	0	0	0	0
4/25/2024	8:30 AM	0	0	0	0	0	0	0	0	0	0	0	0	0
4/25/2024	8:45 AM	0	0	0	0	0	0	0	0	0	0	0	0	0
4/25/2024	9:00 AM	0	0	0	0	0	0	0	0	0	0	0	0	0
4/25/2024	9:15 AM	0	0	0	0	0	0	0	0	0	0	0	0	0
4/25/2024	9:30 AM	0	0	0	0	0	0	0	0	0	0	0	0	0
4/25/2024	9:45 AM	0	0	0	0	0	0	0	0	0	0	0	0	0
4/25/2024	10:00 AM	0	0	0	0	0	0	0	0	0	0	0	0	0
4/25/2024	10:15 AM	0	0	0	0	0	0	0	0	0	0	0	0	0
4/25/2024	10:30 AM	0	0	0	0	0	0	0	0	0	0	0	0	0
4/25/2024	10:45 AM	0	0	0	0	0	0	0	0	0	0	0	0	0
4/25/2024	11:00 AM	0	0	0	0	0	0	0	0	0	0	0	0	0
4/25/2024	11:15 AM	0	0	0	0	0	0	0	0	0	0	0	0	0
4/25/2024	11:30 AM	0	0	0	0	0	0	0	0	0	0	0	0	0
4/25/2024	11:45 AM	0	0	0	0	0	0	0	0	0	0	0	0	0
4/25/2024	12:00 PM	0	0	0	0	0	0	0	0	0	0	0	0	0
4/25/2024	12:15 PM	0	0	0	0	0	0	0	0	0	0	0	0	0
4/25/2024	12:30 PM	0	0	0	0	0	0	0	0	0	0	0	0	0
4/25/2024	12:45 PM	0	0	0	0	0	0	0	0	0	0	0	0	0
4/25/2024	1:00 PM	0	0	0	0	0	0	0	0	0	0	0	0	0
4/25/2024	1:15 PM	0	0	0	0	0	0	0	0	0	0	0	0	0
4/25/2024	1:30 PM	0	0	0	0	0	0	0	0	0	0	0	0	0
4/25/2024	1:45 PM	0	0	0	0	0	0	0	0	0	0	0	0	0
4/25/2024	2:00 PM	0	0	0	0	0	0	0	0	0	0	0	0	0
4/25/2024	2:15 PM	0	0	0	0	0	0	0	0	0	0	0	0	0
4/25/2024	2:30 PM	0	0	0	0	0	0	0	0	0	0	0	0	0
4/25/2024	2:45 PM	0	0	0	0	0	0	0	0	0	0	0	0	0
4/25/2024	3:00 PM	0	0	0	0	0	0	0	0	0	0	0	0	0
4/25/2024	3:15 PM	0	0	0	0	0	0	0	0	0	0	0	0	0
4/25/2024	3:30 PM	0	0	0	0	0	0	0	0	0	0	0	0	0
4/25/2024	3:45 PM	0	0	0	0	0	0	0	0	0	0	0	0	0
4/25/2024	4:00 PM	0	0	0	0	0	0	0	0	0	0	0	0	0
4/25/2024	4:15 PM	0	0	0	0	0	0	0	0	0	0	0	0	0
4/25/2024	4:30 PM	0	0	0	0	0	0	0	0	0	0	0	0	0
4/25/2024	4:45 PM	0	0	0	0	0	0	0	0	0	0	0	0	0
4/25/2024	5:00 PM	0	0	0	0	0	0	0	0	0	0	0	0	0
4/25/2024	5:15 PM	0	0	0	0	0	0	0	0	0	0	0	0	0
4/25/2024	5:30 PM	0	0	0	0	0	0	0	0	0	0	0	0	0
4/25/2024	5:45 PM	0	0	0	0	0	0	0	0	0	0	0	0	0
4/25/2024	6:00 PM	0	0	0	0	0	0	0	0	0	0	0	0	0
4/25/2024	6:15 PM	0	0	0	0	0	0	0	0	0	0	0	0	0
4/25/2024	6:30 PM	0	0	0	0	0	0	0	0	0	0	0	0	0
4/25/2024	6:45 PM	0	0	0	0	0	0	0	0	0	0	0	0	0
4/25/2024	7:00 PM	0	0	0	0	0	0	0	0	0	0	0	0	0
4/25/2024	7:15 PM	0	0	0	0	0	0	0	0	0	0	0	0	0
4/25/2024	7:30 PM	0	0	0	0	0	0	0	0	0	0	0	0	0
4/25/2024	7:45 PM	0	0	0	0	0	0	0	0	0	0	0	0	0
4/25/2024	8:00 PM	0	0	0	0	0	0	0	0	0	0	0	0	0
4/25/2024	8:15 PM	0	0	0	0	0	0	0	0	0	0	0	0	0
4/25/2024	8:30 PM	0	0	0	0	0	0	0	0	0	0	0	0	0
4/25/2024	8:45 PM	0	0	0	0	0	0	0	0	0	0	0	0	0
4/25/2024	9:00 PM	0	0	0	0	0	0	0	0	0	0	0	0	0
4/25/2024	9:15 PM	0	0	0	0	0	0	0	0	0	0	0	0	0
4/25/2024	9:30 PM	0	0	0	0	0	0	0	0	0	0	0	0	0
4/25/2024	9:45 PM	0	0	0	0	0	0	0	0	0	0	0	0	0
4/25/2024	10:00 PM	0	0	0	0	0	0	0	0	0	0	0	0	0
4/25/2024	10:15 PM	0	0	0	0	0	0	0	0	0	0	0	0	0
4/25/2024	10:30 PM	0	0	0	0	0	0	0	0	0	0	0	0	0
4/25/2024	10:45 PM	0	0	0	0	0	0	0	0	0	0	0	0	0
4/25/2024	11:00 PM	0	0	0	0	0	0	0	0	0	0	0	0	0
4/25/2024	11:15 PM	0	0	0	0	0	0	0	0	0	0	0	0	0
4/25/2024	11:30 PM	0	0	0	0	0	0	0	0	0	0	0	0	0
4/25/2024	11:45 PM	0	0	0	0	0	0	0	0	0	0	0	0	0

Bi-Directional Class Count || SB WB 15min

Columbia, SC

Marr Traffic DATA COLLECTION
www.marrtraffic.com

Site 46
I-26 On/Off-Ramp,
south of Bush River Rd

Date
Tuesday, April 23, 2024

Lat/Long
34.029632°, -81.101844°

Click here for Map

Weather
Fair
58°F

Click here for Detailed Weather

0000 - 2400 (Weekday 24h Session) (04-23-2024)
SB WB 15min

	Southbound (Movement 46.1)													15min	60min
Time	1	2	3	4	5	6	7	8	9	10	11	12	13	Total	Total
0000 - 0015	0	0	0	0	0	0	0	0	0	0	0	0	0	**0**	
0015 - 0030	0	0	0	0	0	0	0	0	0	0	0	0	0	**0**	
0030 - 0045	0	0	0	0	0	0	0	0	0	0	0	0	0	**0**	
0045 - 0100	0	0	0	0	0	0	0	0	0	0	0	0	0	**0**	**0**
0100 - 0115	0	0	0	0	0	0	0	0	0	0	0	0	0	**0**	
0115 - 0130	0	0	0	0	0	0	0	0	0	0	0	0	0	**0**	
0130 - 0145	0	0	0	0	0	0	0	0	0	0	0	0	0	**0**	
0145 - 0200	0	0	0	0	0	0	0	0	0	0	0	0	0	**0**	**0**
0200 - 0215	0	0	0	0	0	0	0	0	0	0	0	0	0	**0**	
0215 - 0230	0	0	0	0	0	0	0	0	0	0	0	0	0	**0**	
0230 - 0245	0	0	0	0	0	0	0	0	0	0	0	0	0	**0**	
0245 - 0300	0	0	0	0	0	0	0	0	0	0	0	0	0	**0**	**0**
0300 - 0315	0	0	0	0	0	0	0	0	0	0	0	0	0	**0**	
0315 - 0330	0	0	0	0	0	0	0	0	0	0	0	0	0	**0**	
0330 - 0345	0	0	0	0	0	0	0	0	0	0	0	0	0	**0**	
0345 - 0400	0	0	0	0	0	0	0	0	0	0	0	0	0	**0**	**0**
0400 - 0415	0	0	0	0	0	0	0	0	0	0	0	0	0	**0**	
0415 - 0430	0	0	0	0	0	0	0	0	0	0	0	0	0	**0**	
0430 - 0445	0	0	0	0	0	0	0	0	0	0	0	0	0	**0**	
0445 - 0500	0	0	0	0	0	0	0	0	0	0	0	0	0	**0**	**0**
0500 - 0515	0	0	0	0	0	0	0	0	0	0	0	0	0	**0**	
0515 - 0530	0	0	0	0	0	0	0	0	0	0	0	0	0	**0**	
0530 - 0545	0	0	0	0	0	0	0	0	0	0	0	0	0	**0**	
0545 - 0600	0	0	0	0	0	0	0	0	0	0	0	0	0	**0**	**0**
0600 - 0615	0	0	0	0	0	0	0	0	0	0	0	0	0	**0**	
0615 - 0630	0	0	0	0	0	0	0	0	0	0	0	0	0	**0**	
0630 - 0645	0	0	0	0	0	0	0	0	0	0	0	0	0	**0**	
0645 - 0700	0	0	0	0	0	0	0	0	0	0	0	0	0	**0**	**0**
0700 - 0715	0	0	0	0	0	0	0	0	0	0	0	0	0	**0**	
0715 - 0730	0	0	0	0	0	0	0	0	0	0	0	0	0	**0**	
0730 - 0745	0	0	0	0	0	0	0	0	0	0	0	0	0	**0**	
0745 - 0800	0	0	0	0	0	0	0	0	0	0	0	0	0	**0**	**0**
0800 - 0815	0	0	0	0	0	0	0	0	0	0	0	0	0	**0**	
0815 - 0830	0	0	0	0	0	0	0	0	0	0	0	0	0	**0**	
0830 - 0845	0	0	0	0	0	0	0	0	0	0	0	0	0	**0**	
0845 - 0900	0	0	0	0	0	0	0	0	0	0	0	0	0	**0**	**0**
0900 - 0915	0	0	0	0	0	0	0	0	0	0	0	0	0	**0**	
0915 - 0930	0	0	0	0	0	0	0	0	0	0	0	0	0	**0**	
0930 - 0945	0	0	0	0	0	0	0	0	0	0	0	0	0	**0**	
0945 - 1000	0	0	0	0	0	0	0	0	0	0	0	0	0	**0**	**0**
1000 - 1015	0	0	0	0	0	0	0	0	0	0	0	0	0	**0**	
1015 - 1030	0	0	0	0	0	0	0	0	0	0	0	0	0	**0**	
1030 - 1045	0	0	0	0	0	0	0	0	0	0	0	0	0	**0**	
1045 - 1100	0	0	0	0	0	0	0	0	0	0	0	0	0	**0**	**0**
1100 - 1115	0	0	0	0	0	0	0	0	0	0	0	0	0	**0**	
1115 - 1130	0	0	0	0	0	0	0	0	0	0	0	0	0	**0**	
1130 - 1145	0	0	0	0	0	0	0	0	0	0	0	0	0	**0**	
1145 - 1200	0	0	0	0	0	0	0	0	0	0	0	0	0	**0**	**0**
1200 - 1215	0	0	0	0	0	0	0	0	0	0	0	0	0	**0**	
1215 - 1230	0	0	0	0	0	0	0	0	0	0	0	0	0	**0**	
1230 - 1245	0	0	0	0	0	0	0	0	0	0	0	0	0	**0**	
1245 - 1300	0	0	0	0	0	0	0	0	0	0	0	0	0	**0**	**0**
1300 - 1315	0	0	0	0	0	0	0	0	0	0	0	0	0	**0**	
1315 - 1330	0	0	0	0	0	0	0	0	0	0	0	0	0	**0**	
1330 - 1345	0	0	0	0	0	0	0	0	0	0	0	0	0	**0**	
1345 - 1400	0	0	0	0	0	0	0	0	0	0	0	0	0	**0**	**0**
1400 - 1415	0	0	0	0	0	0	0	0	0	0	0	0	0	**0**	
1415 - 1430	0	0	0	0	0	0	0	0	0	0	0	0	0	**0**	
1430 - 1445	0	0	0	0	0	0	0	0	0	0	0	0	0	**0**	
1445 - 1500	0	0	0	0	0	0	0	0	0	0	0	0	0	**0**	**0**
1500 - 1515	0	0	0	0	0	0	0	0	0	0	0	0	0	**0**	
1515 - 1530	0	0	0	0	0	0	0	0	0	0	0	0	0	**0**	
1530 - 1545	0	0	0	0	0	0	0	0	0	0	0	0	0	**0**	
1545 - 1600	0	0	0	0	0	0	0	0	0	0	0	0	0	**0**	**0**
1600 - 1615	0	0	0	0	0	0	0	0	0	0	0	0	0	**0**	
1615 - 1630	0	0	0	0	0	0	0	0	0	0	0	0	0	**0**	
1630 - 1645	0	0	0	0	0	0	0	0	0	0	0	0	0	**0**	
1645 - 1700	0	0	0	0	0	0	0	0	0	0	0	0	0	**0**	**0**
1700 - 1715	0	0	0	0	0	0	0	0	0	0	0	0	0	**0**	
1715 - 1730	0	0	0	0	0	0	0	0	0	0	0	0	0	**0**	
1730 - 1745	0	0	0	0	0	0	0	0	0	0	0	0	0	**0**	
1745 - 1800	0	0	0	0	0	0	0	0	0	0	0	0	0	**0**	**0**
1800 - 1815	0	0	0	0	0	0	0	0	0	0	0	0	0	**0**	
1815 - 1830	0	0	0	0	0	0	0	0	0	0	0	0	0	**0**	
1830 - 1845	0	0	0	0	0	0	0	0	0	0	0	0	0	**0**	
1845 - 1900	0	0	0	0	0	0	0	0	0	0	0	0	0	**0**	**0**
1900 - 1915	0	24	4	0	0	0	0	0	0	0	0	0	0	**28**	
1915 - 1930	0	27	3	0	0	1	0	0	0	0	0	0	0	**31**	
1930 - 1945	0	33	3	0	1	0	0	0	1	0	0	0	0	**38**	
1945 - 2000	0	27	4	0	0	0	0	0	0	0	0	0	0	**31**	**128**
2000 - 2015	0	32	3	0	1	0	0	0	0	0	0	0	0	**36**	
2015 - 2030	0	18	6	0	0	0	0	0	0	0	0	0	0	**24**	
2030 - 2045	0	20	3	0	1	0	0	0	0	0	0	0	0	**24**	
2045 - 2100	0	14	2	0	0	0	0	0	0	0	0	0	0	**16**	**100**
2100 - 2115	0	17	3	0	0	0	0	0	0	0	0	0	0	**20**	
2115 - 2130	0	10	2	0	0	0	0	0	0	0	0	0	0	**12**	
2130 - 2145	0	12	3	0	0	0	0	0	1	0	0	0	0	**16**	
2145 - 2200	0	10	2	0	0	0	0	0	1	0	0	0	0	**13**	**61**
2200 - 2215	0	16	4	0	0	0	0	0	0	0	0	0	0	**20**	
2215 - 2230	0	11	2	0	1	0	0	0	0	0	0	0	0	**14**	
2230 - 2245	0	12	2	0	0	0	0	0	0	0	0	0	0	**14**	
2245 - 2300	0	8	2	0	0	0	0	0	0	0	0	0	0	**10**	**58**
2300 - 2315	0	6	2	0	0	0	0	0	0	0	0	0	0	**8**	
2315 - 2330	0	8	1	0	0	0	0	1	0	0	0	0	0	**10**	
2330 - 2345	0	7	0	0	0	0	0	0	0	0	0	0	0	**7**	
2345 - 0000	0	10	2	0	0	0	0	0	1	0	0	0	0	**13**	**38**

Session Total	0	322	53	0	4	1	0	1	4	0	0	0	0	**385**
Session Average	0.00	3.35	0.55	0.00	0.04	0.01	0.00	0.01	0.04	0.00	0.00	0.00	0.00	**4.01**
Session Percentage	0.00	83.64	13.77	0.00	1.04	0.26	0.00	0.26	1.04	0.00	0.00	0.00	0.00	

AM Peak Hour	-	-	-	-	-	-	-	-	-	-	-	-	-	**-**
AM Peak Volume	0	0	0	0	0	0	0	0	0	0	0	0	0	**0**

Noon Peak Hour	-	-	-	-	-	-	-	-	-	-	-	-	-	**-**
Noon Peak Volume	0	0	0	0	0	0	0	0	0	0	0	0	0	**0**

PM Peak Hour	-	1915 - 2015	1930 - 2030	-	1915 - 2015	1830 - 1930	-	-	1845 - 1945	-	-	-	-	**1915 - 2015**
PM Peak Volume	0	119	16	0	2	1	0	0	1	0	0	0	0	**136**

Site 46
I-26 On/Off-Ramp,
south of Bush River Rd

Date
Wednesday, April 24, 2024

Lat/Long
34.029632°, -81.101844°

Weather
Fair
66°F

Click here for Detailed Weather

0000 - 2400 (Weekday 24h Session) (04-24-2024)
SB WB 15min

	Southbound (Movement 46.1)													15min	60min
Time	1	2	3	4	5	6	7	8	9	10	11	12	13	Total	Total
0000 - 0015	0	4	0	0	0	0	0	0	2	0	0	0	0	**6**	
0015 - 0030	0	7	0	0	0	0	0	0	0	0	0	0	0	**7**	
0030 - 0045	0	7	1	0	0	0	0	0	0	0	0	0	0	**8**	
0045 - 0100	0	6	0	0	0	0	0	0	0	0	0	0	0	**6**	**27**
0100 - 0115	0	7	1	0	0	0	0	0	0	0	0	0	0	**8**	
0115 - 0130	0	3	1	0	0	0	0	0	0	0	0	0	0	**4**	
0130 - 0145	0	2	0	0	0	0	0	0	0	0	0	0	0	**2**	
0145 - 0200	0	3	0	0	0	0	0	0	0	0	0	0	0	**3**	**17**
0200 - 0215	0	2	0	0	0	0	0	0	0	0	0	0	0	**2**	
0215 - 0230	0	2	0	0	0	0	0	0	0	0	0	0	0	**2**	
0230 - 0245	0	6	0	0	0	0	0	0	0	0	0	0	0	**6**	
0245 - 0300	0	2	0	0	0	0	0	0	0	0	0	0	0	**2**	**12**
0300 - 0315	0	3	0	0	0	0	0	0	0	0	0	0	0	**3**	
0315 - 0330	0	4	0	0	0	0	0	0	0	0	0	0	0	**4**	
0330 - 0345	0	4	0	0	0	0	0	0	0	0	0	0	0	**4**	
0345 - 0400	0	3	1	0	0	0	0	0	0	0	0	0	0	**4**	**15**
0400 - 0415	0	4	3	0	1	1	0	0	1	0	0	0	0	**10**	
0415 - 0430	0	3	0	0	0	0	0	0	0	0	0	0	0	**3**	
0430 - 0445	0	3	1	0	0	0	0	0	0	0	0	0	0	**4**	
0445 - 0500	0	3	1	0	1	0	0	0	0	0	0	0	0	**5**	**22**
0500 - 0515	0	2	1	0	0	0	0	0	0	0	0	0	0	**3**	
0515 - 0530	0	5	3	1	0	0	0	0	1	0	0	0	0	**10**	
0530 - 0545	0	12	1	0	0	0	0	0	0	0	0	0	0	**13**	
0545 - 0600	0	8	1	0	0	0	0	0	0	0	0	0	0	**9**	**35**
0600 - 0615	0	8	0	0	0	1	0	0	1	0	0	0	0	**10**	
0615 - 0630	0	10	2	0	0	0	0	0	1	0	0	0	0	**13**	
0630 - 0645	0	11	2	0	1	0	0	0	0	0	0	0	0	**14**	
0645 - 0700	0	17	3	0	2	0	0	0	1	0	0	0	0	**23**	**60**
0700 - 0715	0	9	2	0	0	0	0	0	0	0	0	0	0	**11**	
0715 - 0730	1	25	8	0	0	0	0	0	0	0	0	0	0	**34**	
0730 - 0745	0	21	6	0	1	0	0	0	1	0	0	0	0	**29**	
0745 - 0800	0	17	8	0	2	0	0	0	1	0	0	0	0	**28**	**102**
0800 - 0815	0	23	4	0	1	0	0	0	0	0	0	0	0	**28**	
0815 - 0830	0	16	6	0	0	0	0	0	0	0	0	0	0	**22**	
0830 - 0845	0	30	4	0	0	0	0	0	2	0	0	0	0	**36**	
0845 - 0900	0	25	7	0	1	0	0	0	0	0	0	0	0	**33**	**119**
0900 - 0915	0	15	3	0	0	0	0	0	0	0	0	0	0	**18**	
0915 - 0930	0	20	8	0	1	0	0	0	0	0	0	0	0	**29**	
0930 - 0945	0	19	3	0	0	0	0	0	2	0	0	0	0	**24**	
0945 - 1000	0	19	10	0	2	0	0	0	0	0	0	0	0	**31**	**102**
1000 - 1015	0	23	6	0	1	0	0	0	0	0	0	0	0	**30**	
1015 - 1030	0	25	12	0	0	1	0	0	0	0	0	0	0	**38**	
1030 - 1045	0	40	6	0	1	1	0	0	0	0	0	0	0	**48**	
1045 - 1100	0	33	9	0	0	0	0	0	0	0	0	0	0	**42**	**158**
1100 - 1115	0	31	12	0	3	0	1	0	0	0	0	0	0	**47**	
1115 - 1130	0	29	8	0	0	0	0	1	0	0	0	0	0	**38**	
1130 - 1145	0	24	6	1	0	0	0	1	0	0	0	0	0	**32**	
1145 - 1200	0	40	9	0	0	0	0	0	1	0	0	0	0	**50**	**167**
1200 - 1215	0	50	11	0	0	1	0	0	1	0	0	0	0	**63**	
1215 - 1230	1	45	9	0	0	1	0	0	1	0	0	0	0	**57**	
1230 - 1245	0	52	10	0	0	0	0	0	0	0	0	0	0	**62**	
1245 - 1300	1	47	10	0	0	1	0	0	1	0	0	0	0	**60**	**242**
1300 - 1315	0	50	5	0	0	0	0	0	0	0	0	0	0	**55**	
1315 - 1330	0	60	15	0	1	0	0	0	0	0	0	0	0	**76**	
1330 - 1345	1	42	9	0	0	0	0	0	0	0	0	0	0	**52**	
1345 - 1400	0	53	12	0	1	1	0	0	0	0	0	0	0	**67**	**250**
1400 - 1415	0	44	12	0	0	0	0	0	0	0	0	0	0	**56**	
1415 - 1430	0	53	9	0	0	0	0	0	0	0	0	0	0	**62**	
1430 - 1445	0	47	6	0	1	0	0	0	0	0	0	0	0	**54**	
1445 - 1500	0	38	10	0	4	1	0	0	0	0	0	0	0	**53**	**225**
1500 - 1515	0	72	10	0	0	0	0	0	0	0	0	0	0	**82**	
1515 - 1530	1	62	12	0	0	0	0	0	0	0	0	0	0	**75**	
1530 - 1545	0	53	10	0	1	0	0	0	1	0	0	0	0	**65**	
1545 - 1600	0	45	5	0	2	0	0	0	0	0	0	0	0	**52**	**274**
1600 - 1615	0	58	8	0	0	0	0	0	0	0	0	0	0	**66**	
1615 - 1630	0	36	6	0	1	0	0	0	1	0	0	0	0	**44**	
1630 - 1645	0	50	5	0	1	1	0	0	0	0	0	0	0	**57**	
1645 - 1700	0	32	5	0	0	0	0	0	0	0	0	0	0	**37**	**204**
1700 - 1715	0	58	11	0	1	0	0	0	1	0	0	0	0	**71**	
1715 - 1730	1	53	10	0	0	0	0	0	0	0	0	0	0	**64**	
1730 - 1745	0	24	5	0	0	0	0	0	0	0	0	0	0	**29**	
1745 - 1800	0	29	8	0	0	0	0	0	0	0	0	0	0	**37**	**201**
1800 - 1815	0	49	3	0	0	0	0	0	0	0	0	0	0	**52**	
1815 - 1830	0	40	4	0	0	0	0	0	1	0	0	0	0	**45**	
1830 - 1845	0	36	5	0	0	0	0	0	0	0	0	0	0	**41**	
1845 - 1900	0	30	3	0	0	0	0	0	0	0	0	0	0	**33**	**171**
1900 - 1915	0	35	6	0	0	0	0	0	0	0	0	0	0	**41**	
1915 - 1930	0	46	11	0	0	0	0	0	0	0	0	0	0	**57**	
1930 - 1945	0	28	12	0	0	0	0	0	0	0	0	0	0	**40**	
1945 - 2000	0	20	3	0	0	0	0	0	0	0	0	0	0	**23**	**161**
2000 - 2015	0	30	7	0	0	0	0	0	1	0	0	0	0	**38**	
2015 - 2030	0	32	8	0	0	0	0	0	0	0	0	0	0	**40**	
2030 - 2045	0	47	10	0	0	0	0	0	0	0	0	0	0	**57**	
2045 - 2100	0	21	2	0	0	0	0	0	0	0	0	0	0	**23**	**158**
2100 - 2115	0	27	4	0	0	0	0	0	0	0	0	0	0	**31**	
2115 - 2130	0	19	1	0	0	0	0	0	1	0	0	0	0	**21**	
2130 - 2145	0	17	1	0	0	0	0	0	0	0	0	0	0	**18**	
2145 - 2200	0	16	0	0	0	0	0	0	0	0	0	0	0	**16**	**86**
2200 - 2215	0	16	1	0	0	0	0	0	0	0	0	0	0	**17**	
2215 - 2230	0	18	2	0	0	0	0	0	0	0	0	0	0	**20**	
2230 - 2245	0	16	0	0	0	0	0	0	0	0	0	0	0	**16**	
2245 - 2300	0	13	0	0	0	0	0	0	0	0	0	0	0	**13**	**66**
2300 - 2315	0	11	0	0	0	0	0	0	0	0	0	0	0	**11**	
2315 - 2330	0	12	0	0	0	0	0	0	0	0	0	0	0	**12**	
2330 - 2345	0	13	1	0	0	0	0	0	0	0	0	0	0	**14**	
2345 - 0000	0	9	0	0	0	0	0	0	0	0	0	0	0	**9**	**46**

Session Total	6	2389	456	2	31	10	1	2	23	0	0	0	0	**2920**
Session Average	0.06	24.89	4.75	0.02	0.32	0.10	0.01	0.02	0.24	0.00	0.00	0.00	0.00	**30.42**
Session Percentage	0.21	81.82	15.62	0.07	1.06	0.34	0.03	0.07	0.79	0.00	0.00	0.00	0.00	

AM Peak Hour	0630 - 0730	0945 - 1045	0945 - 1045	0500 - 0600	0715 - 0815	0945 - 1045	-	-	0600 - 0700	-	-	-	-	**0945 - 1045**
AM Peak Volume	1	107	34	1	4	2	0	0	3	0	0	0	0	**147**

Noon Peak Hour	1200 - 1300	1445 - 1545	1315 - 1415	1045 - 1145	1400 - 1500	1200 - 1300	1015 - 1115	1045 - 1145	1130 - 1230	-	-	-	-	**1445 - 1545**
Noon Peak Volume	2	225	48	1	5	3	1	2	3	0	0	0	0	**275**

PM Peak Hour	1500 - 1600	1500 - 1600	1500 - 1600	-	1530 - 1630	1545 - 1645	-	-	1530 - 1630	-	-	-	-	**1500 - 1600**
PM Peak Volume	1	232	37	0	4	1	0	0	2	0	0	0	0	**274**

Site 46
I-26 On/Off-Ramp,
south of Bush River Rd

Date
Thursday, April 25, 2024

Lat/Long
34.029632°, -81.101844°

Weather
Fair
67°F

Click here for Detailed Weather

0000 - 2400 (Weekday 24h Session) (04-25-2024)
SB WB 15min

	Southbound (Movement 46.1)													15min	60min
TIME	1	2	3	4	5	6	7	8	9	10	11	12	13	Total	Total
0000 - 0015	0	10	2	0	0	0	0	0	0	0	0	0	0	**12**	
0015 - 0030	0	7	1	0	0	0	0	0	0	0	0	0	0	**8**	
0030 - 0045	0	3	1	0	0	0	0	0	0	0	0	0	0	**4**	
0045 - 0100	0	6	1	0	0	0	0	0	0	0	0	0	0	**7**	**31**
0100 - 0115	0	4	0	0	0	0	0	0	0	0	0	0	0	**4**	
0115 - 0130	0	6	1	0	0	0	0	0	0	0	0	0	0	**7**	
0130 - 0145	0	3	0	0	0	0	0	0	0	0	0	0	0	**3**	
0145 - 0200	0	3	1	0	0	0	0	0	0	0	0	0	0	**4**	**18**
0200 - 0215	0	6	0	0	0	0	0	0	0	0	0	0	0	**6**	
0215 - 0230	0	3	0	0	0	0	0	0	0	0	0	0	0	**3**	
0230 - 0245	0	3	1	0	0	0	0	0	1	0	0	0	0	**5**	
0245 - 0300	0	2	0	0	0	0	0	0	0	0	0	0	0	**2**	**16**
0300 - 0315	0	4	1	0	0	0	0	0	0	0	0	0	0	**5**	
0315 - 0330	0	1	0	0	0	0	0	0	0	0	0	0	0	**1**	
0330 - 0345	0	4	0	0	0	0	0	0	2	0	0	0	0	**6**	
0345 - 0400	0	2	0	0	0	0	0	0	0	0	0	0	0	**2**	**14**
0400 - 0415	0	2	1	0	0	0	0	0	0	0	0	0	0	**3**	
0415 - 0430	0	3	0	0	0	1	0	0	1	0	0	0	0	**5**	
0430 - 0445	0	3	0	0	0	1	0	0	0	0	0	0	0	**4**	
0445 - 0500	0	3	1	0	0	0	0	0	1	0	0	0	0	**5**	**17**
0500 - 0515	0	6	1	0	0	0	0	0	0	0	0	0	0	**7**	
0515 - 0530	0	6	1	0	0	0	0	0	0	0	0	0	0	**7**	
0530 - 0545	0	5	3	0	1	0	0	0	0	0	0	0	0	**9**	
0545 - 0600	0	4	0	0	1	0	0	0	0	0	0	0	0	**5**	**28**
0600 - 0615	0	8	3	1	1	0	0	0	0	0	0	0	0	**13**	
0615 - 0630	1	12	2	0	0	0	0	0	1	0	0	0	0	**16**	
0630 - 0645	0	10	2	0	1	0	0	0	0	0	0	0	0	**13**	
0645 - 0700	0	18	6	0	2	0	0	0	0	0	0	0	0	**26**	**68**
0700 - 0715	0	18	3	0	0	1	0	0	0	0	0	0	0	**22**	
0715 - 0730	0	26	6	0	0	0	0	0	0	0	0	0	0	**32**	
0730 - 0745	0	26	6	0	0	0	0	0	0	0	0	0	0	**32**	
0745 - 0800	0	24	8	0	0	1	0	0	0	0	0	0	0	**33**	**119**
0800 - 0815	0	18	2	0	0	0	0	0	0	0	0	0	0	**20**	
0815 - 0830	0	23	5	0	0	0	0	0	0	0	0	0	0	**28**	
0830 - 0845	0	28	6	0	0	0	0	0	1	0	0	0	0	**35**	
0845 - 0900	0	29	6	0	0	2	0	0	0	0	0	0	0	**37**	**120**
0900 - 0915	0	21	6	0	0	0	0	0	0	0	0	0	0	**27**	
0915 - 0930	0	24	9	1	0	1	0	0	0	0	0	0	0	**35**	
0930 - 0945	0	28	9	0	3	0	0	0	0	0	0	0	0	**40**	
0945 - 1000	0	30	12	0	0	0	0	0	0	0	0	0	0	**42**	**144**
1000 - 1015	0	19	3	0	2	0	0	0	0	0	0	0	0	**24**	
1015 - 1030	0	27	9	0	0	0	0	0	0	0	0	0	0	**36**	
1030 - 1045	0	24	8	0	0	0	0	0	0	0	0	0	0	**32**	
1045 - 1100	0	32	9	0	0	2	0	0	0	0	0	0	0	**43**	**135**
1100 - 1115	0	21	12	0	2	0	0	0	0	0	0	0	0	**35**	
1115 - 1130	0	31	14	0	0	0	0	0	0	0	0	0	0	**45**	
1130 - 1145	0	27	8	0	0	1	0	0	1	0	0	0	0	**37**	
1145 - 1200	0	37	12	0	0	1	0	0	0	0	0	0	0	**50**	**167**
1200 - 1215	0	44	13	0	0	0	0	0	2	0	0	0	0	**59**	
1215 - 1230	0	47	6	0	1	0	0	1	0	0	0	0	0	**55**	
1230 - 1245	0	57	12	0	2	0	0	1	0	0	0	0	0	**72**	
1245 - 1300	0	50	9	0	0	0	0	0	0	0	0	0	0	**59**	**245**
1300 - 1315	0	44	12	0	1	0	0	0	1	0	0	0	0	**58**	
1315 - 1330	0	50	10	0	1	0	0	1	0	0	0	0	0	**62**	
1330 - 1345	0	41	8	0	4	0	0	0	1	0	0	0	0	**54**	
1345 - 1400	0	47	6	1	0	0	0	0	0	0	0	0	0	**54**	**228**
1400 - 1415	0	61	10	0	1	0	0	0	0	0	0	0	0	**72**	
1415 - 1430	0	45	8	0	1	1	0	0	0	0	0	0	0	**55**	
1430 - 1445	0	69	13	0	0	0	0	0	0	0	0	0	0	**82**	
1445 - 1500	0	57	10	0	1	0	0	1	0	0	0	0	0	**69**	**278**
1500 - 1515	0	60	6	0	0	1	0	1	0	0	0	0	0	**68**	
1515 - 1530	0	52	11	0	2	0	0	0	0	0	0	0	0	**65**	
1530 - 1545	0	58	7	0	1	0	0	1	0	0	0	0	0	**67**	
1545 - 1600	0	61	9	0	1	0	0	0	0	0	0	0	0	**71**	**271**
1600 - 1615	0	52	11	0	0	1	0	0	0	0	0	0	0	**64**	
1615 - 1630	0	47	7	0	0	0	0	0	0	0	0	0	0	**54**	
1630 - 1645	0	40	6	0	2	0	0	0	0	0	0	0	0	**48**	
1645 - 1700	0	36	7	0	0	0	0	0	0	0	0	0	0	**43**	**209**
1700 - 1715	0	50	10	0	0	0	0	0	1	0	0	0	0	**61**	
1715 - 1730	0	39	6	0	0	0	0	0	0	0	0	0	0	**45**	
1730 - 1745	0	33	8	0	0	0	0	0	0	0	0	0	0	**41**	
1745 - 1800	0	35	5	0	0	0	0	0	0	0	0	0	0	**40**	**187**
1800 - 1815	0	36	5	0	0	0	0	0	0	0	0	0	0	**41**	
1815 - 1830	0	37	4	1	0	0	0	0	0	0	0	0	0	**42**	
1830 - 1845	2	38	6	0	0	0	0	0	0	0	0	0	0	**46**	
1845 - 1900	0	45	9	0	0	0	0	0	0	0	0	0	0	**54**	**183**
1900 - 1915	0	0	0	0	0	0	0	0	0	0	0	0	0	**0**	
1915 - 1930	0	0	0	0	0	0	0	0	0	0	0	0	0	**0**	
1930 - 1945	0	0	0	0	0	0	0	0	0	0	0	0	0	**0**	
1945 - 2000	0	0	0	0	0	0	0	0	0	0	0	0	0	**0**	**0**
2000 - 2015	0	0	0	0	0	0	0	0	0	0	0	0	0	**0**	
2015 - 2030	0	0	0	0	0	0	0	0	0	0	0	0	0	**0**	
2030 - 2045	0	0	0	0	0	0	0	0	0	0	0	0	0	**0**	
2045 - 2100	0	0	0	0	0	0	0	0	0	0	0	0	0	**0**	**0**
2100 - 2115	0	0	0	0	0	0	0	0	0	0	0	0	0	**0**	
2115 - 2130	0	0	0	0	0	0	0	0	0	0	0	0	0	**0**	
2130 - 2145	0	0	0	0	0	0	0	0	0	0	0	0	0	**0**	
2145 - 2200	0	0	0	0	0	0	0	0	0	0	0	0	0	**0**	**0**
2200 - 2215	0	0	0	0	0	0	0	0	0	0	0	0	0	**0**	
2215 - 2230	0	0	0	0	0	0	0	0	0	0	0	0	0	**0**	
2230 - 2245	0	0	0	0	0	0	0	0	0	0	0	0	0	**0**	
2245 - 2300	0	0	0	0	0	0	0	0	0	0	0	0	0	**0**	**0**
2300 - 2315	0	0	0	0	0	0	0	0	0	0	0	0	0	**0**	
2315 - 2330	0	0	0	0	0	0	0	0	0	0	0	0	0	**0**	
2330 - 2345	0	0	0	0	0	0	0	0	0	0	0	0	0	**0**	
2345 - 0000	0	0	0	0	0	0	0	0	0	0	0	0	0	**0**	**0**

Session Total	3	1991	416	4	31	14	0	6	13	0	0	0	0	**2478**
Session Average	0.03	20.74	4.33	0.04	0.32	0.15	0.00	0.06	0.14	0.00	0.00	0.00	0.00	**25.81**
Session Percentage	0.12	80.35	16.79	0.16	1.25	0.56	0.00	0.24	0.52	0.00	0.00	0.00	0.00	

AM Peak Hour	0530 - 0630	0930 - 1030	0900 - 1000	0515 - 0615	0915 - 1015	0830 - 0930	-	-	0530 - 0630	-	-	-	-	**0900 - 1000**
AM Peak Hour Volume	1	104	36	1	5	3	0	0	1	0	0	0	0	**144**

Noon Peak Hour	-	1430 - 1530	1115 - 1215	1300 - 1400	1245 - 1345	1045 - 1145	-	1445 - 1545	1115 - 1215	-	-	-	-	**1430 - 1530**
Noon Peak Hour Volume	0	238	47	1	6	3	0	3	3	0	0	0	0	**284**

PM Peak Hour	1745 - 1845	1500 - 1600	1515 - 1615	1730 - 1830	1500 - 1600	1500 - 1600	-	1500 - 1600	1615 - 1715	-	-	-	-	**1500 - 1600**
PM Peak Hour Volume	2	231	38	1	4	1	0	2	1	0	0	0	0	**271**

Bi-Directional Class Count || SB WB Average 15min

Columbia, SC

Marr Traffic DATA COLLECTION
www.marrtraffic.com

Site 46
I-26 On/Off-Ramp,
south of Bush River Rd

Date
Tuesday, April 23, 2024

Lat/Long
34.029632°, -81.101844°

Weather
Fair
58°F

0000 - 2400 (Weekday 24h Session) (All Dates)
SB WB Average 15min

	SB WB Average 15min													15min	60min
Time	1	2	3	4	5	6	7	8	9	10	11	12	13	Total	Total
0000 - 0015	0	5	1	0	0	0	0	0	1	0	0	0	0	**6**	
0015 - 0030	0	5	0	0	0	0	0	0	0	0	0	0	0	**5**	
0030 - 0045	0	3	1	0	0	0	0	0	0	0	0	0	0	**4**	
0045 - 0100	0	4	0	0	0	0	0	0	0	0	0	0	0	**4**	**19**
0100 - 0115	0	4	0	0	0	0	0	0	0	0	0	0	0	**4**	
0115 - 0130	0	3	1	0	0	0	0	0	0	0	0	0	0	**4**	
0130 - 0145	0	2	0	0	0	0	0	0	0	0	0	0	0	**2**	
0145 - 0200	0	2	0	0	0	0	0	0	0	0	0	0	0	**2**	**12**
0200 - 0215	0	3	0	0	0	0	0	0	0	0	0	0	0	**3**	
0215 - 0230	0	2	0	0	0	0	0	0	0	0	0	0	0	**2**	
0230 - 0245	0	3	0	0	0	0	0	0	0	0	0	0	0	**4**	
0245 - 0300	0	1	0	0	0	0	0	0	0	0	0	0	0	**1**	**9**
0300 - 0315	0	2	0	0	0	0	0	0	0	0	0	0	0	**3**	
0315 - 0330	0	2	0	0	0	0	0	0	0	0	0	0	0	**2**	
0330 - 0345	0	3	0	0	0	0	0	0	1	0	0	0	0	**3**	
0345 - 0400	0	2	0	0	0	0	0	0	0	0	0	0	0	**2**	**10**
0400 - 0415	0	2	1	0	0	0	0	0	0	0	0	0	0	**4**	
0415 - 0430	0	2	0	0	0	0	0	0	0	0	0	0	0	**3**	
0430 - 0445	0	2	0	0	0	0	0	0	0	0	0	0	0	**3**	
0445 - 0500	0	2	1	0	0	0	0	0	0	0	0	0	0	**3**	**13**
0500 - 0515	0	3	1	0	0	0	0	0	0	0	0	0	0	**3**	
0515 - 0530	0	4	1	0	0	0	0	0	0	0	0	0	0	**6**	
0530 - 0545	0	6	1	0	0	0	0	0	0	0	0	0	0	**7**	
0545 - 0600	0	4	0	0	0	0	0	0	0	0	0	0	0	**5**	**21**
0600 - 0615	0	5	1	0	0	0	0	0	0	0	0	0	0	**8**	
0615 - 0630	0	7	1	0	0	0	0	0	1	0	0	0	0	**10**	
0630 - 0645	0	7	1	0	1	0	0	0	0	0	0	0	0	**9**	
0645 - 0700	0	12	3	0	1	0	0	0	0	0	0	0	0	**16**	**43**
0700 - 0715	0	9	2	0	0	0	0	0	0	0	0	0	0	**11**	
0715 - 0730	0	17	5	0	0	0	0	0	0	0	0	0	0	**22**	
0730 - 0745	0	16	4	0	0	0	0	0	0	0	0	0	0	**20**	
0745 - 0800	0	14	5	0	1	0	0	0	0	0	0	0	0	**20**	**74**
0800 - 0815	0	14	2	0	0	0	0	0	0	0	0	0	0	**16**	
0815 - 0830	0	13	4	0	0	0	0	0	0	0	0	0	0	**17**	
0830 - 0845	0	19	3	0	0	0	0	0	1	0	0	0	0	**24**	
0845 - 0900	0	18	4	0	0	1	0	0	0	0	0	0	0	**23**	**80**
0900 - 0915	0	12	3	0	0	0	0	0	0	0	0	0	0	**15**	
0915 - 0930	0	15	6	0	0	0	0	0	0	0	0	0	0	**21**	
0930 - 0945	0	16	4	0	1	0	0	0	1	0	0	0	0	**21**	
0945 - 1000	0	16	7	0	1	0	0	0	0	0	0	0	0	**24**	**82**
1000 - 1015	0	14	3	0	1	0	0	0	0	0	0	0	0	**18**	
1015 - 1030	0	17	7	0	0	0	0	0	0	0	0	0	0	**25**	
1030 - 1045	0	21	5	0	0	0	0	0	0	0	0	0	0	**27**	
1045 - 1100	0	22	6	0	0	1	0	0	0	0	0	0	0	**28**	**98**
1100 - 1115	0	17	8	0	2	0	0	0	0	0	0	0	0	**27**	
1115 - 1130	0	20	7	0	0	0	0	0	0	0	0	0	0	**28**	
1130 - 1145	0	17	5	0	0	0	0	0	0	0	0	0	0	**23**	
1145 - 1200	0	26	7	0	0	0	0	0	0	0	0	0	0	**33**	**111**
1200 - 1215	0	31	8	0	0	0	0	0	1	0	0	0	0	**41**	
1215 - 1230	0	31	5	0	0	0	0	0	0	0	0	0	0	**37**	
1230 - 1245	0	36	7	0	1	0	0	0	0	0	0	0	0	**45**	
1245 - 1300	0	32	6	0	0	0	0	0	0	0	0	0	0	**40**	**162**
1300 - 1315	0	31	6	0	0	0	0	0	0	0	0	0	0	**38**	
1315 - 1330	0	37	8	0	1	0	0	0	0	0	0	0	0	**46**	
1330 - 1345	0	28	6	0	1	0	0	0	0	0	0	0	0	**35**	
1345 - 1400	0	33	6	0	0	0	0	0	0	0	0	0	0	**40**	**159**
1400 - 1415	0	35	7	0	0	0	0	0	0	0	0	0	0	**43**	
1415 - 1430	0	33	6	0	0	0	0	0	0	0	0	0	0	**39**	
1430 - 1445	0	39	6	0	0	0	0	0	0	0	0	0	0	**45**	
1445 - 1500	0	32	7	0	2	0	0	0	0	0	0	0	0	**41**	**168**
1500 - 1515	0	44	5	0	0	0	0	0	0	0	0	0	0	**50**	
1515 - 1530	0	38	8	0	1	0	0	0	0	0	0	0	0	**47**	
1530 - 1545	0	37	6	0	1	0	0	0	0	0	0	0	0	**44**	
1545 - 1600	0	35	5	0	1	0	0	0	0	0	0	0	0	**41**	**182**
1600 - 1615	0	37	6	0	0	0	0	0	0	0	0	0	0	**43**	
1615 - 1630	0	28	4	0	0	0	0	0	0	0	0	0	0	**33**	
1630 - 1645	0	30	4	0	1	0	0	0	0	0	0	0	0	**35**	
1645 - 1700	0	23	4	0	0	0	0	0	0	0	0	0	0	**27**	**138**
1700 - 1715	0	36	7	0	0	0	0	0	1	0	0	0	0	**44**	
1715 - 1730	0	31	5	0	0	0	0	0	0	0	0	0	0	**36**	
1730 - 1745	0	19	4	0	0	0	0	0	0	0	0	0	0	**23**	
1745 - 1800	0	21	4	0	0	0	0	0	0	0	0	0	0	**26**	**129**
1800 - 1815	0	28	3	0	0	0	0	0	0	0	0	0	0	**31**	
1815 - 1830	0	26	3	0	0	0	0	0	0	0	0	0	0	**29**	
1830 - 1845	1	25	4	0	0	0	0	0	0	0	0	0	0	**29**	
1845 - 1900	0	25	4	0	0	0	0	0	0	0	0	0	0	**29**	**118**
1900 - 1915	0	20	3	0	0	0	0	0	0	0	0	0	0	**23**	
1915 - 1930	0	24	5	0	0	0	0	0	0	0	0	0	0	**29**	
1930 - 1945	0	20	5	0	0	0	0	0	0	0	0	0	0	**26**	
1945 - 2000	0	16	2	0	0	0	0	0	0	0	0	0	0	**18**	**96**
2000 - 2015	0	21	3	0	0	0	0	0	0	0	0	0	0	**25**	
2015 - 2030	0	17	5	0	0	0	0	0	0	0	0	0	0	**21**	
2030 - 2045	0	22	4	0	0	0	0	0	0	0	0	0	0	**27**	
2045 - 2100	0	12	1	0	0	0	0	0	0	0	0	0	0	**13**	**86**
2100 - 2115	0	15	2	0	0	0	0	0	0	0	0	0	0	**17**	
2115 - 2130	0	10	1	0	0	0	0	0	0	0	0	0	0	**11**	
2130 - 2145	0	10	1	0	0	0	0	0	0	0	0	0	0	**11**	
2145 - 2200	0	9	1	0	0	0	0	0	0	0	0	0	0	**10**	**49**
2200 - 2215	0	11	2	0	0	0	0	0	0	0	0	0	0	**12**	
2215 - 2230	0	10	1	0	0	0	0	0	0	0	0	0	0	**11**	
2230 - 2245	0	9	1	0	0	0	0	0	0	0	0	0	0	**10**	
2245 - 2300	0	7	1	0	0	0	0	0	0	0	0	0	0	**8**	**41**
2300 - 2315	0	6	1	0	0	0	0	0	0	0	0	0	0	**6**	
2315 - 2330	0	7	0	0	0	0	0	0	0	0	0	0	0	**7**	
2330 - 2345	0	7	0	0	0	0	0	0	0	0	0	0	0	**7**	
2345 - 0000	0	6	1	0	0	0	0	0	0	0	0	0	0	**7**	**28**

Session Total	3	1567	308	2	22	8	0	3	13	0	0	0	0	**1928**
Session Average	0.03	16.33	3.21	0.02	0.23	0.09	0.00	0.03	0.14	0.00	0.00	0.00	0.00	**20.08**
Session Percentage	0.16	81.31	16.00	0.10	1.14	0.43	0.02	0.16	0.69	0.00	0.00	0.00	0.00	

AM Peak Hour	0530 - 0630	0945 - 1045	0945 - 1045	0515 - 0615	0915 - 1015	0830 - 0930	-	-	0600 - 0700	-	-	-	-	**0945 - 1045**
AM Peak Volume	0	69	22	1	3	1	0	0	1	0	0	0	0	**94**

Noon Peak Hour	1200 - 1300	1430 - 1530	1230 - 1330	1045 - 1145	1445 - 1545	1000 - 1100	1015 - 1115	1445 - 1545	1130 - 1230	-	-	-	-	**1430 - 1530**
Noon Peak Volume	1	152	28	0	3	1	0	1	2	0	0	0	0	**183**

PM Peak Hour	1745 - 1845	1500 - 1600	1515 - 1615	1730 - 1830	1500 - 1600	1545 - 1645	-	1500 - 1600	1615 - 1715	-	-	-	-	**1500 - 1600**
PM Peak Volume	1	154	24	0	2	1	0	1	1	0	0	0	0	**182**

Bi-Directional Class Count || Volume Summary 15min

Columbia, SC

Marr Traffic DATA COLLECTION

www.marrtraffic.com

Site 46

I-26 On/Off-Ramp,
south of Bush River Rd

Date

Tuesday, April 23, 2024

Lat/Long

34.029632°, -81.101844°

Weather

Fair
58°F

Click here for Detailed Weather

0000 - 2400 (Weekday 24h Session) (04-23-2024)

Volume Summary 15min

TIME	Volume Summary 15min NB	SB	15min Total	60min Total
0000 - 0015	0	0	**0**	
0015 - 0030	0	0	**0**	
0030 - 0045	0	0	**0**	
0045 - 0100	0	0	**0**	**0**
0100 - 0115	0	0	**0**	
0115 - 0130	0	0	**0**	
0130 - 0145	0	0	**0**	
0145 - 0200	0	0	**0**	**0**
0200 - 0215	0	0	**0**	
0215 - 0230	0	0	**0**	
0230 - 0245	0	0	**0**	
0245 - 0300	0	0	**0**	**0**
0300 - 0315	0	0	**0**	
0315 - 0330	0	0	**0**	
0330 - 0345	0	0	**0**	
0345 - 0400	0	0	**0**	**0**
0400 - 0415	0	0	**0**	
0415 - 0430	0	0	**0**	
0430 - 0445	0	0	**0**	
0445 - 0500	0	0	**0**	**0**
0500 - 0515	0	0	**0**	
0515 - 0530	0	0	**0**	
0530 - 0545	0	0	**0**	
0545 - 0600	0	0	**0**	**0**
0600 - 0615	0	0	**0**	
0615 - 0630	0	0	**0**	
0630 - 0645	0	0	**0**	
0645 - 0700	0	0	**0**	**0**
0700 - 0715	0	0	**0**	
0715 - 0730	0	0	**0**	
0730 - 0745	0	0	**0**	
0745 - 0800	0	0	**0**	**0**
0800 - 0815	0	0	**0**	
0815 - 0830	0	0	**0**	
0830 - 0845	0	0	**0**	
0845 - 0900	0	0	**0**	**0**
0900 - 0915	0	0	**0**	
0915 - 0930	0	0	**0**	
0930 - 0945	0	0	**0**	
0945 - 1000	0	0	**0**	**0**
1000 - 1015	0	0	**0**	
1015 - 1030	0	0	**0**	
1030 - 1045	0	0	**0**	
1045 - 1100	0	0	**0**	**0**
1100 - 1115	0	0	**0**	
1115 - 1130	0	0	**0**	
1130 - 1145	0	0	**0**	
1145 - 1200	0	0	**0**	**0**

Time	Volume Summary 15min NB	SB	15min Total	60min Total
1200 - 1215	0	0	**0**	
1215 - 1230	0	0	**0**	
1230 - 1245	0	0	**0**	
1245 - 1300	0	0	**0**	**0**
1300 - 1315	0	0	**0**	
1315 - 1330	0	0	**0**	
1330 - 1345	0	0	**0**	
1345 - 1400	0	0	**0**	**0**
1400 - 1415	0	0	**0**	
1415 - 1430	0	0	**0**	
1430 - 1445	0	0	**0**	
1445 - 1500	0	0	**0**	**0**
1500 - 1515	0	0	**0**	
1515 - 1530	0	0	**0**	
1530 - 1545	0	0	**0**	
1545 - 1600	0	0	**0**	**0**
1600 - 1615	0	0	**0**	
1615 - 1630	0	0	**0**	
1630 - 1645	0	0	**0**	
1645 - 1700	0	0	**0**	**0**
1700 - 1715	0	0	**0**	
1715 - 1730	0	0	**0**	
1730 - 1745	0	0	**0**	
1745 - 1800	0	0	**0**	**0**
1800 - 1815	0	0	**0**	
1815 - 1830	0	0	**0**	
1830 - 1845	0	0	**0**	
1845 - 1900	0	0	**0**	**0**
1900 - 1915	0	28	**28**	
1915 - 1930	0	31	**31**	
1930 - 1945	0	38	**38**	
1945 - 2000	0	31	**31**	**128**
2000 - 2015	0	36	**36**	
2015 - 2030	0	24	**24**	
2030 - 2045	0	24	**24**	
2045 - 2100	0	16	**16**	**100**
2100 - 2115	0	20	**20**	
2115 - 2130	0	12	**12**	
2130 - 2145	0	16	**16**	
2145 - 2200	0	13	**13**	**61**
2200 - 2215	0	20	**20**	
2215 - 2230	0	14	**14**	
2230 - 2245	0	14	**14**	
2245 - 2300	0	10	**10**	**58**
2300 - 2315	0	8	**8**	
2315 - 2330	0	10	**10**	
2330 - 2345	0	7	**7**	
2345 - 0000	0	13	**13**	**38**

Session Total	0	385	**385**
Session Average	0.00	4.01	**4.01**
Session Percentage	0.00	100.00	

Site 46

I-26 On/Off-Ramp,
south of Bush River Rd

Date

Wednesday, April 24, 2024

Lat/Long

34.029632°, -81.101844°

Weather

Fair
66°F

Click here for Detailed Weather

0000 - 2400 (Weekday 24h Session) (04-24-2024)

Volume Summary 15min

TIME	Volume Summary 15min NB	SB	15min Total	60min Total
0000 - 0015	0	6	**6**	
0015 - 0030	0	7	**7**	
0030 - 0045	0	8	**8**	
0045 - 0100	0	6	**6**	**27**
0100 - 0115	0	8	**8**	
0115 - 0130	0	4	**4**	
0130 - 0145	0	2	**2**	
0145 - 0200	0	3	**3**	**17**
0200 - 0215	0	2	**2**	
0215 - 0230	0	2	**2**	
0230 - 0245	0	6	**6**	
0245 - 0300	0	2	**2**	**12**
0300 - 0315	0	3	**3**	
0315 - 0330	0	4	**4**	
0330 - 0345	0	4	**4**	
0345 - 0400	0	4	**4**	**15**
0400 - 0415	0	10	**10**	
0415 - 0430	0	3	**3**	
0430 - 0445	0	4	**4**	
0445 - 0500	0	5	**5**	**22**
0500 - 0515	0	3	**3**	
0515 - 0530	0	10	**10**	
0530 - 0545	0	13	**13**	
0545 - 0600	0	9	**9**	**35**
0600 - 0615	0	10	**10**	
0615 - 0630	0	13	**13**	
0630 - 0645	0	14	**14**	
0645 - 0700	0	23	**23**	**60**
0700 - 0715	0	11	**11**	
0715 - 0730	0	34	**34**	
0730 - 0745	0	29	**29**	
0745 - 0800	0	28	**28**	**102**
0800 - 0815	0	28	**28**	
0815 - 0830	0	22	**22**	
0830 - 0845	0	36	**36**	
0845 - 0900	0	33	**33**	**119**
0900 - 0915	0	18	**18**	
0915 - 0930	0	29	**29**	
0930 - 0945	0	24	**24**	
0945 - 1000	0	31	**31**	**102**
1000 - 1015	0	30	**30**	
1015 - 1030	0	38	**38**	
1030 - 1045	0	48	**48**	
1045 - 1100	0	42	**42**	**158**
1100 - 1115	0	47	**47**	
1115 - 1130	0	38	**38**	
1130 - 1145	0	32	**32**	
1145 - 1200	0	50	**50**	**167**

Time	Volume Summary 15min NB	SB	15min Total	60min Total
1200 - 1215	0	63	**63**	
1215 - 1230	0	57	**57**	
1230 - 1245	0	62	**62**	
1245 - 1300	0	60	**60**	**242**
1300 - 1315	0	55	**55**	
1315 - 1330	0	76	**76**	
1330 - 1345	0	52	**52**	
1345 - 1400	0	67	**67**	**250**
1400 - 1415	0	56	**56**	
1415 - 1430	0	62	**62**	
1430 - 1445	0	54	**54**	
1445 - 1500	0	53	**53**	**225**
1500 - 1515	0	82	**82**	
1515 - 1530	0	75	**75**	
1530 - 1545	0	65	**65**	
1545 - 1600	0	52	**52**	**274**
1600 - 1615	0	66	**66**	
1615 - 1630	0	44	**44**	
1630 - 1645	0	57	**57**	
1645 - 1700	0	37	**37**	**204**
1700 - 1715	0	71	**71**	
1715 - 1730	0	64	**64**	
1730 - 1745	0	29	**29**	
1745 - 1800	0	37	**37**	**201**
1800 - 1815	0	52	**52**	
1815 - 1830	0	45	**45**	
1830 - 1845	0	41	**41**	
1845 - 1900	0	33	**33**	**171**
1900 - 1915	0	41	**41**	
1915 - 1930	0	57	**57**	
1930 - 1945	0	40	**40**	
1945 - 2000	0	23	**23**	**161**
2000 - 2015	0	38	**38**	
2015 - 2030	0	40	**40**	
2030 - 2045	0	57	**57**	
2045 - 2100	0	23	**23**	**158**
2100 - 2115	0	31	**31**	
2115 - 2130	0	21	**21**	
2130 - 2145	0	18	**18**	
2145 - 2200	0	16	**16**	**86**
2200 - 2215	0	17	**17**	
2215 - 2230	0	20	**20**	
2230 - 2245	0	16	**16**	
2245 - 2300	0	13	**13**	**66**
2300 - 2315	0	11	**11**	
2315 - 2330	0	12	**12**	
2330 - 2345	0	14	**14**	
2345 - 0000	0	9	**9**	**46**

Session Total	0	2920	**2920**
Session Average	0.00	30.42	**30.42**
Session Percentage	0.00	100.00	

Site 46
I-26 On/Off-Ramp,
south of Bush River Rd

Date
Thursday, April 25, 2024

Lat/Long
34.029632°, -81.101844°

Weather
Fair
67°F

Click here for Detailed Weather

0000 - 2400 (Weekday 24h Session) (04-25-2024)
Volume Summary 15min

TIME	Volume Summary 15min NB	SB	15min Total	60min Total
0000 - 0015	0	12	**12**	
0015 - 0030	0	8	**8**	
0030 - 0045	0	4	**4**	
0045 - 0100	0	7	**7**	**31**
0100 - 0115	0	4	**4**	
0115 - 0130	0	7	**7**	
0130 - 0145	0	3	**3**	
0145 - 0200	0	4	**4**	**18**
0200 - 0215	0	6	**6**	
0215 - 0230	0	3	**3**	
0230 - 0245	0	5	**5**	
0245 - 0300	0	2	**2**	**16**
0300 - 0315	0	5	**5**	
0315 - 0330	0	1	**1**	
0330 - 0345	0	6	**6**	
0345 - 0400	0	2	**2**	**14**
0400 - 0415	0	3	**3**	
0415 - 0430	0	5	**5**	
0430 - 0445	0	4	**4**	
0445 - 0500	0	5	**5**	**17**
0500 - 0515	0	7	**7**	
0515 - 0530	0	7	**7**	
0530 - 0545	0	9	**9**	
0545 - 0600	0	5	**5**	**28**
0600 - 0615	0	13	**13**	
0615 - 0630	0	16	**16**	
0630 - 0645	0	13	**13**	
0645 - 0700	0	26	**26**	**68**
0700 - 0715	0	22	**22**	
0715 - 0730	0	32	**32**	
0730 - 0745	0	32	**32**	
0745 - 0800	0	33	**33**	**119**
0800 - 0815	0	20	**20**	
0815 - 0830	0	28	**28**	
0830 - 0845	0	35	**35**	
0845 - 0900	0	37	**37**	**120**
0900 - 0915	0	27	**27**	
0915 - 0930	0	35	**35**	
0930 - 0945	0	40	**40**	
0945 - 1000	0	42	**42**	**144**
1000 - 1015	0	24	**24**	
1015 - 1030	0	36	**36**	
1030 - 1045	0	32	**32**	
1045 - 1100	0	43	**43**	**135**
1100 - 1115	0	35	**35**	
1115 - 1130	0	45	**45**	
1130 - 1145	0	37	**37**	
1145 - 1200	0	50	**50**	**167**

Time	Volume Summary 15min NB	SB	15min Total	60min Total
1200 - 1215	0	59	**59**	
1215 - 1230	0	55	**55**	
1230 - 1245	0	72	**72**	
1245 - 1300	0	59	**59**	**245**
1300 - 1315	0	58	**58**	
1315 - 1330	0	62	**62**	
1330 - 1345	0	54	**54**	
1345 - 1400	0	54	**54**	**228**
1400 - 1415	0	72	**72**	
1415 - 1430	0	55	**55**	
1430 - 1445	0	82	**82**	
1445 - 1500	0	69	**69**	**278**
1500 - 1515	0	68	**68**	
1515 - 1530	0	65	**65**	
1530 - 1545	0	67	**67**	
1545 - 1600	0	71	**71**	**271**
1600 - 1615	0	64	**64**	
1615 - 1630	0	54	**54**	
1630 - 1645	0	48	**48**	
1645 - 1700	0	43	**43**	**209**
1700 - 1715	0	61	**61**	
1715 - 1730	0	45	**45**	
1730 - 1745	0	41	**41**	
1745 - 1800	0	40	**40**	**187**
1800 - 1815	0	41	**41**	
1815 - 1830	0	42	**42**	
1830 - 1845	0	46	**46**	
1845 - 1900	0	54	**54**	**183**
1900 - 1915	0	0	**0**	
1915 - 1930	0	0	**0**	
1930 - 1945	0	0	**0**	
1945 - 2000	0	0	**0**	**0**
2000 - 2015	0	0	**0**	
2015 - 2030	0	0	**0**	
2030 - 2045	0	0	**0**	
2045 - 2100	0	0	**0**	**0**
2100 - 2115	0	0	**0**	
2115 - 2130	0	0	**0**	
2130 - 2145	0	0	**0**	
2145 - 2200	0	0	**0**	**0**
2200 - 2215	0	0	**0**	
2215 - 2230	0	0	**0**	
2230 - 2245	0	0	**0**	
2245 - 2300	0	0	**0**	**0**
2300 - 2315	0	0	**0**	
2315 - 2330	0	0	**0**	
2330 - 2345	0	0	**0**	
2345 - 0000	0	0	**0**	**0**

Session Total	0	2478	**2478**
Session Average	0.00	25.81	**25.81**
Session Percentage	0.00	100.00	

Bi-Directional Class Count || SB WB 60min

Columbia, SC

Marr Traffic DATA COLLECTION

www.marrtraffic.com

Site 46
I-26 On/Off-Ramp,
south of Bush River Rd

Date
Tuesday, April 23, 2024

Lat/Long
34.029632°, -81.101844°

Weather
Fair
58°F

Click here for Detailed Weather

0000 - 2400 (Weekday 24h Session) (04-23-2024)
SB WB 60min

	Southbound (Movement 46.1)													
TIME	1	2	3	4	5	6	7	8	9	10	11	12	13	**Total**
0000 - 0100	0	0	0	0	0	0	0	0	0	0	0	0	0	**0**
0100 - 0200	0	0	0	0	0	0	0	0	0	0	0	0	0	**0**
0200 - 0300	0	0	0	0	0	0	0	0	0	0	0	0	0	**0**
0300 - 0400	0	0	0	0	0	0	0	0	0	0	0	0	0	**0**
0400 - 0500	0	0	0	0	0	0	0	0	0	0	0	0	0	**0**
0500 - 0600	0	0	0	0	0	0	0	0	0	0	0	0	0	**0**
0600 - 0700	0	0	0	0	0	0	0	0	0	0	0	0	0	**0**
0700 - 0800	0	0	0	0	0	0	0	0	0	0	0	0	0	**0**
0800 - 0900	0	0	0	0	0	0	0	0	0	0	0	0	0	**0**
0900 - 1000	0	0	0	0	0	0	0	0	0	0	0	0	0	**0**
1000 - 1100	0	0	0	0	0	0	0	0	0	0	0	0	0	**0**
1100 - 1200	0	0	0	0	0	0	0	0	0	0	0	0	0	**0**
1200 - 1300	0	0	0	0	0	0	0	0	0	0	0	0	0	**0**
1300 - 1400	0	0	0	0	0	0	0	0	0	0	0	0	0	**0**
1400 - 1500	0	0	0	0	0	0	0	0	0	0	0	0	0	**0**
1500 - 1600	0	0	0	0	0	0	0	0	0	0	0	0	0	**0**
1600 - 1700	0	0	0	0	0	0	0	0	0	0	0	0	0	**0**
1700 - 1800	0	0	0	0	0	0	0	0	0	0	0	0	0	**0**
1800 - 1900	0	0	0	0	0	0	0	0	0	0	0	0	0	**0**
1900 - 2000	0	111	14	0	1	1	0	0	1	0	0	0	0	**128**
2000 - 2100	0	84	14	0	2	0	0	0	0	0	0	0	0	**100**
2100 - 2200	0	49	10	0	0	0	0	0	2	0	0	0	0	**61**
2200 - 2300	0	47	10	0	1	0	0	0	0	0	0	0	0	**58**
2300 - 2400	0	31	5	0	0	0	0	1	1	0	0	0	0	**38**
Session Total	0	322	53	0	4	1	0	1	4	0	0	0	0	**385**
Session Average	0.00	13.42	2.21	0.00	0.17	0.04	0.00	0.04	0.17	0.00	0.00	0.00	0.00	**16.04**
Session Percentage	0.00	83.64	13.77	0.00	1.04	0.26	0.00	0.26	1.04	0.00	0.00	0.00	0.00	
AM Peak Hour	-	-	-	-	-	-	-	-	-	-	-	-	-	**-**
AM Peak Volume	0	0	0	0	0	0	0	0	0	0	0	0	0	**0**
Noon Peak Hour	-	-	-	-	-	-	-	-	-	-	-	-	-	**-**
Noon Peak Volume	0	0	0	0	0	0	0	0	0	0	0	0	0	**0**
PM Peak Hour	-	1900 - 2000	1900 - 2000	-	1900 - 2000	1900 - 2000	-	-	1900 - 2000	-	-	-	-	**1900 - 2000**
PM Peak Volume	0	111	14	0	1	1	0	0	1	0	0	0	0	**128**

Site 46
I-26 On/Off-Ramp,
south of Bush River Rd

Date
Wednesday, April 24, 2024

Lat/Long
34.029632°, -81.101844°

Weather
Fair
66°F

Click here for Detailed Weather

0000 - 2400 (Weekday 24h Session) (04-24-2024)
SB WB 60min

	Southbound (Movement 46.1)													
TIME	1	2	3	4	5	6	7	8	9	10	11	12	13	**Total**
0000 - 0100	0	24	1	0	0	0	0	0	2	0	0	0	0	**27**
0100 - 0200	0	15	2	0	0	0	0	0	0	0	0	0	0	**17**
0200 - 0300	0	12	0	0	0	0	0	0	0	0	0	0	0	**12**
0300 - 0400	0	14	1	0	0	0	0	0	0	0	0	0	0	**15**
0400 - 0500	0	13	5	0	2	1	0	0	1	0	0	0	0	**22**
0500 - 0600	0	27	6	1	0	0	0	0	1	0	0	0	0	**35**
0600 - 0700	0	46	7	0	3	1	0	0	3	0	0	0	0	**60**
0700 - 0800	1	72	24	0	3	0	0	0	2	0	0	0	0	**102**
0800 - 0900	0	94	21	0	2	0	0	0	2	0	0	0	0	**119**
0900 - 1000	0	73	24	0	3	0	0	0	2	0	0	0	0	**102**
1000 - 1100	0	121	33	0	2	2	0	0	0	0	0	0	0	**158**
1100 - 1200	0	124	35	1	3	0	1	2	1	0	0	0	0	**167**
1200 - 1300	2	194	40	0	0	3	0	0	3	0	0	0	0	**242**
1300 - 1400	1	205	41	0	2	1	0	0	0	0	0	0	0	**250**
1400 - 1500	0	182	37	0	5	1	0	0	0	0	0	0	0	**225**
1500 - 1600	1	232	37	0	3	0	0	0	1	0	0	0	0	**274**
1600 - 1700	0	176	24	0	2	1	0	0	1	0	0	0	0	**204**
1700 - 1800	1	164	34	0	1	0	0	0	1	0	0	0	0	**201**
1800 - 1900	0	155	15	0	0	0	0	0	1	0	0	0	0	**171**
1900 - 2000	0	129	32	0	0	0	0	0	0	0	0	0	0	**161**
2000 - 2100	0	130	27	0	0	0	0	0	1	0	0	0	0	**158**
2100 - 2200	0	79	6	0	0	0	0	0	1	0	0	0	0	**86**
2200 - 2300	0	63	3	0	0	0	0	0	0	0	0	0	0	**66**
2300 - 2400	0	45	1	0	0	0	0	0	0	0	0	0	0	**46**

Session Total	6	2389	456	2	31	10	1	2	23	0	0	0	0	**2920**
Session Average	0.25	99.54	19.00	0.08	1.29	0.42	0.04	0.08	0.96	0.00	0.00	0.00	0.00	**121.67**
Session Percentage	0.21	81.82	15.62	0.07	1.06	0.34	0.03	0.07	0.79	0.00	0.00	0.00	0.00	

AM Peak Hour	0700 - 0800	0800 - 0900	0700 - 0800	0500 - 0600	0600 - 0700	0600 - 0700	-	-	0600 - 0700	-	-	-	-	**0800 - 0900**
AM Peak Volume	1	94	24	1	3	1	0	0	3	0	0	0	0	**119**

Noon Peak Hour	1200 - 1300	1300 - 1400	1300 - 1400	1100 - 1200	1400 - 1500	1200 - 1300	1100 - 1200	1100 - 1200	1200 - 1300	-	-	-	-	**1300 - 1400**
Noon Peak Volume	2	205	41	1	5	3	1	2	3	0	0	0	0	**250**

PM Peak Hour	1500 - 1600	1500 - 1600	1500 - 1600	-	1500 - 1600	1600 - 1700	-	-	1500 - 1600	-	-	-	-	**1500 - 1600**
PM Peak Volume	1	232	37	0	3	1	0	0	1	0	0	0	0	**274**

Site 46
I-26 On/Off-Ramp,
south of Bush River Rd

Date
Thursday, April 25, 2024

Lat/Long
34.029632°, -81.101844°

Weather
Fair
67°F

Click here for Detailed Weather

0000 - 2400 (Weekday 24h Session) (04-25-2024)
SB WB 60min

	Southbound (Movement 46.1)													
TIME	1	2	3	4	5	6	7	8	9	10	11	12	13	**Total**
0000 - 0100	0	26	5	0	0	0	0	0	0	0	0	0	0	**31**
0100 - 0200	0	16	2	0	0	0	0	0	0	0	0	0	0	**18**
0200 - 0300	0	14	1	0	0	0	0	0	1	0	0	0	0	**16**
0300 - 0400	0	11	1	0	0	0	0	0	2	0	0	0	0	**14**
0400 - 0500	0	11	2	0	0	2	0	0	2	0	0	0	0	**17**
0500 - 0600	0	21	5	0	2	0	0	0	0	0	0	0	0	**28**
0600 - 0700	1	48	13	1	4	0	0	0	1	0	0	0	0	**68**
0700 - 0800	0	94	23	0	0	2	0	0	0	0	0	0	0	**119**
0800 - 0900	0	98	19	0	0	2	0	0	1	0	0	0	0	**120**
0900 - 1000	0	103	36	1	3	1	0	0	0	0	0	0	0	**144**
1000 - 1100	0	102	29	0	2	2	0	0	0	0	0	0	0	**135**
1100 - 1200	0	116	46	0	2	2	0	0	1	0	0	0	0	**167**
1200 - 1300	0	198	40	0	3	0	0	2	2	0	0	0	0	**245**
1300 - 1400	0	182	36	1	6	0	0	1	2	0	0	0	0	**228**
1400 - 1500	0	232	41	0	3	1	0	1	0	0	0	0	0	**278**
1500 - 1600	0	231	33	0	4	1	0	2	0	0	0	0	0	**271**
1600 - 1700	0	175	31	0	2	1	0	0	0	0	0	0	0	**209**
1700 - 1800	0	157	29	0	0	0	0	0	1	0	0	0	0	**187**
1800 - 1900	2	156	24	1	0	0	0	0	0	0	0	0	0	**183**
1900 - 2000	0	0	0	0	0	0	0	0	0	0	0	0	0	**0**
2000 - 2100	0	0	0	0	0	0	0	0	0	0	0	0	0	**0**
2100 - 2200	0	0	0	0	0	0	0	0	0	0	0	0	0	**0**
2200 - 2300	0	0	0	0	0	0	0	0	0	0	0	0	0	**0**
2300 - 2400	0	0	0	0	0	0	0	0	0	0	0	0	0	**0**

Session Total	3	1991	416	4	31	14	0	6	13	0	0	0	0	**2478**
Session Average	0.13	82.96	17.33	0.17	1.29	0.58	0.00	0.25	0.54	0.00	0.00	0.00	0.00	**103.25**
Session Percentage	0.12	80.35	16.79	0.16	1.25	0.56	0.00	0.24	0.52	0.00	0.00	0.00	0.00	

AM Peak Hour	0600 - 0700	0900 - 1000	0900 - 1000	0600 - 0700	0600 - 0700	0700 - 0800	-	-	0600 - 0700	-	-	-	-	**0900 - 1000**
AM Peak Hour Volume	1	103	36	1	4	2	0	0	1	0	0	0	0	**144**

Noon Peak Hour	-	1400 - 1500	1100 - 1200	1300 - 1400	1300 - 1400	1000 - 1100	-	1200 - 1300	1200 - 1300	-	-	-	-	**1400 - 1500**
Noon Peak Hour Volume	0	232	46	1	6	2	0	2	2	0	0	0	0	**278**

PM Peak Hour	1800 - 1900	1500 - 1600	1500 - 1600	1800 - 1900	1500 - 1600	1500 - 1600	-	1500 - 1600	1700 - 1800	-	-	-	-	**1500 - 1600**
PM Peak Hour Volume	2	231	33	1	4	1	0	2	1	0	0	0	0	**271**

Bi-Directional Class Count || Volume Summary 60min

Columbia, SC

Marr Traffic DATA COLLECTION

www.marrtraffic.com

Site 46

I-26 On/Off-Ramp,
south of Bush River Rd

Date

Tuesday, April 23, 2024

Lat/Long

34.029632°, -81.101844°

Weather

Fair
58°F

Click here for Detailed Weather

0000 - 2400 (Weekday 24h Session) (04-23-2024)

Volume Summary 60min

	Volume Summary 60min		
TIME	NB	SB	**Total**
0000 - 0100	0	0	**0**
0100 - 0200	0	0	**0**
0200 - 0300	0	0	**0**
0300 - 0400	0	0	**0**
0400 - 0500	0	0	**0**
0500 - 0600	0	0	**0**
0600 - 0700	0	0	**0**
0700 - 0800	0	0	**0**
0800 - 0900	0	0	**0**
0900 - 1000	0	0	**0**
1000 - 1100	0	0	**0**
1100 - 1200	0	0	**0**

	Volume Summary 60min		
Time	NB	SB	**Total**
1200 - 1300	0	0	**0**
1300 - 1400	0	0	**0**
1400 - 1500	0	0	**0**
1500 - 1600	0	0	**0**
1600 - 1700	0	0	**0**
1700 - 1800	0	0	**0**
1800 - 1900	0	0	**0**
1900 - 2000	0	128	**128**
2000 - 2100	0	100	**100**
2100 - 2200	0	61	**61**
2200 - 2300	0	58	**58**
2300 - 2400	0	38	**38**

Session Total	0	385	**385**
Session Average	0.00	16.04	**16.04**
Session Percentage	0.00	100.00	

Site 46

I-26 On/Off-Ramp,
south of Bush River Rd

Date

Wednesday, April 24, 2024

Lat/Long

34.029632°, -81.101844°

Weather

Fair
66°F

Click here for Detailed Weather

0000 - 2400 (Weekday 24h Session) (04-24-2024)

Volume Summary 60min

	Volume Summary 60min		
TIME	NB	SB	**Total**
0000 - 0100	0	27	**27**
0100 - 0200	0	17	**17**
0200 - 0300	0	12	**12**
0300 - 0400	0	15	**15**
0400 - 0500	0	22	**22**
0500 - 0600	0	35	**35**
0600 - 0700	0	60	**60**
0700 - 0800	0	102	**102**
0800 - 0900	0	119	**119**
0900 - 1000	0	102	**102**
1000 - 1100	0	158	**158**
1100 - 1200	0	167	**167**

Session Total	0	2920	**2920**
Session Average	0.00	121.67	**121.67**
Session Percentage	0.00	100.00	

	Volume Summary 60min		
Time	NB	SB	**Total**
1200 - 1300	0	242	**242**
1300 - 1400	0	250	**250**
1400 - 1500	0	225	**225**
1500 - 1600	0	274	**274**
1600 - 1700	0	204	**204**
1700 - 1800	0	201	**201**
1800 - 1900	0	171	**171**
1900 - 2000	0	161	**161**
2000 - 2100	0	158	**158**
2100 - 2200	0	86	**86**
2200 - 2300	0	66	**66**
2300 - 2400	0	46	**46**

Site 46

I-26 On/Off-Ramp,
south of Bush River Rd

Date

Thursday, April 25, 2024

Lat/Long

34.029632°, -81.101844°

Weather

Fair
67°F

Click here for Detailed Weather

0000 - 2400 (Weekday 24h Session) (04-25-2024)

Volume Summary 60min

	Volume Summary 60min		
TIME	NB	SB	**Total**
0000 - 0100	0	31	**31**
0100 - 0200	0	18	**18**
0200 - 0300	0	16	**16**
0300 - 0400	0	14	**14**
0400 - 0500	0	17	**17**
0500 - 0600	0	28	**28**
0600 - 0700	0	68	**68**
0700 - 0800	0	119	**119**
0800 - 0900	0	120	**120**
0900 - 1000	0	144	**144**
1000 - 1100	0	135	**135**
1100 - 1200	0	167	**167**

Session Total	0	2478	**2478**
Session Average	0.00	103.25	**103.25**
Session Percentage	0.00	100.00	

	Volume Summary 60min		
Time	NB	SB	**Total**
1200 - 1300	0	245	**245**
1300 - 1400	0	228	**228**
1400 - 1500	0	278	**278**
1500 - 1600	0	271	**271**
1600 - 1700	0	209	**209**
1700 - 1800	0	187	**187**
1800 - 1900	0	183	**183**
1900 - 2000	0	0	**0**
2000 - 2100	0	0	**0**
2100 - 2200	0	0	**0**
2200 - 2300	0	0	**0**
2300 - 2400	0	0	**0**

Bi-Directional Class Count || Graphical Analysis SB WB

Columbia, SC

Marr Traffic DATA COLLECTION

www.marrtraffic.com

Site 46

I-26 On/Off-Ramp,
south of Bush River Rd

Lat/Long

34.029632°, -81.101844°

0000 - 2400 (Weekday 24h Session)

Graphical Analysis SB WB

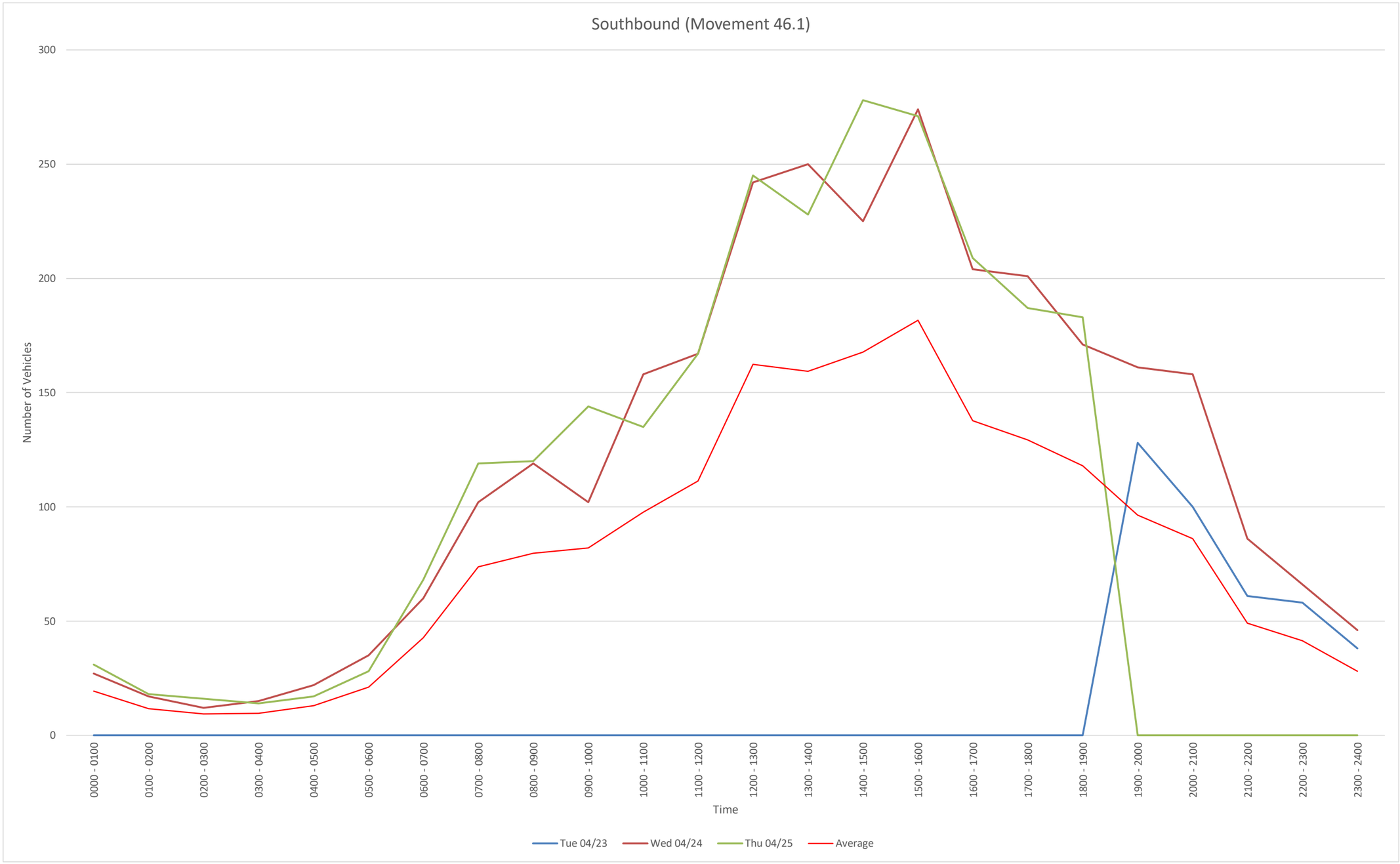

Time	Tue 04/23	Wed 04/24	Thu 04/25				
0000 - 0100	0	27	31				
0100 - 0200	0	17	18				
0200 - 0300	0	12	16				
0300 - 0400	0	15	14				
0400 - 0500	0	22	17				
0500 - 0600	0	35	28				
0600 - 0700	0	60	68				
0700 - 0800	0	102	119				
0800 - 0900	0	119	120				
0900 - 1000	0	102	144				
1000 - 1100	0	158	135				
1100 - 1200	0	167	167				
1200 - 1300	0	242	245				
1300 - 1400	0	250	228				
1400 - 1500	0	225	278				
1500 - 1600	0	274	271				
1600 - 1700	0	204	209				
1700 - 1800	0	201	187				
1800 - 1900	0	171	183				
1900 - 2000	128	161	0				
2000 - 2100	100	158	0				
2100 - 2200	61	86	0				
2200 - 2300	58	66	0				
2300 - 2400	38	46	0				
Daily Total	385	2920	2478				

NB
File Name:
Start Date: 4/23/2024
Start Time: 0
Site Code: 46
Station ID: 1
Location 1: I-26 On/Off-Ramp, south of Bush River Rd
Location 2:

Date	Time	1	2	3	4	5	6	7	8	9	10	11	12	13
4/23/2024	12:00 AM	0	0	0	0	0	0	0	0	0	0	0	0	0
4/23/2024	12:15 AM	0	0	0	0	0	0	0	0	0	0	0	0	0
4/23/2024	12:30 AM	0	0	0	0	0	0	0	0	0	0	0	0	0
4/23/2024	12:45 AM	0	0	0	0	0	0	0	0	0	0	0	0	0
4/23/2024	1:00 AM	0	0	0	0	0	0	0	0	0	0	0	0	0
4/23/2024	1:15 AM	0	0	0	0	0	0	0	0	0	0	0	0	0
4/23/2024	1:30 AM	0	0	0	0	0	0	0	0	0	0	0	0	0
4/23/2024	1:45 AM	0	0	0	0	0	0	0	0	0	0	0	0	0
4/23/2024	2:00 AM	0	0	0	0	0	0	0	0	0	0	0	0	0
4/23/2024	2:15 AM	0	0	0	0	0	0	0	0	0	0	0	0	0
4/23/2024	2:30 AM	0	0	0	0	0	0	0	0	0	0	0	0	0
4/23/2024	2:45 AM	0	0	0	0	0	0	0	0	0	0	0	0	0
4/23/2024	3:00 AM	0	0	0	0	0	0	0	0	0	0	0	0	0
4/23/2024	3:15 AM	0	0	0	0	0	0	0	0	0	0	0	0	0
4/23/2024	3:30 AM	0	0	0	0	0	0	0	0	0	0	0	0	0
4/23/2024	3:45 AM	0	0	0	0	0	0	0	0	0	0	0	0	0
4/23/2024	4:00 AM	0	0	0	0	0	0	0	0	0	0	0	0	0
4/23/2024	4:15 AM	0	0	0	0	0	0	0	0	0	0	0	0	0
4/23/2024	4:30 AM	0	0	0	0	0	0	0	0	0	0	0	0	0
4/23/2024	4:45 AM	0	0	0	0	0	0	0	0	0	0	0	0	0
4/23/2024	5:00 AM	0	0	0	0	0	0	0	0	0	0	0	0	0
4/23/2024	5:15 AM	0	0	0	0	0	0	0	0	0	0	0	0	0
4/23/2024	5:30 AM	0	0	0	0	0	0	0	0	0	0	0	0	0
4/23/2024	5:45 AM	0	0	0	0	0	0	0	0	0	0	0	0	0
4/23/2024	6:00 AM	0	0	0	0	0	0	0	0	0	0	0	0	0
4/23/2024	6:15 AM	0	0	0	0	0	0	0	0	0	0	0	0	0
4/23/2024	6:30 AM	0	0	0	0	0	0	0	0	0	0	0	0	0
4/23/2024	6:45 AM	0	0	0	0	0	0	0	0	0	0	0	0	0
4/23/2024	7:00 AM	0	0	0	0	0	0	0	0	0	0	0	0	0
4/23/2024	7:15 AM	0	0	0	0	0	0	0	0	0	0	0	0	0
4/23/2024	7:30 AM	0	0	0	0	0	0	0	0	0	0	0	0	0
4/23/2024	7:45 AM	0	0	0	0	0	0	0	0	0	0	0	0	0
4/23/2024	8:00 AM	0	0	0	0	0	0	0	0	0	0	0	0	0
4/23/2024	8:15 AM	0	0	0	0	0	0	0	0	0	0	0	0	0
4/23/2024	8:30 AM	0	0	0	0	0	0	0	0	0	0	0	0	0
4/23/2024	8:45 AM	0	0	0	0	0	0	0	0	0	0	0	0	0
4/23/2024	9:00 AM	0	0	0	0	0	0	0	0	0	0	0	0	0
4/23/2024	9:15 AM	0	0	0	0	0	0	0	0	0	0	0	0	0
4/23/2024	9:30 AM	0	0	0	0	0	0	0	0	0	0	0	0	0
4/23/2024	9:45 AM	0	0	0	0	0	0	0	0	0	0	0	0	0
4/23/2024	10:00 AM	0	0	0	0	0	0	0	0	0	0	0	0	0
4/23/2024	10:15 AM	0	0	0	0	0	0	0	0	0	0	0	0	0
4/23/2024	10:30 AM	0	0	0	0	0	0	0	0	0	0	0	0	0
4/23/2024	10:45 AM	0	0	0	0	0	0	0	0	0	0	0	0	0
4/23/2024	11:00 AM	0	0	0	0	0	0	0	0	0	0	0	0	0
4/23/2024	11:15 AM	0	0	0	0	0	0	0	0	0	0	0	0	0
4/23/2024	11:30 AM	0	0	0	0	0	0	0	0	0	0	0	0	0
4/23/2024	11:45 AM	0	0	0	0	0	0	0	0	0	0	0	0	0
4/23/2024	12:00 PM	0	0	0	0	0	0	0	0	0	0	0	0	0
4/23/2024	12:15 PM	0	0	0	0	0	0	0	0	0	0	0	0	0
4/23/2024	12:30 PM	0	0	0	0	0	0	0	0	0	0	0	0	0
4/23/2024	12:45 PM	0	0	0	0	0	0	0	0	0	0	0	0	0
4/23/2024	1:00 PM	0	0	0	0	0	0	0	0	0	0	0	0	0
4/23/2024	1:15 PM	0	0	0	0	0	0	0	0	0	0	0	0	0
4/23/2024	1:30 PM	0	0	0	0	0	0	0	0	0	0	0	0	0
4/23/2024	1:45 PM	0	0	0	0	0	0	0	0	0	0	0	0	0
4/23/2024	2:00 PM	0	0	0	0	0	0	0	0	0	0	0	0	0
4/23/2024	2:15 PM	0	0	0	0	0	0	0	0	0	0	0	0	0
4/23/2024	2:30 PM	0	0	0	0	0	0	0	0	0	0	0	0	0
4/23/2024	2:45 PM	0	0	0	0	0	0	0	0	0	0	0	0	0
4/23/2024	3:00 PM	0	0	0	0	0	0	0	0	0	0	0	0	0
4/23/2024	3:15 PM	0	0	0	0	0	0	0	0	0	0	0	0	0
4/23/2024	3:30 PM	0	0	0	0	0	0	0	0	0	0	0	0	0
4/23/2024	3:45 PM	0	0	0	0	0	0	0	0	0	0	0	0	0
4/23/2024	4:00 PM	0	0	0	0	0	0	0	0	0	0	0	0	0
4/23/2024	4:15 PM	0	0	0	0	0	0	0	0	0	0	0	0	0
4/23/2024	4:30 PM	0	0	0	0	0	0	0	0	0	0	0	0	0
4/23/2024	4:45 PM	0	0	0	0	0	0	0	0	0	0	0	0	0
4/23/2024	5:00 PM	0	0	0	0	0	0	0	0	0	0	0	0	0
4/23/2024	5:15 PM	0	0	0	0	0	0	0	0	0	0	0	0	0
4/23/2024	5:30 PM	0	0	0	0	0	0	0	0	0	0	0	0	0
4/23/2024	5:45 PM	0	0	0	0	0	0	0	0	0	0	0	0	0
4/23/2024	6:00 PM	0	0	0	0	0	0	0	0	0	0	0	0	0
4/23/2024	6:15 PM	0	0	0	0	0	0	0	0	0	0	0	0	0
4/23/2024	6:30 PM	0	0	0	0	0	0	0	0	0	0	0	0	0
4/23/2024	6:45 PM	0	0	0	0	0	0	0	0	0	0	0	0	0
4/23/2024	7:00 PM	0	0	0	0	0	0	0	0	0	0	0	0	0
4/23/2024	7:15 PM	0	0	0	0	0	0	0	0	0	0	0	0	0
4/23/2024	7:30 PM	0	0	0	0	0	0	0	0	0	0	0	0	0
4/23/2024	7:45 PM	0	0	0	0	0	0	0	0	0	0	0	0	0
4/23/2024	8:00 PM	0	0	0	0	0	0	0	0	0	0	0	0	0
4/23/2024	8:15 PM	0	0	0	0	0	0	0	0	0	0	0	0	0
4/23/2024	8:30 PM	0	0	0	0	0	0	0	0	0	0	0	0	0
4/23/2024	8:45 PM	0	0	0	0	0	0	0	0	0	0	0	0	0
4/23/2024	9:00 PM	0	0	0	0	0	0	0	0	0	0	0	0	0
4/23/2024	9:15 PM	0	0	0	0	0	0	0	0	0	0	0	0	0
4/23/2024	9:30 PM	0	0	0	0	0	0	0	0	0	0	0	0	0
4/23/2024	9:45 PM	0	0	0	0	0	0	0	0	0	0	0	0	0
4/23/2024	10:00 PM	0	0	0	0	0	0	0	0	0	0	0	0	0
4/23/2024	10:15 PM	0	0	0	0	0	0	0	0	0	0	0	0	0
4/23/2024	10:30 PM	0	0	0	0	0	0	0	0	0	0	0	0	0
4/23/2024	10:45 PM	0	0	0	0	0	0	0	0	0	0	0	0	0
4/23/2024	11:00 PM	0	0	0	0	0	0	0	0	0	0	0	0	0
4/23/2024	11:15 PM	0	0	0	0	0	0	0	0	0	0	0	0	0
4/23/2024	11:30 PM	0	0	0	0	0	0	0	0	0	0	0	0	0
4/23/2024	11:45 PM	0	0	0	0	0	0	0	0	0	0	0	0	0

4/24/2024	12:00 AM	0	0	0	0	0	0	0	0	0	0	0	0	0
4/24/2024	12:15 AM	0	0	0	0	0	0	0	0	0	0	0	0	0
4/24/2024	12:30 AM	0	0	0	0	0	0	0	0	0	0	0	0	0
4/24/2024	12:45 AM	0	0	0	0	0	0	0	0	0	0	0	0	0
4/24/2024	1:00 AM	0	0	0	0	0	0	0	0	0	0	0	0	0
4/24/2024	1:15 AM	0	0	0	0	0	0	0	0	0	0	0	0	0
4/24/2024	1:30 AM	0	0	0	0	0	0	0	0	0	0	0	0	0
4/24/2024	1:45 AM	0	0	0	0	0	0	0	0	0	0	0	0	0
4/24/2024	2:00 AM	0	0	0	0	0	0	0	0	0	0	0	0	0
4/24/2024	2:15 AM	0	0	0	0	0	0	0	0	0	0	0	0	0
4/24/2024	2:30 AM	0	0	0	0	0	0	0	0	0	0	0	0	0
4/24/2024	2:45 AM	0	0	0	0	0	0	0	0	0	0	0	0	0
4/24/2024	3:00 AM	0	0	0	0	0	0	0	0	0	0	0	0	0
4/24/2024	3:15 AM	0	0	0	0	0	0	0	0	0	0	0	0	0
4/24/2024	3:30 AM	0	0	0	0	0	0	0	0	0	0	0	0	0
4/24/2024	3:45 AM	0	0	0	0	0	0	0	0	0	0	0	0	0
4/24/2024	4:00 AM	0	0	0	0	0	0	0	0	0	0	0	0	0
4/24/2024	4:15 AM	0	0	0	0	0	0	0	0	0	0	0	0	0
4/24/2024	4:30 AM	0	0	0	0	0	0	0	0	0	0	0	0	0
4/24/2024	4:45 AM	0	0	0	0	0	0	0	0	0	0	0	0	0
4/24/2024	5:00 AM	0	0	0	0	0	0	0	0	0	0	0	0	0
4/24/2024	5:15 AM	0	0	0	0	0	0	0	0	0	0	0	0	0
4/24/2024	5:30 AM	0	0	0	0	0	0	0	0	0	0	0	0	0
4/24/2024	5:45 AM	0	0	0	0	0	0	0	0	0	0	0	0	0
4/24/2024	6:00 AM	0	0	0	0	0	0	0	0	0	0	0	0	0
4/24/2024	6:15 AM	0	0	0	0	0	0	0	0	0	0	0	0	0
4/24/2024	6:30 AM	0	0	0	0	0	0	0	0	0	0	0	0	0
4/24/2024	6:45 AM	0	0	0	0	0	0	0	0	0	0	0	0	0
4/24/2024	7:00 AM	0	0	0	0	0	0	0	0	0	0	0	0	0
4/24/2024	7:15 AM	0	0	0	0	0	0	0	0	0	0	0	0	0
4/24/2024	7:30 AM	0	0	0	0	0	0	0	0	0	0	0	0	0
4/24/2024	7:45 AM	0	0	0	0	0	0	0	0	0	0	0	0	0
4/24/2024	8:00 AM	0	0	0	0	0	0	0	0	0	0	0	0	0
4/24/2024	8:15 AM	0	0	0	0	0	0	0	0	0	0	0	0	0
4/24/2024	8:30 AM	0	0	0	0	0	0	0	0	0	0	0	0	0
4/24/2024	8:45 AM	0	0	0	0	0	0	0	0	0	0	0	0	0
4/24/2024	9:00 AM	0	0	0	0	0	0	0	0	0	0	0	0	0
4/24/2024	9:15 AM	0	0	0	0	0	0	0	0	0	0	0	0	0
4/24/2024	9:30 AM	0	0	0	0	0	0	0	0	0	0	0	0	0
4/24/2024	9:45 AM	0	0	0	0	0	0	0	0	0	0	0	0	0
4/24/2024	10:00 AM	0	0	0	0	0	0	0	0	0	0	0	0	0
4/24/2024	10:15 AM	0	0	0	0	0	0	0	0	0	0	0	0	0
4/24/2024	10:30 AM	0	0	0	0	0	0	0	0	0	0	0	0	0
4/24/2024	10:45 AM	0	0	0	0	0	0	0	0	0	0	0	0	0
4/24/2024	11:00 AM	0	0	0	0	0	0	0	0	0	0	0	0	0
4/24/2024	11:15 AM	0	0	0	0	0	0	0	0	0	0	0	0	0
4/24/2024	11:30 AM	0	0	0	0	0	0	0	0	0	0	0	0	0
4/24/2024	11:45 AM	0	0	0	0	0	0	0	0	0	0	0	0	0
4/24/2024	12:00 PM	0	0	0	0	0	0	0	0	0	0	0	0	0
4/24/2024	12:15 PM	0	0	0	0	0	0	0	0	0	0	0	0	0
4/24/2024	12:30 PM	0	0	0	0	0	0	0	0	0	0	0	0	0
4/24/2024	12:45 PM	0	0	0	0	0	0	0	0	0	0	0	0	0
4/24/2024	1:00 PM	0	0	0	0	0	0	0	0	0	0	0	0	0
4/24/2024	1:15 PM	0	0	0	0	0	0	0	0	0	0	0	0	0
4/24/2024	1:30 PM	0	0	0	0	0	0	0	0	0	0	0	0	0
4/24/2024	1:45 PM	0	0	0	0	0	0	0	0	0	0	0	0	0
4/24/2024	2:00 PM	0	0	0	0	0	0	0	0	0	0	0	0	0
4/24/2024	2:15 PM	0	0	0	0	0	0	0	0	0	0	0	0	0
4/24/2024	2:30 PM	0	0	0	0	0	0	0	0	0	0	0	0	0
4/24/2024	2:45 PM	0	0	0	0	0	0	0	0	0	0	0	0	0
4/24/2024	3:00 PM	0	0	0	0	0	0	0	0	0	0	0	0	0
4/24/2024	3:15 PM	0	0	0	0	0	0	0	0	0	0	0	0	0
4/24/2024	3:30 PM	0	0	0	0	0	0	0	0	0	0	0	0	0
4/24/2024	3:45 PM	0	0	0	0	0	0	0	0	0	0	0	0	0
4/24/2024	4:00 PM	0	0	0	0	0	0	0	0	0	0	0	0	0
4/24/2024	4:15 PM	0	0	0	0	0	0	0	0	0	0	0	0	0
4/24/2024	4:30 PM	0	0	0	0	0	0	0	0	0	0	0	0	0
4/24/2024	4:45 PM	0	0	0	0	0	0	0	0	0	0	0	0	0
4/24/2024	5:00 PM	0	0	0	0	0	0	0	0	0	0	0	0	0
4/24/2024	5:15 PM	0	0	0	0	0	0	0	0	0	0	0	0	0
4/24/2024	5:30 PM	0	0	0	0	0	0	0	0	0	0	0	0	0
4/24/2024	5:45 PM	0	0	0	0	0	0	0	0	0	0	0	0	0
4/24/2024	6:00 PM	0	0	0	0	0	0	0	0	0	0	0	0	0
4/24/2024	6:15 PM	0	0	0	0	0	0	0	0	0	0	0	0	0
4/24/2024	6:30 PM	0	0	0	0	0	0	0	0	0	0	0	0	0
4/24/2024	6:45 PM	0	0	0	0	0	0	0	0	0	0	0	0	0
4/24/2024	7:00 PM	0	0	0	0	0	0	0	0	0	0	0	0	0
4/24/2024	7:15 PM	0	0	0	0	0	0	0	0	0	0	0	0	0
4/24/2024	7:30 PM	0	0	0	0	0	0	0	0	0	0	0	0	0
4/24/2024	7:45 PM	0	0	0	0	0	0	0	0	0	0	0	0	0
4/24/2024	8:00 PM	0	0	0	0	0	0	0	0	0	0	0	0	0
4/24/2024	8:15 PM	0	0	0	0	0	0	0	0	0	0	0	0	0
4/24/2024	8:30 PM	0	0	0	0	0	0	0	0	0	0	0	0	0
4/24/2024	8:45 PM	0	0	0	0	0	0	0	0	0	0	0	0	0
4/24/2024	9:00 PM	0	0	0	0	0	0	0	0	0	0	0	0	0
4/24/2024	9:15 PM	0	0	0	0	0	0	0	0	0	0	0	0	0
4/24/2024	9:30 PM	0	0	0	0	0	0	0	0	0	0	0	0	0
4/24/2024	9:45 PM	0	0	0	0	0	0	0	0	0	0	0	0	0
4/24/2024	10:00 PM	0	0	0	0	0	0	0	0	0	0	0	0	0
4/24/2024	10:15 PM	0	0	0	0	0	0	0	0	0	0	0	0	0
4/24/2024	10:30 PM	0	0	0	0	0	0	0	0	0	0	0	0	0
4/24/2024	10:45 PM	0	0	0	0	0	0	0	0	0	0	0	0	0
4/24/2024	11:00 PM	0	0	0	0	0	0	0	0	0	0	0	0	0
4/24/2024	11:15 PM	0	0	0	0	0	0	0	0	0	0	0	0	0
4/24/2024	11:30 PM	0	0	0	0	0	0	0	0	0	0	0	0	0
4/24/2024	11:45 PM	0	0	0	0	0	0	0	0	0	0	0	0	0

4/25/2024	12:00 AM	0	0	0	0	0	0	0	0	0	0	0	0	0
4/25/2024	12:15 AM	0	0	0	0	0	0	0	0	0	0	0	0	0
4/25/2024	12:30 AM	0	0	0	0	0	0	0	0	0	0	0	0	0
4/25/2024	12:45 AM	0	0	0	0	0	0	0	0	0	0	0	0	0
4/25/2024	1:00 AM	0	0	0	0	0	0	0	0	0	0	0	0	0
4/25/2024	1:15 AM	0	0	0	0	0	0	0	0	0	0	0	0	0
4/25/2024	1:30 AM	0	0	0	0	0	0	0	0	0	0	0	0	0
4/25/2024	1:45 AM	0	0	0	0	0	0	0	0	0	0	0	0	0
4/25/2024	2:00 AM	0	0	0	0	0	0	0	0	0	0	0	0	0
4/25/2024	2:15 AM	0	0	0	0	0	0	0	0	0	0	0	0	0
4/25/2024	2:30 AM	0	0	0	0	0	0	0	0	0	0	0	0	0
4/25/2024	2:45 AM	0	0	0	0	0	0	0	0	0	0	0	0	0
4/25/2024	3:00 AM	0	0	0	0	0	0	0	0	0	0	0	0	0
4/25/2024	3:15 AM	0	0	0	0	0	0	0	0	0	0	0	0	0
4/25/2024	3:30 AM	0	0	0	0	0	0	0	0	0	0	0	0	0
4/25/2024	3:45 AM	0	0	0	0	0	0	0	0	0	0	0	0	0
4/25/2024	4:00 AM	0	0	0	0	0	0	0	0	0	0	0	0	0
4/25/2024	4:15 AM	0	0	0	0	0	0	0	0	0	0	0	0	0
4/25/2024	4:30 AM	0	0	0	0	0	0	0	0	0	0	0	0	0
4/25/2024	4:45 AM	0	0	0	0	0	0	0	0	0	0	0	0	0
4/25/2024	5:00 AM	0	0	0	0	0	0	0	0	0	0	0	0	0
4/25/2024	5:15 AM	0	0	0	0	0	0	0	0	0	0	0	0	0
4/25/2024	5:30 AM	0	0	0	0	0	0	0	0	0	0	0	0	0
4/25/2024	5:45 AM	0	0	0	0	0	0	0	0	0	0	0	0	0
4/25/2024	6:00 AM	0	0	0	0	0	0	0	0	0	0	0	0	0
4/25/2024	6:15 AM	0	0	0	0	0	0	0	0	0	0	0	0	0
4/25/2024	6:30 AM	0	0	0	0	0	0	0	0	0	0	0	0	0
4/25/2024	6:45 AM	0	0	0	0	0	0	0	0	0	0	0	0	0
4/25/2024	7:00 AM	0	0	0	0	0	0	0	0	0	0	0	0	0
4/25/2024	7:15 AM	0	0	0	0	0	0	0	0	0	0	0	0	0
4/25/2024	7:30 AM	0	0	0	0	0	0	0	0	0	0	0	0	0
4/25/2024	7:45 AM	0	0	0	0	0	0	0	0	0	0	0	0	0
4/25/2024	8:00 AM	0	0	0	0	0	0	0	0	0	0	0	0	0
4/25/2024	8:15 AM	0	0	0	0	0	0	0	0	0	0	0	0	0
4/25/2024	8:30 AM	0	0	0	0	0	0	0	0	0	0	0	0	0
4/25/2024	8:45 AM	0	0	0	0	0	0	0	0	0	0	0	0	0
4/25/2024	9:00 AM	0	0	0	0	0	0	0	0	0	0	0	0	0
4/25/2024	9:15 AM	0	0	0	0	0	0	0	0	0	0	0	0	0
4/25/2024	9:30 AM	0	0	0	0	0	0	0	0	0	0	0	0	0
4/25/2024	9:45 AM	0	0	0	0	0	0	0	0	0	0	0	0	0
4/25/2024	10:00 AM	0	0	0	0	0	0	0	0	0	0	0	0	0
4/25/2024	10:15 AM	0	0	0	0	0	0	0	0	0	0	0	0	0
4/25/2024	10:30 AM	0	0	0	0	0	0	0	0	0	0	0	0	0
4/25/2024	10:45 AM	0	0	0	0	0	0	0	0	0	0	0	0	0
4/25/2024	11:00 AM	0	0	0	0	0	0	0	0	0	0	0	0	0
4/25/2024	11:15 AM	0	0	0	0	0	0	0	0	0	0	0	0	0
4/25/2024	11:30 AM	0	0	0	0	0	0	0	0	0	0	0	0	0
4/25/2024	11:45 AM	0	0	0	0	0	0	0	0	0	0	0	0	0
4/25/2024	12:00 PM	0	0	0	0	0	0	0	0	0	0	0	0	0
4/25/2024	12:15 PM	0	0	0	0	0	0	0	0	0	0	0	0	0
4/25/2024	12:30 PM	0	0	0	0	0	0	0	0	0	0	0	0	0
4/25/2024	12:45 PM	0	0	0	0	0	0	0	0	0	0	0	0	0
4/25/2024	1:00 PM	0	0	0	0	0	0	0	0	0	0	0	0	0
4/25/2024	1:15 PM	0	0	0	0	0	0	0	0	0	0	0	0	0
4/25/2024	1:30 PM	0	0	0	0	0	0	0	0	0	0	0	0	0
4/25/2024	1:45 PM	0	0	0	0	0	0	0	0	0	0	0	0	0
4/25/2024	2:00 PM	0	0	0	0	0	0	0	0	0	0	0	0	0
4/25/2024	2:15 PM	0	0	0	0	0	0	0	0	0	0	0	0	0
4/25/2024	2:30 PM	0	0	0	0	0	0	0	0	0	0	0	0	0
4/25/2024	2:45 PM	0	0	0	0	0	0	0	0	0	0	0	0	0
4/25/2024	3:00 PM	0	0	0	0	0	0	0	0	0	0	0	0	0
4/25/2024	3:15 PM	0	0	0	0	0	0	0	0	0	0	0	0	0
4/25/2024	3:30 PM	0	0	0	0	0	0	0	0	0	0	0	0	0
4/25/2024	3:45 PM	0	0	0	0	0	0	0	0	0	0	0	0	0
4/25/2024	4:00 PM	0	0	0	0	0	0	0	0	0	0	0	0	0
4/25/2024	4:15 PM	0	0	0	0	0	0	0	0	0	0	0	0	0
4/25/2024	4:30 PM	0	0	0	0	0	0	0	0	0	0	0	0	0
4/25/2024	4:45 PM	0	0	0	0	0	0	0	0	0	0	0	0	0
4/25/2024	5:00 PM	0	0	0	0	0	0	0	0	0	0	0	0	0
4/25/2024	5:15 PM	0	0	0	0	0	0	0	0	0	0	0	0	0
4/25/2024	5:30 PM	0	0	0	0	0	0	0	0	0	0	0	0	0
4/25/2024	5:45 PM	0	0	0	0	0	0	0	0	0	0	0	0	0
4/25/2024	6:00 PM	0	0	0	0	0	0	0	0	0	0	0	0	0
4/25/2024	6:15 PM	0	0	0	0	0	0	0	0	0	0	0	0	0
4/25/2024	6:30 PM	0	0	0	0	0	0	0	0	0	0	0	0	0
4/25/2024	6:45 PM	0	0	0	0	0	0	0	0	0	0	0	0	0
4/25/2024	7:00 PM	0	0	0	0	0	0	0	0	0	0	0	0	0
4/25/2024	7:15 PM	0	0	0	0	0	0	0	0	0	0	0	0	0
4/25/2024	7:30 PM	0	0	0	0	0	0	0	0	0	0	0	0	0
4/25/2024	7:45 PM	0	0	0	0	0	0	0	0	0	0	0	0	0
4/25/2024	8:00 PM	0	0	0	0	0	0	0	0	0	0	0	0	0
4/25/2024	8:15 PM	0	0	0	0	0	0	0	0	0	0	0	0	0
4/25/2024	8:30 PM	0	0	0	0	0	0	0	0	0	0	0	0	0
4/25/2024	8:45 PM	0	0	0	0	0	0	0	0	0	0	0	0	0
4/25/2024	9:00 PM	0	0	0	0	0	0	0	0	0	0	0	0	0
4/25/2024	9:15 PM	0	0	0	0	0	0	0	0	0	0	0	0	0
4/25/2024	9:30 PM	0	0	0	0	0	0	0	0	0	0	0	0	0
4/25/2024	9:45 PM	0	0	0	0	0	0	0	0	0	0	0	0	0
4/25/2024	10:00 PM	0	0	0	0	0	0	0	0	0	0	0	0	0
4/25/2024	10:15 PM	0	0	0	0	0	0	0	0	0	0	0	0	0
4/25/2024	10:30 PM	0	0	0	0	0	0	0	0	0	0	0	0	0
4/25/2024	10:45 PM	0	0	0	0	0	0	0	0	0	0	0	0	0
4/25/2024	11:00 PM	0	0	0	0	0	0	0	0	0	0	0	0	0
4/25/2024	11:15 PM	0	0	0	0	0	0	0	0	0	0	0	0	0
4/25/2024	11:30 PM	0	0	0	0	0	0	0	0	0	0	0	0	0
4/25/2024	11:45 PM	0	0	0	0	0	0	0	0	0	0	0	0	0

SB
File Name:
Start Date: 4/23/2024
Start Time: 0
Site Code: 46
Station ID: 1
Location 1: I-26 On/Off-Ramp, south of Bush River Rd
Location 2:

Date	Time	1	2	3	4	5	6	7	8	9	10	11	12	13
4/23/2024	12:00 AM	0	0	0	0	0	0	0	0	0	0	0	0	0
4/23/2024	12:15 AM	0	0	0	0	0	0	0	0	0	0	0	0	0
4/23/2024	12:30 AM	0	0	0	0	0	0	0	0	0	0	0	0	0
4/23/2024	12:45 AM	0	0	0	0	0	0	0	0	0	0	0	0	0
4/23/2024	1:00 AM	0	0	0	0	0	0	0	0	0	0	0	0	0
4/23/2024	1:15 AM	0	0	0	0	0	0	0	0	0	0	0	0	0
4/23/2024	1:30 AM	0	0	0	0	0	0	0	0	0	0	0	0	0
4/23/2024	1:45 AM	0	0	0	0	0	0	0	0	0	0	0	0	0
4/23/2024	2:00 AM	0	0	0	0	0	0	0	0	0	0	0	0	0
4/23/2024	2:15 AM	0	0	0	0	0	0	0	0	0	0	0	0	0
4/23/2024	2:30 AM	0	0	0	0	0	0	0	0	0	0	0	0	0
4/23/2024	2:45 AM	0	0	0	0	0	0	0	0	0	0	0	0	0
4/23/2024	3:00 AM	0	0	0	0	0	0	0	0	0	0	0	0	0
4/23/2024	3:15 AM	0	0	0	0	0	0	0	0	0	0	0	0	0
4/23/2024	3:30 AM	0	0	0	0	0	0	0	0	0	0	0	0	0
4/23/2024	3:45 AM	0	0	0	0	0	0	0	0	0	0	0	0	0
4/23/2024	4:00 AM	0	0	0	0	0	0	0	0	0	0	0	0	0
4/23/2024	4:15 AM	0	0	0	0	0	0	0	0	0	0	0	0	0
4/23/2024	4:30 AM	0	0	0	0	0	0	0	0	0	0	0	0	0
4/23/2024	4:45 AM	0	0	0	0	0	0	0	0	0	0	0	0	0
4/23/2024	5:00 AM	0	0	0	0	0	0	0	0	0	0	0	0	0
4/23/2024	5:15 AM	0	0	0	0	0	0	0	0	0	0	0	0	0
4/23/2024	5:30 AM	0	0	0	0	0	0	0	0	0	0	0	0	0
4/23/2024	5:45 AM	0	0	0	0	0	0	0	0	0	0	0	0	0
4/23/2024	6:00 AM	0	0	0	0	0	0	0	0	0	0	0	0	0
4/23/2024	6:15 AM	0	0	0	0	0	0	0	0	0	0	0	0	0
4/23/2024	6:30 AM	0	0	0	0	0	0	0	0	0	0	0	0	0
4/23/2024	6:45 AM	0	0	0	0	0	0	0	0	0	0	0	0	0
4/23/2024	7:00 AM	0	0	0	0	0	0	0	0	0	0	0	0	0
4/23/2024	7:15 AM	0	0	0	0	0	0	0	0	0	0	0	0	0
4/23/2024	7:30 AM	0	0	0	0	0	0	0	0	0	0	0	0	0
4/23/2024	7:45 AM	0	0	0	0	0	0	0	0	0	0	0	0	0
4/23/2024	8:00 AM	0	0	0	0	0	0	0	0	0	0	0	0	0
4/23/2024	8:15 AM	0	0	0	0	0	0	0	0	0	0	0	0	0
4/23/2024	8:30 AM	0	0	0	0	0	0	0	0	0	0	0	0	0
4/23/2024	8:45 AM	0	0	0	0	0	0	0	0	0	0	0	0	0
4/23/2024	9:00 AM	0	0	0	0	0	0	0	0	0	0	0	0	0
4/23/2024	9:15 AM	0	0	0	0	0	0	0	0	0	0	0	0	0
4/23/2024	9:30 AM	0	0	0	0	0	0	0	0	0	0	0	0	0
4/23/2024	9:45 AM	0	0	0	0	0	0	0	0	0	0	0	0	0
4/23/2024	10:00 AM	0	0	0	0	0	0	0	0	0	0	0	0	0
4/23/2024	10:15 AM	0	0	0	0	0	0	0	0	0	0	0	0	0
4/23/2024	10:30 AM	0	0	0	0	0	0	0	0	0	0	0	0	0
4/23/2024	10:45 AM	0	0	0	0	0	0	0	0	0	0	0	0	0
4/23/2024	11:00 AM	0	0	0	0	0	0	0	0	0	0	0	0	0
4/23/2024	11:15 AM	0	0	0	0	0	0	0	0	0	0	0	0	0
4/23/2024	11:30 AM	0	0	0	0	0	0	0	0	0	0	0	0	0
4/23/2024	11:45 AM	0	0	0	0	0	0	0	0	0	0	0	0	0
4/23/2024	12:00 PM	0	0	0	0	0	0	0	0	0	0	0	0	0
4/23/2024	12:15 PM	0	0	0	0	0	0	0	0	0	0	0	0	0
4/23/2024	12:30 PM	0	0	0	0	0	0	0	0	0	0	0	0	0
4/23/2024	12:45 PM	0	0	0	0	0	0	0	0	0	0	0	0	0
4/23/2024	1:00 PM	0	0	0	0	0	0	0	0	0	0	0	0	0
4/23/2024	1:15 PM	0	0	0	0	0	0	0	0	0	0	0	0	0
4/23/2024	1:30 PM	0	0	0	0	0	0	0	0	0	0	0	0	0
4/23/2024	1:45 PM	0	0	0	0	0	0	0	0	0	0	0	0	0
4/23/2024	2:00 PM	0	0	0	0	0	0	0	0	0	0	0	0	0
4/23/2024	2:15 PM	0	0	0	0	0	0	0	0	0	0	0	0	0
4/23/2024	2:30 PM	0	0	0	0	0	0	0	0	0	0	0	0	0
4/23/2024	2:45 PM	0	0	0	0	0	0	0	0	0	0	0	0	0
4/23/2024	3:00 PM	0	0	0	0	0	0	0	0	0	0	0	0	0
4/23/2024	3:15 PM	0	0	0	0	0	0	0	0	0	0	0	0	0
4/23/2024	3:30 PM	0	0	0	0	0	0	0	0	0	0	0	0	0
4/23/2024	3:45 PM	0	0	0	0	0	0	0	0	0	0	0	0	0
4/23/2024	4:00 PM	0	0	0	0	0	0	0	0	0	0	0	0	0
4/23/2024	4:15 PM	0	0	0	0	0	0	0	0	0	0	0	0	0
4/23/2024	4:30 PM	0	0	0	0	0	0	0	0	0	0	0	0	0
4/23/2024	4:45 PM	0	0	0	0	0	0	0	0	0	0	0	0	0
4/23/2024	5:00 PM	0	0	0	0	0	0	0	0	0	0	0	0	0
4/23/2024	5:15 PM	0	0	0	0	0	0	0	0	0	0	0	0	0
4/23/2024	5:30 PM	0	0	0	0	0	0	0	0	0	0	0	0	0
4/23/2024	5:45 PM	0	0	0	0	0	0	0	0	0	0	0	0	0
4/23/2024	6:00 PM	0	0	0	0	0	0	0	0	0	0	0	0	0
4/23/2024	6:15 PM	0	0	0	0	0	0	0	0	0	0	0	0	0
4/23/2024	6:30 PM	0	0	0	0	0	0	0	0	0	0	0	0	0
4/23/2024	6:45 PM	0	0	0	0	0	0	0	0	0	0	0	0	0
4/23/2024	7:00 PM	0	24	4	0	0	0	0	0	0	0	0	0	0
4/23/2024	7:15 PM	0	27	3	0	0	1	0	0	0	0	0	0	0
4/23/2024	7:30 PM	0	33	3	0	1	0	0	0	1	0	0	0	0
4/23/2024	7:45 PM	0	27	4	0	0	0	0	0	0	0	0	0	0
4/23/2024	8:00 PM	0	32	3	0	1	0	0	0	0	0	0	0	0
4/23/2024	8:15 PM	0	18	6	0	0	0	0	0	0	0	0	0	0
4/23/2024	8:30 PM	0	20	3	0	1	0	0	0	0	0	0	0	0
4/23/2024	8:45 PM	0	14	2	0	0	0	0	0	0	0	0	0	0
4/23/2024	9:00 PM	0	17	3	0	0	0	0	0	0	0	0	0	0
4/23/2024	9:15 PM	0	10	2	0	0	0	0	0	0	0	0	0	0
4/23/2024	9:30 PM	0	12	3	0	0	0	0	0	1	0	0	0	0
4/23/2024	9:45 PM	0	10	2	0	0	0	0	0	1	0	0	0	0
4/23/2024	10:00 PM	0	16	4	0	0	0	0	0	0	0	0	0	0
4/23/2024	10:15 PM	0	11	2	0	1	0	0	0	0	0	0	0	0
4/23/2024	10:30 PM	0	12	2	0	0	0	0	0	0	0	0	0	0
4/23/2024	10:45 PM	0	8	2	0	0	0	0	0	0	0	0	0	0
4/23/2024	11:00 PM	0	6	2	0	0	0	0	0	0	0	0	0	0
4/23/2024	11:15 PM	0	8	1	0	0	0	0	1	0	0	0	0	0
4/23/2024	11:30 PM	0	7	0	0	0	0	0	0	0	0	0	0	0
4/23/2024	11:45 PM	0	10	2	0	0	0	0	0	1	0	0	0	0

4/24/2024	12:00 AM	0	4	0	0	0	0	0	0	2	0	0	0	0
4/24/2024	12:15 AM	0	7	0	0	0	0	0	0	0	0	0	0	0
4/24/2024	12:30 AM	0	7	1	0	0	0	0	0	0	0	0	0	0
4/24/2024	12:45 AM	0	6	0	0	0	0	0	0	0	0	0	0	0
4/24/2024	1:00 AM	0	7	1	0	0	0	0	0	0	0	0	0	0
4/24/2024	1:15 AM	0	3	1	0	0	0	0	0	0	0	0	0	0
4/24/2024	1:30 AM	0	2	0	0	0	0	0	0	0	0	0	0	0
4/24/2024	1:45 AM	0	3	0	0	0	0	0	0	0	0	0	0	0
4/24/2024	2:00 AM	0	2	0	0	0	0	0	0	0	0	0	0	0
4/24/2024	2:15 AM	0	2	0	0	0	0	0	0	0	0	0	0	0
4/24/2024	2:30 AM	0	6	0	0	0	0	0	0	0	0	0	0	0
4/24/2024	2:45 AM	0	2	0	0	0	0	0	0	0	0	0	0	0
4/24/2024	3:00 AM	0	3	0	0	0	0	0	0	0	0	0	0	0
4/24/2024	3:15 AM	0	4	0	0	0	0	0	0	0	0	0	0	0
4/24/2024	3:30 AM	0	4	0	0	0	0	0	0	0	0	0	0	0
4/24/2024	3:45 AM	0	3	1	0	0	0	0	0	0	0	0	0	0
4/24/2024	4:00 AM	0	4	3	0	1	1	0	0	1	0	0	0	0
4/24/2024	4:15 AM	0	3	0	0	0	0	0	0	0	0	0	0	0
4/24/2024	4:30 AM	0	3	1	0	0	0	0	0	0	0	0	0	0
4/24/2024	4:45 AM	0	3	1	0	1	0	0	0	0	0	0	0	0
4/24/2024	5:00 AM	0	2	1	0	0	0	0	0	0	0	0	0	0
4/24/2024	5:15 AM	0	5	3	1	0	0	0	0	1	0	0	0	0
4/24/2024	5:30 AM	0	12	1	0	0	0	0	0	0	0	0	0	0
4/24/2024	5:45 AM	0	8	1	0	0	0	0	0	0	0	0	0	0
4/24/2024	6:00 AM	0	8	0	0	0	1	0	0	1	0	0	0	0
4/24/2024	6:15 AM	0	10	2	0	0	0	0	0	1	0	0	0	0
4/24/2024	6:30 AM	0	11	2	0	1	0	0	0	0	0	0	0	0
4/24/2024	6:45 AM	0	17	3	0	2	0	0	0	1	0	0	0	0
4/24/2024	7:00 AM	0	9	2	0	0	0	0	0	0	0	0	0	0
4/24/2024	7:15 AM	1	25	8	0	0	0	0	0	0	0	0	0	0
4/24/2024	7:30 AM	0	21	6	0	1	0	0	0	1	0	0	0	0
4/24/2024	7:45 AM	0	17	8	0	2	0	0	0	1	0	0	0	0
4/24/2024	8:00 AM	0	23	4	0	1	0	0	0	0	0	0	0	0
4/24/2024	8:15 AM	0	16	6	0	0	0	0	0	0	0	0	0	0
4/24/2024	8:30 AM	0	30	4	0	0	0	0	0	2	0	0	0	0
4/24/2024	8:45 AM	0	25	7	0	1	0	0	0	0	0	0	0	0
4/24/2024	9:00 AM	0	15	3	0	0	0	0	0	0	0	0	0	0
4/24/2024	9:15 AM	0	20	8	0	1	0	0	0	0	0	0	0	0
4/24/2024	9:30 AM	0	19	3	0	0	0	0	0	2	0	0	0	0
4/24/2024	9:45 AM	0	19	10	0	2	0	0	0	0	0	0	0	0
4/24/2024	10:00 AM	0	23	6	0	1	0	0	0	0	0	0	0	0
4/24/2024	10:15 AM	0	25	12	0	0	1	0	0	0	0	0	0	0
4/24/2024	10:30 AM	0	40	6	0	1	1	0	0	0	0	0	0	0
4/24/2024	10:45 AM	0	33	9	0	0	0	0	0	0	0	0	0	0
4/24/2024	11:00 AM	0	31	12	0	3	0	1	0	0	0	0	0	0
4/24/2024	11:15 AM	0	29	8	0	0	0	0	1	0	0	0	0	0
4/24/2024	11:30 AM	0	24	6	1	0	0	0	1	0	0	0	0	0
4/24/2024	11:45 AM	0	40	9	0	0	0	0	0	1	0	0	0	0
4/24/2024	12:00 PM	0	50	11	0	0	1	0	0	1	0	0	0	0
4/24/2024	12:15 PM	1	45	9	0	0	1	0	0	1	0	0	0	0
4/24/2024	12:30 PM	0	52	10	0	0	0	0	0	0	0	0	0	0
4/24/2024	12:45 PM	1	47	10	0	0	1	0	0	1	0	0	0	0
4/24/2024	1:00 PM	0	50	5	0	0	0	0	0	0	0	0	0	0
4/24/2024	1:15 PM	0	60	15	0	1	0	0	0	0	0	0	0	0
4/24/2024	1:30 PM	1	42	9	0	0	0	0	0	0	0	0	0	0
4/24/2024	1:45 PM	0	53	12	0	1	1	0	0	0	0	0	0	0
4/24/2024	2:00 PM	0	44	12	0	0	0	0	0	0	0	0	0	0
4/24/2024	2:15 PM	0	53	9	0	0	0	0	0	0	0	0	0	0
4/24/2024	2:30 PM	0	47	6	0	1	0	0	0	0	0	0	0	0
4/24/2024	2:45 PM	0	38	10	0	4	1	0	0	0	0	0	0	0
4/24/2024	3:00 PM	0	72	10	0	0	0	0	0	0	0	0	0	0
4/24/2024	3:15 PM	1	62	12	0	0	0	0	0	0	0	0	0	0
4/24/2024	3:30 PM	0	53	10	0	1	0	0	0	1	0	0	0	0
4/24/2024	3:45 PM	0	45	5	0	2	0	0	0	0	0	0	0	0
4/24/2024	4:00 PM	0	58	8	0	0	0	0	0	0	0	0	0	0
4/24/2024	4:15 PM	0	36	6	0	1	0	0	0	1	0	0	0	0
4/24/2024	4:30 PM	0	50	5	0	1	1	0	0	0	0	0	0	0
4/24/2024	4:45 PM	0	32	5	0	0	0	0	0	0	0	0	0	0
4/24/2024	5:00 PM	0	58	11	0	1	0	0	0	1	0	0	0	0
4/24/2024	5:15 PM	1	53	10	0	0	0	0	0	0	0	0	0	0
4/24/2024	5:30 PM	0	24	5	0	0	0	0	0	0	0	0	0	0
4/24/2024	5:45 PM	0	29	8	0	0	0	0	0	0	0	0	0	0
4/24/2024	6:00 PM	0	49	3	0	0	0	0	0	0	0	0	0	0
4/24/2024	6:15 PM	0	40	4	0	0	0	0	0	1	0	0	0	0
4/24/2024	6:30 PM	0	36	5	0	0	0	0	0	0	0	0	0	0
4/24/2024	6:45 PM	0	30	3	0	0	0	0	0	0	0	0	0	0
4/24/2024	7:00 PM	0	35	6	0	0	0	0	0	0	0	0	0	0
4/24/2024	7:15 PM	0	46	11	0	0	0	0	0	0	0	0	0	0
4/24/2024	7:30 PM	0	28	12	0	0	0	0	0	0	0	0	0	0
4/24/2024	7:45 PM	0	20	3	0	0	0	0	0	0	0	0	0	0
4/24/2024	8:00 PM	0	30	7	0	0	0	0	0	1	0	0	0	0
4/24/2024	8:15 PM	0	32	8	0	0	0	0	0	0	0	0	0	0
4/24/2024	8:30 PM	0	47	10	0	0	0	0	0	0	0	0	0	0
4/24/2024	8:45 PM	0	21	2	0	0	0	0	0	0	0	0	0	0
4/24/2024	9:00 PM	0	27	4	0	0	0	0	0	0	0	0	0	0
4/24/2024	9:15 PM	0	19	1	0	0	0	0	0	1	0	0	0	0
4/24/2024	9:30 PM	0	17	1	0	0	0	0	0	0	0	0	0	0
4/24/2024	9:45 PM	0	16	0	0	0	0	0	0	0	0	0	0	0
4/24/2024	10:00 PM	0	16	1	0	0	0	0	0	0	0	0	0	0
4/24/2024	10:15 PM	0	18	2	0	0	0	0	0	0	0	0	0	0
4/24/2024	10:30 PM	0	16	0	0	0	0	0	0	0	0	0	0	0
4/24/2024	10:45 PM	0	13	0	0	0	0	0	0	0	0	0	0	0
4/24/2024	11:00 PM	0	11	0	0	0	0	0	0	0	0	0	0	0
4/24/2024	11:15 PM	0	12	0	0	0	0	0	0	0	0	0	0	0
4/24/2024	11:30 PM	0	13	1	0	0	0	0	0	0	0	0	0	0
4/24/2024	11:45 PM	0	9	0	0	0	0	0	0	0	0	0	0	0

4/25/2024	12:00 AM	0	10	2	0	0	0	0	0	0	0	0	0
4/25/2024	12:15 AM	0	7	1	0	0	0	0	0	0	0	0	0
4/25/2024	12:30 AM	0	3	1	0	0	0	0	0	0	0	0	0
4/25/2024	12:45 AM	0	6	1	0	0	0	0	0	0	0	0	0
4/25/2024	1:00 AM	0	4	0	0	0	0	0	0	0	0	0	0
4/25/2024	1:15 AM	0	6	1	0	0	0	0	0	0	0	0	0
4/25/2024	1:30 AM	0	3	0	0	0	0	0	0	0	0	0	0
4/25/2024	1:45 AM	0	3	1	0	0	0	0	0	0	0	0	0
4/25/2024	2:00 AM	0	6	0	0	0	0	0	0	0	0	0	0
4/25/2024	2:15 AM	0	3	0	0	0	0	0	0	0	0	0	0
4/25/2024	2:30 AM	0	3	1	0	0	0	0	0	1	0	0	0
4/25/2024	2:45 AM	0	2	0	0	0	0	0	0	0	0	0	0
4/25/2024	3:00 AM	0	4	1	0	0	0	0	0	0	0	0	0
4/25/2024	3:15 AM	0	1	0	0	0	0	0	0	0	0	0	0
4/25/2024	3:30 AM	0	4	0	0	0	0	0	0	2	0	0	0
4/25/2024	3:45 AM	0	2	0	0	0	0	0	0	0	0	0	0
4/25/2024	4:00 AM	0	2	1	0	0	0	0	0	0	0	0	0
4/25/2024	4:15 AM	0	3	0	0	0	1	0	0	1	0	0	0
4/25/2024	4:30 AM	0	3	0	0	0	1	0	0	0	0	0	0
4/25/2024	4:45 AM	0	3	1	0	0	0	0	0	1	0	0	0
4/25/2024	5:00 AM	0	6	1	0	0	0	0	0	0	0	0	0
4/25/2024	5:15 AM	0	6	1	0	0	0	0	0	0	0	0	0
4/25/2024	5:30 AM	0	5	3	0	1	0	0	0	0	0	0	0
4/25/2024	5:45 AM	0	4	0	0	1	0	0	0	0	0	0	0
4/25/2024	6:00 AM	0	8	3	1	1	0	0	0	0	0	0	0
4/25/2024	6:15 AM	1	12	2	0	0	0	0	0	1	0	0	0
4/25/2024	6:30 AM	0	10	2	0	1	0	0	0	0	0	0	0
4/25/2024	6:45 AM	0	18	6	0	2	0	0	0	0	0	0	0
4/25/2024	7:00 AM	0	18	3	0	0	1	0	0	0	0	0	0
4/25/2024	7:15 AM	0	26	6	0	0	0	0	0	0	0	0	0
4/25/2024	7:30 AM	0	26	6	0	0	0	0	0	0	0	0	0
4/25/2024	7:45 AM	0	24	8	0	0	1	0	0	0	0	0	0
4/25/2024	8:00 AM	0	18	2	0	0	0	0	0	0	0	0	0
4/25/2024	8:15 AM	0	23	5	0	0	0	0	0	0	0	0	0
4/25/2024	8:30 AM	0	28	6	0	0	0	0	0	1	0	0	0
4/25/2024	8:45 AM	0	29	6	0	0	2	0	0	0	0	0	0
4/25/2024	9:00 AM	0	21	6	0	0	0	0	0	0	0	0	0
4/25/2024	9:15 AM	0	24	9	1	0	1	0	0	0	0	0	0
4/25/2024	9:30 AM	0	28	9	0	3	0	0	0	0	0	0	0
4/25/2024	9:45 AM	0	30	12	0	0	0	0	0	0	0	0	0
4/25/2024	10:00 AM	0	19	3	0	2	0	0	0	0	0	0	0
4/25/2024	10:15 AM	0	27	9	0	0	0	0	0	0	0	0	0
4/25/2024	10:30 AM	0	24	8	0	0	0	0	0	0	0	0	0
4/25/2024	10:45 AM	0	32	9	0	0	2	0	0	0	0	0	0
4/25/2024	11:00 AM	0	21	12	0	2	0	0	0	0	0	0	0
4/25/2024	11:15 AM	0	31	14	0	0	0	0	0	0	0	0	0
4/25/2024	11:30 AM	0	27	8	0	0	1	0	0	1	0	0	0
4/25/2024	11:45 AM	0	37	12	0	0	1	0	0	0	0	0	0
4/25/2024	12:00 PM	0	44	13	0	0	0	0	0	2	0	0	0
4/25/2024	12:15 PM	0	47	6	0	1	0	0	1	0	0	0	0
4/25/2024	12:30 PM	0	57	12	0	2	0	0	1	0	0	0	0
4/25/2024	12:45 PM	0	50	9	0	0	0	0	0	0	0	0	0
4/25/2024	1:00 PM	0	44	12	0	1	0	0	0	1	0	0	0
4/25/2024	1:15 PM	0	50	10	0	1	0	0	1	0	0	0	0
4/25/2024	1:30 PM	0	41	8	0	4	0	0	0	1	0	0	0
4/25/2024	1:45 PM	0	47	6	1	0	0	0	0	0	0	0	0
4/25/2024	2:00 PM	0	61	10	0	1	0	0	0	0	0	0	0
4/25/2024	2:15 PM	0	45	8	0	1	1	0	0	0	0	0	0
4/25/2024	2:30 PM	0	69	13	0	0	0	0	0	0	0	0	0
4/25/2024	2:45 PM	0	57	10	0	1	0	0	1	0	0	0	0
4/25/2024	3:00 PM	0	60	6	0	0	1	0	1	0	0	0	0
4/25/2024	3:15 PM	0	52	11	0	2	0	0	0	0	0	0	0
4/25/2024	3:30 PM	0	58	7	0	1	0	0	1	0	0	0	0
4/25/2024	3:45 PM	0	61	9	0	1	0	0	0	0	0	0	0
4/25/2024	4:00 PM	0	52	11	0	0	1	0	0	0	0	0	0
4/25/2024	4:15 PM	0	47	7	0	0	0	0	0	0	0	0	0
4/25/2024	4:30 PM	0	40	6	0	2	0	0	0	0	0	0	0
4/25/2024	4:45 PM	0	36	7	0	0	0	0	0	0	0	0	0
4/25/2024	5:00 PM	0	50	10	0	0	0	0	0	1	0	0	0
4/25/2024	5:15 PM	0	39	6	0	0	0	0	0	0	0	0	0
4/25/2024	5:30 PM	0	33	8	0	0	0	0	0	0	0	0	0
4/25/2024	5:45 PM	0	35	5	0	0	0	0	0	0	0	0	0
4/25/2024	6:00 PM	0	36	5	0	0	0	0	0	0	0	0	0
4/25/2024	6:15 PM	0	37	4	1	0	0	0	0	0	0	0	0
4/25/2024	6:30 PM	2	38	6	0	0	0	0	0	0	0	0	0
4/25/2024	6:45 PM	0	45	9	0	0	0	0	0	0	0	0	0
4/25/2024	7:00 PM	0	0	0	0	0	0	0	0	0	0	0	0
4/25/2024	7:15 PM	0	0	0	0	0	0	0	0	0	0	0	0
4/25/2024	7:30 PM	0	0	0	0	0	0	0	0	0	0	0	0
4/25/2024	7:45 PM	0	0	0	0	0	0	0	0	0	0	0	0
4/25/2024	8:00 PM	0	0	0	0	0	0	0	0	0	0	0	0
4/25/2024	8:15 PM	0	0	0	0	0	0	0	0	0	0	0	0
4/25/2024	8:30 PM	0	0	0	0	0	0	0	0	0	0	0	0
4/25/2024	8:45 PM	0	0	0	0	0	0	0	0	0	0	0	0
4/25/2024	9:00 PM	0	0	0	0	0	0	0	0	0	0	0	0
4/25/2024	9:15 PM	0	0	0	0	0	0	0	0	0	0	0	0
4/25/2024	9:30 PM	0	0	0	0	0	0	0	0	0	0	0	0
4/25/2024	9:45 PM	0	0	0	0	0	0	0	0	0	0	0	0
4/25/2024	10:00 PM	0	0	0	0	0	0	0	0	0	0	0	0
4/25/2024	10:15 PM	0	0	0	0	0	0	0	0	0	0	0	0
4/25/2024	10:30 PM	0	0	0	0	0	0	0	0	0	0	0	0
4/25/2024	10:45 PM	0	0	0	0	0	0	0	0	0	0	0	0
4/25/2024	11:00 PM	0	0	0	0	0	0	0	0	0	0	0	0
4/25/2024	11:15 PM	0	0	0	0	0	0	0	0	0	0	0	0
4/25/2024	11:30 PM	0	0	0	0	0	0	0	0	0	0	0	0
4/25/2024	11:45 PM	0	0	0	0	0	0	0	0	0	0	0	0

NB
File Name:
Start Date: 4/23/2024
Start Time: 0
Site Code: 46
Station ID: 1
Location 1: I-26 On/Off-Ramp, south of Bush River Rd
Location 2:

Date	Time	1	2	3	4	5	6	7	8	9	10	11	12	13
4/23/2024	12:00 AM	0	0	0	0	0	0	0	0	0	0	0	0	0
4/23/2024	12:15 AM	0	0	0	0	0	0	0	0	0	0	0	0	0
4/23/2024	12:30 AM	0	0	0	0	0	0	0	0	0	0	0	0	0
4/23/2024	12:45 AM	0	0	0	0	0	0	0	0	0	0	0	0	0
4/23/2024	1:00 AM	0	0	0	0	0	0	0	0	0	0	0	0	0
4/23/2024	1:15 AM	0	0	0	0	0	0	0	0	0	0	0	0	0
4/23/2024	1:30 AM	0	0	0	0	0	0	0	0	0	0	0	0	0
4/23/2024	1:45 AM	0	0	0	0	0	0	0	0	0	0	0	0	0
4/23/2024	2:00 AM	0	0	0	0	0	0	0	0	0	0	0	0	0
4/23/2024	2:15 AM	0	0	0	0	0	0	0	0	0	0	0	0	0
4/23/2024	2:30 AM	0	0	0	0	0	0	0	0	0	0	0	0	0
4/23/2024	2:45 AM	0	0	0	0	0	0	0	0	0	0	0	0	0
4/23/2024	3:00 AM	0	0	0	0	0	0	0	0	0	0	0	0	0
4/23/2024	3:15 AM	0	0	0	0	0	0	0	0	0	0	0	0	0
4/23/2024	3:30 AM	0	0	0	0	0	0	0	0	0	0	0	0	0
4/23/2024	3:45 AM	0	0	0	0	0	0	0	0	0	0	0	0	0
4/23/2024	4:00 AM	0	0	0	0	0	0	0	0	0	0	0	0	0
4/23/2024	4:15 AM	0	0	0	0	0	0	0	0	0	0	0	0	0
4/23/2024	4:30 AM	0	0	0	0	0	0	0	0	0	0	0	0	0
4/23/2024	4:45 AM	0	0	0	0	0	0	0	0	0	0	0	0	0
4/23/2024	5:00 AM	0	0	0	0	0	0	0	0	0	0	0	0	0
4/23/2024	5:15 AM	0	0	0	0	0	0	0	0	0	0	0	0	0
4/23/2024	5:30 AM	0	0	0	0	0	0	0	0	0	0	0	0	0
4/23/2024	5:45 AM	0	0	0	0	0	0	0	0	0	0	0	0	0
4/23/2024	6:00 AM	0	0	0	0	0	0	0	0	0	0	0	0	0
4/23/2024	6:15 AM	0	0	0	0	0	0	0	0	0	0	0	0	0
4/23/2024	6:30 AM	0	0	0	0	0	0	0	0	0	0	0	0	0
4/23/2024	6:45 AM	0	0	0	0	0	0	0	0	0	0	0	0	0
4/23/2024	7:00 AM	0	0	0	0	0	0	0	0	0	0	0	0	0
4/23/2024	7:15 AM	0	0	0	0	0	0	0	0	0	0	0	0	0
4/23/2024	7:30 AM	0	0	0	0	0	0	0	0	0	0	0	0	0
4/23/2024	7:45 AM	0	0	0	0	0	0	0	0	0	0	0	0	0
4/23/2024	8:00 AM	0	0	0	0	0	0	0	0	0	0	0	0	0
4/23/2024	8:15 AM	0	0	0	0	0	0	0	0	0	0	0	0	0
4/23/2024	8:30 AM	0	0	0	0	0	0	0	0	0	0	0	0	0
4/23/2024	8:45 AM	0	0	0	0	0	0	0	0	0	0	0	0	0
4/23/2024	9:00 AM	0	0	0	0	0	0	0	0	0	0	0	0	0
4/23/2024	9:15 AM	0	0	0	0	0	0	0	0	0	0	0	0	0
4/23/2024	9:30 AM	0	0	0	0	0	0	0	0	0	0	0	0	0
4/23/2024	9:45 AM	0	0	0	0	0	0	0	0	0	0	0	0	0
4/23/2024	10:00 AM	0	0	0	0	0	0	0	0	0	0	0	0	0
4/23/2024	10:15 AM	0	0	0	0	0	0	0	0	0	0	0	0	0
4/23/2024	10:30 AM	0	0	0	0	0	0	0	0	0	0	0	0	0
4/23/2024	10:45 AM	0	0	0	0	0	0	0	0	0	0	0	0	0
4/23/2024	11:00 AM	0	0	0	0	0	0	0	0	0	0	0	0	0
4/23/2024	11:15 AM	0	0	0	0	0	0	0	0	0	0	0	0	0
4/23/2024	11:30 AM	0	0	0	0	0	0	0	0	0	0	0	0	0
4/23/2024	11:45 AM	0	0	0	0	0	0	0	0	0	0	0	0	0
4/23/2024	12:00 PM	0	0	0	0	0	0	0	0	0	0	0	0	0
4/23/2024	12:15 PM	0	0	0	0	0	0	0	0	0	0	0	0	0
4/23/2024	12:30 PM	0	0	0	0	0	0	0	0	0	0	0	0	0
4/23/2024	12:45 PM	0	0	0	0	0	0	0	0	0	0	0	0	0
4/23/2024	1:00 PM	0	0	0	0	0	0	0	0	0	0	0	0	0
4/23/2024	1:15 PM	0	0	0	0	0	0	0	0	0	0	0	0	0
4/23/2024	1:30 PM	0	0	0	0	0	0	0	0	0	0	0	0	0
4/23/2024	1:45 PM	0	0	0	0	0	0	0	0	0	0	0	0	0
4/23/2024	2:00 PM	0	0	0	0	0	0	0	0	0	0	0	0	0
4/23/2024	2:15 PM	0	0	0	0	0	0	0	0	0	0	0	0	0
4/23/2024	2:30 PM	0	0	0	0	0	0	0	0	0	0	0	0	0
4/23/2024	2:45 PM	0	0	0	0	0	0	0	0	0	0	0	0	0
4/23/2024	3:00 PM	0	0	0	0	0	0	0	0	0	0	0	0	0
4/23/2024	3:15 PM	0	0	0	0	0	0	0	0	0	0	0	0	0
4/23/2024	3:30 PM	0	0	0	0	0	0	0	0	0	0	0	0	0
4/23/2024	3:45 PM	0	0	0	0	0	0	0	0	0	0	0	0	0
4/23/2024	4:00 PM	0	0	0	0	0	0	0	0	0	0	0	0	0
4/23/2024	4:15 PM	0	0	0	0	0	0	0	0	0	0	0	0	0
4/23/2024	4:30 PM	0	0	0	0	0	0	0	0	0	0	0	0	0
4/23/2024	4:45 PM	0	0	0	0	0	0	0	0	0	0	0	0	0
4/23/2024	5:00 PM	0	0	0	0	0	0	0	0	0	0	0	0	0
4/23/2024	5:15 PM	0	0	0	0	0	0	0	0	0	0	0	0	0
4/23/2024	5:30 PM	0	0	0	0	0	0	0	0	0	0	0	0	0
4/23/2024	5:45 PM	0	0	0	0	0	0	0	0	0	0	0	0	0
4/23/2024	6:00 PM	0	0	0	0	0	0	0	0	0	0	0	0	0
4/23/2024	6:15 PM	0	0	0	0	0	0	0	0	0	0	0	0	0
4/23/2024	6:30 PM	0	0	0	0	0	0	0	0	0	0	0	0	0
4/23/2024	6:45 PM	0	0	0	0	0	0	0	0	0	0	0	0	0
4/23/2024	7:00 PM	0	0	0	0	0	0	0	0	0	0	0	0	0
4/23/2024	7:15 PM	0	0	0	0	0	0	0	0	0	0	0	0	0
4/23/2024	7:30 PM	0	0	0	0	0	0	0	0	0	0	0	0	0
4/23/2024	7:45 PM	0	0	0	0	0	0	0	0	0	0	0	0	0
4/23/2024	8:00 PM	0	0	0	0	0	0	0	0	0	0	0	0	0
4/23/2024	8:15 PM	0	0	0	0	0	0	0	0	0	0	0	0	0
4/23/2024	8:30 PM	0	0	0	0	0	0	0	0	0	0	0	0	0
4/23/2024	8:45 PM	0	0	0	0	0	0	0	0	0	0	0	0	0
4/23/2024	9:00 PM	0	0	0	0	0	0	0	0	0	0	0	0	0
4/23/2024	9:15 PM	0	0	0	0	0	0	0	0	0	0	0	0	0
4/23/2024	9:30 PM	0	0	0	0	0	0	0	0	0	0	0	0	0
4/23/2024	9:45 PM	0	0	0	0	0	0	0	0	0	0	0	0	0
4/23/2024	10:00 PM	0	0	0	0	0	0	0	0	0	0	0	0	0
4/23/2024	10:15 PM	0	0	0	0	0	0	0	0	0	0	0	0	0
4/23/2024	10:30 PM	0	0	0	0	0	0	0	0	0	0	0	0	0
4/23/2024	10:45 PM	0	0	0	0	0	0	0	0	0	0	0	0	0
4/23/2024	11:00 PM	0	0	0	0	0	0	0	0	0	0	0	0	0
4/23/2024	11:15 PM	0	0	0	0	0	0	0	0	0	0	0	0	0
4/23/2024	11:30 PM	0	0	0	0	0	0	0	0	0	0	0	0	0
4/23/2024	11:45 PM	0	0	0	0	0	0	0	0	0	0	0	0	0

4/24/2024	12:00 AM	0	0	0	0	0	0	0	0	0	0	0	0	0
4/24/2024	12:15 AM	0	0	0	0	0	0	0	0	0	0	0	0	0
4/24/2024	12:30 AM	0	0	0	0	0	0	0	0	0	0	0	0	0
4/24/2024	12:45 AM	0	0	0	0	0	0	0	0	0	0	0	0	0
4/24/2024	1:00 AM	0	0	0	0	0	0	0	0	0	0	0	0	0
4/24/2024	1:15 AM	0	0	0	0	0	0	0	0	0	0	0	0	0
4/24/2024	1:30 AM	0	0	0	0	0	0	0	0	0	0	0	0	0
4/24/2024	1:45 AM	0	0	0	0	0	0	0	0	0	0	0	0	0
4/24/2024	2:00 AM	0	0	0	0	0	0	0	0	0	0	0	0	0
4/24/2024	2:15 AM	0	0	0	0	0	0	0	0	0	0	0	0	0
4/24/2024	2:30 AM	0	0	0	0	0	0	0	0	0	0	0	0	0
4/24/2024	2:45 AM	0	0	0	0	0	0	0	0	0	0	0	0	0
4/24/2024	3:00 AM	0	0	0	0	0	0	0	0	0	0	0	0	0
4/24/2024	3:15 AM	0	0	0	0	0	0	0	0	0	0	0	0	0
4/24/2024	3:30 AM	0	0	0	0	0	0	0	0	0	0	0	0	0
4/24/2024	3:45 AM	0	0	0	0	0	0	0	0	0	0	0	0	0
4/24/2024	4:00 AM	0	0	0	0	0	0	0	0	0	0	0	0	0
4/24/2024	4:15 AM	0	0	0	0	0	0	0	0	0	0	0	0	0
4/24/2024	4:30 AM	0	0	0	0	0	0	0	0	0	0	0	0	0
4/24/2024	4:45 AM	0	0	0	0	0	0	0	0	0	0	0	0	0
4/24/2024	5:00 AM	0	0	0	0	0	0	0	0	0	0	0	0	0
4/24/2024	5:15 AM	0	0	0	0	0	0	0	0	0	0	0	0	0
4/24/2024	5:30 AM	0	0	0	0	0	0	0	0	0	0	0	0	0
4/24/2024	5:45 AM	0	0	0	0	0	0	0	0	0	0	0	0	0
4/24/2024	6:00 AM	0	0	0	0	0	0	0	0	0	0	0	0	0
4/24/2024	6:15 AM	0	0	0	0	0	0	0	0	0	0	0	0	0
4/24/2024	6:30 AM	0	0	0	0	0	0	0	0	0	0	0	0	0
4/24/2024	6:45 AM	0	0	0	0	0	0	0	0	0	0	0	0	0
4/24/2024	7:00 AM	0	0	0	0	0	0	0	0	0	0	0	0	0
4/24/2024	7:15 AM	0	0	0	0	0	0	0	0	0	0	0	0	0
4/24/2024	7:30 AM	0	0	0	0	0	0	0	0	0	0	0	0	0
4/24/2024	7:45 AM	0	0	0	0	0	0	0	0	0	0	0	0	0
4/24/2024	8:00 AM	0	0	0	0	0	0	0	0	0	0	0	0	0
4/24/2024	8:15 AM	0	0	0	0	0	0	0	0	0	0	0	0	0
4/24/2024	8:30 AM	0	0	0	0	0	0	0	0	0	0	0	0	0
4/24/2024	8:45 AM	0	0	0	0	0	0	0	0	0	0	0	0	0
4/24/2024	9:00 AM	0	0	0	0	0	0	0	0	0	0	0	0	0
4/24/2024	9:15 AM	0	0	0	0	0	0	0	0	0	0	0	0	0
4/24/2024	9:30 AM	0	0	0	0	0	0	0	0	0	0	0	0	0
4/24/2024	9:45 AM	0	0	0	0	0	0	0	0	0	0	0	0	0
4/24/2024	10:00 AM	0	0	0	0	0	0	0	0	0	0	0	0	0
4/24/2024	10:15 AM	0	0	0	0	0	0	0	0	0	0	0	0	0
4/24/2024	10:30 AM	0	0	0	0	0	0	0	0	0	0	0	0	0
4/24/2024	10:45 AM	0	0	0	0	0	0	0	0	0	0	0	0	0
4/24/2024	11:00 AM	0	0	0	0	0	0	0	0	0	0	0	0	0
4/24/2024	11:15 AM	0	0	0	0	0	0	0	0	0	0	0	0	0
4/24/2024	11:30 AM	0	0	0	0	0	0	0	0	0	0	0	0	0
4/24/2024	11:45 AM	0	0	0	0	0	0	0	0	0	0	0	0	0
4/24/2024	12:00 PM	0	0	0	0	0	0	0	0	0	0	0	0	0
4/24/2024	12:15 PM	0	0	0	0	0	0	0	0	0	0	0	0	0
4/24/2024	12:30 PM	0	0	0	0	0	0	0	0	0	0	0	0	0
4/24/2024	12:45 PM	0	0	0	0	0	0	0	0	0	0	0	0	0
4/24/2024	1:00 PM	0	0	0	0	0	0	0	0	0	0	0	0	0
4/24/2024	1:15 PM	0	0	0	0	0	0	0	0	0	0	0	0	0
4/24/2024	1:30 PM	0	0	0	0	0	0	0	0	0	0	0	0	0
4/24/2024	1:45 PM	0	0	0	0	0	0	0	0	0	0	0	0	0
4/24/2024	2:00 PM	0	0	0	0	0	0	0	0	0	0	0	0	0
4/24/2024	2:15 PM	0	0	0	0	0	0	0	0	0	0	0	0	0
4/24/2024	2:30 PM	0	0	0	0	0	0	0	0	0	0	0	0	0
4/24/2024	2:45 PM	0	0	0	0	0	0	0	0	0	0	0	0	0
4/24/2024	3:00 PM	0	0	0	0	0	0	0	0	0	0	0	0	0
4/24/2024	3:15 PM	0	0	0	0	0	0	0	0	0	0	0	0	0
4/24/2024	3:30 PM	0	0	0	0	0	0	0	0	0	0	0	0	0
4/24/2024	3:45 PM	0	0	0	0	0	0	0	0	0	0	0	0	0
4/24/2024	4:00 PM	0	0	0	0	0	0	0	0	0	0	0	0	0
4/24/2024	4:15 PM	0	0	0	0	0	0	0	0	0	0	0	0	0
4/24/2024	4:30 PM	0	0	0	0	0	0	0	0	0	0	0	0	0
4/24/2024	4:45 PM	0	0	0	0	0	0	0	0	0	0	0	0	0
4/24/2024	5:00 PM	0	0	0	0	0	0	0	0	0	0	0	0	0
4/24/2024	5:15 PM	0	0	0	0	0	0	0	0	0	0	0	0	0
4/24/2024	5:30 PM	0	0	0	0	0	0	0	0	0	0	0	0	0
4/24/2024	5:45 PM	0	0	0	0	0	0	0	0	0	0	0	0	0
4/24/2024	6:00 PM	0	0	0	0	0	0	0	0	0	0	0	0	0
4/24/2024	6:15 PM	0	0	0	0	0	0	0	0	0	0	0	0	0
4/24/2024	6:30 PM	0	0	0	0	0	0	0	0	0	0	0	0	0
4/24/2024	6:45 PM	0	0	0	0	0	0	0	0	0	0	0	0	0
4/24/2024	7:00 PM	0	0	0	0	0	0	0	0	0	0	0	0	0
4/24/2024	7:15 PM	0	0	0	0	0	0	0	0	0	0	0	0	0
4/24/2024	7:30 PM	0	0	0	0	0	0	0	0	0	0	0	0	0
4/24/2024	7:45 PM	0	0	0	0	0	0	0	0	0	0	0	0	0
4/24/2024	8:00 PM	0	0	0	0	0	0	0	0	0	0	0	0	0
4/24/2024	8:15 PM	0	0	0	0	0	0	0	0	0	0	0	0	0
4/24/2024	8:30 PM	0	0	0	0	0	0	0	0	0	0	0	0	0
4/24/2024	8:45 PM	0	0	0	0	0	0	0	0	0	0	0	0	0
4/24/2024	9:00 PM	0	0	0	0	0	0	0	0	0	0	0	0	0
4/24/2024	9:15 PM	0	0	0	0	0	0	0	0	0	0	0	0	0
4/24/2024	9:30 PM	0	0	0	0	0	0	0	0	0	0	0	0	0
4/24/2024	9:45 PM	0	0	0	0	0	0	0	0	0	0	0	0	0
4/24/2024	10:00 PM	0	0	0	0	0	0	0	0	0	0	0	0	0
4/24/2024	10:15 PM	0	0	0	0	0	0	0	0	0	0	0	0	0
4/24/2024	10:30 PM	0	0	0	0	0	0	0	0	0	0	0	0	0
4/24/2024	10:45 PM	0	0	0	0	0	0	0	0	0	0	0	0	0
4/24/2024	11:00 PM	0	0	0	0	0	0	0	0	0	0	0	0	0
4/24/2024	11:15 PM	0	0	0	0	0	0	0	0	0	0	0	0	0
4/24/2024	11:30 PM	0	0	0	0	0	0	0	0	0	0	0	0	0
4/24/2024	11:45 PM	0	0	0	0	0	0	0	0	0	0	0	0	0

4/25/2024	12:00 AM	0	0	0	0	0	0	0	0	0	0	0	0	0
4/25/2024	12:15 AM	0	0	0	0	0	0	0	0	0	0	0	0	0
4/25/2024	12:30 AM	0	0	0	0	0	0	0	0	0	0	0	0	0
4/25/2024	12:45 AM	0	0	0	0	0	0	0	0	0	0	0	0	0
4/25/2024	1:00 AM	0	0	0	0	0	0	0	0	0	0	0	0	0
4/25/2024	1:15 AM	0	0	0	0	0	0	0	0	0	0	0	0	0
4/25/2024	1:30 AM	0	0	0	0	0	0	0	0	0	0	0	0	0
4/25/2024	1:45 AM	0	0	0	0	0	0	0	0	0	0	0	0	0
4/25/2024	2:00 AM	0	0	0	0	0	0	0	0	0	0	0	0	0
4/25/2024	2:15 AM	0	0	0	0	0	0	0	0	0	0	0	0	0
4/25/2024	2:30 AM	0	0	0	0	0	0	0	0	0	0	0	0	0
4/25/2024	2:45 AM	0	0	0	0	0	0	0	0	0	0	0	0	0
4/25/2024	3:00 AM	0	0	0	0	0	0	0	0	0	0	0	0	0
4/25/2024	3:15 AM	0	0	0	0	0	0	0	0	0	0	0	0	0
4/25/2024	3:30 AM	0	0	0	0	0	0	0	0	0	0	0	0	0
4/25/2024	3:45 AM	0	0	0	0	0	0	0	0	0	0	0	0	0
4/25/2024	4:00 AM	0	0	0	0	0	0	0	0	0	0	0	0	0
4/25/2024	4:15 AM	0	0	0	0	0	0	0	0	0	0	0	0	0
4/25/2024	4:30 AM	0	0	0	0	0	0	0	0	0	0	0	0	0
4/25/2024	4:45 AM	0	0	0	0	0	0	0	0	0	0	0	0	0
4/25/2024	5:00 AM	0	0	0	0	0	0	0	0	0	0	0	0	0
4/25/2024	5:15 AM	0	0	0	0	0	0	0	0	0	0	0	0	0
4/25/2024	5:30 AM	0	0	0	0	0	0	0	0	0	0	0	0	0
4/25/2024	5:45 AM	0	0	0	0	0	0	0	0	0	0	0	0	0
4/25/2024	6:00 AM	0	0	0	0	0	0	0	0	0	0	0	0	0
4/25/2024	6:15 AM	0	0	0	0	0	0	0	0	0	0	0	0	0
4/25/2024	6:30 AM	0	0	0	0	0	0	0	0	0	0	0	0	0
4/25/2024	6:45 AM	0	0	0	0	0	0	0	0	0	0	0	0	0
4/25/2024	7:00 AM	0	0	0	0	0	0	0	0	0	0	0	0	0
4/25/2024	7:15 AM	0	0	0	0	0	0	0	0	0	0	0	0	0
4/25/2024	7:30 AM	0	0	0	0	0	0	0	0	0	0	0	0	0
4/25/2024	7:45 AM	0	0	0	0	0	0	0	0	0	0	0	0	0
4/25/2024	8:00 AM	0	0	0	0	0	0	0	0	0	0	0	0	0
4/25/2024	8:15 AM	0	0	0	0	0	0	0	0	0	0	0	0	0
4/25/2024	8:30 AM	0	0	0	0	0	0	0	0	0	0	0	0	0
4/25/2024	8:45 AM	0	0	0	0	0	0	0	0	0	0	0	0	0
4/25/2024	9:00 AM	0	0	0	0	0	0	0	0	0	0	0	0	0
4/25/2024	9:15 AM	0	0	0	0	0	0	0	0	0	0	0	0	0
4/25/2024	9:30 AM	0	0	0	0	0	0	0	0	0	0	0	0	0
4/25/2024	9:45 AM	0	0	0	0	0	0	0	0	0	0	0	0	0
4/25/2024	10:00 AM	0	0	0	0	0	0	0	0	0	0	0	0	0
4/25/2024	10:15 AM	0	0	0	0	0	0	0	0	0	0	0	0	0
4/25/2024	10:30 AM	0	0	0	0	0	0	0	0	0	0	0	0	0
4/25/2024	10:45 AM	0	0	0	0	0	0	0	0	0	0	0	0	0
4/25/2024	11:00 AM	0	0	0	0	0	0	0	0	0	0	0	0	0
4/25/2024	11:15 AM	0	0	0	0	0	0	0	0	0	0	0	0	0
4/25/2024	11:30 AM	0	0	0	0	0	0	0	0	0	0	0	0	0
4/25/2024	11:45 AM	0	0	0	0	0	0	0	0	0	0	0	0	0
4/25/2024	12:00 PM	0	0	0	0	0	0	0	0	0	0	0	0	0
4/25/2024	12:15 PM	0	0	0	0	0	0	0	0	0	0	0	0	0
4/25/2024	12:30 PM	0	0	0	0	0	0	0	0	0	0	0	0	0
4/25/2024	12:45 PM	0	0	0	0	0	0	0	0	0	0	0	0	0
4/25/2024	1:00 PM	0	0	0	0	0	0	0	0	0	0	0	0	0
4/25/2024	1:15 PM	0	0	0	0	0	0	0	0	0	0	0	0	0
4/25/2024	1:30 PM	0	0	0	0	0	0	0	0	0	0	0	0	0
4/25/2024	1:45 PM	0	0	0	0	0	0	0	0	0	0	0	0	0
4/25/2024	2:00 PM	0	0	0	0	0	0	0	0	0	0	0	0	0
4/25/2024	2:15 PM	0	0	0	0	0	0	0	0	0	0	0	0	0
4/25/2024	2:30 PM	0	0	0	0	0	0	0	0	0	0	0	0	0
4/25/2024	2:45 PM	0	0	0	0	0	0	0	0	0	0	0	0	0
4/25/2024	3:00 PM	0	0	0	0	0	0	0	0	0	0	0	0	0
4/25/2024	3:15 PM	0	0	0	0	0	0	0	0	0	0	0	0	0
4/25/2024	3:30 PM	0	0	0	0	0	0	0	0	0	0	0	0	0
4/25/2024	3:45 PM	0	0	0	0	0	0	0	0	0	0	0	0	0
4/25/2024	4:00 PM	0	0	0	0	0	0	0	0	0	0	0	0	0
4/25/2024	4:15 PM	0	0	0	0	0	0	0	0	0	0	0	0	0
4/25/2024	4:30 PM	0	0	0	0	0	0	0	0	0	0	0	0	0
4/25/2024	4:45 PM	0	0	0	0	0	0	0	0	0	0	0	0	0
4/25/2024	5:00 PM	0	0	0	0	0	0	0	0	0	0	0	0	0
4/25/2024	5:15 PM	0	0	0	0	0	0	0	0	0	0	0	0	0
4/25/2024	5:30 PM	0	0	0	0	0	0	0	0	0	0	0	0	0
4/25/2024	5:45 PM	0	0	0	0	0	0	0	0	0	0	0	0	0
4/25/2024	6:00 PM	0	0	0	0	0	0	0	0	0	0	0	0	0
4/25/2024	6:15 PM	0	0	0	0	0	0	0	0	0	0	0	0	0
4/25/2024	6:30 PM	0	0	0	0	0	0	0	0	0	0	0	0	0
4/25/2024	6:45 PM	0	0	0	0	0	0	0	0	0	0	0	0	0
4/25/2024	7:00 PM	0	0	0	0	0	0	0	0	0	0	0	0	0
4/25/2024	7:15 PM	0	0	0	0	0	0	0	0	0	0	0	0	0
4/25/2024	7:30 PM	0	0	0	0	0	0	0	0	0	0	0	0	0
4/25/2024	7:45 PM	0	0	0	0	0	0	0	0	0	0	0	0	0
4/25/2024	8:00 PM	0	0	0	0	0	0	0	0	0	0	0	0	0
4/25/2024	8:15 PM	0	0	0	0	0	0	0	0	0	0	0	0	0
4/25/2024	8:30 PM	0	0	0	0	0	0	0	0	0	0	0	0	0
4/25/2024	8:45 PM	0	0	0	0	0	0	0	0	0	0	0	0	0
4/25/2024	9:00 PM	0	0	0	0	0	0	0	0	0	0	0	0	0
4/25/2024	9:15 PM	0	0	0	0	0	0	0	0	0	0	0	0	0
4/25/2024	9:30 PM	0	0	0	0	0	0	0	0	0	0	0	0	0
4/25/2024	9:45 PM	0	0	0	0	0	0	0	0	0	0	0	0	0
4/25/2024	10:00 PM	0	0	0	0	0	0	0	0	0	0	0	0	0
4/25/2024	10:15 PM	0	0	0	0	0	0	0	0	0	0	0	0	0
4/25/2024	10:30 PM	0	0	0	0	0	0	0	0	0	0	0	0	0
4/25/2024	10:45 PM	0	0	0	0	0	0	0	0	0	0	0	0	0
4/25/2024	11:00 PM	0	0	0	0	0	0	0	0	0	0	0	0	0
4/25/2024	11:15 PM	0	0	0	0	0	0	0	0	0	0	0	0	0
4/25/2024	11:30 PM	0	0	0	0	0	0	0	0	0	0	0	0	0
4/25/2024	11:45 PM	0	0	0	0	0	0	0	0	0	0	0	0	0

SB
File Name:
Start Date: 4/23/2024
Start Time: 0
Site Code: 46
Station ID: 1
Location 1: I-26 On/Off-Ramp, south of Bush River Rd
Location 2:

Date	Time	1	2	3	4	5	6	7	8	9	10	11	12	13
4/23/2024	12:00 AM	0	0	0	0	0	0	0	0	0	0	0	0	0
4/23/2024	12:15 AM	0	0	0	0	0	0	0	0	0	0	0	0	0
4/23/2024	12:30 AM	0	0	0	0	0	0	0	0	0	0	0	0	0
4/23/2024	12:45 AM	0	0	0	0	0	0	0	0	0	0	0	0	0
4/23/2024	1:00 AM	0	0	0	0	0	0	0	0	0	0	0	0	0
4/23/2024	1:15 AM	0	0	0	0	0	0	0	0	0	0	0	0	0
4/23/2024	1:30 AM	0	0	0	0	0	0	0	0	0	0	0	0	0
4/23/2024	1:45 AM	0	0	0	0	0	0	0	0	0	0	0	0	0
4/23/2024	2:00 AM	0	0	0	0	0	0	0	0	0	0	0	0	0
4/23/2024	2:15 AM	0	0	0	0	0	0	0	0	0	0	0	0	0
4/23/2024	2:30 AM	0	0	0	0	0	0	0	0	0	0	0	0	0
4/23/2024	2:45 AM	0	0	0	0	0	0	0	0	0	0	0	0	0
4/23/2024	3:00 AM	0	0	0	0	0	0	0	0	0	0	0	0	0
4/23/2024	3:15 AM	0	0	0	0	0	0	0	0	0	0	0	0	0
4/23/2024	3:30 AM	0	0	0	0	0	0	0	0	0	0	0	0	0
4/23/2024	3:45 AM	0	0	0	0	0	0	0	0	0	0	0	0	0
4/23/2024	4:00 AM	0	0	0	0	0	0	0	0	0	0	0	0	0
4/23/2024	4:15 AM	0	0	0	0	0	0	0	0	0	0	0	0	0
4/23/2024	4:30 AM	0	0	0	0	0	0	0	0	0	0	0	0	0
4/23/2024	4:45 AM	0	0	0	0	0	0	0	0	0	0	0	0	0
4/23/2024	5:00 AM	0	0	0	0	0	0	0	0	0	0	0	0	0
4/23/2024	5:15 AM	0	0	0	0	0	0	0	0	0	0	0	0	0
4/23/2024	5:30 AM	0	0	0	0	0	0	0	0	0	0	0	0	0
4/23/2024	5:45 AM	0	0	0	0	0	0	0	0	0	0	0	0	0
4/23/2024	6:00 AM	0	0	0	0	0	0	0	0	0	0	0	0	0
4/23/2024	6:15 AM	0	0	0	0	0	0	0	0	0	0	0	0	0
4/23/2024	6:30 AM	0	0	0	0	0	0	0	0	0	0	0	0	0
4/23/2024	6:45 AM	0	0	0	0	0	0	0	0	0	0	0	0	0
4/23/2024	7:00 AM	0	0	0	0	0	0	0	0	0	0	0	0	0
4/23/2024	7:15 AM	0	0	0	0	0	0	0	0	0	0	0	0	0
4/23/2024	7:30 AM	0	0	0	0	0	0	0	0	0	0	0	0	0
4/23/2024	7:45 AM	0	0	0	0	0	0	0	0	0	0	0	0	0
4/23/2024	8:00 AM	0	0	0	0	0	0	0	0	0	0	0	0	0
4/23/2024	8:15 AM	0	0	0	0	0	0	0	0	0	0	0	0	0
4/23/2024	8:30 AM	0	0	0	0	0	0	0	0	0	0	0	0	0
4/23/2024	8:45 AM	0	0	0	0	0	0	0	0	0	0	0	0	0
4/23/2024	9:00 AM	0	0	0	0	0	0	0	0	0	0	0	0	0
4/23/2024	9:15 AM	0	0	0	0	0	0	0	0	0	0	0	0	0
4/23/2024	9:30 AM	0	0	0	0	0	0	0	0	0	0	0	0	0
4/23/2024	9:45 AM	0	0	0	0	0	0	0	0	0	0	0	0	0
4/23/2024	10:00 AM	0	0	0	0	0	0	0	0	0	0	0	0	0
4/23/2024	10:15 AM	0	0	0	0	0	0	0	0	0	0	0	0	0
4/23/2024	10:30 AM	0	0	0	0	0	0	0	0	0	0	0	0	0
4/23/2024	10:45 AM	0	0	0	0	0	0	0	0	0	0	0	0	0
4/23/2024	11:00 AM	0	0	0	0	0	0	0	0	0	0	0	0	0
4/23/2024	11:15 AM	0	0	0	0	0	0	0	0	0	0	0	0	0
4/23/2024	11:30 AM	0	0	0	0	0	0	0	0	0	0	0	0	0
4/23/2024	11:45 AM	0	0	0	0	0	0	0	0	0	0	0	0	0
4/23/2024	12:00 PM	0	0	0	0	0	0	0	0	0	0	0	0	0
4/23/2024	12:15 PM	0	0	0	0	0	0	0	0	0	0	0	0	0
4/23/2024	12:30 PM	0	0	0	0	0	0	0	0	0	0	0	0	0
4/23/2024	12:45 PM	0	0	0	0	0	0	0	0	0	0	0	0	0
4/23/2024	1:00 PM	0	0	0	0	0	0	0	0	0	0	0	0	0
4/23/2024	1:15 PM	0	0	0	0	0	0	0	0	0	0	0	0	0
4/23/2024	1:30 PM	0	0	0	0	0	0	0	0	0	0	0	0	0
4/23/2024	1:45 PM	0	0	0	0	0	0	0	0	0	0	0	0	0
4/23/2024	2:00 PM	0	0	0	0	0	0	0	0	0	0	0	0	0
4/23/2024	2:15 PM	0	0	0	0	0	0	0	0	0	0	0	0	0
4/23/2024	2:30 PM	0	0	0	0	0	0	0	0	0	0	0	0	0
4/23/2024	2:45 PM	0	0	0	0	0	0	0	0	0	0	0	0	0
4/23/2024	3:00 PM	0	0	0	0	0	0	0	0	0	0	0	0	0
4/23/2024	3:15 PM	0	0	0	0	0	0	0	0	0	0	0	0	0
4/23/2024	3:30 PM	0	0	0	0	0	0	0	0	0	0	0	0	0
4/23/2024	3:45 PM	0	0	0	0	0	0	0	0	0	0	0	0	0
4/23/2024	4:00 PM	0	0	0	0	0	0	0	0	0	0	0	0	0
4/23/2024	4:15 PM	0	0	0	0	0	0	0	0	0	0	0	0	0
4/23/2024	4:30 PM	0	0	0	0	0	0	0	0	0	0	0	0	0
4/23/2024	4:45 PM	0	0	0	0	0	0	0	0	0	0	0	0	0
4/23/2024	5:00 PM	0	0	0	0	0	0	0	0	0	0	0	0	0
4/23/2024	5:15 PM	0	0	0	0	0	0	0	0	0	0	0	0	0
4/23/2024	5:30 PM	0	0	0	0	0	0	0	0	0	0	0	0	0
4/23/2024	5:45 PM	0	0	0	0	0	0	0	0	0	0	0	0	0
4/23/2024	6:00 PM	0	0	0	0	0	0	0	0	0	0	0	0	0
4/23/2024	6:15 PM	0	24	4	0	0	0	0	0	0	0	0	0	0
4/23/2024	6:30 PM	0	51	7	0	0	1	0	0	0	0	0	0	0
4/23/2024	6:45 PM	0	84	10	0	1	1	0	0	1	0	0	0	0
4/23/2024	7:00 PM	0	111	14	0	1	1	0	0	1	0	0	0	0
4/23/2024	7:15 PM	0	119	13	0	2	1	0	0	1	0	0	0	0
4/23/2024	7:30 PM	0	110	16	0	2	0	0	0	1	0	0	0	0
4/23/2024	7:45 PM	0	97	16	0	2	0	0	0	0	0	0	0	0
4/23/2024	8:00 PM	0	84	14	0	2	0	0	0	0	0	0	0	0
4/23/2024	8:15 PM	0	69	14	0	1	0	0	0	0	0	0	0	0
4/23/2024	8:30 PM	0	61	10	0	1	0	0	0	0	0	0	0	0
4/23/2024	8:45 PM	0	53	10	0	0	0	0	0	1	0	0	0	0
4/23/2024	9:00 PM	0	49	10	0	0	0	0	0	2	0	0	0	0
4/23/2024	9:15 PM	0	48	11	0	0	0	0	0	2	0	0	0	0
4/23/2024	9:30 PM	0	49	11	0	1	0	0	0	2	0	0	0	0
4/23/2024	9:45 PM	0	49	10	0	1	0	0	0	1	0	0	0	0
4/23/2024	10:00 PM	0	47	10	0	1	0	0	0	0	0	0	0	0
4/23/2024	10:15 PM	0	37	8	0	1	0	0	0	0	0	0	0	0
4/23/2024	10:30 PM	0	34	7	0	0	0	0	1	0	0	0	0	0
4/23/2024	10:45 PM	0	29	5	0	0	0	0	1	0	0	0	0	0
4/23/2024	11:00 PM	0	31	5	0	0	0	0	1	1	0	0	0	0
4/23/2024	11:15 PM	0	25	3	0	0	0	0	1	1	0	0	0	0
4/23/2024	11:30 PM	0	17	2	0	0	0	0	0	1	0	0	0	0
4/23/2024	11:45 PM	0	10	2	0	0	0	0	0	1	0	0	0	0

4/24/2024	12:00 AM	0	24	1	0	0	0	0	0	2	0	0	0	0
4/24/2024	12:15 AM	0	27	2	0	0	0	0	0	0	0	0	0	0
4/24/2024	12:30 AM	0	23	3	0	0	0	0	0	0	0	0	0	0
4/24/2024	12:45 AM	0	18	2	0	0	0	0	0	0	0	0	0	0
4/24/2024	1:00 AM	0	15	2	0	0	0	0	0	0	0	0	0	0
4/24/2024	1:15 AM	0	10	1	0	0	0	0	0	0	0	0	0	0
4/24/2024	1:30 AM	0	9	0	0	0	0	0	0	0	0	0	0	0
4/24/2024	1:45 AM	0	13	0	0	0	0	0	0	0	0	0	0	0
4/24/2024	2:00 AM	0	12	0	0	0	0	0	0	0	0	0	0	0
4/24/2024	2:15 AM	0	13	0	0	0	0	0	0	0	0	0	0	0
4/24/2024	2:30 AM	0	15	0	0	0	0	0	0	0	0	0	0	0
4/24/2024	2:45 AM	0	13	0	0	0	0	0	0	0	0	0	0	0
4/24/2024	3:00 AM	0	14	1	0	0	0	0	0	0	0	0	0	0
4/24/2024	3:15 AM	0	15	4	0	1	1	0	0	1	0	0	0	0
4/24/2024	3:30 AM	0	14	4	0	1	1	0	0	1	0	0	0	0
4/24/2024	3:45 AM	0	13	5	0	1	1	0	0	1	0	0	0	0
4/24/2024	4:00 AM	0	13	5	0	2	1	0	0	1	0	0	0	0
4/24/2024	4:15 AM	0	11	3	0	1	0	0	0	0	0	0	0	0
4/24/2024	4:30 AM	0	13	6	1	1	0	0	0	1	0	0	0	0
4/24/2024	4:45 AM	0	22	6	1	1	0	0	0	1	0	0	0	0
4/24/2024	5:00 AM	0	27	6	1	0	0	0	0	1	0	0	0	0
4/24/2024	5:15 AM	0	33	5	1	0	1	0	0	2	0	0	0	0
4/24/2024	5:30 AM	0	38	4	0	0	1	0	0	2	0	0	0	0
4/24/2024	5:45 AM	0	37	5	0	1	1	0	0	2	0	0	0	0
4/24/2024	6:00 AM	0	46	7	0	3	1	0	0	3	0	0	0	0
4/24/2024	6:15 AM	0	47	9	0	3	0	0	0	2	0	0	0	0
4/24/2024	6:30 AM	1	62	15	0	3	0	0	0	1	0	0	0	0
4/24/2024	6:45 AM	1	72	19	0	3	0	0	0	2	0	0	0	0
4/24/2024	7:00 AM	1	72	24	0	3	0	0	0	2	0	0	0	0
4/24/2024	7:15 AM	1	86	26	0	4	0	0	0	2	0	0	0	0
4/24/2024	7:30 AM	0	77	24	0	4	0	0	0	2	0	0	0	0
4/24/2024	7:45 AM	0	86	22	0	3	0	0	0	3	0	0	0	0
4/24/2024	8:00 AM	0	94	21	0	2	0	0	0	2	0	0	0	0
4/24/2024	8:15 AM	0	86	20	0	1	0	0	0	2	0	0	0	0
4/24/2024	8:30 AM	0	90	22	0	2	0	0	0	2	0	0	0	0
4/24/2024	8:45 AM	0	79	21	0	2	0	0	0	2	0	0	0	0
4/24/2024	9:00 AM	0	73	24	0	3	0	0	0	2	0	0	0	0
4/24/2024	9:15 AM	0	81	27	0	4	0	0	0	2	0	0	0	0
4/24/2024	9:30 AM	0	86	31	0	3	1	0	0	2	0	0	0	0
4/24/2024	9:45 AM	0	107	34	0	4	2	0	0	0	0	0	0	0
4/24/2024	10:00 AM	0	121	33	0	2	2	0	0	0	0	0	0	0
4/24/2024	10:15 AM	0	129	39	0	4	2	1	0	0	0	0	0	0
4/24/2024	10:30 AM	0	133	35	0	4	1	1	1	0	0	0	0	0
4/24/2024	10:45 AM	0	117	35	1	3	0	1	2	0	0	0	0	0
4/24/2024	11:00 AM	0	124	35	1	3	0	1	2	1	0	0	0	0
4/24/2024	11:15 AM	0	143	34	1	0	1	0	2	2	0	0	0	0
4/24/2024	11:30 AM	1	159	35	1	0	2	0	1	3	0	0	0	0
4/24/2024	11:45 AM	1	187	39	0	0	2	0	0	3	0	0	0	0
4/24/2024	12:00 PM	2	194	40	0	0	3	0	0	3	0	0	0	0
4/24/2024	12:15 PM	2	194	34	0	0	2	0	0	2	0	0	0	0
4/24/2024	12:30 PM	1	209	40	0	1	1	0	0	1	0	0	0	0
4/24/2024	12:45 PM	2	199	39	0	1	1	0	0	1	0	0	0	0
4/24/2024	1:00 PM	1	205	41	0	2	1	0	0	0	0	0	0	0
4/24/2024	1:15 PM	1	199	48	0	2	1	0	0	0	0	0	0	0
4/24/2024	1:30 PM	1	192	42	0	1	1	0	0	0	0	0	0	0
4/24/2024	1:45 PM	0	197	39	0	2	1	0	0	0	0	0	0	0
4/24/2024	2:00 PM	0	182	37	0	5	1	0	0	0	0	0	0	0
4/24/2024	2:15 PM	0	210	35	0	5	1	0	0	0	0	0	0	0
4/24/2024	2:30 PM	1	219	38	0	5	1	0	0	0	0	0	0	0
4/24/2024	2:45 PM	1	225	42	0	5	1	0	0	1	0	0	0	0
4/24/2024	3:00 PM	1	232	37	0	3	0	0	0	1	0	0	0	0
4/24/2024	3:15 PM	1	218	35	0	3	0	0	0	1	0	0	0	0
4/24/2024	3:30 PM	0	192	29	0	4	0	0	0	2	0	0	0	0
4/24/2024	3:45 PM	0	189	24	0	4	1	0	0	1	0	0	0	0
4/24/2024	4:00 PM	0	176	24	0	2	1	0	0	1	0	0	0	0
4/24/2024	4:15 PM	0	176	27	0	3	1	0	0	2	0	0	0	0
4/24/2024	4:30 PM	1	193	31	0	2	1	0	0	1	0	0	0	0
4/24/2024	4:45 PM	1	167	31	0	1	0	0	0	1	0	0	0	0
4/24/2024	5:00 PM	1	164	34	0	1	0	0	0	1	0	0	0	0
4/24/2024	5:15 PM	1	155	26	0	0	0	0	0	0	0	0	0	0
4/24/2024	5:30 PM	0	142	20	0	0	0	0	0	1	0	0	0	0
4/24/2024	5:45 PM	0	154	20	0	0	0	0	0	1	0	0	0	0
4/24/2024	6:00 PM	0	155	15	0	0	0	0	0	1	0	0	0	0
4/24/2024	6:15 PM	0	141	18	0	0	0	0	0	1	0	0	0	0
4/24/2024	6:30 PM	0	147	25	0	0	0	0	0	0	0	0	0	0
4/24/2024	6:45 PM	0	139	32	0	0	0	0	0	0	0	0	0	0
4/24/2024	7:00 PM	0	129	32	0	0	0	0	0	0	0	0	0	0
4/24/2024	7:15 PM	0	124	33	0	0	0	0	0	1	0	0	0	0
4/24/2024	7:30 PM	0	110	30	0	0	0	0	0	1	0	0	0	0
4/24/2024	7:45 PM	0	129	28	0	0	0	0	0	1	0	0	0	0
4/24/2024	8:00 PM	0	130	27	0	0	0	0	0	1	0	0	0	0
4/24/2024	8:15 PM	0	127	24	0	0	0	0	0	0	0	0	0	0
4/24/2024	8:30 PM	0	114	17	0	0	0	0	0	1	0	0	0	0
4/24/2024	8:45 PM	0	84	8	0	0	0	0	0	1	0	0	0	0
4/24/2024	9:00 PM	0	79	6	0	0	0	0	0	1	0	0	0	0
4/24/2024	9:15 PM	0	68	3	0	0	0	0	0	1	0	0	0	0
4/24/2024	9:30 PM	0	67	4	0	0	0	0	0	0	0	0	0	0
4/24/2024	9:45 PM	0	66	3	0	0	0	0	0	0	0	0	0	0
4/24/2024	10:00 PM	0	63	3	0	0	0	0	0	0	0	0	0	0
4/24/2024	10:15 PM	0	58	2	0	0	0	0	0	0	0	0	0	0
4/24/2024	10:30 PM	0	52	0	0	0	0	0	0	0	0	0	0	0
4/24/2024	10:45 PM	0	49	1	0	0	0	0	0	0	0	0	0	0
4/24/2024	11:00 PM	0	45	1	0	0	0	0	0	0	0	0	0	0
4/24/2024	11:15 PM	0	34	1	0	0	0	0	0	0	0	0	0	0
4/24/2024	11:30 PM	0	22	1	0	0	0	0	0	0	0	0	0	0
4/24/2024	11:45 PM	0	9	0	0	0	0	0	0	0	0	0	0	0

4/25/2024	12:00 AM	0	26	5	0	0	0	0	0	0	0	0	0
4/25/2024	12:15 AM	0	20	3	0	0	0	0	0	0	0	0	0
4/25/2024	12:30 AM	0	19	3	0	0	0	0	0	0	0	0	0
4/25/2024	12:45 AM	0	19	2	0	0	0	0	0	0	0	0	0
4/25/2024	1:00 AM	0	16	2	0	0	0	0	0	0	0	0	0
4/25/2024	1:15 AM	0	18	2	0	0	0	0	0	0	0	0	0
4/25/2024	1:30 AM	0	15	1	0	0	0	0	0	0	0	0	0
4/25/2024	1:45 AM	0	15	2	0	0	0	0	0	1	0	0	0
4/25/2024	2:00 AM	0	14	1	0	0	0	0	0	1	0	0	0
4/25/2024	2:15 AM	0	12	2	0	0	0	0	0	1	0	0	0
4/25/2024	2:30 AM	0	10	2	0	0	0	0	0	1	0	0	0
4/25/2024	2:45 AM	0	11	1	0	0	0	0	0	2	0	0	0
4/25/2024	3:00 AM	0	11	1	0	0	0	0	0	2	0	0	0
4/25/2024	3:15 AM	0	9	1	0	0	0	0	0	2	0	0	0
4/25/2024	3:30 AM	0	11	1	0	0	1	0	0	3	0	0	0
4/25/2024	3:45 AM	0	10	1	0	0	2	0	0	1	0	0	0
4/25/2024	4:00 AM	0	11	2	0	0	2	0	0	2	0	0	0
4/25/2024	4:15 AM	0	15	2	0	0	2	0	0	2	0	0	0
4/25/2024	4:30 AM	0	18	3	0	0	1	0	0	1	0	0	0
4/25/2024	4:45 AM	0	20	6	0	1	0	0	0	1	0	0	0
4/25/2024	5:00 AM	0	21	5	0	2	0	0	0	0	0	0	0
4/25/2024	5:15 AM	0	23	7	1	3	0	0	0	0	0	0	0
4/25/2024	5:30 AM	1	29	8	1	3	0	0	0	1	0	0	0
4/25/2024	5:45 AM	1	34	7	1	3	0	0	0	1	0	0	0
4/25/2024	6:00 AM	1	48	13	1	4	0	0	0	1	0	0	0
4/25/2024	6:15 AM	1	58	13	0	3	1	0	0	1	0	0	0
4/25/2024	6:30 AM	0	72	17	0	3	1	0	0	0	0	0	0
4/25/2024	6:45 AM	0	88	21	0	2	1	0	0	0	0	0	0
4/25/2024	7:00 AM	0	94	23	0	0	2	0	0	0	0	0	0
4/25/2024	7:15 AM	0	94	22	0	0	1	0	0	0	0	0	0
4/25/2024	7:30 AM	0	91	21	0	0	1	0	0	0	0	0	0
4/25/2024	7:45 AM	0	93	21	0	0	1	0	0	1	0	0	0
4/25/2024	8:00 AM	0	98	19	0	0	2	0	0	1	0	0	0
4/25/2024	8:15 AM	0	101	23	0	0	2	0	0	1	0	0	0
4/25/2024	8:30 AM	0	102	27	1	0	3	0	0	1	0	0	0
4/25/2024	8:45 AM	0	102	30	1	3	3	0	0	0	0	0	0
4/25/2024	9:00 AM	0	103	36	1	3	1	0	0	0	0	0	0
4/25/2024	9:15 AM	0	101	33	1	5	1	0	0	0	0	0	0
4/25/2024	9:30 AM	0	104	33	0	5	0	0	0	0	0	0	0
4/25/2024	9:45 AM	0	100	32	0	2	0	0	0	0	0	0	0
4/25/2024	10:00 AM	0	102	29	0	2	2	0	0	0	0	0	0
4/25/2024	10:15 AM	0	104	38	0	2	2	0	0	0	0	0	0
4/25/2024	10:30 AM	0	108	43	0	2	2	0	0	0	0	0	0
4/25/2024	10:45 AM	0	111	43	0	2	3	0	0	1	0	0	0
4/25/2024	11:00 AM	0	116	46	0	2	2	0	0	1	0	0	0
4/25/2024	11:15 AM	0	139	47	0	0	2	0	0	3	0	0	0
4/25/2024	11:30 AM	0	155	39	0	1	2	0	1	3	0	0	0
4/25/2024	11:45 AM	0	185	43	0	3	1	0	2	2	0	0	0
4/25/2024	12:00 PM	0	198	40	0	3	0	0	2	2	0	0	0
4/25/2024	12:15 PM	0	198	39	0	4	0	0	2	1	0	0	0
4/25/2024	12:30 PM	0	201	43	0	4	0	0	2	1	0	0	0
4/25/2024	12:45 PM	0	185	39	0	6	0	0	1	2	0	0	0
4/25/2024	1:00 PM	0	182	36	1	6	0	0	1	2	0	0	0
4/25/2024	1:15 PM	0	199	34	1	6	0	0	1	1	0	0	0
4/25/2024	1:30 PM	0	194	32	1	6	1	0	0	1	0	0	0
4/25/2024	1:45 PM	0	222	37	1	2	1	0	0	0	0	0	0
4/25/2024	2:00 PM	0	232	41	0	3	1	0	1	0	0	0	0
4/25/2024	2:15 PM	0	231	37	0	2	2	0	2	0	0	0	0
4/25/2024	2:30 PM	0	238	40	0	3	1	0	2	0	0	0	0
4/25/2024	2:45 PM	0	227	34	0	4	1	0	3	0	0	0	0
4/25/2024	3:00 PM	0	231	33	0	4	1	0	2	0	0	0	0
4/25/2024	3:15 PM	0	223	38	0	4	1	0	1	0	0	0	0
4/25/2024	3:30 PM	0	218	34	0	2	1	0	1	0	0	0	0
4/25/2024	3:45 PM	0	200	33	0	3	1	0	0	0	0	0	0
4/25/2024	4:00 PM	0	175	31	0	2	1	0	0	0	0	0	0
4/25/2024	4:15 PM	0	173	30	0	2	0	0	0	1	0	0	0
4/25/2024	4:30 PM	0	165	29	0	2	0	0	0	1	0	0	0
4/25/2024	4:45 PM	0	158	31	0	0	0	0	0	1	0	0	0
4/25/2024	5:00 PM	0	157	29	0	0	0	0	0	1	0	0	0
4/25/2024	5:15 PM	0	143	24	0	0	0	0	0	0	0	0	0
4/25/2024	5:30 PM	0	141	22	1	0	0	0	0	0	0	0	0
4/25/2024	5:45 PM	2	146	20	1	0	0	0	0	0	0	0	0
4/25/2024	6:00 PM	2	156	24	1	0	0	0	0	0	0	0	0
4/25/2024	6:15 PM	2	120	19	1	0	0	0	0	0	0	0	0
4/25/2024	6:30 PM	2	83	15	0	0	0	0	0	0	0	0	0
4/25/2024	6:45 PM	0	45	9	0	0	0	0	0	0	0	0	0
4/25/2024	7:00 PM	0	0	0	0	0	0	0	0	0	0	0	0
4/25/2024	7:15 PM	0	0	0	0	0	0	0	0	0	0	0	0
4/25/2024	7:30 PM	0	0	0	0	0	0	0	0	0	0	0	0
4/25/2024	7:45 PM	0	0	0	0	0	0	0	0	0	0	0	0
4/25/2024	8:00 PM	0	0	0	0	0	0	0	0	0	0	0	0
4/25/2024	8:15 PM	0	0	0	0	0	0	0	0	0	0	0	0
4/25/2024	8:30 PM	0	0	0	0	0	0	0	0	0	0	0	0
4/25/2024	8:45 PM	0	0	0	0	0	0	0	0	0	0	0	0
4/25/2024	9:00 PM	0	0	0	0	0	0	0	0	0	0	0	0
4/25/2024	9:15 PM	0	0	0	0	0	0	0	0	0	0	0	0
4/25/2024	9:30 PM	0	0	0	0	0	0	0	0	0	0	0	0
4/25/2024	9:45 PM	0	0	0	0	0	0	0	0	0	0	0	0
4/25/2024	10:00 PM	0	0	0	0	0	0	0	0	0	0	0	0
4/25/2024	10:15 PM	0	0	0	0	0	0	0	0	0	0	0	0
4/25/2024	10:30 PM	0	0	0	0	0	0	0	0	0	0	0	0
4/25/2024	10:45 PM	0	0	0	0	0	0	0	0	0	0	0	0
4/25/2024	11:00 PM	0	0	0	0	0	0	0	0	0	0	0	0
4/25/2024	11:15 PM	0	0	0	0	0	0	0	0	0	0	0	0
4/25/2024	11:30 PM	0	0	0	0	0	0	0	0	0	0	0	0
4/25/2024	11:45 PM	0	0	0	0	0	0	0	0	0	0	0	0

Bi-Directional Class Count || SB WB 15min

Columbia, SC

Marr Traffic DATA COLLECTION
www.marrtraffic.com

Site 47
I-126 On/Off-Ramp,
east of Greystone Blvd

Date
Tuesday, April 23, 2024

Lat/Long
34.011912°, -81.074369°

Click here for Map

Weather
Fair
58°F

Click here for Detailed Weather

0000 - 2400 (Weekday 24h Session) (04-23-2024)
SB WB 15min

	Westbound (Movement 47.1)													15min	60min
Time	1	2	3	4	5	6	7	8	9	10	11	12	13	Total	Total
0000 - 0015	0	0	0	0	0	0	0	0	0	0	0	0	0	**0**	
0015 - 0030	0	0	0	0	0	0	0	0	0	0	0	0	0	**0**	
0030 - 0045	0	0	0	0	0	0	0	0	0	0	0	0	0	**0**	
0045 - 0100	0	0	0	0	0	0	0	0	0	0	0	0	0	**0**	**0**
0100 - 0115	0	0	0	0	0	0	0	0	0	0	0	0	0	**0**	
0115 - 0130	0	0	0	0	0	0	0	0	0	0	0	0	0	**0**	
0130 - 0145	0	0	0	0	0	0	0	0	0	0	0	0	0	**0**	
0145 - 0200	0	0	0	0	0	0	0	0	0	0	0	0	0	**0**	**0**
0200 - 0215	0	0	0	0	0	0	0	0	0	0	0	0	0	**0**	
0215 - 0230	0	0	0	0	0	0	0	0	0	0	0	0	0	**0**	
0230 - 0245	0	0	0	0	0	0	0	0	0	0	0	0	0	**0**	
0245 - 0300	0	0	0	0	0	0	0	0	0	0	0	0	0	**0**	**0**
0300 - 0315	0	0	0	0	0	0	0	0	0	0	0	0	0	**0**	
0315 - 0330	0	0	0	0	0	0	0	0	0	0	0	0	0	**0**	
0330 - 0345	0	0	0	0	0	0	0	0	0	0	0	0	0	**0**	
0345 - 0400	0	0	0	0	0	0	0	0	0	0	0	0	0	**0**	**0**
0400 - 0415	0	0	0	0	0	0	0	0	0	0	0	0	0	**0**	
0415 - 0430	0	0	0	0	0	0	0	0	0	0	0	0	0	**0**	
0430 - 0445	0	0	0	0	0	0	0	0	0	0	0	0	0	**0**	
0445 - 0500	0	0	0	0	0	0	0	0	0	0	0	0	0	**0**	**0**
0500 - 0515	0	0	0	0	0	0	0	0	0	0	0	0	0	**0**	
0515 - 0530	0	0	0	0	0	0	0	0	0	0	0	0	0	**0**	
0530 - 0545	0	0	0	0	0	0	0	0	0	0	0	0	0	**0**	
0545 - 0600	0	0	0	0	0	0	0	0	0	0	0	0	0	**0**	**0**
0600 - 0615	0	0	0	0	0	0	0	0	0	0	0	0	0	**0**	
0615 - 0630	0	0	0	0	0	0	0	0	0	0	0	0	0	**0**	
0630 - 0645	0	0	0	0	0	0	0	0	0	0	0	0	0	**0**	
0645 - 0700	0	0	0	0	0	0	0	0	0	0	0	0	0	**0**	**0**
0700 - 0715	0	0	0	0	0	0	0	0	0	0	0	0	0	**0**	
0715 - 0730	0	0	0	0	0	0	0	0	0	0	0	0	0	**0**	
0730 - 0745	0	0	0	0	0	0	0	0	0	0	0	0	0	**0**	
0745 - 0800	0	0	0	0	0	0	0	0	0	0	0	0	0	**0**	**0**
0800 - 0815	0	0	0	0	0	0	0	0	0	0	0	0	0	**0**	
0815 - 0830	0	0	0	0	0	0	0	0	0	0	0	0	0	**0**	
0830 - 0845	0	0	0	0	0	0	0	0	0	0	0	0	0	**0**	
0845 - 0900	0	0	0	0	0	0	0	0	0	0	0	0	0	**0**	**0**
0900 - 0915	0	0	0	0	0	0	0	0	0	0	0	0	0	**0**	
0915 - 0930	0	0	0	0	0	0	0	0	0	0	0	0	0	**0**	
0930 - 0945	0	0	0	0	0	0	0	0	0	0	0	0	0	**0**	
0945 - 1000	0	0	0	0	0	0	0	0	0	0	0	0	0	**0**	**0**
1000 - 1015	0	0	0	0	0	0	0	0	0	0	0	0	0	**0**	
1015 - 1030	0	0	0	0	0	0	0	0	0	0	0	0	0	**0**	
1030 - 1045	0	0	0	0	0	0	0	0	0	0	0	0	0	**0**	
1045 - 1100	0	0	0	0	0	0	0	0	0	0	0	0	0	**0**	**0**
1100 - 1115	0	0	0	0	0	0	0	0	0	0	0	0	0	**0**	
1115 - 1130	0	0	0	0	0	0	0	0	0	0	0	0	0	**0**	
1130 - 1145	0	0	0	0	0	0	0	0	0	0	0	0	0	**0**	
1145 - 1200	0	0	0	0	0	0	0	0	0	0	0	0	0	**0**	**0**
1200 - 1215	0	0	0	0	0	0	0	0	0	0	0	0	0	**0**	
1215 - 1230	0	0	0	0	0	0	0	0	0	0	0	0	0	**0**	
1230 - 1245	0	0	0	0	0	0	0	0	0	0	0	0	0	**0**	
1245 - 1300	0	0	0	0	0	0	0	0	0	0	0	0	0	**0**	**0**
1300 - 1315	0	0	0	0	0	0	0	0	0	0	0	0	0	**0**	
1315 - 1330	0	0	0	0	0	0	0	0	0	0	0	0	0	**0**	
1330 - 1345	0	0	0	0	0	0	0	0	0	0	0	0	0	**0**	
1345 - 1400	0	0	0	0	0	0	0	0	0	0	0	0	0	**0**	**0**
1400 - 1415	0	0	0	0	0	0	0	0	0	0	0	0	0	**0**	
1415 - 1430	0	0	0	0	0	0	0	0	0	0	0	0	0	**0**	
1430 - 1445	0	0	0	0	0	0	0	0	0	0	0	0	0	**0**	
1445 - 1500	0	0	0	0	0	0	0	0	0	0	0	0	0	**0**	**0**
1500 - 1515	0	0	0	0	0	0	0	0	0	0	0	0	0	**0**	
1515 - 1530	0	0	0	0	0	0	0	0	0	0	0	0	0	**0**	
1530 - 1545	0	0	0	0	0	0	0	0	0	0	0	0	0	**0**	
1545 - 1600	0	0	0	0	0	0	0	0	0	0	0	0	0	**0**	**0**
1600 - 1615	0	0	0	0	0	0	0	0	0	0	0	0	0	**0**	
1615 - 1630	0	0	0	0	0	0	0	0	0	0	0	0	0	**0**	
1630 - 1645	0	0	0	0	0	0	0	0	0	0	0	0	0	**0**	
1645 - 1700	0	0	0	0	0	0	0	0	0	0	0	0	0	**0**	**0**
1700 - 1715	0	0	0	0	0	0	0	0	0	0	0	0	0	**0**	
1715 - 1730	0	0	0	0	0	0	0	0	0	0	0	0	0	**0**	
1730 - 1745	0	0	0	0	0	0	0	0	0	0	0	0	0	**0**	
1745 - 1800	0	0	0	0	0	0	0	0	0	0	0	0	0	**0**	**0**
1800 - 1815	0	0	0	0	0	0	0	0	0	0	0	0	0	**0**	
1815 - 1830	0	0	0	0	0	0	0	0	0	0	0	0	0	**0**	
1830 - 1845	0	0	0	0	0	0	0	0	0	0	0	0	0	**0**	
1845 - 1900	0	0	0	0	0	0	0	0	0	0	0	0	0	**0**	**0**
1900 - 1915	0	36	3	0	0	1	0	0	0	0	0	0	0	**40**	
1915 - 1930	0	37	5	0	0	1	0	0	0	0	0	0	0	**43**	
1930 - 1945	1	33	2	0	0	0	0	0	0	0	0	0	0	**36**	
1945 - 2000	0	35	4	0	0	0	0	0	0	0	0	0	0	**39**	**158**
2000 - 2015	0	50	3	0	0	0	0	0	0	0	0	0	0	**53**	
2015 - 2030	0	32	5	0	0	0	0	0	0	0	0	0	0	**37**	
2030 - 2045	0	24	2	0	0	0	0	0	0	0	0	0	0	**26**	
2045 - 2100	0	28	2	0	0	3	0	0	0	0	0	0	0	**33**	**149**
2100 - 2115	0	29	4	0	0	0	0	0	0	0	0	0	0	**33**	
2115 - 2130	0	30	2	0	1	0	0	0	0	0	0	0	0	**33**	
2130 - 2145	0	23	3	0	0	0	0	0	0	0	0	0	0	**26**	
2145 - 2200	0	20	2	0	1	0	0	0	0	0	0	0	0	**23**	**115**
2200 - 2215	0	26	2	0	0	0	0	0	0	0	0	0	0	**28**	
2215 - 2230	0	17	1	0	0	0	0	0	0	0	0	0	0	**18**	
2230 - 2245	0	15	0	0	1	1	0	0	0	0	0	0	0	**17**	
2245 - 2300	0	18	2	0	1	0	0	0	1	0	0	0	0	**22**	**85**
2300 - 2315	0	13	1	0	0	0	0	0	0	0	0	0	0	**14**	
2315 - 2330	0	14	0	0	0	1	0	0	0	0	0	0	0	**15**	
2330 - 2345	0	16	1	0	0	1	0	0	1	0	0	0	0	**19**	
2345 - 0000	0	12	1	0	1	0	0	0	0	0	0	0	0	**14**	**62**

Session Total	1	508	45	0	5	8	0	0	2	0	0	0	0	569
Session Average	0.01	5.29	0.47	0.00	0.05	0.08	0.00	0.00	0.02	0.00	0.00	0.00	0.00	**5.93**
Session Percentage	0.18	89.28	7.91	0.00	0.88	1.41	0.00	0.00	0.35	0.00	0.00	0.00	0.00	

AM Peak Hour	-	-	-	-	-	-	-	-	-	-	-	-	-	-
AM Peak Volume	0	0	0	0	0	0	0	0	0	0	0	0	0	**0**

Noon Peak Hour	-	-	-	-	-	-	-	-	-	-	-	-	-	-
Noon Peak Volume	0	0	0	0	0	0	0	0	0	0	0	0	0	**0**

PM Peak Hour	1845 - 1945	1915 - 2015	1900 - 2000	-	-	1830 - 1930	-	-	-	-	-	-	-	**1915 - 2015**
PM Peak Volume	1	155	14	0	0	2	0	0	0	0	0	0	0	**171**

Site 47
I-126 On/Off-Ramp,
east of Greystone Blvd

Date
Wednesday, April 24, 2024

Lat/Long
34.011912°, -81.074369°

Weather
Fair
66°F

Click here for Detailed Weather

0000 - 2400 (Weekday 24h Session) (04-24-2024)
SB WB 15min

	Westbound (Movement 47.1)													15min	60min
Time	1	2	3	4	5	6	7	8	9	10	11	12	13	Total	Total
0000 - 0015	1	9	0	0	0	0	0	0	1	0	0	0	0	**11**	
0015 - 0030	0	8	1	0	0	0	0	0	0	0	0	0	0	**9**	
0030 - 0045	0	8	2	0	0	1	0	0	0	0	0	0	0	**11**	
0045 - 0100	0	5	1	0	0	1	0	0	0	0	0	0	0	**7**	**38**
0100 - 0115	0	2	0	0	0	0	0	0	0	0	0	0	0	**2**	
0115 - 0130	0	4	0	0	0	0	0	0	2	0	0	0	0	**6**	
0130 - 0145	1	2	1	0	0	0	0	0	0	0	0	0	0	**4**	
0145 - 0200	0	4	0	0	0	0	0	0	0	0	0	0	0	**4**	**16**
0200 - 0215	0	3	0	0	0	0	0	0	0	0	0	0	0	**3**	
0215 - 0230	0	2	2	0	1	0	0	0	0	0	0	0	0	**5**	
0230 - 0245	0	2	0	0	0	1	0	0	0	0	0	0	0	**3**	
0245 - 0300	0	4	1	0	0	0	0	0	0	0	0	0	0	**5**	**16**
0300 - 0315	0	9	0	0	1	0	0	0	0	0	0	0	0	**10**	
0315 - 0330	0	5	1	0	2	0	0	0	0	0	0	0	0	**8**	
0330 - 0345	0	5	0	0	0	0	0	0	0	0	0	0	0	**5**	
0345 - 0400	0	2	1	0	1	1	0	0	0	0	0	0	0	**5**	**28**
0400 - 0415	0	5	0	0	0	0	0	0	0	0	0	0	0	**5**	
0415 - 0430	0	6	2	0	0	0	0	0	0	0	0	0	0	**8**	
0430 - 0445	0	5	0	0	0	0	0	0	0	0	0	0	0	**5**	
0445 - 0500	0	9	2	0	0	0	0	0	0	0	0	0	0	**11**	**29**
0500 - 0515	0	3	0	0	0	0	0	0	0	0	0	0	0	**3**	
0515 - 0530	0	6	1	0	0	0	0	0	0	0	0	0	0	**7**	
0530 - 0545	0	13	2	0	0	0	0	0	0	0	0	0	0	**15**	
0545 - 0600	0	17	2	0	1	0	0	0	0	0	0	0	0	**20**	**45**
0600 - 0615	0	14	1	0	1	0	0	0	0	0	0	0	0	**16**	
0615 - 0630	0	27	13	0	0	0	0	0	0	0	0	0	0	**40**	
0630 - 0645	0	51	15	0	0	0	0	0	0	0	0	0	0	**66**	
0645 - 0700	0	72	21	0	1	0	0	0	0	0	0	0	0	**94**	**216**
0700 - 0715	0	72	19	0	0	0	0	0	0	0	0	0	0	**91**	
0715 - 0730	0	114	22	0	0	0	0	0	1	0	0	0	0	**137**	
0730 - 0745	0	113	15	0	2	1	0	0	1	0	0	0	0	**132**	
0745 - 0800	0	140	14	0	1	0	0	0	0	0	0	0	0	**155**	**515**
0800 - 0815	0	131	14	0	2	0	0	0	0	0	0	0	0	**147**	
0815 - 0830	0	116	28	0	1	1	0	0	2	0	0	0	0	**148**	
0830 - 0845	0	105	12	0	1	0	0	0	1	0	0	0	0	**119**	
0845 - 0900	2	100	22	1	0	0	0	0	0	0	0	0	0	**125**	**539**
0900 - 0915	0	88	10	5	1	0	0	0	0	0	0	0	0	**104**	
0915 - 0930	0	110	18	2	0	0	0	0	0	0	0	0	0	**130**	
0930 - 0945	1	90	11	1	2	0	0	0	0	0	0	0	0	**105**	
0945 - 1000	0	101	4	0	4	0	0	0	0	0	0	0	0	**109**	**448**
1000 - 1015	0	97	11	0	2	0	0	0	2	0	0	0	0	**112**	
1015 - 1030	0	78	8	4	1	1	0	0	0	0	0	0	0	**92**	
1030 - 1045	0	62	6	3	1	0	0	0	0	0	0	0	0	**72**	
1045 - 1100	0	74	13	2	1	0	0	0	1	0	0	0	0	**91**	**367**
1100 - 1115	0	84	11	0	1	0	0	0	0	0	0	0	0	**96**	
1115 - 1130	0	60	10	0	2	1	0	0	1	0	0	0	0	**74**	
1130 - 1145	0	49	8	0	4	1	0	0	1	0	0	0	0	**63**	
1145 - 1200	0	72	12	0	1	0	0	0	1	0	0	0	0	**86**	**319**
1200 - 1215	0	57	8	0	0	0	0	2	0	0	0	0	0	**67**	
1215 - 1230	0	82	14	1	3	1	0	0	1	0	0	0	0	**102**	
1230 - 1245	0	71	14	0	0	1	0	0	0	1	0	0	0	**87**	
1245 - 1300	0	76	8	1	1	1	0	1	2	0	0	0	0	**90**	**346**
1300 - 1315	0	76	16	0	2	0	0	1	1	0	0	0	0	**96**	
1315 - 1330	1	56	15	0	1	0	0	0	0	0	0	0	0	**73**	
1330 - 1345	0	62	22	2	0	0	0	0	1	0	0	0	0	**87**	
1345 - 1400	0	67	12	0	1	0	0	0	0	0	0	0	0	**80**	**336**
1400 - 1415	0	68	8	0	2	0	0	0	0	0	0	0	0	**78**	
1415 - 1430	0	58	15	0	3	1	0	0	2	0	0	0	0	**79**	
1430 - 1445	0	59	6	0	1	3	0	0	0	0	0	0	0	**69**	
1445 - 1500	0	75	11	0	3	3	0	1	0	0	0	0	0	**93**	**319**
1500 - 1515	0	63	10	0	1	1	0	0	0	0	0	0	0	**75**	
1515 - 1530	0	73	11	0	2	1	0	0	0	0	0	0	0	**87**	
1530 - 1545	0	69	6	0	1	1	0	0	1	0	0	0	0	**78**	
1545 - 1600	0	69	12	0	1	1	0	0	1	0	0	0	0	**84**	**324**
1600 - 1615	0	78	14	1	1	2	0	0	0	0	0	0	0	**96**	
1615 - 1630	0	65	11	0	2	2	0	0	0	0	0	0	0	**80**	
1630 - 1645	0	70	5	0	0	1	0	0	1	0	0	0	0	**77**	
1645 - 1700	0	67	15	0	1	2	0	1	0	0	0	0	0	**86**	**339**
1700 - 1715	0	73	6	0	0	1	0	0	0	0	0	0	0	**80**	
1715 - 1730	0	72	6	0	2	2	0	0	1	0	0	0	0	**83**	
1730 - 1745	0	57	5	0	3	1	0	0	0	0	0	0	0	**66**	
1745 - 1800	0	65	9	0	0	2	0	0	0	0	0	0	0	**76**	**305**
1800 - 1815	0	63	6	0	2	1	0	0	1	0	0	0	0	**73**	
1815 - 1830	0	46	9	0	4	0	0	0	0	0	0	0	0	**59**	
1830 - 1845	0	37	7	0	0	1	0	0	0	0	0	0	0	**45**	
1845 - 1900	0	53	6	0	1	0	0	0	0	0	0	0	0	**60**	**237**
1900 - 1915	0	38	4	0	0	0	0	0	0	0	0	0	0	**42**	
1915 - 1930	0	31	3	0	0	0	0	0	0	0	0	0	0	**34**	
1930 - 1945	0	38	4	0	0	0	0	0	0	0	0	0	0	**42**	
1945 - 2000	0	33	6	0	0	0	0	0	0	0	0	0	0	**39**	**157**
2000 - 2015	0	39	3	0	0	0	0	0	1	0	0	0	0	**43**	
2015 - 2030	0	36	3	0	0	0	0	0	0	0	0	0	0	**39**	
2030 - 2045	0	35	2	0	0	0	0	0	0	0	0	0	0	**37**	
2045 - 2100	0	45	3	0	0	0	0	0	0	0	0	0	0	**48**	**167**
2100 - 2115	0	23	1	0	0	0	0	0	1	0	0	0	0	**25**	
2115 - 2130	0	23	1	0	0	1	0	0	1	0	0	0	0	**26**	
2130 - 2145	0	24	2	0	0	0	0	0	0	0	0	0	0	**26**	
2145 - 2200	0	26	1	0	0	1	0	0	0	0	0	0	0	**28**	**105**
2200 - 2215	0	24	4	0	0	0	0	1	1	0	0	0	0	**30**	
2215 - 2230	0	15	1	0	1	0	0	0	0	0	0	0	0	**17**	
2230 - 2245	0	18	2	0	0	0	0	0	0	0	0	0	0	**20**	
2245 - 2300	0	17	0	0	0	0	0	0	1	0	0	0	0	**18**	**85**
2300 - 2315	0	14	1	0	0	0	0	0	0	0	0	0	0	**15**	
2315 - 2330	0	19	2	0	0	0	0	0	0	0	0	0	0	**21**	
2330 - 2345	0	14	1	0	0	0	0	0	0	0	0	0	0	**15**	
2345 - 0000	0	11	0	0	0	0	0	0	0	0	0	0	0	**11**	**62**

Session Total	6	4508	668	23	74	40	0	7	31	1	0	0	0	**5358**
Session Average	0.06	46.96	6.96	0.24	0.77	0.42	0.00	0.07	0.32	0.01	0.00	0.00	0.00	**55.81**
Session Percentage	0.11	84.14	12.47	0.43	1.38	0.75	0.00	0.13	0.58	0.02	0.00	0.00	0.00	

AM Peak Hour	0845 - 0945	0730 - 0830	0630 - 0730	0845 - 0945	0930 - 1030	0730 - 0830	-	-	0730 - 0830	-	-	-	-	**0730 - 0830**
AM Peak Volume	3	500	77	9	9	2	0	0	3	0	0	0	0	**582**

Noon Peak Hour	1230 - 1330	1000 - 1100	1300 - 1400	1000 - 1100	1400 - 1500	1415 - 1515	-	1200 - 1300	1215 - 1315	1145 - 1245	-	-	-	**1215 - 1315**
Noon Peak Volume	1	311	65	9	9	8	0	3	4	1	0	0	0	**375**

PM Peak Hour	-	1515 - 1615	1600 - 1700	1515 - 1615	1730 - 1830	1600 - 1700	-	1600 - 1700	1500 - 1600	-	-	-	-	**1515 - 1615**
PM Peak Volume	0	289	45	1	9	7	0	1	2	0	0	0	0	**345**

Site 47
I-126 On/Off-Ramp,
east of Greystone Blvd

Date
Thursday, April 25, 2024

Lat/Long
34.011912°, -81.074369°

Weather
Fair
67°F

Click here for Detailed Weather

0000 - 2400 (Weekday 24h Session) (04-25-2024)
SB WB 15min

	Westbound (Movement 47.1)													15min	60min
TIME	1	2	3	4	5	6	7	8	9	10	11	12	13	Total	Total
0000 - 0015	0	5	1	0	0	1	0	0	0	0	0	0	0	**7**	
0015 - 0030	0	8	3	0	0	0	0	0	0	0	0	0	0	**11**	
0030 - 0045	0	7	1	0	0	0	0	0	0	0	0	0	0	**8**	
0045 - 0100	0	6	0	0	0	1	0	0	0	0	0	0	0	**7**	**33**
0100 - 0115	0	6	0	0	0	0	0	0	0	0	0	0	0	**6**	
0115 - 0130	0	5	0	0	0	0	0	0	0	0	0	0	0	**5**	
0130 - 0145	0	6	1	0	0	1	0	0	1	0	0	0	0	**9**	
0145 - 0200	0	4	0	0	1	1	0	0	0	0	0	0	0	**6**	**26**
0200 - 0215	0	1	0	0	0	0	0	0	0	0	0	0	0	**1**	
0215 - 0230	0	5	1	0	0	1	0	0	1	0	0	0	0	**8**	
0230 - 0245	0	3	0	0	0	0	0	0	0	0	0	0	0	**3**	
0245 - 0300	0	4	0	0	0	0	0	0	0	0	0	0	0	**4**	**16**
0300 - 0315	0	6	3	0	0	0	0	0	1	0	0	0	0	**10**	
0315 - 0330	0	5	2	0	0	0	0	0	0	0	0	0	0	**7**	
0330 - 0345	0	5	1	0	0	1	0	0	0	0	0	0	0	**7**	
0345 - 0400	0	5	1	0	1	0	0	0	2	0	0	0	0	**9**	**33**
0400 - 0415	0	4	0	0	0	0	0	1	0	0	0	0	0	**5**	
0415 - 0430	0	5	0	0	1	0	0	0	0	0	0	0	0	**6**	
0430 - 0445	0	5	1	0	0	0	0	0	0	0	0	0	0	**6**	
0445 - 0500	0	3	0	0	0	0	0	1	0	0	0	0	0	**4**	**21**
0500 - 0515	0	7	1	0	0	0	0	0	0	0	0	0	0	**8**	
0515 - 0530	0	5	0	0	0	0	0	0	0	0	0	0	0	**5**	
0530 - 0545	0	14	3	0	0	0	0	0	0	0	0	0	0	**17**	
0545 - 0600	0	15	2	0	0	0	0	0	0	0	0	0	0	**17**	**47**
0600 - 0615	0	12	4	0	0	0	0	0	0	0	0	0	0	**16**	
0615 - 0630	0	32	7	0	0	0	0	0	0	0	0	0	0	**39**	
0630 - 0645	0	52	6	0	0	0	0	0	0	0	0	0	0	**58**	
0645 - 0700	0	66	15	0	1	0	0	0	0	0	0	0	0	**82**	**195**
0700 - 0715	0	75	27	0	0	0	0	0	0	0	0	0	0	**102**	
0715 - 0730	0	118	22	0	0	0	0	0	1	0	0	0	0	**141**	
0730 - 0745	0	125	12	0	1	0	0	0	0	1	0	0	0	**139**	
0745 - 0800	0	146	15	0	0	0	0	0	1	0	0	0	0	**162**	**544**
0800 - 0815	0	146	23	0	0	1	0	0	0	0	0	0	0	**170**	
0815 - 0830	0	149	20	1	0	1	0	0	0	0	0	0	0	**171**	
0830 - 0845	0	115	16	1	0	0	0	0	1	0	0	0	0	**133**	
0845 - 0900	0	136	16	0	3	0	0	1	0	0	0	0	0	**156**	**630**
0900 - 0915	0	126	14	2	1	0	0	0	1	0	0	0	0	**144**	
0915 - 0930	0	96	9	0	0	1	0	0	0	0	0	0	0	**106**	
0930 - 0945	0	87	13	0	0	0	0	0	0	0	0	0	0	**100**	
0945 - 1000	1	89	15	5	2	1	0	0	0	0	0	0	0	**113**	**463**
1000 - 1015	0	79	7	2	0	0	0	2	2	0	0	0	0	**92**	
1015 - 1030	0	74	8	3	0	5	0	0	1	0	0	0	0	**91**	
1030 - 1045	0	62	5	1	3	4	0	0	0	0	0	0	0	**75**	
1045 - 1100	0	76	6	1	3	0	0	0	0	0	0	0	0	**86**	**344**
1100 - 1115	0	63	12	0	0	2	0	0	0	0	0	0	0	**77**	
1115 - 1130	0	52	9	0	3	1	0	0	1	0	0	0	0	**66**	
1130 - 1145	0	61	13	0	1	3	0	0	1	0	0	0	0	**79**	
1145 - 1200	0	60	11	1	0	1	0	2	0	0	0	0	0	**75**	**297**
1200 - 1215	0	74	19	0	0	2	0	0	1	0	0	0	0	**96**	
1215 - 1230	0	78	7	0	0	1	0	0	0	0	0	0	0	**86**	
1230 - 1245	0	68	8	0	1	4	0	0	0	0	0	0	0	**81**	
1245 - 1300	0	82	11	0	1	2	0	0	0	0	0	0	0	**96**	**359**
1300 - 1315	0	77	14	0	2	0	0	0	0	0	0	0	0	**93**	
1315 - 1330	0	70	17	0	1	1	0	0	0	0	0	0	0	**89**	
1330 - 1345	1	85	7	0	1	0	0	1	0	0	0	0	0	**95**	
1345 - 1400	0	80	8	0	1	1	0	0	0	0	0	0	0	**90**	**367**
1400 - 1415	0	58	17	0	0	3	0	0	0	0	0	0	0	**78**	
1415 - 1430	0	79	7	0	1	0	0	0	0	0	0	0	0	**87**	
1430 - 1445	0	65	6	0	3	1	0	0	0	1	0	0	0	**76**	
1445 - 1500	0	58	8	0	0	0	0	0	1	0	0	0	0	**67**	**308**
1500 - 1515	0	65	13	0	3	4	0	0	0	0	0	0	0	**85**	
1515 - 1530	0	57	7	0	1	1	0	0	0	0	0	0	0	**66**	
1530 - 1545	0	72	6	0	2	3	0	0	0	0	0	0	0	**83**	
1545 - 1600	0	71	8	0	0	5	0	0	0	0	0	0	0	**84**	**318**
1600 - 1615	0	59	20	0	1	0	0	0	0	0	0	0	0	**80**	
1615 - 1630	0	53	11	0	0	0	0	0	1	0	0	0	0	**65**	
1630 - 1645	1	62	19	0	2	0	0	0	0	0	0	0	0	**84**	
1645 - 1700	0	62	12	0	1	0	0	1	1	0	0	0	0	**77**	**306**
1700 - 1715	0	49	8	0	1	0	0	0	0	0	0	0	0	**58**	
1715 - 1730	0	61	4	0	2	0	0	0	0	0	0	0	0	**67**	
1730 - 1745	1	81	3	0	1	0	0	0	1	0	0	0	0	**87**	
1745 - 1800	0	81	6	0	1	1	0	0	0	0	0	0	0	**89**	**301**
1800 - 1815	0	85	10	0	0	0	0	0	0	0	0	0	0	**95**	
1815 - 1830	0	45	7	0	0	0	0	0	0	0	0	0	0	**52**	
1830 - 1845	1	54	6	0	0	0	0	0	0	0	0	0	0	**61**	
1845 - 1900	0	62	6	0	1	0	0	0	0	0	0	0	0	**69**	**277**
1900 - 1915	0	0	0	0	0	0	0	0	0	0	0	0	0	**0**	
1915 - 1930	0	0	0	0	0	0	0	0	0	0	0	0	0	**0**	
1930 - 1945	0	0	0	0	0	0	0	0	0	0	0	0	0	**0**	
1945 - 2000	0	0	0	0	0	0	0	0	0	0	0	0	0	**0**	**0**
2000 - 2015	0	0	0	0	0	0	0	0	0	0	0	0	0	**0**	
2015 - 2030	0	0	0	0	0	0	0	0	0	0	0	0	0	**0**	
2030 - 2045	0	0	0	0	0	0	0	0	0	0	0	0	0	**0**	
2045 - 2100	0	0	0	0	0	0	0	0	0	0	0	0	0	**0**	**0**
2100 - 2115	0	0	0	0	0	0	0	0	0	0	0	0	0	**0**	
2115 - 2130	0	0	0	0	0	0	0	0	0	0	0	0	0	**0**	
2130 - 2145	0	0	0	0	0	0	0	0	0	0	0	0	0	**0**	
2145 - 2200	0	0	0	0	0	0	0	0	0	0	0	0	0	**0**	**0**
2200 - 2215	0	0	0	0	0	0	0	0	0	0	0	0	0	**0**	
2215 - 2230	0	0	0	0	0	0	0	0	0	0	0	0	0	**0**	
2230 - 2245	0	0	0	0	0	0	0	0	0	0	0	0	0	**0**	
2245 - 2300	0	0	0	0	0	0	0	0	0	0	0	0	0	**0**	**0**
2300 - 2315	0	0	0	0	0	0	0	0	0	0	0	0	0	**0**	
2315 - 2330	0	0	0	0	0	0	0	0	0	0	0	0	0	**0**	
2330 - 2345	0	0	0	0	0	0	0	0	0	0	0	0	0	**0**	
2345 - 0000	0	0	0	0	0	0	0	0	0	0	0	0	0	**0**	**0**

Session Total	5	4129	601	17	48	55	0	9	19	2	0	0	0	**4885**
Session Average	0.05	43.01	6.26	0.18	0.50	0.57	0.00	0.09	0.20	0.02	0.00	0.00	0.00	**50.89**
Session Percentage	0.10	84.52	12.30	0.35	0.98	1.13	0.00	0.18	0.39	0.04	0.00	0.00	0.00	

AM Peak Hour	0900 - 1000	0730 - 0830	0645 - 0745	0945 - 1045	0945 - 1045	0945 - 1045	-	0915 - 1015	0930 - 1030	0645 - 0745	-	-	-	**0730 - 0830**
AM Peak Hour Volume	1	566	76	11	5	10	0	2	3	1	0	0	0	**642**

Noon Peak Hour	1245 - 1345	1245 - 1345	1115 - 1215	1000 - 1100	1030 - 1130	1015 - 1115	-	1000 - 1100	1000 - 1100	1345 - 1445	-	-	-	**1245 - 1345**
Noon Peak Hour Volume	1	314	52	7	9	11	0	2	3	1	0	0	0	**373**

PM Peak Hour	1545 - 1645	1715 - 1815	1600 - 1700	-	1500 - 1600	1500 - 1600	-	1600 - 1700	1600 - 1700	-	-	-	-	**1715 - 1815**
PM Peak Hour Volume	1	308	62	0	6	13	0	1	2	0	0	0	0	**338**

Bi-Directional Class Count || SB WB Average 15min

Columbia, SC

Marr Traffic DATA COLLECTION
www.marrtraffic.com

Site 47
I-126 On/Off-Ramp,
east of Greystone Blvd

Date
Tuesday, April 23, 2024

Lat/Long
34.011912°, -81.074369°

Weather
Fair
58°F

0000 - 2400 (Weekday 24h Session) (All Dates)
SB WB Average 15min

	SB WB Average 15min													15min	60min
Time	1	2	3	4	5	6	7	8	9	10	11	12	13	Total	Total
0000 - 0015	0	5	0	0	0	0	0	0	0	0	0	0	0	**6**	
0015 - 0030	0	5	1	0	0	0	0	0	0	0	0	0	0	**7**	
0030 - 0045	0	5	1	0	0	0	0	0	0	0	0	0	0	**6**	
0045 - 0100	0	4	0	0	0	1	0	0	0	0	0	0	0	**5**	**24**
0100 - 0115	0	3	0	0	0	0	0	0	0	0	0	0	0	**3**	
0115 - 0130	0	3	0	0	0	0	0	0	1	0	0	0	0	**4**	
0130 - 0145	0	3	1	0	0	0	0	0	0	0	0	0	0	**4**	
0145 - 0200	0	3	0	0	0	0	0	0	0	0	0	0	0	**3**	**14**
0200 - 0215	0	1	0	0	0	0	0	0	0	0	0	0	0	**1**	
0215 - 0230	0	2	1	0	0	0	0	0	0	0	0	0	0	**4**	
0230 - 0245	0	2	0	0	0	0	0	0	0	0	0	0	0	**2**	
0245 - 0300	0	3	0	0	0	0	0	0	0	0	0	0	0	**3**	**11**
0300 - 0315	0	5	1	0	0	0	0	0	0	0	0	0	0	**7**	
0315 - 0330	0	3	1	0	1	0	0	0	0	0	0	0	0	**5**	
0330 - 0345	0	3	0	0	0	0	0	0	0	0	0	0	0	**4**	
0345 - 0400	0	2	1	0	1	0	0	0	1	0	0	0	0	**5**	**20**
0400 - 0415	0	3	0	0	0	0	0	0	0	0	0	0	0	**3**	
0415 - 0430	0	4	1	0	0	0	0	0	0	0	0	0	0	**5**	
0430 - 0445	0	3	0	0	0	0	0	0	0	0	0	0	0	**4**	
0445 - 0500	0	4	1	0	0	0	0	0	0	0	0	0	0	**5**	**17**
0500 - 0515	0	3	0	0	0	0	0	0	0	0	0	0	0	**4**	
0515 - 0530	0	4	0	0	0	0	0	0	0	0	0	0	0	**4**	
0530 - 0545	0	9	2	0	0	0	0	0	0	0	0	0	0	**11**	
0545 - 0600	0	11	1	0	0	0	0	0	0	0	0	0	0	**12**	**31**
0600 - 0615	0	9	2	0	0	0	0	0	0	0	0	0	0	**11**	
0615 - 0630	0	20	7	0	0	0	0	0	0	0	0	0	0	**26**	
0630 - 0645	0	34	7	0	0	0	0	0	0	0	0	0	0	**41**	
0645 - 0700	0	46	12	0	1	0	0	0	0	0	0	0	0	**59**	**137**
0700 - 0715	0	49	15	0	0	0	0	0	0	0	0	0	0	**64**	
0715 - 0730	0	77	15	0	0	0	0	0	1	0	0	0	0	**93**	
0730 - 0745	0	79	9	0	1	0	0	0	0	0	0	0	0	**90**	
0745 - 0800	0	95	10	0	0	0	0	0	0	0	0	0	0	**106**	**353**
0800 - 0815	0	92	12	0	1	0	0	0	0	0	0	0	0	**106**	
0815 - 0830	0	88	16	0	0	1	0	0	1	0	0	0	0	**106**	
0830 - 0845	0	73	9	0	0	0	0	0	1	0	0	0	0	**84**	
0845 - 0900	1	79	13	0	1	0	0	0	0	0	0	0	0	**94**	**390**
0900 - 0915	0	71	8	2	1	0	0	0	0	0	0	0	0	**83**	
0915 - 0930	0	69	9	1	0	0	0	0	0	0	0	0	0	**79**	
0930 - 0945	0	59	8	0	1	0	0	0	0	0	0	0	0	**68**	
0945 - 1000	0	63	6	2	2	0	0	0	0	0	0	0	0	**74**	**304**
1000 - 1015	0	59	6	1	1	0	0	1	1	0	0	0	0	**68**	
1015 - 1030	0	51	5	2	0	2	0	0	0	0	0	0	0	**61**	
1030 - 1045	0	41	4	1	1	1	0	0	0	0	0	0	0	**49**	
1045 - 1100	0	50	6	1	1	0	0	0	0	0	0	0	0	**59**	**237**
1100 - 1115	0	49	8	0	0	1	0	0	0	0	0	0	0	**58**	
1115 - 1130	0	37	6	0	2	1	0	0	1	0	0	0	0	**47**	
1130 - 1145	0	37	7	0	2	1	0	0	1	0	0	0	0	**47**	
1145 - 1200	0	44	8	0	0	0	0	1	0	0	0	0	0	**54**	**205**
1200 - 1215	0	44	9	0	0	1	0	1	0	0	0	0	0	**54**	
1215 - 1230	0	53	7	0	1	1	0	0	0	0	0	0	0	**63**	
1230 - 1245	0	46	7	0	0	2	0	0	0	0	0	0	0	**56**	
1245 - 1300	0	53	6	0	1	1	0	0	1	0	0	0	0	**62**	**235**
1300 - 1315	0	51	10	0	1	0	0	0	0	0	0	0	0	**63**	
1315 - 1330	0	42	11	0	1	0	0	0	0	0	0	0	0	**54**	
1330 - 1345	0	49	10	1	0	0	0	0	0	0	0	0	0	**61**	
1345 - 1400	0	49	7	0	1	0	0	0	0	0	0	0	0	**57**	**234**
1400 - 1415	0	42	8	0	1	1	0	0	0	0	0	0	0	**52**	
1415 - 1430	0	46	7	0	1	0	0	0	1	0	0	0	0	**55**	
1430 - 1445	0	41	4	0	1	1	0	0	0	0	0	0	0	**48**	
1445 - 1500	0	44	6	0	1	1	0	0	0	0	0	0	0	**53**	**209**
1500 - 1515	0	43	8	0	1	2	0	0	0	0	0	0	0	**53**	
1515 - 1530	0	43	6	0	1	1	0	0	0	0	0	0	0	**51**	
1530 - 1545	0	47	4	0	1	1	0	0	0	0	0	0	0	**54**	
1545 - 1600	0	47	7	0	0	2	0	0	0	0	0	0	0	**56**	**214**
1600 - 1615	0	46	11	0	1	1	0	0	0	0	0	0	0	**59**	
1615 - 1630	0	39	7	0	1	1	0	0	0	0	0	0	0	**48**	
1630 - 1645	0	44	8	0	1	0	0	0	0	0	0	0	0	**54**	
1645 - 1700	0	43	9	0	1	1	0	1	0	0	0	0	0	**54**	**215**
1700 - 1715	0	41	5	0	0	0	0	0	0	0	0	0	0	**46**	
1715 - 1730	0	44	3	0	1	1	0	0	0	0	0	0	0	**50**	
1730 - 1745	0	46	3	0	1	0	0	0	0	0	0	0	0	**51**	
1745 - 1800	0	49	5	0	0	1	0	0	0	0	0	0	0	**55**	**202**
1800 - 1815	0	49	5	0	1	0	0	0	0	0	0	0	0	**56**	
1815 - 1830	0	30	5	0	1	0	0	0	0	0	0	0	0	**37**	
1830 - 1845	0	30	4	0	0	0	0	0	0	0	0	0	0	**35**	
1845 - 1900	0	38	4	0	1	0	0	0	0	0	0	0	0	**43**	**171**
1900 - 1915	0	25	2	0	0	0	0	0	0	0	0	0	0	**27**	
1915 - 1930	0	23	3	0	0	0	0	0	0	0	0	0	0	**26**	
1930 - 1945	0	24	2	0	0	0	0	0	0	0	0	0	0	**26**	
1945 - 2000	0	23	3	0	0	0	0	0	0	0	0	0	0	**26**	**105**
2000 - 2015	0	30	2	0	0	0	0	0	0	0	0	0	0	**32**	
2015 - 2030	0	23	3	0	0	0	0	0	0	0	0	0	0	**25**	
2030 - 2045	0	20	1	0	0	0	0	0	0	0	0	0	0	**21**	
2045 - 2100	0	24	2	0	0	1	0	0	0	0	0	0	0	**27**	**105**
2100 - 2115	0	17	2	0	0	0	0	0	0	0	0	0	0	**19**	
2115 - 2130	0	18	1	0	0	0	0	0	0	0	0	0	0	**20**	
2130 - 2145	0	16	2	0	0	0	0	0	0	0	0	0	0	**17**	
2145 - 2200	0	15	1	0	0	0	0	0	0	0	0	0	0	**17**	**73**
2200 - 2215	0	17	2	0	0	0	0	0	0	0	0	0	0	**19**	
2215 - 2230	0	11	1	0	0	0	0	0	0	0	0	0	0	**12**	
2230 - 2245	0	11	1	0	0	0	0	0	0	0	0	0	0	**12**	
2245 - 2300	0	12	1	0	0	0	0	0	1	0	0	0	0	**13**	**57**
2300 - 2315	0	9	1	0	0	0	0	0	0	0	0	0	0	**10**	
2315 - 2330	0	11	1	0	0	0	0	0	0	0	0	0	0	**12**	
2330 - 2345	0	10	1	0	0	0	0	0	0	0	0	0	0	**11**	
2345 - 0000	0	8	0	0	0	0	0	0	0	0	0	0	0	**8**	**41**

Session Total	4	3048	438	13	42	34	0	5	17	1	0	0	0	**3604**
Session Average	0.04	31.75	4.56	0.14	0.44	0.36	0.00	0.06	0.18	0.01	0.00	0.00	0.00	**37.54**
Session Percentage	0.11	84.58	12.15	0.37	1.17	0.95	0.00	0.15	0.48	0.03	0.00	0.00	0.00	

AM Peak Hour	0845 - 0945	0730 - 0830	0645 - 0745	0945 - 1045	0945 - 1045	0945 - 1045	-	0915 - 1015	0745 - 0845	0645 - 0745	-	-	-	**0730 - 0830**
AM Peak Volume	1	355	51	6	4	4	0	1	2	0	0	0	0	**408**

Noon Peak Hour	1245 - 1345	1215 - 1315	1300 - 1400	1000 - 1100	1045 - 1145	1430 - 1530	-	1115 - 1215	1000 - 1100	1145 - 1245	-	-	-	**1215 - 1315**
Noon Peak Volume	1	203	37	5	5	5	0	1	2	0	0	0	0	**244**

PM Peak Hour	1545 - 1645	1715 - 1815	1600 - 1700	1515 - 1615	1500 - 1600	1500 - 1600	-	1600 - 1700	1530 - 1630	-	-	-	-	**1515 - 1615**
PM Peak Volume	0	188	36	0	4	6	0	1	1	0	0	0	0	**219**

Bi-Directional Class Count || Volume Summary 15min

Columbia, SC

Marr Traffic DATA COLLECTION
www.marrtraffic.com

Site 47
I-126 On/Off-Ramp,
east of Greystone Blvd

Date
Tuesday, April 23, 2024

Lat/Long
34.011912°, -81.074369°

Weather
Fair
58°F

Click here for Detailed Weather

0000 - 2400 (Weekday 24h Session) (04-23-2024)

Volume Summary 15min

TIME	Volume Summary 15min EB	Volume Summary 15min WB	15min Total	60min Total
0000 - 0015	0	0	**0**	
0015 - 0030	0	0	**0**	
0030 - 0045	0	0	**0**	
0045 - 0100	0	0	**0**	**0**
0100 - 0115	0	0	**0**	
0115 - 0130	0	0	**0**	
0130 - 0145	0	0	**0**	
0145 - 0200	0	0	**0**	**0**
0200 - 0215	0	0	**0**	
0215 - 0230	0	0	**0**	
0230 - 0245	0	0	**0**	
0245 - 0300	0	0	**0**	**0**
0300 - 0315	0	0	**0**	
0315 - 0330	0	0	**0**	
0330 - 0345	0	0	**0**	
0345 - 0400	0	0	**0**	**0**
0400 - 0415	0	0	**0**	
0415 - 0430	0	0	**0**	
0430 - 0445	0	0	**0**	
0445 - 0500	0	0	**0**	**0**
0500 - 0515	0	0	**0**	
0515 - 0530	0	0	**0**	
0530 - 0545	0	0	**0**	
0545 - 0600	0	0	**0**	**0**
0600 - 0615	0	0	**0**	
0615 - 0630	0	0	**0**	
0630 - 0645	0	0	**0**	
0645 - 0700	0	0	**0**	**0**
0700 - 0715	0	0	**0**	
0715 - 0730	0	0	**0**	
0730 - 0745	0	0	**0**	
0745 - 0800	0	0	**0**	**0**
0800 - 0815	0	0	**0**	
0815 - 0830	0	0	**0**	
0830 - 0845	0	0	**0**	
0845 - 0900	0	0	**0**	**0**
0900 - 0915	0	0	**0**	
0915 - 0930	0	0	**0**	
0930 - 0945	0	0	**0**	
0945 - 1000	0	0	**0**	**0**
1000 - 1015	0	0	**0**	
1015 - 1030	0	0	**0**	
1030 - 1045	0	0	**0**	
1045 - 1100	0	0	**0**	**0**
1100 - 1115	0	0	**0**	
1115 - 1130	0	0	**0**	
1130 - 1145	0	0	**0**	
1145 - 1200	0	0	**0**	**0**

Time	Volume Summary 15min EB	Volume Summary 15min WB	15min Total	60min Total
1200 - 1215	0	0	**0**	
1215 - 1230	0	0	**0**	
1230 - 1245	0	0	**0**	
1245 - 1300	0	0	**0**	**0**
1300 - 1315	0	0	**0**	
1315 - 1330	0	0	**0**	
1330 - 1345	0	0	**0**	
1345 - 1400	0	0	**0**	**0**
1400 - 1415	0	0	**0**	
1415 - 1430	0	0	**0**	
1430 - 1445	0	0	**0**	
1445 - 1500	0	0	**0**	**0**
1500 - 1515	0	0	**0**	
1515 - 1530	0	0	**0**	
1530 - 1545	0	0	**0**	
1545 - 1600	0	0	**0**	**0**
1600 - 1615	0	0	**0**	
1615 - 1630	0	0	**0**	
1630 - 1645	0	0	**0**	
1645 - 1700	0	0	**0**	**0**
1700 - 1715	0	0	**0**	
1715 - 1730	0	0	**0**	
1730 - 1745	0	0	**0**	
1745 - 1800	0	0	**0**	**0**
1800 - 1815	0	0	**0**	
1815 - 1830	0	0	**0**	
1830 - 1845	0	0	**0**	
1845 - 1900	0	0	**0**	**0**
1900 - 1915	0	40	**40**	
1915 - 1930	0	43	**43**	
1930 - 1945	0	36	**36**	
1945 - 2000	0	39	**39**	**158**
2000 - 2015	0	53	**53**	
2015 - 2030	0	37	**37**	
2030 - 2045	0	26	**26**	
2045 - 2100	0	33	**33**	**149**
2100 - 2115	0	33	**33**	
2115 - 2130	0	33	**33**	
2130 - 2145	0	26	**26**	
2145 - 2200	0	23	**23**	**115**
2200 - 2215	0	28	**28**	
2215 - 2230	0	18	**18**	
2230 - 2245	0	17	**17**	
2245 - 2300	0	22	**22**	**85**
2300 - 2315	0	14	**14**	
2315 - 2330	0	15	**15**	
2330 - 2345	0	19	**19**	
2345 - 0000	0	14	**14**	**62**

Session Total	0	569	**569**
Session Average	0.00	5.93	**5.93**
Session Percentage	0.00	100.00	

Site 47

I-126 On/Off-Ramp,
east of Greystone Blvd

Date

Wednesday, April 24, 2024

Lat/Long

34.011912°, -81.074369°

Weather

Fair
66°F

Click here for Detailed Weather

0000 - 2400 (Weekday 24h Session) (04-24-2024)

Volume Summary 15min

TIME	Volume Summary 15min EB	Volume Summary 15min WB	15min Total	60min Total
0000 - 0015	0	11	**11**	
0015 - 0030	0	9	**9**	
0030 - 0045	0	11	**11**	
0045 - 0100	0	7	**7**	**38**
0100 - 0115	0	2	**2**	
0115 - 0130	0	6	**6**	
0130 - 0145	0	4	**4**	
0145 - 0200	0	4	**4**	**16**
0200 - 0215	0	3	**3**	
0215 - 0230	0	5	**5**	
0230 - 0245	0	3	**3**	
0245 - 0300	0	5	**5**	**16**
0300 - 0315	0	10	**10**	
0315 - 0330	0	8	**8**	
0330 - 0345	0	5	**5**	
0345 - 0400	0	5	**5**	**28**
0400 - 0415	0	5	**5**	
0415 - 0430	0	8	**8**	
0430 - 0445	0	5	**5**	
0445 - 0500	0	11	**11**	**29**
0500 - 0515	0	3	**3**	
0515 - 0530	0	7	**7**	
0530 - 0545	0	15	**15**	
0545 - 0600	0	20	**20**	**45**
0600 - 0615	0	16	**16**	
0615 - 0630	0	40	**40**	
0630 - 0645	0	66	**66**	
0645 - 0700	0	94	**94**	**216**
0700 - 0715	0	91	**91**	
0715 - 0730	0	137	**137**	
0730 - 0745	0	132	**132**	
0745 - 0800	0	155	**155**	**515**
0800 - 0815	0	147	**147**	
0815 - 0830	0	148	**148**	
0830 - 0845	0	119	**119**	
0845 - 0900	0	125	**125**	**539**
0900 - 0915	0	104	**104**	
0915 - 0930	0	130	**130**	
0930 - 0945	0	105	**105**	
0945 - 1000	0	109	**109**	**448**
1000 - 1015	0	112	**112**	
1015 - 1030	0	92	**92**	
1030 - 1045	0	72	**72**	
1045 - 1100	0	91	**91**	**367**
1100 - 1115	0	96	**96**	
1115 - 1130	0	74	**74**	
1130 - 1145	0	63	**63**	
1145 - 1200	0	86	**86**	**319**

Time	Volume Summary 15min EB	Volume Summary 15min WB	15min Total	60min Total
1200 - 1215	0	67	**67**	
1215 - 1230	0	102	**102**	
1230 - 1245	0	87	**87**	
1245 - 1300	0	90	**90**	**346**
1300 - 1315	0	96	**96**	
1315 - 1330	0	73	**73**	
1330 - 1345	0	87	**87**	
1345 - 1400	0	80	**80**	**336**
1400 - 1415	0	78	**78**	
1415 - 1430	0	79	**79**	
1430 - 1445	0	69	**69**	
1445 - 1500	0	93	**93**	**319**
1500 - 1515	0	75	**75**	
1515 - 1530	0	87	**87**	
1530 - 1545	0	78	**78**	
1545 - 1600	0	84	**84**	**324**
1600 - 1615	0	96	**96**	
1615 - 1630	0	80	**80**	
1630 - 1645	0	77	**77**	
1645 - 1700	0	86	**86**	**339**
1700 - 1715	0	80	**80**	
1715 - 1730	0	83	**83**	
1730 - 1745	0	66	**66**	
1745 - 1800	0	76	**76**	**305**
1800 - 1815	0	73	**73**	
1815 - 1830	0	59	**59**	
1830 - 1845	0	45	**45**	
1845 - 1900	0	60	**60**	**237**
1900 - 1915	0	42	**42**	
1915 - 1930	0	34	**34**	
1930 - 1945	0	42	**42**	
1945 - 2000	0	39	**39**	**157**
2000 - 2015	0	43	**43**	
2015 - 2030	0	39	**39**	
2030 - 2045	0	37	**37**	
2045 - 2100	0	48	**48**	**167**
2100 - 2115	0	25	**25**	
2115 - 2130	0	26	**26**	
2130 - 2145	0	26	**26**	
2145 - 2200	0	28	**28**	**105**
2200 - 2215	0	30	**30**	
2215 - 2230	0	17	**17**	
2230 - 2245	0	20	**20**	
2245 - 2300	0	18	**18**	**85**
2300 - 2315	0	15	**15**	
2315 - 2330	0	21	**21**	
2330 - 2345	0	15	**15**	
2345 - 0000	0	11	**11**	**62**

Session Total	0	5358	**5358**
Session Average	0.00	55.81	**55.81**
Session Percentage	0.00	100.00	

Site 47
I-126 On/Off-Ramp,
east of Greystone Blvd

Date
Thursday, April 25, 2024

Lat/Long
34.011912°, -81.074369°

Weather
Fair
67°F

Click here for Detailed Weather

0000 - 2400 (Weekday 24h Session) (04-25-2024)
Volume Summary 15min

TIME	Volume Summary 15min EB	Volume Summary 15min WB	15min Total	60min Total
0000 - 0015	0	7	**7**	
0015 - 0030	0	11	**11**	
0030 - 0045	0	8	**8**	
0045 - 0100	0	7	**7**	**33**
0100 - 0115	0	6	**6**	
0115 - 0130	0	5	**5**	
0130 - 0145	0	9	**9**	
0145 - 0200	0	6	**6**	**26**
0200 - 0215	0	1	**1**	
0215 - 0230	0	8	**8**	
0230 - 0245	0	3	**3**	
0245 - 0300	0	4	**4**	**16**
0300 - 0315	0	10	**10**	
0315 - 0330	0	7	**7**	
0330 - 0345	0	7	**7**	
0345 - 0400	0	9	**9**	**33**
0400 - 0415	0	5	**5**	
0415 - 0430	0	6	**6**	
0430 - 0445	0	6	**6**	
0445 - 0500	0	4	**4**	**21**
0500 - 0515	0	8	**8**	
0515 - 0530	0	5	**5**	
0530 - 0545	0	17	**17**	
0545 - 0600	0	17	**17**	**47**
0600 - 0615	0	16	**16**	
0615 - 0630	0	39	**39**	
0630 - 0645	0	58	**58**	
0645 - 0700	0	82	**82**	**195**
0700 - 0715	0	102	**102**	
0715 - 0730	0	141	**141**	
0730 - 0745	0	139	**139**	
0745 - 0800	0	162	**162**	**544**
0800 - 0815	0	170	**170**	
0815 - 0830	0	171	**171**	
0830 - 0845	0	133	**133**	
0845 - 0900	0	156	**156**	**630**
0900 - 0915	0	144	**144**	
0915 - 0930	0	106	**106**	
0930 - 0945	0	100	**100**	
0945 - 1000	0	113	**113**	**463**
1000 - 1015	0	92	**92**	
1015 - 1030	0	91	**91**	
1030 - 1045	0	75	**75**	
1045 - 1100	0	86	**86**	**344**
1100 - 1115	0	77	**77**	
1115 - 1130	0	66	**66**	
1130 - 1145	0	79	**79**	
1145 - 1200	0	75	**75**	**297**

Time	Volume Summary 15min EB	Volume Summary 15min WB	15min Total	60min Total
1200 - 1215	0	96	**96**	
1215 - 1230	0	86	**86**	
1230 - 1245	0	81	**81**	
1245 - 1300	0	96	**96**	**359**
1300 - 1315	0	93	**93**	
1315 - 1330	0	89	**89**	
1330 - 1345	0	95	**95**	
1345 - 1400	0	90	**90**	**367**
1400 - 1415	0	78	**78**	
1415 - 1430	0	87	**87**	
1430 - 1445	0	76	**76**	
1445 - 1500	0	67	**67**	**308**
1500 - 1515	0	85	**85**	
1515 - 1530	0	66	**66**	
1530 - 1545	0	83	**83**	
1545 - 1600	0	84	**84**	**318**
1600 - 1615	0	80	**80**	
1615 - 1630	0	65	**65**	
1630 - 1645	0	84	**84**	
1645 - 1700	0	77	**77**	**306**
1700 - 1715	0	58	**58**	
1715 - 1730	0	67	**67**	
1730 - 1745	0	87	**87**	
1745 - 1800	0	89	**89**	**301**
1800 - 1815	0	95	**95**	
1815 - 1830	0	52	**52**	
1830 - 1845	0	61	**61**	
1845 - 1900	0	69	**69**	**277**
1900 - 1915	0	0	**0**	
1915 - 1930	0	0	**0**	
1930 - 1945	0	0	**0**	
1945 - 2000	0	0	**0**	**0**
2000 - 2015	0	0	**0**	
2015 - 2030	0	0	**0**	
2030 - 2045	0	0	**0**	
2045 - 2100	0	0	**0**	**0**
2100 - 2115	0	0	**0**	
2115 - 2130	0	0	**0**	
2130 - 2145	0	0	**0**	
2145 - 2200	0	0	**0**	**0**
2200 - 2215	0	0	**0**	
2215 - 2230	0	0	**0**	
2230 - 2245	0	0	**0**	
2245 - 2300	0	0	**0**	**0**
2300 - 2315	0	0	**0**	
2315 - 2330	0	0	**0**	
2330 - 2345	0	0	**0**	
2345 - 0000	0	0	**0**	**0**

Session Total	0	4885	**4885**
Session Average	0.00	50.89	**50.89**
Session Percentage	0.00	100.00	

Bi-Directional Class Count || SB WB 60min

Columbia, SC

Marr Traffic DATA COLLECTION

www.marrtraffic.com

Site 47
I-126 On/Off-Ramp,
east of Greystone Blvd

Date
Tuesday, April 23, 2024

Lat/Long
34.011912°, -81.074369°

Weather
Fair
58°F

Click here for Detailed Weather

0000 - 2400 (Weekday 24h Session) (04-23-2024)
SB WB 60min

	Westbound (Movement 47.1)													
TIME	1	2	3	4	5	6	7	8	9	10	11	12	13	**Total**
0000 - 0100	0	0	0	0	0	0	0	0	0	0	0	0	0	**0**
0100 - 0200	0	0	0	0	0	0	0	0	0	0	0	0	0	**0**
0200 - 0300	0	0	0	0	0	0	0	0	0	0	0	0	0	**0**
0300 - 0400	0	0	0	0	0	0	0	0	0	0	0	0	0	**0**
0400 - 0500	0	0	0	0	0	0	0	0	0	0	0	0	0	**0**
0500 - 0600	0	0	0	0	0	0	0	0	0	0	0	0	0	**0**
0600 - 0700	0	0	0	0	0	0	0	0	0	0	0	0	0	**0**
0700 - 0800	0	0	0	0	0	0	0	0	0	0	0	0	0	**0**
0800 - 0900	0	0	0	0	0	0	0	0	0	0	0	0	0	**0**
0900 - 1000	0	0	0	0	0	0	0	0	0	0	0	0	0	**0**
1000 - 1100	0	0	0	0	0	0	0	0	0	0	0	0	0	**0**
1100 - 1200	0	0	0	0	0	0	0	0	0	0	0	0	0	**0**
1200 - 1300	0	0	0	0	0	0	0	0	0	0	0	0	0	**0**
1300 - 1400	0	0	0	0	0	0	0	0	0	0	0	0	0	**0**
1400 - 1500	0	0	0	0	0	0	0	0	0	0	0	0	0	**0**
1500 - 1600	0	0	0	0	0	0	0	0	0	0	0	0	0	**0**
1600 - 1700	0	0	0	0	0	0	0	0	0	0	0	0	0	**0**
1700 - 1800	0	0	0	0	0	0	0	0	0	0	0	0	0	**0**
1800 - 1900	0	0	0	0	0	0	0	0	0	0	0	0	0	**0**
1900 - 2000	1	141	14	0	0	2	0	0	0	0	0	0	0	**158**
2000 - 2100	0	134	12	0	0	3	0	0	0	0	0	0	0	**149**
2100 - 2200	0	102	11	0	2	0	0	0	0	0	0	0	0	**115**
2200 - 2300	0	76	5	0	2	1	0	0	1	0	0	0	0	**85**
2300 - 2400	0	55	3	0	1	2	0	0	1	0	0	0	0	**62**
Session Total	1	508	45	0	5	8	0	0	2	0	0	0	0	**569**
Session Average	0.04	21.17	1.88	0.00	0.21	0.33	0.00	0.00	0.08	0.00	0.00	0.00	0.00	**23.71**
Session Percentage	0.18	89.28	7.91	0.00	0.88	1.41	0.00	0.00	0.35	0.00	0.00	0.00	0.00	
AM Peak Hour	-	-	-	-	-	-	-	-	-	-	-	-	-	**-**
AM Peak Volume	0	0	0	0	0	0	0	0	0	0	0	0	0	**0**
Noon Peak Hour	-	-	-	-	-	-	-	-	-	-	-	-	-	**-**
Noon Peak Volume	0	0	0	0	0	0	0	0	0	0	0	0	0	**0**
PM Peak Hour	1900 - 2000	1900 - 2000	1900 - 2000	-	-	1900 - 2000	-	-	-	-	-	-	-	**1900 - 2000**
PM Peak Volume	1	141	14	0	0	2	0	0	0	0	0	0	0	**158**

Site 47
I-126 On/Off-Ramp,
east of Greystone Blvd

Date
Wednesday, April 24, 2024

Lat/Long
34.011912°, -81.074369°

Weather
Fair
66°F

Click here for Detailed Weather

0000 - 2400 (Weekday 24h Session) (04-24-2024)
SB WB 60min

	Westbound (Movement 47.1)													
TIME	1	2	3	4	5	6	7	8	9	10	11	12	13	**Total**
0000 - 0100	1	30	4	0	0	2	0	0	1	0	0	0	0	**38**
0100 - 0200	1	12	1	0	0	0	0	0	2	0	0	0	0	**16**
0200 - 0300	0	11	3	0	1	1	0	0	0	0	0	0	0	**16**
0300 - 0400	0	21	2	0	4	1	0	0	0	0	0	0	0	**28**
0400 - 0500	0	25	4	0	0	0	0	0	0	0	0	0	0	**29**
0500 - 0600	0	39	5	0	1	0	0	0	0	0	0	0	0	**45**
0600 - 0700	0	164	50	0	2	0	0	0	0	0	0	0	0	**216**
0700 - 0800	0	439	70	0	3	1	0	0	2	0	0	0	0	**515**
0800 - 0900	2	452	76	1	4	1	0	0	3	0	0	0	0	**539**
0900 - 1000	1	389	43	8	7	0	0	0	0	0	0	0	0	**448**
1000 - 1100	0	311	38	9	5	1	0	0	3	0	0	0	0	**367**
1100 - 1200	0	265	41	0	8	2	0	0	3	0	0	0	0	**319**
1200 - 1300	0	286	44	2	4	3	0	3	3	1	0	0	0	**346**
1300 - 1400	1	261	65	2	4	0	0	1	2	0	0	0	0	**336**
1400 - 1500	0	260	40	0	9	7	0	1	2	0	0	0	0	**319**
1500 - 1600	0	274	39	0	5	4	0	0	2	0	0	0	0	**324**
1600 - 1700	0	280	45	1	4	7	0	1	1	0	0	0	0	**339**
1700 - 1800	0	267	26	0	5	6	0	0	1	0	0	0	0	**305**
1800 - 1900	0	199	28	0	7	2	0	0	1	0	0	0	0	**237**
1900 - 2000	0	140	17	0	0	0	0	0	0	0	0	0	0	**157**
2000 - 2100	0	155	11	0	0	0	0	0	1	0	0	0	0	**167**
2100 - 2200	0	96	5	0	0	2	0	0	2	0	0	0	0	**105**
2200 - 2300	0	74	7	0	1	0	0	1	2	0	0	0	0	**85**
2300 - 2400	0	58	4	0	0	0	0	0	0	0	0	0	0	**62**

Session Total	6	4508	668	23	74	40	0	7	31	1	0	0	0	**5358**
Session Average	0.25	187.83	27.83	0.96	3.08	1.67	0.00	0.29	1.29	0.04	0.00	0.00	0.00	**223.25**
Session Percentage	0.11	84.14	12.47	0.43	1.38	0.75	0.00	0.13	0.58	0.02	0.00	0.00	0.00	

AM Peak Hour	0800 - 0900	0800 - 0900	0800 - 0900	0900 - 1000	0900 - 1000	0700 - 0800	-	-	0800 - 0900	-	-	-	-	**0800 - 0900**
AM Peak Volume	2	452	76	8	7	1	0	0	3	0	0	0	0	**539**

Noon Peak Hour	1300 - 1400	1000 - 1100	1300 - 1400	1000 - 1100	1400 - 1500	1400 - 1500	-	1200 - 1300	1000 - 1100	1200 - 1300	-	-	-	**1000 - 1100**
Noon Peak Volume	1	311	65	9	9	7	0	3	3	1	0	0	0	**367**

PM Peak Hour	-	1600 - 1700	1600 - 1700	1600 - 1700	1800 - 1900	1600 - 1700	-	1600 - 1700	1500 - 1600	-	-	-	-	**1600 - 1700**
PM Peak Volume	0	280	45	1	7	7	0	1	2	0	0	0	0	**339**

Site 47
I-126 On/Off-Ramp,
east of Greystone Blvd

Date
Thursday, April 25, 2024

Lat/Long
34.011912°, -81.074369°

Weather
Fair
67°F

Click here for Detailed Weather

0000 - 2400 (Weekday 24h Session) (04-25-2024)
SB WB 60min

	Westbound (Movement 47.1)													
TIME	1	2	3	4	5	6	7	8	9	10	11	12	13	**Total**
0000 - 0100	0	26	5	0	0	2	0	0	0	0	0	0	0	**33**
0100 - 0200	0	21	1	0	1	2	0	0	1	0	0	0	0	**26**
0200 - 0300	0	13	1	0	0	1	0	0	1	0	0	0	0	**16**
0300 - 0400	0	21	7	0	1	1	0	0	3	0	0	0	0	**33**
0400 - 0500	0	17	1	0	1	0	0	2	0	0	0	0	0	**21**
0500 - 0600	0	41	6	0	0	0	0	0	0	0	0	0	0	**47**
0600 - 0700	0	162	32	0	1	0	0	0	0	0	0	0	0	**195**
0700 - 0800	0	464	76	0	1	0	0	0	2	1	0	0	0	**544**
0800 - 0900	0	546	75	2	3	2	0	1	1	0	0	0	0	**630**
0900 - 1000	1	398	51	7	3	2	0	0	1	0	0	0	0	**463**
1000 - 1100	0	291	26	7	6	9	0	2	3	0	0	0	0	**344**
1100 - 1200	0	236	45	1	4	7	0	2	2	0	0	0	0	**297**
1200 - 1300	0	302	45	0	2	9	0	0	1	0	0	0	0	**359**
1300 - 1400	1	312	46	0	5	2	0	1	0	0	0	0	0	**367**
1400 - 1500	0	260	38	0	4	4	0	0	1	1	0	0	0	**308**
1500 - 1600	0	265	34	0	6	13	0	0	0	0	0	0	0	**318**
1600 - 1700	1	236	62	0	4	0	0	1	2	0	0	0	0	**306**
1700 - 1800	1	272	21	0	5	1	0	0	1	0	0	0	0	**301**
1800 - 1900	1	246	29	0	1	0	0	0	0	0	0	0	0	**277**
1900 - 2000	0	0	0	0	0	0	0	0	0	0	0	0	0	**0**
2000 - 2100	0	0	0	0	0	0	0	0	0	0	0	0	0	**0**
2100 - 2200	0	0	0	0	0	0	0	0	0	0	0	0	0	**0**
2200 - 2300	0	0	0	0	0	0	0	0	0	0	0	0	0	**0**
2300 - 2400	0	0	0	0	0	0	0	0	0	0	0	0	0	**0**

Session Total	5	4129	601	17	48	55	0	9	19	2	0	0	0	**4885**
Session Average	0.21	172.04	25.04	0.71	2.00	2.29	0.00	0.38	0.79	0.08	0.00	0.00	0.00	**203.54**
Session Percentage	0.10	84.52	12.30	0.35	0.98	1.13	0.00	0.18	0.39	0.04	0.00	0.00	0.00	

AM Peak Hour	0900 - 1000	0800 - 0900	0700 - 0800	0900 - 1000	0800 - 0900	0800 - 0900	-	0800 - 0900	0700 - 0800	0700 - 0800	-	-	-	**0800 - 0900**
AM Peak Hour Volume	1	546	76	7	3	2	0	1	2	1	0	0	0	**630**

Noon Peak Hour	1300 - 1400	1300 - 1400	1300 - 1400	1000 - 1100	1000 - 1100	1000 - 1100	-	1000 - 1100	1000 - 1100	1400 - 1500	-	-	-	**1300 - 1400**
Noon Peak Hour Volume	1	312	46	7	6	9	0	2	3	1	0	0	0	**367**

PM Peak Hour	1600 - 1700	1700 - 1800	1600 - 1700	-	1500 - 1600	1500 - 1600	-	1600 - 1700	1600 - 1700	-	-	-	-	**1500 - 1600**
PM Peak Hour Volume	1	272	62	0	6	13	0	1	2	0	0	0	0	**318**

Bi-Directional Class Count || Volume Summary 60min

Columbia, SC

Marr Traffic DATA COLLECTION

www.marrtraffic.com

Site 47

I-126 On/Off-Ramp,
east of Greystone Blvd

Date

Tuesday, April 23, 2024

Lat/Long

34.011912°, -81.074369°

Weather

Fair
58°F

Click here for Detailed Weather

0000 - 2400 (Weekday 24h Session) (04-23-2024)

Volume Summary 60min

	Volume Summary 60min		
TIME	EB	WB	**Total**
0000 - 0100	0	0	**0**
0100 - 0200	0	0	**0**
0200 - 0300	0	0	**0**
0300 - 0400	0	0	**0**
0400 - 0500	0	0	**0**
0500 - 0600	0	0	**0**
0600 - 0700	0	0	**0**
0700 - 0800	0	0	**0**
0800 - 0900	0	0	**0**
0900 - 1000	0	0	**0**
1000 - 1100	0	0	**0**
1100 - 1200	0	0	**0**

	Volume Summary 60min		
Time	EB	WB	**Total**
1200 - 1300	0	0	**0**
1300 - 1400	0	0	**0**
1400 - 1500	0	0	**0**
1500 - 1600	0	0	**0**
1600 - 1700	0	0	**0**
1700 - 1800	0	0	**0**
1800 - 1900	0	0	**0**
1900 - 2000	0	158	**158**
2000 - 2100	0	149	**149**
2100 - 2200	0	115	**115**
2200 - 2300	0	85	**85**
2300 - 2400	0	62	**62**

Session Total	0	569	**569**
Session Average	0.00	23.71	**23.71**
Session Percentage	0.00	100.00	

Site 47

I-126 On/Off-Ramp,
east of Greystone Blvd

Date

Wednesday, April 24, 2024

Lat/Long

34.011912°, -81.074369°

Weather

Fair
66°F

Click here for Detailed Weather

0000 - 2400 (Weekday 24h Session) (04-24-2024)

Volume Summary 60min

	Volume Summary 60min		
TIME	EB	WB	**Total**
0000 - 0100	0	38	**38**
0100 - 0200	0	16	**16**
0200 - 0300	0	16	**16**
0300 - 0400	0	28	**28**
0400 - 0500	0	29	**29**
0500 - 0600	0	45	**45**
0600 - 0700	0	216	**216**
0700 - 0800	0	515	**515**
0800 - 0900	0	539	**539**
0900 - 1000	0	448	**448**
1000 - 1100	0	367	**367**
1100 - 1200	0	319	**319**

Session Total	0	5358	**5358**
Session Average	0.00	223.25	**223.25**
Session Percentage	0.00	100.00	

	Volume Summary 60min		
Time	EB	WB	**Total**
1200 - 1300	0	346	**346**
1300 - 1400	0	336	**336**
1400 - 1500	0	319	**319**
1500 - 1600	0	324	**324**
1600 - 1700	0	339	**339**
1700 - 1800	0	305	**305**
1800 - 1900	0	237	**237**
1900 - 2000	0	157	**157**
2000 - 2100	0	167	**167**
2100 - 2200	0	105	**105**
2200 - 2300	0	85	**85**
2300 - 2400	0	62	**62**

Site 47

I-126 On/Off-Ramp,
east of Greystone Blvd

Date

Thursday, April 25, 2024

Lat/Long

34.011912°, -81.074369°

Weather

Fair
67°F

Click here for Detailed Weather

0000 - 2400 (Weekday 24h Session) (04-25-2024)

Volume Summary 60min

	Volume Summary 60min		
TIME	EB	WB	**Total**
0000 - 0100	0	33	**33**
0100 - 0200	0	26	**26**
0200 - 0300	0	16	**16**
0300 - 0400	0	33	**33**
0400 - 0500	0	21	**21**
0500 - 0600	0	47	**47**
0600 - 0700	0	195	**195**
0700 - 0800	0	544	**544**
0800 - 0900	0	630	**630**
0900 - 1000	0	463	**463**
1000 - 1100	0	344	**344**
1100 - 1200	0	297	**297**

Session Total	0	4885	**4885**
Session Average	0.00	203.54	**203.54**
Session Percentage	0.00	100.00	

	Volume Summary 60min		
Time	EB	WB	**Total**
1200 - 1300	0	359	**359**
1300 - 1400	0	367	**367**
1400 - 1500	0	308	**308**
1500 - 1600	0	318	**318**
1600 - 1700	0	306	**306**
1700 - 1800	0	301	**301**
1800 - 1900	0	277	**277**
1900 - 2000	0	0	**0**
2000 - 2100	0	0	**0**
2100 - 2200	0	0	**0**
2200 - 2300	0	0	**0**
2300 - 2400	0	0	**0**

Bi-Directional Class Count || Graphical Analysis SB WB

Columbia, SC

Marr Traffic DATA COLLECTION

www.marrtraffic.com

Site 47

I-126 On/Off-Ramp,
east of Greystone Blvd

Lat/Long

34.011912°, -81.074369°

0000 - 2400 (Weekday 24h Session)

Graphical Analysis SB WB

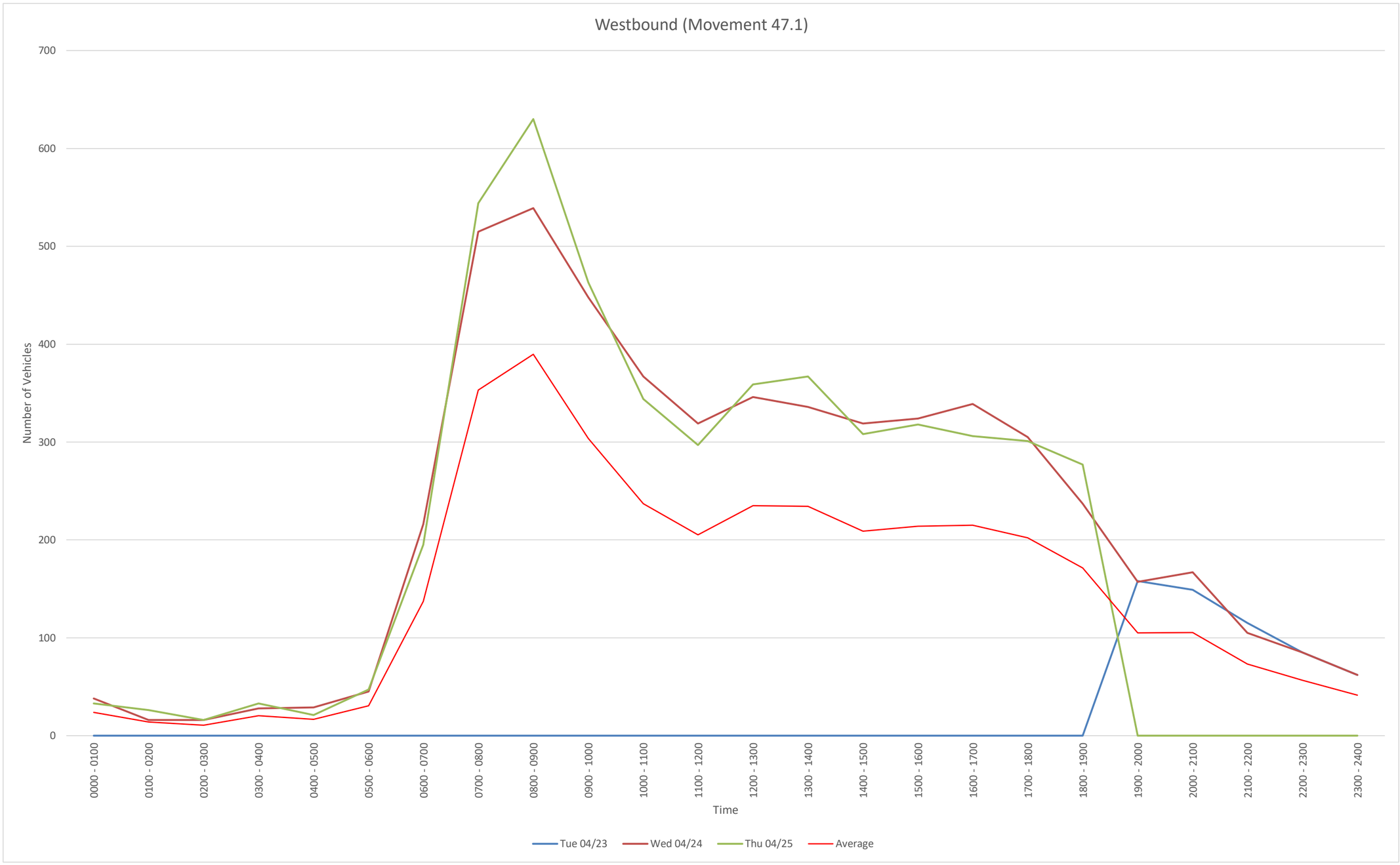

Time	Tue 04/23	Wed 04/24	Thu 04/25				
0000 - 0100	0	38	33				
0100 - 0200	0	16	26				
0200 - 0300	0	16	16				
0300 - 0400	0	28	33				
0400 - 0500	0	29	21				
0500 - 0600	0	45	47				
0600 - 0700	0	216	195				
0700 - 0800	0	515	544				
0800 - 0900	0	539	630				
0900 - 1000	0	448	463				
1000 - 1100	0	367	344				
1100 - 1200	0	319	297				
1200 - 1300	0	346	359				
1300 - 1400	0	336	367				
1400 - 1500	0	319	308				
1500 - 1600	0	324	318				
1600 - 1700	0	339	306				
1700 - 1800	0	305	301				
1800 - 1900	0	237	277				
1900 - 2000	158	157	0				
2000 - 2100	149	167	0				
2100 - 2200	115	105	0				
2200 - 2300	85	85	0				
2300 - 2400	62	62	0				
Daily Total	569	5358	4885				

EB
File Name:
Start Date: 4/23/2024
Start Time: 0
Site Code: 47
Station ID: 1
Location 1: I-126 On/Off-Ramp, east of Greystone Blvd
Location 2:

Date	Time	1	2	3	4	5	6	7	8	9	10	11	12	13
4/23/2024	12:00 AM	0	0	0	0	0	0	0	0	0	0	0	0	0
4/23/2024	12:15 AM	0	0	0	0	0	0	0	0	0	0	0	0	0
4/23/2024	12:30 AM	0	0	0	0	0	0	0	0	0	0	0	0	0
4/23/2024	12:45 AM	0	0	0	0	0	0	0	0	0	0	0	0	0
4/23/2024	1:00 AM	0	0	0	0	0	0	0	0	0	0	0	0	0
4/23/2024	1:15 AM	0	0	0	0	0	0	0	0	0	0	0	0	0
4/23/2024	1:30 AM	0	0	0	0	0	0	0	0	0	0	0	0	0
4/23/2024	1:45 AM	0	0	0	0	0	0	0	0	0	0	0	0	0
4/23/2024	2:00 AM	0	0	0	0	0	0	0	0	0	0	0	0	0
4/23/2024	2:15 AM	0	0	0	0	0	0	0	0	0	0	0	0	0
4/23/2024	2:30 AM	0	0	0	0	0	0	0	0	0	0	0	0	0
4/23/2024	2:45 AM	0	0	0	0	0	0	0	0	0	0	0	0	0
4/23/2024	3:00 AM	0	0	0	0	0	0	0	0	0	0	0	0	0
4/23/2024	3:15 AM	0	0	0	0	0	0	0	0	0	0	0	0	0
4/23/2024	3:30 AM	0	0	0	0	0	0	0	0	0	0	0	0	0
4/23/2024	3:45 AM	0	0	0	0	0	0	0	0	0	0	0	0	0
4/23/2024	4:00 AM	0	0	0	0	0	0	0	0	0	0	0	0	0
4/23/2024	4:15 AM	0	0	0	0	0	0	0	0	0	0	0	0	0
4/23/2024	4:30 AM	0	0	0	0	0	0	0	0	0	0	0	0	0
4/23/2024	4:45 AM	0	0	0	0	0	0	0	0	0	0	0	0	0
4/23/2024	5:00 AM	0	0	0	0	0	0	0	0	0	0	0	0	0
4/23/2024	5:15 AM	0	0	0	0	0	0	0	0	0	0	0	0	0
4/23/2024	5:30 AM	0	0	0	0	0	0	0	0	0	0	0	0	0
4/23/2024	5:45 AM	0	0	0	0	0	0	0	0	0	0	0	0	0
4/23/2024	6:00 AM	0	0	0	0	0	0	0	0	0	0	0	0	0
4/23/2024	6:15 AM	0	0	0	0	0	0	0	0	0	0	0	0	0
4/23/2024	6:30 AM	0	0	0	0	0	0	0	0	0	0	0	0	0
4/23/2024	6:45 AM	0	0	0	0	0	0	0	0	0	0	0	0	0
4/23/2024	7:00 AM	0	0	0	0	0	0	0	0	0	0	0	0	0
4/23/2024	7:15 AM	0	0	0	0	0	0	0	0	0	0	0	0	0
4/23/2024	7:30 AM	0	0	0	0	0	0	0	0	0	0	0	0	0
4/23/2024	7:45 AM	0	0	0	0	0	0	0	0	0	0	0	0	0
4/23/2024	8:00 AM	0	0	0	0	0	0	0	0	0	0	0	0	0
4/23/2024	8:15 AM	0	0	0	0	0	0	0	0	0	0	0	0	0
4/23/2024	8:30 AM	0	0	0	0	0	0	0	0	0	0	0	0	0
4/23/2024	8:45 AM	0	0	0	0	0	0	0	0	0	0	0	0	0
4/23/2024	9:00 AM	0	0	0	0	0	0	0	0	0	0	0	0	0
4/23/2024	9:15 AM	0	0	0	0	0	0	0	0	0	0	0	0	0
4/23/2024	9:30 AM	0	0	0	0	0	0	0	0	0	0	0	0	0
4/23/2024	9:45 AM	0	0	0	0	0	0	0	0	0	0	0	0	0
4/23/2024	10:00 AM	0	0	0	0	0	0	0	0	0	0	0	0	0
4/23/2024	10:15 AM	0	0	0	0	0	0	0	0	0	0	0	0	0
4/23/2024	10:30 AM	0	0	0	0	0	0	0	0	0	0	0	0	0
4/23/2024	10:45 AM	0	0	0	0	0	0	0	0	0	0	0	0	0
4/23/2024	11:00 AM	0	0	0	0	0	0	0	0	0	0	0	0	0
4/23/2024	11:15 AM	0	0	0	0	0	0	0	0	0	0	0	0	0
4/23/2024	11:30 AM	0	0	0	0	0	0	0	0	0	0	0	0	0
4/23/2024	11:45 AM	0	0	0	0	0	0	0	0	0	0	0	0	0
4/23/2024	12:00 PM	0	0	0	0	0	0	0	0	0	0	0	0	0
4/23/2024	12:15 PM	0	0	0	0	0	0	0	0	0	0	0	0	0
4/23/2024	12:30 PM	0	0	0	0	0	0	0	0	0	0	0	0	0
4/23/2024	12:45 PM	0	0	0	0	0	0	0	0	0	0	0	0	0
4/23/2024	1:00 PM	0	0	0	0	0	0	0	0	0	0	0	0	0
4/23/2024	1:15 PM	0	0	0	0	0	0	0	0	0	0	0	0	0
4/23/2024	1:30 PM	0	0	0	0	0	0	0	0	0	0	0	0	0
4/23/2024	1:45 PM	0	0	0	0	0	0	0	0	0	0	0	0	0
4/23/2024	2:00 PM	0	0	0	0	0	0	0	0	0	0	0	0	0
4/23/2024	2:15 PM	0	0	0	0	0	0	0	0	0	0	0	0	0
4/23/2024	2:30 PM	0	0	0	0	0	0	0	0	0	0	0	0	0
4/23/2024	2:45 PM	0	0	0	0	0	0	0	0	0	0	0	0	0
4/23/2024	3:00 PM	0	0	0	0	0	0	0	0	0	0	0	0	0
4/23/2024	3:15 PM	0	0	0	0	0	0	0	0	0	0	0	0	0
4/23/2024	3:30 PM	0	0	0	0	0	0	0	0	0	0	0	0	0
4/23/2024	3:45 PM	0	0	0	0	0	0	0	0	0	0	0	0	0
4/23/2024	4:00 PM	0	0	0	0	0	0	0	0	0	0	0	0	0
4/23/2024	4:15 PM	0	0	0	0	0	0	0	0	0	0	0	0	0
4/23/2024	4:30 PM	0	0	0	0	0	0	0	0	0	0	0	0	0
4/23/2024	4:45 PM	0	0	0	0	0	0	0	0	0	0	0	0	0
4/23/2024	5:00 PM	0	0	0	0	0	0	0	0	0	0	0	0	0
4/23/2024	5:15 PM	0	0	0	0	0	0	0	0	0	0	0	0	0
4/23/2024	5:30 PM	0	0	0	0	0	0	0	0	0	0	0	0	0
4/23/2024	5:45 PM	0	0	0	0	0	0	0	0	0	0	0	0	0
4/23/2024	6:00 PM	0	0	0	0	0	0	0	0	0	0	0	0	0
4/23/2024	6:15 PM	0	0	0	0	0	0	0	0	0	0	0	0	0
4/23/2024	6:30 PM	0	0	0	0	0	0	0	0	0	0	0	0	0
4/23/2024	6:45 PM	0	0	0	0	0	0	0	0	0	0	0	0	0
4/23/2024	7:00 PM	0	0	0	0	0	0	0	0	0	0	0	0	0
4/23/2024	7:15 PM	0	0	0	0	0	0	0	0	0	0	0	0	0
4/23/2024	7:30 PM	0	0	0	0	0	0	0	0	0	0	0	0	0
4/23/2024	7:45 PM	0	0	0	0	0	0	0	0	0	0	0	0	0
4/23/2024	8:00 PM	0	0	0	0	0	0	0	0	0	0	0	0	0
4/23/2024	8:15 PM	0	0	0	0	0	0	0	0	0	0	0	0	0
4/23/2024	8:30 PM	0	0	0	0	0	0	0	0	0	0	0	0	0
4/23/2024	8:45 PM	0	0	0	0	0	0	0	0	0	0	0	0	0
4/23/2024	9:00 PM	0	0	0	0	0	0	0	0	0	0	0	0	0
4/23/2024	9:15 PM	0	0	0	0	0	0	0	0	0	0	0	0	0
4/23/2024	9:30 PM	0	0	0	0	0	0	0	0	0	0	0	0	0
4/23/2024	9:45 PM	0	0	0	0	0	0	0	0	0	0	0	0	0
4/23/2024	10:00 PM	0	0	0	0	0	0	0	0	0	0	0	0	0
4/23/2024	10:15 PM	0	0	0	0	0	0	0	0	0	0	0	0	0
4/23/2024	10:30 PM	0	0	0	0	0	0	0	0	0	0	0	0	0
4/23/2024	10:45 PM	0	0	0	0	0	0	0	0	0	0	0	0	0
4/23/2024	11:00 PM	0	0	0	0	0	0	0	0	0	0	0	0	0
4/23/2024	11:15 PM	0	0	0	0	0	0	0	0	0	0	0	0	0
4/23/2024	11:30 PM	0	0	0	0	0	0	0	0	0	0	0	0	0
4/23/2024	11:45 PM	0	0	0	0	0	0	0	0	0	0	0	0	0

4/24/2024	12:00 AM	0	0	0	0	0	0	0	0	0	0	0	0	0
4/24/2024	12:15 AM	0	0	0	0	0	0	0	0	0	0	0	0	0
4/24/2024	12:30 AM	0	0	0	0	0	0	0	0	0	0	0	0	0
4/24/2024	12:45 AM	0	0	0	0	0	0	0	0	0	0	0	0	0
4/24/2024	1:00 AM	0	0	0	0	0	0	0	0	0	0	0	0	0
4/24/2024	1:15 AM	0	0	0	0	0	0	0	0	0	0	0	0	0
4/24/2024	1:30 AM	0	0	0	0	0	0	0	0	0	0	0	0	0
4/24/2024	1:45 AM	0	0	0	0	0	0	0	0	0	0	0	0	0
4/24/2024	2:00 AM	0	0	0	0	0	0	0	0	0	0	0	0	0
4/24/2024	2:15 AM	0	0	0	0	0	0	0	0	0	0	0	0	0
4/24/2024	2:30 AM	0	0	0	0	0	0	0	0	0	0	0	0	0
4/24/2024	2:45 AM	0	0	0	0	0	0	0	0	0	0	0	0	0
4/24/2024	3:00 AM	0	0	0	0	0	0	0	0	0	0	0	0	0
4/24/2024	3:15 AM	0	0	0	0	0	0	0	0	0	0	0	0	0
4/24/2024	3:30 AM	0	0	0	0	0	0	0	0	0	0	0	0	0
4/24/2024	3:45 AM	0	0	0	0	0	0	0	0	0	0	0	0	0
4/24/2024	4:00 AM	0	0	0	0	0	0	0	0	0	0	0	0	0
4/24/2024	4:15 AM	0	0	0	0	0	0	0	0	0	0	0	0	0
4/24/2024	4:30 AM	0	0	0	0	0	0	0	0	0	0	0	0	0
4/24/2024	4:45 AM	0	0	0	0	0	0	0	0	0	0	0	0	0
4/24/2024	5:00 AM	0	0	0	0	0	0	0	0	0	0	0	0	0
4/24/2024	5:15 AM	0	0	0	0	0	0	0	0	0	0	0	0	0
4/24/2024	5:30 AM	0	0	0	0	0	0	0	0	0	0	0	0	0
4/24/2024	5:45 AM	0	0	0	0	0	0	0	0	0	0	0	0	0
4/24/2024	6:00 AM	0	0	0	0	0	0	0	0	0	0	0	0	0
4/24/2024	6:15 AM	0	0	0	0	0	0	0	0	0	0	0	0	0
4/24/2024	6:30 AM	0	0	0	0	0	0	0	0	0	0	0	0	0
4/24/2024	6:45 AM	0	0	0	0	0	0	0	0	0	0	0	0	0
4/24/2024	7:00 AM	0	0	0	0	0	0	0	0	0	0	0	0	0
4/24/2024	7:15 AM	0	0	0	0	0	0	0	0	0	0	0	0	0
4/24/2024	7:30 AM	0	0	0	0	0	0	0	0	0	0	0	0	0
4/24/2024	7:45 AM	0	0	0	0	0	0	0	0	0	0	0	0	0
4/24/2024	8:00 AM	0	0	0	0	0	0	0	0	0	0	0	0	0
4/24/2024	8:15 AM	0	0	0	0	0	0	0	0	0	0	0	0	0
4/24/2024	8:30 AM	0	0	0	0	0	0	0	0	0	0	0	0	0
4/24/2024	8:45 AM	0	0	0	0	0	0	0	0	0	0	0	0	0
4/24/2024	9:00 AM	0	0	0	0	0	0	0	0	0	0	0	0	0
4/24/2024	9:15 AM	0	0	0	0	0	0	0	0	0	0	0	0	0
4/24/2024	9:30 AM	0	0	0	0	0	0	0	0	0	0	0	0	0
4/24/2024	9:45 AM	0	0	0	0	0	0	0	0	0	0	0	0	0
4/24/2024	10:00 AM	0	0	0	0	0	0	0	0	0	0	0	0	0
4/24/2024	10:15 AM	0	0	0	0	0	0	0	0	0	0	0	0	0
4/24/2024	10:30 AM	0	0	0	0	0	0	0	0	0	0	0	0	0
4/24/2024	10:45 AM	0	0	0	0	0	0	0	0	0	0	0	0	0
4/24/2024	11:00 AM	0	0	0	0	0	0	0	0	0	0	0	0	0
4/24/2024	11:15 AM	0	0	0	0	0	0	0	0	0	0	0	0	0
4/24/2024	11:30 AM	0	0	0	0	0	0	0	0	0	0	0	0	0
4/24/2024	11:45 AM	0	0	0	0	0	0	0	0	0	0	0	0	0
4/24/2024	12:00 PM	0	0	0	0	0	0	0	0	0	0	0	0	0
4/24/2024	12:15 PM	0	0	0	0	0	0	0	0	0	0	0	0	0
4/24/2024	12:30 PM	0	0	0	0	0	0	0	0	0	0	0	0	0
4/24/2024	12:45 PM	0	0	0	0	0	0	0	0	0	0	0	0	0
4/24/2024	1:00 PM	0	0	0	0	0	0	0	0	0	0	0	0	0
4/24/2024	1:15 PM	0	0	0	0	0	0	0	0	0	0	0	0	0
4/24/2024	1:30 PM	0	0	0	0	0	0	0	0	0	0	0	0	0
4/24/2024	1:45 PM	0	0	0	0	0	0	0	0	0	0	0	0	0
4/24/2024	2:00 PM	0	0	0	0	0	0	0	0	0	0	0	0	0
4/24/2024	2:15 PM	0	0	0	0	0	0	0	0	0	0	0	0	0
4/24/2024	2:30 PM	0	0	0	0	0	0	0	0	0	0	0	0	0
4/24/2024	2:45 PM	0	0	0	0	0	0	0	0	0	0	0	0	0
4/24/2024	3:00 PM	0	0	0	0	0	0	0	0	0	0	0	0	0
4/24/2024	3:15 PM	0	0	0	0	0	0	0	0	0	0	0	0	0
4/24/2024	3:30 PM	0	0	0	0	0	0	0	0	0	0	0	0	0
4/24/2024	3:45 PM	0	0	0	0	0	0	0	0	0	0	0	0	0
4/24/2024	4:00 PM	0	0	0	0	0	0	0	0	0	0	0	0	0
4/24/2024	4:15 PM	0	0	0	0	0	0	0	0	0	0	0	0	0
4/24/2024	4:30 PM	0	0	0	0	0	0	0	0	0	0	0	0	0
4/24/2024	4:45 PM	0	0	0	0	0	0	0	0	0	0	0	0	0
4/24/2024	5:00 PM	0	0	0	0	0	0	0	0	0	0	0	0	0
4/24/2024	5:15 PM	0	0	0	0	0	0	0	0	0	0	0	0	0
4/24/2024	5:30 PM	0	0	0	0	0	0	0	0	0	0	0	0	0
4/24/2024	5:45 PM	0	0	0	0	0	0	0	0	0	0	0	0	0
4/24/2024	6:00 PM	0	0	0	0	0	0	0	0	0	0	0	0	0
4/24/2024	6:15 PM	0	0	0	0	0	0	0	0	0	0	0	0	0
4/24/2024	6:30 PM	0	0	0	0	0	0	0	0	0	0	0	0	0
4/24/2024	6:45 PM	0	0	0	0	0	0	0	0	0	0	0	0	0
4/24/2024	7:00 PM	0	0	0	0	0	0	0	0	0	0	0	0	0
4/24/2024	7:15 PM	0	0	0	0	0	0	0	0	0	0	0	0	0
4/24/2024	7:30 PM	0	0	0	0	0	0	0	0	0	0	0	0	0
4/24/2024	7:45 PM	0	0	0	0	0	0	0	0	0	0	0	0	0
4/24/2024	8:00 PM	0	0	0	0	0	0	0	0	0	0	0	0	0
4/24/2024	8:15 PM	0	0	0	0	0	0	0	0	0	0	0	0	0
4/24/2024	8:30 PM	0	0	0	0	0	0	0	0	0	0	0	0	0
4/24/2024	8:45 PM	0	0	0	0	0	0	0	0	0	0	0	0	0
4/24/2024	9:00 PM	0	0	0	0	0	0	0	0	0	0	0	0	0
4/24/2024	9:15 PM	0	0	0	0	0	0	0	0	0	0	0	0	0
4/24/2024	9:30 PM	0	0	0	0	0	0	0	0	0	0	0	0	0
4/24/2024	9:45 PM	0	0	0	0	0	0	0	0	0	0	0	0	0
4/24/2024	10:00 PM	0	0	0	0	0	0	0	0	0	0	0	0	0
4/24/2024	10:15 PM	0	0	0	0	0	0	0	0	0	0	0	0	0
4/24/2024	10:30 PM	0	0	0	0	0	0	0	0	0	0	0	0	0
4/24/2024	10:45 PM	0	0	0	0	0	0	0	0	0	0	0	0	0
4/24/2024	11:00 PM	0	0	0	0	0	0	0	0	0	0	0	0	0
4/24/2024	11:15 PM	0	0	0	0	0	0	0	0	0	0	0	0	0
4/24/2024	11:30 PM	0	0	0	0	0	0	0	0	0	0	0	0	0
4/24/2024	11:45 PM	0	0	0	0	0	0	0	0	0	0	0	0	0

4/25/2024	12:00 AM	0	0	0	0	0	0	0	0	0	0	0	0	0
4/25/2024	12:15 AM	0	0	0	0	0	0	0	0	0	0	0	0	0
4/25/2024	12:30 AM	0	0	0	0	0	0	0	0	0	0	0	0	0
4/25/2024	12:45 AM	0	0	0	0	0	0	0	0	0	0	0	0	0
4/25/2024	1:00 AM	0	0	0	0	0	0	0	0	0	0	0	0	0
4/25/2024	1:15 AM	0	0	0	0	0	0	0	0	0	0	0	0	0
4/25/2024	1:30 AM	0	0	0	0	0	0	0	0	0	0	0	0	0
4/25/2024	1:45 AM	0	0	0	0	0	0	0	0	0	0	0	0	0
4/25/2024	2:00 AM	0	0	0	0	0	0	0	0	0	0	0	0	0
4/25/2024	2:15 AM	0	0	0	0	0	0	0	0	0	0	0	0	0
4/25/2024	2:30 AM	0	0	0	0	0	0	0	0	0	0	0	0	0
4/25/2024	2:45 AM	0	0	0	0	0	0	0	0	0	0	0	0	0
4/25/2024	3:00 AM	0	0	0	0	0	0	0	0	0	0	0	0	0
4/25/2024	3:15 AM	0	0	0	0	0	0	0	0	0	0	0	0	0
4/25/2024	3:30 AM	0	0	0	0	0	0	0	0	0	0	0	0	0
4/25/2024	3:45 AM	0	0	0	0	0	0	0	0	0	0	0	0	0
4/25/2024	4:00 AM	0	0	0	0	0	0	0	0	0	0	0	0	0
4/25/2024	4:15 AM	0	0	0	0	0	0	0	0	0	0	0	0	0
4/25/2024	4:30 AM	0	0	0	0	0	0	0	0	0	0	0	0	0
4/25/2024	4:45 AM	0	0	0	0	0	0	0	0	0	0	0	0	0
4/25/2024	5:00 AM	0	0	0	0	0	0	0	0	0	0	0	0	0
4/25/2024	5:15 AM	0	0	0	0	0	0	0	0	0	0	0	0	0
4/25/2024	5:30 AM	0	0	0	0	0	0	0	0	0	0	0	0	0
4/25/2024	5:45 AM	0	0	0	0	0	0	0	0	0	0	0	0	0
4/25/2024	6:00 AM	0	0	0	0	0	0	0	0	0	0	0	0	0
4/25/2024	6:15 AM	0	0	0	0	0	0	0	0	0	0	0	0	0
4/25/2024	6:30 AM	0	0	0	0	0	0	0	0	0	0	0	0	0
4/25/2024	6:45 AM	0	0	0	0	0	0	0	0	0	0	0	0	0
4/25/2024	7:00 AM	0	0	0	0	0	0	0	0	0	0	0	0	0
4/25/2024	7:15 AM	0	0	0	0	0	0	0	0	0	0	0	0	0
4/25/2024	7:30 AM	0	0	0	0	0	0	0	0	0	0	0	0	0
4/25/2024	7:45 AM	0	0	0	0	0	0	0	0	0	0	0	0	0
4/25/2024	8:00 AM	0	0	0	0	0	0	0	0	0	0	0	0	0
4/25/2024	8:15 AM	0	0	0	0	0	0	0	0	0	0	0	0	0
4/25/2024	8:30 AM	0	0	0	0	0	0	0	0	0	0	0	0	0
4/25/2024	8:45 AM	0	0	0	0	0	0	0	0	0	0	0	0	0
4/25/2024	9:00 AM	0	0	0	0	0	0	0	0	0	0	0	0	0
4/25/2024	9:15 AM	0	0	0	0	0	0	0	0	0	0	0	0	0
4/25/2024	9:30 AM	0	0	0	0	0	0	0	0	0	0	0	0	0
4/25/2024	9:45 AM	0	0	0	0	0	0	0	0	0	0	0	0	0
4/25/2024	10:00 AM	0	0	0	0	0	0	0	0	0	0	0	0	0
4/25/2024	10:15 AM	0	0	0	0	0	0	0	0	0	0	0	0	0
4/25/2024	10:30 AM	0	0	0	0	0	0	0	0	0	0	0	0	0
4/25/2024	10:45 AM	0	0	0	0	0	0	0	0	0	0	0	0	0
4/25/2024	11:00 AM	0	0	0	0	0	0	0	0	0	0	0	0	0
4/25/2024	11:15 AM	0	0	0	0	0	0	0	0	0	0	0	0	0
4/25/2024	11:30 AM	0	0	0	0	0	0	0	0	0	0	0	0	0
4/25/2024	11:45 AM	0	0	0	0	0	0	0	0	0	0	0	0	0
4/25/2024	12:00 PM	0	0	0	0	0	0	0	0	0	0	0	0	0
4/25/2024	12:15 PM	0	0	0	0	0	0	0	0	0	0	0	0	0
4/25/2024	12:30 PM	0	0	0	0	0	0	0	0	0	0	0	0	0
4/25/2024	12:45 PM	0	0	0	0	0	0	0	0	0	0	0	0	0
4/25/2024	1:00 PM	0	0	0	0	0	0	0	0	0	0	0	0	0
4/25/2024	1:15 PM	0	0	0	0	0	0	0	0	0	0	0	0	0
4/25/2024	1:30 PM	0	0	0	0	0	0	0	0	0	0	0	0	0
4/25/2024	1:45 PM	0	0	0	0	0	0	0	0	0	0	0	0	0
4/25/2024	2:00 PM	0	0	0	0	0	0	0	0	0	0	0	0	0
4/25/2024	2:15 PM	0	0	0	0	0	0	0	0	0	0	0	0	0
4/25/2024	2:30 PM	0	0	0	0	0	0	0	0	0	0	0	0	0
4/25/2024	2:45 PM	0	0	0	0	0	0	0	0	0	0	0	0	0
4/25/2024	3:00 PM	0	0	0	0	0	0	0	0	0	0	0	0	0
4/25/2024	3:15 PM	0	0	0	0	0	0	0	0	0	0	0	0	0
4/25/2024	3:30 PM	0	0	0	0	0	0	0	0	0	0	0	0	0
4/25/2024	3:45 PM	0	0	0	0	0	0	0	0	0	0	0	0	0
4/25/2024	4:00 PM	0	0	0	0	0	0	0	0	0	0	0	0	0
4/25/2024	4:15 PM	0	0	0	0	0	0	0	0	0	0	0	0	0
4/25/2024	4:30 PM	0	0	0	0	0	0	0	0	0	0	0	0	0
4/25/2024	4:45 PM	0	0	0	0	0	0	0	0	0	0	0	0	0
4/25/2024	5:00 PM	0	0	0	0	0	0	0	0	0	0	0	0	0
4/25/2024	5:15 PM	0	0	0	0	0	0	0	0	0	0	0	0	0
4/25/2024	5:30 PM	0	0	0	0	0	0	0	0	0	0	0	0	0
4/25/2024	5:45 PM	0	0	0	0	0	0	0	0	0	0	0	0	0
4/25/2024	6:00 PM	0	0	0	0	0	0	0	0	0	0	0	0	0
4/25/2024	6:15 PM	0	0	0	0	0	0	0	0	0	0	0	0	0
4/25/2024	6:30 PM	0	0	0	0	0	0	0	0	0	0	0	0	0
4/25/2024	6:45 PM	0	0	0	0	0	0	0	0	0	0	0	0	0
4/25/2024	7:00 PM	0	0	0	0	0	0	0	0	0	0	0	0	0
4/25/2024	7:15 PM	0	0	0	0	0	0	0	0	0	0	0	0	0
4/25/2024	7:30 PM	0	0	0	0	0	0	0	0	0	0	0	0	0
4/25/2024	7:45 PM	0	0	0	0	0	0	0	0	0	0	0	0	0
4/25/2024	8:00 PM	0	0	0	0	0	0	0	0	0	0	0	0	0
4/25/2024	8:15 PM	0	0	0	0	0	0	0	0	0	0	0	0	0
4/25/2024	8:30 PM	0	0	0	0	0	0	0	0	0	0	0	0	0
4/25/2024	8:45 PM	0	0	0	0	0	0	0	0	0	0	0	0	0
4/25/2024	9:00 PM	0	0	0	0	0	0	0	0	0	0	0	0	0
4/25/2024	9:15 PM	0	0	0	0	0	0	0	0	0	0	0	0	0
4/25/2024	9:30 PM	0	0	0	0	0	0	0	0	0	0	0	0	0
4/25/2024	9:45 PM	0	0	0	0	0	0	0	0	0	0	0	0	0
4/25/2024	10:00 PM	0	0	0	0	0	0	0	0	0	0	0	0	0
4/25/2024	10:15 PM	0	0	0	0	0	0	0	0	0	0	0	0	0
4/25/2024	10:30 PM	0	0	0	0	0	0	0	0	0	0	0	0	0
4/25/2024	10:45 PM	0	0	0	0	0	0	0	0	0	0	0	0	0
4/25/2024	11:00 PM	0	0	0	0	0	0	0	0	0	0	0	0	0
4/25/2024	11:15 PM	0	0	0	0	0	0	0	0	0	0	0	0	0
4/25/2024	11:30 PM	0	0	0	0	0	0	0	0	0	0	0	0	0
4/25/2024	11:45 PM	0	0	0	0	0	0	0	0	0	0	0	0	0

WB
File Name:
Start Date: 4/23/2024
Start Time: 0
Site Code: 47
Station ID: 1
Location 1: I-126 On/Off-Ramp, east of Greystone Blvd
Location 2:

Date	Time	1	2	3	4	5	6	7	8	9	10	11	12	13
4/23/2024	12:00 AM	0	0	0	0	0	0	0	0	0	0	0	0	0
4/23/2024	12:15 AM	0	0	0	0	0	0	0	0	0	0	0	0	0
4/23/2024	12:30 AM	0	0	0	0	0	0	0	0	0	0	0	0	0
4/23/2024	12:45 AM	0	0	0	0	0	0	0	0	0	0	0	0	0
4/23/2024	1:00 AM	0	0	0	0	0	0	0	0	0	0	0	0	0
4/23/2024	1:15 AM	0	0	0	0	0	0	0	0	0	0	0	0	0
4/23/2024	1:30 AM	0	0	0	0	0	0	0	0	0	0	0	0	0
4/23/2024	1:45 AM	0	0	0	0	0	0	0	0	0	0	0	0	0
4/23/2024	2:00 AM	0	0	0	0	0	0	0	0	0	0	0	0	0
4/23/2024	2:15 AM	0	0	0	0	0	0	0	0	0	0	0	0	0
4/23/2024	2:30 AM	0	0	0	0	0	0	0	0	0	0	0	0	0
4/23/2024	2:45 AM	0	0	0	0	0	0	0	0	0	0	0	0	0
4/23/2024	3:00 AM	0	0	0	0	0	0	0	0	0	0	0	0	0
4/23/2024	3:15 AM	0	0	0	0	0	0	0	0	0	0	0	0	0
4/23/2024	3:30 AM	0	0	0	0	0	0	0	0	0	0	0	0	0
4/23/2024	3:45 AM	0	0	0	0	0	0	0	0	0	0	0	0	0
4/23/2024	4:00 AM	0	0	0	0	0	0	0	0	0	0	0	0	0
4/23/2024	4:15 AM	0	0	0	0	0	0	0	0	0	0	0	0	0
4/23/2024	4:30 AM	0	0	0	0	0	0	0	0	0	0	0	0	0
4/23/2024	4:45 AM	0	0	0	0	0	0	0	0	0	0	0	0	0
4/23/2024	5:00 AM	0	0	0	0	0	0	0	0	0	0	0	0	0
4/23/2024	5:15 AM	0	0	0	0	0	0	0	0	0	0	0	0	0
4/23/2024	5:30 AM	0	0	0	0	0	0	0	0	0	0	0	0	0
4/23/2024	5:45 AM	0	0	0	0	0	0	0	0	0	0	0	0	0
4/23/2024	6:00 AM	0	0	0	0	0	0	0	0	0	0	0	0	0
4/23/2024	6:15 AM	0	0	0	0	0	0	0	0	0	0	0	0	0
4/23/2024	6:30 AM	0	0	0	0	0	0	0	0	0	0	0	0	0
4/23/2024	6:45 AM	0	0	0	0	0	0	0	0	0	0	0	0	0
4/23/2024	7:00 AM	0	0	0	0	0	0	0	0	0	0	0	0	0
4/23/2024	7:15 AM	0	0	0	0	0	0	0	0	0	0	0	0	0
4/23/2024	7:30 AM	0	0	0	0	0	0	0	0	0	0	0	0	0
4/23/2024	7:45 AM	0	0	0	0	0	0	0	0	0	0	0	0	0
4/23/2024	8:00 AM	0	0	0	0	0	0	0	0	0	0	0	0	0
4/23/2024	8:15 AM	0	0	0	0	0	0	0	0	0	0	0	0	0
4/23/2024	8:30 AM	0	0	0	0	0	0	0	0	0	0	0	0	0
4/23/2024	8:45 AM	0	0	0	0	0	0	0	0	0	0	0	0	0
4/23/2024	9:00 AM	0	0	0	0	0	0	0	0	0	0	0	0	0
4/23/2024	9:15 AM	0	0	0	0	0	0	0	0	0	0	0	0	0
4/23/2024	9:30 AM	0	0	0	0	0	0	0	0	0	0	0	0	0
4/23/2024	9:45 AM	0	0	0	0	0	0	0	0	0	0	0	0	0
4/23/2024	10:00 AM	0	0	0	0	0	0	0	0	0	0	0	0	0
4/23/2024	10:15 AM	0	0	0	0	0	0	0	0	0	0	0	0	0
4/23/2024	10:30 AM	0	0	0	0	0	0	0	0	0	0	0	0	0
4/23/2024	10:45 AM	0	0	0	0	0	0	0	0	0	0	0	0	0
4/23/2024	11:00 AM	0	0	0	0	0	0	0	0	0	0	0	0	0
4/23/2024	11:15 AM	0	0	0	0	0	0	0	0	0	0	0	0	0
4/23/2024	11:30 AM	0	0	0	0	0	0	0	0	0	0	0	0	0
4/23/2024	11:45 AM	0	0	0	0	0	0	0	0	0	0	0	0	0
4/23/2024	12:00 PM	0	0	0	0	0	0	0	0	0	0	0	0	0
4/23/2024	12:15 PM	0	0	0	0	0	0	0	0	0	0	0	0	0
4/23/2024	12:30 PM	0	0	0	0	0	0	0	0	0	0	0	0	0
4/23/2024	12:45 PM	0	0	0	0	0	0	0	0	0	0	0	0	0
4/23/2024	1:00 PM	0	0	0	0	0	0	0	0	0	0	0	0	0
4/23/2024	1:15 PM	0	0	0	0	0	0	0	0	0	0	0	0	0
4/23/2024	1:30 PM	0	0	0	0	0	0	0	0	0	0	0	0	0
4/23/2024	1:45 PM	0	0	0	0	0	0	0	0	0	0	0	0	0
4/23/2024	2:00 PM	0	0	0	0	0	0	0	0	0	0	0	0	0
4/23/2024	2:15 PM	0	0	0	0	0	0	0	0	0	0	0	0	0
4/23/2024	2:30 PM	0	0	0	0	0	0	0	0	0	0	0	0	0
4/23/2024	2:45 PM	0	0	0	0	0	0	0	0	0	0	0	0	0
4/23/2024	3:00 PM	0	0	0	0	0	0	0	0	0	0	0	0	0
4/23/2024	3:15 PM	0	0	0	0	0	0	0	0	0	0	0	0	0
4/23/2024	3:30 PM	0	0	0	0	0	0	0	0	0	0	0	0	0
4/23/2024	3:45 PM	0	0	0	0	0	0	0	0	0	0	0	0	0
4/23/2024	4:00 PM	0	0	0	0	0	0	0	0	0	0	0	0	0
4/23/2024	4:15 PM	0	0	0	0	0	0	0	0	0	0	0	0	0
4/23/2024	4:30 PM	0	0	0	0	0	0	0	0	0	0	0	0	0
4/23/2024	4:45 PM	0	0	0	0	0	0	0	0	0	0	0	0	0
4/23/2024	5:00 PM	0	0	0	0	0	0	0	0	0	0	0	0	0
4/23/2024	5:15 PM	0	0	0	0	0	0	0	0	0	0	0	0	0
4/23/2024	5:30 PM	0	0	0	0	0	0	0	0	0	0	0	0	0
4/23/2024	5:45 PM	0	0	0	0	0	0	0	0	0	0	0	0	0
4/23/2024	6:00 PM	0	0	0	0	0	0	0	0	0	0	0	0	0
4/23/2024	6:15 PM	0	0	0	0	0	0	0	0	0	0	0	0	0
4/23/2024	6:30 PM	0	0	0	0	0	0	0	0	0	0	0	0	0
4/23/2024	6:45 PM	0	0	0	0	0	0	0	0	0	0	0	0	0
4/23/2024	7:00 PM	0	36	3	0	0	1	0	0	0	0	0	0	0
4/23/2024	7:15 PM	0	37	5	0	0	1	0	0	0	0	0	0	0
4/23/2024	7:30 PM	1	33	2	0	0	0	0	0	0	0	0	0	0
4/23/2024	7:45 PM	0	35	4	0	0	0	0	0	0	0	0	0	0
4/23/2024	8:00 PM	0	50	3	0	0	0	0	0	0	0	0	0	0
4/23/2024	8:15 PM	0	32	5	0	0	0	0	0	0	0	0	0	0
4/23/2024	8:30 PM	0	24	2	0	0	0	0	0	0	0	0	0	0
4/23/2024	8:45 PM	0	28	2	0	0	3	0	0	0	0	0	0	0
4/23/2024	9:00 PM	0	29	4	0	0	0	0	0	0	0	0	0	0
4/23/2024	9:15 PM	0	30	2	0	1	0	0	0	0	0	0	0	0
4/23/2024	9:30 PM	0	23	3	0	0	0	0	0	0	0	0	0	0
4/23/2024	9:45 PM	0	20	2	0	1	0	0	0	0	0	0	0	0
4/23/2024	10:00 PM	0	26	2	0	0	0	0	0	0	0	0	0	0
4/23/2024	10:15 PM	0	17	1	0	0	0	0	0	0	0	0	0	0
4/23/2024	10:30 PM	0	15	0	0	1	1	0	0	0	0	0	0	0
4/23/2024	10:45 PM	0	18	2	0	1	0	0	0	1	0	0	0	0
4/23/2024	11:00 PM	0	13	1	0	0	0	0	0	0	0	0	0	0
4/23/2024	11:15 PM	0	14	0	0	0	1	0	0	0	0	0	0	0
4/23/2024	11:30 PM	0	16	1	0	0	1	0	0	1	0	0	0	0
4/23/2024	11:45 PM	0	12	1	0	1	0	0	0	0	0	0	0	0

4/24/2024	12:00 AM	1	9	0	0	0	0	0	0	1	0	0	0	0
4/24/2024	12:15 AM	0	8	1	0	0	0	0	0	0	0	0	0	0
4/24/2024	12:30 AM	0	8	2	0	0	1	0	0	0	0	0	0	0
4/24/2024	12:45 AM	0	5	1	0	0	1	0	0	0	0	0	0	0
4/24/2024	1:00 AM	0	2	0	0	0	0	0	0	0	0	0	0	0
4/24/2024	1:15 AM	0	4	0	0	0	0	0	0	2	0	0	0	0
4/24/2024	1:30 AM	1	2	1	0	0	0	0	0	0	0	0	0	0
4/24/2024	1:45 AM	0	4	0	0	0	0	0	0	0	0	0	0	0
4/24/2024	2:00 AM	0	3	0	0	0	0	0	0	0	0	0	0	0
4/24/2024	2:15 AM	0	2	2	0	1	0	0	0	0	0	0	0	0
4/24/2024	2:30 AM	0	2	0	0	0	1	0	0	0	0	0	0	0
4/24/2024	2:45 AM	0	4	1	0	0	0	0	0	0	0	0	0	0
4/24/2024	3:00 AM	0	9	0	0	1	0	0	0	0	0	0	0	0
4/24/2024	3:15 AM	0	5	1	0	2	0	0	0	0	0	0	0	0
4/24/2024	3:30 AM	0	5	0	0	0	0	0	0	0	0	0	0	0
4/24/2024	3:45 AM	0	2	1	0	1	1	0	0	0	0	0	0	0
4/24/2024	4:00 AM	0	5	0	0	0	0	0	0	0	0	0	0	0
4/24/2024	4:15 AM	0	6	2	0	0	0	0	0	0	0	0	0	0
4/24/2024	4:30 AM	0	5	0	0	0	0	0	0	0	0	0	0	0
4/24/2024	4:45 AM	0	9	2	0	0	0	0	0	0	0	0	0	0
4/24/2024	5:00 AM	0	3	0	0	0	0	0	0	0	0	0	0	0
4/24/2024	5:15 AM	0	6	1	0	0	0	0	0	0	0	0	0	0
4/24/2024	5:30 AM	0	13	2	0	0	0	0	0	0	0	0	0	0
4/24/2024	5:45 AM	0	17	2	0	1	0	0	0	0	0	0	0	0
4/24/2024	6:00 AM	0	14	1	0	1	0	0	0	0	0	0	0	0
4/24/2024	6:15 AM	0	27	13	0	0	0	0	0	0	0	0	0	0
4/24/2024	6:30 AM	0	51	15	0	0	0	0	0	0	0	0	0	0
4/24/2024	6:45 AM	0	72	21	0	1	0	0	0	0	0	0	0	0
4/24/2024	7:00 AM	0	72	19	0	0	0	0	0	0	0	0	0	0
4/24/2024	7:15 AM	0	114	22	0	0	0	0	0	1	0	0	0	0
4/24/2024	7:30 AM	0	113	15	0	2	1	0	0	1	0	0	0	0
4/24/2024	7:45 AM	0	140	14	0	1	0	0	0	0	0	0	0	0
4/24/2024	8:00 AM	0	131	14	0	2	0	0	0	0	0	0	0	0
4/24/2024	8:15 AM	0	116	28	0	1	1	0	0	2	0	0	0	0
4/24/2024	8:30 AM	0	105	12	0	1	0	0	0	1	0	0	0	0
4/24/2024	8:45 AM	2	100	22	1	0	0	0	0	0	0	0	0	0
4/24/2024	9:00 AM	0	88	10	5	1	0	0	0	0	0	0	0	0
4/24/2024	9:15 AM	0	110	18	2	0	0	0	0	0	0	0	0	0
4/24/2024	9:30 AM	1	90	11	1	2	0	0	0	0	0	0	0	0
4/24/2024	9:45 AM	0	101	4	0	4	0	0	0	0	0	0	0	0
4/24/2024	10:00 AM	0	97	11	0	2	0	0	0	2	0	0	0	0
4/24/2024	10:15 AM	0	78	8	4	1	1	0	0	0	0	0	0	0
4/24/2024	10:30 AM	0	62	6	3	1	0	0	0	0	0	0	0	0
4/24/2024	10:45 AM	0	74	13	2	1	0	0	0	1	0	0	0	0
4/24/2024	11:00 AM	0	84	11	0	1	0	0	0	0	0	0	0	0
4/24/2024	11:15 AM	0	60	10	0	2	1	0	0	1	0	0	0	0
4/24/2024	11:30 AM	0	49	8	0	4	1	0	0	1	0	0	0	0
4/24/2024	11:45 AM	0	72	12	0	1	0	0	0	1	0	0	0	0
4/24/2024	12:00 PM	0	57	8	0	0	0	0	2	0	0	0	0	0
4/24/2024	12:15 PM	0	82	14	1	3	1	0	0	1	0	0	0	0
4/24/2024	12:30 PM	0	71	14	0	0	1	0	0	0	1	0	0	0
4/24/2024	12:45 PM	0	76	8	1	1	1	0	1	2	0	0	0	0
4/24/2024	1:00 PM	0	76	16	0	2	0	0	1	1	0	0	0	0
4/24/2024	1:15 PM	1	56	15	0	1	0	0	0	0	0	0	0	0
4/24/2024	1:30 PM	0	62	22	2	0	0	0	0	1	0	0	0	0
4/24/2024	1:45 PM	0	67	12	0	1	0	0	0	0	0	0	0	0
4/24/2024	2:00 PM	0	68	8	0	2	0	0	0	0	0	0	0	0
4/24/2024	2:15 PM	0	58	15	0	3	1	0	0	2	0	0	0	0
4/24/2024	2:30 PM	0	59	6	0	1	3	0	0	0	0	0	0	0
4/24/2024	2:45 PM	0	75	11	0	3	3	0	1	0	0	0	0	0
4/24/2024	3:00 PM	0	63	10	0	1	1	0	0	0	0	0	0	0
4/24/2024	3:15 PM	0	73	11	0	2	1	0	0	0	0	0	0	0
4/24/2024	3:30 PM	0	69	6	0	1	1	0	0	1	0	0	0	0
4/24/2024	3:45 PM	0	69	12	0	1	1	0	0	1	0	0	0	0
4/24/2024	4:00 PM	0	78	14	1	1	2	0	0	0	0	0	0	0
4/24/2024	4:15 PM	0	65	11	0	2	2	0	0	0	0	0	0	0
4/24/2024	4:30 PM	0	70	5	0	0	1	0	0	1	0	0	0	0
4/24/2024	4:45 PM	0	67	15	0	1	2	0	1	0	0	0	0	0
4/24/2024	5:00 PM	0	73	6	0	0	1	0	0	0	0	0	0	0
4/24/2024	5:15 PM	0	72	6	0	2	2	0	0	1	0	0	0	0
4/24/2024	5:30 PM	0	57	5	0	3	1	0	0	0	0	0	0	0
4/24/2024	5:45 PM	0	65	9	0	0	2	0	0	0	0	0	0	0
4/24/2024	6:00 PM	0	63	6	0	2	1	0	0	1	0	0	0	0
4/24/2024	6:15 PM	0	46	9	0	4	0	0	0	0	0	0	0	0
4/24/2024	6:30 PM	0	37	7	0	0	1	0	0	0	0	0	0	0
4/24/2024	6:45 PM	0	53	6	0	1	0	0	0	0	0	0	0	0
4/24/2024	7:00 PM	0	38	4	0	0	0	0	0	0	0	0	0	0
4/24/2024	7:15 PM	0	31	3	0	0	0	0	0	0	0	0	0	0
4/24/2024	7:30 PM	0	38	4	0	0	0	0	0	0	0	0	0	0
4/24/2024	7:45 PM	0	33	6	0	0	0	0	0	0	0	0	0	0
4/24/2024	8:00 PM	0	39	3	0	0	0	0	0	1	0	0	0	0
4/24/2024	8:15 PM	0	36	3	0	0	0	0	0	0	0	0	0	0
4/24/2024	8:30 PM	0	35	2	0	0	0	0	0	0	0	0	0	0
4/24/2024	8:45 PM	0	45	3	0	0	0	0	0	0	0	0	0	0
4/24/2024	9:00 PM	0	23	1	0	0	0	0	0	1	0	0	0	0
4/24/2024	9:15 PM	0	23	1	0	0	1	0	0	1	0	0	0	0
4/24/2024	9:30 PM	0	24	2	0	0	0	0	0	0	0	0	0	0
4/24/2024	9:45 PM	0	26	1	0	0	1	0	0	0	0	0	0	0
4/24/2024	10:00 PM	0	24	4	0	0	0	0	1	1	0	0	0	0
4/24/2024	10:15 PM	0	15	1	0	1	0	0	0	0	0	0	0	0
4/24/2024	10:30 PM	0	18	2	0	0	0	0	0	0	0	0	0	0
4/24/2024	10:45 PM	0	17	0	0	0	0	0	0	1	0	0	0	0
4/24/2024	11:00 PM	0	14	1	0	0	0	0	0	0	0	0	0	0
4/24/2024	11:15 PM	0	19	2	0	0	0	0	0	0	0	0	0	0
4/24/2024	11:30 PM	0	14	1	0	0	0	0	0	0	0	0	0	0
4/24/2024	11:45 PM	0	11	0	0	0	0	0	0	0	0	0	0	0

4/25/2024	12:00 AM	0	5	1	0	0	1	0	0	0	0	0	0	0
4/25/2024	12:15 AM	0	8	3	0	0	0	0	0	0	0	0	0	0
4/25/2024	12:30 AM	0	7	1	0	0	0	0	0	0	0	0	0	0
4/25/2024	12:45 AM	0	6	0	0	0	1	0	0	0	0	0	0	0
4/25/2024	1:00 AM	0	6	0	0	0	0	0	0	0	0	0	0	0
4/25/2024	1:15 AM	0	5	0	0	0	0	0	0	0	0	0	0	0
4/25/2024	1:30 AM	0	6	1	0	0	1	0	0	1	0	0	0	0
4/25/2024	1:45 AM	0	4	0	0	1	1	0	0	0	0	0	0	0
4/25/2024	2:00 AM	0	1	0	0	0	0	0	0	0	0	0	0	0
4/25/2024	2:15 AM	0	5	1	0	0	1	0	0	1	0	0	0	0
4/25/2024	2:30 AM	0	3	0	0	0	0	0	0	0	0	0	0	0
4/25/2024	2:45 AM	0	4	0	0	0	0	0	0	0	0	0	0	0
4/25/2024	3:00 AM	0	6	3	0	0	0	0	0	1	0	0	0	0
4/25/2024	3:15 AM	0	5	2	0	0	0	0	0	0	0	0	0	0
4/25/2024	3:30 AM	0	5	1	0	0	1	0	0	0	0	0	0	0
4/25/2024	3:45 AM	0	5	1	0	1	0	0	0	2	0	0	0	0
4/25/2024	4:00 AM	0	4	0	0	0	0	0	1	0	0	0	0	0
4/25/2024	4:15 AM	0	5	0	0	1	0	0	0	0	0	0	0	0
4/25/2024	4:30 AM	0	5	1	0	0	0	0	0	0	0	0	0	0
4/25/2024	4:45 AM	0	3	0	0	0	0	0	1	0	0	0	0	0
4/25/2024	5:00 AM	0	7	1	0	0	0	0	0	0	0	0	0	0
4/25/2024	5:15 AM	0	5	0	0	0	0	0	0	0	0	0	0	0
4/25/2024	5:30 AM	0	14	3	0	0	0	0	0	0	0	0	0	0
4/25/2024	5:45 AM	0	15	2	0	0	0	0	0	0	0	0	0	0
4/25/2024	6:00 AM	0	12	4	0	0	0	0	0	0	0	0	0	0
4/25/2024	6:15 AM	0	32	7	0	0	0	0	0	0	0	0	0	0
4/25/2024	6:30 AM	0	52	6	0	0	0	0	0	0	0	0	0	0
4/25/2024	6:45 AM	0	66	15	0	1	0	0	0	0	0	0	0	0
4/25/2024	7:00 AM	0	75	27	0	0	0	0	0	0	0	0	0	0
4/25/2024	7:15 AM	0	118	22	0	0	0	0	0	1	0	0	0	0
4/25/2024	7:30 AM	0	125	12	0	1	0	0	0	0	1	0	0	0
4/25/2024	7:45 AM	0	146	15	0	0	0	0	0	1	0	0	0	0
4/25/2024	8:00 AM	0	146	23	0	0	1	0	0	0	0	0	0	0
4/25/2024	8:15 AM	0	149	20	1	0	1	0	0	0	0	0	0	0
4/25/2024	8:30 AM	0	115	16	1	0	0	0	0	1	0	0	0	0
4/25/2024	8:45 AM	0	136	16	0	3	0	0	1	0	0	0	0	0
4/25/2024	9:00 AM	0	126	14	2	1	0	0	0	1	0	0	0	0
4/25/2024	9:15 AM	0	96	9	0	0	1	0	0	0	0	0	0	0
4/25/2024	9:30 AM	0	87	13	0	0	0	0	0	0	0	0	0	0
4/25/2024	9:45 AM	1	89	15	5	2	1	0	0	0	0	0	0	0
4/25/2024	10:00 AM	0	79	7	2	0	0	0	2	2	0	0	0	0
4/25/2024	10:15 AM	0	74	8	3	0	5	0	0	1	0	0	0	0
4/25/2024	10:30 AM	0	62	5	1	3	4	0	0	0	0	0	0	0
4/25/2024	10:45 AM	0	76	6	1	3	0	0	0	0	0	0	0	0
4/25/2024	11:00 AM	0	63	12	0	0	2	0	0	0	0	0	0	0
4/25/2024	11:15 AM	0	52	9	0	3	1	0	0	1	0	0	0	0
4/25/2024	11:30 AM	0	61	13	0	1	3	0	0	1	0	0	0	0
4/25/2024	11:45 AM	0	60	11	1	0	1	0	2	0	0	0	0	0
4/25/2024	12:00 PM	0	74	19	0	0	2	0	0	1	0	0	0	0
4/25/2024	12:15 PM	0	78	7	0	0	1	0	0	0	0	0	0	0
4/25/2024	12:30 PM	0	68	8	0	1	4	0	0	0	0	0	0	0
4/25/2024	12:45 PM	0	82	11	0	1	2	0	0	0	0	0	0	0
4/25/2024	1:00 PM	0	77	14	0	2	0	0	0	0	0	0	0	0
4/25/2024	1:15 PM	0	70	17	0	1	1	0	0	0	0	0	0	0
4/25/2024	1:30 PM	1	85	7	0	1	0	0	1	0	0	0	0	0
4/25/2024	1:45 PM	0	80	8	0	1	1	0	0	0	0	0	0	0
4/25/2024	2:00 PM	0	58	17	0	0	3	0	0	0	0	0	0	0
4/25/2024	2:15 PM	0	79	7	0	1	0	0	0	0	0	0	0	0
4/25/2024	2:30 PM	0	65	6	0	3	1	0	0	0	1	0	0	0
4/25/2024	2:45 PM	0	58	8	0	0	0	0	0	1	0	0	0	0
4/25/2024	3:00 PM	0	65	13	0	3	4	0	0	0	0	0	0	0
4/25/2024	3:15 PM	0	57	7	0	1	1	0	0	0	0	0	0	0
4/25/2024	3:30 PM	0	72	6	0	2	3	0	0	0	0	0	0	0
4/25/2024	3:45 PM	0	71	8	0	0	5	0	0	0	0	0	0	0
4/25/2024	4:00 PM	0	59	20	0	1	0	0	0	0	0	0	0	0
4/25/2024	4:15 PM	0	53	11	0	0	0	0	0	1	0	0	0	0
4/25/2024	4:30 PM	1	62	19	0	2	0	0	0	0	0	0	0	0
4/25/2024	4:45 PM	0	62	12	0	1	0	0	1	1	0	0	0	0
4/25/2024	5:00 PM	0	49	8	0	1	0	0	0	0	0	0	0	0
4/25/2024	5:15 PM	0	61	4	0	2	0	0	0	0	0	0	0	0
4/25/2024	5:30 PM	1	81	3	0	1	0	0	0	1	0	0	0	0
4/25/2024	5:45 PM	0	81	6	0	1	1	0	0	0	0	0	0	0
4/25/2024	6:00 PM	0	85	10	0	0	0	0	0	0	0	0	0	0
4/25/2024	6:15 PM	0	45	7	0	0	0	0	0	0	0	0	0	0
4/25/2024	6:30 PM	1	54	6	0	0	0	0	0	0	0	0	0	0
4/25/2024	6:45 PM	0	62	6	0	1	0	0	0	0	0	0	0	0
4/25/2024	7:00 PM	0	0	0	0	0	0	0	0	0	0	0	0	0
4/25/2024	7:15 PM	0	0	0	0	0	0	0	0	0	0	0	0	0
4/25/2024	7:30 PM	0	0	0	0	0	0	0	0	0	0	0	0	0
4/25/2024	7:45 PM	0	0	0	0	0	0	0	0	0	0	0	0	0
4/25/2024	8:00 PM	0	0	0	0	0	0	0	0	0	0	0	0	0
4/25/2024	8:15 PM	0	0	0	0	0	0	0	0	0	0	0	0	0
4/25/2024	8:30 PM	0	0	0	0	0	0	0	0	0	0	0	0	0
4/25/2024	8:45 PM	0	0	0	0	0	0	0	0	0	0	0	0	0
4/25/2024	9:00 PM	0	0	0	0	0	0	0	0	0	0	0	0	0
4/25/2024	9:15 PM	0	0	0	0	0	0	0	0	0	0	0	0	0
4/25/2024	9:30 PM	0	0	0	0	0	0	0	0	0	0	0	0	0
4/25/2024	9:45 PM	0	0	0	0	0	0	0	0	0	0	0	0	0
4/25/2024	10:00 PM	0	0	0	0	0	0	0	0	0	0	0	0	0
4/25/2024	10:15 PM	0	0	0	0	0	0	0	0	0	0	0	0	0
4/25/2024	10:30 PM	0	0	0	0	0	0	0	0	0	0	0	0	0
4/25/2024	10:45 PM	0	0	0	0	0	0	0	0	0	0	0	0	0
4/25/2024	11:00 PM	0	0	0	0	0	0	0	0	0	0	0	0	0
4/25/2024	11:15 PM	0	0	0	0	0	0	0	0	0	0	0	0	0
4/25/2024	11:30 PM	0	0	0	0	0	0	0	0	0	0	0	0	0
4/25/2024	11:45 PM	0	0	0	0	0	0	0	0	0	0	0	0	0

EB
File Name:
Start Date: 4/23/2024
Start Time: 0
Site Code: 47
Station ID: 1
Location 1: I-126 On/Off-Ramp, east of Greystone Blvd
Location 2:

Date	Time	1	2	3	4	5	6	7	8	9	10	11	12	13
4/23/2024	12:00 AM	0	0	0	0	0	0	0	0	0	0	0	0	0
4/23/2024	12:15 AM	0	0	0	0	0	0	0	0	0	0	0	0	0
4/23/2024	12:30 AM	0	0	0	0	0	0	0	0	0	0	0	0	0
4/23/2024	12:45 AM	0	0	0	0	0	0	0	0	0	0	0	0	0
4/23/2024	1:00 AM	0	0	0	0	0	0	0	0	0	0	0	0	0
4/23/2024	1:15 AM	0	0	0	0	0	0	0	0	0	0	0	0	0
4/23/2024	1:30 AM	0	0	0	0	0	0	0	0	0	0	0	0	0
4/23/2024	1:45 AM	0	0	0	0	0	0	0	0	0	0	0	0	0
4/23/2024	2:00 AM	0	0	0	0	0	0	0	0	0	0	0	0	0
4/23/2024	2:15 AM	0	0	0	0	0	0	0	0	0	0	0	0	0
4/23/2024	2:30 AM	0	0	0	0	0	0	0	0	0	0	0	0	0
4/23/2024	2:45 AM	0	0	0	0	0	0	0	0	0	0	0	0	0
4/23/2024	3:00 AM	0	0	0	0	0	0	0	0	0	0	0	0	0
4/23/2024	3:15 AM	0	0	0	0	0	0	0	0	0	0	0	0	0
4/23/2024	3:30 AM	0	0	0	0	0	0	0	0	0	0	0	0	0
4/23/2024	3:45 AM	0	0	0	0	0	0	0	0	0	0	0	0	0
4/23/2024	4:00 AM	0	0	0	0	0	0	0	0	0	0	0	0	0
4/23/2024	4:15 AM	0	0	0	0	0	0	0	0	0	0	0	0	0
4/23/2024	4:30 AM	0	0	0	0	0	0	0	0	0	0	0	0	0
4/23/2024	4:45 AM	0	0	0	0	0	0	0	0	0	0	0	0	0
4/23/2024	5:00 AM	0	0	0	0	0	0	0	0	0	0	0	0	0
4/23/2024	5:15 AM	0	0	0	0	0	0	0	0	0	0	0	0	0
4/23/2024	5:30 AM	0	0	0	0	0	0	0	0	0	0	0	0	0
4/23/2024	5:45 AM	0	0	0	0	0	0	0	0	0	0	0	0	0
4/23/2024	6:00 AM	0	0	0	0	0	0	0	0	0	0	0	0	0
4/23/2024	6:15 AM	0	0	0	0	0	0	0	0	0	0	0	0	0
4/23/2024	6:30 AM	0	0	0	0	0	0	0	0	0	0	0	0	0
4/23/2024	6:45 AM	0	0	0	0	0	0	0	0	0	0	0	0	0
4/23/2024	7:00 AM	0	0	0	0	0	0	0	0	0	0	0	0	0
4/23/2024	7:15 AM	0	0	0	0	0	0	0	0	0	0	0	0	0
4/23/2024	7:30 AM	0	0	0	0	0	0	0	0	0	0	0	0	0
4/23/2024	7:45 AM	0	0	0	0	0	0	0	0	0	0	0	0	0
4/23/2024	8:00 AM	0	0	0	0	0	0	0	0	0	0	0	0	0
4/23/2024	8:15 AM	0	0	0	0	0	0	0	0	0	0	0	0	0
4/23/2024	8:30 AM	0	0	0	0	0	0	0	0	0	0	0	0	0
4/23/2024	8:45 AM	0	0	0	0	0	0	0	0	0	0	0	0	0
4/23/2024	9:00 AM	0	0	0	0	0	0	0	0	0	0	0	0	0
4/23/2024	9:15 AM	0	0	0	0	0	0	0	0	0	0	0	0	0
4/23/2024	9:30 AM	0	0	0	0	0	0	0	0	0	0	0	0	0
4/23/2024	9:45 AM	0	0	0	0	0	0	0	0	0	0	0	0	0
4/23/2024	10:00 AM	0	0	0	0	0	0	0	0	0	0	0	0	0
4/23/2024	10:15 AM	0	0	0	0	0	0	0	0	0	0	0	0	0
4/23/2024	10:30 AM	0	0	0	0	0	0	0	0	0	0	0	0	0
4/23/2024	10:45 AM	0	0	0	0	0	0	0	0	0	0	0	0	0
4/23/2024	11:00 AM	0	0	0	0	0	0	0	0	0	0	0	0	0
4/23/2024	11:15 AM	0	0	0	0	0	0	0	0	0	0	0	0	0
4/23/2024	11:30 AM	0	0	0	0	0	0	0	0	0	0	0	0	0
4/23/2024	11:45 AM	0	0	0	0	0	0	0	0	0	0	0	0	0
4/23/2024	12:00 PM	0	0	0	0	0	0	0	0	0	0	0	0	0
4/23/2024	12:15 PM	0	0	0	0	0	0	0	0	0	0	0	0	0
4/23/2024	12:30 PM	0	0	0	0	0	0	0	0	0	0	0	0	0
4/23/2024	12:45 PM	0	0	0	0	0	0	0	0	0	0	0	0	0
4/23/2024	1:00 PM	0	0	0	0	0	0	0	0	0	0	0	0	0
4/23/2024	1:15 PM	0	0	0	0	0	0	0	0	0	0	0	0	0
4/23/2024	1:30 PM	0	0	0	0	0	0	0	0	0	0	0	0	0
4/23/2024	1:45 PM	0	0	0	0	0	0	0	0	0	0	0	0	0
4/23/2024	2:00 PM	0	0	0	0	0	0	0	0	0	0	0	0	0
4/23/2024	2:15 PM	0	0	0	0	0	0	0	0	0	0	0	0	0
4/23/2024	2:30 PM	0	0	0	0	0	0	0	0	0	0	0	0	0
4/23/2024	2:45 PM	0	0	0	0	0	0	0	0	0	0	0	0	0
4/23/2024	3:00 PM	0	0	0	0	0	0	0	0	0	0	0	0	0
4/23/2024	3:15 PM	0	0	0	0	0	0	0	0	0	0	0	0	0
4/23/2024	3:30 PM	0	0	0	0	0	0	0	0	0	0	0	0	0
4/23/2024	3:45 PM	0	0	0	0	0	0	0	0	0	0	0	0	0
4/23/2024	4:00 PM	0	0	0	0	0	0	0	0	0	0	0	0	0
4/23/2024	4:15 PM	0	0	0	0	0	0	0	0	0	0	0	0	0
4/23/2024	4:30 PM	0	0	0	0	0	0	0	0	0	0	0	0	0
4/23/2024	4:45 PM	0	0	0	0	0	0	0	0	0	0	0	0	0
4/23/2024	5:00 PM	0	0	0	0	0	0	0	0	0	0	0	0	0
4/23/2024	5:15 PM	0	0	0	0	0	0	0	0	0	0	0	0	0
4/23/2024	5:30 PM	0	0	0	0	0	0	0	0	0	0	0	0	0
4/23/2024	5:45 PM	0	0	0	0	0	0	0	0	0	0	0	0	0
4/23/2024	6:00 PM	0	0	0	0	0	0	0	0	0	0	0	0	0
4/23/2024	6:15 PM	0	0	0	0	0	0	0	0	0	0	0	0	0
4/23/2024	6:30 PM	0	0	0	0	0	0	0	0	0	0	0	0	0
4/23/2024	6:45 PM	0	0	0	0	0	0	0	0	0	0	0	0	0
4/23/2024	7:00 PM	0	0	0	0	0	0	0	0	0	0	0	0	0
4/23/2024	7:15 PM	0	0	0	0	0	0	0	0	0	0	0	0	0
4/23/2024	7:30 PM	0	0	0	0	0	0	0	0	0	0	0	0	0
4/23/2024	7:45 PM	0	0	0	0	0	0	0	0	0	0	0	0	0
4/23/2024	8:00 PM	0	0	0	0	0	0	0	0	0	0	0	0	0
4/23/2024	8:15 PM	0	0	0	0	0	0	0	0	0	0	0	0	0
4/23/2024	8:30 PM	0	0	0	0	0	0	0	0	0	0	0	0	0
4/23/2024	8:45 PM	0	0	0	0	0	0	0	0	0	0	0	0	0
4/23/2024	9:00 PM	0	0	0	0	0	0	0	0	0	0	0	0	0
4/23/2024	9:15 PM	0	0	0	0	0	0	0	0	0	0	0	0	0
4/23/2024	9:30 PM	0	0	0	0	0	0	0	0	0	0	0	0	0
4/23/2024	9:45 PM	0	0	0	0	0	0	0	0	0	0	0	0	0
4/23/2024	10:00 PM	0	0	0	0	0	0	0	0	0	0	0	0	0
4/23/2024	10:15 PM	0	0	0	0	0	0	0	0	0	0	0	0	0
4/23/2024	10:30 PM	0	0	0	0	0	0	0	0	0	0	0	0	0
4/23/2024	10:45 PM	0	0	0	0	0	0	0	0	0	0	0	0	0
4/23/2024	11:00 PM	0	0	0	0	0	0	0	0	0	0	0	0	0
4/23/2024	11:15 PM	0	0	0	0	0	0	0	0	0	0	0	0	0
4/23/2024	11:30 PM	0	0	0	0	0	0	0	0	0	0	0	0	0
4/23/2024	11:45 PM	0	0	0	0	0	0	0	0	0	0	0	0	0

4/24/2024	12:00 AM	0	0	0	0	0	0	0	0	0	0	0	0	0
4/24/2024	12:15 AM	0	0	0	0	0	0	0	0	0	0	0	0	0
4/24/2024	12:30 AM	0	0	0	0	0	0	0	0	0	0	0	0	0
4/24/2024	12:45 AM	0	0	0	0	0	0	0	0	0	0	0	0	0
4/24/2024	1:00 AM	0	0	0	0	0	0	0	0	0	0	0	0	0
4/24/2024	1:15 AM	0	0	0	0	0	0	0	0	0	0	0	0	0
4/24/2024	1:30 AM	0	0	0	0	0	0	0	0	0	0	0	0	0
4/24/2024	1:45 AM	0	0	0	0	0	0	0	0	0	0	0	0	0
4/24/2024	2:00 AM	0	0	0	0	0	0	0	0	0	0	0	0	0
4/24/2024	2:15 AM	0	0	0	0	0	0	0	0	0	0	0	0	0
4/24/2024	2:30 AM	0	0	0	0	0	0	0	0	0	0	0	0	0
4/24/2024	2:45 AM	0	0	0	0	0	0	0	0	0	0	0	0	0
4/24/2024	3:00 AM	0	0	0	0	0	0	0	0	0	0	0	0	0
4/24/2024	3:15 AM	0	0	0	0	0	0	0	0	0	0	0	0	0
4/24/2024	3:30 AM	0	0	0	0	0	0	0	0	0	0	0	0	0
4/24/2024	3:45 AM	0	0	0	0	0	0	0	0	0	0	0	0	0
4/24/2024	4:00 AM	0	0	0	0	0	0	0	0	0	0	0	0	0
4/24/2024	4:15 AM	0	0	0	0	0	0	0	0	0	0	0	0	0
4/24/2024	4:30 AM	0	0	0	0	0	0	0	0	0	0	0	0	0
4/24/2024	4:45 AM	0	0	0	0	0	0	0	0	0	0	0	0	0
4/24/2024	5:00 AM	0	0	0	0	0	0	0	0	0	0	0	0	0
4/24/2024	5:15 AM	0	0	0	0	0	0	0	0	0	0	0	0	0
4/24/2024	5:30 AM	0	0	0	0	0	0	0	0	0	0	0	0	0
4/24/2024	5:45 AM	0	0	0	0	0	0	0	0	0	0	0	0	0
4/24/2024	6:00 AM	0	0	0	0	0	0	0	0	0	0	0	0	0
4/24/2024	6:15 AM	0	0	0	0	0	0	0	0	0	0	0	0	0
4/24/2024	6:30 AM	0	0	0	0	0	0	0	0	0	0	0	0	0
4/24/2024	6:45 AM	0	0	0	0	0	0	0	0	0	0	0	0	0
4/24/2024	7:00 AM	0	0	0	0	0	0	0	0	0	0	0	0	0
4/24/2024	7:15 AM	0	0	0	0	0	0	0	0	0	0	0	0	0
4/24/2024	7:30 AM	0	0	0	0	0	0	0	0	0	0	0	0	0
4/24/2024	7:45 AM	0	0	0	0	0	0	0	0	0	0	0	0	0
4/24/2024	8:00 AM	0	0	0	0	0	0	0	0	0	0	0	0	0
4/24/2024	8:15 AM	0	0	0	0	0	0	0	0	0	0	0	0	0
4/24/2024	8:30 AM	0	0	0	0	0	0	0	0	0	0	0	0	0
4/24/2024	8:45 AM	0	0	0	0	0	0	0	0	0	0	0	0	0
4/24/2024	9:00 AM	0	0	0	0	0	0	0	0	0	0	0	0	0
4/24/2024	9:15 AM	0	0	0	0	0	0	0	0	0	0	0	0	0
4/24/2024	9:30 AM	0	0	0	0	0	0	0	0	0	0	0	0	0
4/24/2024	9:45 AM	0	0	0	0	0	0	0	0	0	0	0	0	0
4/24/2024	10:00 AM	0	0	0	0	0	0	0	0	0	0	0	0	0
4/24/2024	10:15 AM	0	0	0	0	0	0	0	0	0	0	0	0	0
4/24/2024	10:30 AM	0	0	0	0	0	0	0	0	0	0	0	0	0
4/24/2024	10:45 AM	0	0	0	0	0	0	0	0	0	0	0	0	0
4/24/2024	11:00 AM	0	0	0	0	0	0	0	0	0	0	0	0	0
4/24/2024	11:15 AM	0	0	0	0	0	0	0	0	0	0	0	0	0
4/24/2024	11:30 AM	0	0	0	0	0	0	0	0	0	0	0	0	0
4/24/2024	11:45 AM	0	0	0	0	0	0	0	0	0	0	0	0	0
4/24/2024	12:00 PM	0	0	0	0	0	0	0	0	0	0	0	0	0
4/24/2024	12:15 PM	0	0	0	0	0	0	0	0	0	0	0	0	0
4/24/2024	12:30 PM	0	0	0	0	0	0	0	0	0	0	0	0	0
4/24/2024	12:45 PM	0	0	0	0	0	0	0	0	0	0	0	0	0
4/24/2024	1:00 PM	0	0	0	0	0	0	0	0	0	0	0	0	0
4/24/2024	1:15 PM	0	0	0	0	0	0	0	0	0	0	0	0	0
4/24/2024	1:30 PM	0	0	0	0	0	0	0	0	0	0	0	0	0
4/24/2024	1:45 PM	0	0	0	0	0	0	0	0	0	0	0	0	0
4/24/2024	2:00 PM	0	0	0	0	0	0	0	0	0	0	0	0	0
4/24/2024	2:15 PM	0	0	0	0	0	0	0	0	0	0	0	0	0
4/24/2024	2:30 PM	0	0	0	0	0	0	0	0	0	0	0	0	0
4/24/2024	2:45 PM	0	0	0	0	0	0	0	0	0	0	0	0	0
4/24/2024	3:00 PM	0	0	0	0	0	0	0	0	0	0	0	0	0
4/24/2024	3:15 PM	0	0	0	0	0	0	0	0	0	0	0	0	0
4/24/2024	3:30 PM	0	0	0	0	0	0	0	0	0	0	0	0	0
4/24/2024	3:45 PM	0	0	0	0	0	0	0	0	0	0	0	0	0
4/24/2024	4:00 PM	0	0	0	0	0	0	0	0	0	0	0	0	0
4/24/2024	4:15 PM	0	0	0	0	0	0	0	0	0	0	0	0	0
4/24/2024	4:30 PM	0	0	0	0	0	0	0	0	0	0	0	0	0
4/24/2024	4:45 PM	0	0	0	0	0	0	0	0	0	0	0	0	0
4/24/2024	5:00 PM	0	0	0	0	0	0	0	0	0	0	0	0	0
4/24/2024	5:15 PM	0	0	0	0	0	0	0	0	0	0	0	0	0
4/24/2024	5:30 PM	0	0	0	0	0	0	0	0	0	0	0	0	0
4/24/2024	5:45 PM	0	0	0	0	0	0	0	0	0	0	0	0	0
4/24/2024	6:00 PM	0	0	0	0	0	0	0	0	0	0	0	0	0
4/24/2024	6:15 PM	0	0	0	0	0	0	0	0	0	0	0	0	0
4/24/2024	6:30 PM	0	0	0	0	0	0	0	0	0	0	0	0	0
4/24/2024	6:45 PM	0	0	0	0	0	0	0	0	0	0	0	0	0
4/24/2024	7:00 PM	0	0	0	0	0	0	0	0	0	0	0	0	0
4/24/2024	7:15 PM	0	0	0	0	0	0	0	0	0	0	0	0	0
4/24/2024	7:30 PM	0	0	0	0	0	0	0	0	0	0	0	0	0
4/24/2024	7:45 PM	0	0	0	0	0	0	0	0	0	0	0	0	0
4/24/2024	8:00 PM	0	0	0	0	0	0	0	0	0	0	0	0	0
4/24/2024	8:15 PM	0	0	0	0	0	0	0	0	0	0	0	0	0
4/24/2024	8:30 PM	0	0	0	0	0	0	0	0	0	0	0	0	0
4/24/2024	8:45 PM	0	0	0	0	0	0	0	0	0	0	0	0	0
4/24/2024	9:00 PM	0	0	0	0	0	0	0	0	0	0	0	0	0
4/24/2024	9:15 PM	0	0	0	0	0	0	0	0	0	0	0	0	0
4/24/2024	9:30 PM	0	0	0	0	0	0	0	0	0	0	0	0	0
4/24/2024	9:45 PM	0	0	0	0	0	0	0	0	0	0	0	0	0
4/24/2024	10:00 PM	0	0	0	0	0	0	0	0	0	0	0	0	0
4/24/2024	10:15 PM	0	0	0	0	0	0	0	0	0	0	0	0	0
4/24/2024	10:30 PM	0	0	0	0	0	0	0	0	0	0	0	0	0
4/24/2024	10:45 PM	0	0	0	0	0	0	0	0	0	0	0	0	0
4/24/2024	11:00 PM	0	0	0	0	0	0	0	0	0	0	0	0	0
4/24/2024	11:15 PM	0	0	0	0	0	0	0	0	0	0	0	0	0
4/24/2024	11:30 PM	0	0	0	0	0	0	0	0	0	0	0	0	0
4/24/2024	11:45 PM	0	0	0	0	0	0	0	0	0	0	0	0	0

4/25/2024	12:00 AM	0	0	0	0	0	0	0	0	0	0	0	0	0
4/25/2024	12:15 AM	0	0	0	0	0	0	0	0	0	0	0	0	0
4/25/2024	12:30 AM	0	0	0	0	0	0	0	0	0	0	0	0	0
4/25/2024	12:45 AM	0	0	0	0	0	0	0	0	0	0	0	0	0
4/25/2024	1:00 AM	0	0	0	0	0	0	0	0	0	0	0	0	0
4/25/2024	1:15 AM	0	0	0	0	0	0	0	0	0	0	0	0	0
4/25/2024	1:30 AM	0	0	0	0	0	0	0	0	0	0	0	0	0
4/25/2024	1:45 AM	0	0	0	0	0	0	0	0	0	0	0	0	0
4/25/2024	2:00 AM	0	0	0	0	0	0	0	0	0	0	0	0	0
4/25/2024	2:15 AM	0	0	0	0	0	0	0	0	0	0	0	0	0
4/25/2024	2:30 AM	0	0	0	0	0	0	0	0	0	0	0	0	0
4/25/2024	2:45 AM	0	0	0	0	0	0	0	0	0	0	0	0	0
4/25/2024	3:00 AM	0	0	0	0	0	0	0	0	0	0	0	0	0
4/25/2024	3:15 AM	0	0	0	0	0	0	0	0	0	0	0	0	0
4/25/2024	3:30 AM	0	0	0	0	0	0	0	0	0	0	0	0	0
4/25/2024	3:45 AM	0	0	0	0	0	0	0	0	0	0	0	0	0
4/25/2024	4:00 AM	0	0	0	0	0	0	0	0	0	0	0	0	0
4/25/2024	4:15 AM	0	0	0	0	0	0	0	0	0	0	0	0	0
4/25/2024	4:30 AM	0	0	0	0	0	0	0	0	0	0	0	0	0
4/25/2024	4:45 AM	0	0	0	0	0	0	0	0	0	0	0	0	0
4/25/2024	5:00 AM	0	0	0	0	0	0	0	0	0	0	0	0	0
4/25/2024	5:15 AM	0	0	0	0	0	0	0	0	0	0	0	0	0
4/25/2024	5:30 AM	0	0	0	0	0	0	0	0	0	0	0	0	0
4/25/2024	5:45 AM	0	0	0	0	0	0	0	0	0	0	0	0	0
4/25/2024	6:00 AM	0	0	0	0	0	0	0	0	0	0	0	0	0
4/25/2024	6:15 AM	0	0	0	0	0	0	0	0	0	0	0	0	0
4/25/2024	6:30 AM	0	0	0	0	0	0	0	0	0	0	0	0	0
4/25/2024	6:45 AM	0	0	0	0	0	0	0	0	0	0	0	0	0
4/25/2024	7:00 AM	0	0	0	0	0	0	0	0	0	0	0	0	0
4/25/2024	7:15 AM	0	0	0	0	0	0	0	0	0	0	0	0	0
4/25/2024	7:30 AM	0	0	0	0	0	0	0	0	0	0	0	0	0
4/25/2024	7:45 AM	0	0	0	0	0	0	0	0	0	0	0	0	0
4/25/2024	8:00 AM	0	0	0	0	0	0	0	0	0	0	0	0	0
4/25/2024	8:15 AM	0	0	0	0	0	0	0	0	0	0	0	0	0
4/25/2024	8:30 AM	0	0	0	0	0	0	0	0	0	0	0	0	0
4/25/2024	8:45 AM	0	0	0	0	0	0	0	0	0	0	0	0	0
4/25/2024	9:00 AM	0	0	0	0	0	0	0	0	0	0	0	0	0
4/25/2024	9:15 AM	0	0	0	0	0	0	0	0	0	0	0	0	0
4/25/2024	9:30 AM	0	0	0	0	0	0	0	0	0	0	0	0	0
4/25/2024	9:45 AM	0	0	0	0	0	0	0	0	0	0	0	0	0
4/25/2024	10:00 AM	0	0	0	0	0	0	0	0	0	0	0	0	0
4/25/2024	10:15 AM	0	0	0	0	0	0	0	0	0	0	0	0	0
4/25/2024	10:30 AM	0	0	0	0	0	0	0	0	0	0	0	0	0
4/25/2024	10:45 AM	0	0	0	0	0	0	0	0	0	0	0	0	0
4/25/2024	11:00 AM	0	0	0	0	0	0	0	0	0	0	0	0	0
4/25/2024	11:15 AM	0	0	0	0	0	0	0	0	0	0	0	0	0
4/25/2024	11:30 AM	0	0	0	0	0	0	0	0	0	0	0	0	0
4/25/2024	11:45 AM	0	0	0	0	0	0	0	0	0	0	0	0	0
4/25/2024	12:00 PM	0	0	0	0	0	0	0	0	0	0	0	0	0
4/25/2024	12:15 PM	0	0	0	0	0	0	0	0	0	0	0	0	0
4/25/2024	12:30 PM	0	0	0	0	0	0	0	0	0	0	0	0	0
4/25/2024	12:45 PM	0	0	0	0	0	0	0	0	0	0	0	0	0
4/25/2024	1:00 PM	0	0	0	0	0	0	0	0	0	0	0	0	0
4/25/2024	1:15 PM	0	0	0	0	0	0	0	0	0	0	0	0	0
4/25/2024	1:30 PM	0	0	0	0	0	0	0	0	0	0	0	0	0
4/25/2024	1:45 PM	0	0	0	0	0	0	0	0	0	0	0	0	0
4/25/2024	2:00 PM	0	0	0	0	0	0	0	0	0	0	0	0	0
4/25/2024	2:15 PM	0	0	0	0	0	0	0	0	0	0	0	0	0
4/25/2024	2:30 PM	0	0	0	0	0	0	0	0	0	0	0	0	0
4/25/2024	2:45 PM	0	0	0	0	0	0	0	0	0	0	0	0	0
4/25/2024	3:00 PM	0	0	0	0	0	0	0	0	0	0	0	0	0
4/25/2024	3:15 PM	0	0	0	0	0	0	0	0	0	0	0	0	0
4/25/2024	3:30 PM	0	0	0	0	0	0	0	0	0	0	0	0	0
4/25/2024	3:45 PM	0	0	0	0	0	0	0	0	0	0	0	0	0
4/25/2024	4:00 PM	0	0	0	0	0	0	0	0	0	0	0	0	0
4/25/2024	4:15 PM	0	0	0	0	0	0	0	0	0	0	0	0	0
4/25/2024	4:30 PM	0	0	0	0	0	0	0	0	0	0	0	0	0
4/25/2024	4:45 PM	0	0	0	0	0	0	0	0	0	0	0	0	0
4/25/2024	5:00 PM	0	0	0	0	0	0	0	0	0	0	0	0	0
4/25/2024	5:15 PM	0	0	0	0	0	0	0	0	0	0	0	0	0
4/25/2024	5:30 PM	0	0	0	0	0	0	0	0	0	0	0	0	0
4/25/2024	5:45 PM	0	0	0	0	0	0	0	0	0	0	0	0	0
4/25/2024	6:00 PM	0	0	0	0	0	0	0	0	0	0	0	0	0
4/25/2024	6:15 PM	0	0	0	0	0	0	0	0	0	0	0	0	0
4/25/2024	6:30 PM	0	0	0	0	0	0	0	0	0	0	0	0	0
4/25/2024	6:45 PM	0	0	0	0	0	0	0	0	0	0	0	0	0
4/25/2024	7:00 PM	0	0	0	0	0	0	0	0	0	0	0	0	0
4/25/2024	7:15 PM	0	0	0	0	0	0	0	0	0	0	0	0	0
4/25/2024	7:30 PM	0	0	0	0	0	0	0	0	0	0	0	0	0
4/25/2024	7:45 PM	0	0	0	0	0	0	0	0	0	0	0	0	0
4/25/2024	8:00 PM	0	0	0	0	0	0	0	0	0	0	0	0	0
4/25/2024	8:15 PM	0	0	0	0	0	0	0	0	0	0	0	0	0
4/25/2024	8:30 PM	0	0	0	0	0	0	0	0	0	0	0	0	0
4/25/2024	8:45 PM	0	0	0	0	0	0	0	0	0	0	0	0	0
4/25/2024	9:00 PM	0	0	0	0	0	0	0	0	0	0	0	0	0
4/25/2024	9:15 PM	0	0	0	0	0	0	0	0	0	0	0	0	0
4/25/2024	9:30 PM	0	0	0	0	0	0	0	0	0	0	0	0	0
4/25/2024	9:45 PM	0	0	0	0	0	0	0	0	0	0	0	0	0
4/25/2024	10:00 PM	0	0	0	0	0	0	0	0	0	0	0	0	0
4/25/2024	10:15 PM	0	0	0	0	0	0	0	0	0	0	0	0	0
4/25/2024	10:30 PM	0	0	0	0	0	0	0	0	0	0	0	0	0
4/25/2024	10:45 PM	0	0	0	0	0	0	0	0	0	0	0	0	0
4/25/2024	11:00 PM	0	0	0	0	0	0	0	0	0	0	0	0	0
4/25/2024	11:15 PM	0	0	0	0	0	0	0	0	0	0	0	0	0
4/25/2024	11:30 PM	0	0	0	0	0	0	0	0	0	0	0	0	0
4/25/2024	11:45 PM	0	0	0	0	0	0	0	0	0	0	0	0	0

WB
File Name:
Start Date: 4/23/2024
Start Time: 0
Site Code: 47
Station ID: 1
Location 1: I-126 On/Off-Ramp, east of Greystone Blvd
Location 2:

Date	Time	1	2	3	4	5	6	7	8	9	10	11	12	13
4/23/2024	12:00 AM	0	0	0	0	0	0	0	0	0	0	0	0	0
4/23/2024	12:15 AM	0	0	0	0	0	0	0	0	0	0	0	0	0
4/23/2024	12:30 AM	0	0	0	0	0	0	0	0	0	0	0	0	0
4/23/2024	12:45 AM	0	0	0	0	0	0	0	0	0	0	0	0	0
4/23/2024	1:00 AM	0	0	0	0	0	0	0	0	0	0	0	0	0
4/23/2024	1:15 AM	0	0	0	0	0	0	0	0	0	0	0	0	0
4/23/2024	1:30 AM	0	0	0	0	0	0	0	0	0	0	0	0	0
4/23/2024	1:45 AM	0	0	0	0	0	0	0	0	0	0	0	0	0
4/23/2024	2:00 AM	0	0	0	0	0	0	0	0	0	0	0	0	0
4/23/2024	2:15 AM	0	0	0	0	0	0	0	0	0	0	0	0	0
4/23/2024	2:30 AM	0	0	0	0	0	0	0	0	0	0	0	0	0
4/23/2024	2:45 AM	0	0	0	0	0	0	0	0	0	0	0	0	0
4/23/2024	3:00 AM	0	0	0	0	0	0	0	0	0	0	0	0	0
4/23/2024	3:15 AM	0	0	0	0	0	0	0	0	0	0	0	0	0
4/23/2024	3:30 AM	0	0	0	0	0	0	0	0	0	0	0	0	0
4/23/2024	3:45 AM	0	0	0	0	0	0	0	0	0	0	0	0	0
4/23/2024	4:00 AM	0	0	0	0	0	0	0	0	0	0	0	0	0
4/23/2024	4:15 AM	0	0	0	0	0	0	0	0	0	0	0	0	0
4/23/2024	4:30 AM	0	0	0	0	0	0	0	0	0	0	0	0	0
4/23/2024	4:45 AM	0	0	0	0	0	0	0	0	0	0	0	0	0
4/23/2024	5:00 AM	0	0	0	0	0	0	0	0	0	0	0	0	0
4/23/2024	5:15 AM	0	0	0	0	0	0	0	0	0	0	0	0	0
4/23/2024	5:30 AM	0	0	0	0	0	0	0	0	0	0	0	0	0
4/23/2024	5:45 AM	0	0	0	0	0	0	0	0	0	0	0	0	0
4/23/2024	6:00 AM	0	0	0	0	0	0	0	0	0	0	0	0	0
4/23/2024	6:15 AM	0	0	0	0	0	0	0	0	0	0	0	0	0
4/23/2024	6:30 AM	0	0	0	0	0	0	0	0	0	0	0	0	0
4/23/2024	6:45 AM	0	0	0	0	0	0	0	0	0	0	0	0	0
4/23/2024	7:00 AM	0	0	0	0	0	0	0	0	0	0	0	0	0
4/23/2024	7:15 AM	0	0	0	0	0	0	0	0	0	0	0	0	0
4/23/2024	7:30 AM	0	0	0	0	0	0	0	0	0	0	0	0	0
4/23/2024	7:45 AM	0	0	0	0	0	0	0	0	0	0	0	0	0
4/23/2024	8:00 AM	0	0	0	0	0	0	0	0	0	0	0	0	0
4/23/2024	8:15 AM	0	0	0	0	0	0	0	0	0	0	0	0	0
4/23/2024	8:30 AM	0	0	0	0	0	0	0	0	0	0	0	0	0
4/23/2024	8:45 AM	0	0	0	0	0	0	0	0	0	0	0	0	0
4/23/2024	9:00 AM	0	0	0	0	0	0	0	0	0	0	0	0	0
4/23/2024	9:15 AM	0	0	0	0	0	0	0	0	0	0	0	0	0
4/23/2024	9:30 AM	0	0	0	0	0	0	0	0	0	0	0	0	0
4/23/2024	9:45 AM	0	0	0	0	0	0	0	0	0	0	0	0	0
4/23/2024	10:00 AM	0	0	0	0	0	0	0	0	0	0	0	0	0
4/23/2024	10:15 AM	0	0	0	0	0	0	0	0	0	0	0	0	0
4/23/2024	10:30 AM	0	0	0	0	0	0	0	0	0	0	0	0	0
4/23/2024	10:45 AM	0	0	0	0	0	0	0	0	0	0	0	0	0
4/23/2024	11:00 AM	0	0	0	0	0	0	0	0	0	0	0	0	0
4/23/2024	11:15 AM	0	0	0	0	0	0	0	0	0	0	0	0	0
4/23/2024	11:30 AM	0	0	0	0	0	0	0	0	0	0	0	0	0
4/23/2024	11:45 AM	0	0	0	0	0	0	0	0	0	0	0	0	0
4/23/2024	12:00 PM	0	0	0	0	0	0	0	0	0	0	0	0	0
4/23/2024	12:15 PM	0	0	0	0	0	0	0	0	0	0	0	0	0
4/23/2024	12:30 PM	0	0	0	0	0	0	0	0	0	0	0	0	0
4/23/2024	12:45 PM	0	0	0	0	0	0	0	0	0	0	0	0	0
4/23/2024	1:00 PM	0	0	0	0	0	0	0	0	0	0	0	0	0
4/23/2024	1:15 PM	0	0	0	0	0	0	0	0	0	0	0	0	0
4/23/2024	1:30 PM	0	0	0	0	0	0	0	0	0	0	0	0	0
4/23/2024	1:45 PM	0	0	0	0	0	0	0	0	0	0	0	0	0
4/23/2024	2:00 PM	0	0	0	0	0	0	0	0	0	0	0	0	0
4/23/2024	2:15 PM	0	0	0	0	0	0	0	0	0	0	0	0	0
4/23/2024	2:30 PM	0	0	0	0	0	0	0	0	0	0	0	0	0
4/23/2024	2:45 PM	0	0	0	0	0	0	0	0	0	0	0	0	0
4/23/2024	3:00 PM	0	0	0	0	0	0	0	0	0	0	0	0	0
4/23/2024	3:15 PM	0	0	0	0	0	0	0	0	0	0	0	0	0
4/23/2024	3:30 PM	0	0	0	0	0	0	0	0	0	0	0	0	0
4/23/2024	3:45 PM	0	0	0	0	0	0	0	0	0	0	0	0	0
4/23/2024	4:00 PM	0	0	0	0	0	0	0	0	0	0	0	0	0
4/23/2024	4:15 PM	0	0	0	0	0	0	0	0	0	0	0	0	0
4/23/2024	4:30 PM	0	0	0	0	0	0	0	0	0	0	0	0	0
4/23/2024	4:45 PM	0	0	0	0	0	0	0	0	0	0	0	0	0
4/23/2024	5:00 PM	0	0	0	0	0	0	0	0	0	0	0	0	0
4/23/2024	5:15 PM	0	0	0	0	0	0	0	0	0	0	0	0	0
4/23/2024	5:30 PM	0	0	0	0	0	0	0	0	0	0	0	0	0
4/23/2024	5:45 PM	0	0	0	0	0	0	0	0	0	0	0	0	0
4/23/2024	6:00 PM	0	0	0	0	0	0	0	0	0	0	0	0	0
4/23/2024	6:15 PM	0	36	3	0	0	1	0	0	0	0	0	0	0
4/23/2024	6:30 PM	0	73	8	0	0	2	0	0	0	0	0	0	0
4/23/2024	6:45 PM	1	106	10	0	0	2	0	0	0	0	0	0	0
4/23/2024	7:00 PM	1	141	14	0	0	2	0	0	0	0	0	0	0
4/23/2024	7:15 PM	1	155	14	0	0	1	0	0	0	0	0	0	0
4/23/2024	7:30 PM	1	150	14	0	0	0	0	0	0	0	0	0	0
4/23/2024	7:45 PM	0	141	14	0	0	0	0	0	0	0	0	0	0
4/23/2024	8:00 PM	0	134	12	0	0	3	0	0	0	0	0	0	0
4/23/2024	8:15 PM	0	113	13	0	0	3	0	0	0	0	0	0	0
4/23/2024	8:30 PM	0	111	10	0	1	3	0	0	0	0	0	0	0
4/23/2024	8:45 PM	0	110	11	0	1	3	0	0	0	0	0	0	0
4/23/2024	9:00 PM	0	102	11	0	2	0	0	0	0	0	0	0	0
4/23/2024	9:15 PM	0	99	9	0	2	0	0	0	0	0	0	0	0
4/23/2024	9:30 PM	0	86	8	0	1	0	0	0	0	0	0	0	0
4/23/2024	9:45 PM	0	78	5	0	2	1	0	0	0	0	0	0	0
4/23/2024	10:00 PM	0	76	5	0	2	1	0	0	1	0	0	0	0
4/23/2024	10:15 PM	0	63	4	0	2	1	0	0	1	0	0	0	0
4/23/2024	10:30 PM	0	60	3	0	2	2	0	0	1	0	0	0	0
4/23/2024	10:45 PM	0	61	4	0	1	2	0	0	2	0	0	0	0
4/23/2024	11:00 PM	0	55	3	0	1	2	0	0	1	0	0	0	0
4/23/2024	11:15 PM	0	42	2	0	1	2	0	0	1	0	0	0	0
4/23/2024	11:30 PM	0	28	2	0	1	1	0	0	1	0	0	0	0
4/23/2024	11:45 PM	0	12	1	0	1	0	0	0	0	0	0	0	0

4/24/2024	12:00 AM	1	30	4	0	0	2	0	0	1	0	0	0	0
4/24/2024	12:15 AM	0	23	4	0	0	2	0	0	0	0	0	0	0
4/24/2024	12:30 AM	0	19	3	0	0	2	0	0	2	0	0	0	0
4/24/2024	12:45 AM	1	13	2	0	0	1	0	0	2	0	0	0	0
4/24/2024	1:00 AM	1	12	1	0	0	0	0	0	2	0	0	0	0
4/24/2024	1:15 AM	1	13	1	0	0	0	0	0	2	0	0	0	0
4/24/2024	1:30 AM	1	11	3	0	1	0	0	0	0	0	0	0	0
4/24/2024	1:45 AM	0	11	2	0	1	1	0	0	0	0	0	0	0
4/24/2024	2:00 AM	0	11	3	0	1	1	0	0	0	0	0	0	0
4/24/2024	2:15 AM	0	17	3	0	2	1	0	0	0	0	0	0	0
4/24/2024	2:30 AM	0	20	2	0	3	1	0	0	0	0	0	0	0
4/24/2024	2:45 AM	0	23	2	0	3	0	0	0	0	0	0	0	0
4/24/2024	3:00 AM	0	21	2	0	4	1	0	0	0	0	0	0	0
4/24/2024	3:15 AM	0	17	2	0	3	1	0	0	0	0	0	0	0
4/24/2024	3:30 AM	0	18	3	0	1	1	0	0	0	0	0	0	0
4/24/2024	3:45 AM	0	18	3	0	1	1	0	0	0	0	0	0	0
4/24/2024	4:00 AM	0	25	4	0	0	0	0	0	0	0	0	0	0
4/24/2024	4:15 AM	0	23	4	0	0	0	0	0	0	0	0	0	0
4/24/2024	4:30 AM	0	23	3	0	0	0	0	0	0	0	0	0	0
4/24/2024	4:45 AM	0	31	5	0	0	0	0	0	0	0	0	0	0
4/24/2024	5:00 AM	0	39	5	0	1	0	0	0	0	0	0	0	0
4/24/2024	5:15 AM	0	50	6	0	2	0	0	0	0	0	0	0	0
4/24/2024	5:30 AM	0	71	18	0	2	0	0	0	0	0	0	0	0
4/24/2024	5:45 AM	0	109	31	0	2	0	0	0	0	0	0	0	0
4/24/2024	6:00 AM	0	164	50	0	2	0	0	0	0	0	0	0	0
4/24/2024	6:15 AM	0	222	68	0	1	0	0	0	0	0	0	0	0
4/24/2024	6:30 AM	0	309	77	0	1	0	0	0	1	0	0	0	0
4/24/2024	6:45 AM	0	371	77	0	3	1	0	0	2	0	0	0	0
4/24/2024	7:00 AM	0	439	70	0	3	1	0	0	2	0	0	0	0
4/24/2024	7:15 AM	0	498	65	0	5	1	0	0	2	0	0	0	0
4/24/2024	7:30 AM	0	500	71	0	6	2	0	0	3	0	0	0	0
4/24/2024	7:45 AM	0	492	68	0	5	1	0	0	3	0	0	0	0
4/24/2024	8:00 AM	2	452	76	1	4	1	0	0	3	0	0	0	0
4/24/2024	8:15 AM	2	409	72	6	3	1	0	0	3	0	0	0	0
4/24/2024	8:30 AM	2	403	62	8	2	0	0	0	1	0	0	0	0
4/24/2024	8:45 AM	3	388	61	9	3	0	0	0	0	0	0	0	0
4/24/2024	9:00 AM	1	389	43	8	7	0	0	0	0	0	0	0	0
4/24/2024	9:15 AM	1	398	44	3	8	0	0	0	2	0	0	0	0
4/24/2024	9:30 AM	1	366	34	5	9	1	0	0	2	0	0	0	0
4/24/2024	9:45 AM	0	338	29	7	8	1	0	0	2	0	0	0	0
4/24/2024	10:00 AM	0	311	38	9	5	1	0	0	3	0	0	0	0
4/24/2024	10:15 AM	0	298	38	9	4	1	0	0	1	0	0	0	0
4/24/2024	10:30 AM	0	280	40	5	5	1	0	0	2	0	0	0	0
4/24/2024	10:45 AM	0	267	42	2	8	2	0	0	3	0	0	0	0
4/24/2024	11:00 AM	0	265	41	0	8	2	0	0	3	0	0	0	0
4/24/2024	11:15 AM	0	238	38	0	7	2	0	2	3	0	0	0	0
4/24/2024	11:30 AM	0	260	42	1	8	2	0	2	3	0	0	0	0
4/24/2024	11:45 AM	0	282	48	1	4	2	0	2	2	1	0	0	0
4/24/2024	12:00 PM	0	286	44	2	4	3	0	3	3	1	0	0	0
4/24/2024	12:15 PM	0	305	52	2	6	3	0	2	4	1	0	0	0
4/24/2024	12:30 PM	1	279	53	1	4	2	0	2	3	1	0	0	0
4/24/2024	12:45 PM	1	270	61	3	4	1	0	2	4	0	0	0	0
4/24/2024	1:00 PM	1	261	65	2	4	0	0	1	2	0	0	0	0
4/24/2024	1:15 PM	1	253	57	2	4	0	0	0	1	0	0	0	0
4/24/2024	1:30 PM	0	255	57	2	6	1	0	0	3	0	0	0	0
4/24/2024	1:45 PM	0	252	41	0	7	4	0	0	2	0	0	0	0
4/24/2024	2:00 PM	0	260	40	0	9	7	0	1	2	0	0	0	0
4/24/2024	2:15 PM	0	255	42	0	8	8	0	1	2	0	0	0	0
4/24/2024	2:30 PM	0	270	38	0	7	8	0	1	0	0	0	0	0
4/24/2024	2:45 PM	0	280	38	0	7	6	0	1	1	0	0	0	0
4/24/2024	3:00 PM	0	274	39	0	5	4	0	0	2	0	0	0	0
4/24/2024	3:15 PM	0	289	43	1	5	5	0	0	2	0	0	0	0
4/24/2024	3:30 PM	0	281	43	1	5	6	0	0	2	0	0	0	0
4/24/2024	3:45 PM	0	282	42	1	4	6	0	0	2	0	0	0	0
4/24/2024	4:00 PM	0	280	45	1	4	7	0	1	1	0	0	0	0
4/24/2024	4:15 PM	0	275	37	0	3	6	0	1	1	0	0	0	0
4/24/2024	4:30 PM	0	282	32	0	3	6	0	1	2	0	0	0	0
4/24/2024	4:45 PM	0	269	32	0	6	6	0	1	1	0	0	0	0
4/24/2024	5:00 PM	0	267	26	0	5	6	0	0	1	0	0	0	0
4/24/2024	5:15 PM	0	257	26	0	7	6	0	0	2	0	0	0	0
4/24/2024	5:30 PM	0	231	29	0	9	4	0	0	1	0	0	0	0
4/24/2024	5:45 PM	0	211	31	0	6	4	0	0	1	0	0	0	0
4/24/2024	6:00 PM	0	199	28	0	7	2	0	0	1	0	0	0	0
4/24/2024	6:15 PM	0	174	26	0	5	1	0	0	0	0	0	0	0
4/24/2024	6:30 PM	0	159	20	0	1	1	0	0	0	0	0	0	0
4/24/2024	6:45 PM	0	160	17	0	1	0	0	0	0	0	0	0	0
4/24/2024	7:00 PM	0	140	17	0	0	0	0	0	0	0	0	0	0
4/24/2024	7:15 PM	0	141	16	0	0	0	0	0	1	0	0	0	0
4/24/2024	7:30 PM	0	146	16	0	0	0	0	0	1	0	0	0	0
4/24/2024	7:45 PM	0	143	14	0	0	0	0	0	1	0	0	0	0
4/24/2024	8:00 PM	0	155	11	0	0	0	0	0	1	0	0	0	0
4/24/2024	8:15 PM	0	139	9	0	0	0	0	0	1	0	0	0	0
4/24/2024	8:30 PM	0	126	7	0	0	1	0	0	2	0	0	0	0
4/24/2024	8:45 PM	0	115	7	0	0	1	0	0	2	0	0	0	0
4/24/2024	9:00 PM	0	96	5	0	0	2	0	0	2	0	0	0	0
4/24/2024	9:15 PM	0	97	8	0	0	2	0	1	2	0	0	0	0
4/24/2024	9:30 PM	0	89	8	0	1	1	0	1	1	0	0	0	0
4/24/2024	9:45 PM	0	83	8	0	1	1	0	1	1	0	0	0	0
4/24/2024	10:00 PM	0	74	7	0	1	0	0	1	2	0	0	0	0
4/24/2024	10:15 PM	0	64	4	0	1	0	0	0	1	0	0	0	0
4/24/2024	10:30 PM	0	68	5	0	0	0	0	0	1	0	0	0	0
4/24/2024	10:45 PM	0	64	4	0	0	0	0	0	1	0	0	0	0
4/24/2024	11:00 PM	0	58	4	0	0	0	0	0	0	0	0	0	0
4/24/2024	11:15 PM	0	44	3	0	0	0	0	0	0	0	0	0	0
4/24/2024	11:30 PM	0	25	1	0	0	0	0	0	0	0	0	0	0
4/24/2024	11:45 PM	0	11	0	0	0	0	0	0	0	0	0	0	0

4/25/2024	12:00 AM	0	26	5	0	0	2	0	0	0	0	0	0	0
4/25/2024	12:15 AM	0	27	4	0	0	1	0	0	0	0	0	0	0
4/25/2024	12:30 AM	0	24	1	0	0	1	0	0	0	0	0	0	0
4/25/2024	12:45 AM	0	23	1	0	0	2	0	0	1	0	0	0	0
4/25/2024	1:00 AM	0	21	1	0	1	2	0	0	1	0	0	0	0
4/25/2024	1:15 AM	0	16	1	0	1	2	0	0	1	0	0	0	0
4/25/2024	1:30 AM	0	16	2	0	1	3	0	0	2	0	0	0	0
4/25/2024	1:45 AM	0	13	1	0	1	2	0	0	1	0	0	0	0
4/25/2024	2:00 AM	0	13	1	0	0	1	0	0	1	0	0	0	0
4/25/2024	2:15 AM	0	18	4	0	0	1	0	0	2	0	0	0	0
4/25/2024	2:30 AM	0	18	5	0	0	0	0	0	1	0	0	0	0
4/25/2024	2:45 AM	0	20	6	0	0	1	0	0	1	0	0	0	0
4/25/2024	3:00 AM	0	21	7	0	1	1	0	0	3	0	0	0	0
4/25/2024	3:15 AM	0	19	4	0	1	1	0	1	2	0	0	0	0
4/25/2024	3:30 AM	0	19	2	0	2	1	0	1	2	0	0	0	0
4/25/2024	3:45 AM	0	19	2	0	2	0	0	1	2	0	0	0	0
4/25/2024	4:00 AM	0	17	1	0	1	0	0	2	0	0	0	0	0
4/25/2024	4:15 AM	0	20	2	0	1	0	0	1	0	0	0	0	0
4/25/2024	4:30 AM	0	20	2	0	0	0	0	1	0	0	0	0	0
4/25/2024	4:45 AM	0	29	4	0	0	0	0	1	0	0	0	0	0
4/25/2024	5:00 AM	0	41	6	0	0	0	0	0	0	0	0	0	0
4/25/2024	5:15 AM	0	46	9	0	0	0	0	0	0	0	0	0	0
4/25/2024	5:30 AM	0	73	16	0	0	0	0	0	0	0	0	0	0
4/25/2024	5:45 AM	0	111	19	0	0	0	0	0	0	0	0	0	0
4/25/2024	6:00 AM	0	162	32	0	1	0	0	0	0	0	0	0	0
4/25/2024	6:15 AM	0	225	55	0	1	0	0	0	0	0	0	0	0
4/25/2024	6:30 AM	0	311	70	0	1	0	0	0	1	0	0	0	0
4/25/2024	6:45 AM	0	384	76	0	2	0	0	0	1	1	0	0	0
4/25/2024	7:00 AM	0	464	76	0	1	0	0	0	2	1	0	0	0
4/25/2024	7:15 AM	0	535	72	0	1	1	0	0	2	1	0	0	0
4/25/2024	7:30 AM	0	566	70	1	1	2	0	0	1	1	0	0	0
4/25/2024	7:45 AM	0	556	74	2	0	2	0	0	2	0	0	0	0
4/25/2024	8:00 AM	0	546	75	2	3	2	0	1	1	0	0	0	0
4/25/2024	8:15 AM	0	526	66	4	4	1	0	1	2	0	0	0	0
4/25/2024	8:30 AM	0	473	55	3	4	1	0	1	2	0	0	0	0
4/25/2024	8:45 AM	0	445	52	2	4	1	0	1	1	0	0	0	0
4/25/2024	9:00 AM	1	398	51	7	3	2	0	0	1	0	0	0	0
4/25/2024	9:15 AM	1	351	44	7	2	2	0	2	2	0	0	0	0
4/25/2024	9:30 AM	1	329	43	10	2	6	0	2	3	0	0	0	0
4/25/2024	9:45 AM	1	304	35	11	5	10	0	2	3	0	0	0	0
4/25/2024	10:00 AM	0	291	26	7	6	9	0	2	3	0	0	0	0
4/25/2024	10:15 AM	0	275	31	5	6	11	0	0	1	0	0	0	0
4/25/2024	10:30 AM	0	253	32	2	9	7	0	0	1	0	0	0	0
4/25/2024	10:45 AM	0	252	40	1	7	6	0	0	2	0	0	0	0
4/25/2024	11:00 AM	0	236	45	1	4	7	0	2	2	0	0	0	0
4/25/2024	11:15 AM	0	247	52	1	4	7	0	2	3	0	0	0	0
4/25/2024	11:30 AM	0	273	50	1	1	7	0	2	2	0	0	0	0
4/25/2024	11:45 AM	0	280	45	1	1	8	0	2	1	0	0	0	0
4/25/2024	12:00 PM	0	302	45	0	2	9	0	0	1	0	0	0	0
4/25/2024	12:15 PM	0	305	40	0	4	7	0	0	0	0	0	0	0
4/25/2024	12:30 PM	0	297	50	0	5	7	0	0	0	0	0	0	0
4/25/2024	12:45 PM	1	314	49	0	5	3	0	1	0	0	0	0	0
4/25/2024	1:00 PM	1	312	46	0	5	2	0	1	0	0	0	0	0
4/25/2024	1:15 PM	1	293	49	0	3	5	0	1	0	0	0	0	0
4/25/2024	1:30 PM	1	302	39	0	3	4	0	1	0	0	0	0	0
4/25/2024	1:45 PM	0	282	38	0	5	5	0	0	0	1	0	0	0
4/25/2024	2:00 PM	0	260	38	0	4	4	0	0	1	1	0	0	0
4/25/2024	2:15 PM	0	267	34	0	7	5	0	0	1	1	0	0	0
4/25/2024	2:30 PM	0	245	34	0	7	6	0	0	1	1	0	0	0
4/25/2024	2:45 PM	0	252	34	0	6	8	0	0	1	0	0	0	0
4/25/2024	3:00 PM	0	265	34	0	6	13	0	0	0	0	0	0	0
4/25/2024	3:15 PM	0	259	41	0	4	9	0	0	0	0	0	0	0
4/25/2024	3:30 PM	0	255	45	0	3	8	0	0	1	0	0	0	0
4/25/2024	3:45 PM	1	245	58	0	3	5	0	0	1	0	0	0	0
4/25/2024	4:00 PM	1	236	62	0	4	0	0	1	2	0	0	0	0
4/25/2024	4:15 PM	1	226	50	0	4	0	0	1	2	0	0	0	0
4/25/2024	4:30 PM	1	234	43	0	6	0	0	1	1	0	0	0	0
4/25/2024	4:45 PM	1	253	27	0	5	0	0	1	2	0	0	0	0
4/25/2024	5:00 PM	1	272	21	0	5	1	0	0	1	0	0	0	0
4/25/2024	5:15 PM	1	308	23	0	4	1	0	0	1	0	0	0	0
4/25/2024	5:30 PM	1	292	26	0	2	1	0	0	1	0	0	0	0
4/25/2024	5:45 PM	1	265	29	0	1	1	0	0	0	0	0	0	0
4/25/2024	6:00 PM	1	246	29	0	1	0	0	0	0	0	0	0	0
4/25/2024	6:15 PM	1	161	19	0	1	0	0	0	0	0	0	0	0
4/25/2024	6:30 PM	1	116	12	0	1	0	0	0	0	0	0	0	0
4/25/2024	6:45 PM	0	62	6	0	1	0	0	0	0	0	0	0	0
4/25/2024	7:00 PM	0	0	0	0	0	0	0	0	0	0	0	0	0
4/25/2024	7:15 PM	0	0	0	0	0	0	0	0	0	0	0	0	0
4/25/2024	7:30 PM	0	0	0	0	0	0	0	0	0	0	0	0	0
4/25/2024	7:45 PM	0	0	0	0	0	0	0	0	0	0	0	0	0
4/25/2024	8:00 PM	0	0	0	0	0	0	0	0	0	0	0	0	0
4/25/2024	8:15 PM	0	0	0	0	0	0	0	0	0	0	0	0	0
4/25/2024	8:30 PM	0	0	0	0	0	0	0	0	0	0	0	0	0
4/25/2024	8:45 PM	0	0	0	0	0	0	0	0	0	0	0	0	0
4/25/2024	9:00 PM	0	0	0	0	0	0	0	0	0	0	0	0	0
4/25/2024	9:15 PM	0	0	0	0	0	0	0	0	0	0	0	0	0
4/25/2024	9:30 PM	0	0	0	0	0	0	0	0	0	0	0	0	0
4/25/2024	9:45 PM	0	0	0	0	0	0	0	0	0	0	0	0	0
4/25/2024	10:00 PM	0	0	0	0	0	0	0	0	0	0	0	0	0
4/25/2024	10:15 PM	0	0	0	0	0	0	0	0	0	0	0	0	0
4/25/2024	10:30 PM	0	0	0	0	0	0	0	0	0	0	0	0	0
4/25/2024	10:45 PM	0	0	0	0	0	0	0	0	0	0	0	0	0
4/25/2024	11:00 PM	0	0	0	0	0	0	0	0	0	0	0	0	0
4/25/2024	11:15 PM	0	0	0	0	0	0	0	0	0	0	0	0	0
4/25/2024	11:30 PM	0	0	0	0	0	0	0	0	0	0	0	0	0
4/25/2024	11:45 PM	0	0	0	0	0	0	0	0	0	0	0	0	0

Bi-Directional Class Count || SB WB 15min

Columbia, SC

Marr Traffic DATA COLLECTION
www.marrtraffic.com

Site 48
I-126 W/Bound Off-Ramp,
east of Greystone Blvd

Date
Tuesday, April 23, 2024

Lat/Long
34.012989°, -81.075035°

Weather
Fair
58°F

Click here for Detailed Weather

Click here for Map

0000 - 2400 (Weekday 24h Session) (04-23-2024)
SB WB 15min

	Westbound (Movement 48.1)													15min	60min
Time	1	2	3	4	5	6	7	8	9	10	11	12	13	Total	Total
0000 - 0015	0	0	0	0	0	0	0	0	0	0	0	0	0	**0**	
0015 - 0030	0	0	0	0	0	0	0	0	0	0	0	0	0	**0**	
0030 - 0045	0	0	0	0	0	0	0	0	0	0	0	0	0	**0**	
0045 - 0100	0	0	0	0	0	0	0	0	0	0	0	0	0	**0**	**0**
0100 - 0115	0	0	0	0	0	0	0	0	0	0	0	0	0	**0**	
0115 - 0130	0	0	0	0	0	0	0	0	0	0	0	0	0	**0**	
0130 - 0145	0	0	0	0	0	0	0	0	0	0	0	0	0	**0**	
0145 - 0200	0	0	0	0	0	0	0	0	0	0	0	0	0	**0**	**0**
0200 - 0215	0	0	0	0	0	0	0	0	0	0	0	0	0	**0**	
0215 - 0230	0	0	0	0	0	0	0	0	0	0	0	0	0	**0**	
0230 - 0245	0	0	0	0	0	0	0	0	0	0	0	0	0	**0**	
0245 - 0300	0	0	0	0	0	0	0	0	0	0	0	0	0	**0**	**0**
0300 - 0315	0	0	0	0	0	0	0	0	0	0	0	0	0	**0**	
0315 - 0330	0	0	0	0	0	0	0	0	0	0	0	0	0	**0**	
0330 - 0345	0	0	0	0	0	0	0	0	0	0	0	0	0	**0**	
0345 - 0400	0	0	0	0	0	0	0	0	0	0	0	0	0	**0**	**0**
0400 - 0415	0	0	0	0	0	0	0	0	0	0	0	0	0	**0**	
0415 - 0430	0	0	0	0	0	0	0	0	0	0	0	0	0	**0**	
0430 - 0445	0	0	0	0	0	0	0	0	0	0	0	0	0	**0**	
0445 - 0500	0	0	0	0	0	0	0	0	0	0	0	0	0	**0**	**0**
0500 - 0515	0	0	0	0	0	0	0	0	0	0	0	0	0	**0**	
0515 - 0530	0	0	0	0	0	0	0	0	0	0	0	0	0	**0**	
0530 - 0545	0	0	0	0	0	0	0	0	0	0	0	0	0	**0**	
0545 - 0600	0	0	0	0	0	0	0	0	0	0	0	0	0	**0**	**0**
0600 - 0615	0	0	0	0	0	0	0	0	0	0	0	0	0	**0**	
0615 - 0630	0	0	0	0	0	0	0	0	0	0	0	0	0	**0**	
0630 - 0645	0	0	0	0	0	0	0	0	0	0	0	0	0	**0**	
0645 - 0700	0	0	0	0	0	0	0	0	0	0	0	0	0	**0**	**0**
0700 - 0715	0	0	0	0	0	0	0	0	0	0	0	0	0	**0**	
0715 - 0730	0	0	0	0	0	0	0	0	0	0	0	0	0	**0**	
0730 - 0745	0	0	0	0	0	0	0	0	0	0	0	0	0	**0**	
0745 - 0800	0	0	0	0	0	0	0	0	0	0	0	0	0	**0**	**0**
0800 - 0815	0	0	0	0	0	0	0	0	0	0	0	0	0	**0**	
0815 - 0830	0	0	0	0	0	0	0	0	0	0	0	0	0	**0**	
0830 - 0845	0	0	0	0	0	0	0	0	0	0	0	0	0	**0**	
0845 - 0900	0	0	0	0	0	0	0	0	0	0	0	0	0	**0**	**0**
0900 - 0915	0	0	0	0	0	0	0	0	0	0	0	0	0	**0**	
0915 - 0930	0	0	0	0	0	0	0	0	0	0	0	0	0	**0**	
0930 - 0945	0	0	0	0	0	0	0	0	0	0	0	0	0	**0**	
0945 - 1000	0	0	0	0	0	0	0	0	0	0	0	0	0	**0**	**0**
1000 - 1015	0	0	0	0	0	0	0	0	0	0	0	0	0	**0**	
1015 - 1030	0	0	0	0	0	0	0	0	0	0	0	0	0	**0**	
1030 - 1045	0	0	0	0	0	0	0	0	0	0	0	0	0	**0**	
1045 - 1100	0	0	0	0	0	0	0	0	0	0	0	0	0	**0**	**0**
1100 - 1115	0	0	0	0	0	0	0	0	0	0	0	0	0	**0**	
1115 - 1130	0	0	0	0	0	0	0	0	0	0	0	0	0	**0**	
1130 - 1145	0	0	0	0	0	0	0	0	0	0	0	0	0	**0**	
1145 - 1200	0	0	0	0	0	0	0	0	0	0	0	0	0	**0**	**0**
1200 - 1215	0	0	0	0	0	0	0	0	0	0	0	0	0	**0**	
1215 - 1230	0	0	0	0	0	0	0	0	0	0	0	0	0	**0**	
1230 - 1245	0	0	0	0	0	0	0	0	0	0	0	0	0	**0**	
1245 - 1300	0	0	0	0	0	0	0	0	0	0	0	0	0	**0**	**0**
1300 - 1315	0	0	0	0	0	0	0	0	0	0	0	0	0	**0**	
1315 - 1330	0	0	0	0	0	0	0	0	0	0	0	0	0	**0**	
1330 - 1345	0	0	0	0	0	0	0	0	0	0	0	0	0	**0**	
1345 - 1400	0	0	0	0	0	0	0	0	0	0	0	0	0	**0**	**0**
1400 - 1415	0	0	0	0	0	0	0	0	0	0	0	0	0	**0**	
1415 - 1430	0	0	0	0	0	0	0	0	0	0	0	0	0	**0**	
1430 - 1445	0	0	0	0	0	0	0	0	0	0	0	0	0	**0**	
1445 - 1500	0	0	0	0	0	0	0	0	0	0	0	0	0	**0**	**0**
1500 - 1515	0	0	0	0	0	0	0	0	0	0	0	0	0	**0**	
1515 - 1530	0	0	0	0	0	0	0	0	0	0	0	0	0	**0**	
1530 - 1545	0	0	0	0	0	0	0	0	0	0	0	0	0	**0**	
1545 - 1600	0	0	0	0	0	0	0	0	0	0	0	0	0	**0**	**0**
1600 - 1615	0	0	0	0	0	0	0	0	0	0	0	0	0	**0**	
1615 - 1630	0	0	0	0	0	0	0	0	0	0	0	0	0	**0**	
1630 - 1645	0	0	0	0	0	0	0	0	0	0	0	0	0	**0**	
1645 - 1700	0	0	0	0	0	0	0	0	0	0	0	0	0	**0**	**0**
1700 - 1715	0	0	0	0	0	0	0	0	0	0	0	0	0	**0**	
1715 - 1730	0	0	0	0	0	0	0	0	0	0	0	0	0	**0**	
1730 - 1745	0	0	0	0	0	0	0	0	0	0	0	0	0	**0**	
1745 - 1800	0	0	0	0	0	0	0	0	0	0	0	0	0	**0**	**0**
1800 - 1815	0	0	0	0	0	0	0	0	0	0	0	0	0	**0**	
1815 - 1830	0	0	0	0	0	0	0	0	0	0	0	0	0	**0**	
1830 - 1845	0	0	0	0	0	0	0	0	0	0	0	0	0	**0**	
1845 - 1900	0	0	0	0	0	0	0	0	0	0	0	0	0	**0**	**0**
1900 - 1915	0	63	2	3	0	0	0	0	0	0	0	0	0	**68**	
1915 - 1930	1	55	5	4	0	0	0	1	0	0	0	0	0	**66**	
1930 - 1945	0	43	3	2	0	0	0	0	0	0	0	0	0	**48**	
1945 - 2000	0	53	5	1	0	0	0	0	0	0	0	0	0	**59**	**241**
2000 - 2015	0	57	4	0	0	0	0	0	0	0	0	0	0	**61**	
2015 - 2030	0	57	2	2	0	0	0	0	0	0	0	0	0	**61**	
2030 - 2045	0	66	2	1	0	0	0	0	0	0	0	0	0	**69**	
2045 - 2100	0	61	2	0	0	0	0	0	0	0	0	0	0	**63**	**254**
2100 - 2115	0	60	1	1	0	0	0	0	0	0	0	0	0	**62**	
2115 - 2130	0	35	1	1	0	0	0	0	0	0	0	0	0	**37**	
2130 - 2145	0	50	2	1	0	0	0	0	0	0	0	0	0	**53**	
2145 - 2200	0	37	1	0	0	0	0	0	0	0	0	0	0	**38**	**190**
2200 - 2215	0	42	1	1	0	0	0	0	0	0	0	0	0	**44**	
2215 - 2230	0	40	1	1	0	0	0	0	0	0	0	0	0	**42**	
2230 - 2245	0	25	2	1	0	0	0	0	0	0	0	0	0	**28**	
2245 - 2300	0	23	1	0	0	0	0	0	1	0	0	0	0	**25**	**139**
2300 - 2315	0	28	2	0	0	0	0	0	0	0	0	0	0	**30**	
2315 - 2330	0	28	2	0	1	0	0	0	0	0	0	0	0	**31**	
2330 - 2345	0	16	0	0	0	0	0	0	0	0	0	0	0	**16**	
2345 - 0000	0	10	1	0	0	0	0	0	0	0	0	0	0	**11**	**88**

Session Total	1	849	40	19	1	0	0	1	1	0	0	0	0	**912**
Session Average	0.01	8.84	0.42	0.20	0.01	0.00	0.00	0.01	0.01	0.00	0.00	0.00	0.00	**9.50**
Session Percentage	0.11	93.09	4.39	2.08	0.11	0.00	0.00	0.11	0.11	0.00	0.00	0.00	0.00	

AM Peak Hour	-	-	-	-	-	-	-	-	-	-	-	-	-	-
AM Peak Volume	0	0	0	0	0	0	0	0	0	0	0	0	0	**0**

Noon Peak Hour	-	-	-	-	-	-	-	-	-	-	-	-	-	-
Noon Peak Volume	0	0	0	0	0	0	0	0	0	0	0	0	0	**0**

PM Peak Hour	1830 - 1930	1945 - 2045	1915 - 2015	1900 - 2000	-	-	-	1830 - 1930	-	-	-	-	-	**1945 - 2045**
PM Peak Volume	1	233	17	10	0	0	0	1	0	0	0	0	0	**250**

Site 48
I-126 W/Bound Off-Ramp,
east of Greystone Blvd

Date
Wednesday, April 24, 2024

Lat/Long
34.012989°, -81.075035°

Weather
Fair
66°F

Click here for Detailed Weather

0000 - 2400 (Weekday 24h Session) (04-24-2024)
SB WB 15min

	Westbound (Movement 48.1)													15min	60min
Time	1	2	3	4	5	6	7	8	9	10	11	12	13	Total	Total
0000 - 0015	0	13	1	1	0	0	0	0	0	0	0	0	0	**15**	
0015 - 0030	1	16	1	0	0	0	0	0	0	0	0	0	0	**18**	
0030 - 0045	0	13	2	2	0	0	0	0	0	0	0	0	0	**17**	
0045 - 0100	0	18	1	0	0	0	0	0	0	0	0	0	0	**19**	**69**
0100 - 0115	0	11	1	0	0	0	0	0	0	0	0	0	0	**12**	
0115 - 0130	0	3	0	0	0	0	0	0	0	0	0	0	0	**3**	
0130 - 0145	0	10	2	0	0	2	0	0	0	0	0	0	0	**14**	
0145 - 0200	0	10	0	0	0	0	0	0	0	0	0	0	0	**10**	**39**
0200 - 0215	0	9	1	0	0	0	0	0	0	0	0	0	0	**10**	
0215 - 0230	0	5	0	0	0	0	0	0	0	0	0	0	0	**5**	
0230 - 0245	0	5	1	0	0	0	0	0	0	0	0	0	0	**6**	
0245 - 0300	0	2	0	0	0	0	0	0	0	0	0	0	0	**2**	**23**
0300 - 0315	0	3	0	0	0	0	0	0	0	0	0	0	0	**3**	
0315 - 0330	0	4	0	0	0	1	0	0	0	0	0	0	0	**5**	
0330 - 0345	0	6	1	0	0	1	0	0	0	0	0	0	0	**8**	
0345 - 0400	0	1	0	0	0	0	0	0	0	0	0	0	0	**1**	**17**
0400 - 0415	0	8	0	0	0	1	0	0	0	0	0	0	0	**9**	
0415 - 0430	0	4	0	0	0	0	0	0	0	0	0	0	0	**4**	
0430 - 0445	0	5	0	0	0	0	0	0	0	0	0	0	0	**5**	
0445 - 0500	0	10	1	0	0	0	0	0	0	0	0	0	0	**11**	**29**
0500 - 0515	0	9	0	0	0	0	0	0	0	0	0	0	0	**9**	
0515 - 0530	0	8	1	0	0	0	0	0	0	0	0	0	0	**9**	
0530 - 0545	0	9	0	0	0	0	0	0	0	0	0	0	0	**9**	
0545 - 0600	0	14	1	0	0	0	0	0	0	0	0	0	0	**15**	**42**
0600 - 0615	0	23	1	0	0	0	0	0	0	0	0	0	0	**24**	
0615 - 0630	0	18	3	1	0	0	0	0	0	0	0	0	0	**22**	
0630 - 0645	0	29	4	1	0	0	0	0	0	0	0	0	0	**34**	
0645 - 0700	0	51	6	2	2	1	0	0	0	0	0	0	0	**62**	**142**
0700 - 0715	0	42	4	0	2	2	0	0	0	0	0	0	0	**50**	
0715 - 0730	0	80	6	1	0	1	0	0	0	0	0	0	0	**88**	
0730 - 0745	0	70	6	1	0	1	0	0	0	0	0	0	0	**78**	
0745 - 0800	0	101	5	1	3	0	0	0	2	0	0	0	0	**112**	**328**
0800 - 0815	0	109	6	1	2	1	1	0	0	0	0	0	0	**120**	
0815 - 0830	0	106	7	2	1	0	1	1	0	0	0	0	0	**118**	
0830 - 0845	0	94	4	2	2	2	0	0	2	0	0	0	0	**106**	
0845 - 0900	0	109	11	0	1	0	0	1	0	0	0	0	0	**122**	**466**
0900 - 0915	0	84	4	1	1	1	0	0	1	0	0	0	0	**92**	
0915 - 0930	0	91	4	0	1	3	0	0	0	0	0	0	0	**99**	
0930 - 0945	1	78	6	0	3	2	0	0	0	0	0	0	0	**90**	
0945 - 1000	0	93	7	2	2	1	0	0	0	0	0	0	0	**105**	**386**
1000 - 1015	0	67	5	1	2	2	0	0	0	0	0	0	0	**77**	
1015 - 1030	0	72	10	2	2	0	0	0	1	0	0	0	0	**87**	
1030 - 1045	0	74	11	2	2	0	0	0	0	0	0	0	0	**89**	
1045 - 1100	1	73	8	0	1	1	0	0	0	0	0	0	0	**84**	**337**
1100 - 1115	0	63	5	1	1	1	0	0	0	0	0	0	0	**71**	
1115 - 1130	0	71	6	1	1	3	0	0	1	0	0	0	0	**83**	
1130 - 1145	0	82	6	0	1	0	0	0	0	0	0	0	0	**89**	
1145 - 1200	0	76	5	0	1	0	0	0	0	0	0	0	0	**82**	**325**
1200 - 1215	1	78	7	1	0	2	0	0	0	0	0	0	0	**89**	
1215 - 1230	0	77	5	1	1	1	0	0	0	0	0	0	0	**85**	
1230 - 1245	1	84	12	2	0	1	0	0	0	0	0	0	0	**100**	
1245 - 1300	0	90	10	0	0	0	0	0	0	0	0	0	0	**100**	**374**
1300 - 1315	0	74	6	0	0	2	0	0	0	0	0	0	0	**82**	
1315 - 1330	0	88	6	1	2	0	0	0	1	0	0	0	0	**98**	
1330 - 1345	0	80	9	2	1	1	0	0	0	0	0	0	0	**93**	
1345 - 1400	0	80	4	0	1	1	0	0	0	0	0	0	0	**86**	**359**
1400 - 1415	0	82	10	0	1	0	0	0	0	0	0	0	0	**93**	
1415 - 1430	0	86	9	2	1	2	0	0	0	0	0	0	0	**100**	
1430 - 1445	0	87	10	2	0	1	0	0	0	0	0	0	0	**100**	
1445 - 1500	0	80	11	1	1	0	0	0	0	0	0	0	0	**93**	**386**
1500 - 1515	0	72	8	1	2	0	0	1	1	0	0	0	0	**85**	
1515 - 1530	0	67	8	1	0	0	0	0	0	0	0	0	0	**76**	
1530 - 1545	0	77	12	1	0	0	0	0	0	0	0	0	0	**90**	
1545 - 1600	0	60	7	0	2	0	0	0	0	0	0	0	0	**69**	**320**
1600 - 1615	0	78	11	0	1	0	0	0	0	0	0	0	0	**90**	
1615 - 1630	0	93	12	0	1	0	0	0	0	0	0	0	0	**106**	
1630 - 1645	0	79	9	2	0	0	0	0	0	0	0	0	0	**90**	
1645 - 1700	0	90	10	1	1	0	0	0	0	0	0	0	0	**102**	**388**
1700 - 1715	0	99	13	1	0	0	0	0	0	0	0	0	0	**113**	
1715 - 1730	0	124	15	1	0	0	0	0	0	0	0	0	0	**140**	
1730 - 1745	0	106	7	2	0	0	0	0	0	0	0	0	0	**115**	
1745 - 1800	0	68	6	1	0	0	0	0	0	0	0	0	0	**75**	**443**
1800 - 1815	1	63	6	3	0	0	0	0	1	0	0	0	0	**74**	
1815 - 1830	0	70	8	5	1	0	0	3	0	0	0	0	0	**87**	
1830 - 1845	0	53	4	1	0	0	0	0	0	0	0	0	0	**58**	
1845 - 1900	0	67	5	2	0	0	0	0	0	0	0	0	0	**74**	**293**
1900 - 1915	0	58	7	3	0	0	0	0	0	0	0	0	0	**68**	
1915 - 1930	0	57	7	3	1	0	0	0	0	0	0	0	0	**68**	
1930 - 1945	0	50	6	1	0	0	0	0	0	0	0	0	0	**57**	
1945 - 2000	0	52	3	1	0	0	0	0	0	0	0	0	0	**56**	**249**
2000 - 2015	0	42	3	0	0	0	0	0	0	0	0	0	0	**45**	
2015 - 2030	1	33	4	2	1	0	0	0	0	0	0	0	0	**41**	
2030 - 2045	0	64	5	0	0	0	0	0	0	0	0	0	0	**69**	
2045 - 2100	0	51	4	0	0	0	0	0	0	0	0	0	0	**55**	**210**
2100 - 2115	0	29	3	1	0	0	0	0	1	0	0	0	0	**34**	
2115 - 2130	0	39	4	1	1	0	0	0	0	0	0	0	0	**45**	
2130 - 2145	0	28	2	1	0	0	0	0	0	0	0	0	0	**31**	
2145 - 2200	0	45	4	1	0	0	0	0	0	0	0	0	0	**50**	**160**
2200 - 2215	0	34	3	0	0	0	0	0	0	0	0	0	0	**37**	
2215 - 2230	0	39	4	0	0	0	0	0	0	0	0	0	0	**43**	
2230 - 2245	0	32	2	0	0	0	0	0	0	0	0	0	0	**34**	
2245 - 2300	0	29	1	0	0	0	0	0	0	0	0	0	0	**30**	**144**
2300 - 2315	0	28	2	0	0	0	0	0	0	0	0	0	0	**30**	
2315 - 2330	0	19	2	1	0	0	0	0	0	0	0	0	0	**22**	
2330 - 2345	0	21	1	0	0	0	0	0	0	0	0	0	0	**22**	
2345 - 0000	0	16	1	0	0	0	0	0	1	0	0	0	0	**18**	**92**

Session Total	7	4970	462	74	50	38	2	6	12	0	0	0	0	**5621**
Session Average	0.07	51.77	4.81	0.77	0.52	0.40	0.02	0.06	0.13	0.00	0.00	0.00	0.00	**58.55**
Session Percentage	0.12	88.42	8.22	1.32	0.89	0.68	0.04	0.11	0.21	0.00	0.00	0.00	0.00	

AM Peak Hour	0845 - 0945	0800 - 0900	0945 - 1045	0945 - 1045	0930 - 1030	0915 - 1015	0730 - 0830	0800 - 0900	0745 - 0845	-	-	-	-	**0800 - 0900**
AM Peak Volume	1	418	33	7	9	8	2	2	4	0	0	0	0	**466**

Noon Peak Hour	1145 - 1245	1230 - 1330	1400 - 1500	1415 - 1515	1000 - 1100	1030 - 1130	-	1415 - 1515	1000 - 1100	-	-	-	-	**1400 - 1500**
Noon Peak Volume	2	336	40	6	7	5	0	1	1	0	0	0	0	**386**

PM Peak Hour	1715 - 1815	1645 - 1745	1630 - 1730	1730 - 1830	1500 - 1600	-	-	1730 - 1830	1500 - 1600	-	-	-	-	**1645 - 1745**
PM Peak Volume	1	419	47	11	4	0	0	3	1	0	0	0	0	**470**

Site 48
I-126 W/Bound Off-Ramp,
east of Greystone Blvd

Date
Thursday, April 25, 2024

Lat/Long
34.012989°, -81.075035°

Weather
Fair
67°F

Click here for Detailed Weather

0000 - 2400 (Weekday 24h Session) (04-25-2024)
SB WB 15min

	Westbound (Movement 48.1)													15min	60min
TIME	1	2	3	4	5	6	7	8	9	10	11	12	13	Total	Total
0000 - 0015	0	13	1	0	0	0	0	0	0	0	0	0	0	**14**	
0015 - 0030	0	14	3	0	0	0	0	0	0	0	0	0	0	**17**	
0030 - 0045	0	14	1	2	1	0	0	0	0	0	0	0	0	**18**	
0045 - 0100	0	9	1	0	0	0	0	0	0	0	0	0	0	**10**	**59**
0100 - 0115	0	9	1	0	0	0	0	0	0	0	0	0	0	**10**	
0115 - 0130	0	11	1	0	0	0	0	0	1	0	0	0	0	**13**	
0130 - 0145	0	8	2	0	0	0	0	0	0	0	0	0	0	**10**	
0145 - 0200	0	10	1	0	0	0	0	0	0	0	0	0	0	**11**	**44**
0200 - 0215	0	12	2	0	0	1	0	0	0	0	0	0	0	**15**	
0215 - 0230	0	13	2	0	0	0	0	0	0	0	0	0	0	**15**	
0230 - 0245	0	1	0	0	0	0	0	0	0	0	0	0	0	**1**	
0245 - 0300	0	8	0	0	0	0	0	0	0	0	0	0	0	**8**	**39**
0300 - 0315	0	6	0	0	0	0	0	0	0	0	0	0	0	**6**	
0315 - 0330	0	4	0	0	0	1	0	0	0	0	0	0	0	**5**	
0330 - 0345	0	5	0	0	0	1	0	0	0	0	0	0	0	**6**	
0345 - 0400	0	4	0	0	0	0	0	0	0	0	0	0	0	**4**	**21**
0400 - 0415	0	3	0	0	0	0	0	0	0	0	0	0	0	**3**	
0415 - 0430	0	2	0	0	0	0	0	0	0	0	0	0	0	**2**	
0430 - 0445	0	3	0	0	0	0	0	0	0	0	0	0	0	**3**	
0445 - 0500	0	10	2	0	0	0	0	1	0	0	0	0	0	**13**	**21**
0500 - 0515	0	10	1	0	0	0	0	0	0	0	0	0	0	**11**	
0515 - 0530	0	9	1	0	0	0	0	0	0	0	0	0	0	**10**	
0530 - 0545	0	10	1	0	0	0	0	0	0	0	0	0	0	**11**	
0545 - 0600	0	17	2	0	0	0	0	0	0	0	0	0	0	**19**	**51**
0600 - 0615	0	19	3	0	0	0	0	0	0	0	0	0	0	**22**	
0615 - 0630	0	17	2	1	1	0	0	1	1	0	0	0	0	**23**	
0630 - 0645	0	22	4	0	0	0	0	0	0	0	0	0	0	**26**	
0645 - 0700	0	49	6	1	1	0	0	0	0	0	0	0	0	**57**	**128**
0700 - 0715	0	44	6	0	1	1	0	0	0	0	0	0	0	**52**	
0715 - 0730	0	73	7	2	0	1	0	0	0	0	0	0	0	**83**	
0730 - 0745	0	81	9	0	0	0	0	0	0	0	0	0	0	**90**	
0745 - 0800	0	101	11	0	2	0	0	0	0	0	0	0	0	**114**	**339**
0800 - 0815	0	101	16	0	1	0	0	0	0	0	0	0	0	**118**	
0815 - 0830	0	89	11	0	2	0	0	1	0	0	0	0	0	**103**	
0830 - 0845	0	111	10	1	1	1	1	0	0	0	0	0	0	**125**	
0845 - 0900	0	102	13	2	1	2	0	0	0	0	0	0	0	**120**	**466**
0900 - 0915	0	71	5	7	0	0	0	0	0	0	0	0	0	**83**	
0915 - 0930	0	66	12	3	0	0	0	0	0	0	0	0	0	**81**	
0930 - 0945	0	86	12	1	3	1	0	0	1	0	0	0	0	**104**	
0945 - 1000	0	93	10	1	1	2	0	0	1	0	0	0	0	**108**	**376**
1000 - 1015	0	86	7	0	2	1	0	0	0	0	0	0	0	**96**	
1015 - 1030	0	91	10	2	0	1	0	0	0	0	0	0	0	**104**	
1030 - 1045	0	76	4	3	1	3	0	0	0	0	0	0	0	**87**	
1045 - 1100	0	76	9	0	3	2	0	0	0	0	0	0	0	**90**	**377**
1100 - 1115	1	74	5	2	2	0	0	0	1	0	0	0	0	**85**	
1115 - 1130	0	71	6	2	1	2	0	0	0	0	0	0	0	**82**	
1130 - 1145	0	77	14	2	1	2	0	0	0	0	0	0	0	**96**	
1145 - 1200	0	96	17	1	0	1	0	0	1	0	0	0	0	**116**	**379**
1200 - 1215	0	84	10	0	1	0	0	0	0	0	0	0	0	**95**	
1215 - 1230	0	92	9	0	1	6	0	0	0	0	0	0	0	**108**	
1230 - 1245	0	95	10	2	1	0	0	0	0	0	0	0	0	**108**	
1245 - 1300	0	95	12	1	0	1	0	0	0	0	0	0	0	**109**	**420**
1300 - 1315	0	122	17	1	1	1	0	0	0	0	0	0	0	**142**	
1315 - 1330	0	89	5	2	1	3	0	0	0	0	0	0	0	**100**	
1330 - 1345	0	93	10	0	0	4	0	0	0	0	0	0	0	**107**	
1345 - 1400	0	87	13	1	2	0	0	0	0	0	0	0	0	**103**	**452**
1400 - 1415	0	72	11	2	0	5	0	0	0	0	0	0	0	**90**	
1415 - 1430	0	87	15	0	1	1	0	0	0	0	0	0	0	**104**	
1430 - 1445	0	79	12	2	0	3	0	0	0	0	0	0	0	**96**	
1445 - 1500	0	90	14	1	0	3	0	0	0	0	0	0	0	**108**	**398**
1500 - 1515	0	71	7	2	0	2	0	0	0	0	0	0	0	**82**	
1515 - 1530	0	84	11	2	0	2	0	0	0	0	0	0	0	**99**	
1530 - 1545	0	80	10	1	0	3	0	0	0	0	0	0	0	**94**	
1545 - 1600	1	84	10	1	3	1	0	0	0	0	0	0	0	**100**	**375**
1600 - 1615	0	81	8	0	2	0	0	0	0	0	0	0	0	**91**	
1615 - 1630	0	95	14	0	0	0	0	0	0	0	0	0	0	**109**	
1630 - 1645	0	85	10	2	0	1	0	0	0	0	0	0	0	**98**	
1645 - 1700	0	83	13	1	2	0	0	0	0	0	0	0	0	**99**	**397**
1700 - 1715	0	84	12	0	0	0	0	0	0	0	0	0	0	**96**	
1715 - 1730	0	141	20	0	0	0	0	0	0	0	0	0	0	**161**	
1730 - 1745	1	113	15	2	0	0	0	0	0	0	0	0	0	**131**	
1745 - 1800	0	118	9	2	0	0	0	0	0	0	0	0	0	**129**	**517**
1800 - 1815	0	78	9	2	0	0	0	0	0	0	0	0	0	**89**	
1815 - 1830	0	71	6	4	3	0	0	0	0	0	0	0	0	**84**	
1830 - 1845	0	43	10	2	1	0	0	0	0	0	0	0	0	**56**	
1845 - 1900	0	66	3	1	1	0	0	0	0	0	0	0	0	**71**	**300**
1900 - 1915	0	0	0	0	0	0	0	0	0	0	0	0	0	**0**	
1915 - 1930	0	0	0	0	0	0	0	0	0	0	0	0	0	**0**	
1930 - 1945	0	0	0	0	0	0	0	0	0	0	0	0	0	**0**	
1945 - 2000	0	0	0	0	0	0	0	0	0	0	0	0	0	**0**	**0**
2000 - 2015	0	0	0	0	0	0	0	0	0	0	0	0	0	**0**	
2015 - 2030	0	0	0	0	0	0	0	0	0	0	0	0	0	**0**	
2030 - 2045	0	0	0	0	0	0	0	0	0	0	0	0	0	**0**	
2045 - 2100	0	0	0	0	0	0	0	0	0	0	0	0	0	**0**	**0**
2100 - 2115	0	0	0	0	0	0	0	0	0	0	0	0	0	**0**	
2115 - 2130	0	0	0	0	0	0	0	0	0	0	0	0	0	**0**	
2130 - 2145	0	0	0	0	0	0	0	0	0	0	0	0	0	**0**	
2145 - 2200	0	0	0	0	0	0	0	0	0	0	0	0	0	**0**	**0**
2200 - 2215	0	0	0	0	0	0	0	0	0	0	0	0	0	**0**	
2215 - 2230	0	0	0	0	0	0	0	0	0	0	0	0	0	**0**	
2230 - 2245	0	0	0	0	0	0	0	0	0	0	0	0	0	**0**	
2245 - 2300	0	0	0	0	0	0	0	0	0	0	0	0	0	**0**	**0**
2300 - 2315	0	0	0	0	0	0	0	0	0	0	0	0	0	**0**	
2315 - 2330	0	0	0	0	0	0	0	0	0	0	0	0	0	**0**	
2330 - 2345	0	0	0	0	0	0	0	0	0	0	0	0	0	**0**	
2345 - 0000	0	0	0	0	0	0	0	0	0	0	0	0	0	**0**	**0**

Session Total	3	4439	536	67	45	59	1	3	6	0	0	0	0	**5159**
Session Average	0.03	46.24	5.58	0.70	0.47	0.61	0.01	0.03	0.06	0.00	0.00	0.00	0.00	**53.74**
Session Percentage	0.06	86.04	10.39	1.30	0.87	1.14	0.02	0.06	0.12	0.00	0.00	0.00	0.00	

AM Peak Hour	-	0800 - 0900	0800 - 0900	0830 - 0930	0745 - 0845	0945 - 1045	0745 - 0845	0530 - 0630	0900 - 1000	-	-	-	-	**0800 - 0900**
AM Peak Hour Volume	0	403	50	13	6	7	1	1	2	0	0	0	0	**466**

Noon Peak Hour	1015 - 1115	1215 - 1315	1400 - 1500	1015 - 1115	1030 - 1130	1315 - 1415	-	-	1100 - 1200	-	-	-	-	**1215 - 1315**
Noon Peak Hour Volume	1	404	52	7	7	12	0	0	2	0	0	0	0	**467**

PM Peak Hour	1500 - 1600	1700 - 1800	1645 - 1745	1730 - 1830	1515 - 1615	1500 - 1600	-	-	-	-	-	-	-	**1700 - 1800**
PM Peak Hour Volume	1	456	60	10	5	8	0	0	0	0	0	0	0	**517**

Bi-Directional Class Count || SB WB Average 15min

Columbia, SC

Marr Traffic DATA COLLECTION
www.marrtraffic.com

Site 48
I-126 W/Bound Off-Ramp,
east of Greystone Blvd

Date
Tuesday, April 23, 2024

Lat/Long
34.012989°, -81.075035°

Weather
Fair
58°F

0000 - 2400 (Weekday 24h Session) (All Dates)
SB WB Average 15min

	SB WB Average 15min													15min	60min
Time	1	2	3	4	5	6	7	8	9	10	11	12	13	Total	Total
0000 - 0015	0	9	1	0	0	0	0	0	0	0	0	0	0	**10**	
0015 - 0030	0	10	1	0	0	0	0	0	0	0	0	0	0	**12**	
0030 - 0045	0	9	1	1	0	0	0	0	0	0	0	0	0	**12**	
0045 - 0100	0	9	1	0	0	0	0	0	0	0	0	0	0	**10**	**43**
0100 - 0115	0	7	1	0	0	0	0	0	0	0	0	0	0	**7**	
0115 - 0130	0	5	0	0	0	0	0	0	0	0	0	0	0	**5**	
0130 - 0145	0	6	1	0	0	1	0	0	0	0	0	0	0	**8**	
0145 - 0200	0	7	0	0	0	0	0	0	0	0	0	0	0	**7**	**28**
0200 - 0215	0	7	1	0	0	0	0	0	0	0	0	0	0	**8**	
0215 - 0230	0	6	1	0	0	0	0	0	0	0	0	0	0	**7**	
0230 - 0245	0	2	0	0	0	0	0	0	0	0	0	0	0	**2**	
0245 - 0300	0	3	0	0	0	0	0	0	0	0	0	0	0	**3**	**21**
0300 - 0315	0	3	0	0	0	0	0	0	0	0	0	0	0	**3**	
0315 - 0330	0	3	0	0	0	1	0	0	0	0	0	0	0	**3**	
0330 - 0345	0	4	0	0	0	1	0	0	0	0	0	0	0	**5**	
0345 - 0400	0	2	0	0	0	0	0	0	0	0	0	0	0	**2**	**13**
0400 - 0415	0	4	0	0	0	0	0	0	0	0	0	0	0	**4**	
0415 - 0430	0	2	0	0	0	0	0	0	0	0	0	0	0	**2**	
0430 - 0445	0	3	0	0	0	0	0	0	0	0	0	0	0	**3**	
0445 - 0500	0	7	1	0	0	0	0	0	0	0	0	0	0	**8**	**17**
0500 - 0515	0	6	0	0	0	0	0	0	0	0	0	0	0	**7**	
0515 - 0530	0	6	1	0	0	0	0	0	0	0	0	0	0	**6**	
0530 - 0545	0	6	0	0	0	0	0	0	0	0	0	0	0	**7**	
0545 - 0600	0	10	1	0	0	0	0	0	0	0	0	0	0	**11**	**31**
0600 - 0615	0	14	1	0	0	0	0	0	0	0	0	0	0	**15**	
0615 - 0630	0	12	2	1	0	0	0	0	0	0	0	0	0	**15**	
0630 - 0645	0	17	3	0	0	0	0	0	0	0	0	0	0	**20**	
0645 - 0700	0	33	4	1	1	0	0	0	0	0	0	0	0	**40**	**90**
0700 - 0715	0	29	3	0	1	1	0	0	0	0	0	0	0	**34**	
0715 - 0730	0	51	4	1	0	1	0	0	0	0	0	0	0	**57**	
0730 - 0745	0	50	5	0	0	0	0	0	0	0	0	0	0	**56**	
0745 - 0800	0	67	5	0	2	0	0	0	1	0	0	0	0	**75**	**222**
0800 - 0815	0	70	7	0	1	0	0	0	0	0	0	0	0	**79**	
0815 - 0830	0	65	6	1	1	0	0	1	0	0	0	0	0	**74**	
0830 - 0845	0	68	5	1	1	1	0	0	1	0	0	0	0	**77**	
0845 - 0900	0	70	8	1	1	1	0	0	0	0	0	0	0	**81**	**311**
0900 - 0915	0	52	3	3	0	0	0	0	0	0	0	0	0	**58**	
0915 - 0930	0	52	5	1	0	1	0	0	0	0	0	0	0	**60**	
0930 - 0945	0	55	6	0	2	1	0	0	0	0	0	0	0	**65**	
0945 - 1000	0	62	6	1	1	1	0	0	0	0	0	0	0	**71**	**254**
1000 - 1015	0	51	4	0	1	1	0	0	0	0	0	0	0	**58**	
1015 - 1030	0	54	7	1	1	0	0	0	0	0	0	0	0	**64**	
1030 - 1045	0	50	5	2	1	1	0	0	0	0	0	0	0	**59**	
1045 - 1100	0	50	6	0	1	1	0	0	0	0	0	0	0	**58**	**238**
1100 - 1115	0	46	3	1	1	0	0	0	0	0	0	0	0	**52**	
1115 - 1130	0	47	4	1	1	2	0	0	0	0	0	0	0	**55**	
1130 - 1145	0	53	7	1	1	1	0	0	0	0	0	0	0	**62**	
1145 - 1200	0	57	7	0	0	0	0	0	0	0	0	0	0	**66**	**235**
1200 - 1215	0	54	6	0	0	1	0	0	0	0	0	0	0	**61**	
1215 - 1230	0	56	5	0	1	2	0	0	0	0	0	0	0	**64**	
1230 - 1245	0	60	7	1	0	0	0	0	0	0	0	0	0	**69**	
1245 - 1300	0	62	7	0	0	0	0	0	0	0	0	0	0	**70**	**265**
1300 - 1315	0	65	8	0	0	1	0	0	0	0	0	0	0	**75**	
1315 - 1330	0	59	4	1	1	1	0	0	0	0	0	0	0	**66**	
1330 - 1345	0	58	6	1	0	2	0	0	0	0	0	0	0	**67**	
1345 - 1400	0	56	6	0	1	0	0	0	0	0	0	0	0	**63**	**270**
1400 - 1415	0	51	7	1	0	2	0	0	0	0	0	0	0	**61**	
1415 - 1430	0	58	8	1	1	1	0	0	0	0	0	0	0	**68**	
1430 - 1445	0	55	7	1	0	1	0	0	0	0	0	0	0	**65**	
1445 - 1500	0	57	8	1	0	1	0	0	0	0	0	0	0	**67**	**261**
1500 - 1515	0	48	5	1	1	1	0	0	0	0	0	0	0	**56**	
1515 - 1530	0	50	6	1	0	1	0	0	0	0	0	0	0	**58**	
1530 - 1545	0	52	7	1	0	1	0	0	0	0	0	0	0	**61**	
1545 - 1600	0	48	6	0	2	0	0	0	0	0	0	0	0	**56**	**232**
1600 - 1615	0	53	6	0	1	0	0	0	0	0	0	0	0	**60**	
1615 - 1630	0	63	9	0	0	0	0	0	0	0	0	0	0	**72**	
1630 - 1645	0	55	6	1	0	0	0	0	0	0	0	0	0	**63**	
1645 - 1700	0	58	8	1	1	0	0	0	0	0	0	0	0	**67**	**262**
1700 - 1715	0	61	8	0	0	0	0	0	0	0	0	0	0	**70**	
1715 - 1730	0	88	12	0	0	0	0	0	0	0	0	0	0	**100**	
1730 - 1745	0	73	7	1	0	0	0	0	0	0	0	0	0	**82**	
1745 - 1800	0	62	5	1	0	0	0	0	0	0	0	0	0	**68**	**320**
1800 - 1815	0	47	5	2	0	0	0	0	0	0	0	0	0	**54**	
1815 - 1830	0	47	5	3	1	0	0	1	0	0	0	0	0	**57**	
1830 - 1845	0	32	5	1	0	0	0	0	0	0	0	0	0	**38**	
1845 - 1900	0	44	3	1	0	0	0	0	0	0	0	0	0	**48**	**198**
1900 - 1915	0	40	3	2	0	0	0	0	0	0	0	0	0	**45**	
1915 - 1930	0	37	4	2	0	0	0	0	0	0	0	0	0	**45**	
1930 - 1945	0	31	3	1	0	0	0	0	0	0	0	0	0	**35**	
1945 - 2000	0	35	3	1	0	0	0	0	0	0	0	0	0	**38**	**163**
2000 - 2015	0	33	2	0	0	0	0	0	0	0	0	0	0	**35**	
2015 - 2030	0	30	2	1	0	0	0	0	0	0	0	0	0	**34**	
2030 - 2045	0	43	2	0	0	0	0	0	0	0	0	0	0	**46**	
2045 - 2100	0	37	2	0	0	0	0	0	0	0	0	0	0	**39**	**155**
2100 - 2115	0	30	1	1	0	0	0	0	0	0	0	0	0	**32**	
2115 - 2130	0	25	2	1	0	0	0	0	0	0	0	0	0	**27**	
2130 - 2145	0	26	1	1	0	0	0	0	0	0	0	0	0	**28**	
2145 - 2200	0	27	2	0	0	0	0	0	0	0	0	0	0	**29**	**117**
2200 - 2215	0	25	1	0	0	0	0	0	0	0	0	0	0	**27**	
2215 - 2230	0	26	2	0	0	0	0	0	0	0	0	0	0	**28**	
2230 - 2245	0	19	1	0	0	0	0	0	0	0	0	0	0	**21**	
2245 - 2300	0	17	1	0	0	0	0	0	0	0	0	0	0	**18**	**94**
2300 - 2315	0	19	1	0	0	0	0	0	0	0	0	0	0	**20**	
2315 - 2330	0	16	1	0	0	0	0	0	0	0	0	0	0	**18**	
2330 - 2345	0	12	0	0	0	0	0	0	0	0	0	0	0	**13**	
2345 - 0000	0	9	1	0	0	0	0	0	0	0	0	0	0	**10**	**60**

Session Total	4	3419	346	53	32	32	1	3	6	0	0	0	0	**3897**
Session Average	0.04	35.62	3.60	0.56	0.33	0.34	0.01	0.03	0.07	0.00	0.00	0.00	0.00	**40.60**
Session Percentage	0.09	87.74	8.88	1.37	0.82	0.83	0.03	0.09	0.16	0.00	0.00	0.00	0.00	

AM Peak Hour	0845 - 0945	0800 - 0900	0800 - 0900	0830 - 0930	0930 - 1030	0915 - 1015	0745 - 0845	0800 - 0900	0745 - 0845	-	-	-	-	**0800 - 0900**
AM Peak Volume	0	274	26	5	5	4	1	1	1	0	0	0	0	**311**

Noon Peak Hour	1015 - 1115	1230 - 1330	1400 - 1500	1015 - 1115	1000 - 1100	1400 - 1500	-	1415 - 1515	1100 - 1200	-	-	-	-	**1230 - 1330**
Noon Peak Volume	1	246	31	4	4	5	0	0	1	0	0	0	0	**280**

PM Peak Hour	1715 - 1815	1700 - 1800	1645 - 1745	1730 - 1830	1530 - 1630	1500 - 1600	-	1730 - 1830	1500 - 1600	-	-	-	-	**1700 - 1800**
PM Peak Volume	1	284	35	7	3	3	0	1	0	0	0	0	0	**320**

Bi-Directional Class Count || Volume Summary 15min

Columbia, SC

Marr Traffic DATA COLLECTION
www.marrtraffic.com

Site 48
I-126 W/Bound Off-Ramp,
east of Greystone Blvd

Date
Tuesday, April 23, 2024

Lat/Long
34.012989°, -81.075035°

Weather
Fair
58°F

Click here for Detailed Weather

0000 - 2400 (Weekday 24h Session) (04-23-2024)
Volume Summary 15min

TIME	Volume Summary 15min EB	Volume Summary 15min WB	15min Total	60min Total
0000 - 0015	0	0	**0**	
0015 - 0030	0	0	**0**	
0030 - 0045	0	0	**0**	
0045 - 0100	0	0	**0**	**0**
0100 - 0115	0	0	**0**	
0115 - 0130	0	0	**0**	
0130 - 0145	0	0	**0**	
0145 - 0200	0	0	**0**	**0**
0200 - 0215	0	0	**0**	
0215 - 0230	0	0	**0**	
0230 - 0245	0	0	**0**	
0245 - 0300	0	0	**0**	**0**
0300 - 0315	0	0	**0**	
0315 - 0330	0	0	**0**	
0330 - 0345	0	0	**0**	
0345 - 0400	0	0	**0**	**0**
0400 - 0415	0	0	**0**	
0415 - 0430	0	0	**0**	
0430 - 0445	0	0	**0**	
0445 - 0500	0	0	**0**	**0**
0500 - 0515	0	0	**0**	
0515 - 0530	0	0	**0**	
0530 - 0545	0	0	**0**	
0545 - 0600	0	0	**0**	**0**
0600 - 0615	0	0	**0**	
0615 - 0630	0	0	**0**	
0630 - 0645	0	0	**0**	
0645 - 0700	0	0	**0**	**0**
0700 - 0715	0	0	**0**	
0715 - 0730	0	0	**0**	
0730 - 0745	0	0	**0**	
0745 - 0800	0	0	**0**	**0**
0800 - 0815	0	0	**0**	
0815 - 0830	0	0	**0**	
0830 - 0845	0	0	**0**	
0845 - 0900	0	0	**0**	**0**
0900 - 0915	0	0	**0**	
0915 - 0930	0	0	**0**	
0930 - 0945	0	0	**0**	
0945 - 1000	0	0	**0**	**0**
1000 - 1015	0	0	**0**	
1015 - 1030	0	0	**0**	
1030 - 1045	0	0	**0**	
1045 - 1100	0	0	**0**	**0**
1100 - 1115	0	0	**0**	
1115 - 1130	0	0	**0**	
1130 - 1145	0	0	**0**	
1145 - 1200	0	0	**0**	**0**

Time	Volume Summary 15min EB	Volume Summary 15min WB	15min Total	60min Total
1200 - 1215	0	0	**0**	
1215 - 1230	0	0	**0**	
1230 - 1245	0	0	**0**	
1245 - 1300	0	0	**0**	**0**
1300 - 1315	0	0	**0**	
1315 - 1330	0	0	**0**	
1330 - 1345	0	0	**0**	
1345 - 1400	0	0	**0**	**0**
1400 - 1415	0	0	**0**	
1415 - 1430	0	0	**0**	
1430 - 1445	0	0	**0**	
1445 - 1500	0	0	**0**	**0**
1500 - 1515	0	0	**0**	
1515 - 1530	0	0	**0**	
1530 - 1545	0	0	**0**	
1545 - 1600	0	0	**0**	**0**
1600 - 1615	0	0	**0**	
1615 - 1630	0	0	**0**	
1630 - 1645	0	0	**0**	
1645 - 1700	0	0	**0**	**0**
1700 - 1715	0	0	**0**	
1715 - 1730	0	0	**0**	
1730 - 1745	0	0	**0**	
1745 - 1800	0	0	**0**	**0**
1800 - 1815	0	0	**0**	
1815 - 1830	0	0	**0**	
1830 - 1845	0	0	**0**	
1845 - 1900	0	0	**0**	**0**
1900 - 1915	0	68	**68**	
1915 - 1930	0	66	**66**	
1930 - 1945	0	48	**48**	
1945 - 2000	0	59	**59**	**241**
2000 - 2015	0	61	**61**	
2015 - 2030	0	61	**61**	
2030 - 2045	0	69	**69**	
2045 - 2100	0	63	**63**	**254**
2100 - 2115	0	62	**62**	
2115 - 2130	0	37	**37**	
2130 - 2145	0	53	**53**	
2145 - 2200	0	38	**38**	**190**
2200 - 2215	0	44	**44**	
2215 - 2230	0	42	**42**	
2230 - 2245	0	28	**28**	
2245 - 2300	0	25	**25**	**139**
2300 - 2315	0	30	**30**	
2315 - 2330	0	31	**31**	
2330 - 2345	0	16	**16**	
2345 - 0000	0	11	**11**	**88**

Session Total	0	912	**912**
Session Average	0.00	9.50	**9.50**
Session Percentage	0.00	100.00	

Site 48
I-126 W/Bound Off-Ramp,
east of Greystone Blvd

Date
Wednesday, April 24, 2024

Lat/Long
34.012989°, -81.075035°

Weather
Fair
66°F

Click here for Detailed Weather

0000 - 2400 (Weekday 24h Session) (04-24-2024)
Volume Summary 15min

TIME	Volume Summary 15min EB	WB	15min Total	60min Total
0000 - 0015	0	15	**15**	
0015 - 0030	0	18	**18**	
0030 - 0045	0	17	**17**	
0045 - 0100	0	19	**19**	**69**
0100 - 0115	0	12	**12**	
0115 - 0130	0	3	**3**	
0130 - 0145	0	14	**14**	
0145 - 0200	0	10	**10**	**39**
0200 - 0215	0	10	**10**	
0215 - 0230	0	5	**5**	
0230 - 0245	0	6	**6**	
0245 - 0300	0	2	**2**	**23**
0300 - 0315	0	3	**3**	
0315 - 0330	0	5	**5**	
0330 - 0345	0	8	**8**	
0345 - 0400	0	1	**1**	**17**
0400 - 0415	0	9	**9**	
0415 - 0430	0	4	**4**	
0430 - 0445	0	5	**5**	
0445 - 0500	0	11	**11**	**29**
0500 - 0515	0	9	**9**	
0515 - 0530	0	9	**9**	
0530 - 0545	0	9	**9**	
0545 - 0600	0	15	**15**	**42**
0600 - 0615	0	24	**24**	
0615 - 0630	0	22	**22**	
0630 - 0645	0	34	**34**	
0645 - 0700	0	62	**62**	**142**
0700 - 0715	0	50	**50**	
0715 - 0730	0	88	**88**	
0730 - 0745	0	78	**78**	
0745 - 0800	0	112	**112**	**328**
0800 - 0815	0	120	**120**	
0815 - 0830	0	118	**118**	
0830 - 0845	0	106	**106**	
0845 - 0900	0	122	**122**	**466**
0900 - 0915	0	92	**92**	
0915 - 0930	0	99	**99**	
0930 - 0945	0	90	**90**	
0945 - 1000	0	105	**105**	**386**
1000 - 1015	0	77	**77**	
1015 - 1030	0	87	**87**	
1030 - 1045	0	89	**89**	
1045 - 1100	0	84	**84**	**337**
1100 - 1115	0	71	**71**	
1115 - 1130	0	83	**83**	
1130 - 1145	0	89	**89**	
1145 - 1200	0	82	**82**	**325**

Time	Volume Summary 15min EB	WB	15min Total	60min Total
1200 - 1215	0	89	**89**	
1215 - 1230	0	85	**85**	
1230 - 1245	0	100	**100**	
1245 - 1300	0	100	**100**	**374**
1300 - 1315	0	82	**82**	
1315 - 1330	0	98	**98**	
1330 - 1345	0	93	**93**	
1345 - 1400	0	86	**86**	**359**
1400 - 1415	0	93	**93**	
1415 - 1430	0	100	**100**	
1430 - 1445	0	100	**100**	
1445 - 1500	0	93	**93**	**386**
1500 - 1515	0	85	**85**	
1515 - 1530	0	76	**76**	
1530 - 1545	0	90	**90**	
1545 - 1600	0	69	**69**	**320**
1600 - 1615	0	90	**90**	
1615 - 1630	0	106	**106**	
1630 - 1645	0	90	**90**	
1645 - 1700	0	102	**102**	**388**
1700 - 1715	0	113	**113**	
1715 - 1730	0	140	**140**	
1730 - 1745	0	115	**115**	
1745 - 1800	0	75	**75**	**443**
1800 - 1815	0	74	**74**	
1815 - 1830	0	87	**87**	
1830 - 1845	0	58	**58**	
1845 - 1900	0	74	**74**	**293**
1900 - 1915	0	68	**68**	
1915 - 1930	0	68	**68**	
1930 - 1945	0	57	**57**	
1945 - 2000	0	56	**56**	**249**
2000 - 2015	0	45	**45**	
2015 - 2030	0	41	**41**	
2030 - 2045	0	69	**69**	
2045 - 2100	0	55	**55**	**210**
2100 - 2115	0	34	**34**	
2115 - 2130	0	45	**45**	
2130 - 2145	0	31	**31**	
2145 - 2200	0	50	**50**	**160**
2200 - 2215	0	37	**37**	
2215 - 2230	0	43	**43**	
2230 - 2245	0	34	**34**	
2245 - 2300	0	30	**30**	**144**
2300 - 2315	0	30	**30**	
2315 - 2330	0	22	**22**	
2330 - 2345	0	22	**22**	
2345 - 0000	0	18	**18**	**92**

Session Total	0	5621	**5621**
Session Average	0.00	58.55	**58.55**
Session Percentage	0.00	100.00	

Site 48
I-126 W/Bound Off-Ramp,
east of Greystone Blvd

Date
Thursday, April 25, 2024

Lat/Long
34.012989°, -81.075035°

Weather
Fair
67°F

Click here for Detailed Weather

0000 - 2400 (Weekday 24h Session) (04-25-2024)
Volume Summary 15min

TIME	Volume Summary 15min EB	Volume Summary 15min WB	15min Total	60min Total
0000 - 0015	0	14	**14**	
0015 - 0030	0	17	**17**	
0030 - 0045	0	18	**18**	
0045 - 0100	0	10	**10**	**59**
0100 - 0115	0	10	**10**	
0115 - 0130	0	13	**13**	
0130 - 0145	0	10	**10**	
0145 - 0200	0	11	**11**	**44**
0200 - 0215	0	15	**15**	
0215 - 0230	0	15	**15**	
0230 - 0245	0	1	**1**	
0245 - 0300	0	8	**8**	**39**
0300 - 0315	0	6	**6**	
0315 - 0330	0	5	**5**	
0330 - 0345	0	6	**6**	
0345 - 0400	0	4	**4**	**21**
0400 - 0415	0	3	**3**	
0415 - 0430	0	2	**2**	
0430 - 0445	0	3	**3**	
0445 - 0500	0	13	**13**	**21**
0500 - 0515	0	11	**11**	
0515 - 0530	0	10	**10**	
0530 - 0545	0	11	**11**	
0545 - 0600	0	19	**19**	**51**
0600 - 0615	0	22	**22**	
0615 - 0630	0	23	**23**	
0630 - 0645	0	26	**26**	
0645 - 0700	0	57	**57**	**128**
0700 - 0715	0	52	**52**	
0715 - 0730	0	83	**83**	
0730 - 0745	0	90	**90**	
0745 - 0800	0	114	**114**	**339**
0800 - 0815	0	118	**118**	
0815 - 0830	0	103	**103**	
0830 - 0845	0	125	**125**	
0845 - 0900	0	120	**120**	**466**
0900 - 0915	0	83	**83**	
0915 - 0930	0	81	**81**	
0930 - 0945	0	104	**104**	
0945 - 1000	0	108	**108**	**376**
1000 - 1015	0	96	**96**	
1015 - 1030	0	104	**104**	
1030 - 1045	0	87	**87**	
1045 - 1100	0	90	**90**	**377**
1100 - 1115	0	85	**85**	
1115 - 1130	0	82	**82**	
1130 - 1145	0	96	**96**	
1145 - 1200	0	116	**116**	**379**

Time	Volume Summary 15min EB	Volume Summary 15min WB	15min Total	60min Total
1200 - 1215	0	95	**95**	
1215 - 1230	0	108	**108**	
1230 - 1245	0	108	**108**	
1245 - 1300	0	109	**109**	**420**
1300 - 1315	0	142	**142**	
1315 - 1330	0	100	**100**	
1330 - 1345	0	107	**107**	
1345 - 1400	0	103	**103**	**452**
1400 - 1415	0	90	**90**	
1415 - 1430	0	104	**104**	
1430 - 1445	0	96	**96**	
1445 - 1500	0	108	**108**	**398**
1500 - 1515	0	82	**82**	
1515 - 1530	0	99	**99**	
1530 - 1545	0	94	**94**	
1545 - 1600	0	100	**100**	**375**
1600 - 1615	0	91	**91**	
1615 - 1630	0	109	**109**	
1630 - 1645	0	98	**98**	
1645 - 1700	0	99	**99**	**397**
1700 - 1715	0	96	**96**	
1715 - 1730	0	161	**161**	
1730 - 1745	0	131	**131**	
1745 - 1800	0	129	**129**	**517**
1800 - 1815	0	89	**89**	
1815 - 1830	0	84	**84**	
1830 - 1845	0	56	**56**	
1845 - 1900	0	71	**71**	**300**
1900 - 1915	0	0	**0**	
1915 - 1930	0	0	**0**	
1930 - 1945	0	0	**0**	
1945 - 2000	0	0	**0**	**0**
2000 - 2015	0	0	**0**	
2015 - 2030	0	0	**0**	
2030 - 2045	0	0	**0**	
2045 - 2100	0	0	**0**	**0**
2100 - 2115	0	0	**0**	
2115 - 2130	0	0	**0**	
2130 - 2145	0	0	**0**	
2145 - 2200	0	0	**0**	**0**
2200 - 2215	0	0	**0**	
2215 - 2230	0	0	**0**	
2230 - 2245	0	0	**0**	
2245 - 2300	0	0	**0**	**0**
2300 - 2315	0	0	**0**	
2315 - 2330	0	0	**0**	
2330 - 2345	0	0	**0**	
2345 - 0000	0	0	**0**	**0**

Session Total	0	5159	**5159**
Session Average	0.00	53.74	**53.74**
Session Percentage	0.00	100.00	

Bi-Directional Class Count || SB WB 60min

Columbia, SC

Marr Traffic DATA COLLECTION

www.marrtraffic.com

Site 48
I-126 W/Bound Off-Ramp,
east of Greystone Blvd

Date
Tuesday, April 23, 2024

Lat/Long
34.012989°, -81.075035°

Weather
Fair
58°F

Click here for Detailed Weather

0000 - 2400 (Weekday 24h Session) (04-23-2024)
SB WB 60min

	Westbound (Movement 48.1)													
TIME	1	2	3	4	5	6	7	8	9	10	11	12	13	**Total**
0000 - 0100	0	0	0	0	0	0	0	0	0	0	0	0	0	**0**
0100 - 0200	0	0	0	0	0	0	0	0	0	0	0	0	0	**0**
0200 - 0300	0	0	0	0	0	0	0	0	0	0	0	0	0	**0**
0300 - 0400	0	0	0	0	0	0	0	0	0	0	0	0	0	**0**
0400 - 0500	0	0	0	0	0	0	0	0	0	0	0	0	0	**0**
0500 - 0600	0	0	0	0	0	0	0	0	0	0	0	0	0	**0**
0600 - 0700	0	0	0	0	0	0	0	0	0	0	0	0	0	**0**
0700 - 0800	0	0	0	0	0	0	0	0	0	0	0	0	0	**0**
0800 - 0900	0	0	0	0	0	0	0	0	0	0	0	0	0	**0**
0900 - 1000	0	0	0	0	0	0	0	0	0	0	0	0	0	**0**
1000 - 1100	0	0	0	0	0	0	0	0	0	0	0	0	0	**0**
1100 - 1200	0	0	0	0	0	0	0	0	0	0	0	0	0	**0**
1200 - 1300	0	0	0	0	0	0	0	0	0	0	0	0	0	**0**
1300 - 1400	0	0	0	0	0	0	0	0	0	0	0	0	0	**0**
1400 - 1500	0	0	0	0	0	0	0	0	0	0	0	0	0	**0**
1500 - 1600	0	0	0	0	0	0	0	0	0	0	0	0	0	**0**
1600 - 1700	0	0	0	0	0	0	0	0	0	0	0	0	0	**0**
1700 - 1800	0	0	0	0	0	0	0	0	0	0	0	0	0	**0**
1800 - 1900	0	0	0	0	0	0	0	0	0	0	0	0	0	**0**
1900 - 2000	1	214	15	10	0	0	0	1	0	0	0	0	0	**241**
2000 - 2100	0	241	10	3	0	0	0	0	0	0	0	0	0	**254**
2100 - 2200	0	182	5	3	0	0	0	0	0	0	0	0	0	**190**
2200 - 2300	0	130	5	3	0	0	0	0	1	0	0	0	0	**139**
2300 - 2400	0	82	5	0	1	0	0	0	0	0	0	0	0	**88**

Session Total	1	849	40	19	1	0	0	1	1	0	0	0	0	**912**
Session Average	0.04	35.38	1.67	0.79	0.04	0.00	0.00	0.04	0.04	0.00	0.00	0.00	0.00	**38.00**
Session Percentage	0.11	93.09	4.39	2.08	0.11	0.00	0.00	0.11	0.11	0.00	0.00	0.00	0.00	

AM Peak Hour	-	-	-	-	-	-	-	-	-	-	-	-	-	**-**
AM Peak Volume	0	0	0	0	0	0	0	0	0	0	0	0	0	**0**

Noon Peak Hour	-	-	-	-	-	-	-	-	-	-	-	-	-	**-**
Noon Peak Volume	0	0	0	0	0	0	0	0	0	0	0	0	0	**0**

PM Peak Hour	1900 - 2000	1900 - 2000	1900 - 2000	1900 - 2000	-	-	-	1900 - 2000	-	-	-	-	-	**1900 - 2000**
PM Peak Volume	1	214	15	10	0	0	0	1	0	0	0	0	0	**241**

Site 48
I-126 W/Bound Off-Ramp,
east of Greystone Blvd

Date
Wednesday, April 24, 2024

Lat/Long
34.012989°, -81.075035°

Weather
Fair
66°F

Click here for Detailed Weather

0000 - 2400 (Weekday 24h Session) (04-24-2024)
SB WB 60min

	Westbound (Movement 48.1)													
TIME	1	2	3	4	5	6	7	8	9	10	11	12	13	**Total**
0000 - 0100	1	60	5	3	0	0	0	0	0	0	0	0	0	**69**
0100 - 0200	0	34	3	0	0	2	0	0	0	0	0	0	0	**39**
0200 - 0300	0	21	2	0	0	0	0	0	0	0	0	0	0	**23**
0300 - 0400	0	14	1	0	0	2	0	0	0	0	0	0	0	**17**
0400 - 0500	0	27	1	0	0	1	0	0	0	0	0	0	0	**29**
0500 - 0600	0	40	2	0	0	0	0	0	0	0	0	0	0	**42**
0600 - 0700	0	121	14	4	2	1	0	0	0	0	0	0	0	**142**
0700 - 0800	0	293	21	3	5	4	0	0	2	0	0	0	0	**328**
0800 - 0900	0	418	28	5	6	3	2	2	2	0	0	0	0	**466**
0900 - 1000	1	346	21	3	7	7	0	0	1	0	0	0	0	**386**
1000 - 1100	1	286	34	5	7	3	0	0	1	0	0	0	0	**337**
1100 - 1200	0	292	22	2	4	4	0	0	1	0	0	0	0	**325**
1200 - 1300	2	329	34	4	1	4	0	0	0	0	0	0	0	**374**
1300 - 1400	0	322	25	3	4	4	0	0	1	0	0	0	0	**359**
1400 - 1500	0	335	40	5	3	3	0	0	0	0	0	0	0	**386**
1500 - 1600	0	276	35	3	4	0	0	1	1	0	0	0	0	**320**
1600 - 1700	0	340	42	3	3	0	0	0	0	0	0	0	0	**388**
1700 - 1800	0	397	41	5	0	0	0	0	0	0	0	0	0	**443**
1800 - 1900	1	253	23	11	1	0	0	3	1	0	0	0	0	**293**
1900 - 2000	0	217	23	8	1	0	0	0	0	0	0	0	0	**249**
2000 - 2100	1	190	16	2	1	0	0	0	0	0	0	0	0	**210**
2100 - 2200	0	141	13	4	1	0	0	0	1	0	0	0	0	**160**
2200 - 2300	0	134	10	0	0	0	0	0	0	0	0	0	0	**144**
2300 - 2400	0	84	6	1	0	0	0	0	1	0	0	0	0	**92**

Session Total	7	4970	462	74	50	38	2	6	12	0	0	0	0	**5621**
Session Average	0.29	207.08	19.25	3.08	2.08	1.58	0.08	0.25	0.50	0.00	0.00	0.00	0.00	**234.21**
Session Percentage	0.12	88.42	8.22	1.32	0.89	0.68	0.04	0.11	0.21	0.00	0.00	0.00	0.00	

AM Peak Hour	0900 - 1000	0800 - 0900	0800 - 0900	0800 - 0900	0900 - 1000	0900 - 1000	0800 - 0900	0800 - 0900	0700 - 0800	-	-	-	-	**0800 - 0900**
AM Peak Volume	1	418	28	5	7	7	2	2	2	0	0	0	0	**466**

Noon Peak Hour	1200 - 1300	1400 - 1500	1400 - 1500	1000 - 1100	1000 - 1100	1100 - 1200	-	-	1000 - 1100	-	-	-	-	**1400 - 1500**
Noon Peak Volume	2	335	40	5	7	4	0	0	1	0	0	0	0	**386**

PM Peak Hour	1800 - 1900	1700 - 1800	1600 - 1700	1800 - 1900	1500 - 1600	-	-	1800 - 1900	1500 - 1600	-	-	-	-	**1700 - 1800**
PM Peak Volume	1	397	42	11	4	0	0	3	1	0	0	0	0	**443**

Site 48
I-126 W/Bound Off-Ramp,
east of Greystone Blvd

Date
Thursday, April 25, 2024

Lat/Long
34.012989°, -81.075035°

Weather
Fair
67°F

Click here for Detailed Weather

0000 - 2400 (Weekday 24h Session) (04-25-2024)
SB WB 60min

	Westbound (Movement 48.1)													
TIME	1	2	3	4	5	6	7	8	9	10	11	12	13	**Total**
0000 - 0100	0	50	6	2	1	0	0	0	0	0	0	0	0	**59**
0100 - 0200	0	38	5	0	0	0	0	0	1	0	0	0	0	**44**
0200 - 0300	0	34	4	0	0	1	0	0	0	0	0	0	0	**39**
0300 - 0400	0	19	0	0	0	2	0	0	0	0	0	0	0	**21**
0400 - 0500	0	18	2	0	0	0	0	1	0	0	0	0	0	**21**
0500 - 0600	0	46	5	0	0	0	0	0	0	0	0	0	0	**51**
0600 - 0700	0	107	15	2	2	0	0	1	1	0	0	0	0	**128**
0700 - 0800	0	299	33	2	3	2	0	0	0	0	0	0	0	**339**
0800 - 0900	0	403	50	3	5	3	1	1	0	0	0	0	0	**466**
0900 - 1000	0	316	39	12	4	3	0	0	2	0	0	0	0	**376**
1000 - 1100	0	329	30	5	6	7	0	0	0	0	0	0	0	**377**
1100 - 1200	1	318	42	7	4	5	0	0	2	0	0	0	0	**379**
1200 - 1300	0	366	41	3	3	7	0	0	0	0	0	0	0	**420**
1300 - 1400	0	391	45	4	4	8	0	0	0	0	0	0	0	**452**
1400 - 1500	0	328	52	5	1	12	0	0	0	0	0	0	0	**398**
1500 - 1600	1	319	38	6	3	8	0	0	0	0	0	0	0	**375**
1600 - 1700	0	344	45	3	4	1	0	0	0	0	0	0	0	**397**
1700 - 1800	1	456	56	4	0	0	0	0	0	0	0	0	0	**517**
1800 - 1900	0	258	28	9	5	0	0	0	0	0	0	0	0	**300**
1900 - 2000	0	0	0	0	0	0	0	0	0	0	0	0	0	**0**
2000 - 2100	0	0	0	0	0	0	0	0	0	0	0	0	0	**0**
2100 - 2200	0	0	0	0	0	0	0	0	0	0	0	0	0	**0**
2200 - 2300	0	0	0	0	0	0	0	0	0	0	0	0	0	**0**
2300 - 2400	0	0	0	0	0	0	0	0	0	0	0	0	0	**0**

Session Total	3	4439	536	67	45	59	1	3	6	0	0	0	0	**5159**
Session Average	0.13	184.96	22.33	2.79	1.88	2.46	0.04	0.13	0.25	0.00	0.00	0.00	0.00	**214.96**
Session Percentage	0.06	86.04	10.39	1.30	0.87	1.14	0.02	0.06	0.12	0.00	0.00	0.00	0.00	

AM Peak Hour	-	0800 - 0900	0800 - 0900	0900 - 1000	0800 - 0900	0800 - 0900	0800 - 0900	0600 - 0700	0900 - 1000	-	-	-	-	**0800 - 0900**
AM Peak Hour Volume	0	403	50	12	5	3	1	1	2	0	0	0	0	**466**

Noon Peak Hour	1100 - 1200	1300 - 1400	1400 - 1500	1100 - 1200	1000 - 1100	1400 - 1500	-	-	1100 - 1200	-	-	-	-	**1300 - 1400**
Noon Peak Hour Volume	1	391	52	7	6	12	0	0	2	0	0	0	0	**452**

PM Peak Hour	1500 - 1600	1700 - 1800	1700 - 1800	1800 - 1900	1800 - 1900	1500 - 1600	-	-	-	-	-	-	-	**1700 - 1800**
PM Peak Hour Volume	1	456	56	9	5	8	0	0	0	0	0	0	0	**517**

Bi-Directional Class Count || Volume Summary 60min

Columbia, SC

Marr Traffic DATA COLLECTION

www.marrtraffic.com

Site 48

I-126 W/Bound Off-Ramp,
east of Greystone Blvd

Date

Tuesday, April 23, 2024

Lat/Long

34.012989°, -81.075035°

Weather

Fair
58°F

Click here for Detailed Weather

0000 - 2400 (Weekday 24h Session) (04-23-2024)

Volume Summary 60min

	Volume Summary 60min		
TIME	EB	WB	**Total**
0000 - 0100	0	0	**0**
0100 - 0200	0	0	**0**
0200 - 0300	0	0	**0**
0300 - 0400	0	0	**0**
0400 - 0500	0	0	**0**
0500 - 0600	0	0	**0**
0600 - 0700	0	0	**0**
0700 - 0800	0	0	**0**
0800 - 0900	0	0	**0**
0900 - 1000	0	0	**0**
1000 - 1100	0	0	**0**
1100 - 1200	0	0	**0**

	Volume Summary 60min		
Time	EB	WB	**Total**
1200 - 1300	0	0	**0**
1300 - 1400	0	0	**0**
1400 - 1500	0	0	**0**
1500 - 1600	0	0	**0**
1600 - 1700	0	0	**0**
1700 - 1800	0	0	**0**
1800 - 1900	0	0	**0**
1900 - 2000	0	241	**241**
2000 - 2100	0	254	**254**
2100 - 2200	0	190	**190**
2200 - 2300	0	139	**139**
2300 - 2400	0	88	**88**

Session Total	0	912	**912**
Session Average	0.00	38.00	**38.00**
Session Percentage	0.00	100.00	

Site 48

I-126 W/Bound Off-Ramp,
east of Greystone Blvd

Date

Wednesday, April 24, 2024

Lat/Long

34.012989°, -81.075035°

Weather

Fair
66°F

Click here for Detailed Weather

0000 - 2400 (Weekday 24h Session) (04-24-2024)

Volume Summary 60min

	Volume Summary 60min		
TIME	EB	WB	**Total**
0000 - 0100	0	69	**69**
0100 - 0200	0	39	**39**
0200 - 0300	0	23	**23**
0300 - 0400	0	17	**17**
0400 - 0500	0	29	**29**
0500 - 0600	0	42	**42**
0600 - 0700	0	142	**142**
0700 - 0800	0	328	**328**
0800 - 0900	0	466	**466**
0900 - 1000	0	386	**386**
1000 - 1100	0	337	**337**
1100 - 1200	0	325	**325**

	Volume Summary 60min		
Time	EB	WB	**Total**
1200 - 1300	0	374	**374**
1300 - 1400	0	359	**359**
1400 - 1500	0	386	**386**
1500 - 1600	0	320	**320**
1600 - 1700	0	388	**388**
1700 - 1800	0	443	**443**
1800 - 1900	0	293	**293**
1900 - 2000	0	249	**249**
2000 - 2100	0	210	**210**
2100 - 2200	0	160	**160**
2200 - 2300	0	144	**144**
2300 - 2400	0	92	**92**

Session Total	0	5621	**5621**
Session Average	0.00	234.21	**234.21**
Session Percentage	0.00	100.00	

Site 48

I-126 W/Bound Off-Ramp,
east of Greystone Blvd

Date

Thursday, April 25, 2024

Lat/Long

34.012989°, -81.075035°

Weather

Fair
67°F

Click here for Detailed Weather

0000 - 2400 (Weekday 24h Session) (04-25-2024)

Volume Summary 60min

	Volume Summary 60min		
TIME	EB	WB	**Total**
0000 - 0100	0	59	**59**
0100 - 0200	0	44	**44**
0200 - 0300	0	39	**39**
0300 - 0400	0	21	**21**
0400 - 0500	0	21	**21**
0500 - 0600	0	51	**51**
0600 - 0700	0	128	**128**
0700 - 0800	0	339	**339**
0800 - 0900	0	466	**466**
0900 - 1000	0	376	**376**
1000 - 1100	0	377	**377**
1100 - 1200	0	379	**379**

Session Total	0	5159	**5159**
Session Average	0.00	214.96	**214.96**
Session Percentage	0.00	100.00	

	Volume Summary 60min		
Time	EB	WB	**Total**
1200 - 1300	0	420	**420**
1300 - 1400	0	452	**452**
1400 - 1500	0	398	**398**
1500 - 1600	0	375	**375**
1600 - 1700	0	397	**397**
1700 - 1800	0	517	**517**
1800 - 1900	0	300	**300**
1900 - 2000	0	0	**0**
2000 - 2100	0	0	**0**
2100 - 2200	0	0	**0**
2200 - 2300	0	0	**0**
2300 - 2400	0	0	**0**

Bi-Directional Class Count || Graphical Analysis SB WB

Columbia, SC

Marr Traffic DATA COLLECTION

www.marrtraffic.com

Site 48

I-126 W/Bound Off-Ramp,
east of Greystone Blvd

Lat/Long

34.012989°, -81.075035°

0000 - 2400 (Weekday 24h Session)

Graphical Analysis SB WB

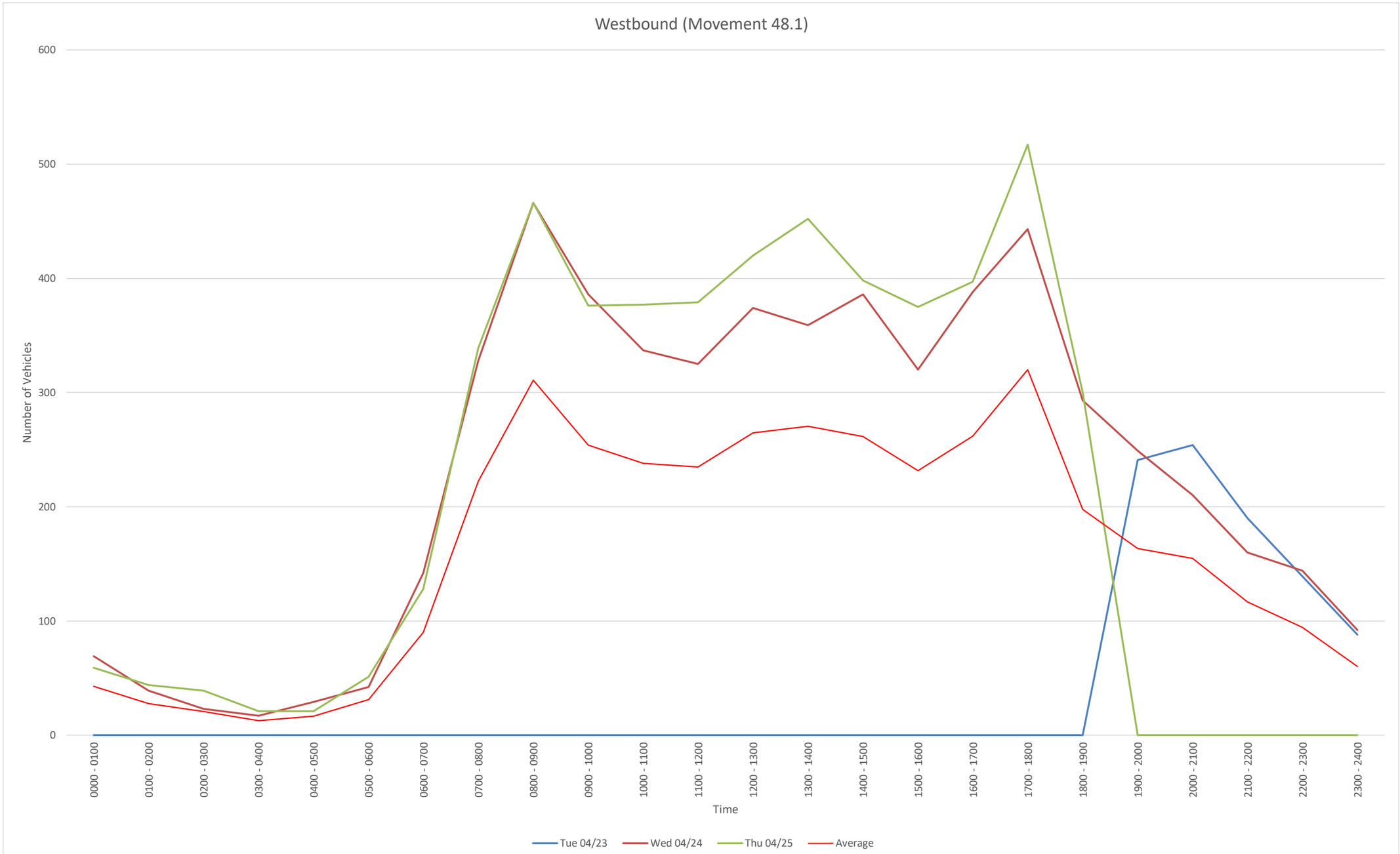

Time	Tue 04/23	Wed 04/24	Thu 04/25				
0000 - 0100	0	69	59				
0100 - 0200	0	39	44				
0200 - 0300	0	23	39				
0300 - 0400	0	17	21				
0400 - 0500	0	29	21				
0500 - 0600	0	42	51				
0600 - 0700	0	142	128				
0700 - 0800	0	328	339				
0800 - 0900	0	466	466				
0900 - 1000	0	386	376				
1000 - 1100	0	337	377				
1100 - 1200	0	325	379				
1200 - 1300	0	374	420				
1300 - 1400	0	359	452				
1400 - 1500	0	386	398				
1500 - 1600	0	320	375				
1600 - 1700	0	388	397				
1700 - 1800	0	443	517				
1800 - 1900	0	293	300				
1900 - 2000	241	249	0				
2000 - 2100	254	210	0				
2100 - 2200	190	160	0				
2200 - 2300	139	144	0				
2300 - 2400	88	92	0				
Daily Total	912	5621	5159				

EB
File Name:
Start Date: 4/23/2024
Start Time: 0
Site Code: 48
Station ID: 1
Location 1: I-126 W/Bound Off-Ramp, east of Greystone Blvd
Location 2:

Date	Time	1	2	3	4	5	6	7	8	9	10	11	12	13
4/23/2024	12:00 AM	0	0	0	0	0	0	0	0	0	0	0	0	0
4/23/2024	12:15 AM	0	0	0	0	0	0	0	0	0	0	0	0	0
4/23/2024	12:30 AM	0	0	0	0	0	0	0	0	0	0	0	0	0
4/23/2024	12:45 AM	0	0	0	0	0	0	0	0	0	0	0	0	0
4/23/2024	1:00 AM	0	0	0	0	0	0	0	0	0	0	0	0	0
4/23/2024	1:15 AM	0	0	0	0	0	0	0	0	0	0	0	0	0
4/23/2024	1:30 AM	0	0	0	0	0	0	0	0	0	0	0	0	0
4/23/2024	1:45 AM	0	0	0	0	0	0	0	0	0	0	0	0	0
4/23/2024	2:00 AM	0	0	0	0	0	0	0	0	0	0	0	0	0
4/23/2024	2:15 AM	0	0	0	0	0	0	0	0	0	0	0	0	0
4/23/2024	2:30 AM	0	0	0	0	0	0	0	0	0	0	0	0	0
4/23/2024	2:45 AM	0	0	0	0	0	0	0	0	0	0	0	0	0
4/23/2024	3:00 AM	0	0	0	0	0	0	0	0	0	0	0	0	0
4/23/2024	3:15 AM	0	0	0	0	0	0	0	0	0	0	0	0	0
4/23/2024	3:30 AM	0	0	0	0	0	0	0	0	0	0	0	0	0
4/23/2024	3:45 AM	0	0	0	0	0	0	0	0	0	0	0	0	0
4/23/2024	4:00 AM	0	0	0	0	0	0	0	0	0	0	0	0	0
4/23/2024	4:15 AM	0	0	0	0	0	0	0	0	0	0	0	0	0
4/23/2024	4:30 AM	0	0	0	0	0	0	0	0	0	0	0	0	0
4/23/2024	4:45 AM	0	0	0	0	0	0	0	0	0	0	0	0	0
4/23/2024	5:00 AM	0	0	0	0	0	0	0	0	0	0	0	0	0
4/23/2024	5:15 AM	0	0	0	0	0	0	0	0	0	0	0	0	0
4/23/2024	5:30 AM	0	0	0	0	0	0	0	0	0	0	0	0	0
4/23/2024	5:45 AM	0	0	0	0	0	0	0	0	0	0	0	0	0
4/23/2024	6:00 AM	0	0	0	0	0	0	0	0	0	0	0	0	0
4/23/2024	6:15 AM	0	0	0	0	0	0	0	0	0	0	0	0	0
4/23/2024	6:30 AM	0	0	0	0	0	0	0	0	0	0	0	0	0
4/23/2024	6:45 AM	0	0	0	0	0	0	0	0	0	0	0	0	0
4/23/2024	7:00 AM	0	0	0	0	0	0	0	0	0	0	0	0	0
4/23/2024	7:15 AM	0	0	0	0	0	0	0	0	0	0	0	0	0
4/23/2024	7:30 AM	0	0	0	0	0	0	0	0	0	0	0	0	0
4/23/2024	7:45 AM	0	0	0	0	0	0	0	0	0	0	0	0	0
4/23/2024	8:00 AM	0	0	0	0	0	0	0	0	0	0	0	0	0
4/23/2024	8:15 AM	0	0	0	0	0	0	0	0	0	0	0	0	0
4/23/2024	8:30 AM	0	0	0	0	0	0	0	0	0	0	0	0	0
4/23/2024	8:45 AM	0	0	0	0	0	0	0	0	0	0	0	0	0
4/23/2024	9:00 AM	0	0	0	0	0	0	0	0	0	0	0	0	0
4/23/2024	9:15 AM	0	0	0	0	0	0	0	0	0	0	0	0	0
4/23/2024	9:30 AM	0	0	0	0	0	0	0	0	0	0	0	0	0
4/23/2024	9:45 AM	0	0	0	0	0	0	0	0	0	0	0	0	0
4/23/2024	10:00 AM	0	0	0	0	0	0	0	0	0	0	0	0	0
4/23/2024	10:15 AM	0	0	0	0	0	0	0	0	0	0	0	0	0
4/23/2024	10:30 AM	0	0	0	0	0	0	0	0	0	0	0	0	0
4/23/2024	10:45 AM	0	0	0	0	0	0	0	0	0	0	0	0	0
4/23/2024	11:00 AM	0	0	0	0	0	0	0	0	0	0	0	0	0
4/23/2024	11:15 AM	0	0	0	0	0	0	0	0	0	0	0	0	0
4/23/2024	11:30 AM	0	0	0	0	0	0	0	0	0	0	0	0	0
4/23/2024	11:45 AM	0	0	0	0	0	0	0	0	0	0	0	0	0
4/23/2024	12:00 PM	0	0	0	0	0	0	0	0	0	0	0	0	0
4/23/2024	12:15 PM	0	0	0	0	0	0	0	0	0	0	0	0	0
4/23/2024	12:30 PM	0	0	0	0	0	0	0	0	0	0	0	0	0
4/23/2024	12:45 PM	0	0	0	0	0	0	0	0	0	0	0	0	0
4/23/2024	1:00 PM	0	0	0	0	0	0	0	0	0	0	0	0	0
4/23/2024	1:15 PM	0	0	0	0	0	0	0	0	0	0	0	0	0
4/23/2024	1:30 PM	0	0	0	0	0	0	0	0	0	0	0	0	0
4/23/2024	1:45 PM	0	0	0	0	0	0	0	0	0	0	0	0	0
4/23/2024	2:00 PM	0	0	0	0	0	0	0	0	0	0	0	0	0
4/23/2024	2:15 PM	0	0	0	0	0	0	0	0	0	0	0	0	0
4/23/2024	2:30 PM	0	0	0	0	0	0	0	0	0	0	0	0	0
4/23/2024	2:45 PM	0	0	0	0	0	0	0	0	0	0	0	0	0
4/23/2024	3:00 PM	0	0	0	0	0	0	0	0	0	0	0	0	0
4/23/2024	3:15 PM	0	0	0	0	0	0	0	0	0	0	0	0	0
4/23/2024	3:30 PM	0	0	0	0	0	0	0	0	0	0	0	0	0
4/23/2024	3:45 PM	0	0	0	0	0	0	0	0	0	0	0	0	0
4/23/2024	4:00 PM	0	0	0	0	0	0	0	0	0	0	0	0	0
4/23/2024	4:15 PM	0	0	0	0	0	0	0	0	0	0	0	0	0
4/23/2024	4:30 PM	0	0	0	0	0	0	0	0	0	0	0	0	0
4/23/2024	4:45 PM	0	0	0	0	0	0	0	0	0	0	0	0	0
4/23/2024	5:00 PM	0	0	0	0	0	0	0	0	0	0	0	0	0
4/23/2024	5:15 PM	0	0	0	0	0	0	0	0	0	0	0	0	0
4/23/2024	5:30 PM	0	0	0	0	0	0	0	0	0	0	0	0	0
4/23/2024	5:45 PM	0	0	0	0	0	0	0	0	0	0	0	0	0
4/23/2024	6:00 PM	0	0	0	0	0	0	0	0	0	0	0	0	0
4/23/2024	6:15 PM	0	0	0	0	0	0	0	0	0	0	0	0	0
4/23/2024	6:30 PM	0	0	0	0	0	0	0	0	0	0	0	0	0
4/23/2024	6:45 PM	0	0	0	0	0	0	0	0	0	0	0	0	0
4/23/2024	7:00 PM	0	0	0	0	0	0	0	0	0	0	0	0	0
4/23/2024	7:15 PM	0	0	0	0	0	0	0	0	0	0	0	0	0
4/23/2024	7:30 PM	0	0	0	0	0	0	0	0	0	0	0	0	0
4/23/2024	7:45 PM	0	0	0	0	0	0	0	0	0	0	0	0	0
4/23/2024	8:00 PM	0	0	0	0	0	0	0	0	0	0	0	0	0
4/23/2024	8:15 PM	0	0	0	0	0	0	0	0	0	0	0	0	0
4/23/2024	8:30 PM	0	0	0	0	0	0	0	0	0	0	0	0	0
4/23/2024	8:45 PM	0	0	0	0	0	0	0	0	0	0	0	0	0
4/23/2024	9:00 PM	0	0	0	0	0	0	0	0	0	0	0	0	0
4/23/2024	9:15 PM	0	0	0	0	0	0	0	0	0	0	0	0	0
4/23/2024	9:30 PM	0	0	0	0	0	0	0	0	0	0	0	0	0
4/23/2024	9:45 PM	0	0	0	0	0	0	0	0	0	0	0	0	0
4/23/2024	10:00 PM	0	0	0	0	0	0	0	0	0	0	0	0	0
4/23/2024	10:15 PM	0	0	0	0	0	0	0	0	0	0	0	0	0
4/23/2024	10:30 PM	0	0	0	0	0	0	0	0	0	0	0	0	0
4/23/2024	10:45 PM	0	0	0	0	0	0	0	0	0	0	0	0	0
4/23/2024	11:00 PM	0	0	0	0	0	0	0	0	0	0	0	0	0
4/23/2024	11:15 PM	0	0	0	0	0	0	0	0	0	0	0	0	0
4/23/2024	11:30 PM	0	0	0	0	0	0	0	0	0	0	0	0	0
4/23/2024	11:45 PM	0	0	0	0	0	0	0	0	0	0	0	0	0

4/24/2024	12:00 AM	0	0	0	0	0	0	0	0	0	0	0	0	0
4/24/2024	12:15 AM	0	0	0	0	0	0	0	0	0	0	0	0	0
4/24/2024	12:30 AM	0	0	0	0	0	0	0	0	0	0	0	0	0
4/24/2024	12:45 AM	0	0	0	0	0	0	0	0	0	0	0	0	0
4/24/2024	1:00 AM	0	0	0	0	0	0	0	0	0	0	0	0	0
4/24/2024	1:15 AM	0	0	0	0	0	0	0	0	0	0	0	0	0
4/24/2024	1:30 AM	0	0	0	0	0	0	0	0	0	0	0	0	0
4/24/2024	1:45 AM	0	0	0	0	0	0	0	0	0	0	0	0	0
4/24/2024	2:00 AM	0	0	0	0	0	0	0	0	0	0	0	0	0
4/24/2024	2:15 AM	0	0	0	0	0	0	0	0	0	0	0	0	0
4/24/2024	2:30 AM	0	0	0	0	0	0	0	0	0	0	0	0	0
4/24/2024	2:45 AM	0	0	0	0	0	0	0	0	0	0	0	0	0
4/24/2024	3:00 AM	0	0	0	0	0	0	0	0	0	0	0	0	0
4/24/2024	3:15 AM	0	0	0	0	0	0	0	0	0	0	0	0	0
4/24/2024	3:30 AM	0	0	0	0	0	0	0	0	0	0	0	0	0
4/24/2024	3:45 AM	0	0	0	0	0	0	0	0	0	0	0	0	0
4/24/2024	4:00 AM	0	0	0	0	0	0	0	0	0	0	0	0	0
4/24/2024	4:15 AM	0	0	0	0	0	0	0	0	0	0	0	0	0
4/24/2024	4:30 AM	0	0	0	0	0	0	0	0	0	0	0	0	0
4/24/2024	4:45 AM	0	0	0	0	0	0	0	0	0	0	0	0	0
4/24/2024	5:00 AM	0	0	0	0	0	0	0	0	0	0	0	0	0
4/24/2024	5:15 AM	0	0	0	0	0	0	0	0	0	0	0	0	0
4/24/2024	5:30 AM	0	0	0	0	0	0	0	0	0	0	0	0	0
4/24/2024	5:45 AM	0	0	0	0	0	0	0	0	0	0	0	0	0
4/24/2024	6:00 AM	0	0	0	0	0	0	0	0	0	0	0	0	0
4/24/2024	6:15 AM	0	0	0	0	0	0	0	0	0	0	0	0	0
4/24/2024	6:30 AM	0	0	0	0	0	0	0	0	0	0	0	0	0
4/24/2024	6:45 AM	0	0	0	0	0	0	0	0	0	0	0	0	0
4/24/2024	7:00 AM	0	0	0	0	0	0	0	0	0	0	0	0	0
4/24/2024	7:15 AM	0	0	0	0	0	0	0	0	0	0	0	0	0
4/24/2024	7:30 AM	0	0	0	0	0	0	0	0	0	0	0	0	0
4/24/2024	7:45 AM	0	0	0	0	0	0	0	0	0	0	0	0	0
4/24/2024	8:00 AM	0	0	0	0	0	0	0	0	0	0	0	0	0
4/24/2024	8:15 AM	0	0	0	0	0	0	0	0	0	0	0	0	0
4/24/2024	8:30 AM	0	0	0	0	0	0	0	0	0	0	0	0	0
4/24/2024	8:45 AM	0	0	0	0	0	0	0	0	0	0	0	0	0
4/24/2024	9:00 AM	0	0	0	0	0	0	0	0	0	0	0	0	0
4/24/2024	9:15 AM	0	0	0	0	0	0	0	0	0	0	0	0	0
4/24/2024	9:30 AM	0	0	0	0	0	0	0	0	0	0	0	0	0
4/24/2024	9:45 AM	0	0	0	0	0	0	0	0	0	0	0	0	0
4/24/2024	10:00 AM	0	0	0	0	0	0	0	0	0	0	0	0	0
4/24/2024	10:15 AM	0	0	0	0	0	0	0	0	0	0	0	0	0
4/24/2024	10:30 AM	0	0	0	0	0	0	0	0	0	0	0	0	0
4/24/2024	10:45 AM	0	0	0	0	0	0	0	0	0	0	0	0	0
4/24/2024	11:00 AM	0	0	0	0	0	0	0	0	0	0	0	0	0
4/24/2024	11:15 AM	0	0	0	0	0	0	0	0	0	0	0	0	0
4/24/2024	11:30 AM	0	0	0	0	0	0	0	0	0	0	0	0	0
4/24/2024	11:45 AM	0	0	0	0	0	0	0	0	0	0	0	0	0
4/24/2024	12:00 PM	0	0	0	0	0	0	0	0	0	0	0	0	0
4/24/2024	12:15 PM	0	0	0	0	0	0	0	0	0	0	0	0	0
4/24/2024	12:30 PM	0	0	0	0	0	0	0	0	0	0	0	0	0
4/24/2024	12:45 PM	0	0	0	0	0	0	0	0	0	0	0	0	0
4/24/2024	1:00 PM	0	0	0	0	0	0	0	0	0	0	0	0	0
4/24/2024	1:15 PM	0	0	0	0	0	0	0	0	0	0	0	0	0
4/24/2024	1:30 PM	0	0	0	0	0	0	0	0	0	0	0	0	0
4/24/2024	1:45 PM	0	0	0	0	0	0	0	0	0	0	0	0	0
4/24/2024	2:00 PM	0	0	0	0	0	0	0	0	0	0	0	0	0
4/24/2024	2:15 PM	0	0	0	0	0	0	0	0	0	0	0	0	0
4/24/2024	2:30 PM	0	0	0	0	0	0	0	0	0	0	0	0	0
4/24/2024	2:45 PM	0	0	0	0	0	0	0	0	0	0	0	0	0
4/24/2024	3:00 PM	0	0	0	0	0	0	0	0	0	0	0	0	0
4/24/2024	3:15 PM	0	0	0	0	0	0	0	0	0	0	0	0	0
4/24/2024	3:30 PM	0	0	0	0	0	0	0	0	0	0	0	0	0
4/24/2024	3:45 PM	0	0	0	0	0	0	0	0	0	0	0	0	0
4/24/2024	4:00 PM	0	0	0	0	0	0	0	0	0	0	0	0	0
4/24/2024	4:15 PM	0	0	0	0	0	0	0	0	0	0	0	0	0
4/24/2024	4:30 PM	0	0	0	0	0	0	0	0	0	0	0	0	0
4/24/2024	4:45 PM	0	0	0	0	0	0	0	0	0	0	0	0	0
4/24/2024	5:00 PM	0	0	0	0	0	0	0	0	0	0	0	0	0
4/24/2024	5:15 PM	0	0	0	0	0	0	0	0	0	0	0	0	0
4/24/2024	5:30 PM	0	0	0	0	0	0	0	0	0	0	0	0	0
4/24/2024	5:45 PM	0	0	0	0	0	0	0	0	0	0	0	0	0
4/24/2024	6:00 PM	0	0	0	0	0	0	0	0	0	0	0	0	0
4/24/2024	6:15 PM	0	0	0	0	0	0	0	0	0	0	0	0	0
4/24/2024	6:30 PM	0	0	0	0	0	0	0	0	0	0	0	0	0
4/24/2024	6:45 PM	0	0	0	0	0	0	0	0	0	0	0	0	0
4/24/2024	7:00 PM	0	0	0	0	0	0	0	0	0	0	0	0	0
4/24/2024	7:15 PM	0	0	0	0	0	0	0	0	0	0	0	0	0
4/24/2024	7:30 PM	0	0	0	0	0	0	0	0	0	0	0	0	0
4/24/2024	7:45 PM	0	0	0	0	0	0	0	0	0	0	0	0	0
4/24/2024	8:00 PM	0	0	0	0	0	0	0	0	0	0	0	0	0
4/24/2024	8:15 PM	0	0	0	0	0	0	0	0	0	0	0	0	0
4/24/2024	8:30 PM	0	0	0	0	0	0	0	0	0	0	0	0	0
4/24/2024	8:45 PM	0	0	0	0	0	0	0	0	0	0	0	0	0
4/24/2024	9:00 PM	0	0	0	0	0	0	0	0	0	0	0	0	0
4/24/2024	9:15 PM	0	0	0	0	0	0	0	0	0	0	0	0	0
4/24/2024	9:30 PM	0	0	0	0	0	0	0	0	0	0	0	0	0
4/24/2024	9:45 PM	0	0	0	0	0	0	0	0	0	0	0	0	0
4/24/2024	10:00 PM	0	0	0	0	0	0	0	0	0	0	0	0	0
4/24/2024	10:15 PM	0	0	0	0	0	0	0	0	0	0	0	0	0
4/24/2024	10:30 PM	0	0	0	0	0	0	0	0	0	0	0	0	0
4/24/2024	10:45 PM	0	0	0	0	0	0	0	0	0	0	0	0	0
4/24/2024	11:00 PM	0	0	0	0	0	0	0	0	0	0	0	0	0
4/24/2024	11:15 PM	0	0	0	0	0	0	0	0	0	0	0	0	0
4/24/2024	11:30 PM	0	0	0	0	0	0	0	0	0	0	0	0	0
4/24/2024	11:45 PM	0	0	0	0	0	0	0	0	0	0	0	0	0

4/25/2024	12:00 AM	0	0	0	0	0	0	0	0	0	0	0	0	0
4/25/2024	12:15 AM	0	0	0	0	0	0	0	0	0	0	0	0	0
4/25/2024	12:30 AM	0	0	0	0	0	0	0	0	0	0	0	0	0
4/25/2024	12:45 AM	0	0	0	0	0	0	0	0	0	0	0	0	0
4/25/2024	1:00 AM	0	0	0	0	0	0	0	0	0	0	0	0	0
4/25/2024	1:15 AM	0	0	0	0	0	0	0	0	0	0	0	0	0
4/25/2024	1:30 AM	0	0	0	0	0	0	0	0	0	0	0	0	0
4/25/2024	1:45 AM	0	0	0	0	0	0	0	0	0	0	0	0	0
4/25/2024	2:00 AM	0	0	0	0	0	0	0	0	0	0	0	0	0
4/25/2024	2:15 AM	0	0	0	0	0	0	0	0	0	0	0	0	0
4/25/2024	2:30 AM	0	0	0	0	0	0	0	0	0	0	0	0	0
4/25/2024	2:45 AM	0	0	0	0	0	0	0	0	0	0	0	0	0
4/25/2024	3:00 AM	0	0	0	0	0	0	0	0	0	0	0	0	0
4/25/2024	3:15 AM	0	0	0	0	0	0	0	0	0	0	0	0	0
4/25/2024	3:30 AM	0	0	0	0	0	0	0	0	0	0	0	0	0
4/25/2024	3:45 AM	0	0	0	0	0	0	0	0	0	0	0	0	0
4/25/2024	4:00 AM	0	0	0	0	0	0	0	0	0	0	0	0	0
4/25/2024	4:15 AM	0	0	0	0	0	0	0	0	0	0	0	0	0
4/25/2024	4:30 AM	0	0	0	0	0	0	0	0	0	0	0	0	0
4/25/2024	4:45 AM	0	0	0	0	0	0	0	0	0	0	0	0	0
4/25/2024	5:00 AM	0	0	0	0	0	0	0	0	0	0	0	0	0
4/25/2024	5:15 AM	0	0	0	0	0	0	0	0	0	0	0	0	0
4/25/2024	5:30 AM	0	0	0	0	0	0	0	0	0	0	0	0	0
4/25/2024	5:45 AM	0	0	0	0	0	0	0	0	0	0	0	0	0
4/25/2024	6:00 AM	0	0	0	0	0	0	0	0	0	0	0	0	0
4/25/2024	6:15 AM	0	0	0	0	0	0	0	0	0	0	0	0	0
4/25/2024	6:30 AM	0	0	0	0	0	0	0	0	0	0	0	0	0
4/25/2024	6:45 AM	0	0	0	0	0	0	0	0	0	0	0	0	0
4/25/2024	7:00 AM	0	0	0	0	0	0	0	0	0	0	0	0	0
4/25/2024	7:15 AM	0	0	0	0	0	0	0	0	0	0	0	0	0
4/25/2024	7:30 AM	0	0	0	0	0	0	0	0	0	0	0	0	0
4/25/2024	7:45 AM	0	0	0	0	0	0	0	0	0	0	0	0	0
4/25/2024	8:00 AM	0	0	0	0	0	0	0	0	0	0	0	0	0
4/25/2024	8:15 AM	0	0	0	0	0	0	0	0	0	0	0	0	0
4/25/2024	8:30 AM	0	0	0	0	0	0	0	0	0	0	0	0	0
4/25/2024	8:45 AM	0	0	0	0	0	0	0	0	0	0	0	0	0
4/25/2024	9:00 AM	0	0	0	0	0	0	0	0	0	0	0	0	0
4/25/2024	9:15 AM	0	0	0	0	0	0	0	0	0	0	0	0	0
4/25/2024	9:30 AM	0	0	0	0	0	0	0	0	0	0	0	0	0
4/25/2024	9:45 AM	0	0	0	0	0	0	0	0	0	0	0	0	0
4/25/2024	10:00 AM	0	0	0	0	0	0	0	0	0	0	0	0	0
4/25/2024	10:15 AM	0	0	0	0	0	0	0	0	0	0	0	0	0
4/25/2024	10:30 AM	0	0	0	0	0	0	0	0	0	0	0	0	0
4/25/2024	10:45 AM	0	0	0	0	0	0	0	0	0	0	0	0	0
4/25/2024	11:00 AM	0	0	0	0	0	0	0	0	0	0	0	0	0
4/25/2024	11:15 AM	0	0	0	0	0	0	0	0	0	0	0	0	0
4/25/2024	11:30 AM	0	0	0	0	0	0	0	0	0	0	0	0	0
4/25/2024	11:45 AM	0	0	0	0	0	0	0	0	0	0	0	0	0
4/25/2024	12:00 PM	0	0	0	0	0	0	0	0	0	0	0	0	0
4/25/2024	12:15 PM	0	0	0	0	0	0	0	0	0	0	0	0	0
4/25/2024	12:30 PM	0	0	0	0	0	0	0	0	0	0	0	0	0
4/25/2024	12:45 PM	0	0	0	0	0	0	0	0	0	0	0	0	0
4/25/2024	1:00 PM	0	0	0	0	0	0	0	0	0	0	0	0	0
4/25/2024	1:15 PM	0	0	0	0	0	0	0	0	0	0	0	0	0
4/25/2024	1:30 PM	0	0	0	0	0	0	0	0	0	0	0	0	0
4/25/2024	1:45 PM	0	0	0	0	0	0	0	0	0	0	0	0	0
4/25/2024	2:00 PM	0	0	0	0	0	0	0	0	0	0	0	0	0
4/25/2024	2:15 PM	0	0	0	0	0	0	0	0	0	0	0	0	0
4/25/2024	2:30 PM	0	0	0	0	0	0	0	0	0	0	0	0	0
4/25/2024	2:45 PM	0	0	0	0	0	0	0	0	0	0	0	0	0
4/25/2024	3:00 PM	0	0	0	0	0	0	0	0	0	0	0	0	0
4/25/2024	3:15 PM	0	0	0	0	0	0	0	0	0	0	0	0	0
4/25/2024	3:30 PM	0	0	0	0	0	0	0	0	0	0	0	0	0
4/25/2024	3:45 PM	0	0	0	0	0	0	0	0	0	0	0	0	0
4/25/2024	4:00 PM	0	0	0	0	0	0	0	0	0	0	0	0	0
4/25/2024	4:15 PM	0	0	0	0	0	0	0	0	0	0	0	0	0
4/25/2024	4:30 PM	0	0	0	0	0	0	0	0	0	0	0	0	0
4/25/2024	4:45 PM	0	0	0	0	0	0	0	0	0	0	0	0	0
4/25/2024	5:00 PM	0	0	0	0	0	0	0	0	0	0	0	0	0
4/25/2024	5:15 PM	0	0	0	0	0	0	0	0	0	0	0	0	0
4/25/2024	5:30 PM	0	0	0	0	0	0	0	0	0	0	0	0	0
4/25/2024	5:45 PM	0	0	0	0	0	0	0	0	0	0	0	0	0
4/25/2024	6:00 PM	0	0	0	0	0	0	0	0	0	0	0	0	0
4/25/2024	6:15 PM	0	0	0	0	0	0	0	0	0	0	0	0	0
4/25/2024	6:30 PM	0	0	0	0	0	0	0	0	0	0	0	0	0
4/25/2024	6:45 PM	0	0	0	0	0	0	0	0	0	0	0	0	0
4/25/2024	7:00 PM	0	0	0	0	0	0	0	0	0	0	0	0	0
4/25/2024	7:15 PM	0	0	0	0	0	0	0	0	0	0	0	0	0
4/25/2024	7:30 PM	0	0	0	0	0	0	0	0	0	0	0	0	0
4/25/2024	7:45 PM	0	0	0	0	0	0	0	0	0	0	0	0	0
4/25/2024	8:00 PM	0	0	0	0	0	0	0	0	0	0	0	0	0
4/25/2024	8:15 PM	0	0	0	0	0	0	0	0	0	0	0	0	0
4/25/2024	8:30 PM	0	0	0	0	0	0	0	0	0	0	0	0	0
4/25/2024	8:45 PM	0	0	0	0	0	0	0	0	0	0	0	0	0
4/25/2024	9:00 PM	0	0	0	0	0	0	0	0	0	0	0	0	0
4/25/2024	9:15 PM	0	0	0	0	0	0	0	0	0	0	0	0	0
4/25/2024	9:30 PM	0	0	0	0	0	0	0	0	0	0	0	0	0
4/25/2024	9:45 PM	0	0	0	0	0	0	0	0	0	0	0	0	0
4/25/2024	10:00 PM	0	0	0	0	0	0	0	0	0	0	0	0	0
4/25/2024	10:15 PM	0	0	0	0	0	0	0	0	0	0	0	0	0
4/25/2024	10:30 PM	0	0	0	0	0	0	0	0	0	0	0	0	0
4/25/2024	10:45 PM	0	0	0	0	0	0	0	0	0	0	0	0	0
4/25/2024	11:00 PM	0	0	0	0	0	0	0	0	0	0	0	0	0
4/25/2024	11:15 PM	0	0	0	0	0	0	0	0	0	0	0	0	0
4/25/2024	11:30 PM	0	0	0	0	0	0	0	0	0	0	0	0	0
4/25/2024	11:45 PM	0	0	0	0	0	0	0	0	0	0	0	0	0

WB
File Name:
Start Date: 4/23/2024
Start Time: 0
Site Code: 48
Station ID: 1
Location 1: I-126 W/Bound Off-Ramp, east of Greystone Blvd
Location 2:

Date	Time	1	2	3	4	5	6	7	8	9	10	11	12	13
4/23/2024	12:00 AM	0	0	0	0	0	0	0	0	0	0	0	0	0
4/23/2024	12:15 AM	0	0	0	0	0	0	0	0	0	0	0	0	0
4/23/2024	12:30 AM	0	0	0	0	0	0	0	0	0	0	0	0	0
4/23/2024	12:45 AM	0	0	0	0	0	0	0	0	0	0	0	0	0
4/23/2024	1:00 AM	0	0	0	0	0	0	0	0	0	0	0	0	0
4/23/2024	1:15 AM	0	0	0	0	0	0	0	0	0	0	0	0	0
4/23/2024	1:30 AM	0	0	0	0	0	0	0	0	0	0	0	0	0
4/23/2024	1:45 AM	0	0	0	0	0	0	0	0	0	0	0	0	0
4/23/2024	2:00 AM	0	0	0	0	0	0	0	0	0	0	0	0	0
4/23/2024	2:15 AM	0	0	0	0	0	0	0	0	0	0	0	0	0
4/23/2024	2:30 AM	0	0	0	0	0	0	0	0	0	0	0	0	0
4/23/2024	2:45 AM	0	0	0	0	0	0	0	0	0	0	0	0	0
4/23/2024	3:00 AM	0	0	0	0	0	0	0	0	0	0	0	0	0
4/23/2024	3:15 AM	0	0	0	0	0	0	0	0	0	0	0	0	0
4/23/2024	3:30 AM	0	0	0	0	0	0	0	0	0	0	0	0	0
4/23/2024	3:45 AM	0	0	0	0	0	0	0	0	0	0	0	0	0
4/23/2024	4:00 AM	0	0	0	0	0	0	0	0	0	0	0	0	0
4/23/2024	4:15 AM	0	0	0	0	0	0	0	0	0	0	0	0	0
4/23/2024	4:30 AM	0	0	0	0	0	0	0	0	0	0	0	0	0
4/23/2024	4:45 AM	0	0	0	0	0	0	0	0	0	0	0	0	0
4/23/2024	5:00 AM	0	0	0	0	0	0	0	0	0	0	0	0	0
4/23/2024	5:15 AM	0	0	0	0	0	0	0	0	0	0	0	0	0
4/23/2024	5:30 AM	0	0	0	0	0	0	0	0	0	0	0	0	0
4/23/2024	5:45 AM	0	0	0	0	0	0	0	0	0	0	0	0	0
4/23/2024	6:00 AM	0	0	0	0	0	0	0	0	0	0	0	0	0
4/23/2024	6:15 AM	0	0	0	0	0	0	0	0	0	0	0	0	0
4/23/2024	6:30 AM	0	0	0	0	0	0	0	0	0	0	0	0	0
4/23/2024	6:45 AM	0	0	0	0	0	0	0	0	0	0	0	0	0
4/23/2024	7:00 AM	0	0	0	0	0	0	0	0	0	0	0	0	0
4/23/2024	7:15 AM	0	0	0	0	0	0	0	0	0	0	0	0	0
4/23/2024	7:30 AM	0	0	0	0	0	0	0	0	0	0	0	0	0
4/23/2024	7:45 AM	0	0	0	0	0	0	0	0	0	0	0	0	0
4/23/2024	8:00 AM	0	0	0	0	0	0	0	0	0	0	0	0	0
4/23/2024	8:15 AM	0	0	0	0	0	0	0	0	0	0	0	0	0
4/23/2024	8:30 AM	0	0	0	0	0	0	0	0	0	0	0	0	0
4/23/2024	8:45 AM	0	0	0	0	0	0	0	0	0	0	0	0	0
4/23/2024	9:00 AM	0	0	0	0	0	0	0	0	0	0	0	0	0
4/23/2024	9:15 AM	0	0	0	0	0	0	0	0	0	0	0	0	0
4/23/2024	9:30 AM	0	0	0	0	0	0	0	0	0	0	0	0	0
4/23/2024	9:45 AM	0	0	0	0	0	0	0	0	0	0	0	0	0
4/23/2024	10:00 AM	0	0	0	0	0	0	0	0	0	0	0	0	0
4/23/2024	10:15 AM	0	0	0	0	0	0	0	0	0	0	0	0	0
4/23/2024	10:30 AM	0	0	0	0	0	0	0	0	0	0	0	0	0
4/23/2024	10:45 AM	0	0	0	0	0	0	0	0	0	0	0	0	0
4/23/2024	11:00 AM	0	0	0	0	0	0	0	0	0	0	0	0	0
4/23/2024	11:15 AM	0	0	0	0	0	0	0	0	0	0	0	0	0
4/23/2024	11:30 AM	0	0	0	0	0	0	0	0	0	0	0	0	0
4/23/2024	11:45 AM	0	0	0	0	0	0	0	0	0	0	0	0	0
4/23/2024	12:00 PM	0	0	0	0	0	0	0	0	0	0	0	0	0
4/23/2024	12:15 PM	0	0	0	0	0	0	0	0	0	0	0	0	0
4/23/2024	12:30 PM	0	0	0	0	0	0	0	0	0	0	0	0	0
4/23/2024	12:45 PM	0	0	0	0	0	0	0	0	0	0	0	0	0
4/23/2024	1:00 PM	0	0	0	0	0	0	0	0	0	0	0	0	0
4/23/2024	1:15 PM	0	0	0	0	0	0	0	0	0	0	0	0	0
4/23/2024	1:30 PM	0	0	0	0	0	0	0	0	0	0	0	0	0
4/23/2024	1:45 PM	0	0	0	0	0	0	0	0	0	0	0	0	0
4/23/2024	2:00 PM	0	0	0	0	0	0	0	0	0	0	0	0	0
4/23/2024	2:15 PM	0	0	0	0	0	0	0	0	0	0	0	0	0
4/23/2024	2:30 PM	0	0	0	0	0	0	0	0	0	0	0	0	0
4/23/2024	2:45 PM	0	0	0	0	0	0	0	0	0	0	0	0	0
4/23/2024	3:00 PM	0	0	0	0	0	0	0	0	0	0	0	0	0
4/23/2024	3:15 PM	0	0	0	0	0	0	0	0	0	0	0	0	0
4/23/2024	3:30 PM	0	0	0	0	0	0	0	0	0	0	0	0	0
4/23/2024	3:45 PM	0	0	0	0	0	0	0	0	0	0	0	0	0
4/23/2024	4:00 PM	0	0	0	0	0	0	0	0	0	0	0	0	0
4/23/2024	4:15 PM	0	0	0	0	0	0	0	0	0	0	0	0	0
4/23/2024	4:30 PM	0	0	0	0	0	0	0	0	0	0	0	0	0
4/23/2024	4:45 PM	0	0	0	0	0	0	0	0	0	0	0	0	0
4/23/2024	5:00 PM	0	0	0	0	0	0	0	0	0	0	0	0	0
4/23/2024	5:15 PM	0	0	0	0	0	0	0	0	0	0	0	0	0
4/23/2024	5:30 PM	0	0	0	0	0	0	0	0	0	0	0	0	0
4/23/2024	5:45 PM	0	0	0	0	0	0	0	0	0	0	0	0	0
4/23/2024	6:00 PM	0	0	0	0	0	0	0	0	0	0	0	0	0
4/23/2024	6:15 PM	0	0	0	0	0	0	0	0	0	0	0	0	0
4/23/2024	6:30 PM	0	0	0	0	0	0	0	0	0	0	0	0	0
4/23/2024	6:45 PM	0	0	0	0	0	0	0	0	0	0	0	0	0
4/23/2024	7:00 PM	0	63	2	3	0	0	0	0	0	0	0	0	0
4/23/2024	7:15 PM	1	55	5	4	0	0	0	1	0	0	0	0	0
4/23/2024	7:30 PM	0	43	3	2	0	0	0	0	0	0	0	0	0
4/23/2024	7:45 PM	0	53	5	1	0	0	0	0	0	0	0	0	0
4/23/2024	8:00 PM	0	57	4	0	0	0	0	0	0	0	0	0	0
4/23/2024	8:15 PM	0	57	2	2	0	0	0	0	0	0	0	0	0
4/23/2024	8:30 PM	0	66	2	1	0	0	0	0	0	0	0	0	0
4/23/2024	8:45 PM	0	61	2	0	0	0	0	0	0	0	0	0	0
4/23/2024	9:00 PM	0	60	1	1	0	0	0	0	0	0	0	0	0
4/23/2024	9:15 PM	0	35	1	1	0	0	0	0	0	0	0	0	0
4/23/2024	9:30 PM	0	50	2	1	0	0	0	0	0	0	0	0	0
4/23/2024	9:45 PM	0	37	1	0	0	0	0	0	0	0	0	0	0
4/23/2024	10:00 PM	0	42	1	1	0	0	0	0	0	0	0	0	0
4/23/2024	10:15 PM	0	40	1	1	0	0	0	0	0	0	0	0	0
4/23/2024	10:30 PM	0	25	2	1	0	0	0	0	0	0	0	0	0
4/23/2024	10:45 PM	0	23	1	0	0	0	0	0	1	0	0	0	0
4/23/2024	11:00 PM	0	28	2	0	0	0	0	0	0	0	0	0	0
4/23/2024	11:15 PM	0	28	2	0	1	0	0	0	0	0	0	0	0
4/23/2024	11:30 PM	0	16	0	0	0	0	0	0	0	0	0	0	0
4/23/2024	11:45 PM	0	10	1	0	0	0	0	0	0	0	0	0	0

4/24/2024	12:00 AM	0	13	1	1	0	0	0	0	0	0	0	0
4/24/2024	12:15 AM	1	16	1	0	0	0	0	0	0	0	0	0
4/24/2024	12:30 AM	0	13	2	2	0	0	0	0	0	0	0	0
4/24/2024	12:45 AM	0	18	1	0	0	0	0	0	0	0	0	0
4/24/2024	1:00 AM	0	11	1	0	0	0	0	0	0	0	0	0
4/24/2024	1:15 AM	0	3	0	0	0	0	0	0	0	0	0	0
4/24/2024	1:30 AM	0	10	2	0	0	2	0	0	0	0	0	0
4/24/2024	1:45 AM	0	10	0	0	0	0	0	0	0	0	0	0
4/24/2024	2:00 AM	0	9	1	0	0	0	0	0	0	0	0	0
4/24/2024	2:15 AM	0	5	0	0	0	0	0	0	0	0	0	0
4/24/2024	2:30 AM	0	5	1	0	0	0	0	0	0	0	0	0
4/24/2024	2:45 AM	0	2	0	0	0	0	0	0	0	0	0	0
4/24/2024	3:00 AM	0	3	0	0	0	0	0	0	0	0	0	0
4/24/2024	3:15 AM	0	4	0	0	0	1	0	0	0	0	0	0
4/24/2024	3:30 AM	0	6	1	0	0	1	0	0	0	0	0	0
4/24/2024	3:45 AM	0	1	0	0	0	0	0	0	0	0	0	0
4/24/2024	4:00 AM	0	8	0	0	0	1	0	0	0	0	0	0
4/24/2024	4:15 AM	0	4	0	0	0	0	0	0	0	0	0	0
4/24/2024	4:30 AM	0	5	0	0	0	0	0	0	0	0	0	0
4/24/2024	4:45 AM	0	10	1	0	0	0	0	0	0	0	0	0
4/24/2024	5:00 AM	0	9	0	0	0	0	0	0	0	0	0	0
4/24/2024	5:15 AM	0	8	1	0	0	0	0	0	0	0	0	0
4/24/2024	5:30 AM	0	9	0	0	0	0	0	0	0	0	0	0
4/24/2024	5:45 AM	0	14	1	0	0	0	0	0	0	0	0	0
4/24/2024	6:00 AM	0	23	1	0	0	0	0	0	0	0	0	0
4/24/2024	6:15 AM	0	18	3	1	0	0	0	0	0	0	0	0
4/24/2024	6:30 AM	0	29	4	1	0	0	0	0	0	0	0	0
4/24/2024	6:45 AM	0	51	6	2	2	1	0	0	0	0	0	0
4/24/2024	7:00 AM	0	42	4	0	2	2	0	0	0	0	0	0
4/24/2024	7:15 AM	0	80	6	1	0	1	0	0	0	0	0	0
4/24/2024	7:30 AM	0	70	6	1	0	1	0	0	0	0	0	0
4/24/2024	7:45 AM	0	101	5	1	3	0	0	0	2	0	0	0
4/24/2024	8:00 AM	0	109	6	1	2	1	1	0	0	0	0	0
4/24/2024	8:15 AM	0	106	7	2	1	0	1	1	0	0	0	0
4/24/2024	8:30 AM	0	94	4	2	2	2	0	0	2	0	0	0
4/24/2024	8:45 AM	0	109	11	0	1	0	0	1	0	0	0	0
4/24/2024	9:00 AM	0	84	4	1	1	1	0	0	1	0	0	0
4/24/2024	9:15 AM	0	91	4	0	1	3	0	0	0	0	0	0
4/24/2024	9:30 AM	1	78	6	0	3	2	0	0	0	0	0	0
4/24/2024	9:45 AM	0	93	7	2	2	1	0	0	0	0	0	0
4/24/2024	10:00 AM	0	67	5	1	2	2	0	0	0	0	0	0
4/24/2024	10:15 AM	0	72	10	2	2	0	0	0	1	0	0	0
4/24/2024	10:30 AM	0	74	11	2	2	0	0	0	0	0	0	0
4/24/2024	10:45 AM	1	73	8	0	1	1	0	0	0	0	0	0
4/24/2024	11:00 AM	0	63	5	1	1	1	0	0	0	0	0	0
4/24/2024	11:15 AM	0	71	6	1	1	3	0	0	1	0	0	0
4/24/2024	11:30 AM	0	82	6	0	1	0	0	0	0	0	0	0
4/24/2024	11:45 AM	0	76	5	0	1	0	0	0	0	0	0	0
4/24/2024	12:00 PM	1	78	7	1	0	2	0	0	0	0	0	0
4/24/2024	12:15 PM	0	77	5	1	1	1	0	0	0	0	0	0
4/24/2024	12:30 PM	1	84	12	2	0	1	0	0	0	0	0	0
4/24/2024	12:45 PM	0	90	10	0	0	0	0	0	0	0	0	0
4/24/2024	1:00 PM	0	74	6	0	0	2	0	0	0	0	0	0
4/24/2024	1:15 PM	0	88	6	1	2	0	0	0	1	0	0	0
4/24/2024	1:30 PM	0	80	9	2	1	1	0	0	0	0	0	0
4/24/2024	1:45 PM	0	80	4	0	1	1	0	0	0	0	0	0
4/24/2024	2:00 PM	0	82	10	0	1	0	0	0	0	0	0	0
4/24/2024	2:15 PM	0	86	9	2	1	2	0	0	0	0	0	0
4/24/2024	2:30 PM	0	87	10	2	0	1	0	0	0	0	0	0
4/24/2024	2:45 PM	0	80	11	1	1	0	0	0	0	0	0	0
4/24/2024	3:00 PM	0	72	8	1	2	0	0	1	1	0	0	0
4/24/2024	3:15 PM	0	67	8	1	0	0	0	0	0	0	0	0
4/24/2024	3:30 PM	0	77	12	1	0	0	0	0	0	0	0	0
4/24/2024	3:45 PM	0	60	7	0	2	0	0	0	0	0	0	0
4/24/2024	4:00 PM	0	78	11	0	1	0	0	0	0	0	0	0
4/24/2024	4:15 PM	0	93	12	0	1	0	0	0	0	0	0	0
4/24/2024	4:30 PM	0	79	9	2	0	0	0	0	0	0	0	0
4/24/2024	4:45 PM	0	90	10	1	1	0	0	0	0	0	0	0
4/24/2024	5:00 PM	0	99	13	1	0	0	0	0	0	0	0	0
4/24/2024	5:15 PM	0	124	15	1	0	0	0	0	0	0	0	0
4/24/2024	5:30 PM	0	106	7	2	0	0	0	0	0	0	0	0
4/24/2024	5:45 PM	0	68	6	1	0	0	0	0	0	0	0	0
4/24/2024	6:00 PM	1	63	6	3	0	0	0	0	1	0	0	0
4/24/2024	6:15 PM	0	70	8	5	1	0	0	3	0	0	0	0
4/24/2024	6:30 PM	0	53	4	1	0	0	0	0	0	0	0	0
4/24/2024	6:45 PM	0	67	5	2	0	0	0	0	0	0	0	0
4/24/2024	7:00 PM	0	58	7	3	0	0	0	0	0	0	0	0
4/24/2024	7:15 PM	0	57	7	3	1	0	0	0	0	0	0	0
4/24/2024	7:30 PM	0	50	6	1	0	0	0	0	0	0	0	0
4/24/2024	7:45 PM	0	52	3	1	0	0	0	0	0	0	0	0
4/24/2024	8:00 PM	0	42	3	0	0	0	0	0	0	0	0	0
4/24/2024	8:15 PM	1	33	4	2	1	0	0	0	0	0	0	0
4/24/2024	8:30 PM	0	64	5	0	0	0	0	0	0	0	0	0
4/24/2024	8:45 PM	0	51	4	0	0	0	0	0	0	0	0	0
4/24/2024	9:00 PM	0	29	3	1	0	0	0	0	1	0	0	0
4/24/2024	9:15 PM	0	39	4	1	1	0	0	0	0	0	0	0
4/24/2024	9:30 PM	0	28	2	1	0	0	0	0	0	0	0	0
4/24/2024	9:45 PM	0	45	4	1	0	0	0	0	0	0	0	0
4/24/2024	10:00 PM	0	34	3	0	0	0	0	0	0	0	0	0
4/24/2024	10:15 PM	0	39	4	0	0	0	0	0	0	0	0	0
4/24/2024	10:30 PM	0	32	2	0	0	0	0	0	0	0	0	0
4/24/2024	10:45 PM	0	29	1	0	0	0	0	0	0	0	0	0
4/24/2024	11:00 PM	0	28	2	0	0	0	0	0	0	0	0	0
4/24/2024	11:15 PM	0	19	2	1	0	0	0	0	0	0	0	0
4/24/2024	11:30 PM	0	21	1	0	0	0	0	0	0	0	0	0
4/24/2024	11:45 PM	0	16	1	0	0	0	0	0	1	0	0	0

4/25/2024	12:00 AM	0	13	1	0	0	0	0	0	0	0	0	0
4/25/2024	12:15 AM	0	14	3	0	0	0	0	0	0	0	0	0
4/25/2024	12:30 AM	0	14	1	2	1	0	0	0	0	0	0	0
4/25/2024	12:45 AM	0	9	1	0	0	0	0	0	0	0	0	0
4/25/2024	1:00 AM	0	9	1	0	0	0	0	0	0	0	0	0
4/25/2024	1:15 AM	0	11	1	0	0	0	0	0	1	0	0	0
4/25/2024	1:30 AM	0	8	2	0	0	0	0	0	0	0	0	0
4/25/2024	1:45 AM	0	10	1	0	0	0	0	0	0	0	0	0
4/25/2024	2:00 AM	0	12	2	0	0	1	0	0	0	0	0	0
4/25/2024	2:15 AM	0	13	2	0	0	0	0	0	0	0	0	0
4/25/2024	2:30 AM	0	1	0	0	0	0	0	0	0	0	0	0
4/25/2024	2:45 AM	0	8	0	0	0	0	0	0	0	0	0	0
4/25/2024	3:00 AM	0	6	0	0	0	0	0	0	0	0	0	0
4/25/2024	3:15 AM	0	4	0	0	0	1	0	0	0	0	0	0
4/25/2024	3:30 AM	0	5	0	0	0	1	0	0	0	0	0	0
4/25/2024	3:45 AM	0	4	0	0	0	0	0	0	0	0	0	0
4/25/2024	4:00 AM	0	3	0	0	0	0	0	0	0	0	0	0
4/25/2024	4:15 AM	0	2	0	0	0	0	0	0	0	0	0	0
4/25/2024	4:30 AM	0	3	0	0	0	0	0	0	0	0	0	0
4/25/2024	4:45 AM	0	10	2	0	0	0	0	1	0	0	0	0
4/25/2024	5:00 AM	0	10	1	0	0	0	0	0	0	0	0	0
4/25/2024	5:15 AM	0	9	1	0	0	0	0	0	0	0	0	0
4/25/2024	5:30 AM	0	10	1	0	0	0	0	0	0	0	0	0
4/25/2024	5:45 AM	0	17	2	0	0	0	0	0	0	0	0	0
4/25/2024	6:00 AM	0	19	3	0	0	0	0	0	0	0	0	0
4/25/2024	6:15 AM	0	17	2	1	1	0	0	1	1	0	0	0
4/25/2024	6:30 AM	0	22	4	0	0	0	0	0	0	0	0	0
4/25/2024	6:45 AM	0	49	6	1	1	0	0	0	0	0	0	0
4/25/2024	7:00 AM	0	44	6	0	1	1	0	0	0	0	0	0
4/25/2024	7:15 AM	0	73	7	2	0	1	0	0	0	0	0	0
4/25/2024	7:30 AM	0	81	9	0	0	0	0	0	0	0	0	0
4/25/2024	7:45 AM	0	101	11	0	2	0	0	0	0	0	0	0
4/25/2024	8:00 AM	0	101	16	0	1	0	0	0	0	0	0	0
4/25/2024	8:15 AM	0	89	11	0	2	0	0	1	0	0	0	0
4/25/2024	8:30 AM	0	111	10	1	1	1	1	0	0	0	0	0
4/25/2024	8:45 AM	0	102	13	2	1	2	0	0	0	0	0	0
4/25/2024	9:00 AM	0	71	5	7	0	0	0	0	0	0	0	0
4/25/2024	9:15 AM	0	66	12	3	0	0	0	0	0	0	0	0
4/25/2024	9:30 AM	0	86	12	1	3	1	0	0	1	0	0	0
4/25/2024	9:45 AM	0	93	10	1	1	2	0	0	1	0	0	0
4/25/2024	10:00 AM	0	86	7	0	2	1	0	0	0	0	0	0
4/25/2024	10:15 AM	0	91	10	2	0	1	0	0	0	0	0	0
4/25/2024	10:30 AM	0	76	4	3	1	3	0	0	0	0	0	0
4/25/2024	10:45 AM	0	76	9	0	3	2	0	0	0	0	0	0
4/25/2024	11:00 AM	1	74	5	2	2	0	0	0	1	0	0	0
4/25/2024	11:15 AM	0	71	6	2	1	2	0	0	0	0	0	0
4/25/2024	11:30 AM	0	77	14	2	1	2	0	0	0	0	0	0
4/25/2024	11:45 AM	0	96	17	1	0	1	0	0	1	0	0	0
4/25/2024	12:00 PM	0	84	10	0	1	0	0	0	0	0	0	0
4/25/2024	12:15 PM	0	92	9	0	1	6	0	0	0	0	0	0
4/25/2024	12:30 PM	0	95	10	2	1	0	0	0	0	0	0	0
4/25/2024	12:45 PM	0	95	12	1	0	1	0	0	0	0	0	0
4/25/2024	1:00 PM	0	122	17	1	1	1	0	0	0	0	0	0
4/25/2024	1:15 PM	0	89	5	2	1	3	0	0	0	0	0	0
4/25/2024	1:30 PM	0	93	10	0	0	4	0	0	0	0	0	0
4/25/2024	1:45 PM	0	87	13	1	2	0	0	0	0	0	0	0
4/25/2024	2:00 PM	0	72	11	2	0	5	0	0	0	0	0	0
4/25/2024	2:15 PM	0	87	15	0	1	1	0	0	0	0	0	0
4/25/2024	2:30 PM	0	79	12	2	0	3	0	0	0	0	0	0
4/25/2024	2:45 PM	0	90	14	1	0	3	0	0	0	0	0	0
4/25/2024	3:00 PM	0	71	7	2	0	2	0	0	0	0	0	0
4/25/2024	3:15 PM	0	84	11	2	0	2	0	0	0	0	0	0
4/25/2024	3:30 PM	0	80	10	1	0	3	0	0	0	0	0	0
4/25/2024	3:45 PM	1	84	10	1	3	1	0	0	0	0	0	0
4/25/2024	4:00 PM	0	81	8	0	2	0	0	0	0	0	0	0
4/25/2024	4:15 PM	0	95	14	0	0	0	0	0	0	0	0	0
4/25/2024	4:30 PM	0	85	10	2	0	1	0	0	0	0	0	0
4/25/2024	4:45 PM	0	83	13	1	2	0	0	0	0	0	0	0
4/25/2024	5:00 PM	0	84	12	0	0	0	0	0	0	0	0	0
4/25/2024	5:15 PM	0	141	20	0	0	0	0	0	0	0	0	0
4/25/2024	5:30 PM	1	113	15	2	0	0	0	0	0	0	0	0
4/25/2024	5:45 PM	0	118	9	2	0	0	0	0	0	0	0	0
4/25/2024	6:00 PM	0	78	9	2	0	0	0	0	0	0	0	0
4/25/2024	6:15 PM	0	71	6	4	3	0	0	0	0	0	0	0
4/25/2024	6:30 PM	0	43	10	2	1	0	0	0	0	0	0	0
4/25/2024	6:45 PM	0	66	3	1	1	0	0	0	0	0	0	0
4/25/2024	7:00 PM	0	0	0	0	0	0	0	0	0	0	0	0
4/25/2024	7:15 PM	0	0	0	0	0	0	0	0	0	0	0	0
4/25/2024	7:30 PM	0	0	0	0	0	0	0	0	0	0	0	0
4/25/2024	7:45 PM	0	0	0	0	0	0	0	0	0	0	0	0
4/25/2024	8:00 PM	0	0	0	0	0	0	0	0	0	0	0	0
4/25/2024	8:15 PM	0	0	0	0	0	0	0	0	0	0	0	0
4/25/2024	8:30 PM	0	0	0	0	0	0	0	0	0	0	0	0
4/25/2024	8:45 PM	0	0	0	0	0	0	0	0	0	0	0	0
4/25/2024	9:00 PM	0	0	0	0	0	0	0	0	0	0	0	0
4/25/2024	9:15 PM	0	0	0	0	0	0	0	0	0	0	0	0
4/25/2024	9:30 PM	0	0	0	0	0	0	0	0	0	0	0	0
4/25/2024	9:45 PM	0	0	0	0	0	0	0	0	0	0	0	0
4/25/2024	10:00 PM	0	0	0	0	0	0	0	0	0	0	0	0
4/25/2024	10:15 PM	0	0	0	0	0	0	0	0	0	0	0	0
4/25/2024	10:30 PM	0	0	0	0	0	0	0	0	0	0	0	0
4/25/2024	10:45 PM	0	0	0	0	0	0	0	0	0	0	0	0
4/25/2024	11:00 PM	0	0	0	0	0	0	0	0	0	0	0	0
4/25/2024	11:15 PM	0	0	0	0	0	0	0	0	0	0	0	0
4/25/2024	11:30 PM	0	0	0	0	0	0	0	0	0	0	0	0
4/25/2024	11:45 PM	0	0	0	0	0	0	0	0	0	0	0	0

EB
File Name:
Start Date: 4/23/2024
Start Time: 0
Site Code: 48
Station ID: 1
Location 1: I-126 W/Bound Off-Ramp, east of Greystone Blvd
Location 2:

Date	Time	1	2	3	4	5	6	7	8	9	10	11	12	13
4/23/2024	12:00 AM	0	0	0	0	0	0	0	0	0	0	0	0	0
4/23/2024	12:15 AM	0	0	0	0	0	0	0	0	0	0	0	0	0
4/23/2024	12:30 AM	0	0	0	0	0	0	0	0	0	0	0	0	0
4/23/2024	12:45 AM	0	0	0	0	0	0	0	0	0	0	0	0	0
4/23/2024	1:00 AM	0	0	0	0	0	0	0	0	0	0	0	0	0
4/23/2024	1:15 AM	0	0	0	0	0	0	0	0	0	0	0	0	0
4/23/2024	1:30 AM	0	0	0	0	0	0	0	0	0	0	0	0	0
4/23/2024	1:45 AM	0	0	0	0	0	0	0	0	0	0	0	0	0
4/23/2024	2:00 AM	0	0	0	0	0	0	0	0	0	0	0	0	0
4/23/2024	2:15 AM	0	0	0	0	0	0	0	0	0	0	0	0	0
4/23/2024	2:30 AM	0	0	0	0	0	0	0	0	0	0	0	0	0
4/23/2024	2:45 AM	0	0	0	0	0	0	0	0	0	0	0	0	0
4/23/2024	3:00 AM	0	0	0	0	0	0	0	0	0	0	0	0	0
4/23/2024	3:15 AM	0	0	0	0	0	0	0	0	0	0	0	0	0
4/23/2024	3:30 AM	0	0	0	0	0	0	0	0	0	0	0	0	0
4/23/2024	3:45 AM	0	0	0	0	0	0	0	0	0	0	0	0	0
4/23/2024	4:00 AM	0	0	0	0	0	0	0	0	0	0	0	0	0
4/23/2024	4:15 AM	0	0	0	0	0	0	0	0	0	0	0	0	0
4/23/2024	4:30 AM	0	0	0	0	0	0	0	0	0	0	0	0	0
4/23/2024	4:45 AM	0	0	0	0	0	0	0	0	0	0	0	0	0
4/23/2024	5:00 AM	0	0	0	0	0	0	0	0	0	0	0	0	0
4/23/2024	5:15 AM	0	0	0	0	0	0	0	0	0	0	0	0	0
4/23/2024	5:30 AM	0	0	0	0	0	0	0	0	0	0	0	0	0
4/23/2024	5:45 AM	0	0	0	0	0	0	0	0	0	0	0	0	0
4/23/2024	6:00 AM	0	0	0	0	0	0	0	0	0	0	0	0	0
4/23/2024	6:15 AM	0	0	0	0	0	0	0	0	0	0	0	0	0
4/23/2024	6:30 AM	0	0	0	0	0	0	0	0	0	0	0	0	0
4/23/2024	6:45 AM	0	0	0	0	0	0	0	0	0	0	0	0	0
4/23/2024	7:00 AM	0	0	0	0	0	0	0	0	0	0	0	0	0
4/23/2024	7:15 AM	0	0	0	0	0	0	0	0	0	0	0	0	0
4/23/2024	7:30 AM	0	0	0	0	0	0	0	0	0	0	0	0	0
4/23/2024	7:45 AM	0	0	0	0	0	0	0	0	0	0	0	0	0
4/23/2024	8:00 AM	0	0	0	0	0	0	0	0	0	0	0	0	0
4/23/2024	8:15 AM	0	0	0	0	0	0	0	0	0	0	0	0	0
4/23/2024	8:30 AM	0	0	0	0	0	0	0	0	0	0	0	0	0
4/23/2024	8:45 AM	0	0	0	0	0	0	0	0	0	0	0	0	0
4/23/2024	9:00 AM	0	0	0	0	0	0	0	0	0	0	0	0	0
4/23/2024	9:15 AM	0	0	0	0	0	0	0	0	0	0	0	0	0
4/23/2024	9:30 AM	0	0	0	0	0	0	0	0	0	0	0	0	0
4/23/2024	9:45 AM	0	0	0	0	0	0	0	0	0	0	0	0	0
4/23/2024	10:00 AM	0	0	0	0	0	0	0	0	0	0	0	0	0
4/23/2024	10:15 AM	0	0	0	0	0	0	0	0	0	0	0	0	0
4/23/2024	10:30 AM	0	0	0	0	0	0	0	0	0	0	0	0	0
4/23/2024	10:45 AM	0	0	0	0	0	0	0	0	0	0	0	0	0
4/23/2024	11:00 AM	0	0	0	0	0	0	0	0	0	0	0	0	0
4/23/2024	11:15 AM	0	0	0	0	0	0	0	0	0	0	0	0	0
4/23/2024	11:30 AM	0	0	0	0	0	0	0	0	0	0	0	0	0
4/23/2024	11:45 AM	0	0	0	0	0	0	0	0	0	0	0	0	0
4/23/2024	12:00 PM	0	0	0	0	0	0	0	0	0	0	0	0	0
4/23/2024	12:15 PM	0	0	0	0	0	0	0	0	0	0	0	0	0
4/23/2024	12:30 PM	0	0	0	0	0	0	0	0	0	0	0	0	0
4/23/2024	12:45 PM	0	0	0	0	0	0	0	0	0	0	0	0	0
4/23/2024	1:00 PM	0	0	0	0	0	0	0	0	0	0	0	0	0
4/23/2024	1:15 PM	0	0	0	0	0	0	0	0	0	0	0	0	0
4/23/2024	1:30 PM	0	0	0	0	0	0	0	0	0	0	0	0	0
4/23/2024	1:45 PM	0	0	0	0	0	0	0	0	0	0	0	0	0
4/23/2024	2:00 PM	0	0	0	0	0	0	0	0	0	0	0	0	0
4/23/2024	2:15 PM	0	0	0	0	0	0	0	0	0	0	0	0	0
4/23/2024	2:30 PM	0	0	0	0	0	0	0	0	0	0	0	0	0
4/23/2024	2:45 PM	0	0	0	0	0	0	0	0	0	0	0	0	0
4/23/2024	3:00 PM	0	0	0	0	0	0	0	0	0	0	0	0	0
4/23/2024	3:15 PM	0	0	0	0	0	0	0	0	0	0	0	0	0
4/23/2024	3:30 PM	0	0	0	0	0	0	0	0	0	0	0	0	0
4/23/2024	3:45 PM	0	0	0	0	0	0	0	0	0	0	0	0	0
4/23/2024	4:00 PM	0	0	0	0	0	0	0	0	0	0	0	0	0
4/23/2024	4:15 PM	0	0	0	0	0	0	0	0	0	0	0	0	0
4/23/2024	4:30 PM	0	0	0	0	0	0	0	0	0	0	0	0	0
4/23/2024	4:45 PM	0	0	0	0	0	0	0	0	0	0	0	0	0
4/23/2024	5:00 PM	0	0	0	0	0	0	0	0	0	0	0	0	0
4/23/2024	5:15 PM	0	0	0	0	0	0	0	0	0	0	0	0	0
4/23/2024	5:30 PM	0	0	0	0	0	0	0	0	0	0	0	0	0
4/23/2024	5:45 PM	0	0	0	0	0	0	0	0	0	0	0	0	0
4/23/2024	6:00 PM	0	0	0	0	0	0	0	0	0	0	0	0	0
4/23/2024	6:15 PM	0	0	0	0	0	0	0	0	0	0	0	0	0
4/23/2024	6:30 PM	0	0	0	0	0	0	0	0	0	0	0	0	0
4/23/2024	6:45 PM	0	0	0	0	0	0	0	0	0	0	0	0	0
4/23/2024	7:00 PM	0	0	0	0	0	0	0	0	0	0	0	0	0
4/23/2024	7:15 PM	0	0	0	0	0	0	0	0	0	0	0	0	0
4/23/2024	7:30 PM	0	0	0	0	0	0	0	0	0	0	0	0	0
4/23/2024	7:45 PM	0	0	0	0	0	0	0	0	0	0	0	0	0
4/23/2024	8:00 PM	0	0	0	0	0	0	0	0	0	0	0	0	0
4/23/2024	8:15 PM	0	0	0	0	0	0	0	0	0	0	0	0	0
4/23/2024	8:30 PM	0	0	0	0	0	0	0	0	0	0	0	0	0
4/23/2024	8:45 PM	0	0	0	0	0	0	0	0	0	0	0	0	0
4/23/2024	9:00 PM	0	0	0	0	0	0	0	0	0	0	0	0	0
4/23/2024	9:15 PM	0	0	0	0	0	0	0	0	0	0	0	0	0
4/23/2024	9:30 PM	0	0	0	0	0	0	0	0	0	0	0	0	0
4/23/2024	9:45 PM	0	0	0	0	0	0	0	0	0	0	0	0	0
4/23/2024	10:00 PM	0	0	0	0	0	0	0	0	0	0	0	0	0
4/23/2024	10:15 PM	0	0	0	0	0	0	0	0	0	0	0	0	0
4/23/2024	10:30 PM	0	0	0	0	0	0	0	0	0	0	0	0	0
4/23/2024	10:45 PM	0	0	0	0	0	0	0	0	0	0	0	0	0
4/23/2024	11:00 PM	0	0	0	0	0	0	0	0	0	0	0	0	0
4/23/2024	11:15 PM	0	0	0	0	0	0	0	0	0	0	0	0	0
4/23/2024	11:30 PM	0	0	0	0	0	0	0	0	0	0	0	0	0
4/23/2024	11:45 PM	0	0	0	0	0	0	0	0	0	0	0	0	0

4/24/2024	12:00 AM	0	0	0	0	0	0	0	0	0	0	0	0	0
4/24/2024	12:15 AM	0	0	0	0	0	0	0	0	0	0	0	0	0
4/24/2024	12:30 AM	0	0	0	0	0	0	0	0	0	0	0	0	0
4/24/2024	12:45 AM	0	0	0	0	0	0	0	0	0	0	0	0	0
4/24/2024	1:00 AM	0	0	0	0	0	0	0	0	0	0	0	0	0
4/24/2024	1:15 AM	0	0	0	0	0	0	0	0	0	0	0	0	0
4/24/2024	1:30 AM	0	0	0	0	0	0	0	0	0	0	0	0	0
4/24/2024	1:45 AM	0	0	0	0	0	0	0	0	0	0	0	0	0
4/24/2024	2:00 AM	0	0	0	0	0	0	0	0	0	0	0	0	0
4/24/2024	2:15 AM	0	0	0	0	0	0	0	0	0	0	0	0	0
4/24/2024	2:30 AM	0	0	0	0	0	0	0	0	0	0	0	0	0
4/24/2024	2:45 AM	0	0	0	0	0	0	0	0	0	0	0	0	0
4/24/2024	3:00 AM	0	0	0	0	0	0	0	0	0	0	0	0	0
4/24/2024	3:15 AM	0	0	0	0	0	0	0	0	0	0	0	0	0
4/24/2024	3:30 AM	0	0	0	0	0	0	0	0	0	0	0	0	0
4/24/2024	3:45 AM	0	0	0	0	0	0	0	0	0	0	0	0	0
4/24/2024	4:00 AM	0	0	0	0	0	0	0	0	0	0	0	0	0
4/24/2024	4:15 AM	0	0	0	0	0	0	0	0	0	0	0	0	0
4/24/2024	4:30 AM	0	0	0	0	0	0	0	0	0	0	0	0	0
4/24/2024	4:45 AM	0	0	0	0	0	0	0	0	0	0	0	0	0
4/24/2024	5:00 AM	0	0	0	0	0	0	0	0	0	0	0	0	0
4/24/2024	5:15 AM	0	0	0	0	0	0	0	0	0	0	0	0	0
4/24/2024	5:30 AM	0	0	0	0	0	0	0	0	0	0	0	0	0
4/24/2024	5:45 AM	0	0	0	0	0	0	0	0	0	0	0	0	0
4/24/2024	6:00 AM	0	0	0	0	0	0	0	0	0	0	0	0	0
4/24/2024	6:15 AM	0	0	0	0	0	0	0	0	0	0	0	0	0
4/24/2024	6:30 AM	0	0	0	0	0	0	0	0	0	0	0	0	0
4/24/2024	6:45 AM	0	0	0	0	0	0	0	0	0	0	0	0	0
4/24/2024	7:00 AM	0	0	0	0	0	0	0	0	0	0	0	0	0
4/24/2024	7:15 AM	0	0	0	0	0	0	0	0	0	0	0	0	0
4/24/2024	7:30 AM	0	0	0	0	0	0	0	0	0	0	0	0	0
4/24/2024	7:45 AM	0	0	0	0	0	0	0	0	0	0	0	0	0
4/24/2024	8:00 AM	0	0	0	0	0	0	0	0	0	0	0	0	0
4/24/2024	8:15 AM	0	0	0	0	0	0	0	0	0	0	0	0	0
4/24/2024	8:30 AM	0	0	0	0	0	0	0	0	0	0	0	0	0
4/24/2024	8:45 AM	0	0	0	0	0	0	0	0	0	0	0	0	0
4/24/2024	9:00 AM	0	0	0	0	0	0	0	0	0	0	0	0	0
4/24/2024	9:15 AM	0	0	0	0	0	0	0	0	0	0	0	0	0
4/24/2024	9:30 AM	0	0	0	0	0	0	0	0	0	0	0	0	0
4/24/2024	9:45 AM	0	0	0	0	0	0	0	0	0	0	0	0	0
4/24/2024	10:00 AM	0	0	0	0	0	0	0	0	0	0	0	0	0
4/24/2024	10:15 AM	0	0	0	0	0	0	0	0	0	0	0	0	0
4/24/2024	10:30 AM	0	0	0	0	0	0	0	0	0	0	0	0	0
4/24/2024	10:45 AM	0	0	0	0	0	0	0	0	0	0	0	0	0
4/24/2024	11:00 AM	0	0	0	0	0	0	0	0	0	0	0	0	0
4/24/2024	11:15 AM	0	0	0	0	0	0	0	0	0	0	0	0	0
4/24/2024	11:30 AM	0	0	0	0	0	0	0	0	0	0	0	0	0
4/24/2024	11:45 AM	0	0	0	0	0	0	0	0	0	0	0	0	0
4/24/2024	12:00 PM	0	0	0	0	0	0	0	0	0	0	0	0	0
4/24/2024	12:15 PM	0	0	0	0	0	0	0	0	0	0	0	0	0
4/24/2024	12:30 PM	0	0	0	0	0	0	0	0	0	0	0	0	0
4/24/2024	12:45 PM	0	0	0	0	0	0	0	0	0	0	0	0	0
4/24/2024	1:00 PM	0	0	0	0	0	0	0	0	0	0	0	0	0
4/24/2024	1:15 PM	0	0	0	0	0	0	0	0	0	0	0	0	0
4/24/2024	1:30 PM	0	0	0	0	0	0	0	0	0	0	0	0	0
4/24/2024	1:45 PM	0	0	0	0	0	0	0	0	0	0	0	0	0
4/24/2024	2:00 PM	0	0	0	0	0	0	0	0	0	0	0	0	0
4/24/2024	2:15 PM	0	0	0	0	0	0	0	0	0	0	0	0	0
4/24/2024	2:30 PM	0	0	0	0	0	0	0	0	0	0	0	0	0
4/24/2024	2:45 PM	0	0	0	0	0	0	0	0	0	0	0	0	0
4/24/2024	3:00 PM	0	0	0	0	0	0	0	0	0	0	0	0	0
4/24/2024	3:15 PM	0	0	0	0	0	0	0	0	0	0	0	0	0
4/24/2024	3:30 PM	0	0	0	0	0	0	0	0	0	0	0	0	0
4/24/2024	3:45 PM	0	0	0	0	0	0	0	0	0	0	0	0	0
4/24/2024	4:00 PM	0	0	0	0	0	0	0	0	0	0	0	0	0
4/24/2024	4:15 PM	0	0	0	0	0	0	0	0	0	0	0	0	0
4/24/2024	4:30 PM	0	0	0	0	0	0	0	0	0	0	0	0	0
4/24/2024	4:45 PM	0	0	0	0	0	0	0	0	0	0	0	0	0
4/24/2024	5:00 PM	0	0	0	0	0	0	0	0	0	0	0	0	0
4/24/2024	5:15 PM	0	0	0	0	0	0	0	0	0	0	0	0	0
4/24/2024	5:30 PM	0	0	0	0	0	0	0	0	0	0	0	0	0
4/24/2024	5:45 PM	0	0	0	0	0	0	0	0	0	0	0	0	0
4/24/2024	6:00 PM	0	0	0	0	0	0	0	0	0	0	0	0	0
4/24/2024	6:15 PM	0	0	0	0	0	0	0	0	0	0	0	0	0
4/24/2024	6:30 PM	0	0	0	0	0	0	0	0	0	0	0	0	0
4/24/2024	6:45 PM	0	0	0	0	0	0	0	0	0	0	0	0	0
4/24/2024	7:00 PM	0	0	0	0	0	0	0	0	0	0	0	0	0
4/24/2024	7:15 PM	0	0	0	0	0	0	0	0	0	0	0	0	0
4/24/2024	7:30 PM	0	0	0	0	0	0	0	0	0	0	0	0	0
4/24/2024	7:45 PM	0	0	0	0	0	0	0	0	0	0	0	0	0
4/24/2024	8:00 PM	0	0	0	0	0	0	0	0	0	0	0	0	0
4/24/2024	8:15 PM	0	0	0	0	0	0	0	0	0	0	0	0	0
4/24/2024	8:30 PM	0	0	0	0	0	0	0	0	0	0	0	0	0
4/24/2024	8:45 PM	0	0	0	0	0	0	0	0	0	0	0	0	0
4/24/2024	9:00 PM	0	0	0	0	0	0	0	0	0	0	0	0	0
4/24/2024	9:15 PM	0	0	0	0	0	0	0	0	0	0	0	0	0
4/24/2024	9:30 PM	0	0	0	0	0	0	0	0	0	0	0	0	0
4/24/2024	9:45 PM	0	0	0	0	0	0	0	0	0	0	0	0	0
4/24/2024	10:00 PM	0	0	0	0	0	0	0	0	0	0	0	0	0
4/24/2024	10:15 PM	0	0	0	0	0	0	0	0	0	0	0	0	0
4/24/2024	10:30 PM	0	0	0	0	0	0	0	0	0	0	0	0	0
4/24/2024	10:45 PM	0	0	0	0	0	0	0	0	0	0	0	0	0
4/24/2024	11:00 PM	0	0	0	0	0	0	0	0	0	0	0	0	0
4/24/2024	11:15 PM	0	0	0	0	0	0	0	0	0	0	0	0	0
4/24/2024	11:30 PM	0	0	0	0	0	0	0	0	0	0	0	0	0
4/24/2024	11:45 PM	0	0	0	0	0	0	0	0	0	0	0	0	0

4/25/2024	12:00 AM	0	0	0	0	0	0	0	0	0	0	0	0	0
4/25/2024	12:15 AM	0	0	0	0	0	0	0	0	0	0	0	0	0
4/25/2024	12:30 AM	0	0	0	0	0	0	0	0	0	0	0	0	0
4/25/2024	12:45 AM	0	0	0	0	0	0	0	0	0	0	0	0	0
4/25/2024	1:00 AM	0	0	0	0	0	0	0	0	0	0	0	0	0
4/25/2024	1:15 AM	0	0	0	0	0	0	0	0	0	0	0	0	0
4/25/2024	1:30 AM	0	0	0	0	0	0	0	0	0	0	0	0	0
4/25/2024	1:45 AM	0	0	0	0	0	0	0	0	0	0	0	0	0
4/25/2024	2:00 AM	0	0	0	0	0	0	0	0	0	0	0	0	0
4/25/2024	2:15 AM	0	0	0	0	0	0	0	0	0	0	0	0	0
4/25/2024	2:30 AM	0	0	0	0	0	0	0	0	0	0	0	0	0
4/25/2024	2:45 AM	0	0	0	0	0	0	0	0	0	0	0	0	0
4/25/2024	3:00 AM	0	0	0	0	0	0	0	0	0	0	0	0	0
4/25/2024	3:15 AM	0	0	0	0	0	0	0	0	0	0	0	0	0
4/25/2024	3:30 AM	0	0	0	0	0	0	0	0	0	0	0	0	0
4/25/2024	3:45 AM	0	0	0	0	0	0	0	0	0	0	0	0	0
4/25/2024	4:00 AM	0	0	0	0	0	0	0	0	0	0	0	0	0
4/25/2024	4:15 AM	0	0	0	0	0	0	0	0	0	0	0	0	0
4/25/2024	4:30 AM	0	0	0	0	0	0	0	0	0	0	0	0	0
4/25/2024	4:45 AM	0	0	0	0	0	0	0	0	0	0	0	0	0
4/25/2024	5:00 AM	0	0	0	0	0	0	0	0	0	0	0	0	0
4/25/2024	5:15 AM	0	0	0	0	0	0	0	0	0	0	0	0	0
4/25/2024	5:30 AM	0	0	0	0	0	0	0	0	0	0	0	0	0
4/25/2024	5:45 AM	0	0	0	0	0	0	0	0	0	0	0	0	0
4/25/2024	6:00 AM	0	0	0	0	0	0	0	0	0	0	0	0	0
4/25/2024	6:15 AM	0	0	0	0	0	0	0	0	0	0	0	0	0
4/25/2024	6:30 AM	0	0	0	0	0	0	0	0	0	0	0	0	0
4/25/2024	6:45 AM	0	0	0	0	0	0	0	0	0	0	0	0	0
4/25/2024	7:00 AM	0	0	0	0	0	0	0	0	0	0	0	0	0
4/25/2024	7:15 AM	0	0	0	0	0	0	0	0	0	0	0	0	0
4/25/2024	7:30 AM	0	0	0	0	0	0	0	0	0	0	0	0	0
4/25/2024	7:45 AM	0	0	0	0	0	0	0	0	0	0	0	0	0
4/25/2024	8:00 AM	0	0	0	0	0	0	0	0	0	0	0	0	0
4/25/2024	8:15 AM	0	0	0	0	0	0	0	0	0	0	0	0	0
4/25/2024	8:30 AM	0	0	0	0	0	0	0	0	0	0	0	0	0
4/25/2024	8:45 AM	0	0	0	0	0	0	0	0	0	0	0	0	0
4/25/2024	9:00 AM	0	0	0	0	0	0	0	0	0	0	0	0	0
4/25/2024	9:15 AM	0	0	0	0	0	0	0	0	0	0	0	0	0
4/25/2024	9:30 AM	0	0	0	0	0	0	0	0	0	0	0	0	0
4/25/2024	9:45 AM	0	0	0	0	0	0	0	0	0	0	0	0	0
4/25/2024	10:00 AM	0	0	0	0	0	0	0	0	0	0	0	0	0
4/25/2024	10:15 AM	0	0	0	0	0	0	0	0	0	0	0	0	0
4/25/2024	10:30 AM	0	0	0	0	0	0	0	0	0	0	0	0	0
4/25/2024	10:45 AM	0	0	0	0	0	0	0	0	0	0	0	0	0
4/25/2024	11:00 AM	0	0	0	0	0	0	0	0	0	0	0	0	0
4/25/2024	11:15 AM	0	0	0	0	0	0	0	0	0	0	0	0	0
4/25/2024	11:30 AM	0	0	0	0	0	0	0	0	0	0	0	0	0
4/25/2024	11:45 AM	0	0	0	0	0	0	0	0	0	0	0	0	0
4/25/2024	12:00 PM	0	0	0	0	0	0	0	0	0	0	0	0	0
4/25/2024	12:15 PM	0	0	0	0	0	0	0	0	0	0	0	0	0
4/25/2024	12:30 PM	0	0	0	0	0	0	0	0	0	0	0	0	0
4/25/2024	12:45 PM	0	0	0	0	0	0	0	0	0	0	0	0	0
4/25/2024	1:00 PM	0	0	0	0	0	0	0	0	0	0	0	0	0
4/25/2024	1:15 PM	0	0	0	0	0	0	0	0	0	0	0	0	0
4/25/2024	1:30 PM	0	0	0	0	0	0	0	0	0	0	0	0	0
4/25/2024	1:45 PM	0	0	0	0	0	0	0	0	0	0	0	0	0
4/25/2024	2:00 PM	0	0	0	0	0	0	0	0	0	0	0	0	0
4/25/2024	2:15 PM	0	0	0	0	0	0	0	0	0	0	0	0	0
4/25/2024	2:30 PM	0	0	0	0	0	0	0	0	0	0	0	0	0
4/25/2024	2:45 PM	0	0	0	0	0	0	0	0	0	0	0	0	0
4/25/2024	3:00 PM	0	0	0	0	0	0	0	0	0	0	0	0	0
4/25/2024	3:15 PM	0	0	0	0	0	0	0	0	0	0	0	0	0
4/25/2024	3:30 PM	0	0	0	0	0	0	0	0	0	0	0	0	0
4/25/2024	3:45 PM	0	0	0	0	0	0	0	0	0	0	0	0	0
4/25/2024	4:00 PM	0	0	0	0	0	0	0	0	0	0	0	0	0
4/25/2024	4:15 PM	0	0	0	0	0	0	0	0	0	0	0	0	0
4/25/2024	4:30 PM	0	0	0	0	0	0	0	0	0	0	0	0	0
4/25/2024	4:45 PM	0	0	0	0	0	0	0	0	0	0	0	0	0
4/25/2024	5:00 PM	0	0	0	0	0	0	0	0	0	0	0	0	0
4/25/2024	5:15 PM	0	0	0	0	0	0	0	0	0	0	0	0	0
4/25/2024	5:30 PM	0	0	0	0	0	0	0	0	0	0	0	0	0
4/25/2024	5:45 PM	0	0	0	0	0	0	0	0	0	0	0	0	0
4/25/2024	6:00 PM	0	0	0	0	0	0	0	0	0	0	0	0	0
4/25/2024	6:15 PM	0	0	0	0	0	0	0	0	0	0	0	0	0
4/25/2024	6:30 PM	0	0	0	0	0	0	0	0	0	0	0	0	0
4/25/2024	6:45 PM	0	0	0	0	0	0	0	0	0	0	0	0	0
4/25/2024	7:00 PM	0	0	0	0	0	0	0	0	0	0	0	0	0
4/25/2024	7:15 PM	0	0	0	0	0	0	0	0	0	0	0	0	0
4/25/2024	7:30 PM	0	0	0	0	0	0	0	0	0	0	0	0	0
4/25/2024	7:45 PM	0	0	0	0	0	0	0	0	0	0	0	0	0
4/25/2024	8:00 PM	0	0	0	0	0	0	0	0	0	0	0	0	0
4/25/2024	8:15 PM	0	0	0	0	0	0	0	0	0	0	0	0	0
4/25/2024	8:30 PM	0	0	0	0	0	0	0	0	0	0	0	0	0
4/25/2024	8:45 PM	0	0	0	0	0	0	0	0	0	0	0	0	0
4/25/2024	9:00 PM	0	0	0	0	0	0	0	0	0	0	0	0	0
4/25/2024	9:15 PM	0	0	0	0	0	0	0	0	0	0	0	0	0
4/25/2024	9:30 PM	0	0	0	0	0	0	0	0	0	0	0	0	0
4/25/2024	9:45 PM	0	0	0	0	0	0	0	0	0	0	0	0	0
4/25/2024	10:00 PM	0	0	0	0	0	0	0	0	0	0	0	0	0
4/25/2024	10:15 PM	0	0	0	0	0	0	0	0	0	0	0	0	0
4/25/2024	10:30 PM	0	0	0	0	0	0	0	0	0	0	0	0	0
4/25/2024	10:45 PM	0	0	0	0	0	0	0	0	0	0	0	0	0
4/25/2024	11:00 PM	0	0	0	0	0	0	0	0	0	0	0	0	0
4/25/2024	11:15 PM	0	0	0	0	0	0	0	0	0	0	0	0	0
4/25/2024	11:30 PM	0	0	0	0	0	0	0	0	0	0	0	0	0
4/25/2024	11:45 PM	0	0	0	0	0	0	0	0	0	0	0	0	0

WB
File Name:
Start Date: 4/23/2024
Start Time: 0
Site Code: 48
Station ID: 1
Location 1: I-126 W/Bound Off-Ramp, east of Greystone Blvd
Location 2:

Date	Time	1	2	3	4	5	6	7	8	9	10	11	12	13
4/23/2024	12:00 AM	0	0	0	0	0	0	0	0	0	0	0	0	0
4/23/2024	12:15 AM	0	0	0	0	0	0	0	0	0	0	0	0	0
4/23/2024	12:30 AM	0	0	0	0	0	0	0	0	0	0	0	0	0
4/23/2024	12:45 AM	0	0	0	0	0	0	0	0	0	0	0	0	0
4/23/2024	1:00 AM	0	0	0	0	0	0	0	0	0	0	0	0	0
4/23/2024	1:15 AM	0	0	0	0	0	0	0	0	0	0	0	0	0
4/23/2024	1:30 AM	0	0	0	0	0	0	0	0	0	0	0	0	0
4/23/2024	1:45 AM	0	0	0	0	0	0	0	0	0	0	0	0	0
4/23/2024	2:00 AM	0	0	0	0	0	0	0	0	0	0	0	0	0
4/23/2024	2:15 AM	0	0	0	0	0	0	0	0	0	0	0	0	0
4/23/2024	2:30 AM	0	0	0	0	0	0	0	0	0	0	0	0	0
4/23/2024	2:45 AM	0	0	0	0	0	0	0	0	0	0	0	0	0
4/23/2024	3:00 AM	0	0	0	0	0	0	0	0	0	0	0	0	0
4/23/2024	3:15 AM	0	0	0	0	0	0	0	0	0	0	0	0	0
4/23/2024	3:30 AM	0	0	0	0	0	0	0	0	0	0	0	0	0
4/23/2024	3:45 AM	0	0	0	0	0	0	0	0	0	0	0	0	0
4/23/2024	4:00 AM	0	0	0	0	0	0	0	0	0	0	0	0	0
4/23/2024	4:15 AM	0	0	0	0	0	0	0	0	0	0	0	0	0
4/23/2024	4:30 AM	0	0	0	0	0	0	0	0	0	0	0	0	0
4/23/2024	4:45 AM	0	0	0	0	0	0	0	0	0	0	0	0	0
4/23/2024	5:00 AM	0	0	0	0	0	0	0	0	0	0	0	0	0
4/23/2024	5:15 AM	0	0	0	0	0	0	0	0	0	0	0	0	0
4/23/2024	5:30 AM	0	0	0	0	0	0	0	0	0	0	0	0	0
4/23/2024	5:45 AM	0	0	0	0	0	0	0	0	0	0	0	0	0
4/23/2024	6:00 AM	0	0	0	0	0	0	0	0	0	0	0	0	0
4/23/2024	6:15 AM	0	0	0	0	0	0	0	0	0	0	0	0	0
4/23/2024	6:30 AM	0	0	0	0	0	0	0	0	0	0	0	0	0
4/23/2024	6:45 AM	0	0	0	0	0	0	0	0	0	0	0	0	0
4/23/2024	7:00 AM	0	0	0	0	0	0	0	0	0	0	0	0	0
4/23/2024	7:15 AM	0	0	0	0	0	0	0	0	0	0	0	0	0
4/23/2024	7:30 AM	0	0	0	0	0	0	0	0	0	0	0	0	0
4/23/2024	7:45 AM	0	0	0	0	0	0	0	0	0	0	0	0	0
4/23/2024	8:00 AM	0	0	0	0	0	0	0	0	0	0	0	0	0
4/23/2024	8:15 AM	0	0	0	0	0	0	0	0	0	0	0	0	0
4/23/2024	8:30 AM	0	0	0	0	0	0	0	0	0	0	0	0	0
4/23/2024	8:45 AM	0	0	0	0	0	0	0	0	0	0	0	0	0
4/23/2024	9:00 AM	0	0	0	0	0	0	0	0	0	0	0	0	0
4/23/2024	9:15 AM	0	0	0	0	0	0	0	0	0	0	0	0	0
4/23/2024	9:30 AM	0	0	0	0	0	0	0	0	0	0	0	0	0
4/23/2024	9:45 AM	0	0	0	0	0	0	0	0	0	0	0	0	0
4/23/2024	10:00 AM	0	0	0	0	0	0	0	0	0	0	0	0	0
4/23/2024	10:15 AM	0	0	0	0	0	0	0	0	0	0	0	0	0
4/23/2024	10:30 AM	0	0	0	0	0	0	0	0	0	0	0	0	0
4/23/2024	10:45 AM	0	0	0	0	0	0	0	0	0	0	0	0	0
4/23/2024	11:00 AM	0	0	0	0	0	0	0	0	0	0	0	0	0
4/23/2024	11:15 AM	0	0	0	0	0	0	0	0	0	0	0	0	0
4/23/2024	11:30 AM	0	0	0	0	0	0	0	0	0	0	0	0	0
4/23/2024	11:45 AM	0	0	0	0	0	0	0	0	0	0	0	0	0
4/23/2024	12:00 PM	0	0	0	0	0	0	0	0	0	0	0	0	0
4/23/2024	12:15 PM	0	0	0	0	0	0	0	0	0	0	0	0	0
4/23/2024	12:30 PM	0	0	0	0	0	0	0	0	0	0	0	0	0
4/23/2024	12:45 PM	0	0	0	0	0	0	0	0	0	0	0	0	0
4/23/2024	1:00 PM	0	0	0	0	0	0	0	0	0	0	0	0	0
4/23/2024	1:15 PM	0	0	0	0	0	0	0	0	0	0	0	0	0
4/23/2024	1:30 PM	0	0	0	0	0	0	0	0	0	0	0	0	0
4/23/2024	1:45 PM	0	0	0	0	0	0	0	0	0	0	0	0	0
4/23/2024	2:00 PM	0	0	0	0	0	0	0	0	0	0	0	0	0
4/23/2024	2:15 PM	0	0	0	0	0	0	0	0	0	0	0	0	0
4/23/2024	2:30 PM	0	0	0	0	0	0	0	0	0	0	0	0	0
4/23/2024	2:45 PM	0	0	0	0	0	0	0	0	0	0	0	0	0
4/23/2024	3:00 PM	0	0	0	0	0	0	0	0	0	0	0	0	0
4/23/2024	3:15 PM	0	0	0	0	0	0	0	0	0	0	0	0	0
4/23/2024	3:30 PM	0	0	0	0	0	0	0	0	0	0	0	0	0
4/23/2024	3:45 PM	0	0	0	0	0	0	0	0	0	0	0	0	0
4/23/2024	4:00 PM	0	0	0	0	0	0	0	0	0	0	0	0	0
4/23/2024	4:15 PM	0	0	0	0	0	0	0	0	0	0	0	0	0
4/23/2024	4:30 PM	0	0	0	0	0	0	0	0	0	0	0	0	0
4/23/2024	4:45 PM	0	0	0	0	0	0	0	0	0	0	0	0	0
4/23/2024	5:00 PM	0	0	0	0	0	0	0	0	0	0	0	0	0
4/23/2024	5:15 PM	0	0	0	0	0	0	0	0	0	0	0	0	0
4/23/2024	5:30 PM	0	0	0	0	0	0	0	0	0	0	0	0	0
4/23/2024	5:45 PM	0	0	0	0	0	0	0	0	0	0	0	0	0
4/23/2024	6:00 PM	0	0	0	0	0	0	0	0	0	0	0	0	0
4/23/2024	6:15 PM	0	63	2	3	0	0	0	0	0	0	0	0	0
4/23/2024	6:30 PM	1	118	7	7	0	0	0	1	0	0	0	0	0
4/23/2024	6:45 PM	1	161	10	9	0	0	0	1	0	0	0	0	0
4/23/2024	7:00 PM	1	214	15	10	0	0	0	1	0	0	0	0	0
4/23/2024	7:15 PM	1	208	17	7	0	0	0	1	0	0	0	0	0
4/23/2024	7:30 PM	0	210	14	5	0	0	0	0	0	0	0	0	0
4/23/2024	7:45 PM	0	233	13	4	0	0	0	0	0	0	0	0	0
4/23/2024	8:00 PM	0	241	10	3	0	0	0	0	0	0	0	0	0
4/23/2024	8:15 PM	0	244	7	4	0	0	0	0	0	0	0	0	0
4/23/2024	8:30 PM	0	222	6	3	0	0	0	0	0	0	0	0	0
4/23/2024	8:45 PM	0	206	6	3	0	0	0	0	0	0	0	0	0
4/23/2024	9:00 PM	0	182	5	3	0	0	0	0	0	0	0	0	0
4/23/2024	9:15 PM	0	164	5	3	0	0	0	0	0	0	0	0	0
4/23/2024	9:30 PM	0	169	5	3	0	0	0	0	0	0	0	0	0
4/23/2024	9:45 PM	0	144	5	3	0	0	0	0	0	0	0	0	0
4/23/2024	10:00 PM	0	130	5	3	0	0	0	0	1	0	0	0	0
4/23/2024	10:15 PM	0	116	6	2	0	0	0	0	1	0	0	0	0
4/23/2024	10:30 PM	0	104	7	1	1	0	0	0	1	0	0	0	0
4/23/2024	10:45 PM	0	95	5	0	1	0	0	0	1	0	0	0	0
4/23/2024	11:00 PM	0	82	5	0	1	0	0	0	0	0	0	0	0
4/23/2024	11:15 PM	0	54	3	0	1	0	0	0	0	0	0	0	0
4/23/2024	11:30 PM	0	26	1	0	0	0	0	0	0	0	0	0	0
4/23/2024	11:45 PM	0	10	1	0	0	0	0	0	0	0	0	0	0

4/24/2024	12:00 AM	1	60	5	3	0	0	0	0	0	0	0	0	0
4/24/2024	12:15 AM	1	58	5	2	0	0	0	0	0	0	0	0	0
4/24/2024	12:30 AM	0	45	4	2	0	0	0	0	0	0	0	0	0
4/24/2024	12:45 AM	0	42	4	0	0	2	0	0	0	0	0	0	0
4/24/2024	1:00 AM	0	34	3	0	0	2	0	0	0	0	0	0	0
4/24/2024	1:15 AM	0	32	3	0	0	2	0	0	0	0	0	0	0
4/24/2024	1:30 AM	0	34	3	0	0	2	0	0	0	0	0	0	0
4/24/2024	1:45 AM	0	29	2	0	0	0	0	0	0	0	0	0	0
4/24/2024	2:00 AM	0	21	2	0	0	0	0	0	0	0	0	0	0
4/24/2024	2:15 AM	0	15	1	0	0	0	0	0	0	0	0	0	0
4/24/2024	2:30 AM	0	14	1	0	0	1	0	0	0	0	0	0	0
4/24/2024	2:45 AM	0	15	1	0	0	2	0	0	0	0	0	0	0
4/24/2024	3:00 AM	0	14	1	0	0	2	0	0	0	0	0	0	0
4/24/2024	3:15 AM	0	19	1	0	0	3	0	0	0	0	0	0	0
4/24/2024	3:30 AM	0	19	1	0	0	2	0	0	0	0	0	0	0
4/24/2024	3:45 AM	0	18	0	0	0	1	0	0	0	0	0	0	0
4/24/2024	4:00 AM	0	27	1	0	0	1	0	0	0	0	0	0	0
4/24/2024	4:15 AM	0	28	1	0	0	0	0	0	0	0	0	0	0
4/24/2024	4:30 AM	0	32	2	0	0	0	0	0	0	0	0	0	0
4/24/2024	4:45 AM	0	36	2	0	0	0	0	0	0	0	0	0	0
4/24/2024	5:00 AM	0	40	2	0	0	0	0	0	0	0	0	0	0
4/24/2024	5:15 AM	0	54	3	0	0	0	0	0	0	0	0	0	0
4/24/2024	5:30 AM	0	64	5	1	0	0	0	0	0	0	0	0	0
4/24/2024	5:45 AM	0	84	9	2	0	0	0	0	0	0	0	0	0
4/24/2024	6:00 AM	0	121	14	4	2	1	0	0	0	0	0	0	0
4/24/2024	6:15 AM	0	140	17	4	4	3	0	0	0	0	0	0	0
4/24/2024	6:30 AM	0	202	20	4	4	4	0	0	0	0	0	0	0
4/24/2024	6:45 AM	0	243	22	4	4	5	0	0	0	0	0	0	0
4/24/2024	7:00 AM	0	293	21	3	5	4	0	0	2	0	0	0	0
4/24/2024	7:15 AM	0	360	23	4	5	3	1	0	2	0	0	0	0
4/24/2024	7:30 AM	0	386	24	5	6	2	2	1	2	0	0	0	0
4/24/2024	7:45 AM	0	410	22	6	8	3	2	1	4	0	0	0	0
4/24/2024	8:00 AM	0	418	28	5	6	3	2	2	2	0	0	0	0
4/24/2024	8:15 AM	0	393	26	5	5	3	1	2	3	0	0	0	0
4/24/2024	8:30 AM	0	378	23	3	5	6	0	1	3	0	0	0	0
4/24/2024	8:45 AM	1	362	25	1	6	6	0	1	1	0	0	0	0
4/24/2024	9:00 AM	1	346	21	3	7	7	0	0	1	0	0	0	0
4/24/2024	9:15 AM	1	329	22	3	8	8	0	0	0	0	0	0	0
4/24/2024	9:30 AM	1	310	28	5	9	5	0	0	1	0	0	0	0
4/24/2024	9:45 AM	0	306	33	7	8	3	0	0	1	0	0	0	0
4/24/2024	10:00 AM	1	286	34	5	7	3	0	0	1	0	0	0	0
4/24/2024	10:15 AM	1	282	34	5	6	2	0	0	1	0	0	0	0
4/24/2024	10:30 AM	1	281	30	4	5	5	0	0	1	0	0	0	0
4/24/2024	10:45 AM	1	289	25	2	4	5	0	0	1	0	0	0	0
4/24/2024	11:00 AM	0	292	22	2	4	4	0	0	1	0	0	0	0
4/24/2024	11:15 AM	1	307	24	2	3	5	0	0	1	0	0	0	0
4/24/2024	11:30 AM	1	313	23	2	3	3	0	0	0	0	0	0	0
4/24/2024	11:45 AM	2	315	29	4	2	4	0	0	0	0	0	0	0
4/24/2024	12:00 PM	2	329	34	4	1	4	0	0	0	0	0	0	0
4/24/2024	12:15 PM	1	325	33	3	1	4	0	0	0	0	0	0	0
4/24/2024	12:30 PM	1	336	34	3	2	3	0	0	1	0	0	0	0
4/24/2024	12:45 PM	0	332	31	3	3	3	0	0	1	0	0	0	0
4/24/2024	1:00 PM	0	322	25	3	4	4	0	0	1	0	0	0	0
4/24/2024	1:15 PM	0	330	29	3	5	2	0	0	1	0	0	0	0
4/24/2024	1:30 PM	0	328	32	4	4	4	0	0	0	0	0	0	0
4/24/2024	1:45 PM	0	335	33	4	3	4	0	0	0	0	0	0	0
4/24/2024	2:00 PM	0	335	40	5	3	3	0	0	0	0	0	0	0
4/24/2024	2:15 PM	0	325	38	6	4	3	0	1	1	0	0	0	0
4/24/2024	2:30 PM	0	306	37	5	3	1	0	1	1	0	0	0	0
4/24/2024	2:45 PM	0	296	39	4	3	0	0	1	1	0	0	0	0
4/24/2024	3:00 PM	0	276	35	3	4	0	0	1	1	0	0	0	0
4/24/2024	3:15 PM	0	282	38	2	3	0	0	0	0	0	0	0	0
4/24/2024	3:30 PM	0	308	42	1	4	0	0	0	0	0	0	0	0
4/24/2024	3:45 PM	0	310	39	2	4	0	0	0	0	0	0	0	0
4/24/2024	4:00 PM	0	340	42	3	3	0	0	0	0	0	0	0	0
4/24/2024	4:15 PM	0	361	44	4	2	0	0	0	0	0	0	0	0
4/24/2024	4:30 PM	0	392	47	5	1	0	0	0	0	0	0	0	0
4/24/2024	4:45 PM	0	419	45	5	1	0	0	0	0	0	0	0	0
4/24/2024	5:00 PM	0	397	41	5	0	0	0	0	0	0	0	0	0
4/24/2024	5:15 PM	1	361	34	7	0	0	0	0	1	0	0	0	0
4/24/2024	5:30 PM	1	307	27	11	1	0	0	3	1	0	0	0	0
4/24/2024	5:45 PM	1	254	24	10	1	0	0	3	1	0	0	0	0
4/24/2024	6:00 PM	1	253	23	11	1	0	0	3	1	0	0	0	0
4/24/2024	6:15 PM	0	248	24	11	1	0	0	3	0	0	0	0	0
4/24/2024	6:30 PM	0	235	23	9	1	0	0	0	0	0	0	0	0
4/24/2024	6:45 PM	0	232	25	9	1	0	0	0	0	0	0	0	0
4/24/2024	7:00 PM	0	217	23	8	1	0	0	0	0	0	0	0	0
4/24/2024	7:15 PM	0	201	19	5	1	0	0	0	0	0	0	0	0
4/24/2024	7:30 PM	1	177	16	4	1	0	0	0	0	0	0	0	0
4/24/2024	7:45 PM	1	191	15	3	1	0	0	0	0	0	0	0	0
4/24/2024	8:00 PM	1	190	16	2	1	0	0	0	0	0	0	0	0
4/24/2024	8:15 PM	1	177	16	3	1	0	0	0	1	0	0	0	0
4/24/2024	8:30 PM	0	183	16	2	1	0	0	0	1	0	0	0	0
4/24/2024	8:45 PM	0	147	13	3	1	0	0	0	1	0	0	0	0
4/24/2024	9:00 PM	0	141	13	4	1	0	0	0	1	0	0	0	0
4/24/2024	9:15 PM	0	146	13	3	1	0	0	0	0	0	0	0	0
4/24/2024	9:30 PM	0	146	13	2	0	0	0	0	0	0	0	0	0
4/24/2024	9:45 PM	0	150	13	1	0	0	0	0	0	0	0	0	0
4/24/2024	10:00 PM	0	134	10	0	0	0	0	0	0	0	0	0	0
4/24/2024	10:15 PM	0	128	9	0	0	0	0	0	0	0	0	0	0
4/24/2024	10:30 PM	0	108	7	1	0	0	0	0	0	0	0	0	0
4/24/2024	10:45 PM	0	97	6	1	0	0	0	0	0	0	0	0	0
4/24/2024	11:00 PM	0	84	6	1	0	0	0	0	1	0	0	0	0
4/24/2024	11:15 PM	0	56	4	1	0	0	0	0	1	0	0	0	0
4/24/2024	11:30 PM	0	37	2	0	0	0	0	0	1	0	0	0	0
4/24/2024	11:45 PM	0	16	1	0	0	0	0	0	1	0	0	0	0

4/25/2024	12:00 AM	0	50	6	2	1	0	0	0	0	0	0	0
4/25/2024	12:15 AM	0	46	6	2	1	0	0	0	0	0	0	0
4/25/2024	12:30 AM	0	43	4	2	1	0	0	0	1	0	0	0	0
4/25/2024	12:45 AM	0	37	5	0	0	0	0	0	1	0	0	0	0
4/25/2024	1:00 AM	0	38	5	0	0	0	0	0	1	0	0	0	0
4/25/2024	1:15 AM	0	41	6	0	0	1	0	0	1	0	0	0	0
4/25/2024	1:30 AM	0	43	7	0	0	1	0	0	0	0	0	0	0
4/25/2024	1:45 AM	0	36	5	0	0	1	0	0	0	0	0	0	0
4/25/2024	2:00 AM	0	34	4	0	0	1	0	0	0	0	0	0	0
4/25/2024	2:15 AM	0	28	2	0	0	0	0	0	0	0	0	0	0
4/25/2024	2:30 AM	0	19	0	0	0	1	0	0	0	0	0	0	0
4/25/2024	2:45 AM	0	23	0	0	0	2	0	0	0	0	0	0	0
4/25/2024	3:00 AM	0	19	0	0	0	2	0	0	0	0	0	0	0
4/25/2024	3:15 AM	0	16	0	0	0	2	0	0	0	0	0	0	0
4/25/2024	3:30 AM	0	14	0	0	0	1	0	0	0	0	0	0	0
4/25/2024	3:45 AM	0	12	0	0	0	0	0	0	0	0	0	0	0
4/25/2024	4:00 AM	0	18	2	0	0	0	0	1	0	0	0	0	0
4/25/2024	4:15 AM	0	25	3	0	0	0	0	1	0	0	0	0	0
4/25/2024	4:30 AM	0	32	4	0	0	0	0	1	0	0	0	0	0
4/25/2024	4:45 AM	0	39	5	0	0	0	0	1	0	0	0	0	0
4/25/2024	5:00 AM	0	46	5	0	0	0	0	0	0	0	0	0	0
4/25/2024	5:15 AM	0	55	7	0	0	0	0	0	0	0	0	0	0
4/25/2024	5:30 AM	0	63	8	1	1	0	0	1	1	0	0	0	0
4/25/2024	5:45 AM	0	75	11	1	1	0	0	1	1	0	0	0	0
4/25/2024	6:00 AM	0	107	15	2	2	0	0	1	1	0	0	0	0
4/25/2024	6:15 AM	0	132	18	2	3	1	0	1	1	0	0	0	0
4/25/2024	6:30 AM	0	188	23	3	2	2	0	0	0	0	0	0	0
4/25/2024	6:45 AM	0	247	28	3	2	2	0	0	0	0	0	0	0
4/25/2024	7:00 AM	0	299	33	2	3	2	0	0	0	0	0	0	0
4/25/2024	7:15 AM	0	356	43	2	3	1	0	0	0	0	0	0	0
4/25/2024	7:30 AM	0	372	47	0	5	0	0	1	0	0	0	0	0
4/25/2024	7:45 AM	0	402	48	1	6	1	1	1	0	0	0	0	0
4/25/2024	8:00 AM	0	403	50	3	5	3	1	1	0	0	0	0	0
4/25/2024	8:15 AM	0	373	39	10	4	3	1	1	0	0	0	0	0
4/25/2024	8:30 AM	0	350	40	13	2	3	1	0	0	0	0	0	0
4/25/2024	8:45 AM	0	325	42	13	4	3	0	0	1	0	0	0	0
4/25/2024	9:00 AM	0	316	39	12	4	3	0	0	2	0	0	0	0
4/25/2024	9:15 AM	0	331	41	5	6	4	0	0	2	0	0	0	0
4/25/2024	9:30 AM	0	356	39	4	6	5	0	0	2	0	0	0	0
4/25/2024	9:45 AM	0	346	31	6	4	7	0	0	1	0	0	0	0
4/25/2024	10:00 AM	0	329	30	5	6	7	0	0	0	0	0	0	0
4/25/2024	10:15 AM	1	317	28	7	6	6	0	0	1	0	0	0	0
4/25/2024	10:30 AM	1	297	24	7	7	7	0	0	1	0	0	0	0
4/25/2024	10:45 AM	1	298	34	6	7	6	0	0	1	0	0	0	0
4/25/2024	11:00 AM	1	318	42	7	4	5	0	0	2	0	0	0	0
4/25/2024	11:15 AM	0	328	47	5	3	5	0	0	1	0	0	0	0
4/25/2024	11:30 AM	0	349	50	3	3	9	0	0	1	0	0	0	0
4/25/2024	11:45 AM	0	367	46	3	3	7	0	0	1	0	0	0	0
4/25/2024	12:00 PM	0	366	41	3	3	7	0	0	0	0	0	0	0
4/25/2024	12:15 PM	0	404	48	4	3	8	0	0	0	0	0	0	0
4/25/2024	12:30 PM	0	401	44	6	3	5	0	0	0	0	0	0	0
4/25/2024	12:45 PM	0	399	44	4	2	9	0	0	0	0	0	0	0
4/25/2024	1:00 PM	0	391	45	4	4	8	0	0	0	0	0	0	0
4/25/2024	1:15 PM	0	341	39	5	3	12	0	0	0	0	0	0	0
4/25/2024	1:30 PM	0	339	49	3	3	10	0	0	0	0	0	0	0
4/25/2024	1:45 PM	0	325	51	5	3	9	0	0	0	0	0	0	0
4/25/2024	2:00 PM	0	328	52	5	1	12	0	0	0	0	0	0	0
4/25/2024	2:15 PM	0	327	48	5	1	9	0	0	0	0	0	0	0
4/25/2024	2:30 PM	0	324	44	7	0	10	0	0	0	0	0	0	0
4/25/2024	2:45 PM	0	325	42	6	0	10	0	0	0	0	0	0	0
4/25/2024	3:00 PM	1	319	38	6	3	8	0	0	0	0	0	0	0
4/25/2024	3:15 PM	1	329	39	4	5	6	0	0	0	0	0	0	0
4/25/2024	3:30 PM	1	340	42	2	5	4	0	0	0	0	0	0	0
4/25/2024	3:45 PM	1	345	42	3	5	2	0	0	0	0	0	0	0
4/25/2024	4:00 PM	0	344	45	3	4	1	0	0	0	0	0	0	0
4/25/2024	4:15 PM	0	347	49	3	2	1	0	0	0	0	0	0	0
4/25/2024	4:30 PM	0	393	55	3	2	1	0	0	0	0	0	0	0
4/25/2024	4:45 PM	1	421	60	3	2	0	0	0	0	0	0	0	0
4/25/2024	5:00 PM	1	456	56	4	0	0	0	0	0	0	0	0	0
4/25/2024	5:15 PM	1	450	53	6	0	0	0	0	0	0	0	0	0
4/25/2024	5:30 PM	1	380	39	10	3	0	0	0	0	0	0	0	0
4/25/2024	5:45 PM	0	310	34	10	4	0	0	0	0	0	0	0	0
4/25/2024	6:00 PM	0	258	28	9	5	0	0	0	0	0	0	0	0
4/25/2024	6:15 PM	0	180	19	7	5	0	0	0	0	0	0	0	0
4/25/2024	6:30 PM	0	109	13	3	2	0	0	0	0	0	0	0	0
4/25/2024	6:45 PM	0	66	3	1	1	0	0	0	0	0	0	0	0
4/25/2024	7:00 PM	0	0	0	0	0	0	0	0	0	0	0	0	0
4/25/2024	7:15 PM	0	0	0	0	0	0	0	0	0	0	0	0	0
4/25/2024	7:30 PM	0	0	0	0	0	0	0	0	0	0	0	0	0
4/25/2024	7:45 PM	0	0	0	0	0	0	0	0	0	0	0	0	0
4/25/2024	8:00 PM	0	0	0	0	0	0	0	0	0	0	0	0	0
4/25/2024	8:15 PM	0	0	0	0	0	0	0	0	0	0	0	0	0
4/25/2024	8:30 PM	0	0	0	0	0	0	0	0	0	0	0	0	0
4/25/2024	8:45 PM	0	0	0	0	0	0	0	0	0	0	0	0	0
4/25/2024	9:00 PM	0	0	0	0	0	0	0	0	0	0	0	0	0
4/25/2024	9:15 PM	0	0	0	0	0	0	0	0	0	0	0	0	0
4/25/2024	9:30 PM	0	0	0	0	0	0	0	0	0	0	0	0	0
4/25/2024	9:45 PM	0	0	0	0	0	0	0	0	0	0	0	0	0
4/25/2024	10:00 PM	0	0	0	0	0	0	0	0	0	0	0	0	0
4/25/2024	10:15 PM	0	0	0	0	0	0	0	0	0	0	0	0	0
4/25/2024	10:30 PM	0	0	0	0	0	0	0	0	0	0	0	0	0
4/25/2024	10:45 PM	0	0	0	0	0	0	0	0	0	0	0	0	0
4/25/2024	11:00 PM	0	0	0	0	0	0	0	0	0	0	0	0	0
4/25/2024	11:15 PM	0	0	0	0	0	0	0	0	0	0	0	0	0
4/25/2024	11:30 PM	0	0	0	0	0	0	0	0	0	0	0	0	0
4/25/2024	11:45 PM	0	0	0	0	0	0	0	0	0	0	0	0	0

Bi-Directional Class Count || SB WB 15min

Columbia, SC

Marr Traffic DATA COLLECTION
www.marrtraffic.com

Site 49
I-126 W/Bound On-Ramp,
west of Greystone Blvd

Date
Tuesday, April 23, 2024

Lat/Long
34.013079°, -81.076940°

Weather
Fair
58°F

Click here for Detailed Weather

Click here for Map

0000 - 2400 (Weekday 24h Session) (04-23-2024)
SB WB 15min

	Westbound (Movement 49.1)													15min	60min
Time	1	2	3	4	5	6	7	8	9	10	11	12	13	Total	Total
0000 - 0015	0	0	0	0	0	0	0	0	0	0	0	0	0	**0**	
0015 - 0030	0	0	0	0	0	0	0	0	0	0	0	0	0	**0**	
0030 - 0045	0	0	0	0	0	0	0	0	0	0	0	0	0	**0**	
0045 - 0100	0	0	0	0	0	0	0	0	0	0	0	0	0	**0**	**0**
0100 - 0115	0	0	0	0	0	0	0	0	0	0	0	0	0	**0**	
0115 - 0130	0	0	0	0	0	0	0	0	0	0	0	0	0	**0**	
0130 - 0145	0	0	0	0	0	0	0	0	0	0	0	0	0	**0**	
0145 - 0200	0	0	0	0	0	0	0	0	0	0	0	0	0	**0**	**0**
0200 - 0215	0	0	0	0	0	0	0	0	0	0	0	0	0	**0**	
0215 - 0230	0	0	0	0	0	0	0	0	0	0	0	0	0	**0**	
0230 - 0245	0	0	0	0	0	0	0	0	0	0	0	0	0	**0**	
0245 - 0300	0	0	0	0	0	0	0	0	0	0	0	0	0	**0**	**0**
0300 - 0315	0	0	0	0	0	0	0	0	0	0	0	0	0	**0**	
0315 - 0330	0	0	0	0	0	0	0	0	0	0	0	0	0	**0**	
0330 - 0345	0	0	0	0	0	0	0	0	0	0	0	0	0	**0**	
0345 - 0400	0	0	0	0	0	0	0	0	0	0	0	0	0	**0**	**0**
0400 - 0415	0	0	0	0	0	0	0	0	0	0	0	0	0	**0**	
0415 - 0430	0	0	0	0	0	0	0	0	0	0	0	0	0	**0**	
0430 - 0445	0	0	0	0	0	0	0	0	0	0	0	0	0	**0**	
0445 - 0500	0	0	0	0	0	0	0	0	0	0	0	0	0	**0**	**0**
0500 - 0515	0	0	0	0	0	0	0	0	0	0	0	0	0	**0**	
0515 - 0530	0	0	0	0	0	0	0	0	0	0	0	0	0	**0**	
0530 - 0545	0	0	0	0	0	0	0	0	0	0	0	0	0	**0**	
0545 - 0600	0	0	0	0	0	0	0	0	0	0	0	0	0	**0**	**0**
0600 - 0615	0	0	0	0	0	0	0	0	0	0	0	0	0	**0**	
0615 - 0630	0	0	0	0	0	0	0	0	0	0	0	0	0	**0**	
0630 - 0645	0	0	0	0	0	0	0	0	0	0	0	0	0	**0**	
0645 - 0700	0	0	0	0	0	0	0	0	0	0	0	0	0	**0**	**0**
0700 - 0715	0	0	0	0	0	0	0	0	0	0	0	0	0	**0**	
0715 - 0730	0	0	0	0	0	0	0	0	0	0	0	0	0	**0**	
0730 - 0745	0	0	0	0	0	0	0	0	0	0	0	0	0	**0**	
0745 - 0800	0	0	0	0	0	0	0	0	0	0	0	0	0	**0**	**0**
0800 - 0815	0	0	0	0	0	0	0	0	0	0	0	0	0	**0**	
0815 - 0830	0	0	0	0	0	0	0	0	0	0	0	0	0	**0**	
0830 - 0845	0	0	0	0	0	0	0	0	0	0	0	0	0	**0**	
0845 - 0900	0	0	0	0	0	0	0	0	0	0	0	0	0	**0**	**0**
0900 - 0915	0	0	0	0	0	0	0	0	0	0	0	0	0	**0**	
0915 - 0930	0	0	0	0	0	0	0	0	0	0	0	0	0	**0**	
0930 - 0945	0	0	0	0	0	0	0	0	0	0	0	0	0	**0**	
0945 - 1000	0	0	0	0	0	0	0	0	0	0	0	0	0	**0**	**0**
1000 - 1015	0	0	0	0	0	0	0	0	0	0	0	0	0	**0**	
1015 - 1030	0	0	0	0	0	0	0	0	0	0	0	0	0	**0**	
1030 - 1045	0	0	0	0	0	0	0	0	0	0	0	0	0	**0**	
1045 - 1100	0	0	0	0	0	0	0	0	0	0	0	0	0	**0**	**0**
1100 - 1115	0	0	0	0	0	0	0	0	0	0	0	0	0	**0**	
1115 - 1130	0	0	0	0	0	0	0	0	0	0	0	0	0	**0**	
1130 - 1145	0	0	0	0	0	0	0	0	0	0	0	0	0	**0**	
1145 - 1200	0	0	0	0	0	0	0	0	0	0	0	0	0	**0**	**0**
1200 - 1215	0	0	0	0	0	0	0	0	0	0	0	0	0	**0**	
1215 - 1230	0	0	0	0	0	0	0	0	0	0	0	0	0	**0**	
1230 - 1245	0	0	0	0	0	0	0	0	0	0	0	0	0	**0**	
1245 - 1300	0	0	0	0	0	0	0	0	0	0	0	0	0	**0**	**0**
1300 - 1315	0	0	0	0	0	0	0	0	0	0	0	0	0	**0**	
1315 - 1330	0	0	0	0	0	0	0	0	0	0	0	0	0	**0**	
1330 - 1345	0	0	0	0	0	0	0	0	0	0	0	0	0	**0**	
1345 - 1400	0	0	0	0	0	0	0	0	0	0	0	0	0	**0**	**0**
1400 - 1415	0	0	0	0	0	0	0	0	0	0	0	0	0	**0**	
1415 - 1430	0	0	0	0	0	0	0	0	0	0	0	0	0	**0**	
1430 - 1445	0	0	0	0	0	0	0	0	0	0	0	0	0	**0**	
1445 - 1500	0	0	0	0	0	0	0	0	0	0	0	0	0	**0**	**0**
1500 - 1515	0	0	0	0	0	0	0	0	0	0	0	0	0	**0**	
1515 - 1530	0	0	0	0	0	0	0	0	0	0	0	0	0	**0**	
1530 - 1545	0	0	0	0	0	0	0	0	0	0	0	0	0	**0**	
1545 - 1600	0	0	0	0	0	0	0	0	0	0	0	0	0	**0**	**0**
1600 - 1615	0	0	0	0	0	0	0	0	0	0	0	0	0	**0**	
1615 - 1630	0	0	0	0	0	0	0	0	0	0	0	0	0	**0**	
1630 - 1645	0	0	0	0	0	0	0	0	0	0	0	0	0	**0**	
1645 - 1700	0	0	0	0	0	0	0	0	0	0	0	0	0	**0**	**0**
1700 - 1715	0	0	0	0	0	0	0	0	0	0	0	0	0	**0**	
1715 - 1730	0	0	0	0	0	0	0	0	0	0	0	0	0	**0**	
1730 - 1745	0	0	0	0	0	0	0	0	0	0	0	0	0	**0**	
1745 - 1800	0	0	0	0	0	0	0	0	0	0	0	0	0	**0**	**0**
1800 - 1815	0	0	0	0	0	0	0	0	0	0	0	0	0	**0**	
1815 - 1830	0	0	0	0	0	0	0	0	0	0	0	0	0	**0**	
1830 - 1845	0	0	0	0	0	0	0	0	0	0	0	0	0	**0**	
1845 - 1900	0	0	0	0	0	0	0	0	0	0	0	0	0	**0**	**0**
1900 - 1915	0	58	10	0	1	0	0	0	0	0	0	0	0	**69**	
1915 - 1930	0	36	4	0	0	1	0	0	0	0	0	0	0	**41**	
1930 - 1945	0	41	10	0	1	0	0	0	0	0	0	0	0	**52**	
1945 - 2000	0	42	9	0	2	0	0	1	0	0	0	0	0	**54**	**216**
2000 - 2015	0	45	12	0	1	1	0	0	0	0	0	0	0	**59**	
2015 - 2030	0	43	13	0	1	0	0	0	0	0	0	0	0	**57**	
2030 - 2045	0	34	10	0	0	0	0	0	0	0	0	0	0	**44**	
2045 - 2100	0	26	7	0	0	3	0	0	0	0	0	0	0	**36**	**196**
2100 - 2115	0	18	6	0	0	2	0	0	0	0	0	0	0	**26**	
2115 - 2130	0	22	8	0	0	1	0	0	0	0	0	0	0	**31**	
2130 - 2145	0	23	3	0	0	1	0	0	0	0	0	0	0	**27**	
2145 - 2200	0	14	1	0	0	0	0	0	0	0	0	0	0	**15**	**99**
2200 - 2215	0	20	5	0	0	1	0	0	0	0	0	0	0	**26**	
2215 - 2230	0	17	3	0	1	0	0	0	0	0	0	0	0	**21**	
2230 - 2245	0	16	1	0	0	2	1	0	0	0	0	0	0	**20**	
2245 - 2300	0	22	3	0	0	2	0	0	0	0	0	0	0	**27**	**94**
2300 - 2315	0	25	6	0	0	1	0	0	0	0	0	0	0	**32**	
2315 - 2330	0	12	0	0	0	1	0	0	0	0	0	0	0	**13**	
2330 - 2345	0	8	4	0	1	0	0	0	0	0	0	0	0	**13**	
2345 - 0000	0	12	4	0	0	4	0	0	0	0	0	0	0	**20**	**78**

Session Total	0	534	119	0	8	20	1	1	0	0	0	0	0	**683**
Session Average	0.00	5.56	1.24	0.00	0.08	0.21	0.01	0.01	0.00	0.00	0.00	0.00	0.00	**7.11**
Session Percentage	0.00	78.18	17.42	0.00	1.17	2.93	0.15	0.15	0.00	0.00	0.00	0.00	0.00	

AM Peak Hour	-	-	-	-	-	-	-	-	-	-	-	-	-	**-**
AM Peak Volume	0	0	0	0	0	0	0	0	0	0	0	0	0	**0**

Noon Peak Hour	-	-	-	-	-	-	-	-	-	-	-	-	-	**-**
Noon Peak Volume	0	0	0	0	0	0	0	0	0	0	0	0	0	**0**

PM Peak Hour	-	1900 - 2000	1930 - 2030	-	1930 - 2030	1915 - 2015	-	1900 - 2000	-	-	-	-	-	**1930 - 2030**
PM Peak Volume	0	177	44	0	5	2	0	1	0	0	0	0	0	**222**

Site 49
I-126 W/Bound On-Ramp,
west of Greystone Blvd

Date
Wednesday, April 24, 2024

Lat/Long
34.013079°, -81.076940°

Weather
Fair
66°F

Click here for Detailed Weather

0000 - 2400 (Weekday 24h Session) (04-24-2024)
SB WB 15min

	Westbound (Movement 49.1)													15min	60min
Time	1	2	3	4	5	6	7	8	9	10	11	12	13	Total	Total
0000 - 0015	0	6	1	0	0	1	0	0	0	0	0	0	0	**8**	
0015 - 0030	0	6	3	0	0	0	0	0	0	1	0	0	0	**10**	
0030 - 0045	0	5	0	0	0	1	0	0	1	0	0	0	0	**7**	
0045 - 0100	0	7	2	0	0	3	0	0	0	0	0	0	0	**12**	**37**
0100 - 0115	0	4	1	0	0	1	0	0	0	0	0	0	0	**6**	
0115 - 0130	0	2	2	0	0	7	0	0	1	0	0	0	0	**12**	
0130 - 0145	0	7	3	0	0	1	0	0	0	0	0	0	0	**11**	
0145 - 0200	0	6	0	0	0	0	0	0	0	0	0	0	0	**6**	**35**
0200 - 0215	0	5	0	0	0	1	0	0	0	0	0	0	0	**6**	
0215 - 0230	0	4	4	0	0	1	0	0	1	0	0	0	0	**10**	
0230 - 0245	0	3	1	0	3	1	0	0	0	0	0	0	0	**8**	
0245 - 0300	0	7	2	0	0	1	0	0	0	0	0	0	0	**10**	**34**
0300 - 0315	0	7	1	0	0	1	0	0	0	0	0	0	0	**9**	
0315 - 0330	0	5	2	0	0	0	0	0	0	0	0	0	0	**7**	
0330 - 0345	0	5	2	0	0	0	0	0	0	0	0	0	0	**7**	
0345 - 0400	0	5	0	0	0	0	0	0	0	0	0	0	0	**5**	**28**
0400 - 0415	0	3	0	0	0	0	0	0	0	0	0	0	0	**3**	
0415 - 0430	0	10	3	0	0	0	0	0	0	0	0	0	0	**13**	
0430 - 0445	0	11	3	0	0	0	0	0	1	0	0	0	0	**15**	
0445 - 0500	0	10	5	0	0	0	0	0	1	0	0	0	0	**16**	**47**
0500 - 0515	0	11	4	0	0	0	0	0	0	0	0	0	0	**15**	
0515 - 0530	0	14	5	0	0	1	0	0	0	0	0	0	0	**20**	
0530 - 0545	0	18	4	0	0	1	0	0	1	0	0	0	0	**24**	
0545 - 0600	0	20	6	0	0	0	0	0	0	0	0	0	0	**26**	**85**
0600 - 0615	0	22	7	0	2	1	0	0	0	0	0	0	0	**32**	
0615 - 0630	0	27	5	0	0	0	0	0	1	0	0	0	0	**33**	
0630 - 0645	0	44	7	0	0	0	0	0	0	0	0	0	0	**51**	
0645 - 0700	0	47	8	0	4	1	0	0	0	0	0	0	0	**60**	**176**
0700 - 0715	0	66	17	0	1	0	0	0	0	0	0	0	0	**84**	
0715 - 0730	0	64	16	0	0	0	0	0	0	0	0	0	0	**80**	
0730 - 0745	0	71	23	0	3	2	0	0	0	1	0	0	0	**100**	
0745 - 0800	0	77	23	0	2	0	0	0	2	0	0	0	0	**104**	**368**
0800 - 0815	0	55	20	1	3	1	0	0	2	0	0	0	0	**82**	
0815 - 0830	0	64	24	0	4	1	0	0	0	0	0	0	0	**93**	
0830 - 0845	0	63	20	1	0	0	0	1	0	0	0	0	0	**85**	
0845 - 0900	0	58	12	0	3	0	0	1	0	0	0	0	0	**74**	**334**
0900 - 0915	0	73	21	0	1	0	0	0	0	0	0	0	0	**95**	
0915 - 0930	0	53	16	0	1	0	0	0	2	0	0	0	0	**72**	
0930 - 0945	0	45	16	1	1	0	0	0	0	0	0	0	0	**63**	
0945 - 1000	0	68	19	0	2	0	0	0	0	0	0	0	0	**89**	**319**
1000 - 1015	0	54	14	0	0	0	0	0	0	0	0	0	0	**68**	
1015 - 1030	0	56	17	0	1	0	0	1	0	0	0	0	0	**75**	
1030 - 1045	0	53	16	1	3	0	0	1	0	1	0	0	0	**75**	
1045 - 1100	0	66	16	1	2	1	0	0	0	0	0	0	0	**86**	**304**
1100 - 1115	2	66	20	0	1	1	0	0	0	1	0	0	0	**91**	
1115 - 1130	0	66	21	0	2	1	0	1	0	1	0	0	0	**92**	
1130 - 1145	1	90	22	0	3	1	0	0	0	0	0	0	0	**117**	
1145 - 1200	0	93	28	2	5	0	0	0	2	1	0	0	0	**131**	**431**
1200 - 1215	0	93	21	6	4	0	0	0	0	0	0	0	0	**124**	
1215 - 1230	0	76	22	0	1	0	0	1	0	0	0	0	0	**100**	
1230 - 1245	0	115	26	0	0	0	0	2	0	0	0	0	0	**143**	
1245 - 1300	0	94	11	0	6	0	0	0	4	0	0	0	0	**115**	**482**
1300 - 1315	0	80	15	1	2	1	0	0	1	0	0	0	0	**100**	
1315 - 1330	0	81	19	0	1	0	0	0	1	1	0	0	0	**103**	
1330 - 1345	0	105	23	0	3	1	0	1	0	0	0	0	0	**133**	
1345 - 1400	0	106	19	0	1	0	0	1	1	0	0	0	0	**128**	**464**
1400 - 1415	0	93	36	0	2	0	0	1	0	0	0	0	0	**132**	
1415 - 1430	0	97	19	4	0	0	0	0	1	0	0	0	0	**121**	
1430 - 1445	1	98	24	3	2	1	0	0	0	0	0	0	0	**129**	
1445 - 1500	1	88	20	0	3	1	0	0	1	0	0	0	0	**114**	**496**
1500 - 1515	0	128	19	1	1	1	0	0	1	0	0	0	0	**151**	
1515 - 1530	0	85	19	0	1	1	0	0	0	0	0	0	0	**106**	
1530 - 1545	0	93	23	0	1	1	0	1	0	0	0	0	0	**119**	
1545 - 1600	0	118	20	1	1	0	0	1	1	0	0	0	0	**142**	**518**
1600 - 1615	0	179	40	0	1	1	0	0	0	0	0	0	0	**221**	
1615 - 1630	0	131	28	1	3	2	0	1	0	0	0	0	0	**166**	
1630 - 1645	1	153	31	0	3	0	0	0	1	0	0	0	0	**189**	
1645 - 1700	0	123	28	0	5	1	0	1	1	0	0	0	0	**159**	**735**
1700 - 1715	0	200	49	0	0	0	0	0	0	0	0	0	0	**249**	
1715 - 1730	0	108	24	0	1	1	0	0	0	0	0	0	0	**134**	
1730 - 1745	0	87	24	0	0	0	0	0	0	0	0	0	0	**111**	
1745 - 1800	0	75	13	0	1	2	0	0	1	0	0	0	0	**92**	**586**
1800 - 1815	0	86	23	0	2	0	0	0	1	0	0	0	0	**112**	
1815 - 1830	0	60	11	1	0	0	0	1	0	0	0	0	0	**73**	
1830 - 1845	0	54	6	0	0	0	0	0	0	0	0	0	0	**60**	
1845 - 1900	0	47	10	0	3	0	0	0	0	0	0	0	0	**60**	**305**
1900 - 1915	0	37	12	0	1	0	0	0	0	0	0	0	0	**50**	
1915 - 1930	0	50	10	0	0	0	0	0	0	0	0	0	0	**60**	
1930 - 1945	0	37	7	0	1	0	0	0	0	0	0	0	0	**45**	
1945 - 2000	0	34	9	0	0	0	0	0	1	0	0	0	0	**44**	**199**
2000 - 2015	0	68	9	0	2	0	0	0	1	0	0	0	0	**80**	
2015 - 2030	0	59	7	0	2	0	0	0	0	0	0	0	0	**68**	
2030 - 2045	0	27	7	0	0	0	0	0	0	0	0	0	0	**34**	
2045 - 2100	0	31	2	0	0	0	0	0	0	0	0	0	0	**33**	**215**
2100 - 2115	0	26	4	0	0	1	0	2	0	0	0	0	0	**33**	
2115 - 2130	0	21	5	0	1	0	0	0	1	0	0	0	0	**28**	
2130 - 2145	0	26	6	0	0	0	0	0	0	0	0	0	0	**32**	
2145 - 2200	0	20	4	0	0	0	0	0	0	0	0	0	0	**24**	**117**
2200 - 2215	0	17	4	0	0	0	0	1	1	0	0	0	0	**23**	
2215 - 2230	0	28	6	0	3	2	0	0	0	0	0	0	0	**39**	
2230 - 2245	0	19	3	0	1	0	0	0	0	0	0	0	0	**23**	
2245 - 2300	0	19	6	0	0	0	0	0	0	0	0	0	0	**25**	**110**
2300 - 2315	0	20	7	0	1	3	0	0	0	0	0	0	0	**31**	
2315 - 2330	0	13	4	0	0	3	0	0	0	0	0	0	0	**20**	
2330 - 2345	0	13	6	0	0	0	0	0	0	0	0	0	0	**19**	
2345 - 0000	0	9	2	0	0	0	0	0	0	0	0	0	0	**11**	**81**

Session Total	6	5049	1205	25	107	54	0	19	34	7	0	0	0	**6506**
Session Average	0.06	52.59	12.55	0.26	1.11	0.56	0.00	0.20	0.35	0.07	0.00	0.00	0.00	**67.77**
Session Percentage	0.09	77.61	18.52	0.38	1.64	0.83	0.00	0.29	0.52	0.11	0.00	0.00	0.00	

AM Peak Hour	-	0700 - 0800	0730 - 0830	0745 - 0845	0730 - 0830	0730 - 0830	-	0800 - 0900	0715 - 0815	0645 - 0745	-	-	-	**0730 - 0830**
AM Peak Volume	0	278	90	2	12	4	0	2	4	1	0	0	0	**379**

Noon Peak Hour	1045 - 1145	1415 - 1515	1400 - 1500	1115 - 1215	1115 - 1215	1045 - 1145	-	1145 - 1245	1230 - 1330	1030 - 1130	-	-	-	**1415 - 1515**
Noon Peak Volume	3	411	99	8	14	4	0	3	6	3	0	0	0	**515**

PM Peak Hour	1545 - 1645	1615 - 1715	1615 - 1715	1500 - 1600	1600 - 1700	1530 - 1630	-	1530 - 1630	1500 - 1600	-	-	-	-	**1615 - 1715**
PM Peak Volume	1	607	136	2	12	4	0	3	2	0	0	0	0	**763**

Site 49
I-126 W/Bound On-Ramp,
west of Greystone Blvd

Date
Thursday, April 25, 2024

Lat/Long
34.013079°, -81.076940°

Weather
Fair
67°F

Click here for Detailed Weather

0000 - 2400 (Weekday 24h Session) (04-25-2024)
SB WB 15min

	Westbound (Movement 49.1)													15min	60min
TIME	1	2	3	4	5	6	7	8	9	10	11	12	13	Total	Total
0000 - 0015	0	8	3	0	1	0	0	0	0	0	0	0	0	**12**	
0015 - 0030	0	6	3	0	0	3	0	0	0	0	0	0	0	**12**	
0030 - 0045	0	5	3	0	0	0	0	0	0	0	0	0	0	**8**	
0045 - 0100	0	8	2	0	2	0	0	0	0	0	0	0	0	**12**	**44**
0100 - 0115	0	3	0	0	0	4	0	0	0	0	0	0	0	**7**	
0115 - 0130	0	3	0	0	0	1	0	0	0	0	0	0	0	**4**	
0130 - 0145	0	7	3	0	0	0	0	0	2	0	0	0	0	**12**	
0145 - 0200	0	6	1	0	0	0	0	0	0	0	0	0	0	**7**	**30**
0200 - 0215	0	3	0	0	0	5	0	0	1	0	0	0	0	**9**	
0215 - 0230	0	4	0	0	0	1	0	0	0	0	0	0	0	**5**	
0230 - 0245	0	5	0	0	0	2	0	0	0	0	0	0	0	**7**	
0245 - 0300	0	2	0	0	0	0	0	0	1	0	0	0	0	**3**	**24**
0300 - 0315	0	7	1	0	0	0	0	0	0	0	0	0	0	**8**	
0315 - 0330	0	8	0	0	1	0	0	0	0	0	0	0	0	**9**	
0330 - 0345	0	7	3	0	1	0	0	0	0	0	0	0	0	**11**	
0345 - 0400	0	7	2	0	2	0	0	0	3	0	0	0	0	**14**	**42**
0400 - 0415	0	8	2	0	0	0	0	0	1	0	0	0	0	**11**	
0415 - 0430	0	5	4	0	1	0	0	0	0	0	0	0	0	**10**	
0430 - 0445	0	7	3	0	0	0	0	0	0	0	0	0	0	**10**	
0445 - 0500	0	8	4	0	0	0	0	0	0	0	0	0	0	**12**	**43**
0500 - 0515	0	8	2	0	0	0	0	0	0	0	0	0	0	**10**	
0515 - 0530	0	15	3	0	1	0	0	0	0	0	0	0	0	**19**	
0530 - 0545	0	19	8	0	0	1	0	0	0	0	0	0	0	**28**	
0545 - 0600	0	23	8	0	0	0	0	0	0	0	0	0	0	**31**	**88**
0600 - 0615	0	29	5	0	0	1	0	0	0	0	0	0	0	**35**	
0615 - 0630	0	26	4	0	0	0	0	0	0	0	0	0	0	**30**	
0630 - 0645	0	48	6	1	0	0	0	0	0	0	0	0	0	**55**	
0645 - 0700	0	46	11	0	1	0	0	0	0	0	0	0	0	**58**	**178**
0700 - 0715	0	56	17	0	4	0	0	1	0	0	0	0	0	**78**	
0715 - 0730	0	56	15	0	3	0	0	0	0	0	0	0	0	**74**	
0730 - 0745	0	64	16	0	0	0	0	1	0	0	0	0	0	**81**	
0745 - 0800	0	73	24	0	0	0	0	0	1	0	0	0	0	**98**	**331**
0800 - 0815	0	56	12	0	0	0	0	0	1	0	0	0	0	**69**	
0815 - 0830	0	60	13	0	1	0	0	0	0	0	0	0	0	**74**	
0830 - 0845	0	66	20	0	1	1	0	0	0	0	0	0	0	**88**	
0845 - 0900	0	73	17	1	3	0	0	0	1	0	0	0	0	**95**	**326**
0900 - 0915	0	58	16	0	1	0	0	0	1	0	0	0	0	**76**	
0915 - 0930	0	41	11	1	0	0	0	0	1	1	0	0	0	**55**	
0930 - 0945	0	62	9	0	2	1	0	0	0	1	0	0	0	**75**	
0945 - 1000	0	57	15	0	4	0	0	0	0	0	0	0	0	**76**	**282**
1000 - 1015	0	62	10	0	2	0	0	0	1	0	0	0	0	**75**	
1015 - 1030	0	72	12	0	0	0	0	1	3	0	0	0	0	**88**	
1030 - 1045	1	54	19	1	2	1	0	2	0	0	0	0	0	**80**	
1045 - 1100	0	91	12	0	2	1	0	0	1	0	0	0	0	**107**	**350**
1100 - 1115	0	71	15	0	3	1	0	0	0	0	0	0	0	**90**	
1115 - 1130	0	68	14	0	1	0	0	0	1	0	0	0	0	**84**	
1130 - 1145	0	81	18	0	0	2	0	0	2	0	0	0	0	**103**	
1145 - 1200	0	91	18	2	4	1	0	0	0	0	0	0	0	**116**	**393**
1200 - 1215	0	109	25	1	1	1	0	0	0	0	0	0	0	**137**	
1215 - 1230	0	79	18	1	0	1	0	0	1	0	0	0	0	**100**	
1230 - 1245	0	95	17	4	0	1	0	0	0	0	0	0	0	**117**	
1245 - 1300	0	95	20	1	0	1	0	0	0	0	0	0	0	**117**	**471**
1300 - 1315	0	99	12	4	3	0	0	0	0	0	0	0	0	**118**	
1315 - 1330	0	80	16	3	1	1	0	0	0	0	0	0	0	**101**	
1330 - 1345	0	86	16	0	2	0	0	0	0	0	0	0	0	**104**	
1345 - 1400	1	89	17	0	1	1	0	0	1	0	0	0	0	**110**	**433**
1400 - 1415	0	108	26	0	3	1	0	0	0	0	0	0	0	**138**	
1415 - 1430	0	99	17	0	1	0	0	0	0	0	0	0	0	**117**	
1430 - 1445	0	99	24	1	3	0	0	0	0	0	0	0	0	**127**	
1445 - 1500	0	105	18	0	0	0	0	0	0	0	0	0	0	**123**	**505**
1500 - 1515	1	119	20	1	1	1	0	0	0	0	0	0	0	**143**	
1515 - 1530	0	116	17	7	1	0	0	0	1	0	0	0	0	**142**	
1530 - 1545	0	112	18	0	4	2	0	0	0	0	0	0	0	**136**	
1545 - 1600	0	116	21	0	1	2	0	1	1	0	0	0	0	**142**	**563**
1600 - 1615	1	183	16	0	4	1	0	0	0	0	0	0	0	**205**	
1615 - 1630	0	141	13	0	0	1	0	0	0	0	0	0	0	**155**	
1630 - 1645	0	161	35	0	4	1	0	0	0	0	0	0	0	**201**	
1645 - 1700	0	118	24	0	3	0	0	0	0	0	0	0	0	**145**	**706**
1700 - 1715	0	196	36	0	0	1	0	0	0	0	0	0	0	**233**	
1715 - 1730	0	123	25	0	2	1	0	0	0	0	0	0	0	**151**	
1730 - 1745	0	97	16	0	0	0	0	0	1	0	0	0	0	**114**	
1745 - 1800	0	87	16	0	0	1	0	0	0	0	0	0	0	**104**	**602**
1800 - 1815	0	87	20	0	1	0	0	0	0	0	0	0	0	**108**	
1815 - 1830	0	86	14	0	1	0	0	0	0	0	0	0	0	**101**	
1830 - 1845	0	57	10	0	0	0	0	0	0	0	0	0	0	**67**	
1845 - 1900	0	50	13	0	0	0	0	0	0	0	0	0	0	**63**	**339**
1900 - 1915	0	0	0	0	0	0	0	0	0	0	0	0	0	**0**	
1915 - 1930	0	0	0	0	0	0	0	0	0	0	0	0	0	**0**	
1930 - 1945	0	0	0	0	0	0	0	0	0	0	0	0	0	**0**	
1945 - 2000	0	0	0	0	0	0	0	0	0	0	0	0	0	**0**	**0**
2000 - 2015	0	0	0	0	0	0	0	0	0	0	0	0	0	**0**	
2015 - 2030	0	0	0	0	0	0	0	0	0	0	0	0	0	**0**	
2030 - 2045	0	0	0	0	0	0	0	0	0	0	0	0	0	**0**	
2045 - 2100	0	0	0	0	0	0	0	0	0	0	0	0	0	**0**	**0**
2100 - 2115	0	0	0	0	0	0	0	0	0	0	0	0	0	**0**	
2115 - 2130	0	0	0	0	0	0	0	0	0	0	0	0	0	**0**	
2130 - 2145	0	0	0	0	0	0	0	0	0	0	0	0	0	**0**	
2145 - 2200	0	0	0	0	0	0	0	0	0	0	0	0	0	**0**	**0**
2200 - 2215	0	0	0	0	0	0	0	0	0	0	0	0	0	**0**	
2215 - 2230	0	0	0	0	0	0	0	0	0	0	0	0	0	**0**	
2230 - 2245	0	0	0	0	0	0	0	0	0	0	0	0	0	**0**	
2245 - 2300	0	0	0	0	0	0	0	0	0	0	0	0	0	**0**	**0**
2300 - 2315	0	0	0	0	0	0	0	0	0	0	0	0	0	**0**	
2315 - 2330	0	0	0	0	0	0	0	0	0	0	0	0	0	**0**	
2330 - 2345	0	0	0	0	0	0	0	0	0	0	0	0	0	**0**	
2345 - 0000	0	0	0	0	0	0	0	0	0	0	0	0	0	**0**	**0**

Session Total	4	4635	924	29	80	44	0	6	26	2	0	0	0	**5750**
Session Average	0.04	48.28	9.63	0.30	0.83	0.46	0.00	0.06	0.27	0.02	0.00	0.00	0.00	**59.90**
Session Percentage	0.07	80.61	16.07	0.50	1.39	0.77	0.00	0.10	0.45	0.03	0.00	0.00	0.00	

AM Peak Hour	0945 - 1045	0815 - 0915	0700 - 0800	0830 - 0930	0630 - 0730	0515 - 0615	-	0945 - 1045	0930 - 1030	0845 - 0945	-	-	-	**0815 - 0915**
AM Peak Hour Volume	1	257	72	2	8	2	0	3	4	2	0	0	0	**333**

Noon Peak Hour	1000 - 1100	1445 - 1545	1400 - 1500	1230 - 1330	1030 - 1130	1130 - 1230	-	1000 - 1100	1000 - 1100	-	-	-	-	**1445 - 1545**
Noon Peak Hour Volume	1	452	85	12	8	5	0	3	5	0	0	0	0	**544**

PM Peak Hour	1500 - 1600	1615 - 1715	1630 - 1730	1500 - 1600	1600 - 1700	1530 - 1630	-	1500 - 1600	1500 - 1600	-	-	-	-	**1615 - 1715**
PM Peak Hour Volume	1	616	120	8	11	6	0	1	2	0	0	0	0	**734**

Bi-Directional Class Count || SB WB Average 15min

Columbia, SC

Marr Traffic DATA COLLECTION
www.marrtraffic.com

Site 49
I-126 W/Bound On-Ramp,
west of Greystone Blvd

Date
Tuesday, April 23, 2024

Lat/Long
34.013079°, -81.076940°

Weather
Fair
58°F

0000 - 2400 (Weekday 24h Session) (All Dates)
SB WB Average 15min

	SB WB Average 15min													15min	60min
Time	1	2	3	4	5	6	7	8	9	10	11	12	13	Total	Total
0000 - 0015	0	5	1	0	0	0	0	0	0	0	0	0	0	**7**	
0015 - 0030	0	4	2	0	0	1	0	0	0	0	0	0	0	**7**	
0030 - 0045	0	3	1	0	0	0	0	0	0	0	0	0	0	**5**	
0045 - 0100	0	5	1	0	1	1	0	0	0	0	0	0	0	**8**	**27**
0100 - 0115	0	2	0	0	0	2	0	0	0	0	0	0	0	**4**	
0115 - 0130	0	2	1	0	0	3	0	0	0	0	0	0	0	**5**	
0130 - 0145	0	5	2	0	0	0	0	0	1	0	0	0	0	**8**	
0145 - 0200	0	4	0	0	0	0	0	0	0	0	0	0	0	**4**	**22**
0200 - 0215	0	3	0	0	0	2	0	0	0	0	0	0	0	**5**	
0215 - 0230	0	3	1	0	0	1	0	0	0	0	0	0	0	**5**	
0230 - 0245	0	3	0	0	1	1	0	0	0	0	0	0	0	**5**	
0245 - 0300	0	3	1	0	0	0	0	0	0	0	0	0	0	**4**	**19**
0300 - 0315	0	5	1	0	0	0	0	0	0	0	0	0	0	**6**	
0315 - 0330	0	4	1	0	0	0	0	0	0	0	0	0	0	**5**	
0330 - 0345	0	4	2	0	0	0	0	0	0	0	0	0	0	**6**	
0345 - 0400	0	4	1	0	1	0	0	0	1	0	0	0	0	**6**	**23**
0400 - 0415	0	4	1	0	0	0	0	0	0	0	0	0	0	**5**	
0415 - 0430	0	5	2	0	0	0	0	0	0	0	0	0	0	**8**	
0430 - 0445	0	6	2	0	0	0	0	0	0	0	0	0	0	**8**	
0445 - 0500	0	6	3	0	0	0	0	0	0	0	0	0	0	**9**	**30**
0500 - 0515	0	6	2	0	0	0	0	0	0	0	0	0	0	**8**	
0515 - 0530	0	10	3	0	0	0	0	0	0	0	0	0	0	**13**	
0530 - 0545	0	12	4	0	0	1	0	0	0	0	0	0	0	**17**	
0545 - 0600	0	14	5	0	0	0	0	0	0	0	0	0	0	**19**	**58**
0600 - 0615	0	17	4	0	1	1	0	0	0	0	0	0	0	**22**	
0615 - 0630	0	18	3	0	0	0	0	0	0	0	0	0	0	**21**	
0630 - 0645	0	31	4	0	0	0	0	0	0	0	0	0	0	**35**	
0645 - 0700	0	31	6	0	2	0	0	0	0	0	0	0	0	**39**	**118**
0700 - 0715	0	41	11	0	2	0	0	0	0	0	0	0	0	**54**	
0715 - 0730	0	40	10	0	1	0	0	0	0	0	0	0	0	**51**	
0730 - 0745	0	45	13	0	1	1	0	0	0	0	0	0	0	**60**	
0745 - 0800	0	50	16	0	1	0	0	0	1	0	0	0	0	**67**	**233**
0800 - 0815	0	37	11	0	1	0	0	0	1	0	0	0	0	**50**	
0815 - 0830	0	41	12	0	2	0	0	0	0	0	0	0	0	**56**	
0830 - 0845	0	43	13	0	0	0	0	0	0	0	0	0	0	**58**	
0845 - 0900	0	44	10	0	2	0	0	0	0	0	0	0	0	**56**	**220**
0900 - 0915	0	44	12	0	1	0	0	0	0	0	0	0	0	**57**	
0915 - 0930	0	31	9	0	0	0	0	0	1	0	0	0	0	**42**	
0930 - 0945	0	36	8	0	1	0	0	0	0	0	0	0	0	**46**	
0945 - 1000	0	42	11	0	2	0	0	0	0	0	0	0	0	**55**	**200**
1000 - 1015	0	39	8	0	1	0	0	0	0	0	0	0	0	**48**	
1015 - 1030	0	43	10	0	0	0	0	1	1	0	0	0	0	**54**	
1030 - 1045	0	36	12	1	2	0	0	1	0	0	0	0	0	**52**	
1045 - 1100	0	52	9	0	1	1	0	0	0	0	0	0	0	**64**	**218**
1100 - 1115	1	46	12	0	1	1	0	0	0	0	0	0	0	**60**	
1115 - 1130	0	45	12	0	1	0	0	0	0	0	0	0	0	**59**	
1130 - 1145	0	57	13	0	1	1	0	0	1	0	0	0	0	**73**	
1145 - 1200	0	61	15	1	3	0	0	0	1	0	0	0	0	**82**	**275**
1200 - 1215	0	67	15	2	2	0	0	0	0	0	0	0	0	**87**	
1215 - 1230	0	52	13	0	0	0	0	0	0	0	0	0	0	**67**	
1230 - 1245	0	70	14	1	0	0	0	1	0	0	0	0	0	**87**	
1245 - 1300	0	63	10	0	2	0	0	0	1	0	0	0	0	**77**	**318**
1300 - 1315	0	60	9	2	2	0	0	0	0	0	0	0	0	**73**	
1315 - 1330	0	54	12	1	1	0	0	0	0	0	0	0	0	**68**	
1330 - 1345	0	64	13	0	2	0	0	0	0	0	0	0	0	**79**	
1345 - 1400	0	65	12	0	1	0	0	0	1	0	0	0	0	**79**	**299**
1400 - 1415	0	67	21	0	2	0	0	0	0	0	0	0	0	**90**	
1415 - 1430	0	65	12	1	0	0	0	0	0	0	0	0	0	**79**	
1430 - 1445	0	66	16	1	2	0	0	0	0	0	0	0	0	**85**	
1445 - 1500	0	64	13	0	1	0	0	0	0	0	0	0	0	**79**	**334**
1500 - 1515	0	82	13	1	1	1	0	0	0	0	0	0	0	**98**	
1515 - 1530	0	67	12	2	1	0	0	0	0	0	0	0	0	**83**	
1530 - 1545	0	68	14	0	2	1	0	0	0	0	0	0	0	**85**	
1545 - 1600	0	78	14	0	1	1	0	1	1	0	0	0	0	**95**	**360**
1600 - 1615	0	121	19	0	2	1	0	0	0	0	0	0	0	**142**	
1615 - 1630	0	91	14	0	1	1	0	0	0	0	0	0	0	**107**	
1630 - 1645	0	105	22	0	2	0	0	0	0	0	0	0	0	**130**	
1645 - 1700	0	80	17	0	3	0	0	0	0	0	0	0	0	**101**	**480**
1700 - 1715	0	132	28	0	0	0	0	0	0	0	0	0	0	**161**	
1715 - 1730	0	77	16	0	1	1	0	0	0	0	0	0	0	**95**	
1730 - 1745	0	61	13	0	0	0	0	0	0	0	0	0	0	**75**	
1745 - 1800	0	54	10	0	0	1	0	0	0	0	0	0	0	**65**	**396**
1800 - 1815	0	58	14	0	1	0	0	0	0	0	0	0	0	**73**	
1815 - 1830	0	49	8	0	0	0	0	0	0	0	0	0	0	**58**	
1830 - 1845	0	37	5	0	0	0	0	0	0	0	0	0	0	**42**	
1845 - 1900	0	32	8	0	1	0	0	0	0	0	0	0	0	**41**	**215**
1900 - 1915	0	32	7	0	1	0	0	0	0	0	0	0	0	**40**	
1915 - 1930	0	29	5	0	0	0	0	0	0	0	0	0	0	**34**	
1930 - 1945	0	26	6	0	1	0	0	0	0	0	0	0	0	**32**	
1945 - 2000	0	25	6	0	1	0	0	0	0	0	0	0	0	**33**	**138**
2000 - 2015	0	38	7	0	1	0	0	0	0	0	0	0	0	**46**	
2015 - 2030	0	34	7	0	1	0	0	0	0	0	0	0	0	**42**	
2030 - 2045	0	20	6	0	0	0	0	0	0	0	0	0	0	**26**	
2045 - 2100	0	19	3	0	0	1	0	0	0	0	0	0	0	**23**	**137**
2100 - 2115	0	15	3	0	0	1	0	1	0	0	0	0	0	**20**	
2115 - 2130	0	14	4	0	0	0	0	0	0	0	0	0	0	**20**	
2130 - 2145	0	16	3	0	0	0	0	0	0	0	0	0	0	**20**	
2145 - 2200	0	11	2	0	0	0	0	0	0	0	0	0	0	**13**	**72**
2200 - 2215	0	12	3	0	0	0	0	0	0	0	0	0	0	**16**	
2215 - 2230	0	15	3	0	1	1	0	0	0	0	0	0	0	**20**	
2230 - 2245	0	12	1	0	0	1	0	0	0	0	0	0	0	**14**	
2245 - 2300	0	14	3	0	0	1	0	0	0	0	0	0	0	**17**	**68**
2300 - 2315	0	15	4	0	0	1	0	0	0	0	0	0	0	**21**	
2315 - 2330	0	8	1	0	0	1	0	0	0	0	0	0	0	**11**	
2330 - 2345	0	7	3	0	0	0	0	0	0	0	0	0	0	**11**	
2345 - 0000	0	7	2	0	0	1	0	0	0	0	0	0	0	**10**	**53**

Session Total	3	3406	749	18	65	39	0	9	20	3	0	0	0	**4313**
Session Average	0.03	35.48	7.81	0.19	0.68	0.41	0.00	0.09	0.21	0.03	0.00	0.00	0.00	**44.93**
Session Percentage	0.08	78.97	17.37	0.42	1.51	0.91	0.01	0.20	0.46	0.07	0.00	0.00	0.00	

AM Peak Hour	0945 - 1045	0700 - 0800	0745 - 0845	0800 - 0900	0645 - 0745	0515 - 0615	-	0945 - 1045	0715 - 0815	0845 - 0945	-	-	-	**0730 - 0830**
AM Peak Volume	0	176	52	1	5	2	0	2	2	1	0	0	0	**234**

Noon Peak Hour	1015 - 1115	1445 - 1545	1400 - 1500	1145 - 1245	1115 - 1215	1045 - 1145	-	1000 - 1100	1215 - 1315	1030 - 1130	-	-	-	**1430 - 1530**
Noon Peak Volume	1	282	61	5	7	3	0	2	2	1	0	0	0	**345**

PM Peak Hour	1545 - 1645	1615 - 1715	1630 - 1730	1500 - 1600	1600 - 1700	1530 - 1630	-	1530 - 1630	1500 - 1600	-	-	-	-	**1615 - 1715**
PM Peak Volume	1	408	84	3	8	3	0	1	1	0	0	0	0	**499**

Bi-Directional Class Count || Volume Summary 15min

Columbia, SC

Marr Traffic DATA COLLECTION

www.marrtraffic.com

Site 49

I-126 W/Bound On-Ramp,
west of Greystone Blvd

Date

Tuesday, April 23, 2024

Lat/Long

34.013079°, -81.076940°

Weather

Fair
58°F

Click here for Detailed Weather

0000 - 2400 (Weekday 24h Session) (04-23-2024)

Volume Summary 15min

TIME	Volume Summary 15min EB	Volume Summary 15min WB	15min Total	60min Total
0000 - 0015	0	0	**0**	
0015 - 0030	0	0	**0**	
0030 - 0045	0	0	**0**	
0045 - 0100	0	0	**0**	**0**
0100 - 0115	0	0	**0**	
0115 - 0130	0	0	**0**	
0130 - 0145	0	0	**0**	
0145 - 0200	0	0	**0**	**0**
0200 - 0215	0	0	**0**	
0215 - 0230	0	0	**0**	
0230 - 0245	0	0	**0**	
0245 - 0300	0	0	**0**	**0**
0300 - 0315	0	0	**0**	
0315 - 0330	0	0	**0**	
0330 - 0345	0	0	**0**	
0345 - 0400	0	0	**0**	**0**
0400 - 0415	0	0	**0**	
0415 - 0430	0	0	**0**	
0430 - 0445	0	0	**0**	
0445 - 0500	0	0	**0**	**0**
0500 - 0515	0	0	**0**	
0515 - 0530	0	0	**0**	
0530 - 0545	0	0	**0**	
0545 - 0600	0	0	**0**	**0**
0600 - 0615	0	0	**0**	
0615 - 0630	0	0	**0**	
0630 - 0645	0	0	**0**	
0645 - 0700	0	0	**0**	**0**
0700 - 0715	0	0	**0**	
0715 - 0730	0	0	**0**	
0730 - 0745	0	0	**0**	
0745 - 0800	0	0	**0**	**0**
0800 - 0815	0	0	**0**	
0815 - 0830	0	0	**0**	
0830 - 0845	0	0	**0**	
0845 - 0900	0	0	**0**	**0**
0900 - 0915	0	0	**0**	
0915 - 0930	0	0	**0**	
0930 - 0945	0	0	**0**	
0945 - 1000	0	0	**0**	**0**
1000 - 1015	0	0	**0**	
1015 - 1030	0	0	**0**	
1030 - 1045	0	0	**0**	
1045 - 1100	0	0	**0**	**0**
1100 - 1115	0	0	**0**	
1115 - 1130	0	0	**0**	
1130 - 1145	0	0	**0**	
1145 - 1200	0	0	**0**	**0**

Time	Volume Summary 15min EB	Volume Summary 15min WB	15min Total	60min Total
1200 - 1215	0	0	**0**	
1215 - 1230	0	0	**0**	
1230 - 1245	0	0	**0**	
1245 - 1300	0	0	**0**	**0**
1300 - 1315	0	0	**0**	
1315 - 1330	0	0	**0**	
1330 - 1345	0	0	**0**	
1345 - 1400	0	0	**0**	**0**
1400 - 1415	0	0	**0**	
1415 - 1430	0	0	**0**	
1430 - 1445	0	0	**0**	
1445 - 1500	0	0	**0**	**0**
1500 - 1515	0	0	**0**	
1515 - 1530	0	0	**0**	
1530 - 1545	0	0	**0**	
1545 - 1600	0	0	**0**	**0**
1600 - 1615	0	0	**0**	
1615 - 1630	0	0	**0**	
1630 - 1645	0	0	**0**	
1645 - 1700	0	0	**0**	**0**
1700 - 1715	0	0	**0**	
1715 - 1730	0	0	**0**	
1730 - 1745	0	0	**0**	
1745 - 1800	0	0	**0**	**0**
1800 - 1815	0	0	**0**	
1815 - 1830	0	0	**0**	
1830 - 1845	0	0	**0**	
1845 - 1900	0	0	**0**	**0**
1900 - 1915	0	69	**69**	
1915 - 1930	0	41	**41**	
1930 - 1945	0	52	**52**	
1945 - 2000	0	54	**54**	**216**
2000 - 2015	0	59	**59**	
2015 - 2030	0	57	**57**	
2030 - 2045	0	44	**44**	
2045 - 2100	0	36	**36**	**196**
2100 - 2115	0	26	**26**	
2115 - 2130	0	31	**31**	
2130 - 2145	0	27	**27**	
2145 - 2200	0	15	**15**	**99**
2200 - 2215	0	26	**26**	
2215 - 2230	0	21	**21**	
2230 - 2245	0	20	**20**	
2245 - 2300	0	27	**27**	**94**
2300 - 2315	0	32	**32**	
2315 - 2330	0	13	**13**	
2330 - 2345	0	13	**13**	
2345 - 0000	0	20	**20**	**78**

Session Total	0	683	**683**
Session Average	0.00	7.11	**7.11**
Session Percentage	0.00	100.00	

Site 49
I-126 W/Bound On-Ramp,
west of Greystone Blvd

Date
Wednesday, April 24, 2024

Lat/Long
34.013079°, -81.076940°

Weather
Fair
66°F

Click here for Detailed Weather

0000 - 2400 (Weekday 24h Session) (04-24-2024)

Volume Summary 15min

TIME	Volume Summary 15min EB	Volume Summary 15min WB	15min Total	60min Total
0000 - 0015	0	8	**8**	
0015 - 0030	0	10	**10**	
0030 - 0045	0	7	**7**	
0045 - 0100	0	12	**12**	**37**
0100 - 0115	0	6	**6**	
0115 - 0130	0	12	**12**	
0130 - 0145	0	11	**11**	
0145 - 0200	0	6	**6**	**35**
0200 - 0215	0	6	**6**	
0215 - 0230	0	10	**10**	
0230 - 0245	0	8	**8**	
0245 - 0300	0	10	**10**	**34**
0300 - 0315	0	9	**9**	
0315 - 0330	0	7	**7**	
0330 - 0345	0	7	**7**	
0345 - 0400	0	5	**5**	**28**
0400 - 0415	0	3	**3**	
0415 - 0430	0	13	**13**	
0430 - 0445	0	15	**15**	
0445 - 0500	0	16	**16**	**47**
0500 - 0515	0	15	**15**	
0515 - 0530	0	20	**20**	
0530 - 0545	0	24	**24**	
0545 - 0600	0	26	**26**	**85**
0600 - 0615	0	32	**32**	
0615 - 0630	0	33	**33**	
0630 - 0645	0	51	**51**	
0645 - 0700	0	60	**60**	**176**
0700 - 0715	0	84	**84**	
0715 - 0730	0	80	**80**	
0730 - 0745	0	100	**100**	
0745 - 0800	0	104	**104**	**368**
0800 - 0815	0	82	**82**	
0815 - 0830	0	93	**93**	
0830 - 0845	0	85	**85**	
0845 - 0900	0	74	**74**	**334**
0900 - 0915	0	95	**95**	
0915 - 0930	0	72	**72**	
0930 - 0945	0	63	**63**	
0945 - 1000	0	89	**89**	**319**
1000 - 1015	0	68	**68**	
1015 - 1030	0	75	**75**	
1030 - 1045	0	75	**75**	
1045 - 1100	0	86	**86**	**304**
1100 - 1115	0	91	**91**	
1115 - 1130	0	92	**92**	
1130 - 1145	0	117	**117**	
1145 - 1200	0	131	**131**	**431**

Time	Volume Summary 15min EB	Volume Summary 15min WB	15min Total	60min Total
1200 - 1215	0	124	**124**	
1215 - 1230	0	100	**100**	
1230 - 1245	0	143	**143**	
1245 - 1300	0	115	**115**	**482**
1300 - 1315	0	100	**100**	
1315 - 1330	0	103	**103**	
1330 - 1345	0	133	**133**	
1345 - 1400	0	128	**128**	**464**
1400 - 1415	0	132	**132**	
1415 - 1430	0	121	**121**	
1430 - 1445	0	129	**129**	
1445 - 1500	0	114	**114**	**496**
1500 - 1515	0	151	**151**	
1515 - 1530	0	106	**106**	
1530 - 1545	0	119	**119**	
1545 - 1600	0	142	**142**	**518**
1600 - 1615	0	221	**221**	
1615 - 1630	0	166	**166**	
1630 - 1645	0	189	**189**	
1645 - 1700	0	159	**159**	**735**
1700 - 1715	0	249	**249**	
1715 - 1730	0	134	**134**	
1730 - 1745	0	111	**111**	
1745 - 1800	0	92	**92**	**586**
1800 - 1815	0	112	**112**	
1815 - 1830	0	73	**73**	
1830 - 1845	0	60	**60**	
1845 - 1900	0	60	**60**	**305**
1900 - 1915	0	50	**50**	
1915 - 1930	0	60	**60**	
1930 - 1945	0	45	**45**	
1945 - 2000	0	44	**44**	**199**
2000 - 2015	0	80	**80**	
2015 - 2030	0	68	**68**	
2030 - 2045	0	34	**34**	
2045 - 2100	0	33	**33**	**215**
2100 - 2115	0	33	**33**	
2115 - 2130	0	28	**28**	
2130 - 2145	0	32	**32**	
2145 - 2200	0	24	**24**	**117**
2200 - 2215	0	23	**23**	
2215 - 2230	0	39	**39**	
2230 - 2245	0	23	**23**	
2245 - 2300	0	25	**25**	**110**
2300 - 2315	0	31	**31**	
2315 - 2330	0	20	**20**	
2330 - 2345	0	19	**19**	
2345 - 0000	0	11	**11**	**81**

Session Total	0	6506	**6506**
Session Average	0.00	67.77	**67.77**
Session Percentage	0.00	100.00	

Site 49
I-126 W/Bound On-Ramp,
west of Greystone Blvd

Date
Thursday, April 25, 2024

Lat/Long
34.013079°, -81.076940°

Weather
Fair
67°F

Click here for Detailed Weather

0000 - 2400 (Weekday 24h Session) (04-25-2024)

Volume Summary 15min

TIME	Volume Summary 15min EB	Volume Summary 15min WB	15min Total	60min Total
0000 - 0015	0	12	**12**	
0015 - 0030	0	12	**12**	
0030 - 0045	0	8	**8**	
0045 - 0100	0	12	**12**	**44**
0100 - 0115	0	7	**7**	
0115 - 0130	0	4	**4**	
0130 - 0145	0	12	**12**	
0145 - 0200	0	7	**7**	**30**
0200 - 0215	0	9	**9**	
0215 - 0230	0	5	**5**	
0230 - 0245	0	7	**7**	
0245 - 0300	0	3	**3**	**24**
0300 - 0315	0	8	**8**	
0315 - 0330	0	9	**9**	
0330 - 0345	0	11	**11**	
0345 - 0400	0	14	**14**	**42**
0400 - 0415	0	11	**11**	
0415 - 0430	0	10	**10**	
0430 - 0445	0	10	**10**	
0445 - 0500	0	12	**12**	**43**
0500 - 0515	0	10	**10**	
0515 - 0530	0	19	**19**	
0530 - 0545	0	28	**28**	
0545 - 0600	0	31	**31**	**88**
0600 - 0615	0	35	**35**	
0615 - 0630	0	30	**30**	
0630 - 0645	0	55	**55**	
0645 - 0700	0	58	**58**	**178**
0700 - 0715	0	78	**78**	
0715 - 0730	0	74	**74**	
0730 - 0745	0	81	**81**	
0745 - 0800	0	98	**98**	**331**
0800 - 0815	0	69	**69**	
0815 - 0830	0	74	**74**	
0830 - 0845	0	88	**88**	
0845 - 0900	0	95	**95**	**326**
0900 - 0915	0	76	**76**	
0915 - 0930	0	55	**55**	
0930 - 0945	0	75	**75**	
0945 - 1000	0	76	**76**	**282**
1000 - 1015	0	75	**75**	
1015 - 1030	0	88	**88**	
1030 - 1045	0	80	**80**	
1045 - 1100	0	107	**107**	**350**
1100 - 1115	0	90	**90**	
1115 - 1130	0	84	**84**	
1130 - 1145	0	103	**103**	
1145 - 1200	0	116	**116**	**393**

Time	Volume Summary 15min EB	Volume Summary 15min WB	15min Total	60min Total
1200 - 1215	0	137	**137**	
1215 - 1230	0	100	**100**	
1230 - 1245	0	117	**117**	
1245 - 1300	0	117	**117**	**471**
1300 - 1315	0	118	**118**	
1315 - 1330	0	101	**101**	
1330 - 1345	0	104	**104**	
1345 - 1400	0	110	**110**	**433**
1400 - 1415	0	138	**138**	
1415 - 1430	0	117	**117**	
1430 - 1445	0	127	**127**	
1445 - 1500	0	123	**123**	**505**
1500 - 1515	0	143	**143**	
1515 - 1530	0	142	**142**	
1530 - 1545	0	136	**136**	
1545 - 1600	0	142	**142**	**563**
1600 - 1615	0	205	**205**	
1615 - 1630	0	155	**155**	
1630 - 1645	0	201	**201**	
1645 - 1700	0	145	**145**	**706**
1700 - 1715	0	233	**233**	
1715 - 1730	0	151	**151**	
1730 - 1745	0	114	**114**	
1745 - 1800	0	104	**104**	**602**
1800 - 1815	0	108	**108**	
1815 - 1830	0	101	**101**	
1830 - 1845	0	67	**67**	
1845 - 1900	0	63	**63**	**339**
1900 - 1915	0	0	**0**	
1915 - 1930	0	0	**0**	
1930 - 1945	0	0	**0**	
1945 - 2000	0	0	**0**	**0**
2000 - 2015	0	0	**0**	
2015 - 2030	0	0	**0**	
2030 - 2045	0	0	**0**	
2045 - 2100	0	0	**0**	**0**
2100 - 2115	0	0	**0**	
2115 - 2130	0	0	**0**	
2130 - 2145	0	0	**0**	
2145 - 2200	0	0	**0**	**0**
2200 - 2215	0	0	**0**	
2215 - 2230	0	0	**0**	
2230 - 2245	0	0	**0**	
2245 - 2300	0	0	**0**	**0**
2300 - 2315	0	0	**0**	
2315 - 2330	0	0	**0**	
2330 - 2345	0	0	**0**	
2345 - 0000	0	0	**0**	**0**

Session Total	0	5750	**5750**
Session Average	0.00	59.90	**59.90**
Session Percentage	0.00	100.00	

Bi-Directional Class Count || SB WB 60min

Columbia, SC

Marr Traffic DATA COLLECTION

www.marrtraffic.com

Site 49
I-126 W/Bound On-Ramp,
west of Greystone Blvd

Date
Tuesday, April 23, 2024

Lat/Long
34.013079°, -81.076940°

Weather
Fair
58°F

Click here for Detailed Weather

0000 - 2400 (Weekday 24h Session) (04-23-2024)
SB WB 60min

	Westbound (Movement 49.1)													
TIME	1	2	3	4	5	6	7	8	9	10	11	12	13	**Total**
0000 - 0100	0	0	0	0	0	0	0	0	0	0	0	0	0	**0**
0100 - 0200	0	0	0	0	0	0	0	0	0	0	0	0	0	**0**
0200 - 0300	0	0	0	0	0	0	0	0	0	0	0	0	0	**0**
0300 - 0400	0	0	0	0	0	0	0	0	0	0	0	0	0	**0**
0400 - 0500	0	0	0	0	0	0	0	0	0	0	0	0	0	**0**
0500 - 0600	0	0	0	0	0	0	0	0	0	0	0	0	0	**0**
0600 - 0700	0	0	0	0	0	0	0	0	0	0	0	0	0	**0**
0700 - 0800	0	0	0	0	0	0	0	0	0	0	0	0	0	**0**
0800 - 0900	0	0	0	0	0	0	0	0	0	0	0	0	0	**0**
0900 - 1000	0	0	0	0	0	0	0	0	0	0	0	0	0	**0**
1000 - 1100	0	0	0	0	0	0	0	0	0	0	0	0	0	**0**
1100 - 1200	0	0	0	0	0	0	0	0	0	0	0	0	0	**0**
1200 - 1300	0	0	0	0	0	0	0	0	0	0	0	0	0	**0**
1300 - 1400	0	0	0	0	0	0	0	0	0	0	0	0	0	**0**
1400 - 1500	0	0	0	0	0	0	0	0	0	0	0	0	0	**0**
1500 - 1600	0	0	0	0	0	0	0	0	0	0	0	0	0	**0**
1600 - 1700	0	0	0	0	0	0	0	0	0	0	0	0	0	**0**
1700 - 1800	0	0	0	0	0	0	0	0	0	0	0	0	0	**0**
1800 - 1900	0	0	0	0	0	0	0	0	0	0	0	0	0	**0**
1900 - 2000	0	177	33	0	4	1	0	1	0	0	0	0	0	**216**
2000 - 2100	0	148	42	0	2	4	0	0	0	0	0	0	0	**196**
2100 - 2200	0	77	18	0	0	4	0	0	0	0	0	0	0	**99**
2200 - 2300	0	75	12	0	1	5	1	0	0	0	0	0	0	**94**
2300 - 2400	0	57	14	0	1	6	0	0	0	0	0	0	0	**78**
Session Total	0	534	119	0	8	20	1	1	0	0	0	0	0	**683**
Session Average	0.00	22.25	4.96	0.00	0.33	0.83	0.04	0.04	0.00	0.00	0.00	0.00	0.00	**28.46**
Session Percentage	0.00	78.18	17.42	0.00	1.17	2.93	0.15	0.15	0.00	0.00	0.00	0.00	0.00	
AM Peak Hour	-	-	-	-	-	-	-	-	-	-	-	-	-	**-**
AM Peak Volume	0	0	0	0	0	0	0	0	0	0	0	0	0	**0**
Noon Peak Hour	-	-	-	-	-	-	-	-	-	-	-	-	-	**-**
Noon Peak Volume	0	0	0	0	0	0	0	0	0	0	0	0	0	**0**
PM Peak Hour	-	1900 - 2000	1900 - 2000	-	1900 - 2000	1900 - 2000	-	1900 - 2000	-	-	-	-	-	**1900 - 2000**
PM Peak Volume	0	177	33	0	4	1	0	1	0	0	0	0	0	**216**

Site 49
I-126 W/Bound On-Ramp,
west of Greystone Blvd

Date
Wednesday, April 24, 2024

Lat/Long
34.013079°, -81.076940°

Weather
Fair
66°F

Click here for Detailed Weather

0000 - 2400 (Weekday 24h Session) (04-24-2024)
SB WB 60min

	Westbound (Movement 49.1)													
TIME	1	2	3	4	5	6	7	8	9	10	11	12	13	**Total**
0000 - 0100	0	24	6	0	0	5	0	0	1	1	0	0	0	**37**
0100 - 0200	0	19	6	0	0	9	0	0	1	0	0	0	0	**35**
0200 - 0300	0	19	7	0	3	4	0	0	1	0	0	0	0	**34**
0300 - 0400	0	22	5	0	0	1	0	0	0	0	0	0	0	**28**
0400 - 0500	0	34	11	0	0	0	0	0	2	0	0	0	0	**47**
0500 - 0600	0	63	19	0	0	2	0	0	1	0	0	0	0	**85**
0600 - 0700	0	140	27	0	6	2	0	0	1	0	0	0	0	**176**
0700 - 0800	0	278	79	0	6	2	0	0	2	1	0	0	0	**368**
0800 - 0900	0	240	76	2	10	2	0	2	2	0	0	0	0	**334**
0900 - 1000	0	239	72	1	5	0	0	0	2	0	0	0	0	**319**
1000 - 1100	0	229	63	2	6	1	0	2	0	1	0	0	0	**304**
1100 - 1200	3	315	91	2	11	3	0	1	2	3	0	0	0	**431**
1200 - 1300	0	378	80	6	11	0	0	3	4	0	0	0	0	**482**
1300 - 1400	0	372	76	1	7	2	0	2	3	1	0	0	0	**464**
1400 - 1500	2	376	99	7	7	2	0	1	2	0	0	0	0	**496**
1500 - 1600	0	424	81	2	4	3	0	2	2	0	0	0	0	**518**
1600 - 1700	1	586	127	1	12	4	0	2	2	0	0	0	0	**735**
1700 - 1800	0	470	110	0	2	3	0	0	1	0	0	0	0	**586**
1800 - 1900	0	247	50	1	5	0	0	1	1	0	0	0	0	**305**
1900 - 2000	0	158	38	0	2	0	0	0	1	0	0	0	0	**199**
2000 - 2100	0	185	25	0	4	0	0	0	1	0	0	0	0	**215**
2100 - 2200	0	93	19	0	1	1	0	2	1	0	0	0	0	**117**
2200 - 2300	0	83	19	0	4	2	0	1	1	0	0	0	0	**110**
2300 - 2400	0	55	19	0	1	6	0	0	0	0	0	0	0	**81**

Session Total	6	5049	1205	25	107	54	0	19	34	7	0	0	0	**6506**
Session Average	0.25	210.38	50.21	1.04	4.46	2.25	0.00	0.79	1.42	0.29	0.00	0.00	0.00	**271.08**
Session Percentage	0.09	77.61	18.52	0.38	1.64	0.83	0.00	0.29	0.52	0.11	0.00	0.00	0.00	

AM Peak Hour	-	0700 - 0800	0700 - 0800	0800 - 0900	0800 - 0900	0500 - 0600	-	0800 - 0900	0700 - 0800	0700 - 0800	-	-	-	**0700 - 0800**
AM Peak Volume	0	278	79	2	10	2	0	2	2	1	0	0	0	**368**

Noon Peak Hour	1100 - 1200	1200 - 1300	1400 - 1500	1400 - 1500	1100 - 1200	1100 - 1200	-	1200 - 1300	1200 - 1300	1100 - 1200	-	-	-	**1400 - 1500**
Noon Peak Volume	3	378	99	7	11	3	0	3	4	3	0	0	0	**496**

PM Peak Hour	1600 - 1700	1600 - 1700	1600 - 1700	1500 - 1600	1600 - 1700	1600 - 1700	-	1500 - 1600	1500 - 1600	-	-	-	-	**1600 - 1700**
PM Peak Volume	1	586	127	2	12	4	0	2	2	0	0	0	0	**735**

Site 49
I-126 W/Bound On-Ramp,
west of Greystone Blvd

Date
Thursday, April 25, 2024

Weather
Fair
67°F

Lat/Long
34.013079°, -81.076940°

Click here for Detailed Weather

0000 - 2400 (Weekday 24h Session) (04-25-2024)
SB WB 60min

	Westbound (Movement 49.1)													
TIME	1	2	3	4	5	6	7	8	9	10	11	12	13	**Total**
0000 - 0100	0	27	11	0	3	3	0	0	0	0	0	0	0	**44**
0100 - 0200	0	19	4	0	0	5	0	0	2	0	0	0	0	**30**
0200 - 0300	0	14	0	0	0	8	0	0	2	0	0	0	0	**24**
0300 - 0400	0	29	6	0	4	0	0	0	3	0	0	0	0	**42**
0400 - 0500	0	28	13	0	1	0	0	0	1	0	0	0	0	**43**
0500 - 0600	0	65	21	0	1	1	0	0	0	0	0	0	0	**88**
0600 - 0700	0	149	26	1	1	1	0	0	0	0	0	0	0	**178**
0700 - 0800	0	249	72	0	7	0	0	2	1	0	0	0	0	**331**
0800 - 0900	0	255	62	1	5	1	0	0	2	0	0	0	0	**326**
0900 - 1000	0	218	51	1	7	1	0	0	2	2	0	0	0	**282**
1000 - 1100	1	279	53	1	6	2	0	3	5	0	0	0	0	**350**
1100 - 1200	0	311	65	2	8	4	0	0	3	0	0	0	0	**393**
1200 - 1300	0	378	80	7	1	4	0	0	1	0	0	0	0	**471**
1300 - 1400	1	354	61	7	7	2	0	0	1	0	0	0	0	**433**
1400 - 1500	0	411	85	1	7	1	0	0	0	0	0	0	0	**505**
1500 - 1600	1	463	76	8	7	5	0	1	2	0	0	0	0	**563**
1600 - 1700	1	603	88	0	11	3	0	0	0	0	0	0	0	**706**
1700 - 1800	0	503	93	0	2	3	0	0	1	0	0	0	0	**602**
1800 - 1900	0	280	57	0	2	0	0	0	0	0	0	0	0	**339**
1900 - 2000	0	0	0	0	0	0	0	0	0	0	0	0	0	**0**
2000 - 2100	0	0	0	0	0	0	0	0	0	0	0	0	0	**0**
2100 - 2200	0	0	0	0	0	0	0	0	0	0	0	0	0	**0**
2200 - 2300	0	0	0	0	0	0	0	0	0	0	0	0	0	**0**
2300 - 2400	0	0	0	0	0	0	0	0	0	0	0	0	0	**0**

Session Total	4	4635	924	29	80	44	0	6	26	2	0	0	0	**5750**
Session Average	0.17	193.13	38.50	1.21	3.33	1.83	0.00	0.25	1.08	0.08	0.00	0.00	0.00	**239.58**
Session Percentage	0.07	80.61	16.07	0.50	1.39	0.77	0.00	0.10	0.45	0.03	0.00	0.00	0.00	

AM Peak Hour	-	0800 - 0900	0700 - 0800	0600 - 0700	0700 - 0800	0500 - 0600	-	0700 - 0800	0800 - 0900	0900 - 1000	-	-	-	**0700 - 0800**
AM Peak Hour Volume	0	255	72	1	7	1	0	2	2	2	0	0	0	**331**

Noon Peak Hour	1000 - 1100	1400 - 1500	1400 - 1500	1200 - 1300	1100 - 1200	1100 - 1200	-	1000 - 1100	1000 - 1100	-	-	-	-	**1400 - 1500**
Noon Peak Hour Volume	1	411	85	7	8	4	0	3	5	0	0	0	0	**505**

PM Peak Hour	1500 - 1600	1600 - 1700	1700 - 1800	1500 - 1600	1600 - 1700	1500 - 1600	-	1500 - 1600	1500 - 1600	-	-	-	-	**1600 - 1700**
PM Peak Hour Volume	1	603	93	8	11	5	0	1	2	0	0	0	0	**706**

Bi-Directional Class Count || Volume Summary 60min

Columbia, SC

Marr Traffic DATA COLLECTION

www.marrtraffic.com

Site 49

I-126 W/Bound On-Ramp,
west of Greystone Blvd

Date

Tuesday, April 23, 2024

Lat/Long

34.013079°, -81.076940°

Weather

Fair
58°F

Click here for Detailed Weather

0000 - 2400 (Weekday 24h Session) (04-23-2024)

Volume Summary 60min

	Volume Summary 60min		
TIME	EB	WB	**Total**
0000 - 0100	0	0	**0**
0100 - 0200	0	0	**0**
0200 - 0300	0	0	**0**
0300 - 0400	0	0	**0**
0400 - 0500	0	0	**0**
0500 - 0600	0	0	**0**
0600 - 0700	0	0	**0**
0700 - 0800	0	0	**0**
0800 - 0900	0	0	**0**
0900 - 1000	0	0	**0**
1000 - 1100	0	0	**0**
1100 - 1200	0	0	**0**

	Volume Summary 60min		
Time	EB	WB	**Total**
1200 - 1300	0	0	**0**
1300 - 1400	0	0	**0**
1400 - 1500	0	0	**0**
1500 - 1600	0	0	**0**
1600 - 1700	0	0	**0**
1700 - 1800	0	0	**0**
1800 - 1900	0	0	**0**
1900 - 2000	0	216	**216**
2000 - 2100	0	196	**196**
2100 - 2200	0	99	**99**
2200 - 2300	0	94	**94**
2300 - 2400	0	78	**78**

Session Total	0	683	**683**
Session Average	0.00	28.46	**28.46**
Session Percentage	0.00	100.00	

Site 49

I-126 W/Bound On-Ramp,
west of Greystone Blvd

Date

Wednesday, April 24, 2024

Lat/Long

34.013079°, -81.076940°

Weather

Fair
66°F

Click here for Detailed Weather

0000 - 2400 (Weekday 24h Session) (04-24-2024)

Volume Summary 60min

	Volume Summary 60min		
TIME	EB	WB	**Total**
0000 - 0100	0	37	**37**
0100 - 0200	0	35	**35**
0200 - 0300	0	34	**34**
0300 - 0400	0	28	**28**
0400 - 0500	0	47	**47**
0500 - 0600	0	85	**85**
0600 - 0700	0	176	**176**
0700 - 0800	0	368	**368**
0800 - 0900	0	334	**334**
0900 - 1000	0	319	**319**
1000 - 1100	0	304	**304**
1100 - 1200	0	431	**431**

Session Total	0	6506	**6506**
Session Average	0.00	271.08	**271.08**
Session Percentage	0.00	100.00	

	Volume Summary 60min		
Time	EB	WB	**Total**
1200 - 1300	0	482	**482**
1300 - 1400	0	464	**464**
1400 - 1500	0	496	**496**
1500 - 1600	0	518	**518**
1600 - 1700	0	735	**735**
1700 - 1800	0	586	**586**
1800 - 1900	0	305	**305**
1900 - 2000	0	199	**199**
2000 - 2100	0	215	**215**
2100 - 2200	0	117	**117**
2200 - 2300	0	110	**110**
2300 - 2400	0	81	**81**

Site 49

I-126 W/Bound On-Ramp,
west of Greystone Blvd

Date

Thursday, April 25, 2024

Lat/Long

34.013079°, -81.076940°

Weather

Fair
67°F

Click here for Detailed Weather

0000 - 2400 (Weekday 24h Session) (04-25-2024)

Volume Summary 60min

	Volume Summary 60min		
TIME	EB	WB	**Total**
0000 - 0100	0	44	**44**
0100 - 0200	0	30	**30**
0200 - 0300	0	24	**24**
0300 - 0400	0	42	**42**
0400 - 0500	0	43	**43**
0500 - 0600	0	88	**88**
0600 - 0700	0	178	**178**
0700 - 0800	0	331	**331**
0800 - 0900	0	326	**326**
0900 - 1000	0	282	**282**
1000 - 1100	0	350	**350**
1100 - 1200	0	393	**393**

	Volume Summary 60min		
Time	EB	WB	**Total**
1200 - 1300	0	471	**471**
1300 - 1400	0	433	**433**
1400 - 1500	0	505	**505**
1500 - 1600	0	563	**563**
1600 - 1700	0	706	**706**
1700 - 1800	0	602	**602**
1800 - 1900	0	339	**339**
1900 - 2000	0	0	**0**
2000 - 2100	0	0	**0**
2100 - 2200	0	0	**0**
2200 - 2300	0	0	**0**
2300 - 2400	0	0	**0**

Session Total	0	5750	**5750**
Session Average	0.00	239.58	**239.58**
Session Percentage	0.00	100.00	

Bi-Directional Class Count || Graphical Analysis SB WB

Columbia, SC

Marr Traffic DATA COLLECTION

www.marrtraffic.com

Site 49

I-126 W/Bound On-Ramp,
west of Greystone Blvd

Lat/Long

34.013079°, -81.076940°

0000 - 2400 (Weekday 24h Session)

Graphical Analysis SB WB

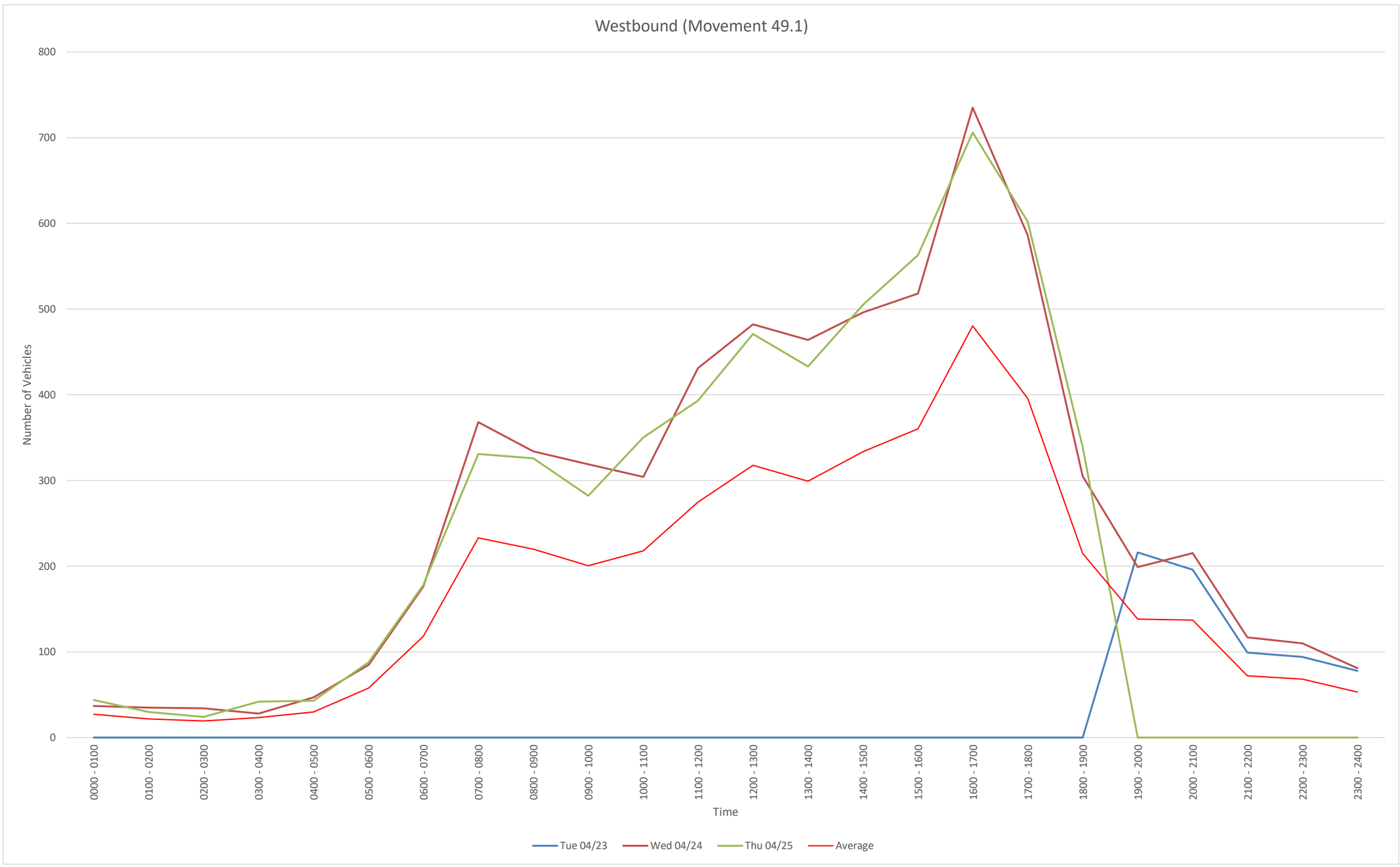

Time	Tue 04/23	Wed 04/24	Thu 04/25				
0000 - 0100	0	37	44				
0100 - 0200	0	35	30				
0200 - 0300	0	34	24				
0300 - 0400	0	28	42				
0400 - 0500	0	47	43				
0500 - 0600	0	85	88				
0600 - 0700	0	176	178				
0700 - 0800	0	368	331				
0800 - 0900	0	334	326				
0900 - 1000	0	319	282				
1000 - 1100	0	304	350				
1100 - 1200	0	431	393				
1200 - 1300	0	482	471				
1300 - 1400	0	464	433				
1400 - 1500	0	496	505				
1500 - 1600	0	518	563				
1600 - 1700	0	735	706				
1700 - 1800	0	586	602				
1800 - 1900	0	305	339				
1900 - 2000	216	199	0				
2000 - 2100	196	215	0				
2100 - 2200	99	117	0				
2200 - 2300	94	110	0				
2300 - 2400	78	81	0				
Daily Total	683	6506	5750				

EB
File Name:
Start Date: 4/23/2024
Start Time: 0
Site Code: 49
Station ID: 1
Location 1: I-126 W/Bound On-Ramp, west of Greystone Blvd
Location 2:

Date	Time	1	2	3	4	5	6	7	8	9	10	11	12	13
4/23/2024	12:00 AM	0	0	0	0	0	0	0	0	0	0	0	0	0
4/23/2024	12:15 AM	0	0	0	0	0	0	0	0	0	0	0	0	0
4/23/2024	12:30 AM	0	0	0	0	0	0	0	0	0	0	0	0	0
4/23/2024	12:45 AM	0	0	0	0	0	0	0	0	0	0	0	0	0
4/23/2024	1:00 AM	0	0	0	0	0	0	0	0	0	0	0	0	0
4/23/2024	1:15 AM	0	0	0	0	0	0	0	0	0	0	0	0	0
4/23/2024	1:30 AM	0	0	0	0	0	0	0	0	0	0	0	0	0
4/23/2024	1:45 AM	0	0	0	0	0	0	0	0	0	0	0	0	0
4/23/2024	2:00 AM	0	0	0	0	0	0	0	0	0	0	0	0	0
4/23/2024	2:15 AM	0	0	0	0	0	0	0	0	0	0	0	0	0
4/23/2024	2:30 AM	0	0	0	0	0	0	0	0	0	0	0	0	0
4/23/2024	2:45 AM	0	0	0	0	0	0	0	0	0	0	0	0	0
4/23/2024	3:00 AM	0	0	0	0	0	0	0	0	0	0	0	0	0
4/23/2024	3:15 AM	0	0	0	0	0	0	0	0	0	0	0	0	0
4/23/2024	3:30 AM	0	0	0	0	0	0	0	0	0	0	0	0	0
4/23/2024	3:45 AM	0	0	0	0	0	0	0	0	0	0	0	0	0
4/23/2024	4:00 AM	0	0	0	0	0	0	0	0	0	0	0	0	0
4/23/2024	4:15 AM	0	0	0	0	0	0	0	0	0	0	0	0	0
4/23/2024	4:30 AM	0	0	0	0	0	0	0	0	0	0	0	0	0
4/23/2024	4:45 AM	0	0	0	0	0	0	0	0	0	0	0	0	0
4/23/2024	5:00 AM	0	0	0	0	0	0	0	0	0	0	0	0	0
4/23/2024	5:15 AM	0	0	0	0	0	0	0	0	0	0	0	0	0
4/23/2024	5:30 AM	0	0	0	0	0	0	0	0	0	0	0	0	0
4/23/2024	5:45 AM	0	0	0	0	0	0	0	0	0	0	0	0	0
4/23/2024	6:00 AM	0	0	0	0	0	0	0	0	0	0	0	0	0
4/23/2024	6:15 AM	0	0	0	0	0	0	0	0	0	0	0	0	0
4/23/2024	6:30 AM	0	0	0	0	0	0	0	0	0	0	0	0	0
4/23/2024	6:45 AM	0	0	0	0	0	0	0	0	0	0	0	0	0
4/23/2024	7:00 AM	0	0	0	0	0	0	0	0	0	0	0	0	0
4/23/2024	7:15 AM	0	0	0	0	0	0	0	0	0	0	0	0	0
4/23/2024	7:30 AM	0	0	0	0	0	0	0	0	0	0	0	0	0
4/23/2024	7:45 AM	0	0	0	0	0	0	0	0	0	0	0	0	0
4/23/2024	8:00 AM	0	0	0	0	0	0	0	0	0	0	0	0	0
4/23/2024	8:15 AM	0	0	0	0	0	0	0	0	0	0	0	0	0
4/23/2024	8:30 AM	0	0	0	0	0	0	0	0	0	0	0	0	0
4/23/2024	8:45 AM	0	0	0	0	0	0	0	0	0	0	0	0	0
4/23/2024	9:00 AM	0	0	0	0	0	0	0	0	0	0	0	0	0
4/23/2024	9:15 AM	0	0	0	0	0	0	0	0	0	0	0	0	0
4/23/2024	9:30 AM	0	0	0	0	0	0	0	0	0	0	0	0	0
4/23/2024	9:45 AM	0	0	0	0	0	0	0	0	0	0	0	0	0
4/23/2024	10:00 AM	0	0	0	0	0	0	0	0	0	0	0	0	0
4/23/2024	10:15 AM	0	0	0	0	0	0	0	0	0	0	0	0	0
4/23/2024	10:30 AM	0	0	0	0	0	0	0	0	0	0	0	0	0
4/23/2024	10:45 AM	0	0	0	0	0	0	0	0	0	0	0	0	0
4/23/2024	11:00 AM	0	0	0	0	0	0	0	0	0	0	0	0	0
4/23/2024	11:15 AM	0	0	0	0	0	0	0	0	0	0	0	0	0
4/23/2024	11:30 AM	0	0	0	0	0	0	0	0	0	0	0	0	0
4/23/2024	11:45 AM	0	0	0	0	0	0	0	0	0	0	0	0	0
4/23/2024	12:00 PM	0	0	0	0	0	0	0	0	0	0	0	0	0
4/23/2024	12:15 PM	0	0	0	0	0	0	0	0	0	0	0	0	0
4/23/2024	12:30 PM	0	0	0	0	0	0	0	0	0	0	0	0	0
4/23/2024	12:45 PM	0	0	0	0	0	0	0	0	0	0	0	0	0
4/23/2024	1:00 PM	0	0	0	0	0	0	0	0	0	0	0	0	0
4/23/2024	1:15 PM	0	0	0	0	0	0	0	0	0	0	0	0	0
4/23/2024	1:30 PM	0	0	0	0	0	0	0	0	0	0	0	0	0
4/23/2024	1:45 PM	0	0	0	0	0	0	0	0	0	0	0	0	0
4/23/2024	2:00 PM	0	0	0	0	0	0	0	0	0	0	0	0	0
4/23/2024	2:15 PM	0	0	0	0	0	0	0	0	0	0	0	0	0
4/23/2024	2:30 PM	0	0	0	0	0	0	0	0	0	0	0	0	0
4/23/2024	2:45 PM	0	0	0	0	0	0	0	0	0	0	0	0	0
4/23/2024	3:00 PM	0	0	0	0	0	0	0	0	0	0	0	0	0
4/23/2024	3:15 PM	0	0	0	0	0	0	0	0	0	0	0	0	0
4/23/2024	3:30 PM	0	0	0	0	0	0	0	0	0	0	0	0	0
4/23/2024	3:45 PM	0	0	0	0	0	0	0	0	0	0	0	0	0
4/23/2024	4:00 PM	0	0	0	0	0	0	0	0	0	0	0	0	0
4/23/2024	4:15 PM	0	0	0	0	0	0	0	0	0	0	0	0	0
4/23/2024	4:30 PM	0	0	0	0	0	0	0	0	0	0	0	0	0
4/23/2024	4:45 PM	0	0	0	0	0	0	0	0	0	0	0	0	0
4/23/2024	5:00 PM	0	0	0	0	0	0	0	0	0	0	0	0	0
4/23/2024	5:15 PM	0	0	0	0	0	0	0	0	0	0	0	0	0
4/23/2024	5:30 PM	0	0	0	0	0	0	0	0	0	0	0	0	0
4/23/2024	5:45 PM	0	0	0	0	0	0	0	0	0	0	0	0	0
4/23/2024	6:00 PM	0	0	0	0	0	0	0	0	0	0	0	0	0
4/23/2024	6:15 PM	0	0	0	0	0	0	0	0	0	0	0	0	0
4/23/2024	6:30 PM	0	0	0	0	0	0	0	0	0	0	0	0	0
4/23/2024	6:45 PM	0	0	0	0	0	0	0	0	0	0	0	0	0
4/23/2024	7:00 PM	0	0	0	0	0	0	0	0	0	0	0	0	0
4/23/2024	7:15 PM	0	0	0	0	0	0	0	0	0	0	0	0	0
4/23/2024	7:30 PM	0	0	0	0	0	0	0	0	0	0	0	0	0
4/23/2024	7:45 PM	0	0	0	0	0	0	0	0	0	0	0	0	0
4/23/2024	8:00 PM	0	0	0	0	0	0	0	0	0	0	0	0	0
4/23/2024	8:15 PM	0	0	0	0	0	0	0	0	0	0	0	0	0
4/23/2024	8:30 PM	0	0	0	0	0	0	0	0	0	0	0	0	0
4/23/2024	8:45 PM	0	0	0	0	0	0	0	0	0	0	0	0	0
4/23/2024	9:00 PM	0	0	0	0	0	0	0	0	0	0	0	0	0
4/23/2024	9:15 PM	0	0	0	0	0	0	0	0	0	0	0	0	0
4/23/2024	9:30 PM	0	0	0	0	0	0	0	0	0	0	0	0	0
4/23/2024	9:45 PM	0	0	0	0	0	0	0	0	0	0	0	0	0
4/23/2024	10:00 PM	0	0	0	0	0	0	0	0	0	0	0	0	0
4/23/2024	10:15 PM	0	0	0	0	0	0	0	0	0	0	0	0	0
4/23/2024	10:30 PM	0	0	0	0	0	0	0	0	0	0	0	0	0
4/23/2024	10:45 PM	0	0	0	0	0	0	0	0	0	0	0	0	0
4/23/2024	11:00 PM	0	0	0	0	0	0	0	0	0	0	0	0	0
4/23/2024	11:15 PM	0	0	0	0	0	0	0	0	0	0	0	0	0
4/23/2024	11:30 PM	0	0	0	0	0	0	0	0	0	0	0	0	0
4/23/2024	11:45 PM	0	0	0	0	0	0	0	0	0	0	0	0	0

4/24/2024	12:00 AM	0	0	0	0	0	0	0	0	0	0	0	0	0
4/24/2024	12:15 AM	0	0	0	0	0	0	0	0	0	0	0	0	0
4/24/2024	12:30 AM	0	0	0	0	0	0	0	0	0	0	0	0	0
4/24/2024	12:45 AM	0	0	0	0	0	0	0	0	0	0	0	0	0
4/24/2024	1:00 AM	0	0	0	0	0	0	0	0	0	0	0	0	0
4/24/2024	1:15 AM	0	0	0	0	0	0	0	0	0	0	0	0	0
4/24/2024	1:30 AM	0	0	0	0	0	0	0	0	0	0	0	0	0
4/24/2024	1:45 AM	0	0	0	0	0	0	0	0	0	0	0	0	0
4/24/2024	2:00 AM	0	0	0	0	0	0	0	0	0	0	0	0	0
4/24/2024	2:15 AM	0	0	0	0	0	0	0	0	0	0	0	0	0
4/24/2024	2:30 AM	0	0	0	0	0	0	0	0	0	0	0	0	0
4/24/2024	2:45 AM	0	0	0	0	0	0	0	0	0	0	0	0	0
4/24/2024	3:00 AM	0	0	0	0	0	0	0	0	0	0	0	0	0
4/24/2024	3:15 AM	0	0	0	0	0	0	0	0	0	0	0	0	0
4/24/2024	3:30 AM	0	0	0	0	0	0	0	0	0	0	0	0	0
4/24/2024	3:45 AM	0	0	0	0	0	0	0	0	0	0	0	0	0
4/24/2024	4:00 AM	0	0	0	0	0	0	0	0	0	0	0	0	0
4/24/2024	4:15 AM	0	0	0	0	0	0	0	0	0	0	0	0	0
4/24/2024	4:30 AM	0	0	0	0	0	0	0	0	0	0	0	0	0
4/24/2024	4:45 AM	0	0	0	0	0	0	0	0	0	0	0	0	0
4/24/2024	5:00 AM	0	0	0	0	0	0	0	0	0	0	0	0	0
4/24/2024	5:15 AM	0	0	0	0	0	0	0	0	0	0	0	0	0
4/24/2024	5:30 AM	0	0	0	0	0	0	0	0	0	0	0	0	0
4/24/2024	5:45 AM	0	0	0	0	0	0	0	0	0	0	0	0	0
4/24/2024	6:00 AM	0	0	0	0	0	0	0	0	0	0	0	0	0
4/24/2024	6:15 AM	0	0	0	0	0	0	0	0	0	0	0	0	0
4/24/2024	6:30 AM	0	0	0	0	0	0	0	0	0	0	0	0	0
4/24/2024	6:45 AM	0	0	0	0	0	0	0	0	0	0	0	0	0
4/24/2024	7:00 AM	0	0	0	0	0	0	0	0	0	0	0	0	0
4/24/2024	7:15 AM	0	0	0	0	0	0	0	0	0	0	0	0	0
4/24/2024	7:30 AM	0	0	0	0	0	0	0	0	0	0	0	0	0
4/24/2024	7:45 AM	0	0	0	0	0	0	0	0	0	0	0	0	0
4/24/2024	8:00 AM	0	0	0	0	0	0	0	0	0	0	0	0	0
4/24/2024	8:15 AM	0	0	0	0	0	0	0	0	0	0	0	0	0
4/24/2024	8:30 AM	0	0	0	0	0	0	0	0	0	0	0	0	0
4/24/2024	8:45 AM	0	0	0	0	0	0	0	0	0	0	0	0	0
4/24/2024	9:00 AM	0	0	0	0	0	0	0	0	0	0	0	0	0
4/24/2024	9:15 AM	0	0	0	0	0	0	0	0	0	0	0	0	0
4/24/2024	9:30 AM	0	0	0	0	0	0	0	0	0	0	0	0	0
4/24/2024	9:45 AM	0	0	0	0	0	0	0	0	0	0	0	0	0
4/24/2024	10:00 AM	0	0	0	0	0	0	0	0	0	0	0	0	0
4/24/2024	10:15 AM	0	0	0	0	0	0	0	0	0	0	0	0	0
4/24/2024	10:30 AM	0	0	0	0	0	0	0	0	0	0	0	0	0
4/24/2024	10:45 AM	0	0	0	0	0	0	0	0	0	0	0	0	0
4/24/2024	11:00 AM	0	0	0	0	0	0	0	0	0	0	0	0	0
4/24/2024	11:15 AM	0	0	0	0	0	0	0	0	0	0	0	0	0
4/24/2024	11:30 AM	0	0	0	0	0	0	0	0	0	0	0	0	0
4/24/2024	11:45 AM	0	0	0	0	0	0	0	0	0	0	0	0	0
4/24/2024	12:00 PM	0	0	0	0	0	0	0	0	0	0	0	0	0
4/24/2024	12:15 PM	0	0	0	0	0	0	0	0	0	0	0	0	0
4/24/2024	12:30 PM	0	0	0	0	0	0	0	0	0	0	0	0	0
4/24/2024	12:45 PM	0	0	0	0	0	0	0	0	0	0	0	0	0
4/24/2024	1:00 PM	0	0	0	0	0	0	0	0	0	0	0	0	0
4/24/2024	1:15 PM	0	0	0	0	0	0	0	0	0	0	0	0	0
4/24/2024	1:30 PM	0	0	0	0	0	0	0	0	0	0	0	0	0
4/24/2024	1:45 PM	0	0	0	0	0	0	0	0	0	0	0	0	0
4/24/2024	2:00 PM	0	0	0	0	0	0	0	0	0	0	0	0	0
4/24/2024	2:15 PM	0	0	0	0	0	0	0	0	0	0	0	0	0
4/24/2024	2:30 PM	0	0	0	0	0	0	0	0	0	0	0	0	0
4/24/2024	2:45 PM	0	0	0	0	0	0	0	0	0	0	0	0	0
4/24/2024	3:00 PM	0	0	0	0	0	0	0	0	0	0	0	0	0
4/24/2024	3:15 PM	0	0	0	0	0	0	0	0	0	0	0	0	0
4/24/2024	3:30 PM	0	0	0	0	0	0	0	0	0	0	0	0	0
4/24/2024	3:45 PM	0	0	0	0	0	0	0	0	0	0	0	0	0
4/24/2024	4:00 PM	0	0	0	0	0	0	0	0	0	0	0	0	0
4/24/2024	4:15 PM	0	0	0	0	0	0	0	0	0	0	0	0	0
4/24/2024	4:30 PM	0	0	0	0	0	0	0	0	0	0	0	0	0
4/24/2024	4:45 PM	0	0	0	0	0	0	0	0	0	0	0	0	0
4/24/2024	5:00 PM	0	0	0	0	0	0	0	0	0	0	0	0	0
4/24/2024	5:15 PM	0	0	0	0	0	0	0	0	0	0	0	0	0
4/24/2024	5:30 PM	0	0	0	0	0	0	0	0	0	0	0	0	0
4/24/2024	5:45 PM	0	0	0	0	0	0	0	0	0	0	0	0	0
4/24/2024	6:00 PM	0	0	0	0	0	0	0	0	0	0	0	0	0
4/24/2024	6:15 PM	0	0	0	0	0	0	0	0	0	0	0	0	0
4/24/2024	6:30 PM	0	0	0	0	0	0	0	0	0	0	0	0	0
4/24/2024	6:45 PM	0	0	0	0	0	0	0	0	0	0	0	0	0
4/24/2024	7:00 PM	0	0	0	0	0	0	0	0	0	0	0	0	0
4/24/2024	7:15 PM	0	0	0	0	0	0	0	0	0	0	0	0	0
4/24/2024	7:30 PM	0	0	0	0	0	0	0	0	0	0	0	0	0
4/24/2024	7:45 PM	0	0	0	0	0	0	0	0	0	0	0	0	0
4/24/2024	8:00 PM	0	0	0	0	0	0	0	0	0	0	0	0	0
4/24/2024	8:15 PM	0	0	0	0	0	0	0	0	0	0	0	0	0
4/24/2024	8:30 PM	0	0	0	0	0	0	0	0	0	0	0	0	0
4/24/2024	8:45 PM	0	0	0	0	0	0	0	0	0	0	0	0	0
4/24/2024	9:00 PM	0	0	0	0	0	0	0	0	0	0	0	0	0
4/24/2024	9:15 PM	0	0	0	0	0	0	0	0	0	0	0	0	0
4/24/2024	9:30 PM	0	0	0	0	0	0	0	0	0	0	0	0	0
4/24/2024	9:45 PM	0	0	0	0	0	0	0	0	0	0	0	0	0
4/24/2024	10:00 PM	0	0	0	0	0	0	0	0	0	0	0	0	0
4/24/2024	10:15 PM	0	0	0	0	0	0	0	0	0	0	0	0	0
4/24/2024	10:30 PM	0	0	0	0	0	0	0	0	0	0	0	0	0
4/24/2024	10:45 PM	0	0	0	0	0	0	0	0	0	0	0	0	0
4/24/2024	11:00 PM	0	0	0	0	0	0	0	0	0	0	0	0	0
4/24/2024	11:15 PM	0	0	0	0	0	0	0	0	0	0	0	0	0
4/24/2024	11:30 PM	0	0	0	0	0	0	0	0	0	0	0	0	0
4/24/2024	11:45 PM	0	0	0	0	0	0	0	0	0	0	0	0	0

4/25/2024	12:00 AM	0	0	0	0	0	0	0	0	0	0	0	0	0
4/25/2024	12:15 AM	0	0	0	0	0	0	0	0	0	0	0	0	0
4/25/2024	12:30 AM	0	0	0	0	0	0	0	0	0	0	0	0	0
4/25/2024	12:45 AM	0	0	0	0	0	0	0	0	0	0	0	0	0
4/25/2024	1:00 AM	0	0	0	0	0	0	0	0	0	0	0	0	0
4/25/2024	1:15 AM	0	0	0	0	0	0	0	0	0	0	0	0	0
4/25/2024	1:30 AM	0	0	0	0	0	0	0	0	0	0	0	0	0
4/25/2024	1:45 AM	0	0	0	0	0	0	0	0	0	0	0	0	0
4/25/2024	2:00 AM	0	0	0	0	0	0	0	0	0	0	0	0	0
4/25/2024	2:15 AM	0	0	0	0	0	0	0	0	0	0	0	0	0
4/25/2024	2:30 AM	0	0	0	0	0	0	0	0	0	0	0	0	0
4/25/2024	2:45 AM	0	0	0	0	0	0	0	0	0	0	0	0	0
4/25/2024	3:00 AM	0	0	0	0	0	0	0	0	0	0	0	0	0
4/25/2024	3:15 AM	0	0	0	0	0	0	0	0	0	0	0	0	0
4/25/2024	3:30 AM	0	0	0	0	0	0	0	0	0	0	0	0	0
4/25/2024	3:45 AM	0	0	0	0	0	0	0	0	0	0	0	0	0
4/25/2024	4:00 AM	0	0	0	0	0	0	0	0	0	0	0	0	0
4/25/2024	4:15 AM	0	0	0	0	0	0	0	0	0	0	0	0	0
4/25/2024	4:30 AM	0	0	0	0	0	0	0	0	0	0	0	0	0
4/25/2024	4:45 AM	0	0	0	0	0	0	0	0	0	0	0	0	0
4/25/2024	5:00 AM	0	0	0	0	0	0	0	0	0	0	0	0	0
4/25/2024	5:15 AM	0	0	0	0	0	0	0	0	0	0	0	0	0
4/25/2024	5:30 AM	0	0	0	0	0	0	0	0	0	0	0	0	0
4/25/2024	5:45 AM	0	0	0	0	0	0	0	0	0	0	0	0	0
4/25/2024	6:00 AM	0	0	0	0	0	0	0	0	0	0	0	0	0
4/25/2024	6:15 AM	0	0	0	0	0	0	0	0	0	0	0	0	0
4/25/2024	6:30 AM	0	0	0	0	0	0	0	0	0	0	0	0	0
4/25/2024	6:45 AM	0	0	0	0	0	0	0	0	0	0	0	0	0
4/25/2024	7:00 AM	0	0	0	0	0	0	0	0	0	0	0	0	0
4/25/2024	7:15 AM	0	0	0	0	0	0	0	0	0	0	0	0	0
4/25/2024	7:30 AM	0	0	0	0	0	0	0	0	0	0	0	0	0
4/25/2024	7:45 AM	0	0	0	0	0	0	0	0	0	0	0	0	0
4/25/2024	8:00 AM	0	0	0	0	0	0	0	0	0	0	0	0	0
4/25/2024	8:15 AM	0	0	0	0	0	0	0	0	0	0	0	0	0
4/25/2024	8:30 AM	0	0	0	0	0	0	0	0	0	0	0	0	0
4/25/2024	8:45 AM	0	0	0	0	0	0	0	0	0	0	0	0	0
4/25/2024	9:00 AM	0	0	0	0	0	0	0	0	0	0	0	0	0
4/25/2024	9:15 AM	0	0	0	0	0	0	0	0	0	0	0	0	0
4/25/2024	9:30 AM	0	0	0	0	0	0	0	0	0	0	0	0	0
4/25/2024	9:45 AM	0	0	0	0	0	0	0	0	0	0	0	0	0
4/25/2024	10:00 AM	0	0	0	0	0	0	0	0	0	0	0	0	0
4/25/2024	10:15 AM	0	0	0	0	0	0	0	0	0	0	0	0	0
4/25/2024	10:30 AM	0	0	0	0	0	0	0	0	0	0	0	0	0
4/25/2024	10:45 AM	0	0	0	0	0	0	0	0	0	0	0	0	0
4/25/2024	11:00 AM	0	0	0	0	0	0	0	0	0	0	0	0	0
4/25/2024	11:15 AM	0	0	0	0	0	0	0	0	0	0	0	0	0
4/25/2024	11:30 AM	0	0	0	0	0	0	0	0	0	0	0	0	0
4/25/2024	11:45 AM	0	0	0	0	0	0	0	0	0	0	0	0	0
4/25/2024	12:00 PM	0	0	0	0	0	0	0	0	0	0	0	0	0
4/25/2024	12:15 PM	0	0	0	0	0	0	0	0	0	0	0	0	0
4/25/2024	12:30 PM	0	0	0	0	0	0	0	0	0	0	0	0	0
4/25/2024	12:45 PM	0	0	0	0	0	0	0	0	0	0	0	0	0
4/25/2024	1:00 PM	0	0	0	0	0	0	0	0	0	0	0	0	0
4/25/2024	1:15 PM	0	0	0	0	0	0	0	0	0	0	0	0	0
4/25/2024	1:30 PM	0	0	0	0	0	0	0	0	0	0	0	0	0
4/25/2024	1:45 PM	0	0	0	0	0	0	0	0	0	0	0	0	0
4/25/2024	2:00 PM	0	0	0	0	0	0	0	0	0	0	0	0	0
4/25/2024	2:15 PM	0	0	0	0	0	0	0	0	0	0	0	0	0
4/25/2024	2:30 PM	0	0	0	0	0	0	0	0	0	0	0	0	0
4/25/2024	2:45 PM	0	0	0	0	0	0	0	0	0	0	0	0	0
4/25/2024	3:00 PM	0	0	0	0	0	0	0	0	0	0	0	0	0
4/25/2024	3:15 PM	0	0	0	0	0	0	0	0	0	0	0	0	0
4/25/2024	3:30 PM	0	0	0	0	0	0	0	0	0	0	0	0	0
4/25/2024	3:45 PM	0	0	0	0	0	0	0	0	0	0	0	0	0
4/25/2024	4:00 PM	0	0	0	0	0	0	0	0	0	0	0	0	0
4/25/2024	4:15 PM	0	0	0	0	0	0	0	0	0	0	0	0	0
4/25/2024	4:30 PM	0	0	0	0	0	0	0	0	0	0	0	0	0
4/25/2024	4:45 PM	0	0	0	0	0	0	0	0	0	0	0	0	0
4/25/2024	5:00 PM	0	0	0	0	0	0	0	0	0	0	0	0	0
4/25/2024	5:15 PM	0	0	0	0	0	0	0	0	0	0	0	0	0
4/25/2024	5:30 PM	0	0	0	0	0	0	0	0	0	0	0	0	0
4/25/2024	5:45 PM	0	0	0	0	0	0	0	0	0	0	0	0	0
4/25/2024	6:00 PM	0	0	0	0	0	0	0	0	0	0	0	0	0
4/25/2024	6:15 PM	0	0	0	0	0	0	0	0	0	0	0	0	0
4/25/2024	6:30 PM	0	0	0	0	0	0	0	0	0	0	0	0	0
4/25/2024	6:45 PM	0	0	0	0	0	0	0	0	0	0	0	0	0
4/25/2024	7:00 PM	0	0	0	0	0	0	0	0	0	0	0	0	0
4/25/2024	7:15 PM	0	0	0	0	0	0	0	0	0	0	0	0	0
4/25/2024	7:30 PM	0	0	0	0	0	0	0	0	0	0	0	0	0
4/25/2024	7:45 PM	0	0	0	0	0	0	0	0	0	0	0	0	0
4/25/2024	8:00 PM	0	0	0	0	0	0	0	0	0	0	0	0	0
4/25/2024	8:15 PM	0	0	0	0	0	0	0	0	0	0	0	0	0
4/25/2024	8:30 PM	0	0	0	0	0	0	0	0	0	0	0	0	0
4/25/2024	8:45 PM	0	0	0	0	0	0	0	0	0	0	0	0	0
4/25/2024	9:00 PM	0	0	0	0	0	0	0	0	0	0	0	0	0
4/25/2024	9:15 PM	0	0	0	0	0	0	0	0	0	0	0	0	0
4/25/2024	9:30 PM	0	0	0	0	0	0	0	0	0	0	0	0	0
4/25/2024	9:45 PM	0	0	0	0	0	0	0	0	0	0	0	0	0
4/25/2024	10:00 PM	0	0	0	0	0	0	0	0	0	0	0	0	0
4/25/2024	10:15 PM	0	0	0	0	0	0	0	0	0	0	0	0	0
4/25/2024	10:30 PM	0	0	0	0	0	0	0	0	0	0	0	0	0
4/25/2024	10:45 PM	0	0	0	0	0	0	0	0	0	0	0	0	0
4/25/2024	11:00 PM	0	0	0	0	0	0	0	0	0	0	0	0	0
4/25/2024	11:15 PM	0	0	0	0	0	0	0	0	0	0	0	0	0
4/25/2024	11:30 PM	0	0	0	0	0	0	0	0	0	0	0	0	0
4/25/2024	11:45 PM	0	0	0	0	0	0	0	0	0	0	0	0	0

WB
File Name:
Start Date: 4/23/2024
Start Time: 0
Site Code: 49
Station ID: 1
Location 1: I-126 W/Bound On-Ramp, west of Greystone Blvd
Location 2:

Date	Time	1	2	3	4	5	6	7	8	9	10	11	12	13
4/23/2024	12:00 AM	0	0	0	0	0	0	0	0	0	0	0	0	0
4/23/2024	12:15 AM	0	0	0	0	0	0	0	0	0	0	0	0	0
4/23/2024	12:30 AM	0	0	0	0	0	0	0	0	0	0	0	0	0
4/23/2024	12:45 AM	0	0	0	0	0	0	0	0	0	0	0	0	0
4/23/2024	1:00 AM	0	0	0	0	0	0	0	0	0	0	0	0	0
4/23/2024	1:15 AM	0	0	0	0	0	0	0	0	0	0	0	0	0
4/23/2024	1:30 AM	0	0	0	0	0	0	0	0	0	0	0	0	0
4/23/2024	1:45 AM	0	0	0	0	0	0	0	0	0	0	0	0	0
4/23/2024	2:00 AM	0	0	0	0	0	0	0	0	0	0	0	0	0
4/23/2024	2:15 AM	0	0	0	0	0	0	0	0	0	0	0	0	0
4/23/2024	2:30 AM	0	0	0	0	0	0	0	0	0	0	0	0	0
4/23/2024	2:45 AM	0	0	0	0	0	0	0	0	0	0	0	0	0
4/23/2024	3:00 AM	0	0	0	0	0	0	0	0	0	0	0	0	0
4/23/2024	3:15 AM	0	0	0	0	0	0	0	0	0	0	0	0	0
4/23/2024	3:30 AM	0	0	0	0	0	0	0	0	0	0	0	0	0
4/23/2024	3:45 AM	0	0	0	0	0	0	0	0	0	0	0	0	0
4/23/2024	4:00 AM	0	0	0	0	0	0	0	0	0	0	0	0	0
4/23/2024	4:15 AM	0	0	0	0	0	0	0	0	0	0	0	0	0
4/23/2024	4:30 AM	0	0	0	0	0	0	0	0	0	0	0	0	0
4/23/2024	4:45 AM	0	0	0	0	0	0	0	0	0	0	0	0	0
4/23/2024	5:00 AM	0	0	0	0	0	0	0	0	0	0	0	0	0
4/23/2024	5:15 AM	0	0	0	0	0	0	0	0	0	0	0	0	0
4/23/2024	5:30 AM	0	0	0	0	0	0	0	0	0	0	0	0	0
4/23/2024	5:45 AM	0	0	0	0	0	0	0	0	0	0	0	0	0
4/23/2024	6:00 AM	0	0	0	0	0	0	0	0	0	0	0	0	0
4/23/2024	6:15 AM	0	0	0	0	0	0	0	0	0	0	0	0	0
4/23/2024	6:30 AM	0	0	0	0	0	0	0	0	0	0	0	0	0
4/23/2024	6:45 AM	0	0	0	0	0	0	0	0	0	0	0	0	0
4/23/2024	7:00 AM	0	0	0	0	0	0	0	0	0	0	0	0	0
4/23/2024	7:15 AM	0	0	0	0	0	0	0	0	0	0	0	0	0
4/23/2024	7:30 AM	0	0	0	0	0	0	0	0	0	0	0	0	0
4/23/2024	7:45 AM	0	0	0	0	0	0	0	0	0	0	0	0	0
4/23/2024	8:00 AM	0	0	0	0	0	0	0	0	0	0	0	0	0
4/23/2024	8:15 AM	0	0	0	0	0	0	0	0	0	0	0	0	0
4/23/2024	8:30 AM	0	0	0	0	0	0	0	0	0	0	0	0	0
4/23/2024	8:45 AM	0	0	0	0	0	0	0	0	0	0	0	0	0
4/23/2024	9:00 AM	0	0	0	0	0	0	0	0	0	0	0	0	0
4/23/2024	9:15 AM	0	0	0	0	0	0	0	0	0	0	0	0	0
4/23/2024	9:30 AM	0	0	0	0	0	0	0	0	0	0	0	0	0
4/23/2024	9:45 AM	0	0	0	0	0	0	0	0	0	0	0	0	0
4/23/2024	10:00 AM	0	0	0	0	0	0	0	0	0	0	0	0	0
4/23/2024	10:15 AM	0	0	0	0	0	0	0	0	0	0	0	0	0
4/23/2024	10:30 AM	0	0	0	0	0	0	0	0	0	0	0	0	0
4/23/2024	10:45 AM	0	0	0	0	0	0	0	0	0	0	0	0	0
4/23/2024	11:00 AM	0	0	0	0	0	0	0	0	0	0	0	0	0
4/23/2024	11:15 AM	0	0	0	0	0	0	0	0	0	0	0	0	0
4/23/2024	11:30 AM	0	0	0	0	0	0	0	0	0	0	0	0	0
4/23/2024	11:45 AM	0	0	0	0	0	0	0	0	0	0	0	0	0
4/23/2024	12:00 PM	0	0	0	0	0	0	0	0	0	0	0	0	0
4/23/2024	12:15 PM	0	0	0	0	0	0	0	0	0	0	0	0	0
4/23/2024	12:30 PM	0	0	0	0	0	0	0	0	0	0	0	0	0
4/23/2024	12:45 PM	0	0	0	0	0	0	0	0	0	0	0	0	0
4/23/2024	1:00 PM	0	0	0	0	0	0	0	0	0	0	0	0	0
4/23/2024	1:15 PM	0	0	0	0	0	0	0	0	0	0	0	0	0
4/23/2024	1:30 PM	0	0	0	0	0	0	0	0	0	0	0	0	0
4/23/2024	1:45 PM	0	0	0	0	0	0	0	0	0	0	0	0	0
4/23/2024	2:00 PM	0	0	0	0	0	0	0	0	0	0	0	0	0
4/23/2024	2:15 PM	0	0	0	0	0	0	0	0	0	0	0	0	0
4/23/2024	2:30 PM	0	0	0	0	0	0	0	0	0	0	0	0	0
4/23/2024	2:45 PM	0	0	0	0	0	0	0	0	0	0	0	0	0
4/23/2024	3:00 PM	0	0	0	0	0	0	0	0	0	0	0	0	0
4/23/2024	3:15 PM	0	0	0	0	0	0	0	0	0	0	0	0	0
4/23/2024	3:30 PM	0	0	0	0	0	0	0	0	0	0	0	0	0
4/23/2024	3:45 PM	0	0	0	0	0	0	0	0	0	0	0	0	0
4/23/2024	4:00 PM	0	0	0	0	0	0	0	0	0	0	0	0	0
4/23/2024	4:15 PM	0	0	0	0	0	0	0	0	0	0	0	0	0
4/23/2024	4:30 PM	0	0	0	0	0	0	0	0	0	0	0	0	0
4/23/2024	4:45 PM	0	0	0	0	0	0	0	0	0	0	0	0	0
4/23/2024	5:00 PM	0	0	0	0	0	0	0	0	0	0	0	0	0
4/23/2024	5:15 PM	0	0	0	0	0	0	0	0	0	0	0	0	0
4/23/2024	5:30 PM	0	0	0	0	0	0	0	0	0	0	0	0	0
4/23/2024	5:45 PM	0	0	0	0	0	0	0	0	0	0	0	0	0
4/23/2024	6:00 PM	0	0	0	0	0	0	0	0	0	0	0	0	0
4/23/2024	6:15 PM	0	0	0	0	0	0	0	0	0	0	0	0	0
4/23/2024	6:30 PM	0	0	0	0	0	0	0	0	0	0	0	0	0
4/23/2024	6:45 PM	0	0	0	0	0	0	0	0	0	0	0	0	0
4/23/2024	7:00 PM	0	58	10	0	1	0	0	0	0	0	0	0	0
4/23/2024	7:15 PM	0	36	4	0	0	1	0	0	0	0	0	0	0
4/23/2024	7:30 PM	0	41	10	0	1	0	0	0	0	0	0	0	0
4/23/2024	7:45 PM	0	42	9	0	2	0	0	1	0	0	0	0	0
4/23/2024	8:00 PM	0	45	12	0	1	1	0	0	0	0	0	0	0
4/23/2024	8:15 PM	0	43	13	0	1	0	0	0	0	0	0	0	0
4/23/2024	8:30 PM	0	34	10	0	0	0	0	0	0	0	0	0	0
4/23/2024	8:45 PM	0	26	7	0	0	3	0	0	0	0	0	0	0
4/23/2024	9:00 PM	0	18	6	0	0	2	0	0	0	0	0	0	0
4/23/2024	9:15 PM	0	22	8	0	0	1	0	0	0	0	0	0	0
4/23/2024	9:30 PM	0	23	3	0	0	1	0	0	0	0	0	0	0
4/23/2024	9:45 PM	0	14	1	0	0	0	0	0	0	0	0	0	0
4/23/2024	10:00 PM	0	20	5	0	0	1	0	0	0	0	0	0	0
4/23/2024	10:15 PM	0	17	3	0	1	0	0	0	0	0	0	0	0
4/23/2024	10:30 PM	0	16	1	0	0	2	1	0	0	0	0	0	0
4/23/2024	10:45 PM	0	22	3	0	0	2	0	0	0	0	0	0	0
4/23/2024	11:00 PM	0	25	6	0	0	1	0	0	0	0	0	0	0
4/23/2024	11:15 PM	0	12	0	0	0	1	0	0	0	0	0	0	0
4/23/2024	11:30 PM	0	8	4	0	1	0	0	0	0	0	0	0	0
4/23/2024	11:45 PM	0	12	4	0	0	4	0	0	0	0	0	0	0

4/24/2024	12:00 AM	0	6	1	0	0	1	0	0	0	0	0	0	0
4/24/2024	12:15 AM	0	6	3	0	0	0	0	0	0	1	0	0	0
4/24/2024	12:30 AM	0	5	0	0	0	1	0	0	1	0	0	0	0
4/24/2024	12:45 AM	0	7	2	0	0	3	0	0	0	0	0	0	0
4/24/2024	1:00 AM	0	4	1	0	0	1	0	0	0	0	0	0	0
4/24/2024	1:15 AM	0	2	2	0	0	7	0	0	1	0	0	0	0
4/24/2024	1:30 AM	0	7	3	0	0	1	0	0	0	0	0	0	0
4/24/2024	1:45 AM	0	6	0	0	0	0	0	0	0	0	0	0	0
4/24/2024	2:00 AM	0	5	0	0	0	1	0	0	0	0	0	0	0
4/24/2024	2:15 AM	0	4	4	0	0	1	0	0	1	0	0	0	0
4/24/2024	2:30 AM	0	3	1	0	3	1	0	0	0	0	0	0	0
4/24/2024	2:45 AM	0	7	2	0	0	1	0	0	0	0	0	0	0
4/24/2024	3:00 AM	0	7	1	0	0	1	0	0	0	0	0	0	0
4/24/2024	3:15 AM	0	5	2	0	0	0	0	0	0	0	0	0	0
4/24/2024	3:30 AM	0	5	2	0	0	0	0	0	0	0	0	0	0
4/24/2024	3:45 AM	0	5	0	0	0	0	0	0	0	0	0	0	0
4/24/2024	4:00 AM	0	3	0	0	0	0	0	0	0	0	0	0	0
4/24/2024	4:15 AM	0	10	3	0	0	0	0	0	0	0	0	0	0
4/24/2024	4:30 AM	0	11	3	0	0	0	0	0	1	0	0	0	0
4/24/2024	4:45 AM	0	10	5	0	0	0	0	0	1	0	0	0	0
4/24/2024	5:00 AM	0	11	4	0	0	0	0	0	0	0	0	0	0
4/24/2024	5:15 AM	0	14	5	0	0	1	0	0	0	0	0	0	0
4/24/2024	5:30 AM	0	18	4	0	0	1	0	0	1	0	0	0	0
4/24/2024	5:45 AM	0	20	6	0	0	0	0	0	0	0	0	0	0
4/24/2024	6:00 AM	0	22	7	0	2	1	0	0	0	0	0	0	0
4/24/2024	6:15 AM	0	27	5	0	0	0	0	0	1	0	0	0	0
4/24/2024	6:30 AM	0	44	7	0	0	0	0	0	0	0	0	0	0
4/24/2024	6:45 AM	0	47	8	0	4	1	0	0	0	0	0	0	0
4/24/2024	7:00 AM	0	66	17	0	1	0	0	0	0	0	0	0	0
4/24/2024	7:15 AM	0	64	16	0	0	0	0	0	0	0	0	0	0
4/24/2024	7:30 AM	0	71	23	0	3	2	0	0	0	1	0	0	0
4/24/2024	7:45 AM	0	77	23	0	2	0	0	0	2	0	0	0	0
4/24/2024	8:00 AM	0	55	20	1	3	1	0	0	2	0	0	0	0
4/24/2024	8:15 AM	0	64	24	0	4	1	0	0	0	0	0	0	0
4/24/2024	8:30 AM	0	63	20	1	0	0	0	1	0	0	0	0	0
4/24/2024	8:45 AM	0	58	12	0	3	0	0	1	0	0	0	0	0
4/24/2024	9:00 AM	0	73	21	0	1	0	0	0	0	0	0	0	0
4/24/2024	9:15 AM	0	53	16	0	1	0	0	0	2	0	0	0	0
4/24/2024	9:30 AM	0	45	16	1	1	0	0	0	0	0	0	0	0
4/24/2024	9:45 AM	0	68	19	0	2	0	0	0	0	0	0	0	0
4/24/2024	10:00 AM	0	54	14	0	0	0	0	0	0	0	0	0	0
4/24/2024	10:15 AM	0	56	17	0	1	0	0	1	0	0	0	0	0
4/24/2024	10:30 AM	0	53	16	1	3	0	0	1	0	1	0	0	0
4/24/2024	10:45 AM	0	66	16	1	2	1	0	0	0	0	0	0	0
4/24/2024	11:00 AM	2	66	20	0	1	1	0	0	0	1	0	0	0
4/24/2024	11:15 AM	0	66	21	0	2	1	0	1	0	1	0	0	0
4/24/2024	11:30 AM	1	90	22	0	3	1	0	0	0	0	0	0	0
4/24/2024	11:45 AM	0	93	28	2	5	0	0	0	2	1	0	0	0
4/24/2024	12:00 PM	0	93	21	6	4	0	0	0	0	0	0	0	0
4/24/2024	12:15 PM	0	76	22	0	1	0	0	1	0	0	0	0	0
4/24/2024	12:30 PM	0	115	26	0	0	0	0	2	0	0	0	0	0
4/24/2024	12:45 PM	0	94	11	0	6	0	0	0	4	0	0	0	0
4/24/2024	1:00 PM	0	80	15	1	2	1	0	0	1	0	0	0	0
4/24/2024	1:15 PM	0	81	19	0	1	0	0	0	1	1	0	0	0
4/24/2024	1:30 PM	0	105	23	0	3	1	0	1	0	0	0	0	0
4/24/2024	1:45 PM	0	106	19	0	1	0	0	1	1	0	0	0	0
4/24/2024	2:00 PM	0	93	36	0	2	0	0	1	0	0	0	0	0
4/24/2024	2:15 PM	0	97	19	4	0	0	0	0	1	0	0	0	0
4/24/2024	2:30 PM	1	98	24	3	2	1	0	0	0	0	0	0	0
4/24/2024	2:45 PM	1	88	20	0	3	1	0	0	1	0	0	0	0
4/24/2024	3:00 PM	0	128	19	1	1	1	0	0	1	0	0	0	0
4/24/2024	3:15 PM	0	85	19	0	1	1	0	0	0	0	0	0	0
4/24/2024	3:30 PM	0	93	23	0	1	1	0	1	0	0	0	0	0
4/24/2024	3:45 PM	0	118	20	1	1	0	0	1	1	0	0	0	0
4/24/2024	4:00 PM	0	179	40	0	1	1	0	0	0	0	0	0	0
4/24/2024	4:15 PM	0	131	28	1	3	2	0	1	0	0	0	0	0
4/24/2024	4:30 PM	1	153	31	0	3	0	0	0	1	0	0	0	0
4/24/2024	4:45 PM	0	123	28	0	5	1	0	1	1	0	0	0	0
4/24/2024	5:00 PM	0	200	49	0	0	0	0	0	0	0	0	0	0
4/24/2024	5:15 PM	0	108	24	0	1	1	0	0	0	0	0	0	0
4/24/2024	5:30 PM	0	87	24	0	0	0	0	0	0	0	0	0	0
4/24/2024	5:45 PM	0	75	13	0	1	2	0	0	1	0	0	0	0
4/24/2024	6:00 PM	0	86	23	0	2	0	0	0	1	0	0	0	0
4/24/2024	6:15 PM	0	60	11	1	0	0	0	1	0	0	0	0	0
4/24/2024	6:30 PM	0	54	6	0	0	0	0	0	0	0	0	0	0
4/24/2024	6:45 PM	0	47	10	0	3	0	0	0	0	0	0	0	0
4/24/2024	7:00 PM	0	37	12	0	1	0	0	0	0	0	0	0	0
4/24/2024	7:15 PM	0	50	10	0	0	0	0	0	0	0	0	0	0
4/24/2024	7:30 PM	0	37	7	0	1	0	0	0	0	0	0	0	0
4/24/2024	7:45 PM	0	34	9	0	0	0	0	0	1	0	0	0	0
4/24/2024	8:00 PM	0	68	9	0	2	0	0	0	1	0	0	0	0
4/24/2024	8:15 PM	0	59	7	0	2	0	0	0	0	0	0	0	0
4/24/2024	8:30 PM	0	27	7	0	0	0	0	0	0	0	0	0	0
4/24/2024	8:45 PM	0	31	2	0	0	0	0	0	0	0	0	0	0
4/24/2024	9:00 PM	0	26	4	0	0	1	0	2	0	0	0	0	0
4/24/2024	9:15 PM	0	21	5	0	1	0	0	0	1	0	0	0	0
4/24/2024	9:30 PM	0	26	6	0	0	0	0	0	0	0	0	0	0
4/24/2024	9:45 PM	0	20	4	0	0	0	0	0	0	0	0	0	0
4/24/2024	10:00 PM	0	17	4	0	0	0	0	1	1	0	0	0	0
4/24/2024	10:15 PM	0	28	6	0	3	2	0	0	0	0	0	0	0
4/24/2024	10:30 PM	0	19	3	0	1	0	0	0	0	0	0	0	0
4/24/2024	10:45 PM	0	19	6	0	0	0	0	0	0	0	0	0	0
4/24/2024	11:00 PM	0	20	7	0	1	3	0	0	0	0	0	0	0
4/24/2024	11:15 PM	0	13	4	0	0	3	0	0	0	0	0	0	0
4/24/2024	11:30 PM	0	13	6	0	0	0	0	0	0	0	0	0	0
4/24/2024	11:45 PM	0	9	2	0	0	0	0	0	0	0	0	0	0

4/25/2024	12:00 AM	0	8	3	0	1	0	0	0	0	0	0	0	0
4/25/2024	12:15 AM	0	6	3	0	0	3	0	0	0	0	0	0	0
4/25/2024	12:30 AM	0	5	3	0	0	0	0	0	0	0	0	0	0
4/25/2024	12:45 AM	0	8	2	0	2	0	0	0	0	0	0	0	0
4/25/2024	1:00 AM	0	3	0	0	0	4	0	0	0	0	0	0	0
4/25/2024	1:15 AM	0	3	0	0	0	1	0	0	0	0	0	0	0
4/25/2024	1:30 AM	0	7	3	0	0	0	0	0	2	0	0	0	0
4/25/2024	1:45 AM	0	6	1	0	0	0	0	0	0	0	0	0	0
4/25/2024	2:00 AM	0	3	0	0	0	5	0	0	1	0	0	0	0
4/25/2024	2:15 AM	0	4	0	0	0	1	0	0	0	0	0	0	0
4/25/2024	2:30 AM	0	5	0	0	0	2	0	0	0	0	0	0	0
4/25/2024	2:45 AM	0	2	0	0	0	0	0	0	1	0	0	0	0
4/25/2024	3:00 AM	0	7	1	0	0	0	0	0	0	0	0	0	0
4/25/2024	3:15 AM	0	8	0	0	1	0	0	0	0	0	0	0	0
4/25/2024	3:30 AM	0	7	3	0	1	0	0	0	0	0	0	0	0
4/25/2024	3:45 AM	0	7	2	0	2	0	0	0	3	0	0	0	0
4/25/2024	4:00 AM	0	8	2	0	0	0	0	0	1	0	0	0	0
4/25/2024	4:15 AM	0	5	4	0	1	0	0	0	0	0	0	0	0
4/25/2024	4:30 AM	0	7	3	0	0	0	0	0	0	0	0	0	0
4/25/2024	4:45 AM	0	8	4	0	0	0	0	0	0	0	0	0	0
4/25/2024	5:00 AM	0	8	2	0	0	0	0	0	0	0	0	0	0
4/25/2024	5:15 AM	0	15	3	0	1	0	0	0	0	0	0	0	0
4/25/2024	5:30 AM	0	19	8	0	0	1	0	0	0	0	0	0	0
4/25/2024	5:45 AM	0	23	8	0	0	0	0	0	0	0	0	0	0
4/25/2024	6:00 AM	0	29	5	0	0	1	0	0	0	0	0	0	0
4/25/2024	6:15 AM	0	26	4	0	0	0	0	0	0	0	0	0	0
4/25/2024	6:30 AM	0	48	6	1	0	0	0	0	0	0	0	0	0
4/25/2024	6:45 AM	0	46	11	0	1	0	0	0	0	0	0	0	0
4/25/2024	7:00 AM	0	56	17	0	4	0	0	1	0	0	0	0	0
4/25/2024	7:15 AM	0	56	15	0	3	0	0	0	0	0	0	0	0
4/25/2024	7:30 AM	0	64	16	0	0	0	0	1	0	0	0	0	0
4/25/2024	7:45 AM	0	73	24	0	0	0	0	0	1	0	0	0	0
4/25/2024	8:00 AM	0	56	12	0	0	0	0	0	1	0	0	0	0
4/25/2024	8:15 AM	0	60	13	0	1	0	0	0	0	0	0	0	0
4/25/2024	8:30 AM	0	66	20	0	1	1	0	0	0	0	0	0	0
4/25/2024	8:45 AM	0	73	17	1	3	0	0	0	1	0	0	0	0
4/25/2024	9:00 AM	0	58	16	0	1	0	0	0	1	0	0	0	0
4/25/2024	9:15 AM	0	41	11	1	0	0	0	0	1	1	0	0	0
4/25/2024	9:30 AM	0	62	9	0	2	1	0	0	0	1	0	0	0
4/25/2024	9:45 AM	0	57	15	0	4	0	0	0	0	0	0	0	0
4/25/2024	10:00 AM	0	62	10	0	2	0	0	0	1	0	0	0	0
4/25/2024	10:15 AM	0	72	12	0	0	0	0	1	3	0	0	0	0
4/25/2024	10:30 AM	1	54	19	1	2	1	0	2	0	0	0	0	0
4/25/2024	10:45 AM	0	91	12	0	2	1	0	0	1	0	0	0	0
4/25/2024	11:00 AM	0	71	15	0	3	1	0	0	0	0	0	0	0
4/25/2024	11:15 AM	0	68	14	0	1	0	0	0	1	0	0	0	0
4/25/2024	11:30 AM	0	81	18	0	0	2	0	0	2	0	0	0	0
4/25/2024	11:45 AM	0	91	18	2	4	1	0	0	0	0	0	0	0
4/25/2024	12:00 PM	0	109	25	1	1	1	0	0	0	0	0	0	0
4/25/2024	12:15 PM	0	79	18	1	0	1	0	0	1	0	0	0	0
4/25/2024	12:30 PM	0	95	17	4	0	1	0	0	0	0	0	0	0
4/25/2024	12:45 PM	0	95	20	1	0	1	0	0	0	0	0	0	0
4/25/2024	1:00 PM	0	99	12	4	3	0	0	0	0	0	0	0	0
4/25/2024	1:15 PM	0	80	16	3	1	1	0	0	0	0	0	0	0
4/25/2024	1:30 PM	0	86	16	0	2	0	0	0	0	0	0	0	0
4/25/2024	1:45 PM	1	89	17	0	1	1	0	0	1	0	0	0	0
4/25/2024	2:00 PM	0	108	26	0	3	1	0	0	0	0	0	0	0
4/25/2024	2:15 PM	0	99	17	0	1	0	0	0	0	0	0	0	0
4/25/2024	2:30 PM	0	99	24	1	3	0	0	0	0	0	0	0	0
4/25/2024	2:45 PM	0	105	18	0	0	0	0	0	0	0	0	0	0
4/25/2024	3:00 PM	1	119	20	1	1	1	0	0	0	0	0	0	0
4/25/2024	3:15 PM	0	116	17	7	1	0	0	0	1	0	0	0	0
4/25/2024	3:30 PM	0	112	18	0	4	2	0	0	0	0	0	0	0
4/25/2024	3:45 PM	0	116	21	0	1	2	0	1	1	0	0	0	0
4/25/2024	4:00 PM	1	183	16	0	4	1	0	0	0	0	0	0	0
4/25/2024	4:15 PM	0	141	13	0	0	1	0	0	0	0	0	0	0
4/25/2024	4:30 PM	0	161	35	0	4	1	0	0	0	0	0	0	0
4/25/2024	4:45 PM	0	118	24	0	3	0	0	0	0	0	0	0	0
4/25/2024	5:00 PM	0	196	36	0	0	1	0	0	0	0	0	0	0
4/25/2024	5:15 PM	0	123	25	0	2	1	0	0	0	0	0	0	0
4/25/2024	5:30 PM	0	97	16	0	0	0	0	0	1	0	0	0	0
4/25/2024	5:45 PM	0	87	16	0	0	1	0	0	0	0	0	0	0
4/25/2024	6:00 PM	0	87	20	0	1	0	0	0	0	0	0	0	0
4/25/2024	6:15 PM	0	86	14	0	1	0	0	0	0	0	0	0	0
4/25/2024	6:30 PM	0	57	10	0	0	0	0	0	0	0	0	0	0
4/25/2024	6:45 PM	0	50	13	0	0	0	0	0	0	0	0	0	0
4/25/2024	7:00 PM	0	0	0	0	0	0	0	0	0	0	0	0	0
4/25/2024	7:15 PM	0	0	0	0	0	0	0	0	0	0	0	0	0
4/25/2024	7:30 PM	0	0	0	0	0	0	0	0	0	0	0	0	0
4/25/2024	7:45 PM	0	0	0	0	0	0	0	0	0	0	0	0	0
4/25/2024	8:00 PM	0	0	0	0	0	0	0	0	0	0	0	0	0
4/25/2024	8:15 PM	0	0	0	0	0	0	0	0	0	0	0	0	0
4/25/2024	8:30 PM	0	0	0	0	0	0	0	0	0	0	0	0	0
4/25/2024	8:45 PM	0	0	0	0	0	0	0	0	0	0	0	0	0
4/25/2024	9:00 PM	0	0	0	0	0	0	0	0	0	0	0	0	0
4/25/2024	9:15 PM	0	0	0	0	0	0	0	0	0	0	0	0	0
4/25/2024	9:30 PM	0	0	0	0	0	0	0	0	0	0	0	0	0
4/25/2024	9:45 PM	0	0	0	0	0	0	0	0	0	0	0	0	0
4/25/2024	10:00 PM	0	0	0	0	0	0	0	0	0	0	0	0	0
4/25/2024	10:15 PM	0	0	0	0	0	0	0	0	0	0	0	0	0
4/25/2024	10:30 PM	0	0	0	0	0	0	0	0	0	0	0	0	0
4/25/2024	10:45 PM	0	0	0	0	0	0	0	0	0	0	0	0	0
4/25/2024	11:00 PM	0	0	0	0	0	0	0	0	0	0	0	0	0
4/25/2024	11:15 PM	0	0	0	0	0	0	0	0	0	0	0	0	0
4/25/2024	11:30 PM	0	0	0	0	0	0	0	0	0	0	0	0	0
4/25/2024	11:45 PM	0	0	0	0	0	0	0	0	0	0	0	0	0

EB
File Name:
Start Date: 4/23/2024
Start Time: 0
Site Code: 49
Station ID: 1
Location 1: I-126 W/Bound On-Ramp, west of Greystone Blvd
Location 2:

Date	Time	1	2	3	4	5	6	7	8	9	10	11	12	13
4/23/2024	12:00 AM	0	0	0	0	0	0	0	0	0	0	0	0	0
4/23/2024	12:15 AM	0	0	0	0	0	0	0	0	0	0	0	0	0
4/23/2024	12:30 AM	0	0	0	0	0	0	0	0	0	0	0	0	0
4/23/2024	12:45 AM	0	0	0	0	0	0	0	0	0	0	0	0	0
4/23/2024	1:00 AM	0	0	0	0	0	0	0	0	0	0	0	0	0
4/23/2024	1:15 AM	0	0	0	0	0	0	0	0	0	0	0	0	0
4/23/2024	1:30 AM	0	0	0	0	0	0	0	0	0	0	0	0	0
4/23/2024	1:45 AM	0	0	0	0	0	0	0	0	0	0	0	0	0
4/23/2024	2:00 AM	0	0	0	0	0	0	0	0	0	0	0	0	0
4/23/2024	2:15 AM	0	0	0	0	0	0	0	0	0	0	0	0	0
4/23/2024	2:30 AM	0	0	0	0	0	0	0	0	0	0	0	0	0
4/23/2024	2:45 AM	0	0	0	0	0	0	0	0	0	0	0	0	0
4/23/2024	3:00 AM	0	0	0	0	0	0	0	0	0	0	0	0	0
4/23/2024	3:15 AM	0	0	0	0	0	0	0	0	0	0	0	0	0
4/23/2024	3:30 AM	0	0	0	0	0	0	0	0	0	0	0	0	0
4/23/2024	3:45 AM	0	0	0	0	0	0	0	0	0	0	0	0	0
4/23/2024	4:00 AM	0	0	0	0	0	0	0	0	0	0	0	0	0
4/23/2024	4:15 AM	0	0	0	0	0	0	0	0	0	0	0	0	0
4/23/2024	4:30 AM	0	0	0	0	0	0	0	0	0	0	0	0	0
4/23/2024	4:45 AM	0	0	0	0	0	0	0	0	0	0	0	0	0
4/23/2024	5:00 AM	0	0	0	0	0	0	0	0	0	0	0	0	0
4/23/2024	5:15 AM	0	0	0	0	0	0	0	0	0	0	0	0	0
4/23/2024	5:30 AM	0	0	0	0	0	0	0	0	0	0	0	0	0
4/23/2024	5:45 AM	0	0	0	0	0	0	0	0	0	0	0	0	0
4/23/2024	6:00 AM	0	0	0	0	0	0	0	0	0	0	0	0	0
4/23/2024	6:15 AM	0	0	0	0	0	0	0	0	0	0	0	0	0
4/23/2024	6:30 AM	0	0	0	0	0	0	0	0	0	0	0	0	0
4/23/2024	6:45 AM	0	0	0	0	0	0	0	0	0	0	0	0	0
4/23/2024	7:00 AM	0	0	0	0	0	0	0	0	0	0	0	0	0
4/23/2024	7:15 AM	0	0	0	0	0	0	0	0	0	0	0	0	0
4/23/2024	7:30 AM	0	0	0	0	0	0	0	0	0	0	0	0	0
4/23/2024	7:45 AM	0	0	0	0	0	0	0	0	0	0	0	0	0
4/23/2024	8:00 AM	0	0	0	0	0	0	0	0	0	0	0	0	0
4/23/2024	8:15 AM	0	0	0	0	0	0	0	0	0	0	0	0	0
4/23/2024	8:30 AM	0	0	0	0	0	0	0	0	0	0	0	0	0
4/23/2024	8:45 AM	0	0	0	0	0	0	0	0	0	0	0	0	0
4/23/2024	9:00 AM	0	0	0	0	0	0	0	0	0	0	0	0	0
4/23/2024	9:15 AM	0	0	0	0	0	0	0	0	0	0	0	0	0
4/23/2024	9:30 AM	0	0	0	0	0	0	0	0	0	0	0	0	0
4/23/2024	9:45 AM	0	0	0	0	0	0	0	0	0	0	0	0	0
4/23/2024	10:00 AM	0	0	0	0	0	0	0	0	0	0	0	0	0
4/23/2024	10:15 AM	0	0	0	0	0	0	0	0	0	0	0	0	0
4/23/2024	10:30 AM	0	0	0	0	0	0	0	0	0	0	0	0	0
4/23/2024	10:45 AM	0	0	0	0	0	0	0	0	0	0	0	0	0
4/23/2024	11:00 AM	0	0	0	0	0	0	0	0	0	0	0	0	0
4/23/2024	11:15 AM	0	0	0	0	0	0	0	0	0	0	0	0	0
4/23/2024	11:30 AM	0	0	0	0	0	0	0	0	0	0	0	0	0
4/23/2024	11:45 AM	0	0	0	0	0	0	0	0	0	0	0	0	0
4/23/2024	12:00 PM	0	0	0	0	0	0	0	0	0	0	0	0	0
4/23/2024	12:15 PM	0	0	0	0	0	0	0	0	0	0	0	0	0
4/23/2024	12:30 PM	0	0	0	0	0	0	0	0	0	0	0	0	0
4/23/2024	12:45 PM	0	0	0	0	0	0	0	0	0	0	0	0	0
4/23/2024	1:00 PM	0	0	0	0	0	0	0	0	0	0	0	0	0
4/23/2024	1:15 PM	0	0	0	0	0	0	0	0	0	0	0	0	0
4/23/2024	1:30 PM	0	0	0	0	0	0	0	0	0	0	0	0	0
4/23/2024	1:45 PM	0	0	0	0	0	0	0	0	0	0	0	0	0
4/23/2024	2:00 PM	0	0	0	0	0	0	0	0	0	0	0	0	0
4/23/2024	2:15 PM	0	0	0	0	0	0	0	0	0	0	0	0	0
4/23/2024	2:30 PM	0	0	0	0	0	0	0	0	0	0	0	0	0
4/23/2024	2:45 PM	0	0	0	0	0	0	0	0	0	0	0	0	0
4/23/2024	3:00 PM	0	0	0	0	0	0	0	0	0	0	0	0	0
4/23/2024	3:15 PM	0	0	0	0	0	0	0	0	0	0	0	0	0
4/23/2024	3:30 PM	0	0	0	0	0	0	0	0	0	0	0	0	0
4/23/2024	3:45 PM	0	0	0	0	0	0	0	0	0	0	0	0	0
4/23/2024	4:00 PM	0	0	0	0	0	0	0	0	0	0	0	0	0
4/23/2024	4:15 PM	0	0	0	0	0	0	0	0	0	0	0	0	0
4/23/2024	4:30 PM	0	0	0	0	0	0	0	0	0	0	0	0	0
4/23/2024	4:45 PM	0	0	0	0	0	0	0	0	0	0	0	0	0
4/23/2024	5:00 PM	0	0	0	0	0	0	0	0	0	0	0	0	0
4/23/2024	5:15 PM	0	0	0	0	0	0	0	0	0	0	0	0	0
4/23/2024	5:30 PM	0	0	0	0	0	0	0	0	0	0	0	0	0
4/23/2024	5:45 PM	0	0	0	0	0	0	0	0	0	0	0	0	0
4/23/2024	6:00 PM	0	0	0	0	0	0	0	0	0	0	0	0	0
4/23/2024	6:15 PM	0	0	0	0	0	0	0	0	0	0	0	0	0
4/23/2024	6:30 PM	0	0	0	0	0	0	0	0	0	0	0	0	0
4/23/2024	6:45 PM	0	0	0	0	0	0	0	0	0	0	0	0	0
4/23/2024	7:00 PM	0	0	0	0	0	0	0	0	0	0	0	0	0
4/23/2024	7:15 PM	0	0	0	0	0	0	0	0	0	0	0	0	0
4/23/2024	7:30 PM	0	0	0	0	0	0	0	0	0	0	0	0	0
4/23/2024	7:45 PM	0	0	0	0	0	0	0	0	0	0	0	0	0
4/23/2024	8:00 PM	0	0	0	0	0	0	0	0	0	0	0	0	0
4/23/2024	8:15 PM	0	0	0	0	0	0	0	0	0	0	0	0	0
4/23/2024	8:30 PM	0	0	0	0	0	0	0	0	0	0	0	0	0
4/23/2024	8:45 PM	0	0	0	0	0	0	0	0	0	0	0	0	0
4/23/2024	9:00 PM	0	0	0	0	0	0	0	0	0	0	0	0	0
4/23/2024	9:15 PM	0	0	0	0	0	0	0	0	0	0	0	0	0
4/23/2024	9:30 PM	0	0	0	0	0	0	0	0	0	0	0	0	0
4/23/2024	9:45 PM	0	0	0	0	0	0	0	0	0	0	0	0	0
4/23/2024	10:00 PM	0	0	0	0	0	0	0	0	0	0	0	0	0
4/23/2024	10:15 PM	0	0	0	0	0	0	0	0	0	0	0	0	0
4/23/2024	10:30 PM	0	0	0	0	0	0	0	0	0	0	0	0	0
4/23/2024	10:45 PM	0	0	0	0	0	0	0	0	0	0	0	0	0
4/23/2024	11:00 PM	0	0	0	0	0	0	0	0	0	0	0	0	0
4/23/2024	11:15 PM	0	0	0	0	0	0	0	0	0	0	0	0	0
4/23/2024	11:30 PM	0	0	0	0	0	0	0	0	0	0	0	0	0
4/23/2024	11:45 PM	0	0	0	0	0	0	0	0	0	0	0	0	0

4/24/2024	12:00 AM	0	0	0	0	0	0	0	0	0	0	0	0	0
4/24/2024	12:15 AM	0	0	0	0	0	0	0	0	0	0	0	0	0
4/24/2024	12:30 AM	0	0	0	0	0	0	0	0	0	0	0	0	0
4/24/2024	12:45 AM	0	0	0	0	0	0	0	0	0	0	0	0	0
4/24/2024	1:00 AM	0	0	0	0	0	0	0	0	0	0	0	0	0
4/24/2024	1:15 AM	0	0	0	0	0	0	0	0	0	0	0	0	0
4/24/2024	1:30 AM	0	0	0	0	0	0	0	0	0	0	0	0	0
4/24/2024	1:45 AM	0	0	0	0	0	0	0	0	0	0	0	0	0
4/24/2024	2:00 AM	0	0	0	0	0	0	0	0	0	0	0	0	0
4/24/2024	2:15 AM	0	0	0	0	0	0	0	0	0	0	0	0	0
4/24/2024	2:30 AM	0	0	0	0	0	0	0	0	0	0	0	0	0
4/24/2024	2:45 AM	0	0	0	0	0	0	0	0	0	0	0	0	0
4/24/2024	3:00 AM	0	0	0	0	0	0	0	0	0	0	0	0	0
4/24/2024	3:15 AM	0	0	0	0	0	0	0	0	0	0	0	0	0
4/24/2024	3:30 AM	0	0	0	0	0	0	0	0	0	0	0	0	0
4/24/2024	3:45 AM	0	0	0	0	0	0	0	0	0	0	0	0	0
4/24/2024	4:00 AM	0	0	0	0	0	0	0	0	0	0	0	0	0
4/24/2024	4:15 AM	0	0	0	0	0	0	0	0	0	0	0	0	0
4/24/2024	4:30 AM	0	0	0	0	0	0	0	0	0	0	0	0	0
4/24/2024	4:45 AM	0	0	0	0	0	0	0	0	0	0	0	0	0
4/24/2024	5:00 AM	0	0	0	0	0	0	0	0	0	0	0	0	0
4/24/2024	5:15 AM	0	0	0	0	0	0	0	0	0	0	0	0	0
4/24/2024	5:30 AM	0	0	0	0	0	0	0	0	0	0	0	0	0
4/24/2024	5:45 AM	0	0	0	0	0	0	0	0	0	0	0	0	0
4/24/2024	6:00 AM	0	0	0	0	0	0	0	0	0	0	0	0	0
4/24/2024	6:15 AM	0	0	0	0	0	0	0	0	0	0	0	0	0
4/24/2024	6:30 AM	0	0	0	0	0	0	0	0	0	0	0	0	0
4/24/2024	6:45 AM	0	0	0	0	0	0	0	0	0	0	0	0	0
4/24/2024	7:00 AM	0	0	0	0	0	0	0	0	0	0	0	0	0
4/24/2024	7:15 AM	0	0	0	0	0	0	0	0	0	0	0	0	0
4/24/2024	7:30 AM	0	0	0	0	0	0	0	0	0	0	0	0	0
4/24/2024	7:45 AM	0	0	0	0	0	0	0	0	0	0	0	0	0
4/24/2024	8:00 AM	0	0	0	0	0	0	0	0	0	0	0	0	0
4/24/2024	8:15 AM	0	0	0	0	0	0	0	0	0	0	0	0	0
4/24/2024	8:30 AM	0	0	0	0	0	0	0	0	0	0	0	0	0
4/24/2024	8:45 AM	0	0	0	0	0	0	0	0	0	0	0	0	0
4/24/2024	9:00 AM	0	0	0	0	0	0	0	0	0	0	0	0	0
4/24/2024	9:15 AM	0	0	0	0	0	0	0	0	0	0	0	0	0
4/24/2024	9:30 AM	0	0	0	0	0	0	0	0	0	0	0	0	0
4/24/2024	9:45 AM	0	0	0	0	0	0	0	0	0	0	0	0	0
4/24/2024	10:00 AM	0	0	0	0	0	0	0	0	0	0	0	0	0
4/24/2024	10:15 AM	0	0	0	0	0	0	0	0	0	0	0	0	0
4/24/2024	10:30 AM	0	0	0	0	0	0	0	0	0	0	0	0	0
4/24/2024	10:45 AM	0	0	0	0	0	0	0	0	0	0	0	0	0
4/24/2024	11:00 AM	0	0	0	0	0	0	0	0	0	0	0	0	0
4/24/2024	11:15 AM	0	0	0	0	0	0	0	0	0	0	0	0	0
4/24/2024	11:30 AM	0	0	0	0	0	0	0	0	0	0	0	0	0
4/24/2024	11:45 AM	0	0	0	0	0	0	0	0	0	0	0	0	0
4/24/2024	12:00 PM	0	0	0	0	0	0	0	0	0	0	0	0	0
4/24/2024	12:15 PM	0	0	0	0	0	0	0	0	0	0	0	0	0
4/24/2024	12:30 PM	0	0	0	0	0	0	0	0	0	0	0	0	0
4/24/2024	12:45 PM	0	0	0	0	0	0	0	0	0	0	0	0	0
4/24/2024	1:00 PM	0	0	0	0	0	0	0	0	0	0	0	0	0
4/24/2024	1:15 PM	0	0	0	0	0	0	0	0	0	0	0	0	0
4/24/2024	1:30 PM	0	0	0	0	0	0	0	0	0	0	0	0	0
4/24/2024	1:45 PM	0	0	0	0	0	0	0	0	0	0	0	0	0
4/24/2024	2:00 PM	0	0	0	0	0	0	0	0	0	0	0	0	0
4/24/2024	2:15 PM	0	0	0	0	0	0	0	0	0	0	0	0	0
4/24/2024	2:30 PM	0	0	0	0	0	0	0	0	0	0	0	0	0
4/24/2024	2:45 PM	0	0	0	0	0	0	0	0	0	0	0	0	0
4/24/2024	3:00 PM	0	0	0	0	0	0	0	0	0	0	0	0	0
4/24/2024	3:15 PM	0	0	0	0	0	0	0	0	0	0	0	0	0
4/24/2024	3:30 PM	0	0	0	0	0	0	0	0	0	0	0	0	0
4/24/2024	3:45 PM	0	0	0	0	0	0	0	0	0	0	0	0	0
4/24/2024	4:00 PM	0	0	0	0	0	0	0	0	0	0	0	0	0
4/24/2024	4:15 PM	0	0	0	0	0	0	0	0	0	0	0	0	0
4/24/2024	4:30 PM	0	0	0	0	0	0	0	0	0	0	0	0	0
4/24/2024	4:45 PM	0	0	0	0	0	0	0	0	0	0	0	0	0
4/24/2024	5:00 PM	0	0	0	0	0	0	0	0	0	0	0	0	0
4/24/2024	5:15 PM	0	0	0	0	0	0	0	0	0	0	0	0	0
4/24/2024	5:30 PM	0	0	0	0	0	0	0	0	0	0	0	0	0
4/24/2024	5:45 PM	0	0	0	0	0	0	0	0	0	0	0	0	0
4/24/2024	6:00 PM	0	0	0	0	0	0	0	0	0	0	0	0	0
4/24/2024	6:15 PM	0	0	0	0	0	0	0	0	0	0	0	0	0
4/24/2024	6:30 PM	0	0	0	0	0	0	0	0	0	0	0	0	0
4/24/2024	6:45 PM	0	0	0	0	0	0	0	0	0	0	0	0	0
4/24/2024	7:00 PM	0	0	0	0	0	0	0	0	0	0	0	0	0
4/24/2024	7:15 PM	0	0	0	0	0	0	0	0	0	0	0	0	0
4/24/2024	7:30 PM	0	0	0	0	0	0	0	0	0	0	0	0	0
4/24/2024	7:45 PM	0	0	0	0	0	0	0	0	0	0	0	0	0
4/24/2024	8:00 PM	0	0	0	0	0	0	0	0	0	0	0	0	0
4/24/2024	8:15 PM	0	0	0	0	0	0	0	0	0	0	0	0	0
4/24/2024	8:30 PM	0	0	0	0	0	0	0	0	0	0	0	0	0
4/24/2024	8:45 PM	0	0	0	0	0	0	0	0	0	0	0	0	0
4/24/2024	9:00 PM	0	0	0	0	0	0	0	0	0	0	0	0	0
4/24/2024	9:15 PM	0	0	0	0	0	0	0	0	0	0	0	0	0
4/24/2024	9:30 PM	0	0	0	0	0	0	0	0	0	0	0	0	0
4/24/2024	9:45 PM	0	0	0	0	0	0	0	0	0	0	0	0	0
4/24/2024	10:00 PM	0	0	0	0	0	0	0	0	0	0	0	0	0
4/24/2024	10:15 PM	0	0	0	0	0	0	0	0	0	0	0	0	0
4/24/2024	10:30 PM	0	0	0	0	0	0	0	0	0	0	0	0	0
4/24/2024	10:45 PM	0	0	0	0	0	0	0	0	0	0	0	0	0
4/24/2024	11:00 PM	0	0	0	0	0	0	0	0	0	0	0	0	0
4/24/2024	11:15 PM	0	0	0	0	0	0	0	0	0	0	0	0	0
4/24/2024	11:30 PM	0	0	0	0	0	0	0	0	0	0	0	0	0
4/24/2024	11:45 PM	0	0	0	0	0	0	0	0	0	0	0	0	0

4/25/2024	12:00 AM	0	0	0	0	0	0	0	0	0	0	0	0	0
4/25/2024	12:15 AM	0	0	0	0	0	0	0	0	0	0	0	0	0
4/25/2024	12:30 AM	0	0	0	0	0	0	0	0	0	0	0	0	0
4/25/2024	12:45 AM	0	0	0	0	0	0	0	0	0	0	0	0	0
4/25/2024	1:00 AM	0	0	0	0	0	0	0	0	0	0	0	0	0
4/25/2024	1:15 AM	0	0	0	0	0	0	0	0	0	0	0	0	0
4/25/2024	1:30 AM	0	0	0	0	0	0	0	0	0	0	0	0	0
4/25/2024	1:45 AM	0	0	0	0	0	0	0	0	0	0	0	0	0
4/25/2024	2:00 AM	0	0	0	0	0	0	0	0	0	0	0	0	0
4/25/2024	2:15 AM	0	0	0	0	0	0	0	0	0	0	0	0	0
4/25/2024	2:30 AM	0	0	0	0	0	0	0	0	0	0	0	0	0
4/25/2024	2:45 AM	0	0	0	0	0	0	0	0	0	0	0	0	0
4/25/2024	3:00 AM	0	0	0	0	0	0	0	0	0	0	0	0	0
4/25/2024	3:15 AM	0	0	0	0	0	0	0	0	0	0	0	0	0
4/25/2024	3:30 AM	0	0	0	0	0	0	0	0	0	0	0	0	0
4/25/2024	3:45 AM	0	0	0	0	0	0	0	0	0	0	0	0	0
4/25/2024	4:00 AM	0	0	0	0	0	0	0	0	0	0	0	0	0
4/25/2024	4:15 AM	0	0	0	0	0	0	0	0	0	0	0	0	0
4/25/2024	4:30 AM	0	0	0	0	0	0	0	0	0	0	0	0	0
4/25/2024	4:45 AM	0	0	0	0	0	0	0	0	0	0	0	0	0
4/25/2024	5:00 AM	0	0	0	0	0	0	0	0	0	0	0	0	0
4/25/2024	5:15 AM	0	0	0	0	0	0	0	0	0	0	0	0	0
4/25/2024	5:30 AM	0	0	0	0	0	0	0	0	0	0	0	0	0
4/25/2024	5:45 AM	0	0	0	0	0	0	0	0	0	0	0	0	0
4/25/2024	6:00 AM	0	0	0	0	0	0	0	0	0	0	0	0	0
4/25/2024	6:15 AM	0	0	0	0	0	0	0	0	0	0	0	0	0
4/25/2024	6:30 AM	0	0	0	0	0	0	0	0	0	0	0	0	0
4/25/2024	6:45 AM	0	0	0	0	0	0	0	0	0	0	0	0	0
4/25/2024	7:00 AM	0	0	0	0	0	0	0	0	0	0	0	0	0
4/25/2024	7:15 AM	0	0	0	0	0	0	0	0	0	0	0	0	0
4/25/2024	7:30 AM	0	0	0	0	0	0	0	0	0	0	0	0	0
4/25/2024	7:45 AM	0	0	0	0	0	0	0	0	0	0	0	0	0
4/25/2024	8:00 AM	0	0	0	0	0	0	0	0	0	0	0	0	0
4/25/2024	8:15 AM	0	0	0	0	0	0	0	0	0	0	0	0	0
4/25/2024	8:30 AM	0	0	0	0	0	0	0	0	0	0	0	0	0
4/25/2024	8:45 AM	0	0	0	0	0	0	0	0	0	0	0	0	0
4/25/2024	9:00 AM	0	0	0	0	0	0	0	0	0	0	0	0	0
4/25/2024	9:15 AM	0	0	0	0	0	0	0	0	0	0	0	0	0
4/25/2024	9:30 AM	0	0	0	0	0	0	0	0	0	0	0	0	0
4/25/2024	9:45 AM	0	0	0	0	0	0	0	0	0	0	0	0	0
4/25/2024	10:00 AM	0	0	0	0	0	0	0	0	0	0	0	0	0
4/25/2024	10:15 AM	0	0	0	0	0	0	0	0	0	0	0	0	0
4/25/2024	10:30 AM	0	0	0	0	0	0	0	0	0	0	0	0	0
4/25/2024	10:45 AM	0	0	0	0	0	0	0	0	0	0	0	0	0
4/25/2024	11:00 AM	0	0	0	0	0	0	0	0	0	0	0	0	0
4/25/2024	11:15 AM	0	0	0	0	0	0	0	0	0	0	0	0	0
4/25/2024	11:30 AM	0	0	0	0	0	0	0	0	0	0	0	0	0
4/25/2024	11:45 AM	0	0	0	0	0	0	0	0	0	0	0	0	0
4/25/2024	12:00 PM	0	0	0	0	0	0	0	0	0	0	0	0	0
4/25/2024	12:15 PM	0	0	0	0	0	0	0	0	0	0	0	0	0
4/25/2024	12:30 PM	0	0	0	0	0	0	0	0	0	0	0	0	0
4/25/2024	12:45 PM	0	0	0	0	0	0	0	0	0	0	0	0	0
4/25/2024	1:00 PM	0	0	0	0	0	0	0	0	0	0	0	0	0
4/25/2024	1:15 PM	0	0	0	0	0	0	0	0	0	0	0	0	0
4/25/2024	1:30 PM	0	0	0	0	0	0	0	0	0	0	0	0	0
4/25/2024	1:45 PM	0	0	0	0	0	0	0	0	0	0	0	0	0
4/25/2024	2:00 PM	0	0	0	0	0	0	0	0	0	0	0	0	0
4/25/2024	2:15 PM	0	0	0	0	0	0	0	0	0	0	0	0	0
4/25/2024	2:30 PM	0	0	0	0	0	0	0	0	0	0	0	0	0
4/25/2024	2:45 PM	0	0	0	0	0	0	0	0	0	0	0	0	0
4/25/2024	3:00 PM	0	0	0	0	0	0	0	0	0	0	0	0	0
4/25/2024	3:15 PM	0	0	0	0	0	0	0	0	0	0	0	0	0
4/25/2024	3:30 PM	0	0	0	0	0	0	0	0	0	0	0	0	0
4/25/2024	3:45 PM	0	0	0	0	0	0	0	0	0	0	0	0	0
4/25/2024	4:00 PM	0	0	0	0	0	0	0	0	0	0	0	0	0
4/25/2024	4:15 PM	0	0	0	0	0	0	0	0	0	0	0	0	0
4/25/2024	4:30 PM	0	0	0	0	0	0	0	0	0	0	0	0	0
4/25/2024	4:45 PM	0	0	0	0	0	0	0	0	0	0	0	0	0
4/25/2024	5:00 PM	0	0	0	0	0	0	0	0	0	0	0	0	0
4/25/2024	5:15 PM	0	0	0	0	0	0	0	0	0	0	0	0	0
4/25/2024	5:30 PM	0	0	0	0	0	0	0	0	0	0	0	0	0
4/25/2024	5:45 PM	0	0	0	0	0	0	0	0	0	0	0	0	0
4/25/2024	6:00 PM	0	0	0	0	0	0	0	0	0	0	0	0	0
4/25/2024	6:15 PM	0	0	0	0	0	0	0	0	0	0	0	0	0
4/25/2024	6:30 PM	0	0	0	0	0	0	0	0	0	0	0	0	0
4/25/2024	6:45 PM	0	0	0	0	0	0	0	0	0	0	0	0	0
4/25/2024	7:00 PM	0	0	0	0	0	0	0	0	0	0	0	0	0
4/25/2024	7:15 PM	0	0	0	0	0	0	0	0	0	0	0	0	0
4/25/2024	7:30 PM	0	0	0	0	0	0	0	0	0	0	0	0	0
4/25/2024	7:45 PM	0	0	0	0	0	0	0	0	0	0	0	0	0
4/25/2024	8:00 PM	0	0	0	0	0	0	0	0	0	0	0	0	0
4/25/2024	8:15 PM	0	0	0	0	0	0	0	0	0	0	0	0	0
4/25/2024	8:30 PM	0	0	0	0	0	0	0	0	0	0	0	0	0
4/25/2024	8:45 PM	0	0	0	0	0	0	0	0	0	0	0	0	0
4/25/2024	9:00 PM	0	0	0	0	0	0	0	0	0	0	0	0	0
4/25/2024	9:15 PM	0	0	0	0	0	0	0	0	0	0	0	0	0
4/25/2024	9:30 PM	0	0	0	0	0	0	0	0	0	0	0	0	0
4/25/2024	9:45 PM	0	0	0	0	0	0	0	0	0	0	0	0	0
4/25/2024	10:00 PM	0	0	0	0	0	0	0	0	0	0	0	0	0
4/25/2024	10:15 PM	0	0	0	0	0	0	0	0	0	0	0	0	0
4/25/2024	10:30 PM	0	0	0	0	0	0	0	0	0	0	0	0	0
4/25/2024	10:45 PM	0	0	0	0	0	0	0	0	0	0	0	0	0
4/25/2024	11:00 PM	0	0	0	0	0	0	0	0	0	0	0	0	0
4/25/2024	11:15 PM	0	0	0	0	0	0	0	0	0	0	0	0	0
4/25/2024	11:30 PM	0	0	0	0	0	0	0	0	0	0	0	0	0
4/25/2024	11:45 PM	0	0	0	0	0	0	0	0	0	0	0	0	0

WB
File Name:
Start Date: 4/23/2024
Start Time: 0
Site Code: 49
Station ID: 1
Location 1: I-126 W/Bound On-Ramp, west of Greystone Blvd
Location 2:

Date	Time	1	2	3	4	5	6	7	8	9	10	11	12	13
4/23/2024	12:00 AM	0	0	0	0	0	0	0	0	0	0	0	0	0
4/23/2024	12:15 AM	0	0	0	0	0	0	0	0	0	0	0	0	0
4/23/2024	12:30 AM	0	0	0	0	0	0	0	0	0	0	0	0	0
4/23/2024	12:45 AM	0	0	0	0	0	0	0	0	0	0	0	0	0
4/23/2024	1:00 AM	0	0	0	0	0	0	0	0	0	0	0	0	0
4/23/2024	1:15 AM	0	0	0	0	0	0	0	0	0	0	0	0	0
4/23/2024	1:30 AM	0	0	0	0	0	0	0	0	0	0	0	0	0
4/23/2024	1:45 AM	0	0	0	0	0	0	0	0	0	0	0	0	0
4/23/2024	2:00 AM	0	0	0	0	0	0	0	0	0	0	0	0	0
4/23/2024	2:15 AM	0	0	0	0	0	0	0	0	0	0	0	0	0
4/23/2024	2:30 AM	0	0	0	0	0	0	0	0	0	0	0	0	0
4/23/2024	2:45 AM	0	0	0	0	0	0	0	0	0	0	0	0	0
4/23/2024	3:00 AM	0	0	0	0	0	0	0	0	0	0	0	0	0
4/23/2024	3:15 AM	0	0	0	0	0	0	0	0	0	0	0	0	0
4/23/2024	3:30 AM	0	0	0	0	0	0	0	0	0	0	0	0	0
4/23/2024	3:45 AM	0	0	0	0	0	0	0	0	0	0	0	0	0
4/23/2024	4:00 AM	0	0	0	0	0	0	0	0	0	0	0	0	0
4/23/2024	4:15 AM	0	0	0	0	0	0	0	0	0	0	0	0	0
4/23/2024	4:30 AM	0	0	0	0	0	0	0	0	0	0	0	0	0
4/23/2024	4:45 AM	0	0	0	0	0	0	0	0	0	0	0	0	0
4/23/2024	5:00 AM	0	0	0	0	0	0	0	0	0	0	0	0	0
4/23/2024	5:15 AM	0	0	0	0	0	0	0	0	0	0	0	0	0
4/23/2024	5:30 AM	0	0	0	0	0	0	0	0	0	0	0	0	0
4/23/2024	5:45 AM	0	0	0	0	0	0	0	0	0	0	0	0	0
4/23/2024	6:00 AM	0	0	0	0	0	0	0	0	0	0	0	0	0
4/23/2024	6:15 AM	0	0	0	0	0	0	0	0	0	0	0	0	0
4/23/2024	6:30 AM	0	0	0	0	0	0	0	0	0	0	0	0	0
4/23/2024	6:45 AM	0	0	0	0	0	0	0	0	0	0	0	0	0
4/23/2024	7:00 AM	0	0	0	0	0	0	0	0	0	0	0	0	0
4/23/2024	7:15 AM	0	0	0	0	0	0	0	0	0	0	0	0	0
4/23/2024	7:30 AM	0	0	0	0	0	0	0	0	0	0	0	0	0
4/23/2024	7:45 AM	0	0	0	0	0	0	0	0	0	0	0	0	0
4/23/2024	8:00 AM	0	0	0	0	0	0	0	0	0	0	0	0	0
4/23/2024	8:15 AM	0	0	0	0	0	0	0	0	0	0	0	0	0
4/23/2024	8:30 AM	0	0	0	0	0	0	0	0	0	0	0	0	0
4/23/2024	8:45 AM	0	0	0	0	0	0	0	0	0	0	0	0	0
4/23/2024	9:00 AM	0	0	0	0	0	0	0	0	0	0	0	0	0
4/23/2024	9:15 AM	0	0	0	0	0	0	0	0	0	0	0	0	0
4/23/2024	9:30 AM	0	0	0	0	0	0	0	0	0	0	0	0	0
4/23/2024	9:45 AM	0	0	0	0	0	0	0	0	0	0	0	0	0
4/23/2024	10:00 AM	0	0	0	0	0	0	0	0	0	0	0	0	0
4/23/2024	10:15 AM	0	0	0	0	0	0	0	0	0	0	0	0	0
4/23/2024	10:30 AM	0	0	0	0	0	0	0	0	0	0	0	0	0
4/23/2024	10:45 AM	0	0	0	0	0	0	0	0	0	0	0	0	0
4/23/2024	11:00 AM	0	0	0	0	0	0	0	0	0	0	0	0	0
4/23/2024	11:15 AM	0	0	0	0	0	0	0	0	0	0	0	0	0
4/23/2024	11:30 AM	0	0	0	0	0	0	0	0	0	0	0	0	0
4/23/2024	11:45 AM	0	0	0	0	0	0	0	0	0	0	0	0	0
4/23/2024	12:00 PM	0	0	0	0	0	0	0	0	0	0	0	0	0
4/23/2024	12:15 PM	0	0	0	0	0	0	0	0	0	0	0	0	0
4/23/2024	12:30 PM	0	0	0	0	0	0	0	0	0	0	0	0	0
4/23/2024	12:45 PM	0	0	0	0	0	0	0	0	0	0	0	0	0
4/23/2024	1:00 PM	0	0	0	0	0	0	0	0	0	0	0	0	0
4/23/2024	1:15 PM	0	0	0	0	0	0	0	0	0	0	0	0	0
4/23/2024	1:30 PM	0	0	0	0	0	0	0	0	0	0	0	0	0
4/23/2024	1:45 PM	0	0	0	0	0	0	0	0	0	0	0	0	0
4/23/2024	2:00 PM	0	0	0	0	0	0	0	0	0	0	0	0	0
4/23/2024	2:15 PM	0	0	0	0	0	0	0	0	0	0	0	0	0
4/23/2024	2:30 PM	0	0	0	0	0	0	0	0	0	0	0	0	0
4/23/2024	2:45 PM	0	0	0	0	0	0	0	0	0	0	0	0	0
4/23/2024	3:00 PM	0	0	0	0	0	0	0	0	0	0	0	0	0
4/23/2024	3:15 PM	0	0	0	0	0	0	0	0	0	0	0	0	0
4/23/2024	3:30 PM	0	0	0	0	0	0	0	0	0	0	0	0	0
4/23/2024	3:45 PM	0	0	0	0	0	0	0	0	0	0	0	0	0
4/23/2024	4:00 PM	0	0	0	0	0	0	0	0	0	0	0	0	0
4/23/2024	4:15 PM	0	0	0	0	0	0	0	0	0	0	0	0	0
4/23/2024	4:30 PM	0	0	0	0	0	0	0	0	0	0	0	0	0
4/23/2024	4:45 PM	0	0	0	0	0	0	0	0	0	0	0	0	0
4/23/2024	5:00 PM	0	0	0	0	0	0	0	0	0	0	0	0	0
4/23/2024	5:15 PM	0	0	0	0	0	0	0	0	0	0	0	0	0
4/23/2024	5:30 PM	0	0	0	0	0	0	0	0	0	0	0	0	0
4/23/2024	5:45 PM	0	0	0	0	0	0	0	0	0	0	0	0	0
4/23/2024	6:00 PM	0	0	0	0	0	0	0	0	0	0	0	0	0
4/23/2024	6:15 PM	0	58	10	0	1	0	0	0	0	0	0	0	0
4/23/2024	6:30 PM	0	94	14	0	1	1	0	0	0	0	0	0	0
4/23/2024	6:45 PM	0	135	24	0	2	1	0	0	0	0	0	0	0
4/23/2024	7:00 PM	0	177	33	0	4	1	0	1	0	0	0	0	0
4/23/2024	7:15 PM	0	164	35	0	4	2	0	1	0	0	0	0	0
4/23/2024	7:30 PM	0	171	44	0	5	1	0	1	0	0	0	0	0
4/23/2024	7:45 PM	0	164	44	0	4	1	0	1	0	0	0	0	0
4/23/2024	8:00 PM	0	148	42	0	2	4	0	0	0	0	0	0	0
4/23/2024	8:15 PM	0	121	36	0	1	5	0	0	0	0	0	0	0
4/23/2024	8:30 PM	0	100	31	0	0	6	0	0	0	0	0	0	0
4/23/2024	8:45 PM	0	89	24	0	0	7	0	0	0	0	0	0	0
4/23/2024	9:00 PM	0	77	18	0	0	4	0	0	0	0	0	0	0
4/23/2024	9:15 PM	0	79	17	0	0	3	0	0	0	0	0	0	0
4/23/2024	9:30 PM	0	74	12	0	1	2	0	0	0	0	0	0	0
4/23/2024	9:45 PM	0	67	10	0	1	3	1	0	0	0	0	0	0
4/23/2024	10:00 PM	0	75	12	0	1	5	1	0	0	0	0	0	0
4/23/2024	10:15 PM	0	80	13	0	1	5	1	0	0	0	0	0	0
4/23/2024	10:30 PM	0	75	10	0	0	6	1	0	0	0	0	0	0
4/23/2024	10:45 PM	0	67	13	0	1	4	0	0	0	0	0	0	0
4/23/2024	11:00 PM	0	57	14	0	1	6	0	0	0	0	0	0	0
4/23/2024	11:15 PM	0	32	8	0	1	5	0	0	0	0	0	0	0
4/23/2024	11:30 PM	0	20	8	0	1	4	0	0	0	0	0	0	0
4/23/2024	11:45 PM	0	12	4	0	0	4	0	0	0	0	0	0	0

4/24/2024	12:00 AM	0	24	6	0	0	5	0	0	1	1	0	0	0
4/24/2024	12:15 AM	0	22	6	0	0	5	0	0	1	1	0	0	0
4/24/2024	12:30 AM	0	18	5	0	0	12	0	0	2	0	0	0	0
4/24/2024	12:45 AM	0	20	8	0	0	12	0	0	1	0	0	0	0
4/24/2024	1:00 AM	0	19	6	0	0	9	0	0	1	0	0	0	0
4/24/2024	1:15 AM	0	20	5	0	0	9	0	0	1	0	0	0	0
4/24/2024	1:30 AM	0	22	7	0	0	3	0	0	1	0	0	0	0
4/24/2024	1:45 AM	0	18	5	0	3	3	0	0	1	0	0	0	0
4/24/2024	2:00 AM	0	19	7	0	3	4	0	0	1	0	0	0	0
4/24/2024	2:15 AM	0	21	8	0	3	4	0	0	1	0	0	0	0
4/24/2024	2:30 AM	0	22	6	0	3	3	0	0	0	0	0	0	0
4/24/2024	2:45 AM	0	24	7	0	0	2	0	0	0	0	0	0	0
4/24/2024	3:00 AM	0	22	5	0	0	1	0	0	0	0	0	0	0
4/24/2024	3:15 AM	0	18	4	0	0	0	0	0	0	0	0	0	0
4/24/2024	3:30 AM	0	23	5	0	0	0	0	0	0	0	0	0	0
4/24/2024	3:45 AM	0	29	6	0	0	0	0	0	1	0	0	0	0
4/24/2024	4:00 AM	0	34	11	0	0	0	0	0	2	0	0	0	0
4/24/2024	4:15 AM	0	42	15	0	0	0	0	0	2	0	0	0	0
4/24/2024	4:30 AM	0	46	17	0	0	1	0	0	2	0	0	0	0
4/24/2024	4:45 AM	0	53	18	0	0	2	0	0	2	0	0	0	0
4/24/2024	5:00 AM	0	63	19	0	0	2	0	0	1	0	0	0	0
4/24/2024	5:15 AM	0	74	22	0	2	3	0	0	1	0	0	0	0
4/24/2024	5:30 AM	0	87	22	0	2	2	0	0	2	0	0	0	0
4/24/2024	5:45 AM	0	113	25	0	2	1	0	0	1	0	0	0	0
4/24/2024	6:00 AM	0	140	27	0	6	2	0	0	1	0	0	0	0
4/24/2024	6:15 AM	0	184	37	0	5	1	0	0	1	0	0	0	0
4/24/2024	6:30 AM	0	221	48	0	5	1	0	0	0	0	0	0	0
4/24/2024	6:45 AM	0	248	64	0	8	3	0	0	0	1	0	0	0
4/24/2024	7:00 AM	0	278	79	0	6	2	0	0	2	1	0	0	0
4/24/2024	7:15 AM	0	267	82	1	8	3	0	0	4	1	0	0	0
4/24/2024	7:30 AM	0	267	90	1	12	4	0	0	4	1	0	0	0
4/24/2024	7:45 AM	0	259	87	2	9	2	0	1	4	0	0	0	0
4/24/2024	8:00 AM	0	240	76	2	10	2	0	2	2	0	0	0	0
4/24/2024	8:15 AM	0	258	77	1	8	1	0	2	0	0	0	0	0
4/24/2024	8:30 AM	0	247	69	1	5	0	0	2	2	0	0	0	0
4/24/2024	8:45 AM	0	229	65	1	6	0	0	1	2	0	0	0	0
4/24/2024	9:00 AM	0	239	72	1	5	0	0	0	2	0	0	0	0
4/24/2024	9:15 AM	0	220	65	1	4	0	0	0	2	0	0	0	0
4/24/2024	9:30 AM	0	223	66	1	4	0	0	1	0	0	0	0	0
4/24/2024	9:45 AM	0	231	66	1	6	0	0	2	0	1	0	0	0
4/24/2024	10:00 AM	0	229	63	2	6	1	0	2	0	1	0	0	0
4/24/2024	10:15 AM	2	241	69	2	7	2	0	2	0	2	0	0	0
4/24/2024	10:30 AM	2	251	73	2	8	3	0	2	0	3	0	0	0
4/24/2024	10:45 AM	3	288	79	1	8	4	0	1	0	2	0	0	0
4/24/2024	11:00 AM	3	315	91	2	11	3	0	1	2	3	0	0	0
4/24/2024	11:15 AM	1	342	92	8	14	2	0	1	2	2	0	0	0
4/24/2024	11:30 AM	1	352	93	8	13	1	0	1	2	1	0	0	0
4/24/2024	11:45 AM	0	377	97	8	10	0	0	3	2	1	0	0	0
4/24/2024	12:00 PM	0	378	80	6	11	0	0	3	4	0	0	0	0
4/24/2024	12:15 PM	0	365	74	1	9	1	0	3	5	0	0	0	0
4/24/2024	12:30 PM	0	370	71	1	9	1	0	2	6	1	0	0	0
4/24/2024	12:45 PM	0	360	68	1	12	2	0	1	6	1	0	0	0
4/24/2024	1:00 PM	0	372	76	1	7	2	0	2	3	1	0	0	0
4/24/2024	1:15 PM	0	385	97	0	7	1	0	3	2	1	0	0	0
4/24/2024	1:30 PM	0	401	97	4	6	1	0	3	2	0	0	0	0
4/24/2024	1:45 PM	1	394	98	7	5	1	0	2	2	0	0	0	0
4/24/2024	2:00 PM	2	376	99	7	7	2	0	1	2	0	0	0	0
4/24/2024	2:15 PM	2	411	82	8	6	3	0	0	3	0	0	0	0
4/24/2024	2:30 PM	2	399	82	4	7	4	0	0	2	0	0	0	0
4/24/2024	2:45 PM	1	394	81	1	6	4	0	1	2	0	0	0	0
4/24/2024	3:00 PM	0	424	81	2	4	3	0	2	2	0	0	0	0
4/24/2024	3:15 PM	0	475	102	1	4	3	0	2	1	0	0	0	0
4/24/2024	3:30 PM	0	521	111	2	6	4	0	3	1	0	0	0	0
4/24/2024	3:45 PM	1	581	119	2	8	3	0	2	2	0	0	0	0
4/24/2024	4:00 PM	1	586	127	1	12	4	0	2	2	0	0	0	0
4/24/2024	4:15 PM	1	607	136	1	11	3	0	2	2	0	0	0	0
4/24/2024	4:30 PM	1	584	132	0	9	2	0	1	2	0	0	0	0
4/24/2024	4:45 PM	0	518	125	0	6	2	0	1	1	0	0	0	0
4/24/2024	5:00 PM	0	470	110	0	2	3	0	0	1	0	0	0	0
4/24/2024	5:15 PM	0	356	84	0	4	3	0	0	2	0	0	0	0
4/24/2024	5:30 PM	0	308	71	1	3	2	0	1	2	0	0	0	0
4/24/2024	5:45 PM	0	275	53	1	3	2	0	1	2	0	0	0	0
4/24/2024	6:00 PM	0	247	50	1	5	0	0	1	1	0	0	0	0
4/24/2024	6:15 PM	0	198	39	1	4	0	0	1	0	0	0	0	0
4/24/2024	6:30 PM	0	188	38	0	4	0	0	0	0	0	0	0	0
4/24/2024	6:45 PM	0	171	39	0	5	0	0	0	0	0	0	0	0
4/24/2024	7:00 PM	0	158	38	0	2	0	0	0	1	0	0	0	0
4/24/2024	7:15 PM	0	189	35	0	3	0	0	0	2	0	0	0	0
4/24/2024	7:30 PM	0	198	32	0	5	0	0	0	2	0	0	0	0
4/24/2024	7:45 PM	0	188	32	0	4	0	0	0	2	0	0	0	0
4/24/2024	8:00 PM	0	185	25	0	4	0	0	0	1	0	0	0	0
4/24/2024	8:15 PM	0	143	20	0	2	1	0	2	0	0	0	0	0
4/24/2024	8:30 PM	0	105	18	0	1	1	0	2	1	0	0	0	0
4/24/2024	8:45 PM	0	104	17	0	1	1	0	2	1	0	0	0	0
4/24/2024	9:00 PM	0	93	19	0	1	1	0	2	1	0	0	0	0
4/24/2024	9:15 PM	0	84	19	0	1	0	0	1	2	0	0	0	0
4/24/2024	9:30 PM	0	91	20	0	3	2	0	1	1	0	0	0	0
4/24/2024	9:45 PM	0	84	17	0	4	2	0	1	1	0	0	0	0
4/24/2024	10:00 PM	0	83	19	0	4	2	0	1	1	0	0	0	0
4/24/2024	10:15 PM	0	86	22	0	5	5	0	0	0	0	0	0	0
4/24/2024	10:30 PM	0	71	20	0	2	6	0	0	0	0	0	0	0
4/24/2024	10:45 PM	0	65	23	0	1	6	0	0	0	0	0	0	0
4/24/2024	11:00 PM	0	55	19	0	1	6	0	0	0	0	0	0	0
4/24/2024	11:15 PM	0	35	12	0	0	3	0	0	0	0	0	0	0
4/24/2024	11:30 PM	0	22	8	0	0	0	0	0	0	0	0	0	0
4/24/2024	11:45 PM	0	9	2	0	0	0	0	0	0	0	0	0	0

4/25/2024	12:00 AM	0	27	11	0	3	3	0	0	0	0	0	0	0
4/25/2024	12:15 AM	0	22	8	0	2	7	0	0	0	0	0	0	0
4/25/2024	12:30 AM	0	19	5	0	2	5	0	0	0	0	0	0	0
4/25/2024	12:45 AM	0	21	5	0	2	5	0	0	2	0	0	0	0
4/25/2024	1:00 AM	0	19	4	0	0	5	0	0	2	0	0	0	0
4/25/2024	1:15 AM	0	19	4	0	0	6	0	0	3	0	0	0	0
4/25/2024	1:30 AM	0	20	4	0	0	6	0	0	3	0	0	0	0
4/25/2024	1:45 AM	0	18	1	0	0	8	0	0	1	0	0	0	0
4/25/2024	2:00 AM	0	14	0	0	0	8	0	0	2	0	0	0	0
4/25/2024	2:15 AM	0	18	1	0	0	3	0	0	1	0	0	0	0
4/25/2024	2:30 AM	0	22	1	0	1	2	0	0	1	0	0	0	0
4/25/2024	2:45 AM	0	24	4	0	2	0	0	0	1	0	0	0	0
4/25/2024	3:00 AM	0	29	6	0	4	0	0	0	3	0	0	0	0
4/25/2024	3:15 AM	0	30	7	0	4	0	0	0	4	0	0	0	0
4/25/2024	3:30 AM	0	27	11	0	4	0	0	0	4	0	0	0	0
4/25/2024	3:45 AM	0	27	11	0	3	0	0	0	4	0	0	0	0
4/25/2024	4:00 AM	0	28	13	0	1	0	0	0	1	0	0	0	0
4/25/2024	4:15 AM	0	28	13	0	1	0	0	0	0	0	0	0	0
4/25/2024	4:30 AM	0	38	12	0	1	0	0	0	0	0	0	0	0
4/25/2024	4:45 AM	0	50	17	0	1	1	0	0	0	0	0	0	0
4/25/2024	5:00 AM	0	65	21	0	1	1	0	0	0	0	0	0	0
4/25/2024	5:15 AM	0	86	24	0	1	2	0	0	0	0	0	0	0
4/25/2024	5:30 AM	0	97	25	0	0	2	0	0	0	0	0	0	0
4/25/2024	5:45 AM	0	126	23	1	0	1	0	0	0	0	0	0	0
4/25/2024	6:00 AM	0	149	26	1	1	1	0	0	0	0	0	0	0
4/25/2024	6:15 AM	0	176	38	1	5	0	0	1	0	0	0	0	0
4/25/2024	6:30 AM	0	206	49	1	8	0	0	1	0	0	0	0	0
4/25/2024	6:45 AM	0	222	59	0	8	0	0	2	0	0	0	0	0
4/25/2024	7:00 AM	0	249	72	0	7	0	0	2	1	0	0	0	0
4/25/2024	7:15 AM	0	249	67	0	3	0	0	1	2	0	0	0	0
4/25/2024	7:30 AM	0	253	65	0	1	0	0	1	2	0	0	0	0
4/25/2024	7:45 AM	0	255	69	0	2	1	0	0	2	0	0	0	0
4/25/2024	8:00 AM	0	255	62	1	5	1	0	0	2	0	0	0	0
4/25/2024	8:15 AM	0	257	66	1	6	1	0	0	2	0	0	0	0
4/25/2024	8:30 AM	0	238	64	2	5	1	0	0	3	1	0	0	0
4/25/2024	8:45 AM	0	234	53	2	6	1	0	0	3	2	0	0	0
4/25/2024	9:00 AM	0	218	51	1	7	1	0	0	2	2	0	0	0
4/25/2024	9:15 AM	0	222	45	1	8	1	0	0	2	2	0	0	0
4/25/2024	9:30 AM	0	253	46	0	8	1	0	1	4	1	0	0	0
4/25/2024	9:45 AM	1	245	56	1	8	1	0	3	4	0	0	0	0
4/25/2024	10:00 AM	1	279	53	1	6	2	0	3	5	0	0	0	0
4/25/2024	10:15 AM	1	288	58	1	7	3	0	3	4	0	0	0	0
4/25/2024	10:30 AM	1	284	60	1	8	3	0	2	2	0	0	0	0
4/25/2024	10:45 AM	0	311	59	0	6	4	0	0	4	0	0	0	0
4/25/2024	11:00 AM	0	311	65	2	8	4	0	0	3	0	0	0	0
4/25/2024	11:15 AM	0	349	75	3	6	4	0	0	3	0	0	0	0
4/25/2024	11:30 AM	0	360	79	4	5	5	0	0	3	0	0	0	0
4/25/2024	11:45 AM	0	374	78	8	5	4	0	0	1	0	0	0	0
4/25/2024	12:00 PM	0	378	80	7	1	4	0	0	1	0	0	0	0
4/25/2024	12:15 PM	0	368	67	10	3	3	0	0	1	0	0	0	0
4/25/2024	12:30 PM	0	369	65	12	4	3	0	0	0	0	0	0	0
4/25/2024	12:45 PM	0	360	64	8	6	2	0	0	0	0	0	0	0
4/25/2024	1:00 PM	1	354	61	7	7	2	0	0	1	0	0	0	0
4/25/2024	1:15 PM	1	363	75	3	7	3	0	0	1	0	0	0	0
4/25/2024	1:30 PM	1	382	76	0	7	2	0	0	1	0	0	0	0
4/25/2024	1:45 PM	1	395	84	1	8	2	0	0	1	0	0	0	0
4/25/2024	2:00 PM	0	411	85	1	7	1	0	0	0	0	0	0	0
4/25/2024	2:15 PM	1	422	79	2	5	1	0	0	0	0	0	0	0
4/25/2024	2:30 PM	1	439	79	9	5	1	0	0	1	0	0	0	0
4/25/2024	2:45 PM	1	452	73	8	6	3	0	0	1	0	0	0	0
4/25/2024	3:00 PM	1	463	76	8	7	5	0	1	2	0	0	0	0
4/25/2024	3:15 PM	1	527	72	7	10	5	0	1	2	0	0	0	0
4/25/2024	3:30 PM	1	552	68	0	9	6	0	1	1	0	0	0	0
4/25/2024	3:45 PM	1	601	85	0	9	5	0	1	1	0	0	0	0
4/25/2024	4:00 PM	1	603	88	0	11	3	0	0	0	0	0	0	0
4/25/2024	4:15 PM	0	616	108	0	7	3	0	0	0	0	0	0	0
4/25/2024	4:30 PM	0	598	120	0	9	3	0	0	0	0	0	0	0
4/25/2024	4:45 PM	0	534	101	0	5	2	0	0	1	0	0	0	0
4/25/2024	5:00 PM	0	503	93	0	2	3	0	0	1	0	0	0	0
4/25/2024	5:15 PM	0	394	77	0	3	2	0	0	1	0	0	0	0
4/25/2024	5:30 PM	0	357	66	0	2	1	0	0	1	0	0	0	0
4/25/2024	5:45 PM	0	317	60	0	2	1	0	0	0	0	0	0	0
4/25/2024	6:00 PM	0	280	57	0	2	0	0	0	0	0	0	0	0
4/25/2024	6:15 PM	0	193	37	0	1	0	0	0	0	0	0	0	0
4/25/2024	6:30 PM	0	107	23	0	0	0	0	0	0	0	0	0	0
4/25/2024	6:45 PM	0	50	13	0	0	0	0	0	0	0	0	0	0
4/25/2024	7:00 PM	0	0	0	0	0	0	0	0	0	0	0	0	0
4/25/2024	7:15 PM	0	0	0	0	0	0	0	0	0	0	0	0	0
4/25/2024	7:30 PM	0	0	0	0	0	0	0	0	0	0	0	0	0
4/25/2024	7:45 PM	0	0	0	0	0	0	0	0	0	0	0	0	0
4/25/2024	8:00 PM	0	0	0	0	0	0	0	0	0	0	0	0	0
4/25/2024	8:15 PM	0	0	0	0	0	0	0	0	0	0	0	0	0
4/25/2024	8:30 PM	0	0	0	0	0	0	0	0	0	0	0	0	0
4/25/2024	8:45 PM	0	0	0	0	0	0	0	0	0	0	0	0	0
4/25/2024	9:00 PM	0	0	0	0	0	0	0	0	0	0	0	0	0
4/25/2024	9:15 PM	0	0	0	0	0	0	0	0	0	0	0	0	0
4/25/2024	9:30 PM	0	0	0	0	0	0	0	0	0	0	0	0	0
4/25/2024	9:45 PM	0	0	0	0	0	0	0	0	0	0	0	0	0
4/25/2024	10:00 PM	0	0	0	0	0	0	0	0	0	0	0	0	0
4/25/2024	10:15 PM	0	0	0	0	0	0	0	0	0	0	0	0	0
4/25/2024	10:30 PM	0	0	0	0	0	0	0	0	0	0	0	0	0
4/25/2024	10:45 PM	0	0	0	0	0	0	0	0	0	0	0	0	0
4/25/2024	11:00 PM	0	0	0	0	0	0	0	0	0	0	0	0	0
4/25/2024	11:15 PM	0	0	0	0	0	0	0	0	0	0	0	0	0
4/25/2024	11:30 PM	0	0	0	0	0	0	0	0	0	0	0	0	0
4/25/2024	11:45 PM	0	0	0	0	0	0	0	0	0	0	0	0	0

Bi-Directional Class Count || NB EB 15min

Columbia, SC

Marr Traffic DATA COLLECTION
www.marrtraffic.com

Site 50
I-126 On/Off-Ramp,
east of Greystone Blvd

Date
Tuesday, April 23, 2024

Lat/Long
34.011799°, -81.074145°

Weather
Fair
58°F

Click here for Detailed Weather

Click here for Map

0000 - 2400 (Weekday 24h Session) (04-23-2024)
NB EB 15min

	Eastbound (Movement 50.1)													15min	60min
Time	1	2	3	4	5	6	7	8	9	10	11	12	13	Total	Total
0000 - 0015	0	0	0	0	0	0	0	0	0	0	0	0	0	**0**	
0015 - 0030	0	0	0	0	0	0	0	0	0	0	0	0	0	**0**	
0030 - 0045	0	0	0	0	0	0	0	0	0	0	0	0	0	**0**	
0045 - 0100	0	0	0	0	0	0	0	0	0	0	0	0	0	**0**	**0**
0100 - 0115	0	0	0	0	0	0	0	0	0	0	0	0	0	**0**	
0115 - 0130	0	0	0	0	0	0	0	0	0	0	0	0	0	**0**	
0130 - 0145	0	0	0	0	0	0	0	0	0	0	0	0	0	**0**	
0145 - 0200	0	0	0	0	0	0	0	0	0	0	0	0	0	**0**	**0**
0200 - 0215	0	0	0	0	0	0	0	0	0	0	0	0	0	**0**	
0215 - 0230	0	0	0	0	0	0	0	0	0	0	0	0	0	**0**	
0230 - 0245	0	0	0	0	0	0	0	0	0	0	0	0	0	**0**	
0245 - 0300	0	0	0	0	0	0	0	0	0	0	0	0	0	**0**	**0**
0300 - 0315	0	0	0	0	0	0	0	0	0	0	0	0	0	**0**	
0315 - 0330	0	0	0	0	0	0	0	0	0	0	0	0	0	**0**	
0330 - 0345	0	0	0	0	0	0	0	0	0	0	0	0	0	**0**	
0345 - 0400	0	0	0	0	0	0	0	0	0	0	0	0	0	**0**	**0**
0400 - 0415	0	0	0	0	0	0	0	0	0	0	0	0	0	**0**	
0415 - 0430	0	0	0	0	0	0	0	0	0	0	0	0	0	**0**	
0430 - 0445	0	0	0	0	0	0	0	0	0	0	0	0	0	**0**	
0445 - 0500	0	0	0	0	0	0	0	0	0	0	0	0	0	**0**	**0**
0500 - 0515	0	0	0	0	0	0	0	0	0	0	0	0	0	**0**	
0515 - 0530	0	0	0	0	0	0	0	0	0	0	0	0	0	**0**	
0530 - 0545	0	0	0	0	0	0	0	0	0	0	0	0	0	**0**	
0545 - 0600	0	0	0	0	0	0	0	0	0	0	0	0	0	**0**	**0**
0600 - 0615	0	0	0	0	0	0	0	0	0	0	0	0	0	**0**	
0615 - 0630	0	0	0	0	0	0	0	0	0	0	0	0	0	**0**	
0630 - 0645	0	0	0	0	0	0	0	0	0	0	0	0	0	**0**	
0645 - 0700	0	0	0	0	0	0	0	0	0	0	0	0	0	**0**	**0**
0700 - 0715	0	0	0	0	0	0	0	0	0	0	0	0	0	**0**	
0715 - 0730	0	0	0	0	0	0	0	0	0	0	0	0	0	**0**	
0730 - 0745	0	0	0	0	0	0	0	0	0	0	0	0	0	**0**	
0745 - 0800	0	0	0	0	0	0	0	0	0	0	0	0	0	**0**	**0**
0800 - 0815	0	0	0	0	0	0	0	0	0	0	0	0	0	**0**	
0815 - 0830	0	0	0	0	0	0	0	0	0	0	0	0	0	**0**	
0830 - 0845	0	0	0	0	0	0	0	0	0	0	0	0	0	**0**	
0845 - 0900	0	0	0	0	0	0	0	0	0	0	0	0	0	**0**	**0**
0900 - 0915	0	0	0	0	0	0	0	0	0	0	0	0	0	**0**	
0915 - 0930	0	0	0	0	0	0	0	0	0	0	0	0	0	**0**	
0930 - 0945	0	0	0	0	0	0	0	0	0	0	0	0	0	**0**	
0945 - 1000	0	0	0	0	0	0	0	0	0	0	0	0	0	**0**	**0**
1000 - 1015	0	0	0	0	0	0	0	0	0	0	0	0	0	**0**	
1015 - 1030	0	0	0	0	0	0	0	0	0	0	0	0	0	**0**	
1030 - 1045	0	0	0	0	0	0	0	0	0	0	0	0	0	**0**	
1045 - 1100	0	0	0	0	0	0	0	0	0	0	0	0	0	**0**	**0**
1100 - 1115	0	0	0	0	0	0	0	0	0	0	0	0	0	**0**	
1115 - 1130	0	0	0	0	0	0	0	0	0	0	0	0	0	**0**	
1130 - 1145	0	0	0	0	0	0	0	0	0	0	0	0	0	**0**	
1145 - 1200	0	0	0	0	0	0	0	0	0	0	0	0	0	**0**	**0**
1200 - 1215	0	0	0	0	0	0	0	0	0	0	0	0	0	**0**	
1215 - 1230	0	0	0	0	0	0	0	0	0	0	0	0	0	**0**	
1230 - 1245	0	0	0	0	0	0	0	0	0	0	0	0	0	**0**	
1245 - 1300	0	0	0	0	0	0	0	0	0	0	0	0	0	**0**	**0**
1300 - 1315	0	0	0	0	0	0	0	0	0	0	0	0	0	**0**	
1315 - 1330	0	0	0	0	0	0	0	0	0	0	0	0	0	**0**	
1330 - 1345	0	0	0	0	0	0	0	0	0	0	0	0	0	**0**	
1345 - 1400	0	0	0	0	0	0	0	0	0	0	0	0	0	**0**	**0**
1400 - 1415	0	0	0	0	0	0	0	0	0	0	0	0	0	**0**	
1415 - 1430	0	0	0	0	0	0	0	0	0	0	0	0	0	**0**	
1430 - 1445	0	0	0	0	0	0	0	0	0	0	0	0	0	**0**	
1445 - 1500	0	0	0	0	0	0	0	0	0	0	0	0	0	**0**	**0**
1500 - 1515	0	0	0	0	0	0	0	0	0	0	0	0	0	**0**	
1515 - 1530	0	0	0	0	0	0	0	0	0	0	0	0	0	**0**	
1530 - 1545	0	0	0	0	0	0	0	0	0	0	0	0	0	**0**	
1545 - 1600	0	0	0	0	0	0	0	0	0	0	0	0	0	**0**	**0**
1600 - 1615	0	0	0	0	0	0	0	0	0	0	0	0	0	**0**	
1615 - 1630	0	0	0	0	0	0	0	0	0	0	0	0	0	**0**	
1630 - 1645	0	0	0	0	0	0	0	0	0	0	0	0	0	**0**	
1645 - 1700	0	0	0	0	0	0	0	0	0	0	0	0	0	**0**	**0**
1700 - 1715	0	0	0	0	0	0	0	0	0	0	0	0	0	**0**	
1715 - 1730	0	0	0	0	0	0	0	0	0	0	0	0	0	**0**	
1730 - 1745	0	0	0	0	0	0	0	0	0	0	0	0	0	**0**	
1745 - 1800	0	0	0	0	0	0	0	0	0	0	0	0	0	**0**	**0**
1800 - 1815	0	0	0	0	0	0	0	0	0	0	0	0	0	**0**	
1815 - 1830	0	0	0	0	0	0	0	0	0	0	0	0	0	**0**	
1830 - 1845	0	0	0	0	0	0	0	0	0	0	0	0	0	**0**	
1845 - 1900	0	0	0	0	0	0	0	0	0	0	0	0	0	**0**	**0**
1900 - 1915	1	42	4	1	0	0	0	0	0	0	0	0	0	**48**	
1915 - 1930	1	48	5	0	0	0	0	0	0	0	0	0	0	**54**	
1930 - 1945	1	53	5	1	0	0	0	0	0	0	0	0	0	**60**	
1945 - 2000	1	38	4	0	0	0	0	0	0	0	0	0	0	**43**	**205**
2000 - 2015	0	43	3	0	0	0	0	0	0	0	0	0	0	**46**	
2015 - 2030	0	40	2	0	0	0	0	0	0	0	0	0	0	**42**	
2030 - 2045	0	33	4	1	0	0	0	0	0	0	0	0	0	**38**	
2045 - 2100	0	27	2	0	0	0	0	0	0	0	0	0	0	**29**	**155**
2100 - 2115	0	36	2	0	0	0	0	0	0	0	0	0	0	**38**	
2115 - 2130	0	37	3	0	1	0	0	0	0	0	0	0	0	**41**	
2130 - 2145	0	25	3	1	0	0	0	0	0	0	0	0	0	**29**	
2145 - 2200	0	22	2	0	0	0	0	0	0	0	0	0	0	**24**	**132**
2200 - 2215	0	14	1	0	0	0	0	0	0	0	0	0	0	**15**	
2215 - 2230	0	13	1	0	0	0	0	0	0	0	0	0	0	**14**	
2230 - 2245	0	20	3	0	0	0	0	0	0	0	0	0	0	**23**	
2245 - 2300	0	19	2	0	0	0	0	0	0	0	0	0	0	**21**	**73**
2300 - 2315	0	23	1	0	0	0	0	0	0	0	0	0	0	**24**	
2315 - 2330	0	14	1	0	0	0	0	0	0	0	0	0	0	**15**	
2330 - 2345	0	18	2	0	0	0	0	0	1	0	0	0	0	**21**	
2345 - 0000	0	10	1	0	0	0	0	0	0	0	0	0	0	**11**	**71**

Session Total	4	575	51	4	1	0	0	0	1	0	0	0	0	**636**
Session Average	0.04	5.99	0.53	0.04	0.01	0.00	0.00	0.00	0.01	0.00	0.00	0.00	0.00	**6.63**
Session Percentage	0.63	90.41	8.02	0.63	0.16	0.00	0.00	0.00	0.16	0.00	0.00	0.00	0.00	

AM Peak Hour	-	-	-	-	-	-	-	-	-	-	-	-	-	**-**
AM Peak Volume	0	0	0	0	0	0	0	0	0	0	0	0	0	**0**

Noon Peak Hour	-	-	-	-	-	-	-	-	-	-	-	-	-	**-**
Noon Peak Volume	0	0	0	0	0	0	0	0	0	0	0	0	0	**0**

PM Peak Hour	1900 - 2000	1915 - 2015	1900 - 2000	1845 - 1945	-	-	-	-	-	-	-	-	-	**1900 - 2000**
PM Peak Volume	4	182	18	2	0	0	0	0	0	0	0	0	0	**205**

Site 50
I-126 On/Off-Ramp,
east of Greystone Blvd

Date
Wednesday, April 24, 2024

Lat/Long
34.011799°, -81.074145°

Weather
Fair
66°F

Click here for Detailed Weather

0000 - 2400 (Weekday 24h Session) (04-24-2024)
NB EB 15min

	Eastbound (Movement 50.1)													15min	60min
Time	1	2	3	4	5	6	7	8	9	10	11	12	13	Total	Total
0000 - 0015	0	8	1	0	0	0	0	0	0	0	0	0	0	**9**	
0015 - 0030	0	5	0	0	0	1	0	0	0	0	0	0	0	**6**	
0030 - 0045	0	9	1	0	0	0	0	0	0	0	0	0	0	**10**	
0045 - 0100	0	8	0	0	0	0	0	0	0	0	0	0	0	**8**	**33**
0100 - 0115	0	4	0	0	0	0	0	0	0	0	0	0	0	**4**	
0115 - 0130	0	4	0	0	0	0	0	0	0	0	0	0	0	**4**	
0130 - 0145	0	3	0	0	0	0	0	0	0	0	0	0	0	**3**	
0145 - 0200	0	4	1	0	0	1	0	0	0	0	0	0	0	**6**	**17**
0200 - 0215	0	2	0	0	0	0	0	0	0	0	0	0	0	**2**	
0215 - 0230	0	4	1	0	0	0	0	0	0	0	0	0	0	**5**	
0230 - 0245	0	2	2	0	0	0	0	0	0	0	0	0	0	**4**	
0245 - 0300	0	4	0	0	0	0	0	0	1	0	0	0	0	**5**	**16**
0300 - 0315	0	5	3	0	0	0	0	1	0	0	0	0	0	**9**	
0315 - 0330	0	2	0	0	0	0	0	0	0	0	0	0	0	**2**	
0330 - 0345	0	8	1	0	0	0	0	0	0	0	0	0	0	**9**	
0345 - 0400	0	7	1	0	0	0	0	0	0	0	0	0	0	**8**	**28**
0400 - 0415	0	6	0	0	0	0	0	0	0	0	0	0	0	**6**	
0415 - 0430	0	10	2	0	0	0	0	0	0	0	0	0	0	**12**	
0430 - 0445	0	8	1	0	0	0	0	0	0	0	0	0	0	**9**	
0445 - 0500	0	9	1	0	0	0	0	0	0	0	0	0	0	**10**	**37**
0500 - 0515	0	11	1	0	0	0	0	0	0	0	0	0	0	**12**	
0515 - 0530	0	19	3	0	0	0	0	0	0	0	0	0	0	**22**	
0530 - 0545	0	19	2	1	0	0	0	0	0	0	0	0	0	**22**	
0545 - 0600	0	30	3	1	0	0	0	0	0	0	0	0	0	**34**	**90**
0600 - 0615	0	20	3	1	0	0	0	0	0	0	0	0	0	**24**	
0615 - 0630	0	25	5	0	0	0	0	0	0	0	0	0	0	**30**	
0630 - 0645	0	46	10	0	1	0	0	0	0	0	0	0	0	**57**	
0645 - 0700	0	55	5	2	0	0	0	0	0	0	0	0	0	**62**	**173**
0700 - 0715	0	57	10	2	2	0	0	0	0	0	0	0	0	**71**	
0715 - 0730	0	56	13	6	0	0	0	0	0	0	0	0	0	**75**	
0730 - 0745	1	80	9	2	0	0	0	0	0	0	0	0	0	**92**	
0745 - 0800	0	86	10	2	0	0	0	0	0	0	0	0	0	**98**	**336**
0800 - 0815	0	86	11	1	1	1	0	0	0	0	0	0	0	**100**	
0815 - 0830	0	79	13	3	0	1	0	0	0	0	0	0	0	**96**	
0830 - 0845	1	102	5	2	2	0	0	0	0	0	0	0	0	**112**	
0845 - 0900	0	88	14	1	2	1	0	0	0	0	0	0	0	**106**	**414**
0900 - 0915	0	66	9	0	2	0	0	0	0	0	0	0	0	**77**	
0915 - 0930	0	68	8	3	0	0	0	0	1	0	0	0	0	**80**	
0930 - 0945	0	60	12	1	1	0	0	0	0	0	0	0	0	**74**	
0945 - 1000	0	74	6	1	1	1	0	0	1	0	0	0	0	**84**	**315**
1000 - 1015	0	62	11	0	1	0	0	0	1	0	0	0	0	**75**	
1015 - 1030	0	63	5	0	0	0	0	0	1	0	0	0	0	**69**	
1030 - 1045	1	74	10	1	0	0	0	0	0	0	0	0	0	**86**	
1045 - 1100	0	84	13	0	0	1	0	0	0	0	0	0	0	**98**	**328**
1100 - 1115	0	69	12	2	0	0	0	0	0	0	0	0	0	**83**	
1115 - 1130	0	67	12	1	0	0	0	0	0	0	0	0	0	**80**	
1130 - 1145	0	71	15	1	1	0	0	0	0	0	0	0	0	**88**	
1145 - 1200	0	85	9	1	2	1	0	0	0	0	0	0	0	**98**	**349**
1200 - 1215	0	92	14	0	0	0	0	0	1	0	0	0	0	**107**	
1215 - 1230	0	84	12	0	1	0	0	0	0	0	0	0	0	**97**	
1230 - 1245	1	95	13	2	2	1	0	1	0	0	0	0	0	**115**	
1245 - 1300	1	73	13	5	0	0	0	0	0	0	0	0	0	**92**	**411**
1300 - 1315	0	100	12	4	1	0	0	0	0	2	0	0	0	**119**	
1315 - 1330	0	80	14	2	0	0	0	0	0	1	0	0	0	**97**	
1330 - 1345	0	84	14	1	0	0	0	0	0	0	0	0	0	**99**	
1345 - 1400	0	68	16	1	0	0	0	0	0	0	0	0	0	**85**	**400**
1400 - 1415	0	88	17	2	0	0	0	0	0	0	0	0	0	**107**	
1415 - 1430	0	94	14	1	0	0	0	0	0	0	0	0	0	**109**	
1430 - 1445	0	81	15	1	0	0	0	0	0	0	0	0	0	**97**	
1445 - 1500	0	83	11	2	0	1	0	0	0	0	0	0	0	**97**	**410**
1500 - 1515	0	90	10	2	1	0	0	0	0	0	0	0	0	**103**	
1515 - 1530	0	78	17	0	0	1	0	0	0	0	0	0	0	**96**	
1530 - 1545	0	71	13	4	1	1	0	0	0	0	0	0	0	**90**	
1545 - 1600	0	86	12	1	1	0	0	0	0	0	0	0	0	**100**	**389**
1600 - 1615	0	116	13	0	2	1	0	0	0	0	0	0	0	**132**	
1615 - 1630	0	67	19	2	1	0	0	2	0	0	0	0	0	**91**	
1630 - 1645	0	101	8	0	2	1	0	0	0	0	0	0	0	**112**	
1645 - 1700	0	100	16	1	0	0	0	0	0	0	0	0	0	**117**	**452**
1700 - 1715	2	120	20	3	2	0	0	0	0	0	0	0	0	**147**	
1715 - 1730	0	83	10	1	1	0	0	0	0	0	0	0	0	**95**	
1730 - 1745	0	70	10	1	1	0	0	0	0	0	0	0	0	**82**	
1745 - 1800	0	65	11	0	0	0	0	0	0	0	0	0	0	**76**	**400**
1800 - 1815	0	74	12	3	1	0	0	0	0	0	0	0	0	**90**	
1815 - 1830	0	67	5	1	0	0	0	0	0	0	0	0	0	**73**	
1830 - 1845	0	68	6	1	1	0	0	0	0	0	0	0	0	**76**	
1845 - 1900	1	55	8	1	1	1	0	0	0	0	0	0	0	**67**	**306**
1900 - 1915	1	49	11	1	1	0	0	0	0	0	0	0	0	**63**	
1915 - 1930	1	58	5	0	0	0	0	0	0	0	0	0	0	**64**	
1930 - 1945	0	44	9	1	0	0	0	0	0	0	0	0	0	**54**	
1945 - 2000	0	27	9	0	0	0	0	0	0	0	0	0	0	**36**	**217**
2000 - 2015	0	33	7	0	0	0	0	0	0	0	0	0	0	**40**	
2015 - 2030	0	30	5	0	0	0	0	0	0	0	0	0	0	**35**	
2030 - 2045	0	47	7	0	0	0	0	0	0	0	0	0	0	**54**	
2045 - 2100	0	33	2	1	0	0	0	0	0	0	0	0	0	**36**	**165**
2100 - 2115	0	33	3	0	0	0	0	0	0	0	0	0	0	**36**	
2115 - 2130	0	25	2	1	0	0	0	0	0	0	0	0	0	**28**	
2130 - 2145	0	30	3	0	0	0	0	0	0	0	0	0	0	**33**	
2145 - 2200	0	21	4	0	0	0	0	0	0	0	0	0	0	**25**	**122**
2200 - 2215	0	21	3	0	0	0	0	0	0	0	0	0	0	**24**	
2215 - 2230	0	33	4	0	0	0	0	0	0	0	0	0	0	**37**	
2230 - 2245	0	22	3	0	0	0	0	0	0	0	0	0	0	**25**	
2245 - 2300	0	22	3	0	0	0	0	0	0	0	0	0	0	**25**	**111**
2300 - 2315	0	17	2	0	0	0	0	0	0	0	0	0	0	**19**	
2315 - 2330	0	15	2	0	0	0	0	0	0	0	0	0	0	**17**	
2330 - 2345	0	11	1	0	0	0	0	0	0	0	0	0	0	**12**	
2345 - 0000	0	15	1	0	0	0	0	0	0	0	0	0	0	**16**	**64**

Session Total	10	4733	695	81	36	15	0	4	6	3	0	0	0	**5583**
Session Average	0.10	49.30	7.24	0.84	0.38	0.16	0.00	0.04	0.06	0.03	0.00	0.00	0.00	**58.16**
Session Percentage	0.18	84.78	12.45	1.45	0.64	0.27	0.00	0.07	0.11	0.05	0.00	0.00	0.00	

AM Peak Hour	0645 - 0745	0800 - 0900	0715 - 0815	0645 - 0745	0815 - 0915	0800 - 0900	-	-	0915 - 1015	-	-	-	-	**0800 - 0900**
AM Peak Volume	1	355	43	12	6	3	0	0	3	0	0	0	0	**414**

Noon Peak Hour	1200 - 1300	1145 - 1245	1345 - 1445	1230 - 1330	1145 - 1245	1445 - 1545	-	1145 - 1245	1000 - 1100	1230 - 1330	-	-	-	**1215 - 1315**
Noon Peak Volume	2	356	62	13	5	3	0	1	2	3	0	0	0	**423**

PM Peak Hour	1830 - 1930	1630 - 1730	1615 - 1715	1500 - 1600	1545 - 1645	1515 - 1615	-	1530 - 1630	-	-	-	-	-	**1630 - 1730**
PM Peak Volume	3	404	63	7	6	3	0	2	0	0	0	0	0	**471**

Site 50
I-126 On/Off-Ramp,
east of Greystone Blvd

Date
Thursday, April 25, 2024

Lat/Long
34.011799°, -81.074145°

Weather
Fair
67°F

Click here for Detailed Weather

0000 - 2400 (Weekday 24h Session) (04-25-2024)
NB EB 15min

	Eastbound (Movement 50.1)													15min	60min
TIME	1	2	3	4	5	6	7	8	9	10	11	12	13	Total	Total
0000 - 0015	0	10	1	0	1	0	1	0	0	0	0	0	0	**13**	
0015 - 0030	0	8	1	0	0	0	0	0	0	0	0	0	0	**9**	
0030 - 0045	0	15	2	0	0	0	1	0	0	0	0	0	0	**18**	
0045 - 0100	0	15	1	0	0	0	0	0	0	0	0	0	0	**16**	**56**
0100 - 0115	0	5	0	0	0	0	0	0	0	0	0	0	0	**5**	
0115 - 0130	0	10	2	0	0	0	0	0	0	0	0	0	0	**12**	
0130 - 0145	0	6	1	0	0	0	0	0	0	0	0	0	0	**7**	
0145 - 0200	0	7	0	0	0	0	0	0	0	0	0	0	0	**7**	**31**
0200 - 0215	0	10	1	0	0	0	0	0	0	0	0	0	0	**11**	
0215 - 0230	0	6	1	0	0	0	0	0	0	0	0	0	0	**7**	
0230 - 0245	0	8	2	0	0	0	0	0	0	0	0	0	0	**10**	
0245 - 0300	0	5	1	0	0	0	0	0	0	0	0	0	0	**6**	**34**
0300 - 0315	0	4	0	0	0	0	0	1	0	0	0	0	0	**5**	
0315 - 0330	0	4	0	0	1	0	0	0	0	0	0	0	0	**5**	
0330 - 0345	0	3	0	0	0	0	0	0	0	0	0	0	0	**3**	
0345 - 0400	0	8	1	0	0	0	0	0	0	0	0	0	0	**9**	**22**
0400 - 0415	0	4	0	0	0	0	0	0	0	0	0	0	0	**4**	
0415 - 0430	0	6	1	0	0	0	0	0	0	0	0	0	0	**7**	
0430 - 0445	0	8	1	0	1	0	1	0	0	0	0	0	0	**11**	
0445 - 0500	0	13	2	0	0	0	0	0	0	0	0	0	0	**15**	**37**
0500 - 0515	0	10	1	0	1	0	0	0	0	0	0	0	0	**12**	
0515 - 0530	0	14	2	0	1	0	0	0	0	0	0	0	0	**17**	
0530 - 0545	0	18	3	1	0	0	0	0	0	0	0	0	0	**22**	
0545 - 0600	0	31	5	0	0	0	0	0	0	0	0	0	0	**36**	**87**
0600 - 0615	0	12	2	1	0	0	0	0	0	0	0	0	0	**15**	
0615 - 0630	0	30	5	0	0	0	0	0	0	0	0	0	0	**35**	
0630 - 0645	0	39	7	0	1	0	0	0	0	0	0	0	0	**47**	
0645 - 0700	0	52	2	2	1	0	0	0	0	0	0	0	0	**57**	**154**
0700 - 0715	0	47	8	4	0	0	0	0	1	0	0	0	0	**60**	
0715 - 0730	0	50	13	5	0	0	0	0	0	0	0	0	0	**68**	
0730 - 0745	0	88	8	1	0	0	0	1	0	0	0	0	0	**98**	
0745 - 0800	0	101	8	1	0	0	0	0	0	0	0	0	0	**110**	**336**
0800 - 0815	0	86	10	3	1	0	0	0	0	0	0	0	0	**100**	
0815 - 0830	0	81	13	3	1	0	0	0	1	0	0	0	0	**99**	
0830 - 0845	0	89	8	4	0	0	0	0	0	0	0	0	0	**101**	
0845 - 0900	0	76	11	2	2	0	0	0	1	0	0	0	0	**92**	**392**
0900 - 0915	0	61	8	3	0	0	0	0	0	0	0	0	0	**72**	
0915 - 0930	0	55	8	3	2	2	0	0	0	0	0	0	0	**70**	
0930 - 0945	0	73	9	1	1	1	0	0	0	0	0	0	0	**85**	
0945 - 1000	0	80	9	3	0	0	0	0	0	0	0	0	0	**92**	**319**
1000 - 1015	0	59	10	1	0	1	0	0	0	0	0	0	0	**71**	
1015 - 1030	0	70	6	0	2	0	0	0	0	0	0	0	0	**78**	
1030 - 1045	0	67	11	2	5	4	0	0	0	0	0	0	0	**89**	
1045 - 1100	0	66	21	0	1	1	0	0	0	0	0	0	0	**89**	**327**
1100 - 1115	0	77	9	1	0	0	0	0	0	0	0	0	0	**87**	
1115 - 1130	0	81	16	0	1	0	0	0	0	0	0	0	0	**98**	
1130 - 1145	0	94	23	0	1	4	0	0	0	0	0	0	0	**122**	
1145 - 1200	0	88	20	1	0	1	0	0	1	0	0	0	0	**111**	**418**
1200 - 1215	0	91	17	0	0	1	0	0	0	0	0	0	0	**109**	
1215 - 1230	0	86	13	0	1	1	0	0	0	0	0	0	0	**101**	
1230 - 1245	0	97	14	0	1	1	0	0	0	0	0	0	0	**113**	
1245 - 1300	0	97	20	11	0	2	0	0	0	0	0	0	0	**130**	**453**
1300 - 1315	0	89	14	4	0	0	0	0	0	0	0	0	0	**107**	
1315 - 1330	0	94	10	0	0	2	0	0	0	0	0	0	0	**106**	
1330 - 1345	0	79	8	3	2	1	0	1	0	0	0	0	0	**94**	
1345 - 1400	0	88	12	0	0	1	0	1	0	0	0	0	0	**102**	**409**
1400 - 1415	0	92	13	1	4	1	1	0	0	0	0	0	0	**112**	
1415 - 1430	0	95	13	1	1	0	0	1	0	0	0	0	0	**111**	
1430 - 1445	0	97	17	3	0	1	0	0	0	0	0	0	0	**118**	
1445 - 1500	0	90	15	2	1	2	0	0	0	0	0	0	0	**110**	**451**
1500 - 1515	0	86	12	1	3	3	0	0	0	0	0	0	0	**105**	
1515 - 1530	0	81	13	0	0	1	0	0	0	1	0	0	0	**96**	
1530 - 1545	0	81	14	1	1	0	0	0	0	0	0	0	0	**97**	
1545 - 1600	0	73	10	1	1	0	0	0	0	0	0	0	0	**85**	**383**
1600 - 1615	1	121	13	2	1	0	0	1	0	0	0	0	0	**139**	
1615 - 1630	0	94	11	1	0	0	0	0	0	0	0	0	0	**106**	
1630 - 1645	0	123	12	1	0	0	0	0	0	0	0	0	0	**136**	
1645 - 1700	0	102	9	1	2	0	0	0	0	0	0	0	0	**114**	**495**
1700 - 1715	1	135	24	3	0	0	0	0	0	0	0	0	0	**163**	
1715 - 1730	0	99	7	0	0	0	0	0	0	0	0	0	0	**106**	
1730 - 1745	0	68	6	1	0	0	0	1	1	0	0	0	0	**77**	
1745 - 1800	0	64	9	1	0	0	0	0	0	0	0	0	0	**74**	**420**
1800 - 1815	0	72	10	2	0	0	0	0	0	0	0	0	0	**84**	
1815 - 1830	0	62	5	0	1	0	0	0	0	0	0	0	0	**68**	
1830 - 1845	0	63	9	1	3	0	0	0	0	0	0	0	0	**76**	
1845 - 1900	1	73	6	0	0	0	0	0	0	0	0	0	0	**80**	**308**
1900 - 1915	0	0	0	0	0	0	0	0	0	0	0	0	0	**0**	
1915 - 1930	0	0	0	0	0	0	0	0	0	0	0	0	0	**0**	
1930 - 1945	0	0	0	0	0	0	0	0	0	0	0	0	0	**0**	
1945 - 2000	0	0	0	0	0	0	0	0	0	0	0	0	0	**0**	**0**
2000 - 2015	0	0	0	0	0	0	0	0	0	0	0	0	0	**0**	
2015 - 2030	0	0	0	0	0	0	0	0	0	0	0	0	0	**0**	
2030 - 2045	0	0	0	0	0	0	0	0	0	0	0	0	0	**0**	
2045 - 2100	0	0	0	0	0	0	0	0	0	0	0	0	0	**0**	**0**
2100 - 2115	0	0	0	0	0	0	0	0	0	0	0	0	0	**0**	
2115 - 2130	0	0	0	0	0	0	0	0	0	0	0	0	0	**0**	
2130 - 2145	0	0	0	0	0	0	0	0	0	0	0	0	0	**0**	
2145 - 2200	0	0	0	0	0	0	0	0	0	0	0	0	0	**0**	**0**
2200 - 2215	0	0	0	0	0	0	0	0	0	0	0	0	0	**0**	
2215 - 2230	0	0	0	0	0	0	0	0	0	0	0	0	0	**0**	
2230 - 2245	0	0	0	0	0	0	0	0	0	0	0	0	0	**0**	
2245 - 2300	0	0	0	0	0	0	0	0	0	0	0	0	0	**0**	**0**
2300 - 2315	0	0	0	0	0	0	0	0	0	0	0	0	0	**0**	
2315 - 2330	0	0	0	0	0	0	0	0	0	0	0	0	0	**0**	
2330 - 2345	0	0	0	0	0	0	0	0	0	0	0	0	0	**0**	
2345 - 0000	0	0	0	0	0	0	0	0	0	0	0	0	0	**0**	**0**

Session Total	3	4342	610	83	46	31	4	7	5	1	0	0	0	**5132**
Session Average	0.03	45.23	6.35	0.86	0.48	0.32	0.04	0.07	0.05	0.01	0.00	0.00	0.00	**53.46**
Session Percentage	0.06	84.61	11.89	1.62	0.90	0.60	0.08	0.14	0.10	0.02	0.00	0.00	0.00	

AM Peak Hour	-	0745 - 0845	0800 - 0900	0645 - 0745	0945 - 1045	0945 - 1045	-	0645 - 0745	0800 - 0900	-	-	-	-	**0745 - 0845**
AM Peak Hour Volume	0	357	42	12	7	5	0	1	2	0	0	0	0	**410**

Noon Peak Hour	-	1230 - 1330	1115 - 1215	1245 - 1345	1000 - 1100	1130 - 1230	1315 - 1415	1330 - 1430	1100 - 1200	1430 - 1530	-	-	-	**1230 - 1330**
Noon Peak Hour Volume	0	377	76	18	8	7	1	3	1	1	0	0	0	**456**

PM Peak Hour	1515 - 1615	1630 - 1730	1615 - 1715	1615 - 1715	1500 - 1600	1500 - 1600	-	1515 - 1615	1645 - 1745	1500 - 1600	-	-	-	**1615 - 1715**
PM Peak Hour Volume	1	459	56	6	5	4	0	1	1	1	0	0	0	**519**

Bi-Directional Class Count || NB EB Average 15min

Columbia, SC

Marr Traffic DATA COLLECTION
www.marrtraffic.com

Site 50
I-126 On/Off-Ramp,
east of Greystone Blvd

Date
Tuesday, April 23, 2024

Lat/Long
34.011799°, -81.074145°

Weather
Fair
58°F

0000 - 2400 (Weekday 24h Session) (All Dates)
NB EB Average 15min

	NB EB Average 15min													15min	60min
Time	1	2	3	4	5	6	7	8	9	10	11	12	13	Total	Total
0000 - 0015	0	6	1	0	0	0	0	0	0	0	0	0	0	**7**	
0015 - 0030	0	4	0	0	0	0	0	0	0	0	0	0	0	**5**	
0030 - 0045	0	8	1	0	0	0	0	0	0	0	0	0	0	**9**	
0045 - 0100	0	8	0	0	0	0	0	0	0	0	0	0	0	**8**	**30**
0100 - 0115	0	3	0	0	0	0	0	0	0	0	0	0	0	**3**	
0115 - 0130	0	5	1	0	0	0	0	0	0	0	0	0	0	**5**	
0130 - 0145	0	3	0	0	0	0	0	0	0	0	0	0	0	**3**	
0145 - 0200	0	4	0	0	0	0	0	0	0	0	0	0	0	**4**	**16**
0200 - 0215	0	4	0	0	0	0	0	0	0	0	0	0	0	**4**	
0215 - 0230	0	3	1	0	0	0	0	0	0	0	0	0	0	**4**	
0230 - 0245	0	3	1	0	0	0	0	0	0	0	0	0	0	**5**	
0245 - 0300	0	3	0	0	0	0	0	0	0	0	0	0	0	**4**	**17**
0300 - 0315	0	3	1	0	0	0	0	1	0	0	0	0	0	**5**	
0315 - 0330	0	2	0	0	0	0	0	0	0	0	0	0	0	**2**	
0330 - 0345	0	4	0	0	0	0	0	0	0	0	0	0	0	**4**	
0345 - 0400	0	5	1	0	0	0	0	0	0	0	0	0	0	**6**	**17**
0400 - 0415	0	3	0	0	0	0	0	0	0	0	0	0	0	**3**	
0415 - 0430	0	5	1	0	0	0	0	0	0	0	0	0	0	**6**	
0430 - 0445	0	5	1	0	0	0	0	0	0	0	0	0	0	**7**	
0445 - 0500	0	7	1	0	0	0	0	0	0	0	0	0	0	**8**	**25**
0500 - 0515	0	7	1	0	0	0	0	0	0	0	0	0	0	**8**	
0515 - 0530	0	11	2	0	0	0	0	0	0	0	0	0	0	**13**	
0530 - 0545	0	12	2	1	0	0	0	0	0	0	0	0	0	**15**	
0545 - 0600	0	20	3	0	0	0	0	0	0	0	0	0	0	**23**	**59**
0600 - 0615	0	11	2	1	0	0	0	0	0	0	0	0	0	**13**	
0615 - 0630	0	18	3	0	0	0	0	0	0	0	0	0	0	**22**	
0630 - 0645	0	28	6	0	1	0	0	0	0	0	0	0	0	**35**	
0645 - 0700	0	36	2	1	0	0	0	0	0	0	0	0	0	**40**	**109**
0700 - 0715	0	35	6	2	1	0	0	0	0	0	0	0	0	**44**	
0715 - 0730	0	35	9	4	0	0	0	0	0	0	0	0	0	**48**	
0730 - 0745	0	56	6	1	0	0	0	0	0	0	0	0	0	**63**	
0745 - 0800	0	62	6	1	0	0	0	0	0	0	0	0	0	**69**	**224**
0800 - 0815	0	57	7	1	1	0	0	0	0	0	0	0	0	**67**	
0815 - 0830	0	53	9	2	0	0	0	0	0	0	0	0	0	**65**	
0830 - 0845	0	64	4	2	1	0	0	0	0	0	0	0	0	**71**	
0845 - 0900	0	55	8	1	1	0	0	0	0	0	0	0	0	**66**	**269**
0900 - 0915	0	42	6	1	1	0	0	0	0	0	0	0	0	**50**	
0915 - 0930	0	41	5	2	1	1	0	0	0	0	0	0	0	**50**	
0930 - 0945	0	44	7	1	1	0	0	0	0	0	0	0	0	**53**	
0945 - 1000	0	51	5	1	0	0	0	0	0	0	0	0	0	**59**	**211**
1000 - 1015	0	40	7	0	0	0	0	0	0	0	0	0	0	**49**	
1015 - 1030	0	44	4	0	1	0	0	0	0	0	0	0	0	**49**	
1030 - 1045	0	47	7	1	2	1	0	0	0	0	0	0	0	**58**	
1045 - 1100	0	50	11	0	0	1	0	0	0	0	0	0	0	**62**	**218**
1100 - 1115	0	49	7	1	0	0	0	0	0	0	0	0	0	**57**	
1115 - 1130	0	49	9	0	0	0	0	0	0	0	0	0	0	**59**	
1130 - 1145	0	55	13	0	1	1	0	0	0	0	0	0	0	**70**	
1145 - 1200	0	58	10	1	1	1	0	0	0	0	0	0	0	**70**	**256**
1200 - 1215	0	61	10	0	0	0	0	0	0	0	0	0	0	**72**	
1215 - 1230	0	57	8	0	1	0	0	0	0	0	0	0	0	**66**	
1230 - 1245	0	64	9	1	1	1	0	0	0	0	0	0	0	**76**	
1245 - 1300	0	57	11	5	0	1	0	0	0	0	0	0	0	**74**	**288**
1300 - 1315	0	63	9	3	0	0	0	0	0	1	0	0	0	**75**	
1315 - 1330	0	58	8	1	0	1	0	0	0	0	0	0	0	**68**	
1330 - 1345	0	54	7	1	1	0	0	0	0	0	0	0	0	**64**	
1345 - 1400	0	52	9	0	0	0	0	0	0	0	0	0	0	**62**	**270**
1400 - 1415	0	60	10	1	1	0	0	0	0	0	0	0	0	**73**	
1415 - 1430	0	63	9	1	0	0	0	0	0	0	0	0	0	**73**	
1430 - 1445	0	59	11	1	0	0	0	0	0	0	0	0	0	**72**	
1445 - 1500	0	58	9	1	0	1	0	0	0	0	0	0	0	**69**	**287**
1500 - 1515	0	59	7	1	1	1	0	0	0	0	0	0	0	**69**	
1515 - 1530	0	53	10	0	0	1	0	0	0	0	0	0	0	**64**	
1530 - 1545	0	51	9	2	1	0	0	0	0	0	0	0	0	**62**	
1545 - 1600	0	53	7	1	1	0	0	0	0	0	0	0	0	**62**	**257**
1600 - 1615	0	79	9	1	1	0	0	0	0	0	0	0	0	**90**	
1615 - 1630	0	54	10	1	0	0	0	1	0	0	0	0	0	**66**	
1630 - 1645	0	75	7	0	1	0	0	0	0	0	0	0	0	**83**	
1645 - 1700	0	67	8	1	1	0	0	0	0	0	0	0	0	**77**	**316**
1700 - 1715	1	85	15	2	1	0	0	0	0	0	0	0	0	**103**	
1715 - 1730	0	61	6	0	0	0	0	0	0	0	0	0	0	**67**	
1730 - 1745	0	46	5	1	0	0	0	0	0	0	0	0	0	**53**	
1745 - 1800	0	43	7	0	0	0	0	0	0	0	0	0	0	**50**	**273**
1800 - 1815	0	49	7	2	0	0	0	0	0	0	0	0	0	**58**	
1815 - 1830	0	43	3	0	0	0	0	0	0	0	0	0	0	**47**	
1830 - 1845	0	44	5	1	1	0	0	0	0	0	0	0	0	**51**	
1845 - 1900	1	43	5	0	0	0	0	0	0	0	0	0	0	**49**	**205**
1900 - 1915	1	30	5	1	0	0	0	0	0	0	0	0	0	**37**	
1915 - 1930	1	35	3	0	0	0	0	0	0	0	0	0	0	**39**	
1930 - 1945	0	32	5	1	0	0	0	0	0	0	0	0	0	**38**	
1945 - 2000	0	22	4	0	0	0	0	0	0	0	0	0	0	**26**	**141**
2000 - 2015	0	25	3	0	0	0	0	0	0	0	0	0	0	**29**	
2015 - 2030	0	23	2	0	0	0	0	0	0	0	0	0	0	**26**	
2030 - 2045	0	27	4	0	0	0	0	0	0	0	0	0	0	**31**	
2045 - 2100	0	20	1	0	0	0	0	0	0	0	0	0	0	**22**	**107**
2100 - 2115	0	23	2	0	0	0	0	0	0	0	0	0	0	**25**	
2115 - 2130	0	21	2	0	0	0	0	0	0	0	0	0	0	**23**	
2130 - 2145	0	18	2	0	0	0	0	0	0	0	0	0	0	**21**	
2145 - 2200	0	14	2	0	0	0	0	0	0	0	0	0	0	**16**	**85**
2200 - 2215	0	12	1	0	0	0	0	0	0	0	0	0	0	**13**	
2215 - 2230	0	15	2	0	0	0	0	0	0	0	0	0	0	**17**	
2230 - 2245	0	14	2	0	0	0	0	0	0	0	0	0	0	**16**	
2245 - 2300	0	14	2	0	0	0	0	0	0	0	0	0	0	**15**	**61**
2300 - 2315	0	13	1	0	0	0	0	0	0	0	0	0	0	**14**	
2315 - 2330	0	10	1	0	0	0	0	0	0	0	0	0	0	**11**	
2330 - 2345	0	10	1	0	0	0	0	0	0	0	0	0	0	**11**	
2345 - 0000	0	8	1	0	0	0	0	0	0	0	0	0	0	**9**	**45**

Session Total	6	3217	452	56	28	15	1	4	4	1	0	0	0	**3784**
Session Average	0.06	33.51	4.71	0.58	0.29	0.16	0.01	0.04	0.04	0.01	0.00	0.00	0.00	**39.41**
Session Percentage	0.15	85.01	11.95	1.48	0.73	0.41	0.04	0.10	0.11	0.04	0.00	0.00	0.00	

AM Peak Hour	0645 - 0745	0745 - 0845	0800 - 0900	0645 - 0745	0830 - 0930	0945 - 1045	-	0645 - 0745	0915 - 1015	-	-	-	-	**0745 - 0845**
AM Peak Volume	0	237	28	8	3	2	0	0	1	0	0	0	0	**272**

Noon Peak Hour	1200 - 1300	1230 - 1330	1115 - 1215	1245 - 1345	1000 - 1100	1445 - 1545	1315 - 1415	1330 - 1430	1000 - 1100	1230 - 1330	-	-	-	**1230 - 1330**
Noon Peak Volume	1	242	42	10	3	3	0	1	1	1	0	0	0	**293**

PM Peak Hour	1845 - 1945	1630 - 1730	1615 - 1715	1530 - 1630	1500 - 1600	1500 - 1600	-	1530 - 1630	1645 - 1745	1500 - 1600	-	-	-	**1630 - 1730**
PM Peak Volume	2	288	40	4	3	2	0	1	0	0	0	0	0	**330**

Bi-Directional Class Count || Volume Summary 15min

Columbia, SC

Marr Traffic DATA COLLECTION

www.marrtraffic.com

Site 50
I-126 On/Off-Ramp,
east of Greystone Blvd

Date
Tuesday, April 23, 2024

Lat/Long
34.011799°, -81.074145°

Weather
Fair
58°F

Click here for Detailed Weather

0000 - 2400 (Weekday 24h Session) (04-23-2024)

Volume Summary 15min

TIME	Volume Summary 15min EB	Volume Summary 15min WB	15min Total	60min Total
0000 - 0015	0	0	**0**	
0015 - 0030	0	0	**0**	
0030 - 0045	0	0	**0**	
0045 - 0100	0	0	**0**	**0**
0100 - 0115	0	0	**0**	
0115 - 0130	0	0	**0**	
0130 - 0145	0	0	**0**	
0145 - 0200	0	0	**0**	**0**
0200 - 0215	0	0	**0**	
0215 - 0230	0	0	**0**	
0230 - 0245	0	0	**0**	
0245 - 0300	0	0	**0**	**0**
0300 - 0315	0	0	**0**	
0315 - 0330	0	0	**0**	
0330 - 0345	0	0	**0**	
0345 - 0400	0	0	**0**	**0**
0400 - 0415	0	0	**0**	
0415 - 0430	0	0	**0**	
0430 - 0445	0	0	**0**	
0445 - 0500	0	0	**0**	**0**
0500 - 0515	0	0	**0**	
0515 - 0530	0	0	**0**	
0530 - 0545	0	0	**0**	
0545 - 0600	0	0	**0**	**0**
0600 - 0615	0	0	**0**	
0615 - 0630	0	0	**0**	
0630 - 0645	0	0	**0**	
0645 - 0700	0	0	**0**	**0**
0700 - 0715	0	0	**0**	
0715 - 0730	0	0	**0**	
0730 - 0745	0	0	**0**	
0745 - 0800	0	0	**0**	**0**
0800 - 0815	0	0	**0**	
0815 - 0830	0	0	**0**	
0830 - 0845	0	0	**0**	
0845 - 0900	0	0	**0**	**0**
0900 - 0915	0	0	**0**	
0915 - 0930	0	0	**0**	
0930 - 0945	0	0	**0**	
0945 - 1000	0	0	**0**	**0**
1000 - 1015	0	0	**0**	
1015 - 1030	0	0	**0**	
1030 - 1045	0	0	**0**	
1045 - 1100	0	0	**0**	**0**
1100 - 1115	0	0	**0**	
1115 - 1130	0	0	**0**	
1130 - 1145	0	0	**0**	
1145 - 1200	0	0	**0**	**0**

Time	Volume Summary 15min EB	Volume Summary 15min WB	15min Total	60min Total
1200 - 1215	0	0	**0**	
1215 - 1230	0	0	**0**	
1230 - 1245	0	0	**0**	
1245 - 1300	0	0	**0**	**0**
1300 - 1315	0	0	**0**	
1315 - 1330	0	0	**0**	
1330 - 1345	0	0	**0**	
1345 - 1400	0	0	**0**	**0**
1400 - 1415	0	0	**0**	
1415 - 1430	0	0	**0**	
1430 - 1445	0	0	**0**	
1445 - 1500	0	0	**0**	**0**
1500 - 1515	0	0	**0**	
1515 - 1530	0	0	**0**	
1530 - 1545	0	0	**0**	
1545 - 1600	0	0	**0**	**0**
1600 - 1615	0	0	**0**	
1615 - 1630	0	0	**0**	
1630 - 1645	0	0	**0**	
1645 - 1700	0	0	**0**	**0**
1700 - 1715	0	0	**0**	
1715 - 1730	0	0	**0**	
1730 - 1745	0	0	**0**	
1745 - 1800	0	0	**0**	**0**
1800 - 1815	0	0	**0**	
1815 - 1830	0	0	**0**	
1830 - 1845	0	0	**0**	
1845 - 1900	0	0	**0**	**0**
1900 - 1915	48	0	**48**	
1915 - 1930	54	0	**54**	
1930 - 1945	60	0	**60**	
1945 - 2000	43	0	**43**	**205**
2000 - 2015	46	0	**46**	
2015 - 2030	42	0	**42**	
2030 - 2045	38	0	**38**	
2045 - 2100	29	0	**29**	**155**
2100 - 2115	38	0	**38**	
2115 - 2130	41	0	**41**	
2130 - 2145	29	0	**29**	
2145 - 2200	24	0	**24**	**132**
2200 - 2215	15	0	**15**	
2215 - 2230	14	0	**14**	
2230 - 2245	23	0	**23**	
2245 - 2300	21	0	**21**	**73**
2300 - 2315	24	0	**24**	
2315 - 2330	15	0	**15**	
2330 - 2345	21	0	**21**	
2345 - 0000	11	0	**11**	**71**

Session Total	636	0	**636**
Session Average	6.63	0.00	**6.63**
Session Percentage	100.00	0.00	

Site 50

I-126 On/Off-Ramp,
east of Greystone Blvd

Date

Wednesday, April 24, 2024

Lat/Long

34.011799°, -81.074145°

Weather

Fair
66°F

Click here for Detailed Weather

0000 - 2400 (Weekday 24h Session) (04-24-2024)

Volume Summary 15min

TIME	Volume Summary 15min EB	WB	15min Total	60min Total
0000 - 0015	9	0	**9**	
0015 - 0030	6	0	**6**	
0030 - 0045	10	0	**10**	
0045 - 0100	8	0	**8**	**33**
0100 - 0115	4	0	**4**	
0115 - 0130	4	0	**4**	
0130 - 0145	3	0	**3**	
0145 - 0200	6	0	**6**	**17**
0200 - 0215	2	0	**2**	
0215 - 0230	5	0	**5**	
0230 - 0245	4	0	**4**	
0245 - 0300	5	0	**5**	**16**
0300 - 0315	9	0	**9**	
0315 - 0330	2	0	**2**	
0330 - 0345	9	0	**9**	
0345 - 0400	8	0	**8**	**28**
0400 - 0415	6	0	**6**	
0415 - 0430	12	0	**12**	
0430 - 0445	9	0	**9**	
0445 - 0500	10	0	**10**	**37**
0500 - 0515	12	0	**12**	
0515 - 0530	22	0	**22**	
0530 - 0545	22	0	**22**	
0545 - 0600	34	0	**34**	**90**
0600 - 0615	24	0	**24**	
0615 - 0630	30	0	**30**	
0630 - 0645	57	0	**57**	
0645 - 0700	62	0	**62**	**173**
0700 - 0715	71	0	**71**	
0715 - 0730	75	0	**75**	
0730 - 0745	92	0	**92**	
0745 - 0800	98	0	**98**	**336**
0800 - 0815	100	0	**100**	
0815 - 0830	96	0	**96**	
0830 - 0845	112	0	**112**	
0845 - 0900	106	0	**106**	**414**
0900 - 0915	77	0	**77**	
0915 - 0930	80	0	**80**	
0930 - 0945	74	0	**74**	
0945 - 1000	84	0	**84**	**315**
1000 - 1015	75	0	**75**	
1015 - 1030	69	0	**69**	
1030 - 1045	86	0	**86**	
1045 - 1100	98	0	**98**	**328**
1100 - 1115	83	0	**83**	
1115 - 1130	80	0	**80**	
1130 - 1145	88	0	**88**	
1145 - 1200	98	0	**98**	**349**

Time	Volume Summary 15min EB	WB	15min Total	60min Total
1200 - 1215	107	0	**107**	
1215 - 1230	97	0	**97**	
1230 - 1245	115	0	**115**	
1245 - 1300	92	0	**92**	**411**
1300 - 1315	119	0	**119**	
1315 - 1330	97	0	**97**	
1330 - 1345	99	0	**99**	
1345 - 1400	85	0	**85**	**400**
1400 - 1415	107	0	**107**	
1415 - 1430	109	0	**109**	
1430 - 1445	97	0	**97**	
1445 - 1500	97	0	**97**	**410**
1500 - 1515	103	0	**103**	
1515 - 1530	96	0	**96**	
1530 - 1545	90	0	**90**	
1545 - 1600	100	0	**100**	**389**
1600 - 1615	132	0	**132**	
1615 - 1630	91	0	**91**	
1630 - 1645	112	0	**112**	
1645 - 1700	117	0	**117**	**452**
1700 - 1715	147	0	**147**	
1715 - 1730	95	0	**95**	
1730 - 1745	82	0	**82**	
1745 - 1800	76	0	**76**	**400**
1800 - 1815	90	0	**90**	
1815 - 1830	73	0	**73**	
1830 - 1845	76	0	**76**	
1845 - 1900	67	0	**67**	**306**
1900 - 1915	63	0	**63**	
1915 - 1930	64	0	**64**	
1930 - 1945	54	0	**54**	
1945 - 2000	36	0	**36**	**217**
2000 - 2015	40	0	**40**	
2015 - 2030	35	0	**35**	
2030 - 2045	54	0	**54**	
2045 - 2100	36	0	**36**	**165**
2100 - 2115	36	0	**36**	
2115 - 2130	28	0	**28**	
2130 - 2145	33	0	**33**	
2145 - 2200	25	0	**25**	**122**
2200 - 2215	24	0	**24**	
2215 - 2230	37	0	**37**	
2230 - 2245	25	0	**25**	
2245 - 2300	25	0	**25**	**111**
2300 - 2315	19	0	**19**	
2315 - 2330	17	0	**17**	
2330 - 2345	12	0	**12**	
2345 - 0000	16	0	**16**	**64**

Session Total	5583	0	**5583**
Session Average	58.16	0.00	**58.16**
Session Percentage	100.00	0.00	

Site 50
I-126 On/Off-Ramp,
east of Greystone Blvd

Date
Thursday, April 25, 2024

Lat/Long
34.011799°, -81.074145°

Weather
Fair
67°F

Click here for Detailed Weather

0000 - 2400 (Weekday 24h Session) (04-25-2024)
Volume Summary 15min

TIME	Volume Summary 15min EB	WB	15min Total	60min Total
0000 - 0015	13	0	**13**	
0015 - 0030	9	0	**9**	
0030 - 0045	18	0	**18**	
0045 - 0100	16	0	**16**	**56**
0100 - 0115	5	0	**5**	
0115 - 0130	12	0	**12**	
0130 - 0145	7	0	**7**	
0145 - 0200	7	0	**7**	**31**
0200 - 0215	11	0	**11**	
0215 - 0230	7	0	**7**	
0230 - 0245	10	0	**10**	
0245 - 0300	6	0	**6**	**34**
0300 - 0315	5	0	**5**	
0315 - 0330	5	0	**5**	
0330 - 0345	3	0	**3**	
0345 - 0400	9	0	**9**	**22**
0400 - 0415	4	0	**4**	
0415 - 0430	7	0	**7**	
0430 - 0445	11	0	**11**	
0445 - 0500	15	0	**15**	**37**
0500 - 0515	12	0	**12**	
0515 - 0530	17	0	**17**	
0530 - 0545	22	0	**22**	
0545 - 0600	36	0	**36**	**87**
0600 - 0615	15	0	**15**	
0615 - 0630	35	0	**35**	
0630 - 0645	47	0	**47**	
0645 - 0700	57	0	**57**	**154**
0700 - 0715	60	0	**60**	
0715 - 0730	68	0	**68**	
0730 - 0745	98	0	**98**	
0745 - 0800	110	0	**110**	**336**
0800 - 0815	100	0	**100**	
0815 - 0830	99	0	**99**	
0830 - 0845	101	0	**101**	
0845 - 0900	92	0	**92**	**392**
0900 - 0915	72	0	**72**	
0915 - 0930	70	0	**70**	
0930 - 0945	85	0	**85**	
0945 - 1000	92	0	**92**	**319**
1000 - 1015	71	0	**71**	
1015 - 1030	78	0	**78**	
1030 - 1045	89	0	**89**	
1045 - 1100	89	0	**89**	**327**
1100 - 1115	87	0	**87**	
1115 - 1130	98	0	**98**	
1130 - 1145	122	0	**122**	
1145 - 1200	111	0	**111**	**418**

Time	Volume Summary 15min EB	WB	15min Total	60min Total
1200 - 1215	109	0	**109**	
1215 - 1230	101	0	**101**	
1230 - 1245	113	0	**113**	
1245 - 1300	130	0	**130**	**453**
1300 - 1315	107	0	**107**	
1315 - 1330	106	0	**106**	
1330 - 1345	94	0	**94**	
1345 - 1400	102	0	**102**	**409**
1400 - 1415	112	0	**112**	
1415 - 1430	111	0	**111**	
1430 - 1445	118	0	**118**	
1445 - 1500	110	0	**110**	**451**
1500 - 1515	105	0	**105**	
1515 - 1530	96	0	**96**	
1530 - 1545	97	0	**97**	
1545 - 1600	85	0	**85**	**383**
1600 - 1615	139	0	**139**	
1615 - 1630	106	0	**106**	
1630 - 1645	136	0	**136**	
1645 - 1700	114	0	**114**	**495**
1700 - 1715	163	0	**163**	
1715 - 1730	106	0	**106**	
1730 - 1745	77	0	**77**	
1745 - 1800	74	0	**74**	**420**
1800 - 1815	84	0	**84**	
1815 - 1830	68	0	**68**	
1830 - 1845	76	0	**76**	
1845 - 1900	80	0	**80**	**308**
1900 - 1915	0	0	**0**	
1915 - 1930	0	0	**0**	
1930 - 1945	0	0	**0**	
1945 - 2000	0	0	**0**	**0**
2000 - 2015	0	0	**0**	
2015 - 2030	0	0	**0**	
2030 - 2045	0	0	**0**	
2045 - 2100	0	0	**0**	**0**
2100 - 2115	0	0	**0**	
2115 - 2130	0	0	**0**	
2130 - 2145	0	0	**0**	
2145 - 2200	0	0	**0**	**0**
2200 - 2215	0	0	**0**	
2215 - 2230	0	0	**0**	
2230 - 2245	0	0	**0**	
2245 - 2300	0	0	**0**	**0**
2300 - 2315	0	0	**0**	
2315 - 2330	0	0	**0**	
2330 - 2345	0	0	**0**	
2345 - 0000	0	0	**0**	**0**

Session Total	5132	0	**5132**
Session Average	53.46	0.00	**53.46**
Session Percentage	100.00	0.00	

Bi-Directional Class Count || NB EB 60min

Columbia, SC

Marr Traffic DATA COLLECTION

www.marrtraffic.com

Site 50
I-126 On/Off-Ramp,
east of Greystone Blvd

Date
Tuesday, April 23, 2024

Lat/Long
34.011799°, -81.074145°

Weather
Fair
58°F

Click here for Detailed Weather

0000 - 2400 (Weekday 24h Session) (04-23-2024)
NB EB 60min

	Eastbound (Movement 50.1)													
TIME	1	2	3	4	5	6	7	8	9	10	11	12	13	**Total**
0000 - 0100	0	0	0	0	0	0	0	0	0	0	0	0	0	**0**
0100 - 0200	0	0	0	0	0	0	0	0	0	0	0	0	0	**0**
0200 - 0300	0	0	0	0	0	0	0	0	0	0	0	0	0	**0**
0300 - 0400	0	0	0	0	0	0	0	0	0	0	0	0	0	**0**
0400 - 0500	0	0	0	0	0	0	0	0	0	0	0	0	0	**0**
0500 - 0600	0	0	0	0	0	0	0	0	0	0	0	0	0	**0**
0600 - 0700	0	0	0	0	0	0	0	0	0	0	0	0	0	**0**
0700 - 0800	0	0	0	0	0	0	0	0	0	0	0	0	0	**0**
0800 - 0900	0	0	0	0	0	0	0	0	0	0	0	0	0	**0**
0900 - 1000	0	0	0	0	0	0	0	0	0	0	0	0	0	**0**
1000 - 1100	0	0	0	0	0	0	0	0	0	0	0	0	0	**0**
1100 - 1200	0	0	0	0	0	0	0	0	0	0	0	0	0	**0**
1200 - 1300	0	0	0	0	0	0	0	0	0	0	0	0	0	**0**
1300 - 1400	0	0	0	0	0	0	0	0	0	0	0	0	0	**0**
1400 - 1500	0	0	0	0	0	0	0	0	0	0	0	0	0	**0**
1500 - 1600	0	0	0	0	0	0	0	0	0	0	0	0	0	**0**
1600 - 1700	0	0	0	0	0	0	0	0	0	0	0	0	0	**0**
1700 - 1800	0	0	0	0	0	0	0	0	0	0	0	0	0	**0**
1800 - 1900	0	0	0	0	0	0	0	0	0	0	0	0	0	**0**
1900 - 2000	4	181	18	2	0	0	0	0	0	0	0	0	0	**205**
2000 - 2100	0	143	11	1	0	0	0	0	0	0	0	0	0	**155**
2100 - 2200	0	120	10	1	1	0	0	0	0	0	0	0	0	**132**
2200 - 2300	0	66	7	0	0	0	0	0	0	0	0	0	0	**73**
2300 - 2400	0	65	5	0	0	0	0	0	1	0	0	0	0	**71**
Session Total	4	575	51	4	1	0	0	0	1	0	0	0	0	**636**
Session Average	0.17	23.96	2.13	0.17	0.04	0.00	0.00	0.00	0.04	0.00	0.00	0.00	0.00	**26.50**
Session Percentage	0.63	90.41	8.02	0.63	0.16	0.00	0.00	0.00	0.16	0.00	0.00	0.00	0.00	
AM Peak Hour	-	-	-	-	-	-	-	-	-	-	-	-	-	-
AM Peak Volume	0	0	0	0	0	0	0	0	0	0	0	0	0	**0**
Noon Peak Hour	-	-	-	-	-	-	-	-	-	-	-	-	-	-
Noon Peak Volume	0	0	0	0	0	0	0	0	0	0	0	0	0	**0**
PM Peak Hour	1900 - 2000	1900 - 2000	1900 - 2000	1900 - 2000	-	-	-	-	-	-	-	-	-	**1900 - 2000**
PM Peak Volume	4	181	18	2	0	0	0	0	0	0	0	0	0	**205**

Site 50
I-126 On/Off-Ramp,
east of Greystone Blvd

Date
Wednesday, April 24, 2024

Lat/Long
34.011799°, -81.074145°

Weather
Fair
66°F

Click here for Detailed Weather

0000 - 2400 (Weekday 24h Session) (04-24-2024)
NB EB 60min

	Eastbound (Movement 50.1)													
TIME	1	2	3	4	5	6	7	8	9	10	11	12	13	**Total**
0000 - 0100	0	30	2	0	0	1	0	0	0	0	0	0	0	**33**
0100 - 0200	0	15	1	0	0	1	0	0	0	0	0	0	0	**17**
0200 - 0300	0	12	3	0	0	0	0	0	1	0	0	0	0	**16**
0300 - 0400	0	22	5	0	0	0	0	1	0	0	0	0	0	**28**
0400 - 0500	0	33	4	0	0	0	0	0	0	0	0	0	0	**37**
0500 - 0600	0	79	9	2	0	0	0	0	0	0	0	0	0	**90**
0600 - 0700	0	146	23	3	1	0	0	0	0	0	0	0	0	**173**
0700 - 0800	1	279	42	12	2	0	0	0	0	0	0	0	0	**336**
0800 - 0900	1	355	43	7	5	3	0	0	0	0	0	0	0	**414**
0900 - 1000	0	268	35	5	4	1	0	0	2	0	0	0	0	**315**
1000 - 1100	1	283	39	1	1	1	0	0	2	0	0	0	0	**328**
1100 - 1200	0	292	48	5	3	1	0	0	0	0	0	0	0	**349**
1200 - 1300	2	344	52	7	3	1	0	1	1	0	0	0	0	**411**
1300 - 1400	0	332	56	8	1	0	0	0	0	3	0	0	0	**400**
1400 - 1500	0	346	57	6	0	1	0	0	0	0	0	0	0	**410**
1500 - 1600	0	325	52	7	3	2	0	0	0	0	0	0	0	**389**
1600 - 1700	0	384	56	3	5	2	0	2	0	0	0	0	0	**452**
1700 - 1800	2	338	51	5	4	0	0	0	0	0	0	0	0	**400**
1800 - 1900	1	264	31	6	3	1	0	0	0	0	0	0	0	**306**
1900 - 2000	2	178	34	2	1	0	0	0	0	0	0	0	0	**217**
2000 - 2100	0	143	21	1	0	0	0	0	0	0	0	0	0	**165**
2100 - 2200	0	109	12	1	0	0	0	0	0	0	0	0	0	**122**
2200 - 2300	0	98	13	0	0	0	0	0	0	0	0	0	0	**111**
2300 - 2400	0	58	6	0	0	0	0	0	0	0	0	0	0	**64**

Session Total	10	4733	695	81	36	15	0	4	6	3	0	0	0	**5583**
Session Average	0.42	197.21	28.96	3.38	1.50	0.63	0.00	0.17	0.25	0.13	0.00	0.00	0.00	**232.63**
Session Percentage	0.18	84.78	12.45	1.45	0.64	0.27	0.00	0.07	0.11	0.05	0.00	0.00	0.00	

AM Peak Hour	0700 - 0800	0800 - 0900	0800 - 0900	0700 - 0800	0800 - 0900	0800 - 0900	-	-	0900 - 1000	-	-	-	-	**0800 - 0900**
AM Peak Volume	1	355	43	12	5	3	0	0	2	0	0	0	0	**414**

Noon Peak Hour	1200 - 1300	1400 - 1500	1400 - 1500	1300 - 1400	1100 - 1200	1000 - 1100	-	1200 - 1300	1000 - 1100	1300 - 1400	-	-	-	**1200 - 1300**
Noon Peak Volume	2	346	57	8	3	1	0	1	2	3	0	0	0	**411**

PM Peak Hour	1700 - 1800	1600 - 1700	1600 - 1700	1500 - 1600	1600 - 1700	1500 - 1600	-	1600 - 1700	-	-	-	-	-	**1600 - 1700**
PM Peak Volume	2	384	56	7	5	2	0	2	0	0	0	0	0	**452**

Site 50
I-126 On/Off-Ramp,
east of Greystone Blvd

Date
Thursday, April 25, 2024

Lat/Long
34.011799°, -81.074145°

Weather
Fair
67°F

Click here for Detailed Weather

0000 - 2400 (Weekday 24h Session) (04-25-2024)
NB EB 60min

	Eastbound (Movement 50.1)													
TIME	1	2	3	4	5	6	7	8	9	10	11	12	13	**Total**
0000 - 0100	0	48	5	0	1	0	2	0	0	0	0	0	0	**56**
0100 - 0200	0	28	3	0	0	0	0	0	0	0	0	0	0	**31**
0200 - 0300	0	29	5	0	0	0	0	0	0	0	0	0	0	**34**
0300 - 0400	0	19	1	0	1	0	0	1	0	0	0	0	0	**22**
0400 - 0500	0	31	4	0	1	0	1	0	0	0	0	0	0	**37**
0500 - 0600	0	73	11	1	2	0	0	0	0	0	0	0	0	**87**
0600 - 0700	0	133	16	3	2	0	0	0	0	0	0	0	0	**154**
0700 - 0800	0	286	37	11	0	0	0	1	1	0	0	0	0	**336**
0800 - 0900	0	332	42	12	4	0	0	0	2	0	0	0	0	**392**
0900 - 1000	0	269	34	10	3	3	0	0	0	0	0	0	0	**319**
1000 - 1100	0	262	48	3	8	6	0	0	0	0	0	0	0	**327**
1100 - 1200	0	340	68	2	2	5	0	0	1	0	0	0	0	**418**
1200 - 1300	0	371	64	11	2	5	0	0	0	0	0	0	0	**453**
1300 - 1400	0	350	44	7	2	4	0	2	0	0	0	0	0	**409**
1400 - 1500	0	374	58	7	6	4	1	1	0	0	0	0	0	**451**
1500 - 1600	0	321	49	3	5	4	0	0	0	1	0	0	0	**383**
1600 - 1700	1	440	45	5	3	0	0	1	0	0	0	0	0	**495**
1700 - 1800	1	366	46	5	0	0	0	1	1	0	0	0	0	**420**
1800 - 1900	1	270	30	3	4	0	0	0	0	0	0	0	0	**308**
1900 - 2000	0	0	0	0	0	0	0	0	0	0	0	0	0	**0**
2000 - 2100	0	0	0	0	0	0	0	0	0	0	0	0	0	**0**
2100 - 2200	0	0	0	0	0	0	0	0	0	0	0	0	0	**0**
2200 - 2300	0	0	0	0	0	0	0	0	0	0	0	0	0	**0**
2300 - 2400	0	0	0	0	0	0	0	0	0	0	0	0	0	**0**

Session Total	3	4342	610	83	46	31	4	7	5	1	0	0	0	**5132**
Session Average	0.13	180.92	25.42	3.46	1.92	1.29	0.17	0.29	0.21	0.04	0.00	0.00	0.00	**213.83**
Session Percentage	0.06	84.61	11.89	1.62	0.90	0.60	0.08	0.14	0.10	0.02	0.00	0.00	0.00	

AM Peak Hour	-	0800 - 0900	0800 - 0900	0800 - 0900	0800 - 0900	0900 - 1000	-	0700 - 0800	0800 - 0900	-	-	-	-	**0800 - 0900**
AM Peak Hour Volume	0	332	42	12	4	3	0	1	2	0	0	0	0	**392**

Noon Peak Hour	-	1400 - 1500	1100 - 1200	1200 - 1300	1000 - 1100	1000 - 1100	1400 - 1500	1300 - 1400	1100 - 1200	-	-	-	-	**1200 - 1300**
Noon Peak Hour Volume	0	374	68	11	8	6	1	2	1	0	0	0	0	**453**

PM Peak Hour	1600 - 1700	1600 - 1700	1500 - 1600	1600 - 1700	1500 - 1600	1500 - 1600	-	1600 - 1700	1700 - 1800	1500 - 1600	-	-	-	**1600 - 1700**
PM Peak Hour Volume	1	440	49	5	5	4	0	1	1	1	0	0	0	**495**

Bi-Directional Class Count || Volume Summary 60min

Columbia, SC

Marr Traffic DATA COLLECTION

www.marrtraffic.com

Site 50

I-126 On/Off-Ramp,
east of Greystone Blvd

Date

Tuesday, April 23, 2024

Lat/Long

34.011799°, -81.074145°

Weather

Fair
58°F

Click here for Detailed Weather

0000 - 2400 (Weekday 24h Session) (04-23-2024)

Volume Summary 60min

	Volume Summary 60min		
TIME	EB	WB	**Total**
0000 - 0100	0	0	**0**
0100 - 0200	0	0	**0**
0200 - 0300	0	0	**0**
0300 - 0400	0	0	**0**
0400 - 0500	0	0	**0**
0500 - 0600	0	0	**0**
0600 - 0700	0	0	**0**
0700 - 0800	0	0	**0**
0800 - 0900	0	0	**0**
0900 - 1000	0	0	**0**
1000 - 1100	0	0	**0**
1100 - 1200	0	0	**0**

	Volume Summary 60min		
Time	EB	WB	**Total**
1200 - 1300	0	0	**0**
1300 - 1400	0	0	**0**
1400 - 1500	0	0	**0**
1500 - 1600	0	0	**0**
1600 - 1700	0	0	**0**
1700 - 1800	0	0	**0**
1800 - 1900	0	0	**0**
1900 - 2000	205	0	**205**
2000 - 2100	155	0	**155**
2100 - 2200	132	0	**132**
2200 - 2300	73	0	**73**
2300 - 2400	71	0	**71**

Session Total	636	0	**636**
Session Average	26.50	0.00	**26.50**
Session Percentage	100.00	0.00	

Site 50

I-126 On/Off-Ramp,
east of Greystone Blvd

Date

Wednesday, April 24, 2024

Lat/Long

34.011799°, -81.074145°

Weather

Fair
66°F

Click here for Detailed Weather

0000 - 2400 (Weekday 24h Session) (04-24-2024)

Volume Summary 60min

	Volume Summary 60min		
TIME	EB	WB	**Total**
0000 - 0100	33	0	**33**
0100 - 0200	17	0	**17**
0200 - 0300	16	0	**16**
0300 - 0400	28	0	**28**
0400 - 0500	37	0	**37**
0500 - 0600	90	0	**90**
0600 - 0700	173	0	**173**
0700 - 0800	336	0	**336**
0800 - 0900	414	0	**414**
0900 - 1000	315	0	**315**
1000 - 1100	328	0	**328**
1100 - 1200	349	0	**349**

Session Total	5583	0	**5583**
Session Average	232.63	0.00	**232.63**
Session Percentage	100.00	0.00	

	Volume Summary 60min		
Time	EB	WB	**Total**
1200 - 1300	411	0	**411**
1300 - 1400	400	0	**400**
1400 - 1500	410	0	**410**
1500 - 1600	389	0	**389**
1600 - 1700	452	0	**452**
1700 - 1800	400	0	**400**
1800 - 1900	306	0	**306**
1900 - 2000	217	0	**217**
2000 - 2100	165	0	**165**
2100 - 2200	122	0	**122**
2200 - 2300	111	0	**111**
2300 - 2400	64	0	**64**

Site 50

I-126 On/Off-Ramp,
east of Greystone Blvd

Date

Thursday, April 25, 2024

Lat/Long

34.011799°, -81.074145°

Weather

Fair
67°F

Click here for Detailed Weather

0000 - 2400 (Weekday 24h Session) (04-25-2024)

Volume Summary 60min

	Volume Summary 60min		
TIME	EB	WB	**Total**
0000 - 0100	56	0	**56**
0100 - 0200	31	0	**31**
0200 - 0300	34	0	**34**
0300 - 0400	22	0	**22**
0400 - 0500	37	0	**37**
0500 - 0600	87	0	**87**
0600 - 0700	154	0	**154**
0700 - 0800	336	0	**336**
0800 - 0900	392	0	**392**
0900 - 1000	319	0	**319**
1000 - 1100	327	0	**327**
1100 - 1200	418	0	**418**

	Volume Summary 60min		
Time	EB	WB	**Total**
1200 - 1300	453	0	**453**
1300 - 1400	409	0	**409**
1400 - 1500	451	0	**451**
1500 - 1600	383	0	**383**
1600 - 1700	495	0	**495**
1700 - 1800	420	0	**420**
1800 - 1900	308	0	**308**
1900 - 2000	0	0	**0**
2000 - 2100	0	0	**0**
2100 - 2200	0	0	**0**
2200 - 2300	0	0	**0**
2300 - 2400	0	0	**0**

Session Total	5132	0	**5132**
Session Average	213.83	0.00	**213.83**
Session Percentage	100.00	0.00	

Bi-Directional Class Count || Graphical Analysis NB EB

Columbia, SC

Marr Traffic DATA COLLECTION

www.marrtraffic.com

Site 50

I-126 On/Off-Ramp,
east of Greystone Blvd

Lat/Long

34.011799°, -81.074145°

0000 - 2400 (Weekday 24h Session)

Graphical Analysis NB EB

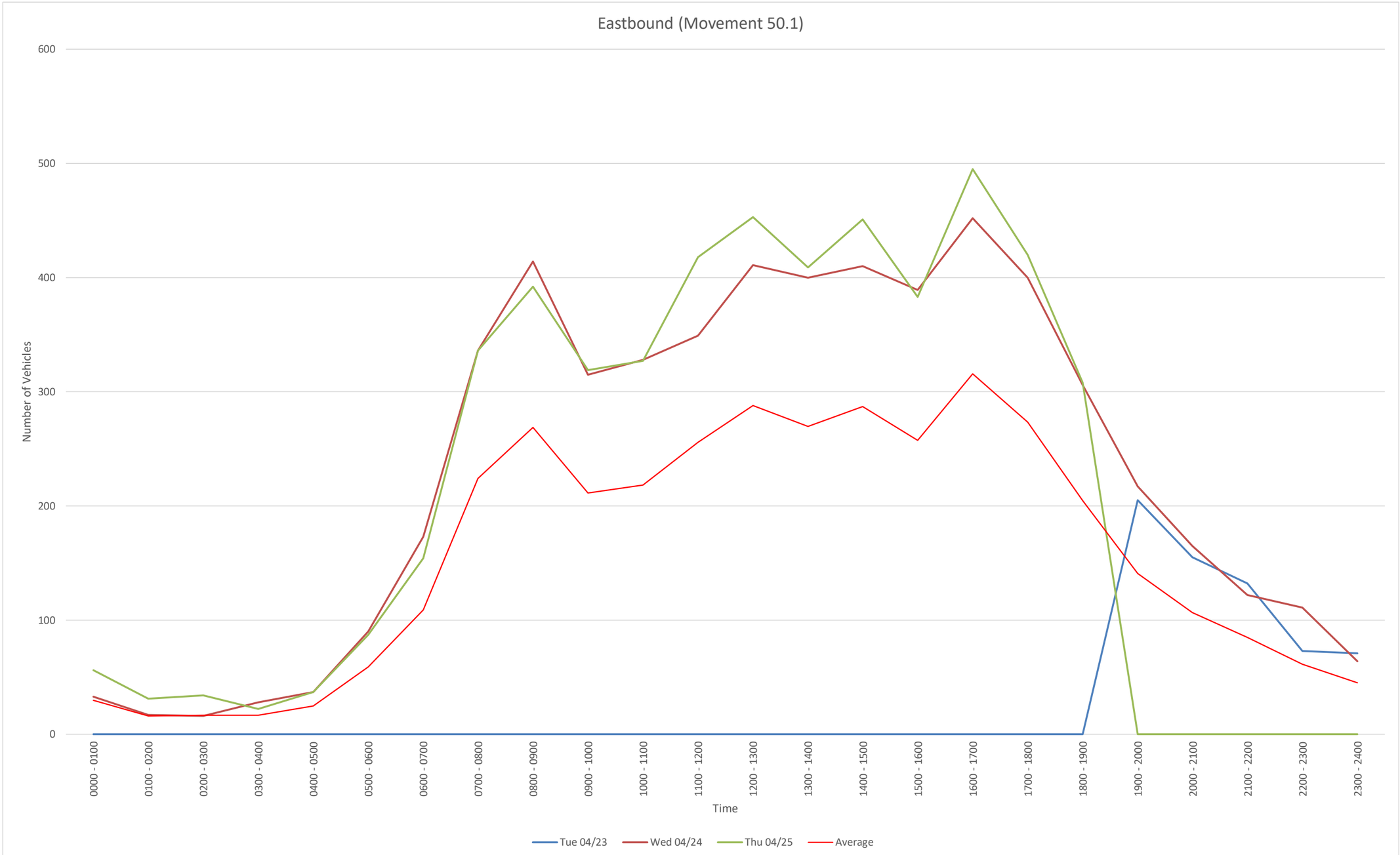

Time	Tue 04/23	Wed 04/24	Thu 04/25				
0000 - 0100	0	33	56				
0100 - 0200	0	17	31				
0200 - 0300	0	16	34				
0300 - 0400	0	28	22				
0400 - 0500	0	37	37				
0500 - 0600	0	90	87				
0600 - 0700	0	173	154				
0700 - 0800	0	336	336				
0800 - 0900	0	414	392				
0900 - 1000	0	315	319				
1000 - 1100	0	328	327				
1100 - 1200	0	349	418				
1200 - 1300	0	411	453				
1300 - 1400	0	400	409				
1400 - 1500	0	410	451				
1500 - 1600	0	389	383				
1600 - 1700	0	452	495				
1700 - 1800	0	400	420				
1800 - 1900	0	306	308				
1900 - 2000	205	217	0				
2000 - 2100	155	165	0				
2100 - 2200	132	122	0				
2200 - 2300	73	111	0				
2300 - 2400	71	64	0				
Daily Total	636	5583	5132				

EB
File Name:
Start Date: 4/23/2024
Start Time: 0
Site Code: 50
Station ID: 1
Location 1: I-126 On/Off-Ramp, east of Greystone Blvd
Location 2:

Date	Time	1	2	3	4	5	6	7	8	9	10	11	12	13
4/23/2024	12:00 AM	0	0	0	0	0	0	0	0	0	0	0	0	0
4/23/2024	12:15 AM	0	0	0	0	0	0	0	0	0	0	0	0	0
4/23/2024	12:30 AM	0	0	0	0	0	0	0	0	0	0	0	0	0
4/23/2024	12:45 AM	0	0	0	0	0	0	0	0	0	0	0	0	0
4/23/2024	1:00 AM	0	0	0	0	0	0	0	0	0	0	0	0	0
4/23/2024	1:15 AM	0	0	0	0	0	0	0	0	0	0	0	0	0
4/23/2024	1:30 AM	0	0	0	0	0	0	0	0	0	0	0	0	0
4/23/2024	1:45 AM	0	0	0	0	0	0	0	0	0	0	0	0	0
4/23/2024	2:00 AM	0	0	0	0	0	0	0	0	0	0	0	0	0
4/23/2024	2:15 AM	0	0	0	0	0	0	0	0	0	0	0	0	0
4/23/2024	2:30 AM	0	0	0	0	0	0	0	0	0	0	0	0	0
4/23/2024	2:45 AM	0	0	0	0	0	0	0	0	0	0	0	0	0
4/23/2024	3:00 AM	0	0	0	0	0	0	0	0	0	0	0	0	0
4/23/2024	3:15 AM	0	0	0	0	0	0	0	0	0	0	0	0	0
4/23/2024	3:30 AM	0	0	0	0	0	0	0	0	0	0	0	0	0
4/23/2024	3:45 AM	0	0	0	0	0	0	0	0	0	0	0	0	0
4/23/2024	4:00 AM	0	0	0	0	0	0	0	0	0	0	0	0	0
4/23/2024	4:15 AM	0	0	0	0	0	0	0	0	0	0	0	0	0
4/23/2024	4:30 AM	0	0	0	0	0	0	0	0	0	0	0	0	0
4/23/2024	4:45 AM	0	0	0	0	0	0	0	0	0	0	0	0	0
4/23/2024	5:00 AM	0	0	0	0	0	0	0	0	0	0	0	0	0
4/23/2024	5:15 AM	0	0	0	0	0	0	0	0	0	0	0	0	0
4/23/2024	5:30 AM	0	0	0	0	0	0	0	0	0	0	0	0	0
4/23/2024	5:45 AM	0	0	0	0	0	0	0	0	0	0	0	0	0
4/23/2024	6:00 AM	0	0	0	0	0	0	0	0	0	0	0	0	0
4/23/2024	6:15 AM	0	0	0	0	0	0	0	0	0	0	0	0	0
4/23/2024	6:30 AM	0	0	0	0	0	0	0	0	0	0	0	0	0
4/23/2024	6:45 AM	0	0	0	0	0	0	0	0	0	0	0	0	0
4/23/2024	7:00 AM	0	0	0	0	0	0	0	0	0	0	0	0	0
4/23/2024	7:15 AM	0	0	0	0	0	0	0	0	0	0	0	0	0
4/23/2024	7:30 AM	0	0	0	0	0	0	0	0	0	0	0	0	0
4/23/2024	7:45 AM	0	0	0	0	0	0	0	0	0	0	0	0	0
4/23/2024	8:00 AM	0	0	0	0	0	0	0	0	0	0	0	0	0
4/23/2024	8:15 AM	0	0	0	0	0	0	0	0	0	0	0	0	0
4/23/2024	8:30 AM	0	0	0	0	0	0	0	0	0	0	0	0	0
4/23/2024	8:45 AM	0	0	0	0	0	0	0	0	0	0	0	0	0
4/23/2024	9:00 AM	0	0	0	0	0	0	0	0	0	0	0	0	0
4/23/2024	9:15 AM	0	0	0	0	0	0	0	0	0	0	0	0	0
4/23/2024	9:30 AM	0	0	0	0	0	0	0	0	0	0	0	0	0
4/23/2024	9:45 AM	0	0	0	0	0	0	0	0	0	0	0	0	0
4/23/2024	10:00 AM	0	0	0	0	0	0	0	0	0	0	0	0	0
4/23/2024	10:15 AM	0	0	0	0	0	0	0	0	0	0	0	0	0
4/23/2024	10:30 AM	0	0	0	0	0	0	0	0	0	0	0	0	0
4/23/2024	10:45 AM	0	0	0	0	0	0	0	0	0	0	0	0	0
4/23/2024	11:00 AM	0	0	0	0	0	0	0	0	0	0	0	0	0
4/23/2024	11:15 AM	0	0	0	0	0	0	0	0	0	0	0	0	0
4/23/2024	11:30 AM	0	0	0	0	0	0	0	0	0	0	0	0	0
4/23/2024	11:45 AM	0	0	0	0	0	0	0	0	0	0	0	0	0
4/23/2024	12:00 PM	0	0	0	0	0	0	0	0	0	0	0	0	0
4/23/2024	12:15 PM	0	0	0	0	0	0	0	0	0	0	0	0	0
4/23/2024	12:30 PM	0	0	0	0	0	0	0	0	0	0	0	0	0
4/23/2024	12:45 PM	0	0	0	0	0	0	0	0	0	0	0	0	0
4/23/2024	1:00 PM	0	0	0	0	0	0	0	0	0	0	0	0	0
4/23/2024	1:15 PM	0	0	0	0	0	0	0	0	0	0	0	0	0
4/23/2024	1:30 PM	0	0	0	0	0	0	0	0	0	0	0	0	0
4/23/2024	1:45 PM	0	0	0	0	0	0	0	0	0	0	0	0	0
4/23/2024	2:00 PM	0	0	0	0	0	0	0	0	0	0	0	0	0
4/23/2024	2:15 PM	0	0	0	0	0	0	0	0	0	0	0	0	0
4/23/2024	2:30 PM	0	0	0	0	0	0	0	0	0	0	0	0	0
4/23/2024	2:45 PM	0	0	0	0	0	0	0	0	0	0	0	0	0
4/23/2024	3:00 PM	0	0	0	0	0	0	0	0	0	0	0	0	0
4/23/2024	3:15 PM	0	0	0	0	0	0	0	0	0	0	0	0	0
4/23/2024	3:30 PM	0	0	0	0	0	0	0	0	0	0	0	0	0
4/23/2024	3:45 PM	0	0	0	0	0	0	0	0	0	0	0	0	0
4/23/2024	4:00 PM	0	0	0	0	0	0	0	0	0	0	0	0	0
4/23/2024	4:15 PM	0	0	0	0	0	0	0	0	0	0	0	0	0
4/23/2024	4:30 PM	0	0	0	0	0	0	0	0	0	0	0	0	0
4/23/2024	4:45 PM	0	0	0	0	0	0	0	0	0	0	0	0	0
4/23/2024	5:00 PM	0	0	0	0	0	0	0	0	0	0	0	0	0
4/23/2024	5:15 PM	0	0	0	0	0	0	0	0	0	0	0	0	0
4/23/2024	5:30 PM	0	0	0	0	0	0	0	0	0	0	0	0	0
4/23/2024	5:45 PM	0	0	0	0	0	0	0	0	0	0	0	0	0
4/23/2024	6:00 PM	0	0	0	0	0	0	0	0	0	0	0	0	0
4/23/2024	6:15 PM	0	0	0	0	0	0	0	0	0	0	0	0	0
4/23/2024	6:30 PM	0	0	0	0	0	0	0	0	0	0	0	0	0
4/23/2024	6:45 PM	0	0	0	0	0	0	0	0	0	0	0	0	0
4/23/2024	7:00 PM	1	42	4	1	0	0	0	0	0	0	0	0	0
4/23/2024	7:15 PM	1	48	5	0	0	0	0	0	0	0	0	0	0
4/23/2024	7:30 PM	1	53	5	1	0	0	0	0	0	0	0	0	0
4/23/2024	7:45 PM	1	38	4	0	0	0	0	0	0	0	0	0	0
4/23/2024	8:00 PM	0	43	3	0	0	0	0	0	0	0	0	0	0
4/23/2024	8:15 PM	0	40	2	0	0	0	0	0	0	0	0	0	0
4/23/2024	8:30 PM	0	33	4	1	0	0	0	0	0	0	0	0	0
4/23/2024	8:45 PM	0	27	2	0	0	0	0	0	0	0	0	0	0
4/23/2024	9:00 PM	0	36	2	0	0	0	0	0	0	0	0	0	0
4/23/2024	9:15 PM	0	37	3	0	1	0	0	0	0	0	0	0	0
4/23/2024	9:30 PM	0	25	3	1	0	0	0	0	0	0	0	0	0
4/23/2024	9:45 PM	0	22	2	0	0	0	0	0	0	0	0	0	0
4/23/2024	10:00 PM	0	14	1	0	0	0	0	0	0	0	0	0	0
4/23/2024	10:15 PM	0	13	1	0	0	0	0	0	0	0	0	0	0
4/23/2024	10:30 PM	0	20	3	0	0	0	0	0	0	0	0	0	0
4/23/2024	10:45 PM	0	19	2	0	0	0	0	0	0	0	0	0	0
4/23/2024	11:00 PM	0	23	1	0	0	0	0	0	0	0	0	0	0
4/23/2024	11:15 PM	0	14	1	0	0	0	0	0	0	0	0	0	0
4/23/2024	11:30 PM	0	18	2	0	0	0	0	0	1	0	0	0	0
4/23/2024	11:45 PM	0	10	1	0	0	0	0	0	0	0	0	0	0

4/24/2024	12:00 AM	0	8	1	0	0	0	0	0	0	0	0	0
4/24/2024	12:15 AM	0	5	0	0	0	1	0	0	0	0	0	0
4/24/2024	12:30 AM	0	9	1	0	0	0	0	0	0	0	0	0
4/24/2024	12:45 AM	0	8	0	0	0	0	0	0	0	0	0	0
4/24/2024	1:00 AM	0	4	0	0	0	0	0	0	0	0	0	0
4/24/2024	1:15 AM	0	4	0	0	0	0	0	0	0	0	0	0
4/24/2024	1:30 AM	0	3	0	0	0	0	0	0	0	0	0	0
4/24/2024	1:45 AM	0	4	1	0	0	1	0	0	0	0	0	0
4/24/2024	2:00 AM	0	2	0	0	0	0	0	0	0	0	0	0
4/24/2024	2:15 AM	0	4	1	0	0	0	0	0	0	0	0	0
4/24/2024	2:30 AM	0	2	2	0	0	0	0	0	0	0	0	0
4/24/2024	2:45 AM	0	4	0	0	0	0	0	0	1	0	0	0
4/24/2024	3:00 AM	0	5	3	0	0	0	0	1	0	0	0	0
4/24/2024	3:15 AM	0	2	0	0	0	0	0	0	0	0	0	0
4/24/2024	3:30 AM	0	8	1	0	0	0	0	0	0	0	0	0
4/24/2024	3:45 AM	0	7	1	0	0	0	0	0	0	0	0	0
4/24/2024	4:00 AM	0	6	0	0	0	0	0	0	0	0	0	0
4/24/2024	4:15 AM	0	10	2	0	0	0	0	0	0	0	0	0
4/24/2024	4:30 AM	0	8	1	0	0	0	0	0	0	0	0	0
4/24/2024	4:45 AM	0	9	1	0	0	0	0	0	0	0	0	0
4/24/2024	5:00 AM	0	11	1	0	0	0	0	0	0	0	0	0
4/24/2024	5:15 AM	0	19	3	0	0	0	0	0	0	0	0	0
4/24/2024	5:30 AM	0	19	2	1	0	0	0	0	0	0	0	0
4/24/2024	5:45 AM	0	30	3	1	0	0	0	0	0	0	0	0
4/24/2024	6:00 AM	0	20	3	1	0	0	0	0	0	0	0	0
4/24/2024	6:15 AM	0	25	5	0	0	0	0	0	0	0	0	0
4/24/2024	6:30 AM	0	46	10	0	1	0	0	0	0	0	0	0
4/24/2024	6:45 AM	0	55	5	2	0	0	0	0	0	0	0	0
4/24/2024	7:00 AM	0	57	10	2	2	0	0	0	0	0	0	0
4/24/2024	7:15 AM	0	56	13	6	0	0	0	0	0	0	0	0
4/24/2024	7:30 AM	1	80	9	2	0	0	0	0	0	0	0	0
4/24/2024	7:45 AM	0	86	10	2	0	0	0	0	0	0	0	0
4/24/2024	8:00 AM	0	86	11	1	1	1	0	0	0	0	0	0
4/24/2024	8:15 AM	0	79	13	3	0	1	0	0	0	0	0	0
4/24/2024	8:30 AM	1	102	5	2	2	0	0	0	0	0	0	0
4/24/2024	8:45 AM	0	88	14	1	2	1	0	0	0	0	0	0
4/24/2024	9:00 AM	0	66	9	0	2	0	0	0	0	0	0	0
4/24/2024	9:15 AM	0	68	8	3	0	0	0	0	1	0	0	0
4/24/2024	9:30 AM	0	60	12	1	1	0	0	0	0	0	0	0
4/24/2024	9:45 AM	0	74	6	1	1	1	0	0	1	0	0	0
4/24/2024	10:00 AM	0	62	11	0	1	0	0	0	1	0	0	0
4/24/2024	10:15 AM	0	63	5	0	0	0	0	0	1	0	0	0
4/24/2024	10:30 AM	1	74	10	1	0	0	0	0	0	0	0	0
4/24/2024	10:45 AM	0	84	13	0	0	1	0	0	0	0	0	0
4/24/2024	11:00 AM	0	69	12	2	0	0	0	0	0	0	0	0
4/24/2024	11:15 AM	0	67	12	1	0	0	0	0	0	0	0	0
4/24/2024	11:30 AM	0	71	15	1	1	0	0	0	0	0	0	0
4/24/2024	11:45 AM	0	85	9	1	2	1	0	0	0	0	0	0
4/24/2024	12:00 PM	0	92	14	0	0	0	0	0	1	0	0	0
4/24/2024	12:15 PM	0	84	12	0	1	0	0	0	0	0	0	0
4/24/2024	12:30 PM	1	95	13	2	2	1	0	1	0	0	0	0
4/24/2024	12:45 PM	1	73	13	5	0	0	0	0	0	0	0	0
4/24/2024	1:00 PM	0	100	12	4	1	0	0	0	0	2	0	0	0
4/24/2024	1:15 PM	0	80	14	2	0	0	0	0	0	1	0	0	0
4/24/2024	1:30 PM	0	84	14	1	0	0	0	0	0	0	0	0	0
4/24/2024	1:45 PM	0	68	16	1	0	0	0	0	0	0	0	0	0
4/24/2024	2:00 PM	0	88	17	2	0	0	0	0	0	0	0	0	0
4/24/2024	2:15 PM	0	94	14	1	0	0	0	0	0	0	0	0	0
4/24/2024	2:30 PM	0	81	15	1	0	0	0	0	0	0	0	0	0
4/24/2024	2:45 PM	0	83	11	2	0	1	0	0	0	0	0	0	0
4/24/2024	3:00 PM	0	90	10	2	1	0	0	0	0	0	0	0	0
4/24/2024	3:15 PM	0	78	17	0	0	1	0	0	0	0	0	0	0
4/24/2024	3:30 PM	0	71	13	4	1	1	0	0	0	0	0	0	0
4/24/2024	3:45 PM	0	86	12	1	1	0	0	0	0	0	0	0	0
4/24/2024	4:00 PM	0	116	13	0	2	1	0	0	0	0	0	0	0
4/24/2024	4:15 PM	0	67	19	2	1	0	0	2	0	0	0	0	0
4/24/2024	4:30 PM	0	101	8	0	2	1	0	0	0	0	0	0	0
4/24/2024	4:45 PM	0	100	16	1	0	0	0	0	0	0	0	0	0
4/24/2024	5:00 PM	2	120	20	3	2	0	0	0	0	0	0	0	0
4/24/2024	5:15 PM	0	83	10	1	1	0	0	0	0	0	0	0	0
4/24/2024	5:30 PM	0	70	10	1	1	0	0	0	0	0	0	0	0
4/24/2024	5:45 PM	0	65	11	0	0	0	0	0	0	0	0	0	0
4/24/2024	6:00 PM	0	74	12	3	1	0	0	0	0	0	0	0	0
4/24/2024	6:15 PM	0	67	5	1	0	0	0	0	0	0	0	0	0
4/24/2024	6:30 PM	0	68	6	1	1	0	0	0	0	0	0	0	0
4/24/2024	6:45 PM	1	55	8	1	1	1	0	0	0	0	0	0	0
4/24/2024	7:00 PM	1	49	11	1	1	0	0	0	0	0	0	0	0
4/24/2024	7:15 PM	1	58	5	0	0	0	0	0	0	0	0	0	0
4/24/2024	7:30 PM	0	44	9	1	0	0	0	0	0	0	0	0	0
4/24/2024	7:45 PM	0	27	9	0	0	0	0	0	0	0	0	0	0
4/24/2024	8:00 PM	0	33	7	0	0	0	0	0	0	0	0	0	0
4/24/2024	8:15 PM	0	30	5	0	0	0	0	0	0	0	0	0	0
4/24/2024	8:30 PM	0	47	7	0	0	0	0	0	0	0	0	0	0
4/24/2024	8:45 PM	0	33	2	1	0	0	0	0	0	0	0	0	0
4/24/2024	9:00 PM	0	33	3	0	0	0	0	0	0	0	0	0	0
4/24/2024	9:15 PM	0	25	2	1	0	0	0	0	0	0	0	0	0
4/24/2024	9:30 PM	0	30	3	0	0	0	0	0	0	0	0	0	0
4/24/2024	9:45 PM	0	21	4	0	0	0	0	0	0	0	0	0	0
4/24/2024	10:00 PM	0	21	3	0	0	0	0	0	0	0	0	0	0
4/24/2024	10:15 PM	0	33	4	0	0	0	0	0	0	0	0	0	0
4/24/2024	10:30 PM	0	22	3	0	0	0	0	0	0	0	0	0	0
4/24/2024	10:45 PM	0	22	3	0	0	0	0	0	0	0	0	0	0
4/24/2024	11:00 PM	0	17	2	0	0	0	0	0	0	0	0	0	0
4/24/2024	11:15 PM	0	15	2	0	0	0	0	0	0	0	0	0	0
4/24/2024	11:30 PM	0	11	1	0	0	0	0	0	0	0	0	0	0
4/24/2024	11:45 PM	0	15	1	0	0	0	0	0	0	0	0	0	0

4/25/2024	12:00 AM	0	10	1	0	1	0	1	0	0	0	0	0	0
4/25/2024	12:15 AM	0	8	1	0	0	0	0	0	0	0	0	0	0
4/25/2024	12:30 AM	0	15	2	0	0	0	1	0	0	0	0	0	0
4/25/2024	12:45 AM	0	15	1	0	0	0	0	0	0	0	0	0	0
4/25/2024	1:00 AM	0	5	0	0	0	0	0	0	0	0	0	0	0
4/25/2024	1:15 AM	0	10	2	0	0	0	0	0	0	0	0	0	0
4/25/2024	1:30 AM	0	6	1	0	0	0	0	0	0	0	0	0	0
4/25/2024	1:45 AM	0	7	0	0	0	0	0	0	0	0	0	0	0
4/25/2024	2:00 AM	0	10	1	0	0	0	0	0	0	0	0	0	0
4/25/2024	2:15 AM	0	6	1	0	0	0	0	0	0	0	0	0	0
4/25/2024	2:30 AM	0	8	2	0	0	0	0	0	0	0	0	0	0
4/25/2024	2:45 AM	0	5	1	0	0	0	0	0	0	0	0	0	0
4/25/2024	3:00 AM	0	4	0	0	0	0	0	1	0	0	0	0	0
4/25/2024	3:15 AM	0	4	0	0	1	0	0	0	0	0	0	0	0
4/25/2024	3:30 AM	0	3	0	0	0	0	0	0	0	0	0	0	0
4/25/2024	3:45 AM	0	8	1	0	0	0	0	0	0	0	0	0	0
4/25/2024	4:00 AM	0	4	0	0	0	0	0	0	0	0	0	0	0
4/25/2024	4:15 AM	0	6	1	0	0	0	0	0	0	0	0	0	0
4/25/2024	4:30 AM	0	8	1	0	1	0	1	0	0	0	0	0	0
4/25/2024	4:45 AM	0	13	2	0	0	0	0	0	0	0	0	0	0
4/25/2024	5:00 AM	0	10	1	0	1	0	0	0	0	0	0	0	0
4/25/2024	5:15 AM	0	14	2	0	1	0	0	0	0	0	0	0	0
4/25/2024	5:30 AM	0	18	3	1	0	0	0	0	0	0	0	0	0
4/25/2024	5:45 AM	0	31	5	0	0	0	0	0	0	0	0	0	0
4/25/2024	6:00 AM	0	12	2	1	0	0	0	0	0	0	0	0	0
4/25/2024	6:15 AM	0	30	5	0	0	0	0	0	0	0	0	0	0
4/25/2024	6:30 AM	0	39	7	0	1	0	0	0	0	0	0	0	0
4/25/2024	6:45 AM	0	52	2	2	1	0	0	0	0	0	0	0	0
4/25/2024	7:00 AM	0	47	8	4	0	0	0	0	1	0	0	0	0
4/25/2024	7:15 AM	0	50	13	5	0	0	0	0	0	0	0	0	0
4/25/2024	7:30 AM	0	88	8	1	0	0	0	1	0	0	0	0	0
4/25/2024	7:45 AM	0	101	8	1	0	0	0	0	0	0	0	0	0
4/25/2024	8:00 AM	0	86	10	3	1	0	0	0	0	0	0	0	0
4/25/2024	8:15 AM	0	81	13	3	1	0	0	0	1	0	0	0	0
4/25/2024	8:30 AM	0	89	8	4	0	0	0	0	0	0	0	0	0
4/25/2024	8:45 AM	0	76	11	2	2	0	0	0	1	0	0	0	0
4/25/2024	9:00 AM	0	61	8	3	0	0	0	0	0	0	0	0	0
4/25/2024	9:15 AM	0	55	8	3	2	2	0	0	0	0	0	0	0
4/25/2024	9:30 AM	0	73	9	1	1	1	0	0	0	0	0	0	0
4/25/2024	9:45 AM	0	80	9	3	0	0	0	0	0	0	0	0	0
4/25/2024	10:00 AM	0	59	10	1	0	1	0	0	0	0	0	0	0
4/25/2024	10:15 AM	0	70	6	0	2	0	0	0	0	0	0	0	0
4/25/2024	10:30 AM	0	67	11	2	5	4	0	0	0	0	0	0	0
4/25/2024	10:45 AM	0	66	21	0	1	1	0	0	0	0	0	0	0
4/25/2024	11:00 AM	0	77	9	1	0	0	0	0	0	0	0	0	0
4/25/2024	11:15 AM	0	81	16	0	1	0	0	0	0	0	0	0	0
4/25/2024	11:30 AM	0	94	23	0	1	4	0	0	0	0	0	0	0
4/25/2024	11:45 AM	0	88	20	1	0	1	0	0	1	0	0	0	0
4/25/2024	12:00 PM	0	91	17	0	0	1	0	0	0	0	0	0	0
4/25/2024	12:15 PM	0	86	13	0	1	1	0	0	0	0	0	0	0
4/25/2024	12:30 PM	0	97	14	0	1	1	0	0	0	0	0	0	0
4/25/2024	12:45 PM	0	97	20	11	0	2	0	0	0	0	0	0	0
4/25/2024	1:00 PM	0	89	14	4	0	0	0	0	0	0	0	0	0
4/25/2024	1:15 PM	0	94	10	0	0	2	0	0	0	0	0	0	0
4/25/2024	1:30 PM	0	79	8	3	2	1	0	1	0	0	0	0	0
4/25/2024	1:45 PM	0	88	12	0	0	1	0	1	0	0	0	0	0
4/25/2024	2:00 PM	0	92	13	1	4	1	1	0	0	0	0	0	0
4/25/2024	2:15 PM	0	95	13	1	1	0	0	1	0	0	0	0	0
4/25/2024	2:30 PM	0	97	17	3	0	1	0	0	0	0	0	0	0
4/25/2024	2:45 PM	0	90	15	2	1	2	0	0	0	0	0	0	0
4/25/2024	3:00 PM	0	86	12	1	3	3	0	0	0	0	0	0	0
4/25/2024	3:15 PM	0	81	13	0	0	1	0	0	0	1	0	0	0
4/25/2024	3:30 PM	0	81	14	1	1	0	0	0	0	0	0	0	0
4/25/2024	3:45 PM	0	73	10	1	1	0	0	0	0	0	0	0	0
4/25/2024	4:00 PM	1	121	13	2	1	0	0	1	0	0	0	0	0
4/25/2024	4:15 PM	0	94	11	1	0	0	0	0	0	0	0	0	0
4/25/2024	4:30 PM	0	123	12	1	0	0	0	0	0	0	0	0	0
4/25/2024	4:45 PM	0	102	9	1	2	0	0	0	0	0	0	0	0
4/25/2024	5:00 PM	1	135	24	3	0	0	0	0	0	0	0	0	0
4/25/2024	5:15 PM	0	99	7	0	0	0	0	0	0	0	0	0	0
4/25/2024	5:30 PM	0	68	6	1	0	0	0	1	1	0	0	0	0
4/25/2024	5:45 PM	0	64	9	1	0	0	0	0	0	0	0	0	0
4/25/2024	6:00 PM	0	72	10	2	0	0	0	0	0	0	0	0	0
4/25/2024	6:15 PM	0	62	5	0	1	0	0	0	0	0	0	0	0
4/25/2024	6:30 PM	0	63	9	1	3	0	0	0	0	0	0	0	0
4/25/2024	6:45 PM	1	73	6	0	0	0	0	0	0	0	0	0	0
4/25/2024	7:00 PM	0	0	0	0	0	0	0	0	0	0	0	0	0
4/25/2024	7:15 PM	0	0	0	0	0	0	0	0	0	0	0	0	0
4/25/2024	7:30 PM	0	0	0	0	0	0	0	0	0	0	0	0	0
4/25/2024	7:45 PM	0	0	0	0	0	0	0	0	0	0	0	0	0
4/25/2024	8:00 PM	0	0	0	0	0	0	0	0	0	0	0	0	0
4/25/2024	8:15 PM	0	0	0	0	0	0	0	0	0	0	0	0	0
4/25/2024	8:30 PM	0	0	0	0	0	0	0	0	0	0	0	0	0
4/25/2024	8:45 PM	0	0	0	0	0	0	0	0	0	0	0	0	0
4/25/2024	9:00 PM	0	0	0	0	0	0	0	0	0	0	0	0	0
4/25/2024	9:15 PM	0	0	0	0	0	0	0	0	0	0	0	0	0
4/25/2024	9:30 PM	0	0	0	0	0	0	0	0	0	0	0	0	0
4/25/2024	9:45 PM	0	0	0	0	0	0	0	0	0	0	0	0	0
4/25/2024	10:00 PM	0	0	0	0	0	0	0	0	0	0	0	0	0
4/25/2024	10:15 PM	0	0	0	0	0	0	0	0	0	0	0	0	0
4/25/2024	10:30 PM	0	0	0	0	0	0	0	0	0	0	0	0	0
4/25/2024	10:45 PM	0	0	0	0	0	0	0	0	0	0	0	0	0
4/25/2024	11:00 PM	0	0	0	0	0	0	0	0	0	0	0	0	0
4/25/2024	11:15 PM	0	0	0	0	0	0	0	0	0	0	0	0	0
4/25/2024	11:30 PM	0	0	0	0	0	0	0	0	0	0	0	0	0
4/25/2024	11:45 PM	0	0	0	0	0	0	0	0	0	0	0	0	0

WB
File Name:
Start Date: 4/23/2024
Start Time: 0
Site Code: 50
Station ID: 1
Location 1: I-126 On/Off-Ramp, east of Greystone Blvd
Location 2:

Date	Time	1	2	3	4	5	6	7	8	9	10	11	12	13
4/23/2024	12:00 AM	0	0	0	0	0	0	0	0	0	0	0	0	0
4/23/2024	12:15 AM	0	0	0	0	0	0	0	0	0	0	0	0	0
4/23/2024	12:30 AM	0	0	0	0	0	0	0	0	0	0	0	0	0
4/23/2024	12:45 AM	0	0	0	0	0	0	0	0	0	0	0	0	0
4/23/2024	1:00 AM	0	0	0	0	0	0	0	0	0	0	0	0	0
4/23/2024	1:15 AM	0	0	0	0	0	0	0	0	0	0	0	0	0
4/23/2024	1:30 AM	0	0	0	0	0	0	0	0	0	0	0	0	0
4/23/2024	1:45 AM	0	0	0	0	0	0	0	0	0	0	0	0	0
4/23/2024	2:00 AM	0	0	0	0	0	0	0	0	0	0	0	0	0
4/23/2024	2:15 AM	0	0	0	0	0	0	0	0	0	0	0	0	0
4/23/2024	2:30 AM	0	0	0	0	0	0	0	0	0	0	0	0	0
4/23/2024	2:45 AM	0	0	0	0	0	0	0	0	0	0	0	0	0
4/23/2024	3:00 AM	0	0	0	0	0	0	0	0	0	0	0	0	0
4/23/2024	3:15 AM	0	0	0	0	0	0	0	0	0	0	0	0	0
4/23/2024	3:30 AM	0	0	0	0	0	0	0	0	0	0	0	0	0
4/23/2024	3:45 AM	0	0	0	0	0	0	0	0	0	0	0	0	0
4/23/2024	4:00 AM	0	0	0	0	0	0	0	0	0	0	0	0	0
4/23/2024	4:15 AM	0	0	0	0	0	0	0	0	0	0	0	0	0
4/23/2024	4:30 AM	0	0	0	0	0	0	0	0	0	0	0	0	0
4/23/2024	4:45 AM	0	0	0	0	0	0	0	0	0	0	0	0	0
4/23/2024	5:00 AM	0	0	0	0	0	0	0	0	0	0	0	0	0
4/23/2024	5:15 AM	0	0	0	0	0	0	0	0	0	0	0	0	0
4/23/2024	5:30 AM	0	0	0	0	0	0	0	0	0	0	0	0	0
4/23/2024	5:45 AM	0	0	0	0	0	0	0	0	0	0	0	0	0
4/23/2024	6:00 AM	0	0	0	0	0	0	0	0	0	0	0	0	0
4/23/2024	6:15 AM	0	0	0	0	0	0	0	0	0	0	0	0	0
4/23/2024	6:30 AM	0	0	0	0	0	0	0	0	0	0	0	0	0
4/23/2024	6:45 AM	0	0	0	0	0	0	0	0	0	0	0	0	0
4/23/2024	7:00 AM	0	0	0	0	0	0	0	0	0	0	0	0	0
4/23/2024	7:15 AM	0	0	0	0	0	0	0	0	0	0	0	0	0
4/23/2024	7:30 AM	0	0	0	0	0	0	0	0	0	0	0	0	0
4/23/2024	7:45 AM	0	0	0	0	0	0	0	0	0	0	0	0	0
4/23/2024	8:00 AM	0	0	0	0	0	0	0	0	0	0	0	0	0
4/23/2024	8:15 AM	0	0	0	0	0	0	0	0	0	0	0	0	0
4/23/2024	8:30 AM	0	0	0	0	0	0	0	0	0	0	0	0	0
4/23/2024	8:45 AM	0	0	0	0	0	0	0	0	0	0	0	0	0
4/23/2024	9:00 AM	0	0	0	0	0	0	0	0	0	0	0	0	0
4/23/2024	9:15 AM	0	0	0	0	0	0	0	0	0	0	0	0	0
4/23/2024	9:30 AM	0	0	0	0	0	0	0	0	0	0	0	0	0
4/23/2024	9:45 AM	0	0	0	0	0	0	0	0	0	0	0	0	0
4/23/2024	10:00 AM	0	0	0	0	0	0	0	0	0	0	0	0	0
4/23/2024	10:15 AM	0	0	0	0	0	0	0	0	0	0	0	0	0
4/23/2024	10:30 AM	0	0	0	0	0	0	0	0	0	0	0	0	0
4/23/2024	10:45 AM	0	0	0	0	0	0	0	0	0	0	0	0	0
4/23/2024	11:00 AM	0	0	0	0	0	0	0	0	0	0	0	0	0
4/23/2024	11:15 AM	0	0	0	0	0	0	0	0	0	0	0	0	0
4/23/2024	11:30 AM	0	0	0	0	0	0	0	0	0	0	0	0	0
4/23/2024	11:45 AM	0	0	0	0	0	0	0	0	0	0	0	0	0
4/23/2024	12:00 PM	0	0	0	0	0	0	0	0	0	0	0	0	0
4/23/2024	12:15 PM	0	0	0	0	0	0	0	0	0	0	0	0	0
4/23/2024	12:30 PM	0	0	0	0	0	0	0	0	0	0	0	0	0
4/23/2024	12:45 PM	0	0	0	0	0	0	0	0	0	0	0	0	0
4/23/2024	1:00 PM	0	0	0	0	0	0	0	0	0	0	0	0	0
4/23/2024	1:15 PM	0	0	0	0	0	0	0	0	0	0	0	0	0
4/23/2024	1:30 PM	0	0	0	0	0	0	0	0	0	0	0	0	0
4/23/2024	1:45 PM	0	0	0	0	0	0	0	0	0	0	0	0	0
4/23/2024	2:00 PM	0	0	0	0	0	0	0	0	0	0	0	0	0
4/23/2024	2:15 PM	0	0	0	0	0	0	0	0	0	0	0	0	0
4/23/2024	2:30 PM	0	0	0	0	0	0	0	0	0	0	0	0	0
4/23/2024	2:45 PM	0	0	0	0	0	0	0	0	0	0	0	0	0
4/23/2024	3:00 PM	0	0	0	0	0	0	0	0	0	0	0	0	0
4/23/2024	3:15 PM	0	0	0	0	0	0	0	0	0	0	0	0	0
4/23/2024	3:30 PM	0	0	0	0	0	0	0	0	0	0	0	0	0
4/23/2024	3:45 PM	0	0	0	0	0	0	0	0	0	0	0	0	0
4/23/2024	4:00 PM	0	0	0	0	0	0	0	0	0	0	0	0	0
4/23/2024	4:15 PM	0	0	0	0	0	0	0	0	0	0	0	0	0
4/23/2024	4:30 PM	0	0	0	0	0	0	0	0	0	0	0	0	0
4/23/2024	4:45 PM	0	0	0	0	0	0	0	0	0	0	0	0	0
4/23/2024	5:00 PM	0	0	0	0	0	0	0	0	0	0	0	0	0
4/23/2024	5:15 PM	0	0	0	0	0	0	0	0	0	0	0	0	0
4/23/2024	5:30 PM	0	0	0	0	0	0	0	0	0	0	0	0	0
4/23/2024	5:45 PM	0	0	0	0	0	0	0	0	0	0	0	0	0
4/23/2024	6:00 PM	0	0	0	0	0	0	0	0	0	0	0	0	0
4/23/2024	6:15 PM	0	0	0	0	0	0	0	0	0	0	0	0	0
4/23/2024	6:30 PM	0	0	0	0	0	0	0	0	0	0	0	0	0
4/23/2024	6:45 PM	0	0	0	0	0	0	0	0	0	0	0	0	0
4/23/2024	7:00 PM	0	0	0	0	0	0	0	0	0	0	0	0	0
4/23/2024	7:15 PM	0	0	0	0	0	0	0	0	0	0	0	0	0
4/23/2024	7:30 PM	0	0	0	0	0	0	0	0	0	0	0	0	0
4/23/2024	7:45 PM	0	0	0	0	0	0	0	0	0	0	0	0	0
4/23/2024	8:00 PM	0	0	0	0	0	0	0	0	0	0	0	0	0
4/23/2024	8:15 PM	0	0	0	0	0	0	0	0	0	0	0	0	0
4/23/2024	8:30 PM	0	0	0	0	0	0	0	0	0	0	0	0	0
4/23/2024	8:45 PM	0	0	0	0	0	0	0	0	0	0	0	0	0
4/23/2024	9:00 PM	0	0	0	0	0	0	0	0	0	0	0	0	0
4/23/2024	9:15 PM	0	0	0	0	0	0	0	0	0	0	0	0	0
4/23/2024	9:30 PM	0	0	0	0	0	0	0	0	0	0	0	0	0
4/23/2024	9:45 PM	0	0	0	0	0	0	0	0	0	0	0	0	0
4/23/2024	10:00 PM	0	0	0	0	0	0	0	0	0	0	0	0	0
4/23/2024	10:15 PM	0	0	0	0	0	0	0	0	0	0	0	0	0
4/23/2024	10:30 PM	0	0	0	0	0	0	0	0	0	0	0	0	0
4/23/2024	10:45 PM	0	0	0	0	0	0	0	0	0	0	0	0	0
4/23/2024	11:00 PM	0	0	0	0	0	0	0	0	0	0	0	0	0
4/23/2024	11:15 PM	0	0	0	0	0	0	0	0	0	0	0	0	0
4/23/2024	11:30 PM	0	0	0	0	0	0	0	0	0	0	0	0	0
4/23/2024	11:45 PM	0	0	0	0	0	0	0	0	0	0	0	0	0

4/24/2024	12:00 AM	0	0	0	0	0	0	0	0	0	0	0	0	0
4/24/2024	12:15 AM	0	0	0	0	0	0	0	0	0	0	0	0	0
4/24/2024	12:30 AM	0	0	0	0	0	0	0	0	0	0	0	0	0
4/24/2024	12:45 AM	0	0	0	0	0	0	0	0	0	0	0	0	0
4/24/2024	1:00 AM	0	0	0	0	0	0	0	0	0	0	0	0	0
4/24/2024	1:15 AM	0	0	0	0	0	0	0	0	0	0	0	0	0
4/24/2024	1:30 AM	0	0	0	0	0	0	0	0	0	0	0	0	0
4/24/2024	1:45 AM	0	0	0	0	0	0	0	0	0	0	0	0	0
4/24/2024	2:00 AM	0	0	0	0	0	0	0	0	0	0	0	0	0
4/24/2024	2:15 AM	0	0	0	0	0	0	0	0	0	0	0	0	0
4/24/2024	2:30 AM	0	0	0	0	0	0	0	0	0	0	0	0	0
4/24/2024	2:45 AM	0	0	0	0	0	0	0	0	0	0	0	0	0
4/24/2024	3:00 AM	0	0	0	0	0	0	0	0	0	0	0	0	0
4/24/2024	3:15 AM	0	0	0	0	0	0	0	0	0	0	0	0	0
4/24/2024	3:30 AM	0	0	0	0	0	0	0	0	0	0	0	0	0
4/24/2024	3:45 AM	0	0	0	0	0	0	0	0	0	0	0	0	0
4/24/2024	4:00 AM	0	0	0	0	0	0	0	0	0	0	0	0	0
4/24/2024	4:15 AM	0	0	0	0	0	0	0	0	0	0	0	0	0
4/24/2024	4:30 AM	0	0	0	0	0	0	0	0	0	0	0	0	0
4/24/2024	4:45 AM	0	0	0	0	0	0	0	0	0	0	0	0	0
4/24/2024	5:00 AM	0	0	0	0	0	0	0	0	0	0	0	0	0
4/24/2024	5:15 AM	0	0	0	0	0	0	0	0	0	0	0	0	0
4/24/2024	5:30 AM	0	0	0	0	0	0	0	0	0	0	0	0	0
4/24/2024	5:45 AM	0	0	0	0	0	0	0	0	0	0	0	0	0
4/24/2024	6:00 AM	0	0	0	0	0	0	0	0	0	0	0	0	0
4/24/2024	6:15 AM	0	0	0	0	0	0	0	0	0	0	0	0	0
4/24/2024	6:30 AM	0	0	0	0	0	0	0	0	0	0	0	0	0
4/24/2024	6:45 AM	0	0	0	0	0	0	0	0	0	0	0	0	0
4/24/2024	7:00 AM	0	0	0	0	0	0	0	0	0	0	0	0	0
4/24/2024	7:15 AM	0	0	0	0	0	0	0	0	0	0	0	0	0
4/24/2024	7:30 AM	0	0	0	0	0	0	0	0	0	0	0	0	0
4/24/2024	7:45 AM	0	0	0	0	0	0	0	0	0	0	0	0	0
4/24/2024	8:00 AM	0	0	0	0	0	0	0	0	0	0	0	0	0
4/24/2024	8:15 AM	0	0	0	0	0	0	0	0	0	0	0	0	0
4/24/2024	8:30 AM	0	0	0	0	0	0	0	0	0	0	0	0	0
4/24/2024	8:45 AM	0	0	0	0	0	0	0	0	0	0	0	0	0
4/24/2024	9:00 AM	0	0	0	0	0	0	0	0	0	0	0	0	0
4/24/2024	9:15 AM	0	0	0	0	0	0	0	0	0	0	0	0	0
4/24/2024	9:30 AM	0	0	0	0	0	0	0	0	0	0	0	0	0
4/24/2024	9:45 AM	0	0	0	0	0	0	0	0	0	0	0	0	0
4/24/2024	10:00 AM	0	0	0	0	0	0	0	0	0	0	0	0	0
4/24/2024	10:15 AM	0	0	0	0	0	0	0	0	0	0	0	0	0
4/24/2024	10:30 AM	0	0	0	0	0	0	0	0	0	0	0	0	0
4/24/2024	10:45 AM	0	0	0	0	0	0	0	0	0	0	0	0	0
4/24/2024	11:00 AM	0	0	0	0	0	0	0	0	0	0	0	0	0
4/24/2024	11:15 AM	0	0	0	0	0	0	0	0	0	0	0	0	0
4/24/2024	11:30 AM	0	0	0	0	0	0	0	0	0	0	0	0	0
4/24/2024	11:45 AM	0	0	0	0	0	0	0	0	0	0	0	0	0
4/24/2024	12:00 PM	0	0	0	0	0	0	0	0	0	0	0	0	0
4/24/2024	12:15 PM	0	0	0	0	0	0	0	0	0	0	0	0	0
4/24/2024	12:30 PM	0	0	0	0	0	0	0	0	0	0	0	0	0
4/24/2024	12:45 PM	0	0	0	0	0	0	0	0	0	0	0	0	0
4/24/2024	1:00 PM	0	0	0	0	0	0	0	0	0	0	0	0	0
4/24/2024	1:15 PM	0	0	0	0	0	0	0	0	0	0	0	0	0
4/24/2024	1:30 PM	0	0	0	0	0	0	0	0	0	0	0	0	0
4/24/2024	1:45 PM	0	0	0	0	0	0	0	0	0	0	0	0	0
4/24/2024	2:00 PM	0	0	0	0	0	0	0	0	0	0	0	0	0
4/24/2024	2:15 PM	0	0	0	0	0	0	0	0	0	0	0	0	0
4/24/2024	2:30 PM	0	0	0	0	0	0	0	0	0	0	0	0	0
4/24/2024	2:45 PM	0	0	0	0	0	0	0	0	0	0	0	0	0
4/24/2024	3:00 PM	0	0	0	0	0	0	0	0	0	0	0	0	0
4/24/2024	3:15 PM	0	0	0	0	0	0	0	0	0	0	0	0	0
4/24/2024	3:30 PM	0	0	0	0	0	0	0	0	0	0	0	0	0
4/24/2024	3:45 PM	0	0	0	0	0	0	0	0	0	0	0	0	0
4/24/2024	4:00 PM	0	0	0	0	0	0	0	0	0	0	0	0	0
4/24/2024	4:15 PM	0	0	0	0	0	0	0	0	0	0	0	0	0
4/24/2024	4:30 PM	0	0	0	0	0	0	0	0	0	0	0	0	0
4/24/2024	4:45 PM	0	0	0	0	0	0	0	0	0	0	0	0	0
4/24/2024	5:00 PM	0	0	0	0	0	0	0	0	0	0	0	0	0
4/24/2024	5:15 PM	0	0	0	0	0	0	0	0	0	0	0	0	0
4/24/2024	5:30 PM	0	0	0	0	0	0	0	0	0	0	0	0	0
4/24/2024	5:45 PM	0	0	0	0	0	0	0	0	0	0	0	0	0
4/24/2024	6:00 PM	0	0	0	0	0	0	0	0	0	0	0	0	0
4/24/2024	6:15 PM	0	0	0	0	0	0	0	0	0	0	0	0	0
4/24/2024	6:30 PM	0	0	0	0	0	0	0	0	0	0	0	0	0
4/24/2024	6:45 PM	0	0	0	0	0	0	0	0	0	0	0	0	0
4/24/2024	7:00 PM	0	0	0	0	0	0	0	0	0	0	0	0	0
4/24/2024	7:15 PM	0	0	0	0	0	0	0	0	0	0	0	0	0
4/24/2024	7:30 PM	0	0	0	0	0	0	0	0	0	0	0	0	0
4/24/2024	7:45 PM	0	0	0	0	0	0	0	0	0	0	0	0	0
4/24/2024	8:00 PM	0	0	0	0	0	0	0	0	0	0	0	0	0
4/24/2024	8:15 PM	0	0	0	0	0	0	0	0	0	0	0	0	0
4/24/2024	8:30 PM	0	0	0	0	0	0	0	0	0	0	0	0	0
4/24/2024	8:45 PM	0	0	0	0	0	0	0	0	0	0	0	0	0
4/24/2024	9:00 PM	0	0	0	0	0	0	0	0	0	0	0	0	0
4/24/2024	9:15 PM	0	0	0	0	0	0	0	0	0	0	0	0	0
4/24/2024	9:30 PM	0	0	0	0	0	0	0	0	0	0	0	0	0
4/24/2024	9:45 PM	0	0	0	0	0	0	0	0	0	0	0	0	0
4/24/2024	10:00 PM	0	0	0	0	0	0	0	0	0	0	0	0	0
4/24/2024	10:15 PM	0	0	0	0	0	0	0	0	0	0	0	0	0
4/24/2024	10:30 PM	0	0	0	0	0	0	0	0	0	0	0	0	0
4/24/2024	10:45 PM	0	0	0	0	0	0	0	0	0	0	0	0	0
4/24/2024	11:00 PM	0	0	0	0	0	0	0	0	0	0	0	0	0
4/24/2024	11:15 PM	0	0	0	0	0	0	0	0	0	0	0	0	0
4/24/2024	11:30 PM	0	0	0	0	0	0	0	0	0	0	0	0	0
4/24/2024	11:45 PM	0	0	0	0	0	0	0	0	0	0	0	0	0

4/25/2024	12:00 AM	0	0	0	0	0	0	0	0	0	0	0	0	0
4/25/2024	12:15 AM	0	0	0	0	0	0	0	0	0	0	0	0	0
4/25/2024	12:30 AM	0	0	0	0	0	0	0	0	0	0	0	0	0
4/25/2024	12:45 AM	0	0	0	0	0	0	0	0	0	0	0	0	0
4/25/2024	1:00 AM	0	0	0	0	0	0	0	0	0	0	0	0	0
4/25/2024	1:15 AM	0	0	0	0	0	0	0	0	0	0	0	0	0
4/25/2024	1:30 AM	0	0	0	0	0	0	0	0	0	0	0	0	0
4/25/2024	1:45 AM	0	0	0	0	0	0	0	0	0	0	0	0	0
4/25/2024	2:00 AM	0	0	0	0	0	0	0	0	0	0	0	0	0
4/25/2024	2:15 AM	0	0	0	0	0	0	0	0	0	0	0	0	0
4/25/2024	2:30 AM	0	0	0	0	0	0	0	0	0	0	0	0	0
4/25/2024	2:45 AM	0	0	0	0	0	0	0	0	0	0	0	0	0
4/25/2024	3:00 AM	0	0	0	0	0	0	0	0	0	0	0	0	0
4/25/2024	3:15 AM	0	0	0	0	0	0	0	0	0	0	0	0	0
4/25/2024	3:30 AM	0	0	0	0	0	0	0	0	0	0	0	0	0
4/25/2024	3:45 AM	0	0	0	0	0	0	0	0	0	0	0	0	0
4/25/2024	4:00 AM	0	0	0	0	0	0	0	0	0	0	0	0	0
4/25/2024	4:15 AM	0	0	0	0	0	0	0	0	0	0	0	0	0
4/25/2024	4:30 AM	0	0	0	0	0	0	0	0	0	0	0	0	0
4/25/2024	4:45 AM	0	0	0	0	0	0	0	0	0	0	0	0	0
4/25/2024	5:00 AM	0	0	0	0	0	0	0	0	0	0	0	0	0
4/25/2024	5:15 AM	0	0	0	0	0	0	0	0	0	0	0	0	0
4/25/2024	5:30 AM	0	0	0	0	0	0	0	0	0	0	0	0	0
4/25/2024	5:45 AM	0	0	0	0	0	0	0	0	0	0	0	0	0
4/25/2024	6:00 AM	0	0	0	0	0	0	0	0	0	0	0	0	0
4/25/2024	6:15 AM	0	0	0	0	0	0	0	0	0	0	0	0	0
4/25/2024	6:30 AM	0	0	0	0	0	0	0	0	0	0	0	0	0
4/25/2024	6:45 AM	0	0	0	0	0	0	0	0	0	0	0	0	0
4/25/2024	7:00 AM	0	0	0	0	0	0	0	0	0	0	0	0	0
4/25/2024	7:15 AM	0	0	0	0	0	0	0	0	0	0	0	0	0
4/25/2024	7:30 AM	0	0	0	0	0	0	0	0	0	0	0	0	0
4/25/2024	7:45 AM	0	0	0	0	0	0	0	0	0	0	0	0	0
4/25/2024	8:00 AM	0	0	0	0	0	0	0	0	0	0	0	0	0
4/25/2024	8:15 AM	0	0	0	0	0	0	0	0	0	0	0	0	0
4/25/2024	8:30 AM	0	0	0	0	0	0	0	0	0	0	0	0	0
4/25/2024	8:45 AM	0	0	0	0	0	0	0	0	0	0	0	0	0
4/25/2024	9:00 AM	0	0	0	0	0	0	0	0	0	0	0	0	0
4/25/2024	9:15 AM	0	0	0	0	0	0	0	0	0	0	0	0	0
4/25/2024	9:30 AM	0	0	0	0	0	0	0	0	0	0	0	0	0
4/25/2024	9:45 AM	0	0	0	0	0	0	0	0	0	0	0	0	0
4/25/2024	10:00 AM	0	0	0	0	0	0	0	0	0	0	0	0	0
4/25/2024	10:15 AM	0	0	0	0	0	0	0	0	0	0	0	0	0
4/25/2024	10:30 AM	0	0	0	0	0	0	0	0	0	0	0	0	0
4/25/2024	10:45 AM	0	0	0	0	0	0	0	0	0	0	0	0	0
4/25/2024	11:00 AM	0	0	0	0	0	0	0	0	0	0	0	0	0
4/25/2024	11:15 AM	0	0	0	0	0	0	0	0	0	0	0	0	0
4/25/2024	11:30 AM	0	0	0	0	0	0	0	0	0	0	0	0	0
4/25/2024	11:45 AM	0	0	0	0	0	0	0	0	0	0	0	0	0
4/25/2024	12:00 PM	0	0	0	0	0	0	0	0	0	0	0	0	0
4/25/2024	12:15 PM	0	0	0	0	0	0	0	0	0	0	0	0	0
4/25/2024	12:30 PM	0	0	0	0	0	0	0	0	0	0	0	0	0
4/25/2024	12:45 PM	0	0	0	0	0	0	0	0	0	0	0	0	0
4/25/2024	1:00 PM	0	0	0	0	0	0	0	0	0	0	0	0	0
4/25/2024	1:15 PM	0	0	0	0	0	0	0	0	0	0	0	0	0
4/25/2024	1:30 PM	0	0	0	0	0	0	0	0	0	0	0	0	0
4/25/2024	1:45 PM	0	0	0	0	0	0	0	0	0	0	0	0	0
4/25/2024	2:00 PM	0	0	0	0	0	0	0	0	0	0	0	0	0
4/25/2024	2:15 PM	0	0	0	0	0	0	0	0	0	0	0	0	0
4/25/2024	2:30 PM	0	0	0	0	0	0	0	0	0	0	0	0	0
4/25/2024	2:45 PM	0	0	0	0	0	0	0	0	0	0	0	0	0
4/25/2024	3:00 PM	0	0	0	0	0	0	0	0	0	0	0	0	0
4/25/2024	3:15 PM	0	0	0	0	0	0	0	0	0	0	0	0	0
4/25/2024	3:30 PM	0	0	0	0	0	0	0	0	0	0	0	0	0
4/25/2024	3:45 PM	0	0	0	0	0	0	0	0	0	0	0	0	0
4/25/2024	4:00 PM	0	0	0	0	0	0	0	0	0	0	0	0	0
4/25/2024	4:15 PM	0	0	0	0	0	0	0	0	0	0	0	0	0
4/25/2024	4:30 PM	0	0	0	0	0	0	0	0	0	0	0	0	0
4/25/2024	4:45 PM	0	0	0	0	0	0	0	0	0	0	0	0	0
4/25/2024	5:00 PM	0	0	0	0	0	0	0	0	0	0	0	0	0
4/25/2024	5:15 PM	0	0	0	0	0	0	0	0	0	0	0	0	0
4/25/2024	5:30 PM	0	0	0	0	0	0	0	0	0	0	0	0	0
4/25/2024	5:45 PM	0	0	0	0	0	0	0	0	0	0	0	0	0
4/25/2024	6:00 PM	0	0	0	0	0	0	0	0	0	0	0	0	0
4/25/2024	6:15 PM	0	0	0	0	0	0	0	0	0	0	0	0	0
4/25/2024	6:30 PM	0	0	0	0	0	0	0	0	0	0	0	0	0
4/25/2024	6:45 PM	0	0	0	0	0	0	0	0	0	0	0	0	0
4/25/2024	7:00 PM	0	0	0	0	0	0	0	0	0	0	0	0	0
4/25/2024	7:15 PM	0	0	0	0	0	0	0	0	0	0	0	0	0
4/25/2024	7:30 PM	0	0	0	0	0	0	0	0	0	0	0	0	0
4/25/2024	7:45 PM	0	0	0	0	0	0	0	0	0	0	0	0	0
4/25/2024	8:00 PM	0	0	0	0	0	0	0	0	0	0	0	0	0
4/25/2024	8:15 PM	0	0	0	0	0	0	0	0	0	0	0	0	0
4/25/2024	8:30 PM	0	0	0	0	0	0	0	0	0	0	0	0	0
4/25/2024	8:45 PM	0	0	0	0	0	0	0	0	0	0	0	0	0
4/25/2024	9:00 PM	0	0	0	0	0	0	0	0	0	0	0	0	0
4/25/2024	9:15 PM	0	0	0	0	0	0	0	0	0	0	0	0	0
4/25/2024	9:30 PM	0	0	0	0	0	0	0	0	0	0	0	0	0
4/25/2024	9:45 PM	0	0	0	0	0	0	0	0	0	0	0	0	0
4/25/2024	10:00 PM	0	0	0	0	0	0	0	0	0	0	0	0	0
4/25/2024	10:15 PM	0	0	0	0	0	0	0	0	0	0	0	0	0
4/25/2024	10:30 PM	0	0	0	0	0	0	0	0	0	0	0	0	0
4/25/2024	10:45 PM	0	0	0	0	0	0	0	0	0	0	0	0	0
4/25/2024	11:00 PM	0	0	0	0	0	0	0	0	0	0	0	0	0
4/25/2024	11:15 PM	0	0	0	0	0	0	0	0	0	0	0	0	0
4/25/2024	11:30 PM	0	0	0	0	0	0	0	0	0	0	0	0	0
4/25/2024	11:45 PM	0	0	0	0	0	0	0	0	0	0	0	0	0

EB
File Name:
Start Date: 4/23/2024
Start Time: 0
Site Code: 50
Station ID: 1
Location 1: I-126 On/Off-Ramp, east of Greystone Blvd
Location 2:

Date	Time	1	2	3	4	5	6	7	8	9	10	11	12	13
4/23/2024	12:00 AM	0	0	0	0	0	0	0	0	0	0	0	0	0
4/23/2024	12:15 AM	0	0	0	0	0	0	0	0	0	0	0	0	0
4/23/2024	12:30 AM	0	0	0	0	0	0	0	0	0	0	0	0	0
4/23/2024	12:45 AM	0	0	0	0	0	0	0	0	0	0	0	0	0
4/23/2024	1:00 AM	0	0	0	0	0	0	0	0	0	0	0	0	0
4/23/2024	1:15 AM	0	0	0	0	0	0	0	0	0	0	0	0	0
4/23/2024	1:30 AM	0	0	0	0	0	0	0	0	0	0	0	0	0
4/23/2024	1:45 AM	0	0	0	0	0	0	0	0	0	0	0	0	0
4/23/2024	2:00 AM	0	0	0	0	0	0	0	0	0	0	0	0	0
4/23/2024	2:15 AM	0	0	0	0	0	0	0	0	0	0	0	0	0
4/23/2024	2:30 AM	0	0	0	0	0	0	0	0	0	0	0	0	0
4/23/2024	2:45 AM	0	0	0	0	0	0	0	0	0	0	0	0	0
4/23/2024	3:00 AM	0	0	0	0	0	0	0	0	0	0	0	0	0
4/23/2024	3:15 AM	0	0	0	0	0	0	0	0	0	0	0	0	0
4/23/2024	3:30 AM	0	0	0	0	0	0	0	0	0	0	0	0	0
4/23/2024	3:45 AM	0	0	0	0	0	0	0	0	0	0	0	0	0
4/23/2024	4:00 AM	0	0	0	0	0	0	0	0	0	0	0	0	0
4/23/2024	4:15 AM	0	0	0	0	0	0	0	0	0	0	0	0	0
4/23/2024	4:30 AM	0	0	0	0	0	0	0	0	0	0	0	0	0
4/23/2024	4:45 AM	0	0	0	0	0	0	0	0	0	0	0	0	0
4/23/2024	5:00 AM	0	0	0	0	0	0	0	0	0	0	0	0	0
4/23/2024	5:15 AM	0	0	0	0	0	0	0	0	0	0	0	0	0
4/23/2024	5:30 AM	0	0	0	0	0	0	0	0	0	0	0	0	0
4/23/2024	5:45 AM	0	0	0	0	0	0	0	0	0	0	0	0	0
4/23/2024	6:00 AM	0	0	0	0	0	0	0	0	0	0	0	0	0
4/23/2024	6:15 AM	0	0	0	0	0	0	0	0	0	0	0	0	0
4/23/2024	6:30 AM	0	0	0	0	0	0	0	0	0	0	0	0	0
4/23/2024	6:45 AM	0	0	0	0	0	0	0	0	0	0	0	0	0
4/23/2024	7:00 AM	0	0	0	0	0	0	0	0	0	0	0	0	0
4/23/2024	7:15 AM	0	0	0	0	0	0	0	0	0	0	0	0	0
4/23/2024	7:30 AM	0	0	0	0	0	0	0	0	0	0	0	0	0
4/23/2024	7:45 AM	0	0	0	0	0	0	0	0	0	0	0	0	0
4/23/2024	8:00 AM	0	0	0	0	0	0	0	0	0	0	0	0	0
4/23/2024	8:15 AM	0	0	0	0	0	0	0	0	0	0	0	0	0
4/23/2024	8:30 AM	0	0	0	0	0	0	0	0	0	0	0	0	0
4/23/2024	8:45 AM	0	0	0	0	0	0	0	0	0	0	0	0	0
4/23/2024	9:00 AM	0	0	0	0	0	0	0	0	0	0	0	0	0
4/23/2024	9:15 AM	0	0	0	0	0	0	0	0	0	0	0	0	0
4/23/2024	9:30 AM	0	0	0	0	0	0	0	0	0	0	0	0	0
4/23/2024	9:45 AM	0	0	0	0	0	0	0	0	0	0	0	0	0
4/23/2024	10:00 AM	0	0	0	0	0	0	0	0	0	0	0	0	0
4/23/2024	10:15 AM	0	0	0	0	0	0	0	0	0	0	0	0	0
4/23/2024	10:30 AM	0	0	0	0	0	0	0	0	0	0	0	0	0
4/23/2024	10:45 AM	0	0	0	0	0	0	0	0	0	0	0	0	0
4/23/2024	11:00 AM	0	0	0	0	0	0	0	0	0	0	0	0	0
4/23/2024	11:15 AM	0	0	0	0	0	0	0	0	0	0	0	0	0
4/23/2024	11:30 AM	0	0	0	0	0	0	0	0	0	0	0	0	0
4/23/2024	11:45 AM	0	0	0	0	0	0	0	0	0	0	0	0	0
4/23/2024	12:00 PM	0	0	0	0	0	0	0	0	0	0	0	0	0
4/23/2024	12:15 PM	0	0	0	0	0	0	0	0	0	0	0	0	0
4/23/2024	12:30 PM	0	0	0	0	0	0	0	0	0	0	0	0	0
4/23/2024	12:45 PM	0	0	0	0	0	0	0	0	0	0	0	0	0
4/23/2024	1:00 PM	0	0	0	0	0	0	0	0	0	0	0	0	0
4/23/2024	1:15 PM	0	0	0	0	0	0	0	0	0	0	0	0	0
4/23/2024	1:30 PM	0	0	0	0	0	0	0	0	0	0	0	0	0
4/23/2024	1:45 PM	0	0	0	0	0	0	0	0	0	0	0	0	0
4/23/2024	2:00 PM	0	0	0	0	0	0	0	0	0	0	0	0	0
4/23/2024	2:15 PM	0	0	0	0	0	0	0	0	0	0	0	0	0
4/23/2024	2:30 PM	0	0	0	0	0	0	0	0	0	0	0	0	0
4/23/2024	2:45 PM	0	0	0	0	0	0	0	0	0	0	0	0	0
4/23/2024	3:00 PM	0	0	0	0	0	0	0	0	0	0	0	0	0
4/23/2024	3:15 PM	0	0	0	0	0	0	0	0	0	0	0	0	0
4/23/2024	3:30 PM	0	0	0	0	0	0	0	0	0	0	0	0	0
4/23/2024	3:45 PM	0	0	0	0	0	0	0	0	0	0	0	0	0
4/23/2024	4:00 PM	0	0	0	0	0	0	0	0	0	0	0	0	0
4/23/2024	4:15 PM	0	0	0	0	0	0	0	0	0	0	0	0	0
4/23/2024	4:30 PM	0	0	0	0	0	0	0	0	0	0	0	0	0
4/23/2024	4:45 PM	0	0	0	0	0	0	0	0	0	0	0	0	0
4/23/2024	5:00 PM	0	0	0	0	0	0	0	0	0	0	0	0	0
4/23/2024	5:15 PM	0	0	0	0	0	0	0	0	0	0	0	0	0
4/23/2024	5:30 PM	0	0	0	0	0	0	0	0	0	0	0	0	0
4/23/2024	5:45 PM	0	0	0	0	0	0	0	0	0	0	0	0	0
4/23/2024	6:00 PM	0	0	0	0	0	0	0	0	0	0	0	0	0
4/23/2024	6:15 PM	1	42	4	1	0	0	0	0	0	0	0	0	0
4/23/2024	6:30 PM	2	90	9	1	0	0	0	0	0	0	0	0	0
4/23/2024	6:45 PM	3	143	14	2	0	0	0	0	0	0	0	0	0
4/23/2024	7:00 PM	4	181	18	2	0	0	0	0	0	0	0	0	0
4/23/2024	7:15 PM	3	182	17	1	0	0	0	0	0	0	0	0	0
4/23/2024	7:30 PM	2	174	14	1	0	0	0	0	0	0	0	0	0
4/23/2024	7:45 PM	1	154	13	1	0	0	0	0	0	0	0	0	0
4/23/2024	8:00 PM	0	143	11	1	0	0	0	0	0	0	0	0	0
4/23/2024	8:15 PM	0	136	10	1	0	0	0	0	0	0	0	0	0
4/23/2024	8:30 PM	0	133	11	1	1	0	0	0	0	0	0	0	0
4/23/2024	8:45 PM	0	125	10	1	1	0	0	0	0	0	0	0	0
4/23/2024	9:00 PM	0	120	10	1	1	0	0	0	0	0	0	0	0
4/23/2024	9:15 PM	0	98	9	1	1	0	0	0	0	0	0	0	0
4/23/2024	9:30 PM	0	74	7	1	0	0	0	0	0	0	0	0	0
4/23/2024	9:45 PM	0	69	7	0	0	0	0	0	0	0	0	0	0
4/23/2024	10:00 PM	0	66	7	0	0	0	0	0	0	0	0	0	0
4/23/2024	10:15 PM	0	75	7	0	0	0	0	0	0	0	0	0	0
4/23/2024	10:30 PM	0	76	7	0	0	0	0	0	0	0	0	0	0
4/23/2024	10:45 PM	0	74	6	0	0	0	0	0	1	0	0	0	0
4/23/2024	11:00 PM	0	65	5	0	0	0	0	0	1	0	0	0	0
4/23/2024	11:15 PM	0	50	5	0	0	0	0	0	1	0	0	0	0
4/23/2024	11:30 PM	0	41	4	0	0	1	0	0	1	0	0	0	0
4/23/2024	11:45 PM	0	32	3	0	0	1	0	0	0	0	0	0	0

4/24/2024	12:00 AM	0	30	2	0	0	1	0	0	0	0	0	0	0
4/24/2024	12:15 AM	0	26	1	0	0	1	0	0	0	0	0	0	0
4/24/2024	12:30 AM	0	25	1	0	0	0	0	0	0	0	0	0	0
4/24/2024	12:45 AM	0	19	0	0	0	0	0	0	0	0	0	0	0
4/24/2024	1:00 AM	0	15	1	0	0	1	0	0	0	0	0	0	0
4/24/2024	1:15 AM	0	13	1	0	0	1	0	0	0	0	0	0	0
4/24/2024	1:30 AM	0	13	2	0	0	1	0	0	0	0	0	0	0
4/24/2024	1:45 AM	0	12	4	0	0	1	0	0	0	0	0	0	0
4/24/2024	2:00 AM	0	12	3	0	0	0	0	0	1	0	0	0	0
4/24/2024	2:15 AM	0	15	6	0	0	0	0	1	1	0	0	0	0
4/24/2024	2:30 AM	0	13	5	0	0	0	0	1	1	0	0	0	0
4/24/2024	2:45 AM	0	19	4	0	0	0	0	1	1	0	0	0	0
4/24/2024	3:00 AM	0	22	5	0	0	0	0	1	0	0	0	0	0
4/24/2024	3:15 AM	0	23	2	0	0	0	0	0	0	0	0	0	0
4/24/2024	3:30 AM	0	31	4	0	0	0	0	0	0	0	0	0	0
4/24/2024	3:45 AM	0	31	4	0	0	0	0	0	0	0	0	0	0
4/24/2024	4:00 AM	0	33	4	0	0	0	0	0	0	0	0	0	0
4/24/2024	4:15 AM	0	38	5	0	0	0	0	0	0	0	0	0	0
4/24/2024	4:30 AM	0	47	6	0	0	0	0	0	0	0	0	0	0
4/24/2024	4:45 AM	0	58	7	1	0	0	0	0	0	0	0	0	0
4/24/2024	5:00 AM	0	79	9	2	0	0	0	0	0	0	0	0	0
4/24/2024	5:15 AM	0	88	11	3	0	0	0	0	0	0	0	0	0
4/24/2024	5:30 AM	0	94	13	3	0	0	0	0	0	0	0	0	0
4/24/2024	5:45 AM	0	121	21	2	1	0	0	0	0	0	0	0	0
4/24/2024	6:00 AM	0	146	23	3	1	0	0	0	0	0	0	0	0
4/24/2024	6:15 AM	0	183	30	4	3	0	0	0	0	0	0	0	0
4/24/2024	6:30 AM	0	214	38	10	3	0	0	0	0	0	0	0	0
4/24/2024	6:45 AM	1	248	37	12	2	0	0	0	0	0	0	0	0
4/24/2024	7:00 AM	1	279	42	12	2	0	0	0	0	0	0	0	0
4/24/2024	7:15 AM	1	308	43	11	1	1	0	0	0	0	0	0	0
4/24/2024	7:30 AM	1	331	43	8	1	2	0	0	0	0	0	0	0
4/24/2024	7:45 AM	1	353	39	8	3	2	0	0	0	0	0	0	0
4/24/2024	8:00 AM	1	355	43	7	5	3	0	0	0	0	0	0	0
4/24/2024	8:15 AM	1	335	41	6	6	2	0	0	0	0	0	0	0
4/24/2024	8:30 AM	1	324	36	6	6	1	0	0	1	0	0	0	0
4/24/2024	8:45 AM	0	282	43	5	5	1	0	0	1	0	0	0	0
4/24/2024	9:00 AM	0	268	35	5	4	1	0	0	2	0	0	0	0
4/24/2024	9:15 AM	0	264	37	5	3	1	0	0	3	0	0	0	0
4/24/2024	9:30 AM	0	259	34	2	3	1	0	0	3	0	0	0	0
4/24/2024	9:45 AM	1	273	32	2	2	1	0	0	3	0	0	0	0
4/24/2024	10:00 AM	1	283	39	1	1	1	0	0	2	0	0	0	0
4/24/2024	10:15 AM	1	290	40	3	0	1	0	0	1	0	0	0	0
4/24/2024	10:30 AM	1	294	47	4	0	1	0	0	0	0	0	0	0
4/24/2024	10:45 AM	0	291	52	4	1	1	0	0	0	0	0	0	0
4/24/2024	11:00 AM	0	292	48	5	3	1	0	0	0	0	0	0	0
4/24/2024	11:15 AM	0	315	50	3	3	1	0	0	1	0	0	0	0
4/24/2024	11:30 AM	0	332	50	2	4	1	0	0	1	0	0	0	0
4/24/2024	11:45 AM	1	356	48	3	5	2	0	1	1	0	0	0	0
4/24/2024	12:00 PM	2	344	52	7	3	1	0	1	1	0	0	0	0
4/24/2024	12:15 PM	2	352	50	11	4	1	0	1	0	2	0	0	0
4/24/2024	12:30 PM	2	348	52	13	3	1	0	1	0	3	0	0	0
4/24/2024	12:45 PM	1	337	53	12	1	0	0	0	0	3	0	0	0
4/24/2024	1:00 PM	0	332	56	8	1	0	0	0	0	3	0	0	0
4/24/2024	1:15 PM	0	320	61	6	0	0	0	0	0	1	0	0	0
4/24/2024	1:30 PM	0	334	61	5	0	0	0	0	0	0	0	0	0
4/24/2024	1:45 PM	0	331	62	5	0	0	0	0	0	0	0	0	0
4/24/2024	2:00 PM	0	346	57	6	0	1	0	0	0	0	0	0	0
4/24/2024	2:15 PM	0	348	50	6	1	1	0	0	0	0	0	0	0
4/24/2024	2:30 PM	0	332	53	5	1	2	0	0	0	0	0	0	0
4/24/2024	2:45 PM	0	322	51	8	2	3	0	0	0	0	0	0	0
4/24/2024	3:00 PM	0	325	52	7	3	2	0	0	0	0	0	0	0
4/24/2024	3:15 PM	0	351	55	5	4	3	0	0	0	0	0	0	0
4/24/2024	3:30 PM	0	340	57	7	5	2	0	2	0	0	0	0	0
4/24/2024	3:45 PM	0	370	52	3	6	2	0	2	0	0	0	0	0
4/24/2024	4:00 PM	0	384	56	3	5	2	0	2	0	0	0	0	0
4/24/2024	4:15 PM	2	388	63	6	5	1	0	2	0	0	0	0	0
4/24/2024	4:30 PM	2	404	54	5	5	1	0	0	0	0	0	0	0
4/24/2024	4:45 PM	2	373	56	6	4	0	0	0	0	0	0	0	0
4/24/2024	5:00 PM	2	338	51	5	4	0	0	0	0	0	0	0	0
4/24/2024	5:15 PM	0	292	43	5	3	0	0	0	0	0	0	0	0
4/24/2024	5:30 PM	0	276	38	5	2	0	0	0	0	0	0	0	0
4/24/2024	5:45 PM	0	274	34	5	2	0	0	0	0	0	0	0	0
4/24/2024	6:00 PM	1	264	31	6	3	1	0	0	0	0	0	0	0
4/24/2024	6:15 PM	2	239	30	4	3	1	0	0	0	0	0	0	0
4/24/2024	6:30 PM	3	230	30	3	3	1	0	0	0	0	0	0	0
4/24/2024	6:45 PM	3	206	33	3	2	1	0	0	0	0	0	0	0
4/24/2024	7:00 PM	2	178	34	2	1	0	0	0	0	0	0	0	0
4/24/2024	7:15 PM	1	162	30	1	0	0	0	0	0	0	0	0	0
4/24/2024	7:30 PM	0	134	30	1	0	0	0	0	0	0	0	0	0
4/24/2024	7:45 PM	0	137	28	0	0	0	0	0	0	0	0	0	0
4/24/2024	8:00 PM	0	143	21	1	0	0	0	0	0	0	0	0	0
4/24/2024	8:15 PM	0	143	17	1	0	0	0	0	0	0	0	0	0
4/24/2024	8:30 PM	0	138	14	2	0	0	0	0	0	0	0	0	0
4/24/2024	8:45 PM	0	121	10	2	0	0	0	0	0	0	0	0	0
4/24/2024	9:00 PM	0	109	12	1	0	0	0	0	0	0	0	0	0
4/24/2024	9:15 PM	0	97	12	1	0	0	0	0	0	0	0	0	0
4/24/2024	9:30 PM	0	105	14	0	0	0	0	0	0	0	0	0	0
4/24/2024	9:45 PM	0	97	14	0	0	0	0	0	0	0	0	0	0
4/24/2024	10:00 PM	0	98	13	0	0	0	0	0	0	0	0	0	0
4/24/2024	10:15 PM	0	94	12	0	0	0	0	0	0	0	0	0	0
4/24/2024	10:30 PM	0	76	10	0	0	0	0	0	0	0	0	0	0
4/24/2024	10:45 PM	0	65	8	0	0	0	0	0	0	0	0	0	0
4/24/2024	11:00 PM	0	58	6	0	0	0	0	0	0	0	0	0	0
4/24/2024	11:15 PM	0	51	5	0	1	0	1	0	0	0	0	0	0
4/24/2024	11:30 PM	0	44	4	0	1	0	1	0	0	0	0	0	0
4/24/2024	11:45 PM	0	48	5	0	1	0	2	0	0	0	0	0	0

4/25/2024	12:00 AM	0	48	5	0	1	0	2	0	0	0	0	0	0
4/25/2024	12:15 AM	0	43	4	0	0	0	1	0	0	0	0	0	0
4/25/2024	12:30 AM	0	45	5	0	0	0	1	0	0	0	0	0	0
4/25/2024	12:45 AM	0	36	4	0	0	0	0	0	0	0	0	0	0
4/25/2024	1:00 AM	0	28	3	0	0	0	0	0	0	0	0	0	0
4/25/2024	1:15 AM	0	33	4	0	0	0	0	0	0	0	0	0	0
4/25/2024	1:30 AM	0	29	3	0	0	0	0	0	0	0	0	0	0
4/25/2024	1:45 AM	0	31	4	0	0	0	0	0	0	0	0	0	0
4/25/2024	2:00 AM	0	29	5	0	0	0	0	0	0	0	0	0	0
4/25/2024	2:15 AM	0	23	4	0	0	0	0	1	0	0	0	0	0
4/25/2024	2:30 AM	0	21	3	0	1	0	0	1	0	0	0	0	0
4/25/2024	2:45 AM	0	16	1	0	1	0	0	1	0	0	0	0	0
4/25/2024	3:00 AM	0	19	1	0	1	0	0	1	0	0	0	0	0
4/25/2024	3:15 AM	0	19	1	0	1	0	0	0	0	0	0	0	0
4/25/2024	3:30 AM	0	21	2	0	0	0	0	0	0	0	0	0	0
4/25/2024	3:45 AM	0	26	3	0	1	0	1	0	0	0	0	0	0
4/25/2024	4:00 AM	0	31	4	0	1	0	1	0	0	0	0	0	0
4/25/2024	4:15 AM	0	37	5	0	2	0	1	0	0	0	0	0	0
4/25/2024	4:30 AM	0	45	6	0	3	0	1	0	0	0	0	0	0
4/25/2024	4:45 AM	0	55	8	1	2	0	0	0	0	0	0	0	0
4/25/2024	5:00 AM	0	73	11	1	2	0	0	0	0	0	0	0	0
4/25/2024	5:15 AM	0	75	12	2	1	0	0	0	0	0	0	0	0
4/25/2024	5:30 AM	0	91	15	2	0	0	0	0	0	0	0	0	0
4/25/2024	5:45 AM	0	112	19	1	1	0	0	0	0	0	0	0	0
4/25/2024	6:00 AM	0	133	16	3	2	0	0	0	0	0	0	0	0
4/25/2024	6:15 AM	0	168	22	6	2	0	0	0	1	0	0	0	0
4/25/2024	6:30 AM	0	188	30	11	2	0	0	0	1	0	0	0	0
4/25/2024	6:45 AM	0	237	31	12	1	0	0	1	1	0	0	0	0
4/25/2024	7:00 AM	0	286	37	11	0	0	0	1	1	0	0	0	0
4/25/2024	7:15 AM	0	325	39	10	1	0	0	1	0	0	0	0	0
4/25/2024	7:30 AM	0	356	39	8	2	0	0	1	1	0	0	0	0
4/25/2024	7:45 AM	0	357	39	11	2	0	0	0	1	0	0	0	0
4/25/2024	8:00 AM	0	332	42	12	4	0	0	0	2	0	0	0	0
4/25/2024	8:15 AM	0	307	40	12	3	0	0	0	2	0	0	0	0
4/25/2024	8:30 AM	0	281	35	12	4	2	0	0	1	0	0	0	0
4/25/2024	8:45 AM	0	265	36	9	5	3	0	0	1	0	0	0	0
4/25/2024	9:00 AM	0	269	34	10	3	3	0	0	0	0	0	0	0
4/25/2024	9:15 AM	0	267	36	8	3	4	0	0	0	0	0	0	0
4/25/2024	9:30 AM	0	282	34	5	3	2	0	0	0	0	0	0	0
4/25/2024	9:45 AM	0	276	36	6	7	5	0	0	0	0	0	0	0
4/25/2024	10:00 AM	0	262	48	3	8	6	0	0	0	0	0	0	0
4/25/2024	10:15 AM	0	280	47	3	8	5	0	0	0	0	0	0	0
4/25/2024	10:30 AM	0	291	57	3	7	5	0	0	0	0	0	0	0
4/25/2024	10:45 AM	0	318	69	1	3	5	0	0	0	0	0	0	0
4/25/2024	11:00 AM	0	340	68	2	2	5	0	0	1	0	0	0	0
4/25/2024	11:15 AM	0	354	76	1	2	6	0	0	1	0	0	0	0
4/25/2024	11:30 AM	0	359	73	1	2	7	0	0	1	0	0	0	0
4/25/2024	11:45 AM	0	362	64	1	2	4	0	0	1	0	0	0	0
4/25/2024	12:00 PM	0	371	64	11	2	5	0	0	0	0	0	0	0
4/25/2024	12:15 PM	0	369	61	15	2	4	0	0	0	0	0	0	0
4/25/2024	12:30 PM	0	377	58	15	1	5	0	0	0	0	0	0	0
4/25/2024	12:45 PM	0	359	52	18	2	5	0	1	0	0	0	0	0
4/25/2024	1:00 PM	0	350	44	7	2	4	0	2	0	0	0	0	0
4/25/2024	1:15 PM	0	353	43	4	6	5	1	2	0	0	0	0	0
4/25/2024	1:30 PM	0	354	46	5	7	3	1	3	0	0	0	0	0
4/25/2024	1:45 PM	0	372	55	5	5	3	1	2	0	0	0	0	0
4/25/2024	2:00 PM	0	374	58	7	6	4	1	1	0	0	0	0	0
4/25/2024	2:15 PM	0	368	57	7	5	6	0	1	0	0	0	0	0
4/25/2024	2:30 PM	0	354	57	6	4	7	0	0	0	1	0	0	0
4/25/2024	2:45 PM	0	338	54	4	5	6	0	0	0	1	0	0	0
4/25/2024	3:00 PM	0	321	49	3	5	4	0	0	0	1	0	0	0
4/25/2024	3:15 PM	1	356	50	4	3	1	0	1	0	1	0	0	0
4/25/2024	3:30 PM	1	369	48	5	3	0	0	1	0	0	0	0	0
4/25/2024	3:45 PM	1	411	46	5	2	0	0	1	0	0	0	0	0
4/25/2024	4:00 PM	1	440	45	5	3	0	0	1	0	0	0	0	0
4/25/2024	4:15 PM	1	454	56	6	2	0	0	0	0	0	0	0	0
4/25/2024	4:30 PM	1	459	52	5	2	0	0	0	0	0	0	0	0
4/25/2024	4:45 PM	1	404	46	5	2	0	0	1	1	0	0	0	0
4/25/2024	5:00 PM	1	366	46	5	0	0	0	1	1	0	0	0	0
4/25/2024	5:15 PM	0	303	32	4	0	0	0	1	1	0	0	0	0
4/25/2024	5:30 PM	0	266	30	4	1	0	0	1	1	0	0	0	0
4/25/2024	5:45 PM	0	261	33	4	4	0	0	0	0	0	0	0	0
4/25/2024	6:00 PM	1	270	30	3	4	0	0	0	0	0	0	0	0
4/25/2024	6:15 PM	1	198	20	1	4	0	0	0	0	0	0	0	0
4/25/2024	6:30 PM	1	136	15	1	3	0	0	0	0	0	0	0	0
4/25/2024	6:45 PM	1	73	6	0	0	0	0	0	0	0	0	0	0
4/25/2024	7:00 PM	0	0	0	0	0	0	0	0	0	0	0	0	0
4/25/2024	7:15 PM	0	0	0	0	0	0	0	0	0	0	0	0	0
4/25/2024	7:30 PM	0	0	0	0	0	0	0	0	0	0	0	0	0
4/25/2024	7:45 PM	0	0	0	0	0	0	0	0	0	0	0	0	0
4/25/2024	8:00 PM	0	0	0	0	0	0	0	0	0	0	0	0	0
4/25/2024	8:15 PM	0	0	0	0	0	0	0	0	0	0	0	0	0
4/25/2024	8:30 PM	0	0	0	0	0	0	0	0	0	0	0	0	0
4/25/2024	8:45 PM	0	0	0	0	0	0	0	0	0	0	0	0	0
4/25/2024	9:00 PM	0	0	0	0	0	0	0	0	0	0	0	0	0
4/25/2024	9:15 PM	0	0	0	0	0	0	0	0	0	0	0	0	0
4/25/2024	9:30 PM	0	0	0	0	0	0	0	0	0	0	0	0	0
4/25/2024	9:45 PM	0	0	0	0	0	0	0	0	0	0	0	0	0
4/25/2024	10:00 PM	0	0	0	0	0	0	0	0	0	0	0	0	0
4/25/2024	10:15 PM	0	0	0	0	0	0	0	0	0	0	0	0	0
4/25/2024	10:30 PM	0	0	0	0	0	0	0	0	0	0	0	0	0
4/25/2024	10:45 PM	0	0	0	0	0	0	0	0	0	0	0	0	0
4/25/2024	11:00 PM	0	0	0	0	0	0	0	0	0	0	0	0	0
4/25/2024	11:15 PM	0	0	0	0	0	0	0	0	0	0	0	0	0
4/25/2024	11:30 PM	0	0	0	0	0	0	0	0	0	0	0	0	0
4/25/2024	11:45 PM	0	0	0	0	0	0	0	0	0	0	0	0	0

WB
File Name:
Start Date: 4/23/2024
Start Time: 0
Site Code: 50
Station ID: 1
Location 1: I-126 On/Off-Ramp, east of Greystone Blvd
Location 2:

Date	Time	1	2	3	4	5	6	7	8	9	10	11	12	13
4/23/2024	12:00 AM	0	0	0	0	0	0	0	0	0	0	0	0	0
4/23/2024	12:15 AM	0	0	0	0	0	0	0	0	0	0	0	0	0
4/23/2024	12:30 AM	0	0	0	0	0	0	0	0	0	0	0	0	0
4/23/2024	12:45 AM	0	0	0	0	0	0	0	0	0	0	0	0	0
4/23/2024	1:00 AM	0	0	0	0	0	0	0	0	0	0	0	0	0
4/23/2024	1:15 AM	0	0	0	0	0	0	0	0	0	0	0	0	0
4/23/2024	1:30 AM	0	0	0	0	0	0	0	0	0	0	0	0	0
4/23/2024	1:45 AM	0	0	0	0	0	0	0	0	0	0	0	0	0
4/23/2024	2:00 AM	0	0	0	0	0	0	0	0	0	0	0	0	0
4/23/2024	2:15 AM	0	0	0	0	0	0	0	0	0	0	0	0	0
4/23/2024	2:30 AM	0	0	0	0	0	0	0	0	0	0	0	0	0
4/23/2024	2:45 AM	0	0	0	0	0	0	0	0	0	0	0	0	0
4/23/2024	3:00 AM	0	0	0	0	0	0	0	0	0	0	0	0	0
4/23/2024	3:15 AM	0	0	0	0	0	0	0	0	0	0	0	0	0
4/23/2024	3:30 AM	0	0	0	0	0	0	0	0	0	0	0	0	0
4/23/2024	3:45 AM	0	0	0	0	0	0	0	0	0	0	0	0	0
4/23/2024	4:00 AM	0	0	0	0	0	0	0	0	0	0	0	0	0
4/23/2024	4:15 AM	0	0	0	0	0	0	0	0	0	0	0	0	0
4/23/2024	4:30 AM	0	0	0	0	0	0	0	0	0	0	0	0	0
4/23/2024	4:45 AM	0	0	0	0	0	0	0	0	0	0	0	0	0
4/23/2024	5:00 AM	0	0	0	0	0	0	0	0	0	0	0	0	0
4/23/2024	5:15 AM	0	0	0	0	0	0	0	0	0	0	0	0	0
4/23/2024	5:30 AM	0	0	0	0	0	0	0	0	0	0	0	0	0
4/23/2024	5:45 AM	0	0	0	0	0	0	0	0	0	0	0	0	0
4/23/2024	6:00 AM	0	0	0	0	0	0	0	0	0	0	0	0	0
4/23/2024	6:15 AM	0	0	0	0	0	0	0	0	0	0	0	0	0
4/23/2024	6:30 AM	0	0	0	0	0	0	0	0	0	0	0	0	0
4/23/2024	6:45 AM	0	0	0	0	0	0	0	0	0	0	0	0	0
4/23/2024	7:00 AM	0	0	0	0	0	0	0	0	0	0	0	0	0
4/23/2024	7:15 AM	0	0	0	0	0	0	0	0	0	0	0	0	0
4/23/2024	7:30 AM	0	0	0	0	0	0	0	0	0	0	0	0	0
4/23/2024	7:45 AM	0	0	0	0	0	0	0	0	0	0	0	0	0
4/23/2024	8:00 AM	0	0	0	0	0	0	0	0	0	0	0	0	0
4/23/2024	8:15 AM	0	0	0	0	0	0	0	0	0	0	0	0	0
4/23/2024	8:30 AM	0	0	0	0	0	0	0	0	0	0	0	0	0
4/23/2024	8:45 AM	0	0	0	0	0	0	0	0	0	0	0	0	0
4/23/2024	9:00 AM	0	0	0	0	0	0	0	0	0	0	0	0	0
4/23/2024	9:15 AM	0	0	0	0	0	0	0	0	0	0	0	0	0
4/23/2024	9:30 AM	0	0	0	0	0	0	0	0	0	0	0	0	0
4/23/2024	9:45 AM	0	0	0	0	0	0	0	0	0	0	0	0	0
4/23/2024	10:00 AM	0	0	0	0	0	0	0	0	0	0	0	0	0
4/23/2024	10:15 AM	0	0	0	0	0	0	0	0	0	0	0	0	0
4/23/2024	10:30 AM	0	0	0	0	0	0	0	0	0	0	0	0	0
4/23/2024	10:45 AM	0	0	0	0	0	0	0	0	0	0	0	0	0
4/23/2024	11:00 AM	0	0	0	0	0	0	0	0	0	0	0	0	0
4/23/2024	11:15 AM	0	0	0	0	0	0	0	0	0	0	0	0	0
4/23/2024	11:30 AM	0	0	0	0	0	0	0	0	0	0	0	0	0
4/23/2024	11:45 AM	0	0	0	0	0	0	0	0	0	0	0	0	0
4/23/2024	12:00 PM	0	0	0	0	0	0	0	0	0	0	0	0	0
4/23/2024	12:15 PM	0	0	0	0	0	0	0	0	0	0	0	0	0
4/23/2024	12:30 PM	0	0	0	0	0	0	0	0	0	0	0	0	0
4/23/2024	12:45 PM	0	0	0	0	0	0	0	0	0	0	0	0	0
4/23/2024	1:00 PM	0	0	0	0	0	0	0	0	0	0	0	0	0
4/23/2024	1:15 PM	0	0	0	0	0	0	0	0	0	0	0	0	0
4/23/2024	1:30 PM	0	0	0	0	0	0	0	0	0	0	0	0	0
4/23/2024	1:45 PM	0	0	0	0	0	0	0	0	0	0	0	0	0
4/23/2024	2:00 PM	0	0	0	0	0	0	0	0	0	0	0	0	0
4/23/2024	2:15 PM	0	0	0	0	0	0	0	0	0	0	0	0	0
4/23/2024	2:30 PM	0	0	0	0	0	0	0	0	0	0	0	0	0
4/23/2024	2:45 PM	0	0	0	0	0	0	0	0	0	0	0	0	0
4/23/2024	3:00 PM	0	0	0	0	0	0	0	0	0	0	0	0	0
4/23/2024	3:15 PM	0	0	0	0	0	0	0	0	0	0	0	0	0
4/23/2024	3:30 PM	0	0	0	0	0	0	0	0	0	0	0	0	0
4/23/2024	3:45 PM	0	0	0	0	0	0	0	0	0	0	0	0	0
4/23/2024	4:00 PM	0	0	0	0	0	0	0	0	0	0	0	0	0
4/23/2024	4:15 PM	0	0	0	0	0	0	0	0	0	0	0	0	0
4/23/2024	4:30 PM	0	0	0	0	0	0	0	0	0	0	0	0	0
4/23/2024	4:45 PM	0	0	0	0	0	0	0	0	0	0	0	0	0
4/23/2024	5:00 PM	0	0	0	0	0	0	0	0	0	0	0	0	0
4/23/2024	5:15 PM	0	0	0	0	0	0	0	0	0	0	0	0	0
4/23/2024	5:30 PM	0	0	0	0	0	0	0	0	0	0	0	0	0
4/23/2024	5:45 PM	0	0	0	0	0	0	0	0	0	0	0	0	0
4/23/2024	6:00 PM	0	0	0	0	0	0	0	0	0	0	0	0	0
4/23/2024	6:15 PM	0	0	0	0	0	0	0	0	0	0	0	0	0
4/23/2024	6:30 PM	0	0	0	0	0	0	0	0	0	0	0	0	0
4/23/2024	6:45 PM	0	0	0	0	0	0	0	0	0	0	0	0	0
4/23/2024	7:00 PM	0	0	0	0	0	0	0	0	0	0	0	0	0
4/23/2024	7:15 PM	0	0	0	0	0	0	0	0	0	0	0	0	0
4/23/2024	7:30 PM	0	0	0	0	0	0	0	0	0	0	0	0	0
4/23/2024	7:45 PM	0	0	0	0	0	0	0	0	0	0	0	0	0
4/23/2024	8:00 PM	0	0	0	0	0	0	0	0	0	0	0	0	0
4/23/2024	8:15 PM	0	0	0	0	0	0	0	0	0	0	0	0	0
4/23/2024	8:30 PM	0	0	0	0	0	0	0	0	0	0	0	0	0
4/23/2024	8:45 PM	0	0	0	0	0	0	0	0	0	0	0	0	0
4/23/2024	9:00 PM	0	0	0	0	0	0	0	0	0	0	0	0	0
4/23/2024	9:15 PM	0	0	0	0	0	0	0	0	0	0	0	0	0
4/23/2024	9:30 PM	0	0	0	0	0	0	0	0	0	0	0	0	0
4/23/2024	9:45 PM	0	0	0	0	0	0	0	0	0	0	0	0	0
4/23/2024	10:00 PM	0	0	0	0	0	0	0	0	0	0	0	0	0
4/23/2024	10:15 PM	0	0	0	0	0	0	0	0	0	0	0	0	0
4/23/2024	10:30 PM	0	0	0	0	0	0	0	0	0	0	0	0	0
4/23/2024	10:45 PM	0	0	0	0	0	0	0	0	0	0	0	0	0
4/23/2024	11:00 PM	0	0	0	0	0	0	0	0	0	0	0	0	0
4/23/2024	11:15 PM	0	0	0	0	0	0	0	0	0	0	0	0	0
4/23/2024	11:30 PM	0	0	0	0	0	0	0	0	0	0	0	0	0
4/23/2024	11:45 PM	0	0	0	0	0	0	0	0	0	0	0	0	0

4/24/2024	12:00 AM	0	0	0	0	0	0	0	0	0	0	0	0	0
4/24/2024	12:15 AM	0	0	0	0	0	0	0	0	0	0	0	0	0
4/24/2024	12:30 AM	0	0	0	0	0	0	0	0	0	0	0	0	0
4/24/2024	12:45 AM	0	0	0	0	0	0	0	0	0	0	0	0	0
4/24/2024	1:00 AM	0	0	0	0	0	0	0	0	0	0	0	0	0
4/24/2024	1:15 AM	0	0	0	0	0	0	0	0	0	0	0	0	0
4/24/2024	1:30 AM	0	0	0	0	0	0	0	0	0	0	0	0	0
4/24/2024	1:45 AM	0	0	0	0	0	0	0	0	0	0	0	0	0
4/24/2024	2:00 AM	0	0	0	0	0	0	0	0	0	0	0	0	0
4/24/2024	2:15 AM	0	0	0	0	0	0	0	0	0	0	0	0	0
4/24/2024	2:30 AM	0	0	0	0	0	0	0	0	0	0	0	0	0
4/24/2024	2:45 AM	0	0	0	0	0	0	0	0	0	0	0	0	0
4/24/2024	3:00 AM	0	0	0	0	0	0	0	0	0	0	0	0	0
4/24/2024	3:15 AM	0	0	0	0	0	0	0	0	0	0	0	0	0
4/24/2024	3:30 AM	0	0	0	0	0	0	0	0	0	0	0	0	0
4/24/2024	3:45 AM	0	0	0	0	0	0	0	0	0	0	0	0	0
4/24/2024	4:00 AM	0	0	0	0	0	0	0	0	0	0	0	0	0
4/24/2024	4:15 AM	0	0	0	0	0	0	0	0	0	0	0	0	0
4/24/2024	4:30 AM	0	0	0	0	0	0	0	0	0	0	0	0	0
4/24/2024	4:45 AM	0	0	0	0	0	0	0	0	0	0	0	0	0
4/24/2024	5:00 AM	0	0	0	0	0	0	0	0	0	0	0	0	0
4/24/2024	5:15 AM	0	0	0	0	0	0	0	0	0	0	0	0	0
4/24/2024	5:30 AM	0	0	0	0	0	0	0	0	0	0	0	0	0
4/24/2024	5:45 AM	0	0	0	0	0	0	0	0	0	0	0	0	0
4/24/2024	6:00 AM	0	0	0	0	0	0	0	0	0	0	0	0	0
4/24/2024	6:15 AM	0	0	0	0	0	0	0	0	0	0	0	0	0
4/24/2024	6:30 AM	0	0	0	0	0	0	0	0	0	0	0	0	0
4/24/2024	6:45 AM	0	0	0	0	0	0	0	0	0	0	0	0	0
4/24/2024	7:00 AM	0	0	0	0	0	0	0	0	0	0	0	0	0
4/24/2024	7:15 AM	0	0	0	0	0	0	0	0	0	0	0	0	0
4/24/2024	7:30 AM	0	0	0	0	0	0	0	0	0	0	0	0	0
4/24/2024	7:45 AM	0	0	0	0	0	0	0	0	0	0	0	0	0
4/24/2024	8:00 AM	0	0	0	0	0	0	0	0	0	0	0	0	0
4/24/2024	8:15 AM	0	0	0	0	0	0	0	0	0	0	0	0	0
4/24/2024	8:30 AM	0	0	0	0	0	0	0	0	0	0	0	0	0
4/24/2024	8:45 AM	0	0	0	0	0	0	0	0	0	0	0	0	0
4/24/2024	9:00 AM	0	0	0	0	0	0	0	0	0	0	0	0	0
4/24/2024	9:15 AM	0	0	0	0	0	0	0	0	0	0	0	0	0
4/24/2024	9:30 AM	0	0	0	0	0	0	0	0	0	0	0	0	0
4/24/2024	9:45 AM	0	0	0	0	0	0	0	0	0	0	0	0	0
4/24/2024	10:00 AM	0	0	0	0	0	0	0	0	0	0	0	0	0
4/24/2024	10:15 AM	0	0	0	0	0	0	0	0	0	0	0	0	0
4/24/2024	10:30 AM	0	0	0	0	0	0	0	0	0	0	0	0	0
4/24/2024	10:45 AM	0	0	0	0	0	0	0	0	0	0	0	0	0
4/24/2024	11:00 AM	0	0	0	0	0	0	0	0	0	0	0	0	0
4/24/2024	11:15 AM	0	0	0	0	0	0	0	0	0	0	0	0	0
4/24/2024	11:30 AM	0	0	0	0	0	0	0	0	0	0	0	0	0
4/24/2024	11:45 AM	0	0	0	0	0	0	0	0	0	0	0	0	0
4/24/2024	12:00 PM	0	0	0	0	0	0	0	0	0	0	0	0	0
4/24/2024	12:15 PM	0	0	0	0	0	0	0	0	0	0	0	0	0
4/24/2024	12:30 PM	0	0	0	0	0	0	0	0	0	0	0	0	0
4/24/2024	12:45 PM	0	0	0	0	0	0	0	0	0	0	0	0	0
4/24/2024	1:00 PM	0	0	0	0	0	0	0	0	0	0	0	0	0
4/24/2024	1:15 PM	0	0	0	0	0	0	0	0	0	0	0	0	0
4/24/2024	1:30 PM	0	0	0	0	0	0	0	0	0	0	0	0	0
4/24/2024	1:45 PM	0	0	0	0	0	0	0	0	0	0	0	0	0
4/24/2024	2:00 PM	0	0	0	0	0	0	0	0	0	0	0	0	0
4/24/2024	2:15 PM	0	0	0	0	0	0	0	0	0	0	0	0	0
4/24/2024	2:30 PM	0	0	0	0	0	0	0	0	0	0	0	0	0
4/24/2024	2:45 PM	0	0	0	0	0	0	0	0	0	0	0	0	0
4/24/2024	3:00 PM	0	0	0	0	0	0	0	0	0	0	0	0	0
4/24/2024	3:15 PM	0	0	0	0	0	0	0	0	0	0	0	0	0
4/24/2024	3:30 PM	0	0	0	0	0	0	0	0	0	0	0	0	0
4/24/2024	3:45 PM	0	0	0	0	0	0	0	0	0	0	0	0	0
4/24/2024	4:00 PM	0	0	0	0	0	0	0	0	0	0	0	0	0
4/24/2024	4:15 PM	0	0	0	0	0	0	0	0	0	0	0	0	0
4/24/2024	4:30 PM	0	0	0	0	0	0	0	0	0	0	0	0	0
4/24/2024	4:45 PM	0	0	0	0	0	0	0	0	0	0	0	0	0
4/24/2024	5:00 PM	0	0	0	0	0	0	0	0	0	0	0	0	0
4/24/2024	5:15 PM	0	0	0	0	0	0	0	0	0	0	0	0	0
4/24/2024	5:30 PM	0	0	0	0	0	0	0	0	0	0	0	0	0
4/24/2024	5:45 PM	0	0	0	0	0	0	0	0	0	0	0	0	0
4/24/2024	6:00 PM	0	0	0	0	0	0	0	0	0	0	0	0	0
4/24/2024	6:15 PM	0	0	0	0	0	0	0	0	0	0	0	0	0
4/24/2024	6:30 PM	0	0	0	0	0	0	0	0	0	0	0	0	0
4/24/2024	6:45 PM	0	0	0	0	0	0	0	0	0	0	0	0	0
4/24/2024	7:00 PM	0	0	0	0	0	0	0	0	0	0	0	0	0
4/24/2024	7:15 PM	0	0	0	0	0	0	0	0	0	0	0	0	0
4/24/2024	7:30 PM	0	0	0	0	0	0	0	0	0	0	0	0	0
4/24/2024	7:45 PM	0	0	0	0	0	0	0	0	0	0	0	0	0
4/24/2024	8:00 PM	0	0	0	0	0	0	0	0	0	0	0	0	0
4/24/2024	8:15 PM	0	0	0	0	0	0	0	0	0	0	0	0	0
4/24/2024	8:30 PM	0	0	0	0	0	0	0	0	0	0	0	0	0
4/24/2024	8:45 PM	0	0	0	0	0	0	0	0	0	0	0	0	0
4/24/2024	9:00 PM	0	0	0	0	0	0	0	0	0	0	0	0	0
4/24/2024	9:15 PM	0	0	0	0	0	0	0	0	0	0	0	0	0
4/24/2024	9:30 PM	0	0	0	0	0	0	0	0	0	0	0	0	0
4/24/2024	9:45 PM	0	0	0	0	0	0	0	0	0	0	0	0	0
4/24/2024	10:00 PM	0	0	0	0	0	0	0	0	0	0	0	0	0
4/24/2024	10:15 PM	0	0	0	0	0	0	0	0	0	0	0	0	0
4/24/2024	10:30 PM	0	0	0	0	0	0	0	0	0	0	0	0	0
4/24/2024	10:45 PM	0	0	0	0	0	0	0	0	0	0	0	0	0
4/24/2024	11:00 PM	0	0	0	0	0	0	0	0	0	0	0	0	0
4/24/2024	11:15 PM	0	0	0	0	0	0	0	0	0	0	0	0	0
4/24/2024	11:30 PM	0	0	0	0	0	0	0	0	0	0	0	0	0
4/24/2024	11:45 PM	0	0	0	0	0	0	0	0	0	0	0	0	0

4/25/2024	12:00 AM	0	0	0	0	0	0	0	0	0	0	0	0	0
4/25/2024	12:15 AM	0	0	0	0	0	0	0	0	0	0	0	0	0
4/25/2024	12:30 AM	0	0	0	0	0	0	0	0	0	0	0	0	0
4/25/2024	12:45 AM	0	0	0	0	0	0	0	0	0	0	0	0	0
4/25/2024	1:00 AM	0	0	0	0	0	0	0	0	0	0	0	0	0
4/25/2024	1:15 AM	0	0	0	0	0	0	0	0	0	0	0	0	0
4/25/2024	1:30 AM	0	0	0	0	0	0	0	0	0	0	0	0	0
4/25/2024	1:45 AM	0	0	0	0	0	0	0	0	0	0	0	0	0
4/25/2024	2:00 AM	0	0	0	0	0	0	0	0	0	0	0	0	0
4/25/2024	2:15 AM	0	0	0	0	0	0	0	0	0	0	0	0	0
4/25/2024	2:30 AM	0	0	0	0	0	0	0	0	0	0	0	0	0
4/25/2024	2:45 AM	0	0	0	0	0	0	0	0	0	0	0	0	0
4/25/2024	3:00 AM	0	0	0	0	0	0	0	0	0	0	0	0	0
4/25/2024	3:15 AM	0	0	0	0	0	0	0	0	0	0	0	0	0
4/25/2024	3:30 AM	0	0	0	0	0	0	0	0	0	0	0	0	0
4/25/2024	3:45 AM	0	0	0	0	0	0	0	0	0	0	0	0	0
4/25/2024	4:00 AM	0	0	0	0	0	0	0	0	0	0	0	0	0
4/25/2024	4:15 AM	0	0	0	0	0	0	0	0	0	0	0	0	0
4/25/2024	4:30 AM	0	0	0	0	0	0	0	0	0	0	0	0	0
4/25/2024	4:45 AM	0	0	0	0	0	0	0	0	0	0	0	0	0
4/25/2024	5:00 AM	0	0	0	0	0	0	0	0	0	0	0	0	0
4/25/2024	5:15 AM	0	0	0	0	0	0	0	0	0	0	0	0	0
4/25/2024	5:30 AM	0	0	0	0	0	0	0	0	0	0	0	0	0
4/25/2024	5:45 AM	0	0	0	0	0	0	0	0	0	0	0	0	0
4/25/2024	6:00 AM	0	0	0	0	0	0	0	0	0	0	0	0	0
4/25/2024	6:15 AM	0	0	0	0	0	0	0	0	0	0	0	0	0
4/25/2024	6:30 AM	0	0	0	0	0	0	0	0	0	0	0	0	0
4/25/2024	6:45 AM	0	0	0	0	0	0	0	0	0	0	0	0	0
4/25/2024	7:00 AM	0	0	0	0	0	0	0	0	0	0	0	0	0
4/25/2024	7:15 AM	0	0	0	0	0	0	0	0	0	0	0	0	0
4/25/2024	7:30 AM	0	0	0	0	0	0	0	0	0	0	0	0	0
4/25/2024	7:45 AM	0	0	0	0	0	0	0	0	0	0	0	0	0
4/25/2024	8:00 AM	0	0	0	0	0	0	0	0	0	0	0	0	0
4/25/2024	8:15 AM	0	0	0	0	0	0	0	0	0	0	0	0	0
4/25/2024	8:30 AM	0	0	0	0	0	0	0	0	0	0	0	0	0
4/25/2024	8:45 AM	0	0	0	0	0	0	0	0	0	0	0	0	0
4/25/2024	9:00 AM	0	0	0	0	0	0	0	0	0	0	0	0	0
4/25/2024	9:15 AM	0	0	0	0	0	0	0	0	0	0	0	0	0
4/25/2024	9:30 AM	0	0	0	0	0	0	0	0	0	0	0	0	0
4/25/2024	9:45 AM	0	0	0	0	0	0	0	0	0	0	0	0	0
4/25/2024	10:00 AM	0	0	0	0	0	0	0	0	0	0	0	0	0
4/25/2024	10:15 AM	0	0	0	0	0	0	0	0	0	0	0	0	0
4/25/2024	10:30 AM	0	0	0	0	0	0	0	0	0	0	0	0	0
4/25/2024	10:45 AM	0	0	0	0	0	0	0	0	0	0	0	0	0
4/25/2024	11:00 AM	0	0	0	0	0	0	0	0	0	0	0	0	0
4/25/2024	11:15 AM	0	0	0	0	0	0	0	0	0	0	0	0	0
4/25/2024	11:30 AM	0	0	0	0	0	0	0	0	0	0	0	0	0
4/25/2024	11:45 AM	0	0	0	0	0	0	0	0	0	0	0	0	0
4/25/2024	12:00 PM	0	0	0	0	0	0	0	0	0	0	0	0	0
4/25/2024	12:15 PM	0	0	0	0	0	0	0	0	0	0	0	0	0
4/25/2024	12:30 PM	0	0	0	0	0	0	0	0	0	0	0	0	0
4/25/2024	12:45 PM	0	0	0	0	0	0	0	0	0	0	0	0	0
4/25/2024	1:00 PM	0	0	0	0	0	0	0	0	0	0	0	0	0
4/25/2024	1:15 PM	0	0	0	0	0	0	0	0	0	0	0	0	0
4/25/2024	1:30 PM	0	0	0	0	0	0	0	0	0	0	0	0	0
4/25/2024	1:45 PM	0	0	0	0	0	0	0	0	0	0	0	0	0
4/25/2024	2:00 PM	0	0	0	0	0	0	0	0	0	0	0	0	0
4/25/2024	2:15 PM	0	0	0	0	0	0	0	0	0	0	0	0	0
4/25/2024	2:30 PM	0	0	0	0	0	0	0	0	0	0	0	0	0
4/25/2024	2:45 PM	0	0	0	0	0	0	0	0	0	0	0	0	0
4/25/2024	3:00 PM	0	0	0	0	0	0	0	0	0	0	0	0	0
4/25/2024	3:15 PM	0	0	0	0	0	0	0	0	0	0	0	0	0
4/25/2024	3:30 PM	0	0	0	0	0	0	0	0	0	0	0	0	0
4/25/2024	3:45 PM	0	0	0	0	0	0	0	0	0	0	0	0	0
4/25/2024	4:00 PM	0	0	0	0	0	0	0	0	0	0	0	0	0
4/25/2024	4:15 PM	0	0	0	0	0	0	0	0	0	0	0	0	0
4/25/2024	4:30 PM	0	0	0	0	0	0	0	0	0	0	0	0	0
4/25/2024	4:45 PM	0	0	0	0	0	0	0	0	0	0	0	0	0
4/25/2024	5:00 PM	0	0	0	0	0	0	0	0	0	0	0	0	0
4/25/2024	5:15 PM	0	0	0	0	0	0	0	0	0	0	0	0	0
4/25/2024	5:30 PM	0	0	0	0	0	0	0	0	0	0	0	0	0
4/25/2024	5:45 PM	0	0	0	0	0	0	0	0	0	0	0	0	0
4/25/2024	6:00 PM	0	0	0	0	0	0	0	0	0	0	0	0	0
4/25/2024	6:15 PM	0	0	0	0	0	0	0	0	0	0	0	0	0
4/25/2024	6:30 PM	0	0	0	0	0	0	0	0	0	0	0	0	0
4/25/2024	6:45 PM	0	0	0	0	0	0	0	0	0	0	0	0	0
4/25/2024	7:00 PM	0	0	0	0	0	0	0	0	0	0	0	0	0
4/25/2024	7:15 PM	0	0	0	0	0	0	0	0	0	0	0	0	0
4/25/2024	7:30 PM	0	0	0	0	0	0	0	0	0	0	0	0	0
4/25/2024	7:45 PM	0	0	0	0	0	0	0	0	0	0	0	0	0
4/25/2024	8:00 PM	0	0	0	0	0	0	0	0	0	0	0	0	0
4/25/2024	8:15 PM	0	0	0	0	0	0	0	0	0	0	0	0	0
4/25/2024	8:30 PM	0	0	0	0	0	0	0	0	0	0	0	0	0
4/25/2024	8:45 PM	0	0	0	0	0	0	0	0	0	0	0	0	0
4/25/2024	9:00 PM	0	0	0	0	0	0	0	0	0	0	0	0	0
4/25/2024	9:15 PM	0	0	0	0	0	0	0	0	0	0	0	0	0
4/25/2024	9:30 PM	0	0	0	0	0	0	0	0	0	0	0	0	0
4/25/2024	9:45 PM	0	0	0	0	0	0	0	0	0	0	0	0	0
4/25/2024	10:00 PM	0	0	0	0	0	0	0	0	0	0	0	0	0
4/25/2024	10:15 PM	0	0	0	0	0	0	0	0	0	0	0	0	0
4/25/2024	10:30 PM	0	0	0	0	0	0	0	0	0	0	0	0	0
4/25/2024	10:45 PM	0	0	0	0	0	0	0	0	0	0	0	0	0
4/25/2024	11:00 PM	0	0	0	0	0	0	0	0	0	0	0	0	0
4/25/2024	11:15 PM	0	0	0	0	0	0	0	0	0	0	0	0	0
4/25/2024	11:30 PM	0	0	0	0	0	0	0	0	0	0	0	0	0
4/25/2024	11:45 PM	0	0	0	0	0	0	0	0	0	0	0	0	0

Bi-Directional Class Count || SB WB 15min

Columbia, SC

Marr Traffic DATA COLLECTION
www.marrtraffic.com

Site 51
I-26 S/Bound Off-Ramp,
north of US-378 Sunset Blvd

Date
Tuesday, April 23, 2024

Lat/Long
34.006147°, -81.111160°

Click here for Map

Weather
Fair
58°F

Click here for Detailed Weather

0000 - 2400 (Weekday 24h Session) (04-23-2024)
SB WB 15min

	Southbound (Movement 51.1)													15min	60min
Time	1	2	3	4	5	6	7	8	9	10	11	12	13	Total	Total
0000 - 0015	0	0	0	0	0	0	0	0	0	0	0	0	0	**0**	
0015 - 0030	0	0	0	0	0	0	0	0	0	0	0	0	0	**0**	
0030 - 0045	0	0	0	0	0	0	0	0	0	0	0	0	0	**0**	
0045 - 0100	0	0	0	0	0	0	0	0	0	0	0	0	0	**0**	**0**
0100 - 0115	0	0	0	0	0	0	0	0	0	0	0	0	0	**0**	
0115 - 0130	0	0	0	0	0	0	0	0	0	0	0	0	0	**0**	
0130 - 0145	0	0	0	0	0	0	0	0	0	0	0	0	0	**0**	
0145 - 0200	0	0	0	0	0	0	0	0	0	0	0	0	0	**0**	**0**
0200 - 0215	0	0	0	0	0	0	0	0	0	0	0	0	0	**0**	
0215 - 0230	0	0	0	0	0	0	0	0	0	0	0	0	0	**0**	
0230 - 0245	0	0	0	0	0	0	0	0	0	0	0	0	0	**0**	
0245 - 0300	0	0	0	0	0	0	0	0	0	0	0	0	0	**0**	**0**
0300 - 0315	0	0	0	0	0	0	0	0	0	0	0	0	0	**0**	
0315 - 0330	0	0	0	0	0	0	0	0	0	0	0	0	0	**0**	
0330 - 0345	0	0	0	0	0	0	0	0	0	0	0	0	0	**0**	
0345 - 0400	0	0	0	0	0	0	0	0	0	0	0	0	0	**0**	**0**
0400 - 0415	0	0	0	0	0	0	0	0	0	0	0	0	0	**0**	
0415 - 0430	0	0	0	0	0	0	0	0	0	0	0	0	0	**0**	
0430 - 0445	0	0	0	0	0	0	0	0	0	0	0	0	0	**0**	
0445 - 0500	0	0	0	0	0	0	0	0	0	0	0	0	0	**0**	**0**
0500 - 0515	0	0	0	0	0	0	0	0	0	0	0	0	0	**0**	
0515 - 0530	0	0	0	0	0	0	0	0	0	0	0	0	0	**0**	
0530 - 0545	0	0	0	0	0	0	0	0	0	0	0	0	0	**0**	
0545 - 0600	0	0	0	0	0	0	0	0	0	0	0	0	0	**0**	**0**
0600 - 0615	0	0	0	0	0	0	0	0	0	0	0	0	0	**0**	
0615 - 0630	0	0	0	0	0	0	0	0	0	0	0	0	0	**0**	
0630 - 0645	0	0	0	0	0	0	0	0	0	0	0	0	0	**0**	
0645 - 0700	0	0	0	0	0	0	0	0	0	0	0	0	0	**0**	**0**
0700 - 0715	0	0	0	0	0	0	0	0	0	0	0	0	0	**0**	
0715 - 0730	0	0	0	0	0	0	0	0	0	0	0	0	0	**0**	
0730 - 0745	0	0	0	0	0	0	0	0	0	0	0	0	0	**0**	
0745 - 0800	0	0	0	0	0	0	0	0	0	0	0	0	0	**0**	**0**
0800 - 0815	0	0	0	0	0	0	0	0	0	0	0	0	0	**0**	
0815 - 0830	0	0	0	0	0	0	0	0	0	0	0	0	0	**0**	
0830 - 0845	0	0	0	0	0	0	0	0	0	0	0	0	0	**0**	
0845 - 0900	0	0	0	0	0	0	0	0	0	0	0	0	0	**0**	**0**
0900 - 0915	0	0	0	0	0	0	0	0	0	0	0	0	0	**0**	
0915 - 0930	0	0	0	0	0	0	0	0	0	0	0	0	0	**0**	
0930 - 0945	0	0	0	0	0	0	0	0	0	0	0	0	0	**0**	
0945 - 1000	0	0	0	0	0	0	0	0	0	0	0	0	0	**0**	**0**
1000 - 1015	0	0	0	0	0	0	0	0	0	0	0	0	0	**0**	
1015 - 1030	0	0	0	0	0	0	0	0	0	0	0	0	0	**0**	
1030 - 1045	0	0	0	0	0	0	0	0	0	0	0	0	0	**0**	
1045 - 1100	0	0	0	0	0	0	0	0	0	0	0	0	0	**0**	**0**
1100 - 1115	0	0	0	0	0	0	0	0	0	0	0	0	0	**0**	
1115 - 1130	0	0	0	0	0	0	0	0	0	0	0	0	0	**0**	
1130 - 1145	0	0	0	0	0	0	0	0	0	0	0	0	0	**0**	
1145 - 1200	0	0	0	0	0	0	0	0	0	0	0	0	0	**0**	**0**
1200 - 1215	0	0	0	0	0	0	0	0	0	0	0	0	0	**0**	
1215 - 1230	0	0	0	0	0	0	0	0	0	0	0	0	0	**0**	
1230 - 1245	0	0	0	0	0	0	0	0	0	0	0	0	0	**0**	
1245 - 1300	0	0	0	0	0	0	0	0	0	0	0	0	0	**0**	**0**
1300 - 1315	0	0	0	0	0	0	0	0	0	0	0	0	0	**0**	
1315 - 1330	0	0	0	0	0	0	0	0	0	0	0	0	0	**0**	
1330 - 1345	0	0	0	0	0	0	0	0	0	0	0	0	0	**0**	
1345 - 1400	0	0	0	0	0	0	0	0	0	0	0	0	0	**0**	**0**
1400 - 1415	0	0	0	0	0	0	0	0	0	0	0	0	0	**0**	
1415 - 1430	0	0	0	0	0	0	0	0	0	0	0	0	0	**0**	
1430 - 1445	0	0	0	0	0	0	0	0	0	0	0	0	0	**0**	
1445 - 1500	0	0	0	0	0	0	0	0	0	0	0	0	0	**0**	**0**
1500 - 1515	0	0	0	0	0	0	0	0	0	0	0	0	0	**0**	
1515 - 1530	0	0	0	0	0	0	0	0	0	0	0	0	0	**0**	
1530 - 1545	0	0	0	0	0	0	0	0	0	0	0	0	0	**0**	
1545 - 1600	0	0	0	0	0	0	0	0	0	0	0	0	0	**0**	**0**
1600 - 1615	0	0	0	0	0	0	0	0	0	0	0	0	0	**0**	
1615 - 1630	0	0	0	0	0	0	0	0	0	0	0	0	0	**0**	
1630 - 1645	0	0	0	0	0	0	0	0	0	0	0	0	0	**0**	
1645 - 1700	0	0	0	0	0	0	0	0	0	0	0	0	0	**0**	**0**
1700 - 1715	0	0	0	0	0	0	0	0	0	0	0	0	0	**0**	
1715 - 1730	0	0	0	0	0	0	0	0	0	0	0	0	0	**0**	
1730 - 1745	0	0	0	0	0	0	0	0	0	0	0	0	0	**0**	
1745 - 1800	0	0	0	0	0	0	0	0	0	0	0	0	0	**0**	**0**
1800 - 1815	0	0	0	0	0	0	0	0	0	0	0	0	0	**0**	
1815 - 1830	0	0	0	0	0	0	0	0	0	0	0	0	0	**0**	
1830 - 1845	0	0	0	0	0	0	0	0	0	0	0	0	0	**0**	
1845 - 1900	0	0	0	0	0	0	0	0	0	0	0	0	0	**0**	**0**
1900 - 1915	0	79	5	0	1	0	0	0	0	0	0	0	0	**85**	
1915 - 1930	0	88	20	0	2	0	0	0	3	0	0	0	0	**113**	
1930 - 1945	0	81	11	0	1	1	0	0	2	0	0	0	0	**96**	
1945 - 2000	0	64	14	0	4	0	0	0	0	0	0	0	0	**82**	**376**
2000 - 2015	0	89	9	0	1	0	0	0	0	0	0	0	0	**99**	
2015 - 2030	2	63	14	0	0	0	0	0	2	0	0	0	0	**81**	
2030 - 2045	0	53	7	0	0	0	0	0	0	0	0	0	0	**60**	
2045 - 2100	0	62	8	0	1	0	0	0	0	0	0	0	0	**71**	**311**
2100 - 2115	0	47	7	0	2	0	0	0	0	0	0	0	0	**56**	
2115 - 2130	0	45	10	0	0	1	0	0	0	0	0	0	0	**56**	
2130 - 2145	1	45	6	0	0	0	0	0	0	0	0	0	0	**52**	
2145 - 2200	0	46	6	0	0	0	0	0	0	0	0	1	0	**53**	**217**
2200 - 2215	0	40	4	0	0	0	0	0	0	0	0	0	0	**44**	
2215 - 2230	1	51	2	1	0	0	0	0	0	0	0	0	0	**55**	
2230 - 2245	0	37	3	0	0	0	0	0	0	0	0	0	0	**40**	
2245 - 2300	0	29	2	0	1	0	0	0	0	0	0	0	0	**32**	**171**
2300 - 2315	0	39	1	0	0	0	0	0	0	0	0	0	0	**40**	
2315 - 2330	0	26	2	0	0	0	1	0	1	0	0	0	0	**30**	
2330 - 2345	0	20	2	0	1	0	0	0	1	0	0	1	0	**25**	
2345 - 0000	0	15	2	0	0	0	0	0	1	0	0	0	0	**18**	**113**

Session Total	4	1019	135	1	14	2	1	0	10	0	0	2	0	**1188**
Session Average	0.04	10.61	1.41	0.01	0.15	0.02	0.01	0.00	0.10	0.00	0.00	0.02	0.00	**12.38**
Session Percentage	0.34	85.77	11.36	0.08	1.18	0.17	0.08	0.00	0.84	0.00	0.00	0.17	0.00	

AM Peak Hour	-	-	-	-	-	-	-	-	-	-	-	-	-	**-**
AM Peak Volume	0	0	0	0	0	0	0	0	0	0	0	0	0	**0**

Noon Peak Hour	-	-	-	-	-	-	-	-	-	-	-	-	-	**-**
Noon Peak Volume	0	0	0	0	0	0	0	0	0	0	0	0	0	**0**

PM Peak Hour	1930 - 2030	1915 - 2015	1915 - 2015	-	1900 - 2000	1845 - 1945	-	-	1845 - 1945	-	-	-	-	**1915 - 2015**
PM Peak Volume	2	322	54	0	8	1	0	0	5	0	0	0	0	**390**

Site 51
I-26 S/Bound Off-Ramp,
north of US-378 Sunset Blvd

Date
Wednesday, April 24, 2024

Lat/Long
34.006147°, -81.111160°

Weather
Fair
66°F

Click here for Detailed Weather

0000 - 2400 (Weekday 24h Session) (04-24-2024)
SB WB 15min

	Southbound (Movement 51.1)													15min	60min
Time	1	2	3	4	5	6	7	8	9	10	11	12	13	Total	Total
0000 - 0015	0	21	2	0	0	0	0	0	0	0	0	0	0	**23**	
0015 - 0030	0	10	1	0	0	0	0	0	0	0	0	1	0	**12**	
0030 - 0045	0	16	3	0	0	0	0	0	1	0	0	0	0	**20**	
0045 - 0100	0	9	3	0	0	0	0	0	0	0	0	1	0	**13**	**68**
0100 - 0115	0	9	3	0	2	1	0	0	0	0	0	0	0	**15**	
0115 - 0130	0	11	1	0	1	0	0	0	2	0	0	0	0	**15**	
0130 - 0145	0	9	0	0	0	0	0	0	0	0	0	1	0	**10**	
0145 - 0200	0	8	1	0	0	0	0	0	0	0	0	1	0	**10**	**50**
0200 - 0215	0	8	0	0	0	0	0	0	0	0	0	0	0	**8**	
0215 - 0230	0	6	0	0	0	1	0	0	0	0	0	0	0	**7**	
0230 - 0245	0	6	1	0	1	0	0	0	1	0	1	0	0	**10**	
0245 - 0300	0	9	0	0	0	0	0	0	0	0	0	0	0	**9**	**34**
0300 - 0315	0	4	3	0	0	0	0	0	0	0	1	0	0	**8**	
0315 - 0330	0	4	3	0	0	0	0	0	1	0	0	0	0	**8**	
0330 - 0345	0	9	0	0	0	0	0	0	0	0	0	0	0	**9**	
0345 - 0400	0	11	1	0	0	0	0	0	0	0	0	0	0	**12**	**37**
0400 - 0415	0	9	0	0	0	0	0	0	0	0	0	0	0	**9**	
0415 - 0430	0	16	2	0	1	0	0	0	0	0	0	0	0	**19**	
0430 - 0445	0	11	2	0	0	0	0	0	0	0	0	0	0	**13**	
0445 - 0500	0	25	3	0	0	0	0	0	0	0	0	0	0	**28**	**69**
0500 - 0515	0	24	3	0	0	1	0	0	0	0	0	0	0	**28**	
0515 - 0530	0	33	1	1	0	0	0	0	0	0	0	0	0	**35**	
0530 - 0545	0	49	3	0	0	0	0	0	4	0	0	0	0	**56**	
0545 - 0600	0	53	7	0	0	0	0	0	2	0	0	1	0	**63**	**182**
0600 - 0615	0	147	23	0	1	0	0	0	1	0	0	0	0	**172**	
0615 - 0630	0	116	22	0	1	1	0	0	0	0	0	0	0	**140**	
0630 - 0645	0	162	24	0	0	0	0	1	0	0	0	0	0	**187**	
0645 - 0700	0	207	35	0	2	0	0	1	2	0	0	0	0	**247**	**746**
0700 - 0715	0	183	15	0	0	0	0	1	1	0	0	0	0	**200**	
0715 - 0730	0	189	25	0	1	0	0	1	0	0	0	0	0	**216**	
0730 - 0745	0	203	29	0	1	0	0	1	0	0	0	0	0	**234**	
0745 - 0800	0	202	28	0	1	0	0	1	0	0	0	0	0	**232**	**882**
0800 - 0815	0	166	37	0	5	2	0	0	1	0	0	0	0	**211**	
0815 - 0830	0	159	35	0	1	0	0	0	1	0	0	0	0	**196**	
0830 - 0845	0	163	45	1	2	0	0	1	0	0	0	0	0	**212**	
0845 - 0900	0	145	28	0	7	2	0	0	2	0	0	0	0	**184**	**803**
0900 - 0915	0	148	38	0	5	1	0	1	0	0	0	0	0	**193**	
0915 - 0930	0	160	31	0	1	1	0	2	3	0	0	0	0	**198**	
0930 - 0945	0	128	31	1	0	3	0	0	1	0	0	0	0	**164**	
0945 - 1000	0	131	39	1	4	0	0	1	1	0	0	0	0	**177**	**732**
1000 - 1015	0	151	44	0	5	0	0	0	0	0	0	0	0	**200**	
1015 - 1030	0	154	29	0	4	1	0	0	0	0	0	0	0	**188**	
1030 - 1045	0	145	27	1	6	0	0	2	0	0	0	0	0	**181**	
1045 - 1100	0	127	32	0	3	0	0	0	0	0	0	0	0	**162**	**731**
1100 - 1115	0	147	36	0	3	0	0	0	2	0	0	0	0	**188**	
1115 - 1130	0	171	39	1	3	0	0	0	0	0	0	0	0	**214**	
1130 - 1145	1	140	38	0	2	1	0	2	0	0	0	0	0	**184**	
1145 - 1200	0	152	46	1	5	1	0	2	1	0	0	0	0	**208**	**794**
1200 - 1215	1	175	43	0	1	0	0	1	0	0	0	0	0	**221**	
1215 - 1230	0	142	21	2	1	0	0	1	3	0	0	0	0	**170**	
1230 - 1245	0	159	31	0	1	0	0	2	0	0	0	0	0	**193**	
1245 - 1300	0	138	32	0	3	0	0	3	0	0	0	0	0	**176**	**760**
1300 - 1315	1	137	45	0	1	1	0	0	1	0	0	0	0	**186**	
1315 - 1330	0	151	42	1	2	0	0	0	3	0	0	0	0	**199**	
1330 - 1345	0	157	33	2	5	0	0	0	0	0	0	0	0	**197**	
1345 - 1400	0	141	28	1	8	0	0	1	0	0	0	0	0	**179**	**761**
1400 - 1415	0	189	45	0	4	1	1	0	2	0	0	0	0	**242**	
1415 - 1430	0	152	44	1	6	1	0	2	1	0	0	0	0	**207**	
1430 - 1445	0	137	36	1	3	0	0	0	0	0	0	0	0	**177**	
1445 - 1500	0	145	30	0	2	0	0	1	0	0	0	0	0	**178**	**804**
1500 - 1515	0	149	38	0	1	1	0	0	2	0	0	0	0	**191**	
1515 - 1530	0	138	29	1	2	0	0	0	3	0	0	0	0	**173**	
1530 - 1545	0	162	34	0	5	0	0	0	1	0	0	0	0	**202**	
1545 - 1600	0	143	34	0	6	0	0	0	0	0	0	0	0	**183**	**749**
1600 - 1615	0	121	23	0	0	0	0	0	0	0	0	0	0	**144**	
1615 - 1630	0	145	21	2	5	1	0	2	2	0	0	0	0	**178**	
1630 - 1645	0	150	35	0	3	0	0	0	0	0	0	0	0	**188**	
1645 - 1700	0	148	30	0	3	0	0	1	0	0	0	0	0	**182**	**692**
1700 - 1715	0	153	21	0	5	0	0	3	1	0	0	0	0	**183**	
1715 - 1730	0	164	23	0	1	1	0	0	0	0	0	0	0	**189**	
1730 - 1745	0	156	36	0	4	0	0	1	0	0	0	0	0	**197**	
1745 - 1800	0	149	19	0	2	0	0	0	1	0	0	0	0	**171**	**740**
1800 - 1815	0	137	20	0	1	0	0	2	1	0	0	0	0	**161**	
1815 - 1830	0	125	30	0	3	0	0	0	0	0	0	0	0	**158**	
1830 - 1845	0	126	25	0	0	0	0	0	0	0	0	0	0	**151**	
1845 - 1900	0	130	17	0	5	0	0	0	2	0	0	0	0	**154**	**624**
1900 - 1915	1	107	26	0	4	1	0	1	1	0	0	0	0	**141**	
1915 - 1930	0	83	15	0	0	0	0	0	0	0	0	0	0	**98**	
1930 - 1945	0	80	11	0	2	0	0	0	1	0	0	0	0	**94**	
1945 - 2000	0	80	16	0	2	0	0	0	1	0	0	0	0	**99**	**432**
2000 - 2015	0	85	12	0	2	0	0	0	1	0	0	0	0	**100**	
2015 - 2030	0	72	15	0	1	0	0	0	0	0	0	0	0	**88**	
2030 - 2045	0	78	9	0	0	0	0	0	0	0	0	0	0	**87**	
2045 - 2100	0	63	9	0	0	1	0	0	1	0	0	0	0	**74**	**349**
2100 - 2115	0	67	12	0	1	0	0	0	0	0	0	0	0	**80**	
2115 - 2130	0	50	4	0	0	0	0	0	0	0	0	0	0	**54**	
2130 - 2145	0	52	5	0	1	0	0	0	1	0	0	0	0	**59**	
2145 - 2200	0	38	6	0	1	0	0	0	0	0	0	0	0	**45**	**238**
2200 - 2215	0	43	5	0	0	0	0	0	0	0	0	0	0	**48**	
2215 - 2230	1	37	8	0	1	0	0	0	0	0	0	0	0	**47**	
2230 - 2245	0	34	8	0	1	0	0	0	0	1	0	0	0	**44**	
2245 - 2300	1	33	2	0	0	0	0	0	0	0	0	1	0	**37**	**176**
2300 - 2315	0	36	5	0	1	0	0	0	0	0	0	0	0	**42**	
2315 - 2330	0	18	2	0	0	0	0	0	0	0	0	0	0	**20**	
2330 - 2345	0	29	5	0	1	0	0	0	0	0	0	0	0	**35**	
2345 - 0000	0	21	2	0	0	0	0	0	0	0	0	0	0	**23**	**120**

Session Total	6	9391	1861	18	169	24	1	38	56	1	2	6	0	**11573**
Session Average	0.06	97.82	19.39	0.19	1.76	0.25	0.01	0.40	0.58	0.01	0.02	0.06	0.00	**120.55**
Session Percentage	0.05	81.15	16.08	0.16	1.46	0.21	0.01	0.33	0.48	0.01	0.02	0.05	0.00	

AM Peak Hour	-	0645 - 0745	0815 - 0915	0900 - 1000	0945 - 1045	0845 - 0945	-	0630 - 0730	0515 - 0615	-	-	0500 - 0600	-	**0645 - 0745**
AM Peak Volume	0	782	146	2	19	7	0	4	7	0	0	1	0	**897**

Noon Peak Hour	1115 - 1215	1330 - 1430	1115 - 1215	1300 - 1400	1330 - 1430	1100 - 1200	1315 - 1415	1200 - 1300	1445 - 1545	-	-	-	-	**1115 - 1215**
Noon Peak Volume	2	639	166	4	23	2	1	7	6	0	0	0	0	**827**

PM Peak Hour	1815 - 1915	1700 - 1800	1500 - 1600	1530 - 1630	1530 - 1630	1500 - 1600	-	1615 - 1715	1500 - 1600	-	-	-	-	**1645 - 1745**
PM Peak Volume	1	622	135	2	16	1	0	6	6	0	0	0	0	**751**

Site 51
I-26 S/Bound Off-Ramp,
north of US-378 Sunset Blvd

Date
Thursday, April 25, 2024

Lat/Long
34.006147°, -81.111160°

Weather
Fair
67°F

Click here for Detailed Weather

0000 - 2400 (Weekday 24h Session) (04-25-2024)
SB WB 15min

	Southbound (Movement 51.1)													15min	60min
TIME	1	2	3	4	5	6	7	8	9	10	11	12	13	Total	Total
0000 - 0015	0	20	3	0	0	0	0	0	0	1	0	0	0	**24**	
0015 - 0030	0	12	0	0	0	0	0	0	1	0	0	1	0	**14**	
0030 - 0045	0	8	4	0	0	1	0	0	0	0	0	0	0	**13**	
0045 - 0100	0	13	0	0	2	0	0	0	1	0	0	0	0	**16**	**67**
0100 - 0115	0	12	2	0	0	0	0	0	0	0	0	2	0	**16**	
0115 - 0130	0	9	2	0	0	0	0	0	1	0	0	0	0	**12**	
0130 - 0145	0	9	1	0	0	1	0	0	0	0	0	0	0	**11**	
0145 - 0200	0	9	0	0	0	0	0	0	0	0	0	2	0	**11**	**50**
0200 - 0215	0	13	0	0	1	0	0	1	0	0	0	0	0	**15**	
0215 - 0230	0	7	2	0	0	0	0	0	1	0	0	0	0	**10**	
0230 - 0245	0	5	1	0	0	0	0	0	1	0	0	0	0	**7**	
0245 - 0300	0	5	1	0	1	0	0	0	1	0	0	0	0	**8**	**40**
0300 - 0315	0	11	3	0	1	0	0	0	0	0	0	0	0	**15**	
0315 - 0330	0	8	2	0	0	0	0	0	0	0	1	0	0	**11**	
0330 - 0345	0	12	1	0	0	1	0	0	0	0	0	0	0	**14**	
0345 - 0400	0	11	1	0	0	0	0	0	1	0	0	0	0	**13**	**53**
0400 - 0415	0	8	3	0	1	1	0	0	0	0	0	0	0	**13**	
0415 - 0430	0	11	4	0	0	0	0	0	0	0	0	0	0	**15**	
0430 - 0445	0	12	4	0	1	0	0	0	0	0	0	0	0	**17**	
0445 - 0500	0	24	1	0	0	0	0	0	0	0	0	0	0	**25**	**70**
0500 - 0515	0	26	4	0	1	0	0	0	0	0	0	0	0	**31**	
0515 - 0530	0	28	4	0	1	1	0	0	0	0	0	0	0	**34**	
0530 - 0545	0	43	16	0	1	0	0	1	1	0	0	1	0	**63**	
0545 - 0600	0	48	6	0	1	0	0	1	0	0	0	0	0	**56**	**184**
0600 - 0615	0	93	9	0	0	0	0	0	1	0	0	0	0	**103**	
0615 - 0630	0	113	23	0	0	0	0	0	0	0	0	0	0	**136**	
0630 - 0645	0	144	31	0	3	0	0	0	1	0	0	0	0	**179**	
0645 - 0700	0	192	34	0	2	0	0	0	1	0	0	0	0	**229**	**647**
0700 - 0715	0	181	31	0	0	0	0	1	0	0	0	0	0	**213**	
0715 - 0730	0	167	44	0	6	0	0	0	1	0	0	0	0	**218**	
0730 - 0745	0	174	30	0	3	0	0	1	1	0	0	0	0	**209**	
0745 - 0800	0	163	32	0	3	0	0	3	1	0	0	0	0	**202**	**842**
0800 - 0815	0	182	32	1	3	2	0	1	0	0	0	0	0	**221**	
0815 - 0830	0	154	39	0	2	0	0	0	1	0	0	0	0	**196**	
0830 - 0845	0	158	45	0	4	0	0	0	0	0	0	0	0	**207**	
0845 - 0900	0	121	46	1	4	1	0	0	0	0	0	0	0	**173**	**797**
0900 - 0915	0	138	35	0	1	0	0	2	2	0	0	0	0	**178**	
0915 - 0930	0	156	41	1	2	2	0	0	0	0	0	0	0	**202**	
0930 - 0945	0	140	42	0	1	3	0	1	0	0	0	0	0	**187**	
0945 - 1000	0	129	39	3	2	0	0	0	1	0	0	0	0	**174**	**741**
1000 - 1015	0	123	25	0	6	3	0	0	1	0	0	0	0	**158**	
1015 - 1030	0	124	34	0	1	1	0	1	3	0	0	0	0	**164**	
1030 - 1045	0	144	23	1	3	1	0	0	1	0	0	0	0	**173**	
1045 - 1100	1	139	38	0	3	2	0	1	2	0	0	0	0	**186**	**681**
1100 - 1115	0	131	28	1	1	0	0	0	0	0	0	0	0	**161**	
1115 - 1130	0	144	48	0	3	1	0	0	3	0	0	0	0	**199**	
1130 - 1145	0	132	38	0	1	1	0	2	1	0	0	0	0	**175**	
1145 - 1200	0	140	38	0	2	1	0	0	4	0	0	0	0	**185**	**720**
1200 - 1215	0	146	39	2	2	2	0	0	1	0	0	0	0	**192**	
1215 - 1230	0	122	40	0	1	0	0	1	1	0	0	0	0	**165**	
1230 - 1245	1	135	27	0	3	2	0	0	1	0	0	0	0	**169**	
1245 - 1300	0	151	39	0	4	0	0	0	2	0	0	0	0	**196**	**722**
1300 - 1315	1	141	25	0	5	3	0	3	1	0	0	0	0	**179**	
1315 - 1330	0	156	33	1	1	0	0	0	2	0	0	0	0	**193**	
1330 - 1345	0	133	40	0	1	0	0	1	1	0	0	0	0	**176**	
1345 - 1400	0	132	26	0	7	0	0	1	0	0	0	0	0	**166**	**714**
1400 - 1415	0	154	43	1	8	0	0	0	1	0	0	0	0	**207**	
1415 - 1430	0	147	36	0	6	1	0	0	2	0	0	0	0	**192**	
1430 - 1445	0	126	25	1	6	1	0	1	1	0	0	0	0	**161**	
1445 - 1500	0	142	36	0	4	3	0	0	0	0	0	0	0	**185**	**745**
1500 - 1515	0	182	33	1	2	1	0	2	3	0	0	0	0	**224**	
1515 - 1530	1	147	33	0	3	0	0	1	2	0	0	0	0	**187**	
1530 - 1545	0	148	21	1	5	0	0	0	1	0	0	0	0	**176**	
1545 - 1600	0	116	32	0	3	2	0	1	2	0	0	0	0	**156**	**743**
1600 - 1615	0	131	25	0	5	3	0	0	1	0	0	0	0	**165**	
1615 - 1630	0	127	28	0	6	1	0	1	0	2	0	0	0	**165**	
1630 - 1645	0	147	23	0	2	0	0	1	0	0	0	0	0	**173**	
1645 - 1700	0	121	22	0	2	1	0	1	0	0	0	0	0	**147**	**650**
1700 - 1715	0	183	27	0	2	1	0	0	2	0	0	0	0	**215**	
1715 - 1730	0	147	24	1	0	0	0	1	1	0	0	0	0	**174**	
1730 - 1745	0	153	30	0	4	0	0	2	0	0	0	0	0	**189**	
1745 - 1800	0	128	35	0	2	2	0	1	0	0	0	0	0	**168**	**746**
1800 - 1815	0	132	30	0	2	0	0	1	1	0	0	0	0	**166**	
1815 - 1830	0	136	23	0	8	0	0	2	0	0	0	0	0	**169**	
1830 - 1845	0	137	22	0	3	1	0	0	2	0	0	0	0	**165**	
1845 - 1900	0	131	20	0	0	1	0	3	1	0	0	0	0	**156**	**656**
1900 - 1915	0	0	0	0	0	0	0	0	0	0	0	0	0	**0**	
1915 - 1930	0	0	0	0	0	0	0	0	0	0	0	0	0	**0**	
1930 - 1945	0	0	0	0	0	0	0	0	0	0	0	0	0	**0**	
1945 - 2000	0	0	0	0	0	0	0	0	0	0	0	0	0	**0**	**0**
2000 - 2015	0	0	0	0	0	0	0	0	0	0	0	0	0	**0**	
2015 - 2030	0	0	0	0	0	0	0	0	0	0	0	0	0	**0**	
2030 - 2045	0	0	0	0	0	0	0	0	0	0	0	0	0	**0**	
2045 - 2100	0	0	0	0	0	0	0	0	0	0	0	0	0	**0**	**0**
2100 - 2115	0	0	0	0	0	0	0	0	0	0	0	0	0	**0**	
2115 - 2130	0	0	0	0	0	0	0	0	0	0	0	0	0	**0**	
2130 - 2145	0	0	0	0	0	0	0	0	0	0	0	0	0	**0**	
2145 - 2200	0	0	0	0	0	0	0	0	0	0	0	0	0	**0**	**0**
2200 - 2215	0	0	0	0	0	0	0	0	0	0	0	0	0	**0**	
2215 - 2230	0	0	0	0	0	0	0	0	0	0	0	0	0	**0**	
2230 - 2245	0	0	0	0	0	0	0	0	0	0	0	0	0	**0**	
2245 - 2300	0	0	0	0	0	0	0	0	0	0	0	0	0	**0**	**0**
2300 - 2315	0	0	0	0	0	0	0	0	0	0	0	0	0	**0**	
2315 - 2330	0	0	0	0	0	0	0	0	0	0	0	0	0	**0**	
2330 - 2345	0	0	0	0	0	0	0	0	0	0	0	0	0	**0**	
2345 - 0000	0	0	0	0	0	0	0	0	0	0	0	0	0	**0**	**0**

Session Total	4	7797	1727	16	164	48	0	40	62	3	1	6	0	**9868**
Session Average	0.04	81.22	17.99	0.17	1.71	0.50	0.00	0.42	0.65	0.03	0.01	0.06	0.00	**102.79**
Session Percentage	0.04	79.01	17.50	0.16	1.66	0.49	0.00	0.41	0.63	0.03	0.01	0.06	0.00	

AM Peak Hour	-	0645 - 0745	0830 - 0930	0900 - 1000	0715 - 0815	0915 - 1015	-	0700 - 0800	0945 - 1045	-	-	0500 - 0600	-	**0645 - 0745**
AM Peak Hour Volume	0	714	167	4	15	8	0	5	6	0	0	1	0	**869**

Noon Peak Hour	1215 - 1315	1445 - 1545	1115 - 1215	1015 - 1115	1345 - 1445	1000 - 1100	-	1300 - 1400	1115 - 1215	-	-	-	-	**1445 - 1545**
Noon Peak Hour Volume	2	619	163	2	27	7	0	5	9	0	0	0	0	**772**

PM Peak Hour	1500 - 1600	1700 - 1800	1500 - 1600	1500 - 1600	1530 - 1630	1530 - 1630	-	1730 - 1830	1500 - 1600	1530 - 1630	-	-	-	**1700 - 1800**
PM Peak Hour Volume	1	611	119	2	19	6	0	6	8	2	0	0	0	**746**

Bi-Directional Class Count || SB WB Average 15min

Columbia, SC

Marr Traffic DATA COLLECTION
www.marrtraffic.com

Site 51
I-26 S/Bound Off-Ramp,
north of US-378 Sunset Blvd

Date
Tuesday, April 23, 2024

Lat/Long
34.006147°, -81.111160°

Weather
Fair
58°F

0000 - 2400 (Weekday 24h Session) (All Dates)
SB WB Average 15min

	SB WB Average 15min													15min	60min
Time	1	2	3	4	5	6	7	8	9	10	11	12	13	Total	Total
0000 - 0015	0	14	2	0	0	0	0	0	0	0	0	0	0	**16**	
0015 - 0030	0	7	0	0	0	0	0	0	0	0	0	1	0	**9**	
0030 - 0045	0	8	2	0	0	0	0	0	0	0	0	0	0	**11**	
0045 - 0100	0	7	1	0	1	0	0	0	0	0	0	0	0	**10**	**45**
0100 - 0115	0	7	2	0	1	0	0	0	0	0	0	1	0	**10**	
0115 - 0130	0	7	1	0	0	0	0	0	1	0	0	0	0	**9**	
0130 - 0145	0	6	0	0	0	0	0	0	0	0	0	0	0	**7**	
0145 - 0200	0	6	0	0	0	0	0	0	0	0	0	1	0	**7**	**33**
0200 - 0215	0	7	0	0	0	0	0	0	0	0	0	0	0	**8**	
0215 - 0230	0	4	1	0	0	0	0	0	0	0	0	0	0	**6**	
0230 - 0245	0	4	1	0	0	0	0	0	1	0	0	0	0	**6**	
0245 - 0300	0	5	0	0	0	0	0	0	0	0	0	0	0	**6**	**25**
0300 - 0315	0	5	2	0	0	0	0	0	0	0	0	0	0	**8**	
0315 - 0330	0	4	2	0	0	0	0	0	0	0	0	0	0	**6**	
0330 - 0345	0	7	0	0	0	0	0	0	0	0	0	0	0	**8**	
0345 - 0400	0	7	1	0	0	0	0	0	0	0	0	0	0	**8**	**30**
0400 - 0415	0	6	1	0	0	0	0	0	0	0	0	0	0	**7**	
0415 - 0430	0	9	2	0	0	0	0	0	0	0	0	0	0	**11**	
0430 - 0445	0	8	2	0	0	0	0	0	0	0	0	0	0	**10**	
0445 - 0500	0	16	1	0	0	0	0	0	0	0	0	0	0	**18**	**46**
0500 - 0515	0	17	2	0	0	0	0	0	0	0	0	0	0	**20**	
0515 - 0530	0	20	2	0	0	0	0	0	0	0	0	0	0	**23**	
0530 - 0545	0	31	6	0	0	0	0	0	2	0	0	0	0	**40**	
0545 - 0600	0	34	4	0	0	0	0	0	1	0	0	0	0	**40**	**122**
0600 - 0615	0	80	11	0	0	0	0	0	1	0	0	0	0	**92**	
0615 - 0630	0	76	15	0	0	0	0	0	0	0	0	0	0	**92**	
0630 - 0645	0	102	18	0	1	0	0	0	0	0	0	0	0	**122**	
0645 - 0700	0	133	23	0	1	0	0	0	1	0	0	0	0	**159**	**464**
0700 - 0715	0	121	15	0	0	0	0	1	0	0	0	0	0	**138**	
0715 - 0730	0	119	23	0	2	0	0	0	0	0	0	0	0	**145**	
0730 - 0745	0	126	20	0	1	0	0	1	0	0	0	0	0	**148**	
0745 - 0800	0	122	20	0	1	0	0	1	0	0	0	0	0	**145**	**575**
0800 - 0815	0	116	23	0	3	1	0	0	0	0	0	0	0	**144**	
0815 - 0830	0	104	25	0	1	0	0	0	1	0	0	0	0	**131**	
0830 - 0845	0	107	30	0	2	0	0	0	0	0	0	0	0	**140**	
0845 - 0900	0	89	25	0	4	1	0	0	1	0	0	0	0	**119**	**533**
0900 - 0915	0	95	24	0	2	0	0	1	1	0	0	0	0	**124**	
0915 - 0930	0	105	24	0	1	1	0	1	1	0	0	0	0	**133**	
0930 - 0945	0	89	24	0	0	2	0	0	0	0	0	0	0	**117**	
0945 - 1000	0	87	26	1	2	0	0	0	1	0	0	0	0	**117**	**491**
1000 - 1015	0	91	23	0	4	1	0	0	0	0	0	0	0	**119**	
1015 - 1030	0	93	21	0	2	1	0	0	1	0	0	0	0	**117**	
1030 - 1045	0	96	17	1	3	0	0	1	0	0	0	0	0	**118**	
1045 - 1100	0	89	23	0	2	1	0	0	1	0	0	0	0	**116**	**471**
1100 - 1115	0	93	21	0	1	0	0	0	1	0	0	0	0	**116**	
1115 - 1130	0	105	29	0	2	0	0	0	1	0	0	0	0	**138**	
1130 - 1145	0	91	25	0	1	1	0	1	0	0	0	0	0	**120**	
1145 - 1200	0	97	28	0	2	1	0	1	2	0	0	0	0	**131**	**505**
1200 - 1215	0	107	27	1	1	1	0	0	0	0	0	0	0	**138**	
1215 - 1230	0	88	20	1	1	0	0	1	1	0	0	0	0	**112**	
1230 - 1245	0	98	19	0	1	1	0	1	0	0	0	0	0	**121**	
1245 - 1300	0	96	24	0	2	0	0	1	1	0	0	0	0	**124**	**494**
1300 - 1315	1	93	23	0	2	1	0	1	1	0	0	0	0	**122**	
1315 - 1330	0	102	25	1	1	0	0	0	2	0	0	0	0	**131**	
1330 - 1345	0	97	24	1	2	0	0	0	0	0	0	0	0	**124**	
1345 - 1400	0	91	18	0	5	0	0	1	0	0	0	0	0	**115**	**492**
1400 - 1415	0	114	29	0	4	0	0	0	1	0	0	0	0	**150**	
1415 - 1430	0	100	27	0	4	1	0	1	1	0	0	0	0	**133**	
1430 - 1445	0	88	20	1	3	0	0	0	0	0	0	0	0	**113**	
1445 - 1500	0	96	22	0	2	1	0	0	0	0	0	0	0	**121**	**516**
1500 - 1515	0	110	24	0	1	1	0	1	2	0	0	0	0	**138**	
1515 - 1530	0	95	21	0	2	0	0	0	2	0	0	0	0	**120**	
1530 - 1545	0	103	18	0	3	0	0	0	1	0	0	0	0	**126**	
1545 - 1600	0	86	22	0	3	1	0	0	1	0	0	0	0	**113**	**497**
1600 - 1615	0	84	16	0	2	1	0	0	0	0	0	0	0	**103**	
1615 - 1630	0	91	16	1	4	1	0	1	1	1	0	0	0	**114**	
1630 - 1645	0	99	19	0	2	0	0	0	0	0	0	0	0	**120**	
1645 - 1700	0	90	17	0	2	0	0	1	0	0	0	0	0	**110**	**447**
1700 - 1715	0	112	16	0	2	0	0	1	1	0	0	0	0	**133**	
1715 - 1730	0	104	16	0	0	0	0	0	0	0	0	0	0	**121**	
1730 - 1745	0	103	22	0	3	0	0	1	0	0	0	0	0	**129**	
1745 - 1800	0	92	18	0	1	1	0	0	0	0	0	0	0	**113**	**495**
1800 - 1815	0	90	17	0	1	0	0	1	1	0	0	0	0	**109**	
1815 - 1830	0	87	18	0	4	0	0	1	0	0	0	0	0	**109**	
1830 - 1845	0	88	16	0	1	0	0	0	1	0	0	0	0	**105**	
1845 - 1900	0	87	12	0	2	0	0	1	1	0	0	0	0	**103**	**427**
1900 - 1915	0	62	10	0	2	0	0	0	0	0	0	0	0	**75**	
1915 - 1930	0	57	12	0	1	0	0	0	1	0	0	0	0	**70**	
1930 - 1945	0	54	7	0	1	0	0	0	1	0	0	0	0	**63**	
1945 - 2000	0	48	10	0	2	0	0	0	0	0	0	0	0	**60**	**269**
2000 - 2015	0	58	7	0	1	0	0	0	0	0	0	0	0	**66**	
2015 - 2030	1	45	10	0	0	0	0	0	1	0	0	0	0	**56**	
2030 - 2045	0	44	5	0	0	0	0	0	0	0	0	0	0	**49**	
2045 - 2100	0	42	6	0	0	0	0	0	0	0	0	0	0	**48**	**220**
2100 - 2115	0	38	6	0	1	0	0	0	0	0	0	0	0	**45**	
2115 - 2130	0	32	5	0	0	0	0	0	0	0	0	0	0	**37**	
2130 - 2145	0	32	4	0	0	0	0	0	0	0	0	0	0	**37**	
2145 - 2200	0	28	4	0	0	0	0	0	0	0	0	0	0	**33**	**152**
2200 - 2215	0	28	3	0	0	0	0	0	0	0	0	0	0	**31**	
2215 - 2230	1	29	3	0	0	0	0	0	0	0	0	0	0	**34**	
2230 - 2245	0	24	4	0	0	0	0	0	0	0	0	0	0	**28**	
2245 - 2300	0	21	1	0	0	0	0	0	0	0	0	0	0	**23**	**116**
2300 - 2315	0	25	2	0	0	0	0	0	0	0	0	0	0	**27**	
2315 - 2330	0	15	1	0	0	0	0	0	0	0	0	0	0	**17**	
2330 - 2345	0	16	2	0	1	0	0	0	0	0	0	0	0	**20**	
2345 - 0000	0	12	1	0	0	0	0	0	0	0	0	0	0	**14**	**78**

Session Total	5	6069	1241	12	116	25	1	26	43	1	1	5	0	**7543**
Session Average	0.05	63.22	12.93	0.12	1.20	0.26	0.01	0.27	0.44	0.01	0.01	0.05	0.00	**78.57**
Session Percentage	0.06	80.46	16.45	0.15	1.53	0.33	0.01	0.34	0.57	0.02	0.01	0.06	0.00	

AM Peak Hour	-	0645 - 0745	0815 - 0915	0900 - 1000	0945 - 1045	0845 - 0945	-	0700 - 0800	0515 - 0615	-	-	0500 - 0600	-	**0645 - 0745**
AM Peak Volume	0	499	104	2	10	4	0	3	3	0	0	1	0	**589**

Noon Peak Hour	1215 - 1315	1315 - 1415	1115 - 1215	1315 - 1415	1345 - 1445	1000 - 1100	1315 - 1415	1215 - 1315	1445 - 1545	-	-	-	-	**1115 - 1215**
Noon Peak Volume	1	404	110	2	16	3	0	3	4	0	0	0	0	**526**

PM Peak Hour	1930 - 2030	1700 - 1800	1500 - 1600	1500 - 1600	1530 - 1630	1530 - 1630	-	1615 - 1715	1500 - 1600	1530 - 1630	-	-	-	**1500 - 1600**
PM Peak Volume	1	411	85	1	12	2	0	3	5	1	0	0	0	**497**

Bi-Directional Class Count || Volume Summary 15min

Columbia, SC

Marr Traffic DATA COLLECTION

www.marrtraffic.com

Site 51

I-26 S/Bound Off-Ramp,
north of US-378 Sunset Blvd

Date

Tuesday, April 23, 2024

Lat/Long

34.006147°, -81.111160°

Weather

Fair
58°F

Click here for Detailed Weather

0000 - 2400 (Weekday 24h Session) (04-23-2024)

Volume Summary 15min

	Volume Summary 15min		15min	60min
TIME	NB	SB	Total	Total
0000 - 0015	0	0	**0**	
0015 - 0030	0	0	**0**	
0030 - 0045	0	0	**0**	
0045 - 0100	0	0	**0**	**0**
0100 - 0115	0	0	**0**	
0115 - 0130	0	0	**0**	
0130 - 0145	0	0	**0**	
0145 - 0200	0	0	**0**	**0**
0200 - 0215	0	0	**0**	
0215 - 0230	0	0	**0**	
0230 - 0245	0	0	**0**	
0245 - 0300	0	0	**0**	**0**
0300 - 0315	0	0	**0**	
0315 - 0330	0	0	**0**	
0330 - 0345	0	0	**0**	
0345 - 0400	0	0	**0**	**0**
0400 - 0415	0	0	**0**	
0415 - 0430	0	0	**0**	
0430 - 0445	0	0	**0**	
0445 - 0500	0	0	**0**	**0**
0500 - 0515	0	0	**0**	
0515 - 0530	0	0	**0**	
0530 - 0545	0	0	**0**	
0545 - 0600	0	0	**0**	**0**
0600 - 0615	0	0	**0**	
0615 - 0630	0	0	**0**	
0630 - 0645	0	0	**0**	
0645 - 0700	0	0	**0**	**0**
0700 - 0715	0	0	**0**	
0715 - 0730	0	0	**0**	
0730 - 0745	0	0	**0**	
0745 - 0800	0	0	**0**	**0**
0800 - 0815	0	0	**0**	
0815 - 0830	0	0	**0**	
0830 - 0845	0	0	**0**	
0845 - 0900	0	0	**0**	**0**
0900 - 0915	0	0	**0**	
0915 - 0930	0	0	**0**	
0930 - 0945	0	0	**0**	
0945 - 1000	0	0	**0**	**0**
1000 - 1015	0	0	**0**	
1015 - 1030	0	0	**0**	
1030 - 1045	0	0	**0**	
1045 - 1100	0	0	**0**	**0**
1100 - 1115	0	0	**0**	
1115 - 1130	0	0	**0**	
1130 - 1145	0	0	**0**	
1145 - 1200	0	0	**0**	**0**

	Volume Summary 15min		15min	60min
Time	NB	SB	Total	Total
1200 - 1215	0	0	**0**	
1215 - 1230	0	0	**0**	
1230 - 1245	0	0	**0**	
1245 - 1300	0	0	**0**	**0**
1300 - 1315	0	0	**0**	
1315 - 1330	0	0	**0**	
1330 - 1345	0	0	**0**	
1345 - 1400	0	0	**0**	**0**
1400 - 1415	0	0	**0**	
1415 - 1430	0	0	**0**	
1430 - 1445	0	0	**0**	
1445 - 1500	0	0	**0**	**0**
1500 - 1515	0	0	**0**	
1515 - 1530	0	0	**0**	
1530 - 1545	0	0	**0**	
1545 - 1600	0	0	**0**	**0**
1600 - 1615	0	0	**0**	
1615 - 1630	0	0	**0**	
1630 - 1645	0	0	**0**	
1645 - 1700	0	0	**0**	**0**
1700 - 1715	0	0	**0**	
1715 - 1730	0	0	**0**	
1730 - 1745	0	0	**0**	
1745 - 1800	0	0	**0**	**0**
1800 - 1815	0	0	**0**	
1815 - 1830	0	0	**0**	
1830 - 1845	0	0	**0**	
1845 - 1900	0	0	**0**	**0**
1900 - 1915	0	85	**85**	
1915 - 1930	0	113	**113**	
1930 - 1945	0	96	**96**	
1945 - 2000	0	82	**82**	**376**
2000 - 2015	0	99	**99**	
2015 - 2030	0	81	**81**	
2030 - 2045	0	60	**60**	
2045 - 2100	0	71	**71**	**311**
2100 - 2115	0	56	**56**	
2115 - 2130	0	56	**56**	
2130 - 2145	0	52	**52**	
2145 - 2200	0	53	**53**	**217**
2200 - 2215	0	44	**44**	
2215 - 2230	0	55	**55**	
2230 - 2245	0	40	**40**	
2245 - 2300	0	32	**32**	**171**
2300 - 2315	0	40	**40**	
2315 - 2330	0	30	**30**	
2330 - 2345	0	25	**25**	
2345 - 0000	0	18	**18**	**113**

Session Total	0	1188	**1188**
Session Average	0.00	12.38	**12.38**
Session Percentage	0.00	100.00	

Site 51
I-26 S/Bound Off-Ramp,
north of US-378 Sunset Blvd

Date
Wednesday, April 24, 2024

Lat/Long
34.006147°, -81.111160°

Weather
Fair
66°F

Click here for Detailed Weather

0000 - 2400 (Weekday 24h Session) (04-24-2024)

Volume Summary 15min

TIME	Volume Summary 15min NB	SB	15min Total	60min Total
0000 - 0015	0	23	**23**	
0015 - 0030	0	12	**12**	
0030 - 0045	0	20	**20**	
0045 - 0100	0	13	**13**	**68**
0100 - 0115	0	15	**15**	
0115 - 0130	0	15	**15**	
0130 - 0145	0	10	**10**	
0145 - 0200	0	10	**10**	**50**
0200 - 0215	0	8	**8**	
0215 - 0230	0	7	**7**	
0230 - 0245	0	10	**10**	
0245 - 0300	0	9	**9**	**34**
0300 - 0315	0	8	**8**	
0315 - 0330	0	8	**8**	
0330 - 0345	0	9	**9**	
0345 - 0400	0	12	**12**	**37**
0400 - 0415	0	9	**9**	
0415 - 0430	0	19	**19**	
0430 - 0445	0	13	**13**	
0445 - 0500	0	28	**28**	**69**
0500 - 0515	0	28	**28**	
0515 - 0530	0	35	**35**	
0530 - 0545	0	56	**56**	
0545 - 0600	0	63	**63**	**182**
0600 - 0615	0	172	**172**	
0615 - 0630	0	140	**140**	
0630 - 0645	0	187	**187**	
0645 - 0700	0	247	**247**	**746**
0700 - 0715	0	200	**200**	
0715 - 0730	0	216	**216**	
0730 - 0745	0	234	**234**	
0745 - 0800	0	232	**232**	**882**
0800 - 0815	0	211	**211**	
0815 - 0830	0	196	**196**	
0830 - 0845	0	212	**212**	
0845 - 0900	0	184	**184**	**803**
0900 - 0915	0	193	**193**	
0915 - 0930	0	198	**198**	
0930 - 0945	0	164	**164**	
0945 - 1000	0	177	**177**	**732**
1000 - 1015	0	200	**200**	
1015 - 1030	0	188	**188**	
1030 - 1045	0	181	**181**	
1045 - 1100	0	162	**162**	**731**
1100 - 1115	0	188	**188**	
1115 - 1130	0	214	**214**	
1130 - 1145	0	184	**184**	
1145 - 1200	0	208	**208**	**794**

Time	Volume Summary 15min NB	SB	15min Total	60min Total
1200 - 1215	0	221	**221**	
1215 - 1230	0	170	**170**	
1230 - 1245	0	193	**193**	
1245 - 1300	0	176	**176**	**760**
1300 - 1315	0	186	**186**	
1315 - 1330	0	199	**199**	
1330 - 1345	0	197	**197**	
1345 - 1400	0	179	**179**	**761**
1400 - 1415	0	242	**242**	
1415 - 1430	0	207	**207**	
1430 - 1445	0	177	**177**	
1445 - 1500	0	178	**178**	**804**
1500 - 1515	0	191	**191**	
1515 - 1530	0	173	**173**	
1530 - 1545	0	202	**202**	
1545 - 1600	0	183	**183**	**749**
1600 - 1615	0	144	**144**	
1615 - 1630	0	178	**178**	
1630 - 1645	0	188	**188**	
1645 - 1700	0	182	**182**	**692**
1700 - 1715	0	183	**183**	
1715 - 1730	0	189	**189**	
1730 - 1745	0	197	**197**	
1745 - 1800	0	171	**171**	**740**
1800 - 1815	0	161	**161**	
1815 - 1830	0	158	**158**	
1830 - 1845	0	151	**151**	
1845 - 1900	0	154	**154**	**624**
1900 - 1915	0	141	**141**	
1915 - 1930	0	98	**98**	
1930 - 1945	0	94	**94**	
1945 - 2000	0	99	**99**	**432**
2000 - 2015	0	100	**100**	
2015 - 2030	0	88	**88**	
2030 - 2045	0	87	**87**	
2045 - 2100	0	74	**74**	**349**
2100 - 2115	0	80	**80**	
2115 - 2130	0	54	**54**	
2130 - 2145	0	59	**59**	
2145 - 2200	0	45	**45**	**238**
2200 - 2215	0	48	**48**	
2215 - 2230	0	47	**47**	
2230 - 2245	0	44	**44**	
2245 - 2300	0	37	**37**	**176**
2300 - 2315	0	42	**42**	
2315 - 2330	0	20	**20**	
2330 - 2345	0	35	**35**	
2345 - 0000	0	23	**23**	**120**

Session Total	0	11573	**11573**
Session Average	0.00	120.55	**120.55**
Session Percentage	0.00	100.00	

Site 51
I-26 S/Bound Off-Ramp,
north of US-378 Sunset Blvd

Date
Thursday, April 25, 2024

Lat/Long
34.006147°, -81.111160°

Weather
Fair
67°F

Click here for Detailed Weather

0000 - 2400 (Weekday 24h Session) (04-25-2024)

Volume Summary 15min

TIME	Volume Summary 15min NB	SB	15min Total	60min Total
0000 - 0015	0	24	**24**	
0015 - 0030	0	14	**14**	
0030 - 0045	0	13	**13**	
0045 - 0100	0	16	**16**	**67**
0100 - 0115	0	16	**16**	
0115 - 0130	0	12	**12**	
0130 - 0145	0	11	**11**	
0145 - 0200	0	11	**11**	**50**
0200 - 0215	0	15	**15**	
0215 - 0230	0	10	**10**	
0230 - 0245	0	7	**7**	
0245 - 0300	0	8	**8**	**40**
0300 - 0315	0	15	**15**	
0315 - 0330	0	11	**11**	
0330 - 0345	0	14	**14**	
0345 - 0400	0	13	**13**	**53**
0400 - 0415	0	13	**13**	
0415 - 0430	0	15	**15**	
0430 - 0445	0	17	**17**	
0445 - 0500	0	25	**25**	**70**
0500 - 0515	0	31	**31**	
0515 - 0530	0	34	**34**	
0530 - 0545	0	63	**63**	
0545 - 0600	0	56	**56**	**184**
0600 - 0615	0	103	**103**	
0615 - 0630	0	136	**136**	
0630 - 0645	0	179	**179**	
0645 - 0700	0	229	**229**	**647**
0700 - 0715	0	213	**213**	
0715 - 0730	0	218	**218**	
0730 - 0745	0	209	**209**	
0745 - 0800	0	202	**202**	**842**
0800 - 0815	0	221	**221**	
0815 - 0830	0	196	**196**	
0830 - 0845	0	207	**207**	
0845 - 0900	0	173	**173**	**797**
0900 - 0915	0	178	**178**	
0915 - 0930	0	202	**202**	
0930 - 0945	0	187	**187**	
0945 - 1000	0	174	**174**	**741**
1000 - 1015	0	158	**158**	
1015 - 1030	0	164	**164**	
1030 - 1045	0	173	**173**	
1045 - 1100	0	186	**186**	**681**
1100 - 1115	0	161	**161**	
1115 - 1130	0	199	**199**	
1130 - 1145	0	175	**175**	
1145 - 1200	0	185	**185**	**720**

Time	Volume Summary 15min NB	SB	15min Total	60min Total
1200 - 1215	0	192	**192**	
1215 - 1230	0	165	**165**	
1230 - 1245	0	169	**169**	
1245 - 1300	0	196	**196**	**722**
1300 - 1315	0	179	**179**	
1315 - 1330	0	193	**193**	
1330 - 1345	0	176	**176**	
1345 - 1400	0	166	**166**	**714**
1400 - 1415	0	207	**207**	
1415 - 1430	0	192	**192**	
1430 - 1445	0	161	**161**	
1445 - 1500	0	185	**185**	**745**
1500 - 1515	0	224	**224**	
1515 - 1530	0	187	**187**	
1530 - 1545	0	176	**176**	
1545 - 1600	0	156	**156**	**743**
1600 - 1615	0	165	**165**	
1615 - 1630	0	165	**165**	
1630 - 1645	0	173	**173**	
1645 - 1700	0	147	**147**	**650**
1700 - 1715	0	215	**215**	
1715 - 1730	0	174	**174**	
1730 - 1745	0	189	**189**	
1745 - 1800	0	168	**168**	**746**
1800 - 1815	0	166	**166**	
1815 - 1830	0	169	**169**	
1830 - 1845	0	165	**165**	
1845 - 1900	0	156	**156**	**656**
1900 - 1915	0	0	**0**	
1915 - 1930	0	0	**0**	
1930 - 1945	0	0	**0**	
1945 - 2000	0	0	**0**	**0**
2000 - 2015	0	0	**0**	
2015 - 2030	0	0	**0**	
2030 - 2045	0	0	**0**	
2045 - 2100	0	0	**0**	**0**
2100 - 2115	0	0	**0**	
2115 - 2130	0	0	**0**	
2130 - 2145	0	0	**0**	
2145 - 2200	0	0	**0**	**0**
2200 - 2215	0	0	**0**	
2215 - 2230	0	0	**0**	
2230 - 2245	0	0	**0**	
2245 - 2300	0	0	**0**	**0**
2300 - 2315	0	0	**0**	
2315 - 2330	0	0	**0**	
2330 - 2345	0	0	**0**	
2345 - 0000	0	0	**0**	**0**

Session Total	0	9868	**9868**
Session Average	0.00	102.79	**102.79**
Session Percentage	0.00	100.00	

Bi-Directional Class Count || SB WB 60min

Columbia, SC

Marr Traffic DATA COLLECTION

www.marrtraffic.com

Site 51
I-26 S/Bound Off-Ramp,
north of US-378 Sunset Blvd

Date
Tuesday, April 23, 2024

Lat/Long
34.006147°, -81.111160°

Weather
Fair
58°F

Click here for Detailed Weather

0000 - 2400 (Weekday 24h Session) (04-23-2024)
SB WB 60min

	Southbound (Movement 51.1)													
TIME	1	2	3	4	5	6	7	8	9	10	11	12	13	**Total**
0000 - 0100	0	0	0	0	0	0	0	0	0	0	0	0	0	**0**
0100 - 0200	0	0	0	0	0	0	0	0	0	0	0	0	0	**0**
0200 - 0300	0	0	0	0	0	0	0	0	0	0	0	0	0	**0**
0300 - 0400	0	0	0	0	0	0	0	0	0	0	0	0	0	**0**
0400 - 0500	0	0	0	0	0	0	0	0	0	0	0	0	0	**0**
0500 - 0600	0	0	0	0	0	0	0	0	0	0	0	0	0	**0**
0600 - 0700	0	0	0	0	0	0	0	0	0	0	0	0	0	**0**
0700 - 0800	0	0	0	0	0	0	0	0	0	0	0	0	0	**0**
0800 - 0900	0	0	0	0	0	0	0	0	0	0	0	0	0	**0**
0900 - 1000	0	0	0	0	0	0	0	0	0	0	0	0	0	**0**
1000 - 1100	0	0	0	0	0	0	0	0	0	0	0	0	0	**0**
1100 - 1200	0	0	0	0	0	0	0	0	0	0	0	0	0	**0**
1200 - 1300	0	0	0	0	0	0	0	0	0	0	0	0	0	**0**
1300 - 1400	0	0	0	0	0	0	0	0	0	0	0	0	0	**0**
1400 - 1500	0	0	0	0	0	0	0	0	0	0	0	0	0	**0**
1500 - 1600	0	0	0	0	0	0	0	0	0	0	0	0	0	**0**
1600 - 1700	0	0	0	0	0	0	0	0	0	0	0	0	0	**0**
1700 - 1800	0	0	0	0	0	0	0	0	0	0	0	0	0	**0**
1800 - 1900	0	0	0	0	0	0	0	0	0	0	0	0	0	**0**
1900 - 2000	0	312	50	0	8	1	0	0	5	0	0	0	0	**376**
2000 - 2100	2	267	38	0	2	0	0	0	2	0	0	0	0	**311**
2100 - 2200	1	183	29	0	2	1	0	0	0	0	0	1	0	**217**
2200 - 2300	1	157	11	1	1	0	0	0	0	0	0	0	0	**171**
2300 - 2400	0	100	7	0	1	0	1	0	3	0	0	1	0	**113**
Session Total	4	1019	135	1	14	2	1	0	10	0	0	2	0	**1188**
Session Average	0.17	42.46	5.63	0.04	0.58	0.08	0.04	0.00	0.42	0.00	0.00	0.08	0.00	**49.50**
Session Percentage	0.34	85.77	11.36	0.08	1.18	0.17	0.08	0.00	0.84	0.00	0.00	0.17	0.00	
AM Peak Hour	-	-	-	-	-	-	-	-	-	-	-	-	-	**-**
AM Peak Volume	0	0	0	0	0	0	0	0	0	0	0	0	0	**0**
Noon Peak Hour	-	-	-	-	-	-	-	-	-	-	-	-	-	**-**
Noon Peak Volume	0	0	0	0	0	0	0	0	0	0	0	0	0	**0**
PM Peak Hour	-	1900 - 2000	1900 - 2000	-	1900 - 2000	1900 - 2000	-	-	1900 - 2000	-	-	-	-	**1900 - 2000**
PM Peak Volume	0	312	50	0	8	1	0	0	5	0	0	0	0	**376**

Site 51
I-26 S/Bound Off-Ramp,
north of US-378 Sunset Blvd

Date
Wednesday, April 24, 2024

Lat/Long
34.006147°, -81.111160°

Weather
Fair
66°F

Click here for Detailed Weather

0000 - 2400 (Weekday 24h Session) (04-24-2024)
SB WB 60min

	Southbound (Movement 51.1)													
TIME	1	2	3	4	5	6	7	8	9	10	11	12	13	**Total**
0000 - 0100	0	56	9	0	0	0	0	0	1	0	0	2	0	**68**
0100 - 0200	0	37	5	0	3	1	0	0	2	0	0	2	0	**50**
0200 - 0300	0	29	1	0	1	1	0	0	1	0	1	0	0	**34**
0300 - 0400	0	28	7	0	0	0	0	0	1	0	1	0	0	**37**
0400 - 0500	0	61	7	0	1	0	0	0	0	0	0	0	0	**69**
0500 - 0600	0	159	14	1	0	1	0	0	6	0	0	1	0	**182**
0600 - 0700	0	632	104	0	4	1	0	2	3	0	0	0	0	**746**
0700 - 0800	0	777	97	0	3	0	0	4	1	0	0	0	0	**882**
0800 - 0900	0	633	145	1	15	4	0	1	4	0	0	0	0	**803**
0900 - 1000	0	567	139	2	10	5	0	4	5	0	0	0	0	**732**
1000 - 1100	0	577	132	1	18	1	0	2	0	0	0	0	0	**731**
1100 - 1200	1	610	159	2	13	2	0	4	3	0	0	0	0	**794**
1200 - 1300	1	614	127	2	6	0	0	7	3	0	0	0	0	**760**
1300 - 1400	1	586	148	4	16	1	0	1	4	0	0	0	0	**761**
1400 - 1500	0	623	155	2	15	2	1	3	3	0	0	0	0	**804**
1500 - 1600	0	592	135	1	14	1	0	0	6	0	0	0	0	**749**
1600 - 1700	0	564	109	2	11	1	0	3	2	0	0	0	0	**692**
1700 - 1800	0	622	99	0	12	1	0	4	2	0	0	0	0	**740**
1800 - 1900	0	518	92	0	9	0	0	2	3	0	0	0	0	**624**
1900 - 2000	1	350	68	0	8	1	0	1	3	0	0	0	0	**432**
2000 - 2100	0	298	45	0	3	1	0	0	2	0	0	0	0	**349**
2100 - 2200	0	207	27	0	3	0	0	0	1	0	0	0	0	**238**
2200 - 2300	2	147	23	0	2	0	0	0	0	1	0	1	0	**176**
2300 - 2400	0	104	14	0	2	0	0	0	0	0	0	0	0	**120**

Session Total	6	9391	1861	18	169	24	1	38	56	1	2	6	0	**11573**
Session Average	0.25	391.29	77.54	0.75	7.04	1.00	0.04	1.58	2.33	0.04	0.08	0.25	0.00	**482.21**
Session Percentage	0.05	81.15	16.08	0.16	1.46	0.21	0.01	0.33	0.48	0.01	0.02	0.05	0.00	

AM Peak Hour	-	0700 - 0800	0800 - 0900	0900 - 1000	0800 - 0900	0900 - 1000	-	0700 - 0800	0500 - 0600	-	-	0500 - 0600	-	**0700 - 0800**
AM Peak Volume	0	777	145	2	15	5	0	4	6	0	0	1	0	**882**

Noon Peak Hour	1100 - 1200	1400 - 1500	1100 - 1200	1300 - 1400	1000 - 1100	1100 - 1200	1400 - 1500	1200 - 1300	1300 - 1400	-	-	-	-	**1400 - 1500**
Noon Peak Volume	1	623	159	4	18	2	1	7	4	0	0	0	0	**804**

PM Peak Hour	1900 - 2000	1700 - 1800	1500 - 1600	1600 - 1700	1500 - 1600	1500 - 1600	-	1700 - 1800	1500 - 1600	-	-	-	-	**1500 - 1600**
PM Peak Volume	1	622	135	2	14	1	0	4	6	0	0	0	0	**749**

Site 51
I-26 S/Bound Off-Ramp,
north of US-378 Sunset Blvd

Date
Thursday, April 25, 2024

Lat/Long
34.006147°, -81.111160°

Weather
Fair
67°F

Click here for Detailed Weather

0000 - 2400 (Weekday 24h Session) (04-25-2024)
SB WB 60min

	Southbound (Movement 51.1)													
TIME	1	2	3	4	5	6	7	8	9	10	11	12	13	**Total**
0000 - 0100	0	53	7	0	2	1	0	0	2	1	0	1	0	**67**
0100 - 0200	0	39	5	0	0	1	0	0	1	0	0	4	0	**50**
0200 - 0300	0	30	4	0	2	0	0	1	3	0	0	0	0	**40**
0300 - 0400	0	42	7	0	1	1	0	0	1	0	1	0	0	**53**
0400 - 0500	0	55	12	0	2	1	0	0	0	0	0	0	0	**70**
0500 - 0600	0	145	30	0	4	1	0	2	1	0	0	1	0	**184**
0600 - 0700	0	542	97	0	5	0	0	0	3	0	0	0	0	**647**
0700 - 0800	0	685	137	0	12	0	0	5	3	0	0	0	0	**842**
0800 - 0900	0	615	162	2	13	3	0	1	1	0	0	0	0	**797**
0900 - 1000	0	563	157	4	6	5	0	3	3	0	0	0	0	**741**
1000 - 1100	1	530	120	1	13	7	0	2	7	0	0	0	0	**681**
1100 - 1200	0	547	152	1	7	3	0	2	8	0	0	0	0	**720**
1200 - 1300	1	554	145	2	10	4	0	1	5	0	0	0	0	**722**
1300 - 1400	1	562	124	1	14	3	0	5	4	0	0	0	0	**714**
1400 - 1500	0	569	140	2	24	5	0	1	4	0	0	0	0	**745**
1500 - 1600	1	593	119	2	13	3	0	4	8	0	0	0	0	**743**
1600 - 1700	0	526	98	0	15	5	0	3	1	2	0	0	0	**650**
1700 - 1800	0	611	116	1	8	3	0	4	3	0	0	0	0	**746**
1800 - 1900	0	536	95	0	13	2	0	6	4	0	0	0	0	**656**
1900 - 2000	0	0	0	0	0	0	0	0	0	0	0	0	0	**0**
2000 - 2100	0	0	0	0	0	0	0	0	0	0	0	0	0	**0**
2100 - 2200	0	0	0	0	0	0	0	0	0	0	0	0	0	**0**
2200 - 2300	0	0	0	0	0	0	0	0	0	0	0	0	0	**0**
2300 - 2400	0	0	0	0	0	0	0	0	0	0	0	0	0	**0**

Session Total	4	7797	1727	16	164	48	0	40	62	3	1	6	0	**9868**
Session Average	0.17	324.88	71.96	0.67	6.83	2.00	0.00	1.67	2.58	0.13	0.04	0.25	0.00	**411.17**
Session Percentage	0.04	79.01	17.50	0.16	1.66	0.49	0.00	0.41	0.63	0.03	0.01	0.06	0.00	

AM Peak Hour	-	0700 - 0800	0800 - 0900	0900 - 1000	0800 - 0900	0900 - 1000	-	0700 - 0800	0600 - 0700	-	-	0500 - 0600	-	**0700 - 0800**
AM Peak Hour Volume	0	685	162	4	13	5	0	5	3	0	0	1	0	**842**

Noon Peak Hour	1000 - 1100	1400 - 1500	1100 - 1200	1200 - 1300	1400 - 1500	1000 - 1100	-	1300 - 1400	1100 - 1200	-	-	-	-	**1400 - 1500**
Noon Peak Hour Volume	1	569	152	2	24	7	0	5	8	0	0	0	0	**745**

PM Peak Hour	1500 - 1600	1700 - 1800	1500 - 1600	1500 - 1600	1600 - 1700	1600 - 1700	-	1800 - 1900	1500 - 1600	1600 - 1700	-	-	-	**1700 - 1800**
PM Peak Hour Volume	1	611	119	2	15	5	0	6	8	2	0	0	0	**746**

Bi-Directional Class Count || Volume Summary 60min

Columbia, SC

Marr Traffic DATA COLLECTION

www.marrtraffic.com

Site 51

I-26 S/Bound Off-Ramp,
north of US-378 Sunset Blvd

Date

Tuesday, April 23, 2024

Lat/Long

34.006147°, -81.111160°

Weather

Fair
58°F

Click here for Detailed Weather

0000 - 2400 (Weekday 24h Session) (04-23-2024)

Volume Summary 60min

	Volume Summary 60min		
TIME	NB	SB	**Total**
0000 - 0100	0	0	**0**
0100 - 0200	0	0	**0**
0200 - 0300	0	0	**0**
0300 - 0400	0	0	**0**
0400 - 0500	0	0	**0**
0500 - 0600	0	0	**0**
0600 - 0700	0	0	**0**
0700 - 0800	0	0	**0**
0800 - 0900	0	0	**0**
0900 - 1000	0	0	**0**
1000 - 1100	0	0	**0**
1100 - 1200	0	0	**0**

	Volume Summary 60min		
Time	NB	SB	**Total**
1200 - 1300	0	0	**0**
1300 - 1400	0	0	**0**
1400 - 1500	0	0	**0**
1500 - 1600	0	0	**0**
1600 - 1700	0	0	**0**
1700 - 1800	0	0	**0**
1800 - 1900	0	0	**0**
1900 - 2000	0	376	**376**
2000 - 2100	0	311	**311**
2100 - 2200	0	217	**217**
2200 - 2300	0	171	**171**
2300 - 2400	0	113	**113**

Session Total	0	1188	**1188**
Session Average	0.00	49.50	**49.50**
Session Percentage	0.00	100.00	

Site 51

I-26 S/Bound Off-Ramp,
north of US-378 Sunset Blvd

Date

Wednesday, April 24, 2024

Lat/Long

34.006147°, -81.111160°

Weather

Fair
66°F

Click here for Detailed Weather

0000 - 2400 (Weekday 24h Session) (04-24-2024)

Volume Summary 60min

	Volume Summary 60min		
TIME	NB	SB	**Total**
0000 - 0100	0	68	**68**
0100 - 0200	0	50	**50**
0200 - 0300	0	34	**34**
0300 - 0400	0	37	**37**
0400 - 0500	0	69	**69**
0500 - 0600	0	182	**182**
0600 - 0700	0	746	**746**
0700 - 0800	0	882	**882**
0800 - 0900	0	803	**803**
0900 - 1000	0	732	**732**
1000 - 1100	0	731	**731**
1100 - 1200	0	794	**794**

Session Total	0	11573	**11573**
Session Average	0.00	482.21	**482.21**
Session Percentage	0.00	100.00	

	Volume Summary 60min		
Time	NB	SB	**Total**
1200 - 1300	0	760	**760**
1300 - 1400	0	761	**761**
1400 - 1500	0	804	**804**
1500 - 1600	0	749	**749**
1600 - 1700	0	692	**692**
1700 - 1800	0	740	**740**
1800 - 1900	0	624	**624**
1900 - 2000	0	432	**432**
2000 - 2100	0	349	**349**
2100 - 2200	0	238	**238**
2200 - 2300	0	176	**176**
2300 - 2400	0	120	**120**

Site 51

I-26 S/Bound Off-Ramp,
north of US-378 Sunset Blvd

Date

Thursday, April 25, 2024

Lat/Long

34.006147°, -81.111160°

Weather

Fair
67°F

Click here for Detailed Weather

0000 - 2400 (Weekday 24h Session) (04-25-2024)

Volume Summary 60min

	Volume Summary 60min		
TIME	NB	SB	**Total**
0000 - 0100	0	67	**67**
0100 - 0200	0	50	**50**
0200 - 0300	0	40	**40**
0300 - 0400	0	53	**53**
0400 - 0500	0	70	**70**
0500 - 0600	0	184	**184**
0600 - 0700	0	647	**647**
0700 - 0800	0	842	**842**
0800 - 0900	0	797	**797**
0900 - 1000	0	741	**741**
1000 - 1100	0	681	**681**
1100 - 1200	0	720	**720**

	Volume Summary 60min		
Time	NB	SB	**Total**
1200 - 1300	0	722	**722**
1300 - 1400	0	714	**714**
1400 - 1500	0	745	**745**
1500 - 1600	0	743	**743**
1600 - 1700	0	650	**650**
1700 - 1800	0	746	**746**
1800 - 1900	0	656	**656**
1900 - 2000	0	0	**0**
2000 - 2100	0	0	**0**
2100 - 2200	0	0	**0**
2200 - 2300	0	0	**0**
2300 - 2400	0	0	**0**

Session Total	0	9868	**9868**
Session Average	0.00	411.17	**411.17**
Session Percentage	0.00	100.00	

Bi-Directional Class Count || Graphical Analysis SB WB

Columbia, SC

Marr Traffic DATA COLLECTION

www.marrtraffic.com

Site 51

I-26 S/Bound Off-Ramp,
north of US-378 Sunset Blvd

Lat/Long

34.006147°, -81.111160°

0000 - 2400 (Weekday 24h Session)

Graphical Analysis SB WB

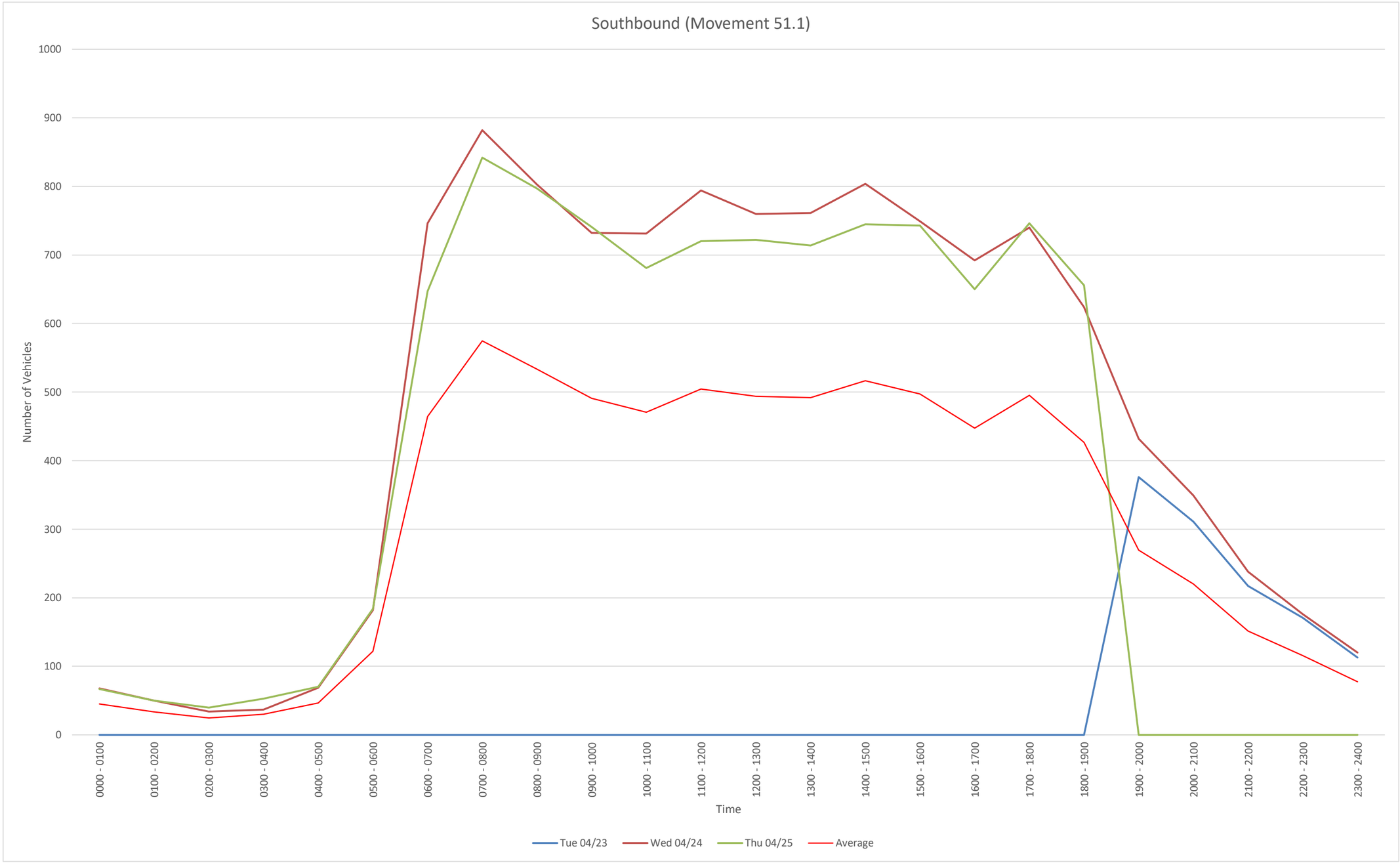

Time	Tue 04/23	Wed 04/24	Thu 04/25				
0000 - 0100	0	68	67				
0100 - 0200	0	50	50				
0200 - 0300	0	34	40				
0300 - 0400	0	37	53				
0400 - 0500	0	69	70				
0500 - 0600	0	182	184				
0600 - 0700	0	746	647				
0700 - 0800	0	882	842				
0800 - 0900	0	803	797				
0900 - 1000	0	732	741				
1000 - 1100	0	731	681				
1100 - 1200	0	794	720				
1200 - 1300	0	760	722				
1300 - 1400	0	761	714				
1400 - 1500	0	804	745				
1500 - 1600	0	749	743				
1600 - 1700	0	692	650				
1700 - 1800	0	740	746				
1800 - 1900	0	624	656				
1900 - 2000	376	432	0				
2000 - 2100	311	349	0				
2100 - 2200	217	238	0				
2200 - 2300	171	176	0				
2300 - 2400	113	120	0				
Daily Total	1188	11573	9868				

NB
File Name:
Start Date: 4/23/2024
Start Time: 0
Site Code: 51
Station ID: 1
Location 1: I-26 S/Bound Off-Ramp, north of US-378 Sunset Blvd
Location 2:

Date	Time	1	2	3	4	5	6	7	8	9	10	11	12	13
4/23/2024	12:00 AM	0	0	0	0	0	0	0	0	0	0	0	0	0
4/23/2024	12:15 AM	0	0	0	0	0	0	0	0	0	0	0	0	0
4/23/2024	12:30 AM	0	0	0	0	0	0	0	0	0	0	0	0	0
4/23/2024	12:45 AM	0	0	0	0	0	0	0	0	0	0	0	0	0
4/23/2024	1:00 AM	0	0	0	0	0	0	0	0	0	0	0	0	0
4/23/2024	1:15 AM	0	0	0	0	0	0	0	0	0	0	0	0	0
4/23/2024	1:30 AM	0	0	0	0	0	0	0	0	0	0	0	0	0
4/23/2024	1:45 AM	0	0	0	0	0	0	0	0	0	0	0	0	0
4/23/2024	2:00 AM	0	0	0	0	0	0	0	0	0	0	0	0	0
4/23/2024	2:15 AM	0	0	0	0	0	0	0	0	0	0	0	0	0
4/23/2024	2:30 AM	0	0	0	0	0	0	0	0	0	0	0	0	0
4/23/2024	2:45 AM	0	0	0	0	0	0	0	0	0	0	0	0	0
4/23/2024	3:00 AM	0	0	0	0	0	0	0	0	0	0	0	0	0
4/23/2024	3:15 AM	0	0	0	0	0	0	0	0	0	0	0	0	0
4/23/2024	3:30 AM	0	0	0	0	0	0	0	0	0	0	0	0	0
4/23/2024	3:45 AM	0	0	0	0	0	0	0	0	0	0	0	0	0
4/23/2024	4:00 AM	0	0	0	0	0	0	0	0	0	0	0	0	0
4/23/2024	4:15 AM	0	0	0	0	0	0	0	0	0	0	0	0	0
4/23/2024	4:30 AM	0	0	0	0	0	0	0	0	0	0	0	0	0
4/23/2024	4:45 AM	0	0	0	0	0	0	0	0	0	0	0	0	0
4/23/2024	5:00 AM	0	0	0	0	0	0	0	0	0	0	0	0	0
4/23/2024	5:15 AM	0	0	0	0	0	0	0	0	0	0	0	0	0
4/23/2024	5:30 AM	0	0	0	0	0	0	0	0	0	0	0	0	0
4/23/2024	5:45 AM	0	0	0	0	0	0	0	0	0	0	0	0	0
4/23/2024	6:00 AM	0	0	0	0	0	0	0	0	0	0	0	0	0
4/23/2024	6:15 AM	0	0	0	0	0	0	0	0	0	0	0	0	0
4/23/2024	6:30 AM	0	0	0	0	0	0	0	0	0	0	0	0	0
4/23/2024	6:45 AM	0	0	0	0	0	0	0	0	0	0	0	0	0
4/23/2024	7:00 AM	0	0	0	0	0	0	0	0	0	0	0	0	0
4/23/2024	7:15 AM	0	0	0	0	0	0	0	0	0	0	0	0	0
4/23/2024	7:30 AM	0	0	0	0	0	0	0	0	0	0	0	0	0
4/23/2024	7:45 AM	0	0	0	0	0	0	0	0	0	0	0	0	0
4/23/2024	8:00 AM	0	0	0	0	0	0	0	0	0	0	0	0	0
4/23/2024	8:15 AM	0	0	0	0	0	0	0	0	0	0	0	0	0
4/23/2024	8:30 AM	0	0	0	0	0	0	0	0	0	0	0	0	0
4/23/2024	8:45 AM	0	0	0	0	0	0	0	0	0	0	0	0	0
4/23/2024	9:00 AM	0	0	0	0	0	0	0	0	0	0	0	0	0
4/23/2024	9:15 AM	0	0	0	0	0	0	0	0	0	0	0	0	0
4/23/2024	9:30 AM	0	0	0	0	0	0	0	0	0	0	0	0	0
4/23/2024	9:45 AM	0	0	0	0	0	0	0	0	0	0	0	0	0
4/23/2024	10:00 AM	0	0	0	0	0	0	0	0	0	0	0	0	0
4/23/2024	10:15 AM	0	0	0	0	0	0	0	0	0	0	0	0	0
4/23/2024	10:30 AM	0	0	0	0	0	0	0	0	0	0	0	0	0
4/23/2024	10:45 AM	0	0	0	0	0	0	0	0	0	0	0	0	0
4/23/2024	11:00 AM	0	0	0	0	0	0	0	0	0	0	0	0	0
4/23/2024	11:15 AM	0	0	0	0	0	0	0	0	0	0	0	0	0
4/23/2024	11:30 AM	0	0	0	0	0	0	0	0	0	0	0	0	0
4/23/2024	11:45 AM	0	0	0	0	0	0	0	0	0	0	0	0	0
4/23/2024	12:00 PM	0	0	0	0	0	0	0	0	0	0	0	0	0
4/23/2024	12:15 PM	0	0	0	0	0	0	0	0	0	0	0	0	0
4/23/2024	12:30 PM	0	0	0	0	0	0	0	0	0	0	0	0	0
4/23/2024	12:45 PM	0	0	0	0	0	0	0	0	0	0	0	0	0
4/23/2024	1:00 PM	0	0	0	0	0	0	0	0	0	0	0	0	0
4/23/2024	1:15 PM	0	0	0	0	0	0	0	0	0	0	0	0	0
4/23/2024	1:30 PM	0	0	0	0	0	0	0	0	0	0	0	0	0
4/23/2024	1:45 PM	0	0	0	0	0	0	0	0	0	0	0	0	0
4/23/2024	2:00 PM	0	0	0	0	0	0	0	0	0	0	0	0	0
4/23/2024	2:15 PM	0	0	0	0	0	0	0	0	0	0	0	0	0
4/23/2024	2:30 PM	0	0	0	0	0	0	0	0	0	0	0	0	0
4/23/2024	2:45 PM	0	0	0	0	0	0	0	0	0	0	0	0	0
4/23/2024	3:00 PM	0	0	0	0	0	0	0	0	0	0	0	0	0
4/23/2024	3:15 PM	0	0	0	0	0	0	0	0	0	0	0	0	0
4/23/2024	3:30 PM	0	0	0	0	0	0	0	0	0	0	0	0	0
4/23/2024	3:45 PM	0	0	0	0	0	0	0	0	0	0	0	0	0
4/23/2024	4:00 PM	0	0	0	0	0	0	0	0	0	0	0	0	0
4/23/2024	4:15 PM	0	0	0	0	0	0	0	0	0	0	0	0	0
4/23/2024	4:30 PM	0	0	0	0	0	0	0	0	0	0	0	0	0
4/23/2024	4:45 PM	0	0	0	0	0	0	0	0	0	0	0	0	0
4/23/2024	5:00 PM	0	0	0	0	0	0	0	0	0	0	0	0	0
4/23/2024	5:15 PM	0	0	0	0	0	0	0	0	0	0	0	0	0
4/23/2024	5:30 PM	0	0	0	0	0	0	0	0	0	0	0	0	0
4/23/2024	5:45 PM	0	0	0	0	0	0	0	0	0	0	0	0	0
4/23/2024	6:00 PM	0	0	0	0	0	0	0	0	0	0	0	0	0
4/23/2024	6:15 PM	0	0	0	0	0	0	0	0	0	0	0	0	0
4/23/2024	6:30 PM	0	0	0	0	0	0	0	0	0	0	0	0	0
4/23/2024	6:45 PM	0	0	0	0	0	0	0	0	0	0	0	0	0
4/23/2024	7:00 PM	0	0	0	0	0	0	0	0	0	0	0	0	0
4/23/2024	7:15 PM	0	0	0	0	0	0	0	0	0	0	0	0	0
4/23/2024	7:30 PM	0	0	0	0	0	0	0	0	0	0	0	0	0
4/23/2024	7:45 PM	0	0	0	0	0	0	0	0	0	0	0	0	0
4/23/2024	8:00 PM	0	0	0	0	0	0	0	0	0	0	0	0	0
4/23/2024	8:15 PM	0	0	0	0	0	0	0	0	0	0	0	0	0
4/23/2024	8:30 PM	0	0	0	0	0	0	0	0	0	0	0	0	0
4/23/2024	8:45 PM	0	0	0	0	0	0	0	0	0	0	0	0	0
4/23/2024	9:00 PM	0	0	0	0	0	0	0	0	0	0	0	0	0
4/23/2024	9:15 PM	0	0	0	0	0	0	0	0	0	0	0	0	0
4/23/2024	9:30 PM	0	0	0	0	0	0	0	0	0	0	0	0	0
4/23/2024	9:45 PM	0	0	0	0	0	0	0	0	0	0	0	0	0
4/23/2024	10:00 PM	0	0	0	0	0	0	0	0	0	0	0	0	0
4/23/2024	10:15 PM	0	0	0	0	0	0	0	0	0	0	0	0	0
4/23/2024	10:30 PM	0	0	0	0	0	0	0	0	0	0	0	0	0
4/23/2024	10:45 PM	0	0	0	0	0	0	0	0	0	0	0	0	0
4/23/2024	11:00 PM	0	0	0	0	0	0	0	0	0	0	0	0	0
4/23/2024	11:15 PM	0	0	0	0	0	0	0	0	0	0	0	0	0
4/23/2024	11:30 PM	0	0	0	0	0	0	0	0	0	0	0	0	0
4/23/2024	11:45 PM	0	0	0	0	0	0	0	0	0	0	0	0	0

4/24/2024	12:00 AM	0	0	0	0	0	0	0	0	0	0	0	0	0
4/24/2024	12:15 AM	0	0	0	0	0	0	0	0	0	0	0	0	0
4/24/2024	12:30 AM	0	0	0	0	0	0	0	0	0	0	0	0	0
4/24/2024	12:45 AM	0	0	0	0	0	0	0	0	0	0	0	0	0
4/24/2024	1:00 AM	0	0	0	0	0	0	0	0	0	0	0	0	0
4/24/2024	1:15 AM	0	0	0	0	0	0	0	0	0	0	0	0	0
4/24/2024	1:30 AM	0	0	0	0	0	0	0	0	0	0	0	0	0
4/24/2024	1:45 AM	0	0	0	0	0	0	0	0	0	0	0	0	0
4/24/2024	2:00 AM	0	0	0	0	0	0	0	0	0	0	0	0	0
4/24/2024	2:15 AM	0	0	0	0	0	0	0	0	0	0	0	0	0
4/24/2024	2:30 AM	0	0	0	0	0	0	0	0	0	0	0	0	0
4/24/2024	2:45 AM	0	0	0	0	0	0	0	0	0	0	0	0	0
4/24/2024	3:00 AM	0	0	0	0	0	0	0	0	0	0	0	0	0
4/24/2024	3:15 AM	0	0	0	0	0	0	0	0	0	0	0	0	0
4/24/2024	3:30 AM	0	0	0	0	0	0	0	0	0	0	0	0	0
4/24/2024	3:45 AM	0	0	0	0	0	0	0	0	0	0	0	0	0
4/24/2024	4:00 AM	0	0	0	0	0	0	0	0	0	0	0	0	0
4/24/2024	4:15 AM	0	0	0	0	0	0	0	0	0	0	0	0	0
4/24/2024	4:30 AM	0	0	0	0	0	0	0	0	0	0	0	0	0
4/24/2024	4:45 AM	0	0	0	0	0	0	0	0	0	0	0	0	0
4/24/2024	5:00 AM	0	0	0	0	0	0	0	0	0	0	0	0	0
4/24/2024	5:15 AM	0	0	0	0	0	0	0	0	0	0	0	0	0
4/24/2024	5:30 AM	0	0	0	0	0	0	0	0	0	0	0	0	0
4/24/2024	5:45 AM	0	0	0	0	0	0	0	0	0	0	0	0	0
4/24/2024	6:00 AM	0	0	0	0	0	0	0	0	0	0	0	0	0
4/24/2024	6:15 AM	0	0	0	0	0	0	0	0	0	0	0	0	0
4/24/2024	6:30 AM	0	0	0	0	0	0	0	0	0	0	0	0	0
4/24/2024	6:45 AM	0	0	0	0	0	0	0	0	0	0	0	0	0
4/24/2024	7:00 AM	0	0	0	0	0	0	0	0	0	0	0	0	0
4/24/2024	7:15 AM	0	0	0	0	0	0	0	0	0	0	0	0	0
4/24/2024	7:30 AM	0	0	0	0	0	0	0	0	0	0	0	0	0
4/24/2024	7:45 AM	0	0	0	0	0	0	0	0	0	0	0	0	0
4/24/2024	8:00 AM	0	0	0	0	0	0	0	0	0	0	0	0	0
4/24/2024	8:15 AM	0	0	0	0	0	0	0	0	0	0	0	0	0
4/24/2024	8:30 AM	0	0	0	0	0	0	0	0	0	0	0	0	0
4/24/2024	8:45 AM	0	0	0	0	0	0	0	0	0	0	0	0	0
4/24/2024	9:00 AM	0	0	0	0	0	0	0	0	0	0	0	0	0
4/24/2024	9:15 AM	0	0	0	0	0	0	0	0	0	0	0	0	0
4/24/2024	9:30 AM	0	0	0	0	0	0	0	0	0	0	0	0	0
4/24/2024	9:45 AM	0	0	0	0	0	0	0	0	0	0	0	0	0
4/24/2024	10:00 AM	0	0	0	0	0	0	0	0	0	0	0	0	0
4/24/2024	10:15 AM	0	0	0	0	0	0	0	0	0	0	0	0	0
4/24/2024	10:30 AM	0	0	0	0	0	0	0	0	0	0	0	0	0
4/24/2024	10:45 AM	0	0	0	0	0	0	0	0	0	0	0	0	0
4/24/2024	11:00 AM	0	0	0	0	0	0	0	0	0	0	0	0	0
4/24/2024	11:15 AM	0	0	0	0	0	0	0	0	0	0	0	0	0
4/24/2024	11:30 AM	0	0	0	0	0	0	0	0	0	0	0	0	0
4/24/2024	11:45 AM	0	0	0	0	0	0	0	0	0	0	0	0	0
4/24/2024	12:00 PM	0	0	0	0	0	0	0	0	0	0	0	0	0
4/24/2024	12:15 PM	0	0	0	0	0	0	0	0	0	0	0	0	0
4/24/2024	12:30 PM	0	0	0	0	0	0	0	0	0	0	0	0	0
4/24/2024	12:45 PM	0	0	0	0	0	0	0	0	0	0	0	0	0
4/24/2024	1:00 PM	0	0	0	0	0	0	0	0	0	0	0	0	0
4/24/2024	1:15 PM	0	0	0	0	0	0	0	0	0	0	0	0	0
4/24/2024	1:30 PM	0	0	0	0	0	0	0	0	0	0	0	0	0
4/24/2024	1:45 PM	0	0	0	0	0	0	0	0	0	0	0	0	0
4/24/2024	2:00 PM	0	0	0	0	0	0	0	0	0	0	0	0	0
4/24/2024	2:15 PM	0	0	0	0	0	0	0	0	0	0	0	0	0
4/24/2024	2:30 PM	0	0	0	0	0	0	0	0	0	0	0	0	0
4/24/2024	2:45 PM	0	0	0	0	0	0	0	0	0	0	0	0	0
4/24/2024	3:00 PM	0	0	0	0	0	0	0	0	0	0	0	0	0
4/24/2024	3:15 PM	0	0	0	0	0	0	0	0	0	0	0	0	0
4/24/2024	3:30 PM	0	0	0	0	0	0	0	0	0	0	0	0	0
4/24/2024	3:45 PM	0	0	0	0	0	0	0	0	0	0	0	0	0
4/24/2024	4:00 PM	0	0	0	0	0	0	0	0	0	0	0	0	0
4/24/2024	4:15 PM	0	0	0	0	0	0	0	0	0	0	0	0	0
4/24/2024	4:30 PM	0	0	0	0	0	0	0	0	0	0	0	0	0
4/24/2024	4:45 PM	0	0	0	0	0	0	0	0	0	0	0	0	0
4/24/2024	5:00 PM	0	0	0	0	0	0	0	0	0	0	0	0	0
4/24/2024	5:15 PM	0	0	0	0	0	0	0	0	0	0	0	0	0
4/24/2024	5:30 PM	0	0	0	0	0	0	0	0	0	0	0	0	0
4/24/2024	5:45 PM	0	0	0	0	0	0	0	0	0	0	0	0	0
4/24/2024	6:00 PM	0	0	0	0	0	0	0	0	0	0	0	0	0
4/24/2024	6:15 PM	0	0	0	0	0	0	0	0	0	0	0	0	0
4/24/2024	6:30 PM	0	0	0	0	0	0	0	0	0	0	0	0	0
4/24/2024	6:45 PM	0	0	0	0	0	0	0	0	0	0	0	0	0
4/24/2024	7:00 PM	0	0	0	0	0	0	0	0	0	0	0	0	0
4/24/2024	7:15 PM	0	0	0	0	0	0	0	0	0	0	0	0	0
4/24/2024	7:30 PM	0	0	0	0	0	0	0	0	0	0	0	0	0
4/24/2024	7:45 PM	0	0	0	0	0	0	0	0	0	0	0	0	0
4/24/2024	8:00 PM	0	0	0	0	0	0	0	0	0	0	0	0	0
4/24/2024	8:15 PM	0	0	0	0	0	0	0	0	0	0	0	0	0
4/24/2024	8:30 PM	0	0	0	0	0	0	0	0	0	0	0	0	0
4/24/2024	8:45 PM	0	0	0	0	0	0	0	0	0	0	0	0	0
4/24/2024	9:00 PM	0	0	0	0	0	0	0	0	0	0	0	0	0
4/24/2024	9:15 PM	0	0	0	0	0	0	0	0	0	0	0	0	0
4/24/2024	9:30 PM	0	0	0	0	0	0	0	0	0	0	0	0	0
4/24/2024	9:45 PM	0	0	0	0	0	0	0	0	0	0	0	0	0
4/24/2024	10:00 PM	0	0	0	0	0	0	0	0	0	0	0	0	0
4/24/2024	10:15 PM	0	0	0	0	0	0	0	0	0	0	0	0	0
4/24/2024	10:30 PM	0	0	0	0	0	0	0	0	0	0	0	0	0
4/24/2024	10:45 PM	0	0	0	0	0	0	0	0	0	0	0	0	0
4/24/2024	11:00 PM	0	0	0	0	0	0	0	0	0	0	0	0	0
4/24/2024	11:15 PM	0	0	0	0	0	0	0	0	0	0	0	0	0
4/24/2024	11:30 PM	0	0	0	0	0	0	0	0	0	0	0	0	0
4/24/2024	11:45 PM	0	0	0	0	0	0	0	0	0	0	0	0	0

4/25/2024	12:00 AM	0	0	0	0	0	0	0	0	0	0	0	0	0
4/25/2024	12:15 AM	0	0	0	0	0	0	0	0	0	0	0	0	0
4/25/2024	12:30 AM	0	0	0	0	0	0	0	0	0	0	0	0	0
4/25/2024	12:45 AM	0	0	0	0	0	0	0	0	0	0	0	0	0
4/25/2024	1:00 AM	0	0	0	0	0	0	0	0	0	0	0	0	0
4/25/2024	1:15 AM	0	0	0	0	0	0	0	0	0	0	0	0	0
4/25/2024	1:30 AM	0	0	0	0	0	0	0	0	0	0	0	0	0
4/25/2024	1:45 AM	0	0	0	0	0	0	0	0	0	0	0	0	0
4/25/2024	2:00 AM	0	0	0	0	0	0	0	0	0	0	0	0	0
4/25/2024	2:15 AM	0	0	0	0	0	0	0	0	0	0	0	0	0
4/25/2024	2:30 AM	0	0	0	0	0	0	0	0	0	0	0	0	0
4/25/2024	2:45 AM	0	0	0	0	0	0	0	0	0	0	0	0	0
4/25/2024	3:00 AM	0	0	0	0	0	0	0	0	0	0	0	0	0
4/25/2024	3:15 AM	0	0	0	0	0	0	0	0	0	0	0	0	0
4/25/2024	3:30 AM	0	0	0	0	0	0	0	0	0	0	0	0	0
4/25/2024	3:45 AM	0	0	0	0	0	0	0	0	0	0	0	0	0
4/25/2024	4:00 AM	0	0	0	0	0	0	0	0	0	0	0	0	0
4/25/2024	4:15 AM	0	0	0	0	0	0	0	0	0	0	0	0	0
4/25/2024	4:30 AM	0	0	0	0	0	0	0	0	0	0	0	0	0
4/25/2024	4:45 AM	0	0	0	0	0	0	0	0	0	0	0	0	0
4/25/2024	5:00 AM	0	0	0	0	0	0	0	0	0	0	0	0	0
4/25/2024	5:15 AM	0	0	0	0	0	0	0	0	0	0	0	0	0
4/25/2024	5:30 AM	0	0	0	0	0	0	0	0	0	0	0	0	0
4/25/2024	5:45 AM	0	0	0	0	0	0	0	0	0	0	0	0	0
4/25/2024	6:00 AM	0	0	0	0	0	0	0	0	0	0	0	0	0
4/25/2024	6:15 AM	0	0	0	0	0	0	0	0	0	0	0	0	0
4/25/2024	6:30 AM	0	0	0	0	0	0	0	0	0	0	0	0	0
4/25/2024	6:45 AM	0	0	0	0	0	0	0	0	0	0	0	0	0
4/25/2024	7:00 AM	0	0	0	0	0	0	0	0	0	0	0	0	0
4/25/2024	7:15 AM	0	0	0	0	0	0	0	0	0	0	0	0	0
4/25/2024	7:30 AM	0	0	0	0	0	0	0	0	0	0	0	0	0
4/25/2024	7:45 AM	0	0	0	0	0	0	0	0	0	0	0	0	0
4/25/2024	8:00 AM	0	0	0	0	0	0	0	0	0	0	0	0	0
4/25/2024	8:15 AM	0	0	0	0	0	0	0	0	0	0	0	0	0
4/25/2024	8:30 AM	0	0	0	0	0	0	0	0	0	0	0	0	0
4/25/2024	8:45 AM	0	0	0	0	0	0	0	0	0	0	0	0	0
4/25/2024	9:00 AM	0	0	0	0	0	0	0	0	0	0	0	0	0
4/25/2024	9:15 AM	0	0	0	0	0	0	0	0	0	0	0	0	0
4/25/2024	9:30 AM	0	0	0	0	0	0	0	0	0	0	0	0	0
4/25/2024	9:45 AM	0	0	0	0	0	0	0	0	0	0	0	0	0
4/25/2024	10:00 AM	0	0	0	0	0	0	0	0	0	0	0	0	0
4/25/2024	10:15 AM	0	0	0	0	0	0	0	0	0	0	0	0	0
4/25/2024	10:30 AM	0	0	0	0	0	0	0	0	0	0	0	0	0
4/25/2024	10:45 AM	0	0	0	0	0	0	0	0	0	0	0	0	0
4/25/2024	11:00 AM	0	0	0	0	0	0	0	0	0	0	0	0	0
4/25/2024	11:15 AM	0	0	0	0	0	0	0	0	0	0	0	0	0
4/25/2024	11:30 AM	0	0	0	0	0	0	0	0	0	0	0	0	0
4/25/2024	11:45 AM	0	0	0	0	0	0	0	0	0	0	0	0	0
4/25/2024	12:00 PM	0	0	0	0	0	0	0	0	0	0	0	0	0
4/25/2024	12:15 PM	0	0	0	0	0	0	0	0	0	0	0	0	0
4/25/2024	12:30 PM	0	0	0	0	0	0	0	0	0	0	0	0	0
4/25/2024	12:45 PM	0	0	0	0	0	0	0	0	0	0	0	0	0
4/25/2024	1:00 PM	0	0	0	0	0	0	0	0	0	0	0	0	0
4/25/2024	1:15 PM	0	0	0	0	0	0	0	0	0	0	0	0	0
4/25/2024	1:30 PM	0	0	0	0	0	0	0	0	0	0	0	0	0
4/25/2024	1:45 PM	0	0	0	0	0	0	0	0	0	0	0	0	0
4/25/2024	2:00 PM	0	0	0	0	0	0	0	0	0	0	0	0	0
4/25/2024	2:15 PM	0	0	0	0	0	0	0	0	0	0	0	0	0
4/25/2024	2:30 PM	0	0	0	0	0	0	0	0	0	0	0	0	0
4/25/2024	2:45 PM	0	0	0	0	0	0	0	0	0	0	0	0	0
4/25/2024	3:00 PM	0	0	0	0	0	0	0	0	0	0	0	0	0
4/25/2024	3:15 PM	0	0	0	0	0	0	0	0	0	0	0	0	0
4/25/2024	3:30 PM	0	0	0	0	0	0	0	0	0	0	0	0	0
4/25/2024	3:45 PM	0	0	0	0	0	0	0	0	0	0	0	0	0
4/25/2024	4:00 PM	0	0	0	0	0	0	0	0	0	0	0	0	0
4/25/2024	4:15 PM	0	0	0	0	0	0	0	0	0	0	0	0	0
4/25/2024	4:30 PM	0	0	0	0	0	0	0	0	0	0	0	0	0
4/25/2024	4:45 PM	0	0	0	0	0	0	0	0	0	0	0	0	0
4/25/2024	5:00 PM	0	0	0	0	0	0	0	0	0	0	0	0	0
4/25/2024	5:15 PM	0	0	0	0	0	0	0	0	0	0	0	0	0
4/25/2024	5:30 PM	0	0	0	0	0	0	0	0	0	0	0	0	0
4/25/2024	5:45 PM	0	0	0	0	0	0	0	0	0	0	0	0	0
4/25/2024	6:00 PM	0	0	0	0	0	0	0	0	0	0	0	0	0
4/25/2024	6:15 PM	0	0	0	0	0	0	0	0	0	0	0	0	0
4/25/2024	6:30 PM	0	0	0	0	0	0	0	0	0	0	0	0	0
4/25/2024	6:45 PM	0	0	0	0	0	0	0	0	0	0	0	0	0
4/25/2024	7:00 PM	0	0	0	0	0	0	0	0	0	0	0	0	0
4/25/2024	7:15 PM	0	0	0	0	0	0	0	0	0	0	0	0	0
4/25/2024	7:30 PM	0	0	0	0	0	0	0	0	0	0	0	0	0
4/25/2024	7:45 PM	0	0	0	0	0	0	0	0	0	0	0	0	0
4/25/2024	8:00 PM	0	0	0	0	0	0	0	0	0	0	0	0	0
4/25/2024	8:15 PM	0	0	0	0	0	0	0	0	0	0	0	0	0
4/25/2024	8:30 PM	0	0	0	0	0	0	0	0	0	0	0	0	0
4/25/2024	8:45 PM	0	0	0	0	0	0	0	0	0	0	0	0	0
4/25/2024	9:00 PM	0	0	0	0	0	0	0	0	0	0	0	0	0
4/25/2024	9:15 PM	0	0	0	0	0	0	0	0	0	0	0	0	0
4/25/2024	9:30 PM	0	0	0	0	0	0	0	0	0	0	0	0	0
4/25/2024	9:45 PM	0	0	0	0	0	0	0	0	0	0	0	0	0
4/25/2024	10:00 PM	0	0	0	0	0	0	0	0	0	0	0	0	0
4/25/2024	10:15 PM	0	0	0	0	0	0	0	0	0	0	0	0	0
4/25/2024	10:30 PM	0	0	0	0	0	0	0	0	0	0	0	0	0
4/25/2024	10:45 PM	0	0	0	0	0	0	0	0	0	0	0	0	0
4/25/2024	11:00 PM	0	0	0	0	0	0	0	0	0	0	0	0	0
4/25/2024	11:15 PM	0	0	0	0	0	0	0	0	0	0	0	0	0
4/25/2024	11:30 PM	0	0	0	0	0	0	0	0	0	0	0	0	0
4/25/2024	11:45 PM	0	0	0	0	0	0	0	0	0	0	0	0	0

SB
File Name:
Start Date: 4/23/2024
Start Time: 0
Site Code: 51
Station ID: 1
Location 1: I-26 S/Bound Off-Ramp, north of US-378 Sunset Blvd
Location 2:

Date	Time	1	2	3	4	5	6	7	8	9	10	11	12	13
4/23/2024	12:00 AM	0	0	0	0	0	0	0	0	0	0	0	0	0
4/23/2024	12:15 AM	0	0	0	0	0	0	0	0	0	0	0	0	0
4/23/2024	12:30 AM	0	0	0	0	0	0	0	0	0	0	0	0	0
4/23/2024	12:45 AM	0	0	0	0	0	0	0	0	0	0	0	0	0
4/23/2024	1:00 AM	0	0	0	0	0	0	0	0	0	0	0	0	0
4/23/2024	1:15 AM	0	0	0	0	0	0	0	0	0	0	0	0	0
4/23/2024	1:30 AM	0	0	0	0	0	0	0	0	0	0	0	0	0
4/23/2024	1:45 AM	0	0	0	0	0	0	0	0	0	0	0	0	0
4/23/2024	2:00 AM	0	0	0	0	0	0	0	0	0	0	0	0	0
4/23/2024	2:15 AM	0	0	0	0	0	0	0	0	0	0	0	0	0
4/23/2024	2:30 AM	0	0	0	0	0	0	0	0	0	0	0	0	0
4/23/2024	2:45 AM	0	0	0	0	0	0	0	0	0	0	0	0	0
4/23/2024	3:00 AM	0	0	0	0	0	0	0	0	0	0	0	0	0
4/23/2024	3:15 AM	0	0	0	0	0	0	0	0	0	0	0	0	0
4/23/2024	3:30 AM	0	0	0	0	0	0	0	0	0	0	0	0	0
4/23/2024	3:45 AM	0	0	0	0	0	0	0	0	0	0	0	0	0
4/23/2024	4:00 AM	0	0	0	0	0	0	0	0	0	0	0	0	0
4/23/2024	4:15 AM	0	0	0	0	0	0	0	0	0	0	0	0	0
4/23/2024	4:30 AM	0	0	0	0	0	0	0	0	0	0	0	0	0
4/23/2024	4:45 AM	0	0	0	0	0	0	0	0	0	0	0	0	0
4/23/2024	5:00 AM	0	0	0	0	0	0	0	0	0	0	0	0	0
4/23/2024	5:15 AM	0	0	0	0	0	0	0	0	0	0	0	0	0
4/23/2024	5:30 AM	0	0	0	0	0	0	0	0	0	0	0	0	0
4/23/2024	5:45 AM	0	0	0	0	0	0	0	0	0	0	0	0	0
4/23/2024	6:00 AM	0	0	0	0	0	0	0	0	0	0	0	0	0
4/23/2024	6:15 AM	0	0	0	0	0	0	0	0	0	0	0	0	0
4/23/2024	6:30 AM	0	0	0	0	0	0	0	0	0	0	0	0	0
4/23/2024	6:45 AM	0	0	0	0	0	0	0	0	0	0	0	0	0
4/23/2024	7:00 AM	0	0	0	0	0	0	0	0	0	0	0	0	0
4/23/2024	7:15 AM	0	0	0	0	0	0	0	0	0	0	0	0	0
4/23/2024	7:30 AM	0	0	0	0	0	0	0	0	0	0	0	0	0
4/23/2024	7:45 AM	0	0	0	0	0	0	0	0	0	0	0	0	0
4/23/2024	8:00 AM	0	0	0	0	0	0	0	0	0	0	0	0	0
4/23/2024	8:15 AM	0	0	0	0	0	0	0	0	0	0	0	0	0
4/23/2024	8:30 AM	0	0	0	0	0	0	0	0	0	0	0	0	0
4/23/2024	8:45 AM	0	0	0	0	0	0	0	0	0	0	0	0	0
4/23/2024	9:00 AM	0	0	0	0	0	0	0	0	0	0	0	0	0
4/23/2024	9:15 AM	0	0	0	0	0	0	0	0	0	0	0	0	0
4/23/2024	9:30 AM	0	0	0	0	0	0	0	0	0	0	0	0	0
4/23/2024	9:45 AM	0	0	0	0	0	0	0	0	0	0	0	0	0
4/23/2024	10:00 AM	0	0	0	0	0	0	0	0	0	0	0	0	0
4/23/2024	10:15 AM	0	0	0	0	0	0	0	0	0	0	0	0	0
4/23/2024	10:30 AM	0	0	0	0	0	0	0	0	0	0	0	0	0
4/23/2024	10:45 AM	0	0	0	0	0	0	0	0	0	0	0	0	0
4/23/2024	11:00 AM	0	0	0	0	0	0	0	0	0	0	0	0	0
4/23/2024	11:15 AM	0	0	0	0	0	0	0	0	0	0	0	0	0
4/23/2024	11:30 AM	0	0	0	0	0	0	0	0	0	0	0	0	0
4/23/2024	11:45 AM	0	0	0	0	0	0	0	0	0	0	0	0	0
4/23/2024	12:00 PM	0	0	0	0	0	0	0	0	0	0	0	0	0
4/23/2024	12:15 PM	0	0	0	0	0	0	0	0	0	0	0	0	0
4/23/2024	12:30 PM	0	0	0	0	0	0	0	0	0	0	0	0	0
4/23/2024	12:45 PM	0	0	0	0	0	0	0	0	0	0	0	0	0
4/23/2024	1:00 PM	0	0	0	0	0	0	0	0	0	0	0	0	0
4/23/2024	1:15 PM	0	0	0	0	0	0	0	0	0	0	0	0	0
4/23/2024	1:30 PM	0	0	0	0	0	0	0	0	0	0	0	0	0
4/23/2024	1:45 PM	0	0	0	0	0	0	0	0	0	0	0	0	0
4/23/2024	2:00 PM	0	0	0	0	0	0	0	0	0	0	0	0	0
4/23/2024	2:15 PM	0	0	0	0	0	0	0	0	0	0	0	0	0
4/23/2024	2:30 PM	0	0	0	0	0	0	0	0	0	0	0	0	0
4/23/2024	2:45 PM	0	0	0	0	0	0	0	0	0	0	0	0	0
4/23/2024	3:00 PM	0	0	0	0	0	0	0	0	0	0	0	0	0
4/23/2024	3:15 PM	0	0	0	0	0	0	0	0	0	0	0	0	0
4/23/2024	3:30 PM	0	0	0	0	0	0	0	0	0	0	0	0	0
4/23/2024	3:45 PM	0	0	0	0	0	0	0	0	0	0	0	0	0
4/23/2024	4:00 PM	0	0	0	0	0	0	0	0	0	0	0	0	0
4/23/2024	4:15 PM	0	0	0	0	0	0	0	0	0	0	0	0	0
4/23/2024	4:30 PM	0	0	0	0	0	0	0	0	0	0	0	0	0
4/23/2024	4:45 PM	0	0	0	0	0	0	0	0	0	0	0	0	0
4/23/2024	5:00 PM	0	0	0	0	0	0	0	0	0	0	0	0	0
4/23/2024	5:15 PM	0	0	0	0	0	0	0	0	0	0	0	0	0
4/23/2024	5:30 PM	0	0	0	0	0	0	0	0	0	0	0	0	0
4/23/2024	5:45 PM	0	0	0	0	0	0	0	0	0	0	0	0	0
4/23/2024	6:00 PM	0	0	0	0	0	0	0	0	0	0	0	0	0
4/23/2024	6:15 PM	0	0	0	0	0	0	0	0	0	0	0	0	0
4/23/2024	6:30 PM	0	0	0	0	0	0	0	0	0	0	0	0	0
4/23/2024	6:45 PM	0	0	0	0	0	0	0	0	0	0	0	0	0
4/23/2024	7:00 PM	0	79	5	0	1	0	0	0	0	0	0	0	0
4/23/2024	7:15 PM	0	88	20	0	2	0	0	0	3	0	0	0	0
4/23/2024	7:30 PM	0	81	11	0	1	1	0	0	2	0	0	0	0
4/23/2024	7:45 PM	0	64	14	0	4	0	0	0	0	0	0	0	0
4/23/2024	8:00 PM	0	89	9	0	1	0	0	0	0	0	0	0	0
4/23/2024	8:15 PM	2	63	14	0	0	0	0	0	2	0	0	0	0
4/23/2024	8:30 PM	0	53	7	0	0	0	0	0	0	0	0	0	0
4/23/2024	8:45 PM	0	62	8	0	1	0	0	0	0	0	0	0	0
4/23/2024	9:00 PM	0	47	7	0	2	0	0	0	0	0	0	0	0
4/23/2024	9:15 PM	0	45	10	0	0	1	0	0	0	0	0	0	0
4/23/2024	9:30 PM	1	45	6	0	0	0	0	0	0	0	0	0	0
4/23/2024	9:45 PM	0	46	6	0	0	0	0	0	0	0	0	1	0
4/23/2024	10:00 PM	0	40	4	0	0	0	0	0	0	0	0	0	0
4/23/2024	10:15 PM	1	51	2	1	0	0	0	0	0	0	0	0	0
4/23/2024	10:30 PM	0	37	3	0	0	0	0	0	0	0	0	0	0
4/23/2024	10:45 PM	0	29	2	0	1	0	0	0	0	0	0	0	0
4/23/2024	11:00 PM	0	39	1	0	0	0	0	0	0	0	0	0	0
4/23/2024	11:15 PM	0	26	2	0	0	0	1	0	1	0	0	0	0
4/23/2024	11:30 PM	0	20	2	0	1	0	0	0	1	0	0	1	0
4/23/2024	11:45 PM	0	15	2	0	0	0	0	0	1	0	0	0	0

4/24/2024	12:00 AM	0	21	2	0	0	0	0	0	0	0	0	0
4/24/2024	12:15 AM	0	10	1	0	0	0	0	0	0	0	1	0
4/24/2024	12:30 AM	0	16	3	0	0	0	0	0	1	0	0	0
4/24/2024	12:45 AM	0	9	3	0	0	0	0	0	0	0	1	0
4/24/2024	1:00 AM	0	9	3	0	2	1	0	0	0	0	0	0
4/24/2024	1:15 AM	0	11	1	0	1	0	0	0	2	0	0	0
4/24/2024	1:30 AM	0	9	0	0	0	0	0	0	0	0	1	0
4/24/2024	1:45 AM	0	8	1	0	0	0	0	0	0	0	1	0
4/24/2024	2:00 AM	0	8	0	0	0	0	0	0	0	0	0	0
4/24/2024	2:15 AM	0	6	0	0	0	1	0	0	0	0	0	0
4/24/2024	2:30 AM	0	6	1	0	1	0	0	0	1	0	1	0
4/24/2024	2:45 AM	0	9	0	0	0	0	0	0	0	0	0	0
4/24/2024	3:00 AM	0	4	3	0	0	0	0	0	0	0	1	0
4/24/2024	3:15 AM	0	4	3	0	0	0	0	0	1	0	0	0
4/24/2024	3:30 AM	0	9	0	0	0	0	0	0	0	0	0	0
4/24/2024	3:45 AM	0	11	1	0	0	0	0	0	0	0	0	0
4/24/2024	4:00 AM	0	9	0	0	0	0	0	0	0	0	0	0
4/24/2024	4:15 AM	0	16	2	0	1	0	0	0	0	0	0	0
4/24/2024	4:30 AM	0	11	2	0	0	0	0	0	0	0	0	0
4/24/2024	4:45 AM	0	25	3	0	0	0	0	0	0	0	0	0
4/24/2024	5:00 AM	0	24	3	0	0	1	0	0	0	0	0	0
4/24/2024	5:15 AM	0	33	1	1	0	0	0	0	0	0	0	0
4/24/2024	5:30 AM	0	49	3	0	0	0	0	0	4	0	0	0
4/24/2024	5:45 AM	0	53	7	0	0	0	0	0	2	0	1	0
4/24/2024	6:00 AM	0	147	23	0	1	0	0	0	1	0	0	0
4/24/2024	6:15 AM	0	116	22	0	1	1	0	0	0	0	0	0
4/24/2024	6:30 AM	0	162	24	0	0	0	0	1	0	0	0	0
4/24/2024	6:45 AM	0	207	35	0	2	0	0	1	2	0	0	0
4/24/2024	7:00 AM	0	183	15	0	0	0	0	1	1	0	0	0
4/24/2024	7:15 AM	0	189	25	0	1	0	0	1	0	0	0	0
4/24/2024	7:30 AM	0	203	29	0	1	0	0	1	0	0	0	0
4/24/2024	7:45 AM	0	202	28	0	1	0	0	1	0	0	0	0
4/24/2024	8:00 AM	0	166	37	0	5	2	0	0	1	0	0	0
4/24/2024	8:15 AM	0	159	35	0	1	0	0	0	1	0	0	0
4/24/2024	8:30 AM	0	163	45	1	2	0	0	1	0	0	0	0
4/24/2024	8:45 AM	0	145	28	0	7	2	0	0	2	0	0	0
4/24/2024	9:00 AM	0	148	38	0	5	1	0	1	0	0	0	0
4/24/2024	9:15 AM	0	160	31	0	1	1	0	2	3	0	0	0
4/24/2024	9:30 AM	0	128	31	1	0	3	0	0	1	0	0	0
4/24/2024	9:45 AM	0	131	39	1	4	0	0	1	1	0	0	0
4/24/2024	10:00 AM	0	151	44	0	5	0	0	0	0	0	0	0
4/24/2024	10:15 AM	0	154	29	0	4	1	0	0	0	0	0	0
4/24/2024	10:30 AM	0	145	27	1	6	0	0	2	0	0	0	0
4/24/2024	10:45 AM	0	127	32	0	3	0	0	0	0	0	0	0
4/24/2024	11:00 AM	0	147	36	0	3	0	0	0	2	0	0	0
4/24/2024	11:15 AM	0	171	39	1	3	0	0	0	0	0	0	0
4/24/2024	11:30 AM	1	140	38	0	2	1	0	2	0	0	0	0
4/24/2024	11:45 AM	0	152	46	1	5	1	0	2	1	0	0	0
4/24/2024	12:00 PM	1	175	43	0	1	0	0	1	0	0	0	0
4/24/2024	12:15 PM	0	142	21	2	1	0	0	1	3	0	0	0
4/24/2024	12:30 PM	0	159	31	0	1	0	0	2	0	0	0	0
4/24/2024	12:45 PM	0	138	32	0	3	0	0	3	0	0	0	0
4/24/2024	1:00 PM	1	137	45	0	1	1	0	0	1	0	0	0
4/24/2024	1:15 PM	0	151	42	1	2	0	0	0	3	0	0	0
4/24/2024	1:30 PM	0	157	33	2	5	0	0	0	0	0	0	0
4/24/2024	1:45 PM	0	141	28	1	8	0	0	1	0	0	0	0
4/24/2024	2:00 PM	0	189	45	0	4	1	1	0	2	0	0	0
4/24/2024	2:15 PM	0	152	44	1	6	1	0	2	1	0	0	0
4/24/2024	2:30 PM	0	137	36	1	3	0	0	0	0	0	0	0
4/24/2024	2:45 PM	0	145	30	0	2	0	0	1	0	0	0	0
4/24/2024	3:00 PM	0	149	38	0	1	1	0	0	2	0	0	0
4/24/2024	3:15 PM	0	138	29	1	2	0	0	0	3	0	0	0
4/24/2024	3:30 PM	0	162	34	0	5	0	0	0	1	0	0	0
4/24/2024	3:45 PM	0	143	34	0	6	0	0	0	0	0	0	0
4/24/2024	4:00 PM	0	121	23	0	0	0	0	0	0	0	0	0
4/24/2024	4:15 PM	0	145	21	2	5	1	0	2	2	0	0	0
4/24/2024	4:30 PM	0	150	35	0	3	0	0	0	0	0	0	0
4/24/2024	4:45 PM	0	148	30	0	3	0	0	1	0	0	0	0
4/24/2024	5:00 PM	0	153	21	0	5	0	0	3	1	0	0	0
4/24/2024	5:15 PM	0	164	23	0	1	1	0	0	0	0	0	0
4/24/2024	5:30 PM	0	156	36	0	4	0	0	1	0	0	0	0
4/24/2024	5:45 PM	0	149	19	0	2	0	0	0	1	0	0	0
4/24/2024	6:00 PM	0	137	20	0	1	0	0	2	1	0	0	0
4/24/2024	6:15 PM	0	125	30	0	3	0	0	0	0	0	0	0
4/24/2024	6:30 PM	0	126	25	0	0	0	0	0	0	0	0	0
4/24/2024	6:45 PM	0	130	17	0	5	0	0	0	2	0	0	0
4/24/2024	7:00 PM	1	107	26	0	4	1	0	1	1	0	0	0
4/24/2024	7:15 PM	0	83	15	0	0	0	0	0	0	0	0	0
4/24/2024	7:30 PM	0	80	11	0	2	0	0	0	1	0	0	0
4/24/2024	7:45 PM	0	80	16	0	2	0	0	0	1	0	0	0
4/24/2024	8:00 PM	0	85	12	0	2	0	0	0	1	0	0	0
4/24/2024	8:15 PM	0	72	15	0	1	0	0	0	0	0	0	0
4/24/2024	8:30 PM	0	78	9	0	0	0	0	0	0	0	0	0
4/24/2024	8:45 PM	0	63	9	0	0	1	0	0	1	0	0	0
4/24/2024	9:00 PM	0	67	12	0	1	0	0	0	0	0	0	0
4/24/2024	9:15 PM	0	50	4	0	0	0	0	0	0	0	0	0
4/24/2024	9:30 PM	0	52	5	0	1	0	0	0	1	0	0	0
4/24/2024	9:45 PM	0	38	6	0	1	0	0	0	0	0	0	0
4/24/2024	10:00 PM	0	43	5	0	0	0	0	0	0	0	0	0
4/24/2024	10:15 PM	1	37	8	0	1	0	0	0	0	0	0	0
4/24/2024	10:30 PM	0	34	8	0	1	0	0	0	0	1	0	0
4/24/2024	10:45 PM	1	33	2	0	0	0	0	0	0	0	1	0
4/24/2024	11:00 PM	0	36	5	0	1	0	0	0	0	0	0	0
4/24/2024	11:15 PM	0	18	2	0	0	0	0	0	0	0	0	0
4/24/2024	11:30 PM	0	29	5	0	1	0	0	0	0	0	0	0
4/24/2024	11:45 PM	0	21	2	0	0	0	0	0	0	0	0	0

4/25/2024	12:00 AM	0	20	3	0	0	0	0	0	0	1	0	0	0
4/25/2024	12:15 AM	0	12	0	0	0	0	0	0	1	0	0	1	0
4/25/2024	12:30 AM	0	8	4	0	0	1	0	0	0	0	0	0	0
4/25/2024	12:45 AM	0	13	0	0	2	0	0	0	1	0	0	0	0
4/25/2024	1:00 AM	0	12	2	0	0	0	0	0	0	0	0	2	0
4/25/2024	1:15 AM	0	9	2	0	0	0	0	0	1	0	0	0	0
4/25/2024	1:30 AM	0	9	1	0	0	1	0	0	0	0	0	0	0
4/25/2024	1:45 AM	0	9	0	0	0	0	0	0	0	0	0	2	0
4/25/2024	2:00 AM	0	13	0	0	1	0	0	1	0	0	0	0	0
4/25/2024	2:15 AM	0	7	2	0	0	0	0	0	1	0	0	0	0
4/25/2024	2:30 AM	0	5	1	0	0	0	0	0	1	0	0	0	0
4/25/2024	2:45 AM	0	5	1	0	1	0	0	0	1	0	0	0	0
4/25/2024	3:00 AM	0	11	3	0	1	0	0	0	0	0	0	0	0
4/25/2024	3:15 AM	0	8	2	0	0	0	0	0	0	0	1	0	0
4/25/2024	3:30 AM	0	12	1	0	0	1	0	0	0	0	0	0	0
4/25/2024	3:45 AM	0	11	1	0	0	0	0	0	1	0	0	0	0
4/25/2024	4:00 AM	0	8	3	0	1	1	0	0	0	0	0	0	0
4/25/2024	4:15 AM	0	11	4	0	0	0	0	0	0	0	0	0	0
4/25/2024	4:30 AM	0	12	4	0	1	0	0	0	0	0	0	0	0
4/25/2024	4:45 AM	0	24	1	0	0	0	0	0	0	0	0	0	0
4/25/2024	5:00 AM	0	26	4	0	1	0	0	0	0	0	0	0	0
4/25/2024	5:15 AM	0	28	4	0	1	1	0	0	0	0	0	0	0
4/25/2024	5:30 AM	0	43	16	0	1	0	0	1	1	0	0	1	0
4/25/2024	5:45 AM	0	48	6	0	1	0	0	1	0	0	0	0	0
4/25/2024	6:00 AM	0	93	9	0	0	0	0	0	1	0	0	0	0
4/25/2024	6:15 AM	0	113	23	0	0	0	0	0	0	0	0	0	0
4/25/2024	6:30 AM	0	144	31	0	3	0	0	0	1	0	0	0	0
4/25/2024	6:45 AM	0	192	34	0	2	0	0	0	1	0	0	0	0
4/25/2024	7:00 AM	0	181	31	0	0	0	0	1	0	0	0	0	0
4/25/2024	7:15 AM	0	167	44	0	6	0	0	0	1	0	0	0	0
4/25/2024	7:30 AM	0	174	30	0	3	0	0	1	1	0	0	0	0
4/25/2024	7:45 AM	0	163	32	0	3	0	0	3	1	0	0	0	0
4/25/2024	8:00 AM	0	182	32	1	3	2	0	1	0	0	0	0	0
4/25/2024	8:15 AM	0	154	39	0	2	0	0	0	1	0	0	0	0
4/25/2024	8:30 AM	0	158	45	0	4	0	0	0	0	0	0	0	0
4/25/2024	8:45 AM	0	121	46	1	4	1	0	0	0	0	0	0	0
4/25/2024	9:00 AM	0	138	35	0	1	0	0	2	2	0	0	0	0
4/25/2024	9:15 AM	0	156	41	1	2	2	0	0	0	0	0	0	0
4/25/2024	9:30 AM	0	140	42	0	1	3	0	1	0	0	0	0	0
4/25/2024	9:45 AM	0	129	39	3	2	0	0	0	1	0	0	0	0
4/25/2024	10:00 AM	0	123	25	0	6	3	0	0	1	0	0	0	0
4/25/2024	10:15 AM	0	124	34	0	1	1	0	1	3	0	0	0	0
4/25/2024	10:30 AM	0	144	23	1	3	1	0	0	1	0	0	0	0
4/25/2024	10:45 AM	1	139	38	0	3	2	0	1	2	0	0	0	0
4/25/2024	11:00 AM	0	131	28	1	1	0	0	0	0	0	0	0	0
4/25/2024	11:15 AM	0	144	48	0	3	1	0	0	3	0	0	0	0
4/25/2024	11:30 AM	0	132	38	0	1	1	0	2	1	0	0	0	0
4/25/2024	11:45 AM	0	140	38	0	2	1	0	0	4	0	0	0	0
4/25/2024	12:00 PM	0	146	39	2	2	2	0	0	1	0	0	0	0
4/25/2024	12:15 PM	0	122	40	0	1	0	0	1	1	0	0	0	0
4/25/2024	12:30 PM	1	135	27	0	3	2	0	0	1	0	0	0	0
4/25/2024	12:45 PM	0	151	39	0	4	0	0	0	2	0	0	0	0
4/25/2024	1:00 PM	1	141	25	0	5	3	0	3	1	0	0	0	0
4/25/2024	1:15 PM	0	156	33	1	1	0	0	0	2	0	0	0	0
4/25/2024	1:30 PM	0	133	40	0	1	0	0	1	1	0	0	0	0
4/25/2024	1:45 PM	0	132	26	0	7	0	0	1	0	0	0	0	0
4/25/2024	2:00 PM	0	154	43	1	8	0	0	0	1	0	0	0	0
4/25/2024	2:15 PM	0	147	36	0	6	1	0	0	2	0	0	0	0
4/25/2024	2:30 PM	0	126	25	1	6	1	0	1	1	0	0	0	0
4/25/2024	2:45 PM	0	142	36	0	4	3	0	0	0	0	0	0	0
4/25/2024	3:00 PM	0	182	33	1	2	1	0	2	3	0	0	0	0
4/25/2024	3:15 PM	1	147	33	0	3	0	0	1	2	0	0	0	0
4/25/2024	3:30 PM	0	148	21	1	5	0	0	0	1	0	0	0	0
4/25/2024	3:45 PM	0	116	32	0	3	2	0	1	2	0	0	0	0
4/25/2024	4:00 PM	0	131	25	0	5	3	0	0	1	0	0	0	0
4/25/2024	4:15 PM	0	127	28	0	6	1	0	1	0	2	0	0	0
4/25/2024	4:30 PM	0	147	23	0	2	0	0	1	0	0	0	0	0
4/25/2024	4:45 PM	0	121	22	0	2	1	0	1	0	0	0	0	0
4/25/2024	5:00 PM	0	183	27	0	2	1	0	0	2	0	0	0	0
4/25/2024	5:15 PM	0	147	24	1	0	0	0	1	1	0	0	0	0
4/25/2024	5:30 PM	0	153	30	0	4	0	0	2	0	0	0	0	0
4/25/2024	5:45 PM	0	128	35	0	2	2	0	1	0	0	0	0	0
4/25/2024	6:00 PM	0	132	30	0	2	0	0	1	1	0	0	0	0
4/25/2024	6:15 PM	0	136	23	0	8	0	0	2	0	0	0	0	0
4/25/2024	6:30 PM	0	137	22	0	3	1	0	0	2	0	0	0	0
4/25/2024	6:45 PM	0	131	20	0	0	1	0	3	1	0	0	0	0
4/25/2024	7:00 PM	0	0	0	0	0	0	0	0	0	0	0	0	0
4/25/2024	7:15 PM	0	0	0	0	0	0	0	0	0	0	0	0	0
4/25/2024	7:30 PM	0	0	0	0	0	0	0	0	0	0	0	0	0
4/25/2024	7:45 PM	0	0	0	0	0	0	0	0	0	0	0	0	0
4/25/2024	8:00 PM	0	0	0	0	0	0	0	0	0	0	0	0	0
4/25/2024	8:15 PM	0	0	0	0	0	0	0	0	0	0	0	0	0
4/25/2024	8:30 PM	0	0	0	0	0	0	0	0	0	0	0	0	0
4/25/2024	8:45 PM	0	0	0	0	0	0	0	0	0	0	0	0	0
4/25/2024	9:00 PM	0	0	0	0	0	0	0	0	0	0	0	0	0
4/25/2024	9:15 PM	0	0	0	0	0	0	0	0	0	0	0	0	0
4/25/2024	9:30 PM	0	0	0	0	0	0	0	0	0	0	0	0	0
4/25/2024	9:45 PM	0	0	0	0	0	0	0	0	0	0	0	0	0
4/25/2024	10:00 PM	0	0	0	0	0	0	0	0	0	0	0	0	0
4/25/2024	10:15 PM	0	0	0	0	0	0	0	0	0	0	0	0	0
4/25/2024	10:30 PM	0	0	0	0	0	0	0	0	0	0	0	0	0
4/25/2024	10:45 PM	0	0	0	0	0	0	0	0	0	0	0	0	0
4/25/2024	11:00 PM	0	0	0	0	0	0	0	0	0	0	0	0	0
4/25/2024	11:15 PM	0	0	0	0	0	0	0	0	0	0	0	0	0
4/25/2024	11:30 PM	0	0	0	0	0	0	0	0	0	0	0	0	0
4/25/2024	11:45 PM	0	0	0	0	0	0	0	0	0	0	0	0	0

NB
File Name:
Start Date: 4/23/2024
Start Time: 0
Site Code: 51
Station ID: 1
Location 1: I-26 S/Bound Off-Ramp, north of US-378 Sunset Blvd
Location 2:

Date	Time	1	2	3	4	5	6	7	8	9	10	11	12	13
4/23/2024	12:00 AM	0	0	0	0	0	0	0	0	0	0	0	0	0
4/23/2024	12:15 AM	0	0	0	0	0	0	0	0	0	0	0	0	0
4/23/2024	12:30 AM	0	0	0	0	0	0	0	0	0	0	0	0	0
4/23/2024	12:45 AM	0	0	0	0	0	0	0	0	0	0	0	0	0
4/23/2024	1:00 AM	0	0	0	0	0	0	0	0	0	0	0	0	0
4/23/2024	1:15 AM	0	0	0	0	0	0	0	0	0	0	0	0	0
4/23/2024	1:30 AM	0	0	0	0	0	0	0	0	0	0	0	0	0
4/23/2024	1:45 AM	0	0	0	0	0	0	0	0	0	0	0	0	0
4/23/2024	2:00 AM	0	0	0	0	0	0	0	0	0	0	0	0	0
4/23/2024	2:15 AM	0	0	0	0	0	0	0	0	0	0	0	0	0
4/23/2024	2:30 AM	0	0	0	0	0	0	0	0	0	0	0	0	0
4/23/2024	2:45 AM	0	0	0	0	0	0	0	0	0	0	0	0	0
4/23/2024	3:00 AM	0	0	0	0	0	0	0	0	0	0	0	0	0
4/23/2024	3:15 AM	0	0	0	0	0	0	0	0	0	0	0	0	0
4/23/2024	3:30 AM	0	0	0	0	0	0	0	0	0	0	0	0	0
4/23/2024	3:45 AM	0	0	0	0	0	0	0	0	0	0	0	0	0
4/23/2024	4:00 AM	0	0	0	0	0	0	0	0	0	0	0	0	0
4/23/2024	4:15 AM	0	0	0	0	0	0	0	0	0	0	0	0	0
4/23/2024	4:30 AM	0	0	0	0	0	0	0	0	0	0	0	0	0
4/23/2024	4:45 AM	0	0	0	0	0	0	0	0	0	0	0	0	0
4/23/2024	5:00 AM	0	0	0	0	0	0	0	0	0	0	0	0	0
4/23/2024	5:15 AM	0	0	0	0	0	0	0	0	0	0	0	0	0
4/23/2024	5:30 AM	0	0	0	0	0	0	0	0	0	0	0	0	0
4/23/2024	5:45 AM	0	0	0	0	0	0	0	0	0	0	0	0	0
4/23/2024	6:00 AM	0	0	0	0	0	0	0	0	0	0	0	0	0
4/23/2024	6:15 AM	0	0	0	0	0	0	0	0	0	0	0	0	0
4/23/2024	6:30 AM	0	0	0	0	0	0	0	0	0	0	0	0	0
4/23/2024	6:45 AM	0	0	0	0	0	0	0	0	0	0	0	0	0
4/23/2024	7:00 AM	0	0	0	0	0	0	0	0	0	0	0	0	0
4/23/2024	7:15 AM	0	0	0	0	0	0	0	0	0	0	0	0	0
4/23/2024	7:30 AM	0	0	0	0	0	0	0	0	0	0	0	0	0
4/23/2024	7:45 AM	0	0	0	0	0	0	0	0	0	0	0	0	0
4/23/2024	8:00 AM	0	0	0	0	0	0	0	0	0	0	0	0	0
4/23/2024	8:15 AM	0	0	0	0	0	0	0	0	0	0	0	0	0
4/23/2024	8:30 AM	0	0	0	0	0	0	0	0	0	0	0	0	0
4/23/2024	8:45 AM	0	0	0	0	0	0	0	0	0	0	0	0	0
4/23/2024	9:00 AM	0	0	0	0	0	0	0	0	0	0	0	0	0
4/23/2024	9:15 AM	0	0	0	0	0	0	0	0	0	0	0	0	0
4/23/2024	9:30 AM	0	0	0	0	0	0	0	0	0	0	0	0	0
4/23/2024	9:45 AM	0	0	0	0	0	0	0	0	0	0	0	0	0
4/23/2024	10:00 AM	0	0	0	0	0	0	0	0	0	0	0	0	0
4/23/2024	10:15 AM	0	0	0	0	0	0	0	0	0	0	0	0	0
4/23/2024	10:30 AM	0	0	0	0	0	0	0	0	0	0	0	0	0
4/23/2024	10:45 AM	0	0	0	0	0	0	0	0	0	0	0	0	0
4/23/2024	11:00 AM	0	0	0	0	0	0	0	0	0	0	0	0	0
4/23/2024	11:15 AM	0	0	0	0	0	0	0	0	0	0	0	0	0
4/23/2024	11:30 AM	0	0	0	0	0	0	0	0	0	0	0	0	0
4/23/2024	11:45 AM	0	0	0	0	0	0	0	0	0	0	0	0	0
4/23/2024	12:00 PM	0	0	0	0	0	0	0	0	0	0	0	0	0
4/23/2024	12:15 PM	0	0	0	0	0	0	0	0	0	0	0	0	0
4/23/2024	12:30 PM	0	0	0	0	0	0	0	0	0	0	0	0	0
4/23/2024	12:45 PM	0	0	0	0	0	0	0	0	0	0	0	0	0
4/23/2024	1:00 PM	0	0	0	0	0	0	0	0	0	0	0	0	0
4/23/2024	1:15 PM	0	0	0	0	0	0	0	0	0	0	0	0	0
4/23/2024	1:30 PM	0	0	0	0	0	0	0	0	0	0	0	0	0
4/23/2024	1:45 PM	0	0	0	0	0	0	0	0	0	0	0	0	0
4/23/2024	2:00 PM	0	0	0	0	0	0	0	0	0	0	0	0	0
4/23/2024	2:15 PM	0	0	0	0	0	0	0	0	0	0	0	0	0
4/23/2024	2:30 PM	0	0	0	0	0	0	0	0	0	0	0	0	0
4/23/2024	2:45 PM	0	0	0	0	0	0	0	0	0	0	0	0	0
4/23/2024	3:00 PM	0	0	0	0	0	0	0	0	0	0	0	0	0
4/23/2024	3:15 PM	0	0	0	0	0	0	0	0	0	0	0	0	0
4/23/2024	3:30 PM	0	0	0	0	0	0	0	0	0	0	0	0	0
4/23/2024	3:45 PM	0	0	0	0	0	0	0	0	0	0	0	0	0
4/23/2024	4:00 PM	0	0	0	0	0	0	0	0	0	0	0	0	0
4/23/2024	4:15 PM	0	0	0	0	0	0	0	0	0	0	0	0	0
4/23/2024	4:30 PM	0	0	0	0	0	0	0	0	0	0	0	0	0
4/23/2024	4:45 PM	0	0	0	0	0	0	0	0	0	0	0	0	0
4/23/2024	5:00 PM	0	0	0	0	0	0	0	0	0	0	0	0	0
4/23/2024	5:15 PM	0	0	0	0	0	0	0	0	0	0	0	0	0
4/23/2024	5:30 PM	0	0	0	0	0	0	0	0	0	0	0	0	0
4/23/2024	5:45 PM	0	0	0	0	0	0	0	0	0	0	0	0	0
4/23/2024	6:00 PM	0	0	0	0	0	0	0	0	0	0	0	0	0
4/23/2024	6:15 PM	0	0	0	0	0	0	0	0	0	0	0	0	0
4/23/2024	6:30 PM	0	0	0	0	0	0	0	0	0	0	0	0	0
4/23/2024	6:45 PM	0	0	0	0	0	0	0	0	0	0	0	0	0
4/23/2024	7:00 PM	0	0	0	0	0	0	0	0	0	0	0	0	0
4/23/2024	7:15 PM	0	0	0	0	0	0	0	0	0	0	0	0	0
4/23/2024	7:30 PM	0	0	0	0	0	0	0	0	0	0	0	0	0
4/23/2024	7:45 PM	0	0	0	0	0	0	0	0	0	0	0	0	0
4/23/2024	8:00 PM	0	0	0	0	0	0	0	0	0	0	0	0	0
4/23/2024	8:15 PM	0	0	0	0	0	0	0	0	0	0	0	0	0
4/23/2024	8:30 PM	0	0	0	0	0	0	0	0	0	0	0	0	0
4/23/2024	8:45 PM	0	0	0	0	0	0	0	0	0	0	0	0	0
4/23/2024	9:00 PM	0	0	0	0	0	0	0	0	0	0	0	0	0
4/23/2024	9:15 PM	0	0	0	0	0	0	0	0	0	0	0	0	0
4/23/2024	9:30 PM	0	0	0	0	0	0	0	0	0	0	0	0	0
4/23/2024	9:45 PM	0	0	0	0	0	0	0	0	0	0	0	0	0
4/23/2024	10:00 PM	0	0	0	0	0	0	0	0	0	0	0	0	0
4/23/2024	10:15 PM	0	0	0	0	0	0	0	0	0	0	0	0	0
4/23/2024	10:30 PM	0	0	0	0	0	0	0	0	0	0	0	0	0
4/23/2024	10:45 PM	0	0	0	0	0	0	0	0	0	0	0	0	0
4/23/2024	11:00 PM	0	0	0	0	0	0	0	0	0	0	0	0	0
4/23/2024	11:15 PM	0	0	0	0	0	0	0	0	0	0	0	0	0
4/23/2024	11:30 PM	0	0	0	0	0	0	0	0	0	0	0	0	0
4/23/2024	11:45 PM	0	0	0	0	0	0	0	0	0	0	0	0	0

4/24/2024	12:00 AM	0	0	0	0	0	0	0	0	0	0	0	0	0
4/24/2024	12:15 AM	0	0	0	0	0	0	0	0	0	0	0	0	0
4/24/2024	12:30 AM	0	0	0	0	0	0	0	0	0	0	0	0	0
4/24/2024	12:45 AM	0	0	0	0	0	0	0	0	0	0	0	0	0
4/24/2024	1:00 AM	0	0	0	0	0	0	0	0	0	0	0	0	0
4/24/2024	1:15 AM	0	0	0	0	0	0	0	0	0	0	0	0	0
4/24/2024	1:30 AM	0	0	0	0	0	0	0	0	0	0	0	0	0
4/24/2024	1:45 AM	0	0	0	0	0	0	0	0	0	0	0	0	0
4/24/2024	2:00 AM	0	0	0	0	0	0	0	0	0	0	0	0	0
4/24/2024	2:15 AM	0	0	0	0	0	0	0	0	0	0	0	0	0
4/24/2024	2:30 AM	0	0	0	0	0	0	0	0	0	0	0	0	0
4/24/2024	2:45 AM	0	0	0	0	0	0	0	0	0	0	0	0	0
4/24/2024	3:00 AM	0	0	0	0	0	0	0	0	0	0	0	0	0
4/24/2024	3:15 AM	0	0	0	0	0	0	0	0	0	0	0	0	0
4/24/2024	3:30 AM	0	0	0	0	0	0	0	0	0	0	0	0	0
4/24/2024	3:45 AM	0	0	0	0	0	0	0	0	0	0	0	0	0
4/24/2024	4:00 AM	0	0	0	0	0	0	0	0	0	0	0	0	0
4/24/2024	4:15 AM	0	0	0	0	0	0	0	0	0	0	0	0	0
4/24/2024	4:30 AM	0	0	0	0	0	0	0	0	0	0	0	0	0
4/24/2024	4:45 AM	0	0	0	0	0	0	0	0	0	0	0	0	0
4/24/2024	5:00 AM	0	0	0	0	0	0	0	0	0	0	0	0	0
4/24/2024	5:15 AM	0	0	0	0	0	0	0	0	0	0	0	0	0
4/24/2024	5:30 AM	0	0	0	0	0	0	0	0	0	0	0	0	0
4/24/2024	5:45 AM	0	0	0	0	0	0	0	0	0	0	0	0	0
4/24/2024	6:00 AM	0	0	0	0	0	0	0	0	0	0	0	0	0
4/24/2024	6:15 AM	0	0	0	0	0	0	0	0	0	0	0	0	0
4/24/2024	6:30 AM	0	0	0	0	0	0	0	0	0	0	0	0	0
4/24/2024	6:45 AM	0	0	0	0	0	0	0	0	0	0	0	0	0
4/24/2024	7:00 AM	0	0	0	0	0	0	0	0	0	0	0	0	0
4/24/2024	7:15 AM	0	0	0	0	0	0	0	0	0	0	0	0	0
4/24/2024	7:30 AM	0	0	0	0	0	0	0	0	0	0	0	0	0
4/24/2024	7:45 AM	0	0	0	0	0	0	0	0	0	0	0	0	0
4/24/2024	8:00 AM	0	0	0	0	0	0	0	0	0	0	0	0	0
4/24/2024	8:15 AM	0	0	0	0	0	0	0	0	0	0	0	0	0
4/24/2024	8:30 AM	0	0	0	0	0	0	0	0	0	0	0	0	0
4/24/2024	8:45 AM	0	0	0	0	0	0	0	0	0	0	0	0	0
4/24/2024	9:00 AM	0	0	0	0	0	0	0	0	0	0	0	0	0
4/24/2024	9:15 AM	0	0	0	0	0	0	0	0	0	0	0	0	0
4/24/2024	9:30 AM	0	0	0	0	0	0	0	0	0	0	0	0	0
4/24/2024	9:45 AM	0	0	0	0	0	0	0	0	0	0	0	0	0
4/24/2024	10:00 AM	0	0	0	0	0	0	0	0	0	0	0	0	0
4/24/2024	10:15 AM	0	0	0	0	0	0	0	0	0	0	0	0	0
4/24/2024	10:30 AM	0	0	0	0	0	0	0	0	0	0	0	0	0
4/24/2024	10:45 AM	0	0	0	0	0	0	0	0	0	0	0	0	0
4/24/2024	11:00 AM	0	0	0	0	0	0	0	0	0	0	0	0	0
4/24/2024	11:15 AM	0	0	0	0	0	0	0	0	0	0	0	0	0
4/24/2024	11:30 AM	0	0	0	0	0	0	0	0	0	0	0	0	0
4/24/2024	11:45 AM	0	0	0	0	0	0	0	0	0	0	0	0	0
4/24/2024	12:00 PM	0	0	0	0	0	0	0	0	0	0	0	0	0
4/24/2024	12:15 PM	0	0	0	0	0	0	0	0	0	0	0	0	0
4/24/2024	12:30 PM	0	0	0	0	0	0	0	0	0	0	0	0	0
4/24/2024	12:45 PM	0	0	0	0	0	0	0	0	0	0	0	0	0
4/24/2024	1:00 PM	0	0	0	0	0	0	0	0	0	0	0	0	0
4/24/2024	1:15 PM	0	0	0	0	0	0	0	0	0	0	0	0	0
4/24/2024	1:30 PM	0	0	0	0	0	0	0	0	0	0	0	0	0
4/24/2024	1:45 PM	0	0	0	0	0	0	0	0	0	0	0	0	0
4/24/2024	2:00 PM	0	0	0	0	0	0	0	0	0	0	0	0	0
4/24/2024	2:15 PM	0	0	0	0	0	0	0	0	0	0	0	0	0
4/24/2024	2:30 PM	0	0	0	0	0	0	0	0	0	0	0	0	0
4/24/2024	2:45 PM	0	0	0	0	0	0	0	0	0	0	0	0	0
4/24/2024	3:00 PM	0	0	0	0	0	0	0	0	0	0	0	0	0
4/24/2024	3:15 PM	0	0	0	0	0	0	0	0	0	0	0	0	0
4/24/2024	3:30 PM	0	0	0	0	0	0	0	0	0	0	0	0	0
4/24/2024	3:45 PM	0	0	0	0	0	0	0	0	0	0	0	0	0
4/24/2024	4:00 PM	0	0	0	0	0	0	0	0	0	0	0	0	0
4/24/2024	4:15 PM	0	0	0	0	0	0	0	0	0	0	0	0	0
4/24/2024	4:30 PM	0	0	0	0	0	0	0	0	0	0	0	0	0
4/24/2024	4:45 PM	0	0	0	0	0	0	0	0	0	0	0	0	0
4/24/2024	5:00 PM	0	0	0	0	0	0	0	0	0	0	0	0	0
4/24/2024	5:15 PM	0	0	0	0	0	0	0	0	0	0	0	0	0
4/24/2024	5:30 PM	0	0	0	0	0	0	0	0	0	0	0	0	0
4/24/2024	5:45 PM	0	0	0	0	0	0	0	0	0	0	0	0	0
4/24/2024	6:00 PM	0	0	0	0	0	0	0	0	0	0	0	0	0
4/24/2024	6:15 PM	0	0	0	0	0	0	0	0	0	0	0	0	0
4/24/2024	6:30 PM	0	0	0	0	0	0	0	0	0	0	0	0	0
4/24/2024	6:45 PM	0	0	0	0	0	0	0	0	0	0	0	0	0
4/24/2024	7:00 PM	0	0	0	0	0	0	0	0	0	0	0	0	0
4/24/2024	7:15 PM	0	0	0	0	0	0	0	0	0	0	0	0	0
4/24/2024	7:30 PM	0	0	0	0	0	0	0	0	0	0	0	0	0
4/24/2024	7:45 PM	0	0	0	0	0	0	0	0	0	0	0	0	0
4/24/2024	8:00 PM	0	0	0	0	0	0	0	0	0	0	0	0	0
4/24/2024	8:15 PM	0	0	0	0	0	0	0	0	0	0	0	0	0
4/24/2024	8:30 PM	0	0	0	0	0	0	0	0	0	0	0	0	0
4/24/2024	8:45 PM	0	0	0	0	0	0	0	0	0	0	0	0	0
4/24/2024	9:00 PM	0	0	0	0	0	0	0	0	0	0	0	0	0
4/24/2024	9:15 PM	0	0	0	0	0	0	0	0	0	0	0	0	0
4/24/2024	9:30 PM	0	0	0	0	0	0	0	0	0	0	0	0	0
4/24/2024	9:45 PM	0	0	0	0	0	0	0	0	0	0	0	0	0
4/24/2024	10:00 PM	0	0	0	0	0	0	0	0	0	0	0	0	0
4/24/2024	10:15 PM	0	0	0	0	0	0	0	0	0	0	0	0	0
4/24/2024	10:30 PM	0	0	0	0	0	0	0	0	0	0	0	0	0
4/24/2024	10:45 PM	0	0	0	0	0	0	0	0	0	0	0	0	0
4/24/2024	11:00 PM	0	0	0	0	0	0	0	0	0	0	0	0	0
4/24/2024	11:15 PM	0	0	0	0	0	0	0	0	0	0	0	0	0
4/24/2024	11:30 PM	0	0	0	0	0	0	0	0	0	0	0	0	0
4/24/2024	11:45 PM	0	0	0	0	0	0	0	0	0	0	0	0	0

4/25/2024	12:00 AM	0	0	0	0	0	0	0	0	0	0	0	0	0
4/25/2024	12:15 AM	0	0	0	0	0	0	0	0	0	0	0	0	0
4/25/2024	12:30 AM	0	0	0	0	0	0	0	0	0	0	0	0	0
4/25/2024	12:45 AM	0	0	0	0	0	0	0	0	0	0	0	0	0
4/25/2024	1:00 AM	0	0	0	0	0	0	0	0	0	0	0	0	0
4/25/2024	1:15 AM	0	0	0	0	0	0	0	0	0	0	0	0	0
4/25/2024	1:30 AM	0	0	0	0	0	0	0	0	0	0	0	0	0
4/25/2024	1:45 AM	0	0	0	0	0	0	0	0	0	0	0	0	0
4/25/2024	2:00 AM	0	0	0	0	0	0	0	0	0	0	0	0	0
4/25/2024	2:15 AM	0	0	0	0	0	0	0	0	0	0	0	0	0
4/25/2024	2:30 AM	0	0	0	0	0	0	0	0	0	0	0	0	0
4/25/2024	2:45 AM	0	0	0	0	0	0	0	0	0	0	0	0	0
4/25/2024	3:00 AM	0	0	0	0	0	0	0	0	0	0	0	0	0
4/25/2024	3:15 AM	0	0	0	0	0	0	0	0	0	0	0	0	0
4/25/2024	3:30 AM	0	0	0	0	0	0	0	0	0	0	0	0	0
4/25/2024	3:45 AM	0	0	0	0	0	0	0	0	0	0	0	0	0
4/25/2024	4:00 AM	0	0	0	0	0	0	0	0	0	0	0	0	0
4/25/2024	4:15 AM	0	0	0	0	0	0	0	0	0	0	0	0	0
4/25/2024	4:30 AM	0	0	0	0	0	0	0	0	0	0	0	0	0
4/25/2024	4:45 AM	0	0	0	0	0	0	0	0	0	0	0	0	0
4/25/2024	5:00 AM	0	0	0	0	0	0	0	0	0	0	0	0	0
4/25/2024	5:15 AM	0	0	0	0	0	0	0	0	0	0	0	0	0
4/25/2024	5:30 AM	0	0	0	0	0	0	0	0	0	0	0	0	0
4/25/2024	5:45 AM	0	0	0	0	0	0	0	0	0	0	0	0	0
4/25/2024	6:00 AM	0	0	0	0	0	0	0	0	0	0	0	0	0
4/25/2024	6:15 AM	0	0	0	0	0	0	0	0	0	0	0	0	0
4/25/2024	6:30 AM	0	0	0	0	0	0	0	0	0	0	0	0	0
4/25/2024	6:45 AM	0	0	0	0	0	0	0	0	0	0	0	0	0
4/25/2024	7:00 AM	0	0	0	0	0	0	0	0	0	0	0	0	0
4/25/2024	7:15 AM	0	0	0	0	0	0	0	0	0	0	0	0	0
4/25/2024	7:30 AM	0	0	0	0	0	0	0	0	0	0	0	0	0
4/25/2024	7:45 AM	0	0	0	0	0	0	0	0	0	0	0	0	0
4/25/2024	8:00 AM	0	0	0	0	0	0	0	0	0	0	0	0	0
4/25/2024	8:15 AM	0	0	0	0	0	0	0	0	0	0	0	0	0
4/25/2024	8:30 AM	0	0	0	0	0	0	0	0	0	0	0	0	0
4/25/2024	8:45 AM	0	0	0	0	0	0	0	0	0	0	0	0	0
4/25/2024	9:00 AM	0	0	0	0	0	0	0	0	0	0	0	0	0
4/25/2024	9:15 AM	0	0	0	0	0	0	0	0	0	0	0	0	0
4/25/2024	9:30 AM	0	0	0	0	0	0	0	0	0	0	0	0	0
4/25/2024	9:45 AM	0	0	0	0	0	0	0	0	0	0	0	0	0
4/25/2024	10:00 AM	0	0	0	0	0	0	0	0	0	0	0	0	0
4/25/2024	10:15 AM	0	0	0	0	0	0	0	0	0	0	0	0	0
4/25/2024	10:30 AM	0	0	0	0	0	0	0	0	0	0	0	0	0
4/25/2024	10:45 AM	0	0	0	0	0	0	0	0	0	0	0	0	0
4/25/2024	11:00 AM	0	0	0	0	0	0	0	0	0	0	0	0	0
4/25/2024	11:15 AM	0	0	0	0	0	0	0	0	0	0	0	0	0
4/25/2024	11:30 AM	0	0	0	0	0	0	0	0	0	0	0	0	0
4/25/2024	11:45 AM	0	0	0	0	0	0	0	0	0	0	0	0	0
4/25/2024	12:00 PM	0	0	0	0	0	0	0	0	0	0	0	0	0
4/25/2024	12:15 PM	0	0	0	0	0	0	0	0	0	0	0	0	0
4/25/2024	12:30 PM	0	0	0	0	0	0	0	0	0	0	0	0	0
4/25/2024	12:45 PM	0	0	0	0	0	0	0	0	0	0	0	0	0
4/25/2024	1:00 PM	0	0	0	0	0	0	0	0	0	0	0	0	0
4/25/2024	1:15 PM	0	0	0	0	0	0	0	0	0	0	0	0	0
4/25/2024	1:30 PM	0	0	0	0	0	0	0	0	0	0	0	0	0
4/25/2024	1:45 PM	0	0	0	0	0	0	0	0	0	0	0	0	0
4/25/2024	2:00 PM	0	0	0	0	0	0	0	0	0	0	0	0	0
4/25/2024	2:15 PM	0	0	0	0	0	0	0	0	0	0	0	0	0
4/25/2024	2:30 PM	0	0	0	0	0	0	0	0	0	0	0	0	0
4/25/2024	2:45 PM	0	0	0	0	0	0	0	0	0	0	0	0	0
4/25/2024	3:00 PM	0	0	0	0	0	0	0	0	0	0	0	0	0
4/25/2024	3:15 PM	0	0	0	0	0	0	0	0	0	0	0	0	0
4/25/2024	3:30 PM	0	0	0	0	0	0	0	0	0	0	0	0	0
4/25/2024	3:45 PM	0	0	0	0	0	0	0	0	0	0	0	0	0
4/25/2024	4:00 PM	0	0	0	0	0	0	0	0	0	0	0	0	0
4/25/2024	4:15 PM	0	0	0	0	0	0	0	0	0	0	0	0	0
4/25/2024	4:30 PM	0	0	0	0	0	0	0	0	0	0	0	0	0
4/25/2024	4:45 PM	0	0	0	0	0	0	0	0	0	0	0	0	0
4/25/2024	5:00 PM	0	0	0	0	0	0	0	0	0	0	0	0	0
4/25/2024	5:15 PM	0	0	0	0	0	0	0	0	0	0	0	0	0
4/25/2024	5:30 PM	0	0	0	0	0	0	0	0	0	0	0	0	0
4/25/2024	5:45 PM	0	0	0	0	0	0	0	0	0	0	0	0	0
4/25/2024	6:00 PM	0	0	0	0	0	0	0	0	0	0	0	0	0
4/25/2024	6:15 PM	0	0	0	0	0	0	0	0	0	0	0	0	0
4/25/2024	6:30 PM	0	0	0	0	0	0	0	0	0	0	0	0	0
4/25/2024	6:45 PM	0	0	0	0	0	0	0	0	0	0	0	0	0
4/25/2024	7:00 PM	0	0	0	0	0	0	0	0	0	0	0	0	0
4/25/2024	7:15 PM	0	0	0	0	0	0	0	0	0	0	0	0	0
4/25/2024	7:30 PM	0	0	0	0	0	0	0	0	0	0	0	0	0
4/25/2024	7:45 PM	0	0	0	0	0	0	0	0	0	0	0	0	0
4/25/2024	8:00 PM	0	0	0	0	0	0	0	0	0	0	0	0	0
4/25/2024	8:15 PM	0	0	0	0	0	0	0	0	0	0	0	0	0
4/25/2024	8:30 PM	0	0	0	0	0	0	0	0	0	0	0	0	0
4/25/2024	8:45 PM	0	0	0	0	0	0	0	0	0	0	0	0	0
4/25/2024	9:00 PM	0	0	0	0	0	0	0	0	0	0	0	0	0
4/25/2024	9:15 PM	0	0	0	0	0	0	0	0	0	0	0	0	0
4/25/2024	9:30 PM	0	0	0	0	0	0	0	0	0	0	0	0	0
4/25/2024	9:45 PM	0	0	0	0	0	0	0	0	0	0	0	0	0
4/25/2024	10:00 PM	0	0	0	0	0	0	0	0	0	0	0	0	0
4/25/2024	10:15 PM	0	0	0	0	0	0	0	0	0	0	0	0	0
4/25/2024	10:30 PM	0	0	0	0	0	0	0	0	0	0	0	0	0
4/25/2024	10:45 PM	0	0	0	0	0	0	0	0	0	0	0	0	0
4/25/2024	11:00 PM	0	0	0	0	0	0	0	0	0	0	0	0	0
4/25/2024	11:15 PM	0	0	0	0	0	0	0	0	0	0	0	0	0
4/25/2024	11:30 PM	0	0	0	0	0	0	0	0	0	0	0	0	0
4/25/2024	11:45 PM	0	0	0	0	0	0	0	0	0	0	0	0	0

SB
File Name:
Start Date: 4/23/2024
Start Time: 0
Site Code: 51
Station ID: 1
Location 1: I-26 S/Bound Off-Ramp, north of US-378 Sunset Blvd
Location 2:

Date	Time	1	2	3	4	5	6	7	8	9	10	11	12	13
4/23/2024	12:00 AM	0	0	0	0	0	0	0	0	0	0	0	0	0
4/23/2024	12:15 AM	0	0	0	0	0	0	0	0	0	0	0	0	0
4/23/2024	12:30 AM	0	0	0	0	0	0	0	0	0	0	0	0	0
4/23/2024	12:45 AM	0	0	0	0	0	0	0	0	0	0	0	0	0
4/23/2024	1:00 AM	0	0	0	0	0	0	0	0	0	0	0	0	0
4/23/2024	1:15 AM	0	0	0	0	0	0	0	0	0	0	0	0	0
4/23/2024	1:30 AM	0	0	0	0	0	0	0	0	0	0	0	0	0
4/23/2024	1:45 AM	0	0	0	0	0	0	0	0	0	0	0	0	0
4/23/2024	2:00 AM	0	0	0	0	0	0	0	0	0	0	0	0	0
4/23/2024	2:15 AM	0	0	0	0	0	0	0	0	0	0	0	0	0
4/23/2024	2:30 AM	0	0	0	0	0	0	0	0	0	0	0	0	0
4/23/2024	2:45 AM	0	0	0	0	0	0	0	0	0	0	0	0	0
4/23/2024	3:00 AM	0	0	0	0	0	0	0	0	0	0	0	0	0
4/23/2024	3:15 AM	0	0	0	0	0	0	0	0	0	0	0	0	0
4/23/2024	3:30 AM	0	0	0	0	0	0	0	0	0	0	0	0	0
4/23/2024	3:45 AM	0	0	0	0	0	0	0	0	0	0	0	0	0
4/23/2024	4:00 AM	0	0	0	0	0	0	0	0	0	0	0	0	0
4/23/2024	4:15 AM	0	0	0	0	0	0	0	0	0	0	0	0	0
4/23/2024	4:30 AM	0	0	0	0	0	0	0	0	0	0	0	0	0
4/23/2024	4:45 AM	0	0	0	0	0	0	0	0	0	0	0	0	0
4/23/2024	5:00 AM	0	0	0	0	0	0	0	0	0	0	0	0	0
4/23/2024	5:15 AM	0	0	0	0	0	0	0	0	0	0	0	0	0
4/23/2024	5:30 AM	0	0	0	0	0	0	0	0	0	0	0	0	0
4/23/2024	5:45 AM	0	0	0	0	0	0	0	0	0	0	0	0	0
4/23/2024	6:00 AM	0	0	0	0	0	0	0	0	0	0	0	0	0
4/23/2024	6:15 AM	0	0	0	0	0	0	0	0	0	0	0	0	0
4/23/2024	6:30 AM	0	0	0	0	0	0	0	0	0	0	0	0	0
4/23/2024	6:45 AM	0	0	0	0	0	0	0	0	0	0	0	0	0
4/23/2024	7:00 AM	0	0	0	0	0	0	0	0	0	0	0	0	0
4/23/2024	7:15 AM	0	0	0	0	0	0	0	0	0	0	0	0	0
4/23/2024	7:30 AM	0	0	0	0	0	0	0	0	0	0	0	0	0
4/23/2024	7:45 AM	0	0	0	0	0	0	0	0	0	0	0	0	0
4/23/2024	8:00 AM	0	0	0	0	0	0	0	0	0	0	0	0	0
4/23/2024	8:15 AM	0	0	0	0	0	0	0	0	0	0	0	0	0
4/23/2024	8:30 AM	0	0	0	0	0	0	0	0	0	0	0	0	0
4/23/2024	8:45 AM	0	0	0	0	0	0	0	0	0	0	0	0	0
4/23/2024	9:00 AM	0	0	0	0	0	0	0	0	0	0	0	0	0
4/23/2024	9:15 AM	0	0	0	0	0	0	0	0	0	0	0	0	0
4/23/2024	9:30 AM	0	0	0	0	0	0	0	0	0	0	0	0	0
4/23/2024	9:45 AM	0	0	0	0	0	0	0	0	0	0	0	0	0
4/23/2024	10:00 AM	0	0	0	0	0	0	0	0	0	0	0	0	0
4/23/2024	10:15 AM	0	0	0	0	0	0	0	0	0	0	0	0	0
4/23/2024	10:30 AM	0	0	0	0	0	0	0	0	0	0	0	0	0
4/23/2024	10:45 AM	0	0	0	0	0	0	0	0	0	0	0	0	0
4/23/2024	11:00 AM	0	0	0	0	0	0	0	0	0	0	0	0	0
4/23/2024	11:15 AM	0	0	0	0	0	0	0	0	0	0	0	0	0
4/23/2024	11:30 AM	0	0	0	0	0	0	0	0	0	0	0	0	0
4/23/2024	11:45 AM	0	0	0	0	0	0	0	0	0	0	0	0	0
4/23/2024	12:00 PM	0	0	0	0	0	0	0	0	0	0	0	0	0
4/23/2024	12:15 PM	0	0	0	0	0	0	0	0	0	0	0	0	0
4/23/2024	12:30 PM	0	0	0	0	0	0	0	0	0	0	0	0	0
4/23/2024	12:45 PM	0	0	0	0	0	0	0	0	0	0	0	0	0
4/23/2024	1:00 PM	0	0	0	0	0	0	0	0	0	0	0	0	0
4/23/2024	1:15 PM	0	0	0	0	0	0	0	0	0	0	0	0	0
4/23/2024	1:30 PM	0	0	0	0	0	0	0	0	0	0	0	0	0
4/23/2024	1:45 PM	0	0	0	0	0	0	0	0	0	0	0	0	0
4/23/2024	2:00 PM	0	0	0	0	0	0	0	0	0	0	0	0	0
4/23/2024	2:15 PM	0	0	0	0	0	0	0	0	0	0	0	0	0
4/23/2024	2:30 PM	0	0	0	0	0	0	0	0	0	0	0	0	0
4/23/2024	2:45 PM	0	0	0	0	0	0	0	0	0	0	0	0	0
4/23/2024	3:00 PM	0	0	0	0	0	0	0	0	0	0	0	0	0
4/23/2024	3:15 PM	0	0	0	0	0	0	0	0	0	0	0	0	0
4/23/2024	3:30 PM	0	0	0	0	0	0	0	0	0	0	0	0	0
4/23/2024	3:45 PM	0	0	0	0	0	0	0	0	0	0	0	0	0
4/23/2024	4:00 PM	0	0	0	0	0	0	0	0	0	0	0	0	0
4/23/2024	4:15 PM	0	0	0	0	0	0	0	0	0	0	0	0	0
4/23/2024	4:30 PM	0	0	0	0	0	0	0	0	0	0	0	0	0
4/23/2024	4:45 PM	0	0	0	0	0	0	0	0	0	0	0	0	0
4/23/2024	5:00 PM	0	0	0	0	0	0	0	0	0	0	0	0	0
4/23/2024	5:15 PM	0	0	0	0	0	0	0	0	0	0	0	0	0
4/23/2024	5:30 PM	0	0	0	0	0	0	0	0	0	0	0	0	0
4/23/2024	5:45 PM	0	0	0	0	0	0	0	0	0	0	0	0	0
4/23/2024	6:00 PM	0	0	0	0	0	0	0	0	0	0	0	0	0
4/23/2024	6:15 PM	0	79	5	0	1	0	0	0	0	0	0	0	0
4/23/2024	6:30 PM	0	167	25	0	3	0	0	0	3	0	0	0	0
4/23/2024	6:45 PM	0	248	36	0	4	1	0	0	5	0	0	0	0
4/23/2024	7:00 PM	0	312	50	0	8	1	0	0	5	0	0	0	0
4/23/2024	7:15 PM	0	322	54	0	8	1	0	0	5	0	0	0	0
4/23/2024	7:30 PM	2	297	48	0	6	1	0	0	4	0	0	0	0
4/23/2024	7:45 PM	2	269	44	0	5	0	0	0	2	0	0	0	0
4/23/2024	8:00 PM	2	267	38	0	2	0	0	0	2	0	0	0	0
4/23/2024	8:15 PM	2	225	36	0	3	0	0	0	2	0	0	0	0
4/23/2024	8:30 PM	0	207	32	0	3	1	0	0	0	0	0	0	0
4/23/2024	8:45 PM	1	199	31	0	3	1	0	0	0	0	0	0	0
4/23/2024	9:00 PM	1	183	29	0	2	1	0	0	0	0	0	1	0
4/23/2024	9:15 PM	1	176	26	0	0	1	0	0	0	0	0	1	0
4/23/2024	9:30 PM	2	182	18	1	0	0	0	0	0	0	0	1	0
4/23/2024	9:45 PM	1	174	15	1	0	0	0	0	0	0	0	1	0
4/23/2024	10:00 PM	1	157	11	1	1	0	0	0	0	0	0	0	0
4/23/2024	10:15 PM	1	156	8	1	1	0	0	0	0	0	0	0	0
4/23/2024	10:30 PM	0	131	8	0	1	0	1	0	1	0	0	0	0
4/23/2024	10:45 PM	0	114	7	0	2	0	1	0	2	0	0	1	0
4/23/2024	11:00 PM	0	100	7	0	1	0	1	0	3	0	0	1	0
4/23/2024	11:15 PM	0	61	6	0	1	0	1	0	3	0	0	1	0
4/23/2024	11:30 PM	0	35	4	0	1	0	0	0	2	0	0	1	0
4/23/2024	11:45 PM	0	15	2	0	0	0	0	0	1	0	0	0	0

4/24/2024	12:00 AM	0	56	9	0	0	0	0	0	1	0	0	2	0
4/24/2024	12:15 AM	0	44	10	0	2	1	0	0	1	0	0	2	0
4/24/2024	12:30 AM	0	45	10	0	3	1	0	0	3	0	0	1	0
4/24/2024	12:45 AM	0	38	7	0	3	1	0	0	2	0	0	2	0
4/24/2024	1:00 AM	0	37	5	0	3	1	0	0	2	0	0	2	0
4/24/2024	1:15 AM	0	36	2	0	1	0	0	0	2	0	0	2	0
4/24/2024	1:30 AM	0	31	1	0	0	1	0	0	0	0	0	2	0
4/24/2024	1:45 AM	0	28	2	0	1	1	0	0	1	0	1	1	0
4/24/2024	2:00 AM	0	29	1	0	1	1	0	0	1	0	1	0	0
4/24/2024	2:15 AM	0	25	4	0	1	1	0	0	1	0	2	0	0
4/24/2024	2:30 AM	0	23	7	0	1	0	0	0	2	0	2	0	0
4/24/2024	2:45 AM	0	26	6	0	0	0	0	0	1	0	1	0	0
4/24/2024	3:00 AM	0	28	7	0	0	0	0	0	1	0	1	0	0
4/24/2024	3:15 AM	0	33	4	0	0	0	0	0	1	0	0	0	0
4/24/2024	3:30 AM	0	45	3	0	1	0	0	0	0	0	0	0	0
4/24/2024	3:45 AM	0	47	5	0	1	0	0	0	0	0	0	0	0
4/24/2024	4:00 AM	0	61	7	0	1	0	0	0	0	0	0	0	0
4/24/2024	4:15 AM	0	76	10	0	1	1	0	0	0	0	0	0	0
4/24/2024	4:30 AM	0	93	9	1	0	1	0	0	0	0	0	0	0
4/24/2024	4:45 AM	0	131	10	1	0	1	0	0	4	0	0	0	0
4/24/2024	5:00 AM	0	159	14	1	0	1	0	0	6	0	0	1	0
4/24/2024	5:15 AM	0	282	34	1	1	0	0	0	7	0	0	1	0
4/24/2024	5:30 AM	0	365	55	0	2	1	0	0	7	0	0	1	0
4/24/2024	5:45 AM	0	478	76	0	2	1	0	1	3	0	0	1	0
4/24/2024	6:00 AM	0	632	104	0	4	1	0	2	3	0	0	0	0
4/24/2024	6:15 AM	0	668	96	0	3	1	0	3	3	0	0	0	0
4/24/2024	6:30 AM	0	741	99	0	3	0	0	4	3	0	0	0	0
4/24/2024	6:45 AM	0	782	104	0	4	0	0	4	3	0	0	0	0
4/24/2024	7:00 AM	0	777	97	0	3	0	0	4	1	0	0	0	0
4/24/2024	7:15 AM	0	760	119	0	8	2	0	3	1	0	0	0	0
4/24/2024	7:30 AM	0	730	129	0	8	2	0	2	2	0	0	0	0
4/24/2024	7:45 AM	0	690	145	1	9	2	0	2	2	0	0	0	0
4/24/2024	8:00 AM	0	633	145	1	15	4	0	1	4	0	0	0	0
4/24/2024	8:15 AM	0	615	146	1	15	3	0	2	3	0	0	0	0
4/24/2024	8:30 AM	0	616	142	1	15	4	0	4	5	0	0	0	0
4/24/2024	8:45 AM	0	581	128	1	13	7	0	3	6	0	0	0	0
4/24/2024	9:00 AM	0	567	139	2	10	5	0	4	5	0	0	0	0
4/24/2024	9:15 AM	0	570	145	2	10	4	0	3	5	0	0	0	0
4/24/2024	9:30 AM	0	564	143	2	13	4	0	1	2	0	0	0	0
4/24/2024	9:45 AM	0	581	139	2	19	1	0	3	1	0	0	0	0
4/24/2024	10:00 AM	0	577	132	1	18	1	0	2	0	0	0	0	0
4/24/2024	10:15 AM	0	573	124	1	16	1	0	2	2	0	0	0	0
4/24/2024	10:30 AM	0	590	134	2	15	0	0	2	2	0	0	0	0
4/24/2024	10:45 AM	1	585	145	1	11	1	0	2	2	0	0	0	0
4/24/2024	11:00 AM	1	610	159	2	13	2	0	4	3	0	0	0	0
4/24/2024	11:15 AM	2	638	166	2	11	2	0	5	1	0	0	0	0
4/24/2024	11:30 AM	2	609	148	3	9	2	0	6	4	0	0	0	0
4/24/2024	11:45 AM	1	628	141	3	8	1	0	6	4	0	0	0	0
4/24/2024	12:00 PM	1	614	127	2	6	0	0	7	3	0	0	0	0
4/24/2024	12:15 PM	1	576	129	2	6	1	0	6	4	0	0	0	0
4/24/2024	12:30 PM	1	585	150	1	7	1	0	5	4	0	0	0	0
4/24/2024	12:45 PM	1	583	152	3	11	1	0	3	4	0	0	0	0
4/24/2024	1:00 PM	1	586	148	4	16	1	0	1	4	0	0	0	0
4/24/2024	1:15 PM	0	638	148	4	19	1	1	1	5	0	0	0	0
4/24/2024	1:30 PM	0	639	150	4	23	2	1	3	3	0	0	0	0
4/24/2024	1:45 PM	0	619	153	3	21	2	1	3	3	0	0	0	0
4/24/2024	2:00 PM	0	623	155	2	15	2	1	3	3	0	0	0	0
4/24/2024	2:15 PM	0	583	148	2	12	2	0	3	3	0	0	0	0
4/24/2024	2:30 PM	0	569	133	2	8	1	0	1	5	0	0	0	0
4/24/2024	2:45 PM	0	594	131	1	10	1	0	1	6	0	0	0	0
4/24/2024	3:00 PM	0	592	135	1	14	1	0	0	6	0	0	0	0
4/24/2024	3:15 PM	0	564	120	1	13	0	0	0	4	0	0	0	0
4/24/2024	3:30 PM	0	571	112	2	16	1	0	2	3	0	0	0	0
4/24/2024	3:45 PM	0	559	113	2	14	1	0	2	2	0	0	0	0
4/24/2024	4:00 PM	0	564	109	2	11	1	0	3	2	0	0	0	0
4/24/2024	4:15 PM	0	596	107	2	16	1	0	6	3	0	0	0	0
4/24/2024	4:30 PM	0	615	109	0	12	1	0	4	1	0	0	0	0
4/24/2024	4:45 PM	0	621	110	0	13	1	0	5	1	0	0	0	0
4/24/2024	5:00 PM	0	622	99	0	12	1	0	4	2	0	0	0	0
4/24/2024	5:15 PM	0	606	98	0	8	1	0	3	2	0	0	0	0
4/24/2024	5:30 PM	0	567	105	0	10	0	0	3	2	0	0	0	0
4/24/2024	5:45 PM	0	537	94	0	6	0	0	2	2	0	0	0	0
4/24/2024	6:00 PM	0	518	92	0	9	0	0	2	3	0	0	0	0
4/24/2024	6:15 PM	1	488	98	0	12	1	0	1	3	0	0	0	0
4/24/2024	6:30 PM	1	446	83	0	9	1	0	1	3	0	0	0	0
4/24/2024	6:45 PM	1	400	69	0	11	1	0	1	4	0	0	0	0
4/24/2024	7:00 PM	1	350	68	0	8	1	0	1	3	0	0	0	0
4/24/2024	7:15 PM	0	328	54	0	6	0	0	0	3	0	0	0	0
4/24/2024	7:30 PM	0	317	54	0	7	0	0	0	3	0	0	0	0
4/24/2024	7:45 PM	0	315	52	0	5	0	0	0	2	0	0	0	0
4/24/2024	8:00 PM	0	298	45	0	3	1	0	0	2	0	0	0	0
4/24/2024	8:15 PM	0	280	45	0	2	1	0	0	1	0	0	0	0
4/24/2024	8:30 PM	0	258	34	0	1	1	0	0	1	0	0	0	0
4/24/2024	8:45 PM	0	232	30	0	2	1	0	0	2	0	0	0	0
4/24/2024	9:00 PM	0	207	27	0	3	0	0	0	1	0	0	0	0
4/24/2024	9:15 PM	0	183	20	0	2	0	0	0	1	0	0	0	0
4/24/2024	9:30 PM	1	170	24	0	3	0	0	0	1	0	0	0	0
4/24/2024	9:45 PM	1	152	27	0	3	0	0	0	0	1	0	0	0
4/24/2024	10:00 PM	2	147	23	0	2	0	0	0	0	1	0	1	0
4/24/2024	10:15 PM	2	140	23	0	3	0	0	0	0	1	0	1	0
4/24/2024	10:30 PM	1	121	17	0	2	0	0	0	0	1	0	1	0
4/24/2024	10:45 PM	1	116	14	0	2	0	0	0	0	0	0	1	0
4/24/2024	11:00 PM	0	104	14	0	2	0	0	0	0	0	0	0	0
4/24/2024	11:15 PM	0	68	9	0	1	0	0	0	0	0	0	0	0
4/24/2024	11:30 PM	0	50	7	0	1	0	0	0	0	0	0	0	0
4/24/2024	11:45 PM	0	21	2	0	0	0	0	0	0	0	0	0	0

4/25/2024	12:00 AM	0	53	7	0	2	1	0	0	2	1	0	1	0
4/25/2024	12:15 AM	0	45	6	0	2	1	0	0	2	0	0	3	0
4/25/2024	12:30 AM	0	42	8	0	2	1	0	0	2	0	0	2	0
4/25/2024	12:45 AM	0	43	5	0	2	1	0	0	2	0	0	2	0
4/25/2024	1:00 AM	0	39	5	0	0	1	0	0	1	0	0	4	0
4/25/2024	1:15 AM	0	40	3	0	1	1	0	1	1	0	0	2	0
4/25/2024	1:30 AM	0	38	3	0	1	1	0	1	1	0	0	2	0
4/25/2024	1:45 AM	0	34	3	0	1	0	0	1	2	0	0	2	0
4/25/2024	2:00 AM	0	30	4	0	2	0	0	1	3	0	0	0	0
4/25/2024	2:15 AM	0	28	7	0	2	0	0	0	3	0	0	0	0
4/25/2024	2:30 AM	0	29	7	0	2	0	0	0	2	0	1	0	0
4/25/2024	2:45 AM	0	36	7	0	2	1	0	0	1	0	1	0	0
4/25/2024	3:00 AM	0	42	7	0	1	1	0	0	1	0	1	0	0
4/25/2024	3:15 AM	0	39	7	0	1	2	0	0	1	0	1	0	0
4/25/2024	3:30 AM	0	42	9	0	1	2	0	0	1	0	0	0	0
4/25/2024	3:45 AM	0	42	12	0	2	1	0	0	1	0	0	0	0
4/25/2024	4:00 AM	0	55	12	0	2	1	0	0	0	0	0	0	0
4/25/2024	4:15 AM	0	73	13	0	2	0	0	0	0	0	0	0	0
4/25/2024	4:30 AM	0	90	13	0	3	1	0	0	0	0	0	0	0
4/25/2024	4:45 AM	0	121	25	0	3	1	0	1	1	0	0	1	0
4/25/2024	5:00 AM	0	145	30	0	4	1	0	2	1	0	0	1	0
4/25/2024	5:15 AM	0	212	35	0	3	1	0	2	2	0	0	1	0
4/25/2024	5:30 AM	0	297	54	0	2	0	0	2	2	0	0	1	0
4/25/2024	5:45 AM	0	398	69	0	4	0	0	1	2	0	0	0	0
4/25/2024	6:00 AM	0	542	97	0	5	0	0	0	3	0	0	0	0
4/25/2024	6:15 AM	0	630	119	0	5	0	0	1	2	0	0	0	0
4/25/2024	6:30 AM	0	684	140	0	11	0	0	1	3	0	0	0	0
4/25/2024	6:45 AM	0	714	139	0	11	0	0	2	3	0	0	0	0
4/25/2024	7:00 AM	0	685	137	0	12	0	0	5	3	0	0	0	0
4/25/2024	7:15 AM	0	686	138	1	15	2	0	5	3	0	0	0	0
4/25/2024	7:30 AM	0	673	133	1	11	2	0	5	3	0	0	0	0
4/25/2024	7:45 AM	0	657	148	1	12	2	0	4	2	0	0	0	0
4/25/2024	8:00 AM	0	615	162	2	13	3	0	1	1	0	0	0	0
4/25/2024	8:15 AM	0	571	165	1	11	1	0	2	3	0	0	0	0
4/25/2024	8:30 AM	0	573	167	2	11	3	0	2	2	0	0	0	0
4/25/2024	8:45 AM	0	555	164	2	8	6	0	3	2	0	0	0	0
4/25/2024	9:00 AM	0	563	157	4	6	5	0	3	3	0	0	0	0
4/25/2024	9:15 AM	0	548	147	4	11	8	0	1	2	0	0	0	0
4/25/2024	9:30 AM	0	516	140	3	10	7	0	2	5	0	0	0	0
4/25/2024	9:45 AM	0	520	121	4	12	5	0	1	6	0	0	0	0
4/25/2024	10:00 AM	1	530	120	1	13	7	0	2	7	0	0	0	0
4/25/2024	10:15 AM	1	538	123	2	8	4	0	2	6	0	0	0	0
4/25/2024	10:30 AM	1	558	137	2	10	4	0	1	6	0	0	0	0
4/25/2024	10:45 AM	1	546	152	1	8	4	0	3	6	0	0	0	0
4/25/2024	11:00 AM	0	547	152	1	7	3	0	2	8	0	0	0	0
4/25/2024	11:15 AM	0	562	163	2	8	5	0	2	9	0	0	0	0
4/25/2024	11:30 AM	0	540	155	2	6	4	0	3	7	0	0	0	0
4/25/2024	11:45 AM	1	543	144	2	8	5	0	1	7	0	0	0	0
4/25/2024	12:00 PM	1	554	145	2	10	4	0	1	5	0	0	0	0
4/25/2024	12:15 PM	2	549	131	0	13	5	0	4	5	0	0	0	0
4/25/2024	12:30 PM	2	583	124	1	13	5	0	3	6	0	0	0	0
4/25/2024	12:45 PM	1	581	137	1	11	3	0	4	6	0	0	0	0
4/25/2024	1:00 PM	1	562	124	1	14	3	0	5	4	0	0	0	0
4/25/2024	1:15 PM	0	575	142	2	17	0	0	2	4	0	0	0	0
4/25/2024	1:30 PM	0	566	145	1	22	1	0	2	4	0	0	0	0
4/25/2024	1:45 PM	0	559	130	2	27	2	0	2	4	0	0	0	0
4/25/2024	2:00 PM	0	569	140	2	24	5	0	1	4	0	0	0	0
4/25/2024	2:15 PM	0	597	130	2	18	6	0	3	6	0	0	0	0
4/25/2024	2:30 PM	1	597	127	2	15	5	0	4	6	0	0	0	0
4/25/2024	2:45 PM	1	619	123	2	14	4	0	3	6	0	0	0	0
4/25/2024	3:00 PM	1	593	119	2	13	3	0	4	8	0	0	0	0
4/25/2024	3:15 PM	1	542	111	1	16	5	0	2	6	0	0	0	0
4/25/2024	3:30 PM	0	522	106	1	19	6	0	2	4	2	0	0	0
4/25/2024	3:45 PM	0	521	108	0	16	6	0	3	3	2	0	0	0
4/25/2024	4:00 PM	0	526	98	0	15	5	0	3	1	2	0	0	0
4/25/2024	4:15 PM	0	578	100	0	12	3	0	3	2	2	0	0	0
4/25/2024	4:30 PM	0	598	96	1	6	2	0	3	3	0	0	0	0
4/25/2024	4:45 PM	0	604	103	1	8	2	0	4	3	0	0	0	0
4/25/2024	5:00 PM	0	611	116	1	8	3	0	4	3	0	0	0	0
4/25/2024	5:15 PM	0	560	119	1	8	2	0	5	2	0	0	0	0
4/25/2024	5:30 PM	0	549	118	0	16	2	0	6	1	0	0	0	0
4/25/2024	5:45 PM	0	533	110	0	15	3	0	4	3	0	0	0	0
4/25/2024	6:00 PM	0	536	95	0	13	2	0	6	4	0	0	0	0
4/25/2024	6:15 PM	0	404	65	0	11	2	0	5	3	0	0	0	0
4/25/2024	6:30 PM	0	268	42	0	3	2	0	3	3	0	0	0	0
4/25/2024	6:45 PM	0	131	20	0	0	1	0	3	1	0	0	0	0
4/25/2024	7:00 PM	0	0	0	0	0	0	0	0	0	0	0	0	0
4/25/2024	7:15 PM	0	0	0	0	0	0	0	0	0	0	0	0	0
4/25/2024	7:30 PM	0	0	0	0	0	0	0	0	0	0	0	0	0
4/25/2024	7:45 PM	0	0	0	0	0	0	0	0	0	0	0	0	0
4/25/2024	8:00 PM	0	0	0	0	0	0	0	0	0	0	0	0	0
4/25/2024	8:15 PM	0	0	0	0	0	0	0	0	0	0	0	0	0
4/25/2024	8:30 PM	0	0	0	0	0	0	0	0	0	0	0	0	0
4/25/2024	8:45 PM	0	0	0	0	0	0	0	0	0	0	0	0	0
4/25/2024	9:00 PM	0	0	0	0	0	0	0	0	0	0	0	0	0
4/25/2024	9:15 PM	0	0	0	0	0	0	0	0	0	0	0	0	0
4/25/2024	9:30 PM	0	0	0	0	0	0	0	0	0	0	0	0	0
4/25/2024	9:45 PM	0	0	0	0	0	0	0	0	0	0	0	0	0
4/25/2024	10:00 PM	0	0	0	0	0	0	0	0	0	0	0	0	0
4/25/2024	10:15 PM	0	0	0	0	0	0	0	0	0	0	0	0	0
4/25/2024	10:30 PM	0	0	0	0	0	0	0	0	0	0	0	0	0
4/25/2024	10:45 PM	0	0	0	0	0	0	0	0	0	0	0	0	0
4/25/2024	11:00 PM	0	0	0	0	0	0	0	0	0	0	0	0	0
4/25/2024	11:15 PM	0	0	0	0	0	0	0	0	0	0	0	0	0
4/25/2024	11:30 PM	0	0	0	0	0	0	0	0	0	0	0	0	0
4/25/2024	11:45 PM	0	0	0	0	0	0	0	0	0	0	0	0	0

Bi-Directional Class Count || NB EB 15min

Columbia, SC

Marr Traffic DATA COLLECTION
www.marrtraffic.com

Site 52
I-26 N/Bound Off-Ramp,
south of US-378 Sunset Blvd

Date
Tuesday, April 23, 2024

Lat/Long
34.000523°, -81.109217°

Click here for Map

Weather
Fair
58°F

Click here for Detailed Weather

0000 - 2400 (Weekday 24h Session) (04-23-2024)
NB EB 15min

	Northbound (Movement 52.1)													15min	60min
Time	1	2	3	4	5	6	7	8	9	10	11	12	13	Total	Total
0000 - 0015	0	0	0	0	0	0	0	0	0	0	0	0	0	**0**	
0015 - 0030	0	0	0	0	0	0	0	0	0	0	0	0	0	**0**	
0030 - 0045	0	0	0	0	0	0	0	0	0	0	0	0	0	**0**	
0045 - 0100	0	0	0	0	0	0	0	0	0	0	0	0	0	**0**	**0**
0100 - 0115	0	0	0	0	0	0	0	0	0	0	0	0	0	**0**	
0115 - 0130	0	0	0	0	0	0	0	0	0	0	0	0	0	**0**	
0130 - 0145	0	0	0	0	0	0	0	0	0	0	0	0	0	**0**	
0145 - 0200	0	0	0	0	0	0	0	0	0	0	0	0	0	**0**	**0**
0200 - 0215	0	0	0	0	0	0	0	0	0	0	0	0	0	**0**	
0215 - 0230	0	0	0	0	0	0	0	0	0	0	0	0	0	**0**	
0230 - 0245	0	0	0	0	0	0	0	0	0	0	0	0	0	**0**	
0245 - 0300	0	0	0	0	0	0	0	0	0	0	0	0	0	**0**	**0**
0300 - 0315	0	0	0	0	0	0	0	0	0	0	0	0	0	**0**	
0315 - 0330	0	0	0	0	0	0	0	0	0	0	0	0	0	**0**	
0330 - 0345	0	0	0	0	0	0	0	0	0	0	0	0	0	**0**	
0345 - 0400	0	0	0	0	0	0	0	0	0	0	0	0	0	**0**	**0**
0400 - 0415	0	0	0	0	0	0	0	0	0	0	0	0	0	**0**	
0415 - 0430	0	0	0	0	0	0	0	0	0	0	0	0	0	**0**	
0430 - 0445	0	0	0	0	0	0	0	0	0	0	0	0	0	**0**	
0445 - 0500	0	0	0	0	0	0	0	0	0	0	0	0	0	**0**	**0**
0500 - 0515	0	0	0	0	0	0	0	0	0	0	0	0	0	**0**	
0515 - 0530	0	0	0	0	0	0	0	0	0	0	0	0	0	**0**	
0530 - 0545	0	0	0	0	0	0	0	0	0	0	0	0	0	**0**	
0545 - 0600	0	0	0	0	0	0	0	0	0	0	0	0	0	**0**	**0**
0600 - 0615	0	0	0	0	0	0	0	0	0	0	0	0	0	**0**	
0615 - 0630	0	0	0	0	0	0	0	0	0	0	0	0	0	**0**	
0630 - 0645	0	0	0	0	0	0	0	0	0	0	0	0	0	**0**	
0645 - 0700	0	0	0	0	0	0	0	0	0	0	0	0	0	**0**	**0**
0700 - 0715	0	0	0	0	0	0	0	0	0	0	0	0	0	**0**	
0715 - 0730	0	0	0	0	0	0	0	0	0	0	0	0	0	**0**	
0730 - 0745	0	0	0	0	0	0	0	0	0	0	0	0	0	**0**	
0745 - 0800	0	0	0	0	0	0	0	0	0	0	0	0	0	**0**	**0**
0800 - 0815	0	0	0	0	0	0	0	0	0	0	0	0	0	**0**	
0815 - 0830	0	0	0	0	0	0	0	0	0	0	0	0	0	**0**	
0830 - 0845	0	0	0	0	0	0	0	0	0	0	0	0	0	**0**	
0845 - 0900	0	0	0	0	0	0	0	0	0	0	0	0	0	**0**	**0**
0900 - 0915	0	0	0	0	0	0	0	0	0	0	0	0	0	**0**	
0915 - 0930	0	0	0	0	0	0	0	0	0	0	0	0	0	**0**	
0930 - 0945	0	0	0	0	0	0	0	0	0	0	0	0	0	**0**	
0945 - 1000	0	0	0	0	0	0	0	0	0	0	0	0	0	**0**	**0**
1000 - 1015	0	0	0	0	0	0	0	0	0	0	0	0	0	**0**	
1015 - 1030	0	0	0	0	0	0	0	0	0	0	0	0	0	**0**	
1030 - 1045	0	0	0	0	0	0	0	0	0	0	0	0	0	**0**	
1045 - 1100	0	0	0	0	0	0	0	0	0	0	0	0	0	**0**	**0**
1100 - 1115	0	0	0	0	0	0	0	0	0	0	0	0	0	**0**	
1115 - 1130	0	0	0	0	0	0	0	0	0	0	0	0	0	**0**	
1130 - 1145	0	0	0	0	0	0	0	0	0	0	0	0	0	**0**	
1145 - 1200	0	0	0	0	0	0	0	0	0	0	0	0	0	**0**	**0**
1200 - 1215	0	0	0	0	0	0	0	0	0	0	0	0	0	**0**	
1215 - 1230	0	0	0	0	0	0	0	0	0	0	0	0	0	**0**	
1230 - 1245	0	0	0	0	0	0	0	0	0	0	0	0	0	**0**	
1245 - 1300	0	0	0	0	0	0	0	0	0	0	0	0	0	**0**	**0**
1300 - 1315	0	0	0	0	0	0	0	0	0	0	0	0	0	**0**	
1315 - 1330	0	0	0	0	0	0	0	0	0	0	0	0	0	**0**	
1330 - 1345	0	0	0	0	0	0	0	0	0	0	0	0	0	**0**	
1345 - 1400	0	0	0	0	0	0	0	0	0	0	0	0	0	**0**	**0**
1400 - 1415	0	0	0	0	0	0	0	0	0	0	0	0	0	**0**	
1415 - 1430	0	0	0	0	0	0	0	0	0	0	0	0	0	**0**	
1430 - 1445	0	0	0	0	0	0	0	0	0	0	0	0	0	**0**	
1445 - 1500	0	0	0	0	0	0	0	0	0	0	0	0	0	**0**	**0**
1500 - 1515	0	0	0	0	0	0	0	0	0	0	0	0	0	**0**	
1515 - 1530	0	0	0	0	0	0	0	0	0	0	0	0	0	**0**	
1530 - 1545	0	0	0	0	0	0	0	0	0	0	0	0	0	**0**	
1545 - 1600	0	0	0	0	0	0	0	0	0	0	0	0	0	**0**	**0**
1600 - 1615	0	0	0	0	0	0	0	0	0	0	0	0	0	**0**	
1615 - 1630	0	0	0	0	0	0	0	0	0	0	0	0	0	**0**	
1630 - 1645	0	0	0	0	0	0	0	0	0	0	0	0	0	**0**	
1645 - 1700	0	0	0	0	0	0	0	0	0	0	0	0	0	**0**	**0**
1700 - 1715	0	0	0	0	0	0	0	0	0	0	0	0	0	**0**	
1715 - 1730	0	0	0	0	0	0	0	0	0	0	0	0	0	**0**	
1730 - 1745	0	0	0	0	0	0	0	0	0	0	0	0	0	**0**	
1745 - 1800	0	0	0	0	0	0	0	0	0	0	0	0	0	**0**	**0**
1800 - 1815	0	0	0	0	0	0	0	0	0	0	0	0	0	**0**	
1815 - 1830	0	0	0	0	0	0	0	0	0	0	0	0	0	**0**	
1830 - 1845	0	0	0	0	0	0	0	0	0	0	0	0	0	**0**	
1845 - 1900	0	0	0	0	0	0	0	0	0	0	0	0	0	**0**	**0**
1900 - 1915	0	79	9	0	0	0	0	0	2	0	0	0	0	**90**	
1915 - 1930	0	57	10	0	0	0	0	0	1	0	0	0	0	**68**	
1930 - 1945	0	70	8	0	1	0	0	0	1	0	0	0	0	**80**	
1945 - 2000	0	53	14	0	1	0	0	0	1	0	0	0	0	**69**	**307**
2000 - 2015	0	51	10	0	1	0	0	0	2	0	1	0	0	**65**	
2015 - 2030	0	48	5	0	0	0	0	0	1	0	0	0	0	**54**	
2030 - 2045	0	47	4	0	0	0	0	1	2	0	0	0	0	**54**	
2045 - 2100	0	50	3	0	1	0	0	0	2	0	0	0	0	**56**	**229**
2100 - 2115	0	35	2	0	2	0	0	0	1	0	0	0	0	**40**	
2115 - 2130	0	35	6	0	1	0	0	0	2	0	0	0	0	**44**	
2130 - 2145	0	38	3	0	1	0	0	0	4	0	0	0	0	**46**	
2145 - 2200	0	31	2	0	1	0	0	0	2	0	0	0	0	**36**	**166**
2200 - 2215	0	29	2	0	1	0	0	0	1	0	4	0	0	**37**	
2215 - 2230	0	29	3	0	0	0	0	1	2	0	1	0	0	**36**	
2230 - 2245	0	27	3	0	1	0	0	0	2	0	5	0	0	**38**	
2245 - 2300	0	24	2	0	1	0	0	0	1	0	0	0	0	**28**	**139**
2300 - 2315	0	25	3	0	1	0	0	0	3	0	1	0	0	**33**	
2315 - 2330	0	15	0	0	0	0	0	0	0	0	1	0	0	**16**	
2330 - 2345	0	10	0	0	1	0	0	0	0	0	2	0	0	**13**	
2345 - 0000	0	12	0	0	0	0	0	0	3	0	2	0	0	**17**	**79**

Session Total	0	765	89	0	14	0	0	2	33	0	17	0	0	**920**
Session Average	0.00	7.97	0.93	0.00	0.15	0.00	0.00	0.02	0.34	0.00	0.18	0.00	0.00	**9.58**
Session Percentage	0.00	83.15	9.67	0.00	1.52	0.00	0.00	0.22	3.59	0.00	1.85	0.00	0.00	

AM Peak Hour	-	-	-	-	-	-	-	-	-	-	-	-	-	-
AM Peak Volume	0	0	0	0	0	0	0	0	0	0	0	0	0	**0**

Noon Peak Hour	-	-	-	-	-	-	-	-	-	-	-	-	-	-
Noon Peak Volume	0	0	0	0	0	0	0	0	0	0	0	0	0	**0**

PM Peak Hour	-	1900 - 2000	1915 - 2015	-	1915 - 2015	-	-	1945 - 2045	1945 - 2045	-	1915 - 2015	-	-	**1900 - 2000**
PM Peak Volume	0	259	42	0	3	0	0	1	6	0	1	0	0	**307**

Site 52
I-26 N/Bound Off-Ramp,
south of US-378 Sunset Blvd

Date
Wednesday, April 24, 2024

Lat/Long
34.000523°, -81.109217°

Weather
Fair
66°F

Click here for Detailed Weather

0000 - 2400 (Weekday 24h Session) (04-24-2024)
NB EB 15min

	Northbound (Movement 52.1)													15min	60min
Time	1	2	3	4	5	6	7	8	9	10	11	12	13	Total	Total
0000 - 0015	0	12	0	0	1	0	0	0	0	0	0	0	0	**13**	
0015 - 0030	0	13	1	0	0	0	0	0	0	0	0	0	0	**14**	
0030 - 0045	0	10	1	0	0	0	0	0	0	0	0	0	0	**11**	
0045 - 0100	0	7	0	0	2	0	0	0	0	0	0	0	0	**9**	**47**
0100 - 0115	0	3	0	0	1	0	0	0	0	0	0	0	0	**4**	
0115 - 0130	0	8	0	0	1	0	0	0	1	0	0	0	0	**10**	
0130 - 0145	0	11	0	0	0	0	0	0	0	0	2	0	0	**13**	
0145 - 0200	0	8	0	0	3	0	0	0	1	0	0	0	0	**12**	**39**
0200 - 0215	0	7	0	0	1	0	0	0	3	0	0	0	0	**11**	
0215 - 0230	0	6	0	0	3	0	0	0	1	0	0	0	0	**10**	
0230 - 0245	0	4	0	0	0	0	0	0	0	0	0	0	0	**4**	
0245 - 0300	0	5	0	0	0	0	0	0	3	0	0	0	0	**8**	**33**
0300 - 0315	0	6	1	0	0	1	0	0	2	0	0	0	0	**10**	
0315 - 0330	0	5	0	0	0	0	0	0	1	0	0	0	0	**6**	
0330 - 0345	0	4	0	0	1	0	0	0	0	0	1	0	0	**6**	
0345 - 0400	0	6	0	0	0	0	0	0	0	0	0	0	0	**6**	**28**
0400 - 0415	0	6	0	0	0	0	0	0	0	0	0	0	0	**6**	
0415 - 0430	0	7	0	0	3	0	0	0	1	0	0	0	0	**11**	
0430 - 0445	0	18	1	0	2	0	0	0	1	0	0	0	0	**22**	
0445 - 0500	0	20	1	0	2	1	0	0	1	0	0	0	0	**25**	**64**
0500 - 0515	0	16	2	0	0	0	0	0	2	0	2	0	0	**22**	
0515 - 0530	0	22	3	0	1	0	0	0	2	0	0	0	0	**28**	
0530 - 0545	0	26	2	0	0	0	0	0	1	0	0	0	0	**29**	
0545 - 0600	0	38	9	0	1	0	0	0	0	0	1	0	0	**49**	**128**
0600 - 0615	0	56	11	0	1	0	0	0	2	0	1	0	0	**71**	
0615 - 0630	0	94	17	2	0	0	0	0	0	0	1	0	0	**114**	
0630 - 0645	0	130	12	4	1	0	0	0	1	0	0	0	0	**148**	
0645 - 0700	0	184	29	0	0	0	0	0	1	0	0	0	0	**214**	**547**
0700 - 0715	0	175	28	0	3	1	0	1	3	0	0	0	0	**211**	
0715 - 0730	0	187	25	0	2	1	0	1	0	0	0	0	0	**216**	
0730 - 0745	0	207	28	1	6	0	0	0	0	0	0	0	0	**242**	
0745 - 0800	0	195	21	0	5	1	0	0	2	0	0	0	0	**224**	**893**
0800 - 0815	0	183	26	0	5	3	0	0	5	0	0	0	0	**222**	
0815 - 0830	0	195	36	0	2	0	0	1	4	1	0	0	0	**239**	
0830 - 0845	0	187	34	0	2	1	0	4	0	0	1	0	0	**229**	
0845 - 0900	0	185	32	1	7	1	0	0	2	0	0	0	0	**228**	**918**
0900 - 0915	0	135	29	0	7	0	0	2	1	0	0	0	0	**174**	
0915 - 0930	0	203	30	0	6	0	0	2	2	0	0	0	0	**243**	
0930 - 0945	0	137	39	0	3	1	0	0	2	0	0	0	0	**182**	
0945 - 1000	0	155	38	2	2	0	0	1	2	0	0	0	0	**200**	**799**
1000 - 1015	0	111	34	0	5	0	0	1	5	0	0	0	0	**156**	
1015 - 1030	0	115	28	0	1	3	0	0	3	0	0	0	0	**150**	
1030 - 1045	0	109	28	2	3	1	0	0	5	0	0	0	0	**148**	
1045 - 1100	0	100	32	0	4	1	0	1	5	0	0	0	0	**143**	**597**
1100 - 1115	0	93	34	0	5	2	0	1	5	0	0	0	0	**140**	
1115 - 1130	0	90	30	1	1	0	0	0	4	0	0	0	0	**126**	
1130 - 1145	0	109	42	1	5	1	0	0	1	0	0	0	0	**159**	
1145 - 1200	0	84	32	0	4	2	0	0	2	0	0	0	0	**124**	**549**
1200 - 1215	0	79	22	0	3	0	0	0	3	0	0	0	0	**107**	
1215 - 1230	0	89	38	2	2	0	0	0	1	0	0	0	0	**132**	
1230 - 1245	0	112	32	0	4	1	0	0	5	0	0	0	0	**154**	
1245 - 1300	0	136	33	0	3	0	0	0	3	0	0	0	0	**175**	**568**
1300 - 1315	0	111	38	1	1	1	0	1	2	0	0	0	0	**155**	
1315 - 1330	0	129	48	0	4	2	0	0	5	0	0	0	0	**188**	
1330 - 1345	0	114	33	2	5	1	0	0	5	0	0	0	0	**160**	
1345 - 1400	0	134	34	6	4	1	0	0	4	0	0	0	0	**183**	**686**
1400 - 1415	0	106	32	2	3	0	0	0	5	1	0	0	0	**149**	
1415 - 1430	0	114	28	5	0	1	0	1	6	0	0	0	0	**155**	
1430 - 1445	0	127	30	2	3	0	0	0	9	0	0	0	0	**171**	
1445 - 1500	0	129	38	0	9	0	0	0	4	0	0	0	0	**180**	**655**
1500 - 1515	0	121	34	1	0	1	0	0	1	0	0	0	0	**158**	
1515 - 1530	0	112	28	0	4	0	0	0	2	0	0	0	0	**146**	
1530 - 1545	0	110	33	1	1	1	0	1	3	0	0	0	0	**150**	
1545 - 1600	0	100	24	1	1	1	0	0	3	0	0	0	0	**130**	**584**
1600 - 1615	0	103	39	1	3	0	0	0	2	0	0	0	0	**148**	
1615 - 1630	0	111	41	2	5	0	0	0	5	0	0	0	0	**164**	
1630 - 1645	0	119	40	1	1	0	0	1	4	0	0	0	0	**166**	
1645 - 1700	0	118	33	0	5	0	0	1	6	0	0	0	0	**163**	**641**
1700 - 1715	0	78	24	0	1	0	0	0	3	0	0	0	0	**106**	
1715 - 1730	0	107	44	0	1	0	0	0	3	0	0	0	0	**155**	
1730 - 1745	0	126	36	1	1	0	0	0	3	0	0	0	0	**167**	
1745 - 1800	0	127	32	0	1	2	0	0	5	0	0	0	0	**167**	**595**
1800 - 1815	0	101	21	0	3	0	1	0	6	0	0	0	0	**132**	
1815 - 1830	1	97	22	1	0	0	0	1	4	0	3	0	0	**129**	
1830 - 1845	0	113	30	0	2	0	0	0	7	0	2	0	0	**154**	
1845 - 1900	0	93	14	0	1	0	0	0	2	0	0	0	0	**110**	**525**
1900 - 1915	0	64	20	0	0	0	0	0	5	0	1	0	0	**90**	
1915 - 1930	0	61	15	0	2	0	0	0	1	1	0	0	0	**80**	
1930 - 1945	0	55	14	0	0	0	0	0	5	0	0	0	0	**74**	
1945 - 2000	0	59	10	0	2	0	0	0	1	0	0	0	0	**72**	**316**
2000 - 2015	1	53	9	1	0	0	0	0	3	0	2	0	0	**69**	
2015 - 2030	0	38	7	0	0	0	0	0	4	0	2	0	0	**51**	
2030 - 2045	0	54	7	0	2	0	0	0	3	0	0	0	0	**66**	
2045 - 2100	0	39	6	0	2	0	0	0	1	0	0	0	0	**48**	**234**
2100 - 2115	0	41	5	0	0	0	0	0	1	0	0	0	0	**47**	
2115 - 2130	0	29	3	0	3	0	0	0	3	0	0	0	0	**38**	
2130 - 2145	0	37	4	0	1	0	0	0	1	0	0	0	0	**43**	
2145 - 2200	0	22	5	0	0	0	0	0	4	0	0	0	0	**31**	**159**
2200 - 2215	0	18	6	0	0	0	0	0	1	0	0	0	0	**25**	
2215 - 2230	0	31	5	0	0	0	0	0	3	0	0	2	0	**41**	
2230 - 2245	0	28	5	0	0	0	0	0	1	0	1	3	0	**38**	
2245 - 2300	0	30	4	0	0	1	0	0	0	0	0	0	0	**35**	**139**
2300 - 2315	0	24	5	0	1	0	0	0	4	0	0	0	0	**34**	
2315 - 2330	0	12	2	0	1	0	0	0	1	0	0	3	0	**19**	
2330 - 2345	0	14	2	0	1	0	0	0	0	0	0	3	0	**20**	
2345 - 0000	0	11	1	0	2	0	0	0	1	0	0	0	0	**15**	**88**

Session Total	2	7523	1752	44	190	34	1	21	231	3	20	11	0	**9832**
Session Average	0.02	78.36	18.25	0.46	1.98	0.35	0.01	0.22	2.41	0.03	0.21	0.11	0.00	**102.42**
Session Percentage	0.02	76.52	17.82	0.45	1.93	0.35	0.01	0.21	2.35	0.03	0.20	0.11	0.00	

AM Peak Hour	-	0730 - 0830	0915 - 1015	0545 - 0645	0845 - 0945	0715 - 0815	-	0830 - 0930	0945 - 1045	0730 - 0830	0500 - 0600	-	-	**0730 - 0830**
AM Peak Volume	0	780	141	6	23	5	0	8	15	1	3	0	0	**927**

Noon Peak Hour	-	1415 - 1515	1300 - 1400	1330 - 1430	1315 - 1415	1015 - 1115	-	1000 - 1100	1345 - 1445	1315 - 1415	-	-	-	**1300 - 1400**
Noon Peak Volume	0	491	153	15	16	7	0	2	24	1	0	0	0	**686**

PM Peak Hour	1730 - 1830	1715 - 1815	1600 - 1700	1530 - 1630	1600 - 1700	1500 - 1600	1715 - 1815	1600 - 1700	1745 - 1845	1830 - 1930	1815 - 1915	-	-	**1600 - 1700**
PM Peak Volume	1	461	153	5	14	3	1	2	22	1	6	0	0	**641**

Site 52
I-26 N/Bound Off-Ramp,
south of US-378 Sunset Blvd

Date
Thursday, April 25, 2024

Lat/Long
34.000523°, -81.109217°

Weather
Fair
67°F

Click here for Detailed Weather

0000 - 2400 (Weekday 24h Session) (04-25-2024)
NB EB 15min

	Northbound (Movement 52.1)													15min	60min
TIME	1	2	3	4	5	6	7	8	9	10	11	12	13	Total	Total
0000 - 0015	0	13	7	0	0	0	0	0	0	0	0	0	0	**20**	
0015 - 0030	0	13	5	0	1	0	0	0	0	0	1	0	0	**20**	
0030 - 0045	0	7	3	0	0	0	0	0	1	0	0	0	0	**11**	
0045 - 0100	0	7	0	1	0	0	0	0	0	0	0	0	0	**8**	**59**
0100 - 0115	0	4	0	0	0	0	0	0	1	0	0	0	0	**5**	
0115 - 0130	0	7	0	0	0	0	0	0	0	0	0	0	0	**7**	
0130 - 0145	0	6	2	0	0	0	0	0	1	0	0	0	0	**9**	
0145 - 0200	0	6	1	0	0	0	0	0	0	0	3	0	0	**10**	**31**
0200 - 0215	0	5	3	0	2	0	0	0	1	0	0	0	0	**11**	
0215 - 0230	0	5	0	0	1	0	0	0	1	0	2	0	0	**9**	
0230 - 0245	0	4	1	0	0	1	0	1	0	0	0	0	0	**7**	
0245 - 0300	0	3	0	0	1	0	0	0	0	0	0	0	0	**4**	**31**
0300 - 0315	0	2	0	0	0	0	0	0	0	0	1	0	0	**3**	
0315 - 0330	0	12	4	0	0	0	0	0	1	0	0	0	0	**17**	
0330 - 0345	0	8	1	0	1	0	0	0	1	0	0	0	0	**11**	
0345 - 0400	0	10	3	0	0	0	0	0	0	0	0	0	0	**13**	**44**
0400 - 0415	0	6	0	0	2	0	0	0	1	0	0	0	0	**9**	
0415 - 0430	0	9	0	0	3	0	0	0	1	0	1	0	0	**14**	
0430 - 0445	0	12	4	0	1	1	0	0	2	0	0	0	0	**20**	
0445 - 0500	0	14	7	0	5	0	0	0	2	0	0	0	0	**28**	**71**
0500 - 0515	0	9	2	0	1	0	0	0	2	0	1	0	0	**15**	
0515 - 0530	0	18	6	0	1	0	0	0	0	0	1	0	0	**26**	
0530 - 0545	0	21	5	0	2	0	0	0	3	0	0	0	0	**31**	
0545 - 0600	0	37	10	0	1	0	0	0	4	0	1	0	0	**53**	**125**
0600 - 0615	0	53	17	0	1	0	0	0	1	0	2	0	0	**74**	
0615 - 0630	0	78	29	1	0	0	0	1	2	0	0	0	0	**111**	
0630 - 0645	0	89	40	4	3	0	0	0	4	0	0	0	0	**140**	
0645 - 0700	0	147	53	0	2	0	0	0	6	0	0	0	0	**208**	**533**
0700 - 0715	0	168	26	0	2	2	0	1	2	0	0	0	0	**201**	
0715 - 0730	0	193	24	1	3	0	0	0	0	1	1	0	0	**223**	
0730 - 0745	0	197	20	0	6	0	0	0	3	0	1	0	0	**227**	
0745 - 0800	0	218	58	0	6	1	0	0	0	0	0	0	0	**283**	**934**
0800 - 0815	0	168	31	0	8	1	0	2	2	0	0	0	0	**212**	
0815 - 0830	0	150	30	2	1	0	0	0	3	0	0	0	0	**186**	
0830 - 0845	0	142	34	1	6	0	0	0	1	0	0	0	0	**184**	
0845 - 0900	0	137	39	0	7	1	0	1	1	0	0	0	0	**186**	**768**
0900 - 0915	0	104	38	0	12	1	0	0	3	0	0	0	0	**158**	
0915 - 0930	0	145	39	3	3	0	0	2	3	0	0	0	0	**195**	
0930 - 0945	0	113	35	3	5	0	0	0	3	0	0	0	0	**159**	
0945 - 1000	0	129	42	1	7	0	0	1	3	0	0	0	0	**183**	**695**
1000 - 1015	0	113	38	1	3	2	0	2	4	0	0	0	0	**163**	
1015 - 1030	0	101	38	1	5	0	0	0	2	0	0	0	0	**147**	
1030 - 1045	0	94	33	2	3	0	0	1	4	0	0	0	0	**137**	
1045 - 1100	0	123	29	0	1	1	0	0	0	0	0	0	0	**154**	**601**
1100 - 1115	0	89	29	0	8	0	0	0	4	0	0	0	0	**130**	
1115 - 1130	0	94	43	1	4	1	0	1	2	0	0	0	0	**146**	
1130 - 1145	0	87	28	0	1	1	0	2	1	0	0	0	0	**120**	
1145 - 1200	0	111	32	0	4	0	0	0	3	0	0	0	0	**150**	**546**
1200 - 1215	1	91	36	1	3	0	0	0	1	0	0	0	0	**133**	
1215 - 1230	0	100	34	1	5	1	0	0	0	1	0	0	0	**142**	
1230 - 1245	0	127	49	0	3	0	0	1	2	0	0	0	0	**182**	
1245 - 1300	0	113	30	0	3	0	0	0	1	0	0	0	0	**147**	**604**
1300 - 1315	0	123	37	0	4	0	0	0	1	0	0	0	0	**165**	
1315 - 1330	0	118	30	1	2	0	0	0	1	0	0	0	0	**152**	
1330 - 1345	0	94	37	3	3	0	0	1	0	0	0	0	0	**138**	
1345 - 1400	0	118	29	6	9	0	0	0	0	0	0	0	0	**162**	**617**
1400 - 1415	0	117	40	3	4	0	0	0	1	0	0	0	0	**165**	
1415 - 1430	0	117	30	3	2	1	0	0	0	0	0	0	0	**153**	
1430 - 1445	0	112	40	1	1	3	0	0	1	0	0	0	0	**158**	
1445 - 1500	0	124	37	0	1	0	0	0	2	0	0	0	0	**164**	**640**
1500 - 1515	1	113	26	1	3	0	0	0	1	0	0	0	0	**145**	
1515 - 1530	0	123	31	0	2	0	0	0	2	0	0	0	0	**158**	
1530 - 1545	0	140	30	0	2	0	0	0	0	0	0	0	0	**172**	
1545 - 1600	1	95	17	0	1	0	0	1	1	0	0	0	0	**116**	**591**
1600 - 1615	0	117	18	1	1	0	0	0	1	0	0	0	0	**138**	
1615 - 1630	0	159	35	1	1	0	0	0	1	0	0	0	0	**197**	
1630 - 1645	0	118	33	0	1	0	0	0	3	0	0	0	0	**155**	
1645 - 1700	0	109	27	1	1	0	0	0	1	0	0	0	0	**139**	**629**
1700 - 1715	0	137	33	0	1	0	0	2	1	0	0	0	0	**174**	
1715 - 1730	0	155	38	0	2	0	0	0	3	0	0	0	0	**198**	
1730 - 1745	0	148	49	0	0	0	0	0	3	0	0	0	0	**200**	
1745 - 1800	0	165	36	0	0	0	0	1	2	0	0	0	0	**204**	**776**
1800 - 1815	0	107	33	0	2	0	0	0	0	0	0	0	0	**142**	
1815 - 1830	0	119	28	0	0	0	0	0	1	0	0	0	0	**148**	
1830 - 1845	0	112	26	1	2	1	0	0	1	0	1	0	0	**144**	
1845 - 1900	0	86	11	0	0	0	0	0	4	0	0	0	0	**101**	**535**
1900 - 1915	0	0	0	0	0	0	0	0	0	0	0	0	0	**0**	
1915 - 1930	0	0	0	0	0	0	0	0	0	0	0	0	0	**0**	
1930 - 1945	0	0	0	0	0	0	0	0	0	0	0	0	0	**0**	
1945 - 2000	0	0	0	0	0	0	0	0	0	0	0	0	0	**0**	**0**
2000 - 2015	0	0	0	0	0	0	0	0	0	0	0	0	0	**0**	
2015 - 2030	0	0	0	0	0	0	0	0	0	0	0	0	0	**0**	
2030 - 2045	0	0	0	0	0	0	0	0	0	0	0	0	0	**0**	
2045 - 2100	0	0	0	0	0	0	0	0	0	0	0	0	0	**0**	**0**
2100 - 2115	0	0	0	0	0	0	0	0	0	0	0	0	0	**0**	
2115 - 2130	0	0	0	0	0	0	0	0	0	0	0	0	0	**0**	
2130 - 2145	0	0	0	0	0	0	0	0	0	0	0	0	0	**0**	
2145 - 2200	0	0	0	0	0	0	0	0	0	0	0	0	0	**0**	**0**
2200 - 2215	0	0	0	0	0	0	0	0	0	0	0	0	0	**0**	
2215 - 2230	0	0	0	0	0	0	0	0	0	0	0	0	0	**0**	
2230 - 2245	0	0	0	0	0	0	0	0	0	0	0	0	0	**0**	
2245 - 2300	0	0	0	0	0	0	0	0	0	0	0	0	0	**0**	**0**
2300 - 2315	0	0	0	0	0	0	0	0	0	0	0	0	0	**0**	
2315 - 2330	0	0	0	0	0	0	0	0	0	0	0	0	0	**0**	
2330 - 2345	0	0	0	0	0	0	0	0	0	0	0	0	0	**0**	
2345 - 0000	0	0	0	0	0	0	0	0	0	0	0	0	0	**0**	**0**

Session Total	3	6638	1789	46	182	19	0	21	114	2	16	0	0	**8830**
Session Average	0.03	69.15	18.64	0.48	1.90	0.20	0.00	0.22	1.19	0.02	0.17	0.00	0.00	**91.98**
Session Percentage	0.03	75.18	20.26	0.52	2.06	0.22	0.00	0.24	1.29	0.02	0.18	0.00	0.00	

AM Peak Hour	-	0700 - 0800	0900 - 1000	0915 - 1015	0830 - 0930	0700 - 0800	-	0915 - 1015	0615 - 0715	0630 - 0730	0515 - 0615	-	-	**0715 - 0815**
AM Peak Hour Volume	0	776	154	8	28	3	0	5	14	1	4	0	0	**945**

Noon Peak Hour	1115 - 1215	1445 - 1545	1145 - 1245	1330 - 1430	1300 - 1400	1345 - 1445	-	1000 - 1100	1000 - 1100	1130 - 1230	-	-	-	**1230 - 1330**
Noon Peak Hour Volume	1	500	151	15	18	4	0	3	10	1	0	0	0	**646**

PM Peak Hour	1500 - 1600	1700 - 1800	1700 - 1800	1600 - 1700	1500 - 1600	1745 - 1845	-	1700 - 1800	1700 - 1800	-	1745 - 1845	-	-	**1700 - 1800**
PM Peak Hour Volume	2	605	156	3	8	1	0	3	9	0	1	0	0	**776**

Bi-Directional Class Count || NB EB Average 15min

Columbia, SC

Marr Traffic DATA COLLECTION
www.marrtraffic.com

Site 52
I-26 N/Bound Off-Ramp,
south of US-378 Sunset Blvd

Date
Tuesday, April 23, 2024

Lat/Long
34.000523°, -81.109217°

Weather
Fair
58°F

0000 - 2400 (Weekday 24h Session) (All Dates)
NB EB Average 15min

	NB EB Average 15min													15min	60min
Time	1	2	3	4	5	6	7	8	9	10	11	12	13	Total	Total
0000 - 0015	0	8	2	0	0	0	0	0	0	0	0	0	0	**11**	
0015 - 0030	0	9	2	0	0	0	0	0	0	0	0	0	0	**11**	
0030 - 0045	0	6	1	0	0	0	0	0	0	0	0	0	0	**7**	
0045 - 0100	0	5	0	0	1	0	0	0	0	0	0	0	0	**6**	**35**
0100 - 0115	0	2	0	0	0	0	0	0	0	0	0	0	0	**3**	
0115 - 0130	0	5	0	0	0	0	0	0	0	0	0	0	0	**6**	
0130 - 0145	0	6	1	0	0	0	0	0	0	0	1	0	0	**7**	
0145 - 0200	0	5	0	0	1	0	0	0	0	0	1	0	0	**7**	**23**
0200 - 0215	0	4	1	0	1	0	0	0	1	0	0	0	0	**7**	
0215 - 0230	0	4	0	0	1	0	0	0	1	0	1	0	0	**6**	
0230 - 0245	0	3	0	0	0	0	0	0	0	0	0	0	0	**4**	
0245 - 0300	0	3	0	0	0	0	0	0	1	0	0	0	0	**4**	**21**
0300 - 0315	0	3	0	0	0	0	0	0	1	0	0	0	0	**4**	
0315 - 0330	0	6	1	0	0	0	0	0	1	0	0	0	0	**8**	
0330 - 0345	0	4	0	0	1	0	0	0	0	0	0	0	0	**6**	
0345 - 0400	0	5	1	0	0	0	0	0	0	0	0	0	0	**6**	**24**
0400 - 0415	0	4	0	0	1	0	0	0	0	0	0	0	0	**5**	
0415 - 0430	0	5	0	0	2	0	0	0	1	0	0	0	0	**8**	
0430 - 0445	0	10	2	0	1	0	0	0	1	0	0	0	0	**14**	
0445 - 0500	0	11	3	0	2	0	0	0	1	0	0	0	0	**18**	**45**
0500 - 0515	0	8	1	0	0	0	0	0	1	0	1	0	0	**12**	
0515 - 0530	0	13	3	0	1	0	0	0	1	0	0	0	0	**18**	
0530 - 0545	0	16	2	0	1	0	0	0	1	0	0	0	0	**20**	
0545 - 0600	0	25	6	0	1	0	0	0	1	0	1	0	0	**34**	**84**
0600 - 0615	0	36	9	0	1	0	0	0	1	0	1	0	0	**48**	
0615 - 0630	0	57	15	1	0	0	0	0	1	0	0	0	0	**75**	
0630 - 0645	0	73	17	3	1	0	0	0	2	0	0	0	0	**96**	
0645 - 0700	0	110	27	0	1	0	0	0	2	0	0	0	0	**141**	**360**
0700 - 0715	0	114	18	0	2	1	0	1	2	0	0	0	0	**137**	
0715 - 0730	0	127	16	0	2	0	0	0	0	0	0	0	0	**146**	
0730 - 0745	0	135	16	0	4	0	0	0	1	0	0	0	0	**156**	
0745 - 0800	0	138	26	0	4	1	0	0	1	0	0	0	0	**169**	**609**
0800 - 0815	0	117	19	0	4	1	0	1	2	0	0	0	0	**145**	
0815 - 0830	0	115	22	1	1	0	0	0	2	0	0	0	0	**142**	
0830 - 0845	0	110	23	0	3	0	0	1	0	0	0	0	0	**138**	
0845 - 0900	0	107	24	0	5	1	0	0	1	0	0	0	0	**138**	**562**
0900 - 0915	0	80	22	0	6	0	0	1	1	0	0	0	0	**111**	
0915 - 0930	0	116	23	1	3	0	0	1	2	0	0	0	0	**146**	
0930 - 0945	0	83	25	1	3	0	0	0	2	0	0	0	0	**114**	
0945 - 1000	0	95	27	1	3	0	0	1	2	0	0	0	0	**128**	**498**
1000 - 1015	0	75	24	0	3	1	0	1	3	0	0	0	0	**106**	
1015 - 1030	0	72	22	0	2	1	0	0	2	0	0	0	0	**99**	
1030 - 1045	0	68	20	1	2	0	0	0	3	0	0	0	0	**95**	
1045 - 1100	0	74	20	0	2	1	0	0	2	0	0	0	0	**99**	**399**
1100 - 1115	0	61	21	0	4	1	0	0	3	0	0	0	0	**90**	
1115 - 1130	0	61	24	1	2	0	0	0	2	0	0	0	0	**91**	
1130 - 1145	0	65	23	0	2	1	0	1	1	0	0	0	0	**93**	
1145 - 1200	0	65	21	0	3	1	0	0	2	0	0	0	0	**91**	**365**
1200 - 1215	0	57	19	0	2	0	0	0	1	0	0	0	0	**80**	
1215 - 1230	0	63	24	1	2	0	0	0	0	0	0	0	0	**91**	
1230 - 1245	0	80	27	0	2	0	0	0	2	0	0	0	0	**112**	
1245 - 1300	0	83	21	0	2	0	0	0	1	0	0	0	0	**107**	**391**
1300 - 1315	0	78	25	0	2	0	0	0	1	0	0	0	0	**107**	
1315 - 1330	0	82	26	0	2	1	0	0	2	0	0	0	0	**113**	
1330 - 1345	0	69	23	2	3	0	0	0	2	0	0	0	0	**99**	
1345 - 1400	0	84	21	4	4	0	0	0	1	0	0	0	0	**115**	**434**
1400 - 1415	0	74	24	2	2	0	0	0	2	0	0	0	0	**105**	
1415 - 1430	0	77	19	3	1	1	0	0	2	0	0	0	0	**103**	
1430 - 1445	0	80	23	1	1	1	0	0	3	0	0	0	0	**110**	
1445 - 1500	0	84	25	0	3	0	0	0	2	0	0	0	0	**115**	**432**
1500 - 1515	0	78	20	1	1	0	0	0	1	0	0	0	0	**101**	
1515 - 1530	0	78	20	0	2	0	0	0	1	0	0	0	0	**101**	
1530 - 1545	0	83	21	0	1	0	0	0	1	0	0	0	0	**107**	
1545 - 1600	0	65	14	0	1	0	0	0	1	0	0	0	0	**82**	**392**
1600 - 1615	0	73	19	1	1	0	0	0	1	0	0	0	0	**95**	
1615 - 1630	0	90	25	1	2	0	0	0	2	0	0	0	0	**120**	
1630 - 1645	0	79	24	0	1	0	0	0	2	0	0	0	0	**107**	
1645 - 1700	0	76	20	0	2	0	0	0	2	0	0	0	0	**101**	**423**
1700 - 1715	0	72	19	0	1	0	0	1	1	0	0	0	0	**93**	
1715 - 1730	0	87	27	0	1	0	0	0	2	0	0	0	0	**118**	
1730 - 1745	0	91	28	0	0	0	0	0	2	0	0	0	0	**122**	
1745 - 1800	0	97	23	0	0	1	0	0	2	0	0	0	0	**124**	**457**
1800 - 1815	0	69	18	0	2	0	0	0	2	0	0	0	0	**91**	
1815 - 1830	0	72	17	0	0	0	0	0	2	0	1	0	0	**92**	
1830 - 1845	0	75	19	0	1	0	0	0	3	0	1	0	0	**99**	
1845 - 1900	0	60	8	0	0	0	0	0	2	0	0	0	0	**70**	**353**
1900 - 1915	0	48	10	0	0	0	0	0	2	0	0	0	0	**60**	
1915 - 1930	0	39	8	0	1	0	0	0	1	0	0	0	0	**49**	
1930 - 1945	0	42	7	0	0	0	0	0	2	0	0	0	0	**51**	
1945 - 2000	0	37	8	0	1	0	0	0	1	0	0	0	0	**47**	**208**
2000 - 2015	0	35	6	0	0	0	0	0	2	0	1	0	0	**45**	
2015 - 2030	0	29	4	0	0	0	0	0	2	0	1	0	0	**35**	
2030 - 2045	0	34	4	0	1	0	0	0	2	0	0	0	0	**40**	
2045 - 2100	0	30	3	0	1	0	0	0	1	0	0	0	0	**35**	**154**
2100 - 2115	0	25	2	0	1	0	0	0	1	0	0	0	0	**29**	
2115 - 2130	0	21	3	0	1	0	0	0	2	0	0	0	0	**27**	
2130 - 2145	0	25	2	0	1	0	0	0	2	0	0	0	0	**30**	
2145 - 2200	0	18	2	0	0	0	0	0	2	0	0	0	0	**22**	**108**
2200 - 2215	0	16	3	0	0	0	0	0	1	0	1	0	0	**21**	
2215 - 2230	0	20	3	0	0	0	0	0	2	0	0	1	0	**26**	
2230 - 2245	0	18	3	0	0	0	0	0	1	0	2	1	0	**25**	
2245 - 2300	0	18	2	0	0	0	0	0	0	0	0	0	0	**21**	**93**
2300 - 2315	0	16	3	0	1	0	0	0	2	0	0	0	0	**22**	
2315 - 2330	0	9	1	0	0	0	0	0	0	0	0	1	0	**12**	
2330 - 2345	0	8	1	0	1	0	0	0	0	0	1	1	0	**11**	
2345 - 0000	0	8	0	0	1	0	0	0	1	0	1	0	0	**11**	**56**

Session Total	2	4975	1210	30	129	18	0	15	126	2	18	4	0	**6527**
Session Average	0.02	51.83	12.60	0.31	1.34	0.18	0.00	0.15	1.31	0.02	0.18	0.04	0.00	**67.99**
Session Percentage	0.03	76.22	18.54	0.46	1.97	0.27	0.01	0.22	1.93	0.03	0.27	0.06	0.00	

AM Peak Hour	-	0715 - 0815	0915 - 1015	0545 - 0645	0830 - 0930	0745 - 0845	-	0830 - 0930	0945 - 1045	0630 - 0730	0500 - 0600	-	-	**0715 - 0815**
AM Peak Volume	0	516	98	4	17	2	0	4	9	0	2	0	0	**616**

Noon Peak Hour	1115 - 1215	1445 - 1545	1230 - 1330	1330 - 1430	1315 - 1415	1000 - 1100	-	1000 - 1100	1030 - 1130	1130 - 1230	-	-	-	**1230 - 1330**
Noon Peak Volume	0	324	99	10	11	3	0	2	10	0	0	0	0	**439**

PM Peak Hour	1500 - 1600	1700 - 1800	1700 - 1800	1545 - 1645	1600 - 1700	1500 - 1600	1715 - 1815	1615 - 1715	1745 - 1845	1830 - 1930	1815 - 1915	-	-	**1700 - 1800**
PM Peak Volume	1	348	97	2	6	1	0	1	9	0	2	0	0	**457**

Bi-Directional Class Count || Volume Summary 15min

Columbia, SC

Marr Traffic DATA COLLECTION

www.marrtraffic.com

Site 52

I-26 N/Bound Off-Ramp,
south of US-378 Sunset Blvd

Date

Tuesday, April 23, 2024

Lat/Long

34.000523°, -81.109217°

Weather

Fair
58°F

Click here for Detailed Weather

0000 - 2400 (Weekday 24h Session) (04-23-2024)

Volume Summary 15min

TIME	Volume Summary 15min NB	SB	15min Total	60min Total
0000 - 0015	0	0	**0**	
0015 - 0030	0	0	**0**	
0030 - 0045	0	0	**0**	
0045 - 0100	0	0	**0**	**0**
0100 - 0115	0	0	**0**	
0115 - 0130	0	0	**0**	
0130 - 0145	0	0	**0**	
0145 - 0200	0	0	**0**	**0**
0200 - 0215	0	0	**0**	
0215 - 0230	0	0	**0**	
0230 - 0245	0	0	**0**	
0245 - 0300	0	0	**0**	**0**
0300 - 0315	0	0	**0**	
0315 - 0330	0	0	**0**	
0330 - 0345	0	0	**0**	
0345 - 0400	0	0	**0**	**0**
0400 - 0415	0	0	**0**	
0415 - 0430	0	0	**0**	
0430 - 0445	0	0	**0**	
0445 - 0500	0	0	**0**	**0**
0500 - 0515	0	0	**0**	
0515 - 0530	0	0	**0**	
0530 - 0545	0	0	**0**	
0545 - 0600	0	0	**0**	**0**
0600 - 0615	0	0	**0**	
0615 - 0630	0	0	**0**	
0630 - 0645	0	0	**0**	
0645 - 0700	0	0	**0**	**0**
0700 - 0715	0	0	**0**	
0715 - 0730	0	0	**0**	
0730 - 0745	0	0	**0**	
0745 - 0800	0	0	**0**	**0**
0800 - 0815	0	0	**0**	
0815 - 0830	0	0	**0**	
0830 - 0845	0	0	**0**	
0845 - 0900	0	0	**0**	**0**
0900 - 0915	0	0	**0**	
0915 - 0930	0	0	**0**	
0930 - 0945	0	0	**0**	
0945 - 1000	0	0	**0**	**0**
1000 - 1015	0	0	**0**	
1015 - 1030	0	0	**0**	
1030 - 1045	0	0	**0**	
1045 - 1100	0	0	**0**	**0**
1100 - 1115	0	0	**0**	
1115 - 1130	0	0	**0**	
1130 - 1145	0	0	**0**	
1145 - 1200	0	0	**0**	**0**

Time	Volume Summary 15min NB	SB	15min Total	60min Total
1200 - 1215	0	0	**0**	
1215 - 1230	0	0	**0**	
1230 - 1245	0	0	**0**	
1245 - 1300	0	0	**0**	**0**
1300 - 1315	0	0	**0**	
1315 - 1330	0	0	**0**	
1330 - 1345	0	0	**0**	
1345 - 1400	0	0	**0**	**0**
1400 - 1415	0	0	**0**	
1415 - 1430	0	0	**0**	
1430 - 1445	0	0	**0**	
1445 - 1500	0	0	**0**	**0**
1500 - 1515	0	0	**0**	
1515 - 1530	0	0	**0**	
1530 - 1545	0	0	**0**	
1545 - 1600	0	0	**0**	**0**
1600 - 1615	0	0	**0**	
1615 - 1630	0	0	**0**	
1630 - 1645	0	0	**0**	
1645 - 1700	0	0	**0**	**0**
1700 - 1715	0	0	**0**	
1715 - 1730	0	0	**0**	
1730 - 1745	0	0	**0**	
1745 - 1800	0	0	**0**	**0**
1800 - 1815	0	0	**0**	
1815 - 1830	0	0	**0**	
1830 - 1845	0	0	**0**	
1845 - 1900	0	0	**0**	**0**
1900 - 1915	90	0	**90**	
1915 - 1930	68	0	**68**	
1930 - 1945	80	0	**80**	
1945 - 2000	69	0	**69**	**307**
2000 - 2015	65	0	**65**	
2015 - 2030	54	0	**54**	
2030 - 2045	54	0	**54**	
2045 - 2100	56	0	**56**	**229**
2100 - 2115	40	0	**40**	
2115 - 2130	44	0	**44**	
2130 - 2145	46	0	**46**	
2145 - 2200	36	0	**36**	**166**
2200 - 2215	37	0	**37**	
2215 - 2230	36	0	**36**	
2230 - 2245	38	0	**38**	
2245 - 2300	28	0	**28**	**139**
2300 - 2315	33	0	**33**	
2315 - 2330	16	0	**16**	
2330 - 2345	13	0	**13**	
2345 - 0000	17	0	**17**	**79**

Session Total	920	0	**920**
Session Average	9.58	0.00	**9.58**
Session Percentage	100.00	0.00	

Site 52
I-26 N/Bound Off-Ramp,
south of US-378 Sunset Blvd

Date
Wednesday, April 24, 2024

Lat/Long
34.000523°, -81.109217°

Weather
Fair
66°F

Click here for Detailed Weather

0000 - 2400 (Weekday 24h Session) (04-24-2024)
Volume Summary 15min

TIME	Volume Summary 15min NB	SB	15min Total	60min Total
0000 - 0015	13	0	**13**	
0015 - 0030	14	0	**14**	
0030 - 0045	11	0	**11**	
0045 - 0100	9	0	**9**	**47**
0100 - 0115	4	0	**4**	
0115 - 0130	10	0	**10**	
0130 - 0145	13	0	**13**	
0145 - 0200	12	0	**12**	**39**
0200 - 0215	11	0	**11**	
0215 - 0230	10	0	**10**	
0230 - 0245	4	0	**4**	
0245 - 0300	8	0	**8**	**33**
0300 - 0315	10	0	**10**	
0315 - 0330	6	0	**6**	
0330 - 0345	6	0	**6**	
0345 - 0400	6	0	**6**	**28**
0400 - 0415	6	0	**6**	
0415 - 0430	11	0	**11**	
0430 - 0445	22	0	**22**	
0445 - 0500	25	0	**25**	**64**
0500 - 0515	22	0	**22**	
0515 - 0530	28	0	**28**	
0530 - 0545	29	0	**29**	
0545 - 0600	49	0	**49**	**128**
0600 - 0615	71	0	**71**	
0615 - 0630	114	0	**114**	
0630 - 0645	148	0	**148**	
0645 - 0700	214	0	**214**	**547**
0700 - 0715	211	0	**211**	
0715 - 0730	216	0	**216**	
0730 - 0745	242	0	**242**	
0745 - 0800	224	0	**224**	**893**
0800 - 0815	222	0	**222**	
0815 - 0830	239	0	**239**	
0830 - 0845	229	0	**229**	
0845 - 0900	228	0	**228**	**918**
0900 - 0915	174	0	**174**	
0915 - 0930	243	0	**243**	
0930 - 0945	182	0	**182**	
0945 - 1000	200	0	**200**	**799**
1000 - 1015	156	0	**156**	
1015 - 1030	150	0	**150**	
1030 - 1045	148	0	**148**	
1045 - 1100	143	0	**143**	**597**
1100 - 1115	140	0	**140**	
1115 - 1130	126	0	**126**	
1130 - 1145	159	0	**159**	
1145 - 1200	124	0	**124**	**549**

Time	Volume Summary 15min NB	SB	15min Total	60min Total
1200 - 1215	107	0	**107**	
1215 - 1230	132	0	**132**	
1230 - 1245	154	0	**154**	
1245 - 1300	175	0	**175**	**568**
1300 - 1315	155	0	**155**	
1315 - 1330	188	0	**188**	
1330 - 1345	160	0	**160**	
1345 - 1400	183	0	**183**	**686**
1400 - 1415	149	0	**149**	
1415 - 1430	155	0	**155**	
1430 - 1445	171	0	**171**	
1445 - 1500	180	0	**180**	**655**
1500 - 1515	158	0	**158**	
1515 - 1530	146	0	**146**	
1530 - 1545	150	0	**150**	
1545 - 1600	130	0	**130**	**584**
1600 - 1615	148	0	**148**	
1615 - 1630	164	0	**164**	
1630 - 1645	166	0	**166**	
1645 - 1700	163	0	**163**	**641**
1700 - 1715	106	0	**106**	
1715 - 1730	155	0	**155**	
1730 - 1745	167	0	**167**	
1745 - 1800	167	0	**167**	**595**
1800 - 1815	132	0	**132**	
1815 - 1830	129	0	**129**	
1830 - 1845	154	0	**154**	
1845 - 1900	110	0	**110**	**525**
1900 - 1915	90	0	**90**	
1915 - 1930	80	0	**80**	
1930 - 1945	74	0	**74**	
1945 - 2000	72	0	**72**	**316**
2000 - 2015	69	0	**69**	
2015 - 2030	51	0	**51**	
2030 - 2045	66	0	**66**	
2045 - 2100	48	0	**48**	**234**
2100 - 2115	47	0	**47**	
2115 - 2130	38	0	**38**	
2130 - 2145	43	0	**43**	
2145 - 2200	31	0	**31**	**159**
2200 - 2215	25	0	**25**	
2215 - 2230	41	0	**41**	
2230 - 2245	38	0	**38**	
2245 - 2300	35	0	**35**	**139**
2300 - 2315	34	0	**34**	
2315 - 2330	19	0	**19**	
2330 - 2345	20	0	**20**	
2345 - 0000	15	0	**15**	**88**

Session Total	9832	0	**9832**
Session Average	102.42	0.00	**102.42**
Session Percentage	100.00	0.00	

Site 52
I-26 N/Bound Off-Ramp,
south of US-378 Sunset Blvd

Date
Thursday, April 25, 2024

Lat/Long
34.000523°, -81.109217°

Weather
Fair
67°F

Click here for Detailed Weather

0000 - 2400 (Weekday 24h Session) (04-25-2024)
Volume Summary 15min

TIME	Volume Summary 15min NB	SB	15min Total	60min Total
0000 - 0015	20	0	**20**	
0015 - 0030	20	0	**20**	
0030 - 0045	11	0	**11**	
0045 - 0100	8	0	**8**	**59**
0100 - 0115	5	0	**5**	
0115 - 0130	7	0	**7**	
0130 - 0145	9	0	**9**	
0145 - 0200	10	0	**10**	**31**
0200 - 0215	11	0	**11**	
0215 - 0230	9	0	**9**	
0230 - 0245	7	0	**7**	
0245 - 0300	4	0	**4**	**31**
0300 - 0315	3	0	**3**	
0315 - 0330	17	0	**17**	
0330 - 0345	11	0	**11**	
0345 - 0400	13	0	**13**	**44**
0400 - 0415	9	0	**9**	
0415 - 0430	14	0	**14**	
0430 - 0445	20	0	**20**	
0445 - 0500	28	0	**28**	**71**
0500 - 0515	15	0	**15**	
0515 - 0530	26	0	**26**	
0530 - 0545	31	0	**31**	
0545 - 0600	53	0	**53**	**125**
0600 - 0615	74	0	**74**	
0615 - 0630	111	0	**111**	
0630 - 0645	140	0	**140**	
0645 - 0700	208	0	**208**	**533**
0700 - 0715	201	0	**201**	
0715 - 0730	223	0	**223**	
0730 - 0745	227	0	**227**	
0745 - 0800	283	0	**283**	**934**
0800 - 0815	212	0	**212**	
0815 - 0830	186	0	**186**	
0830 - 0845	184	0	**184**	
0845 - 0900	186	0	**186**	**768**
0900 - 0915	158	0	**158**	
0915 - 0930	195	0	**195**	
0930 - 0945	159	0	**159**	
0945 - 1000	183	0	**183**	**695**
1000 - 1015	163	0	**163**	
1015 - 1030	147	0	**147**	
1030 - 1045	137	0	**137**	
1045 - 1100	154	0	**154**	**601**
1100 - 1115	130	0	**130**	
1115 - 1130	146	0	**146**	
1130 - 1145	120	0	**120**	
1145 - 1200	150	0	**150**	**546**

Time	Volume Summary 15min NB	SB	15min Total	60min Total
1200 - 1215	133	0	**133**	
1215 - 1230	142	0	**142**	
1230 - 1245	182	0	**182**	
1245 - 1300	147	0	**147**	**604**
1300 - 1315	165	0	**165**	
1315 - 1330	152	0	**152**	
1330 - 1345	138	0	**138**	
1345 - 1400	162	0	**162**	**617**
1400 - 1415	165	0	**165**	
1415 - 1430	153	0	**153**	
1430 - 1445	158	0	**158**	
1445 - 1500	164	0	**164**	**640**
1500 - 1515	145	0	**145**	
1515 - 1530	158	0	**158**	
1530 - 1545	172	0	**172**	
1545 - 1600	116	0	**116**	**591**
1600 - 1615	138	0	**138**	
1615 - 1630	197	0	**197**	
1630 - 1645	155	0	**155**	
1645 - 1700	139	0	**139**	**629**
1700 - 1715	174	0	**174**	
1715 - 1730	198	0	**198**	
1730 - 1745	200	0	**200**	
1745 - 1800	204	0	**204**	**776**
1800 - 1815	142	0	**142**	
1815 - 1830	148	0	**148**	
1830 - 1845	144	0	**144**	
1845 - 1900	101	0	**101**	**535**
1900 - 1915	0	0	**0**	
1915 - 1930	0	0	**0**	
1930 - 1945	0	0	**0**	
1945 - 2000	0	0	**0**	**0**
2000 - 2015	0	0	**0**	
2015 - 2030	0	0	**0**	
2030 - 2045	0	0	**0**	
2045 - 2100	0	0	**0**	**0**
2100 - 2115	0	0	**0**	
2115 - 2130	0	0	**0**	
2130 - 2145	0	0	**0**	
2145 - 2200	0	0	**0**	**0**
2200 - 2215	0	0	**0**	
2215 - 2230	0	0	**0**	
2230 - 2245	0	0	**0**	
2245 - 2300	0	0	**0**	**0**
2300 - 2315	0	0	**0**	
2315 - 2330	0	0	**0**	
2330 - 2345	0	0	**0**	
2345 - 0000	0	0	**0**	**0**

Session Total	8830	0	**8830**
Session Average	91.98	0.00	**91.98**
Session Percentage	100.00	0.00	

Bi-Directional Class Count || NB EB 60min

Columbia, SC

Marr Traffic DATA COLLECTION

www.marrtraffic.com

Site 52
I-26 N/Bound Off-Ramp,
south of US-378 Sunset Blvd

Date
Tuesday, April 23, 2024

Lat/Long
34.000523°, -81.109217°

Weather
Fair
58°F

Click here for Detailed Weather

0000 - 2400 (Weekday 24h Session) (04-23-2024)
NB EB 60min

	Northbound (Movement 52.1)													
TIME	1	2	3	4	5	6	7	8	9	10	11	12	13	**Total**
0000 - 0100	0	0	0	0	0	0	0	0	0	0	0	0	0	**0**
0100 - 0200	0	0	0	0	0	0	0	0	0	0	0	0	0	**0**
0200 - 0300	0	0	0	0	0	0	0	0	0	0	0	0	0	**0**
0300 - 0400	0	0	0	0	0	0	0	0	0	0	0	0	0	**0**
0400 - 0500	0	0	0	0	0	0	0	0	0	0	0	0	0	**0**
0500 - 0600	0	0	0	0	0	0	0	0	0	0	0	0	0	**0**
0600 - 0700	0	0	0	0	0	0	0	0	0	0	0	0	0	**0**
0700 - 0800	0	0	0	0	0	0	0	0	0	0	0	0	0	**0**
0800 - 0900	0	0	0	0	0	0	0	0	0	0	0	0	0	**0**
0900 - 1000	0	0	0	0	0	0	0	0	0	0	0	0	0	**0**
1000 - 1100	0	0	0	0	0	0	0	0	0	0	0	0	0	**0**
1100 - 1200	0	0	0	0	0	0	0	0	0	0	0	0	0	**0**
1200 - 1300	0	0	0	0	0	0	0	0	0	0	0	0	0	**0**
1300 - 1400	0	0	0	0	0	0	0	0	0	0	0	0	0	**0**
1400 - 1500	0	0	0	0	0	0	0	0	0	0	0	0	0	**0**
1500 - 1600	0	0	0	0	0	0	0	0	0	0	0	0	0	**0**
1600 - 1700	0	0	0	0	0	0	0	0	0	0	0	0	0	**0**
1700 - 1800	0	0	0	0	0	0	0	0	0	0	0	0	0	**0**
1800 - 1900	0	0	0	0	0	0	0	0	0	0	0	0	0	**0**
1900 - 2000	0	259	41	0	2	0	0	0	5	0	0	0	0	**307**
2000 - 2100	0	196	22	0	2	0	0	1	7	0	1	0	0	**229**
2100 - 2200	0	139	13	0	5	0	0	0	9	0	0	0	0	**166**
2200 - 2300	0	109	10	0	3	0	0	1	6	0	10	0	0	**139**
2300 - 2400	0	62	3	0	2	0	0	0	6	0	6	0	0	**79**
Session Total	0	765	89	0	14	0	0	2	33	0	17	0	0	**920**
Session Average	0.00	31.88	3.71	0.00	0.58	0.00	0.00	0.08	1.38	0.00	0.71	0.00	0.00	**38.33**
Session Percentage	0.00	83.15	9.67	0.00	1.52	0.00	0.00	0.22	3.59	0.00	1.85	0.00	0.00	
AM Peak Hour	-	-	-	-	-	-	-	-	-	-	-	-	-	-
AM Peak Volume	0	0	0	0	0	0	0	0	0	0	0	0	0	**0**
Noon Peak Hour	-	-	-	-	-	-	-	-	-	-	-	-	-	-
Noon Peak Volume	0	0	0	0	0	0	0	0	0	0	0	0	0	**0**
PM Peak Hour	-	1900 - 2000	1900 - 2000	-	1900 - 2000	-	-	-	1900 - 2000	-	-	-	-	**1900 - 2000**
PM Peak Volume	0	259	41	0	2	0	0	0	5	0	0	0	0	**307**

Site 52
I-26 N/Bound Off-Ramp,
south of US-378 Sunset Blvd

Date
Wednesday, April 24, 2024

Lat/Long
34.000523°, -81.109217°

Weather
Fair
66°F

Click here for Detailed Weather

0000 - 2400 (Weekday 24h Session) (04-24-2024)
NB EB 60min

	Northbound (Movement 52.1)													
TIME	1	2	3	4	5	6	7	8	9	10	11	12	13	**Total**
0000 - 0100	0	42	2	0	3	0	0	0	0	0	0	0	0	**47**
0100 - 0200	0	30	0	0	5	0	0	0	2	0	2	0	0	**39**
0200 - 0300	0	22	0	0	4	0	0	0	7	0	0	0	0	**33**
0300 - 0400	0	21	1	0	1	1	0	0	3	0	1	0	0	**28**
0400 - 0500	0	51	2	0	7	1	0	0	3	0	0	0	0	**64**
0500 - 0600	0	102	16	0	2	0	0	0	5	0	3	0	0	**128**
0600 - 0700	0	464	69	6	2	0	0	0	4	0	2	0	0	**547**
0700 - 0800	0	764	102	1	16	3	0	2	5	0	0	0	0	**893**
0800 - 0900	0	750	128	1	16	5	0	5	11	1	1	0	0	**918**
0900 - 1000	0	630	136	2	18	1	0	5	7	0	0	0	0	**799**
1000 - 1100	0	435	122	2	13	5	0	2	18	0	0	0	0	**597**
1100 - 1200	0	376	138	2	15	5	0	1	12	0	0	0	0	**549**
1200 - 1300	0	416	125	2	12	1	0	0	12	0	0	0	0	**568**
1300 - 1400	0	488	153	9	14	5	0	1	16	0	0	0	0	**686**
1400 - 1500	0	476	128	9	15	1	0	1	24	1	0	0	0	**655**
1500 - 1600	0	443	119	3	6	3	0	1	9	0	0	0	0	**584**
1600 - 1700	0	451	153	4	14	0	0	2	17	0	0	0	0	**641**
1700 - 1800	0	438	136	1	4	2	0	0	14	0	0	0	0	**595**
1800 - 1900	1	404	87	1	6	0	1	1	19	0	5	0	0	**525**
1900 - 2000	0	239	59	0	4	0	0	0	12	1	1	0	0	**316**
2000 - 2100	1	184	29	1	4	0	0	0	11	0	4	0	0	**234**
2100 - 2200	0	129	17	0	4	0	0	0	9	0	0	0	0	**159**
2200 - 2300	0	107	20	0	0	1	0	0	5	0	1	5	0	**139**
2300 - 2400	0	61	10	0	5	0	0	0	6	0	0	6	0	**88**

Session Total	2	7523	1752	44	190	34	1	21	231	3	20	11	0	**9832**
Session Average	0.08	313.46	73.00	1.83	7.92	1.42	0.04	0.88	9.63	0.13	0.83	0.46	0.00	**409.67**
Session Percentage	0.02	76.52	17.82	0.45	1.93	0.35	0.01	0.21	2.35	0.03	0.20	0.11	0.00	

AM Peak Hour	-	0700 - 0800	0900 - 1000	0600 - 0700	0900 - 1000	0800 - 0900	-	0800 - 0900	0800 - 0900	0800 - 0900	0500 - 0600	-	-	**0800 - 0900**
AM Peak Volume	0	764	136	6	18	5	0	5	11	1	3	0	0	**918**

Noon Peak Hour	-	1300 - 1400	1300 - 1400	1300 - 1400	1100 - 1200	1000 - 1100	-	1000 - 1100	1400 - 1500	1400 - 1500	-	-	-	**1300 - 1400**
Noon Peak Volume	0	488	153	9	15	5	0	2	24	1	0	0	0	**686**

PM Peak Hour	1800 - 1900	1600 - 1700	1600 - 1700	1600 - 1700	1600 - 1700	1500 - 1600	1800 - 1900	1600 - 1700	1800 - 1900	1900 - 2000	1800 - 1900	-	-	**1600 - 1700**
PM Peak Volume	1	451	153	4	14	3	1	2	19	1	5	0	0	**641**

Site 52
I-26 N/Bound Off-Ramp,
south of US-378 Sunset Blvd

Date
Thursday, April 25, 2024

Lat/Long
34.000523°, -81.109217°

Weather
Fair
67°F

Click here for Detailed Weather

0000 - 2400 (Weekday 24h Session) (04-25-2024)
NB EB 60min

	Northbound (Movement 52.1)													
TIME	1	2	3	4	5	6	7	8	9	10	11	12	13	**Total**
0000 - 0100	0	40	15	1	1	0	0	0	1	0	1	0	0	**59**
0100 - 0200	0	23	3	0	0	0	0	0	2	0	3	0	0	**31**
0200 - 0300	0	17	4	0	4	1	0	1	2	0	2	0	0	**31**
0300 - 0400	0	32	8	0	1	0	0	0	2	0	1	0	0	**44**
0400 - 0500	0	41	11	0	11	1	0	0	6	0	1	0	0	**71**
0500 - 0600	0	85	23	0	5	0	0	0	9	0	3	0	0	**125**
0600 - 0700	0	367	139	5	6	0	0	1	13	0	2	0	0	**533**
0700 - 0800	0	776	128	1	17	3	0	1	5	1	2	0	0	**934**
0800 - 0900	0	597	134	3	22	2	0	3	7	0	0	0	0	**768**
0900 - 1000	0	491	154	7	27	1	0	3	12	0	0	0	0	**695**
1000 - 1100	0	431	138	4	12	3	0	3	10	0	0	0	0	**601**
1100 - 1200	0	381	132	1	17	2	0	3	10	0	0	0	0	**546**
1200 - 1300	1	431	149	2	14	1	0	1	4	1	0	0	0	**604**
1300 - 1400	0	453	133	10	18	0	0	1	2	0	0	0	0	**617**
1400 - 1500	0	470	147	7	8	4	0	0	4	0	0	0	0	**640**
1500 - 1600	2	471	104	1	8	0	0	1	4	0	0	0	0	**591**
1600 - 1700	0	503	113	3	4	0	0	0	6	0	0	0	0	**629**
1700 - 1800	0	605	156	0	3	0	0	3	9	0	0	0	0	**776**
1800 - 1900	0	424	98	1	4	1	0	0	6	0	1	0	0	**535**
1900 - 2000	0	0	0	0	0	0	0	0	0	0	0	0	0	**0**
2000 - 2100	0	0	0	0	0	0	0	0	0	0	0	0	0	**0**
2100 - 2200	0	0	0	0	0	0	0	0	0	0	0	0	0	**0**
2200 - 2300	0	0	0	0	0	0	0	0	0	0	0	0	0	**0**
2300 - 2400	0	0	0	0	0	0	0	0	0	0	0	0	0	**0**

Session Total	3	6638	1789	46	182	19	0	21	114	2	16	0	0	**8830**
Session Average	0.13	276.58	74.54	1.92	7.58	0.79	0.00	0.88	4.75	0.08	0.67	0.00	0.00	**367.92**
Session Percentage	0.03	75.18	20.26	0.52	2.06	0.22	0.00	0.24	1.29	0.02	0.18	0.00	0.00	

AM Peak Hour	-	0700 - 0800	0900 - 1000	0900 - 1000	0900 - 1000	0700 - 0800	-	0800 - 0900	0600 - 0700	0700 - 0800	0500 - 0600	-	-	**0700 - 0800**
AM Peak Hour Volume	0	776	154	7	27	3	0	3	13	1	3	0	0	**934**

Noon Peak Hour	1200 - 1300	1400 - 1500	1200 - 1300	1300 - 1400	1300 - 1400	1400 - 1500	-	1000 - 1100	1000 - 1100	1200 - 1300	-	-	-	**1400 - 1500**
Noon Peak Hour Volume	1	470	149	10	18	4	0	3	10	1	0	0	0	**640**

PM Peak Hour	1500 - 1600	1700 - 1800	1700 - 1800	1600 - 1700	1500 - 1600	1800 - 1900	-	1700 - 1800	1700 - 1800	-	1800 - 1900	-	-	**1700 - 1800**
PM Peak Hour Volume	2	605	156	3	8	1	0	3	9	0	1	0	0	**776**

Bi-Directional Class Count || Volume Summary 60min

Columbia, SC

Marr Traffic DATA COLLECTION

www.marrtraffic.com

Site 52

I-26 N/Bound Off-Ramp,
south of US-378 Sunset Blvd

Date

Tuesday, April 23, 2024

Lat/Long

34.000523°, -81.109217°

Weather

Fair
58°F

Click here for Detailed Weather

0000 - 2400 (Weekday 24h Session) (04-23-2024)

Volume Summary 60min

	Volume Summary 60min		
TIME	NB	SB	**Total**
0000 - 0100	0	0	**0**
0100 - 0200	0	0	**0**
0200 - 0300	0	0	**0**
0300 - 0400	0	0	**0**
0400 - 0500	0	0	**0**
0500 - 0600	0	0	**0**
0600 - 0700	0	0	**0**
0700 - 0800	0	0	**0**
0800 - 0900	0	0	**0**
0900 - 1000	0	0	**0**
1000 - 1100	0	0	**0**
1100 - 1200	0	0	**0**

	Volume Summary 60min		
Time	NB	SB	**Total**
1200 - 1300	0	0	**0**
1300 - 1400	0	0	**0**
1400 - 1500	0	0	**0**
1500 - 1600	0	0	**0**
1600 - 1700	0	0	**0**
1700 - 1800	0	0	**0**
1800 - 1900	0	0	**0**
1900 - 2000	307	0	**307**
2000 - 2100	229	0	**229**
2100 - 2200	166	0	**166**
2200 - 2300	139	0	**139**
2300 - 2400	79	0	**79**

Session Total	920	0	**920**
Session Average	38.33	0.00	**38.33**
Session Percentage	100.00	0.00	

Site 52

I-26 N/Bound Off-Ramp,
south of US-378 Sunset Blvd

Date

Wednesday, April 24, 2024

Lat/Long

34.000523°, -81.109217°

Weather

Fair
66°F

Click here for Detailed Weather

0000 - 2400 (Weekday 24h Session) (04-24-2024)

Volume Summary 60min

	Volume Summary 60min		
TIME	NB	SB	**Total**
0000 - 0100	47	0	**47**
0100 - 0200	39	0	**39**
0200 - 0300	33	0	**33**
0300 - 0400	28	0	**28**
0400 - 0500	64	0	**64**
0500 - 0600	128	0	**128**
0600 - 0700	547	0	**547**
0700 - 0800	893	0	**893**
0800 - 0900	918	0	**918**
0900 - 1000	799	0	**799**
1000 - 1100	597	0	**597**
1100 - 1200	549	0	**549**

Session Total	9832	0	**9832**
Session Average	409.67	0.00	**409.67**
Session Percentage	100.00	0.00	

	Volume Summary 60min		
Time	NB	SB	**Total**
1200 - 1300	568	0	**568**
1300 - 1400	686	0	**686**
1400 - 1500	655	0	**655**
1500 - 1600	584	0	**584**
1600 - 1700	641	0	**641**
1700 - 1800	595	0	**595**
1800 - 1900	525	0	**525**
1900 - 2000	316	0	**316**
2000 - 2100	234	0	**234**
2100 - 2200	159	0	**159**
2200 - 2300	139	0	**139**
2300 - 2400	88	0	**88**

Site 52

I-26 N/Bound Off-Ramp,
south of US-378 Sunset Blvd

Date

Thursday, April 25, 2024

Lat/Long

34.000523°, -81.109217°

Weather

Fair
67°F

Click here for Detailed Weather

0000 - 2400 (Weekday 24h Session) (04-25-2024)

Volume Summary 60min

	Volume Summary 60min		
TIME	NB	SB	**Total**
0000 - 0100	59	0	**59**
0100 - 0200	31	0	**31**
0200 - 0300	31	0	**31**
0300 - 0400	44	0	**44**
0400 - 0500	71	0	**71**
0500 - 0600	125	0	**125**
0600 - 0700	533	0	**533**
0700 - 0800	934	0	**934**
0800 - 0900	768	0	**768**
0900 - 1000	695	0	**695**
1000 - 1100	601	0	**601**
1100 - 1200	546	0	**546**

	Volume Summary 60min		
Time	NB	SB	**Total**
1200 - 1300	604	0	**604**
1300 - 1400	617	0	**617**
1400 - 1500	640	0	**640**
1500 - 1600	591	0	**591**
1600 - 1700	629	0	**629**
1700 - 1800	776	0	**776**
1800 - 1900	535	0	**535**
1900 - 2000	0	0	**0**
2000 - 2100	0	0	**0**
2100 - 2200	0	0	**0**
2200 - 2300	0	0	**0**
2300 - 2400	0	0	**0**

Session Total	8830	0	**8830**
Session Average	367.92	0.00	**367.92**
Session Percentage	100.00	0.00	

Bi-Directional Class Count || Graphical Analysis NB EB

Columbia, SC

www.marrtraffic.com

Site 52

I-26 N/Bound Off-Ramp,
south of US-378 Sunset Blvd

Lat/Long

34.000523°, -81.109217°

0000 - 2400 (Weekday 24h Session)

Graphical Analysis NB EB

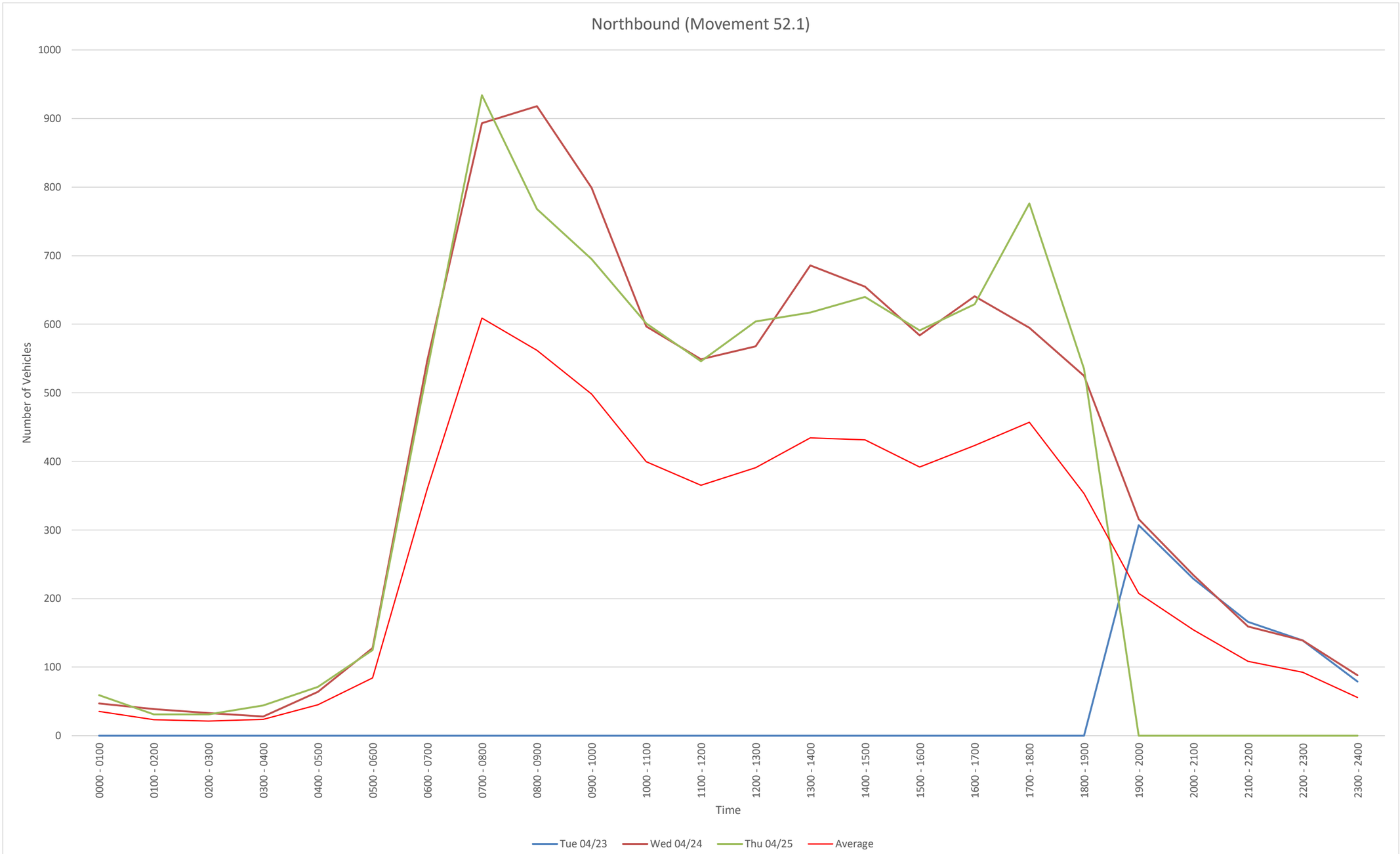

Time	Tue 04/23	Wed 04/24	Thu 04/25				
0000 - 0100	0	47	59				
0100 - 0200	0	39	31				
0200 - 0300	0	33	31				
0300 - 0400	0	28	44				
0400 - 0500	0	64	71				
0500 - 0600	0	128	125				
0600 - 0700	0	547	533				
0700 - 0800	0	893	934				
0800 - 0900	0	918	768				
0900 - 1000	0	799	695				
1000 - 1100	0	597	601				
1100 - 1200	0	549	546				
1200 - 1300	0	568	604				
1300 - 1400	0	686	617				
1400 - 1500	0	655	640				
1500 - 1600	0	584	591				
1600 - 1700	0	641	629				
1700 - 1800	0	595	776				
1800 - 1900	0	525	535				
1900 - 2000	307	316	0				
2000 - 2100	229	234	0				
2100 - 2200	166	159	0				
2200 - 2300	139	139	0				
2300 - 2400	79	88	0				
Daily Total	920	9832	8830				

NB
File Name:
Start Date: 4/23/2024
Start Time: 0
Site Code: 52
Station ID: 1
Location 1: I-26 N/Bound Off-Ramp, south of US-378 Sunset Blvd
Location 2:

Date	Time	1	2	3	4	5	6	7	8	9	10	11	12	13
4/23/2024	12:00 AM	0	0	0	0	0	0	0	0	0	0	0	0	0
4/23/2024	12:15 AM	0	0	0	0	0	0	0	0	0	0	0	0	0
4/23/2024	12:30 AM	0	0	0	0	0	0	0	0	0	0	0	0	0
4/23/2024	12:45 AM	0	0	0	0	0	0	0	0	0	0	0	0	0
4/23/2024	1:00 AM	0	0	0	0	0	0	0	0	0	0	0	0	0
4/23/2024	1:15 AM	0	0	0	0	0	0	0	0	0	0	0	0	0
4/23/2024	1:30 AM	0	0	0	0	0	0	0	0	0	0	0	0	0
4/23/2024	1:45 AM	0	0	0	0	0	0	0	0	0	0	0	0	0
4/23/2024	2:00 AM	0	0	0	0	0	0	0	0	0	0	0	0	0
4/23/2024	2:15 AM	0	0	0	0	0	0	0	0	0	0	0	0	0
4/23/2024	2:30 AM	0	0	0	0	0	0	0	0	0	0	0	0	0
4/23/2024	2:45 AM	0	0	0	0	0	0	0	0	0	0	0	0	0
4/23/2024	3:00 AM	0	0	0	0	0	0	0	0	0	0	0	0	0
4/23/2024	3:15 AM	0	0	0	0	0	0	0	0	0	0	0	0	0
4/23/2024	3:30 AM	0	0	0	0	0	0	0	0	0	0	0	0	0
4/23/2024	3:45 AM	0	0	0	0	0	0	0	0	0	0	0	0	0
4/23/2024	4:00 AM	0	0	0	0	0	0	0	0	0	0	0	0	0
4/23/2024	4:15 AM	0	0	0	0	0	0	0	0	0	0	0	0	0
4/23/2024	4:30 AM	0	0	0	0	0	0	0	0	0	0	0	0	0
4/23/2024	4:45 AM	0	0	0	0	0	0	0	0	0	0	0	0	0
4/23/2024	5:00 AM	0	0	0	0	0	0	0	0	0	0	0	0	0
4/23/2024	5:15 AM	0	0	0	0	0	0	0	0	0	0	0	0	0
4/23/2024	5:30 AM	0	0	0	0	0	0	0	0	0	0	0	0	0
4/23/2024	5:45 AM	0	0	0	0	0	0	0	0	0	0	0	0	0
4/23/2024	6:00 AM	0	0	0	0	0	0	0	0	0	0	0	0	0
4/23/2024	6:15 AM	0	0	0	0	0	0	0	0	0	0	0	0	0
4/23/2024	6:30 AM	0	0	0	0	0	0	0	0	0	0	0	0	0
4/23/2024	6:45 AM	0	0	0	0	0	0	0	0	0	0	0	0	0
4/23/2024	7:00 AM	0	0	0	0	0	0	0	0	0	0	0	0	0
4/23/2024	7:15 AM	0	0	0	0	0	0	0	0	0	0	0	0	0
4/23/2024	7:30 AM	0	0	0	0	0	0	0	0	0	0	0	0	0
4/23/2024	7:45 AM	0	0	0	0	0	0	0	0	0	0	0	0	0
4/23/2024	8:00 AM	0	0	0	0	0	0	0	0	0	0	0	0	0
4/23/2024	8:15 AM	0	0	0	0	0	0	0	0	0	0	0	0	0
4/23/2024	8:30 AM	0	0	0	0	0	0	0	0	0	0	0	0	0
4/23/2024	8:45 AM	0	0	0	0	0	0	0	0	0	0	0	0	0
4/23/2024	9:00 AM	0	0	0	0	0	0	0	0	0	0	0	0	0
4/23/2024	9:15 AM	0	0	0	0	0	0	0	0	0	0	0	0	0
4/23/2024	9:30 AM	0	0	0	0	0	0	0	0	0	0	0	0	0
4/23/2024	9:45 AM	0	0	0	0	0	0	0	0	0	0	0	0	0
4/23/2024	10:00 AM	0	0	0	0	0	0	0	0	0	0	0	0	0
4/23/2024	10:15 AM	0	0	0	0	0	0	0	0	0	0	0	0	0
4/23/2024	10:30 AM	0	0	0	0	0	0	0	0	0	0	0	0	0
4/23/2024	10:45 AM	0	0	0	0	0	0	0	0	0	0	0	0	0
4/23/2024	11:00 AM	0	0	0	0	0	0	0	0	0	0	0	0	0
4/23/2024	11:15 AM	0	0	0	0	0	0	0	0	0	0	0	0	0
4/23/2024	11:30 AM	0	0	0	0	0	0	0	0	0	0	0	0	0
4/23/2024	11:45 AM	0	0	0	0	0	0	0	0	0	0	0	0	0
4/23/2024	12:00 PM	0	0	0	0	0	0	0	0	0	0	0	0	0
4/23/2024	12:15 PM	0	0	0	0	0	0	0	0	0	0	0	0	0
4/23/2024	12:30 PM	0	0	0	0	0	0	0	0	0	0	0	0	0
4/23/2024	12:45 PM	0	0	0	0	0	0	0	0	0	0	0	0	0
4/23/2024	1:00 PM	0	0	0	0	0	0	0	0	0	0	0	0	0
4/23/2024	1:15 PM	0	0	0	0	0	0	0	0	0	0	0	0	0
4/23/2024	1:30 PM	0	0	0	0	0	0	0	0	0	0	0	0	0
4/23/2024	1:45 PM	0	0	0	0	0	0	0	0	0	0	0	0	0
4/23/2024	2:00 PM	0	0	0	0	0	0	0	0	0	0	0	0	0
4/23/2024	2:15 PM	0	0	0	0	0	0	0	0	0	0	0	0	0
4/23/2024	2:30 PM	0	0	0	0	0	0	0	0	0	0	0	0	0
4/23/2024	2:45 PM	0	0	0	0	0	0	0	0	0	0	0	0	0
4/23/2024	3:00 PM	0	0	0	0	0	0	0	0	0	0	0	0	0
4/23/2024	3:15 PM	0	0	0	0	0	0	0	0	0	0	0	0	0
4/23/2024	3:30 PM	0	0	0	0	0	0	0	0	0	0	0	0	0
4/23/2024	3:45 PM	0	0	0	0	0	0	0	0	0	0	0	0	0
4/23/2024	4:00 PM	0	0	0	0	0	0	0	0	0	0	0	0	0
4/23/2024	4:15 PM	0	0	0	0	0	0	0	0	0	0	0	0	0
4/23/2024	4:30 PM	0	0	0	0	0	0	0	0	0	0	0	0	0
4/23/2024	4:45 PM	0	0	0	0	0	0	0	0	0	0	0	0	0
4/23/2024	5:00 PM	0	0	0	0	0	0	0	0	0	0	0	0	0
4/23/2024	5:15 PM	0	0	0	0	0	0	0	0	0	0	0	0	0
4/23/2024	5:30 PM	0	0	0	0	0	0	0	0	0	0	0	0	0
4/23/2024	5:45 PM	0	0	0	0	0	0	0	0	0	0	0	0	0
4/23/2024	6:00 PM	0	0	0	0	0	0	0	0	0	0	0	0	0
4/23/2024	6:15 PM	0	0	0	0	0	0	0	0	0	0	0	0	0
4/23/2024	6:30 PM	0	0	0	0	0	0	0	0	0	0	0	0	0
4/23/2024	6:45 PM	0	0	0	0	0	0	0	0	0	0	0	0	0
4/23/2024	7:00 PM	0	79	9	0	0	0	0	0	2	0	0	0	0
4/23/2024	7:15 PM	0	57	10	0	0	0	0	0	1	0	0	0	0
4/23/2024	7:30 PM	0	70	8	0	1	0	0	0	1	0	0	0	0
4/23/2024	7:45 PM	0	53	14	0	1	0	0	0	1	0	0	0	0
4/23/2024	8:00 PM	0	51	10	0	1	0	0	0	2	0	1	0	0
4/23/2024	8:15 PM	0	48	5	0	0	0	0	0	1	0	0	0	0
4/23/2024	8:30 PM	0	47	4	0	0	0	0	1	2	0	0	0	0
4/23/2024	8:45 PM	0	50	3	0	1	0	0	0	2	0	0	0	0
4/23/2024	9:00 PM	0	35	2	0	2	0	0	0	1	0	0	0	0
4/23/2024	9:15 PM	0	35	6	0	1	0	0	0	2	0	0	0	0
4/23/2024	9:30 PM	0	38	3	0	1	0	0	0	4	0	0	0	0
4/23/2024	9:45 PM	0	31	2	0	1	0	0	0	2	0	0	0	0
4/23/2024	10:00 PM	0	29	2	0	1	0	0	0	1	0	4	0	0
4/23/2024	10:15 PM	0	29	3	0	0	0	0	1	2	0	1	0	0
4/23/2024	10:30 PM	0	27	3	0	1	0	0	0	2	0	5	0	0
4/23/2024	10:45 PM	0	24	2	0	1	0	0	0	1	0	0	0	0
4/23/2024	11:00 PM	0	25	3	0	1	0	0	0	3	0	1	0	0
4/23/2024	11:15 PM	0	15	0	0	0	0	0	0	0	0	1	0	0
4/23/2024	11:30 PM	0	10	0	0	1	0	0	0	0	0	2	0	0
4/23/2024	11:45 PM	0	12	0	0	0	0	0	0	3	0	2	0	0

4/24/2024	12:00 AM	0	12	0	0	1	0	0	0	0	0	0	0	0
4/24/2024	12:15 AM	0	13	1	0	0	0	0	0	0	0	0	0	0
4/24/2024	12:30 AM	0	10	1	0	0	0	0	0	0	0	0	0	0
4/24/2024	12:45 AM	0	7	0	0	2	0	0	0	0	0	0	0	0
4/24/2024	1:00 AM	0	3	0	0	1	0	0	0	0	0	0	0	0
4/24/2024	1:15 AM	0	8	0	0	1	0	0	0	1	0	0	0	0
4/24/2024	1:30 AM	0	11	0	0	0	0	0	0	0	0	2	0	0
4/24/2024	1:45 AM	0	8	0	0	3	0	0	0	1	0	0	0	0
4/24/2024	2:00 AM	0	7	0	0	1	0	0	0	3	0	0	0	0
4/24/2024	2:15 AM	0	6	0	0	3	0	0	0	1	0	0	0	0
4/24/2024	2:30 AM	0	4	0	0	0	0	0	0	0	0	0	0	0
4/24/2024	2:45 AM	0	5	0	0	0	0	0	0	3	0	0	0	0
4/24/2024	3:00 AM	0	6	1	0	0	1	0	0	2	0	0	0	0
4/24/2024	3:15 AM	0	5	0	0	0	0	0	0	1	0	0	0	0
4/24/2024	3:30 AM	0	4	0	0	1	0	0	0	0	0	1	0	0
4/24/2024	3:45 AM	0	6	0	0	0	0	0	0	0	0	0	0	0
4/24/2024	4:00 AM	0	6	0	0	0	0	0	0	0	0	0	0	0
4/24/2024	4:15 AM	0	7	0	0	3	0	0	0	1	0	0	0	0
4/24/2024	4:30 AM	0	18	1	0	2	0	0	0	1	0	0	0	0
4/24/2024	4:45 AM	0	20	1	0	2	1	0	0	1	0	0	0	0
4/24/2024	5:00 AM	0	16	2	0	0	0	0	0	2	0	2	0	0
4/24/2024	5:15 AM	0	22	3	0	1	0	0	0	2	0	0	0	0
4/24/2024	5:30 AM	0	26	2	0	0	0	0	0	1	0	0	0	0
4/24/2024	5:45 AM	0	38	9	0	1	0	0	0	0	0	1	0	0
4/24/2024	6:00 AM	0	56	11	0	1	0	0	0	2	0	1	0	0
4/24/2024	6:15 AM	0	94	17	2	0	0	0	0	0	0	1	0	0
4/24/2024	6:30 AM	0	130	12	4	1	0	0	0	1	0	0	0	0
4/24/2024	6:45 AM	0	184	29	0	0	0	0	0	1	0	0	0	0
4/24/2024	7:00 AM	0	175	28	0	3	1	0	1	3	0	0	0	0
4/24/2024	7:15 AM	0	187	25	0	2	1	0	1	0	0	0	0	0
4/24/2024	7:30 AM	0	207	28	1	6	0	0	0	0	0	0	0	0
4/24/2024	7:45 AM	0	195	21	0	5	1	0	0	2	0	0	0	0
4/24/2024	8:00 AM	0	183	26	0	5	3	0	0	5	0	0	0	0
4/24/2024	8:15 AM	0	195	36	0	2	0	0	1	4	1	0	0	0
4/24/2024	8:30 AM	0	187	34	0	2	1	0	4	0	0	1	0	0
4/24/2024	8:45 AM	0	185	32	1	7	1	0	0	2	0	0	0	0
4/24/2024	9:00 AM	0	135	29	0	7	0	0	2	1	0	0	0	0
4/24/2024	9:15 AM	0	203	30	0	6	0	0	2	2	0	0	0	0
4/24/2024	9:30 AM	0	137	39	0	3	1	0	0	2	0	0	0	0
4/24/2024	9:45 AM	0	155	38	2	2	0	0	1	2	0	0	0	0
4/24/2024	10:00 AM	0	111	34	0	5	0	0	1	5	0	0	0	0
4/24/2024	10:15 AM	0	115	28	0	1	3	0	0	3	0	0	0	0
4/24/2024	10:30 AM	0	109	28	2	3	1	0	0	5	0	0	0	0
4/24/2024	10:45 AM	0	100	32	0	4	1	0	1	5	0	0	0	0
4/24/2024	11:00 AM	0	93	34	0	5	2	0	1	5	0	0	0	0
4/24/2024	11:15 AM	0	90	30	1	1	0	0	0	4	0	0	0	0
4/24/2024	11:30 AM	0	109	42	1	5	1	0	0	1	0	0	0	0
4/24/2024	11:45 AM	0	84	32	0	4	2	0	0	2	0	0	0	0
4/24/2024	12:00 PM	0	79	22	0	3	0	0	0	3	0	0	0	0
4/24/2024	12:15 PM	0	89	38	2	2	0	0	0	1	0	0	0	0
4/24/2024	12:30 PM	0	112	32	0	4	1	0	0	5	0	0	0	0
4/24/2024	12:45 PM	0	136	33	0	3	0	0	0	3	0	0	0	0
4/24/2024	1:00 PM	0	111	38	1	1	1	0	1	2	0	0	0	0
4/24/2024	1:15 PM	0	129	48	0	4	2	0	0	5	0	0	0	0
4/24/2024	1:30 PM	0	114	33	2	5	1	0	0	5	0	0	0	0
4/24/2024	1:45 PM	0	134	34	6	4	1	0	0	4	0	0	0	0
4/24/2024	2:00 PM	0	106	32	2	3	0	0	0	5	1	0	0	0
4/24/2024	2:15 PM	0	114	28	5	0	1	0	1	6	0	0	0	0
4/24/2024	2:30 PM	0	127	30	2	3	0	0	0	9	0	0	0	0
4/24/2024	2:45 PM	0	129	38	0	9	0	0	0	4	0	0	0	0
4/24/2024	3:00 PM	0	121	34	1	0	1	0	0	1	0	0	0	0
4/24/2024	3:15 PM	0	112	28	0	4	0	0	0	2	0	0	0	0
4/24/2024	3:30 PM	0	110	33	1	1	1	0	1	3	0	0	0	0
4/24/2024	3:45 PM	0	100	24	1	1	1	0	0	3	0	0	0	0
4/24/2024	4:00 PM	0	103	39	1	3	0	0	0	2	0	0	0	0
4/24/2024	4:15 PM	0	111	41	2	5	0	0	0	5	0	0	0	0
4/24/2024	4:30 PM	0	119	40	1	1	0	0	1	4	0	0	0	0
4/24/2024	4:45 PM	0	118	33	0	5	0	0	1	6	0	0	0	0
4/24/2024	5:00 PM	0	78	24	0	1	0	0	0	3	0	0	0	0
4/24/2024	5:15 PM	0	107	44	0	1	0	0	0	3	0	0	0	0
4/24/2024	5:30 PM	0	126	36	1	1	0	0	0	3	0	0	0	0
4/24/2024	5:45 PM	0	127	32	0	1	2	0	0	5	0	0	0	0
4/24/2024	6:00 PM	0	101	21	0	3	0	1	0	6	0	0	0	0
4/24/2024	6:15 PM	1	97	22	1	0	0	0	1	4	0	3	0	0
4/24/2024	6:30 PM	0	113	30	0	2	0	0	0	7	0	2	0	0
4/24/2024	6:45 PM	0	93	14	0	1	0	0	0	2	0	0	0	0
4/24/2024	7:00 PM	0	64	20	0	0	0	0	0	5	0	1	0	0
4/24/2024	7:15 PM	0	61	15	0	2	0	0	0	1	1	0	0	0
4/24/2024	7:30 PM	0	55	14	0	0	0	0	0	5	0	0	0	0
4/24/2024	7:45 PM	0	59	10	0	2	0	0	0	1	0	0	0	0
4/24/2024	8:00 PM	1	53	9	1	0	0	0	0	3	0	2	0	0
4/24/2024	8:15 PM	0	38	7	0	0	0	0	0	4	0	2	0	0
4/24/2024	8:30 PM	0	54	7	0	2	0	0	0	3	0	0	0	0
4/24/2024	8:45 PM	0	39	6	0	2	0	0	0	1	0	0	0	0
4/24/2024	9:00 PM	0	41	5	0	0	0	0	0	1	0	0	0	0
4/24/2024	9:15 PM	0	29	3	0	3	0	0	0	3	0	0	0	0
4/24/2024	9:30 PM	0	37	4	0	1	0	0	0	1	0	0	0	0
4/24/2024	9:45 PM	0	22	5	0	0	0	0	0	4	0	0	0	0
4/24/2024	10:00 PM	0	18	6	0	0	0	0	0	1	0	0	0	0
4/24/2024	10:15 PM	0	31	5	0	0	0	0	0	3	0	0	2	0
4/24/2024	10:30 PM	0	28	5	0	0	0	0	0	1	0	1	3	0
4/24/2024	10:45 PM	0	30	4	0	0	1	0	0	0	0	0	0	0
4/24/2024	11:00 PM	0	24	5	0	1	0	0	0	4	0	0	0	0
4/24/2024	11:15 PM	0	12	2	0	1	0	0	0	1	0	0	3	0
4/24/2024	11:30 PM	0	14	2	0	1	0	0	0	0	0	0	3	0
4/24/2024	11:45 PM	0	11	1	0	2	0	0	0	1	0	0	0	0

4/25/2024	12:00 AM	0	13	7	0	0	0	0	0	0	0	0	0	0
4/25/2024	12:15 AM	0	13	5	0	1	0	0	0	0	0	1	0	0
4/25/2024	12:30 AM	0	7	3	0	0	0	0	0	1	0	0	0	0
4/25/2024	12:45 AM	0	7	0	1	0	0	0	0	0	0	0	0	0
4/25/2024	1:00 AM	0	4	0	0	0	0	0	0	1	0	0	0	0
4/25/2024	1:15 AM	0	7	0	0	0	0	0	0	0	0	0	0	0
4/25/2024	1:30 AM	0	6	2	0	0	0	0	0	1	0	0	0	0
4/25/2024	1:45 AM	0	6	1	0	0	0	0	0	0	0	3	0	0
4/25/2024	2:00 AM	0	5	3	0	2	0	0	0	1	0	0	0	0
4/25/2024	2:15 AM	0	5	0	0	1	0	0	0	1	0	2	0	0
4/25/2024	2:30 AM	0	4	1	0	0	1	0	1	0	0	0	0	0
4/25/2024	2:45 AM	0	3	0	0	1	0	0	0	0	0	0	0	0
4/25/2024	3:00 AM	0	2	0	0	0	0	0	0	0	0	1	0	0
4/25/2024	3:15 AM	0	12	4	0	0	0	0	0	1	0	0	0	0
4/25/2024	3:30 AM	0	8	1	0	1	0	0	0	1	0	0	0	0
4/25/2024	3:45 AM	0	10	3	0	0	0	0	0	0	0	0	0	0
4/25/2024	4:00 AM	0	6	0	0	2	0	0	0	1	0	0	0	0
4/25/2024	4:15 AM	0	9	0	0	3	0	0	0	1	0	1	0	0
4/25/2024	4:30 AM	0	12	4	0	1	1	0	0	2	0	0	0	0
4/25/2024	4:45 AM	0	14	7	0	5	0	0	0	2	0	0	0	0
4/25/2024	5:00 AM	0	9	2	0	1	0	0	0	2	0	1	0	0
4/25/2024	5:15 AM	0	18	6	0	1	0	0	0	0	0	1	0	0
4/25/2024	5:30 AM	0	21	5	0	2	0	0	0	3	0	0	0	0
4/25/2024	5:45 AM	0	37	10	0	1	0	0	0	4	0	1	0	0
4/25/2024	6:00 AM	0	53	17	0	1	0	0	0	1	0	2	0	0
4/25/2024	6:15 AM	0	78	29	1	0	0	0	1	2	0	0	0	0
4/25/2024	6:30 AM	0	89	40	4	3	0	0	0	4	0	0	0	0
4/25/2024	6:45 AM	0	147	53	0	2	0	0	0	6	0	0	0	0
4/25/2024	7:00 AM	0	168	26	0	2	2	0	1	2	0	0	0	0
4/25/2024	7:15 AM	0	193	24	1	3	0	0	0	0	1	1	0	0
4/25/2024	7:30 AM	0	197	20	0	6	0	0	0	3	0	1	0	0
4/25/2024	7:45 AM	0	218	58	0	6	1	0	0	0	0	0	0	0
4/25/2024	8:00 AM	0	168	31	0	8	1	0	2	2	0	0	0	0
4/25/2024	8:15 AM	0	150	30	2	1	0	0	0	3	0	0	0	0
4/25/2024	8:30 AM	0	142	34	1	6	0	0	0	1	0	0	0	0
4/25/2024	8:45 AM	0	137	39	0	7	1	0	1	1	0	0	0	0
4/25/2024	9:00 AM	0	104	38	0	12	1	0	0	3	0	0	0	0
4/25/2024	9:15 AM	0	145	39	3	3	0	0	2	3	0	0	0	0
4/25/2024	9:30 AM	0	113	35	3	5	0	0	0	3	0	0	0	0
4/25/2024	9:45 AM	0	129	42	1	7	0	0	1	3	0	0	0	0
4/25/2024	10:00 AM	0	113	38	1	3	2	0	2	4	0	0	0	0
4/25/2024	10:15 AM	0	101	38	1	5	0	0	0	2	0	0	0	0
4/25/2024	10:30 AM	0	94	33	2	3	0	0	1	4	0	0	0	0
4/25/2024	10:45 AM	0	123	29	0	1	1	0	0	0	0	0	0	0
4/25/2024	11:00 AM	0	89	29	0	8	0	0	0	4	0	0	0	0
4/25/2024	11:15 AM	0	94	43	1	4	1	0	1	2	0	0	0	0
4/25/2024	11:30 AM	0	87	28	0	1	1	0	2	1	0	0	0	0
4/25/2024	11:45 AM	0	111	32	0	4	0	0	0	3	0	0	0	0
4/25/2024	12:00 PM	1	91	36	1	3	0	0	0	1	0	0	0	0
4/25/2024	12:15 PM	0	100	34	1	5	1	0	0	0	1	0	0	0
4/25/2024	12:30 PM	0	127	49	0	3	0	0	1	2	0	0	0	0
4/25/2024	12:45 PM	0	113	30	0	3	0	0	0	1	0	0	0	0
4/25/2024	1:00 PM	0	123	37	0	4	0	0	0	1	0	0	0	0
4/25/2024	1:15 PM	0	118	30	1	2	0	0	0	1	0	0	0	0
4/25/2024	1:30 PM	0	94	37	3	3	0	0	1	0	0	0	0	0
4/25/2024	1:45 PM	0	118	29	6	9	0	0	0	0	0	0	0	0
4/25/2024	2:00 PM	0	117	40	3	4	0	0	0	1	0	0	0	0
4/25/2024	2:15 PM	0	117	30	3	2	1	0	0	0	0	0	0	0
4/25/2024	2:30 PM	0	112	40	1	1	3	0	0	1	0	0	0	0
4/25/2024	2:45 PM	0	124	37	0	1	0	0	0	2	0	0	0	0
4/25/2024	3:00 PM	1	113	26	1	3	0	0	0	1	0	0	0	0
4/25/2024	3:15 PM	0	123	31	0	2	0	0	0	2	0	0	0	0
4/25/2024	3:30 PM	0	140	30	0	2	0	0	0	0	0	0	0	0
4/25/2024	3:45 PM	1	95	17	0	1	0	0	1	1	0	0	0	0
4/25/2024	4:00 PM	0	117	18	1	1	0	0	0	1	0	0	0	0
4/25/2024	4:15 PM	0	159	35	1	1	0	0	0	1	0	0	0	0
4/25/2024	4:30 PM	0	118	33	0	1	0	0	0	3	0	0	0	0
4/25/2024	4:45 PM	0	109	27	1	1	0	0	0	1	0	0	0	0
4/25/2024	5:00 PM	0	137	33	0	1	0	0	2	1	0	0	0	0
4/25/2024	5:15 PM	0	155	38	0	2	0	0	0	3	0	0	0	0
4/25/2024	5:30 PM	0	148	49	0	0	0	0	0	3	0	0	0	0
4/25/2024	5:45 PM	0	165	36	0	0	0	0	1	2	0	0	0	0
4/25/2024	6:00 PM	0	107	33	0	2	0	0	0	0	0	0	0	0
4/25/2024	6:15 PM	0	119	28	0	0	0	0	0	1	0	0	0	0
4/25/2024	6:30 PM	0	112	26	1	2	1	0	0	1	0	1	0	0
4/25/2024	6:45 PM	0	86	11	0	0	0	0	0	4	0	0	0	0
4/25/2024	7:00 PM	0	0	0	0	0	0	0	0	0	0	0	0	0
4/25/2024	7:15 PM	0	0	0	0	0	0	0	0	0	0	0	0	0
4/25/2024	7:30 PM	0	0	0	0	0	0	0	0	0	0	0	0	0
4/25/2024	7:45 PM	0	0	0	0	0	0	0	0	0	0	0	0	0
4/25/2024	8:00 PM	0	0	0	0	0	0	0	0	0	0	0	0	0
4/25/2024	8:15 PM	0	0	0	0	0	0	0	0	0	0	0	0	0
4/25/2024	8:30 PM	0	0	0	0	0	0	0	0	0	0	0	0	0
4/25/2024	8:45 PM	0	0	0	0	0	0	0	0	0	0	0	0	0
4/25/2024	9:00 PM	0	0	0	0	0	0	0	0	0	0	0	0	0
4/25/2024	9:15 PM	0	0	0	0	0	0	0	0	0	0	0	0	0
4/25/2024	9:30 PM	0	0	0	0	0	0	0	0	0	0	0	0	0
4/25/2024	9:45 PM	0	0	0	0	0	0	0	0	0	0	0	0	0
4/25/2024	10:00 PM	0	0	0	0	0	0	0	0	0	0	0	0	0
4/25/2024	10:15 PM	0	0	0	0	0	0	0	0	0	0	0	0	0
4/25/2024	10:30 PM	0	0	0	0	0	0	0	0	0	0	0	0	0
4/25/2024	10:45 PM	0	0	0	0	0	0	0	0	0	0	0	0	0
4/25/2024	11:00 PM	0	0	0	0	0	0	0	0	0	0	0	0	0
4/25/2024	11:15 PM	0	0	0	0	0	0	0	0	0	0	0	0	0
4/25/2024	11:30 PM	0	0	0	0	0	0	0	0	0	0	0	0	0
4/25/2024	11:45 PM	0	0	0	0	0	0	0	0	0	0	0	0	0

SB
File Name:
Start Date: 4/23/2024
Start Time: 0
Site Code: 52
Station ID: 1
Location 1: I-26 N/Bound Off-Ramp, south of US-378 Sunset Blvd
Location 2:

Date	Time	1	2	3	4	5	6	7	8	9	10	11	12	13
4/23/2024	12:00 AM	0	0	0	0	0	0	0	0	0	0	0	0	0
4/23/2024	12:15 AM	0	0	0	0	0	0	0	0	0	0	0	0	0
4/23/2024	12:30 AM	0	0	0	0	0	0	0	0	0	0	0	0	0
4/23/2024	12:45 AM	0	0	0	0	0	0	0	0	0	0	0	0	0
4/23/2024	1:00 AM	0	0	0	0	0	0	0	0	0	0	0	0	0
4/23/2024	1:15 AM	0	0	0	0	0	0	0	0	0	0	0	0	0
4/23/2024	1:30 AM	0	0	0	0	0	0	0	0	0	0	0	0	0
4/23/2024	1:45 AM	0	0	0	0	0	0	0	0	0	0	0	0	0
4/23/2024	2:00 AM	0	0	0	0	0	0	0	0	0	0	0	0	0
4/23/2024	2:15 AM	0	0	0	0	0	0	0	0	0	0	0	0	0
4/23/2024	2:30 AM	0	0	0	0	0	0	0	0	0	0	0	0	0
4/23/2024	2:45 AM	0	0	0	0	0	0	0	0	0	0	0	0	0
4/23/2024	3:00 AM	0	0	0	0	0	0	0	0	0	0	0	0	0
4/23/2024	3:15 AM	0	0	0	0	0	0	0	0	0	0	0	0	0
4/23/2024	3:30 AM	0	0	0	0	0	0	0	0	0	0	0	0	0
4/23/2024	3:45 AM	0	0	0	0	0	0	0	0	0	0	0	0	0
4/23/2024	4:00 AM	0	0	0	0	0	0	0	0	0	0	0	0	0
4/23/2024	4:15 AM	0	0	0	0	0	0	0	0	0	0	0	0	0
4/23/2024	4:30 AM	0	0	0	0	0	0	0	0	0	0	0	0	0
4/23/2024	4:45 AM	0	0	0	0	0	0	0	0	0	0	0	0	0
4/23/2024	5:00 AM	0	0	0	0	0	0	0	0	0	0	0	0	0
4/23/2024	5:15 AM	0	0	0	0	0	0	0	0	0	0	0	0	0
4/23/2024	5:30 AM	0	0	0	0	0	0	0	0	0	0	0	0	0
4/23/2024	5:45 AM	0	0	0	0	0	0	0	0	0	0	0	0	0
4/23/2024	6:00 AM	0	0	0	0	0	0	0	0	0	0	0	0	0
4/23/2024	6:15 AM	0	0	0	0	0	0	0	0	0	0	0	0	0
4/23/2024	6:30 AM	0	0	0	0	0	0	0	0	0	0	0	0	0
4/23/2024	6:45 AM	0	0	0	0	0	0	0	0	0	0	0	0	0
4/23/2024	7:00 AM	0	0	0	0	0	0	0	0	0	0	0	0	0
4/23/2024	7:15 AM	0	0	0	0	0	0	0	0	0	0	0	0	0
4/23/2024	7:30 AM	0	0	0	0	0	0	0	0	0	0	0	0	0
4/23/2024	7:45 AM	0	0	0	0	0	0	0	0	0	0	0	0	0
4/23/2024	8:00 AM	0	0	0	0	0	0	0	0	0	0	0	0	0
4/23/2024	8:15 AM	0	0	0	0	0	0	0	0	0	0	0	0	0
4/23/2024	8:30 AM	0	0	0	0	0	0	0	0	0	0	0	0	0
4/23/2024	8:45 AM	0	0	0	0	0	0	0	0	0	0	0	0	0
4/23/2024	9:00 AM	0	0	0	0	0	0	0	0	0	0	0	0	0
4/23/2024	9:15 AM	0	0	0	0	0	0	0	0	0	0	0	0	0
4/23/2024	9:30 AM	0	0	0	0	0	0	0	0	0	0	0	0	0
4/23/2024	9:45 AM	0	0	0	0	0	0	0	0	0	0	0	0	0
4/23/2024	10:00 AM	0	0	0	0	0	0	0	0	0	0	0	0	0
4/23/2024	10:15 AM	0	0	0	0	0	0	0	0	0	0	0	0	0
4/23/2024	10:30 AM	0	0	0	0	0	0	0	0	0	0	0	0	0
4/23/2024	10:45 AM	0	0	0	0	0	0	0	0	0	0	0	0	0
4/23/2024	11:00 AM	0	0	0	0	0	0	0	0	0	0	0	0	0
4/23/2024	11:15 AM	0	0	0	0	0	0	0	0	0	0	0	0	0
4/23/2024	11:30 AM	0	0	0	0	0	0	0	0	0	0	0	0	0
4/23/2024	11:45 AM	0	0	0	0	0	0	0	0	0	0	0	0	0
4/23/2024	12:00 PM	0	0	0	0	0	0	0	0	0	0	0	0	0
4/23/2024	12:15 PM	0	0	0	0	0	0	0	0	0	0	0	0	0
4/23/2024	12:30 PM	0	0	0	0	0	0	0	0	0	0	0	0	0
4/23/2024	12:45 PM	0	0	0	0	0	0	0	0	0	0	0	0	0
4/23/2024	1:00 PM	0	0	0	0	0	0	0	0	0	0	0	0	0
4/23/2024	1:15 PM	0	0	0	0	0	0	0	0	0	0	0	0	0
4/23/2024	1:30 PM	0	0	0	0	0	0	0	0	0	0	0	0	0
4/23/2024	1:45 PM	0	0	0	0	0	0	0	0	0	0	0	0	0
4/23/2024	2:00 PM	0	0	0	0	0	0	0	0	0	0	0	0	0
4/23/2024	2:15 PM	0	0	0	0	0	0	0	0	0	0	0	0	0
4/23/2024	2:30 PM	0	0	0	0	0	0	0	0	0	0	0	0	0
4/23/2024	2:45 PM	0	0	0	0	0	0	0	0	0	0	0	0	0
4/23/2024	3:00 PM	0	0	0	0	0	0	0	0	0	0	0	0	0
4/23/2024	3:15 PM	0	0	0	0	0	0	0	0	0	0	0	0	0
4/23/2024	3:30 PM	0	0	0	0	0	0	0	0	0	0	0	0	0
4/23/2024	3:45 PM	0	0	0	0	0	0	0	0	0	0	0	0	0
4/23/2024	4:00 PM	0	0	0	0	0	0	0	0	0	0	0	0	0
4/23/2024	4:15 PM	0	0	0	0	0	0	0	0	0	0	0	0	0
4/23/2024	4:30 PM	0	0	0	0	0	0	0	0	0	0	0	0	0
4/23/2024	4:45 PM	0	0	0	0	0	0	0	0	0	0	0	0	0
4/23/2024	5:00 PM	0	0	0	0	0	0	0	0	0	0	0	0	0
4/23/2024	5:15 PM	0	0	0	0	0	0	0	0	0	0	0	0	0
4/23/2024	5:30 PM	0	0	0	0	0	0	0	0	0	0	0	0	0
4/23/2024	5:45 PM	0	0	0	0	0	0	0	0	0	0	0	0	0
4/23/2024	6:00 PM	0	0	0	0	0	0	0	0	0	0	0	0	0
4/23/2024	6:15 PM	0	0	0	0	0	0	0	0	0	0	0	0	0
4/23/2024	6:30 PM	0	0	0	0	0	0	0	0	0	0	0	0	0
4/23/2024	6:45 PM	0	0	0	0	0	0	0	0	0	0	0	0	0
4/23/2024	7:00 PM	0	0	0	0	0	0	0	0	0	0	0	0	0
4/23/2024	7:15 PM	0	0	0	0	0	0	0	0	0	0	0	0	0
4/23/2024	7:30 PM	0	0	0	0	0	0	0	0	0	0	0	0	0
4/23/2024	7:45 PM	0	0	0	0	0	0	0	0	0	0	0	0	0
4/23/2024	8:00 PM	0	0	0	0	0	0	0	0	0	0	0	0	0
4/23/2024	8:15 PM	0	0	0	0	0	0	0	0	0	0	0	0	0
4/23/2024	8:30 PM	0	0	0	0	0	0	0	0	0	0	0	0	0
4/23/2024	8:45 PM	0	0	0	0	0	0	0	0	0	0	0	0	0
4/23/2024	9:00 PM	0	0	0	0	0	0	0	0	0	0	0	0	0
4/23/2024	9:15 PM	0	0	0	0	0	0	0	0	0	0	0	0	0
4/23/2024	9:30 PM	0	0	0	0	0	0	0	0	0	0	0	0	0
4/23/2024	9:45 PM	0	0	0	0	0	0	0	0	0	0	0	0	0
4/23/2024	10:00 PM	0	0	0	0	0	0	0	0	0	0	0	0	0
4/23/2024	10:15 PM	0	0	0	0	0	0	0	0	0	0	0	0	0
4/23/2024	10:30 PM	0	0	0	0	0	0	0	0	0	0	0	0	0
4/23/2024	10:45 PM	0	0	0	0	0	0	0	0	0	0	0	0	0
4/23/2024	11:00 PM	0	0	0	0	0	0	0	0	0	0	0	0	0
4/23/2024	11:15 PM	0	0	0	0	0	0	0	0	0	0	0	0	0
4/23/2024	11:30 PM	0	0	0	0	0	0	0	0	0	0	0	0	0
4/23/2024	11:45 PM	0	0	0	0	0	0	0	0	0	0	0	0	0

4/24/2024	12:00 AM	0	0	0	0	0	0	0	0	0	0	0	0	0
4/24/2024	12:15 AM	0	0	0	0	0	0	0	0	0	0	0	0	0
4/24/2024	12:30 AM	0	0	0	0	0	0	0	0	0	0	0	0	0
4/24/2024	12:45 AM	0	0	0	0	0	0	0	0	0	0	0	0	0
4/24/2024	1:00 AM	0	0	0	0	0	0	0	0	0	0	0	0	0
4/24/2024	1:15 AM	0	0	0	0	0	0	0	0	0	0	0	0	0
4/24/2024	1:30 AM	0	0	0	0	0	0	0	0	0	0	0	0	0
4/24/2024	1:45 AM	0	0	0	0	0	0	0	0	0	0	0	0	0
4/24/2024	2:00 AM	0	0	0	0	0	0	0	0	0	0	0	0	0
4/24/2024	2:15 AM	0	0	0	0	0	0	0	0	0	0	0	0	0
4/24/2024	2:30 AM	0	0	0	0	0	0	0	0	0	0	0	0	0
4/24/2024	2:45 AM	0	0	0	0	0	0	0	0	0	0	0	0	0
4/24/2024	3:00 AM	0	0	0	0	0	0	0	0	0	0	0	0	0
4/24/2024	3:15 AM	0	0	0	0	0	0	0	0	0	0	0	0	0
4/24/2024	3:30 AM	0	0	0	0	0	0	0	0	0	0	0	0	0
4/24/2024	3:45 AM	0	0	0	0	0	0	0	0	0	0	0	0	0
4/24/2024	4:00 AM	0	0	0	0	0	0	0	0	0	0	0	0	0
4/24/2024	4:15 AM	0	0	0	0	0	0	0	0	0	0	0	0	0
4/24/2024	4:30 AM	0	0	0	0	0	0	0	0	0	0	0	0	0
4/24/2024	4:45 AM	0	0	0	0	0	0	0	0	0	0	0	0	0
4/24/2024	5:00 AM	0	0	0	0	0	0	0	0	0	0	0	0	0
4/24/2024	5:15 AM	0	0	0	0	0	0	0	0	0	0	0	0	0
4/24/2024	5:30 AM	0	0	0	0	0	0	0	0	0	0	0	0	0
4/24/2024	5:45 AM	0	0	0	0	0	0	0	0	0	0	0	0	0
4/24/2024	6:00 AM	0	0	0	0	0	0	0	0	0	0	0	0	0
4/24/2024	6:15 AM	0	0	0	0	0	0	0	0	0	0	0	0	0
4/24/2024	6:30 AM	0	0	0	0	0	0	0	0	0	0	0	0	0
4/24/2024	6:45 AM	0	0	0	0	0	0	0	0	0	0	0	0	0
4/24/2024	7:00 AM	0	0	0	0	0	0	0	0	0	0	0	0	0
4/24/2024	7:15 AM	0	0	0	0	0	0	0	0	0	0	0	0	0
4/24/2024	7:30 AM	0	0	0	0	0	0	0	0	0	0	0	0	0
4/24/2024	7:45 AM	0	0	0	0	0	0	0	0	0	0	0	0	0
4/24/2024	8:00 AM	0	0	0	0	0	0	0	0	0	0	0	0	0
4/24/2024	8:15 AM	0	0	0	0	0	0	0	0	0	0	0	0	0
4/24/2024	8:30 AM	0	0	0	0	0	0	0	0	0	0	0	0	0
4/24/2024	8:45 AM	0	0	0	0	0	0	0	0	0	0	0	0	0
4/24/2024	9:00 AM	0	0	0	0	0	0	0	0	0	0	0	0	0
4/24/2024	9:15 AM	0	0	0	0	0	0	0	0	0	0	0	0	0
4/24/2024	9:30 AM	0	0	0	0	0	0	0	0	0	0	0	0	0
4/24/2024	9:45 AM	0	0	0	0	0	0	0	0	0	0	0	0	0
4/24/2024	10:00 AM	0	0	0	0	0	0	0	0	0	0	0	0	0
4/24/2024	10:15 AM	0	0	0	0	0	0	0	0	0	0	0	0	0
4/24/2024	10:30 AM	0	0	0	0	0	0	0	0	0	0	0	0	0
4/24/2024	10:45 AM	0	0	0	0	0	0	0	0	0	0	0	0	0
4/24/2024	11:00 AM	0	0	0	0	0	0	0	0	0	0	0	0	0
4/24/2024	11:15 AM	0	0	0	0	0	0	0	0	0	0	0	0	0
4/24/2024	11:30 AM	0	0	0	0	0	0	0	0	0	0	0	0	0
4/24/2024	11:45 AM	0	0	0	0	0	0	0	0	0	0	0	0	0
4/24/2024	12:00 PM	0	0	0	0	0	0	0	0	0	0	0	0	0
4/24/2024	12:15 PM	0	0	0	0	0	0	0	0	0	0	0	0	0
4/24/2024	12:30 PM	0	0	0	0	0	0	0	0	0	0	0	0	0
4/24/2024	12:45 PM	0	0	0	0	0	0	0	0	0	0	0	0	0
4/24/2024	1:00 PM	0	0	0	0	0	0	0	0	0	0	0	0	0
4/24/2024	1:15 PM	0	0	0	0	0	0	0	0	0	0	0	0	0
4/24/2024	1:30 PM	0	0	0	0	0	0	0	0	0	0	0	0	0
4/24/2024	1:45 PM	0	0	0	0	0	0	0	0	0	0	0	0	0
4/24/2024	2:00 PM	0	0	0	0	0	0	0	0	0	0	0	0	0
4/24/2024	2:15 PM	0	0	0	0	0	0	0	0	0	0	0	0	0
4/24/2024	2:30 PM	0	0	0	0	0	0	0	0	0	0	0	0	0
4/24/2024	2:45 PM	0	0	0	0	0	0	0	0	0	0	0	0	0
4/24/2024	3:00 PM	0	0	0	0	0	0	0	0	0	0	0	0	0
4/24/2024	3:15 PM	0	0	0	0	0	0	0	0	0	0	0	0	0
4/24/2024	3:30 PM	0	0	0	0	0	0	0	0	0	0	0	0	0
4/24/2024	3:45 PM	0	0	0	0	0	0	0	0	0	0	0	0	0
4/24/2024	4:00 PM	0	0	0	0	0	0	0	0	0	0	0	0	0
4/24/2024	4:15 PM	0	0	0	0	0	0	0	0	0	0	0	0	0
4/24/2024	4:30 PM	0	0	0	0	0	0	0	0	0	0	0	0	0
4/24/2024	4:45 PM	0	0	0	0	0	0	0	0	0	0	0	0	0
4/24/2024	5:00 PM	0	0	0	0	0	0	0	0	0	0	0	0	0
4/24/2024	5:15 PM	0	0	0	0	0	0	0	0	0	0	0	0	0
4/24/2024	5:30 PM	0	0	0	0	0	0	0	0	0	0	0	0	0
4/24/2024	5:45 PM	0	0	0	0	0	0	0	0	0	0	0	0	0
4/24/2024	6:00 PM	0	0	0	0	0	0	0	0	0	0	0	0	0
4/24/2024	6:15 PM	0	0	0	0	0	0	0	0	0	0	0	0	0
4/24/2024	6:30 PM	0	0	0	0	0	0	0	0	0	0	0	0	0
4/24/2024	6:45 PM	0	0	0	0	0	0	0	0	0	0	0	0	0
4/24/2024	7:00 PM	0	0	0	0	0	0	0	0	0	0	0	0	0
4/24/2024	7:15 PM	0	0	0	0	0	0	0	0	0	0	0	0	0
4/24/2024	7:30 PM	0	0	0	0	0	0	0	0	0	0	0	0	0
4/24/2024	7:45 PM	0	0	0	0	0	0	0	0	0	0	0	0	0
4/24/2024	8:00 PM	0	0	0	0	0	0	0	0	0	0	0	0	0
4/24/2024	8:15 PM	0	0	0	0	0	0	0	0	0	0	0	0	0
4/24/2024	8:30 PM	0	0	0	0	0	0	0	0	0	0	0	0	0
4/24/2024	8:45 PM	0	0	0	0	0	0	0	0	0	0	0	0	0
4/24/2024	9:00 PM	0	0	0	0	0	0	0	0	0	0	0	0	0
4/24/2024	9:15 PM	0	0	0	0	0	0	0	0	0	0	0	0	0
4/24/2024	9:30 PM	0	0	0	0	0	0	0	0	0	0	0	0	0
4/24/2024	9:45 PM	0	0	0	0	0	0	0	0	0	0	0	0	0
4/24/2024	10:00 PM	0	0	0	0	0	0	0	0	0	0	0	0	0
4/24/2024	10:15 PM	0	0	0	0	0	0	0	0	0	0	0	0	0
4/24/2024	10:30 PM	0	0	0	0	0	0	0	0	0	0	0	0	0
4/24/2024	10:45 PM	0	0	0	0	0	0	0	0	0	0	0	0	0
4/24/2024	11:00 PM	0	0	0	0	0	0	0	0	0	0	0	0	0
4/24/2024	11:15 PM	0	0	0	0	0	0	0	0	0	0	0	0	0
4/24/2024	11:30 PM	0	0	0	0	0	0	0	0	0	0	0	0	0
4/24/2024	11:45 PM	0	0	0	0	0	0	0	0	0	0	0	0	0

4/25/2024	12:00 AM	0	0	0	0	0	0	0	0	0	0	0	0	0
4/25/2024	12:15 AM	0	0	0	0	0	0	0	0	0	0	0	0	0
4/25/2024	12:30 AM	0	0	0	0	0	0	0	0	0	0	0	0	0
4/25/2024	12:45 AM	0	0	0	0	0	0	0	0	0	0	0	0	0
4/25/2024	1:00 AM	0	0	0	0	0	0	0	0	0	0	0	0	0
4/25/2024	1:15 AM	0	0	0	0	0	0	0	0	0	0	0	0	0
4/25/2024	1:30 AM	0	0	0	0	0	0	0	0	0	0	0	0	0
4/25/2024	1:45 AM	0	0	0	0	0	0	0	0	0	0	0	0	0
4/25/2024	2:00 AM	0	0	0	0	0	0	0	0	0	0	0	0	0
4/25/2024	2:15 AM	0	0	0	0	0	0	0	0	0	0	0	0	0
4/25/2024	2:30 AM	0	0	0	0	0	0	0	0	0	0	0	0	0
4/25/2024	2:45 AM	0	0	0	0	0	0	0	0	0	0	0	0	0
4/25/2024	3:00 AM	0	0	0	0	0	0	0	0	0	0	0	0	0
4/25/2024	3:15 AM	0	0	0	0	0	0	0	0	0	0	0	0	0
4/25/2024	3:30 AM	0	0	0	0	0	0	0	0	0	0	0	0	0
4/25/2024	3:45 AM	0	0	0	0	0	0	0	0	0	0	0	0	0
4/25/2024	4:00 AM	0	0	0	0	0	0	0	0	0	0	0	0	0
4/25/2024	4:15 AM	0	0	0	0	0	0	0	0	0	0	0	0	0
4/25/2024	4:30 AM	0	0	0	0	0	0	0	0	0	0	0	0	0
4/25/2024	4:45 AM	0	0	0	0	0	0	0	0	0	0	0	0	0
4/25/2024	5:00 AM	0	0	0	0	0	0	0	0	0	0	0	0	0
4/25/2024	5:15 AM	0	0	0	0	0	0	0	0	0	0	0	0	0
4/25/2024	5:30 AM	0	0	0	0	0	0	0	0	0	0	0	0	0
4/25/2024	5:45 AM	0	0	0	0	0	0	0	0	0	0	0	0	0
4/25/2024	6:00 AM	0	0	0	0	0	0	0	0	0	0	0	0	0
4/25/2024	6:15 AM	0	0	0	0	0	0	0	0	0	0	0	0	0
4/25/2024	6:30 AM	0	0	0	0	0	0	0	0	0	0	0	0	0
4/25/2024	6:45 AM	0	0	0	0	0	0	0	0	0	0	0	0	0
4/25/2024	7:00 AM	0	0	0	0	0	0	0	0	0	0	0	0	0
4/25/2024	7:15 AM	0	0	0	0	0	0	0	0	0	0	0	0	0
4/25/2024	7:30 AM	0	0	0	0	0	0	0	0	0	0	0	0	0
4/25/2024	7:45 AM	0	0	0	0	0	0	0	0	0	0	0	0	0
4/25/2024	8:00 AM	0	0	0	0	0	0	0	0	0	0	0	0	0
4/25/2024	8:15 AM	0	0	0	0	0	0	0	0	0	0	0	0	0
4/25/2024	8:30 AM	0	0	0	0	0	0	0	0	0	0	0	0	0
4/25/2024	8:45 AM	0	0	0	0	0	0	0	0	0	0	0	0	0
4/25/2024	9:00 AM	0	0	0	0	0	0	0	0	0	0	0	0	0
4/25/2024	9:15 AM	0	0	0	0	0	0	0	0	0	0	0	0	0
4/25/2024	9:30 AM	0	0	0	0	0	0	0	0	0	0	0	0	0
4/25/2024	9:45 AM	0	0	0	0	0	0	0	0	0	0	0	0	0
4/25/2024	10:00 AM	0	0	0	0	0	0	0	0	0	0	0	0	0
4/25/2024	10:15 AM	0	0	0	0	0	0	0	0	0	0	0	0	0
4/25/2024	10:30 AM	0	0	0	0	0	0	0	0	0	0	0	0	0
4/25/2024	10:45 AM	0	0	0	0	0	0	0	0	0	0	0	0	0
4/25/2024	11:00 AM	0	0	0	0	0	0	0	0	0	0	0	0	0
4/25/2024	11:15 AM	0	0	0	0	0	0	0	0	0	0	0	0	0
4/25/2024	11:30 AM	0	0	0	0	0	0	0	0	0	0	0	0	0
4/25/2024	11:45 AM	0	0	0	0	0	0	0	0	0	0	0	0	0
4/25/2024	12:00 PM	0	0	0	0	0	0	0	0	0	0	0	0	0
4/25/2024	12:15 PM	0	0	0	0	0	0	0	0	0	0	0	0	0
4/25/2024	12:30 PM	0	0	0	0	0	0	0	0	0	0	0	0	0
4/25/2024	12:45 PM	0	0	0	0	0	0	0	0	0	0	0	0	0
4/25/2024	1:00 PM	0	0	0	0	0	0	0	0	0	0	0	0	0
4/25/2024	1:15 PM	0	0	0	0	0	0	0	0	0	0	0	0	0
4/25/2024	1:30 PM	0	0	0	0	0	0	0	0	0	0	0	0	0
4/25/2024	1:45 PM	0	0	0	0	0	0	0	0	0	0	0	0	0
4/25/2024	2:00 PM	0	0	0	0	0	0	0	0	0	0	0	0	0
4/25/2024	2:15 PM	0	0	0	0	0	0	0	0	0	0	0	0	0
4/25/2024	2:30 PM	0	0	0	0	0	0	0	0	0	0	0	0	0
4/25/2024	2:45 PM	0	0	0	0	0	0	0	0	0	0	0	0	0
4/25/2024	3:00 PM	0	0	0	0	0	0	0	0	0	0	0	0	0
4/25/2024	3:15 PM	0	0	0	0	0	0	0	0	0	0	0	0	0
4/25/2024	3:30 PM	0	0	0	0	0	0	0	0	0	0	0	0	0
4/25/2024	3:45 PM	0	0	0	0	0	0	0	0	0	0	0	0	0
4/25/2024	4:00 PM	0	0	0	0	0	0	0	0	0	0	0	0	0
4/25/2024	4:15 PM	0	0	0	0	0	0	0	0	0	0	0	0	0
4/25/2024	4:30 PM	0	0	0	0	0	0	0	0	0	0	0	0	0
4/25/2024	4:45 PM	0	0	0	0	0	0	0	0	0	0	0	0	0
4/25/2024	5:00 PM	0	0	0	0	0	0	0	0	0	0	0	0	0
4/25/2024	5:15 PM	0	0	0	0	0	0	0	0	0	0	0	0	0
4/25/2024	5:30 PM	0	0	0	0	0	0	0	0	0	0	0	0	0
4/25/2024	5:45 PM	0	0	0	0	0	0	0	0	0	0	0	0	0
4/25/2024	6:00 PM	0	0	0	0	0	0	0	0	0	0	0	0	0
4/25/2024	6:15 PM	0	0	0	0	0	0	0	0	0	0	0	0	0
4/25/2024	6:30 PM	0	0	0	0	0	0	0	0	0	0	0	0	0
4/25/2024	6:45 PM	0	0	0	0	0	0	0	0	0	0	0	0	0
4/25/2024	7:00 PM	0	0	0	0	0	0	0	0	0	0	0	0	0
4/25/2024	7:15 PM	0	0	0	0	0	0	0	0	0	0	0	0	0
4/25/2024	7:30 PM	0	0	0	0	0	0	0	0	0	0	0	0	0
4/25/2024	7:45 PM	0	0	0	0	0	0	0	0	0	0	0	0	0
4/25/2024	8:00 PM	0	0	0	0	0	0	0	0	0	0	0	0	0
4/25/2024	8:15 PM	0	0	0	0	0	0	0	0	0	0	0	0	0
4/25/2024	8:30 PM	0	0	0	0	0	0	0	0	0	0	0	0	0
4/25/2024	8:45 PM	0	0	0	0	0	0	0	0	0	0	0	0	0
4/25/2024	9:00 PM	0	0	0	0	0	0	0	0	0	0	0	0	0
4/25/2024	9:15 PM	0	0	0	0	0	0	0	0	0	0	0	0	0
4/25/2024	9:30 PM	0	0	0	0	0	0	0	0	0	0	0	0	0
4/25/2024	9:45 PM	0	0	0	0	0	0	0	0	0	0	0	0	0
4/25/2024	10:00 PM	0	0	0	0	0	0	0	0	0	0	0	0	0
4/25/2024	10:15 PM	0	0	0	0	0	0	0	0	0	0	0	0	0
4/25/2024	10:30 PM	0	0	0	0	0	0	0	0	0	0	0	0	0
4/25/2024	10:45 PM	0	0	0	0	0	0	0	0	0	0	0	0	0
4/25/2024	11:00 PM	0	0	0	0	0	0	0	0	0	0	0	0	0
4/25/2024	11:15 PM	0	0	0	0	0	0	0	0	0	0	0	0	0
4/25/2024	11:30 PM	0	0	0	0	0	0	0	0	0	0	0	0	0
4/25/2024	11:45 PM	0	0	0	0	0	0	0	0	0	0	0	0	0

NB
File Name:
Start Date: 4/23/2024
Start Time: 0
Site Code: 52
Station ID: 1
Location 1: I-26 N/Bound Off-Ramp, south of US-378 Sunset Blvd
Location 2:

Date	Time	1	2	3	4	5	6	7	8	9	10	11	12	13
4/23/2024	12:00 AM	0	0	0	0	0	0	0	0	0	0	0	0	0
4/23/2024	12:15 AM	0	0	0	0	0	0	0	0	0	0	0	0	0
4/23/2024	12:30 AM	0	0	0	0	0	0	0	0	0	0	0	0	0
4/23/2024	12:45 AM	0	0	0	0	0	0	0	0	0	0	0	0	0
4/23/2024	1:00 AM	0	0	0	0	0	0	0	0	0	0	0	0	0
4/23/2024	1:15 AM	0	0	0	0	0	0	0	0	0	0	0	0	0
4/23/2024	1:30 AM	0	0	0	0	0	0	0	0	0	0	0	0	0
4/23/2024	1:45 AM	0	0	0	0	0	0	0	0	0	0	0	0	0
4/23/2024	2:00 AM	0	0	0	0	0	0	0	0	0	0	0	0	0
4/23/2024	2:15 AM	0	0	0	0	0	0	0	0	0	0	0	0	0
4/23/2024	2:30 AM	0	0	0	0	0	0	0	0	0	0	0	0	0
4/23/2024	2:45 AM	0	0	0	0	0	0	0	0	0	0	0	0	0
4/23/2024	3:00 AM	0	0	0	0	0	0	0	0	0	0	0	0	0
4/23/2024	3:15 AM	0	0	0	0	0	0	0	0	0	0	0	0	0
4/23/2024	3:30 AM	0	0	0	0	0	0	0	0	0	0	0	0	0
4/23/2024	3:45 AM	0	0	0	0	0	0	0	0	0	0	0	0	0
4/23/2024	4:00 AM	0	0	0	0	0	0	0	0	0	0	0	0	0
4/23/2024	4:15 AM	0	0	0	0	0	0	0	0	0	0	0	0	0
4/23/2024	4:30 AM	0	0	0	0	0	0	0	0	0	0	0	0	0
4/23/2024	4:45 AM	0	0	0	0	0	0	0	0	0	0	0	0	0
4/23/2024	5:00 AM	0	0	0	0	0	0	0	0	0	0	0	0	0
4/23/2024	5:15 AM	0	0	0	0	0	0	0	0	0	0	0	0	0
4/23/2024	5:30 AM	0	0	0	0	0	0	0	0	0	0	0	0	0
4/23/2024	5:45 AM	0	0	0	0	0	0	0	0	0	0	0	0	0
4/23/2024	6:00 AM	0	0	0	0	0	0	0	0	0	0	0	0	0
4/23/2024	6:15 AM	0	0	0	0	0	0	0	0	0	0	0	0	0
4/23/2024	6:30 AM	0	0	0	0	0	0	0	0	0	0	0	0	0
4/23/2024	6:45 AM	0	0	0	0	0	0	0	0	0	0	0	0	0
4/23/2024	7:00 AM	0	0	0	0	0	0	0	0	0	0	0	0	0
4/23/2024	7:15 AM	0	0	0	0	0	0	0	0	0	0	0	0	0
4/23/2024	7:30 AM	0	0	0	0	0	0	0	0	0	0	0	0	0
4/23/2024	7:45 AM	0	0	0	0	0	0	0	0	0	0	0	0	0
4/23/2024	8:00 AM	0	0	0	0	0	0	0	0	0	0	0	0	0
4/23/2024	8:15 AM	0	0	0	0	0	0	0	0	0	0	0	0	0
4/23/2024	8:30 AM	0	0	0	0	0	0	0	0	0	0	0	0	0
4/23/2024	8:45 AM	0	0	0	0	0	0	0	0	0	0	0	0	0
4/23/2024	9:00 AM	0	0	0	0	0	0	0	0	0	0	0	0	0
4/23/2024	9:15 AM	0	0	0	0	0	0	0	0	0	0	0	0	0
4/23/2024	9:30 AM	0	0	0	0	0	0	0	0	0	0	0	0	0
4/23/2024	9:45 AM	0	0	0	0	0	0	0	0	0	0	0	0	0
4/23/2024	10:00 AM	0	0	0	0	0	0	0	0	0	0	0	0	0
4/23/2024	10:15 AM	0	0	0	0	0	0	0	0	0	0	0	0	0
4/23/2024	10:30 AM	0	0	0	0	0	0	0	0	0	0	0	0	0
4/23/2024	10:45 AM	0	0	0	0	0	0	0	0	0	0	0	0	0
4/23/2024	11:00 AM	0	0	0	0	0	0	0	0	0	0	0	0	0
4/23/2024	11:15 AM	0	0	0	0	0	0	0	0	0	0	0	0	0
4/23/2024	11:30 AM	0	0	0	0	0	0	0	0	0	0	0	0	0
4/23/2024	11:45 AM	0	0	0	0	0	0	0	0	0	0	0	0	0
4/23/2024	12:00 PM	0	0	0	0	0	0	0	0	0	0	0	0	0
4/23/2024	12:15 PM	0	0	0	0	0	0	0	0	0	0	0	0	0
4/23/2024	12:30 PM	0	0	0	0	0	0	0	0	0	0	0	0	0
4/23/2024	12:45 PM	0	0	0	0	0	0	0	0	0	0	0	0	0
4/23/2024	1:00 PM	0	0	0	0	0	0	0	0	0	0	0	0	0
4/23/2024	1:15 PM	0	0	0	0	0	0	0	0	0	0	0	0	0
4/23/2024	1:30 PM	0	0	0	0	0	0	0	0	0	0	0	0	0
4/23/2024	1:45 PM	0	0	0	0	0	0	0	0	0	0	0	0	0
4/23/2024	2:00 PM	0	0	0	0	0	0	0	0	0	0	0	0	0
4/23/2024	2:15 PM	0	0	0	0	0	0	0	0	0	0	0	0	0
4/23/2024	2:30 PM	0	0	0	0	0	0	0	0	0	0	0	0	0
4/23/2024	2:45 PM	0	0	0	0	0	0	0	0	0	0	0	0	0
4/23/2024	3:00 PM	0	0	0	0	0	0	0	0	0	0	0	0	0
4/23/2024	3:15 PM	0	0	0	0	0	0	0	0	0	0	0	0	0
4/23/2024	3:30 PM	0	0	0	0	0	0	0	0	0	0	0	0	0
4/23/2024	3:45 PM	0	0	0	0	0	0	0	0	0	0	0	0	0
4/23/2024	4:00 PM	0	0	0	0	0	0	0	0	0	0	0	0	0
4/23/2024	4:15 PM	0	0	0	0	0	0	0	0	0	0	0	0	0
4/23/2024	4:30 PM	0	0	0	0	0	0	0	0	0	0	0	0	0
4/23/2024	4:45 PM	0	0	0	0	0	0	0	0	0	0	0	0	0
4/23/2024	5:00 PM	0	0	0	0	0	0	0	0	0	0	0	0	0
4/23/2024	5:15 PM	0	0	0	0	0	0	0	0	0	0	0	0	0
4/23/2024	5:30 PM	0	0	0	0	0	0	0	0	0	0	0	0	0
4/23/2024	5:45 PM	0	0	0	0	0	0	0	0	0	0	0	0	0
4/23/2024	6:00 PM	0	0	0	0	0	0	0	0	0	0	0	0	0
4/23/2024	6:15 PM	0	79	9	0	0	0	0	0	2	0	0	0	0
4/23/2024	6:30 PM	0	136	19	0	0	0	0	0	3	0	0	0	0
4/23/2024	6:45 PM	0	206	27	0	1	0	0	0	4	0	0	0	0
4/23/2024	7:00 PM	0	259	41	0	2	0	0	0	5	0	0	0	0
4/23/2024	7:15 PM	0	231	42	0	3	0	0	0	5	0	1	0	0
4/23/2024	7:30 PM	0	222	37	0	3	0	0	0	5	0	1	0	0
4/23/2024	7:45 PM	0	199	33	0	2	0	0	1	6	0	1	0	0
4/23/2024	8:00 PM	0	196	22	0	2	0	0	1	7	0	1	0	0
4/23/2024	8:15 PM	0	180	14	0	3	0	0	1	6	0	0	0	0
4/23/2024	8:30 PM	0	167	15	0	4	0	0	1	7	0	0	0	0
4/23/2024	8:45 PM	0	158	14	0	5	0	0	0	9	0	0	0	0
4/23/2024	9:00 PM	0	139	13	0	5	0	0	0	9	0	0	0	0
4/23/2024	9:15 PM	0	133	13	0	4	0	0	0	9	0	4	0	0
4/23/2024	9:30 PM	0	127	10	0	3	0	0	1	9	0	5	0	0
4/23/2024	9:45 PM	0	116	10	0	3	0	0	1	7	0	10	0	0
4/23/2024	10:00 PM	0	109	10	0	3	0	0	1	6	0	10	0	0
4/23/2024	10:15 PM	0	105	11	0	3	0	0	1	8	0	7	0	0
4/23/2024	10:30 PM	0	91	8	0	3	0	0	0	6	0	7	0	0
4/23/2024	10:45 PM	0	74	5	0	3	0	0	0	4	0	4	0	0
4/23/2024	11:00 PM	0	62	3	0	2	0	0	0	6	0	6	0	0
4/23/2024	11:15 PM	0	49	0	0	2	0	0	0	3	0	5	0	0
4/23/2024	11:30 PM	0	47	1	0	2	0	0	0	3	0	4	0	0
4/23/2024	11:45 PM	0	47	2	0	1	0	0	0	3	0	2	0	0

4/24/2024	12:00 AM	0	42	2	0	3	0	0	0	0	0	0	0
4/24/2024	12:15 AM	0	33	2	0	3	0	0	0	0	0	0	0
4/24/2024	12:30 AM	0	28	1	0	4	0	0	0	1	0	0	0
4/24/2024	12:45 AM	0	29	0	0	4	0	0	0	1	0	2	0
4/24/2024	1:00 AM	0	30	0	0	5	0	0	0	2	0	2	0
4/24/2024	1:15 AM	0	34	0	0	5	0	0	0	5	0	2	0
4/24/2024	1:30 AM	0	32	0	0	7	0	0	0	5	0	2	0
4/24/2024	1:45 AM	0	25	0	0	7	0	0	0	5	0	0	0
4/24/2024	2:00 AM	0	22	0	0	4	0	0	0	7	0	0	0
4/24/2024	2:15 AM	0	21	1	0	3	1	0	0	6	0	0	0
4/24/2024	2:30 AM	0	20	1	0	0	1	0	0	6	0	0	0
4/24/2024	2:45 AM	0	20	1	0	1	1	0	0	6	0	1	0
4/24/2024	3:00 AM	0	21	1	0	1	1	0	0	3	0	1	0
4/24/2024	3:15 AM	0	21	0	0	1	0	0	0	1	0	1	0
4/24/2024	3:30 AM	0	23	0	0	4	0	0	0	1	0	1	0
4/24/2024	3:45 AM	0	37	1	0	5	0	0	0	2	0	0	0
4/24/2024	4:00 AM	0	51	2	0	7	1	0	0	3	0	0	0
4/24/2024	4:15 AM	0	61	4	0	7	1	0	0	5	0	2	0
4/24/2024	4:30 AM	0	76	7	0	5	1	0	0	6	0	2	0
4/24/2024	4:45 AM	0	84	8	0	3	1	0	0	6	0	2	0
4/24/2024	5:00 AM	0	102	16	0	2	0	0	0	5	0	3	0
4/24/2024	5:15 AM	0	142	25	0	3	0	0	0	5	0	2	0
4/24/2024	5:30 AM	0	214	39	2	2	0	0	0	3	0	3	0
4/24/2024	5:45 AM	0	318	49	6	3	0	0	0	3	0	3	0
4/24/2024	6:00 AM	0	464	69	6	2	0	0	0	4	0	2	0
4/24/2024	6:15 AM	0	583	86	6	4	1	0	1	5	0	1	0
4/24/2024	6:30 AM	0	676	94	4	6	2	0	2	5	0	0	0
4/24/2024	6:45 AM	0	753	110	1	11	2	0	2	4	0	0	0
4/24/2024	7:00 AM	0	764	102	1	16	3	0	2	5	0	0	0
4/24/2024	7:15 AM	0	772	100	1	18	5	0	1	7	0	0	0
4/24/2024	7:30 AM	0	780	111	1	18	4	0	1	11	1	0	0
4/24/2024	7:45 AM	0	760	117	0	14	5	0	5	11	1	1	0
4/24/2024	8:00 AM	0	750	128	1	16	5	0	5	11	1	1	0
4/24/2024	8:15 AM	0	702	131	1	18	2	0	7	7	1	1	0
4/24/2024	8:30 AM	0	710	125	1	22	2	0	8	5	0	1	0
4/24/2024	8:45 AM	0	660	130	1	23	2	0	4	7	0	0	0
4/24/2024	9:00 AM	0	630	136	2	18	1	0	5	7	0	0	0
4/24/2024	9:15 AM	0	606	141	2	16	1	0	4	11	0	0	0
4/24/2024	9:30 AM	0	518	139	2	11	4	0	2	12	0	0	0
4/24/2024	9:45 AM	0	490	128	4	11	4	0	2	15	0	0	0
4/24/2024	10:00 AM	0	435	122	2	13	5	0	2	18	0	0	0
4/24/2024	10:15 AM	0	417	122	2	13	7	0	2	18	0	0	0
4/24/2024	10:30 AM	0	392	124	3	13	4	0	2	19	0	0	0
4/24/2024	10:45 AM	0	392	138	2	15	4	0	2	15	0	0	0
4/24/2024	11:00 AM	0	376	138	2	15	5	0	1	12	0	0	0
4/24/2024	11:15 AM	0	362	126	2	13	3	0	0	10	0	0	0
4/24/2024	11:30 AM	0	361	134	3	14	3	0	0	7	0	0	0
4/24/2024	11:45 AM	0	364	124	2	13	3	0	0	11	0	0	0
4/24/2024	12:00 PM	0	416	125	2	12	1	0	0	12	0	0	0
4/24/2024	12:15 PM	0	448	141	3	10	2	0	1	11	0	0	0
4/24/2024	12:30 PM	0	488	151	1	12	4	0	1	15	0	0	0
4/24/2024	12:45 PM	0	490	152	3	13	4	0	1	15	0	0	0
4/24/2024	1:00 PM	0	488	153	9	14	5	0	1	16	0	0	0
4/24/2024	1:15 PM	0	483	147	10	16	4	0	0	19	1	0	0
4/24/2024	1:30 PM	0	468	127	15	12	3	0	1	20	1	0	0
4/24/2024	1:45 PM	0	481	124	15	10	2	0	1	24	1	0	0
4/24/2024	2:00 PM	0	476	128	9	15	1	0	1	24	1	0	0
4/24/2024	2:15 PM	0	491	130	8	12	2	0	1	20	0	0	0
4/24/2024	2:30 PM	0	489	130	3	16	1	0	0	16	0	0	0
4/24/2024	2:45 PM	0	472	133	2	14	2	0	1	10	0	0	0
4/24/2024	3:00 PM	0	443	119	3	6	3	0	1	9	0	0	0
4/24/2024	3:15 PM	0	425	124	3	9	2	0	1	10	0	0	0
4/24/2024	3:30 PM	0	424	137	5	10	2	0	1	13	0	0	0
4/24/2024	3:45 PM	0	433	144	5	10	1	0	1	14	0	0	0
4/24/2024	4:00 PM	0	451	153	4	14	0	0	2	17	0	0	0
4/24/2024	4:15 PM	0	426	138	3	12	0	0	2	18	0	0	0
4/24/2024	4:30 PM	0	422	141	1	8	0	0	2	16	0	0	0
4/24/2024	4:45 PM	0	429	137	1	8	0	0	1	15	0	0	0
4/24/2024	5:00 PM	0	438	136	1	4	2	0	0	14	0	0	0
4/24/2024	5:15 PM	0	461	133	1	6	2	1	0	17	0	0	0
4/24/2024	5:30 PM	1	451	111	2	5	2	1	1	18	0	3	0
4/24/2024	5:45 PM	1	438	105	1	6	2	1	1	22	0	5	0
4/24/2024	6:00 PM	1	404	87	1	6	0	1	1	19	0	5	0
4/24/2024	6:15 PM	1	367	86	1	3	0	0	1	18	0	6	0
4/24/2024	6:30 PM	0	331	79	0	5	0	0	0	15	1	3	0
4/24/2024	6:45 PM	0	273	63	0	3	0	0	0	13	1	1	0
4/24/2024	7:00 PM	0	239	59	0	4	0	0	0	12	1	1	0
4/24/2024	7:15 PM	1	228	48	1	4	0	0	0	10	1	2	0
4/24/2024	7:30 PM	1	205	40	1	2	0	0	0	13	0	4	0
4/24/2024	7:45 PM	1	204	33	1	4	0	0	0	11	0	4	0
4/24/2024	8:00 PM	1	184	29	1	4	0	0	0	11	0	4	0
4/24/2024	8:15 PM	0	172	25	0	4	0	0	0	9	0	2	0
4/24/2024	8:30 PM	0	163	21	0	7	0	0	0	8	0	0	0
4/24/2024	8:45 PM	0	146	18	0	6	0	0	0	6	0	0	0
4/24/2024	9:00 PM	0	129	17	0	4	0	0	0	9	0	0	0
4/24/2024	9:15 PM	0	106	18	0	4	0	0	0	9	0	0	0
4/24/2024	9:30 PM	0	108	20	0	1	0	0	0	9	0	0	2
4/24/2024	9:45 PM	0	99	21	0	0	0	0	0	9	0	1	5
4/24/2024	10:00 PM	0	107	20	0	0	1	0	0	5	0	1	5
4/24/2024	10:15 PM	0	113	19	0	1	1	0	0	8	0	1	5
4/24/2024	10:30 PM	0	94	16	0	2	1	0	0	6	0	1	6
4/24/2024	10:45 PM	0	80	13	0	3	1	0	0	5	0	0	6
4/24/2024	11:00 PM	0	61	10	0	5	0	0	0	6	0	0	6
4/24/2024	11:15 PM	0	50	12	0	4	0	0	0	2	0	0	6
4/24/2024	11:30 PM	0	51	15	0	4	0	0	0	1	0	1	3
4/24/2024	11:45 PM	0	44	16	0	3	0	0	0	2	0	1	0

4/25/2024	12:00 AM	0	40	15	1	1	0	0	0	1	0	1	0	0
4/25/2024	12:15 AM	0	31	8	1	1	0	0	0	2	0	1	0	0
4/25/2024	12:30 AM	0	25	3	1	0	0	0	0	2	0	0	0	0
4/25/2024	12:45 AM	0	24	2	1	0	0	0	0	2	0	0	0	0
4/25/2024	1:00 AM	0	23	3	0	0	0	0	0	2	0	3	0	0
4/25/2024	1:15 AM	0	24	6	0	2	0	0	0	2	0	3	0	0
4/25/2024	1:30 AM	0	22	6	0	3	0	0	0	3	0	5	0	0
4/25/2024	1:45 AM	0	20	5	0	3	1	0	1	2	0	5	0	0
4/25/2024	2:00 AM	0	17	4	0	4	1	0	1	2	0	2	0	0
4/25/2024	2:15 AM	0	14	1	0	2	1	0	1	1	0	3	0	0
4/25/2024	2:30 AM	0	21	5	0	1	1	0	1	1	0	1	0	0
4/25/2024	2:45 AM	0	25	5	0	2	0	0	0	2	0	1	0	0
4/25/2024	3:00 AM	0	32	8	0	1	0	0	0	2	0	1	0	0
4/25/2024	3:15 AM	0	36	8	0	3	0	0	0	3	0	0	0	0
4/25/2024	3:30 AM	0	33	4	0	6	0	0	0	3	0	1	0	0
4/25/2024	3:45 AM	0	37	7	0	6	1	0	0	4	0	1	0	0
4/25/2024	4:00 AM	0	41	11	0	11	1	0	0	6	0	1	0	0
4/25/2024	4:15 AM	0	44	13	0	10	1	0	0	7	0	2	0	0
4/25/2024	4:30 AM	0	53	19	0	8	1	0	0	6	0	2	0	0
4/25/2024	4:45 AM	0	62	20	0	9	0	0	0	7	0	2	0	0
4/25/2024	5:00 AM	0	85	23	0	5	0	0	0	9	0	3	0	0
4/25/2024	5:15 AM	0	129	38	0	5	0	0	0	8	0	4	0	0
4/25/2024	5:30 AM	0	189	61	1	4	0	0	1	10	0	3	0	0
4/25/2024	5:45 AM	0	257	96	5	5	0	0	1	11	0	3	0	0
4/25/2024	6:00 AM	0	367	139	5	6	0	0	1	13	0	2	0	0
4/25/2024	6:15 AM	0	482	148	5	7	2	0	2	14	0	0	0	0
4/25/2024	6:30 AM	0	597	143	5	10	2	0	1	12	1	1	0	0
4/25/2024	6:45 AM	0	705	123	1	13	2	0	1	11	1	2	0	0
4/25/2024	7:00 AM	0	776	128	1	17	3	0	1	5	1	2	0	0
4/25/2024	7:15 AM	0	776	133	1	23	2	0	2	5	1	2	0	0
4/25/2024	7:30 AM	0	733	139	2	21	2	0	2	8	0	1	0	0
4/25/2024	7:45 AM	0	678	153	3	21	2	0	2	6	0	0	0	0
4/25/2024	8:00 AM	0	597	134	3	22	2	0	3	7	0	0	0	0
4/25/2024	8:15 AM	0	533	141	3	26	2	0	1	8	0	0	0	0
4/25/2024	8:30 AM	0	528	150	4	28	2	0	3	8	0	0	0	0
4/25/2024	8:45 AM	0	499	151	6	27	2	0	3	10	0	0	0	0
4/25/2024	9:00 AM	0	491	154	7	27	1	0	3	12	0	0	0	0
4/25/2024	9:15 AM	0	500	154	8	18	2	0	5	13	0	0	0	0
4/25/2024	9:30 AM	0	456	153	6	20	2	0	3	12	0	0	0	0
4/25/2024	9:45 AM	0	437	151	5	18	2	0	4	13	0	0	0	0
4/25/2024	10:00 AM	0	431	138	4	12	3	0	3	10	0	0	0	0
4/25/2024	10:15 AM	0	407	129	3	17	1	0	1	10	0	0	0	0
4/25/2024	10:30 AM	0	400	134	3	16	2	0	2	10	0	0	0	0
4/25/2024	10:45 AM	0	393	129	1	14	3	0	3	7	0	0	0	0
4/25/2024	11:00 AM	0	381	132	1	17	2	0	3	10	0	0	0	0
4/25/2024	11:15 AM	1	383	139	2	12	2	0	3	7	0	0	0	0
4/25/2024	11:30 AM	1	389	130	2	13	2	0	2	5	1	0	0	0
4/25/2024	11:45 AM	1	429	151	2	15	1	0	1	6	1	0	0	0
4/25/2024	12:00 PM	1	431	149	2	14	1	0	1	4	1	0	0	0
4/25/2024	12:15 PM	0	463	150	1	15	1	0	1	4	1	0	0	0
4/25/2024	12:30 PM	0	481	146	1	12	0	0	1	5	0	0	0	0
4/25/2024	12:45 PM	0	448	134	4	12	0	0	1	3	0	0	0	0
4/25/2024	1:00 PM	0	453	133	10	18	0	0	1	2	0	0	0	0
4/25/2024	1:15 PM	0	447	136	13	18	0	0	1	2	0	0	0	0
4/25/2024	1:30 PM	0	446	136	15	18	1	0	1	1	0	0	0	0
4/25/2024	1:45 PM	0	464	139	13	16	4	0	0	2	0	0	0	0
4/25/2024	2:00 PM	0	470	147	7	8	4	0	0	4	0	0	0	0
4/25/2024	2:15 PM	1	466	133	5	7	4	0	0	4	0	0	0	0
4/25/2024	2:30 PM	1	472	134	2	7	3	0	0	6	0	0	0	0
4/25/2024	2:45 PM	1	500	124	1	8	0	0	0	5	0	0	0	0
4/25/2024	3:00 PM	2	471	104	1	8	0	0	1	4	0	0	0	0
4/25/2024	3:15 PM	1	475	96	1	6	0	0	1	4	0	0	0	0
4/25/2024	3:30 PM	1	511	100	2	5	0	0	1	3	0	0	0	0
4/25/2024	3:45 PM	1	489	103	2	4	0	0	1	6	0	0	0	0
4/25/2024	4:00 PM	0	503	113	3	4	0	0	0	6	0	0	0	0
4/25/2024	4:15 PM	0	523	128	2	4	0	0	2	6	0	0	0	0
4/25/2024	4:30 PM	0	519	131	1	5	0	0	2	8	0	0	0	0
4/25/2024	4:45 PM	0	549	147	1	4	0	0	2	8	0	0	0	0
4/25/2024	5:00 PM	0	605	156	0	3	0	0	3	9	0	0	0	0
4/25/2024	5:15 PM	0	575	156	0	4	0	0	1	8	0	0	0	0
4/25/2024	5:30 PM	0	539	146	0	2	0	0	1	6	0	0	0	0
4/25/2024	5:45 PM	0	503	123	1	4	1	0	1	4	0	1	0	0
4/25/2024	6:00 PM	0	424	98	1	4	1	0	0	6	0	1	0	0
4/25/2024	6:15 PM	0	317	65	1	2	1	0	0	6	0	1	0	0
4/25/2024	6:30 PM	0	198	37	1	2	1	0	0	5	0	1	0	0
4/25/2024	6:45 PM	0	86	11	0	0	0	0	0	4	0	0	0	0
4/25/2024	7:00 PM	0	0	0	0	0	0	0	0	0	0	0	0	0
4/25/2024	7:15 PM	0	0	0	0	0	0	0	0	0	0	0	0	0
4/25/2024	7:30 PM	0	0	0	0	0	0	0	0	0	0	0	0	0
4/25/2024	7:45 PM	0	0	0	0	0	0	0	0	0	0	0	0	0
4/25/2024	8:00 PM	0	0	0	0	0	0	0	0	0	0	0	0	0
4/25/2024	8:15 PM	0	0	0	0	0	0	0	0	0	0	0	0	0
4/25/2024	8:30 PM	0	0	0	0	0	0	0	0	0	0	0	0	0
4/25/2024	8:45 PM	0	0	0	0	0	0	0	0	0	0	0	0	0
4/25/2024	9:00 PM	0	0	0	0	0	0	0	0	0	0	0	0	0
4/25/2024	9:15 PM	0	0	0	0	0	0	0	0	0	0	0	0	0
4/25/2024	9:30 PM	0	0	0	0	0	0	0	0	0	0	0	0	0
4/25/2024	9:45 PM	0	0	0	0	0	0	0	0	0	0	0	0	0
4/25/2024	10:00 PM	0	0	0	0	0	0	0	0	0	0	0	0	0
4/25/2024	10:15 PM	0	0	0	0	0	0	0	0	0	0	0	0	0
4/25/2024	10:30 PM	0	0	0	0	0	0	0	0	0	0	0	0	0
4/25/2024	10:45 PM	0	0	0	0	0	0	0	0	0	0	0	0	0
4/25/2024	11:00 PM	0	0	0	0	0	0	0	0	0	0	0	0	0
4/25/2024	11:15 PM	0	0	0	0	0	0	0	0	0	0	0	0	0
4/25/2024	11:30 PM	0	0	0	0	0	0	0	0	0	0	0	0	0
4/25/2024	11:45 PM	0	0	0	0	0	0	0	0	0	0	0	0	0

SB
File Name:
Start Date: 4/23/2024
Start Time: 0
Site Code: 52
Station ID: 1
Location 1: I-26 N/Bound Off-Ramp, south of US-378 Sunset Blvd
Location 2:

Date	Time	1	2	3	4	5	6	7	8	9	10	11	12	13
4/23/2024	12:00 AM	0	0	0	0	0	0	0	0	0	0	0	0	0
4/23/2024	12:15 AM	0	0	0	0	0	0	0	0	0	0	0	0	0
4/23/2024	12:30 AM	0	0	0	0	0	0	0	0	0	0	0	0	0
4/23/2024	12:45 AM	0	0	0	0	0	0	0	0	0	0	0	0	0
4/23/2024	1:00 AM	0	0	0	0	0	0	0	0	0	0	0	0	0
4/23/2024	1:15 AM	0	0	0	0	0	0	0	0	0	0	0	0	0
4/23/2024	1:30 AM	0	0	0	0	0	0	0	0	0	0	0	0	0
4/23/2024	1:45 AM	0	0	0	0	0	0	0	0	0	0	0	0	0
4/23/2024	2:00 AM	0	0	0	0	0	0	0	0	0	0	0	0	0
4/23/2024	2:15 AM	0	0	0	0	0	0	0	0	0	0	0	0	0
4/23/2024	2:30 AM	0	0	0	0	0	0	0	0	0	0	0	0	0
4/23/2024	2:45 AM	0	0	0	0	0	0	0	0	0	0	0	0	0
4/23/2024	3:00 AM	0	0	0	0	0	0	0	0	0	0	0	0	0
4/23/2024	3:15 AM	0	0	0	0	0	0	0	0	0	0	0	0	0
4/23/2024	3:30 AM	0	0	0	0	0	0	0	0	0	0	0	0	0
4/23/2024	3:45 AM	0	0	0	0	0	0	0	0	0	0	0	0	0
4/23/2024	4:00 AM	0	0	0	0	0	0	0	0	0	0	0	0	0
4/23/2024	4:15 AM	0	0	0	0	0	0	0	0	0	0	0	0	0
4/23/2024	4:30 AM	0	0	0	0	0	0	0	0	0	0	0	0	0
4/23/2024	4:45 AM	0	0	0	0	0	0	0	0	0	0	0	0	0
4/23/2024	5:00 AM	0	0	0	0	0	0	0	0	0	0	0	0	0
4/23/2024	5:15 AM	0	0	0	0	0	0	0	0	0	0	0	0	0
4/23/2024	5:30 AM	0	0	0	0	0	0	0	0	0	0	0	0	0
4/23/2024	5:45 AM	0	0	0	0	0	0	0	0	0	0	0	0	0
4/23/2024	6:00 AM	0	0	0	0	0	0	0	0	0	0	0	0	0
4/23/2024	6:15 AM	0	0	0	0	0	0	0	0	0	0	0	0	0
4/23/2024	6:30 AM	0	0	0	0	0	0	0	0	0	0	0	0	0
4/23/2024	6:45 AM	0	0	0	0	0	0	0	0	0	0	0	0	0
4/23/2024	7:00 AM	0	0	0	0	0	0	0	0	0	0	0	0	0
4/23/2024	7:15 AM	0	0	0	0	0	0	0	0	0	0	0	0	0
4/23/2024	7:30 AM	0	0	0	0	0	0	0	0	0	0	0	0	0
4/23/2024	7:45 AM	0	0	0	0	0	0	0	0	0	0	0	0	0
4/23/2024	8:00 AM	0	0	0	0	0	0	0	0	0	0	0	0	0
4/23/2024	8:15 AM	0	0	0	0	0	0	0	0	0	0	0	0	0
4/23/2024	8:30 AM	0	0	0	0	0	0	0	0	0	0	0	0	0
4/23/2024	8:45 AM	0	0	0	0	0	0	0	0	0	0	0	0	0
4/23/2024	9:00 AM	0	0	0	0	0	0	0	0	0	0	0	0	0
4/23/2024	9:15 AM	0	0	0	0	0	0	0	0	0	0	0	0	0
4/23/2024	9:30 AM	0	0	0	0	0	0	0	0	0	0	0	0	0
4/23/2024	9:45 AM	0	0	0	0	0	0	0	0	0	0	0	0	0
4/23/2024	10:00 AM	0	0	0	0	0	0	0	0	0	0	0	0	0
4/23/2024	10:15 AM	0	0	0	0	0	0	0	0	0	0	0	0	0
4/23/2024	10:30 AM	0	0	0	0	0	0	0	0	0	0	0	0	0
4/23/2024	10:45 AM	0	0	0	0	0	0	0	0	0	0	0	0	0
4/23/2024	11:00 AM	0	0	0	0	0	0	0	0	0	0	0	0	0
4/23/2024	11:15 AM	0	0	0	0	0	0	0	0	0	0	0	0	0
4/23/2024	11:30 AM	0	0	0	0	0	0	0	0	0	0	0	0	0
4/23/2024	11:45 AM	0	0	0	0	0	0	0	0	0	0	0	0	0
4/23/2024	12:00 PM	0	0	0	0	0	0	0	0	0	0	0	0	0
4/23/2024	12:15 PM	0	0	0	0	0	0	0	0	0	0	0	0	0
4/23/2024	12:30 PM	0	0	0	0	0	0	0	0	0	0	0	0	0
4/23/2024	12:45 PM	0	0	0	0	0	0	0	0	0	0	0	0	0
4/23/2024	1:00 PM	0	0	0	0	0	0	0	0	0	0	0	0	0
4/23/2024	1:15 PM	0	0	0	0	0	0	0	0	0	0	0	0	0
4/23/2024	1:30 PM	0	0	0	0	0	0	0	0	0	0	0	0	0
4/23/2024	1:45 PM	0	0	0	0	0	0	0	0	0	0	0	0	0
4/23/2024	2:00 PM	0	0	0	0	0	0	0	0	0	0	0	0	0
4/23/2024	2:15 PM	0	0	0	0	0	0	0	0	0	0	0	0	0
4/23/2024	2:30 PM	0	0	0	0	0	0	0	0	0	0	0	0	0
4/23/2024	2:45 PM	0	0	0	0	0	0	0	0	0	0	0	0	0
4/23/2024	3:00 PM	0	0	0	0	0	0	0	0	0	0	0	0	0
4/23/2024	3:15 PM	0	0	0	0	0	0	0	0	0	0	0	0	0
4/23/2024	3:30 PM	0	0	0	0	0	0	0	0	0	0	0	0	0
4/23/2024	3:45 PM	0	0	0	0	0	0	0	0	0	0	0	0	0
4/23/2024	4:00 PM	0	0	0	0	0	0	0	0	0	0	0	0	0
4/23/2024	4:15 PM	0	0	0	0	0	0	0	0	0	0	0	0	0
4/23/2024	4:30 PM	0	0	0	0	0	0	0	0	0	0	0	0	0
4/23/2024	4:45 PM	0	0	0	0	0	0	0	0	0	0	0	0	0
4/23/2024	5:00 PM	0	0	0	0	0	0	0	0	0	0	0	0	0
4/23/2024	5:15 PM	0	0	0	0	0	0	0	0	0	0	0	0	0
4/23/2024	5:30 PM	0	0	0	0	0	0	0	0	0	0	0	0	0
4/23/2024	5:45 PM	0	0	0	0	0	0	0	0	0	0	0	0	0
4/23/2024	6:00 PM	0	0	0	0	0	0	0	0	0	0	0	0	0
4/23/2024	6:15 PM	0	0	0	0	0	0	0	0	0	0	0	0	0
4/23/2024	6:30 PM	0	0	0	0	0	0	0	0	0	0	0	0	0
4/23/2024	6:45 PM	0	0	0	0	0	0	0	0	0	0	0	0	0
4/23/2024	7:00 PM	0	0	0	0	0	0	0	0	0	0	0	0	0
4/23/2024	7:15 PM	0	0	0	0	0	0	0	0	0	0	0	0	0
4/23/2024	7:30 PM	0	0	0	0	0	0	0	0	0	0	0	0	0
4/23/2024	7:45 PM	0	0	0	0	0	0	0	0	0	0	0	0	0
4/23/2024	8:00 PM	0	0	0	0	0	0	0	0	0	0	0	0	0
4/23/2024	8:15 PM	0	0	0	0	0	0	0	0	0	0	0	0	0
4/23/2024	8:30 PM	0	0	0	0	0	0	0	0	0	0	0	0	0
4/23/2024	8:45 PM	0	0	0	0	0	0	0	0	0	0	0	0	0
4/23/2024	9:00 PM	0	0	0	0	0	0	0	0	0	0	0	0	0
4/23/2024	9:15 PM	0	0	0	0	0	0	0	0	0	0	0	0	0
4/23/2024	9:30 PM	0	0	0	0	0	0	0	0	0	0	0	0	0
4/23/2024	9:45 PM	0	0	0	0	0	0	0	0	0	0	0	0	0
4/23/2024	10:00 PM	0	0	0	0	0	0	0	0	0	0	0	0	0
4/23/2024	10:15 PM	0	0	0	0	0	0	0	0	0	0	0	0	0
4/23/2024	10:30 PM	0	0	0	0	0	0	0	0	0	0	0	0	0
4/23/2024	10:45 PM	0	0	0	0	0	0	0	0	0	0	0	0	0
4/23/2024	11:00 PM	0	0	0	0	0	0	0	0	0	0	0	0	0
4/23/2024	11:15 PM	0	0	0	0	0	0	0	0	0	0	0	0	0
4/23/2024	11:30 PM	0	0	0	0	0	0	0	0	0	0	0	0	0
4/23/2024	11:45 PM	0	0	0	0	0	0	0	0	0	0	0	0	0

4/24/2024	12:00 AM	0	0	0	0	0	0	0	0	0	0	0	0	0
4/24/2024	12:15 AM	0	0	0	0	0	0	0	0	0	0	0	0	0
4/24/2024	12:30 AM	0	0	0	0	0	0	0	0	0	0	0	0	0
4/24/2024	12:45 AM	0	0	0	0	0	0	0	0	0	0	0	0	0
4/24/2024	1:00 AM	0	0	0	0	0	0	0	0	0	0	0	0	0
4/24/2024	1:15 AM	0	0	0	0	0	0	0	0	0	0	0	0	0
4/24/2024	1:30 AM	0	0	0	0	0	0	0	0	0	0	0	0	0
4/24/2024	1:45 AM	0	0	0	0	0	0	0	0	0	0	0	0	0
4/24/2024	2:00 AM	0	0	0	0	0	0	0	0	0	0	0	0	0
4/24/2024	2:15 AM	0	0	0	0	0	0	0	0	0	0	0	0	0
4/24/2024	2:30 AM	0	0	0	0	0	0	0	0	0	0	0	0	0
4/24/2024	2:45 AM	0	0	0	0	0	0	0	0	0	0	0	0	0
4/24/2024	3:00 AM	0	0	0	0	0	0	0	0	0	0	0	0	0
4/24/2024	3:15 AM	0	0	0	0	0	0	0	0	0	0	0	0	0
4/24/2024	3:30 AM	0	0	0	0	0	0	0	0	0	0	0	0	0
4/24/2024	3:45 AM	0	0	0	0	0	0	0	0	0	0	0	0	0
4/24/2024	4:00 AM	0	0	0	0	0	0	0	0	0	0	0	0	0
4/24/2024	4:15 AM	0	0	0	0	0	0	0	0	0	0	0	0	0
4/24/2024	4:30 AM	0	0	0	0	0	0	0	0	0	0	0	0	0
4/24/2024	4:45 AM	0	0	0	0	0	0	0	0	0	0	0	0	0
4/24/2024	5:00 AM	0	0	0	0	0	0	0	0	0	0	0	0	0
4/24/2024	5:15 AM	0	0	0	0	0	0	0	0	0	0	0	0	0
4/24/2024	5:30 AM	0	0	0	0	0	0	0	0	0	0	0	0	0
4/24/2024	5:45 AM	0	0	0	0	0	0	0	0	0	0	0	0	0
4/24/2024	6:00 AM	0	0	0	0	0	0	0	0	0	0	0	0	0
4/24/2024	6:15 AM	0	0	0	0	0	0	0	0	0	0	0	0	0
4/24/2024	6:30 AM	0	0	0	0	0	0	0	0	0	0	0	0	0
4/24/2024	6:45 AM	0	0	0	0	0	0	0	0	0	0	0	0	0
4/24/2024	7:00 AM	0	0	0	0	0	0	0	0	0	0	0	0	0
4/24/2024	7:15 AM	0	0	0	0	0	0	0	0	0	0	0	0	0
4/24/2024	7:30 AM	0	0	0	0	0	0	0	0	0	0	0	0	0
4/24/2024	7:45 AM	0	0	0	0	0	0	0	0	0	0	0	0	0
4/24/2024	8:00 AM	0	0	0	0	0	0	0	0	0	0	0	0	0
4/24/2024	8:15 AM	0	0	0	0	0	0	0	0	0	0	0	0	0
4/24/2024	8:30 AM	0	0	0	0	0	0	0	0	0	0	0	0	0
4/24/2024	8:45 AM	0	0	0	0	0	0	0	0	0	0	0	0	0
4/24/2024	9:00 AM	0	0	0	0	0	0	0	0	0	0	0	0	0
4/24/2024	9:15 AM	0	0	0	0	0	0	0	0	0	0	0	0	0
4/24/2024	9:30 AM	0	0	0	0	0	0	0	0	0	0	0	0	0
4/24/2024	9:45 AM	0	0	0	0	0	0	0	0	0	0	0	0	0
4/24/2024	10:00 AM	0	0	0	0	0	0	0	0	0	0	0	0	0
4/24/2024	10:15 AM	0	0	0	0	0	0	0	0	0	0	0	0	0
4/24/2024	10:30 AM	0	0	0	0	0	0	0	0	0	0	0	0	0
4/24/2024	10:45 AM	0	0	0	0	0	0	0	0	0	0	0	0	0
4/24/2024	11:00 AM	0	0	0	0	0	0	0	0	0	0	0	0	0
4/24/2024	11:15 AM	0	0	0	0	0	0	0	0	0	0	0	0	0
4/24/2024	11:30 AM	0	0	0	0	0	0	0	0	0	0	0	0	0
4/24/2024	11:45 AM	0	0	0	0	0	0	0	0	0	0	0	0	0
4/24/2024	12:00 PM	0	0	0	0	0	0	0	0	0	0	0	0	0
4/24/2024	12:15 PM	0	0	0	0	0	0	0	0	0	0	0	0	0
4/24/2024	12:30 PM	0	0	0	0	0	0	0	0	0	0	0	0	0
4/24/2024	12:45 PM	0	0	0	0	0	0	0	0	0	0	0	0	0
4/24/2024	1:00 PM	0	0	0	0	0	0	0	0	0	0	0	0	0
4/24/2024	1:15 PM	0	0	0	0	0	0	0	0	0	0	0	0	0
4/24/2024	1:30 PM	0	0	0	0	0	0	0	0	0	0	0	0	0
4/24/2024	1:45 PM	0	0	0	0	0	0	0	0	0	0	0	0	0
4/24/2024	2:00 PM	0	0	0	0	0	0	0	0	0	0	0	0	0
4/24/2024	2:15 PM	0	0	0	0	0	0	0	0	0	0	0	0	0
4/24/2024	2:30 PM	0	0	0	0	0	0	0	0	0	0	0	0	0
4/24/2024	2:45 PM	0	0	0	0	0	0	0	0	0	0	0	0	0
4/24/2024	3:00 PM	0	0	0	0	0	0	0	0	0	0	0	0	0
4/24/2024	3:15 PM	0	0	0	0	0	0	0	0	0	0	0	0	0
4/24/2024	3:30 PM	0	0	0	0	0	0	0	0	0	0	0	0	0
4/24/2024	3:45 PM	0	0	0	0	0	0	0	0	0	0	0	0	0
4/24/2024	4:00 PM	0	0	0	0	0	0	0	0	0	0	0	0	0
4/24/2024	4:15 PM	0	0	0	0	0	0	0	0	0	0	0	0	0
4/24/2024	4:30 PM	0	0	0	0	0	0	0	0	0	0	0	0	0
4/24/2024	4:45 PM	0	0	0	0	0	0	0	0	0	0	0	0	0
4/24/2024	5:00 PM	0	0	0	0	0	0	0	0	0	0	0	0	0
4/24/2024	5:15 PM	0	0	0	0	0	0	0	0	0	0	0	0	0
4/24/2024	5:30 PM	0	0	0	0	0	0	0	0	0	0	0	0	0
4/24/2024	5:45 PM	0	0	0	0	0	0	0	0	0	0	0	0	0
4/24/2024	6:00 PM	0	0	0	0	0	0	0	0	0	0	0	0	0
4/24/2024	6:15 PM	0	0	0	0	0	0	0	0	0	0	0	0	0
4/24/2024	6:30 PM	0	0	0	0	0	0	0	0	0	0	0	0	0
4/24/2024	6:45 PM	0	0	0	0	0	0	0	0	0	0	0	0	0
4/24/2024	7:00 PM	0	0	0	0	0	0	0	0	0	0	0	0	0
4/24/2024	7:15 PM	0	0	0	0	0	0	0	0	0	0	0	0	0
4/24/2024	7:30 PM	0	0	0	0	0	0	0	0	0	0	0	0	0
4/24/2024	7:45 PM	0	0	0	0	0	0	0	0	0	0	0	0	0
4/24/2024	8:00 PM	0	0	0	0	0	0	0	0	0	0	0	0	0
4/24/2024	8:15 PM	0	0	0	0	0	0	0	0	0	0	0	0	0
4/24/2024	8:30 PM	0	0	0	0	0	0	0	0	0	0	0	0	0
4/24/2024	8:45 PM	0	0	0	0	0	0	0	0	0	0	0	0	0
4/24/2024	9:00 PM	0	0	0	0	0	0	0	0	0	0	0	0	0
4/24/2024	9:15 PM	0	0	0	0	0	0	0	0	0	0	0	0	0
4/24/2024	9:30 PM	0	0	0	0	0	0	0	0	0	0	0	0	0
4/24/2024	9:45 PM	0	0	0	0	0	0	0	0	0	0	0	0	0
4/24/2024	10:00 PM	0	0	0	0	0	0	0	0	0	0	0	0	0
4/24/2024	10:15 PM	0	0	0	0	0	0	0	0	0	0	0	0	0
4/24/2024	10:30 PM	0	0	0	0	0	0	0	0	0	0	0	0	0
4/24/2024	10:45 PM	0	0	0	0	0	0	0	0	0	0	0	0	0
4/24/2024	11:00 PM	0	0	0	0	0	0	0	0	0	0	0	0	0
4/24/2024	11:15 PM	0	0	0	0	0	0	0	0	0	0	0	0	0
4/24/2024	11:30 PM	0	0	0	0	0	0	0	0	0	0	0	0	0
4/24/2024	11:45 PM	0	0	0	0	0	0	0	0	0	0	0	0	0

4/25/2024	12:00 AM	0	0	0	0	0	0	0	0	0	0	0	0	0
4/25/2024	12:15 AM	0	0	0	0	0	0	0	0	0	0	0	0	0
4/25/2024	12:30 AM	0	0	0	0	0	0	0	0	0	0	0	0	0
4/25/2024	12:45 AM	0	0	0	0	0	0	0	0	0	0	0	0	0
4/25/2024	1:00 AM	0	0	0	0	0	0	0	0	0	0	0	0	0
4/25/2024	1:15 AM	0	0	0	0	0	0	0	0	0	0	0	0	0
4/25/2024	1:30 AM	0	0	0	0	0	0	0	0	0	0	0	0	0
4/25/2024	1:45 AM	0	0	0	0	0	0	0	0	0	0	0	0	0
4/25/2024	2:00 AM	0	0	0	0	0	0	0	0	0	0	0	0	0
4/25/2024	2:15 AM	0	0	0	0	0	0	0	0	0	0	0	0	0
4/25/2024	2:30 AM	0	0	0	0	0	0	0	0	0	0	0	0	0
4/25/2024	2:45 AM	0	0	0	0	0	0	0	0	0	0	0	0	0
4/25/2024	3:00 AM	0	0	0	0	0	0	0	0	0	0	0	0	0
4/25/2024	3:15 AM	0	0	0	0	0	0	0	0	0	0	0	0	0
4/25/2024	3:30 AM	0	0	0	0	0	0	0	0	0	0	0	0	0
4/25/2024	3:45 AM	0	0	0	0	0	0	0	0	0	0	0	0	0
4/25/2024	4:00 AM	0	0	0	0	0	0	0	0	0	0	0	0	0
4/25/2024	4:15 AM	0	0	0	0	0	0	0	0	0	0	0	0	0
4/25/2024	4:30 AM	0	0	0	0	0	0	0	0	0	0	0	0	0
4/25/2024	4:45 AM	0	0	0	0	0	0	0	0	0	0	0	0	0
4/25/2024	5:00 AM	0	0	0	0	0	0	0	0	0	0	0	0	0
4/25/2024	5:15 AM	0	0	0	0	0	0	0	0	0	0	0	0	0
4/25/2024	5:30 AM	0	0	0	0	0	0	0	0	0	0	0	0	0
4/25/2024	5:45 AM	0	0	0	0	0	0	0	0	0	0	0	0	0
4/25/2024	6:00 AM	0	0	0	0	0	0	0	0	0	0	0	0	0
4/25/2024	6:15 AM	0	0	0	0	0	0	0	0	0	0	0	0	0
4/25/2024	6:30 AM	0	0	0	0	0	0	0	0	0	0	0	0	0
4/25/2024	6:45 AM	0	0	0	0	0	0	0	0	0	0	0	0	0
4/25/2024	7:00 AM	0	0	0	0	0	0	0	0	0	0	0	0	0
4/25/2024	7:15 AM	0	0	0	0	0	0	0	0	0	0	0	0	0
4/25/2024	7:30 AM	0	0	0	0	0	0	0	0	0	0	0	0	0
4/25/2024	7:45 AM	0	0	0	0	0	0	0	0	0	0	0	0	0
4/25/2024	8:00 AM	0	0	0	0	0	0	0	0	0	0	0	0	0
4/25/2024	8:15 AM	0	0	0	0	0	0	0	0	0	0	0	0	0
4/25/2024	8:30 AM	0	0	0	0	0	0	0	0	0	0	0	0	0
4/25/2024	8:45 AM	0	0	0	0	0	0	0	0	0	0	0	0	0
4/25/2024	9:00 AM	0	0	0	0	0	0	0	0	0	0	0	0	0
4/25/2024	9:15 AM	0	0	0	0	0	0	0	0	0	0	0	0	0
4/25/2024	9:30 AM	0	0	0	0	0	0	0	0	0	0	0	0	0
4/25/2024	9:45 AM	0	0	0	0	0	0	0	0	0	0	0	0	0
4/25/2024	10:00 AM	0	0	0	0	0	0	0	0	0	0	0	0	0
4/25/2024	10:15 AM	0	0	0	0	0	0	0	0	0	0	0	0	0
4/25/2024	10:30 AM	0	0	0	0	0	0	0	0	0	0	0	0	0
4/25/2024	10:45 AM	0	0	0	0	0	0	0	0	0	0	0	0	0
4/25/2024	11:00 AM	0	0	0	0	0	0	0	0	0	0	0	0	0
4/25/2024	11:15 AM	0	0	0	0	0	0	0	0	0	0	0	0	0
4/25/2024	11:30 AM	0	0	0	0	0	0	0	0	0	0	0	0	0
4/25/2024	11:45 AM	0	0	0	0	0	0	0	0	0	0	0	0	0
4/25/2024	12:00 PM	0	0	0	0	0	0	0	0	0	0	0	0	0
4/25/2024	12:15 PM	0	0	0	0	0	0	0	0	0	0	0	0	0
4/25/2024	12:30 PM	0	0	0	0	0	0	0	0	0	0	0	0	0
4/25/2024	12:45 PM	0	0	0	0	0	0	0	0	0	0	0	0	0
4/25/2024	1:00 PM	0	0	0	0	0	0	0	0	0	0	0	0	0
4/25/2024	1:15 PM	0	0	0	0	0	0	0	0	0	0	0	0	0
4/25/2024	1:30 PM	0	0	0	0	0	0	0	0	0	0	0	0	0
4/25/2024	1:45 PM	0	0	0	0	0	0	0	0	0	0	0	0	0
4/25/2024	2:00 PM	0	0	0	0	0	0	0	0	0	0	0	0	0
4/25/2024	2:15 PM	0	0	0	0	0	0	0	0	0	0	0	0	0
4/25/2024	2:30 PM	0	0	0	0	0	0	0	0	0	0	0	0	0
4/25/2024	2:45 PM	0	0	0	0	0	0	0	0	0	0	0	0	0
4/25/2024	3:00 PM	0	0	0	0	0	0	0	0	0	0	0	0	0
4/25/2024	3:15 PM	0	0	0	0	0	0	0	0	0	0	0	0	0
4/25/2024	3:30 PM	0	0	0	0	0	0	0	0	0	0	0	0	0
4/25/2024	3:45 PM	0	0	0	0	0	0	0	0	0	0	0	0	0
4/25/2024	4:00 PM	0	0	0	0	0	0	0	0	0	0	0	0	0
4/25/2024	4:15 PM	0	0	0	0	0	0	0	0	0	0	0	0	0
4/25/2024	4:30 PM	0	0	0	0	0	0	0	0	0	0	0	0	0
4/25/2024	4:45 PM	0	0	0	0	0	0	0	0	0	0	0	0	0
4/25/2024	5:00 PM	0	0	0	0	0	0	0	0	0	0	0	0	0
4/25/2024	5:15 PM	0	0	0	0	0	0	0	0	0	0	0	0	0
4/25/2024	5:30 PM	0	0	0	0	0	0	0	0	0	0	0	0	0
4/25/2024	5:45 PM	0	0	0	0	0	0	0	0	0	0	0	0	0
4/25/2024	6:00 PM	0	0	0	0	0	0	0	0	0	0	0	0	0
4/25/2024	6:15 PM	0	0	0	0	0	0	0	0	0	0	0	0	0
4/25/2024	6:30 PM	0	0	0	0	0	0	0	0	0	0	0	0	0
4/25/2024	6:45 PM	0	0	0	0	0	0	0	0	0	0	0	0	0
4/25/2024	7:00 PM	0	0	0	0	0	0	0	0	0	0	0	0	0
4/25/2024	7:15 PM	0	0	0	0	0	0	0	0	0	0	0	0	0
4/25/2024	7:30 PM	0	0	0	0	0	0	0	0	0	0	0	0	0
4/25/2024	7:45 PM	0	0	0	0	0	0	0	0	0	0	0	0	0
4/25/2024	8:00 PM	0	0	0	0	0	0	0	0	0	0	0	0	0
4/25/2024	8:15 PM	0	0	0	0	0	0	0	0	0	0	0	0	0
4/25/2024	8:30 PM	0	0	0	0	0	0	0	0	0	0	0	0	0
4/25/2024	8:45 PM	0	0	0	0	0	0	0	0	0	0	0	0	0
4/25/2024	9:00 PM	0	0	0	0	0	0	0	0	0	0	0	0	0
4/25/2024	9:15 PM	0	0	0	0	0	0	0	0	0	0	0	0	0
4/25/2024	9:30 PM	0	0	0	0	0	0	0	0	0	0	0	0	0
4/25/2024	9:45 PM	0	0	0	0	0	0	0	0	0	0	0	0	0
4/25/2024	10:00 PM	0	0	0	0	0	0	0	0	0	0	0	0	0
4/25/2024	10:15 PM	0	0	0	0	0	0	0	0	0	0	0	0	0
4/25/2024	10:30 PM	0	0	0	0	0	0	0	0	0	0	0	0	0
4/25/2024	10:45 PM	0	0	0	0	0	0	0	0	0	0	0	0	0
4/25/2024	11:00 PM	0	0	0	0	0	0	0	0	0	0	0	0	0
4/25/2024	11:15 PM	0	0	0	0	0	0	0	0	0	0	0	0	0
4/25/2024	11:30 PM	0	0	0	0	0	0	0	0	0	0	0	0	0
4/25/2024	11:45 PM	0	0	0	0	0	0	0	0	0	0	0	0	0

Bi-Directional Class Count || NB EB 15min

Columbia, SC

Marr Traffic DATA COLLECTION
www.marrtraffic.com

Site 53
I-26 N/Bound On-Ramp,
north of US-378 Sunset Blvd

Date
Tuesday, April 23, 2024

Lat/Long
34.005565°, -81.110515°

Weather
Fair
58°F

Click here for Detailed Weather

Click here for Map

0000 - 2400 (Weekday 24h Session) (04-23-2024)
NB EB 15min

	Northbound (Movement 53.1)													15min	60min
Time	1	2	3	4	5	6	7	8	9	10	11	12	13	Total	Total
0000 - 0015	0	0	0	0	0	0	0	0	0	0	0	0	0	**0**	
0015 - 0030	0	0	0	0	0	0	0	0	0	0	0	0	0	**0**	
0030 - 0045	0	0	0	0	0	0	0	0	0	0	0	0	0	**0**	
0045 - 0100	0	0	0	0	0	0	0	0	0	0	0	0	0	**0**	**0**
0100 - 0115	0	0	0	0	0	0	0	0	0	0	0	0	0	**0**	
0115 - 0130	0	0	0	0	0	0	0	0	0	0	0	0	0	**0**	
0130 - 0145	0	0	0	0	0	0	0	0	0	0	0	0	0	**0**	
0145 - 0200	0	0	0	0	0	0	0	0	0	0	0	0	0	**0**	**0**
0200 - 0215	0	0	0	0	0	0	0	0	0	0	0	0	0	**0**	
0215 - 0230	0	0	0	0	0	0	0	0	0	0	0	0	0	**0**	
0230 - 0245	0	0	0	0	0	0	0	0	0	0	0	0	0	**0**	
0245 - 0300	0	0	0	0	0	0	0	0	0	0	0	0	0	**0**	**0**
0300 - 0315	0	0	0	0	0	0	0	0	0	0	0	0	0	**0**	
0315 - 0330	0	0	0	0	0	0	0	0	0	0	0	0	0	**0**	
0330 - 0345	0	0	0	0	0	0	0	0	0	0	0	0	0	**0**	
0345 - 0400	0	0	0	0	0	0	0	0	0	0	0	0	0	**0**	**0**
0400 - 0415	0	0	0	0	0	0	0	0	0	0	0	0	0	**0**	
0415 - 0430	0	0	0	0	0	0	0	0	0	0	0	0	0	**0**	
0430 - 0445	0	0	0	0	0	0	0	0	0	0	0	0	0	**0**	
0445 - 0500	0	0	0	0	0	0	0	0	0	0	0	0	0	**0**	**0**
0500 - 0515	0	0	0	0	0	0	0	0	0	0	0	0	0	**0**	
0515 - 0530	0	0	0	0	0	0	0	0	0	0	0	0	0	**0**	
0530 - 0545	0	0	0	0	0	0	0	0	0	0	0	0	0	**0**	
0545 - 0600	0	0	0	0	0	0	0	0	0	0	0	0	0	**0**	**0**
0600 - 0615	0	0	0	0	0	0	0	0	0	0	0	0	0	**0**	
0615 - 0630	0	0	0	0	0	0	0	0	0	0	0	0	0	**0**	
0630 - 0645	0	0	0	0	0	0	0	0	0	0	0	0	0	**0**	
0645 - 0700	0	0	0	0	0	0	0	0	0	0	0	0	0	**0**	**0**
0700 - 0715	0	0	0	0	0	0	0	0	0	0	0	0	0	**0**	
0715 - 0730	0	0	0	0	0	0	0	0	0	0	0	0	0	**0**	
0730 - 0745	0	0	0	0	0	0	0	0	0	0	0	0	0	**0**	
0745 - 0800	0	0	0	0	0	0	0	0	0	0	0	0	0	**0**	**0**
0800 - 0815	0	0	0	0	0	0	0	0	0	0	0	0	0	**0**	
0815 - 0830	0	0	0	0	0	0	0	0	0	0	0	0	0	**0**	
0830 - 0845	0	0	0	0	0	0	0	0	0	0	0	0	0	**0**	
0845 - 0900	0	0	0	0	0	0	0	0	0	0	0	0	0	**0**	**0**
0900 - 0915	0	0	0	0	0	0	0	0	0	0	0	0	0	**0**	
0915 - 0930	0	0	0	0	0	0	0	0	0	0	0	0	0	**0**	
0930 - 0945	0	0	0	0	0	0	0	0	0	0	0	0	0	**0**	
0945 - 1000	0	0	0	0	0	0	0	0	0	0	0	0	0	**0**	**0**
1000 - 1015	0	0	0	0	0	0	0	0	0	0	0	0	0	**0**	
1015 - 1030	0	0	0	0	0	0	0	0	0	0	0	0	0	**0**	
1030 - 1045	0	0	0	0	0	0	0	0	0	0	0	0	0	**0**	
1045 - 1100	0	0	0	0	0	0	0	0	0	0	0	0	0	**0**	**0**
1100 - 1115	0	0	0	0	0	0	0	0	0	0	0	0	0	**0**	
1115 - 1130	0	0	0	0	0	0	0	0	0	0	0	0	0	**0**	
1130 - 1145	0	0	0	0	0	0	0	0	0	0	0	0	0	**0**	
1145 - 1200	0	0	0	0	0	0	0	0	0	0	0	0	0	**0**	**0**
1200 - 1215	0	0	0	0	0	0	0	0	0	0	0	0	0	**0**	
1215 - 1230	0	0	0	0	0	0	0	0	0	0	0	0	0	**0**	
1230 - 1245	0	0	0	0	0	0	0	0	0	0	0	0	0	**0**	
1245 - 1300	0	0	0	0	0	0	0	0	0	0	0	0	0	**0**	**0**
1300 - 1315	0	0	0	0	0	0	0	0	0	0	0	0	0	**0**	
1315 - 1330	0	0	0	0	0	0	0	0	0	0	0	0	0	**0**	
1330 - 1345	0	0	0	0	0	0	0	0	0	0	0	0	0	**0**	
1345 - 1400	0	0	0	0	0	0	0	0	0	0	0	0	0	**0**	**0**
1400 - 1415	0	0	0	0	0	0	0	0	0	0	0	0	0	**0**	
1415 - 1430	0	0	0	0	0	0	0	0	0	0	0	0	0	**0**	
1430 - 1445	0	0	0	0	0	0	0	0	0	0	0	0	0	**0**	
1445 - 1500	0	0	0	0	0	0	0	0	0	0	0	0	0	**0**	**0**
1500 - 1515	0	0	0	0	0	0	0	0	0	0	0	0	0	**0**	
1515 - 1530	0	0	0	0	0	0	0	0	0	0	0	0	0	**0**	
1530 - 1545	0	0	0	0	0	0	0	0	0	0	0	0	0	**0**	
1545 - 1600	0	0	0	0	0	0	0	0	0	0	0	0	0	**0**	**0**
1600 - 1615	0	0	0	0	0	0	0	0	0	0	0	0	0	**0**	
1615 - 1630	0	0	0	0	0	0	0	0	0	0	0	0	0	**0**	
1630 - 1645	0	0	0	0	0	0	0	0	0	0	0	0	0	**0**	
1645 - 1700	0	0	0	0	0	0	0	0	0	0	0	0	0	**0**	**0**
1700 - 1715	0	0	0	0	0	0	0	0	0	0	0	0	0	**0**	
1715 - 1730	0	0	0	0	0	0	0	0	0	0	0	0	0	**0**	
1730 - 1745	0	0	0	0	0	0	0	0	0	0	0	0	0	**0**	
1745 - 1800	0	0	0	0	0	0	0	0	0	0	0	0	0	**0**	**0**
1800 - 1815	0	0	0	0	0	0	0	0	0	0	0	0	0	**0**	
1815 - 1830	0	0	0	0	0	0	0	0	0	0	0	0	0	**0**	
1830 - 1845	0	0	0	0	0	0	0	0	0	0	0	0	0	**0**	
1845 - 1900	0	0	0	0	0	0	0	0	0	0	0	0	0	**0**	**0**
1900 - 1915	0	114	16	0	3	0	0	0	1	0	0	0	0	**134**	
1915 - 1930	0	114	22	0	0	0	0	0	1	0	0	0	0	**137**	
1930 - 1945	0	115	20	0	2	0	0	0	0	0	0	0	0	**137**	
1945 - 2000	1	90	21	0	0	0	0	0	0	0	0	0	0	**112**	**520**
2000 - 2015	0	87	20	0	0	0	0	0	0	0	0	0	0	**107**	
2015 - 2030	0	94	20	0	2	0	0	0	0	0	0	0	0	**116**	
2030 - 2045	0	91	20	0	0	0	0	0	0	0	0	0	0	**111**	
2045 - 2100	0	88	20	0	0	0	0	0	0	0	0	0	0	**108**	**442**
2100 - 2115	0	50	12	0	0	0	0	0	2	0	0	0	0	**64**	
2115 - 2130	0	67	14	0	0	0	0	0	0	0	0	0	0	**81**	
2130 - 2145	1	55	17	0	0	0	0	0	0	0	1	0	0	**74**	
2145 - 2200	0	30	12	0	0	0	0	0	0	0	1	0	0	**43**	**262**
2200 - 2215	0	26	6	0	1	0	0	0	0	0	0	0	0	**33**	
2215 - 2230	1	18	8	0	0	0	0	0	1	0	0	1	0	**29**	
2230 - 2245	0	18	3	0	0	0	0	0	0	0	0	0	0	**21**	
2245 - 2300	0	14	2	0	0	0	0	0	1	0	1	0	0	**18**	**101**
2300 - 2315	0	16	4	0	0	0	0	0	0	0	0	0	0	**20**	
2315 - 2330	0	19	4	0	0	0	0	0	1	0	0	0	0	**24**	
2330 - 2345	0	24	5	0	0	0	0	0	0	0	0	0	0	**29**	
2345 - 0000	0	9	2	0	0	0	0	0	1	0	0	0	0	**12**	**85**

Session Total	3	1139	248	0	8	0	0	0	8	0	3	1	0	**1410**
Session Average	0.03	11.86	2.58	0.00	0.08	0.00	0.00	0.00	0.08	0.00	0.03	0.01	0.00	**14.69**
Session Percentage	0.21	80.78	17.59	0.00	0.57	0.00	0.00	0.00	0.57	0.00	0.21	0.07	0.00	

AM Peak Hour	-	-	-	-	-	-	-	-	-	-	-	-	-	**-**
AM Peak Volume	0	0	0	0	0	0	0	0	0	0	0	0	0	**0**

Noon Peak Hour	-	-	-	-	-	-	-	-	-	-	-	-	-	**-**
Noon Peak Volume	0	0	0	0	0	0	0	0	0	0	0	0	0	**0**

PM Peak Hour	1900 - 2000	1900 - 2000	1915 - 2015	-	1845 - 1945	-	-	-	1830 - 1930	-	-	-	-	**1900 - 2000**
PM Peak Volume	1	433	83	0	5	0	0	0	2	0	0	0	0	**520**

Site 53
I-26 N/Bound On-Ramp,
north of US-378 Sunset Blvd

Date
Wednesday, April 24, 2024

Lat/Long
34.005565°, -81.110515°

Weather
Fair
66°F

Click here for Detailed Weather

0000 - 2400 (Weekday 24h Session) (04-24-2024)
NB EB 15min

	Northbound (Movement 53.1)													15min	60min
Time	1	2	3	4	5	6	7	8	9	10	11	12	13	Total	Total
0000 - 0015	0	15	5	0	0	0	0	0	0	0	0	0	0	**20**	
0015 - 0030	0	11	1	0	1	0	0	0	1	0	0	0	0	**14**	
0030 - 0045	0	11	1	0	1	0	0	0	0	0	1	0	0	**14**	
0045 - 0100	0	10	1	0	2	0	0	0	0	0	0	0	0	**13**	**61**
0100 - 0115	0	12	2	0	1	0	0	0	0	0	0	0	0	**15**	
0115 - 0130	0	7	1	0	2	0	0	0	0	0	0	0	0	**10**	
0130 - 0145	0	9	1	0	0	0	0	0	0	0	0	0	0	**10**	
0145 - 0200	0	7	2	0	2	0	0	0	0	0	1	1	0	**13**	**48**
0200 - 0215	0	4	0	0	1	0	0	0	0	0	1	0	0	**6**	
0215 - 0230	0	5	1	0	0	0	0	0	0	0	1	0	0	**7**	
0230 - 0245	0	4	1	0	0	0	0	0	0	0	1	0	0	**6**	
0245 - 0300	0	4	1	0	0	0	0	0	0	0	0	0	0	**5**	**24**
0300 - 0315	0	10	1	0	1	0	0	0	0	0	0	0	0	**12**	
0315 - 0330	0	4	0	0	1	0	0	0	0	0	0	0	0	**5**	
0330 - 0345	0	5	1	0	0	0	0	0	0	0	0	0	0	**6**	
0345 - 0400	0	14	1	0	1	0	0	0	0	0	0	0	0	**16**	**39**
0400 - 0415	0	6	1	0	0	0	0	0	0	0	0	0	0	**7**	
0415 - 0430	0	7	1	0	1	0	0	0	0	0	0	0	0	**9**	
0430 - 0445	0	10	2	0	1	0	0	0	0	0	0	0	0	**13**	
0445 - 0500	0	10	1	0	1	0	0	0	0	0	0	0	0	**12**	**41**
0500 - 0515	0	5	1	0	3	0	0	0	0	0	0	0	0	**9**	
0515 - 0530	0	21	5	0	1	0	0	0	0	0	0	0	0	**27**	
0530 - 0545	0	26	6	0	3	1	0	0	1	0	0	0	0	**37**	
0545 - 0600	0	27	9	0	2	1	0	0	3	0	0	0	0	**42**	**115**
0600 - 0615	0	57	7	0	2	1	0	0	1	0	0	0	0	**68**	
0615 - 0630	0	51	10	0	1	0	0	1	0	0	0	0	0	**63**	
0630 - 0645	0	91	12	1	3	1	0	0	0	0	0	0	0	**108**	
0645 - 0700	0	68	14	0	1	0	0	0	1	0	0	0	0	**84**	**323**
0700 - 0715	0	113	22	0	2	0	0	0	1	0	0	0	0	**138**	
0715 - 0730	0	153	30	0	1	0	0	0	0	0	0	0	0	**184**	
0730 - 0745	0	202	28	0	2	0	0	1	0	0	0	0	0	**233**	
0745 - 0800	0	177	30	0	5	0	0	0	2	0	0	0	0	**214**	**769**
0800 - 0815	0	159	26	0	3	0	0	0	0	0	0	0	0	**188**	
0815 - 0830	0	139	24	0	6	5	0	0	2	0	0	0	0	**176**	
0830 - 0845	0	118	25	0	6	2	0	1	1	0	0	0	0	**153**	
0845 - 0900	0	143	30	1	4	1	0	1	1	0	0	0	0	**181**	**698**
0900 - 0915	0	123	30	0	8	2	0	0	2	0	0	0	0	**165**	
0915 - 0930	0	128	27	0	7	0	0	1	1	0	0	0	0	**164**	
0930 - 0945	0	137	21	1	2	1	0	1	5	0	0	0	0	**168**	
0945 - 1000	0	136	20	0	2	0	0	1	2	0	0	0	0	**161**	**658**
1000 - 1015	0	117	21	1	4	0	0	1	1	0	0	0	0	**145**	
1015 - 1030	0	136	28	0	5	2	0	0	0	0	0	0	0	**171**	
1030 - 1045	0	142	28	0	4	3	0	1	5	0	0	0	0	**183**	
1045 - 1100	0	166	37	0	1	0	0	0	3	0	0	0	0	**207**	**706**
1100 - 1115	0	159	22	0	6	0	0	0	3	0	0	0	0	**190**	
1115 - 1130	0	165	28	0	9	1	0	0	1	0	0	0	0	**204**	
1130 - 1145	0	171	22	0	5	0	0	1	1	0	0	0	0	**200**	
1145 - 1200	0	190	25	0	5	1	0	1	2	0	0	0	0	**224**	**818**
1200 - 1215	0	162	24	0	2	0	0	0	1	0	0	0	0	**189**	
1215 - 1230	0	188	33	0	2	0	0	0	1	0	0	0	0	**224**	
1230 - 1245	0	155	31	1	3	0	0	0	0	0	0	0	0	**190**	
1245 - 1300	0	148	35	0	5	0	0	0	2	0	0	0	0	**190**	**793**
1300 - 1315	0	158	24	3	1	1	0	1	0	0	0	0	0	**188**	
1315 - 1330	0	153	34	0	3	1	0	1	1	0	0	0	0	**193**	
1330 - 1345	0	190	30	1	1	2	0	1	0	0	0	0	0	**225**	
1345 - 1400	2	161	21	2	1	0	0	0	0	0	0	0	0	**187**	**793**
1400 - 1415	0	151	29	0	1	1	0	1	1	0	0	0	0	**184**	
1415 - 1430	0	155	38	0	0	3	0	0	0	0	0	0	0	**196**	
1430 - 1445	0	189	21	0	8	1	0	0	1	0	0	0	0	**220**	
1445 - 1500	0	202	33	0	3	0	0	2	1	0	0	0	0	**241**	**841**
1500 - 1515	0	193	50	0	0	0	0	0	0	0	0	0	0	**243**	
1515 - 1530	0	192	40	0	2	1	0	0	0	0	0	0	0	**235**	
1530 - 1545	0	237	30	0	3	1	0	0	0	0	0	0	0	**271**	
1545 - 1600	1	236	32	1	2	0	0	0	2	0	0	0	0	**274**	**1023**
1600 - 1615	0	242	38	0	1	0	0	0	1	0	0	0	0	**282**	
1615 - 1630	0	193	33	0	0	1	0	0	1	0	0	0	0	**228**	
1630 - 1645	0	194	30	0	0	0	0	1	0	0	0	0	0	**225**	
1645 - 1700	0	191	30	1	4	0	0	1	0	0	0	0	0	**227**	**962**
1700 - 1715	0	194	57	0	2	0	0	0	0	0	0	0	0	**253**	
1715 - 1730	0	206	36	0	1	0	0	0	0	0	0	0	0	**243**	
1730 - 1745	0	176	22	0	2	0	0	1	1	0	0	0	0	**202**	
1745 - 1800	0	190	15	0	2	0	0	0	0	0	0	0	0	**207**	**905**
1800 - 1815	0	195	38	0	5	0	0	0	1	0	0	0	0	**239**	
1815 - 1830	0	181	42	0	0	0	0	0	1	0	0	0	0	**224**	
1830 - 1845	0	184	27	0	1	0	0	0	2	0	0	0	0	**214**	
1845 - 1900	0	182	27	0	1	0	0	0	0	0	0	0	0	**210**	**887**
1900 - 1915	0	137	25	0	1	1	0	0	0	0	0	0	0	**164**	
1915 - 1930	0	114	26	1	1	0	0	0	0	0	0	0	0	**142**	
1930 - 1945	2	120	22	0	2	0	0	0	1	0	0	0	0	**147**	
1945 - 2000	0	84	18	0	3	0	0	0	0	0	0	0	0	**105**	**558**
2000 - 2015	0	109	13	0	1	0	0	0	0	0	0	0	0	**123**	
2015 - 2030	0	100	11	0	0	0	0	0	0	0	0	0	0	**111**	
2030 - 2045	0	108	11	0	0	0	0	0	0	0	0	0	0	**119**	
2045 - 2100	0	103	9	0	0	0	0	0	0	0	0	0	0	**112**	**465**
2100 - 2115	0	60	8	0	0	0	0	0	0	0	0	0	0	**68**	
2115 - 2130	0	73	9	0	0	0	0	0	0	0	0	0	0	**82**	
2130 - 2145	0	54	12	0	0	0	0	0	1	0	1	0	0	**68**	
2145 - 2200	0	48	6	1	0	0	0	0	0	0	0	0	0	**55**	**273**
2200 - 2215	0	43	5	0	1	0	0	0	1	0	1	0	0	**51**	
2215 - 2230	0	44	4	0	0	0	0	0	0	0	0	0	0	**48**	
2230 - 2245	0	37	4	0	1	0	0	0	0	1	0	0	0	**43**	
2245 - 2300	0	31	5	0	0	0	0	0	1	0	2	0	0	**39**	**181**
2300 - 2315	0	34	4	0	0	0	0	0	1	0	0	0	0	**39**	
2315 - 2330	0	33	3	0	1	0	0	0	0	0	0	0	0	**37**	
2330 - 2345	0	34	1	0	0	0	0	0	0	0	0	0	0	**35**	
2345 - 0000	0	22	3	0	0	0	0	0	0	0	0	0	0	**25**	**136**

Session Total	5	10071	1712	15	186	35	0	20	62	1	9	1	0	**12117**
Session Average	0.05	104.91	17.83	0.16	1.94	0.36	0.00	0.21	0.65	0.01	0.09	0.01	0.00	**126.22**
Session Percentage	0.04	83.11	14.13	0.12	1.54	0.29	0.00	0.17	0.51	0.01	0.07	0.01	0.00	

AM Peak Hour	-	0715 - 0815	0715 - 0815	0845 - 0945	0830 - 0930	0815 - 0915	-	0915 - 1015	0900 - 1000	-	-	-	-	**0715 - 0815**
AM Peak Volume	0	691	114	2	25	10	0	4	10	0	0	0	0	**819**

Noon Peak Hour	1300 - 1400	1445 - 1545	1445 - 1545	1300 - 1400	1100 - 1200	1330 - 1430	-	1245 - 1345	1030 - 1130	-	-	-	-	**1445 - 1545**
Noon Peak Volume	2	824	153	6	25	6	0	3	12	0	0	0	0	**990**

PM Peak Hour	1845 - 1945	1530 - 1630	1630 - 1730	1500 - 1600	1715 - 1815	1500 - 1600	-	1600 - 1700	1530 - 1630	-	-	-	-	**1515 - 1615**
PM Peak Volume	2	908	153	1	10	2	0	2	4	0	0	0	0	**1062**

Site 53
I-26 N/Bound On-Ramp,
north of US-378 Sunset Blvd

Date
Thursday, April 25, 2024

Lat/Long
34.005565°, -81.110515°

Weather
Fair
67°F

Click here for Detailed Weather

0000 - 2400 (Weekday 24h Session) (04-25-2024)
NB EB 15min

	Northbound (Movement 53.1)													15min	60min
TIME	1	2	3	4	5	6	7	8	9	10	11	12	13	Total	Total
0000 - 0015	0	21	0	0	1	0	0	0	0	1	0	0	0	**23**	
0015 - 0030	0	19	1	0	0	0	0	0	0	0	0	0	0	**20**	
0030 - 0045	0	16	1	0	0	1	0	0	1	0	0	0	0	**19**	
0045 - 0100	0	17	0	0	0	0	0	0	0	0	1	0	0	**18**	**80**
0100 - 0115	0	9	0	0	0	0	0	0	0	0	0	0	0	**9**	
0115 - 0130	0	12	0	0	0	0	0	0	1	0	0	0	0	**13**	
0130 - 0145	0	11	0	0	0	1	0	0	0	0	0	0	0	**12**	
0145 - 0200	0	5	0	0	0	0	0	0	0	0	1	0	0	**6**	**40**
0200 - 0215	0	8	1	0	0	0	0	0	0	0	1	0	0	**10**	
0215 - 0230	0	9	2	0	0	0	0	0	0	0	0	0	0	**11**	
0230 - 0245	0	4	0	0	0	0	0	0	0	0	1	0	0	**5**	
0245 - 0300	0	8	1	0	0	0	0	0	0	0	0	0	0	**9**	**35**
0300 - 0315	0	6	1	0	0	0	0	0	0	0	0	0	0	**7**	
0315 - 0330	0	9	0	0	1	0	0	0	0	0	0	0	0	**10**	
0330 - 0345	0	7	0	0	1	0	0	0	0	0	1	0	0	**9**	
0345 - 0400	0	9	0	0	0	0	0	0	0	0	0	0	0	**9**	**35**
0400 - 0415	0	6	0	0	1	0	0	0	0	0	0	0	0	**7**	
0415 - 0430	0	8	0	0	1	0	0	0	0	0	0	0	0	**9**	
0430 - 0445	0	15	0	0	1	0	0	1	1	0	0	0	0	**18**	
0445 - 0500	0	12	2	0	0	0	0	0	1	0	0	0	0	**15**	**49**
0500 - 0515	0	10	5	0	0	0	0	0	0	0	1	0	0	**16**	
0515 - 0530	0	20	6	0	3	1	0	0	1	0	0	0	0	**31**	
0530 - 0545	0	35	4	0	0	0	0	0	2	0	0	0	0	**41**	
0545 - 0600	0	36	4	0	0	1	0	0	0	0	0	0	0	**41**	**129**
0600 - 0615	0	35	7	3	2	0	0	1	1	0	0	0	0	**49**	
0615 - 0630	0	70	10	3	2	0	0	1	1	0	0	0	0	**87**	
0630 - 0645	0	82	13	2	0	0	0	1	1	0	0	0	0	**99**	
0645 - 0700	0	77	22	1	2	1	0	2	1	0	0	0	0	**106**	**341**
0700 - 0715	0	102	17	0	4	1	0	1	0	0	0	0	0	**125**	
0715 - 0730	0	171	29	0	2	0	0	1	2	0	0	0	0	**205**	
0730 - 0745	0	219	35	0	6	1	0	1	3	0	0	0	0	**265**	
0745 - 0800	0	182	27	0	3	0	0	0	2	0	0	0	0	**214**	**809**
0800 - 0815	0	190	15	0	4	0	0	1	1	0	0	0	0	**211**	
0815 - 0830	0	150	16	0	3	0	0	0	2	0	0	0	0	**171**	
0830 - 0845	0	163	10	0	6	3	0	1	0	0	0	0	0	**183**	
0845 - 0900	0	146	9	0	4	0	0	0	0	0	0	0	0	**159**	**724**
0900 - 0915	0	156	13	0	1	0	0	0	3	0	0	0	0	**173**	
0915 - 0930	0	157	12	3	2	1	0	1	1	0	0	0	0	**177**	
0930 - 0945	0	146	10	0	1	0	0	1	4	0	0	0	0	**162**	
0945 - 1000	0	143	18	1	2	0	0	0	1	0	0	0	0	**165**	**677**
1000 - 1015	0	142	24	0	5	0	0	1	2	0	0	0	0	**174**	
1015 - 1030	0	140	30	0	5	0	0	0	1	0	0	0	0	**176**	
1030 - 1045	0	153	38	0	6	0	0	2	1	0	0	0	0	**200**	
1045 - 1100	0	143	26	0	3	0	0	0	2	0	0	0	0	**174**	**724**
1100 - 1115	0	152	23	1	2	0	0	0	1	0	0	0	0	**179**	
1115 - 1130	0	151	28	0	5	0	0	0	2	0	0	0	0	**186**	
1130 - 1145	0	151	29	0	7	1	0	0	0	0	0	0	0	**188**	
1145 - 1200	0	171	28	0	8	1	0	0	0	0	0	0	0	**208**	**761**
1200 - 1215	0	133	22	0	7	0	0	1	2	0	0	0	0	**165**	
1215 - 1230	0	153	37	0	1	0	0	0	1	0	0	0	0	**192**	
1230 - 1245	0	162	32	0	5	0	0	0	3	0	0	0	0	**202**	
1245 - 1300	1	168	35	0	7	0	0	0	0	0	0	0	0	**211**	**770**
1300 - 1315	0	160	42	1	5	0	0	0	1	0	0	0	0	**209**	
1315 - 1330	0	150	31	0	2	0	0	0	1	0	0	0	0	**184**	
1330 - 1345	0	166	51	1	2	0	0	1	1	0	0	0	0	**222**	
1345 - 1400	0	173	51	0	2	1	0	0	0	0	0	0	0	**227**	**842**
1400 - 1415	0	133	50	1	4	1	0	0	2	0	0	0	0	**191**	
1415 - 1430	0	154	50	1	0	0	0	0	0	0	0	0	0	**205**	
1430 - 1445	0	166	38	1	6	1	0	0	0	0	0	0	0	**212**	
1445 - 1500	0	180	51	0	2	0	0	0	0	0	0	0	0	**233**	**841**
1500 - 1515	0	183	36	0	2	0	0	1	0	0	0	0	0	**222**	
1515 - 1530	0	190	38	1	1	0	0	0	1	0	0	0	0	**231**	
1530 - 1545	0	219	31	0	2	0	0	0	0	1	0	0	0	**253**	
1545 - 1600	0	191	37	0	1	0	0	0	1	1	0	0	0	**231**	**937**
1600 - 1615	0	190	40	0	4	0	0	0	1	0	0	0	0	**235**	
1615 - 1630	0	145	32	0	0	1	0	0	0	0	0	0	0	**178**	
1630 - 1645	0	162	22	0	2	0	0	0	0	0	0	0	0	**186**	
1645 - 1700	0	140	20	0	2	0	0	0	0	0	0	0	0	**162**	**761**
1700 - 1715	0	186	22	0	2	0	0	0	0	0	0	0	0	**210**	
1715 - 1730	0	177	30	0	2	0	0	0	1	0	0	0	0	**210**	
1730 - 1745	0	170	21	1	1	0	0	0	0	0	0	0	0	**193**	
1745 - 1800	0	144	29	0	0	0	0	0	0	0	0	0	0	**173**	**786**
1800 - 1815	0	155	20	0	2	0	0	0	0	0	0	0	0	**177**	
1815 - 1830	0	166	33	0	3	0	0	0	0	0	0	0	0	**202**	
1830 - 1845	1	177	27	0	2	0	0	0	0	0	0	0	0	**207**	
1845 - 1900	0	175	35	0	1	0	0	0	0	0	0	0	0	**211**	**797**
1900 - 1915	0	0	0	0	0	0	0	0	0	0	0	0	0	**0**	
1915 - 1930	0	0	0	0	0	0	0	0	0	0	0	0	0	**0**	
1930 - 1945	0	0	0	0	0	0	0	0	0	0	0	0	0	**0**	
1945 - 2000	0	0	0	0	0	0	0	0	0	0	0	0	0	**0**	**0**
2000 - 2015	0	0	0	0	0	0	0	0	0	0	0	0	0	**0**	
2015 - 2030	0	0	0	0	0	0	0	0	0	0	0	0	0	**0**	
2030 - 2045	0	0	0	0	0	0	0	0	0	0	0	0	0	**0**	
2045 - 2100	0	0	0	0	0	0	0	0	0	0	0	0	0	**0**	**0**
2100 - 2115	0	0	0	0	0	0	0	0	0	0	0	0	0	**0**	
2115 - 2130	0	0	0	0	0	0	0	0	0	0	0	0	0	**0**	
2130 - 2145	0	0	0	0	0	0	0	0	0	0	0	0	0	**0**	
2145 - 2200	0	0	0	0	0	0	0	0	0	0	0	0	0	**0**	**0**
2200 - 2215	0	0	0	0	0	0	0	0	0	0	0	0	0	**0**	
2215 - 2230	0	0	0	0	0	0	0	0	0	0	0	0	0	**0**	
2230 - 2245	0	0	0	0	0	0	0	0	0	0	0	0	0	**0**	
2245 - 2300	0	0	0	0	0	0	0	0	0	0	0	0	0	**0**	**0**
2300 - 2315	0	0	0	0	0	0	0	0	0	0	0	0	0	**0**	
2315 - 2330	0	0	0	0	0	0	0	0	0	0	0	0	0	**0**	
2330 - 2345	0	0	0	0	0	0	0	0	0	0	0	0	0	**0**	
2345 - 0000	0	0	0	0	0	0	0	0	0	0	0	0	0	**0**	**0**

Session Total	2	8372	1480	21	164	17	0	19	54	3	6	0	0	**10138**
Session Average	0.02	87.21	15.42	0.22	1.71	0.18	0.00	0.20	0.56	0.03	0.06	0.00	0.00	**105.60**
Session Percentage	0.02	82.58	14.60	0.21	1.62	0.17	0.00	0.19	0.53	0.03	0.06	0.00	0.00	

AM Peak Hour	-	0715 - 0815	0945 - 1045	0600 - 0700	0945 - 1045	0830 - 0930	-	0600 - 0700	0900 - 1000	-	0500 - 0600	-	-	**0715 - 0815**
AM Peak Hour Volume	0	762	110	9	18	4	0	5	9	0	1	0	0	**895**

Noon Peak Hour	1200 - 1300	1445 - 1545	1330 - 1430	1330 - 1430	1115 - 1215	1345 - 1445	-	1000 - 1100	1000 - 1100	1445 - 1545	-	-	-	**1445 - 1545**
Noon Peak Hour Volume	1	772	202	3	27	3	0	3	6	1	0	0	0	**939**

PM Peak Hour	1745 - 1845	1515 - 1615	1515 - 1615	1500 - 1600	1515 - 1615	1530 - 1630	-	1500 - 1600	1515 - 1615	1500 - 1600	-	-	-	**1515 - 1615**
PM Peak Hour Volume	1	790	146	1	8	1	0	1	3	2	0	0	0	**950**

Bi-Directional Class Count || NB EB Average 15min

Columbia, SC

Marr Traffic DATA COLLECTION
www.marrtraffic.com

Site 53
I-26 N/Bound On-Ramp,
north of US-378 Sunset Blvd

Date
Tuesday, April 23, 2024

Lat/Long
34.005565°, -81.110515°

Weather
Fair
58°F

0000 - 2400 (Weekday 24h Session) (All Dates)
NB EB Average 15min

	NB EB Average 15min													15min	60min
Time	1	2	3	4	5	6	7	8	9	10	11	12	13	Total	Total
0000 - 0015	0	12	2	0	0	0	0	0	0	0	0	0	0	**14**	
0015 - 0030	0	10	1	0	0	0	0	0	0	0	0	0	0	**11**	
0030 - 0045	0	9	1	0	0	0	0	0	0	0	0	0	0	**11**	
0045 - 0100	0	9	0	0	1	0	0	0	0	0	0	0	0	**10**	**47**
0100 - 0115	0	7	1	0	0	0	0	0	0	0	0	0	0	**8**	
0115 - 0130	0	6	0	0	1	0	0	0	0	0	0	0	0	**8**	
0130 - 0145	0	7	0	0	0	0	0	0	0	0	0	0	0	**7**	
0145 - 0200	0	4	1	0	1	0	0	0	0	0	1	0	0	**6**	**29**
0200 - 0215	0	4	0	0	0	0	0	0	0	0	1	0	0	**5**	
0215 - 0230	0	5	1	0	0	0	0	0	0	0	0	0	0	**6**	
0230 - 0245	0	3	0	0	0	0	0	0	0	0	1	0	0	**4**	
0245 - 0300	0	4	1	0	0	0	0	0	0	0	0	0	0	**5**	**20**
0300 - 0315	0	5	1	0	0	0	0	0	0	0	0	0	0	**6**	
0315 - 0330	0	4	0	0	1	0	0	0	0	0	0	0	0	**5**	
0330 - 0345	0	4	0	0	0	0	0	0	0	0	0	0	0	**5**	
0345 - 0400	0	8	0	0	0	0	0	0	0	0	0	0	0	**8**	**25**
0400 - 0415	0	4	0	0	0	0	0	0	0	0	0	0	0	**5**	
0415 - 0430	0	5	0	0	1	0	0	0	0	0	0	0	0	**6**	
0430 - 0445	0	8	1	0	1	0	0	0	0	0	0	0	0	**10**	
0445 - 0500	0	7	1	0	0	0	0	0	0	0	0	0	0	**9**	**30**
0500 - 0515	0	5	2	0	1	0	0	0	0	0	0	0	0	**8**	
0515 - 0530	0	14	4	0	1	0	0	0	0	0	0	0	0	**19**	
0530 - 0545	0	20	3	0	1	0	0	0	1	0	0	0	0	**26**	
0545 - 0600	0	21	4	0	1	1	0	0	1	0	0	0	0	**28**	**81**
0600 - 0615	0	31	5	1	1	0	0	0	1	0	0	0	0	**39**	
0615 - 0630	0	40	7	1	1	0	0	1	0	0	0	0	0	**50**	
0630 - 0645	0	58	8	1	1	0	0	0	0	0	0	0	0	**69**	
0645 - 0700	0	48	12	0	1	0	0	1	1	0	0	0	0	**63**	**221**
0700 - 0715	0	72	13	0	2	0	0	0	0	0	0	0	0	**88**	
0715 - 0730	0	108	20	0	1	0	0	0	1	0	0	0	0	**130**	
0730 - 0745	0	140	21	0	3	0	0	1	1	0	0	0	0	**166**	
0745 - 0800	0	120	19	0	3	0	0	0	1	0	0	0	0	**143**	**526**
0800 - 0815	0	116	14	0	2	0	0	0	0	0	0	0	0	**133**	
0815 - 0830	0	96	13	0	3	2	0	0	1	0	0	0	0	**116**	
0830 - 0845	0	94	12	0	4	2	0	1	0	0	0	0	0	**112**	
0845 - 0900	0	96	13	0	3	0	0	0	0	0	0	0	0	**113**	**474**
0900 - 0915	0	93	14	0	3	1	0	0	2	0	0	0	0	**113**	
0915 - 0930	0	95	13	1	3	0	0	1	1	0	0	0	0	**114**	
0930 - 0945	0	94	10	0	1	0	0	1	3	0	0	0	0	**110**	
0945 - 1000	0	93	13	0	1	0	0	0	1	0	0	0	0	**109**	**445**
1000 - 1015	0	86	15	0	3	0	0	1	1	0	0	0	0	**106**	
1015 - 1030	0	92	19	0	3	1	0	0	0	0	0	0	0	**116**	
1030 - 1045	0	98	22	0	3	1	0	1	2	0	0	0	0	**128**	
1045 - 1100	0	103	21	0	1	0	0	0	2	0	0	0	0	**127**	**477**
1100 - 1115	0	104	15	0	3	0	0	0	1	0	0	0	0	**123**	
1115 - 1130	0	105	19	0	5	0	0	0	1	0	0	0	0	**130**	
1130 - 1145	0	107	17	0	4	0	0	0	0	0	0	0	0	**129**	
1145 - 1200	0	120	18	0	4	1	0	0	1	0	0	0	0	**144**	**526**
1200 - 1215	0	98	15	0	3	0	0	0	1	0	0	0	0	**118**	
1215 - 1230	0	114	23	0	1	0	0	0	1	0	0	0	0	**139**	
1230 - 1245	0	106	21	0	3	0	0	0	1	0	0	0	0	**131**	
1245 - 1300	0	105	23	0	4	0	0	0	1	0	0	0	0	**134**	**521**
1300 - 1315	0	106	22	1	2	0	0	0	0	0	0	0	0	**132**	
1315 - 1330	0	101	22	0	2	0	0	0	1	0	0	0	0	**126**	
1330 - 1345	0	119	27	1	1	1	0	1	0	0	0	0	0	**149**	
1345 - 1400	1	111	24	1	1	0	0	0	0	0	0	0	0	**138**	**545**
1400 - 1415	0	95	26	0	2	1	0	0	1	0	0	0	0	**125**	
1415 - 1430	0	103	29	0	0	1	0	0	0	0	0	0	0	**134**	
1430 - 1445	0	118	20	0	5	1	0	0	0	0	0	0	0	**144**	
1445 - 1500	0	127	28	0	2	0	0	1	0	0	0	0	0	**158**	**561**
1500 - 1515	0	125	29	0	1	0	0	0	0	0	0	0	0	**155**	
1515 - 1530	0	127	26	0	1	0	0	0	0	0	0	0	0	**155**	
1530 - 1545	0	152	20	0	2	0	0	0	0	0	0	0	0	**175**	
1545 - 1600	0	142	23	0	1	0	0	0	1	0	0	0	0	**168**	**653**
1600 - 1615	0	144	26	0	2	0	0	0	1	0	0	0	0	**172**	
1615 - 1630	0	113	22	0	0	1	0	0	0	0	0	0	0	**135**	
1630 - 1645	0	119	17	0	1	0	0	0	0	0	0	0	0	**137**	
1645 - 1700	0	110	17	0	2	0	0	0	0	0	0	0	0	**130**	**574**
1700 - 1715	0	127	26	0	1	0	0	0	0	0	0	0	0	**154**	
1715 - 1730	0	128	22	0	1	0	0	0	0	0	0	0	0	**151**	
1730 - 1745	0	115	14	0	1	0	0	0	0	0	0	0	0	**132**	
1745 - 1800	0	111	15	0	1	0	0	0	0	0	0	0	0	**127**	**564**
1800 - 1815	0	117	19	0	2	0	0	0	0	0	0	0	0	**139**	
1815 - 1830	0	116	25	0	1	0	0	0	0	0	0	0	0	**142**	
1830 - 1845	0	120	18	0	1	0	0	0	1	0	0	0	0	**140**	
1845 - 1900	0	119	21	0	1	0	0	0	0	0	0	0	0	**140**	**561**
1900 - 1915	0	84	14	0	1	0	0	0	0	0	0	0	0	**99**	
1915 - 1930	0	76	16	0	0	0	0	0	0	0	0	0	0	**93**	
1930 - 1945	1	78	14	0	1	0	0	0	0	0	0	0	0	**95**	
1945 - 2000	0	58	13	0	1	0	0	0	0	0	0	0	0	**72**	**359**
2000 - 2015	0	65	11	0	0	0	0	0	0	0	0	0	0	**77**	
2015 - 2030	0	65	10	0	1	0	0	0	0	0	0	0	0	**76**	
2030 - 2045	0	66	10	0	0	0	0	0	0	0	0	0	0	**77**	
2045 - 2100	0	64	10	0	0	0	0	0	0	0	0	0	0	**73**	**302**
2100 - 2115	0	37	7	0	0	0	0	0	1	0	0	0	0	**44**	
2115 - 2130	0	47	8	0	0	0	0	0	0	0	0	0	0	**54**	
2130 - 2145	0	36	10	0	0	0	0	0	0	0	1	0	0	**47**	
2145 - 2200	0	26	6	0	0	0	0	0	0	0	0	0	0	**33**	**178**
2200 - 2215	0	23	4	0	1	0	0	0	0	0	0	0	0	**28**	
2215 - 2230	0	21	4	0	0	0	0	0	0	0	0	0	0	**26**	
2230 - 2245	0	18	2	0	0	0	0	0	0	0	0	0	0	**21**	
2245 - 2300	0	15	2	0	0	0	0	0	1	0	1	0	0	**19**	**94**
2300 - 2315	0	17	3	0	0	0	0	0	0	0	0	0	0	**20**	
2315 - 2330	0	17	2	0	0	0	0	0	0	0	0	0	0	**20**	
2330 - 2345	0	19	2	0	0	0	0	0	0	0	0	0	0	**21**	
2345 - 0000	0	10	2	0	0	0	0	0	0	0	0	0	0	**12**	**74**

Session Total	3	6527	1147	12	119	17	0	13	41	1	6	1	0	**7888**
Session Average	0.03	67.99	11.94	0.13	1.24	0.18	0.00	0.14	0.43	0.01	0.06	0.01	0.00	**82.17**
Session Percentage	0.04	82.75	14.54	0.15	1.51	0.22	0.00	0.16	0.52	0.02	0.08	0.01	0.00	

AM Peak Hour	-	0715 - 0815	0715 - 0815	0600 - 0700	0815 - 0915	0815 - 0915	-	0915 - 1015	0900 - 1000	-	0500 - 0600	-	-	**0715 - 0815**
AM Peak Volume	0	484	73	3	13	4	0	2	6	0	0	0	0	**571**

Noon Peak Hour	1300 - 1400	1445 - 1545	1330 - 1430	1300 - 1400	1115 - 1215	1330 - 1430	-	1000 - 1100	1030 - 1130	1445 - 1545	-	-	-	**1445 - 1545**
Noon Peak Volume	1	532	107	3	16	3	0	2	6	0	0	0	0	**643**

PM Peak Hour	1900 - 2000	1515 - 1615	1500 - 1600	1500 - 1600	1515 - 1615	1530 - 1630	-	1600 - 1700	1515 - 1615	1500 - 1600	-	-	-	**1515 - 1615**
PM Peak Volume	1	566	98	1	5	1	0	1	2	1	0	0	0	**671**

Bi-Directional Class Count || Volume Summary 15min

Columbia, SC

Marr Traffic DATA COLLECTION

www.marrtraffic.com

Site 53

I-26 N/Bound On-Ramp,
north of US-378 Sunset Blvd

Date

Tuesday, April 23, 2024

Lat/Long

34.005565°, -81.110515°

Weather

Fair
58°F

Click here for Detailed Weather

0000 - 2400 (Weekday 24h Session) (04-23-2024)

Volume Summary 15min

TIME	Volume Summary 15min		15min Total	60min Total
	NB	SB		
0000 - 0015	0	0	**0**	
0015 - 0030	0	0	**0**	
0030 - 0045	0	0	**0**	
0045 - 0100	0	0	**0**	**0**
0100 - 0115	0	0	**0**	
0115 - 0130	0	0	**0**	
0130 - 0145	0	0	**0**	
0145 - 0200	0	0	**0**	**0**
0200 - 0215	0	0	**0**	
0215 - 0230	0	0	**0**	
0230 - 0245	0	0	**0**	
0245 - 0300	0	0	**0**	**0**
0300 - 0315	0	0	**0**	
0315 - 0330	0	0	**0**	
0330 - 0345	0	0	**0**	
0345 - 0400	0	0	**0**	**0**
0400 - 0415	0	0	**0**	
0415 - 0430	0	0	**0**	
0430 - 0445	0	0	**0**	
0445 - 0500	0	0	**0**	**0**
0500 - 0515	0	0	**0**	
0515 - 0530	0	0	**0**	
0530 - 0545	0	0	**0**	
0545 - 0600	0	0	**0**	**0**
0600 - 0615	0	0	**0**	
0615 - 0630	0	0	**0**	
0630 - 0645	0	0	**0**	
0645 - 0700	0	0	**0**	**0**
0700 - 0715	0	0	**0**	
0715 - 0730	0	0	**0**	
0730 - 0745	0	0	**0**	
0745 - 0800	0	0	**0**	**0**
0800 - 0815	0	0	**0**	
0815 - 0830	0	0	**0**	
0830 - 0845	0	0	**0**	
0845 - 0900	0	0	**0**	**0**
0900 - 0915	0	0	**0**	
0915 - 0930	0	0	**0**	
0930 - 0945	0	0	**0**	
0945 - 1000	0	0	**0**	**0**
1000 - 1015	0	0	**0**	
1015 - 1030	0	0	**0**	
1030 - 1045	0	0	**0**	
1045 - 1100	0	0	**0**	**0**
1100 - 1115	0	0	**0**	
1115 - 1130	0	0	**0**	
1130 - 1145	0	0	**0**	
1145 - 1200	0	0	**0**	**0**

Time	Volume Summary 15min		15min Total	60min Total
	NB	SB		
1200 - 1215	0	0	**0**	
1215 - 1230	0	0	**0**	
1230 - 1245	0	0	**0**	
1245 - 1300	0	0	**0**	**0**
1300 - 1315	0	0	**0**	
1315 - 1330	0	0	**0**	
1330 - 1345	0	0	**0**	
1345 - 1400	0	0	**0**	**0**
1400 - 1415	0	0	**0**	
1415 - 1430	0	0	**0**	
1430 - 1445	0	0	**0**	
1445 - 1500	0	0	**0**	**0**
1500 - 1515	0	0	**0**	
1515 - 1530	0	0	**0**	
1530 - 1545	0	0	**0**	
1545 - 1600	0	0	**0**	**0**
1600 - 1615	0	0	**0**	
1615 - 1630	0	0	**0**	
1630 - 1645	0	0	**0**	
1645 - 1700	0	0	**0**	**0**
1700 - 1715	0	0	**0**	
1715 - 1730	0	0	**0**	
1730 - 1745	0	0	**0**	
1745 - 1800	0	0	**0**	**0**
1800 - 1815	0	0	**0**	
1815 - 1830	0	0	**0**	
1830 - 1845	0	0	**0**	
1845 - 1900	0	0	**0**	**0**
1900 - 1915	134	0	**134**	
1915 - 1930	137	0	**137**	
1930 - 1945	137	0	**137**	
1945 - 2000	112	0	**112**	**520**
2000 - 2015	107	0	**107**	
2015 - 2030	116	0	**116**	
2030 - 2045	111	0	**111**	
2045 - 2100	108	0	**108**	**442**
2100 - 2115	64	0	**64**	
2115 - 2130	81	0	**81**	
2130 - 2145	74	0	**74**	
2145 - 2200	43	0	**43**	**262**
2200 - 2215	33	0	**33**	
2215 - 2230	29	0	**29**	
2230 - 2245	21	0	**21**	
2245 - 2300	18	0	**18**	**101**
2300 - 2315	20	0	**20**	
2315 - 2330	24	0	**24**	
2330 - 2345	29	0	**29**	
2345 - 0000	12	0	**12**	**85**

Session Total	1410	0	**1410**
Session Average	14.69	0.00	**14.69**
Session Percentage	100.00	0.00	

Site 53
I-26 N/Bound On-Ramp,
north of US-378 Sunset Blvd

Date
Wednesday, April 24, 2024

Lat/Long
34.005565°, -81.110515°

Weather
Fair
66°F

Click here for Detailed Weather

0000 - 2400 (Weekday 24h Session) (04-24-2024)
Volume Summary 15min

TIME	Volume Summary 15min NB	SB	15min Total	60min Total
0000 - 0015	20	0	**20**	
0015 - 0030	14	0	**14**	
0030 - 0045	14	0	**14**	
0045 - 0100	13	0	**13**	**61**
0100 - 0115	15	0	**15**	
0115 - 0130	10	0	**10**	
0130 - 0145	10	0	**10**	
0145 - 0200	13	0	**13**	**48**
0200 - 0215	6	0	**6**	
0215 - 0230	7	0	**7**	
0230 - 0245	6	0	**6**	
0245 - 0300	5	0	**5**	**24**
0300 - 0315	12	0	**12**	
0315 - 0330	5	0	**5**	
0330 - 0345	6	0	**6**	
0345 - 0400	16	0	**16**	**39**
0400 - 0415	7	0	**7**	
0415 - 0430	9	0	**9**	
0430 - 0445	13	0	**13**	
0445 - 0500	12	0	**12**	**41**
0500 - 0515	9	0	**9**	
0515 - 0530	27	0	**27**	
0530 - 0545	37	0	**37**	
0545 - 0600	42	0	**42**	**115**
0600 - 0615	68	0	**68**	
0615 - 0630	63	0	**63**	
0630 - 0645	108	0	**108**	
0645 - 0700	84	0	**84**	**323**
0700 - 0715	138	0	**138**	
0715 - 0730	184	0	**184**	
0730 - 0745	233	0	**233**	
0745 - 0800	214	0	**214**	**769**
0800 - 0815	188	0	**188**	
0815 - 0830	176	0	**176**	
0830 - 0845	153	0	**153**	
0845 - 0900	181	0	**181**	**698**
0900 - 0915	165	0	**165**	
0915 - 0930	164	0	**164**	
0930 - 0945	168	0	**168**	
0945 - 1000	161	0	**161**	**658**
1000 - 1015	145	0	**145**	
1015 - 1030	171	0	**171**	
1030 - 1045	183	0	**183**	
1045 - 1100	207	0	**207**	**706**
1100 - 1115	190	0	**190**	
1115 - 1130	204	0	**204**	
1130 - 1145	200	0	**200**	
1145 - 1200	224	0	**224**	**818**

Time	Volume Summary 15min NB	SB	15min Total	60min Total
1200 - 1215	189	0	**189**	
1215 - 1230	224	0	**224**	
1230 - 1245	190	0	**190**	
1245 - 1300	190	0	**190**	**793**
1300 - 1315	188	0	**188**	
1315 - 1330	193	0	**193**	
1330 - 1345	225	0	**225**	
1345 - 1400	187	0	**187**	**793**
1400 - 1415	184	0	**184**	
1415 - 1430	196	0	**196**	
1430 - 1445	220	0	**220**	
1445 - 1500	241	0	**241**	**841**
1500 - 1515	243	0	**243**	
1515 - 1530	235	0	**235**	
1530 - 1545	271	0	**271**	
1545 - 1600	274	0	**274**	**1023**
1600 - 1615	282	0	**282**	
1615 - 1630	228	0	**228**	
1630 - 1645	225	0	**225**	
1645 - 1700	227	0	**227**	**962**
1700 - 1715	253	0	**253**	
1715 - 1730	243	0	**243**	
1730 - 1745	202	0	**202**	
1745 - 1800	207	0	**207**	**905**
1800 - 1815	239	0	**239**	
1815 - 1830	224	0	**224**	
1830 - 1845	214	0	**214**	
1845 - 1900	210	0	**210**	**887**
1900 - 1915	164	0	**164**	
1915 - 1930	142	0	**142**	
1930 - 1945	147	0	**147**	
1945 - 2000	105	0	**105**	**558**
2000 - 2015	123	0	**123**	
2015 - 2030	111	0	**111**	
2030 - 2045	119	0	**119**	
2045 - 2100	112	0	**112**	**465**
2100 - 2115	68	0	**68**	
2115 - 2130	82	0	**82**	
2130 - 2145	68	0	**68**	
2145 - 2200	55	0	**55**	**273**
2200 - 2215	51	0	**51**	
2215 - 2230	48	0	**48**	
2230 - 2245	43	0	**43**	
2245 - 2300	39	0	**39**	**181**
2300 - 2315	39	0	**39**	
2315 - 2330	37	0	**37**	
2330 - 2345	35	0	**35**	
2345 - 0000	25	0	**25**	**136**

Session Total	12117	0	**12117**
Session Average	126.22	0.00	**126.22**
Session Percentage	100.00	0.00	

Site 53
I-26 N/Bound On-Ramp,
north of US-378 Sunset Blvd

Date
Thursday, April 25, 2024

Lat/Long
34.005565°, -81.110515°

Weather
Fair
67°F

Click here for Detailed Weather

0000 - 2400 (Weekday 24h Session) (04-25-2024)
Volume Summary 15min

TIME	Volume Summary 15min NB	SB	15min Total	60min Total
0000 - 0015	23	0	**23**	
0015 - 0030	20	0	**20**	
0030 - 0045	19	0	**19**	
0045 - 0100	18	0	**18**	**80**
0100 - 0115	9	0	**9**	
0115 - 0130	13	0	**13**	
0130 - 0145	12	0	**12**	
0145 - 0200	6	0	**6**	**40**
0200 - 0215	10	0	**10**	
0215 - 0230	11	0	**11**	
0230 - 0245	5	0	**5**	
0245 - 0300	9	0	**9**	**35**
0300 - 0315	7	0	**7**	
0315 - 0330	10	0	**10**	
0330 - 0345	9	0	**9**	
0345 - 0400	9	0	**9**	**35**
0400 - 0415	7	0	**7**	
0415 - 0430	9	0	**9**	
0430 - 0445	18	0	**18**	
0445 - 0500	15	0	**15**	**49**
0500 - 0515	16	0	**16**	
0515 - 0530	31	0	**31**	
0530 - 0545	41	0	**41**	
0545 - 0600	41	0	**41**	**129**
0600 - 0615	49	0	**49**	
0615 - 0630	87	0	**87**	
0630 - 0645	99	0	**99**	
0645 - 0700	106	0	**106**	**341**
0700 - 0715	125	0	**125**	
0715 - 0730	205	0	**205**	
0730 - 0745	265	0	**265**	
0745 - 0800	214	0	**214**	**809**
0800 - 0815	211	0	**211**	
0815 - 0830	171	0	**171**	
0830 - 0845	183	0	**183**	
0845 - 0900	159	0	**159**	**724**
0900 - 0915	173	0	**173**	
0915 - 0930	177	0	**177**	
0930 - 0945	162	0	**162**	
0945 - 1000	165	0	**165**	**677**
1000 - 1015	174	0	**174**	
1015 - 1030	176	0	**176**	
1030 - 1045	200	0	**200**	
1045 - 1100	174	0	**174**	**724**
1100 - 1115	179	0	**179**	
1115 - 1130	186	0	**186**	
1130 - 1145	188	0	**188**	
1145 - 1200	208	0	**208**	**761**

Time	Volume Summary 15min NB	SB	15min Total	60min Total
1200 - 1215	165	0	**165**	
1215 - 1230	192	0	**192**	
1230 - 1245	202	0	**202**	
1245 - 1300	211	0	**211**	**770**
1300 - 1315	209	0	**209**	
1315 - 1330	184	0	**184**	
1330 - 1345	222	0	**222**	
1345 - 1400	227	0	**227**	**842**
1400 - 1415	191	0	**191**	
1415 - 1430	205	0	**205**	
1430 - 1445	212	0	**212**	
1445 - 1500	233	0	**233**	**841**
1500 - 1515	222	0	**222**	
1515 - 1530	231	0	**231**	
1530 - 1545	253	0	**253**	
1545 - 1600	231	0	**231**	**937**
1600 - 1615	235	0	**235**	
1615 - 1630	178	0	**178**	
1630 - 1645	186	0	**186**	
1645 - 1700	162	0	**162**	**761**
1700 - 1715	210	0	**210**	
1715 - 1730	210	0	**210**	
1730 - 1745	193	0	**193**	
1745 - 1800	173	0	**173**	**786**
1800 - 1815	177	0	**177**	
1815 - 1830	202	0	**202**	
1830 - 1845	207	0	**207**	
1845 - 1900	211	0	**211**	**797**
1900 - 1915	0	0	**0**	
1915 - 1930	0	0	**0**	
1930 - 1945	0	0	**0**	
1945 - 2000	0	0	**0**	**0**
2000 - 2015	0	0	**0**	
2015 - 2030	0	0	**0**	
2030 - 2045	0	0	**0**	
2045 - 2100	0	0	**0**	**0**
2100 - 2115	0	0	**0**	
2115 - 2130	0	0	**0**	
2130 - 2145	0	0	**0**	
2145 - 2200	0	0	**0**	**0**
2200 - 2215	0	0	**0**	
2215 - 2230	0	0	**0**	
2230 - 2245	0	0	**0**	
2245 - 2300	0	0	**0**	**0**
2300 - 2315	0	0	**0**	
2315 - 2330	0	0	**0**	
2330 - 2345	0	0	**0**	
2345 - 0000	0	0	**0**	**0**

Session Total	10138	0	**10138**
Session Average	105.60	0.00	**105.60**
Session Percentage	100.00	0.00	

Bi-Directional Class Count || NB EB 60min

Columbia, SC

Marr Traffic DATA COLLECTION

www.marrtraffic.com

Site 53
I-26 N/Bound On-Ramp,
north of US-378 Sunset Blvd

Date
Tuesday, April 23, 2024

Lat/Long
34.005565°, -81.110515°

Weather
Fair
58°F

Click here for Detailed Weather

0000 - 2400 (Weekday 24h Session) (04-23-2024)
NB EB 60min

	Northbound (Movement 53.1)													
TIME	1	2	3	4	5	6	7	8	9	10	11	12	13	**Total**
0000 - 0100	0	0	0	0	0	0	0	0	0	0	0	0	0	**0**
0100 - 0200	0	0	0	0	0	0	0	0	0	0	0	0	0	**0**
0200 - 0300	0	0	0	0	0	0	0	0	0	0	0	0	0	**0**
0300 - 0400	0	0	0	0	0	0	0	0	0	0	0	0	0	**0**
0400 - 0500	0	0	0	0	0	0	0	0	0	0	0	0	0	**0**
0500 - 0600	0	0	0	0	0	0	0	0	0	0	0	0	0	**0**
0600 - 0700	0	0	0	0	0	0	0	0	0	0	0	0	0	**0**
0700 - 0800	0	0	0	0	0	0	0	0	0	0	0	0	0	**0**
0800 - 0900	0	0	0	0	0	0	0	0	0	0	0	0	0	**0**
0900 - 1000	0	0	0	0	0	0	0	0	0	0	0	0	0	**0**
1000 - 1100	0	0	0	0	0	0	0	0	0	0	0	0	0	**0**
1100 - 1200	0	0	0	0	0	0	0	0	0	0	0	0	0	**0**
1200 - 1300	0	0	0	0	0	0	0	0	0	0	0	0	0	**0**
1300 - 1400	0	0	0	0	0	0	0	0	0	0	0	0	0	**0**
1400 - 1500	0	0	0	0	0	0	0	0	0	0	0	0	0	**0**
1500 - 1600	0	0	0	0	0	0	0	0	0	0	0	0	0	**0**
1600 - 1700	0	0	0	0	0	0	0	0	0	0	0	0	0	**0**
1700 - 1800	0	0	0	0	0	0	0	0	0	0	0	0	0	**0**
1800 - 1900	0	0	0	0	0	0	0	0	0	0	0	0	0	**0**
1900 - 2000	1	433	79	0	5	0	0	0	2	0	0	0	0	**520**
2000 - 2100	0	360	80	0	2	0	0	0	0	0	0	0	0	**442**
2100 - 2200	1	202	55	0	0	0	0	0	2	0	2	0	0	**262**
2200 - 2300	1	76	19	0	1	0	0	0	2	0	1	1	0	**101**
2300 - 2400	0	68	15	0	0	0	0	0	2	0	0	0	0	**85**
Session Total	3	1139	248	0	8	0	0	0	8	0	3	1	0	**1410**
Session Average	0.13	47.46	10.33	0.00	0.33	0.00	0.00	0.00	0.33	0.00	0.13	0.04	0.00	**58.75**
Session Percentage	0.21	80.78	17.59	0.00	0.57	0.00	0.00	0.00	0.57	0.00	0.21	0.07	0.00	
AM Peak Hour	-	-	-	-	-	-	-	-	-	-	-	-	-	**-**
AM Peak Volume	0	0	0	0	0	0	0	0	0	0	0	0	0	**0**
Noon Peak Hour	-	-	-	-	-	-	-	-	-	-	-	-	-	**-**
Noon Peak Volume	0	0	0	0	0	0	0	0	0	0	0	0	0	**0**
PM Peak Hour	1900 - 2000	1900 - 2000	1900 - 2000	-	1900 - 2000	-	-	-	1900 - 2000	-	-	-	-	**1900 - 2000**
PM Peak Volume	1	433	79	0	5	0	0	0	2	0	0	0	0	**520**

Site 53
I-26 N/Bound On-Ramp,
north of US-378 Sunset Blvd

Date
Wednesday, April 24, 2024

Lat/Long
34.005565°, -81.110515°

Weather
Fair
66°F

Click here for Detailed Weather

0000 - 2400 (Weekday 24h Session) (04-24-2024)
NB EB 60min

	Northbound (Movement 53.1)													
TIME	1	2	3	4	5	6	7	8	9	10	11	12	13	**Total**
0000 - 0100	0	47	8	0	4	0	0	0	1	0	1	0	0	**61**
0100 - 0200	0	35	6	0	5	0	0	0	0	0	1	1	0	**48**
0200 - 0300	0	17	3	0	1	0	0	0	0	0	3	0	0	**24**
0300 - 0400	0	33	3	0	3	0	0	0	0	0	0	0	0	**39**
0400 - 0500	0	33	5	0	3	0	0	0	0	0	0	0	0	**41**
0500 - 0600	0	79	21	0	9	2	0	0	4	0	0	0	0	**115**
0600 - 0700	0	267	43	1	7	2	0	1	2	0	0	0	0	**323**
0700 - 0800	0	645	110	0	10	0	0	1	3	0	0	0	0	**769**
0800 - 0900	0	559	105	1	19	8	0	2	4	0	0	0	0	**698**
0900 - 1000	0	524	98	1	19	3	0	3	10	0	0	0	0	**658**
1000 - 1100	0	561	114	1	14	5	0	2	9	0	0	0	0	**706**
1100 - 1200	0	685	97	0	25	2	0	2	7	0	0	0	0	**818**
1200 - 1300	0	653	123	1	12	0	0	0	4	0	0	0	0	**793**
1300 - 1400	2	662	109	6	6	4	0	3	1	0	0	0	0	**793**
1400 - 1500	0	697	121	0	12	5	0	3	3	0	0	0	0	**841**
1500 - 1600	1	858	152	1	7	2	0	0	2	0	0	0	0	**1023**
1600 - 1700	0	820	131	1	5	1	0	2	2	0	0	0	0	**962**
1700 - 1800	0	766	130	0	7	0	0	1	1	0	0	0	0	**905**
1800 - 1900	0	742	134	0	7	0	0	0	4	0	0	0	0	**887**
1900 - 2000	2	455	91	1	7	1	0	0	1	0	0	0	0	**558**
2000 - 2100	0	420	44	0	1	0	0	0	0	0	0	0	0	**465**
2100 - 2200	0	235	35	1	0	0	0	0	1	0	1	0	0	**273**
2200 - 2300	0	155	18	0	2	0	0	0	2	1	3	0	0	**181**
2300 - 2400	0	123	11	0	1	0	0	0	1	0	0	0	0	**136**

Session Total	5	10071	1712	15	186	35	0	20	62	1	9	1	0	**12117**
Session Average	0.21	419.63	71.33	0.63	7.75	1.46	0.00	0.83	2.58	0.04	0.38	0.04	0.00	**504.88**
Session Percentage	0.04	83.11	14.13	0.12	1.54	0.29	0.00	0.17	0.51	0.01	0.07	0.01	0.00	

AM Peak Hour	-	0700 - 0800	0700 - 0800	0600 - 0700	0800 - 0900	0800 - 0900	-	0900 - 1000	0900 - 1000	-	-	-	-	**0700 - 0800**
AM Peak Volume	0	645	110	1	19	8	0	3	10	0	0	0	0	**769**

Noon Peak Hour	1300 - 1400	1400 - 1500	1200 - 1300	1300 - 1400	1100 - 1200	1000 - 1100	-	1300 - 1400	1000 - 1100	-	-	-	-	**1400 - 1500**
Noon Peak Volume	2	697	123	6	25	5	0	3	9	0	0	0	0	**841**

PM Peak Hour	1900 - 2000	1500 - 1600	1500 - 1600	1500 - 1600	1500 - 1600	1500 - 1600	-	1600 - 1700	1800 - 1900	-	-	-	-	**1500 - 1600**
PM Peak Volume	2	858	152	1	7	2	0	2	4	0	0	0	0	**1023**

Site 53
I-26 N/Bound On-Ramp,
north of US-378 Sunset Blvd

Date
Thursday, April 25, 2024

Lat/Long
34.005565°, -81.110515°

Weather
Fair
67°F

Click here for Detailed Weather

0000 - 2400 (Weekday 24h Session) (04-25-2024)
NB EB 60min

	Northbound (Movement 53.1)													
TIME	1	2	3	4	5	6	7	8	9	10	11	12	13	**Total**
0000 - 0100	0	73	2	0	1	1	0	0	1	1	1	0	0	**80**
0100 - 0200	0	37	0	0	0	1	0	0	1	0	1	0	0	**40**
0200 - 0300	0	29	4	0	0	0	0	0	0	0	2	0	0	**35**
0300 - 0400	0	31	1	0	2	0	0	0	0	0	1	0	0	**35**
0400 - 0500	0	41	2	0	3	0	0	1	2	0	0	0	0	**49**
0500 - 0600	0	101	19	0	3	2	0	0	3	0	1	0	0	**129**
0600 - 0700	0	264	52	9	6	1	0	5	4	0	0	0	0	**341**
0700 - 0800	0	674	108	0	15	2	0	3	7	0	0	0	0	**809**
0800 - 0900	0	649	50	0	17	3	0	2	3	0	0	0	0	**724**
0900 - 1000	0	602	53	4	6	1	0	2	9	0	0	0	0	**677**
1000 - 1100	0	578	118	0	19	0	0	3	6	0	0	0	0	**724**
1100 - 1200	0	625	108	1	22	2	0	0	3	0	0	0	0	**761**
1200 - 1300	1	616	126	0	20	0	0	1	6	0	0	0	0	**770**
1300 - 1400	0	649	175	2	11	1	0	1	3	0	0	0	0	**842**
1400 - 1500	0	633	189	3	12	2	0	0	2	0	0	0	0	**841**
1500 - 1600	0	783	142	1	6	0	0	1	2	2	0	0	0	**937**
1600 - 1700	0	637	114	0	8	1	0	0	1	0	0	0	0	**761**
1700 - 1800	0	677	102	1	5	0	0	0	1	0	0	0	0	**786**
1800 - 1900	1	673	115	0	8	0	0	0	0	0	0	0	0	**797**
1900 - 2000	0	0	0	0	0	0	0	0	0	0	0	0	0	**0**
2000 - 2100	0	0	0	0	0	0	0	0	0	0	0	0	0	**0**
2100 - 2200	0	0	0	0	0	0	0	0	0	0	0	0	0	**0**
2200 - 2300	0	0	0	0	0	0	0	0	0	0	0	0	0	**0**
2300 - 2400	0	0	0	0	0	0	0	0	0	0	0	0	0	**0**

Session Total	2	8372	1480	21	164	17	0	19	54	3	6	0	0	**10138**
Session Average	0.08	348.83	61.67	0.88	6.83	0.71	0.00	0.79	2.25	0.13	0.25	0.00	0.00	**422.42**
Session Percentage	0.02	82.58	14.60	0.21	1.62	0.17	0.00	0.19	0.53	0.03	0.06	0.00	0.00	

AM Peak Hour	-	0700 - 0800	0700 - 0800	0600 - 0700	0800 - 0900	0800 - 0900	-	0600 - 0700	0900 - 1000	-	0500 - 0600	-	-	**0700 - 0800**
AM Peak Hour Volume	0	674	108	9	17	3	0	5	9	0	1	0	0	**809**

Noon Peak Hour	1200 - 1300	1300 - 1400	1400 - 1500	1400 - 1500	1100 - 1200	1100 - 1200	-	1000 - 1100	1000 - 1100	-	-	-	-	**1300 - 1400**
Noon Peak Hour Volume	1	649	189	3	22	2	0	3	6	0	0	0	0	**842**

PM Peak Hour	1800 - 1900	1500 - 1600	1500 - 1600	1500 - 1600	1600 - 1700	1600 - 1700	-	1500 - 1600	1500 - 1600	1500 - 1600	-	-	-	**1500 - 1600**
PM Peak Hour Volume	1	783	142	1	8	1	0	1	2	2	0	0	0	**937**

Bi-Directional Class Count || Volume Summary 60min

Columbia, SC

Marr Traffic DATA COLLECTION

www.marrtraffic.com

Site 53

I-26 N/Bound On-Ramp,
north of US-378 Sunset Blvd

Date

Tuesday, April 23, 2024

Lat/Long

34.005565°, -81.110515°

Weather

Fair
58°F

Click here for Detailed Weather

0000 - 2400 (Weekday 24h Session) (04-23-2024)

Volume Summary 60min

	Volume Summary 60min		
TIME	NB	SB	**Total**
0000 - 0100	0	0	**0**
0100 - 0200	0	0	**0**
0200 - 0300	0	0	**0**
0300 - 0400	0	0	**0**
0400 - 0500	0	0	**0**
0500 - 0600	0	0	**0**
0600 - 0700	0	0	**0**
0700 - 0800	0	0	**0**
0800 - 0900	0	0	**0**
0900 - 1000	0	0	**0**
1000 - 1100	0	0	**0**
1100 - 1200	0	0	**0**

	Volume Summary 60min		
Time	NB	SB	**Total**
1200 - 1300	0	0	**0**
1300 - 1400	0	0	**0**
1400 - 1500	0	0	**0**
1500 - 1600	0	0	**0**
1600 - 1700	0	0	**0**
1700 - 1800	0	0	**0**
1800 - 1900	0	0	**0**
1900 - 2000	520	0	**520**
2000 - 2100	442	0	**442**
2100 - 2200	262	0	**262**
2200 - 2300	101	0	**101**
2300 - 2400	85	0	**85**

Session Total	1410	0	**1410**
Session Average	58.75	0.00	**58.75**
Session Percentage	100.00	0.00	

Site 53

I-26 N/Bound On-Ramp,
north of US-378 Sunset Blvd

Date

Wednesday, April 24, 2024

Lat/Long

34.005565°, -81.110515°

Weather

Fair
66°F

Click here for Detailed Weather

0000 - 2400 (Weekday 24h Session) (04-24-2024)

Volume Summary 60min

	Volume Summary 60min		
TIME	NB	SB	**Total**
0000 - 0100	61	0	**61**
0100 - 0200	48	0	**48**
0200 - 0300	24	0	**24**
0300 - 0400	39	0	**39**
0400 - 0500	41	0	**41**
0500 - 0600	115	0	**115**
0600 - 0700	323	0	**323**
0700 - 0800	769	0	**769**
0800 - 0900	698	0	**698**
0900 - 1000	658	0	**658**
1000 - 1100	706	0	**706**
1100 - 1200	818	0	**818**

Session Total	12117	0	**12117**
Session Average	504.88	0.00	**504.88**
Session Percentage	100.00	0.00	

	Volume Summary 60min		
Time	NB	SB	**Total**
1200 - 1300	793	0	**793**
1300 - 1400	793	0	**793**
1400 - 1500	841	0	**841**
1500 - 1600	1023	0	**1023**
1600 - 1700	962	0	**962**
1700 - 1800	905	0	**905**
1800 - 1900	887	0	**887**
1900 - 2000	558	0	**558**
2000 - 2100	465	0	**465**
2100 - 2200	273	0	**273**
2200 - 2300	181	0	**181**
2300 - 2400	136	0	**136**

Site 53

I-26 N/Bound On-Ramp,
north of US-378 Sunset Blvd

Date

Thursday, April 25, 2024

Lat/Long

34.005565°, -81.110515°

Weather

Fair
67°F

Click here for Detailed Weather

0000 - 2400 (Weekday 24h Session) (04-25-2024)

Volume Summary 60min

	Volume Summary 60min		
TIME	NB	SB	**Total**
0000 - 0100	80	0	**80**
0100 - 0200	40	0	**40**
0200 - 0300	35	0	**35**
0300 - 0400	35	0	**35**
0400 - 0500	49	0	**49**
0500 - 0600	129	0	**129**
0600 - 0700	341	0	**341**
0700 - 0800	809	0	**809**
0800 - 0900	724	0	**724**
0900 - 1000	677	0	**677**
1000 - 1100	724	0	**724**
1100 - 1200	761	0	**761**

	Volume Summary 60min		
Time	NB	SB	**Total**
1200 - 1300	770	0	**770**
1300 - 1400	842	0	**842**
1400 - 1500	841	0	**841**
1500 - 1600	937	0	**937**
1600 - 1700	761	0	**761**
1700 - 1800	786	0	**786**
1800 - 1900	797	0	**797**
1900 - 2000	0	0	**0**
2000 - 2100	0	0	**0**
2100 - 2200	0	0	**0**
2200 - 2300	0	0	**0**
2300 - 2400	0	0	**0**

Session Total	10138	0	**10138**
Session Average	422.42	0.00	**422.42**
Session Percentage	100.00	0.00	

Bi-Directional Class Count || Graphical Analysis NB EB

Columbia, SC

Marr Traffic DATA COLLECTION

www.marrtraffic.com

Site 53

I-26 N/Bound On-Ramp,
north of US-378 Sunset Blvd

Lat/Long

34.005565°, -81.110515°

0000 - 2400 (Weekday 24h Session)

Graphical Analysis NB EB

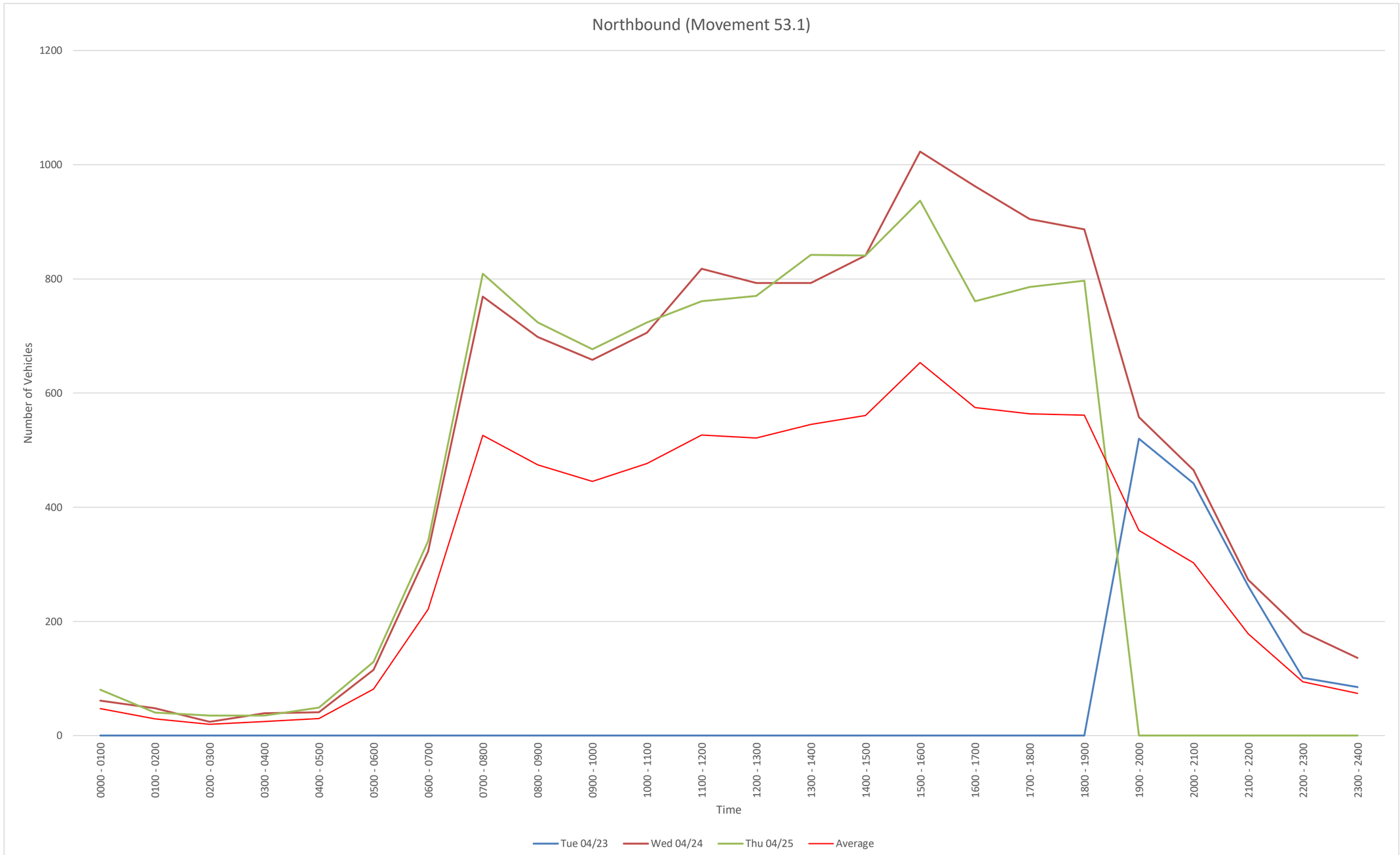

Time	Tue 04/23	Wed 04/24	Thu 04/25				
0000 - 0100	0	61	80				
0100 - 0200	0	48	40				
0200 - 0300	0	24	35				
0300 - 0400	0	39	35				
0400 - 0500	0	41	49				
0500 - 0600	0	115	129				
0600 - 0700	0	323	341				
0700 - 0800	0	769	809				
0800 - 0900	0	698	724				
0900 - 1000	0	658	677				
1000 - 1100	0	706	724				
1100 - 1200	0	818	761				
1200 - 1300	0	793	770				
1300 - 1400	0	793	842				
1400 - 1500	0	841	841				
1500 - 1600	0	1023	937				
1600 - 1700	0	962	761				
1700 - 1800	0	905	786				
1800 - 1900	0	887	797				
1900 - 2000	520	558	0				
2000 - 2100	442	465	0				
2100 - 2200	262	273	0				
2200 - 2300	101	181	0				
2300 - 2400	85	136	0				
Daily Total	1410	12117	10138				

NB
File Name:
Start Date: 4/23/2024
Start Time: 0
Site Code: 53
Station ID: 1
Location 1: I-26 N/Bound On-Ramp, north of US-378 Sunset Blvd
Location 2:

Date	Time	1	2	3	4	5	6	7	8	9	10	11	12	13
4/23/2024	12:00 AM	0	0	0	0	0	0	0	0	0	0	0	0	0
4/23/2024	12:15 AM	0	0	0	0	0	0	0	0	0	0	0	0	0
4/23/2024	12:30 AM	0	0	0	0	0	0	0	0	0	0	0	0	0
4/23/2024	12:45 AM	0	0	0	0	0	0	0	0	0	0	0	0	0
4/23/2024	1:00 AM	0	0	0	0	0	0	0	0	0	0	0	0	0
4/23/2024	1:15 AM	0	0	0	0	0	0	0	0	0	0	0	0	0
4/23/2024	1:30 AM	0	0	0	0	0	0	0	0	0	0	0	0	0
4/23/2024	1:45 AM	0	0	0	0	0	0	0	0	0	0	0	0	0
4/23/2024	2:00 AM	0	0	0	0	0	0	0	0	0	0	0	0	0
4/23/2024	2:15 AM	0	0	0	0	0	0	0	0	0	0	0	0	0
4/23/2024	2:30 AM	0	0	0	0	0	0	0	0	0	0	0	0	0
4/23/2024	2:45 AM	0	0	0	0	0	0	0	0	0	0	0	0	0
4/23/2024	3:00 AM	0	0	0	0	0	0	0	0	0	0	0	0	0
4/23/2024	3:15 AM	0	0	0	0	0	0	0	0	0	0	0	0	0
4/23/2024	3:30 AM	0	0	0	0	0	0	0	0	0	0	0	0	0
4/23/2024	3:45 AM	0	0	0	0	0	0	0	0	0	0	0	0	0
4/23/2024	4:00 AM	0	0	0	0	0	0	0	0	0	0	0	0	0
4/23/2024	4:15 AM	0	0	0	0	0	0	0	0	0	0	0	0	0
4/23/2024	4:30 AM	0	0	0	0	0	0	0	0	0	0	0	0	0
4/23/2024	4:45 AM	0	0	0	0	0	0	0	0	0	0	0	0	0
4/23/2024	5:00 AM	0	0	0	0	0	0	0	0	0	0	0	0	0
4/23/2024	5:15 AM	0	0	0	0	0	0	0	0	0	0	0	0	0
4/23/2024	5:30 AM	0	0	0	0	0	0	0	0	0	0	0	0	0
4/23/2024	5:45 AM	0	0	0	0	0	0	0	0	0	0	0	0	0
4/23/2024	6:00 AM	0	0	0	0	0	0	0	0	0	0	0	0	0
4/23/2024	6:15 AM	0	0	0	0	0	0	0	0	0	0	0	0	0
4/23/2024	6:30 AM	0	0	0	0	0	0	0	0	0	0	0	0	0
4/23/2024	6:45 AM	0	0	0	0	0	0	0	0	0	0	0	0	0
4/23/2024	7:00 AM	0	0	0	0	0	0	0	0	0	0	0	0	0
4/23/2024	7:15 AM	0	0	0	0	0	0	0	0	0	0	0	0	0
4/23/2024	7:30 AM	0	0	0	0	0	0	0	0	0	0	0	0	0
4/23/2024	7:45 AM	0	0	0	0	0	0	0	0	0	0	0	0	0
4/23/2024	8:00 AM	0	0	0	0	0	0	0	0	0	0	0	0	0
4/23/2024	8:15 AM	0	0	0	0	0	0	0	0	0	0	0	0	0
4/23/2024	8:30 AM	0	0	0	0	0	0	0	0	0	0	0	0	0
4/23/2024	8:45 AM	0	0	0	0	0	0	0	0	0	0	0	0	0
4/23/2024	9:00 AM	0	0	0	0	0	0	0	0	0	0	0	0	0
4/23/2024	9:15 AM	0	0	0	0	0	0	0	0	0	0	0	0	0
4/23/2024	9:30 AM	0	0	0	0	0	0	0	0	0	0	0	0	0
4/23/2024	9:45 AM	0	0	0	0	0	0	0	0	0	0	0	0	0
4/23/2024	10:00 AM	0	0	0	0	0	0	0	0	0	0	0	0	0
4/23/2024	10:15 AM	0	0	0	0	0	0	0	0	0	0	0	0	0
4/23/2024	10:30 AM	0	0	0	0	0	0	0	0	0	0	0	0	0
4/23/2024	10:45 AM	0	0	0	0	0	0	0	0	0	0	0	0	0
4/23/2024	11:00 AM	0	0	0	0	0	0	0	0	0	0	0	0	0
4/23/2024	11:15 AM	0	0	0	0	0	0	0	0	0	0	0	0	0
4/23/2024	11:30 AM	0	0	0	0	0	0	0	0	0	0	0	0	0
4/23/2024	11:45 AM	0	0	0	0	0	0	0	0	0	0	0	0	0
4/23/2024	12:00 PM	0	0	0	0	0	0	0	0	0	0	0	0	0
4/23/2024	12:15 PM	0	0	0	0	0	0	0	0	0	0	0	0	0
4/23/2024	12:30 PM	0	0	0	0	0	0	0	0	0	0	0	0	0
4/23/2024	12:45 PM	0	0	0	0	0	0	0	0	0	0	0	0	0
4/23/2024	1:00 PM	0	0	0	0	0	0	0	0	0	0	0	0	0
4/23/2024	1:15 PM	0	0	0	0	0	0	0	0	0	0	0	0	0
4/23/2024	1:30 PM	0	0	0	0	0	0	0	0	0	0	0	0	0
4/23/2024	1:45 PM	0	0	0	0	0	0	0	0	0	0	0	0	0
4/23/2024	2:00 PM	0	0	0	0	0	0	0	0	0	0	0	0	0
4/23/2024	2:15 PM	0	0	0	0	0	0	0	0	0	0	0	0	0
4/23/2024	2:30 PM	0	0	0	0	0	0	0	0	0	0	0	0	0
4/23/2024	2:45 PM	0	0	0	0	0	0	0	0	0	0	0	0	0
4/23/2024	3:00 PM	0	0	0	0	0	0	0	0	0	0	0	0	0
4/23/2024	3:15 PM	0	0	0	0	0	0	0	0	0	0	0	0	0
4/23/2024	3:30 PM	0	0	0	0	0	0	0	0	0	0	0	0	0
4/23/2024	3:45 PM	0	0	0	0	0	0	0	0	0	0	0	0	0
4/23/2024	4:00 PM	0	0	0	0	0	0	0	0	0	0	0	0	0
4/23/2024	4:15 PM	0	0	0	0	0	0	0	0	0	0	0	0	0
4/23/2024	4:30 PM	0	0	0	0	0	0	0	0	0	0	0	0	0
4/23/2024	4:45 PM	0	0	0	0	0	0	0	0	0	0	0	0	0
4/23/2024	5:00 PM	0	0	0	0	0	0	0	0	0	0	0	0	0
4/23/2024	5:15 PM	0	0	0	0	0	0	0	0	0	0	0	0	0
4/23/2024	5:30 PM	0	0	0	0	0	0	0	0	0	0	0	0	0
4/23/2024	5:45 PM	0	0	0	0	0	0	0	0	0	0	0	0	0
4/23/2024	6:00 PM	0	0	0	0	0	0	0	0	0	0	0	0	0
4/23/2024	6:15 PM	0	0	0	0	0	0	0	0	0	0	0	0	0
4/23/2024	6:30 PM	0	0	0	0	0	0	0	0	0	0	0	0	0
4/23/2024	6:45 PM	0	0	0	0	0	0	0	0	0	0	0	0	0
4/23/2024	7:00 PM	0	114	16	0	3	0	0	0	1	0	0	0	0
4/23/2024	7:15 PM	0	114	22	0	0	0	0	0	1	0	0	0	0
4/23/2024	7:30 PM	0	115	20	0	2	0	0	0	0	0	0	0	0
4/23/2024	7:45 PM	1	90	21	0	0	0	0	0	0	0	0	0	0
4/23/2024	8:00 PM	0	87	20	0	0	0	0	0	0	0	0	0	0
4/23/2024	8:15 PM	0	94	20	0	2	0	0	0	0	0	0	0	0
4/23/2024	8:30 PM	0	91	20	0	0	0	0	0	0	0	0	0	0
4/23/2024	8:45 PM	0	88	20	0	0	0	0	0	0	0	0	0	0
4/23/2024	9:00 PM	0	50	12	0	0	0	0	0	2	0	0	0	0
4/23/2024	9:15 PM	0	67	14	0	0	0	0	0	0	0	0	0	0
4/23/2024	9:30 PM	1	55	17	0	0	0	0	0	0	0	1	0	0
4/23/2024	9:45 PM	0	30	12	0	0	0	0	0	0	0	1	0	0
4/23/2024	10:00 PM	0	26	6	0	1	0	0	0	0	0	0	0	0
4/23/2024	10:15 PM	1	18	8	0	0	0	0	0	1	0	0	1	0
4/23/2024	10:30 PM	0	18	3	0	0	0	0	0	0	0	0	0	0
4/23/2024	10:45 PM	0	14	2	0	0	0	0	0	1	0	1	0	0
4/23/2024	11:00 PM	0	16	4	0	0	0	0	0	0	0	0	0	0
4/23/2024	11:15 PM	0	19	4	0	0	0	0	0	1	0	0	0	0
4/23/2024	11:30 PM	0	24	5	0	0	0	0	0	0	0	0	0	0
4/23/2024	11:45 PM	0	9	2	0	0	0	0	0	1	0	0	0	0

4/24/2024	12:00 AM	0	15	5	0	0	0	0	0	0	0	0	0
4/24/2024	12:15 AM	0	11	1	0	1	0	0	0	1	0	0	0
4/24/2024	12:30 AM	0	11	1	0	1	0	0	0	0	0	1	0
4/24/2024	12:45 AM	0	10	1	0	2	0	0	0	0	0	0	0
4/24/2024	1:00 AM	0	12	2	0	1	0	0	0	0	0	0	0
4/24/2024	1:15 AM	0	7	1	0	2	0	0	0	0	0	0	0
4/24/2024	1:30 AM	0	9	1	0	0	0	0	0	0	0	0	0
4/24/2024	1:45 AM	0	7	2	0	2	0	0	0	0	0	1	0
4/24/2024	2:00 AM	0	4	0	0	1	0	0	0	0	0	1	0
4/24/2024	2:15 AM	0	5	1	0	0	0	0	0	0	0	1	0
4/24/2024	2:30 AM	0	4	1	0	0	0	0	0	0	0	1	0
4/24/2024	2:45 AM	0	4	1	0	0	0	0	0	0	0	0	0
4/24/2024	3:00 AM	0	10	1	0	1	0	0	0	0	0	0	0
4/24/2024	3:15 AM	0	4	0	0	1	0	0	0	0	0	0	0
4/24/2024	3:30 AM	0	5	1	0	0	0	0	0	0	0	0	0
4/24/2024	3:45 AM	0	14	1	0	1	0	0	0	0	0	0	0
4/24/2024	4:00 AM	0	6	1	0	0	0	0	0	0	0	0	0
4/24/2024	4:15 AM	0	7	1	0	1	0	0	0	0	0	0	0
4/24/2024	4:30 AM	0	10	2	0	1	0	0	0	0	0	0	0
4/24/2024	4:45 AM	0	10	1	0	1	0	0	0	0	0	0	0
4/24/2024	5:00 AM	0	5	1	0	3	0	0	0	0	0	0	0
4/24/2024	5:15 AM	0	21	5	0	1	0	0	0	0	0	0	0
4/24/2024	5:30 AM	0	26	6	0	3	1	0	0	1	0	0	0
4/24/2024	5:45 AM	0	27	9	0	2	1	0	0	3	0	0	0
4/24/2024	6:00 AM	0	57	7	0	2	1	0	0	1	0	0	0
4/24/2024	6:15 AM	0	51	10	0	1	0	0	1	0	0	0	0
4/24/2024	6:30 AM	0	91	12	1	3	1	0	0	0	0	0	0
4/24/2024	6:45 AM	0	68	14	0	1	0	0	0	1	0	0	0
4/24/2024	7:00 AM	0	113	22	0	2	0	0	0	1	0	0	0
4/24/2024	7:15 AM	0	153	30	0	1	0	0	0	0	0	0	0
4/24/2024	7:30 AM	0	202	28	0	2	0	0	1	0	0	0	0
4/24/2024	7:45 AM	0	177	30	0	5	0	0	0	2	0	0	0
4/24/2024	8:00 AM	0	159	26	0	3	0	0	0	0	0	0	0
4/24/2024	8:15 AM	0	139	24	0	6	5	0	0	2	0	0	0
4/24/2024	8:30 AM	0	118	25	0	6	2	0	1	1	0	0	0
4/24/2024	8:45 AM	0	143	30	1	4	1	0	1	1	0	0	0
4/24/2024	9:00 AM	0	123	30	0	8	2	0	0	2	0	0	0
4/24/2024	9:15 AM	0	128	27	0	7	0	0	1	1	0	0	0
4/24/2024	9:30 AM	0	137	21	1	2	1	0	1	5	0	0	0
4/24/2024	9:45 AM	0	136	20	0	2	0	0	1	2	0	0	0
4/24/2024	10:00 AM	0	117	21	1	4	0	0	1	1	0	0	0
4/24/2024	10:15 AM	0	136	28	0	5	2	0	0	0	0	0	0
4/24/2024	10:30 AM	0	142	28	0	4	3	0	1	5	0	0	0
4/24/2024	10:45 AM	0	166	37	0	1	0	0	0	3	0	0	0
4/24/2024	11:00 AM	0	159	22	0	6	0	0	0	3	0	0	0
4/24/2024	11:15 AM	0	165	28	0	9	1	0	0	1	0	0	0
4/24/2024	11:30 AM	0	171	22	0	5	0	0	1	1	0	0	0
4/24/2024	11:45 AM	0	190	25	0	5	1	0	1	2	0	0	0
4/24/2024	12:00 PM	0	162	24	0	2	0	0	0	1	0	0	0
4/24/2024	12:15 PM	0	188	33	0	2	0	0	0	1	0	0	0
4/24/2024	12:30 PM	0	155	31	1	3	0	0	0	0	0	0	0
4/24/2024	12:45 PM	0	148	35	0	5	0	0	0	2	0	0	0
4/24/2024	1:00 PM	0	158	24	3	1	1	0	1	0	0	0	0
4/24/2024	1:15 PM	0	153	34	0	3	1	0	1	1	0	0	0
4/24/2024	1:30 PM	0	190	30	1	1	2	0	1	0	0	0	0
4/24/2024	1:45 PM	2	161	21	2	1	0	0	0	0	0	0	0
4/24/2024	2:00 PM	0	151	29	0	1	1	0	1	1	0	0	0
4/24/2024	2:15 PM	0	155	38	0	0	3	0	0	0	0	0	0
4/24/2024	2:30 PM	0	189	21	0	8	1	0	0	1	0	0	0
4/24/2024	2:45 PM	0	202	33	0	3	0	0	2	1	0	0	0
4/24/2024	3:00 PM	0	193	50	0	0	0	0	0	0	0	0	0
4/24/2024	3:15 PM	0	192	40	0	2	1	0	0	0	0	0	0
4/24/2024	3:30 PM	0	237	30	0	3	1	0	0	0	0	0	0
4/24/2024	3:45 PM	1	236	32	1	2	0	0	0	2	0	0	0
4/24/2024	4:00 PM	0	242	38	0	1	0	0	0	1	0	0	0
4/24/2024	4:15 PM	0	193	33	0	0	1	0	0	1	0	0	0
4/24/2024	4:30 PM	0	194	30	0	0	0	0	1	0	0	0	0
4/24/2024	4:45 PM	0	191	30	1	4	0	0	1	0	0	0	0
4/24/2024	5:00 PM	0	194	57	0	2	0	0	0	0	0	0	0
4/24/2024	5:15 PM	0	206	36	0	1	0	0	0	0	0	0	0
4/24/2024	5:30 PM	0	176	22	0	2	0	0	1	1	0	0	0
4/24/2024	5:45 PM	0	190	15	0	2	0	0	0	0	0	0	0
4/24/2024	6:00 PM	0	195	38	0	5	0	0	0	1	0	0	0
4/24/2024	6:15 PM	0	181	42	0	0	0	0	0	1	0	0	0
4/24/2024	6:30 PM	0	184	27	0	1	0	0	0	2	0	0	0
4/24/2024	6:45 PM	0	182	27	0	1	0	0	0	0	0	0	0
4/24/2024	7:00 PM	0	137	25	0	1	1	0	0	0	0	0	0
4/24/2024	7:15 PM	0	114	26	1	1	0	0	0	0	0	0	0
4/24/2024	7:30 PM	2	120	22	0	2	0	0	0	1	0	0	0
4/24/2024	7:45 PM	0	84	18	0	3	0	0	0	0	0	0	0
4/24/2024	8:00 PM	0	109	13	0	1	0	0	0	0	0	0	0
4/24/2024	8:15 PM	0	100	11	0	0	0	0	0	0	0	0	0
4/24/2024	8:30 PM	0	108	11	0	0	0	0	0	0	0	0	0
4/24/2024	8:45 PM	0	103	9	0	0	0	0	0	0	0	0	0
4/24/2024	9:00 PM	0	60	8	0	0	0	0	0	0	0	0	0
4/24/2024	9:15 PM	0	73	9	0	0	0	0	0	0	0	0	0
4/24/2024	9:30 PM	0	54	12	0	0	0	0	0	1	0	1	0
4/24/2024	9:45 PM	0	48	6	1	0	0	0	0	0	0	0	0
4/24/2024	10:00 PM	0	43	5	0	1	0	0	0	1	0	1	0
4/24/2024	10:15 PM	0	44	4	0	0	0	0	0	0	0	0	0
4/24/2024	10:30 PM	0	37	4	0	1	0	0	0	0	1	0	0
4/24/2024	10:45 PM	0	31	5	0	0	0	0	0	1	0	2	0
4/24/2024	11:00 PM	0	34	4	0	0	0	0	0	1	0	0	0
4/24/2024	11:15 PM	0	33	3	0	1	0	0	0	0	0	0	0
4/24/2024	11:30 PM	0	34	1	0	0	0	0	0	0	0	0	0
4/24/2024	11:45 PM	0	22	3	0	0	0	0	0	0	0	0	0

4/25/2024	12:00 AM	0	21	0	0	1	0	0	0	0	1	0	0	0
4/25/2024	12:15 AM	0	19	1	0	0	0	0	0	0	0	0	0	0
4/25/2024	12:30 AM	0	16	1	0	0	1	0	0	1	0	0	0	0
4/25/2024	12:45 AM	0	17	0	0	0	0	0	0	0	0	1	0	0
4/25/2024	1:00 AM	0	9	0	0	0	0	0	0	0	0	0	0	0
4/25/2024	1:15 AM	0	12	0	0	0	0	0	0	1	0	0	0	0
4/25/2024	1:30 AM	0	11	0	0	0	1	0	0	0	0	0	0	0
4/25/2024	1:45 AM	0	5	0	0	0	0	0	0	0	0	1	0	0
4/25/2024	2:00 AM	0	8	1	0	0	0	0	0	0	0	1	0	0
4/25/2024	2:15 AM	0	9	2	0	0	0	0	0	0	0	0	0	0
4/25/2024	2:30 AM	0	4	0	0	0	0	0	0	0	0	1	0	0
4/25/2024	2:45 AM	0	8	1	0	0	0	0	0	0	0	0	0	0
4/25/2024	3:00 AM	0	6	1	0	0	0	0	0	0	0	0	0	0
4/25/2024	3:15 AM	0	9	0	0	1	0	0	0	0	0	0	0	0
4/25/2024	3:30 AM	0	7	0	0	1	0	0	0	0	0	1	0	0
4/25/2024	3:45 AM	0	9	0	0	0	0	0	0	0	0	0	0	0
4/25/2024	4:00 AM	0	6	0	0	1	0	0	0	0	0	0	0	0
4/25/2024	4:15 AM	0	8	0	0	1	0	0	0	0	0	0	0	0
4/25/2024	4:30 AM	0	15	0	0	1	0	0	1	1	0	0	0	0
4/25/2024	4:45 AM	0	12	2	0	0	0	0	0	1	0	0	0	0
4/25/2024	5:00 AM	0	10	5	0	0	0	0	0	0	0	1	0	0
4/25/2024	5:15 AM	0	20	6	0	3	1	0	0	1	0	0	0	0
4/25/2024	5:30 AM	0	35	4	0	0	0	0	0	2	0	0	0	0
4/25/2024	5:45 AM	0	36	4	0	0	1	0	0	0	0	0	0	0
4/25/2024	6:00 AM	0	35	7	3	2	0	0	1	1	0	0	0	0
4/25/2024	6:15 AM	0	70	10	3	2	0	0	1	1	0	0	0	0
4/25/2024	6:30 AM	0	82	13	2	0	0	0	1	1	0	0	0	0
4/25/2024	6:45 AM	0	77	22	1	2	1	0	2	1	0	0	0	0
4/25/2024	7:00 AM	0	102	17	0	4	1	0	1	0	0	0	0	0
4/25/2024	7:15 AM	0	171	29	0	2	0	0	1	2	0	0	0	0
4/25/2024	7:30 AM	0	219	35	0	6	1	0	1	3	0	0	0	0
4/25/2024	7:45 AM	0	182	27	0	3	0	0	0	2	0	0	0	0
4/25/2024	8:00 AM	0	190	15	0	4	0	0	1	1	0	0	0	0
4/25/2024	8:15 AM	0	150	16	0	3	0	0	0	2	0	0	0	0
4/25/2024	8:30 AM	0	163	10	0	6	3	0	1	0	0	0	0	0
4/25/2024	8:45 AM	0	146	9	0	4	0	0	0	0	0	0	0	0
4/25/2024	9:00 AM	0	156	13	0	1	0	0	0	3	0	0	0	0
4/25/2024	9:15 AM	0	157	12	3	2	1	0	1	1	0	0	0	0
4/25/2024	9:30 AM	0	146	10	0	1	0	0	1	4	0	0	0	0
4/25/2024	9:45 AM	0	143	18	1	2	0	0	0	1	0	0	0	0
4/25/2024	10:00 AM	0	142	24	0	5	0	0	1	2	0	0	0	0
4/25/2024	10:15 AM	0	140	30	0	5	0	0	0	1	0	0	0	0
4/25/2024	10:30 AM	0	153	38	0	6	0	0	2	1	0	0	0	0
4/25/2024	10:45 AM	0	143	26	0	3	0	0	0	2	0	0	0	0
4/25/2024	11:00 AM	0	152	23	1	2	0	0	0	1	0	0	0	0
4/25/2024	11:15 AM	0	151	28	0	5	0	0	0	2	0	0	0	0
4/25/2024	11:30 AM	0	151	29	0	7	1	0	0	0	0	0	0	0
4/25/2024	11:45 AM	0	171	28	0	8	1	0	0	0	0	0	0	0
4/25/2024	12:00 PM	0	133	22	0	7	0	0	1	2	0	0	0	0
4/25/2024	12:15 PM	0	153	37	0	1	0	0	0	1	0	0	0	0
4/25/2024	12:30 PM	0	162	32	0	5	0	0	0	3	0	0	0	0
4/25/2024	12:45 PM	1	168	35	0	7	0	0	0	0	0	0	0	0
4/25/2024	1:00 PM	0	160	42	1	5	0	0	0	1	0	0	0	0
4/25/2024	1:15 PM	0	150	31	0	2	0	0	0	1	0	0	0	0
4/25/2024	1:30 PM	0	166	51	1	2	0	0	1	1	0	0	0	0
4/25/2024	1:45 PM	0	173	51	0	2	1	0	0	0	0	0	0	0
4/25/2024	2:00 PM	0	133	50	1	4	1	0	0	2	0	0	0	0
4/25/2024	2:15 PM	0	154	50	1	0	0	0	0	0	0	0	0	0
4/25/2024	2:30 PM	0	166	38	1	6	1	0	0	0	0	0	0	0
4/25/2024	2:45 PM	0	180	51	0	2	0	0	0	0	0	0	0	0
4/25/2024	3:00 PM	0	183	36	0	2	0	0	1	0	0	0	0	0
4/25/2024	3:15 PM	0	190	38	1	1	0	0	0	1	0	0	0	0
4/25/2024	3:30 PM	0	219	31	0	2	0	0	0	0	1	0	0	0
4/25/2024	3:45 PM	0	191	37	0	1	0	0	0	1	1	0	0	0
4/25/2024	4:00 PM	0	190	40	0	4	0	0	0	1	0	0	0	0
4/25/2024	4:15 PM	0	145	32	0	0	1	0	0	0	0	0	0	0
4/25/2024	4:30 PM	0	162	22	0	2	0	0	0	0	0	0	0	0
4/25/2024	4:45 PM	0	140	20	0	2	0	0	0	0	0	0	0	0
4/25/2024	5:00 PM	0	186	22	0	2	0	0	0	0	0	0	0	0
4/25/2024	5:15 PM	0	177	30	0	2	0	0	0	1	0	0	0	0
4/25/2024	5:30 PM	0	170	21	1	1	0	0	0	0	0	0	0	0
4/25/2024	5:45 PM	0	144	29	0	0	0	0	0	0	0	0	0	0
4/25/2024	6:00 PM	0	155	20	0	2	0	0	0	0	0	0	0	0
4/25/2024	6:15 PM	0	166	33	0	3	0	0	0	0	0	0	0	0
4/25/2024	6:30 PM	1	177	27	0	2	0	0	0	0	0	0	0	0
4/25/2024	6:45 PM	0	175	35	0	1	0	0	0	0	0	0	0	0
4/25/2024	7:00 PM	0	0	0	0	0	0	0	0	0	0	0	0	0
4/25/2024	7:15 PM	0	0	0	0	0	0	0	0	0	0	0	0	0
4/25/2024	7:30 PM	0	0	0	0	0	0	0	0	0	0	0	0	0
4/25/2024	7:45 PM	0	0	0	0	0	0	0	0	0	0	0	0	0
4/25/2024	8:00 PM	0	0	0	0	0	0	0	0	0	0	0	0	0
4/25/2024	8:15 PM	0	0	0	0	0	0	0	0	0	0	0	0	0
4/25/2024	8:30 PM	0	0	0	0	0	0	0	0	0	0	0	0	0
4/25/2024	8:45 PM	0	0	0	0	0	0	0	0	0	0	0	0	0
4/25/2024	9:00 PM	0	0	0	0	0	0	0	0	0	0	0	0	0
4/25/2024	9:15 PM	0	0	0	0	0	0	0	0	0	0	0	0	0
4/25/2024	9:30 PM	0	0	0	0	0	0	0	0	0	0	0	0	0
4/25/2024	9:45 PM	0	0	0	0	0	0	0	0	0	0	0	0	0
4/25/2024	10:00 PM	0	0	0	0	0	0	0	0	0	0	0	0	0
4/25/2024	10:15 PM	0	0	0	0	0	0	0	0	0	0	0	0	0
4/25/2024	10:30 PM	0	0	0	0	0	0	0	0	0	0	0	0	0
4/25/2024	10:45 PM	0	0	0	0	0	0	0	0	0	0	0	0	0
4/25/2024	11:00 PM	0	0	0	0	0	0	0	0	0	0	0	0	0
4/25/2024	11:15 PM	0	0	0	0	0	0	0	0	0	0	0	0	0
4/25/2024	11:30 PM	0	0	0	0	0	0	0	0	0	0	0	0	0
4/25/2024	11:45 PM	0	0	0	0	0	0	0	0	0	0	0	0	0

SB
File Name:
Start Date: 4/23/2024
Start Time: 0
Site Code: 53
Station ID: 1
Location 1: I-26 N/Bound On-Ramp, north of US-378 Sunset Blvd
Location 2:

Date	Time	1	2	3	4	5	6	7	8	9	10	11	12	13
4/23/2024	12:00 AM	0	0	0	0	0	0	0	0	0	0	0	0	0
4/23/2024	12:15 AM	0	0	0	0	0	0	0	0	0	0	0	0	0
4/23/2024	12:30 AM	0	0	0	0	0	0	0	0	0	0	0	0	0
4/23/2024	12:45 AM	0	0	0	0	0	0	0	0	0	0	0	0	0
4/23/2024	1:00 AM	0	0	0	0	0	0	0	0	0	0	0	0	0
4/23/2024	1:15 AM	0	0	0	0	0	0	0	0	0	0	0	0	0
4/23/2024	1:30 AM	0	0	0	0	0	0	0	0	0	0	0	0	0
4/23/2024	1:45 AM	0	0	0	0	0	0	0	0	0	0	0	0	0
4/23/2024	2:00 AM	0	0	0	0	0	0	0	0	0	0	0	0	0
4/23/2024	2:15 AM	0	0	0	0	0	0	0	0	0	0	0	0	0
4/23/2024	2:30 AM	0	0	0	0	0	0	0	0	0	0	0	0	0
4/23/2024	2:45 AM	0	0	0	0	0	0	0	0	0	0	0	0	0
4/23/2024	3:00 AM	0	0	0	0	0	0	0	0	0	0	0	0	0
4/23/2024	3:15 AM	0	0	0	0	0	0	0	0	0	0	0	0	0
4/23/2024	3:30 AM	0	0	0	0	0	0	0	0	0	0	0	0	0
4/23/2024	3:45 AM	0	0	0	0	0	0	0	0	0	0	0	0	0
4/23/2024	4:00 AM	0	0	0	0	0	0	0	0	0	0	0	0	0
4/23/2024	4:15 AM	0	0	0	0	0	0	0	0	0	0	0	0	0
4/23/2024	4:30 AM	0	0	0	0	0	0	0	0	0	0	0	0	0
4/23/2024	4:45 AM	0	0	0	0	0	0	0	0	0	0	0	0	0
4/23/2024	5:00 AM	0	0	0	0	0	0	0	0	0	0	0	0	0
4/23/2024	5:15 AM	0	0	0	0	0	0	0	0	0	0	0	0	0
4/23/2024	5:30 AM	0	0	0	0	0	0	0	0	0	0	0	0	0
4/23/2024	5:45 AM	0	0	0	0	0	0	0	0	0	0	0	0	0
4/23/2024	6:00 AM	0	0	0	0	0	0	0	0	0	0	0	0	0
4/23/2024	6:15 AM	0	0	0	0	0	0	0	0	0	0	0	0	0
4/23/2024	6:30 AM	0	0	0	0	0	0	0	0	0	0	0	0	0
4/23/2024	6:45 AM	0	0	0	0	0	0	0	0	0	0	0	0	0
4/23/2024	7:00 AM	0	0	0	0	0	0	0	0	0	0	0	0	0
4/23/2024	7:15 AM	0	0	0	0	0	0	0	0	0	0	0	0	0
4/23/2024	7:30 AM	0	0	0	0	0	0	0	0	0	0	0	0	0
4/23/2024	7:45 AM	0	0	0	0	0	0	0	0	0	0	0	0	0
4/23/2024	8:00 AM	0	0	0	0	0	0	0	0	0	0	0	0	0
4/23/2024	8:15 AM	0	0	0	0	0	0	0	0	0	0	0	0	0
4/23/2024	8:30 AM	0	0	0	0	0	0	0	0	0	0	0	0	0
4/23/2024	8:45 AM	0	0	0	0	0	0	0	0	0	0	0	0	0
4/23/2024	9:00 AM	0	0	0	0	0	0	0	0	0	0	0	0	0
4/23/2024	9:15 AM	0	0	0	0	0	0	0	0	0	0	0	0	0
4/23/2024	9:30 AM	0	0	0	0	0	0	0	0	0	0	0	0	0
4/23/2024	9:45 AM	0	0	0	0	0	0	0	0	0	0	0	0	0
4/23/2024	10:00 AM	0	0	0	0	0	0	0	0	0	0	0	0	0
4/23/2024	10:15 AM	0	0	0	0	0	0	0	0	0	0	0	0	0
4/23/2024	10:30 AM	0	0	0	0	0	0	0	0	0	0	0	0	0
4/23/2024	10:45 AM	0	0	0	0	0	0	0	0	0	0	0	0	0
4/23/2024	11:00 AM	0	0	0	0	0	0	0	0	0	0	0	0	0
4/23/2024	11:15 AM	0	0	0	0	0	0	0	0	0	0	0	0	0
4/23/2024	11:30 AM	0	0	0	0	0	0	0	0	0	0	0	0	0
4/23/2024	11:45 AM	0	0	0	0	0	0	0	0	0	0	0	0	0
4/23/2024	12:00 PM	0	0	0	0	0	0	0	0	0	0	0	0	0
4/23/2024	12:15 PM	0	0	0	0	0	0	0	0	0	0	0	0	0
4/23/2024	12:30 PM	0	0	0	0	0	0	0	0	0	0	0	0	0
4/23/2024	12:45 PM	0	0	0	0	0	0	0	0	0	0	0	0	0
4/23/2024	1:00 PM	0	0	0	0	0	0	0	0	0	0	0	0	0
4/23/2024	1:15 PM	0	0	0	0	0	0	0	0	0	0	0	0	0
4/23/2024	1:30 PM	0	0	0	0	0	0	0	0	0	0	0	0	0
4/23/2024	1:45 PM	0	0	0	0	0	0	0	0	0	0	0	0	0
4/23/2024	2:00 PM	0	0	0	0	0	0	0	0	0	0	0	0	0
4/23/2024	2:15 PM	0	0	0	0	0	0	0	0	0	0	0	0	0
4/23/2024	2:30 PM	0	0	0	0	0	0	0	0	0	0	0	0	0
4/23/2024	2:45 PM	0	0	0	0	0	0	0	0	0	0	0	0	0
4/23/2024	3:00 PM	0	0	0	0	0	0	0	0	0	0	0	0	0
4/23/2024	3:15 PM	0	0	0	0	0	0	0	0	0	0	0	0	0
4/23/2024	3:30 PM	0	0	0	0	0	0	0	0	0	0	0	0	0
4/23/2024	3:45 PM	0	0	0	0	0	0	0	0	0	0	0	0	0
4/23/2024	4:00 PM	0	0	0	0	0	0	0	0	0	0	0	0	0
4/23/2024	4:15 PM	0	0	0	0	0	0	0	0	0	0	0	0	0
4/23/2024	4:30 PM	0	0	0	0	0	0	0	0	0	0	0	0	0
4/23/2024	4:45 PM	0	0	0	0	0	0	0	0	0	0	0	0	0
4/23/2024	5:00 PM	0	0	0	0	0	0	0	0	0	0	0	0	0
4/23/2024	5:15 PM	0	0	0	0	0	0	0	0	0	0	0	0	0
4/23/2024	5:30 PM	0	0	0	0	0	0	0	0	0	0	0	0	0
4/23/2024	5:45 PM	0	0	0	0	0	0	0	0	0	0	0	0	0
4/23/2024	6:00 PM	0	0	0	0	0	0	0	0	0	0	0	0	0
4/23/2024	6:15 PM	0	0	0	0	0	0	0	0	0	0	0	0	0
4/23/2024	6:30 PM	0	0	0	0	0	0	0	0	0	0	0	0	0
4/23/2024	6:45 PM	0	0	0	0	0	0	0	0	0	0	0	0	0
4/23/2024	7:00 PM	0	0	0	0	0	0	0	0	0	0	0	0	0
4/23/2024	7:15 PM	0	0	0	0	0	0	0	0	0	0	0	0	0
4/23/2024	7:30 PM	0	0	0	0	0	0	0	0	0	0	0	0	0
4/23/2024	7:45 PM	0	0	0	0	0	0	0	0	0	0	0	0	0
4/23/2024	8:00 PM	0	0	0	0	0	0	0	0	0	0	0	0	0
4/23/2024	8:15 PM	0	0	0	0	0	0	0	0	0	0	0	0	0
4/23/2024	8:30 PM	0	0	0	0	0	0	0	0	0	0	0	0	0
4/23/2024	8:45 PM	0	0	0	0	0	0	0	0	0	0	0	0	0
4/23/2024	9:00 PM	0	0	0	0	0	0	0	0	0	0	0	0	0
4/23/2024	9:15 PM	0	0	0	0	0	0	0	0	0	0	0	0	0
4/23/2024	9:30 PM	0	0	0	0	0	0	0	0	0	0	0	0	0
4/23/2024	9:45 PM	0	0	0	0	0	0	0	0	0	0	0	0	0
4/23/2024	10:00 PM	0	0	0	0	0	0	0	0	0	0	0	0	0
4/23/2024	10:15 PM	0	0	0	0	0	0	0	0	0	0	0	0	0
4/23/2024	10:30 PM	0	0	0	0	0	0	0	0	0	0	0	0	0
4/23/2024	10:45 PM	0	0	0	0	0	0	0	0	0	0	0	0	0
4/23/2024	11:00 PM	0	0	0	0	0	0	0	0	0	0	0	0	0
4/23/2024	11:15 PM	0	0	0	0	0	0	0	0	0	0	0	0	0
4/23/2024	11:30 PM	0	0	0	0	0	0	0	0	0	0	0	0	0
4/23/2024	11:45 PM	0	0	0	0	0	0	0	0	0	0	0	0	0

4/24/2024	12:00 AM	0	0	0	0	0	0	0	0	0	0	0	0	0
4/24/2024	12:15 AM	0	0	0	0	0	0	0	0	0	0	0	0	0
4/24/2024	12:30 AM	0	0	0	0	0	0	0	0	0	0	0	0	0
4/24/2024	12:45 AM	0	0	0	0	0	0	0	0	0	0	0	0	0
4/24/2024	1:00 AM	0	0	0	0	0	0	0	0	0	0	0	0	0
4/24/2024	1:15 AM	0	0	0	0	0	0	0	0	0	0	0	0	0
4/24/2024	1:30 AM	0	0	0	0	0	0	0	0	0	0	0	0	0
4/24/2024	1:45 AM	0	0	0	0	0	0	0	0	0	0	0	0	0
4/24/2024	2:00 AM	0	0	0	0	0	0	0	0	0	0	0	0	0
4/24/2024	2:15 AM	0	0	0	0	0	0	0	0	0	0	0	0	0
4/24/2024	2:30 AM	0	0	0	0	0	0	0	0	0	0	0	0	0
4/24/2024	2:45 AM	0	0	0	0	0	0	0	0	0	0	0	0	0
4/24/2024	3:00 AM	0	0	0	0	0	0	0	0	0	0	0	0	0
4/24/2024	3:15 AM	0	0	0	0	0	0	0	0	0	0	0	0	0
4/24/2024	3:30 AM	0	0	0	0	0	0	0	0	0	0	0	0	0
4/24/2024	3:45 AM	0	0	0	0	0	0	0	0	0	0	0	0	0
4/24/2024	4:00 AM	0	0	0	0	0	0	0	0	0	0	0	0	0
4/24/2024	4:15 AM	0	0	0	0	0	0	0	0	0	0	0	0	0
4/24/2024	4:30 AM	0	0	0	0	0	0	0	0	0	0	0	0	0
4/24/2024	4:45 AM	0	0	0	0	0	0	0	0	0	0	0	0	0
4/24/2024	5:00 AM	0	0	0	0	0	0	0	0	0	0	0	0	0
4/24/2024	5:15 AM	0	0	0	0	0	0	0	0	0	0	0	0	0
4/24/2024	5:30 AM	0	0	0	0	0	0	0	0	0	0	0	0	0
4/24/2024	5:45 AM	0	0	0	0	0	0	0	0	0	0	0	0	0
4/24/2024	6:00 AM	0	0	0	0	0	0	0	0	0	0	0	0	0
4/24/2024	6:15 AM	0	0	0	0	0	0	0	0	0	0	0	0	0
4/24/2024	6:30 AM	0	0	0	0	0	0	0	0	0	0	0	0	0
4/24/2024	6:45 AM	0	0	0	0	0	0	0	0	0	0	0	0	0
4/24/2024	7:00 AM	0	0	0	0	0	0	0	0	0	0	0	0	0
4/24/2024	7:15 AM	0	0	0	0	0	0	0	0	0	0	0	0	0
4/24/2024	7:30 AM	0	0	0	0	0	0	0	0	0	0	0	0	0
4/24/2024	7:45 AM	0	0	0	0	0	0	0	0	0	0	0	0	0
4/24/2024	8:00 AM	0	0	0	0	0	0	0	0	0	0	0	0	0
4/24/2024	8:15 AM	0	0	0	0	0	0	0	0	0	0	0	0	0
4/24/2024	8:30 AM	0	0	0	0	0	0	0	0	0	0	0	0	0
4/24/2024	8:45 AM	0	0	0	0	0	0	0	0	0	0	0	0	0
4/24/2024	9:00 AM	0	0	0	0	0	0	0	0	0	0	0	0	0
4/24/2024	9:15 AM	0	0	0	0	0	0	0	0	0	0	0	0	0
4/24/2024	9:30 AM	0	0	0	0	0	0	0	0	0	0	0	0	0
4/24/2024	9:45 AM	0	0	0	0	0	0	0	0	0	0	0	0	0
4/24/2024	10:00 AM	0	0	0	0	0	0	0	0	0	0	0	0	0
4/24/2024	10:15 AM	0	0	0	0	0	0	0	0	0	0	0	0	0
4/24/2024	10:30 AM	0	0	0	0	0	0	0	0	0	0	0	0	0
4/24/2024	10:45 AM	0	0	0	0	0	0	0	0	0	0	0	0	0
4/24/2024	11:00 AM	0	0	0	0	0	0	0	0	0	0	0	0	0
4/24/2024	11:15 AM	0	0	0	0	0	0	0	0	0	0	0	0	0
4/24/2024	11:30 AM	0	0	0	0	0	0	0	0	0	0	0	0	0
4/24/2024	11:45 AM	0	0	0	0	0	0	0	0	0	0	0	0	0
4/24/2024	12:00 PM	0	0	0	0	0	0	0	0	0	0	0	0	0
4/24/2024	12:15 PM	0	0	0	0	0	0	0	0	0	0	0	0	0
4/24/2024	12:30 PM	0	0	0	0	0	0	0	0	0	0	0	0	0
4/24/2024	12:45 PM	0	0	0	0	0	0	0	0	0	0	0	0	0
4/24/2024	1:00 PM	0	0	0	0	0	0	0	0	0	0	0	0	0
4/24/2024	1:15 PM	0	0	0	0	0	0	0	0	0	0	0	0	0
4/24/2024	1:30 PM	0	0	0	0	0	0	0	0	0	0	0	0	0
4/24/2024	1:45 PM	0	0	0	0	0	0	0	0	0	0	0	0	0
4/24/2024	2:00 PM	0	0	0	0	0	0	0	0	0	0	0	0	0
4/24/2024	2:15 PM	0	0	0	0	0	0	0	0	0	0	0	0	0
4/24/2024	2:30 PM	0	0	0	0	0	0	0	0	0	0	0	0	0
4/24/2024	2:45 PM	0	0	0	0	0	0	0	0	0	0	0	0	0
4/24/2024	3:00 PM	0	0	0	0	0	0	0	0	0	0	0	0	0
4/24/2024	3:15 PM	0	0	0	0	0	0	0	0	0	0	0	0	0
4/24/2024	3:30 PM	0	0	0	0	0	0	0	0	0	0	0	0	0
4/24/2024	3:45 PM	0	0	0	0	0	0	0	0	0	0	0	0	0
4/24/2024	4:00 PM	0	0	0	0	0	0	0	0	0	0	0	0	0
4/24/2024	4:15 PM	0	0	0	0	0	0	0	0	0	0	0	0	0
4/24/2024	4:30 PM	0	0	0	0	0	0	0	0	0	0	0	0	0
4/24/2024	4:45 PM	0	0	0	0	0	0	0	0	0	0	0	0	0
4/24/2024	5:00 PM	0	0	0	0	0	0	0	0	0	0	0	0	0
4/24/2024	5:15 PM	0	0	0	0	0	0	0	0	0	0	0	0	0
4/24/2024	5:30 PM	0	0	0	0	0	0	0	0	0	0	0	0	0
4/24/2024	5:45 PM	0	0	0	0	0	0	0	0	0	0	0	0	0
4/24/2024	6:00 PM	0	0	0	0	0	0	0	0	0	0	0	0	0
4/24/2024	6:15 PM	0	0	0	0	0	0	0	0	0	0	0	0	0
4/24/2024	6:30 PM	0	0	0	0	0	0	0	0	0	0	0	0	0
4/24/2024	6:45 PM	0	0	0	0	0	0	0	0	0	0	0	0	0
4/24/2024	7:00 PM	0	0	0	0	0	0	0	0	0	0	0	0	0
4/24/2024	7:15 PM	0	0	0	0	0	0	0	0	0	0	0	0	0
4/24/2024	7:30 PM	0	0	0	0	0	0	0	0	0	0	0	0	0
4/24/2024	7:45 PM	0	0	0	0	0	0	0	0	0	0	0	0	0
4/24/2024	8:00 PM	0	0	0	0	0	0	0	0	0	0	0	0	0
4/24/2024	8:15 PM	0	0	0	0	0	0	0	0	0	0	0	0	0
4/24/2024	8:30 PM	0	0	0	0	0	0	0	0	0	0	0	0	0
4/24/2024	8:45 PM	0	0	0	0	0	0	0	0	0	0	0	0	0
4/24/2024	9:00 PM	0	0	0	0	0	0	0	0	0	0	0	0	0
4/24/2024	9:15 PM	0	0	0	0	0	0	0	0	0	0	0	0	0
4/24/2024	9:30 PM	0	0	0	0	0	0	0	0	0	0	0	0	0
4/24/2024	9:45 PM	0	0	0	0	0	0	0	0	0	0	0	0	0
4/24/2024	10:00 PM	0	0	0	0	0	0	0	0	0	0	0	0	0
4/24/2024	10:15 PM	0	0	0	0	0	0	0	0	0	0	0	0	0
4/24/2024	10:30 PM	0	0	0	0	0	0	0	0	0	0	0	0	0
4/24/2024	10:45 PM	0	0	0	0	0	0	0	0	0	0	0	0	0
4/24/2024	11:00 PM	0	0	0	0	0	0	0	0	0	0	0	0	0
4/24/2024	11:15 PM	0	0	0	0	0	0	0	0	0	0	0	0	0
4/24/2024	11:30 PM	0	0	0	0	0	0	0	0	0	0	0	0	0
4/24/2024	11:45 PM	0	0	0	0	0	0	0	0	0	0	0	0	0

4/25/2024	12:00 AM	0	0	0	0	0	0	0	0	0	0	0	0	0
4/25/2024	12:15 AM	0	0	0	0	0	0	0	0	0	0	0	0	0
4/25/2024	12:30 AM	0	0	0	0	0	0	0	0	0	0	0	0	0
4/25/2024	12:45 AM	0	0	0	0	0	0	0	0	0	0	0	0	0
4/25/2024	1:00 AM	0	0	0	0	0	0	0	0	0	0	0	0	0
4/25/2024	1:15 AM	0	0	0	0	0	0	0	0	0	0	0	0	0
4/25/2024	1:30 AM	0	0	0	0	0	0	0	0	0	0	0	0	0
4/25/2024	1:45 AM	0	0	0	0	0	0	0	0	0	0	0	0	0
4/25/2024	2:00 AM	0	0	0	0	0	0	0	0	0	0	0	0	0
4/25/2024	2:15 AM	0	0	0	0	0	0	0	0	0	0	0	0	0
4/25/2024	2:30 AM	0	0	0	0	0	0	0	0	0	0	0	0	0
4/25/2024	2:45 AM	0	0	0	0	0	0	0	0	0	0	0	0	0
4/25/2024	3:00 AM	0	0	0	0	0	0	0	0	0	0	0	0	0
4/25/2024	3:15 AM	0	0	0	0	0	0	0	0	0	0	0	0	0
4/25/2024	3:30 AM	0	0	0	0	0	0	0	0	0	0	0	0	0
4/25/2024	3:45 AM	0	0	0	0	0	0	0	0	0	0	0	0	0
4/25/2024	4:00 AM	0	0	0	0	0	0	0	0	0	0	0	0	0
4/25/2024	4:15 AM	0	0	0	0	0	0	0	0	0	0	0	0	0
4/25/2024	4:30 AM	0	0	0	0	0	0	0	0	0	0	0	0	0
4/25/2024	4:45 AM	0	0	0	0	0	0	0	0	0	0	0	0	0
4/25/2024	5:00 AM	0	0	0	0	0	0	0	0	0	0	0	0	0
4/25/2024	5:15 AM	0	0	0	0	0	0	0	0	0	0	0	0	0
4/25/2024	5:30 AM	0	0	0	0	0	0	0	0	0	0	0	0	0
4/25/2024	5:45 AM	0	0	0	0	0	0	0	0	0	0	0	0	0
4/25/2024	6:00 AM	0	0	0	0	0	0	0	0	0	0	0	0	0
4/25/2024	6:15 AM	0	0	0	0	0	0	0	0	0	0	0	0	0
4/25/2024	6:30 AM	0	0	0	0	0	0	0	0	0	0	0	0	0
4/25/2024	6:45 AM	0	0	0	0	0	0	0	0	0	0	0	0	0
4/25/2024	7:00 AM	0	0	0	0	0	0	0	0	0	0	0	0	0
4/25/2024	7:15 AM	0	0	0	0	0	0	0	0	0	0	0	0	0
4/25/2024	7:30 AM	0	0	0	0	0	0	0	0	0	0	0	0	0
4/25/2024	7:45 AM	0	0	0	0	0	0	0	0	0	0	0	0	0
4/25/2024	8:00 AM	0	0	0	0	0	0	0	0	0	0	0	0	0
4/25/2024	8:15 AM	0	0	0	0	0	0	0	0	0	0	0	0	0
4/25/2024	8:30 AM	0	0	0	0	0	0	0	0	0	0	0	0	0
4/25/2024	8:45 AM	0	0	0	0	0	0	0	0	0	0	0	0	0
4/25/2024	9:00 AM	0	0	0	0	0	0	0	0	0	0	0	0	0
4/25/2024	9:15 AM	0	0	0	0	0	0	0	0	0	0	0	0	0
4/25/2024	9:30 AM	0	0	0	0	0	0	0	0	0	0	0	0	0
4/25/2024	9:45 AM	0	0	0	0	0	0	0	0	0	0	0	0	0
4/25/2024	10:00 AM	0	0	0	0	0	0	0	0	0	0	0	0	0
4/25/2024	10:15 AM	0	0	0	0	0	0	0	0	0	0	0	0	0
4/25/2024	10:30 AM	0	0	0	0	0	0	0	0	0	0	0	0	0
4/25/2024	10:45 AM	0	0	0	0	0	0	0	0	0	0	0	0	0
4/25/2024	11:00 AM	0	0	0	0	0	0	0	0	0	0	0	0	0
4/25/2024	11:15 AM	0	0	0	0	0	0	0	0	0	0	0	0	0
4/25/2024	11:30 AM	0	0	0	0	0	0	0	0	0	0	0	0	0
4/25/2024	11:45 AM	0	0	0	0	0	0	0	0	0	0	0	0	0
4/25/2024	12:00 PM	0	0	0	0	0	0	0	0	0	0	0	0	0
4/25/2024	12:15 PM	0	0	0	0	0	0	0	0	0	0	0	0	0
4/25/2024	12:30 PM	0	0	0	0	0	0	0	0	0	0	0	0	0
4/25/2024	12:45 PM	0	0	0	0	0	0	0	0	0	0	0	0	0
4/25/2024	1:00 PM	0	0	0	0	0	0	0	0	0	0	0	0	0
4/25/2024	1:15 PM	0	0	0	0	0	0	0	0	0	0	0	0	0
4/25/2024	1:30 PM	0	0	0	0	0	0	0	0	0	0	0	0	0
4/25/2024	1:45 PM	0	0	0	0	0	0	0	0	0	0	0	0	0
4/25/2024	2:00 PM	0	0	0	0	0	0	0	0	0	0	0	0	0
4/25/2024	2:15 PM	0	0	0	0	0	0	0	0	0	0	0	0	0
4/25/2024	2:30 PM	0	0	0	0	0	0	0	0	0	0	0	0	0
4/25/2024	2:45 PM	0	0	0	0	0	0	0	0	0	0	0	0	0
4/25/2024	3:00 PM	0	0	0	0	0	0	0	0	0	0	0	0	0
4/25/2024	3:15 PM	0	0	0	0	0	0	0	0	0	0	0	0	0
4/25/2024	3:30 PM	0	0	0	0	0	0	0	0	0	0	0	0	0
4/25/2024	3:45 PM	0	0	0	0	0	0	0	0	0	0	0	0	0
4/25/2024	4:00 PM	0	0	0	0	0	0	0	0	0	0	0	0	0
4/25/2024	4:15 PM	0	0	0	0	0	0	0	0	0	0	0	0	0
4/25/2024	4:30 PM	0	0	0	0	0	0	0	0	0	0	0	0	0
4/25/2024	4:45 PM	0	0	0	0	0	0	0	0	0	0	0	0	0
4/25/2024	5:00 PM	0	0	0	0	0	0	0	0	0	0	0	0	0
4/25/2024	5:15 PM	0	0	0	0	0	0	0	0	0	0	0	0	0
4/25/2024	5:30 PM	0	0	0	0	0	0	0	0	0	0	0	0	0
4/25/2024	5:45 PM	0	0	0	0	0	0	0	0	0	0	0	0	0
4/25/2024	6:00 PM	0	0	0	0	0	0	0	0	0	0	0	0	0
4/25/2024	6:15 PM	0	0	0	0	0	0	0	0	0	0	0	0	0
4/25/2024	6:30 PM	0	0	0	0	0	0	0	0	0	0	0	0	0
4/25/2024	6:45 PM	0	0	0	0	0	0	0	0	0	0	0	0	0
4/25/2024	7:00 PM	0	0	0	0	0	0	0	0	0	0	0	0	0
4/25/2024	7:15 PM	0	0	0	0	0	0	0	0	0	0	0	0	0
4/25/2024	7:30 PM	0	0	0	0	0	0	0	0	0	0	0	0	0
4/25/2024	7:45 PM	0	0	0	0	0	0	0	0	0	0	0	0	0
4/25/2024	8:00 PM	0	0	0	0	0	0	0	0	0	0	0	0	0
4/25/2024	8:15 PM	0	0	0	0	0	0	0	0	0	0	0	0	0
4/25/2024	8:30 PM	0	0	0	0	0	0	0	0	0	0	0	0	0
4/25/2024	8:45 PM	0	0	0	0	0	0	0	0	0	0	0	0	0
4/25/2024	9:00 PM	0	0	0	0	0	0	0	0	0	0	0	0	0
4/25/2024	9:15 PM	0	0	0	0	0	0	0	0	0	0	0	0	0
4/25/2024	9:30 PM	0	0	0	0	0	0	0	0	0	0	0	0	0
4/25/2024	9:45 PM	0	0	0	0	0	0	0	0	0	0	0	0	0
4/25/2024	10:00 PM	0	0	0	0	0	0	0	0	0	0	0	0	0
4/25/2024	10:15 PM	0	0	0	0	0	0	0	0	0	0	0	0	0
4/25/2024	10:30 PM	0	0	0	0	0	0	0	0	0	0	0	0	0
4/25/2024	10:45 PM	0	0	0	0	0	0	0	0	0	0	0	0	0
4/25/2024	11:00 PM	0	0	0	0	0	0	0	0	0	0	0	0	0
4/25/2024	11:15 PM	0	0	0	0	0	0	0	0	0	0	0	0	0
4/25/2024	11:30 PM	0	0	0	0	0	0	0	0	0	0	0	0	0
4/25/2024	11:45 PM	0	0	0	0	0	0	0	0	0	0	0	0	0

NB
File Name:
Start Date: 4/23/2024
Start Time: 0
Site Code: 53
Station ID: 1
Location 1: I-26 N/Bound On-Ramp, north of US-378 Sunset Blvd
Location 2:

Date	Time	1	2	3	4	5	6	7	8	9	10	11	12	13
4/23/2024	12:00 AM	0	0	0	0	0	0	0	0	0	0	0	0	0
4/23/2024	12:15 AM	0	0	0	0	0	0	0	0	0	0	0	0	0
4/23/2024	12:30 AM	0	0	0	0	0	0	0	0	0	0	0	0	0
4/23/2024	12:45 AM	0	0	0	0	0	0	0	0	0	0	0	0	0
4/23/2024	1:00 AM	0	0	0	0	0	0	0	0	0	0	0	0	0
4/23/2024	1:15 AM	0	0	0	0	0	0	0	0	0	0	0	0	0
4/23/2024	1:30 AM	0	0	0	0	0	0	0	0	0	0	0	0	0
4/23/2024	1:45 AM	0	0	0	0	0	0	0	0	0	0	0	0	0
4/23/2024	2:00 AM	0	0	0	0	0	0	0	0	0	0	0	0	0
4/23/2024	2:15 AM	0	0	0	0	0	0	0	0	0	0	0	0	0
4/23/2024	2:30 AM	0	0	0	0	0	0	0	0	0	0	0	0	0
4/23/2024	2:45 AM	0	0	0	0	0	0	0	0	0	0	0	0	0
4/23/2024	3:00 AM	0	0	0	0	0	0	0	0	0	0	0	0	0
4/23/2024	3:15 AM	0	0	0	0	0	0	0	0	0	0	0	0	0
4/23/2024	3:30 AM	0	0	0	0	0	0	0	0	0	0	0	0	0
4/23/2024	3:45 AM	0	0	0	0	0	0	0	0	0	0	0	0	0
4/23/2024	4:00 AM	0	0	0	0	0	0	0	0	0	0	0	0	0
4/23/2024	4:15 AM	0	0	0	0	0	0	0	0	0	0	0	0	0
4/23/2024	4:30 AM	0	0	0	0	0	0	0	0	0	0	0	0	0
4/23/2024	4:45 AM	0	0	0	0	0	0	0	0	0	0	0	0	0
4/23/2024	5:00 AM	0	0	0	0	0	0	0	0	0	0	0	0	0
4/23/2024	5:15 AM	0	0	0	0	0	0	0	0	0	0	0	0	0
4/23/2024	5:30 AM	0	0	0	0	0	0	0	0	0	0	0	0	0
4/23/2024	5:45 AM	0	0	0	0	0	0	0	0	0	0	0	0	0
4/23/2024	6:00 AM	0	0	0	0	0	0	0	0	0	0	0	0	0
4/23/2024	6:15 AM	0	0	0	0	0	0	0	0	0	0	0	0	0
4/23/2024	6:30 AM	0	0	0	0	0	0	0	0	0	0	0	0	0
4/23/2024	6:45 AM	0	0	0	0	0	0	0	0	0	0	0	0	0
4/23/2024	7:00 AM	0	0	0	0	0	0	0	0	0	0	0	0	0
4/23/2024	7:15 AM	0	0	0	0	0	0	0	0	0	0	0	0	0
4/23/2024	7:30 AM	0	0	0	0	0	0	0	0	0	0	0	0	0
4/23/2024	7:45 AM	0	0	0	0	0	0	0	0	0	0	0	0	0
4/23/2024	8:00 AM	0	0	0	0	0	0	0	0	0	0	0	0	0
4/23/2024	8:15 AM	0	0	0	0	0	0	0	0	0	0	0	0	0
4/23/2024	8:30 AM	0	0	0	0	0	0	0	0	0	0	0	0	0
4/23/2024	8:45 AM	0	0	0	0	0	0	0	0	0	0	0	0	0
4/23/2024	9:00 AM	0	0	0	0	0	0	0	0	0	0	0	0	0
4/23/2024	9:15 AM	0	0	0	0	0	0	0	0	0	0	0	0	0
4/23/2024	9:30 AM	0	0	0	0	0	0	0	0	0	0	0	0	0
4/23/2024	9:45 AM	0	0	0	0	0	0	0	0	0	0	0	0	0
4/23/2024	10:00 AM	0	0	0	0	0	0	0	0	0	0	0	0	0
4/23/2024	10:15 AM	0	0	0	0	0	0	0	0	0	0	0	0	0
4/23/2024	10:30 AM	0	0	0	0	0	0	0	0	0	0	0	0	0
4/23/2024	10:45 AM	0	0	0	0	0	0	0	0	0	0	0	0	0
4/23/2024	11:00 AM	0	0	0	0	0	0	0	0	0	0	0	0	0
4/23/2024	11:15 AM	0	0	0	0	0	0	0	0	0	0	0	0	0
4/23/2024	11:30 AM	0	0	0	0	0	0	0	0	0	0	0	0	0
4/23/2024	11:45 AM	0	0	0	0	0	0	0	0	0	0	0	0	0
4/23/2024	12:00 PM	0	0	0	0	0	0	0	0	0	0	0	0	0
4/23/2024	12:15 PM	0	0	0	0	0	0	0	0	0	0	0	0	0
4/23/2024	12:30 PM	0	0	0	0	0	0	0	0	0	0	0	0	0
4/23/2024	12:45 PM	0	0	0	0	0	0	0	0	0	0	0	0	0
4/23/2024	1:00 PM	0	0	0	0	0	0	0	0	0	0	0	0	0
4/23/2024	1:15 PM	0	0	0	0	0	0	0	0	0	0	0	0	0
4/23/2024	1:30 PM	0	0	0	0	0	0	0	0	0	0	0	0	0
4/23/2024	1:45 PM	0	0	0	0	0	0	0	0	0	0	0	0	0
4/23/2024	2:00 PM	0	0	0	0	0	0	0	0	0	0	0	0	0
4/23/2024	2:15 PM	0	0	0	0	0	0	0	0	0	0	0	0	0
4/23/2024	2:30 PM	0	0	0	0	0	0	0	0	0	0	0	0	0
4/23/2024	2:45 PM	0	0	0	0	0	0	0	0	0	0	0	0	0
4/23/2024	3:00 PM	0	0	0	0	0	0	0	0	0	0	0	0	0
4/23/2024	3:15 PM	0	0	0	0	0	0	0	0	0	0	0	0	0
4/23/2024	3:30 PM	0	0	0	0	0	0	0	0	0	0	0	0	0
4/23/2024	3:45 PM	0	0	0	0	0	0	0	0	0	0	0	0	0
4/23/2024	4:00 PM	0	0	0	0	0	0	0	0	0	0	0	0	0
4/23/2024	4:15 PM	0	0	0	0	0	0	0	0	0	0	0	0	0
4/23/2024	4:30 PM	0	0	0	0	0	0	0	0	0	0	0	0	0
4/23/2024	4:45 PM	0	0	0	0	0	0	0	0	0	0	0	0	0
4/23/2024	5:00 PM	0	0	0	0	0	0	0	0	0	0	0	0	0
4/23/2024	5:15 PM	0	0	0	0	0	0	0	0	0	0	0	0	0
4/23/2024	5:30 PM	0	0	0	0	0	0	0	0	0	0	0	0	0
4/23/2024	5:45 PM	0	0	0	0	0	0	0	0	0	0	0	0	0
4/23/2024	6:00 PM	0	0	0	0	0	0	0	0	0	0	0	0	0
4/23/2024	6:15 PM	0	114	16	0	3	0	0	0	1	0	0	0	0
4/23/2024	6:30 PM	0	228	38	0	3	0	0	0	2	0	0	0	0
4/23/2024	6:45 PM	0	343	58	0	5	0	0	0	2	0	0	0	0
4/23/2024	7:00 PM	1	433	79	0	5	0	0	0	2	0	0	0	0
4/23/2024	7:15 PM	1	406	83	0	2	0	0	0	1	0	0	0	0
4/23/2024	7:30 PM	1	386	81	0	4	0	0	0	0	0	0	0	0
4/23/2024	7:45 PM	1	362	81	0	2	0	0	0	0	0	0	0	0
4/23/2024	8:00 PM	0	360	80	0	2	0	0	0	0	0	0	0	0
4/23/2024	8:15 PM	0	323	72	0	2	0	0	0	2	0	0	0	0
4/23/2024	8:30 PM	0	296	66	0	0	0	0	0	2	0	0	0	0
4/23/2024	8:45 PM	1	260	63	0	0	0	0	0	2	0	1	0	0
4/23/2024	9:00 PM	1	202	55	0	0	0	0	0	2	0	2	0	0
4/23/2024	9:15 PM	1	178	49	0	1	0	0	0	0	0	2	0	0
4/23/2024	9:30 PM	2	129	43	0	1	0	0	0	1	0	2	1	0
4/23/2024	9:45 PM	1	92	29	0	1	0	0	0	1	0	1	1	0
4/23/2024	10:00 PM	1	76	19	0	1	0	0	0	2	0	1	1	0
4/23/2024	10:15 PM	1	66	17	0	0	0	0	0	2	0	1	1	0
4/23/2024	10:30 PM	0	67	13	0	0	0	0	0	2	0	1	0	0
4/23/2024	10:45 PM	0	73	15	0	0	0	0	0	2	0	1	0	0
4/23/2024	11:00 PM	0	68	15	0	0	0	0	0	2	0	0	0	0
4/23/2024	11:15 PM	0	67	16	0	0	0	0	0	2	0	0	0	0
4/23/2024	11:30 PM	0	59	13	0	1	0	0	0	2	0	0	0	0
4/23/2024	11:45 PM	0	46	9	0	2	0	0	0	2	0	1	0	0

4/24/2024	12:00 AM	0	47	8	0	4	0	0	0	1	0	1	0	0
4/24/2024	12:15 AM	0	44	5	0	5	0	0	0	1	0	1	0	0
4/24/2024	12:30 AM	0	40	5	0	6	0	0	0	0	0	1	0	0
4/24/2024	12:45 AM	0	38	5	0	5	0	0	0	0	0	0	0	0
4/24/2024	1:00 AM	0	35	6	0	5	0	0	0	0	0	1	1	0
4/24/2024	1:15 AM	0	27	4	0	5	0	0	0	0	0	2	1	0
4/24/2024	1:30 AM	0	25	4	0	3	0	0	0	0	0	3	1	0
4/24/2024	1:45 AM	0	20	4	0	3	0	0	0	0	0	4	1	0
4/24/2024	2:00 AM	0	17	3	0	1	0	0	0	0	0	3	0	0
4/24/2024	2:15 AM	0	23	4	0	1	0	0	0	0	0	2	0	0
4/24/2024	2:30 AM	0	22	3	0	2	0	0	0	0	0	1	0	0
4/24/2024	2:45 AM	0	23	3	0	2	0	0	0	0	0	0	0	0
4/24/2024	3:00 AM	0	33	3	0	3	0	0	0	0	0	0	0	0
4/24/2024	3:15 AM	0	29	3	0	2	0	0	0	0	0	0	0	0
4/24/2024	3:30 AM	0	32	4	0	2	0	0	0	0	0	0	0	0
4/24/2024	3:45 AM	0	37	5	0	3	0	0	0	0	0	0	0	0
4/24/2024	4:00 AM	0	33	5	0	3	0	0	0	0	0	0	0	0
4/24/2024	4:15 AM	0	32	5	0	6	0	0	0	0	0	0	0	0
4/24/2024	4:30 AM	0	46	9	0	6	0	0	0	0	0	0	0	0
4/24/2024	4:45 AM	0	62	13	0	8	1	0	0	1	0	0	0	0
4/24/2024	5:00 AM	0	79	21	0	9	2	0	0	4	0	0	0	0
4/24/2024	5:15 AM	0	131	27	0	8	3	0	0	5	0	0	0	0
4/24/2024	5:30 AM	0	161	32	0	8	3	0	1	5	0	0	0	0
4/24/2024	5:45 AM	0	226	38	1	8	3	0	1	4	0	0	0	0
4/24/2024	6:00 AM	0	267	43	1	7	2	0	1	2	0	0	0	0
4/24/2024	6:15 AM	0	323	58	1	7	1	0	1	2	0	0	0	0
4/24/2024	6:30 AM	0	425	78	1	7	1	0	0	2	0	0	0	0
4/24/2024	6:45 AM	0	536	94	0	6	0	0	1	2	0	0	0	0
4/24/2024	7:00 AM	0	645	110	0	10	0	0	1	3	0	0	0	0
4/24/2024	7:15 AM	0	691	114	0	11	0	0	1	2	0	0	0	0
4/24/2024	7:30 AM	0	677	108	0	16	5	0	1	4	0	0	0	0
4/24/2024	7:45 AM	0	593	105	0	20	7	0	1	5	0	0	0	0
4/24/2024	8:00 AM	0	559	105	1	19	8	0	2	4	0	0	0	0
4/24/2024	8:15 AM	0	523	109	1	24	10	0	2	6	0	0	0	0
4/24/2024	8:30 AM	0	512	112	1	25	5	0	3	5	0	0	0	0
4/24/2024	8:45 AM	0	531	108	2	21	4	0	3	9	0	0	0	0
4/24/2024	9:00 AM	0	524	98	1	19	3	0	3	10	0	0	0	0
4/24/2024	9:15 AM	0	518	89	2	15	1	0	4	9	0	0	0	0
4/24/2024	9:30 AM	0	526	90	2	13	3	0	3	8	0	0	0	0
4/24/2024	9:45 AM	0	531	97	1	15	5	0	3	8	0	0	0	0
4/24/2024	10:00 AM	0	561	114	1	14	5	0	2	9	0	0	0	0
4/24/2024	10:15 AM	0	603	115	0	16	5	0	1	11	0	0	0	0
4/24/2024	10:30 AM	0	632	115	0	20	4	0	1	12	0	0	0	0
4/24/2024	10:45 AM	0	661	109	0	21	1	0	1	8	0	0	0	0
4/24/2024	11:00 AM	0	685	97	0	25	2	0	2	7	0	0	0	0
4/24/2024	11:15 AM	0	688	99	0	21	2	0	2	5	0	0	0	0
4/24/2024	11:30 AM	0	711	104	0	14	1	0	2	5	0	0	0	0
4/24/2024	11:45 AM	0	695	113	1	12	1	0	1	4	0	0	0	0
4/24/2024	12:00 PM	0	653	123	1	12	0	0	0	4	0	0	0	0
4/24/2024	12:15 PM	0	649	123	4	11	1	0	1	3	0	0	0	0
4/24/2024	12:30 PM	0	614	124	4	12	2	0	2	3	0	0	0	0
4/24/2024	12:45 PM	0	649	123	4	10	4	0	3	3	0	0	0	0
4/24/2024	1:00 PM	2	662	109	6	6	4	0	3	1	0	0	0	0
4/24/2024	1:15 PM	2	655	114	3	6	4	0	3	2	0	0	0	0
4/24/2024	1:30 PM	2	657	118	3	3	6	0	2	1	0	0	0	0
4/24/2024	1:45 PM	2	656	109	2	10	5	0	1	2	0	0	0	0
4/24/2024	2:00 PM	0	697	121	0	12	5	0	3	3	0	0	0	0
4/24/2024	2:15 PM	0	739	142	0	11	4	0	2	2	0	0	0	0
4/24/2024	2:30 PM	0	776	144	0	13	2	0	2	2	0	0	0	0
4/24/2024	2:45 PM	0	824	153	0	8	2	0	2	1	0	0	0	0
4/24/2024	3:00 PM	1	858	152	1	7	2	0	0	2	0	0	0	0
4/24/2024	3:15 PM	1	907	140	1	8	2	0	0	3	0	0	0	0
4/24/2024	3:30 PM	1	908	133	1	6	2	0	0	4	0	0	0	0
4/24/2024	3:45 PM	1	865	133	1	3	1	0	1	4	0	0	0	0
4/24/2024	4:00 PM	0	820	131	1	5	1	0	2	2	0	0	0	0
4/24/2024	4:15 PM	0	772	150	1	6	1	0	2	1	0	0	0	0
4/24/2024	4:30 PM	0	785	153	1	7	0	0	2	0	0	0	0	0
4/24/2024	4:45 PM	0	767	145	1	9	0	0	2	1	0	0	0	0
4/24/2024	5:00 PM	0	766	130	0	7	0	0	1	1	0	0	0	0
4/24/2024	5:15 PM	0	767	111	0	10	0	0	1	2	0	0	0	0
4/24/2024	5:30 PM	0	742	117	0	9	0	0	1	3	0	0	0	0
4/24/2024	5:45 PM	0	750	122	0	8	0	0	0	4	0	0	0	0
4/24/2024	6:00 PM	0	742	134	0	7	0	0	0	4	0	0	0	0
4/24/2024	6:15 PM	0	684	121	0	3	1	0	0	3	0	0	0	0
4/24/2024	6:30 PM	0	617	105	1	4	1	0	0	2	0	0	0	0
4/24/2024	6:45 PM	2	553	100	1	5	1	0	0	1	0	0	0	0
4/24/2024	7:00 PM	2	455	91	1	7	1	0	0	1	0	0	0	0
4/24/2024	7:15 PM	2	427	79	1	7	0	0	0	1	0	0	0	0
4/24/2024	7:30 PM	2	413	64	0	6	0	0	0	1	0	0	0	0
4/24/2024	7:45 PM	0	401	53	0	4	0	0	0	0	0	0	0	0
4/24/2024	8:00 PM	0	420	44	0	1	0	0	0	0	0	0	0	0
4/24/2024	8:15 PM	0	371	39	0	0	0	0	0	0	0	0	0	0
4/24/2024	8:30 PM	0	344	37	0	0	0	0	0	0	0	0	0	0
4/24/2024	8:45 PM	0	290	38	0	0	0	0	0	1	0	1	0	0
4/24/2024	9:00 PM	0	235	35	1	0	0	0	0	1	0	1	0	0
4/24/2024	9:15 PM	0	218	32	1	1	0	0	0	2	0	2	0	0
4/24/2024	9:30 PM	0	189	27	1	1	0	0	0	2	0	2	0	0
4/24/2024	9:45 PM	0	172	19	1	2	0	0	0	1	1	1	0	0
4/24/2024	10:00 PM	0	155	18	0	2	0	0	0	2	1	3	0	0
4/24/2024	10:15 PM	0	146	17	0	1	0	0	0	2	1	2	0	0
4/24/2024	10:30 PM	0	135	16	0	2	0	0	0	2	1	2	0	0
4/24/2024	10:45 PM	0	132	13	0	1	0	0	0	2	0	2	0	0
4/24/2024	11:00 PM	0	123	11	0	1	0	0	0	1	0	0	0	0
4/24/2024	11:15 PM	0	110	7	0	2	0	0	0	0	1	0	0	0
4/24/2024	11:30 PM	0	96	5	0	1	0	0	0	0	1	0	0	0
4/24/2024	11:45 PM	0	78	5	0	1	1	0	0	1	1	0	0	0

4/25/2024	12:00 AM	0	73	2	0	1	1	0	0	1	1	1	0	0
4/25/2024	12:15 AM	0	61	2	0	0	1	0	0	1	0	1	0	0
4/25/2024	12:30 AM	0	54	1	0	0	1	0	0	2	0	1	0	0
4/25/2024	12:45 AM	0	49	0	0	0	1	0	0	1	0	1	0	0
4/25/2024	1:00 AM	0	37	0	0	0	1	0	0	1	0	1	0	0
4/25/2024	1:15 AM	0	36	1	0	0	1	0	0	1	0	2	0	0
4/25/2024	1:30 AM	0	33	3	0	0	1	0	0	0	0	2	0	0
4/25/2024	1:45 AM	0	26	3	0	0	0	0	0	0	0	3	0	0
4/25/2024	2:00 AM	0	29	4	0	0	0	0	0	0	0	2	0	0
4/25/2024	2:15 AM	0	27	4	0	0	0	0	0	0	0	1	0	0
4/25/2024	2:30 AM	0	27	2	0	1	0	0	0	0	0	1	0	0
4/25/2024	2:45 AM	0	30	2	0	2	0	0	0	0	0	1	0	0
4/25/2024	3:00 AM	0	31	1	0	2	0	0	0	0	0	1	0	0
4/25/2024	3:15 AM	0	31	0	0	3	0	0	0	0	0	1	0	0
4/25/2024	3:30 AM	0	30	0	0	3	0	0	0	0	0	1	0	0
4/25/2024	3:45 AM	0	38	0	0	3	0	0	1	1	0	0	0	0
4/25/2024	4:00 AM	0	41	2	0	3	0	0	1	2	0	0	0	0
4/25/2024	4:15 AM	0	45	7	0	2	0	0	1	2	0	1	0	0
4/25/2024	4:30 AM	0	57	13	0	4	1	0	1	3	0	1	0	0
4/25/2024	4:45 AM	0	77	17	0	3	1	0	0	4	0	1	0	0
4/25/2024	5:00 AM	0	101	19	0	3	2	0	0	3	0	1	0	0
4/25/2024	5:15 AM	0	126	21	3	5	2	0	1	4	0	0	0	0
4/25/2024	5:30 AM	0	176	25	6	4	1	0	2	4	0	0	0	0
4/25/2024	5:45 AM	0	223	34	8	4	1	0	3	3	0	0	0	0
4/25/2024	6:00 AM	0	264	52	9	6	1	0	5	4	0	0	0	0
4/25/2024	6:15 AM	0	331	62	6	8	2	0	5	3	0	0	0	0
4/25/2024	6:30 AM	0	432	81	3	8	2	0	5	4	0	0	0	0
4/25/2024	6:45 AM	0	569	103	1	14	3	0	5	6	0	0	0	0
4/25/2024	7:00 AM	0	674	108	0	15	2	0	3	7	0	0	0	0
4/25/2024	7:15 AM	0	762	106	0	15	1	0	3	8	0	0	0	0
4/25/2024	7:30 AM	0	741	93	0	16	1	0	2	8	0	0	0	0
4/25/2024	7:45 AM	0	685	68	0	16	3	0	2	5	0	0	0	0
4/25/2024	8:00 AM	0	649	50	0	17	3	0	2	3	0	0	0	0
4/25/2024	8:15 AM	0	615	48	0	14	3	0	1	5	0	0	0	0
4/25/2024	8:30 AM	0	622	44	3	13	4	0	2	4	0	0	0	0
4/25/2024	8:45 AM	0	605	44	3	8	1	0	2	8	0	0	0	0
4/25/2024	9:00 AM	0	602	53	4	6	1	0	2	9	0	0	0	0
4/25/2024	9:15 AM	0	588	64	4	10	1	0	3	8	0	0	0	0
4/25/2024	9:30 AM	0	571	82	1	13	0	0	2	8	0	0	0	0
4/25/2024	9:45 AM	0	578	110	1	18	0	0	3	5	0	0	0	0
4/25/2024	10:00 AM	0	578	118	0	19	0	0	3	6	0	0	0	0
4/25/2024	10:15 AM	0	588	117	1	16	0	0	2	5	0	0	0	0
4/25/2024	10:30 AM	0	599	115	1	16	0	0	2	6	0	0	0	0
4/25/2024	10:45 AM	0	597	106	1	17	1	0	0	5	0	0	0	0
4/25/2024	11:00 AM	0	625	108	1	22	2	0	0	3	0	0	0	0
4/25/2024	11:15 AM	0	606	107	0	27	2	0	1	4	0	0	0	0
4/25/2024	11:30 AM	0	608	116	0	23	2	0	1	3	0	0	0	0
4/25/2024	11:45 AM	0	619	119	0	21	1	0	1	6	0	0	0	0
4/25/2024	12:00 PM	1	616	126	0	20	0	0	1	6	0	0	0	0
4/25/2024	12:15 PM	1	643	146	1	18	0	0	0	5	0	0	0	0
4/25/2024	12:30 PM	1	640	140	1	19	0	0	0	5	0	0	0	0
4/25/2024	12:45 PM	1	644	159	2	16	0	0	1	3	0	0	0	0
4/25/2024	1:00 PM	0	649	175	2	11	1	0	1	3	0	0	0	0
4/25/2024	1:15 PM	0	622	183	2	10	2	0	1	4	0	0	0	0
4/25/2024	1:30 PM	0	626	202	3	8	2	0	1	3	0	0	0	0
4/25/2024	1:45 PM	0	626	189	3	12	3	0	0	2	0	0	0	0
4/25/2024	2:00 PM	0	633	189	3	12	2	0	0	2	0	0	0	0
4/25/2024	2:15 PM	0	683	175	2	10	1	0	1	0	0	0	0	0
4/25/2024	2:30 PM	0	719	163	2	11	1	0	1	1	0	0	0	0
4/25/2024	2:45 PM	0	772	156	1	7	0	0	1	1	1	0	0	0
4/25/2024	3:00 PM	0	783	142	1	6	0	0	1	2	2	0	0	0
4/25/2024	3:15 PM	0	790	146	1	8	0	0	0	3	2	0	0	0
4/25/2024	3:30 PM	0	745	140	0	7	1	0	0	2	2	0	0	0
4/25/2024	3:45 PM	0	688	131	0	7	1	0	0	2	1	0	0	0
4/25/2024	4:00 PM	0	637	114	0	8	1	0	0	1	0	0	0	0
4/25/2024	4:15 PM	0	633	96	0	6	1	0	0	0	0	0	0	0
4/25/2024	4:30 PM	0	665	94	0	8	0	0	0	1	0	0	0	0
4/25/2024	4:45 PM	0	673	93	1	7	0	0	0	1	0	0	0	0
4/25/2024	5:00 PM	0	677	102	1	5	0	0	0	1	0	0	0	0
4/25/2024	5:15 PM	0	646	100	1	5	0	0	0	1	0	0	0	0
4/25/2024	5:30 PM	0	635	103	1	6	0	0	0	0	0	0	0	0
4/25/2024	5:45 PM	1	642	109	0	7	0	0	0	0	0	0	0	0
4/25/2024	6:00 PM	1	673	115	0	8	0	0	0	0	0	0	0	0
4/25/2024	6:15 PM	1	518	95	0	6	0	0	0	0	0	0	0	0
4/25/2024	6:30 PM	1	352	62	0	3	0	0	0	0	0	0	0	0
4/25/2024	6:45 PM	0	175	35	0	1	0	0	0	0	0	0	0	0
4/25/2024	7:00 PM	0	0	0	0	0	0	0	0	0	0	0	0	0
4/25/2024	7:15 PM	0	0	0	0	0	0	0	0	0	0	0	0	0
4/25/2024	7:30 PM	0	0	0	0	0	0	0	0	0	0	0	0	0
4/25/2024	7:45 PM	0	0	0	0	0	0	0	0	0	0	0	0	0
4/25/2024	8:00 PM	0	0	0	0	0	0	0	0	0	0	0	0	0
4/25/2024	8:15 PM	0	0	0	0	0	0	0	0	0	0	0	0	0
4/25/2024	8:30 PM	0	0	0	0	0	0	0	0	0	0	0	0	0
4/25/2024	8:45 PM	0	0	0	0	0	0	0	0	0	0	0	0	0
4/25/2024	9:00 PM	0	0	0	0	0	0	0	0	0	0	0	0	0
4/25/2024	9:15 PM	0	0	0	0	0	0	0	0	0	0	0	0	0
4/25/2024	9:30 PM	0	0	0	0	0	0	0	0	0	0	0	0	0
4/25/2024	9:45 PM	0	0	0	0	0	0	0	0	0	0	0	0	0
4/25/2024	10:00 PM	0	0	0	0	0	0	0	0	0	0	0	0	0
4/25/2024	10:15 PM	0	0	0	0	0	0	0	0	0	0	0	0	0
4/25/2024	10:30 PM	0	0	0	0	0	0	0	0	0	0	0	0	0
4/25/2024	10:45 PM	0	0	0	0	0	0	0	0	0	0	0	0	0
4/25/2024	11:00 PM	0	0	0	0	0	0	0	0	0	0	0	0	0
4/25/2024	11:15 PM	0	0	0	0	0	0	0	0	0	0	0	0	0
4/25/2024	11:30 PM	0	0	0	0	0	0	0	0	0	0	0	0	0
4/25/2024	11:45 PM	0	0	0	0	0	0	0	0	0	0	0	0	0

SB
File Name:
Start Date: 4/23/2024
Start Time: 0
Site Code: 53
Station ID: 1
Location 1: I-26 N/Bound On-Ramp, north of US-378 Sunset Blvd
Location 2:

Date	Time	1	2	3	4	5	6	7	8	9	10	11	12	13
4/23/2024	12:00 AM	0	0	0	0	0	0	0	0	0	0	0	0	0
4/23/2024	12:15 AM	0	0	0	0	0	0	0	0	0	0	0	0	0
4/23/2024	12:30 AM	0	0	0	0	0	0	0	0	0	0	0	0	0
4/23/2024	12:45 AM	0	0	0	0	0	0	0	0	0	0	0	0	0
4/23/2024	1:00 AM	0	0	0	0	0	0	0	0	0	0	0	0	0
4/23/2024	1:15 AM	0	0	0	0	0	0	0	0	0	0	0	0	0
4/23/2024	1:30 AM	0	0	0	0	0	0	0	0	0	0	0	0	0
4/23/2024	1:45 AM	0	0	0	0	0	0	0	0	0	0	0	0	0
4/23/2024	2:00 AM	0	0	0	0	0	0	0	0	0	0	0	0	0
4/23/2024	2:15 AM	0	0	0	0	0	0	0	0	0	0	0	0	0
4/23/2024	2:30 AM	0	0	0	0	0	0	0	0	0	0	0	0	0
4/23/2024	2:45 AM	0	0	0	0	0	0	0	0	0	0	0	0	0
4/23/2024	3:00 AM	0	0	0	0	0	0	0	0	0	0	0	0	0
4/23/2024	3:15 AM	0	0	0	0	0	0	0	0	0	0	0	0	0
4/23/2024	3:30 AM	0	0	0	0	0	0	0	0	0	0	0	0	0
4/23/2024	3:45 AM	0	0	0	0	0	0	0	0	0	0	0	0	0
4/23/2024	4:00 AM	0	0	0	0	0	0	0	0	0	0	0	0	0
4/23/2024	4:15 AM	0	0	0	0	0	0	0	0	0	0	0	0	0
4/23/2024	4:30 AM	0	0	0	0	0	0	0	0	0	0	0	0	0
4/23/2024	4:45 AM	0	0	0	0	0	0	0	0	0	0	0	0	0
4/23/2024	5:00 AM	0	0	0	0	0	0	0	0	0	0	0	0	0
4/23/2024	5:15 AM	0	0	0	0	0	0	0	0	0	0	0	0	0
4/23/2024	5:30 AM	0	0	0	0	0	0	0	0	0	0	0	0	0
4/23/2024	5:45 AM	0	0	0	0	0	0	0	0	0	0	0	0	0
4/23/2024	6:00 AM	0	0	0	0	0	0	0	0	0	0	0	0	0
4/23/2024	6:15 AM	0	0	0	0	0	0	0	0	0	0	0	0	0
4/23/2024	6:30 AM	0	0	0	0	0	0	0	0	0	0	0	0	0
4/23/2024	6:45 AM	0	0	0	0	0	0	0	0	0	0	0	0	0
4/23/2024	7:00 AM	0	0	0	0	0	0	0	0	0	0	0	0	0
4/23/2024	7:15 AM	0	0	0	0	0	0	0	0	0	0	0	0	0
4/23/2024	7:30 AM	0	0	0	0	0	0	0	0	0	0	0	0	0
4/23/2024	7:45 AM	0	0	0	0	0	0	0	0	0	0	0	0	0
4/23/2024	8:00 AM	0	0	0	0	0	0	0	0	0	0	0	0	0
4/23/2024	8:15 AM	0	0	0	0	0	0	0	0	0	0	0	0	0
4/23/2024	8:30 AM	0	0	0	0	0	0	0	0	0	0	0	0	0
4/23/2024	8:45 AM	0	0	0	0	0	0	0	0	0	0	0	0	0
4/23/2024	9:00 AM	0	0	0	0	0	0	0	0	0	0	0	0	0
4/23/2024	9:15 AM	0	0	0	0	0	0	0	0	0	0	0	0	0
4/23/2024	9:30 AM	0	0	0	0	0	0	0	0	0	0	0	0	0
4/23/2024	9:45 AM	0	0	0	0	0	0	0	0	0	0	0	0	0
4/23/2024	10:00 AM	0	0	0	0	0	0	0	0	0	0	0	0	0
4/23/2024	10:15 AM	0	0	0	0	0	0	0	0	0	0	0	0	0
4/23/2024	10:30 AM	0	0	0	0	0	0	0	0	0	0	0	0	0
4/23/2024	10:45 AM	0	0	0	0	0	0	0	0	0	0	0	0	0
4/23/2024	11:00 AM	0	0	0	0	0	0	0	0	0	0	0	0	0
4/23/2024	11:15 AM	0	0	0	0	0	0	0	0	0	0	0	0	0
4/23/2024	11:30 AM	0	0	0	0	0	0	0	0	0	0	0	0	0
4/23/2024	11:45 AM	0	0	0	0	0	0	0	0	0	0	0	0	0
4/23/2024	12:00 PM	0	0	0	0	0	0	0	0	0	0	0	0	0
4/23/2024	12:15 PM	0	0	0	0	0	0	0	0	0	0	0	0	0
4/23/2024	12:30 PM	0	0	0	0	0	0	0	0	0	0	0	0	0
4/23/2024	12:45 PM	0	0	0	0	0	0	0	0	0	0	0	0	0
4/23/2024	1:00 PM	0	0	0	0	0	0	0	0	0	0	0	0	0
4/23/2024	1:15 PM	0	0	0	0	0	0	0	0	0	0	0	0	0
4/23/2024	1:30 PM	0	0	0	0	0	0	0	0	0	0	0	0	0
4/23/2024	1:45 PM	0	0	0	0	0	0	0	0	0	0	0	0	0
4/23/2024	2:00 PM	0	0	0	0	0	0	0	0	0	0	0	0	0
4/23/2024	2:15 PM	0	0	0	0	0	0	0	0	0	0	0	0	0
4/23/2024	2:30 PM	0	0	0	0	0	0	0	0	0	0	0	0	0
4/23/2024	2:45 PM	0	0	0	0	0	0	0	0	0	0	0	0	0
4/23/2024	3:00 PM	0	0	0	0	0	0	0	0	0	0	0	0	0
4/23/2024	3:15 PM	0	0	0	0	0	0	0	0	0	0	0	0	0
4/23/2024	3:30 PM	0	0	0	0	0	0	0	0	0	0	0	0	0
4/23/2024	3:45 PM	0	0	0	0	0	0	0	0	0	0	0	0	0
4/23/2024	4:00 PM	0	0	0	0	0	0	0	0	0	0	0	0	0
4/23/2024	4:15 PM	0	0	0	0	0	0	0	0	0	0	0	0	0
4/23/2024	4:30 PM	0	0	0	0	0	0	0	0	0	0	0	0	0
4/23/2024	4:45 PM	0	0	0	0	0	0	0	0	0	0	0	0	0
4/23/2024	5:00 PM	0	0	0	0	0	0	0	0	0	0	0	0	0
4/23/2024	5:15 PM	0	0	0	0	0	0	0	0	0	0	0	0	0
4/23/2024	5:30 PM	0	0	0	0	0	0	0	0	0	0	0	0	0
4/23/2024	5:45 PM	0	0	0	0	0	0	0	0	0	0	0	0	0
4/23/2024	6:00 PM	0	0	0	0	0	0	0	0	0	0	0	0	0
4/23/2024	6:15 PM	0	0	0	0	0	0	0	0	0	0	0	0	0
4/23/2024	6:30 PM	0	0	0	0	0	0	0	0	0	0	0	0	0
4/23/2024	6:45 PM	0	0	0	0	0	0	0	0	0	0	0	0	0
4/23/2024	7:00 PM	0	0	0	0	0	0	0	0	0	0	0	0	0
4/23/2024	7:15 PM	0	0	0	0	0	0	0	0	0	0	0	0	0
4/23/2024	7:30 PM	0	0	0	0	0	0	0	0	0	0	0	0	0
4/23/2024	7:45 PM	0	0	0	0	0	0	0	0	0	0	0	0	0
4/23/2024	8:00 PM	0	0	0	0	0	0	0	0	0	0	0	0	0
4/23/2024	8:15 PM	0	0	0	0	0	0	0	0	0	0	0	0	0
4/23/2024	8:30 PM	0	0	0	0	0	0	0	0	0	0	0	0	0
4/23/2024	8:45 PM	0	0	0	0	0	0	0	0	0	0	0	0	0
4/23/2024	9:00 PM	0	0	0	0	0	0	0	0	0	0	0	0	0
4/23/2024	9:15 PM	0	0	0	0	0	0	0	0	0	0	0	0	0
4/23/2024	9:30 PM	0	0	0	0	0	0	0	0	0	0	0	0	0
4/23/2024	9:45 PM	0	0	0	0	0	0	0	0	0	0	0	0	0
4/23/2024	10:00 PM	0	0	0	0	0	0	0	0	0	0	0	0	0
4/23/2024	10:15 PM	0	0	0	0	0	0	0	0	0	0	0	0	0
4/23/2024	10:30 PM	0	0	0	0	0	0	0	0	0	0	0	0	0
4/23/2024	10:45 PM	0	0	0	0	0	0	0	0	0	0	0	0	0
4/23/2024	11:00 PM	0	0	0	0	0	0	0	0	0	0	0	0	0
4/23/2024	11:15 PM	0	0	0	0	0	0	0	0	0	0	0	0	0
4/23/2024	11:30 PM	0	0	0	0	0	0	0	0	0	0	0	0	0
4/23/2024	11:45 PM	0	0	0	0	0	0	0	0	0	0	0	0	0

4/24/2024	12:00 AM	0	0	0	0	0	0	0	0	0	0	0	0	0
4/24/2024	12:15 AM	0	0	0	0	0	0	0	0	0	0	0	0	0
4/24/2024	12:30 AM	0	0	0	0	0	0	0	0	0	0	0	0	0
4/24/2024	12:45 AM	0	0	0	0	0	0	0	0	0	0	0	0	0
4/24/2024	1:00 AM	0	0	0	0	0	0	0	0	0	0	0	0	0
4/24/2024	1:15 AM	0	0	0	0	0	0	0	0	0	0	0	0	0
4/24/2024	1:30 AM	0	0	0	0	0	0	0	0	0	0	0	0	0
4/24/2024	1:45 AM	0	0	0	0	0	0	0	0	0	0	0	0	0
4/24/2024	2:00 AM	0	0	0	0	0	0	0	0	0	0	0	0	0
4/24/2024	2:15 AM	0	0	0	0	0	0	0	0	0	0	0	0	0
4/24/2024	2:30 AM	0	0	0	0	0	0	0	0	0	0	0	0	0
4/24/2024	2:45 AM	0	0	0	0	0	0	0	0	0	0	0	0	0
4/24/2024	3:00 AM	0	0	0	0	0	0	0	0	0	0	0	0	0
4/24/2024	3:15 AM	0	0	0	0	0	0	0	0	0	0	0	0	0
4/24/2024	3:30 AM	0	0	0	0	0	0	0	0	0	0	0	0	0
4/24/2024	3:45 AM	0	0	0	0	0	0	0	0	0	0	0	0	0
4/24/2024	4:00 AM	0	0	0	0	0	0	0	0	0	0	0	0	0
4/24/2024	4:15 AM	0	0	0	0	0	0	0	0	0	0	0	0	0
4/24/2024	4:30 AM	0	0	0	0	0	0	0	0	0	0	0	0	0
4/24/2024	4:45 AM	0	0	0	0	0	0	0	0	0	0	0	0	0
4/24/2024	5:00 AM	0	0	0	0	0	0	0	0	0	0	0	0	0
4/24/2024	5:15 AM	0	0	0	0	0	0	0	0	0	0	0	0	0
4/24/2024	5:30 AM	0	0	0	0	0	0	0	0	0	0	0	0	0
4/24/2024	5:45 AM	0	0	0	0	0	0	0	0	0	0	0	0	0
4/24/2024	6:00 AM	0	0	0	0	0	0	0	0	0	0	0	0	0
4/24/2024	6:15 AM	0	0	0	0	0	0	0	0	0	0	0	0	0
4/24/2024	6:30 AM	0	0	0	0	0	0	0	0	0	0	0	0	0
4/24/2024	6:45 AM	0	0	0	0	0	0	0	0	0	0	0	0	0
4/24/2024	7:00 AM	0	0	0	0	0	0	0	0	0	0	0	0	0
4/24/2024	7:15 AM	0	0	0	0	0	0	0	0	0	0	0	0	0
4/24/2024	7:30 AM	0	0	0	0	0	0	0	0	0	0	0	0	0
4/24/2024	7:45 AM	0	0	0	0	0	0	0	0	0	0	0	0	0
4/24/2024	8:00 AM	0	0	0	0	0	0	0	0	0	0	0	0	0
4/24/2024	8:15 AM	0	0	0	0	0	0	0	0	0	0	0	0	0
4/24/2024	8:30 AM	0	0	0	0	0	0	0	0	0	0	0	0	0
4/24/2024	8:45 AM	0	0	0	0	0	0	0	0	0	0	0	0	0
4/24/2024	9:00 AM	0	0	0	0	0	0	0	0	0	0	0	0	0
4/24/2024	9:15 AM	0	0	0	0	0	0	0	0	0	0	0	0	0
4/24/2024	9:30 AM	0	0	0	0	0	0	0	0	0	0	0	0	0
4/24/2024	9:45 AM	0	0	0	0	0	0	0	0	0	0	0	0	0
4/24/2024	10:00 AM	0	0	0	0	0	0	0	0	0	0	0	0	0
4/24/2024	10:15 AM	0	0	0	0	0	0	0	0	0	0	0	0	0
4/24/2024	10:30 AM	0	0	0	0	0	0	0	0	0	0	0	0	0
4/24/2024	10:45 AM	0	0	0	0	0	0	0	0	0	0	0	0	0
4/24/2024	11:00 AM	0	0	0	0	0	0	0	0	0	0	0	0	0
4/24/2024	11:15 AM	0	0	0	0	0	0	0	0	0	0	0	0	0
4/24/2024	11:30 AM	0	0	0	0	0	0	0	0	0	0	0	0	0
4/24/2024	11:45 AM	0	0	0	0	0	0	0	0	0	0	0	0	0
4/24/2024	12:00 PM	0	0	0	0	0	0	0	0	0	0	0	0	0
4/24/2024	12:15 PM	0	0	0	0	0	0	0	0	0	0	0	0	0
4/24/2024	12:30 PM	0	0	0	0	0	0	0	0	0	0	0	0	0
4/24/2024	12:45 PM	0	0	0	0	0	0	0	0	0	0	0	0	0
4/24/2024	1:00 PM	0	0	0	0	0	0	0	0	0	0	0	0	0
4/24/2024	1:15 PM	0	0	0	0	0	0	0	0	0	0	0	0	0
4/24/2024	1:30 PM	0	0	0	0	0	0	0	0	0	0	0	0	0
4/24/2024	1:45 PM	0	0	0	0	0	0	0	0	0	0	0	0	0
4/24/2024	2:00 PM	0	0	0	0	0	0	0	0	0	0	0	0	0
4/24/2024	2:15 PM	0	0	0	0	0	0	0	0	0	0	0	0	0
4/24/2024	2:30 PM	0	0	0	0	0	0	0	0	0	0	0	0	0
4/24/2024	2:45 PM	0	0	0	0	0	0	0	0	0	0	0	0	0
4/24/2024	3:00 PM	0	0	0	0	0	0	0	0	0	0	0	0	0
4/24/2024	3:15 PM	0	0	0	0	0	0	0	0	0	0	0	0	0
4/24/2024	3:30 PM	0	0	0	0	0	0	0	0	0	0	0	0	0
4/24/2024	3:45 PM	0	0	0	0	0	0	0	0	0	0	0	0	0
4/24/2024	4:00 PM	0	0	0	0	0	0	0	0	0	0	0	0	0
4/24/2024	4:15 PM	0	0	0	0	0	0	0	0	0	0	0	0	0
4/24/2024	4:30 PM	0	0	0	0	0	0	0	0	0	0	0	0	0
4/24/2024	4:45 PM	0	0	0	0	0	0	0	0	0	0	0	0	0
4/24/2024	5:00 PM	0	0	0	0	0	0	0	0	0	0	0	0	0
4/24/2024	5:15 PM	0	0	0	0	0	0	0	0	0	0	0	0	0
4/24/2024	5:30 PM	0	0	0	0	0	0	0	0	0	0	0	0	0
4/24/2024	5:45 PM	0	0	0	0	0	0	0	0	0	0	0	0	0
4/24/2024	6:00 PM	0	0	0	0	0	0	0	0	0	0	0	0	0
4/24/2024	6:15 PM	0	0	0	0	0	0	0	0	0	0	0	0	0
4/24/2024	6:30 PM	0	0	0	0	0	0	0	0	0	0	0	0	0
4/24/2024	6:45 PM	0	0	0	0	0	0	0	0	0	0	0	0	0
4/24/2024	7:00 PM	0	0	0	0	0	0	0	0	0	0	0	0	0
4/24/2024	7:15 PM	0	0	0	0	0	0	0	0	0	0	0	0	0
4/24/2024	7:30 PM	0	0	0	0	0	0	0	0	0	0	0	0	0
4/24/2024	7:45 PM	0	0	0	0	0	0	0	0	0	0	0	0	0
4/24/2024	8:00 PM	0	0	0	0	0	0	0	0	0	0	0	0	0
4/24/2024	8:15 PM	0	0	0	0	0	0	0	0	0	0	0	0	0
4/24/2024	8:30 PM	0	0	0	0	0	0	0	0	0	0	0	0	0
4/24/2024	8:45 PM	0	0	0	0	0	0	0	0	0	0	0	0	0
4/24/2024	9:00 PM	0	0	0	0	0	0	0	0	0	0	0	0	0
4/24/2024	9:15 PM	0	0	0	0	0	0	0	0	0	0	0	0	0
4/24/2024	9:30 PM	0	0	0	0	0	0	0	0	0	0	0	0	0
4/24/2024	9:45 PM	0	0	0	0	0	0	0	0	0	0	0	0	0
4/24/2024	10:00 PM	0	0	0	0	0	0	0	0	0	0	0	0	0
4/24/2024	10:15 PM	0	0	0	0	0	0	0	0	0	0	0	0	0
4/24/2024	10:30 PM	0	0	0	0	0	0	0	0	0	0	0	0	0
4/24/2024	10:45 PM	0	0	0	0	0	0	0	0	0	0	0	0	0
4/24/2024	11:00 PM	0	0	0	0	0	0	0	0	0	0	0	0	0
4/24/2024	11:15 PM	0	0	0	0	0	0	0	0	0	0	0	0	0
4/24/2024	11:30 PM	0	0	0	0	0	0	0	0	0	0	0	0	0
4/24/2024	11:45 PM	0	0	0	0	0	0	0	0	0	0	0	0	0

4/25/2024	12:00 AM	0	0	0	0	0	0	0	0	0	0	0	0	0
4/25/2024	12:15 AM	0	0	0	0	0	0	0	0	0	0	0	0	0
4/25/2024	12:30 AM	0	0	0	0	0	0	0	0	0	0	0	0	0
4/25/2024	12:45 AM	0	0	0	0	0	0	0	0	0	0	0	0	0
4/25/2024	1:00 AM	0	0	0	0	0	0	0	0	0	0	0	0	0
4/25/2024	1:15 AM	0	0	0	0	0	0	0	0	0	0	0	0	0
4/25/2024	1:30 AM	0	0	0	0	0	0	0	0	0	0	0	0	0
4/25/2024	1:45 AM	0	0	0	0	0	0	0	0	0	0	0	0	0
4/25/2024	2:00 AM	0	0	0	0	0	0	0	0	0	0	0	0	0
4/25/2024	2:15 AM	0	0	0	0	0	0	0	0	0	0	0	0	0
4/25/2024	2:30 AM	0	0	0	0	0	0	0	0	0	0	0	0	0
4/25/2024	2:45 AM	0	0	0	0	0	0	0	0	0	0	0	0	0
4/25/2024	3:00 AM	0	0	0	0	0	0	0	0	0	0	0	0	0
4/25/2024	3:15 AM	0	0	0	0	0	0	0	0	0	0	0	0	0
4/25/2024	3:30 AM	0	0	0	0	0	0	0	0	0	0	0	0	0
4/25/2024	3:45 AM	0	0	0	0	0	0	0	0	0	0	0	0	0
4/25/2024	4:00 AM	0	0	0	0	0	0	0	0	0	0	0	0	0
4/25/2024	4:15 AM	0	0	0	0	0	0	0	0	0	0	0	0	0
4/25/2024	4:30 AM	0	0	0	0	0	0	0	0	0	0	0	0	0
4/25/2024	4:45 AM	0	0	0	0	0	0	0	0	0	0	0	0	0
4/25/2024	5:00 AM	0	0	0	0	0	0	0	0	0	0	0	0	0
4/25/2024	5:15 AM	0	0	0	0	0	0	0	0	0	0	0	0	0
4/25/2024	5:30 AM	0	0	0	0	0	0	0	0	0	0	0	0	0
4/25/2024	5:45 AM	0	0	0	0	0	0	0	0	0	0	0	0	0
4/25/2024	6:00 AM	0	0	0	0	0	0	0	0	0	0	0	0	0
4/25/2024	6:15 AM	0	0	0	0	0	0	0	0	0	0	0	0	0
4/25/2024	6:30 AM	0	0	0	0	0	0	0	0	0	0	0	0	0
4/25/2024	6:45 AM	0	0	0	0	0	0	0	0	0	0	0	0	0
4/25/2024	7:00 AM	0	0	0	0	0	0	0	0	0	0	0	0	0
4/25/2024	7:15 AM	0	0	0	0	0	0	0	0	0	0	0	0	0
4/25/2024	7:30 AM	0	0	0	0	0	0	0	0	0	0	0	0	0
4/25/2024	7:45 AM	0	0	0	0	0	0	0	0	0	0	0	0	0
4/25/2024	8:00 AM	0	0	0	0	0	0	0	0	0	0	0	0	0
4/25/2024	8:15 AM	0	0	0	0	0	0	0	0	0	0	0	0	0
4/25/2024	8:30 AM	0	0	0	0	0	0	0	0	0	0	0	0	0
4/25/2024	8:45 AM	0	0	0	0	0	0	0	0	0	0	0	0	0
4/25/2024	9:00 AM	0	0	0	0	0	0	0	0	0	0	0	0	0
4/25/2024	9:15 AM	0	0	0	0	0	0	0	0	0	0	0	0	0
4/25/2024	9:30 AM	0	0	0	0	0	0	0	0	0	0	0	0	0
4/25/2024	9:45 AM	0	0	0	0	0	0	0	0	0	0	0	0	0
4/25/2024	10:00 AM	0	0	0	0	0	0	0	0	0	0	0	0	0
4/25/2024	10:15 AM	0	0	0	0	0	0	0	0	0	0	0	0	0
4/25/2024	10:30 AM	0	0	0	0	0	0	0	0	0	0	0	0	0
4/25/2024	10:45 AM	0	0	0	0	0	0	0	0	0	0	0	0	0
4/25/2024	11:00 AM	0	0	0	0	0	0	0	0	0	0	0	0	0
4/25/2024	11:15 AM	0	0	0	0	0	0	0	0	0	0	0	0	0
4/25/2024	11:30 AM	0	0	0	0	0	0	0	0	0	0	0	0	0
4/25/2024	11:45 AM	0	0	0	0	0	0	0	0	0	0	0	0	0
4/25/2024	12:00 PM	0	0	0	0	0	0	0	0	0	0	0	0	0
4/25/2024	12:15 PM	0	0	0	0	0	0	0	0	0	0	0	0	0
4/25/2024	12:30 PM	0	0	0	0	0	0	0	0	0	0	0	0	0
4/25/2024	12:45 PM	0	0	0	0	0	0	0	0	0	0	0	0	0
4/25/2024	1:00 PM	0	0	0	0	0	0	0	0	0	0	0	0	0
4/25/2024	1:15 PM	0	0	0	0	0	0	0	0	0	0	0	0	0
4/25/2024	1:30 PM	0	0	0	0	0	0	0	0	0	0	0	0	0
4/25/2024	1:45 PM	0	0	0	0	0	0	0	0	0	0	0	0	0
4/25/2024	2:00 PM	0	0	0	0	0	0	0	0	0	0	0	0	0
4/25/2024	2:15 PM	0	0	0	0	0	0	0	0	0	0	0	0	0
4/25/2024	2:30 PM	0	0	0	0	0	0	0	0	0	0	0	0	0
4/25/2024	2:45 PM	0	0	0	0	0	0	0	0	0	0	0	0	0
4/25/2024	3:00 PM	0	0	0	0	0	0	0	0	0	0	0	0	0
4/25/2024	3:15 PM	0	0	0	0	0	0	0	0	0	0	0	0	0
4/25/2024	3:30 PM	0	0	0	0	0	0	0	0	0	0	0	0	0
4/25/2024	3:45 PM	0	0	0	0	0	0	0	0	0	0	0	0	0
4/25/2024	4:00 PM	0	0	0	0	0	0	0	0	0	0	0	0	0
4/25/2024	4:15 PM	0	0	0	0	0	0	0	0	0	0	0	0	0
4/25/2024	4:30 PM	0	0	0	0	0	0	0	0	0	0	0	0	0
4/25/2024	4:45 PM	0	0	0	0	0	0	0	0	0	0	0	0	0
4/25/2024	5:00 PM	0	0	0	0	0	0	0	0	0	0	0	0	0
4/25/2024	5:15 PM	0	0	0	0	0	0	0	0	0	0	0	0	0
4/25/2024	5:30 PM	0	0	0	0	0	0	0	0	0	0	0	0	0
4/25/2024	5:45 PM	0	0	0	0	0	0	0	0	0	0	0	0	0
4/25/2024	6:00 PM	0	0	0	0	0	0	0	0	0	0	0	0	0
4/25/2024	6:15 PM	0	0	0	0	0	0	0	0	0	0	0	0	0
4/25/2024	6:30 PM	0	0	0	0	0	0	0	0	0	0	0	0	0
4/25/2024	6:45 PM	0	0	0	0	0	0	0	0	0	0	0	0	0
4/25/2024	7:00 PM	0	0	0	0	0	0	0	0	0	0	0	0	0
4/25/2024	7:15 PM	0	0	0	0	0	0	0	0	0	0	0	0	0
4/25/2024	7:30 PM	0	0	0	0	0	0	0	0	0	0	0	0	0
4/25/2024	7:45 PM	0	0	0	0	0	0	0	0	0	0	0	0	0
4/25/2024	8:00 PM	0	0	0	0	0	0	0	0	0	0	0	0	0
4/25/2024	8:15 PM	0	0	0	0	0	0	0	0	0	0	0	0	0
4/25/2024	8:30 PM	0	0	0	0	0	0	0	0	0	0	0	0	0
4/25/2024	8:45 PM	0	0	0	0	0	0	0	0	0	0	0	0	0
4/25/2024	9:00 PM	0	0	0	0	0	0	0	0	0	0	0	0	0
4/25/2024	9:15 PM	0	0	0	0	0	0	0	0	0	0	0	0	0
4/25/2024	9:30 PM	0	0	0	0	0	0	0	0	0	0	0	0	0
4/25/2024	9:45 PM	0	0	0	0	0	0	0	0	0	0	0	0	0
4/25/2024	10:00 PM	0	0	0	0	0	0	0	0	0	0	0	0	0
4/25/2024	10:15 PM	0	0	0	0	0	0	0	0	0	0	0	0	0
4/25/2024	10:30 PM	0	0	0	0	0	0	0	0	0	0	0	0	0
4/25/2024	10:45 PM	0	0	0	0	0	0	0	0	0	0	0	0	0
4/25/2024	11:00 PM	0	0	0	0	0	0	0	0	0	0	0	0	0
4/25/2024	11:15 PM	0	0	0	0	0	0	0	0	0	0	0	0	0
4/25/2024	11:30 PM	0	0	0	0	0	0	0	0	0	0	0	0	0
4/25/2024	11:45 PM	0	0	0	0	0	0	0	0	0	0	0	0	0

Bi-Directional Class Count || SB WB 15min

Columbia, SC

Marr Traffic DATA COLLECTION
www.marrtraffic.com

Site 54
I-26 S/Bound On-Ramp,
south of US-378 Sunset Blvd

Date
Tuesday, April 23, 2024

Lat/Long
34.002082°, -81.110174°

Weather
Fair
58°F

Click here for Detailed Weather

Click here for Map

0000 - 2400 (Weekday 24h Session) (04-23-2024)
SB WB 15min

	Southbound (Movement 54.1)													15min	60min
Time	1	2	3	4	5	6	7	8	9	10	11	12	13	Total	Total
0000 - 0015	0	0	0	0	0	0	0	0	0	0	0	0	0	**0**	
0015 - 0030	0	0	0	0	0	0	0	0	0	0	0	0	0	**0**	
0030 - 0045	0	0	0	0	0	0	0	0	0	0	0	0	0	**0**	
0045 - 0100	0	0	0	0	0	0	0	0	0	0	0	0	0	**0**	**0**
0100 - 0115	0	0	0	0	0	0	0	0	0	0	0	0	0	**0**	
0115 - 0130	0	0	0	0	0	0	0	0	0	0	0	0	0	**0**	
0130 - 0145	0	0	0	0	0	0	0	0	0	0	0	0	0	**0**	
0145 - 0200	0	0	0	0	0	0	0	0	0	0	0	0	0	**0**	**0**
0200 - 0215	0	0	0	0	0	0	0	0	0	0	0	0	0	**0**	
0215 - 0230	0	0	0	0	0	0	0	0	0	0	0	0	0	**0**	
0230 - 0245	0	0	0	0	0	0	0	0	0	0	0	0	0	**0**	
0245 - 0300	0	0	0	0	0	0	0	0	0	0	0	0	0	**0**	**0**
0300 - 0315	0	0	0	0	0	0	0	0	0	0	0	0	0	**0**	
0315 - 0330	0	0	0	0	0	0	0	0	0	0	0	0	0	**0**	
0330 - 0345	0	0	0	0	0	0	0	0	0	0	0	0	0	**0**	
0345 - 0400	0	0	0	0	0	0	0	0	0	0	0	0	0	**0**	**0**
0400 - 0415	0	0	0	0	0	0	0	0	0	0	0	0	0	**0**	
0415 - 0430	0	0	0	0	0	0	0	0	0	0	0	0	0	**0**	
0430 - 0445	0	0	0	0	0	0	0	0	0	0	0	0	0	**0**	
0445 - 0500	0	0	0	0	0	0	0	0	0	0	0	0	0	**0**	**0**
0500 - 0515	0	0	0	0	0	0	0	0	0	0	0	0	0	**0**	
0515 - 0530	0	0	0	0	0	0	0	0	0	0	0	0	0	**0**	
0530 - 0545	0	0	0	0	0	0	0	0	0	0	0	0	0	**0**	
0545 - 0600	0	0	0	0	0	0	0	0	0	0	0	0	0	**0**	**0**
0600 - 0615	0	0	0	0	0	0	0	0	0	0	0	0	0	**0**	
0615 - 0630	0	0	0	0	0	0	0	0	0	0	0	0	0	**0**	
0630 - 0645	0	0	0	0	0	0	0	0	0	0	0	0	0	**0**	
0645 - 0700	0	0	0	0	0	0	0	0	0	0	0	0	0	**0**	**0**
0700 - 0715	0	0	0	0	0	0	0	0	0	0	0	0	0	**0**	
0715 - 0730	0	0	0	0	0	0	0	0	0	0	0	0	0	**0**	
0730 - 0745	0	0	0	0	0	0	0	0	0	0	0	0	0	**0**	
0745 - 0800	0	0	0	0	0	0	0	0	0	0	0	0	0	**0**	**0**
0800 - 0815	0	0	0	0	0	0	0	0	0	0	0	0	0	**0**	
0815 - 0830	0	0	0	0	0	0	0	0	0	0	0	0	0	**0**	
0830 - 0845	0	0	0	0	0	0	0	0	0	0	0	0	0	**0**	
0845 - 0900	0	0	0	0	0	0	0	0	0	0	0	0	0	**0**	**0**
0900 - 0915	0	0	0	0	0	0	0	0	0	0	0	0	0	**0**	
0915 - 0930	0	0	0	0	0	0	0	0	0	0	0	0	0	**0**	
0930 - 0945	0	0	0	0	0	0	0	0	0	0	0	0	0	**0**	
0945 - 1000	0	0	0	0	0	0	0	0	0	0	0	0	0	**0**	**0**
1000 - 1015	0	0	0	0	0	0	0	0	0	0	0	0	0	**0**	
1015 - 1030	0	0	0	0	0	0	0	0	0	0	0	0	0	**0**	
1030 - 1045	0	0	0	0	0	0	0	0	0	0	0	0	0	**0**	
1045 - 1100	0	0	0	0	0	0	0	0	0	0	0	0	0	**0**	**0**
1100 - 1115	0	0	0	0	0	0	0	0	0	0	0	0	0	**0**	
1115 - 1130	0	0	0	0	0	0	0	0	0	0	0	0	0	**0**	
1130 - 1145	0	0	0	0	0	0	0	0	0	0	0	0	0	**0**	
1145 - 1200	0	0	0	0	0	0	0	0	0	0	0	0	0	**0**	**0**
1200 - 1215	0	0	0	0	0	0	0	0	0	0	0	0	0	**0**	
1215 - 1230	0	0	0	0	0	0	0	0	0	0	0	0	0	**0**	
1230 - 1245	0	0	0	0	0	0	0	0	0	0	0	0	0	**0**	
1245 - 1300	0	0	0	0	0	0	0	0	0	0	0	0	0	**0**	**0**
1300 - 1315	0	0	0	0	0	0	0	0	0	0	0	0	0	**0**	
1315 - 1330	0	0	0	0	0	0	0	0	0	0	0	0	0	**0**	
1330 - 1345	0	0	0	0	0	0	0	0	0	0	0	0	0	**0**	
1345 - 1400	0	0	0	0	0	0	0	0	0	0	0	0	0	**0**	**0**
1400 - 1415	0	0	0	0	0	0	0	0	0	0	0	0	0	**0**	
1415 - 1430	0	0	0	0	0	0	0	0	0	0	0	0	0	**0**	
1430 - 1445	0	0	0	0	0	0	0	0	0	0	0	0	0	**0**	
1445 - 1500	0	0	0	0	0	0	0	0	0	0	0	0	0	**0**	**0**
1500 - 1515	0	0	0	0	0	0	0	0	0	0	0	0	0	**0**	
1515 - 1530	0	0	0	0	0	0	0	0	0	0	0	0	0	**0**	
1530 - 1545	0	0	0	0	0	0	0	0	0	0	0	0	0	**0**	
1545 - 1600	0	0	0	0	0	0	0	0	0	0	0	0	0	**0**	**0**
1600 - 1615	0	0	0	0	0	0	0	0	0	0	0	0	0	**0**	
1615 - 1630	0	0	0	0	0	0	0	0	0	0	0	0	0	**0**	
1630 - 1645	0	0	0	0	0	0	0	0	0	0	0	0	0	**0**	
1645 - 1700	0	0	0	0	0	0	0	0	0	0	0	0	0	**0**	**0**
1700 - 1715	0	0	0	0	0	0	0	0	0	0	0	0	0	**0**	
1715 - 1730	0	0	0	0	0	0	0	0	0	0	0	0	0	**0**	
1730 - 1745	0	0	0	0	0	0	0	0	0	0	0	0	0	**0**	
1745 - 1800	0	0	0	0	0	0	0	0	0	0	0	0	0	**0**	**0**
1800 - 1815	0	0	0	0	0	0	0	0	0	0	0	0	0	**0**	
1815 - 1830	0	0	0	0	0	0	0	0	0	0	0	0	0	**0**	
1830 - 1845	0	0	0	0	0	0	0	0	0	0	0	0	0	**0**	
1845 - 1900	0	0	0	0	0	0	0	0	0	0	0	0	0	**0**	**0**
1900 - 1915	0	70	23	0	2	0	0	0	1	0	0	0	0	**96**	
1915 - 1930	0	80	21	0	2	3	0	0	4	0	0	0	0	**110**	
1930 - 1945	0	89	15	0	2	0	0	0	1	0	0	0	0	**107**	
1945 - 2000	0	69	20	0	0	0	0	0	1	0	0	0	0	**90**	**403**
2000 - 2015	0	96	20	0	1	0	0	0	2	0	0	0	0	**119**	
2015 - 2030	0	90	20	0	1	0	0	0	5	0	0	0	0	**116**	
2030 - 2045	0	61	24	0	0	0	0	0	6	0	1	0	0	**92**	
2045 - 2100	0	59	20	0	0	0	0	0	2	0	0	0	0	**81**	**408**
2100 - 2115	0	49	13	0	0	0	0	1	4	0	0	0	0	**67**	
2115 - 2130	0	38	15	0	2	0	0	0	0	0	1	0	0	**56**	
2130 - 2145	0	44	12	0	1	0	0	0	2	0	0	0	0	**59**	
2145 - 2200	0	24	5	0	2	0	0	0	4	0	0	0	0	**35**	**217**
2200 - 2215	0	42	8	0	2	1	0	0	3	0	0	0	0	**56**	
2215 - 2230	0	40	8	0	1	0	0	0	0	0	0	0	0	**49**	
2230 - 2245	0	25	3	0	0	0	0	0	3	0	0	0	0	**31**	
2245 - 2300	0	30	7	0	3	0	0	0	2	0	1	0	0	**43**	**179**
2300 - 2315	0	29	4	0	1	0	0	0	3	0	0	0	0	**37**	
2315 - 2330	0	29	4	0	0	0	0	0	4	0	1	0	0	**38**	
2330 - 2345	0	28	6	0	1	0	0	0	1	0	0	0	0	**36**	
2345 - 0000	1	11	2	0	1	0	0	0	0	0	0	0	0	**15**	**126**

Session Total	1	1003	250	0	22	4	0	1	48	0	4	0	0	**1333**
Session Average	0.01	10.45	2.60	0.00	0.23	0.04	0.00	0.01	0.50	0.00	0.04	0.00	0.00	**13.89**
Session Percentage	0.08	75.24	18.75	0.00	1.65	0.30	0.00	0.08	3.60	0.00	0.30	0.00	0.00	

AM Peak Hour	-	-	-	-	-	-	-	-	-	-	-	-	-	-
AM Peak Volume	0	0	0	0	0	0	0	0	0	0	0	0	0	**0**

Noon Peak Hour	-	-	-	-	-	-	-	-	-	-	-	-	-	-
Noon Peak Volume	0	0	0	0	0	0	0	0	0	0	0	0	0	**0**

PM Peak Hour	-	1930 - 2030	1945 - 2045	-	1845 - 1945	1830 - 1930	-	-	1945 - 2045	-	1945 - 2045	-	-	**1930 - 2030**
PM Peak Volume	0	344	84	0	6	3	0	0	14	0	1	0	0	**432**

Site 54
I-26 S/Bound On-Ramp,
south of US-378 Sunset Blvd

Date
Wednesday, April 24, 2024

Lat/Long
34.002082°, -81.110174°

Weather
Fair
66°F

Click here for Detailed Weather

0000 - 2400 (Weekday 24h Session) (04-24-2024)
SB WB 15min

	Southbound (Movement 54.1)													15min	60min
Time	1	2	3	4	5	6	7	8	9	10	11	12	13	Total	Total
0000 - 0015	0	13	4	0	0	0	0	0	0	0	0	0	0	**17**	
0015 - 0030	0	10	3	0	2	0	0	0	0	0	0	0	0	**15**	
0030 - 0045	0	12	2	0	0	0	0	0	0	0	0	0	0	**14**	
0045 - 0100	0	6	1	0	0	0	0	0	1	0	0	0	0	**8**	**54**
0100 - 0115	0	3	1	0	1	0	0	0	2	0	1	0	0	**8**	
0115 - 0130	0	3	1	0	1	0	0	0	1	0	0	0	0	**6**	
0130 - 0145	0	5	1	0	0	0	0	0	3	0	1	0	0	**10**	
0145 - 0200	0	5	1	0	0	0	0	0	0	0	0	0	0	**6**	**30**
0200 - 0215	0	4	1	0	0	0	0	0	1	0	0	0	0	**6**	
0215 - 0230	0	6	1	0	0	0	0	0	0	0	3	0	0	**10**	
0230 - 0245	0	4	1	0	2	0	0	0	1	0	0	2	0	**10**	
0245 - 0300	0	5	0	0	0	0	0	0	0	0	0	1	0	**6**	**32**
0300 - 0315	0	7	1	0	0	0	0	0	0	0	0	0	0	**8**	
0315 - 0330	0	4	1	0	1	0	0	0	1	0	0	0	0	**7**	
0330 - 0345	0	10	1	0	1	0	0	0	0	0	1	0	0	**13**	
0345 - 0400	0	9	2	0	0	0	0	0	1	0	0	0	0	**12**	**40**
0400 - 0415	0	9	1	0	0	2	0	0	4	0	2	0	0	**18**	
0415 - 0430	0	13	3	0	0	0	0	0	3	0	1	0	0	**20**	
0430 - 0445	0	24	3	0	0	0	0	0	1	0	0	0	0	**28**	
0445 - 0500	0	22	3	0	0	0	0	0	1	0	1	0	0	**27**	**93**
0500 - 0515	0	15	6	0	0	0	0	0	1	0	0	0	0	**22**	
0515 - 0530	0	25	11	0	0	1	0	0	3	0	1	0	0	**41**	
0530 - 0545	0	40	12	0	2	1	0	0	2	0	0	0	0	**57**	
0545 - 0600	0	37	11	1	1	0	0	0	1	0	0	0	0	**51**	**171**
0600 - 0615	0	59	22	0	0	1	0	0	7	0	0	0	0	**89**	
0615 - 0630	0	47	26	0	2	0	0	0	4	0	0	0	0	**79**	
0630 - 0645	0	102	27	0	1	0	0	0	1	0	0	0	0	**131**	
0645 - 0700	0	119	18	0	3	0	0	0	2	0	0	0	0	**142**	**441**
0700 - 0715	0	148	21	2	4	2	0	0	3	0	0	0	0	**180**	
0715 - 0730	0	179	50	0	5	0	0	0	5	0	0	0	0	**239**	
0730 - 0745	0	182	34	1	5	1	0	0	6	0	0	0	0	**229**	
0745 - 0800	0	154	30	0	4	0	0	0	3	0	0	0	0	**191**	**839**
0800 - 0815	0	120	25	5	3	3	0	1	5	0	0	0	0	**162**	
0815 - 0830	0	132	23	2	6	1	0	0	9	0	0	0	0	**173**	
0830 - 0845	0	119	26	1	3	0	0	1	6	0	0	0	0	**156**	
0845 - 0900	0	124	18	0	3	0	0	1	8	0	0	0	0	**154**	**645**
0900 - 0915	0	149	29	1	5	2	0	1	9	0	0	0	0	**196**	
0915 - 0930	0	133	39	1	3	0	0	2	3	0	0	0	0	**181**	
0930 - 0945	0	158	31	0	1	1	0	2	8	1	0	0	0	**202**	
0945 - 1000	0	144	65	0	3	0	0	0	3	0	0	0	0	**215**	**794**
1000 - 1015	0	137	74	0	5	0	0	0	8	0	0	0	0	**224**	
1015 - 1030	0	162	69	0	4	0	0	0	4	0	0	0	0	**239**	
1030 - 1045	0	185	93	1	1	2	0	0	6	0	0	0	0	**288**	
1045 - 1100	0	150	88	0	3	1	0	0	10	0	0	0	0	**252**	**1003**
1100 - 1115	0	154	85	1	1	0	0	0	3	0	0	0	0	**244**	
1115 - 1130	0	152	88	1	2	2	0	0	5	0	0	0	0	**250**	
1130 - 1145	0	163	67	0	2	1	0	0	4	0	0	0	0	**237**	
1145 - 1200	0	142	54	1	4	0	0	0	3	0	0	0	0	**204**	**935**
1200 - 1215	0	164	45	1	4	1	0	1	4	0	0	0	0	**220**	
1215 - 1230	0	154	47	2	4	0	0	0	4	0	0	0	0	**211**	
1230 - 1245	0	180	50	1	2	1	0	1	3	0	0	0	0	**238**	
1245 - 1300	0	175	73	0	4	1	0	1	7	0	0	0	0	**261**	**930**
1300 - 1315	0	147	17	1	2	1	0	1	7	0	0	0	0	**176**	
1315 - 1330	0	124	21	0	5	0	0	0	8	0	0	0	0	**158**	
1330 - 1345	0	149	31	0	6	0	0	0	8	0	0	0	0	**194**	
1345 - 1400	0	151	21	0	4	1	0	0	3	0	0	0	0	**180**	**708**
1400 - 1415	0	154	19	0	3	0	0	0	5	0	0	0	0	**181**	
1415 - 1430	0	167	21	0	1	1	0	0	3	0	0	0	0	**193**	
1430 - 1445	0	186	20	1	1	0	0	0	0	0	0	0	0	**208**	
1445 - 1500	0	189	26	1	0	0	0	0	0	0	0	0	0	**216**	**798**
1500 - 1515	0	202	28	0	0	0	0	0	3	0	0	0	0	**233**	
1515 - 1530	0	145	31	0	0	0	0	0	3	0	0	0	0	**179**	
1530 - 1545	0	156	37	0	0	0	0	0	2	0	0	0	0	**195**	
1545 - 1600	0	154	28	0	0	0	0	0	3	0	0	0	0	**185**	**792**
1600 - 1615	1	178	33	2	5	0	0	0	1	0	0	0	0	**220**	
1615 - 1630	0	161	28	1	1	1	0	0	1	0	0	0	0	**193**	
1630 - 1645	0	170	25	1	0	1	0	0	1	0	0	0	0	**198**	
1645 - 1700	0	157	20	2	0	0	0	0	2	0	0	0	0	**181**	**792**
1700 - 1715	0	265	31	0	0	0	0	0	0	0	0	0	0	**296**	
1715 - 1730	0	245	26	0	0	0	0	0	0	0	0	0	0	**271**	
1730 - 1745	0	167	31	1	3	0	0	0	3	0	0	0	0	**205**	
1745 - 1800	0	155	32	1	1	0	0	0	2	0	0	0	0	**191**	**963**
1800 - 1815	0	129	17	0	0	0	0	0	7	0	0	0	0	**153**	
1815 - 1830	0	140	24	0	0	0	0	0	2	0	0	0	0	**166**	
1830 - 1845	0	141	16	0	0	0	0	0	2	0	0	0	0	**159**	
1845 - 1900	0	130	15	0	0	0	0	0	1	0	0	0	0	**146**	**624**
1900 - 1915	0	61	16	0	1	0	0	0	5	0	0	0	0	**83**	
1915 - 1930	1	84	24	0	4	0	0	0	5	0	0	0	0	**118**	
1930 - 1945	0	86	9	0	1	0	0	0	1	0	0	0	0	**97**	
1945 - 2000	0	67	14	1	0	0	0	0	1	0	0	0	0	**83**	**381**
2000 - 2015	1	82	12	0	0	0	0	0	1	0	1	0	0	**97**	
2015 - 2030	0	55	6	0	1	0	0	0	2	0	0	0	0	**64**	
2030 - 2045	0	70	4	0	1	0	0	0	1	0	0	0	0	**76**	
2045 - 2100	0	64	4	0	0	1	0	0	1	0	0	0	0	**70**	**307**
2100 - 2115	0	43	5	0	1	0	0	0	0	0	1	0	0	**50**	
2115 - 2130	0	40	6	0	0	0	0	0	2	0	2	0	0	**50**	
2130 - 2145	0	29	0	0	1	0	0	0	0	0	4	0	0	**34**	
2145 - 2200	0	35	7	0	0	0	0	0	2	0	1	0	0	**45**	**179**
2200 - 2215	0	34	8	0	0	0	0	0	1	0	0	0	0	**43**	
2215 - 2230	0	24	5	0	1	0	0	0	4	0	2	0	0	**36**	
2230 - 2245	0	18	3	0	0	0	0	0	2	0	0	0	0	**23**	
2245 - 2300	0	18	2	0	0	0	0	0	2	0	0	0	0	**22**	**124**
2300 - 2315	0	25	2	0	1	0	0	0	0	0	0	0	0	**28**	
2315 - 2330	1	18	1	0	0	0	0	0	1	0	0	0	0	**21**	
2330 - 2345	0	21	2	0	0	0	0	0	2	0	0	0	0	**25**	
2345 - 0000	0	19	2	0	0	0	0	0	1	0	1	0	0	**23**	**97**

Session Total	4	9133	2119	34	142	30	0	12	271	1	23	3	0	**11772**
Session Average	0.04	95.14	22.07	0.35	1.48	0.31	0.00	0.13	2.82	0.01	0.24	0.03	0.00	**122.63**
Session Percentage	0.03	77.58	18.00	0.29	1.21	0.25	0.00	0.10	2.30	0.01	0.20	0.03	0.00	

AM Peak Hour	-	0700 - 0800	0945 - 1045	0730 - 0830	0700 - 0800	0730 - 0830	-	0845 - 0945	0815 - 0915	0845 - 0945	0500 - 0600	-	-	**0945 - 1045**
AM Peak Volume	0	663	301	8	18	5	0	6	32	1	1	0	0	**966**

Noon Peak Hour	-	1415 - 1515	1030 - 1130	1145 - 1245	1315 - 1415	1030 - 1130	-	1200 - 1300	1245 - 1345	-	-	-	-	**1030 - 1130**
Noon Peak Volume	0	744	354	5	18	5	0	3	30	0	0	0	0	**1034**

PM Peak Hour	1915 - 2015	1630 - 1730	1515 - 1615	1600 - 1700	1530 - 1630	1545 - 1645	-	-	1730 - 1830	-	1915 - 2015	-	-	**1700 - 1800**
PM Peak Volume	2	837	129	6	6	2	0	0	14	0	1	0	0	**963**

Site 54
I-26 S/Bound On-Ramp,
south of US-378 Sunset Blvd

Date
Thursday, April 25, 2024

Lat/Long
34.002082°, -81.110174°

Weather
Fair
67°F

Click here for Detailed Weather

0000 - 2400 (Weekday 24h Session) (04-25-2024)
SB WB 15min

	Southbound (Movement 54.1)													15min	60min
TIME	1	2	3	4	5	6	7	8	9	10	11	12	13	Total	Total
0000 - 0015	0	12	0	0	0	0	0	0	1	0	1	0	0	**14**	
0015 - 0030	0	16	2	0	1	0	0	0	1	0	0	0	0	**20**	
0030 - 0045	0	13	0	0	1	0	0	0	2	0	0	0	0	**16**	
0045 - 0100	0	8	0	0	0	0	0	0	1	0	0	0	0	**9**	**59**
0100 - 0115	0	11	0	0	0	0	0	0	0	0	0	0	0	**11**	
0115 - 0130	0	3	0	0	0	0	0	0	0	0	1	0	0	**4**	
0130 - 0145	0	9	0	0	0	0	0	0	1	0	0	0	0	**10**	
0145 - 0200	0	8	0	0	0	0	0	0	0	0	0	0	0	**8**	**33**
0200 - 0215	0	5	0	0	0	0	0	0	1	0	3	0	0	**9**	
0215 - 0230	0	3	0	0	0	0	0	0	2	0	0	0	0	**5**	
0230 - 0245	0	4	0	0	0	0	0	0	1	0	0	0	0	**5**	
0245 - 0300	0	8	0	0	0	0	0	0	1	0	3	0	0	**12**	**31**
0300 - 0315	0	6	0	0	2	0	0	0	0	0	2	0	0	**10**	
0315 - 0330	0	7	0	0	0	0	0	0	0	0	1	0	0	**8**	
0330 - 0345	0	10	0	0	1	0	0	0	1	0	2	0	0	**14**	
0345 - 0400	0	8	0	0	0	0	0	0	3	0	2	0	0	**13**	**45**
0400 - 0415	0	14	0	0	3	0	0	0	3	0	1	0	0	**21**	
0415 - 0430	0	18	1	0	0	0	0	0	1	0	0	0	0	**20**	
0430 - 0445	0	19	0	0	0	0	0	0	0	0	0	0	0	**19**	
0445 - 0500	0	23	0	0	0	0	0	0	4	0	0	0	0	**27**	**87**
0500 - 0515	0	21	1	0	0	2	0	0	4	0	0	0	0	**28**	
0515 - 0530	0	27	3	0	0	0	0	0	5	0	0	0	0	**35**	
0530 - 0545	0	40	4	0	0	0	0	0	0	0	0	0	0	**44**	
0545 - 0600	0	51	7	0	3	0	0	0	1	0	0	0	0	**62**	**169**
0600 - 0615	0	38	11	1	2	0	0	0	4	0	1	0	0	**57**	
0615 - 0630	0	53	15	0	0	0	0	0	1	0	0	0	0	**69**	
0630 - 0645	0	88	28	0	2	2	0	0	3	0	0	0	0	**123**	
0645 - 0700	0	102	20	0	0	0	0	1	5	0	0	0	0	**128**	**377**
0700 - 0715	0	127	38	2	5	1	0	0	3	0	0	0	0	**176**	
0715 - 0730	0	151	35	1	1	0	0	1	3	0	0	0	0	**192**	
0730 - 0745	0	157	33	0	2	4	0	0	2	0	0	0	0	**198**	
0745 - 0800	0	90	24	0	1	3	0	0	0	0	0	0	0	**118**	**684**
0800 - 0815	0	104	26	7	4	0	0	0	3	0	0	0	0	**144**	
0815 - 0830	0	101	25	0	3	1	0	0	6	0	0	0	0	**136**	
0830 - 0845	0	103	17	0	1	1	0	0	5	0	0	0	0	**127**	
0845 - 0900	0	90	22	1	2	0	0	0	8	0	0	0	0	**123**	**530**
0900 - 0915	0	87	23	1	1	0	0	0	6	0	0	0	0	**118**	
0915 - 0930	0	95	27	0	1	4	0	0	6	0	0	0	0	**133**	
0930 - 0945	0	97	25	0	5	1	0	0	7	0	0	0	0	**135**	
0945 - 1000	0	92	24	0	6	0	0	0	0	0	0	0	0	**122**	**508**
1000 - 1015	1	94	33	0	5	1	0	0	4	0	0	0	0	**138**	
1015 - 1030	0	93	26	0	4	0	0	0	2	0	0	0	0	**125**	
1030 - 1045	0	81	24	0	0	1	0	0	4	0	0	0	0	**110**	
1045 - 1100	0	81	20	0	3	0	0	0	2	0	0	0	0	**106**	**479**
1100 - 1115	0	91	26	0	3	0	0	0	4	0	0	0	0	**124**	
1115 - 1130	0	116	35	1	1	1	0	0	5	0	0	0	0	**159**	
1130 - 1145	0	88	23	1	4	3	0	0	2	0	0	0	0	**121**	
1145 - 1200	0	92	14	0	3	0	0	0	8	0	0	0	0	**117**	**521**
1200 - 1215	0	101	21	0	5	2	0	1	6	0	0	0	0	**136**	
1215 - 1230	0	108	33	1	2	0	0	2	7	0	0	0	0	**153**	
1230 - 1245	0	99	21	0	5	0	0	0	2	0	0	0	0	**127**	
1245 - 1300	0	95	22	0	1	1	0	0	4	0	0	0	0	**123**	**539**
1300 - 1315	2	105	32	1	1	1	0	0	7	0	0	0	0	**149**	
1315 - 1330	0	88	26	1	2	1	0	1	8	0	0	0	0	**127**	
1330 - 1345	0	112	38	0	3	1	0	1	10	0	0	0	0	**165**	
1345 - 1400	0	119	35	0	5	1	0	1	4	0	0	0	0	**165**	**606**
1400 - 1415	0	111	37	0	1	0	1	0	4	0	0	0	0	**154**	
1415 - 1430	0	117	40	0	2	1	0	0	4	0	0	0	0	**164**	
1430 - 1445	0	144	38	2	0	2	0	0	3	0	0	0	0	**189**	
1445 - 1500	0	140	33	0	2	1	0	1	0	0	0	0	0	**177**	**684**
1500 - 1515	0	170	41	0	1	0	0	0	4	0	0	0	0	**216**	
1515 - 1530	0	158	41	0	3	0	0	0	4	0	0	0	0	**206**	
1530 - 1545	0	166	33	0	3	1	0	0	8	0	0	0	0	**211**	
1545 - 1600	0	191	47	0	0	0	0	0	4	0	0	0	0	**242**	**875**
1600 - 1615	2	200	47	1	3	0	0	0	2	0	0	0	0	**255**	
1615 - 1630	0	200	36	4	2	0	0	0	1	0	0	0	0	**243**	
1630 - 1645	1	180	38	1	1	1	0	0	7	0	0	0	0	**229**	
1645 - 1700	0	190	44	0	3	0	0	0	0	0	0	0	0	**237**	**964**
1700 - 1715	0	211	38	0	0	1	0	0	4	0	0	0	0	**254**	
1715 - 1730	0	196	40	1	0	0	0	0	0	0	0	0	0	**237**	
1730 - 1745	0	165	30	1	1	0	0	0	4	0	0	0	0	**201**	
1745 - 1800	0	125	19	0	0	2	0	0	2	0	0	0	0	**148**	**840**
1800 - 1815	0	122	16	0	1	1	0	0	7	0	0	0	0	**147**	
1815 - 1830	0	122	20	0	1	0	0	0	3	0	0	0	0	**146**	
1830 - 1845	1	106	18	0	2	0	0	0	2	0	0	0	0	**129**	
1845 - 1900	1	98	21	1	0	2	0	0	3	0	0	0	0	**126**	**548**
1900 - 1915	0	0	0	0	0	0	0	0	0	0	0	0	0	**0**	
1915 - 1930	0	0	0	0	0	0	0	0	0	0	0	0	0	**0**	
1930 - 1945	0	0	0	0	0	0	0	0	0	0	0	0	0	**0**	
1945 - 2000	0	0	0	0	0	0	0	0	0	0	0	0	0	**0**	**0**
2000 - 2015	0	0	0	0	0	0	0	0	0	0	0	0	0	**0**	
2015 - 2030	0	0	0	0	0	0	0	0	0	0	0	0	0	**0**	
2030 - 2045	0	0	0	0	0	0	0	0	0	0	0	0	0	**0**	
2045 - 2100	0	0	0	0	0	0	0	0	0	0	0	0	0	**0**	**0**
2100 - 2115	0	0	0	0	0	0	0	0	0	0	0	0	0	**0**	
2115 - 2130	0	0	0	0	0	0	0	0	0	0	0	0	0	**0**	
2130 - 2145	0	0	0	0	0	0	0	0	0	0	0	0	0	**0**	
2145 - 2200	0	0	0	0	0	0	0	0	0	0	0	0	0	**0**	**0**
2200 - 2215	0	0	0	0	0	0	0	0	0	0	0	0	0	**0**	
2215 - 2230	0	0	0	0	0	0	0	0	0	0	0	0	0	**0**	
2230 - 2245	0	0	0	0	0	0	0	0	0	0	0	0	0	**0**	
2245 - 2300	0	0	0	0	0	0	0	0	0	0	0	0	0	**0**	**0**
2300 - 2315	0	0	0	0	0	0	0	0	0	0	0	0	0	**0**	
2315 - 2330	0	0	0	0	0	0	0	0	0	0	0	0	0	**0**	
2330 - 2345	0	0	0	0	0	0	0	0	0	0	0	0	0	**0**	
2345 - 0000	0	0	0	0	0	0	0	0	0	0	0	0	0	**0**	**0**

Session Total	8	6594	1517	29	120	44	1	9	240	0	17	0	0	**8579**
Session Average	0.08	68.69	15.80	0.30	1.25	0.46	0.01	0.09	2.50	0.00	0.18	0.00	0.00	**89.36**
Session Percentage	0.09	76.86	17.68	0.34	1.40	0.51	0.01	0.10	2.80	0.00	0.20	0.00	0.00	

AM Peak Hour	0915 - 1015	0645 - 0745	0700 - 0800	0715 - 0815	0930 - 1030	0700 - 0800	-	0630 - 0730	0845 - 0945	-	0515 - 0615	-	-	**0645 - 0745**
AM Peak Hour Volume	1	537	130	8	20	8	0	2	27	0	1	0	0	**694**

Noon Peak Hour	1215 - 1315	1445 - 1545	1430 - 1530	1045 - 1145	1145 - 1245	1115 - 1215	1315 - 1415	1130 - 1230	1245 - 1345	-	-	-	-	**1445 - 1545**
Noon Peak Hour Volume	2	634	153	2	15	6	1	3	29	0	0	0	0	**810**

PM Peak Hour	1545 - 1645	1615 - 1715	1515 - 1615	1545 - 1645	1515 - 1615	1700 - 1800	-	-	1500 - 1600	-	-	-	-	**1545 - 1645**
PM Peak Hour Volume	3	781	168	6	9	3	0	0	20	0	0	0	0	**969**

Bi-Directional Class Count || SB WB Average 15min

Columbia, SC

Marr Traffic DATA COLLECTION
www.marrtraffic.com

Site 54
I-26 S/Bound On-Ramp,
south of US-378 Sunset Blvd

Date
Tuesday, April 23, 2024

Lat/Long
34.002082°, -81.110174°

Weather
Fair
58°F

0000 - 2400 (Weekday 24h Session) (All Dates)
SB WB Average 15min

	SB WB Average 15min													15min	60min
Time	1	2	3	4	5	6	7	8	9	10	11	12	13	Total	Total
0000 - 0015	0	8	1	0	0	0	0	0	0	0	0	0	0	**10**	
0015 - 0030	0	9	2	0	1	0	0	0	0	0	0	0	0	**12**	
0030 - 0045	0	8	1	0	0	0	0	0	1	0	0	0	0	**10**	
0045 - 0100	0	5	0	0	0	0	0	0	1	0	0	0	0	**6**	**38**
0100 - 0115	0	5	0	0	0	0	0	0	1	0	0	0	0	**6**	
0115 - 0130	0	2	0	0	0	0	0	0	0	0	0	0	0	**3**	
0130 - 0145	0	5	0	0	0	0	0	0	1	0	0	0	0	**7**	
0145 - 0200	0	4	0	0	0	0	0	0	0	0	0	0	0	**5**	**21**
0200 - 0215	0	3	0	0	0	0	0	0	1	0	1	0	0	**5**	
0215 - 0230	0	3	0	0	0	0	0	0	1	0	1	0	0	**5**	
0230 - 0245	0	3	0	0	1	0	0	0	1	0	0	1	0	**5**	
0245 - 0300	0	4	0	0	0	0	0	0	0	0	1	0	0	**6**	**21**
0300 - 0315	0	4	0	0	1	0	0	0	0	0	1	0	0	**6**	
0315 - 0330	0	4	0	0	0	0	0	0	0	0	0	0	0	**5**	
0330 - 0345	0	7	0	0	1	0	0	0	0	0	1	0	0	**9**	
0345 - 0400	0	6	1	0	0	0	0	0	1	0	1	0	0	**8**	**28**
0400 - 0415	0	8	0	0	1	1	0	0	2	0	1	0	0	**13**	
0415 - 0430	0	10	1	0	0	0	0	0	1	0	0	0	0	**13**	
0430 - 0445	0	14	1	0	0	0	0	0	0	0	0	0	0	**16**	
0445 - 0500	0	15	1	0	0	0	0	0	2	0	0	0	0	**18**	**60**
0500 - 0515	0	12	2	0	0	1	0	0	2	0	0	0	0	**17**	
0515 - 0530	0	17	5	0	0	0	0	0	3	0	0	0	0	**25**	
0530 - 0545	0	27	5	0	1	0	0	0	1	0	0	0	0	**34**	
0545 - 0600	0	29	6	0	1	0	0	0	1	0	0	0	0	**38**	**113**
0600 - 0615	0	32	11	0	1	0	0	0	4	0	0	0	0	**49**	
0615 - 0630	0	33	14	0	1	0	0	0	2	0	0	0	0	**49**	
0630 - 0645	0	63	18	0	1	1	0	0	1	0	0	0	0	**85**	
0645 - 0700	0	74	13	0	1	0	0	0	2	0	0	0	0	**90**	**273**
0700 - 0715	0	92	20	1	3	1	0	0	2	0	0	0	0	**119**	
0715 - 0730	0	110	28	0	2	0	0	0	3	0	0	0	0	**144**	
0730 - 0745	0	113	22	0	2	2	0	0	3	0	0	0	0	**142**	
0745 - 0800	0	81	18	0	2	1	0	0	1	0	0	0	0	**103**	**508**
0800 - 0815	0	75	17	4	2	1	0	0	3	0	0	0	0	**102**	
0815 - 0830	0	78	16	1	3	1	0	0	5	0	0	0	0	**103**	
0830 - 0845	0	74	14	0	1	0	0	0	4	0	0	0	0	**94**	
0845 - 0900	0	71	13	0	2	0	0	0	5	0	0	0	0	**92**	**392**
0900 - 0915	0	79	17	1	2	1	0	0	5	0	0	0	0	**105**	
0915 - 0930	0	76	22	0	1	1	0	1	3	0	0	0	0	**105**	
0930 - 0945	0	85	19	0	2	1	0	1	5	0	0	0	0	**112**	
0945 - 1000	0	79	30	0	3	0	0	0	1	0	0	0	0	**112**	**434**
1000 - 1015	0	77	36	0	3	0	0	0	4	0	0	0	0	**121**	
1015 - 1030	0	85	32	0	3	0	0	0	2	0	0	0	0	**121**	
1030 - 1045	0	89	39	0	0	1	0	0	3	0	0	0	0	**133**	
1045 - 1100	0	77	36	0	2	0	0	0	4	0	0	0	0	**119**	**494**
1100 - 1115	0	82	37	0	1	0	0	0	2	0	0	0	0	**123**	
1115 - 1130	0	89	41	1	1	1	0	0	3	0	0	0	0	**136**	
1130 - 1145	0	84	30	0	2	1	0	0	2	0	0	0	0	**119**	
1145 - 1200	0	78	23	0	2	0	0	0	4	0	0	0	0	**107**	**485**
1200 - 1215	0	88	22	0	3	1	0	1	3	0	0	0	0	**119**	
1215 - 1230	0	87	27	1	2	0	0	1	4	0	0	0	0	**121**	
1230 - 1245	0	93	24	0	2	0	0	0	2	0	0	0	0	**122**	
1245 - 1300	0	90	32	0	2	1	0	0	4	0	0	0	0	**128**	**490**
1300 - 1315	1	84	16	1	1	1	0	0	5	0	0	0	0	**108**	
1315 - 1330	0	71	16	0	2	0	0	0	5	0	0	0	0	**95**	
1330 - 1345	0	87	23	0	3	0	0	0	6	0	0	0	0	**120**	
1345 - 1400	0	90	19	0	3	1	0	0	2	0	0	0	0	**115**	**438**
1400 - 1415	0	88	19	0	1	0	0	0	3	0	0	0	0	**112**	
1415 - 1430	0	95	20	0	1	1	0	0	2	0	0	0	0	**119**	
1430 - 1445	0	110	19	1	0	1	0	0	1	0	0	0	0	**132**	
1445 - 1500	0	110	20	0	1	0	0	0	0	0	0	0	0	**131**	**494**
1500 - 1515	0	124	23	0	0	0	0	0	2	0	0	0	0	**150**	
1515 - 1530	0	101	24	0	1	0	0	0	2	0	0	0	0	**128**	
1530 - 1545	0	107	23	0	1	0	0	0	3	0	0	0	0	**135**	
1545 - 1600	0	115	25	0	0	0	0	0	2	0	0	0	0	**142**	**556**
1600 - 1615	1	126	27	1	3	0	0	0	1	0	0	0	0	**158**	
1615 - 1630	0	120	21	2	1	0	0	0	1	0	0	0	0	**145**	
1630 - 1645	0	117	21	1	0	1	0	0	3	0	0	0	0	**142**	
1645 - 1700	0	116	21	1	1	0	0	0	1	0	0	0	0	**139**	**585**
1700 - 1715	0	159	23	0	0	0	0	0	1	0	0	0	0	**183**	
1715 - 1730	0	147	22	0	0	0	0	0	0	0	0	0	0	**169**	
1730 - 1745	0	111	20	1	1	0	0	0	2	0	0	0	0	**135**	
1745 - 1800	0	93	17	0	0	1	0	0	1	0	0	0	0	**113**	**601**
1800 - 1815	0	84	11	0	0	0	0	0	5	0	0	0	0	**100**	
1815 - 1830	0	87	15	0	0	0	0	0	2	0	0	0	0	**104**	
1830 - 1845	0	82	11	0	1	0	0	0	1	0	0	0	0	**96**	
1845 - 1900	0	76	12	0	0	1	0	0	1	0	0	0	0	**91**	**391**
1900 - 1915	0	44	13	0	1	0	0	0	2	0	0	0	0	**60**	
1915 - 1930	0	55	15	0	2	1	0	0	3	0	0	0	0	**76**	
1930 - 1945	0	58	8	0	1	0	0	0	1	0	0	0	0	**68**	
1945 - 2000	0	45	11	0	0	0	0	0	1	0	0	0	0	**58**	**261**
2000 - 2015	0	59	11	0	0	0	0	0	1	0	0	0	0	**72**	
2015 - 2030	0	48	9	0	1	0	0	0	2	0	0	0	0	**60**	
2030 - 2045	0	44	9	0	0	0	0	0	2	0	0	0	0	**56**	
2045 - 2100	0	41	8	0	0	0	0	0	1	0	0	0	0	**50**	**238**
2100 - 2115	0	31	6	0	0	0	0	0	1	0	0	0	0	**39**	
2115 - 2130	0	26	7	0	1	0	0	0	1	0	1	0	0	**35**	
2130 - 2145	0	24	4	0	1	0	0	0	1	0	1	0	0	**31**	
2145 - 2200	0	20	4	0	1	0	0	0	2	0	0	0	0	**27**	**132**
2200 - 2215	0	25	5	0	1	0	0	0	1	0	0	0	0	**33**	
2215 - 2230	0	21	4	0	1	0	0	0	1	0	1	0	0	**28**	
2230 - 2245	0	14	2	0	0	0	0	0	2	0	0	0	0	**18**	
2245 - 2300	0	16	3	0	1	0	0	0	1	0	0	0	0	**22**	**101**
2300 - 2315	0	18	2	0	1	0	0	0	1	0	0	0	0	**22**	
2315 - 2330	0	16	2	0	0	0	0	0	2	0	0	0	0	**20**	
2330 - 2345	0	16	3	0	0	0	0	0	1	0	0	0	0	**20**	
2345 - 0000	0	10	1	0	0	0	0	0	0	0	0	0	0	**13**	**74**

Session Total	4	5577	1295	21	95	26	0	7	186	0	15	1	0	**7228**
Session Average	0.05	58.09	13.49	0.22	0.99	0.27	0.00	0.08	1.94	0.00	0.15	0.01	0.00	**75.29**
Session Percentage	0.06	77.15	17.92	0.29	1.31	0.36	0.00	0.10	2.58	0.00	0.20	0.01	0.00	

AM Peak Hour	0915 - 1015	0700 - 0800	0945 - 1045	0800 - 0900	0930 - 1030	0730 - 0830	-	0845 - 0945	0815 - 0915	0845 - 0945	0515 - 0615	-	-	**0700 - 0800**
AM Peak Volume	0	396	136	5	11	4	0	2	19	0	1	0	0	**508**

Noon Peak Hour	1215 - 1315	1430 - 1530	1030 - 1130	1130 - 1230	1145 - 1245	1115 - 1215	1315 - 1415	1200 - 1300	1245 - 1345	-	-	-	-	**1445 - 1545**
Noon Peak Volume	1	445	153	2	10	3	0	2	20	0	0	0	0	**544**

PM Peak Hour	1545 - 1645	1630 - 1730	1515 - 1615	1600 - 1700	1600 - 1700	1830 - 1930	-	-	1500 - 1600	-	1945 - 2045	-	-	**1630 - 1730**
PM Peak Volume	1	538	99	4	5	2	0	0	10	0	1	0	0	**634**

Bi-Directional Class Count || Volume Summary 15min

Columbia, SC

Marr Traffic DATA COLLECTION

www.marrtraffic.com

Site 54

I-26 S/Bound On-Ramp,
south of US-378 Sunset Blvd

Date

Tuesday, April 23, 2024

Lat/Long

34.002082°, -81.110174°

Weather

Fair
58°F

Click here for Detailed Weather

0000 - 2400 (Weekday 24h Session) (04-23-2024)

Volume Summary 15min

TIME	Volume Summary 15min NB	SB	15min Total	60min Total
0000 - 0015	0	0	**0**	
0015 - 0030	0	0	**0**	
0030 - 0045	0	0	**0**	
0045 - 0100	0	0	**0**	**0**
0100 - 0115	0	0	**0**	
0115 - 0130	0	0	**0**	
0130 - 0145	0	0	**0**	
0145 - 0200	0	0	**0**	**0**
0200 - 0215	0	0	**0**	
0215 - 0230	0	0	**0**	
0230 - 0245	0	0	**0**	
0245 - 0300	0	0	**0**	**0**
0300 - 0315	0	0	**0**	
0315 - 0330	0	0	**0**	
0330 - 0345	0	0	**0**	
0345 - 0400	0	0	**0**	**0**
0400 - 0415	0	0	**0**	
0415 - 0430	0	0	**0**	
0430 - 0445	0	0	**0**	
0445 - 0500	0	0	**0**	**0**
0500 - 0515	0	0	**0**	
0515 - 0530	0	0	**0**	
0530 - 0545	0	0	**0**	
0545 - 0600	0	0	**0**	**0**
0600 - 0615	0	0	**0**	
0615 - 0630	0	0	**0**	
0630 - 0645	0	0	**0**	
0645 - 0700	0	0	**0**	**0**
0700 - 0715	0	0	**0**	
0715 - 0730	0	0	**0**	
0730 - 0745	0	0	**0**	
0745 - 0800	0	0	**0**	**0**
0800 - 0815	0	0	**0**	
0815 - 0830	0	0	**0**	
0830 - 0845	0	0	**0**	
0845 - 0900	0	0	**0**	**0**
0900 - 0915	0	0	**0**	
0915 - 0930	0	0	**0**	
0930 - 0945	0	0	**0**	
0945 - 1000	0	0	**0**	**0**
1000 - 1015	0	0	**0**	
1015 - 1030	0	0	**0**	
1030 - 1045	0	0	**0**	
1045 - 1100	0	0	**0**	**0**
1100 - 1115	0	0	**0**	
1115 - 1130	0	0	**0**	
1130 - 1145	0	0	**0**	
1145 - 1200	0	0	**0**	**0**

Time	Volume Summary 15min NB	SB	15min Total	60min Total
1200 - 1215	0	0	**0**	
1215 - 1230	0	0	**0**	
1230 - 1245	0	0	**0**	
1245 - 1300	0	0	**0**	**0**
1300 - 1315	0	0	**0**	
1315 - 1330	0	0	**0**	
1330 - 1345	0	0	**0**	
1345 - 1400	0	0	**0**	**0**
1400 - 1415	0	0	**0**	
1415 - 1430	0	0	**0**	
1430 - 1445	0	0	**0**	
1445 - 1500	0	0	**0**	**0**
1500 - 1515	0	0	**0**	
1515 - 1530	0	0	**0**	
1530 - 1545	0	0	**0**	
1545 - 1600	0	0	**0**	**0**
1600 - 1615	0	0	**0**	
1615 - 1630	0	0	**0**	
1630 - 1645	0	0	**0**	
1645 - 1700	0	0	**0**	**0**
1700 - 1715	0	0	**0**	
1715 - 1730	0	0	**0**	
1730 - 1745	0	0	**0**	
1745 - 1800	0	0	**0**	**0**
1800 - 1815	0	0	**0**	
1815 - 1830	0	0	**0**	
1830 - 1845	0	0	**0**	
1845 - 1900	0	0	**0**	**0**
1900 - 1915	0	96	**96**	
1915 - 1930	0	110	**110**	
1930 - 1945	0	107	**107**	
1945 - 2000	0	90	**90**	**403**
2000 - 2015	0	119	**119**	
2015 - 2030	0	116	**116**	
2030 - 2045	0	92	**92**	
2045 - 2100	0	81	**81**	**408**
2100 - 2115	0	67	**67**	
2115 - 2130	0	56	**56**	
2130 - 2145	0	59	**59**	
2145 - 2200	0	35	**35**	**217**
2200 - 2215	0	56	**56**	
2215 - 2230	0	49	**49**	
2230 - 2245	0	31	**31**	
2245 - 2300	0	43	**43**	**179**
2300 - 2315	0	37	**37**	
2315 - 2330	0	38	**38**	
2330 - 2345	0	36	**36**	
2345 - 0000	0	15	**15**	**126**

Session Total	0	1333	**1333**
Session Average	0.00	13.89	**13.89**
Session Percentage	0.00	100.00	

Site 54

I-26 S/Bound On-Ramp,
south of US-378 Sunset Blvd

Date

Wednesday, April 24, 2024

Lat/Long

34.002082°, -81.110174°

Weather

Fair
66°F

Click here for Detailed Weather

0000 - 2400 (Weekday 24h Session) (04-24-2024)

Volume Summary 15min

TIME	Volume Summary 15min NB	SB	15min Total	60min Total
0000 - 0015	0	17	**17**	
0015 - 0030	0	15	**15**	
0030 - 0045	0	14	**14**	
0045 - 0100	0	8	**8**	**54**
0100 - 0115	0	8	**8**	
0115 - 0130	0	6	**6**	
0130 - 0145	0	10	**10**	
0145 - 0200	0	6	**6**	**30**
0200 - 0215	0	6	**6**	
0215 - 0230	0	10	**10**	
0230 - 0245	0	10	**10**	
0245 - 0300	0	6	**6**	**32**
0300 - 0315	0	8	**8**	
0315 - 0330	0	7	**7**	
0330 - 0345	0	13	**13**	
0345 - 0400	0	12	**12**	**40**
0400 - 0415	0	18	**18**	
0415 - 0430	0	20	**20**	
0430 - 0445	0	28	**28**	
0445 - 0500	0	27	**27**	**93**
0500 - 0515	0	22	**22**	
0515 - 0530	0	41	**41**	
0530 - 0545	0	57	**57**	
0545 - 0600	0	51	**51**	**171**
0600 - 0615	0	89	**89**	
0615 - 0630	0	79	**79**	
0630 - 0645	0	131	**131**	
0645 - 0700	0	142	**142**	**441**
0700 - 0715	0	180	**180**	
0715 - 0730	0	239	**239**	
0730 - 0745	0	229	**229**	
0745 - 0800	0	191	**191**	**839**
0800 - 0815	0	162	**162**	
0815 - 0830	0	173	**173**	
0830 - 0845	0	156	**156**	
0845 - 0900	0	154	**154**	**645**
0900 - 0915	0	196	**196**	
0915 - 0930	0	181	**181**	
0930 - 0945	0	202	**202**	
0945 - 1000	0	215	**215**	**794**
1000 - 1015	0	224	**224**	
1015 - 1030	0	239	**239**	
1030 - 1045	0	288	**288**	
1045 - 1100	0	252	**252**	**1003**
1100 - 1115	0	244	**244**	
1115 - 1130	0	250	**250**	
1130 - 1145	0	237	**237**	
1145 - 1200	0	204	**204**	**935**

Time	Volume Summary 15min NB	SB	15min Total	60min Total
1200 - 1215	0	220	**220**	
1215 - 1230	0	211	**211**	
1230 - 1245	0	238	**238**	
1245 - 1300	0	261	**261**	**930**
1300 - 1315	0	176	**176**	
1315 - 1330	0	158	**158**	
1330 - 1345	0	194	**194**	
1345 - 1400	0	180	**180**	**708**
1400 - 1415	0	181	**181**	
1415 - 1430	0	193	**193**	
1430 - 1445	0	208	**208**	
1445 - 1500	0	216	**216**	**798**
1500 - 1515	0	233	**233**	
1515 - 1530	0	179	**179**	
1530 - 1545	0	195	**195**	
1545 - 1600	0	185	**185**	**792**
1600 - 1615	0	220	**220**	
1615 - 1630	0	193	**193**	
1630 - 1645	0	198	**198**	
1645 - 1700	0	181	**181**	**792**
1700 - 1715	0	296	**296**	
1715 - 1730	0	271	**271**	
1730 - 1745	0	205	**205**	
1745 - 1800	0	191	**191**	**963**
1800 - 1815	0	153	**153**	
1815 - 1830	0	166	**166**	
1830 - 1845	0	159	**159**	
1845 - 1900	0	146	**146**	**624**
1900 - 1915	0	83	**83**	
1915 - 1930	0	118	**118**	
1930 - 1945	0	97	**97**	
1945 - 2000	0	83	**83**	**381**
2000 - 2015	0	97	**97**	
2015 - 2030	0	64	**64**	
2030 - 2045	0	76	**76**	
2045 - 2100	0	70	**70**	**307**
2100 - 2115	0	50	**50**	
2115 - 2130	0	50	**50**	
2130 - 2145	0	34	**34**	
2145 - 2200	0	45	**45**	**179**
2200 - 2215	0	43	**43**	
2215 - 2230	0	36	**36**	
2230 - 2245	0	23	**23**	
2245 - 2300	0	22	**22**	**124**
2300 - 2315	0	28	**28**	
2315 - 2330	0	21	**21**	
2330 - 2345	0	25	**25**	
2345 - 0000	0	23	**23**	**97**

Session Total	0	11772	**11772**
Session Average	0.00	122.63	**122.63**
Session Percentage	0.00	100.00	

Site 54
I-26 S/Bound On-Ramp,
south of US-378 Sunset Blvd

Date
Thursday, April 25, 2024

Lat/Long
34.002082°, -81.110174°

Weather
Fair
67°F

Click here for Detailed Weather

0000 - 2400 (Weekday 24h Session) (04-25-2024)

Volume Summary 15min

TIME	Volume Summary 15min NB	SB	15min Total	60min Total
0000 - 0015	0	14	**14**	
0015 - 0030	0	20	**20**	
0030 - 0045	0	16	**16**	
0045 - 0100	0	9	**9**	**59**
0100 - 0115	0	11	**11**	
0115 - 0130	0	4	**4**	
0130 - 0145	0	10	**10**	
0145 - 0200	0	8	**8**	**33**
0200 - 0215	0	9	**9**	
0215 - 0230	0	5	**5**	
0230 - 0245	0	5	**5**	
0245 - 0300	0	12	**12**	**31**
0300 - 0315	0	10	**10**	
0315 - 0330	0	8	**8**	
0330 - 0345	0	14	**14**	
0345 - 0400	0	13	**13**	**45**
0400 - 0415	0	21	**21**	
0415 - 0430	0	20	**20**	
0430 - 0445	0	19	**19**	
0445 - 0500	0	27	**27**	**87**
0500 - 0515	0	28	**28**	
0515 - 0530	0	35	**35**	
0530 - 0545	0	44	**44**	
0545 - 0600	0	62	**62**	**169**
0600 - 0615	0	57	**57**	
0615 - 0630	0	69	**69**	
0630 - 0645	0	123	**123**	
0645 - 0700	0	128	**128**	**377**
0700 - 0715	0	176	**176**	
0715 - 0730	0	192	**192**	
0730 - 0745	0	198	**198**	
0745 - 0800	0	118	**118**	**684**
0800 - 0815	0	144	**144**	
0815 - 0830	0	136	**136**	
0830 - 0845	0	127	**127**	
0845 - 0900	0	123	**123**	**530**
0900 - 0915	0	118	**118**	
0915 - 0930	0	133	**133**	
0930 - 0945	0	135	**135**	
0945 - 1000	0	122	**122**	**508**
1000 - 1015	0	138	**138**	
1015 - 1030	0	125	**125**	
1030 - 1045	0	110	**110**	
1045 - 1100	0	106	**106**	**479**
1100 - 1115	0	124	**124**	
1115 - 1130	0	159	**159**	
1130 - 1145	0	121	**121**	
1145 - 1200	0	117	**117**	**521**

Time	Volume Summary 15min NB	SB	15min Total	60min Total
1200 - 1215	0	136	**136**	
1215 - 1230	0	153	**153**	
1230 - 1245	0	127	**127**	
1245 - 1300	0	123	**123**	**539**
1300 - 1315	0	149	**149**	
1315 - 1330	0	127	**127**	
1330 - 1345	0	165	**165**	
1345 - 1400	0	165	**165**	**606**
1400 - 1415	0	154	**154**	
1415 - 1430	0	164	**164**	
1430 - 1445	0	189	**189**	
1445 - 1500	0	177	**177**	**684**
1500 - 1515	0	216	**216**	
1515 - 1530	0	206	**206**	
1530 - 1545	0	211	**211**	
1545 - 1600	0	242	**242**	**875**
1600 - 1615	0	255	**255**	
1615 - 1630	0	243	**243**	
1630 - 1645	0	229	**229**	
1645 - 1700	0	237	**237**	**964**
1700 - 1715	0	254	**254**	
1715 - 1730	0	237	**237**	
1730 - 1745	0	201	**201**	
1745 - 1800	0	148	**148**	**840**
1800 - 1815	0	147	**147**	
1815 - 1830	0	146	**146**	
1830 - 1845	0	129	**129**	
1845 - 1900	0	126	**126**	**548**
1900 - 1915	0	0	**0**	
1915 - 1930	0	0	**0**	
1930 - 1945	0	0	**0**	
1945 - 2000	0	0	**0**	**0**
2000 - 2015	0	0	**0**	
2015 - 2030	0	0	**0**	
2030 - 2045	0	0	**0**	
2045 - 2100	0	0	**0**	**0**
2100 - 2115	0	0	**0**	
2115 - 2130	0	0	**0**	
2130 - 2145	0	0	**0**	
2145 - 2200	0	0	**0**	**0**
2200 - 2215	0	0	**0**	
2215 - 2230	0	0	**0**	
2230 - 2245	0	0	**0**	
2245 - 2300	0	0	**0**	**0**
2300 - 2315	0	0	**0**	
2315 - 2330	0	0	**0**	
2330 - 2345	0	0	**0**	
2345 - 0000	0	0	**0**	**0**

Session Total	0	8579	**8579**
Session Average	0.00	89.36	**89.36**
Session Percentage	0.00	100.00	

Bi-Directional Class Count || SB WB 60min

Columbia, SC

Marr Traffic DATA COLLECTION

www.marrtraffic.com

Site 54
I-26 S/Bound On-Ramp,
south of US-378 Sunset Blvd

Date
Tuesday, April 23, 2024

Lat/Long
34.002082°, -81.110174°

Weather
Fair
58°F

Click here for Detailed Weather

0000 - 2400 (Weekday 24h Session) (04-23-2024)
SB WB 60min

	Southbound (Movement 54.1)													
TIME	1	2	3	4	5	6	7	8	9	10	11	12	13	**Total**
0000 - 0100	0	0	0	0	0	0	0	0	0	0	0	0	0	**0**
0100 - 0200	0	0	0	0	0	0	0	0	0	0	0	0	0	**0**
0200 - 0300	0	0	0	0	0	0	0	0	0	0	0	0	0	**0**
0300 - 0400	0	0	0	0	0	0	0	0	0	0	0	0	0	**0**
0400 - 0500	0	0	0	0	0	0	0	0	0	0	0	0	0	**0**
0500 - 0600	0	0	0	0	0	0	0	0	0	0	0	0	0	**0**
0600 - 0700	0	0	0	0	0	0	0	0	0	0	0	0	0	**0**
0700 - 0800	0	0	0	0	0	0	0	0	0	0	0	0	0	**0**
0800 - 0900	0	0	0	0	0	0	0	0	0	0	0	0	0	**0**
0900 - 1000	0	0	0	0	0	0	0	0	0	0	0	0	0	**0**
1000 - 1100	0	0	0	0	0	0	0	0	0	0	0	0	0	**0**
1100 - 1200	0	0	0	0	0	0	0	0	0	0	0	0	0	**0**
1200 - 1300	0	0	0	0	0	0	0	0	0	0	0	0	0	**0**
1300 - 1400	0	0	0	0	0	0	0	0	0	0	0	0	0	**0**
1400 - 1500	0	0	0	0	0	0	0	0	0	0	0	0	0	**0**
1500 - 1600	0	0	0	0	0	0	0	0	0	0	0	0	0	**0**
1600 - 1700	0	0	0	0	0	0	0	0	0	0	0	0	0	**0**
1700 - 1800	0	0	0	0	0	0	0	0	0	0	0	0	0	**0**
1800 - 1900	0	0	0	0	0	0	0	0	0	0	0	0	0	**0**
1900 - 2000	0	308	79	0	6	3	0	0	7	0	0	0	0	**403**
2000 - 2100	0	306	84	0	2	0	0	0	15	0	1	0	0	**408**
2100 - 2200	0	155	45	0	5	0	0	1	10	0	1	0	0	**217**
2200 - 2300	0	137	26	0	6	1	0	0	8	0	1	0	0	**179**
2300 - 2400	1	97	16	0	3	0	0	0	8	0	1	0	0	**126**
Session Total	1	1003	250	0	22	4	0	1	48	0	4	0	0	**1333**
Session Average	0.04	41.79	10.42	0.00	0.92	0.17	0.00	0.04	2.00	0.00	0.17	0.00	0.00	**55.54**
Session Percentage	0.08	75.24	18.75	0.00	1.65	0.30	0.00	0.08	3.60	0.00	0.30	0.00	0.00	
AM Peak Hour	-	-	-	-	-	-	-	-	-	-	-	-	-	**-**
AM Peak Volume	0	0	0	0	0	0	0	0	0	0	0	0	0	**0**
Noon Peak Hour	-	-	-	-	-	-	-	-	-	-	-	-	-	**-**
Noon Peak Volume	0	0	0	0	0	0	0	0	0	0	0	0	0	**0**
PM Peak Hour	-	1900 - 2000	1900 - 2000	-	1900 - 2000	1900 - 2000	-	-	1900 - 2000	-	-	-	-	**1900 - 2000**
PM Peak Volume	0	308	79	0	6	3	0	0	7	0	0	0	0	**403**

Site 54
I-26 S/Bound On-Ramp,
south of US-378 Sunset Blvd

Date
Wednesday, April 24, 2024

Lat/Long
34.002082°, -81.110174°

Weather
Fair
66°F

Click here for Detailed Weather

0000 - 2400 (Weekday 24h Session) (04-24-2024)
SB WB 60min

	Southbound (Movement 54.1)													
TIME	1	2	3	4	5	6	7	8	9	10	11	12	13	**Total**
0000 - 0100	0	41	10	0	2	0	0	0	1	0	0	0	0	**54**
0100 - 0200	0	16	4	0	2	0	0	0	6	0	2	0	0	**30**
0200 - 0300	0	19	3	0	2	0	0	0	2	0	3	3	0	**32**
0300 - 0400	0	30	5	0	2	0	0	0	2	0	1	0	0	**40**
0400 - 0500	0	68	10	0	0	2	0	0	9	0	4	0	0	**93**
0500 - 0600	0	117	40	1	3	2	0	0	7	0	1	0	0	**171**
0600 - 0700	0	327	93	0	6	1	0	0	14	0	0	0	0	**441**
0700 - 0800	0	663	135	3	18	3	0	0	17	0	0	0	0	**839**
0800 - 0900	0	495	92	8	15	4	0	3	28	0	0	0	0	**645**
0900 - 1000	0	584	164	2	12	3	0	5	23	1	0	0	0	**794**
1000 - 1100	0	634	324	1	13	3	0	0	28	0	0	0	0	**1003**
1100 - 1200	0	611	294	3	9	3	0	0	15	0	0	0	0	**935**
1200 - 1300	0	673	215	4	14	3	0	3	18	0	0	0	0	**930**
1300 - 1400	0	571	90	1	17	2	0	1	26	0	0	0	0	**708**
1400 - 1500	0	696	86	2	5	1	0	0	8	0	0	0	0	**798**
1500 - 1600	0	657	124	0	0	0	0	0	11	0	0	0	0	**792**
1600 - 1700	1	666	106	6	6	2	0	0	5	0	0	0	0	**792**
1700 - 1800	0	832	120	2	4	0	0	0	5	0	0	0	0	**963**
1800 - 1900	0	540	72	0	0	0	0	0	12	0	0	0	0	**624**
1900 - 2000	1	298	63	1	6	0	0	0	12	0	0	0	0	**381**
2000 - 2100	1	271	26	0	2	1	0	0	5	0	1	0	0	**307**
2100 - 2200	0	147	18	0	2	0	0	0	4	0	8	0	0	**179**
2200 - 2300	0	94	18	0	1	0	0	0	9	0	2	0	0	**124**
2300 - 2400	1	83	7	0	1	0	0	0	4	0	1	0	0	**97**

Session Total	4	9133	2119	34	142	30	0	12	271	1	23	3	0	**11772**
Session Average	0.17	380.54	88.29	1.42	5.92	1.25	0.00	0.50	11.29	0.04	0.96	0.13	0.00	**490.50**
Session Percentage	0.03	77.58	18.00	0.29	1.21	0.25	0.00	0.10	2.30	0.01	0.20	0.03	0.00	

AM Peak Hour	-	0700 - 0800	0900 - 1000	0800 - 0900	0700 - 0800	0800 - 0900	-	0900 - 1000	0800 - 0900	0900 - 1000	0500 - 0600	-	-	**0700 - 0800**
AM Peak Volume	0	663	164	8	18	4	0	5	28	1	1	0	0	**839**

Noon Peak Hour	-	1400 - 1500	1000 - 1100	1200 - 1300	1300 - 1400	1000 - 1100	-	1200 - 1300	1000 - 1100	-	-	-	-	**1000 - 1100**
Noon Peak Volume	0	696	324	4	17	3	0	3	28	0	0	0	0	**1003**

PM Peak Hour	1600 - 1700	1700 - 1800	1500 - 1600	1600 - 1700	1600 - 1700	1600 - 1700	-	-	1800 - 1900	-	-	-	-	**1700 - 1800**
PM Peak Volume	1	832	124	6	6	2	0	0	12	0	0	0	0	**963**

Site 54
I-26 S/Bound On-Ramp,
south of US-378 Sunset Blvd

Date
Thursday, April 25, 2024

Lat/Long
34.002082°, -81.110174°

Weather
Fair
67°F

Click here for Detailed Weather

0000 - 2400 (Weekday 24h Session) (04-25-2024)
SB WB 60min

	Southbound (Movement 54.1)													
TIME	1	2	3	4	5	6	7	8	9	10	11	12	13	**Total**
0000 - 0100	0	49	2	0	2	0	0	0	5	0	1	0	0	**59**
0100 - 0200	0	31	0	0	0	0	0	0	1	0	1	0	0	**33**
0200 - 0300	0	20	0	0	0	0	0	0	5	0	6	0	0	**31**
0300 - 0400	0	31	0	0	3	0	0	0	4	0	7	0	0	**45**
0400 - 0500	0	74	1	0	3	0	0	0	8	0	1	0	0	**87**
0500 - 0600	0	139	15	0	3	2	0	0	10	0	0	0	0	**169**
0600 - 0700	0	281	74	1	4	2	0	1	13	0	1	0	0	**377**
0700 - 0800	0	525	130	3	9	8	0	1	8	0	0	0	0	**684**
0800 - 0900	0	398	90	8	10	2	0	0	22	0	0	0	0	**530**
0900 - 1000	0	371	99	1	13	5	0	0	19	0	0	0	0	**508**
1000 - 1100	1	349	103	0	12	2	0	0	12	0	0	0	0	**479**
1100 - 1200	0	387	98	2	11	4	0	0	19	0	0	0	0	**521**
1200 - 1300	0	403	97	1	13	3	0	3	19	0	0	0	0	**539**
1300 - 1400	2	424	131	2	11	4	0	3	29	0	0	0	0	**606**
1400 - 1500	0	512	148	2	5	4	1	1	11	0	0	0	0	**684**
1500 - 1600	0	685	162	0	7	1	0	0	20	0	0	0	0	**875**
1600 - 1700	3	770	165	6	9	1	0	0	10	0	0	0	0	**964**
1700 - 1800	0	697	127	2	1	3	0	0	10	0	0	0	0	**840**
1800 - 1900	2	448	75	1	4	3	0	0	15	0	0	0	0	**548**
1900 - 2000	0	0	0	0	0	0	0	0	0	0	0	0	0	**0**
2000 - 2100	0	0	0	0	0	0	0	0	0	0	0	0	0	**0**
2100 - 2200	0	0	0	0	0	0	0	0	0	0	0	0	0	**0**
2200 - 2300	0	0	0	0	0	0	0	0	0	0	0	0	0	**0**
2300 - 2400	0	0	0	0	0	0	0	0	0	0	0	0	0	**0**

Session Total	8	6594	1517	29	120	44	1	9	240	0	17	0	0	**8579**
Session Average	0.33	274.75	63.21	1.21	5.00	1.83	0.04	0.38	10.00	0.00	0.71	0.00	0.00	**357.46**
Session Percentage	0.09	76.86	17.68	0.34	1.40	0.51	0.01	0.10	2.80	0.00	0.20	0.00	0.00	

AM Peak Hour	-	0700 - 0800	0700 - 0800	0800 - 0900	0900 - 1000	0700 - 0800	-	0600 - 0700	0800 - 0900	-	0600 - 0700	-	-	**0700 - 0800**
AM Peak Hour Volume	0	525	130	8	13	8	0	1	22	0	1	0	0	**684**

Noon Peak Hour	1300 - 1400	1400 - 1500	1400 - 1500	1100 - 1200	1200 - 1300	1100 - 1200	1400 - 1500	1200 - 1300	1300 - 1400	-	-	-	-	**1400 - 1500**
Noon Peak Hour Volume	2	512	148	2	13	4	1	3	29	0	0	0	0	**684**

PM Peak Hour	1600 - 1700	1600 - 1700	1600 - 1700	1600 - 1700	1600 - 1700	1700 - 1800	-	-	1500 - 1600	-	-	-	-	**1600 - 1700**
PM Peak Hour Volume	3	770	165	6	9	3	0	0	20	0	0	0	0	**964**

Bi-Directional Class Count || Volume Summary 60min

Columbia, SC

Marr Traffic DATA COLLECTION

www.marrtraffic.com

Site 54

I-26 S/Bound On-Ramp,
south of US-378 Sunset Blvd

Date

Tuesday, April 23, 2024

Lat/Long

34.002082°, -81.110174°

Weather

Fair
58°F

Click here for Detailed Weather

0000 - 2400 (Weekday 24h Session) (04-23-2024)

Volume Summary 60min

	Volume Summary 60min		
TIME	NB	SB	**Total**
0000 - 0100	0	0	**0**
0100 - 0200	0	0	**0**
0200 - 0300	0	0	**0**
0300 - 0400	0	0	**0**
0400 - 0500	0	0	**0**
0500 - 0600	0	0	**0**
0600 - 0700	0	0	**0**
0700 - 0800	0	0	**0**
0800 - 0900	0	0	**0**
0900 - 1000	0	0	**0**
1000 - 1100	0	0	**0**
1100 - 1200	0	0	**0**

	Volume Summary 60min		
Time	NB	SB	**Total**
1200 - 1300	0	0	**0**
1300 - 1400	0	0	**0**
1400 - 1500	0	0	**0**
1500 - 1600	0	0	**0**
1600 - 1700	0	0	**0**
1700 - 1800	0	0	**0**
1800 - 1900	0	0	**0**
1900 - 2000	0	403	**403**
2000 - 2100	0	408	**408**
2100 - 2200	0	217	**217**
2200 - 2300	0	179	**179**
2300 - 2400	0	126	**126**

Session Total	0	1333	**1333**
Session Average	0.00	55.54	**55.54**
Session Percentage	0.00	100.00	

Site 54

I-26 S/Bound On-Ramp,
south of US-378 Sunset Blvd

Date

Wednesday, April 24, 2024

Lat/Long

34.002082°, -81.110174°

Weather

Fair
66°F

Click here for Detailed Weather

0000 - 2400 (Weekday 24h Session) (04-24-2024)

Volume Summary 60min

	Volume Summary 60min		
TIME	NB	SB	**Total**
0000 - 0100	0	54	**54**
0100 - 0200	0	30	**30**
0200 - 0300	0	32	**32**
0300 - 0400	0	40	**40**
0400 - 0500	0	93	**93**
0500 - 0600	0	171	**171**
0600 - 0700	0	441	**441**
0700 - 0800	0	839	**839**
0800 - 0900	0	645	**645**
0900 - 1000	0	794	**794**
1000 - 1100	0	1003	**1003**
1100 - 1200	0	935	**935**

	Volume Summary 60min		
Time	NB	SB	**Total**
1200 - 1300	0	930	**930**
1300 - 1400	0	708	**708**
1400 - 1500	0	798	**798**
1500 - 1600	0	792	**792**
1600 - 1700	0	792	**792**
1700 - 1800	0	963	**963**
1800 - 1900	0	624	**624**
1900 - 2000	0	381	**381**
2000 - 2100	0	307	**307**
2100 - 2200	0	179	**179**
2200 - 2300	0	124	**124**
2300 - 2400	0	97	**97**

Session Total	0	11772	**11772**
Session Average	0.00	490.50	**490.50**
Session Percentage	0.00	100.00	

Site 54

I-26 S/Bound On-Ramp,
south of US-378 Sunset Blvd

Date

Thursday, April 25, 2024

Lat/Long

34.002082°, -81.110174°

Weather

Fair
67°F

Click here for Detailed Weather

0000 - 2400 (Weekday 24h Session) (04-25-2024)

Volume Summary 60min

	Volume Summary 60min		
TIME	NB	SB	**Total**
0000 - 0100	0	59	**59**
0100 - 0200	0	33	**33**
0200 - 0300	0	31	**31**
0300 - 0400	0	45	**45**
0400 - 0500	0	87	**87**
0500 - 0600	0	169	**169**
0600 - 0700	0	377	**377**
0700 - 0800	0	684	**684**
0800 - 0900	0	530	**530**
0900 - 1000	0	508	**508**
1000 - 1100	0	479	**479**
1100 - 1200	0	521	**521**

	Volume Summary 60min		
Time	NB	SB	**Total**
1200 - 1300	0	539	**539**
1300 - 1400	0	606	**606**
1400 - 1500	0	684	**684**
1500 - 1600	0	875	**875**
1600 - 1700	0	964	**964**
1700 - 1800	0	840	**840**
1800 - 1900	0	548	**548**
1900 - 2000	0	0	**0**
2000 - 2100	0	0	**0**
2100 - 2200	0	0	**0**
2200 - 2300	0	0	**0**
2300 - 2400	0	0	**0**

Session Total	0	8579	**8579**
Session Average	0.00	357.46	**357.46**
Session Percentage	0.00	100.00	

Bi-Directional Class Count || Graphical Analysis SB WB

Columbia, SC

Marr Traffic DATA COLLECTION

www.marrtraffic.com

Site 54

I-26 S/Bound On-Ramp,
south of US-378 Sunset Blvd

Lat/Long

34.002082°, -81.110174°

0000 - 2400 (Weekday 24h Session)

Graphical Analysis SB WB

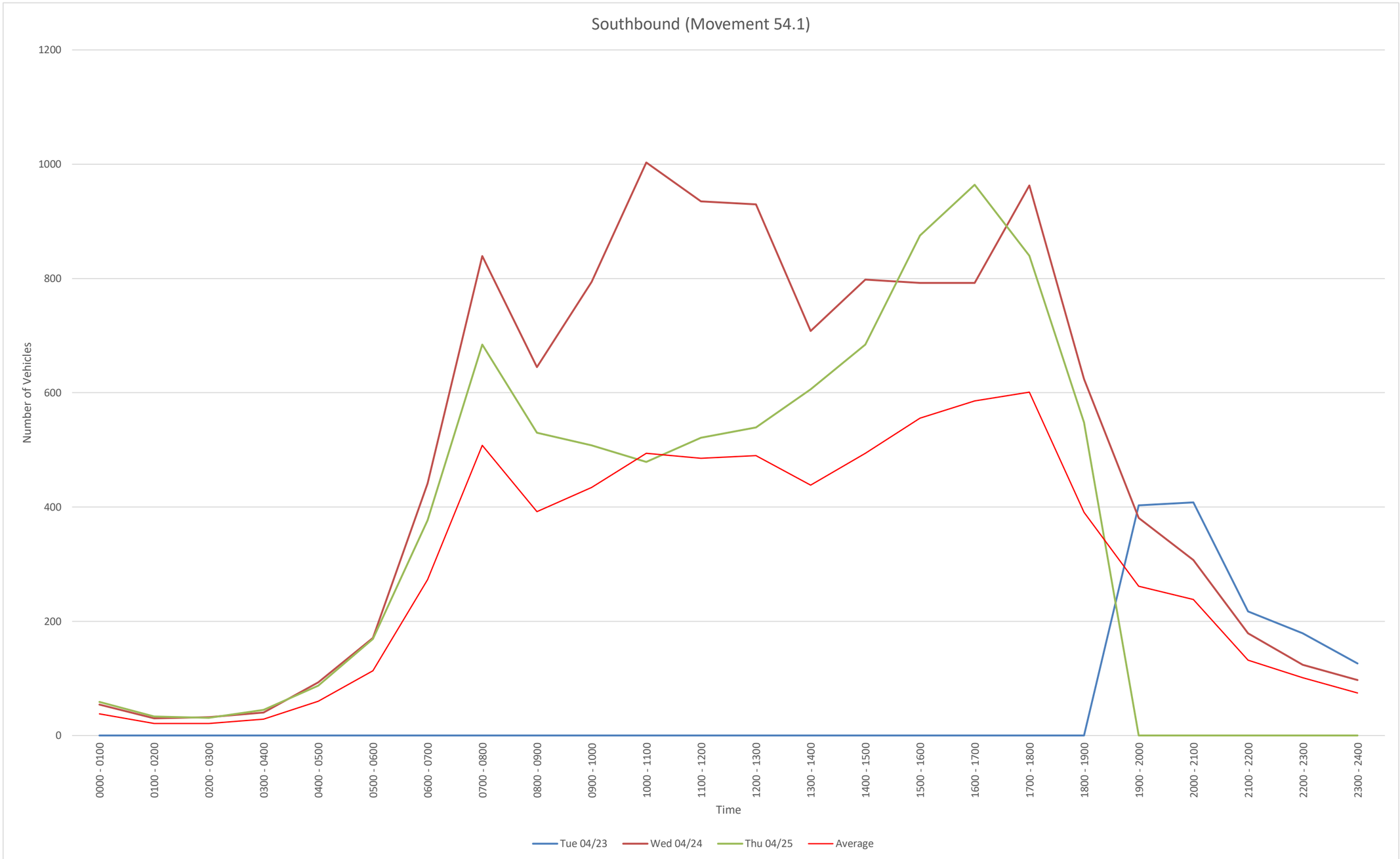

Time	Tue 04/23	Wed 04/24	Thu 04/25				
0000 - 0100	0	54	59				
0100 - 0200	0	30	33				
0200 - 0300	0	32	31				
0300 - 0400	0	40	45				
0400 - 0500	0	93	87				
0500 - 0600	0	171	169				
0600 - 0700	0	441	377				
0700 - 0800	0	839	684				
0800 - 0900	0	645	530				
0900 - 1000	0	794	508				
1000 - 1100	0	1003	479				
1100 - 1200	0	935	521				
1200 - 1300	0	930	539				
1300 - 1400	0	708	606				
1400 - 1500	0	798	684				
1500 - 1600	0	792	875				
1600 - 1700	0	792	964				
1700 - 1800	0	963	840				
1800 - 1900	0	624	548				
1900 - 2000	403	381	0				
2000 - 2100	408	307	0				
2100 - 2200	217	179	0				
2200 - 2300	179	124	0				
2300 - 2400	126	97	0				
Daily Total	1333	11772	8579				

NB
File Name:
Start Date: 4/23/2024
Start Time: 0
Site Code: 54
Station ID: 1
Location 1: I-26 S/Bound On-Ramp, south of US-378 Sunset Blvd
Location 2:

Date	Time	1	2	3	4	5	6	7	8	9	10	11	12	13
4/23/2024	12:00 AM	0	0	0	0	0	0	0	0	0	0	0	0	0
4/23/2024	12:15 AM	0	0	0	0	0	0	0	0	0	0	0	0	0
4/23/2024	12:30 AM	0	0	0	0	0	0	0	0	0	0	0	0	0
4/23/2024	12:45 AM	0	0	0	0	0	0	0	0	0	0	0	0	0
4/23/2024	1:00 AM	0	0	0	0	0	0	0	0	0	0	0	0	0
4/23/2024	1:15 AM	0	0	0	0	0	0	0	0	0	0	0	0	0
4/23/2024	1:30 AM	0	0	0	0	0	0	0	0	0	0	0	0	0
4/23/2024	1:45 AM	0	0	0	0	0	0	0	0	0	0	0	0	0
4/23/2024	2:00 AM	0	0	0	0	0	0	0	0	0	0	0	0	0
4/23/2024	2:15 AM	0	0	0	0	0	0	0	0	0	0	0	0	0
4/23/2024	2:30 AM	0	0	0	0	0	0	0	0	0	0	0	0	0
4/23/2024	2:45 AM	0	0	0	0	0	0	0	0	0	0	0	0	0
4/23/2024	3:00 AM	0	0	0	0	0	0	0	0	0	0	0	0	0
4/23/2024	3:15 AM	0	0	0	0	0	0	0	0	0	0	0	0	0
4/23/2024	3:30 AM	0	0	0	0	0	0	0	0	0	0	0	0	0
4/23/2024	3:45 AM	0	0	0	0	0	0	0	0	0	0	0	0	0
4/23/2024	4:00 AM	0	0	0	0	0	0	0	0	0	0	0	0	0
4/23/2024	4:15 AM	0	0	0	0	0	0	0	0	0	0	0	0	0
4/23/2024	4:30 AM	0	0	0	0	0	0	0	0	0	0	0	0	0
4/23/2024	4:45 AM	0	0	0	0	0	0	0	0	0	0	0	0	0
4/23/2024	5:00 AM	0	0	0	0	0	0	0	0	0	0	0	0	0
4/23/2024	5:15 AM	0	0	0	0	0	0	0	0	0	0	0	0	0
4/23/2024	5:30 AM	0	0	0	0	0	0	0	0	0	0	0	0	0
4/23/2024	5:45 AM	0	0	0	0	0	0	0	0	0	0	0	0	0
4/23/2024	6:00 AM	0	0	0	0	0	0	0	0	0	0	0	0	0
4/23/2024	6:15 AM	0	0	0	0	0	0	0	0	0	0	0	0	0
4/23/2024	6:30 AM	0	0	0	0	0	0	0	0	0	0	0	0	0
4/23/2024	6:45 AM	0	0	0	0	0	0	0	0	0	0	0	0	0
4/23/2024	7:00 AM	0	0	0	0	0	0	0	0	0	0	0	0	0
4/23/2024	7:15 AM	0	0	0	0	0	0	0	0	0	0	0	0	0
4/23/2024	7:30 AM	0	0	0	0	0	0	0	0	0	0	0	0	0
4/23/2024	7:45 AM	0	0	0	0	0	0	0	0	0	0	0	0	0
4/23/2024	8:00 AM	0	0	0	0	0	0	0	0	0	0	0	0	0
4/23/2024	8:15 AM	0	0	0	0	0	0	0	0	0	0	0	0	0
4/23/2024	8:30 AM	0	0	0	0	0	0	0	0	0	0	0	0	0
4/23/2024	8:45 AM	0	0	0	0	0	0	0	0	0	0	0	0	0
4/23/2024	9:00 AM	0	0	0	0	0	0	0	0	0	0	0	0	0
4/23/2024	9:15 AM	0	0	0	0	0	0	0	0	0	0	0	0	0
4/23/2024	9:30 AM	0	0	0	0	0	0	0	0	0	0	0	0	0
4/23/2024	9:45 AM	0	0	0	0	0	0	0	0	0	0	0	0	0
4/23/2024	10:00 AM	0	0	0	0	0	0	0	0	0	0	0	0	0
4/23/2024	10:15 AM	0	0	0	0	0	0	0	0	0	0	0	0	0
4/23/2024	10:30 AM	0	0	0	0	0	0	0	0	0	0	0	0	0
4/23/2024	10:45 AM	0	0	0	0	0	0	0	0	0	0	0	0	0
4/23/2024	11:00 AM	0	0	0	0	0	0	0	0	0	0	0	0	0
4/23/2024	11:15 AM	0	0	0	0	0	0	0	0	0	0	0	0	0
4/23/2024	11:30 AM	0	0	0	0	0	0	0	0	0	0	0	0	0
4/23/2024	11:45 AM	0	0	0	0	0	0	0	0	0	0	0	0	0
4/23/2024	12:00 PM	0	0	0	0	0	0	0	0	0	0	0	0	0
4/23/2024	12:15 PM	0	0	0	0	0	0	0	0	0	0	0	0	0
4/23/2024	12:30 PM	0	0	0	0	0	0	0	0	0	0	0	0	0
4/23/2024	12:45 PM	0	0	0	0	0	0	0	0	0	0	0	0	0
4/23/2024	1:00 PM	0	0	0	0	0	0	0	0	0	0	0	0	0
4/23/2024	1:15 PM	0	0	0	0	0	0	0	0	0	0	0	0	0
4/23/2024	1:30 PM	0	0	0	0	0	0	0	0	0	0	0	0	0
4/23/2024	1:45 PM	0	0	0	0	0	0	0	0	0	0	0	0	0
4/23/2024	2:00 PM	0	0	0	0	0	0	0	0	0	0	0	0	0
4/23/2024	2:15 PM	0	0	0	0	0	0	0	0	0	0	0	0	0
4/23/2024	2:30 PM	0	0	0	0	0	0	0	0	0	0	0	0	0
4/23/2024	2:45 PM	0	0	0	0	0	0	0	0	0	0	0	0	0
4/23/2024	3:00 PM	0	0	0	0	0	0	0	0	0	0	0	0	0
4/23/2024	3:15 PM	0	0	0	0	0	0	0	0	0	0	0	0	0
4/23/2024	3:30 PM	0	0	0	0	0	0	0	0	0	0	0	0	0
4/23/2024	3:45 PM	0	0	0	0	0	0	0	0	0	0	0	0	0
4/23/2024	4:00 PM	0	0	0	0	0	0	0	0	0	0	0	0	0
4/23/2024	4:15 PM	0	0	0	0	0	0	0	0	0	0	0	0	0
4/23/2024	4:30 PM	0	0	0	0	0	0	0	0	0	0	0	0	0
4/23/2024	4:45 PM	0	0	0	0	0	0	0	0	0	0	0	0	0
4/23/2024	5:00 PM	0	0	0	0	0	0	0	0	0	0	0	0	0
4/23/2024	5:15 PM	0	0	0	0	0	0	0	0	0	0	0	0	0
4/23/2024	5:30 PM	0	0	0	0	0	0	0	0	0	0	0	0	0
4/23/2024	5:45 PM	0	0	0	0	0	0	0	0	0	0	0	0	0
4/23/2024	6:00 PM	0	0	0	0	0	0	0	0	0	0	0	0	0
4/23/2024	6:15 PM	0	0	0	0	0	0	0	0	0	0	0	0	0
4/23/2024	6:30 PM	0	0	0	0	0	0	0	0	0	0	0	0	0
4/23/2024	6:45 PM	0	0	0	0	0	0	0	0	0	0	0	0	0
4/23/2024	7:00 PM	0	0	0	0	0	0	0	0	0	0	0	0	0
4/23/2024	7:15 PM	0	0	0	0	0	0	0	0	0	0	0	0	0
4/23/2024	7:30 PM	0	0	0	0	0	0	0	0	0	0	0	0	0
4/23/2024	7:45 PM	0	0	0	0	0	0	0	0	0	0	0	0	0
4/23/2024	8:00 PM	0	0	0	0	0	0	0	0	0	0	0	0	0
4/23/2024	8:15 PM	0	0	0	0	0	0	0	0	0	0	0	0	0
4/23/2024	8:30 PM	0	0	0	0	0	0	0	0	0	0	0	0	0
4/23/2024	8:45 PM	0	0	0	0	0	0	0	0	0	0	0	0	0
4/23/2024	9:00 PM	0	0	0	0	0	0	0	0	0	0	0	0	0
4/23/2024	9:15 PM	0	0	0	0	0	0	0	0	0	0	0	0	0
4/23/2024	9:30 PM	0	0	0	0	0	0	0	0	0	0	0	0	0
4/23/2024	9:45 PM	0	0	0	0	0	0	0	0	0	0	0	0	0
4/23/2024	10:00 PM	0	0	0	0	0	0	0	0	0	0	0	0	0
4/23/2024	10:15 PM	0	0	0	0	0	0	0	0	0	0	0	0	0
4/23/2024	10:30 PM	0	0	0	0	0	0	0	0	0	0	0	0	0
4/23/2024	10:45 PM	0	0	0	0	0	0	0	0	0	0	0	0	0
4/23/2024	11:00 PM	0	0	0	0	0	0	0	0	0	0	0	0	0
4/23/2024	11:15 PM	0	0	0	0	0	0	0	0	0	0	0	0	0
4/23/2024	11:30 PM	0	0	0	0	0	0	0	0	0	0	0	0	0
4/23/2024	11:45 PM	0	0	0	0	0	0	0	0	0	0	0	0	0

4/24/2024	12:00 AM	0	0	0	0	0	0	0	0	0	0	0	0	0
4/24/2024	12:15 AM	0	0	0	0	0	0	0	0	0	0	0	0	0
4/24/2024	12:30 AM	0	0	0	0	0	0	0	0	0	0	0	0	0
4/24/2024	12:45 AM	0	0	0	0	0	0	0	0	0	0	0	0	0
4/24/2024	1:00 AM	0	0	0	0	0	0	0	0	0	0	0	0	0
4/24/2024	1:15 AM	0	0	0	0	0	0	0	0	0	0	0	0	0
4/24/2024	1:30 AM	0	0	0	0	0	0	0	0	0	0	0	0	0
4/24/2024	1:45 AM	0	0	0	0	0	0	0	0	0	0	0	0	0
4/24/2024	2:00 AM	0	0	0	0	0	0	0	0	0	0	0	0	0
4/24/2024	2:15 AM	0	0	0	0	0	0	0	0	0	0	0	0	0
4/24/2024	2:30 AM	0	0	0	0	0	0	0	0	0	0	0	0	0
4/24/2024	2:45 AM	0	0	0	0	0	0	0	0	0	0	0	0	0
4/24/2024	3:00 AM	0	0	0	0	0	0	0	0	0	0	0	0	0
4/24/2024	3:15 AM	0	0	0	0	0	0	0	0	0	0	0	0	0
4/24/2024	3:30 AM	0	0	0	0	0	0	0	0	0	0	0	0	0
4/24/2024	3:45 AM	0	0	0	0	0	0	0	0	0	0	0	0	0
4/24/2024	4:00 AM	0	0	0	0	0	0	0	0	0	0	0	0	0
4/24/2024	4:15 AM	0	0	0	0	0	0	0	0	0	0	0	0	0
4/24/2024	4:30 AM	0	0	0	0	0	0	0	0	0	0	0	0	0
4/24/2024	4:45 AM	0	0	0	0	0	0	0	0	0	0	0	0	0
4/24/2024	5:00 AM	0	0	0	0	0	0	0	0	0	0	0	0	0
4/24/2024	5:15 AM	0	0	0	0	0	0	0	0	0	0	0	0	0
4/24/2024	5:30 AM	0	0	0	0	0	0	0	0	0	0	0	0	0
4/24/2024	5:45 AM	0	0	0	0	0	0	0	0	0	0	0	0	0
4/24/2024	6:00 AM	0	0	0	0	0	0	0	0	0	0	0	0	0
4/24/2024	6:15 AM	0	0	0	0	0	0	0	0	0	0	0	0	0
4/24/2024	6:30 AM	0	0	0	0	0	0	0	0	0	0	0	0	0
4/24/2024	6:45 AM	0	0	0	0	0	0	0	0	0	0	0	0	0
4/24/2024	7:00 AM	0	0	0	0	0	0	0	0	0	0	0	0	0
4/24/2024	7:15 AM	0	0	0	0	0	0	0	0	0	0	0	0	0
4/24/2024	7:30 AM	0	0	0	0	0	0	0	0	0	0	0	0	0
4/24/2024	7:45 AM	0	0	0	0	0	0	0	0	0	0	0	0	0
4/24/2024	8:00 AM	0	0	0	0	0	0	0	0	0	0	0	0	0
4/24/2024	8:15 AM	0	0	0	0	0	0	0	0	0	0	0	0	0
4/24/2024	8:30 AM	0	0	0	0	0	0	0	0	0	0	0	0	0
4/24/2024	8:45 AM	0	0	0	0	0	0	0	0	0	0	0	0	0
4/24/2024	9:00 AM	0	0	0	0	0	0	0	0	0	0	0	0	0
4/24/2024	9:15 AM	0	0	0	0	0	0	0	0	0	0	0	0	0
4/24/2024	9:30 AM	0	0	0	0	0	0	0	0	0	0	0	0	0
4/24/2024	9:45 AM	0	0	0	0	0	0	0	0	0	0	0	0	0
4/24/2024	10:00 AM	0	0	0	0	0	0	0	0	0	0	0	0	0
4/24/2024	10:15 AM	0	0	0	0	0	0	0	0	0	0	0	0	0
4/24/2024	10:30 AM	0	0	0	0	0	0	0	0	0	0	0	0	0
4/24/2024	10:45 AM	0	0	0	0	0	0	0	0	0	0	0	0	0
4/24/2024	11:00 AM	0	0	0	0	0	0	0	0	0	0	0	0	0
4/24/2024	11:15 AM	0	0	0	0	0	0	0	0	0	0	0	0	0
4/24/2024	11:30 AM	0	0	0	0	0	0	0	0	0	0	0	0	0
4/24/2024	11:45 AM	0	0	0	0	0	0	0	0	0	0	0	0	0
4/24/2024	12:00 PM	0	0	0	0	0	0	0	0	0	0	0	0	0
4/24/2024	12:15 PM	0	0	0	0	0	0	0	0	0	0	0	0	0
4/24/2024	12:30 PM	0	0	0	0	0	0	0	0	0	0	0	0	0
4/24/2024	12:45 PM	0	0	0	0	0	0	0	0	0	0	0	0	0
4/24/2024	1:00 PM	0	0	0	0	0	0	0	0	0	0	0	0	0
4/24/2024	1:15 PM	0	0	0	0	0	0	0	0	0	0	0	0	0
4/24/2024	1:30 PM	0	0	0	0	0	0	0	0	0	0	0	0	0
4/24/2024	1:45 PM	0	0	0	0	0	0	0	0	0	0	0	0	0
4/24/2024	2:00 PM	0	0	0	0	0	0	0	0	0	0	0	0	0
4/24/2024	2:15 PM	0	0	0	0	0	0	0	0	0	0	0	0	0
4/24/2024	2:30 PM	0	0	0	0	0	0	0	0	0	0	0	0	0
4/24/2024	2:45 PM	0	0	0	0	0	0	0	0	0	0	0	0	0
4/24/2024	3:00 PM	0	0	0	0	0	0	0	0	0	0	0	0	0
4/24/2024	3:15 PM	0	0	0	0	0	0	0	0	0	0	0	0	0
4/24/2024	3:30 PM	0	0	0	0	0	0	0	0	0	0	0	0	0
4/24/2024	3:45 PM	0	0	0	0	0	0	0	0	0	0	0	0	0
4/24/2024	4:00 PM	0	0	0	0	0	0	0	0	0	0	0	0	0
4/24/2024	4:15 PM	0	0	0	0	0	0	0	0	0	0	0	0	0
4/24/2024	4:30 PM	0	0	0	0	0	0	0	0	0	0	0	0	0
4/24/2024	4:45 PM	0	0	0	0	0	0	0	0	0	0	0	0	0
4/24/2024	5:00 PM	0	0	0	0	0	0	0	0	0	0	0	0	0
4/24/2024	5:15 PM	0	0	0	0	0	0	0	0	0	0	0	0	0
4/24/2024	5:30 PM	0	0	0	0	0	0	0	0	0	0	0	0	0
4/24/2024	5:45 PM	0	0	0	0	0	0	0	0	0	0	0	0	0
4/24/2024	6:00 PM	0	0	0	0	0	0	0	0	0	0	0	0	0
4/24/2024	6:15 PM	0	0	0	0	0	0	0	0	0	0	0	0	0
4/24/2024	6:30 PM	0	0	0	0	0	0	0	0	0	0	0	0	0
4/24/2024	6:45 PM	0	0	0	0	0	0	0	0	0	0	0	0	0
4/24/2024	7:00 PM	0	0	0	0	0	0	0	0	0	0	0	0	0
4/24/2024	7:15 PM	0	0	0	0	0	0	0	0	0	0	0	0	0
4/24/2024	7:30 PM	0	0	0	0	0	0	0	0	0	0	0	0	0
4/24/2024	7:45 PM	0	0	0	0	0	0	0	0	0	0	0	0	0
4/24/2024	8:00 PM	0	0	0	0	0	0	0	0	0	0	0	0	0
4/24/2024	8:15 PM	0	0	0	0	0	0	0	0	0	0	0	0	0
4/24/2024	8:30 PM	0	0	0	0	0	0	0	0	0	0	0	0	0
4/24/2024	8:45 PM	0	0	0	0	0	0	0	0	0	0	0	0	0
4/24/2024	9:00 PM	0	0	0	0	0	0	0	0	0	0	0	0	0
4/24/2024	9:15 PM	0	0	0	0	0	0	0	0	0	0	0	0	0
4/24/2024	9:30 PM	0	0	0	0	0	0	0	0	0	0	0	0	0
4/24/2024	9:45 PM	0	0	0	0	0	0	0	0	0	0	0	0	0
4/24/2024	10:00 PM	0	0	0	0	0	0	0	0	0	0	0	0	0
4/24/2024	10:15 PM	0	0	0	0	0	0	0	0	0	0	0	0	0
4/24/2024	10:30 PM	0	0	0	0	0	0	0	0	0	0	0	0	0
4/24/2024	10:45 PM	0	0	0	0	0	0	0	0	0	0	0	0	0
4/24/2024	11:00 PM	0	0	0	0	0	0	0	0	0	0	0	0	0
4/24/2024	11:15 PM	0	0	0	0	0	0	0	0	0	0	0	0	0
4/24/2024	11:30 PM	0	0	0	0	0	0	0	0	0	0	0	0	0
4/24/2024	11:45 PM	0	0	0	0	0	0	0	0	0	0	0	0	0

4/25/2024	12:00 AM	0	0	0	0	0	0	0	0	0	0	0	0	0
4/25/2024	12:15 AM	0	0	0	0	0	0	0	0	0	0	0	0	0
4/25/2024	12:30 AM	0	0	0	0	0	0	0	0	0	0	0	0	0
4/25/2024	12:45 AM	0	0	0	0	0	0	0	0	0	0	0	0	0
4/25/2024	1:00 AM	0	0	0	0	0	0	0	0	0	0	0	0	0
4/25/2024	1:15 AM	0	0	0	0	0	0	0	0	0	0	0	0	0
4/25/2024	1:30 AM	0	0	0	0	0	0	0	0	0	0	0	0	0
4/25/2024	1:45 AM	0	0	0	0	0	0	0	0	0	0	0	0	0
4/25/2024	2:00 AM	0	0	0	0	0	0	0	0	0	0	0	0	0
4/25/2024	2:15 AM	0	0	0	0	0	0	0	0	0	0	0	0	0
4/25/2024	2:30 AM	0	0	0	0	0	0	0	0	0	0	0	0	0
4/25/2024	2:45 AM	0	0	0	0	0	0	0	0	0	0	0	0	0
4/25/2024	3:00 AM	0	0	0	0	0	0	0	0	0	0	0	0	0
4/25/2024	3:15 AM	0	0	0	0	0	0	0	0	0	0	0	0	0
4/25/2024	3:30 AM	0	0	0	0	0	0	0	0	0	0	0	0	0
4/25/2024	3:45 AM	0	0	0	0	0	0	0	0	0	0	0	0	0
4/25/2024	4:00 AM	0	0	0	0	0	0	0	0	0	0	0	0	0
4/25/2024	4:15 AM	0	0	0	0	0	0	0	0	0	0	0	0	0
4/25/2024	4:30 AM	0	0	0	0	0	0	0	0	0	0	0	0	0
4/25/2024	4:45 AM	0	0	0	0	0	0	0	0	0	0	0	0	0
4/25/2024	5:00 AM	0	0	0	0	0	0	0	0	0	0	0	0	0
4/25/2024	5:15 AM	0	0	0	0	0	0	0	0	0	0	0	0	0
4/25/2024	5:30 AM	0	0	0	0	0	0	0	0	0	0	0	0	0
4/25/2024	5:45 AM	0	0	0	0	0	0	0	0	0	0	0	0	0
4/25/2024	6:00 AM	0	0	0	0	0	0	0	0	0	0	0	0	0
4/25/2024	6:15 AM	0	0	0	0	0	0	0	0	0	0	0	0	0
4/25/2024	6:30 AM	0	0	0	0	0	0	0	0	0	0	0	0	0
4/25/2024	6:45 AM	0	0	0	0	0	0	0	0	0	0	0	0	0
4/25/2024	7:00 AM	0	0	0	0	0	0	0	0	0	0	0	0	0
4/25/2024	7:15 AM	0	0	0	0	0	0	0	0	0	0	0	0	0
4/25/2024	7:30 AM	0	0	0	0	0	0	0	0	0	0	0	0	0
4/25/2024	7:45 AM	0	0	0	0	0	0	0	0	0	0	0	0	0
4/25/2024	8:00 AM	0	0	0	0	0	0	0	0	0	0	0	0	0
4/25/2024	8:15 AM	0	0	0	0	0	0	0	0	0	0	0	0	0
4/25/2024	8:30 AM	0	0	0	0	0	0	0	0	0	0	0	0	0
4/25/2024	8:45 AM	0	0	0	0	0	0	0	0	0	0	0	0	0
4/25/2024	9:00 AM	0	0	0	0	0	0	0	0	0	0	0	0	0
4/25/2024	9:15 AM	0	0	0	0	0	0	0	0	0	0	0	0	0
4/25/2024	9:30 AM	0	0	0	0	0	0	0	0	0	0	0	0	0
4/25/2024	9:45 AM	0	0	0	0	0	0	0	0	0	0	0	0	0
4/25/2024	10:00 AM	0	0	0	0	0	0	0	0	0	0	0	0	0
4/25/2024	10:15 AM	0	0	0	0	0	0	0	0	0	0	0	0	0
4/25/2024	10:30 AM	0	0	0	0	0	0	0	0	0	0	0	0	0
4/25/2024	10:45 AM	0	0	0	0	0	0	0	0	0	0	0	0	0
4/25/2024	11:00 AM	0	0	0	0	0	0	0	0	0	0	0	0	0
4/25/2024	11:15 AM	0	0	0	0	0	0	0	0	0	0	0	0	0
4/25/2024	11:30 AM	0	0	0	0	0	0	0	0	0	0	0	0	0
4/25/2024	11:45 AM	0	0	0	0	0	0	0	0	0	0	0	0	0
4/25/2024	12:00 PM	0	0	0	0	0	0	0	0	0	0	0	0	0
4/25/2024	12:15 PM	0	0	0	0	0	0	0	0	0	0	0	0	0
4/25/2024	12:30 PM	0	0	0	0	0	0	0	0	0	0	0	0	0
4/25/2024	12:45 PM	0	0	0	0	0	0	0	0	0	0	0	0	0
4/25/2024	1:00 PM	0	0	0	0	0	0	0	0	0	0	0	0	0
4/25/2024	1:15 PM	0	0	0	0	0	0	0	0	0	0	0	0	0
4/25/2024	1:30 PM	0	0	0	0	0	0	0	0	0	0	0	0	0
4/25/2024	1:45 PM	0	0	0	0	0	0	0	0	0	0	0	0	0
4/25/2024	2:00 PM	0	0	0	0	0	0	0	0	0	0	0	0	0
4/25/2024	2:15 PM	0	0	0	0	0	0	0	0	0	0	0	0	0
4/25/2024	2:30 PM	0	0	0	0	0	0	0	0	0	0	0	0	0
4/25/2024	2:45 PM	0	0	0	0	0	0	0	0	0	0	0	0	0
4/25/2024	3:00 PM	0	0	0	0	0	0	0	0	0	0	0	0	0
4/25/2024	3:15 PM	0	0	0	0	0	0	0	0	0	0	0	0	0
4/25/2024	3:30 PM	0	0	0	0	0	0	0	0	0	0	0	0	0
4/25/2024	3:45 PM	0	0	0	0	0	0	0	0	0	0	0	0	0
4/25/2024	4:00 PM	0	0	0	0	0	0	0	0	0	0	0	0	0
4/25/2024	4:15 PM	0	0	0	0	0	0	0	0	0	0	0	0	0
4/25/2024	4:30 PM	0	0	0	0	0	0	0	0	0	0	0	0	0
4/25/2024	4:45 PM	0	0	0	0	0	0	0	0	0	0	0	0	0
4/25/2024	5:00 PM	0	0	0	0	0	0	0	0	0	0	0	0	0
4/25/2024	5:15 PM	0	0	0	0	0	0	0	0	0	0	0	0	0
4/25/2024	5:30 PM	0	0	0	0	0	0	0	0	0	0	0	0	0
4/25/2024	5:45 PM	0	0	0	0	0	0	0	0	0	0	0	0	0
4/25/2024	6:00 PM	0	0	0	0	0	0	0	0	0	0	0	0	0
4/25/2024	6:15 PM	0	0	0	0	0	0	0	0	0	0	0	0	0
4/25/2024	6:30 PM	0	0	0	0	0	0	0	0	0	0	0	0	0
4/25/2024	6:45 PM	0	0	0	0	0	0	0	0	0	0	0	0	0
4/25/2024	7:00 PM	0	0	0	0	0	0	0	0	0	0	0	0	0
4/25/2024	7:15 PM	0	0	0	0	0	0	0	0	0	0	0	0	0
4/25/2024	7:30 PM	0	0	0	0	0	0	0	0	0	0	0	0	0
4/25/2024	7:45 PM	0	0	0	0	0	0	0	0	0	0	0	0	0
4/25/2024	8:00 PM	0	0	0	0	0	0	0	0	0	0	0	0	0
4/25/2024	8:15 PM	0	0	0	0	0	0	0	0	0	0	0	0	0
4/25/2024	8:30 PM	0	0	0	0	0	0	0	0	0	0	0	0	0
4/25/2024	8:45 PM	0	0	0	0	0	0	0	0	0	0	0	0	0
4/25/2024	9:00 PM	0	0	0	0	0	0	0	0	0	0	0	0	0
4/25/2024	9:15 PM	0	0	0	0	0	0	0	0	0	0	0	0	0
4/25/2024	9:30 PM	0	0	0	0	0	0	0	0	0	0	0	0	0
4/25/2024	9:45 PM	0	0	0	0	0	0	0	0	0	0	0	0	0
4/25/2024	10:00 PM	0	0	0	0	0	0	0	0	0	0	0	0	0
4/25/2024	10:15 PM	0	0	0	0	0	0	0	0	0	0	0	0	0
4/25/2024	10:30 PM	0	0	0	0	0	0	0	0	0	0	0	0	0
4/25/2024	10:45 PM	0	0	0	0	0	0	0	0	0	0	0	0	0
4/25/2024	11:00 PM	0	0	0	0	0	0	0	0	0	0	0	0	0
4/25/2024	11:15 PM	0	0	0	0	0	0	0	0	0	0	0	0	0
4/25/2024	11:30 PM	0	0	0	0	0	0	0	0	0	0	0	0	0
4/25/2024	11:45 PM	0	0	0	0	0	0	0	0	0	0	0	0	0

SB
File Name:
Start Date: 4/23/2024
Start Time: 0
Site Code: 54
Station ID: 1
Location 1: I-26 S/Bound On-Ramp, south of US-378 Sunset Blvd
Location 2:

Date	Time	1	2	3	4	5	6	7	8	9	10	11	12	13
4/23/2024	12:00 AM	0	0	0	0	0	0	0	0	0	0	0	0	0
4/23/2024	12:15 AM	0	0	0	0	0	0	0	0	0	0	0	0	0
4/23/2024	12:30 AM	0	0	0	0	0	0	0	0	0	0	0	0	0
4/23/2024	12:45 AM	0	0	0	0	0	0	0	0	0	0	0	0	0
4/23/2024	1:00 AM	0	0	0	0	0	0	0	0	0	0	0	0	0
4/23/2024	1:15 AM	0	0	0	0	0	0	0	0	0	0	0	0	0
4/23/2024	1:30 AM	0	0	0	0	0	0	0	0	0	0	0	0	0
4/23/2024	1:45 AM	0	0	0	0	0	0	0	0	0	0	0	0	0
4/23/2024	2:00 AM	0	0	0	0	0	0	0	0	0	0	0	0	0
4/23/2024	2:15 AM	0	0	0	0	0	0	0	0	0	0	0	0	0
4/23/2024	2:30 AM	0	0	0	0	0	0	0	0	0	0	0	0	0
4/23/2024	2:45 AM	0	0	0	0	0	0	0	0	0	0	0	0	0
4/23/2024	3:00 AM	0	0	0	0	0	0	0	0	0	0	0	0	0
4/23/2024	3:15 AM	0	0	0	0	0	0	0	0	0	0	0	0	0
4/23/2024	3:30 AM	0	0	0	0	0	0	0	0	0	0	0	0	0
4/23/2024	3:45 AM	0	0	0	0	0	0	0	0	0	0	0	0	0
4/23/2024	4:00 AM	0	0	0	0	0	0	0	0	0	0	0	0	0
4/23/2024	4:15 AM	0	0	0	0	0	0	0	0	0	0	0	0	0
4/23/2024	4:30 AM	0	0	0	0	0	0	0	0	0	0	0	0	0
4/23/2024	4:45 AM	0	0	0	0	0	0	0	0	0	0	0	0	0
4/23/2024	5:00 AM	0	0	0	0	0	0	0	0	0	0	0	0	0
4/23/2024	5:15 AM	0	0	0	0	0	0	0	0	0	0	0	0	0
4/23/2024	5:30 AM	0	0	0	0	0	0	0	0	0	0	0	0	0
4/23/2024	5:45 AM	0	0	0	0	0	0	0	0	0	0	0	0	0
4/23/2024	6:00 AM	0	0	0	0	0	0	0	0	0	0	0	0	0
4/23/2024	6:15 AM	0	0	0	0	0	0	0	0	0	0	0	0	0
4/23/2024	6:30 AM	0	0	0	0	0	0	0	0	0	0	0	0	0
4/23/2024	6:45 AM	0	0	0	0	0	0	0	0	0	0	0	0	0
4/23/2024	7:00 AM	0	0	0	0	0	0	0	0	0	0	0	0	0
4/23/2024	7:15 AM	0	0	0	0	0	0	0	0	0	0	0	0	0
4/23/2024	7:30 AM	0	0	0	0	0	0	0	0	0	0	0	0	0
4/23/2024	7:45 AM	0	0	0	0	0	0	0	0	0	0	0	0	0
4/23/2024	8:00 AM	0	0	0	0	0	0	0	0	0	0	0	0	0
4/23/2024	8:15 AM	0	0	0	0	0	0	0	0	0	0	0	0	0
4/23/2024	8:30 AM	0	0	0	0	0	0	0	0	0	0	0	0	0
4/23/2024	8:45 AM	0	0	0	0	0	0	0	0	0	0	0	0	0
4/23/2024	9:00 AM	0	0	0	0	0	0	0	0	0	0	0	0	0
4/23/2024	9:15 AM	0	0	0	0	0	0	0	0	0	0	0	0	0
4/23/2024	9:30 AM	0	0	0	0	0	0	0	0	0	0	0	0	0
4/23/2024	9:45 AM	0	0	0	0	0	0	0	0	0	0	0	0	0
4/23/2024	10:00 AM	0	0	0	0	0	0	0	0	0	0	0	0	0
4/23/2024	10:15 AM	0	0	0	0	0	0	0	0	0	0	0	0	0
4/23/2024	10:30 AM	0	0	0	0	0	0	0	0	0	0	0	0	0
4/23/2024	10:45 AM	0	0	0	0	0	0	0	0	0	0	0	0	0
4/23/2024	11:00 AM	0	0	0	0	0	0	0	0	0	0	0	0	0
4/23/2024	11:15 AM	0	0	0	0	0	0	0	0	0	0	0	0	0
4/23/2024	11:30 AM	0	0	0	0	0	0	0	0	0	0	0	0	0
4/23/2024	11:45 AM	0	0	0	0	0	0	0	0	0	0	0	0	0
4/23/2024	12:00 PM	0	0	0	0	0	0	0	0	0	0	0	0	0
4/23/2024	12:15 PM	0	0	0	0	0	0	0	0	0	0	0	0	0
4/23/2024	12:30 PM	0	0	0	0	0	0	0	0	0	0	0	0	0
4/23/2024	12:45 PM	0	0	0	0	0	0	0	0	0	0	0	0	0
4/23/2024	1:00 PM	0	0	0	0	0	0	0	0	0	0	0	0	0
4/23/2024	1:15 PM	0	0	0	0	0	0	0	0	0	0	0	0	0
4/23/2024	1:30 PM	0	0	0	0	0	0	0	0	0	0	0	0	0
4/23/2024	1:45 PM	0	0	0	0	0	0	0	0	0	0	0	0	0
4/23/2024	2:00 PM	0	0	0	0	0	0	0	0	0	0	0	0	0
4/23/2024	2:15 PM	0	0	0	0	0	0	0	0	0	0	0	0	0
4/23/2024	2:30 PM	0	0	0	0	0	0	0	0	0	0	0	0	0
4/23/2024	2:45 PM	0	0	0	0	0	0	0	0	0	0	0	0	0
4/23/2024	3:00 PM	0	0	0	0	0	0	0	0	0	0	0	0	0
4/23/2024	3:15 PM	0	0	0	0	0	0	0	0	0	0	0	0	0
4/23/2024	3:30 PM	0	0	0	0	0	0	0	0	0	0	0	0	0
4/23/2024	3:45 PM	0	0	0	0	0	0	0	0	0	0	0	0	0
4/23/2024	4:00 PM	0	0	0	0	0	0	0	0	0	0	0	0	0
4/23/2024	4:15 PM	0	0	0	0	0	0	0	0	0	0	0	0	0
4/23/2024	4:30 PM	0	0	0	0	0	0	0	0	0	0	0	0	0
4/23/2024	4:45 PM	0	0	0	0	0	0	0	0	0	0	0	0	0
4/23/2024	5:00 PM	0	0	0	0	0	0	0	0	0	0	0	0	0
4/23/2024	5:15 PM	0	0	0	0	0	0	0	0	0	0	0	0	0
4/23/2024	5:30 PM	0	0	0	0	0	0	0	0	0	0	0	0	0
4/23/2024	5:45 PM	0	0	0	0	0	0	0	0	0	0	0	0	0
4/23/2024	6:00 PM	0	0	0	0	0	0	0	0	0	0	0	0	0
4/23/2024	6:15 PM	0	0	0	0	0	0	0	0	0	0	0	0	0
4/23/2024	6:30 PM	0	0	0	0	0	0	0	0	0	0	0	0	0
4/23/2024	6:45 PM	0	0	0	0	0	0	0	0	0	0	0	0	0
4/23/2024	7:00 PM	0	70	23	0	2	0	0	0	1	0	0	0	0
4/23/2024	7:15 PM	0	80	21	0	2	3	0	0	4	0	0	0	0
4/23/2024	7:30 PM	0	89	15	0	2	0	0	0	1	0	0	0	0
4/23/2024	7:45 PM	0	69	20	0	0	0	0	0	1	0	0	0	0
4/23/2024	8:00 PM	0	96	20	0	1	0	0	0	2	0	0	0	0
4/23/2024	8:15 PM	0	90	20	0	1	0	0	0	5	0	0	0	0
4/23/2024	8:30 PM	0	61	24	0	0	0	0	0	6	0	1	0	0
4/23/2024	8:45 PM	0	59	20	0	0	0	0	0	2	0	0	0	0
4/23/2024	9:00 PM	0	49	13	0	0	0	0	1	4	0	0	0	0
4/23/2024	9:15 PM	0	38	15	0	2	0	0	0	0	0	1	0	0
4/23/2024	9:30 PM	0	44	12	0	1	0	0	0	2	0	0	0	0
4/23/2024	9:45 PM	0	24	5	0	2	0	0	0	4	0	0	0	0
4/23/2024	10:00 PM	0	42	8	0	2	1	0	0	3	0	0	0	0
4/23/2024	10:15 PM	0	40	8	0	1	0	0	0	0	0	0	0	0
4/23/2024	10:30 PM	0	25	3	0	0	0	0	0	3	0	0	0	0
4/23/2024	10:45 PM	0	30	7	0	3	0	0	0	2	0	1	0	0
4/23/2024	11:00 PM	0	29	4	0	1	0	0	0	3	0	0	0	0
4/23/2024	11:15 PM	0	29	4	0	0	0	0	0	4	0	1	0	0
4/23/2024	11:30 PM	0	28	6	0	1	0	0	0	1	0	0	0	0
4/23/2024	11:45 PM	1	11	2	0	1	0	0	0	0	0	0	0	0

4/24/2024	12:00 AM	0	13	4	0	0	0	0	0	0	0	0	0
4/24/2024	12:15 AM	0	10	3	0	2	0	0	0	0	0	0	0
4/24/2024	12:30 AM	0	12	2	0	0	0	0	0	0	0	0	0
4/24/2024	12:45 AM	0	6	1	0	0	0	0	0	1	0	0	0
4/24/2024	1:00 AM	0	3	1	0	1	0	0	0	2	0	1	0
4/24/2024	1:15 AM	0	3	1	0	1	0	0	0	1	0	0	0
4/24/2024	1:30 AM	0	5	1	0	0	0	0	0	3	0	1	0
4/24/2024	1:45 AM	0	5	1	0	0	0	0	0	0	0	0	0
4/24/2024	2:00 AM	0	4	1	0	0	0	0	0	1	0	0	0
4/24/2024	2:15 AM	0	6	1	0	0	0	0	0	0	0	3	0
4/24/2024	2:30 AM	0	4	1	0	2	0	0	0	1	0	0	2
4/24/2024	2:45 AM	0	5	0	0	0	0	0	0	0	0	0	1
4/24/2024	3:00 AM	0	7	1	0	0	0	0	0	0	0	0	0
4/24/2024	3:15 AM	0	4	1	0	1	0	0	0	1	0	0	0
4/24/2024	3:30 AM	0	10	1	0	1	0	0	0	0	0	1	0
4/24/2024	3:45 AM	0	9	2	0	0	0	0	0	1	0	0	0
4/24/2024	4:00 AM	0	9	1	0	0	2	0	0	4	0	2	0
4/24/2024	4:15 AM	0	13	3	0	0	0	0	0	3	0	1	0
4/24/2024	4:30 AM	0	24	3	0	0	0	0	0	1	0	0	0
4/24/2024	4:45 AM	0	22	3	0	0	0	0	0	1	0	1	0
4/24/2024	5:00 AM	0	15	6	0	0	0	0	0	1	0	0	0
4/24/2024	5:15 AM	0	25	11	0	0	1	0	0	3	0	1	0
4/24/2024	5:30 AM	0	40	12	0	2	1	0	0	2	0	0	0
4/24/2024	5:45 AM	0	37	11	1	1	0	0	0	1	0	0	0
4/24/2024	6:00 AM	0	59	22	0	0	1	0	0	7	0	0	0
4/24/2024	6:15 AM	0	47	26	0	2	0	0	0	4	0	0	0
4/24/2024	6:30 AM	0	102	27	0	1	0	0	0	1	0	0	0
4/24/2024	6:45 AM	0	119	18	0	3	0	0	0	2	0	0	0
4/24/2024	7:00 AM	0	148	21	2	4	2	0	0	3	0	0	0
4/24/2024	7:15 AM	0	179	50	0	5	0	0	0	5	0	0	0
4/24/2024	7:30 AM	0	182	34	1	5	1	0	0	6	0	0	0
4/24/2024	7:45 AM	0	154	30	0	4	0	0	0	3	0	0	0
4/24/2024	8:00 AM	0	120	25	5	3	3	0	1	5	0	0	0
4/24/2024	8:15 AM	0	132	23	2	6	1	0	0	9	0	0	0
4/24/2024	8:30 AM	0	119	26	1	3	0	0	1	6	0	0	0
4/24/2024	8:45 AM	0	124	18	0	3	0	0	1	8	0	0	0
4/24/2024	9:00 AM	0	149	29	1	5	2	0	1	9	0	0	0
4/24/2024	9:15 AM	0	133	39	1	3	0	0	2	3	0	0	0
4/24/2024	9:30 AM	0	158	31	0	1	1	0	2	8	1	0	0
4/24/2024	9:45 AM	0	144	65	0	3	0	0	0	3	0	0	0
4/24/2024	10:00 AM	0	137	74	0	5	0	0	0	8	0	0	0
4/24/2024	10:15 AM	0	162	69	0	4	0	0	0	4	0	0	0
4/24/2024	10:30 AM	0	185	93	1	1	2	0	0	6	0	0	0
4/24/2024	10:45 AM	0	150	88	0	3	1	0	0	10	0	0	0
4/24/2024	11:00 AM	0	154	85	1	1	0	0	0	3	0	0	0
4/24/2024	11:15 AM	0	152	88	1	2	2	0	0	5	0	0	0
4/24/2024	11:30 AM	0	163	67	0	2	1	0	0	4	0	0	0
4/24/2024	11:45 AM	0	142	54	1	4	0	0	0	3	0	0	0
4/24/2024	12:00 PM	0	164	45	1	4	1	0	1	4	0	0	0
4/24/2024	12:15 PM	0	154	47	2	4	0	0	0	4	0	0	0
4/24/2024	12:30 PM	0	180	50	1	2	1	0	1	3	0	0	0
4/24/2024	12:45 PM	0	175	73	0	4	1	0	1	7	0	0	0
4/24/2024	1:00 PM	0	147	17	1	2	1	0	1	7	0	0	0
4/24/2024	1:15 PM	0	124	21	0	5	0	0	0	8	0	0	0
4/24/2024	1:30 PM	0	149	31	0	6	0	0	0	8	0	0	0
4/24/2024	1:45 PM	0	151	21	0	4	1	0	0	3	0	0	0
4/24/2024	2:00 PM	0	154	19	0	3	0	0	0	5	0	0	0
4/24/2024	2:15 PM	0	167	21	0	1	1	0	0	3	0	0	0
4/24/2024	2:30 PM	0	186	20	1	1	0	0	0	0	0	0	0
4/24/2024	2:45 PM	0	189	26	1	0	0	0	0	0	0	0	0
4/24/2024	3:00 PM	0	202	28	0	0	0	0	0	3	0	0	0
4/24/2024	3:15 PM	0	145	31	0	0	0	0	0	3	0	0	0
4/24/2024	3:30 PM	0	156	37	0	0	0	0	0	2	0	0	0
4/24/2024	3:45 PM	0	154	28	0	0	0	0	0	3	0	0	0
4/24/2024	4:00 PM	1	178	33	2	5	0	0	0	1	0	0	0
4/24/2024	4:15 PM	0	161	28	1	1	1	0	0	1	0	0	0
4/24/2024	4:30 PM	0	170	25	1	0	1	0	0	1	0	0	0
4/24/2024	4:45 PM	0	157	20	2	0	0	0	0	2	0	0	0
4/24/2024	5:00 PM	0	265	31	0	0	0	0	0	0	0	0	0
4/24/2024	5:15 PM	0	245	26	0	0	0	0	0	0	0	0	0
4/24/2024	5:30 PM	0	167	31	1	3	0	0	0	3	0	0	0
4/24/2024	5:45 PM	0	155	32	1	1	0	0	0	2	0	0	0
4/24/2024	6:00 PM	0	129	17	0	0	0	0	0	7	0	0	0
4/24/2024	6:15 PM	0	140	24	0	0	0	0	0	2	0	0	0
4/24/2024	6:30 PM	0	141	16	0	0	0	0	0	2	0	0	0
4/24/2024	6:45 PM	0	130	15	0	0	0	0	0	1	0	0	0
4/24/2024	7:00 PM	0	61	16	0	1	0	0	0	5	0	0	0
4/24/2024	7:15 PM	1	84	24	0	4	0	0	0	5	0	0	0
4/24/2024	7:30 PM	0	86	9	0	1	0	0	0	1	0	0	0
4/24/2024	7:45 PM	0	67	14	1	0	0	0	0	1	0	0	0
4/24/2024	8:00 PM	1	82	12	0	0	0	0	0	1	0	1	0
4/24/2024	8:15 PM	0	55	6	0	1	0	0	0	2	0	0	0
4/24/2024	8:30 PM	0	70	4	0	1	0	0	0	1	0	0	0
4/24/2024	8:45 PM	0	64	4	0	0	1	0	0	1	0	0	0
4/24/2024	9:00 PM	0	43	5	0	1	0	0	0	0	0	1	0
4/24/2024	9:15 PM	0	40	6	0	0	0	0	0	2	0	2	0
4/24/2024	9:30 PM	0	29	0	0	1	0	0	0	0	0	4	0
4/24/2024	9:45 PM	0	35	7	0	0	0	0	0	2	0	1	0
4/24/2024	10:00 PM	0	34	8	0	0	0	0	0	1	0	0	0
4/24/2024	10:15 PM	0	24	5	0	1	0	0	0	4	0	2	0
4/24/2024	10:30 PM	0	18	3	0	0	0	0	0	2	0	0	0
4/24/2024	10:45 PM	0	18	2	0	0	0	0	0	2	0	0	0
4/24/2024	11:00 PM	0	25	2	0	1	0	0	0	0	0	0	0
4/24/2024	11:15 PM	1	18	1	0	0	0	0	0	1	0	0	0
4/24/2024	11:30 PM	0	21	2	0	0	0	0	0	2	0	0	0
4/24/2024	11:45 PM	0	19	2	0	0	0	0	0	1	0	1	0

4/25/2024	12:00 AM	0	12	0	0	0	0	0	0	1	0	1	0	0
4/25/2024	12:15 AM	0	16	2	0	1	0	0	0	1	0	0	0	0
4/25/2024	12:30 AM	0	13	0	0	1	0	0	0	2	0	0	0	0
4/25/2024	12:45 AM	0	8	0	0	0	0	0	0	1	0	0	0	0
4/25/2024	1:00 AM	0	11	0	0	0	0	0	0	0	0	0	0	0
4/25/2024	1:15 AM	0	3	0	0	0	0	0	0	0	0	1	0	0
4/25/2024	1:30 AM	0	9	0	0	0	0	0	0	1	0	0	0	0
4/25/2024	1:45 AM	0	8	0	0	0	0	0	0	0	0	0	0	0
4/25/2024	2:00 AM	0	5	0	0	0	0	0	0	1	0	3	0	0
4/25/2024	2:15 AM	0	3	0	0	0	0	0	0	2	0	0	0	0
4/25/2024	2:30 AM	0	4	0	0	0	0	0	0	1	0	0	0	0
4/25/2024	2:45 AM	0	8	0	0	0	0	0	0	1	0	3	0	0
4/25/2024	3:00 AM	0	6	0	0	2	0	0	0	0	0	2	0	0
4/25/2024	3:15 AM	0	7	0	0	0	0	0	0	0	0	1	0	0
4/25/2024	3:30 AM	0	10	0	0	1	0	0	0	1	0	2	0	0
4/25/2024	3:45 AM	0	8	0	0	0	0	0	0	3	0	2	0	0
4/25/2024	4:00 AM	0	14	0	0	3	0	0	0	3	0	1	0	0
4/25/2024	4:15 AM	0	18	1	0	0	0	0	0	1	0	0	0	0
4/25/2024	4:30 AM	0	19	0	0	0	0	0	0	0	0	0	0	0
4/25/2024	4:45 AM	0	23	0	0	0	0	0	0	4	0	0	0	0
4/25/2024	5:00 AM	0	21	1	0	0	2	0	0	4	0	0	0	0
4/25/2024	5:15 AM	0	27	3	0	0	0	0	0	5	0	0	0	0
4/25/2024	5:30 AM	0	40	4	0	0	0	0	0	0	0	0	0	0
4/25/2024	5:45 AM	0	51	7	0	3	0	0	0	1	0	0	0	0
4/25/2024	6:00 AM	0	38	11	1	2	0	0	0	4	0	1	0	0
4/25/2024	6:15 AM	0	53	15	0	0	0	0	0	1	0	0	0	0
4/25/2024	6:30 AM	0	88	28	0	2	2	0	0	3	0	0	0	0
4/25/2024	6:45 AM	0	102	20	0	0	0	0	1	5	0	0	0	0
4/25/2024	7:00 AM	0	127	38	2	5	1	0	0	3	0	0	0	0
4/25/2024	7:15 AM	0	151	35	1	1	0	0	1	3	0	0	0	0
4/25/2024	7:30 AM	0	157	33	0	2	4	0	0	2	0	0	0	0
4/25/2024	7:45 AM	0	90	24	0	1	3	0	0	0	0	0	0	0
4/25/2024	8:00 AM	0	104	26	7	4	0	0	0	3	0	0	0	0
4/25/2024	8:15 AM	0	101	25	0	3	1	0	0	6	0	0	0	0
4/25/2024	8:30 AM	0	103	17	0	1	1	0	0	5	0	0	0	0
4/25/2024	8:45 AM	0	90	22	1	2	0	0	0	8	0	0	0	0
4/25/2024	9:00 AM	0	87	23	1	1	0	0	0	6	0	0	0	0
4/25/2024	9:15 AM	0	95	27	0	1	4	0	0	6	0	0	0	0
4/25/2024	9:30 AM	0	97	25	0	5	1	0	0	7	0	0	0	0
4/25/2024	9:45 AM	0	92	24	0	6	0	0	0	0	0	0	0	0
4/25/2024	10:00 AM	1	94	33	0	5	1	0	0	4	0	0	0	0
4/25/2024	10:15 AM	0	93	26	0	4	0	0	0	2	0	0	0	0
4/25/2024	10:30 AM	0	81	24	0	0	1	0	0	4	0	0	0	0
4/25/2024	10:45 AM	0	81	20	0	3	0	0	0	2	0	0	0	0
4/25/2024	11:00 AM	0	91	26	0	3	0	0	0	4	0	0	0	0
4/25/2024	11:15 AM	0	116	35	1	1	1	0	0	5	0	0	0	0
4/25/2024	11:30 AM	0	88	23	1	4	3	0	0	2	0	0	0	0
4/25/2024	11:45 AM	0	92	14	0	3	0	0	0	8	0	0	0	0
4/25/2024	12:00 PM	0	101	21	0	5	2	0	1	6	0	0	0	0
4/25/2024	12:15 PM	0	108	33	1	2	0	0	2	7	0	0	0	0
4/25/2024	12:30 PM	0	99	21	0	5	0	0	0	2	0	0	0	0
4/25/2024	12:45 PM	0	95	22	0	1	1	0	0	4	0	0	0	0
4/25/2024	1:00 PM	2	105	32	1	1	1	0	0	7	0	0	0	0
4/25/2024	1:15 PM	0	88	26	1	2	1	0	1	8	0	0	0	0
4/25/2024	1:30 PM	0	112	38	0	3	1	0	1	10	0	0	0	0
4/25/2024	1:45 PM	0	119	35	0	5	1	0	1	4	0	0	0	0
4/25/2024	2:00 PM	0	111	37	0	1	0	1	0	4	0	0	0	0
4/25/2024	2:15 PM	0	117	40	0	2	1	0	0	4	0	0	0	0
4/25/2024	2:30 PM	0	144	38	2	0	2	0	0	3	0	0	0	0
4/25/2024	2:45 PM	0	140	33	0	2	1	0	1	0	0	0	0	0
4/25/2024	3:00 PM	0	170	41	0	1	0	0	0	4	0	0	0	0
4/25/2024	3:15 PM	0	158	41	0	3	0	0	0	4	0	0	0	0
4/25/2024	3:30 PM	0	166	33	0	3	1	0	0	8	0	0	0	0
4/25/2024	3:45 PM	0	191	47	0	0	0	0	0	4	0	0	0	0
4/25/2024	4:00 PM	2	200	47	1	3	0	0	0	2	0	0	0	0
4/25/2024	4:15 PM	0	200	36	4	2	0	0	0	1	0	0	0	0
4/25/2024	4:30 PM	1	180	38	1	1	1	0	0	7	0	0	0	0
4/25/2024	4:45 PM	0	190	44	0	3	0	0	0	0	0	0	0	0
4/25/2024	5:00 PM	0	211	38	0	0	1	0	0	4	0	0	0	0
4/25/2024	5:15 PM	0	196	40	1	0	0	0	0	0	0	0	0	0
4/25/2024	5:30 PM	0	165	30	1	1	0	0	0	4	0	0	0	0
4/25/2024	5:45 PM	0	125	19	0	0	2	0	0	2	0	0	0	0
4/25/2024	6:00 PM	0	122	16	0	1	1	0	0	7	0	0	0	0
4/25/2024	6:15 PM	0	122	20	0	1	0	0	0	3	0	0	0	0
4/25/2024	6:30 PM	1	106	18	0	2	0	0	0	2	0	0	0	0
4/25/2024	6:45 PM	1	98	21	1	0	2	0	0	3	0	0	0	0
4/25/2024	7:00 PM	0	0	0	0	0	0	0	0	0	0	0	0	0
4/25/2024	7:15 PM	0	0	0	0	0	0	0	0	0	0	0	0	0
4/25/2024	7:30 PM	0	0	0	0	0	0	0	0	0	0	0	0	0
4/25/2024	7:45 PM	0	0	0	0	0	0	0	0	0	0	0	0	0
4/25/2024	8:00 PM	0	0	0	0	0	0	0	0	0	0	0	0	0
4/25/2024	8:15 PM	0	0	0	0	0	0	0	0	0	0	0	0	0
4/25/2024	8:30 PM	0	0	0	0	0	0	0	0	0	0	0	0	0
4/25/2024	8:45 PM	0	0	0	0	0	0	0	0	0	0	0	0	0
4/25/2024	9:00 PM	0	0	0	0	0	0	0	0	0	0	0	0	0
4/25/2024	9:15 PM	0	0	0	0	0	0	0	0	0	0	0	0	0
4/25/2024	9:30 PM	0	0	0	0	0	0	0	0	0	0	0	0	0
4/25/2024	9:45 PM	0	0	0	0	0	0	0	0	0	0	0	0	0
4/25/2024	10:00 PM	0	0	0	0	0	0	0	0	0	0	0	0	0
4/25/2024	10:15 PM	0	0	0	0	0	0	0	0	0	0	0	0	0
4/25/2024	10:30 PM	0	0	0	0	0	0	0	0	0	0	0	0	0
4/25/2024	10:45 PM	0	0	0	0	0	0	0	0	0	0	0	0	0
4/25/2024	11:00 PM	0	0	0	0	0	0	0	0	0	0	0	0	0
4/25/2024	11:15 PM	0	0	0	0	0	0	0	0	0	0	0	0	0
4/25/2024	11:30 PM	0	0	0	0	0	0	0	0	0	0	0	0	0
4/25/2024	11:45 PM	0	0	0	0	0	0	0	0	0	0	0	0	0

NB
File Name:
Start Date: 4/23/2024
Start Time: 0
Site Code: 54
Station ID: 1
Location 1: I-26 S/Bound On-Ramp, south of US-378 Sunset Blvd
Location 2:

Date	Time	1	2	3	4	5	6	7	8	9	10	11	12	13
4/23/2024	12:00 AM	0	0	0	0	0	0	0	0	0	0	0	0	0
4/23/2024	12:15 AM	0	0	0	0	0	0	0	0	0	0	0	0	0
4/23/2024	12:30 AM	0	0	0	0	0	0	0	0	0	0	0	0	0
4/23/2024	12:45 AM	0	0	0	0	0	0	0	0	0	0	0	0	0
4/23/2024	1:00 AM	0	0	0	0	0	0	0	0	0	0	0	0	0
4/23/2024	1:15 AM	0	0	0	0	0	0	0	0	0	0	0	0	0
4/23/2024	1:30 AM	0	0	0	0	0	0	0	0	0	0	0	0	0
4/23/2024	1:45 AM	0	0	0	0	0	0	0	0	0	0	0	0	0
4/23/2024	2:00 AM	0	0	0	0	0	0	0	0	0	0	0	0	0
4/23/2024	2:15 AM	0	0	0	0	0	0	0	0	0	0	0	0	0
4/23/2024	2:30 AM	0	0	0	0	0	0	0	0	0	0	0	0	0
4/23/2024	2:45 AM	0	0	0	0	0	0	0	0	0	0	0	0	0
4/23/2024	3:00 AM	0	0	0	0	0	0	0	0	0	0	0	0	0
4/23/2024	3:15 AM	0	0	0	0	0	0	0	0	0	0	0	0	0
4/23/2024	3:30 AM	0	0	0	0	0	0	0	0	0	0	0	0	0
4/23/2024	3:45 AM	0	0	0	0	0	0	0	0	0	0	0	0	0
4/23/2024	4:00 AM	0	0	0	0	0	0	0	0	0	0	0	0	0
4/23/2024	4:15 AM	0	0	0	0	0	0	0	0	0	0	0	0	0
4/23/2024	4:30 AM	0	0	0	0	0	0	0	0	0	0	0	0	0
4/23/2024	4:45 AM	0	0	0	0	0	0	0	0	0	0	0	0	0
4/23/2024	5:00 AM	0	0	0	0	0	0	0	0	0	0	0	0	0
4/23/2024	5:15 AM	0	0	0	0	0	0	0	0	0	0	0	0	0
4/23/2024	5:30 AM	0	0	0	0	0	0	0	0	0	0	0	0	0
4/23/2024	5:45 AM	0	0	0	0	0	0	0	0	0	0	0	0	0
4/23/2024	6:00 AM	0	0	0	0	0	0	0	0	0	0	0	0	0
4/23/2024	6:15 AM	0	0	0	0	0	0	0	0	0	0	0	0	0
4/23/2024	6:30 AM	0	0	0	0	0	0	0	0	0	0	0	0	0
4/23/2024	6:45 AM	0	0	0	0	0	0	0	0	0	0	0	0	0
4/23/2024	7:00 AM	0	0	0	0	0	0	0	0	0	0	0	0	0
4/23/2024	7:15 AM	0	0	0	0	0	0	0	0	0	0	0	0	0
4/23/2024	7:30 AM	0	0	0	0	0	0	0	0	0	0	0	0	0
4/23/2024	7:45 AM	0	0	0	0	0	0	0	0	0	0	0	0	0
4/23/2024	8:00 AM	0	0	0	0	0	0	0	0	0	0	0	0	0
4/23/2024	8:15 AM	0	0	0	0	0	0	0	0	0	0	0	0	0
4/23/2024	8:30 AM	0	0	0	0	0	0	0	0	0	0	0	0	0
4/23/2024	8:45 AM	0	0	0	0	0	0	0	0	0	0	0	0	0
4/23/2024	9:00 AM	0	0	0	0	0	0	0	0	0	0	0	0	0
4/23/2024	9:15 AM	0	0	0	0	0	0	0	0	0	0	0	0	0
4/23/2024	9:30 AM	0	0	0	0	0	0	0	0	0	0	0	0	0
4/23/2024	9:45 AM	0	0	0	0	0	0	0	0	0	0	0	0	0
4/23/2024	10:00 AM	0	0	0	0	0	0	0	0	0	0	0	0	0
4/23/2024	10:15 AM	0	0	0	0	0	0	0	0	0	0	0	0	0
4/23/2024	10:30 AM	0	0	0	0	0	0	0	0	0	0	0	0	0
4/23/2024	10:45 AM	0	0	0	0	0	0	0	0	0	0	0	0	0
4/23/2024	11:00 AM	0	0	0	0	0	0	0	0	0	0	0	0	0
4/23/2024	11:15 AM	0	0	0	0	0	0	0	0	0	0	0	0	0
4/23/2024	11:30 AM	0	0	0	0	0	0	0	0	0	0	0	0	0
4/23/2024	11:45 AM	0	0	0	0	0	0	0	0	0	0	0	0	0
4/23/2024	12:00 PM	0	0	0	0	0	0	0	0	0	0	0	0	0
4/23/2024	12:15 PM	0	0	0	0	0	0	0	0	0	0	0	0	0
4/23/2024	12:30 PM	0	0	0	0	0	0	0	0	0	0	0	0	0
4/23/2024	12:45 PM	0	0	0	0	0	0	0	0	0	0	0	0	0
4/23/2024	1:00 PM	0	0	0	0	0	0	0	0	0	0	0	0	0
4/23/2024	1:15 PM	0	0	0	0	0	0	0	0	0	0	0	0	0
4/23/2024	1:30 PM	0	0	0	0	0	0	0	0	0	0	0	0	0
4/23/2024	1:45 PM	0	0	0	0	0	0	0	0	0	0	0	0	0
4/23/2024	2:00 PM	0	0	0	0	0	0	0	0	0	0	0	0	0
4/23/2024	2:15 PM	0	0	0	0	0	0	0	0	0	0	0	0	0
4/23/2024	2:30 PM	0	0	0	0	0	0	0	0	0	0	0	0	0
4/23/2024	2:45 PM	0	0	0	0	0	0	0	0	0	0	0	0	0
4/23/2024	3:00 PM	0	0	0	0	0	0	0	0	0	0	0	0	0
4/23/2024	3:15 PM	0	0	0	0	0	0	0	0	0	0	0	0	0
4/23/2024	3:30 PM	0	0	0	0	0	0	0	0	0	0	0	0	0
4/23/2024	3:45 PM	0	0	0	0	0	0	0	0	0	0	0	0	0
4/23/2024	4:00 PM	0	0	0	0	0	0	0	0	0	0	0	0	0
4/23/2024	4:15 PM	0	0	0	0	0	0	0	0	0	0	0	0	0
4/23/2024	4:30 PM	0	0	0	0	0	0	0	0	0	0	0	0	0
4/23/2024	4:45 PM	0	0	0	0	0	0	0	0	0	0	0	0	0
4/23/2024	5:00 PM	0	0	0	0	0	0	0	0	0	0	0	0	0
4/23/2024	5:15 PM	0	0	0	0	0	0	0	0	0	0	0	0	0
4/23/2024	5:30 PM	0	0	0	0	0	0	0	0	0	0	0	0	0
4/23/2024	5:45 PM	0	0	0	0	0	0	0	0	0	0	0	0	0
4/23/2024	6:00 PM	0	0	0	0	0	0	0	0	0	0	0	0	0
4/23/2024	6:15 PM	0	0	0	0	0	0	0	0	0	0	0	0	0
4/23/2024	6:30 PM	0	0	0	0	0	0	0	0	0	0	0	0	0
4/23/2024	6:45 PM	0	0	0	0	0	0	0	0	0	0	0	0	0
4/23/2024	7:00 PM	0	0	0	0	0	0	0	0	0	0	0	0	0
4/23/2024	7:15 PM	0	0	0	0	0	0	0	0	0	0	0	0	0
4/23/2024	7:30 PM	0	0	0	0	0	0	0	0	0	0	0	0	0
4/23/2024	7:45 PM	0	0	0	0	0	0	0	0	0	0	0	0	0
4/23/2024	8:00 PM	0	0	0	0	0	0	0	0	0	0	0	0	0
4/23/2024	8:15 PM	0	0	0	0	0	0	0	0	0	0	0	0	0
4/23/2024	8:30 PM	0	0	0	0	0	0	0	0	0	0	0	0	0
4/23/2024	8:45 PM	0	0	0	0	0	0	0	0	0	0	0	0	0
4/23/2024	9:00 PM	0	0	0	0	0	0	0	0	0	0	0	0	0
4/23/2024	9:15 PM	0	0	0	0	0	0	0	0	0	0	0	0	0
4/23/2024	9:30 PM	0	0	0	0	0	0	0	0	0	0	0	0	0
4/23/2024	9:45 PM	0	0	0	0	0	0	0	0	0	0	0	0	0
4/23/2024	10:00 PM	0	0	0	0	0	0	0	0	0	0	0	0	0
4/23/2024	10:15 PM	0	0	0	0	0	0	0	0	0	0	0	0	0
4/23/2024	10:30 PM	0	0	0	0	0	0	0	0	0	0	0	0	0
4/23/2024	10:45 PM	0	0	0	0	0	0	0	0	0	0	0	0	0
4/23/2024	11:00 PM	0	0	0	0	0	0	0	0	0	0	0	0	0
4/23/2024	11:15 PM	0	0	0	0	0	0	0	0	0	0	0	0	0
4/23/2024	11:30 PM	0	0	0	0	0	0	0	0	0	0	0	0	0
4/23/2024	11:45 PM	0	0	0	0	0	0	0	0	0	0	0	0	0

4/24/2024	12:00 AM	0	0	0	0	0	0	0	0	0	0	0	0	0
4/24/2024	12:15 AM	0	0	0	0	0	0	0	0	0	0	0	0	0
4/24/2024	12:30 AM	0	0	0	0	0	0	0	0	0	0	0	0	0
4/24/2024	12:45 AM	0	0	0	0	0	0	0	0	0	0	0	0	0
4/24/2024	1:00 AM	0	0	0	0	0	0	0	0	0	0	0	0	0
4/24/2024	1:15 AM	0	0	0	0	0	0	0	0	0	0	0	0	0
4/24/2024	1:30 AM	0	0	0	0	0	0	0	0	0	0	0	0	0
4/24/2024	1:45 AM	0	0	0	0	0	0	0	0	0	0	0	0	0
4/24/2024	2:00 AM	0	0	0	0	0	0	0	0	0	0	0	0	0
4/24/2024	2:15 AM	0	0	0	0	0	0	0	0	0	0	0	0	0
4/24/2024	2:30 AM	0	0	0	0	0	0	0	0	0	0	0	0	0
4/24/2024	2:45 AM	0	0	0	0	0	0	0	0	0	0	0	0	0
4/24/2024	3:00 AM	0	0	0	0	0	0	0	0	0	0	0	0	0
4/24/2024	3:15 AM	0	0	0	0	0	0	0	0	0	0	0	0	0
4/24/2024	3:30 AM	0	0	0	0	0	0	0	0	0	0	0	0	0
4/24/2024	3:45 AM	0	0	0	0	0	0	0	0	0	0	0	0	0
4/24/2024	4:00 AM	0	0	0	0	0	0	0	0	0	0	0	0	0
4/24/2024	4:15 AM	0	0	0	0	0	0	0	0	0	0	0	0	0
4/24/2024	4:30 AM	0	0	0	0	0	0	0	0	0	0	0	0	0
4/24/2024	4:45 AM	0	0	0	0	0	0	0	0	0	0	0	0	0
4/24/2024	5:00 AM	0	0	0	0	0	0	0	0	0	0	0	0	0
4/24/2024	5:15 AM	0	0	0	0	0	0	0	0	0	0	0	0	0
4/24/2024	5:30 AM	0	0	0	0	0	0	0	0	0	0	0	0	0
4/24/2024	5:45 AM	0	0	0	0	0	0	0	0	0	0	0	0	0
4/24/2024	6:00 AM	0	0	0	0	0	0	0	0	0	0	0	0	0
4/24/2024	6:15 AM	0	0	0	0	0	0	0	0	0	0	0	0	0
4/24/2024	6:30 AM	0	0	0	0	0	0	0	0	0	0	0	0	0
4/24/2024	6:45 AM	0	0	0	0	0	0	0	0	0	0	0	0	0
4/24/2024	7:00 AM	0	0	0	0	0	0	0	0	0	0	0	0	0
4/24/2024	7:15 AM	0	0	0	0	0	0	0	0	0	0	0	0	0
4/24/2024	7:30 AM	0	0	0	0	0	0	0	0	0	0	0	0	0
4/24/2024	7:45 AM	0	0	0	0	0	0	0	0	0	0	0	0	0
4/24/2024	8:00 AM	0	0	0	0	0	0	0	0	0	0	0	0	0
4/24/2024	8:15 AM	0	0	0	0	0	0	0	0	0	0	0	0	0
4/24/2024	8:30 AM	0	0	0	0	0	0	0	0	0	0	0	0	0
4/24/2024	8:45 AM	0	0	0	0	0	0	0	0	0	0	0	0	0
4/24/2024	9:00 AM	0	0	0	0	0	0	0	0	0	0	0	0	0
4/24/2024	9:15 AM	0	0	0	0	0	0	0	0	0	0	0	0	0
4/24/2024	9:30 AM	0	0	0	0	0	0	0	0	0	0	0	0	0
4/24/2024	9:45 AM	0	0	0	0	0	0	0	0	0	0	0	0	0
4/24/2024	10:00 AM	0	0	0	0	0	0	0	0	0	0	0	0	0
4/24/2024	10:15 AM	0	0	0	0	0	0	0	0	0	0	0	0	0
4/24/2024	10:30 AM	0	0	0	0	0	0	0	0	0	0	0	0	0
4/24/2024	10:45 AM	0	0	0	0	0	0	0	0	0	0	0	0	0
4/24/2024	11:00 AM	0	0	0	0	0	0	0	0	0	0	0	0	0
4/24/2024	11:15 AM	0	0	0	0	0	0	0	0	0	0	0	0	0
4/24/2024	11:30 AM	0	0	0	0	0	0	0	0	0	0	0	0	0
4/24/2024	11:45 AM	0	0	0	0	0	0	0	0	0	0	0	0	0
4/24/2024	12:00 PM	0	0	0	0	0	0	0	0	0	0	0	0	0
4/24/2024	12:15 PM	0	0	0	0	0	0	0	0	0	0	0	0	0
4/24/2024	12:30 PM	0	0	0	0	0	0	0	0	0	0	0	0	0
4/24/2024	12:45 PM	0	0	0	0	0	0	0	0	0	0	0	0	0
4/24/2024	1:00 PM	0	0	0	0	0	0	0	0	0	0	0	0	0
4/24/2024	1:15 PM	0	0	0	0	0	0	0	0	0	0	0	0	0
4/24/2024	1:30 PM	0	0	0	0	0	0	0	0	0	0	0	0	0
4/24/2024	1:45 PM	0	0	0	0	0	0	0	0	0	0	0	0	0
4/24/2024	2:00 PM	0	0	0	0	0	0	0	0	0	0	0	0	0
4/24/2024	2:15 PM	0	0	0	0	0	0	0	0	0	0	0	0	0
4/24/2024	2:30 PM	0	0	0	0	0	0	0	0	0	0	0	0	0
4/24/2024	2:45 PM	0	0	0	0	0	0	0	0	0	0	0	0	0
4/24/2024	3:00 PM	0	0	0	0	0	0	0	0	0	0	0	0	0
4/24/2024	3:15 PM	0	0	0	0	0	0	0	0	0	0	0	0	0
4/24/2024	3:30 PM	0	0	0	0	0	0	0	0	0	0	0	0	0
4/24/2024	3:45 PM	0	0	0	0	0	0	0	0	0	0	0	0	0
4/24/2024	4:00 PM	0	0	0	0	0	0	0	0	0	0	0	0	0
4/24/2024	4:15 PM	0	0	0	0	0	0	0	0	0	0	0	0	0
4/24/2024	4:30 PM	0	0	0	0	0	0	0	0	0	0	0	0	0
4/24/2024	4:45 PM	0	0	0	0	0	0	0	0	0	0	0	0	0
4/24/2024	5:00 PM	0	0	0	0	0	0	0	0	0	0	0	0	0
4/24/2024	5:15 PM	0	0	0	0	0	0	0	0	0	0	0	0	0
4/24/2024	5:30 PM	0	0	0	0	0	0	0	0	0	0	0	0	0
4/24/2024	5:45 PM	0	0	0	0	0	0	0	0	0	0	0	0	0
4/24/2024	6:00 PM	0	0	0	0	0	0	0	0	0	0	0	0	0
4/24/2024	6:15 PM	0	0	0	0	0	0	0	0	0	0	0	0	0
4/24/2024	6:30 PM	0	0	0	0	0	0	0	0	0	0	0	0	0
4/24/2024	6:45 PM	0	0	0	0	0	0	0	0	0	0	0	0	0
4/24/2024	7:00 PM	0	0	0	0	0	0	0	0	0	0	0	0	0
4/24/2024	7:15 PM	0	0	0	0	0	0	0	0	0	0	0	0	0
4/24/2024	7:30 PM	0	0	0	0	0	0	0	0	0	0	0	0	0
4/24/2024	7:45 PM	0	0	0	0	0	0	0	0	0	0	0	0	0
4/24/2024	8:00 PM	0	0	0	0	0	0	0	0	0	0	0	0	0
4/24/2024	8:15 PM	0	0	0	0	0	0	0	0	0	0	0	0	0
4/24/2024	8:30 PM	0	0	0	0	0	0	0	0	0	0	0	0	0
4/24/2024	8:45 PM	0	0	0	0	0	0	0	0	0	0	0	0	0
4/24/2024	9:00 PM	0	0	0	0	0	0	0	0	0	0	0	0	0
4/24/2024	9:15 PM	0	0	0	0	0	0	0	0	0	0	0	0	0
4/24/2024	9:30 PM	0	0	0	0	0	0	0	0	0	0	0	0	0
4/24/2024	9:45 PM	0	0	0	0	0	0	0	0	0	0	0	0	0
4/24/2024	10:00 PM	0	0	0	0	0	0	0	0	0	0	0	0	0
4/24/2024	10:15 PM	0	0	0	0	0	0	0	0	0	0	0	0	0
4/24/2024	10:30 PM	0	0	0	0	0	0	0	0	0	0	0	0	0
4/24/2024	10:45 PM	0	0	0	0	0	0	0	0	0	0	0	0	0
4/24/2024	11:00 PM	0	0	0	0	0	0	0	0	0	0	0	0	0
4/24/2024	11:15 PM	0	0	0	0	0	0	0	0	0	0	0	0	0
4/24/2024	11:30 PM	0	0	0	0	0	0	0	0	0	0	0	0	0
4/24/2024	11:45 PM	0	0	0	0	0	0	0	0	0	0	0	0	0

4/25/2024	12:00 AM	0	0	0	0	0	0	0	0	0	0	0	0	0
4/25/2024	12:15 AM	0	0	0	0	0	0	0	0	0	0	0	0	0
4/25/2024	12:30 AM	0	0	0	0	0	0	0	0	0	0	0	0	0
4/25/2024	12:45 AM	0	0	0	0	0	0	0	0	0	0	0	0	0
4/25/2024	1:00 AM	0	0	0	0	0	0	0	0	0	0	0	0	0
4/25/2024	1:15 AM	0	0	0	0	0	0	0	0	0	0	0	0	0
4/25/2024	1:30 AM	0	0	0	0	0	0	0	0	0	0	0	0	0
4/25/2024	1:45 AM	0	0	0	0	0	0	0	0	0	0	0	0	0
4/25/2024	2:00 AM	0	0	0	0	0	0	0	0	0	0	0	0	0
4/25/2024	2:15 AM	0	0	0	0	0	0	0	0	0	0	0	0	0
4/25/2024	2:30 AM	0	0	0	0	0	0	0	0	0	0	0	0	0
4/25/2024	2:45 AM	0	0	0	0	0	0	0	0	0	0	0	0	0
4/25/2024	3:00 AM	0	0	0	0	0	0	0	0	0	0	0	0	0
4/25/2024	3:15 AM	0	0	0	0	0	0	0	0	0	0	0	0	0
4/25/2024	3:30 AM	0	0	0	0	0	0	0	0	0	0	0	0	0
4/25/2024	3:45 AM	0	0	0	0	0	0	0	0	0	0	0	0	0
4/25/2024	4:00 AM	0	0	0	0	0	0	0	0	0	0	0	0	0
4/25/2024	4:15 AM	0	0	0	0	0	0	0	0	0	0	0	0	0
4/25/2024	4:30 AM	0	0	0	0	0	0	0	0	0	0	0	0	0
4/25/2024	4:45 AM	0	0	0	0	0	0	0	0	0	0	0	0	0
4/25/2024	5:00 AM	0	0	0	0	0	0	0	0	0	0	0	0	0
4/25/2024	5:15 AM	0	0	0	0	0	0	0	0	0	0	0	0	0
4/25/2024	5:30 AM	0	0	0	0	0	0	0	0	0	0	0	0	0
4/25/2024	5:45 AM	0	0	0	0	0	0	0	0	0	0	0	0	0
4/25/2024	6:00 AM	0	0	0	0	0	0	0	0	0	0	0	0	0
4/25/2024	6:15 AM	0	0	0	0	0	0	0	0	0	0	0	0	0
4/25/2024	6:30 AM	0	0	0	0	0	0	0	0	0	0	0	0	0
4/25/2024	6:45 AM	0	0	0	0	0	0	0	0	0	0	0	0	0
4/25/2024	7:00 AM	0	0	0	0	0	0	0	0	0	0	0	0	0
4/25/2024	7:15 AM	0	0	0	0	0	0	0	0	0	0	0	0	0
4/25/2024	7:30 AM	0	0	0	0	0	0	0	0	0	0	0	0	0
4/25/2024	7:45 AM	0	0	0	0	0	0	0	0	0	0	0	0	0
4/25/2024	8:00 AM	0	0	0	0	0	0	0	0	0	0	0	0	0
4/25/2024	8:15 AM	0	0	0	0	0	0	0	0	0	0	0	0	0
4/25/2024	8:30 AM	0	0	0	0	0	0	0	0	0	0	0	0	0
4/25/2024	8:45 AM	0	0	0	0	0	0	0	0	0	0	0	0	0
4/25/2024	9:00 AM	0	0	0	0	0	0	0	0	0	0	0	0	0
4/25/2024	9:15 AM	0	0	0	0	0	0	0	0	0	0	0	0	0
4/25/2024	9:30 AM	0	0	0	0	0	0	0	0	0	0	0	0	0
4/25/2024	9:45 AM	0	0	0	0	0	0	0	0	0	0	0	0	0
4/25/2024	10:00 AM	0	0	0	0	0	0	0	0	0	0	0	0	0
4/25/2024	10:15 AM	0	0	0	0	0	0	0	0	0	0	0	0	0
4/25/2024	10:30 AM	0	0	0	0	0	0	0	0	0	0	0	0	0
4/25/2024	10:45 AM	0	0	0	0	0	0	0	0	0	0	0	0	0
4/25/2024	11:00 AM	0	0	0	0	0	0	0	0	0	0	0	0	0
4/25/2024	11:15 AM	0	0	0	0	0	0	0	0	0	0	0	0	0
4/25/2024	11:30 AM	0	0	0	0	0	0	0	0	0	0	0	0	0
4/25/2024	11:45 AM	0	0	0	0	0	0	0	0	0	0	0	0	0
4/25/2024	12:00 PM	0	0	0	0	0	0	0	0	0	0	0	0	0
4/25/2024	12:15 PM	0	0	0	0	0	0	0	0	0	0	0	0	0
4/25/2024	12:30 PM	0	0	0	0	0	0	0	0	0	0	0	0	0
4/25/2024	12:45 PM	0	0	0	0	0	0	0	0	0	0	0	0	0
4/25/2024	1:00 PM	0	0	0	0	0	0	0	0	0	0	0	0	0
4/25/2024	1:15 PM	0	0	0	0	0	0	0	0	0	0	0	0	0
4/25/2024	1:30 PM	0	0	0	0	0	0	0	0	0	0	0	0	0
4/25/2024	1:45 PM	0	0	0	0	0	0	0	0	0	0	0	0	0
4/25/2024	2:00 PM	0	0	0	0	0	0	0	0	0	0	0	0	0
4/25/2024	2:15 PM	0	0	0	0	0	0	0	0	0	0	0	0	0
4/25/2024	2:30 PM	0	0	0	0	0	0	0	0	0	0	0	0	0
4/25/2024	2:45 PM	0	0	0	0	0	0	0	0	0	0	0	0	0
4/25/2024	3:00 PM	0	0	0	0	0	0	0	0	0	0	0	0	0
4/25/2024	3:15 PM	0	0	0	0	0	0	0	0	0	0	0	0	0
4/25/2024	3:30 PM	0	0	0	0	0	0	0	0	0	0	0	0	0
4/25/2024	3:45 PM	0	0	0	0	0	0	0	0	0	0	0	0	0
4/25/2024	4:00 PM	0	0	0	0	0	0	0	0	0	0	0	0	0
4/25/2024	4:15 PM	0	0	0	0	0	0	0	0	0	0	0	0	0
4/25/2024	4:30 PM	0	0	0	0	0	0	0	0	0	0	0	0	0
4/25/2024	4:45 PM	0	0	0	0	0	0	0	0	0	0	0	0	0
4/25/2024	5:00 PM	0	0	0	0	0	0	0	0	0	0	0	0	0
4/25/2024	5:15 PM	0	0	0	0	0	0	0	0	0	0	0	0	0
4/25/2024	5:30 PM	0	0	0	0	0	0	0	0	0	0	0	0	0
4/25/2024	5:45 PM	0	0	0	0	0	0	0	0	0	0	0	0	0
4/25/2024	6:00 PM	0	0	0	0	0	0	0	0	0	0	0	0	0
4/25/2024	6:15 PM	0	0	0	0	0	0	0	0	0	0	0	0	0
4/25/2024	6:30 PM	0	0	0	0	0	0	0	0	0	0	0	0	0
4/25/2024	6:45 PM	0	0	0	0	0	0	0	0	0	0	0	0	0
4/25/2024	7:00 PM	0	0	0	0	0	0	0	0	0	0	0	0	0
4/25/2024	7:15 PM	0	0	0	0	0	0	0	0	0	0	0	0	0
4/25/2024	7:30 PM	0	0	0	0	0	0	0	0	0	0	0	0	0
4/25/2024	7:45 PM	0	0	0	0	0	0	0	0	0	0	0	0	0
4/25/2024	8:00 PM	0	0	0	0	0	0	0	0	0	0	0	0	0
4/25/2024	8:15 PM	0	0	0	0	0	0	0	0	0	0	0	0	0
4/25/2024	8:30 PM	0	0	0	0	0	0	0	0	0	0	0	0	0
4/25/2024	8:45 PM	0	0	0	0	0	0	0	0	0	0	0	0	0
4/25/2024	9:00 PM	0	0	0	0	0	0	0	0	0	0	0	0	0
4/25/2024	9:15 PM	0	0	0	0	0	0	0	0	0	0	0	0	0
4/25/2024	9:30 PM	0	0	0	0	0	0	0	0	0	0	0	0	0
4/25/2024	9:45 PM	0	0	0	0	0	0	0	0	0	0	0	0	0
4/25/2024	10:00 PM	0	0	0	0	0	0	0	0	0	0	0	0	0
4/25/2024	10:15 PM	0	0	0	0	0	0	0	0	0	0	0	0	0
4/25/2024	10:30 PM	0	0	0	0	0	0	0	0	0	0	0	0	0
4/25/2024	10:45 PM	0	0	0	0	0	0	0	0	0	0	0	0	0
4/25/2024	11:00 PM	0	0	0	0	0	0	0	0	0	0	0	0	0
4/25/2024	11:15 PM	0	0	0	0	0	0	0	0	0	0	0	0	0
4/25/2024	11:30 PM	0	0	0	0	0	0	0	0	0	0	0	0	0
4/25/2024	11:45 PM	0	0	0	0	0	0	0	0	0	0	0	0	0

SB
File Name:
Start Date: 4/23/2024
Start Time: 0
Site Code: 54
Station ID: 1
Location 1: I-26 S/Bound On-Ramp, south of US-378 Sunset Blvd
Location 2:

Date	Time	1	2	3	4	5	6	7	8	9	10	11	12	13
4/23/2024	12:00 AM	0	0	0	0	0	0	0	0	0	0	0	0	0
4/23/2024	12:15 AM	0	0	0	0	0	0	0	0	0	0	0	0	0
4/23/2024	12:30 AM	0	0	0	0	0	0	0	0	0	0	0	0	0
4/23/2024	12:45 AM	0	0	0	0	0	0	0	0	0	0	0	0	0
4/23/2024	1:00 AM	0	0	0	0	0	0	0	0	0	0	0	0	0
4/23/2024	1:15 AM	0	0	0	0	0	0	0	0	0	0	0	0	0
4/23/2024	1:30 AM	0	0	0	0	0	0	0	0	0	0	0	0	0
4/23/2024	1:45 AM	0	0	0	0	0	0	0	0	0	0	0	0	0
4/23/2024	2:00 AM	0	0	0	0	0	0	0	0	0	0	0	0	0
4/23/2024	2:15 AM	0	0	0	0	0	0	0	0	0	0	0	0	0
4/23/2024	2:30 AM	0	0	0	0	0	0	0	0	0	0	0	0	0
4/23/2024	2:45 AM	0	0	0	0	0	0	0	0	0	0	0	0	0
4/23/2024	3:00 AM	0	0	0	0	0	0	0	0	0	0	0	0	0
4/23/2024	3:15 AM	0	0	0	0	0	0	0	0	0	0	0	0	0
4/23/2024	3:30 AM	0	0	0	0	0	0	0	0	0	0	0	0	0
4/23/2024	3:45 AM	0	0	0	0	0	0	0	0	0	0	0	0	0
4/23/2024	4:00 AM	0	0	0	0	0	0	0	0	0	0	0	0	0
4/23/2024	4:15 AM	0	0	0	0	0	0	0	0	0	0	0	0	0
4/23/2024	4:30 AM	0	0	0	0	0	0	0	0	0	0	0	0	0
4/23/2024	4:45 AM	0	0	0	0	0	0	0	0	0	0	0	0	0
4/23/2024	5:00 AM	0	0	0	0	0	0	0	0	0	0	0	0	0
4/23/2024	5:15 AM	0	0	0	0	0	0	0	0	0	0	0	0	0
4/23/2024	5:30 AM	0	0	0	0	0	0	0	0	0	0	0	0	0
4/23/2024	5:45 AM	0	0	0	0	0	0	0	0	0	0	0	0	0
4/23/2024	6:00 AM	0	0	0	0	0	0	0	0	0	0	0	0	0
4/23/2024	6:15 AM	0	0	0	0	0	0	0	0	0	0	0	0	0
4/23/2024	6:30 AM	0	0	0	0	0	0	0	0	0	0	0	0	0
4/23/2024	6:45 AM	0	0	0	0	0	0	0	0	0	0	0	0	0
4/23/2024	7:00 AM	0	0	0	0	0	0	0	0	0	0	0	0	0
4/23/2024	7:15 AM	0	0	0	0	0	0	0	0	0	0	0	0	0
4/23/2024	7:30 AM	0	0	0	0	0	0	0	0	0	0	0	0	0
4/23/2024	7:45 AM	0	0	0	0	0	0	0	0	0	0	0	0	0
4/23/2024	8:00 AM	0	0	0	0	0	0	0	0	0	0	0	0	0
4/23/2024	8:15 AM	0	0	0	0	0	0	0	0	0	0	0	0	0
4/23/2024	8:30 AM	0	0	0	0	0	0	0	0	0	0	0	0	0
4/23/2024	8:45 AM	0	0	0	0	0	0	0	0	0	0	0	0	0
4/23/2024	9:00 AM	0	0	0	0	0	0	0	0	0	0	0	0	0
4/23/2024	9:15 AM	0	0	0	0	0	0	0	0	0	0	0	0	0
4/23/2024	9:30 AM	0	0	0	0	0	0	0	0	0	0	0	0	0
4/23/2024	9:45 AM	0	0	0	0	0	0	0	0	0	0	0	0	0
4/23/2024	10:00 AM	0	0	0	0	0	0	0	0	0	0	0	0	0
4/23/2024	10:15 AM	0	0	0	0	0	0	0	0	0	0	0	0	0
4/23/2024	10:30 AM	0	0	0	0	0	0	0	0	0	0	0	0	0
4/23/2024	10:45 AM	0	0	0	0	0	0	0	0	0	0	0	0	0
4/23/2024	11:00 AM	0	0	0	0	0	0	0	0	0	0	0	0	0
4/23/2024	11:15 AM	0	0	0	0	0	0	0	0	0	0	0	0	0
4/23/2024	11:30 AM	0	0	0	0	0	0	0	0	0	0	0	0	0
4/23/2024	11:45 AM	0	0	0	0	0	0	0	0	0	0	0	0	0
4/23/2024	12:00 PM	0	0	0	0	0	0	0	0	0	0	0	0	0
4/23/2024	12:15 PM	0	0	0	0	0	0	0	0	0	0	0	0	0
4/23/2024	12:30 PM	0	0	0	0	0	0	0	0	0	0	0	0	0
4/23/2024	12:45 PM	0	0	0	0	0	0	0	0	0	0	0	0	0
4/23/2024	1:00 PM	0	0	0	0	0	0	0	0	0	0	0	0	0
4/23/2024	1:15 PM	0	0	0	0	0	0	0	0	0	0	0	0	0
4/23/2024	1:30 PM	0	0	0	0	0	0	0	0	0	0	0	0	0
4/23/2024	1:45 PM	0	0	0	0	0	0	0	0	0	0	0	0	0
4/23/2024	2:00 PM	0	0	0	0	0	0	0	0	0	0	0	0	0
4/23/2024	2:15 PM	0	0	0	0	0	0	0	0	0	0	0	0	0
4/23/2024	2:30 PM	0	0	0	0	0	0	0	0	0	0	0	0	0
4/23/2024	2:45 PM	0	0	0	0	0	0	0	0	0	0	0	0	0
4/23/2024	3:00 PM	0	0	0	0	0	0	0	0	0	0	0	0	0
4/23/2024	3:15 PM	0	0	0	0	0	0	0	0	0	0	0	0	0
4/23/2024	3:30 PM	0	0	0	0	0	0	0	0	0	0	0	0	0
4/23/2024	3:45 PM	0	0	0	0	0	0	0	0	0	0	0	0	0
4/23/2024	4:00 PM	0	0	0	0	0	0	0	0	0	0	0	0	0
4/23/2024	4:15 PM	0	0	0	0	0	0	0	0	0	0	0	0	0
4/23/2024	4:30 PM	0	0	0	0	0	0	0	0	0	0	0	0	0
4/23/2024	4:45 PM	0	0	0	0	0	0	0	0	0	0	0	0	0
4/23/2024	5:00 PM	0	0	0	0	0	0	0	0	0	0	0	0	0
4/23/2024	5:15 PM	0	0	0	0	0	0	0	0	0	0	0	0	0
4/23/2024	5:30 PM	0	0	0	0	0	0	0	0	0	0	0	0	0
4/23/2024	5:45 PM	0	0	0	0	0	0	0	0	0	0	0	0	0
4/23/2024	6:00 PM	0	0	0	0	0	0	0	0	0	0	0	0	0
4/23/2024	6:15 PM	0	70	23	0	2	0	0	0	1	0	0	0	0
4/23/2024	6:30 PM	0	150	44	0	4	3	0	0	5	0	0	0	0
4/23/2024	6:45 PM	0	239	59	0	6	3	0	0	6	0	0	0	0
4/23/2024	7:00 PM	0	308	79	0	6	3	0	0	7	0	0	0	0
4/23/2024	7:15 PM	0	334	76	0	5	3	0	0	8	0	0	0	0
4/23/2024	7:30 PM	0	344	75	0	4	0	0	0	9	0	0	0	0
4/23/2024	7:45 PM	0	316	84	0	2	0	0	0	14	0	1	0	0
4/23/2024	8:00 PM	0	306	84	0	2	0	0	0	15	0	1	0	0
4/23/2024	8:15 PM	0	259	77	0	1	0	0	1	17	0	1	0	0
4/23/2024	8:30 PM	0	207	72	0	2	0	0	1	12	0	2	0	0
4/23/2024	8:45 PM	0	190	60	0	3	0	0	1	8	0	1	0	0
4/23/2024	9:00 PM	0	155	45	0	5	0	0	1	10	0	1	0	0
4/23/2024	9:15 PM	0	148	40	0	7	1	0	0	9	0	1	0	0
4/23/2024	9:30 PM	0	150	33	0	6	1	0	0	9	0	0	0	0
4/23/2024	9:45 PM	0	131	24	0	5	1	0	0	10	0	0	0	0
4/23/2024	10:00 PM	0	137	26	0	6	1	0	0	8	0	1	0	0
4/23/2024	10:15 PM	0	124	22	0	5	0	0	0	8	0	1	0	0
4/23/2024	10:30 PM	0	113	18	0	4	0	0	0	12	0	2	0	0
4/23/2024	10:45 PM	0	116	21	0	5	0	0	0	10	0	2	0	0
4/23/2024	11:00 PM	1	97	16	0	3	0	0	0	8	0	1	0	0
4/23/2024	11:15 PM	1	68	12	0	2	0	0	0	5	0	1	0	0
4/23/2024	11:30 PM	1	39	8	0	2	0	0	0	1	0	0	0	0
4/23/2024	11:45 PM	1	11	2	0	1	0	0	0	0	0	0	0	0

4/24/2024	12:00 AM	0	41	10	0	2	0	0	0	1	0	0	0	0
4/24/2024	12:15 AM	0	31	7	0	3	0	0	0	3	0	1	0	0
4/24/2024	12:30 AM	0	24	5	0	2	0	0	0	4	0	1	0	0
4/24/2024	12:45 AM	0	17	4	0	2	0	0	0	7	0	2	0	0
4/24/2024	1:00 AM	0	16	4	0	2	0	0	0	6	0	2	0	0
4/24/2024	1:15 AM	0	17	4	0	1	0	0	0	5	0	1	0	0
4/24/2024	1:30 AM	0	20	4	0	0	0	0	0	4	0	4	0	0
4/24/2024	1:45 AM	0	19	4	0	2	0	0	0	2	0	3	2	0
4/24/2024	2:00 AM	0	19	3	0	2	0	0	0	2	0	3	3	0
4/24/2024	2:15 AM	0	22	3	0	2	0	0	0	1	0	3	3	0
4/24/2024	2:30 AM	0	20	3	0	3	0	0	0	2	0	0	3	0
4/24/2024	2:45 AM	0	26	3	0	2	0	0	0	1	0	1	1	0
4/24/2024	3:00 AM	0	30	5	0	2	0	0	0	2	0	1	0	0
4/24/2024	3:15 AM	0	32	5	0	2	2	0	0	6	0	3	0	0
4/24/2024	3:30 AM	0	41	7	0	1	2	0	0	8	0	4	0	0
4/24/2024	3:45 AM	0	55	9	0	0	2	0	0	9	0	3	0	0
4/24/2024	4:00 AM	0	68	10	0	0	2	0	0	9	0	4	0	0
4/24/2024	4:15 AM	0	74	15	0	0	0	0	0	6	0	2	0	0
4/24/2024	4:30 AM	0	86	23	0	0	1	0	0	6	0	2	0	0
4/24/2024	4:45 AM	0	102	32	0	2	2	0	0	7	0	2	0	0
4/24/2024	5:00 AM	0	117	40	1	3	2	0	0	7	0	1	0	0
4/24/2024	5:15 AM	0	161	56	1	3	3	0	0	13	0	1	0	0
4/24/2024	5:30 AM	0	183	71	1	5	2	0	0	14	0	0	0	0
4/24/2024	5:45 AM	0	245	86	1	4	1	0	0	13	0	0	0	0
4/24/2024	6:00 AM	0	327	93	0	6	1	0	0	14	0	0	0	0
4/24/2024	6:15 AM	0	416	92	2	10	2	0	0	10	0	0	0	0
4/24/2024	6:30 AM	0	548	116	2	13	2	0	0	11	0	0	0	0
4/24/2024	6:45 AM	0	628	123	3	17	3	0	0	16	0	0	0	0
4/24/2024	7:00 AM	0	663	135	3	18	3	0	0	17	0	0	0	0
4/24/2024	7:15 AM	0	635	139	6	17	4	0	1	19	0	0	0	0
4/24/2024	7:30 AM	0	588	112	8	18	5	0	1	23	0	0	0	0
4/24/2024	7:45 AM	0	525	104	8	16	4	0	2	23	0	0	0	0
4/24/2024	8:00 AM	0	495	92	8	15	4	0	3	28	0	0	0	0
4/24/2024	8:15 AM	0	524	96	4	17	3	0	3	32	0	0	0	0
4/24/2024	8:30 AM	0	525	112	3	14	2	0	5	26	0	0	0	0
4/24/2024	8:45 AM	0	564	117	2	12	3	0	6	28	1	0	0	0
4/24/2024	9:00 AM	0	584	164	2	12	3	0	5	23	1	0	0	0
4/24/2024	9:15 AM	0	572	209	1	12	1	0	4	22	1	0	0	0
4/24/2024	9:30 AM	0	601	239	0	13	1	0	2	23	1	0	0	0
4/24/2024	9:45 AM	0	628	301	1	13	2	0	0	21	0	0	0	0
4/24/2024	10:00 AM	0	634	324	1	13	3	0	0	28	0	0	0	0
4/24/2024	10:15 AM	0	651	335	2	9	3	0	0	23	0	0	0	0
4/24/2024	10:30 AM	0	641	354	3	7	5	0	0	24	0	0	0	0
4/24/2024	10:45 AM	0	619	328	2	8	4	0	0	22	0	0	0	0
4/24/2024	11:00 AM	0	611	294	3	9	3	0	0	15	0	0	0	0
4/24/2024	11:15 AM	0	621	254	3	12	4	0	1	16	0	0	0	0
4/24/2024	11:30 AM	0	623	213	4	14	2	0	1	15	0	0	0	0
4/24/2024	11:45 AM	0	640	196	5	14	2	0	2	14	0	0	0	0
4/24/2024	12:00 PM	0	673	215	4	14	3	0	3	18	0	0	0	0
4/24/2024	12:15 PM	0	656	187	4	12	3	0	3	21	0	0	0	0
4/24/2024	12:30 PM	0	626	161	2	13	3	0	3	25	0	0	0	0
4/24/2024	12:45 PM	0	595	142	1	17	2	0	2	30	0	0	0	0
4/24/2024	1:00 PM	0	571	90	1	17	2	0	1	26	0	0	0	0
4/24/2024	1:15 PM	0	578	92	0	18	1	0	0	24	0	0	0	0
4/24/2024	1:30 PM	0	621	92	0	14	2	0	0	19	0	0	0	0
4/24/2024	1:45 PM	0	658	81	1	9	2	0	0	11	0	0	0	0
4/24/2024	2:00 PM	0	696	86	2	5	1	0	0	8	0	0	0	0
4/24/2024	2:15 PM	0	744	95	2	2	1	0	0	6	0	0	0	0
4/24/2024	2:30 PM	0	722	105	2	1	0	0	0	6	0	0	0	0
4/24/2024	2:45 PM	0	692	122	1	0	0	0	0	8	0	0	0	0
4/24/2024	3:00 PM	0	657	124	0	0	0	0	0	11	0	0	0	0
4/24/2024	3:15 PM	1	633	129	2	5	0	0	0	9	0	0	0	0
4/24/2024	3:30 PM	1	649	126	3	6	1	0	0	7	0	0	0	0
4/24/2024	3:45 PM	1	663	114	4	6	2	0	0	6	0	0	0	0
4/24/2024	4:00 PM	1	666	106	6	6	2	0	0	5	0	0	0	0
4/24/2024	4:15 PM	0	753	104	4	1	2	0	0	4	0	0	0	0
4/24/2024	4:30 PM	0	837	102	3	0	1	0	0	3	0	0	0	0
4/24/2024	4:45 PM	0	834	108	3	3	0	0	0	5	0	0	0	0
4/24/2024	5:00 PM	0	832	120	2	4	0	0	0	5	0	0	0	0
4/24/2024	5:15 PM	0	696	106	2	4	0	0	0	12	0	0	0	0
4/24/2024	5:30 PM	0	591	104	2	4	0	0	0	14	0	0	0	0
4/24/2024	5:45 PM	0	565	89	1	1	0	0	0	13	0	0	0	0
4/24/2024	6:00 PM	0	540	72	0	0	0	0	0	12	0	0	0	0
4/24/2024	6:15 PM	0	472	71	0	1	0	0	0	10	0	0	0	0
4/24/2024	6:30 PM	1	416	71	0	5	0	0	0	13	0	0	0	0
4/24/2024	6:45 PM	1	361	64	0	6	0	0	0	12	0	0	0	0
4/24/2024	7:00 PM	1	298	63	1	6	0	0	0	12	0	0	0	0
4/24/2024	7:15 PM	2	319	59	1	5	0	0	0	8	0	1	0	0
4/24/2024	7:30 PM	1	290	41	1	2	0	0	0	5	0	1	0	0
4/24/2024	7:45 PM	1	274	36	1	2	0	0	0	5	0	1	0	0
4/24/2024	8:00 PM	1	271	26	0	2	1	0	0	5	0	1	0	0
4/24/2024	8:15 PM	0	232	19	0	3	1	0	0	4	0	1	0	0
4/24/2024	8:30 PM	0	217	19	0	2	1	0	0	4	0	3	0	0
4/24/2024	8:45 PM	0	176	15	0	2	1	0	0	3	0	7	0	0
4/24/2024	9:00 PM	0	147	18	0	2	0	0	0	4	0	8	0	0
4/24/2024	9:15 PM	0	138	21	0	1	0	0	0	5	0	7	0	0
4/24/2024	9:30 PM	0	122	20	0	2	0	0	0	7	0	7	0	0
4/24/2024	9:45 PM	0	111	23	0	1	0	0	0	9	0	3	0	0
4/24/2024	10:00 PM	0	94	18	0	1	0	0	0	9	0	2	0	0
4/24/2024	10:15 PM	0	85	12	0	2	0	0	0	8	0	2	0	0
4/24/2024	10:30 PM	1	79	8	0	1	0	0	0	5	0	0	0	0
4/24/2024	10:45 PM	1	82	7	0	1	0	0	0	5	0	0	0	0
4/24/2024	11:00 PM	1	83	7	0	1	0	0	0	4	0	1	0	0
4/24/2024	11:15 PM	1	58	5	0	0	0	0	0	4	0	1	0	0
4/24/2024	11:30 PM	0	40	4	0	0	0	0	0	3	0	1	0	0
4/24/2024	11:45 PM	0	19	2	0	0	0	0	0	1	0	1	0	0

4/25/2024	12:00 AM	0	49	2	0	2	0	0	0	5	0	1	0	0
4/25/2024	12:15 AM	0	48	2	0	2	0	0	0	4	0	0	0	0
4/25/2024	12:30 AM	0	35	0	0	1	0	0	0	3	0	1	0	0
4/25/2024	12:45 AM	0	31	0	0	0	0	0	0	2	0	1	0	0
4/25/2024	1:00 AM	0	31	0	0	0	0	0	0	1	0	1	0	0
4/25/2024	1:15 AM	0	25	0	0	0	0	0	0	2	0	4	0	0
4/25/2024	1:30 AM	0	25	0	0	0	0	0	0	4	0	3	0	0
4/25/2024	1:45 AM	0	20	0	0	0	0	0	0	4	0	3	0	0
4/25/2024	2:00 AM	0	20	0	0	0	0	0	0	5	0	6	0	0
4/25/2024	2:15 AM	0	21	0	0	2	0	0	0	4	0	5	0	0
4/25/2024	2:30 AM	0	25	0	0	2	0	0	0	2	0	6	0	0
4/25/2024	2:45 AM	0	31	0	0	3	0	0	0	2	0	8	0	0
4/25/2024	3:00 AM	0	31	0	0	3	0	0	0	4	0	7	0	0
4/25/2024	3:15 AM	0	39	0	0	4	0	0	0	7	0	6	0	0
4/25/2024	3:30 AM	0	50	1	0	4	0	0	0	8	0	5	0	0
4/25/2024	3:45 AM	0	59	1	0	3	0	0	0	7	0	3	0	0
4/25/2024	4:00 AM	0	74	1	0	3	0	0	0	8	0	1	0	0
4/25/2024	4:15 AM	0	81	2	0	0	2	0	0	9	0	0	0	0
4/25/2024	4:30 AM	0	90	4	0	0	2	0	0	13	0	0	0	0
4/25/2024	4:45 AM	0	111	8	0	0	2	0	0	13	0	0	0	0
4/25/2024	5:00 AM	0	139	15	0	3	2	0	0	10	0	0	0	0
4/25/2024	5:15 AM	0	156	25	1	5	0	0	0	10	0	1	0	0
4/25/2024	5:30 AM	0	182	37	1	5	0	0	0	6	0	1	0	0
4/25/2024	5:45 AM	0	230	61	1	7	2	0	0	9	0	1	0	0
4/25/2024	6:00 AM	0	281	74	1	4	2	0	1	13	0	1	0	0
4/25/2024	6:15 AM	0	370	101	2	7	3	0	1	12	0	0	0	0
4/25/2024	6:30 AM	0	468	121	3	8	3	0	2	14	0	0	0	0
4/25/2024	6:45 AM	0	537	126	3	8	5	0	2	13	0	0	0	0
4/25/2024	7:00 AM	0	525	130	3	9	8	0	1	8	0	0	0	0
4/25/2024	7:15 AM	0	502	118	8	8	7	0	1	8	0	0	0	0
4/25/2024	7:30 AM	0	452	108	7	10	8	0	0	11	0	0	0	0
4/25/2024	7:45 AM	0	398	92	7	9	5	0	0	14	0	0	0	0
4/25/2024	8:00 AM	0	398	90	8	10	2	0	0	22	0	0	0	0
4/25/2024	8:15 AM	0	381	87	2	7	2	0	0	25	0	0	0	0
4/25/2024	8:30 AM	0	375	89	2	5	5	0	0	25	0	0	0	0
4/25/2024	8:45 AM	0	369	97	2	9	5	0	0	27	0	0	0	0
4/25/2024	9:00 AM	0	371	99	1	13	5	0	0	19	0	0	0	0
4/25/2024	9:15 AM	1	378	109	0	17	6	0	0	17	0	0	0	0
4/25/2024	9:30 AM	1	376	108	0	20	2	0	0	13	0	0	0	0
4/25/2024	9:45 AM	1	360	107	0	15	2	0	0	10	0	0	0	0
4/25/2024	10:00 AM	1	349	103	0	12	2	0	0	12	0	0	0	0
4/25/2024	10:15 AM	0	346	96	0	10	1	0	0	12	0	0	0	0
4/25/2024	10:30 AM	0	369	105	1	7	2	0	0	15	0	0	0	0
4/25/2024	10:45 AM	0	376	104	2	11	4	0	0	13	0	0	0	0
4/25/2024	11:00 AM	0	387	98	2	11	4	0	0	19	0	0	0	0
4/25/2024	11:15 AM	0	397	93	2	13	6	0	1	21	0	0	0	0
4/25/2024	11:30 AM	0	389	91	2	14	5	0	3	23	0	0	0	0
4/25/2024	11:45 AM	0	400	89	1	15	2	0	3	23	0	0	0	0
4/25/2024	12:00 PM	0	403	97	1	13	3	0	3	19	0	0	0	0
4/25/2024	12:15 PM	2	407	108	2	9	2	0	2	20	0	0	0	0
4/25/2024	12:30 PM	2	387	101	2	9	3	0	1	21	0	0	0	0
4/25/2024	12:45 PM	2	400	118	2	7	4	0	2	29	0	0	0	0
4/25/2024	1:00 PM	2	424	131	2	11	4	0	3	29	0	0	0	0
4/25/2024	1:15 PM	0	430	136	1	11	3	1	3	26	0	0	0	0
4/25/2024	1:30 PM	0	459	150	0	11	3	1	2	22	0	0	0	0
4/25/2024	1:45 PM	0	491	150	2	8	4	1	1	15	0	0	0	0
4/25/2024	2:00 PM	0	512	148	2	5	4	1	1	11	0	0	0	0
4/25/2024	2:15 PM	0	571	152	2	5	4	0	1	11	0	0	0	0
4/25/2024	2:30 PM	0	612	153	2	6	3	0	1	11	0	0	0	0
4/25/2024	2:45 PM	0	634	148	0	9	2	0	1	16	0	0	0	0
4/25/2024	3:00 PM	0	685	162	0	7	1	0	0	20	0	0	0	0
4/25/2024	3:15 PM	2	715	168	1	9	1	0	0	18	0	0	0	0
4/25/2024	3:30 PM	2	757	163	5	8	1	0	0	15	0	0	0	0
4/25/2024	3:45 PM	3	771	168	6	6	1	0	0	14	0	0	0	0
4/25/2024	4:00 PM	3	770	165	6	9	1	0	0	10	0	0	0	0
4/25/2024	4:15 PM	1	781	156	5	6	2	0	0	12	0	0	0	0
4/25/2024	4:30 PM	1	777	160	2	4	2	0	0	11	0	0	0	0
4/25/2024	4:45 PM	0	762	152	2	4	1	0	0	8	0	0	0	0
4/25/2024	5:00 PM	0	697	127	2	1	3	0	0	10	0	0	0	0
4/25/2024	5:15 PM	0	608	105	2	2	3	0	0	13	0	0	0	0
4/25/2024	5:30 PM	0	534	85	1	3	3	0	0	16	0	0	0	0
4/25/2024	5:45 PM	1	475	73	0	4	3	0	0	14	0	0	0	0
4/25/2024	6:00 PM	2	448	75	1	4	3	0	0	15	0	0	0	0
4/25/2024	6:15 PM	2	326	59	1	3	2	0	0	8	0	0	0	0
4/25/2024	6:30 PM	2	204	39	1	2	2	0	0	5	0	0	0	0
4/25/2024	6:45 PM	1	98	21	1	0	2	0	0	3	0	0	0	0
4/25/2024	7:00 PM	0	0	0	0	0	0	0	0	0	0	0	0	0
4/25/2024	7:15 PM	0	0	0	0	0	0	0	0	0	0	0	0	0
4/25/2024	7:30 PM	0	0	0	0	0	0	0	0	0	0	0	0	0
4/25/2024	7:45 PM	0	0	0	0	0	0	0	0	0	0	0	0	0
4/25/2024	8:00 PM	0	0	0	0	0	0	0	0	0	0	0	0	0
4/25/2024	8:15 PM	0	0	0	0	0	0	0	0	0	0	0	0	0
4/25/2024	8:30 PM	0	0	0	0	0	0	0	0	0	0	0	0	0
4/25/2024	8:45 PM	0	0	0	0	0	0	0	0	0	0	0	0	0
4/25/2024	9:00 PM	0	0	0	0	0	0	0	0	0	0	0	0	0
4/25/2024	9:15 PM	0	0	0	0	0	0	0	0	0	0	0	0	0
4/25/2024	9:30 PM	0	0	0	0	0	0	0	0	0	0	0	0	0
4/25/2024	9:45 PM	0	0	0	0	0	0	0	0	0	0	0	0	0
4/25/2024	10:00 PM	0	0	0	0	0	0	0	0	0	0	0	0	0
4/25/2024	10:15 PM	0	0	0	0	0	0	0	0	0	0	0	0	0
4/25/2024	10:30 PM	0	0	0	0	0	0	0	0	0	0	0	0	0
4/25/2024	10:45 PM	0	0	0	0	0	0	0	0	0	0	0	0	0
4/25/2024	11:00 PM	0	0	0	0	0	0	0	0	0	0	0	0	0
4/25/2024	11:15 PM	0	0	0	0	0	0	0	0	0	0	0	0	0
4/25/2024	11:30 PM	0	0	0	0	0	0	0	0	0	0	0	0	0
4/25/2024	11:45 PM	0	0	0	0	0	0	0	0	0	0	0	0	0

Bi-Directional Class Count || NB EB 15min

Columbia, SC

Marr Traffic DATA COLLECTION
www.marrtraffic.com

Site 55
I-20 On/Off-Ramp,
west of US-378 Sunset Blvd

Date
Tuesday, April 23, 2024

Lat/Long
34.009718°, -81.150120°

Weather
Fair
58°F

Click here for Detailed Weather

Click here for Map

0000 - 2400 (Weekday 24h Session) (04-23-2024)
NB EB 15min

	Eastbound (Movement 55.1)													15min	60min
Time	1	2	3	4	5	6	7	8	9	10	11	12	13	Total	Total
0000 - 0015	0	0	0	0	0	0	0	0	0	0	0	0	0	**0**	
0015 - 0030	0	0	0	0	0	0	0	0	0	0	0	0	0	**0**	
0030 - 0045	0	0	0	0	0	0	0	0	0	0	0	0	0	**0**	
0045 - 0100	0	0	0	0	0	0	0	0	0	0	0	0	0	**0**	**0**
0100 - 0115	0	0	0	0	0	0	0	0	0	0	0	0	0	**0**	
0115 - 0130	0	0	0	0	0	0	0	0	0	0	0	0	0	**0**	
0130 - 0145	0	0	0	0	0	0	0	0	0	0	0	0	0	**0**	
0145 - 0200	0	0	0	0	0	0	0	0	0	0	0	0	0	**0**	**0**
0200 - 0215	0	0	0	0	0	0	0	0	0	0	0	0	0	**0**	
0215 - 0230	0	0	0	0	0	0	0	0	0	0	0	0	0	**0**	
0230 - 0245	0	0	0	0	0	0	0	0	0	0	0	0	0	**0**	
0245 - 0300	0	0	0	0	0	0	0	0	0	0	0	0	0	**0**	**0**
0300 - 0315	0	0	0	0	0	0	0	0	0	0	0	0	0	**0**	
0315 - 0330	0	0	0	0	0	0	0	0	0	0	0	0	0	**0**	
0330 - 0345	0	0	0	0	0	0	0	0	0	0	0	0	0	**0**	
0345 - 0400	0	0	0	0	0	0	0	0	0	0	0	0	0	**0**	**0**
0400 - 0415	0	0	0	0	0	0	0	0	0	0	0	0	0	**0**	
0415 - 0430	0	0	0	0	0	0	0	0	0	0	0	0	0	**0**	
0430 - 0445	0	0	0	0	0	0	0	0	0	0	0	0	0	**0**	
0445 - 0500	0	0	0	0	0	0	0	0	0	0	0	0	0	**0**	**0**
0500 - 0515	0	0	0	0	0	0	0	0	0	0	0	0	0	**0**	
0515 - 0530	0	0	0	0	0	0	0	0	0	0	0	0	0	**0**	
0530 - 0545	0	0	0	0	0	0	0	0	0	0	0	0	0	**0**	
0545 - 0600	0	0	0	0	0	0	0	0	0	0	0	0	0	**0**	**0**
0600 - 0615	0	0	0	0	0	0	0	0	0	0	0	0	0	**0**	
0615 - 0630	0	0	0	0	0	0	0	0	0	0	0	0	0	**0**	
0630 - 0645	0	0	0	0	0	0	0	0	0	0	0	0	0	**0**	
0645 - 0700	0	0	0	0	0	0	0	0	0	0	0	0	0	**0**	**0**
0700 - 0715	0	0	0	0	0	0	0	0	0	0	0	0	0	**0**	
0715 - 0730	0	0	0	0	0	0	0	0	0	0	0	0	0	**0**	
0730 - 0745	0	0	0	0	0	0	0	0	0	0	0	0	0	**0**	
0745 - 0800	0	0	0	0	0	0	0	0	0	0	0	0	0	**0**	**0**
0800 - 0815	0	0	0	0	0	0	0	0	0	0	0	0	0	**0**	
0815 - 0830	0	0	0	0	0	0	0	0	0	0	0	0	0	**0**	
0830 - 0845	0	0	0	0	0	0	0	0	0	0	0	0	0	**0**	
0845 - 0900	0	0	0	0	0	0	0	0	0	0	0	0	0	**0**	**0**
0900 - 0915	0	0	0	0	0	0	0	0	0	0	0	0	0	**0**	
0915 - 0930	0	0	0	0	0	0	0	0	0	0	0	0	0	**0**	
0930 - 0945	0	0	0	0	0	0	0	0	0	0	0	0	0	**0**	
0945 - 1000	0	0	0	0	0	0	0	0	0	0	0	0	0	**0**	**0**
1000 - 1015	0	0	0	0	0	0	0	0	0	0	0	0	0	**0**	
1015 - 1030	0	0	0	0	0	0	0	0	0	0	0	0	0	**0**	
1030 - 1045	0	0	0	0	0	0	0	0	0	0	0	0	0	**0**	
1045 - 1100	0	0	0	0	0	0	0	0	0	0	0	0	0	**0**	**0**
1100 - 1115	0	0	0	0	0	0	0	0	0	0	0	0	0	**0**	
1115 - 1130	0	0	0	0	0	0	0	0	0	0	0	0	0	**0**	
1130 - 1145	0	0	0	0	0	0	0	0	0	0	0	0	0	**0**	
1145 - 1200	0	0	0	0	0	0	0	0	0	0	0	0	0	**0**	**0**
1200 - 1215	0	0	0	0	0	0	0	0	0	0	0	0	0	**0**	
1215 - 1230	0	0	0	0	0	0	0	0	0	0	0	0	0	**0**	
1230 - 1245	0	0	0	0	0	0	0	0	0	0	0	0	0	**0**	
1245 - 1300	0	0	0	0	0	0	0	0	0	0	0	0	0	**0**	**0**
1300 - 1315	0	0	0	0	0	0	0	0	0	0	0	0	0	**0**	
1315 - 1330	0	0	0	0	0	0	0	0	0	0	0	0	0	**0**	
1330 - 1345	0	0	0	0	0	0	0	0	0	0	0	0	0	**0**	
1345 - 1400	0	0	0	0	0	0	0	0	0	0	0	0	0	**0**	**0**
1400 - 1415	0	0	0	0	0	0	0	0	0	0	0	0	0	**0**	
1415 - 1430	0	0	0	0	0	0	0	0	0	0	0	0	0	**0**	
1430 - 1445	0	0	0	0	0	0	0	0	0	0	0	0	0	**0**	
1445 - 1500	0	0	0	0	0	0	0	0	0	0	0	0	0	**0**	**0**
1500 - 1515	0	0	0	0	0	0	0	0	0	0	0	0	0	**0**	
1515 - 1530	0	0	0	0	0	0	0	0	0	0	0	0	0	**0**	
1530 - 1545	0	0	0	0	0	0	0	0	0	0	0	0	0	**0**	
1545 - 1600	0	0	0	0	0	0	0	0	0	0	0	0	0	**0**	**0**
1600 - 1615	0	0	0	0	0	0	0	0	0	0	0	0	0	**0**	
1615 - 1630	0	0	0	0	0	0	0	0	0	0	0	0	0	**0**	
1630 - 1645	0	0	0	0	0	0	0	0	0	0	0	0	0	**0**	
1645 - 1700	0	0	0	0	0	0	0	0	0	0	0	0	0	**0**	**0**
1700 - 1715	0	0	0	0	0	0	0	0	0	0	0	0	0	**0**	
1715 - 1730	0	0	0	0	0	0	0	0	0	0	0	0	0	**0**	
1730 - 1745	0	0	0	0	0	0	0	0	0	0	0	0	0	**0**	
1745 - 1800	0	0	0	0	0	0	0	0	0	0	0	0	0	**0**	**0**
1800 - 1815	0	0	0	0	0	0	0	0	0	0	0	0	0	**0**	
1815 - 1830	0	0	0	0	0	0	0	0	0	0	0	0	0	**0**	
1830 - 1845	0	0	0	0	0	0	0	0	0	0	0	0	0	**0**	
1845 - 1900	0	0	0	0	0	0	0	0	0	0	0	0	0	**0**	**0**
1900 - 1915	0	58	7	0	2	1	0	0	3	0	0	0	0	**71**	
1915 - 1930	0	41	11	0	1	0	0	0	2	0	0	0	0	**55**	
1930 - 1945	0	43	7	0	1	0	0	0	3	0	0	0	0	**54**	
1945 - 2000	0	35	19	1	0	0	0	0	1	0	0	0	0	**56**	**236**
2000 - 2015	0	33	7	0	0	0	0	0	1	0	0	0	0	**41**	
2015 - 2030	0	32	8	0	0	0	0	1	5	0	0	0	0	**46**	
2030 - 2045	0	30	2	0	1	0	0	0	5	0	1	0	0	**39**	
2045 - 2100	0	21	3	0	0	0	0	0	2	0	0	0	0	**26**	**152**
2100 - 2115	0	34	4	0	0	0	0	0	4	0	0	0	0	**42**	
2115 - 2130	0	39	1	0	0	1	0	0	3	0	1	0	0	**45**	
2130 - 2145	0	23	0	0	3	0	0	0	2	0	0	0	0	**28**	
2145 - 2200	0	13	0	0	1	0	0	0	6	0	1	0	0	**21**	**136**
2200 - 2215	0	12	0	0	1	0	0	0	3	0	0	0	0	**16**	
2215 - 2230	0	12	1	0	0	0	0	0	0	0	0	0	0	**13**	
2230 - 2245	0	14	0	0	0	0	0	0	3	0	0	0	0	**17**	
2245 - 2300	0	18	2	0	0	0	0	0	2	0	0	0	0	**22**	**68**
2300 - 2315	0	7	0	0	1	0	0	0	2	0	0	0	0	**10**	
2315 - 2330	0	6	0	0	0	0	0	0	6	0	0	0	0	**12**	
2330 - 2345	0	5	0	0	1	0	0	0	2	0	1	0	0	**9**	
2345 - 0000	0	3	1	0	0	0	0	0	0	0	0	0	0	**4**	**35**

Session Total	0	479	73	1	12	2	0	1	55	0	4	0	0	**627**
Session Average	0.00	4.99	0.76	0.01	0.13	0.02	0.00	0.01	0.57	0.00	0.04	0.00	0.00	**6.53**
Session Percentage	0.00	76.40	11.64	0.16	1.91	0.32	0.00	0.16	8.77	0.00	0.64	0.00	0.00	

AM Peak Hour	-	-	-	-	-	-	-	-	-	-	-	-	-	**-**
AM Peak Volume	0	0	0	0	0	0	0	0	0	0	0	0	0	**0**

Noon Peak Hour	-	-	-	-	-	-	-	-	-	-	-	-	-	**-**
Noon Peak Volume	0	0	0	0	0	0	0	0	0	0	0	0	0	**0**

PM Peak Hour	-	1900 - 2000	1900 - 2000	1900 - 2000	1845 - 1945	1815 - 1915	-	1930 - 2030	1945 - 2045	-	1945 - 2045	-	-	**1900 - 2000**
PM Peak Volume	0	177	44	1	4	1	0	1	12	0	1	0	0	**236**

Site 55
I-20 On/Off-Ramp,
west of US-378 Sunset Blvd

Date
Wednesday, April 24, 2024

Lat/Long
34.009718°, -81.150120°

Weather
Fair
66°F

Click here for Detailed Weather

0000 - 2400 (Weekday 24h Session) (04-24-2024)
NB EB 15min

	Eastbound (Movement 55.1)													15min	60min
Time	1	2	3	4	5	6	7	8	9	10	11	12	13	Total	Total
0000 - 0015	0	4	0	0	0	0	0	0	0	0	0	0	0	**4**	
0015 - 0030	0	6	0	0	0	0	0	0	1	0	1	0	0	**8**	
0030 - 0045	0	2	0	0	0	0	0	0	2	0	2	0	0	**6**	
0045 - 0100	0	3	0	0	0	0	0	0	3	0	0	0	0	**6**	**24**
0100 - 0115	0	1	0	0	0	0	0	0	3	0	0	0	0	**4**	
0115 - 0130	0	5	0	0	1	0	0	0	4	0	0	0	0	**10**	
0130 - 0145	0	3	0	0	0	0	0	0	1	0	0	0	0	**4**	
0145 - 0200	0	2	0	0	0	0	0	0	1	0	0	0	0	**3**	**21**
0200 - 0215	0	2	0	0	0	0	0	0	1	0	0	0	0	**3**	
0215 - 0230	0	1	0	0	0	0	0	0	0	0	6	0	0	**7**	
0230 - 0245	0	1	0	0	0	0	0	0	1	0	2	0	0	**4**	
0245 - 0300	0	3	0	0	0	0	0	0	1	0	0	0	0	**4**	**18**
0300 - 0315	0	3	0	0	0	0	0	0	0	0	1	0	0	**4**	
0315 - 0330	0	4	0	0	2	0	0	0	3	0	0	0	0	**9**	
0330 - 0345	0	5	1	0	0	0	0	0	0	0	1	0	0	**7**	
0345 - 0400	0	5	0	0	0	0	0	0	1	0	0	0	0	**6**	**26**
0400 - 0415	0	2	1	0	1	0	0	0	5	0	0	0	0	**9**	
0415 - 0430	0	4	0	0	0	0	0	0	3	0	1	0	0	**8**	
0430 - 0445	0	7	0	0	0	0	0	0	2	0	0	0	0	**9**	
0445 - 0500	0	15	0	0	1	0	0	0	1	0	0	0	0	**17**	**43**
0500 - 0515	0	11	0	0	0	0	0	0	1	0	2	0	0	**14**	
0515 - 0530	0	9	0	0	1	0	0	0	1	0	2	0	0	**13**	
0530 - 0545	0	39	0	0	1	0	0	0	4	0	0	0	0	**44**	
0545 - 0600	0	44	2	0	2	0	0	0	4	0	0	0	0	**52**	**123**
0600 - 0615	1	66	0	0	0	0	0	0	3	0	0	0	0	**70**	
0615 - 0630	0	90	14	0	1	0	0	1	4	0	2	0	0	**112**	
0630 - 0645	0	139	21	0	0	0	1	0	1	0	0	0	0	**162**	
0645 - 0700	0	152	49	0	2	0	0	1	4	0	0	0	0	**208**	**552**
0700 - 0715	0	130	48	1	2	0	0	0	5	0	0	0	0	**186**	
0715 - 0730	0	221	52	0	2	0	0	0	5	0	0	0	0	**280**	
0730 - 0745	0	250	44	2	0	0	0	0	4	0	0	0	0	**300**	
0745 - 0800	1	205	57	0	5	0	0	3	3	0	0	0	0	**274**	**1040**
0800 - 0815	0	183	38	0	3	0	0	0	3	0	0	0	0	**227**	
0815 - 0830	0	165	41	0	3	1	0	0	9	0	1	0	0	**220**	
0830 - 0845	0	160	40	3	4	0	0	4	3	0	0	0	0	**214**	
0845 - 0900	1	109	28	0	5	0	0	0	5	0	0	0	0	**148**	**809**
0900 - 0915	0	96	24	0	2	0	0	0	4	0	0	0	0	**126**	
0915 - 0930	0	74	30	0	1	0	0	0	1	0	0	0	0	**106**	
0930 - 0945	0	100	25	0	6	1	0	0	7	0	0	0	0	**139**	
0945 - 1000	0	92	25	0	1	0	0	0	3	0	0	0	0	**121**	**492**
1000 - 1015	0	60	22	0	4	2	0	3	6	1	0	0	0	**98**	
1015 - 1030	0	70	22	0	6	1	0	2	3	0	0	0	0	**104**	
1030 - 1045	0	72	22	0	3	1	0	1	3	0	0	0	0	**102**	
1045 - 1100	0	71	18	0	3	1	0	0	2	1	0	0	0	**96**	**400**
1100 - 1115	0	60	26	3	2	1	0	1	1	0	0	0	0	**94**	
1115 - 1130	0	56	16	1	3	0	0	0	5	0	0	0	0	**81**	
1130 - 1145	0	57	20	1	2	1	0	0	2	0	0	0	0	**83**	
1145 - 1200	0	68	22	1	5	1	0	0	5	0	0	0	0	**102**	**360**
1200 - 1215	0	71	21	1	4	0	0	2	3	0	0	0	0	**102**	
1215 - 1230	0	71	17	0	3	0	0	0	4	0	0	0	0	**95**	
1230 - 1245	0	75	21	0	1	2	0	0	2	0	0	0	0	**101**	
1245 - 1300	0	85	27	0	1	0	0	0	2	0	0	0	0	**115**	**413**
1300 - 1315	0	74	20	1	1	0	0	2	2	0	0	0	0	**100**	
1315 - 1330	0	72	24	0	1	1	0	1	2	0	0	0	0	**101**	
1330 - 1345	0	83	28	2	1	0	0	0	2	0	0	0	0	**116**	
1345 - 1400	0	76	26	1	2	1	0	1	4	0	0	0	0	**111**	**428**
1400 - 1415	0	81	21	0	0	0	0	0	3	0	0	0	0	**105**	
1415 - 1430	0	67	20	0	0	0	0	0	0	0	0	0	0	**87**	
1430 - 1445	0	77	30	1	3	1	0	2	6	0	0	0	0	**120**	
1445 - 1500	0	83	23	0	4	1	0	1	2	0	0	0	0	**114**	**426**
1500 - 1515	0	97	37	1	12	2	0	0	5	0	0	0	0	**154**	
1515 - 1530	0	85	23	0	6	0	0	2	3	0	0	0	0	**119**	
1530 - 1545	0	73	22	1	2	0	0	0	3	0	0	0	0	**101**	
1545 - 1600	0	78	21	0	1	0	0	0	6	0	0	0	0	**106**	**480**
1600 - 1615	0	76	14	0	2	0	0	0	2	0	0	0	0	**94**	
1615 - 1630	0	74	12	0	2	0	0	1	4	0	0	0	0	**93**	
1630 - 1645	0	78	11	0	4	1	0	3	5	0	0	0	0	**102**	
1645 - 1700	0	80	34	0	3	0	0	2	3	0	0	0	0	**122**	**411**
1700 - 1715	0	67	17	0	3	0	1	0	3	0	0	0	0	**91**	
1715 - 1730	0	78	21	0	0	0	0	0	2	0	0	0	0	**101**	
1730 - 1745	1	98	18	0	2	0	0	1	9	0	0	0	0	**129**	
1745 - 1800	0	95	38	0	2	0	0	1	6	0	0	0	0	**142**	**463**
1800 - 1815	0	86	20	0	1	0	0	1	7	0	0	0	0	**115**	
1815 - 1830	0	78	15	0	1	0	0	1	3	0	0	0	0	**98**	
1830 - 1845	0	72	14	0	0	0	0	1	4	0	0	0	0	**91**	
1845 - 1900	0	58	9	0	1	1	0	0	4	0	0	0	0	**73**	**377**
1900 - 1915	0	47	15	1	1	0	0	0	2	0	0	0	0	**66**	
1915 - 1930	0	36	11	0	1	0	0	0	6	0	0	0	0	**54**	
1930 - 1945	0	42	9	0	2	0	0	0	0	0	0	0	0	**53**	
1945 - 2000	0	53	10	2	2	0	0	0	2	0	0	0	0	**69**	**242**
2000 - 2015	0	26	13	0	1	0	0	0	2	0	0	0	0	**42**	
2015 - 2030	0	25	5	0	0	0	0	0	1	0	0	0	0	**31**	
2030 - 2045	0	35	2	0	1	0	0	0	0	0	0	0	0	**38**	
2045 - 2100	0	32	0	0	0	1	0	0	1	0	0	0	0	**34**	**145**
2100 - 2115	0	26	0	0	0	0	0	0	0	0	0	0	0	**26**	
2115 - 2130	0	20	0	0	0	0	0	0	4	0	4	0	0	**28**	
2130 - 2145	0	18	0	0	1	0	0	0	0	0	0	0	0	**19**	
2145 - 2200	0	22	0	0	1	0	0	0	2	0	2	0	0	**27**	**100**
2200 - 2215	0	24	0	0	2	0	0	0	3	0	1	0	0	**30**	
2215 - 2230	0	14	0	0	1	0	0	0	3	0	2	0	0	**20**	
2230 - 2245	0	15	0	0	0	0	0	0	3	0	0	0	0	**18**	
2245 - 2300	0	23	0	0	1	0	0	0	1	0	0	0	0	**25**	**93**
2300 - 2315	0	9	0	0	0	0	0	0	0	0	0	0	0	**9**	
2315 - 2330	0	4	0	0	0	0	0	0	2	0	0	0	0	**6**	
2330 - 2345	0	3	1	0	0	0	0	0	2	0	1	0	0	**7**	
2345 - 0000	0	4	0	0	1	0	0	0	2	0	0	0	0	**7**	**29**

Session Total	4	5593	1378	23	152	21	2	38	271	2	31	0	0	**7515**
Session Average	0.04	58.26	14.35	0.24	1.58	0.22	0.02	0.40	2.82	0.02	0.32	0.00	0.00	**78.28**
Session Percentage	0.05	74.42	18.34	0.31	2.02	0.28	0.03	0.51	3.61	0.03	0.41	0.00	0.00	

AM Peak Hour	0515 - 0615	0715 - 0815	0700 - 0800	0645 - 0745	0930 - 1030	0930 - 1030	0545 - 0645	0745 - 0845	0815 - 0915	0915 - 1015	0500 - 0600	-	-	**0715 - 0815**
AM Peak Volume	1	859	201	3	17	4	1	7	21	1	4	0	0	**1081**

Noon Peak Hour	-	1430 - 1530	1430 - 1530	1100 - 1200	1430 - 1530	1000 - 1100	-	1000 - 1100	1430 - 1530	1000 - 1100	-	-	-	**1430 - 1530**
Noon Peak Volume	0	342	113	6	25	5	0	6	16	2	0	0	0	**507**

PM Peak Hour	1645 - 1745	1715 - 1815	1500 - 1600	1900 - 2000	1500 - 1600	1500 - 1600	1615 - 1715	1600 - 1700	1730 - 1830	-	-	-	-	**1715 - 1815**
PM Peak Volume	1	357	103	3	21	2	1	6	25	0	0	0	0	**487**

Site 55
I-20 On/Off-Ramp,
west of US-378 Sunset Blvd

Date
Thursday, April 25, 2024

Lat/Long
34.009718°, -81.150120°

Weather
Fair
67°F

Click here for Detailed Weather

0000 - 2400 (Weekday 24h Session) (04-25-2024)
NB EB 15min

	Eastbound (Movement 55.1)													15min	60min
TIME	1	2	3	4	5	6	7	8	9	10	11	12	13	Total	Total
0000 - 0015	0	3	0	0	0	0	0	0	1	0	1	0	0	**5**	
0015 - 0030	0	8	0	0	0	0	0	0	4	0	2	0	0	**14**	
0030 - 0045	0	9	0	0	0	0	0	0	1	0	2	0	0	**12**	
0045 - 0100	0	2	0	0	0	0	0	0	0	0	0	0	0	**2**	**33**
0100 - 0115	0	3	0	0	0	0	0	0	1	0	1	0	0	**5**	
0115 - 0130	0	0	0	0	1	0	0	0	1	0	0	0	0	**2**	
0130 - 0145	0	4	0	0	0	0	0	0	1	0	2	0	0	**7**	
0145 - 0200	0	0	0	0	1	0	0	0	2	0	1	0	0	**4**	**18**
0200 - 0215	0	1	0	0	0	0	0	0	1	0	1	0	0	**3**	
0215 - 0230	0	2	0	0	0	0	0	0	2	0	0	0	0	**4**	
0230 - 0245	0	2	0	0	0	0	0	0	2	0	1	0	0	**5**	
0245 - 0300	0	3	0	0	0	0	0	0	2	0	3	0	0	**8**	**20**
0300 - 0315	0	5	0	0	0	0	0	0	1	0	1	0	0	**7**	
0315 - 0330	0	3	0	0	0	0	0	0	1	0	0	0	0	**4**	
0330 - 0345	0	3	0	0	0	0	0	0	1	0	2	0	0	**6**	
0345 - 0400	0	6	0	0	1	0	0	0	2	0	1	0	0	**10**	**27**
0400 - 0415	0	1	0	0	0	0	0	0	5	1	0	0	0	**7**	
0415 - 0430	0	7	0	0	0	0	0	0	0	0	0	0	0	**7**	
0430 - 0445	0	9	0	0	0	0	0	0	2	0	0	0	0	**11**	
0445 - 0500	0	15	0	0	0	0	0	0	7	0	1	0	0	**23**	**48**
0500 - 0515	0	10	0	0	1	0	0	0	2	0	0	0	0	**13**	
0515 - 0530	0	24	1	0	0	1	0	0	4	0	1	0	0	**31**	
0530 - 0545	0	36	0	0	1	0	0	0	1	0	0	0	0	**38**	
0545 - 0600	1	61	0	0	0	0	0	0	1	0	0	0	0	**63**	**145**
0600 - 0615	0	65	1	0	1	1	0	0	2	0	1	0	0	**71**	
0615 - 0630	0	81	10	0	3	0	0	2	1	0	1	0	0	**98**	
0630 - 0645	1	130	25	0	0	0	0	0	1	0	1	0	0	**158**	
0645 - 0700	1	141	48	0	0	0	0	0	5	0	0	0	0	**195**	**522**
0700 - 0715	1	148	46	2	3	0	0	0	5	0	0	0	0	**205**	
0715 - 0730	0	202	57	1	3	0	0	2	2	0	0	0	0	**267**	
0730 - 0745	0	207	38	0	2	1	0	0	3	0	0	0	0	**251**	
0745 - 0800	0	223	63	0	0	1	0	1	5	0	0	0	0	**293**	**1016**
0800 - 0815	0	144	45	0	2	0	0	1	6	0	0	0	0	**198**	
0815 - 0830	0	159	70	0	0	0	0	1	6	0	0	0	0	**236**	
0830 - 0845	0	120	26	1	0	0	0	0	0	0	0	0	0	**147**	
0845 - 0900	0	124	34	1	0	0	0	1	7	0	0	0	0	**167**	**748**
0900 - 0915	0	83	25	1	2	0	0	1	4	0	0	0	0	**116**	
0915 - 0930	0	113	33	0	5	0	1	2	4	0	0	0	0	**158**	
0930 - 0945	0	73	20	0	3	1	0	0	3	0	0	0	0	**100**	
0945 - 1000	0	97	17	0	1	0	0	1	3	0	0	0	0	**119**	**493**
1000 - 1015	0	51	18	0	1	1	0	0	0	0	0	0	0	**71**	
1015 - 1030	0	75	23	0	3	1	0	0	2	0	0	0	0	**104**	
1030 - 1045	0	63	17	0	4	0	0	0	1	0	0	0	0	**85**	
1045 - 1100	0	64	14	0	1	1	0	2	2	0	0	0	0	**84**	**344**
1100 - 1115	0	63	20	1	1	0	0	0	4	0	0	0	0	**89**	
1115 - 1130	0	60	23	2	3	1	0	0	7	0	0	0	0	**96**	
1130 - 1145	0	63	27	1	3	1	0	1	3	0	0	0	0	**99**	
1145 - 1200	0	54	25	1	2	0	0	0	5	0	0	0	0	**87**	**371**
1200 - 1215	0	70	19	0	2	0	0	0	5	0	0	0	0	**96**	
1215 - 1230	0	99	17	0	1	0	0	0	5	0	0	0	0	**122**	
1230 - 1245	0	79	29	0	0	0	0	0	2	0	0	0	0	**110**	
1245 - 1300	1	72	28	0	12	0	0	0	2	1	0	0	0	**116**	**444**
1300 - 1315	0	79	23	2	5	1	0	0	4	0	0	0	0	**114**	
1315 - 1330	0	92	13	0	2	0	0	1	5	0	0	0	0	**113**	
1330 - 1345	0	85	26	1	3	2	0	0	8	0	0	0	0	**125**	
1345 - 1400	0	95	29	2	1	0	0	0	1	0	0	0	0	**128**	**480**
1400 - 1415	0	70	26	0	1	0	0	2	5	0	0	0	0	**104**	
1415 - 1430	0	69	28	0	4	0	0	1	4	0	0	0	0	**106**	
1430 - 1445	0	96	26	1	2	1	0	0	3	0	0	0	0	**129**	
1445 - 1500	0	76	22	1	1	1	0	1	2	0	0	0	0	**104**	**443**
1500 - 1515	0	77	24	1	0	0	0	2	2	0	0	0	0	**106**	
1515 - 1530	0	86	19	1	1	0	0	1	6	0	0	0	0	**114**	
1530 - 1545	0	80	22	1	2	1	0	0	4	1	0	0	0	**111**	
1545 - 1600	2	99	24	0	6	0	0	1	3	0	0	0	0	**135**	**466**
1600 - 1615	0	74	22	0	1	0	0	0	2	0	0	0	0	**99**	
1615 - 1630	0	68	23	0	3	0	0	0	9	0	0	0	0	**103**	
1630 - 1645	1	86	19	1	3	0	0	0	3	0	0	0	0	**113**	
1645 - 1700	0	92	19	0	3	0	0	1	3	0	0	0	0	**118**	**433**
1700 - 1715	0	77	27	0	1	0	0	0	3	0	0	0	0	**108**	
1715 - 1730	0	87	25	1	0	0	0	0	3	0	0	0	0	**116**	
1730 - 1745	0	85	21	0	2	0	0	0	3	0	0	0	0	**111**	
1745 - 1800	0	91	19	0	2	0	0	0	3	0	0	0	0	**115**	**450**
1800 - 1815	0	95	18	0	0	0	0	0	6	0	0	0	0	**119**	
1815 - 1830	0	94	21	0	3	1	0	0	4	0	0	0	0	**123**	
1830 - 1845	1	60	24	0	2	0	0	1	2	0	0	0	0	**90**	
1845 - 1900	0	58	18	0	2	0	0	1	3	0	0	0	0	**82**	**414**
1900 - 1915	0	0	0	0	0	0	0	0	0	0	0	0	0	**0**	
1915 - 1930	0	0	0	0	0	0	0	0	0	0	0	0	0	**0**	
1930 - 1945	0	0	0	0	0	0	0	0	0	0	0	0	0	**0**	
1945 - 2000	0	0	0	0	0	0	0	0	0	0	0	0	0	**0**	**0**
2000 - 2015	0	0	0	0	0	0	0	0	0	0	0	0	0	**0**	
2015 - 2030	0	0	0	0	0	0	0	0	0	0	0	0	0	**0**	
2030 - 2045	0	0	0	0	0	0	0	0	0	0	0	0	0	**0**	
2045 - 2100	0	0	0	0	0	0	0	0	0	0	0	0	0	**0**	**0**
2100 - 2115	0	0	0	0	0	0	0	0	0	0	0	0	0	**0**	
2115 - 2130	0	0	0	0	0	0	0	0	0	0	0	0	0	**0**	
2130 - 2145	0	0	0	0	0	0	0	0	0	0	0	0	0	**0**	
2145 - 2200	0	0	0	0	0	0	0	0	0	0	0	0	0	**0**	**0**
2200 - 2215	0	0	0	0	0	0	0	0	0	0	0	0	0	**0**	
2215 - 2230	0	0	0	0	0	0	0	0	0	0	0	0	0	**0**	
2230 - 2245	0	0	0	0	0	0	0	0	0	0	0	0	0	**0**	
2245 - 2300	0	0	0	0	0	0	0	0	0	0	0	0	0	**0**	**0**
2300 - 2315	0	0	0	0	0	0	0	0	0	0	0	0	0	**0**	
2315 - 2330	0	0	0	0	0	0	0	0	0	0	0	0	0	**0**	
2330 - 2345	0	0	0	0	0	0	0	0	0	0	0	0	0	**0**	
2345 - 0000	0	0	0	0	0	0	0	0	0	0	0	0	0	**0**	**0**

Session Total	9	5111	1357	23	113	17	1	27	231	3	23	0	0	**6915**
Session Average	0.09	53.24	14.14	0.24	1.18	0.18	0.01	0.28	2.41	0.03	0.24	0.00	0.00	**72.03**
Session Percentage	0.13	73.91	19.62	0.33	1.63	0.25	0.01	0.39	3.34	0.04	0.33	0.00	0.00	

AM Peak Hour	0615 - 0715	0700 - 0800	0730 - 0830	0630 - 0730	0900 - 1000	0930 - 1030	0830 - 0930	0715 - 0815	0730 - 0830	-	0545 - 0645	-	-	**0700 - 0800**
AM Peak Hour Volume	3	780	216	3	11	3	1	4	20	0	3	0	0	**1016**

Noon Peak Hour	1200 - 1300	1300 - 1400	1330 - 1430	1100 - 1200	1245 - 1345	1000 - 1100	-	1400 - 1500	1115 - 1215	1200 - 1300	-	-	-	**1300 - 1400**
Noon Peak Hour Volume	1	351	109	5	22	3	0	4	20	1	0	0	0	**480**

PM Peak Hour	1545 - 1645	1730 - 1830	1645 - 1745	1500 - 1600	1545 - 1645	1500 - 1600	-	1500 - 1600	1530 - 1630	1500 - 1600	-	-	-	**1730 - 1830**
PM Peak Hour Volume	3	365	92	3	13	1	0	4	18	1	0	0	0	**468**

Bi-Directional Class Count || NB EB Average 15min

Columbia, SC

Marr Traffic DATA COLLECTION
www.marrtraffic.com

Site 55
I-20 On/Off-Ramp,
west of US-378 Sunset Blvd

Date
Tuesday, April 23, 2024

Lat/Long
34.009718°, -81.150120°

Weather
Fair
58°F

0000 - 2400 (Weekday 24h Session) (All Dates)
NB EB Average 15min

	NB EB Average 15min													15min	60min
Time	1	2	3	4	5	6	7	8	9	10	11	12	13	Total	Total
0000 - 0015	0	2	0	0	0	0	0	0	0	0	0	0	0	**3**	
0015 - 0030	0	5	0	0	0	0	0	0	2	0	1	0	0	**7**	
0030 - 0045	0	4	0	0	0	0	0	0	1	0	1	0	0	**6**	
0045 - 0100	0	2	0	0	0	0	0	0	1	0	0	0	0	**3**	**19**
0100 - 0115	0	1	0	0	0	0	0	0	1	0	0	0	0	**3**	
0115 - 0130	0	2	0	0	1	0	0	0	2	0	0	0	0	**4**	
0130 - 0145	0	2	0	0	0	0	0	0	1	0	1	0	0	**4**	
0145 - 0200	0	1	0	0	0	0	0	0	1	0	0	0	0	**2**	**13**
0200 - 0215	0	1	0	0	0	0	0	0	1	0	0	0	0	**2**	
0215 - 0230	0	1	0	0	0	0	0	0	1	0	2	0	0	**4**	
0230 - 0245	0	1	0	0	0	0	0	0	1	0	1	0	0	**3**	
0245 - 0300	0	2	0	0	0	0	0	0	1	0	1	0	0	**4**	**13**
0300 - 0315	0	3	0	0	0	0	0	0	0	0	1	0	0	**4**	
0315 - 0330	0	2	0	0	1	0	0	0	1	0	0	0	0	**4**	
0330 - 0345	0	3	0	0	0	0	0	0	0	0	1	0	0	**4**	
0345 - 0400	0	4	0	0	0	0	0	0	1	0	0	0	0	**5**	**18**
0400 - 0415	0	1	0	0	0	0	0	0	3	0	0	0	0	**5**	
0415 - 0430	0	4	0	0	0	0	0	0	1	0	0	0	0	**5**	
0430 - 0445	0	5	0	0	0	0	0	0	1	0	0	0	0	**7**	
0445 - 0500	0	10	0	0	0	0	0	0	3	0	0	0	0	**13**	**30**
0500 - 0515	0	7	0	0	0	0	0	0	1	0	1	0	0	**9**	
0515 - 0530	0	11	0	0	0	0	0	0	2	0	1	0	0	**15**	
0530 - 0545	0	25	0	0	1	0	0	0	2	0	0	0	0	**27**	
0545 - 0600	0	35	1	0	1	0	0	0	2	0	0	0	0	**38**	**89**
0600 - 0615	0	44	0	0	0	0	0	0	2	0	0	0	0	**47**	
0615 - 0630	0	57	8	0	1	0	0	1	2	0	1	0	0	**70**	
0630 - 0645	0	90	15	0	0	0	0	0	1	0	0	0	0	**107**	
0645 - 0700	0	98	32	0	1	0	0	0	3	0	0	0	0	**134**	**358**
0700 - 0715	0	93	31	1	2	0	0	0	3	0	0	0	0	**130**	
0715 - 0730	0	141	36	0	2	0	0	1	2	0	0	0	0	**182**	
0730 - 0745	0	152	27	1	1	0	0	0	2	0	0	0	0	**184**	
0745 - 0800	0	143	40	0	2	0	0	1	3	0	0	0	0	**189**	**685**
0800 - 0815	0	109	28	0	2	0	0	0	3	0	0	0	0	**142**	
0815 - 0830	0	108	37	0	1	0	0	0	5	0	0	0	0	**152**	
0830 - 0845	0	93	22	1	1	0	0	1	1	0	0	0	0	**120**	
0845 - 0900	0	78	21	0	2	0	0	0	4	0	0	0	0	**105**	**519**
0900 - 0915	0	60	16	0	1	0	0	0	3	0	0	0	0	**81**	
0915 - 0930	0	62	21	0	2	0	0	1	2	0	0	0	0	**88**	
0930 - 0945	0	58	15	0	3	1	0	0	3	0	0	0	0	**80**	
0945 - 1000	0	63	14	0	1	0	0	0	2	0	0	0	0	**80**	**328**
1000 - 1015	0	37	13	0	2	1	0	1	2	0	0	0	0	**56**	
1015 - 1030	0	48	15	0	3	1	0	1	2	0	0	0	0	**69**	
1030 - 1045	0	45	13	0	2	0	0	0	1	0	0	0	0	**62**	
1045 - 1100	0	45	11	0	1	1	0	1	1	0	0	0	0	**60**	**248**
1100 - 1115	0	41	15	1	1	0	0	0	2	0	0	0	0	**61**	
1115 - 1130	0	39	13	1	2	0	0	0	4	0	0	0	0	**59**	
1130 - 1145	0	40	16	1	2	1	0	0	2	0	0	0	0	**61**	
1145 - 1200	0	41	16	1	2	0	0	0	3	0	0	0	0	**63**	**244**
1200 - 1215	0	47	13	0	2	0	0	1	3	0	0	0	0	**66**	
1215 - 1230	0	57	11	0	1	0	0	0	3	0	0	0	0	**72**	
1230 - 1245	0	51	17	0	0	1	0	0	1	0	0	0	0	**70**	
1245 - 1300	0	52	18	0	4	0	0	0	1	0	0	0	0	**77**	**286**
1300 - 1315	0	51	14	1	2	0	0	1	2	0	0	0	0	**71**	
1315 - 1330	0	55	12	0	1	0	0	1	2	0	0	0	0	**71**	
1330 - 1345	0	56	18	1	1	1	0	0	3	0	0	0	0	**80**	
1345 - 1400	0	57	18	1	1	0	0	0	2	0	0	0	0	**80**	**303**
1400 - 1415	0	50	16	0	0	0	0	1	3	0	0	0	0	**70**	
1415 - 1430	0	45	16	0	1	0	0	0	1	0	0	0	0	**64**	
1430 - 1445	0	58	19	1	2	1	0	1	3	0	0	0	0	**83**	
1445 - 1500	0	53	15	0	2	1	0	1	1	0	0	0	0	**73**	**290**
1500 - 1515	0	58	20	1	4	1	0	1	2	0	0	0	0	**87**	
1515 - 1530	0	57	14	0	2	0	0	1	3	0	0	0	0	**78**	
1530 - 1545	0	51	15	1	1	0	0	0	2	0	0	0	0	**71**	
1545 - 1600	1	59	15	0	2	0	0	0	3	0	0	0	0	**80**	**315**
1600 - 1615	0	50	12	0	1	0	0	0	1	0	0	0	0	**64**	
1615 - 1630	0	47	12	0	2	0	0	0	4	0	0	0	0	**65**	
1630 - 1645	0	55	10	0	2	0	0	1	3	0	0	0	0	**72**	
1645 - 1700	0	57	18	0	2	0	0	1	2	0	0	0	0	**80**	**281**
1700 - 1715	0	48	15	0	1	0	0	0	2	0	0	0	0	**66**	
1715 - 1730	0	55	15	0	0	0	0	0	2	0	0	0	0	**72**	
1730 - 1745	0	61	13	0	1	0	0	0	4	0	0	0	0	**80**	
1745 - 1800	0	62	19	0	1	0	0	0	3	0	0	0	0	**86**	**304**
1800 - 1815	0	60	13	0	0	0	0	0	4	0	0	0	0	**78**	
1815 - 1830	0	57	12	0	1	0	0	0	2	0	0	0	0	**74**	
1830 - 1845	0	44	13	0	1	0	0	1	2	0	0	0	0	**60**	
1845 - 1900	0	39	9	0	1	0	0	0	2	0	0	0	0	**52**	**264**
1900 - 1915	0	35	7	0	1	0	0	0	2	0	0	0	0	**46**	
1915 - 1930	0	26	7	0	1	0	0	0	3	0	0	0	0	**36**	
1930 - 1945	0	28	5	0	1	0	0	0	1	0	0	0	0	**36**	
1945 - 2000	0	29	10	1	1	0	0	0	1	0	0	0	0	**42**	**159**
2000 - 2015	0	20	7	0	0	0	0	0	1	0	0	0	0	**28**	
2015 - 2030	0	19	4	0	0	0	0	0	2	0	0	0	0	**26**	
2030 - 2045	0	22	1	0	1	0	0	0	2	0	0	0	0	**26**	
2045 - 2100	0	18	1	0	0	0	0	0	1	0	0	0	0	**20**	**99**
2100 - 2115	0	20	1	0	0	0	0	0	1	0	0	0	0	**23**	
2115 - 2130	0	20	0	0	0	0	0	0	2	0	2	0	0	**24**	
2130 - 2145	0	14	0	0	1	0	0	0	1	0	0	0	0	**16**	
2145 - 2200	0	12	0	0	1	0	0	0	3	0	1	0	0	**16**	**79**
2200 - 2215	0	12	0	0	1	0	0	0	2	0	0	0	0	**15**	
2215 - 2230	0	9	0	0	0	0	0	0	1	0	1	0	0	**11**	
2230 - 2245	0	10	0	0	0	0	0	0	2	0	0	0	0	**12**	
2245 - 2300	0	14	1	0	0	0	0	0	1	0	0	0	0	**16**	**54**
2300 - 2315	0	5	0	0	0	0	0	0	1	0	0	0	0	**6**	
2315 - 2330	0	3	0	0	0	0	0	0	3	0	0	0	0	**6**	
2330 - 2345	0	3	0	0	0	0	0	0	1	0	1	0	0	**5**	
2345 - 0000	0	2	0	0	0	0	0	0	1	0	0	0	0	**4**	**21**

Session Total	4	3728	936	16	92	13	1	22	186	2	19	0	0	**5019**
Session Average	0.05	38.83	9.75	0.16	0.96	0.14	0.01	0.23	1.93	0.02	0.20	0.00	0.00	**52.28**
Session Percentage	0.09	74.27	18.65	0.31	1.84	0.27	0.02	0.44	3.70	0.03	0.39	0.00	0.00	

AM Peak Hour	0545 - 0645	0715 - 0815	0700 - 0800	0645 - 0745	0930 - 1030	0930 - 1030	0545 - 0645	0745 - 0845	0730 - 0830	0915 - 1015	0500 - 0600	-	-	**0715 - 0815**
AM Peak Volume	1	545	135	2	8	2	0	3	13	0	2	0	0	**697**

Noon Peak Hour	1200 - 1300	1430 - 1530	1415 - 1515	1100 - 1200	1430 - 1530	1000 - 1100	-	1430 - 1530	1115 - 1215	1000 - 1100	-	-	-	**1430 - 1530**
Noon Peak Volume	0	226	70	4	10	3	0	3	12	1	0	0	0	**320**

PM Peak Hour	1545 - 1645	1730 - 1830	1500 - 1600	1500 - 1600	1500 - 1600	1500 - 1600	1615 - 1715	1600 - 1700	1730 - 1830	1500 - 1600	1945 - 2045	-	-	**1730 - 1830**
PM Peak Volume	1	241	64	2	10	1	0	2	14	0	0	0	0	**317**

Bi-Directional Class Count || Volume Summary 15min

Columbia, SC

Marr Traffic DATA COLLECTION

www.marrtraffic.com

Site 55

I-20 On/Off-Ramp,
west of US-378 Sunset Blvd

Date

Tuesday, April 23, 2024

Lat/Long

34.009718°, -81.150120°

Weather

Fair
58°F

Click here for Detailed Weather

0000 - 2400 (Weekday 24h Session) (04-23-2024)

Volume Summary 15min

TIME	Volume Summary 15min EB	Volume Summary 15min WB	15min Total	60min Total
0000 - 0015	0	0	**0**	
0015 - 0030	0	0	**0**	
0030 - 0045	0	0	**0**	
0045 - 0100	0	0	**0**	**0**
0100 - 0115	0	0	**0**	
0115 - 0130	0	0	**0**	
0130 - 0145	0	0	**0**	
0145 - 0200	0	0	**0**	**0**
0200 - 0215	0	0	**0**	
0215 - 0230	0	0	**0**	
0230 - 0245	0	0	**0**	
0245 - 0300	0	0	**0**	**0**
0300 - 0315	0	0	**0**	
0315 - 0330	0	0	**0**	
0330 - 0345	0	0	**0**	
0345 - 0400	0	0	**0**	**0**
0400 - 0415	0	0	**0**	
0415 - 0430	0	0	**0**	
0430 - 0445	0	0	**0**	
0445 - 0500	0	0	**0**	**0**
0500 - 0515	0	0	**0**	
0515 - 0530	0	0	**0**	
0530 - 0545	0	0	**0**	
0545 - 0600	0	0	**0**	**0**
0600 - 0615	0	0	**0**	
0615 - 0630	0	0	**0**	
0630 - 0645	0	0	**0**	
0645 - 0700	0	0	**0**	**0**
0700 - 0715	0	0	**0**	
0715 - 0730	0	0	**0**	
0730 - 0745	0	0	**0**	
0745 - 0800	0	0	**0**	**0**
0800 - 0815	0	0	**0**	
0815 - 0830	0	0	**0**	
0830 - 0845	0	0	**0**	
0845 - 0900	0	0	**0**	**0**
0900 - 0915	0	0	**0**	
0915 - 0930	0	0	**0**	
0930 - 0945	0	0	**0**	
0945 - 1000	0	0	**0**	**0**
1000 - 1015	0	0	**0**	
1015 - 1030	0	0	**0**	
1030 - 1045	0	0	**0**	
1045 - 1100	0	0	**0**	**0**
1100 - 1115	0	0	**0**	
1115 - 1130	0	0	**0**	
1130 - 1145	0	0	**0**	
1145 - 1200	0	0	**0**	**0**

Time	Volume Summary 15min EB	Volume Summary 15min WB	15min Total	60min Total
1200 - 1215	0	0	**0**	
1215 - 1230	0	0	**0**	
1230 - 1245	0	0	**0**	
1245 - 1300	0	0	**0**	**0**
1300 - 1315	0	0	**0**	
1315 - 1330	0	0	**0**	
1330 - 1345	0	0	**0**	
1345 - 1400	0	0	**0**	**0**
1400 - 1415	0	0	**0**	
1415 - 1430	0	0	**0**	
1430 - 1445	0	0	**0**	
1445 - 1500	0	0	**0**	**0**
1500 - 1515	0	0	**0**	
1515 - 1530	0	0	**0**	
1530 - 1545	0	0	**0**	
1545 - 1600	0	0	**0**	**0**
1600 - 1615	0	0	**0**	
1615 - 1630	0	0	**0**	
1630 - 1645	0	0	**0**	
1645 - 1700	0	0	**0**	**0**
1700 - 1715	0	0	**0**	
1715 - 1730	0	0	**0**	
1730 - 1745	0	0	**0**	
1745 - 1800	0	0	**0**	**0**
1800 - 1815	0	0	**0**	
1815 - 1830	0	0	**0**	
1830 - 1845	0	0	**0**	
1845 - 1900	0	0	**0**	**0**
1900 - 1915	71	0	**71**	
1915 - 1930	55	0	**55**	
1930 - 1945	54	0	**54**	
1945 - 2000	56	0	**56**	**236**
2000 - 2015	41	0	**41**	
2015 - 2030	46	0	**46**	
2030 - 2045	39	0	**39**	
2045 - 2100	26	0	**26**	**152**
2100 - 2115	42	0	**42**	
2115 - 2130	45	0	**45**	
2130 - 2145	28	0	**28**	
2145 - 2200	21	0	**21**	**136**
2200 - 2215	16	0	**16**	
2215 - 2230	13	0	**13**	
2230 - 2245	17	0	**17**	
2245 - 2300	22	0	**22**	**68**
2300 - 2315	10	0	**10**	
2315 - 2330	12	0	**12**	
2330 - 2345	9	0	**9**	
2345 - 0000	4	0	**4**	**35**

Session Total	627	0	**627**
Session Average	6.53	0.00	**6.53**
Session Percentage	100.00	0.00	

Site 55
I-20 On/Off-Ramp,
west of US-378 Sunset Blvd

Date
Wednesday, April 24, 2024

Lat/Long
34.009718°, -81.150120°

Weather
Fair
66°F

Click here for Detailed Weather

0000 - 2400 (Weekday 24h Session) (04-24-2024)
Volume Summary 15min

TIME	Volume Summary 15min EB	WB	15min Total	60min Total
0000 - 0015	4	0	**4**	
0015 - 0030	8	0	**8**	
0030 - 0045	6	0	**6**	
0045 - 0100	6	0	**6**	**24**
0100 - 0115	4	0	**4**	
0115 - 0130	10	0	**10**	
0130 - 0145	4	0	**4**	
0145 - 0200	3	0	**3**	**21**
0200 - 0215	3	0	**3**	
0215 - 0230	7	0	**7**	
0230 - 0245	4	0	**4**	
0245 - 0300	4	0	**4**	**18**
0300 - 0315	4	0	**4**	
0315 - 0330	9	0	**9**	
0330 - 0345	7	0	**7**	
0345 - 0400	6	0	**6**	**26**
0400 - 0415	9	0	**9**	
0415 - 0430	8	0	**8**	
0430 - 0445	9	0	**9**	
0445 - 0500	17	0	**17**	**43**
0500 - 0515	14	0	**14**	
0515 - 0530	13	0	**13**	
0530 - 0545	44	0	**44**	
0545 - 0600	52	0	**52**	**123**
0600 - 0615	70	0	**70**	
0615 - 0630	112	0	**112**	
0630 - 0645	162	0	**162**	
0645 - 0700	208	0	**208**	**552**
0700 - 0715	186	0	**186**	
0715 - 0730	280	0	**280**	
0730 - 0745	300	0	**300**	
0745 - 0800	274	0	**274**	**1040**
0800 - 0815	227	0	**227**	
0815 - 0830	220	0	**220**	
0830 - 0845	214	0	**214**	
0845 - 0900	148	0	**148**	**809**
0900 - 0915	126	0	**126**	
0915 - 0930	106	0	**106**	
0930 - 0945	139	0	**139**	
0945 - 1000	121	0	**121**	**492**
1000 - 1015	98	0	**98**	
1015 - 1030	104	0	**104**	
1030 - 1045	102	0	**102**	
1045 - 1100	96	0	**96**	**400**
1100 - 1115	94	0	**94**	
1115 - 1130	81	0	**81**	
1130 - 1145	83	0	**83**	
1145 - 1200	102	0	**102**	**360**

Time	Volume Summary 15min EB	WB	15min Total	60min Total
1200 - 1215	102	0	**102**	
1215 - 1230	95	0	**95**	
1230 - 1245	101	0	**101**	
1245 - 1300	115	0	**115**	**413**
1300 - 1315	100	0	**100**	
1315 - 1330	101	0	**101**	
1330 - 1345	116	0	**116**	
1345 - 1400	111	0	**111**	**428**
1400 - 1415	105	0	**105**	
1415 - 1430	87	0	**87**	
1430 - 1445	120	0	**120**	
1445 - 1500	114	0	**114**	**426**
1500 - 1515	154	0	**154**	
1515 - 1530	119	0	**119**	
1530 - 1545	101	0	**101**	
1545 - 1600	106	0	**106**	**480**
1600 - 1615	94	0	**94**	
1615 - 1630	93	0	**93**	
1630 - 1645	102	0	**102**	
1645 - 1700	122	0	**122**	**411**
1700 - 1715	91	0	**91**	
1715 - 1730	101	0	**101**	
1730 - 1745	129	0	**129**	
1745 - 1800	142	0	**142**	**463**
1800 - 1815	115	0	**115**	
1815 - 1830	98	0	**98**	
1830 - 1845	91	0	**91**	
1845 - 1900	73	0	**73**	**377**
1900 - 1915	66	0	**66**	
1915 - 1930	54	0	**54**	
1930 - 1945	53	0	**53**	
1945 - 2000	69	0	**69**	**242**
2000 - 2015	42	0	**42**	
2015 - 2030	31	0	**31**	
2030 - 2045	38	0	**38**	
2045 - 2100	34	0	**34**	**145**
2100 - 2115	26	0	**26**	
2115 - 2130	28	0	**28**	
2130 - 2145	19	0	**19**	
2145 - 2200	27	0	**27**	**100**
2200 - 2215	30	0	**30**	
2215 - 2230	20	0	**20**	
2230 - 2245	18	0	**18**	
2245 - 2300	25	0	**25**	**93**
2300 - 2315	9	0	**9**	
2315 - 2330	6	0	**6**	
2330 - 2345	7	0	**7**	
2345 - 0000	7	0	**7**	**29**

Session Total	7515	0	**7515**
Session Average	78.28	0.00	**78.28**
Session Percentage	100.00	0.00	

Site 55
I-20 On/Off-Ramp,
west of US-378 Sunset Blvd

Date
Thursday, April 25, 2024

Lat/Long
34.009718°, -81.150120°

Weather
Fair
67°F

Click here for Detailed Weather

0000 - 2400 (Weekday 24h Session) (04-25-2024)
Volume Summary 15min

TIME	Volume Summary 15min EB	WB	15min Total	60min Total
0000 - 0015	5	0	**5**	
0015 - 0030	14	0	**14**	
0030 - 0045	12	0	**12**	
0045 - 0100	2	0	**2**	**33**
0100 - 0115	5	0	**5**	
0115 - 0130	2	0	**2**	
0130 - 0145	7	0	**7**	
0145 - 0200	4	0	**4**	**18**
0200 - 0215	3	0	**3**	
0215 - 0230	4	0	**4**	
0230 - 0245	5	0	**5**	
0245 - 0300	8	0	**8**	**20**
0300 - 0315	7	0	**7**	
0315 - 0330	4	0	**4**	
0330 - 0345	6	0	**6**	
0345 - 0400	10	0	**10**	**27**
0400 - 0415	7	0	**7**	
0415 - 0430	7	0	**7**	
0430 - 0445	11	0	**11**	
0445 - 0500	23	0	**23**	**48**
0500 - 0515	13	0	**13**	
0515 - 0530	31	0	**31**	
0530 - 0545	38	0	**38**	
0545 - 0600	63	0	**63**	**145**
0600 - 0615	71	0	**71**	
0615 - 0630	98	0	**98**	
0630 - 0645	158	0	**158**	
0645 - 0700	195	0	**195**	**522**
0700 - 0715	205	0	**205**	
0715 - 0730	267	0	**267**	
0730 - 0745	251	0	**251**	
0745 - 0800	293	0	**293**	**1016**
0800 - 0815	198	0	**198**	
0815 - 0830	236	0	**236**	
0830 - 0845	147	0	**147**	
0845 - 0900	167	0	**167**	**748**
0900 - 0915	116	0	**116**	
0915 - 0930	158	0	**158**	
0930 - 0945	100	0	**100**	
0945 - 1000	119	0	**119**	**493**
1000 - 1015	71	0	**71**	
1015 - 1030	104	0	**104**	
1030 - 1045	85	0	**85**	
1045 - 1100	84	0	**84**	**344**
1100 - 1115	89	0	**89**	
1115 - 1130	96	0	**96**	
1130 - 1145	99	0	**99**	
1145 - 1200	87	0	**87**	**371**

Time	Volume Summary 15min EB	WB	15min Total	60min Total
1200 - 1215	96	0	**96**	
1215 - 1230	122	0	**122**	
1230 - 1245	110	0	**110**	
1245 - 1300	116	0	**116**	**444**
1300 - 1315	114	0	**114**	
1315 - 1330	113	0	**113**	
1330 - 1345	125	0	**125**	
1345 - 1400	128	0	**128**	**480**
1400 - 1415	104	0	**104**	
1415 - 1430	106	0	**106**	
1430 - 1445	129	0	**129**	
1445 - 1500	104	0	**104**	**443**
1500 - 1515	106	0	**106**	
1515 - 1530	114	0	**114**	
1530 - 1545	111	0	**111**	
1545 - 1600	135	0	**135**	**466**
1600 - 1615	99	0	**99**	
1615 - 1630	103	0	**103**	
1630 - 1645	113	0	**113**	
1645 - 1700	118	0	**118**	**433**
1700 - 1715	108	0	**108**	
1715 - 1730	116	0	**116**	
1730 - 1745	111	0	**111**	
1745 - 1800	115	0	**115**	**450**
1800 - 1815	119	0	**119**	
1815 - 1830	123	0	**123**	
1830 - 1845	90	0	**90**	
1845 - 1900	82	0	**82**	**414**
1900 - 1915	0	0	**0**	
1915 - 1930	0	0	**0**	
1930 - 1945	0	0	**0**	
1945 - 2000	0	0	**0**	**0**
2000 - 2015	0	0	**0**	
2015 - 2030	0	0	**0**	
2030 - 2045	0	0	**0**	
2045 - 2100	0	0	**0**	**0**
2100 - 2115	0	0	**0**	
2115 - 2130	0	0	**0**	
2130 - 2145	0	0	**0**	
2145 - 2200	0	0	**0**	**0**
2200 - 2215	0	0	**0**	
2215 - 2230	0	0	**0**	
2230 - 2245	0	0	**0**	
2245 - 2300	0	0	**0**	**0**
2300 - 2315	0	0	**0**	
2315 - 2330	0	0	**0**	
2330 - 2345	0	0	**0**	
2345 - 0000	0	0	**0**	**0**

Session Total	6915	0	**6915**
Session Average	72.03	0.00	**72.03**
Session Percentage	100.00	0.00	

Bi-Directional Class Count || NB EB 60min

Columbia, SC

Marr Traffic DATA COLLECTION

www.marrtraffic.com

Site 55
I-20 On/Off-Ramp,
west of US-378 Sunset Blvd

Date
Tuesday, April 23, 2024

Lat/Long
34.009718°, -81.150120°

Weather
Fair
58°F

Click here for Detailed Weather

0000 - 2400 (Weekday 24h Session) (04-23-2024)
NB EB 60min

	Eastbound (Movement 55.1)													
TIME	1	2	3	4	5	6	7	8	9	10	11	12	13	**Total**
0000 - 0100	0	0	0	0	0	0	0	0	0	0	0	0	0	**0**
0100 - 0200	0	0	0	0	0	0	0	0	0	0	0	0	0	**0**
0200 - 0300	0	0	0	0	0	0	0	0	0	0	0	0	0	**0**
0300 - 0400	0	0	0	0	0	0	0	0	0	0	0	0	0	**0**
0400 - 0500	0	0	0	0	0	0	0	0	0	0	0	0	0	**0**
0500 - 0600	0	0	0	0	0	0	0	0	0	0	0	0	0	**0**
0600 - 0700	0	0	0	0	0	0	0	0	0	0	0	0	0	**0**
0700 - 0800	0	0	0	0	0	0	0	0	0	0	0	0	0	**0**
0800 - 0900	0	0	0	0	0	0	0	0	0	0	0	0	0	**0**
0900 - 1000	0	0	0	0	0	0	0	0	0	0	0	0	0	**0**
1000 - 1100	0	0	0	0	0	0	0	0	0	0	0	0	0	**0**
1100 - 1200	0	0	0	0	0	0	0	0	0	0	0	0	0	**0**
1200 - 1300	0	0	0	0	0	0	0	0	0	0	0	0	0	**0**
1300 - 1400	0	0	0	0	0	0	0	0	0	0	0	0	0	**0**
1400 - 1500	0	0	0	0	0	0	0	0	0	0	0	0	0	**0**
1500 - 1600	0	0	0	0	0	0	0	0	0	0	0	0	0	**0**
1600 - 1700	0	0	0	0	0	0	0	0	0	0	0	0	0	**0**
1700 - 1800	0	0	0	0	0	0	0	0	0	0	0	0	0	**0**
1800 - 1900	0	0	0	0	0	0	0	0	0	0	0	0	0	**0**
1900 - 2000	0	177	44	1	4	1	0	0	9	0	0	0	0	**236**
2000 - 2100	0	116	20	0	1	0	0	1	13	0	1	0	0	**152**
2100 - 2200	0	109	5	0	4	1	0	0	15	0	2	0	0	**136**
2200 - 2300	0	56	3	0	1	0	0	0	8	0	0	0	0	**68**
2300 - 2400	0	21	1	0	2	0	0	0	10	0	1	0	0	**35**
Session Total	0	479	73	1	12	2	0	1	55	0	4	0	0	**627**
Session Average	0.00	19.96	3.04	0.04	0.50	0.08	0.00	0.04	2.29	0.00	0.17	0.00	0.00	**26.13**
Session Percentage	0.00	76.40	11.64	0.16	1.91	0.32	0.00	0.16	8.77	0.00	0.64	0.00	0.00	
AM Peak Hour	-	-	-	-	-	-	-	-	-	-	-	-	-	**-**
AM Peak Volume	0	0	0	0	0	0	0	0	0	0	0	0	0	**0**
Noon Peak Hour	-	-	-	-	-	-	-	-	-	-	-	-	-	**-**
Noon Peak Volume	0	0	0	0	0	0	0	0	0	0	0	0	0	**0**
PM Peak Hour	-	1900 - 2000	1900 - 2000	1900 - 2000	1900 - 2000	1900 - 2000	-	-	1900 - 2000	-	-	-	-	**1900 - 2000**
PM Peak Volume	0	177	44	1	4	1	0	0	9	0	0	0	0	**236**

Site 55
I-20 On/Off-Ramp,
west of US-378 Sunset Blvd

Date
Wednesday, April 24, 2024

Lat/Long
34.009718°, -81.150120°

Weather
Fair
66°F

Click here for Detailed Weather

0000 - 2400 (Weekday 24h Session) (04-24-2024)
NB EB 60min

	Eastbound (Movement 55.1)													
TIME	1	2	3	4	5	6	7	8	9	10	11	12	13	**Total**
0000 - 0100	0	15	0	0	0	0	0	0	6	0	3	0	0	**24**
0100 - 0200	0	11	0	0	1	0	0	0	9	0	0	0	0	**21**
0200 - 0300	0	7	0	0	0	0	0	0	3	0	8	0	0	**18**
0300 - 0400	0	17	1	0	2	0	0	0	4	0	2	0	0	**26**
0400 - 0500	0	28	1	0	2	0	0	0	11	0	1	0	0	**43**
0500 - 0600	0	103	2	0	4	0	0	0	10	0	4	0	0	**123**
0600 - 0700	1	447	84	0	3	0	1	2	12	0	2	0	0	**552**
0700 - 0800	1	806	201	3	9	0	0	3	17	0	0	0	0	**1040**
0800 - 0900	1	617	147	3	15	1	0	4	20	0	1	0	0	**809**
0900 - 1000	0	362	104	0	10	1	0	0	15	0	0	0	0	**492**
1000 - 1100	0	273	84	0	16	5	0	6	14	2	0	0	0	**400**
1100 - 1200	0	241	84	6	12	3	0	1	13	0	0	0	0	**360**
1200 - 1300	0	302	86	1	9	2	0	2	11	0	0	0	0	**413**
1300 - 1400	0	305	98	4	5	2	0	4	10	0	0	0	0	**428**
1400 - 1500	0	308	94	1	7	2	0	3	11	0	0	0	0	**426**
1500 - 1600	0	333	103	2	21	2	0	2	17	0	0	0	0	**480**
1600 - 1700	0	308	71	0	11	1	0	6	14	0	0	0	0	**411**
1700 - 1800	1	338	94	0	7	0	1	2	20	0	0	0	0	**463**
1800 - 1900	0	294	58	0	3	1	0	3	18	0	0	0	0	**377**
1900 - 2000	0	178	45	3	6	0	0	0	10	0	0	0	0	**242**
2000 - 2100	0	118	20	0	2	1	0	0	4	0	0	0	0	**145**
2100 - 2200	0	86	0	0	2	0	0	0	6	0	6	0	0	**100**
2200 - 2300	0	76	0	0	4	0	0	0	10	0	3	0	0	**93**
2300 - 2400	0	20	1	0	1	0	0	0	6	0	1	0	0	**29**

Session Total	4	5593	1378	23	152	21	2	38	271	2	31	0	0	**7515**
Session Average	0.17	233.04	57.42	0.96	6.33	0.88	0.08	1.58	11.29	0.08	1.29	0.00	0.00	**313.13**
Session Percentage	0.05	74.42	18.34	0.31	2.02	0.28	0.03	0.51	3.61	0.03	0.41	0.00	0.00	

AM Peak Hour	0600 - 0700	0700 - 0800	0700 - 0800	0700 - 0800	0800 - 0900	0800 - 0900	0600 - 0700	0800 - 0900	0800 - 0900	-	0500 - 0600	-	-	**0700 - 0800**
AM Peak Volume	1	806	201	3	15	1	1	4	20	0	4	0	0	**1040**

Noon Peak Hour	-	1400 - 1500	1300 - 1400	1100 - 1200	1000 - 1100	1000 - 1100	-	1000 - 1100	1000 - 1100	1000 - 1100	-	-	-	**1300 - 1400**
Noon Peak Volume	0	308	98	6	16	5	0	6	14	2	0	0	0	**428**

PM Peak Hour	1700 - 1800	1700 - 1800	1500 - 1600	1900 - 2000	1500 - 1600	1500 - 1600	1700 - 1800	1600 - 1700	1700 - 1800	-	-	-	-	**1500 - 1600**
PM Peak Volume	1	338	103	3	21	2	1	6	20	0	0	0	0	**480**

Site 55
I-20 On/Off-Ramp,
west of US-378 Sunset Blvd

Date
Thursday, April 25, 2024

Lat/Long
34.009718°, -81.150120°

Weather
Fair
67°F

Click here for Detailed Weather

0000 - 2400 (Weekday 24h Session) (04-25-2024)
NB EB 60min

	Eastbound (Movement 55.1)													
TIME	1	2	3	4	5	6	7	8	9	10	11	12	13	**Total**
0000 - 0100	0	22	0	0	0	0	0	0	6	0	5	0	0	**33**
0100 - 0200	0	7	0	0	2	0	0	0	5	0	4	0	0	**18**
0200 - 0300	0	8	0	0	0	0	0	0	7	0	5	0	0	**20**
0300 - 0400	0	17	0	0	1	0	0	0	5	0	4	0	0	**27**
0400 - 0500	0	32	0	0	0	0	0	0	14	1	1	0	0	**48**
0500 - 0600	1	131	1	0	2	1	0	0	8	0	1	0	0	**145**
0600 - 0700	2	417	84	0	4	1	0	2	9	0	3	0	0	**522**
0700 - 0800	1	780	204	3	8	2	0	3	15	0	0	0	0	**1016**
0800 - 0900	0	547	175	2	2	0	0	3	19	0	0	0	0	**748**
0900 - 1000	0	366	95	1	11	1	1	4	14	0	0	0	0	**493**
1000 - 1100	0	253	72	0	9	3	0	2	5	0	0	0	0	**344**
1100 - 1200	0	240	95	5	9	2	0	1	19	0	0	0	0	**371**
1200 - 1300	1	320	93	0	15	0	0	0	14	1	0	0	0	**444**
1300 - 1400	0	351	91	5	11	3	0	1	18	0	0	0	0	**480**
1400 - 1500	0	311	102	2	8	2	0	4	14	0	0	0	0	**443**
1500 - 1600	2	342	89	3	9	1	0	4	15	1	0	0	0	**466**
1600 - 1700	1	320	83	1	10	0	0	1	17	0	0	0	0	**433**
1700 - 1800	0	340	92	1	5	0	0	0	12	0	0	0	0	**450**
1800 - 1900	1	307	81	0	7	1	0	2	15	0	0	0	0	**414**
1900 - 2000	0	0	0	0	0	0	0	0	0	0	0	0	0	**0**
2000 - 2100	0	0	0	0	0	0	0	0	0	0	0	0	0	**0**
2100 - 2200	0	0	0	0	0	0	0	0	0	0	0	0	0	**0**
2200 - 2300	0	0	0	0	0	0	0	0	0	0	0	0	0	**0**
2300 - 2400	0	0	0	0	0	0	0	0	0	0	0	0	0	**0**

Session Total	9	5111	1357	23	113	17	1	27	231	3	23	0	0	**6915**
Session Average	0.38	212.96	56.54	0.96	4.71	0.71	0.04	1.13	9.63	0.13	0.96	0.00	0.00	**288.13**
Session Percentage	0.13	73.91	19.62	0.33	1.63	0.25	0.01	0.39	3.34	0.04	0.33	0.00	0.00	

AM Peak Hour	0600 - 0700	0700 - 0800	0700 - 0800	0700 - 0800	0900 - 1000	0700 - 0800	0900 - 1000	0900 - 1000	0800 - 0900	-	0600 - 0700	-	-	**0700 - 0800**
AM Peak Hour Volume	2	780	204	3	11	2	1	4	19	0	3	0	0	**1016**

Noon Peak Hour	1200 - 1300	1300 - 1400	1400 - 1500	1100 - 1200	1200 - 1300	1000 - 1100	-	1400 - 1500	1100 - 1200	1200 - 1300	-	-	-	**1300 - 1400**
Noon Peak Hour Volume	1	351	102	5	15	3	0	4	19	1	0	0	0	**480**

PM Peak Hour	1500 - 1600	1500 - 1600	1700 - 1800	1500 - 1600	1600 - 1700	1500 - 1600	-	1500 - 1600	1600 - 1700	1500 - 1600	-	-	-	**1500 - 1600**
PM Peak Hour Volume	2	342	92	3	10	1	0	4	17	1	0	0	0	**466**

Bi-Directional Class Count || Volume Summary 60min

Columbia, SC

Marr Traffic DATA COLLECTION

www.marrtraffic.com

Site 55

I-20 On/Off-Ramp,
west of US-378 Sunset Blvd

Date

Tuesday, April 23, 2024

Lat/Long

34.009718°, -81.150120°

Weather

Fair
58°F

Click here for Detailed Weather

0000 - 2400 (Weekday 24h Session) (04-23-2024)

Volume Summary 60min

	Volume Summary 60min		
TIME	EB	WB	**Total**
0000 - 0100	0	0	**0**
0100 - 0200	0	0	**0**
0200 - 0300	0	0	**0**
0300 - 0400	0	0	**0**
0400 - 0500	0	0	**0**
0500 - 0600	0	0	**0**
0600 - 0700	0	0	**0**
0700 - 0800	0	0	**0**
0800 - 0900	0	0	**0**
0900 - 1000	0	0	**0**
1000 - 1100	0	0	**0**
1100 - 1200	0	0	**0**

	Volume Summary 60min		
Time	EB	WB	**Total**
1200 - 1300	0	0	**0**
1300 - 1400	0	0	**0**
1400 - 1500	0	0	**0**
1500 - 1600	0	0	**0**
1600 - 1700	0	0	**0**
1700 - 1800	0	0	**0**
1800 - 1900	0	0	**0**
1900 - 2000	236	0	**236**
2000 - 2100	152	0	**152**
2100 - 2200	136	0	**136**
2200 - 2300	68	0	**68**
2300 - 2400	35	0	**35**

Session Total	627	0	**627**
Session Average	26.13	0.00	**26.13**
Session Percentage	100.00	0.00	

Site 55

I-20 On/Off-Ramp,
west of US-378 Sunset Blvd

Date

Wednesday, April 24, 2024

Lat/Long

34.009718°, -81.150120°

Weather

Fair
66°F

Click here for Detailed Weather

0000 - 2400 (Weekday 24h Session) (04-24-2024)

Volume Summary 60min

	Volume Summary 60min		
TIME	EB	WB	**Total**
0000 - 0100	24	0	**24**
0100 - 0200	21	0	**21**
0200 - 0300	18	0	**18**
0300 - 0400	26	0	**26**
0400 - 0500	43	0	**43**
0500 - 0600	123	0	**123**
0600 - 0700	552	0	**552**
0700 - 0800	1040	0	**1040**
0800 - 0900	809	0	**809**
0900 - 1000	492	0	**492**
1000 - 1100	400	0	**400**
1100 - 1200	360	0	**360**

	Volume Summary 60min		
Time	EB	WB	**Total**
1200 - 1300	413	0	**413**
1300 - 1400	428	0	**428**
1400 - 1500	426	0	**426**
1500 - 1600	480	0	**480**
1600 - 1700	411	0	**411**
1700 - 1800	463	0	**463**
1800 - 1900	377	0	**377**
1900 - 2000	242	0	**242**
2000 - 2100	145	0	**145**
2100 - 2200	100	0	**100**
2200 - 2300	93	0	**93**
2300 - 2400	29	0	**29**

Session Total	7515	0	**7515**
Session Average	313.13	0.00	**313.13**
Session Percentage	100.00	0.00	

Site 55

I-20 On/Off-Ramp,
west of US-378 Sunset Blvd

Date

Thursday, April 25, 2024

Lat/Long

34.009718°, -81.150120°

Weather

Fair
67°F

Click here for Detailed Weather

0000 - 2400 (Weekday 24h Session) (04-25-2024)

Volume Summary 60min

	Volume Summary 60min		
TIME	EB	WB	**Total**
0000 - 0100	33	0	**33**
0100 - 0200	18	0	**18**
0200 - 0300	20	0	**20**
0300 - 0400	27	0	**27**
0400 - 0500	48	0	**48**
0500 - 0600	145	0	**145**
0600 - 0700	522	0	**522**
0700 - 0800	1016	0	**1016**
0800 - 0900	748	0	**748**
0900 - 1000	493	0	**493**
1000 - 1100	344	0	**344**
1100 - 1200	371	0	**371**

	Volume Summary 60min		
Time	EB	WB	**Total**
1200 - 1300	444	0	**444**
1300 - 1400	480	0	**480**
1400 - 1500	443	0	**443**
1500 - 1600	466	0	**466**
1600 - 1700	433	0	**433**
1700 - 1800	450	0	**450**
1800 - 1900	414	0	**414**
1900 - 2000	0	0	**0**
2000 - 2100	0	0	**0**
2100 - 2200	0	0	**0**
2200 - 2300	0	0	**0**
2300 - 2400	0	0	**0**

Session Total	6915	0	**6915**
Session Average	288.13	0.00	**288.13**
Session Percentage	100.00	0.00	

Bi-Directional Class Count || Graphical Analysis NB EB

Columbia, SC

Marr Traffic DATA COLLECTION

www.marrtraffic.com

Site 55

I-20 On/Off-Ramp,
west of US-378 Sunset Blvd

Lat/Long

34.009718°, -81.150120°

0000 - 2400 (Weekday 24h Session)

Graphical Analysis NB EB

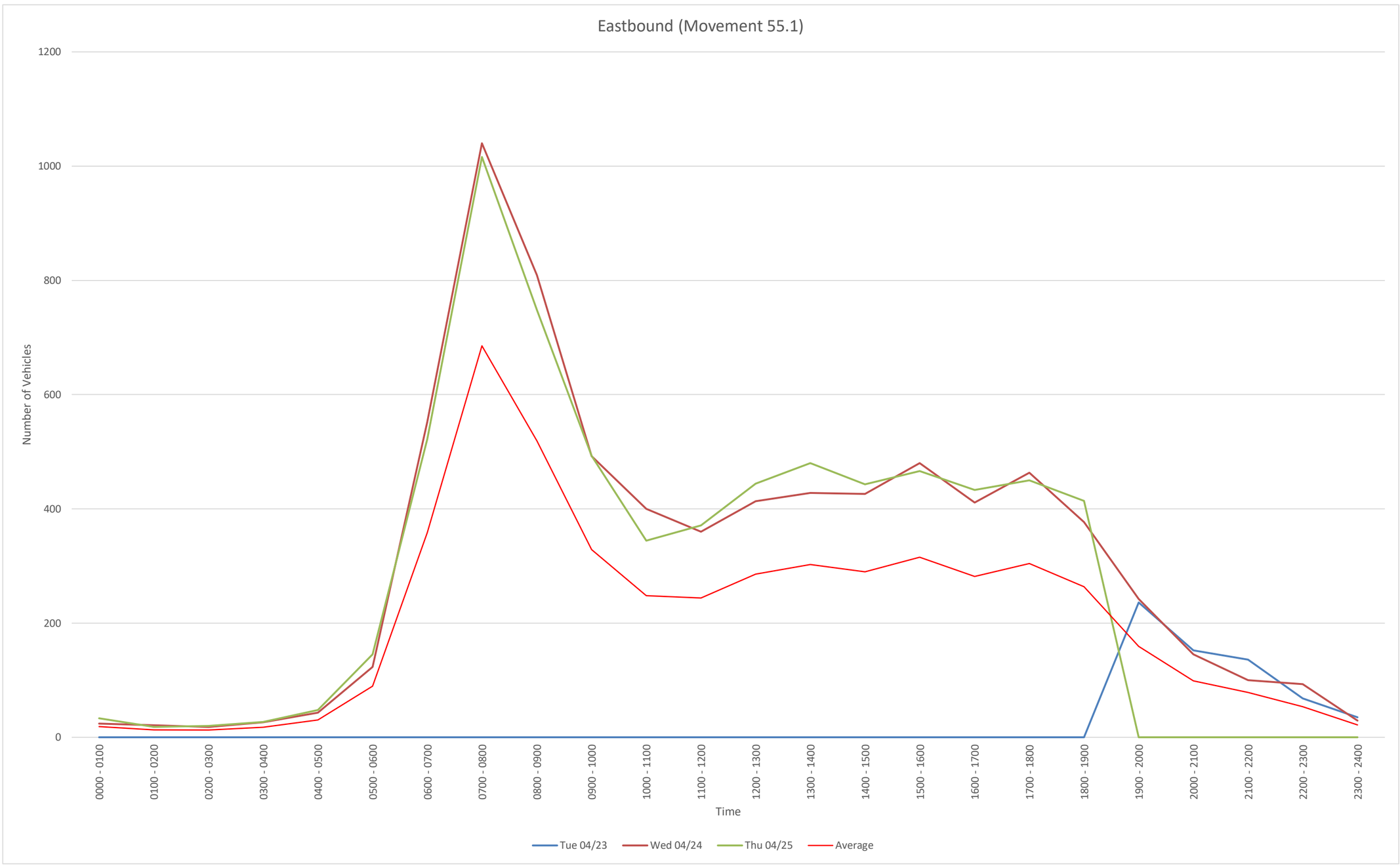

Time	Tue 04/23	Wed 04/24	Thu 04/25				
0000 - 0100	0	24	33				
0100 - 0200	0	21	18				
0200 - 0300	0	18	20				
0300 - 0400	0	26	27				
0400 - 0500	0	43	48				
0500 - 0600	0	123	145				
0600 - 0700	0	552	522				
0700 - 0800	0	1040	1016				
0800 - 0900	0	809	748				
0900 - 1000	0	492	493				
1000 - 1100	0	400	344				
1100 - 1200	0	360	371				
1200 - 1300	0	413	444				
1300 - 1400	0	428	480				
1400 - 1500	0	426	443				
1500 - 1600	0	480	466				
1600 - 1700	0	411	433				
1700 - 1800	0	463	450				
1800 - 1900	0	377	414				
1900 - 2000	236	242	0				
2000 - 2100	152	145	0				
2100 - 2200	136	100	0				
2200 - 2300	68	93	0				
2300 - 2400	35	29	0				
Daily Total	627	7515	6915				

EB
File Name:
Start Date: 4/23/2024
Start Time: 0
Site Code: 55
Station ID: 1
Location 1: I-20 On/Off-Ramp, west of US-378 Sunset Blvd
Location 2:

Date	Time	1	2	3	4	5	6	7	8	9	10	11	12	13
4/23/2024	12:00 AM	0	0	0	0	0	0	0	0	0	0	0	0	0
4/23/2024	12:15 AM	0	0	0	0	0	0	0	0	0	0	0	0	0
4/23/2024	12:30 AM	0	0	0	0	0	0	0	0	0	0	0	0	0
4/23/2024	12:45 AM	0	0	0	0	0	0	0	0	0	0	0	0	0
4/23/2024	1:00 AM	0	0	0	0	0	0	0	0	0	0	0	0	0
4/23/2024	1:15 AM	0	0	0	0	0	0	0	0	0	0	0	0	0
4/23/2024	1:30 AM	0	0	0	0	0	0	0	0	0	0	0	0	0
4/23/2024	1:45 AM	0	0	0	0	0	0	0	0	0	0	0	0	0
4/23/2024	2:00 AM	0	0	0	0	0	0	0	0	0	0	0	0	0
4/23/2024	2:15 AM	0	0	0	0	0	0	0	0	0	0	0	0	0
4/23/2024	2:30 AM	0	0	0	0	0	0	0	0	0	0	0	0	0
4/23/2024	2:45 AM	0	0	0	0	0	0	0	0	0	0	0	0	0
4/23/2024	3:00 AM	0	0	0	0	0	0	0	0	0	0	0	0	0
4/23/2024	3:15 AM	0	0	0	0	0	0	0	0	0	0	0	0	0
4/23/2024	3:30 AM	0	0	0	0	0	0	0	0	0	0	0	0	0
4/23/2024	3:45 AM	0	0	0	0	0	0	0	0	0	0	0	0	0
4/23/2024	4:00 AM	0	0	0	0	0	0	0	0	0	0	0	0	0
4/23/2024	4:15 AM	0	0	0	0	0	0	0	0	0	0	0	0	0
4/23/2024	4:30 AM	0	0	0	0	0	0	0	0	0	0	0	0	0
4/23/2024	4:45 AM	0	0	0	0	0	0	0	0	0	0	0	0	0
4/23/2024	5:00 AM	0	0	0	0	0	0	0	0	0	0	0	0	0
4/23/2024	5:15 AM	0	0	0	0	0	0	0	0	0	0	0	0	0
4/23/2024	5:30 AM	0	0	0	0	0	0	0	0	0	0	0	0	0
4/23/2024	5:45 AM	0	0	0	0	0	0	0	0	0	0	0	0	0
4/23/2024	6:00 AM	0	0	0	0	0	0	0	0	0	0	0	0	0
4/23/2024	6:15 AM	0	0	0	0	0	0	0	0	0	0	0	0	0
4/23/2024	6:30 AM	0	0	0	0	0	0	0	0	0	0	0	0	0
4/23/2024	6:45 AM	0	0	0	0	0	0	0	0	0	0	0	0	0
4/23/2024	7:00 AM	0	0	0	0	0	0	0	0	0	0	0	0	0
4/23/2024	7:15 AM	0	0	0	0	0	0	0	0	0	0	0	0	0
4/23/2024	7:30 AM	0	0	0	0	0	0	0	0	0	0	0	0	0
4/23/2024	7:45 AM	0	0	0	0	0	0	0	0	0	0	0	0	0
4/23/2024	8:00 AM	0	0	0	0	0	0	0	0	0	0	0	0	0
4/23/2024	8:15 AM	0	0	0	0	0	0	0	0	0	0	0	0	0
4/23/2024	8:30 AM	0	0	0	0	0	0	0	0	0	0	0	0	0
4/23/2024	8:45 AM	0	0	0	0	0	0	0	0	0	0	0	0	0
4/23/2024	9:00 AM	0	0	0	0	0	0	0	0	0	0	0	0	0
4/23/2024	9:15 AM	0	0	0	0	0	0	0	0	0	0	0	0	0
4/23/2024	9:30 AM	0	0	0	0	0	0	0	0	0	0	0	0	0
4/23/2024	9:45 AM	0	0	0	0	0	0	0	0	0	0	0	0	0
4/23/2024	10:00 AM	0	0	0	0	0	0	0	0	0	0	0	0	0
4/23/2024	10:15 AM	0	0	0	0	0	0	0	0	0	0	0	0	0
4/23/2024	10:30 AM	0	0	0	0	0	0	0	0	0	0	0	0	0
4/23/2024	10:45 AM	0	0	0	0	0	0	0	0	0	0	0	0	0
4/23/2024	11:00 AM	0	0	0	0	0	0	0	0	0	0	0	0	0
4/23/2024	11:15 AM	0	0	0	0	0	0	0	0	0	0	0	0	0
4/23/2024	11:30 AM	0	0	0	0	0	0	0	0	0	0	0	0	0
4/23/2024	11:45 AM	0	0	0	0	0	0	0	0	0	0	0	0	0
4/23/2024	12:00 PM	0	0	0	0	0	0	0	0	0	0	0	0	0
4/23/2024	12:15 PM	0	0	0	0	0	0	0	0	0	0	0	0	0
4/23/2024	12:30 PM	0	0	0	0	0	0	0	0	0	0	0	0	0
4/23/2024	12:45 PM	0	0	0	0	0	0	0	0	0	0	0	0	0
4/23/2024	1:00 PM	0	0	0	0	0	0	0	0	0	0	0	0	0
4/23/2024	1:15 PM	0	0	0	0	0	0	0	0	0	0	0	0	0
4/23/2024	1:30 PM	0	0	0	0	0	0	0	0	0	0	0	0	0
4/23/2024	1:45 PM	0	0	0	0	0	0	0	0	0	0	0	0	0
4/23/2024	2:00 PM	0	0	0	0	0	0	0	0	0	0	0	0	0
4/23/2024	2:15 PM	0	0	0	0	0	0	0	0	0	0	0	0	0
4/23/2024	2:30 PM	0	0	0	0	0	0	0	0	0	0	0	0	0
4/23/2024	2:45 PM	0	0	0	0	0	0	0	0	0	0	0	0	0
4/23/2024	3:00 PM	0	0	0	0	0	0	0	0	0	0	0	0	0
4/23/2024	3:15 PM	0	0	0	0	0	0	0	0	0	0	0	0	0
4/23/2024	3:30 PM	0	0	0	0	0	0	0	0	0	0	0	0	0
4/23/2024	3:45 PM	0	0	0	0	0	0	0	0	0	0	0	0	0
4/23/2024	4:00 PM	0	0	0	0	0	0	0	0	0	0	0	0	0
4/23/2024	4:15 PM	0	0	0	0	0	0	0	0	0	0	0	0	0
4/23/2024	4:30 PM	0	0	0	0	0	0	0	0	0	0	0	0	0
4/23/2024	4:45 PM	0	0	0	0	0	0	0	0	0	0	0	0	0
4/23/2024	5:00 PM	0	0	0	0	0	0	0	0	0	0	0	0	0
4/23/2024	5:15 PM	0	0	0	0	0	0	0	0	0	0	0	0	0
4/23/2024	5:30 PM	0	0	0	0	0	0	0	0	0	0	0	0	0
4/23/2024	5:45 PM	0	0	0	0	0	0	0	0	0	0	0	0	0
4/23/2024	6:00 PM	0	0	0	0	0	0	0	0	0	0	0	0	0
4/23/2024	6:15 PM	0	0	0	0	0	0	0	0	0	0	0	0	0
4/23/2024	6:30 PM	0	0	0	0	0	0	0	0	0	0	0	0	0
4/23/2024	6:45 PM	0	0	0	0	0	0	0	0	0	0	0	0	0
4/23/2024	7:00 PM	0	58	7	0	2	1	0	0	3	0	0	0	0
4/23/2024	7:15 PM	0	41	11	0	1	0	0	0	2	0	0	0	0
4/23/2024	7:30 PM	0	43	7	0	1	0	0	0	3	0	0	0	0
4/23/2024	7:45 PM	0	35	19	1	0	0	0	0	1	0	0	0	0
4/23/2024	8:00 PM	0	33	7	0	0	0	0	0	1	0	0	0	0
4/23/2024	8:15 PM	0	32	8	0	0	0	0	1	5	0	0	0	0
4/23/2024	8:30 PM	0	30	2	0	1	0	0	0	5	0	1	0	0
4/23/2024	8:45 PM	0	21	3	0	0	0	0	0	2	0	0	0	0
4/23/2024	9:00 PM	0	34	4	0	0	0	0	0	4	0	0	0	0
4/23/2024	9:15 PM	0	39	1	0	0	1	0	0	3	0	1	0	0
4/23/2024	9:30 PM	0	23	0	0	3	0	0	0	2	0	0	0	0
4/23/2024	9:45 PM	0	13	0	0	1	0	0	0	6	0	1	0	0
4/23/2024	10:00 PM	0	12	0	0	1	0	0	0	3	0	0	0	0
4/23/2024	10:15 PM	0	12	1	0	0	0	0	0	0	0	0	0	0
4/23/2024	10:30 PM	0	14	0	0	0	0	0	0	3	0	0	0	0
4/23/2024	10:45 PM	0	18	2	0	0	0	0	0	2	0	0	0	0
4/23/2024	11:00 PM	0	7	0	0	1	0	0	0	2	0	0	0	0
4/23/2024	11:15 PM	0	6	0	0	0	0	0	0	6	0	0	0	0
4/23/2024	11:30 PM	0	5	0	0	1	0	0	0	2	0	1	0	0
4/23/2024	11:45 PM	0	3	1	0	0	0	0	0	0	0	0	0	0

4/24/2024	12:00 AM	0	4	0	0	0	0	0	0	0	0	0	0	0
4/24/2024	12:15 AM	0	6	0	0	0	0	0	0	1	0	1	0	0
4/24/2024	12:30 AM	0	2	0	0	0	0	0	0	2	0	2	0	0
4/24/2024	12:45 AM	0	3	0	0	0	0	0	0	3	0	0	0	0
4/24/2024	1:00 AM	0	1	0	0	0	0	0	0	3	0	0	0	0
4/24/2024	1:15 AM	0	5	0	0	1	0	0	0	4	0	0	0	0
4/24/2024	1:30 AM	0	3	0	0	0	0	0	0	1	0	0	0	0
4/24/2024	1:45 AM	0	2	0	0	0	0	0	0	1	0	0	0	0
4/24/2024	2:00 AM	0	2	0	0	0	0	0	0	1	0	0	0	0
4/24/2024	2:15 AM	0	1	0	0	0	0	0	0	0	0	6	0	0
4/24/2024	2:30 AM	0	1	0	0	0	0	0	0	1	0	2	0	0
4/24/2024	2:45 AM	0	3	0	0	0	0	0	0	1	0	0	0	0
4/24/2024	3:00 AM	0	3	0	0	0	0	0	0	0	0	1	0	0
4/24/2024	3:15 AM	0	4	0	0	2	0	0	0	3	0	0	0	0
4/24/2024	3:30 AM	0	5	1	0	0	0	0	0	0	0	1	0	0
4/24/2024	3:45 AM	0	5	0	0	0	0	0	0	1	0	0	0	0
4/24/2024	4:00 AM	0	2	1	0	1	0	0	0	5	0	0	0	0
4/24/2024	4:15 AM	0	4	0	0	0	0	0	0	3	0	1	0	0
4/24/2024	4:30 AM	0	7	0	0	0	0	0	0	2	0	0	0	0
4/24/2024	4:45 AM	0	15	0	0	1	0	0	0	1	0	0	0	0
4/24/2024	5:00 AM	0	11	0	0	0	0	0	0	1	0	2	0	0
4/24/2024	5:15 AM	0	9	0	0	1	0	0	0	1	0	2	0	0
4/24/2024	5:30 AM	0	39	0	0	1	0	0	0	4	0	0	0	0
4/24/2024	5:45 AM	0	44	2	0	2	0	0	0	4	0	0	0	0
4/24/2024	6:00 AM	1	66	0	0	0	0	0	0	3	0	0	0	0
4/24/2024	6:15 AM	0	90	14	0	1	0	0	1	4	0	2	0	0
4/24/2024	6:30 AM	0	139	21	0	0	0	1	0	1	0	0	0	0
4/24/2024	6:45 AM	0	152	49	0	2	0	0	1	4	0	0	0	0
4/24/2024	7:00 AM	0	130	48	1	2	0	0	0	5	0	0	0	0
4/24/2024	7:15 AM	0	221	52	0	2	0	0	0	5	0	0	0	0
4/24/2024	7:30 AM	0	250	44	2	0	0	0	0	4	0	0	0	0
4/24/2024	7:45 AM	1	205	57	0	5	0	0	3	3	0	0	0	0
4/24/2024	8:00 AM	0	183	38	0	3	0	0	0	3	0	0	0	0
4/24/2024	8:15 AM	0	165	41	0	3	1	0	0	9	0	1	0	0
4/24/2024	8:30 AM	0	160	40	3	4	0	0	4	3	0	0	0	0
4/24/2024	8:45 AM	1	109	28	0	5	0	0	0	5	0	0	0	0
4/24/2024	9:00 AM	0	96	24	0	2	0	0	0	4	0	0	0	0
4/24/2024	9:15 AM	0	74	30	0	1	0	0	0	1	0	0	0	0
4/24/2024	9:30 AM	0	100	25	0	6	1	0	0	7	0	0	0	0
4/24/2024	9:45 AM	0	92	25	0	1	0	0	0	3	0	0	0	0
4/24/2024	10:00 AM	0	60	22	0	4	2	0	3	6	1	0	0	0
4/24/2024	10:15 AM	0	70	22	0	6	1	0	2	3	0	0	0	0
4/24/2024	10:30 AM	0	72	22	0	3	1	0	1	3	0	0	0	0
4/24/2024	10:45 AM	0	71	18	0	3	1	0	0	2	1	0	0	0
4/24/2024	11:00 AM	0	60	26	3	2	1	0	1	1	0	0	0	0
4/24/2024	11:15 AM	0	56	16	1	3	0	0	0	5	0	0	0	0
4/24/2024	11:30 AM	0	57	20	1	2	1	0	0	2	0	0	0	0
4/24/2024	11:45 AM	0	68	22	1	5	1	0	0	5	0	0	0	0
4/24/2024	12:00 PM	0	71	21	1	4	0	0	2	3	0	0	0	0
4/24/2024	12:15 PM	0	71	17	0	3	0	0	0	4	0	0	0	0
4/24/2024	12:30 PM	0	75	21	0	1	2	0	0	2	0	0	0	0
4/24/2024	12:45 PM	0	85	27	0	1	0	0	0	2	0	0	0	0
4/24/2024	1:00 PM	0	74	20	1	1	0	0	2	2	0	0	0	0
4/24/2024	1:15 PM	0	72	24	0	1	1	0	1	2	0	0	0	0
4/24/2024	1:30 PM	0	83	28	2	1	0	0	0	2	0	0	0	0
4/24/2024	1:45 PM	0	76	26	1	2	1	0	1	4	0	0	0	0
4/24/2024	2:00 PM	0	81	21	0	0	0	0	0	3	0	0	0	0
4/24/2024	2:15 PM	0	67	20	0	0	0	0	0	0	0	0	0	0
4/24/2024	2:30 PM	0	77	30	1	3	1	0	2	6	0	0	0	0
4/24/2024	2:45 PM	0	83	23	0	4	1	0	1	2	0	0	0	0
4/24/2024	3:00 PM	0	97	37	1	12	2	0	0	5	0	0	0	0
4/24/2024	3:15 PM	0	85	23	0	6	0	0	2	3	0	0	0	0
4/24/2024	3:30 PM	0	73	22	1	2	0	0	0	3	0	0	0	0
4/24/2024	3:45 PM	0	78	21	0	1	0	0	0	6	0	0	0	0
4/24/2024	4:00 PM	0	76	14	0	2	0	0	0	2	0	0	0	0
4/24/2024	4:15 PM	0	74	12	0	2	0	0	1	4	0	0	0	0
4/24/2024	4:30 PM	0	78	11	0	4	1	0	3	5	0	0	0	0
4/24/2024	4:45 PM	0	80	34	0	3	0	0	2	3	0	0	0	0
4/24/2024	5:00 PM	0	67	17	0	3	0	1	0	3	0	0	0	0
4/24/2024	5:15 PM	0	78	21	0	0	0	0	0	2	0	0	0	0
4/24/2024	5:30 PM	1	98	18	0	2	0	0	1	9	0	0	0	0
4/24/2024	5:45 PM	0	95	38	0	2	0	0	1	6	0	0	0	0
4/24/2024	6:00 PM	0	86	20	0	1	0	0	1	7	0	0	0	0
4/24/2024	6:15 PM	0	78	15	0	1	0	0	1	3	0	0	0	0
4/24/2024	6:30 PM	0	72	14	0	0	0	0	1	4	0	0	0	0
4/24/2024	6:45 PM	0	58	9	0	1	1	0	0	4	0	0	0	0
4/24/2024	7:00 PM	0	47	15	1	1	0	0	0	2	0	0	0	0
4/24/2024	7:15 PM	0	36	11	0	1	0	0	0	6	0	0	0	0
4/24/2024	7:30 PM	0	42	9	0	2	0	0	0	0	0	0	0	0
4/24/2024	7:45 PM	0	53	10	2	2	0	0	0	2	0	0	0	0
4/24/2024	8:00 PM	0	26	13	0	1	0	0	0	2	0	0	0	0
4/24/2024	8:15 PM	0	25	5	0	0	0	0	0	1	0	0	0	0
4/24/2024	8:30 PM	0	35	2	0	1	0	0	0	0	0	0	0	0
4/24/2024	8:45 PM	0	32	0	0	0	1	0	0	1	0	0	0	0
4/24/2024	9:00 PM	0	26	0	0	0	0	0	0	0	0	0	0	0
4/24/2024	9:15 PM	0	20	0	0	0	0	0	0	4	0	4	0	0
4/24/2024	9:30 PM	0	18	0	0	1	0	0	0	0	0	0	0	0
4/24/2024	9:45 PM	0	22	0	0	1	0	0	0	2	0	2	0	0
4/24/2024	10:00 PM	0	24	0	0	2	0	0	0	3	0	1	0	0
4/24/2024	10:15 PM	0	14	0	0	1	0	0	0	3	0	2	0	0
4/24/2024	10:30 PM	0	15	0	0	0	0	0	0	3	0	0	0	0
4/24/2024	10:45 PM	0	23	0	0	1	0	0	0	1	0	0	0	0
4/24/2024	11:00 PM	0	9	0	0	0	0	0	0	0	0	0	0	0
4/24/2024	11:15 PM	0	4	0	0	0	0	0	0	2	0	0	0	0
4/24/2024	11:30 PM	0	3	1	0	0	0	0	0	2	0	1	0	0
4/24/2024	11:45 PM	0	4	0	0	1	0	0	0	2	0	0	0	0

4/25/2024	12:00 AM	0	3	0	0	0	0	0	0	1	0	1	0	0
4/25/2024	12:15 AM	0	8	0	0	0	0	0	0	4	0	2	0	0
4/25/2024	12:30 AM	0	9	0	0	0	0	0	0	1	0	2	0	0
4/25/2024	12:45 AM	0	2	0	0	0	0	0	0	0	0	0	0	0
4/25/2024	1:00 AM	0	3	0	0	0	0	0	0	1	0	1	0	0
4/25/2024	1:15 AM	0	0	0	0	1	0	0	0	1	0	0	0	0
4/25/2024	1:30 AM	0	4	0	0	0	0	0	0	1	0	2	0	0
4/25/2024	1:45 AM	0	0	0	0	1	0	0	0	2	0	1	0	0
4/25/2024	2:00 AM	0	1	0	0	0	0	0	0	1	0	1	0	0
4/25/2024	2:15 AM	0	2	0	0	0	0	0	0	2	0	0	0	0
4/25/2024	2:30 AM	0	2	0	0	0	0	0	0	2	0	1	0	0
4/25/2024	2:45 AM	0	3	0	0	0	0	0	0	2	0	3	0	0
4/25/2024	3:00 AM	0	5	0	0	0	0	0	0	1	0	1	0	0
4/25/2024	3:15 AM	0	3	0	0	0	0	0	0	1	0	0	0	0
4/25/2024	3:30 AM	0	3	0	0	0	0	0	0	1	0	2	0	0
4/25/2024	3:45 AM	0	6	0	0	1	0	0	0	2	0	1	0	0
4/25/2024	4:00 AM	0	1	0	0	0	0	0	0	5	1	0	0	0
4/25/2024	4:15 AM	0	7	0	0	0	0	0	0	0	0	0	0	0
4/25/2024	4:30 AM	0	9	0	0	0	0	0	0	2	0	0	0	0
4/25/2024	4:45 AM	0	15	0	0	0	0	0	0	7	0	1	0	0
4/25/2024	5:00 AM	0	10	0	0	1	0	0	0	2	0	0	0	0
4/25/2024	5:15 AM	0	24	1	0	0	1	0	0	4	0	1	0	0
4/25/2024	5:30 AM	0	36	0	0	1	0	0	0	1	0	0	0	0
4/25/2024	5:45 AM	1	61	0	0	0	0	0	0	1	0	0	0	0
4/25/2024	6:00 AM	0	65	1	0	1	1	0	0	2	0	1	0	0
4/25/2024	6:15 AM	0	81	10	0	3	0	0	2	1	0	1	0	0
4/25/2024	6:30 AM	1	130	25	0	0	0	0	0	1	0	1	0	0
4/25/2024	6:45 AM	1	141	48	0	0	0	0	0	5	0	0	0	0
4/25/2024	7:00 AM	1	148	46	2	3	0	0	0	5	0	0	0	0
4/25/2024	7:15 AM	0	202	57	1	3	0	0	2	2	0	0	0	0
4/25/2024	7:30 AM	0	207	38	0	2	1	0	0	3	0	0	0	0
4/25/2024	7:45 AM	0	223	63	0	0	1	0	1	5	0	0	0	0
4/25/2024	8:00 AM	0	144	45	0	2	0	0	1	6	0	0	0	0
4/25/2024	8:15 AM	0	159	70	0	0	0	0	1	6	0	0	0	0
4/25/2024	8:30 AM	0	120	26	1	0	0	0	0	0	0	0	0	0
4/25/2024	8:45 AM	0	124	34	1	0	0	0	1	7	0	0	0	0
4/25/2024	9:00 AM	0	83	25	1	2	0	0	1	4	0	0	0	0
4/25/2024	9:15 AM	0	113	33	0	5	0	1	2	4	0	0	0	0
4/25/2024	9:30 AM	0	73	20	0	3	1	0	0	3	0	0	0	0
4/25/2024	9:45 AM	0	97	17	0	1	0	0	1	3	0	0	0	0
4/25/2024	10:00 AM	0	51	18	0	1	1	0	0	0	0	0	0	0
4/25/2024	10:15 AM	0	75	23	0	3	1	0	0	2	0	0	0	0
4/25/2024	10:30 AM	0	63	17	0	4	0	0	0	1	0	0	0	0
4/25/2024	10:45 AM	0	64	14	0	1	1	0	2	2	0	0	0	0
4/25/2024	11:00 AM	0	63	20	1	1	0	0	0	4	0	0	0	0
4/25/2024	11:15 AM	0	60	23	2	3	1	0	0	7	0	0	0	0
4/25/2024	11:30 AM	0	63	27	1	3	1	0	1	3	0	0	0	0
4/25/2024	11:45 AM	0	54	25	1	2	0	0	0	5	0	0	0	0
4/25/2024	12:00 PM	0	70	19	0	2	0	0	0	5	0	0	0	0
4/25/2024	12:15 PM	0	99	17	0	1	0	0	0	5	0	0	0	0
4/25/2024	12:30 PM	0	79	29	0	0	0	0	0	2	0	0	0	0
4/25/2024	12:45 PM	1	72	28	0	12	0	0	0	2	1	0	0	0
4/25/2024	1:00 PM	0	79	23	2	5	1	0	0	4	0	0	0	0
4/25/2024	1:15 PM	0	92	13	0	2	0	0	1	5	0	0	0	0
4/25/2024	1:30 PM	0	85	26	1	3	2	0	0	8	0	0	0	0
4/25/2024	1:45 PM	0	95	29	2	1	0	0	0	1	0	0	0	0
4/25/2024	2:00 PM	0	70	26	0	1	0	0	2	5	0	0	0	0
4/25/2024	2:15 PM	0	69	28	0	4	0	0	1	4	0	0	0	0
4/25/2024	2:30 PM	0	96	26	1	2	1	0	0	3	0	0	0	0
4/25/2024	2:45 PM	0	76	22	1	1	1	0	1	2	0	0	0	0
4/25/2024	3:00 PM	0	77	24	1	0	0	0	2	2	0	0	0	0
4/25/2024	3:15 PM	0	86	19	1	1	0	0	1	6	0	0	0	0
4/25/2024	3:30 PM	0	80	22	1	2	1	0	0	4	1	0	0	0
4/25/2024	3:45 PM	2	99	24	0	6	0	0	1	3	0	0	0	0
4/25/2024	4:00 PM	0	74	22	0	1	0	0	0	2	0	0	0	0
4/25/2024	4:15 PM	0	68	23	0	3	0	0	0	9	0	0	0	0
4/25/2024	4:30 PM	1	86	19	1	3	0	0	0	3	0	0	0	0
4/25/2024	4:45 PM	0	92	19	0	3	0	0	1	3	0	0	0	0
4/25/2024	5:00 PM	0	77	27	0	1	0	0	0	3	0	0	0	0
4/25/2024	5:15 PM	0	87	25	1	0	0	0	0	3	0	0	0	0
4/25/2024	5:30 PM	0	85	21	0	2	0	0	0	3	0	0	0	0
4/25/2024	5:45 PM	0	91	19	0	2	0	0	0	3	0	0	0	0
4/25/2024	6:00 PM	0	95	18	0	0	0	0	0	6	0	0	0	0
4/25/2024	6:15 PM	0	94	21	0	3	1	0	0	4	0	0	0	0
4/25/2024	6:30 PM	1	60	24	0	2	0	0	1	2	0	0	0	0
4/25/2024	6:45 PM	0	58	18	0	2	0	0	1	3	0	0	0	0
4/25/2024	7:00 PM	0	0	0	0	0	0	0	0	0	0	0	0	0
4/25/2024	7:15 PM	0	0	0	0	0	0	0	0	0	0	0	0	0
4/25/2024	7:30 PM	0	0	0	0	0	0	0	0	0	0	0	0	0
4/25/2024	7:45 PM	0	0	0	0	0	0	0	0	0	0	0	0	0
4/25/2024	8:00 PM	0	0	0	0	0	0	0	0	0	0	0	0	0
4/25/2024	8:15 PM	0	0	0	0	0	0	0	0	0	0	0	0	0
4/25/2024	8:30 PM	0	0	0	0	0	0	0	0	0	0	0	0	0
4/25/2024	8:45 PM	0	0	0	0	0	0	0	0	0	0	0	0	0
4/25/2024	9:00 PM	0	0	0	0	0	0	0	0	0	0	0	0	0
4/25/2024	9:15 PM	0	0	0	0	0	0	0	0	0	0	0	0	0
4/25/2024	9:30 PM	0	0	0	0	0	0	0	0	0	0	0	0	0
4/25/2024	9:45 PM	0	0	0	0	0	0	0	0	0	0	0	0	0
4/25/2024	10:00 PM	0	0	0	0	0	0	0	0	0	0	0	0	0
4/25/2024	10:15 PM	0	0	0	0	0	0	0	0	0	0	0	0	0
4/25/2024	10:30 PM	0	0	0	0	0	0	0	0	0	0	0	0	0
4/25/2024	10:45 PM	0	0	0	0	0	0	0	0	0	0	0	0	0
4/25/2024	11:00 PM	0	0	0	0	0	0	0	0	0	0	0	0	0
4/25/2024	11:15 PM	0	0	0	0	0	0	0	0	0	0	0	0	0
4/25/2024	11:30 PM	0	0	0	0	0	0	0	0	0	0	0	0	0
4/25/2024	11:45 PM	0	0	0	0	0	0	0	0	0	0	0	0	0

WB
File Name:
Start Date: 4/23/2024
Start Time: 0
Site Code: 55
Station ID: 1
Location 1: I-20 On/Off-Ramp, west of US-378 Sunset Blvd
Location 2:

Date	Time	1	2	3	4	5	6	7	8	9	10	11	12	13
4/23/2024	12:00 AM	0	0	0	0	0	0	0	0	0	0	0	0	0
4/23/2024	12:15 AM	0	0	0	0	0	0	0	0	0	0	0	0	0
4/23/2024	12:30 AM	0	0	0	0	0	0	0	0	0	0	0	0	0
4/23/2024	12:45 AM	0	0	0	0	0	0	0	0	0	0	0	0	0
4/23/2024	1:00 AM	0	0	0	0	0	0	0	0	0	0	0	0	0
4/23/2024	1:15 AM	0	0	0	0	0	0	0	0	0	0	0	0	0
4/23/2024	1:30 AM	0	0	0	0	0	0	0	0	0	0	0	0	0
4/23/2024	1:45 AM	0	0	0	0	0	0	0	0	0	0	0	0	0
4/23/2024	2:00 AM	0	0	0	0	0	0	0	0	0	0	0	0	0
4/23/2024	2:15 AM	0	0	0	0	0	0	0	0	0	0	0	0	0
4/23/2024	2:30 AM	0	0	0	0	0	0	0	0	0	0	0	0	0
4/23/2024	2:45 AM	0	0	0	0	0	0	0	0	0	0	0	0	0
4/23/2024	3:00 AM	0	0	0	0	0	0	0	0	0	0	0	0	0
4/23/2024	3:15 AM	0	0	0	0	0	0	0	0	0	0	0	0	0
4/23/2024	3:30 AM	0	0	0	0	0	0	0	0	0	0	0	0	0
4/23/2024	3:45 AM	0	0	0	0	0	0	0	0	0	0	0	0	0
4/23/2024	4:00 AM	0	0	0	0	0	0	0	0	0	0	0	0	0
4/23/2024	4:15 AM	0	0	0	0	0	0	0	0	0	0	0	0	0
4/23/2024	4:30 AM	0	0	0	0	0	0	0	0	0	0	0	0	0
4/23/2024	4:45 AM	0	0	0	0	0	0	0	0	0	0	0	0	0
4/23/2024	5:00 AM	0	0	0	0	0	0	0	0	0	0	0	0	0
4/23/2024	5:15 AM	0	0	0	0	0	0	0	0	0	0	0	0	0
4/23/2024	5:30 AM	0	0	0	0	0	0	0	0	0	0	0	0	0
4/23/2024	5:45 AM	0	0	0	0	0	0	0	0	0	0	0	0	0
4/23/2024	6:00 AM	0	0	0	0	0	0	0	0	0	0	0	0	0
4/23/2024	6:15 AM	0	0	0	0	0	0	0	0	0	0	0	0	0
4/23/2024	6:30 AM	0	0	0	0	0	0	0	0	0	0	0	0	0
4/23/2024	6:45 AM	0	0	0	0	0	0	0	0	0	0	0	0	0
4/23/2024	7:00 AM	0	0	0	0	0	0	0	0	0	0	0	0	0
4/23/2024	7:15 AM	0	0	0	0	0	0	0	0	0	0	0	0	0
4/23/2024	7:30 AM	0	0	0	0	0	0	0	0	0	0	0	0	0
4/23/2024	7:45 AM	0	0	0	0	0	0	0	0	0	0	0	0	0
4/23/2024	8:00 AM	0	0	0	0	0	0	0	0	0	0	0	0	0
4/23/2024	8:15 AM	0	0	0	0	0	0	0	0	0	0	0	0	0
4/23/2024	8:30 AM	0	0	0	0	0	0	0	0	0	0	0	0	0
4/23/2024	8:45 AM	0	0	0	0	0	0	0	0	0	0	0	0	0
4/23/2024	9:00 AM	0	0	0	0	0	0	0	0	0	0	0	0	0
4/23/2024	9:15 AM	0	0	0	0	0	0	0	0	0	0	0	0	0
4/23/2024	9:30 AM	0	0	0	0	0	0	0	0	0	0	0	0	0
4/23/2024	9:45 AM	0	0	0	0	0	0	0	0	0	0	0	0	0
4/23/2024	10:00 AM	0	0	0	0	0	0	0	0	0	0	0	0	0
4/23/2024	10:15 AM	0	0	0	0	0	0	0	0	0	0	0	0	0
4/23/2024	10:30 AM	0	0	0	0	0	0	0	0	0	0	0	0	0
4/23/2024	10:45 AM	0	0	0	0	0	0	0	0	0	0	0	0	0
4/23/2024	11:00 AM	0	0	0	0	0	0	0	0	0	0	0	0	0
4/23/2024	11:15 AM	0	0	0	0	0	0	0	0	0	0	0	0	0
4/23/2024	11:30 AM	0	0	0	0	0	0	0	0	0	0	0	0	0
4/23/2024	11:45 AM	0	0	0	0	0	0	0	0	0	0	0	0	0
4/23/2024	12:00 PM	0	0	0	0	0	0	0	0	0	0	0	0	0
4/23/2024	12:15 PM	0	0	0	0	0	0	0	0	0	0	0	0	0
4/23/2024	12:30 PM	0	0	0	0	0	0	0	0	0	0	0	0	0
4/23/2024	12:45 PM	0	0	0	0	0	0	0	0	0	0	0	0	0
4/23/2024	1:00 PM	0	0	0	0	0	0	0	0	0	0	0	0	0
4/23/2024	1:15 PM	0	0	0	0	0	0	0	0	0	0	0	0	0
4/23/2024	1:30 PM	0	0	0	0	0	0	0	0	0	0	0	0	0
4/23/2024	1:45 PM	0	0	0	0	0	0	0	0	0	0	0	0	0
4/23/2024	2:00 PM	0	0	0	0	0	0	0	0	0	0	0	0	0
4/23/2024	2:15 PM	0	0	0	0	0	0	0	0	0	0	0	0	0
4/23/2024	2:30 PM	0	0	0	0	0	0	0	0	0	0	0	0	0
4/23/2024	2:45 PM	0	0	0	0	0	0	0	0	0	0	0	0	0
4/23/2024	3:00 PM	0	0	0	0	0	0	0	0	0	0	0	0	0
4/23/2024	3:15 PM	0	0	0	0	0	0	0	0	0	0	0	0	0
4/23/2024	3:30 PM	0	0	0	0	0	0	0	0	0	0	0	0	0
4/23/2024	3:45 PM	0	0	0	0	0	0	0	0	0	0	0	0	0
4/23/2024	4:00 PM	0	0	0	0	0	0	0	0	0	0	0	0	0
4/23/2024	4:15 PM	0	0	0	0	0	0	0	0	0	0	0	0	0
4/23/2024	4:30 PM	0	0	0	0	0	0	0	0	0	0	0	0	0
4/23/2024	4:45 PM	0	0	0	0	0	0	0	0	0	0	0	0	0
4/23/2024	5:00 PM	0	0	0	0	0	0	0	0	0	0	0	0	0
4/23/2024	5:15 PM	0	0	0	0	0	0	0	0	0	0	0	0	0
4/23/2024	5:30 PM	0	0	0	0	0	0	0	0	0	0	0	0	0
4/23/2024	5:45 PM	0	0	0	0	0	0	0	0	0	0	0	0	0
4/23/2024	6:00 PM	0	0	0	0	0	0	0	0	0	0	0	0	0
4/23/2024	6:15 PM	0	0	0	0	0	0	0	0	0	0	0	0	0
4/23/2024	6:30 PM	0	0	0	0	0	0	0	0	0	0	0	0	0
4/23/2024	6:45 PM	0	0	0	0	0	0	0	0	0	0	0	0	0
4/23/2024	7:00 PM	0	0	0	0	0	0	0	0	0	0	0	0	0
4/23/2024	7:15 PM	0	0	0	0	0	0	0	0	0	0	0	0	0
4/23/2024	7:30 PM	0	0	0	0	0	0	0	0	0	0	0	0	0
4/23/2024	7:45 PM	0	0	0	0	0	0	0	0	0	0	0	0	0
4/23/2024	8:00 PM	0	0	0	0	0	0	0	0	0	0	0	0	0
4/23/2024	8:15 PM	0	0	0	0	0	0	0	0	0	0	0	0	0
4/23/2024	8:30 PM	0	0	0	0	0	0	0	0	0	0	0	0	0
4/23/2024	8:45 PM	0	0	0	0	0	0	0	0	0	0	0	0	0
4/23/2024	9:00 PM	0	0	0	0	0	0	0	0	0	0	0	0	0
4/23/2024	9:15 PM	0	0	0	0	0	0	0	0	0	0	0	0	0
4/23/2024	9:30 PM	0	0	0	0	0	0	0	0	0	0	0	0	0
4/23/2024	9:45 PM	0	0	0	0	0	0	0	0	0	0	0	0	0
4/23/2024	10:00 PM	0	0	0	0	0	0	0	0	0	0	0	0	0
4/23/2024	10:15 PM	0	0	0	0	0	0	0	0	0	0	0	0	0
4/23/2024	10:30 PM	0	0	0	0	0	0	0	0	0	0	0	0	0
4/23/2024	10:45 PM	0	0	0	0	0	0	0	0	0	0	0	0	0
4/23/2024	11:00 PM	0	0	0	0	0	0	0	0	0	0	0	0	0
4/23/2024	11:15 PM	0	0	0	0	0	0	0	0	0	0	0	0	0
4/23/2024	11:30 PM	0	0	0	0	0	0	0	0	0	0	0	0	0
4/23/2024	11:45 PM	0	0	0	0	0	0	0	0	0	0	0	0	0

4/24/2024	12:00 AM	0	0	0	0	0	0	0	0	0	0	0	0	0
4/24/2024	12:15 AM	0	0	0	0	0	0	0	0	0	0	0	0	0
4/24/2024	12:30 AM	0	0	0	0	0	0	0	0	0	0	0	0	0
4/24/2024	12:45 AM	0	0	0	0	0	0	0	0	0	0	0	0	0
4/24/2024	1:00 AM	0	0	0	0	0	0	0	0	0	0	0	0	0
4/24/2024	1:15 AM	0	0	0	0	0	0	0	0	0	0	0	0	0
4/24/2024	1:30 AM	0	0	0	0	0	0	0	0	0	0	0	0	0
4/24/2024	1:45 AM	0	0	0	0	0	0	0	0	0	0	0	0	0
4/24/2024	2:00 AM	0	0	0	0	0	0	0	0	0	0	0	0	0
4/24/2024	2:15 AM	0	0	0	0	0	0	0	0	0	0	0	0	0
4/24/2024	2:30 AM	0	0	0	0	0	0	0	0	0	0	0	0	0
4/24/2024	2:45 AM	0	0	0	0	0	0	0	0	0	0	0	0	0
4/24/2024	3:00 AM	0	0	0	0	0	0	0	0	0	0	0	0	0
4/24/2024	3:15 AM	0	0	0	0	0	0	0	0	0	0	0	0	0
4/24/2024	3:30 AM	0	0	0	0	0	0	0	0	0	0	0	0	0
4/24/2024	3:45 AM	0	0	0	0	0	0	0	0	0	0	0	0	0
4/24/2024	4:00 AM	0	0	0	0	0	0	0	0	0	0	0	0	0
4/24/2024	4:15 AM	0	0	0	0	0	0	0	0	0	0	0	0	0
4/24/2024	4:30 AM	0	0	0	0	0	0	0	0	0	0	0	0	0
4/24/2024	4:45 AM	0	0	0	0	0	0	0	0	0	0	0	0	0
4/24/2024	5:00 AM	0	0	0	0	0	0	0	0	0	0	0	0	0
4/24/2024	5:15 AM	0	0	0	0	0	0	0	0	0	0	0	0	0
4/24/2024	5:30 AM	0	0	0	0	0	0	0	0	0	0	0	0	0
4/24/2024	5:45 AM	0	0	0	0	0	0	0	0	0	0	0	0	0
4/24/2024	6:00 AM	0	0	0	0	0	0	0	0	0	0	0	0	0
4/24/2024	6:15 AM	0	0	0	0	0	0	0	0	0	0	0	0	0
4/24/2024	6:30 AM	0	0	0	0	0	0	0	0	0	0	0	0	0
4/24/2024	6:45 AM	0	0	0	0	0	0	0	0	0	0	0	0	0
4/24/2024	7:00 AM	0	0	0	0	0	0	0	0	0	0	0	0	0
4/24/2024	7:15 AM	0	0	0	0	0	0	0	0	0	0	0	0	0
4/24/2024	7:30 AM	0	0	0	0	0	0	0	0	0	0	0	0	0
4/24/2024	7:45 AM	0	0	0	0	0	0	0	0	0	0	0	0	0
4/24/2024	8:00 AM	0	0	0	0	0	0	0	0	0	0	0	0	0
4/24/2024	8:15 AM	0	0	0	0	0	0	0	0	0	0	0	0	0
4/24/2024	8:30 AM	0	0	0	0	0	0	0	0	0	0	0	0	0
4/24/2024	8:45 AM	0	0	0	0	0	0	0	0	0	0	0	0	0
4/24/2024	9:00 AM	0	0	0	0	0	0	0	0	0	0	0	0	0
4/24/2024	9:15 AM	0	0	0	0	0	0	0	0	0	0	0	0	0
4/24/2024	9:30 AM	0	0	0	0	0	0	0	0	0	0	0	0	0
4/24/2024	9:45 AM	0	0	0	0	0	0	0	0	0	0	0	0	0
4/24/2024	10:00 AM	0	0	0	0	0	0	0	0	0	0	0	0	0
4/24/2024	10:15 AM	0	0	0	0	0	0	0	0	0	0	0	0	0
4/24/2024	10:30 AM	0	0	0	0	0	0	0	0	0	0	0	0	0
4/24/2024	10:45 AM	0	0	0	0	0	0	0	0	0	0	0	0	0
4/24/2024	11:00 AM	0	0	0	0	0	0	0	0	0	0	0	0	0
4/24/2024	11:15 AM	0	0	0	0	0	0	0	0	0	0	0	0	0
4/24/2024	11:30 AM	0	0	0	0	0	0	0	0	0	0	0	0	0
4/24/2024	11:45 AM	0	0	0	0	0	0	0	0	0	0	0	0	0
4/24/2024	12:00 PM	0	0	0	0	0	0	0	0	0	0	0	0	0
4/24/2024	12:15 PM	0	0	0	0	0	0	0	0	0	0	0	0	0
4/24/2024	12:30 PM	0	0	0	0	0	0	0	0	0	0	0	0	0
4/24/2024	12:45 PM	0	0	0	0	0	0	0	0	0	0	0	0	0
4/24/2024	1:00 PM	0	0	0	0	0	0	0	0	0	0	0	0	0
4/24/2024	1:15 PM	0	0	0	0	0	0	0	0	0	0	0	0	0
4/24/2024	1:30 PM	0	0	0	0	0	0	0	0	0	0	0	0	0
4/24/2024	1:45 PM	0	0	0	0	0	0	0	0	0	0	0	0	0
4/24/2024	2:00 PM	0	0	0	0	0	0	0	0	0	0	0	0	0
4/24/2024	2:15 PM	0	0	0	0	0	0	0	0	0	0	0	0	0
4/24/2024	2:30 PM	0	0	0	0	0	0	0	0	0	0	0	0	0
4/24/2024	2:45 PM	0	0	0	0	0	0	0	0	0	0	0	0	0
4/24/2024	3:00 PM	0	0	0	0	0	0	0	0	0	0	0	0	0
4/24/2024	3:15 PM	0	0	0	0	0	0	0	0	0	0	0	0	0
4/24/2024	3:30 PM	0	0	0	0	0	0	0	0	0	0	0	0	0
4/24/2024	3:45 PM	0	0	0	0	0	0	0	0	0	0	0	0	0
4/24/2024	4:00 PM	0	0	0	0	0	0	0	0	0	0	0	0	0
4/24/2024	4:15 PM	0	0	0	0	0	0	0	0	0	0	0	0	0
4/24/2024	4:30 PM	0	0	0	0	0	0	0	0	0	0	0	0	0
4/24/2024	4:45 PM	0	0	0	0	0	0	0	0	0	0	0	0	0
4/24/2024	5:00 PM	0	0	0	0	0	0	0	0	0	0	0	0	0
4/24/2024	5:15 PM	0	0	0	0	0	0	0	0	0	0	0	0	0
4/24/2024	5:30 PM	0	0	0	0	0	0	0	0	0	0	0	0	0
4/24/2024	5:45 PM	0	0	0	0	0	0	0	0	0	0	0	0	0
4/24/2024	6:00 PM	0	0	0	0	0	0	0	0	0	0	0	0	0
4/24/2024	6:15 PM	0	0	0	0	0	0	0	0	0	0	0	0	0
4/24/2024	6:30 PM	0	0	0	0	0	0	0	0	0	0	0	0	0
4/24/2024	6:45 PM	0	0	0	0	0	0	0	0	0	0	0	0	0
4/24/2024	7:00 PM	0	0	0	0	0	0	0	0	0	0	0	0	0
4/24/2024	7:15 PM	0	0	0	0	0	0	0	0	0	0	0	0	0
4/24/2024	7:30 PM	0	0	0	0	0	0	0	0	0	0	0	0	0
4/24/2024	7:45 PM	0	0	0	0	0	0	0	0	0	0	0	0	0
4/24/2024	8:00 PM	0	0	0	0	0	0	0	0	0	0	0	0	0
4/24/2024	8:15 PM	0	0	0	0	0	0	0	0	0	0	0	0	0
4/24/2024	8:30 PM	0	0	0	0	0	0	0	0	0	0	0	0	0
4/24/2024	8:45 PM	0	0	0	0	0	0	0	0	0	0	0	0	0
4/24/2024	9:00 PM	0	0	0	0	0	0	0	0	0	0	0	0	0
4/24/2024	9:15 PM	0	0	0	0	0	0	0	0	0	0	0	0	0
4/24/2024	9:30 PM	0	0	0	0	0	0	0	0	0	0	0	0	0
4/24/2024	9:45 PM	0	0	0	0	0	0	0	0	0	0	0	0	0
4/24/2024	10:00 PM	0	0	0	0	0	0	0	0	0	0	0	0	0
4/24/2024	10:15 PM	0	0	0	0	0	0	0	0	0	0	0	0	0
4/24/2024	10:30 PM	0	0	0	0	0	0	0	0	0	0	0	0	0
4/24/2024	10:45 PM	0	0	0	0	0	0	0	0	0	0	0	0	0
4/24/2024	11:00 PM	0	0	0	0	0	0	0	0	0	0	0	0	0
4/24/2024	11:15 PM	0	0	0	0	0	0	0	0	0	0	0	0	0
4/24/2024	11:30 PM	0	0	0	0	0	0	0	0	0	0	0	0	0
4/24/2024	11:45 PM	0	0	0	0	0	0	0	0	0	0	0	0	0

4/25/2024	12:00 AM	0	0	0	0	0	0	0	0	0	0	0	0	0
4/25/2024	12:15 AM	0	0	0	0	0	0	0	0	0	0	0	0	0
4/25/2024	12:30 AM	0	0	0	0	0	0	0	0	0	0	0	0	0
4/25/2024	12:45 AM	0	0	0	0	0	0	0	0	0	0	0	0	0
4/25/2024	1:00 AM	0	0	0	0	0	0	0	0	0	0	0	0	0
4/25/2024	1:15 AM	0	0	0	0	0	0	0	0	0	0	0	0	0
4/25/2024	1:30 AM	0	0	0	0	0	0	0	0	0	0	0	0	0
4/25/2024	1:45 AM	0	0	0	0	0	0	0	0	0	0	0	0	0
4/25/2024	2:00 AM	0	0	0	0	0	0	0	0	0	0	0	0	0
4/25/2024	2:15 AM	0	0	0	0	0	0	0	0	0	0	0	0	0
4/25/2024	2:30 AM	0	0	0	0	0	0	0	0	0	0	0	0	0
4/25/2024	2:45 AM	0	0	0	0	0	0	0	0	0	0	0	0	0
4/25/2024	3:00 AM	0	0	0	0	0	0	0	0	0	0	0	0	0
4/25/2024	3:15 AM	0	0	0	0	0	0	0	0	0	0	0	0	0
4/25/2024	3:30 AM	0	0	0	0	0	0	0	0	0	0	0	0	0
4/25/2024	3:45 AM	0	0	0	0	0	0	0	0	0	0	0	0	0
4/25/2024	4:00 AM	0	0	0	0	0	0	0	0	0	0	0	0	0
4/25/2024	4:15 AM	0	0	0	0	0	0	0	0	0	0	0	0	0
4/25/2024	4:30 AM	0	0	0	0	0	0	0	0	0	0	0	0	0
4/25/2024	4:45 AM	0	0	0	0	0	0	0	0	0	0	0	0	0
4/25/2024	5:00 AM	0	0	0	0	0	0	0	0	0	0	0	0	0
4/25/2024	5:15 AM	0	0	0	0	0	0	0	0	0	0	0	0	0
4/25/2024	5:30 AM	0	0	0	0	0	0	0	0	0	0	0	0	0
4/25/2024	5:45 AM	0	0	0	0	0	0	0	0	0	0	0	0	0
4/25/2024	6:00 AM	0	0	0	0	0	0	0	0	0	0	0	0	0
4/25/2024	6:15 AM	0	0	0	0	0	0	0	0	0	0	0	0	0
4/25/2024	6:30 AM	0	0	0	0	0	0	0	0	0	0	0	0	0
4/25/2024	6:45 AM	0	0	0	0	0	0	0	0	0	0	0	0	0
4/25/2024	7:00 AM	0	0	0	0	0	0	0	0	0	0	0	0	0
4/25/2024	7:15 AM	0	0	0	0	0	0	0	0	0	0	0	0	0
4/25/2024	7:30 AM	0	0	0	0	0	0	0	0	0	0	0	0	0
4/25/2024	7:45 AM	0	0	0	0	0	0	0	0	0	0	0	0	0
4/25/2024	8:00 AM	0	0	0	0	0	0	0	0	0	0	0	0	0
4/25/2024	8:15 AM	0	0	0	0	0	0	0	0	0	0	0	0	0
4/25/2024	8:30 AM	0	0	0	0	0	0	0	0	0	0	0	0	0
4/25/2024	8:45 AM	0	0	0	0	0	0	0	0	0	0	0	0	0
4/25/2024	9:00 AM	0	0	0	0	0	0	0	0	0	0	0	0	0
4/25/2024	9:15 AM	0	0	0	0	0	0	0	0	0	0	0	0	0
4/25/2024	9:30 AM	0	0	0	0	0	0	0	0	0	0	0	0	0
4/25/2024	9:45 AM	0	0	0	0	0	0	0	0	0	0	0	0	0
4/25/2024	10:00 AM	0	0	0	0	0	0	0	0	0	0	0	0	0
4/25/2024	10:15 AM	0	0	0	0	0	0	0	0	0	0	0	0	0
4/25/2024	10:30 AM	0	0	0	0	0	0	0	0	0	0	0	0	0
4/25/2024	10:45 AM	0	0	0	0	0	0	0	0	0	0	0	0	0
4/25/2024	11:00 AM	0	0	0	0	0	0	0	0	0	0	0	0	0
4/25/2024	11:15 AM	0	0	0	0	0	0	0	0	0	0	0	0	0
4/25/2024	11:30 AM	0	0	0	0	0	0	0	0	0	0	0	0	0
4/25/2024	11:45 AM	0	0	0	0	0	0	0	0	0	0	0	0	0
4/25/2024	12:00 PM	0	0	0	0	0	0	0	0	0	0	0	0	0
4/25/2024	12:15 PM	0	0	0	0	0	0	0	0	0	0	0	0	0
4/25/2024	12:30 PM	0	0	0	0	0	0	0	0	0	0	0	0	0
4/25/2024	12:45 PM	0	0	0	0	0	0	0	0	0	0	0	0	0
4/25/2024	1:00 PM	0	0	0	0	0	0	0	0	0	0	0	0	0
4/25/2024	1:15 PM	0	0	0	0	0	0	0	0	0	0	0	0	0
4/25/2024	1:30 PM	0	0	0	0	0	0	0	0	0	0	0	0	0
4/25/2024	1:45 PM	0	0	0	0	0	0	0	0	0	0	0	0	0
4/25/2024	2:00 PM	0	0	0	0	0	0	0	0	0	0	0	0	0
4/25/2024	2:15 PM	0	0	0	0	0	0	0	0	0	0	0	0	0
4/25/2024	2:30 PM	0	0	0	0	0	0	0	0	0	0	0	0	0
4/25/2024	2:45 PM	0	0	0	0	0	0	0	0	0	0	0	0	0
4/25/2024	3:00 PM	0	0	0	0	0	0	0	0	0	0	0	0	0
4/25/2024	3:15 PM	0	0	0	0	0	0	0	0	0	0	0	0	0
4/25/2024	3:30 PM	0	0	0	0	0	0	0	0	0	0	0	0	0
4/25/2024	3:45 PM	0	0	0	0	0	0	0	0	0	0	0	0	0
4/25/2024	4:00 PM	0	0	0	0	0	0	0	0	0	0	0	0	0
4/25/2024	4:15 PM	0	0	0	0	0	0	0	0	0	0	0	0	0
4/25/2024	4:30 PM	0	0	0	0	0	0	0	0	0	0	0	0	0
4/25/2024	4:45 PM	0	0	0	0	0	0	0	0	0	0	0	0	0
4/25/2024	5:00 PM	0	0	0	0	0	0	0	0	0	0	0	0	0
4/25/2024	5:15 PM	0	0	0	0	0	0	0	0	0	0	0	0	0
4/25/2024	5:30 PM	0	0	0	0	0	0	0	0	0	0	0	0	0
4/25/2024	5:45 PM	0	0	0	0	0	0	0	0	0	0	0	0	0
4/25/2024	6:00 PM	0	0	0	0	0	0	0	0	0	0	0	0	0
4/25/2024	6:15 PM	0	0	0	0	0	0	0	0	0	0	0	0	0
4/25/2024	6:30 PM	0	0	0	0	0	0	0	0	0	0	0	0	0
4/25/2024	6:45 PM	0	0	0	0	0	0	0	0	0	0	0	0	0
4/25/2024	7:00 PM	0	0	0	0	0	0	0	0	0	0	0	0	0
4/25/2024	7:15 PM	0	0	0	0	0	0	0	0	0	0	0	0	0
4/25/2024	7:30 PM	0	0	0	0	0	0	0	0	0	0	0	0	0
4/25/2024	7:45 PM	0	0	0	0	0	0	0	0	0	0	0	0	0
4/25/2024	8:00 PM	0	0	0	0	0	0	0	0	0	0	0	0	0
4/25/2024	8:15 PM	0	0	0	0	0	0	0	0	0	0	0	0	0
4/25/2024	8:30 PM	0	0	0	0	0	0	0	0	0	0	0	0	0
4/25/2024	8:45 PM	0	0	0	0	0	0	0	0	0	0	0	0	0
4/25/2024	9:00 PM	0	0	0	0	0	0	0	0	0	0	0	0	0
4/25/2024	9:15 PM	0	0	0	0	0	0	0	0	0	0	0	0	0
4/25/2024	9:30 PM	0	0	0	0	0	0	0	0	0	0	0	0	0
4/25/2024	9:45 PM	0	0	0	0	0	0	0	0	0	0	0	0	0
4/25/2024	10:00 PM	0	0	0	0	0	0	0	0	0	0	0	0	0
4/25/2024	10:15 PM	0	0	0	0	0	0	0	0	0	0	0	0	0
4/25/2024	10:30 PM	0	0	0	0	0	0	0	0	0	0	0	0	0
4/25/2024	10:45 PM	0	0	0	0	0	0	0	0	0	0	0	0	0
4/25/2024	11:00 PM	0	0	0	0	0	0	0	0	0	0	0	0	0
4/25/2024	11:15 PM	0	0	0	0	0	0	0	0	0	0	0	0	0
4/25/2024	11:30 PM	0	0	0	0	0	0	0	0	0	0	0	0	0
4/25/2024	11:45 PM	0	0	0	0	0	0	0	0	0	0	0	0	0

EB
File Name:
Start Date: 4/23/2024
Start Time: 0
Site Code: 55
Station ID: 1
Location 1: I-20 On/Off-Ramp, west of US-378 Sunset Blvd
Location 2:

Date	Time	1	2	3	4	5	6	7	8	9	10	11	12	13
4/23/2024	12:00 AM	0	0	0	0	0	0	0	0	0	0	0	0	0
4/23/2024	12:15 AM	0	0	0	0	0	0	0	0	0	0	0	0	0
4/23/2024	12:30 AM	0	0	0	0	0	0	0	0	0	0	0	0	0
4/23/2024	12:45 AM	0	0	0	0	0	0	0	0	0	0	0	0	0
4/23/2024	1:00 AM	0	0	0	0	0	0	0	0	0	0	0	0	0
4/23/2024	1:15 AM	0	0	0	0	0	0	0	0	0	0	0	0	0
4/23/2024	1:30 AM	0	0	0	0	0	0	0	0	0	0	0	0	0
4/23/2024	1:45 AM	0	0	0	0	0	0	0	0	0	0	0	0	0
4/23/2024	2:00 AM	0	0	0	0	0	0	0	0	0	0	0	0	0
4/23/2024	2:15 AM	0	0	0	0	0	0	0	0	0	0	0	0	0
4/23/2024	2:30 AM	0	0	0	0	0	0	0	0	0	0	0	0	0
4/23/2024	2:45 AM	0	0	0	0	0	0	0	0	0	0	0	0	0
4/23/2024	3:00 AM	0	0	0	0	0	0	0	0	0	0	0	0	0
4/23/2024	3:15 AM	0	0	0	0	0	0	0	0	0	0	0	0	0
4/23/2024	3:30 AM	0	0	0	0	0	0	0	0	0	0	0	0	0
4/23/2024	3:45 AM	0	0	0	0	0	0	0	0	0	0	0	0	0
4/23/2024	4:00 AM	0	0	0	0	0	0	0	0	0	0	0	0	0
4/23/2024	4:15 AM	0	0	0	0	0	0	0	0	0	0	0	0	0
4/23/2024	4:30 AM	0	0	0	0	0	0	0	0	0	0	0	0	0
4/23/2024	4:45 AM	0	0	0	0	0	0	0	0	0	0	0	0	0
4/23/2024	5:00 AM	0	0	0	0	0	0	0	0	0	0	0	0	0
4/23/2024	5:15 AM	0	0	0	0	0	0	0	0	0	0	0	0	0
4/23/2024	5:30 AM	0	0	0	0	0	0	0	0	0	0	0	0	0
4/23/2024	5:45 AM	0	0	0	0	0	0	0	0	0	0	0	0	0
4/23/2024	6:00 AM	0	0	0	0	0	0	0	0	0	0	0	0	0
4/23/2024	6:15 AM	0	0	0	0	0	0	0	0	0	0	0	0	0
4/23/2024	6:30 AM	0	0	0	0	0	0	0	0	0	0	0	0	0
4/23/2024	6:45 AM	0	0	0	0	0	0	0	0	0	0	0	0	0
4/23/2024	7:00 AM	0	0	0	0	0	0	0	0	0	0	0	0	0
4/23/2024	7:15 AM	0	0	0	0	0	0	0	0	0	0	0	0	0
4/23/2024	7:30 AM	0	0	0	0	0	0	0	0	0	0	0	0	0
4/23/2024	7:45 AM	0	0	0	0	0	0	0	0	0	0	0	0	0
4/23/2024	8:00 AM	0	0	0	0	0	0	0	0	0	0	0	0	0
4/23/2024	8:15 AM	0	0	0	0	0	0	0	0	0	0	0	0	0
4/23/2024	8:30 AM	0	0	0	0	0	0	0	0	0	0	0	0	0
4/23/2024	8:45 AM	0	0	0	0	0	0	0	0	0	0	0	0	0
4/23/2024	9:00 AM	0	0	0	0	0	0	0	0	0	0	0	0	0
4/23/2024	9:15 AM	0	0	0	0	0	0	0	0	0	0	0	0	0
4/23/2024	9:30 AM	0	0	0	0	0	0	0	0	0	0	0	0	0
4/23/2024	9:45 AM	0	0	0	0	0	0	0	0	0	0	0	0	0
4/23/2024	10:00 AM	0	0	0	0	0	0	0	0	0	0	0	0	0
4/23/2024	10:15 AM	0	0	0	0	0	0	0	0	0	0	0	0	0
4/23/2024	10:30 AM	0	0	0	0	0	0	0	0	0	0	0	0	0
4/23/2024	10:45 AM	0	0	0	0	0	0	0	0	0	0	0	0	0
4/23/2024	11:00 AM	0	0	0	0	0	0	0	0	0	0	0	0	0
4/23/2024	11:15 AM	0	0	0	0	0	0	0	0	0	0	0	0	0
4/23/2024	11:30 AM	0	0	0	0	0	0	0	0	0	0	0	0	0
4/23/2024	11:45 AM	0	0	0	0	0	0	0	0	0	0	0	0	0
4/23/2024	12:00 PM	0	0	0	0	0	0	0	0	0	0	0	0	0
4/23/2024	12:15 PM	0	0	0	0	0	0	0	0	0	0	0	0	0
4/23/2024	12:30 PM	0	0	0	0	0	0	0	0	0	0	0	0	0
4/23/2024	12:45 PM	0	0	0	0	0	0	0	0	0	0	0	0	0
4/23/2024	1:00 PM	0	0	0	0	0	0	0	0	0	0	0	0	0
4/23/2024	1:15 PM	0	0	0	0	0	0	0	0	0	0	0	0	0
4/23/2024	1:30 PM	0	0	0	0	0	0	0	0	0	0	0	0	0
4/23/2024	1:45 PM	0	0	0	0	0	0	0	0	0	0	0	0	0
4/23/2024	2:00 PM	0	0	0	0	0	0	0	0	0	0	0	0	0
4/23/2024	2:15 PM	0	0	0	0	0	0	0	0	0	0	0	0	0
4/23/2024	2:30 PM	0	0	0	0	0	0	0	0	0	0	0	0	0
4/23/2024	2:45 PM	0	0	0	0	0	0	0	0	0	0	0	0	0
4/23/2024	3:00 PM	0	0	0	0	0	0	0	0	0	0	0	0	0
4/23/2024	3:15 PM	0	0	0	0	0	0	0	0	0	0	0	0	0
4/23/2024	3:30 PM	0	0	0	0	0	0	0	0	0	0	0	0	0
4/23/2024	3:45 PM	0	0	0	0	0	0	0	0	0	0	0	0	0
4/23/2024	4:00 PM	0	0	0	0	0	0	0	0	0	0	0	0	0
4/23/2024	4:15 PM	0	0	0	0	0	0	0	0	0	0	0	0	0
4/23/2024	4:30 PM	0	0	0	0	0	0	0	0	0	0	0	0	0
4/23/2024	4:45 PM	0	0	0	0	0	0	0	0	0	0	0	0	0
4/23/2024	5:00 PM	0	0	0	0	0	0	0	0	0	0	0	0	0
4/23/2024	5:15 PM	0	0	0	0	0	0	0	0	0	0	0	0	0
4/23/2024	5:30 PM	0	0	0	0	0	0	0	0	0	0	0	0	0
4/23/2024	5:45 PM	0	0	0	0	0	0	0	0	0	0	0	0	0
4/23/2024	6:00 PM	0	0	0	0	0	0	0	0	0	0	0	0	0
4/23/2024	6:15 PM	0	58	7	0	2	1	0	0	3	0	0	0	0
4/23/2024	6:30 PM	0	99	18	0	3	1	0	0	5	0	0	0	0
4/23/2024	6:45 PM	0	142	25	0	4	1	0	0	8	0	0	0	0
4/23/2024	7:00 PM	0	177	44	1	4	1	0	0	9	0	0	0	0
4/23/2024	7:15 PM	0	152	44	1	2	0	0	0	7	0	0	0	0
4/23/2024	7:30 PM	0	143	41	1	1	0	0	1	10	0	0	0	0
4/23/2024	7:45 PM	0	130	36	1	1	0	0	1	12	0	1	0	0
4/23/2024	8:00 PM	0	116	20	0	1	0	0	1	13	0	1	0	0
4/23/2024	8:15 PM	0	117	17	0	1	0	0	1	16	0	1	0	0
4/23/2024	8:30 PM	0	124	10	0	1	1	0	0	14	0	2	0	0
4/23/2024	8:45 PM	0	117	8	0	3	1	0	0	11	0	1	0	0
4/23/2024	9:00 PM	0	109	5	0	4	1	0	0	15	0	2	0	0
4/23/2024	9:15 PM	0	87	1	0	5	1	0	0	14	0	2	0	0
4/23/2024	9:30 PM	0	60	1	0	5	0	0	0	11	0	1	0	0
4/23/2024	9:45 PM	0	51	1	0	2	0	0	0	12	0	1	0	0
4/23/2024	10:00 PM	0	56	3	0	1	0	0	0	8	0	0	0	0
4/23/2024	10:15 PM	0	51	3	0	1	0	0	0	7	0	0	0	0
4/23/2024	10:30 PM	0	45	2	0	1	0	0	0	13	0	0	0	0
4/23/2024	10:45 PM	0	36	2	0	2	0	0	0	12	0	1	0	0
4/23/2024	11:00 PM	0	21	1	0	2	0	0	0	10	0	1	0	0
4/23/2024	11:15 PM	0	18	1	0	1	0	0	0	8	0	1	0	0
4/23/2024	11:30 PM	0	18	1	0	1	0	0	0	3	0	2	0	0
4/23/2024	11:45 PM	0	15	1	0	0	0	0	0	3	0	3	0	0

4/24/2024	12:00 AM	0	15	0	0	0	0	0	0	6	0	3	0	0
4/24/2024	12:15 AM	0	12	0	0	0	0	0	0	9	0	3	0	0
4/24/2024	12:30 AM	0	11	0	0	1	0	0	0	12	0	2	0	0
4/24/2024	12:45 AM	0	12	0	0	1	0	0	0	11	0	0	0	0
4/24/2024	1:00 AM	0	11	0	0	1	0	0	0	9	0	0	0	0
4/24/2024	1:15 AM	0	12	0	0	1	0	0	0	7	0	0	0	0
4/24/2024	1:30 AM	0	8	0	0	0	0	0	0	3	0	6	0	0
4/24/2024	1:45 AM	0	6	0	0	0	0	0	0	3	0	8	0	0
4/24/2024	2:00 AM	0	7	0	0	0	0	0	0	3	0	8	0	0
4/24/2024	2:15 AM	0	8	0	0	0	0	0	0	2	0	9	0	0
4/24/2024	2:30 AM	0	11	0	0	2	0	0	0	5	0	3	0	0
4/24/2024	2:45 AM	0	15	1	0	2	0	0	0	4	0	2	0	0
4/24/2024	3:00 AM	0	17	1	0	2	0	0	0	4	0	2	0	0
4/24/2024	3:15 AM	0	16	2	0	3	0	0	0	9	0	1	0	0
4/24/2024	3:30 AM	0	16	2	0	1	0	0	0	9	0	2	0	0
4/24/2024	3:45 AM	0	18	1	0	1	0	0	0	11	0	1	0	0
4/24/2024	4:00 AM	0	28	1	0	2	0	0	0	11	0	1	0	0
4/24/2024	4:15 AM	0	37	0	0	1	0	0	0	7	0	3	0	0
4/24/2024	4:30 AM	0	42	0	0	2	0	0	0	5	0	4	0	0
4/24/2024	4:45 AM	0	74	0	0	3	0	0	0	7	0	4	0	0
4/24/2024	5:00 AM	0	103	2	0	4	0	0	0	10	0	4	0	0
4/24/2024	5:15 AM	1	158	2	0	4	0	0	0	12	0	2	0	0
4/24/2024	5:30 AM	1	239	16	0	4	0	0	1	15	0	2	0	0
4/24/2024	5:45 AM	1	339	37	0	3	0	1	1	12	0	2	0	0
4/24/2024	6:00 AM	1	447	84	0	3	0	1	2	12	0	2	0	0
4/24/2024	6:15 AM	0	511	132	1	5	0	1	2	14	0	2	0	0
4/24/2024	6:30 AM	0	642	170	1	6	0	1	1	15	0	0	0	0
4/24/2024	6:45 AM	0	753	193	3	6	0	0	1	18	0	0	0	0
4/24/2024	7:00 AM	1	806	201	3	9	0	0	3	17	0	0	0	0
4/24/2024	7:15 AM	1	859	191	2	10	0	0	3	15	0	0	0	0
4/24/2024	7:30 AM	1	803	180	2	11	1	0	3	19	0	1	0	0
4/24/2024	7:45 AM	1	713	176	3	15	1	0	7	18	0	1	0	0
4/24/2024	8:00 AM	1	617	147	3	15	1	0	4	20	0	1	0	0
4/24/2024	8:15 AM	1	530	133	3	14	1	0	4	21	0	1	0	0
4/24/2024	8:30 AM	1	439	122	3	12	0	0	4	13	0	0	0	0
4/24/2024	8:45 AM	1	379	107	0	14	1	0	0	17	0	0	0	0
4/24/2024	9:00 AM	0	362	104	0	10	1	0	0	15	0	0	0	0
4/24/2024	9:15 AM	0	326	102	0	12	3	0	3	17	1	0	0	0
4/24/2024	9:30 AM	0	322	94	0	17	4	0	5	19	1	0	0	0
4/24/2024	9:45 AM	0	294	91	0	14	4	0	6	15	1	0	0	0
4/24/2024	10:00 AM	0	273	84	0	16	5	0	6	14	2	0	0	0
4/24/2024	10:15 AM	0	273	88	3	14	4	0	4	9	1	0	0	0
4/24/2024	10:30 AM	0	259	82	4	11	3	0	2	11	1	0	0	0
4/24/2024	10:45 AM	0	244	80	5	10	3	0	1	10	1	0	0	0
4/24/2024	11:00 AM	0	241	84	6	12	3	0	1	13	0	0	0	0
4/24/2024	11:15 AM	0	252	79	4	14	2	0	2	15	0	0	0	0
4/24/2024	11:30 AM	0	267	80	3	14	2	0	2	14	0	0	0	0
4/24/2024	11:45 AM	0	285	81	2	13	3	0	2	14	0	0	0	0
4/24/2024	12:00 PM	0	302	86	1	9	2	0	2	11	0	0	0	0
4/24/2024	12:15 PM	0	305	85	1	6	2	0	2	10	0	0	0	0
4/24/2024	12:30 PM	0	306	92	1	4	3	0	3	8	0	0	0	0
4/24/2024	12:45 PM	0	314	99	3	4	1	0	3	8	0	0	0	0
4/24/2024	1:00 PM	0	305	98	4	5	2	0	4	10	0	0	0	0
4/24/2024	1:15 PM	0	312	99	3	4	2	0	2	11	0	0	0	0
4/24/2024	1:30 PM	0	307	95	3	3	1	0	1	9	0	0	0	0
4/24/2024	1:45 PM	0	301	97	2	5	2	0	3	13	0	0	0	0
4/24/2024	2:00 PM	0	308	94	1	7	2	0	3	11	0	0	0	0
4/24/2024	2:15 PM	0	324	110	2	19	4	0	3	13	0	0	0	0
4/24/2024	2:30 PM	0	342	113	2	25	4	0	5	16	0	0	0	0
4/24/2024	2:45 PM	0	338	105	2	24	3	0	3	13	0	0	0	0
4/24/2024	3:00 PM	0	333	103	2	21	2	0	2	17	0	0	0	0
4/24/2024	3:15 PM	0	312	80	1	11	0	0	2	14	0	0	0	0
4/24/2024	3:30 PM	0	301	69	1	7	0	0	1	15	0	0	0	0
4/24/2024	3:45 PM	0	306	58	0	9	1	0	4	17	0	0	0	0
4/24/2024	4:00 PM	0	308	71	0	11	1	0	6	14	0	0	0	0
4/24/2024	4:15 PM	0	299	74	0	12	1	1	6	15	0	0	0	0
4/24/2024	4:30 PM	0	303	83	0	10	1	1	5	13	0	0	0	0
4/24/2024	4:45 PM	1	323	90	0	8	0	1	3	17	0	0	0	0
4/24/2024	5:00 PM	1	338	94	0	7	0	1	2	20	0	0	0	0
4/24/2024	5:15 PM	1	357	97	0	5	0	0	3	24	0	0	0	0
4/24/2024	5:30 PM	1	357	91	0	6	0	0	4	25	0	0	0	0
4/24/2024	5:45 PM	0	331	87	0	4	0	0	4	20	0	0	0	0
4/24/2024	6:00 PM	0	294	58	0	3	1	0	3	18	0	0	0	0
4/24/2024	6:15 PM	0	255	53	1	3	1	0	2	13	0	0	0	0
4/24/2024	6:30 PM	0	213	49	1	3	1	0	1	16	0	0	0	0
4/24/2024	6:45 PM	0	183	44	1	5	1	0	0	12	0	0	0	0
4/24/2024	7:00 PM	0	178	45	3	6	0	0	0	10	0	0	0	0
4/24/2024	7:15 PM	0	157	43	2	6	0	0	0	10	0	0	0	0
4/24/2024	7:30 PM	0	146	37	2	5	0	0	0	5	0	0	0	0
4/24/2024	7:45 PM	0	139	30	2	4	0	0	0	5	0	0	0	0
4/24/2024	8:00 PM	0	118	20	0	2	1	0	0	4	0	0	0	0
4/24/2024	8:15 PM	0	118	7	0	1	1	0	0	2	0	0	0	0
4/24/2024	8:30 PM	0	113	2	0	1	1	0	0	5	0	4	0	0
4/24/2024	8:45 PM	0	96	0	0	1	1	0	0	5	0	4	0	0
4/24/2024	9:00 PM	0	86	0	0	2	0	0	0	6	0	6	0	0
4/24/2024	9:15 PM	0	84	0	0	4	0	0	0	9	0	7	0	0
4/24/2024	9:30 PM	0	78	0	0	5	0	0	0	8	0	5	0	0
4/24/2024	9:45 PM	0	75	0	0	4	0	0	0	11	0	5	0	0
4/24/2024	10:00 PM	0	76	0	0	4	0	0	0	10	0	3	0	0
4/24/2024	10:15 PM	0	61	0	0	2	0	0	0	7	0	2	0	0
4/24/2024	10:30 PM	0	51	0	0	1	0	0	0	6	0	0	0	0
4/24/2024	10:45 PM	0	39	1	0	1	0	0	0	5	0	1	0	0
4/24/2024	11:00 PM	0	20	1	0	1	0	0	0	6	0	1	0	0
4/24/2024	11:15 PM	0	14	1	0	1	0	0	0	7	0	2	0	0
4/24/2024	11:30 PM	0	18	1	0	1	0	0	0	9	0	4	0	0
4/24/2024	11:45 PM	0	24	0	0	1	0	0	0	8	0	5	0	0

4/25/2024	12:00 AM	0	22	0	0	0	0	0	0	6	0	5	0	0
4/25/2024	12:15 AM	0	22	0	0	0	0	0	0	6	0	5	0	0
4/25/2024	12:30 AM	0	14	0	0	1	0	0	0	3	0	3	0	0
4/25/2024	12:45 AM	0	9	0	0	1	0	0	0	3	0	3	0	0
4/25/2024	1:00 AM	0	7	0	0	2	0	0	0	5	0	4	0	0
4/25/2024	1:15 AM	0	5	0	0	2	0	0	0	5	0	4	0	0
4/25/2024	1:30 AM	0	7	0	0	1	0	0	0	6	0	4	0	0
4/25/2024	1:45 AM	0	5	0	0	1	0	0	0	7	0	3	0	0
4/25/2024	2:00 AM	0	8	0	0	0	0	0	0	7	0	5	0	0
4/25/2024	2:15 AM	0	12	0	0	0	0	0	0	7	0	5	0	0
4/25/2024	2:30 AM	0	13	0	0	0	0	0	0	6	0	5	0	0
4/25/2024	2:45 AM	0	14	0	0	0	0	0	0	5	0	6	0	0
4/25/2024	3:00 AM	0	17	0	0	1	0	0	0	5	0	4	0	0
4/25/2024	3:15 AM	0	13	0	0	1	0	0	0	9	1	3	0	0
4/25/2024	3:30 AM	0	17	0	0	1	0	0	0	8	1	3	0	0
4/25/2024	3:45 AM	0	23	0	0	1	0	0	0	9	1	1	0	0
4/25/2024	4:00 AM	0	32	0	0	0	0	0	0	14	1	1	0	0
4/25/2024	4:15 AM	0	41	0	0	1	0	0	0	11	0	1	0	0
4/25/2024	4:30 AM	0	58	1	0	1	1	0	0	15	0	2	0	0
4/25/2024	4:45 AM	0	85	1	0	2	1	0	0	14	0	2	0	0
4/25/2024	5:00 AM	1	131	1	0	2	1	0	0	8	0	1	0	0
4/25/2024	5:15 AM	1	186	2	0	2	2	0	0	8	0	2	0	0
4/25/2024	5:30 AM	1	243	11	0	5	1	0	2	5	0	2	0	0
4/25/2024	5:45 AM	2	337	36	0	4	1	0	2	5	0	3	0	0
4/25/2024	6:00 AM	2	417	84	0	4	1	0	2	9	0	3	0	0
4/25/2024	6:15 AM	3	500	129	2	6	0	0	2	12	0	2	0	0
4/25/2024	6:30 AM	3	621	176	3	6	0	0	2	13	0	1	0	0
4/25/2024	6:45 AM	2	698	189	3	8	1	0	2	15	0	0	0	0
4/25/2024	7:00 AM	1	780	204	3	8	2	0	3	15	0	0	0	0
4/25/2024	7:15 AM	0	776	203	1	7	2	0	4	16	0	0	0	0
4/25/2024	7:30 AM	0	733	216	0	4	2	0	3	20	0	0	0	0
4/25/2024	7:45 AM	0	646	204	1	2	1	0	3	17	0	0	0	0
4/25/2024	8:00 AM	0	547	175	2	2	0	0	3	19	0	0	0	0
4/25/2024	8:15 AM	0	486	155	3	2	0	0	3	17	0	0	0	0
4/25/2024	8:30 AM	0	440	118	3	7	0	1	4	15	0	0	0	0
4/25/2024	8:45 AM	0	393	112	2	10	1	1	4	18	0	0	0	0
4/25/2024	9:00 AM	0	366	95	1	11	1	1	4	14	0	0	0	0
4/25/2024	9:15 AM	0	334	88	0	10	2	1	3	10	0	0	0	0
4/25/2024	9:30 AM	0	296	78	0	8	3	0	1	8	0	0	0	0
4/25/2024	9:45 AM	0	286	75	0	9	2	0	1	6	0	0	0	0
4/25/2024	10:00 AM	0	253	72	0	9	3	0	2	5	0	0	0	0
4/25/2024	10:15 AM	0	265	74	1	9	2	0	2	9	0	0	0	0
4/25/2024	10:30 AM	0	250	74	3	9	2	0	2	14	0	0	0	0
4/25/2024	10:45 AM	0	250	84	4	8	3	0	3	16	0	0	0	0
4/25/2024	11:00 AM	0	240	95	5	9	2	0	1	19	0	0	0	0
4/25/2024	11:15 AM	0	247	94	4	10	2	0	1	20	0	0	0	0
4/25/2024	11:30 AM	0	286	88	2	8	1	0	1	18	0	0	0	0
4/25/2024	11:45 AM	0	302	90	1	5	0	0	0	17	0	0	0	0
4/25/2024	12:00 PM	1	320	93	0	15	0	0	0	14	1	0	0	0
4/25/2024	12:15 PM	1	329	97	2	18	1	0	0	13	1	0	0	0
4/25/2024	12:30 PM	1	322	93	2	19	1	0	1	13	1	0	0	0
4/25/2024	12:45 PM	1	328	90	3	22	3	0	1	19	1	0	0	0
4/25/2024	1:00 PM	0	351	91	5	11	3	0	1	18	0	0	0	0
4/25/2024	1:15 PM	0	342	94	3	7	2	0	3	19	0	0	0	0
4/25/2024	1:30 PM	0	319	109	3	9	2	0	3	18	0	0	0	0
4/25/2024	1:45 PM	0	330	109	3	8	1	0	3	13	0	0	0	0
4/25/2024	2:00 PM	0	311	102	2	8	2	0	4	14	0	0	0	0
4/25/2024	2:15 PM	0	318	100	3	7	2	0	4	11	0	0	0	0
4/25/2024	2:30 PM	0	335	91	4	4	2	0	4	13	0	0	0	0
4/25/2024	2:45 PM	0	319	87	4	4	2	0	4	14	1	0	0	0
4/25/2024	3:00 PM	2	342	89	3	9	1	0	4	15	1	0	0	0
4/25/2024	3:15 PM	2	339	87	2	10	1	0	2	15	1	0	0	0
4/25/2024	3:30 PM	2	321	91	1	12	1	0	1	18	1	0	0	0
4/25/2024	3:45 PM	3	327	88	1	13	0	0	1	17	0	0	0	0
4/25/2024	4:00 PM	1	320	83	1	10	0	0	1	17	0	0	0	0
4/25/2024	4:15 PM	1	323	88	1	10	0	0	1	18	0	0	0	0
4/25/2024	4:30 PM	1	342	90	2	7	0	0	1	12	0	0	0	0
4/25/2024	4:45 PM	0	341	92	1	6	0	0	1	12	0	0	0	0
4/25/2024	5:00 PM	0	340	92	1	5	0	0	0	12	0	0	0	0
4/25/2024	5:15 PM	0	358	83	1	4	0	0	0	15	0	0	0	0
4/25/2024	5:30 PM	0	365	79	0	7	1	0	0	16	0	0	0	0
4/25/2024	5:45 PM	1	340	82	0	7	1	0	1	15	0	0	0	0
4/25/2024	6:00 PM	1	307	81	0	7	1	0	2	15	0	0	0	0
4/25/2024	6:15 PM	1	212	63	0	7	1	0	2	9	0	0	0	0
4/25/2024	6:30 PM	1	118	42	0	4	0	0	2	5	0	0	0	0
4/25/2024	6:45 PM	0	58	18	0	2	0	0	1	3	0	0	0	0
4/25/2024	7:00 PM	0	0	0	0	0	0	0	0	0	0	0	0	0
4/25/2024	7:15 PM	0	0	0	0	0	0	0	0	0	0	0	0	0
4/25/2024	7:30 PM	0	0	0	0	0	0	0	0	0	0	0	0	0
4/25/2024	7:45 PM	0	0	0	0	0	0	0	0	0	0	0	0	0
4/25/2024	8:00 PM	0	0	0	0	0	0	0	0	0	0	0	0	0
4/25/2024	8:15 PM	0	0	0	0	0	0	0	0	0	0	0	0	0
4/25/2024	8:30 PM	0	0	0	0	0	0	0	0	0	0	0	0	0
4/25/2024	8:45 PM	0	0	0	0	0	0	0	0	0	0	0	0	0
4/25/2024	9:00 PM	0	0	0	0	0	0	0	0	0	0	0	0	0
4/25/2024	9:15 PM	0	0	0	0	0	0	0	0	0	0	0	0	0
4/25/2024	9:30 PM	0	0	0	0	0	0	0	0	0	0	0	0	0
4/25/2024	9:45 PM	0	0	0	0	0	0	0	0	0	0	0	0	0
4/25/2024	10:00 PM	0	0	0	0	0	0	0	0	0	0	0	0	0
4/25/2024	10:15 PM	0	0	0	0	0	0	0	0	0	0	0	0	0
4/25/2024	10:30 PM	0	0	0	0	0	0	0	0	0	0	0	0	0
4/25/2024	10:45 PM	0	0	0	0	0	0	0	0	0	0	0	0	0
4/25/2024	11:00 PM	0	0	0	0	0	0	0	0	0	0	0	0	0
4/25/2024	11:15 PM	0	0	0	0	0	0	0	0	0	0	0	0	0
4/25/2024	11:30 PM	0	0	0	0	0	0	0	0	0	0	0	0	0
4/25/2024	11:45 PM	0	0	0	0	0	0	0	0	0	0	0	0	0

WB
File Name:
Start Date: 4/23/2024
Start Time: 0
Site Code: 55
Station ID: 1
Location 1: I-20 On/Off-Ramp, west of US-378 Sunset Blvd
Location 2:

Date	Time	1	2	3	4	5	6	7	8	9	10	11	12	13
4/23/2024	12:00 AM	0	0	0	0	0	0	0	0	0	0	0	0	0
4/23/2024	12:15 AM	0	0	0	0	0	0	0	0	0	0	0	0	0
4/23/2024	12:30 AM	0	0	0	0	0	0	0	0	0	0	0	0	0
4/23/2024	12:45 AM	0	0	0	0	0	0	0	0	0	0	0	0	0
4/23/2024	1:00 AM	0	0	0	0	0	0	0	0	0	0	0	0	0
4/23/2024	1:15 AM	0	0	0	0	0	0	0	0	0	0	0	0	0
4/23/2024	1:30 AM	0	0	0	0	0	0	0	0	0	0	0	0	0
4/23/2024	1:45 AM	0	0	0	0	0	0	0	0	0	0	0	0	0
4/23/2024	2:00 AM	0	0	0	0	0	0	0	0	0	0	0	0	0
4/23/2024	2:15 AM	0	0	0	0	0	0	0	0	0	0	0	0	0
4/23/2024	2:30 AM	0	0	0	0	0	0	0	0	0	0	0	0	0
4/23/2024	2:45 AM	0	0	0	0	0	0	0	0	0	0	0	0	0
4/23/2024	3:00 AM	0	0	0	0	0	0	0	0	0	0	0	0	0
4/23/2024	3:15 AM	0	0	0	0	0	0	0	0	0	0	0	0	0
4/23/2024	3:30 AM	0	0	0	0	0	0	0	0	0	0	0	0	0
4/23/2024	3:45 AM	0	0	0	0	0	0	0	0	0	0	0	0	0
4/23/2024	4:00 AM	0	0	0	0	0	0	0	0	0	0	0	0	0
4/23/2024	4:15 AM	0	0	0	0	0	0	0	0	0	0	0	0	0
4/23/2024	4:30 AM	0	0	0	0	0	0	0	0	0	0	0	0	0
4/23/2024	4:45 AM	0	0	0	0	0	0	0	0	0	0	0	0	0
4/23/2024	5:00 AM	0	0	0	0	0	0	0	0	0	0	0	0	0
4/23/2024	5:15 AM	0	0	0	0	0	0	0	0	0	0	0	0	0
4/23/2024	5:30 AM	0	0	0	0	0	0	0	0	0	0	0	0	0
4/23/2024	5:45 AM	0	0	0	0	0	0	0	0	0	0	0	0	0
4/23/2024	6:00 AM	0	0	0	0	0	0	0	0	0	0	0	0	0
4/23/2024	6:15 AM	0	0	0	0	0	0	0	0	0	0	0	0	0
4/23/2024	6:30 AM	0	0	0	0	0	0	0	0	0	0	0	0	0
4/23/2024	6:45 AM	0	0	0	0	0	0	0	0	0	0	0	0	0
4/23/2024	7:00 AM	0	0	0	0	0	0	0	0	0	0	0	0	0
4/23/2024	7:15 AM	0	0	0	0	0	0	0	0	0	0	0	0	0
4/23/2024	7:30 AM	0	0	0	0	0	0	0	0	0	0	0	0	0
4/23/2024	7:45 AM	0	0	0	0	0	0	0	0	0	0	0	0	0
4/23/2024	8:00 AM	0	0	0	0	0	0	0	0	0	0	0	0	0
4/23/2024	8:15 AM	0	0	0	0	0	0	0	0	0	0	0	0	0
4/23/2024	8:30 AM	0	0	0	0	0	0	0	0	0	0	0	0	0
4/23/2024	8:45 AM	0	0	0	0	0	0	0	0	0	0	0	0	0
4/23/2024	9:00 AM	0	0	0	0	0	0	0	0	0	0	0	0	0
4/23/2024	9:15 AM	0	0	0	0	0	0	0	0	0	0	0	0	0
4/23/2024	9:30 AM	0	0	0	0	0	0	0	0	0	0	0	0	0
4/23/2024	9:45 AM	0	0	0	0	0	0	0	0	0	0	0	0	0
4/23/2024	10:00 AM	0	0	0	0	0	0	0	0	0	0	0	0	0
4/23/2024	10:15 AM	0	0	0	0	0	0	0	0	0	0	0	0	0
4/23/2024	10:30 AM	0	0	0	0	0	0	0	0	0	0	0	0	0
4/23/2024	10:45 AM	0	0	0	0	0	0	0	0	0	0	0	0	0
4/23/2024	11:00 AM	0	0	0	0	0	0	0	0	0	0	0	0	0
4/23/2024	11:15 AM	0	0	0	0	0	0	0	0	0	0	0	0	0
4/23/2024	11:30 AM	0	0	0	0	0	0	0	0	0	0	0	0	0
4/23/2024	11:45 AM	0	0	0	0	0	0	0	0	0	0	0	0	0
4/23/2024	12:00 PM	0	0	0	0	0	0	0	0	0	0	0	0	0
4/23/2024	12:15 PM	0	0	0	0	0	0	0	0	0	0	0	0	0
4/23/2024	12:30 PM	0	0	0	0	0	0	0	0	0	0	0	0	0
4/23/2024	12:45 PM	0	0	0	0	0	0	0	0	0	0	0	0	0
4/23/2024	1:00 PM	0	0	0	0	0	0	0	0	0	0	0	0	0
4/23/2024	1:15 PM	0	0	0	0	0	0	0	0	0	0	0	0	0
4/23/2024	1:30 PM	0	0	0	0	0	0	0	0	0	0	0	0	0
4/23/2024	1:45 PM	0	0	0	0	0	0	0	0	0	0	0	0	0
4/23/2024	2:00 PM	0	0	0	0	0	0	0	0	0	0	0	0	0
4/23/2024	2:15 PM	0	0	0	0	0	0	0	0	0	0	0	0	0
4/23/2024	2:30 PM	0	0	0	0	0	0	0	0	0	0	0	0	0
4/23/2024	2:45 PM	0	0	0	0	0	0	0	0	0	0	0	0	0
4/23/2024	3:00 PM	0	0	0	0	0	0	0	0	0	0	0	0	0
4/23/2024	3:15 PM	0	0	0	0	0	0	0	0	0	0	0	0	0
4/23/2024	3:30 PM	0	0	0	0	0	0	0	0	0	0	0	0	0
4/23/2024	3:45 PM	0	0	0	0	0	0	0	0	0	0	0	0	0
4/23/2024	4:00 PM	0	0	0	0	0	0	0	0	0	0	0	0	0
4/23/2024	4:15 PM	0	0	0	0	0	0	0	0	0	0	0	0	0
4/23/2024	4:30 PM	0	0	0	0	0	0	0	0	0	0	0	0	0
4/23/2024	4:45 PM	0	0	0	0	0	0	0	0	0	0	0	0	0
4/23/2024	5:00 PM	0	0	0	0	0	0	0	0	0	0	0	0	0
4/23/2024	5:15 PM	0	0	0	0	0	0	0	0	0	0	0	0	0
4/23/2024	5:30 PM	0	0	0	0	0	0	0	0	0	0	0	0	0
4/23/2024	5:45 PM	0	0	0	0	0	0	0	0	0	0	0	0	0
4/23/2024	6:00 PM	0	0	0	0	0	0	0	0	0	0	0	0	0
4/23/2024	6:15 PM	0	0	0	0	0	0	0	0	0	0	0	0	0
4/23/2024	6:30 PM	0	0	0	0	0	0	0	0	0	0	0	0	0
4/23/2024	6:45 PM	0	0	0	0	0	0	0	0	0	0	0	0	0
4/23/2024	7:00 PM	0	0	0	0	0	0	0	0	0	0	0	0	0
4/23/2024	7:15 PM	0	0	0	0	0	0	0	0	0	0	0	0	0
4/23/2024	7:30 PM	0	0	0	0	0	0	0	0	0	0	0	0	0
4/23/2024	7:45 PM	0	0	0	0	0	0	0	0	0	0	0	0	0
4/23/2024	8:00 PM	0	0	0	0	0	0	0	0	0	0	0	0	0
4/23/2024	8:15 PM	0	0	0	0	0	0	0	0	0	0	0	0	0
4/23/2024	8:30 PM	0	0	0	0	0	0	0	0	0	0	0	0	0
4/23/2024	8:45 PM	0	0	0	0	0	0	0	0	0	0	0	0	0
4/23/2024	9:00 PM	0	0	0	0	0	0	0	0	0	0	0	0	0
4/23/2024	9:15 PM	0	0	0	0	0	0	0	0	0	0	0	0	0
4/23/2024	9:30 PM	0	0	0	0	0	0	0	0	0	0	0	0	0
4/23/2024	9:45 PM	0	0	0	0	0	0	0	0	0	0	0	0	0
4/23/2024	10:00 PM	0	0	0	0	0	0	0	0	0	0	0	0	0
4/23/2024	10:15 PM	0	0	0	0	0	0	0	0	0	0	0	0	0
4/23/2024	10:30 PM	0	0	0	0	0	0	0	0	0	0	0	0	0
4/23/2024	10:45 PM	0	0	0	0	0	0	0	0	0	0	0	0	0
4/23/2024	11:00 PM	0	0	0	0	0	0	0	0	0	0	0	0	0
4/23/2024	11:15 PM	0	0	0	0	0	0	0	0	0	0	0	0	0
4/23/2024	11:30 PM	0	0	0	0	0	0	0	0	0	0	0	0	0
4/23/2024	11:45 PM	0	0	0	0	0	0	0	0	0	0	0	0	0

4/24/2024	12:00 AM	0	0	0	0	0	0	0	0	0	0	0	0	0
4/24/2024	12:15 AM	0	0	0	0	0	0	0	0	0	0	0	0	0
4/24/2024	12:30 AM	0	0	0	0	0	0	0	0	0	0	0	0	0
4/24/2024	12:45 AM	0	0	0	0	0	0	0	0	0	0	0	0	0
4/24/2024	1:00 AM	0	0	0	0	0	0	0	0	0	0	0	0	0
4/24/2024	1:15 AM	0	0	0	0	0	0	0	0	0	0	0	0	0
4/24/2024	1:30 AM	0	0	0	0	0	0	0	0	0	0	0	0	0
4/24/2024	1:45 AM	0	0	0	0	0	0	0	0	0	0	0	0	0
4/24/2024	2:00 AM	0	0	0	0	0	0	0	0	0	0	0	0	0
4/24/2024	2:15 AM	0	0	0	0	0	0	0	0	0	0	0	0	0
4/24/2024	2:30 AM	0	0	0	0	0	0	0	0	0	0	0	0	0
4/24/2024	2:45 AM	0	0	0	0	0	0	0	0	0	0	0	0	0
4/24/2024	3:00 AM	0	0	0	0	0	0	0	0	0	0	0	0	0
4/24/2024	3:15 AM	0	0	0	0	0	0	0	0	0	0	0	0	0
4/24/2024	3:30 AM	0	0	0	0	0	0	0	0	0	0	0	0	0
4/24/2024	3:45 AM	0	0	0	0	0	0	0	0	0	0	0	0	0
4/24/2024	4:00 AM	0	0	0	0	0	0	0	0	0	0	0	0	0
4/24/2024	4:15 AM	0	0	0	0	0	0	0	0	0	0	0	0	0
4/24/2024	4:30 AM	0	0	0	0	0	0	0	0	0	0	0	0	0
4/24/2024	4:45 AM	0	0	0	0	0	0	0	0	0	0	0	0	0
4/24/2024	5:00 AM	0	0	0	0	0	0	0	0	0	0	0	0	0
4/24/2024	5:15 AM	0	0	0	0	0	0	0	0	0	0	0	0	0
4/24/2024	5:30 AM	0	0	0	0	0	0	0	0	0	0	0	0	0
4/24/2024	5:45 AM	0	0	0	0	0	0	0	0	0	0	0	0	0
4/24/2024	6:00 AM	0	0	0	0	0	0	0	0	0	0	0	0	0
4/24/2024	6:15 AM	0	0	0	0	0	0	0	0	0	0	0	0	0
4/24/2024	6:30 AM	0	0	0	0	0	0	0	0	0	0	0	0	0
4/24/2024	6:45 AM	0	0	0	0	0	0	0	0	0	0	0	0	0
4/24/2024	7:00 AM	0	0	0	0	0	0	0	0	0	0	0	0	0
4/24/2024	7:15 AM	0	0	0	0	0	0	0	0	0	0	0	0	0
4/24/2024	7:30 AM	0	0	0	0	0	0	0	0	0	0	0	0	0
4/24/2024	7:45 AM	0	0	0	0	0	0	0	0	0	0	0	0	0
4/24/2024	8:00 AM	0	0	0	0	0	0	0	0	0	0	0	0	0
4/24/2024	8:15 AM	0	0	0	0	0	0	0	0	0	0	0	0	0
4/24/2024	8:30 AM	0	0	0	0	0	0	0	0	0	0	0	0	0
4/24/2024	8:45 AM	0	0	0	0	0	0	0	0	0	0	0	0	0
4/24/2024	9:00 AM	0	0	0	0	0	0	0	0	0	0	0	0	0
4/24/2024	9:15 AM	0	0	0	0	0	0	0	0	0	0	0	0	0
4/24/2024	9:30 AM	0	0	0	0	0	0	0	0	0	0	0	0	0
4/24/2024	9:45 AM	0	0	0	0	0	0	0	0	0	0	0	0	0
4/24/2024	10:00 AM	0	0	0	0	0	0	0	0	0	0	0	0	0
4/24/2024	10:15 AM	0	0	0	0	0	0	0	0	0	0	0	0	0
4/24/2024	10:30 AM	0	0	0	0	0	0	0	0	0	0	0	0	0
4/24/2024	10:45 AM	0	0	0	0	0	0	0	0	0	0	0	0	0
4/24/2024	11:00 AM	0	0	0	0	0	0	0	0	0	0	0	0	0
4/24/2024	11:15 AM	0	0	0	0	0	0	0	0	0	0	0	0	0
4/24/2024	11:30 AM	0	0	0	0	0	0	0	0	0	0	0	0	0
4/24/2024	11:45 AM	0	0	0	0	0	0	0	0	0	0	0	0	0
4/24/2024	12:00 PM	0	0	0	0	0	0	0	0	0	0	0	0	0
4/24/2024	12:15 PM	0	0	0	0	0	0	0	0	0	0	0	0	0
4/24/2024	12:30 PM	0	0	0	0	0	0	0	0	0	0	0	0	0
4/24/2024	12:45 PM	0	0	0	0	0	0	0	0	0	0	0	0	0
4/24/2024	1:00 PM	0	0	0	0	0	0	0	0	0	0	0	0	0
4/24/2024	1:15 PM	0	0	0	0	0	0	0	0	0	0	0	0	0
4/24/2024	1:30 PM	0	0	0	0	0	0	0	0	0	0	0	0	0
4/24/2024	1:45 PM	0	0	0	0	0	0	0	0	0	0	0	0	0
4/24/2024	2:00 PM	0	0	0	0	0	0	0	0	0	0	0	0	0
4/24/2024	2:15 PM	0	0	0	0	0	0	0	0	0	0	0	0	0
4/24/2024	2:30 PM	0	0	0	0	0	0	0	0	0	0	0	0	0
4/24/2024	2:45 PM	0	0	0	0	0	0	0	0	0	0	0	0	0
4/24/2024	3:00 PM	0	0	0	0	0	0	0	0	0	0	0	0	0
4/24/2024	3:15 PM	0	0	0	0	0	0	0	0	0	0	0	0	0
4/24/2024	3:30 PM	0	0	0	0	0	0	0	0	0	0	0	0	0
4/24/2024	3:45 PM	0	0	0	0	0	0	0	0	0	0	0	0	0
4/24/2024	4:00 PM	0	0	0	0	0	0	0	0	0	0	0	0	0
4/24/2024	4:15 PM	0	0	0	0	0	0	0	0	0	0	0	0	0
4/24/2024	4:30 PM	0	0	0	0	0	0	0	0	0	0	0	0	0
4/24/2024	4:45 PM	0	0	0	0	0	0	0	0	0	0	0	0	0
4/24/2024	5:00 PM	0	0	0	0	0	0	0	0	0	0	0	0	0
4/24/2024	5:15 PM	0	0	0	0	0	0	0	0	0	0	0	0	0
4/24/2024	5:30 PM	0	0	0	0	0	0	0	0	0	0	0	0	0
4/24/2024	5:45 PM	0	0	0	0	0	0	0	0	0	0	0	0	0
4/24/2024	6:00 PM	0	0	0	0	0	0	0	0	0	0	0	0	0
4/24/2024	6:15 PM	0	0	0	0	0	0	0	0	0	0	0	0	0
4/24/2024	6:30 PM	0	0	0	0	0	0	0	0	0	0	0	0	0
4/24/2024	6:45 PM	0	0	0	0	0	0	0	0	0	0	0	0	0
4/24/2024	7:00 PM	0	0	0	0	0	0	0	0	0	0	0	0	0
4/24/2024	7:15 PM	0	0	0	0	0	0	0	0	0	0	0	0	0
4/24/2024	7:30 PM	0	0	0	0	0	0	0	0	0	0	0	0	0
4/24/2024	7:45 PM	0	0	0	0	0	0	0	0	0	0	0	0	0
4/24/2024	8:00 PM	0	0	0	0	0	0	0	0	0	0	0	0	0
4/24/2024	8:15 PM	0	0	0	0	0	0	0	0	0	0	0	0	0
4/24/2024	8:30 PM	0	0	0	0	0	0	0	0	0	0	0	0	0
4/24/2024	8:45 PM	0	0	0	0	0	0	0	0	0	0	0	0	0
4/24/2024	9:00 PM	0	0	0	0	0	0	0	0	0	0	0	0	0
4/24/2024	9:15 PM	0	0	0	0	0	0	0	0	0	0	0	0	0
4/24/2024	9:30 PM	0	0	0	0	0	0	0	0	0	0	0	0	0
4/24/2024	9:45 PM	0	0	0	0	0	0	0	0	0	0	0	0	0
4/24/2024	10:00 PM	0	0	0	0	0	0	0	0	0	0	0	0	0
4/24/2024	10:15 PM	0	0	0	0	0	0	0	0	0	0	0	0	0
4/24/2024	10:30 PM	0	0	0	0	0	0	0	0	0	0	0	0	0
4/24/2024	10:45 PM	0	0	0	0	0	0	0	0	0	0	0	0	0
4/24/2024	11:00 PM	0	0	0	0	0	0	0	0	0	0	0	0	0
4/24/2024	11:15 PM	0	0	0	0	0	0	0	0	0	0	0	0	0
4/24/2024	11:30 PM	0	0	0	0	0	0	0	0	0	0	0	0	0
4/24/2024	11:45 PM	0	0	0	0	0	0	0	0	0	0	0	0	0

4/25/2024	12:00 AM	0	0	0	0	0	0	0	0	0	0	0	0	0
4/25/2024	12:15 AM	0	0	0	0	0	0	0	0	0	0	0	0	0
4/25/2024	12:30 AM	0	0	0	0	0	0	0	0	0	0	0	0	0
4/25/2024	12:45 AM	0	0	0	0	0	0	0	0	0	0	0	0	0
4/25/2024	1:00 AM	0	0	0	0	0	0	0	0	0	0	0	0	0
4/25/2024	1:15 AM	0	0	0	0	0	0	0	0	0	0	0	0	0
4/25/2024	1:30 AM	0	0	0	0	0	0	0	0	0	0	0	0	0
4/25/2024	1:45 AM	0	0	0	0	0	0	0	0	0	0	0	0	0
4/25/2024	2:00 AM	0	0	0	0	0	0	0	0	0	0	0	0	0
4/25/2024	2:15 AM	0	0	0	0	0	0	0	0	0	0	0	0	0
4/25/2024	2:30 AM	0	0	0	0	0	0	0	0	0	0	0	0	0
4/25/2024	2:45 AM	0	0	0	0	0	0	0	0	0	0	0	0	0
4/25/2024	3:00 AM	0	0	0	0	0	0	0	0	0	0	0	0	0
4/25/2024	3:15 AM	0	0	0	0	0	0	0	0	0	0	0	0	0
4/25/2024	3:30 AM	0	0	0	0	0	0	0	0	0	0	0	0	0
4/25/2024	3:45 AM	0	0	0	0	0	0	0	0	0	0	0	0	0
4/25/2024	4:00 AM	0	0	0	0	0	0	0	0	0	0	0	0	0
4/25/2024	4:15 AM	0	0	0	0	0	0	0	0	0	0	0	0	0
4/25/2024	4:30 AM	0	0	0	0	0	0	0	0	0	0	0	0	0
4/25/2024	4:45 AM	0	0	0	0	0	0	0	0	0	0	0	0	0
4/25/2024	5:00 AM	0	0	0	0	0	0	0	0	0	0	0	0	0
4/25/2024	5:15 AM	0	0	0	0	0	0	0	0	0	0	0	0	0
4/25/2024	5:30 AM	0	0	0	0	0	0	0	0	0	0	0	0	0
4/25/2024	5:45 AM	0	0	0	0	0	0	0	0	0	0	0	0	0
4/25/2024	6:00 AM	0	0	0	0	0	0	0	0	0	0	0	0	0
4/25/2024	6:15 AM	0	0	0	0	0	0	0	0	0	0	0	0	0
4/25/2024	6:30 AM	0	0	0	0	0	0	0	0	0	0	0	0	0
4/25/2024	6:45 AM	0	0	0	0	0	0	0	0	0	0	0	0	0
4/25/2024	7:00 AM	0	0	0	0	0	0	0	0	0	0	0	0	0
4/25/2024	7:15 AM	0	0	0	0	0	0	0	0	0	0	0	0	0
4/25/2024	7:30 AM	0	0	0	0	0	0	0	0	0	0	0	0	0
4/25/2024	7:45 AM	0	0	0	0	0	0	0	0	0	0	0	0	0
4/25/2024	8:00 AM	0	0	0	0	0	0	0	0	0	0	0	0	0
4/25/2024	8:15 AM	0	0	0	0	0	0	0	0	0	0	0	0	0
4/25/2024	8:30 AM	0	0	0	0	0	0	0	0	0	0	0	0	0
4/25/2024	8:45 AM	0	0	0	0	0	0	0	0	0	0	0	0	0
4/25/2024	9:00 AM	0	0	0	0	0	0	0	0	0	0	0	0	0
4/25/2024	9:15 AM	0	0	0	0	0	0	0	0	0	0	0	0	0
4/25/2024	9:30 AM	0	0	0	0	0	0	0	0	0	0	0	0	0
4/25/2024	9:45 AM	0	0	0	0	0	0	0	0	0	0	0	0	0
4/25/2024	10:00 AM	0	0	0	0	0	0	0	0	0	0	0	0	0
4/25/2024	10:15 AM	0	0	0	0	0	0	0	0	0	0	0	0	0
4/25/2024	10:30 AM	0	0	0	0	0	0	0	0	0	0	0	0	0
4/25/2024	10:45 AM	0	0	0	0	0	0	0	0	0	0	0	0	0
4/25/2024	11:00 AM	0	0	0	0	0	0	0	0	0	0	0	0	0
4/25/2024	11:15 AM	0	0	0	0	0	0	0	0	0	0	0	0	0
4/25/2024	11:30 AM	0	0	0	0	0	0	0	0	0	0	0	0	0
4/25/2024	11:45 AM	0	0	0	0	0	0	0	0	0	0	0	0	0
4/25/2024	12:00 PM	0	0	0	0	0	0	0	0	0	0	0	0	0
4/25/2024	12:15 PM	0	0	0	0	0	0	0	0	0	0	0	0	0
4/25/2024	12:30 PM	0	0	0	0	0	0	0	0	0	0	0	0	0
4/25/2024	12:45 PM	0	0	0	0	0	0	0	0	0	0	0	0	0
4/25/2024	1:00 PM	0	0	0	0	0	0	0	0	0	0	0	0	0
4/25/2024	1:15 PM	0	0	0	0	0	0	0	0	0	0	0	0	0
4/25/2024	1:30 PM	0	0	0	0	0	0	0	0	0	0	0	0	0
4/25/2024	1:45 PM	0	0	0	0	0	0	0	0	0	0	0	0	0
4/25/2024	2:00 PM	0	0	0	0	0	0	0	0	0	0	0	0	0
4/25/2024	2:15 PM	0	0	0	0	0	0	0	0	0	0	0	0	0
4/25/2024	2:30 PM	0	0	0	0	0	0	0	0	0	0	0	0	0
4/25/2024	2:45 PM	0	0	0	0	0	0	0	0	0	0	0	0	0
4/25/2024	3:00 PM	0	0	0	0	0	0	0	0	0	0	0	0	0
4/25/2024	3:15 PM	0	0	0	0	0	0	0	0	0	0	0	0	0
4/25/2024	3:30 PM	0	0	0	0	0	0	0	0	0	0	0	0	0
4/25/2024	3:45 PM	0	0	0	0	0	0	0	0	0	0	0	0	0
4/25/2024	4:00 PM	0	0	0	0	0	0	0	0	0	0	0	0	0
4/25/2024	4:15 PM	0	0	0	0	0	0	0	0	0	0	0	0	0
4/25/2024	4:30 PM	0	0	0	0	0	0	0	0	0	0	0	0	0
4/25/2024	4:45 PM	0	0	0	0	0	0	0	0	0	0	0	0	0
4/25/2024	5:00 PM	0	0	0	0	0	0	0	0	0	0	0	0	0
4/25/2024	5:15 PM	0	0	0	0	0	0	0	0	0	0	0	0	0
4/25/2024	5:30 PM	0	0	0	0	0	0	0	0	0	0	0	0	0
4/25/2024	5:45 PM	0	0	0	0	0	0	0	0	0	0	0	0	0
4/25/2024	6:00 PM	0	0	0	0	0	0	0	0	0	0	0	0	0
4/25/2024	6:15 PM	0	0	0	0	0	0	0	0	0	0	0	0	0
4/25/2024	6:30 PM	0	0	0	0	0	0	0	0	0	0	0	0	0
4/25/2024	6:45 PM	0	0	0	0	0	0	0	0	0	0	0	0	0
4/25/2024	7:00 PM	0	0	0	0	0	0	0	0	0	0	0	0	0
4/25/2024	7:15 PM	0	0	0	0	0	0	0	0	0	0	0	0	0
4/25/2024	7:30 PM	0	0	0	0	0	0	0	0	0	0	0	0	0
4/25/2024	7:45 PM	0	0	0	0	0	0	0	0	0	0	0	0	0
4/25/2024	8:00 PM	0	0	0	0	0	0	0	0	0	0	0	0	0
4/25/2024	8:15 PM	0	0	0	0	0	0	0	0	0	0	0	0	0
4/25/2024	8:30 PM	0	0	0	0	0	0	0	0	0	0	0	0	0
4/25/2024	8:45 PM	0	0	0	0	0	0	0	0	0	0	0	0	0
4/25/2024	9:00 PM	0	0	0	0	0	0	0	0	0	0	0	0	0
4/25/2024	9:15 PM	0	0	0	0	0	0	0	0	0	0	0	0	0
4/25/2024	9:30 PM	0	0	0	0	0	0	0	0	0	0	0	0	0
4/25/2024	9:45 PM	0	0	0	0	0	0	0	0	0	0	0	0	0
4/25/2024	10:00 PM	0	0	0	0	0	0	0	0	0	0	0	0	0
4/25/2024	10:15 PM	0	0	0	0	0	0	0	0	0	0	0	0	0
4/25/2024	10:30 PM	0	0	0	0	0	0	0	0	0	0	0	0	0
4/25/2024	10:45 PM	0	0	0	0	0	0	0	0	0	0	0	0	0
4/25/2024	11:00 PM	0	0	0	0	0	0	0	0	0	0	0	0	0
4/25/2024	11:15 PM	0	0	0	0	0	0	0	0	0	0	0	0	0
4/25/2024	11:30 PM	0	0	0	0	0	0	0	0	0	0	0	0	0
4/25/2024	11:45 PM	0	0	0	0	0	0	0	0	0	0	0	0	0

Bi-Directional Class Count || SB WB 15min

Columbia, SC

Marr Traffic DATA COLLECTION
www.marrtraffic.com

Site 56
I-20 W/Bound Off-Ramp,
east of US-378 Sunset Blvd

Date
Tuesday, April 23, 2024

Lat/Long
34.012817°, -81.146564°

Weather
Fair
58°F

Click here for Detailed Weather

Click here for Map

0000 - 2400 (Weekday 24h Session) (04-23-2024)
SB WB 15min

	Westbound (Movement 56.1)													15min	60min
Time	1	2	3	4	5	6	7	8	9	10	11	12	13	Total	Total
0000 - 0015	0	0	0	0	0	0	0	0	0	0	0	0	0	**0**	
0015 - 0030	0	0	0	0	0	0	0	0	0	0	0	0	0	**0**	
0030 - 0045	0	0	0	0	0	0	0	0	0	0	0	0	0	**0**	
0045 - 0100	0	0	0	0	0	0	0	0	0	0	0	0	0	**0**	**0**
0100 - 0115	0	0	0	0	0	0	0	0	0	0	0	0	0	**0**	
0115 - 0130	0	0	0	0	0	0	0	0	0	0	0	0	0	**0**	
0130 - 0145	0	0	0	0	0	0	0	0	0	0	0	0	0	**0**	
0145 - 0200	0	0	0	0	0	0	0	0	0	0	0	0	0	**0**	**0**
0200 - 0215	0	0	0	0	0	0	0	0	0	0	0	0	0	**0**	
0215 - 0230	0	0	0	0	0	0	0	0	0	0	0	0	0	**0**	
0230 - 0245	0	0	0	0	0	0	0	0	0	0	0	0	0	**0**	
0245 - 0300	0	0	0	0	0	0	0	0	0	0	0	0	0	**0**	**0**
0300 - 0315	0	0	0	0	0	0	0	0	0	0	0	0	0	**0**	
0315 - 0330	0	0	0	0	0	0	0	0	0	0	0	0	0	**0**	
0330 - 0345	0	0	0	0	0	0	0	0	0	0	0	0	0	**0**	
0345 - 0400	0	0	0	0	0	0	0	0	0	0	0	0	0	**0**	**0**
0400 - 0415	0	0	0	0	0	0	0	0	0	0	0	0	0	**0**	
0415 - 0430	0	0	0	0	0	0	0	0	0	0	0	0	0	**0**	
0430 - 0445	0	0	0	0	0	0	0	0	0	0	0	0	0	**0**	
0445 - 0500	0	0	0	0	0	0	0	0	0	0	0	0	0	**0**	**0**
0500 - 0515	0	0	0	0	0	0	0	0	0	0	0	0	0	**0**	
0515 - 0530	0	0	0	0	0	0	0	0	0	0	0	0	0	**0**	
0530 - 0545	0	0	0	0	0	0	0	0	0	0	0	0	0	**0**	
0545 - 0600	0	0	0	0	0	0	0	0	0	0	0	0	0	**0**	**0**
0600 - 0615	0	0	0	0	0	0	0	0	0	0	0	0	0	**0**	
0615 - 0630	0	0	0	0	0	0	0	0	0	0	0	0	0	**0**	
0630 - 0645	0	0	0	0	0	0	0	0	0	0	0	0	0	**0**	
0645 - 0700	0	0	0	0	0	0	0	0	0	0	0	0	0	**0**	**0**
0700 - 0715	0	0	0	0	0	0	0	0	0	0	0	0	0	**0**	
0715 - 0730	0	0	0	0	0	0	0	0	0	0	0	0	0	**0**	
0730 - 0745	0	0	0	0	0	0	0	0	0	0	0	0	0	**0**	
0745 - 0800	0	0	0	0	0	0	0	0	0	0	0	0	0	**0**	**0**
0800 - 0815	0	0	0	0	0	0	0	0	0	0	0	0	0	**0**	
0815 - 0830	0	0	0	0	0	0	0	0	0	0	0	0	0	**0**	
0830 - 0845	0	0	0	0	0	0	0	0	0	0	0	0	0	**0**	
0845 - 0900	0	0	0	0	0	0	0	0	0	0	0	0	0	**0**	**0**
0900 - 0915	0	0	0	0	0	0	0	0	0	0	0	0	0	**0**	
0915 - 0930	0	0	0	0	0	0	0	0	0	0	0	0	0	**0**	
0930 - 0945	0	0	0	0	0	0	0	0	0	0	0	0	0	**0**	
0945 - 1000	0	0	0	0	0	0	0	0	0	0	0	0	0	**0**	**0**
1000 - 1015	0	0	0	0	0	0	0	0	0	0	0	0	0	**0**	
1015 - 1030	0	0	0	0	0	0	0	0	0	0	0	0	0	**0**	
1030 - 1045	0	0	0	0	0	0	0	0	0	0	0	0	0	**0**	
1045 - 1100	0	0	0	0	0	0	0	0	0	0	0	0	0	**0**	**0**
1100 - 1115	0	0	0	0	0	0	0	0	0	0	0	0	0	**0**	
1115 - 1130	0	0	0	0	0	0	0	0	0	0	0	0	0	**0**	
1130 - 1145	0	0	0	0	0	0	0	0	0	0	0	0	0	**0**	
1145 - 1200	0	0	0	0	0	0	0	0	0	0	0	0	0	**0**	**0**
1200 - 1215	0	0	0	0	0	0	0	0	0	0	0	0	0	**0**	
1215 - 1230	0	0	0	0	0	0	0	0	0	0	0	0	0	**0**	
1230 - 1245	0	0	0	0	0	0	0	0	0	0	0	0	0	**0**	
1245 - 1300	0	0	0	0	0	0	0	0	0	0	0	0	0	**0**	**0**
1300 - 1315	0	0	0	0	0	0	0	0	0	0	0	0	0	**0**	
1315 - 1330	0	0	0	0	0	0	0	0	0	0	0	0	0	**0**	
1330 - 1345	0	0	0	0	0	0	0	0	0	0	0	0	0	**0**	
1345 - 1400	0	0	0	0	0	0	0	0	0	0	0	0	0	**0**	**0**
1400 - 1415	0	0	0	0	0	0	0	0	0	0	0	0	0	**0**	
1415 - 1430	0	0	0	0	0	0	0	0	0	0	0	0	0	**0**	
1430 - 1445	0	0	0	0	0	0	0	0	0	0	0	0	0	**0**	
1445 - 1500	0	0	0	0	0	0	0	0	0	0	0	0	0	**0**	**0**
1500 - 1515	0	0	0	0	0	0	0	0	0	0	0	0	0	**0**	
1515 - 1530	0	0	0	0	0	0	0	0	0	0	0	0	0	**0**	
1530 - 1545	0	0	0	0	0	0	0	0	0	0	0	0	0	**0**	
1545 - 1600	0	0	0	0	0	0	0	0	0	0	0	0	0	**0**	**0**
1600 - 1615	0	0	0	0	0	0	0	0	0	0	0	0	0	**0**	
1615 - 1630	0	0	0	0	0	0	0	0	0	0	0	0	0	**0**	
1630 - 1645	0	0	0	0	0	0	0	0	0	0	0	0	0	**0**	
1645 - 1700	0	0	0	0	0	0	0	0	0	0	0	0	0	**0**	**0**
1700 - 1715	0	0	0	0	0	0	0	0	0	0	0	0	0	**0**	
1715 - 1730	0	0	0	0	0	0	0	0	0	0	0	0	0	**0**	
1730 - 1745	0	0	0	0	0	0	0	0	0	0	0	0	0	**0**	
1745 - 1800	0	0	0	0	0	0	0	0	0	0	0	0	0	**0**	**0**
1800 - 1815	0	0	0	0	0	0	0	0	0	0	0	0	0	**0**	
1815 - 1830	0	0	0	0	0	0	0	0	0	0	0	0	0	**0**	
1830 - 1845	0	0	0	0	0	0	0	0	0	0	0	0	0	**0**	
1845 - 1900	0	0	0	0	0	0	0	0	0	0	0	0	0	**0**	**0**
1900 - 1915	0	0	0	0	0	0	0	0	0	0	0	0	0	**0**	
1915 - 1930	1	161	41	0	3	0	0	0	1	0	0	0	0	**207**	
1930 - 1945	0	150	30	0	0	0	0	0	0	0	0	0	0	**180**	
1945 - 2000	1	127	23	1	0	0	0	0	1	0	0	0	0	**153**	**540**
2000 - 2015	0	126	11	0	1	0	0	0	1	0	0	0	0	**139**	
2015 - 2030	0	141	16	0	0	0	0	0	0	0	0	0	0	**157**	
2030 - 2045	0	134	12	0	1	0	0	1	0	0	0	0	0	**148**	
2045 - 2100	0	116	8	0	1	0	0	0	1	0	0	0	0	**126**	**570**
2100 - 2115	0	118	4	1	0	0	0	1	1	0	0	0	0	**125**	
2115 - 2130	0	76	6	0	0	0	0	0	1	0	0	0	0	**83**	
2130 - 2145	0	79	5	0	0	0	0	0	1	0	0	0	0	**85**	
2145 - 2200	0	60	7	0	2	0	0	0	0	0	0	0	0	**69**	**362**
2200 - 2215	0	52	9	0	0	0	0	0	0	0	0	0	0	**61**	
2215 - 2230	0	57	3	0	1	0	0	0	0	0	0	0	0	**61**	
2230 - 2245	0	67	5	0	0	0	0	0	0	0	0	0	0	**72**	
2245 - 2300	0	50	5	0	0	0	0	0	0	0	0	0	0	**55**	**249**
2300 - 2315	0	40	5	0	0	0	0	0	0	0	1	0	0	**46**	
2315 - 2330	0	29	3	0	1	0	0	0	0	0	3	0	0	**36**	
2330 - 2345	0	32	3	0	0	0	0	0	2	0	0	0	0	**37**	
2345 - 0000	0	12	2	0	1	0	0	0	1	0	1	0	0	**17**	**136**

Session Total	2	1627	198	2	11	0	0	2	10	0	5	0	0	**1857**
Session Average	0.02	16.95	2.06	0.02	0.11	0.00	0.00	0.02	0.10	0.00	0.05	0.00	0.00	**19.34**
Session Percentage	0.11	87.61	10.66	0.11	0.59	0.00	0.00	0.11	0.54	0.00	0.27	0.00	0.00	

AM Peak Hour	-	-	-	-	-	-	-	-	-	-	-	-	-	-
AM Peak Volume	0	0	0	0	0	0	0	0	0	0	0	0	0	**0**

Noon Peak Hour	-	-	-	-	-	-	-	-	-	-	-	-	-	-
Noon Peak Volume	0	0	0	0	0	0	0	0	0	0	0	0	0	**0**

PM Peak Hour	1900 - 2000	1915 - 2015	1915 - 2015	1900 - 2000	1915 - 2015	-	-	1945 - 2045	1915 - 2015	-	-	-	-	**1915 - 2015**
PM Peak Volume	2	564	105	1	4	0	0	1	3	0	0	0	0	**679**

Site 56
I-20 W/Bound Off-Ramp,
east of US-378 Sunset Blvd

Date
Wednesday, April 24, 2024

Lat/Long
34.012817°, -81.146564°

Weather
Fair
66°F

Click here for Detailed Weather

0000 - 2400 (Weekday 24h Session) (04-24-2024)
SB WB 15min

	Westbound (Movement 56.1)													15min	60min
Time	1	2	3	4	5	6	7	8	9	10	11	12	13	Total	Total
0000 - 0015	0	13	4	0	1	0	0	0	0	0	1	0	0	**19**	
0015 - 0030	1	13	2	0	2	0	0	0	0	0	2	0	0	**20**	
0030 - 0045	0	13	2	0	0	0	0	0	0	0	2	0	0	**17**	
0045 - 0100	0	17	5	0	0	0	0	0	2	0	1	0	0	**25**	**81**
0100 - 0115	0	14	0	0	0	0	0	0	2	0	0	0	0	**16**	
0115 - 0130	0	11	0	0	0	0	0	0	0	0	0	0	0	**11**	
0130 - 0145	0	9	2	0	0	0	0	0	2	0	0	0	0	**13**	
0145 - 0200	0	9	1	0	1	0	1	0	1	0	0	0	0	**13**	**53**
0200 - 0215	0	3	1	0	0	0	0	0	0	0	0	0	0	**4**	
0215 - 0230	0	9	1	0	0	0	0	2	0	0	1	0	0	**13**	
0230 - 0245	0	7	2	0	0	0	0	0	0	0	1	0	0	**10**	
0245 - 0300	0	1	0	0	0	1	0	0	0	0	0	0	0	**2**	**29**
0300 - 0315	2	4	0	0	0	0	0	0	1	0	0	0	0	**7**	
0315 - 0330	1	5	0	0	0	0	1	0	0	0	0	0	0	**7**	
0330 - 0345	3	4	0	0	0	0	0	1	0	0	0	0	0	**8**	
0345 - 0400	0	13	2	0	1	0	0	0	1	0	0	0	0	**17**	**39**
0400 - 0415	0	9	3	0	1	2	0	0	1	0	0	0	0	**16**	
0415 - 0430	0	7	0	0	0	0	0	0	1	0	1	0	0	**9**	
0430 - 0445	0	17	2	0	0	1	0	0	0	0	0	0	0	**20**	
0445 - 0500	0	15	1	0	0	0	0	0	2	0	1	0	0	**19**	**64**
0500 - 0515	0	18	3	0	2	0	0	0	3	0	0	0	0	**26**	
0515 - 0530	0	21	3	0	1	0	0	0	2	0	0	0	0	**27**	
0530 - 0545	0	25	0	0	2	0	0	1	1	0	1	0	0	**30**	
0545 - 0600	0	58	7	0	1	0	0	1	0	0	0	0	0	**67**	**150**
0600 - 0615	0	54	12	0	2	1	0	0	3	0	1	0	0	**73**	
0615 - 0630	0	96	22	0	5	1	0	0	0	0	1	0	0	**125**	
0630 - 0645	0	129	27	0	2	2	0	0	0	0	0	0	0	**160**	
0645 - 0700	0	193	44	0	1	1	0	0	2	0	0	0	0	**241**	**599**
0700 - 0715	0	226	43	0	4	4	0	0	1	0	0	0	0	**278**	
0715 - 0730	0	288	66	0	7	0	0	0	2	0	0	0	0	**363**	
0730 - 0745	0	271	56	0	4	0	0	0	2	0	0	0	0	**333**	
0745 - 0800	1	319	64	0	5	1	0	5	0	0	0	0	0	**395**	**1369**
0800 - 0815	0	197	26	0	5	0	0	0	2	0	0	0	0	**230**	
0815 - 0830	0	185	50	0	6	1	0	0	1	0	0	0	0	**243**	
0830 - 0845	0	201	59	0	6	1	0	1	3	1	0	0	0	**272**	
0845 - 0900	1	212	50	0	6	1	0	0	1	0	0	0	0	**271**	**1016**
0900 - 0915	1	184	56	0	8	2	0	2	0	0	0	0	0	**253**	
0915 - 0930	1	132	34	1	3	2	0	1	4	0	0	0	0	**178**	
0930 - 0945	0	164	39	0	6	0	0	1	4	0	0	0	0	**214**	
0945 - 1000	0	177	62	0	2	1	0	2	1	0	0	0	0	**245**	**890**
1000 - 1015	0	163	49	1	7	2	0	0	3	0	0	0	0	**225**	
1015 - 1030	0	182	55	0	8	1	0	0	1	0	0	0	0	**247**	
1030 - 1045	0	168	50	0	9	2	0	1	2	1	0	0	0	**233**	
1045 - 1100	0	198	42	0	5	0	0	1	2	0	0	0	0	**248**	**953**
1100 - 1115	1	157	48	1	3	1	0	1	2	0	0	0	0	**214**	
1115 - 1130	0	181	53	1	4	0	0	0	4	1	0	0	0	**244**	
1130 - 1145	1	179	58	0	6	2	0	0	2	1	0	0	0	**249**	
1145 - 1200	0	195	52	0	2	0	0	1	2	0	0	0	0	**252**	**959**
1200 - 1215	1	180	34	0	3	2	0	1	2	1	0	0	0	**224**	
1215 - 1230	0	190	61	0	5	1	0	0	1	0	0	0	0	**258**	
1230 - 1245	0	187	47	0	8	0	0	0	2	0	0	0	0	**244**	
1245 - 1300	0	203	67	0	6	0	0	0	2	0	0	0	0	**278**	**1004**
1300 - 1315	0	232	37	0	3	2	0	0	1	0	0	0	0	**275**	
1315 - 1330	0	229	75	1	4	0	0	0	4	0	0	0	0	**313**	
1330 - 1345	0	226	58	0	11	2	0	1	2	0	0	1	0	**301**	
1345 - 1400	0	237	47	0	5	1	0	2	2	1	0	0	0	**295**	**1184**
1400 - 1415	0	262	60	0	3	2	0	1	1	0	0	0	0	**329**	
1415 - 1430	0	251	59	0	0	1	0	2	2	0	0	0	0	**315**	
1430 - 1445	2	212	62	0	2	0	0	0	1	0	0	0	0	**279**	
1445 - 1500	2	221	50	0	3	0	0	1	1	0	0	0	0	**278**	**1201**
1500 - 1515	0	267	61	0	4	1	0	1	3	0	0	0	0	**337**	
1515 - 1530	1	231	61	0	3	1	0	0	0	0	0	0	0	**297**	
1530 - 1545	0	266	59	2	3	0	0	0	2	0	0	0	0	**332**	
1545 - 1600	0	240	62	1	4	0	0	0	1	0	0	0	0	**308**	**1274**
1600 - 1615	1	248	53	0	7	0	0	2	1	0	0	0	0	**312**	
1615 - 1630	0	322	59	0	9	1	0	0	1	0	0	0	0	**392**	
1630 - 1645	1	323	62	0	2	0	0	1	2	0	0	0	0	**391**	
1645 - 1700	0	327	55	0	7	0	0	1	0	0	0	0	0	**390**	**1485**
1700 - 1715	0	289	55	0	2	0	0	0	1	0	0	0	0	**347**	
1715 - 1730	1	318	64	0	1	0	0	1	2	0	0	0	0	**387**	
1730 - 1745	0	333	56	0	7	1	0	2	1	0	0	0	0	**400**	
1745 - 1800	2	309	59	0	0	1	0	1		0	0	0	0	**372**	**1506**
1800 - 1815	3	218	49	1	4	0	0	1	2	0	0	0	0	**278**	
1815 - 1830	0	206	44	2	2	0	0	0	1	0	0	0	0	**255**	
1830 - 1845	0	190	35	0	2	0	0	0	1	0	0	0	0	**228**	
1845 - 1900	0	190	46	0	0	0	0	0	2	0	0	0	0	**238**	**999**
1900 - 1915	0	155	30	0	1	0	0	0	1	0	0	0	0	**187**	
1915 - 1930	1	162	40	0	0	0	0	1	0	0	0	0	0	**204**	
1930 - 1945	0	164	35	0	0	0	0	0	0	0	0	0	0	**199**	
1945 - 2000	1	132	22	0	2	0	0	0	1	0	0	0	0	**158**	**748**
2000 - 2015	0	147	23	0	2	0	0	0	1	0	0	0	0	**173**	
2015 - 2030	0	139	22	0	0	0	0	1	1	0	0	0	0	**163**	
2030 - 2045	0	119	17	0	1	0	0	0	0	0	0	0	0	**137**	
2045 - 2100	0	124	21	0	1	0	0	0	0	0	0	0	0	**146**	**619**
2100 - 2115	0	104	12	0	1	1	0	0	0	0	0	0	0	**118**	
2115 - 2130	1	95	7	0	0	0	0	0	0	0	0	0	0	**103**	
2130 - 2145	0	56	15	1	0	0	0	0	2	0	0	0	0	**74**	
2145 - 2200	0	69	10	0	1	0	0	0	0	0	0	0	0	**80**	**375**
2200 - 2215	0	70	5	0	0	0	0	0	0	0	1	0	0	**76**	
2215 - 2230	0	46	8	0	1	0	0	0	0	0	1	0	0	**56**	
2230 - 2245	0	79	5	0	0	0	0	0	0	0	1	0	0	**85**	
2245 - 2300	0	37	6	0	1	0	0	0	0	0	2	0	0	**46**	**263**
2300 - 2315	0	50	3	0	1	0	0	0	0	0	1	0	0	**55**	
2315 - 2330	0	25	2	0	0	0	0	0	1	0	2	0	0	**30**	
2330 - 2345	0	29	3	0	0	0	0	0	1	0	0	0	0	**33**	
2345 - 0000	2	18	1	0	0	0	0	0	0	0	0	0	0	**21**	**139**

Session Total	32	13493	2982	12	250	47	2	41	112	6	21	1	0	**16999**
Session Average	0.33	140.55	31.06	0.13	2.60	0.49	0.02	0.43	1.18	0.06	0.22	0.01	0.00	**177.07**
Session Percentage	0.19	79.38	17.54	0.07	1.47	0.28	0.01	0.24	0.66	0.04	0.12	0.01	0.00	

AM Peak Hour	0830 - 0930	0700 - 0800	0700 - 0800	0915 - 1015	0815 - 0915	0615 - 0715	-	0745 - 0845	0915 - 1015	0745 - 0845	0530 - 0630	-	-	**0700 - 0800**
AM Peak Volume	3	1104	229	2	26	8	0	6	12	1	3	0	0	**1369**

Noon Peak Hour	1430 - 1530	1445 - 1545	1315 - 1415	1030 - 1130	1000 - 1100	1330 - 1430	-	1330 - 1430	1030 - 1130	1115 - 1215	-	1245 - 1345	-	**1445 - 1545**
Noon Peak Volume	5	985	240	2	29	6	0	6	10	3	0	1	0	**1244**

PM Peak Hour	1715 - 1815	1645 - 1745	1500 - 1600	1500 - 1600	1600 - 1700	1500 - 1600	-	1715 - 1815	1500 - 1600	-	-	-	-	**1645 - 1745**
PM Peak Volume	6	1267	243	3	25	2	0	5	6	0	0	0	0	**1524**

Site 56
I-20 W/Bound Off-Ramp,
east of US-378 Sunset Blvd

Date
Thursday, April 25, 2024

Lat/Long
34.012817°, -81.146564°

Weather
Fair
67°F

Click here for Detailed Weather

0000 - 2400 (Weekday 24h Session) (04-25-2024)
SB WB 15min

	Westbound (Movement 56.1)													15min	60min
TIME	1	2	3	4	5	6	7	8	9	10	11	12	13	Total	Total
0000 - 0015	0	21	4	0	0	0	0	0	0	0	1	0	0	**26**	
0015 - 0030	0	15	3	0	0	0	0	0	1	0	2	0	0	**21**	
0030 - 0045	0	15	2	0	0	0	0	0	1	0	6	0	0	**24**	
0045 - 0100	0	9	1	0	0	0	0	0	0	0	0	0	0	**10**	**81**
0100 - 0115	0	6	0	0	0	0	0	0	3	0	0	1	0	**10**	
0115 - 0130	0	9	0	0	0	0	0	0	0	0	0	0	0	**9**	
0130 - 0145	0	9	0	0	0	0	0	0	0	1	1	1	0	**12**	
0145 - 0200	0	5	1	0	0	0	0	0	0	0	0	0	0	**6**	**37**
0200 - 0215	0	6	1	0	0	0	0	0	0	0	0	2	0	**9**	
0215 - 0230	0	4	1	0	0	0	0	0	0	0	0	0	0	**5**	
0230 - 0245	0	7	0	0	1	0	0	0	0	0	0	0	0	**8**	
0245 - 0300	0	7	1	0	0	0	0	0	2	0	0	0	0	**10**	**32**
0300 - 0315	0	6	1	0	0	0	0	0	0	0	0	0	1	**8**	
0315 - 0330	0	9	3	0	1	0	0	0	0	0	0	2	0	**15**	
0330 - 0345	0	5	0	0	0	0	0	0	0	0	0	0	0	**5**	
0345 - 0400	0	13	0	0	0	0	0	0	1	0	0	0	0	**14**	**42**
0400 - 0415	0	5	0	0	0	0	0	0	0	0	0	0	0	**5**	
0415 - 0430	0	6	3	0	0	0	0	0	0	0	0	0	1	**10**	
0430 - 0445	0	12	0	0	0	0	0	0	2	0	0	0	0	**14**	
0445 - 0500	0	17	1	0	0	0	0	0	0	0	0	0	0	**18**	**47**
0500 - 0515	0	14	1	0	1	0	0	0	4	0	0	0	0	**20**	
0515 - 0530	0	21	2	0	1	0	0	0	0	0	0	0	0	**24**	
0530 - 0545	0	35	4	0	0	0	0	1	2	0	1	0	0	**43**	
0545 - 0600	0	43	6	0	1	0	0	1	2	0	0	0	0	**53**	**140**
0600 - 0615	0	54	16	0	2	0	0	0	2	0	0	0	0	**74**	
0615 - 0630	0	91	17	0	2	1	0	0	2	0	0	0	0	**113**	
0630 - 0645	0	118	21	0	3	0	0	0	1	0	0	0	0	**143**	
0645 - 0700	0	184	45	0	3	1	0	0	2	0	0	0	0	**235**	**565**
0700 - 0715	0	211	51	0	2	1	0	1	0	0	1	0	0	**267**	
0715 - 0730	0	286	54	1	2	3	2	0	1	0	0	0	0	**349**	
0730 - 0745	1	257	62	0	4	2	0	0	0	1	0	0	0	**327**	
0745 - 0800	0	260	57	0	8	0	0	0	1	0	0	0	0	**326**	**1269**
0800 - 0815	0	244	54	0	4	0	0	2	2	0	0	0	0	**306**	
0815 - 0830	0	222	51	1	2	1	0	0	2	0	0	0	0	**279**	
0830 - 0845	0	200	47	1	6	0	0	2	1	0	0	0	0	**257**	
0845 - 0900	0	234	45	0	10	1	0	0	1	0	0	0	0	**291**	**1133**
0900 - 0915	1	151	49	0	7	2	0	0	1	0	0	0	0	**211**	
0915 - 0930	0	154	62	0	5	0	0	0	4	0	0	0	0	**225**	
0930 - 0945	0	174	45	1	4	0	1	0	3	0	0	0	0	**228**	
0945 - 1000	0	184	46	0	3	0	0	1	2	0	0	0	0	**236**	**900**
1000 - 1015	0	163	39	0	6	1	0	0	0	0	0	0	0	**209**	
1015 - 1030	0	206	39	0	3	1	2	0	2	0	0	0	0	**253**	
1030 - 1045	0	177	43	0	4	1	0	0	2	0	0	0	0	**227**	
1045 - 1100	0	162	42	0	7	2	2	0	0	0	0	0	0	**215**	**904**
1100 - 1115	1	160	46	0	6	0	0	2	2	0	0	0	0	**217**	
1115 - 1130	0	143	46	0	5	0	0	0	5	0	0	0	0	**199**	
1130 - 1145	0	215	48	0	2	2	0	0	3	0	0	0	0	**270**	
1145 - 1200	2	175	48	1	5	1	1	1	1	0	0	0	0	**235**	**921**
1200 - 1215	0	218	54	0	9	2	0	2	2	0	0	0	0	**287**	
1215 - 1230	2	183	63	0	3	0	0	2	0	0	0	0	0	**253**	
1230 - 1245	2	190	53	0	5	0	0	1	0	0	0	0	0	**251**	
1245 - 1300	1	227	40	0	3	3	0	1	1	0	0	0	0	**276**	**1067**
1300 - 1315	0	217	69	1	1	1	0	0	2	0	0	0	0	**291**	
1315 - 1330	0	213	40	0	1	0	0	0	5	0	0	0	0	**259**	
1330 - 1345	0	244	61	0	4	2	0	2	0	0	0	0	0	**313**	
1345 - 1400	0	231	45	0	6	0	0	0	3	0	0	0	0	**285**	**1148**
1400 - 1415	0	268	66	0	2	0	0	0	0	0	0	0	0	**336**	
1415 - 1430	2	279	52	0	3	0	0	0	3	1	0	0	0	**340**	
1430 - 1445	0	228	43	0	0	0	0	2	0	0	0	0	0	**273**	
1445 - 1500	0	260	70	1	8	0	0	2	3	0	0	0	0	**344**	**1293**
1500 - 1515	0	241	52	0	4	0	0	1	0	0	0	0	0	**298**	
1515 - 1530	1	252	68	0	2	1	0	1	3	0	0	0	0	**328**	
1530 - 1545	0	284	60	1	4	2	1	0	0	0	0	0	0	**352**	
1545 - 1600	0	268	41	1	8	0	0	2	1	0	0	0	0	**321**	**1299**
1600 - 1615	1	278	52	0	6	1	0	1	2	0	0	0	0	**341**	
1615 - 1630	1	308	80	0	2	0	0	2	0	0	0	0	0	**393**	
1630 - 1645	0	283	63	2	3	0	0	0	0	0	0	0	0	**351**	
1645 - 1700	0	329	51	1	2	0	0	3	2	0	0	0	0	**388**	**1473**
1700 - 1715	2	309	59	1	4	0	0	1	1	0	0	0	0	**377**	
1715 - 1730	1	329	60	0	3	0	0	1	3	0	0	0	0	**397**	
1730 - 1745	1	337	52	0	1	0	0	0	0	0	0	0	0	**391**	
1745 - 1800	0	256	45	0	1	1	0	1	1	0	0	0	0	**305**	**1470**
1800 - 1815	1	239	43	0	2	1	0	2	0	0	0	0	0	**288**	
1815 - 1830	1	218	46	1	1	0	0	0	1	0	0	0	0	**268**	
1830 - 1845	0	185	24	0	0	0	0	0	0	0	0	0	0	**209**	
1845 - 1900	0	203	34	1	3	0	0	0	1	0	0	0	0	**242**	**1007**
1900 - 1915	0	0	0	0	0	0	0	0	0	0	0	0	0	**0**	
1915 - 1930	0	0	0	0	0	0	0	0	0	0	0	0	0	**0**	
1930 - 1945	0	0	0	0	0	0	0	0	0	0	0	0	0	**0**	
1945 - 2000	0	0	0	0	0	0	0	0	0	0	0	0	0	**0**	**0**
2000 - 2015	0	0	0	0	0	0	0	0	0	0	0	0	0	**0**	
2015 - 2030	0	0	0	0	0	0	0	0	0	0	0	0	0	**0**	
2030 - 2045	0	0	0	0	0	0	0	0	0	0	0	0	0	**0**	
2045 - 2100	0	0	0	0	0	0	0	0	0	0	0	0	0	**0**	**0**
2100 - 2115	0	0	0	0	0	0	0	0	0	0	0	0	0	**0**	
2115 - 2130	0	0	0	0	0	0	0	0	0	0	0	0	0	**0**	
2130 - 2145	0	0	0	0	0	0	0	0	0	0	0	0	0	**0**	
2145 - 2200	0	0	0	0	0	0	0	0	0	0	0	0	0	**0**	**0**
2200 - 2215	0	0	0	0	0	0	0	0	0	0	0	0	0	**0**	
2215 - 2230	0	0	0	0	0	0	0	0	0	0	0	0	0	**0**	
2230 - 2245	0	0	0	0	0	0	0	0	0	0	0	0	0	**0**	
2245 - 2300	0	0	0	0	0	0	0	0	0	0	0	0	0	**0**	**0**
2300 - 2315	0	0	0	0	0	0	0	0	0	0	0	0	0	**0**	
2315 - 2330	0	0	0	0	0	0	0	0	0	0	0	0	0	**0**	
2330 - 2345	0	0	0	0	0	0	0	0	0	0	0	0	0	**0**	
2345 - 0000	0	0	0	0	0	0	0	0	0	0	0	0	0	**0**	**0**

Session Total	21	11801	2594	15	201	34	9	38	92	3	12	6	2	**14828**
Session Average	0.22	122.93	27.02	0.16	2.09	0.35	0.09	0.40	0.96	0.03	0.13	0.06	0.02	**154.46**
Session Percentage	0.14	79.59	17.49	0.10	1.36	0.23	0.06	0.26	0.62	0.02	0.08	0.04	0.01	

AM Peak Hour	0645 - 0745	0715 - 0815	0715 - 0815	0745 - 0845	0830 - 0930	0645 - 0745	0930 - 1030	0745 - 0845	0900 - 1000	0645 - 0745	0500 - 0600	-	-	**0715 - 0815**
AM Peak Hour Volume	1	1047	227	2	28	7	3	4	10	1	1	0	0	**1308**

Noon Peak Hour	1145 - 1245	1445 - 1545	1445 - 1545	1445 - 1545	1030 - 1130	1245 - 1345	1000 - 1100	1145 - 1245	1100 - 1200	1330 - 1430	-	-	-	**1445 - 1545**
Noon Peak Hour Volume	6	1037	250	2	22	6	4	6	11	1	0	0	0	**1322**

PM Peak Hour	1645 - 1745	1645 - 1745	1615 - 1715	1615 - 1715	1515 - 1615	1515 - 1615	1500 - 1600	1600 - 1700	1515 - 1615	-	-	-	-	**1645 - 1745**
PM Peak Hour Volume	4	1304	253	4	20	4	1	6	6	0	0	0	0	**1553**

Bi-Directional Class Count || SB WB Average 15min

Columbia, SC

Marr Traffic DATA COLLECTION
www.marrtraffic.com

Site 56
I-20 W/Bound Off-Ramp,
east of US-378 Sunset Blvd

Date
Tuesday, April 23, 2024

Lat/Long
34.012817°, -81.146564°

Weather
Fair
58°F

0000 - 2400 (Weekday 24h Session) (All Dates)
SB WB Average 15min

	SB WB Average 15min													15min	60min
Time	1	2	3	4	5	6	7	8	9	10	11	12	13	Total	Total
0000 - 0015	0	11	3	0	0	0	0	0	0	0	1	0	0	**15**	
0015 - 0030	0	9	2	0	1	0	0	0	0	0	1	0	0	**14**	
0030 - 0045	0	9	1	0	0	0	0	0	0	0	3	0	0	**14**	
0045 - 0100	0	9	2	0	0	0	0	0	1	0	0	0	0	**12**	**54**
0100 - 0115	0	7	0	0	0	0	0	0	2	0	0	0	0	**9**	
0115 - 0130	0	7	0	0	0	0	0	0	0	0	0	0	0	**7**	
0130 - 0145	0	6	1	0	0	0	0	0	1	0	0	0	0	**8**	
0145 - 0200	0	5	1	0	0	0	0	0	0	0	0	0	0	**6**	**30**
0200 - 0215	0	3	1	0	0	0	0	0	0	0	0	1	0	**4**	
0215 - 0230	0	4	1	0	0	0	0	1	0	0	0	0	0	**6**	
0230 - 0245	0	5	1	0	0	0	0	0	0	0	0	0	0	**6**	
0245 - 0300	0	3	0	0	0	0	0	0	1	0	0	0	0	**4**	**20**
0300 - 0315	1	3	0	0	0	0	0	0	0	0	0	0	0	**5**	
0315 - 0330	0	5	1	0	0	0	0	0	0	0	0	1	0	**7**	
0330 - 0345	1	3	0	0	0	0	0	0	0	0	0	0	0	**4**	
0345 - 0400	0	9	1	0	0	0	0	0	1	0	0	0	0	**10**	**27**
0400 - 0415	0	5	1	0	0	1	0	0	0	0	0	0	0	**7**	
0415 - 0430	0	4	1	0	0	0	0	0	0	0	0	0	0	**6**	
0430 - 0445	0	10	1	0	0	0	0	0	1	0	0	0	0	**11**	
0445 - 0500	0	11	1	0	0	0	0	0	1	0	0	0	0	**12**	**37**
0500 - 0515	0	11	1	0	1	0	0	0	2	0	0	0	0	**15**	
0515 - 0530	0	14	2	0	1	0	0	0	1	0	0	0	0	**17**	
0530 - 0545	0	20	1	0	1	0	0	1	1	0	1	0	0	**24**	
0545 - 0600	0	34	4	0	1	0	0	1	1	0	0	0	0	**40**	**97**
0600 - 0615	0	36	9	0	1	0	0	0	2	0	0	0	0	**49**	
0615 - 0630	0	62	13	0	2	1	0	0	1	0	0	0	0	**79**	
0630 - 0645	0	82	16	0	2	1	0	0	0	0	0	0	0	**101**	
0645 - 0700	0	126	30	0	1	1	0	0	1	0	0	0	0	**159**	**388**
0700 - 0715	0	146	31	0	2	2	0	0	0	0	0	0	0	**182**	
0715 - 0730	0	191	40	0	3	1	1	0	1	0	0	0	0	**237**	
0730 - 0745	0	176	39	0	3	1	0	0	1	0	0	0	0	**220**	
0745 - 0800	0	193	40	0	4	0	0	2	0	0	0	0	0	**240**	**879**
0800 - 0815	0	147	27	0	3	0	0	1	1	0	0	0	0	**179**	
0815 - 0830	0	136	34	0	3	1	0	0	1	0	0	0	0	**174**	
0830 - 0845	0	134	35	0	4	0	0	1	1	0	0	0	0	**176**	
0845 - 0900	0	149	32	0	5	1	0	0	1	0	0	0	0	**187**	**716**
0900 - 0915	1	112	35	0	5	1	0	1	0	0	0	0	0	**155**	
0915 - 0930	0	95	32	0	3	1	0	0	3	0	0	0	0	**134**	
0930 - 0945	0	113	28	0	3	0	0	0	2	0	0	0	0	**147**	
0945 - 1000	0	120	36	0	2	0	0	1	1	0	0	0	0	**160**	**597**
1000 - 1015	0	109	29	0	4	1	0	0	1	0	0	0	0	**145**	
1015 - 1030	0	129	31	0	4	1	1	0	1	0	0	0	0	**167**	
1030 - 1045	0	115	31	0	4	1	0	0	1	0	0	0	0	**153**	
1045 - 1100	0	120	28	0	4	1	1	0	1	0	0	0	0	**154**	**619**
1100 - 1115	1	106	31	0	3	0	0	1	1	0	0	0	0	**144**	
1115 - 1130	0	108	33	0	3	0	0	0	3	0	0	0	0	**148**	
1130 - 1145	0	131	35	0	3	1	0	0	2	0	0	0	0	**173**	
1145 - 1200	1	123	33	0	2	0	0	1	1	0	0	0	0	**162**	**627**
1200 - 1215	0	133	29	0	4	1	0	1	1	0	0	0	0	**170**	
1215 - 1230	1	124	41	0	3	0	0	1	0	0	0	0	0	**170**	
1230 - 1245	1	126	33	0	4	0	0	0	1	0	0	0	0	**165**	
1245 - 1300	0	143	36	0	3	1	0	0	1	0	0	0	0	**185**	**690**
1300 - 1315	0	150	35	0	1	1	0	0	1	0	0	0	0	**189**	
1315 - 1330	0	147	38	0	2	0	0	0	3	0	0	0	0	**191**	
1330 - 1345	0	157	40	0	5	1	0	1	1	0	0	0	0	**205**	
1345 - 1400	0	156	31	0	4	0	0	1	2	0	0	0	0	**193**	**777**
1400 - 1415	0	177	42	0	2	1	0	0	0	0	0	0	0	**222**	
1415 - 1430	1	177	37	0	1	0	0	1	2	0	0	0	0	**218**	
1430 - 1445	1	147	35	0	1	0	0	1	0	0	0	0	0	**184**	
1445 - 1500	1	160	40	0	4	0	0	1	1	0	0	0	0	**207**	**831**
1500 - 1515	0	169	38	0	3	0	0	1	1	0	0	0	0	**212**	
1515 - 1530	1	161	43	0	2	1	0	0	1	0	0	0	0	**208**	
1530 - 1545	0	183	40	1	2	1	0	0	1	0	0	0	0	**228**	
1545 - 1600	0	169	34	1	4	0	0	1	1	0	0	0	0	**210**	**858**
1600 - 1615	1	175	35	0	4	0	0	1	1	0	0	0	0	**218**	
1615 - 1630	0	210	46	0	4	0	0	1	0	0	0	0	0	**262**	
1630 - 1645	0	202	42	1	2	0	0	0	1	0	0	0	0	**247**	
1645 - 1700	0	219	35	0	3	0	0	1	1	0	0	0	0	**259**	**986**
1700 - 1715	1	199	38	0	2	0	0	0	1	0	0	0	0	**241**	
1715 - 1730	1	216	41	0	1	0	0	1	2	0	0	0	0	**261**	
1730 - 1745	0	223	36	0	3	0	0	1	0	0	0	0	0	**264**	
1745 - 1800	1	188	35	0	0	1	0	1	1	0	0	0	0	**226**	**992**
1800 - 1815	1	152	31	0	2	0	0	1	1	0	0	0	0	**189**	
1815 - 1830	0	141	30	1	1	0	0	0	1	0	0	0	0	**174**	
1830 - 1845	0	125	20	0	1	0	0	0	0	0	0	0	0	**146**	
1845 - 1900	0	131	27	0	1	0	0	0	1	0	0	0	0	**160**	**669**
1900 - 1915	0	52	10	0	0	0	0	0	0	0	0	0	0	**62**	
1915 - 1930	1	108	27	0	1	0	0	0	0	0	0	0	0	**137**	
1930 - 1945	0	105	22	0	0	0	0	0	0	0	0	0	0	**126**	
1945 - 2000	1	86	15	0	1	0	0	0	1	0	0	0	0	**104**	**429**
2000 - 2015	0	91	11	0	1	0	0	0	1	0	0	0	0	**104**	
2015 - 2030	0	93	13	0	0	0	0	0	0	0	0	0	0	**107**	
2030 - 2045	0	84	10	0	1	0	0	0	0	0	0	0	0	**95**	
2045 - 2100	0	80	10	0	1	0	0	0	0	0	0	0	0	**91**	**396**
2100 - 2115	0	74	5	0	0	0	0	0	0	0	0	0	0	**81**	
2115 - 2130	0	57	4	0	0	0	0	0	0	0	0	0	0	**62**	
2130 - 2145	0	45	7	0	0	0	0	0	1	0	0	0	0	**53**	
2145 - 2200	0	43	6	0	1	0	0	0	0	0	0	0	0	**50**	**246**
2200 - 2215	0	41	5	0	0	0	0	0	0	0	0	0	0	**46**	
2215 - 2230	0	34	4	0	1	0	0	0	0	0	0	0	0	**39**	
2230 - 2245	0	49	3	0	0	0	0	0	0	0	0	0	0	**52**	
2245 - 2300	0	29	4	0	0	0	0	0	0	0	1	0	0	**34**	**171**
2300 - 2315	0	30	3	0	0	0	0	0	0	0	1	0	0	**34**	
2315 - 2330	0	18	2	0	0	0	0	0	0	0	2	0	0	**22**	
2330 - 2345	0	20	2	0	0	0	0	0	1	0	0	0	0	**23**	
2345 - 0000	1	10	1	0	0	0	0	0	0	0	0	0	0	**13**	**92**

Session Total	18	8974	1925	10	154	27	4	27	72	3	13	2	1	**11228**
Session Average	0.19	93.48	20.05	0.10	1.60	0.28	0.04	0.28	0.74	0.03	0.13	0.02	0.01	**116.96**
Session Percentage	0.16	79.92	17.14	0.09	1.37	0.24	0.03	0.24	0.64	0.03	0.11	0.02	0.01	

AM Peak Hour	0830 - 0930	0715 - 0815	0700 - 0800	0915 - 1015	0815 - 0915	0630 - 0730	0930 - 1030	0745 - 0845	0915 - 1015	0645 - 0745	0530 - 0630	-	-	**0700 - 0800**
AM Peak Volume	1	707	151	1	17	4	1	3	7	0	1	0	0	**879**

Noon Peak Hour	1145 - 1245	1445 - 1545	1445 - 1545	1445 - 1545	1000 - 1100	1130 - 1230	1000 - 1100	1415 - 1515	1100 - 1200	1115 - 1215	-	1245 - 1345	-	**1445 - 1545**
Noon Peak Volume	2	674	160	1	16	3	1	3	7	1	0	0	0	**855**

PM Peak Hour	1715 - 1815	1645 - 1745	1615 - 1715	1500 - 1600	1530 - 1630	1500 - 1600	1500 - 1600	1600 - 1700	1630 - 1730	-	-	-	-	**1645 - 1745**
PM Peak Volume	3	857	161	2	14	2	0	3	4	0	0	0	0	**1026**

Bi-Directional Class Count || Volume Summary 15min

Columbia, SC

Marr Traffic DATA COLLECTION
www.marrtraffic.com

Site 56
I-20 W/Bound Off-Ramp,
east of US-378 Sunset Blvd

Date
Tuesday, April 23, 2024

Lat/Long
34.012817°, -81.146564°

Weather
Fair
58°F

Click here for Detailed Weather

0000 - 2400 (Weekday 24h Session) (04-23-2024)
Volume Summary 15min

	Volume Summary 15min		15min	60min
TIME	EB	WB	Total	Total
0000 - 0015	0	0	**0**	
0015 - 0030	0	0	**0**	
0030 - 0045	0	0	**0**	
0045 - 0100	0	0	**0**	**0**
0100 - 0115	0	0	**0**	
0115 - 0130	0	0	**0**	
0130 - 0145	0	0	**0**	
0145 - 0200	0	0	**0**	**0**
0200 - 0215	0	0	**0**	
0215 - 0230	0	0	**0**	
0230 - 0245	0	0	**0**	
0245 - 0300	0	0	**0**	**0**
0300 - 0315	0	0	**0**	
0315 - 0330	0	0	**0**	
0330 - 0345	0	0	**0**	
0345 - 0400	0	0	**0**	**0**
0400 - 0415	0	0	**0**	
0415 - 0430	0	0	**0**	
0430 - 0445	0	0	**0**	
0445 - 0500	0	0	**0**	**0**
0500 - 0515	0	0	**0**	
0515 - 0530	0	0	**0**	
0530 - 0545	0	0	**0**	
0545 - 0600	0	0	**0**	**0**
0600 - 0615	0	0	**0**	
0615 - 0630	0	0	**0**	
0630 - 0645	0	0	**0**	
0645 - 0700	0	0	**0**	**0**
0700 - 0715	0	0	**0**	
0715 - 0730	0	0	**0**	
0730 - 0745	0	0	**0**	
0745 - 0800	0	0	**0**	**0**
0800 - 0815	0	0	**0**	
0815 - 0830	0	0	**0**	
0830 - 0845	0	0	**0**	
0845 - 0900	0	0	**0**	**0**
0900 - 0915	0	0	**0**	
0915 - 0930	0	0	**0**	
0930 - 0945	0	0	**0**	
0945 - 1000	0	0	**0**	**0**
1000 - 1015	0	0	**0**	
1015 - 1030	0	0	**0**	
1030 - 1045	0	0	**0**	
1045 - 1100	0	0	**0**	**0**
1100 - 1115	0	0	**0**	
1115 - 1130	0	0	**0**	
1130 - 1145	0	0	**0**	
1145 - 1200	0	0	**0**	**0**

	Volume Summary 15min		15min	60min
Time	EB	WB	Total	Total
1200 - 1215	0	0	**0**	
1215 - 1230	0	0	**0**	
1230 - 1245	0	0	**0**	
1245 - 1300	0	0	**0**	**0**
1300 - 1315	0	0	**0**	
1315 - 1330	0	0	**0**	
1330 - 1345	0	0	**0**	
1345 - 1400	0	0	**0**	**0**
1400 - 1415	0	0	**0**	
1415 - 1430	0	0	**0**	
1430 - 1445	0	0	**0**	
1445 - 1500	0	0	**0**	**0**
1500 - 1515	0	0	**0**	
1515 - 1530	0	0	**0**	
1530 - 1545	0	0	**0**	
1545 - 1600	0	0	**0**	**0**
1600 - 1615	0	0	**0**	
1615 - 1630	0	0	**0**	
1630 - 1645	0	0	**0**	
1645 - 1700	0	0	**0**	**0**
1700 - 1715	0	0	**0**	
1715 - 1730	0	0	**0**	
1730 - 1745	0	0	**0**	
1745 - 1800	0	0	**0**	**0**
1800 - 1815	0	0	**0**	
1815 - 1830	0	0	**0**	
1830 - 1845	0	0	**0**	
1845 - 1900	0	0	**0**	**0**
1900 - 1915	0	0	**0**	
1915 - 1930	0	207	**207**	
1930 - 1945	0	180	**180**	
1945 - 2000	0	153	**153**	**540**
2000 - 2015	0	139	**139**	
2015 - 2030	0	157	**157**	
2030 - 2045	0	148	**148**	
2045 - 2100	0	126	**126**	**570**
2100 - 2115	0	125	**125**	
2115 - 2130	0	83	**83**	
2130 - 2145	0	85	**85**	
2145 - 2200	0	69	**69**	**362**
2200 - 2215	0	61	**61**	
2215 - 2230	0	61	**61**	
2230 - 2245	0	72	**72**	
2245 - 2300	0	55	**55**	**249**
2300 - 2315	0	46	**46**	
2315 - 2330	0	36	**36**	
2330 - 2345	0	37	**37**	
2345 - 0000	0	17	**17**	**136**

Session Total	0	1857	**1857**
Session Average	0.00	19.34	**19.34**
Session Percentage	0.00	100.00	

Site 56
I-20 W/Bound Off-Ramp,
east of US-378 Sunset Blvd

Date
Wednesday, April 24, 2024

Lat/Long
34.012817°, -81.146564°

Weather
Fair
66°F

Click here for Detailed Weather

0000 - 2400 (Weekday 24h Session) (04-24-2024)

Volume Summary 15min

TIME	Volume Summary 15min EB	Volume Summary 15min WB	15min Total	60min Total
0000 - 0015	0	19	**19**	
0015 - 0030	0	20	**20**	
0030 - 0045	0	17	**17**	
0045 - 0100	0	25	**25**	**81**
0100 - 0115	0	16	**16**	
0115 - 0130	0	11	**11**	
0130 - 0145	0	13	**13**	
0145 - 0200	0	13	**13**	**53**
0200 - 0215	0	4	**4**	
0215 - 0230	0	13	**13**	
0230 - 0245	0	10	**10**	
0245 - 0300	0	2	**2**	**29**
0300 - 0315	0	7	**7**	
0315 - 0330	0	7	**7**	
0330 - 0345	0	8	**8**	
0345 - 0400	0	17	**17**	**39**
0400 - 0415	0	16	**16**	
0415 - 0430	0	9	**9**	
0430 - 0445	0	20	**20**	
0445 - 0500	0	19	**19**	**64**
0500 - 0515	0	26	**26**	
0515 - 0530	0	27	**27**	
0530 - 0545	0	30	**30**	
0545 - 0600	0	67	**67**	**150**
0600 - 0615	0	73	**73**	
0615 - 0630	0	125	**125**	
0630 - 0645	0	160	**160**	
0645 - 0700	0	241	**241**	**599**
0700 - 0715	0	278	**278**	
0715 - 0730	0	363	**363**	
0730 - 0745	0	333	**333**	
0745 - 0800	0	395	**395**	**1369**
0800 - 0815	0	230	**230**	
0815 - 0830	0	243	**243**	
0830 - 0845	0	272	**272**	
0845 - 0900	0	271	**271**	**1016**
0900 - 0915	0	253	**253**	
0915 - 0930	0	178	**178**	
0930 - 0945	0	214	**214**	
0945 - 1000	0	245	**245**	**890**
1000 - 1015	0	225	**225**	
1015 - 1030	0	247	**247**	
1030 - 1045	0	233	**233**	
1045 - 1100	0	248	**248**	**953**
1100 - 1115	0	214	**214**	
1115 - 1130	0	244	**244**	
1130 - 1145	0	249	**249**	
1145 - 1200	0	252	**252**	**959**

Time	Volume Summary 15min EB	Volume Summary 15min WB	15min Total	60min Total
1200 - 1215	0	224	**224**	
1215 - 1230	0	258	**258**	
1230 - 1245	0	244	**244**	
1245 - 1300	0	278	**278**	**1004**
1300 - 1315	0	275	**275**	
1315 - 1330	0	313	**313**	
1330 - 1345	0	301	**301**	
1345 - 1400	0	295	**295**	**1184**
1400 - 1415	0	329	**329**	
1415 - 1430	0	315	**315**	
1430 - 1445	0	279	**279**	
1445 - 1500	0	278	**278**	**1201**
1500 - 1515	0	337	**337**	
1515 - 1530	0	297	**297**	
1530 - 1545	0	332	**332**	
1545 - 1600	0	308	**308**	**1274**
1600 - 1615	0	312	**312**	
1615 - 1630	0	392	**392**	
1630 - 1645	0	391	**391**	
1645 - 1700	0	390	**390**	**1485**
1700 - 1715	0	347	**347**	
1715 - 1730	0	387	**387**	
1730 - 1745	0	400	**400**	
1745 - 1800	0	372	**372**	**1506**
1800 - 1815	0	278	**278**	
1815 - 1830	0	255	**255**	
1830 - 1845	0	228	**228**	
1845 - 1900	0	238	**238**	**999**
1900 - 1915	0	187	**187**	
1915 - 1930	0	204	**204**	
1930 - 1945	0	199	**199**	
1945 - 2000	0	158	**158**	**748**
2000 - 2015	0	173	**173**	
2015 - 2030	0	163	**163**	
2030 - 2045	0	137	**137**	
2045 - 2100	0	146	**146**	**619**
2100 - 2115	0	118	**118**	
2115 - 2130	0	103	**103**	
2130 - 2145	0	74	**74**	
2145 - 2200	0	80	**80**	**375**
2200 - 2215	0	76	**76**	
2215 - 2230	0	56	**56**	
2230 - 2245	0	85	**85**	
2245 - 2300	0	46	**46**	**263**
2300 - 2315	0	55	**55**	
2315 - 2330	0	30	**30**	
2330 - 2345	0	33	**33**	
2345 - 0000	0	21	**21**	**139**

Session Total	0	16999	**16999**
Session Average	0.00	177.07	**177.07**
Session Percentage	0.00	100.00	

Site 56
I-20 W/Bound Off-Ramp,
east of US-378 Sunset Blvd

Date
Thursday, April 25, 2024

Lat/Long
34.012817°, -81.146564°

Weather
Fair
67°F

Click here for Detailed Weather

0000 - 2400 (Weekday 24h Session) (04-25-2024)

Volume Summary 15min

TIME	Volume Summary 15min EB	Volume Summary 15min WB	15min Total	60min Total
0000 - 0015	0	26	**26**	
0015 - 0030	0	21	**21**	
0030 - 0045	0	24	**24**	
0045 - 0100	0	10	**10**	**81**
0100 - 0115	0	10	**10**	
0115 - 0130	0	9	**9**	
0130 - 0145	0	12	**12**	
0145 - 0200	0	6	**6**	**37**
0200 - 0215	0	9	**9**	
0215 - 0230	0	5	**5**	
0230 - 0245	0	8	**8**	
0245 - 0300	0	10	**10**	**32**
0300 - 0315	0	8	**8**	
0315 - 0330	0	15	**15**	
0330 - 0345	0	5	**5**	
0345 - 0400	0	14	**14**	**42**
0400 - 0415	0	5	**5**	
0415 - 0430	0	10	**10**	
0430 - 0445	0	14	**14**	
0445 - 0500	0	18	**18**	**47**
0500 - 0515	0	20	**20**	
0515 - 0530	0	24	**24**	
0530 - 0545	0	43	**43**	
0545 - 0600	0	53	**53**	**140**
0600 - 0615	0	74	**74**	
0615 - 0630	0	113	**113**	
0630 - 0645	0	143	**143**	
0645 - 0700	0	235	**235**	**565**
0700 - 0715	0	267	**267**	
0715 - 0730	0	349	**349**	
0730 - 0745	0	327	**327**	
0745 - 0800	0	326	**326**	**1269**
0800 - 0815	0	306	**306**	
0815 - 0830	0	279	**279**	
0830 - 0845	0	257	**257**	
0845 - 0900	0	291	**291**	**1133**
0900 - 0915	0	211	**211**	
0915 - 0930	0	225	**225**	
0930 - 0945	0	228	**228**	
0945 - 1000	0	236	**236**	**900**
1000 - 1015	0	209	**209**	
1015 - 1030	0	253	**253**	
1030 - 1045	0	227	**227**	
1045 - 1100	0	215	**215**	**904**
1100 - 1115	0	217	**217**	
1115 - 1130	0	199	**199**	
1130 - 1145	0	270	**270**	
1145 - 1200	0	235	**235**	**921**

Time	Volume Summary 15min EB	Volume Summary 15min WB	15min Total	60min Total
1200 - 1215	0	287	**287**	
1215 - 1230	0	253	**253**	
1230 - 1245	0	251	**251**	
1245 - 1300	0	276	**276**	**1067**
1300 - 1315	0	291	**291**	
1315 - 1330	0	259	**259**	
1330 - 1345	0	313	**313**	
1345 - 1400	0	285	**285**	**1148**
1400 - 1415	0	336	**336**	
1415 - 1430	0	340	**340**	
1430 - 1445	0	273	**273**	
1445 - 1500	0	344	**344**	**1293**
1500 - 1515	0	298	**298**	
1515 - 1530	0	328	**328**	
1530 - 1545	0	352	**352**	
1545 - 1600	0	321	**321**	**1299**
1600 - 1615	0	341	**341**	
1615 - 1630	0	393	**393**	
1630 - 1645	0	351	**351**	
1645 - 1700	0	388	**388**	**1473**
1700 - 1715	0	377	**377**	
1715 - 1730	0	397	**397**	
1730 - 1745	0	391	**391**	
1745 - 1800	0	305	**305**	**1470**
1800 - 1815	0	288	**288**	
1815 - 1830	0	268	**268**	
1830 - 1845	0	209	**209**	
1845 - 1900	0	242	**242**	**1007**
1900 - 1915	0	0	**0**	
1915 - 1930	0	0	**0**	
1930 - 1945	0	0	**0**	
1945 - 2000	0	0	**0**	**0**
2000 - 2015	0	0	**0**	
2015 - 2030	0	0	**0**	
2030 - 2045	0	0	**0**	
2045 - 2100	0	0	**0**	**0**
2100 - 2115	0	0	**0**	
2115 - 2130	0	0	**0**	
2130 - 2145	0	0	**0**	
2145 - 2200	0	0	**0**	**0**
2200 - 2215	0	0	**0**	
2215 - 2230	0	0	**0**	
2230 - 2245	0	0	**0**	
2245 - 2300	0	0	**0**	**0**
2300 - 2315	0	0	**0**	
2315 - 2330	0	0	**0**	
2330 - 2345	0	0	**0**	
2345 - 0000	0	0	**0**	**0**

Session Total	0	14828	**14828**
Session Average	0.00	154.46	**154.46**
Session Percentage	0.00	100.00	

Bi-Directional Class Count || SB WB 60min

Columbia, SC

Marr Traffic DATA COLLECTION

www.marrtraffic.com

Site 56
I-20 W/Bound Off-Ramp,
east of US-378 Sunset Blvd

Date
Tuesday, April 23, 2024

Lat/Long
34.012817°, -81.146564°

Weather
Fair
58°F

Click here for Detailed Weather

0000 - 2400 (Weekday 24h Session) (04-23-2024)
SB WB 60min

	Westbound (Movement 56.1)													
TIME	1	2	3	4	5	6	7	8	9	10	11	12	13	**Total**
0000 - 0100	0	0	0	0	0	0	0	0	0	0	0	0	0	**0**
0100 - 0200	0	0	0	0	0	0	0	0	0	0	0	0	0	**0**
0200 - 0300	0	0	0	0	0	0	0	0	0	0	0	0	0	**0**
0300 - 0400	0	0	0	0	0	0	0	0	0	0	0	0	0	**0**
0400 - 0500	0	0	0	0	0	0	0	0	0	0	0	0	0	**0**
0500 - 0600	0	0	0	0	0	0	0	0	0	0	0	0	0	**0**
0600 - 0700	0	0	0	0	0	0	0	0	0	0	0	0	0	**0**
0700 - 0800	0	0	0	0	0	0	0	0	0	0	0	0	0	**0**
0800 - 0900	0	0	0	0	0	0	0	0	0	0	0	0	0	**0**
0900 - 1000	0	0	0	0	0	0	0	0	0	0	0	0	0	**0**
1000 - 1100	0	0	0	0	0	0	0	0	0	0	0	0	0	**0**
1100 - 1200	0	0	0	0	0	0	0	0	0	0	0	0	0	**0**
1200 - 1300	0	0	0	0	0	0	0	0	0	0	0	0	0	**0**
1300 - 1400	0	0	0	0	0	0	0	0	0	0	0	0	0	**0**
1400 - 1500	0	0	0	0	0	0	0	0	0	0	0	0	0	**0**
1500 - 1600	0	0	0	0	0	0	0	0	0	0	0	0	0	**0**
1600 - 1700	0	0	0	0	0	0	0	0	0	0	0	0	0	**0**
1700 - 1800	0	0	0	0	0	0	0	0	0	0	0	0	0	**0**
1800 - 1900	0	0	0	0	0	0	0	0	0	0	0	0	0	**0**
1900 - 2000	2	438	94	1	3	0	0	0	2	0	0	0	0	**540**
2000 - 2100	0	517	47	0	3	0	0	1	2	0	0	0	0	**570**
2100 - 2200	0	333	22	1	2	0	0	1	3	0	0	0	0	**362**
2200 - 2300	0	226	22	0	1	0	0	0	0	0	0	0	0	**249**
2300 - 2400	0	113	13	0	2	0	0	0	3	0	5	0	0	**136**
Session Total	2	1627	198	2	11	0	0	2	10	0	5	0	0	**1857**
Session Average	0.08	67.79	8.25	0.08	0.46	0.00	0.00	0.08	0.42	0.00	0.21	0.00	0.00	**77.38**
Session Percentage	0.11	87.61	10.66	0.11	0.59	0.00	0.00	0.11	0.54	0.00	0.27	0.00	0.00	
AM Peak Hour	-	-	-	-	-	-	-	-	-	-	-	-	-	**-**
AM Peak Volume	0	0	0	0	0	0	0	0	0	0	0	0	0	**0**
Noon Peak Hour	-	-	-	-	-	-	-	-	-	-	-	-	-	**-**
Noon Peak Volume	0	0	0	0	0	0	0	0	0	0	0	0	0	**0**
PM Peak Hour	1900 - 2000	1900 - 2000	1900 - 2000	1900 - 2000	1900 - 2000	-	-	-	1900 - 2000	-	-	-	-	**1900 - 2000**
PM Peak Volume	2	438	94	1	3	0	0	0	2	0	0	0	0	**540**

Site 56
I-20 W/Bound Off-Ramp,
east of US-378 Sunset Blvd

Date
Wednesday, April 24, 2024

Lat/Long
34.012817°, -81.146564°

Weather
Fair
66°F

Click here for Detailed Weather

0000 - 2400 (Weekday 24h Session) (04-24-2024)
SB WB 60min

	Westbound (Movement 56.1)													
TIME	1	2	3	4	5	6	7	8	9	10	11	12	13	**Total**
0000 - 0100	1	56	13	0	3	0	0	0	2	0	6	0	0	**81**
0100 - 0200	0	43	3	0	1	0	1	0	5	0	0	0	0	**53**
0200 - 0300	0	20	4	0	0	1	0	2	0	0	2	0	0	**29**
0300 - 0400	6	26	2	0	1	0	1	1	2	0	0	0	0	**39**
0400 - 0500	0	48	6	0	1	3	0	0	4	0	2	0	0	**64**
0500 - 0600	0	122	13	0	6	0	0	2	6	0	1	0	0	**150**
0600 - 0700	0	472	105	0	10	5	0	0	5	0	2	0	0	**599**
0700 - 0800	1	1104	229	0	20	5	0	5	5	0	0	0	0	**1369**
0800 - 0900	1	795	185	0	23	3	0	1	7	1	0	0	0	**1016**
0900 - 1000	2	657	191	1	19	5	0	6	9	0	0	0	0	**890**
1000 - 1100	0	711	196	1	29	5	0	2	8	1	0	0	0	**953**
1100 - 1200	2	712	211	2	15	3	0	2	10	2	0	0	0	**959**
1200 - 1300	1	760	209	0	22	3	0	1	7	1	0	0	0	**1004**
1300 - 1400	0	924	217	1	23	5	0	3	9	1	0	1	0	**1184**
1400 - 1500	4	946	231	0	8	3	0	4	5	0	0	0	0	**1201**
1500 - 1600	1	1004	243	3	14	2	0	1	6	0	0	0	0	**1274**
1600 - 1700	2	1220	229	0	25	1	0	4	4	0	0	0	0	**1485**
1700 - 1800	3	1249	234	0	10	2	0	4	4	0	0	0	0	**1506**
1800 - 1900	3	804	174	3	8	0	0	1	6	0	0	0	0	**999**
1900 - 2000	2	613	127	0	3	0	0	1	2	0	0	0	0	**748**
2000 - 2100	0	529	83	0	4	0	0	1	2	0	0	0	0	**619**
2100 - 2200	1	324	44	1	2	1	0	0	2	0	0	0	0	**375**
2200 - 2300	0	232	24	0	2	0	0	0	0	0	5	0	0	**263**
2300 - 2400	2	122	9	0	1	0	0	0	2	0	3	0	0	**139**

Session Total	32	13493	2982	12	250	47	2	41	112	6	21	1	0	**16999**
Session Average	1.33	562.21	124.25	0.50	10.42	1.96	0.08	1.71	4.67	0.25	0.88	0.04	0.00	**708.29**
Session Percentage	0.19	79.38	17.54	0.07	1.47	0.28	0.01	0.24	0.66	0.04	0.12	0.01	0.00	

AM Peak Hour	0900 - 1000	0700 - 0800	0700 - 0800	0900 - 1000	0800 - 0900	0600 - 0700	-	0900 - 1000	0900 - 1000	0800 - 0900	0600 - 0700	-	-	**0700 - 0800**
AM Peak Volume	2	1104	229	1	23	5	0	6	9	1	2	0	0	**1369**

Noon Peak Hour	1400 - 1500	1400 - 1500	1400 - 1500	1100 - 1200	1000 - 1100	1000 - 1100	-	1400 - 1500	1100 - 1200	1100 - 1200	-	1300 - 1400	-	**1400 - 1500**
Noon Peak Volume	4	946	231	2	29	5	0	4	10	2	0	1	0	**1201**

PM Peak Hour	1700 - 1800	1700 - 1800	1500 - 1600	1500 - 1600	1600 - 1700	1500 - 1600	-	1600 - 1700	1500 - 1600	-	-	-	-	**1700 - 1800**
PM Peak Volume	3	1249	243	3	25	2	0	4	6	0	0	0	0	**1506**

Site 56
I-20 W/Bound Off-Ramp,
east of US-378 Sunset Blvd

Date
Thursday, April 25, 2024

Lat/Long
34.012817°, -81.146564°

Weather
Fair
67°F

Click here for Detailed Weather

0000 - 2400 (Weekday 24h Session) (04-25-2024)
SB WB 60min

	Westbound (Movement 56.1)													
TIME	1	2	3	4	5	6	7	8	9	10	11	12	13	**Total**
0000 - 0100	0	60	10	0	0	0	0	0	2	0	9	0	0	**81**
0100 - 0200	0	29	1	0	0	0	0	0	3	1	1	2	0	**37**
0200 - 0300	0	24	3	0	1	0	0	0	2	0	0	2	0	**32**
0300 - 0400	0	33	4	0	1	0	0	0	1	0	0	2	1	**42**
0400 - 0500	0	40	4	0	0	0	0	0	2	0	0	0	1	**47**
0500 - 0600	0	113	13	0	3	0	0	2	8	0	1	0	0	**140**
0600 - 0700	0	447	99	0	10	2	0	0	7	0	0	0	0	**565**
0700 - 0800	1	1014	224	1	16	6	2	1	2	1	1	0	0	**1269**
0800 - 0900	0	900	197	2	22	2	0	4	6	0	0	0	0	**1133**
0900 - 1000	1	663	202	1	19	2	1	1	10	0	0	0	0	**900**
1000 - 1100	0	708	163	0	20	5	4	0	4	0	0	0	0	**904**
1100 - 1200	3	693	188	1	18	3	1	3	11	0	0	0	0	**921**
1200 - 1300	5	818	210	0	20	5	0	6	3	0	0	0	0	**1067**
1300 - 1400	0	905	215	1	12	3	0	2	10	0	0	0	0	**1148**
1400 - 1500	2	1035	231	1	13	0	0	4	6	1	0	0	0	**1293**
1500 - 1600	1	1045	221	2	18	3	1	4	4	0	0	0	0	**1299**
1600 - 1700	2	1198	246	3	13	1	0	6	4	0	0	0	0	**1473**
1700 - 1800	4	1231	216	1	9	1	0	3	5	0	0	0	0	**1470**
1800 - 1900	2	845	147	2	6	1	0	2	2	0	0	0	0	**1007**
1900 - 2000	0	0	0	0	0	0	0	0	0	0	0	0	0	**0**
2000 - 2100	0	0	0	0	0	0	0	0	0	0	0	0	0	**0**
2100 - 2200	0	0	0	0	0	0	0	0	0	0	0	0	0	**0**
2200 - 2300	0	0	0	0	0	0	0	0	0	0	0	0	0	**0**
2300 - 2400	0	0	0	0	0	0	0	0	0	0	0	0	0	**0**

Session Total	21	11801	2594	15	201	34	9	38	92	3	12	6	2	**14828**
Session Average	0.88	491.71	108.08	0.63	8.38	1.42	0.38	1.58	3.83	0.13	0.50	0.25	0.08	**617.83**
Session Percentage	0.14	79.59	17.49	0.10	1.36	0.23	0.06	0.26	0.62	0.02	0.08	0.04	0.01	

AM Peak Hour	0700 - 0800	0700 - 0800	0700 - 0800	0800 - 0900	0800 - 0900	0700 - 0800	0700 - 0800	0800 - 0900	0900 - 1000	0700 - 0800	0500 - 0600	-	-	**0700 - 0800**
AM Peak Hour Volume	1	1014	224	2	22	6	2	4	10	1	1	0	0	**1269**

Noon Peak Hour	1200 - 1300	1400 - 1500	1400 - 1500	1100 - 1200	1000 - 1100	1000 - 1100	1000 - 1100	1200 - 1300	1100 - 1200	1400 - 1500	-	-	-	**1400 - 1500**
Noon Peak Hour Volume	5	1035	231	1	20	5	4	6	11	1	0	0	0	**1293**

PM Peak Hour	1700 - 1800	1700 - 1800	1600 - 1700	1600 - 1700	1500 - 1600	1500 - 1600	1500 - 1600	1600 - 1700	1700 - 1800	-	-	-	-	**1600 - 1700**
PM Peak Hour Volume	4	1231	246	3	18	3	1	6	5	0	0	0	0	**1473**

Bi-Directional Class Count || Volume Summary 60min

Columbia, SC

Marr Traffic DATA COLLECTION

www.marrtraffic.com

Site 56

I-20 W/Bound Off-Ramp,
east of US-378 Sunset Blvd

Date

Tuesday, April 23, 2024

Lat/Long

34.012817°, -81.146564°

Weather

Fair
58°F

Click here for Detailed Weather

0000 - 2400 (Weekday 24h Session) (04-23-2024)

Volume Summary 60min

	Volume Summary 60min		
TIME	EB	WB	**Total**
0000 - 0100	0	0	**0**
0100 - 0200	0	0	**0**
0200 - 0300	0	0	**0**
0300 - 0400	0	0	**0**
0400 - 0500	0	0	**0**
0500 - 0600	0	0	**0**
0600 - 0700	0	0	**0**
0700 - 0800	0	0	**0**
0800 - 0900	0	0	**0**
0900 - 1000	0	0	**0**
1000 - 1100	0	0	**0**
1100 - 1200	0	0	**0**

	Volume Summary 60min		
Time	EB	WB	**Total**
1200 - 1300	0	0	**0**
1300 - 1400	0	0	**0**
1400 - 1500	0	0	**0**
1500 - 1600	0	0	**0**
1600 - 1700	0	0	**0**
1700 - 1800	0	0	**0**
1800 - 1900	0	0	**0**
1900 - 2000	0	540	**540**
2000 - 2100	0	570	**570**
2100 - 2200	0	362	**362**
2200 - 2300	0	249	**249**
2300 - 2400	0	136	**136**

Session Total	0	1857	**1857**
Session Average	0.00	77.38	**77.38**
Session Percentage	0.00	100.00	

Site 56

I-20 W/Bound Off-Ramp,
east of US-378 Sunset Blvd

Date

Wednesday, April 24, 2024

Lat/Long

34.012817°, -81.146564°

Weather

Fair
66°F

Click here for Detailed Weather

0000 - 2400 (Weekday 24h Session) (04-24-2024)

Volume Summary 60min

	Volume Summary 60min		
TIME	EB	WB	**Total**
0000 - 0100	0	81	**81**
0100 - 0200	0	53	**53**
0200 - 0300	0	29	**29**
0300 - 0400	0	39	**39**
0400 - 0500	0	64	**64**
0500 - 0600	0	150	**150**
0600 - 0700	0	599	**599**
0700 - 0800	0	1369	**1369**
0800 - 0900	0	1016	**1016**
0900 - 1000	0	890	**890**
1000 - 1100	0	953	**953**
1100 - 1200	0	959	**959**

	Volume Summary 60min		
Time	EB	WB	**Total**
1200 - 1300	0	1004	**1004**
1300 - 1400	0	1184	**1184**
1400 - 1500	0	1201	**1201**
1500 - 1600	0	1274	**1274**
1600 - 1700	0	1485	**1485**
1700 - 1800	0	1506	**1506**
1800 - 1900	0	999	**999**
1900 - 2000	0	748	**748**
2000 - 2100	0	619	**619**
2100 - 2200	0	375	**375**
2200 - 2300	0	263	**263**
2300 - 2400	0	139	**139**

Session Total	0	16999	**16999**
Session Average	0.00	708.29	**708.29**
Session Percentage	0.00	100.00	

Site 56

I-20 W/Bound Off-Ramp,
east of US-378 Sunset Blvd

Date

Thursday, April 25, 2024

Lat/Long

34.012817°, -81.146564°

Weather

Fair
67°F

Click here for Detailed Weather

0000 - 2400 (Weekday 24h Session) (04-25-2024)

Volume Summary 60min

	Volume Summary 60min		
TIME	EB	WB	**Total**
0000 - 0100	0	81	**81**
0100 - 0200	0	37	**37**
0200 - 0300	0	32	**32**
0300 - 0400	0	42	**42**
0400 - 0500	0	47	**47**
0500 - 0600	0	140	**140**
0600 - 0700	0	565	**565**
0700 - 0800	0	1269	**1269**
0800 - 0900	0	1133	**1133**
0900 - 1000	0	900	**900**
1000 - 1100	0	904	**904**
1100 - 1200	0	921	**921**

	Volume Summary 60min		
Time	EB	WB	**Total**
1200 - 1300	0	1067	**1067**
1300 - 1400	0	1148	**1148**
1400 - 1500	0	1293	**1293**
1500 - 1600	0	1299	**1299**
1600 - 1700	0	1473	**1473**
1700 - 1800	0	1470	**1470**
1800 - 1900	0	1007	**1007**
1900 - 2000	0	0	**0**
2000 - 2100	0	0	**0**
2100 - 2200	0	0	**0**
2200 - 2300	0	0	**0**
2300 - 2400	0	0	**0**

Session Total	0	14828	**14828**
Session Average	0.00	617.83	**617.83**
Session Percentage	0.00	100.00	

Bi-Directional Class Count || Graphical Analysis SB WB

Columbia, SC

Marr Traffic DATA COLLECTION

www.marrtraffic.com

Site 56

I-20 W/Bound Off-Ramp,
east of US-378 Sunset Blvd

Lat/Long

34.012817°, -81.146564°

0000 - 2400 (Weekday 24h Session)

Graphical Analysis SB WB

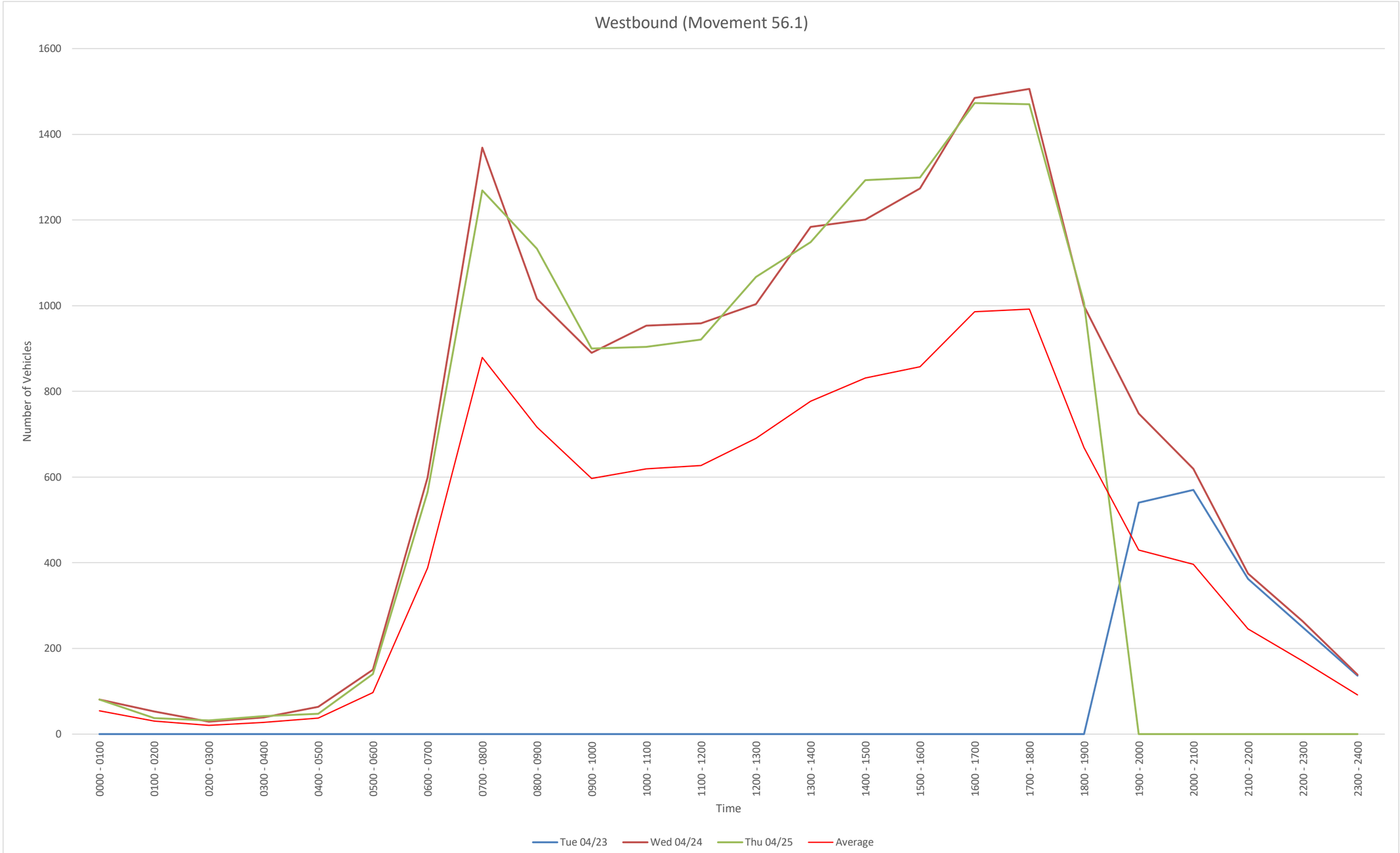

Time	Tue 04/23	Wed 04/24	Thu 04/25				
0000 - 0100	0	81	81				
0100 - 0200	0	53	37				
0200 - 0300	0	29	32				
0300 - 0400	0	39	42				
0400 - 0500	0	64	47				
0500 - 0600	0	150	140				
0600 - 0700	0	599	565				
0700 - 0800	0	1369	1269				
0800 - 0900	0	1016	1133				
0900 - 1000	0	890	900				
1000 - 1100	0	953	904				
1100 - 1200	0	959	921				
1200 - 1300	0	1004	1067				
1300 - 1400	0	1184	1148				
1400 - 1500	0	1201	1293				
1500 - 1600	0	1274	1299				
1600 - 1700	0	1485	1473				
1700 - 1800	0	1506	1470				
1800 - 1900	0	999	1007				
1900 - 2000	540	748	0				
2000 - 2100	570	619	0				
2100 - 2200	362	375	0				
2200 - 2300	249	263	0				
2300 - 2400	136	139	0				
Daily Total	1857	16999	14828				

EB
File Name:
Start Date: 4/23/2024
Start Time: 0
Site Code: 56
Station ID: 1
Location 1: I-20 W/Bound Off-Ramp, east of US-378 Sunset Blvd
Location 2:

Date	Time	1	2	3	4	5	6	7	8	9	10	11	12	13
4/23/2024	12:00 AM	0	0	0	0	0	0	0	0	0	0	0	0	0
4/23/2024	12:15 AM	0	0	0	0	0	0	0	0	0	0	0	0	0
4/23/2024	12:30 AM	0	0	0	0	0	0	0	0	0	0	0	0	0
4/23/2024	12:45 AM	0	0	0	0	0	0	0	0	0	0	0	0	0
4/23/2024	1:00 AM	0	0	0	0	0	0	0	0	0	0	0	0	0
4/23/2024	1:15 AM	0	0	0	0	0	0	0	0	0	0	0	0	0
4/23/2024	1:30 AM	0	0	0	0	0	0	0	0	0	0	0	0	0
4/23/2024	1:45 AM	0	0	0	0	0	0	0	0	0	0	0	0	0
4/23/2024	2:00 AM	0	0	0	0	0	0	0	0	0	0	0	0	0
4/23/2024	2:15 AM	0	0	0	0	0	0	0	0	0	0	0	0	0
4/23/2024	2:30 AM	0	0	0	0	0	0	0	0	0	0	0	0	0
4/23/2024	2:45 AM	0	0	0	0	0	0	0	0	0	0	0	0	0
4/23/2024	3:00 AM	0	0	0	0	0	0	0	0	0	0	0	0	0
4/23/2024	3:15 AM	0	0	0	0	0	0	0	0	0	0	0	0	0
4/23/2024	3:30 AM	0	0	0	0	0	0	0	0	0	0	0	0	0
4/23/2024	3:45 AM	0	0	0	0	0	0	0	0	0	0	0	0	0
4/23/2024	4:00 AM	0	0	0	0	0	0	0	0	0	0	0	0	0
4/23/2024	4:15 AM	0	0	0	0	0	0	0	0	0	0	0	0	0
4/23/2024	4:30 AM	0	0	0	0	0	0	0	0	0	0	0	0	0
4/23/2024	4:45 AM	0	0	0	0	0	0	0	0	0	0	0	0	0
4/23/2024	5:00 AM	0	0	0	0	0	0	0	0	0	0	0	0	0
4/23/2024	5:15 AM	0	0	0	0	0	0	0	0	0	0	0	0	0
4/23/2024	5:30 AM	0	0	0	0	0	0	0	0	0	0	0	0	0
4/23/2024	5:45 AM	0	0	0	0	0	0	0	0	0	0	0	0	0
4/23/2024	6:00 AM	0	0	0	0	0	0	0	0	0	0	0	0	0
4/23/2024	6:15 AM	0	0	0	0	0	0	0	0	0	0	0	0	0
4/23/2024	6:30 AM	0	0	0	0	0	0	0	0	0	0	0	0	0
4/23/2024	6:45 AM	0	0	0	0	0	0	0	0	0	0	0	0	0
4/23/2024	7:00 AM	0	0	0	0	0	0	0	0	0	0	0	0	0
4/23/2024	7:15 AM	0	0	0	0	0	0	0	0	0	0	0	0	0
4/23/2024	7:30 AM	0	0	0	0	0	0	0	0	0	0	0	0	0
4/23/2024	7:45 AM	0	0	0	0	0	0	0	0	0	0	0	0	0
4/23/2024	8:00 AM	0	0	0	0	0	0	0	0	0	0	0	0	0
4/23/2024	8:15 AM	0	0	0	0	0	0	0	0	0	0	0	0	0
4/23/2024	8:30 AM	0	0	0	0	0	0	0	0	0	0	0	0	0
4/23/2024	8:45 AM	0	0	0	0	0	0	0	0	0	0	0	0	0
4/23/2024	9:00 AM	0	0	0	0	0	0	0	0	0	0	0	0	0
4/23/2024	9:15 AM	0	0	0	0	0	0	0	0	0	0	0	0	0
4/23/2024	9:30 AM	0	0	0	0	0	0	0	0	0	0	0	0	0
4/23/2024	9:45 AM	0	0	0	0	0	0	0	0	0	0	0	0	0
4/23/2024	10:00 AM	0	0	0	0	0	0	0	0	0	0	0	0	0
4/23/2024	10:15 AM	0	0	0	0	0	0	0	0	0	0	0	0	0
4/23/2024	10:30 AM	0	0	0	0	0	0	0	0	0	0	0	0	0
4/23/2024	10:45 AM	0	0	0	0	0	0	0	0	0	0	0	0	0
4/23/2024	11:00 AM	0	0	0	0	0	0	0	0	0	0	0	0	0
4/23/2024	11:15 AM	0	0	0	0	0	0	0	0	0	0	0	0	0
4/23/2024	11:30 AM	0	0	0	0	0	0	0	0	0	0	0	0	0
4/23/2024	11:45 AM	0	0	0	0	0	0	0	0	0	0	0	0	0
4/23/2024	12:00 PM	0	0	0	0	0	0	0	0	0	0	0	0	0
4/23/2024	12:15 PM	0	0	0	0	0	0	0	0	0	0	0	0	0
4/23/2024	12:30 PM	0	0	0	0	0	0	0	0	0	0	0	0	0
4/23/2024	12:45 PM	0	0	0	0	0	0	0	0	0	0	0	0	0
4/23/2024	1:00 PM	0	0	0	0	0	0	0	0	0	0	0	0	0
4/23/2024	1:15 PM	0	0	0	0	0	0	0	0	0	0	0	0	0
4/23/2024	1:30 PM	0	0	0	0	0	0	0	0	0	0	0	0	0
4/23/2024	1:45 PM	0	0	0	0	0	0	0	0	0	0	0	0	0
4/23/2024	2:00 PM	0	0	0	0	0	0	0	0	0	0	0	0	0
4/23/2024	2:15 PM	0	0	0	0	0	0	0	0	0	0	0	0	0
4/23/2024	2:30 PM	0	0	0	0	0	0	0	0	0	0	0	0	0
4/23/2024	2:45 PM	0	0	0	0	0	0	0	0	0	0	0	0	0
4/23/2024	3:00 PM	0	0	0	0	0	0	0	0	0	0	0	0	0
4/23/2024	3:15 PM	0	0	0	0	0	0	0	0	0	0	0	0	0
4/23/2024	3:30 PM	0	0	0	0	0	0	0	0	0	0	0	0	0
4/23/2024	3:45 PM	0	0	0	0	0	0	0	0	0	0	0	0	0
4/23/2024	4:00 PM	0	0	0	0	0	0	0	0	0	0	0	0	0
4/23/2024	4:15 PM	0	0	0	0	0	0	0	0	0	0	0	0	0
4/23/2024	4:30 PM	0	0	0	0	0	0	0	0	0	0	0	0	0
4/23/2024	4:45 PM	0	0	0	0	0	0	0	0	0	0	0	0	0
4/23/2024	5:00 PM	0	0	0	0	0	0	0	0	0	0	0	0	0
4/23/2024	5:15 PM	0	0	0	0	0	0	0	0	0	0	0	0	0
4/23/2024	5:30 PM	0	0	0	0	0	0	0	0	0	0	0	0	0
4/23/2024	5:45 PM	0	0	0	0	0	0	0	0	0	0	0	0	0
4/23/2024	6:00 PM	0	0	0	0	0	0	0	0	0	0	0	0	0
4/23/2024	6:15 PM	0	0	0	0	0	0	0	0	0	0	0	0	0
4/23/2024	6:30 PM	0	0	0	0	0	0	0	0	0	0	0	0	0
4/23/2024	6:45 PM	0	0	0	0	0	0	0	0	0	0	0	0	0
4/23/2024	7:00 PM	0	0	0	0	0	0	0	0	0	0	0	0	0
4/23/2024	7:15 PM	0	0	0	0	0	0	0	0	0	0	0	0	0
4/23/2024	7:30 PM	0	0	0	0	0	0	0	0	0	0	0	0	0
4/23/2024	7:45 PM	0	0	0	0	0	0	0	0	0	0	0	0	0
4/23/2024	8:00 PM	0	0	0	0	0	0	0	0	0	0	0	0	0
4/23/2024	8:15 PM	0	0	0	0	0	0	0	0	0	0	0	0	0
4/23/2024	8:30 PM	0	0	0	0	0	0	0	0	0	0	0	0	0
4/23/2024	8:45 PM	0	0	0	0	0	0	0	0	0	0	0	0	0
4/23/2024	9:00 PM	0	0	0	0	0	0	0	0	0	0	0	0	0
4/23/2024	9:15 PM	0	0	0	0	0	0	0	0	0	0	0	0	0
4/23/2024	9:30 PM	0	0	0	0	0	0	0	0	0	0	0	0	0
4/23/2024	9:45 PM	0	0	0	0	0	0	0	0	0	0	0	0	0
4/23/2024	10:00 PM	0	0	0	0	0	0	0	0	0	0	0	0	0
4/23/2024	10:15 PM	0	0	0	0	0	0	0	0	0	0	0	0	0
4/23/2024	10:30 PM	0	0	0	0	0	0	0	0	0	0	0	0	0
4/23/2024	10:45 PM	0	0	0	0	0	0	0	0	0	0	0	0	0
4/23/2024	11:00 PM	0	0	0	0	0	0	0	0	0	0	0	0	0
4/23/2024	11:15 PM	0	0	0	0	0	0	0	0	0	0	0	0	0
4/23/2024	11:30 PM	0	0	0	0	0	0	0	0	0	0	0	0	0
4/23/2024	11:45 PM	0	0	0	0	0	0	0	0	0	0	0	0	0

4/24/2024	12:00 AM	0	0	0	0	0	0	0	0	0	0	0	0	0
4/24/2024	12:15 AM	0	0	0	0	0	0	0	0	0	0	0	0	0
4/24/2024	12:30 AM	0	0	0	0	0	0	0	0	0	0	0	0	0
4/24/2024	12:45 AM	0	0	0	0	0	0	0	0	0	0	0	0	0
4/24/2024	1:00 AM	0	0	0	0	0	0	0	0	0	0	0	0	0
4/24/2024	1:15 AM	0	0	0	0	0	0	0	0	0	0	0	0	0
4/24/2024	1:30 AM	0	0	0	0	0	0	0	0	0	0	0	0	0
4/24/2024	1:45 AM	0	0	0	0	0	0	0	0	0	0	0	0	0
4/24/2024	2:00 AM	0	0	0	0	0	0	0	0	0	0	0	0	0
4/24/2024	2:15 AM	0	0	0	0	0	0	0	0	0	0	0	0	0
4/24/2024	2:30 AM	0	0	0	0	0	0	0	0	0	0	0	0	0
4/24/2024	2:45 AM	0	0	0	0	0	0	0	0	0	0	0	0	0
4/24/2024	3:00 AM	0	0	0	0	0	0	0	0	0	0	0	0	0
4/24/2024	3:15 AM	0	0	0	0	0	0	0	0	0	0	0	0	0
4/24/2024	3:30 AM	0	0	0	0	0	0	0	0	0	0	0	0	0
4/24/2024	3:45 AM	0	0	0	0	0	0	0	0	0	0	0	0	0
4/24/2024	4:00 AM	0	0	0	0	0	0	0	0	0	0	0	0	0
4/24/2024	4:15 AM	0	0	0	0	0	0	0	0	0	0	0	0	0
4/24/2024	4:30 AM	0	0	0	0	0	0	0	0	0	0	0	0	0
4/24/2024	4:45 AM	0	0	0	0	0	0	0	0	0	0	0	0	0
4/24/2024	5:00 AM	0	0	0	0	0	0	0	0	0	0	0	0	0
4/24/2024	5:15 AM	0	0	0	0	0	0	0	0	0	0	0	0	0
4/24/2024	5:30 AM	0	0	0	0	0	0	0	0	0	0	0	0	0
4/24/2024	5:45 AM	0	0	0	0	0	0	0	0	0	0	0	0	0
4/24/2024	6:00 AM	0	0	0	0	0	0	0	0	0	0	0	0	0
4/24/2024	6:15 AM	0	0	0	0	0	0	0	0	0	0	0	0	0
4/24/2024	6:30 AM	0	0	0	0	0	0	0	0	0	0	0	0	0
4/24/2024	6:45 AM	0	0	0	0	0	0	0	0	0	0	0	0	0
4/24/2024	7:00 AM	0	0	0	0	0	0	0	0	0	0	0	0	0
4/24/2024	7:15 AM	0	0	0	0	0	0	0	0	0	0	0	0	0
4/24/2024	7:30 AM	0	0	0	0	0	0	0	0	0	0	0	0	0
4/24/2024	7:45 AM	0	0	0	0	0	0	0	0	0	0	0	0	0
4/24/2024	8:00 AM	0	0	0	0	0	0	0	0	0	0	0	0	0
4/24/2024	8:15 AM	0	0	0	0	0	0	0	0	0	0	0	0	0
4/24/2024	8:30 AM	0	0	0	0	0	0	0	0	0	0	0	0	0
4/24/2024	8:45 AM	0	0	0	0	0	0	0	0	0	0	0	0	0
4/24/2024	9:00 AM	0	0	0	0	0	0	0	0	0	0	0	0	0
4/24/2024	9:15 AM	0	0	0	0	0	0	0	0	0	0	0	0	0
4/24/2024	9:30 AM	0	0	0	0	0	0	0	0	0	0	0	0	0
4/24/2024	9:45 AM	0	0	0	0	0	0	0	0	0	0	0	0	0
4/24/2024	10:00 AM	0	0	0	0	0	0	0	0	0	0	0	0	0
4/24/2024	10:15 AM	0	0	0	0	0	0	0	0	0	0	0	0	0
4/24/2024	10:30 AM	0	0	0	0	0	0	0	0	0	0	0	0	0
4/24/2024	10:45 AM	0	0	0	0	0	0	0	0	0	0	0	0	0
4/24/2024	11:00 AM	0	0	0	0	0	0	0	0	0	0	0	0	0
4/24/2024	11:15 AM	0	0	0	0	0	0	0	0	0	0	0	0	0
4/24/2024	11:30 AM	0	0	0	0	0	0	0	0	0	0	0	0	0
4/24/2024	11:45 AM	0	0	0	0	0	0	0	0	0	0	0	0	0
4/24/2024	12:00 PM	0	0	0	0	0	0	0	0	0	0	0	0	0
4/24/2024	12:15 PM	0	0	0	0	0	0	0	0	0	0	0	0	0
4/24/2024	12:30 PM	0	0	0	0	0	0	0	0	0	0	0	0	0
4/24/2024	12:45 PM	0	0	0	0	0	0	0	0	0	0	0	0	0
4/24/2024	1:00 PM	0	0	0	0	0	0	0	0	0	0	0	0	0
4/24/2024	1:15 PM	0	0	0	0	0	0	0	0	0	0	0	0	0
4/24/2024	1:30 PM	0	0	0	0	0	0	0	0	0	0	0	0	0
4/24/2024	1:45 PM	0	0	0	0	0	0	0	0	0	0	0	0	0
4/24/2024	2:00 PM	0	0	0	0	0	0	0	0	0	0	0	0	0
4/24/2024	2:15 PM	0	0	0	0	0	0	0	0	0	0	0	0	0
4/24/2024	2:30 PM	0	0	0	0	0	0	0	0	0	0	0	0	0
4/24/2024	2:45 PM	0	0	0	0	0	0	0	0	0	0	0	0	0
4/24/2024	3:00 PM	0	0	0	0	0	0	0	0	0	0	0	0	0
4/24/2024	3:15 PM	0	0	0	0	0	0	0	0	0	0	0	0	0
4/24/2024	3:30 PM	0	0	0	0	0	0	0	0	0	0	0	0	0
4/24/2024	3:45 PM	0	0	0	0	0	0	0	0	0	0	0	0	0
4/24/2024	4:00 PM	0	0	0	0	0	0	0	0	0	0	0	0	0
4/24/2024	4:15 PM	0	0	0	0	0	0	0	0	0	0	0	0	0
4/24/2024	4:30 PM	0	0	0	0	0	0	0	0	0	0	0	0	0
4/24/2024	4:45 PM	0	0	0	0	0	0	0	0	0	0	0	0	0
4/24/2024	5:00 PM	0	0	0	0	0	0	0	0	0	0	0	0	0
4/24/2024	5:15 PM	0	0	0	0	0	0	0	0	0	0	0	0	0
4/24/2024	5:30 PM	0	0	0	0	0	0	0	0	0	0	0	0	0
4/24/2024	5:45 PM	0	0	0	0	0	0	0	0	0	0	0	0	0
4/24/2024	6:00 PM	0	0	0	0	0	0	0	0	0	0	0	0	0
4/24/2024	6:15 PM	0	0	0	0	0	0	0	0	0	0	0	0	0
4/24/2024	6:30 PM	0	0	0	0	0	0	0	0	0	0	0	0	0
4/24/2024	6:45 PM	0	0	0	0	0	0	0	0	0	0	0	0	0
4/24/2024	7:00 PM	0	0	0	0	0	0	0	0	0	0	0	0	0
4/24/2024	7:15 PM	0	0	0	0	0	0	0	0	0	0	0	0	0
4/24/2024	7:30 PM	0	0	0	0	0	0	0	0	0	0	0	0	0
4/24/2024	7:45 PM	0	0	0	0	0	0	0	0	0	0	0	0	0
4/24/2024	8:00 PM	0	0	0	0	0	0	0	0	0	0	0	0	0
4/24/2024	8:15 PM	0	0	0	0	0	0	0	0	0	0	0	0	0
4/24/2024	8:30 PM	0	0	0	0	0	0	0	0	0	0	0	0	0
4/24/2024	8:45 PM	0	0	0	0	0	0	0	0	0	0	0	0	0
4/24/2024	9:00 PM	0	0	0	0	0	0	0	0	0	0	0	0	0
4/24/2024	9:15 PM	0	0	0	0	0	0	0	0	0	0	0	0	0
4/24/2024	9:30 PM	0	0	0	0	0	0	0	0	0	0	0	0	0
4/24/2024	9:45 PM	0	0	0	0	0	0	0	0	0	0	0	0	0
4/24/2024	10:00 PM	0	0	0	0	0	0	0	0	0	0	0	0	0
4/24/2024	10:15 PM	0	0	0	0	0	0	0	0	0	0	0	0	0
4/24/2024	10:30 PM	0	0	0	0	0	0	0	0	0	0	0	0	0
4/24/2024	10:45 PM	0	0	0	0	0	0	0	0	0	0	0	0	0
4/24/2024	11:00 PM	0	0	0	0	0	0	0	0	0	0	0	0	0
4/24/2024	11:15 PM	0	0	0	0	0	0	0	0	0	0	0	0	0
4/24/2024	11:30 PM	0	0	0	0	0	0	0	0	0	0	0	0	0
4/24/2024	11:45 PM	0	0	0	0	0	0	0	0	0	0	0	0	0

4/25/2024	12:00 AM	0	0	0	0	0	0	0	0	0	0	0	0	0
4/25/2024	12:15 AM	0	0	0	0	0	0	0	0	0	0	0	0	0
4/25/2024	12:30 AM	0	0	0	0	0	0	0	0	0	0	0	0	0
4/25/2024	12:45 AM	0	0	0	0	0	0	0	0	0	0	0	0	0
4/25/2024	1:00 AM	0	0	0	0	0	0	0	0	0	0	0	0	0
4/25/2024	1:15 AM	0	0	0	0	0	0	0	0	0	0	0	0	0
4/25/2024	1:30 AM	0	0	0	0	0	0	0	0	0	0	0	0	0
4/25/2024	1:45 AM	0	0	0	0	0	0	0	0	0	0	0	0	0
4/25/2024	2:00 AM	0	0	0	0	0	0	0	0	0	0	0	0	0
4/25/2024	2:15 AM	0	0	0	0	0	0	0	0	0	0	0	0	0
4/25/2024	2:30 AM	0	0	0	0	0	0	0	0	0	0	0	0	0
4/25/2024	2:45 AM	0	0	0	0	0	0	0	0	0	0	0	0	0
4/25/2024	3:00 AM	0	0	0	0	0	0	0	0	0	0	0	0	0
4/25/2024	3:15 AM	0	0	0	0	0	0	0	0	0	0	0	0	0
4/25/2024	3:30 AM	0	0	0	0	0	0	0	0	0	0	0	0	0
4/25/2024	3:45 AM	0	0	0	0	0	0	0	0	0	0	0	0	0
4/25/2024	4:00 AM	0	0	0	0	0	0	0	0	0	0	0	0	0
4/25/2024	4:15 AM	0	0	0	0	0	0	0	0	0	0	0	0	0
4/25/2024	4:30 AM	0	0	0	0	0	0	0	0	0	0	0	0	0
4/25/2024	4:45 AM	0	0	0	0	0	0	0	0	0	0	0	0	0
4/25/2024	5:00 AM	0	0	0	0	0	0	0	0	0	0	0	0	0
4/25/2024	5:15 AM	0	0	0	0	0	0	0	0	0	0	0	0	0
4/25/2024	5:30 AM	0	0	0	0	0	0	0	0	0	0	0	0	0
4/25/2024	5:45 AM	0	0	0	0	0	0	0	0	0	0	0	0	0
4/25/2024	6:00 AM	0	0	0	0	0	0	0	0	0	0	0	0	0
4/25/2024	6:15 AM	0	0	0	0	0	0	0	0	0	0	0	0	0
4/25/2024	6:30 AM	0	0	0	0	0	0	0	0	0	0	0	0	0
4/25/2024	6:45 AM	0	0	0	0	0	0	0	0	0	0	0	0	0
4/25/2024	7:00 AM	0	0	0	0	0	0	0	0	0	0	0	0	0
4/25/2024	7:15 AM	0	0	0	0	0	0	0	0	0	0	0	0	0
4/25/2024	7:30 AM	0	0	0	0	0	0	0	0	0	0	0	0	0
4/25/2024	7:45 AM	0	0	0	0	0	0	0	0	0	0	0	0	0
4/25/2024	8:00 AM	0	0	0	0	0	0	0	0	0	0	0	0	0
4/25/2024	8:15 AM	0	0	0	0	0	0	0	0	0	0	0	0	0
4/25/2024	8:30 AM	0	0	0	0	0	0	0	0	0	0	0	0	0
4/25/2024	8:45 AM	0	0	0	0	0	0	0	0	0	0	0	0	0
4/25/2024	9:00 AM	0	0	0	0	0	0	0	0	0	0	0	0	0
4/25/2024	9:15 AM	0	0	0	0	0	0	0	0	0	0	0	0	0
4/25/2024	9:30 AM	0	0	0	0	0	0	0	0	0	0	0	0	0
4/25/2024	9:45 AM	0	0	0	0	0	0	0	0	0	0	0	0	0
4/25/2024	10:00 AM	0	0	0	0	0	0	0	0	0	0	0	0	0
4/25/2024	10:15 AM	0	0	0	0	0	0	0	0	0	0	0	0	0
4/25/2024	10:30 AM	0	0	0	0	0	0	0	0	0	0	0	0	0
4/25/2024	10:45 AM	0	0	0	0	0	0	0	0	0	0	0	0	0
4/25/2024	11:00 AM	0	0	0	0	0	0	0	0	0	0	0	0	0
4/25/2024	11:15 AM	0	0	0	0	0	0	0	0	0	0	0	0	0
4/25/2024	11:30 AM	0	0	0	0	0	0	0	0	0	0	0	0	0
4/25/2024	11:45 AM	0	0	0	0	0	0	0	0	0	0	0	0	0
4/25/2024	12:00 PM	0	0	0	0	0	0	0	0	0	0	0	0	0
4/25/2024	12:15 PM	0	0	0	0	0	0	0	0	0	0	0	0	0
4/25/2024	12:30 PM	0	0	0	0	0	0	0	0	0	0	0	0	0
4/25/2024	12:45 PM	0	0	0	0	0	0	0	0	0	0	0	0	0
4/25/2024	1:00 PM	0	0	0	0	0	0	0	0	0	0	0	0	0
4/25/2024	1:15 PM	0	0	0	0	0	0	0	0	0	0	0	0	0
4/25/2024	1:30 PM	0	0	0	0	0	0	0	0	0	0	0	0	0
4/25/2024	1:45 PM	0	0	0	0	0	0	0	0	0	0	0	0	0
4/25/2024	2:00 PM	0	0	0	0	0	0	0	0	0	0	0	0	0
4/25/2024	2:15 PM	0	0	0	0	0	0	0	0	0	0	0	0	0
4/25/2024	2:30 PM	0	0	0	0	0	0	0	0	0	0	0	0	0
4/25/2024	2:45 PM	0	0	0	0	0	0	0	0	0	0	0	0	0
4/25/2024	3:00 PM	0	0	0	0	0	0	0	0	0	0	0	0	0
4/25/2024	3:15 PM	0	0	0	0	0	0	0	0	0	0	0	0	0
4/25/2024	3:30 PM	0	0	0	0	0	0	0	0	0	0	0	0	0
4/25/2024	3:45 PM	0	0	0	0	0	0	0	0	0	0	0	0	0
4/25/2024	4:00 PM	0	0	0	0	0	0	0	0	0	0	0	0	0
4/25/2024	4:15 PM	0	0	0	0	0	0	0	0	0	0	0	0	0
4/25/2024	4:30 PM	0	0	0	0	0	0	0	0	0	0	0	0	0
4/25/2024	4:45 PM	0	0	0	0	0	0	0	0	0	0	0	0	0
4/25/2024	5:00 PM	0	0	0	0	0	0	0	0	0	0	0	0	0
4/25/2024	5:15 PM	0	0	0	0	0	0	0	0	0	0	0	0	0
4/25/2024	5:30 PM	0	0	0	0	0	0	0	0	0	0	0	0	0
4/25/2024	5:45 PM	0	0	0	0	0	0	0	0	0	0	0	0	0
4/25/2024	6:00 PM	0	0	0	0	0	0	0	0	0	0	0	0	0
4/25/2024	6:15 PM	0	0	0	0	0	0	0	0	0	0	0	0	0
4/25/2024	6:30 PM	0	0	0	0	0	0	0	0	0	0	0	0	0
4/25/2024	6:45 PM	0	0	0	0	0	0	0	0	0	0	0	0	0
4/25/2024	7:00 PM	0	0	0	0	0	0	0	0	0	0	0	0	0
4/25/2024	7:15 PM	0	0	0	0	0	0	0	0	0	0	0	0	0
4/25/2024	7:30 PM	0	0	0	0	0	0	0	0	0	0	0	0	0
4/25/2024	7:45 PM	0	0	0	0	0	0	0	0	0	0	0	0	0
4/25/2024	8:00 PM	0	0	0	0	0	0	0	0	0	0	0	0	0
4/25/2024	8:15 PM	0	0	0	0	0	0	0	0	0	0	0	0	0
4/25/2024	8:30 PM	0	0	0	0	0	0	0	0	0	0	0	0	0
4/25/2024	8:45 PM	0	0	0	0	0	0	0	0	0	0	0	0	0
4/25/2024	9:00 PM	0	0	0	0	0	0	0	0	0	0	0	0	0
4/25/2024	9:15 PM	0	0	0	0	0	0	0	0	0	0	0	0	0
4/25/2024	9:30 PM	0	0	0	0	0	0	0	0	0	0	0	0	0
4/25/2024	9:45 PM	0	0	0	0	0	0	0	0	0	0	0	0	0
4/25/2024	10:00 PM	0	0	0	0	0	0	0	0	0	0	0	0	0
4/25/2024	10:15 PM	0	0	0	0	0	0	0	0	0	0	0	0	0
4/25/2024	10:30 PM	0	0	0	0	0	0	0	0	0	0	0	0	0
4/25/2024	10:45 PM	0	0	0	0	0	0	0	0	0	0	0	0	0
4/25/2024	11:00 PM	0	0	0	0	0	0	0	0	0	0	0	0	0
4/25/2024	11:15 PM	0	0	0	0	0	0	0	0	0	0	0	0	0
4/25/2024	11:30 PM	0	0	0	0	0	0	0	0	0	0	0	0	0
4/25/2024	11:45 PM	0	0	0	0	0	0	0	0	0	0	0	0	0

WB
File Name:
Start Date: 4/23/2024
Start Time: 0
Site Code: 56
Station ID: 1
Location 1: I-20 W/Bound Off-Ramp, east of US-378 Sunset Blvd
Location 2:

Date	Time	1	2	3	4	5	6	7	8	9	10	11	12	13
4/23/2024	12:00 AM	0	0	0	0	0	0	0	0	0	0	0	0	0
4/23/2024	12:15 AM	0	0	0	0	0	0	0	0	0	0	0	0	0
4/23/2024	12:30 AM	0	0	0	0	0	0	0	0	0	0	0	0	0
4/23/2024	12:45 AM	0	0	0	0	0	0	0	0	0	0	0	0	0
4/23/2024	1:00 AM	0	0	0	0	0	0	0	0	0	0	0	0	0
4/23/2024	1:15 AM	0	0	0	0	0	0	0	0	0	0	0	0	0
4/23/2024	1:30 AM	0	0	0	0	0	0	0	0	0	0	0	0	0
4/23/2024	1:45 AM	0	0	0	0	0	0	0	0	0	0	0	0	0
4/23/2024	2:00 AM	0	0	0	0	0	0	0	0	0	0	0	0	0
4/23/2024	2:15 AM	0	0	0	0	0	0	0	0	0	0	0	0	0
4/23/2024	2:30 AM	0	0	0	0	0	0	0	0	0	0	0	0	0
4/23/2024	2:45 AM	0	0	0	0	0	0	0	0	0	0	0	0	0
4/23/2024	3:00 AM	0	0	0	0	0	0	0	0	0	0	0	0	0
4/23/2024	3:15 AM	0	0	0	0	0	0	0	0	0	0	0	0	0
4/23/2024	3:30 AM	0	0	0	0	0	0	0	0	0	0	0	0	0
4/23/2024	3:45 AM	0	0	0	0	0	0	0	0	0	0	0	0	0
4/23/2024	4:00 AM	0	0	0	0	0	0	0	0	0	0	0	0	0
4/23/2024	4:15 AM	0	0	0	0	0	0	0	0	0	0	0	0	0
4/23/2024	4:30 AM	0	0	0	0	0	0	0	0	0	0	0	0	0
4/23/2024	4:45 AM	0	0	0	0	0	0	0	0	0	0	0	0	0
4/23/2024	5:00 AM	0	0	0	0	0	0	0	0	0	0	0	0	0
4/23/2024	5:15 AM	0	0	0	0	0	0	0	0	0	0	0	0	0
4/23/2024	5:30 AM	0	0	0	0	0	0	0	0	0	0	0	0	0
4/23/2024	5:45 AM	0	0	0	0	0	0	0	0	0	0	0	0	0
4/23/2024	6:00 AM	0	0	0	0	0	0	0	0	0	0	0	0	0
4/23/2024	6:15 AM	0	0	0	0	0	0	0	0	0	0	0	0	0
4/23/2024	6:30 AM	0	0	0	0	0	0	0	0	0	0	0	0	0
4/23/2024	6:45 AM	0	0	0	0	0	0	0	0	0	0	0	0	0
4/23/2024	7:00 AM	0	0	0	0	0	0	0	0	0	0	0	0	0
4/23/2024	7:15 AM	0	0	0	0	0	0	0	0	0	0	0	0	0
4/23/2024	7:30 AM	0	0	0	0	0	0	0	0	0	0	0	0	0
4/23/2024	7:45 AM	0	0	0	0	0	0	0	0	0	0	0	0	0
4/23/2024	8:00 AM	0	0	0	0	0	0	0	0	0	0	0	0	0
4/23/2024	8:15 AM	0	0	0	0	0	0	0	0	0	0	0	0	0
4/23/2024	8:30 AM	0	0	0	0	0	0	0	0	0	0	0	0	0
4/23/2024	8:45 AM	0	0	0	0	0	0	0	0	0	0	0	0	0
4/23/2024	9:00 AM	0	0	0	0	0	0	0	0	0	0	0	0	0
4/23/2024	9:15 AM	0	0	0	0	0	0	0	0	0	0	0	0	0
4/23/2024	9:30 AM	0	0	0	0	0	0	0	0	0	0	0	0	0
4/23/2024	9:45 AM	0	0	0	0	0	0	0	0	0	0	0	0	0
4/23/2024	10:00 AM	0	0	0	0	0	0	0	0	0	0	0	0	0
4/23/2024	10:15 AM	0	0	0	0	0	0	0	0	0	0	0	0	0
4/23/2024	10:30 AM	0	0	0	0	0	0	0	0	0	0	0	0	0
4/23/2024	10:45 AM	0	0	0	0	0	0	0	0	0	0	0	0	0
4/23/2024	11:00 AM	0	0	0	0	0	0	0	0	0	0	0	0	0
4/23/2024	11:15 AM	0	0	0	0	0	0	0	0	0	0	0	0	0
4/23/2024	11:30 AM	0	0	0	0	0	0	0	0	0	0	0	0	0
4/23/2024	11:45 AM	0	0	0	0	0	0	0	0	0	0	0	0	0
4/23/2024	12:00 PM	0	0	0	0	0	0	0	0	0	0	0	0	0
4/23/2024	12:15 PM	0	0	0	0	0	0	0	0	0	0	0	0	0
4/23/2024	12:30 PM	0	0	0	0	0	0	0	0	0	0	0	0	0
4/23/2024	12:45 PM	0	0	0	0	0	0	0	0	0	0	0	0	0
4/23/2024	1:00 PM	0	0	0	0	0	0	0	0	0	0	0	0	0
4/23/2024	1:15 PM	0	0	0	0	0	0	0	0	0	0	0	0	0
4/23/2024	1:30 PM	0	0	0	0	0	0	0	0	0	0	0	0	0
4/23/2024	1:45 PM	0	0	0	0	0	0	0	0	0	0	0	0	0
4/23/2024	2:00 PM	0	0	0	0	0	0	0	0	0	0	0	0	0
4/23/2024	2:15 PM	0	0	0	0	0	0	0	0	0	0	0	0	0
4/23/2024	2:30 PM	0	0	0	0	0	0	0	0	0	0	0	0	0
4/23/2024	2:45 PM	0	0	0	0	0	0	0	0	0	0	0	0	0
4/23/2024	3:00 PM	0	0	0	0	0	0	0	0	0	0	0	0	0
4/23/2024	3:15 PM	0	0	0	0	0	0	0	0	0	0	0	0	0
4/23/2024	3:30 PM	0	0	0	0	0	0	0	0	0	0	0	0	0
4/23/2024	3:45 PM	0	0	0	0	0	0	0	0	0	0	0	0	0
4/23/2024	4:00 PM	0	0	0	0	0	0	0	0	0	0	0	0	0
4/23/2024	4:15 PM	0	0	0	0	0	0	0	0	0	0	0	0	0
4/23/2024	4:30 PM	0	0	0	0	0	0	0	0	0	0	0	0	0
4/23/2024	4:45 PM	0	0	0	0	0	0	0	0	0	0	0	0	0
4/23/2024	5:00 PM	0	0	0	0	0	0	0	0	0	0	0	0	0
4/23/2024	5:15 PM	0	0	0	0	0	0	0	0	0	0	0	0	0
4/23/2024	5:30 PM	0	0	0	0	0	0	0	0	0	0	0	0	0
4/23/2024	5:45 PM	0	0	0	0	0	0	0	0	0	0	0	0	0
4/23/2024	6:00 PM	0	0	0	0	0	0	0	0	0	0	0	0	0
4/23/2024	6:15 PM	0	0	0	0	0	0	0	0	0	0	0	0	0
4/23/2024	6:30 PM	0	0	0	0	0	0	0	0	0	0	0	0	0
4/23/2024	6:45 PM	0	0	0	0	0	0	0	0	0	0	0	0	0
4/23/2024	7:00 PM	0	0	0	0	0	0	0	0	0	0	0	0	0
4/23/2024	7:15 PM	1	161	41	0	3	0	0	0	1	0	0	0	0
4/23/2024	7:30 PM	0	150	30	0	0	0	0	0	0	0	0	0	0
4/23/2024	7:45 PM	1	127	23	1	0	0	0	0	1	0	0	0	0
4/23/2024	8:00 PM	0	126	11	0	1	0	0	0	1	0	0	0	0
4/23/2024	8:15 PM	0	141	16	0	0	0	0	0	0	0	0	0	0
4/23/2024	8:30 PM	0	134	12	0	1	0	0	1	0	0	0	0	0
4/23/2024	8:45 PM	0	116	8	0	1	0	0	0	1	0	0	0	0
4/23/2024	9:00 PM	0	118	4	1	0	0	0	1	1	0	0	0	0
4/23/2024	9:15 PM	0	76	6	0	0	0	0	0	1	0	0	0	0
4/23/2024	9:30 PM	0	79	5	0	0	0	0	0	1	0	0	0	0
4/23/2024	9:45 PM	0	60	7	0	2	0	0	0	0	0	0	0	0
4/23/2024	10:00 PM	0	52	9	0	0	0	0	0	0	0	0	0	0
4/23/2024	10:15 PM	0	57	3	0	1	0	0	0	0	0	0	0	0
4/23/2024	10:30 PM	0	67	5	0	0	0	0	0	0	0	0	0	0
4/23/2024	10:45 PM	0	50	5	0	0	0	0	0	0	0	0	0	0
4/23/2024	11:00 PM	0	40	5	0	0	0	0	0	0	0	1	0	0
4/23/2024	11:15 PM	0	29	3	0	1	0	0	0	0	0	3	0	0
4/23/2024	11:30 PM	0	32	3	0	0	0	0	0	2	0	0	0	0
4/23/2024	11:45 PM	0	12	2	0	1	0	0	0	1	0	1	0	0

4/24/2024	12:00 AM	0	13	4	0	1	0	0	0	0	0	1	0	0
4/24/2024	12:15 AM	1	13	2	0	2	0	0	0	0	0	2	0	0
4/24/2024	12:30 AM	0	13	2	0	0	0	0	0	0	0	2	0	0
4/24/2024	12:45 AM	0	17	5	0	0	0	0	0	2	0	1	0	0
4/24/2024	1:00 AM	0	14	0	0	0	0	0	0	2	0	0	0	0
4/24/2024	1:15 AM	0	11	0	0	0	0	0	0	0	0	0	0	0
4/24/2024	1:30 AM	0	9	2	0	0	0	0	0	2	0	0	0	0
4/24/2024	1:45 AM	0	9	1	0	1	0	1	0	1	0	0	0	0
4/24/2024	2:00 AM	0	3	1	0	0	0	0	0	0	0	0	0	0
4/24/2024	2:15 AM	0	9	1	0	0	0	0	2	0	0	1	0	0
4/24/2024	2:30 AM	0	7	2	0	0	0	0	0	0	0	1	0	0
4/24/2024	2:45 AM	0	1	0	0	0	1	0	0	0	0	0	0	0
4/24/2024	3:00 AM	2	4	0	0	0	0	0	0	1	0	0	0	0
4/24/2024	3:15 AM	1	5	0	0	0	0	1	0	0	0	0	0	0
4/24/2024	3:30 AM	3	4	0	0	0	0	0	1	0	0	0	0	0
4/24/2024	3:45 AM	0	13	2	0	1	0	0	0	1	0	0	0	0
4/24/2024	4:00 AM	0	9	3	0	1	2	0	0	1	0	0	0	0
4/24/2024	4:15 AM	0	7	0	0	0	0	0	0	1	0	1	0	0
4/24/2024	4:30 AM	0	17	2	0	0	1	0	0	0	0	0	0	0
4/24/2024	4:45 AM	0	15	1	0	0	0	0	0	2	0	1	0	0
4/24/2024	5:00 AM	0	18	3	0	2	0	0	0	3	0	0	0	0
4/24/2024	5:15 AM	0	21	3	0	1	0	0	0	2	0	0	0	0
4/24/2024	5:30 AM	0	25	0	0	2	0	0	1	1	0	1	0	0
4/24/2024	5:45 AM	0	58	7	0	1	0	0	1	0	0	0	0	0
4/24/2024	6:00 AM	0	54	12	0	2	1	0	0	3	0	1	0	0
4/24/2024	6:15 AM	0	96	22	0	5	1	0	0	0	0	1	0	0
4/24/2024	6:30 AM	0	129	27	0	2	2	0	0	0	0	0	0	0
4/24/2024	6:45 AM	0	193	44	0	1	1	0	0	2	0	0	0	0
4/24/2024	7:00 AM	0	226	43	0	4	4	0	0	1	0	0	0	0
4/24/2024	7:15 AM	0	288	66	0	7	0	0	0	2	0	0	0	0
4/24/2024	7:30 AM	0	271	56	0	4	0	0	0	2	0	0	0	0
4/24/2024	7:45 AM	1	319	64	0	5	1	0	5	0	0	0	0	0
4/24/2024	8:00 AM	0	197	26	0	5	0	0	0	2	0	0	0	0
4/24/2024	8:15 AM	0	185	50	0	6	1	0	0	1	0	0	0	0
4/24/2024	8:30 AM	0	201	59	0	6	1	0	1	3	1	0	0	0
4/24/2024	8:45 AM	1	212	50	0	6	1	0	0	1	0	0	0	0
4/24/2024	9:00 AM	1	184	56	0	8	2	0	2	0	0	0	0	0
4/24/2024	9:15 AM	1	132	34	1	3	2	0	1	4	0	0	0	0
4/24/2024	9:30 AM	0	164	39	0	6	0	0	1	4	0	0	0	0
4/24/2024	9:45 AM	0	177	62	0	2	1	0	2	1	0	0	0	0
4/24/2024	10:00 AM	0	163	49	1	7	2	0	0	3	0	0	0	0
4/24/2024	10:15 AM	0	182	55	0	8	1	0	0	1	0	0	0	0
4/24/2024	10:30 AM	0	168	50	0	9	2	0	1	2	1	0	0	0
4/24/2024	10:45 AM	0	198	42	0	5	0	0	1	2	0	0	0	0
4/24/2024	11:00 AM	1	157	48	1	3	1	0	1	2	0	0	0	0
4/24/2024	11:15 AM	0	181	53	1	4	0	0	0	4	1	0	0	0
4/24/2024	11:30 AM	1	179	58	0	6	2	0	0	2	1	0	0	0
4/24/2024	11:45 AM	0	195	52	0	2	0	0	1	2	0	0	0	0
4/24/2024	12:00 PM	1	180	34	0	3	2	0	1	2	1	0	0	0
4/24/2024	12:15 PM	0	190	61	0	5	1	0	0	1	0	0	0	0
4/24/2024	12:30 PM	0	187	47	0	8	0	0	0	2	0	0	0	0
4/24/2024	12:45 PM	0	203	67	0	6	0	0	0	2	0	0	0	0
4/24/2024	1:00 PM	0	232	37	0	3	2	0	0	1	0	0	0	0
4/24/2024	1:15 PM	0	229	75	1	4	0	0	0	4	0	0	0	0
4/24/2024	1:30 PM	0	226	58	0	11	2	0	1	2	0	0	1	0
4/24/2024	1:45 PM	0	237	47	0	5	1	0	2	2	1	0	0	0
4/24/2024	2:00 PM	0	262	60	0	3	2	0	1	1	0	0	0	0
4/24/2024	2:15 PM	0	251	59	0	0	1	0	2	2	0	0	0	0
4/24/2024	2:30 PM	2	212	62	0	2	0	0	0	1	0	0	0	0
4/24/2024	2:45 PM	2	221	50	0	3	0	0	1	1	0	0	0	0
4/24/2024	3:00 PM	0	267	61	0	4	1	0	1	3	0	0	0	0
4/24/2024	3:15 PM	1	231	61	0	3	1	0	0	0	0	0	0	0
4/24/2024	3:30 PM	0	266	59	2	3	0	0	0	2	0	0	0	0
4/24/2024	3:45 PM	0	240	62	1	4	0	0	0	1	0	0	0	0
4/24/2024	4:00 PM	1	248	53	0	7	0	0	2	1	0	0	0	0
4/24/2024	4:15 PM	0	322	59	0	9	1	0	0	1	0	0	0	0
4/24/2024	4:30 PM	1	323	62	0	2	0	0	1	2	0	0	0	0
4/24/2024	4:45 PM	0	327	55	0	7	0	0	1	0	0	0	0	0
4/24/2024	5:00 PM	0	289	55	0	2	0	0	0	1	0	0	0	0
4/24/2024	5:15 PM	1	318	64	0	1	0	0	1	2	0	0	0	0
4/24/2024	5:30 PM	0	333	56	0	7	1	0	2	1	0	0	0	0
4/24/2024	5:45 PM	2	309	59	0	0	1	0	1	0	0	0	0	0
4/24/2024	6:00 PM	3	218	49	1	4	0	0	1	2	0	0	0	0
4/24/2024	6:15 PM	0	206	44	2	2	0	0	0	1	0	0	0	0
4/24/2024	6:30 PM	0	190	35	0	2	0	0	0	1	0	0	0	0
4/24/2024	6:45 PM	0	190	46	0	0	0	0	0	2	0	0	0	0
4/24/2024	7:00 PM	0	155	30	0	1	0	0	0	1	0	0	0	0
4/24/2024	7:15 PM	1	162	40	0	0	0	0	1	0	0	0	0	0
4/24/2024	7:30 PM	0	164	35	0	0	0	0	0	0	0	0	0	0
4/24/2024	7:45 PM	1	132	22	0	2	0	0	0	1	0	0	0	0
4/24/2024	8:00 PM	0	147	23	0	2	0	0	0	1	0	0	0	0
4/24/2024	8:15 PM	0	139	22	0	0	0	0	1	1	0	0	0	0
4/24/2024	8:30 PM	0	119	17	0	1	0	0	0	0	0	0	0	0
4/24/2024	8:45 PM	0	124	21	0	1	0	0	0	0	0	0	0	0
4/24/2024	9:00 PM	0	104	12	0	1	1	0	0	0	0	0	0	0
4/24/2024	9:15 PM	1	95	7	0	0	0	0	0	0	0	0	0	0
4/24/2024	9:30 PM	0	56	15	1	0	0	0	0	2	0	0	0	0
4/24/2024	9:45 PM	0	69	10	0	1	0	0	0	0	0	0	0	0
4/24/2024	10:00 PM	0	70	5	0	0	0	0	0	0	0	1	0	0
4/24/2024	10:15 PM	0	46	8	0	1	0	0	0	0	0	1	0	0
4/24/2024	10:30 PM	0	79	5	0	0	0	0	0	0	0	1	0	0
4/24/2024	10:45 PM	0	37	6	0	1	0	0	0	0	0	2	0	0
4/24/2024	11:00 PM	0	50	3	0	1	0	0	0	0	0	1	0	0
4/24/2024	11:15 PM	0	25	2	0	0	0	0	0	1	0	2	0	0
4/24/2024	11:30 PM	0	29	3	0	0	0	0	0	1	0	0	0	0
4/24/2024	11:45 PM	2	18	1	0	0	0	0	0	0	0	0	0	0

4/25/2024	12:00 AM	0	21	4	0	0	0	0	0	0	0	1	0	0
4/25/2024	12:15 AM	0	15	3	0	0	0	0	0	1	0	2	0	0
4/25/2024	12:30 AM	0	15	2	0	0	0	0	0	1	0	6	0	0
4/25/2024	12:45 AM	0	9	1	0	0	0	0	0	0	0	0	0	0
4/25/2024	1:00 AM	0	6	0	0	0	0	0	0	3	0	0	1	0
4/25/2024	1:15 AM	0	9	0	0	0	0	0	0	0	0	0	0	0
4/25/2024	1:30 AM	0	9	0	0	0	0	0	0	0	1	1	1	0
4/25/2024	1:45 AM	0	5	1	0	0	0	0	0	0	0	0	0	0
4/25/2024	2:00 AM	0	6	1	0	0	0	0	0	0	0	0	2	0
4/25/2024	2:15 AM	0	4	1	0	0	0	0	0	0	0	0	0	0
4/25/2024	2:30 AM	0	7	0	0	1	0	0	0	0	0	0	0	0
4/25/2024	2:45 AM	0	7	1	0	0	0	0	0	2	0	0	0	0
4/25/2024	3:00 AM	0	6	1	0	0	0	0	0	0	0	0	0	1
4/25/2024	3:15 AM	0	9	3	0	1	0	0	0	0	0	0	2	0
4/25/2024	3:30 AM	0	5	0	0	0	0	0	0	0	0	0	0	0
4/25/2024	3:45 AM	0	13	0	0	0	0	0	0	1	0	0	0	0
4/25/2024	4:00 AM	0	5	0	0	0	0	0	0	0	0	0	0	0
4/25/2024	4:15 AM	0	6	3	0	0	0	0	0	0	0	0	0	1
4/25/2024	4:30 AM	0	12	0	0	0	0	0	0	2	0	0	0	0
4/25/2024	4:45 AM	0	17	1	0	0	0	0	0	0	0	0	0	0
4/25/2024	5:00 AM	0	14	1	0	1	0	0	0	4	0	0	0	0
4/25/2024	5:15 AM	0	21	2	0	1	0	0	0	0	0	0	0	0
4/25/2024	5:30 AM	0	35	4	0	0	0	0	1	2	0	1	0	0
4/25/2024	5:45 AM	0	43	6	0	1	0	0	1	2	0	0	0	0
4/25/2024	6:00 AM	0	54	16	0	2	0	0	0	2	0	0	0	0
4/25/2024	6:15 AM	0	91	17	0	2	1	0	0	2	0	0	0	0
4/25/2024	6:30 AM	0	118	21	0	3	0	0	0	1	0	0	0	0
4/25/2024	6:45 AM	0	184	45	0	3	1	0	0	2	0	0	0	0
4/25/2024	7:00 AM	0	211	51	0	2	1	0	1	0	0	1	0	0
4/25/2024	7:15 AM	0	286	54	1	2	3	2	0	1	0	0	0	0
4/25/2024	7:30 AM	1	257	62	0	4	2	0	0	0	1	0	0	0
4/25/2024	7:45 AM	0	260	57	0	8	0	0	0	1	0	0	0	0
4/25/2024	8:00 AM	0	244	54	0	4	0	0	2	2	0	0	0	0
4/25/2024	8:15 AM	0	222	51	1	2	1	0	0	2	0	0	0	0
4/25/2024	8:30 AM	0	200	47	1	6	0	0	2	1	0	0	0	0
4/25/2024	8:45 AM	0	234	45	0	10	1	0	0	1	0	0	0	0
4/25/2024	9:00 AM	1	151	49	0	7	2	0	0	1	0	0	0	0
4/25/2024	9:15 AM	0	154	62	0	5	0	0	0	4	0	0	0	0
4/25/2024	9:30 AM	0	174	45	1	4	0	1	0	3	0	0	0	0
4/25/2024	9:45 AM	0	184	46	0	3	0	0	1	2	0	0	0	0
4/25/2024	10:00 AM	0	163	39	0	6	1	0	0	0	0	0	0	0
4/25/2024	10:15 AM	0	206	39	0	3	1	2	0	2	0	0	0	0
4/25/2024	10:30 AM	0	177	43	0	4	1	0	0	2	0	0	0	0
4/25/2024	10:45 AM	0	162	42	0	7	2	2	0	0	0	0	0	0
4/25/2024	11:00 AM	1	160	46	0	6	0	0	2	2	0	0	0	0
4/25/2024	11:15 AM	0	143	46	0	5	0	0	0	5	0	0	0	0
4/25/2024	11:30 AM	0	215	48	0	2	2	0	0	3	0	0	0	0
4/25/2024	11:45 AM	2	175	48	1	5	1	1	1	1	0	0	0	0
4/25/2024	12:00 PM	0	218	54	0	9	2	0	2	2	0	0	0	0
4/25/2024	12:15 PM	2	183	63	0	3	0	0	2	0	0	0	0	0
4/25/2024	12:30 PM	2	190	53	0	5	0	0	1	0	0	0	0	0
4/25/2024	12:45 PM	1	227	40	0	3	3	0	1	1	0	0	0	0
4/25/2024	1:00 PM	0	217	69	1	1	1	0	0	2	0	0	0	0
4/25/2024	1:15 PM	0	213	40	0	1	0	0	0	5	0	0	0	0
4/25/2024	1:30 PM	0	244	61	0	4	2	0	2	0	0	0	0	0
4/25/2024	1:45 PM	0	231	45	0	6	0	0	0	3	0	0	0	0
4/25/2024	2:00 PM	0	268	66	0	2	0	0	0	0	0	0	0	0
4/25/2024	2:15 PM	2	279	52	0	3	0	0	0	3	1	0	0	0
4/25/2024	2:30 PM	0	228	43	0	0	0	0	2	0	0	0	0	0
4/25/2024	2:45 PM	0	260	70	1	8	0	0	2	3	0	0	0	0
4/25/2024	3:00 PM	0	241	52	0	4	0	0	1	0	0	0	0	0
4/25/2024	3:15 PM	1	252	68	0	2	1	0	1	3	0	0	0	0
4/25/2024	3:30 PM	0	284	60	1	4	2	1	0	0	0	0	0	0
4/25/2024	3:45 PM	0	268	41	1	8	0	0	2	1	0	0	0	0
4/25/2024	4:00 PM	1	278	52	0	6	1	0	1	2	0	0	0	0
4/25/2024	4:15 PM	1	308	80	0	2	0	0	2	0	0	0	0	0
4/25/2024	4:30 PM	0	283	63	2	3	0	0	0	0	0	0	0	0
4/25/2024	4:45 PM	0	329	51	1	2	0	0	3	2	0	0	0	0
4/25/2024	5:00 PM	2	309	59	1	4	0	0	1	1	0	0	0	0
4/25/2024	5:15 PM	1	329	60	0	3	0	0	1	3	0	0	0	0
4/25/2024	5:30 PM	1	337	52	0	1	0	0	0	0	0	0	0	0
4/25/2024	5:45 PM	0	256	45	0	1	1	0	1	1	0	0	0	0
4/25/2024	6:00 PM	1	239	43	0	2	1	0	2	0	0	0	0	0
4/25/2024	6:15 PM	1	218	46	1	1	0	0	0	1	0	0	0	0
4/25/2024	6:30 PM	0	185	24	0	0	0	0	0	0	0	0	0	0
4/25/2024	6:45 PM	0	203	34	1	3	0	0	0	1	0	0	0	0
4/25/2024	7:00 PM	0	0	0	0	0	0	0	0	0	0	0	0	0
4/25/2024	7:15 PM	0	0	0	0	0	0	0	0	0	0	0	0	0
4/25/2024	7:30 PM	0	0	0	0	0	0	0	0	0	0	0	0	0
4/25/2024	7:45 PM	0	0	0	0	0	0	0	0	0	0	0	0	0
4/25/2024	8:00 PM	0	0	0	0	0	0	0	0	0	0	0	0	0
4/25/2024	8:15 PM	0	0	0	0	0	0	0	0	0	0	0	0	0
4/25/2024	8:30 PM	0	0	0	0	0	0	0	0	0	0	0	0	0
4/25/2024	8:45 PM	0	0	0	0	0	0	0	0	0	0	0	0	0
4/25/2024	9:00 PM	0	0	0	0	0	0	0	0	0	0	0	0	0
4/25/2024	9:15 PM	0	0	0	0	0	0	0	0	0	0	0	0	0
4/25/2024	9:30 PM	0	0	0	0	0	0	0	0	0	0	0	0	0
4/25/2024	9:45 PM	0	0	0	0	0	0	0	0	0	0	0	0	0
4/25/2024	10:00 PM	0	0	0	0	0	0	0	0	0	0	0	0	0
4/25/2024	10:15 PM	0	0	0	0	0	0	0	0	0	0	0	0	0
4/25/2024	10:30 PM	0	0	0	0	0	0	0	0	0	0	0	0	0
4/25/2024	10:45 PM	0	0	0	0	0	0	0	0	0	0	0	0	0
4/25/2024	11:00 PM	0	0	0	0	0	0	0	0	0	0	0	0	0
4/25/2024	11:15 PM	0	0	0	0	0	0	0	0	0	0	0	0	0
4/25/2024	11:30 PM	0	0	0	0	0	0	0	0	0	0	0	0	0
4/25/2024	11:45 PM	0	0	0	0	0	0	0	0	0	0	0	0	0

EB
File Name:
Start Date: 4/23/2024
Start Time: 0
Site Code: 56
Station ID: 1
Location 1: I-20 W/Bound Off-Ramp, east of US-378 Sunset Blvd
Location 2:

Date	Time	1	2	3	4	5	6	7	8	9	10	11	12	13
4/23/2024	12:00 AM	0	0	0	0	0	0	0	0	0	0	0	0	0
4/23/2024	12:15 AM	0	0	0	0	0	0	0	0	0	0	0	0	0
4/23/2024	12:30 AM	0	0	0	0	0	0	0	0	0	0	0	0	0
4/23/2024	12:45 AM	0	0	0	0	0	0	0	0	0	0	0	0	0
4/23/2024	1:00 AM	0	0	0	0	0	0	0	0	0	0	0	0	0
4/23/2024	1:15 AM	0	0	0	0	0	0	0	0	0	0	0	0	0
4/23/2024	1:30 AM	0	0	0	0	0	0	0	0	0	0	0	0	0
4/23/2024	1:45 AM	0	0	0	0	0	0	0	0	0	0	0	0	0
4/23/2024	2:00 AM	0	0	0	0	0	0	0	0	0	0	0	0	0
4/23/2024	2:15 AM	0	0	0	0	0	0	0	0	0	0	0	0	0
4/23/2024	2:30 AM	0	0	0	0	0	0	0	0	0	0	0	0	0
4/23/2024	2:45 AM	0	0	0	0	0	0	0	0	0	0	0	0	0
4/23/2024	3:00 AM	0	0	0	0	0	0	0	0	0	0	0	0	0
4/23/2024	3:15 AM	0	0	0	0	0	0	0	0	0	0	0	0	0
4/23/2024	3:30 AM	0	0	0	0	0	0	0	0	0	0	0	0	0
4/23/2024	3:45 AM	0	0	0	0	0	0	0	0	0	0	0	0	0
4/23/2024	4:00 AM	0	0	0	0	0	0	0	0	0	0	0	0	0
4/23/2024	4:15 AM	0	0	0	0	0	0	0	0	0	0	0	0	0
4/23/2024	4:30 AM	0	0	0	0	0	0	0	0	0	0	0	0	0
4/23/2024	4:45 AM	0	0	0	0	0	0	0	0	0	0	0	0	0
4/23/2024	5:00 AM	0	0	0	0	0	0	0	0	0	0	0	0	0
4/23/2024	5:15 AM	0	0	0	0	0	0	0	0	0	0	0	0	0
4/23/2024	5:30 AM	0	0	0	0	0	0	0	0	0	0	0	0	0
4/23/2024	5:45 AM	0	0	0	0	0	0	0	0	0	0	0	0	0
4/23/2024	6:00 AM	0	0	0	0	0	0	0	0	0	0	0	0	0
4/23/2024	6:15 AM	0	0	0	0	0	0	0	0	0	0	0	0	0
4/23/2024	6:30 AM	0	0	0	0	0	0	0	0	0	0	0	0	0
4/23/2024	6:45 AM	0	0	0	0	0	0	0	0	0	0	0	0	0
4/23/2024	7:00 AM	0	0	0	0	0	0	0	0	0	0	0	0	0
4/23/2024	7:15 AM	0	0	0	0	0	0	0	0	0	0	0	0	0
4/23/2024	7:30 AM	0	0	0	0	0	0	0	0	0	0	0	0	0
4/23/2024	7:45 AM	0	0	0	0	0	0	0	0	0	0	0	0	0
4/23/2024	8:00 AM	0	0	0	0	0	0	0	0	0	0	0	0	0
4/23/2024	8:15 AM	0	0	0	0	0	0	0	0	0	0	0	0	0
4/23/2024	8:30 AM	0	0	0	0	0	0	0	0	0	0	0	0	0
4/23/2024	8:45 AM	0	0	0	0	0	0	0	0	0	0	0	0	0
4/23/2024	9:00 AM	0	0	0	0	0	0	0	0	0	0	0	0	0
4/23/2024	9:15 AM	0	0	0	0	0	0	0	0	0	0	0	0	0
4/23/2024	9:30 AM	0	0	0	0	0	0	0	0	0	0	0	0	0
4/23/2024	9:45 AM	0	0	0	0	0	0	0	0	0	0	0	0	0
4/23/2024	10:00 AM	0	0	0	0	0	0	0	0	0	0	0	0	0
4/23/2024	10:15 AM	0	0	0	0	0	0	0	0	0	0	0	0	0
4/23/2024	10:30 AM	0	0	0	0	0	0	0	0	0	0	0	0	0
4/23/2024	10:45 AM	0	0	0	0	0	0	0	0	0	0	0	0	0
4/23/2024	11:00 AM	0	0	0	0	0	0	0	0	0	0	0	0	0
4/23/2024	11:15 AM	0	0	0	0	0	0	0	0	0	0	0	0	0
4/23/2024	11:30 AM	0	0	0	0	0	0	0	0	0	0	0	0	0
4/23/2024	11:45 AM	0	0	0	0	0	0	0	0	0	0	0	0	0
4/23/2024	12:00 PM	0	0	0	0	0	0	0	0	0	0	0	0	0
4/23/2024	12:15 PM	0	0	0	0	0	0	0	0	0	0	0	0	0
4/23/2024	12:30 PM	0	0	0	0	0	0	0	0	0	0	0	0	0
4/23/2024	12:45 PM	0	0	0	0	0	0	0	0	0	0	0	0	0
4/23/2024	1:00 PM	0	0	0	0	0	0	0	0	0	0	0	0	0
4/23/2024	1:15 PM	0	0	0	0	0	0	0	0	0	0	0	0	0
4/23/2024	1:30 PM	0	0	0	0	0	0	0	0	0	0	0	0	0
4/23/2024	1:45 PM	0	0	0	0	0	0	0	0	0	0	0	0	0
4/23/2024	2:00 PM	0	0	0	0	0	0	0	0	0	0	0	0	0
4/23/2024	2:15 PM	0	0	0	0	0	0	0	0	0	0	0	0	0
4/23/2024	2:30 PM	0	0	0	0	0	0	0	0	0	0	0	0	0
4/23/2024	2:45 PM	0	0	0	0	0	0	0	0	0	0	0	0	0
4/23/2024	3:00 PM	0	0	0	0	0	0	0	0	0	0	0	0	0
4/23/2024	3:15 PM	0	0	0	0	0	0	0	0	0	0	0	0	0
4/23/2024	3:30 PM	0	0	0	0	0	0	0	0	0	0	0	0	0
4/23/2024	3:45 PM	0	0	0	0	0	0	0	0	0	0	0	0	0
4/23/2024	4:00 PM	0	0	0	0	0	0	0	0	0	0	0	0	0
4/23/2024	4:15 PM	0	0	0	0	0	0	0	0	0	0	0	0	0
4/23/2024	4:30 PM	0	0	0	0	0	0	0	0	0	0	0	0	0
4/23/2024	4:45 PM	0	0	0	0	0	0	0	0	0	0	0	0	0
4/23/2024	5:00 PM	0	0	0	0	0	0	0	0	0	0	0	0	0
4/23/2024	5:15 PM	0	0	0	0	0	0	0	0	0	0	0	0	0
4/23/2024	5:30 PM	0	0	0	0	0	0	0	0	0	0	0	0	0
4/23/2024	5:45 PM	0	0	0	0	0	0	0	0	0	0	0	0	0
4/23/2024	6:00 PM	0	0	0	0	0	0	0	0	0	0	0	0	0
4/23/2024	6:15 PM	0	0	0	0	0	0	0	0	0	0	0	0	0
4/23/2024	6:30 PM	0	0	0	0	0	0	0	0	0	0	0	0	0
4/23/2024	6:45 PM	0	0	0	0	0	0	0	0	0	0	0	0	0
4/23/2024	7:00 PM	0	0	0	0	0	0	0	0	0	0	0	0	0
4/23/2024	7:15 PM	0	0	0	0	0	0	0	0	0	0	0	0	0
4/23/2024	7:30 PM	0	0	0	0	0	0	0	0	0	0	0	0	0
4/23/2024	7:45 PM	0	0	0	0	0	0	0	0	0	0	0	0	0
4/23/2024	8:00 PM	0	0	0	0	0	0	0	0	0	0	0	0	0
4/23/2024	8:15 PM	0	0	0	0	0	0	0	0	0	0	0	0	0
4/23/2024	8:30 PM	0	0	0	0	0	0	0	0	0	0	0	0	0
4/23/2024	8:45 PM	0	0	0	0	0	0	0	0	0	0	0	0	0
4/23/2024	9:00 PM	0	0	0	0	0	0	0	0	0	0	0	0	0
4/23/2024	9:15 PM	0	0	0	0	0	0	0	0	0	0	0	0	0
4/23/2024	9:30 PM	0	0	0	0	0	0	0	0	0	0	0	0	0
4/23/2024	9:45 PM	0	0	0	0	0	0	0	0	0	0	0	0	0
4/23/2024	10:00 PM	0	0	0	0	0	0	0	0	0	0	0	0	0
4/23/2024	10:15 PM	0	0	0	0	0	0	0	0	0	0	0	0	0
4/23/2024	10:30 PM	0	0	0	0	0	0	0	0	0	0	0	0	0
4/23/2024	10:45 PM	0	0	0	0	0	0	0	0	0	0	0	0	0
4/23/2024	11:00 PM	0	0	0	0	0	0	0	0	0	0	0	0	0
4/23/2024	11:15 PM	0	0	0	0	0	0	0	0	0	0	0	0	0
4/23/2024	11:30 PM	0	0	0	0	0	0	0	0	0	0	0	0	0
4/23/2024	11:45 PM	0	0	0	0	0	0	0	0	0	0	0	0	0

4/24/2024	12:00 AM	0	0	0	0	0	0	0	0	0	0	0	0	0
4/24/2024	12:15 AM	0	0	0	0	0	0	0	0	0	0	0	0	0
4/24/2024	12:30 AM	0	0	0	0	0	0	0	0	0	0	0	0	0
4/24/2024	12:45 AM	0	0	0	0	0	0	0	0	0	0	0	0	0
4/24/2024	1:00 AM	0	0	0	0	0	0	0	0	0	0	0	0	0
4/24/2024	1:15 AM	0	0	0	0	0	0	0	0	0	0	0	0	0
4/24/2024	1:30 AM	0	0	0	0	0	0	0	0	0	0	0	0	0
4/24/2024	1:45 AM	0	0	0	0	0	0	0	0	0	0	0	0	0
4/24/2024	2:00 AM	0	0	0	0	0	0	0	0	0	0	0	0	0
4/24/2024	2:15 AM	0	0	0	0	0	0	0	0	0	0	0	0	0
4/24/2024	2:30 AM	0	0	0	0	0	0	0	0	0	0	0	0	0
4/24/2024	2:45 AM	0	0	0	0	0	0	0	0	0	0	0	0	0
4/24/2024	3:00 AM	0	0	0	0	0	0	0	0	0	0	0	0	0
4/24/2024	3:15 AM	0	0	0	0	0	0	0	0	0	0	0	0	0
4/24/2024	3:30 AM	0	0	0	0	0	0	0	0	0	0	0	0	0
4/24/2024	3:45 AM	0	0	0	0	0	0	0	0	0	0	0	0	0
4/24/2024	4:00 AM	0	0	0	0	0	0	0	0	0	0	0	0	0
4/24/2024	4:15 AM	0	0	0	0	0	0	0	0	0	0	0	0	0
4/24/2024	4:30 AM	0	0	0	0	0	0	0	0	0	0	0	0	0
4/24/2024	4:45 AM	0	0	0	0	0	0	0	0	0	0	0	0	0
4/24/2024	5:00 AM	0	0	0	0	0	0	0	0	0	0	0	0	0
4/24/2024	5:15 AM	0	0	0	0	0	0	0	0	0	0	0	0	0
4/24/2024	5:30 AM	0	0	0	0	0	0	0	0	0	0	0	0	0
4/24/2024	5:45 AM	0	0	0	0	0	0	0	0	0	0	0	0	0
4/24/2024	6:00 AM	0	0	0	0	0	0	0	0	0	0	0	0	0
4/24/2024	6:15 AM	0	0	0	0	0	0	0	0	0	0	0	0	0
4/24/2024	6:30 AM	0	0	0	0	0	0	0	0	0	0	0	0	0
4/24/2024	6:45 AM	0	0	0	0	0	0	0	0	0	0	0	0	0
4/24/2024	7:00 AM	0	0	0	0	0	0	0	0	0	0	0	0	0
4/24/2024	7:15 AM	0	0	0	0	0	0	0	0	0	0	0	0	0
4/24/2024	7:30 AM	0	0	0	0	0	0	0	0	0	0	0	0	0
4/24/2024	7:45 AM	0	0	0	0	0	0	0	0	0	0	0	0	0
4/24/2024	8:00 AM	0	0	0	0	0	0	0	0	0	0	0	0	0
4/24/2024	8:15 AM	0	0	0	0	0	0	0	0	0	0	0	0	0
4/24/2024	8:30 AM	0	0	0	0	0	0	0	0	0	0	0	0	0
4/24/2024	8:45 AM	0	0	0	0	0	0	0	0	0	0	0	0	0
4/24/2024	9:00 AM	0	0	0	0	0	0	0	0	0	0	0	0	0
4/24/2024	9:15 AM	0	0	0	0	0	0	0	0	0	0	0	0	0
4/24/2024	9:30 AM	0	0	0	0	0	0	0	0	0	0	0	0	0
4/24/2024	9:45 AM	0	0	0	0	0	0	0	0	0	0	0	0	0
4/24/2024	10:00 AM	0	0	0	0	0	0	0	0	0	0	0	0	0
4/24/2024	10:15 AM	0	0	0	0	0	0	0	0	0	0	0	0	0
4/24/2024	10:30 AM	0	0	0	0	0	0	0	0	0	0	0	0	0
4/24/2024	10:45 AM	0	0	0	0	0	0	0	0	0	0	0	0	0
4/24/2024	11:00 AM	0	0	0	0	0	0	0	0	0	0	0	0	0
4/24/2024	11:15 AM	0	0	0	0	0	0	0	0	0	0	0	0	0
4/24/2024	11:30 AM	0	0	0	0	0	0	0	0	0	0	0	0	0
4/24/2024	11:45 AM	0	0	0	0	0	0	0	0	0	0	0	0	0
4/24/2024	12:00 PM	0	0	0	0	0	0	0	0	0	0	0	0	0
4/24/2024	12:15 PM	0	0	0	0	0	0	0	0	0	0	0	0	0
4/24/2024	12:30 PM	0	0	0	0	0	0	0	0	0	0	0	0	0
4/24/2024	12:45 PM	0	0	0	0	0	0	0	0	0	0	0	0	0
4/24/2024	1:00 PM	0	0	0	0	0	0	0	0	0	0	0	0	0
4/24/2024	1:15 PM	0	0	0	0	0	0	0	0	0	0	0	0	0
4/24/2024	1:30 PM	0	0	0	0	0	0	0	0	0	0	0	0	0
4/24/2024	1:45 PM	0	0	0	0	0	0	0	0	0	0	0	0	0
4/24/2024	2:00 PM	0	0	0	0	0	0	0	0	0	0	0	0	0
4/24/2024	2:15 PM	0	0	0	0	0	0	0	0	0	0	0	0	0
4/24/2024	2:30 PM	0	0	0	0	0	0	0	0	0	0	0	0	0
4/24/2024	2:45 PM	0	0	0	0	0	0	0	0	0	0	0	0	0
4/24/2024	3:00 PM	0	0	0	0	0	0	0	0	0	0	0	0	0
4/24/2024	3:15 PM	0	0	0	0	0	0	0	0	0	0	0	0	0
4/24/2024	3:30 PM	0	0	0	0	0	0	0	0	0	0	0	0	0
4/24/2024	3:45 PM	0	0	0	0	0	0	0	0	0	0	0	0	0
4/24/2024	4:00 PM	0	0	0	0	0	0	0	0	0	0	0	0	0
4/24/2024	4:15 PM	0	0	0	0	0	0	0	0	0	0	0	0	0
4/24/2024	4:30 PM	0	0	0	0	0	0	0	0	0	0	0	0	0
4/24/2024	4:45 PM	0	0	0	0	0	0	0	0	0	0	0	0	0
4/24/2024	5:00 PM	0	0	0	0	0	0	0	0	0	0	0	0	0
4/24/2024	5:15 PM	0	0	0	0	0	0	0	0	0	0	0	0	0
4/24/2024	5:30 PM	0	0	0	0	0	0	0	0	0	0	0	0	0
4/24/2024	5:45 PM	0	0	0	0	0	0	0	0	0	0	0	0	0
4/24/2024	6:00 PM	0	0	0	0	0	0	0	0	0	0	0	0	0
4/24/2024	6:15 PM	0	0	0	0	0	0	0	0	0	0	0	0	0
4/24/2024	6:30 PM	0	0	0	0	0	0	0	0	0	0	0	0	0
4/24/2024	6:45 PM	0	0	0	0	0	0	0	0	0	0	0	0	0
4/24/2024	7:00 PM	0	0	0	0	0	0	0	0	0	0	0	0	0
4/24/2024	7:15 PM	0	0	0	0	0	0	0	0	0	0	0	0	0
4/24/2024	7:30 PM	0	0	0	0	0	0	0	0	0	0	0	0	0
4/24/2024	7:45 PM	0	0	0	0	0	0	0	0	0	0	0	0	0
4/24/2024	8:00 PM	0	0	0	0	0	0	0	0	0	0	0	0	0
4/24/2024	8:15 PM	0	0	0	0	0	0	0	0	0	0	0	0	0
4/24/2024	8:30 PM	0	0	0	0	0	0	0	0	0	0	0	0	0
4/24/2024	8:45 PM	0	0	0	0	0	0	0	0	0	0	0	0	0
4/24/2024	9:00 PM	0	0	0	0	0	0	0	0	0	0	0	0	0
4/24/2024	9:15 PM	0	0	0	0	0	0	0	0	0	0	0	0	0
4/24/2024	9:30 PM	0	0	0	0	0	0	0	0	0	0	0	0	0
4/24/2024	9:45 PM	0	0	0	0	0	0	0	0	0	0	0	0	0
4/24/2024	10:00 PM	0	0	0	0	0	0	0	0	0	0	0	0	0
4/24/2024	10:15 PM	0	0	0	0	0	0	0	0	0	0	0	0	0
4/24/2024	10:30 PM	0	0	0	0	0	0	0	0	0	0	0	0	0
4/24/2024	10:45 PM	0	0	0	0	0	0	0	0	0	0	0	0	0
4/24/2024	11:00 PM	0	0	0	0	0	0	0	0	0	0	0	0	0
4/24/2024	11:15 PM	0	0	0	0	0	0	0	0	0	0	0	0	0
4/24/2024	11:30 PM	0	0	0	0	0	0	0	0	0	0	0	0	0
4/24/2024	11:45 PM	0	0	0	0	0	0	0	0	0	0	0	0	0

4/25/2024	12:00 AM	0	0	0	0	0	0	0	0	0	0	0	0	0
4/25/2024	12:15 AM	0	0	0	0	0	0	0	0	0	0	0	0	0
4/25/2024	12:30 AM	0	0	0	0	0	0	0	0	0	0	0	0	0
4/25/2024	12:45 AM	0	0	0	0	0	0	0	0	0	0	0	0	0
4/25/2024	1:00 AM	0	0	0	0	0	0	0	0	0	0	0	0	0
4/25/2024	1:15 AM	0	0	0	0	0	0	0	0	0	0	0	0	0
4/25/2024	1:30 AM	0	0	0	0	0	0	0	0	0	0	0	0	0
4/25/2024	1:45 AM	0	0	0	0	0	0	0	0	0	0	0	0	0
4/25/2024	2:00 AM	0	0	0	0	0	0	0	0	0	0	0	0	0
4/25/2024	2:15 AM	0	0	0	0	0	0	0	0	0	0	0	0	0
4/25/2024	2:30 AM	0	0	0	0	0	0	0	0	0	0	0	0	0
4/25/2024	2:45 AM	0	0	0	0	0	0	0	0	0	0	0	0	0
4/25/2024	3:00 AM	0	0	0	0	0	0	0	0	0	0	0	0	0
4/25/2024	3:15 AM	0	0	0	0	0	0	0	0	0	0	0	0	0
4/25/2024	3:30 AM	0	0	0	0	0	0	0	0	0	0	0	0	0
4/25/2024	3:45 AM	0	0	0	0	0	0	0	0	0	0	0	0	0
4/25/2024	4:00 AM	0	0	0	0	0	0	0	0	0	0	0	0	0
4/25/2024	4:15 AM	0	0	0	0	0	0	0	0	0	0	0	0	0
4/25/2024	4:30 AM	0	0	0	0	0	0	0	0	0	0	0	0	0
4/25/2024	4:45 AM	0	0	0	0	0	0	0	0	0	0	0	0	0
4/25/2024	5:00 AM	0	0	0	0	0	0	0	0	0	0	0	0	0
4/25/2024	5:15 AM	0	0	0	0	0	0	0	0	0	0	0	0	0
4/25/2024	5:30 AM	0	0	0	0	0	0	0	0	0	0	0	0	0
4/25/2024	5:45 AM	0	0	0	0	0	0	0	0	0	0	0	0	0
4/25/2024	6:00 AM	0	0	0	0	0	0	0	0	0	0	0	0	0
4/25/2024	6:15 AM	0	0	0	0	0	0	0	0	0	0	0	0	0
4/25/2024	6:30 AM	0	0	0	0	0	0	0	0	0	0	0	0	0
4/25/2024	6:45 AM	0	0	0	0	0	0	0	0	0	0	0	0	0
4/25/2024	7:00 AM	0	0	0	0	0	0	0	0	0	0	0	0	0
4/25/2024	7:15 AM	0	0	0	0	0	0	0	0	0	0	0	0	0
4/25/2024	7:30 AM	0	0	0	0	0	0	0	0	0	0	0	0	0
4/25/2024	7:45 AM	0	0	0	0	0	0	0	0	0	0	0	0	0
4/25/2024	8:00 AM	0	0	0	0	0	0	0	0	0	0	0	0	0
4/25/2024	8:15 AM	0	0	0	0	0	0	0	0	0	0	0	0	0
4/25/2024	8:30 AM	0	0	0	0	0	0	0	0	0	0	0	0	0
4/25/2024	8:45 AM	0	0	0	0	0	0	0	0	0	0	0	0	0
4/25/2024	9:00 AM	0	0	0	0	0	0	0	0	0	0	0	0	0
4/25/2024	9:15 AM	0	0	0	0	0	0	0	0	0	0	0	0	0
4/25/2024	9:30 AM	0	0	0	0	0	0	0	0	0	0	0	0	0
4/25/2024	9:45 AM	0	0	0	0	0	0	0	0	0	0	0	0	0
4/25/2024	10:00 AM	0	0	0	0	0	0	0	0	0	0	0	0	0
4/25/2024	10:15 AM	0	0	0	0	0	0	0	0	0	0	0	0	0
4/25/2024	10:30 AM	0	0	0	0	0	0	0	0	0	0	0	0	0
4/25/2024	10:45 AM	0	0	0	0	0	0	0	0	0	0	0	0	0
4/25/2024	11:00 AM	0	0	0	0	0	0	0	0	0	0	0	0	0
4/25/2024	11:15 AM	0	0	0	0	0	0	0	0	0	0	0	0	0
4/25/2024	11:30 AM	0	0	0	0	0	0	0	0	0	0	0	0	0
4/25/2024	11:45 AM	0	0	0	0	0	0	0	0	0	0	0	0	0
4/25/2024	12:00 PM	0	0	0	0	0	0	0	0	0	0	0	0	0
4/25/2024	12:15 PM	0	0	0	0	0	0	0	0	0	0	0	0	0
4/25/2024	12:30 PM	0	0	0	0	0	0	0	0	0	0	0	0	0
4/25/2024	12:45 PM	0	0	0	0	0	0	0	0	0	0	0	0	0
4/25/2024	1:00 PM	0	0	0	0	0	0	0	0	0	0	0	0	0
4/25/2024	1:15 PM	0	0	0	0	0	0	0	0	0	0	0	0	0
4/25/2024	1:30 PM	0	0	0	0	0	0	0	0	0	0	0	0	0
4/25/2024	1:45 PM	0	0	0	0	0	0	0	0	0	0	0	0	0
4/25/2024	2:00 PM	0	0	0	0	0	0	0	0	0	0	0	0	0
4/25/2024	2:15 PM	0	0	0	0	0	0	0	0	0	0	0	0	0
4/25/2024	2:30 PM	0	0	0	0	0	0	0	0	0	0	0	0	0
4/25/2024	2:45 PM	0	0	0	0	0	0	0	0	0	0	0	0	0
4/25/2024	3:00 PM	0	0	0	0	0	0	0	0	0	0	0	0	0
4/25/2024	3:15 PM	0	0	0	0	0	0	0	0	0	0	0	0	0
4/25/2024	3:30 PM	0	0	0	0	0	0	0	0	0	0	0	0	0
4/25/2024	3:45 PM	0	0	0	0	0	0	0	0	0	0	0	0	0
4/25/2024	4:00 PM	0	0	0	0	0	0	0	0	0	0	0	0	0
4/25/2024	4:15 PM	0	0	0	0	0	0	0	0	0	0	0	0	0
4/25/2024	4:30 PM	0	0	0	0	0	0	0	0	0	0	0	0	0
4/25/2024	4:45 PM	0	0	0	0	0	0	0	0	0	0	0	0	0
4/25/2024	5:00 PM	0	0	0	0	0	0	0	0	0	0	0	0	0
4/25/2024	5:15 PM	0	0	0	0	0	0	0	0	0	0	0	0	0
4/25/2024	5:30 PM	0	0	0	0	0	0	0	0	0	0	0	0	0
4/25/2024	5:45 PM	0	0	0	0	0	0	0	0	0	0	0	0	0
4/25/2024	6:00 PM	0	0	0	0	0	0	0	0	0	0	0	0	0
4/25/2024	6:15 PM	0	0	0	0	0	0	0	0	0	0	0	0	0
4/25/2024	6:30 PM	0	0	0	0	0	0	0	0	0	0	0	0	0
4/25/2024	6:45 PM	0	0	0	0	0	0	0	0	0	0	0	0	0
4/25/2024	7:00 PM	0	0	0	0	0	0	0	0	0	0	0	0	0
4/25/2024	7:15 PM	0	0	0	0	0	0	0	0	0	0	0	0	0
4/25/2024	7:30 PM	0	0	0	0	0	0	0	0	0	0	0	0	0
4/25/2024	7:45 PM	0	0	0	0	0	0	0	0	0	0	0	0	0
4/25/2024	8:00 PM	0	0	0	0	0	0	0	0	0	0	0	0	0
4/25/2024	8:15 PM	0	0	0	0	0	0	0	0	0	0	0	0	0
4/25/2024	8:30 PM	0	0	0	0	0	0	0	0	0	0	0	0	0
4/25/2024	8:45 PM	0	0	0	0	0	0	0	0	0	0	0	0	0
4/25/2024	9:00 PM	0	0	0	0	0	0	0	0	0	0	0	0	0
4/25/2024	9:15 PM	0	0	0	0	0	0	0	0	0	0	0	0	0
4/25/2024	9:30 PM	0	0	0	0	0	0	0	0	0	0	0	0	0
4/25/2024	9:45 PM	0	0	0	0	0	0	0	0	0	0	0	0	0
4/25/2024	10:00 PM	0	0	0	0	0	0	0	0	0	0	0	0	0
4/25/2024	10:15 PM	0	0	0	0	0	0	0	0	0	0	0	0	0
4/25/2024	10:30 PM	0	0	0	0	0	0	0	0	0	0	0	0	0
4/25/2024	10:45 PM	0	0	0	0	0	0	0	0	0	0	0	0	0
4/25/2024	11:00 PM	0	0	0	0	0	0	0	0	0	0	0	0	0
4/25/2024	11:15 PM	0	0	0	0	0	0	0	0	0	0	0	0	0
4/25/2024	11:30 PM	0	0	0	0	0	0	0	0	0	0	0	0	0
4/25/2024	11:45 PM	0	0	0	0	0	0	0	0	0	0	0	0	0

WB
File Name:
Start Date: 4/23/2024
Start Time: 0
Site Code: 56
Station ID: 1
Location 1: I-20 W/Bound Off-Ramp, east of US-378 Sunset Blvd
Location 2:

Date	Time	1	2	3	4	5	6	7	8	9	10	11	12	13
4/23/2024	12:00 AM	0	0	0	0	0	0	0	0	0	0	0	0	0
4/23/2024	12:15 AM	0	0	0	0	0	0	0	0	0	0	0	0	0
4/23/2024	12:30 AM	0	0	0	0	0	0	0	0	0	0	0	0	0
4/23/2024	12:45 AM	0	0	0	0	0	0	0	0	0	0	0	0	0
4/23/2024	1:00 AM	0	0	0	0	0	0	0	0	0	0	0	0	0
4/23/2024	1:15 AM	0	0	0	0	0	0	0	0	0	0	0	0	0
4/23/2024	1:30 AM	0	0	0	0	0	0	0	0	0	0	0	0	0
4/23/2024	1:45 AM	0	0	0	0	0	0	0	0	0	0	0	0	0
4/23/2024	2:00 AM	0	0	0	0	0	0	0	0	0	0	0	0	0
4/23/2024	2:15 AM	0	0	0	0	0	0	0	0	0	0	0	0	0
4/23/2024	2:30 AM	0	0	0	0	0	0	0	0	0	0	0	0	0
4/23/2024	2:45 AM	0	0	0	0	0	0	0	0	0	0	0	0	0
4/23/2024	3:00 AM	0	0	0	0	0	0	0	0	0	0	0	0	0
4/23/2024	3:15 AM	0	0	0	0	0	0	0	0	0	0	0	0	0
4/23/2024	3:30 AM	0	0	0	0	0	0	0	0	0	0	0	0	0
4/23/2024	3:45 AM	0	0	0	0	0	0	0	0	0	0	0	0	0
4/23/2024	4:00 AM	0	0	0	0	0	0	0	0	0	0	0	0	0
4/23/2024	4:15 AM	0	0	0	0	0	0	0	0	0	0	0	0	0
4/23/2024	4:30 AM	0	0	0	0	0	0	0	0	0	0	0	0	0
4/23/2024	4:45 AM	0	0	0	0	0	0	0	0	0	0	0	0	0
4/23/2024	5:00 AM	0	0	0	0	0	0	0	0	0	0	0	0	0
4/23/2024	5:15 AM	0	0	0	0	0	0	0	0	0	0	0	0	0
4/23/2024	5:30 AM	0	0	0	0	0	0	0	0	0	0	0	0	0
4/23/2024	5:45 AM	0	0	0	0	0	0	0	0	0	0	0	0	0
4/23/2024	6:00 AM	0	0	0	0	0	0	0	0	0	0	0	0	0
4/23/2024	6:15 AM	0	0	0	0	0	0	0	0	0	0	0	0	0
4/23/2024	6:30 AM	0	0	0	0	0	0	0	0	0	0	0	0	0
4/23/2024	6:45 AM	0	0	0	0	0	0	0	0	0	0	0	0	0
4/23/2024	7:00 AM	0	0	0	0	0	0	0	0	0	0	0	0	0
4/23/2024	7:15 AM	0	0	0	0	0	0	0	0	0	0	0	0	0
4/23/2024	7:30 AM	0	0	0	0	0	0	0	0	0	0	0	0	0
4/23/2024	7:45 AM	0	0	0	0	0	0	0	0	0	0	0	0	0
4/23/2024	8:00 AM	0	0	0	0	0	0	0	0	0	0	0	0	0
4/23/2024	8:15 AM	0	0	0	0	0	0	0	0	0	0	0	0	0
4/23/2024	8:30 AM	0	0	0	0	0	0	0	0	0	0	0	0	0
4/23/2024	8:45 AM	0	0	0	0	0	0	0	0	0	0	0	0	0
4/23/2024	9:00 AM	0	0	0	0	0	0	0	0	0	0	0	0	0
4/23/2024	9:15 AM	0	0	0	0	0	0	0	0	0	0	0	0	0
4/23/2024	9:30 AM	0	0	0	0	0	0	0	0	0	0	0	0	0
4/23/2024	9:45 AM	0	0	0	0	0	0	0	0	0	0	0	0	0
4/23/2024	10:00 AM	0	0	0	0	0	0	0	0	0	0	0	0	0
4/23/2024	10:15 AM	0	0	0	0	0	0	0	0	0	0	0	0	0
4/23/2024	10:30 AM	0	0	0	0	0	0	0	0	0	0	0	0	0
4/23/2024	10:45 AM	0	0	0	0	0	0	0	0	0	0	0	0	0
4/23/2024	11:00 AM	0	0	0	0	0	0	0	0	0	0	0	0	0
4/23/2024	11:15 AM	0	0	0	0	0	0	0	0	0	0	0	0	0
4/23/2024	11:30 AM	0	0	0	0	0	0	0	0	0	0	0	0	0
4/23/2024	11:45 AM	0	0	0	0	0	0	0	0	0	0	0	0	0
4/23/2024	12:00 PM	0	0	0	0	0	0	0	0	0	0	0	0	0
4/23/2024	12:15 PM	0	0	0	0	0	0	0	0	0	0	0	0	0
4/23/2024	12:30 PM	0	0	0	0	0	0	0	0	0	0	0	0	0
4/23/2024	12:45 PM	0	0	0	0	0	0	0	0	0	0	0	0	0
4/23/2024	1:00 PM	0	0	0	0	0	0	0	0	0	0	0	0	0
4/23/2024	1:15 PM	0	0	0	0	0	0	0	0	0	0	0	0	0
4/23/2024	1:30 PM	0	0	0	0	0	0	0	0	0	0	0	0	0
4/23/2024	1:45 PM	0	0	0	0	0	0	0	0	0	0	0	0	0
4/23/2024	2:00 PM	0	0	0	0	0	0	0	0	0	0	0	0	0
4/23/2024	2:15 PM	0	0	0	0	0	0	0	0	0	0	0	0	0
4/23/2024	2:30 PM	0	0	0	0	0	0	0	0	0	0	0	0	0
4/23/2024	2:45 PM	0	0	0	0	0	0	0	0	0	0	0	0	0
4/23/2024	3:00 PM	0	0	0	0	0	0	0	0	0	0	0	0	0
4/23/2024	3:15 PM	0	0	0	0	0	0	0	0	0	0	0	0	0
4/23/2024	3:30 PM	0	0	0	0	0	0	0	0	0	0	0	0	0
4/23/2024	3:45 PM	0	0	0	0	0	0	0	0	0	0	0	0	0
4/23/2024	4:00 PM	0	0	0	0	0	0	0	0	0	0	0	0	0
4/23/2024	4:15 PM	0	0	0	0	0	0	0	0	0	0	0	0	0
4/23/2024	4:30 PM	0	0	0	0	0	0	0	0	0	0	0	0	0
4/23/2024	4:45 PM	0	0	0	0	0	0	0	0	0	0	0	0	0
4/23/2024	5:00 PM	0	0	0	0	0	0	0	0	0	0	0	0	0
4/23/2024	5:15 PM	0	0	0	0	0	0	0	0	0	0	0	0	0
4/23/2024	5:30 PM	0	0	0	0	0	0	0	0	0	0	0	0	0
4/23/2024	5:45 PM	0	0	0	0	0	0	0	0	0	0	0	0	0
4/23/2024	6:00 PM	0	0	0	0	0	0	0	0	0	0	0	0	0
4/23/2024	6:15 PM	0	0	0	0	0	0	0	0	0	0	0	0	0
4/23/2024	6:30 PM	1	161	41	0	3	0	0	0	1	0	0	0	0
4/23/2024	6:45 PM	1	311	71	0	3	0	0	0	1	0	0	0	0
4/23/2024	7:00 PM	2	438	94	1	3	0	0	0	2	0	0	0	0
4/23/2024	7:15 PM	2	564	105	1	4	0	0	0	3	0	0	0	0
4/23/2024	7:30 PM	1	544	80	1	1	0	0	0	2	0	0	0	0
4/23/2024	7:45 PM	1	528	62	1	2	0	0	1	2	0	0	0	0
4/23/2024	8:00 PM	0	517	47	0	3	0	0	1	2	0	0	0	0
4/23/2024	8:15 PM	0	509	40	1	2	0	0	2	2	0	0	0	0
4/23/2024	8:30 PM	0	444	30	1	2	0	0	2	3	0	0	0	0
4/23/2024	8:45 PM	0	389	23	1	1	0	0	1	4	0	0	0	0
4/23/2024	9:00 PM	0	333	22	1	2	0	0	1	3	0	0	0	0
4/23/2024	9:15 PM	0	267	27	0	2	0	0	0	2	0	0	0	0
4/23/2024	9:30 PM	0	248	24	0	3	0	0	0	1	0	0	0	0
4/23/2024	9:45 PM	0	236	24	0	3	0	0	0	0	0	0	0	0
4/23/2024	10:00 PM	0	226	22	0	1	0	0	0	0	0	0	0	0
4/23/2024	10:15 PM	0	214	18	0	1	0	0	0	0	0	1	0	0
4/23/2024	10:30 PM	0	186	18	0	1	0	0	0	0	0	4	0	0
4/23/2024	10:45 PM	0	151	16	0	1	0	0	0	2	0	4	0	0
4/23/2024	11:00 PM	0	113	13	0	2	0	0	0	3	0	5	0	0
4/23/2024	11:15 PM	0	73	8	0	2	0	0	0	3	0	4	0	0
4/23/2024	11:30 PM	0	44	5	0	1	0	0	0	3	0	1	0	0
4/23/2024	11:45 PM	0	12	2	0	1	0	0	0	1	0	1	0	0

4/24/2024	12:00 AM	1	56	13	0	3	0	0	0	2	0	6	0	0
4/24/2024	12:15 AM	1	57	9	0	2	0	0	0	4	0	5	0	0
4/24/2024	12:30 AM	0	55	7	0	0	0	0	0	4	0	3	0	0
4/24/2024	12:45 AM	0	51	7	0	0	0	0	0	6	0	1	0	0
4/24/2024	1:00 AM	0	43	3	0	1	0	1	0	5	0	0	0	0
4/24/2024	1:15 AM	0	32	4	0	1	0	1	0	3	0	0	0	0
4/24/2024	1:30 AM	0	30	5	0	1	0	1	2	3	0	1	0	0
4/24/2024	1:45 AM	0	28	5	0	1	0	1	2	1	0	2	0	0
4/24/2024	2:00 AM	0	20	4	0	0	1	0	2	0	0	2	0	0
4/24/2024	2:15 AM	2	21	3	0	0	1	0	2	1	0	2	0	0
4/24/2024	2:30 AM	3	17	2	0	0	1	1	0	1	0	1	0	0
4/24/2024	2:45 AM	6	14	0	0	0	1	1	1	1	0	0	0	0
4/24/2024	3:00 AM	6	26	2	0	1	0	1	1	2	0	0	0	0
4/24/2024	3:15 AM	4	31	5	0	2	2	1	1	2	0	0	0	0
4/24/2024	3:30 AM	3	33	5	0	2	2	0	1	3	0	1	0	0
4/24/2024	3:45 AM	0	46	7	0	2	3	0	0	3	0	1	0	0
4/24/2024	4:00 AM	0	48	6	0	1	3	0	0	4	0	2	0	0
4/24/2024	4:15 AM	0	57	6	0	2	1	0	0	6	0	2	0	0
4/24/2024	4:30 AM	0	71	9	0	3	1	0	0	7	0	1	0	0
4/24/2024	4:45 AM	0	79	7	0	5	0	0	1	8	0	2	0	0
4/24/2024	5:00 AM	0	122	13	0	6	0	0	2	6	0	1	0	0
4/24/2024	5:15 AM	0	158	22	0	6	1	0	2	6	0	2	0	0
4/24/2024	5:30 AM	0	233	41	0	10	2	0	2	4	0	3	0	0
4/24/2024	5:45 AM	0	337	68	0	10	4	0	1	3	0	2	0	0
4/24/2024	6:00 AM	0	472	105	0	10	5	0	0	5	0	2	0	0
4/24/2024	6:15 AM	0	644	136	0	12	8	0	0	3	0	1	0	0
4/24/2024	6:30 AM	0	836	180	0	14	7	0	0	5	0	0	0	0
4/24/2024	6:45 AM	0	978	209	0	16	5	0	0	7	0	0	0	0
4/24/2024	7:00 AM	1	1104	229	0	20	5	0	5	5	0	0	0	0
4/24/2024	7:15 AM	1	1075	212	0	21	1	0	5	6	0	0	0	0
4/24/2024	7:30 AM	1	972	196	0	20	2	0	5	5	0	0	0	0
4/24/2024	7:45 AM	1	902	199	0	22	3	0	6	6	1	0	0	0
4/24/2024	8:00 AM	1	795	185	0	23	3	0	1	7	1	0	0	0
4/24/2024	8:15 AM	2	782	215	0	26	5	0	3	5	1	0	0	0
4/24/2024	8:30 AM	3	729	199	1	23	6	0	4	8	1	0	0	0
4/24/2024	8:45 AM	3	692	179	1	23	5	0	4	9	0	0	0	0
4/24/2024	9:00 AM	2	657	191	1	19	5	0	6	9	0	0	0	0
4/24/2024	9:15 AM	1	636	184	2	18	5	0	4	12	0	0	0	0
4/24/2024	9:30 AM	0	686	205	1	23	4	0	3	9	0	0	0	0
4/24/2024	9:45 AM	0	690	216	1	26	6	0	3	7	1	0	0	0
4/24/2024	10:00 AM	0	711	196	1	29	5	0	2	8	1	0	0	0
4/24/2024	10:15 AM	1	705	195	1	25	4	0	3	7	1	0	0	0
4/24/2024	10:30 AM	1	704	193	2	21	3	0	3	10	2	0	0	0
4/24/2024	10:45 AM	2	715	201	2	18	3	0	2	10	2	0	0	0
4/24/2024	11:00 AM	2	712	211	2	15	3	0	2	10	2	0	0	0
4/24/2024	11:15 AM	2	735	197	1	15	4	0	2	10	3	0	0	0
4/24/2024	11:30 AM	2	744	205	0	16	5	0	2	7	2	0	0	0
4/24/2024	11:45 AM	1	752	194	0	18	3	0	2	7	1	0	0	0
4/24/2024	12:00 PM	1	760	209	0	22	3	0	1	7	1	0	0	0
4/24/2024	12:15 PM	0	812	212	0	22	3	0	0	6	0	0	0	0
4/24/2024	12:30 PM	0	851	226	1	21	2	0	0	9	0	0	0	0
4/24/2024	12:45 PM	0	890	237	1	24	4	0	1	9	0	0	1	0
4/24/2024	1:00 PM	0	924	217	1	23	5	0	3	9	1	0	1	0
4/24/2024	1:15 PM	0	954	240	1	23	5	0	4	9	1	0	1	0
4/24/2024	1:30 PM	0	976	224	0	19	6	0	6	7	1	0	1	0
4/24/2024	1:45 PM	2	962	228	0	10	4	0	5	6	1	0	0	0
4/24/2024	2:00 PM	4	946	231	0	8	3	0	4	5	0	0	0	0
4/24/2024	2:15 PM	4	951	232	0	9	2	0	4	7	0	0	0	0
4/24/2024	2:30 PM	5	931	234	0	12	2	0	2	5	0	0	0	0
4/24/2024	2:45 PM	3	985	231	2	13	2	0	2	6	0	0	0	0
4/24/2024	3:00 PM	1	1004	243	3	14	2	0	1	6	0	0	0	0
4/24/2024	3:15 PM	2	985	235	3	17	1	0	2	4	0	0	0	0
4/24/2024	3:30 PM	1	1076	233	3	23	1	0	2	5	0	0	0	0
4/24/2024	3:45 PM	2	1133	236	1	22	1	0	3	5	0	0	0	0
4/24/2024	4:00 PM	2	1220	229	0	25	1	0	4	4	0	0	0	0
4/24/2024	4:15 PM	1	1261	231	0	20	1	0	2	4	0	0	0	0
4/24/2024	4:30 PM	2	1257	236	0	12	0	0	3	5	0	0	0	0
4/24/2024	4:45 PM	1	1267	230	0	17	1	0	4	4	0	0	0	0
4/24/2024	5:00 PM	3	1249	234	0	10	2	0	4	4	0	0	0	0
4/24/2024	5:15 PM	6	1178	228	1	12	2	0	5	5	0	0	0	0
4/24/2024	5:30 PM	5	1066	208	3	13	2	0	4	4	0	0	0	0
4/24/2024	5:45 PM	5	923	187	3	8	1	0	2	4	0	0	0	0
4/24/2024	6:00 PM	3	804	174	3	8	0	0	1	6	0	0	0	0
4/24/2024	6:15 PM	0	741	155	2	5	0	0	0	5	0	0	0	0
4/24/2024	6:30 PM	1	697	151	0	3	0	0	1	4	0	0	0	0
4/24/2024	6:45 PM	1	671	151	0	1	0	0	1	3	0	0	0	0
4/24/2024	7:00 PM	2	613	127	0	3	0	0	1	2	0	0	0	0
4/24/2024	7:15 PM	2	605	120	0	4	0	0	1	2	0	0	0	0
4/24/2024	7:30 PM	1	582	102	0	4	0	0	1	3	0	0	0	0
4/24/2024	7:45 PM	1	537	84	0	5	0	0	1	3	0	0	0	0
4/24/2024	8:00 PM	0	529	83	0	4	0	0	1	2	0	0	0	0
4/24/2024	8:15 PM	0	486	72	0	3	1	0	1	1	0	0	0	0
4/24/2024	8:30 PM	1	442	57	0	3	1	0	0	0	0	0	0	0
4/24/2024	8:45 PM	1	379	55	1	2	1	0	0	2	0	0	0	0
4/24/2024	9:00 PM	1	324	44	1	2	1	0	0	2	0	0	0	0
4/24/2024	9:15 PM	1	290	37	1	1	0	0	0	2	0	1	0	0
4/24/2024	9:30 PM	0	241	38	1	2	0	0	0	2	0	2	0	0
4/24/2024	9:45 PM	0	264	28	0	2	0	0	0	0	0	3	0	0
4/24/2024	10:00 PM	0	232	24	0	2	0	0	0	0	0	5	0	0
4/24/2024	10:15 PM	0	212	22	0	3	0	0	0	0	0	5	0	0
4/24/2024	10:30 PM	0	191	16	0	2	0	0	0	1	0	6	0	0
4/24/2024	10:45 PM	0	141	14	0	2	0	0	0	2	0	5	0	0
4/24/2024	11:00 PM	2	122	9	0	1	0	0	0	2	0	3	0	0
4/24/2024	11:15 PM	2	72	6	0	0	0	0	0	2	0	2	0	0
4/24/2024	11:30 PM	2	47	4	0	0	0	0	0	1	0	0	0	0
4/24/2024	11:45 PM	2	18	1	0	0	0	0	0	0	0	0	0	0

4/25/2024	12:00 AM	0	60	10	0	0	0	0	0	2	0	9	0	0
4/25/2024	12:15 AM	0	45	6	0	0	0	0	0	5	0	8	1	0
4/25/2024	12:30 AM	0	39	3	0	0	0	0	0	4	0	6	1	0
4/25/2024	12:45 AM	0	33	1	0	0	0	0	0	3	1	1	2	0
4/25/2024	1:00 AM	0	29	1	0	0	0	0	0	3	1	1	2	0
4/25/2024	1:15 AM	0	29	2	0	0	0	0	0	0	1	1	3	0
4/25/2024	1:30 AM	0	24	3	0	0	0	0	0	0	1	1	3	0
4/25/2024	1:45 AM	0	22	3	0	1	0	0	0	0	0	0	2	0
4/25/2024	2:00 AM	0	24	3	0	1	0	0	0	2	0	0	2	0
4/25/2024	2:15 AM	0	24	3	0	1	0	0	0	2	0	0	0	1
4/25/2024	2:30 AM	0	29	5	0	2	0	0	0	2	0	0	2	1
4/25/2024	2:45 AM	0	27	5	0	1	0	0	0	2	0	0	2	1
4/25/2024	3:00 AM	0	33	4	0	1	0	0	0	1	0	0	2	1
4/25/2024	3:15 AM	0	32	3	0	1	0	0	0	1	0	0	2	0
4/25/2024	3:30 AM	0	29	3	0	0	0	0	0	1	0	0	0	1
4/25/2024	3:45 AM	0	36	3	0	0	0	0	0	3	0	0	0	1
4/25/2024	4:00 AM	0	40	4	0	0	0	0	0	2	0	0	0	1
4/25/2024	4:15 AM	0	49	5	0	1	0	0	0	6	0	0	0	1
4/25/2024	4:30 AM	0	64	4	0	2	0	0	0	6	0	0	0	0
4/25/2024	4:45 AM	0	87	8	0	2	0	0	1	6	0	1	0	0
4/25/2024	5:00 AM	0	113	13	0	3	0	0	2	8	0	1	0	0
4/25/2024	5:15 AM	0	153	28	0	4	0	0	2	6	0	1	0	0
4/25/2024	5:30 AM	0	223	43	0	5	1	0	2	8	0	1	0	0
4/25/2024	5:45 AM	0	306	60	0	8	1	0	1	7	0	0	0	0
4/25/2024	6:00 AM	0	447	99	0	10	2	0	0	7	0	0	0	0
4/25/2024	6:15 AM	0	604	134	0	10	3	0	1	5	0	1	0	0
4/25/2024	6:30 AM	0	799	171	1	10	5	2	1	4	0	1	0	0
4/25/2024	6:45 AM	1	938	212	1	11	7	2	1	3	1	1	0	0
4/25/2024	7:00 AM	1	1014	224	1	16	6	2	1	2	1	1	0	0
4/25/2024	7:15 AM	1	1047	227	1	18	5	2	2	4	1	0	0	0
4/25/2024	7:30 AM	1	983	224	1	18	3	0	2	5	1	0	0	0
4/25/2024	7:45 AM	0	926	209	2	20	1	0	4	6	0	0	0	0
4/25/2024	8:00 AM	0	900	197	2	22	2	0	4	6	0	0	0	0
4/25/2024	8:15 AM	1	807	192	2	25	4	0	2	5	0	0	0	0
4/25/2024	8:30 AM	1	739	203	1	28	3	0	2	7	0	0	0	0
4/25/2024	8:45 AM	1	713	201	1	26	3	1	0	9	0	0	0	0
4/25/2024	9:00 AM	1	663	202	1	19	2	1	1	10	0	0	0	0
4/25/2024	9:15 AM	0	675	192	1	18	1	1	1	9	0	0	0	0
4/25/2024	9:30 AM	0	727	169	1	16	2	3	1	7	0	0	0	0
4/25/2024	9:45 AM	0	730	167	0	16	3	2	1	6	0	0	0	0
4/25/2024	10:00 AM	0	708	163	0	20	5	4	0	4	0	0	0	0
4/25/2024	10:15 AM	1	705	170	0	20	4	4	2	6	0	0	0	0
4/25/2024	10:30 AM	1	642	177	0	22	3	2	2	9	0	0	0	0
4/25/2024	10:45 AM	1	680	182	0	20	4	2	2	10	0	0	0	0
4/25/2024	11:00 AM	3	693	188	1	18	3	1	3	11	0	0	0	0
4/25/2024	11:15 AM	2	751	196	1	21	5	1	3	11	0	0	0	0
4/25/2024	11:30 AM	4	791	213	1	19	5	1	5	6	0	0	0	0
4/25/2024	11:45 AM	6	766	218	1	22	3	1	6	3	0	0	0	0
4/25/2024	12:00 PM	5	818	210	0	20	5	0	6	3	0	0	0	0
4/25/2024	12:15 PM	5	817	225	1	12	4	0	4	3	0	0	0	0
4/25/2024	12:30 PM	3	847	202	1	10	4	0	2	8	0	0	0	0
4/25/2024	12:45 PM	1	901	210	1	9	6	0	3	8	0	0	0	0
4/25/2024	1:00 PM	0	905	215	1	12	3	0	2	10	0	0	0	0
4/25/2024	1:15 PM	0	956	212	0	13	2	0	2	8	0	0	0	0
4/25/2024	1:30 PM	2	1022	224	0	15	2	0	2	6	1	0	0	0
4/25/2024	1:45 PM	2	1006	206	0	11	0	0	2	6	1	0	0	0
4/25/2024	2:00 PM	2	1035	231	1	13	0	0	4	6	1	0	0	0
4/25/2024	2:15 PM	2	1008	217	1	15	0	0	5	6	1	0	0	0
4/25/2024	2:30 PM	1	981	233	1	14	1	0	6	6	0	0	0	0
4/25/2024	2:45 PM	1	1037	250	2	18	3	1	4	6	0	0	0	0
4/25/2024	3:00 PM	1	1045	221	2	18	3	1	4	4	0	0	0	0
4/25/2024	3:15 PM	2	1082	221	2	20	4	1	4	6	0	0	0	0
4/25/2024	3:30 PM	2	1138	233	2	20	3	1	5	3	0	0	0	0
4/25/2024	3:45 PM	2	1137	236	3	19	1	0	5	3	0	0	0	0
4/25/2024	4:00 PM	2	1198	246	3	13	1	0	6	4	0	0	0	0
4/25/2024	4:15 PM	3	1229	253	4	11	0	0	6	3	0	0	0	0
4/25/2024	4:30 PM	3	1250	233	4	12	0	0	5	6	0	0	0	0
4/25/2024	4:45 PM	4	1304	222	2	10	0	0	5	6	0	0	0	0
4/25/2024	5:00 PM	4	1231	216	1	9	1	0	3	5	0	0	0	0
4/25/2024	5:15 PM	3	1161	200	0	7	2	0	4	4	0	0	0	0
4/25/2024	5:30 PM	3	1050	186	1	5	2	0	3	2	0	0	0	0
4/25/2024	5:45 PM	2	898	158	1	4	2	0	3	2	0	0	0	0
4/25/2024	6:00 PM	2	845	147	2	6	1	0	2	2	0	0	0	0
4/25/2024	6:15 PM	1	606	104	2	4	0	0	0	2	0	0	0	0
4/25/2024	6:30 PM	0	388	58	1	3	0	0	0	1	0	0	0	0
4/25/2024	6:45 PM	0	203	34	1	3	0	0	0	1	0	0	0	0
4/25/2024	7:00 PM	0	0	0	0	0	0	0	0	0	0	0	0	0
4/25/2024	7:15 PM	0	0	0	0	0	0	0	0	0	0	0	0	0
4/25/2024	7:30 PM	0	0	0	0	0	0	0	0	0	0	0	0	0
4/25/2024	7:45 PM	0	0	0	0	0	0	0	0	0	0	0	0	0
4/25/2024	8:00 PM	0	0	0	0	0	0	0	0	0	0	0	0	0
4/25/2024	8:15 PM	0	0	0	0	0	0	0	0	0	0	0	0	0
4/25/2024	8:30 PM	0	0	0	0	0	0	0	0	0	0	0	0	0
4/25/2024	8:45 PM	0	0	0	0	0	0	0	0	0	0	0	0	0
4/25/2024	9:00 PM	0	0	0	0	0	0	0	0	0	0	0	0	0
4/25/2024	9:15 PM	0	0	0	0	0	0	0	0	0	0	0	0	0
4/25/2024	9:30 PM	0	0	0	0	0	0	0	0	0	0	0	0	0
4/25/2024	9:45 PM	0	0	0	0	0	0	0	0	0	0	0	0	0
4/25/2024	10:00 PM	0	0	0	0	0	0	0	0	0	0	0	0	0
4/25/2024	10:15 PM	0	0	0	0	0	0	0	0	0	0	0	0	0
4/25/2024	10:30 PM	0	0	0	0	0	0	0	0	0	0	0	0	0
4/25/2024	10:45 PM	0	0	0	0	0	0	0	0	0	0	0	0	0
4/25/2024	11:00 PM	0	0	0	0	0	0	0	0	0	0	0	0	0
4/25/2024	11:15 PM	0	0	0	0	0	0	0	0	0	0	0	0	0
4/25/2024	11:30 PM	0	0	0	0	0	0	0	0	0	0	0	0	0
4/25/2024	11:45 PM	0	0	0	0	0	0	0	0	0	0	0	0	0

Bi-Directional Class Count || SB WB 15min

Columbia, SC

Marr Traffic DATA COLLECTION
www.marrtraffic.com

Site 57
I-20 On/Off-Ramp,
west of US-378 Sunset Blvd

Date
Tuesday, April 23, 2024

Lat/Long
34.009828°, -81.149049°

Click here for Map

Weather
Fair
58°F

Click here for Detailed Weather

0000 - 2400 (Weekday 24h Session) (04-23-2024)
SB WB 15min

	Westbound (Movement 57.1)													15min	60min
Time	1	2	3	4	5	6	7	8	9	10	11	12	13	Total	Total
0000 - 0015	0	0	0	0	0	0	0	0	0	0	0	0	0	**0**	
0015 - 0030	0	0	0	0	0	0	0	0	0	0	0	0	0	**0**	
0030 - 0045	0	0	0	0	0	0	0	0	0	0	0	0	0	**0**	
0045 - 0100	0	0	0	0	0	0	0	0	0	0	0	0	0	**0**	**0**
0100 - 0115	0	0	0	0	0	0	0	0	0	0	0	0	0	**0**	
0115 - 0130	0	0	0	0	0	0	0	0	0	0	0	0	0	**0**	
0130 - 0145	0	0	0	0	0	0	0	0	0	0	0	0	0	**0**	
0145 - 0200	0	0	0	0	0	0	0	0	0	0	0	0	0	**0**	**0**
0200 - 0215	0	0	0	0	0	0	0	0	0	0	0	0	0	**0**	
0215 - 0230	0	0	0	0	0	0	0	0	0	0	0	0	0	**0**	
0230 - 0245	0	0	0	0	0	0	0	0	0	0	0	0	0	**0**	
0245 - 0300	0	0	0	0	0	0	0	0	0	0	0	0	0	**0**	**0**
0300 - 0315	0	0	0	0	0	0	0	0	0	0	0	0	0	**0**	
0315 - 0330	0	0	0	0	0	0	0	0	0	0	0	0	0	**0**	
0330 - 0345	0	0	0	0	0	0	0	0	0	0	0	0	0	**0**	
0345 - 0400	0	0	0	0	0	0	0	0	0	0	0	0	0	**0**	**0**
0400 - 0415	0	0	0	0	0	0	0	0	0	0	0	0	0	**0**	
0415 - 0430	0	0	0	0	0	0	0	0	0	0	0	0	0	**0**	
0430 - 0445	0	0	0	0	0	0	0	0	0	0	0	0	0	**0**	
0445 - 0500	0	0	0	0	0	0	0	0	0	0	0	0	0	**0**	**0**
0500 - 0515	0	0	0	0	0	0	0	0	0	0	0	0	0	**0**	
0515 - 0530	0	0	0	0	0	0	0	0	0	0	0	0	0	**0**	
0530 - 0545	0	0	0	0	0	0	0	0	0	0	0	0	0	**0**	
0545 - 0600	0	0	0	0	0	0	0	0	0	0	0	0	0	**0**	**0**
0600 - 0615	0	0	0	0	0	0	0	0	0	0	0	0	0	**0**	
0615 - 0630	0	0	0	0	0	0	0	0	0	0	0	0	0	**0**	
0630 - 0645	0	0	0	0	0	0	0	0	0	0	0	0	0	**0**	
0645 - 0700	0	0	0	0	0	0	0	0	0	0	0	0	0	**0**	**0**
0700 - 0715	0	0	0	0	0	0	0	0	0	0	0	0	0	**0**	
0715 - 0730	0	0	0	0	0	0	0	0	0	0	0	0	0	**0**	
0730 - 0745	0	0	0	0	0	0	0	0	0	0	0	0	0	**0**	
0745 - 0800	0	0	0	0	0	0	0	0	0	0	0	0	0	**0**	**0**
0800 - 0815	0	0	0	0	0	0	0	0	0	0	0	0	0	**0**	
0815 - 0830	0	0	0	0	0	0	0	0	0	0	0	0	0	**0**	
0830 - 0845	0	0	0	0	0	0	0	0	0	0	0	0	0	**0**	
0845 - 0900	0	0	0	0	0	0	0	0	0	0	0	0	0	**0**	**0**
0900 - 0915	0	0	0	0	0	0	0	0	0	0	0	0	0	**0**	
0915 - 0930	0	0	0	0	0	0	0	0	0	0	0	0	0	**0**	
0930 - 0945	0	0	0	0	0	0	0	0	0	0	0	0	0	**0**	
0945 - 1000	0	0	0	0	0	0	0	0	0	0	0	0	0	**0**	**0**
1000 - 1015	0	0	0	0	0	0	0	0	0	0	0	0	0	**0**	
1015 - 1030	0	0	0	0	0	0	0	0	0	0	0	0	0	**0**	
1030 - 1045	0	0	0	0	0	0	0	0	0	0	0	0	0	**0**	
1045 - 1100	0	0	0	0	0	0	0	0	0	0	0	0	0	**0**	**0**
1100 - 1115	0	0	0	0	0	0	0	0	0	0	0	0	0	**0**	
1115 - 1130	0	0	0	0	0	0	0	0	0	0	0	0	0	**0**	
1130 - 1145	0	0	0	0	0	0	0	0	0	0	0	0	0	**0**	
1145 - 1200	0	0	0	0	0	0	0	0	0	0	0	0	0	**0**	**0**
1200 - 1215	0	0	0	0	0	0	0	0	0	0	0	0	0	**0**	
1215 - 1230	0	0	0	0	0	0	0	0	0	0	0	0	0	**0**	
1230 - 1245	0	0	0	0	0	0	0	0	0	0	0	0	0	**0**	
1245 - 1300	0	0	0	0	0	0	0	0	0	0	0	0	0	**0**	**0**
1300 - 1315	0	0	0	0	0	0	0	0	0	0	0	0	0	**0**	
1315 - 1330	0	0	0	0	0	0	0	0	0	0	0	0	0	**0**	
1330 - 1345	0	0	0	0	0	0	0	0	0	0	0	0	0	**0**	
1345 - 1400	0	0	0	0	0	0	0	0	0	0	0	0	0	**0**	**0**
1400 - 1415	0	0	0	0	0	0	0	0	0	0	0	0	0	**0**	
1415 - 1430	0	0	0	0	0	0	0	0	0	0	0	0	0	**0**	
1430 - 1445	0	0	0	0	0	0	0	0	0	0	0	0	0	**0**	
1445 - 1500	0	0	0	0	0	0	0	0	0	0	0	0	0	**0**	**0**
1500 - 1515	0	0	0	0	0	0	0	0	0	0	0	0	0	**0**	
1515 - 1530	0	0	0	0	0	0	0	0	0	0	0	0	0	**0**	
1530 - 1545	0	0	0	0	0	0	0	0	0	0	0	0	0	**0**	
1545 - 1600	0	0	0	0	0	0	0	0	0	0	0	0	0	**0**	**0**
1600 - 1615	0	0	0	0	0	0	0	0	0	0	0	0	0	**0**	
1615 - 1630	0	0	0	0	0	0	0	0	0	0	0	0	0	**0**	
1630 - 1645	0	0	0	0	0	0	0	0	0	0	0	0	0	**0**	
1645 - 1700	0	0	0	0	0	0	0	0	0	0	0	0	0	**0**	**0**
1700 - 1715	0	0	0	0	0	0	0	0	0	0	0	0	0	**0**	
1715 - 1730	0	0	0	0	0	0	0	0	0	0	0	0	0	**0**	
1730 - 1745	0	0	0	0	0	0	0	0	0	0	0	0	0	**0**	
1745 - 1800	0	0	0	0	0	0	0	0	0	0	0	0	0	**0**	**0**
1800 - 1815	0	0	0	0	0	0	0	0	0	0	0	0	0	**0**	
1815 - 1830	0	0	0	0	0	0	0	0	0	0	0	0	0	**0**	
1830 - 1845	0	0	0	0	0	0	0	0	0	0	0	0	0	**0**	
1845 - 1900	0	0	0	0	0	0	0	0	0	0	0	0	0	**0**	**0**
1900 - 1915	0	79	8	1	0	0	0	0	0	0	0	0	0	**88**	
1915 - 1930	0	85	10	0	0	0	0	0	0	0	0	0	0	**95**	
1930 - 1945	0	72	8	0	1	0	0	0	1	0	0	0	0	**82**	
1945 - 2000	0	82	16	0	0	0	0	0	0	0	0	0	0	**98**	**363**
2000 - 2015	0	59	9	0	0	0	0	0	0	0	0	0	0	**68**	
2015 - 2030	0	61	11	0	1	0	0	0	1	0	0	0	0	**74**	
2030 - 2045	0	69	4	0	1	0	0	0	1	0	0	0	0	**75**	
2045 - 2100	0	56	2	0	1	0	0	0	1	0	0	0	0	**60**	**277**
2100 - 2115	0	79	2	0	0	0	0	0	0	0	0	0	0	**81**	
2115 - 2130	0	62	0	0	1	0	0	0	0	0	0	0	0	**63**	
2130 - 2145	0	61	0	0	0	0	0	0	0	0	0	0	0	**61**	
2145 - 2200	0	54	0	0	3	0	0	0	1	0	0	0	0	**58**	**263**
2200 - 2215	0	40	0	0	1	0	0	0	1	0	0	0	0	**42**	
2215 - 2230	0	31	0	0	1	0	0	0	0	0	0	0	0	**32**	
2230 - 2245	0	22	0	0	0	0	0	0	0	0	0	0	0	**22**	
2245 - 2300	0	26	0	0	0	0	0	0	0	0	0	0	0	**26**	**122**
2300 - 2315	0	15	0	0	0	0	0	0	0	0	0	0	0	**15**	
2315 - 2330	0	16	0	0	0	0	0	0	0	0	0	0	0	**16**	
2330 - 2345	0	14	0	0	0	0	0	0	0	0	0	0	0	**14**	
2345 - 0000	0	10	1	0	0	0	0	0	0	0	0	0	0	**11**	**56**

Session Total	0	993	71	1	10	0	0	0	6	0	0	0	0	**1081**
Session Average	0.00	10.34	0.74	0.01	0.10	0.00	0.00	0.00	0.06	0.00	0.00	0.00	0.00	**11.26**
Session Percentage	0.00	91.86	6.57	0.09	0.93	0.00	0.00	0.00	0.56	0.00	0.00	0.00	0.00	

AM Peak Hour	-	-	-	-	-	-	-	-	-	-	-	-	-	-
AM Peak Volume	0	0	0	0	0	0	0	0	0	0	0	0	0	**0**

Noon Peak Hour	-	-	-	-	-	-	-	-	-	-	-	-	-	-
Noon Peak Volume	0	0	0	0	0	0	0	0	0	0	0	0	0	**0**

PM Peak Hour	-	1900 - 2000	1930 - 2030	1815 - 1915	1930 - 2030	-	-	-	1930 - 2030	-	-	-	-	**1900 - 2000**
PM Peak Volume	0	318	44	1	2	0	0	0	2	0	0	0	0	**363**

Site 57
I-20 On/Off-Ramp,
west of US-378 Sunset Blvd

Date
Wednesday, April 24, 2024

Lat/Long
34.009828°, -81.149049°

Weather
Fair
66°F

Click here for Detailed Weather

0000 - 2400 (Weekday 24h Session) (04-24-2024)
SB WB 15min

	Westbound (Movement 57.1)													15min	60min
Time	1	2	3	4	5	6	7	8	9	10	11	12	13	Total	Total
0000 - 0015	0	6	0	0	1	0	0	0	0	0	0	0	0	**7**	
0015 - 0030	0	9	0	0	0	0	0	0	0	0	0	0	0	**9**	
0030 - 0045	0	7	0	0	0	0	0	0	0	0	0	0	0	**7**	
0045 - 0100	0	5	0	0	0	0	0	0	1	0	0	0	0	**6**	**29**
0100 - 0115	0	4	0	0	0	0	0	0	0	0	0	0	0	**4**	
0115 - 0130	0	3	0	0	0	0	0	0	0	0	0	0	0	**3**	
0130 - 0145	0	4	0	0	0	0	0	0	0	0	0	0	0	**4**	
0145 - 0200	0	4	0	0	0	0	0	0	1	0	0	0	0	**5**	**16**
0200 - 0215	0	6	1	0	1	0	0	0	0	0	0	0	0	**8**	
0215 - 0230	0	2	0	0	0	0	0	0	1	0	0	0	0	**3**	
0230 - 0245	0	3	0	0	0	0	0	0	0	0	0	0	0	**3**	
0245 - 0300	0	4	0	0	0	0	0	0	0	0	0	0	0	**4**	**18**
0300 - 0315	0	8	0	0	1	0	0	0	0	0	0	0	0	**9**	
0315 - 0330	0	7	0	0	0	0	0	0	0	0	0	0	0	**7**	
0330 - 0345	0	8	0	0	0	0	0	0	0	0	0	0	0	**8**	
0345 - 0400	0	10	0	0	1	0	0	0	0	0	0	0	0	**11**	**35**
0400 - 0415	0	11	0	0	1	0	0	0	0	0	0	0	0	**12**	
0415 - 0430	0	11	0	0	0	0	0	0	0	0	0	0	0	**11**	
0430 - 0445	0	14	0	0	0	0	0	0	1	0	0	0	0	**15**	
0445 - 0500	0	16	0	0	0	0	0	0	1	0	0	0	0	**17**	**55**
0500 - 0515	0	13	2	0	1	0	0	0	0	0	0	0	0	**16**	
0515 - 0530	1	24	0	0	0	0	0	0	0	0	0	0	0	**25**	
0530 - 0545	0	33	0	0	0	0	0	0	0	0	0	0	0	**33**	
0545 - 0600	0	29	0	0	1	0	0	0	1	0	0	0	0	**31**	**105**
0600 - 0615	0	55	1	0	0	0	0	0	0	0	0	0	0	**56**	
0615 - 0630	0	66	5	0	0	0	0	0	1	0	0	0	0	**72**	
0630 - 0645	0	110	20	0	3	0	0	0	1	0	0	0	0	**134**	
0645 - 0700	0	82	22	0	0	0	0	0	1	0	0	0	0	**105**	**367**
0700 - 0715	0	127	19	0	0	0	0	0	0	0	0	0	0	**146**	
0715 - 0730	0	126	20	0	1	0	0	0	0	0	0	0	0	**147**	
0730 - 0745	0	159	27	0	2	0	0	0	1	0	0	0	0	**189**	
0745 - 0800	0	169	18	0	5	0	0	1	0	0	0	0	0	**193**	**675**
0800 - 0815	0	139	23	2	1	0	0	0	4	0	0	0	0	**169**	
0815 - 0830	0	142	14	0	1	0	0	0	3	0	0	0	0	**160**	
0830 - 0845	0	173	27	0	1	0	0	1	2	0	0	0	0	**204**	
0845 - 0900	0	142	28	0	3	0	1	0	1	0	0	0	0	**175**	**708**
0900 - 0915	0	102	20	0	4	0	0	1	1	0	0	0	0	**128**	
0915 - 0930	0	122	21	0	4	1	0	0	1	0	0	0	0	**149**	
0930 - 0945	0	110	23	0	3	0	0	0	1	0	0	0	0	**137**	
0945 - 1000	0	98	20	0	1	0	0	0	0	0	0	0	0	**119**	**533**
1000 - 1015	0	76	9	0	0	0	0	0	1	0	0	0	0	**86**	
1015 - 1030	0	113	14	0	2	0	0	0	1	0	0	0	0	**130**	
1030 - 1045	0	96	21	0	1	0	0	0	2	0	0	0	0	**120**	
1045 - 1100	0	86	15	0	1	0	0	0	4	0	0	0	0	**106**	**442**
1100 - 1115	0	121	18	0	4	0	1	0	0	0	0	0	0	**144**	
1115 - 1130	0	118	19	0	1	0	0	0	2	0	0	0	0	**140**	
1130 - 1145	0	83	10	0	1	1	0	0	2	0	0	0	0	**97**	
1145 - 1200	0	94	12	0	1	0	0	0	1	0	0	0	0	**108**	**489**
1200 - 1215	0	73	16	0	2	0	0	0	4	0	0	0	0	**95**	
1215 - 1230	0	108	19	0	2	0	0	0	0	0	0	0	0	**129**	
1230 - 1245	0	98	13	0	0	0	0	0	0	0	0	0	0	**111**	
1245 - 1300	0	111	17	0	0	0	0	0	5	0	0	0	0	**133**	**468**
1300 - 1315	0	103	25	0	2	0	0	0	2	0	0	0	0	**132**	
1315 - 1330	0	101	24	0	2	0	0	1	0	0	0	0	0	**128**	
1330 - 1345	0	93	20	0	0	0	0	0	1	0	0	0	0	**114**	
1345 - 1400	0	96	10	0	1	0	0	0	0	0	0	0	0	**107**	**481**
1400 - 1415	0	88	11	0	3	1	0	0	0	0	0	0	0	**103**	
1415 - 1430	0	107	10	0	4	0	0	0	1	0	0	0	0	**122**	
1430 - 1445	0	81	9	0	1	2	0	0	1	0	0	0	0	**94**	
1445 - 1500	0	101	11	0	3	1	0	0	0	0	0	0	0	**116**	**435**
1500 - 1515	0	83	9	0	0	0	0	0	2	0	0	0	0	**94**	
1515 - 1530	0	80	5	0	1	0	0	0	1	0	0	0	0	**87**	
1530 - 1545	0	121	10	0	0	0	0	0	0	0	0	0	0	**131**	
1545 - 1600	0	103	9	0	2	1	0	0	1	0	0	0	0	**116**	**428**
1600 - 1615	0	117	8	0	0	0	0	0	0	0	0	0	0	**125**	
1615 - 1630	0	141	11	0	1	0	0	0	0	0	0	0	0	**153**	
1630 - 1645	0	136	13	0	1	0	0	0	0	0	0	0	0	**150**	
1645 - 1700	0	133	12	0	1	0	0	0	0	0	0	0	0	**146**	**574**
1700 - 1715	0	120	11	0	0	0	0	0	1	0	0	0	0	**132**	
1715 - 1730	0	101	12	0	2	0	0	0	0	0	0	0	0	**115**	
1730 - 1745	0	90	6	0	2	0	0	0	0	0	0	0	0	**98**	
1745 - 1800	0	84	10	0	0	0	0	0	0	0	0	0	0	**94**	**439**
1800 - 1815	0	119	14	0	0	0	0	0	0	0	0	0	0	**133**	
1815 - 1830	0	107	13	2	0	0	0	0	0	0	0	0	0	**122**	
1830 - 1845	0	118	10	0	0	0	0	0	1	0	0	0	0	**129**	
1845 - 1900	0	104	14	0	0	0	0	0	1	0	0	0	0	**119**	**503**
1900 - 1915	0	70	8	0	1	0	0	0	0	1	0	0	0	**80**	
1915 - 1930	0	90	7	0	1	0	0	0	0	0	0	0	0	**98**	
1930 - 1945	0	93	10	0	0	0	0	0	2	0	0	0	0	**105**	
1945 - 2000	0	86	5	0	0	0	0	0	0	0	0	0	0	**91**	**374**
2000 - 2015	0	82	6	0	0	0	0	0	0	0	0	0	0	**88**	
2015 - 2030	0	71	6	0	0	0	0	0	0	0	0	0	0	**77**	
2030 - 2045	0	69	0	0	0	0	0	0	0	0	0	0	0	**69**	
2045 - 2100	0	74	0	0	0	0	0	0	1	0	0	0	0	**75**	**309**
2100 - 2115	0	44	1	0	2	0	0	1	1	0	0	0	0	**49**	
2115 - 2130	0	56	0	0	2	0	0	0	0	0	0	0	0	**58**	
2130 - 2145	0	29	1	0	0	0	0	0	1	0	0	0	0	**31**	
2145 - 2200	0	35	0	0	0	0	0	0	0	0	0	0	0	**35**	**173**
2200 - 2215	0	36	1	0	0	0	0	0	0	0	0	0	0	**37**	
2215 - 2230	0	44	0	0	0	0	0	0	0	0	0	0	0	**44**	
2230 - 2245	0	25	0	0	0	0	0	0	0	0	0	0	0	**25**	
2245 - 2300	0	17	0	0	0	0	0	0	0	1	0	0	0	**18**	**124**
2300 - 2315	0	16	0	0	0	0	0	0	0	0	0	0	0	**16**	
2315 - 2330	0	27	0	0	0	0	0	0	0	0	0	0	0	**27**	
2330 - 2345	0	15	1	0	1	0	0	0	0	0	0	0	0	**17**	
2345 - 0000	0	11	0	0	0	0	0	0	0	0	0	0	0	**11**	**71**

Session Total	1	6857	827	4	84	7	2	5	62	2	0	0	0	**7851**
Session Average	0.01	71.43	8.61	0.04	0.88	0.07	0.02	0.05	0.65	0.02	0.00	0.00	0.00	**81.78**
Session Percentage	0.01	87.34	10.53	0.05	1.07	0.09	0.03	0.06	0.79	0.03	0.00	0.00	0.00	

AM Peak Hour	0500 - 0600	0745 - 0845	0830 - 0930	0715 - 0815	0845 - 0945	0830 - 0930	0800 - 0900	0745 - 0845	0800 - 0900	-	-	-	-	**0745 - 0845**
AM Peak Volume	1	623	96	2	14	1	1	2	10	0	0	0	0	**726**

Noon Peak Hour	-	1030 - 1130	1245 - 1345	-	1400 - 1500	1400 - 1500	1015 - 1115	1230 - 1330	1115 - 1215	-	-	-	-	**1030 - 1130**
Noon Peak Volume	0	421	86	0	11	4	1	1	9	0	0	0	0	**510**

PM Peak Hour	-	1615 - 1715	1800 - 1900	1730 - 1830	1645 - 1745	1500 - 1600	-	-	1500 - 1600	1815 - 1915	-	-	-	**1615 - 1715**
PM Peak Volume	0	530	51	2	5	1	0	0	4	1	0	0	0	**581**

Site 57
I-20 On/Off-Ramp,
west of US-378 Sunset Blvd

Date
Thursday, April 25, 2024

Lat/Long
34.009828°, -81.149049°

Weather
Fair
67°F

Click here for Detailed Weather

0000 - 2400 (Weekday 24h Session) (04-25-2024)
SB WB 15min

	Westbound (Movement 57.1)													15min	60min
TIME	1	2	3	4	5	6	7	8	9	10	11	12	13	Total	Total
0000 - 0015	0	7	0	0	0	0	0	0	0	0	0	0	0	**7**	
0015 - 0030	0	8	0	0	0	0	0	0	0	0	0	0	0	**8**	
0030 - 0045	0	9	0	0	0	0	0	0	0	0	0	0	0	**9**	
0045 - 0100	0	5	0	0	0	0	0	0	0	0	0	0	0	**5**	**29**
0100 - 0115	0	4	0	0	0	0	0	0	0	2	0	0	0	**6**	
0115 - 0130	0	5	0	0	0	0	0	0	0	0	0	0	0	**5**	
0130 - 0145	0	3	0	0	0	0	0	0	0	0	0	0	0	**3**	
0145 - 0200	0	3	0	0	0	0	0	0	0	0	0	0	0	**3**	**17**
0200 - 0215	0	2	0	0	0	0	0	0	0	0	0	0	0	**2**	
0215 - 0230	0	4	1	0	0	0	0	0	1	0	0	0	0	**6**	
0230 - 0245	0	5	0	0	0	0	0	0	0	0	0	0	0	**5**	
0245 - 0300	0	3	0	0	0	0	0	0	0	0	0	0	0	**3**	**16**
0300 - 0315	0	2	0	0	0	0	0	0	0	0	0	0	0	**2**	
0315 - 0330	0	7	0	0	1	0	0	0	1	0	0	0	0	**9**	
0330 - 0345	0	3	0	0	0	0	0	0	0	0	0	0	0	**3**	
0345 - 0400	0	13	0	0	0	0	0	0	0	0	0	0	0	**13**	**27**
0400 - 0415	0	4	0	0	0	0	0	0	0	0	0	0	0	**4**	
0415 - 0430	0	8	0	0	0	0	0	0	0	0	0	0	0	**8**	
0430 - 0445	0	15	0	0	0	1	0	0	0	0	0	0	0	**16**	
0445 - 0500	0	24	0	0	0	0	0	0	0	1	0	0	0	**25**	**53**
0500 - 0515	0	14	0	0	0	0	0	0	1	0	0	0	0	**15**	
0515 - 0530	0	26	0	0	0	0	0	0	0	0	0	0	0	**26**	
0530 - 0545	0	39	0	0	1	0	0	0	0	0	0	0	0	**40**	
0545 - 0600	0	58	0	0	0	0	0	0	0	0	0	0	0	**58**	**139**
0600 - 0615	0	59	3	0	0	0	0	0	0	0	0	0	0	**62**	
0615 - 0630	0	72	10	0	0	0	0	0	0	0	0	0	0	**82**	
0630 - 0645	0	90	11	0	2	0	0	1	1	0	0	0	0	**105**	
0645 - 0700	0	121	15	0	1	0	0	0	0	0	0	0	0	**137**	**386**
0700 - 0715	0	232	7	0	1	1	0	0	0	0	0	0	0	**241**	
0715 - 0730	0	239	7	0	1	0	0	0	0	0	0	0	0	**247**	
0730 - 0745	0	250	12	0	2	0	1	0	0	0	0	0	0	**265**	
0745 - 0800	0	265	10	1	1	1	0	0	1	0	0	0	0	**279**	**1032**
0800 - 0815	0	229	16	0	0	0	0	0	0	2	0	0	0	**247**	
0815 - 0830	0	263	13	0	1	0	0	0	0	2	0	0	0	**279**	
0830 - 0845	0	232	9	0	3	1	0	0	0	0	0	0	0	**245**	
0845 - 0900	0	203	12	0	3	1	0	0	0	0	0	0	0	**219**	**990**
0900 - 0915	0	178	14	0	0	1	0	0	1	2	0	0	0	**196**	
0915 - 0930	0	177	15	0	1	1	0	0	0	0	0	0	0	**194**	
0930 - 0945	0	141	15	0	1	0	0	0	0	1	0	0	0	**158**	
0945 - 1000	0	124	12	0	1	1	0	0	1	1	0	0	0	**140**	**688**
1000 - 1015	0	131	14	0	4	0	0	0	0	1	0	0	0	**150**	
1015 - 1030	0	139	13	0	2	0	0	0	0	2	0	0	0	**156**	
1030 - 1045	0	143	9	0	1	0	0	0	0	1	0	0	0	**154**	
1045 - 1100	2	144	19	0	2	0	0	1	0	3	0	0	0	**171**	**631**
1100 - 1115	0	89	13	0	2	1	1	0	0	1	0	0	0	**107**	
1115 - 1130	0	48	12	0	3	0	0	0	0	3	0	0	0	**66**	
1130 - 1145	0	148	17	0	1	1	0	0	1	0	0	0	0	**168**	
1145 - 1200	0	140	15	0	2	0	0	0	0	0	0	0	0	**157**	**498**
1200 - 1215	0	112	13	0	2	0	0	0	2	0	0	0	0	**129**	
1215 - 1230	0	109	20	0	2	0	0	0	0	0	0	0	0	**131**	
1230 - 1245	0	137	27	0	6	0	0	0	2	0	0	0	0	**172**	
1245 - 1300	0	159	16	0	7	0	0	0	0	0	0	0	0	**182**	**614**
1300 - 1315	0	142	19	0	1	0	0	0	2	0	0	0	0	**164**	
1315 - 1330	0	123	22	0	1	1	0	0	0	0	0	0	0	**147**	
1330 - 1345	0	136	12	0	2	0	0	0	0	0	0	0	0	**150**	
1345 - 1400	0	128	18	0	7	0	0	0	2	0	0	0	0	**155**	**616**
1400 - 1415	0	130	15	0	4	0	0	0	2	0	0	0	0	**151**	
1415 - 1430	0	164	10	0	2	0	0	0	1	0	0	0	0	**177**	
1430 - 1445	0	136	6	0	4	0	0	0	0	0	0	0	0	**146**	
1445 - 1500	0	125	7	0	1	0	0	0	1	0	0	0	0	**134**	**608**
1500 - 1515	0	162	14	0	4	0	0	0	0	0	0	0	0	**180**	
1515 - 1530	0	148	10	0	5	0	0	0	1	0	0	0	0	**164**	
1530 - 1545	0	145	11	0	1	0	0	0	1	0	0	0	0	**158**	
1545 - 1600	0	162	7	0	2	0	0	0	1	0	0	0	0	**172**	**674**
1600 - 1615	0	155	10	0	3	0	0	0	0	0	0	0	0	**168**	
1615 - 1630	0	156	13	0	2	0	0	0	1	0	0	0	0	**172**	
1630 - 1645	0	141	7	0	0	1	0	0	0	0	0	0	0	**149**	
1645 - 1700	0	167	12	0	1	0	0	0	0	0	0	0	0	**180**	**669**
1700 - 1715	0	175	11	0	2	0	0	0	0	0	0	0	0	**188**	
1715 - 1730	0	201	14	0	3	1	0	0	1	0	0	0	0	**220**	
1730 - 1745	0	166	5	0	0	0	0	0	0	0	0	0	0	**171**	
1745 - 1800	0	151	4	0	0	0	0	0	1	0	0	0	0	**156**	**735**
1800 - 1815	0	162	6	0	0	0	0	0	0	0	0	0	0	**168**	
1815 - 1830	0	135	4	0	0	0	0	0	0	0	0	0	0	**139**	
1830 - 1845	0	124	4	0	1	0	0	0	1	0	0	0	0	**130**	
1845 - 1900	0	133	5	0	1	0	0	0	0	0	0	0	0	**139**	**576**
1900 - 1915	0	0	0	0	0	0	0	0	0	0	0	0	0	**0**	
1915 - 1930	0	0	0	0	0	0	0	0	0	0	0	0	0	**0**	
1930 - 1945	0	0	0	0	0	0	0	0	0	0	0	0	0	**0**	
1945 - 2000	0	0	0	0	0	0	0	0	0	0	0	0	0	**0**	**0**
2000 - 2015	0	0	0	0	0	0	0	0	0	0	0	0	0	**0**	
2015 - 2030	0	0	0	0	0	0	0	0	0	0	0	0	0	**0**	
2030 - 2045	0	0	0	0	0	0	0	0	0	0	0	0	0	**0**	
2045 - 2100	0	0	0	0	0	0	0	0	0	0	0	0	0	**0**	**0**
2100 - 2115	0	0	0	0	0	0	0	0	0	0	0	0	0	**0**	
2115 - 2130	0	0	0	0	0	0	0	0	0	0	0	0	0	**0**	
2130 - 2145	0	0	0	0	0	0	0	0	0	0	0	0	0	**0**	
2145 - 2200	0	0	0	0	0	0	0	0	0	0	0	0	0	**0**	**0**
2200 - 2215	0	0	0	0	0	0	0	0	0	0	0	0	0	**0**	
2215 - 2230	0	0	0	0	0	0	0	0	0	0	0	0	0	**0**	
2230 - 2245	0	0	0	0	0	0	0	0	0	0	0	0	0	**0**	
2245 - 2300	0	0	0	0	0	0	0	0	0	0	0	0	0	**0**	**0**
2300 - 2315	0	0	0	0	0	0	0	0	0	0	0	0	0	**0**	
2315 - 2330	0	0	0	0	0	0	0	0	0	0	0	0	0	**0**	
2330 - 2345	0	0	0	0	0	0	0	0	0	0	0	0	0	**0**	
2345 - 0000	0	0	0	0	0	0	0	0	0	0	0	0	0	**0**	**0**

Session Total	2	8212	616	1	101	13	2	2	27	22	0	0	0	**8998**
Session Average	0.02	85.54	6.42	0.01	1.05	0.14	0.02	0.02	0.28	0.23	0.00	0.00	0.00	**93.73**
Session Percentage	0.02	91.26	6.85	0.01	1.12	0.14	0.02	0.02	0.30	0.24	0.00	0.00	0.00	

AM Peak Hour	-	0730 - 0830	0845 - 0945	0700 - 0800	0930 - 1030	0830 - 0930	0645 - 0745	0545 - 0645	0900 - 1000	0930 - 1030	-	-	-	**0730 - 0830**
AM Peak Hour Volume	0	1007	56	1	8	4	1	1	2	5	0	0	0	**1070**

Noon Peak Hour	1000 - 1100	1415 - 1515	1230 - 1330	-	1200 - 1300	1045 - 1145	1015 - 1115	1000 - 1100	1330 - 1430	1030 - 1130	-	-	-	**1230 - 1330**
Noon Peak Hour Volume	2	587	84	0	17	2	1	1	5	8	0	0	0	**665**

PM Peak Hour	-	1645 - 1745	1630 - 1730	-	1500 - 1600	1630 - 1730	-	-	1500 - 1600	-	-	-	-	**1645 - 1745**
PM Peak Hour Volume	0	709	44	0	12	2	0	0	3	0	0	0	0	**759**

Bi-Directional Class Count || SB WB Average 15min

Columbia, SC

Marr Traffic DATA COLLECTION
www.marrtraffic.com

Site 57
I-20 On/Off-Ramp,
west of US-378 Sunset Blvd

Date
Tuesday, April 23, 2024

Lat/Long
34.009828°, -81.149049°

Weather
Fair
58°F

0000 - 2400 (Weekday 24h Session) (All Dates)
SB WB Average 15min

	SB WB Average 15min													15min	60min
Time	1	2	3	4	5	6	7	8	9	10	11	12	13	Total	Total
0000 - 0015	0	4	0	0	0	0	0	0	0	0	0	0	0	**5**	
0015 - 0030	0	6	0	0	0	0	0	0	0	0	0	0	0	**6**	
0030 - 0045	0	5	0	0	0	0	0	0	0	0	0	0	0	**5**	
0045 - 0100	0	3	0	0	0	0	0	0	0	0	0	0	0	**4**	**19**
0100 - 0115	0	3	0	0	0	0	0	0	0	1	0	0	0	**3**	
0115 - 0130	0	3	0	0	0	0	0	0	0	0	0	0	0	**3**	
0130 - 0145	0	2	0	0	0	0	0	0	0	0	0	0	0	**2**	
0145 - 0200	0	2	0	0	0	0	0	0	0	0	0	0	0	**3**	**11**
0200 - 0215	0	3	0	0	0	0	0	0	0	0	0	0	0	**3**	
0215 - 0230	0	2	0	0	0	0	0	0	1	0	0	0	0	**3**	
0230 - 0245	0	3	0	0	0	0	0	0	0	0	0	0	0	**3**	
0245 - 0300	0	2	0	0	0	0	0	0	0	0	0	0	0	**2**	**11**
0300 - 0315	0	3	0	0	0	0	0	0	0	0	0	0	0	**4**	
0315 - 0330	0	5	0	0	0	0	0	0	0	0	0	0	0	**5**	
0330 - 0345	0	4	0	0	0	0	0	0	0	0	0	0	0	**4**	
0345 - 0400	0	8	0	0	0	0	0	0	0	0	0	0	0	**8**	**21**
0400 - 0415	0	5	0	0	0	0	0	0	0	0	0	0	0	**5**	
0415 - 0430	0	6	0	0	0	0	0	0	0	0	0	0	0	**6**	
0430 - 0445	0	10	0	0	0	0	0	0	0	0	0	0	0	**10**	
0445 - 0500	0	13	0	0	0	0	0	0	0	0	0	0	0	**14**	**36**
0500 - 0515	0	9	1	0	0	0	0	0	0	0	0	0	0	**10**	
0515 - 0530	0	17	0	0	0	0	0	0	0	0	0	0	0	**17**	
0530 - 0545	0	24	0	0	0	0	0	0	0	0	0	0	0	**24**	
0545 - 0600	0	29	0	0	0	0	0	0	0	0	0	0	0	**30**	**81**
0600 - 0615	0	38	1	0	0	0	0	0	0	0	0	0	0	**39**	
0615 - 0630	0	46	5	0	0	0	0	0	0	0	0	0	0	**51**	
0630 - 0645	0	67	10	0	2	0	0	0	1	0	0	0	0	**80**	
0645 - 0700	0	68	12	0	0	0	0	0	0	0	0	0	0	**81**	**251**
0700 - 0715	0	120	9	0	0	0	0	0	0	0	0	0	0	**129**	
0715 - 0730	0	122	9	0	1	0	0	0	0	0	0	0	0	**131**	
0730 - 0745	0	136	13	0	1	0	0	0	0	0	0	0	0	**151**	
0745 - 0800	0	145	9	0	2	0	0	0	0	0	0	0	0	**157**	**569**
0800 - 0815	0	123	13	1	0	0	0	0	1	1	0	0	0	**139**	
0815 - 0830	0	135	9	0	1	0	0	0	1	1	0	0	0	**146**	
0830 - 0845	0	135	12	0	1	0	0	0	1	0	0	0	0	**150**	
0845 - 0900	0	115	13	0	2	0	0	0	0	0	0	0	0	**131**	**566**
0900 - 0915	0	93	11	0	1	0	0	0	1	1	0	0	0	**108**	
0915 - 0930	0	100	12	0	2	1	0	0	0	0	0	0	0	**114**	
0930 - 0945	0	84	13	0	1	0	0	0	0	0	0	0	0	**98**	
0945 - 1000	0	74	11	0	1	0	0	0	0	0	0	0	0	**86**	**407**
1000 - 1015	0	69	8	0	1	0	0	0	0	0	0	0	0	**79**	
1015 - 1030	0	84	9	0	1	0	0	0	0	1	0	0	0	**95**	
1030 - 1045	0	80	10	0	1	0	0	0	1	0	0	0	0	**91**	
1045 - 1100	1	77	11	0	1	0	0	0	1	1	0	0	0	**92**	**358**
1100 - 1115	0	70	10	0	2	0	1	0	0	0	0	0	0	**84**	
1115 - 1130	0	55	10	0	1	0	0	0	1	1	0	0	0	**69**	
1130 - 1145	0	77	9	0	1	1	0	0	1	0	0	0	0	**88**	
1145 - 1200	0	78	9	0	1	0	0	0	0	0	0	0	0	**88**	**329**
1200 - 1215	0	62	10	0	1	0	0	0	2	0	0	0	0	**75**	
1215 - 1230	0	72	13	0	1	0	0	0	0	0	0	0	0	**87**	
1230 - 1245	0	78	13	0	2	0	0	0	1	0	0	0	0	**94**	
1245 - 1300	0	90	11	0	2	0	0	0	2	0	0	0	0	**105**	**361**
1300 - 1315	0	82	15	0	1	0	0	0	1	0	0	0	0	**99**	
1315 - 1330	0	75	15	0	1	0	0	0	0	0	0	0	0	**92**	
1330 - 1345	0	76	11	0	1	0	0	0	0	0	0	0	0	**88**	
1345 - 1400	0	75	9	0	3	0	0	0	1	0	0	0	0	**87**	**366**
1400 - 1415	0	73	9	0	2	0	0	0	1	0	0	0	0	**85**	
1415 - 1430	0	90	7	0	2	0	0	0	1	0	0	0	0	**100**	
1430 - 1445	0	72	5	0	2	1	0	0	0	0	0	0	0	**80**	
1445 - 1500	0	75	6	0	1	0	0	0	0	0	0	0	0	**83**	**348**
1500 - 1515	0	82	8	0	1	0	0	0	1	0	0	0	0	**91**	
1515 - 1530	0	76	5	0	2	0	0	0	1	0	0	0	0	**84**	
1530 - 1545	0	89	7	0	0	0	0	0	0	0	0	0	0	**96**	
1545 - 1600	0	88	5	0	1	0	0	0	1	0	0	0	0	**96**	**367**
1600 - 1615	0	91	6	0	1	0	0	0	0	0	0	0	0	**98**	
1615 - 1630	0	99	8	0	1	0	0	0	0	0	0	0	0	**108**	
1630 - 1645	0	92	7	0	0	0	0	0	0	0	0	0	0	**100**	
1645 - 1700	0	100	8	0	1	0	0	0	0	0	0	0	0	**109**	**414**
1700 - 1715	0	98	7	0	1	0	0	0	0	0	0	0	0	**107**	
1715 - 1730	0	101	9	0	2	0	0	0	0	0	0	0	0	**112**	
1730 - 1745	0	85	4	0	1	0	0	0	0	0	0	0	0	**90**	
1745 - 1800	0	78	5	0	0	0	0	0	0	0	0	0	0	**83**	**391**
1800 - 1815	0	94	7	0	0	0	0	0	0	0	0	0	0	**100**	
1815 - 1830	0	81	6	1	0	0	0	0	0	0	0	0	0	**87**	
1830 - 1845	0	81	5	0	0	0	0	0	1	0	0	0	0	**86**	
1845 - 1900	0	79	6	0	0	0	0	0	0	0	0	0	0	**86**	**360**
1900 - 1915	0	50	5	0	0	0	0	0	0	0	0	0	0	**56**	
1915 - 1930	0	58	6	0	0	0	0	0	0	0	0	0	0	**64**	
1930 - 1945	0	55	6	0	0	0	0	0	1	0	0	0	0	**62**	
1945 - 2000	0	56	7	0	0	0	0	0	0	0	0	0	0	**63**	**246**
2000 - 2015	0	47	5	0	0	0	0	0	0	0	0	0	0	**52**	
2015 - 2030	0	44	6	0	0	0	0	0	0	0	0	0	0	**50**	
2030 - 2045	0	46	1	0	0	0	0	0	0	0	0	0	0	**48**	
2045 - 2100	0	43	1	0	0	0	0	0	1	0	0	0	0	**45**	**195**
2100 - 2115	0	41	1	0	1	0	0	0	0	0	0	0	0	**43**	
2115 - 2130	0	39	0	0	1	0	0	0	0	0	0	0	0	**40**	
2130 - 2145	0	30	0	0	0	0	0	0	0	0	0	0	0	**31**	
2145 - 2200	0	30	0	0	1	0	0	0	0	0	0	0	0	**31**	**145**
2200 - 2215	0	25	0	0	0	0	0	0	0	0	0	0	0	**26**	
2215 - 2230	0	25	0	0	0	0	0	0	0	0	0	0	0	**25**	
2230 - 2245	0	16	0	0	0	0	0	0	0	0	0	0	0	**16**	
2245 - 2300	0	14	0	0	0	0	0	0	0	0	0	0	0	**15**	**82**
2300 - 2315	0	10	0	0	0	0	0	0	0	0	0	0	0	**10**	
2315 - 2330	0	14	0	0	0	0	0	0	0	0	0	0	0	**14**	
2330 - 2345	0	10	0	0	0	0	0	0	0	0	0	0	0	**10**	
2345 - 0000	0	7	0	0	0	0	0	0	0	0	0	0	0	**7**	**42**

Session Total	1	5354	505	2	65	7	1	2	32	8	0	0	0	**5977**
Session Average	0.01	55.77	5.26	0.02	0.68	0.07	0.01	0.02	0.33	0.08	0.00	0.00	0.00	**62.26**
Session Percentage	0.02	89.58	8.44	0.03	1.09	0.11	0.02	0.04	0.53	0.13	0.00	0.00	0.00	

AM Peak Hour	0500 - 0600	0730 - 0830	0845 - 0945	0715 - 0815	0830 - 0930	0830 - 0930	0645 - 0745	0745 - 0845	0745 - 0845	0930 - 1030	-	-	-	**0730 - 0830**
AM Peak Volume	0	539	49	1	6	2	0	1	3	2	0	0	0	**594**

Noon Peak Hour	1000 - 1100	1230 - 1330	1230 - 1330	-	1345 - 1445	1400 - 1500	1015 - 1115	1000 - 1100	1200 - 1300	1030 - 1130	-	-	-	**1230 - 1330**
Noon Peak Volume	1	325	54	0	9	1	1	0	4	3	0	0	0	**390**

PM Peak Hour	-	1630 - 1730	1630 - 1730	1815 - 1915	1500 - 1600	1545 - 1645	-	-	1500 - 1600	1815 - 1915	-	-	-	**1630 - 1730**
PM Peak Volume	0	391	31	1	5	1	0	0	2	0	0	0	0	**427**

Bi-Directional Class Count || Volume Summary 15min

Columbia, SC

Marr Traffic DATA COLLECTION

www.marrtraffic.com

Site 57

I-20 On/Off-Ramp,
west of US-378 Sunset Blvd

Date

Tuesday, April 23, 2024

Lat/Long

34.009828°, -81.149049°

Weather

Fair
58°F

Click here for Detailed Weather

0000 - 2400 (Weekday 24h Session) (04-23-2024)

Volume Summary 15min

	Volume Summary 15min		15min	60min
TIME	EB	WB	**Total**	**Total**
0000 - 0015	0	0	**0**	
0015 - 0030	0	0	**0**	
0030 - 0045	0	0	**0**	
0045 - 0100	0	0	**0**	**0**
0100 - 0115	0	0	**0**	
0115 - 0130	0	0	**0**	
0130 - 0145	0	0	**0**	
0145 - 0200	0	0	**0**	**0**
0200 - 0215	0	0	**0**	
0215 - 0230	0	0	**0**	
0230 - 0245	0	0	**0**	
0245 - 0300	0	0	**0**	**0**
0300 - 0315	0	0	**0**	
0315 - 0330	0	0	**0**	
0330 - 0345	0	0	**0**	
0345 - 0400	0	0	**0**	**0**
0400 - 0415	0	0	**0**	
0415 - 0430	0	0	**0**	
0430 - 0445	0	0	**0**	
0445 - 0500	0	0	**0**	**0**
0500 - 0515	0	0	**0**	
0515 - 0530	0	0	**0**	
0530 - 0545	0	0	**0**	
0545 - 0600	0	0	**0**	**0**
0600 - 0615	0	0	**0**	
0615 - 0630	0	0	**0**	
0630 - 0645	0	0	**0**	
0645 - 0700	0	0	**0**	**0**
0700 - 0715	0	0	**0**	
0715 - 0730	0	0	**0**	
0730 - 0745	0	0	**0**	
0745 - 0800	0	0	**0**	**0**
0800 - 0815	0	0	**0**	
0815 - 0830	0	0	**0**	
0830 - 0845	0	0	**0**	
0845 - 0900	0	0	**0**	**0**
0900 - 0915	0	0	**0**	
0915 - 0930	0	0	**0**	
0930 - 0945	0	0	**0**	
0945 - 1000	0	0	**0**	**0**
1000 - 1015	0	0	**0**	
1015 - 1030	0	0	**0**	
1030 - 1045	0	0	**0**	
1045 - 1100	0	0	**0**	**0**
1100 - 1115	0	0	**0**	
1115 - 1130	0	0	**0**	
1130 - 1145	0	0	**0**	
1145 - 1200	0	0	**0**	**0**

	Volume Summary 15min		15min	60min
Time	EB	WB	**Total**	**Total**
1200 - 1215	0	0	**0**	
1215 - 1230	0	0	**0**	
1230 - 1245	0	0	**0**	
1245 - 1300	0	0	**0**	**0**
1300 - 1315	0	0	**0**	
1315 - 1330	0	0	**0**	
1330 - 1345	0	0	**0**	
1345 - 1400	0	0	**0**	**0**
1400 - 1415	0	0	**0**	
1415 - 1430	0	0	**0**	
1430 - 1445	0	0	**0**	
1445 - 1500	0	0	**0**	**0**
1500 - 1515	0	0	**0**	
1515 - 1530	0	0	**0**	
1530 - 1545	0	0	**0**	
1545 - 1600	0	0	**0**	**0**
1600 - 1615	0	0	**0**	
1615 - 1630	0	0	**0**	
1630 - 1645	0	0	**0**	
1645 - 1700	0	0	**0**	**0**
1700 - 1715	0	0	**0**	
1715 - 1730	0	0	**0**	
1730 - 1745	0	0	**0**	
1745 - 1800	0	0	**0**	**0**
1800 - 1815	0	0	**0**	
1815 - 1830	0	0	**0**	
1830 - 1845	0	0	**0**	
1845 - 1900	0	0	**0**	**0**
1900 - 1915	0	88	**88**	
1915 - 1930	0	95	**95**	
1930 - 1945	0	82	**82**	
1945 - 2000	0	98	**98**	**363**
2000 - 2015	0	68	**68**	
2015 - 2030	0	74	**74**	
2030 - 2045	0	75	**75**	
2045 - 2100	0	60	**60**	**277**
2100 - 2115	0	81	**81**	
2115 - 2130	0	63	**63**	
2130 - 2145	0	61	**61**	
2145 - 2200	0	58	**58**	**263**
2200 - 2215	0	42	**42**	
2215 - 2230	0	32	**32**	
2230 - 2245	0	22	**22**	
2245 - 2300	0	26	**26**	**122**
2300 - 2315	0	15	**15**	
2315 - 2330	0	16	**16**	
2330 - 2345	0	14	**14**	
2345 - 0000	0	11	**11**	**56**

Session Total	0	1081	**1081**
Session Average	0.00	11.26	**11.26**
Session Percentage	0.00	100.00	

Site 57
I-20 On/Off-Ramp,
west of US-378 Sunset Blvd

Date
Wednesday, April 24, 2024

Lat/Long
34.009828°, -81.149049°

Weather
Fair
66°F

Click here for Detailed Weather

0000 - 2400 (Weekday 24h Session) (04-24-2024)

Volume Summary 15min

TIME	Volume Summary 15min EB	WB	15min Total	60min Total
0000 - 0015	0	7	**7**	
0015 - 0030	0	9	**9**	
0030 - 0045	0	7	**7**	
0045 - 0100	0	6	**6**	**29**
0100 - 0115	0	4	**4**	
0115 - 0130	0	3	**3**	
0130 - 0145	0	4	**4**	
0145 - 0200	0	5	**5**	**16**
0200 - 0215	0	8	**8**	
0215 - 0230	0	3	**3**	
0230 - 0245	0	3	**3**	
0245 - 0300	0	4	**4**	**18**
0300 - 0315	0	9	**9**	
0315 - 0330	0	7	**7**	
0330 - 0345	0	8	**8**	
0345 - 0400	0	11	**11**	**35**
0400 - 0415	0	12	**12**	
0415 - 0430	0	11	**11**	
0430 - 0445	0	15	**15**	
0445 - 0500	0	17	**17**	**55**
0500 - 0515	0	16	**16**	
0515 - 0530	0	25	**25**	
0530 - 0545	0	33	**33**	
0545 - 0600	0	31	**31**	**105**
0600 - 0615	0	56	**56**	
0615 - 0630	0	72	**72**	
0630 - 0645	0	134	**134**	
0645 - 0700	0	105	**105**	**367**
0700 - 0715	0	146	**146**	
0715 - 0730	0	147	**147**	
0730 - 0745	0	189	**189**	
0745 - 0800	0	193	**193**	**675**
0800 - 0815	0	169	**169**	
0815 - 0830	0	160	**160**	
0830 - 0845	0	204	**204**	
0845 - 0900	0	175	**175**	**708**
0900 - 0915	0	128	**128**	
0915 - 0930	0	149	**149**	
0930 - 0945	0	137	**137**	
0945 - 1000	0	119	**119**	**533**
1000 - 1015	0	86	**86**	
1015 - 1030	0	130	**130**	
1030 - 1045	0	120	**120**	
1045 - 1100	0	106	**106**	**442**
1100 - 1115	0	144	**144**	
1115 - 1130	0	140	**140**	
1130 - 1145	0	97	**97**	
1145 - 1200	0	108	**108**	**489**

Time	Volume Summary 15min EB	WB	15min Total	60min Total
1200 - 1215	0	95	**95**	
1215 - 1230	0	129	**129**	
1230 - 1245	0	111	**111**	
1245 - 1300	0	133	**133**	**468**
1300 - 1315	0	132	**132**	
1315 - 1330	0	128	**128**	
1330 - 1345	0	114	**114**	
1345 - 1400	0	107	**107**	**481**
1400 - 1415	0	103	**103**	
1415 - 1430	0	122	**122**	
1430 - 1445	0	94	**94**	
1445 - 1500	0	116	**116**	**435**
1500 - 1515	0	94	**94**	
1515 - 1530	0	87	**87**	
1530 - 1545	0	131	**131**	
1545 - 1600	0	116	**116**	**428**
1600 - 1615	0	125	**125**	
1615 - 1630	0	153	**153**	
1630 - 1645	0	150	**150**	
1645 - 1700	0	146	**146**	**574**
1700 - 1715	0	132	**132**	
1715 - 1730	0	115	**115**	
1730 - 1745	0	98	**98**	
1745 - 1800	0	94	**94**	**439**
1800 - 1815	0	133	**133**	
1815 - 1830	0	122	**122**	
1830 - 1845	0	129	**129**	
1845 - 1900	0	119	**119**	**503**
1900 - 1915	0	80	**80**	
1915 - 1930	0	98	**98**	
1930 - 1945	0	105	**105**	
1945 - 2000	0	91	**91**	**374**
2000 - 2015	0	88	**88**	
2015 - 2030	0	77	**77**	
2030 - 2045	0	69	**69**	
2045 - 2100	0	75	**75**	**309**
2100 - 2115	0	49	**49**	
2115 - 2130	0	58	**58**	
2130 - 2145	0	31	**31**	
2145 - 2200	0	35	**35**	**173**
2200 - 2215	0	37	**37**	
2215 - 2230	0	44	**44**	
2230 - 2245	0	25	**25**	
2245 - 2300	0	18	**18**	**124**
2300 - 2315	0	16	**16**	
2315 - 2330	0	27	**27**	
2330 - 2345	0	17	**17**	
2345 - 0000	0	11	**11**	**71**

Session Total	0	7851	**7851**
Session Average	0.00	81.78	**81.78**
Session Percentage	0.00	100.00	

Site 57
I-20 On/Off-Ramp,
west of US-378 Sunset Blvd

Date
Thursday, April 25, 2024

Lat/Long
34.009828°, -81.149049°

Weather
Fair
67°F

Click here for Detailed Weather

0000 - 2400 (Weekday 24h Session) (04-25-2024)
Volume Summary 15min

TIME	Volume Summary 15min EB	Volume Summary 15min WB	15min Total	60min Total
0000 - 0015	0	7	**7**	
0015 - 0030	0	8	**8**	
0030 - 0045	0	9	**9**	
0045 - 0100	0	5	**5**	**29**
0100 - 0115	0	6	**6**	
0115 - 0130	0	5	**5**	
0130 - 0145	0	3	**3**	
0145 - 0200	0	3	**3**	**17**
0200 - 0215	0	2	**2**	
0215 - 0230	0	6	**6**	
0230 - 0245	0	5	**5**	
0245 - 0300	0	3	**3**	**16**
0300 - 0315	0	2	**2**	
0315 - 0330	0	9	**9**	
0330 - 0345	0	3	**3**	
0345 - 0400	0	13	**13**	**27**
0400 - 0415	0	4	**4**	
0415 - 0430	0	8	**8**	
0430 - 0445	0	16	**16**	
0445 - 0500	0	25	**25**	**53**
0500 - 0515	0	15	**15**	
0515 - 0530	0	26	**26**	
0530 - 0545	0	40	**40**	
0545 - 0600	0	58	**58**	**139**
0600 - 0615	0	62	**62**	
0615 - 0630	0	82	**82**	
0630 - 0645	0	105	**105**	
0645 - 0700	0	137	**137**	**386**
0700 - 0715	0	241	**241**	
0715 - 0730	0	247	**247**	
0730 - 0745	0	265	**265**	
0745 - 0800	0	279	**279**	**1032**
0800 - 0815	0	247	**247**	
0815 - 0830	0	279	**279**	
0830 - 0845	0	245	**245**	
0845 - 0900	0	219	**219**	**990**
0900 - 0915	0	196	**196**	
0915 - 0930	0	194	**194**	
0930 - 0945	0	158	**158**	
0945 - 1000	0	140	**140**	**688**
1000 - 1015	0	150	**150**	
1015 - 1030	0	156	**156**	
1030 - 1045	0	154	**154**	
1045 - 1100	0	171	**171**	**631**
1100 - 1115	0	107	**107**	
1115 - 1130	0	66	**66**	
1130 - 1145	0	168	**168**	
1145 - 1200	0	157	**157**	**498**
1200 - 1215	0	129	**129**	
1215 - 1230	0	131	**131**	
1230 - 1245	0	172	**172**	
1245 - 1300	0	182	**182**	**614**
1300 - 1315	0	164	**164**	
1315 - 1330	0	147	**147**	
1330 - 1345	0	150	**150**	
1345 - 1400	0	155	**155**	**616**
1400 - 1415	0	151	**151**	
1415 - 1430	0	177	**177**	
1430 - 1445	0	146	**146**	
1445 - 1500	0	134	**134**	**608**
1500 - 1515	0	180	**180**	
1515 - 1530	0	164	**164**	
1530 - 1545	0	158	**158**	
1545 - 1600	0	172	**172**	**674**
1600 - 1615	0	168	**168**	
1615 - 1630	0	172	**172**	
1630 - 1645	0	149	**149**	
1645 - 1700	0	180	**180**	**669**
1700 - 1715	0	188	**188**	
1715 - 1730	0	220	**220**	
1730 - 1745	0	171	**171**	
1745 - 1800	0	156	**156**	**735**
1800 - 1815	0	168	**168**	
1815 - 1830	0	139	**139**	
1830 - 1845	0	130	**130**	
1845 - 1900	0	139	**139**	**576**
1900 - 1915	0	0	**0**	
1915 - 1930	0	0	**0**	
1930 - 1945	0	0	**0**	
1945 - 2000	0	0	**0**	**0**
2000 - 2015	0	0	**0**	
2015 - 2030	0	0	**0**	
2030 - 2045	0	0	**0**	
2045 - 2100	0	0	**0**	**0**
2100 - 2115	0	0	**0**	
2115 - 2130	0	0	**0**	
2130 - 2145	0	0	**0**	
2145 - 2200	0	0	**0**	**0**
2200 - 2215	0	0	**0**	
2215 - 2230	0	0	**0**	
2230 - 2245	0	0	**0**	
2245 - 2300	0	0	**0**	**0**
2300 - 2315	0	0	**0**	
2315 - 2330	0	0	**0**	
2330 - 2345	0	0	**0**	
2345 - 0000	0	0	**0**	**0**

Session Total	0	8998	**8998**
Session Average	0.00	93.73	**93.73**
Session Percentage	0.00	100.00	

Bi-Directional Class Count || SB WB 60min

Columbia, SC

Marr Traffic DATA COLLECTION

www.marrtraffic.com

Site 57
I-20 On/Off-Ramp,
west of US-378 Sunset Blvd

Date
Tuesday, April 23, 2024

Lat/Long
34.009828°, -81.149049°

Weather
Fair
58°F

Click here for Detailed Weather

0000 - 2400 (Weekday 24h Session) (04-23-2024)
SB WB 60min

	Westbound (Movement 57.1)													
TIME	1	2	3	4	5	6	7	8	9	10	11	12	13	**Total**
0000 - 0100	0	0	0	0	0	0	0	0	0	0	0	0	0	**0**
0100 - 0200	0	0	0	0	0	0	0	0	0	0	0	0	0	**0**
0200 - 0300	0	0	0	0	0	0	0	0	0	0	0	0	0	**0**
0300 - 0400	0	0	0	0	0	0	0	0	0	0	0	0	0	**0**
0400 - 0500	0	0	0	0	0	0	0	0	0	0	0	0	0	**0**
0500 - 0600	0	0	0	0	0	0	0	0	0	0	0	0	0	**0**
0600 - 0700	0	0	0	0	0	0	0	0	0	0	0	0	0	**0**
0700 - 0800	0	0	0	0	0	0	0	0	0	0	0	0	0	**0**
0800 - 0900	0	0	0	0	0	0	0	0	0	0	0	0	0	**0**
0900 - 1000	0	0	0	0	0	0	0	0	0	0	0	0	0	**0**
1000 - 1100	0	0	0	0	0	0	0	0	0	0	0	0	0	**0**
1100 - 1200	0	0	0	0	0	0	0	0	0	0	0	0	0	**0**
1200 - 1300	0	0	0	0	0	0	0	0	0	0	0	0	0	**0**
1300 - 1400	0	0	0	0	0	0	0	0	0	0	0	0	0	**0**
1400 - 1500	0	0	0	0	0	0	0	0	0	0	0	0	0	**0**
1500 - 1600	0	0	0	0	0	0	0	0	0	0	0	0	0	**0**
1600 - 1700	0	0	0	0	0	0	0	0	0	0	0	0	0	**0**
1700 - 1800	0	0	0	0	0	0	0	0	0	0	0	0	0	**0**
1800 - 1900	0	0	0	0	0	0	0	0	0	0	0	0	0	**0**
1900 - 2000	0	318	42	1	1	0	0	0	1	0	0	0	0	**363**
2000 - 2100	0	245	26	0	3	0	0	0	3	0	0	0	0	**277**
2100 - 2200	0	256	2	0	4	0	0	0	1	0	0	0	0	**263**
2200 - 2300	0	119	0	0	2	0	0	0	1	0	0	0	0	**122**
2300 - 2400	0	55	1	0	0	0	0	0	0	0	0	0	0	**56**
Session Total	0	993	71	1	10	0	0	0	6	0	0	0	0	**1081**
Session Average	0.00	41.38	2.96	0.04	0.42	0.00	0.00	0.00	0.25	0.00	0.00	0.00	0.00	**45.04**
Session Percentage	0.00	91.86	6.57	0.09	0.93	0.00	0.00	0.00	0.56	0.00	0.00	0.00	0.00	
AM Peak Hour	-	-	-	-	-	-	-	-	-	-	-	-	-	**-**
AM Peak Volume	0	0	0	0	0	0	0	0	0	0	0	0	0	**0**
Noon Peak Hour	-	-	-	-	-	-	-	-	-	-	-	-	-	**-**
Noon Peak Volume	0	0	0	0	0	0	0	0	0	0	0	0	0	**0**
PM Peak Hour	-	1900 - 2000	1900 - 2000	1900 - 2000	1900 - 2000	-	-	-	1900 - 2000	-	-	-	-	**1900 - 2000**
PM Peak Volume	0	318	42	1	1	0	0	0	1	0	0	0	0	**363**

Site 57
I-20 On/Off-Ramp,
west of US-378 Sunset Blvd

Date
Wednesday, April 24, 2024

Lat/Long
34.009828°, -81.149049°

Weather
Fair
66°F

Click here for Detailed Weather

0000 - 2400 (Weekday 24h Session) (04-24-2024)
SB WB 60min

	Westbound (Movement 57.1)													
TIME	1	2	3	4	5	6	7	8	9	10	11	12	13	**Total**
0000 - 0100	0	27	0	0	1	0	0	0	1	0	0	0	0	**29**
0100 - 0200	0	15	0	0	0	0	0	0	1	0	0	0	0	**16**
0200 - 0300	0	15	1	0	1	0	0	0	1	0	0	0	0	**18**
0300 - 0400	0	33	0	0	2	0	0	0	0	0	0	0	0	**35**
0400 - 0500	0	52	0	0	1	0	0	0	2	0	0	0	0	**55**
0500 - 0600	1	99	2	0	2	0	0	0	1	0	0	0	0	**105**
0600 - 0700	0	313	48	0	3	0	0	0	3	0	0	0	0	**367**
0700 - 0800	0	581	84	0	8	0	0	1	1	0	0	0	0	**675**
0800 - 0900	0	596	92	2	6	0	1	1	10	0	0	0	0	**708**
0900 - 1000	0	432	84	0	12	1	0	1	3	0	0	0	0	**533**
1000 - 1100	0	371	59	0	4	0	0	0	8	0	0	0	0	**442**
1100 - 1200	0	416	59	0	7	1	1	0	5	0	0	0	0	**489**
1200 - 1300	0	390	65	0	4	0	0	0	9	0	0	0	0	**468**
1300 - 1400	0	393	79	0	5	0	0	1	3	0	0	0	0	**481**
1400 - 1500	0	377	41	0	11	4	0	0	2	0	0	0	0	**435**
1500 - 1600	0	387	33	0	3	1	0	0	4	0	0	0	0	**428**
1600 - 1700	0	527	44	0	3	0	0	0	0	0	0	0	0	**574**
1700 - 1800	0	395	39	0	4	0	0	0	1	0	0	0	0	**439**
1800 - 1900	0	448	51	2	0	0	0	0	2	0	0	0	0	**503**
1900 - 2000	0	339	30	0	2	0	0	0	2	1	0	0	0	**374**
2000 - 2100	0	296	12	0	0	0	0	0	1	0	0	0	0	**309**
2100 - 2200	0	164	2	0	4	0	0	1	2	0	0	0	0	**173**
2200 - 2300	0	122	1	0	0	0	0	0	0	1	0	0	0	**124**
2300 - 2400	0	69	1	0	1	0	0	0	0	0	0	0	0	**71**

Session Total	1	6857	827	4	84	7	2	5	62	2	0	0	0	**7851**
Session Average	0.04	285.71	34.46	0.17	3.50	0.29	0.08	0.21	2.58	0.08	0.00	0.00	0.00	**327.13**
Session Percentage	0.01	87.34	10.53	0.05	1.07	0.09	0.03	0.06	0.79	0.03	0.00	0.00	0.00	

AM Peak Hour	0500 - 0600	0800 - 0900	0800 - 0900	0800 - 0900	0900 - 1000	0900 - 1000	0800 - 0900	0700 - 0800	0800 - 0900	-	-	-	-	**0800 - 0900**
AM Peak Volume	1	596	92	2	12	1	1	1	10	0	0	0	0	**708**

Noon Peak Hour	-	1100 - 1200	1300 - 1400	-	1400 - 1500	1400 - 1500	1100 - 1200	1300 - 1400	1200 - 1300	-	-	-	-	**1100 - 1200**
Noon Peak Volume	0	416	79	0	11	4	1	1	9	0	0	0	0	**489**

PM Peak Hour	-	1600 - 1700	1800 - 1900	1800 - 1900	1700 - 1800	1500 - 1600	-	-	1500 - 1600	1900 - 2000	-	-	-	**1600 - 1700**
PM Peak Volume	0	527	51	2	4	1	0	0	4	1	0	0	0	**574**

Site 57
I-20 On/Off-Ramp,
west of US-378 Sunset Blvd

Date
Thursday, April 25, 2024

Lat/Long
34.009828°, -81.149049°

Weather
Fair
67°F

Click here for Detailed Weather

0000 - 2400 (Weekday 24h Session) (04-25-2024)
SB WB 60min

	Westbound (Movement 57.1)													
TIME	1	2	3	4	5	6	7	8	9	10	11	12	13	**Total**
0000 - 0100	0	29	0	0	0	0	0	0	0	0	0	0	0	**29**
0100 - 0200	0	15	0	0	0	0	0	0	0	2	0	0	0	**17**
0200 - 0300	0	14	1	0	0	0	0	0	1	0	0	0	0	**16**
0300 - 0400	0	25	0	0	1	0	0	0	1	0	0	0	0	**27**
0400 - 0500	0	51	0	0	0	1	0	0	0	1	0	0	0	**53**
0500 - 0600	0	137	0	0	1	0	0	0	1	0	0	0	0	**139**
0600 - 0700	0	342	39	0	3	0	0	1	1	0	0	0	0	**386**
0700 - 0800	0	986	36	1	5	2	1	0	1	0	0	0	0	**1032**
0800 - 0900	0	927	50	0	7	2	0	0	0	4	0	0	0	**990**
0900 - 1000	0	620	56	0	3	3	0	0	2	4	0	0	0	**688**
1000 - 1100	2	557	55	0	9	0	0	1	0	7	0	0	0	**631**
1100 - 1200	0	425	57	0	8	2	1	0	1	4	0	0	0	**498**
1200 - 1300	0	517	76	0	17	0	0	0	4	0	0	0	0	**614**
1300 - 1400	0	529	71	0	11	1	0	0	4	0	0	0	0	**616**
1400 - 1500	0	555	38	0	11	0	0	0	4	0	0	0	0	**608**
1500 - 1600	0	617	42	0	12	0	0	0	3	0	0	0	0	**674**
1600 - 1700	0	619	42	0	6	1	0	0	1	0	0	0	0	**669**
1700 - 1800	0	693	34	0	5	1	0	0	2	0	0	0	0	**735**
1800 - 1900	0	554	19	0	2	0	0	0	1	0	0	0	0	**576**
1900 - 2000	0	0	0	0	0	0	0	0	0	0	0	0	0	**0**
2000 - 2100	0	0	0	0	0	0	0	0	0	0	0	0	0	**0**
2100 - 2200	0	0	0	0	0	0	0	0	0	0	0	0	0	**0**
2200 - 2300	0	0	0	0	0	0	0	0	0	0	0	0	0	**0**
2300 - 2400	0	0	0	0	0	0	0	0	0	0	0	0	0	**0**

Session Total	2	8212	616	1	101	13	2	2	27	22	0	0	0	**8998**
Session Average	0.08	342.17	25.67	0.04	4.21	0.54	0.08	0.08	1.13	0.92	0.00	0.00	0.00	**374.92**
Session Percentage	0.02	91.26	6.85	0.01	1.12	0.14	0.02	0.02	0.30	0.24	0.00	0.00	0.00	

AM Peak Hour	-	0700 - 0800	0900 - 1000	0700 - 0800	0800 - 0900	0900 - 1000	0700 - 0800	0600 - 0700	0900 - 1000	0800 - 0900	-	-	-	**0700 - 0800**
AM Peak Hour Volume	0	986	56	1	7	3	1	1	2	4	0	0	0	**1032**

Noon Peak Hour	1000 - 1100	1000 - 1100	1200 - 1300	-	1200 - 1300	1100 - 1200	1100 - 1200	1000 - 1100	1200 - 1300	1000 - 1100	-	-	-	**1000 - 1100**
Noon Peak Hour Volume	2	557	76	0	17	2	1	1	4	7	0	0	0	**631**

PM Peak Hour	-	1700 - 1800	1500 - 1600	-	1500 - 1600	1600 - 1700	-	-	1500 - 1600	-	-	-	-	**1700 - 1800**
PM Peak Hour Volume	0	693	42	0	12	1	0	0	3	0	0	0	0	**735**

Bi-Directional Class Count || Volume Summary 60min

Columbia, SC

Marr Traffic DATA COLLECTION

www.marrtraffic.com

Site 57

I-20 On/Off-Ramp,
west of US-378 Sunset Blvd

Date

Tuesday, April 23, 2024

Lat/Long

34.009828°, -81.149049°

Weather

Fair
58°F

Click here for Detailed Weather

0000 - 2400 (Weekday 24h Session) (04-23-2024)

Volume Summary 60min

	Volume Summary 60min		
TIME	EB	WB	**Total**
0000 - 0100	0	0	**0**
0100 - 0200	0	0	**0**
0200 - 0300	0	0	**0**
0300 - 0400	0	0	**0**
0400 - 0500	0	0	**0**
0500 - 0600	0	0	**0**
0600 - 0700	0	0	**0**
0700 - 0800	0	0	**0**
0800 - 0900	0	0	**0**
0900 - 1000	0	0	**0**
1000 - 1100	0	0	**0**
1100 - 1200	0	0	**0**

	Volume Summary 60min		
Time	EB	WB	**Total**
1200 - 1300	0	0	**0**
1300 - 1400	0	0	**0**
1400 - 1500	0	0	**0**
1500 - 1600	0	0	**0**
1600 - 1700	0	0	**0**
1700 - 1800	0	0	**0**
1800 - 1900	0	0	**0**
1900 - 2000	0	363	**363**
2000 - 2100	0	277	**277**
2100 - 2200	0	263	**263**
2200 - 2300	0	122	**122**
2300 - 2400	0	56	**56**

Session Total	0	1081	**1081**
Session Average	0.00	45.04	**45.04**
Session Percentage	0.00	100.00	

Site 57

I-20 On/Off-Ramp,
west of US-378 Sunset Blvd

Date

Wednesday, April 24, 2024

Lat/Long

34.009828°, -81.149049°

Weather

Fair
66°F

Click here for Detailed Weather

0000 - 2400 (Weekday 24h Session) (04-24-2024)

Volume Summary 60min

	Volume Summary 60min		
TIME	EB	WB	**Total**
0000 - 0100	0	29	**29**
0100 - 0200	0	16	**16**
0200 - 0300	0	18	**18**
0300 - 0400	0	35	**35**
0400 - 0500	0	55	**55**
0500 - 0600	0	105	**105**
0600 - 0700	0	367	**367**
0700 - 0800	0	675	**675**
0800 - 0900	0	708	**708**
0900 - 1000	0	533	**533**
1000 - 1100	0	442	**442**
1100 - 1200	0	489	**489**

	Volume Summary 60min		
Time	EB	WB	**Total**
1200 - 1300	0	468	**468**
1300 - 1400	0	481	**481**
1400 - 1500	0	435	**435**
1500 - 1600	0	428	**428**
1600 - 1700	0	574	**574**
1700 - 1800	0	439	**439**
1800 - 1900	0	503	**503**
1900 - 2000	0	374	**374**
2000 - 2100	0	309	**309**
2100 - 2200	0	173	**173**
2200 - 2300	0	124	**124**
2300 - 2400	0	71	**71**

Session Total	0	7851	**7851**
Session Average	0.00	327.13	**327.13**
Session Percentage	0.00	100.00	

Site 57

I-20 On/Off-Ramp,
west of US-378 Sunset Blvd

Date

Thursday, April 25, 2024

Lat/Long

34.009828°, -81.149049°

Weather

Fair
67°F

Click here for Detailed Weather

0000 - 2400 (Weekday 24h Session) (04-25-2024)

Volume Summary 60min

	Volume Summary 60min		
TIME	EB	WB	**Total**
0000 - 0100	0	29	**29**
0100 - 0200	0	17	**17**
0200 - 0300	0	16	**16**
0300 - 0400	0	27	**27**
0400 - 0500	0	53	**53**
0500 - 0600	0	139	**139**
0600 - 0700	0	386	**386**
0700 - 0800	0	1032	**1032**
0800 - 0900	0	990	**990**
0900 - 1000	0	688	**688**
1000 - 1100	0	631	**631**
1100 - 1200	0	498	**498**

	Volume Summary 60min		
Time	EB	WB	**Total**
1200 - 1300	0	614	**614**
1300 - 1400	0	616	**616**
1400 - 1500	0	608	**608**
1500 - 1600	0	674	**674**
1600 - 1700	0	669	**669**
1700 - 1800	0	735	**735**
1800 - 1900	0	576	**576**
1900 - 2000	0	0	**0**
2000 - 2100	0	0	**0**
2100 - 2200	0	0	**0**
2200 - 2300	0	0	**0**
2300 - 2400	0	0	**0**

Session Total	0	8998	**8998**
Session Average	0.00	374.92	**374.92**
Session Percentage	0.00	100.00	

Bi-Directional Class Count || Graphical Analysis SB WB

Columbia, SC

Marr Traffic DATA COLLECTION

www.marrtraffic.com

Site 57

I-20 On/Off-Ramp,
west of US-378 Sunset Blvd

Lat/Long

34.009828°, -81.149049°

0000 - 2400 (Weekday 24h Session)

Graphical Analysis SB WB

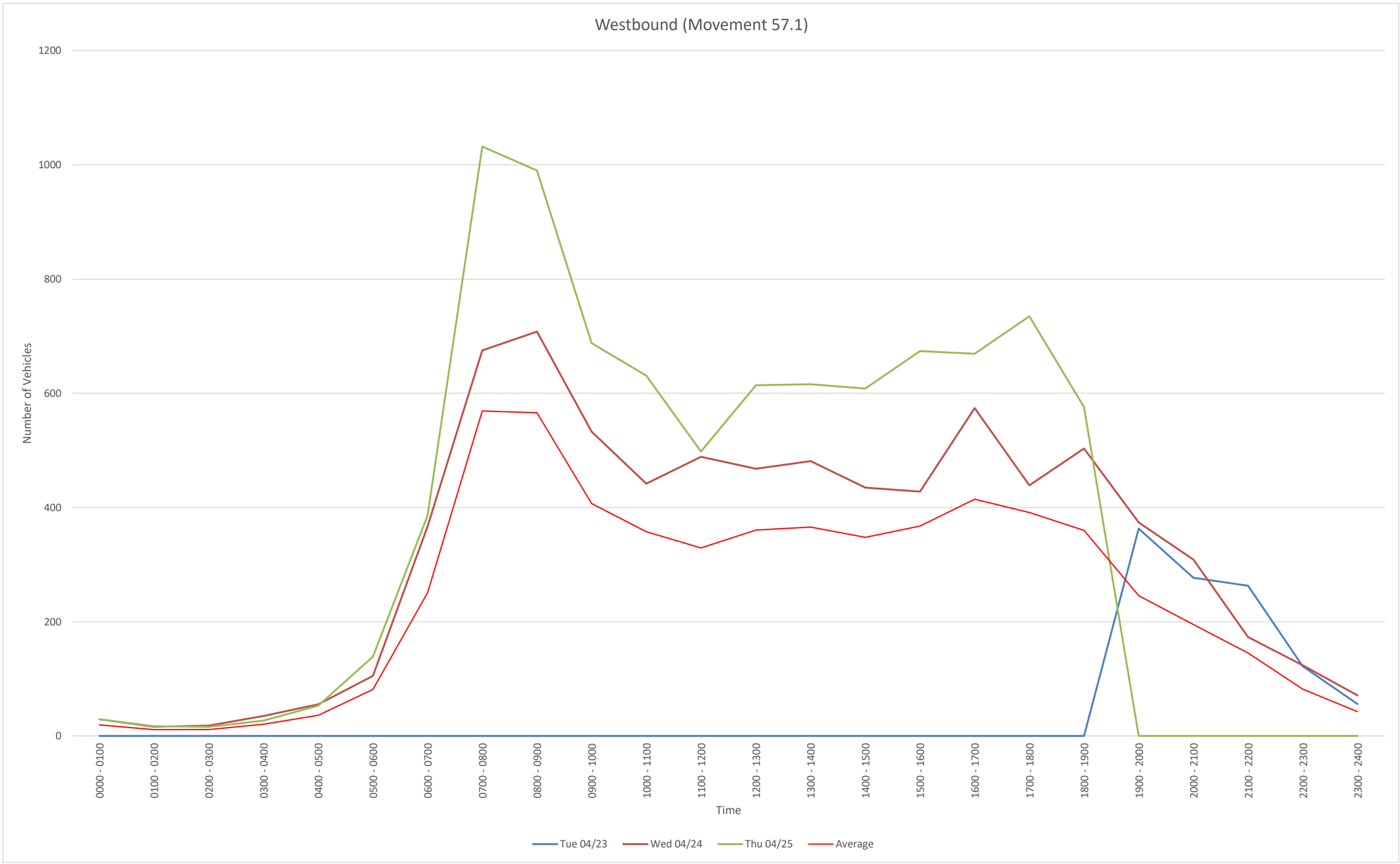

Time	Tue 04/23	Wed 04/24	Thu 04/25				
0000 - 0100	0	29	29				
0100 - 0200	0	16	17				
0200 - 0300	0	18	16				
0300 - 0400	0	35	27				
0400 - 0500	0	55	53				
0500 - 0600	0	105	139				
0600 - 0700	0	367	386				
0700 - 0800	0	675	1032				
0800 - 0900	0	708	990				
0900 - 1000	0	533	688				
1000 - 1100	0	442	631				
1100 - 1200	0	489	498				
1200 - 1300	0	468	614				
1300 - 1400	0	481	616				
1400 - 1500	0	435	608				
1500 - 1600	0	428	674				
1600 - 1700	0	574	669				
1700 - 1800	0	439	735				
1800 - 1900	0	503	576				
1900 - 2000	363	374	0				
2000 - 2100	277	309	0				
2100 - 2200	263	173	0				
2200 - 2300	122	124	0				
2300 - 2400	56	71	0				
Daily Total	1081	7851	8998				

EB
File Name:
Start Date: 4/23/2024
Start Time: 0
Site Code: 57
Station ID: 1
Location 1: I-20 On/Off-Ramp, west of US-378 Sunset Blvd
Location 2:

Date	Time	1	2	3	4	5	6	7	8	9	10	11	12	13
4/23/2024	12:00 AM	0	0	0	0	0	0	0	0	0	0	0	0	0
4/23/2024	12:15 AM	0	0	0	0	0	0	0	0	0	0	0	0	0
4/23/2024	12:30 AM	0	0	0	0	0	0	0	0	0	0	0	0	0
4/23/2024	12:45 AM	0	0	0	0	0	0	0	0	0	0	0	0	0
4/23/2024	1:00 AM	0	0	0	0	0	0	0	0	0	0	0	0	0
4/23/2024	1:15 AM	0	0	0	0	0	0	0	0	0	0	0	0	0
4/23/2024	1:30 AM	0	0	0	0	0	0	0	0	0	0	0	0	0
4/23/2024	1:45 AM	0	0	0	0	0	0	0	0	0	0	0	0	0
4/23/2024	2:00 AM	0	0	0	0	0	0	0	0	0	0	0	0	0
4/23/2024	2:15 AM	0	0	0	0	0	0	0	0	0	0	0	0	0
4/23/2024	2:30 AM	0	0	0	0	0	0	0	0	0	0	0	0	0
4/23/2024	2:45 AM	0	0	0	0	0	0	0	0	0	0	0	0	0
4/23/2024	3:00 AM	0	0	0	0	0	0	0	0	0	0	0	0	0
4/23/2024	3:15 AM	0	0	0	0	0	0	0	0	0	0	0	0	0
4/23/2024	3:30 AM	0	0	0	0	0	0	0	0	0	0	0	0	0
4/23/2024	3:45 AM	0	0	0	0	0	0	0	0	0	0	0	0	0
4/23/2024	4:00 AM	0	0	0	0	0	0	0	0	0	0	0	0	0
4/23/2024	4:15 AM	0	0	0	0	0	0	0	0	0	0	0	0	0
4/23/2024	4:30 AM	0	0	0	0	0	0	0	0	0	0	0	0	0
4/23/2024	4:45 AM	0	0	0	0	0	0	0	0	0	0	0	0	0
4/23/2024	5:00 AM	0	0	0	0	0	0	0	0	0	0	0	0	0
4/23/2024	5:15 AM	0	0	0	0	0	0	0	0	0	0	0	0	0
4/23/2024	5:30 AM	0	0	0	0	0	0	0	0	0	0	0	0	0
4/23/2024	5:45 AM	0	0	0	0	0	0	0	0	0	0	0	0	0
4/23/2024	6:00 AM	0	0	0	0	0	0	0	0	0	0	0	0	0
4/23/2024	6:15 AM	0	0	0	0	0	0	0	0	0	0	0	0	0
4/23/2024	6:30 AM	0	0	0	0	0	0	0	0	0	0	0	0	0
4/23/2024	6:45 AM	0	0	0	0	0	0	0	0	0	0	0	0	0
4/23/2024	7:00 AM	0	0	0	0	0	0	0	0	0	0	0	0	0
4/23/2024	7:15 AM	0	0	0	0	0	0	0	0	0	0	0	0	0
4/23/2024	7:30 AM	0	0	0	0	0	0	0	0	0	0	0	0	0
4/23/2024	7:45 AM	0	0	0	0	0	0	0	0	0	0	0	0	0
4/23/2024	8:00 AM	0	0	0	0	0	0	0	0	0	0	0	0	0
4/23/2024	8:15 AM	0	0	0	0	0	0	0	0	0	0	0	0	0
4/23/2024	8:30 AM	0	0	0	0	0	0	0	0	0	0	0	0	0
4/23/2024	8:45 AM	0	0	0	0	0	0	0	0	0	0	0	0	0
4/23/2024	9:00 AM	0	0	0	0	0	0	0	0	0	0	0	0	0
4/23/2024	9:15 AM	0	0	0	0	0	0	0	0	0	0	0	0	0
4/23/2024	9:30 AM	0	0	0	0	0	0	0	0	0	0	0	0	0
4/23/2024	9:45 AM	0	0	0	0	0	0	0	0	0	0	0	0	0
4/23/2024	10:00 AM	0	0	0	0	0	0	0	0	0	0	0	0	0
4/23/2024	10:15 AM	0	0	0	0	0	0	0	0	0	0	0	0	0
4/23/2024	10:30 AM	0	0	0	0	0	0	0	0	0	0	0	0	0
4/23/2024	10:45 AM	0	0	0	0	0	0	0	0	0	0	0	0	0
4/23/2024	11:00 AM	0	0	0	0	0	0	0	0	0	0	0	0	0
4/23/2024	11:15 AM	0	0	0	0	0	0	0	0	0	0	0	0	0
4/23/2024	11:30 AM	0	0	0	0	0	0	0	0	0	0	0	0	0
4/23/2024	11:45 AM	0	0	0	0	0	0	0	0	0	0	0	0	0
4/23/2024	12:00 PM	0	0	0	0	0	0	0	0	0	0	0	0	0
4/23/2024	12:15 PM	0	0	0	0	0	0	0	0	0	0	0	0	0
4/23/2024	12:30 PM	0	0	0	0	0	0	0	0	0	0	0	0	0
4/23/2024	12:45 PM	0	0	0	0	0	0	0	0	0	0	0	0	0
4/23/2024	1:00 PM	0	0	0	0	0	0	0	0	0	0	0	0	0
4/23/2024	1:15 PM	0	0	0	0	0	0	0	0	0	0	0	0	0
4/23/2024	1:30 PM	0	0	0	0	0	0	0	0	0	0	0	0	0
4/23/2024	1:45 PM	0	0	0	0	0	0	0	0	0	0	0	0	0
4/23/2024	2:00 PM	0	0	0	0	0	0	0	0	0	0	0	0	0
4/23/2024	2:15 PM	0	0	0	0	0	0	0	0	0	0	0	0	0
4/23/2024	2:30 PM	0	0	0	0	0	0	0	0	0	0	0	0	0
4/23/2024	2:45 PM	0	0	0	0	0	0	0	0	0	0	0	0	0
4/23/2024	3:00 PM	0	0	0	0	0	0	0	0	0	0	0	0	0
4/23/2024	3:15 PM	0	0	0	0	0	0	0	0	0	0	0	0	0
4/23/2024	3:30 PM	0	0	0	0	0	0	0	0	0	0	0	0	0
4/23/2024	3:45 PM	0	0	0	0	0	0	0	0	0	0	0	0	0
4/23/2024	4:00 PM	0	0	0	0	0	0	0	0	0	0	0	0	0
4/23/2024	4:15 PM	0	0	0	0	0	0	0	0	0	0	0	0	0
4/23/2024	4:30 PM	0	0	0	0	0	0	0	0	0	0	0	0	0
4/23/2024	4:45 PM	0	0	0	0	0	0	0	0	0	0	0	0	0
4/23/2024	5:00 PM	0	0	0	0	0	0	0	0	0	0	0	0	0
4/23/2024	5:15 PM	0	0	0	0	0	0	0	0	0	0	0	0	0
4/23/2024	5:30 PM	0	0	0	0	0	0	0	0	0	0	0	0	0
4/23/2024	5:45 PM	0	0	0	0	0	0	0	0	0	0	0	0	0
4/23/2024	6:00 PM	0	0	0	0	0	0	0	0	0	0	0	0	0
4/23/2024	6:15 PM	0	0	0	0	0	0	0	0	0	0	0	0	0
4/23/2024	6:30 PM	0	0	0	0	0	0	0	0	0	0	0	0	0
4/23/2024	6:45 PM	0	0	0	0	0	0	0	0	0	0	0	0	0
4/23/2024	7:00 PM	0	0	0	0	0	0	0	0	0	0	0	0	0
4/23/2024	7:15 PM	0	0	0	0	0	0	0	0	0	0	0	0	0
4/23/2024	7:30 PM	0	0	0	0	0	0	0	0	0	0	0	0	0
4/23/2024	7:45 PM	0	0	0	0	0	0	0	0	0	0	0	0	0
4/23/2024	8:00 PM	0	0	0	0	0	0	0	0	0	0	0	0	0
4/23/2024	8:15 PM	0	0	0	0	0	0	0	0	0	0	0	0	0
4/23/2024	8:30 PM	0	0	0	0	0	0	0	0	0	0	0	0	0
4/23/2024	8:45 PM	0	0	0	0	0	0	0	0	0	0	0	0	0
4/23/2024	9:00 PM	0	0	0	0	0	0	0	0	0	0	0	0	0
4/23/2024	9:15 PM	0	0	0	0	0	0	0	0	0	0	0	0	0
4/23/2024	9:30 PM	0	0	0	0	0	0	0	0	0	0	0	0	0
4/23/2024	9:45 PM	0	0	0	0	0	0	0	0	0	0	0	0	0
4/23/2024	10:00 PM	0	0	0	0	0	0	0	0	0	0	0	0	0
4/23/2024	10:15 PM	0	0	0	0	0	0	0	0	0	0	0	0	0
4/23/2024	10:30 PM	0	0	0	0	0	0	0	0	0	0	0	0	0
4/23/2024	10:45 PM	0	0	0	0	0	0	0	0	0	0	0	0	0
4/23/2024	11:00 PM	0	0	0	0	0	0	0	0	0	0	0	0	0
4/23/2024	11:15 PM	0	0	0	0	0	0	0	0	0	0	0	0	0
4/23/2024	11:30 PM	0	0	0	0	0	0	0	0	0	0	0	0	0
4/23/2024	11:45 PM	0	0	0	0	0	0	0	0	0	0	0	0	0

4/24/2024	12:00 AM	0	0	0	0	0	0	0	0	0	0	0	0	0
4/24/2024	12:15 AM	0	0	0	0	0	0	0	0	0	0	0	0	0
4/24/2024	12:30 AM	0	0	0	0	0	0	0	0	0	0	0	0	0
4/24/2024	12:45 AM	0	0	0	0	0	0	0	0	0	0	0	0	0
4/24/2024	1:00 AM	0	0	0	0	0	0	0	0	0	0	0	0	0
4/24/2024	1:15 AM	0	0	0	0	0	0	0	0	0	0	0	0	0
4/24/2024	1:30 AM	0	0	0	0	0	0	0	0	0	0	0	0	0
4/24/2024	1:45 AM	0	0	0	0	0	0	0	0	0	0	0	0	0
4/24/2024	2:00 AM	0	0	0	0	0	0	0	0	0	0	0	0	0
4/24/2024	2:15 AM	0	0	0	0	0	0	0	0	0	0	0	0	0
4/24/2024	2:30 AM	0	0	0	0	0	0	0	0	0	0	0	0	0
4/24/2024	2:45 AM	0	0	0	0	0	0	0	0	0	0	0	0	0
4/24/2024	3:00 AM	0	0	0	0	0	0	0	0	0	0	0	0	0
4/24/2024	3:15 AM	0	0	0	0	0	0	0	0	0	0	0	0	0
4/24/2024	3:30 AM	0	0	0	0	0	0	0	0	0	0	0	0	0
4/24/2024	3:45 AM	0	0	0	0	0	0	0	0	0	0	0	0	0
4/24/2024	4:00 AM	0	0	0	0	0	0	0	0	0	0	0	0	0
4/24/2024	4:15 AM	0	0	0	0	0	0	0	0	0	0	0	0	0
4/24/2024	4:30 AM	0	0	0	0	0	0	0	0	0	0	0	0	0
4/24/2024	4:45 AM	0	0	0	0	0	0	0	0	0	0	0	0	0
4/24/2024	5:00 AM	0	0	0	0	0	0	0	0	0	0	0	0	0
4/24/2024	5:15 AM	0	0	0	0	0	0	0	0	0	0	0	0	0
4/24/2024	5:30 AM	0	0	0	0	0	0	0	0	0	0	0	0	0
4/24/2024	5:45 AM	0	0	0	0	0	0	0	0	0	0	0	0	0
4/24/2024	6:00 AM	0	0	0	0	0	0	0	0	0	0	0	0	0
4/24/2024	6:15 AM	0	0	0	0	0	0	0	0	0	0	0	0	0
4/24/2024	6:30 AM	0	0	0	0	0	0	0	0	0	0	0	0	0
4/24/2024	6:45 AM	0	0	0	0	0	0	0	0	0	0	0	0	0
4/24/2024	7:00 AM	0	0	0	0	0	0	0	0	0	0	0	0	0
4/24/2024	7:15 AM	0	0	0	0	0	0	0	0	0	0	0	0	0
4/24/2024	7:30 AM	0	0	0	0	0	0	0	0	0	0	0	0	0
4/24/2024	7:45 AM	0	0	0	0	0	0	0	0	0	0	0	0	0
4/24/2024	8:00 AM	0	0	0	0	0	0	0	0	0	0	0	0	0
4/24/2024	8:15 AM	0	0	0	0	0	0	0	0	0	0	0	0	0
4/24/2024	8:30 AM	0	0	0	0	0	0	0	0	0	0	0	0	0
4/24/2024	8:45 AM	0	0	0	0	0	0	0	0	0	0	0	0	0
4/24/2024	9:00 AM	0	0	0	0	0	0	0	0	0	0	0	0	0
4/24/2024	9:15 AM	0	0	0	0	0	0	0	0	0	0	0	0	0
4/24/2024	9:30 AM	0	0	0	0	0	0	0	0	0	0	0	0	0
4/24/2024	9:45 AM	0	0	0	0	0	0	0	0	0	0	0	0	0
4/24/2024	10:00 AM	0	0	0	0	0	0	0	0	0	0	0	0	0
4/24/2024	10:15 AM	0	0	0	0	0	0	0	0	0	0	0	0	0
4/24/2024	10:30 AM	0	0	0	0	0	0	0	0	0	0	0	0	0
4/24/2024	10:45 AM	0	0	0	0	0	0	0	0	0	0	0	0	0
4/24/2024	11:00 AM	0	0	0	0	0	0	0	0	0	0	0	0	0
4/24/2024	11:15 AM	0	0	0	0	0	0	0	0	0	0	0	0	0
4/24/2024	11:30 AM	0	0	0	0	0	0	0	0	0	0	0	0	0
4/24/2024	11:45 AM	0	0	0	0	0	0	0	0	0	0	0	0	0
4/24/2024	12:00 PM	0	0	0	0	0	0	0	0	0	0	0	0	0
4/24/2024	12:15 PM	0	0	0	0	0	0	0	0	0	0	0	0	0
4/24/2024	12:30 PM	0	0	0	0	0	0	0	0	0	0	0	0	0
4/24/2024	12:45 PM	0	0	0	0	0	0	0	0	0	0	0	0	0
4/24/2024	1:00 PM	0	0	0	0	0	0	0	0	0	0	0	0	0
4/24/2024	1:15 PM	0	0	0	0	0	0	0	0	0	0	0	0	0
4/24/2024	1:30 PM	0	0	0	0	0	0	0	0	0	0	0	0	0
4/24/2024	1:45 PM	0	0	0	0	0	0	0	0	0	0	0	0	0
4/24/2024	2:00 PM	0	0	0	0	0	0	0	0	0	0	0	0	0
4/24/2024	2:15 PM	0	0	0	0	0	0	0	0	0	0	0	0	0
4/24/2024	2:30 PM	0	0	0	0	0	0	0	0	0	0	0	0	0
4/24/2024	2:45 PM	0	0	0	0	0	0	0	0	0	0	0	0	0
4/24/2024	3:00 PM	0	0	0	0	0	0	0	0	0	0	0	0	0
4/24/2024	3:15 PM	0	0	0	0	0	0	0	0	0	0	0	0	0
4/24/2024	3:30 PM	0	0	0	0	0	0	0	0	0	0	0	0	0
4/24/2024	3:45 PM	0	0	0	0	0	0	0	0	0	0	0	0	0
4/24/2024	4:00 PM	0	0	0	0	0	0	0	0	0	0	0	0	0
4/24/2024	4:15 PM	0	0	0	0	0	0	0	0	0	0	0	0	0
4/24/2024	4:30 PM	0	0	0	0	0	0	0	0	0	0	0	0	0
4/24/2024	4:45 PM	0	0	0	0	0	0	0	0	0	0	0	0	0
4/24/2024	5:00 PM	0	0	0	0	0	0	0	0	0	0	0	0	0
4/24/2024	5:15 PM	0	0	0	0	0	0	0	0	0	0	0	0	0
4/24/2024	5:30 PM	0	0	0	0	0	0	0	0	0	0	0	0	0
4/24/2024	5:45 PM	0	0	0	0	0	0	0	0	0	0	0	0	0
4/24/2024	6:00 PM	0	0	0	0	0	0	0	0	0	0	0	0	0
4/24/2024	6:15 PM	0	0	0	0	0	0	0	0	0	0	0	0	0
4/24/2024	6:30 PM	0	0	0	0	0	0	0	0	0	0	0	0	0
4/24/2024	6:45 PM	0	0	0	0	0	0	0	0	0	0	0	0	0
4/24/2024	7:00 PM	0	0	0	0	0	0	0	0	0	0	0	0	0
4/24/2024	7:15 PM	0	0	0	0	0	0	0	0	0	0	0	0	0
4/24/2024	7:30 PM	0	0	0	0	0	0	0	0	0	0	0	0	0
4/24/2024	7:45 PM	0	0	0	0	0	0	0	0	0	0	0	0	0
4/24/2024	8:00 PM	0	0	0	0	0	0	0	0	0	0	0	0	0
4/24/2024	8:15 PM	0	0	0	0	0	0	0	0	0	0	0	0	0
4/24/2024	8:30 PM	0	0	0	0	0	0	0	0	0	0	0	0	0
4/24/2024	8:45 PM	0	0	0	0	0	0	0	0	0	0	0	0	0
4/24/2024	9:00 PM	0	0	0	0	0	0	0	0	0	0	0	0	0
4/24/2024	9:15 PM	0	0	0	0	0	0	0	0	0	0	0	0	0
4/24/2024	9:30 PM	0	0	0	0	0	0	0	0	0	0	0	0	0
4/24/2024	9:45 PM	0	0	0	0	0	0	0	0	0	0	0	0	0
4/24/2024	10:00 PM	0	0	0	0	0	0	0	0	0	0	0	0	0
4/24/2024	10:15 PM	0	0	0	0	0	0	0	0	0	0	0	0	0
4/24/2024	10:30 PM	0	0	0	0	0	0	0	0	0	0	0	0	0
4/24/2024	10:45 PM	0	0	0	0	0	0	0	0	0	0	0	0	0
4/24/2024	11:00 PM	0	0	0	0	0	0	0	0	0	0	0	0	0
4/24/2024	11:15 PM	0	0	0	0	0	0	0	0	0	0	0	0	0
4/24/2024	11:30 PM	0	0	0	0	0	0	0	0	0	0	0	0	0
4/24/2024	11:45 PM	0	0	0	0	0	0	0	0	0	0	0	0	0

4/25/2024	12:00 AM	0	0	0	0	0	0	0	0	0	0	0	0	0
4/25/2024	12:15 AM	0	0	0	0	0	0	0	0	0	0	0	0	0
4/25/2024	12:30 AM	0	0	0	0	0	0	0	0	0	0	0	0	0
4/25/2024	12:45 AM	0	0	0	0	0	0	0	0	0	0	0	0	0
4/25/2024	1:00 AM	0	0	0	0	0	0	0	0	0	0	0	0	0
4/25/2024	1:15 AM	0	0	0	0	0	0	0	0	0	0	0	0	0
4/25/2024	1:30 AM	0	0	0	0	0	0	0	0	0	0	0	0	0
4/25/2024	1:45 AM	0	0	0	0	0	0	0	0	0	0	0	0	0
4/25/2024	2:00 AM	0	0	0	0	0	0	0	0	0	0	0	0	0
4/25/2024	2:15 AM	0	0	0	0	0	0	0	0	0	0	0	0	0
4/25/2024	2:30 AM	0	0	0	0	0	0	0	0	0	0	0	0	0
4/25/2024	2:45 AM	0	0	0	0	0	0	0	0	0	0	0	0	0
4/25/2024	3:00 AM	0	0	0	0	0	0	0	0	0	0	0	0	0
4/25/2024	3:15 AM	0	0	0	0	0	0	0	0	0	0	0	0	0
4/25/2024	3:30 AM	0	0	0	0	0	0	0	0	0	0	0	0	0
4/25/2024	3:45 AM	0	0	0	0	0	0	0	0	0	0	0	0	0
4/25/2024	4:00 AM	0	0	0	0	0	0	0	0	0	0	0	0	0
4/25/2024	4:15 AM	0	0	0	0	0	0	0	0	0	0	0	0	0
4/25/2024	4:30 AM	0	0	0	0	0	0	0	0	0	0	0	0	0
4/25/2024	4:45 AM	0	0	0	0	0	0	0	0	0	0	0	0	0
4/25/2024	5:00 AM	0	0	0	0	0	0	0	0	0	0	0	0	0
4/25/2024	5:15 AM	0	0	0	0	0	0	0	0	0	0	0	0	0
4/25/2024	5:30 AM	0	0	0	0	0	0	0	0	0	0	0	0	0
4/25/2024	5:45 AM	0	0	0	0	0	0	0	0	0	0	0	0	0
4/25/2024	6:00 AM	0	0	0	0	0	0	0	0	0	0	0	0	0
4/25/2024	6:15 AM	0	0	0	0	0	0	0	0	0	0	0	0	0
4/25/2024	6:30 AM	0	0	0	0	0	0	0	0	0	0	0	0	0
4/25/2024	6:45 AM	0	0	0	0	0	0	0	0	0	0	0	0	0
4/25/2024	7:00 AM	0	0	0	0	0	0	0	0	0	0	0	0	0
4/25/2024	7:15 AM	0	0	0	0	0	0	0	0	0	0	0	0	0
4/25/2024	7:30 AM	0	0	0	0	0	0	0	0	0	0	0	0	0
4/25/2024	7:45 AM	0	0	0	0	0	0	0	0	0	0	0	0	0
4/25/2024	8:00 AM	0	0	0	0	0	0	0	0	0	0	0	0	0
4/25/2024	8:15 AM	0	0	0	0	0	0	0	0	0	0	0	0	0
4/25/2024	8:30 AM	0	0	0	0	0	0	0	0	0	0	0	0	0
4/25/2024	8:45 AM	0	0	0	0	0	0	0	0	0	0	0	0	0
4/25/2024	9:00 AM	0	0	0	0	0	0	0	0	0	0	0	0	0
4/25/2024	9:15 AM	0	0	0	0	0	0	0	0	0	0	0	0	0
4/25/2024	9:30 AM	0	0	0	0	0	0	0	0	0	0	0	0	0
4/25/2024	9:45 AM	0	0	0	0	0	0	0	0	0	0	0	0	0
4/25/2024	10:00 AM	0	0	0	0	0	0	0	0	0	0	0	0	0
4/25/2024	10:15 AM	0	0	0	0	0	0	0	0	0	0	0	0	0
4/25/2024	10:30 AM	0	0	0	0	0	0	0	0	0	0	0	0	0
4/25/2024	10:45 AM	0	0	0	0	0	0	0	0	0	0	0	0	0
4/25/2024	11:00 AM	0	0	0	0	0	0	0	0	0	0	0	0	0
4/25/2024	11:15 AM	0	0	0	0	0	0	0	0	0	0	0	0	0
4/25/2024	11:30 AM	0	0	0	0	0	0	0	0	0	0	0	0	0
4/25/2024	11:45 AM	0	0	0	0	0	0	0	0	0	0	0	0	0
4/25/2024	12:00 PM	0	0	0	0	0	0	0	0	0	0	0	0	0
4/25/2024	12:15 PM	0	0	0	0	0	0	0	0	0	0	0	0	0
4/25/2024	12:30 PM	0	0	0	0	0	0	0	0	0	0	0	0	0
4/25/2024	12:45 PM	0	0	0	0	0	0	0	0	0	0	0	0	0
4/25/2024	1:00 PM	0	0	0	0	0	0	0	0	0	0	0	0	0
4/25/2024	1:15 PM	0	0	0	0	0	0	0	0	0	0	0	0	0
4/25/2024	1:30 PM	0	0	0	0	0	0	0	0	0	0	0	0	0
4/25/2024	1:45 PM	0	0	0	0	0	0	0	0	0	0	0	0	0
4/25/2024	2:00 PM	0	0	0	0	0	0	0	0	0	0	0	0	0
4/25/2024	2:15 PM	0	0	0	0	0	0	0	0	0	0	0	0	0
4/25/2024	2:30 PM	0	0	0	0	0	0	0	0	0	0	0	0	0
4/25/2024	2:45 PM	0	0	0	0	0	0	0	0	0	0	0	0	0
4/25/2024	3:00 PM	0	0	0	0	0	0	0	0	0	0	0	0	0
4/25/2024	3:15 PM	0	0	0	0	0	0	0	0	0	0	0	0	0
4/25/2024	3:30 PM	0	0	0	0	0	0	0	0	0	0	0	0	0
4/25/2024	3:45 PM	0	0	0	0	0	0	0	0	0	0	0	0	0
4/25/2024	4:00 PM	0	0	0	0	0	0	0	0	0	0	0	0	0
4/25/2024	4:15 PM	0	0	0	0	0	0	0	0	0	0	0	0	0
4/25/2024	4:30 PM	0	0	0	0	0	0	0	0	0	0	0	0	0
4/25/2024	4:45 PM	0	0	0	0	0	0	0	0	0	0	0	0	0
4/25/2024	5:00 PM	0	0	0	0	0	0	0	0	0	0	0	0	0
4/25/2024	5:15 PM	0	0	0	0	0	0	0	0	0	0	0	0	0
4/25/2024	5:30 PM	0	0	0	0	0	0	0	0	0	0	0	0	0
4/25/2024	5:45 PM	0	0	0	0	0	0	0	0	0	0	0	0	0
4/25/2024	6:00 PM	0	0	0	0	0	0	0	0	0	0	0	0	0
4/25/2024	6:15 PM	0	0	0	0	0	0	0	0	0	0	0	0	0
4/25/2024	6:30 PM	0	0	0	0	0	0	0	0	0	0	0	0	0
4/25/2024	6:45 PM	0	0	0	0	0	0	0	0	0	0	0	0	0
4/25/2024	7:00 PM	0	0	0	0	0	0	0	0	0	0	0	0	0
4/25/2024	7:15 PM	0	0	0	0	0	0	0	0	0	0	0	0	0
4/25/2024	7:30 PM	0	0	0	0	0	0	0	0	0	0	0	0	0
4/25/2024	7:45 PM	0	0	0	0	0	0	0	0	0	0	0	0	0
4/25/2024	8:00 PM	0	0	0	0	0	0	0	0	0	0	0	0	0
4/25/2024	8:15 PM	0	0	0	0	0	0	0	0	0	0	0	0	0
4/25/2024	8:30 PM	0	0	0	0	0	0	0	0	0	0	0	0	0
4/25/2024	8:45 PM	0	0	0	0	0	0	0	0	0	0	0	0	0
4/25/2024	9:00 PM	0	0	0	0	0	0	0	0	0	0	0	0	0
4/25/2024	9:15 PM	0	0	0	0	0	0	0	0	0	0	0	0	0
4/25/2024	9:30 PM	0	0	0	0	0	0	0	0	0	0	0	0	0
4/25/2024	9:45 PM	0	0	0	0	0	0	0	0	0	0	0	0	0
4/25/2024	10:00 PM	0	0	0	0	0	0	0	0	0	0	0	0	0
4/25/2024	10:15 PM	0	0	0	0	0	0	0	0	0	0	0	0	0
4/25/2024	10:30 PM	0	0	0	0	0	0	0	0	0	0	0	0	0
4/25/2024	10:45 PM	0	0	0	0	0	0	0	0	0	0	0	0	0
4/25/2024	11:00 PM	0	0	0	0	0	0	0	0	0	0	0	0	0
4/25/2024	11:15 PM	0	0	0	0	0	0	0	0	0	0	0	0	0
4/25/2024	11:30 PM	0	0	0	0	0	0	0	0	0	0	0	0	0
4/25/2024	11:45 PM	0	0	0	0	0	0	0	0	0	0	0	0	0

WB
File Name:
Start Date: 4/23/2024
Start Time: 0
Site Code: 57
Station ID: 1
Location 1: I-20 On/Off-Ramp, west of US-378 Sunset Blvd
Location 2:

Date	Time	1	2	3	4	5	6	7	8	9	10	11	12	13
4/23/2024	12:00 AM	0	0	0	0	0	0	0	0	0	0	0	0	0
4/23/2024	12:15 AM	0	0	0	0	0	0	0	0	0	0	0	0	0
4/23/2024	12:30 AM	0	0	0	0	0	0	0	0	0	0	0	0	0
4/23/2024	12:45 AM	0	0	0	0	0	0	0	0	0	0	0	0	0
4/23/2024	1:00 AM	0	0	0	0	0	0	0	0	0	0	0	0	0
4/23/2024	1:15 AM	0	0	0	0	0	0	0	0	0	0	0	0	0
4/23/2024	1:30 AM	0	0	0	0	0	0	0	0	0	0	0	0	0
4/23/2024	1:45 AM	0	0	0	0	0	0	0	0	0	0	0	0	0
4/23/2024	2:00 AM	0	0	0	0	0	0	0	0	0	0	0	0	0
4/23/2024	2:15 AM	0	0	0	0	0	0	0	0	0	0	0	0	0
4/23/2024	2:30 AM	0	0	0	0	0	0	0	0	0	0	0	0	0
4/23/2024	2:45 AM	0	0	0	0	0	0	0	0	0	0	0	0	0
4/23/2024	3:00 AM	0	0	0	0	0	0	0	0	0	0	0	0	0
4/23/2024	3:15 AM	0	0	0	0	0	0	0	0	0	0	0	0	0
4/23/2024	3:30 AM	0	0	0	0	0	0	0	0	0	0	0	0	0
4/23/2024	3:45 AM	0	0	0	0	0	0	0	0	0	0	0	0	0
4/23/2024	4:00 AM	0	0	0	0	0	0	0	0	0	0	0	0	0
4/23/2024	4:15 AM	0	0	0	0	0	0	0	0	0	0	0	0	0
4/23/2024	4:30 AM	0	0	0	0	0	0	0	0	0	0	0	0	0
4/23/2024	4:45 AM	0	0	0	0	0	0	0	0	0	0	0	0	0
4/23/2024	5:00 AM	0	0	0	0	0	0	0	0	0	0	0	0	0
4/23/2024	5:15 AM	0	0	0	0	0	0	0	0	0	0	0	0	0
4/23/2024	5:30 AM	0	0	0	0	0	0	0	0	0	0	0	0	0
4/23/2024	5:45 AM	0	0	0	0	0	0	0	0	0	0	0	0	0
4/23/2024	6:00 AM	0	0	0	0	0	0	0	0	0	0	0	0	0
4/23/2024	6:15 AM	0	0	0	0	0	0	0	0	0	0	0	0	0
4/23/2024	6:30 AM	0	0	0	0	0	0	0	0	0	0	0	0	0
4/23/2024	6:45 AM	0	0	0	0	0	0	0	0	0	0	0	0	0
4/23/2024	7:00 AM	0	0	0	0	0	0	0	0	0	0	0	0	0
4/23/2024	7:15 AM	0	0	0	0	0	0	0	0	0	0	0	0	0
4/23/2024	7:30 AM	0	0	0	0	0	0	0	0	0	0	0	0	0
4/23/2024	7:45 AM	0	0	0	0	0	0	0	0	0	0	0	0	0
4/23/2024	8:00 AM	0	0	0	0	0	0	0	0	0	0	0	0	0
4/23/2024	8:15 AM	0	0	0	0	0	0	0	0	0	0	0	0	0
4/23/2024	8:30 AM	0	0	0	0	0	0	0	0	0	0	0	0	0
4/23/2024	8:45 AM	0	0	0	0	0	0	0	0	0	0	0	0	0
4/23/2024	9:00 AM	0	0	0	0	0	0	0	0	0	0	0	0	0
4/23/2024	9:15 AM	0	0	0	0	0	0	0	0	0	0	0	0	0
4/23/2024	9:30 AM	0	0	0	0	0	0	0	0	0	0	0	0	0
4/23/2024	9:45 AM	0	0	0	0	0	0	0	0	0	0	0	0	0
4/23/2024	10:00 AM	0	0	0	0	0	0	0	0	0	0	0	0	0
4/23/2024	10:15 AM	0	0	0	0	0	0	0	0	0	0	0	0	0
4/23/2024	10:30 AM	0	0	0	0	0	0	0	0	0	0	0	0	0
4/23/2024	10:45 AM	0	0	0	0	0	0	0	0	0	0	0	0	0
4/23/2024	11:00 AM	0	0	0	0	0	0	0	0	0	0	0	0	0
4/23/2024	11:15 AM	0	0	0	0	0	0	0	0	0	0	0	0	0
4/23/2024	11:30 AM	0	0	0	0	0	0	0	0	0	0	0	0	0
4/23/2024	11:45 AM	0	0	0	0	0	0	0	0	0	0	0	0	0
4/23/2024	12:00 PM	0	0	0	0	0	0	0	0	0	0	0	0	0
4/23/2024	12:15 PM	0	0	0	0	0	0	0	0	0	0	0	0	0
4/23/2024	12:30 PM	0	0	0	0	0	0	0	0	0	0	0	0	0
4/23/2024	12:45 PM	0	0	0	0	0	0	0	0	0	0	0	0	0
4/23/2024	1:00 PM	0	0	0	0	0	0	0	0	0	0	0	0	0
4/23/2024	1:15 PM	0	0	0	0	0	0	0	0	0	0	0	0	0
4/23/2024	1:30 PM	0	0	0	0	0	0	0	0	0	0	0	0	0
4/23/2024	1:45 PM	0	0	0	0	0	0	0	0	0	0	0	0	0
4/23/2024	2:00 PM	0	0	0	0	0	0	0	0	0	0	0	0	0
4/23/2024	2:15 PM	0	0	0	0	0	0	0	0	0	0	0	0	0
4/23/2024	2:30 PM	0	0	0	0	0	0	0	0	0	0	0	0	0
4/23/2024	2:45 PM	0	0	0	0	0	0	0	0	0	0	0	0	0
4/23/2024	3:00 PM	0	0	0	0	0	0	0	0	0	0	0	0	0
4/23/2024	3:15 PM	0	0	0	0	0	0	0	0	0	0	0	0	0
4/23/2024	3:30 PM	0	0	0	0	0	0	0	0	0	0	0	0	0
4/23/2024	3:45 PM	0	0	0	0	0	0	0	0	0	0	0	0	0
4/23/2024	4:00 PM	0	0	0	0	0	0	0	0	0	0	0	0	0
4/23/2024	4:15 PM	0	0	0	0	0	0	0	0	0	0	0	0	0
4/23/2024	4:30 PM	0	0	0	0	0	0	0	0	0	0	0	0	0
4/23/2024	4:45 PM	0	0	0	0	0	0	0	0	0	0	0	0	0
4/23/2024	5:00 PM	0	0	0	0	0	0	0	0	0	0	0	0	0
4/23/2024	5:15 PM	0	0	0	0	0	0	0	0	0	0	0	0	0
4/23/2024	5:30 PM	0	0	0	0	0	0	0	0	0	0	0	0	0
4/23/2024	5:45 PM	0	0	0	0	0	0	0	0	0	0	0	0	0
4/23/2024	6:00 PM	0	0	0	0	0	0	0	0	0	0	0	0	0
4/23/2024	6:15 PM	0	0	0	0	0	0	0	0	0	0	0	0	0
4/23/2024	6:30 PM	0	0	0	0	0	0	0	0	0	0	0	0	0
4/23/2024	6:45 PM	0	0	0	0	0	0	0	0	0	0	0	0	0
4/23/2024	7:00 PM	0	79	8	1	0	0	0	0	0	0	0	0	0
4/23/2024	7:15 PM	0	85	10	0	0	0	0	0	0	0	0	0	0
4/23/2024	7:30 PM	0	72	8	0	1	0	0	0	1	0	0	0	0
4/23/2024	7:45 PM	0	82	16	0	0	0	0	0	0	0	0	0	0
4/23/2024	8:00 PM	0	59	9	0	0	0	0	0	0	0	0	0	0
4/23/2024	8:15 PM	0	61	11	0	1	0	0	0	1	0	0	0	0
4/23/2024	8:30 PM	0	69	4	0	1	0	0	0	1	0	0	0	0
4/23/2024	8:45 PM	0	56	2	0	1	0	0	0	1	0	0	0	0
4/23/2024	9:00 PM	0	79	2	0	0	0	0	0	0	0	0	0	0
4/23/2024	9:15 PM	0	62	0	0	1	0	0	0	0	0	0	0	0
4/23/2024	9:30 PM	0	61	0	0	0	0	0	0	0	0	0	0	0
4/23/2024	9:45 PM	0	54	0	0	3	0	0	0	1	0	0	0	0
4/23/2024	10:00 PM	0	40	0	0	1	0	0	0	1	0	0	0	0
4/23/2024	10:15 PM	0	31	0	0	1	0	0	0	0	0	0	0	0
4/23/2024	10:30 PM	0	22	0	0	0	0	0	0	0	0	0	0	0
4/23/2024	10:45 PM	0	26	0	0	0	0	0	0	0	0	0	0	0
4/23/2024	11:00 PM	0	15	0	0	0	0	0	0	0	0	0	0	0
4/23/2024	11:15 PM	0	16	0	0	0	0	0	0	0	0	0	0	0
4/23/2024	11:30 PM	0	14	0	0	0	0	0	0	0	0	0	0	0
4/23/2024	11:45 PM	0	10	1	0	0	0	0	0	0	0	0	0	0

4/24/2024	12:00 AM	0	6	0	0	1	0	0	0	0	0	0	0	0
4/24/2024	12:15 AM	0	9	0	0	0	0	0	0	0	0	0	0	0
4/24/2024	12:30 AM	0	7	0	0	0	0	0	0	0	0	0	0	0
4/24/2024	12:45 AM	0	5	0	0	0	0	0	0	1	0	0	0	0
4/24/2024	1:00 AM	0	4	0	0	0	0	0	0	0	0	0	0	0
4/24/2024	1:15 AM	0	3	0	0	0	0	0	0	0	0	0	0	0
4/24/2024	1:30 AM	0	4	0	0	0	0	0	0	0	0	0	0	0
4/24/2024	1:45 AM	0	4	0	0	0	0	0	0	1	0	0	0	0
4/24/2024	2:00 AM	0	6	1	0	1	0	0	0	0	0	0	0	0
4/24/2024	2:15 AM	0	2	0	0	0	0	0	0	1	0	0	0	0
4/24/2024	2:30 AM	0	3	0	0	0	0	0	0	0	0	0	0	0
4/24/2024	2:45 AM	0	4	0	0	0	0	0	0	0	0	0	0	0
4/24/2024	3:00 AM	0	8	0	0	1	0	0	0	0	0	0	0	0
4/24/2024	3:15 AM	0	7	0	0	0	0	0	0	0	0	0	0	0
4/24/2024	3:30 AM	0	8	0	0	0	0	0	0	0	0	0	0	0
4/24/2024	3:45 AM	0	10	0	0	1	0	0	0	0	0	0	0	0
4/24/2024	4:00 AM	0	11	0	0	1	0	0	0	0	0	0	0	0
4/24/2024	4:15 AM	0	11	0	0	0	0	0	0	0	0	0	0	0
4/24/2024	4:30 AM	0	14	0	0	0	0	0	0	1	0	0	0	0
4/24/2024	4:45 AM	0	16	0	0	0	0	0	0	1	0	0	0	0
4/24/2024	5:00 AM	0	13	2	0	1	0	0	0	0	0	0	0	0
4/24/2024	5:15 AM	1	24	0	0	0	0	0	0	0	0	0	0	0
4/24/2024	5:30 AM	0	33	0	0	0	0	0	0	0	0	0	0	0
4/24/2024	5:45 AM	0	29	0	0	1	0	0	0	1	0	0	0	0
4/24/2024	6:00 AM	0	55	1	0	0	0	0	0	0	0	0	0	0
4/24/2024	6:15 AM	0	66	5	0	0	0	0	0	1	0	0	0	0
4/24/2024	6:30 AM	0	110	20	0	3	0	0	0	1	0	0	0	0
4/24/2024	6:45 AM	0	82	22	0	0	0	0	0	1	0	0	0	0
4/24/2024	7:00 AM	0	127	19	0	0	0	0	0	0	0	0	0	0
4/24/2024	7:15 AM	0	126	20	0	1	0	0	0	0	0	0	0	0
4/24/2024	7:30 AM	0	159	27	0	2	0	0	0	1	0	0	0	0
4/24/2024	7:45 AM	0	169	18	0	5	0	0	1	0	0	0	0	0
4/24/2024	8:00 AM	0	139	23	2	1	0	0	0	4	0	0	0	0
4/24/2024	8:15 AM	0	142	14	0	1	0	0	0	3	0	0	0	0
4/24/2024	8:30 AM	0	173	27	0	1	0	0	1	2	0	0	0	0
4/24/2024	8:45 AM	0	142	28	0	3	0	1	0	1	0	0	0	0
4/24/2024	9:00 AM	0	102	20	0	4	0	0	1	1	0	0	0	0
4/24/2024	9:15 AM	0	122	21	0	4	1	0	0	1	0	0	0	0
4/24/2024	9:30 AM	0	110	23	0	3	0	0	0	1	0	0	0	0
4/24/2024	9:45 AM	0	98	20	0	1	0	0	0	0	0	0	0	0
4/24/2024	10:00 AM	0	76	9	0	0	0	0	0	1	0	0	0	0
4/24/2024	10:15 AM	0	113	14	0	2	0	0	0	1	0	0	0	0
4/24/2024	10:30 AM	0	96	21	0	1	0	0	0	2	0	0	0	0
4/24/2024	10:45 AM	0	86	15	0	1	0	0	0	4	0	0	0	0
4/24/2024	11:00 AM	0	121	18	0	4	0	1	0	0	0	0	0	0
4/24/2024	11:15 AM	0	118	19	0	1	0	0	0	2	0	0	0	0
4/24/2024	11:30 AM	0	83	10	0	1	1	0	0	2	0	0	0	0
4/24/2024	11:45 AM	0	94	12	0	1	0	0	0	1	0	0	0	0
4/24/2024	12:00 PM	0	73	16	0	2	0	0	0	4	0	0	0	0
4/24/2024	12:15 PM	0	108	19	0	2	0	0	0	0	0	0	0	0
4/24/2024	12:30 PM	0	98	13	0	0	0	0	0	0	0	0	0	0
4/24/2024	12:45 PM	0	111	17	0	0	0	0	0	5	0	0	0	0
4/24/2024	1:00 PM	0	103	25	0	2	0	0	0	2	0	0	0	0
4/24/2024	1:15 PM	0	101	24	0	2	0	0	1	0	0	0	0	0
4/24/2024	1:30 PM	0	93	20	0	0	0	0	0	1	0	0	0	0
4/24/2024	1:45 PM	0	96	10	0	1	0	0	0	0	0	0	0	0
4/24/2024	2:00 PM	0	88	11	0	3	1	0	0	0	0	0	0	0
4/24/2024	2:15 PM	0	107	10	0	4	0	0	0	1	0	0	0	0
4/24/2024	2:30 PM	0	81	9	0	1	2	0	0	1	0	0	0	0
4/24/2024	2:45 PM	0	101	11	0	3	1	0	0	0	0	0	0	0
4/24/2024	3:00 PM	0	83	9	0	0	0	0	0	2	0	0	0	0
4/24/2024	3:15 PM	0	80	5	0	1	0	0	0	1	0	0	0	0
4/24/2024	3:30 PM	0	121	10	0	0	0	0	0	0	0	0	0	0
4/24/2024	3:45 PM	0	103	9	0	2	1	0	0	1	0	0	0	0
4/24/2024	4:00 PM	0	117	8	0	0	0	0	0	0	0	0	0	0
4/24/2024	4:15 PM	0	141	11	0	1	0	0	0	0	0	0	0	0
4/24/2024	4:30 PM	0	136	13	0	1	0	0	0	0	0	0	0	0
4/24/2024	4:45 PM	0	133	12	0	1	0	0	0	0	0	0	0	0
4/24/2024	5:00 PM	0	120	11	0	0	0	0	0	1	0	0	0	0
4/24/2024	5:15 PM	0	101	12	0	2	0	0	0	0	0	0	0	0
4/24/2024	5:30 PM	0	90	6	0	2	0	0	0	0	0	0	0	0
4/24/2024	5:45 PM	0	84	10	0	0	0	0	0	0	0	0	0	0
4/24/2024	6:00 PM	0	119	14	0	0	0	0	0	0	0	0	0	0
4/24/2024	6:15 PM	0	107	13	2	0	0	0	0	0	0	0	0	0
4/24/2024	6:30 PM	0	118	10	0	0	0	0	0	1	0	0	0	0
4/24/2024	6:45 PM	0	104	14	0	0	0	0	0	1	0	0	0	0
4/24/2024	7:00 PM	0	70	8	0	1	0	0	0	0	1	0	0	0
4/24/2024	7:15 PM	0	90	7	0	1	0	0	0	0	0	0	0	0
4/24/2024	7:30 PM	0	93	10	0	0	0	0	0	2	0	0	0	0
4/24/2024	7:45 PM	0	86	5	0	0	0	0	0	0	0	0	0	0
4/24/2024	8:00 PM	0	82	6	0	0	0	0	0	0	0	0	0	0
4/24/2024	8:15 PM	0	71	6	0	0	0	0	0	0	0	0	0	0
4/24/2024	8:30 PM	0	69	0	0	0	0	0	0	0	0	0	0	0
4/24/2024	8:45 PM	0	74	0	0	0	0	0	0	1	0	0	0	0
4/24/2024	9:00 PM	0	44	1	0	2	0	0	1	1	0	0	0	0
4/24/2024	9:15 PM	0	56	0	0	2	0	0	0	0	0	0	0	0
4/24/2024	9:30 PM	0	29	1	0	0	0	0	0	1	0	0	0	0
4/24/2024	9:45 PM	0	35	0	0	0	0	0	0	0	0	0	0	0
4/24/2024	10:00 PM	0	36	1	0	0	0	0	0	0	0	0	0	0
4/24/2024	10:15 PM	0	44	0	0	0	0	0	0	0	0	0	0	0
4/24/2024	10:30 PM	0	25	0	0	0	0	0	0	0	0	0	0	0
4/24/2024	10:45 PM	0	17	0	0	0	0	0	0	0	1	0	0	0
4/24/2024	11:00 PM	0	16	0	0	0	0	0	0	0	0	0	0	0
4/24/2024	11:15 PM	0	27	0	0	0	0	0	0	0	0	0	0	0
4/24/2024	11:30 PM	0	15	1	0	1	0	0	0	0	0	0	0	0
4/24/2024	11:45 PM	0	11	0	0	0	0	0	0	0	0	0	0	0

4/25/2024	12:00 AM	0	7	0	0	0	0	0	0	0	0	0	0
4/25/2024	12:15 AM	0	8	0	0	0	0	0	0	0	0	0	0
4/25/2024	12:30 AM	0	9	0	0	0	0	0	0	0	0	0	0
4/25/2024	12:45 AM	0	5	0	0	0	0	0	0	0	0	0	0
4/25/2024	1:00 AM	0	4	0	0	0	0	0	0	2	0	0	0
4/25/2024	1:15 AM	0	5	0	0	0	0	0	0	0	0	0	0
4/25/2024	1:30 AM	0	3	0	0	0	0	0	0	0	0	0	0
4/25/2024	1:45 AM	0	3	0	0	0	0	0	0	0	0	0	0
4/25/2024	2:00 AM	0	2	0	0	0	0	0	0	0	0	0	0
4/25/2024	2:15 AM	0	4	1	0	0	0	0	1	0	0	0	0
4/25/2024	2:30 AM	0	5	0	0	0	0	0	0	0	0	0	0
4/25/2024	2:45 AM	0	3	0	0	0	0	0	0	0	0	0	0
4/25/2024	3:00 AM	0	2	0	0	0	0	0	0	0	0	0	0
4/25/2024	3:15 AM	0	7	0	0	1	0	0	1	0	0	0	0
4/25/2024	3:30 AM	0	3	0	0	0	0	0	0	0	0	0	0
4/25/2024	3:45 AM	0	13	0	0	0	0	0	0	0	0	0	0
4/25/2024	4:00 AM	0	4	0	0	0	0	0	0	0	0	0	0
4/25/2024	4:15 AM	0	8	0	0	0	0	0	0	0	0	0	0
4/25/2024	4:30 AM	0	15	0	0	0	1	0	0	0	0	0	0
4/25/2024	4:45 AM	0	24	0	0	0	0	0	0	1	0	0	0
4/25/2024	5:00 AM	0	14	0	0	0	0	0	1	0	0	0	0
4/25/2024	5:15 AM	0	26	0	0	0	0	0	0	0	0	0	0
4/25/2024	5:30 AM	0	39	0	0	1	0	0	0	0	0	0	0
4/25/2024	5:45 AM	0	58	0	0	0	0	0	0	0	0	0	0
4/25/2024	6:00 AM	0	59	3	0	0	0	0	0	0	0	0	0
4/25/2024	6:15 AM	0	72	10	0	0	0	0	0	0	0	0	0
4/25/2024	6:30 AM	0	90	11	0	2	0	0	1	1	0	0	0
4/25/2024	6:45 AM	0	121	15	0	1	0	0	0	0	0	0	0
4/25/2024	7:00 AM	0	232	7	0	1	1	0	0	0	0	0	0
4/25/2024	7:15 AM	0	239	7	0	1	0	0	0	0	0	0	0
4/25/2024	7:30 AM	0	250	12	0	2	0	1	0	0	0	0	0
4/25/2024	7:45 AM	0	265	10	1	1	1	0	0	1	0	0	0
4/25/2024	8:00 AM	0	229	16	0	0	0	0	0	0	2	0	0
4/25/2024	8:15 AM	0	263	13	0	1	0	0	0	0	2	0	0	0
4/25/2024	8:30 AM	0	232	9	0	3	1	0	0	0	0	0	0	0
4/25/2024	8:45 AM	0	203	12	0	3	1	0	0	0	0	0	0	0
4/25/2024	9:00 AM	0	178	14	0	0	1	0	0	1	2	0	0	0
4/25/2024	9:15 AM	0	177	15	0	1	1	0	0	0	0	0	0	0
4/25/2024	9:30 AM	0	141	15	0	1	0	0	0	0	1	0	0	0
4/25/2024	9:45 AM	0	124	12	0	1	1	0	0	1	1	0	0	0
4/25/2024	10:00 AM	0	131	14	0	4	0	0	0	0	1	0	0	0
4/25/2024	10:15 AM	0	139	13	0	2	0	0	0	0	2	0	0	0
4/25/2024	10:30 AM	0	143	9	0	1	0	0	0	0	1	0	0	0
4/25/2024	10:45 AM	2	144	19	0	2	0	0	1	0	3	0	0	0
4/25/2024	11:00 AM	0	89	13	0	2	1	1	0	0	1	0	0	0
4/25/2024	11:15 AM	0	48	12	0	3	0	0	0	0	3	0	0	0
4/25/2024	11:30 AM	0	148	17	0	1	1	0	0	1	0	0	0	0
4/25/2024	11:45 AM	0	140	15	0	2	0	0	0	0	0	0	0	0
4/25/2024	12:00 PM	0	112	13	0	2	0	0	0	2	0	0	0	0
4/25/2024	12:15 PM	0	109	20	0	2	0	0	0	0	0	0	0	0
4/25/2024	12:30 PM	0	137	27	0	6	0	0	0	2	0	0	0	0
4/25/2024	12:45 PM	0	159	16	0	7	0	0	0	0	0	0	0	0
4/25/2024	1:00 PM	0	142	19	0	1	0	0	0	2	0	0	0	0
4/25/2024	1:15 PM	0	123	22	0	1	1	0	0	0	0	0	0	0
4/25/2024	1:30 PM	0	136	12	0	2	0	0	0	0	0	0	0	0
4/25/2024	1:45 PM	0	128	18	0	7	0	0	0	2	0	0	0	0
4/25/2024	2:00 PM	0	130	15	0	4	0	0	0	2	0	0	0	0
4/25/2024	2:15 PM	0	164	10	0	2	0	0	0	1	0	0	0	0
4/25/2024	2:30 PM	0	136	6	0	4	0	0	0	0	0	0	0	0
4/25/2024	2:45 PM	0	125	7	0	1	0	0	0	1	0	0	0	0
4/25/2024	3:00 PM	0	162	14	0	4	0	0	0	0	0	0	0	0
4/25/2024	3:15 PM	0	148	10	0	5	0	0	0	1	0	0	0	0
4/25/2024	3:30 PM	0	145	11	0	1	0	0	0	1	0	0	0	0
4/25/2024	3:45 PM	0	162	7	0	2	0	0	0	1	0	0	0	0
4/25/2024	4:00 PM	0	155	10	0	3	0	0	0	0	0	0	0	0
4/25/2024	4:15 PM	0	156	13	0	2	0	0	0	1	0	0	0	0
4/25/2024	4:30 PM	0	141	7	0	0	1	0	0	0	0	0	0	0
4/25/2024	4:45 PM	0	167	12	0	1	0	0	0	0	0	0	0	0
4/25/2024	5:00 PM	0	175	11	0	2	0	0	0	0	0	0	0	0
4/25/2024	5:15 PM	0	201	14	0	3	1	0	0	1	0	0	0	0
4/25/2024	5:30 PM	0	166	5	0	0	0	0	0	0	0	0	0	0
4/25/2024	5:45 PM	0	151	4	0	0	0	0	0	1	0	0	0	0
4/25/2024	6:00 PM	0	162	6	0	0	0	0	0	0	0	0	0	0
4/25/2024	6:15 PM	0	135	4	0	0	0	0	0	0	0	0	0	0
4/25/2024	6:30 PM	0	124	4	0	1	0	0	0	1	0	0	0	0
4/25/2024	6:45 PM	0	133	5	0	1	0	0	0	0	0	0	0	0
4/25/2024	7:00 PM	0	0	0	0	0	0	0	0	0	0	0	0	0
4/25/2024	7:15 PM	0	0	0	0	0	0	0	0	0	0	0	0	0
4/25/2024	7:30 PM	0	0	0	0	0	0	0	0	0	0	0	0	0
4/25/2024	7:45 PM	0	0	0	0	0	0	0	0	0	0	0	0	0
4/25/2024	8:00 PM	0	0	0	0	0	0	0	0	0	0	0	0	0
4/25/2024	8:15 PM	0	0	0	0	0	0	0	0	0	0	0	0	0
4/25/2024	8:30 PM	0	0	0	0	0	0	0	0	0	0	0	0	0
4/25/2024	8:45 PM	0	0	0	0	0	0	0	0	0	0	0	0	0
4/25/2024	9:00 PM	0	0	0	0	0	0	0	0	0	0	0	0	0
4/25/2024	9:15 PM	0	0	0	0	0	0	0	0	0	0	0	0	0
4/25/2024	9:30 PM	0	0	0	0	0	0	0	0	0	0	0	0	0
4/25/2024	9:45 PM	0	0	0	0	0	0	0	0	0	0	0	0	0
4/25/2024	10:00 PM	0	0	0	0	0	0	0	0	0	0	0	0	0
4/25/2024	10:15 PM	0	0	0	0	0	0	0	0	0	0	0	0	0
4/25/2024	10:30 PM	0	0	0	0	0	0	0	0	0	0	0	0	0
4/25/2024	10:45 PM	0	0	0	0	0	0	0	0	0	0	0	0	0
4/25/2024	11:00 PM	0	0	0	0	0	0	0	0	0	0	0	0	0
4/25/2024	11:15 PM	0	0	0	0	0	0	0	0	0	0	0	0	0
4/25/2024	11:30 PM	0	0	0	0	0	0	0	0	0	0	0	0	0
4/25/2024	11:45 PM	0	0	0	0	0	0	0	0	0	0	0	0	0

EB
File Name:
Start Date: 4/23/2024
Start Time: 0
Site Code: 57
Station ID: 1
Location 1: I-20 On/Off-Ramp, west of US-378 Sunset Blvd
Location 2:

Date	Time	1	2	3	4	5	6	7	8	9	10	11	12	13
4/23/2024	12:00 AM	0	0	0	0	0	0	0	0	0	0	0	0	0
4/23/2024	12:15 AM	0	0	0	0	0	0	0	0	0	0	0	0	0
4/23/2024	12:30 AM	0	0	0	0	0	0	0	0	0	0	0	0	0
4/23/2024	12:45 AM	0	0	0	0	0	0	0	0	0	0	0	0	0
4/23/2024	1:00 AM	0	0	0	0	0	0	0	0	0	0	0	0	0
4/23/2024	1:15 AM	0	0	0	0	0	0	0	0	0	0	0	0	0
4/23/2024	1:30 AM	0	0	0	0	0	0	0	0	0	0	0	0	0
4/23/2024	1:45 AM	0	0	0	0	0	0	0	0	0	0	0	0	0
4/23/2024	2:00 AM	0	0	0	0	0	0	0	0	0	0	0	0	0
4/23/2024	2:15 AM	0	0	0	0	0	0	0	0	0	0	0	0	0
4/23/2024	2:30 AM	0	0	0	0	0	0	0	0	0	0	0	0	0
4/23/2024	2:45 AM	0	0	0	0	0	0	0	0	0	0	0	0	0
4/23/2024	3:00 AM	0	0	0	0	0	0	0	0	0	0	0	0	0
4/23/2024	3:15 AM	0	0	0	0	0	0	0	0	0	0	0	0	0
4/23/2024	3:30 AM	0	0	0	0	0	0	0	0	0	0	0	0	0
4/23/2024	3:45 AM	0	0	0	0	0	0	0	0	0	0	0	0	0
4/23/2024	4:00 AM	0	0	0	0	0	0	0	0	0	0	0	0	0
4/23/2024	4:15 AM	0	0	0	0	0	0	0	0	0	0	0	0	0
4/23/2024	4:30 AM	0	0	0	0	0	0	0	0	0	0	0	0	0
4/23/2024	4:45 AM	0	0	0	0	0	0	0	0	0	0	0	0	0
4/23/2024	5:00 AM	0	0	0	0	0	0	0	0	0	0	0	0	0
4/23/2024	5:15 AM	0	0	0	0	0	0	0	0	0	0	0	0	0
4/23/2024	5:30 AM	0	0	0	0	0	0	0	0	0	0	0	0	0
4/23/2024	5:45 AM	0	0	0	0	0	0	0	0	0	0	0	0	0
4/23/2024	6:00 AM	0	0	0	0	0	0	0	0	0	0	0	0	0
4/23/2024	6:15 AM	0	0	0	0	0	0	0	0	0	0	0	0	0
4/23/2024	6:30 AM	0	0	0	0	0	0	0	0	0	0	0	0	0
4/23/2024	6:45 AM	0	0	0	0	0	0	0	0	0	0	0	0	0
4/23/2024	7:00 AM	0	0	0	0	0	0	0	0	0	0	0	0	0
4/23/2024	7:15 AM	0	0	0	0	0	0	0	0	0	0	0	0	0
4/23/2024	7:30 AM	0	0	0	0	0	0	0	0	0	0	0	0	0
4/23/2024	7:45 AM	0	0	0	0	0	0	0	0	0	0	0	0	0
4/23/2024	8:00 AM	0	0	0	0	0	0	0	0	0	0	0	0	0
4/23/2024	8:15 AM	0	0	0	0	0	0	0	0	0	0	0	0	0
4/23/2024	8:30 AM	0	0	0	0	0	0	0	0	0	0	0	0	0
4/23/2024	8:45 AM	0	0	0	0	0	0	0	0	0	0	0	0	0
4/23/2024	9:00 AM	0	0	0	0	0	0	0	0	0	0	0	0	0
4/23/2024	9:15 AM	0	0	0	0	0	0	0	0	0	0	0	0	0
4/23/2024	9:30 AM	0	0	0	0	0	0	0	0	0	0	0	0	0
4/23/2024	9:45 AM	0	0	0	0	0	0	0	0	0	0	0	0	0
4/23/2024	10:00 AM	0	0	0	0	0	0	0	0	0	0	0	0	0
4/23/2024	10:15 AM	0	0	0	0	0	0	0	0	0	0	0	0	0
4/23/2024	10:30 AM	0	0	0	0	0	0	0	0	0	0	0	0	0
4/23/2024	10:45 AM	0	0	0	0	0	0	0	0	0	0	0	0	0
4/23/2024	11:00 AM	0	0	0	0	0	0	0	0	0	0	0	0	0
4/23/2024	11:15 AM	0	0	0	0	0	0	0	0	0	0	0	0	0
4/23/2024	11:30 AM	0	0	0	0	0	0	0	0	0	0	0	0	0
4/23/2024	11:45 AM	0	0	0	0	0	0	0	0	0	0	0	0	0
4/23/2024	12:00 PM	0	0	0	0	0	0	0	0	0	0	0	0	0
4/23/2024	12:15 PM	0	0	0	0	0	0	0	0	0	0	0	0	0
4/23/2024	12:30 PM	0	0	0	0	0	0	0	0	0	0	0	0	0
4/23/2024	12:45 PM	0	0	0	0	0	0	0	0	0	0	0	0	0
4/23/2024	1:00 PM	0	0	0	0	0	0	0	0	0	0	0	0	0
4/23/2024	1:15 PM	0	0	0	0	0	0	0	0	0	0	0	0	0
4/23/2024	1:30 PM	0	0	0	0	0	0	0	0	0	0	0	0	0
4/23/2024	1:45 PM	0	0	0	0	0	0	0	0	0	0	0	0	0
4/23/2024	2:00 PM	0	0	0	0	0	0	0	0	0	0	0	0	0
4/23/2024	2:15 PM	0	0	0	0	0	0	0	0	0	0	0	0	0
4/23/2024	2:30 PM	0	0	0	0	0	0	0	0	0	0	0	0	0
4/23/2024	2:45 PM	0	0	0	0	0	0	0	0	0	0	0	0	0
4/23/2024	3:00 PM	0	0	0	0	0	0	0	0	0	0	0	0	0
4/23/2024	3:15 PM	0	0	0	0	0	0	0	0	0	0	0	0	0
4/23/2024	3:30 PM	0	0	0	0	0	0	0	0	0	0	0	0	0
4/23/2024	3:45 PM	0	0	0	0	0	0	0	0	0	0	0	0	0
4/23/2024	4:00 PM	0	0	0	0	0	0	0	0	0	0	0	0	0
4/23/2024	4:15 PM	0	0	0	0	0	0	0	0	0	0	0	0	0
4/23/2024	4:30 PM	0	0	0	0	0	0	0	0	0	0	0	0	0
4/23/2024	4:45 PM	0	0	0	0	0	0	0	0	0	0	0	0	0
4/23/2024	5:00 PM	0	0	0	0	0	0	0	0	0	0	0	0	0
4/23/2024	5:15 PM	0	0	0	0	0	0	0	0	0	0	0	0	0
4/23/2024	5:30 PM	0	0	0	0	0	0	0	0	0	0	0	0	0
4/23/2024	5:45 PM	0	0	0	0	0	0	0	0	0	0	0	0	0
4/23/2024	6:00 PM	0	0	0	0	0	0	0	0	0	0	0	0	0
4/23/2024	6:15 PM	0	0	0	0	0	0	0	0	0	0	0	0	0
4/23/2024	6:30 PM	0	0	0	0	0	0	0	0	0	0	0	0	0
4/23/2024	6:45 PM	0	0	0	0	0	0	0	0	0	0	0	0	0
4/23/2024	7:00 PM	0	0	0	0	0	0	0	0	0	0	0	0	0
4/23/2024	7:15 PM	0	0	0	0	0	0	0	0	0	0	0	0	0
4/23/2024	7:30 PM	0	0	0	0	0	0	0	0	0	0	0	0	0
4/23/2024	7:45 PM	0	0	0	0	0	0	0	0	0	0	0	0	0
4/23/2024	8:00 PM	0	0	0	0	0	0	0	0	0	0	0	0	0
4/23/2024	8:15 PM	0	0	0	0	0	0	0	0	0	0	0	0	0
4/23/2024	8:30 PM	0	0	0	0	0	0	0	0	0	0	0	0	0
4/23/2024	8:45 PM	0	0	0	0	0	0	0	0	0	0	0	0	0
4/23/2024	9:00 PM	0	0	0	0	0	0	0	0	0	0	0	0	0
4/23/2024	9:15 PM	0	0	0	0	0	0	0	0	0	0	0	0	0
4/23/2024	9:30 PM	0	0	0	0	0	0	0	0	0	0	0	0	0
4/23/2024	9:45 PM	0	0	0	0	0	0	0	0	0	0	0	0	0
4/23/2024	10:00 PM	0	0	0	0	0	0	0	0	0	0	0	0	0
4/23/2024	10:15 PM	0	0	0	0	0	0	0	0	0	0	0	0	0
4/23/2024	10:30 PM	0	0	0	0	0	0	0	0	0	0	0	0	0
4/23/2024	10:45 PM	0	0	0	0	0	0	0	0	0	0	0	0	0
4/23/2024	11:00 PM	0	0	0	0	0	0	0	0	0	0	0	0	0
4/23/2024	11:15 PM	0	0	0	0	0	0	0	0	0	0	0	0	0
4/23/2024	11:30 PM	0	0	0	0	0	0	0	0	0	0	0	0	0
4/23/2024	11:45 PM	0	0	0	0	0	0	0	0	0	0	0	0	0

4/24/2024	12:00 AM	0	0	0	0	0	0	0	0	0	0	0	0	0
4/24/2024	12:15 AM	0	0	0	0	0	0	0	0	0	0	0	0	0
4/24/2024	12:30 AM	0	0	0	0	0	0	0	0	0	0	0	0	0
4/24/2024	12:45 AM	0	0	0	0	0	0	0	0	0	0	0	0	0
4/24/2024	1:00 AM	0	0	0	0	0	0	0	0	0	0	0	0	0
4/24/2024	1:15 AM	0	0	0	0	0	0	0	0	0	0	0	0	0
4/24/2024	1:30 AM	0	0	0	0	0	0	0	0	0	0	0	0	0
4/24/2024	1:45 AM	0	0	0	0	0	0	0	0	0	0	0	0	0
4/24/2024	2:00 AM	0	0	0	0	0	0	0	0	0	0	0	0	0
4/24/2024	2:15 AM	0	0	0	0	0	0	0	0	0	0	0	0	0
4/24/2024	2:30 AM	0	0	0	0	0	0	0	0	0	0	0	0	0
4/24/2024	2:45 AM	0	0	0	0	0	0	0	0	0	0	0	0	0
4/24/2024	3:00 AM	0	0	0	0	0	0	0	0	0	0	0	0	0
4/24/2024	3:15 AM	0	0	0	0	0	0	0	0	0	0	0	0	0
4/24/2024	3:30 AM	0	0	0	0	0	0	0	0	0	0	0	0	0
4/24/2024	3:45 AM	0	0	0	0	0	0	0	0	0	0	0	0	0
4/24/2024	4:00 AM	0	0	0	0	0	0	0	0	0	0	0	0	0
4/24/2024	4:15 AM	0	0	0	0	0	0	0	0	0	0	0	0	0
4/24/2024	4:30 AM	0	0	0	0	0	0	0	0	0	0	0	0	0
4/24/2024	4:45 AM	0	0	0	0	0	0	0	0	0	0	0	0	0
4/24/2024	5:00 AM	0	0	0	0	0	0	0	0	0	0	0	0	0
4/24/2024	5:15 AM	0	0	0	0	0	0	0	0	0	0	0	0	0
4/24/2024	5:30 AM	0	0	0	0	0	0	0	0	0	0	0	0	0
4/24/2024	5:45 AM	0	0	0	0	0	0	0	0	0	0	0	0	0
4/24/2024	6:00 AM	0	0	0	0	0	0	0	0	0	0	0	0	0
4/24/2024	6:15 AM	0	0	0	0	0	0	0	0	0	0	0	0	0
4/24/2024	6:30 AM	0	0	0	0	0	0	0	0	0	0	0	0	0
4/24/2024	6:45 AM	0	0	0	0	0	0	0	0	0	0	0	0	0
4/24/2024	7:00 AM	0	0	0	0	0	0	0	0	0	0	0	0	0
4/24/2024	7:15 AM	0	0	0	0	0	0	0	0	0	0	0	0	0
4/24/2024	7:30 AM	0	0	0	0	0	0	0	0	0	0	0	0	0
4/24/2024	7:45 AM	0	0	0	0	0	0	0	0	0	0	0	0	0
4/24/2024	8:00 AM	0	0	0	0	0	0	0	0	0	0	0	0	0
4/24/2024	8:15 AM	0	0	0	0	0	0	0	0	0	0	0	0	0
4/24/2024	8:30 AM	0	0	0	0	0	0	0	0	0	0	0	0	0
4/24/2024	8:45 AM	0	0	0	0	0	0	0	0	0	0	0	0	0
4/24/2024	9:00 AM	0	0	0	0	0	0	0	0	0	0	0	0	0
4/24/2024	9:15 AM	0	0	0	0	0	0	0	0	0	0	0	0	0
4/24/2024	9:30 AM	0	0	0	0	0	0	0	0	0	0	0	0	0
4/24/2024	9:45 AM	0	0	0	0	0	0	0	0	0	0	0	0	0
4/24/2024	10:00 AM	0	0	0	0	0	0	0	0	0	0	0	0	0
4/24/2024	10:15 AM	0	0	0	0	0	0	0	0	0	0	0	0	0
4/24/2024	10:30 AM	0	0	0	0	0	0	0	0	0	0	0	0	0
4/24/2024	10:45 AM	0	0	0	0	0	0	0	0	0	0	0	0	0
4/24/2024	11:00 AM	0	0	0	0	0	0	0	0	0	0	0	0	0
4/24/2024	11:15 AM	0	0	0	0	0	0	0	0	0	0	0	0	0
4/24/2024	11:30 AM	0	0	0	0	0	0	0	0	0	0	0	0	0
4/24/2024	11:45 AM	0	0	0	0	0	0	0	0	0	0	0	0	0
4/24/2024	12:00 PM	0	0	0	0	0	0	0	0	0	0	0	0	0
4/24/2024	12:15 PM	0	0	0	0	0	0	0	0	0	0	0	0	0
4/24/2024	12:30 PM	0	0	0	0	0	0	0	0	0	0	0	0	0
4/24/2024	12:45 PM	0	0	0	0	0	0	0	0	0	0	0	0	0
4/24/2024	1:00 PM	0	0	0	0	0	0	0	0	0	0	0	0	0
4/24/2024	1:15 PM	0	0	0	0	0	0	0	0	0	0	0	0	0
4/24/2024	1:30 PM	0	0	0	0	0	0	0	0	0	0	0	0	0
4/24/2024	1:45 PM	0	0	0	0	0	0	0	0	0	0	0	0	0
4/24/2024	2:00 PM	0	0	0	0	0	0	0	0	0	0	0	0	0
4/24/2024	2:15 PM	0	0	0	0	0	0	0	0	0	0	0	0	0
4/24/2024	2:30 PM	0	0	0	0	0	0	0	0	0	0	0	0	0
4/24/2024	2:45 PM	0	0	0	0	0	0	0	0	0	0	0	0	0
4/24/2024	3:00 PM	0	0	0	0	0	0	0	0	0	0	0	0	0
4/24/2024	3:15 PM	0	0	0	0	0	0	0	0	0	0	0	0	0
4/24/2024	3:30 PM	0	0	0	0	0	0	0	0	0	0	0	0	0
4/24/2024	3:45 PM	0	0	0	0	0	0	0	0	0	0	0	0	0
4/24/2024	4:00 PM	0	0	0	0	0	0	0	0	0	0	0	0	0
4/24/2024	4:15 PM	0	0	0	0	0	0	0	0	0	0	0	0	0
4/24/2024	4:30 PM	0	0	0	0	0	0	0	0	0	0	0	0	0
4/24/2024	4:45 PM	0	0	0	0	0	0	0	0	0	0	0	0	0
4/24/2024	5:00 PM	0	0	0	0	0	0	0	0	0	0	0	0	0
4/24/2024	5:15 PM	0	0	0	0	0	0	0	0	0	0	0	0	0
4/24/2024	5:30 PM	0	0	0	0	0	0	0	0	0	0	0	0	0
4/24/2024	5:45 PM	0	0	0	0	0	0	0	0	0	0	0	0	0
4/24/2024	6:00 PM	0	0	0	0	0	0	0	0	0	0	0	0	0
4/24/2024	6:15 PM	0	0	0	0	0	0	0	0	0	0	0	0	0
4/24/2024	6:30 PM	0	0	0	0	0	0	0	0	0	0	0	0	0
4/24/2024	6:45 PM	0	0	0	0	0	0	0	0	0	0	0	0	0
4/24/2024	7:00 PM	0	0	0	0	0	0	0	0	0	0	0	0	0
4/24/2024	7:15 PM	0	0	0	0	0	0	0	0	0	0	0	0	0
4/24/2024	7:30 PM	0	0	0	0	0	0	0	0	0	0	0	0	0
4/24/2024	7:45 PM	0	0	0	0	0	0	0	0	0	0	0	0	0
4/24/2024	8:00 PM	0	0	0	0	0	0	0	0	0	0	0	0	0
4/24/2024	8:15 PM	0	0	0	0	0	0	0	0	0	0	0	0	0
4/24/2024	8:30 PM	0	0	0	0	0	0	0	0	0	0	0	0	0
4/24/2024	8:45 PM	0	0	0	0	0	0	0	0	0	0	0	0	0
4/24/2024	9:00 PM	0	0	0	0	0	0	0	0	0	0	0	0	0
4/24/2024	9:15 PM	0	0	0	0	0	0	0	0	0	0	0	0	0
4/24/2024	9:30 PM	0	0	0	0	0	0	0	0	0	0	0	0	0
4/24/2024	9:45 PM	0	0	0	0	0	0	0	0	0	0	0	0	0
4/24/2024	10:00 PM	0	0	0	0	0	0	0	0	0	0	0	0	0
4/24/2024	10:15 PM	0	0	0	0	0	0	0	0	0	0	0	0	0
4/24/2024	10:30 PM	0	0	0	0	0	0	0	0	0	0	0	0	0
4/24/2024	10:45 PM	0	0	0	0	0	0	0	0	0	0	0	0	0
4/24/2024	11:00 PM	0	0	0	0	0	0	0	0	0	0	0	0	0
4/24/2024	11:15 PM	0	0	0	0	0	0	0	0	0	0	0	0	0
4/24/2024	11:30 PM	0	0	0	0	0	0	0	0	0	0	0	0	0
4/24/2024	11:45 PM	0	0	0	0	0	0	0	0	0	0	0	0	0

4/25/2024	12:00 AM	0	0	0	0	0	0	0	0	0	0	0	0	0
4/25/2024	12:15 AM	0	0	0	0	0	0	0	0	0	0	0	0	0
4/25/2024	12:30 AM	0	0	0	0	0	0	0	0	0	0	0	0	0
4/25/2024	12:45 AM	0	0	0	0	0	0	0	0	0	0	0	0	0
4/25/2024	1:00 AM	0	0	0	0	0	0	0	0	0	0	0	0	0
4/25/2024	1:15 AM	0	0	0	0	0	0	0	0	0	0	0	0	0
4/25/2024	1:30 AM	0	0	0	0	0	0	0	0	0	0	0	0	0
4/25/2024	1:45 AM	0	0	0	0	0	0	0	0	0	0	0	0	0
4/25/2024	2:00 AM	0	0	0	0	0	0	0	0	0	0	0	0	0
4/25/2024	2:15 AM	0	0	0	0	0	0	0	0	0	0	0	0	0
4/25/2024	2:30 AM	0	0	0	0	0	0	0	0	0	0	0	0	0
4/25/2024	2:45 AM	0	0	0	0	0	0	0	0	0	0	0	0	0
4/25/2024	3:00 AM	0	0	0	0	0	0	0	0	0	0	0	0	0
4/25/2024	3:15 AM	0	0	0	0	0	0	0	0	0	0	0	0	0
4/25/2024	3:30 AM	0	0	0	0	0	0	0	0	0	0	0	0	0
4/25/2024	3:45 AM	0	0	0	0	0	0	0	0	0	0	0	0	0
4/25/2024	4:00 AM	0	0	0	0	0	0	0	0	0	0	0	0	0
4/25/2024	4:15 AM	0	0	0	0	0	0	0	0	0	0	0	0	0
4/25/2024	4:30 AM	0	0	0	0	0	0	0	0	0	0	0	0	0
4/25/2024	4:45 AM	0	0	0	0	0	0	0	0	0	0	0	0	0
4/25/2024	5:00 AM	0	0	0	0	0	0	0	0	0	0	0	0	0
4/25/2024	5:15 AM	0	0	0	0	0	0	0	0	0	0	0	0	0
4/25/2024	5:30 AM	0	0	0	0	0	0	0	0	0	0	0	0	0
4/25/2024	5:45 AM	0	0	0	0	0	0	0	0	0	0	0	0	0
4/25/2024	6:00 AM	0	0	0	0	0	0	0	0	0	0	0	0	0
4/25/2024	6:15 AM	0	0	0	0	0	0	0	0	0	0	0	0	0
4/25/2024	6:30 AM	0	0	0	0	0	0	0	0	0	0	0	0	0
4/25/2024	6:45 AM	0	0	0	0	0	0	0	0	0	0	0	0	0
4/25/2024	7:00 AM	0	0	0	0	0	0	0	0	0	0	0	0	0
4/25/2024	7:15 AM	0	0	0	0	0	0	0	0	0	0	0	0	0
4/25/2024	7:30 AM	0	0	0	0	0	0	0	0	0	0	0	0	0
4/25/2024	7:45 AM	0	0	0	0	0	0	0	0	0	0	0	0	0
4/25/2024	8:00 AM	0	0	0	0	0	0	0	0	0	0	0	0	0
4/25/2024	8:15 AM	0	0	0	0	0	0	0	0	0	0	0	0	0
4/25/2024	8:30 AM	0	0	0	0	0	0	0	0	0	0	0	0	0
4/25/2024	8:45 AM	0	0	0	0	0	0	0	0	0	0	0	0	0
4/25/2024	9:00 AM	0	0	0	0	0	0	0	0	0	0	0	0	0
4/25/2024	9:15 AM	0	0	0	0	0	0	0	0	0	0	0	0	0
4/25/2024	9:30 AM	0	0	0	0	0	0	0	0	0	0	0	0	0
4/25/2024	9:45 AM	0	0	0	0	0	0	0	0	0	0	0	0	0
4/25/2024	10:00 AM	0	0	0	0	0	0	0	0	0	0	0	0	0
4/25/2024	10:15 AM	0	0	0	0	0	0	0	0	0	0	0	0	0
4/25/2024	10:30 AM	0	0	0	0	0	0	0	0	0	0	0	0	0
4/25/2024	10:45 AM	0	0	0	0	0	0	0	0	0	0	0	0	0
4/25/2024	11:00 AM	0	0	0	0	0	0	0	0	0	0	0	0	0
4/25/2024	11:15 AM	0	0	0	0	0	0	0	0	0	0	0	0	0
4/25/2024	11:30 AM	0	0	0	0	0	0	0	0	0	0	0	0	0
4/25/2024	11:45 AM	0	0	0	0	0	0	0	0	0	0	0	0	0
4/25/2024	12:00 PM	0	0	0	0	0	0	0	0	0	0	0	0	0
4/25/2024	12:15 PM	0	0	0	0	0	0	0	0	0	0	0	0	0
4/25/2024	12:30 PM	0	0	0	0	0	0	0	0	0	0	0	0	0
4/25/2024	12:45 PM	0	0	0	0	0	0	0	0	0	0	0	0	0
4/25/2024	1:00 PM	0	0	0	0	0	0	0	0	0	0	0	0	0
4/25/2024	1:15 PM	0	0	0	0	0	0	0	0	0	0	0	0	0
4/25/2024	1:30 PM	0	0	0	0	0	0	0	0	0	0	0	0	0
4/25/2024	1:45 PM	0	0	0	0	0	0	0	0	0	0	0	0	0
4/25/2024	2:00 PM	0	0	0	0	0	0	0	0	0	0	0	0	0
4/25/2024	2:15 PM	0	0	0	0	0	0	0	0	0	0	0	0	0
4/25/2024	2:30 PM	0	0	0	0	0	0	0	0	0	0	0	0	0
4/25/2024	2:45 PM	0	0	0	0	0	0	0	0	0	0	0	0	0
4/25/2024	3:00 PM	0	0	0	0	0	0	0	0	0	0	0	0	0
4/25/2024	3:15 PM	0	0	0	0	0	0	0	0	0	0	0	0	0
4/25/2024	3:30 PM	0	0	0	0	0	0	0	0	0	0	0	0	0
4/25/2024	3:45 PM	0	0	0	0	0	0	0	0	0	0	0	0	0
4/25/2024	4:00 PM	0	0	0	0	0	0	0	0	0	0	0	0	0
4/25/2024	4:15 PM	0	0	0	0	0	0	0	0	0	0	0	0	0
4/25/2024	4:30 PM	0	0	0	0	0	0	0	0	0	0	0	0	0
4/25/2024	4:45 PM	0	0	0	0	0	0	0	0	0	0	0	0	0
4/25/2024	5:00 PM	0	0	0	0	0	0	0	0	0	0	0	0	0
4/25/2024	5:15 PM	0	0	0	0	0	0	0	0	0	0	0	0	0
4/25/2024	5:30 PM	0	0	0	0	0	0	0	0	0	0	0	0	0
4/25/2024	5:45 PM	0	0	0	0	0	0	0	0	0	0	0	0	0
4/25/2024	6:00 PM	0	0	0	0	0	0	0	0	0	0	0	0	0
4/25/2024	6:15 PM	0	0	0	0	0	0	0	0	0	0	0	0	0
4/25/2024	6:30 PM	0	0	0	0	0	0	0	0	0	0	0	0	0
4/25/2024	6:45 PM	0	0	0	0	0	0	0	0	0	0	0	0	0
4/25/2024	7:00 PM	0	0	0	0	0	0	0	0	0	0	0	0	0
4/25/2024	7:15 PM	0	0	0	0	0	0	0	0	0	0	0	0	0
4/25/2024	7:30 PM	0	0	0	0	0	0	0	0	0	0	0	0	0
4/25/2024	7:45 PM	0	0	0	0	0	0	0	0	0	0	0	0	0
4/25/2024	8:00 PM	0	0	0	0	0	0	0	0	0	0	0	0	0
4/25/2024	8:15 PM	0	0	0	0	0	0	0	0	0	0	0	0	0
4/25/2024	8:30 PM	0	0	0	0	0	0	0	0	0	0	0	0	0
4/25/2024	8:45 PM	0	0	0	0	0	0	0	0	0	0	0	0	0
4/25/2024	9:00 PM	0	0	0	0	0	0	0	0	0	0	0	0	0
4/25/2024	9:15 PM	0	0	0	0	0	0	0	0	0	0	0	0	0
4/25/2024	9:30 PM	0	0	0	0	0	0	0	0	0	0	0	0	0
4/25/2024	9:45 PM	0	0	0	0	0	0	0	0	0	0	0	0	0
4/25/2024	10:00 PM	0	0	0	0	0	0	0	0	0	0	0	0	0
4/25/2024	10:15 PM	0	0	0	0	0	0	0	0	0	0	0	0	0
4/25/2024	10:30 PM	0	0	0	0	0	0	0	0	0	0	0	0	0
4/25/2024	10:45 PM	0	0	0	0	0	0	0	0	0	0	0	0	0
4/25/2024	11:00 PM	0	0	0	0	0	0	0	0	0	0	0	0	0
4/25/2024	11:15 PM	0	0	0	0	0	0	0	0	0	0	0	0	0
4/25/2024	11:30 PM	0	0	0	0	0	0	0	0	0	0	0	0	0
4/25/2024	11:45 PM	0	0	0	0	0	0	0	0	0	0	0	0	0

WB
File Name:
Start Date: 4/23/2024
Start Time: 0
Site Code: 57
Station ID: 1
Location 1: I-20 On/Off-Ramp, west of US-378 Sunset Blvd
Location 2:

Date	Time	1	2	3	4	5	6	7	8	9	10	11	12	13
4/23/2024	12:00 AM	0	0	0	0	0	0	0	0	0	0	0	0	0
4/23/2024	12:15 AM	0	0	0	0	0	0	0	0	0	0	0	0	0
4/23/2024	12:30 AM	0	0	0	0	0	0	0	0	0	0	0	0	0
4/23/2024	12:45 AM	0	0	0	0	0	0	0	0	0	0	0	0	0
4/23/2024	1:00 AM	0	0	0	0	0	0	0	0	0	0	0	0	0
4/23/2024	1:15 AM	0	0	0	0	0	0	0	0	0	0	0	0	0
4/23/2024	1:30 AM	0	0	0	0	0	0	0	0	0	0	0	0	0
4/23/2024	1:45 AM	0	0	0	0	0	0	0	0	0	0	0	0	0
4/23/2024	2:00 AM	0	0	0	0	0	0	0	0	0	0	0	0	0
4/23/2024	2:15 AM	0	0	0	0	0	0	0	0	0	0	0	0	0
4/23/2024	2:30 AM	0	0	0	0	0	0	0	0	0	0	0	0	0
4/23/2024	2:45 AM	0	0	0	0	0	0	0	0	0	0	0	0	0
4/23/2024	3:00 AM	0	0	0	0	0	0	0	0	0	0	0	0	0
4/23/2024	3:15 AM	0	0	0	0	0	0	0	0	0	0	0	0	0
4/23/2024	3:30 AM	0	0	0	0	0	0	0	0	0	0	0	0	0
4/23/2024	3:45 AM	0	0	0	0	0	0	0	0	0	0	0	0	0
4/23/2024	4:00 AM	0	0	0	0	0	0	0	0	0	0	0	0	0
4/23/2024	4:15 AM	0	0	0	0	0	0	0	0	0	0	0	0	0
4/23/2024	4:30 AM	0	0	0	0	0	0	0	0	0	0	0	0	0
4/23/2024	4:45 AM	0	0	0	0	0	0	0	0	0	0	0	0	0
4/23/2024	5:00 AM	0	0	0	0	0	0	0	0	0	0	0	0	0
4/23/2024	5:15 AM	0	0	0	0	0	0	0	0	0	0	0	0	0
4/23/2024	5:30 AM	0	0	0	0	0	0	0	0	0	0	0	0	0
4/23/2024	5:45 AM	0	0	0	0	0	0	0	0	0	0	0	0	0
4/23/2024	6:00 AM	0	0	0	0	0	0	0	0	0	0	0	0	0
4/23/2024	6:15 AM	0	0	0	0	0	0	0	0	0	0	0	0	0
4/23/2024	6:30 AM	0	0	0	0	0	0	0	0	0	0	0	0	0
4/23/2024	6:45 AM	0	0	0	0	0	0	0	0	0	0	0	0	0
4/23/2024	7:00 AM	0	0	0	0	0	0	0	0	0	0	0	0	0
4/23/2024	7:15 AM	0	0	0	0	0	0	0	0	0	0	0	0	0
4/23/2024	7:30 AM	0	0	0	0	0	0	0	0	0	0	0	0	0
4/23/2024	7:45 AM	0	0	0	0	0	0	0	0	0	0	0	0	0
4/23/2024	8:00 AM	0	0	0	0	0	0	0	0	0	0	0	0	0
4/23/2024	8:15 AM	0	0	0	0	0	0	0	0	0	0	0	0	0
4/23/2024	8:30 AM	0	0	0	0	0	0	0	0	0	0	0	0	0
4/23/2024	8:45 AM	0	0	0	0	0	0	0	0	0	0	0	0	0
4/23/2024	9:00 AM	0	0	0	0	0	0	0	0	0	0	0	0	0
4/23/2024	9:15 AM	0	0	0	0	0	0	0	0	0	0	0	0	0
4/23/2024	9:30 AM	0	0	0	0	0	0	0	0	0	0	0	0	0
4/23/2024	9:45 AM	0	0	0	0	0	0	0	0	0	0	0	0	0
4/23/2024	10:00 AM	0	0	0	0	0	0	0	0	0	0	0	0	0
4/23/2024	10:15 AM	0	0	0	0	0	0	0	0	0	0	0	0	0
4/23/2024	10:30 AM	0	0	0	0	0	0	0	0	0	0	0	0	0
4/23/2024	10:45 AM	0	0	0	0	0	0	0	0	0	0	0	0	0
4/23/2024	11:00 AM	0	0	0	0	0	0	0	0	0	0	0	0	0
4/23/2024	11:15 AM	0	0	0	0	0	0	0	0	0	0	0	0	0
4/23/2024	11:30 AM	0	0	0	0	0	0	0	0	0	0	0	0	0
4/23/2024	11:45 AM	0	0	0	0	0	0	0	0	0	0	0	0	0
4/23/2024	12:00 PM	0	0	0	0	0	0	0	0	0	0	0	0	0
4/23/2024	12:15 PM	0	0	0	0	0	0	0	0	0	0	0	0	0
4/23/2024	12:30 PM	0	0	0	0	0	0	0	0	0	0	0	0	0
4/23/2024	12:45 PM	0	0	0	0	0	0	0	0	0	0	0	0	0
4/23/2024	1:00 PM	0	0	0	0	0	0	0	0	0	0	0	0	0
4/23/2024	1:15 PM	0	0	0	0	0	0	0	0	0	0	0	0	0
4/23/2024	1:30 PM	0	0	0	0	0	0	0	0	0	0	0	0	0
4/23/2024	1:45 PM	0	0	0	0	0	0	0	0	0	0	0	0	0
4/23/2024	2:00 PM	0	0	0	0	0	0	0	0	0	0	0	0	0
4/23/2024	2:15 PM	0	0	0	0	0	0	0	0	0	0	0	0	0
4/23/2024	2:30 PM	0	0	0	0	0	0	0	0	0	0	0	0	0
4/23/2024	2:45 PM	0	0	0	0	0	0	0	0	0	0	0	0	0
4/23/2024	3:00 PM	0	0	0	0	0	0	0	0	0	0	0	0	0
4/23/2024	3:15 PM	0	0	0	0	0	0	0	0	0	0	0	0	0
4/23/2024	3:30 PM	0	0	0	0	0	0	0	0	0	0	0	0	0
4/23/2024	3:45 PM	0	0	0	0	0	0	0	0	0	0	0	0	0
4/23/2024	4:00 PM	0	0	0	0	0	0	0	0	0	0	0	0	0
4/23/2024	4:15 PM	0	0	0	0	0	0	0	0	0	0	0	0	0
4/23/2024	4:30 PM	0	0	0	0	0	0	0	0	0	0	0	0	0
4/23/2024	4:45 PM	0	0	0	0	0	0	0	0	0	0	0	0	0
4/23/2024	5:00 PM	0	0	0	0	0	0	0	0	0	0	0	0	0
4/23/2024	5:15 PM	0	0	0	0	0	0	0	0	0	0	0	0	0
4/23/2024	5:30 PM	0	0	0	0	0	0	0	0	0	0	0	0	0
4/23/2024	5:45 PM	0	0	0	0	0	0	0	0	0	0	0	0	0
4/23/2024	6:00 PM	0	0	0	0	0	0	0	0	0	0	0	0	0
4/23/2024	6:15 PM	0	79	8	1	0	0	0	0	0	0	0	0	0
4/23/2024	6:30 PM	0	164	18	1	0	0	0	0	0	0	0	0	0
4/23/2024	6:45 PM	0	236	26	1	1	0	0	0	1	0	0	0	0
4/23/2024	7:00 PM	0	318	42	1	1	0	0	0	1	0	0	0	0
4/23/2024	7:15 PM	0	298	43	0	1	0	0	0	1	0	0	0	0
4/23/2024	7:30 PM	0	274	44	0	2	0	0	0	2	0	0	0	0
4/23/2024	7:45 PM	0	271	40	0	2	0	0	0	2	0	0	0	0
4/23/2024	8:00 PM	0	245	26	0	3	0	0	0	3	0	0	0	0
4/23/2024	8:15 PM	0	265	19	0	3	0	0	0	3	0	0	0	0
4/23/2024	8:30 PM	0	266	8	0	3	0	0	0	2	0	0	0	0
4/23/2024	8:45 PM	0	258	4	0	2	0	0	0	1	0	0	0	0
4/23/2024	9:00 PM	0	256	2	0	4	0	0	0	1	0	0	0	0
4/23/2024	9:15 PM	0	217	0	0	5	0	0	0	2	0	0	0	0
4/23/2024	9:30 PM	0	186	0	0	5	0	0	0	2	0	0	0	0
4/23/2024	9:45 PM	0	147	0	0	5	0	0	0	2	0	0	0	0
4/23/2024	10:00 PM	0	119	0	0	2	0	0	0	1	0	0	0	0
4/23/2024	10:15 PM	0	94	0	0	1	0	0	0	0	0	0	0	0
4/23/2024	10:30 PM	0	79	0	0	0	0	0	0	0	0	0	0	0
4/23/2024	10:45 PM	0	71	0	0	0	0	0	0	0	0	0	0	0
4/23/2024	11:00 PM	0	55	1	0	0	0	0	0	0	0	0	0	0
4/23/2024	11:15 PM	0	40	1	0	0	0	0	0	0	0	0	0	0
4/23/2024	11:30 PM	0	24	1	0	0	0	0	0	0	0	0	0	0
4/23/2024	11:45 PM	0	10	1	0	0	0	0	0	0	0	0	0	0

4/24/2024	12:00 AM	0	27	0	0	1	0	0	0	1	0	0	0	0
4/24/2024	12:15 AM	0	25	0	0	0	0	0	0	1	0	0	0	0
4/24/2024	12:30 AM	0	19	0	0	0	0	0	0	1	0	0	0	0
4/24/2024	12:45 AM	0	16	0	0	0	0	0	0	1	0	0	0	0
4/24/2024	1:00 AM	0	15	0	0	0	0	0	0	1	0	0	0	0
4/24/2024	1:15 AM	0	17	1	0	1	0	0	0	1	0	0	0	0
4/24/2024	1:30 AM	0	16	1	0	1	0	0	0	2	0	0	0	0
4/24/2024	1:45 AM	0	15	1	0	1	0	0	0	2	0	0	0	0
4/24/2024	2:00 AM	0	15	1	0	1	0	0	0	1	0	0	0	0
4/24/2024	2:15 AM	0	17	0	0	1	0	0	0	1	0	0	0	0
4/24/2024	2:30 AM	0	22	0	0	1	0	0	0	0	0	0	0	0
4/24/2024	2:45 AM	0	27	0	0	1	0	0	0	0	0	0	0	0
4/24/2024	3:00 AM	0	33	0	0	2	0	0	0	0	0	0	0	0
4/24/2024	3:15 AM	0	36	0	0	2	0	0	0	0	0	0	0	0
4/24/2024	3:30 AM	0	40	0	0	2	0	0	0	0	0	0	0	0
4/24/2024	3:45 AM	0	46	0	0	2	0	0	0	1	0	0	0	0
4/24/2024	4:00 AM	0	52	0	0	1	0	0	0	2	0	0	0	0
4/24/2024	4:15 AM	0	54	2	0	1	0	0	0	2	0	0	0	0
4/24/2024	4:30 AM	1	67	2	0	1	0	0	0	2	0	0	0	0
4/24/2024	4:45 AM	1	86	2	0	1	0	0	0	1	0	0	0	0
4/24/2024	5:00 AM	1	99	2	0	2	0	0	0	1	0	0	0	0
4/24/2024	5:15 AM	1	141	1	0	1	0	0	0	1	0	0	0	0
4/24/2024	5:30 AM	0	183	6	0	1	0	0	0	2	0	0	0	0
4/24/2024	5:45 AM	0	260	26	0	4	0	0	0	3	0	0	0	0
4/24/2024	6:00 AM	0	313	48	0	3	0	0	0	3	0	0	0	0
4/24/2024	6:15 AM	0	385	66	0	3	0	0	0	3	0	0	0	0
4/24/2024	6:30 AM	0	445	81	0	4	0	0	0	2	0	0	0	0
4/24/2024	6:45 AM	0	494	88	0	3	0	0	0	2	0	0	0	0
4/24/2024	7:00 AM	0	581	84	0	8	0	0	1	1	0	0	0	0
4/24/2024	7:15 AM	0	593	88	2	9	0	0	1	5	0	0	0	0
4/24/2024	7:30 AM	0	609	82	2	9	0	0	1	8	0	0	0	0
4/24/2024	7:45 AM	0	623	82	2	8	0	0	2	9	0	0	0	0
4/24/2024	8:00 AM	0	596	92	2	6	0	1	1	10	0	0	0	0
4/24/2024	8:15 AM	0	559	89	0	9	0	1	2	7	0	0	0	0
4/24/2024	8:30 AM	0	539	96	0	12	1	1	2	5	0	0	0	0
4/24/2024	8:45 AM	0	476	92	0	14	1	1	1	4	0	0	0	0
4/24/2024	9:00 AM	0	432	84	0	12	1	0	1	3	0	0	0	0
4/24/2024	9:15 AM	0	406	73	0	8	1	0	0	3	0	0	0	0
4/24/2024	9:30 AM	0	397	66	0	6	0	0	0	3	0	0	0	0
4/24/2024	9:45 AM	0	383	64	0	4	0	0	0	4	0	0	0	0
4/24/2024	10:00 AM	0	371	59	0	4	0	0	0	8	0	0	0	0
4/24/2024	10:15 AM	0	416	68	0	8	0	1	0	7	0	0	0	0
4/24/2024	10:30 AM	0	421	73	0	7	0	1	0	8	0	0	0	0
4/24/2024	10:45 AM	0	408	62	0	7	1	1	0	8	0	0	0	0
4/24/2024	11:00 AM	0	416	59	0	7	1	1	0	5	0	0	0	0
4/24/2024	11:15 AM	0	368	57	0	5	1	0	0	9	0	0	0	0
4/24/2024	11:30 AM	0	358	57	0	6	1	0	0	7	0	0	0	0
4/24/2024	11:45 AM	0	373	60	0	5	0	0	0	5	0	0	0	0
4/24/2024	12:00 PM	0	390	65	0	4	0	0	0	9	0	0	0	0
4/24/2024	12:15 PM	0	420	74	0	4	0	0	0	7	0	0	0	0
4/24/2024	12:30 PM	0	413	79	0	4	0	0	1	7	0	0	0	0
4/24/2024	12:45 PM	0	408	86	0	4	0	0	1	8	0	0	0	0
4/24/2024	1:00 PM	0	393	79	0	5	0	0	1	3	0	0	0	0
4/24/2024	1:15 PM	0	378	65	0	6	1	0	1	1	0	0	0	0
4/24/2024	1:30 PM	0	384	51	0	8	1	0	0	2	0	0	0	0
4/24/2024	1:45 PM	0	372	40	0	9	3	0	0	2	0	0	0	0
4/24/2024	2:00 PM	0	377	41	0	11	4	0	0	2	0	0	0	0
4/24/2024	2:15 PM	0	372	39	0	8	3	0	0	4	0	0	0	0
4/24/2024	2:30 PM	0	345	34	0	5	3	0	0	4	0	0	0	0
4/24/2024	2:45 PM	0	385	35	0	4	1	0	0	3	0	0	0	0
4/24/2024	3:00 PM	0	387	33	0	3	1	0	0	4	0	0	0	0
4/24/2024	3:15 PM	0	421	32	0	3	1	0	0	2	0	0	0	0
4/24/2024	3:30 PM	0	482	38	0	3	1	0	0	1	0	0	0	0
4/24/2024	3:45 PM	0	497	41	0	4	1	0	0	1	0	0	0	0
4/24/2024	4:00 PM	0	527	44	0	3	0	0	0	0	0	0	0	0
4/24/2024	4:15 PM	0	530	47	0	3	0	0	0	1	0	0	0	0
4/24/2024	4:30 PM	0	490	48	0	4	0	0	0	1	0	0	0	0
4/24/2024	4:45 PM	0	444	41	0	5	0	0	0	1	0	0	0	0
4/24/2024	5:00 PM	0	395	39	0	4	0	0	0	1	0	0	0	0
4/24/2024	5:15 PM	0	394	42	0	4	0	0	0	0	0	0	0	0
4/24/2024	5:30 PM	0	400	43	2	2	0	0	0	0	0	0	0	0
4/24/2024	5:45 PM	0	428	47	2	0	0	0	0	1	0	0	0	0
4/24/2024	6:00 PM	0	448	51	2	0	0	0	0	2	0	0	0	0
4/24/2024	6:15 PM	0	399	45	2	1	0	0	0	2	1	0	0	0
4/24/2024	6:30 PM	0	382	39	0	2	0	0	0	2	1	0	0	0
4/24/2024	6:45 PM	0	357	39	0	2	0	0	0	3	1	0	0	0
4/24/2024	7:00 PM	0	339	30	0	2	0	0	0	2	1	0	0	0
4/24/2024	7:15 PM	0	351	28	0	1	0	0	0	2	0	0	0	0
4/24/2024	7:30 PM	0	332	27	0	0	0	0	0	2	0	0	0	0
4/24/2024	7:45 PM	0	308	17	0	0	0	0	0	0	0	0	0	0
4/24/2024	8:00 PM	0	296	12	0	0	0	0	0	1	0	0	0	0
4/24/2024	8:15 PM	0	258	7	0	2	0	0	1	2	0	0	0	0
4/24/2024	8:30 PM	0	243	1	0	4	0	0	1	2	0	0	0	0
4/24/2024	8:45 PM	0	203	2	0	4	0	0	1	3	0	0	0	0
4/24/2024	9:00 PM	0	164	2	0	4	0	0	1	2	0	0	0	0
4/24/2024	9:15 PM	0	156	2	0	2	0	0	0	1	0	0	0	0
4/24/2024	9:30 PM	0	144	2	0	0	0	0	0	1	0	0	0	0
4/24/2024	9:45 PM	0	140	1	0	0	0	0	0	0	0	0	0	0
4/24/2024	10:00 PM	0	122	1	0	0	0	0	0	0	1	0	0	0
4/24/2024	10:15 PM	0	102	0	0	0	0	0	0	0	1	0	0	0
4/24/2024	10:30 PM	0	85	0	0	0	0	0	0	0	1	0	0	0
4/24/2024	10:45 PM	0	75	1	0	1	0	0	0	0	1	0	0	0
4/24/2024	11:00 PM	0	69	1	0	1	0	0	0	0	0	0	0	0
4/24/2024	11:15 PM	0	53	1	0	1	0	0	0	0	0	0	0	0
4/24/2024	11:30 PM	0	26	1	0	1	0	0	0	0	0	0	0	0
4/24/2024	11:45 PM	0	11	0	0	0	0	0	0	0	0	0	0	0

4/25/2024	12:00 AM	0	29	0	0	0	0	0	0	0	0	0	0
4/25/2024	12:15 AM	0	26	0	0	0	0	0	0	0	2	0	0
4/25/2024	12:30 AM	0	23	0	0	0	0	0	0	0	2	0	0
4/25/2024	12:45 AM	0	17	0	0	0	0	0	0	0	2	0	0
4/25/2024	1:00 AM	0	15	0	0	0	0	0	0	0	2	0	0
4/25/2024	1:15 AM	0	13	0	0	0	0	0	0	0	0	0	0
4/25/2024	1:30 AM	0	12	1	0	0	0	0	0	1	0	0	0
4/25/2024	1:45 AM	0	14	1	0	0	0	0	0	1	0	0	0
4/25/2024	2:00 AM	0	14	1	0	0	0	0	0	1	0	0	0
4/25/2024	2:15 AM	0	14	1	0	0	0	0	0	1	0	0	0
4/25/2024	2:30 AM	0	17	0	0	1	0	0	0	1	0	0	0
4/25/2024	2:45 AM	0	15	0	0	1	0	0	0	1	0	0	0
4/25/2024	3:00 AM	0	25	0	0	1	0	0	0	1	0	0	0
4/25/2024	3:15 AM	0	27	0	0	1	0	0	0	1	0	0	0
4/25/2024	3:30 AM	0	28	0	0	0	0	0	0	0	0	0	0
4/25/2024	3:45 AM	0	40	0	0	0	1	0	0	0	0	0	0
4/25/2024	4:00 AM	0	51	0	0	0	1	0	0	0	1	0	0
4/25/2024	4:15 AM	0	61	0	0	0	1	0	0	1	1	0	0
4/25/2024	4:30 AM	0	79	0	0	0	1	0	0	1	1	0	0
4/25/2024	4:45 AM	0	103	0	0	1	0	0	0	1	1	0	0
4/25/2024	5:00 AM	0	137	0	0	1	0	0	0	1	0	0	0
4/25/2024	5:15 AM	0	182	3	0	1	0	0	0	0	0	0	0
4/25/2024	5:30 AM	0	228	13	0	1	0	0	0	0	0	0	0
4/25/2024	5:45 AM	0	279	24	0	2	0	0	1	1	0	0	0
4/25/2024	6:00 AM	0	342	39	0	3	0	0	1	1	0	0	0
4/25/2024	6:15 AM	0	515	43	0	4	1	0	1	1	0	0	0
4/25/2024	6:30 AM	0	682	40	0	5	1	0	1	1	0	0	0
4/25/2024	6:45 AM	0	842	41	0	5	1	1	0	0	0	0	0
4/25/2024	7:00 AM	0	986	36	1	5	2	1	0	1	0	0	0
4/25/2024	7:15 AM	0	983	45	1	4	1	1	0	1	2	0	0
4/25/2024	7:30 AM	0	1007	51	1	4	1	1	0	1	4	0	0
4/25/2024	7:45 AM	0	989	48	1	5	2	0	0	1	4	0	0
4/25/2024	8:00 AM	0	927	50	0	7	2	0	0	0	4	0	0
4/25/2024	8:15 AM	0	876	48	0	7	3	0	0	1	4	0	0
4/25/2024	8:30 AM	0	790	50	0	7	4	0	0	1	2	0	0
4/25/2024	8:45 AM	0	699	56	0	5	3	0	0	1	3	0	0
4/25/2024	9:00 AM	0	620	56	0	3	3	0	0	2	4	0	0
4/25/2024	9:15 AM	0	573	56	0	7	2	0	0	1	3	0	0
4/25/2024	9:30 AM	0	535	54	0	8	1	0	0	1	5	0	0
4/25/2024	9:45 AM	0	537	48	0	8	1	0	0	1	5	0	0
4/25/2024	10:00 AM	2	557	55	0	9	0	0	1	0	7	0	0
4/25/2024	10:15 AM	2	515	54	0	7	1	1	1	0	7	0	0
4/25/2024	10:30 AM	2	424	53	0	8	1	1	1	0	8	0	0
4/25/2024	10:45 AM	2	429	61	0	8	2	1	1	1	7	0	0
4/25/2024	11:00 AM	0	425	57	0	8	2	1	0	1	4	0	0
4/25/2024	11:15 AM	0	448	57	0	8	1	0	0	3	3	0	0
4/25/2024	11:30 AM	0	509	65	0	7	1	0	0	3	0	0	0
4/25/2024	11:45 AM	0	498	75	0	12	0	0	0	4	0	0	0
4/25/2024	12:00 PM	0	517	76	0	17	0	0	0	4	0	0	0
4/25/2024	12:15 PM	0	547	82	0	16	0	0	0	4	0	0	0
4/25/2024	12:30 PM	0	561	84	0	15	1	0	0	4	0	0	0
4/25/2024	12:45 PM	0	560	69	0	11	1	0	0	2	0	0	0
4/25/2024	1:00 PM	0	529	71	0	11	1	0	0	4	0	0	0
4/25/2024	1:15 PM	0	517	67	0	14	1	0	0	4	0	0	0
4/25/2024	1:30 PM	0	558	55	0	15	0	0	0	5	0	0	0
4/25/2024	1:45 PM	0	558	49	0	17	0	0	0	5	0	0	0
4/25/2024	2:00 PM	0	555	38	0	11	0	0	0	4	0	0	0
4/25/2024	2:15 PM	0	587	37	0	11	0	0	0	2	0	0	0
4/25/2024	2:30 PM	0	571	37	0	14	0	0	0	2	0	0	0
4/25/2024	2:45 PM	0	580	42	0	11	0	0	0	3	0	0	0
4/25/2024	3:00 PM	0	617	42	0	12	0	0	0	3	0	0	0
4/25/2024	3:15 PM	0	610	38	0	11	0	0	0	3	0	0	0
4/25/2024	3:30 PM	0	618	41	0	8	0	0	0	3	0	0	0
4/25/2024	3:45 PM	0	614	37	0	7	1	0	0	2	0	0	0
4/25/2024	4:00 PM	0	619	42	0	6	1	0	0	1	0	0	0
4/25/2024	4:15 PM	0	639	43	0	5	1	0	0	1	0	0	0
4/25/2024	4:30 PM	0	684	44	0	6	2	0	0	1	0	0	0
4/25/2024	4:45 PM	0	709	42	0	6	1	0	0	1	0	0	0
4/25/2024	5:00 PM	0	693	34	0	5	1	0	0	2	0	0	0
4/25/2024	5:15 PM	0	680	29	0	3	1	0	0	2	0	0	0
4/25/2024	5:30 PM	0	614	19	0	0	0	0	0	1	0	0	0
4/25/2024	5:45 PM	0	572	18	0	1	0	0	0	2	0	0	0
4/25/2024	6:00 PM	0	554	19	0	2	0	0	0	1	0	0	0
4/25/2024	6:15 PM	0	392	13	0	2	0	0	0	1	0	0	0
4/25/2024	6:30 PM	0	257	9	0	2	0	0	0	1	0	0	0
4/25/2024	6:45 PM	0	133	5	0	1	0	0	0	0	0	0	0
4/25/2024	7:00 PM	0	0	0	0	0	0	0	0	0	0	0	0
4/25/2024	7:15 PM	0	0	0	0	0	0	0	0	0	0	0	0
4/25/2024	7:30 PM	0	0	0	0	0	0	0	0	0	0	0	0
4/25/2024	7:45 PM	0	0	0	0	0	0	0	0	0	0	0	0
4/25/2024	8:00 PM	0	0	0	0	0	0	0	0	0	0	0	0
4/25/2024	8:15 PM	0	0	0	0	0	0	0	0	0	0	0	0
4/25/2024	8:30 PM	0	0	0	0	0	0	0	0	0	0	0	0
4/25/2024	8:45 PM	0	0	0	0	0	0	0	0	0	0	0	0
4/25/2024	9:00 PM	0	0	0	0	0	0	0	0	0	0	0	0
4/25/2024	9:15 PM	0	0	0	0	0	0	0	0	0	0	0	0
4/25/2024	9:30 PM	0	0	0	0	0	0	0	0	0	0	0	0
4/25/2024	9:45 PM	0	0	0	0	0	0	0	0	0	0	0	0
4/25/2024	10:00 PM	0	0	0	0	0	0	0	0	0	0	0	0
4/25/2024	10:15 PM	0	0	0	0	0	0	0	0	0	0	0	0
4/25/2024	10:30 PM	0	0	0	0	0	0	0	0	0	0	0	0
4/25/2024	10:45 PM	0	0	0	0	0	0	0	0	0	0	0	0
4/25/2024	11:00 PM	0	0	0	0	0	0	0	0	0	0	0	0
4/25/2024	11:15 PM	0	0	0	0	0	0	0	0	0	0	0	0
4/25/2024	11:30 PM	0	0	0	0	0	0	0	0	0	0	0	0
4/25/2024	11:45 PM	0	0	0	0	0	0	0	0	0	0	0	0

Bi-Directional Class Count || NB EB 15min

Columbia, SC

Marr Traffic DATA COLLECTION
www.marrtraffic.com

Site 58
I-20 E/Bound On-Ramp,
east of US-378 Sunset Blvd

Date
Tuesday, April 23, 2024

Lat/Long
34.012711°, -81.148545°

Weather
Fair
58°F

Click here for Detailed Weather

Click here for Map

0000 - 2400 (Weekday 24h Session) (04-23-2024)
NB EB 15min

	Eastbound (Movement 58.1)													15min	60min
Time	1	2	3	4	5	6	7	8	9	10	11	12	13	Total	Total
0000 - 0015	0	0	0	0	0	0	0	0	0	0	0	0	0	**0**	
0015 - 0030	0	0	0	0	0	0	0	0	0	0	0	0	0	**0**	
0030 - 0045	0	0	0	0	0	0	0	0	0	0	0	0	0	**0**	
0045 - 0100	0	0	0	0	0	0	0	0	0	0	0	0	0	**0**	**0**
0100 - 0115	0	0	0	0	0	0	0	0	0	0	0	0	0	**0**	
0115 - 0130	0	0	0	0	0	0	0	0	0	0	0	0	0	**0**	
0130 - 0145	0	0	0	0	0	0	0	0	0	0	0	0	0	**0**	
0145 - 0200	0	0	0	0	0	0	0	0	0	0	0	0	0	**0**	**0**
0200 - 0215	0	0	0	0	0	0	0	0	0	0	0	0	0	**0**	
0215 - 0230	0	0	0	0	0	0	0	0	0	0	0	0	0	**0**	
0230 - 0245	0	0	0	0	0	0	0	0	0	0	0	0	0	**0**	
0245 - 0300	0	0	0	0	0	0	0	0	0	0	0	0	0	**0**	**0**
0300 - 0315	0	0	0	0	0	0	0	0	0	0	0	0	0	**0**	
0315 - 0330	0	0	0	0	0	0	0	0	0	0	0	0	0	**0**	
0330 - 0345	0	0	0	0	0	0	0	0	0	0	0	0	0	**0**	
0345 - 0400	0	0	0	0	0	0	0	0	0	0	0	0	0	**0**	**0**
0400 - 0415	0	0	0	0	0	0	0	0	0	0	0	0	0	**0**	
0415 - 0430	0	0	0	0	0	0	0	0	0	0	0	0	0	**0**	
0430 - 0445	0	0	0	0	0	0	0	0	0	0	0	0	0	**0**	
0445 - 0500	0	0	0	0	0	0	0	0	0	0	0	0	0	**0**	**0**
0500 - 0515	0	0	0	0	0	0	0	0	0	0	0	0	0	**0**	
0515 - 0530	0	0	0	0	0	0	0	0	0	0	0	0	0	**0**	
0530 - 0545	0	0	0	0	0	0	0	0	0	0	0	0	0	**0**	
0545 - 0600	0	0	0	0	0	0	0	0	0	0	0	0	0	**0**	**0**
0600 - 0615	0	0	0	0	0	0	0	0	0	0	0	0	0	**0**	
0615 - 0630	0	0	0	0	0	0	0	0	0	0	0	0	0	**0**	
0630 - 0645	0	0	0	0	0	0	0	0	0	0	0	0	0	**0**	
0645 - 0700	0	0	0	0	0	0	0	0	0	0	0	0	0	**0**	**0**
0700 - 0715	0	0	0	0	0	0	0	0	0	0	0	0	0	**0**	
0715 - 0730	0	0	0	0	0	0	0	0	0	0	0	0	0	**0**	
0730 - 0745	0	0	0	0	0	0	0	0	0	0	0	0	0	**0**	
0745 - 0800	0	0	0	0	0	0	0	0	0	0	0	0	0	**0**	**0**
0800 - 0815	0	0	0	0	0	0	0	0	0	0	0	0	0	**0**	
0815 - 0830	0	0	0	0	0	0	0	0	0	0	0	0	0	**0**	
0830 - 0845	0	0	0	0	0	0	0	0	0	0	0	0	0	**0**	
0845 - 0900	0	0	0	0	0	0	0	0	0	0	0	0	0	**0**	**0**
0900 - 0915	0	0	0	0	0	0	0	0	0	0	0	0	0	**0**	
0915 - 0930	0	0	0	0	0	0	0	0	0	0	0	0	0	**0**	
0930 - 0945	0	0	0	0	0	0	0	0	0	0	0	0	0	**0**	
0945 - 1000	0	0	0	0	0	0	0	0	0	0	0	0	0	**0**	**0**
1000 - 1015	0	0	0	0	0	0	0	0	0	0	0	0	0	**0**	
1015 - 1030	0	0	0	0	0	0	0	0	0	0	0	0	0	**0**	
1030 - 1045	0	0	0	0	0	0	0	0	0	0	0	0	0	**0**	
1045 - 1100	0	0	0	0	0	0	0	0	0	0	0	0	0	**0**	**0**
1100 - 1115	0	0	0	0	0	0	0	0	0	0	0	0	0	**0**	
1115 - 1130	0	0	0	0	0	0	0	0	0	0	0	0	0	**0**	
1130 - 1145	0	0	0	0	0	0	0	0	0	0	0	0	0	**0**	
1145 - 1200	0	0	0	0	0	0	0	0	0	0	0	0	0	**0**	**0**
1200 - 1215	0	0	0	0	0	0	0	0	0	0	0	0	0	**0**	
1215 - 1230	0	0	0	0	0	0	0	0	0	0	0	0	0	**0**	
1230 - 1245	0	0	0	0	0	0	0	0	0	0	0	0	0	**0**	
1245 - 1300	0	0	0	0	0	0	0	0	0	0	0	0	0	**0**	**0**
1300 - 1315	0	0	0	0	0	0	0	0	0	0	0	0	0	**0**	
1315 - 1330	0	0	0	0	0	0	0	0	0	0	0	0	0	**0**	
1330 - 1345	0	0	0	0	0	0	0	0	0	0	0	0	0	**0**	
1345 - 1400	0	0	0	0	0	0	0	0	0	0	0	0	0	**0**	**0**
1400 - 1415	0	0	0	0	0	0	0	0	0	0	0	0	0	**0**	
1415 - 1430	0	0	0	0	0	0	0	0	0	0	0	0	0	**0**	
1430 - 1445	0	0	0	0	0	0	0	0	0	0	0	0	0	**0**	
1445 - 1500	0	0	0	0	0	0	0	0	0	0	0	0	0	**0**	**0**
1500 - 1515	0	0	0	0	0	0	0	0	0	0	0	0	0	**0**	
1515 - 1530	0	0	0	0	0	0	0	0	0	0	0	0	0	**0**	
1530 - 1545	0	0	0	0	0	0	0	0	0	0	0	0	0	**0**	
1545 - 1600	0	0	0	0	0	0	0	0	0	0	0	0	0	**0**	**0**
1600 - 1615	0	0	0	0	0	0	0	0	0	0	0	0	0	**0**	
1615 - 1630	0	0	0	0	0	0	0	0	0	0	0	0	0	**0**	
1630 - 1645	0	0	0	0	0	0	0	0	0	0	0	0	0	**0**	
1645 - 1700	0	0	0	0	0	0	0	0	0	0	0	0	0	**0**	**0**
1700 - 1715	0	0	0	0	0	0	0	0	0	0	0	0	0	**0**	
1715 - 1730	0	0	0	0	0	0	0	0	0	0	0	0	0	**0**	
1730 - 1745	0	0	0	0	0	0	0	0	0	0	0	0	0	**0**	
1745 - 1800	0	0	0	0	0	0	0	0	0	0	0	0	0	**0**	**0**
1800 - 1815	0	0	0	0	0	0	0	0	0	0	0	0	0	**0**	
1815 - 1830	0	0	0	0	0	0	0	0	0	0	0	0	0	**0**	
1830 - 1845	0	0	0	0	0	0	0	0	0	0	0	0	0	**0**	
1845 - 1900	0	0	0	0	0	0	0	0	0	0	0	0	0	**0**	**0**
1900 - 1915	0	0	0	0	0	0	0	0	0	0	0	0	0	**0**	
1915 - 1930	0	13	4	0	0	0	0	0	0	0	0	0	0	**17**	
1930 - 1945	0	38	6	1	0	0	0	0	3	0	0	0	0	**48**	
1945 - 2000	0	43	10	1	0	0	0	0	1	0	1	0	0	**56**	**121**
2000 - 2015	0	41	8	0	1	0	0	1	2	0	0	0	0	**53**	
2015 - 2030	0	25	0	0	1	1	0	0	2	0	2	0	0	**31**	
2030 - 2045	0	28	2	0	0	0	0	0	5	0	1	0	0	**36**	
2045 - 2100	0	20	0	0	0	0	0	0	2	0	1	0	0	**23**	**143**
2100 - 2115	0	19	0	0	1	0	0	0	2	0	1	0	0	**23**	
2115 - 2130	0	12	0	0	2	0	0	0	4	0	1	0	0	**19**	
2130 - 2145	0	11	0	0	1	0	0	0	1	0	0	0	0	**13**	
2145 - 2200	0	14	0	0	0	0	0	0	2	0	2	0	0	**18**	**73**
2200 - 2215	0	6	0	0	1	0	0	0	4	0	1	0	0	**12**	
2215 - 2230	0	17	0	0	0	0	0	0	2	0	4	0	0	**23**	
2230 - 2245	0	12	0	0	0	0	0	0	4	0	0	0	0	**16**	
2245 - 2300	0	11	0	0	0	0	0	0	2	0	1	0	0	**14**	**65**
2300 - 2315	0	9	0	0	0	0	0	0	1	0	0	0	0	**10**	
2315 - 2330	0	6	0	0	1	0	0	0	0	0	0	0	0	**7**	
2330 - 2345	0	6	0	0	0	0	0	0	4	0	1	0	0	**11**	
2345 - 0000	0	6	0	0	0	0	0	0	3	0	2	0	0	**11**	**39**

Session Total	0	337	30	2	8	1	0	1	44	0	18	0	0	**441**
Session Average	0.00	3.51	0.31	0.02	0.08	0.01	0.00	0.01	0.46	0.00	0.19	0.00	0.00	**4.59**
Session Percentage	0.00	76.42	6.80	0.45	1.81	0.23	0.00	0.23	9.98	0.00	4.08	0.00	0.00	

AM Peak Hour	-	-	-	-	-	-	-	-	-	-	-	-	-	**-**
AM Peak Volume	0	0	0	0	0	0	0	0	0	0	0	0	0	**0**

Noon Peak Hour	-	-	-	-	-	-	-	-	-	-	-	-	-	**-**
Noon Peak Volume	0	0	0	0	0	0	0	0	0	0	0	0	0	**0**

PM Peak Hour	-	1930 - 2030	1915 - 2015	1900 - 2000	1930 - 2030	1930 - 2030	-	1915 - 2015	1945 - 2045	-	1945 - 2045	-	-	**1930 - 2030**
PM Peak Volume	0	147	28	2	2	1	0	1	10	0	4	0	0	**188**

Site 58
I-20 E/Bound On-Ramp,
east of US-378 Sunset Blvd

Date
Wednesday, April 24, 2024

Lat/Long
34.012711°, -81.148545°

Weather
Fair
66°F

Click here for Detailed Weather

0000 - 2400 (Weekday 24h Session) (04-24-2024)
NB EB 15min

	Eastbound (Movement 58.1)													15min	60min
Time	1	2	3	4	5	6	7	8	9	10	11	12	13	Total	Total
0000 - 0015	0	3	0	0	0	0	0	0	2	0	0	0	0	**5**	
0015 - 0030	0	6	0	0	0	0	0	0	0	0	0	0	0	**6**	
0030 - 0045	0	4	0	0	0	0	0	0	0	0	2	0	0	**6**	
0045 - 0100	0	1	0	0	0	0	0	0	1	0	1	0	0	**3**	**20**
0100 - 0115	0	0	0	0	1	0	0	0	0	0	1	0	0	**2**	
0115 - 0130	0	1	0	0	0	0	0	0	1	0	1	0	0	**3**	
0130 - 0145	0	2	0	0	0	0	0	0	2	0	0	0	0	**4**	
0145 - 0200	0	0	0	0	1	0	0	0	3	0	0	0	0	**4**	**13**
0200 - 0215	0	2	0	0	0	0	0	0	2	0	0	0	0	**4**	
0215 - 0230	0	3	0	0	0	0	0	0	1	0	1	0	0	**5**	
0230 - 0245	0	5	0	0	0	0	0	0	3	0	0	0	0	**8**	
0245 - 0300	0	3	0	0	1	0	0	0	3	0	1	0	0	**8**	**25**
0300 - 0315	0	5	0	0	0	0	0	0	1	0	1	0	0	**7**	
0315 - 0330	0	4	0	0	0	0	0	0	0	0	2	0	0	**6**	
0330 - 0345	0	3	0	0	0	0	0	0	0	0	0	0	0	**3**	
0345 - 0400	0	4	2	0	0	0	0	0	0	0	0	0	0	**6**	**22**
0400 - 0415	0	3	0	0	2	0	0	0	1	0	0	0	0	**6**	
0415 - 0430	0	5	0	0	0	0	0	0	1	0	0	0	0	**6**	
0430 - 0445	0	6	0	0	1	0	0	0	2	0	1	0	0	**10**	
0445 - 0500	0	10	2	0	0	0	0	0	3	0	0	0	0	**15**	**37**
0500 - 0515	0	13	0	0	2	0	0	1	0	0	0	0	0	**16**	
0515 - 0530	0	17	1	0	0	0	0	0	0	0	0	0	0	**18**	
0530 - 0545	0	11	1	0	0	1	0	4	0	0	0	0	0	**17**	
0545 - 0600	0	23	1	0	0	0	0	2	0	0	0	0	0	**26**	**77**
0600 - 0615	0	24	5	0	0	0	0	3	0	0	0	0	0	**32**	
0615 - 0630	0	24	5	0	0	0	0	0	0	1	0	0	0	**30**	
0630 - 0645	0	34	3	0	0	0	0	0	1	0	0	0	0	**38**	
0645 - 0700	0	20	2	0	2	0	0	3	0	0	0	0	0	**27**	**127**
0700 - 0715	0	24	2	0	0	0	0	0	3	0	0	0	0	**29**	
0715 - 0730	0	34	4	0	1	0	0	1	2	0	0	0	0	**42**	
0730 - 0745	0	35	6	1	2	0	0	1	1	0	0	0	0	**46**	
0745 - 0800	0	43	5	0	1	0	0	0	6	0	0	0	0	**55**	**172**
0800 - 0815	0	59	7	0	2	0	0	1	6	0	0	0	0	**75**	
0815 - 0830	0	36	3	0	1	0	0	0	1	0	0	0	0	**41**	
0830 - 0845	0	44	7	0	2	0	0	0	2	0	0	0	0	**55**	
0845 - 0900	0	46	6	0	0	0	0	0	2	0	0	0	0	**54**	**225**
0900 - 0915	0	34	5	0	3	0	0	0	3	0	0	0	0	**45**	
0915 - 0930	0	24	7	0	2	1	0	0	7	0	0	0	0	**41**	
0930 - 0945	0	34	5	0	1	0	0	0	5	0	0	0	0	**45**	
0945 - 1000	0	36	4	0	1	0	0	0	3	0	0	0	0	**44**	**175**
1000 - 1015	0	43	4	0	2	0	0	0	3	0	0	0	0	**52**	
1015 - 1030	0	57	8	0	0	1	0	0	5	0	0	0	0	**71**	
1030 - 1045	0	23	3	0	0	1	0	0	4	0	0	0	0	**31**	
1045 - 1100	0	36	5	0	2	0	0	1	3	0	0	0	0	**47**	**201**
1100 - 1115	0	46	4	0	2	0	0	0	5	0	0	0	0	**57**	
1115 - 1130	0	30	6	0	2	0	0	0	2	0	0	0	0	**40**	
1130 - 1145	0	23	1	0	0	0	1	0	2	0	0	0	0	**27**	
1145 - 1200	0	47	5	0	1	0	0	0	3	0	0	0	0	**56**	**180**
1200 - 1215	0	45	4	0	2	0	1	0	3	0	0	0	0	**55**	
1215 - 1230	0	32	3	1	0	1	0	0	3	0	0	0	0	**40**	
1230 - 1245	0	22	2	0	1	0	0	0	5	0	0	0	0	**30**	
1245 - 1300	0	42	6	0	0	0	0	1	2	0	0	0	0	**51**	**176**
1300 - 1315	0	45	9	1	0	0	0	0	7	0	0	0	0	**62**	
1315 - 1330	0	51	12	0	2	0	0	0	4	0	0	0	0	**69**	
1330 - 1345	0	42	9	0	1	0	0	0	4	0	0	0	0	**56**	
1345 - 1400	0	65	12	0	1	0	0	0	5	1	0	0	0	**84**	**271**
1400 - 1415	0	61	11	0	0	0	0	0	4	1	0	0	0	**77**	
1415 - 1430	0	58	18	1	0	0	0	0	6	0	0	1	0	**84**	
1430 - 1445	0	73	16	0	1	0	0	0	5	0	0	0	0	**95**	
1445 - 1500	0	65	8	0	1	0	0	0	2	0	0	0	0	**76**	**332**
1500 - 1515	0	73	7	0	2	0	0	0	5	1	0	0	0	**88**	
1515 - 1530	0	89	12	0	0	0	0	0	3	0	0	0	0	**104**	
1530 - 1545	0	106	10	0	3	0	0	0	2	0	0	0	0	**121**	
1545 - 1600	0	107	16	0	0	0	0	0	0	0	0	0	0	**123**	**436**
1600 - 1615	0	93	9	1	1	0	0	0	4	0	0	0	0	**108**	
1615 - 1630	0	102	16	0	2	0	0	0	3	0	0	0	0	**123**	
1630 - 1645	0	97	13	1	1	0	0	0	3	0	0	0	0	**115**	
1645 - 1700	0	127	14	0	1	0	0	0	2	0	0	0	0	**144**	**490**
1700 - 1715	0	82	16	0	0	0	0	0	1	0	0	0	0	**99**	
1715 - 1730	0	76	16	0	2	0	0	0	1	0	0	0	0	**95**	
1730 - 1745	0	69	6	0	0	0	0	0	5	0	0	0	0	**80**	
1745 - 1800	0	71	10	0	1	0	1	0	5	0	0	0	0	**88**	**362**
1800 - 1815	0	41	4	0	2	0	0	0	2	0	3	0	0	**52**	
1815 - 1830	0	42	5	0	0	0	0	0	1	0	2	0	0	**50**	
1830 - 1845	1	42	5	0	0	0	0	0	1	0	0	0	0	**49**	
1845 - 1900	0	43	5	0	0	0	0	0	3	0	1	0	0	**52**	**203**
1900 - 1915	0	34	5	0	1	0	0	0	3	0	0	0	0	**43**	
1915 - 1930	0	28	1	0	0	0	0	0	5	0	0	0	0	**34**	
1930 - 1945	0	30	3	0	1	0	0	0	0	0	0	0	0	**34**	
1945 - 2000	0	31	4	0	1	0	0	0	2	0	2	0	0	**40**	**151**
2000 - 2015	0	33	1	0	0	0	0	0	4	0	2	0	0	**40**	
2015 - 2030	0	21	0	0	2	0	0	0	0	0	0	0	0	**23**	
2030 - 2045	0	26	1	0	1	0	0	0	2	0	2	0	0	**32**	
2045 - 2100	0	19	0	0	1	0	0	0	3	0	2	0	0	**25**	**120**
2100 - 2115	0	15	0	0	0	0	0	0	4	0	0	0	0	**19**	
2115 - 2130	0	22	1	0	0	0	0	0	0	0	0	0	0	**23**	
2130 - 2145	0	13	0	0	1	0	0	0	3	0	0	0	0	**17**	
2145 - 2200	0	16	0	0	0	0	0	0	4	0	1	0	0	**21**	**80**
2200 - 2215	0	15	0	0	1	0	0	0	2	0	1	0	0	**19**	
2215 - 2230	0	15	0	0	0	0	0	0	3	0	2	0	0	**20**	
2230 - 2245	0	5	0	0	0	0	0	0	1	0	1	0	0	**7**	
2245 - 2300	0	17	0	0	0	0	0	0	3	0	1	0	0	**21**	**67**
2300 - 2315	0	6	0	0	0	0	0	0	2	0	5	0	0	**13**	
2315 - 2330	0	8	0	0	0	0	0	0	2	0	0	0	0	**10**	
2330 - 2345	0	4	0	0	1	0	0	0	0	0	0	0	0	**5**	
2345 - 0000	0	4	0	0	0	0	0	0	0	0	0	0	0	**4**	**32**

Session Total	1	3213	409	6	69	5	3	18	229	4	36	1	0	**3994**
Session Average	0.01	33.47	4.26	0.06	0.72	0.05	0.03	0.19	2.39	0.04	0.38	0.01	0.00	**41.60**
Session Percentage	0.03	80.45	10.24	0.15	1.73	0.13	0.08	0.45	5.73	0.10	0.90	0.03	0.00	

AM Peak Hour	-	0800 - 0900	0830 - 0930	0645 - 0745	0830 - 0930	0945 - 1045	-	0515 - 0615	0900 - 1000	0530 - 0630	-	-	-	**0745 - 0845**
AM Peak Volume	0	185	25	1	7	2	0	9	18	1	0	0	0	**226**

Noon Peak Hour	-	1445 - 1545	1345 - 1445	1215 - 1315	1030 - 1130	1000 - 1100	1115 - 1215	1000 - 1100	1300 - 1400	1315 - 1415	-	1330 - 1430	-	**1445 - 1545**
Noon Peak Volume	0	333	57	2	6	2	2	1	20	2	0	1	0	**389**

PM Peak Hour	1745 - 1845	1600 - 1700	1615 - 1715	1545 - 1645	1530 - 1630	-	1700 - 1800	-	1715 - 1815	1500 - 1600	1800 - 1900	-	-	**1600 - 1700**
PM Peak Volume	1	419	59	2	6	0	1	0	13	1	6	0	0	**490**

Site 58
I-20 E/Bound On-Ramp,
east of US-378 Sunset Blvd

Date
Thursday, April 25, 2024

Lat/Long
34.012711°, -81.148545°

Weather
Fair
67°F

Click here for Detailed Weather

0000 - 2400 (Weekday 24h Session) (04-25-2024)
NB EB 15min

	Eastbound (Movement 58.1)													15min	60min
TIME	1	2	3	4	5	6	7	8	9	10	11	12	13	Total	Total
0000 - 0015	0	2	1	0	0	0	0	0	2	0	0	0	0	**5**	
0015 - 0030	0	6	0	0	0	0	0	0	0	0	0	0	0	**6**	
0030 - 0045	0	4	0	0	0	0	0	0	1	0	1	0	0	**6**	
0045 - 0100	0	2	0	0	0	0	0	0	1	0	1	0	0	**4**	**21**
0100 - 0115	0	2	0	0	0	0	0	0	1	0	0	0	0	**3**	
0115 - 0130	0	2	0	0	0	0	0	0	1	0	0	0	0	**3**	
0130 - 0145	0	1	0	0	0	0	0	0	1	0	2	0	0	**4**	
0145 - 0200	0	1	0	0	0	0	0	0	1	0	1	0	0	**3**	**13**
0200 - 0215	0	5	0	0	0	0	0	0	0	0	0	0	0	**5**	
0215 - 0230	0	2	0	0	1	0	0	2	2	0	0	0	0	**7**	
0230 - 0245	0	3	0	0	0	0	0	0	0	0	0	0	0	**3**	
0245 - 0300	0	6	0	0	0	0	0	0	0	0	1	0	0	**7**	**22**
0300 - 0315	0	3	1	0	0	0	0	0	1	0	2	0	0	**7**	
0315 - 0330	0	5	0	0	1	0	0	0	1	0	0	0	0	**7**	
0330 - 0345	0	3	0	0	1	0	0	0	3	0	0	0	0	**7**	
0345 - 0400	0	3	0	0	0	0	0	1	2	0	1	0	0	**7**	**28**
0400 - 0415	0	4	0	0	2	0	0	0	0	0	0	0	0	**6**	
0415 - 0430	0	5	0	0	1	0	0	0	4	0	0	0	0	**10**	
0430 - 0445	0	7	0	0	1	0	0	0	3	0	0	0	0	**11**	
0445 - 0500	0	16	0	0	0	0	0	0	1	0	1	0	0	**18**	**45**
0500 - 0515	0	10	0	0	1	0	0	0	1	0	0	0	0	**12**	
0515 - 0530	0	15	0	0	1	0	0	2	4	0	1	0	0	**23**	
0530 - 0545	0	18	0	0	0	0	0	1	2	0	0	0	0	**21**	
0545 - 0600	0	22	0	0	1	0	0	0	0	0	0	0	0	**23**	**79**
0600 - 0615	0	22	1	0	0	0	0	0	4	0	0	0	0	**27**	
0615 - 0630	0	40	3	2	1	1	0	0	3	0	0	0	0	**50**	
0630 - 0645	0	31	2	0	0	0	0	0	5	0	0	0	0	**38**	
0645 - 0700	0	31	3	1	0	1	0	1	3	0	0	0	0	**40**	**155**
0700 - 0715	0	45	4	0	0	0	0	0	0	0	0	0	0	**49**	
0715 - 0730	0	49	8	0	0	1	0	0	0	0	0	0	0	**58**	
0730 - 0745	0	33	3	1	0	0	0	0	0	0	0	0	0	**37**	
0745 - 0800	0	26	4	0	1	0	0	0	0	0	0	0	0	**31**	**175**
0800 - 0815	0	30	3	0	1	0	0	0	0	0	0	0	0	**34**	
0815 - 0830	0	47	8	0	0	0	0	0	0	0	0	0	0	**55**	
0830 - 0845	0	35	9	0	3	0	0	0	0	0	0	0	0	**47**	
0845 - 0900	0	51	6	0	0	0	0	0	0	0	0	0	0	**57**	**193**
0900 - 0915	0	48	5	0	1	0	0	0	0	0	0	0	0	**54**	
0915 - 0930	0	44	5	0	0	0	0	0	0	0	0	0	0	**49**	
0930 - 0945	0	37	6	0	1	0	0	0	0	0	0	0	0	**44**	
0945 - 1000	0	56	4	0	1	1	0	0	0	0	0	0	0	**62**	**209**
1000 - 1015	0	48	4	0	1	0	0	0	0	0	0	0	0	**53**	
1015 - 1030	0	57	5	0	0	0	0	0	0	0	0	0	0	**62**	
1030 - 1045	0	42	9	0	0	0	0	0	0	0	0	0	0	**51**	
1045 - 1100	0	36	7	1	1	1	0	0	0	0	0	0	0	**46**	**212**
1100 - 1115	0	41	5	0	0	0	0	0	0	0	0	0	0	**46**	
1115 - 1130	0	40	7	0	2	0	0	0	0	0	0	0	0	**49**	
1130 - 1145	0	53	9	0	1	0	0	0	0	0	0	0	0	**63**	
1145 - 1200	0	44	8	0	1	0	0	0	0	0	0	0	0	**53**	**211**
1200 - 1215	0	48	8	0	0	0	0	0	0	0	0	0	0	**56**	
1215 - 1230	0	46	13	0	1	0	0	0	0	0	0	0	0	**60**	
1230 - 1245	0	34	14	0	1	0	0	0	0	0	0	0	0	**49**	
1245 - 1300	0	50	12	0	3	0	0	0	0	0	0	0	0	**65**	**230**
1300 - 1315	0	52	9	0	0	0	0	0	0	0	0	0	0	**61**	
1315 - 1330	0	44	10	0	0	1	0	0	0	0	0	0	0	**55**	
1330 - 1345	0	56	13	1	0	0	0	0	0	0	0	0	0	**70**	
1345 - 1400	0	67	10	1	2	0	0	0	0	0	0	0	0	**80**	**266**
1400 - 1415	0	59	23	0	0	1	0	0	0	0	0	0	0	**83**	
1415 - 1430	0	66	16	0	3	0	0	0	0	0	0	0	0	**85**	
1430 - 1445	0	65	14	0	1	0	0	0	0	0	0	0	0	**80**	
1445 - 1500	0	92	19	0	2	0	0	0	0	0	0	0	0	**113**	**361**
1500 - 1515	0	82	8	0	2	0	0	0	0	0	0	0	0	**92**	
1515 - 1530	0	89	12	0	2	0	0	0	0	0	0	0	0	**103**	
1530 - 1545	0	91	13	0	1	0	0	0	0	0	0	0	0	**105**	
1545 - 1600	0	102	7	0	3	0	0	0	0	0	0	0	0	**112**	**412**
1600 - 1615	0	103	7	0	1	0	0	0	0	0	0	0	0	**111**	
1615 - 1630	0	88	9	0	2	0	0	0	0	0	0	0	0	**99**	
1630 - 1645	0	98	13	0	2	0	0	0	0	0	0	0	0	**113**	
1645 - 1700	0	98	8	0	4	0	0	0	0	0	0	0	0	**110**	**433**
1700 - 1715	0	103	16	0	2	0	0	0	0	0	0	0	0	**121**	
1715 - 1730	1	66	8	0	1	1	0	0	0	0	0	0	0	**77**	
1730 - 1745	0	70	7	0	3	0	0	0	0	0	0	0	0	**80**	
1745 - 1800	0	71	9	0	0	0	0	0	0	0	0	0	0	**80**	**358**
1800 - 1815	0	47	4	0	0	0	0	0	0	0	0	0	0	**51**	
1815 - 1830	0	36	9	0	1	0	0	0	0	0	0	0	0	**46**	
1830 - 1845	0	41	9	0	2	0	0	0	0	0	0	0	0	**52**	
1845 - 1900	0	52	5	0	1	0	0	0	0	0	0	0	0	**58**	**207**
1900 - 1915	0	0	0	0	0	0	0	0	0	0	0	0	0	**0**	
1915 - 1930	0	0	0	0	0	0	0	0	0	0	0	0	0	**0**	
1930 - 1945	0	0	0	0	0	0	0	0	0	0	0	0	0	**0**	
1945 - 2000	0	0	0	0	0	0	0	0	0	0	0	0	0	**0**	**0**
2000 - 2015	0	0	0	0	0	0	0	0	0	0	0	0	0	**0**	
2015 - 2030	0	0	0	0	0	0	0	0	0	0	0	0	0	**0**	
2030 - 2045	0	0	0	0	0	0	0	0	0	0	0	0	0	**0**	
2045 - 2100	0	0	0	0	0	0	0	0	0	0	0	0	0	**0**	**0**
2100 - 2115	0	0	0	0	0	0	0	0	0	0	0	0	0	**0**	
2115 - 2130	0	0	0	0	0	0	0	0	0	0	0	0	0	**0**	
2130 - 2145	0	0	0	0	0	0	0	0	0	0	0	0	0	**0**	
2145 - 2200	0	0	0	0	0	0	0	0	0	0	0	0	0	**0**	**0**
2200 - 2215	0	0	0	0	0	0	0	0	0	0	0	0	0	**0**	
2215 - 2230	0	0	0	0	0	0	0	0	0	0	0	0	0	**0**	
2230 - 2245	0	0	0	0	0	0	0	0	0	0	0	0	0	**0**	
2245 - 2300	0	0	0	0	0	0	0	0	0	0	0	0	0	**0**	**0**
2300 - 2315	0	0	0	0	0	0	0	0	0	0	0	0	0	**0**	
2315 - 2330	0	0	0	0	0	0	0	0	0	0	0	0	0	**0**	
2330 - 2345	0	0	0	0	0	0	0	0	0	0	0	0	0	**0**	
2345 - 0000	0	0	0	0	0	0	0	0	0	0	0	0	0	**0**	**0**

Session Total	1	3049	435	7	65	8	0	7	47	0	11	0	0	**3630**
Session Average	0.01	31.76	4.53	0.07	0.68	0.08	0.00	0.07	0.49	0.00	0.11	0.00	0.00	**37.81**
Session Percentage	0.03	83.99	11.98	0.19	1.79	0.22	0.00	0.19	1.29	0.00	0.30	0.00	0.00	

AM Peak Hour	-	0945 - 1045	0815 - 0915	0600 - 0700	0745 - 0845	0600 - 0700	-	0500 - 0600	0600 - 0700	-	0500 - 0600	-	-	**0945 - 1045**
AM Peak Hour Volume	0	203	28	3	5	2	0	3	15	0	1	0	0	**228**

Noon Peak Hour	-	1445 - 1545	1400 - 1500	1300 - 1400	1415 - 1515	1315 - 1415	-	-	-	-	-	-	-	**1445 - 1545**
Noon Peak Hour Volume	0	354	72	2	8	2	0	0	0	0	0	0	0	**413**

PM Peak Hour	1630 - 1730	1545 - 1645	1615 - 1715	-	1615 - 1715	1630 - 1730	-	-	-	-	-	-	-	**1615 - 1715**
PM Peak Hour Volume	1	391	46	0	10	1	0	0	0	0	0	0	0	**443**

Bi-Directional Class Count || NB EB Average 15min

Columbia, SC

Marr Traffic DATA COLLECTION
www.marrtraffic.com

Site 58
I-20 E/Bound On-Ramp,
east of US-378 Sunset Blvd

Date
Tuesday, April 23, 2024

Lat/Long
34.012711°, -81.148545°

Weather
Fair
58°F

0000 - 2400 (Weekday 24h Session) (All Dates)
NB EB Average 15min

	NB EB Average 15min													15min	60min
Time	1	2	3	4	5	6	7	8	9	10	11	12	13	Total	Total
0000 - 0015	0	2	0	0	0	0	0	0	1	0	0	0	0	**3**	
0015 - 0030	0	4	0	0	0	0	0	0	0	0	0	0	0	**4**	
0030 - 0045	0	3	0	0	0	0	0	0	0	0	1	0	0	**4**	
0045 - 0100	0	1	0	0	0	0	0	0	1	0	1	0	0	**2**	**14**
0100 - 0115	0	1	0	0	0	0	0	0	0	0	0	0	0	**2**	
0115 - 0130	0	1	0	0	0	0	0	0	1	0	0	0	0	**2**	
0130 - 0145	0	1	0	0	0	0	0	0	1	0	1	0	0	**3**	
0145 - 0200	0	0	0	0	0	0	0	0	1	0	0	0	0	**2**	**9**
0200 - 0215	0	2	0	0	0	0	0	0	1	0	0	0	0	**3**	
0215 - 0230	0	2	0	0	0	0	0	1	1	0	0	0	0	**4**	
0230 - 0245	0	3	0	0	0	0	0	0	1	0	0	0	0	**4**	
0245 - 0300	0	3	0	0	0	0	0	0	1	0	1	0	0	**5**	**16**
0300 - 0315	0	3	0	0	0	0	0	0	1	0	1	0	0	**5**	
0315 - 0330	0	3	0	0	0	0	0	0	0	0	1	0	0	**4**	
0330 - 0345	0	2	0	0	0	0	0	0	1	0	0	0	0	**3**	
0345 - 0400	0	2	1	0	0	0	0	0	1	0	0	0	0	**4**	**17**
0400 - 0415	0	2	0	0	1	0	0	0	0	0	0	0	0	**4**	
0415 - 0430	0	3	0	0	0	0	0	0	2	0	0	0	0	**5**	
0430 - 0445	0	4	0	0	1	0	0	0	2	0	0	0	0	**7**	
0445 - 0500	0	9	1	0	0	0	0	0	1	0	0	0	0	**11**	**27**
0500 - 0515	0	8	0	0	1	0	0	0	0	0	0	0	0	**9**	
0515 - 0530	0	11	0	0	0	0	0	1	1	0	0	0	0	**14**	
0530 - 0545	0	10	0	0	0	0	0	2	1	0	0	0	0	**13**	
0545 - 0600	0	15	0	0	0	0	0	1	0	0	0	0	0	**16**	**52**
0600 - 0615	0	15	2	0	0	0	0	1	1	0	0	0	0	**20**	
0615 - 0630	0	21	3	1	0	0	0	0	1	0	0	0	0	**27**	
0630 - 0645	0	22	2	0	0	0	0	0	2	0	0	0	0	**25**	
0645 - 0700	0	17	2	0	1	0	0	1	1	0	0	0	0	**22**	**94**
0700 - 0715	0	23	2	0	0	0	0	0	1	0	0	0	0	**26**	
0715 - 0730	0	28	4	0	0	0	0	0	1	0	0	0	0	**33**	
0730 - 0745	0	23	3	1	1	0	0	0	0	0	0	0	0	**28**	
0745 - 0800	0	23	3	0	1	0	0	0	2	0	0	0	0	**29**	**116**
0800 - 0815	0	30	3	0	1	0	0	0	2	0	0	0	0	**36**	
0815 - 0830	0	28	4	0	0	0	0	0	0	0	0	0	0	**32**	
0830 - 0845	0	26	5	0	2	0	0	0	1	0	0	0	0	**34**	
0845 - 0900	0	32	4	0	0	0	0	0	1	0	0	0	0	**37**	**139**
0900 - 0915	0	27	3	0	1	0	0	0	1	0	0	0	0	**33**	
0915 - 0930	0	23	4	0	1	0	0	0	2	0	0	0	0	**30**	
0930 - 0945	0	24	4	0	1	0	0	0	2	0	0	0	0	**30**	
0945 - 1000	0	31	3	0	1	0	0	0	1	0	0	0	0	**35**	**128**
1000 - 1015	0	30	3	0	1	0	0	0	1	0	0	0	0	**35**	
1015 - 1030	0	38	4	0	0	0	0	0	2	0	0	0	0	**44**	
1030 - 1045	0	22	4	0	0	0	0	0	1	0	0	0	0	**27**	
1045 - 1100	0	24	4	0	1	0	0	0	1	0	0	0	0	**31**	**138**
1100 - 1115	0	29	3	0	1	0	0	0	2	0	0	0	0	**34**	
1115 - 1130	0	23	4	0	1	0	0	0	1	0	0	0	0	**30**	
1130 - 1145	0	25	3	0	0	0	0	0	1	0	0	0	0	**30**	
1145 - 1200	0	30	4	0	1	0	0	0	1	0	0	0	0	**36**	**130**
1200 - 1215	0	31	4	0	1	0	0	0	1	0	0	0	0	**37**	
1215 - 1230	0	26	5	0	0	0	0	0	1	0	0	0	0	**33**	
1230 - 1245	0	19	5	0	1	0	0	0	2	0	0	0	0	**26**	
1245 - 1300	0	31	6	0	1	0	0	0	1	0	0	0	0	**39**	**135**
1300 - 1315	0	32	6	0	0	0	0	0	2	0	0	0	0	**41**	
1315 - 1330	0	32	7	0	1	0	0	0	1	0	0	0	0	**41**	
1330 - 1345	0	33	7	0	0	0	0	0	1	0	0	0	0	**42**	
1345 - 1400	0	44	7	0	1	0	0	0	2	0	0	0	0	**55**	**179**
1400 - 1415	0	40	11	0	0	0	0	0	1	0	0	0	0	**53**	
1415 - 1430	0	41	11	0	1	0	0	0	2	0	0	0	0	**56**	
1430 - 1445	0	46	10	0	1	0	0	0	2	0	0	0	0	**58**	
1445 - 1500	0	52	9	0	1	0	0	0	1	0	0	0	0	**63**	**231**
1500 - 1515	0	52	5	0	1	0	0	0	2	0	0	0	0	**60**	
1515 - 1530	0	59	8	0	1	0	0	0	1	0	0	0	0	**69**	
1530 - 1545	0	66	8	0	1	0	0	0	1	0	0	0	0	**75**	
1545 - 1600	0	70	8	0	1	0	0	0	0	0	0	0	0	**78**	**283**
1600 - 1615	0	65	5	0	1	0	0	0	1	0	0	0	0	**73**	
1615 - 1630	0	63	8	0	1	0	0	0	1	0	0	0	0	**74**	
1630 - 1645	0	65	9	0	1	0	0	0	1	0	0	0	0	**76**	
1645 - 1700	0	75	7	0	2	0	0	0	1	0	0	0	0	**85**	**308**
1700 - 1715	0	62	11	0	1	0	0	0	0	0	0	0	0	**73**	
1715 - 1730	0	47	8	0	1	0	0	0	0	0	0	0	0	**57**	
1730 - 1745	0	46	4	0	1	0	0	0	2	0	0	0	0	**53**	
1745 - 1800	0	47	6	0	0	0	0	0	2	0	0	0	0	**56**	**240**
1800 - 1815	0	29	3	0	1	0	0	0	1	0	1	0	0	**34**	
1815 - 1830	0	26	5	0	0	0	0	0	0	0	1	0	0	**32**	
1830 - 1845	0	28	5	0	1	0	0	0	0	0	0	0	0	**34**	
1845 - 1900	0	32	3	0	0	0	0	0	1	0	0	0	0	**37**	**137**
1900 - 1915	0	11	2	0	0	0	0	0	1	0	0	0	0	**14**	
1915 - 1930	0	14	2	0	0	0	0	0	2	0	0	0	0	**17**	
1930 - 1945	0	23	3	0	0	0	0	0	1	0	0	0	0	**27**	
1945 - 2000	0	25	5	0	0	0	0	0	1	0	1	0	0	**32**	**91**
2000 - 2015	0	25	3	0	0	0	0	0	2	0	1	0	0	**31**	
2015 - 2030	0	15	0	0	1	0	0	0	1	0	1	0	0	**18**	
2030 - 2045	0	18	1	0	0	0	0	0	2	0	1	0	0	**23**	
2045 - 2100	0	13	0	0	0	0	0	0	2	0	1	0	0	**16**	**88**
2100 - 2115	0	11	0	0	0	0	0	0	2	0	0	0	0	**14**	
2115 - 2130	0	11	0	0	1	0	0	0	1	0	0	0	0	**14**	
2130 - 2145	0	8	0	0	1	0	0	0	1	0	0	0	0	**10**	
2145 - 2200	0	10	0	0	0	0	0	0	2	0	1	0	0	**13**	**51**
2200 - 2215	0	7	0	0	1	0	0	0	2	0	1	0	0	**10**	
2215 - 2230	0	11	0	0	0	0	0	0	2	0	2	0	0	**14**	
2230 - 2245	0	6	0	0	0	0	0	0	2	0	0	0	0	**8**	
2245 - 2300	0	9	0	0	0	0	0	0	2	0	1	0	0	**12**	**44**
2300 - 2315	0	5	0	0	0	0	0	0	1	0	2	0	0	**8**	
2315 - 2330	0	5	0	0	0	0	0	0	1	0	0	0	0	**6**	
2330 - 2345	0	3	0	0	0	0	0	0	1	0	0	0	0	**5**	
2345 - 0000	0	3	0	0	0	0	0	0	1	0	1	0	0	**5**	**24**

Session Total	1	2200	291	5	47	5	1	9	107	1	22	0	0	**2688**
Session Average	0.01	22.91	3.03	0.05	0.49	0.05	0.01	0.09	1.11	0.01	0.23	0.00	0.00	**28.00**
Session Percentage	0.02	81.82	10.84	0.19	1.76	0.17	0.04	0.32	3.97	0.05	0.81	0.01	0.00	

AM Peak Hour	-	0930 - 1030	0830 - 0930	0600 - 0700	0745 - 0845	0945 - 1045	-	0515 - 0615	0900 - 1000	0530 - 0630	0500 - 0600	-	-	**0930 - 1030**
AM Peak Volume	0	123	17	1	4	1	0	4	6	0	0	0	0	**144**

Noon Peak Hour	-	1445 - 1545	1400 - 1500	1300 - 1400	1445 - 1545	1000 - 1100	1115 - 1215	1000 - 1100	1300 - 1400	1315 - 1415	-	1330 - 1430	-	**1445 - 1545**
Noon Peak Volume	0	229	42	1	4	1	1	0	7	1	0	0	0	**267**

PM Peak Hour	1630 - 1730	1600 - 1700	1615 - 1715	1545 - 1645	1600 - 1700	1630 - 1730	1700 - 1800	1915 - 2015	1945 - 2045	1500 - 1600	1945 - 2045	-	-	**1615 - 1715**
PM Peak Volume	0	269	35	1	5	0	0	0	6	0	3	0	0	**308**

Bi-Directional Class Count || Volume Summary 15min

Columbia, SC

Marr Traffic DATA COLLECTION
www.marrtraffic.com

Site 58
I-20 E/Bound On-Ramp,
east of US-378 Sunset Blvd

Date
Tuesday, April 23, 2024

Lat/Long
34.012711°, -81.148545°

Weather
Fair
58°F

Click here for Detailed Weather

0000 - 2400 (Weekday 24h Session) (04-23-2024)

Volume Summary 15min

	Volume Summary 15min		15min	60min
TIME	EB	WB	Total	Total
0000 - 0015	0	0	**0**	
0015 - 0030	0	0	**0**	
0030 - 0045	0	0	**0**	
0045 - 0100	0	0	**0**	**0**
0100 - 0115	0	0	**0**	
0115 - 0130	0	0	**0**	
0130 - 0145	0	0	**0**	
0145 - 0200	0	0	**0**	**0**
0200 - 0215	0	0	**0**	
0215 - 0230	0	0	**0**	
0230 - 0245	0	0	**0**	
0245 - 0300	0	0	**0**	**0**
0300 - 0315	0	0	**0**	
0315 - 0330	0	0	**0**	
0330 - 0345	0	0	**0**	
0345 - 0400	0	0	**0**	**0**
0400 - 0415	0	0	**0**	
0415 - 0430	0	0	**0**	
0430 - 0445	0	0	**0**	
0445 - 0500	0	0	**0**	**0**
0500 - 0515	0	0	**0**	
0515 - 0530	0	0	**0**	
0530 - 0545	0	0	**0**	
0545 - 0600	0	0	**0**	**0**
0600 - 0615	0	0	**0**	
0615 - 0630	0	0	**0**	
0630 - 0645	0	0	**0**	
0645 - 0700	0	0	**0**	**0**
0700 - 0715	0	0	**0**	
0715 - 0730	0	0	**0**	
0730 - 0745	0	0	**0**	
0745 - 0800	0	0	**0**	**0**
0800 - 0815	0	0	**0**	
0815 - 0830	0	0	**0**	
0830 - 0845	0	0	**0**	
0845 - 0900	0	0	**0**	**0**
0900 - 0915	0	0	**0**	
0915 - 0930	0	0	**0**	
0930 - 0945	0	0	**0**	
0945 - 1000	0	0	**0**	**0**
1000 - 1015	0	0	**0**	
1015 - 1030	0	0	**0**	
1030 - 1045	0	0	**0**	
1045 - 1100	0	0	**0**	**0**
1100 - 1115	0	0	**0**	
1115 - 1130	0	0	**0**	
1130 - 1145	0	0	**0**	
1145 - 1200	0	0	**0**	**0**

	Volume Summary 15min		15min	60min
Time	EB	WB	Total	Total
1200 - 1215	0	0	**0**	
1215 - 1230	0	0	**0**	
1230 - 1245	0	0	**0**	
1245 - 1300	0	0	**0**	**0**
1300 - 1315	0	0	**0**	
1315 - 1330	0	0	**0**	
1330 - 1345	0	0	**0**	
1345 - 1400	0	0	**0**	**0**
1400 - 1415	0	0	**0**	
1415 - 1430	0	0	**0**	
1430 - 1445	0	0	**0**	
1445 - 1500	0	0	**0**	**0**
1500 - 1515	0	0	**0**	
1515 - 1530	0	0	**0**	
1530 - 1545	0	0	**0**	
1545 - 1600	0	0	**0**	**0**
1600 - 1615	0	0	**0**	
1615 - 1630	0	0	**0**	
1630 - 1645	0	0	**0**	
1645 - 1700	0	0	**0**	**0**
1700 - 1715	0	0	**0**	
1715 - 1730	0	0	**0**	
1730 - 1745	0	0	**0**	
1745 - 1800	0	0	**0**	**0**
1800 - 1815	0	0	**0**	
1815 - 1830	0	0	**0**	
1830 - 1845	0	0	**0**	
1845 - 1900	0	0	**0**	**0**
1900 - 1915	0	0	**0**	
1915 - 1930	17	0	**17**	
1930 - 1945	48	0	**48**	
1945 - 2000	56	0	**56**	**121**
2000 - 2015	53	0	**53**	
2015 - 2030	31	0	**31**	
2030 - 2045	36	0	**36**	
2045 - 2100	23	0	**23**	**143**
2100 - 2115	23	0	**23**	
2115 - 2130	19	0	**19**	
2130 - 2145	13	0	**13**	
2145 - 2200	18	0	**18**	**73**
2200 - 2215	12	0	**12**	
2215 - 2230	23	0	**23**	
2230 - 2245	16	0	**16**	
2245 - 2300	14	0	**14**	**65**
2300 - 2315	10	0	**10**	
2315 - 2330	7	0	**7**	
2330 - 2345	11	0	**11**	
2345 - 0000	11	0	**11**	**39**

Session Total	441	0	**441**
Session Average	4.59	0.00	**4.59**
Session Percentage	100.00	0.00	

Site 58
I-20 E/Bound On-Ramp,
east of US-378 Sunset Blvd

Date
Wednesday, April 24, 2024

Lat/Long
34.012711°, -81.148545°

Weather
Fair
66°F

Click here for Detailed Weather

0000 - 2400 (Weekday 24h Session) (04-24-2024)

Volume Summary 15min

TIME	Volume Summary 15min EB	WB	15min Total	60min Total
0000 - 0015	5	0	**5**	
0015 - 0030	6	0	**6**	
0030 - 0045	6	0	**6**	
0045 - 0100	3	0	**3**	**20**
0100 - 0115	2	0	**2**	
0115 - 0130	3	0	**3**	
0130 - 0145	4	0	**4**	
0145 - 0200	4	0	**4**	**13**
0200 - 0215	4	0	**4**	
0215 - 0230	5	0	**5**	
0230 - 0245	8	0	**8**	
0245 - 0300	8	0	**8**	**25**
0300 - 0315	7	0	**7**	
0315 - 0330	6	0	**6**	
0330 - 0345	3	0	**3**	
0345 - 0400	6	0	**6**	**22**
0400 - 0415	6	0	**6**	
0415 - 0430	6	0	**6**	
0430 - 0445	10	0	**10**	
0445 - 0500	15	0	**15**	**37**
0500 - 0515	16	0	**16**	
0515 - 0530	18	0	**18**	
0530 - 0545	17	0	**17**	
0545 - 0600	26	0	**26**	**77**
0600 - 0615	32	0	**32**	
0615 - 0630	30	0	**30**	
0630 - 0645	38	0	**38**	
0645 - 0700	27	0	**27**	**127**
0700 - 0715	29	0	**29**	
0715 - 0730	42	0	**42**	
0730 - 0745	46	0	**46**	
0745 - 0800	55	0	**55**	**172**
0800 - 0815	75	0	**75**	
0815 - 0830	41	0	**41**	
0830 - 0845	55	0	**55**	
0845 - 0900	54	0	**54**	**225**
0900 - 0915	45	0	**45**	
0915 - 0930	41	0	**41**	
0930 - 0945	45	0	**45**	
0945 - 1000	44	0	**44**	**175**
1000 - 1015	52	0	**52**	
1015 - 1030	71	0	**71**	
1030 - 1045	31	0	**31**	
1045 - 1100	47	0	**47**	**201**
1100 - 1115	57	0	**57**	
1115 - 1130	40	0	**40**	
1130 - 1145	27	0	**27**	
1145 - 1200	56	0	**56**	**180**

Time	Volume Summary 15min EB	WB	15min Total	60min Total
1200 - 1215	55	0	**55**	
1215 - 1230	40	0	**40**	
1230 - 1245	30	0	**30**	
1245 - 1300	51	0	**51**	**176**
1300 - 1315	62	0	**62**	
1315 - 1330	69	0	**69**	
1330 - 1345	56	0	**56**	
1345 - 1400	84	0	**84**	**271**
1400 - 1415	77	0	**77**	
1415 - 1430	84	0	**84**	
1430 - 1445	95	0	**95**	
1445 - 1500	76	0	**76**	**332**
1500 - 1515	88	0	**88**	
1515 - 1530	104	0	**104**	
1530 - 1545	121	0	**121**	
1545 - 1600	123	0	**123**	**436**
1600 - 1615	108	0	**108**	
1615 - 1630	123	0	**123**	
1630 - 1645	115	0	**115**	
1645 - 1700	144	0	**144**	**490**
1700 - 1715	99	0	**99**	
1715 - 1730	95	0	**95**	
1730 - 1745	80	0	**80**	
1745 - 1800	88	0	**88**	**362**
1800 - 1815	52	0	**52**	
1815 - 1830	50	0	**50**	
1830 - 1845	49	0	**49**	
1845 - 1900	52	0	**52**	**203**
1900 - 1915	43	0	**43**	
1915 - 1930	34	0	**34**	
1930 - 1945	34	0	**34**	
1945 - 2000	40	0	**40**	**151**
2000 - 2015	40	0	**40**	
2015 - 2030	23	0	**23**	
2030 - 2045	32	0	**32**	
2045 - 2100	25	0	**25**	**120**
2100 - 2115	19	0	**19**	
2115 - 2130	23	0	**23**	
2130 - 2145	17	0	**17**	
2145 - 2200	21	0	**21**	**80**
2200 - 2215	19	0	**19**	
2215 - 2230	20	0	**20**	
2230 - 2245	7	0	**7**	
2245 - 2300	21	0	**21**	**67**
2300 - 2315	13	0	**13**	
2315 - 2330	10	0	**10**	
2330 - 2345	5	0	**5**	
2345 - 0000	4	0	**4**	**32**

Session Total	3994	0	**3994**
Session Average	41.60	0.00	**41.60**
Session Percentage	100.00	0.00	

Site 58
I-20 E/Bound On-Ramp,
east of US-378 Sunset Blvd

Date
Thursday, April 25, 2024

Lat/Long
34.012711°, -81.148545°

Weather
Fair
67°F

Click here for Detailed Weather

0000 - 2400 (Weekday 24h Session) (04-25-2024)
Volume Summary 15min

TIME	Volume Summary 15min EB	WB	15min Total	60min Total
0000 - 0015	5	0	**5**	
0015 - 0030	6	0	**6**	
0030 - 0045	6	0	**6**	
0045 - 0100	4	0	**4**	**21**
0100 - 0115	3	0	**3**	
0115 - 0130	3	0	**3**	
0130 - 0145	4	0	**4**	
0145 - 0200	3	0	**3**	**13**
0200 - 0215	5	0	**5**	
0215 - 0230	7	0	**7**	
0230 - 0245	3	0	**3**	
0245 - 0300	7	0	**7**	**22**
0300 - 0315	7	0	**7**	
0315 - 0330	7	0	**7**	
0330 - 0345	7	0	**7**	
0345 - 0400	7	0	**7**	**28**
0400 - 0415	6	0	**6**	
0415 - 0430	10	0	**10**	
0430 - 0445	11	0	**11**	
0445 - 0500	18	0	**18**	**45**
0500 - 0515	12	0	**12**	
0515 - 0530	23	0	**23**	
0530 - 0545	21	0	**21**	
0545 - 0600	23	0	**23**	**79**
0600 - 0615	27	0	**27**	
0615 - 0630	50	0	**50**	
0630 - 0645	38	0	**38**	
0645 - 0700	40	0	**40**	**155**
0700 - 0715	49	0	**49**	
0715 - 0730	58	0	**58**	
0730 - 0745	37	0	**37**	
0745 - 0800	31	0	**31**	**175**
0800 - 0815	34	0	**34**	
0815 - 0830	55	0	**55**	
0830 - 0845	47	0	**47**	
0845 - 0900	57	0	**57**	**193**
0900 - 0915	54	0	**54**	
0915 - 0930	49	0	**49**	
0930 - 0945	44	0	**44**	
0945 - 1000	62	0	**62**	**209**
1000 - 1015	53	0	**53**	
1015 - 1030	62	0	**62**	
1030 - 1045	51	0	**51**	
1045 - 1100	46	0	**46**	**212**
1100 - 1115	46	0	**46**	
1115 - 1130	49	0	**49**	
1130 - 1145	63	0	**63**	
1145 - 1200	53	0	**53**	**211**

Time	Volume Summary 15min EB	WB	15min Total	60min Total
1200 - 1215	56	0	**56**	
1215 - 1230	60	0	**60**	
1230 - 1245	49	0	**49**	
1245 - 1300	65	0	**65**	**230**
1300 - 1315	61	0	**61**	
1315 - 1330	55	0	**55**	
1330 - 1345	70	0	**70**	
1345 - 1400	80	0	**80**	**266**
1400 - 1415	83	0	**83**	
1415 - 1430	85	0	**85**	
1430 - 1445	80	0	**80**	
1445 - 1500	113	0	**113**	**361**
1500 - 1515	92	0	**92**	
1515 - 1530	103	0	**103**	
1530 - 1545	105	0	**105**	
1545 - 1600	112	0	**112**	**412**
1600 - 1615	111	0	**111**	
1615 - 1630	99	0	**99**	
1630 - 1645	113	0	**113**	
1645 - 1700	110	0	**110**	**433**
1700 - 1715	121	0	**121**	
1715 - 1730	77	0	**77**	
1730 - 1745	80	0	**80**	
1745 - 1800	80	0	**80**	**358**
1800 - 1815	51	0	**51**	
1815 - 1830	46	0	**46**	
1830 - 1845	52	0	**52**	
1845 - 1900	58	0	**58**	**207**
1900 - 1915	0	0	**0**	
1915 - 1930	0	0	**0**	
1930 - 1945	0	0	**0**	
1945 - 2000	0	0	**0**	**0**
2000 - 2015	0	0	**0**	
2015 - 2030	0	0	**0**	
2030 - 2045	0	0	**0**	
2045 - 2100	0	0	**0**	**0**
2100 - 2115	0	0	**0**	
2115 - 2130	0	0	**0**	
2130 - 2145	0	0	**0**	
2145 - 2200	0	0	**0**	**0**
2200 - 2215	0	0	**0**	
2215 - 2230	0	0	**0**	
2230 - 2245	0	0	**0**	
2245 - 2300	0	0	**0**	**0**
2300 - 2315	0	0	**0**	
2315 - 2330	0	0	**0**	
2330 - 2345	0	0	**0**	
2345 - 0000	0	0	**0**	**0**

Session Total	3630	0	**3630**
Session Average	37.81	0.00	**37.81**
Session Percentage	100.00	0.00	

Bi-Directional Class Count || NB EB 60min

Columbia, SC

Marr Traffic DATA COLLECTION

www.marrtraffic.com

Site 58
I-20 E/Bound On-Ramp,
east of US-378 Sunset Blvd

Date
Tuesday, April 23, 2024

Lat/Long
34.012711°, -81.148545°

Weather
Fair
58°F

Click here for Detailed Weather

0000 - 2400 (Weekday 24h Session) (04-23-2024)
NB EB 60min

	Eastbound (Movement 58.1)													
TIME	1	2	3	4	5	6	7	8	9	10	11	12	13	**Total**
0000 - 0100	0	0	0	0	0	0	0	0	0	0	0	0	0	**0**
0100 - 0200	0	0	0	0	0	0	0	0	0	0	0	0	0	**0**
0200 - 0300	0	0	0	0	0	0	0	0	0	0	0	0	0	**0**
0300 - 0400	0	0	0	0	0	0	0	0	0	0	0	0	0	**0**
0400 - 0500	0	0	0	0	0	0	0	0	0	0	0	0	0	**0**
0500 - 0600	0	0	0	0	0	0	0	0	0	0	0	0	0	**0**
0600 - 0700	0	0	0	0	0	0	0	0	0	0	0	0	0	**0**
0700 - 0800	0	0	0	0	0	0	0	0	0	0	0	0	0	**0**
0800 - 0900	0	0	0	0	0	0	0	0	0	0	0	0	0	**0**
0900 - 1000	0	0	0	0	0	0	0	0	0	0	0	0	0	**0**
1000 - 1100	0	0	0	0	0	0	0	0	0	0	0	0	0	**0**
1100 - 1200	0	0	0	0	0	0	0	0	0	0	0	0	0	**0**
1200 - 1300	0	0	0	0	0	0	0	0	0	0	0	0	0	**0**
1300 - 1400	0	0	0	0	0	0	0	0	0	0	0	0	0	**0**
1400 - 1500	0	0	0	0	0	0	0	0	0	0	0	0	0	**0**
1500 - 1600	0	0	0	0	0	0	0	0	0	0	0	0	0	**0**
1600 - 1700	0	0	0	0	0	0	0	0	0	0	0	0	0	**0**
1700 - 1800	0	0	0	0	0	0	0	0	0	0	0	0	0	**0**
1800 - 1900	0	0	0	0	0	0	0	0	0	0	0	0	0	**0**
1900 - 2000	0	94	20	2	0	0	0	0	4	0	1	0	0	**121**
2000 - 2100	0	114	10	0	2	1	0	1	11	0	4	0	0	**143**
2100 - 2200	0	56	0	0	4	0	0	0	9	0	4	0	0	**73**
2200 - 2300	0	46	0	0	1	0	0	0	12	0	6	0	0	**65**
2300 - 2400	0	27	0	0	1	0	0	0	8	0	3	0	0	**39**
Session Total	0	337	30	2	8	1	0	1	44	0	18	0	0	**441**
Session Average	0.00	14.04	1.25	0.08	0.33	0.04	0.00	0.04	1.83	0.00	0.75	0.00	0.00	**18.38**
Session Percentage	0.00	76.42	6.80	0.45	1.81	0.23	0.00	0.23	9.98	0.00	4.08	0.00	0.00	
AM Peak Hour	-	-	-	-	-	-	-	-	-	-	-	-	-	**-**
AM Peak Volume	0	0	0	0	0	0	0	0	0	0	0	0	0	**0**
Noon Peak Hour	-	-	-	-	-	-	-	-	-	-	-	-	-	**-**
Noon Peak Volume	0	0	0	0	0	0	0	0	0	0	0	0	0	**0**
PM Peak Hour	-	1900 - 2000	1900 - 2000	1900 - 2000	-	-	-	-	1900 - 2000	-	1900 - 2000	-	-	**1900 - 2000**
PM Peak Volume	0	94	20	2	0	0	0	0	4	0	1	0	0	**121**

Site 58
I-20 E/Bound On-Ramp,
east of US-378 Sunset Blvd

Date
Wednesday, April 24, 2024

Lat/Long
34.012711°, -81.148545°

Weather
Fair
66°F

Click here for Detailed Weather

0000 - 2400 (Weekday 24h Session) (04-24-2024)
NB EB 60min

	Eastbound (Movement 58.1)													
TIME	1	2	3	4	5	6	7	8	9	10	11	12	13	**Total**
0000 - 0100	0	14	0	0	0	0	0	0	3	0	3	0	0	**20**
0100 - 0200	0	3	0	0	2	0	0	0	6	0	2	0	0	**13**
0200 - 0300	0	13	0	0	1	0	0	0	9	0	2	0	0	**25**
0300 - 0400	0	16	2	0	0	0	0	0	1	0	3	0	0	**22**
0400 - 0500	0	24	2	0	3	0	0	0	7	0	1	0	0	**37**
0500 - 0600	0	64	3	0	2	1	0	7	0	0	0	0	0	**77**
0600 - 0700	0	102	15	0	2	0	0	6	1	1	0	0	0	**127**
0700 - 0800	0	136	17	1	4	0	0	2	12	0	0	0	0	**172**
0800 - 0900	0	185	23	0	5	0	0	1	11	0	0	0	0	**225**
0900 - 1000	0	128	21	0	7	1	0	0	18	0	0	0	0	**175**
1000 - 1100	0	159	20	0	4	2	0	1	15	0	0	0	0	**201**
1100 - 1200	0	146	16	0	5	0	1	0	12	0	0	0	0	**180**
1200 - 1300	0	141	15	1	3	1	1	1	13	0	0	0	0	**176**
1300 - 1400	0	203	42	1	4	0	0	0	20	1	0	0	0	**271**
1400 - 1500	0	257	53	1	2	0	0	0	17	1	0	1	0	**332**
1500 - 1600	0	375	45	0	5	0	0	0	10	1	0	0	0	**436**
1600 - 1700	0	419	52	2	5	0	0	0	12	0	0	0	0	**490**
1700 - 1800	0	298	48	0	3	0	1	0	12	0	0	0	0	**362**
1800 - 1900	1	168	19	0	2	0	0	0	7	0	6	0	0	**203**
1900 - 2000	0	123	13	0	3	0	0	0	10	0	2	0	0	**151**
2000 - 2100	0	99	2	0	4	0	0	0	9	0	6	0	0	**120**
2100 - 2200	0	66	1	0	1	0	0	0	11	0	1	0	0	**80**
2200 - 2300	0	52	0	0	1	0	0	0	9	0	5	0	0	**67**
2300 - 2400	0	22	0	0	1	0	0	0	4	0	5	0	0	**32**

Session Total	1	3213	409	6	69	5	3	18	229	4	36	1	0	**3994**
Session Average	0.04	133.88	17.04	0.25	2.88	0.21	0.13	0.75	9.54	0.17	1.50	0.04	0.00	**166.42**
Session Percentage	0.03	80.45	10.24	0.15	1.73	0.13	0.08	0.45	5.73	0.10	0.90	0.03	0.00	

AM Peak Hour	-	0800 - 0900	0800 - 0900	0700 - 0800	0900 - 1000	0500 - 0600	-	0500 - 0600	0900 - 1000	0600 - 0700	-	-	-	**0800 - 0900**
AM Peak Volume	0	185	23	1	7	1	0	7	18	1	0	0	0	**225**

Noon Peak Hour	-	1400 - 1500	1400 - 1500	1200 - 1300	1100 - 1200	1000 - 1100	1100 - 1200	1000 - 1100	1300 - 1400	1300 - 1400	-	1400 - 1500	-	**1400 - 1500**
Noon Peak Volume	0	257	53	1	5	2	1	1	20	1	0	1	0	**332**

PM Peak Hour	1800 - 1900	1600 - 1700	1600 - 1700	1600 - 1700	1500 - 1600	-	1700 - 1800	-	1600 - 1700	1500 - 1600	1800 - 1900	-	-	**1600 - 1700**
PM Peak Volume	1	419	52	2	5	0	1	0	12	1	6	0	0	**490**

Site 58
I-20 E/Bound On-Ramp,
east of US-378 Sunset Blvd

Date
Thursday, April 25, 2024

Lat/Long
34.012711°, -81.148545°

Weather
Fair
67°F

Click here for Detailed Weather

0000 - 2400 (Weekday 24h Session) (04-25-2024)
NB EB 60min

	Eastbound (Movement 58.1)													
TIME	1	2	3	4	5	6	7	8	9	10	11	12	13	**Total**
0000 - 0100	0	14	1	0	0	0	0	0	4	0	2	0	0	**21**
0100 - 0200	0	6	0	0	0	0	0	0	4	0	3	0	0	**13**
0200 - 0300	0	16	0	0	1	0	0	2	2	0	1	0	0	**22**
0300 - 0400	0	14	1	0	2	0	0	1	7	0	3	0	0	**28**
0400 - 0500	0	32	0	0	4	0	0	0	8	0	1	0	0	**45**
0500 - 0600	0	65	0	0	3	0	0	3	7	0	1	0	0	**79**
0600 - 0700	0	124	9	3	1	2	0	1	15	0	0	0	0	**155**
0700 - 0800	0	153	19	1	1	1	0	0	0	0	0	0	0	**175**
0800 - 0900	0	163	26	0	4	0	0	0	0	0	0	0	0	**193**
0900 - 1000	0	185	20	0	3	1	0	0	0	0	0	0	0	**209**
1000 - 1100	0	183	25	1	2	1	0	0	0	0	0	0	0	**212**
1100 - 1200	0	178	29	0	4	0	0	0	0	0	0	0	0	**211**
1200 - 1300	0	178	47	0	5	0	0	0	0	0	0	0	0	**230**
1300 - 1400	0	219	42	2	2	1	0	0	0	0	0	0	0	**266**
1400 - 1500	0	282	72	0	6	1	0	0	0	0	0	0	0	**361**
1500 - 1600	0	364	40	0	8	0	0	0	0	0	0	0	0	**412**
1600 - 1700	0	387	37	0	9	0	0	0	0	0	0	0	0	**433**
1700 - 1800	1	310	40	0	6	1	0	0	0	0	0	0	0	**358**
1800 - 1900	0	176	27	0	4	0	0	0	0	0	0	0	0	**207**
1900 - 2000	0	0	0	0	0	0	0	0	0	0	0	0	0	**0**
2000 - 2100	0	0	0	0	0	0	0	0	0	0	0	0	0	**0**
2100 - 2200	0	0	0	0	0	0	0	0	0	0	0	0	0	**0**
2200 - 2300	0	0	0	0	0	0	0	0	0	0	0	0	0	**0**
2300 - 2400	0	0	0	0	0	0	0	0	0	0	0	0	0	**0**

Session Total	1	3049	435	7	65	8	0	7	47	0	11	0	0	**3630**
Session Average	0.04	127.04	18.13	0.29	2.71	0.33	0.00	0.29	1.96	0.00	0.46	0.00	0.00	**151.25**
Session Percentage	0.03	83.99	11.98	0.19	1.79	0.22	0.00	0.19	1.29	0.00	0.30	0.00	0.00	

AM Peak Hour	-	0900 - 1000	0800 - 0900	0600 - 0700	0800 - 0900	0600 - 0700	-	0500 - 0600	0600 - 0700	-	0500 - 0600	-	-	**0900 - 1000**
AM Peak Hour Volume	0	185	26	3	4	2	0	3	15	0	1	0	0	**209**

Noon Peak Hour	-	1400 - 1500	1400 - 1500	1300 - 1400	1400 - 1500	1000 - 1100	-	-	-	-	-	-	-	**1400 - 1500**
Noon Peak Hour Volume	0	282	72	2	6	1	0	0	0	0	0	0	0	**361**

PM Peak Hour	1700 - 1800	1600 - 1700	1500 - 1600	-	1600 - 1700	1700 - 1800	-	-	-	-	-	-	-	**1600 - 1700**
PM Peak Hour Volume	1	387	40	0	9	1	0	0	0	0	0	0	0	**433**

Bi-Directional Class Count || Volume Summary 60min

Columbia, SC

Marr Traffic DATA COLLECTION

www.marrtraffic.com

Site 58

I-20 E/Bound On-Ramp,
east of US-378 Sunset Blvd

Date

Tuesday, April 23, 2024

Lat/Long

34.012711°, -81.148545°

Weather

Fair
58°F

Click here for Detailed Weather

0000 - 2400 (Weekday 24h Session) (04-23-2024)

Volume Summary 60min

	Volume Summary 60min		
TIME	EB	WB	**Total**
0000 - 0100	0	0	**0**
0100 - 0200	0	0	**0**
0200 - 0300	0	0	**0**
0300 - 0400	0	0	**0**
0400 - 0500	0	0	**0**
0500 - 0600	0	0	**0**
0600 - 0700	0	0	**0**
0700 - 0800	0	0	**0**
0800 - 0900	0	0	**0**
0900 - 1000	0	0	**0**
1000 - 1100	0	0	**0**
1100 - 1200	0	0	**0**

	Volume Summary 60min		
Time	EB	WB	**Total**
1200 - 1300	0	0	**0**
1300 - 1400	0	0	**0**
1400 - 1500	0	0	**0**
1500 - 1600	0	0	**0**
1600 - 1700	0	0	**0**
1700 - 1800	0	0	**0**
1800 - 1900	0	0	**0**
1900 - 2000	121	0	**121**
2000 - 2100	143	0	**143**
2100 - 2200	73	0	**73**
2200 - 2300	65	0	**65**
2300 - 2400	39	0	**39**

Session Total	441	0	**441**
Session Average	18.38	0.00	**18.38**
Session Percentage	100.00	0.00	

Site 58

I-20 E/Bound On-Ramp,
east of US-378 Sunset Blvd

Date

Wednesday, April 24, 2024

Lat/Long

34.012711°, -81.148545°

Weather

Fair
66°F

Click here for Detailed Weather

0000 - 2400 (Weekday 24h Session) (04-24-2024)

Volume Summary 60min

	Volume Summary 60min		
TIME	EB	WB	**Total**
0000 - 0100	20	0	**20**
0100 - 0200	13	0	**13**
0200 - 0300	25	0	**25**
0300 - 0400	22	0	**22**
0400 - 0500	37	0	**37**
0500 - 0600	77	0	**77**
0600 - 0700	127	0	**127**
0700 - 0800	172	0	**172**
0800 - 0900	225	0	**225**
0900 - 1000	175	0	**175**
1000 - 1100	201	0	**201**
1100 - 1200	180	0	**180**

	Volume Summary 60min		
Time	EB	WB	**Total**
1200 - 1300	176	0	**176**
1300 - 1400	271	0	**271**
1400 - 1500	332	0	**332**
1500 - 1600	436	0	**436**
1600 - 1700	490	0	**490**
1700 - 1800	362	0	**362**
1800 - 1900	203	0	**203**
1900 - 2000	151	0	**151**
2000 - 2100	120	0	**120**
2100 - 2200	80	0	**80**
2200 - 2300	67	0	**67**
2300 - 2400	32	0	**32**

Session Total	3994	0	**3994**
Session Average	166.42	0.00	**166.42**
Session Percentage	100.00	0.00	

Site 58

I-20 E/Bound On-Ramp,
east of US-378 Sunset Blvd

Date

Thursday, April 25, 2024

Lat/Long

34.012711°, -81.148545°

Weather

Fair
67°F

Click here for Detailed Weather

0000 - 2400 (Weekday 24h Session) (04-25-2024)

Volume Summary 60min

	Volume Summary 60min		
TIME	EB	WB	**Total**
0000 - 0100	21	0	**21**
0100 - 0200	13	0	**13**
0200 - 0300	22	0	**22**
0300 - 0400	28	0	**28**
0400 - 0500	45	0	**45**
0500 - 0600	79	0	**79**
0600 - 0700	155	0	**155**
0700 - 0800	175	0	**175**
0800 - 0900	193	0	**193**
0900 - 1000	209	0	**209**
1000 - 1100	212	0	**212**
1100 - 1200	211	0	**211**

Session Total	3630	0	**3630**
Session Average	151.25	0.00	**151.25**
Session Percentage	100.00	0.00	

	Volume Summary 60min		
Time	EB	WB	**Total**
1200 - 1300	230	0	**230**
1300 - 1400	266	0	**266**
1400 - 1500	361	0	**361**
1500 - 1600	412	0	**412**
1600 - 1700	433	0	**433**
1700 - 1800	358	0	**358**
1800 - 1900	207	0	**207**
1900 - 2000	0	0	**0**
2000 - 2100	0	0	**0**
2100 - 2200	0	0	**0**
2200 - 2300	0	0	**0**
2300 - 2400	0	0	**0**

Bi-Directional Class Count || Graphical Analysis NB EB

Columbia, SC

Marr Traffic DATA COLLECTION

www.marrtraffic.com

Site 58

I-20 E/Bound On-Ramp,
east of US-378 Sunset Blvd

Lat/Long

34.012711°, -81.148545°

0000 - 2400 (Weekday 24h Session)

Graphical Analysis NB EB

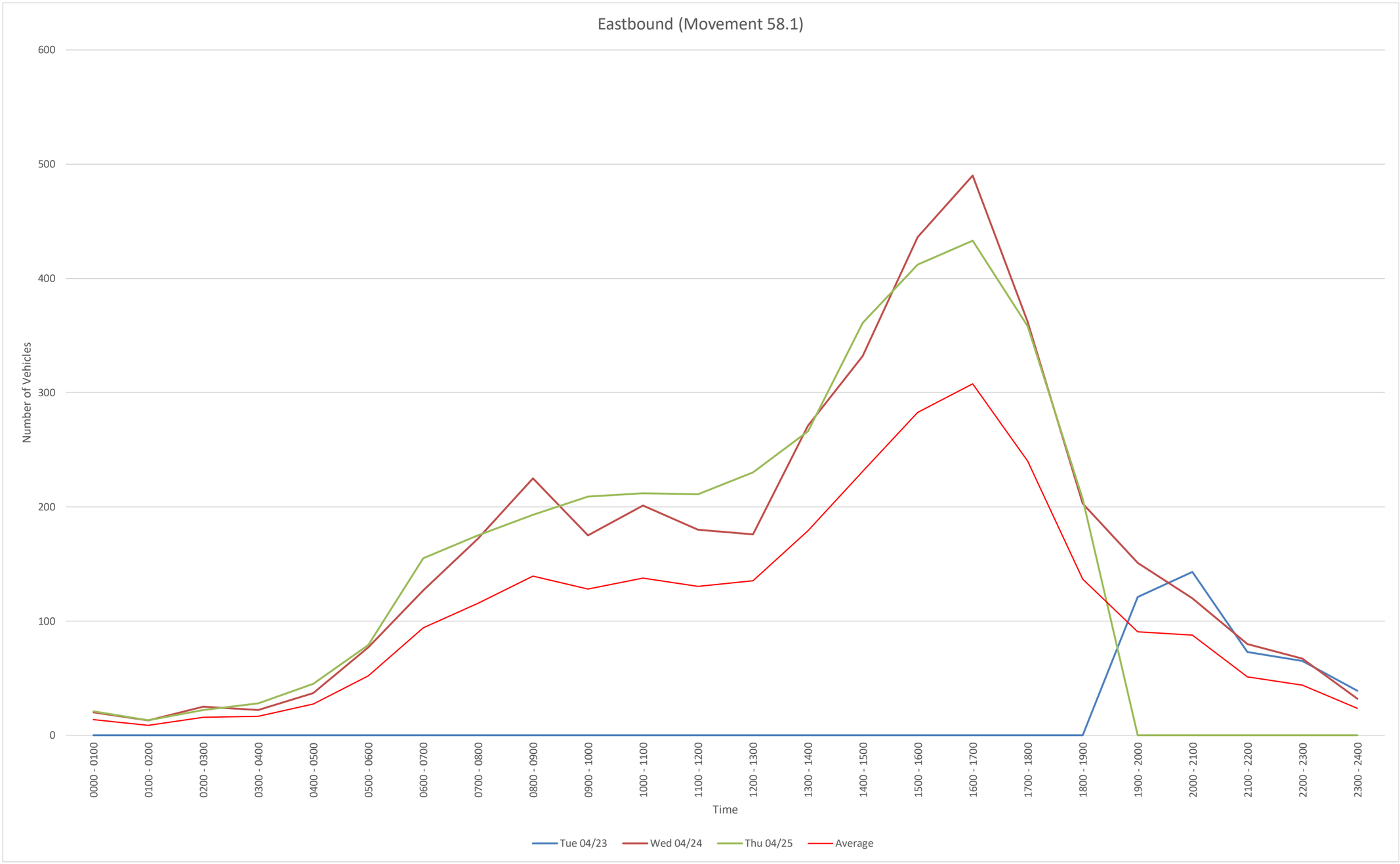

Time	Tue 04/23	Wed 04/24	Thu 04/25				
0000 - 0100	0	20	21				
0100 - 0200	0	13	13				
0200 - 0300	0	25	22				
0300 - 0400	0	22	28				
0400 - 0500	0	37	45				
0500 - 0600	0	77	79				
0600 - 0700	0	127	155				
0700 - 0800	0	172	175				
0800 - 0900	0	225	193				
0900 - 1000	0	175	209				
1000 - 1100	0	201	212				
1100 - 1200	0	180	211				
1200 - 1300	0	176	230				
1300 - 1400	0	271	266				
1400 - 1500	0	332	361				
1500 - 1600	0	436	412				
1600 - 1700	0	490	433				
1700 - 1800	0	362	358				
1800 - 1900	0	203	207				
1900 - 2000	121	151	0				
2000 - 2100	143	120	0				
2100 - 2200	73	80	0				
2200 - 2300	65	67	0				
2300 - 2400	39	32	0				
Daily Total	441	3994	3630				

EB
File Name:
Start Date: 4/23/2024
Start Time: 0
Site Code: 58
Station ID: 1
Location 1: I-20 E/Bound On-Ramp, east of US-378 Sunset Blvd
Location 2:

Date	Time	1	2	3	4	5	6	7	8	9	10	11	12	13
4/23/2024	12:00 AM	0	0	0	0	0	0	0	0	0	0	0	0	0
4/23/2024	12:15 AM	0	0	0	0	0	0	0	0	0	0	0	0	0
4/23/2024	12:30 AM	0	0	0	0	0	0	0	0	0	0	0	0	0
4/23/2024	12:45 AM	0	0	0	0	0	0	0	0	0	0	0	0	0
4/23/2024	1:00 AM	0	0	0	0	0	0	0	0	0	0	0	0	0
4/23/2024	1:15 AM	0	0	0	0	0	0	0	0	0	0	0	0	0
4/23/2024	1:30 AM	0	0	0	0	0	0	0	0	0	0	0	0	0
4/23/2024	1:45 AM	0	0	0	0	0	0	0	0	0	0	0	0	0
4/23/2024	2:00 AM	0	0	0	0	0	0	0	0	0	0	0	0	0
4/23/2024	2:15 AM	0	0	0	0	0	0	0	0	0	0	0	0	0
4/23/2024	2:30 AM	0	0	0	0	0	0	0	0	0	0	0	0	0
4/23/2024	2:45 AM	0	0	0	0	0	0	0	0	0	0	0	0	0
4/23/2024	3:00 AM	0	0	0	0	0	0	0	0	0	0	0	0	0
4/23/2024	3:15 AM	0	0	0	0	0	0	0	0	0	0	0	0	0
4/23/2024	3:30 AM	0	0	0	0	0	0	0	0	0	0	0	0	0
4/23/2024	3:45 AM	0	0	0	0	0	0	0	0	0	0	0	0	0
4/23/2024	4:00 AM	0	0	0	0	0	0	0	0	0	0	0	0	0
4/23/2024	4:15 AM	0	0	0	0	0	0	0	0	0	0	0	0	0
4/23/2024	4:30 AM	0	0	0	0	0	0	0	0	0	0	0	0	0
4/23/2024	4:45 AM	0	0	0	0	0	0	0	0	0	0	0	0	0
4/23/2024	5:00 AM	0	0	0	0	0	0	0	0	0	0	0	0	0
4/23/2024	5:15 AM	0	0	0	0	0	0	0	0	0	0	0	0	0
4/23/2024	5:30 AM	0	0	0	0	0	0	0	0	0	0	0	0	0
4/23/2024	5:45 AM	0	0	0	0	0	0	0	0	0	0	0	0	0
4/23/2024	6:00 AM	0	0	0	0	0	0	0	0	0	0	0	0	0
4/23/2024	6:15 AM	0	0	0	0	0	0	0	0	0	0	0	0	0
4/23/2024	6:30 AM	0	0	0	0	0	0	0	0	0	0	0	0	0
4/23/2024	6:45 AM	0	0	0	0	0	0	0	0	0	0	0	0	0
4/23/2024	7:00 AM	0	0	0	0	0	0	0	0	0	0	0	0	0
4/23/2024	7:15 AM	0	0	0	0	0	0	0	0	0	0	0	0	0
4/23/2024	7:30 AM	0	0	0	0	0	0	0	0	0	0	0	0	0
4/23/2024	7:45 AM	0	0	0	0	0	0	0	0	0	0	0	0	0
4/23/2024	8:00 AM	0	0	0	0	0	0	0	0	0	0	0	0	0
4/23/2024	8:15 AM	0	0	0	0	0	0	0	0	0	0	0	0	0
4/23/2024	8:30 AM	0	0	0	0	0	0	0	0	0	0	0	0	0
4/23/2024	8:45 AM	0	0	0	0	0	0	0	0	0	0	0	0	0
4/23/2024	9:00 AM	0	0	0	0	0	0	0	0	0	0	0	0	0
4/23/2024	9:15 AM	0	0	0	0	0	0	0	0	0	0	0	0	0
4/23/2024	9:30 AM	0	0	0	0	0	0	0	0	0	0	0	0	0
4/23/2024	9:45 AM	0	0	0	0	0	0	0	0	0	0	0	0	0
4/23/2024	10:00 AM	0	0	0	0	0	0	0	0	0	0	0	0	0
4/23/2024	10:15 AM	0	0	0	0	0	0	0	0	0	0	0	0	0
4/23/2024	10:30 AM	0	0	0	0	0	0	0	0	0	0	0	0	0
4/23/2024	10:45 AM	0	0	0	0	0	0	0	0	0	0	0	0	0
4/23/2024	11:00 AM	0	0	0	0	0	0	0	0	0	0	0	0	0
4/23/2024	11:15 AM	0	0	0	0	0	0	0	0	0	0	0	0	0
4/23/2024	11:30 AM	0	0	0	0	0	0	0	0	0	0	0	0	0
4/23/2024	11:45 AM	0	0	0	0	0	0	0	0	0	0	0	0	0
4/23/2024	12:00 PM	0	0	0	0	0	0	0	0	0	0	0	0	0
4/23/2024	12:15 PM	0	0	0	0	0	0	0	0	0	0	0	0	0
4/23/2024	12:30 PM	0	0	0	0	0	0	0	0	0	0	0	0	0
4/23/2024	12:45 PM	0	0	0	0	0	0	0	0	0	0	0	0	0
4/23/2024	1:00 PM	0	0	0	0	0	0	0	0	0	0	0	0	0
4/23/2024	1:15 PM	0	0	0	0	0	0	0	0	0	0	0	0	0
4/23/2024	1:30 PM	0	0	0	0	0	0	0	0	0	0	0	0	0
4/23/2024	1:45 PM	0	0	0	0	0	0	0	0	0	0	0	0	0
4/23/2024	2:00 PM	0	0	0	0	0	0	0	0	0	0	0	0	0
4/23/2024	2:15 PM	0	0	0	0	0	0	0	0	0	0	0	0	0
4/23/2024	2:30 PM	0	0	0	0	0	0	0	0	0	0	0	0	0
4/23/2024	2:45 PM	0	0	0	0	0	0	0	0	0	0	0	0	0
4/23/2024	3:00 PM	0	0	0	0	0	0	0	0	0	0	0	0	0
4/23/2024	3:15 PM	0	0	0	0	0	0	0	0	0	0	0	0	0
4/23/2024	3:30 PM	0	0	0	0	0	0	0	0	0	0	0	0	0
4/23/2024	3:45 PM	0	0	0	0	0	0	0	0	0	0	0	0	0
4/23/2024	4:00 PM	0	0	0	0	0	0	0	0	0	0	0	0	0
4/23/2024	4:15 PM	0	0	0	0	0	0	0	0	0	0	0	0	0
4/23/2024	4:30 PM	0	0	0	0	0	0	0	0	0	0	0	0	0
4/23/2024	4:45 PM	0	0	0	0	0	0	0	0	0	0	0	0	0
4/23/2024	5:00 PM	0	0	0	0	0	0	0	0	0	0	0	0	0
4/23/2024	5:15 PM	0	0	0	0	0	0	0	0	0	0	0	0	0
4/23/2024	5:30 PM	0	0	0	0	0	0	0	0	0	0	0	0	0
4/23/2024	5:45 PM	0	0	0	0	0	0	0	0	0	0	0	0	0
4/23/2024	6:00 PM	0	0	0	0	0	0	0	0	0	0	0	0	0
4/23/2024	6:15 PM	0	0	0	0	0	0	0	0	0	0	0	0	0
4/23/2024	6:30 PM	0	0	0	0	0	0	0	0	0	0	0	0	0
4/23/2024	6:45 PM	0	0	0	0	0	0	0	0	0	0	0	0	0
4/23/2024	7:00 PM	0	0	0	0	0	0	0	0	0	0	0	0	0
4/23/2024	7:15 PM	0	13	4	0	0	0	0	0	0	0	0	0	0
4/23/2024	7:30 PM	0	38	6	1	0	0	0	0	3	0	0	0	0
4/23/2024	7:45 PM	0	43	10	1	0	0	0	0	1	0	1	0	0
4/23/2024	8:00 PM	0	41	8	0	1	0	0	1	2	0	0	0	0
4/23/2024	8:15 PM	0	25	0	0	1	1	0	0	2	0	2	0	0
4/23/2024	8:30 PM	0	28	2	0	0	0	0	0	5	0	1	0	0
4/23/2024	8:45 PM	0	20	0	0	0	0	0	0	2	0	1	0	0
4/23/2024	9:00 PM	0	19	0	0	1	0	0	0	2	0	1	0	0
4/23/2024	9:15 PM	0	12	0	0	2	0	0	0	4	0	1	0	0
4/23/2024	9:30 PM	0	11	0	0	1	0	0	0	1	0	0	0	0
4/23/2024	9:45 PM	0	14	0	0	0	0	0	0	2	0	2	0	0
4/23/2024	10:00 PM	0	6	0	0	1	0	0	0	4	0	1	0	0
4/23/2024	10:15 PM	0	17	0	0	0	0	0	0	2	0	4	0	0
4/23/2024	10:30 PM	0	12	0	0	0	0	0	0	4	0	0	0	0
4/23/2024	10:45 PM	0	11	0	0	0	0	0	0	2	0	1	0	0
4/23/2024	11:00 PM	0	9	0	0	0	0	0	0	1	0	0	0	0
4/23/2024	11:15 PM	0	6	0	0	1	0	0	0	0	0	0	0	0
4/23/2024	11:30 PM	0	6	0	0	0	0	0	0	4	0	1	0	0
4/23/2024	11:45 PM	0	6	0	0	0	0	0	0	3	0	2	0	0

4/24/2024	12:00 AM	0	3	0	0	0	0	0	0	2	0	0	0	0
4/24/2024	12:15 AM	0	6	0	0	0	0	0	0	0	0	0	0	0
4/24/2024	12:30 AM	0	4	0	0	0	0	0	0	0	0	2	0	0
4/24/2024	12:45 AM	0	1	0	0	0	0	0	0	1	0	1	0	0
4/24/2024	1:00 AM	0	0	0	0	1	0	0	0	0	0	1	0	0
4/24/2024	1:15 AM	0	1	0	0	0	0	0	0	1	0	1	0	0
4/24/2024	1:30 AM	0	2	0	0	0	0	0	0	2	0	0	0	0
4/24/2024	1:45 AM	0	0	0	0	1	0	0	0	3	0	0	0	0
4/24/2024	2:00 AM	0	2	0	0	0	0	0	0	2	0	0	0	0
4/24/2024	2:15 AM	0	3	0	0	0	0	0	0	1	0	1	0	0
4/24/2024	2:30 AM	0	5	0	0	0	0	0	0	3	0	0	0	0
4/24/2024	2:45 AM	0	3	0	0	1	0	0	0	3	0	1	0	0
4/24/2024	3:00 AM	0	5	0	0	0	0	0	0	1	0	1	0	0
4/24/2024	3:15 AM	0	4	0	0	0	0	0	0	0	0	2	0	0
4/24/2024	3:30 AM	0	3	0	0	0	0	0	0	0	0	0	0	0
4/24/2024	3:45 AM	0	4	2	0	0	0	0	0	0	0	0	0	0
4/24/2024	4:00 AM	0	3	0	0	2	0	0	0	1	0	0	0	0
4/24/2024	4:15 AM	0	5	0	0	0	0	0	0	1	0	0	0	0
4/24/2024	4:30 AM	0	6	0	0	1	0	0	0	2	0	1	0	0
4/24/2024	4:45 AM	0	10	2	0	0	0	0	0	3	0	0	0	0
4/24/2024	5:00 AM	0	13	0	0	2	0	0	1	0	0	0	0	0
4/24/2024	5:15 AM	0	17	1	0	0	0	0	0	0	0	0	0	0
4/24/2024	5:30 AM	0	11	1	0	0	1	0	4	0	0	0	0	0
4/24/2024	5:45 AM	0	23	1	0	0	0	0	2	0	0	0	0	0
4/24/2024	6:00 AM	0	24	5	0	0	0	0	3	0	0	0	0	0
4/24/2024	6:15 AM	0	24	5	0	0	0	0	0	0	1	0	0	0
4/24/2024	6:30 AM	0	34	3	0	0	0	0	0	1	0	0	0	0
4/24/2024	6:45 AM	0	20	2	0	2	0	0	3	0	0	0	0	0
4/24/2024	7:00 AM	0	24	2	0	0	0	0	0	3	0	0	0	0
4/24/2024	7:15 AM	0	34	4	0	1	0	0	1	2	0	0	0	0
4/24/2024	7:30 AM	0	35	6	1	2	0	0	1	1	0	0	0	0
4/24/2024	7:45 AM	0	43	5	0	1	0	0	0	6	0	0	0	0
4/24/2024	8:00 AM	0	59	7	0	2	0	0	1	6	0	0	0	0
4/24/2024	8:15 AM	0	36	3	0	1	0	0	0	1	0	0	0	0
4/24/2024	8:30 AM	0	44	7	0	2	0	0	0	2	0	0	0	0
4/24/2024	8:45 AM	0	46	6	0	0	0	0	0	2	0	0	0	0
4/24/2024	9:00 AM	0	34	5	0	3	0	0	0	3	0	0	0	0
4/24/2024	9:15 AM	0	24	7	0	2	1	0	0	7	0	0	0	0
4/24/2024	9:30 AM	0	34	5	0	1	0	0	0	5	0	0	0	0
4/24/2024	9:45 AM	0	36	4	0	1	0	0	0	3	0	0	0	0
4/24/2024	10:00 AM	0	43	4	0	2	0	0	0	3	0	0	0	0
4/24/2024	10:15 AM	0	57	8	0	0	1	0	0	5	0	0	0	0
4/24/2024	10:30 AM	0	23	3	0	0	1	0	0	4	0	0	0	0
4/24/2024	10:45 AM	0	36	5	0	2	0	0	1	3	0	0	0	0
4/24/2024	11:00 AM	0	46	4	0	2	0	0	0	5	0	0	0	0
4/24/2024	11:15 AM	0	30	6	0	2	0	0	0	2	0	0	0	0
4/24/2024	11:30 AM	0	23	1	0	0	0	1	0	2	0	0	0	0
4/24/2024	11:45 AM	0	47	5	0	1	0	0	0	3	0	0	0	0
4/24/2024	12:00 PM	0	45	4	0	2	0	1	0	3	0	0	0	0
4/24/2024	12:15 PM	0	32	3	1	0	1	0	0	3	0	0	0	0
4/24/2024	12:30 PM	0	22	2	0	1	0	0	0	5	0	0	0	0
4/24/2024	12:45 PM	0	42	6	0	0	0	0	1	2	0	0	0	0
4/24/2024	1:00 PM	0	45	9	1	0	0	0	0	7	0	0	0	0
4/24/2024	1:15 PM	0	51	12	0	2	0	0	0	4	0	0	0	0
4/24/2024	1:30 PM	0	42	9	0	1	0	0	0	4	0	0	0	0
4/24/2024	1:45 PM	0	65	12	0	1	0	0	0	5	1	0	0	0
4/24/2024	2:00 PM	0	61	11	0	0	0	0	0	4	1	0	0	0
4/24/2024	2:15 PM	0	58	18	1	0	0	0	0	6	0	0	1	0
4/24/2024	2:30 PM	0	73	16	0	1	0	0	0	5	0	0	0	0
4/24/2024	2:45 PM	0	65	8	0	1	0	0	0	2	0	0	0	0
4/24/2024	3:00 PM	0	73	7	0	2	0	0	0	5	1	0	0	0
4/24/2024	3:15 PM	0	89	12	0	0	0	0	0	3	0	0	0	0
4/24/2024	3:30 PM	0	106	10	0	3	0	0	0	2	0	0	0	0
4/24/2024	3:45 PM	0	107	16	0	0	0	0	0	0	0	0	0	0
4/24/2024	4:00 PM	0	93	9	1	1	0	0	0	4	0	0	0	0
4/24/2024	4:15 PM	0	102	16	0	2	0	0	0	3	0	0	0	0
4/24/2024	4:30 PM	0	97	13	1	1	0	0	0	3	0	0	0	0
4/24/2024	4:45 PM	0	127	14	0	1	0	0	0	2	0	0	0	0
4/24/2024	5:00 PM	0	82	16	0	0	0	0	0	1	0	0	0	0
4/24/2024	5:15 PM	0	76	16	0	2	0	0	0	1	0	0	0	0
4/24/2024	5:30 PM	0	69	6	0	0	0	0	0	5	0	0	0	0
4/24/2024	5:45 PM	0	71	10	0	1	0	1	0	5	0	0	0	0
4/24/2024	6:00 PM	0	41	4	0	2	0	0	0	2	0	3	0	0
4/24/2024	6:15 PM	0	42	5	0	0	0	0	0	1	0	2	0	0
4/24/2024	6:30 PM	1	42	5	0	0	0	0	0	1	0	0	0	0
4/24/2024	6:45 PM	0	43	5	0	0	0	0	0	3	0	1	0	0
4/24/2024	7:00 PM	0	34	5	0	1	0	0	0	3	0	0	0	0
4/24/2024	7:15 PM	0	28	1	0	0	0	0	0	5	0	0	0	0
4/24/2024	7:30 PM	0	30	3	0	1	0	0	0	0	0	0	0	0
4/24/2024	7:45 PM	0	31	4	0	1	0	0	0	2	0	2	0	0
4/24/2024	8:00 PM	0	33	1	0	0	0	0	0	4	0	2	0	0
4/24/2024	8:15 PM	0	21	0	0	2	0	0	0	0	0	0	0	0
4/24/2024	8:30 PM	0	26	1	0	1	0	0	0	2	0	2	0	0
4/24/2024	8:45 PM	0	19	0	0	1	0	0	0	3	0	2	0	0
4/24/2024	9:00 PM	0	15	0	0	0	0	0	0	4	0	0	0	0
4/24/2024	9:15 PM	0	22	1	0	0	0	0	0	0	0	0	0	0
4/24/2024	9:30 PM	0	13	0	0	1	0	0	0	3	0	0	0	0
4/24/2024	9:45 PM	0	16	0	0	0	0	0	0	4	0	1	0	0
4/24/2024	10:00 PM	0	15	0	0	1	0	0	0	2	0	1	0	0
4/24/2024	10:15 PM	0	15	0	0	0	0	0	0	3	0	2	0	0
4/24/2024	10:30 PM	0	5	0	0	0	0	0	0	1	0	1	0	0
4/24/2024	10:45 PM	0	17	0	0	0	0	0	0	3	0	1	0	0
4/24/2024	11:00 PM	0	6	0	0	0	0	0	0	2	0	5	0	0
4/24/2024	11:15 PM	0	8	0	0	0	0	0	0	2	0	0	0	0
4/24/2024	11:30 PM	0	4	0	0	1	0	0	0	0	0	0	0	0
4/24/2024	11:45 PM	0	4	0	0	0	0	0	0	0	0	0	0	0

4/25/2024	12:00 AM	0	2	1	0	0	0	0	0	2	0	0	0	0
4/25/2024	12:15 AM	0	6	0	0	0	0	0	0	0	0	0	0	0
4/25/2024	12:30 AM	0	4	0	0	0	0	0	0	1	0	1	0	0
4/25/2024	12:45 AM	0	2	0	0	0	0	0	0	1	0	1	0	0
4/25/2024	1:00 AM	0	2	0	0	0	0	0	0	1	0	0	0	0
4/25/2024	1:15 AM	0	2	0	0	0	0	0	0	1	0	0	0	0
4/25/2024	1:30 AM	0	1	0	0	0	0	0	0	1	0	2	0	0
4/25/2024	1:45 AM	0	1	0	0	0	0	0	0	1	0	1	0	0
4/25/2024	2:00 AM	0	5	0	0	0	0	0	0	0	0	0	0	0
4/25/2024	2:15 AM	0	2	0	0	1	0	0	2	2	0	0	0	0
4/25/2024	2:30 AM	0	3	0	0	0	0	0	0	0	0	0	0	0
4/25/2024	2:45 AM	0	6	0	0	0	0	0	0	0	0	1	0	0
4/25/2024	3:00 AM	0	3	1	0	0	0	0	0	1	0	2	0	0
4/25/2024	3:15 AM	0	5	0	0	1	0	0	0	1	0	0	0	0
4/25/2024	3:30 AM	0	3	0	0	1	0	0	0	3	0	0	0	0
4/25/2024	3:45 AM	0	3	0	0	0	0	0	1	2	0	1	0	0
4/25/2024	4:00 AM	0	4	0	0	2	0	0	0	0	0	0	0	0
4/25/2024	4:15 AM	0	5	0	0	1	0	0	0	4	0	0	0	0
4/25/2024	4:30 AM	0	7	0	0	1	0	0	0	3	0	0	0	0
4/25/2024	4:45 AM	0	16	0	0	0	0	0	0	1	0	1	0	0
4/25/2024	5:00 AM	0	10	0	0	1	0	0	0	1	0	0	0	0
4/25/2024	5:15 AM	0	15	0	0	1	0	0	2	4	0	1	0	0
4/25/2024	5:30 AM	0	18	0	0	0	0	0	1	2	0	0	0	0
4/25/2024	5:45 AM	0	22	0	0	1	0	0	0	0	0	0	0	0
4/25/2024	6:00 AM	0	22	1	0	0	0	0	0	4	0	0	0	0
4/25/2024	6:15 AM	0	40	3	2	1	1	0	0	3	0	0	0	0
4/25/2024	6:30 AM	0	31	2	0	0	0	0	0	5	0	0	0	0
4/25/2024	6:45 AM	0	31	3	1	0	1	0	1	3	0	0	0	0
4/25/2024	7:00 AM	0	45	4	0	0	0	0	0	0	0	0	0	0
4/25/2024	7:15 AM	0	49	8	0	0	1	0	0	0	0	0	0	0
4/25/2024	7:30 AM	0	33	3	1	0	0	0	0	0	0	0	0	0
4/25/2024	7:45 AM	0	26	4	0	1	0	0	0	0	0	0	0	0
4/25/2024	8:00 AM	0	30	3	0	1	0	0	0	0	0	0	0	0
4/25/2024	8:15 AM	0	47	8	0	0	0	0	0	0	0	0	0	0
4/25/2024	8:30 AM	0	35	9	0	3	0	0	0	0	0	0	0	0
4/25/2024	8:45 AM	0	51	6	0	0	0	0	0	0	0	0	0	0
4/25/2024	9:00 AM	0	48	5	0	1	0	0	0	0	0	0	0	0
4/25/2024	9:15 AM	0	44	5	0	0	0	0	0	0	0	0	0	0
4/25/2024	9:30 AM	0	37	6	0	1	0	0	0	0	0	0	0	0
4/25/2024	9:45 AM	0	56	4	0	1	1	0	0	0	0	0	0	0
4/25/2024	10:00 AM	0	48	4	0	1	0	0	0	0	0	0	0	0
4/25/2024	10:15 AM	0	57	5	0	0	0	0	0	0	0	0	0	0
4/25/2024	10:30 AM	0	42	9	0	0	0	0	0	0	0	0	0	0
4/25/2024	10:45 AM	0	36	7	1	1	1	0	0	0	0	0	0	0
4/25/2024	11:00 AM	0	41	5	0	0	0	0	0	0	0	0	0	0
4/25/2024	11:15 AM	0	40	7	0	2	0	0	0	0	0	0	0	0
4/25/2024	11:30 AM	0	53	9	0	1	0	0	0	0	0	0	0	0
4/25/2024	11:45 AM	0	44	8	0	1	0	0	0	0	0	0	0	0
4/25/2024	12:00 PM	0	48	8	0	0	0	0	0	0	0	0	0	0
4/25/2024	12:15 PM	0	46	13	0	1	0	0	0	0	0	0	0	0
4/25/2024	12:30 PM	0	34	14	0	1	0	0	0	0	0	0	0	0
4/25/2024	12:45 PM	0	50	12	0	3	0	0	0	0	0	0	0	0
4/25/2024	1:00 PM	0	52	9	0	0	0	0	0	0	0	0	0	0
4/25/2024	1:15 PM	0	44	10	0	0	1	0	0	0	0	0	0	0
4/25/2024	1:30 PM	0	56	13	1	0	0	0	0	0	0	0	0	0
4/25/2024	1:45 PM	0	67	10	1	2	0	0	0	0	0	0	0	0
4/25/2024	2:00 PM	0	59	23	0	0	1	0	0	0	0	0	0	0
4/25/2024	2:15 PM	0	66	16	0	3	0	0	0	0	0	0	0	0
4/25/2024	2:30 PM	0	65	14	0	1	0	0	0	0	0	0	0	0
4/25/2024	2:45 PM	0	92	19	0	2	0	0	0	0	0	0	0	0
4/25/2024	3:00 PM	0	82	8	0	2	0	0	0	0	0	0	0	0
4/25/2024	3:15 PM	0	89	12	0	2	0	0	0	0	0	0	0	0
4/25/2024	3:30 PM	0	91	13	0	1	0	0	0	0	0	0	0	0
4/25/2024	3:45 PM	0	102	7	0	3	0	0	0	0	0	0	0	0
4/25/2024	4:00 PM	0	103	7	0	1	0	0	0	0	0	0	0	0
4/25/2024	4:15 PM	0	88	9	0	2	0	0	0	0	0	0	0	0
4/25/2024	4:30 PM	0	98	13	0	2	0	0	0	0	0	0	0	0
4/25/2024	4:45 PM	0	98	8	0	4	0	0	0	0	0	0	0	0
4/25/2024	5:00 PM	0	103	16	0	2	0	0	0	0	0	0	0	0
4/25/2024	5:15 PM	1	66	8	0	1	1	0	0	0	0	0	0	0
4/25/2024	5:30 PM	0	70	7	0	3	0	0	0	0	0	0	0	0
4/25/2024	5:45 PM	0	71	9	0	0	0	0	0	0	0	0	0	0
4/25/2024	6:00 PM	0	47	4	0	0	0	0	0	0	0	0	0	0
4/25/2024	6:15 PM	0	36	9	0	1	0	0	0	0	0	0	0	0
4/25/2024	6:30 PM	0	41	9	0	2	0	0	0	0	0	0	0	0
4/25/2024	6:45 PM	0	52	5	0	1	0	0	0	0	0	0	0	0
4/25/2024	7:00 PM	0	0	0	0	0	0	0	0	0	0	0	0	0
4/25/2024	7:15 PM	0	0	0	0	0	0	0	0	0	0	0	0	0
4/25/2024	7:30 PM	0	0	0	0	0	0	0	0	0	0	0	0	0
4/25/2024	7:45 PM	0	0	0	0	0	0	0	0	0	0	0	0	0
4/25/2024	8:00 PM	0	0	0	0	0	0	0	0	0	0	0	0	0
4/25/2024	8:15 PM	0	0	0	0	0	0	0	0	0	0	0	0	0
4/25/2024	8:30 PM	0	0	0	0	0	0	0	0	0	0	0	0	0
4/25/2024	8:45 PM	0	0	0	0	0	0	0	0	0	0	0	0	0
4/25/2024	9:00 PM	0	0	0	0	0	0	0	0	0	0	0	0	0
4/25/2024	9:15 PM	0	0	0	0	0	0	0	0	0	0	0	0	0
4/25/2024	9:30 PM	0	0	0	0	0	0	0	0	0	0	0	0	0
4/25/2024	9:45 PM	0	0	0	0	0	0	0	0	0	0	0	0	0
4/25/2024	10:00 PM	0	0	0	0	0	0	0	0	0	0	0	0	0
4/25/2024	10:15 PM	0	0	0	0	0	0	0	0	0	0	0	0	0
4/25/2024	10:30 PM	0	0	0	0	0	0	0	0	0	0	0	0	0
4/25/2024	10:45 PM	0	0	0	0	0	0	0	0	0	0	0	0	0
4/25/2024	11:00 PM	0	0	0	0	0	0	0	0	0	0	0	0	0
4/25/2024	11:15 PM	0	0	0	0	0	0	0	0	0	0	0	0	0
4/25/2024	11:30 PM	0	0	0	0	0	0	0	0	0	0	0	0	0
4/25/2024	11:45 PM	0	0	0	0	0	0	0	0	0	0	0	0	0

WB
File Name:
Start Date: 4/23/2024
Start Time: 0
Site Code: 58
Station ID: 1
Location 1: I-20 E/Bound On-Ramp, east of US-378 Sunset Blvd
Location 2:

Date	Time	1	2	3	4	5	6	7	8	9	10	11	12	13
4/23/2024	12:00 AM	0	0	0	0	0	0	0	0	0	0	0	0	0
4/23/2024	12:15 AM	0	0	0	0	0	0	0	0	0	0	0	0	0
4/23/2024	12:30 AM	0	0	0	0	0	0	0	0	0	0	0	0	0
4/23/2024	12:45 AM	0	0	0	0	0	0	0	0	0	0	0	0	0
4/23/2024	1:00 AM	0	0	0	0	0	0	0	0	0	0	0	0	0
4/23/2024	1:15 AM	0	0	0	0	0	0	0	0	0	0	0	0	0
4/23/2024	1:30 AM	0	0	0	0	0	0	0	0	0	0	0	0	0
4/23/2024	1:45 AM	0	0	0	0	0	0	0	0	0	0	0	0	0
4/23/2024	2:00 AM	0	0	0	0	0	0	0	0	0	0	0	0	0
4/23/2024	2:15 AM	0	0	0	0	0	0	0	0	0	0	0	0	0
4/23/2024	2:30 AM	0	0	0	0	0	0	0	0	0	0	0	0	0
4/23/2024	2:45 AM	0	0	0	0	0	0	0	0	0	0	0	0	0
4/23/2024	3:00 AM	0	0	0	0	0	0	0	0	0	0	0	0	0
4/23/2024	3:15 AM	0	0	0	0	0	0	0	0	0	0	0	0	0
4/23/2024	3:30 AM	0	0	0	0	0	0	0	0	0	0	0	0	0
4/23/2024	3:45 AM	0	0	0	0	0	0	0	0	0	0	0	0	0
4/23/2024	4:00 AM	0	0	0	0	0	0	0	0	0	0	0	0	0
4/23/2024	4:15 AM	0	0	0	0	0	0	0	0	0	0	0	0	0
4/23/2024	4:30 AM	0	0	0	0	0	0	0	0	0	0	0	0	0
4/23/2024	4:45 AM	0	0	0	0	0	0	0	0	0	0	0	0	0
4/23/2024	5:00 AM	0	0	0	0	0	0	0	0	0	0	0	0	0
4/23/2024	5:15 AM	0	0	0	0	0	0	0	0	0	0	0	0	0
4/23/2024	5:30 AM	0	0	0	0	0	0	0	0	0	0	0	0	0
4/23/2024	5:45 AM	0	0	0	0	0	0	0	0	0	0	0	0	0
4/23/2024	6:00 AM	0	0	0	0	0	0	0	0	0	0	0	0	0
4/23/2024	6:15 AM	0	0	0	0	0	0	0	0	0	0	0	0	0
4/23/2024	6:30 AM	0	0	0	0	0	0	0	0	0	0	0	0	0
4/23/2024	6:45 AM	0	0	0	0	0	0	0	0	0	0	0	0	0
4/23/2024	7:00 AM	0	0	0	0	0	0	0	0	0	0	0	0	0
4/23/2024	7:15 AM	0	0	0	0	0	0	0	0	0	0	0	0	0
4/23/2024	7:30 AM	0	0	0	0	0	0	0	0	0	0	0	0	0
4/23/2024	7:45 AM	0	0	0	0	0	0	0	0	0	0	0	0	0
4/23/2024	8:00 AM	0	0	0	0	0	0	0	0	0	0	0	0	0
4/23/2024	8:15 AM	0	0	0	0	0	0	0	0	0	0	0	0	0
4/23/2024	8:30 AM	0	0	0	0	0	0	0	0	0	0	0	0	0
4/23/2024	8:45 AM	0	0	0	0	0	0	0	0	0	0	0	0	0
4/23/2024	9:00 AM	0	0	0	0	0	0	0	0	0	0	0	0	0
4/23/2024	9:15 AM	0	0	0	0	0	0	0	0	0	0	0	0	0
4/23/2024	9:30 AM	0	0	0	0	0	0	0	0	0	0	0	0	0
4/23/2024	9:45 AM	0	0	0	0	0	0	0	0	0	0	0	0	0
4/23/2024	10:00 AM	0	0	0	0	0	0	0	0	0	0	0	0	0
4/23/2024	10:15 AM	0	0	0	0	0	0	0	0	0	0	0	0	0
4/23/2024	10:30 AM	0	0	0	0	0	0	0	0	0	0	0	0	0
4/23/2024	10:45 AM	0	0	0	0	0	0	0	0	0	0	0	0	0
4/23/2024	11:00 AM	0	0	0	0	0	0	0	0	0	0	0	0	0
4/23/2024	11:15 AM	0	0	0	0	0	0	0	0	0	0	0	0	0
4/23/2024	11:30 AM	0	0	0	0	0	0	0	0	0	0	0	0	0
4/23/2024	11:45 AM	0	0	0	0	0	0	0	0	0	0	0	0	0
4/23/2024	12:00 PM	0	0	0	0	0	0	0	0	0	0	0	0	0
4/23/2024	12:15 PM	0	0	0	0	0	0	0	0	0	0	0	0	0
4/23/2024	12:30 PM	0	0	0	0	0	0	0	0	0	0	0	0	0
4/23/2024	12:45 PM	0	0	0	0	0	0	0	0	0	0	0	0	0
4/23/2024	1:00 PM	0	0	0	0	0	0	0	0	0	0	0	0	0
4/23/2024	1:15 PM	0	0	0	0	0	0	0	0	0	0	0	0	0
4/23/2024	1:30 PM	0	0	0	0	0	0	0	0	0	0	0	0	0
4/23/2024	1:45 PM	0	0	0	0	0	0	0	0	0	0	0	0	0
4/23/2024	2:00 PM	0	0	0	0	0	0	0	0	0	0	0	0	0
4/23/2024	2:15 PM	0	0	0	0	0	0	0	0	0	0	0	0	0
4/23/2024	2:30 PM	0	0	0	0	0	0	0	0	0	0	0	0	0
4/23/2024	2:45 PM	0	0	0	0	0	0	0	0	0	0	0	0	0
4/23/2024	3:00 PM	0	0	0	0	0	0	0	0	0	0	0	0	0
4/23/2024	3:15 PM	0	0	0	0	0	0	0	0	0	0	0	0	0
4/23/2024	3:30 PM	0	0	0	0	0	0	0	0	0	0	0	0	0
4/23/2024	3:45 PM	0	0	0	0	0	0	0	0	0	0	0	0	0
4/23/2024	4:00 PM	0	0	0	0	0	0	0	0	0	0	0	0	0
4/23/2024	4:15 PM	0	0	0	0	0	0	0	0	0	0	0	0	0
4/23/2024	4:30 PM	0	0	0	0	0	0	0	0	0	0	0	0	0
4/23/2024	4:45 PM	0	0	0	0	0	0	0	0	0	0	0	0	0
4/23/2024	5:00 PM	0	0	0	0	0	0	0	0	0	0	0	0	0
4/23/2024	5:15 PM	0	0	0	0	0	0	0	0	0	0	0	0	0
4/23/2024	5:30 PM	0	0	0	0	0	0	0	0	0	0	0	0	0
4/23/2024	5:45 PM	0	0	0	0	0	0	0	0	0	0	0	0	0
4/23/2024	6:00 PM	0	0	0	0	0	0	0	0	0	0	0	0	0
4/23/2024	6:15 PM	0	0	0	0	0	0	0	0	0	0	0	0	0
4/23/2024	6:30 PM	0	0	0	0	0	0	0	0	0	0	0	0	0
4/23/2024	6:45 PM	0	0	0	0	0	0	0	0	0	0	0	0	0
4/23/2024	7:00 PM	0	0	0	0	0	0	0	0	0	0	0	0	0
4/23/2024	7:15 PM	0	0	0	0	0	0	0	0	0	0	0	0	0
4/23/2024	7:30 PM	0	0	0	0	0	0	0	0	0	0	0	0	0
4/23/2024	7:45 PM	0	0	0	0	0	0	0	0	0	0	0	0	0
4/23/2024	8:00 PM	0	0	0	0	0	0	0	0	0	0	0	0	0
4/23/2024	8:15 PM	0	0	0	0	0	0	0	0	0	0	0	0	0
4/23/2024	8:30 PM	0	0	0	0	0	0	0	0	0	0	0	0	0
4/23/2024	8:45 PM	0	0	0	0	0	0	0	0	0	0	0	0	0
4/23/2024	9:00 PM	0	0	0	0	0	0	0	0	0	0	0	0	0
4/23/2024	9:15 PM	0	0	0	0	0	0	0	0	0	0	0	0	0
4/23/2024	9:30 PM	0	0	0	0	0	0	0	0	0	0	0	0	0
4/23/2024	9:45 PM	0	0	0	0	0	0	0	0	0	0	0	0	0
4/23/2024	10:00 PM	0	0	0	0	0	0	0	0	0	0	0	0	0
4/23/2024	10:15 PM	0	0	0	0	0	0	0	0	0	0	0	0	0
4/23/2024	10:30 PM	0	0	0	0	0	0	0	0	0	0	0	0	0
4/23/2024	10:45 PM	0	0	0	0	0	0	0	0	0	0	0	0	0
4/23/2024	11:00 PM	0	0	0	0	0	0	0	0	0	0	0	0	0
4/23/2024	11:15 PM	0	0	0	0	0	0	0	0	0	0	0	0	0
4/23/2024	11:30 PM	0	0	0	0	0	0	0	0	0	0	0	0	0
4/23/2024	11:45 PM	0	0	0	0	0	0	0	0	0	0	0	0	0

4/24/2024	12:00 AM	0	0	0	0	0	0	0	0	0	0	0	0	0
4/24/2024	12:15 AM	0	0	0	0	0	0	0	0	0	0	0	0	0
4/24/2024	12:30 AM	0	0	0	0	0	0	0	0	0	0	0	0	0
4/24/2024	12:45 AM	0	0	0	0	0	0	0	0	0	0	0	0	0
4/24/2024	1:00 AM	0	0	0	0	0	0	0	0	0	0	0	0	0
4/24/2024	1:15 AM	0	0	0	0	0	0	0	0	0	0	0	0	0
4/24/2024	1:30 AM	0	0	0	0	0	0	0	0	0	0	0	0	0
4/24/2024	1:45 AM	0	0	0	0	0	0	0	0	0	0	0	0	0
4/24/2024	2:00 AM	0	0	0	0	0	0	0	0	0	0	0	0	0
4/24/2024	2:15 AM	0	0	0	0	0	0	0	0	0	0	0	0	0
4/24/2024	2:30 AM	0	0	0	0	0	0	0	0	0	0	0	0	0
4/24/2024	2:45 AM	0	0	0	0	0	0	0	0	0	0	0	0	0
4/24/2024	3:00 AM	0	0	0	0	0	0	0	0	0	0	0	0	0
4/24/2024	3:15 AM	0	0	0	0	0	0	0	0	0	0	0	0	0
4/24/2024	3:30 AM	0	0	0	0	0	0	0	0	0	0	0	0	0
4/24/2024	3:45 AM	0	0	0	0	0	0	0	0	0	0	0	0	0
4/24/2024	4:00 AM	0	0	0	0	0	0	0	0	0	0	0	0	0
4/24/2024	4:15 AM	0	0	0	0	0	0	0	0	0	0	0	0	0
4/24/2024	4:30 AM	0	0	0	0	0	0	0	0	0	0	0	0	0
4/24/2024	4:45 AM	0	0	0	0	0	0	0	0	0	0	0	0	0
4/24/2024	5:00 AM	0	0	0	0	0	0	0	0	0	0	0	0	0
4/24/2024	5:15 AM	0	0	0	0	0	0	0	0	0	0	0	0	0
4/24/2024	5:30 AM	0	0	0	0	0	0	0	0	0	0	0	0	0
4/24/2024	5:45 AM	0	0	0	0	0	0	0	0	0	0	0	0	0
4/24/2024	6:00 AM	0	0	0	0	0	0	0	0	0	0	0	0	0
4/24/2024	6:15 AM	0	0	0	0	0	0	0	0	0	0	0	0	0
4/24/2024	6:30 AM	0	0	0	0	0	0	0	0	0	0	0	0	0
4/24/2024	6:45 AM	0	0	0	0	0	0	0	0	0	0	0	0	0
4/24/2024	7:00 AM	0	0	0	0	0	0	0	0	0	0	0	0	0
4/24/2024	7:15 AM	0	0	0	0	0	0	0	0	0	0	0	0	0
4/24/2024	7:30 AM	0	0	0	0	0	0	0	0	0	0	0	0	0
4/24/2024	7:45 AM	0	0	0	0	0	0	0	0	0	0	0	0	0
4/24/2024	8:00 AM	0	0	0	0	0	0	0	0	0	0	0	0	0
4/24/2024	8:15 AM	0	0	0	0	0	0	0	0	0	0	0	0	0
4/24/2024	8:30 AM	0	0	0	0	0	0	0	0	0	0	0	0	0
4/24/2024	8:45 AM	0	0	0	0	0	0	0	0	0	0	0	0	0
4/24/2024	9:00 AM	0	0	0	0	0	0	0	0	0	0	0	0	0
4/24/2024	9:15 AM	0	0	0	0	0	0	0	0	0	0	0	0	0
4/24/2024	9:30 AM	0	0	0	0	0	0	0	0	0	0	0	0	0
4/24/2024	9:45 AM	0	0	0	0	0	0	0	0	0	0	0	0	0
4/24/2024	10:00 AM	0	0	0	0	0	0	0	0	0	0	0	0	0
4/24/2024	10:15 AM	0	0	0	0	0	0	0	0	0	0	0	0	0
4/24/2024	10:30 AM	0	0	0	0	0	0	0	0	0	0	0	0	0
4/24/2024	10:45 AM	0	0	0	0	0	0	0	0	0	0	0	0	0
4/24/2024	11:00 AM	0	0	0	0	0	0	0	0	0	0	0	0	0
4/24/2024	11:15 AM	0	0	0	0	0	0	0	0	0	0	0	0	0
4/24/2024	11:30 AM	0	0	0	0	0	0	0	0	0	0	0	0	0
4/24/2024	11:45 AM	0	0	0	0	0	0	0	0	0	0	0	0	0
4/24/2024	12:00 PM	0	0	0	0	0	0	0	0	0	0	0	0	0
4/24/2024	12:15 PM	0	0	0	0	0	0	0	0	0	0	0	0	0
4/24/2024	12:30 PM	0	0	0	0	0	0	0	0	0	0	0	0	0
4/24/2024	12:45 PM	0	0	0	0	0	0	0	0	0	0	0	0	0
4/24/2024	1:00 PM	0	0	0	0	0	0	0	0	0	0	0	0	0
4/24/2024	1:15 PM	0	0	0	0	0	0	0	0	0	0	0	0	0
4/24/2024	1:30 PM	0	0	0	0	0	0	0	0	0	0	0	0	0
4/24/2024	1:45 PM	0	0	0	0	0	0	0	0	0	0	0	0	0
4/24/2024	2:00 PM	0	0	0	0	0	0	0	0	0	0	0	0	0
4/24/2024	2:15 PM	0	0	0	0	0	0	0	0	0	0	0	0	0
4/24/2024	2:30 PM	0	0	0	0	0	0	0	0	0	0	0	0	0
4/24/2024	2:45 PM	0	0	0	0	0	0	0	0	0	0	0	0	0
4/24/2024	3:00 PM	0	0	0	0	0	0	0	0	0	0	0	0	0
4/24/2024	3:15 PM	0	0	0	0	0	0	0	0	0	0	0	0	0
4/24/2024	3:30 PM	0	0	0	0	0	0	0	0	0	0	0	0	0
4/24/2024	3:45 PM	0	0	0	0	0	0	0	0	0	0	0	0	0
4/24/2024	4:00 PM	0	0	0	0	0	0	0	0	0	0	0	0	0
4/24/2024	4:15 PM	0	0	0	0	0	0	0	0	0	0	0	0	0
4/24/2024	4:30 PM	0	0	0	0	0	0	0	0	0	0	0	0	0
4/24/2024	4:45 PM	0	0	0	0	0	0	0	0	0	0	0	0	0
4/24/2024	5:00 PM	0	0	0	0	0	0	0	0	0	0	0	0	0
4/24/2024	5:15 PM	0	0	0	0	0	0	0	0	0	0	0	0	0
4/24/2024	5:30 PM	0	0	0	0	0	0	0	0	0	0	0	0	0
4/24/2024	5:45 PM	0	0	0	0	0	0	0	0	0	0	0	0	0
4/24/2024	6:00 PM	0	0	0	0	0	0	0	0	0	0	0	0	0
4/24/2024	6:15 PM	0	0	0	0	0	0	0	0	0	0	0	0	0
4/24/2024	6:30 PM	0	0	0	0	0	0	0	0	0	0	0	0	0
4/24/2024	6:45 PM	0	0	0	0	0	0	0	0	0	0	0	0	0
4/24/2024	7:00 PM	0	0	0	0	0	0	0	0	0	0	0	0	0
4/24/2024	7:15 PM	0	0	0	0	0	0	0	0	0	0	0	0	0
4/24/2024	7:30 PM	0	0	0	0	0	0	0	0	0	0	0	0	0
4/24/2024	7:45 PM	0	0	0	0	0	0	0	0	0	0	0	0	0
4/24/2024	8:00 PM	0	0	0	0	0	0	0	0	0	0	0	0	0
4/24/2024	8:15 PM	0	0	0	0	0	0	0	0	0	0	0	0	0
4/24/2024	8:30 PM	0	0	0	0	0	0	0	0	0	0	0	0	0
4/24/2024	8:45 PM	0	0	0	0	0	0	0	0	0	0	0	0	0
4/24/2024	9:00 PM	0	0	0	0	0	0	0	0	0	0	0	0	0
4/24/2024	9:15 PM	0	0	0	0	0	0	0	0	0	0	0	0	0
4/24/2024	9:30 PM	0	0	0	0	0	0	0	0	0	0	0	0	0
4/24/2024	9:45 PM	0	0	0	0	0	0	0	0	0	0	0	0	0
4/24/2024	10:00 PM	0	0	0	0	0	0	0	0	0	0	0	0	0
4/24/2024	10:15 PM	0	0	0	0	0	0	0	0	0	0	0	0	0
4/24/2024	10:30 PM	0	0	0	0	0	0	0	0	0	0	0	0	0
4/24/2024	10:45 PM	0	0	0	0	0	0	0	0	0	0	0	0	0
4/24/2024	11:00 PM	0	0	0	0	0	0	0	0	0	0	0	0	0
4/24/2024	11:15 PM	0	0	0	0	0	0	0	0	0	0	0	0	0
4/24/2024	11:30 PM	0	0	0	0	0	0	0	0	0	0	0	0	0
4/24/2024	11:45 PM	0	0	0	0	0	0	0	0	0	0	0	0	0

4/25/2024	12:00 AM	0	0	0	0	0	0	0	0	0	0	0	0	0
4/25/2024	12:15 AM	0	0	0	0	0	0	0	0	0	0	0	0	0
4/25/2024	12:30 AM	0	0	0	0	0	0	0	0	0	0	0	0	0
4/25/2024	12:45 AM	0	0	0	0	0	0	0	0	0	0	0	0	0
4/25/2024	1:00 AM	0	0	0	0	0	0	0	0	0	0	0	0	0
4/25/2024	1:15 AM	0	0	0	0	0	0	0	0	0	0	0	0	0
4/25/2024	1:30 AM	0	0	0	0	0	0	0	0	0	0	0	0	0
4/25/2024	1:45 AM	0	0	0	0	0	0	0	0	0	0	0	0	0
4/25/2024	2:00 AM	0	0	0	0	0	0	0	0	0	0	0	0	0
4/25/2024	2:15 AM	0	0	0	0	0	0	0	0	0	0	0	0	0
4/25/2024	2:30 AM	0	0	0	0	0	0	0	0	0	0	0	0	0
4/25/2024	2:45 AM	0	0	0	0	0	0	0	0	0	0	0	0	0
4/25/2024	3:00 AM	0	0	0	0	0	0	0	0	0	0	0	0	0
4/25/2024	3:15 AM	0	0	0	0	0	0	0	0	0	0	0	0	0
4/25/2024	3:30 AM	0	0	0	0	0	0	0	0	0	0	0	0	0
4/25/2024	3:45 AM	0	0	0	0	0	0	0	0	0	0	0	0	0
4/25/2024	4:00 AM	0	0	0	0	0	0	0	0	0	0	0	0	0
4/25/2024	4:15 AM	0	0	0	0	0	0	0	0	0	0	0	0	0
4/25/2024	4:30 AM	0	0	0	0	0	0	0	0	0	0	0	0	0
4/25/2024	4:45 AM	0	0	0	0	0	0	0	0	0	0	0	0	0
4/25/2024	5:00 AM	0	0	0	0	0	0	0	0	0	0	0	0	0
4/25/2024	5:15 AM	0	0	0	0	0	0	0	0	0	0	0	0	0
4/25/2024	5:30 AM	0	0	0	0	0	0	0	0	0	0	0	0	0
4/25/2024	5:45 AM	0	0	0	0	0	0	0	0	0	0	0	0	0
4/25/2024	6:00 AM	0	0	0	0	0	0	0	0	0	0	0	0	0
4/25/2024	6:15 AM	0	0	0	0	0	0	0	0	0	0	0	0	0
4/25/2024	6:30 AM	0	0	0	0	0	0	0	0	0	0	0	0	0
4/25/2024	6:45 AM	0	0	0	0	0	0	0	0	0	0	0	0	0
4/25/2024	7:00 AM	0	0	0	0	0	0	0	0	0	0	0	0	0
4/25/2024	7:15 AM	0	0	0	0	0	0	0	0	0	0	0	0	0
4/25/2024	7:30 AM	0	0	0	0	0	0	0	0	0	0	0	0	0
4/25/2024	7:45 AM	0	0	0	0	0	0	0	0	0	0	0	0	0
4/25/2024	8:00 AM	0	0	0	0	0	0	0	0	0	0	0	0	0
4/25/2024	8:15 AM	0	0	0	0	0	0	0	0	0	0	0	0	0
4/25/2024	8:30 AM	0	0	0	0	0	0	0	0	0	0	0	0	0
4/25/2024	8:45 AM	0	0	0	0	0	0	0	0	0	0	0	0	0
4/25/2024	9:00 AM	0	0	0	0	0	0	0	0	0	0	0	0	0
4/25/2024	9:15 AM	0	0	0	0	0	0	0	0	0	0	0	0	0
4/25/2024	9:30 AM	0	0	0	0	0	0	0	0	0	0	0	0	0
4/25/2024	9:45 AM	0	0	0	0	0	0	0	0	0	0	0	0	0
4/25/2024	10:00 AM	0	0	0	0	0	0	0	0	0	0	0	0	0
4/25/2024	10:15 AM	0	0	0	0	0	0	0	0	0	0	0	0	0
4/25/2024	10:30 AM	0	0	0	0	0	0	0	0	0	0	0	0	0
4/25/2024	10:45 AM	0	0	0	0	0	0	0	0	0	0	0	0	0
4/25/2024	11:00 AM	0	0	0	0	0	0	0	0	0	0	0	0	0
4/25/2024	11:15 AM	0	0	0	0	0	0	0	0	0	0	0	0	0
4/25/2024	11:30 AM	0	0	0	0	0	0	0	0	0	0	0	0	0
4/25/2024	11:45 AM	0	0	0	0	0	0	0	0	0	0	0	0	0
4/25/2024	12:00 PM	0	0	0	0	0	0	0	0	0	0	0	0	0
4/25/2024	12:15 PM	0	0	0	0	0	0	0	0	0	0	0	0	0
4/25/2024	12:30 PM	0	0	0	0	0	0	0	0	0	0	0	0	0
4/25/2024	12:45 PM	0	0	0	0	0	0	0	0	0	0	0	0	0
4/25/2024	1:00 PM	0	0	0	0	0	0	0	0	0	0	0	0	0
4/25/2024	1:15 PM	0	0	0	0	0	0	0	0	0	0	0	0	0
4/25/2024	1:30 PM	0	0	0	0	0	0	0	0	0	0	0	0	0
4/25/2024	1:45 PM	0	0	0	0	0	0	0	0	0	0	0	0	0
4/25/2024	2:00 PM	0	0	0	0	0	0	0	0	0	0	0	0	0
4/25/2024	2:15 PM	0	0	0	0	0	0	0	0	0	0	0	0	0
4/25/2024	2:30 PM	0	0	0	0	0	0	0	0	0	0	0	0	0
4/25/2024	2:45 PM	0	0	0	0	0	0	0	0	0	0	0	0	0
4/25/2024	3:00 PM	0	0	0	0	0	0	0	0	0	0	0	0	0
4/25/2024	3:15 PM	0	0	0	0	0	0	0	0	0	0	0	0	0
4/25/2024	3:30 PM	0	0	0	0	0	0	0	0	0	0	0	0	0
4/25/2024	3:45 PM	0	0	0	0	0	0	0	0	0	0	0	0	0
4/25/2024	4:00 PM	0	0	0	0	0	0	0	0	0	0	0	0	0
4/25/2024	4:15 PM	0	0	0	0	0	0	0	0	0	0	0	0	0
4/25/2024	4:30 PM	0	0	0	0	0	0	0	0	0	0	0	0	0
4/25/2024	4:45 PM	0	0	0	0	0	0	0	0	0	0	0	0	0
4/25/2024	5:00 PM	0	0	0	0	0	0	0	0	0	0	0	0	0
4/25/2024	5:15 PM	0	0	0	0	0	0	0	0	0	0	0	0	0
4/25/2024	5:30 PM	0	0	0	0	0	0	0	0	0	0	0	0	0
4/25/2024	5:45 PM	0	0	0	0	0	0	0	0	0	0	0	0	0
4/25/2024	6:00 PM	0	0	0	0	0	0	0	0	0	0	0	0	0
4/25/2024	6:15 PM	0	0	0	0	0	0	0	0	0	0	0	0	0
4/25/2024	6:30 PM	0	0	0	0	0	0	0	0	0	0	0	0	0
4/25/2024	6:45 PM	0	0	0	0	0	0	0	0	0	0	0	0	0
4/25/2024	7:00 PM	0	0	0	0	0	0	0	0	0	0	0	0	0
4/25/2024	7:15 PM	0	0	0	0	0	0	0	0	0	0	0	0	0
4/25/2024	7:30 PM	0	0	0	0	0	0	0	0	0	0	0	0	0
4/25/2024	7:45 PM	0	0	0	0	0	0	0	0	0	0	0	0	0
4/25/2024	8:00 PM	0	0	0	0	0	0	0	0	0	0	0	0	0
4/25/2024	8:15 PM	0	0	0	0	0	0	0	0	0	0	0	0	0
4/25/2024	8:30 PM	0	0	0	0	0	0	0	0	0	0	0	0	0
4/25/2024	8:45 PM	0	0	0	0	0	0	0	0	0	0	0	0	0
4/25/2024	9:00 PM	0	0	0	0	0	0	0	0	0	0	0	0	0
4/25/2024	9:15 PM	0	0	0	0	0	0	0	0	0	0	0	0	0
4/25/2024	9:30 PM	0	0	0	0	0	0	0	0	0	0	0	0	0
4/25/2024	9:45 PM	0	0	0	0	0	0	0	0	0	0	0	0	0
4/25/2024	10:00 PM	0	0	0	0	0	0	0	0	0	0	0	0	0
4/25/2024	10:15 PM	0	0	0	0	0	0	0	0	0	0	0	0	0
4/25/2024	10:30 PM	0	0	0	0	0	0	0	0	0	0	0	0	0
4/25/2024	10:45 PM	0	0	0	0	0	0	0	0	0	0	0	0	0
4/25/2024	11:00 PM	0	0	0	0	0	0	0	0	0	0	0	0	0
4/25/2024	11:15 PM	0	0	0	0	0	0	0	0	0	0	0	0	0
4/25/2024	11:30 PM	0	0	0	0	0	0	0	0	0	0	0	0	0
4/25/2024	11:45 PM	0	0	0	0	0	0	0	0	0	0	0	0	0

EB
File Name:
Start Date: 4/23/2024
Start Time: 0
Site Code: 58
Station ID: 1
Location 1: I-20 E/Bound On-Ramp, east of US-378 Sunset Blvd
Location 2:

Date	Time	1	2	3	4	5	6	7	8	9	10	11	12	13
4/23/2024	12:00 AM	0	0	0	0	0	0	0	0	0	0	0	0	0
4/23/2024	12:15 AM	0	0	0	0	0	0	0	0	0	0	0	0	0
4/23/2024	12:30 AM	0	0	0	0	0	0	0	0	0	0	0	0	0
4/23/2024	12:45 AM	0	0	0	0	0	0	0	0	0	0	0	0	0
4/23/2024	1:00 AM	0	0	0	0	0	0	0	0	0	0	0	0	0
4/23/2024	1:15 AM	0	0	0	0	0	0	0	0	0	0	0	0	0
4/23/2024	1:30 AM	0	0	0	0	0	0	0	0	0	0	0	0	0
4/23/2024	1:45 AM	0	0	0	0	0	0	0	0	0	0	0	0	0
4/23/2024	2:00 AM	0	0	0	0	0	0	0	0	0	0	0	0	0
4/23/2024	2:15 AM	0	0	0	0	0	0	0	0	0	0	0	0	0
4/23/2024	2:30 AM	0	0	0	0	0	0	0	0	0	0	0	0	0
4/23/2024	2:45 AM	0	0	0	0	0	0	0	0	0	0	0	0	0
4/23/2024	3:00 AM	0	0	0	0	0	0	0	0	0	0	0	0	0
4/23/2024	3:15 AM	0	0	0	0	0	0	0	0	0	0	0	0	0
4/23/2024	3:30 AM	0	0	0	0	0	0	0	0	0	0	0	0	0
4/23/2024	3:45 AM	0	0	0	0	0	0	0	0	0	0	0	0	0
4/23/2024	4:00 AM	0	0	0	0	0	0	0	0	0	0	0	0	0
4/23/2024	4:15 AM	0	0	0	0	0	0	0	0	0	0	0	0	0
4/23/2024	4:30 AM	0	0	0	0	0	0	0	0	0	0	0	0	0
4/23/2024	4:45 AM	0	0	0	0	0	0	0	0	0	0	0	0	0
4/23/2024	5:00 AM	0	0	0	0	0	0	0	0	0	0	0	0	0
4/23/2024	5:15 AM	0	0	0	0	0	0	0	0	0	0	0	0	0
4/23/2024	5:30 AM	0	0	0	0	0	0	0	0	0	0	0	0	0
4/23/2024	5:45 AM	0	0	0	0	0	0	0	0	0	0	0	0	0
4/23/2024	6:00 AM	0	0	0	0	0	0	0	0	0	0	0	0	0
4/23/2024	6:15 AM	0	0	0	0	0	0	0	0	0	0	0	0	0
4/23/2024	6:30 AM	0	0	0	0	0	0	0	0	0	0	0	0	0
4/23/2024	6:45 AM	0	0	0	0	0	0	0	0	0	0	0	0	0
4/23/2024	7:00 AM	0	0	0	0	0	0	0	0	0	0	0	0	0
4/23/2024	7:15 AM	0	0	0	0	0	0	0	0	0	0	0	0	0
4/23/2024	7:30 AM	0	0	0	0	0	0	0	0	0	0	0	0	0
4/23/2024	7:45 AM	0	0	0	0	0	0	0	0	0	0	0	0	0
4/23/2024	8:00 AM	0	0	0	0	0	0	0	0	0	0	0	0	0
4/23/2024	8:15 AM	0	0	0	0	0	0	0	0	0	0	0	0	0
4/23/2024	8:30 AM	0	0	0	0	0	0	0	0	0	0	0	0	0
4/23/2024	8:45 AM	0	0	0	0	0	0	0	0	0	0	0	0	0
4/23/2024	9:00 AM	0	0	0	0	0	0	0	0	0	0	0	0	0
4/23/2024	9:15 AM	0	0	0	0	0	0	0	0	0	0	0	0	0
4/23/2024	9:30 AM	0	0	0	0	0	0	0	0	0	0	0	0	0
4/23/2024	9:45 AM	0	0	0	0	0	0	0	0	0	0	0	0	0
4/23/2024	10:00 AM	0	0	0	0	0	0	0	0	0	0	0	0	0
4/23/2024	10:15 AM	0	0	0	0	0	0	0	0	0	0	0	0	0
4/23/2024	10:30 AM	0	0	0	0	0	0	0	0	0	0	0	0	0
4/23/2024	10:45 AM	0	0	0	0	0	0	0	0	0	0	0	0	0
4/23/2024	11:00 AM	0	0	0	0	0	0	0	0	0	0	0	0	0
4/23/2024	11:15 AM	0	0	0	0	0	0	0	0	0	0	0	0	0
4/23/2024	11:30 AM	0	0	0	0	0	0	0	0	0	0	0	0	0
4/23/2024	11:45 AM	0	0	0	0	0	0	0	0	0	0	0	0	0
4/23/2024	12:00 PM	0	0	0	0	0	0	0	0	0	0	0	0	0
4/23/2024	12:15 PM	0	0	0	0	0	0	0	0	0	0	0	0	0
4/23/2024	12:30 PM	0	0	0	0	0	0	0	0	0	0	0	0	0
4/23/2024	12:45 PM	0	0	0	0	0	0	0	0	0	0	0	0	0
4/23/2024	1:00 PM	0	0	0	0	0	0	0	0	0	0	0	0	0
4/23/2024	1:15 PM	0	0	0	0	0	0	0	0	0	0	0	0	0
4/23/2024	1:30 PM	0	0	0	0	0	0	0	0	0	0	0	0	0
4/23/2024	1:45 PM	0	0	0	0	0	0	0	0	0	0	0	0	0
4/23/2024	2:00 PM	0	0	0	0	0	0	0	0	0	0	0	0	0
4/23/2024	2:15 PM	0	0	0	0	0	0	0	0	0	0	0	0	0
4/23/2024	2:30 PM	0	0	0	0	0	0	0	0	0	0	0	0	0
4/23/2024	2:45 PM	0	0	0	0	0	0	0	0	0	0	0	0	0
4/23/2024	3:00 PM	0	0	0	0	0	0	0	0	0	0	0	0	0
4/23/2024	3:15 PM	0	0	0	0	0	0	0	0	0	0	0	0	0
4/23/2024	3:30 PM	0	0	0	0	0	0	0	0	0	0	0	0	0
4/23/2024	3:45 PM	0	0	0	0	0	0	0	0	0	0	0	0	0
4/23/2024	4:00 PM	0	0	0	0	0	0	0	0	0	0	0	0	0
4/23/2024	4:15 PM	0	0	0	0	0	0	0	0	0	0	0	0	0
4/23/2024	4:30 PM	0	0	0	0	0	0	0	0	0	0	0	0	0
4/23/2024	4:45 PM	0	0	0	0	0	0	0	0	0	0	0	0	0
4/23/2024	5:00 PM	0	0	0	0	0	0	0	0	0	0	0	0	0
4/23/2024	5:15 PM	0	0	0	0	0	0	0	0	0	0	0	0	0
4/23/2024	5:30 PM	0	0	0	0	0	0	0	0	0	0	0	0	0
4/23/2024	5:45 PM	0	0	0	0	0	0	0	0	0	0	0	0	0
4/23/2024	6:00 PM	0	0	0	0	0	0	0	0	0	0	0	0	0
4/23/2024	6:15 PM	0	0	0	0	0	0	0	0	0	0	0	0	0
4/23/2024	6:30 PM	0	13	4	0	0	0	0	0	0	0	0	0	0
4/23/2024	6:45 PM	0	51	10	1	0	0	0	0	3	0	0	0	0
4/23/2024	7:00 PM	0	94	20	2	0	0	0	0	4	0	1	0	0
4/23/2024	7:15 PM	0	135	28	2	1	0	0	1	6	0	1	0	0
4/23/2024	7:30 PM	0	147	24	2	2	1	0	1	8	0	3	0	0
4/23/2024	7:45 PM	0	137	20	1	2	1	0	1	10	0	4	0	0
4/23/2024	8:00 PM	0	114	10	0	2	1	0	1	11	0	4	0	0
4/23/2024	8:15 PM	0	92	2	0	2	1	0	0	11	0	5	0	0
4/23/2024	8:30 PM	0	79	2	0	3	0	0	0	13	0	4	0	0
4/23/2024	8:45 PM	0	62	0	0	4	0	0	0	9	0	3	0	0
4/23/2024	9:00 PM	0	56	0	0	4	0	0	0	9	0	4	0	0
4/23/2024	9:15 PM	0	43	0	0	4	0	0	0	11	0	4	0	0
4/23/2024	9:30 PM	0	48	0	0	2	0	0	0	9	0	7	0	0
4/23/2024	9:45 PM	0	49	0	0	1	0	0	0	12	0	7	0	0
4/23/2024	10:00 PM	0	46	0	0	1	0	0	0	12	0	6	0	0
4/23/2024	10:15 PM	0	49	0	0	0	0	0	0	9	0	5	0	0
4/23/2024	10:30 PM	0	38	0	0	1	0	0	0	7	0	1	0	0
4/23/2024	10:45 PM	0	32	0	0	1	0	0	0	7	0	2	0	0
4/23/2024	11:00 PM	0	27	0	0	1	0	0	0	8	0	3	0	0
4/23/2024	11:15 PM	0	21	0	0	1	0	0	0	9	0	3	0	0
4/23/2024	11:30 PM	0	21	0	0	0	0	0	0	9	0	3	0	0
4/23/2024	11:45 PM	0	19	0	0	0	0	0	0	5	0	4	0	0

4/24/2024	12:00 AM	0	14	0	0	0	0	0	0	3	0	3	0	0
4/24/2024	12:15 AM	0	11	0	0	1	0	0	0	1	0	4	0	0
4/24/2024	12:30 AM	0	6	0	0	1	0	0	0	2	0	5	0	0
4/24/2024	12:45 AM	0	4	0	0	1	0	0	0	4	0	3	0	0
4/24/2024	1:00 AM	0	3	0	0	2	0	0	0	6	0	2	0	0
4/24/2024	1:15 AM	0	5	0	0	1	0	0	0	8	0	1	0	0
4/24/2024	1:30 AM	0	7	0	0	1	0	0	0	8	0	1	0	0
4/24/2024	1:45 AM	0	10	0	0	1	0	0	0	9	0	1	0	0
4/24/2024	2:00 AM	0	13	0	0	1	0	0	0	9	0	2	0	0
4/24/2024	2:15 AM	0	16	0	0	1	0	0	0	8	0	3	0	0
4/24/2024	2:30 AM	0	17	0	0	1	0	0	0	7	0	4	0	0
4/24/2024	2:45 AM	0	15	0	0	1	0	0	0	4	0	4	0	0
4/24/2024	3:00 AM	0	16	2	0	0	0	0	0	1	0	3	0	0
4/24/2024	3:15 AM	0	14	2	0	2	0	0	0	1	0	2	0	0
4/24/2024	3:30 AM	0	15	2	0	2	0	0	0	2	0	0	0	0
4/24/2024	3:45 AM	0	18	2	0	3	0	0	0	4	0	1	0	0
4/24/2024	4:00 AM	0	24	2	0	3	0	0	0	7	0	1	0	0
4/24/2024	4:15 AM	0	34	2	0	3	0	0	1	6	0	1	0	0
4/24/2024	4:30 AM	0	46	3	0	3	0	0	1	5	0	1	0	0
4/24/2024	4:45 AM	0	51	4	0	2	1	0	5	3	0	0	0	0
4/24/2024	5:00 AM	0	64	3	0	2	1	0	7	0	0	0	0	0
4/24/2024	5:15 AM	0	75	8	0	0	1	0	9	0	0	0	0	0
4/24/2024	5:30 AM	0	82	12	0	0	1	0	9	0	1	0	0	0
4/24/2024	5:45 AM	0	105	14	0	0	0	0	5	1	1	0	0	0
4/24/2024	6:00 AM	0	102	15	0	2	0	0	6	1	1	0	0	0
4/24/2024	6:15 AM	0	102	12	0	2	0	0	3	4	1	0	0	0
4/24/2024	6:30 AM	0	112	11	0	3	0	0	4	6	0	0	0	0
4/24/2024	6:45 AM	0	113	14	1	5	0	0	5	6	0	0	0	0
4/24/2024	7:00 AM	0	136	17	1	4	0	0	2	12	0	0	0	0
4/24/2024	7:15 AM	0	171	22	1	6	0	0	3	15	0	0	0	0
4/24/2024	7:30 AM	0	173	21	1	6	0	0	2	14	0	0	0	0
4/24/2024	7:45 AM	0	182	22	0	6	0	0	1	15	0	0	0	0
4/24/2024	8:00 AM	0	185	23	0	5	0	0	1	11	0	0	0	0
4/24/2024	8:15 AM	0	160	21	0	6	0	0	0	8	0	0	0	0
4/24/2024	8:30 AM	0	148	25	0	7	1	0	0	14	0	0	0	0
4/24/2024	8:45 AM	0	138	23	0	6	1	0	0	17	0	0	0	0
4/24/2024	9:00 AM	0	128	21	0	7	1	0	0	18	0	0	0	0
4/24/2024	9:15 AM	0	137	20	0	6	1	0	0	18	0	0	0	0
4/24/2024	9:30 AM	0	170	21	0	4	1	0	0	16	0	0	0	0
4/24/2024	9:45 AM	0	159	19	0	3	2	0	0	15	0	0	0	0
4/24/2024	10:00 AM	0	159	20	0	4	2	0	1	15	0	0	0	0
4/24/2024	10:15 AM	0	162	20	0	4	2	0	1	17	0	0	0	0
4/24/2024	10:30 AM	0	135	18	0	6	1	0	1	14	0	0	0	0
4/24/2024	10:45 AM	0	135	16	0	6	0	1	1	12	0	0	0	0
4/24/2024	11:00 AM	0	146	16	0	5	0	1	0	12	0	0	0	0
4/24/2024	11:15 AM	0	145	16	0	5	0	2	0	10	0	0	0	0
4/24/2024	11:30 AM	0	147	13	1	3	1	2	0	11	0	0	0	0
4/24/2024	11:45 AM	0	146	14	1	4	1	1	0	14	0	0	0	0
4/24/2024	12:00 PM	0	141	15	1	3	1	1	1	13	0	0	0	0
4/24/2024	12:15 PM	0	141	20	2	1	1	0	1	17	0	0	0	0
4/24/2024	12:30 PM	0	160	29	1	3	0	0	1	18	0	0	0	0
4/24/2024	12:45 PM	0	180	36	1	3	0	0	1	17	0	0	0	0
4/24/2024	1:00 PM	0	203	42	1	4	0	0	0	20	1	0	0	0
4/24/2024	1:15 PM	0	219	44	0	4	0	0	0	17	2	0	0	0
4/24/2024	1:30 PM	0	226	50	1	2	0	0	0	19	2	0	1	0
4/24/2024	1:45 PM	0	257	57	1	2	0	0	0	20	2	0	1	0
4/24/2024	2:00 PM	0	257	53	1	2	0	0	0	17	1	0	1	0
4/24/2024	2:15 PM	0	269	49	1	4	0	0	0	18	1	0	1	0
4/24/2024	2:30 PM	0	300	43	0	4	0	0	0	15	1	0	0	0
4/24/2024	2:45 PM	0	333	37	0	6	0	0	0	12	1	0	0	0
4/24/2024	3:00 PM	0	375	45	0	5	0	0	0	10	1	0	0	0
4/24/2024	3:15 PM	0	395	47	1	4	0	0	0	9	0	0	0	0
4/24/2024	3:30 PM	0	408	51	1	6	0	0	0	9	0	0	0	0
4/24/2024	3:45 PM	0	399	54	2	4	0	0	0	10	0	0	0	0
4/24/2024	4:00 PM	0	419	52	2	5	0	0	0	12	0	0	0	0
4/24/2024	4:15 PM	0	408	59	1	4	0	0	0	9	0	0	0	0
4/24/2024	4:30 PM	0	382	59	1	4	0	0	0	7	0	0	0	0
4/24/2024	4:45 PM	0	354	52	0	3	0	0	0	9	0	0	0	0
4/24/2024	5:00 PM	0	298	48	0	3	0	1	0	12	0	0	0	0
4/24/2024	5:15 PM	0	257	36	0	5	0	1	0	13	0	3	0	0
4/24/2024	5:30 PM	0	223	25	0	3	0	1	0	13	0	5	0	0
4/24/2024	5:45 PM	1	196	24	0	3	0	1	0	9	0	5	0	0
4/24/2024	6:00 PM	1	168	19	0	2	0	0	0	7	0	6	0	0
4/24/2024	6:15 PM	1	161	20	0	1	0	0	0	8	0	3	0	0
4/24/2024	6:30 PM	1	147	16	0	1	0	0	0	12	0	1	0	0
4/24/2024	6:45 PM	0	135	14	0	2	0	0	0	11	0	1	0	0
4/24/2024	7:00 PM	0	123	13	0	3	0	0	0	10	0	2	0	0
4/24/2024	7:15 PM	0	122	9	0	2	0	0	0	11	0	4	0	0
4/24/2024	7:30 PM	0	115	8	0	4	0	0	0	6	0	4	0	0
4/24/2024	7:45 PM	0	111	6	0	4	0	0	0	8	0	6	0	0
4/24/2024	8:00 PM	0	99	2	0	4	0	0	0	9	0	6	0	0
4/24/2024	8:15 PM	0	81	1	0	4	0	0	0	9	0	4	0	0
4/24/2024	8:30 PM	0	82	2	0	2	0	0	0	9	0	4	0	0
4/24/2024	8:45 PM	0	69	1	0	2	0	0	0	10	0	2	0	0
4/24/2024	9:00 PM	0	66	1	0	1	0	0	0	11	0	1	0	0
4/24/2024	9:15 PM	0	66	1	0	2	0	0	0	9	0	2	0	0
4/24/2024	9:30 PM	0	59	0	0	2	0	0	0	12	0	4	0	0
4/24/2024	9:45 PM	0	51	0	0	1	0	0	0	10	0	5	0	0
4/24/2024	10:00 PM	0	52	0	0	1	0	0	0	9	0	5	0	0
4/24/2024	10:15 PM	0	43	0	0	0	0	0	0	9	0	9	0	0
4/24/2024	10:30 PM	0	36	0	0	0	0	0	0	8	0	7	0	0
4/24/2024	10:45 PM	0	35	0	0	1	0	0	0	7	0	6	0	0
4/24/2024	11:00 PM	0	22	0	0	1	0	0	0	4	0	5	0	0
4/24/2024	11:15 PM	0	18	1	0	1	0	0	0	4	0	0	0	0
4/24/2024	11:30 PM	0	16	1	0	1	0	0	0	2	0	0	0	0
4/24/2024	11:45 PM	0	16	1	0	0	0	0	0	3	0	1	0	0

4/25/2024	12:00 AM	0	14	1	0	0	0	0	0	4	0	2	0	0
4/25/2024	12:15 AM	0	14	0	0	0	0	0	0	3	0	2	0	0
4/25/2024	12:30 AM	0	10	0	0	0	0	0	0	4	0	2	0	0
4/25/2024	12:45 AM	0	7	0	0	0	0	0	0	4	0	3	0	0
4/25/2024	1:00 AM	0	6	0	0	0	0	0	0	4	0	3	0	0
4/25/2024	1:15 AM	0	9	0	0	0	0	0	0	3	0	3	0	0
4/25/2024	1:30 AM	0	9	0	0	1	0	0	2	4	0	3	0	0
4/25/2024	1:45 AM	0	11	0	0	1	0	0	2	3	0	1	0	0
4/25/2024	2:00 AM	0	16	0	0	1	0	0	2	2	0	1	0	0
4/25/2024	2:15 AM	0	14	1	0	1	0	0	2	3	0	3	0	0
4/25/2024	2:30 AM	0	17	1	0	1	0	0	0	2	0	3	0	0
4/25/2024	2:45 AM	0	17	1	0	2	0	0	0	5	0	3	0	0
4/25/2024	3:00 AM	0	14	1	0	2	0	0	1	7	0	3	0	0
4/25/2024	3:15 AM	0	15	0	0	4	0	0	1	6	0	1	0	0
4/25/2024	3:30 AM	0	15	0	0	4	0	0	1	9	0	1	0	0
4/25/2024	3:45 AM	0	19	0	0	4	0	0	1	9	0	1	0	0
4/25/2024	4:00 AM	0	32	0	0	4	0	0	0	8	0	1	0	0
4/25/2024	4:15 AM	0	38	0	0	3	0	0	0	9	0	1	0	0
4/25/2024	4:30 AM	0	48	0	0	3	0	0	2	9	0	2	0	0
4/25/2024	4:45 AM	0	59	0	0	2	0	0	3	8	0	2	0	0
4/25/2024	5:00 AM	0	65	0	0	3	0	0	3	7	0	1	0	0
4/25/2024	5:15 AM	0	77	1	0	2	0	0	3	10	0	1	0	0
4/25/2024	5:30 AM	0	102	4	2	2	1	0	1	9	0	0	0	0
4/25/2024	5:45 AM	0	115	6	2	2	1	0	0	12	0	0	0	0
4/25/2024	6:00 AM	0	124	9	3	1	2	0	1	15	0	0	0	0
4/25/2024	6:15 AM	0	147	12	3	1	2	0	1	11	0	0	0	0
4/25/2024	6:30 AM	0	156	17	1	0	2	0	1	8	0	0	0	0
4/25/2024	6:45 AM	0	158	18	2	0	2	0	1	3	0	0	0	0
4/25/2024	7:00 AM	0	153	19	1	1	1	0	0	0	0	0	0	0
4/25/2024	7:15 AM	0	138	18	1	2	1	0	0	0	0	0	0	0
4/25/2024	7:30 AM	0	136	18	1	2	0	0	0	0	0	0	0	0
4/25/2024	7:45 AM	0	138	24	0	5	0	0	0	0	0	0	0	0
4/25/2024	8:00 AM	0	163	26	0	4	0	0	0	0	0	0	0	0
4/25/2024	8:15 AM	0	181	28	0	4	0	0	0	0	0	0	0	0
4/25/2024	8:30 AM	0	178	25	0	4	0	0	0	0	0	0	0	0
4/25/2024	8:45 AM	0	180	22	0	2	0	0	0	0	0	0	0	0
4/25/2024	9:00 AM	0	185	20	0	3	1	0	0	0	0	0	0	0
4/25/2024	9:15 AM	0	185	19	0	3	1	0	0	0	0	0	0	0
4/25/2024	9:30 AM	0	198	19	0	3	1	0	0	0	0	0	0	0
4/25/2024	9:45 AM	0	203	22	0	2	1	0	0	0	0	0	0	0
4/25/2024	10:00 AM	0	183	25	1	2	1	0	0	0	0	0	0	0
4/25/2024	10:15 AM	0	176	26	1	1	1	0	0	0	0	0	0	0
4/25/2024	10:30 AM	0	159	28	1	3	1	0	0	0	0	0	0	0
4/25/2024	10:45 AM	0	170	28	1	4	1	0	0	0	0	0	0	0
4/25/2024	11:00 AM	0	178	29	0	4	0	0	0	0	0	0	0	0
4/25/2024	11:15 AM	0	185	32	0	4	0	0	0	0	0	0	0	0
4/25/2024	11:30 AM	0	191	38	0	3	0	0	0	0	0	0	0	0
4/25/2024	11:45 AM	0	172	43	0	3	0	0	0	0	0	0	0	0
4/25/2024	12:00 PM	0	178	47	0	5	0	0	0	0	0	0	0	0
4/25/2024	12:15 PM	0	182	48	0	5	0	0	0	0	0	0	0	0
4/25/2024	12:30 PM	0	180	45	0	4	1	0	0	0	0	0	0	0
4/25/2024	12:45 PM	0	202	44	1	3	1	0	0	0	0	0	0	0
4/25/2024	1:00 PM	0	219	42	2	2	1	0	0	0	0	0	0	0
4/25/2024	1:15 PM	0	226	56	2	2	2	0	0	0	0	0	0	0
4/25/2024	1:30 PM	0	248	62	2	5	1	0	0	0	0	0	0	0
4/25/2024	1:45 PM	0	257	63	1	6	1	0	0	0	0	0	0	0
4/25/2024	2:00 PM	0	282	72	0	6	1	0	0	0	0	0	0	0
4/25/2024	2:15 PM	0	305	57	0	8	0	0	0	0	0	0	0	0
4/25/2024	2:30 PM	0	328	53	0	7	0	0	0	0	0	0	0	0
4/25/2024	2:45 PM	0	354	52	0	7	0	0	0	0	0	0	0	0
4/25/2024	3:00 PM	0	364	40	0	8	0	0	0	0	0	0	0	0
4/25/2024	3:15 PM	0	385	39	0	7	0	0	0	0	0	0	0	0
4/25/2024	3:30 PM	0	384	36	0	7	0	0	0	0	0	0	0	0
4/25/2024	3:45 PM	0	391	36	0	8	0	0	0	0	0	0	0	0
4/25/2024	4:00 PM	0	387	37	0	9	0	0	0	0	0	0	0	0
4/25/2024	4:15 PM	0	387	46	0	10	0	0	0	0	0	0	0	0
4/25/2024	4:30 PM	1	365	45	0	9	1	0	0	0	0	0	0	0
4/25/2024	4:45 PM	1	337	39	0	10	1	0	0	0	0	0	0	0
4/25/2024	5:00 PM	1	310	40	0	6	1	0	0	0	0	0	0	0
4/25/2024	5:15 PM	1	254	28	0	4	1	0	0	0	0	0	0	0
4/25/2024	5:30 PM	0	224	29	0	4	0	0	0	0	0	0	0	0
4/25/2024	5:45 PM	0	195	31	0	3	0	0	0	0	0	0	0	0
4/25/2024	6:00 PM	0	176	27	0	4	0	0	0	0	0	0	0	0
4/25/2024	6:15 PM	0	129	23	0	4	0	0	0	0	0	0	0	0
4/25/2024	6:30 PM	0	93	14	0	3	0	0	0	0	0	0	0	0
4/25/2024	6:45 PM	0	52	5	0	1	0	0	0	0	0	0	0	0
4/25/2024	7:00 PM	0	0	0	0	0	0	0	0	0	0	0	0	0
4/25/2024	7:15 PM	0	0	0	0	0	0	0	0	0	0	0	0	0
4/25/2024	7:30 PM	0	0	0	0	0	0	0	0	0	0	0	0	0
4/25/2024	7:45 PM	0	0	0	0	0	0	0	0	0	0	0	0	0
4/25/2024	8:00 PM	0	0	0	0	0	0	0	0	0	0	0	0	0
4/25/2024	8:15 PM	0	0	0	0	0	0	0	0	0	0	0	0	0
4/25/2024	8:30 PM	0	0	0	0	0	0	0	0	0	0	0	0	0
4/25/2024	8:45 PM	0	0	0	0	0	0	0	0	0	0	0	0	0
4/25/2024	9:00 PM	0	0	0	0	0	0	0	0	0	0	0	0	0
4/25/2024	9:15 PM	0	0	0	0	0	0	0	0	0	0	0	0	0
4/25/2024	9:30 PM	0	0	0	0	0	0	0	0	0	0	0	0	0
4/25/2024	9:45 PM	0	0	0	0	0	0	0	0	0	0	0	0	0
4/25/2024	10:00 PM	0	0	0	0	0	0	0	0	0	0	0	0	0
4/25/2024	10:15 PM	0	0	0	0	0	0	0	0	0	0	0	0	0
4/25/2024	10:30 PM	0	0	0	0	0	0	0	0	0	0	0	0	0
4/25/2024	10:45 PM	0	0	0	0	0	0	0	0	0	0	0	0	0
4/25/2024	11:00 PM	0	0	0	0	0	0	0	0	0	0	0	0	0
4/25/2024	11:15 PM	0	0	0	0	0	0	0	0	0	0	0	0	0
4/25/2024	11:30 PM	0	0	0	0	0	0	0	0	0	0	0	0	0
4/25/2024	11:45 PM	0	0	0	0	0	0	0	0	0	0	0	0	0

WB
File Name:
Start Date: 4/23/2024
Start Time: 0
Site Code: 58
Station ID: 1
Location 1: I-20 E/Bound On-Ramp, east of US-378 Sunset Blvd
Location 2:

Date	Time	1	2	3	4	5	6	7	8	9	10	11	12	13
4/23/2024	12:00 AM	0	0	0	0	0	0	0	0	0	0	0	0	0
4/23/2024	12:15 AM	0	0	0	0	0	0	0	0	0	0	0	0	0
4/23/2024	12:30 AM	0	0	0	0	0	0	0	0	0	0	0	0	0
4/23/2024	12:45 AM	0	0	0	0	0	0	0	0	0	0	0	0	0
4/23/2024	1:00 AM	0	0	0	0	0	0	0	0	0	0	0	0	0
4/23/2024	1:15 AM	0	0	0	0	0	0	0	0	0	0	0	0	0
4/23/2024	1:30 AM	0	0	0	0	0	0	0	0	0	0	0	0	0
4/23/2024	1:45 AM	0	0	0	0	0	0	0	0	0	0	0	0	0
4/23/2024	2:00 AM	0	0	0	0	0	0	0	0	0	0	0	0	0
4/23/2024	2:15 AM	0	0	0	0	0	0	0	0	0	0	0	0	0
4/23/2024	2:30 AM	0	0	0	0	0	0	0	0	0	0	0	0	0
4/23/2024	2:45 AM	0	0	0	0	0	0	0	0	0	0	0	0	0
4/23/2024	3:00 AM	0	0	0	0	0	0	0	0	0	0	0	0	0
4/23/2024	3:15 AM	0	0	0	0	0	0	0	0	0	0	0	0	0
4/23/2024	3:30 AM	0	0	0	0	0	0	0	0	0	0	0	0	0
4/23/2024	3:45 AM	0	0	0	0	0	0	0	0	0	0	0	0	0
4/23/2024	4:00 AM	0	0	0	0	0	0	0	0	0	0	0	0	0
4/23/2024	4:15 AM	0	0	0	0	0	0	0	0	0	0	0	0	0
4/23/2024	4:30 AM	0	0	0	0	0	0	0	0	0	0	0	0	0
4/23/2024	4:45 AM	0	0	0	0	0	0	0	0	0	0	0	0	0
4/23/2024	5:00 AM	0	0	0	0	0	0	0	0	0	0	0	0	0
4/23/2024	5:15 AM	0	0	0	0	0	0	0	0	0	0	0	0	0
4/23/2024	5:30 AM	0	0	0	0	0	0	0	0	0	0	0	0	0
4/23/2024	5:45 AM	0	0	0	0	0	0	0	0	0	0	0	0	0
4/23/2024	6:00 AM	0	0	0	0	0	0	0	0	0	0	0	0	0
4/23/2024	6:15 AM	0	0	0	0	0	0	0	0	0	0	0	0	0
4/23/2024	6:30 AM	0	0	0	0	0	0	0	0	0	0	0	0	0
4/23/2024	6:45 AM	0	0	0	0	0	0	0	0	0	0	0	0	0
4/23/2024	7:00 AM	0	0	0	0	0	0	0	0	0	0	0	0	0
4/23/2024	7:15 AM	0	0	0	0	0	0	0	0	0	0	0	0	0
4/23/2024	7:30 AM	0	0	0	0	0	0	0	0	0	0	0	0	0
4/23/2024	7:45 AM	0	0	0	0	0	0	0	0	0	0	0	0	0
4/23/2024	8:00 AM	0	0	0	0	0	0	0	0	0	0	0	0	0
4/23/2024	8:15 AM	0	0	0	0	0	0	0	0	0	0	0	0	0
4/23/2024	8:30 AM	0	0	0	0	0	0	0	0	0	0	0	0	0
4/23/2024	8:45 AM	0	0	0	0	0	0	0	0	0	0	0	0	0
4/23/2024	9:00 AM	0	0	0	0	0	0	0	0	0	0	0	0	0
4/23/2024	9:15 AM	0	0	0	0	0	0	0	0	0	0	0	0	0
4/23/2024	9:30 AM	0	0	0	0	0	0	0	0	0	0	0	0	0
4/23/2024	9:45 AM	0	0	0	0	0	0	0	0	0	0	0	0	0
4/23/2024	10:00 AM	0	0	0	0	0	0	0	0	0	0	0	0	0
4/23/2024	10:15 AM	0	0	0	0	0	0	0	0	0	0	0	0	0
4/23/2024	10:30 AM	0	0	0	0	0	0	0	0	0	0	0	0	0
4/23/2024	10:45 AM	0	0	0	0	0	0	0	0	0	0	0	0	0
4/23/2024	11:00 AM	0	0	0	0	0	0	0	0	0	0	0	0	0
4/23/2024	11:15 AM	0	0	0	0	0	0	0	0	0	0	0	0	0
4/23/2024	11:30 AM	0	0	0	0	0	0	0	0	0	0	0	0	0
4/23/2024	11:45 AM	0	0	0	0	0	0	0	0	0	0	0	0	0
4/23/2024	12:00 PM	0	0	0	0	0	0	0	0	0	0	0	0	0
4/23/2024	12:15 PM	0	0	0	0	0	0	0	0	0	0	0	0	0
4/23/2024	12:30 PM	0	0	0	0	0	0	0	0	0	0	0	0	0
4/23/2024	12:45 PM	0	0	0	0	0	0	0	0	0	0	0	0	0
4/23/2024	1:00 PM	0	0	0	0	0	0	0	0	0	0	0	0	0
4/23/2024	1:15 PM	0	0	0	0	0	0	0	0	0	0	0	0	0
4/23/2024	1:30 PM	0	0	0	0	0	0	0	0	0	0	0	0	0
4/23/2024	1:45 PM	0	0	0	0	0	0	0	0	0	0	0	0	0
4/23/2024	2:00 PM	0	0	0	0	0	0	0	0	0	0	0	0	0
4/23/2024	2:15 PM	0	0	0	0	0	0	0	0	0	0	0	0	0
4/23/2024	2:30 PM	0	0	0	0	0	0	0	0	0	0	0	0	0
4/23/2024	2:45 PM	0	0	0	0	0	0	0	0	0	0	0	0	0
4/23/2024	3:00 PM	0	0	0	0	0	0	0	0	0	0	0	0	0
4/23/2024	3:15 PM	0	0	0	0	0	0	0	0	0	0	0	0	0
4/23/2024	3:30 PM	0	0	0	0	0	0	0	0	0	0	0	0	0
4/23/2024	3:45 PM	0	0	0	0	0	0	0	0	0	0	0	0	0
4/23/2024	4:00 PM	0	0	0	0	0	0	0	0	0	0	0	0	0
4/23/2024	4:15 PM	0	0	0	0	0	0	0	0	0	0	0	0	0
4/23/2024	4:30 PM	0	0	0	0	0	0	0	0	0	0	0	0	0
4/23/2024	4:45 PM	0	0	0	0	0	0	0	0	0	0	0	0	0
4/23/2024	5:00 PM	0	0	0	0	0	0	0	0	0	0	0	0	0
4/23/2024	5:15 PM	0	0	0	0	0	0	0	0	0	0	0	0	0
4/23/2024	5:30 PM	0	0	0	0	0	0	0	0	0	0	0	0	0
4/23/2024	5:45 PM	0	0	0	0	0	0	0	0	0	0	0	0	0
4/23/2024	6:00 PM	0	0	0	0	0	0	0	0	0	0	0	0	0
4/23/2024	6:15 PM	0	0	0	0	0	0	0	0	0	0	0	0	0
4/23/2024	6:30 PM	0	0	0	0	0	0	0	0	0	0	0	0	0
4/23/2024	6:45 PM	0	0	0	0	0	0	0	0	0	0	0	0	0
4/23/2024	7:00 PM	0	0	0	0	0	0	0	0	0	0	0	0	0
4/23/2024	7:15 PM	0	0	0	0	0	0	0	0	0	0	0	0	0
4/23/2024	7:30 PM	0	0	0	0	0	0	0	0	0	0	0	0	0
4/23/2024	7:45 PM	0	0	0	0	0	0	0	0	0	0	0	0	0
4/23/2024	8:00 PM	0	0	0	0	0	0	0	0	0	0	0	0	0
4/23/2024	8:15 PM	0	0	0	0	0	0	0	0	0	0	0	0	0
4/23/2024	8:30 PM	0	0	0	0	0	0	0	0	0	0	0	0	0
4/23/2024	8:45 PM	0	0	0	0	0	0	0	0	0	0	0	0	0
4/23/2024	9:00 PM	0	0	0	0	0	0	0	0	0	0	0	0	0
4/23/2024	9:15 PM	0	0	0	0	0	0	0	0	0	0	0	0	0
4/23/2024	9:30 PM	0	0	0	0	0	0	0	0	0	0	0	0	0
4/23/2024	9:45 PM	0	0	0	0	0	0	0	0	0	0	0	0	0
4/23/2024	10:00 PM	0	0	0	0	0	0	0	0	0	0	0	0	0
4/23/2024	10:15 PM	0	0	0	0	0	0	0	0	0	0	0	0	0
4/23/2024	10:30 PM	0	0	0	0	0	0	0	0	0	0	0	0	0
4/23/2024	10:45 PM	0	0	0	0	0	0	0	0	0	0	0	0	0
4/23/2024	11:00 PM	0	0	0	0	0	0	0	0	0	0	0	0	0
4/23/2024	11:15 PM	0	0	0	0	0	0	0	0	0	0	0	0	0
4/23/2024	11:30 PM	0	0	0	0	0	0	0	0	0	0	0	0	0
4/23/2024	11:45 PM	0	0	0	0	0	0	0	0	0	0	0	0	0

4/24/2024	12:00 AM	0	0	0	0	0	0	0	0	0	0	0	0	0
4/24/2024	12:15 AM	0	0	0	0	0	0	0	0	0	0	0	0	0
4/24/2024	12:30 AM	0	0	0	0	0	0	0	0	0	0	0	0	0
4/24/2024	12:45 AM	0	0	0	0	0	0	0	0	0	0	0	0	0
4/24/2024	1:00 AM	0	0	0	0	0	0	0	0	0	0	0	0	0
4/24/2024	1:15 AM	0	0	0	0	0	0	0	0	0	0	0	0	0
4/24/2024	1:30 AM	0	0	0	0	0	0	0	0	0	0	0	0	0
4/24/2024	1:45 AM	0	0	0	0	0	0	0	0	0	0	0	0	0
4/24/2024	2:00 AM	0	0	0	0	0	0	0	0	0	0	0	0	0
4/24/2024	2:15 AM	0	0	0	0	0	0	0	0	0	0	0	0	0
4/24/2024	2:30 AM	0	0	0	0	0	0	0	0	0	0	0	0	0
4/24/2024	2:45 AM	0	0	0	0	0	0	0	0	0	0	0	0	0
4/24/2024	3:00 AM	0	0	0	0	0	0	0	0	0	0	0	0	0
4/24/2024	3:15 AM	0	0	0	0	0	0	0	0	0	0	0	0	0
4/24/2024	3:30 AM	0	0	0	0	0	0	0	0	0	0	0	0	0
4/24/2024	3:45 AM	0	0	0	0	0	0	0	0	0	0	0	0	0
4/24/2024	4:00 AM	0	0	0	0	0	0	0	0	0	0	0	0	0
4/24/2024	4:15 AM	0	0	0	0	0	0	0	0	0	0	0	0	0
4/24/2024	4:30 AM	0	0	0	0	0	0	0	0	0	0	0	0	0
4/24/2024	4:45 AM	0	0	0	0	0	0	0	0	0	0	0	0	0
4/24/2024	5:00 AM	0	0	0	0	0	0	0	0	0	0	0	0	0
4/24/2024	5:15 AM	0	0	0	0	0	0	0	0	0	0	0	0	0
4/24/2024	5:30 AM	0	0	0	0	0	0	0	0	0	0	0	0	0
4/24/2024	5:45 AM	0	0	0	0	0	0	0	0	0	0	0	0	0
4/24/2024	6:00 AM	0	0	0	0	0	0	0	0	0	0	0	0	0
4/24/2024	6:15 AM	0	0	0	0	0	0	0	0	0	0	0	0	0
4/24/2024	6:30 AM	0	0	0	0	0	0	0	0	0	0	0	0	0
4/24/2024	6:45 AM	0	0	0	0	0	0	0	0	0	0	0	0	0
4/24/2024	7:00 AM	0	0	0	0	0	0	0	0	0	0	0	0	0
4/24/2024	7:15 AM	0	0	0	0	0	0	0	0	0	0	0	0	0
4/24/2024	7:30 AM	0	0	0	0	0	0	0	0	0	0	0	0	0
4/24/2024	7:45 AM	0	0	0	0	0	0	0	0	0	0	0	0	0
4/24/2024	8:00 AM	0	0	0	0	0	0	0	0	0	0	0	0	0
4/24/2024	8:15 AM	0	0	0	0	0	0	0	0	0	0	0	0	0
4/24/2024	8:30 AM	0	0	0	0	0	0	0	0	0	0	0	0	0
4/24/2024	8:45 AM	0	0	0	0	0	0	0	0	0	0	0	0	0
4/24/2024	9:00 AM	0	0	0	0	0	0	0	0	0	0	0	0	0
4/24/2024	9:15 AM	0	0	0	0	0	0	0	0	0	0	0	0	0
4/24/2024	9:30 AM	0	0	0	0	0	0	0	0	0	0	0	0	0
4/24/2024	9:45 AM	0	0	0	0	0	0	0	0	0	0	0	0	0
4/24/2024	10:00 AM	0	0	0	0	0	0	0	0	0	0	0	0	0
4/24/2024	10:15 AM	0	0	0	0	0	0	0	0	0	0	0	0	0
4/24/2024	10:30 AM	0	0	0	0	0	0	0	0	0	0	0	0	0
4/24/2024	10:45 AM	0	0	0	0	0	0	0	0	0	0	0	0	0
4/24/2024	11:00 AM	0	0	0	0	0	0	0	0	0	0	0	0	0
4/24/2024	11:15 AM	0	0	0	0	0	0	0	0	0	0	0	0	0
4/24/2024	11:30 AM	0	0	0	0	0	0	0	0	0	0	0	0	0
4/24/2024	11:45 AM	0	0	0	0	0	0	0	0	0	0	0	0	0
4/24/2024	12:00 PM	0	0	0	0	0	0	0	0	0	0	0	0	0
4/24/2024	12:15 PM	0	0	0	0	0	0	0	0	0	0	0	0	0
4/24/2024	12:30 PM	0	0	0	0	0	0	0	0	0	0	0	0	0
4/24/2024	12:45 PM	0	0	0	0	0	0	0	0	0	0	0	0	0
4/24/2024	1:00 PM	0	0	0	0	0	0	0	0	0	0	0	0	0
4/24/2024	1:15 PM	0	0	0	0	0	0	0	0	0	0	0	0	0
4/24/2024	1:30 PM	0	0	0	0	0	0	0	0	0	0	0	0	0
4/24/2024	1:45 PM	0	0	0	0	0	0	0	0	0	0	0	0	0
4/24/2024	2:00 PM	0	0	0	0	0	0	0	0	0	0	0	0	0
4/24/2024	2:15 PM	0	0	0	0	0	0	0	0	0	0	0	0	0
4/24/2024	2:30 PM	0	0	0	0	0	0	0	0	0	0	0	0	0
4/24/2024	2:45 PM	0	0	0	0	0	0	0	0	0	0	0	0	0
4/24/2024	3:00 PM	0	0	0	0	0	0	0	0	0	0	0	0	0
4/24/2024	3:15 PM	0	0	0	0	0	0	0	0	0	0	0	0	0
4/24/2024	3:30 PM	0	0	0	0	0	0	0	0	0	0	0	0	0
4/24/2024	3:45 PM	0	0	0	0	0	0	0	0	0	0	0	0	0
4/24/2024	4:00 PM	0	0	0	0	0	0	0	0	0	0	0	0	0
4/24/2024	4:15 PM	0	0	0	0	0	0	0	0	0	0	0	0	0
4/24/2024	4:30 PM	0	0	0	0	0	0	0	0	0	0	0	0	0
4/24/2024	4:45 PM	0	0	0	0	0	0	0	0	0	0	0	0	0
4/24/2024	5:00 PM	0	0	0	0	0	0	0	0	0	0	0	0	0
4/24/2024	5:15 PM	0	0	0	0	0	0	0	0	0	0	0	0	0
4/24/2024	5:30 PM	0	0	0	0	0	0	0	0	0	0	0	0	0
4/24/2024	5:45 PM	0	0	0	0	0	0	0	0	0	0	0	0	0
4/24/2024	6:00 PM	0	0	0	0	0	0	0	0	0	0	0	0	0
4/24/2024	6:15 PM	0	0	0	0	0	0	0	0	0	0	0	0	0
4/24/2024	6:30 PM	0	0	0	0	0	0	0	0	0	0	0	0	0
4/24/2024	6:45 PM	0	0	0	0	0	0	0	0	0	0	0	0	0
4/24/2024	7:00 PM	0	0	0	0	0	0	0	0	0	0	0	0	0
4/24/2024	7:15 PM	0	0	0	0	0	0	0	0	0	0	0	0	0
4/24/2024	7:30 PM	0	0	0	0	0	0	0	0	0	0	0	0	0
4/24/2024	7:45 PM	0	0	0	0	0	0	0	0	0	0	0	0	0
4/24/2024	8:00 PM	0	0	0	0	0	0	0	0	0	0	0	0	0
4/24/2024	8:15 PM	0	0	0	0	0	0	0	0	0	0	0	0	0
4/24/2024	8:30 PM	0	0	0	0	0	0	0	0	0	0	0	0	0
4/24/2024	8:45 PM	0	0	0	0	0	0	0	0	0	0	0	0	0
4/24/2024	9:00 PM	0	0	0	0	0	0	0	0	0	0	0	0	0
4/24/2024	9:15 PM	0	0	0	0	0	0	0	0	0	0	0	0	0
4/24/2024	9:30 PM	0	0	0	0	0	0	0	0	0	0	0	0	0
4/24/2024	9:45 PM	0	0	0	0	0	0	0	0	0	0	0	0	0
4/24/2024	10:00 PM	0	0	0	0	0	0	0	0	0	0	0	0	0
4/24/2024	10:15 PM	0	0	0	0	0	0	0	0	0	0	0	0	0
4/24/2024	10:30 PM	0	0	0	0	0	0	0	0	0	0	0	0	0
4/24/2024	10:45 PM	0	0	0	0	0	0	0	0	0	0	0	0	0
4/24/2024	11:00 PM	0	0	0	0	0	0	0	0	0	0	0	0	0
4/24/2024	11:15 PM	0	0	0	0	0	0	0	0	0	0	0	0	0
4/24/2024	11:30 PM	0	0	0	0	0	0	0	0	0	0	0	0	0
4/24/2024	11:45 PM	0	0	0	0	0	0	0	0	0	0	0	0	0

4/25/2024	12:00 AM	0	0	0	0	0	0	0	0	0	0	0	0	0
4/25/2024	12:15 AM	0	0	0	0	0	0	0	0	0	0	0	0	0
4/25/2024	12:30 AM	0	0	0	0	0	0	0	0	0	0	0	0	0
4/25/2024	12:45 AM	0	0	0	0	0	0	0	0	0	0	0	0	0
4/25/2024	1:00 AM	0	0	0	0	0	0	0	0	0	0	0	0	0
4/25/2024	1:15 AM	0	0	0	0	0	0	0	0	0	0	0	0	0
4/25/2024	1:30 AM	0	0	0	0	0	0	0	0	0	0	0	0	0
4/25/2024	1:45 AM	0	0	0	0	0	0	0	0	0	0	0	0	0
4/25/2024	2:00 AM	0	0	0	0	0	0	0	0	0	0	0	0	0
4/25/2024	2:15 AM	0	0	0	0	0	0	0	0	0	0	0	0	0
4/25/2024	2:30 AM	0	0	0	0	0	0	0	0	0	0	0	0	0
4/25/2024	2:45 AM	0	0	0	0	0	0	0	0	0	0	0	0	0
4/25/2024	3:00 AM	0	0	0	0	0	0	0	0	0	0	0	0	0
4/25/2024	3:15 AM	0	0	0	0	0	0	0	0	0	0	0	0	0
4/25/2024	3:30 AM	0	0	0	0	0	0	0	0	0	0	0	0	0
4/25/2024	3:45 AM	0	0	0	0	0	0	0	0	0	0	0	0	0
4/25/2024	4:00 AM	0	0	0	0	0	0	0	0	0	0	0	0	0
4/25/2024	4:15 AM	0	0	0	0	0	0	0	0	0	0	0	0	0
4/25/2024	4:30 AM	0	0	0	0	0	0	0	0	0	0	0	0	0
4/25/2024	4:45 AM	0	0	0	0	0	0	0	0	0	0	0	0	0
4/25/2024	5:00 AM	0	0	0	0	0	0	0	0	0	0	0	0	0
4/25/2024	5:15 AM	0	0	0	0	0	0	0	0	0	0	0	0	0
4/25/2024	5:30 AM	0	0	0	0	0	0	0	0	0	0	0	0	0
4/25/2024	5:45 AM	0	0	0	0	0	0	0	0	0	0	0	0	0
4/25/2024	6:00 AM	0	0	0	0	0	0	0	0	0	0	0	0	0
4/25/2024	6:15 AM	0	0	0	0	0	0	0	0	0	0	0	0	0
4/25/2024	6:30 AM	0	0	0	0	0	0	0	0	0	0	0	0	0
4/25/2024	6:45 AM	0	0	0	0	0	0	0	0	0	0	0	0	0
4/25/2024	7:00 AM	0	0	0	0	0	0	0	0	0	0	0	0	0
4/25/2024	7:15 AM	0	0	0	0	0	0	0	0	0	0	0	0	0
4/25/2024	7:30 AM	0	0	0	0	0	0	0	0	0	0	0	0	0
4/25/2024	7:45 AM	0	0	0	0	0	0	0	0	0	0	0	0	0
4/25/2024	8:00 AM	0	0	0	0	0	0	0	0	0	0	0	0	0
4/25/2024	8:15 AM	0	0	0	0	0	0	0	0	0	0	0	0	0
4/25/2024	8:30 AM	0	0	0	0	0	0	0	0	0	0	0	0	0
4/25/2024	8:45 AM	0	0	0	0	0	0	0	0	0	0	0	0	0
4/25/2024	9:00 AM	0	0	0	0	0	0	0	0	0	0	0	0	0
4/25/2024	9:15 AM	0	0	0	0	0	0	0	0	0	0	0	0	0
4/25/2024	9:30 AM	0	0	0	0	0	0	0	0	0	0	0	0	0
4/25/2024	9:45 AM	0	0	0	0	0	0	0	0	0	0	0	0	0
4/25/2024	10:00 AM	0	0	0	0	0	0	0	0	0	0	0	0	0
4/25/2024	10:15 AM	0	0	0	0	0	0	0	0	0	0	0	0	0
4/25/2024	10:30 AM	0	0	0	0	0	0	0	0	0	0	0	0	0
4/25/2024	10:45 AM	0	0	0	0	0	0	0	0	0	0	0	0	0
4/25/2024	11:00 AM	0	0	0	0	0	0	0	0	0	0	0	0	0
4/25/2024	11:15 AM	0	0	0	0	0	0	0	0	0	0	0	0	0
4/25/2024	11:30 AM	0	0	0	0	0	0	0	0	0	0	0	0	0
4/25/2024	11:45 AM	0	0	0	0	0	0	0	0	0	0	0	0	0
4/25/2024	12:00 PM	0	0	0	0	0	0	0	0	0	0	0	0	0
4/25/2024	12:15 PM	0	0	0	0	0	0	0	0	0	0	0	0	0
4/25/2024	12:30 PM	0	0	0	0	0	0	0	0	0	0	0	0	0
4/25/2024	12:45 PM	0	0	0	0	0	0	0	0	0	0	0	0	0
4/25/2024	1:00 PM	0	0	0	0	0	0	0	0	0	0	0	0	0
4/25/2024	1:15 PM	0	0	0	0	0	0	0	0	0	0	0	0	0
4/25/2024	1:30 PM	0	0	0	0	0	0	0	0	0	0	0	0	0
4/25/2024	1:45 PM	0	0	0	0	0	0	0	0	0	0	0	0	0
4/25/2024	2:00 PM	0	0	0	0	0	0	0	0	0	0	0	0	0
4/25/2024	2:15 PM	0	0	0	0	0	0	0	0	0	0	0	0	0
4/25/2024	2:30 PM	0	0	0	0	0	0	0	0	0	0	0	0	0
4/25/2024	2:45 PM	0	0	0	0	0	0	0	0	0	0	0	0	0
4/25/2024	3:00 PM	0	0	0	0	0	0	0	0	0	0	0	0	0
4/25/2024	3:15 PM	0	0	0	0	0	0	0	0	0	0	0	0	0
4/25/2024	3:30 PM	0	0	0	0	0	0	0	0	0	0	0	0	0
4/25/2024	3:45 PM	0	0	0	0	0	0	0	0	0	0	0	0	0
4/25/2024	4:00 PM	0	0	0	0	0	0	0	0	0	0	0	0	0
4/25/2024	4:15 PM	0	0	0	0	0	0	0	0	0	0	0	0	0
4/25/2024	4:30 PM	0	0	0	0	0	0	0	0	0	0	0	0	0
4/25/2024	4:45 PM	0	0	0	0	0	0	0	0	0	0	0	0	0
4/25/2024	5:00 PM	0	0	0	0	0	0	0	0	0	0	0	0	0
4/25/2024	5:15 PM	0	0	0	0	0	0	0	0	0	0	0	0	0
4/25/2024	5:30 PM	0	0	0	0	0	0	0	0	0	0	0	0	0
4/25/2024	5:45 PM	0	0	0	0	0	0	0	0	0	0	0	0	0
4/25/2024	6:00 PM	0	0	0	0	0	0	0	0	0	0	0	0	0
4/25/2024	6:15 PM	0	0	0	0	0	0	0	0	0	0	0	0	0
4/25/2024	6:30 PM	0	0	0	0	0	0	0	0	0	0	0	0	0
4/25/2024	6:45 PM	0	0	0	0	0	0	0	0	0	0	0	0	0
4/25/2024	7:00 PM	0	0	0	0	0	0	0	0	0	0	0	0	0
4/25/2024	7:15 PM	0	0	0	0	0	0	0	0	0	0	0	0	0
4/25/2024	7:30 PM	0	0	0	0	0	0	0	0	0	0	0	0	0
4/25/2024	7:45 PM	0	0	0	0	0	0	0	0	0	0	0	0	0
4/25/2024	8:00 PM	0	0	0	0	0	0	0	0	0	0	0	0	0
4/25/2024	8:15 PM	0	0	0	0	0	0	0	0	0	0	0	0	0
4/25/2024	8:30 PM	0	0	0	0	0	0	0	0	0	0	0	0	0
4/25/2024	8:45 PM	0	0	0	0	0	0	0	0	0	0	0	0	0
4/25/2024	9:00 PM	0	0	0	0	0	0	0	0	0	0	0	0	0
4/25/2024	9:15 PM	0	0	0	0	0	0	0	0	0	0	0	0	0
4/25/2024	9:30 PM	0	0	0	0	0	0	0	0	0	0	0	0	0
4/25/2024	9:45 PM	0	0	0	0	0	0	0	0	0	0	0	0	0
4/25/2024	10:00 PM	0	0	0	0	0	0	0	0	0	0	0	0	0
4/25/2024	10:15 PM	0	0	0	0	0	0	0	0	0	0	0	0	0
4/25/2024	10:30 PM	0	0	0	0	0	0	0	0	0	0	0	0	0
4/25/2024	10:45 PM	0	0	0	0	0	0	0	0	0	0	0	0	0
4/25/2024	11:00 PM	0	0	0	0	0	0	0	0	0	0	0	0	0
4/25/2024	11:15 PM	0	0	0	0	0	0	0	0	0	0	0	0	0
4/25/2024	11:30 PM	0	0	0	0	0	0	0	0	0	0	0	0	0
4/25/2024	11:45 PM	0	0	0	0	0	0	0	0	0	0	0	0	0

Bi-Directional Class Count || NB EB 15min

Columbia, SC

Marr Traffic DATA COLLECTION
www.marrtraffic.com

Site 59
I-20 E/Bound On-Ramp,
east of US-378 Sunset Blvd

Date
Tuesday, April 23, 2024

Lat/Long
34.010865°, -81.147520°

Weather
Fair
58°F

Click here for Detailed Weather

Click here for Map

0000 - 2400 (Weekday 24h Session) (04-23-2024)
NB EB 15min

	Eastbound (Movement 59.1)													15min	60min
Time	1	2	3	4	5	6	7	8	9	10	11	12	13	Total	Total
0000 - 0015	0	0	0	0	0	0	0	0	0	0	0	0	0	**0**	
0015 - 0030	0	0	0	0	0	0	0	0	0	0	0	0	0	**0**	
0030 - 0045	0	0	0	0	0	0	0	0	0	0	0	0	0	**0**	
0045 - 0100	0	0	0	0	0	0	0	0	0	0	0	0	0	**0**	**0**
0100 - 0115	0	0	0	0	0	0	0	0	0	0	0	0	0	**0**	
0115 - 0130	0	0	0	0	0	0	0	0	0	0	0	0	0	**0**	
0130 - 0145	0	0	0	0	0	0	0	0	0	0	0	0	0	**0**	
0145 - 0200	0	0	0	0	0	0	0	0	0	0	0	0	0	**0**	**0**
0200 - 0215	0	0	0	0	0	0	0	0	0	0	0	0	0	**0**	
0215 - 0230	0	0	0	0	0	0	0	0	0	0	0	0	0	**0**	
0230 - 0245	0	0	0	0	0	0	0	0	0	0	0	0	0	**0**	
0245 - 0300	0	0	0	0	0	0	0	0	0	0	0	0	0	**0**	**0**
0300 - 0315	0	0	0	0	0	0	0	0	0	0	0	0	0	**0**	
0315 - 0330	0	0	0	0	0	0	0	0	0	0	0	0	0	**0**	
0330 - 0345	0	0	0	0	0	0	0	0	0	0	0	0	0	**0**	
0345 - 0400	0	0	0	0	0	0	0	0	0	0	0	0	0	**0**	**0**
0400 - 0415	0	0	0	0	0	0	0	0	0	0	0	0	0	**0**	
0415 - 0430	0	0	0	0	0	0	0	0	0	0	0	0	0	**0**	
0430 - 0445	0	0	0	0	0	0	0	0	0	0	0	0	0	**0**	
0445 - 0500	0	0	0	0	0	0	0	0	0	0	0	0	0	**0**	**0**
0500 - 0515	0	0	0	0	0	0	0	0	0	0	0	0	0	**0**	
0515 - 0530	0	0	0	0	0	0	0	0	0	0	0	0	0	**0**	
0530 - 0545	0	0	0	0	0	0	0	0	0	0	0	0	0	**0**	
0545 - 0600	0	0	0	0	0	0	0	0	0	0	0	0	0	**0**	**0**
0600 - 0615	0	0	0	0	0	0	0	0	0	0	0	0	0	**0**	
0615 - 0630	0	0	0	0	0	0	0	0	0	0	0	0	0	**0**	
0630 - 0645	0	0	0	0	0	0	0	0	0	0	0	0	0	**0**	
0645 - 0700	0	0	0	0	0	0	0	0	0	0	0	0	0	**0**	**0**
0700 - 0715	0	0	0	0	0	0	0	0	0	0	0	0	0	**0**	
0715 - 0730	0	0	0	0	0	0	0	0	0	0	0	0	0	**0**	
0730 - 0745	0	0	0	0	0	0	0	0	0	0	0	0	0	**0**	
0745 - 0800	0	0	0	0	0	0	0	0	0	0	0	0	0	**0**	**0**
0800 - 0815	0	0	0	0	0	0	0	0	0	0	0	0	0	**0**	
0815 - 0830	0	0	0	0	0	0	0	0	0	0	0	0	0	**0**	
0830 - 0845	0	0	0	0	0	0	0	0	0	0	0	0	0	**0**	
0845 - 0900	0	0	0	0	0	0	0	0	0	0	0	0	0	**0**	**0**
0900 - 0915	0	0	0	0	0	0	0	0	0	0	0	0	0	**0**	
0915 - 0930	0	0	0	0	0	0	0	0	0	0	0	0	0	**0**	
0930 - 0945	0	0	0	0	0	0	0	0	0	0	0	0	0	**0**	
0945 - 1000	0	0	0	0	0	0	0	0	0	0	0	0	0	**0**	**0**
1000 - 1015	0	0	0	0	0	0	0	0	0	0	0	0	0	**0**	
1015 - 1030	0	0	0	0	0	0	0	0	0	0	0	0	0	**0**	
1030 - 1045	0	0	0	0	0	0	0	0	0	0	0	0	0	**0**	
1045 - 1100	0	0	0	0	0	0	0	0	0	0	0	0	0	**0**	**0**
1100 - 1115	0	0	0	0	0	0	0	0	0	0	0	0	0	**0**	
1115 - 1130	0	0	0	0	0	0	0	0	0	0	0	0	0	**0**	
1130 - 1145	0	0	0	0	0	0	0	0	0	0	0	0	0	**0**	
1145 - 1200	0	0	0	0	0	0	0	0	0	0	0	0	0	**0**	**0**
1200 - 1215	0	0	0	0	0	0	0	0	0	0	0	0	0	**0**	
1215 - 1230	0	0	0	0	0	0	0	0	0	0	0	0	0	**0**	
1230 - 1245	0	0	0	0	0	0	0	0	0	0	0	0	0	**0**	
1245 - 1300	0	0	0	0	0	0	0	0	0	0	0	0	0	**0**	**0**
1300 - 1315	0	0	0	0	0	0	0	0	0	0	0	0	0	**0**	
1315 - 1330	0	0	0	0	0	0	0	0	0	0	0	0	0	**0**	
1330 - 1345	0	0	0	0	0	0	0	0	0	0	0	0	0	**0**	
1345 - 1400	0	0	0	0	0	0	0	0	0	0	0	0	0	**0**	**0**
1400 - 1415	0	0	0	0	0	0	0	0	0	0	0	0	0	**0**	
1415 - 1430	0	0	0	0	0	0	0	0	0	0	0	0	0	**0**	
1430 - 1445	0	0	0	0	0	0	0	0	0	0	0	0	0	**0**	
1445 - 1500	0	0	0	0	0	0	0	0	0	0	0	0	0	**0**	**0**
1500 - 1515	0	0	0	0	0	0	0	0	0	0	0	0	0	**0**	
1515 - 1530	0	0	0	0	0	0	0	0	0	0	0	0	0	**0**	
1530 - 1545	0	0	0	0	0	0	0	0	0	0	0	0	0	**0**	
1545 - 1600	0	0	0	0	0	0	0	0	0	0	0	0	0	**0**	**0**
1600 - 1615	0	0	0	0	0	0	0	0	0	0	0	0	0	**0**	
1615 - 1630	0	0	0	0	0	0	0	0	0	0	0	0	0	**0**	
1630 - 1645	0	0	0	0	0	0	0	0	0	0	0	0	0	**0**	
1645 - 1700	0	0	0	0	0	0	0	0	0	0	0	0	0	**0**	**0**
1700 - 1715	0	0	0	0	0	0	0	0	0	0	0	0	0	**0**	
1715 - 1730	0	0	0	0	0	0	0	0	0	0	0	0	0	**0**	
1730 - 1745	0	0	0	0	0	0	0	0	0	0	0	0	0	**0**	
1745 - 1800	0	0	0	0	0	0	0	0	0	0	0	0	0	**0**	**0**
1800 - 1815	0	0	0	0	0	0	0	0	0	0	0	0	0	**0**	
1815 - 1830	0	0	0	0	0	0	0	0	0	0	0	0	0	**0**	
1830 - 1845	0	0	0	0	0	0	0	0	0	0	0	0	0	**0**	
1845 - 1900	0	0	0	0	0	0	0	0	0	0	0	0	0	**0**	**0**
1900 - 1915	0	61	6	0	0	0	0	0	0	1	0	0	0	**68**	
1915 - 1930	0	43	7	0	0	0	0	0	0	0	0	0	0	**50**	
1930 - 1945	0	31	4	0	0	0	0	0	0	0	1	0	0	**36**	
1945 - 2000	0	26	5	0	0	0	0	0	0	0	0	0	0	**31**	**185**
2000 - 2015	0	24	2	0	0	0	0	0	0	0	0	0	0	**26**	
2015 - 2030	0	39	14	0	1	0	0	0	0	0	0	0	0	**54**	
2030 - 2045	0	29	2	0	0	0	0	0	1	0	0	0	0	**32**	
2045 - 2100	0	23	1	0	0	0	0	0	0	0	0	0	0	**24**	**136**
2100 - 2115	0	23	0	0	1	0	0	0	0	0	1	0	0	**25**	
2115 - 2130	0	18	0	0	0	0	0	0	0	0	0	0	0	**18**	
2130 - 2145	0	15	2	0	0	0	0	0	0	0	0	0	0	**17**	
2145 - 2200	0	16	0	0	0	0	0	0	0	0	0	0	0	**16**	**76**
2200 - 2215	0	8	0	0	0	0	0	0	0	0	0	0	0	**8**	
2215 - 2230	0	18	0	0	0	0	0	0	0	0	1	0	0	**19**	
2230 - 2245	0	13	0	0	0	0	0	0	1	0	1	0	0	**15**	
2245 - 2300	0	17	0	0	0	0	0	0	0	0	0	0	0	**17**	**59**
2300 - 2315	0	7	0	0	0	0	0	0	0	0	1	0	0	**8**	
2315 - 2330	0	11	0	0	0	0	0	0	0	0	3	0	0	**14**	
2330 - 2345	0	8	0	0	0	0	0	0	0	0	1	0	0	**9**	
2345 - 0000	0	5	0	0	1	0	0	0	0	0	0	0	0	**6**	**37**

Session Total	0	435	43	0	3	0	0	0	2	1	9	0	0	**493**
Session Average	0.00	4.53	0.45	0.00	0.03	0.00	0.00	0.00	0.02	0.01	0.09	0.00	0.00	**5.14**
Session Percentage	0.00	88.24	8.72	0.00	0.61	0.00	0.00	0.00	0.41	0.20	1.83	0.00	0.00	

AM Peak Hour	-	-	-	-	-	-	-	-	-	-	-	-	-	-
AM Peak Volume	0	0	0	0	0	0	0	0	0	0	0	0	0	**0**

Noon Peak Hour	-	-	-	-	-	-	-	-	-	-	-	-	-	-
Noon Peak Volume	0	0	0	0	0	0	0	0	0	0	0	0	0	**0**

PM Peak Hour	-	1900 - 2000	1930 - 2030	-	1930 - 2030	-	-	-	1945 - 2045	1815 - 1915	1845 - 1945	-	-	**1900 - 2000**
PM Peak Volume	0	161	25	0	1	0	0	0	1	1	1	0	0	**185**

Site 59
I-20 E/Bound On-Ramp,
east of US-378 Sunset Blvd

Date
Wednesday, April 24, 2024

Lat/Long
34.010865°, -81.147520°

Weather
Fair
66°F

Click here for Detailed Weather

0000 - 2400 (Weekday 24h Session) (04-24-2024)
NB EB 15min

	Eastbound (Movement 59.1)													15min	60min
Time	1	2	3	4	5	6	7	8	9	10	11	12	13	Total	Total
0000 - 0015	0	7	0	0	0	0	0	0	1	0	1	0	0	**9**	
0015 - 0030	0	5	0	0	0	0	0	0	0	0	0	0	0	**5**	
0030 - 0045	0	7	0	0	0	0	0	0	0	0	1	0	0	**8**	
0045 - 0100	0	1	0	0	0	0	0	0	2	0	1	0	0	**4**	**26**
0100 - 0115	0	8	0	0	0	0	0	0	1	0	0	0	0	**9**	
0115 - 0130	0	3	0	0	0	0	0	0	0	0	2	0	0	**5**	
0130 - 0145	0	2	0	0	0	0	0	0	0	0	1	0	0	**3**	
0145 - 0200	0	5	0	0	0	0	0	0	0	0	2	0	0	**7**	**24**
0200 - 0215	0	0	0	0	0	0	0	0	1	0	3	0	0	**4**	
0215 - 0230	0	4	0	0	0	0	0	0	0	0	0	0	0	**4**	
0230 - 0245	0	0	0	0	1	0	0	0	0	0	3	0	0	**4**	
0245 - 0300	0	2	0	0	0	0	0	0	0	0	3	0	0	**5**	**17**
0300 - 0315	0	3	0	0	0	0	0	0	0	0	1	0	0	**4**	
0315 - 0330	0	1	0	0	0	0	0	0	1	0	0	0	0	**2**	
0330 - 0345	0	2	0	0	0	0	0	0	0	0	1	0	0	**3**	
0345 - 0400	0	5	0	0	0	0	0	0	0	0	0	0	0	**5**	**14**
0400 - 0415	0	4	0	0	1	0	0	0	0	0	1	0	0	**6**	
0415 - 0430	0	6	0	0	0	0	0	0	2	0	0	0	0	**8**	
0430 - 0445	0	5	0	0	0	0	0	0	0	0	1	0	0	**6**	
0445 - 0500	0	10	0	0	0	0	0	0	1	0	0	0	0	**11**	**31**
0500 - 0515	0	14	3	0	0	0	0	0	0	0	0	0	0	**17**	
0515 - 0530	0	20	0	0	1	0	0	0	0	0	1	0	0	**22**	
0530 - 0545	0	23	0	0	0	0	0	0	0	0	0	0	0	**23**	
0545 - 0600	0	28	1	0	1	0	0	0	1	0	0	0	0	**31**	**93**
0600 - 0615	0	34	2	0	2	0	0	0	0	0	0	0	0	**38**	
0615 - 0630	0	39	2	0	3	0	0	0	1	0	0	0	0	**45**	
0630 - 0645	0	73	10	0	2	0	0	2	0	0	1	0	0	**88**	
0645 - 0700	0	50	24	0	3	0	0	0	1	0	0	0	0	**78**	**249**
0700 - 0715	1	85	28	0	1	0	0	1	1	0	0	0	0	**117**	
0715 - 0730	0	101	28	0	1	0	0	1	0	0	0	0	0	**131**	
0730 - 0745	0	132	37	0	4	0	0	1	0	0	0	0	0	**174**	
0745 - 0800	2	144	32	0	1	0	0	0	0	0	0	0	0	**179**	**601**
0800 - 0815	0	118	32	0	4	0	0	1	0	1	0	0	0	**156**	
0815 - 0830	0	96	17	0	5	0	0	0	1	0	0	0	0	**119**	
0830 - 0845	0	83	26	0	5	0	0	1	1	0	0	0	0	**116**	
0845 - 0900	0	67	24	0	2	0	0	0	4	0	0	0	0	**97**	**488**
0900 - 0915	0	70	17	0	1	0	0	2	0	0	0	0	0	**90**	
0915 - 0930	0	81	22	0	2	0	0	1	3	0	0	0	0	**109**	
0930 - 0945	0	72	14	0	2	1	0	0	0	0	0	0	0	**89**	
0945 - 1000	0	77	6	0	4	0	0	0	1	0	0	0	0	**88**	**376**
1000 - 1015	0	60	17	0	0	0	0	2	1	0	0	0	0	**80**	
1015 - 1030	0	58	18	0	5	0	0	2	0	0	0	0	0	**83**	
1030 - 1045	0	68	20	0	5	0	0	0	0	0	0	0	0	**93**	
1045 - 1100	0	53	20	0	3	1	0	0	1	0	0	0	0	**78**	**334**
1100 - 1115	0	63	23	0	2	0	0	0	2	1	0	0	0	**91**	
1115 - 1130	0	67	11	0	1	0	0	0	0	0	0	0	0	**79**	
1130 - 1145	2	64	24	0	2	1	0	0	1	0	0	0	0	**94**	
1145 - 1200	1	54	19	0	3	1	0	0	2	0	0	0	0	**80**	**344**
1200 - 1215	1	69	17	0	0	0	0	0	1	0	0	0	0	**88**	
1215 - 1230	1	69	19	0	3	0	0	0	0	0	0	0	0	**92**	
1230 - 1245	0	69	20	0	0	0	0	0	1	0	0	0	0	**90**	
1245 - 1300	0	57	20	0	0	0	0	0	0	0	0	0	0	**77**	**347**
1300 - 1315	0	73	26	0	3	0	0	0	0	0	0	0	0	**102**	
1315 - 1330	0	51	17	0	3	1	0	0	1	0	0	0	0	**73**	
1330 - 1345	0	74	19	0	4	1	0	0	0	0	0	0	0	**98**	
1345 - 1400	0	64	23	0	1	0	0	0	0	0	0	0	0	**88**	**361**
1400 - 1415	1	87	24	1	0	0	0	0	0	0	0	0	0	**113**	
1415 - 1430	1	89	13	0	1	0	0	0	0	0	0	0	0	**104**	
1430 - 1445	0	73	21	0	2	0	0	0	2	0	0	0	0	**98**	
1445 - 1500	0	87	16	2	2	0	0	0	0	0	0	0	0	**107**	**422**
1500 - 1515	0	87	25	0	4	0	0	0	0	0	0	0	0	**116**	
1515 - 1530	0	83	19	2	1	1	0	0	0	0	0	0	0	**106**	
1530 - 1545	0	119	25	1	1	0	0	0	0	0	0	0	0	**146**	
1545 - 1600	1	111	28	2	0	0	0	0	1	0	0	0	0	**143**	**511**
1600 - 1615	0	117	30	0	2	0	0	0	0	0	0	0	0	**149**	
1615 - 1630	0	99	23	0	3	0	0	1	1	0	0	0	0	**127**	
1630 - 1645	0	116	17	0	1	0	0	0	1	0	0	0	0	**135**	
1645 - 1700	0	118	22	2	1	0	0	0	1	0	0	0	0	**144**	**555**
1700 - 1715	0	129	30	0	0	0	0	0	1	0	0	0	0	**160**	
1715 - 1730	0	115	27	0	1	0	0	0	0	0	0	0	0	**143**	
1730 - 1745	0	113	21	0	1	0	0	0	0	0	0	0	0	**135**	
1745 - 1800	2	88	14	0	0	0	0	0	0	0	0	0	0	**104**	**542**
1800 - 1815	0	76	14	0	0	0	0	0	0	1	0	0	0	**91**	
1815 - 1830	0	68	11	0	0	1	0	0	2	0	0	0	0	**82**	
1830 - 1845	0	52	4	0	0	4	0	0	0	0	0	0	0	**60**	
1845 - 1900	0	55	7	0	0	1	0	0	0	0	0	0	0	**63**	**296**
1900 - 1915	0	41	9	0	3	0	0	0	0	0	0	0	0	**53**	
1915 - 1930	0	35	11	0	0	0	0	0	0	0	0	0	0	**46**	
1930 - 1945	0	35	7	0	0	0	0	0	1	0	1	0	0	**44**	
1945 - 2000	0	27	2	1	0	0	0	0	0	0	0	0	0	**30**	**173**
2000 - 2015	0	23	3	0	0	1	0	0	0	0	1	0	0	**28**	
2015 - 2030	0	31	7	0	0	0	0	0	0	0	0	0	0	**38**	
2030 - 2045	1	34	7	0	0	0	0	0	0	0	0	0	0	**42**	
2045 - 2100	0	16	2	0	0	0	0	0	0	0	1	0	0	**19**	**127**
2100 - 2115	0	22	2	0	0	0	0	0	0	0	2	0	0	**26**	
2115 - 2130	0	16	3	0	0	0	0	0	0	0	1	0	0	**20**	
2130 - 2145	0	17	6	0	0	0	0	0	0	0	0	0	0	**23**	
2145 - 2200	0	9	0	0	0	0	0	0	1	0	0	0	0	**10**	**79**
2200 - 2215	0	21	0	0	0	0	0	0	0	0	1	0	0	**22**	
2215 - 2230	0	14	1	0	0	0	0	0	0	0	2	0	0	**17**	
2230 - 2245	0	19	1	0	0	0	0	0	0	0	0	0	0	**20**	
2245 - 2300	0	13	0	0	0	0	0	0	0	0	1	0	0	**14**	**73**
2300 - 2315	0	9	2	0	1	0	0	0	0	0	0	0	0	**12**	
2315 - 2330	0	8	0	0	0	0	0	0	0	0	0	0	0	**8**	
2330 - 2345	0	14	0	0	0	0	0	0	0	0	1	0	0	**15**	
2345 - 0000	0	5	1	0	0	0	0	0	2	0	2	0	0	**10**	**45**

Session Total	14	4791	1093	11	105	14	0	15	46	3	36	0	0	**6128**
Session Average	0.15	49.91	11.39	0.11	1.09	0.15	0.00	0.16	0.48	0.03	0.38	0.00	0.00	**63.83**
Session Percentage	0.23	78.18	17.84	0.18	1.71	0.23	0.00	0.24	0.75	0.05	0.59	0.00	0.00	

AM Peak Hour	0700 - 0800	0715 - 0815	0715 - 0815	-	0800 - 0900	0845 - 0945	-	0630 - 0730	0830 - 0930	0715 - 0815	0500 - 0600	-	-	**0715 - 0815**
AM Peak Volume	3	495	129	0	16	1	0	4	8	1	1	0	0	**640**

Noon Peak Hour	1130 - 1230	1445 - 1545	1215 - 1315	1445 - 1545	1015 - 1115	1045 - 1145	-	1000 - 1100	1100 - 1200	1015 - 1115	-	-	-	**1445 - 1545**
Noon Peak Volume	5	376	85	5	15	2	0	4	5	1	0	0	0	**475**

PM Peak Hour	1700 - 1800	1630 - 1730	1530 - 1630	1500 - 1600	1600 - 1700	1800 - 1900	-	1530 - 1630	1615 - 1715	1715 - 1815	1915 - 2015	-	-	**1630 - 1730**
PM Peak Volume	2	478	106	5	7	6	0	1	4	1	2	0	0	**582**

Site 59
I-20 E/Bound On-Ramp,
east of US-378 Sunset Blvd

Date
Thursday, April 25, 2024

Lat/Long
34.010865°, -81.147520°

Weather
Fair
67°F

Click here for Detailed Weather

0000 - 2400 (Weekday 24h Session) (04-25-2024)
NB EB 15min

	Eastbound (Movement 59.1)													15min	60min
TIME	1	2	3	4	5	6	7	8	9	10	11	12	13	Total	Total
0000 - 0015	0	4	0	0	0	0	0	0	0	0	0	0	0	**4**	
0015 - 0030	0	4	1	0	0	0	0	0	1	0	0	0	0	**6**	
0030 - 0045	0	3	0	0	0	0	0	0	1	0	0	0	0	**4**	
0045 - 0100	0	3	0	0	0	0	0	0	0	0	0	0	0	**3**	**17**
0100 - 0115	0	2	1	0	0	0	0	0	0	0	3	0	0	**6**	
0115 - 0130	0	3	0	0	1	0	0	0	0	0	4	0	0	**8**	
0130 - 0145	0	0	0	0	0	0	0	0	0	0	2	0	0	**2**	
0145 - 0200	0	2	1	0	0	0	0	0	0	0	1	0	0	**4**	**20**
0200 - 0215	0	1	0	0	0	0	0	0	0	0	1	0	0	**2**	
0215 - 0230	0	1	1	0	0	0	0	0	0	0	3	0	0	**5**	
0230 - 0245	1	1	0	0	0	0	0	0	0	0	1	0	0	**3**	
0245 - 0300	0	4	1	0	0	0	0	0	0	0	1	0	0	**6**	**16**
0300 - 0315	0	2	1	0	0	0	0	0	0	0	0	0	0	**3**	
0315 - 0330	0	2	1	0	0	0	0	0	1	0	2	0	0	**6**	
0330 - 0345	0	5	1	0	0	0	0	0	2	0	2	0	0	**10**	
0345 - 0400	0	3	0	0	2	0	0	0	1	0	1	0	0	**7**	**26**
0400 - 0415	0	3	3	0	0	0	0	0	0	0	0	0	0	**6**	
0415 - 0430	0	2	1	0	0	0	0	0	0	0	0	0	0	**3**	
0430 - 0445	0	6	0	0	0	0	0	0	0	0	1	0	0	**7**	
0445 - 0500	0	8	2	0	0	0	0	0	0	0	1	0	0	**11**	**27**
0500 - 0515	0	10	6	0	2	0	0	0	0	0	0	0	0	**18**	
0515 - 0530	0	13	4	0	1	0	0	0	0	0	0	0	0	**18**	
0530 - 0545	0	15	5	0	1	0	0	0	0	0	1	0	0	**22**	
0545 - 0600	0	25	4	0	1	1	0	0	0	0	0	0	0	**31**	**89**
0600 - 0615	0	20	2	1	1	0	0	0	0	1	0	0	0	**25**	
0615 - 0630	0	42	7	5	0	1	0	0	1	0	1	0	0	**57**	
0630 - 0645	0	56	16	1	1	0	0	0	2	0	0	0	0	**76**	
0645 - 0700	0	48	24	0	3	0	0	0	1	0	0	0	0	**76**	**234**
0700 - 0715	0	76	26	0	0	0	0	0	1	0	0	0	0	**103**	
0715 - 0730	0	117	24	0	3	0	0	0	0	0	0	0	0	**144**	
0730 - 0745	0	121	28	0	3	0	0	2	0	0	0	0	0	**154**	
0745 - 0800	0	138	37	0	2	1	0	2	0	0	0	0	0	**180**	**581**
0800 - 0815	2	118	28	0	2	0	0	0	0	0	0	0	0	**150**	
0815 - 0830	0	106	18	0	4	0	0	0	0	0	0	0	0	**128**	
0830 - 0845	1	82	27	1	4	0	0	2	0	0	0	0	0	**117**	
0845 - 0900	0	70	18	0	3	2	0	2	0	0	0	0	0	**95**	**490**
0900 - 0915	0	82	18	0	5	1	0	1	1	0	0	0	0	**108**	
0915 - 0930	0	64	18	0	3	1	0	2	1	0	0	0	0	**89**	
0930 - 0945	2	72	20	0	4	0	0	0	1	0	0	0	0	**99**	
0945 - 1000	0	68	19	0	0	1	0	1	2	0	0	0	0	**91**	**387**
1000 - 1015	0	69	26	0	3	0	0	1	0	0	0	0	0	**99**	
1015 - 1030	0	59	21	0	2	1	0	0	0	0	0	0	0	**83**	
1030 - 1045	0	84	24	0	3	2	0	0	1	0	0	0	0	**114**	
1045 - 1100	0	56	16	0	3	1	0	0	0	0	0	0	0	**76**	**372**
1100 - 1115	0	59	17	0	1	1	0	0	0	0	0	0	0	**78**	
1115 - 1130	1	51	15	0	0	0	0	0	0	0	0	0	0	**67**	
1130 - 1145	1	59	16	0	1	1	0	1	2	0	0	0	0	**81**	
1145 - 1200	0	60	16	0	1	2	0	2	0	0	0	0	0	**81**	**307**
1200 - 1215	0	68	17	0	0	0	0	0	1	0	0	0	0	**86**	
1215 - 1230	0	76	18	0	1	1	0	1	2	0	0	0	0	**99**	
1230 - 1245	0	69	19	0	2	0	0	0	0	0	0	0	0	**90**	
1245 - 1300	0	53	14	0	4	0	0	0	0	0	0	0	0	**71**	**346**
1300 - 1315	1	60	13	0	3	0	0	0	0	0	0	0	0	**77**	
1315 - 1330	0	52	15	0	0	0	0	0	1	0	0	0	0	**68**	
1330 - 1345	0	78	15	0	4	1	0	0	0	0	0	0	0	**98**	
1345 - 1400	1	60	17	0	2	1	0	0	1	0	0	0	0	**82**	**325**
1400 - 1415	0	63	10	1	2	0	0	1	1	0	0	0	0	**78**	
1415 - 1430	0	69	11	0	7	0	0	2	0	0	0	0	0	**89**	
1430 - 1445	0	79	17	0	5	1	0	0	1	0	0	0	0	**103**	
1445 - 1500	0	72	17	0	1	1	0	0	1	0	0	0	0	**92**	**362**
1500 - 1515	0	73	31	0	5	1	0	0	0	0	0	0	0	**110**	
1515 - 1530	0	76	12	0	2	1	0	0	1	0	0	0	0	**92**	
1530 - 1545	0	98	12	0	1	2	0	0	1	0	0	0	0	**114**	
1545 - 1600	0	107	24	0	1	1	0	0	1	0	0	0	0	**134**	**450**
1600 - 1615	1	128	26	0	2	0	0	0	2	0	0	0	0	**159**	
1615 - 1630	0	149	29	0	2	1	0	1	1	0	0	0	0	**183**	
1630 - 1645	0	150	19	0	1	0	0	0	1	0	0	0	0	**171**	
1645 - 1700	1	115	13	0	2	0	0	0	1	0	0	0	0	**132**	**645**
1700 - 1715	0	127	22	0	0	0	0	0	0	0	0	0	0	**149**	
1715 - 1730	1	122	23	0	1	0	0	0	1	0	0	0	0	**148**	
1730 - 1745	0	126	23	0	0	0	0	0	0	0	0	0	0	**149**	
1745 - 1800	0	112	21	0	0	0	0	0	1	0	0	0	0	**134**	**580**
1800 - 1815	0	86	27	0	0	1	0	0	2	0	0	0	0	**116**	
1815 - 1830	0	54	16	0	2	0	0	0	0	0	0	0	0	**72**	
1830 - 1845	0	52	16	0	1	0	0	0	0	0	0	0	0	**69**	
1845 - 1900	0	35	9	0	0	0	0	0	0	0	0	0	0	**44**	**301**
1900 - 1915	0	0	0	0	0	0	0	0	0	0	0	0	0	**0**	
1915 - 1930	0	0	0	0	0	0	0	0	0	0	0	0	0	**0**	
1930 - 1945	0	0	0	0	0	0	0	0	0	0	0	0	0	**0**	
1945 - 2000	0	0	0	0	0	0	0	0	0	0	0	0	0	**0**	**0**
2000 - 2015	0	0	0	0	0	0	0	0	0	0	0	0	0	**0**	
2015 - 2030	0	0	0	0	0	0	0	0	0	0	0	0	0	**0**	
2030 - 2045	0	0	0	0	0	0	0	0	0	0	0	0	0	**0**	
2045 - 2100	0	0	0	0	0	0	0	0	0	0	0	0	0	**0**	**0**
2100 - 2115	0	0	0	0	0	0	0	0	0	0	0	0	0	**0**	
2115 - 2130	0	0	0	0	0	0	0	0	0	0	0	0	0	**0**	
2130 - 2145	0	0	0	0	0	0	0	0	0	0	0	0	0	**0**	
2145 - 2200	0	0	0	0	0	0	0	0	0	0	0	0	0	**0**	**0**
2200 - 2215	0	0	0	0	0	0	0	0	0	0	0	0	0	**0**	
2215 - 2230	0	0	0	0	0	0	0	0	0	0	0	0	0	**0**	
2230 - 2245	0	0	0	0	0	0	0	0	0	0	0	0	0	**0**	
2245 - 2300	0	0	0	0	0	0	0	0	0	0	0	0	0	**0**	**0**
2300 - 2315	0	0	0	0	0	0	0	0	0	0	0	0	0	**0**	
2315 - 2330	0	0	0	0	0	0	0	0	0	0	0	0	0	**0**	
2330 - 2345	0	0	0	0	0	0	0	0	0	0	0	0	0	**0**	
2345 - 0000	0	0	0	0	0	0	0	0	0	0	0	0	0	**0**	**0**

Session Total	13	4308	1020	9	111	28	0	21	39	1	25	0	0	**5575**
Session Average	0.14	44.88	10.63	0.09	1.16	0.29	0.00	0.22	0.41	0.01	0.26	0.00	0.00	**58.07**
Session Percentage	0.23	77.27	18.30	0.16	1.99	0.50	0.00	0.38	0.70	0.02	0.45	0.00	0.00	

AM Peak Hour	0745 - 0845	0715 - 0815	0715 - 0815	0545 - 0645	0815 - 0915	0830 - 0930	-	0830 - 0930	0615 - 0715	0515 - 0615	0530 - 0630	-	-	**0715 - 0815**
AM Peak Hour Volume	3	494	117	7	16	4	0	7	5	1	2	0	0	**628**

Noon Peak Hour	1045 - 1145	1445 - 1545	1000 - 1100	1315 - 1415	1415 - 1515	1015 - 1115	-	1130 - 1230	1130 - 1230	-	-	-	-	**1445 - 1545**
Noon Peak Hour Volume	2	319	87	1	18	5	0	4	5	0	0	0	0	**408**

PM Peak Hour	1600 - 1700	1600 - 1700	1545 - 1645	-	1500 - 1600	1500 - 1600	-	1530 - 1630	1515 - 1615	-	-	-	-	**1545 - 1645**
PM Peak Hour Volume	2	542	98	0	9	5	0	1	5	0	0	0	0	**647**

Bi-Directional Class Count || NB EB Average 15min

Columbia, SC

Marr Traffic DATA COLLECTION
www.marrtraffic.com

Site 59
I-20 E/Bound On-Ramp,
east of US-378 Sunset Blvd

Date
Tuesday, April 23, 2024

Lat/Long
34.010865°, -81.147520°

Weather
Fair
58°F

0000 - 2400 (Weekday 24h Session) (All Dates)
NB EB Average 15min

	NB EB Average 15min													15min	60min
Time	1	2	3	4	5	6	7	8	9	10	11	12	13	Total	Total
0000 - 0015	0	4	0	0	0	0	0	0	0	0	0	0	0	**4**	
0015 - 0030	0	3	0	0	0	0	0	0	0	0	0	0	0	**4**	
0030 - 0045	0	3	0	0	0	0	0	0	0	0	0	0	0	**4**	
0045 - 0100	0	1	0	0	0	0	0	0	1	0	0	0	0	**2**	**14**
0100 - 0115	0	3	0	0	0	0	0	0	0	0	1	0	0	**5**	
0115 - 0130	0	2	0	0	0	0	0	0	0	0	2	0	0	**4**	
0130 - 0145	0	1	0	0	0	0	0	0	0	0	1	0	0	**2**	
0145 - 0200	0	2	0	0	0	0	0	0	0	0	1	0	0	**4**	**15**
0200 - 0215	0	0	0	0	0	0	0	0	0	0	1	0	0	**2**	
0215 - 0230	0	2	0	0	0	0	0	0	0	0	1	0	0	**3**	
0230 - 0245	0	0	0	0	0	0	0	0	0	0	1	0	0	**2**	
0245 - 0300	0	2	0	0	0	0	0	0	0	0	1	0	0	**4**	**11**
0300 - 0315	0	2	0	0	0	0	0	0	0	0	0	0	0	**2**	
0315 - 0330	0	1	0	0	0	0	0	0	1	0	1	0	0	**3**	
0330 - 0345	0	2	0	0	0	0	0	0	1	0	1	0	0	**4**	
0345 - 0400	0	3	0	0	1	0	0	0	0	0	0	0	0	**4**	**13**
0400 - 0415	0	2	1	0	0	0	0	0	0	0	0	0	0	**4**	
0415 - 0430	0	3	0	0	0	0	0	0	1	0	0	0	0	**4**	
0430 - 0445	0	4	0	0	0	0	0	0	0	0	1	0	0	**4**	
0445 - 0500	0	6	1	0	0	0	0	0	0	0	0	0	0	**7**	**19**
0500 - 0515	0	8	3	0	1	0	0	0	0	0	0	0	0	**12**	
0515 - 0530	0	11	1	0	1	0	0	0	0	0	0	0	0	**13**	
0530 - 0545	0	13	2	0	0	0	0	0	0	0	0	0	0	**15**	
0545 - 0600	0	18	2	0	1	0	0	0	0	0	0	0	0	**21**	**61**
0600 - 0615	0	18	1	0	1	0	0	0	0	0	0	0	0	**21**	
0615 - 0630	0	27	3	2	1	0	0	0	1	0	0	0	0	**34**	
0630 - 0645	0	43	9	0	1	0	0	1	1	0	0	0	0	**55**	
0645 - 0700	0	33	16	0	2	0	0	0	1	0	0	0	0	**51**	**161**
0700 - 0715	0	54	18	0	0	0	0	0	1	0	0	0	0	**73**	
0715 - 0730	0	73	17	0	1	0	0	0	0	0	0	0	0	**92**	
0730 - 0745	0	84	22	0	2	0	0	1	0	0	0	0	0	**109**	
0745 - 0800	1	94	23	0	1	0	0	1	0	0	0	0	0	**120**	**394**
0800 - 0815	1	79	20	0	2	0	0	0	0	0	0	0	0	**102**	
0815 - 0830	0	67	12	0	3	0	0	0	0	0	0	0	0	**82**	
0830 - 0845	0	55	18	0	3	0	0	1	0	0	0	0	0	**78**	
0845 - 0900	0	46	14	0	2	1	0	1	1	0	0	0	0	**64**	**326**
0900 - 0915	0	51	12	0	2	0	0	1	0	0	0	0	0	**66**	
0915 - 0930	0	48	13	0	2	0	0	1	1	0	0	0	0	**66**	
0930 - 0945	1	48	11	0	2	0	0	0	0	0	0	0	0	**63**	
0945 - 1000	0	48	8	0	1	0	0	0	1	0	0	0	0	**60**	**254**
1000 - 1015	0	43	14	0	1	0	0	1	0	0	0	0	0	**60**	
1015 - 1030	0	39	13	0	2	0	0	1	0	0	0	0	0	**55**	
1030 - 1045	0	51	15	0	3	1	0	0	0	0	0	0	0	**69**	
1045 - 1100	0	36	12	0	2	1	0	0	0	0	0	0	0	**51**	**235**
1100 - 1115	0	41	13	0	1	0	0	0	1	0	0	0	0	**56**	
1115 - 1130	0	39	9	0	0	0	0	0	0	0	0	0	0	**49**	
1130 - 1145	1	41	13	0	1	1	0	0	1	0	0	0	0	**58**	
1145 - 1200	0	38	12	0	1	1	0	1	1	0	0	0	0	**54**	**217**
1200 - 1215	0	46	11	0	0	0	0	0	1	0	0	0	0	**58**	
1215 - 1230	0	48	12	0	1	0	0	0	1	0	0	0	0	**64**	
1230 - 1245	0	46	13	0	1	0	0	0	0	0	0	0	0	**60**	
1245 - 1300	0	37	11	0	1	0	0	0	0	0	0	0	0	**49**	**231**
1300 - 1315	0	44	13	0	2	0	0	0	0	0	0	0	0	**60**	
1315 - 1330	0	34	11	0	1	0	0	0	1	0	0	0	0	**47**	
1330 - 1345	0	51	11	0	3	1	0	0	0	0	0	0	0	**65**	
1345 - 1400	0	41	13	0	1	0	0	0	0	0	0	0	0	**57**	**229**
1400 - 1415	0	50	11	1	1	0	0	0	0	0	0	0	0	**64**	
1415 - 1430	0	53	8	0	3	0	0	1	0	0	0	0	0	**64**	
1430 - 1445	0	51	13	0	2	0	0	0	1	0	0	0	0	**67**	
1445 - 1500	0	53	11	1	1	0	0	0	0	0	0	0	0	**66**	**261**
1500 - 1515	0	53	19	0	3	0	0	0	0	0	0	0	0	**75**	
1515 - 1530	0	53	10	1	1	1	0	0	0	0	0	0	0	**66**	
1530 - 1545	0	72	12	0	1	1	0	0	0	0	0	0	0	**87**	
1545 - 1600	0	73	17	1	0	0	0	0	1	0	0	0	0	**92**	**320**
1600 - 1615	0	82	19	0	1	0	0	0	1	0	0	0	0	**103**	
1615 - 1630	0	83	17	0	2	0	0	1	1	0	0	0	0	**103**	
1630 - 1645	0	89	12	0	1	0	0	0	1	0	0	0	0	**102**	
1645 - 1700	0	78	12	1	1	0	0	0	1	0	0	0	0	**92**	**400**
1700 - 1715	0	85	17	0	0	0	0	0	0	0	0	0	0	**103**	
1715 - 1730	0	79	17	0	1	0	0	0	0	0	0	0	0	**97**	
1730 - 1745	0	80	15	0	0	0	0	0	0	0	0	0	0	**95**	
1745 - 1800	1	67	12	0	0	0	0	0	0	0	0	0	0	**79**	**374**
1800 - 1815	0	54	14	0	0	0	0	0	1	0	0	0	0	**69**	
1815 - 1830	0	41	9	0	1	0	0	0	1	0	0	0	0	**51**	
1830 - 1845	0	35	7	0	0	1	0	0	0	0	0	0	0	**43**	
1845 - 1900	0	30	5	0	0	0	0	0	0	0	0	0	0	**36**	**199**
1900 - 1915	0	34	5	0	1	0	0	0	0	0	0	0	0	**40**	
1915 - 1930	0	26	6	0	0	0	0	0	0	0	0	0	0	**32**	
1930 - 1945	0	22	4	0	0	0	0	0	0	0	1	0	0	**27**	
1945 - 2000	0	18	2	0	0	0	0	0	0	0	0	0	0	**20**	**119**
2000 - 2015	0	16	2	0	0	0	0	0	0	0	0	0	0	**18**	
2015 - 2030	0	23	7	0	0	0	0	0	0	0	0	0	0	**31**	
2030 - 2045	0	21	3	0	0	0	0	0	0	0	0	0	0	**25**	
2045 - 2100	0	13	1	0	0	0	0	0	0	0	0	0	0	**14**	**88**
2100 - 2115	0	15	1	0	0	0	0	0	0	0	1	0	0	**17**	
2115 - 2130	0	11	1	0	0	0	0	0	0	0	0	0	0	**13**	
2130 - 2145	0	11	3	0	0	0	0	0	0	0	0	0	0	**13**	
2145 - 2200	0	8	0	0	0	0	0	0	0	0	0	0	0	**9**	**52**
2200 - 2215	0	10	0	0	0	0	0	0	0	0	0	0	0	**10**	
2215 - 2230	0	11	0	0	0	0	0	0	0	0	1	0	0	**12**	
2230 - 2245	0	11	0	0	0	0	0	0	0	0	0	0	0	**12**	
2245 - 2300	0	10	0	0	0	0	0	0	0	0	0	0	0	**10**	**44**
2300 - 2315	0	5	1	0	0	0	0	0	0	0	0	0	0	**7**	
2315 - 2330	0	6	0	0	0	0	0	0	0	0	1	0	0	**7**	
2330 - 2345	0	7	0	0	0	0	0	0	0	0	1	0	0	**8**	
2345 - 0000	0	3	0	0	0	0	0	0	1	0	1	0	0	**5**	**27**

Session Total	9	3178	719	7	73	14	0	12	29	2	23	0	0	**4065**
Session Average	0.09	33.10	7.49	0.07	0.76	0.15	0.00	0.13	0.30	0.02	0.24	0.00	0.00	**42.35**
Session Percentage	0.22	78.17	17.68	0.16	1.80	0.34	0.00	0.30	0.71	0.04	0.57	0.00	0.00	

AM Peak Hour	0745 - 0845	0715 - 0815	0715 - 0815	0545 - 0645	0815 - 0915	0845 - 0945	-	0830 - 0930	0845 - 0945	0515 - 0615	0500 - 0600	-	-	**0715 - 0815**
AM Peak Volume	2	330	82	2	10	2	0	4	3	0	1	0	0	**423**

Noon Peak Hour	1115 - 1215	1445 - 1545	1000 - 1100	1445 - 1545	1415 - 1515	1100 - 1200	-	1000 - 1100	1130 - 1230	1015 - 1115	-	-	-	**1445 - 1545**
Noon Peak Volume	2	232	54	2	9	2	0	2	3	0	0	0	0	**294**

PM Peak Hour	1700 - 1800	1615 - 1715	1530 - 1630	1500 - 1600	1500 - 1600	1800 - 1900	-	1530 - 1630	1545 - 1645	1715 - 1815	1915 - 2015	-	-	**1545 - 1645**
PM Peak Volume	1	334	66	2	5	2	0	1	3	0	1	0	0	**400**

Bi-Directional Class Count || Volume Summary 15min

Columbia, SC

Marr Traffic DATA COLLECTION

www.marrtraffic.com

Site 59

I-20 E/Bound On-Ramp,
east of US-378 Sunset Blvd

Date

Tuesday, April 23, 2024

Lat/Long

34.010865°, -81.147520°

Weather

Fair
58°F

Click here for Detailed Weather

0000 - 2400 (Weekday 24h Session) (04-23-2024)

Volume Summary 15min

TIME	Volume Summary 15min EB	WB	15min Total	60min Total
0000 - 0015	0	0	**0**	
0015 - 0030	0	0	**0**	
0030 - 0045	0	0	**0**	
0045 - 0100	0	0	**0**	**0**
0100 - 0115	0	0	**0**	
0115 - 0130	0	0	**0**	
0130 - 0145	0	0	**0**	
0145 - 0200	0	0	**0**	**0**
0200 - 0215	0	0	**0**	
0215 - 0230	0	0	**0**	
0230 - 0245	0	0	**0**	
0245 - 0300	0	0	**0**	**0**
0300 - 0315	0	0	**0**	
0315 - 0330	0	0	**0**	
0330 - 0345	0	0	**0**	
0345 - 0400	0	0	**0**	**0**
0400 - 0415	0	0	**0**	
0415 - 0430	0	0	**0**	
0430 - 0445	0	0	**0**	
0445 - 0500	0	0	**0**	**0**
0500 - 0515	0	0	**0**	
0515 - 0530	0	0	**0**	
0530 - 0545	0	0	**0**	
0545 - 0600	0	0	**0**	**0**
0600 - 0615	0	0	**0**	
0615 - 0630	0	0	**0**	
0630 - 0645	0	0	**0**	
0645 - 0700	0	0	**0**	**0**
0700 - 0715	0	0	**0**	
0715 - 0730	0	0	**0**	
0730 - 0745	0	0	**0**	
0745 - 0800	0	0	**0**	**0**
0800 - 0815	0	0	**0**	
0815 - 0830	0	0	**0**	
0830 - 0845	0	0	**0**	
0845 - 0900	0	0	**0**	**0**
0900 - 0915	0	0	**0**	
0915 - 0930	0	0	**0**	
0930 - 0945	0	0	**0**	
0945 - 1000	0	0	**0**	**0**
1000 - 1015	0	0	**0**	
1015 - 1030	0	0	**0**	
1030 - 1045	0	0	**0**	
1045 - 1100	0	0	**0**	**0**
1100 - 1115	0	0	**0**	
1115 - 1130	0	0	**0**	
1130 - 1145	0	0	**0**	
1145 - 1200	0	0	**0**	**0**

Time	Volume Summary 15min EB	WB	15min Total	60min Total
1200 - 1215	0	0	**0**	
1215 - 1230	0	0	**0**	
1230 - 1245	0	0	**0**	
1245 - 1300	0	0	**0**	**0**
1300 - 1315	0	0	**0**	
1315 - 1330	0	0	**0**	
1330 - 1345	0	0	**0**	
1345 - 1400	0	0	**0**	**0**
1400 - 1415	0	0	**0**	
1415 - 1430	0	0	**0**	
1430 - 1445	0	0	**0**	
1445 - 1500	0	0	**0**	**0**
1500 - 1515	0	0	**0**	
1515 - 1530	0	0	**0**	
1530 - 1545	0	0	**0**	
1545 - 1600	0	0	**0**	**0**
1600 - 1615	0	0	**0**	
1615 - 1630	0	0	**0**	
1630 - 1645	0	0	**0**	
1645 - 1700	0	0	**0**	**0**
1700 - 1715	0	0	**0**	
1715 - 1730	0	0	**0**	
1730 - 1745	0	0	**0**	
1745 - 1800	0	0	**0**	**0**
1800 - 1815	0	0	**0**	
1815 - 1830	0	0	**0**	
1830 - 1845	0	0	**0**	
1845 - 1900	0	0	**0**	**0**
1900 - 1915	68	0	**68**	
1915 - 1930	50	0	**50**	
1930 - 1945	36	0	**36**	
1945 - 2000	31	0	**31**	**185**
2000 - 2015	26	0	**26**	
2015 - 2030	54	0	**54**	
2030 - 2045	32	0	**32**	
2045 - 2100	24	0	**24**	**136**
2100 - 2115	25	0	**25**	
2115 - 2130	18	0	**18**	
2130 - 2145	17	0	**17**	
2145 - 2200	16	0	**16**	**76**
2200 - 2215	8	0	**8**	
2215 - 2230	19	0	**19**	
2230 - 2245	15	0	**15**	
2245 - 2300	17	0	**17**	**59**
2300 - 2315	8	0	**8**	
2315 - 2330	14	0	**14**	
2330 - 2345	9	0	**9**	
2345 - 0000	6	0	**6**	**37**

Session Total	493	0	**493**
Session Average	5.14	0.00	**5.14**
Session Percentage	100.00	0.00	

Site 59
I-20 E/Bound On-Ramp,
east of US-378 Sunset Blvd

Date
Wednesday, April 24, 2024

Lat/Long
34.010865°, -81.147520°

Weather
Fair
66°F

Click here for Detailed Weather

0000 - 2400 (Weekday 24h Session) (04-24-2024)

Volume Summary 15min

TIME	Volume Summary 15min EB	WB	15min Total	60min Total
0000 - 0015	9	0	**9**	
0015 - 0030	5	0	**5**	
0030 - 0045	8	0	**8**	
0045 - 0100	4	0	**4**	**26**
0100 - 0115	9	0	**9**	
0115 - 0130	5	0	**5**	
0130 - 0145	3	0	**3**	
0145 - 0200	7	0	**7**	**24**
0200 - 0215	4	0	**4**	
0215 - 0230	4	0	**4**	
0230 - 0245	4	0	**4**	
0245 - 0300	5	0	**5**	**17**
0300 - 0315	4	0	**4**	
0315 - 0330	2	0	**2**	
0330 - 0345	3	0	**3**	
0345 - 0400	5	0	**5**	**14**
0400 - 0415	6	0	**6**	
0415 - 0430	8	0	**8**	
0430 - 0445	6	0	**6**	
0445 - 0500	11	0	**11**	**31**
0500 - 0515	17	0	**17**	
0515 - 0530	22	0	**22**	
0530 - 0545	23	0	**23**	
0545 - 0600	31	0	**31**	**93**
0600 - 0615	38	0	**38**	
0615 - 0630	45	0	**45**	
0630 - 0645	88	0	**88**	
0645 - 0700	78	0	**78**	**249**
0700 - 0715	117	0	**117**	
0715 - 0730	131	0	**131**	
0730 - 0745	174	0	**174**	
0745 - 0800	179	0	**179**	**601**
0800 - 0815	156	0	**156**	
0815 - 0830	119	0	**119**	
0830 - 0845	116	0	**116**	
0845 - 0900	97	0	**97**	**488**
0900 - 0915	90	0	**90**	
0915 - 0930	109	0	**109**	
0930 - 0945	89	0	**89**	
0945 - 1000	88	0	**88**	**376**
1000 - 1015	80	0	**80**	
1015 - 1030	83	0	**83**	
1030 - 1045	93	0	**93**	
1045 - 1100	78	0	**78**	**334**
1100 - 1115	91	0	**91**	
1115 - 1130	79	0	**79**	
1130 - 1145	94	0	**94**	
1145 - 1200	80	0	**80**	**344**

Time	Volume Summary 15min EB	WB	15min Total	60min Total
1200 - 1215	88	0	**88**	
1215 - 1230	92	0	**92**	
1230 - 1245	90	0	**90**	
1245 - 1300	77	0	**77**	**347**
1300 - 1315	102	0	**102**	
1315 - 1330	73	0	**73**	
1330 - 1345	98	0	**98**	
1345 - 1400	88	0	**88**	**361**
1400 - 1415	113	0	**113**	
1415 - 1430	104	0	**104**	
1430 - 1445	98	0	**98**	
1445 - 1500	107	0	**107**	**422**
1500 - 1515	116	0	**116**	
1515 - 1530	106	0	**106**	
1530 - 1545	146	0	**146**	
1545 - 1600	143	0	**143**	**511**
1600 - 1615	149	0	**149**	
1615 - 1630	127	0	**127**	
1630 - 1645	135	0	**135**	
1645 - 1700	144	0	**144**	**555**
1700 - 1715	160	0	**160**	
1715 - 1730	143	0	**143**	
1730 - 1745	135	0	**135**	
1745 - 1800	104	0	**104**	**542**
1800 - 1815	91	0	**91**	
1815 - 1830	82	0	**82**	
1830 - 1845	60	0	**60**	
1845 - 1900	63	0	**63**	**296**
1900 - 1915	53	0	**53**	
1915 - 1930	46	0	**46**	
1930 - 1945	44	0	**44**	
1945 - 2000	30	0	**30**	**173**
2000 - 2015	28	0	**28**	
2015 - 2030	38	0	**38**	
2030 - 2045	42	0	**42**	
2045 - 2100	19	0	**19**	**127**
2100 - 2115	26	0	**26**	
2115 - 2130	20	0	**20**	
2130 - 2145	23	0	**23**	
2145 - 2200	10	0	**10**	**79**
2200 - 2215	22	0	**22**	
2215 - 2230	17	0	**17**	
2230 - 2245	20	0	**20**	
2245 - 2300	14	0	**14**	**73**
2300 - 2315	12	0	**12**	
2315 - 2330	8	0	**8**	
2330 - 2345	15	0	**15**	
2345 - 0000	10	0	**10**	**45**

Session Total	6128	0	**6128**
Session Average	63.83	0.00	**63.83**
Session Percentage	100.00	0.00	

Site 59
I-20 E/Bound On-Ramp,
east of US-378 Sunset Blvd

Date
Thursday, April 25, 2024

Lat/Long
34.010865°, -81.147520°

Weather
Fair
67°F

Click here for Detailed Weather

0000 - 2400 (Weekday 24h Session) (04-25-2024)
Volume Summary 15min

TIME	Volume Summary 15min EB	WB	15min Total	60min Total
0000 - 0015	4	0	**4**	
0015 - 0030	6	0	**6**	
0030 - 0045	4	0	**4**	
0045 - 0100	3	0	**3**	**17**
0100 - 0115	6	0	**6**	
0115 - 0130	8	0	**8**	
0130 - 0145	2	0	**2**	
0145 - 0200	4	0	**4**	**20**
0200 - 0215	2	0	**2**	
0215 - 0230	5	0	**5**	
0230 - 0245	3	0	**3**	
0245 - 0300	6	0	**6**	**16**
0300 - 0315	3	0	**3**	
0315 - 0330	6	0	**6**	
0330 - 0345	10	0	**10**	
0345 - 0400	7	0	**7**	**26**
0400 - 0415	6	0	**6**	
0415 - 0430	3	0	**3**	
0430 - 0445	7	0	**7**	
0445 - 0500	11	0	**11**	**27**
0500 - 0515	18	0	**18**	
0515 - 0530	18	0	**18**	
0530 - 0545	22	0	**22**	
0545 - 0600	31	0	**31**	**89**
0600 - 0615	25	0	**25**	
0615 - 0630	57	0	**57**	
0630 - 0645	76	0	**76**	
0645 - 0700	76	0	**76**	**234**
0700 - 0715	103	0	**103**	
0715 - 0730	144	0	**144**	
0730 - 0745	154	0	**154**	
0745 - 0800	180	0	**180**	**581**
0800 - 0815	150	0	**150**	
0815 - 0830	128	0	**128**	
0830 - 0845	117	0	**117**	
0845 - 0900	95	0	**95**	**490**
0900 - 0915	108	0	**108**	
0915 - 0930	89	0	**89**	
0930 - 0945	99	0	**99**	
0945 - 1000	91	0	**91**	**387**
1000 - 1015	99	0	**99**	
1015 - 1030	83	0	**83**	
1030 - 1045	114	0	**114**	
1045 - 1100	76	0	**76**	**372**
1100 - 1115	78	0	**78**	
1115 - 1130	67	0	**67**	
1130 - 1145	81	0	**81**	
1145 - 1200	81	0	**81**	**307**

Time	Volume Summary 15min EB	WB	15min Total	60min Total
1200 - 1215	86	0	**86**	
1215 - 1230	99	0	**99**	
1230 - 1245	90	0	**90**	
1245 - 1300	71	0	**71**	**346**
1300 - 1315	77	0	**77**	
1315 - 1330	68	0	**68**	
1330 - 1345	98	0	**98**	
1345 - 1400	82	0	**82**	**325**
1400 - 1415	78	0	**78**	
1415 - 1430	89	0	**89**	
1430 - 1445	103	0	**103**	
1445 - 1500	92	0	**92**	**362**
1500 - 1515	110	0	**110**	
1515 - 1530	92	0	**92**	
1530 - 1545	114	0	**114**	
1545 - 1600	134	0	**134**	**450**
1600 - 1615	159	0	**159**	
1615 - 1630	183	0	**183**	
1630 - 1645	171	0	**171**	
1645 - 1700	132	0	**132**	**645**
1700 - 1715	149	0	**149**	
1715 - 1730	148	0	**148**	
1730 - 1745	149	0	**149**	
1745 - 1800	134	0	**134**	**580**
1800 - 1815	116	0	**116**	
1815 - 1830	72	0	**72**	
1830 - 1845	69	0	**69**	
1845 - 1900	44	0	**44**	**301**
1900 - 1915	0	0	**0**	
1915 - 1930	0	0	**0**	
1930 - 1945	0	0	**0**	
1945 - 2000	0	0	**0**	**0**
2000 - 2015	0	0	**0**	
2015 - 2030	0	0	**0**	
2030 - 2045	0	0	**0**	
2045 - 2100	0	0	**0**	**0**
2100 - 2115	0	0	**0**	
2115 - 2130	0	0	**0**	
2130 - 2145	0	0	**0**	
2145 - 2200	0	0	**0**	**0**
2200 - 2215	0	0	**0**	
2215 - 2230	0	0	**0**	
2230 - 2245	0	0	**0**	
2245 - 2300	0	0	**0**	**0**
2300 - 2315	0	0	**0**	
2315 - 2330	0	0	**0**	
2330 - 2345	0	0	**0**	
2345 - 0000	0	0	**0**	**0**

Session Total	5575	0	**5575**
Session Average	58.07	0.00	**58.07**
Session Percentage	100.00	0.00	

Bi-Directional Class Count || NB EB 60min

Columbia, SC

Marr Traffic DATA COLLECTION

www.marrtraffic.com

Site 59

I-20 E/Bound On-Ramp,
east of US-378 Sunset Blvd

Date

Tuesday, April 23, 2024

Lat/Long

34.010865°, -81.147520°

Weather

Fair
58°F

Click here for Detailed Weather

0000 - 2400 (Weekday 24h Session) (04-23-2024)

NB EB 60min

	Eastbound (Movement 59.1)													
TIME	1	2	3	4	5	6	7	8	9	10	11	12	13	**Total**
0000 - 0100	0	0	0	0	0	0	0	0	0	0	0	0	0	**0**
0100 - 0200	0	0	0	0	0	0	0	0	0	0	0	0	0	**0**
0200 - 0300	0	0	0	0	0	0	0	0	0	0	0	0	0	**0**
0300 - 0400	0	0	0	0	0	0	0	0	0	0	0	0	0	**0**
0400 - 0500	0	0	0	0	0	0	0	0	0	0	0	0	0	**0**
0500 - 0600	0	0	0	0	0	0	0	0	0	0	0	0	0	**0**
0600 - 0700	0	0	0	0	0	0	0	0	0	0	0	0	0	**0**
0700 - 0800	0	0	0	0	0	0	0	0	0	0	0	0	0	**0**
0800 - 0900	0	0	0	0	0	0	0	0	0	0	0	0	0	**0**
0900 - 1000	0	0	0	0	0	0	0	0	0	0	0	0	0	**0**
1000 - 1100	0	0	0	0	0	0	0	0	0	0	0	0	0	**0**
1100 - 1200	0	0	0	0	0	0	0	0	0	0	0	0	0	**0**
1200 - 1300	0	0	0	0	0	0	0	0	0	0	0	0	0	**0**
1300 - 1400	0	0	0	0	0	0	0	0	0	0	0	0	0	**0**
1400 - 1500	0	0	0	0	0	0	0	0	0	0	0	0	0	**0**
1500 - 1600	0	0	0	0	0	0	0	0	0	0	0	0	0	**0**
1600 - 1700	0	0	0	0	0	0	0	0	0	0	0	0	0	**0**
1700 - 1800	0	0	0	0	0	0	0	0	0	0	0	0	0	**0**
1800 - 1900	0	0	0	0	0	0	0	0	0	0	0	0	0	**0**
1900 - 2000	0	161	22	0	0	0	0	0	0	1	1	0	0	**185**
2000 - 2100	0	115	19	0	1	0	0	0	1	0	0	0	0	**136**
2100 - 2200	0	72	2	0	1	0	0	0	0	0	1	0	0	**76**
2200 - 2300	0	56	0	0	0	0	0	0	1	0	2	0	0	**59**
2300 - 2400	0	31	0	0	1	0	0	0	0	0	5	0	0	**37**
Session Total	0	435	43	0	3	0	0	0	2	1	9	0	0	**493**
Session Average	0.00	18.13	1.79	0.00	0.13	0.00	0.00	0.00	0.08	0.04	0.38	0.00	0.00	**20.54**
Session Percentage	0.00	88.24	8.72	0.00	0.61	0.00	0.00	0.00	0.41	0.20	1.83	0.00	0.00	
AM Peak Hour	-	-	-	-	-	-	-	-	-	-	-	-	-	**-**
AM Peak Volume	0	0	0	0	0	0	0	0	0	0	0	0	0	**0**
Noon Peak Hour	-	-	-	-	-	-	-	-	-	-	-	-	-	**-**
Noon Peak Volume	0	0	0	0	0	0	0	0	0	0	0	0	0	**0**
PM Peak Hour	-	1900 - 2000	1900 - 2000	-	-	-	-	-	-	1900 - 2000	1900 - 2000	-	-	**1900 - 2000**
PM Peak Volume	0	161	22	0	0	0	0	0	0	1	1	0	0	**185**

Site 59
I-20 E/Bound On-Ramp,
east of US-378 Sunset Blvd

Date
Wednesday, April 24, 2024

Lat/Long
34.010865°, -81.147520°

Weather
Fair
66°F

Click here for Detailed Weather

0000 - 2400 (Weekday 24h Session) (04-24-2024)
NB EB 60min

	Eastbound (Movement 59.1)													
TIME	1	2	3	4	5	6	7	8	9	10	11	12	13	**Total**
0000 - 0100	0	20	0	0	0	0	0	0	3	0	3	0	0	**26**
0100 - 0200	0	18	0	0	0	0	0	0	1	0	5	0	0	**24**
0200 - 0300	0	6	0	0	1	0	0	0	1	0	9	0	0	**17**
0300 - 0400	0	11	0	0	0	0	0	0	1	0	2	0	0	**14**
0400 - 0500	0	25	0	0	1	0	0	0	3	0	2	0	0	**31**
0500 - 0600	0	85	4	0	2	0	0	0	1	0	1	0	0	**93**
0600 - 0700	0	196	38	0	10	0	0	2	2	0	1	0	0	**249**
0700 - 0800	3	462	125	0	7	0	0	3	1	0	0	0	0	**601**
0800 - 0900	0	364	99	0	16	0	0	2	6	1	0	0	0	**488**
0900 - 1000	0	300	59	0	9	1	0	3	4	0	0	0	0	**376**
1000 - 1100	0	239	75	0	13	1	0	4	2	0	0	0	0	**334**
1100 - 1200	3	248	77	0	8	2	0	0	5	1	0	0	0	**344**
1200 - 1300	2	264	76	0	3	0	0	0	2	0	0	0	0	**347**
1300 - 1400	0	262	85	0	11	2	0	0	1	0	0	0	0	**361**
1400 - 1500	2	336	74	3	5	0	0	0	2	0	0	0	0	**422**
1500 - 1600	1	400	97	5	6	1	0	0	1	0	0	0	0	**511**
1600 - 1700	0	450	92	2	7	0	0	1	3	0	0	0	0	**555**
1700 - 1800	2	445	92	0	2	0	0	0	1	0	0	0	0	**542**
1800 - 1900	0	251	36	0	0	6	0	0	2	1	0	0	0	**296**
1900 - 2000	0	138	29	1	3	0	0	0	1	0	1	0	0	**173**
2000 - 2100	1	104	19	0	0	1	0	0	0	0	2	0	0	**127**
2100 - 2200	0	64	11	0	0	0	0	0	1	0	3	0	0	**79**
2200 - 2300	0	67	2	0	0	0	0	0	0	0	4	0	0	**73**
2300 - 2400	0	36	3	0	1	0	0	0	2	0	3	0	0	**45**

Session Total	14	4791	1093	11	105	14	0	15	46	3	36	0	0	**6128**
Session Average	0.58	199.63	45.54	0.46	4.38	0.58	0.00	0.63	1.92	0.13	1.50	0.00	0.00	**255.33**
Session Percentage	0.23	78.18	17.84	0.18	1.71	0.23	0.00	0.24	0.75	0.05	0.59	0.00	0.00	

AM Peak Hour	0700 - 0800	0700 - 0800	0700 - 0800	-	0800 - 0900	0900 - 1000	-	0700 - 0800	0800 - 0900	0800 - 0900	0500 - 0600	-	-	**0700 - 0800**
AM Peak Volume	3	462	125	0	16	1	0	3	6	1	1	0	0	**601**

Noon Peak Hour	1100 - 1200	1400 - 1500	1300 - 1400	1400 - 1500	1000 - 1100	1100 - 1200	-	1000 - 1100	1100 - 1200	1100 - 1200	-	-	-	**1400 - 1500**
Noon Peak Volume	3	336	85	3	13	2	0	4	5	1	0	0	0	**422**

PM Peak Hour	1700 - 1800	1600 - 1700	1500 - 1600	1500 - 1600	1600 - 1700	1800 - 1900	-	1600 - 1700	1600 - 1700	1800 - 1900	1900 - 2000	-	-	**1600 - 1700**
PM Peak Volume	2	450	97	5	7	6	0	1	3	1	1	0	0	**555**

Site 59
I-20 E/Bound On-Ramp,
east of US-378 Sunset Blvd

Date
Thursday, April 25, 2024

Lat/Long
34.010865°, -81.147520°

Weather
Fair
67°F

Click here for Detailed Weather

0000 - 2400 (Weekday 24h Session) (04-25-2024)
NB EB 60min

	Eastbound (Movement 59.1)													
TIME	1	2	3	4	5	6	7	8	9	10	11	12	13	**Total**
0000 - 0100	0	14	1	0	0	0	0	0	2	0	0	0	0	**17**
0100 - 0200	0	7	2	0	1	0	0	0	0	0	10	0	0	**20**
0200 - 0300	1	7	2	0	0	0	0	0	0	0	6	0	0	**16**
0300 - 0400	0	12	3	0	2	0	0	0	4	0	5	0	0	**26**
0400 - 0500	0	19	6	0	0	0	0	0	0	0	2	0	0	**27**
0500 - 0600	0	63	19	0	5	1	0	0	0	0	1	0	0	**89**
0600 - 0700	0	166	49	7	5	1	0	0	4	1	1	0	0	**234**
0700 - 0800	0	452	115	0	8	1	0	4	1	0	0	0	0	**581**
0800 - 0900	3	376	91	1	13	2	0	4	0	0	0	0	0	**490**
0900 - 1000	2	286	75	0	12	3	0	4	5	0	0	0	0	**387**
1000 - 1100	0	268	87	0	11	4	0	1	1	0	0	0	0	**372**
1100 - 1200	2	229	64	0	3	4	0	3	2	0	0	0	0	**307**
1200 - 1300	0	266	68	0	7	1	0	1	3	0	0	0	0	**346**
1300 - 1400	2	250	60	0	9	2	0	0	2	0	0	0	0	**325**
1400 - 1500	0	283	55	1	15	2	0	3	3	0	0	0	0	**362**
1500 - 1600	0	354	79	0	9	5	0	0	3	0	0	0	0	**450**
1600 - 1700	2	542	87	0	7	1	0	1	5	0	0	0	0	**645**
1700 - 1800	1	487	89	0	1	0	0	0	2	0	0	0	0	**580**
1800 - 1900	0	227	68	0	3	1	0	0	2	0	0	0	0	**301**
1900 - 2000	0	0	0	0	0	0	0	0	0	0	0	0	0	**0**
2000 - 2100	0	0	0	0	0	0	0	0	0	0	0	0	0	**0**
2100 - 2200	0	0	0	0	0	0	0	0	0	0	0	0	0	**0**
2200 - 2300	0	0	0	0	0	0	0	0	0	0	0	0	0	**0**
2300 - 2400	0	0	0	0	0	0	0	0	0	0	0	0	0	**0**

Session Total	13	4308	1020	9	111	28	0	21	39	1	25	0	0	**5575**
Session Average	0.54	179.50	42.50	0.38	4.63	1.17	0.00	0.88	1.63	0.04	1.04	0.00	0.00	**232.29**
Session Percentage	0.23	77.27	18.30	0.16	1.99	0.50	0.00	0.38	0.70	0.02	0.45	0.00	0.00	

AM Peak Hour	0800 - 0900	0700 - 0800	0700 - 0800	0600 - 0700	0800 - 0900	0900 - 1000	-	0700 - 0800	0900 - 1000	0600 - 0700	0500 - 0600	-	-	**0700 - 0800**
AM Peak Hour Volume	3	452	115	7	13	3	0	4	5	1	1	0	0	**581**

Noon Peak Hour	1100 - 1200	1400 - 1500	1000 - 1100	1400 - 1500	1400 - 1500	1000 - 1100	-	1100 - 1200	1200 - 1300	-	-	-	-	**1000 - 1100**
Noon Peak Hour Volume	2	283	87	1	15	4	0	3	3	0	0	0	0	**372**

PM Peak Hour	1600 - 1700	1600 - 1700	1700 - 1800	-	1500 - 1600	1500 - 1600	-	1600 - 1700	1600 - 1700	-	-	-	-	**1600 - 1700**
PM Peak Hour Volume	2	542	89	0	9	5	0	1	5	0	0	0	0	**645**

Bi-Directional Class Count || Volume Summary 60min

Columbia, SC

Marr Traffic DATA COLLECTION

www.marrtraffic.com

Site 59

I-20 E/Bound On-Ramp,
east of US-378 Sunset Blvd

Date

Tuesday, April 23, 2024

Lat/Long

34.010865°, -81.147520°

Weather

Fair
58°F

Click here for Detailed Weather

0000 - 2400 (Weekday 24h Session) (04-23-2024)

Volume Summary 60min

	Volume Summary 60min		
TIME	EB	WB	**Total**
0000 - 0100	0	0	**0**
0100 - 0200	0	0	**0**
0200 - 0300	0	0	**0**
0300 - 0400	0	0	**0**
0400 - 0500	0	0	**0**
0500 - 0600	0	0	**0**
0600 - 0700	0	0	**0**
0700 - 0800	0	0	**0**
0800 - 0900	0	0	**0**
0900 - 1000	0	0	**0**
1000 - 1100	0	0	**0**
1100 - 1200	0	0	**0**

	Volume Summary 60min		
Time	EB	WB	**Total**
1200 - 1300	0	0	**0**
1300 - 1400	0	0	**0**
1400 - 1500	0	0	**0**
1500 - 1600	0	0	**0**
1600 - 1700	0	0	**0**
1700 - 1800	0	0	**0**
1800 - 1900	0	0	**0**
1900 - 2000	185	0	**185**
2000 - 2100	136	0	**136**
2100 - 2200	76	0	**76**
2200 - 2300	59	0	**59**
2300 - 2400	37	0	**37**

Session Total	493	0	**493**
Session Average	20.54	0.00	**20.54**
Session Percentage	100.00	0.00	

Site 59

I-20 E/Bound On-Ramp,
east of US-378 Sunset Blvd

Date

Wednesday, April 24, 2024

Lat/Long

34.010865°, -81.147520°

Weather

Fair
66°F

Click here for Detailed Weather

0000 - 2400 (Weekday 24h Session) (04-24-2024)

Volume Summary 60min

	Volume Summary 60min		
TIME	EB	WB	**Total**
0000 - 0100	26	0	**26**
0100 - 0200	24	0	**24**
0200 - 0300	17	0	**17**
0300 - 0400	14	0	**14**
0400 - 0500	31	0	**31**
0500 - 0600	93	0	**93**
0600 - 0700	249	0	**249**
0700 - 0800	601	0	**601**
0800 - 0900	488	0	**488**
0900 - 1000	376	0	**376**
1000 - 1100	334	0	**334**
1100 - 1200	344	0	**344**

	Volume Summary 60min		
Time	EB	WB	**Total**
1200 - 1300	347	0	**347**
1300 - 1400	361	0	**361**
1400 - 1500	422	0	**422**
1500 - 1600	511	0	**511**
1600 - 1700	555	0	**555**
1700 - 1800	542	0	**542**
1800 - 1900	296	0	**296**
1900 - 2000	173	0	**173**
2000 - 2100	127	0	**127**
2100 - 2200	79	0	**79**
2200 - 2300	73	0	**73**
2300 - 2400	45	0	**45**

Session Total	6128	0	**6128**
Session Average	255.33	0.00	**255.33**
Session Percentage	100.00	0.00	

Site 59

I-20 E/Bound On-Ramp,
east of US-378 Sunset Blvd

Date

Thursday, April 25, 2024

Lat/Long

34.010865°, -81.147520°

Weather

Fair
67°F

Click here for Detailed Weather

0000 - 2400 (Weekday 24h Session) (04-25-2024)

Volume Summary 60min

	Volume Summary 60min		
TIME	EB	WB	**Total**
0000 - 0100	17	0	**17**
0100 - 0200	20	0	**20**
0200 - 0300	16	0	**16**
0300 - 0400	26	0	**26**
0400 - 0500	27	0	**27**
0500 - 0600	89	0	**89**
0600 - 0700	234	0	**234**
0700 - 0800	581	0	**581**
0800 - 0900	490	0	**490**
0900 - 1000	387	0	**387**
1000 - 1100	372	0	**372**
1100 - 1200	307	0	**307**

Session Total	5575	0	**5575**
Session Average	232.29	0.00	**232.29**
Session Percentage	100.00	0.00	

	Volume Summary 60min		
Time	EB	WB	**Total**
1200 - 1300	346	0	**346**
1300 - 1400	325	0	**325**
1400 - 1500	362	0	**362**
1500 - 1600	450	0	**450**
1600 - 1700	645	0	**645**
1700 - 1800	580	0	**580**
1800 - 1900	301	0	**301**
1900 - 2000	0	0	**0**
2000 - 2100	0	0	**0**
2100 - 2200	0	0	**0**
2200 - 2300	0	0	**0**
2300 - 2400	0	0	**0**

Bi-Directional Class Count || Graphical Analysis NB EB

Columbia, SC

www.marrtraffic.com

Site 59

I-20 E/Bound On-Ramp,
east of US-378 Sunset Blvd

Lat/Long

34.010865°, -81.147520°

0000 - 2400 (Weekday 24h Session)

Graphical Analysis NB EB

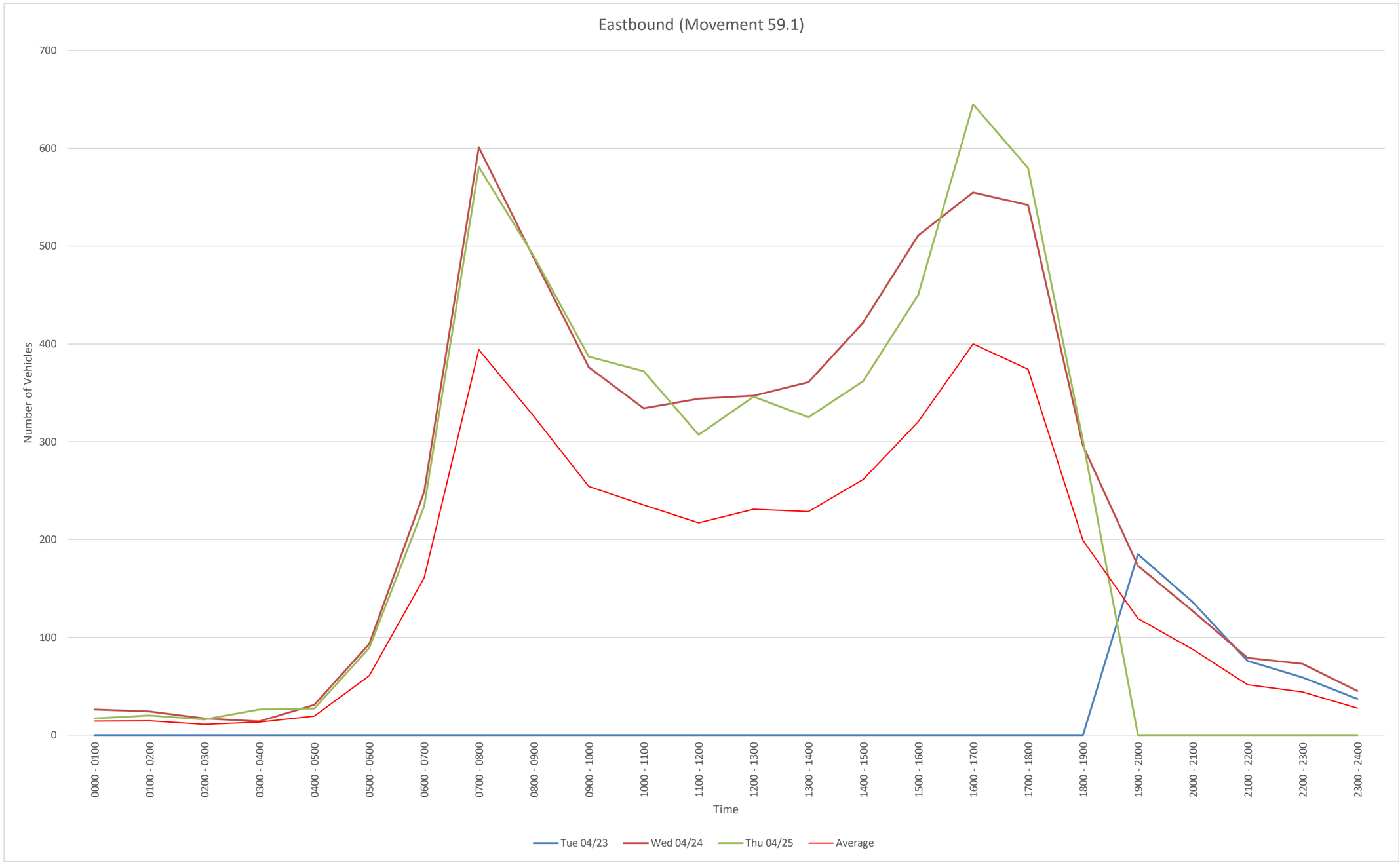

Time	Tue 04/23	Wed 04/24	Thu 04/25				
0000 - 0100	0	26	17				
0100 - 0200	0	24	20				
0200 - 0300	0	17	16				
0300 - 0400	0	14	26				
0400 - 0500	0	31	27				
0500 - 0600	0	93	89				
0600 - 0700	0	249	234				
0700 - 0800	0	601	581				
0800 - 0900	0	488	490				
0900 - 1000	0	376	387				
1000 - 1100	0	334	372				
1100 - 1200	0	344	307				
1200 - 1300	0	347	346				
1300 - 1400	0	361	325				
1400 - 1500	0	422	362				
1500 - 1600	0	511	450				
1600 - 1700	0	555	645				
1700 - 1800	0	542	580				
1800 - 1900	0	296	301				
1900 - 2000	185	173	0				
2000 - 2100	136	127	0				
2100 - 2200	76	79	0				
2200 - 2300	59	73	0				
2300 - 2400	37	45	0				
Daily Total	493	6128	5575				

EB
File Name:
Start Date: 4/23/2024
Start Time: 0
Site Code: 59
Station ID: 1
Location 1: I-20 E/Bound On-Ramp, east of US-378 Sunset Blvd
Location 2:

Date	Time	1	2	3	4	5	6	7	8	9	10	11	12	13
4/23/2024	12:00 AM	0	0	0	0	0	0	0	0	0	0	0	0	0
4/23/2024	12:15 AM	0	0	0	0	0	0	0	0	0	0	0	0	0
4/23/2024	12:30 AM	0	0	0	0	0	0	0	0	0	0	0	0	0
4/23/2024	12:45 AM	0	0	0	0	0	0	0	0	0	0	0	0	0
4/23/2024	1:00 AM	0	0	0	0	0	0	0	0	0	0	0	0	0
4/23/2024	1:15 AM	0	0	0	0	0	0	0	0	0	0	0	0	0
4/23/2024	1:30 AM	0	0	0	0	0	0	0	0	0	0	0	0	0
4/23/2024	1:45 AM	0	0	0	0	0	0	0	0	0	0	0	0	0
4/23/2024	2:00 AM	0	0	0	0	0	0	0	0	0	0	0	0	0
4/23/2024	2:15 AM	0	0	0	0	0	0	0	0	0	0	0	0	0
4/23/2024	2:30 AM	0	0	0	0	0	0	0	0	0	0	0	0	0
4/23/2024	2:45 AM	0	0	0	0	0	0	0	0	0	0	0	0	0
4/23/2024	3:00 AM	0	0	0	0	0	0	0	0	0	0	0	0	0
4/23/2024	3:15 AM	0	0	0	0	0	0	0	0	0	0	0	0	0
4/23/2024	3:30 AM	0	0	0	0	0	0	0	0	0	0	0	0	0
4/23/2024	3:45 AM	0	0	0	0	0	0	0	0	0	0	0	0	0
4/23/2024	4:00 AM	0	0	0	0	0	0	0	0	0	0	0	0	0
4/23/2024	4:15 AM	0	0	0	0	0	0	0	0	0	0	0	0	0
4/23/2024	4:30 AM	0	0	0	0	0	0	0	0	0	0	0	0	0
4/23/2024	4:45 AM	0	0	0	0	0	0	0	0	0	0	0	0	0
4/23/2024	5:00 AM	0	0	0	0	0	0	0	0	0	0	0	0	0
4/23/2024	5:15 AM	0	0	0	0	0	0	0	0	0	0	0	0	0
4/23/2024	5:30 AM	0	0	0	0	0	0	0	0	0	0	0	0	0
4/23/2024	5:45 AM	0	0	0	0	0	0	0	0	0	0	0	0	0
4/23/2024	6:00 AM	0	0	0	0	0	0	0	0	0	0	0	0	0
4/23/2024	6:15 AM	0	0	0	0	0	0	0	0	0	0	0	0	0
4/23/2024	6:30 AM	0	0	0	0	0	0	0	0	0	0	0	0	0
4/23/2024	6:45 AM	0	0	0	0	0	0	0	0	0	0	0	0	0
4/23/2024	7:00 AM	0	0	0	0	0	0	0	0	0	0	0	0	0
4/23/2024	7:15 AM	0	0	0	0	0	0	0	0	0	0	0	0	0
4/23/2024	7:30 AM	0	0	0	0	0	0	0	0	0	0	0	0	0
4/23/2024	7:45 AM	0	0	0	0	0	0	0	0	0	0	0	0	0
4/23/2024	8:00 AM	0	0	0	0	0	0	0	0	0	0	0	0	0
4/23/2024	8:15 AM	0	0	0	0	0	0	0	0	0	0	0	0	0
4/23/2024	8:30 AM	0	0	0	0	0	0	0	0	0	0	0	0	0
4/23/2024	8:45 AM	0	0	0	0	0	0	0	0	0	0	0	0	0
4/23/2024	9:00 AM	0	0	0	0	0	0	0	0	0	0	0	0	0
4/23/2024	9:15 AM	0	0	0	0	0	0	0	0	0	0	0	0	0
4/23/2024	9:30 AM	0	0	0	0	0	0	0	0	0	0	0	0	0
4/23/2024	9:45 AM	0	0	0	0	0	0	0	0	0	0	0	0	0
4/23/2024	10:00 AM	0	0	0	0	0	0	0	0	0	0	0	0	0
4/23/2024	10:15 AM	0	0	0	0	0	0	0	0	0	0	0	0	0
4/23/2024	10:30 AM	0	0	0	0	0	0	0	0	0	0	0	0	0
4/23/2024	10:45 AM	0	0	0	0	0	0	0	0	0	0	0	0	0
4/23/2024	11:00 AM	0	0	0	0	0	0	0	0	0	0	0	0	0
4/23/2024	11:15 AM	0	0	0	0	0	0	0	0	0	0	0	0	0
4/23/2024	11:30 AM	0	0	0	0	0	0	0	0	0	0	0	0	0
4/23/2024	11:45 AM	0	0	0	0	0	0	0	0	0	0	0	0	0
4/23/2024	12:00 PM	0	0	0	0	0	0	0	0	0	0	0	0	0
4/23/2024	12:15 PM	0	0	0	0	0	0	0	0	0	0	0	0	0
4/23/2024	12:30 PM	0	0	0	0	0	0	0	0	0	0	0	0	0
4/23/2024	12:45 PM	0	0	0	0	0	0	0	0	0	0	0	0	0
4/23/2024	1:00 PM	0	0	0	0	0	0	0	0	0	0	0	0	0
4/23/2024	1:15 PM	0	0	0	0	0	0	0	0	0	0	0	0	0
4/23/2024	1:30 PM	0	0	0	0	0	0	0	0	0	0	0	0	0
4/23/2024	1:45 PM	0	0	0	0	0	0	0	0	0	0	0	0	0
4/23/2024	2:00 PM	0	0	0	0	0	0	0	0	0	0	0	0	0
4/23/2024	2:15 PM	0	0	0	0	0	0	0	0	0	0	0	0	0
4/23/2024	2:30 PM	0	0	0	0	0	0	0	0	0	0	0	0	0
4/23/2024	2:45 PM	0	0	0	0	0	0	0	0	0	0	0	0	0
4/23/2024	3:00 PM	0	0	0	0	0	0	0	0	0	0	0	0	0
4/23/2024	3:15 PM	0	0	0	0	0	0	0	0	0	0	0	0	0
4/23/2024	3:30 PM	0	0	0	0	0	0	0	0	0	0	0	0	0
4/23/2024	3:45 PM	0	0	0	0	0	0	0	0	0	0	0	0	0
4/23/2024	4:00 PM	0	0	0	0	0	0	0	0	0	0	0	0	0
4/23/2024	4:15 PM	0	0	0	0	0	0	0	0	0	0	0	0	0
4/23/2024	4:30 PM	0	0	0	0	0	0	0	0	0	0	0	0	0
4/23/2024	4:45 PM	0	0	0	0	0	0	0	0	0	0	0	0	0
4/23/2024	5:00 PM	0	0	0	0	0	0	0	0	0	0	0	0	0
4/23/2024	5:15 PM	0	0	0	0	0	0	0	0	0	0	0	0	0
4/23/2024	5:30 PM	0	0	0	0	0	0	0	0	0	0	0	0	0
4/23/2024	5:45 PM	0	0	0	0	0	0	0	0	0	0	0	0	0
4/23/2024	6:00 PM	0	0	0	0	0	0	0	0	0	0	0	0	0
4/23/2024	6:15 PM	0	0	0	0	0	0	0	0	0	0	0	0	0
4/23/2024	6:30 PM	0	0	0	0	0	0	0	0	0	0	0	0	0
4/23/2024	6:45 PM	0	0	0	0	0	0	0	0	0	0	0	0	0
4/23/2024	7:00 PM	0	61	6	0	0	0	0	0	0	1	0	0	0
4/23/2024	7:15 PM	0	43	7	0	0	0	0	0	0	0	0	0	0
4/23/2024	7:30 PM	0	31	4	0	0	0	0	0	0	0	1	0	0
4/23/2024	7:45 PM	0	26	5	0	0	0	0	0	0	0	0	0	0
4/23/2024	8:00 PM	0	24	2	0	0	0	0	0	0	0	0	0	0
4/23/2024	8:15 PM	0	39	14	0	1	0	0	0	0	0	0	0	0
4/23/2024	8:30 PM	0	29	2	0	0	0	0	0	1	0	0	0	0
4/23/2024	8:45 PM	0	23	1	0	0	0	0	0	0	0	0	0	0
4/23/2024	9:00 PM	0	23	0	0	1	0	0	0	0	0	1	0	0
4/23/2024	9:15 PM	0	18	0	0	0	0	0	0	0	0	0	0	0
4/23/2024	9:30 PM	0	15	2	0	0	0	0	0	0	0	0	0	0
4/23/2024	9:45 PM	0	16	0	0	0	0	0	0	0	0	0	0	0
4/23/2024	10:00 PM	0	8	0	0	0	0	0	0	0	0	0	0	0
4/23/2024	10:15 PM	0	18	0	0	0	0	0	0	0	0	1	0	0
4/23/2024	10:30 PM	0	13	0	0	0	0	0	0	1	0	1	0	0
4/23/2024	10:45 PM	0	17	0	0	0	0	0	0	0	0	0	0	0
4/23/2024	11:00 PM	0	7	0	0	0	0	0	0	0	0	1	0	0
4/23/2024	11:15 PM	0	11	0	0	0	0	0	0	0	0	3	0	0
4/23/2024	11:30 PM	0	8	0	0	0	0	0	0	0	0	1	0	0
4/23/2024	11:45 PM	0	5	0	0	1	0	0	0	0	0	0	0	0

4/24/2024	12:00 AM	0	7	0	0	0	0	0	0	1	0	1	0	0
4/24/2024	12:15 AM	0	5	0	0	0	0	0	0	0	0	0	0	0
4/24/2024	12:30 AM	0	7	0	0	0	0	0	0	0	0	1	0	0
4/24/2024	12:45 AM	0	1	0	0	0	0	0	0	2	0	1	0	0
4/24/2024	1:00 AM	0	8	0	0	0	0	0	0	1	0	0	0	0
4/24/2024	1:15 AM	0	3	0	0	0	0	0	0	0	0	2	0	0
4/24/2024	1:30 AM	0	2	0	0	0	0	0	0	0	0	1	0	0
4/24/2024	1:45 AM	0	5	0	0	0	0	0	0	0	0	2	0	0
4/24/2024	2:00 AM	0	0	0	0	0	0	0	0	1	0	3	0	0
4/24/2024	2:15 AM	0	4	0	0	0	0	0	0	0	0	0	0	0
4/24/2024	2:30 AM	0	0	0	0	1	0	0	0	0	0	3	0	0
4/24/2024	2:45 AM	0	2	0	0	0	0	0	0	0	0	3	0	0
4/24/2024	3:00 AM	0	3	0	0	0	0	0	0	0	0	1	0	0
4/24/2024	3:15 AM	0	1	0	0	0	0	0	0	1	0	0	0	0
4/24/2024	3:30 AM	0	2	0	0	0	0	0	0	0	0	1	0	0
4/24/2024	3:45 AM	0	5	0	0	0	0	0	0	0	0	0	0	0
4/24/2024	4:00 AM	0	4	0	0	1	0	0	0	0	0	1	0	0
4/24/2024	4:15 AM	0	6	0	0	0	0	0	0	2	0	0	0	0
4/24/2024	4:30 AM	0	5	0	0	0	0	0	0	0	0	1	0	0
4/24/2024	4:45 AM	0	10	0	0	0	0	0	0	1	0	0	0	0
4/24/2024	5:00 AM	0	14	3	0	0	0	0	0	0	0	0	0	0
4/24/2024	5:15 AM	0	20	0	0	1	0	0	0	0	0	1	0	0
4/24/2024	5:30 AM	0	23	0	0	0	0	0	0	0	0	0	0	0
4/24/2024	5:45 AM	0	28	1	0	1	0	0	0	1	0	0	0	0
4/24/2024	6:00 AM	0	34	2	0	2	0	0	0	0	0	0	0	0
4/24/2024	6:15 AM	0	39	2	0	3	0	0	0	1	0	0	0	0
4/24/2024	6:30 AM	0	73	10	0	2	0	0	2	0	0	1	0	0
4/24/2024	6:45 AM	0	50	24	0	3	0	0	0	1	0	0	0	0
4/24/2024	7:00 AM	1	85	28	0	1	0	0	1	1	0	0	0	0
4/24/2024	7:15 AM	0	101	28	0	1	0	0	1	0	0	0	0	0
4/24/2024	7:30 AM	0	132	37	0	4	0	0	1	0	0	0	0	0
4/24/2024	7:45 AM	2	144	32	0	1	0	0	0	0	0	0	0	0
4/24/2024	8:00 AM	0	118	32	0	4	0	0	1	0	1	0	0	0
4/24/2024	8:15 AM	0	96	17	0	5	0	0	0	1	0	0	0	0
4/24/2024	8:30 AM	0	83	26	0	5	0	0	1	1	0	0	0	0
4/24/2024	8:45 AM	0	67	24	0	2	0	0	0	4	0	0	0	0
4/24/2024	9:00 AM	0	70	17	0	1	0	0	2	0	0	0	0	0
4/24/2024	9:15 AM	0	81	22	0	2	0	0	1	3	0	0	0	0
4/24/2024	9:30 AM	0	72	14	0	2	1	0	0	0	0	0	0	0
4/24/2024	9:45 AM	0	77	6	0	4	0	0	0	1	0	0	0	0
4/24/2024	10:00 AM	0	60	17	0	0	0	0	2	1	0	0	0	0
4/24/2024	10:15 AM	0	58	18	0	5	0	0	2	0	0	0	0	0
4/24/2024	10:30 AM	0	68	20	0	5	0	0	0	0	0	0	0	0
4/24/2024	10:45 AM	0	53	20	0	3	1	0	0	1	0	0	0	0
4/24/2024	11:00 AM	0	63	23	0	2	0	0	0	2	1	0	0	0
4/24/2024	11:15 AM	0	67	11	0	1	0	0	0	0	0	0	0	0
4/24/2024	11:30 AM	2	64	24	0	2	1	0	0	1	0	0	0	0
4/24/2024	11:45 AM	1	54	19	0	3	1	0	0	2	0	0	0	0
4/24/2024	12:00 PM	1	69	17	0	0	0	0	0	1	0	0	0	0
4/24/2024	12:15 PM	1	69	19	0	3	0	0	0	0	0	0	0	0
4/24/2024	12:30 PM	0	69	20	0	0	0	0	0	1	0	0	0	0
4/24/2024	12:45 PM	0	57	20	0	0	0	0	0	0	0	0	0	0
4/24/2024	1:00 PM	0	73	26	0	3	0	0	0	0	0	0	0	0
4/24/2024	1:15 PM	0	51	17	0	3	1	0	0	1	0	0	0	0
4/24/2024	1:30 PM	0	74	19	0	4	1	0	0	0	0	0	0	0
4/24/2024	1:45 PM	0	64	23	0	1	0	0	0	0	0	0	0	0
4/24/2024	2:00 PM	1	87	24	1	0	0	0	0	0	0	0	0	0
4/24/2024	2:15 PM	1	89	13	0	1	0	0	0	0	0	0	0	0
4/24/2024	2:30 PM	0	73	21	0	2	0	0	0	2	0	0	0	0
4/24/2024	2:45 PM	0	87	16	2	2	0	0	0	0	0	0	0	0
4/24/2024	3:00 PM	0	87	25	0	4	0	0	0	0	0	0	0	0
4/24/2024	3:15 PM	0	83	19	2	1	1	0	0	0	0	0	0	0
4/24/2024	3:30 PM	0	119	25	1	1	0	0	0	0	0	0	0	0
4/24/2024	3:45 PM	1	111	28	2	0	0	0	0	1	0	0	0	0
4/24/2024	4:00 PM	0	117	30	0	2	0	0	0	0	0	0	0	0
4/24/2024	4:15 PM	0	99	23	0	3	0	0	1	1	0	0	0	0
4/24/2024	4:30 PM	0	116	17	0	1	0	0	0	1	0	0	0	0
4/24/2024	4:45 PM	0	118	22	2	1	0	0	0	1	0	0	0	0
4/24/2024	5:00 PM	0	129	30	0	0	0	0	0	1	0	0	0	0
4/24/2024	5:15 PM	0	115	27	0	1	0	0	0	0	0	0	0	0
4/24/2024	5:30 PM	0	113	21	0	1	0	0	0	0	0	0	0	0
4/24/2024	5:45 PM	2	88	14	0	0	0	0	0	0	0	0	0	0
4/24/2024	6:00 PM	0	76	14	0	0	0	0	0	0	1	0	0	0
4/24/2024	6:15 PM	0	68	11	0	0	1	0	0	2	0	0	0	0
4/24/2024	6:30 PM	0	52	4	0	0	4	0	0	0	0	0	0	0
4/24/2024	6:45 PM	0	55	7	0	0	1	0	0	0	0	0	0	0
4/24/2024	7:00 PM	0	41	9	0	3	0	0	0	0	0	0	0	0
4/24/2024	7:15 PM	0	35	11	0	0	0	0	0	0	0	0	0	0
4/24/2024	7:30 PM	0	35	7	0	0	0	0	0	1	0	1	0	0
4/24/2024	7:45 PM	0	27	2	1	0	0	0	0	0	0	0	0	0
4/24/2024	8:00 PM	0	23	3	0	0	1	0	0	0	0	1	0	0
4/24/2024	8:15 PM	0	31	7	0	0	0	0	0	0	0	0	0	0
4/24/2024	8:30 PM	1	34	7	0	0	0	0	0	0	0	0	0	0
4/24/2024	8:45 PM	0	16	2	0	0	0	0	0	0	0	1	0	0
4/24/2024	9:00 PM	0	22	2	0	0	0	0	0	0	0	2	0	0
4/24/2024	9:15 PM	0	16	3	0	0	0	0	0	0	0	1	0	0
4/24/2024	9:30 PM	0	17	6	0	0	0	0	0	0	0	0	0	0
4/24/2024	9:45 PM	0	9	0	0	0	0	0	0	1	0	0	0	0
4/24/2024	10:00 PM	0	21	0	0	0	0	0	0	0	0	1	0	0
4/24/2024	10:15 PM	0	14	1	0	0	0	0	0	0	0	2	0	0
4/24/2024	10:30 PM	0	19	1	0	0	0	0	0	0	0	0	0	0
4/24/2024	10:45 PM	0	13	0	0	0	0	0	0	0	0	1	0	0
4/24/2024	11:00 PM	0	9	2	0	1	0	0	0	0	0	0	0	0
4/24/2024	11:15 PM	0	8	0	0	0	0	0	0	0	0	0	0	0
4/24/2024	11:30 PM	0	14	0	0	0	0	0	0	0	0	1	0	0
4/24/2024	11:45 PM	0	5	1	0	0	0	0	0	2	0	2	0	0

4/25/2024	12:00 AM	0	4	0	0	0	0	0	0	0	0	0	0
4/25/2024	12:15 AM	0	4	1	0	0	0	0	0	1	0	0	0
4/25/2024	12:30 AM	0	3	0	0	0	0	0	0	1	0	0	0
4/25/2024	12:45 AM	0	3	0	0	0	0	0	0	0	0	0	0
4/25/2024	1:00 AM	0	2	1	0	0	0	0	0	0	0	3	0	0
4/25/2024	1:15 AM	0	3	0	0	1	0	0	0	0	0	4	0	0
4/25/2024	1:30 AM	0	0	0	0	0	0	0	0	0	0	2	0	0
4/25/2024	1:45 AM	0	2	1	0	0	0	0	0	0	0	1	0	0
4/25/2024	2:00 AM	0	1	0	0	0	0	0	0	0	0	1	0	0
4/25/2024	2:15 AM	0	1	1	0	0	0	0	0	0	0	3	0	0
4/25/2024	2:30 AM	1	1	0	0	0	0	0	0	0	0	1	0	0
4/25/2024	2:45 AM	0	4	1	0	0	0	0	0	0	0	1	0	0
4/25/2024	3:00 AM	0	2	1	0	0	0	0	0	0	0	0	0	0
4/25/2024	3:15 AM	0	2	1	0	0	0	0	0	1	0	2	0	0
4/25/2024	3:30 AM	0	5	1	0	0	0	0	0	2	0	2	0	0
4/25/2024	3:45 AM	0	3	0	0	2	0	0	0	1	0	1	0	0
4/25/2024	4:00 AM	0	3	3	0	0	0	0	0	0	0	0	0	0
4/25/2024	4:15 AM	0	2	1	0	0	0	0	0	0	0	0	0	0
4/25/2024	4:30 AM	0	6	0	0	0	0	0	0	0	0	1	0	0
4/25/2024	4:45 AM	0	8	2	0	0	0	0	0	0	0	1	0	0
4/25/2024	5:00 AM	0	10	6	0	2	0	0	0	0	0	0	0	0
4/25/2024	5:15 AM	0	13	4	0	1	0	0	0	0	0	0	0	0
4/25/2024	5:30 AM	0	15	5	0	1	0	0	0	0	0	1	0	0
4/25/2024	5:45 AM	0	25	4	0	1	1	0	0	0	0	0	0	0
4/25/2024	6:00 AM	0	20	2	1	1	0	0	0	0	1	0	0	0
4/25/2024	6:15 AM	0	42	7	5	0	1	0	0	1	0	1	0	0
4/25/2024	6:30 AM	0	56	16	1	1	0	0	0	2	0	0	0	0
4/25/2024	6:45 AM	0	48	24	0	3	0	0	0	1	0	0	0	0
4/25/2024	7:00 AM	0	76	26	0	0	0	0	0	1	0	0	0	0
4/25/2024	7:15 AM	0	117	24	0	3	0	0	0	0	0	0	0	0
4/25/2024	7:30 AM	0	121	28	0	3	0	0	2	0	0	0	0	0
4/25/2024	7:45 AM	0	138	37	0	2	1	0	2	0	0	0	0	0
4/25/2024	8:00 AM	2	118	28	0	2	0	0	0	0	0	0	0	0
4/25/2024	8:15 AM	0	106	18	0	4	0	0	0	0	0	0	0	0
4/25/2024	8:30 AM	1	82	27	1	4	0	0	2	0	0	0	0	0
4/25/2024	8:45 AM	0	70	18	0	3	2	0	2	0	0	0	0	0
4/25/2024	9:00 AM	0	82	18	0	5	1	0	1	1	0	0	0	0
4/25/2024	9:15 AM	0	64	18	0	3	1	0	2	1	0	0	0	0
4/25/2024	9:30 AM	2	72	20	0	4	0	0	0	1	0	0	0	0
4/25/2024	9:45 AM	0	68	19	0	0	1	0	1	2	0	0	0	0
4/25/2024	10:00 AM	0	69	26	0	3	0	0	1	0	0	0	0	0
4/25/2024	10:15 AM	0	59	21	0	2	1	0	0	0	0	0	0	0
4/25/2024	10:30 AM	0	84	24	0	3	2	0	0	1	0	0	0	0
4/25/2024	10:45 AM	0	56	16	0	3	1	0	0	0	0	0	0	0
4/25/2024	11:00 AM	0	59	17	0	1	1	0	0	0	0	0	0	0
4/25/2024	11:15 AM	1	51	15	0	0	0	0	0	0	0	0	0	0
4/25/2024	11:30 AM	1	59	16	0	1	1	0	1	2	0	0	0	0
4/25/2024	11:45 AM	0	60	16	0	1	2	0	2	0	0	0	0	0
4/25/2024	12:00 PM	0	68	17	0	0	0	0	0	1	0	0	0	0
4/25/2024	12:15 PM	0	76	18	0	1	1	0	1	2	0	0	0	0
4/25/2024	12:30 PM	0	69	19	0	2	0	0	0	0	0	0	0	0
4/25/2024	12:45 PM	0	53	14	0	4	0	0	0	0	0	0	0	0
4/25/2024	1:00 PM	1	60	13	0	3	0	0	0	0	0	0	0	0
4/25/2024	1:15 PM	0	52	15	0	0	0	0	0	1	0	0	0	0
4/25/2024	1:30 PM	0	78	15	0	4	1	0	0	0	0	0	0	0
4/25/2024	1:45 PM	1	60	17	0	2	1	0	0	1	0	0	0	0
4/25/2024	2:00 PM	0	63	10	1	2	0	0	1	1	0	0	0	0
4/25/2024	2:15 PM	0	69	11	0	7	0	0	2	0	0	0	0	0
4/25/2024	2:30 PM	0	79	17	0	5	1	0	0	1	0	0	0	0
4/25/2024	2:45 PM	0	72	17	0	1	1	0	0	1	0	0	0	0
4/25/2024	3:00 PM	0	73	31	0	5	1	0	0	0	0	0	0	0
4/25/2024	3:15 PM	0	76	12	0	2	1	0	0	1	0	0	0	0
4/25/2024	3:30 PM	0	98	12	0	1	2	0	0	1	0	0	0	0
4/25/2024	3:45 PM	0	107	24	0	1	1	0	0	1	0	0	0	0
4/25/2024	4:00 PM	1	128	26	0	2	0	0	0	2	0	0	0	0
4/25/2024	4:15 PM	0	149	29	0	2	1	0	1	1	0	0	0	0
4/25/2024	4:30 PM	0	150	19	0	1	0	0	0	1	0	0	0	0
4/25/2024	4:45 PM	1	115	13	0	2	0	0	0	1	0	0	0	0
4/25/2024	5:00 PM	0	127	22	0	0	0	0	0	0	0	0	0	0
4/25/2024	5:15 PM	1	122	23	0	1	0	0	0	1	0	0	0	0
4/25/2024	5:30 PM	0	126	23	0	0	0	0	0	0	0	0	0	0
4/25/2024	5:45 PM	0	112	21	0	0	0	0	0	1	0	0	0	0
4/25/2024	6:00 PM	0	86	27	0	0	1	0	0	2	0	0	0	0
4/25/2024	6:15 PM	0	54	16	0	2	0	0	0	0	0	0	0	0
4/25/2024	6:30 PM	0	52	16	0	1	0	0	0	0	0	0	0	0
4/25/2024	6:45 PM	0	35	9	0	0	0	0	0	0	0	0	0	0
4/25/2024	7:00 PM	0	0	0	0	0	0	0	0	0	0	0	0	0
4/25/2024	7:15 PM	0	0	0	0	0	0	0	0	0	0	0	0	0
4/25/2024	7:30 PM	0	0	0	0	0	0	0	0	0	0	0	0	0
4/25/2024	7:45 PM	0	0	0	0	0	0	0	0	0	0	0	0	0
4/25/2024	8:00 PM	0	0	0	0	0	0	0	0	0	0	0	0	0
4/25/2024	8:15 PM	0	0	0	0	0	0	0	0	0	0	0	0	0
4/25/2024	8:30 PM	0	0	0	0	0	0	0	0	0	0	0	0	0
4/25/2024	8:45 PM	0	0	0	0	0	0	0	0	0	0	0	0	0
4/25/2024	9:00 PM	0	0	0	0	0	0	0	0	0	0	0	0	0
4/25/2024	9:15 PM	0	0	0	0	0	0	0	0	0	0	0	0	0
4/25/2024	9:30 PM	0	0	0	0	0	0	0	0	0	0	0	0	0
4/25/2024	9:45 PM	0	0	0	0	0	0	0	0	0	0	0	0	0
4/25/2024	10:00 PM	0	0	0	0	0	0	0	0	0	0	0	0	0
4/25/2024	10:15 PM	0	0	0	0	0	0	0	0	0	0	0	0	0
4/25/2024	10:30 PM	0	0	0	0	0	0	0	0	0	0	0	0	0
4/25/2024	10:45 PM	0	0	0	0	0	0	0	0	0	0	0	0	0
4/25/2024	11:00 PM	0	0	0	0	0	0	0	0	0	0	0	0	0
4/25/2024	11:15 PM	0	0	0	0	0	0	0	0	0	0	0	0	0
4/25/2024	11:30 PM	0	0	0	0	0	0	0	0	0	0	0	0	0
4/25/2024	11:45 PM	0	0	0	0	0	0	0	0	0	0	0	0	0

WB
File Name:
Start Date: 4/23/2024
Start Time: 0
Site Code: 59
Station ID: 1
Location 1: I-20 E/Bound On-Ramp, east of US-378 Sunset Blvd
Location 2:

Date	Time	1	2	3	4	5	6	7	8	9	10	11	12	13
4/23/2024	12:00 AM	0	0	0	0	0	0	0	0	0	0	0	0	0
4/23/2024	12:15 AM	0	0	0	0	0	0	0	0	0	0	0	0	0
4/23/2024	12:30 AM	0	0	0	0	0	0	0	0	0	0	0	0	0
4/23/2024	12:45 AM	0	0	0	0	0	0	0	0	0	0	0	0	0
4/23/2024	1:00 AM	0	0	0	0	0	0	0	0	0	0	0	0	0
4/23/2024	1:15 AM	0	0	0	0	0	0	0	0	0	0	0	0	0
4/23/2024	1:30 AM	0	0	0	0	0	0	0	0	0	0	0	0	0
4/23/2024	1:45 AM	0	0	0	0	0	0	0	0	0	0	0	0	0
4/23/2024	2:00 AM	0	0	0	0	0	0	0	0	0	0	0	0	0
4/23/2024	2:15 AM	0	0	0	0	0	0	0	0	0	0	0	0	0
4/23/2024	2:30 AM	0	0	0	0	0	0	0	0	0	0	0	0	0
4/23/2024	2:45 AM	0	0	0	0	0	0	0	0	0	0	0	0	0
4/23/2024	3:00 AM	0	0	0	0	0	0	0	0	0	0	0	0	0
4/23/2024	3:15 AM	0	0	0	0	0	0	0	0	0	0	0	0	0
4/23/2024	3:30 AM	0	0	0	0	0	0	0	0	0	0	0	0	0
4/23/2024	3:45 AM	0	0	0	0	0	0	0	0	0	0	0	0	0
4/23/2024	4:00 AM	0	0	0	0	0	0	0	0	0	0	0	0	0
4/23/2024	4:15 AM	0	0	0	0	0	0	0	0	0	0	0	0	0
4/23/2024	4:30 AM	0	0	0	0	0	0	0	0	0	0	0	0	0
4/23/2024	4:45 AM	0	0	0	0	0	0	0	0	0	0	0	0	0
4/23/2024	5:00 AM	0	0	0	0	0	0	0	0	0	0	0	0	0
4/23/2024	5:15 AM	0	0	0	0	0	0	0	0	0	0	0	0	0
4/23/2024	5:30 AM	0	0	0	0	0	0	0	0	0	0	0	0	0
4/23/2024	5:45 AM	0	0	0	0	0	0	0	0	0	0	0	0	0
4/23/2024	6:00 AM	0	0	0	0	0	0	0	0	0	0	0	0	0
4/23/2024	6:15 AM	0	0	0	0	0	0	0	0	0	0	0	0	0
4/23/2024	6:30 AM	0	0	0	0	0	0	0	0	0	0	0	0	0
4/23/2024	6:45 AM	0	0	0	0	0	0	0	0	0	0	0	0	0
4/23/2024	7:00 AM	0	0	0	0	0	0	0	0	0	0	0	0	0
4/23/2024	7:15 AM	0	0	0	0	0	0	0	0	0	0	0	0	0
4/23/2024	7:30 AM	0	0	0	0	0	0	0	0	0	0	0	0	0
4/23/2024	7:45 AM	0	0	0	0	0	0	0	0	0	0	0	0	0
4/23/2024	8:00 AM	0	0	0	0	0	0	0	0	0	0	0	0	0
4/23/2024	8:15 AM	0	0	0	0	0	0	0	0	0	0	0	0	0
4/23/2024	8:30 AM	0	0	0	0	0	0	0	0	0	0	0	0	0
4/23/2024	8:45 AM	0	0	0	0	0	0	0	0	0	0	0	0	0
4/23/2024	9:00 AM	0	0	0	0	0	0	0	0	0	0	0	0	0
4/23/2024	9:15 AM	0	0	0	0	0	0	0	0	0	0	0	0	0
4/23/2024	9:30 AM	0	0	0	0	0	0	0	0	0	0	0	0	0
4/23/2024	9:45 AM	0	0	0	0	0	0	0	0	0	0	0	0	0
4/23/2024	10:00 AM	0	0	0	0	0	0	0	0	0	0	0	0	0
4/23/2024	10:15 AM	0	0	0	0	0	0	0	0	0	0	0	0	0
4/23/2024	10:30 AM	0	0	0	0	0	0	0	0	0	0	0	0	0
4/23/2024	10:45 AM	0	0	0	0	0	0	0	0	0	0	0	0	0
4/23/2024	11:00 AM	0	0	0	0	0	0	0	0	0	0	0	0	0
4/23/2024	11:15 AM	0	0	0	0	0	0	0	0	0	0	0	0	0
4/23/2024	11:30 AM	0	0	0	0	0	0	0	0	0	0	0	0	0
4/23/2024	11:45 AM	0	0	0	0	0	0	0	0	0	0	0	0	0
4/23/2024	12:00 PM	0	0	0	0	0	0	0	0	0	0	0	0	0
4/23/2024	12:15 PM	0	0	0	0	0	0	0	0	0	0	0	0	0
4/23/2024	12:30 PM	0	0	0	0	0	0	0	0	0	0	0	0	0
4/23/2024	12:45 PM	0	0	0	0	0	0	0	0	0	0	0	0	0
4/23/2024	1:00 PM	0	0	0	0	0	0	0	0	0	0	0	0	0
4/23/2024	1:15 PM	0	0	0	0	0	0	0	0	0	0	0	0	0
4/23/2024	1:30 PM	0	0	0	0	0	0	0	0	0	0	0	0	0
4/23/2024	1:45 PM	0	0	0	0	0	0	0	0	0	0	0	0	0
4/23/2024	2:00 PM	0	0	0	0	0	0	0	0	0	0	0	0	0
4/23/2024	2:15 PM	0	0	0	0	0	0	0	0	0	0	0	0	0
4/23/2024	2:30 PM	0	0	0	0	0	0	0	0	0	0	0	0	0
4/23/2024	2:45 PM	0	0	0	0	0	0	0	0	0	0	0	0	0
4/23/2024	3:00 PM	0	0	0	0	0	0	0	0	0	0	0	0	0
4/23/2024	3:15 PM	0	0	0	0	0	0	0	0	0	0	0	0	0
4/23/2024	3:30 PM	0	0	0	0	0	0	0	0	0	0	0	0	0
4/23/2024	3:45 PM	0	0	0	0	0	0	0	0	0	0	0	0	0
4/23/2024	4:00 PM	0	0	0	0	0	0	0	0	0	0	0	0	0
4/23/2024	4:15 PM	0	0	0	0	0	0	0	0	0	0	0	0	0
4/23/2024	4:30 PM	0	0	0	0	0	0	0	0	0	0	0	0	0
4/23/2024	4:45 PM	0	0	0	0	0	0	0	0	0	0	0	0	0
4/23/2024	5:00 PM	0	0	0	0	0	0	0	0	0	0	0	0	0
4/23/2024	5:15 PM	0	0	0	0	0	0	0	0	0	0	0	0	0
4/23/2024	5:30 PM	0	0	0	0	0	0	0	0	0	0	0	0	0
4/23/2024	5:45 PM	0	0	0	0	0	0	0	0	0	0	0	0	0
4/23/2024	6:00 PM	0	0	0	0	0	0	0	0	0	0	0	0	0
4/23/2024	6:15 PM	0	0	0	0	0	0	0	0	0	0	0	0	0
4/23/2024	6:30 PM	0	0	0	0	0	0	0	0	0	0	0	0	0
4/23/2024	6:45 PM	0	0	0	0	0	0	0	0	0	0	0	0	0
4/23/2024	7:00 PM	0	0	0	0	0	0	0	0	0	0	0	0	0
4/23/2024	7:15 PM	0	0	0	0	0	0	0	0	0	0	0	0	0
4/23/2024	7:30 PM	0	0	0	0	0	0	0	0	0	0	0	0	0
4/23/2024	7:45 PM	0	0	0	0	0	0	0	0	0	0	0	0	0
4/23/2024	8:00 PM	0	0	0	0	0	0	0	0	0	0	0	0	0
4/23/2024	8:15 PM	0	0	0	0	0	0	0	0	0	0	0	0	0
4/23/2024	8:30 PM	0	0	0	0	0	0	0	0	0	0	0	0	0
4/23/2024	8:45 PM	0	0	0	0	0	0	0	0	0	0	0	0	0
4/23/2024	9:00 PM	0	0	0	0	0	0	0	0	0	0	0	0	0
4/23/2024	9:15 PM	0	0	0	0	0	0	0	0	0	0	0	0	0
4/23/2024	9:30 PM	0	0	0	0	0	0	0	0	0	0	0	0	0
4/23/2024	9:45 PM	0	0	0	0	0	0	0	0	0	0	0	0	0
4/23/2024	10:00 PM	0	0	0	0	0	0	0	0	0	0	0	0	0
4/23/2024	10:15 PM	0	0	0	0	0	0	0	0	0	0	0	0	0
4/23/2024	10:30 PM	0	0	0	0	0	0	0	0	0	0	0	0	0
4/23/2024	10:45 PM	0	0	0	0	0	0	0	0	0	0	0	0	0
4/23/2024	11:00 PM	0	0	0	0	0	0	0	0	0	0	0	0	0
4/23/2024	11:15 PM	0	0	0	0	0	0	0	0	0	0	0	0	0
4/23/2024	11:30 PM	0	0	0	0	0	0	0	0	0	0	0	0	0
4/23/2024	11:45 PM	0	0	0	0	0	0	0	0	0	0	0	0	0

4/24/2024	12:00 AM	0	0	0	0	0	0	0	0	0	0	0	0	0
4/24/2024	12:15 AM	0	0	0	0	0	0	0	0	0	0	0	0	0
4/24/2024	12:30 AM	0	0	0	0	0	0	0	0	0	0	0	0	0
4/24/2024	12:45 AM	0	0	0	0	0	0	0	0	0	0	0	0	0
4/24/2024	1:00 AM	0	0	0	0	0	0	0	0	0	0	0	0	0
4/24/2024	1:15 AM	0	0	0	0	0	0	0	0	0	0	0	0	0
4/24/2024	1:30 AM	0	0	0	0	0	0	0	0	0	0	0	0	0
4/24/2024	1:45 AM	0	0	0	0	0	0	0	0	0	0	0	0	0
4/24/2024	2:00 AM	0	0	0	0	0	0	0	0	0	0	0	0	0
4/24/2024	2:15 AM	0	0	0	0	0	0	0	0	0	0	0	0	0
4/24/2024	2:30 AM	0	0	0	0	0	0	0	0	0	0	0	0	0
4/24/2024	2:45 AM	0	0	0	0	0	0	0	0	0	0	0	0	0
4/24/2024	3:00 AM	0	0	0	0	0	0	0	0	0	0	0	0	0
4/24/2024	3:15 AM	0	0	0	0	0	0	0	0	0	0	0	0	0
4/24/2024	3:30 AM	0	0	0	0	0	0	0	0	0	0	0	0	0
4/24/2024	3:45 AM	0	0	0	0	0	0	0	0	0	0	0	0	0
4/24/2024	4:00 AM	0	0	0	0	0	0	0	0	0	0	0	0	0
4/24/2024	4:15 AM	0	0	0	0	0	0	0	0	0	0	0	0	0
4/24/2024	4:30 AM	0	0	0	0	0	0	0	0	0	0	0	0	0
4/24/2024	4:45 AM	0	0	0	0	0	0	0	0	0	0	0	0	0
4/24/2024	5:00 AM	0	0	0	0	0	0	0	0	0	0	0	0	0
4/24/2024	5:15 AM	0	0	0	0	0	0	0	0	0	0	0	0	0
4/24/2024	5:30 AM	0	0	0	0	0	0	0	0	0	0	0	0	0
4/24/2024	5:45 AM	0	0	0	0	0	0	0	0	0	0	0	0	0
4/24/2024	6:00 AM	0	0	0	0	0	0	0	0	0	0	0	0	0
4/24/2024	6:15 AM	0	0	0	0	0	0	0	0	0	0	0	0	0
4/24/2024	6:30 AM	0	0	0	0	0	0	0	0	0	0	0	0	0
4/24/2024	6:45 AM	0	0	0	0	0	0	0	0	0	0	0	0	0
4/24/2024	7:00 AM	0	0	0	0	0	0	0	0	0	0	0	0	0
4/24/2024	7:15 AM	0	0	0	0	0	0	0	0	0	0	0	0	0
4/24/2024	7:30 AM	0	0	0	0	0	0	0	0	0	0	0	0	0
4/24/2024	7:45 AM	0	0	0	0	0	0	0	0	0	0	0	0	0
4/24/2024	8:00 AM	0	0	0	0	0	0	0	0	0	0	0	0	0
4/24/2024	8:15 AM	0	0	0	0	0	0	0	0	0	0	0	0	0
4/24/2024	8:30 AM	0	0	0	0	0	0	0	0	0	0	0	0	0
4/24/2024	8:45 AM	0	0	0	0	0	0	0	0	0	0	0	0	0
4/24/2024	9:00 AM	0	0	0	0	0	0	0	0	0	0	0	0	0
4/24/2024	9:15 AM	0	0	0	0	0	0	0	0	0	0	0	0	0
4/24/2024	9:30 AM	0	0	0	0	0	0	0	0	0	0	0	0	0
4/24/2024	9:45 AM	0	0	0	0	0	0	0	0	0	0	0	0	0
4/24/2024	10:00 AM	0	0	0	0	0	0	0	0	0	0	0	0	0
4/24/2024	10:15 AM	0	0	0	0	0	0	0	0	0	0	0	0	0
4/24/2024	10:30 AM	0	0	0	0	0	0	0	0	0	0	0	0	0
4/24/2024	10:45 AM	0	0	0	0	0	0	0	0	0	0	0	0	0
4/24/2024	11:00 AM	0	0	0	0	0	0	0	0	0	0	0	0	0
4/24/2024	11:15 AM	0	0	0	0	0	0	0	0	0	0	0	0	0
4/24/2024	11:30 AM	0	0	0	0	0	0	0	0	0	0	0	0	0
4/24/2024	11:45 AM	0	0	0	0	0	0	0	0	0	0	0	0	0
4/24/2024	12:00 PM	0	0	0	0	0	0	0	0	0	0	0	0	0
4/24/2024	12:15 PM	0	0	0	0	0	0	0	0	0	0	0	0	0
4/24/2024	12:30 PM	0	0	0	0	0	0	0	0	0	0	0	0	0
4/24/2024	12:45 PM	0	0	0	0	0	0	0	0	0	0	0	0	0
4/24/2024	1:00 PM	0	0	0	0	0	0	0	0	0	0	0	0	0
4/24/2024	1:15 PM	0	0	0	0	0	0	0	0	0	0	0	0	0
4/24/2024	1:30 PM	0	0	0	0	0	0	0	0	0	0	0	0	0
4/24/2024	1:45 PM	0	0	0	0	0	0	0	0	0	0	0	0	0
4/24/2024	2:00 PM	0	0	0	0	0	0	0	0	0	0	0	0	0
4/24/2024	2:15 PM	0	0	0	0	0	0	0	0	0	0	0	0	0
4/24/2024	2:30 PM	0	0	0	0	0	0	0	0	0	0	0	0	0
4/24/2024	2:45 PM	0	0	0	0	0	0	0	0	0	0	0	0	0
4/24/2024	3:00 PM	0	0	0	0	0	0	0	0	0	0	0	0	0
4/24/2024	3:15 PM	0	0	0	0	0	0	0	0	0	0	0	0	0
4/24/2024	3:30 PM	0	0	0	0	0	0	0	0	0	0	0	0	0
4/24/2024	3:45 PM	0	0	0	0	0	0	0	0	0	0	0	0	0
4/24/2024	4:00 PM	0	0	0	0	0	0	0	0	0	0	0	0	0
4/24/2024	4:15 PM	0	0	0	0	0	0	0	0	0	0	0	0	0
4/24/2024	4:30 PM	0	0	0	0	0	0	0	0	0	0	0	0	0
4/24/2024	4:45 PM	0	0	0	0	0	0	0	0	0	0	0	0	0
4/24/2024	5:00 PM	0	0	0	0	0	0	0	0	0	0	0	0	0
4/24/2024	5:15 PM	0	0	0	0	0	0	0	0	0	0	0	0	0
4/24/2024	5:30 PM	0	0	0	0	0	0	0	0	0	0	0	0	0
4/24/2024	5:45 PM	0	0	0	0	0	0	0	0	0	0	0	0	0
4/24/2024	6:00 PM	0	0	0	0	0	0	0	0	0	0	0	0	0
4/24/2024	6:15 PM	0	0	0	0	0	0	0	0	0	0	0	0	0
4/24/2024	6:30 PM	0	0	0	0	0	0	0	0	0	0	0	0	0
4/24/2024	6:45 PM	0	0	0	0	0	0	0	0	0	0	0	0	0
4/24/2024	7:00 PM	0	0	0	0	0	0	0	0	0	0	0	0	0
4/24/2024	7:15 PM	0	0	0	0	0	0	0	0	0	0	0	0	0
4/24/2024	7:30 PM	0	0	0	0	0	0	0	0	0	0	0	0	0
4/24/2024	7:45 PM	0	0	0	0	0	0	0	0	0	0	0	0	0
4/24/2024	8:00 PM	0	0	0	0	0	0	0	0	0	0	0	0	0
4/24/2024	8:15 PM	0	0	0	0	0	0	0	0	0	0	0	0	0
4/24/2024	8:30 PM	0	0	0	0	0	0	0	0	0	0	0	0	0
4/24/2024	8:45 PM	0	0	0	0	0	0	0	0	0	0	0	0	0
4/24/2024	9:00 PM	0	0	0	0	0	0	0	0	0	0	0	0	0
4/24/2024	9:15 PM	0	0	0	0	0	0	0	0	0	0	0	0	0
4/24/2024	9:30 PM	0	0	0	0	0	0	0	0	0	0	0	0	0
4/24/2024	9:45 PM	0	0	0	0	0	0	0	0	0	0	0	0	0
4/24/2024	10:00 PM	0	0	0	0	0	0	0	0	0	0	0	0	0
4/24/2024	10:15 PM	0	0	0	0	0	0	0	0	0	0	0	0	0
4/24/2024	10:30 PM	0	0	0	0	0	0	0	0	0	0	0	0	0
4/24/2024	10:45 PM	0	0	0	0	0	0	0	0	0	0	0	0	0
4/24/2024	11:00 PM	0	0	0	0	0	0	0	0	0	0	0	0	0
4/24/2024	11:15 PM	0	0	0	0	0	0	0	0	0	0	0	0	0
4/24/2024	11:30 PM	0	0	0	0	0	0	0	0	0	0	0	0	0
4/24/2024	11:45 PM	0	0	0	0	0	0	0	0	0	0	0	0	0

4/25/2024	12:00 AM	0	0	0	0	0	0	0	0	0	0	0	0	0
4/25/2024	12:15 AM	0	0	0	0	0	0	0	0	0	0	0	0	0
4/25/2024	12:30 AM	0	0	0	0	0	0	0	0	0	0	0	0	0
4/25/2024	12:45 AM	0	0	0	0	0	0	0	0	0	0	0	0	0
4/25/2024	1:00 AM	0	0	0	0	0	0	0	0	0	0	0	0	0
4/25/2024	1:15 AM	0	0	0	0	0	0	0	0	0	0	0	0	0
4/25/2024	1:30 AM	0	0	0	0	0	0	0	0	0	0	0	0	0
4/25/2024	1:45 AM	0	0	0	0	0	0	0	0	0	0	0	0	0
4/25/2024	2:00 AM	0	0	0	0	0	0	0	0	0	0	0	0	0
4/25/2024	2:15 AM	0	0	0	0	0	0	0	0	0	0	0	0	0
4/25/2024	2:30 AM	0	0	0	0	0	0	0	0	0	0	0	0	0
4/25/2024	2:45 AM	0	0	0	0	0	0	0	0	0	0	0	0	0
4/25/2024	3:00 AM	0	0	0	0	0	0	0	0	0	0	0	0	0
4/25/2024	3:15 AM	0	0	0	0	0	0	0	0	0	0	0	0	0
4/25/2024	3:30 AM	0	0	0	0	0	0	0	0	0	0	0	0	0
4/25/2024	3:45 AM	0	0	0	0	0	0	0	0	0	0	0	0	0
4/25/2024	4:00 AM	0	0	0	0	0	0	0	0	0	0	0	0	0
4/25/2024	4:15 AM	0	0	0	0	0	0	0	0	0	0	0	0	0
4/25/2024	4:30 AM	0	0	0	0	0	0	0	0	0	0	0	0	0
4/25/2024	4:45 AM	0	0	0	0	0	0	0	0	0	0	0	0	0
4/25/2024	5:00 AM	0	0	0	0	0	0	0	0	0	0	0	0	0
4/25/2024	5:15 AM	0	0	0	0	0	0	0	0	0	0	0	0	0
4/25/2024	5:30 AM	0	0	0	0	0	0	0	0	0	0	0	0	0
4/25/2024	5:45 AM	0	0	0	0	0	0	0	0	0	0	0	0	0
4/25/2024	6:00 AM	0	0	0	0	0	0	0	0	0	0	0	0	0
4/25/2024	6:15 AM	0	0	0	0	0	0	0	0	0	0	0	0	0
4/25/2024	6:30 AM	0	0	0	0	0	0	0	0	0	0	0	0	0
4/25/2024	6:45 AM	0	0	0	0	0	0	0	0	0	0	0	0	0
4/25/2024	7:00 AM	0	0	0	0	0	0	0	0	0	0	0	0	0
4/25/2024	7:15 AM	0	0	0	0	0	0	0	0	0	0	0	0	0
4/25/2024	7:30 AM	0	0	0	0	0	0	0	0	0	0	0	0	0
4/25/2024	7:45 AM	0	0	0	0	0	0	0	0	0	0	0	0	0
4/25/2024	8:00 AM	0	0	0	0	0	0	0	0	0	0	0	0	0
4/25/2024	8:15 AM	0	0	0	0	0	0	0	0	0	0	0	0	0
4/25/2024	8:30 AM	0	0	0	0	0	0	0	0	0	0	0	0	0
4/25/2024	8:45 AM	0	0	0	0	0	0	0	0	0	0	0	0	0
4/25/2024	9:00 AM	0	0	0	0	0	0	0	0	0	0	0	0	0
4/25/2024	9:15 AM	0	0	0	0	0	0	0	0	0	0	0	0	0
4/25/2024	9:30 AM	0	0	0	0	0	0	0	0	0	0	0	0	0
4/25/2024	9:45 AM	0	0	0	0	0	0	0	0	0	0	0	0	0
4/25/2024	10:00 AM	0	0	0	0	0	0	0	0	0	0	0	0	0
4/25/2024	10:15 AM	0	0	0	0	0	0	0	0	0	0	0	0	0
4/25/2024	10:30 AM	0	0	0	0	0	0	0	0	0	0	0	0	0
4/25/2024	10:45 AM	0	0	0	0	0	0	0	0	0	0	0	0	0
4/25/2024	11:00 AM	0	0	0	0	0	0	0	0	0	0	0	0	0
4/25/2024	11:15 AM	0	0	0	0	0	0	0	0	0	0	0	0	0
4/25/2024	11:30 AM	0	0	0	0	0	0	0	0	0	0	0	0	0
4/25/2024	11:45 AM	0	0	0	0	0	0	0	0	0	0	0	0	0
4/25/2024	12:00 PM	0	0	0	0	0	0	0	0	0	0	0	0	0
4/25/2024	12:15 PM	0	0	0	0	0	0	0	0	0	0	0	0	0
4/25/2024	12:30 PM	0	0	0	0	0	0	0	0	0	0	0	0	0
4/25/2024	12:45 PM	0	0	0	0	0	0	0	0	0	0	0	0	0
4/25/2024	1:00 PM	0	0	0	0	0	0	0	0	0	0	0	0	0
4/25/2024	1:15 PM	0	0	0	0	0	0	0	0	0	0	0	0	0
4/25/2024	1:30 PM	0	0	0	0	0	0	0	0	0	0	0	0	0
4/25/2024	1:45 PM	0	0	0	0	0	0	0	0	0	0	0	0	0
4/25/2024	2:00 PM	0	0	0	0	0	0	0	0	0	0	0	0	0
4/25/2024	2:15 PM	0	0	0	0	0	0	0	0	0	0	0	0	0
4/25/2024	2:30 PM	0	0	0	0	0	0	0	0	0	0	0	0	0
4/25/2024	2:45 PM	0	0	0	0	0	0	0	0	0	0	0	0	0
4/25/2024	3:00 PM	0	0	0	0	0	0	0	0	0	0	0	0	0
4/25/2024	3:15 PM	0	0	0	0	0	0	0	0	0	0	0	0	0
4/25/2024	3:30 PM	0	0	0	0	0	0	0	0	0	0	0	0	0
4/25/2024	3:45 PM	0	0	0	0	0	0	0	0	0	0	0	0	0
4/25/2024	4:00 PM	0	0	0	0	0	0	0	0	0	0	0	0	0
4/25/2024	4:15 PM	0	0	0	0	0	0	0	0	0	0	0	0	0
4/25/2024	4:30 PM	0	0	0	0	0	0	0	0	0	0	0	0	0
4/25/2024	4:45 PM	0	0	0	0	0	0	0	0	0	0	0	0	0
4/25/2024	5:00 PM	0	0	0	0	0	0	0	0	0	0	0	0	0
4/25/2024	5:15 PM	0	0	0	0	0	0	0	0	0	0	0	0	0
4/25/2024	5:30 PM	0	0	0	0	0	0	0	0	0	0	0	0	0
4/25/2024	5:45 PM	0	0	0	0	0	0	0	0	0	0	0	0	0
4/25/2024	6:00 PM	0	0	0	0	0	0	0	0	0	0	0	0	0
4/25/2024	6:15 PM	0	0	0	0	0	0	0	0	0	0	0	0	0
4/25/2024	6:30 PM	0	0	0	0	0	0	0	0	0	0	0	0	0
4/25/2024	6:45 PM	0	0	0	0	0	0	0	0	0	0	0	0	0
4/25/2024	7:00 PM	0	0	0	0	0	0	0	0	0	0	0	0	0
4/25/2024	7:15 PM	0	0	0	0	0	0	0	0	0	0	0	0	0
4/25/2024	7:30 PM	0	0	0	0	0	0	0	0	0	0	0	0	0
4/25/2024	7:45 PM	0	0	0	0	0	0	0	0	0	0	0	0	0
4/25/2024	8:00 PM	0	0	0	0	0	0	0	0	0	0	0	0	0
4/25/2024	8:15 PM	0	0	0	0	0	0	0	0	0	0	0	0	0
4/25/2024	8:30 PM	0	0	0	0	0	0	0	0	0	0	0	0	0
4/25/2024	8:45 PM	0	0	0	0	0	0	0	0	0	0	0	0	0
4/25/2024	9:00 PM	0	0	0	0	0	0	0	0	0	0	0	0	0
4/25/2024	9:15 PM	0	0	0	0	0	0	0	0	0	0	0	0	0
4/25/2024	9:30 PM	0	0	0	0	0	0	0	0	0	0	0	0	0
4/25/2024	9:45 PM	0	0	0	0	0	0	0	0	0	0	0	0	0
4/25/2024	10:00 PM	0	0	0	0	0	0	0	0	0	0	0	0	0
4/25/2024	10:15 PM	0	0	0	0	0	0	0	0	0	0	0	0	0
4/25/2024	10:30 PM	0	0	0	0	0	0	0	0	0	0	0	0	0
4/25/2024	10:45 PM	0	0	0	0	0	0	0	0	0	0	0	0	0
4/25/2024	11:00 PM	0	0	0	0	0	0	0	0	0	0	0	0	0
4/25/2024	11:15 PM	0	0	0	0	0	0	0	0	0	0	0	0	0
4/25/2024	11:30 PM	0	0	0	0	0	0	0	0	0	0	0	0	0
4/25/2024	11:45 PM	0	0	0	0	0	0	0	0	0	0	0	0	0

EB
File Name:
Start Date: 4/23/2024
Start Time: 0
Site Code: 59
Station ID: 1
Location 1: I-20 E/Bound On-Ramp, east of US-378 Sunset Blvd
Location 2:

Date	Time	1	2	3	4	5	6	7	8	9	10	11	12	13
4/23/2024	12:00 AM	0	0	0	0	0	0	0	0	0	0	0	0	0
4/23/2024	12:15 AM	0	0	0	0	0	0	0	0	0	0	0	0	0
4/23/2024	12:30 AM	0	0	0	0	0	0	0	0	0	0	0	0	0
4/23/2024	12:45 AM	0	0	0	0	0	0	0	0	0	0	0	0	0
4/23/2024	1:00 AM	0	0	0	0	0	0	0	0	0	0	0	0	0
4/23/2024	1:15 AM	0	0	0	0	0	0	0	0	0	0	0	0	0
4/23/2024	1:30 AM	0	0	0	0	0	0	0	0	0	0	0	0	0
4/23/2024	1:45 AM	0	0	0	0	0	0	0	0	0	0	0	0	0
4/23/2024	2:00 AM	0	0	0	0	0	0	0	0	0	0	0	0	0
4/23/2024	2:15 AM	0	0	0	0	0	0	0	0	0	0	0	0	0
4/23/2024	2:30 AM	0	0	0	0	0	0	0	0	0	0	0	0	0
4/23/2024	2:45 AM	0	0	0	0	0	0	0	0	0	0	0	0	0
4/23/2024	3:00 AM	0	0	0	0	0	0	0	0	0	0	0	0	0
4/23/2024	3:15 AM	0	0	0	0	0	0	0	0	0	0	0	0	0
4/23/2024	3:30 AM	0	0	0	0	0	0	0	0	0	0	0	0	0
4/23/2024	3:45 AM	0	0	0	0	0	0	0	0	0	0	0	0	0
4/23/2024	4:00 AM	0	0	0	0	0	0	0	0	0	0	0	0	0
4/23/2024	4:15 AM	0	0	0	0	0	0	0	0	0	0	0	0	0
4/23/2024	4:30 AM	0	0	0	0	0	0	0	0	0	0	0	0	0
4/23/2024	4:45 AM	0	0	0	0	0	0	0	0	0	0	0	0	0
4/23/2024	5:00 AM	0	0	0	0	0	0	0	0	0	0	0	0	0
4/23/2024	5:15 AM	0	0	0	0	0	0	0	0	0	0	0	0	0
4/23/2024	5:30 AM	0	0	0	0	0	0	0	0	0	0	0	0	0
4/23/2024	5:45 AM	0	0	0	0	0	0	0	0	0	0	0	0	0
4/23/2024	6:00 AM	0	0	0	0	0	0	0	0	0	0	0	0	0
4/23/2024	6:15 AM	0	0	0	0	0	0	0	0	0	0	0	0	0
4/23/2024	6:30 AM	0	0	0	0	0	0	0	0	0	0	0	0	0
4/23/2024	6:45 AM	0	0	0	0	0	0	0	0	0	0	0	0	0
4/23/2024	7:00 AM	0	0	0	0	0	0	0	0	0	0	0	0	0
4/23/2024	7:15 AM	0	0	0	0	0	0	0	0	0	0	0	0	0
4/23/2024	7:30 AM	0	0	0	0	0	0	0	0	0	0	0	0	0
4/23/2024	7:45 AM	0	0	0	0	0	0	0	0	0	0	0	0	0
4/23/2024	8:00 AM	0	0	0	0	0	0	0	0	0	0	0	0	0
4/23/2024	8:15 AM	0	0	0	0	0	0	0	0	0	0	0	0	0
4/23/2024	8:30 AM	0	0	0	0	0	0	0	0	0	0	0	0	0
4/23/2024	8:45 AM	0	0	0	0	0	0	0	0	0	0	0	0	0
4/23/2024	9:00 AM	0	0	0	0	0	0	0	0	0	0	0	0	0
4/23/2024	9:15 AM	0	0	0	0	0	0	0	0	0	0	0	0	0
4/23/2024	9:30 AM	0	0	0	0	0	0	0	0	0	0	0	0	0
4/23/2024	9:45 AM	0	0	0	0	0	0	0	0	0	0	0	0	0
4/23/2024	10:00 AM	0	0	0	0	0	0	0	0	0	0	0	0	0
4/23/2024	10:15 AM	0	0	0	0	0	0	0	0	0	0	0	0	0
4/23/2024	10:30 AM	0	0	0	0	0	0	0	0	0	0	0	0	0
4/23/2024	10:45 AM	0	0	0	0	0	0	0	0	0	0	0	0	0
4/23/2024	11:00 AM	0	0	0	0	0	0	0	0	0	0	0	0	0
4/23/2024	11:15 AM	0	0	0	0	0	0	0	0	0	0	0	0	0
4/23/2024	11:30 AM	0	0	0	0	0	0	0	0	0	0	0	0	0
4/23/2024	11:45 AM	0	0	0	0	0	0	0	0	0	0	0	0	0
4/23/2024	12:00 PM	0	0	0	0	0	0	0	0	0	0	0	0	0
4/23/2024	12:15 PM	0	0	0	0	0	0	0	0	0	0	0	0	0
4/23/2024	12:30 PM	0	0	0	0	0	0	0	0	0	0	0	0	0
4/23/2024	12:45 PM	0	0	0	0	0	0	0	0	0	0	0	0	0
4/23/2024	1:00 PM	0	0	0	0	0	0	0	0	0	0	0	0	0
4/23/2024	1:15 PM	0	0	0	0	0	0	0	0	0	0	0	0	0
4/23/2024	1:30 PM	0	0	0	0	0	0	0	0	0	0	0	0	0
4/23/2024	1:45 PM	0	0	0	0	0	0	0	0	0	0	0	0	0
4/23/2024	2:00 PM	0	0	0	0	0	0	0	0	0	0	0	0	0
4/23/2024	2:15 PM	0	0	0	0	0	0	0	0	0	0	0	0	0
4/23/2024	2:30 PM	0	0	0	0	0	0	0	0	0	0	0	0	0
4/23/2024	2:45 PM	0	0	0	0	0	0	0	0	0	0	0	0	0
4/23/2024	3:00 PM	0	0	0	0	0	0	0	0	0	0	0	0	0
4/23/2024	3:15 PM	0	0	0	0	0	0	0	0	0	0	0	0	0
4/23/2024	3:30 PM	0	0	0	0	0	0	0	0	0	0	0	0	0
4/23/2024	3:45 PM	0	0	0	0	0	0	0	0	0	0	0	0	0
4/23/2024	4:00 PM	0	0	0	0	0	0	0	0	0	0	0	0	0
4/23/2024	4:15 PM	0	0	0	0	0	0	0	0	0	0	0	0	0
4/23/2024	4:30 PM	0	0	0	0	0	0	0	0	0	0	0	0	0
4/23/2024	4:45 PM	0	0	0	0	0	0	0	0	0	0	0	0	0
4/23/2024	5:00 PM	0	0	0	0	0	0	0	0	0	0	0	0	0
4/23/2024	5:15 PM	0	0	0	0	0	0	0	0	0	0	0	0	0
4/23/2024	5:30 PM	0	0	0	0	0	0	0	0	0	0	0	0	0
4/23/2024	5:45 PM	0	0	0	0	0	0	0	0	0	0	0	0	0
4/23/2024	6:00 PM	0	0	0	0	0	0	0	0	0	0	0	0	0
4/23/2024	6:15 PM	0	61	6	0	0	0	0	0	0	1	0	0	0
4/23/2024	6:30 PM	0	104	13	0	0	0	0	0	0	1	0	0	0
4/23/2024	6:45 PM	0	135	17	0	0	0	0	0	0	1	1	0	0
4/23/2024	7:00 PM	0	161	22	0	0	0	0	0	0	1	1	0	0
4/23/2024	7:15 PM	0	124	18	0	0	0	0	0	0	0	1	0	0
4/23/2024	7:30 PM	0	120	25	0	1	0	0	0	0	0	1	0	0
4/23/2024	7:45 PM	0	118	23	0	1	0	0	0	1	0	0	0	0
4/23/2024	8:00 PM	0	115	19	0	1	0	0	0	1	0	0	0	0
4/23/2024	8:15 PM	0	114	17	0	2	0	0	0	1	0	1	0	0
4/23/2024	8:30 PM	0	93	3	0	1	0	0	0	1	0	1	0	0
4/23/2024	8:45 PM	0	79	3	0	1	0	0	0	0	0	1	0	0
4/23/2024	9:00 PM	0	72	2	0	1	0	0	0	0	0	1	0	0
4/23/2024	9:15 PM	0	57	2	0	0	0	0	0	0	0	0	0	0
4/23/2024	9:30 PM	0	57	2	0	0	0	0	0	0	0	1	0	0
4/23/2024	9:45 PM	0	55	0	0	0	0	0	0	1	0	2	0	0
4/23/2024	10:00 PM	0	56	0	0	0	0	0	0	1	0	2	0	0
4/23/2024	10:15 PM	0	55	0	0	0	0	0	0	1	0	3	0	0
4/23/2024	10:30 PM	0	48	0	0	0	0	0	0	1	0	5	0	0
4/23/2024	10:45 PM	0	43	0	0	0	0	0	0	0	0	5	0	0
4/23/2024	11:00 PM	0	31	0	0	1	0	0	0	0	0	5	0	0
4/23/2024	11:15 PM	0	31	0	0	1	0	0	0	1	0	5	0	0
4/23/2024	11:30 PM	0	25	0	0	1	0	0	0	1	0	2	0	0
4/23/2024	11:45 PM	0	24	0	0	1	0	0	0	1	0	2	0	0

4/24/2024	12:00 AM	0	20	0	0	0	0	0	0	3	0	3	0	0
4/24/2024	12:15 AM	0	21	0	0	0	0	0	0	3	0	2	0	0
4/24/2024	12:30 AM	0	19	0	0	0	0	0	0	3	0	4	0	0
4/24/2024	12:45 AM	0	14	0	0	0	0	0	0	3	0	4	0	0
4/24/2024	1:00 AM	0	18	0	0	0	0	0	0	1	0	5	0	0
4/24/2024	1:15 AM	0	10	0	0	0	0	0	0	1	0	8	0	0
4/24/2024	1:30 AM	0	11	0	0	0	0	0	0	1	0	6	0	0
4/24/2024	1:45 AM	0	9	0	0	1	0	0	0	1	0	8	0	0
4/24/2024	2:00 AM	0	6	0	0	1	0	0	0	1	0	9	0	0
4/24/2024	2:15 AM	0	9	0	0	1	0	0	0	0	0	7	0	0
4/24/2024	2:30 AM	0	6	0	0	1	0	0	0	1	0	7	0	0
4/24/2024	2:45 AM	0	8	0	0	0	0	0	0	1	0	5	0	0
4/24/2024	3:00 AM	0	11	0	0	0	0	0	0	1	0	2	0	0
4/24/2024	3:15 AM	0	12	0	0	1	0	0	0	1	0	2	0	0
4/24/2024	3:30 AM	0	17	0	0	1	0	0	0	2	0	2	0	0
4/24/2024	3:45 AM	0	20	0	0	1	0	0	0	2	0	2	0	0
4/24/2024	4:00 AM	0	25	0	0	1	0	0	0	3	0	2	0	0
4/24/2024	4:15 AM	0	35	3	0	0	0	0	0	3	0	1	0	0
4/24/2024	4:30 AM	0	49	3	0	1	0	0	0	1	0	2	0	0
4/24/2024	4:45 AM	0	67	3	0	1	0	0	0	1	0	1	0	0
4/24/2024	5:00 AM	0	85	4	0	2	0	0	0	1	0	1	0	0
4/24/2024	5:15 AM	0	105	3	0	4	0	0	0	1	0	1	0	0
4/24/2024	5:30 AM	0	124	5	0	6	0	0	0	2	0	0	0	0
4/24/2024	5:45 AM	0	174	15	0	8	0	0	2	2	0	1	0	0
4/24/2024	6:00 AM	0	196	38	0	10	0	0	2	2	0	1	0	0
4/24/2024	6:15 AM	1	247	64	0	9	0	0	3	3	0	1	0	0
4/24/2024	6:30 AM	1	309	90	0	7	0	0	4	2	0	1	0	0
4/24/2024	6:45 AM	1	368	117	0	9	0	0	3	2	0	0	0	0
4/24/2024	7:00 AM	3	462	125	0	7	0	0	3	1	0	0	0	0
4/24/2024	7:15 AM	2	495	129	0	10	0	0	3	0	1	0	0	0
4/24/2024	7:30 AM	2	490	118	0	14	0	0	2	1	1	0	0	0
4/24/2024	7:45 AM	2	441	107	0	15	0	0	2	2	1	0	0	0
4/24/2024	8:00 AM	0	364	99	0	16	0	0	2	6	1	0	0	0
4/24/2024	8:15 AM	0	316	84	0	13	0	0	3	6	0	0	0	0
4/24/2024	8:30 AM	0	301	89	0	10	0	0	4	8	0	0	0	0
4/24/2024	8:45 AM	0	290	77	0	7	1	0	3	7	0	0	0	0
4/24/2024	9:00 AM	0	300	59	0	9	1	0	3	4	0	0	0	0
4/24/2024	9:15 AM	0	290	59	0	8	1	0	3	5	0	0	0	0
4/24/2024	9:30 AM	0	267	55	0	11	1	0	4	2	0	0	0	0
4/24/2024	9:45 AM	0	263	61	0	14	0	0	4	2	0	0	0	0
4/24/2024	10:00 AM	0	239	75	0	13	1	0	4	2	0	0	0	0
4/24/2024	10:15 AM	0	242	81	0	15	1	0	2	3	1	0	0	0
4/24/2024	10:30 AM	0	251	74	0	11	1	0	0	3	1	0	0	0
4/24/2024	10:45 AM	2	247	78	0	8	2	0	0	4	1	0	0	0
4/24/2024	11:00 AM	3	248	77	0	8	2	0	0	5	1	0	0	0
4/24/2024	11:15 AM	4	254	71	0	6	2	0	0	4	0	0	0	0
4/24/2024	11:30 AM	5	256	79	0	8	2	0	0	4	0	0	0	0
4/24/2024	11:45 AM	3	261	75	0	6	1	0	0	4	0	0	0	0
4/24/2024	12:00 PM	2	264	76	0	3	0	0	0	2	0	0	0	0
4/24/2024	12:15 PM	1	268	85	0	6	0	0	0	1	0	0	0	0
4/24/2024	12:30 PM	0	250	83	0	6	1	0	0	2	0	0	0	0
4/24/2024	12:45 PM	0	255	82	0	10	2	0	0	1	0	0	0	0
4/24/2024	1:00 PM	0	262	85	0	11	2	0	0	1	0	0	0	0
4/24/2024	1:15 PM	1	276	83	1	8	2	0	0	1	0	0	0	0
4/24/2024	1:30 PM	2	314	79	1	6	1	0	0	0	0	0	0	0
4/24/2024	1:45 PM	2	313	81	1	4	0	0	0	2	0	0	0	0
4/24/2024	2:00 PM	2	336	74	3	5	0	0	0	2	0	0	0	0
4/24/2024	2:15 PM	1	336	75	2	9	0	0	0	2	0	0	0	0
4/24/2024	2:30 PM	0	330	81	4	9	1	0	0	2	0	0	0	0
4/24/2024	2:45 PM	0	376	85	5	8	1	0	0	0	0	0	0	0
4/24/2024	3:00 PM	1	400	97	5	6	1	0	0	1	0	0	0	0
4/24/2024	3:15 PM	1	430	102	5	4	1	0	0	1	0	0	0	0
4/24/2024	3:30 PM	1	446	106	3	6	0	0	1	2	0	0	0	0
4/24/2024	3:45 PM	1	443	98	2	6	0	0	1	3	0	0	0	0
4/24/2024	4:00 PM	0	450	92	2	7	0	0	1	3	0	0	0	0
4/24/2024	4:15 PM	0	462	92	2	5	0	0	1	4	0	0	0	0
4/24/2024	4:30 PM	0	478	96	2	3	0	0	0	3	0	0	0	0
4/24/2024	4:45 PM	0	475	100	2	3	0	0	0	2	0	0	0	0
4/24/2024	5:00 PM	2	445	92	0	2	0	0	0	1	0	0	0	0
4/24/2024	5:15 PM	2	392	76	0	2	0	0	0	0	1	0	0	0
4/24/2024	5:30 PM	2	345	60	0	1	1	0	0	2	1	0	0	0
4/24/2024	5:45 PM	2	284	43	0	0	5	0	0	2	1	0	0	0
4/24/2024	6:00 PM	0	251	36	0	0	6	0	0	2	1	0	0	0
4/24/2024	6:15 PM	0	216	31	0	3	6	0	0	2	0	0	0	0
4/24/2024	6:30 PM	0	183	31	0	3	5	0	0	0	0	0	0	0
4/24/2024	6:45 PM	0	166	34	0	3	1	0	0	1	0	1	0	0
4/24/2024	7:00 PM	0	138	29	1	3	0	0	0	1	0	1	0	0
4/24/2024	7:15 PM	0	120	23	1	0	1	0	0	1	0	2	0	0
4/24/2024	7:30 PM	0	116	19	1	0	1	0	0	1	0	2	0	0
4/24/2024	7:45 PM	1	115	19	1	0	1	0	0	0	0	1	0	0
4/24/2024	8:00 PM	1	104	19	0	0	1	0	0	0	0	2	0	0
4/24/2024	8:15 PM	1	103	18	0	0	0	0	0	0	0	3	0	0
4/24/2024	8:30 PM	1	88	14	0	0	0	0	0	0	0	4	0	0
4/24/2024	8:45 PM	0	71	13	0	0	0	0	0	0	0	4	0	0
4/24/2024	9:00 PM	0	64	11	0	0	0	0	0	1	0	3	0	0
4/24/2024	9:15 PM	0	63	9	0	0	0	0	0	1	0	2	0	0
4/24/2024	9:30 PM	0	61	7	0	0	0	0	0	1	0	3	0	0
4/24/2024	9:45 PM	0	63	2	0	0	0	0	0	1	0	3	0	0
4/24/2024	10:00 PM	0	67	2	0	0	0	0	0	0	0	4	0	0
4/24/2024	10:15 PM	0	55	4	0	1	0	0	0	0	0	3	0	0
4/24/2024	10:30 PM	0	49	3	0	1	0	0	0	0	0	1	0	0
4/24/2024	10:45 PM	0	44	2	0	1	0	0	0	0	0	2	0	0
4/24/2024	11:00 PM	0	36	3	0	1	0	0	0	2	0	3	0	0
4/24/2024	11:15 PM	0	31	1	0	0	0	0	0	2	0	3	0	0
4/24/2024	11:30 PM	0	27	2	0	0	0	0	0	3	0	3	0	0
4/24/2024	11:45 PM	0	16	2	0	0	0	0	0	4	0	2	0	0

4/25/2024	12:00 AM	0	14	1	0	0	0	0	0	2	0	0	0	0
4/25/2024	12:15 AM	0	12	2	0	0	0	0	0	2	0	3	0	0
4/25/2024	12:30 AM	0	11	1	0	1	0	0	0	1	0	7	0	0
4/25/2024	12:45 AM	0	8	1	0	1	0	0	0	0	0	9	0	0
4/25/2024	1:00 AM	0	7	2	0	1	0	0	0	0	0	10	0	0
4/25/2024	1:15 AM	0	6	1	0	1	0	0	0	0	0	8	0	0
4/25/2024	1:30 AM	0	4	2	0	0	0	0	0	0	0	7	0	0
4/25/2024	1:45 AM	1	5	2	0	0	0	0	0	0	0	6	0	0
4/25/2024	2:00 AM	1	7	2	0	0	0	0	0	0	0	6	0	0
4/25/2024	2:15 AM	1	8	3	0	0	0	0	0	0	0	5	0	0
4/25/2024	2:30 AM	1	9	3	0	0	0	0	0	1	0	4	0	0
4/25/2024	2:45 AM	0	13	4	0	0	0	0	0	3	0	5	0	0
4/25/2024	3:00 AM	0	12	3	0	2	0	0	0	4	0	5	0	0
4/25/2024	3:15 AM	0	13	5	0	2	0	0	0	4	0	5	0	0
4/25/2024	3:30 AM	0	13	5	0	2	0	0	0	3	0	3	0	0
4/25/2024	3:45 AM	0	14	4	0	2	0	0	0	1	0	2	0	0
4/25/2024	4:00 AM	0	19	6	0	0	0	0	0	0	0	2	0	0
4/25/2024	4:15 AM	0	26	9	0	2	0	0	0	0	0	2	0	0
4/25/2024	4:30 AM	0	37	12	0	3	0	0	0	0	0	2	0	0
4/25/2024	4:45 AM	0	46	17	0	4	0	0	0	0	0	2	0	0
4/25/2024	5:00 AM	0	63	19	0	5	1	0	0	0	0	1	0	0
4/25/2024	5:15 AM	0	73	15	1	4	1	0	0	0	1	1	0	0
4/25/2024	5:30 AM	0	102	18	6	3	2	0	0	1	1	2	0	0
4/25/2024	5:45 AM	0	143	29	7	3	2	0	0	3	1	1	0	0
4/25/2024	6:00 AM	0	166	49	7	5	1	0	0	4	1	1	0	0
4/25/2024	6:15 AM	0	222	73	6	4	1	0	0	5	0	1	0	0
4/25/2024	6:30 AM	0	297	90	1	7	0	0	0	4	0	0	0	0
4/25/2024	6:45 AM	0	362	102	0	9	0	0	2	2	0	0	0	0
4/25/2024	7:00 AM	0	452	115	0	8	1	0	4	1	0	0	0	0
4/25/2024	7:15 AM	2	494	117	0	10	1	0	4	0	0	0	0	0
4/25/2024	7:30 AM	2	483	111	0	11	1	0	4	0	0	0	0	0
4/25/2024	7:45 AM	3	444	110	1	12	1	0	4	0	0	0	0	0
4/25/2024	8:00 AM	3	376	91	1	13	2	0	4	0	0	0	0	0
4/25/2024	8:15 AM	1	340	81	1	16	3	0	5	1	0	0	0	0
4/25/2024	8:30 AM	1	298	81	1	15	4	0	7	2	0	0	0	0
4/25/2024	8:45 AM	2	288	74	0	15	4	0	5	3	0	0	0	0
4/25/2024	9:00 AM	2	286	75	0	12	3	0	4	5	0	0	0	0
4/25/2024	9:15 AM	2	273	83	0	10	2	0	4	4	0	0	0	0
4/25/2024	9:30 AM	2	268	86	0	9	2	0	2	3	0	0	0	0
4/25/2024	9:45 AM	0	280	90	0	8	4	0	2	3	0	0	0	0
4/25/2024	10:00 AM	0	268	87	0	11	4	0	1	1	0	0	0	0
4/25/2024	10:15 AM	0	258	78	0	9	5	0	0	1	0	0	0	0
4/25/2024	10:30 AM	1	250	72	0	7	4	0	0	1	0	0	0	0
4/25/2024	10:45 AM	2	225	64	0	5	3	0	1	2	0	0	0	0
4/25/2024	11:00 AM	2	229	64	0	3	4	0	3	2	0	0	0	0
4/25/2024	11:15 AM	2	238	64	0	2	3	0	3	3	0	0	0	0
4/25/2024	11:30 AM	1	263	67	0	3	4	0	4	5	0	0	0	0
4/25/2024	11:45 AM	0	273	70	0	4	3	0	3	3	0	0	0	0
4/25/2024	12:00 PM	0	266	68	0	7	1	0	1	3	0	0	0	0
4/25/2024	12:15 PM	1	258	64	0	10	1	0	1	2	0	0	0	0
4/25/2024	12:30 PM	1	234	61	0	9	0	0	0	1	0	0	0	0
4/25/2024	12:45 PM	1	243	57	0	11	1	0	0	1	0	0	0	0
4/25/2024	1:00 PM	2	250	60	0	9	2	0	0	2	0	0	0	0
4/25/2024	1:15 PM	1	253	57	1	8	2	0	1	3	0	0	0	0
4/25/2024	1:30 PM	1	270	53	1	15	2	0	3	2	0	0	0	0
4/25/2024	1:45 PM	1	271	55	1	16	2	0	3	3	0	0	0	0
4/25/2024	2:00 PM	0	283	55	1	15	2	0	3	3	0	0	0	0
4/25/2024	2:15 PM	0	293	76	0	18	3	0	2	2	0	0	0	0
4/25/2024	2:30 PM	0	300	77	0	13	4	0	0	3	0	0	0	0
4/25/2024	2:45 PM	0	319	72	0	9	5	0	0	3	0	0	0	0
4/25/2024	3:00 PM	0	354	79	0	9	5	0	0	3	0	0	0	0
4/25/2024	3:15 PM	1	409	74	0	6	4	0	0	5	0	0	0	0
4/25/2024	3:30 PM	1	482	91	0	6	4	0	1	5	0	0	0	0
4/25/2024	3:45 PM	1	534	98	0	6	2	0	1	5	0	0	0	0
4/25/2024	4:00 PM	2	542	87	0	7	1	0	1	5	0	0	0	0
4/25/2024	4:15 PM	1	541	83	0	5	1	0	1	3	0	0	0	0
4/25/2024	4:30 PM	2	514	77	0	4	0	0	0	3	0	0	0	0
4/25/2024	4:45 PM	2	490	81	0	3	0	0	0	2	0	0	0	0
4/25/2024	5:00 PM	1	487	89	0	1	0	0	0	2	0	0	0	0
4/25/2024	5:15 PM	1	446	94	0	1	1	0	0	4	0	0	0	0
4/25/2024	5:30 PM	0	378	87	0	2	1	0	0	3	0	0	0	0
4/25/2024	5:45 PM	0	304	80	0	3	1	0	0	3	0	0	0	0
4/25/2024	6:00 PM	0	227	68	0	3	1	0	0	2	0	0	0	0
4/25/2024	6:15 PM	0	141	41	0	3	0	0	0	0	0	0	0	0
4/25/2024	6:30 PM	0	87	25	0	1	0	0	0	0	0	0	0	0
4/25/2024	6:45 PM	0	35	9	0	0	0	0	0	0	0	0	0	0
4/25/2024	7:00 PM	0	0	0	0	0	0	0	0	0	0	0	0	0
4/25/2024	7:15 PM	0	0	0	0	0	0	0	0	0	0	0	0	0
4/25/2024	7:30 PM	0	0	0	0	0	0	0	0	0	0	0	0	0
4/25/2024	7:45 PM	0	0	0	0	0	0	0	0	0	0	0	0	0
4/25/2024	8:00 PM	0	0	0	0	0	0	0	0	0	0	0	0	0
4/25/2024	8:15 PM	0	0	0	0	0	0	0	0	0	0	0	0	0
4/25/2024	8:30 PM	0	0	0	0	0	0	0	0	0	0	0	0	0
4/25/2024	8:45 PM	0	0	0	0	0	0	0	0	0	0	0	0	0
4/25/2024	9:00 PM	0	0	0	0	0	0	0	0	0	0	0	0	0
4/25/2024	9:15 PM	0	0	0	0	0	0	0	0	0	0	0	0	0
4/25/2024	9:30 PM	0	0	0	0	0	0	0	0	0	0	0	0	0
4/25/2024	9:45 PM	0	0	0	0	0	0	0	0	0	0	0	0	0
4/25/2024	10:00 PM	0	0	0	0	0	0	0	0	0	0	0	0	0
4/25/2024	10:15 PM	0	0	0	0	0	0	0	0	0	0	0	0	0
4/25/2024	10:30 PM	0	0	0	0	0	0	0	0	0	0	0	0	0
4/25/2024	10:45 PM	0	0	0	0	0	0	0	0	0	0	0	0	0
4/25/2024	11:00 PM	0	0	0	0	0	0	0	0	0	0	0	0	0
4/25/2024	11:15 PM	0	0	0	0	0	0	0	0	0	0	0	0	0
4/25/2024	11:30 PM	0	0	0	0	0	0	0	0	0	0	0	0	0
4/25/2024	11:45 PM	0	0	0	0	0	0	0	0	0	0	0	0	0

WB
File Name:
Start Date: 4/23/2024
Start Time: 0
Site Code: 59
Station ID: 1
Location 1: I-20 E/Bound On-Ramp, east of US-378 Sunset Blvd
Location 2:

Date	Time	1	2	3	4	5	6	7	8	9	10	11	12	13
4/23/2024	12:00 AM	0	0	0	0	0	0	0	0	0	0	0	0	0
4/23/2024	12:15 AM	0	0	0	0	0	0	0	0	0	0	0	0	0
4/23/2024	12:30 AM	0	0	0	0	0	0	0	0	0	0	0	0	0
4/23/2024	12:45 AM	0	0	0	0	0	0	0	0	0	0	0	0	0
4/23/2024	1:00 AM	0	0	0	0	0	0	0	0	0	0	0	0	0
4/23/2024	1:15 AM	0	0	0	0	0	0	0	0	0	0	0	0	0
4/23/2024	1:30 AM	0	0	0	0	0	0	0	0	0	0	0	0	0
4/23/2024	1:45 AM	0	0	0	0	0	0	0	0	0	0	0	0	0
4/23/2024	2:00 AM	0	0	0	0	0	0	0	0	0	0	0	0	0
4/23/2024	2:15 AM	0	0	0	0	0	0	0	0	0	0	0	0	0
4/23/2024	2:30 AM	0	0	0	0	0	0	0	0	0	0	0	0	0
4/23/2024	2:45 AM	0	0	0	0	0	0	0	0	0	0	0	0	0
4/23/2024	3:00 AM	0	0	0	0	0	0	0	0	0	0	0	0	0
4/23/2024	3:15 AM	0	0	0	0	0	0	0	0	0	0	0	0	0
4/23/2024	3:30 AM	0	0	0	0	0	0	0	0	0	0	0	0	0
4/23/2024	3:45 AM	0	0	0	0	0	0	0	0	0	0	0	0	0
4/23/2024	4:00 AM	0	0	0	0	0	0	0	0	0	0	0	0	0
4/23/2024	4:15 AM	0	0	0	0	0	0	0	0	0	0	0	0	0
4/23/2024	4:30 AM	0	0	0	0	0	0	0	0	0	0	0	0	0
4/23/2024	4:45 AM	0	0	0	0	0	0	0	0	0	0	0	0	0
4/23/2024	5:00 AM	0	0	0	0	0	0	0	0	0	0	0	0	0
4/23/2024	5:15 AM	0	0	0	0	0	0	0	0	0	0	0	0	0
4/23/2024	5:30 AM	0	0	0	0	0	0	0	0	0	0	0	0	0
4/23/2024	5:45 AM	0	0	0	0	0	0	0	0	0	0	0	0	0
4/23/2024	6:00 AM	0	0	0	0	0	0	0	0	0	0	0	0	0
4/23/2024	6:15 AM	0	0	0	0	0	0	0	0	0	0	0	0	0
4/23/2024	6:30 AM	0	0	0	0	0	0	0	0	0	0	0	0	0
4/23/2024	6:45 AM	0	0	0	0	0	0	0	0	0	0	0	0	0
4/23/2024	7:00 AM	0	0	0	0	0	0	0	0	0	0	0	0	0
4/23/2024	7:15 AM	0	0	0	0	0	0	0	0	0	0	0	0	0
4/23/2024	7:30 AM	0	0	0	0	0	0	0	0	0	0	0	0	0
4/23/2024	7:45 AM	0	0	0	0	0	0	0	0	0	0	0	0	0
4/23/2024	8:00 AM	0	0	0	0	0	0	0	0	0	0	0	0	0
4/23/2024	8:15 AM	0	0	0	0	0	0	0	0	0	0	0	0	0
4/23/2024	8:30 AM	0	0	0	0	0	0	0	0	0	0	0	0	0
4/23/2024	8:45 AM	0	0	0	0	0	0	0	0	0	0	0	0	0
4/23/2024	9:00 AM	0	0	0	0	0	0	0	0	0	0	0	0	0
4/23/2024	9:15 AM	0	0	0	0	0	0	0	0	0	0	0	0	0
4/23/2024	9:30 AM	0	0	0	0	0	0	0	0	0	0	0	0	0
4/23/2024	9:45 AM	0	0	0	0	0	0	0	0	0	0	0	0	0
4/23/2024	10:00 AM	0	0	0	0	0	0	0	0	0	0	0	0	0
4/23/2024	10:15 AM	0	0	0	0	0	0	0	0	0	0	0	0	0
4/23/2024	10:30 AM	0	0	0	0	0	0	0	0	0	0	0	0	0
4/23/2024	10:45 AM	0	0	0	0	0	0	0	0	0	0	0	0	0
4/23/2024	11:00 AM	0	0	0	0	0	0	0	0	0	0	0	0	0
4/23/2024	11:15 AM	0	0	0	0	0	0	0	0	0	0	0	0	0
4/23/2024	11:30 AM	0	0	0	0	0	0	0	0	0	0	0	0	0
4/23/2024	11:45 AM	0	0	0	0	0	0	0	0	0	0	0	0	0
4/23/2024	12:00 PM	0	0	0	0	0	0	0	0	0	0	0	0	0
4/23/2024	12:15 PM	0	0	0	0	0	0	0	0	0	0	0	0	0
4/23/2024	12:30 PM	0	0	0	0	0	0	0	0	0	0	0	0	0
4/23/2024	12:45 PM	0	0	0	0	0	0	0	0	0	0	0	0	0
4/23/2024	1:00 PM	0	0	0	0	0	0	0	0	0	0	0	0	0
4/23/2024	1:15 PM	0	0	0	0	0	0	0	0	0	0	0	0	0
4/23/2024	1:30 PM	0	0	0	0	0	0	0	0	0	0	0	0	0
4/23/2024	1:45 PM	0	0	0	0	0	0	0	0	0	0	0	0	0
4/23/2024	2:00 PM	0	0	0	0	0	0	0	0	0	0	0	0	0
4/23/2024	2:15 PM	0	0	0	0	0	0	0	0	0	0	0	0	0
4/23/2024	2:30 PM	0	0	0	0	0	0	0	0	0	0	0	0	0
4/23/2024	2:45 PM	0	0	0	0	0	0	0	0	0	0	0	0	0
4/23/2024	3:00 PM	0	0	0	0	0	0	0	0	0	0	0	0	0
4/23/2024	3:15 PM	0	0	0	0	0	0	0	0	0	0	0	0	0
4/23/2024	3:30 PM	0	0	0	0	0	0	0	0	0	0	0	0	0
4/23/2024	3:45 PM	0	0	0	0	0	0	0	0	0	0	0	0	0
4/23/2024	4:00 PM	0	0	0	0	0	0	0	0	0	0	0	0	0
4/23/2024	4:15 PM	0	0	0	0	0	0	0	0	0	0	0	0	0
4/23/2024	4:30 PM	0	0	0	0	0	0	0	0	0	0	0	0	0
4/23/2024	4:45 PM	0	0	0	0	0	0	0	0	0	0	0	0	0
4/23/2024	5:00 PM	0	0	0	0	0	0	0	0	0	0	0	0	0
4/23/2024	5:15 PM	0	0	0	0	0	0	0	0	0	0	0	0	0
4/23/2024	5:30 PM	0	0	0	0	0	0	0	0	0	0	0	0	0
4/23/2024	5:45 PM	0	0	0	0	0	0	0	0	0	0	0	0	0
4/23/2024	6:00 PM	0	0	0	0	0	0	0	0	0	0	0	0	0
4/23/2024	6:15 PM	0	0	0	0	0	0	0	0	0	0	0	0	0
4/23/2024	6:30 PM	0	0	0	0	0	0	0	0	0	0	0	0	0
4/23/2024	6:45 PM	0	0	0	0	0	0	0	0	0	0	0	0	0
4/23/2024	7:00 PM	0	0	0	0	0	0	0	0	0	0	0	0	0
4/23/2024	7:15 PM	0	0	0	0	0	0	0	0	0	0	0	0	0
4/23/2024	7:30 PM	0	0	0	0	0	0	0	0	0	0	0	0	0
4/23/2024	7:45 PM	0	0	0	0	0	0	0	0	0	0	0	0	0
4/23/2024	8:00 PM	0	0	0	0	0	0	0	0	0	0	0	0	0
4/23/2024	8:15 PM	0	0	0	0	0	0	0	0	0	0	0	0	0
4/23/2024	8:30 PM	0	0	0	0	0	0	0	0	0	0	0	0	0
4/23/2024	8:45 PM	0	0	0	0	0	0	0	0	0	0	0	0	0
4/23/2024	9:00 PM	0	0	0	0	0	0	0	0	0	0	0	0	0
4/23/2024	9:15 PM	0	0	0	0	0	0	0	0	0	0	0	0	0
4/23/2024	9:30 PM	0	0	0	0	0	0	0	0	0	0	0	0	0
4/23/2024	9:45 PM	0	0	0	0	0	0	0	0	0	0	0	0	0
4/23/2024	10:00 PM	0	0	0	0	0	0	0	0	0	0	0	0	0
4/23/2024	10:15 PM	0	0	0	0	0	0	0	0	0	0	0	0	0
4/23/2024	10:30 PM	0	0	0	0	0	0	0	0	0	0	0	0	0
4/23/2024	10:45 PM	0	0	0	0	0	0	0	0	0	0	0	0	0
4/23/2024	11:00 PM	0	0	0	0	0	0	0	0	0	0	0	0	0
4/23/2024	11:15 PM	0	0	0	0	0	0	0	0	0	0	0	0	0
4/23/2024	11:30 PM	0	0	0	0	0	0	0	0	0	0	0	0	0
4/23/2024	11:45 PM	0	0	0	0	0	0	0	0	0	0	0	0	0

4/24/2024	12:00 AM	0	0	0	0	0	0	0	0	0	0	0	0	0
4/24/2024	12:15 AM	0	0	0	0	0	0	0	0	0	0	0	0	0
4/24/2024	12:30 AM	0	0	0	0	0	0	0	0	0	0	0	0	0
4/24/2024	12:45 AM	0	0	0	0	0	0	0	0	0	0	0	0	0
4/24/2024	1:00 AM	0	0	0	0	0	0	0	0	0	0	0	0	0
4/24/2024	1:15 AM	0	0	0	0	0	0	0	0	0	0	0	0	0
4/24/2024	1:30 AM	0	0	0	0	0	0	0	0	0	0	0	0	0
4/24/2024	1:45 AM	0	0	0	0	0	0	0	0	0	0	0	0	0
4/24/2024	2:00 AM	0	0	0	0	0	0	0	0	0	0	0	0	0
4/24/2024	2:15 AM	0	0	0	0	0	0	0	0	0	0	0	0	0
4/24/2024	2:30 AM	0	0	0	0	0	0	0	0	0	0	0	0	0
4/24/2024	2:45 AM	0	0	0	0	0	0	0	0	0	0	0	0	0
4/24/2024	3:00 AM	0	0	0	0	0	0	0	0	0	0	0	0	0
4/24/2024	3:15 AM	0	0	0	0	0	0	0	0	0	0	0	0	0
4/24/2024	3:30 AM	0	0	0	0	0	0	0	0	0	0	0	0	0
4/24/2024	3:45 AM	0	0	0	0	0	0	0	0	0	0	0	0	0
4/24/2024	4:00 AM	0	0	0	0	0	0	0	0	0	0	0	0	0
4/24/2024	4:15 AM	0	0	0	0	0	0	0	0	0	0	0	0	0
4/24/2024	4:30 AM	0	0	0	0	0	0	0	0	0	0	0	0	0
4/24/2024	4:45 AM	0	0	0	0	0	0	0	0	0	0	0	0	0
4/24/2024	5:00 AM	0	0	0	0	0	0	0	0	0	0	0	0	0
4/24/2024	5:15 AM	0	0	0	0	0	0	0	0	0	0	0	0	0
4/24/2024	5:30 AM	0	0	0	0	0	0	0	0	0	0	0	0	0
4/24/2024	5:45 AM	0	0	0	0	0	0	0	0	0	0	0	0	0
4/24/2024	6:00 AM	0	0	0	0	0	0	0	0	0	0	0	0	0
4/24/2024	6:15 AM	0	0	0	0	0	0	0	0	0	0	0	0	0
4/24/2024	6:30 AM	0	0	0	0	0	0	0	0	0	0	0	0	0
4/24/2024	6:45 AM	0	0	0	0	0	0	0	0	0	0	0	0	0
4/24/2024	7:00 AM	0	0	0	0	0	0	0	0	0	0	0	0	0
4/24/2024	7:15 AM	0	0	0	0	0	0	0	0	0	0	0	0	0
4/24/2024	7:30 AM	0	0	0	0	0	0	0	0	0	0	0	0	0
4/24/2024	7:45 AM	0	0	0	0	0	0	0	0	0	0	0	0	0
4/24/2024	8:00 AM	0	0	0	0	0	0	0	0	0	0	0	0	0
4/24/2024	8:15 AM	0	0	0	0	0	0	0	0	0	0	0	0	0
4/24/2024	8:30 AM	0	0	0	0	0	0	0	0	0	0	0	0	0
4/24/2024	8:45 AM	0	0	0	0	0	0	0	0	0	0	0	0	0
4/24/2024	9:00 AM	0	0	0	0	0	0	0	0	0	0	0	0	0
4/24/2024	9:15 AM	0	0	0	0	0	0	0	0	0	0	0	0	0
4/24/2024	9:30 AM	0	0	0	0	0	0	0	0	0	0	0	0	0
4/24/2024	9:45 AM	0	0	0	0	0	0	0	0	0	0	0	0	0
4/24/2024	10:00 AM	0	0	0	0	0	0	0	0	0	0	0	0	0
4/24/2024	10:15 AM	0	0	0	0	0	0	0	0	0	0	0	0	0
4/24/2024	10:30 AM	0	0	0	0	0	0	0	0	0	0	0	0	0
4/24/2024	10:45 AM	0	0	0	0	0	0	0	0	0	0	0	0	0
4/24/2024	11:00 AM	0	0	0	0	0	0	0	0	0	0	0	0	0
4/24/2024	11:15 AM	0	0	0	0	0	0	0	0	0	0	0	0	0
4/24/2024	11:30 AM	0	0	0	0	0	0	0	0	0	0	0	0	0
4/24/2024	11:45 AM	0	0	0	0	0	0	0	0	0	0	0	0	0
4/24/2024	12:00 PM	0	0	0	0	0	0	0	0	0	0	0	0	0
4/24/2024	12:15 PM	0	0	0	0	0	0	0	0	0	0	0	0	0
4/24/2024	12:30 PM	0	0	0	0	0	0	0	0	0	0	0	0	0
4/24/2024	12:45 PM	0	0	0	0	0	0	0	0	0	0	0	0	0
4/24/2024	1:00 PM	0	0	0	0	0	0	0	0	0	0	0	0	0
4/24/2024	1:15 PM	0	0	0	0	0	0	0	0	0	0	0	0	0
4/24/2024	1:30 PM	0	0	0	0	0	0	0	0	0	0	0	0	0
4/24/2024	1:45 PM	0	0	0	0	0	0	0	0	0	0	0	0	0
4/24/2024	2:00 PM	0	0	0	0	0	0	0	0	0	0	0	0	0
4/24/2024	2:15 PM	0	0	0	0	0	0	0	0	0	0	0	0	0
4/24/2024	2:30 PM	0	0	0	0	0	0	0	0	0	0	0	0	0
4/24/2024	2:45 PM	0	0	0	0	0	0	0	0	0	0	0	0	0
4/24/2024	3:00 PM	0	0	0	0	0	0	0	0	0	0	0	0	0
4/24/2024	3:15 PM	0	0	0	0	0	0	0	0	0	0	0	0	0
4/24/2024	3:30 PM	0	0	0	0	0	0	0	0	0	0	0	0	0
4/24/2024	3:45 PM	0	0	0	0	0	0	0	0	0	0	0	0	0
4/24/2024	4:00 PM	0	0	0	0	0	0	0	0	0	0	0	0	0
4/24/2024	4:15 PM	0	0	0	0	0	0	0	0	0	0	0	0	0
4/24/2024	4:30 PM	0	0	0	0	0	0	0	0	0	0	0	0	0
4/24/2024	4:45 PM	0	0	0	0	0	0	0	0	0	0	0	0	0
4/24/2024	5:00 PM	0	0	0	0	0	0	0	0	0	0	0	0	0
4/24/2024	5:15 PM	0	0	0	0	0	0	0	0	0	0	0	0	0
4/24/2024	5:30 PM	0	0	0	0	0	0	0	0	0	0	0	0	0
4/24/2024	5:45 PM	0	0	0	0	0	0	0	0	0	0	0	0	0
4/24/2024	6:00 PM	0	0	0	0	0	0	0	0	0	0	0	0	0
4/24/2024	6:15 PM	0	0	0	0	0	0	0	0	0	0	0	0	0
4/24/2024	6:30 PM	0	0	0	0	0	0	0	0	0	0	0	0	0
4/24/2024	6:45 PM	0	0	0	0	0	0	0	0	0	0	0	0	0
4/24/2024	7:00 PM	0	0	0	0	0	0	0	0	0	0	0	0	0
4/24/2024	7:15 PM	0	0	0	0	0	0	0	0	0	0	0	0	0
4/24/2024	7:30 PM	0	0	0	0	0	0	0	0	0	0	0	0	0
4/24/2024	7:45 PM	0	0	0	0	0	0	0	0	0	0	0	0	0
4/24/2024	8:00 PM	0	0	0	0	0	0	0	0	0	0	0	0	0
4/24/2024	8:15 PM	0	0	0	0	0	0	0	0	0	0	0	0	0
4/24/2024	8:30 PM	0	0	0	0	0	0	0	0	0	0	0	0	0
4/24/2024	8:45 PM	0	0	0	0	0	0	0	0	0	0	0	0	0
4/24/2024	9:00 PM	0	0	0	0	0	0	0	0	0	0	0	0	0
4/24/2024	9:15 PM	0	0	0	0	0	0	0	0	0	0	0	0	0
4/24/2024	9:30 PM	0	0	0	0	0	0	0	0	0	0	0	0	0
4/24/2024	9:45 PM	0	0	0	0	0	0	0	0	0	0	0	0	0
4/24/2024	10:00 PM	0	0	0	0	0	0	0	0	0	0	0	0	0
4/24/2024	10:15 PM	0	0	0	0	0	0	0	0	0	0	0	0	0
4/24/2024	10:30 PM	0	0	0	0	0	0	0	0	0	0	0	0	0
4/24/2024	10:45 PM	0	0	0	0	0	0	0	0	0	0	0	0	0
4/24/2024	11:00 PM	0	0	0	0	0	0	0	0	0	0	0	0	0
4/24/2024	11:15 PM	0	0	0	0	0	0	0	0	0	0	0	0	0
4/24/2024	11:30 PM	0	0	0	0	0	0	0	0	0	0	0	0	0
4/24/2024	11:45 PM	0	0	0	0	0	0	0	0	0	0	0	0	0

4/25/2024	12:00 AM	0	0	0	0	0	0	0	0	0	0	0	0	0
4/25/2024	12:15 AM	0	0	0	0	0	0	0	0	0	0	0	0	0
4/25/2024	12:30 AM	0	0	0	0	0	0	0	0	0	0	0	0	0
4/25/2024	12:45 AM	0	0	0	0	0	0	0	0	0	0	0	0	0
4/25/2024	1:00 AM	0	0	0	0	0	0	0	0	0	0	0	0	0
4/25/2024	1:15 AM	0	0	0	0	0	0	0	0	0	0	0	0	0
4/25/2024	1:30 AM	0	0	0	0	0	0	0	0	0	0	0	0	0
4/25/2024	1:45 AM	0	0	0	0	0	0	0	0	0	0	0	0	0
4/25/2024	2:00 AM	0	0	0	0	0	0	0	0	0	0	0	0	0
4/25/2024	2:15 AM	0	0	0	0	0	0	0	0	0	0	0	0	0
4/25/2024	2:30 AM	0	0	0	0	0	0	0	0	0	0	0	0	0
4/25/2024	2:45 AM	0	0	0	0	0	0	0	0	0	0	0	0	0
4/25/2024	3:00 AM	0	0	0	0	0	0	0	0	0	0	0	0	0
4/25/2024	3:15 AM	0	0	0	0	0	0	0	0	0	0	0	0	0
4/25/2024	3:30 AM	0	0	0	0	0	0	0	0	0	0	0	0	0
4/25/2024	3:45 AM	0	0	0	0	0	0	0	0	0	0	0	0	0
4/25/2024	4:00 AM	0	0	0	0	0	0	0	0	0	0	0	0	0
4/25/2024	4:15 AM	0	0	0	0	0	0	0	0	0	0	0	0	0
4/25/2024	4:30 AM	0	0	0	0	0	0	0	0	0	0	0	0	0
4/25/2024	4:45 AM	0	0	0	0	0	0	0	0	0	0	0	0	0
4/25/2024	5:00 AM	0	0	0	0	0	0	0	0	0	0	0	0	0
4/25/2024	5:15 AM	0	0	0	0	0	0	0	0	0	0	0	0	0
4/25/2024	5:30 AM	0	0	0	0	0	0	0	0	0	0	0	0	0
4/25/2024	5:45 AM	0	0	0	0	0	0	0	0	0	0	0	0	0
4/25/2024	6:00 AM	0	0	0	0	0	0	0	0	0	0	0	0	0
4/25/2024	6:15 AM	0	0	0	0	0	0	0	0	0	0	0	0	0
4/25/2024	6:30 AM	0	0	0	0	0	0	0	0	0	0	0	0	0
4/25/2024	6:45 AM	0	0	0	0	0	0	0	0	0	0	0	0	0
4/25/2024	7:00 AM	0	0	0	0	0	0	0	0	0	0	0	0	0
4/25/2024	7:15 AM	0	0	0	0	0	0	0	0	0	0	0	0	0
4/25/2024	7:30 AM	0	0	0	0	0	0	0	0	0	0	0	0	0
4/25/2024	7:45 AM	0	0	0	0	0	0	0	0	0	0	0	0	0
4/25/2024	8:00 AM	0	0	0	0	0	0	0	0	0	0	0	0	0
4/25/2024	8:15 AM	0	0	0	0	0	0	0	0	0	0	0	0	0
4/25/2024	8:30 AM	0	0	0	0	0	0	0	0	0	0	0	0	0
4/25/2024	8:45 AM	0	0	0	0	0	0	0	0	0	0	0	0	0
4/25/2024	9:00 AM	0	0	0	0	0	0	0	0	0	0	0	0	0
4/25/2024	9:15 AM	0	0	0	0	0	0	0	0	0	0	0	0	0
4/25/2024	9:30 AM	0	0	0	0	0	0	0	0	0	0	0	0	0
4/25/2024	9:45 AM	0	0	0	0	0	0	0	0	0	0	0	0	0
4/25/2024	10:00 AM	0	0	0	0	0	0	0	0	0	0	0	0	0
4/25/2024	10:15 AM	0	0	0	0	0	0	0	0	0	0	0	0	0
4/25/2024	10:30 AM	0	0	0	0	0	0	0	0	0	0	0	0	0
4/25/2024	10:45 AM	0	0	0	0	0	0	0	0	0	0	0	0	0
4/25/2024	11:00 AM	0	0	0	0	0	0	0	0	0	0	0	0	0
4/25/2024	11:15 AM	0	0	0	0	0	0	0	0	0	0	0	0	0
4/25/2024	11:30 AM	0	0	0	0	0	0	0	0	0	0	0	0	0
4/25/2024	11:45 AM	0	0	0	0	0	0	0	0	0	0	0	0	0
4/25/2024	12:00 PM	0	0	0	0	0	0	0	0	0	0	0	0	0
4/25/2024	12:15 PM	0	0	0	0	0	0	0	0	0	0	0	0	0
4/25/2024	12:30 PM	0	0	0	0	0	0	0	0	0	0	0	0	0
4/25/2024	12:45 PM	0	0	0	0	0	0	0	0	0	0	0	0	0
4/25/2024	1:00 PM	0	0	0	0	0	0	0	0	0	0	0	0	0
4/25/2024	1:15 PM	0	0	0	0	0	0	0	0	0	0	0	0	0
4/25/2024	1:30 PM	0	0	0	0	0	0	0	0	0	0	0	0	0
4/25/2024	1:45 PM	0	0	0	0	0	0	0	0	0	0	0	0	0
4/25/2024	2:00 PM	0	0	0	0	0	0	0	0	0	0	0	0	0
4/25/2024	2:15 PM	0	0	0	0	0	0	0	0	0	0	0	0	0
4/25/2024	2:30 PM	0	0	0	0	0	0	0	0	0	0	0	0	0
4/25/2024	2:45 PM	0	0	0	0	0	0	0	0	0	0	0	0	0
4/25/2024	3:00 PM	0	0	0	0	0	0	0	0	0	0	0	0	0
4/25/2024	3:15 PM	0	0	0	0	0	0	0	0	0	0	0	0	0
4/25/2024	3:30 PM	0	0	0	0	0	0	0	0	0	0	0	0	0
4/25/2024	3:45 PM	0	0	0	0	0	0	0	0	0	0	0	0	0
4/25/2024	4:00 PM	0	0	0	0	0	0	0	0	0	0	0	0	0
4/25/2024	4:15 PM	0	0	0	0	0	0	0	0	0	0	0	0	0
4/25/2024	4:30 PM	0	0	0	0	0	0	0	0	0	0	0	0	0
4/25/2024	4:45 PM	0	0	0	0	0	0	0	0	0	0	0	0	0
4/25/2024	5:00 PM	0	0	0	0	0	0	0	0	0	0	0	0	0
4/25/2024	5:15 PM	0	0	0	0	0	0	0	0	0	0	0	0	0
4/25/2024	5:30 PM	0	0	0	0	0	0	0	0	0	0	0	0	0
4/25/2024	5:45 PM	0	0	0	0	0	0	0	0	0	0	0	0	0
4/25/2024	6:00 PM	0	0	0	0	0	0	0	0	0	0	0	0	0
4/25/2024	6:15 PM	0	0	0	0	0	0	0	0	0	0	0	0	0
4/25/2024	6:30 PM	0	0	0	0	0	0	0	0	0	0	0	0	0
4/25/2024	6:45 PM	0	0	0	0	0	0	0	0	0	0	0	0	0
4/25/2024	7:00 PM	0	0	0	0	0	0	0	0	0	0	0	0	0
4/25/2024	7:15 PM	0	0	0	0	0	0	0	0	0	0	0	0	0
4/25/2024	7:30 PM	0	0	0	0	0	0	0	0	0	0	0	0	0
4/25/2024	7:45 PM	0	0	0	0	0	0	0	0	0	0	0	0	0
4/25/2024	8:00 PM	0	0	0	0	0	0	0	0	0	0	0	0	0
4/25/2024	8:15 PM	0	0	0	0	0	0	0	0	0	0	0	0	0
4/25/2024	8:30 PM	0	0	0	0	0	0	0	0	0	0	0	0	0
4/25/2024	8:45 PM	0	0	0	0	0	0	0	0	0	0	0	0	0
4/25/2024	9:00 PM	0	0	0	0	0	0	0	0	0	0	0	0	0
4/25/2024	9:15 PM	0	0	0	0	0	0	0	0	0	0	0	0	0
4/25/2024	9:30 PM	0	0	0	0	0	0	0	0	0	0	0	0	0
4/25/2024	9:45 PM	0	0	0	0	0	0	0	0	0	0	0	0	0
4/25/2024	10:00 PM	0	0	0	0	0	0	0	0	0	0	0	0	0
4/25/2024	10:15 PM	0	0	0	0	0	0	0	0	0	0	0	0	0
4/25/2024	10:30 PM	0	0	0	0	0	0	0	0	0	0	0	0	0
4/25/2024	10:45 PM	0	0	0	0	0	0	0	0	0	0	0	0	0
4/25/2024	11:00 PM	0	0	0	0	0	0	0	0	0	0	0	0	0
4/25/2024	11:15 PM	0	0	0	0	0	0	0	0	0	0	0	0	0
4/25/2024	11:30 PM	0	0	0	0	0	0	0	0	0	0	0	0	0
4/25/2024	11:45 PM	0	0	0	0	0	0	0	0	0	0	0	0	0

Bi-Directional Class Count || SB WB 15min

Columbia, SC

Marr Traffic DATA COLLECTION
www.marrtraffic.com

Site 60
I-20 W/Bound On-Ramp,
west of US-378 Sunset Blvd

Date
Tuesday, April 23, 2024

Lat/Long
34.011608°, -81.150171°

Click here for Map

Weather
Fair
58°F

Click here for Detailed Weather

0000 - 2400 (Weekday 24h Session) (04-23-2024)
SB WB 15min

	Westbound (Movement 60.1)													15min	60min
Time	1	2	3	4	5	6	7	8	9	10	11	12	13	Total	Total
0000 - 0015	0	0	0	0	0	0	0	0	0	0	0	0	0	**0**	
0015 - 0030	0	0	0	0	0	0	0	0	0	0	0	0	0	**0**	
0030 - 0045	0	0	0	0	0	0	0	0	0	0	0	0	0	**0**	
0045 - 0100	0	0	0	0	0	0	0	0	0	0	0	0	0	**0**	**0**
0100 - 0115	0	0	0	0	0	0	0	0	0	0	0	0	0	**0**	
0115 - 0130	0	0	0	0	0	0	0	0	0	0	0	0	0	**0**	
0130 - 0145	0	0	0	0	0	0	0	0	0	0	0	0	0	**0**	
0145 - 0200	0	0	0	0	0	0	0	0	0	0	0	0	0	**0**	**0**
0200 - 0215	0	0	0	0	0	0	0	0	0	0	0	0	0	**0**	
0215 - 0230	0	0	0	0	0	0	0	0	0	0	0	0	0	**0**	
0230 - 0245	0	0	0	0	0	0	0	0	0	0	0	0	0	**0**	
0245 - 0300	0	0	0	0	0	0	0	0	0	0	0	0	0	**0**	**0**
0300 - 0315	0	0	0	0	0	0	0	0	0	0	0	0	0	**0**	
0315 - 0330	0	0	0	0	0	0	0	0	0	0	0	0	0	**0**	
0330 - 0345	0	0	0	0	0	0	0	0	0	0	0	0	0	**0**	
0345 - 0400	0	0	0	0	0	0	0	0	0	0	0	0	0	**0**	**0**
0400 - 0415	0	0	0	0	0	0	0	0	0	0	0	0	0	**0**	
0415 - 0430	0	0	0	0	0	0	0	0	0	0	0	0	0	**0**	
0430 - 0445	0	0	0	0	0	0	0	0	0	0	0	0	0	**0**	
0445 - 0500	0	0	0	0	0	0	0	0	0	0	0	0	0	**0**	**0**
0500 - 0515	0	0	0	0	0	0	0	0	0	0	0	0	0	**0**	
0515 - 0530	0	0	0	0	0	0	0	0	0	0	0	0	0	**0**	
0530 - 0545	0	0	0	0	0	0	0	0	0	0	0	0	0	**0**	
0545 - 0600	0	0	0	0	0	0	0	0	0	0	0	0	0	**0**	**0**
0600 - 0615	0	0	0	0	0	0	0	0	0	0	0	0	0	**0**	
0615 - 0630	0	0	0	0	0	0	0	0	0	0	0	0	0	**0**	
0630 - 0645	0	0	0	0	0	0	0	0	0	0	0	0	0	**0**	
0645 - 0700	0	0	0	0	0	0	0	0	0	0	0	0	0	**0**	**0**
0700 - 0715	0	0	0	0	0	0	0	0	0	0	0	0	0	**0**	
0715 - 0730	0	0	0	0	0	0	0	0	0	0	0	0	0	**0**	
0730 - 0745	0	0	0	0	0	0	0	0	0	0	0	0	0	**0**	
0745 - 0800	0	0	0	0	0	0	0	0	0	0	0	0	0	**0**	**0**
0800 - 0815	0	0	0	0	0	0	0	0	0	0	0	0	0	**0**	
0815 - 0830	0	0	0	0	0	0	0	0	0	0	0	0	0	**0**	
0830 - 0845	0	0	0	0	0	0	0	0	0	0	0	0	0	**0**	
0845 - 0900	0	0	0	0	0	0	0	0	0	0	0	0	0	**0**	**0**
0900 - 0915	0	0	0	0	0	0	0	0	0	0	0	0	0	**0**	
0915 - 0930	0	0	0	0	0	0	0	0	0	0	0	0	0	**0**	
0930 - 0945	0	0	0	0	0	0	0	0	0	0	0	0	0	**0**	
0945 - 1000	0	0	0	0	0	0	0	0	0	0	0	0	0	**0**	**0**
1000 - 1015	0	0	0	0	0	0	0	0	0	0	0	0	0	**0**	
1015 - 1030	0	0	0	0	0	0	0	0	0	0	0	0	0	**0**	
1030 - 1045	0	0	0	0	0	0	0	0	0	0	0	0	0	**0**	
1045 - 1100	0	0	0	0	0	0	0	0	0	0	0	0	0	**0**	**0**
1100 - 1115	0	0	0	0	0	0	0	0	0	0	0	0	0	**0**	
1115 - 1130	0	0	0	0	0	0	0	0	0	0	0	0	0	**0**	
1130 - 1145	0	0	0	0	0	0	0	0	0	0	0	0	0	**0**	
1145 - 1200	0	0	0	0	0	0	0	0	0	0	0	0	0	**0**	**0**
1200 - 1215	0	0	0	0	0	0	0	0	0	0	0	0	0	**0**	
1215 - 1230	0	0	0	0	0	0	0	0	0	0	0	0	0	**0**	
1230 - 1245	0	0	0	0	0	0	0	0	0	0	0	0	0	**0**	
1245 - 1300	0	0	0	0	0	0	0	0	0	0	0	0	0	**0**	**0**
1300 - 1315	0	0	0	0	0	0	0	0	0	0	0	0	0	**0**	
1315 - 1330	0	0	0	0	0	0	0	0	0	0	0	0	0	**0**	
1330 - 1345	0	0	0	0	0	0	0	0	0	0	0	0	0	**0**	
1345 - 1400	0	0	0	0	0	0	0	0	0	0	0	0	0	**0**	**0**
1400 - 1415	0	0	0	0	0	0	0	0	0	0	0	0	0	**0**	
1415 - 1430	0	0	0	0	0	0	0	0	0	0	0	0	0	**0**	
1430 - 1445	0	0	0	0	0	0	0	0	0	0	0	0	0	**0**	
1445 - 1500	0	0	0	0	0	0	0	0	0	0	0	0	0	**0**	**0**
1500 - 1515	0	0	0	0	0	0	0	0	0	0	0	0	0	**0**	
1515 - 1530	0	0	0	0	0	0	0	0	0	0	0	0	0	**0**	
1530 - 1545	0	0	0	0	0	0	0	0	0	0	0	0	0	**0**	
1545 - 1600	0	0	0	0	0	0	0	0	0	0	0	0	0	**0**	**0**
1600 - 1615	0	0	0	0	0	0	0	0	0	0	0	0	0	**0**	
1615 - 1630	0	0	0	0	0	0	0	0	0	0	0	0	0	**0**	
1630 - 1645	0	0	0	0	0	0	0	0	0	0	0	0	0	**0**	
1645 - 1700	0	0	0	0	0	0	0	0	0	0	0	0	0	**0**	**0**
1700 - 1715	0	0	0	0	0	0	0	0	0	0	0	0	0	**0**	
1715 - 1730	0	0	0	0	0	0	0	0	0	0	0	0	0	**0**	
1730 - 1745	0	0	0	0	0	0	0	0	0	0	0	0	0	**0**	
1745 - 1800	0	0	0	0	0	0	0	0	0	0	0	0	0	**0**	**0**
1800 - 1815	0	0	0	0	0	0	0	0	0	0	0	0	0	**0**	
1815 - 1830	0	0	0	0	0	0	0	0	0	0	0	0	0	**0**	
1830 - 1845	0	0	0	0	0	0	0	0	0	0	0	0	0	**0**	
1845 - 1900	0	0	0	0	0	0	0	0	0	0	0	0	0	**0**	**0**
1900 - 1915	0	0	0	0	0	0	0	0	0	0	0	0	0	**0**	
1915 - 1930	0	16	5	0	0	0	0	0	1	0	0	0	0	**22**	
1930 - 1945	0	37	8	0	0	0	0	0	0	0	0	0	0	**45**	
1945 - 2000	0	23	5	0	0	0	0	0	0	0	0	0	0	**28**	**95**
2000 - 2015	0	32	1	0	0	0	0	0	0	0	0	0	0	**33**	
2015 - 2030	0	17	3	0	1	0	0	0	0	0	0	0	0	**21**	
2030 - 2045	0	14	3	0	0	0	0	0	0	0	0	0	0	**17**	
2045 - 2100	0	24	6	0	0	0	0	0	0	0	0	0	0	**30**	**101**
2100 - 2115	0	19	7	0	0	0	0	0	0	0	0	0	0	**26**	
2115 - 2130	0	16	2	0	0	0	0	0	0	0	0	0	0	**18**	
2130 - 2145	0	19	0	0	0	0	0	0	0	0	0	0	0	**19**	
2145 - 2200	0	6	0	1	0	0	0	0	0	0	0	0	0	**7**	**70**
2200 - 2215	0	10	0	0	0	0	0	0	0	0	0	0	0	**10**	
2215 - 2230	0	6	0	0	0	0	0	0	0	0	0	0	0	**6**	
2230 - 2245	0	5	0	0	0	0	0	0	0	0	0	0	0	**5**	
2245 - 2300	0	0	0	0	0	0	0	0	0	0	0	0	0	**0**	**21**
2300 - 2315	0	0	0	0	0	0	0	0	0	0	0	0	0	**0**	
2315 - 2330	0	1	1	0	0	0	0	0	0	0	0	0	0	**2**	
2330 - 2345	0	0	0	0	0	0	0	0	0	0	0	0	0	**0**	
2345 - 0000	0	1	0	0	0	0	0	0	0	0	0	0	0	**1**	**3**

Session Total	0	246	41	1	1	0	0	0	1	0	0	0	0	**290**
Session Average	0.00	2.56	0.43	0.01	0.01	0.00	0.00	0.00	0.01	0.00	0.00	0.00	0.00	**3.02**
Session Percentage	0.00	84.83	14.14	0.34	0.34	0.00	0.00	0.00	0.34	0.00	0.00	0.00	0.00	

AM Peak Hour	-	-	-	-	-	-	-	-	-	-	-	-	-	-
AM Peak Volume	0	0	0	0	0	0	0	0	0	0	0	0	0	**0**

Noon Peak Hour	-	-	-	-	-	-	-	-	-	-	-	-	-	-
Noon Peak Volume	0	0	0	0	0	0	0	0	0	0	0	0	0	**0**

PM Peak Hour	-	1930 - 2030	1915 - 2015	-	1930 - 2030	-	-	-	1830 - 1930	-	-	-	-	**1915 - 2015**
PM Peak Volume	0	109	19	0	1	0	0	0	1	0	0	0	0	**128**

Site 60
I-20 W/Bound On-Ramp,
west of US-378 Sunset Blvd

Date
Wednesday, April 24, 2024

Lat/Long
34.011608°, -81.150171°

Weather
Fair
66°F

Click here for Detailed Weather

0000 - 2400 (Weekday 24h Session) (04-24-2024)
SB WB 15min

	Westbound (Movement 60.1)													15min	60min
Time	1	2	3	4	5	6	7	8	9	10	11	12	13	Total	Total
0000 - 0015	0	0	0	0	0	0	0	0	0	0	0	0	0	**0**	
0015 - 0030	0	1	0	0	0	0	0	0	0	0	0	0	0	**1**	
0030 - 0045	0	0	0	0	0	0	0	0	1	0	0	0	0	**1**	
0045 - 0100	0	1	1	0	0	0	0	0	0	0	0	0	0	**2**	**4**
0100 - 0115	0	2	0	0	0	0	0	0	0	0	0	0	0	**2**	
0115 - 0130	0	0	0	0	0	0	0	0	0	0	0	0	0	**0**	
0130 - 0145	0	2	0	0	0	0	0	0	0	0	0	0	0	**2**	
0145 - 0200	0	0	0	0	0	0	0	0	0	0	0	0	0	**0**	**4**
0200 - 0215	0	0	0	0	0	0	0	0	0	0	0	0	0	**0**	
0215 - 0230	0	0	0	0	0	0	0	0	0	0	0	0	0	**0**	
0230 - 0245	0	0	0	0	0	0	0	0	0	0	0	0	0	**0**	
0245 - 0300	0	1	0	0	0	0	0	0	0	0	0	0	0	**1**	**1**
0300 - 0315	0	0	0	0	0	0	0	0	0	0	0	0	0	**0**	
0315 - 0330	0	0	0	0	1	0	0	0	0	0	0	0	0	**1**	
0330 - 0345	0	0	0	0	0	0	0	0	0	0	0	0	0	**0**	
0345 - 0400	0	1	0	0	0	0	0	0	0	0	0	0	0	**1**	**2**
0400 - 0415	0	1	0	0	0	0	0	0	0	0	0	0	0	**1**	
0415 - 0430	0	1	0	0	0	0	0	0	0	0	0	0	0	**1**	
0430 - 0445	0	1	0	0	0	0	0	0	0	0	0	0	0	**1**	
0445 - 0500	0	1	0	0	0	0	0	0	0	0	0	0	0	**1**	**4**
0500 - 0515	0	3	0	0	0	0	0	0	0	0	0	0	0	**3**	
0515 - 0530	0	6	1	0	0	0	0	0	0	0	0	0	0	**7**	
0530 - 0545	0	6	0	0	1	0	0	0	0	0	0	0	0	**7**	
0545 - 0600	0	4	0	0	1	0	0	0	0	0	0	0	0	**5**	**22**
0600 - 0615	0	7	4	0	0	0	0	0	0	0	0	0	0	**11**	
0615 - 0630	0	21	3	0	0	0	0	0	0	0	0	0	0	**24**	
0630 - 0645	0	14	2	0	1	0	0	1	0	0	0	0	0	**18**	
0645 - 0700	0	20	3	0	0	0	0	0	0	0	0	0	0	**23**	**76**
0700 - 0715	0	25	3	0	1	0	0	0	0	0	0	0	0	**29**	
0715 - 0730	0	31	6	1	0	0	0	0	0	0	0	0	0	**38**	
0730 - 0745	0	33	5	0	0	0	0	0	0	0	0	0	0	**38**	
0745 - 0800	0	39	6	2	0	0	0	0	0	0	0	0	0	**47**	**152**
0800 - 0815	0	49	5	2	1	0	0	0	0	0	0	0	0	**57**	
0815 - 0830	0	26	10	3	0	0	0	0	0	0	0	0	0	**39**	
0830 - 0845	0	30	5	1	2	0	0	0	0	0	0	0	0	**38**	
0845 - 0900	0	24	5	3	0	0	0	0	0	0	0	0	0	**32**	**166**
0900 - 0915	0	29	5	0	1	0	0	0	0	0	0	0	0	**35**	
0915 - 0930	0	20	6	0	2	1	0	1	0	0	0	0	0	**30**	
0930 - 0945	0	24	2	0	2	0	0	0	0	0	0	0	0	**28**	
0945 - 1000	0	27	8	0	0	0	0	0	1	0	0	0	0	**36**	**129**
1000 - 1015	0	26	1	0	1	1	0	2	0	0	0	0	0	**31**	
1015 - 1030	0	16	4	0	0	0	0	0	0	0	0	0	0	**20**	
1030 - 1045	0	20	0	0	2	0	0	0	0	0	0	0	0	**22**	
1045 - 1100	0	28	9	0	3	0	0	0	0	0	0	0	0	**40**	**113**
1100 - 1115	0	25	8	0	1	0	0	0	0	0	0	0	0	**34**	
1115 - 1130	0	22	13	1	1	0	0	0	0	0	0	0	0	**37**	
1130 - 1145	0	28	5	1	0	0	0	0	0	0	0	0	0	**34**	
1145 - 1200	0	24	4	0	0	0	0	1	0	0	0	0	0	**29**	**134**
1200 - 1215	0	25	7	0	2	0	0	0	1	0	0	0	0	**35**	
1215 - 1230	0	23	9	4	1	0	0	0	0	0	0	0	0	**37**	
1230 - 1245	0	27	7	1	1	0	0	0	0	0	0	0	0	**36**	
1245 - 1300	0	37	8	1	1	0	0	0	1	0	0	0	0	**48**	**156**
1300 - 1315	0	35	8	0	0	0	0	0	0	0	0	0	0	**43**	
1315 - 1330	1	37	7	0	0	0	0	0	0	0	0	0	0	**45**	
1330 - 1345	0	40	2	0	0	0	0	1	0	0	0	0	0	**43**	
1345 - 1400	0	36	1	0	1	0	0	0	0	0	0	0	0	**38**	**169**
1400 - 1415	0	25	10	3	1	1	0	0	0	0	0	0	0	**40**	
1415 - 1430	0	35	8	0	0	0	0	0	1	0	0	0	0	**44**	
1430 - 1445	0	35	7	0	1	1	0	0	0	0	0	0	0	**44**	
1445 - 1500	0	49	10	0	2	0	0	0	0	0	0	0	0	**61**	**189**
1500 - 1515	0	55	7	0	1	0	0	0	0	0	0	0	0	**63**	
1515 - 1530	0	59	11	0	1	0	0	0	0	0	0	0	0	**71**	
1530 - 1545	0	51	16	1	3	0	0	1	0	0	0	0	0	**72**	
1545 - 1600	0	49	19	2	1	0	0	0	0	0	0	0	0	**71**	**277**
1600 - 1615	0	75	8	1	0	0	0	0	0	0	0	0	0	**84**	
1615 - 1630	0	55	18	0	0	0	0	0	0	0	0	0	0	**73**	
1630 - 1645	0	56	11	0	0	0	0	0	0	0	0	0	0	**67**	
1645 - 1700	0	59	4	0	0	0	0	0	0	0	0	0	0	**63**	**287**
1700 - 1715	0	75	13	0	0	0	0	1	0	0	0	0	0	**89**	
1715 - 1730	1	47	15	0	0	0	0	1	0	0	0	0	0	**64**	
1730 - 1745	2	33	10	0	0	0	0	0	0	0	0	0	0	**45**	
1745 - 1800	0	38	15	0	0	0	0	0	0	0	0	0	0	**53**	**251**
1800 - 1815	0	46	9	0	0	0	0	0	0	0	0	0	0	**55**	
1815 - 1830	1	31	8	0	1	0	0	0	0	0	0	0	0	**41**	
1830 - 1845	0	34	7	0	1	0	0	0	0	0	0	0	0	**42**	
1845 - 1900	0	25	5	0	0	0	0	0	0	0	0	0	0	**30**	**168**
1900 - 1915	0	30	3	0	1	0	0	0	0	0	0	0	0	**34**	
1915 - 1930	0	29	11	0	1	0	0	0	0	0	0	0	0	**41**	
1930 - 1945	0	29	7	0	0	0	0	0	0	0	0	0	0	**36**	
1945 - 2000	0	24	4	0	0	0	0	0	0	0	0	0	0	**28**	**139**
2000 - 2015	0	16	5	0	0	0	0	0	0	0	0	0	0	**21**	
2015 - 2030	0	19	5	0	0	0	0	0	0	0	0	0	0	**24**	
2030 - 2045	0	21	1	0	1	0	0	0	0	0	0	0	0	**23**	
2045 - 2100	0	23	2	0	2	0	0	0	0	0	0	0	0	**27**	**95**
2100 - 2115	0	20	3	0	1	0	0	0	0	0	0	0	0	**24**	
2115 - 2130	0	19	1	0	0	0	0	0	0	0	0	0	0	**20**	
2130 - 2145	0	13	0	0	0	0	0	0	0	0	0	0	0	**13**	
2145 - 2200	0	16	2	0	0	0	0	0	0	0	0	0	0	**18**	**75**
2200 - 2215	0	7	0	0	1	0	0	0	0	0	0	0	0	**8**	
2215 - 2230	0	7	0	0	0	0	0	0	0	0	0	0	0	**7**	
2230 - 2245	0	4	0	0	0	0	0	0	0	0	0	0	0	**4**	
2245 - 2300	0	2	0	0	0	0	0	0	0	0	0	0	0	**2**	**21**
2300 - 2315	0	2	0	0	0	1	0	0	0	0	0	0	0	**3**	
2315 - 2330	0	1	0	0	0	0	0	0	0	0	0	0	0	**1**	
2330 - 2345	0	5	0	0	0	0	0	0	0	0	0	0	0	**5**	
2345 - 0000	0	2	0	0	0	0	0	0	0	0	0	0	0	**2**	**11**

Session Total	5	2120	428	27	46	5	0	9	5	0	0	0	0	**2645**
Session Average	0.05	22.08	4.46	0.28	0.48	0.05	0.00	0.09	0.05	0.00	0.00	0.00	0.00	**27.55**
Session Percentage	0.19	80.15	16.18	1.02	1.74	0.19	0.00	0.34	0.19	0.00	0.00	0.00	0.00	

AM Peak Hour	-	0715 - 0815	0730 - 0830	0800 - 0900	0830 - 0930	0915 - 1015	-	0915 - 1015	0900 - 1000	-	-	-	-	**0730 - 0830**
AM Peak Volume	0	152	26	9	5	2	0	3	1	0	0	0	0	**181**

Noon Peak Hour	1230 - 1330	1445 - 1545	1445 - 1545	1200 - 1300	1030 - 1130	1345 - 1445	-	1000 - 1100	1200 - 1300	-	-	-	-	**1445 - 1545**
Noon Peak Volume	1	214	44	6	7	2	0	2	2	0	0	0	0	**267**

PM Peak Hour	1645 - 1745	1600 - 1700	1530 - 1630	1515 - 1615	1500 - 1600	-	-	1630 - 1730	-	-	-	-	-	**1530 - 1630**
PM Peak Volume	3	245	61	4	6	0	0	2	0	0	0	0	0	**300**

Site 60
I-20 W/Bound On-Ramp,
west of US-378 Sunset Blvd

Date
Thursday, April 25, 2024

Lat/Long
34.011608°, -81.150171°

Weather
Fair
67°F

Click here for Detailed Weather

0000 - 2400 (Weekday 24h Session) (04-25-2024)
SB WB 15min

	Westbound (Movement 60.1)													15min	60min
TIME	1	2	3	4	5	6	7	8	9	10	11	12	13	Total	Total
0000 - 0015	0	0	0	0	0	0	0	0	0	0	0	0	0	**0**	
0015 - 0030	0	1	0	0	0	0	0	0	0	0	0	0	0	**1**	
0030 - 0045	0	1	0	0	0	0	0	0	0	0	0	0	0	**1**	
0045 - 0100	0	0	0	0	0	0	0	0	0	0	0	0	0	**0**	**2**
0100 - 0115	0	2	2	0	0	0	0	0	0	0	0	0	0	**4**	
0115 - 0130	0	0	0	0	0	0	0	0	0	0	0	0	0	**0**	
0130 - 0145	0	0	0	0	0	0	0	0	0	0	0	0	0	**0**	
0145 - 0200	0	0	0	0	0	0	0	0	0	0	0	0	0	**0**	**4**
0200 - 0215	0	0	0	0	0	0	0	0	0	0	0	0	0	**0**	
0215 - 0230	0	0	0	0	0	0	0	0	0	0	0	0	0	**0**	
0230 - 0245	0	1	0	0	0	0	0	0	0	0	0	0	0	**1**	
0245 - 0300	0	2	0	0	1	1	0	0	0	0	0	0	0	**4**	**5**
0300 - 0315	0	0	0	0	0	0	0	0	0	0	0	0	0	**0**	
0315 - 0330	0	3	0	0	0	0	0	0	0	0	0	0	0	**3**	
0330 - 0345	0	0	0	0	0	0	0	0	0	0	0	0	0	**0**	
0345 - 0400	0	1	0	0	1	0	0	0	0	0	0	0	0	**2**	**5**
0400 - 0415	0	0	0	0	0	0	0	0	0	0	0	0	0	**0**	
0415 - 0430	0	2	0	0	0	0	0	0	0	0	0	0	0	**2**	
0430 - 0445	0	2	1	0	1	0	0	0	0	0	0	0	0	**4**	
0445 - 0500	0	4	0	0	0	0	0	0	0	0	0	0	0	**4**	**10**
0500 - 0515	0	1	0	0	0	0	0	0	0	0	0	0	0	**1**	
0515 - 0530	0	6	0	0	0	0	0	0	0	0	0	0	0	**6**	
0530 - 0545	0	7	1	0	0	0	0	0	0	0	0	0	0	**8**	
0545 - 0600	0	7	0	0	0	0	0	0	0	0	0	0	0	**7**	**22**
0600 - 0615	0	13	0	0	0	0	0	0	0	0	0	0	0	**13**	
0615 - 0630	0	6	4	0	1	0	0	0	0	0	0	0	0	**11**	
0630 - 0645	0	20	2	0	0	0	0	0	0	0	0	0	0	**22**	
0645 - 0700	0	18	4	0	0	0	0	2	0	0	0	0	0	**24**	**70**
0700 - 0715	0	23	10	0	0	0	0	0	0	0	0	0	0	**33**	
0715 - 0730	0	29	5	1	0	0	0	0	1	0	0	0	0	**36**	
0730 - 0745	0	27	6	0	0	0	0	0	0	0	0	0	0	**33**	
0745 - 0800	0	26	5	2	0	0	0	1	0	0	0	0	0	**34**	**136**
0800 - 0815	0	33	11	2	0	0	0	0	0	0	0	0	0	**46**	
0815 - 0830	0	26	7	2	2	0	0	0	0	0	0	0	0	**37**	
0830 - 0845	0	23	9	1	0	0	0	0	0	0	0	0	0	**33**	
0845 - 0900	0	19	6	1	0	0	0	0	0	0	0	0	0	**26**	**142**
0900 - 0915	0	22	9	1	1	0	0	0	0	0	0	0	0	**33**	
0915 - 0930	0	20	6	0	1	0	0	0	0	0	0	0	0	**27**	
0930 - 0945	0	22	4	0	0	0	0	0	0	0	0	0	0	**26**	
0945 - 1000	0	21	8	0	0	0	0	0	0	0	0	0	0	**29**	**115**
1000 - 1015	0	17	8	0	0	0	0	1	0	0	0	0	0	**26**	
1015 - 1030	0	20	6	0	0	0	0	1	0	0	0	0	0	**27**	
1030 - 1045	0	34	7	0	1	0	0	1	0	0	0	0	0	**43**	
1045 - 1100	0	25	8	0	1	0	0	0	0	0	0	0	0	**34**	**130**
1100 - 1115	0	25	6	0	1	0	0	1	0	0	0	0	0	**33**	
1115 - 1130	0	28	10	0	0	0	0	0	0	0	0	0	0	**38**	
1130 - 1145	0	18	7	2	0	0	0	0	0	0	0	0	0	**27**	
1145 - 1200	1	20	4	0	0	0	0	0	0	0	0	0	0	**25**	**123**
1200 - 1215	0	36	10	0	1	0	0	0	0	0	0	0	0	**47**	
1215 - 1230	0	29	6	1	2	0	0	1	0	0	0	0	0	**39**	
1230 - 1245	0	37	6	3	0	0	0	0	0	0	0	0	0	**46**	
1245 - 1300	0	43	11	0	0	1	0	0	0	0	0	0	0	**55**	**187**
1300 - 1315	0	33	10	1	0	1	0	0	0	0	0	0	0	**45**	
1315 - 1330	0	39	12	1	1	0	0	1	0	0	0	0	0	**54**	
1330 - 1345	0	40	10	0	0	0	0	0	0	0	0	0	0	**50**	
1345 - 1400	1	40	12	0	3	0	0	0	1	0	0	0	0	**57**	**206**
1400 - 1415	0	32	12	3	0	0	0	0	1	0	0	0	0	**48**	
1415 - 1430	0	45	12	0	0	0	0	0	0	0	0	0	0	**57**	
1430 - 1445	0	32	10	0	0	0	0	1	0	0	0	0	0	**43**	
1445 - 1500	0	58	9	0	0	0	0	0	0	0	0	0	0	**67**	**215**
1500 - 1515	0	42	16	0	0	1	0	0	0	0	0	0	0	**59**	
1515 - 1530	0	53	12	0	1	0	0	0	0	0	0	0	0	**66**	
1530 - 1545	1	58	11	1	3	0	0	0	0	0	0	0	0	**74**	
1545 - 1600	0	51	9	1	2	1	0	0	0	0	0	0	0	**64**	**263**
1600 - 1615	0	57	14	0	0	1	0	0	0	0	0	0	0	**72**	
1615 - 1630	0	53	11	1	1	0	0	0	0	0	0	0	0	**66**	
1630 - 1645	0	50	10	1	1	0	0	0	0	0	0	0	0	**62**	
1645 - 1700	0	50	8	2	1	0	0	0	0	0	0	0	0	**61**	**261**
1700 - 1715	0	73	11	0	0	0	0	0	0	0	0	0	0	**84**	
1715 - 1730	0	44	6	0	1	0	0	0	0	0	0	0	0	**51**	
1730 - 1745	0	52	9	0	0	0	0	0	0	0	0	0	0	**61**	
1745 - 1800	0	44	6	0	0	0	0	0	0	0	0	0	0	**50**	**246**
1800 - 1815	0	31	11	0	0	0	0	0	0	0	0	0	0	**42**	
1815 - 1830	1	31	6	0	0	0	0	0	0	0	0	0	0	**38**	
1830 - 1845	0	30	9	0	0	0	0	0	0	0	0	0	0	**39**	
1845 - 1900	0	18	9	0	1	0	0	0	0	0	0	0	0	**28**	**147**
1900 - 1915	0	0	0	0	0	0	0	0	0	0	0	0	0	**0**	
1915 - 1930	0	0	0	0	0	0	0	0	0	0	0	0	0	**0**	
1930 - 1945	0	0	0	0	0	0	0	0	0	0	0	0	0	**0**	
1945 - 2000	0	0	0	0	0	0	0	0	0	0	0	0	0	**0**	**0**
2000 - 2015	0	0	0	0	0	0	0	0	0	0	0	0	0	**0**	
2015 - 2030	0	0	0	0	0	0	0	0	0	0	0	0	0	**0**	
2030 - 2045	0	0	0	0	0	0	0	0	0	0	0	0	0	**0**	
2045 - 2100	0	0	0	0	0	0	0	0	0	0	0	0	0	**0**	**0**
2100 - 2115	0	0	0	0	0	0	0	0	0	0	0	0	0	**0**	
2115 - 2130	0	0	0	0	0	0	0	0	0	0	0	0	0	**0**	
2130 - 2145	0	0	0	0	0	0	0	0	0	0	0	0	0	**0**	
2145 - 2200	0	0	0	0	0	0	0	0	0	0	0	0	0	**0**	**0**
2200 - 2215	0	0	0	0	0	0	0	0	0	0	0	0	0	**0**	
2215 - 2230	0	0	0	0	0	0	0	0	0	0	0	0	0	**0**	
2230 - 2245	0	0	0	0	0	0	0	0	0	0	0	0	0	**0**	
2245 - 2300	0	0	0	0	0	0	0	0	0	0	0	0	0	**0**	**0**
2300 - 2315	0	0	0	0	0	0	0	0	0	0	0	0	0	**0**	
2315 - 2330	0	0	0	0	0	0	0	0	0	0	0	0	0	**0**	
2330 - 2345	0	0	0	0	0	0	0	0	0	0	0	0	0	**0**	
2345 - 0000	0	0	0	0	0	0	0	0	0	0	0	0	0	**0**	**0**

Session Total	4	1776	434	27	29	6	0	10	3	0	0	0	0	**2289**
Session Average	0.04	18.50	4.52	0.28	0.30	0.06	0.00	0.10	0.03	0.00	0.00	0.00	0.00	**23.84**
Session Percentage	0.17	77.59	18.96	1.18	1.27	0.26	0.00	0.44	0.13	0.00	0.00	0.00	0.00	

AM Peak Hour	-	0715 - 0815	0800 - 0900	0745 - 0845	0815 - 0915	-	-	0945 - 1045	0630 - 0730	-	-	-	-	**0730 - 0830**
AM Peak Hour Volume	0	115	33	7	3	0	0	3	1	0	0	0	0	**150**

Noon Peak Hour	1100 - 1200	1445 - 1545	1445 - 1545	1215 - 1315	1300 - 1400	1215 - 1315	-	1000 - 1100	1315 - 1415	-	-	-	-	**1445 - 1545**
Noon Peak Hour Volume	1	211	48	5	4	2	0	3	2	0	0	0	0	**266**

PM Peak Hour	1500 - 1600	1615 - 1715	1500 - 1600	1600 - 1700	1500 - 1600	1500 - 1600	-	-	-	-	-	-	-	**1515 - 1615**
PM Peak Hour Volume	1	226	48	4	6	2	0	0	0	0	0	0	0	**276**

Bi-Directional Class Count || SB WB Average 15min

Columbia, SC

Marr Traffic DATA COLLECTION
www.marrtraffic.com

Site 60
I-20 W/Bound On-Ramp,
west of US-378 Sunset Blvd

Date
Tuesday, April 23, 2024

Lat/Long
34.011608°, -81.150171°

Weather
Fair
58°F

0000 - 2400 (Weekday 24h Session) (All Dates)
SB WB Average 15min

	SB WB Average 15min													15min	60min
Time	1	2	3	4	5	6	7	8	9	10	11	12	13	Total	Total
0000 - 0015	0	0	0	0	0	0	0	0	0	0	0	0	0	**0**	
0015 - 0030	0	1	0	0	0	0	0	0	0	0	0	0	0	**1**	
0030 - 0045	0	0	0	0	0	0	0	0	0	0	0	0	0	**1**	
0045 - 0100	0	0	0	0	0	0	0	0	0	0	0	0	0	**1**	**2**
0100 - 0115	0	1	1	0	0	0	0	0	0	0	0	0	0	**2**	
0115 - 0130	0	0	0	0	0	0	0	0	0	0	0	0	0	**0**	
0130 - 0145	0	1	0	0	0	0	0	0	0	0	0	0	0	**1**	
0145 - 0200	0	0	0	0	0	0	0	0	0	0	0	0	0	**0**	**3**
0200 - 0215	0	0	0	0	0	0	0	0	0	0	0	0	0	**0**	
0215 - 0230	0	0	0	0	0	0	0	0	0	0	0	0	0	**0**	
0230 - 0245	0	0	0	0	0	0	0	0	0	0	0	0	0	**0**	
0245 - 0300	0	1	0	0	0	0	0	0	0	0	0	0	0	**2**	**2**
0300 - 0315	0	0	0	0	0	0	0	0	0	0	0	0	0	**0**	
0315 - 0330	0	1	0	0	0	0	0	0	0	0	0	0	0	**1**	
0330 - 0345	0	0	0	0	0	0	0	0	0	0	0	0	0	**0**	
0345 - 0400	0	1	0	0	0	0	0	0	0	0	0	0	0	**1**	**2**
0400 - 0415	0	0	0	0	0	0	0	0	0	0	0	0	0	**0**	
0415 - 0430	0	1	0	0	0	0	0	0	0	0	0	0	0	**1**	
0430 - 0445	0	1	0	0	0	0	0	0	0	0	0	0	0	**2**	
0445 - 0500	0	2	0	0	0	0	0	0	0	0	0	0	0	**2**	**5**
0500 - 0515	0	1	0	0	0	0	0	0	0	0	0	0	0	**1**	
0515 - 0530	0	4	0	0	0	0	0	0	0	0	0	0	0	**4**	
0530 - 0545	0	4	0	0	0	0	0	0	0	0	0	0	0	**5**	
0545 - 0600	0	4	0	0	0	0	0	0	0	0	0	0	0	**4**	**15**
0600 - 0615	0	7	1	0	0	0	0	0	0	0	0	0	0	**8**	
0615 - 0630	0	9	2	0	0	0	0	0	0	0	0	0	0	**12**	
0630 - 0645	0	11	1	0	0	0	0	0	0	0	0	0	0	**13**	
0645 - 0700	0	13	2	0	0	0	0	1	0	0	0	0	0	**16**	**49**
0700 - 0715	0	16	4	0	0	0	0	0	0	0	0	0	0	**21**	
0715 - 0730	0	20	4	1	0	0	0	0	0	0	0	0	0	**25**	
0730 - 0745	0	20	4	0	0	0	0	0	0	0	0	0	0	**24**	
0745 - 0800	0	22	4	1	0	0	0	0	0	0	0	0	0	**27**	**96**
0800 - 0815	0	27	5	1	0	0	0	0	0	0	0	0	0	**34**	
0815 - 0830	0	17	6	2	1	0	0	0	0	0	0	0	0	**25**	
0830 - 0845	0	18	5	1	1	0	0	0	0	0	0	0	0	**24**	
0845 - 0900	0	14	4	1	0	0	0	0	0	0	0	0	0	**19**	**103**
0900 - 0915	0	17	5	0	1	0	0	0	0	0	0	0	0	**23**	
0915 - 0930	0	13	4	0	1	0	0	0	0	0	0	0	0	**19**	
0930 - 0945	0	15	2	0	1	0	0	0	0	0	0	0	0	**18**	
0945 - 1000	0	16	5	0	0	0	0	0	0	0	0	0	0	**22**	**81**
1000 - 1015	0	14	3	0	0	0	0	1	0	0	0	0	0	**19**	
1015 - 1030	0	12	3	0	0	0	0	0	0	0	0	0	0	**16**	
1030 - 1045	0	18	2	0	1	0	0	0	0	0	0	0	0	**22**	
1045 - 1100	0	18	6	0	1	0	0	0	0	0	0	0	0	**25**	**81**
1100 - 1115	0	17	5	0	1	0	0	0	0	0	0	0	0	**22**	
1115 - 1130	0	17	8	0	0	0	0	0	0	0	0	0	0	**25**	
1130 - 1145	0	15	4	1	0	0	0	0	0	0	0	0	0	**20**	
1145 - 1200	0	15	3	0	0	0	0	0	0	0	0	0	0	**18**	**86**
1200 - 1215	0	20	6	0	1	0	0	0	0	0	0	0	0	**27**	
1215 - 1230	0	17	5	2	1	0	0	0	0	0	0	0	0	**25**	
1230 - 1245	0	21	4	1	0	0	0	0	0	0	0	0	0	**27**	
1245 - 1300	0	27	6	0	0	0	0	0	0	0	0	0	0	**34**	**114**
1300 - 1315	0	23	6	0	0	0	0	0	0	0	0	0	0	**29**	
1315 - 1330	0	25	6	0	0	0	0	0	0	0	0	0	0	**33**	
1330 - 1345	0	27	4	0	0	0	0	0	0	0	0	0	0	**31**	
1345 - 1400	0	25	4	0	1	0	0	0	0	0	0	0	0	**32**	**125**
1400 - 1415	0	19	7	2	0	0	0	0	0	0	0	0	0	**29**	
1415 - 1430	0	27	7	0	0	0	0	0	0	0	0	0	0	**34**	
1430 - 1445	0	22	6	0	0	0	0	0	0	0	0	0	0	**29**	
1445 - 1500	0	36	6	0	1	0	0	0	0	0	0	0	0	**43**	**135**
1500 - 1515	0	32	8	0	0	0	0	0	0	0	0	0	0	**41**	
1515 - 1530	0	37	8	0	1	0	0	0	0	0	0	0	0	**46**	
1530 - 1545	0	36	9	1	2	0	0	0	0	0	0	0	0	**49**	
1545 - 1600	0	33	9	1	1	0	0	0	0	0	0	0	0	**45**	**180**
1600 - 1615	0	44	7	0	0	0	0	0	0	0	0	0	0	**52**	
1615 - 1630	0	36	10	0	0	0	0	0	0	0	0	0	0	**46**	
1630 - 1645	0	35	7	0	0	0	0	0	0	0	0	0	0	**43**	
1645 - 1700	0	36	4	1	0	0	0	0	0	0	0	0	0	**41**	**183**
1700 - 1715	0	49	8	0	0	0	0	0	0	0	0	0	0	**58**	
1715 - 1730	0	30	7	0	0	0	0	0	0	0	0	0	0	**38**	
1730 - 1745	1	28	6	0	0	0	0	0	0	0	0	0	0	**35**	
1745 - 1800	0	27	7	0	0	0	0	0	0	0	0	0	0	**34**	**166**
1800 - 1815	0	26	7	0	0	0	0	0	0	0	0	0	0	**32**	
1815 - 1830	1	21	5	0	0	0	0	0	0	0	0	0	0	**26**	
1830 - 1845	0	21	5	0	0	0	0	0	0	0	0	0	0	**27**	
1845 - 1900	0	14	5	0	0	0	0	0	0	0	0	0	0	**19**	**105**
1900 - 1915	0	10	1	0	0	0	0	0	0	0	0	0	0	**11**	
1915 - 1930	0	15	5	0	0	0	0	0	0	0	0	0	0	**21**	
1930 - 1945	0	22	5	0	0	0	0	0	0	0	0	0	0	**27**	
1945 - 2000	0	16	3	0	0	0	0	0	0	0	0	0	0	**19**	**78**
2000 - 2015	0	16	2	0	0	0	0	0	0	0	0	0	0	**18**	
2015 - 2030	0	12	3	0	0	0	0	0	0	0	0	0	0	**15**	
2030 - 2045	0	12	1	0	0	0	0	0	0	0	0	0	0	**13**	
2045 - 2100	0	16	3	0	1	0	0	0	0	0	0	0	0	**19**	**65**
2100 - 2115	0	13	3	0	0	0	0	0	0	0	0	0	0	**17**	
2115 - 2130	0	12	1	0	0	0	0	0	0	0	0	0	0	**13**	
2130 - 2145	0	11	0	0	0	0	0	0	0	0	0	0	0	**11**	
2145 - 2200	0	7	1	0	0	0	0	0	0	0	0	0	0	**8**	**48**
2200 - 2215	0	6	0	0	0	0	0	0	0	0	0	0	0	**6**	
2215 - 2230	0	4	0	0	0	0	0	0	0	0	0	0	0	**4**	
2230 - 2245	0	3	0	0	0	0	0	0	0	0	0	0	0	**3**	
2245 - 2300	0	1	0	0	0	0	0	0	0	0	0	0	0	**1**	**14**
2300 - 2315	0	1	0	0	0	0	0	0	0	0	0	0	0	**1**	
2315 - 2330	0	1	0	0	0	0	0	0	0	0	0	0	0	**1**	
2330 - 2345	0	2	0	0	0	0	0	0	0	0	0	0	0	**2**	
2345 - 0000	0	1	0	0	0	0	0	0	0	0	0	0	0	**1**	**5**

Session Total	3	1381	301	18	25	4	0	6	3	0	0	0	0	**1741**
Session Average	0.03	14.38	3.14	0.19	0.26	0.04	0.00	0.07	0.03	0.00	0.00	0.00	0.00	**18.14**
Session Percentage	0.17	79.29	17.29	1.05	1.45	0.21	0.00	0.36	0.17	0.00	0.00	0.00	0.00	

AM Peak Hour	-	0715 - 0815	0745 - 0845	0745 - 0845	0830 - 0930	0915 - 1015	-	0945 - 1045	0630 - 0730	-	-	-	-	**0730 - 0830**
AM Peak Volume	0	89	19	5	2	1	0	2	0	0	0	0	0	**110**

Noon Peak Hour	1300 - 1400	1445 - 1545	1445 - 1545	1215 - 1315	1445 - 1545	1215 - 1315	-	1000 - 1100	1330 - 1430	-	-	-	-	**1445 - 1545**
Noon Peak Volume	1	142	31	4	4	1	0	2	1	0	0	0	0	**178**

PM Peak Hour	1730 - 1830	1615 - 1715	1530 - 1630	1530 - 1630	1500 - 1600	1500 - 1600	-	1630 - 1730	1830 - 1930	-	-	-	-	**1530 - 1630**
PM Peak Volume	1	157	35	2	4	1	0	1	0	0	0	0	0	**192**

Bi-Directional Class Count || Volume Summary 15min

Columbia, SC

Marr Traffic DATA COLLECTION

www.marrtraffic.com

Site 60

I-20 W/Bound On-Ramp,
west of US-378 Sunset Blvd

Date

Tuesday, April 23, 2024

Lat/Long

34.011608°, -81.150171°

Weather

Fair
58°F

Click here for Detailed Weather

0000 - 2400 (Weekday 24h Session) (04-23-2024)

Volume Summary 15min

TIME	Volume Summary 15min EB	Volume Summary 15min WB	15min Total	60min Total
0000 - 0015	0	0	**0**	
0015 - 0030	0	0	**0**	
0030 - 0045	0	0	**0**	
0045 - 0100	0	0	**0**	**0**
0100 - 0115	0	0	**0**	
0115 - 0130	0	0	**0**	
0130 - 0145	0	0	**0**	
0145 - 0200	0	0	**0**	**0**
0200 - 0215	0	0	**0**	
0215 - 0230	0	0	**0**	
0230 - 0245	0	0	**0**	
0245 - 0300	0	0	**0**	**0**
0300 - 0315	0	0	**0**	
0315 - 0330	0	0	**0**	
0330 - 0345	0	0	**0**	
0345 - 0400	0	0	**0**	**0**
0400 - 0415	0	0	**0**	
0415 - 0430	0	0	**0**	
0430 - 0445	0	0	**0**	
0445 - 0500	0	0	**0**	**0**
0500 - 0515	0	0	**0**	
0515 - 0530	0	0	**0**	
0530 - 0545	0	0	**0**	
0545 - 0600	0	0	**0**	**0**
0600 - 0615	0	0	**0**	
0615 - 0630	0	0	**0**	
0630 - 0645	0	0	**0**	
0645 - 0700	0	0	**0**	**0**
0700 - 0715	0	0	**0**	
0715 - 0730	0	0	**0**	
0730 - 0745	0	0	**0**	
0745 - 0800	0	0	**0**	**0**
0800 - 0815	0	0	**0**	
0815 - 0830	0	0	**0**	
0830 - 0845	0	0	**0**	
0845 - 0900	0	0	**0**	**0**
0900 - 0915	0	0	**0**	
0915 - 0930	0	0	**0**	
0930 - 0945	0	0	**0**	
0945 - 1000	0	0	**0**	**0**
1000 - 1015	0	0	**0**	
1015 - 1030	0	0	**0**	
1030 - 1045	0	0	**0**	
1045 - 1100	0	0	**0**	**0**
1100 - 1115	0	0	**0**	
1115 - 1130	0	0	**0**	
1130 - 1145	0	0	**0**	
1145 - 1200	0	0	**0**	**0**

Time	Volume Summary 15min EB	Volume Summary 15min WB	15min Total	60min Total
1200 - 1215	0	0	**0**	
1215 - 1230	0	0	**0**	
1230 - 1245	0	0	**0**	
1245 - 1300	0	0	**0**	**0**
1300 - 1315	0	0	**0**	
1315 - 1330	0	0	**0**	
1330 - 1345	0	0	**0**	
1345 - 1400	0	0	**0**	**0**
1400 - 1415	0	0	**0**	
1415 - 1430	0	0	**0**	
1430 - 1445	0	0	**0**	
1445 - 1500	0	0	**0**	**0**
1500 - 1515	0	0	**0**	
1515 - 1530	0	0	**0**	
1530 - 1545	0	0	**0**	
1545 - 1600	0	0	**0**	**0**
1600 - 1615	0	0	**0**	
1615 - 1630	0	0	**0**	
1630 - 1645	0	0	**0**	
1645 - 1700	0	0	**0**	**0**
1700 - 1715	0	0	**0**	
1715 - 1730	0	0	**0**	
1730 - 1745	0	0	**0**	
1745 - 1800	0	0	**0**	**0**
1800 - 1815	0	0	**0**	
1815 - 1830	0	0	**0**	
1830 - 1845	0	0	**0**	
1845 - 1900	0	0	**0**	**0**
1900 - 1915	0	0	**0**	
1915 - 1930	0	22	**22**	
1930 - 1945	0	45	**45**	
1945 - 2000	0	28	**28**	**95**
2000 - 2015	0	33	**33**	
2015 - 2030	0	21	**21**	
2030 - 2045	0	17	**17**	
2045 - 2100	0	30	**30**	**101**
2100 - 2115	0	26	**26**	
2115 - 2130	0	18	**18**	
2130 - 2145	0	19	**19**	
2145 - 2200	0	7	**7**	**70**
2200 - 2215	0	10	**10**	
2215 - 2230	0	6	**6**	
2230 - 2245	0	5	**5**	
2245 - 2300	0	0	**0**	**21**
2300 - 2315	0	0	**0**	
2315 - 2330	0	2	**2**	
2330 - 2345	0	0	**0**	
2345 - 0000	0	1	**1**	**3**

Session Total	0	290	**290**
Session Average	0.00	3.02	**3.02**
Session Percentage	0.00	100.00	

Site 60
I-20 W/Bound On-Ramp,
west of US-378 Sunset Blvd

Date
Wednesday, April 24, 2024

Lat/Long
34.011608°, -81.150171°

Weather
Fair
66°F

Click here for Detailed Weather

0000 - 2400 (Weekday 24h Session) (04-24-2024)

Volume Summary 15min

TIME	Volume Summary 15min EB	WB	15min Total	60min Total
0000 - 0015	0	0	**0**	
0015 - 0030	0	1	**1**	
0030 - 0045	0	1	**1**	
0045 - 0100	0	2	**2**	**4**
0100 - 0115	0	2	**2**	
0115 - 0130	0	0	**0**	
0130 - 0145	0	2	**2**	
0145 - 0200	0	0	**0**	**4**
0200 - 0215	0	0	**0**	
0215 - 0230	0	0	**0**	
0230 - 0245	0	0	**0**	
0245 - 0300	0	1	**1**	**1**
0300 - 0315	0	0	**0**	
0315 - 0330	0	1	**1**	
0330 - 0345	0	0	**0**	
0345 - 0400	0	1	**1**	**2**
0400 - 0415	0	1	**1**	
0415 - 0430	0	1	**1**	
0430 - 0445	0	1	**1**	
0445 - 0500	0	1	**1**	**4**
0500 - 0515	0	3	**3**	
0515 - 0530	0	7	**7**	
0530 - 0545	0	7	**7**	
0545 - 0600	0	5	**5**	**22**
0600 - 0615	0	11	**11**	
0615 - 0630	0	24	**24**	
0630 - 0645	0	18	**18**	
0645 - 0700	0	23	**23**	**76**
0700 - 0715	0	29	**29**	
0715 - 0730	0	38	**38**	
0730 - 0745	0	38	**38**	
0745 - 0800	0	47	**47**	**152**
0800 - 0815	0	57	**57**	
0815 - 0830	0	39	**39**	
0830 - 0845	0	38	**38**	
0845 - 0900	0	32	**32**	**166**
0900 - 0915	0	35	**35**	
0915 - 0930	0	30	**30**	
0930 - 0945	0	28	**28**	
0945 - 1000	0	36	**36**	**129**
1000 - 1015	0	31	**31**	
1015 - 1030	0	20	**20**	
1030 - 1045	0	22	**22**	
1045 - 1100	0	40	**40**	**113**
1100 - 1115	0	34	**34**	
1115 - 1130	0	37	**37**	
1130 - 1145	0	34	**34**	
1145 - 1200	0	29	**29**	**134**

Time	Volume Summary 15min EB	WB	15min Total	60min Total
1200 - 1215	0	35	**35**	
1215 - 1230	0	37	**37**	
1230 - 1245	0	36	**36**	
1245 - 1300	0	48	**48**	**156**
1300 - 1315	0	43	**43**	
1315 - 1330	0	45	**45**	
1330 - 1345	0	43	**43**	
1345 - 1400	0	38	**38**	**169**
1400 - 1415	0	40	**40**	
1415 - 1430	0	44	**44**	
1430 - 1445	0	44	**44**	
1445 - 1500	0	61	**61**	**189**
1500 - 1515	0	63	**63**	
1515 - 1530	0	71	**71**	
1530 - 1545	0	72	**72**	
1545 - 1600	0	71	**71**	**277**
1600 - 1615	0	84	**84**	
1615 - 1630	0	73	**73**	
1630 - 1645	0	67	**67**	
1645 - 1700	0	63	**63**	**287**
1700 - 1715	0	89	**89**	
1715 - 1730	0	64	**64**	
1730 - 1745	0	45	**45**	
1745 - 1800	0	53	**53**	**251**
1800 - 1815	0	55	**55**	
1815 - 1830	0	41	**41**	
1830 - 1845	0	42	**42**	
1845 - 1900	0	30	**30**	**168**
1900 - 1915	0	34	**34**	
1915 - 1930	0	41	**41**	
1930 - 1945	0	36	**36**	
1945 - 2000	0	28	**28**	**139**
2000 - 2015	0	21	**21**	
2015 - 2030	0	24	**24**	
2030 - 2045	0	23	**23**	
2045 - 2100	0	27	**27**	**95**
2100 - 2115	0	24	**24**	
2115 - 2130	0	20	**20**	
2130 - 2145	0	13	**13**	
2145 - 2200	0	18	**18**	**75**
2200 - 2215	0	8	**8**	
2215 - 2230	0	7	**7**	
2230 - 2245	0	4	**4**	
2245 - 2300	0	2	**2**	**21**
2300 - 2315	0	3	**3**	
2315 - 2330	0	1	**1**	
2330 - 2345	0	5	**5**	
2345 - 0000	0	2	**2**	**11**

Session Total	0	2645	**2645**
Session Average	0.00	27.55	**27.55**
Session Percentage	0.00	100.00	

Site 60
I-20 W/Bound On-Ramp,
west of US-378 Sunset Blvd

Date
Thursday, April 25, 2024

Lat/Long
34.011608°, -81.150171°

Weather
Fair
67°F

Click here for Detailed Weather

0000 - 2400 (Weekday 24h Session) (04-25-2024)
Volume Summary 15min

TIME	Volume Summary 15min EB	WB	15min Total	60min Total
0000 - 0015	0	0	**0**	
0015 - 0030	0	1	**1**	
0030 - 0045	0	1	**1**	
0045 - 0100	0	0	**0**	**2**
0100 - 0115	0	4	**4**	
0115 - 0130	0	0	**0**	
0130 - 0145	0	0	**0**	
0145 - 0200	0	0	**0**	**4**
0200 - 0215	0	0	**0**	
0215 - 0230	0	0	**0**	
0230 - 0245	0	1	**1**	
0245 - 0300	0	4	**4**	**5**
0300 - 0315	0	0	**0**	
0315 - 0330	0	3	**3**	
0330 - 0345	0	0	**0**	
0345 - 0400	0	2	**2**	**5**
0400 - 0415	0	0	**0**	
0415 - 0430	0	2	**2**	
0430 - 0445	0	4	**4**	
0445 - 0500	0	4	**4**	**10**
0500 - 0515	0	1	**1**	
0515 - 0530	0	6	**6**	
0530 - 0545	0	8	**8**	
0545 - 0600	0	7	**7**	**22**
0600 - 0615	0	13	**13**	
0615 - 0630	0	11	**11**	
0630 - 0645	0	22	**22**	
0645 - 0700	0	24	**24**	**70**
0700 - 0715	0	33	**33**	
0715 - 0730	0	36	**36**	
0730 - 0745	0	33	**33**	
0745 - 0800	0	34	**34**	**136**
0800 - 0815	0	46	**46**	
0815 - 0830	0	37	**37**	
0830 - 0845	0	33	**33**	
0845 - 0900	0	26	**26**	**142**
0900 - 0915	0	33	**33**	
0915 - 0930	0	27	**27**	
0930 - 0945	0	26	**26**	
0945 - 1000	0	29	**29**	**115**
1000 - 1015	0	26	**26**	
1015 - 1030	0	27	**27**	
1030 - 1045	0	43	**43**	
1045 - 1100	0	34	**34**	**130**
1100 - 1115	0	33	**33**	
1115 - 1130	0	38	**38**	
1130 - 1145	0	27	**27**	
1145 - 1200	0	25	**25**	**123**

Time	Volume Summary 15min EB	WB	15min Total	60min Total
1200 - 1215	0	47	**47**	
1215 - 1230	0	39	**39**	
1230 - 1245	0	46	**46**	
1245 - 1300	0	55	**55**	**187**
1300 - 1315	0	45	**45**	
1315 - 1330	0	54	**54**	
1330 - 1345	0	50	**50**	
1345 - 1400	0	57	**57**	**206**
1400 - 1415	0	48	**48**	
1415 - 1430	0	57	**57**	
1430 - 1445	0	43	**43**	
1445 - 1500	0	67	**67**	**215**
1500 - 1515	0	59	**59**	
1515 - 1530	0	66	**66**	
1530 - 1545	0	74	**74**	
1545 - 1600	0	64	**64**	**263**
1600 - 1615	0	72	**72**	
1615 - 1630	0	66	**66**	
1630 - 1645	0	62	**62**	
1645 - 1700	0	61	**61**	**261**
1700 - 1715	0	84	**84**	
1715 - 1730	0	51	**51**	
1730 - 1745	0	61	**61**	
1745 - 1800	0	50	**50**	**246**
1800 - 1815	0	42	**42**	
1815 - 1830	0	38	**38**	
1830 - 1845	0	39	**39**	
1845 - 1900	0	28	**28**	**147**
1900 - 1915	0	0	**0**	
1915 - 1930	0	0	**0**	
1930 - 1945	0	0	**0**	
1945 - 2000	0	0	**0**	**0**
2000 - 2015	0	0	**0**	
2015 - 2030	0	0	**0**	
2030 - 2045	0	0	**0**	
2045 - 2100	0	0	**0**	**0**
2100 - 2115	0	0	**0**	
2115 - 2130	0	0	**0**	
2130 - 2145	0	0	**0**	
2145 - 2200	0	0	**0**	**0**
2200 - 2215	0	0	**0**	
2215 - 2230	0	0	**0**	
2230 - 2245	0	0	**0**	
2245 - 2300	0	0	**0**	**0**
2300 - 2315	0	0	**0**	
2315 - 2330	0	0	**0**	
2330 - 2345	0	0	**0**	
2345 - 0000	0	0	**0**	**0**

Session Total	0	2289	**2289**
Session Average	0.00	23.84	**23.84**
Session Percentage	0.00	100.00	

Bi-Directional Class Count || SB WB 60min

Columbia, SC

Marr Traffic DATA COLLECTION

www.marrtraffic.com

Site 60
I-20 W/Bound On-Ramp,
west of US-378 Sunset Blvd

Date
Tuesday, April 23, 2024

Lat/Long
34.011608°, -81.150171°

Weather
Fair
58°F

Click here for Detailed Weather

0000 - 2400 (Weekday 24h Session) (04-23-2024)
SB WB 60min

	Westbound (Movement 60.1)													
TIME	1	2	3	4	5	6	7	8	9	10	11	12	13	**Total**
0000 - 0100	0	0	0	0	0	0	0	0	0	0	0	0	0	**0**
0100 - 0200	0	0	0	0	0	0	0	0	0	0	0	0	0	**0**
0200 - 0300	0	0	0	0	0	0	0	0	0	0	0	0	0	**0**
0300 - 0400	0	0	0	0	0	0	0	0	0	0	0	0	0	**0**
0400 - 0500	0	0	0	0	0	0	0	0	0	0	0	0	0	**0**
0500 - 0600	0	0	0	0	0	0	0	0	0	0	0	0	0	**0**
0600 - 0700	0	0	0	0	0	0	0	0	0	0	0	0	0	**0**
0700 - 0800	0	0	0	0	0	0	0	0	0	0	0	0	0	**0**
0800 - 0900	0	0	0	0	0	0	0	0	0	0	0	0	0	**0**
0900 - 1000	0	0	0	0	0	0	0	0	0	0	0	0	0	**0**
1000 - 1100	0	0	0	0	0	0	0	0	0	0	0	0	0	**0**
1100 - 1200	0	0	0	0	0	0	0	0	0	0	0	0	0	**0**
1200 - 1300	0	0	0	0	0	0	0	0	0	0	0	0	0	**0**
1300 - 1400	0	0	0	0	0	0	0	0	0	0	0	0	0	**0**
1400 - 1500	0	0	0	0	0	0	0	0	0	0	0	0	0	**0**
1500 - 1600	0	0	0	0	0	0	0	0	0	0	0	0	0	**0**
1600 - 1700	0	0	0	0	0	0	0	0	0	0	0	0	0	**0**
1700 - 1800	0	0	0	0	0	0	0	0	0	0	0	0	0	**0**
1800 - 1900	0	0	0	0	0	0	0	0	0	0	0	0	0	**0**
1900 - 2000	0	76	18	0	0	0	0	0	1	0	0	0	0	**95**
2000 - 2100	0	87	13	0	1	0	0	0	0	0	0	0	0	**101**
2100 - 2200	0	60	9	1	0	0	0	0	0	0	0	0	0	**70**
2200 - 2300	0	21	0	0	0	0	0	0	0	0	0	0	0	**21**
2300 - 2400	0	2	1	0	0	0	0	0	0	0	0	0	0	**3**
Session Total	0	246	41	1	1	0	0	0	1	0	0	0	0	**290**
Session Average	0.00	10.25	1.71	0.04	0.04	0.00	0.00	0.00	0.04	0.00	0.00	0.00	0.00	**12.08**
Session Percentage	0.00	84.83	14.14	0.34	0.34	0.00	0.00	0.00	0.34	0.00	0.00	0.00	0.00	
AM Peak Hour	-	-	-	-	-	-	-	-	-	-	-	-	-	**-**
AM Peak Volume	0	0	0	0	0	0	0	0	0	0	0	0	0	**0**
Noon Peak Hour	-	-	-	-	-	-	-	-	-	-	-	-	-	**-**
Noon Peak Volume	0	0	0	0	0	0	0	0	0	0	0	0	0	**0**
PM Peak Hour	-	1900 - 2000	1900 - 2000	-	-	-	-	-	1900 - 2000	-	-	-	-	**1900 - 2000**
PM Peak Volume	0	76	18	0	0	0	0	0	1	0	0	0	0	**95**

Site 60
I-20 W/Bound On-Ramp,
west of US-378 Sunset Blvd

Date
Wednesday, April 24, 2024

Lat/Long
34.011608°, -81.150171°

Weather
Fair
66°F

Click here for Detailed Weather

0000 - 2400 (Weekday 24h Session) (04-24-2024)
SB WB 60min

	Westbound (Movement 60.1)													
TIME	1	2	3	4	5	6	7	8	9	10	11	12	13	**Total**
0000 - 0100	0	2	1	0	0	0	0	0	1	0	0	0	0	**4**
0100 - 0200	0	4	0	0	0	0	0	0	0	0	0	0	0	**4**
0200 - 0300	0	1	0	0	0	0	0	0	0	0	0	0	0	**1**
0300 - 0400	0	1	0	0	1	0	0	0	0	0	0	0	0	**2**
0400 - 0500	0	4	0	0	0	0	0	0	0	0	0	0	0	**4**
0500 - 0600	0	19	1	0	2	0	0	0	0	0	0	0	0	**22**
0600 - 0700	0	62	12	0	1	0	0	1	0	0	0	0	0	**76**
0700 - 0800	0	128	20	3	1	0	0	0	0	0	0	0	0	**152**
0800 - 0900	0	129	25	9	3	0	0	0	0	0	0	0	0	**166**
0900 - 1000	0	100	21	0	5	1	0	1	1	0	0	0	0	**129**
1000 - 1100	0	90	14	0	6	1	0	2	0	0	0	0	0	**113**
1100 - 1200	0	99	30	2	2	0	0	1	0	0	0	0	0	**134**
1200 - 1300	0	112	31	6	5	0	0	0	2	0	0	0	0	**156**
1300 - 1400	1	148	18	0	1	0	0	1	0	0	0	0	0	**169**
1400 - 1500	0	144	35	3	4	2	0	0	1	0	0	0	0	**189**
1500 - 1600	0	214	53	3	6	0	0	1	0	0	0	0	0	**277**
1600 - 1700	0	245	41	1	0	0	0	0	0	0	0	0	0	**287**
1700 - 1800	3	193	53	0	0	0	0	2	0	0	0	0	0	**251**
1800 - 1900	1	136	29	0	2	0	0	0	0	0	0	0	0	**168**
1900 - 2000	0	112	25	0	2	0	0	0	0	0	0	0	0	**139**
2000 - 2100	0	79	13	0	3	0	0	0	0	0	0	0	0	**95**
2100 - 2200	0	68	6	0	1	0	0	0	0	0	0	0	0	**75**
2200 - 2300	0	20	0	0	1	0	0	0	0	0	0	0	0	**21**
2300 - 2400	0	10	0	0	0	1	0	0	0	0	0	0	0	**11**

Session Total	5	2120	428	27	46	5	0	9	5	0	0	0	0	**2645**
Session Average	0.21	88.33	17.83	1.13	1.92	0.21	0.00	0.38	0.21	0.00	0.00	0.00	0.00	**110.21**
Session Percentage	0.19	80.15	16.18	1.02	1.74	0.19	0.00	0.34	0.19	0.00	0.00	0.00	0.00	

AM Peak Hour	-	0800 - 0900	0800 - 0900	0800 - 0900	0900 - 1000	0900 - 1000	-	0600 - 0700	0900 - 1000	-	-	-	-	**0800 - 0900**
AM Peak Volume	0	129	25	9	5	1	0	1	1	0	0	0	0	**166**

Noon Peak Hour	1300 - 1400	1300 - 1400	1400 - 1500	1200 - 1300	1000 - 1100	1400 - 1500	-	1000 - 1100	1200 - 1300	-	-	-	-	**1400 - 1500**
Noon Peak Volume	1	148	35	6	6	2	0	2	2	0	0	0	0	**189**

PM Peak Hour	1700 - 1800	1600 - 1700	1500 - 1600	1500 - 1600	1500 - 1600	-	-	1700 - 1800	-	-	-	-	-	**1600 - 1700**
PM Peak Volume	3	245	53	3	6	0	0	2	0	0	0	0	0	**287**

Site 60
I-20 W/Bound On-Ramp,
west of US-378 Sunset Blvd

Date
Thursday, April 25, 2024

Weather
Fair
67°F

Lat/Long
34.011608°, -81.150171°

Click here for Detailed Weather

0000 - 2400 (Weekday 24h Session) (04-25-2024)
SB WB 60min

	Westbound (Movement 60.1)													
TIME	1	2	3	4	5	6	7	8	9	10	11	12	13	**Total**
0000 - 0100	0	2	0	0	0	0	0	0	0	0	0	0	0	**2**
0100 - 0200	0	2	2	0	0	0	0	0	0	0	0	0	0	**4**
0200 - 0300	0	3	0	0	1	1	0	0	0	0	0	0	0	**5**
0300 - 0400	0	4	0	0	1	0	0	0	0	0	0	0	0	**5**
0400 - 0500	0	8	1	0	1	0	0	0	0	0	0	0	0	**10**
0500 - 0600	0	21	1	0	0	0	0	0	0	0	0	0	0	**22**
0600 - 0700	0	57	10	0	1	0	0	2	0	0	0	0	0	**70**
0700 - 0800	0	105	26	3	0	0	0	1	1	0	0	0	0	**136**
0800 - 0900	0	101	33	6	2	0	0	0	0	0	0	0	0	**142**
0900 - 1000	0	85	27	1	2	0	0	0	0	0	0	0	0	**115**
1000 - 1100	0	96	29	0	2	0	0	3	0	0	0	0	0	**130**
1100 - 1200	1	91	27	2	1	0	0	1	0	0	0	0	0	**123**
1200 - 1300	0	145	33	4	3	1	0	1	0	0	0	0	0	**187**
1300 - 1400	1	152	44	2	4	1	0	1	1	0	0	0	0	**206**
1400 - 1500	0	167	43	3	0	0	0	1	1	0	0	0	0	**215**
1500 - 1600	1	204	48	2	6	2	0	0	0	0	0	0	0	**263**
1600 - 1700	0	210	43	4	3	1	0	0	0	0	0	0	0	**261**
1700 - 1800	0	213	32	0	1	0	0	0	0	0	0	0	0	**246**
1800 - 1900	1	110	35	0	1	0	0	0	0	0	0	0	0	**147**
1900 - 2000	0	0	0	0	0	0	0	0	0	0	0	0	0	**0**
2000 - 2100	0	0	0	0	0	0	0	0	0	0	0	0	0	**0**
2100 - 2200	0	0	0	0	0	0	0	0	0	0	0	0	0	**0**
2200 - 2300	0	0	0	0	0	0	0	0	0	0	0	0	0	**0**
2300 - 2400	0	0	0	0	0	0	0	0	0	0	0	0	0	**0**

Session Total	4	1776	434	27	29	6	0	10	3	0	0	0	0	**2289**
Session Average	0.17	74.00	18.08	1.13	1.21	0.25	0.00	0.42	0.13	0.00	0.00	0.00	0.00	**95.38**
Session Percentage	0.17	77.59	18.96	1.18	1.27	0.26	0.00	0.44	0.13	0.00	0.00	0.00	0.00	

AM Peak Hour	-	0700 - 0800	0800 - 0900	0800 - 0900	0800 - 0900	-	-	0600 - 0700	0700 - 0800	-	-	-	-	**0800 - 0900**
AM Peak Hour Volume	0	105	33	6	2	0	0	2	1	0	0	0	0	**142**

Noon Peak Hour	1100 - 1200	1400 - 1500	1300 - 1400	1200 - 1300	1300 - 1400	1200 - 1300	-	1000 - 1100	1300 - 1400	-	-	-	-	**1400 - 1500**
Noon Peak Hour Volume	1	167	44	4	4	1	0	3	1	0	0	0	0	**215**

PM Peak Hour	1500 - 1600	1700 - 1800	1500 - 1600	1600 - 1700	1500 - 1600	1500 - 1600	-	-	-	-	-	-	-	**1500 - 1600**
PM Peak Hour Volume	1	213	48	4	6	2	0	0	0	0	0	0	0	**263**

Bi-Directional Class Count || Volume Summary 60min

Columbia, SC

Marr Traffic DATA COLLECTION

www.marrtraffic.com

Site 60

I-20 W/Bound On-Ramp,
west of US-378 Sunset Blvd

Date

Tuesday, April 23, 2024

Lat/Long

34.011608°, -81.150171°

Weather

Fair
58°F

Click here for Detailed Weather

0000 - 2400 (Weekday 24h Session) (04-23-2024)

Volume Summary 60min

	Volume Summary 60min		
TIME	EB	WB	**Total**
0000 - 0100	0	0	**0**
0100 - 0200	0	0	**0**
0200 - 0300	0	0	**0**
0300 - 0400	0	0	**0**
0400 - 0500	0	0	**0**
0500 - 0600	0	0	**0**
0600 - 0700	0	0	**0**
0700 - 0800	0	0	**0**
0800 - 0900	0	0	**0**
0900 - 1000	0	0	**0**
1000 - 1100	0	0	**0**
1100 - 1200	0	0	**0**

	Volume Summary 60min		
Time	EB	WB	**Total**
1200 - 1300	0	0	**0**
1300 - 1400	0	0	**0**
1400 - 1500	0	0	**0**
1500 - 1600	0	0	**0**
1600 - 1700	0	0	**0**
1700 - 1800	0	0	**0**
1800 - 1900	0	0	**0**
1900 - 2000	0	95	**95**
2000 - 2100	0	101	**101**
2100 - 2200	0	70	**70**
2200 - 2300	0	21	**21**
2300 - 2400	0	3	**3**

Session Total	0	290	**290**
Session Average	0.00	12.08	**12.08**
Session Percentage	0.00	100.00	

Site 60

I-20 W/Bound On-Ramp,
west of US-378 Sunset Blvd

Date

Wednesday, April 24, 2024

Lat/Long

34.011608°, -81.150171°

Weather

Fair
66°F

Click here for Detailed Weather

0000 - 2400 (Weekday 24h Session) (04-24-2024)

Volume Summary 60min

	Volume Summary 60min		
TIME	EB	WB	**Total**
0000 - 0100	0	4	**4**
0100 - 0200	0	4	**4**
0200 - 0300	0	1	**1**
0300 - 0400	0	2	**2**
0400 - 0500	0	4	**4**
0500 - 0600	0	22	**22**
0600 - 0700	0	76	**76**
0700 - 0800	0	152	**152**
0800 - 0900	0	166	**166**
0900 - 1000	0	129	**129**
1000 - 1100	0	113	**113**
1100 - 1200	0	134	**134**

	Volume Summary 60min		
Time	EB	WB	**Total**
1200 - 1300	0	156	**156**
1300 - 1400	0	169	**169**
1400 - 1500	0	189	**189**
1500 - 1600	0	277	**277**
1600 - 1700	0	287	**287**
1700 - 1800	0	251	**251**
1800 - 1900	0	168	**168**
1900 - 2000	0	139	**139**
2000 - 2100	0	95	**95**
2100 - 2200	0	75	**75**
2200 - 2300	0	21	**21**
2300 - 2400	0	11	**11**

Session Total	0	2645	**2645**
Session Average	0.00	110.21	**110.21**
Session Percentage	0.00	100.00	

Site 60

I-20 W/Bound On-Ramp,
west of US-378 Sunset Blvd

Date

Thursday, April 25, 2024

Lat/Long

34.011608°, -81.150171°

Weather

Fair
67°F

Click here for Detailed Weather

0000 - 2400 (Weekday 24h Session) (04-25-2024)

Volume Summary 60min

	Volume Summary 60min		
TIME	EB	WB	**Total**
0000 - 0100	0	2	**2**
0100 - 0200	0	4	**4**
0200 - 0300	0	5	**5**
0300 - 0400	0	5	**5**
0400 - 0500	0	10	**10**
0500 - 0600	0	22	**22**
0600 - 0700	0	70	**70**
0700 - 0800	0	136	**136**
0800 - 0900	0	142	**142**
0900 - 1000	0	115	**115**
1000 - 1100	0	130	**130**
1100 - 1200	0	123	**123**

Session Total	0	2289	**2289**
Session Average	0.00	95.38	**95.38**
Session Percentage	0.00	100.00	

	Volume Summary 60min		
Time	EB	WB	**Total**
1200 - 1300	0	187	**187**
1300 - 1400	0	206	**206**
1400 - 1500	0	215	**215**
1500 - 1600	0	263	**263**
1600 - 1700	0	261	**261**
1700 - 1800	0	246	**246**
1800 - 1900	0	147	**147**
1900 - 2000	0	0	**0**
2000 - 2100	0	0	**0**
2100 - 2200	0	0	**0**
2200 - 2300	0	0	**0**
2300 - 2400	0	0	**0**

Bi-Directional Class Count || Graphical Analysis SB WB

Columbia, SC

Marr Traffic DATA COLLECTION

www.marrtraffic.com

Site 60

I-20 W/Bound On-Ramp,
west of US-378 Sunset Blvd

Lat/Long

34.011608°, -81.150171°

0000 - 2400 (Weekday 24h Session)

Graphical Analysis SB WB

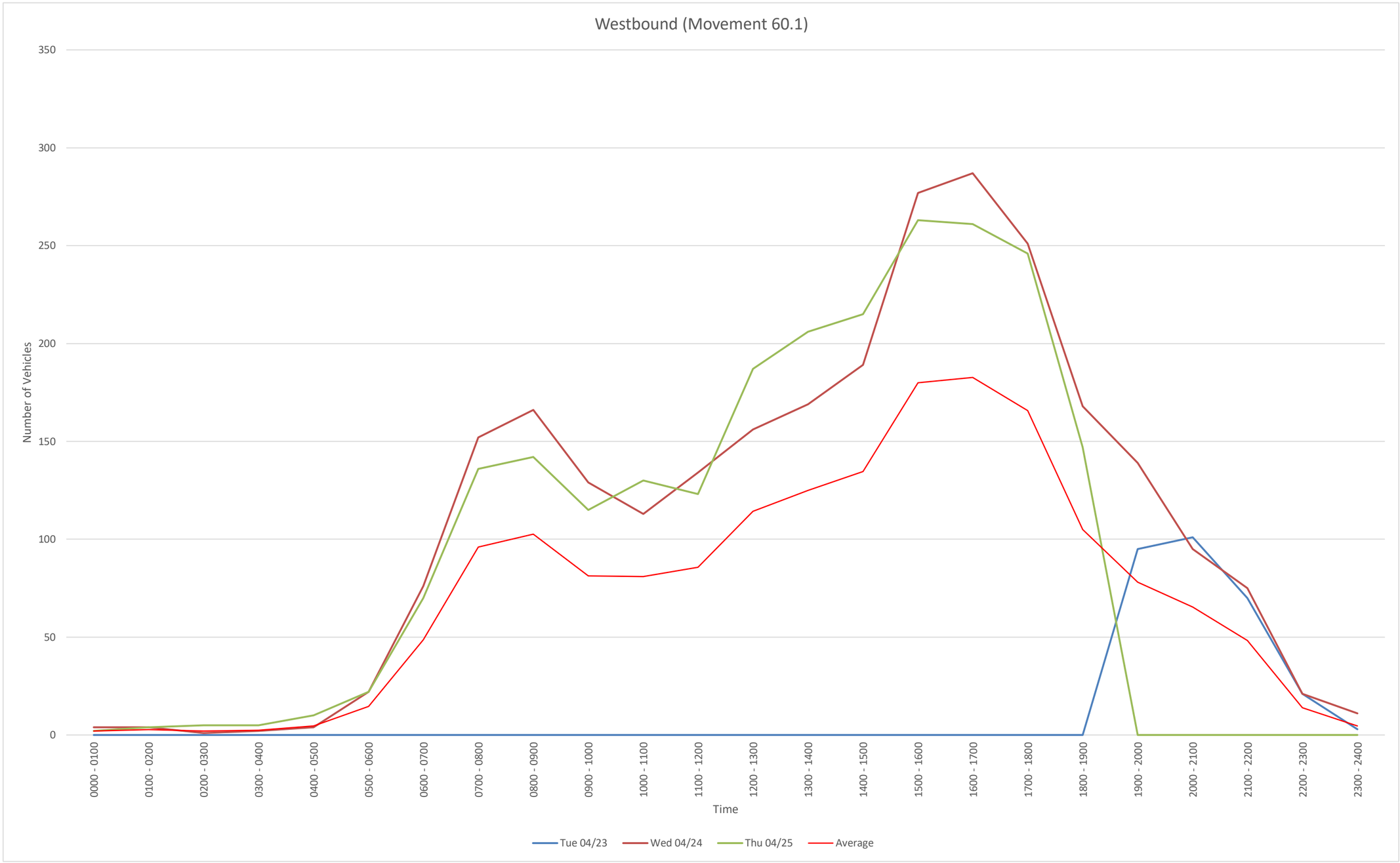

Time	Tue 04/23	Wed 04/24	Thu 04/25				
0000 - 0100	0	4	2				
0100 - 0200	0	4	4				
0200 - 0300	0	1	5				
0300 - 0400	0	2	5				
0400 - 0500	0	4	10				
0500 - 0600	0	22	22				
0600 - 0700	0	76	70				
0700 - 0800	0	152	136				
0800 - 0900	0	166	142				
0900 - 1000	0	129	115				
1000 - 1100	0	113	130				
1100 - 1200	0	134	123				
1200 - 1300	0	156	187				
1300 - 1400	0	169	206				
1400 - 1500	0	189	215				
1500 - 1600	0	277	263				
1600 - 1700	0	287	261				
1700 - 1800	0	251	246				
1800 - 1900	0	168	147				
1900 - 2000	95	139	0				
2000 - 2100	101	95	0				
2100 - 2200	70	75	0				
2200 - 2300	21	21	0				
2300 - 2400	3	11	0				
Daily Total	290	2645	2289				

EB
File Name:
Start Date: 4/23/2024
Start Time: 0
Site Code: 60
Station ID: 1
Location 1: I-20 W/Bound On-Ramp, west of US-378 Sunset Blvd
Location 2:

Date	Time	1	2	3	4	5	6	7	8	9	10	11	12	13
4/23/2024	12:00 AM	0	0	0	0	0	0	0	0	0	0	0	0	0
4/23/2024	12:15 AM	0	0	0	0	0	0	0	0	0	0	0	0	0
4/23/2024	12:30 AM	0	0	0	0	0	0	0	0	0	0	0	0	0
4/23/2024	12:45 AM	0	0	0	0	0	0	0	0	0	0	0	0	0
4/23/2024	1:00 AM	0	0	0	0	0	0	0	0	0	0	0	0	0
4/23/2024	1:15 AM	0	0	0	0	0	0	0	0	0	0	0	0	0
4/23/2024	1:30 AM	0	0	0	0	0	0	0	0	0	0	0	0	0
4/23/2024	1:45 AM	0	0	0	0	0	0	0	0	0	0	0	0	0
4/23/2024	2:00 AM	0	0	0	0	0	0	0	0	0	0	0	0	0
4/23/2024	2:15 AM	0	0	0	0	0	0	0	0	0	0	0	0	0
4/23/2024	2:30 AM	0	0	0	0	0	0	0	0	0	0	0	0	0
4/23/2024	2:45 AM	0	0	0	0	0	0	0	0	0	0	0	0	0
4/23/2024	3:00 AM	0	0	0	0	0	0	0	0	0	0	0	0	0
4/23/2024	3:15 AM	0	0	0	0	0	0	0	0	0	0	0	0	0
4/23/2024	3:30 AM	0	0	0	0	0	0	0	0	0	0	0	0	0
4/23/2024	3:45 AM	0	0	0	0	0	0	0	0	0	0	0	0	0
4/23/2024	4:00 AM	0	0	0	0	0	0	0	0	0	0	0	0	0
4/23/2024	4:15 AM	0	0	0	0	0	0	0	0	0	0	0	0	0
4/23/2024	4:30 AM	0	0	0	0	0	0	0	0	0	0	0	0	0
4/23/2024	4:45 AM	0	0	0	0	0	0	0	0	0	0	0	0	0
4/23/2024	5:00 AM	0	0	0	0	0	0	0	0	0	0	0	0	0
4/23/2024	5:15 AM	0	0	0	0	0	0	0	0	0	0	0	0	0
4/23/2024	5:30 AM	0	0	0	0	0	0	0	0	0	0	0	0	0
4/23/2024	5:45 AM	0	0	0	0	0	0	0	0	0	0	0	0	0
4/23/2024	6:00 AM	0	0	0	0	0	0	0	0	0	0	0	0	0
4/23/2024	6:15 AM	0	0	0	0	0	0	0	0	0	0	0	0	0
4/23/2024	6:30 AM	0	0	0	0	0	0	0	0	0	0	0	0	0
4/23/2024	6:45 AM	0	0	0	0	0	0	0	0	0	0	0	0	0
4/23/2024	7:00 AM	0	0	0	0	0	0	0	0	0	0	0	0	0
4/23/2024	7:15 AM	0	0	0	0	0	0	0	0	0	0	0	0	0
4/23/2024	7:30 AM	0	0	0	0	0	0	0	0	0	0	0	0	0
4/23/2024	7:45 AM	0	0	0	0	0	0	0	0	0	0	0	0	0
4/23/2024	8:00 AM	0	0	0	0	0	0	0	0	0	0	0	0	0
4/23/2024	8:15 AM	0	0	0	0	0	0	0	0	0	0	0	0	0
4/23/2024	8:30 AM	0	0	0	0	0	0	0	0	0	0	0	0	0
4/23/2024	8:45 AM	0	0	0	0	0	0	0	0	0	0	0	0	0
4/23/2024	9:00 AM	0	0	0	0	0	0	0	0	0	0	0	0	0
4/23/2024	9:15 AM	0	0	0	0	0	0	0	0	0	0	0	0	0
4/23/2024	9:30 AM	0	0	0	0	0	0	0	0	0	0	0	0	0
4/23/2024	9:45 AM	0	0	0	0	0	0	0	0	0	0	0	0	0
4/23/2024	10:00 AM	0	0	0	0	0	0	0	0	0	0	0	0	0
4/23/2024	10:15 AM	0	0	0	0	0	0	0	0	0	0	0	0	0
4/23/2024	10:30 AM	0	0	0	0	0	0	0	0	0	0	0	0	0
4/23/2024	10:45 AM	0	0	0	0	0	0	0	0	0	0	0	0	0
4/23/2024	11:00 AM	0	0	0	0	0	0	0	0	0	0	0	0	0
4/23/2024	11:15 AM	0	0	0	0	0	0	0	0	0	0	0	0	0
4/23/2024	11:30 AM	0	0	0	0	0	0	0	0	0	0	0	0	0
4/23/2024	11:45 AM	0	0	0	0	0	0	0	0	0	0	0	0	0
4/23/2024	12:00 PM	0	0	0	0	0	0	0	0	0	0	0	0	0
4/23/2024	12:15 PM	0	0	0	0	0	0	0	0	0	0	0	0	0
4/23/2024	12:30 PM	0	0	0	0	0	0	0	0	0	0	0	0	0
4/23/2024	12:45 PM	0	0	0	0	0	0	0	0	0	0	0	0	0
4/23/2024	1:00 PM	0	0	0	0	0	0	0	0	0	0	0	0	0
4/23/2024	1:15 PM	0	0	0	0	0	0	0	0	0	0	0	0	0
4/23/2024	1:30 PM	0	0	0	0	0	0	0	0	0	0	0	0	0
4/23/2024	1:45 PM	0	0	0	0	0	0	0	0	0	0	0	0	0
4/23/2024	2:00 PM	0	0	0	0	0	0	0	0	0	0	0	0	0
4/23/2024	2:15 PM	0	0	0	0	0	0	0	0	0	0	0	0	0
4/23/2024	2:30 PM	0	0	0	0	0	0	0	0	0	0	0	0	0
4/23/2024	2:45 PM	0	0	0	0	0	0	0	0	0	0	0	0	0
4/23/2024	3:00 PM	0	0	0	0	0	0	0	0	0	0	0	0	0
4/23/2024	3:15 PM	0	0	0	0	0	0	0	0	0	0	0	0	0
4/23/2024	3:30 PM	0	0	0	0	0	0	0	0	0	0	0	0	0
4/23/2024	3:45 PM	0	0	0	0	0	0	0	0	0	0	0	0	0
4/23/2024	4:00 PM	0	0	0	0	0	0	0	0	0	0	0	0	0
4/23/2024	4:15 PM	0	0	0	0	0	0	0	0	0	0	0	0	0
4/23/2024	4:30 PM	0	0	0	0	0	0	0	0	0	0	0	0	0
4/23/2024	4:45 PM	0	0	0	0	0	0	0	0	0	0	0	0	0
4/23/2024	5:00 PM	0	0	0	0	0	0	0	0	0	0	0	0	0
4/23/2024	5:15 PM	0	0	0	0	0	0	0	0	0	0	0	0	0
4/23/2024	5:30 PM	0	0	0	0	0	0	0	0	0	0	0	0	0
4/23/2024	5:45 PM	0	0	0	0	0	0	0	0	0	0	0	0	0
4/23/2024	6:00 PM	0	0	0	0	0	0	0	0	0	0	0	0	0
4/23/2024	6:15 PM	0	0	0	0	0	0	0	0	0	0	0	0	0
4/23/2024	6:30 PM	0	0	0	0	0	0	0	0	0	0	0	0	0
4/23/2024	6:45 PM	0	0	0	0	0	0	0	0	0	0	0	0	0
4/23/2024	7:00 PM	0	0	0	0	0	0	0	0	0	0	0	0	0
4/23/2024	7:15 PM	0	0	0	0	0	0	0	0	0	0	0	0	0
4/23/2024	7:30 PM	0	0	0	0	0	0	0	0	0	0	0	0	0
4/23/2024	7:45 PM	0	0	0	0	0	0	0	0	0	0	0	0	0
4/23/2024	8:00 PM	0	0	0	0	0	0	0	0	0	0	0	0	0
4/23/2024	8:15 PM	0	0	0	0	0	0	0	0	0	0	0	0	0
4/23/2024	8:30 PM	0	0	0	0	0	0	0	0	0	0	0	0	0
4/23/2024	8:45 PM	0	0	0	0	0	0	0	0	0	0	0	0	0
4/23/2024	9:00 PM	0	0	0	0	0	0	0	0	0	0	0	0	0
4/23/2024	9:15 PM	0	0	0	0	0	0	0	0	0	0	0	0	0
4/23/2024	9:30 PM	0	0	0	0	0	0	0	0	0	0	0	0	0
4/23/2024	9:45 PM	0	0	0	0	0	0	0	0	0	0	0	0	0
4/23/2024	10:00 PM	0	0	0	0	0	0	0	0	0	0	0	0	0
4/23/2024	10:15 PM	0	0	0	0	0	0	0	0	0	0	0	0	0
4/23/2024	10:30 PM	0	0	0	0	0	0	0	0	0	0	0	0	0
4/23/2024	10:45 PM	0	0	0	0	0	0	0	0	0	0	0	0	0
4/23/2024	11:00 PM	0	0	0	0	0	0	0	0	0	0	0	0	0
4/23/2024	11:15 PM	0	0	0	0	0	0	0	0	0	0	0	0	0
4/23/2024	11:30 PM	0	0	0	0	0	0	0	0	0	0	0	0	0
4/23/2024	11:45 PM	0	0	0	0	0	0	0	0	0	0	0	0	0

4/24/2024	12:00 AM	0	0	0	0	0	0	0	0	0	0	0	0	0
4/24/2024	12:15 AM	0	0	0	0	0	0	0	0	0	0	0	0	0
4/24/2024	12:30 AM	0	0	0	0	0	0	0	0	0	0	0	0	0
4/24/2024	12:45 AM	0	0	0	0	0	0	0	0	0	0	0	0	0
4/24/2024	1:00 AM	0	0	0	0	0	0	0	0	0	0	0	0	0
4/24/2024	1:15 AM	0	0	0	0	0	0	0	0	0	0	0	0	0
4/24/2024	1:30 AM	0	0	0	0	0	0	0	0	0	0	0	0	0
4/24/2024	1:45 AM	0	0	0	0	0	0	0	0	0	0	0	0	0
4/24/2024	2:00 AM	0	0	0	0	0	0	0	0	0	0	0	0	0
4/24/2024	2:15 AM	0	0	0	0	0	0	0	0	0	0	0	0	0
4/24/2024	2:30 AM	0	0	0	0	0	0	0	0	0	0	0	0	0
4/24/2024	2:45 AM	0	0	0	0	0	0	0	0	0	0	0	0	0
4/24/2024	3:00 AM	0	0	0	0	0	0	0	0	0	0	0	0	0
4/24/2024	3:15 AM	0	0	0	0	0	0	0	0	0	0	0	0	0
4/24/2024	3:30 AM	0	0	0	0	0	0	0	0	0	0	0	0	0
4/24/2024	3:45 AM	0	0	0	0	0	0	0	0	0	0	0	0	0
4/24/2024	4:00 AM	0	0	0	0	0	0	0	0	0	0	0	0	0
4/24/2024	4:15 AM	0	0	0	0	0	0	0	0	0	0	0	0	0
4/24/2024	4:30 AM	0	0	0	0	0	0	0	0	0	0	0	0	0
4/24/2024	4:45 AM	0	0	0	0	0	0	0	0	0	0	0	0	0
4/24/2024	5:00 AM	0	0	0	0	0	0	0	0	0	0	0	0	0
4/24/2024	5:15 AM	0	0	0	0	0	0	0	0	0	0	0	0	0
4/24/2024	5:30 AM	0	0	0	0	0	0	0	0	0	0	0	0	0
4/24/2024	5:45 AM	0	0	0	0	0	0	0	0	0	0	0	0	0
4/24/2024	6:00 AM	0	0	0	0	0	0	0	0	0	0	0	0	0
4/24/2024	6:15 AM	0	0	0	0	0	0	0	0	0	0	0	0	0
4/24/2024	6:30 AM	0	0	0	0	0	0	0	0	0	0	0	0	0
4/24/2024	6:45 AM	0	0	0	0	0	0	0	0	0	0	0	0	0
4/24/2024	7:00 AM	0	0	0	0	0	0	0	0	0	0	0	0	0
4/24/2024	7:15 AM	0	0	0	0	0	0	0	0	0	0	0	0	0
4/24/2024	7:30 AM	0	0	0	0	0	0	0	0	0	0	0	0	0
4/24/2024	7:45 AM	0	0	0	0	0	0	0	0	0	0	0	0	0
4/24/2024	8:00 AM	0	0	0	0	0	0	0	0	0	0	0	0	0
4/24/2024	8:15 AM	0	0	0	0	0	0	0	0	0	0	0	0	0
4/24/2024	8:30 AM	0	0	0	0	0	0	0	0	0	0	0	0	0
4/24/2024	8:45 AM	0	0	0	0	0	0	0	0	0	0	0	0	0
4/24/2024	9:00 AM	0	0	0	0	0	0	0	0	0	0	0	0	0
4/24/2024	9:15 AM	0	0	0	0	0	0	0	0	0	0	0	0	0
4/24/2024	9:30 AM	0	0	0	0	0	0	0	0	0	0	0	0	0
4/24/2024	9:45 AM	0	0	0	0	0	0	0	0	0	0	0	0	0
4/24/2024	10:00 AM	0	0	0	0	0	0	0	0	0	0	0	0	0
4/24/2024	10:15 AM	0	0	0	0	0	0	0	0	0	0	0	0	0
4/24/2024	10:30 AM	0	0	0	0	0	0	0	0	0	0	0	0	0
4/24/2024	10:45 AM	0	0	0	0	0	0	0	0	0	0	0	0	0
4/24/2024	11:00 AM	0	0	0	0	0	0	0	0	0	0	0	0	0
4/24/2024	11:15 AM	0	0	0	0	0	0	0	0	0	0	0	0	0
4/24/2024	11:30 AM	0	0	0	0	0	0	0	0	0	0	0	0	0
4/24/2024	11:45 AM	0	0	0	0	0	0	0	0	0	0	0	0	0
4/24/2024	12:00 PM	0	0	0	0	0	0	0	0	0	0	0	0	0
4/24/2024	12:15 PM	0	0	0	0	0	0	0	0	0	0	0	0	0
4/24/2024	12:30 PM	0	0	0	0	0	0	0	0	0	0	0	0	0
4/24/2024	12:45 PM	0	0	0	0	0	0	0	0	0	0	0	0	0
4/24/2024	1:00 PM	0	0	0	0	0	0	0	0	0	0	0	0	0
4/24/2024	1:15 PM	0	0	0	0	0	0	0	0	0	0	0	0	0
4/24/2024	1:30 PM	0	0	0	0	0	0	0	0	0	0	0	0	0
4/24/2024	1:45 PM	0	0	0	0	0	0	0	0	0	0	0	0	0
4/24/2024	2:00 PM	0	0	0	0	0	0	0	0	0	0	0	0	0
4/24/2024	2:15 PM	0	0	0	0	0	0	0	0	0	0	0	0	0
4/24/2024	2:30 PM	0	0	0	0	0	0	0	0	0	0	0	0	0
4/24/2024	2:45 PM	0	0	0	0	0	0	0	0	0	0	0	0	0
4/24/2024	3:00 PM	0	0	0	0	0	0	0	0	0	0	0	0	0
4/24/2024	3:15 PM	0	0	0	0	0	0	0	0	0	0	0	0	0
4/24/2024	3:30 PM	0	0	0	0	0	0	0	0	0	0	0	0	0
4/24/2024	3:45 PM	0	0	0	0	0	0	0	0	0	0	0	0	0
4/24/2024	4:00 PM	0	0	0	0	0	0	0	0	0	0	0	0	0
4/24/2024	4:15 PM	0	0	0	0	0	0	0	0	0	0	0	0	0
4/24/2024	4:30 PM	0	0	0	0	0	0	0	0	0	0	0	0	0
4/24/2024	4:45 PM	0	0	0	0	0	0	0	0	0	0	0	0	0
4/24/2024	5:00 PM	0	0	0	0	0	0	0	0	0	0	0	0	0
4/24/2024	5:15 PM	0	0	0	0	0	0	0	0	0	0	0	0	0
4/24/2024	5:30 PM	0	0	0	0	0	0	0	0	0	0	0	0	0
4/24/2024	5:45 PM	0	0	0	0	0	0	0	0	0	0	0	0	0
4/24/2024	6:00 PM	0	0	0	0	0	0	0	0	0	0	0	0	0
4/24/2024	6:15 PM	0	0	0	0	0	0	0	0	0	0	0	0	0
4/24/2024	6:30 PM	0	0	0	0	0	0	0	0	0	0	0	0	0
4/24/2024	6:45 PM	0	0	0	0	0	0	0	0	0	0	0	0	0
4/24/2024	7:00 PM	0	0	0	0	0	0	0	0	0	0	0	0	0
4/24/2024	7:15 PM	0	0	0	0	0	0	0	0	0	0	0	0	0
4/24/2024	7:30 PM	0	0	0	0	0	0	0	0	0	0	0	0	0
4/24/2024	7:45 PM	0	0	0	0	0	0	0	0	0	0	0	0	0
4/24/2024	8:00 PM	0	0	0	0	0	0	0	0	0	0	0	0	0
4/24/2024	8:15 PM	0	0	0	0	0	0	0	0	0	0	0	0	0
4/24/2024	8:30 PM	0	0	0	0	0	0	0	0	0	0	0	0	0
4/24/2024	8:45 PM	0	0	0	0	0	0	0	0	0	0	0	0	0
4/24/2024	9:00 PM	0	0	0	0	0	0	0	0	0	0	0	0	0
4/24/2024	9:15 PM	0	0	0	0	0	0	0	0	0	0	0	0	0
4/24/2024	9:30 PM	0	0	0	0	0	0	0	0	0	0	0	0	0
4/24/2024	9:45 PM	0	0	0	0	0	0	0	0	0	0	0	0	0
4/24/2024	10:00 PM	0	0	0	0	0	0	0	0	0	0	0	0	0
4/24/2024	10:15 PM	0	0	0	0	0	0	0	0	0	0	0	0	0
4/24/2024	10:30 PM	0	0	0	0	0	0	0	0	0	0	0	0	0
4/24/2024	10:45 PM	0	0	0	0	0	0	0	0	0	0	0	0	0
4/24/2024	11:00 PM	0	0	0	0	0	0	0	0	0	0	0	0	0
4/24/2024	11:15 PM	0	0	0	0	0	0	0	0	0	0	0	0	0
4/24/2024	11:30 PM	0	0	0	0	0	0	0	0	0	0	0	0	0
4/24/2024	11:45 PM	0	0	0	0	0	0	0	0	0	0	0	0	0

4/25/2024	12:00 AM	0	0	0	0	0	0	0	0	0	0	0	0	0
4/25/2024	12:15 AM	0	0	0	0	0	0	0	0	0	0	0	0	0
4/25/2024	12:30 AM	0	0	0	0	0	0	0	0	0	0	0	0	0
4/25/2024	12:45 AM	0	0	0	0	0	0	0	0	0	0	0	0	0
4/25/2024	1:00 AM	0	0	0	0	0	0	0	0	0	0	0	0	0
4/25/2024	1:15 AM	0	0	0	0	0	0	0	0	0	0	0	0	0
4/25/2024	1:30 AM	0	0	0	0	0	0	0	0	0	0	0	0	0
4/25/2024	1:45 AM	0	0	0	0	0	0	0	0	0	0	0	0	0
4/25/2024	2:00 AM	0	0	0	0	0	0	0	0	0	0	0	0	0
4/25/2024	2:15 AM	0	0	0	0	0	0	0	0	0	0	0	0	0
4/25/2024	2:30 AM	0	0	0	0	0	0	0	0	0	0	0	0	0
4/25/2024	2:45 AM	0	0	0	0	0	0	0	0	0	0	0	0	0
4/25/2024	3:00 AM	0	0	0	0	0	0	0	0	0	0	0	0	0
4/25/2024	3:15 AM	0	0	0	0	0	0	0	0	0	0	0	0	0
4/25/2024	3:30 AM	0	0	0	0	0	0	0	0	0	0	0	0	0
4/25/2024	3:45 AM	0	0	0	0	0	0	0	0	0	0	0	0	0
4/25/2024	4:00 AM	0	0	0	0	0	0	0	0	0	0	0	0	0
4/25/2024	4:15 AM	0	0	0	0	0	0	0	0	0	0	0	0	0
4/25/2024	4:30 AM	0	0	0	0	0	0	0	0	0	0	0	0	0
4/25/2024	4:45 AM	0	0	0	0	0	0	0	0	0	0	0	0	0
4/25/2024	5:00 AM	0	0	0	0	0	0	0	0	0	0	0	0	0
4/25/2024	5:15 AM	0	0	0	0	0	0	0	0	0	0	0	0	0
4/25/2024	5:30 AM	0	0	0	0	0	0	0	0	0	0	0	0	0
4/25/2024	5:45 AM	0	0	0	0	0	0	0	0	0	0	0	0	0
4/25/2024	6:00 AM	0	0	0	0	0	0	0	0	0	0	0	0	0
4/25/2024	6:15 AM	0	0	0	0	0	0	0	0	0	0	0	0	0
4/25/2024	6:30 AM	0	0	0	0	0	0	0	0	0	0	0	0	0
4/25/2024	6:45 AM	0	0	0	0	0	0	0	0	0	0	0	0	0
4/25/2024	7:00 AM	0	0	0	0	0	0	0	0	0	0	0	0	0
4/25/2024	7:15 AM	0	0	0	0	0	0	0	0	0	0	0	0	0
4/25/2024	7:30 AM	0	0	0	0	0	0	0	0	0	0	0	0	0
4/25/2024	7:45 AM	0	0	0	0	0	0	0	0	0	0	0	0	0
4/25/2024	8:00 AM	0	0	0	0	0	0	0	0	0	0	0	0	0
4/25/2024	8:15 AM	0	0	0	0	0	0	0	0	0	0	0	0	0
4/25/2024	8:30 AM	0	0	0	0	0	0	0	0	0	0	0	0	0
4/25/2024	8:45 AM	0	0	0	0	0	0	0	0	0	0	0	0	0
4/25/2024	9:00 AM	0	0	0	0	0	0	0	0	0	0	0	0	0
4/25/2024	9:15 AM	0	0	0	0	0	0	0	0	0	0	0	0	0
4/25/2024	9:30 AM	0	0	0	0	0	0	0	0	0	0	0	0	0
4/25/2024	9:45 AM	0	0	0	0	0	0	0	0	0	0	0	0	0
4/25/2024	10:00 AM	0	0	0	0	0	0	0	0	0	0	0	0	0
4/25/2024	10:15 AM	0	0	0	0	0	0	0	0	0	0	0	0	0
4/25/2024	10:30 AM	0	0	0	0	0	0	0	0	0	0	0	0	0
4/25/2024	10:45 AM	0	0	0	0	0	0	0	0	0	0	0	0	0
4/25/2024	11:00 AM	0	0	0	0	0	0	0	0	0	0	0	0	0
4/25/2024	11:15 AM	0	0	0	0	0	0	0	0	0	0	0	0	0
4/25/2024	11:30 AM	0	0	0	0	0	0	0	0	0	0	0	0	0
4/25/2024	11:45 AM	0	0	0	0	0	0	0	0	0	0	0	0	0
4/25/2024	12:00 PM	0	0	0	0	0	0	0	0	0	0	0	0	0
4/25/2024	12:15 PM	0	0	0	0	0	0	0	0	0	0	0	0	0
4/25/2024	12:30 PM	0	0	0	0	0	0	0	0	0	0	0	0	0
4/25/2024	12:45 PM	0	0	0	0	0	0	0	0	0	0	0	0	0
4/25/2024	1:00 PM	0	0	0	0	0	0	0	0	0	0	0	0	0
4/25/2024	1:15 PM	0	0	0	0	0	0	0	0	0	0	0	0	0
4/25/2024	1:30 PM	0	0	0	0	0	0	0	0	0	0	0	0	0
4/25/2024	1:45 PM	0	0	0	0	0	0	0	0	0	0	0	0	0
4/25/2024	2:00 PM	0	0	0	0	0	0	0	0	0	0	0	0	0
4/25/2024	2:15 PM	0	0	0	0	0	0	0	0	0	0	0	0	0
4/25/2024	2:30 PM	0	0	0	0	0	0	0	0	0	0	0	0	0
4/25/2024	2:45 PM	0	0	0	0	0	0	0	0	0	0	0	0	0
4/25/2024	3:00 PM	0	0	0	0	0	0	0	0	0	0	0	0	0
4/25/2024	3:15 PM	0	0	0	0	0	0	0	0	0	0	0	0	0
4/25/2024	3:30 PM	0	0	0	0	0	0	0	0	0	0	0	0	0
4/25/2024	3:45 PM	0	0	0	0	0	0	0	0	0	0	0	0	0
4/25/2024	4:00 PM	0	0	0	0	0	0	0	0	0	0	0	0	0
4/25/2024	4:15 PM	0	0	0	0	0	0	0	0	0	0	0	0	0
4/25/2024	4:30 PM	0	0	0	0	0	0	0	0	0	0	0	0	0
4/25/2024	4:45 PM	0	0	0	0	0	0	0	0	0	0	0	0	0
4/25/2024	5:00 PM	0	0	0	0	0	0	0	0	0	0	0	0	0
4/25/2024	5:15 PM	0	0	0	0	0	0	0	0	0	0	0	0	0
4/25/2024	5:30 PM	0	0	0	0	0	0	0	0	0	0	0	0	0
4/25/2024	5:45 PM	0	0	0	0	0	0	0	0	0	0	0	0	0
4/25/2024	6:00 PM	0	0	0	0	0	0	0	0	0	0	0	0	0
4/25/2024	6:15 PM	0	0	0	0	0	0	0	0	0	0	0	0	0
4/25/2024	6:30 PM	0	0	0	0	0	0	0	0	0	0	0	0	0
4/25/2024	6:45 PM	0	0	0	0	0	0	0	0	0	0	0	0	0
4/25/2024	7:00 PM	0	0	0	0	0	0	0	0	0	0	0	0	0
4/25/2024	7:15 PM	0	0	0	0	0	0	0	0	0	0	0	0	0
4/25/2024	7:30 PM	0	0	0	0	0	0	0	0	0	0	0	0	0
4/25/2024	7:45 PM	0	0	0	0	0	0	0	0	0	0	0	0	0
4/25/2024	8:00 PM	0	0	0	0	0	0	0	0	0	0	0	0	0
4/25/2024	8:15 PM	0	0	0	0	0	0	0	0	0	0	0	0	0
4/25/2024	8:30 PM	0	0	0	0	0	0	0	0	0	0	0	0	0
4/25/2024	8:45 PM	0	0	0	0	0	0	0	0	0	0	0	0	0
4/25/2024	9:00 PM	0	0	0	0	0	0	0	0	0	0	0	0	0
4/25/2024	9:15 PM	0	0	0	0	0	0	0	0	0	0	0	0	0
4/25/2024	9:30 PM	0	0	0	0	0	0	0	0	0	0	0	0	0
4/25/2024	9:45 PM	0	0	0	0	0	0	0	0	0	0	0	0	0
4/25/2024	10:00 PM	0	0	0	0	0	0	0	0	0	0	0	0	0
4/25/2024	10:15 PM	0	0	0	0	0	0	0	0	0	0	0	0	0
4/25/2024	10:30 PM	0	0	0	0	0	0	0	0	0	0	0	0	0
4/25/2024	10:45 PM	0	0	0	0	0	0	0	0	0	0	0	0	0
4/25/2024	11:00 PM	0	0	0	0	0	0	0	0	0	0	0	0	0
4/25/2024	11:15 PM	0	0	0	0	0	0	0	0	0	0	0	0	0
4/25/2024	11:30 PM	0	0	0	0	0	0	0	0	0	0	0	0	0
4/25/2024	11:45 PM	0	0	0	0	0	0	0	0	0	0	0	0	0

WB
File Name:
Start Date: 4/23/2024
Start Time: 0
Site Code: 60
Station ID: 1
Location 1: I-20 W/Bound On-Ramp, west of US-378 Sunset Blvd
Location 2:

Date	Time	1	2	3	4	5	6	7	8	9	10	11	12	13
4/23/2024	12:00 AM	0	0	0	0	0	0	0	0	0	0	0	0	0
4/23/2024	12:15 AM	0	0	0	0	0	0	0	0	0	0	0	0	0
4/23/2024	12:30 AM	0	0	0	0	0	0	0	0	0	0	0	0	0
4/23/2024	12:45 AM	0	0	0	0	0	0	0	0	0	0	0	0	0
4/23/2024	1:00 AM	0	0	0	0	0	0	0	0	0	0	0	0	0
4/23/2024	1:15 AM	0	0	0	0	0	0	0	0	0	0	0	0	0
4/23/2024	1:30 AM	0	0	0	0	0	0	0	0	0	0	0	0	0
4/23/2024	1:45 AM	0	0	0	0	0	0	0	0	0	0	0	0	0
4/23/2024	2:00 AM	0	0	0	0	0	0	0	0	0	0	0	0	0
4/23/2024	2:15 AM	0	0	0	0	0	0	0	0	0	0	0	0	0
4/23/2024	2:30 AM	0	0	0	0	0	0	0	0	0	0	0	0	0
4/23/2024	2:45 AM	0	0	0	0	0	0	0	0	0	0	0	0	0
4/23/2024	3:00 AM	0	0	0	0	0	0	0	0	0	0	0	0	0
4/23/2024	3:15 AM	0	0	0	0	0	0	0	0	0	0	0	0	0
4/23/2024	3:30 AM	0	0	0	0	0	0	0	0	0	0	0	0	0
4/23/2024	3:45 AM	0	0	0	0	0	0	0	0	0	0	0	0	0
4/23/2024	4:00 AM	0	0	0	0	0	0	0	0	0	0	0	0	0
4/23/2024	4:15 AM	0	0	0	0	0	0	0	0	0	0	0	0	0
4/23/2024	4:30 AM	0	0	0	0	0	0	0	0	0	0	0	0	0
4/23/2024	4:45 AM	0	0	0	0	0	0	0	0	0	0	0	0	0
4/23/2024	5:00 AM	0	0	0	0	0	0	0	0	0	0	0	0	0
4/23/2024	5:15 AM	0	0	0	0	0	0	0	0	0	0	0	0	0
4/23/2024	5:30 AM	0	0	0	0	0	0	0	0	0	0	0	0	0
4/23/2024	5:45 AM	0	0	0	0	0	0	0	0	0	0	0	0	0
4/23/2024	6:00 AM	0	0	0	0	0	0	0	0	0	0	0	0	0
4/23/2024	6:15 AM	0	0	0	0	0	0	0	0	0	0	0	0	0
4/23/2024	6:30 AM	0	0	0	0	0	0	0	0	0	0	0	0	0
4/23/2024	6:45 AM	0	0	0	0	0	0	0	0	0	0	0	0	0
4/23/2024	7:00 AM	0	0	0	0	0	0	0	0	0	0	0	0	0
4/23/2024	7:15 AM	0	0	0	0	0	0	0	0	0	0	0	0	0
4/23/2024	7:30 AM	0	0	0	0	0	0	0	0	0	0	0	0	0
4/23/2024	7:45 AM	0	0	0	0	0	0	0	0	0	0	0	0	0
4/23/2024	8:00 AM	0	0	0	0	0	0	0	0	0	0	0	0	0
4/23/2024	8:15 AM	0	0	0	0	0	0	0	0	0	0	0	0	0
4/23/2024	8:30 AM	0	0	0	0	0	0	0	0	0	0	0	0	0
4/23/2024	8:45 AM	0	0	0	0	0	0	0	0	0	0	0	0	0
4/23/2024	9:00 AM	0	0	0	0	0	0	0	0	0	0	0	0	0
4/23/2024	9:15 AM	0	0	0	0	0	0	0	0	0	0	0	0	0
4/23/2024	9:30 AM	0	0	0	0	0	0	0	0	0	0	0	0	0
4/23/2024	9:45 AM	0	0	0	0	0	0	0	0	0	0	0	0	0
4/23/2024	10:00 AM	0	0	0	0	0	0	0	0	0	0	0	0	0
4/23/2024	10:15 AM	0	0	0	0	0	0	0	0	0	0	0	0	0
4/23/2024	10:30 AM	0	0	0	0	0	0	0	0	0	0	0	0	0
4/23/2024	10:45 AM	0	0	0	0	0	0	0	0	0	0	0	0	0
4/23/2024	11:00 AM	0	0	0	0	0	0	0	0	0	0	0	0	0
4/23/2024	11:15 AM	0	0	0	0	0	0	0	0	0	0	0	0	0
4/23/2024	11:30 AM	0	0	0	0	0	0	0	0	0	0	0	0	0
4/23/2024	11:45 AM	0	0	0	0	0	0	0	0	0	0	0	0	0
4/23/2024	12:00 PM	0	0	0	0	0	0	0	0	0	0	0	0	0
4/23/2024	12:15 PM	0	0	0	0	0	0	0	0	0	0	0	0	0
4/23/2024	12:30 PM	0	0	0	0	0	0	0	0	0	0	0	0	0
4/23/2024	12:45 PM	0	0	0	0	0	0	0	0	0	0	0	0	0
4/23/2024	1:00 PM	0	0	0	0	0	0	0	0	0	0	0	0	0
4/23/2024	1:15 PM	0	0	0	0	0	0	0	0	0	0	0	0	0
4/23/2024	1:30 PM	0	0	0	0	0	0	0	0	0	0	0	0	0
4/23/2024	1:45 PM	0	0	0	0	0	0	0	0	0	0	0	0	0
4/23/2024	2:00 PM	0	0	0	0	0	0	0	0	0	0	0	0	0
4/23/2024	2:15 PM	0	0	0	0	0	0	0	0	0	0	0	0	0
4/23/2024	2:30 PM	0	0	0	0	0	0	0	0	0	0	0	0	0
4/23/2024	2:45 PM	0	0	0	0	0	0	0	0	0	0	0	0	0
4/23/2024	3:00 PM	0	0	0	0	0	0	0	0	0	0	0	0	0
4/23/2024	3:15 PM	0	0	0	0	0	0	0	0	0	0	0	0	0
4/23/2024	3:30 PM	0	0	0	0	0	0	0	0	0	0	0	0	0
4/23/2024	3:45 PM	0	0	0	0	0	0	0	0	0	0	0	0	0
4/23/2024	4:00 PM	0	0	0	0	0	0	0	0	0	0	0	0	0
4/23/2024	4:15 PM	0	0	0	0	0	0	0	0	0	0	0	0	0
4/23/2024	4:30 PM	0	0	0	0	0	0	0	0	0	0	0	0	0
4/23/2024	4:45 PM	0	0	0	0	0	0	0	0	0	0	0	0	0
4/23/2024	5:00 PM	0	0	0	0	0	0	0	0	0	0	0	0	0
4/23/2024	5:15 PM	0	0	0	0	0	0	0	0	0	0	0	0	0
4/23/2024	5:30 PM	0	0	0	0	0	0	0	0	0	0	0	0	0
4/23/2024	5:45 PM	0	0	0	0	0	0	0	0	0	0	0	0	0
4/23/2024	6:00 PM	0	0	0	0	0	0	0	0	0	0	0	0	0
4/23/2024	6:15 PM	0	0	0	0	0	0	0	0	0	0	0	0	0
4/23/2024	6:30 PM	0	0	0	0	0	0	0	0	0	0	0	0	0
4/23/2024	6:45 PM	0	0	0	0	0	0	0	0	0	0	0	0	0
4/23/2024	7:00 PM	0	0	0	0	0	0	0	0	0	0	0	0	0
4/23/2024	7:15 PM	0	16	5	0	0	0	0	0	1	0	0	0	0
4/23/2024	7:30 PM	0	37	8	0	0	0	0	0	0	0	0	0	0
4/23/2024	7:45 PM	0	23	5	0	0	0	0	0	0	0	0	0	0
4/23/2024	8:00 PM	0	32	1	0	0	0	0	0	0	0	0	0	0
4/23/2024	8:15 PM	0	17	3	0	1	0	0	0	0	0	0	0	0
4/23/2024	8:30 PM	0	14	3	0	0	0	0	0	0	0	0	0	0
4/23/2024	8:45 PM	0	24	6	0	0	0	0	0	0	0	0	0	0
4/23/2024	9:00 PM	0	19	7	0	0	0	0	0	0	0	0	0	0
4/23/2024	9:15 PM	0	16	2	0	0	0	0	0	0	0	0	0	0
4/23/2024	9:30 PM	0	19	0	0	0	0	0	0	0	0	0	0	0
4/23/2024	9:45 PM	0	6	0	1	0	0	0	0	0	0	0	0	0
4/23/2024	10:00 PM	0	10	0	0	0	0	0	0	0	0	0	0	0
4/23/2024	10:15 PM	0	6	0	0	0	0	0	0	0	0	0	0	0
4/23/2024	10:30 PM	0	5	0	0	0	0	0	0	0	0	0	0	0
4/23/2024	10:45 PM	0	0	0	0	0	0	0	0	0	0	0	0	0
4/23/2024	11:00 PM	0	0	0	0	0	0	0	0	0	0	0	0	0
4/23/2024	11:15 PM	0	1	1	0	0	0	0	0	0	0	0	0	0
4/23/2024	11:30 PM	0	0	0	0	0	0	0	0	0	0	0	0	0
4/23/2024	11:45 PM	0	1	0	0	0	0	0	0	0	0	0	0	0

4/24/2024	12:00 AM	0	0	0	0	0	0	0	0	0	0	0	0	0
4/24/2024	12:15 AM	0	1	0	0	0	0	0	0	0	0	0	0	0
4/24/2024	12:30 AM	0	0	0	0	0	0	0	0	1	0	0	0	0
4/24/2024	12:45 AM	0	1	1	0	0	0	0	0	0	0	0	0	0
4/24/2024	1:00 AM	0	2	0	0	0	0	0	0	0	0	0	0	0
4/24/2024	1:15 AM	0	0	0	0	0	0	0	0	0	0	0	0	0
4/24/2024	1:30 AM	0	2	0	0	0	0	0	0	0	0	0	0	0
4/24/2024	1:45 AM	0	0	0	0	0	0	0	0	0	0	0	0	0
4/24/2024	2:00 AM	0	0	0	0	0	0	0	0	0	0	0	0	0
4/24/2024	2:15 AM	0	0	0	0	0	0	0	0	0	0	0	0	0
4/24/2024	2:30 AM	0	0	0	0	0	0	0	0	0	0	0	0	0
4/24/2024	2:45 AM	0	1	0	0	0	0	0	0	0	0	0	0	0
4/24/2024	3:00 AM	0	0	0	0	0	0	0	0	0	0	0	0	0
4/24/2024	3:15 AM	0	0	0	0	1	0	0	0	0	0	0	0	0
4/24/2024	3:30 AM	0	0	0	0	0	0	0	0	0	0	0	0	0
4/24/2024	3:45 AM	0	1	0	0	0	0	0	0	0	0	0	0	0
4/24/2024	4:00 AM	0	1	0	0	0	0	0	0	0	0	0	0	0
4/24/2024	4:15 AM	0	1	0	0	0	0	0	0	0	0	0	0	0
4/24/2024	4:30 AM	0	1	0	0	0	0	0	0	0	0	0	0	0
4/24/2024	4:45 AM	0	1	0	0	0	0	0	0	0	0	0	0	0
4/24/2024	5:00 AM	0	3	0	0	0	0	0	0	0	0	0	0	0
4/24/2024	5:15 AM	0	6	1	0	0	0	0	0	0	0	0	0	0
4/24/2024	5:30 AM	0	6	0	0	1	0	0	0	0	0	0	0	0
4/24/2024	5:45 AM	0	4	0	0	1	0	0	0	0	0	0	0	0
4/24/2024	6:00 AM	0	7	4	0	0	0	0	0	0	0	0	0	0
4/24/2024	6:15 AM	0	21	3	0	0	0	0	0	0	0	0	0	0
4/24/2024	6:30 AM	0	14	2	0	1	0	0	1	0	0	0	0	0
4/24/2024	6:45 AM	0	20	3	0	0	0	0	0	0	0	0	0	0
4/24/2024	7:00 AM	0	25	3	0	1	0	0	0	0	0	0	0	0
4/24/2024	7:15 AM	0	31	6	1	0	0	0	0	0	0	0	0	0
4/24/2024	7:30 AM	0	33	5	0	0	0	0	0	0	0	0	0	0
4/24/2024	7:45 AM	0	39	6	2	0	0	0	0	0	0	0	0	0
4/24/2024	8:00 AM	0	49	5	2	1	0	0	0	0	0	0	0	0
4/24/2024	8:15 AM	0	26	10	3	0	0	0	0	0	0	0	0	0
4/24/2024	8:30 AM	0	30	5	1	2	0	0	0	0	0	0	0	0
4/24/2024	8:45 AM	0	24	5	3	0	0	0	0	0	0	0	0	0
4/24/2024	9:00 AM	0	29	5	0	1	0	0	0	0	0	0	0	0
4/24/2024	9:15 AM	0	20	6	0	2	1	0	1	0	0	0	0	0
4/24/2024	9:30 AM	0	24	2	0	2	0	0	0	0	0	0	0	0
4/24/2024	9:45 AM	0	27	8	0	0	0	0	0	1	0	0	0	0
4/24/2024	10:00 AM	0	26	1	0	1	1	0	2	0	0	0	0	0
4/24/2024	10:15 AM	0	16	4	0	0	0	0	0	0	0	0	0	0
4/24/2024	10:30 AM	0	20	0	0	2	0	0	0	0	0	0	0	0
4/24/2024	10:45 AM	0	28	9	0	3	0	0	0	0	0	0	0	0
4/24/2024	11:00 AM	0	25	8	0	1	0	0	0	0	0	0	0	0
4/24/2024	11:15 AM	0	22	13	1	1	0	0	0	0	0	0	0	0
4/24/2024	11:30 AM	0	28	5	1	0	0	0	0	0	0	0	0	0
4/24/2024	11:45 AM	0	24	4	0	0	0	0	1	0	0	0	0	0
4/24/2024	12:00 PM	0	25	7	0	2	0	0	0	1	0	0	0	0
4/24/2024	12:15 PM	0	23	9	4	1	0	0	0	0	0	0	0	0
4/24/2024	12:30 PM	0	27	7	1	1	0	0	0	0	0	0	0	0
4/24/2024	12:45 PM	0	37	8	1	1	0	0	0	1	0	0	0	0
4/24/2024	1:00 PM	0	35	8	0	0	0	0	0	0	0	0	0	0
4/24/2024	1:15 PM	1	37	7	0	0	0	0	0	0	0	0	0	0
4/24/2024	1:30 PM	0	40	2	0	0	0	0	1	0	0	0	0	0
4/24/2024	1:45 PM	0	36	1	0	1	0	0	0	0	0	0	0	0
4/24/2024	2:00 PM	0	25	10	3	1	1	0	0	0	0	0	0	0
4/24/2024	2:15 PM	0	35	8	0	0	0	0	0	1	0	0	0	0
4/24/2024	2:30 PM	0	35	7	0	1	1	0	0	0	0	0	0	0
4/24/2024	2:45 PM	0	49	10	0	2	0	0	0	0	0	0	0	0
4/24/2024	3:00 PM	0	55	7	0	1	0	0	0	0	0	0	0	0
4/24/2024	3:15 PM	0	59	11	0	1	0	0	0	0	0	0	0	0
4/24/2024	3:30 PM	0	51	16	1	3	0	0	1	0	0	0	0	0
4/24/2024	3:45 PM	0	49	19	2	1	0	0	0	0	0	0	0	0
4/24/2024	4:00 PM	0	75	8	1	0	0	0	0	0	0	0	0	0
4/24/2024	4:15 PM	0	55	18	0	0	0	0	0	0	0	0	0	0
4/24/2024	4:30 PM	0	56	11	0	0	0	0	0	0	0	0	0	0
4/24/2024	4:45 PM	0	59	4	0	0	0	0	0	0	0	0	0	0
4/24/2024	5:00 PM	0	75	13	0	0	0	0	1	0	0	0	0	0
4/24/2024	5:15 PM	1	47	15	0	0	0	0	1	0	0	0	0	0
4/24/2024	5:30 PM	2	33	10	0	0	0	0	0	0	0	0	0	0
4/24/2024	5:45 PM	0	38	15	0	0	0	0	0	0	0	0	0	0
4/24/2024	6:00 PM	0	46	9	0	0	0	0	0	0	0	0	0	0
4/24/2024	6:15 PM	1	31	8	0	1	0	0	0	0	0	0	0	0
4/24/2024	6:30 PM	0	34	7	0	1	0	0	0	0	0	0	0	0
4/24/2024	6:45 PM	0	25	5	0	0	0	0	0	0	0	0	0	0
4/24/2024	7:00 PM	0	30	3	0	1	0	0	0	0	0	0	0	0
4/24/2024	7:15 PM	0	29	11	0	1	0	0	0	0	0	0	0	0
4/24/2024	7:30 PM	0	29	7	0	0	0	0	0	0	0	0	0	0
4/24/2024	7:45 PM	0	24	4	0	0	0	0	0	0	0	0	0	0
4/24/2024	8:00 PM	0	16	5	0	0	0	0	0	0	0	0	0	0
4/24/2024	8:15 PM	0	19	5	0	0	0	0	0	0	0	0	0	0
4/24/2024	8:30 PM	0	21	1	0	1	0	0	0	0	0	0	0	0
4/24/2024	8:45 PM	0	23	2	0	2	0	0	0	0	0	0	0	0
4/24/2024	9:00 PM	0	20	3	0	1	0	0	0	0	0	0	0	0
4/24/2024	9:15 PM	0	19	1	0	0	0	0	0	0	0	0	0	0
4/24/2024	9:30 PM	0	13	0	0	0	0	0	0	0	0	0	0	0
4/24/2024	9:45 PM	0	16	2	0	0	0	0	0	0	0	0	0	0
4/24/2024	10:00 PM	0	7	0	0	1	0	0	0	0	0	0	0	0
4/24/2024	10:15 PM	0	7	0	0	0	0	0	0	0	0	0	0	0
4/24/2024	10:30 PM	0	4	0	0	0	0	0	0	0	0	0	0	0
4/24/2024	10:45 PM	0	2	0	0	0	0	0	0	0	0	0	0	0
4/24/2024	11:00 PM	0	2	0	0	0	1	0	0	0	0	0	0	0
4/24/2024	11:15 PM	0	1	0	0	0	0	0	0	0	0	0	0	0
4/24/2024	11:30 PM	0	5	0	0	0	0	0	0	0	0	0	0	0
4/24/2024	11:45 PM	0	2	0	0	0	0	0	0	0	0	0	0	0

4/25/2024	12:00 AM	0	0	0	0	0	0	0	0	0	0	0	0	0
4/25/2024	12:15 AM	0	1	0	0	0	0	0	0	0	0	0	0	0
4/25/2024	12:30 AM	0	1	0	0	0	0	0	0	0	0	0	0	0
4/25/2024	12:45 AM	0	0	0	0	0	0	0	0	0	0	0	0	0
4/25/2024	1:00 AM	0	2	2	0	0	0	0	0	0	0	0	0	0
4/25/2024	1:15 AM	0	0	0	0	0	0	0	0	0	0	0	0	0
4/25/2024	1:30 AM	0	0	0	0	0	0	0	0	0	0	0	0	0
4/25/2024	1:45 AM	0	0	0	0	0	0	0	0	0	0	0	0	0
4/25/2024	2:00 AM	0	0	0	0	0	0	0	0	0	0	0	0	0
4/25/2024	2:15 AM	0	0	0	0	0	0	0	0	0	0	0	0	0
4/25/2024	2:30 AM	0	1	0	0	0	0	0	0	0	0	0	0	0
4/25/2024	2:45 AM	0	2	0	0	1	1	0	0	0	0	0	0	0
4/25/2024	3:00 AM	0	0	0	0	0	0	0	0	0	0	0	0	0
4/25/2024	3:15 AM	0	3	0	0	0	0	0	0	0	0	0	0	0
4/25/2024	3:30 AM	0	0	0	0	0	0	0	0	0	0	0	0	0
4/25/2024	3:45 AM	0	1	0	0	1	0	0	0	0	0	0	0	0
4/25/2024	4:00 AM	0	0	0	0	0	0	0	0	0	0	0	0	0
4/25/2024	4:15 AM	0	2	0	0	0	0	0	0	0	0	0	0	0
4/25/2024	4:30 AM	0	2	1	0	1	0	0	0	0	0	0	0	0
4/25/2024	4:45 AM	0	4	0	0	0	0	0	0	0	0	0	0	0
4/25/2024	5:00 AM	0	1	0	0	0	0	0	0	0	0	0	0	0
4/25/2024	5:15 AM	0	6	0	0	0	0	0	0	0	0	0	0	0
4/25/2024	5:30 AM	0	7	1	0	0	0	0	0	0	0	0	0	0
4/25/2024	5:45 AM	0	7	0	0	0	0	0	0	0	0	0	0	0
4/25/2024	6:00 AM	0	13	0	0	0	0	0	0	0	0	0	0	0
4/25/2024	6:15 AM	0	6	4	0	1	0	0	0	0	0	0	0	0
4/25/2024	6:30 AM	0	20	2	0	0	0	0	0	0	0	0	0	0
4/25/2024	6:45 AM	0	18	4	0	0	0	0	2	0	0	0	0	0
4/25/2024	7:00 AM	0	23	10	0	0	0	0	0	0	0	0	0	0
4/25/2024	7:15 AM	0	29	5	1	0	0	0	0	1	0	0	0	0
4/25/2024	7:30 AM	0	27	6	0	0	0	0	0	0	0	0	0	0
4/25/2024	7:45 AM	0	26	5	2	0	0	0	1	0	0	0	0	0
4/25/2024	8:00 AM	0	33	11	2	0	0	0	0	0	0	0	0	0
4/25/2024	8:15 AM	0	26	7	2	2	0	0	0	0	0	0	0	0
4/25/2024	8:30 AM	0	23	9	1	0	0	0	0	0	0	0	0	0
4/25/2024	8:45 AM	0	19	6	1	0	0	0	0	0	0	0	0	0
4/25/2024	9:00 AM	0	22	9	1	1	0	0	0	0	0	0	0	0
4/25/2024	9:15 AM	0	20	6	0	1	0	0	0	0	0	0	0	0
4/25/2024	9:30 AM	0	22	4	0	0	0	0	0	0	0	0	0	0
4/25/2024	9:45 AM	0	21	8	0	0	0	0	0	0	0	0	0	0
4/25/2024	10:00 AM	0	17	8	0	0	0	0	1	0	0	0	0	0
4/25/2024	10:15 AM	0	20	6	0	0	0	0	1	0	0	0	0	0
4/25/2024	10:30 AM	0	34	7	0	1	0	0	1	0	0	0	0	0
4/25/2024	10:45 AM	0	25	8	0	1	0	0	0	0	0	0	0	0
4/25/2024	11:00 AM	0	25	6	0	1	0	0	1	0	0	0	0	0
4/25/2024	11:15 AM	0	28	10	0	0	0	0	0	0	0	0	0	0
4/25/2024	11:30 AM	0	18	7	2	0	0	0	0	0	0	0	0	0
4/25/2024	11:45 AM	1	20	4	0	0	0	0	0	0	0	0	0	0
4/25/2024	12:00 PM	0	36	10	0	1	0	0	0	0	0	0	0	0
4/25/2024	12:15 PM	0	29	6	1	2	0	0	1	0	0	0	0	0
4/25/2024	12:30 PM	0	37	6	3	0	0	0	0	0	0	0	0	0
4/25/2024	12:45 PM	0	43	11	0	0	1	0	0	0	0	0	0	0
4/25/2024	1:00 PM	0	33	10	1	0	1	0	0	0	0	0	0	0
4/25/2024	1:15 PM	0	39	12	1	1	0	0	1	0	0	0	0	0
4/25/2024	1:30 PM	0	40	10	0	0	0	0	0	0	0	0	0	0
4/25/2024	1:45 PM	1	40	12	0	3	0	0	0	1	0	0	0	0
4/25/2024	2:00 PM	0	32	12	3	0	0	0	0	1	0	0	0	0
4/25/2024	2:15 PM	0	45	12	0	0	0	0	0	0	0	0	0	0
4/25/2024	2:30 PM	0	32	10	0	0	0	0	1	0	0	0	0	0
4/25/2024	2:45 PM	0	58	9	0	0	0	0	0	0	0	0	0	0
4/25/2024	3:00 PM	0	42	16	0	0	1	0	0	0	0	0	0	0
4/25/2024	3:15 PM	0	53	12	0	1	0	0	0	0	0	0	0	0
4/25/2024	3:30 PM	1	58	11	1	3	0	0	0	0	0	0	0	0
4/25/2024	3:45 PM	0	51	9	1	2	1	0	0	0	0	0	0	0
4/25/2024	4:00 PM	0	57	14	0	0	1	0	0	0	0	0	0	0
4/25/2024	4:15 PM	0	53	11	1	1	0	0	0	0	0	0	0	0
4/25/2024	4:30 PM	0	50	10	1	1	0	0	0	0	0	0	0	0
4/25/2024	4:45 PM	0	50	8	2	1	0	0	0	0	0	0	0	0
4/25/2024	5:00 PM	0	73	11	0	0	0	0	0	0	0	0	0	0
4/25/2024	5:15 PM	0	44	6	0	1	0	0	0	0	0	0	0	0
4/25/2024	5:30 PM	0	52	9	0	0	0	0	0	0	0	0	0	0
4/25/2024	5:45 PM	0	44	6	0	0	0	0	0	0	0	0	0	0
4/25/2024	6:00 PM	0	31	11	0	0	0	0	0	0	0	0	0	0
4/25/2024	6:15 PM	1	31	6	0	0	0	0	0	0	0	0	0	0
4/25/2024	6:30 PM	0	30	9	0	0	0	0	0	0	0	0	0	0
4/25/2024	6:45 PM	0	18	9	0	1	0	0	0	0	0	0	0	0
4/25/2024	7:00 PM	0	0	0	0	0	0	0	0	0	0	0	0	0
4/25/2024	7:15 PM	0	0	0	0	0	0	0	0	0	0	0	0	0
4/25/2024	7:30 PM	0	0	0	0	0	0	0	0	0	0	0	0	0
4/25/2024	7:45 PM	0	0	0	0	0	0	0	0	0	0	0	0	0
4/25/2024	8:00 PM	0	0	0	0	0	0	0	0	0	0	0	0	0
4/25/2024	8:15 PM	0	0	0	0	0	0	0	0	0	0	0	0	0
4/25/2024	8:30 PM	0	0	0	0	0	0	0	0	0	0	0	0	0
4/25/2024	8:45 PM	0	0	0	0	0	0	0	0	0	0	0	0	0
4/25/2024	9:00 PM	0	0	0	0	0	0	0	0	0	0	0	0	0
4/25/2024	9:15 PM	0	0	0	0	0	0	0	0	0	0	0	0	0
4/25/2024	9:30 PM	0	0	0	0	0	0	0	0	0	0	0	0	0
4/25/2024	9:45 PM	0	0	0	0	0	0	0	0	0	0	0	0	0
4/25/2024	10:00 PM	0	0	0	0	0	0	0	0	0	0	0	0	0
4/25/2024	10:15 PM	0	0	0	0	0	0	0	0	0	0	0	0	0
4/25/2024	10:30 PM	0	0	0	0	0	0	0	0	0	0	0	0	0
4/25/2024	10:45 PM	0	0	0	0	0	0	0	0	0	0	0	0	0
4/25/2024	11:00 PM	0	0	0	0	0	0	0	0	0	0	0	0	0
4/25/2024	11:15 PM	0	0	0	0	0	0	0	0	0	0	0	0	0
4/25/2024	11:30 PM	0	0	0	0	0	0	0	0	0	0	0	0	0
4/25/2024	11:45 PM	0	0	0	0	0	0	0	0	0	0	0	0	0

EB
File Name:
Start Date: 4/23/2024
Start Time: 0
Site Code: 60
Station ID: 1
Location 1: I-20 W/Bound On-Ramp, west of US-378 Sunset Blvd
Location 2:

Date	Time	1	2	3	4	5	6	7	8	9	10	11	12	13
4/23/2024	12:00 AM	0	0	0	0	0	0	0	0	0	0	0	0	0
4/23/2024	12:15 AM	0	0	0	0	0	0	0	0	0	0	0	0	0
4/23/2024	12:30 AM	0	0	0	0	0	0	0	0	0	0	0	0	0
4/23/2024	12:45 AM	0	0	0	0	0	0	0	0	0	0	0	0	0
4/23/2024	1:00 AM	0	0	0	0	0	0	0	0	0	0	0	0	0
4/23/2024	1:15 AM	0	0	0	0	0	0	0	0	0	0	0	0	0
4/23/2024	1:30 AM	0	0	0	0	0	0	0	0	0	0	0	0	0
4/23/2024	1:45 AM	0	0	0	0	0	0	0	0	0	0	0	0	0
4/23/2024	2:00 AM	0	0	0	0	0	0	0	0	0	0	0	0	0
4/23/2024	2:15 AM	0	0	0	0	0	0	0	0	0	0	0	0	0
4/23/2024	2:30 AM	0	0	0	0	0	0	0	0	0	0	0	0	0
4/23/2024	2:45 AM	0	0	0	0	0	0	0	0	0	0	0	0	0
4/23/2024	3:00 AM	0	0	0	0	0	0	0	0	0	0	0	0	0
4/23/2024	3:15 AM	0	0	0	0	0	0	0	0	0	0	0	0	0
4/23/2024	3:30 AM	0	0	0	0	0	0	0	0	0	0	0	0	0
4/23/2024	3:45 AM	0	0	0	0	0	0	0	0	0	0	0	0	0
4/23/2024	4:00 AM	0	0	0	0	0	0	0	0	0	0	0	0	0
4/23/2024	4:15 AM	0	0	0	0	0	0	0	0	0	0	0	0	0
4/23/2024	4:30 AM	0	0	0	0	0	0	0	0	0	0	0	0	0
4/23/2024	4:45 AM	0	0	0	0	0	0	0	0	0	0	0	0	0
4/23/2024	5:00 AM	0	0	0	0	0	0	0	0	0	0	0	0	0
4/23/2024	5:15 AM	0	0	0	0	0	0	0	0	0	0	0	0	0
4/23/2024	5:30 AM	0	0	0	0	0	0	0	0	0	0	0	0	0
4/23/2024	5:45 AM	0	0	0	0	0	0	0	0	0	0	0	0	0
4/23/2024	6:00 AM	0	0	0	0	0	0	0	0	0	0	0	0	0
4/23/2024	6:15 AM	0	0	0	0	0	0	0	0	0	0	0	0	0
4/23/2024	6:30 AM	0	0	0	0	0	0	0	0	0	0	0	0	0
4/23/2024	6:45 AM	0	0	0	0	0	0	0	0	0	0	0	0	0
4/23/2024	7:00 AM	0	0	0	0	0	0	0	0	0	0	0	0	0
4/23/2024	7:15 AM	0	0	0	0	0	0	0	0	0	0	0	0	0
4/23/2024	7:30 AM	0	0	0	0	0	0	0	0	0	0	0	0	0
4/23/2024	7:45 AM	0	0	0	0	0	0	0	0	0	0	0	0	0
4/23/2024	8:00 AM	0	0	0	0	0	0	0	0	0	0	0	0	0
4/23/2024	8:15 AM	0	0	0	0	0	0	0	0	0	0	0	0	0
4/23/2024	8:30 AM	0	0	0	0	0	0	0	0	0	0	0	0	0
4/23/2024	8:45 AM	0	0	0	0	0	0	0	0	0	0	0	0	0
4/23/2024	9:00 AM	0	0	0	0	0	0	0	0	0	0	0	0	0
4/23/2024	9:15 AM	0	0	0	0	0	0	0	0	0	0	0	0	0
4/23/2024	9:30 AM	0	0	0	0	0	0	0	0	0	0	0	0	0
4/23/2024	9:45 AM	0	0	0	0	0	0	0	0	0	0	0	0	0
4/23/2024	10:00 AM	0	0	0	0	0	0	0	0	0	0	0	0	0
4/23/2024	10:15 AM	0	0	0	0	0	0	0	0	0	0	0	0	0
4/23/2024	10:30 AM	0	0	0	0	0	0	0	0	0	0	0	0	0
4/23/2024	10:45 AM	0	0	0	0	0	0	0	0	0	0	0	0	0
4/23/2024	11:00 AM	0	0	0	0	0	0	0	0	0	0	0	0	0
4/23/2024	11:15 AM	0	0	0	0	0	0	0	0	0	0	0	0	0
4/23/2024	11:30 AM	0	0	0	0	0	0	0	0	0	0	0	0	0
4/23/2024	11:45 AM	0	0	0	0	0	0	0	0	0	0	0	0	0
4/23/2024	12:00 PM	0	0	0	0	0	0	0	0	0	0	0	0	0
4/23/2024	12:15 PM	0	0	0	0	0	0	0	0	0	0	0	0	0
4/23/2024	12:30 PM	0	0	0	0	0	0	0	0	0	0	0	0	0
4/23/2024	12:45 PM	0	0	0	0	0	0	0	0	0	0	0	0	0
4/23/2024	1:00 PM	0	0	0	0	0	0	0	0	0	0	0	0	0
4/23/2024	1:15 PM	0	0	0	0	0	0	0	0	0	0	0	0	0
4/23/2024	1:30 PM	0	0	0	0	0	0	0	0	0	0	0	0	0
4/23/2024	1:45 PM	0	0	0	0	0	0	0	0	0	0	0	0	0
4/23/2024	2:00 PM	0	0	0	0	0	0	0	0	0	0	0	0	0
4/23/2024	2:15 PM	0	0	0	0	0	0	0	0	0	0	0	0	0
4/23/2024	2:30 PM	0	0	0	0	0	0	0	0	0	0	0	0	0
4/23/2024	2:45 PM	0	0	0	0	0	0	0	0	0	0	0	0	0
4/23/2024	3:00 PM	0	0	0	0	0	0	0	0	0	0	0	0	0
4/23/2024	3:15 PM	0	0	0	0	0	0	0	0	0	0	0	0	0
4/23/2024	3:30 PM	0	0	0	0	0	0	0	0	0	0	0	0	0
4/23/2024	3:45 PM	0	0	0	0	0	0	0	0	0	0	0	0	0
4/23/2024	4:00 PM	0	0	0	0	0	0	0	0	0	0	0	0	0
4/23/2024	4:15 PM	0	0	0	0	0	0	0	0	0	0	0	0	0
4/23/2024	4:30 PM	0	0	0	0	0	0	0	0	0	0	0	0	0
4/23/2024	4:45 PM	0	0	0	0	0	0	0	0	0	0	0	0	0
4/23/2024	5:00 PM	0	0	0	0	0	0	0	0	0	0	0	0	0
4/23/2024	5:15 PM	0	0	0	0	0	0	0	0	0	0	0	0	0
4/23/2024	5:30 PM	0	0	0	0	0	0	0	0	0	0	0	0	0
4/23/2024	5:45 PM	0	0	0	0	0	0	0	0	0	0	0	0	0
4/23/2024	6:00 PM	0	0	0	0	0	0	0	0	0	0	0	0	0
4/23/2024	6:15 PM	0	0	0	0	0	0	0	0	0	0	0	0	0
4/23/2024	6:30 PM	0	0	0	0	0	0	0	0	0	0	0	0	0
4/23/2024	6:45 PM	0	0	0	0	0	0	0	0	0	0	0	0	0
4/23/2024	7:00 PM	0	0	0	0	0	0	0	0	0	0	0	0	0
4/23/2024	7:15 PM	0	0	0	0	0	0	0	0	0	0	0	0	0
4/23/2024	7:30 PM	0	0	0	0	0	0	0	0	0	0	0	0	0
4/23/2024	7:45 PM	0	0	0	0	0	0	0	0	0	0	0	0	0
4/23/2024	8:00 PM	0	0	0	0	0	0	0	0	0	0	0	0	0
4/23/2024	8:15 PM	0	0	0	0	0	0	0	0	0	0	0	0	0
4/23/2024	8:30 PM	0	0	0	0	0	0	0	0	0	0	0	0	0
4/23/2024	8:45 PM	0	0	0	0	0	0	0	0	0	0	0	0	0
4/23/2024	9:00 PM	0	0	0	0	0	0	0	0	0	0	0	0	0
4/23/2024	9:15 PM	0	0	0	0	0	0	0	0	0	0	0	0	0
4/23/2024	9:30 PM	0	0	0	0	0	0	0	0	0	0	0	0	0
4/23/2024	9:45 PM	0	0	0	0	0	0	0	0	0	0	0	0	0
4/23/2024	10:00 PM	0	0	0	0	0	0	0	0	0	0	0	0	0
4/23/2024	10:15 PM	0	0	0	0	0	0	0	0	0	0	0	0	0
4/23/2024	10:30 PM	0	0	0	0	0	0	0	0	0	0	0	0	0
4/23/2024	10:45 PM	0	0	0	0	0	0	0	0	0	0	0	0	0
4/23/2024	11:00 PM	0	0	0	0	0	0	0	0	0	0	0	0	0
4/23/2024	11:15 PM	0	0	0	0	0	0	0	0	0	0	0	0	0
4/23/2024	11:30 PM	0	0	0	0	0	0	0	0	0	0	0	0	0
4/23/2024	11:45 PM	0	0	0	0	0	0	0	0	0	0	0	0	0

4/24/2024	12:00 AM	0	0	0	0	0	0	0	0	0	0	0	0	0
4/24/2024	12:15 AM	0	0	0	0	0	0	0	0	0	0	0	0	0
4/24/2024	12:30 AM	0	0	0	0	0	0	0	0	0	0	0	0	0
4/24/2024	12:45 AM	0	0	0	0	0	0	0	0	0	0	0	0	0
4/24/2024	1:00 AM	0	0	0	0	0	0	0	0	0	0	0	0	0
4/24/2024	1:15 AM	0	0	0	0	0	0	0	0	0	0	0	0	0
4/24/2024	1:30 AM	0	0	0	0	0	0	0	0	0	0	0	0	0
4/24/2024	1:45 AM	0	0	0	0	0	0	0	0	0	0	0	0	0
4/24/2024	2:00 AM	0	0	0	0	0	0	0	0	0	0	0	0	0
4/24/2024	2:15 AM	0	0	0	0	0	0	0	0	0	0	0	0	0
4/24/2024	2:30 AM	0	0	0	0	0	0	0	0	0	0	0	0	0
4/24/2024	2:45 AM	0	0	0	0	0	0	0	0	0	0	0	0	0
4/24/2024	3:00 AM	0	0	0	0	0	0	0	0	0	0	0	0	0
4/24/2024	3:15 AM	0	0	0	0	0	0	0	0	0	0	0	0	0
4/24/2024	3:30 AM	0	0	0	0	0	0	0	0	0	0	0	0	0
4/24/2024	3:45 AM	0	0	0	0	0	0	0	0	0	0	0	0	0
4/24/2024	4:00 AM	0	0	0	0	0	0	0	0	0	0	0	0	0
4/24/2024	4:15 AM	0	0	0	0	0	0	0	0	0	0	0	0	0
4/24/2024	4:30 AM	0	0	0	0	0	0	0	0	0	0	0	0	0
4/24/2024	4:45 AM	0	0	0	0	0	0	0	0	0	0	0	0	0
4/24/2024	5:00 AM	0	0	0	0	0	0	0	0	0	0	0	0	0
4/24/2024	5:15 AM	0	0	0	0	0	0	0	0	0	0	0	0	0
4/24/2024	5:30 AM	0	0	0	0	0	0	0	0	0	0	0	0	0
4/24/2024	5:45 AM	0	0	0	0	0	0	0	0	0	0	0	0	0
4/24/2024	6:00 AM	0	0	0	0	0	0	0	0	0	0	0	0	0
4/24/2024	6:15 AM	0	0	0	0	0	0	0	0	0	0	0	0	0
4/24/2024	6:30 AM	0	0	0	0	0	0	0	0	0	0	0	0	0
4/24/2024	6:45 AM	0	0	0	0	0	0	0	0	0	0	0	0	0
4/24/2024	7:00 AM	0	0	0	0	0	0	0	0	0	0	0	0	0
4/24/2024	7:15 AM	0	0	0	0	0	0	0	0	0	0	0	0	0
4/24/2024	7:30 AM	0	0	0	0	0	0	0	0	0	0	0	0	0
4/24/2024	7:45 AM	0	0	0	0	0	0	0	0	0	0	0	0	0
4/24/2024	8:00 AM	0	0	0	0	0	0	0	0	0	0	0	0	0
4/24/2024	8:15 AM	0	0	0	0	0	0	0	0	0	0	0	0	0
4/24/2024	8:30 AM	0	0	0	0	0	0	0	0	0	0	0	0	0
4/24/2024	8:45 AM	0	0	0	0	0	0	0	0	0	0	0	0	0
4/24/2024	9:00 AM	0	0	0	0	0	0	0	0	0	0	0	0	0
4/24/2024	9:15 AM	0	0	0	0	0	0	0	0	0	0	0	0	0
4/24/2024	9:30 AM	0	0	0	0	0	0	0	0	0	0	0	0	0
4/24/2024	9:45 AM	0	0	0	0	0	0	0	0	0	0	0	0	0
4/24/2024	10:00 AM	0	0	0	0	0	0	0	0	0	0	0	0	0
4/24/2024	10:15 AM	0	0	0	0	0	0	0	0	0	0	0	0	0
4/24/2024	10:30 AM	0	0	0	0	0	0	0	0	0	0	0	0	0
4/24/2024	10:45 AM	0	0	0	0	0	0	0	0	0	0	0	0	0
4/24/2024	11:00 AM	0	0	0	0	0	0	0	0	0	0	0	0	0
4/24/2024	11:15 AM	0	0	0	0	0	0	0	0	0	0	0	0	0
4/24/2024	11:30 AM	0	0	0	0	0	0	0	0	0	0	0	0	0
4/24/2024	11:45 AM	0	0	0	0	0	0	0	0	0	0	0	0	0
4/24/2024	12:00 PM	0	0	0	0	0	0	0	0	0	0	0	0	0
4/24/2024	12:15 PM	0	0	0	0	0	0	0	0	0	0	0	0	0
4/24/2024	12:30 PM	0	0	0	0	0	0	0	0	0	0	0	0	0
4/24/2024	12:45 PM	0	0	0	0	0	0	0	0	0	0	0	0	0
4/24/2024	1:00 PM	0	0	0	0	0	0	0	0	0	0	0	0	0
4/24/2024	1:15 PM	0	0	0	0	0	0	0	0	0	0	0	0	0
4/24/2024	1:30 PM	0	0	0	0	0	0	0	0	0	0	0	0	0
4/24/2024	1:45 PM	0	0	0	0	0	0	0	0	0	0	0	0	0
4/24/2024	2:00 PM	0	0	0	0	0	0	0	0	0	0	0	0	0
4/24/2024	2:15 PM	0	0	0	0	0	0	0	0	0	0	0	0	0
4/24/2024	2:30 PM	0	0	0	0	0	0	0	0	0	0	0	0	0
4/24/2024	2:45 PM	0	0	0	0	0	0	0	0	0	0	0	0	0
4/24/2024	3:00 PM	0	0	0	0	0	0	0	0	0	0	0	0	0
4/24/2024	3:15 PM	0	0	0	0	0	0	0	0	0	0	0	0	0
4/24/2024	3:30 PM	0	0	0	0	0	0	0	0	0	0	0	0	0
4/24/2024	3:45 PM	0	0	0	0	0	0	0	0	0	0	0	0	0
4/24/2024	4:00 PM	0	0	0	0	0	0	0	0	0	0	0	0	0
4/24/2024	4:15 PM	0	0	0	0	0	0	0	0	0	0	0	0	0
4/24/2024	4:30 PM	0	0	0	0	0	0	0	0	0	0	0	0	0
4/24/2024	4:45 PM	0	0	0	0	0	0	0	0	0	0	0	0	0
4/24/2024	5:00 PM	0	0	0	0	0	0	0	0	0	0	0	0	0
4/24/2024	5:15 PM	0	0	0	0	0	0	0	0	0	0	0	0	0
4/24/2024	5:30 PM	0	0	0	0	0	0	0	0	0	0	0	0	0
4/24/2024	5:45 PM	0	0	0	0	0	0	0	0	0	0	0	0	0
4/24/2024	6:00 PM	0	0	0	0	0	0	0	0	0	0	0	0	0
4/24/2024	6:15 PM	0	0	0	0	0	0	0	0	0	0	0	0	0
4/24/2024	6:30 PM	0	0	0	0	0	0	0	0	0	0	0	0	0
4/24/2024	6:45 PM	0	0	0	0	0	0	0	0	0	0	0	0	0
4/24/2024	7:00 PM	0	0	0	0	0	0	0	0	0	0	0	0	0
4/24/2024	7:15 PM	0	0	0	0	0	0	0	0	0	0	0	0	0
4/24/2024	7:30 PM	0	0	0	0	0	0	0	0	0	0	0	0	0
4/24/2024	7:45 PM	0	0	0	0	0	0	0	0	0	0	0	0	0
4/24/2024	8:00 PM	0	0	0	0	0	0	0	0	0	0	0	0	0
4/24/2024	8:15 PM	0	0	0	0	0	0	0	0	0	0	0	0	0
4/24/2024	8:30 PM	0	0	0	0	0	0	0	0	0	0	0	0	0
4/24/2024	8:45 PM	0	0	0	0	0	0	0	0	0	0	0	0	0
4/24/2024	9:00 PM	0	0	0	0	0	0	0	0	0	0	0	0	0
4/24/2024	9:15 PM	0	0	0	0	0	0	0	0	0	0	0	0	0
4/24/2024	9:30 PM	0	0	0	0	0	0	0	0	0	0	0	0	0
4/24/2024	9:45 PM	0	0	0	0	0	0	0	0	0	0	0	0	0
4/24/2024	10:00 PM	0	0	0	0	0	0	0	0	0	0	0	0	0
4/24/2024	10:15 PM	0	0	0	0	0	0	0	0	0	0	0	0	0
4/24/2024	10:30 PM	0	0	0	0	0	0	0	0	0	0	0	0	0
4/24/2024	10:45 PM	0	0	0	0	0	0	0	0	0	0	0	0	0
4/24/2024	11:00 PM	0	0	0	0	0	0	0	0	0	0	0	0	0
4/24/2024	11:15 PM	0	0	0	0	0	0	0	0	0	0	0	0	0
4/24/2024	11:30 PM	0	0	0	0	0	0	0	0	0	0	0	0	0
4/24/2024	11:45 PM	0	0	0	0	0	0	0	0	0	0	0	0	0

4/25/2024	12:00 AM	0	0	0	0	0	0	0	0	0	0	0	0	0
4/25/2024	12:15 AM	0	0	0	0	0	0	0	0	0	0	0	0	0
4/25/2024	12:30 AM	0	0	0	0	0	0	0	0	0	0	0	0	0
4/25/2024	12:45 AM	0	0	0	0	0	0	0	0	0	0	0	0	0
4/25/2024	1:00 AM	0	0	0	0	0	0	0	0	0	0	0	0	0
4/25/2024	1:15 AM	0	0	0	0	0	0	0	0	0	0	0	0	0
4/25/2024	1:30 AM	0	0	0	0	0	0	0	0	0	0	0	0	0
4/25/2024	1:45 AM	0	0	0	0	0	0	0	0	0	0	0	0	0
4/25/2024	2:00 AM	0	0	0	0	0	0	0	0	0	0	0	0	0
4/25/2024	2:15 AM	0	0	0	0	0	0	0	0	0	0	0	0	0
4/25/2024	2:30 AM	0	0	0	0	0	0	0	0	0	0	0	0	0
4/25/2024	2:45 AM	0	0	0	0	0	0	0	0	0	0	0	0	0
4/25/2024	3:00 AM	0	0	0	0	0	0	0	0	0	0	0	0	0
4/25/2024	3:15 AM	0	0	0	0	0	0	0	0	0	0	0	0	0
4/25/2024	3:30 AM	0	0	0	0	0	0	0	0	0	0	0	0	0
4/25/2024	3:45 AM	0	0	0	0	0	0	0	0	0	0	0	0	0
4/25/2024	4:00 AM	0	0	0	0	0	0	0	0	0	0	0	0	0
4/25/2024	4:15 AM	0	0	0	0	0	0	0	0	0	0	0	0	0
4/25/2024	4:30 AM	0	0	0	0	0	0	0	0	0	0	0	0	0
4/25/2024	4:45 AM	0	0	0	0	0	0	0	0	0	0	0	0	0
4/25/2024	5:00 AM	0	0	0	0	0	0	0	0	0	0	0	0	0
4/25/2024	5:15 AM	0	0	0	0	0	0	0	0	0	0	0	0	0
4/25/2024	5:30 AM	0	0	0	0	0	0	0	0	0	0	0	0	0
4/25/2024	5:45 AM	0	0	0	0	0	0	0	0	0	0	0	0	0
4/25/2024	6:00 AM	0	0	0	0	0	0	0	0	0	0	0	0	0
4/25/2024	6:15 AM	0	0	0	0	0	0	0	0	0	0	0	0	0
4/25/2024	6:30 AM	0	0	0	0	0	0	0	0	0	0	0	0	0
4/25/2024	6:45 AM	0	0	0	0	0	0	0	0	0	0	0	0	0
4/25/2024	7:00 AM	0	0	0	0	0	0	0	0	0	0	0	0	0
4/25/2024	7:15 AM	0	0	0	0	0	0	0	0	0	0	0	0	0
4/25/2024	7:30 AM	0	0	0	0	0	0	0	0	0	0	0	0	0
4/25/2024	7:45 AM	0	0	0	0	0	0	0	0	0	0	0	0	0
4/25/2024	8:00 AM	0	0	0	0	0	0	0	0	0	0	0	0	0
4/25/2024	8:15 AM	0	0	0	0	0	0	0	0	0	0	0	0	0
4/25/2024	8:30 AM	0	0	0	0	0	0	0	0	0	0	0	0	0
4/25/2024	8:45 AM	0	0	0	0	0	0	0	0	0	0	0	0	0
4/25/2024	9:00 AM	0	0	0	0	0	0	0	0	0	0	0	0	0
4/25/2024	9:15 AM	0	0	0	0	0	0	0	0	0	0	0	0	0
4/25/2024	9:30 AM	0	0	0	0	0	0	0	0	0	0	0	0	0
4/25/2024	9:45 AM	0	0	0	0	0	0	0	0	0	0	0	0	0
4/25/2024	10:00 AM	0	0	0	0	0	0	0	0	0	0	0	0	0
4/25/2024	10:15 AM	0	0	0	0	0	0	0	0	0	0	0	0	0
4/25/2024	10:30 AM	0	0	0	0	0	0	0	0	0	0	0	0	0
4/25/2024	10:45 AM	0	0	0	0	0	0	0	0	0	0	0	0	0
4/25/2024	11:00 AM	0	0	0	0	0	0	0	0	0	0	0	0	0
4/25/2024	11:15 AM	0	0	0	0	0	0	0	0	0	0	0	0	0
4/25/2024	11:30 AM	0	0	0	0	0	0	0	0	0	0	0	0	0
4/25/2024	11:45 AM	0	0	0	0	0	0	0	0	0	0	0	0	0
4/25/2024	12:00 PM	0	0	0	0	0	0	0	0	0	0	0	0	0
4/25/2024	12:15 PM	0	0	0	0	0	0	0	0	0	0	0	0	0
4/25/2024	12:30 PM	0	0	0	0	0	0	0	0	0	0	0	0	0
4/25/2024	12:45 PM	0	0	0	0	0	0	0	0	0	0	0	0	0
4/25/2024	1:00 PM	0	0	0	0	0	0	0	0	0	0	0	0	0
4/25/2024	1:15 PM	0	0	0	0	0	0	0	0	0	0	0	0	0
4/25/2024	1:30 PM	0	0	0	0	0	0	0	0	0	0	0	0	0
4/25/2024	1:45 PM	0	0	0	0	0	0	0	0	0	0	0	0	0
4/25/2024	2:00 PM	0	0	0	0	0	0	0	0	0	0	0	0	0
4/25/2024	2:15 PM	0	0	0	0	0	0	0	0	0	0	0	0	0
4/25/2024	2:30 PM	0	0	0	0	0	0	0	0	0	0	0	0	0
4/25/2024	2:45 PM	0	0	0	0	0	0	0	0	0	0	0	0	0
4/25/2024	3:00 PM	0	0	0	0	0	0	0	0	0	0	0	0	0
4/25/2024	3:15 PM	0	0	0	0	0	0	0	0	0	0	0	0	0
4/25/2024	3:30 PM	0	0	0	0	0	0	0	0	0	0	0	0	0
4/25/2024	3:45 PM	0	0	0	0	0	0	0	0	0	0	0	0	0
4/25/2024	4:00 PM	0	0	0	0	0	0	0	0	0	0	0	0	0
4/25/2024	4:15 PM	0	0	0	0	0	0	0	0	0	0	0	0	0
4/25/2024	4:30 PM	0	0	0	0	0	0	0	0	0	0	0	0	0
4/25/2024	4:45 PM	0	0	0	0	0	0	0	0	0	0	0	0	0
4/25/2024	5:00 PM	0	0	0	0	0	0	0	0	0	0	0	0	0
4/25/2024	5:15 PM	0	0	0	0	0	0	0	0	0	0	0	0	0
4/25/2024	5:30 PM	0	0	0	0	0	0	0	0	0	0	0	0	0
4/25/2024	5:45 PM	0	0	0	0	0	0	0	0	0	0	0	0	0
4/25/2024	6:00 PM	0	0	0	0	0	0	0	0	0	0	0	0	0
4/25/2024	6:15 PM	0	0	0	0	0	0	0	0	0	0	0	0	0
4/25/2024	6:30 PM	0	0	0	0	0	0	0	0	0	0	0	0	0
4/25/2024	6:45 PM	0	0	0	0	0	0	0	0	0	0	0	0	0
4/25/2024	7:00 PM	0	0	0	0	0	0	0	0	0	0	0	0	0
4/25/2024	7:15 PM	0	0	0	0	0	0	0	0	0	0	0	0	0
4/25/2024	7:30 PM	0	0	0	0	0	0	0	0	0	0	0	0	0
4/25/2024	7:45 PM	0	0	0	0	0	0	0	0	0	0	0	0	0
4/25/2024	8:00 PM	0	0	0	0	0	0	0	0	0	0	0	0	0
4/25/2024	8:15 PM	0	0	0	0	0	0	0	0	0	0	0	0	0
4/25/2024	8:30 PM	0	0	0	0	0	0	0	0	0	0	0	0	0
4/25/2024	8:45 PM	0	0	0	0	0	0	0	0	0	0	0	0	0
4/25/2024	9:00 PM	0	0	0	0	0	0	0	0	0	0	0	0	0
4/25/2024	9:15 PM	0	0	0	0	0	0	0	0	0	0	0	0	0
4/25/2024	9:30 PM	0	0	0	0	0	0	0	0	0	0	0	0	0
4/25/2024	9:45 PM	0	0	0	0	0	0	0	0	0	0	0	0	0
4/25/2024	10:00 PM	0	0	0	0	0	0	0	0	0	0	0	0	0
4/25/2024	10:15 PM	0	0	0	0	0	0	0	0	0	0	0	0	0
4/25/2024	10:30 PM	0	0	0	0	0	0	0	0	0	0	0	0	0
4/25/2024	10:45 PM	0	0	0	0	0	0	0	0	0	0	0	0	0
4/25/2024	11:00 PM	0	0	0	0	0	0	0	0	0	0	0	0	0
4/25/2024	11:15 PM	0	0	0	0	0	0	0	0	0	0	0	0	0
4/25/2024	11:30 PM	0	0	0	0	0	0	0	0	0	0	0	0	0
4/25/2024	11:45 PM	0	0	0	0	0	0	0	0	0	0	0	0	0

WB
File Name:
Start Date: 4/23/2024
Start Time: 0
Site Code: 60
Station ID: 1
Location 1: I-20 W/Bound On-Ramp, west of US-378 Sunset Blvd
Location 2:

Date	Time	1	2	3	4	5	6	7	8	9	10	11	12	13
4/23/2024	12:00 AM	0	0	0	0	0	0	0	0	0	0	0	0	0
4/23/2024	12:15 AM	0	0	0	0	0	0	0	0	0	0	0	0	0
4/23/2024	12:30 AM	0	0	0	0	0	0	0	0	0	0	0	0	0
4/23/2024	12:45 AM	0	0	0	0	0	0	0	0	0	0	0	0	0
4/23/2024	1:00 AM	0	0	0	0	0	0	0	0	0	0	0	0	0
4/23/2024	1:15 AM	0	0	0	0	0	0	0	0	0	0	0	0	0
4/23/2024	1:30 AM	0	0	0	0	0	0	0	0	0	0	0	0	0
4/23/2024	1:45 AM	0	0	0	0	0	0	0	0	0	0	0	0	0
4/23/2024	2:00 AM	0	0	0	0	0	0	0	0	0	0	0	0	0
4/23/2024	2:15 AM	0	0	0	0	0	0	0	0	0	0	0	0	0
4/23/2024	2:30 AM	0	0	0	0	0	0	0	0	0	0	0	0	0
4/23/2024	2:45 AM	0	0	0	0	0	0	0	0	0	0	0	0	0
4/23/2024	3:00 AM	0	0	0	0	0	0	0	0	0	0	0	0	0
4/23/2024	3:15 AM	0	0	0	0	0	0	0	0	0	0	0	0	0
4/23/2024	3:30 AM	0	0	0	0	0	0	0	0	0	0	0	0	0
4/23/2024	3:45 AM	0	0	0	0	0	0	0	0	0	0	0	0	0
4/23/2024	4:00 AM	0	0	0	0	0	0	0	0	0	0	0	0	0
4/23/2024	4:15 AM	0	0	0	0	0	0	0	0	0	0	0	0	0
4/23/2024	4:30 AM	0	0	0	0	0	0	0	0	0	0	0	0	0
4/23/2024	4:45 AM	0	0	0	0	0	0	0	0	0	0	0	0	0
4/23/2024	5:00 AM	0	0	0	0	0	0	0	0	0	0	0	0	0
4/23/2024	5:15 AM	0	0	0	0	0	0	0	0	0	0	0	0	0
4/23/2024	5:30 AM	0	0	0	0	0	0	0	0	0	0	0	0	0
4/23/2024	5:45 AM	0	0	0	0	0	0	0	0	0	0	0	0	0
4/23/2024	6:00 AM	0	0	0	0	0	0	0	0	0	0	0	0	0
4/23/2024	6:15 AM	0	0	0	0	0	0	0	0	0	0	0	0	0
4/23/2024	6:30 AM	0	0	0	0	0	0	0	0	0	0	0	0	0
4/23/2024	6:45 AM	0	0	0	0	0	0	0	0	0	0	0	0	0
4/23/2024	7:00 AM	0	0	0	0	0	0	0	0	0	0	0	0	0
4/23/2024	7:15 AM	0	0	0	0	0	0	0	0	0	0	0	0	0
4/23/2024	7:30 AM	0	0	0	0	0	0	0	0	0	0	0	0	0
4/23/2024	7:45 AM	0	0	0	0	0	0	0	0	0	0	0	0	0
4/23/2024	8:00 AM	0	0	0	0	0	0	0	0	0	0	0	0	0
4/23/2024	8:15 AM	0	0	0	0	0	0	0	0	0	0	0	0	0
4/23/2024	8:30 AM	0	0	0	0	0	0	0	0	0	0	0	0	0
4/23/2024	8:45 AM	0	0	0	0	0	0	0	0	0	0	0	0	0
4/23/2024	9:00 AM	0	0	0	0	0	0	0	0	0	0	0	0	0
4/23/2024	9:15 AM	0	0	0	0	0	0	0	0	0	0	0	0	0
4/23/2024	9:30 AM	0	0	0	0	0	0	0	0	0	0	0	0	0
4/23/2024	9:45 AM	0	0	0	0	0	0	0	0	0	0	0	0	0
4/23/2024	10:00 AM	0	0	0	0	0	0	0	0	0	0	0	0	0
4/23/2024	10:15 AM	0	0	0	0	0	0	0	0	0	0	0	0	0
4/23/2024	10:30 AM	0	0	0	0	0	0	0	0	0	0	0	0	0
4/23/2024	10:45 AM	0	0	0	0	0	0	0	0	0	0	0	0	0
4/23/2024	11:00 AM	0	0	0	0	0	0	0	0	0	0	0	0	0
4/23/2024	11:15 AM	0	0	0	0	0	0	0	0	0	0	0	0	0
4/23/2024	11:30 AM	0	0	0	0	0	0	0	0	0	0	0	0	0
4/23/2024	11:45 AM	0	0	0	0	0	0	0	0	0	0	0	0	0
4/23/2024	12:00 PM	0	0	0	0	0	0	0	0	0	0	0	0	0
4/23/2024	12:15 PM	0	0	0	0	0	0	0	0	0	0	0	0	0
4/23/2024	12:30 PM	0	0	0	0	0	0	0	0	0	0	0	0	0
4/23/2024	12:45 PM	0	0	0	0	0	0	0	0	0	0	0	0	0
4/23/2024	1:00 PM	0	0	0	0	0	0	0	0	0	0	0	0	0
4/23/2024	1:15 PM	0	0	0	0	0	0	0	0	0	0	0	0	0
4/23/2024	1:30 PM	0	0	0	0	0	0	0	0	0	0	0	0	0
4/23/2024	1:45 PM	0	0	0	0	0	0	0	0	0	0	0	0	0
4/23/2024	2:00 PM	0	0	0	0	0	0	0	0	0	0	0	0	0
4/23/2024	2:15 PM	0	0	0	0	0	0	0	0	0	0	0	0	0
4/23/2024	2:30 PM	0	0	0	0	0	0	0	0	0	0	0	0	0
4/23/2024	2:45 PM	0	0	0	0	0	0	0	0	0	0	0	0	0
4/23/2024	3:00 PM	0	0	0	0	0	0	0	0	0	0	0	0	0
4/23/2024	3:15 PM	0	0	0	0	0	0	0	0	0	0	0	0	0
4/23/2024	3:30 PM	0	0	0	0	0	0	0	0	0	0	0	0	0
4/23/2024	3:45 PM	0	0	0	0	0	0	0	0	0	0	0	0	0
4/23/2024	4:00 PM	0	0	0	0	0	0	0	0	0	0	0	0	0
4/23/2024	4:15 PM	0	0	0	0	0	0	0	0	0	0	0	0	0
4/23/2024	4:30 PM	0	0	0	0	0	0	0	0	0	0	0	0	0
4/23/2024	4:45 PM	0	0	0	0	0	0	0	0	0	0	0	0	0
4/23/2024	5:00 PM	0	0	0	0	0	0	0	0	0	0	0	0	0
4/23/2024	5:15 PM	0	0	0	0	0	0	0	0	0	0	0	0	0
4/23/2024	5:30 PM	0	0	0	0	0	0	0	0	0	0	0	0	0
4/23/2024	5:45 PM	0	0	0	0	0	0	0	0	0	0	0	0	0
4/23/2024	6:00 PM	0	0	0	0	0	0	0	0	0	0	0	0	0
4/23/2024	6:15 PM	0	0	0	0	0	0	0	0	0	0	0	0	0
4/23/2024	6:30 PM	0	16	5	0	0	0	0	0	1	0	0	0	0
4/23/2024	6:45 PM	0	53	13	0	0	0	0	0	1	0	0	0	0
4/23/2024	7:00 PM	0	76	18	0	0	0	0	0	1	0	0	0	0
4/23/2024	7:15 PM	0	108	19	0	0	0	0	0	1	0	0	0	0
4/23/2024	7:30 PM	0	109	17	0	1	0	0	0	0	0	0	0	0
4/23/2024	7:45 PM	0	86	12	0	1	0	0	0	0	0	0	0	0
4/23/2024	8:00 PM	0	87	13	0	1	0	0	0	0	0	0	0	0
4/23/2024	8:15 PM	0	74	19	0	1	0	0	0	0	0	0	0	0
4/23/2024	8:30 PM	0	73	18	0	0	0	0	0	0	0	0	0	0
4/23/2024	8:45 PM	0	78	15	0	0	0	0	0	0	0	0	0	0
4/23/2024	9:00 PM	0	60	9	1	0	0	0	0	0	0	0	0	0
4/23/2024	9:15 PM	0	51	2	1	0	0	0	0	0	0	0	0	0
4/23/2024	9:30 PM	0	41	0	1	0	0	0	0	0	0	0	0	0
4/23/2024	9:45 PM	0	27	0	1	0	0	0	0	0	0	0	0	0
4/23/2024	10:00 PM	0	21	0	0	0	0	0	0	0	0	0	0	0
4/23/2024	10:15 PM	0	11	0	0	0	0	0	0	0	0	0	0	0
4/23/2024	10:30 PM	0	6	1	0	0	0	0	0	0	0	0	0	0
4/23/2024	10:45 PM	0	1	1	0	0	0	0	0	0	0	0	0	0
4/23/2024	11:00 PM	0	2	1	0	0	0	0	0	0	0	0	0	0
4/23/2024	11:15 PM	0	2	1	0	0	0	0	0	0	0	0	0	0
4/23/2024	11:30 PM	0	1	0	0	0	0	0	0	0	0	0	0	0
4/23/2024	11:45 PM	0	1	0	0	0	0	0	0	0	0	0	0	0

4/24/2024	12:00 AM	0	2	1	0	0	0	0	0	1	0	0	0	0
4/24/2024	12:15 AM	0	4	1	0	0	0	0	0	1	0	0	0	0
4/24/2024	12:30 AM	0	3	1	0	0	0	0	0	1	0	0	0	0
4/24/2024	12:45 AM	0	5	1	0	0	0	0	0	0	0	0	0	0
4/24/2024	1:00 AM	0	4	0	0	0	0	0	0	0	0	0	0	0
4/24/2024	1:15 AM	0	2	0	0	0	0	0	0	0	0	0	0	0
4/24/2024	1:30 AM	0	2	0	0	0	0	0	0	0	0	0	0	0
4/24/2024	1:45 AM	0	0	0	0	0	0	0	0	0	0	0	0	0
4/24/2024	2:00 AM	0	1	0	0	0	0	0	0	0	0	0	0	0
4/24/2024	2:15 AM	0	1	0	0	0	0	0	0	0	0	0	0	0
4/24/2024	2:30 AM	0	1	0	0	1	0	0	0	0	0	0	0	0
4/24/2024	2:45 AM	0	1	0	0	1	0	0	0	0	0	0	0	0
4/24/2024	3:00 AM	0	1	0	0	1	0	0	0	0	0	0	0	0
4/24/2024	3:15 AM	0	2	0	0	1	0	0	0	0	0	0	0	0
4/24/2024	3:30 AM	0	3	0	0	0	0	0	0	0	0	0	0	0
4/24/2024	3:45 AM	0	4	0	0	0	0	0	0	0	0	0	0	0
4/24/2024	4:00 AM	0	4	0	0	0	0	0	0	0	0	0	0	0
4/24/2024	4:15 AM	0	6	0	0	0	0	0	0	0	0	0	0	0
4/24/2024	4:30 AM	0	11	1	0	0	0	0	0	0	0	0	0	0
4/24/2024	4:45 AM	0	16	1	0	1	0	0	0	0	0	0	0	0
4/24/2024	5:00 AM	0	19	1	0	2	0	0	0	0	0	0	0	0
4/24/2024	5:15 AM	0	23	5	0	2	0	0	0	0	0	0	0	0
4/24/2024	5:30 AM	0	38	7	0	2	0	0	0	0	0	0	0	0
4/24/2024	5:45 AM	0	46	9	0	2	0	0	1	0	0	0	0	0
4/24/2024	6:00 AM	0	62	12	0	1	0	0	1	0	0	0	0	0
4/24/2024	6:15 AM	0	80	11	0	2	0	0	1	0	0	0	0	0
4/24/2024	6:30 AM	0	90	14	1	2	0	0	1	0	0	0	0	0
4/24/2024	6:45 AM	0	109	17	1	1	0	0	0	0	0	0	0	0
4/24/2024	7:00 AM	0	128	20	3	1	0	0	0	0	0	0	0	0
4/24/2024	7:15 AM	0	152	22	5	1	0	0	0	0	0	0	0	0
4/24/2024	7:30 AM	0	147	26	7	1	0	0	0	0	0	0	0	0
4/24/2024	7:45 AM	0	144	26	8	3	0	0	0	0	0	0	0	0
4/24/2024	8:00 AM	0	129	25	9	3	0	0	0	0	0	0	0	0
4/24/2024	8:15 AM	0	109	25	7	3	0	0	0	0	0	0	0	0
4/24/2024	8:30 AM	0	103	21	4	5	1	0	1	0	0	0	0	0
4/24/2024	8:45 AM	0	97	18	3	5	1	0	1	0	0	0	0	0
4/24/2024	9:00 AM	0	100	21	0	5	1	0	1	1	0	0	0	0
4/24/2024	9:15 AM	0	97	17	0	5	2	0	3	1	0	0	0	0
4/24/2024	9:30 AM	0	93	15	0	3	1	0	2	1	0	0	0	0
4/24/2024	9:45 AM	0	89	13	0	3	1	0	2	1	0	0	0	0
4/24/2024	10:00 AM	0	90	14	0	6	1	0	2	0	0	0	0	0
4/24/2024	10:15 AM	0	89	21	0	6	0	0	0	0	0	0	0	0
4/24/2024	10:30 AM	0	95	30	1	7	0	0	0	0	0	0	0	0
4/24/2024	10:45 AM	0	103	35	2	5	0	0	0	0	0	0	0	0
4/24/2024	11:00 AM	0	99	30	2	2	0	0	1	0	0	0	0	0
4/24/2024	11:15 AM	0	99	29	2	3	0	0	1	1	0	0	0	0
4/24/2024	11:30 AM	0	100	25	5	3	0	0	1	1	0	0	0	0
4/24/2024	11:45 AM	0	99	27	5	4	0	0	1	1	0	0	0	0
4/24/2024	12:00 PM	0	112	31	6	5	0	0	0	2	0	0	0	0
4/24/2024	12:15 PM	0	122	32	6	3	0	0	0	1	0	0	0	0
4/24/2024	12:30 PM	1	136	30	2	2	0	0	0	1	0	0	0	0
4/24/2024	12:45 PM	1	149	25	1	1	0	0	1	1	0	0	0	0
4/24/2024	1:00 PM	1	148	18	0	1	0	0	1	0	0	0	0	0
4/24/2024	1:15 PM	1	138	20	3	2	1	0	1	0	0	0	0	0
4/24/2024	1:30 PM	0	136	21	3	2	1	0	1	1	0	0	0	0
4/24/2024	1:45 PM	0	131	26	3	3	2	0	0	1	0	0	0	0
4/24/2024	2:00 PM	0	144	35	3	4	2	0	0	1	0	0	0	0
4/24/2024	2:15 PM	0	174	32	0	4	1	0	0	1	0	0	0	0
4/24/2024	2:30 PM	0	198	35	0	5	1	0	0	0	0	0	0	0
4/24/2024	2:45 PM	0	214	44	1	7	0	0	1	0	0	0	0	0
4/24/2024	3:00 PM	0	214	53	3	6	0	0	1	0	0	0	0	0
4/24/2024	3:15 PM	0	234	54	4	5	0	0	1	0	0	0	0	0
4/24/2024	3:30 PM	0	230	61	4	4	0	0	1	0	0	0	0	0
4/24/2024	3:45 PM	0	235	56	3	1	0	0	0	0	0	0	0	0
4/24/2024	4:00 PM	0	245	41	1	0	0	0	0	0	0	0	0	0
4/24/2024	4:15 PM	0	245	46	0	0	0	0	1	0	0	0	0	0
4/24/2024	4:30 PM	1	237	43	0	0	0	0	2	0	0	0	0	0
4/24/2024	4:45 PM	3	214	42	0	0	0	0	2	0	0	0	0	0
4/24/2024	5:00 PM	3	193	53	0	0	0	0	2	0	0	0	0	0
4/24/2024	5:15 PM	3	164	49	0	0	0	0	1	0	0	0	0	0
4/24/2024	5:30 PM	3	148	42	0	1	0	0	0	0	0	0	0	0
4/24/2024	5:45 PM	1	149	39	0	2	0	0	0	0	0	0	0	0
4/24/2024	6:00 PM	1	136	29	0	2	0	0	0	0	0	0	0	0
4/24/2024	6:15 PM	1	120	23	0	3	0	0	0	0	0	0	0	0
4/24/2024	6:30 PM	0	118	26	0	3	0	0	0	0	0	0	0	0
4/24/2024	6:45 PM	0	113	26	0	2	0	0	0	0	0	0	0	0
4/24/2024	7:00 PM	0	112	25	0	2	0	0	0	0	0	0	0	0
4/24/2024	7:15 PM	0	98	27	0	1	0	0	0	0	0	0	0	0
4/24/2024	7:30 PM	0	88	21	0	0	0	0	0	0	0	0	0	0
4/24/2024	7:45 PM	0	80	15	0	1	0	0	0	0	0	0	0	0
4/24/2024	8:00 PM	0	79	13	0	3	0	0	0	0	0	0	0	0
4/24/2024	8:15 PM	0	83	11	0	4	0	0	0	0	0	0	0	0
4/24/2024	8:30 PM	0	83	7	0	4	0	0	0	0	0	0	0	0
4/24/2024	8:45 PM	0	75	6	0	3	0	0	0	0	0	0	0	0
4/24/2024	9:00 PM	0	68	6	0	1	0	0	0	0	0	0	0	0
4/24/2024	9:15 PM	0	55	3	0	1	0	0	0	0	0	0	0	0
4/24/2024	9:30 PM	0	43	2	0	1	0	0	0	0	0	0	0	0
4/24/2024	9:45 PM	0	34	2	0	1	0	0	0	0	0	0	0	0
4/24/2024	10:00 PM	0	20	0	0	1	0	0	0	0	0	0	0	0
4/24/2024	10:15 PM	0	15	0	0	0	1	0	0	0	0	0	0	0
4/24/2024	10:30 PM	0	9	0	0	0	1	0	0	0	0	0	0	0
4/24/2024	10:45 PM	0	10	0	0	0	1	0	0	0	0	0	0	0
4/24/2024	11:00 PM	0	10	0	0	0	1	0	0	0	0	0	0	0
4/24/2024	11:15 PM	0	8	0	0	0	0	0	0	0	0	0	0	0
4/24/2024	11:30 PM	0	7	0	0	0	0	0	0	0	0	0	0	0
4/24/2024	11:45 PM	0	2	0	0	0	0	0	0	0	0	0	0	0

4/25/2024	12:00 AM	0	2	0	0	0	0	0	0	0	0	0	0
4/25/2024	12:15 AM	0	4	2	0	0	0	0	0	0	0	0	0
4/25/2024	12:30 AM	0	3	2	0	0	0	0	0	0	0	0	0
4/25/2024	12:45 AM	0	2	2	0	0	0	0	0	0	0	0	0
4/25/2024	1:00 AM	0	2	2	0	0	0	0	0	0	0	0	0
4/25/2024	1:15 AM	0	0	0	0	0	0	0	0	0	0	0	0
4/25/2024	1:30 AM	0	0	0	0	0	0	0	0	0	0	0	0
4/25/2024	1:45 AM	0	1	0	0	0	0	0	0	0	0	0	0
4/25/2024	2:00 AM	0	3	0	0	1	1	0	0	0	0	0	0
4/25/2024	2:15 AM	0	3	0	0	1	1	0	0	0	0	0	0
4/25/2024	2:30 AM	0	6	0	0	1	1	0	0	0	0	0	0
4/25/2024	2:45 AM	0	5	0	0	1	1	0	0	0	0	0	0
4/25/2024	3:00 AM	0	4	0	0	1	0	0	0	0	0	0	0
4/25/2024	3:15 AM	0	4	0	0	1	0	0	0	0	0	0	0
4/25/2024	3:30 AM	0	3	0	0	1	0	0	0	0	0	0	0
4/25/2024	3:45 AM	0	5	1	0	2	0	0	0	0	0	0	0
4/25/2024	4:00 AM	0	8	1	0	1	0	0	0	0	0	0	0
4/25/2024	4:15 AM	0	9	1	0	1	0	0	0	0	0	0	0
4/25/2024	4:30 AM	0	13	1	0	1	0	0	0	0	0	0	0
4/25/2024	4:45 AM	0	18	1	0	0	0	0	0	0	0	0	0
4/25/2024	5:00 AM	0	21	1	0	0	0	0	0	0	0	0	0
4/25/2024	5:15 AM	0	33	1	0	0	0	0	0	0	0	0	0
4/25/2024	5:30 AM	0	33	5	0	1	0	0	0	0	0	0	0
4/25/2024	5:45 AM	0	46	6	0	1	0	0	0	0	0	0	0
4/25/2024	6:00 AM	0	57	10	0	1	0	0	2	0	0	0	0
4/25/2024	6:15 AM	0	67	20	0	1	0	0	2	0	0	0	0
4/25/2024	6:30 AM	0	90	21	1	0	0	0	2	1	0	0	0
4/25/2024	6:45 AM	0	97	25	1	0	0	0	2	1	0	0	0
4/25/2024	7:00 AM	0	105	26	3	0	0	0	1	1	0	0	0
4/25/2024	7:15 AM	0	115	27	5	0	0	0	1	1	0	0	0
4/25/2024	7:30 AM	0	112	29	6	2	0	0	1	0	0	0	0
4/25/2024	7:45 AM	0	108	32	7	2	0	0	1	0	0	0	0
4/25/2024	8:00 AM	0	101	33	6	2	0	0	0	0	0	0	0
4/25/2024	8:15 AM	0	90	31	5	3	0	0	0	0	0	0	0
4/25/2024	8:30 AM	0	84	30	3	2	0	0	0	0	0	0	0
4/25/2024	8:45 AM	0	83	25	2	2	0	0	0	0	0	0	0
4/25/2024	9:00 AM	0	85	27	1	2	0	0	0	0	0	0	0
4/25/2024	9:15 AM	0	80	26	0	1	0	0	1	0	0	0	0
4/25/2024	9:30 AM	0	80	26	0	0	0	0	2	0	0	0	0
4/25/2024	9:45 AM	0	92	29	0	1	0	0	3	0	0	0	0
4/25/2024	10:00 AM	0	96	29	0	2	0	0	3	0	0	0	0
4/25/2024	10:15 AM	0	104	27	0	3	0	0	3	0	0	0	0
4/25/2024	10:30 AM	0	112	31	0	3	0	0	2	0	0	0	0
4/25/2024	10:45 AM	0	96	31	2	2	0	0	1	0	0	0	0
4/25/2024	11:00 AM	1	91	27	2	1	0	0	1	0	0	0	0
4/25/2024	11:15 AM	1	102	31	2	1	0	0	0	0	0	0	0
4/25/2024	11:30 AM	1	103	27	3	3	0	0	1	0	0	0	0
4/25/2024	11:45 AM	1	122	26	4	3	0	0	1	0	0	0	0
4/25/2024	12:00 PM	0	145	33	4	3	1	0	1	0	0	0	0
4/25/2024	12:15 PM	0	142	33	5	2	2	0	1	0	0	0	0
4/25/2024	12:30 PM	0	152	39	5	1	2	0	1	0	0	0	0
4/25/2024	12:45 PM	0	155	43	2	1	2	0	1	0	0	0	0
4/25/2024	1:00 PM	1	152	44	2	4	1	0	1	1	0	0	0
4/25/2024	1:15 PM	1	151	46	4	4	0	0	1	2	0	0	0
4/25/2024	1:30 PM	1	157	46	3	3	0	0	0	2	0	0	0
4/25/2024	1:45 PM	1	149	46	3	3	0	0	1	2	0	0	0
4/25/2024	2:00 PM	0	167	43	3	0	0	0	1	1	0	0	0
4/25/2024	2:15 PM	0	177	47	0	0	1	0	1	0	0	0	0
4/25/2024	2:30 PM	0	185	47	0	1	1	0	1	0	0	0	0
4/25/2024	2:45 PM	1	211	48	1	4	1	0	0	0	0	0	0
4/25/2024	3:00 PM	1	204	48	2	6	2	0	0	0	0	0	0
4/25/2024	3:15 PM	1	219	46	2	6	2	0	0	0	0	0	0
4/25/2024	3:30 PM	1	219	45	3	6	2	0	0	0	0	0	0
4/25/2024	3:45 PM	0	211	44	3	4	2	0	0	0	0	0	0
4/25/2024	4:00 PM	0	210	43	4	3	1	0	0	0	0	0	0
4/25/2024	4:15 PM	0	226	40	4	3	0	0	0	0	0	0	0
4/25/2024	4:30 PM	0	217	35	3	3	0	0	0	0	0	0	0
4/25/2024	4:45 PM	0	219	34	2	2	0	0	0	0	0	0	0
4/25/2024	5:00 PM	0	213	32	0	1	0	0	0	0	0	0	0
4/25/2024	5:15 PM	0	171	32	0	1	0	0	0	0	0	0	0
4/25/2024	5:30 PM	1	158	32	0	0	0	0	0	0	0	0	0
4/25/2024	5:45 PM	1	136	32	0	0	0	0	0	0	0	0	0
4/25/2024	6:00 PM	1	110	35	0	1	0	0	0	0	0	0	0
4/25/2024	6:15 PM	1	79	24	0	1	0	0	0	0	0	0	0
4/25/2024	6:30 PM	0	48	18	0	1	0	0	0	0	0	0	0
4/25/2024	6:45 PM	0	18	9	0	1	0	0	0	0	0	0	0
4/25/2024	7:00 PM	0	0	0	0	0	0	0	0	0	0	0	0
4/25/2024	7:15 PM	0	0	0	0	0	0	0	0	0	0	0	0
4/25/2024	7:30 PM	0	0	0	0	0	0	0	0	0	0	0	0
4/25/2024	7:45 PM	0	0	0	0	0	0	0	0	0	0	0	0
4/25/2024	8:00 PM	0	0	0	0	0	0	0	0	0	0	0	0
4/25/2024	8:15 PM	0	0	0	0	0	0	0	0	0	0	0	0
4/25/2024	8:30 PM	0	0	0	0	0	0	0	0	0	0	0	0
4/25/2024	8:45 PM	0	0	0	0	0	0	0	0	0	0	0	0
4/25/2024	9:00 PM	0	0	0	0	0	0	0	0	0	0	0	0
4/25/2024	9:15 PM	0	0	0	0	0	0	0	0	0	0	0	0
4/25/2024	9:30 PM	0	0	0	0	0	0	0	0	0	0	0	0
4/25/2024	9:45 PM	0	0	0	0	0	0	0	0	0	0	0	0
4/25/2024	10:00 PM	0	0	0	0	0	0	0	0	0	0	0	0
4/25/2024	10:15 PM	0	0	0	0	0	0	0	0	0	0	0	0
4/25/2024	10:30 PM	0	0	0	0	0	0	0	0	0	0	0	0
4/25/2024	10:45 PM	0	0	0	0	0	0	0	0	0	0	0	0
4/25/2024	11:00 PM	0	0	0	0	0	0	0	0	0	0	0	0
4/25/2024	11:15 PM	0	0	0	0	0	0	0	0	0	0	0	0
4/25/2024	11:30 PM	0	0	0	0	0	0	0	0	0	0	0	0
4/25/2024	11:45 PM	0	0	0	0	0	0	0	0	0	0	0	0

Bi-Directional Class Count || NB EB 15min

Columbia, SC

Marr Traffic DATA COLLECTION
www.marrtraffic.com

Site 61
I-20 N/Bound On-Ramp,
north of Bush River Rd

Date
Tuesday, April 23, 2024

Lat/Long
34.031633°, -81.120057°

Weather
Fair
58°F

Click here for Detailed Weather

Click here for Map

0000 - 2400 (Weekday 24h Session) (04-23-2024)
NB EB 15min

	Northbound (Movement 61.1)													15min	60min
Time	1	2	3	4	5	6	7	8	9	10	11	12	13	Total	Total
0000 - 0015	0	0	0	0	0	0	0	0	0	0	0	0	0	**0**	
0015 - 0030	0	0	0	0	0	0	0	0	0	0	0	0	0	**0**	
0030 - 0045	0	0	0	0	0	0	0	0	0	0	0	0	0	**0**	
0045 - 0100	0	0	0	0	0	0	0	0	0	0	0	0	0	**0**	**0**
0100 - 0115	0	0	0	0	0	0	0	0	0	0	0	0	0	**0**	
0115 - 0130	0	0	0	0	0	0	0	0	0	0	0	0	0	**0**	
0130 - 0145	0	0	0	0	0	0	0	0	0	0	0	0	0	**0**	
0145 - 0200	0	0	0	0	0	0	0	0	0	0	0	0	0	**0**	**0**
0200 - 0215	0	0	0	0	0	0	0	0	0	0	0	0	0	**0**	
0215 - 0230	0	0	0	0	0	0	0	0	0	0	0	0	0	**0**	
0230 - 0245	0	0	0	0	0	0	0	0	0	0	0	0	0	**0**	
0245 - 0300	0	0	0	0	0	0	0	0	0	0	0	0	0	**0**	**0**
0300 - 0315	0	0	0	0	0	0	0	0	0	0	0	0	0	**0**	
0315 - 0330	0	0	0	0	0	0	0	0	0	0	0	0	0	**0**	
0330 - 0345	0	0	0	0	0	0	0	0	0	0	0	0	0	**0**	
0345 - 0400	0	0	0	0	0	0	0	0	0	0	0	0	0	**0**	**0**
0400 - 0415	0	0	0	0	0	0	0	0	0	0	0	0	0	**0**	
0415 - 0430	0	0	0	0	0	0	0	0	0	0	0	0	0	**0**	
0430 - 0445	0	0	0	0	0	0	0	0	0	0	0	0	0	**0**	
0445 - 0500	0	0	0	0	0	0	0	0	0	0	0	0	0	**0**	**0**
0500 - 0515	0	0	0	0	0	0	0	0	0	0	0	0	0	**0**	
0515 - 0530	0	0	0	0	0	0	0	0	0	0	0	0	0	**0**	
0530 - 0545	0	0	0	0	0	0	0	0	0	0	0	0	0	**0**	
0545 - 0600	0	0	0	0	0	0	0	0	0	0	0	0	0	**0**	**0**
0600 - 0615	0	0	0	0	0	0	0	0	0	0	0	0	0	**0**	
0615 - 0630	0	0	0	0	0	0	0	0	0	0	0	0	0	**0**	
0630 - 0645	0	0	0	0	0	0	0	0	0	0	0	0	0	**0**	
0645 - 0700	0	0	0	0	0	0	0	0	0	0	0	0	0	**0**	**0**
0700 - 0715	0	0	0	0	0	0	0	0	0	0	0	0	0	**0**	
0715 - 0730	0	0	0	0	0	0	0	0	0	0	0	0	0	**0**	
0730 - 0745	0	0	0	0	0	0	0	0	0	0	0	0	0	**0**	
0745 - 0800	0	0	0	0	0	0	0	0	0	0	0	0	0	**0**	**0**
0800 - 0815	0	0	0	0	0	0	0	0	0	0	0	0	0	**0**	
0815 - 0830	0	0	0	0	0	0	0	0	0	0	0	0	0	**0**	
0830 - 0845	0	0	0	0	0	0	0	0	0	0	0	0	0	**0**	
0845 - 0900	0	0	0	0	0	0	0	0	0	0	0	0	0	**0**	**0**
0900 - 0915	0	0	0	0	0	0	0	0	0	0	0	0	0	**0**	
0915 - 0930	0	0	0	0	0	0	0	0	0	0	0	0	0	**0**	
0930 - 0945	0	0	0	0	0	0	0	0	0	0	0	0	0	**0**	
0945 - 1000	0	0	0	0	0	0	0	0	0	0	0	0	0	**0**	**0**
1000 - 1015	0	0	0	0	0	0	0	0	0	0	0	0	0	**0**	
1015 - 1030	0	0	0	0	0	0	0	0	0	0	0	0	0	**0**	
1030 - 1045	0	0	0	0	0	0	0	0	0	0	0	0	0	**0**	
1045 - 1100	0	0	0	0	0	0	0	0	0	0	0	0	0	**0**	**0**
1100 - 1115	0	0	0	0	0	0	0	0	0	0	0	0	0	**0**	
1115 - 1130	0	0	0	0	0	0	0	0	0	0	0	0	0	**0**	
1130 - 1145	0	0	0	0	0	0	0	0	0	0	0	0	0	**0**	
1145 - 1200	0	0	0	0	0	0	0	0	0	0	0	0	0	**0**	**0**
1200 - 1215	0	0	0	0	0	0	0	0	0	0	0	0	0	**0**	
1215 - 1230	0	0	0	0	0	0	0	0	0	0	0	0	0	**0**	
1230 - 1245	0	0	0	0	0	0	0	0	0	0	0	0	0	**0**	
1245 - 1300	0	0	0	0	0	0	0	0	0	0	0	0	0	**0**	**0**
1300 - 1315	0	0	0	0	0	0	0	0	0	0	0	0	0	**0**	
1315 - 1330	0	0	0	0	0	0	0	0	0	0	0	0	0	**0**	
1330 - 1345	0	0	0	0	0	0	0	0	0	0	0	0	0	**0**	
1345 - 1400	0	0	0	0	0	0	0	0	0	0	0	0	0	**0**	**0**
1400 - 1415	0	0	0	0	0	0	0	0	0	0	0	0	0	**0**	
1415 - 1430	0	0	0	0	0	0	0	0	0	0	0	0	0	**0**	
1430 - 1445	0	0	0	0	0	0	0	0	0	0	0	0	0	**0**	
1445 - 1500	0	0	0	0	0	0	0	0	0	0	0	0	0	**0**	**0**
1500 - 1515	0	0	0	0	0	0	0	0	0	0	0	0	0	**0**	
1515 - 1530	0	0	0	0	0	0	0	0	0	0	0	0	0	**0**	
1530 - 1545	0	0	0	0	0	0	0	0	0	0	0	0	0	**0**	
1545 - 1600	0	0	0	0	0	0	0	0	0	0	0	0	0	**0**	**0**
1600 - 1615	0	0	0	0	0	0	0	0	0	0	0	0	0	**0**	
1615 - 1630	0	0	0	0	0	0	0	0	0	0	0	0	0	**0**	
1630 - 1645	0	0	0	0	0	0	0	0	0	0	0	0	0	**0**	
1645 - 1700	0	0	0	0	0	0	0	0	0	0	0	0	0	**0**	**0**
1700 - 1715	0	0	0	0	0	0	0	0	0	0	0	0	0	**0**	
1715 - 1730	0	0	0	0	0	0	0	0	0	0	0	0	0	**0**	
1730 - 1745	0	0	0	0	0	0	0	0	0	0	0	0	0	**0**	
1745 - 1800	0	0	0	0	0	0	0	0	0	0	0	0	0	**0**	**0**
1800 - 1815	0	0	0	0	0	0	0	0	0	0	0	0	0	**0**	
1815 - 1830	0	0	0	0	0	0	0	0	0	0	0	0	0	**0**	
1830 - 1845	0	0	0	0	0	0	0	0	0	0	0	0	0	**0**	
1845 - 1900	0	0	0	0	0	0	0	0	0	0	0	0	0	**0**	**0**
1900 - 1915	0	14	2	0	0	0	0	0	1	0	0	0	0	**17**	
1915 - 1930	0	17	1	0	0	0	0	0	0	0	0	0	0	**18**	
1930 - 1945	0	15	1	0	0	0	0	0	0	0	0	0	0	**16**	
1945 - 2000	0	17	4	0	1	1	0	0	0	0	0	0	0	**23**	**74**
2000 - 2015	0	19	1	0	0	0	0	0	0	0	0	0	0	**20**	
2015 - 2030	0	12	2	0	0	0	0	0	0	0	0	0	0	**14**	
2030 - 2045	0	10	1	0	0	0	0	0	0	0	0	0	0	**11**	
2045 - 2100	0	17	2	0	1	0	0	0	0	0	0	0	0	**20**	**65**
2100 - 2115	0	20	3	0	0	0	0	0	0	0	0	0	0	**23**	
2115 - 2130	0	8	1	0	0	0	0	0	0	0	0	0	0	**9**	
2130 - 2145	0	10	3	0	0	0	0	0	0	0	0	0	0	**13**	
2145 - 2200	0	11	5	0	0	0	0	0	0	0	0	0	0	**16**	**61**
2200 - 2215	0	6	1	0	0	0	0	0	0	0	0	0	0	**7**	
2215 - 2230	0	3	1	0	0	0	0	0	0	0	0	0	0	**4**	
2230 - 2245	0	7	2	0	0	0	0	0	0	0	0	0	0	**9**	
2245 - 2300	0	4	1	0	0	0	0	0	0	0	0	0	0	**5**	**25**
2300 - 2315	0	8	1	0	0	0	0	0	0	0	0	0	0	**9**	
2315 - 2330	0	2	0	0	0	0	0	0	0	0	0	0	0	**2**	
2330 - 2345	0	6	1	0	0	0	0	0	0	0	0	0	0	**7**	
2345 - 0000	0	1	0	0	0	0	0	0	0	0	0	0	0	**1**	**19**

Session Total	0	207	33	0	2	1	0	0	1	0	0	0	0	**244**
Session Average	0.00	2.16	0.34	0.00	0.02	0.01	0.00	0.00	0.01	0.00	0.00	0.00	0.00	**2.54**
Session Percentage	0.00	84.84	13.52	0.00	0.82	0.41	0.00	0.00	0.41	0.00	0.00	0.00	0.00	

AM Peak Hour	-	-	-	-	-	-	-	-	-	-	-	-	-	-
AM Peak Volume	0	0	0	0	0	0	0	0	0	0	0	0	0	**0**

Noon Peak Hour	-	-	-	-	-	-	-	-	-	-	-	-	-	-
Noon Peak Volume	0	0	0	0	0	0	0	0	0	0	0	0	0	**0**

PM Peak Hour	-	1915 - 2015	1900 - 2000	-	1900 - 2000	1900 - 2000	-	-	1815 - 1915	-	-	-	-	**1915 - 2015**
PM Peak Volume	0	68	8	0	1	1	0	0	1	0	0	0	0	**77**

Site 61
I-20 N/Bound On-Ramp,
north of Bush River Rd

Date
Wednesday, April 24, 2024

Lat/Long
34.031633°, -81.120057°

Weather
Fair
66°F

Click here for Detailed Weather

0000 - 2400 (Weekday 24h Session) (04-24-2024)
NB EB 15min

	Northbound (Movement 61.1)													15min	60min
Time	1	2	3	4	5	6	7	8	9	10	11	12	13	Total	Total
0000 - 0015	0	3	1	0	0	0	0	0	0	0	0	0	0	**4**	
0015 - 0030	0	3	0	0	0	0	0	0	0	0	0	0	0	**3**	
0030 - 0045	0	0	0	0	0	0	0	0	0	0	0	0	0	**0**	
0045 - 0100	0	2	0	0	0	0	0	0	0	0	0	0	0	**2**	**9**
0100 - 0115	0	2	0	0	0	0	0	0	0	0	0	0	0	**2**	
0115 - 0130	0	2	0	0	0	0	0	0	0	0	0	0	0	**2**	
0130 - 0145	0	0	0	0	0	0	0	0	0	0	0	0	0	**0**	
0145 - 0200	0	2	1	0	0	0	0	0	0	0	0	0	0	**3**	**7**
0200 - 0215	0	3	1	0	0	0	0	0	0	0	0	0	0	**4**	
0215 - 0230	0	1	0	0	0	0	0	0	0	0	0	0	0	**1**	
0230 - 0245	0	2	0	0	0	0	0	0	0	0	0	0	0	**2**	
0245 - 0300	0	1	0	0	0	0	0	0	0	0	0	0	0	**1**	**8**
0300 - 0315	0	2	1	0	0	0	0	0	1	0	0	0	0	**4**	
0315 - 0330	0	2	0	0	0	0	0	0	0	0	0	0	0	**2**	
0330 - 0345	0	2	0	0	0	0	0	0	0	0	0	0	0	**2**	
0345 - 0400	0	2	0	0	0	0	0	0	0	0	0	0	0	**2**	**10**
0400 - 0415	0	2	0	0	0	0	0	0	0	0	0	0	0	**2**	
0415 - 0430	0	2	1	0	0	0	0	0	0	0	0	0	0	**3**	
0430 - 0445	0	2	1	0	0	0	0	0	0	0	0	0	0	**3**	
0445 - 0500	0	0	0	0	0	0	0	0	0	0	0	0	0	**0**	**8**
0500 - 0515	0	2	0	0	1	0	0	0	0	0	0	0	0	**3**	
0515 - 0530	0	7	1	0	0	0	0	0	0	0	0	0	0	**8**	
0530 - 0545	0	8	1	0	0	0	0	0	0	0	0	0	0	**9**	
0545 - 0600	0	9	2	0	0	0	0	0	0	0	0	0	0	**11**	**31**
0600 - 0615	0	6	1	0	0	0	0	0	0	0	0	0	0	**7**	
0615 - 0630	0	3	1	0	0	0	0	0	0	0	0	0	0	**4**	
0630 - 0645	0	12	2	0	0	0	0	0	0	0	0	0	0	**14**	
0645 - 0700	0	6	2	0	0	5	0	0	0	0	0	0	0	**13**	**38**
0700 - 0715	0	14	3	0	2	3	0	0	1	0	0	0	0	**23**	
0715 - 0730	0	16	3	0	1	1	0	0	6	0	0	0	0	**27**	
0730 - 0745	0	7	1	0	0	3	0	0	2	0	0	0	0	**13**	
0745 - 0800	0	26	5	0	0	7	0	0	0	0	0	0	0	**38**	**101**
0800 - 0815	0	12	2	0	1	3	0	0	1	0	0	0	0	**19**	
0815 - 0830	0	6	2	0	0	3	0	0	0	0	0	0	0	**11**	
0830 - 0845	0	3	0	0	0	2	0	1	0	0	0	0	0	**6**	
0845 - 0900	0	10	2	0	0	2	0	1	0	0	0	0	0	**15**	**51**
0900 - 0915	0	8	1	0	0	2	0	0	0	0	0	0	0	**11**	
0915 - 0930	0	8	1	0	1	3	0	0	0	0	0	0	0	**13**	
0930 - 0945	0	8	1	0	0	3	0	0	0	0	0	0	0	**12**	
0945 - 1000	0	7	4	0	0	3	0	0	1	0	0	0	0	**15**	**51**
1000 - 1015	0	8	3	0	0	3	0	0	0	0	0	0	0	**14**	
1015 - 1030	0	12	6	0	0	3	0	0	0	0	0	0	0	**21**	
1030 - 1045	0	14	3	0	0	8	0	0	2	0	0	0	0	**27**	
1045 - 1100	0	20	5	0	0	1	0	0	0	0	0	0	0	**26**	**88**
1100 - 1115	0	7	2	0	0	1	0	1	1	0	0	0	0	**12**	
1115 - 1130	0	16	3	0	0	5	0	1	0	0	0	0	0	**25**	
1130 - 1145	0	14	5	0	0	2	0	1	1	0	0	0	0	**23**	
1145 - 1200	0	17	3	0	0	1	0	0	2	0	0	0	0	**23**	**83**
1200 - 1215	0	18	6	0	0	3	0	0	0	0	0	0	0	**27**	
1215 - 1230	0	13	4	0	1	2	0	0	0	0	0	0	0	**20**	
1230 - 1245	0	23	6	0	1	1	0	0	1	0	0	0	0	**32**	
1245 - 1300	0	14	4	0	1	2	0	0	0	0	0	0	0	**21**	**100**
1300 - 1315	0	17	4	0	0	3	0	1	0	0	0	0	0	**25**	
1315 - 1330	0	18	3	0	0	0	0	0	0	0	0	0	0	**21**	
1330 - 1345	0	24	4	0	0	2	0	0	0	0	0	0	0	**30**	
1345 - 1400	1	109	15	0	2	0	0	0	1	0	0	0	0	**128**	**204**
1400 - 1415	0	32	2	0	0	3	0	0	0	0	0	0	0	**37**	
1415 - 1430	0	10	4	0	0	3	0	1	0	0	0	0	0	**18**	
1430 - 1445	0	24	5	0	2	0	0	0	1	0	0	0	0	**32**	
1445 - 1500	0	13	1	0	0	0	0	0	2	0	0	0	0	**16**	**103**
1500 - 1515	0	27	3	0	0	3	0	0	0	0	0	0	0	**33**	
1515 - 1530	0	23	6	0	0	1	0	0	0	0	0	0	0	**30**	
1530 - 1545	0	28	2	0	0	1	0	0	1	0	0	0	0	**32**	
1545 - 1600	0	26	2	0	0	0	0	0	0	0	0	0	0	**28**	**123**
1600 - 1615	0	27	8	0	0	4	0	0	0	0	0	0	0	**39**	
1615 - 1630	0	24	3	0	0	0	0	0	1	0	0	0	0	**28**	
1630 - 1645	0	33	2	0	0	0	0	0	1	0	0	0	0	**36**	
1645 - 1700	0	26	9	0	0	2	0	0	0	0	0	0	0	**37**	**140**
1700 - 1715	0	31	5	0	0	1	0	0	0	0	0	0	0	**37**	
1715 - 1730	0	18	3	0	0	0	0	0	0	0	0	0	0	**21**	
1730 - 1745	0	40	7	0	0	0	0	0	1	0	0	0	0	**48**	
1745 - 1800	0	24	5	0	1	0	0	0	0	0	0	0	0	**30**	**136**
1800 - 1815	0	27	2	0	0	0	0	0	1	0	0	0	0	**30**	
1815 - 1830	1	17	1	0	0	0	0	0	0	0	0	0	0	**19**	
1830 - 1845	0	19	5	0	0	0	0	0	0	1	0	0	0	**25**	
1845 - 1900	0	14	2	0	0	0	0	0	0	0	0	0	0	**16**	**90**
1900 - 1915	0	13	1	0	0	0	0	0	2	0	0	0	0	**16**	
1915 - 1930	0	8	2	0	0	0	0	0	0	0	0	0	0	**10**	
1930 - 1945	0	8	1	0	0	0	0	0	0	0	0	0	0	**9**	
1945 - 2000	0	10	1	0	0	0	0	0	0	0	0	0	0	**11**	**46**
2000 - 2015	0	8	2	0	0	0	0	0	0	0	0	0	0	**10**	
2015 - 2030	0	12	1	0	0	0	0	0	0	0	0	0	0	**13**	
2030 - 2045	0	15	2	0	0	0	0	0	0	0	0	0	0	**17**	
2045 - 2100	0	10	2	0	0	0	0	0	0	0	0	0	0	**12**	**52**
2100 - 2115	0	10	1	0	0	0	0	0	0	0	0	0	0	**11**	
2115 - 2130	0	11	1	0	0	0	0	0	0	0	0	0	0	**12**	
2130 - 2145	0	7	1	0	0	0	0	0	0	0	0	0	0	**8**	
2145 - 2200	0	6	2	0	0	0	0	0	0	0	0	0	0	**8**	**39**
2200 - 2215	0	6	1	0	0	0	0	0	0	0	0	0	0	**7**	
2215 - 2230	0	5	1	0	0	0	0	0	0	0	0	0	0	**6**	
2230 - 2245	0	7	1	0	0	0	0	0	0	0	0	0	0	**8**	
2245 - 2300	0	6	1	0	0	0	0	0	0	0	0	0	0	**7**	**28**
2300 - 2315	0	12	1	0	0	0	0	0	0	0	0	0	0	**13**	
2315 - 2330	0	10	1	0	0	0	0	0	0	0	0	0	0	**11**	
2330 - 2345	0	3	1	0	0	0	0	0	0	0	0	0	0	**4**	
2345 - 0000	0	5	1	0	0	0	0	0	0	0	0	0	0	**6**	**34**

Session Total	2	1212	219	0	14	95	0	7	30	1	0	0	0	**1580**
Session Average	0.02	12.63	2.28	0.00	0.15	0.99	0.00	0.07	0.31	0.01	0.00	0.00	0.00	**16.46**
Session Percentage	0.13	76.71	13.86	0.00	0.89	6.01	0.00	0.44	1.90	0.06	0.00	0.00	0.00	

AM Peak Hour	-	0700 - 0800	0945 - 1045	-	0630 - 0730	0945 - 1045	-	0800 - 0900	0645 - 0745	-	-	-	-	**0700 - 0800**
AM Peak Volume	0	63	16	0	3	17	0	2	9	0	0	0	0	**101**

Noon Peak Hour	1300 - 1400	1315 - 1415	1300 - 1400	-	1345 - 1445	1000 - 1100	-	1045 - 1145	1100 - 1200	-	-	-	-	**1315 - 1415**
Noon Peak Volume	1	183	26	0	4	15	0	3	4	0	0	0	0	**216**

PM Peak Hour	1730 - 1830	1645 - 1745	1645 - 1745	-	1700 - 1800	1515 - 1615	-	-	1530 - 1630	1745 - 1845	-	-	-	**1645 - 1745**
PM Peak Volume	1	115	24	0	1	6	0	0	2	1	0	0	0	**143**

Site 61
I-20 N/Bound On-Ramp,
north of Bush River Rd

Date
Thursday, April 25, 2024

Lat/Long
34.031633°, -81.120057°

Weather
Fair
67°F

Click here for Detailed Weather

0000 - 2400 (Weekday 24h Session) (04-25-2024)
NB EB 15min

	Northbound (Movement 61.1)													15min	60min
TIME	1	2	3	4	5	6	7	8	9	10	11	12	13	Total	Total
0000 - 0015	0	2	0	0	0	0	0	0	0	0	0	0	0	**2**	
0015 - 0030	0	2	0	0	0	0	0	0	0	0	0	0	0	**2**	
0030 - 0045	0	3	0	0	0	0	0	0	0	0	0	0	0	**3**	
0045 - 0100	0	0	0	0	0	0	0	0	0	0	0	0	0	**0**	**7**
0100 - 0115	0	4	0	0	0	0	0	0	0	0	0	0	0	**4**	
0115 - 0130	0	1	0	0	0	0	0	0	1	0	0	0	0	**2**	
0130 - 0145	0	2	0	0	0	0	0	0	0	0	0	0	0	**2**	
0145 - 0200	0	1	0	0	0	0	0	0	0	0	0	0	0	**1**	**9**
0200 - 0215	0	0	0	0	0	0	0	0	0	0	0	0	0	**0**	
0215 - 0230	0	1	0	0	0	0	0	0	1	0	0	0	0	**2**	
0230 - 0245	0	0	0	0	0	0	3	0	0	0	0	0	0	**3**	
0245 - 0300	0	0	0	0	0	0	1	0	0	0	0	0	0	**1**	**6**
0300 - 0315	0	2	0	0	0	0	1	0	1	0	0	0	0	**4**	
0315 - 0330	0	1	0	0	0	0	0	0	0	0	0	0	0	**1**	
0330 - 0345	0	0	0	0	0	0	2	0	2	0	0	0	0	**4**	
0345 - 0400	0	2	0	0	0	0	0	0	0	0	0	0	0	**2**	**11**
0400 - 0415	0	1	0	0	0	0	0	0	0	0	0	0	0	**1**	
0415 - 0430	0	2	0	0	0	1	0	0	0	0	0	0	0	**3**	
0430 - 0445	0	2	0	0	0	0	0	0	0	0	0	0	0	**2**	
0445 - 0500	0	1	1	0	0	1	0	0	0	0	0	0	0	**3**	**9**
0500 - 0515	0	2	0	0	0	0	3	0	0	0	0	0	0	**5**	
0515 - 0530	0	1	0	0	1	0	2	0	0	0	0	0	0	**4**	
0530 - 0545	0	2	0	0	0	0	5	0	0	0	0	0	0	**7**	
0545 - 0600	0	2	3	0	0	0	16	0	1	0	0	0	0	**22**	**38**
0600 - 0615	0	3	0	0	0	1	0	0	0	0	0	0	0	**4**	
0615 - 0630	0	5	1	0	0	0	2	0	1	0	0	0	0	**9**	
0630 - 0645	0	6	0	0	0	0	0	0	4	0	0	0	0	**10**	
0645 - 0700	0	10	1	0	1	5	0	0	0	0	0	0	0	**17**	**40**
0700 - 0715	0	7	5	0	0	5	0	0	0	0	0	0	0	**17**	
0715 - 0730	0	4	4	0	2	4	0	0	2	0	0	0	0	**16**	
0730 - 0745	0	11	2	0	1	3	0	0	1	0	0	0	0	**18**	
0745 - 0800	0	12	4	0	0	0	0	0	0	0	0	0	0	**16**	**67**
0800 - 0815	0	2	0	0	0	3	0	1	0	0	0	0	0	**6**	
0815 - 0830	0	7	3	0	1	0	0	1	9	0	0	0	0	**21**	
0830 - 0845	0	11	2	0	1	1	0	3	3	0	0	0	0	**21**	
0845 - 0900	0	10	0	0	1	0	1	0	1	0	0	0	0	**13**	**61**
0900 - 0915	0	13	2	0	0	2	0	0	2	0	0	0	0	**19**	
0915 - 0930	0	5	1	0	1	2	1	0	2	0	0	0	0	**12**	
0930 - 0945	0	10	5	0	1	6	0	0	2	0	0	0	0	**24**	
0945 - 1000	0	12	2	0	0	1	0	1	1	0	0	0	0	**17**	**72**
1000 - 1015	0	14	4	0	0	1	0	0	2	0	0	0	0	**21**	
1015 - 1030	0	13	1	0	0	6	0	0	2	0	0	0	0	**22**	
1030 - 1045	0	14	2	0	1	3	1	0	0	0	0	0	0	**21**	
1045 - 1100	0	26	1	0	0	1	0	0	0	0	0	0	0	**28**	**92**
1100 - 1115	0	18	1	0	1	0	0	0	2	0	0	0	0	**22**	
1115 - 1130	0	17	2	0	0	3	0	0	2	0	0	0	0	**24**	
1130 - 1145	0	11	1	0	1	3	0	0	1	0	0	0	0	**17**	
1145 - 1200	0	7	8	0	0	3	0	0	0	0	0	0	0	**18**	**81**
1200 - 1215	0	18	3	0	2	1	1	1	0	0	0	0	0	**26**	
1215 - 1230	0	24	8	0	0	1	0	0	3	0	0	0	0	**36**	
1230 - 1245	0	37	7	0	0	9	0	0	1	0	0	0	0	**54**	
1245 - 1300	0	33	6	0	0	1	0	0	2	0	0	0	0	**42**	**158**
1300 - 1315	0	29	9	0	1	1	0	0	0	0	0	0	0	**40**	
1315 - 1330	0	19	8	0	0	3	0	0	1	0	0	0	0	**31**	
1330 - 1345	0	38	10	0	0	2	1	0	0	0	0	0	0	**51**	
1345 - 1400	0	45	10	0	1	2	0	0	1	0	0	0	0	**59**	**181**
1400 - 1415	0	50	12	0	0	1	0	1	0	0	0	0	0	**64**	
1415 - 1430	0	32	7	0	0	3	0	0	0	0	0	0	0	**42**	
1430 - 1445	0	24	7	0	1	1	0	0	1	0	0	0	0	**34**	
1445 - 1500	1	11	6	1	1	2	0	0	1	0	0	0	0	**23**	**163**
1500 - 1515	0	25	6	0	0	2	0	0	1	0	0	0	0	**34**	
1515 - 1530	0	20	5	0	0	1	0	0	0	0	0	0	0	**26**	
1530 - 1545	0	16	3	0	0	3	0	0	0	0	0	0	0	**22**	
1545 - 1600	0	21	7	0	1	0	0	0	0	0	0	0	0	**29**	**111**
1600 - 1615	0	22	3	0	0	0	0	0	0	0	0	0	0	**25**	
1615 - 1630	0	23	3	0	0	0	0	0	1	0	0	0	0	**27**	
1630 - 1645	0	22	3	0	0	1	0	0	0	0	0	0	0	**26**	
1645 - 1700	0	26	11	0	0	0	0	0	0	0	0	0	0	**37**	**115**
1700 - 1715	0	22	9	1	0	0	0	0	1	0	0	0	0	**33**	
1715 - 1730	0	26	4	0	0	0	0	0	0	0	0	0	0	**30**	
1730 - 1745	0	11	6	0	1	0	0	0	0	0	0	0	0	**18**	
1745 - 1800	0	14	7	1	0	0	0	0	1	0	0	0	0	**23**	**104**
1800 - 1815	1	16	2	0	0	0	0	0	0	0	0	0	0	**19**	
1815 - 1830	0	19	5	0	0	0	0	0	1	0	0	0	0	**25**	
1830 - 1845	0	12	2	0	0	0	0	0	1	0	0	0	0	**15**	
1845 - 1900	0	13	6	0	0	0	0	0	0	0	0	0	0	**19**	**78**
1900 - 1915	0	0	0	0	0	0	0	0	0	0	0	0	0	**0**	
1915 - 1930	0	0	0	0	0	0	0	0	0	0	0	0	0	**0**	
1930 - 1945	0	0	0	0	0	0	0	0	0	0	0	0	0	**0**	
1945 - 2000	0	0	0	0	0	0	0	0	0	0	0	0	0	**0**	**0**
2000 - 2015	0	0	0	0	0	0	0	0	0	0	0	0	0	**0**	
2015 - 2030	0	0	0	0	0	0	0	0	0	0	0	0	0	**0**	
2030 - 2045	0	0	0	0	0	0	0	0	0	0	0	0	0	**0**	
2045 - 2100	0	0	0	0	0	0	0	0	0	0	0	0	0	**0**	**0**
2100 - 2115	0	0	0	0	0	0	0	0	0	0	0	0	0	**0**	
2115 - 2130	0	0	0	0	0	0	0	0	0	0	0	0	0	**0**	
2130 - 2145	0	0	0	0	0	0	0	0	0	0	0	0	0	**0**	
2145 - 2200	0	0	0	0	0	0	0	0	0	0	0	0	0	**0**	**0**
2200 - 2215	0	0	0	0	0	0	0	0	0	0	0	0	0	**0**	
2215 - 2230	0	0	0	0	0	0	0	0	0	0	0	0	0	**0**	
2230 - 2245	0	0	0	0	0	0	0	0	0	0	0	0	0	**0**	
2245 - 2300	0	0	0	0	0	0	0	0	0	0	0	0	0	**0**	**0**
2300 - 2315	0	0	0	0	0	0	0	0	0	0	0	0	0	**0**	
2315 - 2330	0	0	0	0	0	0	0	0	0	0	0	0	0	**0**	
2330 - 2345	0	0	0	0	0	0	0	0	0	0	0	0	0	**0**	
2345 - 0000	0	0	0	0	0	0	0	0	0	0	0	0	0	**0**	**0**

Session Total	2	950	231	3	21	89	40	8	59	0	0	0	0	**1403**
Session Average	0.02	9.90	2.41	0.03	0.22	0.93	0.42	0.08	0.61	0.00	0.00	0.00	0.00	**14.61**
Session Percentage	0.14	67.71	16.46	0.21	1.50	6.34	2.85	0.57	4.21	0.00	0.00	0.00	0.00	

AM Peak Hour	-	0945 - 1045	0700 - 0800	-	0645 - 0745	0645 - 0745	0500 - 0600	0745 - 0845	0815 - 0915	-	-	-	-	**0930 - 1030**
AM Peak Hour Volume	0	53	15	0	4	17	26	5	15	0	0	0	0	**84**

Noon Peak Hour	1400 - 1500	1330 - 1430	1315 - 1415	1400 - 1500	1115 - 1215	1145 - 1245	1000 - 1100	1115 - 1215	1200 - 1300	-	-	-	-	**1330 - 1430**
Noon Peak Hour Volume	1	165	40	1	3	14	1	1	6	0	0	0	0	**216**

PM Peak Hour	1715 - 1815	1630 - 1730	1645 - 1745	1700 - 1800	1500 - 1600	1500 - 1600	-	-	1745 - 1845	-	-	-	-	**1630 - 1730**
PM Peak Hour Volume	1	96	30	2	1	6	0	0	3	0	0	0	0	**126**

Bi-Directional Class Count || NB EB Average 15min

Columbia, SC

Marr Traffic DATA COLLECTION
www.marrtraffic.com

Site 61
I-20 N/Bound On-Ramp,
north of Bush River Rd

Date
Tuesday, April 23, 2024

Lat/Long
34.031633°, -81.120057°

Weather
Fair
58°F

0000 - 2400 (Weekday 24h Session) (All Dates)
NB EB Average 15min

	NB EB Average 15min													15min	60min
Time	1	2	3	4	5	6	7	8	9	10	11	12	13	Total	Total
0000 - 0015	0	2	0	0	0	0	0	0	0	0	0	0	0	**2**	
0015 - 0030	0	2	0	0	0	0	0	0	0	0	0	0	0	**2**	
0030 - 0045	0	1	0	0	0	0	0	0	0	0	0	0	0	**1**	
0045 - 0100	0	1	0	0	0	0	0	0	0	0	0	0	0	**1**	**5**
0100 - 0115	0	2	0	0	0	0	0	0	0	0	0	0	0	**2**	
0115 - 0130	0	1	0	0	0	0	0	0	0	0	0	0	0	**1**	
0130 - 0145	0	1	0	0	0	0	0	0	0	0	0	0	0	**1**	
0145 - 0200	0	1	0	0	0	0	0	0	0	0	0	0	0	**1**	**5**
0200 - 0215	0	1	0	0	0	0	0	0	0	0	0	0	0	**1**	
0215 - 0230	0	1	0	0	0	0	0	0	0	0	0	0	0	**1**	
0230 - 0245	0	1	0	0	0	0	1	0	0	0	0	0	0	**2**	
0245 - 0300	0	0	0	0	0	0	0	0	0	0	0	0	0	**1**	**5**
0300 - 0315	0	1	0	0	0	0	0	0	1	0	0	0	0	**3**	
0315 - 0330	0	1	0	0	0	0	0	0	0	0	0	0	0	**1**	
0330 - 0345	0	1	0	0	0	0	1	0	1	0	0	0	0	**2**	
0345 - 0400	0	1	0	0	0	0	0	0	0	0	0	0	0	**1**	**7**
0400 - 0415	0	1	0	0	0	0	0	0	0	0	0	0	0	**1**	
0415 - 0430	0	1	0	0	0	0	0	0	0	0	0	0	0	**2**	
0430 - 0445	0	1	0	0	0	0	0	0	0	0	0	0	0	**2**	
0445 - 0500	0	0	0	0	0	0	0	0	0	0	0	0	0	**1**	**6**
0500 - 0515	0	1	0	0	0	0	1	0	0	0	0	0	0	**3**	
0515 - 0530	0	3	0	0	0	0	1	0	0	0	0	0	0	**4**	
0530 - 0545	0	3	0	0	0	0	2	0	0	0	0	0	0	**5**	
0545 - 0600	0	4	2	0	0	0	5	0	0	0	0	0	0	**11**	**23**
0600 - 0615	0	3	0	0	0	0	0	0	0	0	0	0	0	**4**	
0615 - 0630	0	3	1	0	0	0	1	0	0	0	0	0	0	**4**	
0630 - 0645	0	6	1	0	0	0	0	0	1	0	0	0	0	**8**	
0645 - 0700	0	5	1	0	0	3	0	0	0	0	0	0	0	**10**	**26**
0700 - 0715	0	7	3	0	1	3	0	0	0	0	0	0	0	**13**	
0715 - 0730	0	7	2	0	1	2	0	0	3	0	0	0	0	**14**	
0730 - 0745	0	6	1	0	0	2	0	0	1	0	0	0	0	**10**	
0745 - 0800	0	13	3	0	0	2	0	0	0	0	0	0	0	**18**	**56**
0800 - 0815	0	5	1	0	0	2	0	0	0	0	0	0	0	**8**	
0815 - 0830	0	4	2	0	0	1	0	0	3	0	0	0	0	**11**	
0830 - 0845	0	5	1	0	0	1	0	1	1	0	0	0	0	**9**	
0845 - 0900	0	7	1	0	0	1	0	0	0	0	0	0	0	**9**	**37**
0900 - 0915	0	7	1	0	0	1	0	0	1	0	0	0	0	**10**	
0915 - 0930	0	4	1	0	1	2	0	0	1	0	0	0	0	**8**	
0930 - 0945	0	6	2	0	0	3	0	0	1	0	0	0	0	**12**	
0945 - 1000	0	6	2	0	0	1	0	0	1	0	0	0	0	**11**	**41**
1000 - 1015	0	7	2	0	0	1	0	0	1	0	0	0	0	**12**	
1015 - 1030	0	8	2	0	0	3	0	0	1	0	0	0	0	**14**	
1030 - 1045	0	9	2	0	0	4	0	0	1	0	0	0	0	**16**	
1045 - 1100	0	15	2	0	0	1	0	0	0	0	0	0	0	**18**	**60**
1100 - 1115	0	8	1	0	0	0	0	0	1	0	0	0	0	**11**	
1115 - 1130	0	11	2	0	0	3	0	0	1	0	0	0	0	**16**	
1130 - 1145	0	8	2	0	0	2	0	0	1	0	0	0	0	**13**	
1145 - 1200	0	8	4	0	0	1	0	0	1	0	0	0	0	**14**	**55**
1200 - 1215	0	12	3	0	1	1	0	0	0	0	0	0	0	**18**	
1215 - 1230	0	12	4	0	0	1	0	0	1	0	0	0	0	**19**	
1230 - 1245	0	20	4	0	0	3	0	0	1	0	0	0	0	**29**	
1245 - 1300	0	16	3	0	0	1	0	0	1	0	0	0	0	**21**	**86**
1300 - 1315	0	15	4	0	0	1	0	0	0	0	0	0	0	**22**	
1315 - 1330	0	12	4	0	0	1	0	0	0	0	0	0	0	**17**	
1330 - 1345	0	21	5	0	0	1	0	0	0	0	0	0	0	**27**	
1345 - 1400	0	51	8	0	1	1	0	0	1	0	0	0	0	**62**	**128**
1400 - 1415	0	27	5	0	0	1	0	0	0	0	0	0	0	**34**	
1415 - 1430	0	14	4	0	0	2	0	0	0	0	0	0	0	**20**	
1430 - 1445	0	16	4	0	1	0	0	0	1	0	0	0	0	**22**	
1445 - 1500	0	8	2	0	0	1	0	0	1	0	0	0	0	**13**	**89**
1500 - 1515	0	17	3	0	0	2	0	0	0	0	0	0	0	**22**	
1515 - 1530	0	14	4	0	0	1	0	0	0	0	0	0	0	**19**	
1530 - 1545	0	15	2	0	0	1	0	0	0	0	0	0	0	**18**	
1545 - 1600	0	16	3	0	0	0	0	0	0	0	0	0	0	**19**	**78**
1600 - 1615	0	16	4	0	0	1	0	0	0	0	0	0	0	**21**	
1615 - 1630	0	16	2	0	0	0	0	0	1	0	0	0	0	**18**	
1630 - 1645	0	18	2	0	0	0	0	0	0	0	0	0	0	**21**	
1645 - 1700	0	17	7	0	0	1	0	0	0	0	0	0	0	**25**	**85**
1700 - 1715	0	18	5	0	0	0	0	0	0	0	0	0	0	**23**	
1715 - 1730	0	15	2	0	0	0	0	0	0	0	0	0	0	**17**	
1730 - 1745	0	17	4	0	0	0	0	0	0	0	0	0	0	**22**	
1745 - 1800	0	13	4	0	0	0	0	0	0	0	0	0	0	**18**	**80**
1800 - 1815	0	14	1	0	0	0	0	0	0	0	0	0	0	**16**	
1815 - 1830	0	12	2	0	0	0	0	0	0	0	0	0	0	**15**	
1830 - 1845	0	10	2	0	0	0	0	0	0	0	0	0	0	**13**	
1845 - 1900	0	9	3	0	0	0	0	0	0	0	0	0	0	**12**	**56**
1900 - 1915	0	9	1	0	0	0	0	0	1	0	0	0	0	**11**	
1915 - 1930	0	8	1	0	0	0	0	0	0	0	0	0	0	**9**	
1930 - 1945	0	8	1	0	0	0	0	0	0	0	0	0	0	**8**	
1945 - 2000	0	9	2	0	0	0	0	0	0	0	0	0	0	**11**	**40**
2000 - 2015	0	9	1	0	0	0	0	0	0	0	0	0	0	**10**	
2015 - 2030	0	8	1	0	0	0	0	0	0	0	0	0	0	**9**	
2030 - 2045	0	8	1	0	0	0	0	0	0	0	0	0	0	**9**	
2045 - 2100	0	9	1	0	0	0	0	0	0	0	0	0	0	**11**	**39**
2100 - 2115	0	10	1	0	0	0	0	0	0	0	0	0	0	**11**	
2115 - 2130	0	6	1	0	0	0	0	0	0	0	0	0	0	**7**	
2130 - 2145	0	6	1	0	0	0	0	0	0	0	0	0	0	**7**	
2145 - 2200	0	6	2	0	0	0	0	0	0	0	0	0	0	**8**	**33**
2200 - 2215	0	4	1	0	0	0	0	0	0	0	0	0	0	**5**	
2215 - 2230	0	3	1	0	0	0	0	0	0	0	0	0	0	**3**	
2230 - 2245	0	5	1	0	0	0	0	0	0	0	0	0	0	**6**	
2245 - 2300	0	3	1	0	0	0	0	0	0	0	0	0	0	**4**	**18**
2300 - 2315	0	7	1	0	0	0	0	0	0	0	0	0	0	**7**	
2315 - 2330	0	4	0	0	0	0	0	0	0	0	0	0	0	**4**	
2330 - 2345	0	3	1	0	0	0	0	0	0	0	0	0	0	**4**	
2345 - 0000	0	2	0	0	0	0	0	0	0	0	0	0	0	**2**	**18**

Session Total	1	790	161	1	12	62	13	5	30	0	0	0	0	**1076**
Session Average	0.01	8.23	1.68	0.01	0.13	0.64	0.14	0.05	0.31	0.00	0.00	0.00	0.00	**11.20**
Session Percentage	0.12	73.41	14.97	0.09	1.15	5.73	1.24	0.46	2.79	0.03	0.00	0.00	0.00	

AM Peak Hour	-	0700 - 0800	0700 - 0800	-	0645 - 0745	0645 - 0745	0500 - 0600	0800 - 0900	0815 - 0915	-	-	-	-	**0700 - 0800**
AM Peak Volume	0	32	9	0	2	10	9	2	5	0	0	0	0	**56**

Noon Peak Hour	1300 - 1400	1330 - 1430	1315 - 1415	1400 - 1500	1345 - 1445	1000 - 1100	1000 - 1100	1045 - 1145	1100 - 1200	-	-	-	-	**1330 - 1430**
Noon Peak Volume	0	113	21	0	2	9	0	1	3	0	0	0	0	**143**

PM Peak Hour	1730 - 1830	1615 - 1715	1645 - 1745	1700 - 1800	1700 - 1800	1500 - 1600	-	-	1815 - 1915	1745 - 1845	-	-	-	**1615 - 1715**
PM Peak Volume	1	69	18	1	1	4	0	0	2	0	0	0	0	**87**

Bi-Directional Class Count || Volume Summary 15min

Columbia, SC

Marr Traffic DATA COLLECTION
www.marrtraffic.com

Site 61
I-20 N/Bound On-Ramp,
north of Bush River Rd

Date
Tuesday, April 23, 2024

Lat/Long
34.031633°, -81.120057°

Weather
Fair
58°F

Click here for Detailed Weather

0000 - 2400 (Weekday 24h Session) (04-23-2024)

Volume Summary 15min

TIME	Volume Summary 15min NB	SB	15min Total	60min Total
0000 - 0015	0	0	**0**	
0015 - 0030	0	0	**0**	
0030 - 0045	0	0	**0**	
0045 - 0100	0	0	**0**	**0**
0100 - 0115	0	0	**0**	
0115 - 0130	0	0	**0**	
0130 - 0145	0	0	**0**	
0145 - 0200	0	0	**0**	**0**
0200 - 0215	0	0	**0**	
0215 - 0230	0	0	**0**	
0230 - 0245	0	0	**0**	
0245 - 0300	0	0	**0**	**0**
0300 - 0315	0	0	**0**	
0315 - 0330	0	0	**0**	
0330 - 0345	0	0	**0**	
0345 - 0400	0	0	**0**	**0**
0400 - 0415	0	0	**0**	
0415 - 0430	0	0	**0**	
0430 - 0445	0	0	**0**	
0445 - 0500	0	0	**0**	**0**
0500 - 0515	0	0	**0**	
0515 - 0530	0	0	**0**	
0530 - 0545	0	0	**0**	
0545 - 0600	0	0	**0**	**0**
0600 - 0615	0	0	**0**	
0615 - 0630	0	0	**0**	
0630 - 0645	0	0	**0**	
0645 - 0700	0	0	**0**	**0**
0700 - 0715	0	0	**0**	
0715 - 0730	0	0	**0**	
0730 - 0745	0	0	**0**	
0745 - 0800	0	0	**0**	**0**
0800 - 0815	0	0	**0**	
0815 - 0830	0	0	**0**	
0830 - 0845	0	0	**0**	
0845 - 0900	0	0	**0**	**0**
0900 - 0915	0	0	**0**	
0915 - 0930	0	0	**0**	
0930 - 0945	0	0	**0**	
0945 - 1000	0	0	**0**	**0**
1000 - 1015	0	0	**0**	
1015 - 1030	0	0	**0**	
1030 - 1045	0	0	**0**	
1045 - 1100	0	0	**0**	**0**
1100 - 1115	0	0	**0**	
1115 - 1130	0	0	**0**	
1130 - 1145	0	0	**0**	
1145 - 1200	0	0	**0**	**0**

Time	Volume Summary 15min NB	SB	15min Total	60min Total
1200 - 1215	0	0	**0**	
1215 - 1230	0	0	**0**	
1230 - 1245	0	0	**0**	
1245 - 1300	0	0	**0**	**0**
1300 - 1315	0	0	**0**	
1315 - 1330	0	0	**0**	
1330 - 1345	0	0	**0**	
1345 - 1400	0	0	**0**	**0**
1400 - 1415	0	0	**0**	
1415 - 1430	0	0	**0**	
1430 - 1445	0	0	**0**	
1445 - 1500	0	0	**0**	**0**
1500 - 1515	0	0	**0**	
1515 - 1530	0	0	**0**	
1530 - 1545	0	0	**0**	
1545 - 1600	0	0	**0**	**0**
1600 - 1615	0	0	**0**	
1615 - 1630	0	0	**0**	
1630 - 1645	0	0	**0**	
1645 - 1700	0	0	**0**	**0**
1700 - 1715	0	0	**0**	
1715 - 1730	0	0	**0**	
1730 - 1745	0	0	**0**	
1745 - 1800	0	0	**0**	**0**
1800 - 1815	0	0	**0**	
1815 - 1830	0	0	**0**	
1830 - 1845	0	0	**0**	
1845 - 1900	0	0	**0**	**0**
1900 - 1915	17	0	**17**	
1915 - 1930	18	0	**18**	
1930 - 1945	16	0	**16**	
1945 - 2000	23	0	**23**	**74**
2000 - 2015	20	0	**20**	
2015 - 2030	14	0	**14**	
2030 - 2045	11	0	**11**	
2045 - 2100	20	0	**20**	**65**
2100 - 2115	23	0	**23**	
2115 - 2130	9	0	**9**	
2130 - 2145	13	0	**13**	
2145 - 2200	16	0	**16**	**61**
2200 - 2215	7	0	**7**	
2215 - 2230	4	0	**4**	
2230 - 2245	9	0	**9**	
2245 - 2300	5	0	**5**	**25**
2300 - 2315	9	0	**9**	
2315 - 2330	2	0	**2**	
2330 - 2345	7	0	**7**	
2345 - 0000	1	0	**1**	**19**

Session Total	244	0	**244**
Session Average	2.54	0.00	**2.54**
Session Percentage	100.00	0.00	

Site 61
I-20 N/Bound On-Ramp,
north of Bush River Rd

Date
Wednesday, April 24, 2024

Lat/Long
34.031633°, -81.120057°

Weather
Fair
66°F

Click here for Detailed Weather

0000 - 2400 (Weekday 24h Session) (04-24-2024)
Volume Summary 15min

TIME	Volume Summary 15min NB	SB	15min Total	60min Total
0000 - 0015	4	0	**4**	
0015 - 0030	3	0	**3**	
0030 - 0045	0	0	**0**	
0045 - 0100	2	0	**2**	**9**
0100 - 0115	2	0	**2**	
0115 - 0130	2	0	**2**	
0130 - 0145	0	0	**0**	
0145 - 0200	3	0	**3**	**7**
0200 - 0215	4	0	**4**	
0215 - 0230	1	0	**1**	
0230 - 0245	2	0	**2**	
0245 - 0300	1	0	**1**	**8**
0300 - 0315	4	0	**4**	
0315 - 0330	2	0	**2**	
0330 - 0345	2	0	**2**	
0345 - 0400	2	0	**2**	**10**
0400 - 0415	2	0	**2**	
0415 - 0430	3	0	**3**	
0430 - 0445	3	0	**3**	
0445 - 0500	0	0	**0**	**8**
0500 - 0515	3	0	**3**	
0515 - 0530	8	0	**8**	
0530 - 0545	9	0	**9**	
0545 - 0600	11	0	**11**	**31**
0600 - 0615	7	0	**7**	
0615 - 0630	4	0	**4**	
0630 - 0645	14	0	**14**	
0645 - 0700	13	0	**13**	**38**
0700 - 0715	23	0	**23**	
0715 - 0730	27	0	**27**	
0730 - 0745	13	0	**13**	
0745 - 0800	38	0	**38**	**101**
0800 - 0815	19	0	**19**	
0815 - 0830	11	0	**11**	
0830 - 0845	6	0	**6**	
0845 - 0900	15	0	**15**	**51**
0900 - 0915	11	0	**11**	
0915 - 0930	13	0	**13**	
0930 - 0945	12	0	**12**	
0945 - 1000	15	0	**15**	**51**
1000 - 1015	14	0	**14**	
1015 - 1030	21	0	**21**	
1030 - 1045	27	0	**27**	
1045 - 1100	26	0	**26**	**88**
1100 - 1115	12	0	**12**	
1115 - 1130	25	0	**25**	
1130 - 1145	23	0	**23**	
1145 - 1200	23	0	**23**	**83**

Time	Volume Summary 15min NB	SB	15min Total	60min Total
1200 - 1215	27	0	**27**	
1215 - 1230	20	0	**20**	
1230 - 1245	32	0	**32**	
1245 - 1300	21	0	**21**	**100**
1300 - 1315	25	0	**25**	
1315 - 1330	21	0	**21**	
1330 - 1345	30	0	**30**	
1345 - 1400	128	0	**128**	**204**
1400 - 1415	37	0	**37**	
1415 - 1430	18	0	**18**	
1430 - 1445	32	0	**32**	
1445 - 1500	16	0	**16**	**103**
1500 - 1515	33	0	**33**	
1515 - 1530	30	0	**30**	
1530 - 1545	32	0	**32**	
1545 - 1600	28	0	**28**	**123**
1600 - 1615	39	0	**39**	
1615 - 1630	28	0	**28**	
1630 - 1645	36	0	**36**	
1645 - 1700	37	0	**37**	**140**
1700 - 1715	37	0	**37**	
1715 - 1730	21	0	**21**	
1730 - 1745	48	0	**48**	
1745 - 1800	30	0	**30**	**136**
1800 - 1815	30	0	**30**	
1815 - 1830	19	0	**19**	
1830 - 1845	25	0	**25**	
1845 - 1900	16	0	**16**	**90**
1900 - 1915	16	0	**16**	
1915 - 1930	10	0	**10**	
1930 - 1945	9	0	**9**	
1945 - 2000	11	0	**11**	**46**
2000 - 2015	10	0	**10**	
2015 - 2030	13	0	**13**	
2030 - 2045	17	0	**17**	
2045 - 2100	12	0	**12**	**52**
2100 - 2115	11	0	**11**	
2115 - 2130	12	0	**12**	
2130 - 2145	8	0	**8**	
2145 - 2200	8	0	**8**	**39**
2200 - 2215	7	0	**7**	
2215 - 2230	6	0	**6**	
2230 - 2245	8	0	**8**	
2245 - 2300	7	0	**7**	**28**
2300 - 2315	13	0	**13**	
2315 - 2330	11	0	**11**	
2330 - 2345	4	0	**4**	
2345 - 0000	6	0	**6**	**34**

Session Total	1580	0	**1580**
Session Average	16.46	0.00	**16.46**
Session Percentage	100.00	0.00	

Site 61
I-20 N/Bound On-Ramp,
north of Bush River Rd

Date
Thursday, April 25, 2024

Lat/Long
34.031633°, -81.120057°

Weather
Fair
67°F

Click here for Detailed Weather

0000 - 2400 (Weekday 24h Session) (04-25-2024)
Volume Summary 15min

TIME	Volume Summary 15min NB	SB	15min Total	60min Total
0000 - 0015	2	0	**2**	
0015 - 0030	2	0	**2**	
0030 - 0045	3	0	**3**	
0045 - 0100	0	0	**0**	**7**
0100 - 0115	4	0	**4**	
0115 - 0130	2	0	**2**	
0130 - 0145	2	0	**2**	
0145 - 0200	1	0	**1**	**9**
0200 - 0215	0	0	**0**	
0215 - 0230	2	0	**2**	
0230 - 0245	3	0	**3**	
0245 - 0300	1	0	**1**	**6**
0300 - 0315	4	0	**4**	
0315 - 0330	1	0	**1**	
0330 - 0345	4	0	**4**	
0345 - 0400	2	0	**2**	**11**
0400 - 0415	1	0	**1**	
0415 - 0430	3	0	**3**	
0430 - 0445	2	0	**2**	
0445 - 0500	3	0	**3**	**9**
0500 - 0515	5	0	**5**	
0515 - 0530	4	0	**4**	
0530 - 0545	7	0	**7**	
0545 - 0600	22	0	**22**	**38**
0600 - 0615	4	0	**4**	
0615 - 0630	9	0	**9**	
0630 - 0645	10	0	**10**	
0645 - 0700	17	0	**17**	**40**
0700 - 0715	17	0	**17**	
0715 - 0730	16	0	**16**	
0730 - 0745	18	0	**18**	
0745 - 0800	16	0	**16**	**67**
0800 - 0815	6	0	**6**	
0815 - 0830	21	0	**21**	
0830 - 0845	21	0	**21**	
0845 - 0900	13	0	**13**	**61**
0900 - 0915	19	0	**19**	
0915 - 0930	12	0	**12**	
0930 - 0945	24	0	**24**	
0945 - 1000	17	0	**17**	**72**
1000 - 1015	21	0	**21**	
1015 - 1030	22	0	**22**	
1030 - 1045	21	0	**21**	
1045 - 1100	28	0	**28**	**92**
1100 - 1115	22	0	**22**	
1115 - 1130	24	0	**24**	
1130 - 1145	17	0	**17**	
1145 - 1200	18	0	**18**	**81**

Time	Volume Summary 15min NB	SB	15min Total	60min Total
1200 - 1215	26	0	**26**	
1215 - 1230	36	0	**36**	
1230 - 1245	54	0	**54**	
1245 - 1300	42	0	**42**	**158**
1300 - 1315	40	0	**40**	
1315 - 1330	31	0	**31**	
1330 - 1345	51	0	**51**	
1345 - 1400	59	0	**59**	**181**
1400 - 1415	64	0	**64**	
1415 - 1430	42	0	**42**	
1430 - 1445	34	0	**34**	
1445 - 1500	23	0	**23**	**163**
1500 - 1515	34	0	**34**	
1515 - 1530	26	0	**26**	
1530 - 1545	22	0	**22**	
1545 - 1600	29	0	**29**	**111**
1600 - 1615	25	0	**25**	
1615 - 1630	27	0	**27**	
1630 - 1645	26	0	**26**	
1645 - 1700	37	0	**37**	**115**
1700 - 1715	33	0	**33**	
1715 - 1730	30	0	**30**	
1730 - 1745	18	0	**18**	
1745 - 1800	23	0	**23**	**104**
1800 - 1815	19	0	**19**	
1815 - 1830	25	0	**25**	
1830 - 1845	15	0	**15**	
1845 - 1900	19	0	**19**	**78**
1900 - 1915	0	0	**0**	
1915 - 1930	0	0	**0**	
1930 - 1945	0	0	**0**	
1945 - 2000	0	0	**0**	**0**
2000 - 2015	0	0	**0**	
2015 - 2030	0	0	**0**	
2030 - 2045	0	0	**0**	
2045 - 2100	0	0	**0**	**0**
2100 - 2115	0	0	**0**	
2115 - 2130	0	0	**0**	
2130 - 2145	0	0	**0**	
2145 - 2200	0	0	**0**	**0**
2200 - 2215	0	0	**0**	
2215 - 2230	0	0	**0**	
2230 - 2245	0	0	**0**	
2245 - 2300	0	0	**0**	**0**
2300 - 2315	0	0	**0**	
2315 - 2330	0	0	**0**	
2330 - 2345	0	0	**0**	
2345 - 0000	0	0	**0**	**0**

Session Total	1403	0	**1403**
Session Average	14.61	0.00	**14.61**
Session Percentage	100.00	0.00	

Bi-Directional Class Count || NB EB 60min

Columbia, SC

Marr Traffic DATA COLLECTION

www.marrtraffic.com

Site 61
I-20 N/Bound On-Ramp,
north of Bush River Rd

Date
Tuesday, April 23, 2024

Lat/Long
34.031633°, -81.120057°

Weather
Fair
58°F

Click here for Detailed Weather

0000 - 2400 (Weekday 24h Session) (04-23-2024)
NB EB 60min

	Northbound (Movement 61.1)													
TIME	1	2	3	4	5	6	7	8	9	10	11	12	13	**Total**
0000 - 0100	0	0	0	0	0	0	0	0	0	0	0	0	0	**0**
0100 - 0200	0	0	0	0	0	0	0	0	0	0	0	0	0	**0**
0200 - 0300	0	0	0	0	0	0	0	0	0	0	0	0	0	**0**
0300 - 0400	0	0	0	0	0	0	0	0	0	0	0	0	0	**0**
0400 - 0500	0	0	0	0	0	0	0	0	0	0	0	0	0	**0**
0500 - 0600	0	0	0	0	0	0	0	0	0	0	0	0	0	**0**
0600 - 0700	0	0	0	0	0	0	0	0	0	0	0	0	0	**0**
0700 - 0800	0	0	0	0	0	0	0	0	0	0	0	0	0	**0**
0800 - 0900	0	0	0	0	0	0	0	0	0	0	0	0	0	**0**
0900 - 1000	0	0	0	0	0	0	0	0	0	0	0	0	0	**0**
1000 - 1100	0	0	0	0	0	0	0	0	0	0	0	0	0	**0**
1100 - 1200	0	0	0	0	0	0	0	0	0	0	0	0	0	**0**
1200 - 1300	0	0	0	0	0	0	0	0	0	0	0	0	0	**0**
1300 - 1400	0	0	0	0	0	0	0	0	0	0	0	0	0	**0**
1400 - 1500	0	0	0	0	0	0	0	0	0	0	0	0	0	**0**
1500 - 1600	0	0	0	0	0	0	0	0	0	0	0	0	0	**0**
1600 - 1700	0	0	0	0	0	0	0	0	0	0	0	0	0	**0**
1700 - 1800	0	0	0	0	0	0	0	0	0	0	0	0	0	**0**
1800 - 1900	0	0	0	0	0	0	0	0	0	0	0	0	0	**0**
1900 - 2000	0	63	8	0	1	1	0	0	1	0	0	0	0	**74**
2000 - 2100	0	58	6	0	1	0	0	0	0	0	0	0	0	**65**
2100 - 2200	0	49	12	0	0	0	0	0	0	0	0	0	0	**61**
2200 - 2300	0	20	5	0	0	0	0	0	0	0	0	0	0	**25**
2300 - 2400	0	17	2	0	0	0	0	0	0	0	0	0	0	**19**
Session Total	0	207	33	0	2	1	0	0	1	0	0	0	0	**244**
Session Average	0.00	8.63	1.38	0.00	0.08	0.04	0.00	0.00	0.04	0.00	0.00	0.00	0.00	**10.17**
Session Percentage	0.00	84.84	13.52	0.00	0.82	0.41	0.00	0.00	0.41	0.00	0.00	0.00	0.00	
AM Peak Hour	-	-	-	-	-	-	-	-	-	-	-	-	-	**-**
AM Peak Volume	0	0	0	0	0	0	0	0	0	0	0	0	0	**0**
Noon Peak Hour	-	-	-	-	-	-	-	-	-	-	-	-	-	**-**
Noon Peak Volume	0	0	0	0	0	0	0	0	0	0	0	0	0	**0**
PM Peak Hour	-	1900 - 2000	1900 - 2000	-	1900 - 2000	1900 - 2000	-	-	1900 - 2000	-	-	-	-	**1900 - 2000**
PM Peak Volume	0	63	8	0	1	1	0	0	1	0	0	0	0	**74**

Site 61
I-20 N/Bound On-Ramp,
north of Bush River Rd

Date
Wednesday, April 24, 2024

Weather
Fair
66°F

Lat/Long
34.031633°, -81.120057°

Click here for Detailed Weather

0000 - 2400 (Weekday 24h Session) (04-24-2024)
NB EB 60min

	Northbound (Movement 61.1)													
TIME	1	2	3	4	5	6	7	8	9	10	11	12	13	**Total**
0000 - 0100	0	8	1	0	0	0	0	0	0	0	0	0	0	**9**
0100 - 0200	0	6	1	0	0	0	0	0	0	0	0	0	0	**7**
0200 - 0300	0	7	1	0	0	0	0	0	0	0	0	0	0	**8**
0300 - 0400	0	8	1	0	0	0	0	0	1	0	0	0	0	**10**
0400 - 0500	0	6	2	0	0	0	0	0	0	0	0	0	0	**8**
0500 - 0600	0	26	4	0	1	0	0	0	0	0	0	0	0	**31**
0600 - 0700	0	27	6	0	0	5	0	0	0	0	0	0	0	**38**
0700 - 0800	0	63	12	0	3	14	0	0	9	0	0	0	0	**101**
0800 - 0900	0	31	6	0	1	10	0	2	1	0	0	0	0	**51**
0900 - 1000	0	31	7	0	1	11	0	0	1	0	0	0	0	**51**
1000 - 1100	0	54	17	0	0	15	0	0	2	0	0	0	0	**88**
1100 - 1200	0	54	13	0	0	9	0	3	4	0	0	0	0	**83**
1200 - 1300	0	68	20	0	3	8	0	0	1	0	0	0	0	**100**
1300 - 1400	1	168	26	0	2	5	0	1	1	0	0	0	0	**204**
1400 - 1500	0	79	12	0	2	6	0	1	3	0	0	0	0	**103**
1500 - 1600	0	104	13	0	0	5	0	0	1	0	0	0	0	**123**
1600 - 1700	0	110	22	0	0	6	0	0	2	0	0	0	0	**140**
1700 - 1800	0	113	20	0	1	1	0	0	1	0	0	0	0	**136**
1800 - 1900	1	77	10	0	0	0	0	0	1	1	0	0	0	**90**
1900 - 2000	0	39	5	0	0	0	0	0	2	0	0	0	0	**46**
2000 - 2100	0	45	7	0	0	0	0	0	0	0	0	0	0	**52**
2100 - 2200	0	34	5	0	0	0	0	0	0	0	0	0	0	**39**
2200 - 2300	0	24	4	0	0	0	0	0	0	0	0	0	0	**28**
2300 - 2400	0	30	4	0	0	0	0	0	0	0	0	0	0	**34**

Session Total	2	1212	219	0	14	95	0	7	30	1	0	0	0	**1580**
Session Average	0.08	50.50	9.13	0.00	0.58	3.96	0.00	0.29	1.25	0.04	0.00	0.00	0.00	**65.83**
Session Percentage	0.13	76.71	13.86	0.00	0.89	6.01	0.00	0.44	1.90	0.06	0.00	0.00	0.00	

AM Peak Hour	-	0700 - 0800	0700 - 0800	-	0700 - 0800	0700 - 0800	-	0800 - 0900	0700 - 0800	-	-	-	-	**0700 - 0800**
AM Peak Volume	0	63	12	0	3	14	0	2	9	0	0	0	0	**101**

Noon Peak Hour	1300 - 1400	1300 - 1400	1300 - 1400	-	1200 - 1300	1000 - 1100	-	1100 - 1200	1100 - 1200	-	-	-	-	**1300 - 1400**
Noon Peak Volume	1	168	26	0	3	15	0	3	4	0	0	0	0	**204**

PM Peak Hour	1800 - 1900	1700 - 1800	1600 - 1700	-	1700 - 1800	1600 - 1700	-	-	1600 - 1700	1800 - 1900	-	-	-	**1600 - 1700**
PM Peak Volume	1	113	22	0	1	6	0	0	2	1	0	0	0	**140**

Site 61
I-20 N/Bound On-Ramp,
north of Bush River Rd

Date
Thursday, April 25, 2024

Weather
Fair
67°F

Lat/Long
34.031633°, -81.120057°

Click here for Detailed Weather

0000 - 2400 (Weekday 24h Session) (04-25-2024)
NB EB 60min

	Northbound (Movement 61.1)													
TIME	1	2	3	4	5	6	7	8	9	10	11	12	13	**Total**
0000 - 0100	0	7	0	0	0	0	0	0	0	0	0	0	0	**7**
0100 - 0200	0	8	0	0	0	0	0	0	1	0	0	0	0	**9**
0200 - 0300	0	1	0	0	0	0	4	0	1	0	0	0	0	**6**
0300 - 0400	0	5	0	0	0	0	3	0	3	0	0	0	0	**11**
0400 - 0500	0	6	1	0	0	2	0	0	0	0	0	0	0	**9**
0500 - 0600	0	7	3	0	1	0	26	0	1	0	0	0	0	**38**
0600 - 0700	0	24	2	0	1	6	2	0	5	0	0	0	0	**40**
0700 - 0800	0	34	15	0	3	12	0	0	3	0	0	0	0	**67**
0800 - 0900	0	30	5	0	3	4	1	5	13	0	0	0	0	**61**
0900 - 1000	0	40	10	0	2	11	1	1	7	0	0	0	0	**72**
1000 - 1100	0	67	8	0	1	11	1	0	4	0	0	0	0	**92**
1100 - 1200	0	53	12	0	2	9	0	0	5	0	0	0	0	**81**
1200 - 1300	0	112	24	0	2	12	1	1	6	0	0	0	0	**158**
1300 - 1400	0	131	37	0	2	8	1	0	2	0	0	0	0	**181**
1400 - 1500	1	117	32	1	2	7	0	1	2	0	0	0	0	**163**
1500 - 1600	0	82	21	0	1	6	0	0	1	0	0	0	0	**111**
1600 - 1700	0	93	20	0	0	1	0	0	1	0	0	0	0	**115**
1700 - 1800	0	73	26	2	1	0	0	0	2	0	0	0	0	**104**
1800 - 1900	1	60	15	0	0	0	0	0	2	0	0	0	0	**78**
1900 - 2000	0	0	0	0	0	0	0	0	0	0	0	0	0	**0**
2000 - 2100	0	0	0	0	0	0	0	0	0	0	0	0	0	**0**
2100 - 2200	0	0	0	0	0	0	0	0	0	0	0	0	0	**0**
2200 - 2300	0	0	0	0	0	0	0	0	0	0	0	0	0	**0**
2300 - 2400	0	0	0	0	0	0	0	0	0	0	0	0	0	**0**

Session Total	2	950	231	3	21	89	40	8	59	0	0	0	0	**1403**
Session Average	0.08	39.58	9.63	0.13	0.88	3.71	1.67	0.33	2.46	0.00	0.00	0.00	0.00	**58.46**
Session Percentage	0.14	67.71	16.46	0.21	1.50	6.34	2.85	0.57	4.21	0.00	0.00	0.00	0.00	

AM Peak Hour	-	0900 - 1000	0700 - 0800	-	0700 - 0800	0700 - 0800	0500 - 0600	0800 - 0900	0800 - 0900	-	-	-	-	**0900 - 1000**
AM Peak Hour Volume	0	40	15	0	3	12	26	5	13	0	0	0	0	**72**

Noon Peak Hour	1400 - 1500	1300 - 1400	1300 - 1400	1400 - 1500	1100 - 1200	1200 - 1300	1000 - 1100	1200 - 1300	1200 - 1300	-	-	-	-	**1300 - 1400**
Noon Peak Hour Volume	1	131	37	1	2	12	1	1	6	0	0	0	0	**181**

PM Peak Hour	1800 - 1900	1600 - 1700	1700 - 1800	1700 - 1800	1500 - 1600	1500 - 1600	-	-	1700 - 1800	-	-	-	-	**1600 - 1700**
PM Peak Hour Volume	1	93	26	2	1	6	0	0	2	0	0	0	0	**115**

Bi-Directional Class Count || Volume Summary 60min

Columbia, SC

Marr Traffic DATA COLLECTION

www.marrtraffic.com

Site 61

I-20 N/Bound On-Ramp,
north of Bush River Rd

Date

Tuesday, April 23, 2024

Lat/Long

34.031633°, -81.120057°

Weather

Fair
58°F

Click here for Detailed Weather

0000 - 2400 (Weekday 24h Session) (04-23-2024)

Volume Summary 60min

	Volume Summary 60min		
TIME	NB	SB	**Total**
0000 - 0100	0	0	**0**
0100 - 0200	0	0	**0**
0200 - 0300	0	0	**0**
0300 - 0400	0	0	**0**
0400 - 0500	0	0	**0**
0500 - 0600	0	0	**0**
0600 - 0700	0	0	**0**
0700 - 0800	0	0	**0**
0800 - 0900	0	0	**0**
0900 - 1000	0	0	**0**
1000 - 1100	0	0	**0**
1100 - 1200	0	0	**0**

	Volume Summary 60min		
Time	NB	SB	**Total**
1200 - 1300	0	0	**0**
1300 - 1400	0	0	**0**
1400 - 1500	0	0	**0**
1500 - 1600	0	0	**0**
1600 - 1700	0	0	**0**
1700 - 1800	0	0	**0**
1800 - 1900	0	0	**0**
1900 - 2000	74	0	**74**
2000 - 2100	65	0	**65**
2100 - 2200	61	0	**61**
2200 - 2300	25	0	**25**
2300 - 2400	19	0	**19**

Session Total	244	0	**244**
Session Average	10.17	0.00	**10.17**
Session Percentage	100.00	0.00	

Site 61

I-20 N/Bound On-Ramp,
north of Bush River Rd

Date

Wednesday, April 24, 2024

Lat/Long

34.031633°, -81.120057°

Weather

Fair
66°F

Click here for Detailed Weather

0000 - 2400 (Weekday 24h Session) (04-24-2024)

Volume Summary 60min

	Volume Summary 60min		
TIME	NB	SB	**Total**
0000 - 0100	9	0	**9**
0100 - 0200	7	0	**7**
0200 - 0300	8	0	**8**
0300 - 0400	10	0	**10**
0400 - 0500	8	0	**8**
0500 - 0600	31	0	**31**
0600 - 0700	38	0	**38**
0700 - 0800	101	0	**101**
0800 - 0900	51	0	**51**
0900 - 1000	51	0	**51**
1000 - 1100	88	0	**88**
1100 - 1200	83	0	**83**

Session Total	1580	0	**1580**
Session Average	65.83	0.00	**65.83**
Session Percentage	100.00	0.00	

	Volume Summary 60min		
Time	NB	SB	**Total**
1200 - 1300	100	0	**100**
1300 - 1400	204	0	**204**
1400 - 1500	103	0	**103**
1500 - 1600	123	0	**123**
1600 - 1700	140	0	**140**
1700 - 1800	136	0	**136**
1800 - 1900	90	0	**90**
1900 - 2000	46	0	**46**
2000 - 2100	52	0	**52**
2100 - 2200	39	0	**39**
2200 - 2300	28	0	**28**
2300 - 2400	34	0	**34**

Site 61

I-20 N/Bound On-Ramp,
north of Bush River Rd

Date

Thursday, April 25, 2024

Lat/Long

34.031633°, -81.120057°

Weather

Fair
67°F

Click here for Detailed Weather

0000 - 2400 (Weekday 24h Session) (04-25-2024)

Volume Summary 60min

	Volume Summary 60min		
TIME	NB	SB	**Total**
0000 - 0100	7	0	**7**
0100 - 0200	9	0	**9**
0200 - 0300	6	0	**6**
0300 - 0400	11	0	**11**
0400 - 0500	9	0	**9**
0500 - 0600	38	0	**38**
0600 - 0700	40	0	**40**
0700 - 0800	67	0	**67**
0800 - 0900	61	0	**61**
0900 - 1000	72	0	**72**
1000 - 1100	92	0	**92**
1100 - 1200	81	0	**81**

	Volume Summary 60min		
Time	NB	SB	**Total**
1200 - 1300	158	0	**158**
1300 - 1400	181	0	**181**
1400 - 1500	163	0	**163**
1500 - 1600	111	0	**111**
1600 - 1700	115	0	**115**
1700 - 1800	104	0	**104**
1800 - 1900	78	0	**78**
1900 - 2000	0	0	**0**
2000 - 2100	0	0	**0**
2100 - 2200	0	0	**0**
2200 - 2300	0	0	**0**
2300 - 2400	0	0	**0**

Session Total	1403	0	**1403**
Session Average	58.46	0.00	**58.46**
Session Percentage	100.00	0.00	

Bi-Directional Class Count || Graphical Analysis NB EB

Columbia, SC

Marr Traffic DATA COLLECTION

www.marrtraffic.com

Site 61

I-20 N/Bound On-Ramp,
north of Bush River Rd

Lat/Long

34.031633°, -81.120057°

0000 - 2400 (Weekday 24h Session)

Graphical Analysis NB EB

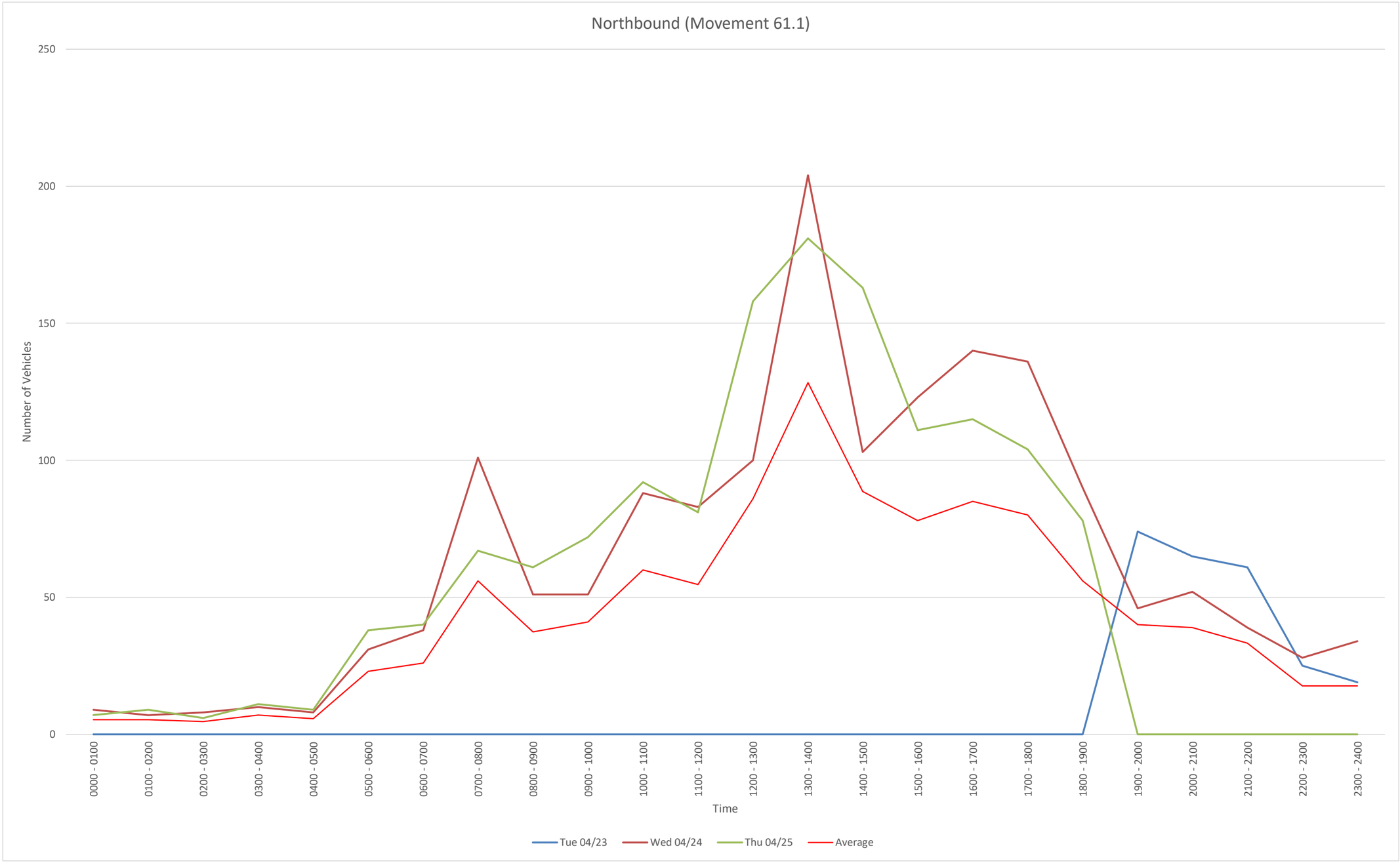

Time	Tue 04/23	Wed 04/24	Thu 04/25				
0000 - 0100	0	9	7				
0100 - 0200	0	7	9				
0200 - 0300	0	8	6				
0300 - 0400	0	10	11				
0400 - 0500	0	8	9				
0500 - 0600	0	31	38				
0600 - 0700	0	38	40				
0700 - 0800	0	101	67				
0800 - 0900	0	51	61				
0900 - 1000	0	51	72				
1000 - 1100	0	88	92				
1100 - 1200	0	83	81				
1200 - 1300	0	100	158				
1300 - 1400	0	204	181				
1400 - 1500	0	103	163				
1500 - 1600	0	123	111				
1600 - 1700	0	140	115				
1700 - 1800	0	136	104				
1800 - 1900	0	90	78				
1900 - 2000	74	46	0				
2000 - 2100	65	52	0				
2100 - 2200	61	39	0				
2200 - 2300	25	28	0				
2300 - 2400	19	34	0				
Daily Total	244	1580	1403				

NB
File Name:
Start Date: 4/23/2024
Start Time: 0
Site Code: 61
Station ID: 1
Location 1: I-20 N/Bound On-Ramp, north of Bush River Rd
Location 2:

Date	Time	1	2	3	4	5	6	7	8	9	10	11	12	13
4/23/2024	12:00 AM	0	0	0	0	0	0	0	0	0	0	0	0	0
4/23/2024	12:15 AM	0	0	0	0	0	0	0	0	0	0	0	0	0
4/23/2024	12:30 AM	0	0	0	0	0	0	0	0	0	0	0	0	0
4/23/2024	12:45 AM	0	0	0	0	0	0	0	0	0	0	0	0	0
4/23/2024	1:00 AM	0	0	0	0	0	0	0	0	0	0	0	0	0
4/23/2024	1:15 AM	0	0	0	0	0	0	0	0	0	0	0	0	0
4/23/2024	1:30 AM	0	0	0	0	0	0	0	0	0	0	0	0	0
4/23/2024	1:45 AM	0	0	0	0	0	0	0	0	0	0	0	0	0
4/23/2024	2:00 AM	0	0	0	0	0	0	0	0	0	0	0	0	0
4/23/2024	2:15 AM	0	0	0	0	0	0	0	0	0	0	0	0	0
4/23/2024	2:30 AM	0	0	0	0	0	0	0	0	0	0	0	0	0
4/23/2024	2:45 AM	0	0	0	0	0	0	0	0	0	0	0	0	0
4/23/2024	3:00 AM	0	0	0	0	0	0	0	0	0	0	0	0	0
4/23/2024	3:15 AM	0	0	0	0	0	0	0	0	0	0	0	0	0
4/23/2024	3:30 AM	0	0	0	0	0	0	0	0	0	0	0	0	0
4/23/2024	3:45 AM	0	0	0	0	0	0	0	0	0	0	0	0	0
4/23/2024	4:00 AM	0	0	0	0	0	0	0	0	0	0	0	0	0
4/23/2024	4:15 AM	0	0	0	0	0	0	0	0	0	0	0	0	0
4/23/2024	4:30 AM	0	0	0	0	0	0	0	0	0	0	0	0	0
4/23/2024	4:45 AM	0	0	0	0	0	0	0	0	0	0	0	0	0
4/23/2024	5:00 AM	0	0	0	0	0	0	0	0	0	0	0	0	0
4/23/2024	5:15 AM	0	0	0	0	0	0	0	0	0	0	0	0	0
4/23/2024	5:30 AM	0	0	0	0	0	0	0	0	0	0	0	0	0
4/23/2024	5:45 AM	0	0	0	0	0	0	0	0	0	0	0	0	0
4/23/2024	6:00 AM	0	0	0	0	0	0	0	0	0	0	0	0	0
4/23/2024	6:15 AM	0	0	0	0	0	0	0	0	0	0	0	0	0
4/23/2024	6:30 AM	0	0	0	0	0	0	0	0	0	0	0	0	0
4/23/2024	6:45 AM	0	0	0	0	0	0	0	0	0	0	0	0	0
4/23/2024	7:00 AM	0	0	0	0	0	0	0	0	0	0	0	0	0
4/23/2024	7:15 AM	0	0	0	0	0	0	0	0	0	0	0	0	0
4/23/2024	7:30 AM	0	0	0	0	0	0	0	0	0	0	0	0	0
4/23/2024	7:45 AM	0	0	0	0	0	0	0	0	0	0	0	0	0
4/23/2024	8:00 AM	0	0	0	0	0	0	0	0	0	0	0	0	0
4/23/2024	8:15 AM	0	0	0	0	0	0	0	0	0	0	0	0	0
4/23/2024	8:30 AM	0	0	0	0	0	0	0	0	0	0	0	0	0
4/23/2024	8:45 AM	0	0	0	0	0	0	0	0	0	0	0	0	0
4/23/2024	9:00 AM	0	0	0	0	0	0	0	0	0	0	0	0	0
4/23/2024	9:15 AM	0	0	0	0	0	0	0	0	0	0	0	0	0
4/23/2024	9:30 AM	0	0	0	0	0	0	0	0	0	0	0	0	0
4/23/2024	9:45 AM	0	0	0	0	0	0	0	0	0	0	0	0	0
4/23/2024	10:00 AM	0	0	0	0	0	0	0	0	0	0	0	0	0
4/23/2024	10:15 AM	0	0	0	0	0	0	0	0	0	0	0	0	0
4/23/2024	10:30 AM	0	0	0	0	0	0	0	0	0	0	0	0	0
4/23/2024	10:45 AM	0	0	0	0	0	0	0	0	0	0	0	0	0
4/23/2024	11:00 AM	0	0	0	0	0	0	0	0	0	0	0	0	0
4/23/2024	11:15 AM	0	0	0	0	0	0	0	0	0	0	0	0	0
4/23/2024	11:30 AM	0	0	0	0	0	0	0	0	0	0	0	0	0
4/23/2024	11:45 AM	0	0	0	0	0	0	0	0	0	0	0	0	0
4/23/2024	12:00 PM	0	0	0	0	0	0	0	0	0	0	0	0	0
4/23/2024	12:15 PM	0	0	0	0	0	0	0	0	0	0	0	0	0
4/23/2024	12:30 PM	0	0	0	0	0	0	0	0	0	0	0	0	0
4/23/2024	12:45 PM	0	0	0	0	0	0	0	0	0	0	0	0	0
4/23/2024	1:00 PM	0	0	0	0	0	0	0	0	0	0	0	0	0
4/23/2024	1:15 PM	0	0	0	0	0	0	0	0	0	0	0	0	0
4/23/2024	1:30 PM	0	0	0	0	0	0	0	0	0	0	0	0	0
4/23/2024	1:45 PM	0	0	0	0	0	0	0	0	0	0	0	0	0
4/23/2024	2:00 PM	0	0	0	0	0	0	0	0	0	0	0	0	0
4/23/2024	2:15 PM	0	0	0	0	0	0	0	0	0	0	0	0	0
4/23/2024	2:30 PM	0	0	0	0	0	0	0	0	0	0	0	0	0
4/23/2024	2:45 PM	0	0	0	0	0	0	0	0	0	0	0	0	0
4/23/2024	3:00 PM	0	0	0	0	0	0	0	0	0	0	0	0	0
4/23/2024	3:15 PM	0	0	0	0	0	0	0	0	0	0	0	0	0
4/23/2024	3:30 PM	0	0	0	0	0	0	0	0	0	0	0	0	0
4/23/2024	3:45 PM	0	0	0	0	0	0	0	0	0	0	0	0	0
4/23/2024	4:00 PM	0	0	0	0	0	0	0	0	0	0	0	0	0
4/23/2024	4:15 PM	0	0	0	0	0	0	0	0	0	0	0	0	0
4/23/2024	4:30 PM	0	0	0	0	0	0	0	0	0	0	0	0	0
4/23/2024	4:45 PM	0	0	0	0	0	0	0	0	0	0	0	0	0
4/23/2024	5:00 PM	0	0	0	0	0	0	0	0	0	0	0	0	0
4/23/2024	5:15 PM	0	0	0	0	0	0	0	0	0	0	0	0	0
4/23/2024	5:30 PM	0	0	0	0	0	0	0	0	0	0	0	0	0
4/23/2024	5:45 PM	0	0	0	0	0	0	0	0	0	0	0	0	0
4/23/2024	6:00 PM	0	0	0	0	0	0	0	0	0	0	0	0	0
4/23/2024	6:15 PM	0	0	0	0	0	0	0	0	0	0	0	0	0
4/23/2024	6:30 PM	0	0	0	0	0	0	0	0	0	0	0	0	0
4/23/2024	6:45 PM	0	0	0	0	0	0	0	0	0	0	0	0	0
4/23/2024	7:00 PM	0	14	2	0	0	0	0	0	1	0	0	0	0
4/23/2024	7:15 PM	0	17	1	0	0	0	0	0	0	0	0	0	0
4/23/2024	7:30 PM	0	15	1	0	0	0	0	0	0	0	0	0	0
4/23/2024	7:45 PM	0	17	4	0	1	1	0	0	0	0	0	0	0
4/23/2024	8:00 PM	0	19	1	0	0	0	0	0	0	0	0	0	0
4/23/2024	8:15 PM	0	12	2	0	0	0	0	0	0	0	0	0	0
4/23/2024	8:30 PM	0	10	1	0	0	0	0	0	0	0	0	0	0
4/23/2024	8:45 PM	0	17	2	0	1	0	0	0	0	0	0	0	0
4/23/2024	9:00 PM	0	20	3	0	0	0	0	0	0	0	0	0	0
4/23/2024	9:15 PM	0	8	1	0	0	0	0	0	0	0	0	0	0
4/23/2024	9:30 PM	0	10	3	0	0	0	0	0	0	0	0	0	0
4/23/2024	9:45 PM	0	11	5	0	0	0	0	0	0	0	0	0	0
4/23/2024	10:00 PM	0	6	1	0	0	0	0	0	0	0	0	0	0
4/23/2024	10:15 PM	0	3	1	0	0	0	0	0	0	0	0	0	0
4/23/2024	10:30 PM	0	7	2	0	0	0	0	0	0	0	0	0	0
4/23/2024	10:45 PM	0	4	1	0	0	0	0	0	0	0	0	0	0
4/23/2024	11:00 PM	0	8	1	0	0	0	0	0	0	0	0	0	0
4/23/2024	11:15 PM	0	2	0	0	0	0	0	0	0	0	0	0	0
4/23/2024	11:30 PM	0	6	1	0	0	0	0	0	0	0	0	0	0
4/23/2024	11:45 PM	0	1	0	0	0	0	0	0	0	0	0	0	0

4/24/2024	12:00 AM	0	3	1	0	0	0	0	0	0	0	0	0
4/24/2024	12:15 AM	0	3	0	0	0	0	0	0	0	0	0	0
4/24/2024	12:30 AM	0	0	0	0	0	0	0	0	0	0	0	0
4/24/2024	12:45 AM	0	2	0	0	0	0	0	0	0	0	0	0
4/24/2024	1:00 AM	0	2	0	0	0	0	0	0	0	0	0	0
4/24/2024	1:15 AM	0	2	0	0	0	0	0	0	0	0	0	0
4/24/2024	1:30 AM	0	0	0	0	0	0	0	0	0	0	0	0
4/24/2024	1:45 AM	0	2	1	0	0	0	0	0	0	0	0	0
4/24/2024	2:00 AM	0	3	1	0	0	0	0	0	0	0	0	0
4/24/2024	2:15 AM	0	1	0	0	0	0	0	0	0	0	0	0
4/24/2024	2:30 AM	0	2	0	0	0	0	0	0	0	0	0	0
4/24/2024	2:45 AM	0	1	0	0	0	0	0	0	0	0	0	0
4/24/2024	3:00 AM	0	2	1	0	0	0	0	0	1	0	0	0
4/24/2024	3:15 AM	0	2	0	0	0	0	0	0	0	0	0	0
4/24/2024	3:30 AM	0	2	0	0	0	0	0	0	0	0	0	0
4/24/2024	3:45 AM	0	2	0	0	0	0	0	0	0	0	0	0
4/24/2024	4:00 AM	0	2	0	0	0	0	0	0	0	0	0	0
4/24/2024	4:15 AM	0	2	1	0	0	0	0	0	0	0	0	0
4/24/2024	4:30 AM	0	2	1	0	0	0	0	0	0	0	0	0
4/24/2024	4:45 AM	0	0	0	0	0	0	0	0	0	0	0	0
4/24/2024	5:00 AM	0	2	0	0	1	0	0	0	0	0	0	0
4/24/2024	5:15 AM	0	7	1	0	0	0	0	0	0	0	0	0
4/24/2024	5:30 AM	0	8	1	0	0	0	0	0	0	0	0	0
4/24/2024	5:45 AM	0	9	2	0	0	0	0	0	0	0	0	0
4/24/2024	6:00 AM	0	6	1	0	0	0	0	0	0	0	0	0
4/24/2024	6:15 AM	0	3	1	0	0	0	0	0	0	0	0	0
4/24/2024	6:30 AM	0	12	2	0	0	0	0	0	0	0	0	0
4/24/2024	6:45 AM	0	6	2	0	0	5	0	0	0	0	0	0
4/24/2024	7:00 AM	0	14	3	0	2	3	0	0	1	0	0	0
4/24/2024	7:15 AM	0	16	3	0	1	1	0	0	6	0	0	0
4/24/2024	7:30 AM	0	7	1	0	0	3	0	0	2	0	0	0
4/24/2024	7:45 AM	0	26	5	0	0	7	0	0	0	0	0	0
4/24/2024	8:00 AM	0	12	2	0	1	3	0	0	1	0	0	0
4/24/2024	8:15 AM	0	6	2	0	0	3	0	0	0	0	0	0
4/24/2024	8:30 AM	0	3	0	0	0	2	0	1	0	0	0	0
4/24/2024	8:45 AM	0	10	2	0	0	2	0	1	0	0	0	0
4/24/2024	9:00 AM	0	8	1	0	0	2	0	0	0	0	0	0
4/24/2024	9:15 AM	0	8	1	0	1	3	0	0	0	0	0	0
4/24/2024	9:30 AM	0	8	1	0	0	3	0	0	0	0	0	0
4/24/2024	9:45 AM	0	7	4	0	0	3	0	0	1	0	0	0
4/24/2024	10:00 AM	0	8	3	0	0	3	0	0	0	0	0	0
4/24/2024	10:15 AM	0	12	6	0	0	3	0	0	0	0	0	0
4/24/2024	10:30 AM	0	14	3	0	0	8	0	0	2	0	0	0
4/24/2024	10:45 AM	0	20	5	0	0	1	0	0	0	0	0	0
4/24/2024	11:00 AM	0	7	2	0	0	1	0	1	1	0	0	0
4/24/2024	11:15 AM	0	16	3	0	0	5	0	1	0	0	0	0
4/24/2024	11:30 AM	0	14	5	0	0	2	0	1	1	0	0	0
4/24/2024	11:45 AM	0	17	3	0	0	1	0	0	2	0	0	0
4/24/2024	12:00 PM	0	18	6	0	0	3	0	0	0	0	0	0
4/24/2024	12:15 PM	0	13	4	0	1	2	0	0	0	0	0	0
4/24/2024	12:30 PM	0	23	6	0	1	1	0	0	1	0	0	0
4/24/2024	12:45 PM	0	14	4	0	1	2	0	0	0	0	0	0
4/24/2024	1:00 PM	0	17	4	0	0	3	0	1	0	0	0	0
4/24/2024	1:15 PM	0	18	3	0	0	0	0	0	0	0	0	0
4/24/2024	1:30 PM	0	24	4	0	0	2	0	0	0	0	0	0
4/24/2024	1:45 PM	1	109	15	0	2	0	0	0	1	0	0	0
4/24/2024	2:00 PM	0	32	2	0	0	3	0	0	0	0	0	0
4/24/2024	2:15 PM	0	10	4	0	0	3	0	1	0	0	0	0
4/24/2024	2:30 PM	0	24	5	0	2	0	0	0	1	0	0	0
4/24/2024	2:45 PM	0	13	1	0	0	0	0	0	2	0	0	0
4/24/2024	3:00 PM	0	27	3	0	0	3	0	0	0	0	0	0
4/24/2024	3:15 PM	0	23	6	0	0	1	0	0	0	0	0	0
4/24/2024	3:30 PM	0	28	2	0	0	1	0	0	1	0	0	0
4/24/2024	3:45 PM	0	26	2	0	0	0	0	0	0	0	0	0
4/24/2024	4:00 PM	0	27	8	0	0	4	0	0	0	0	0	0
4/24/2024	4:15 PM	0	24	3	0	0	0	0	0	1	0	0	0
4/24/2024	4:30 PM	0	33	2	0	0	0	0	0	1	0	0	0
4/24/2024	4:45 PM	0	26	9	0	0	2	0	0	0	0	0	0
4/24/2024	5:00 PM	0	31	5	0	0	1	0	0	0	0	0	0
4/24/2024	5:15 PM	0	18	3	0	0	0	0	0	0	0	0	0
4/24/2024	5:30 PM	0	40	7	0	0	0	0	0	1	0	0	0
4/24/2024	5:45 PM	0	24	5	0	1	0	0	0	0	0	0	0
4/24/2024	6:00 PM	0	27	2	0	0	0	0	0	1	0	0	0
4/24/2024	6:15 PM	1	17	1	0	0	0	0	0	0	0	0	0
4/24/2024	6:30 PM	0	19	5	0	0	0	0	0	0	1	0	0	0
4/24/2024	6:45 PM	0	14	2	0	0	0	0	0	0	0	0	0	0
4/24/2024	7:00 PM	0	13	1	0	0	0	0	0	2	0	0	0	0
4/24/2024	7:15 PM	0	8	2	0	0	0	0	0	0	0	0	0	0
4/24/2024	7:30 PM	0	8	1	0	0	0	0	0	0	0	0	0	0
4/24/2024	7:45 PM	0	10	1	0	0	0	0	0	0	0	0	0	0
4/24/2024	8:00 PM	0	8	2	0	0	0	0	0	0	0	0	0	0
4/24/2024	8:15 PM	0	12	1	0	0	0	0	0	0	0	0	0	0
4/24/2024	8:30 PM	0	15	2	0	0	0	0	0	0	0	0	0	0
4/24/2024	8:45 PM	0	10	2	0	0	0	0	0	0	0	0	0	0
4/24/2024	9:00 PM	0	10	1	0	0	0	0	0	0	0	0	0	0
4/24/2024	9:15 PM	0	11	1	0	0	0	0	0	0	0	0	0	0
4/24/2024	9:30 PM	0	7	1	0	0	0	0	0	0	0	0	0	0
4/24/2024	9:45 PM	0	6	2	0	0	0	0	0	0	0	0	0	0
4/24/2024	10:00 PM	0	6	1	0	0	0	0	0	0	0	0	0	0
4/24/2024	10:15 PM	0	5	1	0	0	0	0	0	0	0	0	0	0
4/24/2024	10:30 PM	0	7	1	0	0	0	0	0	0	0	0	0	0
4/24/2024	10:45 PM	0	6	1	0	0	0	0	0	0	0	0	0	0
4/24/2024	11:00 PM	0	12	1	0	0	0	0	0	0	0	0	0	0
4/24/2024	11:15 PM	0	10	1	0	0	0	0	0	0	0	0	0	0
4/24/2024	11:30 PM	0	3	1	0	0	0	0	0	0	0	0	0	0
4/24/2024	11:45 PM	0	5	1	0	0	0	0	0	0	0	0	0	0

4/25/2024	12:00 AM	0	2	0	0	0	0	0	0	0	0	0	0	0
4/25/2024	12:15 AM	0	2	0	0	0	0	0	0	0	0	0	0	0
4/25/2024	12:30 AM	0	3	0	0	0	0	0	0	0	0	0	0	0
4/25/2024	12:45 AM	0	0	0	0	0	0	0	0	0	0	0	0	0
4/25/2024	1:00 AM	0	4	0	0	0	0	0	0	0	0	0	0	0
4/25/2024	1:15 AM	0	1	0	0	0	0	0	0	1	0	0	0	0
4/25/2024	1:30 AM	0	2	0	0	0	0	0	0	0	0	0	0	0
4/25/2024	1:45 AM	0	1	0	0	0	0	0	0	0	0	0	0	0
4/25/2024	2:00 AM	0	0	0	0	0	0	0	0	0	0	0	0	0
4/25/2024	2:15 AM	0	1	0	0	0	0	0	0	1	0	0	0	0
4/25/2024	2:30 AM	0	0	0	0	0	0	3	0	0	0	0	0	0
4/25/2024	2:45 AM	0	0	0	0	0	0	1	0	0	0	0	0	0
4/25/2024	3:00 AM	0	2	0	0	0	0	1	0	1	0	0	0	0
4/25/2024	3:15 AM	0	1	0	0	0	0	0	0	0	0	0	0	0
4/25/2024	3:30 AM	0	0	0	0	0	0	2	0	2	0	0	0	0
4/25/2024	3:45 AM	0	2	0	0	0	0	0	0	0	0	0	0	0
4/25/2024	4:00 AM	0	1	0	0	0	0	0	0	0	0	0	0	0
4/25/2024	4:15 AM	0	2	0	0	0	1	0	0	0	0	0	0	0
4/25/2024	4:30 AM	0	2	0	0	0	0	0	0	0	0	0	0	0
4/25/2024	4:45 AM	0	1	1	0	0	1	0	0	0	0	0	0	0
4/25/2024	5:00 AM	0	2	0	0	0	0	3	0	0	0	0	0	0
4/25/2024	5:15 AM	0	1	0	0	1	0	2	0	0	0	0	0	0
4/25/2024	5:30 AM	0	2	0	0	0	0	5	0	0	0	0	0	0
4/25/2024	5:45 AM	0	2	3	0	0	0	16	0	1	0	0	0	0
4/25/2024	6:00 AM	0	3	0	0	0	1	0	0	0	0	0	0	0
4/25/2024	6:15 AM	0	5	1	0	0	0	2	0	1	0	0	0	0
4/25/2024	6:30 AM	0	6	0	0	0	0	0	0	4	0	0	0	0
4/25/2024	6:45 AM	0	10	1	0	1	5	0	0	0	0	0	0	0
4/25/2024	7:00 AM	0	7	5	0	0	5	0	0	0	0	0	0	0
4/25/2024	7:15 AM	0	4	4	0	2	4	0	0	2	0	0	0	0
4/25/2024	7:30 AM	0	11	2	0	1	3	0	0	1	0	0	0	0
4/25/2024	7:45 AM	0	12	4	0	0	0	0	0	0	0	0	0	0
4/25/2024	8:00 AM	0	2	0	0	0	3	0	1	0	0	0	0	0
4/25/2024	8:15 AM	0	7	3	0	1	0	0	1	9	0	0	0	0
4/25/2024	8:30 AM	0	11	2	0	1	1	0	3	3	0	0	0	0
4/25/2024	8:45 AM	0	10	0	0	1	0	1	0	1	0	0	0	0
4/25/2024	9:00 AM	0	13	2	0	0	2	0	0	2	0	0	0	0
4/25/2024	9:15 AM	0	5	1	0	1	2	1	0	2	0	0	0	0
4/25/2024	9:30 AM	0	10	5	0	1	6	0	0	2	0	0	0	0
4/25/2024	9:45 AM	0	12	2	0	0	1	0	1	1	0	0	0	0
4/25/2024	10:00 AM	0	14	4	0	0	1	0	0	2	0	0	0	0
4/25/2024	10:15 AM	0	13	1	0	0	6	0	0	2	0	0	0	0
4/25/2024	10:30 AM	0	14	2	0	1	3	1	0	0	0	0	0	0
4/25/2024	10:45 AM	0	26	1	0	0	1	0	0	0	0	0	0	0
4/25/2024	11:00 AM	0	18	1	0	1	0	0	0	2	0	0	0	0
4/25/2024	11:15 AM	0	17	2	0	0	3	0	0	2	0	0	0	0
4/25/2024	11:30 AM	0	11	1	0	1	3	0	0	1	0	0	0	0
4/25/2024	11:45 AM	0	7	8	0	0	3	0	0	0	0	0	0	0
4/25/2024	12:00 PM	0	18	3	0	2	1	1	1	0	0	0	0	0
4/25/2024	12:15 PM	0	24	8	0	0	1	0	0	3	0	0	0	0
4/25/2024	12:30 PM	0	37	7	0	0	9	0	0	1	0	0	0	0
4/25/2024	12:45 PM	0	33	6	0	0	1	0	0	2	0	0	0	0
4/25/2024	1:00 PM	0	29	9	0	1	1	0	0	0	0	0	0	0
4/25/2024	1:15 PM	0	19	8	0	0	3	0	0	1	0	0	0	0
4/25/2024	1:30 PM	0	38	10	0	0	2	1	0	0	0	0	0	0
4/25/2024	1:45 PM	0	45	10	0	1	2	0	0	1	0	0	0	0
4/25/2024	2:00 PM	0	50	12	0	0	1	0	1	0	0	0	0	0
4/25/2024	2:15 PM	0	32	7	0	0	3	0	0	0	0	0	0	0
4/25/2024	2:30 PM	0	24	7	0	1	1	0	0	1	0	0	0	0
4/25/2024	2:45 PM	1	11	6	1	1	2	0	0	1	0	0	0	0
4/25/2024	3:00 PM	0	25	6	0	0	2	0	0	1	0	0	0	0
4/25/2024	3:15 PM	0	20	5	0	0	1	0	0	0	0	0	0	0
4/25/2024	3:30 PM	0	16	3	0	0	3	0	0	0	0	0	0	0
4/25/2024	3:45 PM	0	21	7	0	1	0	0	0	0	0	0	0	0
4/25/2024	4:00 PM	0	22	3	0	0	0	0	0	0	0	0	0	0
4/25/2024	4:15 PM	0	23	3	0	0	0	0	0	1	0	0	0	0
4/25/2024	4:30 PM	0	22	3	0	0	1	0	0	0	0	0	0	0
4/25/2024	4:45 PM	0	26	11	0	0	0	0	0	0	0	0	0	0
4/25/2024	5:00 PM	0	22	9	1	0	0	0	0	1	0	0	0	0
4/25/2024	5:15 PM	0	26	4	0	0	0	0	0	0	0	0	0	0
4/25/2024	5:30 PM	0	11	6	0	1	0	0	0	0	0	0	0	0
4/25/2024	5:45 PM	0	14	7	1	0	0	0	0	1	0	0	0	0
4/25/2024	6:00 PM	1	16	2	0	0	0	0	0	0	0	0	0	0
4/25/2024	6:15 PM	0	19	5	0	0	0	0	0	1	0	0	0	0
4/25/2024	6:30 PM	0	12	2	0	0	0	0	0	1	0	0	0	0
4/25/2024	6:45 PM	0	13	6	0	0	0	0	0	0	0	0	0	0
4/25/2024	7:00 PM	0	0	0	0	0	0	0	0	0	0	0	0	0
4/25/2024	7:15 PM	0	0	0	0	0	0	0	0	0	0	0	0	0
4/25/2024	7:30 PM	0	0	0	0	0	0	0	0	0	0	0	0	0
4/25/2024	7:45 PM	0	0	0	0	0	0	0	0	0	0	0	0	0
4/25/2024	8:00 PM	0	0	0	0	0	0	0	0	0	0	0	0	0
4/25/2024	8:15 PM	0	0	0	0	0	0	0	0	0	0	0	0	0
4/25/2024	8:30 PM	0	0	0	0	0	0	0	0	0	0	0	0	0
4/25/2024	8:45 PM	0	0	0	0	0	0	0	0	0	0	0	0	0
4/25/2024	9:00 PM	0	0	0	0	0	0	0	0	0	0	0	0	0
4/25/2024	9:15 PM	0	0	0	0	0	0	0	0	0	0	0	0	0
4/25/2024	9:30 PM	0	0	0	0	0	0	0	0	0	0	0	0	0
4/25/2024	9:45 PM	0	0	0	0	0	0	0	0	0	0	0	0	0
4/25/2024	10:00 PM	0	0	0	0	0	0	0	0	0	0	0	0	0
4/25/2024	10:15 PM	0	0	0	0	0	0	0	0	0	0	0	0	0
4/25/2024	10:30 PM	0	0	0	0	0	0	0	0	0	0	0	0	0
4/25/2024	10:45 PM	0	0	0	0	0	0	0	0	0	0	0	0	0
4/25/2024	11:00 PM	0	0	0	0	0	0	0	0	0	0	0	0	0
4/25/2024	11:15 PM	0	0	0	0	0	0	0	0	0	0	0	0	0
4/25/2024	11:30 PM	0	0	0	0	0	0	0	0	0	0	0	0	0
4/25/2024	11:45 PM	0	0	0	0	0	0	0	0	0	0	0	0	0

SB
File Name:
Start Date: 4/23/2024
Start Time: 0
Site Code: 61
Station ID: 1
Location 1: I-20 N/Bound On-Ramp, north of Bush River Rd
Location 2:

Date	Time	1	2	3	4	5	6	7	8	9	10	11	12	13
4/23/2024	12:00 AM	0	0	0	0	0	0	0	0	0	0	0	0	0
4/23/2024	12:15 AM	0	0	0	0	0	0	0	0	0	0	0	0	0
4/23/2024	12:30 AM	0	0	0	0	0	0	0	0	0	0	0	0	0
4/23/2024	12:45 AM	0	0	0	0	0	0	0	0	0	0	0	0	0
4/23/2024	1:00 AM	0	0	0	0	0	0	0	0	0	0	0	0	0
4/23/2024	1:15 AM	0	0	0	0	0	0	0	0	0	0	0	0	0
4/23/2024	1:30 AM	0	0	0	0	0	0	0	0	0	0	0	0	0
4/23/2024	1:45 AM	0	0	0	0	0	0	0	0	0	0	0	0	0
4/23/2024	2:00 AM	0	0	0	0	0	0	0	0	0	0	0	0	0
4/23/2024	2:15 AM	0	0	0	0	0	0	0	0	0	0	0	0	0
4/23/2024	2:30 AM	0	0	0	0	0	0	0	0	0	0	0	0	0
4/23/2024	2:45 AM	0	0	0	0	0	0	0	0	0	0	0	0	0
4/23/2024	3:00 AM	0	0	0	0	0	0	0	0	0	0	0	0	0
4/23/2024	3:15 AM	0	0	0	0	0	0	0	0	0	0	0	0	0
4/23/2024	3:30 AM	0	0	0	0	0	0	0	0	0	0	0	0	0
4/23/2024	3:45 AM	0	0	0	0	0	0	0	0	0	0	0	0	0
4/23/2024	4:00 AM	0	0	0	0	0	0	0	0	0	0	0	0	0
4/23/2024	4:15 AM	0	0	0	0	0	0	0	0	0	0	0	0	0
4/23/2024	4:30 AM	0	0	0	0	0	0	0	0	0	0	0	0	0
4/23/2024	4:45 AM	0	0	0	0	0	0	0	0	0	0	0	0	0
4/23/2024	5:00 AM	0	0	0	0	0	0	0	0	0	0	0	0	0
4/23/2024	5:15 AM	0	0	0	0	0	0	0	0	0	0	0	0	0
4/23/2024	5:30 AM	0	0	0	0	0	0	0	0	0	0	0	0	0
4/23/2024	5:45 AM	0	0	0	0	0	0	0	0	0	0	0	0	0
4/23/2024	6:00 AM	0	0	0	0	0	0	0	0	0	0	0	0	0
4/23/2024	6:15 AM	0	0	0	0	0	0	0	0	0	0	0	0	0
4/23/2024	6:30 AM	0	0	0	0	0	0	0	0	0	0	0	0	0
4/23/2024	6:45 AM	0	0	0	0	0	0	0	0	0	0	0	0	0
4/23/2024	7:00 AM	0	0	0	0	0	0	0	0	0	0	0	0	0
4/23/2024	7:15 AM	0	0	0	0	0	0	0	0	0	0	0	0	0
4/23/2024	7:30 AM	0	0	0	0	0	0	0	0	0	0	0	0	0
4/23/2024	7:45 AM	0	0	0	0	0	0	0	0	0	0	0	0	0
4/23/2024	8:00 AM	0	0	0	0	0	0	0	0	0	0	0	0	0
4/23/2024	8:15 AM	0	0	0	0	0	0	0	0	0	0	0	0	0
4/23/2024	8:30 AM	0	0	0	0	0	0	0	0	0	0	0	0	0
4/23/2024	8:45 AM	0	0	0	0	0	0	0	0	0	0	0	0	0
4/23/2024	9:00 AM	0	0	0	0	0	0	0	0	0	0	0	0	0
4/23/2024	9:15 AM	0	0	0	0	0	0	0	0	0	0	0	0	0
4/23/2024	9:30 AM	0	0	0	0	0	0	0	0	0	0	0	0	0
4/23/2024	9:45 AM	0	0	0	0	0	0	0	0	0	0	0	0	0
4/23/2024	10:00 AM	0	0	0	0	0	0	0	0	0	0	0	0	0
4/23/2024	10:15 AM	0	0	0	0	0	0	0	0	0	0	0	0	0
4/23/2024	10:30 AM	0	0	0	0	0	0	0	0	0	0	0	0	0
4/23/2024	10:45 AM	0	0	0	0	0	0	0	0	0	0	0	0	0
4/23/2024	11:00 AM	0	0	0	0	0	0	0	0	0	0	0	0	0
4/23/2024	11:15 AM	0	0	0	0	0	0	0	0	0	0	0	0	0
4/23/2024	11:30 AM	0	0	0	0	0	0	0	0	0	0	0	0	0
4/23/2024	11:45 AM	0	0	0	0	0	0	0	0	0	0	0	0	0
4/23/2024	12:00 PM	0	0	0	0	0	0	0	0	0	0	0	0	0
4/23/2024	12:15 PM	0	0	0	0	0	0	0	0	0	0	0	0	0
4/23/2024	12:30 PM	0	0	0	0	0	0	0	0	0	0	0	0	0
4/23/2024	12:45 PM	0	0	0	0	0	0	0	0	0	0	0	0	0
4/23/2024	1:00 PM	0	0	0	0	0	0	0	0	0	0	0	0	0
4/23/2024	1:15 PM	0	0	0	0	0	0	0	0	0	0	0	0	0
4/23/2024	1:30 PM	0	0	0	0	0	0	0	0	0	0	0	0	0
4/23/2024	1:45 PM	0	0	0	0	0	0	0	0	0	0	0	0	0
4/23/2024	2:00 PM	0	0	0	0	0	0	0	0	0	0	0	0	0
4/23/2024	2:15 PM	0	0	0	0	0	0	0	0	0	0	0	0	0
4/23/2024	2:30 PM	0	0	0	0	0	0	0	0	0	0	0	0	0
4/23/2024	2:45 PM	0	0	0	0	0	0	0	0	0	0	0	0	0
4/23/2024	3:00 PM	0	0	0	0	0	0	0	0	0	0	0	0	0
4/23/2024	3:15 PM	0	0	0	0	0	0	0	0	0	0	0	0	0
4/23/2024	3:30 PM	0	0	0	0	0	0	0	0	0	0	0	0	0
4/23/2024	3:45 PM	0	0	0	0	0	0	0	0	0	0	0	0	0
4/23/2024	4:00 PM	0	0	0	0	0	0	0	0	0	0	0	0	0
4/23/2024	4:15 PM	0	0	0	0	0	0	0	0	0	0	0	0	0
4/23/2024	4:30 PM	0	0	0	0	0	0	0	0	0	0	0	0	0
4/23/2024	4:45 PM	0	0	0	0	0	0	0	0	0	0	0	0	0
4/23/2024	5:00 PM	0	0	0	0	0	0	0	0	0	0	0	0	0
4/23/2024	5:15 PM	0	0	0	0	0	0	0	0	0	0	0	0	0
4/23/2024	5:30 PM	0	0	0	0	0	0	0	0	0	0	0	0	0
4/23/2024	5:45 PM	0	0	0	0	0	0	0	0	0	0	0	0	0
4/23/2024	6:00 PM	0	0	0	0	0	0	0	0	0	0	0	0	0
4/23/2024	6:15 PM	0	0	0	0	0	0	0	0	0	0	0	0	0
4/23/2024	6:30 PM	0	0	0	0	0	0	0	0	0	0	0	0	0
4/23/2024	6:45 PM	0	0	0	0	0	0	0	0	0	0	0	0	0
4/23/2024	7:00 PM	0	0	0	0	0	0	0	0	0	0	0	0	0
4/23/2024	7:15 PM	0	0	0	0	0	0	0	0	0	0	0	0	0
4/23/2024	7:30 PM	0	0	0	0	0	0	0	0	0	0	0	0	0
4/23/2024	7:45 PM	0	0	0	0	0	0	0	0	0	0	0	0	0
4/23/2024	8:00 PM	0	0	0	0	0	0	0	0	0	0	0	0	0
4/23/2024	8:15 PM	0	0	0	0	0	0	0	0	0	0	0	0	0
4/23/2024	8:30 PM	0	0	0	0	0	0	0	0	0	0	0	0	0
4/23/2024	8:45 PM	0	0	0	0	0	0	0	0	0	0	0	0	0
4/23/2024	9:00 PM	0	0	0	0	0	0	0	0	0	0	0	0	0
4/23/2024	9:15 PM	0	0	0	0	0	0	0	0	0	0	0	0	0
4/23/2024	9:30 PM	0	0	0	0	0	0	0	0	0	0	0	0	0
4/23/2024	9:45 PM	0	0	0	0	0	0	0	0	0	0	0	0	0
4/23/2024	10:00 PM	0	0	0	0	0	0	0	0	0	0	0	0	0
4/23/2024	10:15 PM	0	0	0	0	0	0	0	0	0	0	0	0	0
4/23/2024	10:30 PM	0	0	0	0	0	0	0	0	0	0	0	0	0
4/23/2024	10:45 PM	0	0	0	0	0	0	0	0	0	0	0	0	0
4/23/2024	11:00 PM	0	0	0	0	0	0	0	0	0	0	0	0	0
4/23/2024	11:15 PM	0	0	0	0	0	0	0	0	0	0	0	0	0
4/23/2024	11:30 PM	0	0	0	0	0	0	0	0	0	0	0	0	0
4/23/2024	11:45 PM	0	0	0	0	0	0	0	0	0	0	0	0	0

4/24/2024	12:00 AM	0	0	0	0	0	0	0	0	0	0	0	0	0
4/24/2024	12:15 AM	0	0	0	0	0	0	0	0	0	0	0	0	0
4/24/2024	12:30 AM	0	0	0	0	0	0	0	0	0	0	0	0	0
4/24/2024	12:45 AM	0	0	0	0	0	0	0	0	0	0	0	0	0
4/24/2024	1:00 AM	0	0	0	0	0	0	0	0	0	0	0	0	0
4/24/2024	1:15 AM	0	0	0	0	0	0	0	0	0	0	0	0	0
4/24/2024	1:30 AM	0	0	0	0	0	0	0	0	0	0	0	0	0
4/24/2024	1:45 AM	0	0	0	0	0	0	0	0	0	0	0	0	0
4/24/2024	2:00 AM	0	0	0	0	0	0	0	0	0	0	0	0	0
4/24/2024	2:15 AM	0	0	0	0	0	0	0	0	0	0	0	0	0
4/24/2024	2:30 AM	0	0	0	0	0	0	0	0	0	0	0	0	0
4/24/2024	2:45 AM	0	0	0	0	0	0	0	0	0	0	0	0	0
4/24/2024	3:00 AM	0	0	0	0	0	0	0	0	0	0	0	0	0
4/24/2024	3:15 AM	0	0	0	0	0	0	0	0	0	0	0	0	0
4/24/2024	3:30 AM	0	0	0	0	0	0	0	0	0	0	0	0	0
4/24/2024	3:45 AM	0	0	0	0	0	0	0	0	0	0	0	0	0
4/24/2024	4:00 AM	0	0	0	0	0	0	0	0	0	0	0	0	0
4/24/2024	4:15 AM	0	0	0	0	0	0	0	0	0	0	0	0	0
4/24/2024	4:30 AM	0	0	0	0	0	0	0	0	0	0	0	0	0
4/24/2024	4:45 AM	0	0	0	0	0	0	0	0	0	0	0	0	0
4/24/2024	5:00 AM	0	0	0	0	0	0	0	0	0	0	0	0	0
4/24/2024	5:15 AM	0	0	0	0	0	0	0	0	0	0	0	0	0
4/24/2024	5:30 AM	0	0	0	0	0	0	0	0	0	0	0	0	0
4/24/2024	5:45 AM	0	0	0	0	0	0	0	0	0	0	0	0	0
4/24/2024	6:00 AM	0	0	0	0	0	0	0	0	0	0	0	0	0
4/24/2024	6:15 AM	0	0	0	0	0	0	0	0	0	0	0	0	0
4/24/2024	6:30 AM	0	0	0	0	0	0	0	0	0	0	0	0	0
4/24/2024	6:45 AM	0	0	0	0	0	0	0	0	0	0	0	0	0
4/24/2024	7:00 AM	0	0	0	0	0	0	0	0	0	0	0	0	0
4/24/2024	7:15 AM	0	0	0	0	0	0	0	0	0	0	0	0	0
4/24/2024	7:30 AM	0	0	0	0	0	0	0	0	0	0	0	0	0
4/24/2024	7:45 AM	0	0	0	0	0	0	0	0	0	0	0	0	0
4/24/2024	8:00 AM	0	0	0	0	0	0	0	0	0	0	0	0	0
4/24/2024	8:15 AM	0	0	0	0	0	0	0	0	0	0	0	0	0
4/24/2024	8:30 AM	0	0	0	0	0	0	0	0	0	0	0	0	0
4/24/2024	8:45 AM	0	0	0	0	0	0	0	0	0	0	0	0	0
4/24/2024	9:00 AM	0	0	0	0	0	0	0	0	0	0	0	0	0
4/24/2024	9:15 AM	0	0	0	0	0	0	0	0	0	0	0	0	0
4/24/2024	9:30 AM	0	0	0	0	0	0	0	0	0	0	0	0	0
4/24/2024	9:45 AM	0	0	0	0	0	0	0	0	0	0	0	0	0
4/24/2024	10:00 AM	0	0	0	0	0	0	0	0	0	0	0	0	0
4/24/2024	10:15 AM	0	0	0	0	0	0	0	0	0	0	0	0	0
4/24/2024	10:30 AM	0	0	0	0	0	0	0	0	0	0	0	0	0
4/24/2024	10:45 AM	0	0	0	0	0	0	0	0	0	0	0	0	0
4/24/2024	11:00 AM	0	0	0	0	0	0	0	0	0	0	0	0	0
4/24/2024	11:15 AM	0	0	0	0	0	0	0	0	0	0	0	0	0
4/24/2024	11:30 AM	0	0	0	0	0	0	0	0	0	0	0	0	0
4/24/2024	11:45 AM	0	0	0	0	0	0	0	0	0	0	0	0	0
4/24/2024	12:00 PM	0	0	0	0	0	0	0	0	0	0	0	0	0
4/24/2024	12:15 PM	0	0	0	0	0	0	0	0	0	0	0	0	0
4/24/2024	12:30 PM	0	0	0	0	0	0	0	0	0	0	0	0	0
4/24/2024	12:45 PM	0	0	0	0	0	0	0	0	0	0	0	0	0
4/24/2024	1:00 PM	0	0	0	0	0	0	0	0	0	0	0	0	0
4/24/2024	1:15 PM	0	0	0	0	0	0	0	0	0	0	0	0	0
4/24/2024	1:30 PM	0	0	0	0	0	0	0	0	0	0	0	0	0
4/24/2024	1:45 PM	0	0	0	0	0	0	0	0	0	0	0	0	0
4/24/2024	2:00 PM	0	0	0	0	0	0	0	0	0	0	0	0	0
4/24/2024	2:15 PM	0	0	0	0	0	0	0	0	0	0	0	0	0
4/24/2024	2:30 PM	0	0	0	0	0	0	0	0	0	0	0	0	0
4/24/2024	2:45 PM	0	0	0	0	0	0	0	0	0	0	0	0	0
4/24/2024	3:00 PM	0	0	0	0	0	0	0	0	0	0	0	0	0
4/24/2024	3:15 PM	0	0	0	0	0	0	0	0	0	0	0	0	0
4/24/2024	3:30 PM	0	0	0	0	0	0	0	0	0	0	0	0	0
4/24/2024	3:45 PM	0	0	0	0	0	0	0	0	0	0	0	0	0
4/24/2024	4:00 PM	0	0	0	0	0	0	0	0	0	0	0	0	0
4/24/2024	4:15 PM	0	0	0	0	0	0	0	0	0	0	0	0	0
4/24/2024	4:30 PM	0	0	0	0	0	0	0	0	0	0	0	0	0
4/24/2024	4:45 PM	0	0	0	0	0	0	0	0	0	0	0	0	0
4/24/2024	5:00 PM	0	0	0	0	0	0	0	0	0	0	0	0	0
4/24/2024	5:15 PM	0	0	0	0	0	0	0	0	0	0	0	0	0
4/24/2024	5:30 PM	0	0	0	0	0	0	0	0	0	0	0	0	0
4/24/2024	5:45 PM	0	0	0	0	0	0	0	0	0	0	0	0	0
4/24/2024	6:00 PM	0	0	0	0	0	0	0	0	0	0	0	0	0
4/24/2024	6:15 PM	0	0	0	0	0	0	0	0	0	0	0	0	0
4/24/2024	6:30 PM	0	0	0	0	0	0	0	0	0	0	0	0	0
4/24/2024	6:45 PM	0	0	0	0	0	0	0	0	0	0	0	0	0
4/24/2024	7:00 PM	0	0	0	0	0	0	0	0	0	0	0	0	0
4/24/2024	7:15 PM	0	0	0	0	0	0	0	0	0	0	0	0	0
4/24/2024	7:30 PM	0	0	0	0	0	0	0	0	0	0	0	0	0
4/24/2024	7:45 PM	0	0	0	0	0	0	0	0	0	0	0	0	0
4/24/2024	8:00 PM	0	0	0	0	0	0	0	0	0	0	0	0	0
4/24/2024	8:15 PM	0	0	0	0	0	0	0	0	0	0	0	0	0
4/24/2024	8:30 PM	0	0	0	0	0	0	0	0	0	0	0	0	0
4/24/2024	8:45 PM	0	0	0	0	0	0	0	0	0	0	0	0	0
4/24/2024	9:00 PM	0	0	0	0	0	0	0	0	0	0	0	0	0
4/24/2024	9:15 PM	0	0	0	0	0	0	0	0	0	0	0	0	0
4/24/2024	9:30 PM	0	0	0	0	0	0	0	0	0	0	0	0	0
4/24/2024	9:45 PM	0	0	0	0	0	0	0	0	0	0	0	0	0
4/24/2024	10:00 PM	0	0	0	0	0	0	0	0	0	0	0	0	0
4/24/2024	10:15 PM	0	0	0	0	0	0	0	0	0	0	0	0	0
4/24/2024	10:30 PM	0	0	0	0	0	0	0	0	0	0	0	0	0
4/24/2024	10:45 PM	0	0	0	0	0	0	0	0	0	0	0	0	0
4/24/2024	11:00 PM	0	0	0	0	0	0	0	0	0	0	0	0	0
4/24/2024	11:15 PM	0	0	0	0	0	0	0	0	0	0	0	0	0
4/24/2024	11:30 PM	0	0	0	0	0	0	0	0	0	0	0	0	0
4/24/2024	11:45 PM	0	0	0	0	0	0	0	0	0	0	0	0	0

4/25/2024	12:00 AM	0	0	0	0	0	0	0	0	0	0	0	0	0
4/25/2024	12:15 AM	0	0	0	0	0	0	0	0	0	0	0	0	0
4/25/2024	12:30 AM	0	0	0	0	0	0	0	0	0	0	0	0	0
4/25/2024	12:45 AM	0	0	0	0	0	0	0	0	0	0	0	0	0
4/25/2024	1:00 AM	0	0	0	0	0	0	0	0	0	0	0	0	0
4/25/2024	1:15 AM	0	0	0	0	0	0	0	0	0	0	0	0	0
4/25/2024	1:30 AM	0	0	0	0	0	0	0	0	0	0	0	0	0
4/25/2024	1:45 AM	0	0	0	0	0	0	0	0	0	0	0	0	0
4/25/2024	2:00 AM	0	0	0	0	0	0	0	0	0	0	0	0	0
4/25/2024	2:15 AM	0	0	0	0	0	0	0	0	0	0	0	0	0
4/25/2024	2:30 AM	0	0	0	0	0	0	0	0	0	0	0	0	0
4/25/2024	2:45 AM	0	0	0	0	0	0	0	0	0	0	0	0	0
4/25/2024	3:00 AM	0	0	0	0	0	0	0	0	0	0	0	0	0
4/25/2024	3:15 AM	0	0	0	0	0	0	0	0	0	0	0	0	0
4/25/2024	3:30 AM	0	0	0	0	0	0	0	0	0	0	0	0	0
4/25/2024	3:45 AM	0	0	0	0	0	0	0	0	0	0	0	0	0
4/25/2024	4:00 AM	0	0	0	0	0	0	0	0	0	0	0	0	0
4/25/2024	4:15 AM	0	0	0	0	0	0	0	0	0	0	0	0	0
4/25/2024	4:30 AM	0	0	0	0	0	0	0	0	0	0	0	0	0
4/25/2024	4:45 AM	0	0	0	0	0	0	0	0	0	0	0	0	0
4/25/2024	5:00 AM	0	0	0	0	0	0	0	0	0	0	0	0	0
4/25/2024	5:15 AM	0	0	0	0	0	0	0	0	0	0	0	0	0
4/25/2024	5:30 AM	0	0	0	0	0	0	0	0	0	0	0	0	0
4/25/2024	5:45 AM	0	0	0	0	0	0	0	0	0	0	0	0	0
4/25/2024	6:00 AM	0	0	0	0	0	0	0	0	0	0	0	0	0
4/25/2024	6:15 AM	0	0	0	0	0	0	0	0	0	0	0	0	0
4/25/2024	6:30 AM	0	0	0	0	0	0	0	0	0	0	0	0	0
4/25/2024	6:45 AM	0	0	0	0	0	0	0	0	0	0	0	0	0
4/25/2024	7:00 AM	0	0	0	0	0	0	0	0	0	0	0	0	0
4/25/2024	7:15 AM	0	0	0	0	0	0	0	0	0	0	0	0	0
4/25/2024	7:30 AM	0	0	0	0	0	0	0	0	0	0	0	0	0
4/25/2024	7:45 AM	0	0	0	0	0	0	0	0	0	0	0	0	0
4/25/2024	8:00 AM	0	0	0	0	0	0	0	0	0	0	0	0	0
4/25/2024	8:15 AM	0	0	0	0	0	0	0	0	0	0	0	0	0
4/25/2024	8:30 AM	0	0	0	0	0	0	0	0	0	0	0	0	0
4/25/2024	8:45 AM	0	0	0	0	0	0	0	0	0	0	0	0	0
4/25/2024	9:00 AM	0	0	0	0	0	0	0	0	0	0	0	0	0
4/25/2024	9:15 AM	0	0	0	0	0	0	0	0	0	0	0	0	0
4/25/2024	9:30 AM	0	0	0	0	0	0	0	0	0	0	0	0	0
4/25/2024	9:45 AM	0	0	0	0	0	0	0	0	0	0	0	0	0
4/25/2024	10:00 AM	0	0	0	0	0	0	0	0	0	0	0	0	0
4/25/2024	10:15 AM	0	0	0	0	0	0	0	0	0	0	0	0	0
4/25/2024	10:30 AM	0	0	0	0	0	0	0	0	0	0	0	0	0
4/25/2024	10:45 AM	0	0	0	0	0	0	0	0	0	0	0	0	0
4/25/2024	11:00 AM	0	0	0	0	0	0	0	0	0	0	0	0	0
4/25/2024	11:15 AM	0	0	0	0	0	0	0	0	0	0	0	0	0
4/25/2024	11:30 AM	0	0	0	0	0	0	0	0	0	0	0	0	0
4/25/2024	11:45 AM	0	0	0	0	0	0	0	0	0	0	0	0	0
4/25/2024	12:00 PM	0	0	0	0	0	0	0	0	0	0	0	0	0
4/25/2024	12:15 PM	0	0	0	0	0	0	0	0	0	0	0	0	0
4/25/2024	12:30 PM	0	0	0	0	0	0	0	0	0	0	0	0	0
4/25/2024	12:45 PM	0	0	0	0	0	0	0	0	0	0	0	0	0
4/25/2024	1:00 PM	0	0	0	0	0	0	0	0	0	0	0	0	0
4/25/2024	1:15 PM	0	0	0	0	0	0	0	0	0	0	0	0	0
4/25/2024	1:30 PM	0	0	0	0	0	0	0	0	0	0	0	0	0
4/25/2024	1:45 PM	0	0	0	0	0	0	0	0	0	0	0	0	0
4/25/2024	2:00 PM	0	0	0	0	0	0	0	0	0	0	0	0	0
4/25/2024	2:15 PM	0	0	0	0	0	0	0	0	0	0	0	0	0
4/25/2024	2:30 PM	0	0	0	0	0	0	0	0	0	0	0	0	0
4/25/2024	2:45 PM	0	0	0	0	0	0	0	0	0	0	0	0	0
4/25/2024	3:00 PM	0	0	0	0	0	0	0	0	0	0	0	0	0
4/25/2024	3:15 PM	0	0	0	0	0	0	0	0	0	0	0	0	0
4/25/2024	3:30 PM	0	0	0	0	0	0	0	0	0	0	0	0	0
4/25/2024	3:45 PM	0	0	0	0	0	0	0	0	0	0	0	0	0
4/25/2024	4:00 PM	0	0	0	0	0	0	0	0	0	0	0	0	0
4/25/2024	4:15 PM	0	0	0	0	0	0	0	0	0	0	0	0	0
4/25/2024	4:30 PM	0	0	0	0	0	0	0	0	0	0	0	0	0
4/25/2024	4:45 PM	0	0	0	0	0	0	0	0	0	0	0	0	0
4/25/2024	5:00 PM	0	0	0	0	0	0	0	0	0	0	0	0	0
4/25/2024	5:15 PM	0	0	0	0	0	0	0	0	0	0	0	0	0
4/25/2024	5:30 PM	0	0	0	0	0	0	0	0	0	0	0	0	0
4/25/2024	5:45 PM	0	0	0	0	0	0	0	0	0	0	0	0	0
4/25/2024	6:00 PM	0	0	0	0	0	0	0	0	0	0	0	0	0
4/25/2024	6:15 PM	0	0	0	0	0	0	0	0	0	0	0	0	0
4/25/2024	6:30 PM	0	0	0	0	0	0	0	0	0	0	0	0	0
4/25/2024	6:45 PM	0	0	0	0	0	0	0	0	0	0	0	0	0
4/25/2024	7:00 PM	0	0	0	0	0	0	0	0	0	0	0	0	0
4/25/2024	7:15 PM	0	0	0	0	0	0	0	0	0	0	0	0	0
4/25/2024	7:30 PM	0	0	0	0	0	0	0	0	0	0	0	0	0
4/25/2024	7:45 PM	0	0	0	0	0	0	0	0	0	0	0	0	0
4/25/2024	8:00 PM	0	0	0	0	0	0	0	0	0	0	0	0	0
4/25/2024	8:15 PM	0	0	0	0	0	0	0	0	0	0	0	0	0
4/25/2024	8:30 PM	0	0	0	0	0	0	0	0	0	0	0	0	0
4/25/2024	8:45 PM	0	0	0	0	0	0	0	0	0	0	0	0	0
4/25/2024	9:00 PM	0	0	0	0	0	0	0	0	0	0	0	0	0
4/25/2024	9:15 PM	0	0	0	0	0	0	0	0	0	0	0	0	0
4/25/2024	9:30 PM	0	0	0	0	0	0	0	0	0	0	0	0	0
4/25/2024	9:45 PM	0	0	0	0	0	0	0	0	0	0	0	0	0
4/25/2024	10:00 PM	0	0	0	0	0	0	0	0	0	0	0	0	0
4/25/2024	10:15 PM	0	0	0	0	0	0	0	0	0	0	0	0	0
4/25/2024	10:30 PM	0	0	0	0	0	0	0	0	0	0	0	0	0
4/25/2024	10:45 PM	0	0	0	0	0	0	0	0	0	0	0	0	0
4/25/2024	11:00 PM	0	0	0	0	0	0	0	0	0	0	0	0	0
4/25/2024	11:15 PM	0	0	0	0	0	0	0	0	0	0	0	0	0
4/25/2024	11:30 PM	0	0	0	0	0	0	0	0	0	0	0	0	0
4/25/2024	11:45 PM	0	0	0	0	0	0	0	0	0	0	0	0	0

NB
File Name:
Start Date: 4/23/2024
Start Time: 0
Site Code: 61
Station ID: 1
Location 1: I-20 N/Bound On-Ramp, north of Bush River Rd
Location 2:

Date	Time	1	2	3	4	5	6	7	8	9	10	11	12	13
4/23/2024	12:00 AM	0	0	0	0	0	0	0	0	0	0	0	0	0
4/23/2024	12:15 AM	0	0	0	0	0	0	0	0	0	0	0	0	0
4/23/2024	12:30 AM	0	0	0	0	0	0	0	0	0	0	0	0	0
4/23/2024	12:45 AM	0	0	0	0	0	0	0	0	0	0	0	0	0
4/23/2024	1:00 AM	0	0	0	0	0	0	0	0	0	0	0	0	0
4/23/2024	1:15 AM	0	0	0	0	0	0	0	0	0	0	0	0	0
4/23/2024	1:30 AM	0	0	0	0	0	0	0	0	0	0	0	0	0
4/23/2024	1:45 AM	0	0	0	0	0	0	0	0	0	0	0	0	0
4/23/2024	2:00 AM	0	0	0	0	0	0	0	0	0	0	0	0	0
4/23/2024	2:15 AM	0	0	0	0	0	0	0	0	0	0	0	0	0
4/23/2024	2:30 AM	0	0	0	0	0	0	0	0	0	0	0	0	0
4/23/2024	2:45 AM	0	0	0	0	0	0	0	0	0	0	0	0	0
4/23/2024	3:00 AM	0	0	0	0	0	0	0	0	0	0	0	0	0
4/23/2024	3:15 AM	0	0	0	0	0	0	0	0	0	0	0	0	0
4/23/2024	3:30 AM	0	0	0	0	0	0	0	0	0	0	0	0	0
4/23/2024	3:45 AM	0	0	0	0	0	0	0	0	0	0	0	0	0
4/23/2024	4:00 AM	0	0	0	0	0	0	0	0	0	0	0	0	0
4/23/2024	4:15 AM	0	0	0	0	0	0	0	0	0	0	0	0	0
4/23/2024	4:30 AM	0	0	0	0	0	0	0	0	0	0	0	0	0
4/23/2024	4:45 AM	0	0	0	0	0	0	0	0	0	0	0	0	0
4/23/2024	5:00 AM	0	0	0	0	0	0	0	0	0	0	0	0	0
4/23/2024	5:15 AM	0	0	0	0	0	0	0	0	0	0	0	0	0
4/23/2024	5:30 AM	0	0	0	0	0	0	0	0	0	0	0	0	0
4/23/2024	5:45 AM	0	0	0	0	0	0	0	0	0	0	0	0	0
4/23/2024	6:00 AM	0	0	0	0	0	0	0	0	0	0	0	0	0
4/23/2024	6:15 AM	0	0	0	0	0	0	0	0	0	0	0	0	0
4/23/2024	6:30 AM	0	0	0	0	0	0	0	0	0	0	0	0	0
4/23/2024	6:45 AM	0	0	0	0	0	0	0	0	0	0	0	0	0
4/23/2024	7:00 AM	0	0	0	0	0	0	0	0	0	0	0	0	0
4/23/2024	7:15 AM	0	0	0	0	0	0	0	0	0	0	0	0	0
4/23/2024	7:30 AM	0	0	0	0	0	0	0	0	0	0	0	0	0
4/23/2024	7:45 AM	0	0	0	0	0	0	0	0	0	0	0	0	0
4/23/2024	8:00 AM	0	0	0	0	0	0	0	0	0	0	0	0	0
4/23/2024	8:15 AM	0	0	0	0	0	0	0	0	0	0	0	0	0
4/23/2024	8:30 AM	0	0	0	0	0	0	0	0	0	0	0	0	0
4/23/2024	8:45 AM	0	0	0	0	0	0	0	0	0	0	0	0	0
4/23/2024	9:00 AM	0	0	0	0	0	0	0	0	0	0	0	0	0
4/23/2024	9:15 AM	0	0	0	0	0	0	0	0	0	0	0	0	0
4/23/2024	9:30 AM	0	0	0	0	0	0	0	0	0	0	0	0	0
4/23/2024	9:45 AM	0	0	0	0	0	0	0	0	0	0	0	0	0
4/23/2024	10:00 AM	0	0	0	0	0	0	0	0	0	0	0	0	0
4/23/2024	10:15 AM	0	0	0	0	0	0	0	0	0	0	0	0	0
4/23/2024	10:30 AM	0	0	0	0	0	0	0	0	0	0	0	0	0
4/23/2024	10:45 AM	0	0	0	0	0	0	0	0	0	0	0	0	0
4/23/2024	11:00 AM	0	0	0	0	0	0	0	0	0	0	0	0	0
4/23/2024	11:15 AM	0	0	0	0	0	0	0	0	0	0	0	0	0
4/23/2024	11:30 AM	0	0	0	0	0	0	0	0	0	0	0	0	0
4/23/2024	11:45 AM	0	0	0	0	0	0	0	0	0	0	0	0	0
4/23/2024	12:00 PM	0	0	0	0	0	0	0	0	0	0	0	0	0
4/23/2024	12:15 PM	0	0	0	0	0	0	0	0	0	0	0	0	0
4/23/2024	12:30 PM	0	0	0	0	0	0	0	0	0	0	0	0	0
4/23/2024	12:45 PM	0	0	0	0	0	0	0	0	0	0	0	0	0
4/23/2024	1:00 PM	0	0	0	0	0	0	0	0	0	0	0	0	0
4/23/2024	1:15 PM	0	0	0	0	0	0	0	0	0	0	0	0	0
4/23/2024	1:30 PM	0	0	0	0	0	0	0	0	0	0	0	0	0
4/23/2024	1:45 PM	0	0	0	0	0	0	0	0	0	0	0	0	0
4/23/2024	2:00 PM	0	0	0	0	0	0	0	0	0	0	0	0	0
4/23/2024	2:15 PM	0	0	0	0	0	0	0	0	0	0	0	0	0
4/23/2024	2:30 PM	0	0	0	0	0	0	0	0	0	0	0	0	0
4/23/2024	2:45 PM	0	0	0	0	0	0	0	0	0	0	0	0	0
4/23/2024	3:00 PM	0	0	0	0	0	0	0	0	0	0	0	0	0
4/23/2024	3:15 PM	0	0	0	0	0	0	0	0	0	0	0	0	0
4/23/2024	3:30 PM	0	0	0	0	0	0	0	0	0	0	0	0	0
4/23/2024	3:45 PM	0	0	0	0	0	0	0	0	0	0	0	0	0
4/23/2024	4:00 PM	0	0	0	0	0	0	0	0	0	0	0	0	0
4/23/2024	4:15 PM	0	0	0	0	0	0	0	0	0	0	0	0	0
4/23/2024	4:30 PM	0	0	0	0	0	0	0	0	0	0	0	0	0
4/23/2024	4:45 PM	0	0	0	0	0	0	0	0	0	0	0	0	0
4/23/2024	5:00 PM	0	0	0	0	0	0	0	0	0	0	0	0	0
4/23/2024	5:15 PM	0	0	0	0	0	0	0	0	0	0	0	0	0
4/23/2024	5:30 PM	0	0	0	0	0	0	0	0	0	0	0	0	0
4/23/2024	5:45 PM	0	0	0	0	0	0	0	0	0	0	0	0	0
4/23/2024	6:00 PM	0	0	0	0	0	0	0	0	0	0	0	0	0
4/23/2024	6:15 PM	0	14	2	0	0	0	0	0	1	0	0	0	0
4/23/2024	6:30 PM	0	31	3	0	0	0	0	0	1	0	0	0	0
4/23/2024	6:45 PM	0	46	4	0	0	0	0	0	1	0	0	0	0
4/23/2024	7:00 PM	0	63	8	0	1	1	0	0	1	0	0	0	0
4/23/2024	7:15 PM	0	68	7	0	1	1	0	0	0	0	0	0	0
4/23/2024	7:30 PM	0	63	8	0	1	1	0	0	0	0	0	0	0
4/23/2024	7:45 PM	0	58	8	0	1	1	0	0	0	0	0	0	0
4/23/2024	8:00 PM	0	58	6	0	1	0	0	0	0	0	0	0	0
4/23/2024	8:15 PM	0	59	8	0	1	0	0	0	0	0	0	0	0
4/23/2024	8:30 PM	0	55	7	0	1	0	0	0	0	0	0	0	0
4/23/2024	8:45 PM	0	55	9	0	1	0	0	0	0	0	0	0	0
4/23/2024	9:00 PM	0	49	12	0	0	0	0	0	0	0	0	0	0
4/23/2024	9:15 PM	0	35	10	0	0	0	0	0	0	0	0	0	0
4/23/2024	9:30 PM	0	30	10	0	0	0	0	0	0	0	0	0	0
4/23/2024	9:45 PM	0	27	9	0	0	0	0	0	0	0	0	0	0
4/23/2024	10:00 PM	0	20	5	0	0	0	0	0	0	0	0	0	0
4/23/2024	10:15 PM	0	22	5	0	0	0	0	0	0	0	0	0	0
4/23/2024	10:30 PM	0	21	4	0	0	0	0	0	0	0	0	0	0
4/23/2024	10:45 PM	0	20	3	0	0	0	0	0	0	0	0	0	0
4/23/2024	11:00 PM	0	17	2	0	0	0	0	0	0	0	0	0	0
4/23/2024	11:15 PM	0	12	2	0	0	0	0	0	0	0	0	0	0
4/23/2024	11:30 PM	0	13	2	0	0	0	0	0	0	0	0	0	0
4/23/2024	11:45 PM	0	7	1	0	0	0	0	0	0	0	0	0	0

4/24/2024	12:00 AM	0	8	1	0	0	0	0	0	0	0	0	0
4/24/2024	12:15 AM	0	7	0	0	0	0	0	0	0	0	0	0
4/24/2024	12:30 AM	0	6	0	0	0	0	0	0	0	0	0	0
4/24/2024	12:45 AM	0	6	0	0	0	0	0	0	0	0	0	0
4/24/2024	1:00 AM	0	6	1	0	0	0	0	0	0	0	0	0
4/24/2024	1:15 AM	0	7	2	0	0	0	0	0	0	0	0	0
4/24/2024	1:30 AM	0	6	2	0	0	0	0	0	0	0	0	0
4/24/2024	1:45 AM	0	8	2	0	0	0	0	0	0	0	0	0
4/24/2024	2:00 AM	0	7	1	0	0	0	0	0	0	0	0	0
4/24/2024	2:15 AM	0	6	1	0	0	0	0	1	0	0	0	0
4/24/2024	2:30 AM	0	7	1	0	0	0	0	1	0	0	0	0
4/24/2024	2:45 AM	0	7	1	0	0	0	0	1	0	0	0	0
4/24/2024	3:00 AM	0	8	1	0	0	0	0	1	0	0	0	0
4/24/2024	3:15 AM	0	8	0	0	0	0	0	0	0	0	0	0
4/24/2024	3:30 AM	0	8	1	0	0	0	0	0	0	0	0	0
4/24/2024	3:45 AM	0	8	2	0	0	0	0	0	0	0	0	0
4/24/2024	4:00 AM	0	6	2	0	0	0	0	0	0	0	0	0
4/24/2024	4:15 AM	0	6	2	0	1	0	0	0	0	0	0	0
4/24/2024	4:30 AM	0	11	2	0	1	0	0	0	0	0	0	0
4/24/2024	4:45 AM	0	17	2	0	1	0	0	0	0	0	0	0
4/24/2024	5:00 AM	0	26	4	0	1	0	0	0	0	0	0	0
4/24/2024	5:15 AM	0	30	5	0	0	0	0	0	0	0	0	0
4/24/2024	5:30 AM	0	26	5	0	0	0	0	0	0	0	0	0
4/24/2024	5:45 AM	0	30	6	0	0	0	0	0	0	0	0	0
4/24/2024	6:00 AM	0	27	6	0	0	5	0	0	0	0	0	0
4/24/2024	6:15 AM	0	35	8	0	2	8	0	0	1	0	0	0
4/24/2024	6:30 AM	0	48	10	0	3	9	0	0	7	0	0	0
4/24/2024	6:45 AM	0	43	9	0	3	12	0	0	9	0	0	0
4/24/2024	7:00 AM	0	63	12	0	3	14	0	0	9	0	0	0
4/24/2024	7:15 AM	0	61	11	0	2	14	0	0	9	0	0	0
4/24/2024	7:30 AM	0	51	10	0	1	16	0	0	3	0	0	0
4/24/2024	7:45 AM	0	47	9	0	1	15	0	1	1	0	0	0
4/24/2024	8:00 AM	0	31	6	0	1	10	0	2	1	0	0	0
4/24/2024	8:15 AM	0	27	5	0	0	9	0	2	0	0	0	0
4/24/2024	8:30 AM	0	29	4	0	1	9	0	2	0	0	0	0
4/24/2024	8:45 AM	0	34	5	0	1	10	0	1	0	0	0	0
4/24/2024	9:00 AM	0	31	7	0	1	11	0	0	1	0	0	0
4/24/2024	9:15 AM	0	31	9	0	1	12	0	0	1	0	0	0
4/24/2024	9:30 AM	0	35	14	0	0	12	0	0	1	0	0	0
4/24/2024	9:45 AM	0	41	16	0	0	17	0	0	3	0	0	0
4/24/2024	10:00 AM	0	54	17	0	0	15	0	0	2	0	0	0
4/24/2024	10:15 AM	0	53	16	0	0	13	0	1	3	0	0	0
4/24/2024	10:30 AM	0	57	13	0	0	15	0	2	3	0	0	0
4/24/2024	10:45 AM	0	57	15	0	0	9	0	3	2	0	0	0
4/24/2024	11:00 AM	0	54	13	0	0	9	0	3	4	0	0	0
4/24/2024	11:15 AM	0	65	17	0	0	11	0	2	3	0	0	0
4/24/2024	11:30 AM	0	62	18	0	1	8	0	1	3	0	0	0
4/24/2024	11:45 AM	0	71	19	0	2	7	0	0	3	0	0	0
4/24/2024	12:00 PM	0	68	20	0	3	8	0	0	1	0	0	0
4/24/2024	12:15 PM	0	67	18	0	3	8	0	1	1	0	0	0
4/24/2024	12:30 PM	0	72	17	0	2	6	0	1	1	0	0	0
4/24/2024	12:45 PM	0	73	15	0	1	7	0	1	0	0	0	0
4/24/2024	1:00 PM	1	168	26	0	2	5	0	1	1	0	0	0
4/24/2024	1:15 PM	1	183	24	0	2	5	0	0	1	0	0	0
4/24/2024	1:30 PM	1	175	25	0	2	8	0	1	1	0	0	0
4/24/2024	1:45 PM	1	175	26	0	4	6	0	1	2	0	0	0
4/24/2024	2:00 PM	0	79	12	0	2	6	0	1	3	0	0	0
4/24/2024	2:15 PM	0	74	13	0	2	6	0	1	3	0	0	0
4/24/2024	2:30 PM	0	87	15	0	2	4	0	0	3	0	0	0
4/24/2024	2:45 PM	0	91	12	0	0	5	0	0	3	0	0	0
4/24/2024	3:00 PM	0	104	13	0	0	5	0	0	1	0	0	0
4/24/2024	3:15 PM	0	104	18	0	0	6	0	0	1	0	0	0
4/24/2024	3:30 PM	0	105	15	0	0	5	0	0	2	0	0	0
4/24/2024	3:45 PM	0	110	15	0	0	4	0	0	2	0	0	0
4/24/2024	4:00 PM	0	110	22	0	0	6	0	0	2	0	0	0
4/24/2024	4:15 PM	0	114	19	0	0	3	0	0	2	0	0	0
4/24/2024	4:30 PM	0	108	19	0	0	3	0	0	1	0	0	0
4/24/2024	4:45 PM	0	115	24	0	0	3	0	0	1	0	0	0
4/24/2024	5:00 PM	0	113	20	0	1	1	0	0	1	0	0	0
4/24/2024	5:15 PM	0	109	17	0	1	0	0	0	2	0	0	0
4/24/2024	5:30 PM	1	108	15	0	1	0	0	0	2	0	0	0
4/24/2024	5:45 PM	1	87	13	0	1	0	0	0	1	1	0	0
4/24/2024	6:00 PM	1	77	10	0	0	0	0	0	1	1	0	0
4/24/2024	6:15 PM	1	63	9	0	0	0	0	0	2	1	0	0
4/24/2024	6:30 PM	0	54	10	0	0	0	0	0	2	1	0	0
4/24/2024	6:45 PM	0	43	6	0	0	0	0	0	2	0	0	0
4/24/2024	7:00 PM	0	39	5	0	0	0	0	0	2	0	0	0
4/24/2024	7:15 PM	0	34	6	0	0	0	0	0	0	0	0	0
4/24/2024	7:30 PM	0	38	5	0	0	0	0	0	0	0	0	0
4/24/2024	7:45 PM	0	45	6	0	0	0	0	0	0	0	0	0
4/24/2024	8:00 PM	0	45	7	0	0	0	0	0	0	0	0	0
4/24/2024	8:15 PM	0	47	6	0	0	0	0	0	0	0	0	0
4/24/2024	8:30 PM	0	46	6	0	0	0	0	0	0	0	0	0
4/24/2024	8:45 PM	0	38	5	0	0	0	0	0	0	0	0	0
4/24/2024	9:00 PM	0	34	5	0	0	0	0	0	0	0	0	0
4/24/2024	9:15 PM	0	30	5	0	0	0	0	0	0	0	0	0
4/24/2024	9:30 PM	0	24	5	0	0	0	0	0	0	0	0	0
4/24/2024	9:45 PM	0	24	5	0	0	0	0	0	0	0	0	0
4/24/2024	10:00 PM	0	24	4	0	0	0	0	0	0	0	0	0
4/24/2024	10:15 PM	0	30	4	0	0	0	0	0	0	0	0	0
4/24/2024	10:30 PM	0	35	4	0	0	0	0	0	0	0	0	0
4/24/2024	10:45 PM	0	31	4	0	0	0	0	0	0	0	0	0
4/24/2024	11:00 PM	0	30	4	0	0	0	0	0	0	0	0	0
4/24/2024	11:15 PM	0	20	3	0	0	0	0	0	0	0	0	0
4/24/2024	11:30 PM	0	12	2	0	0	0	0	0	0	0	0	0
4/24/2024	11:45 PM	0	12	1	0	0	0	0	0	0	0	0	0

4/25/2024	12:00 AM	0	7	0	0	0	0	0	0	0	0	0	0	0
4/25/2024	12:15 AM	0	9	0	0	0	0	0	0	0	0	0	0	0
4/25/2024	12:30 AM	0	8	0	0	0	0	0	0	1	0	0	0	0
4/25/2024	12:45 AM	0	7	0	0	0	0	0	0	1	0	0	0	0
4/25/2024	1:00 AM	0	8	0	0	0	0	0	0	1	0	0	0	0
4/25/2024	1:15 AM	0	4	0	0	0	0	0	0	1	0	0	0	0
4/25/2024	1:30 AM	0	4	0	0	0	0	0	0	1	0	0	0	0
4/25/2024	1:45 AM	0	2	0	0	0	0	3	0	1	0	0	0	0
4/25/2024	2:00 AM	0	1	0	0	0	0	4	0	1	0	0	0	0
4/25/2024	2:15 AM	0	3	0	0	0	0	5	0	2	0	0	0	0
4/25/2024	2:30 AM	0	3	0	0	0	0	5	0	1	0	0	0	0
4/25/2024	2:45 AM	0	3	0	0	0	0	4	0	3	0	0	0	0
4/25/2024	3:00 AM	0	5	0	0	0	0	3	0	3	0	0	0	0
4/25/2024	3:15 AM	0	4	0	0	0	0	2	0	2	0	0	0	0
4/25/2024	3:30 AM	0	5	0	0	0	1	2	0	2	0	0	0	0
4/25/2024	3:45 AM	0	7	0	0	0	1	0	0	0	0	0	0	0
4/25/2024	4:00 AM	0	6	1	0	0	2	0	0	0	0	0	0	0
4/25/2024	4:15 AM	0	7	1	0	0	2	3	0	0	0	0	0	0
4/25/2024	4:30 AM	0	6	1	0	1	1	5	0	0	0	0	0	0
4/25/2024	4:45 AM	0	6	1	0	1	1	10	0	0	0	0	0	0
4/25/2024	5:00 AM	0	7	3	0	1	0	26	0	1	0	0	0	0
4/25/2024	5:15 AM	0	8	3	0	1	1	23	0	1	0	0	0	0
4/25/2024	5:30 AM	0	12	4	0	0	1	23	0	2	0	0	0	0
4/25/2024	5:45 AM	0	16	4	0	0	1	18	0	6	0	0	0	0
4/25/2024	6:00 AM	0	24	2	0	1	6	2	0	5	0	0	0	0
4/25/2024	6:15 AM	0	28	7	0	1	10	2	0	5	0	0	0	0
4/25/2024	6:30 AM	0	27	10	0	3	14	0	0	6	0	0	0	0
4/25/2024	6:45 AM	0	32	12	0	4	17	0	0	3	0	0	0	0
4/25/2024	7:00 AM	0	34	15	0	3	12	0	0	3	0	0	0	0
4/25/2024	7:15 AM	0	29	10	0	3	10	0	1	3	0	0	0	0
4/25/2024	7:30 AM	0	32	9	0	2	6	0	2	10	0	0	0	0
4/25/2024	7:45 AM	0	32	9	0	2	4	0	5	12	0	0	0	0
4/25/2024	8:00 AM	0	30	5	0	3	4	1	5	13	0	0	0	0
4/25/2024	8:15 AM	0	41	7	0	3	3	1	4	15	0	0	0	0
4/25/2024	8:30 AM	0	39	5	0	3	5	2	3	8	0	0	0	0
4/25/2024	8:45 AM	0	38	8	0	3	10	2	0	7	0	0	0	0
4/25/2024	9:00 AM	0	40	10	0	2	11	1	1	7	0	0	0	0
4/25/2024	9:15 AM	0	41	12	0	2	10	1	1	7	0	0	0	0
4/25/2024	9:30 AM	0	49	12	0	1	14	0	1	7	0	0	0	0
4/25/2024	9:45 AM	0	53	9	0	1	11	1	1	5	0	0	0	0
4/25/2024	10:00 AM	0	67	8	0	1	11	1	0	4	0	0	0	0
4/25/2024	10:15 AM	0	71	5	0	2	10	1	0	4	0	0	0	0
4/25/2024	10:30 AM	0	75	6	0	2	7	1	0	4	0	0	0	0
4/25/2024	10:45 AM	0	72	5	0	2	7	0	0	5	0	0	0	0
4/25/2024	11:00 AM	0	53	12	0	2	9	0	0	5	0	0	0	0
4/25/2024	11:15 AM	0	53	14	0	3	10	1	1	3	0	0	0	0
4/25/2024	11:30 AM	0	60	20	0	3	8	1	1	4	0	0	0	0
4/25/2024	11:45 AM	0	86	26	0	2	14	1	1	4	0	0	0	0
4/25/2024	12:00 PM	0	112	24	0	2	12	1	1	6	0	0	0	0
4/25/2024	12:15 PM	0	123	30	0	1	12	0	0	6	0	0	0	0
4/25/2024	12:30 PM	0	118	30	0	1	14	0	0	4	0	0	0	0
4/25/2024	12:45 PM	0	119	33	0	1	7	1	0	3	0	0	0	0
4/25/2024	1:00 PM	0	131	37	0	2	8	1	0	2	0	0	0	0
4/25/2024	1:15 PM	0	152	40	0	1	8	1	1	2	0	0	0	0
4/25/2024	1:30 PM	0	165	39	0	1	8	1	1	1	0	0	0	0
4/25/2024	1:45 PM	0	151	36	0	2	7	0	1	2	0	0	0	0
4/25/2024	2:00 PM	1	117	32	1	2	7	0	1	2	0	0	0	0
4/25/2024	2:15 PM	1	92	26	1	2	8	0	0	3	0	0	0	0
4/25/2024	2:30 PM	1	80	24	1	2	6	0	0	3	0	0	0	0
4/25/2024	2:45 PM	1	72	20	1	1	8	0	0	2	0	0	0	0
4/25/2024	3:00 PM	0	82	21	0	1	6	0	0	1	0	0	0	0
4/25/2024	3:15 PM	0	79	18	0	1	4	0	0	0	0	0	0	0
4/25/2024	3:30 PM	0	82	16	0	1	3	0	0	1	0	0	0	0
4/25/2024	3:45 PM	0	88	16	0	1	1	0	0	1	0	0	0	0
4/25/2024	4:00 PM	0	93	20	0	0	1	0	0	1	0	0	0	0
4/25/2024	4:15 PM	0	93	26	1	0	1	0	0	2	0	0	0	0
4/25/2024	4:30 PM	0	96	27	1	0	1	0	0	1	0	0	0	0
4/25/2024	4:45 PM	0	85	30	1	1	0	0	0	1	0	0	0	0
4/25/2024	5:00 PM	0	73	26	2	1	0	0	0	2	0	0	0	0
4/25/2024	5:15 PM	1	67	19	1	1	0	0	0	1	0	0	0	0
4/25/2024	5:30 PM	1	60	20	1	1	0	0	0	2	0	0	0	0
4/25/2024	5:45 PM	1	61	16	1	0	0	0	0	3	0	0	0	0
4/25/2024	6:00 PM	1	60	15	0	0	0	0	0	2	0	0	0	0
4/25/2024	6:15 PM	0	44	13	0	0	0	0	0	2	0	0	0	0
4/25/2024	6:30 PM	0	25	8	0	0	0	0	0	1	0	0	0	0
4/25/2024	6:45 PM	0	13	6	0	0	0	0	0	0	0	0	0	0
4/25/2024	7:00 PM	0	0	0	0	0	0	0	0	0	0	0	0	0
4/25/2024	7:15 PM	0	0	0	0	0	0	0	0	0	0	0	0	0
4/25/2024	7:30 PM	0	0	0	0	0	0	0	0	0	0	0	0	0
4/25/2024	7:45 PM	0	0	0	0	0	0	0	0	0	0	0	0	0
4/25/2024	8:00 PM	0	0	0	0	0	0	0	0	0	0	0	0	0
4/25/2024	8:15 PM	0	0	0	0	0	0	0	0	0	0	0	0	0
4/25/2024	8:30 PM	0	0	0	0	0	0	0	0	0	0	0	0	0
4/25/2024	8:45 PM	0	0	0	0	0	0	0	0	0	0	0	0	0
4/25/2024	9:00 PM	0	0	0	0	0	0	0	0	0	0	0	0	0
4/25/2024	9:15 PM	0	0	0	0	0	0	0	0	0	0	0	0	0
4/25/2024	9:30 PM	0	0	0	0	0	0	0	0	0	0	0	0	0
4/25/2024	9:45 PM	0	0	0	0	0	0	0	0	0	0	0	0	0
4/25/2024	10:00 PM	0	0	0	0	0	0	0	0	0	0	0	0	0
4/25/2024	10:15 PM	0	0	0	0	0	0	0	0	0	0	0	0	0
4/25/2024	10:30 PM	0	0	0	0	0	0	0	0	0	0	0	0	0
4/25/2024	10:45 PM	0	0	0	0	0	0	0	0	0	0	0	0	0
4/25/2024	11:00 PM	0	0	0	0	0	0	0	0	0	0	0	0	0
4/25/2024	11:15 PM	0	0	0	0	0	0	0	0	0	0	0	0	0
4/25/2024	11:30 PM	0	0	0	0	0	0	0	0	0	0	0	0	0
4/25/2024	11:45 PM	0	0	0	0	0	0	0	0	0	0	0	0	0

SB
File Name:
Start Date: 4/23/2024
Start Time: 0
Site Code: 61
Station ID: 1
Location 1: I-20 N/Bound On-Ramp, north of Bush River Rd
Location 2:

Date	Time	1	2	3	4	5	6	7	8	9	10	11	12	13
4/23/2024	12:00 AM	0	0	0	0	0	0	0	0	0	0	0	0	0
4/23/2024	12:15 AM	0	0	0	0	0	0	0	0	0	0	0	0	0
4/23/2024	12:30 AM	0	0	0	0	0	0	0	0	0	0	0	0	0
4/23/2024	12:45 AM	0	0	0	0	0	0	0	0	0	0	0	0	0
4/23/2024	1:00 AM	0	0	0	0	0	0	0	0	0	0	0	0	0
4/23/2024	1:15 AM	0	0	0	0	0	0	0	0	0	0	0	0	0
4/23/2024	1:30 AM	0	0	0	0	0	0	0	0	0	0	0	0	0
4/23/2024	1:45 AM	0	0	0	0	0	0	0	0	0	0	0	0	0
4/23/2024	2:00 AM	0	0	0	0	0	0	0	0	0	0	0	0	0
4/23/2024	2:15 AM	0	0	0	0	0	0	0	0	0	0	0	0	0
4/23/2024	2:30 AM	0	0	0	0	0	0	0	0	0	0	0	0	0
4/23/2024	2:45 AM	0	0	0	0	0	0	0	0	0	0	0	0	0
4/23/2024	3:00 AM	0	0	0	0	0	0	0	0	0	0	0	0	0
4/23/2024	3:15 AM	0	0	0	0	0	0	0	0	0	0	0	0	0
4/23/2024	3:30 AM	0	0	0	0	0	0	0	0	0	0	0	0	0
4/23/2024	3:45 AM	0	0	0	0	0	0	0	0	0	0	0	0	0
4/23/2024	4:00 AM	0	0	0	0	0	0	0	0	0	0	0	0	0
4/23/2024	4:15 AM	0	0	0	0	0	0	0	0	0	0	0	0	0
4/23/2024	4:30 AM	0	0	0	0	0	0	0	0	0	0	0	0	0
4/23/2024	4:45 AM	0	0	0	0	0	0	0	0	0	0	0	0	0
4/23/2024	5:00 AM	0	0	0	0	0	0	0	0	0	0	0	0	0
4/23/2024	5:15 AM	0	0	0	0	0	0	0	0	0	0	0	0	0
4/23/2024	5:30 AM	0	0	0	0	0	0	0	0	0	0	0	0	0
4/23/2024	5:45 AM	0	0	0	0	0	0	0	0	0	0	0	0	0
4/23/2024	6:00 AM	0	0	0	0	0	0	0	0	0	0	0	0	0
4/23/2024	6:15 AM	0	0	0	0	0	0	0	0	0	0	0	0	0
4/23/2024	6:30 AM	0	0	0	0	0	0	0	0	0	0	0	0	0
4/23/2024	6:45 AM	0	0	0	0	0	0	0	0	0	0	0	0	0
4/23/2024	7:00 AM	0	0	0	0	0	0	0	0	0	0	0	0	0
4/23/2024	7:15 AM	0	0	0	0	0	0	0	0	0	0	0	0	0
4/23/2024	7:30 AM	0	0	0	0	0	0	0	0	0	0	0	0	0
4/23/2024	7:45 AM	0	0	0	0	0	0	0	0	0	0	0	0	0
4/23/2024	8:00 AM	0	0	0	0	0	0	0	0	0	0	0	0	0
4/23/2024	8:15 AM	0	0	0	0	0	0	0	0	0	0	0	0	0
4/23/2024	8:30 AM	0	0	0	0	0	0	0	0	0	0	0	0	0
4/23/2024	8:45 AM	0	0	0	0	0	0	0	0	0	0	0	0	0
4/23/2024	9:00 AM	0	0	0	0	0	0	0	0	0	0	0	0	0
4/23/2024	9:15 AM	0	0	0	0	0	0	0	0	0	0	0	0	0
4/23/2024	9:30 AM	0	0	0	0	0	0	0	0	0	0	0	0	0
4/23/2024	9:45 AM	0	0	0	0	0	0	0	0	0	0	0	0	0
4/23/2024	10:00 AM	0	0	0	0	0	0	0	0	0	0	0	0	0
4/23/2024	10:15 AM	0	0	0	0	0	0	0	0	0	0	0	0	0
4/23/2024	10:30 AM	0	0	0	0	0	0	0	0	0	0	0	0	0
4/23/2024	10:45 AM	0	0	0	0	0	0	0	0	0	0	0	0	0
4/23/2024	11:00 AM	0	0	0	0	0	0	0	0	0	0	0	0	0
4/23/2024	11:15 AM	0	0	0	0	0	0	0	0	0	0	0	0	0
4/23/2024	11:30 AM	0	0	0	0	0	0	0	0	0	0	0	0	0
4/23/2024	11:45 AM	0	0	0	0	0	0	0	0	0	0	0	0	0
4/23/2024	12:00 PM	0	0	0	0	0	0	0	0	0	0	0	0	0
4/23/2024	12:15 PM	0	0	0	0	0	0	0	0	0	0	0	0	0
4/23/2024	12:30 PM	0	0	0	0	0	0	0	0	0	0	0	0	0
4/23/2024	12:45 PM	0	0	0	0	0	0	0	0	0	0	0	0	0
4/23/2024	1:00 PM	0	0	0	0	0	0	0	0	0	0	0	0	0
4/23/2024	1:15 PM	0	0	0	0	0	0	0	0	0	0	0	0	0
4/23/2024	1:30 PM	0	0	0	0	0	0	0	0	0	0	0	0	0
4/23/2024	1:45 PM	0	0	0	0	0	0	0	0	0	0	0	0	0
4/23/2024	2:00 PM	0	0	0	0	0	0	0	0	0	0	0	0	0
4/23/2024	2:15 PM	0	0	0	0	0	0	0	0	0	0	0	0	0
4/23/2024	2:30 PM	0	0	0	0	0	0	0	0	0	0	0	0	0
4/23/2024	2:45 PM	0	0	0	0	0	0	0	0	0	0	0	0	0
4/23/2024	3:00 PM	0	0	0	0	0	0	0	0	0	0	0	0	0
4/23/2024	3:15 PM	0	0	0	0	0	0	0	0	0	0	0	0	0
4/23/2024	3:30 PM	0	0	0	0	0	0	0	0	0	0	0	0	0
4/23/2024	3:45 PM	0	0	0	0	0	0	0	0	0	0	0	0	0
4/23/2024	4:00 PM	0	0	0	0	0	0	0	0	0	0	0	0	0
4/23/2024	4:15 PM	0	0	0	0	0	0	0	0	0	0	0	0	0
4/23/2024	4:30 PM	0	0	0	0	0	0	0	0	0	0	0	0	0
4/23/2024	4:45 PM	0	0	0	0	0	0	0	0	0	0	0	0	0
4/23/2024	5:00 PM	0	0	0	0	0	0	0	0	0	0	0	0	0
4/23/2024	5:15 PM	0	0	0	0	0	0	0	0	0	0	0	0	0
4/23/2024	5:30 PM	0	0	0	0	0	0	0	0	0	0	0	0	0
4/23/2024	5:45 PM	0	0	0	0	0	0	0	0	0	0	0	0	0
4/23/2024	6:00 PM	0	0	0	0	0	0	0	0	0	0	0	0	0
4/23/2024	6:15 PM	0	0	0	0	0	0	0	0	0	0	0	0	0
4/23/2024	6:30 PM	0	0	0	0	0	0	0	0	0	0	0	0	0
4/23/2024	6:45 PM	0	0	0	0	0	0	0	0	0	0	0	0	0
4/23/2024	7:00 PM	0	0	0	0	0	0	0	0	0	0	0	0	0
4/23/2024	7:15 PM	0	0	0	0	0	0	0	0	0	0	0	0	0
4/23/2024	7:30 PM	0	0	0	0	0	0	0	0	0	0	0	0	0
4/23/2024	7:45 PM	0	0	0	0	0	0	0	0	0	0	0	0	0
4/23/2024	8:00 PM	0	0	0	0	0	0	0	0	0	0	0	0	0
4/23/2024	8:15 PM	0	0	0	0	0	0	0	0	0	0	0	0	0
4/23/2024	8:30 PM	0	0	0	0	0	0	0	0	0	0	0	0	0
4/23/2024	8:45 PM	0	0	0	0	0	0	0	0	0	0	0	0	0
4/23/2024	9:00 PM	0	0	0	0	0	0	0	0	0	0	0	0	0
4/23/2024	9:15 PM	0	0	0	0	0	0	0	0	0	0	0	0	0
4/23/2024	9:30 PM	0	0	0	0	0	0	0	0	0	0	0	0	0
4/23/2024	9:45 PM	0	0	0	0	0	0	0	0	0	0	0	0	0
4/23/2024	10:00 PM	0	0	0	0	0	0	0	0	0	0	0	0	0
4/23/2024	10:15 PM	0	0	0	0	0	0	0	0	0	0	0	0	0
4/23/2024	10:30 PM	0	0	0	0	0	0	0	0	0	0	0	0	0
4/23/2024	10:45 PM	0	0	0	0	0	0	0	0	0	0	0	0	0
4/23/2024	11:00 PM	0	0	0	0	0	0	0	0	0	0	0	0	0
4/23/2024	11:15 PM	0	0	0	0	0	0	0	0	0	0	0	0	0
4/23/2024	11:30 PM	0	0	0	0	0	0	0	0	0	0	0	0	0
4/23/2024	11:45 PM	0	0	0	0	0	0	0	0	0	0	0	0	0

4/24/2024	12:00 AM	0	0	0	0	0	0	0	0	0	0	0	0	0
4/24/2024	12:15 AM	0	0	0	0	0	0	0	0	0	0	0	0	0
4/24/2024	12:30 AM	0	0	0	0	0	0	0	0	0	0	0	0	0
4/24/2024	12:45 AM	0	0	0	0	0	0	0	0	0	0	0	0	0
4/24/2024	1:00 AM	0	0	0	0	0	0	0	0	0	0	0	0	0
4/24/2024	1:15 AM	0	0	0	0	0	0	0	0	0	0	0	0	0
4/24/2024	1:30 AM	0	0	0	0	0	0	0	0	0	0	0	0	0
4/24/2024	1:45 AM	0	0	0	0	0	0	0	0	0	0	0	0	0
4/24/2024	2:00 AM	0	0	0	0	0	0	0	0	0	0	0	0	0
4/24/2024	2:15 AM	0	0	0	0	0	0	0	0	0	0	0	0	0
4/24/2024	2:30 AM	0	0	0	0	0	0	0	0	0	0	0	0	0
4/24/2024	2:45 AM	0	0	0	0	0	0	0	0	0	0	0	0	0
4/24/2024	3:00 AM	0	0	0	0	0	0	0	0	0	0	0	0	0
4/24/2024	3:15 AM	0	0	0	0	0	0	0	0	0	0	0	0	0
4/24/2024	3:30 AM	0	0	0	0	0	0	0	0	0	0	0	0	0
4/24/2024	3:45 AM	0	0	0	0	0	0	0	0	0	0	0	0	0
4/24/2024	4:00 AM	0	0	0	0	0	0	0	0	0	0	0	0	0
4/24/2024	4:15 AM	0	0	0	0	0	0	0	0	0	0	0	0	0
4/24/2024	4:30 AM	0	0	0	0	0	0	0	0	0	0	0	0	0
4/24/2024	4:45 AM	0	0	0	0	0	0	0	0	0	0	0	0	0
4/24/2024	5:00 AM	0	0	0	0	0	0	0	0	0	0	0	0	0
4/24/2024	5:15 AM	0	0	0	0	0	0	0	0	0	0	0	0	0
4/24/2024	5:30 AM	0	0	0	0	0	0	0	0	0	0	0	0	0
4/24/2024	5:45 AM	0	0	0	0	0	0	0	0	0	0	0	0	0
4/24/2024	6:00 AM	0	0	0	0	0	0	0	0	0	0	0	0	0
4/24/2024	6:15 AM	0	0	0	0	0	0	0	0	0	0	0	0	0
4/24/2024	6:30 AM	0	0	0	0	0	0	0	0	0	0	0	0	0
4/24/2024	6:45 AM	0	0	0	0	0	0	0	0	0	0	0	0	0
4/24/2024	7:00 AM	0	0	0	0	0	0	0	0	0	0	0	0	0
4/24/2024	7:15 AM	0	0	0	0	0	0	0	0	0	0	0	0	0
4/24/2024	7:30 AM	0	0	0	0	0	0	0	0	0	0	0	0	0
4/24/2024	7:45 AM	0	0	0	0	0	0	0	0	0	0	0	0	0
4/24/2024	8:00 AM	0	0	0	0	0	0	0	0	0	0	0	0	0
4/24/2024	8:15 AM	0	0	0	0	0	0	0	0	0	0	0	0	0
4/24/2024	8:30 AM	0	0	0	0	0	0	0	0	0	0	0	0	0
4/24/2024	8:45 AM	0	0	0	0	0	0	0	0	0	0	0	0	0
4/24/2024	9:00 AM	0	0	0	0	0	0	0	0	0	0	0	0	0
4/24/2024	9:15 AM	0	0	0	0	0	0	0	0	0	0	0	0	0
4/24/2024	9:30 AM	0	0	0	0	0	0	0	0	0	0	0	0	0
4/24/2024	9:45 AM	0	0	0	0	0	0	0	0	0	0	0	0	0
4/24/2024	10:00 AM	0	0	0	0	0	0	0	0	0	0	0	0	0
4/24/2024	10:15 AM	0	0	0	0	0	0	0	0	0	0	0	0	0
4/24/2024	10:30 AM	0	0	0	0	0	0	0	0	0	0	0	0	0
4/24/2024	10:45 AM	0	0	0	0	0	0	0	0	0	0	0	0	0
4/24/2024	11:00 AM	0	0	0	0	0	0	0	0	0	0	0	0	0
4/24/2024	11:15 AM	0	0	0	0	0	0	0	0	0	0	0	0	0
4/24/2024	11:30 AM	0	0	0	0	0	0	0	0	0	0	0	0	0
4/24/2024	11:45 AM	0	0	0	0	0	0	0	0	0	0	0	0	0
4/24/2024	12:00 PM	0	0	0	0	0	0	0	0	0	0	0	0	0
4/24/2024	12:15 PM	0	0	0	0	0	0	0	0	0	0	0	0	0
4/24/2024	12:30 PM	0	0	0	0	0	0	0	0	0	0	0	0	0
4/24/2024	12:45 PM	0	0	0	0	0	0	0	0	0	0	0	0	0
4/24/2024	1:00 PM	0	0	0	0	0	0	0	0	0	0	0	0	0
4/24/2024	1:15 PM	0	0	0	0	0	0	0	0	0	0	0	0	0
4/24/2024	1:30 PM	0	0	0	0	0	0	0	0	0	0	0	0	0
4/24/2024	1:45 PM	0	0	0	0	0	0	0	0	0	0	0	0	0
4/24/2024	2:00 PM	0	0	0	0	0	0	0	0	0	0	0	0	0
4/24/2024	2:15 PM	0	0	0	0	0	0	0	0	0	0	0	0	0
4/24/2024	2:30 PM	0	0	0	0	0	0	0	0	0	0	0	0	0
4/24/2024	2:45 PM	0	0	0	0	0	0	0	0	0	0	0	0	0
4/24/2024	3:00 PM	0	0	0	0	0	0	0	0	0	0	0	0	0
4/24/2024	3:15 PM	0	0	0	0	0	0	0	0	0	0	0	0	0
4/24/2024	3:30 PM	0	0	0	0	0	0	0	0	0	0	0	0	0
4/24/2024	3:45 PM	0	0	0	0	0	0	0	0	0	0	0	0	0
4/24/2024	4:00 PM	0	0	0	0	0	0	0	0	0	0	0	0	0
4/24/2024	4:15 PM	0	0	0	0	0	0	0	0	0	0	0	0	0
4/24/2024	4:30 PM	0	0	0	0	0	0	0	0	0	0	0	0	0
4/24/2024	4:45 PM	0	0	0	0	0	0	0	0	0	0	0	0	0
4/24/2024	5:00 PM	0	0	0	0	0	0	0	0	0	0	0	0	0
4/24/2024	5:15 PM	0	0	0	0	0	0	0	0	0	0	0	0	0
4/24/2024	5:30 PM	0	0	0	0	0	0	0	0	0	0	0	0	0
4/24/2024	5:45 PM	0	0	0	0	0	0	0	0	0	0	0	0	0
4/24/2024	6:00 PM	0	0	0	0	0	0	0	0	0	0	0	0	0
4/24/2024	6:15 PM	0	0	0	0	0	0	0	0	0	0	0	0	0
4/24/2024	6:30 PM	0	0	0	0	0	0	0	0	0	0	0	0	0
4/24/2024	6:45 PM	0	0	0	0	0	0	0	0	0	0	0	0	0
4/24/2024	7:00 PM	0	0	0	0	0	0	0	0	0	0	0	0	0
4/24/2024	7:15 PM	0	0	0	0	0	0	0	0	0	0	0	0	0
4/24/2024	7:30 PM	0	0	0	0	0	0	0	0	0	0	0	0	0
4/24/2024	7:45 PM	0	0	0	0	0	0	0	0	0	0	0	0	0
4/24/2024	8:00 PM	0	0	0	0	0	0	0	0	0	0	0	0	0
4/24/2024	8:15 PM	0	0	0	0	0	0	0	0	0	0	0	0	0
4/24/2024	8:30 PM	0	0	0	0	0	0	0	0	0	0	0	0	0
4/24/2024	8:45 PM	0	0	0	0	0	0	0	0	0	0	0	0	0
4/24/2024	9:00 PM	0	0	0	0	0	0	0	0	0	0	0	0	0
4/24/2024	9:15 PM	0	0	0	0	0	0	0	0	0	0	0	0	0
4/24/2024	9:30 PM	0	0	0	0	0	0	0	0	0	0	0	0	0
4/24/2024	9:45 PM	0	0	0	0	0	0	0	0	0	0	0	0	0
4/24/2024	10:00 PM	0	0	0	0	0	0	0	0	0	0	0	0	0
4/24/2024	10:15 PM	0	0	0	0	0	0	0	0	0	0	0	0	0
4/24/2024	10:30 PM	0	0	0	0	0	0	0	0	0	0	0	0	0
4/24/2024	10:45 PM	0	0	0	0	0	0	0	0	0	0	0	0	0
4/24/2024	11:00 PM	0	0	0	0	0	0	0	0	0	0	0	0	0
4/24/2024	11:15 PM	0	0	0	0	0	0	0	0	0	0	0	0	0
4/24/2024	11:30 PM	0	0	0	0	0	0	0	0	0	0	0	0	0
4/24/2024	11:45 PM	0	0	0	0	0	0	0	0	0	0	0	0	0

4/25/2024	12:00 AM	0	0	0	0	0	0	0	0	0	0	0	0	0
4/25/2024	12:15 AM	0	0	0	0	0	0	0	0	0	0	0	0	0
4/25/2024	12:30 AM	0	0	0	0	0	0	0	0	0	0	0	0	0
4/25/2024	12:45 AM	0	0	0	0	0	0	0	0	0	0	0	0	0
4/25/2024	1:00 AM	0	0	0	0	0	0	0	0	0	0	0	0	0
4/25/2024	1:15 AM	0	0	0	0	0	0	0	0	0	0	0	0	0
4/25/2024	1:30 AM	0	0	0	0	0	0	0	0	0	0	0	0	0
4/25/2024	1:45 AM	0	0	0	0	0	0	0	0	0	0	0	0	0
4/25/2024	2:00 AM	0	0	0	0	0	0	0	0	0	0	0	0	0
4/25/2024	2:15 AM	0	0	0	0	0	0	0	0	0	0	0	0	0
4/25/2024	2:30 AM	0	0	0	0	0	0	0	0	0	0	0	0	0
4/25/2024	2:45 AM	0	0	0	0	0	0	0	0	0	0	0	0	0
4/25/2024	3:00 AM	0	0	0	0	0	0	0	0	0	0	0	0	0
4/25/2024	3:15 AM	0	0	0	0	0	0	0	0	0	0	0	0	0
4/25/2024	3:30 AM	0	0	0	0	0	0	0	0	0	0	0	0	0
4/25/2024	3:45 AM	0	0	0	0	0	0	0	0	0	0	0	0	0
4/25/2024	4:00 AM	0	0	0	0	0	0	0	0	0	0	0	0	0
4/25/2024	4:15 AM	0	0	0	0	0	0	0	0	0	0	0	0	0
4/25/2024	4:30 AM	0	0	0	0	0	0	0	0	0	0	0	0	0
4/25/2024	4:45 AM	0	0	0	0	0	0	0	0	0	0	0	0	0
4/25/2024	5:00 AM	0	0	0	0	0	0	0	0	0	0	0	0	0
4/25/2024	5:15 AM	0	0	0	0	0	0	0	0	0	0	0	0	0
4/25/2024	5:30 AM	0	0	0	0	0	0	0	0	0	0	0	0	0
4/25/2024	5:45 AM	0	0	0	0	0	0	0	0	0	0	0	0	0
4/25/2024	6:00 AM	0	0	0	0	0	0	0	0	0	0	0	0	0
4/25/2024	6:15 AM	0	0	0	0	0	0	0	0	0	0	0	0	0
4/25/2024	6:30 AM	0	0	0	0	0	0	0	0	0	0	0	0	0
4/25/2024	6:45 AM	0	0	0	0	0	0	0	0	0	0	0	0	0
4/25/2024	7:00 AM	0	0	0	0	0	0	0	0	0	0	0	0	0
4/25/2024	7:15 AM	0	0	0	0	0	0	0	0	0	0	0	0	0
4/25/2024	7:30 AM	0	0	0	0	0	0	0	0	0	0	0	0	0
4/25/2024	7:45 AM	0	0	0	0	0	0	0	0	0	0	0	0	0
4/25/2024	8:00 AM	0	0	0	0	0	0	0	0	0	0	0	0	0
4/25/2024	8:15 AM	0	0	0	0	0	0	0	0	0	0	0	0	0
4/25/2024	8:30 AM	0	0	0	0	0	0	0	0	0	0	0	0	0
4/25/2024	8:45 AM	0	0	0	0	0	0	0	0	0	0	0	0	0
4/25/2024	9:00 AM	0	0	0	0	0	0	0	0	0	0	0	0	0
4/25/2024	9:15 AM	0	0	0	0	0	0	0	0	0	0	0	0	0
4/25/2024	9:30 AM	0	0	0	0	0	0	0	0	0	0	0	0	0
4/25/2024	9:45 AM	0	0	0	0	0	0	0	0	0	0	0	0	0
4/25/2024	10:00 AM	0	0	0	0	0	0	0	0	0	0	0	0	0
4/25/2024	10:15 AM	0	0	0	0	0	0	0	0	0	0	0	0	0
4/25/2024	10:30 AM	0	0	0	0	0	0	0	0	0	0	0	0	0
4/25/2024	10:45 AM	0	0	0	0	0	0	0	0	0	0	0	0	0
4/25/2024	11:00 AM	0	0	0	0	0	0	0	0	0	0	0	0	0
4/25/2024	11:15 AM	0	0	0	0	0	0	0	0	0	0	0	0	0
4/25/2024	11:30 AM	0	0	0	0	0	0	0	0	0	0	0	0	0
4/25/2024	11:45 AM	0	0	0	0	0	0	0	0	0	0	0	0	0
4/25/2024	12:00 PM	0	0	0	0	0	0	0	0	0	0	0	0	0
4/25/2024	12:15 PM	0	0	0	0	0	0	0	0	0	0	0	0	0
4/25/2024	12:30 PM	0	0	0	0	0	0	0	0	0	0	0	0	0
4/25/2024	12:45 PM	0	0	0	0	0	0	0	0	0	0	0	0	0
4/25/2024	1:00 PM	0	0	0	0	0	0	0	0	0	0	0	0	0
4/25/2024	1:15 PM	0	0	0	0	0	0	0	0	0	0	0	0	0
4/25/2024	1:30 PM	0	0	0	0	0	0	0	0	0	0	0	0	0
4/25/2024	1:45 PM	0	0	0	0	0	0	0	0	0	0	0	0	0
4/25/2024	2:00 PM	0	0	0	0	0	0	0	0	0	0	0	0	0
4/25/2024	2:15 PM	0	0	0	0	0	0	0	0	0	0	0	0	0
4/25/2024	2:30 PM	0	0	0	0	0	0	0	0	0	0	0	0	0
4/25/2024	2:45 PM	0	0	0	0	0	0	0	0	0	0	0	0	0
4/25/2024	3:00 PM	0	0	0	0	0	0	0	0	0	0	0	0	0
4/25/2024	3:15 PM	0	0	0	0	0	0	0	0	0	0	0	0	0
4/25/2024	3:30 PM	0	0	0	0	0	0	0	0	0	0	0	0	0
4/25/2024	3:45 PM	0	0	0	0	0	0	0	0	0	0	0	0	0
4/25/2024	4:00 PM	0	0	0	0	0	0	0	0	0	0	0	0	0
4/25/2024	4:15 PM	0	0	0	0	0	0	0	0	0	0	0	0	0
4/25/2024	4:30 PM	0	0	0	0	0	0	0	0	0	0	0	0	0
4/25/2024	4:45 PM	0	0	0	0	0	0	0	0	0	0	0	0	0
4/25/2024	5:00 PM	0	0	0	0	0	0	0	0	0	0	0	0	0
4/25/2024	5:15 PM	0	0	0	0	0	0	0	0	0	0	0	0	0
4/25/2024	5:30 PM	0	0	0	0	0	0	0	0	0	0	0	0	0
4/25/2024	5:45 PM	0	0	0	0	0	0	0	0	0	0	0	0	0
4/25/2024	6:00 PM	0	0	0	0	0	0	0	0	0	0	0	0	0
4/25/2024	6:15 PM	0	0	0	0	0	0	0	0	0	0	0	0	0
4/25/2024	6:30 PM	0	0	0	0	0	0	0	0	0	0	0	0	0
4/25/2024	6:45 PM	0	0	0	0	0	0	0	0	0	0	0	0	0
4/25/2024	7:00 PM	0	0	0	0	0	0	0	0	0	0	0	0	0
4/25/2024	7:15 PM	0	0	0	0	0	0	0	0	0	0	0	0	0
4/25/2024	7:30 PM	0	0	0	0	0	0	0	0	0	0	0	0	0
4/25/2024	7:45 PM	0	0	0	0	0	0	0	0	0	0	0	0	0
4/25/2024	8:00 PM	0	0	0	0	0	0	0	0	0	0	0	0	0
4/25/2024	8:15 PM	0	0	0	0	0	0	0	0	0	0	0	0	0
4/25/2024	8:30 PM	0	0	0	0	0	0	0	0	0	0	0	0	0
4/25/2024	8:45 PM	0	0	0	0	0	0	0	0	0	0	0	0	0
4/25/2024	9:00 PM	0	0	0	0	0	0	0	0	0	0	0	0	0
4/25/2024	9:15 PM	0	0	0	0	0	0	0	0	0	0	0	0	0
4/25/2024	9:30 PM	0	0	0	0	0	0	0	0	0	0	0	0	0
4/25/2024	9:45 PM	0	0	0	0	0	0	0	0	0	0	0	0	0
4/25/2024	10:00 PM	0	0	0	0	0	0	0	0	0	0	0	0	0
4/25/2024	10:15 PM	0	0	0	0	0	0	0	0	0	0	0	0	0
4/25/2024	10:30 PM	0	0	0	0	0	0	0	0	0	0	0	0	0
4/25/2024	10:45 PM	0	0	0	0	0	0	0	0	0	0	0	0	0
4/25/2024	11:00 PM	0	0	0	0	0	0	0	0	0	0	0	0	0
4/25/2024	11:15 PM	0	0	0	0	0	0	0	0	0	0	0	0	0
4/25/2024	11:30 PM	0	0	0	0	0	0	0	0	0	0	0	0	0
4/25/2024	11:45 PM	0	0	0	0	0	0	0	0	0	0	0	0	0

Bi-Directional Class Count || SB WB 15min

Columbia, SC

Marr Traffic DATA COLLECTION
www.marrtraffic.com

Site 62
I-20 S/Bound On-Ramp,
south of Bush River Rd

Date
Tuesday, April 23, 2024

Lat/Long
34.030904°, -81.122954°

Weather
Fair
58°F

Click here for Detailed Weather

Click here for Map

0000 - 2400 (Weekday 24h Session) (04-23-2024)
SB WB 15min

	Southbound (Movement 62.1)													15min	60min
Time	1	2	3	4	5	6	7	8	9	10	11	12	13	Total	Total
0000 - 0015	0	0	0	0	0	0	0	0	0	0	0	0	0	**0**	
0015 - 0030	0	0	0	0	0	0	0	0	0	0	0	0	0	**0**	
0030 - 0045	0	0	0	0	0	0	0	0	0	0	0	0	0	**0**	
0045 - 0100	0	0	0	0	0	0	0	0	0	0	0	0	0	**0**	**0**
0100 - 0115	0	0	0	0	0	0	0	0	0	0	0	0	0	**0**	
0115 - 0130	0	0	0	0	0	0	0	0	0	0	0	0	0	**0**	
0130 - 0145	0	0	0	0	0	0	0	0	0	0	0	0	0	**0**	
0145 - 0200	0	0	0	0	0	0	0	0	0	0	0	0	0	**0**	**0**
0200 - 0215	0	0	0	0	0	0	0	0	0	0	0	0	0	**0**	
0215 - 0230	0	0	0	0	0	0	0	0	0	0	0	0	0	**0**	
0230 - 0245	0	0	0	0	0	0	0	0	0	0	0	0	0	**0**	
0245 - 0300	0	0	0	0	0	0	0	0	0	0	0	0	0	**0**	**0**
0300 - 0315	0	0	0	0	0	0	0	0	0	0	0	0	0	**0**	
0315 - 0330	0	0	0	0	0	0	0	0	0	0	0	0	0	**0**	
0330 - 0345	0	0	0	0	0	0	0	0	0	0	0	0	0	**0**	
0345 - 0400	0	0	0	0	0	0	0	0	0	0	0	0	0	**0**	**0**
0400 - 0415	0	0	0	0	0	0	0	0	0	0	0	0	0	**0**	
0415 - 0430	0	0	0	0	0	0	0	0	0	0	0	0	0	**0**	
0430 - 0445	0	0	0	0	0	0	0	0	0	0	0	0	0	**0**	
0445 - 0500	0	0	0	0	0	0	0	0	0	0	0	0	0	**0**	**0**
0500 - 0515	0	0	0	0	0	0	0	0	0	0	0	0	0	**0**	
0515 - 0530	0	0	0	0	0	0	0	0	0	0	0	0	0	**0**	
0530 - 0545	0	0	0	0	0	0	0	0	0	0	0	0	0	**0**	
0545 - 0600	0	0	0	0	0	0	0	0	0	0	0	0	0	**0**	**0**
0600 - 0615	0	0	0	0	0	0	0	0	0	0	0	0	0	**0**	
0615 - 0630	0	0	0	0	0	0	0	0	0	0	0	0	0	**0**	
0630 - 0645	0	0	0	0	0	0	0	0	0	0	0	0	0	**0**	
0645 - 0700	0	0	0	0	0	0	0	0	0	0	0	0	0	**0**	**0**
0700 - 0715	0	0	0	0	0	0	0	0	0	0	0	0	0	**0**	
0715 - 0730	0	0	0	0	0	0	0	0	0	0	0	0	0	**0**	
0730 - 0745	0	0	0	0	0	0	0	0	0	0	0	0	0	**0**	
0745 - 0800	0	0	0	0	0	0	0	0	0	0	0	0	0	**0**	**0**
0800 - 0815	0	0	0	0	0	0	0	0	0	0	0	0	0	**0**	
0815 - 0830	0	0	0	0	0	0	0	0	0	0	0	0	0	**0**	
0830 - 0845	0	0	0	0	0	0	0	0	0	0	0	0	0	**0**	
0845 - 0900	0	0	0	0	0	0	0	0	0	0	0	0	0	**0**	**0**
0900 - 0915	0	0	0	0	0	0	0	0	0	0	0	0	0	**0**	
0915 - 0930	0	0	0	0	0	0	0	0	0	0	0	0	0	**0**	
0930 - 0945	0	0	0	0	0	0	0	0	0	0	0	0	0	**0**	
0945 - 1000	0	0	0	0	0	0	0	0	0	0	0	0	0	**0**	**0**
1000 - 1015	0	0	0	0	0	0	0	0	0	0	0	0	0	**0**	
1015 - 1030	0	0	0	0	0	0	0	0	0	0	0	0	0	**0**	
1030 - 1045	0	0	0	0	0	0	0	0	0	0	0	0	0	**0**	
1045 - 1100	0	0	0	0	0	0	0	0	0	0	0	0	0	**0**	**0**
1100 - 1115	0	0	0	0	0	0	0	0	0	0	0	0	0	**0**	
1115 - 1130	0	0	0	0	0	0	0	0	0	0	0	0	0	**0**	
1130 - 1145	0	0	0	0	0	0	0	0	0	0	0	0	0	**0**	
1145 - 1200	0	0	0	0	0	0	0	0	0	0	0	0	0	**0**	**0**
1200 - 1215	0	0	0	0	0	0	0	0	0	0	0	0	0	**0**	
1215 - 1230	0	0	0	0	0	0	0	0	0	0	0	0	0	**0**	
1230 - 1245	0	0	0	0	0	0	0	0	0	0	0	0	0	**0**	
1245 - 1300	0	0	0	0	0	0	0	0	0	0	0	0	0	**0**	**0**
1300 - 1315	0	0	0	0	0	0	0	0	0	0	0	0	0	**0**	
1315 - 1330	0	0	0	0	0	0	0	0	0	0	0	0	0	**0**	
1330 - 1345	0	0	0	0	0	0	0	0	0	0	0	0	0	**0**	
1345 - 1400	0	0	0	0	0	0	0	0	0	0	0	0	0	**0**	**0**
1400 - 1415	0	0	0	0	0	0	0	0	0	0	0	0	0	**0**	
1415 - 1430	0	0	0	0	0	0	0	0	0	0	0	0	0	**0**	
1430 - 1445	0	0	0	0	0	0	0	0	0	0	0	0	0	**0**	
1445 - 1500	0	0	0	0	0	0	0	0	0	0	0	0	0	**0**	**0**
1500 - 1515	0	0	0	0	0	0	0	0	0	0	0	0	0	**0**	
1515 - 1530	0	0	0	0	0	0	0	0	0	0	0	0	0	**0**	
1530 - 1545	0	0	0	0	0	0	0	0	0	0	0	0	0	**0**	
1545 - 1600	0	0	0	0	0	0	0	0	0	0	0	0	0	**0**	**0**
1600 - 1615	0	0	0	0	0	0	0	0	0	0	0	0	0	**0**	
1615 - 1630	0	0	0	0	0	0	0	0	0	0	0	0	0	**0**	
1630 - 1645	0	0	0	0	0	0	0	0	0	0	0	0	0	**0**	
1645 - 1700	0	0	0	0	0	0	0	0	0	0	0	0	0	**0**	**0**
1700 - 1715	0	0	0	0	0	0	0	0	0	0	0	0	0	**0**	
1715 - 1730	0	0	0	0	0	0	0	0	0	0	0	0	0	**0**	
1730 - 1745	0	0	0	0	0	0	0	0	0	0	0	0	0	**0**	
1745 - 1800	0	0	0	0	0	0	0	0	0	0	0	0	0	**0**	**0**
1800 - 1815	0	0	0	0	0	0	0	0	0	0	0	0	0	**0**	
1815 - 1830	0	0	0	0	0	0	0	0	0	0	0	0	0	**0**	
1830 - 1845	0	0	0	0	0	0	0	0	0	0	0	0	0	**0**	
1845 - 1900	0	0	0	0	0	0	0	0	0	0	0	0	0	**0**	**0**
1900 - 1915	0	51	4	0	0	0	0	0	0	0	0	0	0	**55**	
1915 - 1930	0	57	6	0	0	0	0	0	0	0	0	0	0	**63**	
1930 - 1945	0	46	8	0	2	0	0	0	0	0	0	0	0	**56**	
1945 - 2000	1	40	9	0	0	0	0	0	0	0	0	0	0	**50**	**224**
2000 - 2015	0	48	8	0	0	1	0	0	0	0	0	0	0	**57**	
2015 - 2030	0	61	9	0	0	0	0	0	1	0	0	0	0	**71**	
2030 - 2045	0	41	5	0	0	1	0	0	0	0	0	0	0	**47**	
2045 - 2100	0	60	6	0	1	0	0	0	0	0	0	0	0	**67**	**242**
2100 - 2115	0	40	6	0	0	0	0	0	0	0	0	0	0	**46**	
2115 - 2130	0	29	5	0	0	0	0	0	0	0	0	0	0	**34**	
2130 - 2145	0	23	4	0	2	0	0	0	1	0	0	0	0	**30**	
2145 - 2200	0	18	4	0	0	0	0	0	0	0	0	0	0	**22**	**132**
2200 - 2215	0	15	3	0	0	0	0	0	1	0	0	0	0	**19**	
2215 - 2230	0	12	4	0	0	0	0	0	1	0	0	0	0	**17**	
2230 - 2245	0	12	3	0	0	0	0	0	0	0	0	0	0	**15**	
2245 - 2300	0	12	3	0	0	0	0	0	0	0	0	0	0	**15**	**66**
2300 - 2315	0	12	3	0	0	0	0	0	0	0	0	0	0	**15**	
2315 - 2330	0	6	0	0	0	0	0	0	0	0	0	0	0	**6**	
2330 - 2345	0	8	2	0	0	0	0	0	1	0	0	0	0	**11**	
2345 - 0000	0	4	1	0	0	0	0	0	0	0	0	0	0	**5**	**37**

Session Total	1	595	93	0	5	2	0	0	5	0	0	0	0	**701**
Session Average	0.01	6.20	0.97	0.00	0.05	0.02	0.00	0.00	0.05	0.00	0.00	0.00	0.00	**7.30**
Session Percentage	0.14	84.88	13.27	0.00	0.71	0.29	0.00	0.00	0.71	0.00	0.00	0.00	0.00	

AM Peak Hour	-	-	-	-	-	-	-	-	-	-	-	-	-	-
AM Peak Volume	0	0	0	0	0	0	0	0	0	0	0	0	0	**0**

Noon Peak Hour	-	-	-	-	-	-	-	-	-	-	-	-	-	-
Noon Peak Volume	0	0	0	0	0	0	0	0	0	0	0	0	0	**0**

PM Peak Hour	1900 - 2000	1930 - 2030	1930 - 2030	-	1845 - 1945	1945 - 2045	-	-	1930 - 2030	-	-	-	-	**1930 - 2030**
PM Peak Volume	1	195	34	0	2	2	0	0	1	0	0	0	0	**234**

Site 62
I-20 S/Bound On-Ramp,
south of Bush River Rd

Date
Wednesday, April 24, 2024

Lat/Long
34.030904°, -81.122954°

Weather
Fair
66°F

Click here for Detailed Weather

0000 - 2400 (Weekday 24h Session) (04-24-2024)
SB WB 15min

	Southbound (Movement 62.1)													15min	60min
Time	1	2	3	4	5	6	7	8	9	10	11	12	13	Total	Total
0000 - 0015	0	5	1	0	0	0	0	0	0	0	0	0	0	**6**	
0015 - 0030	0	7	3	0	1	0	0	0	1	0	0	0	0	**12**	
0030 - 0045	0	3	0	0	0	0	0	0	1	0	0	0	0	**4**	
0045 - 0100	0	4	1	0	0	0	0	0	1	0	0	0	0	**6**	**28**
0100 - 0115	0	2	0	0	0	0	0	0	0	0	0	0	0	**2**	
0115 - 0130	0	4	1	0	0	0	0	0	0	0	0	0	0	**5**	
0130 - 0145	0	3	0	0	0	0	0	0	0	0	0	0	0	**3**	
0145 - 0200	0	6	1	0	0	0	0	0	1	0	0	0	0	**8**	**18**
0200 - 0215	0	1	0	0	0	0	0	0	0	0	0	0	0	**1**	
0215 - 0230	0	2	0	0	0	0	0	0	0	0	0	0	0	**2**	
0230 - 0245	0	2	0	0	0	0	0	0	0	0	0	0	0	**2**	
0245 - 0300	0	2	0	0	0	0	0	0	0	0	0	0	0	**2**	**7**
0300 - 0315	0	3	0	0	0	0	0	0	1	0	0	0	0	**4**	
0315 - 0330	0	2	0	0	0	0	0	0	1	0	0	0	0	**3**	
0330 - 0345	0	4	1	0	0	0	0	0	0	0	0	0	0	**5**	
0345 - 0400	0	2	1	0	0	0	0	0	0	0	0	0	0	**3**	**15**
0400 - 0415	0	3	0	0	0	1	0	0	0	0	0	0	0	**4**	
0415 - 0430	0	3	2	0	0	0	0	0	0	0	0	0	0	**5**	
0430 - 0445	0	4	0	0	1	0	0	0	1	0	0	0	0	**6**	
0445 - 0500	0	7	0	0	0	0	0	0	0	0	0	0	0	**7**	**22**
0500 - 0515	0	5	1	0	0	0	0	0	1	0	0	0	0	**7**	
0515 - 0530	0	10	3	0	0	0	0	0	0	0	0	0	0	**13**	
0530 - 0545	0	12	3	0	0	0	0	0	1	0	0	0	0	**16**	
0545 - 0600	0	16	3	0	0	0	0	0	0	0	0	0	0	**19**	**55**
0600 - 0615	0	21	5	0	0	1	0	0	0	0	0	0	0	**27**	
0615 - 0630	0	26	4	0	0	0	0	0	0	0	0	0	0	**30**	
0630 - 0645	0	31	4	0	3	0	0	0	0	0	0	0	0	**38**	
0645 - 0700	0	49	11	0	0	0	0	0	0	0	0	0	0	**60**	**155**
0700 - 0715	0	47	10	0	2	0	0	0	2	0	0	0	0	**61**	
0715 - 0730	0	73	16	0	1	0	0	0	0	0	0	0	0	**90**	
0730 - 0745	0	70	15	0	2	0	0	0	2	0	0	0	0	**89**	
0745 - 0800	0	72	12	0	0	0	0	1	1	0	0	0	0	**86**	**326**
0800 - 0815	0	53	7	0	0	0	0	0	2	0	0	0	0	**62**	
0815 - 0830	0	50	8	0	2	0	0	0	0	0	0	0	0	**60**	
0830 - 0845	0	59	8	0	0	0	0	0	0	0	0	0	0	**67**	
0845 - 0900	0	60	12	0	1	0	0	0	0	0	0	0	0	**73**	**262**
0900 - 0915	0	47	6	0	1	0	0	0	0	0	0	0	0	**54**	
0915 - 0930	0	42	7	0	0	2	0	1	0	0	0	0	0	**52**	
0930 - 0945	0	47	12	0	2	0	0	0	2	0	0	0	0	**63**	
0945 - 1000	0	55	10	0	1	0	0	0	1	0	0	0	0	**67**	**236**
1000 - 1015	0	45	9	0	2	0	0	0	2	0	0	0	0	**58**	
1015 - 1030	0	43	14	0	2	1	0	0	1	0	0	0	0	**61**	
1030 - 1045	0	51	12	0	1	0	0	0	0	0	0	0	0	**64**	
1045 - 1100	0	61	8	0	0	0	0	0	0	0	0	0	0	**69**	**252**
1100 - 1115	0	42	11	0	1	0	0	0	0	0	0	0	0	**54**	
1115 - 1130	0	51	4	0	0	0	0	0	0	0	0	0	0	**55**	
1130 - 1145	0	54	16	0	0	0	0	0	0	0	0	0	0	**70**	
1145 - 1200	0	54	9	0	1	0	0	0	1	0	0	0	0	**65**	**244**
1200 - 1215	0	59	12	0	1	0	0	0	1	0	0	0	0	**73**	
1215 - 1230	0	61	17	0	0	0	0	1	0	0	0	0	0	**79**	
1230 - 1245	0	79	18	0	3	0	0	0	0	0	0	0	0	**100**	
1245 - 1300	0	86	17	0	4	0	0	0	0	0	0	0	0	**107**	**359**
1300 - 1315	0	78	16	0	2	1	0	0	4	0	0	0	0	**101**	
1315 - 1330	0	81	15	0	1	0	0	2	0	0	0	0	0	**99**	
1330 - 1345	1	57	17	0	3	0	0	1	3	0	0	0	0	**82**	
1345 - 1400	0	73	16	0	1	1	0	0	1	0	0	0	0	**92**	**374**
1400 - 1415	0	87	18	0	0	1	0	0	1	0	0	0	0	**107**	
1415 - 1430	0	108	31	0	1	0	0	0	1	0	0	0	0	**141**	
1430 - 1445	0	82	19	0	4	0	0	1	1	0	0	0	0	**107**	
1445 - 1500	0	67	18	0	0	0	0	0	1	0	0	0	0	**86**	**441**
1500 - 1515	0	100	27	0	0	0	0	0	1	0	0	0	0	**128**	
1515 - 1530	0	98	21	0	1	0	0	1	2	0	0	0	0	**123**	
1530 - 1545	0	121	15	0	1	0	0	0	2	0	0	0	0	**139**	
1545 - 1600	0	107	21	0	0	0	0	0	0	0	0	0	0	**128**	**518**
1600 - 1615	0	116	27	0	0	0	0	0	1	0	0	0	0	**144**	
1615 - 1630	0	107	14	0	1	1	0	0	0	0	0	0	0	**123**	
1630 - 1645	0	153	30	0	3	0	0	1	0	0	0	0	0	**187**	
1645 - 1700	0	129	26	1	0	1	0	1	1	0	0	0	0	**159**	**613**
1700 - 1715	0	194	30	0	1	0	0	0	2	0	0	0	0	**227**	
1715 - 1730	0	153	30	0	0	0	0	0	1	0	0	0	0	**184**	
1730 - 1745	0	145	22	0	1	0	0	1	0	0	0	0	0	**169**	
1745 - 1800	0	118	25	0	3	1	0	0	1	0	0	0	0	**148**	**728**
1800 - 1815	2	76	13	0	0	0	0	2	0	0	0	0	0	**93**	
1815 - 1830	1	71	12	0	0	1	0	0	0	0	0	0	0	**85**	
1830 - 1845	0	66	7	0	1	0	0	0	1	0	0	0	0	**75**	
1845 - 1900	0	71	9	0	0	1	0	0	0	0	0	0	0	**81**	**334**
1900 - 1915	0	66	10	0	0	1	0	0	0	0	0	0	0	**77**	
1915 - 1930	0	56	11	1	1	1	0	0	0	0	0	0	0	**70**	
1930 - 1945	0	54	8	0	0	0	0	0	0	0	0	0	0	**62**	
1945 - 2000	0	39	7	0	1	0	0	0	0	0	0	0	0	**47**	**256**
2000 - 2015	0	51	4	0	0	1	0	0	1	0	0	0	0	**57**	
2015 - 2030	0	55	8	0	0	0	0	0	1	0	0	0	0	**64**	
2030 - 2045	0	62	7	0	1	0	0	0	0	0	0	0	0	**70**	
2045 - 2100	0	69	9	0	0	0	0	0	0	0	0	0	0	**78**	**269**
2100 - 2115	0	59	10	0	0	0	0	0	0	0	0	0	0	**69**	
2115 - 2130	0	24	3	0	0	0	0	0	0	0	0	0	0	**27**	
2130 - 2145	0	17	3	0	0	0	0	0	0	0	0	0	0	**20**	
2145 - 2200	0	26	3	0	0	0	0	0	0	0	0	0	0	**29**	**145**
2200 - 2215	0	28	7	0	0	0	0	0	0	0	0	0	0	**35**	
2215 - 2230	0	17	3	0	0	0	0	0	0	0	0	0	0	**20**	
2230 - 2245	0	10	2	0	0	0	0	0	0	0	0	0	0	**12**	
2245 - 2300	0	17	4	0	0	0	0	0	0	0	0	0	0	**21**	**88**
2300 - 2315	0	14	3	0	0	0	0	0	1	0	0	0	0	**18**	
2315 - 2330	0	12	3	0	0	0	0	0	0	0	0	0	0	**15**	
2330 - 2345	0	3	1	0	0	0	0	0	0	0	0	0	0	**4**	
2345 - 0000	0	5	1	0	0	0	0	0	0	0	0	0	0	**6**	**43**

Session Total	4	4742	901	2	59	16	0	13	51	0	0	0	0	**5788**
Session Average	0.04	49.40	9.39	0.02	0.61	0.17	0.00	0.14	0.53	0.00	0.00	0.00	0.00	**60.29**
Session Percentage	0.07	81.93	15.57	0.03	1.02	0.28	0.00	0.22	0.88	0.00	0.00	0.00	0.00	

AM Peak Hour	-	0715 - 0815	0700 - 0800	-	0930 - 1030	0830 - 0930	-	0700 - 0800	0930 - 1030	-	-	-	-	**0715 - 0815**
AM Peak Volume	0	268	53	0	7	2	0	1	6	0	0	0	0	**327**

Noon Peak Hour	1245 - 1345	1445 - 1545	1415 - 1515	-	1230 - 1330	1300 - 1400	-	1245 - 1345	1300 - 1400	-	-	-	-	**1445 - 1545**
Noon Peak Volume	1	386	95	0	10	2	0	3	8	0	0	0	0	**476**

PM Peak Hour	1730 - 1830	1630 - 1730	1630 - 1730	1600 - 1700	1615 - 1715	1815 - 1915	-	1715 - 1815	1500 - 1600	-	-	-	-	**1630 - 1730**
PM Peak Volume	3	629	116	1	5	3	0	3	5	0	0	0	0	**757**

Site 62
I-20 S/Bound On-Ramp,
south of Bush River Rd

Date
Thursday, April 25, 2024

Lat/Long
34.030904°, -81.122954°

Weather
Fair
67°F

Click here for Detailed Weather

0000 - 2400 (Weekday 24h Session) (04-25-2024)
SB WB 15min

	Southbound (Movement 62.1)													15min	60min
TIME	1	2	3	4	5	6	7	8	9	10	11	12	13	Total	Total
0000 - 0015	0	9	2	0	0	0	0	0	0	0	0	0	0	**11**	
0015 - 0030	0	8	0	0	0	0	0	0	0	0	0	0	0	**8**	
0030 - 0045	0	7	0	0	0	0	0	0	0	0	0	0	0	**7**	
0045 - 0100	0	1	0	0	0	0	0	0	0	0	0	0	0	**1**	**27**
0100 - 0115	0	2	0	0	0	0	0	0	1	0	0	0	0	**3**	
0115 - 0130	0	1	0	0	0	0	0	0	0	0	0	0	0	**1**	
0130 - 0145	0	3	1	0	0	0	0	0	0	0	0	0	0	**4**	
0145 - 0200	0	4	2	0	0	0	0	0	0	0	0	0	0	**6**	**14**
0200 - 0215	0	2	0	0	0	0	0	0	0	0	0	0	0	**2**	
0215 - 0230	0	0	0	0	0	0	0	0	0	0	0	0	0	**0**	
0230 - 0245	0	0	0	0	0	0	0	0	2	0	0	0	0	**2**	
0245 - 0300	0	3	1	0	0	0	0	0	0	0	0	0	0	**4**	**8**
0300 - 0315	0	3	1	0	0	0	0	0	0	0	0	0	0	**4**	
0315 - 0330	0	5	1	0	0	0	0	0	0	0	0	0	0	**6**	
0330 - 0345	0	0	0	0	0	0	0	0	0	0	0	0	0	**0**	
0345 - 0400	0	4	0	0	0	0	0	0	1	0	0	0	0	**5**	**15**
0400 - 0415	0	3	0	0	0	0	0	0	0	0	0	0	0	**3**	
0415 - 0430	0	2	0	0	0	0	0	0	0	0	0	0	0	**2**	
0430 - 0445	0	6	2	0	0	0	0	0	0	0	0	0	0	**8**	
0445 - 0500	0	4	1	0	0	0	0	0	0	0	0	0	0	**5**	**18**
0500 - 0515	0	5	2	0	0	0	0	0	0	0	0	0	0	**7**	
0515 - 0530	0	9	3	0	0	0	0	0	0	0	0	0	0	**12**	
0530 - 0545	0	15	4	0	0	0	0	0	1	0	0	0	0	**20**	
0545 - 0600	0	7	2	0	0	0	0	0	0	0	0	0	0	**9**	**48**
0600 - 0615	0	23	4	0	0	0	0	0	0	0	0	0	0	**27**	
0615 - 0630	0	23	4	0	1	0	0	0	2	0	0	0	0	**30**	
0630 - 0645	0	35	7	0	0	0	0	0	0	0	0	0	0	**42**	
0645 - 0700	0	45	10	0	0	0	0	0	0	0	0	0	0	**55**	**154**
0700 - 0715	0	52	11	0	0	0	0	0	0	0	0	0	0	**63**	
0715 - 0730	0	85	13	0	1	0	0	0	0	0	0	0	0	**99**	
0730 - 0745	0	71	15	0	1	0	0	0	0	0	0	0	0	**87**	
0745 - 0800	0	83	12	0	3	0	0	0	1	0	0	0	0	**99**	**348**
0800 - 0815	0	56	11	0	2	0	0	1	0	0	0	0	0	**70**	
0815 - 0830	0	50	7	0	0	0	0	0	1	0	0	0	0	**58**	
0830 - 0845	0	59	8	0	0	0	0	0	0	0	0	0	0	**67**	
0845 - 0900	1	51	9	0	2	1	0	0	0	0	0	0	0	**64**	**259**
0900 - 0915	0	43	7	0	1	1	0	0	0	0	0	0	0	**52**	
0915 - 0930	0	32	13	0	0	1	0	0	1	0	0	0	0	**47**	
0930 - 0945	0	42	11	0	2	0	0	0	0	0	0	0	0	**55**	
0945 - 1000	0	42	7	0	0	0	0	0	0	0	0	0	0	**49**	**203**
1000 - 1015	0	51	13	0	1	0	0	0	0	0	0	0	0	**65**	
1015 - 1030	0	50	11	0	0	0	0	0	1	0	0	0	0	**62**	
1030 - 1045	0	52	9	0	1	1	0	0	1	0	0	0	0	**64**	
1045 - 1100	0	52	13	0	1	1	0	0	0	0	0	0	0	**67**	**258**
1100 - 1115	0	54	11	0	4	1	0	0	1	0	0	0	0	**71**	
1115 - 1130	0	59	9	0	3	0	0	0	1	0	0	0	0	**72**	
1130 - 1145	0	61	14	0	1	1	0	0	1	0	0	0	0	**78**	
1145 - 1200	0	52	23	0	0	1	1	0	1	0	0	0	0	**78**	**299**
1200 - 1215	0	72	15	0	0	1	0	1	0	0	0	0	0	**89**	
1215 - 1230	0	72	18	0	1	1	0	1	1	0	0	0	0	**94**	
1230 - 1245	0	63	11	0	0	0	0	1	0	0	0	0	0	**75**	
1245 - 1300	0	75	17	0	0	1	0	0	0	0	0	0	0	**93**	**351**
1300 - 1315	0	88	17	0	1	2	0	1	0	0	0	0	0	**109**	
1315 - 1330	0	87	20	0	0	1	0	0	3	0	0	0	0	**111**	
1330 - 1345	0	96	24	0	0	0	0	0	0	0	0	0	0	**120**	
1345 - 1400	0	93	26	0	2	0	0	0	1	0	0	0	0	**122**	**462**
1400 - 1415	0	105	23	0	2	1	1	0	0	0	0	0	0	**132**	
1415 - 1430	0	99	20	0	0	0	0	1	1	0	0	0	0	**121**	
1430 - 1445	0	85	10	0	0	0	1	0	2	0	0	0	0	**98**	
1445 - 1500	0	99	19	0	2	0	0	0	0	0	0	0	0	**120**	**471**
1500 - 1515	1	78	15	1	0	0	0	0	0	0	0	0	0	**95**	
1515 - 1530	0	105	21	0	2	0	2	0	0	0	0	0	0	**130**	
1530 - 1545	0	110	16	0	0	1	1	1	1	0	0	0	0	**130**	
1545 - 1600	0	122	21	0	2	1	0	0	0	0	0	0	0	**146**	**501**
1600 - 1615	0	151	23	0	1	1	0	0	1	0	0	0	0	**177**	
1615 - 1630	0	120	21	0	2	1	0	0	0	0	0	0	0	**144**	
1630 - 1645	0	132	24	0	3	0	0	0	0	0	0	0	0	**159**	
1645 - 1700	0	129	32	0	1	1	0	0	1	0	0	0	0	**164**	**644**
1700 - 1715	0	189	22	0	0	0	0	0	1	0	0	0	0	**212**	
1715 - 1730	0	177	32	0	0	0	0	0	1	0	0	0	0	**210**	
1730 - 1745	0	133	19	0	1	0	0	0	0	0	0	0	0	**153**	
1745 - 1800	0	107	14	0	0	0	0	0	1	0	0	0	0	**122**	**697**
1800 - 1815	0	82	13	0	0	1	0	0	1	0	0	0	0	**97**	
1815 - 1830	2	88	16	0	0	0	0	0	0	0	0	0	0	**106**	
1830 - 1845	0	67	15	0	2	0	0	1	1	0	0	0	0	**86**	
1845 - 1900	0	74	12	0	1	0	0	0	1	0	0	0	0	**88**	**377**
1900 - 1915	0	0	0	0	0	0	0	0	0	0	0	0	0	**0**	
1915 - 1930	0	0	0	0	0	0	0	0	0	0	0	0	0	**0**	
1930 - 1945	0	0	0	0	0	0	0	0	0	0	0	0	0	**0**	
1945 - 2000	0	0	0	0	0	0	0	0	0	0	0	0	0	**0**	**0**
2000 - 2015	0	0	0	0	0	0	0	0	0	0	0	0	0	**0**	
2015 - 2030	0	0	0	0	0	0	0	0	0	0	0	0	0	**0**	
2030 - 2045	0	0	0	0	0	0	0	0	0	0	0	0	0	**0**	
2045 - 2100	0	0	0	0	0	0	0	0	0	0	0	0	0	**0**	**0**
2100 - 2115	0	0	0	0	0	0	0	0	0	0	0	0	0	**0**	
2115 - 2130	0	0	0	0	0	0	0	0	0	0	0	0	0	**0**	
2130 - 2145	0	0	0	0	0	0	0	0	0	0	0	0	0	**0**	
2145 - 2200	0	0	0	0	0	0	0	0	0	0	0	0	0	**0**	**0**
2200 - 2215	0	0	0	0	0	0	0	0	0	0	0	0	0	**0**	
2215 - 2230	0	0	0	0	0	0	0	0	0	0	0	0	0	**0**	
2230 - 2245	0	0	0	0	0	0	0	0	0	0	0	0	0	**0**	
2245 - 2300	0	0	0	0	0	0	0	0	0	0	0	0	0	**0**	**0**
2300 - 2315	0	0	0	0	0	0	0	0	0	0	0	0	0	**0**	
2315 - 2330	0	0	0	0	0	0	0	0	0	0	0	0	0	**0**	
2330 - 2345	0	0	0	0	0	0	0	0	0	0	0	0	0	**0**	
2345 - 0000	0	0	0	0	0	0	0	0	0	0	0	0	0	**0**	**0**

Session Total	4	4224	810	1	47	21	6	8	33	0	0	0	0	**5154**
Session Average	0.04	44.00	8.44	0.01	0.49	0.22	0.06	0.08	0.34	0.00	0.00	0.00	0.00	**53.69**
Session Percentage	0.08	81.96	15.72	0.02	0.91	0.41	0.12	0.16	0.64	0.00	0.00	0.00	0.00	

AM Peak Hour	0800 - 0900	0715 - 0815	0700 - 0800	-	0715 - 0815	0830 - 0930	-	0715 - 0815	0530 - 0630	-	-	-	-	**0715 - 0815**
AM Peak Hour Volume	1	295	51	0	7	3	0	1	3	0	0	0	0	**355**

Noon Peak Hour	1415 - 1515	1330 - 1430	1315 - 1415	1415 - 1515	1030 - 1130	1130 - 1230	1430 - 1530	1145 - 1245	1100 - 1200	-	-	-	-	**1330 - 1430**
Noon Peak Hour Volume	1	393	93	1	9	4	3	3	4	0	0	0	0	**495**

PM Peak Hour	1730 - 1830	1645 - 1745	1630 - 1730	1500 - 1600	1545 - 1645	1530 - 1630	1500 - 1600	1500 - 1600	1630 - 1730	-	-	-	-	**1630 - 1730**
PM Peak Hour Volume	2	628	110	1	8	4	3	1	3	0	0	0	0	**745**

Bi-Directional Class Count || SB WB Average 15min

Columbia, SC

Marr Traffic DATA COLLECTION
www.marrtraffic.com

Site 62
I-20 S/Bound On-Ramp,
south of Bush River Rd

Date
Tuesday, April 23, 2024

Lat/Long
34.030904°, -81.122954°

Weather
Fair
58°F

0000 - 2400 (Weekday 24h Session) (All Dates)
SB WB Average 15min

	SB WB Average 15min													15min	60min
Time	1	2	3	4	5	6	7	8	9	10	11	12	13	Total	Total
0000 - 0015	0	5	1	0	0	0	0	0	0	0	0	0	0	**6**	
0015 - 0030	0	5	1	0	0	0	0	0	0	0	0	0	0	**7**	
0030 - 0045	0	3	0	0	0	0	0	0	0	0	0	0	0	**4**	
0045 - 0100	0	2	0	0	0	0	0	0	0	0	0	0	0	**2**	**18**
0100 - 0115	0	1	0	0	0	0	0	0	0	0	0	0	0	**2**	
0115 - 0130	0	2	0	0	0	0	0	0	0	0	0	0	0	**2**	
0130 - 0145	0	2	0	0	0	0	0	0	0	0	0	0	0	**2**	
0145 - 0200	0	3	1	0	0	0	0	0	0	0	0	0	0	**5**	**11**
0200 - 0215	0	1	0	0	0	0	0	0	0	0	0	0	0	**1**	
0215 - 0230	0	1	0	0	0	0	0	0	0	0	0	0	0	**1**	
0230 - 0245	0	1	0	0	0	0	0	0	1	0	0	0	0	**1**	
0245 - 0300	0	2	0	0	0	0	0	0	0	0	0	0	0	**2**	**5**
0300 - 0315	0	2	0	0	0	0	0	0	0	0	0	0	0	**3**	
0315 - 0330	0	2	0	0	0	0	0	0	0	0	0	0	0	**3**	
0330 - 0345	0	1	0	0	0	0	0	0	0	0	0	0	0	**2**	
0345 - 0400	0	2	0	0	0	0	0	0	0	0	0	0	0	**3**	**10**
0400 - 0415	0	2	0	0	0	0	0	0	0	0	0	0	0	**2**	
0415 - 0430	0	2	1	0	0	0	0	0	0	0	0	0	0	**2**	
0430 - 0445	0	3	1	0	0	0	0	0	0	0	0	0	0	**5**	
0445 - 0500	0	4	0	0	0	0	0	0	0	0	0	0	0	**4**	**13**
0500 - 0515	0	3	1	0	0	0	0	0	0	0	0	0	0	**5**	
0515 - 0530	0	6	2	0	0	0	0	0	0	0	0	0	0	**8**	
0530 - 0545	0	9	2	0	0	0	0	0	1	0	0	0	0	**12**	
0545 - 0600	0	8	2	0	0	0	0	0	0	0	0	0	0	**9**	**34**
0600 - 0615	0	15	3	0	0	0	0	0	0	0	0	0	0	**18**	
0615 - 0630	0	16	3	0	0	0	0	0	1	0	0	0	0	**20**	
0630 - 0645	0	22	4	0	1	0	0	0	0	0	0	0	0	**27**	
0645 - 0700	0	31	7	0	0	0	0	0	0	0	0	0	0	**38**	**103**
0700 - 0715	0	33	7	0	1	0	0	0	1	0	0	0	0	**41**	
0715 - 0730	0	53	10	0	1	0	0	0	0	0	0	0	0	**63**	
0730 - 0745	0	47	10	0	1	0	0	0	1	0	0	0	0	**59**	
0745 - 0800	0	52	8	0	1	0	0	0	1	0	0	0	0	**62**	**225**
0800 - 0815	0	36	6	0	1	0	0	0	1	0	0	0	0	**44**	
0815 - 0830	0	33	5	0	1	0	0	0	0	0	0	0	0	**39**	
0830 - 0845	0	39	5	0	0	0	0	0	0	0	0	0	0	**45**	
0845 - 0900	0	37	7	0	1	0	0	0	0	0	0	0	0	**46**	**174**
0900 - 0915	0	30	4	0	1	0	0	0	0	0	0	0	0	**35**	
0915 - 0930	0	25	7	0	0	1	0	0	0	0	0	0	0	**33**	
0930 - 0945	0	30	8	0	1	0	0	0	1	0	0	0	0	**39**	
0945 - 1000	0	32	6	0	0	0	0	0	0	0	0	0	0	**39**	**146**
1000 - 1015	0	32	7	0	1	0	0	0	1	0	0	0	0	**41**	
1015 - 1030	0	31	8	0	1	0	0	0	1	0	0	0	0	**41**	
1030 - 1045	0	34	7	0	1	0	0	0	0	0	0	0	0	**43**	
1045 - 1100	0	38	7	0	0	0	0	0	0	0	0	0	0	**45**	**170**
1100 - 1115	0	32	7	0	2	0	0	0	0	0	0	0	0	**42**	
1115 - 1130	0	37	4	0	1	0	0	0	0	0	0	0	0	**42**	
1130 - 1145	0	38	10	0	0	0	0	0	0	0	0	0	0	**49**	
1145 - 1200	0	35	11	0	0	0	0	0	1	0	0	0	0	**48**	**181**
1200 - 1215	0	44	9	0	0	0	0	0	0	0	0	0	0	**54**	
1215 - 1230	0	44	12	0	0	0	0	1	0	0	0	0	0	**58**	
1230 - 1245	0	47	10	0	1	0	0	0	0	0	0	0	0	**58**	
1245 - 1300	0	54	11	0	1	0	0	0	0	0	0	0	0	**67**	**237**
1300 - 1315	0	55	11	0	1	1	0	0	1	0	0	0	0	**70**	
1315 - 1330	0	56	12	0	0	0	0	1	1	0	0	0	0	**70**	
1330 - 1345	0	51	14	0	1	0	0	0	1	0	0	0	0	**67**	
1345 - 1400	0	55	14	0	1	0	0	0	1	0	0	0	0	**71**	**279**
1400 - 1415	0	64	14	0	1	1	0	0	0	0	0	0	0	**80**	
1415 - 1430	0	69	17	0	0	0	0	0	1	0	0	0	0	**87**	
1430 - 1445	0	56	10	0	1	0	0	0	1	0	0	0	0	**68**	
1445 - 1500	0	55	12	0	1	0	0	0	0	0	0	0	0	**69**	**304**
1500 - 1515	0	59	14	0	0	0	0	0	0	0	0	0	0	**74**	
1515 - 1530	0	68	14	0	1	0	1	0	1	0	0	0	0	**84**	
1530 - 1545	0	77	10	0	0	0	0	0	1	0	0	0	0	**90**	
1545 - 1600	0	76	14	0	1	0	0	0	0	0	0	0	0	**91**	**340**
1600 - 1615	0	89	17	0	0	0	0	0	1	0	0	0	0	**107**	
1615 - 1630	0	76	12	0	1	1	0	0	0	0	0	0	0	**89**	
1630 - 1645	0	95	18	0	2	0	0	0	0	0	0	0	0	**115**	
1645 - 1700	0	86	19	0	0	1	0	0	1	0	0	0	0	**108**	**419**
1700 - 1715	0	128	17	0	0	0	0	0	1	0	0	0	0	**146**	
1715 - 1730	0	110	21	0	0	0	0	0	1	0	0	0	0	**131**	
1730 - 1745	0	93	14	0	1	0	0	0	0	0	0	0	0	**107**	
1745 - 1800	0	75	13	0	1	0	0	0	1	0	0	0	0	**90**	**475**
1800 - 1815	1	53	9	0	0	0	0	1	0	0	0	0	0	**63**	
1815 - 1830	1	53	9	0	0	0	0	0	0	0	0	0	0	**64**	
1830 - 1845	0	44	7	0	1	0	0	0	1	0	0	0	0	**54**	
1845 - 1900	0	48	7	0	0	0	0	0	0	0	0	0	0	**56**	**237**
1900 - 1915	0	39	5	0	0	0	0	0	0	0	0	0	0	**44**	
1915 - 1930	0	38	6	0	0	0	0	0	0	0	0	0	0	**44**	
1930 - 1945	0	33	5	0	1	0	0	0	0	0	0	0	0	**39**	
1945 - 2000	0	26	5	0	0	0	0	0	0	0	0	0	0	**32**	**160**
2000 - 2015	0	33	4	0	0	1	0	0	0	0	0	0	0	**38**	
2015 - 2030	0	39	6	0	0	0	0	0	1	0	0	0	0	**45**	
2030 - 2045	0	34	4	0	0	0	0	0	0	0	0	0	0	**39**	
2045 - 2100	0	43	5	0	0	0	0	0	0	0	0	0	0	**48**	**170**
2100 - 2115	0	33	5	0	0	0	0	0	0	0	0	0	0	**38**	
2115 - 2130	0	18	3	0	0	0	0	0	0	0	0	0	0	**20**	
2130 - 2145	0	13	2	0	1	0	0	0	0	0	0	0	0	**17**	
2145 - 2200	0	15	2	0	0	0	0	0	0	0	0	0	0	**17**	**92**
2200 - 2215	0	14	3	0	0	0	0	0	0	0	0	0	0	**18**	
2215 - 2230	0	10	2	0	0	0	0	0	0	0	0	0	0	**12**	
2230 - 2245	0	7	2	0	0	0	0	0	0	0	0	0	0	**9**	
2245 - 2300	0	10	2	0	0	0	0	0	0	0	0	0	0	**12**	**51**
2300 - 2315	0	9	2	0	0	0	0	0	0	0	0	0	0	**11**	
2315 - 2330	0	6	1	0	0	0	0	0	0	0	0	0	0	**7**	
2330 - 2345	0	4	1	0	0	0	0	0	0	0	0	0	0	**5**	
2345 - 0000	0	3	1	0	0	0	0	0	0	0	0	0	0	**4**	**27**

Session Total	3	3187	601	1	37	13	2	7	30	0	0	0	0	**3881**
Session Average	0.03	33.20	6.26	0.01	0.39	0.14	0.02	0.07	0.31	0.00	0.00	0.00	0.00	**40.43**
Session Percentage	0.08	82.12	15.49	0.03	0.95	0.33	0.05	0.18	0.76	0.00	0.00	0.00	0.00	

AM Peak Hour	0800 - 0900	0715 - 0815	0700 - 0800	-	0700 - 0800	0830 - 0930	-	0715 - 0815	0730 - 0830	-	-	-	-	**0715 - 0815**
AM Peak Volume	0	188	35	0	3	2	0	1	2	0	0	0	0	**227**

Noon Peak Hour	1245 - 1345	1445 - 1545	1330 - 1430	1415 - 1515	1030 - 1130	1215 - 1315	1430 - 1530	1145 - 1245	1300 - 1400	-	-	-	-	**1445 - 1545**
Noon Peak Volume	0	259	58	0	4	2	1	1	4	0	0	0	0	**317**

PM Peak Hour	1730 - 1830	1630 - 1730	1630 - 1730	1500 - 1600	1545 - 1645	1530 - 1630	1500 - 1600	1715 - 1815	1515 - 1615	-	-	-	-	**1630 - 1730**
PM Peak Volume	2	419	75	0	4	2	1	1	2	0	0	0	0	**501**

Bi-Directional Class Count || Volume Summary 15min

Columbia, SC

Marr Traffic DATA COLLECTION

www.marrtraffic.com

Site 62

I-20 S/Bound On-Ramp,
south of Bush River Rd

Date

Tuesday, April 23, 2024

Lat/Long

34.030904°, -81.122954°

Weather

Fair
58°F

Click here for Detailed Weather

0000 - 2400 (Weekday 24h Session) (04-23-2024)

Volume Summary 15min

TIME	Volume Summary 15min NB	SB	15min Total	60min Total
0000 - 0015	0	0	**0**	
0015 - 0030	0	0	**0**	
0030 - 0045	0	0	**0**	
0045 - 0100	0	0	**0**	**0**
0100 - 0115	0	0	**0**	
0115 - 0130	0	0	**0**	
0130 - 0145	0	0	**0**	
0145 - 0200	0	0	**0**	**0**
0200 - 0215	0	0	**0**	
0215 - 0230	0	0	**0**	
0230 - 0245	0	0	**0**	
0245 - 0300	0	0	**0**	**0**
0300 - 0315	0	0	**0**	
0315 - 0330	0	0	**0**	
0330 - 0345	0	0	**0**	
0345 - 0400	0	0	**0**	**0**
0400 - 0415	0	0	**0**	
0415 - 0430	0	0	**0**	
0430 - 0445	0	0	**0**	
0445 - 0500	0	0	**0**	**0**
0500 - 0515	0	0	**0**	
0515 - 0530	0	0	**0**	
0530 - 0545	0	0	**0**	
0545 - 0600	0	0	**0**	**0**
0600 - 0615	0	0	**0**	
0615 - 0630	0	0	**0**	
0630 - 0645	0	0	**0**	
0645 - 0700	0	0	**0**	**0**
0700 - 0715	0	0	**0**	
0715 - 0730	0	0	**0**	
0730 - 0745	0	0	**0**	
0745 - 0800	0	0	**0**	**0**
0800 - 0815	0	0	**0**	
0815 - 0830	0	0	**0**	
0830 - 0845	0	0	**0**	
0845 - 0900	0	0	**0**	**0**
0900 - 0915	0	0	**0**	
0915 - 0930	0	0	**0**	
0930 - 0945	0	0	**0**	
0945 - 1000	0	0	**0**	**0**
1000 - 1015	0	0	**0**	
1015 - 1030	0	0	**0**	
1030 - 1045	0	0	**0**	
1045 - 1100	0	0	**0**	**0**
1100 - 1115	0	0	**0**	
1115 - 1130	0	0	**0**	
1130 - 1145	0	0	**0**	
1145 - 1200	0	0	**0**	**0**

Time	Volume Summary 15min NB	SB	15min Total	60min Total
1200 - 1215	0	0	**0**	
1215 - 1230	0	0	**0**	
1230 - 1245	0	0	**0**	
1245 - 1300	0	0	**0**	**0**
1300 - 1315	0	0	**0**	
1315 - 1330	0	0	**0**	
1330 - 1345	0	0	**0**	
1345 - 1400	0	0	**0**	**0**
1400 - 1415	0	0	**0**	
1415 - 1430	0	0	**0**	
1430 - 1445	0	0	**0**	
1445 - 1500	0	0	**0**	**0**
1500 - 1515	0	0	**0**	
1515 - 1530	0	0	**0**	
1530 - 1545	0	0	**0**	
1545 - 1600	0	0	**0**	**0**
1600 - 1615	0	0	**0**	
1615 - 1630	0	0	**0**	
1630 - 1645	0	0	**0**	
1645 - 1700	0	0	**0**	**0**
1700 - 1715	0	0	**0**	
1715 - 1730	0	0	**0**	
1730 - 1745	0	0	**0**	
1745 - 1800	0	0	**0**	**0**
1800 - 1815	0	0	**0**	
1815 - 1830	0	0	**0**	
1830 - 1845	0	0	**0**	
1845 - 1900	0	0	**0**	**0**
1900 - 1915	0	55	**55**	
1915 - 1930	0	63	**63**	
1930 - 1945	0	56	**56**	
1945 - 2000	0	50	**50**	**224**
2000 - 2015	0	57	**57**	
2015 - 2030	0	71	**71**	
2030 - 2045	0	47	**47**	
2045 - 2100	0	67	**67**	**242**
2100 - 2115	0	46	**46**	
2115 - 2130	0	34	**34**	
2130 - 2145	0	30	**30**	
2145 - 2200	0	22	**22**	**132**
2200 - 2215	0	19	**19**	
2215 - 2230	0	17	**17**	
2230 - 2245	0	15	**15**	
2245 - 2300	0	15	**15**	**66**
2300 - 2315	0	15	**15**	
2315 - 2330	0	6	**6**	
2330 - 2345	0	11	**11**	
2345 - 0000	0	5	**5**	**37**

Session Total	0	701	**701**
Session Average	0.00	7.30	**7.30**
Session Percentage	0.00	100.00	

Site 62

I-20 S/Bound On-Ramp,
south of Bush River Rd

Date

Wednesday, April 24, 2024

Lat/Long

34.030904°, -81.122954°

Weather

Fair
66°F

Click here for Detailed Weather

0000 - 2400 (Weekday 24h Session) (04-24-2024)

Volume Summary 15min

TIME	Volume Summary 15min NB	Volume Summary 15min SB	15min Total	60min Total
0000 - 0015	0	6	**6**	
0015 - 0030	0	12	**12**	
0030 - 0045	0	4	**4**	
0045 - 0100	0	6	**6**	**28**
0100 - 0115	0	2	**2**	
0115 - 0130	0	5	**5**	
0130 - 0145	0	3	**3**	
0145 - 0200	0	8	**8**	**18**
0200 - 0215	0	1	**1**	
0215 - 0230	0	2	**2**	
0230 - 0245	0	2	**2**	
0245 - 0300	0	2	**2**	**7**
0300 - 0315	0	4	**4**	
0315 - 0330	0	3	**3**	
0330 - 0345	0	5	**5**	
0345 - 0400	0	3	**3**	**15**
0400 - 0415	0	4	**4**	
0415 - 0430	0	5	**5**	
0430 - 0445	0	6	**6**	
0445 - 0500	0	7	**7**	**22**
0500 - 0515	0	7	**7**	
0515 - 0530	0	13	**13**	
0530 - 0545	0	16	**16**	
0545 - 0600	0	19	**19**	**55**
0600 - 0615	0	27	**27**	
0615 - 0630	0	30	**30**	
0630 - 0645	0	38	**38**	
0645 - 0700	0	60	**60**	**155**
0700 - 0715	0	61	**61**	
0715 - 0730	0	90	**90**	
0730 - 0745	0	89	**89**	
0745 - 0800	0	86	**86**	**326**
0800 - 0815	0	62	**62**	
0815 - 0830	0	60	**60**	
0830 - 0845	0	67	**67**	
0845 - 0900	0	73	**73**	**262**
0900 - 0915	0	54	**54**	
0915 - 0930	0	52	**52**	
0930 - 0945	0	63	**63**	
0945 - 1000	0	67	**67**	**236**
1000 - 1015	0	58	**58**	
1015 - 1030	0	61	**61**	
1030 - 1045	0	64	**64**	
1045 - 1100	0	69	**69**	**252**
1100 - 1115	0	54	**54**	
1115 - 1130	0	55	**55**	
1130 - 1145	0	70	**70**	
1145 - 1200	0	65	**65**	**244**

Time	Volume Summary 15min NB	Volume Summary 15min SB	15min Total	60min Total
1200 - 1215	0	73	**73**	
1215 - 1230	0	79	**79**	
1230 - 1245	0	100	**100**	
1245 - 1300	0	107	**107**	**359**
1300 - 1315	0	101	**101**	
1315 - 1330	0	99	**99**	
1330 - 1345	0	82	**82**	
1345 - 1400	0	92	**92**	**374**
1400 - 1415	0	107	**107**	
1415 - 1430	0	141	**141**	
1430 - 1445	0	107	**107**	
1445 - 1500	0	86	**86**	**441**
1500 - 1515	0	128	**128**	
1515 - 1530	0	123	**123**	
1530 - 1545	0	139	**139**	
1545 - 1600	0	128	**128**	**518**
1600 - 1615	0	144	**144**	
1615 - 1630	0	123	**123**	
1630 - 1645	0	187	**187**	
1645 - 1700	0	159	**159**	**613**
1700 - 1715	0	227	**227**	
1715 - 1730	0	184	**184**	
1730 - 1745	0	169	**169**	
1745 - 1800	0	148	**148**	**728**
1800 - 1815	0	93	**93**	
1815 - 1830	0	85	**85**	
1830 - 1845	0	75	**75**	
1845 - 1900	0	81	**81**	**334**
1900 - 1915	0	77	**77**	
1915 - 1930	0	70	**70**	
1930 - 1945	0	62	**62**	
1945 - 2000	0	47	**47**	**256**
2000 - 2015	0	57	**57**	
2015 - 2030	0	64	**64**	
2030 - 2045	0	70	**70**	
2045 - 2100	0	78	**78**	**269**
2100 - 2115	0	69	**69**	
2115 - 2130	0	27	**27**	
2130 - 2145	0	20	**20**	
2145 - 2200	0	29	**29**	**145**
2200 - 2215	0	35	**35**	
2215 - 2230	0	20	**20**	
2230 - 2245	0	12	**12**	
2245 - 2300	0	21	**21**	**88**
2300 - 2315	0	18	**18**	
2315 - 2330	0	15	**15**	
2330 - 2345	0	4	**4**	
2345 - 0000	0	6	**6**	**43**

Session Total	0	5788	**5788**
Session Average	0.00	60.29	**60.29**
Session Percentage	0.00	100.00	

Site 62
I-20 S/Bound On-Ramp,
south of Bush River Rd

Date
Thursday, April 25, 2024

Lat/Long
34.030904°, -81.122954°

Weather
Fair
67°F

Click here for Detailed Weather

0000 - 2400 (Weekday 24h Session) (04-25-2024)
Volume Summary 15min

TIME	Volume Summary 15min NB	SB	15min Total	60min Total
0000 - 0015	0	11	**11**	
0015 - 0030	0	8	**8**	
0030 - 0045	0	7	**7**	
0045 - 0100	0	1	**1**	**27**
0100 - 0115	0	3	**3**	
0115 - 0130	0	1	**1**	
0130 - 0145	0	4	**4**	
0145 - 0200	0	6	**6**	**14**
0200 - 0215	0	2	**2**	
0215 - 0230	0	0	**0**	
0230 - 0245	0	2	**2**	
0245 - 0300	0	4	**4**	**8**
0300 - 0315	0	4	**4**	
0315 - 0330	0	6	**6**	
0330 - 0345	0	0	**0**	
0345 - 0400	0	5	**5**	**15**
0400 - 0415	0	3	**3**	
0415 - 0430	0	2	**2**	
0430 - 0445	0	8	**8**	
0445 - 0500	0	5	**5**	**18**
0500 - 0515	0	7	**7**	
0515 - 0530	0	12	**12**	
0530 - 0545	0	20	**20**	
0545 - 0600	0	9	**9**	**48**
0600 - 0615	0	27	**27**	
0615 - 0630	0	30	**30**	
0630 - 0645	0	42	**42**	
0645 - 0700	0	55	**55**	**154**
0700 - 0715	0	63	**63**	
0715 - 0730	0	99	**99**	
0730 - 0745	0	87	**87**	
0745 - 0800	0	99	**99**	**348**
0800 - 0815	0	70	**70**	
0815 - 0830	0	58	**58**	
0830 - 0845	0	67	**67**	
0845 - 0900	0	64	**64**	**259**
0900 - 0915	0	52	**52**	
0915 - 0930	0	47	**47**	
0930 - 0945	0	55	**55**	
0945 - 1000	0	49	**49**	**203**
1000 - 1015	0	65	**65**	
1015 - 1030	0	62	**62**	
1030 - 1045	0	64	**64**	
1045 - 1100	0	67	**67**	**258**
1100 - 1115	0	71	**71**	
1115 - 1130	0	72	**72**	
1130 - 1145	0	78	**78**	
1145 - 1200	0	78	**78**	**299**

Time	Volume Summary 15min NB	SB	15min Total	60min Total
1200 - 1215	0	89	**89**	
1215 - 1230	0	94	**94**	
1230 - 1245	0	75	**75**	
1245 - 1300	0	93	**93**	**351**
1300 - 1315	0	109	**109**	
1315 - 1330	0	111	**111**	
1330 - 1345	0	120	**120**	
1345 - 1400	0	122	**122**	**462**
1400 - 1415	0	132	**132**	
1415 - 1430	0	121	**121**	
1430 - 1445	0	98	**98**	
1445 - 1500	0	120	**120**	**471**
1500 - 1515	0	95	**95**	
1515 - 1530	0	130	**130**	
1530 - 1545	0	130	**130**	
1545 - 1600	0	146	**146**	**501**
1600 - 1615	0	177	**177**	
1615 - 1630	0	144	**144**	
1630 - 1645	0	159	**159**	
1645 - 1700	0	164	**164**	**644**
1700 - 1715	0	212	**212**	
1715 - 1730	0	210	**210**	
1730 - 1745	0	153	**153**	
1745 - 1800	0	122	**122**	**697**
1800 - 1815	0	97	**97**	
1815 - 1830	0	106	**106**	
1830 - 1845	0	86	**86**	
1845 - 1900	0	88	**88**	**377**
1900 - 1915	0	0	**0**	
1915 - 1930	0	0	**0**	
1930 - 1945	0	0	**0**	
1945 - 2000	0	0	**0**	**0**
2000 - 2015	0	0	**0**	
2015 - 2030	0	0	**0**	
2030 - 2045	0	0	**0**	
2045 - 2100	0	0	**0**	**0**
2100 - 2115	0	0	**0**	
2115 - 2130	0	0	**0**	
2130 - 2145	0	0	**0**	
2145 - 2200	0	0	**0**	**0**
2200 - 2215	0	0	**0**	
2215 - 2230	0	0	**0**	
2230 - 2245	0	0	**0**	
2245 - 2300	0	0	**0**	**0**
2300 - 2315	0	0	**0**	
2315 - 2330	0	0	**0**	
2330 - 2345	0	0	**0**	
2345 - 0000	0	0	**0**	**0**

Session Total	0	5154	**5154**
Session Average	0.00	53.69	**53.69**
Session Percentage	0.00	100.00	

Bi-Directional Class Count || SB WB 60min

Columbia, SC

Marr Traffic DATA COLLECTION

www.marrtraffic.com

Site 62
I-20 S/Bound On-Ramp,
south of Bush River Rd

Date
Tuesday, April 23, 2024

Lat/Long
34.030904°, -81.122954°

Weather
Fair
58°F

Click here for Detailed Weather

0000 - 2400 (Weekday 24h Session) (04-23-2024)
SB WB 60min

	Southbound (Movement 62.1)													
TIME	1	2	3	4	5	6	7	8	9	10	11	12	13	**Total**
0000 - 0100	0	0	0	0	0	0	0	0	0	0	0	0	0	**0**
0100 - 0200	0	0	0	0	0	0	0	0	0	0	0	0	0	**0**
0200 - 0300	0	0	0	0	0	0	0	0	0	0	0	0	0	**0**
0300 - 0400	0	0	0	0	0	0	0	0	0	0	0	0	0	**0**
0400 - 0500	0	0	0	0	0	0	0	0	0	0	0	0	0	**0**
0500 - 0600	0	0	0	0	0	0	0	0	0	0	0	0	0	**0**
0600 - 0700	0	0	0	0	0	0	0	0	0	0	0	0	0	**0**
0700 - 0800	0	0	0	0	0	0	0	0	0	0	0	0	0	**0**
0800 - 0900	0	0	0	0	0	0	0	0	0	0	0	0	0	**0**
0900 - 1000	0	0	0	0	0	0	0	0	0	0	0	0	0	**0**
1000 - 1100	0	0	0	0	0	0	0	0	0	0	0	0	0	**0**
1100 - 1200	0	0	0	0	0	0	0	0	0	0	0	0	0	**0**
1200 - 1300	0	0	0	0	0	0	0	0	0	0	0	0	0	**0**
1300 - 1400	0	0	0	0	0	0	0	0	0	0	0	0	0	**0**
1400 - 1500	0	0	0	0	0	0	0	0	0	0	0	0	0	**0**
1500 - 1600	0	0	0	0	0	0	0	0	0	0	0	0	0	**0**
1600 - 1700	0	0	0	0	0	0	0	0	0	0	0	0	0	**0**
1700 - 1800	0	0	0	0	0	0	0	0	0	0	0	0	0	**0**
1800 - 1900	0	0	0	0	0	0	0	0	0	0	0	0	0	**0**
1900 - 2000	1	194	27	0	2	0	0	0	0	0	0	0	0	**224**
2000 - 2100	0	210	28	0	1	2	0	0	1	0	0	0	0	**242**
2100 - 2200	0	110	19	0	2	0	0	0	1	0	0	0	0	**132**
2200 - 2300	0	51	13	0	0	0	0	0	2	0	0	0	0	**66**
2300 - 2400	0	30	6	0	0	0	0	0	1	0	0	0	0	**37**
Session Total	1	595	93	0	5	2	0	0	5	0	0	0	0	**701**
Session Average	0.04	24.79	3.88	0.00	0.21	0.08	0.00	0.00	0.21	0.00	0.00	0.00	0.00	**29.21**
Session Percentage	0.14	84.88	13.27	0.00	0.71	0.29	0.00	0.00	0.71	0.00	0.00	0.00	0.00	
AM Peak Hour	-	-	-	-	-	-	-	-	-	-	-	-	-	**-**
AM Peak Volume	0	0	0	0	0	0	0	0	0	0	0	0	0	**0**
Noon Peak Hour	-	-	-	-	-	-	-	-	-	-	-	-	-	**-**
Noon Peak Volume	0	0	0	0	0	0	0	0	0	0	0	0	0	**0**
PM Peak Hour	1900 - 2000	1900 - 2000	1900 - 2000	-	1900 - 2000	-	-	-	-	-	-	-	-	**1900 - 2000**
PM Peak Volume	1	194	27	0	2	0	0	0	0	0	0	0	0	**224**

Site 62
I-20 S/Bound On-Ramp,
south of Bush River Rd

Date
Wednesday, April 24, 2024

Weather
Fair
66°F

Lat/Long
34.030904°, -81.122954°

Click here for Detailed Weather

0000 - 2400 (Weekday 24h Session) (04-24-2024)
SB WB 60min

	Southbound (Movement 62.1)													
TIME	1	2	3	4	5	6	7	8	9	10	11	12	13	**Total**
0000 - 0100	0	19	5	0	1	0	0	0	3	0	0	0	0	**28**
0100 - 0200	0	15	2	0	0	0	0	0	1	0	0	0	0	**18**
0200 - 0300	0	7	0	0	0	0	0	0	0	0	0	0	0	**7**
0300 - 0400	0	11	2	0	0	0	0	0	2	0	0	0	0	**15**
0400 - 0500	0	17	2	0	1	1	0	0	1	0	0	0	0	**22**
0500 - 0600	0	43	10	0	0	0	0	0	2	0	0	0	0	**55**
0600 - 0700	0	127	24	0	3	1	0	0	0	0	0	0	0	**155**
0700 - 0800	0	262	53	0	5	0	0	1	5	0	0	0	0	**326**
0800 - 0900	0	222	35	0	3	0	0	0	2	0	0	0	0	**262**
0900 - 1000	0	191	35	0	4	2	0	1	3	0	0	0	0	**236**
1000 - 1100	0	200	43	0	5	1	0	0	3	0	0	0	0	**252**
1100 - 1200	0	201	40	0	2	0	0	0	1	0	0	0	0	**244**
1200 - 1300	0	285	64	0	8	0	0	1	1	0	0	0	0	**359**
1300 - 1400	1	289	64	0	7	2	0	3	8	0	0	0	0	**374**
1400 - 1500	0	344	86	0	5	1	0	1	4	0	0	0	0	**441**
1500 - 1600	0	426	84	0	2	0	0	1	5	0	0	0	0	**518**
1600 - 1700	0	505	97	1	4	2	0	2	2	0	0	0	0	**613**
1700 - 1800	0	610	107	0	5	1	0	1	4	0	0	0	0	**728**
1800 - 1900	3	284	41	0	1	2	0	2	1	0	0	0	0	**334**
1900 - 2000	0	215	36	1	2	2	0	0	0	0	0	0	0	**256**
2000 - 2100	0	237	28	0	1	1	0	0	2	0	0	0	0	**269**
2100 - 2200	0	126	19	0	0	0	0	0	0	0	0	0	0	**145**
2200 - 2300	0	72	16	0	0	0	0	0	0	0	0	0	0	**88**
2300 - 2400	0	34	8	0	0	0	0	0	1	0	0	0	0	**43**

Session Total	4	4742	901	2	59	16	0	13	51	0	0	0	0	**5788**
Session Average	0.17	197.58	37.54	0.08	2.46	0.67	0.00	0.54	2.13	0.00	0.00	0.00	0.00	**241.17**
Session Percentage	0.07	81.93	15.57	0.03	1.02	0.28	0.00	0.22	0.88	0.00	0.00	0.00	0.00	

AM Peak Hour	-	0700 - 0800	0700 - 0800	-	0700 - 0800	0900 - 1000	-	0700 - 0800	0700 - 0800	-	-	-	-	**0700 - 0800**
AM Peak Volume	0	262	53	0	5	2	0	1	5	0	0	0	0	**326**

Noon Peak Hour	1300 - 1400	1400 - 1500	1400 - 1500	-	1200 - 1300	1300 - 1400	-	1300 - 1400	1300 - 1400	-	-	-	-	**1400 - 1500**
Noon Peak Volume	1	344	86	0	8	2	0	3	8	0	0	0	0	**441**

PM Peak Hour	1800 - 1900	1700 - 1800	1700 - 1800	1600 - 1700	1700 - 1800	1600 - 1700	-	1600 - 1700	1500 - 1600	-	-	-	-	**1700 - 1800**
PM Peak Volume	3	610	107	1	5	2	0	2	5	0	0	0	0	**728**

Site 62
I-20 S/Bound On-Ramp,
south of Bush River Rd

Date
Thursday, April 25, 2024

Lat/Long
34.030904°, -81.122954°

Weather
Fair
67°F

Click here for Detailed Weather

0000 - 2400 (Weekday 24h Session) (04-25-2024)
SB WB 60min

	Southbound (Movement 62.1)													
TIME	1	2	3	4	5	6	7	8	9	10	11	12	13	**Total**
0000 - 0100	0	25	2	0	0	0	0	0	0	0	0	0	0	**27**
0100 - 0200	0	10	3	0	0	0	0	0	1	0	0	0	0	**14**
0200 - 0300	0	5	1	0	0	0	0	0	2	0	0	0	0	**8**
0300 - 0400	0	12	2	0	0	0	0	0	1	0	0	0	0	**15**
0400 - 0500	0	15	3	0	0	0	0	0	0	0	0	0	0	**18**
0500 - 0600	0	36	11	0	0	0	0	0	1	0	0	0	0	**48**
0600 - 0700	0	126	25	0	1	0	0	0	2	0	0	0	0	**154**
0700 - 0800	0	291	51	0	5	0	0	0	1	0	0	0	0	**348**
0800 - 0900	1	216	35	0	4	1	0	1	1	0	0	0	0	**259**
0900 - 1000	0	159	38	0	3	2	0	0	1	0	0	0	0	**203**
1000 - 1100	0	205	46	0	3	2	0	0	2	0	0	0	0	**258**
1100 - 1200	0	226	57	0	8	3	1	0	4	0	0	0	0	**299**
1200 - 1300	0	282	61	0	1	3	0	3	1	0	0	0	0	**351**
1300 - 1400	0	364	87	0	3	3	0	1	4	0	0	0	0	**462**
1400 - 1500	0	388	72	0	4	1	2	1	3	0	0	0	0	**471**
1500 - 1600	1	415	73	1	4	2	3	1	1	0	0	0	0	**501**
1600 - 1700	0	532	100	0	7	3	0	0	2	0	0	0	0	**644**
1700 - 1800	0	606	87	0	1	0	0	0	3	0	0	0	0	**697**
1800 - 1900	2	311	56	0	3	1	0	1	3	0	0	0	0	**377**
1900 - 2000	0	0	0	0	0	0	0	0	0	0	0	0	0	**0**
2000 - 2100	0	0	0	0	0	0	0	0	0	0	0	0	0	**0**
2100 - 2200	0	0	0	0	0	0	0	0	0	0	0	0	0	**0**
2200 - 2300	0	0	0	0	0	0	0	0	0	0	0	0	0	**0**
2300 - 2400	0	0	0	0	0	0	0	0	0	0	0	0	0	**0**

Session Total	4	4224	810	1	47	21	6	8	33	0	0	0	0	**5154**
Session Average	0.17	176.00	33.75	0.04	1.96	0.88	0.25	0.33	1.38	0.00	0.00	0.00	0.00	**214.75**
Session Percentage	0.08	81.96	15.72	0.02	0.91	0.41	0.12	0.16	0.64	0.00	0.00	0.00	0.00	

AM Peak Hour	0800 - 0900	0700 - 0800	0700 - 0800	-	0700 - 0800	0900 - 1000	-	0800 - 0900	0600 - 0700	-	-	-	-	**0700 - 0800**
AM Peak Hour Volume	1	291	51	0	5	2	0	1	2	0	0	0	0	**348**

Noon Peak Hour	-	1400 - 1500	1300 - 1400	-	1100 - 1200	1100 - 1200	1400 - 1500	1200 - 1300	1100 - 1200	-	-	-	-	**1400 - 1500**
Noon Peak Hour Volume	0	388	87	0	8	3	2	3	4	0	0	0	0	**471**

PM Peak Hour	1800 - 1900	1700 - 1800	1600 - 1700	1500 - 1600	1600 - 1700	1600 - 1700	1500 - 1600	1500 - 1600	1700 - 1800	-	-	-	-	**1700 - 1800**
PM Peak Hour Volume	2	606	100	1	7	3	3	1	3	0	0	0	0	**697**

Bi-Directional Class Count || Volume Summary 60min

Columbia, SC

Marr Traffic DATA COLLECTION

www.marrtraffic.com

Site 62

I-20 S/Bound On-Ramp,
south of Bush River Rd

Date

Tuesday, April 23, 2024

Lat/Long

34.030904°, -81.122954°

Weather

Fair
58°F

Click here for Detailed Weather

0000 - 2400 (Weekday 24h Session) (04-23-2024)

Volume Summary 60min

	Volume Summary 60min		
TIME	NB	SB	**Total**
0000 - 0100	0	0	**0**
0100 - 0200	0	0	**0**
0200 - 0300	0	0	**0**
0300 - 0400	0	0	**0**
0400 - 0500	0	0	**0**
0500 - 0600	0	0	**0**
0600 - 0700	0	0	**0**
0700 - 0800	0	0	**0**
0800 - 0900	0	0	**0**
0900 - 1000	0	0	**0**
1000 - 1100	0	0	**0**
1100 - 1200	0	0	**0**

	Volume Summary 60min		
Time	NB	SB	**Total**
1200 - 1300	0	0	**0**
1300 - 1400	0	0	**0**
1400 - 1500	0	0	**0**
1500 - 1600	0	0	**0**
1600 - 1700	0	0	**0**
1700 - 1800	0	0	**0**
1800 - 1900	0	0	**0**
1900 - 2000	0	224	**224**
2000 - 2100	0	242	**242**
2100 - 2200	0	132	**132**
2200 - 2300	0	66	**66**
2300 - 2400	0	37	**37**

Session Total	0	701	**701**
Session Average	0.00	29.21	**29.21**
Session Percentage	0.00	100.00	

Site 62

I-20 S/Bound On-Ramp,
south of Bush River Rd

Date

Wednesday, April 24, 2024

Lat/Long

34.030904°, -81.122954°

Weather

Fair
66°F

Click here for Detailed Weather

0000 - 2400 (Weekday 24h Session) (04-24-2024)

Volume Summary 60min

	Volume Summary 60min		
TIME	NB	SB	**Total**
0000 - 0100	0	28	**28**
0100 - 0200	0	18	**18**
0200 - 0300	0	7	**7**
0300 - 0400	0	15	**15**
0400 - 0500	0	22	**22**
0500 - 0600	0	55	**55**
0600 - 0700	0	155	**155**
0700 - 0800	0	326	**326**
0800 - 0900	0	262	**262**
0900 - 1000	0	236	**236**
1000 - 1100	0	252	**252**
1100 - 1200	0	244	**244**

	Volume Summary 60min		
Time	NB	SB	**Total**
1200 - 1300	0	359	**359**
1300 - 1400	0	374	**374**
1400 - 1500	0	441	**441**
1500 - 1600	0	518	**518**
1600 - 1700	0	613	**613**
1700 - 1800	0	728	**728**
1800 - 1900	0	334	**334**
1900 - 2000	0	256	**256**
2000 - 2100	0	269	**269**
2100 - 2200	0	145	**145**
2200 - 2300	0	88	**88**
2300 - 2400	0	43	**43**

Session Total	0	5788	**5788**
Session Average	0.00	241.17	**241.17**
Session Percentage	0.00	100.00	

Site 62

I-20 S/Bound On-Ramp,
south of Bush River Rd

Date

Thursday, April 25, 2024

Lat/Long

34.030904°, -81.122954°

Weather

Fair
67°F

Click here for Detailed Weather

0000 - 2400 (Weekday 24h Session) (04-25-2024)

Volume Summary 60min

	Volume Summary 60min		
TIME	NB	SB	**Total**
0000 - 0100	0	27	**27**
0100 - 0200	0	14	**14**
0200 - 0300	0	8	**8**
0300 - 0400	0	15	**15**
0400 - 0500	0	18	**18**
0500 - 0600	0	48	**48**
0600 - 0700	0	154	**154**
0700 - 0800	0	348	**348**
0800 - 0900	0	259	**259**
0900 - 1000	0	203	**203**
1000 - 1100	0	258	**258**
1100 - 1200	0	299	**299**

Session Total	0	5154	**5154**
Session Average	0.00	214.75	**214.75**
Session Percentage	0.00	100.00	

	Volume Summary 60min		
Time	NB	SB	**Total**
1200 - 1300	0	351	**351**
1300 - 1400	0	462	**462**
1400 - 1500	0	471	**471**
1500 - 1600	0	501	**501**
1600 - 1700	0	644	**644**
1700 - 1800	0	697	**697**
1800 - 1900	0	377	**377**
1900 - 2000	0	0	**0**
2000 - 2100	0	0	**0**
2100 - 2200	0	0	**0**
2200 - 2300	0	0	**0**
2300 - 2400	0	0	**0**

Bi-Directional Class Count || Graphical Analysis SB WB

Columbia, SC

Marr Traffic DATA COLLECTION

www.marrtraffic.com

Site 62

I-20 S/Bound On-Ramp,
south of Bush River Rd

Lat/Long

34.030904°, -81.122954°

0000 - 2400 (Weekday 24h Session)

Graphical Analysis SB WB

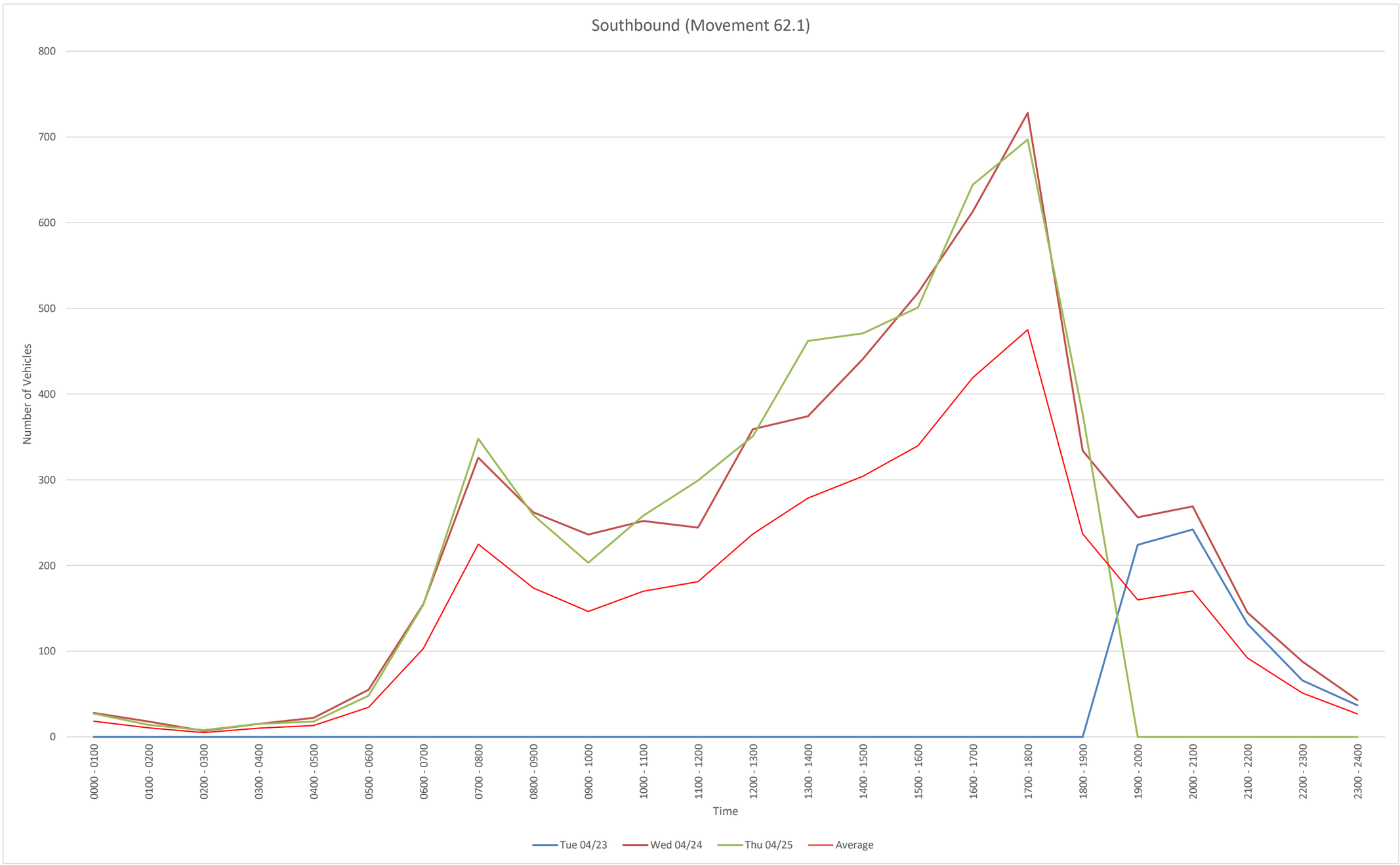

Time	Tue 04/23	Wed 04/24	Thu 04/25				
0000 - 0100	0	28	27				
0100 - 0200	0	18	14				
0200 - 0300	0	7	8				
0300 - 0400	0	15	15				
0400 - 0500	0	22	18				
0500 - 0600	0	55	48				
0600 - 0700	0	155	154				
0700 - 0800	0	326	348				
0800 - 0900	0	262	259				
0900 - 1000	0	236	203				
1000 - 1100	0	252	258				
1100 - 1200	0	244	299				
1200 - 1300	0	359	351				
1300 - 1400	0	374	462				
1400 - 1500	0	441	471				
1500 - 1600	0	518	501				
1600 - 1700	0	613	644				
1700 - 1800	0	728	697				
1800 - 1900	0	334	377				
1900 - 2000	224	256	0				
2000 - 2100	242	269	0				
2100 - 2200	132	145	0				
2200 - 2300	66	88	0				
2300 - 2400	37	43	0				
Daily Total	701	5788	5154				

NB
File Name:
Start Date: 4/23/2024
Start Time: 0
Site Code: 62
Station ID: 1
Location 1: I-20 S/Bound On-Ramp, south of Bush River Rd
Location 2:

Date	Time	1	2	3	4	5	6	7	8	9	10	11	12	13
4/23/2024	12:00 AM	0	0	0	0	0	0	0	0	0	0	0	0	0
4/23/2024	12:15 AM	0	0	0	0	0	0	0	0	0	0	0	0	0
4/23/2024	12:30 AM	0	0	0	0	0	0	0	0	0	0	0	0	0
4/23/2024	12:45 AM	0	0	0	0	0	0	0	0	0	0	0	0	0
4/23/2024	1:00 AM	0	0	0	0	0	0	0	0	0	0	0	0	0
4/23/2024	1:15 AM	0	0	0	0	0	0	0	0	0	0	0	0	0
4/23/2024	1:30 AM	0	0	0	0	0	0	0	0	0	0	0	0	0
4/23/2024	1:45 AM	0	0	0	0	0	0	0	0	0	0	0	0	0
4/23/2024	2:00 AM	0	0	0	0	0	0	0	0	0	0	0	0	0
4/23/2024	2:15 AM	0	0	0	0	0	0	0	0	0	0	0	0	0
4/23/2024	2:30 AM	0	0	0	0	0	0	0	0	0	0	0	0	0
4/23/2024	2:45 AM	0	0	0	0	0	0	0	0	0	0	0	0	0
4/23/2024	3:00 AM	0	0	0	0	0	0	0	0	0	0	0	0	0
4/23/2024	3:15 AM	0	0	0	0	0	0	0	0	0	0	0	0	0
4/23/2024	3:30 AM	0	0	0	0	0	0	0	0	0	0	0	0	0
4/23/2024	3:45 AM	0	0	0	0	0	0	0	0	0	0	0	0	0
4/23/2024	4:00 AM	0	0	0	0	0	0	0	0	0	0	0	0	0
4/23/2024	4:15 AM	0	0	0	0	0	0	0	0	0	0	0	0	0
4/23/2024	4:30 AM	0	0	0	0	0	0	0	0	0	0	0	0	0
4/23/2024	4:45 AM	0	0	0	0	0	0	0	0	0	0	0	0	0
4/23/2024	5:00 AM	0	0	0	0	0	0	0	0	0	0	0	0	0
4/23/2024	5:15 AM	0	0	0	0	0	0	0	0	0	0	0	0	0
4/23/2024	5:30 AM	0	0	0	0	0	0	0	0	0	0	0	0	0
4/23/2024	5:45 AM	0	0	0	0	0	0	0	0	0	0	0	0	0
4/23/2024	6:00 AM	0	0	0	0	0	0	0	0	0	0	0	0	0
4/23/2024	6:15 AM	0	0	0	0	0	0	0	0	0	0	0	0	0
4/23/2024	6:30 AM	0	0	0	0	0	0	0	0	0	0	0	0	0
4/23/2024	6:45 AM	0	0	0	0	0	0	0	0	0	0	0	0	0
4/23/2024	7:00 AM	0	0	0	0	0	0	0	0	0	0	0	0	0
4/23/2024	7:15 AM	0	0	0	0	0	0	0	0	0	0	0	0	0
4/23/2024	7:30 AM	0	0	0	0	0	0	0	0	0	0	0	0	0
4/23/2024	7:45 AM	0	0	0	0	0	0	0	0	0	0	0	0	0
4/23/2024	8:00 AM	0	0	0	0	0	0	0	0	0	0	0	0	0
4/23/2024	8:15 AM	0	0	0	0	0	0	0	0	0	0	0	0	0
4/23/2024	8:30 AM	0	0	0	0	0	0	0	0	0	0	0	0	0
4/23/2024	8:45 AM	0	0	0	0	0	0	0	0	0	0	0	0	0
4/23/2024	9:00 AM	0	0	0	0	0	0	0	0	0	0	0	0	0
4/23/2024	9:15 AM	0	0	0	0	0	0	0	0	0	0	0	0	0
4/23/2024	9:30 AM	0	0	0	0	0	0	0	0	0	0	0	0	0
4/23/2024	9:45 AM	0	0	0	0	0	0	0	0	0	0	0	0	0
4/23/2024	10:00 AM	0	0	0	0	0	0	0	0	0	0	0	0	0
4/23/2024	10:15 AM	0	0	0	0	0	0	0	0	0	0	0	0	0
4/23/2024	10:30 AM	0	0	0	0	0	0	0	0	0	0	0	0	0
4/23/2024	10:45 AM	0	0	0	0	0	0	0	0	0	0	0	0	0
4/23/2024	11:00 AM	0	0	0	0	0	0	0	0	0	0	0	0	0
4/23/2024	11:15 AM	0	0	0	0	0	0	0	0	0	0	0	0	0
4/23/2024	11:30 AM	0	0	0	0	0	0	0	0	0	0	0	0	0
4/23/2024	11:45 AM	0	0	0	0	0	0	0	0	0	0	0	0	0
4/23/2024	12:00 PM	0	0	0	0	0	0	0	0	0	0	0	0	0
4/23/2024	12:15 PM	0	0	0	0	0	0	0	0	0	0	0	0	0
4/23/2024	12:30 PM	0	0	0	0	0	0	0	0	0	0	0	0	0
4/23/2024	12:45 PM	0	0	0	0	0	0	0	0	0	0	0	0	0
4/23/2024	1:00 PM	0	0	0	0	0	0	0	0	0	0	0	0	0
4/23/2024	1:15 PM	0	0	0	0	0	0	0	0	0	0	0	0	0
4/23/2024	1:30 PM	0	0	0	0	0	0	0	0	0	0	0	0	0
4/23/2024	1:45 PM	0	0	0	0	0	0	0	0	0	0	0	0	0
4/23/2024	2:00 PM	0	0	0	0	0	0	0	0	0	0	0	0	0
4/23/2024	2:15 PM	0	0	0	0	0	0	0	0	0	0	0	0	0
4/23/2024	2:30 PM	0	0	0	0	0	0	0	0	0	0	0	0	0
4/23/2024	2:45 PM	0	0	0	0	0	0	0	0	0	0	0	0	0
4/23/2024	3:00 PM	0	0	0	0	0	0	0	0	0	0	0	0	0
4/23/2024	3:15 PM	0	0	0	0	0	0	0	0	0	0	0	0	0
4/23/2024	3:30 PM	0	0	0	0	0	0	0	0	0	0	0	0	0
4/23/2024	3:45 PM	0	0	0	0	0	0	0	0	0	0	0	0	0
4/23/2024	4:00 PM	0	0	0	0	0	0	0	0	0	0	0	0	0
4/23/2024	4:15 PM	0	0	0	0	0	0	0	0	0	0	0	0	0
4/23/2024	4:30 PM	0	0	0	0	0	0	0	0	0	0	0	0	0
4/23/2024	4:45 PM	0	0	0	0	0	0	0	0	0	0	0	0	0
4/23/2024	5:00 PM	0	0	0	0	0	0	0	0	0	0	0	0	0
4/23/2024	5:15 PM	0	0	0	0	0	0	0	0	0	0	0	0	0
4/23/2024	5:30 PM	0	0	0	0	0	0	0	0	0	0	0	0	0
4/23/2024	5:45 PM	0	0	0	0	0	0	0	0	0	0	0	0	0
4/23/2024	6:00 PM	0	0	0	0	0	0	0	0	0	0	0	0	0
4/23/2024	6:15 PM	0	0	0	0	0	0	0	0	0	0	0	0	0
4/23/2024	6:30 PM	0	0	0	0	0	0	0	0	0	0	0	0	0
4/23/2024	6:45 PM	0	0	0	0	0	0	0	0	0	0	0	0	0
4/23/2024	7:00 PM	0	0	0	0	0	0	0	0	0	0	0	0	0
4/23/2024	7:15 PM	0	0	0	0	0	0	0	0	0	0	0	0	0
4/23/2024	7:30 PM	0	0	0	0	0	0	0	0	0	0	0	0	0
4/23/2024	7:45 PM	0	0	0	0	0	0	0	0	0	0	0	0	0
4/23/2024	8:00 PM	0	0	0	0	0	0	0	0	0	0	0	0	0
4/23/2024	8:15 PM	0	0	0	0	0	0	0	0	0	0	0	0	0
4/23/2024	8:30 PM	0	0	0	0	0	0	0	0	0	0	0	0	0
4/23/2024	8:45 PM	0	0	0	0	0	0	0	0	0	0	0	0	0
4/23/2024	9:00 PM	0	0	0	0	0	0	0	0	0	0	0	0	0
4/23/2024	9:15 PM	0	0	0	0	0	0	0	0	0	0	0	0	0
4/23/2024	9:30 PM	0	0	0	0	0	0	0	0	0	0	0	0	0
4/23/2024	9:45 PM	0	0	0	0	0	0	0	0	0	0	0	0	0
4/23/2024	10:00 PM	0	0	0	0	0	0	0	0	0	0	0	0	0
4/23/2024	10:15 PM	0	0	0	0	0	0	0	0	0	0	0	0	0
4/23/2024	10:30 PM	0	0	0	0	0	0	0	0	0	0	0	0	0
4/23/2024	10:45 PM	0	0	0	0	0	0	0	0	0	0	0	0	0
4/23/2024	11:00 PM	0	0	0	0	0	0	0	0	0	0	0	0	0
4/23/2024	11:15 PM	0	0	0	0	0	0	0	0	0	0	0	0	0
4/23/2024	11:30 PM	0	0	0	0	0	0	0	0	0	0	0	0	0
4/23/2024	11:45 PM	0	0	0	0	0	0	0	0	0	0	0	0	0

4/24/2024	12:00 AM	0	0	0	0	0	0	0	0	0	0	0	0	0
4/24/2024	12:15 AM	0	0	0	0	0	0	0	0	0	0	0	0	0
4/24/2024	12:30 AM	0	0	0	0	0	0	0	0	0	0	0	0	0
4/24/2024	12:45 AM	0	0	0	0	0	0	0	0	0	0	0	0	0
4/24/2024	1:00 AM	0	0	0	0	0	0	0	0	0	0	0	0	0
4/24/2024	1:15 AM	0	0	0	0	0	0	0	0	0	0	0	0	0
4/24/2024	1:30 AM	0	0	0	0	0	0	0	0	0	0	0	0	0
4/24/2024	1:45 AM	0	0	0	0	0	0	0	0	0	0	0	0	0
4/24/2024	2:00 AM	0	0	0	0	0	0	0	0	0	0	0	0	0
4/24/2024	2:15 AM	0	0	0	0	0	0	0	0	0	0	0	0	0
4/24/2024	2:30 AM	0	0	0	0	0	0	0	0	0	0	0	0	0
4/24/2024	2:45 AM	0	0	0	0	0	0	0	0	0	0	0	0	0
4/24/2024	3:00 AM	0	0	0	0	0	0	0	0	0	0	0	0	0
4/24/2024	3:15 AM	0	0	0	0	0	0	0	0	0	0	0	0	0
4/24/2024	3:30 AM	0	0	0	0	0	0	0	0	0	0	0	0	0
4/24/2024	3:45 AM	0	0	0	0	0	0	0	0	0	0	0	0	0
4/24/2024	4:00 AM	0	0	0	0	0	0	0	0	0	0	0	0	0
4/24/2024	4:15 AM	0	0	0	0	0	0	0	0	0	0	0	0	0
4/24/2024	4:30 AM	0	0	0	0	0	0	0	0	0	0	0	0	0
4/24/2024	4:45 AM	0	0	0	0	0	0	0	0	0	0	0	0	0
4/24/2024	5:00 AM	0	0	0	0	0	0	0	0	0	0	0	0	0
4/24/2024	5:15 AM	0	0	0	0	0	0	0	0	0	0	0	0	0
4/24/2024	5:30 AM	0	0	0	0	0	0	0	0	0	0	0	0	0
4/24/2024	5:45 AM	0	0	0	0	0	0	0	0	0	0	0	0	0
4/24/2024	6:00 AM	0	0	0	0	0	0	0	0	0	0	0	0	0
4/24/2024	6:15 AM	0	0	0	0	0	0	0	0	0	0	0	0	0
4/24/2024	6:30 AM	0	0	0	0	0	0	0	0	0	0	0	0	0
4/24/2024	6:45 AM	0	0	0	0	0	0	0	0	0	0	0	0	0
4/24/2024	7:00 AM	0	0	0	0	0	0	0	0	0	0	0	0	0
4/24/2024	7:15 AM	0	0	0	0	0	0	0	0	0	0	0	0	0
4/24/2024	7:30 AM	0	0	0	0	0	0	0	0	0	0	0	0	0
4/24/2024	7:45 AM	0	0	0	0	0	0	0	0	0	0	0	0	0
4/24/2024	8:00 AM	0	0	0	0	0	0	0	0	0	0	0	0	0
4/24/2024	8:15 AM	0	0	0	0	0	0	0	0	0	0	0	0	0
4/24/2024	8:30 AM	0	0	0	0	0	0	0	0	0	0	0	0	0
4/24/2024	8:45 AM	0	0	0	0	0	0	0	0	0	0	0	0	0
4/24/2024	9:00 AM	0	0	0	0	0	0	0	0	0	0	0	0	0
4/24/2024	9:15 AM	0	0	0	0	0	0	0	0	0	0	0	0	0
4/24/2024	9:30 AM	0	0	0	0	0	0	0	0	0	0	0	0	0
4/24/2024	9:45 AM	0	0	0	0	0	0	0	0	0	0	0	0	0
4/24/2024	10:00 AM	0	0	0	0	0	0	0	0	0	0	0	0	0
4/24/2024	10:15 AM	0	0	0	0	0	0	0	0	0	0	0	0	0
4/24/2024	10:30 AM	0	0	0	0	0	0	0	0	0	0	0	0	0
4/24/2024	10:45 AM	0	0	0	0	0	0	0	0	0	0	0	0	0
4/24/2024	11:00 AM	0	0	0	0	0	0	0	0	0	0	0	0	0
4/24/2024	11:15 AM	0	0	0	0	0	0	0	0	0	0	0	0	0
4/24/2024	11:30 AM	0	0	0	0	0	0	0	0	0	0	0	0	0
4/24/2024	11:45 AM	0	0	0	0	0	0	0	0	0	0	0	0	0
4/24/2024	12:00 PM	0	0	0	0	0	0	0	0	0	0	0	0	0
4/24/2024	12:15 PM	0	0	0	0	0	0	0	0	0	0	0	0	0
4/24/2024	12:30 PM	0	0	0	0	0	0	0	0	0	0	0	0	0
4/24/2024	12:45 PM	0	0	0	0	0	0	0	0	0	0	0	0	0
4/24/2024	1:00 PM	0	0	0	0	0	0	0	0	0	0	0	0	0
4/24/2024	1:15 PM	0	0	0	0	0	0	0	0	0	0	0	0	0
4/24/2024	1:30 PM	0	0	0	0	0	0	0	0	0	0	0	0	0
4/24/2024	1:45 PM	0	0	0	0	0	0	0	0	0	0	0	0	0
4/24/2024	2:00 PM	0	0	0	0	0	0	0	0	0	0	0	0	0
4/24/2024	2:15 PM	0	0	0	0	0	0	0	0	0	0	0	0	0
4/24/2024	2:30 PM	0	0	0	0	0	0	0	0	0	0	0	0	0
4/24/2024	2:45 PM	0	0	0	0	0	0	0	0	0	0	0	0	0
4/24/2024	3:00 PM	0	0	0	0	0	0	0	0	0	0	0	0	0
4/24/2024	3:15 PM	0	0	0	0	0	0	0	0	0	0	0	0	0
4/24/2024	3:30 PM	0	0	0	0	0	0	0	0	0	0	0	0	0
4/24/2024	3:45 PM	0	0	0	0	0	0	0	0	0	0	0	0	0
4/24/2024	4:00 PM	0	0	0	0	0	0	0	0	0	0	0	0	0
4/24/2024	4:15 PM	0	0	0	0	0	0	0	0	0	0	0	0	0
4/24/2024	4:30 PM	0	0	0	0	0	0	0	0	0	0	0	0	0
4/24/2024	4:45 PM	0	0	0	0	0	0	0	0	0	0	0	0	0
4/24/2024	5:00 PM	0	0	0	0	0	0	0	0	0	0	0	0	0
4/24/2024	5:15 PM	0	0	0	0	0	0	0	0	0	0	0	0	0
4/24/2024	5:30 PM	0	0	0	0	0	0	0	0	0	0	0	0	0
4/24/2024	5:45 PM	0	0	0	0	0	0	0	0	0	0	0	0	0
4/24/2024	6:00 PM	0	0	0	0	0	0	0	0	0	0	0	0	0
4/24/2024	6:15 PM	0	0	0	0	0	0	0	0	0	0	0	0	0
4/24/2024	6:30 PM	0	0	0	0	0	0	0	0	0	0	0	0	0
4/24/2024	6:45 PM	0	0	0	0	0	0	0	0	0	0	0	0	0
4/24/2024	7:00 PM	0	0	0	0	0	0	0	0	0	0	0	0	0
4/24/2024	7:15 PM	0	0	0	0	0	0	0	0	0	0	0	0	0
4/24/2024	7:30 PM	0	0	0	0	0	0	0	0	0	0	0	0	0
4/24/2024	7:45 PM	0	0	0	0	0	0	0	0	0	0	0	0	0
4/24/2024	8:00 PM	0	0	0	0	0	0	0	0	0	0	0	0	0
4/24/2024	8:15 PM	0	0	0	0	0	0	0	0	0	0	0	0	0
4/24/2024	8:30 PM	0	0	0	0	0	0	0	0	0	0	0	0	0
4/24/2024	8:45 PM	0	0	0	0	0	0	0	0	0	0	0	0	0
4/24/2024	9:00 PM	0	0	0	0	0	0	0	0	0	0	0	0	0
4/24/2024	9:15 PM	0	0	0	0	0	0	0	0	0	0	0	0	0
4/24/2024	9:30 PM	0	0	0	0	0	0	0	0	0	0	0	0	0
4/24/2024	9:45 PM	0	0	0	0	0	0	0	0	0	0	0	0	0
4/24/2024	10:00 PM	0	0	0	0	0	0	0	0	0	0	0	0	0
4/24/2024	10:15 PM	0	0	0	0	0	0	0	0	0	0	0	0	0
4/24/2024	10:30 PM	0	0	0	0	0	0	0	0	0	0	0	0	0
4/24/2024	10:45 PM	0	0	0	0	0	0	0	0	0	0	0	0	0
4/24/2024	11:00 PM	0	0	0	0	0	0	0	0	0	0	0	0	0
4/24/2024	11:15 PM	0	0	0	0	0	0	0	0	0	0	0	0	0
4/24/2024	11:30 PM	0	0	0	0	0	0	0	0	0	0	0	0	0
4/24/2024	11:45 PM	0	0	0	0	0	0	0	0	0	0	0	0	0

4/25/2024	12:00 AM	0	0	0	0	0	0	0	0	0	0	0	0	0
4/25/2024	12:15 AM	0	0	0	0	0	0	0	0	0	0	0	0	0
4/25/2024	12:30 AM	0	0	0	0	0	0	0	0	0	0	0	0	0
4/25/2024	12:45 AM	0	0	0	0	0	0	0	0	0	0	0	0	0
4/25/2024	1:00 AM	0	0	0	0	0	0	0	0	0	0	0	0	0
4/25/2024	1:15 AM	0	0	0	0	0	0	0	0	0	0	0	0	0
4/25/2024	1:30 AM	0	0	0	0	0	0	0	0	0	0	0	0	0
4/25/2024	1:45 AM	0	0	0	0	0	0	0	0	0	0	0	0	0
4/25/2024	2:00 AM	0	0	0	0	0	0	0	0	0	0	0	0	0
4/25/2024	2:15 AM	0	0	0	0	0	0	0	0	0	0	0	0	0
4/25/2024	2:30 AM	0	0	0	0	0	0	0	0	0	0	0	0	0
4/25/2024	2:45 AM	0	0	0	0	0	0	0	0	0	0	0	0	0
4/25/2024	3:00 AM	0	0	0	0	0	0	0	0	0	0	0	0	0
4/25/2024	3:15 AM	0	0	0	0	0	0	0	0	0	0	0	0	0
4/25/2024	3:30 AM	0	0	0	0	0	0	0	0	0	0	0	0	0
4/25/2024	3:45 AM	0	0	0	0	0	0	0	0	0	0	0	0	0
4/25/2024	4:00 AM	0	0	0	0	0	0	0	0	0	0	0	0	0
4/25/2024	4:15 AM	0	0	0	0	0	0	0	0	0	0	0	0	0
4/25/2024	4:30 AM	0	0	0	0	0	0	0	0	0	0	0	0	0
4/25/2024	4:45 AM	0	0	0	0	0	0	0	0	0	0	0	0	0
4/25/2024	5:00 AM	0	0	0	0	0	0	0	0	0	0	0	0	0
4/25/2024	5:15 AM	0	0	0	0	0	0	0	0	0	0	0	0	0
4/25/2024	5:30 AM	0	0	0	0	0	0	0	0	0	0	0	0	0
4/25/2024	5:45 AM	0	0	0	0	0	0	0	0	0	0	0	0	0
4/25/2024	6:00 AM	0	0	0	0	0	0	0	0	0	0	0	0	0
4/25/2024	6:15 AM	0	0	0	0	0	0	0	0	0	0	0	0	0
4/25/2024	6:30 AM	0	0	0	0	0	0	0	0	0	0	0	0	0
4/25/2024	6:45 AM	0	0	0	0	0	0	0	0	0	0	0	0	0
4/25/2024	7:00 AM	0	0	0	0	0	0	0	0	0	0	0	0	0
4/25/2024	7:15 AM	0	0	0	0	0	0	0	0	0	0	0	0	0
4/25/2024	7:30 AM	0	0	0	0	0	0	0	0	0	0	0	0	0
4/25/2024	7:45 AM	0	0	0	0	0	0	0	0	0	0	0	0	0
4/25/2024	8:00 AM	0	0	0	0	0	0	0	0	0	0	0	0	0
4/25/2024	8:15 AM	0	0	0	0	0	0	0	0	0	0	0	0	0
4/25/2024	8:30 AM	0	0	0	0	0	0	0	0	0	0	0	0	0
4/25/2024	8:45 AM	0	0	0	0	0	0	0	0	0	0	0	0	0
4/25/2024	9:00 AM	0	0	0	0	0	0	0	0	0	0	0	0	0
4/25/2024	9:15 AM	0	0	0	0	0	0	0	0	0	0	0	0	0
4/25/2024	9:30 AM	0	0	0	0	0	0	0	0	0	0	0	0	0
4/25/2024	9:45 AM	0	0	0	0	0	0	0	0	0	0	0	0	0
4/25/2024	10:00 AM	0	0	0	0	0	0	0	0	0	0	0	0	0
4/25/2024	10:15 AM	0	0	0	0	0	0	0	0	0	0	0	0	0
4/25/2024	10:30 AM	0	0	0	0	0	0	0	0	0	0	0	0	0
4/25/2024	10:45 AM	0	0	0	0	0	0	0	0	0	0	0	0	0
4/25/2024	11:00 AM	0	0	0	0	0	0	0	0	0	0	0	0	0
4/25/2024	11:15 AM	0	0	0	0	0	0	0	0	0	0	0	0	0
4/25/2024	11:30 AM	0	0	0	0	0	0	0	0	0	0	0	0	0
4/25/2024	11:45 AM	0	0	0	0	0	0	0	0	0	0	0	0	0
4/25/2024	12:00 PM	0	0	0	0	0	0	0	0	0	0	0	0	0
4/25/2024	12:15 PM	0	0	0	0	0	0	0	0	0	0	0	0	0
4/25/2024	12:30 PM	0	0	0	0	0	0	0	0	0	0	0	0	0
4/25/2024	12:45 PM	0	0	0	0	0	0	0	0	0	0	0	0	0
4/25/2024	1:00 PM	0	0	0	0	0	0	0	0	0	0	0	0	0
4/25/2024	1:15 PM	0	0	0	0	0	0	0	0	0	0	0	0	0
4/25/2024	1:30 PM	0	0	0	0	0	0	0	0	0	0	0	0	0
4/25/2024	1:45 PM	0	0	0	0	0	0	0	0	0	0	0	0	0
4/25/2024	2:00 PM	0	0	0	0	0	0	0	0	0	0	0	0	0
4/25/2024	2:15 PM	0	0	0	0	0	0	0	0	0	0	0	0	0
4/25/2024	2:30 PM	0	0	0	0	0	0	0	0	0	0	0	0	0
4/25/2024	2:45 PM	0	0	0	0	0	0	0	0	0	0	0	0	0
4/25/2024	3:00 PM	0	0	0	0	0	0	0	0	0	0	0	0	0
4/25/2024	3:15 PM	0	0	0	0	0	0	0	0	0	0	0	0	0
4/25/2024	3:30 PM	0	0	0	0	0	0	0	0	0	0	0	0	0
4/25/2024	3:45 PM	0	0	0	0	0	0	0	0	0	0	0	0	0
4/25/2024	4:00 PM	0	0	0	0	0	0	0	0	0	0	0	0	0
4/25/2024	4:15 PM	0	0	0	0	0	0	0	0	0	0	0	0	0
4/25/2024	4:30 PM	0	0	0	0	0	0	0	0	0	0	0	0	0
4/25/2024	4:45 PM	0	0	0	0	0	0	0	0	0	0	0	0	0
4/25/2024	5:00 PM	0	0	0	0	0	0	0	0	0	0	0	0	0
4/25/2024	5:15 PM	0	0	0	0	0	0	0	0	0	0	0	0	0
4/25/2024	5:30 PM	0	0	0	0	0	0	0	0	0	0	0	0	0
4/25/2024	5:45 PM	0	0	0	0	0	0	0	0	0	0	0	0	0
4/25/2024	6:00 PM	0	0	0	0	0	0	0	0	0	0	0	0	0
4/25/2024	6:15 PM	0	0	0	0	0	0	0	0	0	0	0	0	0
4/25/2024	6:30 PM	0	0	0	0	0	0	0	0	0	0	0	0	0
4/25/2024	6:45 PM	0	0	0	0	0	0	0	0	0	0	0	0	0
4/25/2024	7:00 PM	0	0	0	0	0	0	0	0	0	0	0	0	0
4/25/2024	7:15 PM	0	0	0	0	0	0	0	0	0	0	0	0	0
4/25/2024	7:30 PM	0	0	0	0	0	0	0	0	0	0	0	0	0
4/25/2024	7:45 PM	0	0	0	0	0	0	0	0	0	0	0	0	0
4/25/2024	8:00 PM	0	0	0	0	0	0	0	0	0	0	0	0	0
4/25/2024	8:15 PM	0	0	0	0	0	0	0	0	0	0	0	0	0
4/25/2024	8:30 PM	0	0	0	0	0	0	0	0	0	0	0	0	0
4/25/2024	8:45 PM	0	0	0	0	0	0	0	0	0	0	0	0	0
4/25/2024	9:00 PM	0	0	0	0	0	0	0	0	0	0	0	0	0
4/25/2024	9:15 PM	0	0	0	0	0	0	0	0	0	0	0	0	0
4/25/2024	9:30 PM	0	0	0	0	0	0	0	0	0	0	0	0	0
4/25/2024	9:45 PM	0	0	0	0	0	0	0	0	0	0	0	0	0
4/25/2024	10:00 PM	0	0	0	0	0	0	0	0	0	0	0	0	0
4/25/2024	10:15 PM	0	0	0	0	0	0	0	0	0	0	0	0	0
4/25/2024	10:30 PM	0	0	0	0	0	0	0	0	0	0	0	0	0
4/25/2024	10:45 PM	0	0	0	0	0	0	0	0	0	0	0	0	0
4/25/2024	11:00 PM	0	0	0	0	0	0	0	0	0	0	0	0	0
4/25/2024	11:15 PM	0	0	0	0	0	0	0	0	0	0	0	0	0
4/25/2024	11:30 PM	0	0	0	0	0	0	0	0	0	0	0	0	0
4/25/2024	11:45 PM	0	0	0	0	0	0	0	0	0	0	0	0	0

SB
File Name:
Start Date: 4/23/2024
Start Time: 0
Site Code: 62
Station ID: 1
Location 1: I-20 S/Bound On-Ramp, south of Bush River Rd
Location 2:

Date	Time	1	2	3	4	5	6	7	8	9	10	11	12	13
4/23/2024	12:00 AM	0	0	0	0	0	0	0	0	0	0	0	0	0
4/23/2024	12:15 AM	0	0	0	0	0	0	0	0	0	0	0	0	0
4/23/2024	12:30 AM	0	0	0	0	0	0	0	0	0	0	0	0	0
4/23/2024	12:45 AM	0	0	0	0	0	0	0	0	0	0	0	0	0
4/23/2024	1:00 AM	0	0	0	0	0	0	0	0	0	0	0	0	0
4/23/2024	1:15 AM	0	0	0	0	0	0	0	0	0	0	0	0	0
4/23/2024	1:30 AM	0	0	0	0	0	0	0	0	0	0	0	0	0
4/23/2024	1:45 AM	0	0	0	0	0	0	0	0	0	0	0	0	0
4/23/2024	2:00 AM	0	0	0	0	0	0	0	0	0	0	0	0	0
4/23/2024	2:15 AM	0	0	0	0	0	0	0	0	0	0	0	0	0
4/23/2024	2:30 AM	0	0	0	0	0	0	0	0	0	0	0	0	0
4/23/2024	2:45 AM	0	0	0	0	0	0	0	0	0	0	0	0	0
4/23/2024	3:00 AM	0	0	0	0	0	0	0	0	0	0	0	0	0
4/23/2024	3:15 AM	0	0	0	0	0	0	0	0	0	0	0	0	0
4/23/2024	3:30 AM	0	0	0	0	0	0	0	0	0	0	0	0	0
4/23/2024	3:45 AM	0	0	0	0	0	0	0	0	0	0	0	0	0
4/23/2024	4:00 AM	0	0	0	0	0	0	0	0	0	0	0	0	0
4/23/2024	4:15 AM	0	0	0	0	0	0	0	0	0	0	0	0	0
4/23/2024	4:30 AM	0	0	0	0	0	0	0	0	0	0	0	0	0
4/23/2024	4:45 AM	0	0	0	0	0	0	0	0	0	0	0	0	0
4/23/2024	5:00 AM	0	0	0	0	0	0	0	0	0	0	0	0	0
4/23/2024	5:15 AM	0	0	0	0	0	0	0	0	0	0	0	0	0
4/23/2024	5:30 AM	0	0	0	0	0	0	0	0	0	0	0	0	0
4/23/2024	5:45 AM	0	0	0	0	0	0	0	0	0	0	0	0	0
4/23/2024	6:00 AM	0	0	0	0	0	0	0	0	0	0	0	0	0
4/23/2024	6:15 AM	0	0	0	0	0	0	0	0	0	0	0	0	0
4/23/2024	6:30 AM	0	0	0	0	0	0	0	0	0	0	0	0	0
4/23/2024	6:45 AM	0	0	0	0	0	0	0	0	0	0	0	0	0
4/23/2024	7:00 AM	0	0	0	0	0	0	0	0	0	0	0	0	0
4/23/2024	7:15 AM	0	0	0	0	0	0	0	0	0	0	0	0	0
4/23/2024	7:30 AM	0	0	0	0	0	0	0	0	0	0	0	0	0
4/23/2024	7:45 AM	0	0	0	0	0	0	0	0	0	0	0	0	0
4/23/2024	8:00 AM	0	0	0	0	0	0	0	0	0	0	0	0	0
4/23/2024	8:15 AM	0	0	0	0	0	0	0	0	0	0	0	0	0
4/23/2024	8:30 AM	0	0	0	0	0	0	0	0	0	0	0	0	0
4/23/2024	8:45 AM	0	0	0	0	0	0	0	0	0	0	0	0	0
4/23/2024	9:00 AM	0	0	0	0	0	0	0	0	0	0	0	0	0
4/23/2024	9:15 AM	0	0	0	0	0	0	0	0	0	0	0	0	0
4/23/2024	9:30 AM	0	0	0	0	0	0	0	0	0	0	0	0	0
4/23/2024	9:45 AM	0	0	0	0	0	0	0	0	0	0	0	0	0
4/23/2024	10:00 AM	0	0	0	0	0	0	0	0	0	0	0	0	0
4/23/2024	10:15 AM	0	0	0	0	0	0	0	0	0	0	0	0	0
4/23/2024	10:30 AM	0	0	0	0	0	0	0	0	0	0	0	0	0
4/23/2024	10:45 AM	0	0	0	0	0	0	0	0	0	0	0	0	0
4/23/2024	11:00 AM	0	0	0	0	0	0	0	0	0	0	0	0	0
4/23/2024	11:15 AM	0	0	0	0	0	0	0	0	0	0	0	0	0
4/23/2024	11:30 AM	0	0	0	0	0	0	0	0	0	0	0	0	0
4/23/2024	11:45 AM	0	0	0	0	0	0	0	0	0	0	0	0	0
4/23/2024	12:00 PM	0	0	0	0	0	0	0	0	0	0	0	0	0
4/23/2024	12:15 PM	0	0	0	0	0	0	0	0	0	0	0	0	0
4/23/2024	12:30 PM	0	0	0	0	0	0	0	0	0	0	0	0	0
4/23/2024	12:45 PM	0	0	0	0	0	0	0	0	0	0	0	0	0
4/23/2024	1:00 PM	0	0	0	0	0	0	0	0	0	0	0	0	0
4/23/2024	1:15 PM	0	0	0	0	0	0	0	0	0	0	0	0	0
4/23/2024	1:30 PM	0	0	0	0	0	0	0	0	0	0	0	0	0
4/23/2024	1:45 PM	0	0	0	0	0	0	0	0	0	0	0	0	0
4/23/2024	2:00 PM	0	0	0	0	0	0	0	0	0	0	0	0	0
4/23/2024	2:15 PM	0	0	0	0	0	0	0	0	0	0	0	0	0
4/23/2024	2:30 PM	0	0	0	0	0	0	0	0	0	0	0	0	0
4/23/2024	2:45 PM	0	0	0	0	0	0	0	0	0	0	0	0	0
4/23/2024	3:00 PM	0	0	0	0	0	0	0	0	0	0	0	0	0
4/23/2024	3:15 PM	0	0	0	0	0	0	0	0	0	0	0	0	0
4/23/2024	3:30 PM	0	0	0	0	0	0	0	0	0	0	0	0	0
4/23/2024	3:45 PM	0	0	0	0	0	0	0	0	0	0	0	0	0
4/23/2024	4:00 PM	0	0	0	0	0	0	0	0	0	0	0	0	0
4/23/2024	4:15 PM	0	0	0	0	0	0	0	0	0	0	0	0	0
4/23/2024	4:30 PM	0	0	0	0	0	0	0	0	0	0	0	0	0
4/23/2024	4:45 PM	0	0	0	0	0	0	0	0	0	0	0	0	0
4/23/2024	5:00 PM	0	0	0	0	0	0	0	0	0	0	0	0	0
4/23/2024	5:15 PM	0	0	0	0	0	0	0	0	0	0	0	0	0
4/23/2024	5:30 PM	0	0	0	0	0	0	0	0	0	0	0	0	0
4/23/2024	5:45 PM	0	0	0	0	0	0	0	0	0	0	0	0	0
4/23/2024	6:00 PM	0	0	0	0	0	0	0	0	0	0	0	0	0
4/23/2024	6:15 PM	0	0	0	0	0	0	0	0	0	0	0	0	0
4/23/2024	6:30 PM	0	0	0	0	0	0	0	0	0	0	0	0	0
4/23/2024	6:45 PM	0	0	0	0	0	0	0	0	0	0	0	0	0
4/23/2024	7:00 PM	0	51	4	0	0	0	0	0	0	0	0	0	0
4/23/2024	7:15 PM	0	57	6	0	0	0	0	0	0	0	0	0	0
4/23/2024	7:30 PM	0	46	8	0	2	0	0	0	0	0	0	0	0
4/23/2024	7:45 PM	1	40	9	0	0	0	0	0	0	0	0	0	0
4/23/2024	8:00 PM	0	48	8	0	0	1	0	0	0	0	0	0	0
4/23/2024	8:15 PM	0	61	9	0	0	0	0	0	1	0	0	0	0
4/23/2024	8:30 PM	0	41	5	0	0	1	0	0	0	0	0	0	0
4/23/2024	8:45 PM	0	60	6	0	1	0	0	0	0	0	0	0	0
4/23/2024	9:00 PM	0	40	6	0	0	0	0	0	0	0	0	0	0
4/23/2024	9:15 PM	0	29	5	0	0	0	0	0	0	0	0	0	0
4/23/2024	9:30 PM	0	23	4	0	2	0	0	0	1	0	0	0	0
4/23/2024	9:45 PM	0	18	4	0	0	0	0	0	0	0	0	0	0
4/23/2024	10:00 PM	0	15	3	0	0	0	0	0	1	0	0	0	0
4/23/2024	10:15 PM	0	12	4	0	0	0	0	0	1	0	0	0	0
4/23/2024	10:30 PM	0	12	3	0	0	0	0	0	0	0	0	0	0
4/23/2024	10:45 PM	0	12	3	0	0	0	0	0	0	0	0	0	0
4/23/2024	11:00 PM	0	12	3	0	0	0	0	0	0	0	0	0	0
4/23/2024	11:15 PM	0	6	0	0	0	0	0	0	0	0	0	0	0
4/23/2024	11:30 PM	0	8	2	0	0	0	0	0	1	0	0	0	0
4/23/2024	11:45 PM	0	4	1	0	0	0	0	0	0	0	0	0	0

4/24/2024	12:00 AM	0	5	1	0	0	0	0	0	0	0	0	0	0
4/24/2024	12:15 AM	0	7	3	0	1	0	0	0	1	0	0	0	0
4/24/2024	12:30 AM	0	3	0	0	0	0	0	0	1	0	0	0	0
4/24/2024	12:45 AM	0	4	1	0	0	0	0	0	1	0	0	0	0
4/24/2024	1:00 AM	0	2	0	0	0	0	0	0	0	0	0	0	0
4/24/2024	1:15 AM	0	4	1	0	0	0	0	0	0	0	0	0	0
4/24/2024	1:30 AM	0	3	0	0	0	0	0	0	0	0	0	0	0
4/24/2024	1:45 AM	0	6	1	0	0	0	0	0	1	0	0	0	0
4/24/2024	2:00 AM	0	1	0	0	0	0	0	0	0	0	0	0	0
4/24/2024	2:15 AM	0	2	0	0	0	0	0	0	0	0	0	0	0
4/24/2024	2:30 AM	0	2	0	0	0	0	0	0	0	0	0	0	0
4/24/2024	2:45 AM	0	2	0	0	0	0	0	0	0	0	0	0	0
4/24/2024	3:00 AM	0	3	0	0	0	0	0	0	1	0	0	0	0
4/24/2024	3:15 AM	0	2	0	0	0	0	0	0	1	0	0	0	0
4/24/2024	3:30 AM	0	4	1	0	0	0	0	0	0	0	0	0	0
4/24/2024	3:45 AM	0	2	1	0	0	0	0	0	0	0	0	0	0
4/24/2024	4:00 AM	0	3	0	0	0	1	0	0	0	0	0	0	0
4/24/2024	4:15 AM	0	3	2	0	0	0	0	0	0	0	0	0	0
4/24/2024	4:30 AM	0	4	0	0	1	0	0	0	1	0	0	0	0
4/24/2024	4:45 AM	0	7	0	0	0	0	0	0	0	0	0	0	0
4/24/2024	5:00 AM	0	5	1	0	0	0	0	0	1	0	0	0	0
4/24/2024	5:15 AM	0	10	3	0	0	0	0	0	0	0	0	0	0
4/24/2024	5:30 AM	0	12	3	0	0	0	0	0	1	0	0	0	0
4/24/2024	5:45 AM	0	16	3	0	0	0	0	0	0	0	0	0	0
4/24/2024	6:00 AM	0	21	5	0	0	1	0	0	0	0	0	0	0
4/24/2024	6:15 AM	0	26	4	0	0	0	0	0	0	0	0	0	0
4/24/2024	6:30 AM	0	31	4	0	3	0	0	0	0	0	0	0	0
4/24/2024	6:45 AM	0	49	11	0	0	0	0	0	0	0	0	0	0
4/24/2024	7:00 AM	0	47	10	0	2	0	0	0	2	0	0	0	0
4/24/2024	7:15 AM	0	73	16	0	1	0	0	0	0	0	0	0	0
4/24/2024	7:30 AM	0	70	15	0	2	0	0	0	2	0	0	0	0
4/24/2024	7:45 AM	0	72	12	0	0	0	0	1	1	0	0	0	0
4/24/2024	8:00 AM	0	53	7	0	0	0	0	0	2	0	0	0	0
4/24/2024	8:15 AM	0	50	8	0	2	0	0	0	0	0	0	0	0
4/24/2024	8:30 AM	0	59	8	0	0	0	0	0	0	0	0	0	0
4/24/2024	8:45 AM	0	60	12	0	1	0	0	0	0	0	0	0	0
4/24/2024	9:00 AM	0	47	6	0	1	0	0	0	0	0	0	0	0
4/24/2024	9:15 AM	0	42	7	0	0	2	0	1	0	0	0	0	0
4/24/2024	9:30 AM	0	47	12	0	2	0	0	0	2	0	0	0	0
4/24/2024	9:45 AM	0	55	10	0	1	0	0	0	1	0	0	0	0
4/24/2024	10:00 AM	0	45	9	0	2	0	0	0	2	0	0	0	0
4/24/2024	10:15 AM	0	43	14	0	2	1	0	0	1	0	0	0	0
4/24/2024	10:30 AM	0	51	12	0	1	0	0	0	0	0	0	0	0
4/24/2024	10:45 AM	0	61	8	0	0	0	0	0	0	0	0	0	0
4/24/2024	11:00 AM	0	42	11	0	1	0	0	0	0	0	0	0	0
4/24/2024	11:15 AM	0	51	4	0	0	0	0	0	0	0	0	0	0
4/24/2024	11:30 AM	0	54	16	0	0	0	0	0	0	0	0	0	0
4/24/2024	11:45 AM	0	54	9	0	1	0	0	0	1	0	0	0	0
4/24/2024	12:00 PM	0	59	12	0	1	0	0	0	1	0	0	0	0
4/24/2024	12:15 PM	0	61	17	0	0	0	0	1	0	0	0	0	0
4/24/2024	12:30 PM	0	79	18	0	3	0	0	0	0	0	0	0	0
4/24/2024	12:45 PM	0	86	17	0	4	0	0	0	0	0	0	0	0
4/24/2024	1:00 PM	0	78	16	0	2	1	0	0	4	0	0	0	0
4/24/2024	1:15 PM	0	81	15	0	1	0	0	2	0	0	0	0	0
4/24/2024	1:30 PM	1	57	17	0	3	0	0	1	3	0	0	0	0
4/24/2024	1:45 PM	0	73	16	0	1	1	0	0	1	0	0	0	0
4/24/2024	2:00 PM	0	87	18	0	0	1	0	0	1	0	0	0	0
4/24/2024	2:15 PM	0	108	31	0	1	0	0	0	1	0	0	0	0
4/24/2024	2:30 PM	0	82	19	0	4	0	0	1	1	0	0	0	0
4/24/2024	2:45 PM	0	67	18	0	0	0	0	0	1	0	0	0	0
4/24/2024	3:00 PM	0	100	27	0	0	0	0	0	1	0	0	0	0
4/24/2024	3:15 PM	0	98	21	0	1	0	0	1	2	0	0	0	0
4/24/2024	3:30 PM	0	121	15	0	1	0	0	0	2	0	0	0	0
4/24/2024	3:45 PM	0	107	21	0	0	0	0	0	0	0	0	0	0
4/24/2024	4:00 PM	0	116	27	0	0	0	0	0	1	0	0	0	0
4/24/2024	4:15 PM	0	107	14	0	1	1	0	0	0	0	0	0	0
4/24/2024	4:30 PM	0	153	30	0	3	0	0	1	0	0	0	0	0
4/24/2024	4:45 PM	0	129	26	1	0	1	0	1	1	0	0	0	0
4/24/2024	5:00 PM	0	194	30	0	1	0	0	0	2	0	0	0	0
4/24/2024	5:15 PM	0	153	30	0	0	0	0	0	1	0	0	0	0
4/24/2024	5:30 PM	0	145	22	0	1	0	0	1	0	0	0	0	0
4/24/2024	5:45 PM	0	118	25	0	3	1	0	0	1	0	0	0	0
4/24/2024	6:00 PM	2	76	13	0	0	0	0	2	0	0	0	0	0
4/24/2024	6:15 PM	1	71	12	0	0	1	0	0	0	0	0	0	0
4/24/2024	6:30 PM	0	66	7	0	1	0	0	0	1	0	0	0	0
4/24/2024	6:45 PM	0	71	9	0	0	1	0	0	0	0	0	0	0
4/24/2024	7:00 PM	0	66	10	0	0	1	0	0	0	0	0	0	0
4/24/2024	7:15 PM	0	56	11	1	1	1	0	0	0	0	0	0	0
4/24/2024	7:30 PM	0	54	8	0	0	0	0	0	0	0	0	0	0
4/24/2024	7:45 PM	0	39	7	0	1	0	0	0	0	0	0	0	0
4/24/2024	8:00 PM	0	51	4	0	0	1	0	0	1	0	0	0	0
4/24/2024	8:15 PM	0	55	8	0	0	0	0	0	1	0	0	0	0
4/24/2024	8:30 PM	0	62	7	0	1	0	0	0	0	0	0	0	0
4/24/2024	8:45 PM	0	69	9	0	0	0	0	0	0	0	0	0	0
4/24/2024	9:00 PM	0	59	10	0	0	0	0	0	0	0	0	0	0
4/24/2024	9:15 PM	0	24	3	0	0	0	0	0	0	0	0	0	0
4/24/2024	9:30 PM	0	17	3	0	0	0	0	0	0	0	0	0	0
4/24/2024	9:45 PM	0	26	3	0	0	0	0	0	0	0	0	0	0
4/24/2024	10:00 PM	0	28	7	0	0	0	0	0	0	0	0	0	0
4/24/2024	10:15 PM	0	17	3	0	0	0	0	0	0	0	0	0	0
4/24/2024	10:30 PM	0	10	2	0	0	0	0	0	0	0	0	0	0
4/24/2024	10:45 PM	0	17	4	0	0	0	0	0	0	0	0	0	0
4/24/2024	11:00 PM	0	14	3	0	0	0	0	0	1	0	0	0	0
4/24/2024	11:15 PM	0	12	3	0	0	0	0	0	0	0	0	0	0
4/24/2024	11:30 PM	0	3	1	0	0	0	0	0	0	0	0	0	0
4/24/2024	11:45 PM	0	5	1	0	0	0	0	0	0	0	0	0	0

4/25/2024	12:00 AM	0	9	2	0	0	0	0	0	0	0	0	0
4/25/2024	12:15 AM	0	8	0	0	0	0	0	0	0	0	0	0
4/25/2024	12:30 AM	0	7	0	0	0	0	0	0	0	0	0	0
4/25/2024	12:45 AM	0	1	0	0	0	0	0	0	0	0	0	0
4/25/2024	1:00 AM	0	2	0	0	0	0	0	1	0	0	0	0
4/25/2024	1:15 AM	0	1	0	0	0	0	0	0	0	0	0	0
4/25/2024	1:30 AM	0	3	1	0	0	0	0	0	0	0	0	0
4/25/2024	1:45 AM	0	4	2	0	0	0	0	0	0	0	0	0
4/25/2024	2:00 AM	0	2	0	0	0	0	0	0	0	0	0	0
4/25/2024	2:15 AM	0	0	0	0	0	0	0	0	0	0	0	0
4/25/2024	2:30 AM	0	0	0	0	0	0	0	2	0	0	0	0
4/25/2024	2:45 AM	0	3	1	0	0	0	0	0	0	0	0	0
4/25/2024	3:00 AM	0	3	1	0	0	0	0	0	0	0	0	0
4/25/2024	3:15 AM	0	5	1	0	0	0	0	0	0	0	0	0
4/25/2024	3:30 AM	0	0	0	0	0	0	0	0	0	0	0	0
4/25/2024	3:45 AM	0	4	0	0	0	0	0	1	0	0	0	0
4/25/2024	4:00 AM	0	3	0	0	0	0	0	0	0	0	0	0
4/25/2024	4:15 AM	0	2	0	0	0	0	0	0	0	0	0	0
4/25/2024	4:30 AM	0	6	2	0	0	0	0	0	0	0	0	0
4/25/2024	4:45 AM	0	4	1	0	0	0	0	0	0	0	0	0
4/25/2024	5:00 AM	0	5	2	0	0	0	0	0	0	0	0	0
4/25/2024	5:15 AM	0	9	3	0	0	0	0	0	0	0	0	0
4/25/2024	5:30 AM	0	15	4	0	0	0	0	0	1	0	0	0
4/25/2024	5:45 AM	0	7	2	0	0	0	0	0	0	0	0	0
4/25/2024	6:00 AM	0	23	4	0	0	0	0	0	0	0	0	0
4/25/2024	6:15 AM	0	23	4	0	1	0	0	0	2	0	0	0
4/25/2024	6:30 AM	0	35	7	0	0	0	0	0	0	0	0	0
4/25/2024	6:45 AM	0	45	10	0	0	0	0	0	0	0	0	0
4/25/2024	7:00 AM	0	52	11	0	0	0	0	0	0	0	0	0
4/25/2024	7:15 AM	0	85	13	0	1	0	0	0	0	0	0	0
4/25/2024	7:30 AM	0	71	15	0	1	0	0	0	0	0	0	0
4/25/2024	7:45 AM	0	83	12	0	3	0	0	0	1	0	0	0
4/25/2024	8:00 AM	0	56	11	0	2	0	0	1	0	0	0	0
4/25/2024	8:15 AM	0	50	7	0	0	0	0	0	1	0	0	0
4/25/2024	8:30 AM	0	59	8	0	0	0	0	0	0	0	0	0
4/25/2024	8:45 AM	1	51	9	0	2	1	0	0	0	0	0	0
4/25/2024	9:00 AM	0	43	7	0	1	1	0	0	0	0	0	0
4/25/2024	9:15 AM	0	32	13	0	0	1	0	0	1	0	0	0
4/25/2024	9:30 AM	0	42	11	0	2	0	0	0	0	0	0	0
4/25/2024	9:45 AM	0	42	7	0	0	0	0	0	0	0	0	0
4/25/2024	10:00 AM	0	51	13	0	1	0	0	0	0	0	0	0
4/25/2024	10:15 AM	0	50	11	0	0	0	0	0	1	0	0	0
4/25/2024	10:30 AM	0	52	9	0	1	1	0	0	1	0	0	0
4/25/2024	10:45 AM	0	52	13	0	1	1	0	0	0	0	0	0
4/25/2024	11:00 AM	0	54	11	0	4	1	0	0	1	0	0	0
4/25/2024	11:15 AM	0	59	9	0	3	0	0	0	1	0	0	0
4/25/2024	11:30 AM	0	61	14	0	1	1	0	0	1	0	0	0
4/25/2024	11:45 AM	0	52	23	0	0	1	1	0	1	0	0	0
4/25/2024	12:00 PM	0	72	15	0	0	1	0	1	0	0	0	0
4/25/2024	12:15 PM	0	72	18	0	1	1	0	1	1	0	0	0
4/25/2024	12:30 PM	0	63	11	0	0	0	0	1	0	0	0	0
4/25/2024	12:45 PM	0	75	17	0	0	1	0	0	0	0	0	0
4/25/2024	1:00 PM	0	88	17	0	1	2	0	1	0	0	0	0
4/25/2024	1:15 PM	0	87	20	0	0	1	0	0	3	0	0	0
4/25/2024	1:30 PM	0	96	24	0	0	0	0	0	0	0	0	0
4/25/2024	1:45 PM	0	93	26	0	2	0	0	0	1	0	0	0
4/25/2024	2:00 PM	0	105	23	0	2	1	1	0	0	0	0	0
4/25/2024	2:15 PM	0	99	20	0	0	0	0	1	1	0	0	0
4/25/2024	2:30 PM	0	85	10	0	0	0	1	0	2	0	0	0
4/25/2024	2:45 PM	0	99	19	0	2	0	0	0	0	0	0	0
4/25/2024	3:00 PM	1	78	15	1	0	0	0	0	0	0	0	0
4/25/2024	3:15 PM	0	105	21	0	2	0	2	0	0	0	0	0
4/25/2024	3:30 PM	0	110	16	0	0	1	1	1	1	0	0	0
4/25/2024	3:45 PM	0	122	21	0	2	1	0	0	0	0	0	0
4/25/2024	4:00 PM	0	151	23	0	1	1	0	0	1	0	0	0
4/25/2024	4:15 PM	0	120	21	0	2	1	0	0	0	0	0	0
4/25/2024	4:30 PM	0	132	24	0	3	0	0	0	0	0	0	0
4/25/2024	4:45 PM	0	129	32	0	1	1	0	0	1	0	0	0
4/25/2024	5:00 PM	0	189	22	0	0	0	0	0	1	0	0	0
4/25/2024	5:15 PM	0	177	32	0	0	0	0	0	1	0	0	0
4/25/2024	5:30 PM	0	133	19	0	1	0	0	0	0	0	0	0
4/25/2024	5:45 PM	0	107	14	0	0	0	0	0	1	0	0	0
4/25/2024	6:00 PM	0	82	13	0	0	1	0	0	1	0	0	0
4/25/2024	6:15 PM	2	88	16	0	0	0	0	0	0	0	0	0
4/25/2024	6:30 PM	0	67	15	0	2	0	0	1	1	0	0	0
4/25/2024	6:45 PM	0	74	12	0	1	0	0	0	1	0	0	0
4/25/2024	7:00 PM	0	0	0	0	0	0	0	0	0	0	0	0
4/25/2024	7:15 PM	0	0	0	0	0	0	0	0	0	0	0	0
4/25/2024	7:30 PM	0	0	0	0	0	0	0	0	0	0	0	0
4/25/2024	7:45 PM	0	0	0	0	0	0	0	0	0	0	0	0
4/25/2024	8:00 PM	0	0	0	0	0	0	0	0	0	0	0	0
4/25/2024	8:15 PM	0	0	0	0	0	0	0	0	0	0	0	0
4/25/2024	8:30 PM	0	0	0	0	0	0	0	0	0	0	0	0
4/25/2024	8:45 PM	0	0	0	0	0	0	0	0	0	0	0	0
4/25/2024	9:00 PM	0	0	0	0	0	0	0	0	0	0	0	0
4/25/2024	9:15 PM	0	0	0	0	0	0	0	0	0	0	0	0
4/25/2024	9:30 PM	0	0	0	0	0	0	0	0	0	0	0	0
4/25/2024	9:45 PM	0	0	0	0	0	0	0	0	0	0	0	0
4/25/2024	10:00 PM	0	0	0	0	0	0	0	0	0	0	0	0
4/25/2024	10:15 PM	0	0	0	0	0	0	0	0	0	0	0	0
4/25/2024	10:30 PM	0	0	0	0	0	0	0	0	0	0	0	0
4/25/2024	10:45 PM	0	0	0	0	0	0	0	0	0	0	0	0
4/25/2024	11:00 PM	0	0	0	0	0	0	0	0	0	0	0	0
4/25/2024	11:15 PM	0	0	0	0	0	0	0	0	0	0	0	0
4/25/2024	11:30 PM	0	0	0	0	0	0	0	0	0	0	0	0
4/25/2024	11:45 PM	0	0	0	0	0	0	0	0	0	0	0	0

NB
File Name:
Start Date: 4/23/2024
Start Time: 0
Site Code: 62
Station ID: 1
Location 1: I-20 S/Bound On-Ramp, south of Bush River Rd
Location 2:

Date	Time	1	2	3	4	5	6	7	8	9	10	11	12	13
4/23/2024	12:00 AM	0	0	0	0	0	0	0	0	0	0	0	0	0
4/23/2024	12:15 AM	0	0	0	0	0	0	0	0	0	0	0	0	0
4/23/2024	12:30 AM	0	0	0	0	0	0	0	0	0	0	0	0	0
4/23/2024	12:45 AM	0	0	0	0	0	0	0	0	0	0	0	0	0
4/23/2024	1:00 AM	0	0	0	0	0	0	0	0	0	0	0	0	0
4/23/2024	1:15 AM	0	0	0	0	0	0	0	0	0	0	0	0	0
4/23/2024	1:30 AM	0	0	0	0	0	0	0	0	0	0	0	0	0
4/23/2024	1:45 AM	0	0	0	0	0	0	0	0	0	0	0	0	0
4/23/2024	2:00 AM	0	0	0	0	0	0	0	0	0	0	0	0	0
4/23/2024	2:15 AM	0	0	0	0	0	0	0	0	0	0	0	0	0
4/23/2024	2:30 AM	0	0	0	0	0	0	0	0	0	0	0	0	0
4/23/2024	2:45 AM	0	0	0	0	0	0	0	0	0	0	0	0	0
4/23/2024	3:00 AM	0	0	0	0	0	0	0	0	0	0	0	0	0
4/23/2024	3:15 AM	0	0	0	0	0	0	0	0	0	0	0	0	0
4/23/2024	3:30 AM	0	0	0	0	0	0	0	0	0	0	0	0	0
4/23/2024	3:45 AM	0	0	0	0	0	0	0	0	0	0	0	0	0
4/23/2024	4:00 AM	0	0	0	0	0	0	0	0	0	0	0	0	0
4/23/2024	4:15 AM	0	0	0	0	0	0	0	0	0	0	0	0	0
4/23/2024	4:30 AM	0	0	0	0	0	0	0	0	0	0	0	0	0
4/23/2024	4:45 AM	0	0	0	0	0	0	0	0	0	0	0	0	0
4/23/2024	5:00 AM	0	0	0	0	0	0	0	0	0	0	0	0	0
4/23/2024	5:15 AM	0	0	0	0	0	0	0	0	0	0	0	0	0
4/23/2024	5:30 AM	0	0	0	0	0	0	0	0	0	0	0	0	0
4/23/2024	5:45 AM	0	0	0	0	0	0	0	0	0	0	0	0	0
4/23/2024	6:00 AM	0	0	0	0	0	0	0	0	0	0	0	0	0
4/23/2024	6:15 AM	0	0	0	0	0	0	0	0	0	0	0	0	0
4/23/2024	6:30 AM	0	0	0	0	0	0	0	0	0	0	0	0	0
4/23/2024	6:45 AM	0	0	0	0	0	0	0	0	0	0	0	0	0
4/23/2024	7:00 AM	0	0	0	0	0	0	0	0	0	0	0	0	0
4/23/2024	7:15 AM	0	0	0	0	0	0	0	0	0	0	0	0	0
4/23/2024	7:30 AM	0	0	0	0	0	0	0	0	0	0	0	0	0
4/23/2024	7:45 AM	0	0	0	0	0	0	0	0	0	0	0	0	0
4/23/2024	8:00 AM	0	0	0	0	0	0	0	0	0	0	0	0	0
4/23/2024	8:15 AM	0	0	0	0	0	0	0	0	0	0	0	0	0
4/23/2024	8:30 AM	0	0	0	0	0	0	0	0	0	0	0	0	0
4/23/2024	8:45 AM	0	0	0	0	0	0	0	0	0	0	0	0	0
4/23/2024	9:00 AM	0	0	0	0	0	0	0	0	0	0	0	0	0
4/23/2024	9:15 AM	0	0	0	0	0	0	0	0	0	0	0	0	0
4/23/2024	9:30 AM	0	0	0	0	0	0	0	0	0	0	0	0	0
4/23/2024	9:45 AM	0	0	0	0	0	0	0	0	0	0	0	0	0
4/23/2024	10:00 AM	0	0	0	0	0	0	0	0	0	0	0	0	0
4/23/2024	10:15 AM	0	0	0	0	0	0	0	0	0	0	0	0	0
4/23/2024	10:30 AM	0	0	0	0	0	0	0	0	0	0	0	0	0
4/23/2024	10:45 AM	0	0	0	0	0	0	0	0	0	0	0	0	0
4/23/2024	11:00 AM	0	0	0	0	0	0	0	0	0	0	0	0	0
4/23/2024	11:15 AM	0	0	0	0	0	0	0	0	0	0	0	0	0
4/23/2024	11:30 AM	0	0	0	0	0	0	0	0	0	0	0	0	0
4/23/2024	11:45 AM	0	0	0	0	0	0	0	0	0	0	0	0	0
4/23/2024	12:00 PM	0	0	0	0	0	0	0	0	0	0	0	0	0
4/23/2024	12:15 PM	0	0	0	0	0	0	0	0	0	0	0	0	0
4/23/2024	12:30 PM	0	0	0	0	0	0	0	0	0	0	0	0	0
4/23/2024	12:45 PM	0	0	0	0	0	0	0	0	0	0	0	0	0
4/23/2024	1:00 PM	0	0	0	0	0	0	0	0	0	0	0	0	0
4/23/2024	1:15 PM	0	0	0	0	0	0	0	0	0	0	0	0	0
4/23/2024	1:30 PM	0	0	0	0	0	0	0	0	0	0	0	0	0
4/23/2024	1:45 PM	0	0	0	0	0	0	0	0	0	0	0	0	0
4/23/2024	2:00 PM	0	0	0	0	0	0	0	0	0	0	0	0	0
4/23/2024	2:15 PM	0	0	0	0	0	0	0	0	0	0	0	0	0
4/23/2024	2:30 PM	0	0	0	0	0	0	0	0	0	0	0	0	0
4/23/2024	2:45 PM	0	0	0	0	0	0	0	0	0	0	0	0	0
4/23/2024	3:00 PM	0	0	0	0	0	0	0	0	0	0	0	0	0
4/23/2024	3:15 PM	0	0	0	0	0	0	0	0	0	0	0	0	0
4/23/2024	3:30 PM	0	0	0	0	0	0	0	0	0	0	0	0	0
4/23/2024	3:45 PM	0	0	0	0	0	0	0	0	0	0	0	0	0
4/23/2024	4:00 PM	0	0	0	0	0	0	0	0	0	0	0	0	0
4/23/2024	4:15 PM	0	0	0	0	0	0	0	0	0	0	0	0	0
4/23/2024	4:30 PM	0	0	0	0	0	0	0	0	0	0	0	0	0
4/23/2024	4:45 PM	0	0	0	0	0	0	0	0	0	0	0	0	0
4/23/2024	5:00 PM	0	0	0	0	0	0	0	0	0	0	0	0	0
4/23/2024	5:15 PM	0	0	0	0	0	0	0	0	0	0	0	0	0
4/23/2024	5:30 PM	0	0	0	0	0	0	0	0	0	0	0	0	0
4/23/2024	5:45 PM	0	0	0	0	0	0	0	0	0	0	0	0	0
4/23/2024	6:00 PM	0	0	0	0	0	0	0	0	0	0	0	0	0
4/23/2024	6:15 PM	0	0	0	0	0	0	0	0	0	0	0	0	0
4/23/2024	6:30 PM	0	0	0	0	0	0	0	0	0	0	0	0	0
4/23/2024	6:45 PM	0	0	0	0	0	0	0	0	0	0	0	0	0
4/23/2024	7:00 PM	0	0	0	0	0	0	0	0	0	0	0	0	0
4/23/2024	7:15 PM	0	0	0	0	0	0	0	0	0	0	0	0	0
4/23/2024	7:30 PM	0	0	0	0	0	0	0	0	0	0	0	0	0
4/23/2024	7:45 PM	0	0	0	0	0	0	0	0	0	0	0	0	0
4/23/2024	8:00 PM	0	0	0	0	0	0	0	0	0	0	0	0	0
4/23/2024	8:15 PM	0	0	0	0	0	0	0	0	0	0	0	0	0
4/23/2024	8:30 PM	0	0	0	0	0	0	0	0	0	0	0	0	0
4/23/2024	8:45 PM	0	0	0	0	0	0	0	0	0	0	0	0	0
4/23/2024	9:00 PM	0	0	0	0	0	0	0	0	0	0	0	0	0
4/23/2024	9:15 PM	0	0	0	0	0	0	0	0	0	0	0	0	0
4/23/2024	9:30 PM	0	0	0	0	0	0	0	0	0	0	0	0	0
4/23/2024	9:45 PM	0	0	0	0	0	0	0	0	0	0	0	0	0
4/23/2024	10:00 PM	0	0	0	0	0	0	0	0	0	0	0	0	0
4/23/2024	10:15 PM	0	0	0	0	0	0	0	0	0	0	0	0	0
4/23/2024	10:30 PM	0	0	0	0	0	0	0	0	0	0	0	0	0
4/23/2024	10:45 PM	0	0	0	0	0	0	0	0	0	0	0	0	0
4/23/2024	11:00 PM	0	0	0	0	0	0	0	0	0	0	0	0	0
4/23/2024	11:15 PM	0	0	0	0	0	0	0	0	0	0	0	0	0
4/23/2024	11:30 PM	0	0	0	0	0	0	0	0	0	0	0	0	0
4/23/2024	11:45 PM	0	0	0	0	0	0	0	0	0	0	0	0	0

4/24/2024	12:00 AM	0	0	0	0	0	0	0	0	0	0	0	0	0
4/24/2024	12:15 AM	0	0	0	0	0	0	0	0	0	0	0	0	0
4/24/2024	12:30 AM	0	0	0	0	0	0	0	0	0	0	0	0	0
4/24/2024	12:45 AM	0	0	0	0	0	0	0	0	0	0	0	0	0
4/24/2024	1:00 AM	0	0	0	0	0	0	0	0	0	0	0	0	0
4/24/2024	1:15 AM	0	0	0	0	0	0	0	0	0	0	0	0	0
4/24/2024	1:30 AM	0	0	0	0	0	0	0	0	0	0	0	0	0
4/24/2024	1:45 AM	0	0	0	0	0	0	0	0	0	0	0	0	0
4/24/2024	2:00 AM	0	0	0	0	0	0	0	0	0	0	0	0	0
4/24/2024	2:15 AM	0	0	0	0	0	0	0	0	0	0	0	0	0
4/24/2024	2:30 AM	0	0	0	0	0	0	0	0	0	0	0	0	0
4/24/2024	2:45 AM	0	0	0	0	0	0	0	0	0	0	0	0	0
4/24/2024	3:00 AM	0	0	0	0	0	0	0	0	0	0	0	0	0
4/24/2024	3:15 AM	0	0	0	0	0	0	0	0	0	0	0	0	0
4/24/2024	3:30 AM	0	0	0	0	0	0	0	0	0	0	0	0	0
4/24/2024	3:45 AM	0	0	0	0	0	0	0	0	0	0	0	0	0
4/24/2024	4:00 AM	0	0	0	0	0	0	0	0	0	0	0	0	0
4/24/2024	4:15 AM	0	0	0	0	0	0	0	0	0	0	0	0	0
4/24/2024	4:30 AM	0	0	0	0	0	0	0	0	0	0	0	0	0
4/24/2024	4:45 AM	0	0	0	0	0	0	0	0	0	0	0	0	0
4/24/2024	5:00 AM	0	0	0	0	0	0	0	0	0	0	0	0	0
4/24/2024	5:15 AM	0	0	0	0	0	0	0	0	0	0	0	0	0
4/24/2024	5:30 AM	0	0	0	0	0	0	0	0	0	0	0	0	0
4/24/2024	5:45 AM	0	0	0	0	0	0	0	0	0	0	0	0	0
4/24/2024	6:00 AM	0	0	0	0	0	0	0	0	0	0	0	0	0
4/24/2024	6:15 AM	0	0	0	0	0	0	0	0	0	0	0	0	0
4/24/2024	6:30 AM	0	0	0	0	0	0	0	0	0	0	0	0	0
4/24/2024	6:45 AM	0	0	0	0	0	0	0	0	0	0	0	0	0
4/24/2024	7:00 AM	0	0	0	0	0	0	0	0	0	0	0	0	0
4/24/2024	7:15 AM	0	0	0	0	0	0	0	0	0	0	0	0	0
4/24/2024	7:30 AM	0	0	0	0	0	0	0	0	0	0	0	0	0
4/24/2024	7:45 AM	0	0	0	0	0	0	0	0	0	0	0	0	0
4/24/2024	8:00 AM	0	0	0	0	0	0	0	0	0	0	0	0	0
4/24/2024	8:15 AM	0	0	0	0	0	0	0	0	0	0	0	0	0
4/24/2024	8:30 AM	0	0	0	0	0	0	0	0	0	0	0	0	0
4/24/2024	8:45 AM	0	0	0	0	0	0	0	0	0	0	0	0	0
4/24/2024	9:00 AM	0	0	0	0	0	0	0	0	0	0	0	0	0
4/24/2024	9:15 AM	0	0	0	0	0	0	0	0	0	0	0	0	0
4/24/2024	9:30 AM	0	0	0	0	0	0	0	0	0	0	0	0	0
4/24/2024	9:45 AM	0	0	0	0	0	0	0	0	0	0	0	0	0
4/24/2024	10:00 AM	0	0	0	0	0	0	0	0	0	0	0	0	0
4/24/2024	10:15 AM	0	0	0	0	0	0	0	0	0	0	0	0	0
4/24/2024	10:30 AM	0	0	0	0	0	0	0	0	0	0	0	0	0
4/24/2024	10:45 AM	0	0	0	0	0	0	0	0	0	0	0	0	0
4/24/2024	11:00 AM	0	0	0	0	0	0	0	0	0	0	0	0	0
4/24/2024	11:15 AM	0	0	0	0	0	0	0	0	0	0	0	0	0
4/24/2024	11:30 AM	0	0	0	0	0	0	0	0	0	0	0	0	0
4/24/2024	11:45 AM	0	0	0	0	0	0	0	0	0	0	0	0	0
4/24/2024	12:00 PM	0	0	0	0	0	0	0	0	0	0	0	0	0
4/24/2024	12:15 PM	0	0	0	0	0	0	0	0	0	0	0	0	0
4/24/2024	12:30 PM	0	0	0	0	0	0	0	0	0	0	0	0	0
4/24/2024	12:45 PM	0	0	0	0	0	0	0	0	0	0	0	0	0
4/24/2024	1:00 PM	0	0	0	0	0	0	0	0	0	0	0	0	0
4/24/2024	1:15 PM	0	0	0	0	0	0	0	0	0	0	0	0	0
4/24/2024	1:30 PM	0	0	0	0	0	0	0	0	0	0	0	0	0
4/24/2024	1:45 PM	0	0	0	0	0	0	0	0	0	0	0	0	0
4/24/2024	2:00 PM	0	0	0	0	0	0	0	0	0	0	0	0	0
4/24/2024	2:15 PM	0	0	0	0	0	0	0	0	0	0	0	0	0
4/24/2024	2:30 PM	0	0	0	0	0	0	0	0	0	0	0	0	0
4/24/2024	2:45 PM	0	0	0	0	0	0	0	0	0	0	0	0	0
4/24/2024	3:00 PM	0	0	0	0	0	0	0	0	0	0	0	0	0
4/24/2024	3:15 PM	0	0	0	0	0	0	0	0	0	0	0	0	0
4/24/2024	3:30 PM	0	0	0	0	0	0	0	0	0	0	0	0	0
4/24/2024	3:45 PM	0	0	0	0	0	0	0	0	0	0	0	0	0
4/24/2024	4:00 PM	0	0	0	0	0	0	0	0	0	0	0	0	0
4/24/2024	4:15 PM	0	0	0	0	0	0	0	0	0	0	0	0	0
4/24/2024	4:30 PM	0	0	0	0	0	0	0	0	0	0	0	0	0
4/24/2024	4:45 PM	0	0	0	0	0	0	0	0	0	0	0	0	0
4/24/2024	5:00 PM	0	0	0	0	0	0	0	0	0	0	0	0	0
4/24/2024	5:15 PM	0	0	0	0	0	0	0	0	0	0	0	0	0
4/24/2024	5:30 PM	0	0	0	0	0	0	0	0	0	0	0	0	0
4/24/2024	5:45 PM	0	0	0	0	0	0	0	0	0	0	0	0	0
4/24/2024	6:00 PM	0	0	0	0	0	0	0	0	0	0	0	0	0
4/24/2024	6:15 PM	0	0	0	0	0	0	0	0	0	0	0	0	0
4/24/2024	6:30 PM	0	0	0	0	0	0	0	0	0	0	0	0	0
4/24/2024	6:45 PM	0	0	0	0	0	0	0	0	0	0	0	0	0
4/24/2024	7:00 PM	0	0	0	0	0	0	0	0	0	0	0	0	0
4/24/2024	7:15 PM	0	0	0	0	0	0	0	0	0	0	0	0	0
4/24/2024	7:30 PM	0	0	0	0	0	0	0	0	0	0	0	0	0
4/24/2024	7:45 PM	0	0	0	0	0	0	0	0	0	0	0	0	0
4/24/2024	8:00 PM	0	0	0	0	0	0	0	0	0	0	0	0	0
4/24/2024	8:15 PM	0	0	0	0	0	0	0	0	0	0	0	0	0
4/24/2024	8:30 PM	0	0	0	0	0	0	0	0	0	0	0	0	0
4/24/2024	8:45 PM	0	0	0	0	0	0	0	0	0	0	0	0	0
4/24/2024	9:00 PM	0	0	0	0	0	0	0	0	0	0	0	0	0
4/24/2024	9:15 PM	0	0	0	0	0	0	0	0	0	0	0	0	0
4/24/2024	9:30 PM	0	0	0	0	0	0	0	0	0	0	0	0	0
4/24/2024	9:45 PM	0	0	0	0	0	0	0	0	0	0	0	0	0
4/24/2024	10:00 PM	0	0	0	0	0	0	0	0	0	0	0	0	0
4/24/2024	10:15 PM	0	0	0	0	0	0	0	0	0	0	0	0	0
4/24/2024	10:30 PM	0	0	0	0	0	0	0	0	0	0	0	0	0
4/24/2024	10:45 PM	0	0	0	0	0	0	0	0	0	0	0	0	0
4/24/2024	11:00 PM	0	0	0	0	0	0	0	0	0	0	0	0	0
4/24/2024	11:15 PM	0	0	0	0	0	0	0	0	0	0	0	0	0
4/24/2024	11:30 PM	0	0	0	0	0	0	0	0	0	0	0	0	0
4/24/2024	11:45 PM	0	0	0	0	0	0	0	0	0	0	0	0	0

4/25/2024	12:00 AM	0	0	0	0	0	0	0	0	0	0	0	0	0
4/25/2024	12:15 AM	0	0	0	0	0	0	0	0	0	0	0	0	0
4/25/2024	12:30 AM	0	0	0	0	0	0	0	0	0	0	0	0	0
4/25/2024	12:45 AM	0	0	0	0	0	0	0	0	0	0	0	0	0
4/25/2024	1:00 AM	0	0	0	0	0	0	0	0	0	0	0	0	0
4/25/2024	1:15 AM	0	0	0	0	0	0	0	0	0	0	0	0	0
4/25/2024	1:30 AM	0	0	0	0	0	0	0	0	0	0	0	0	0
4/25/2024	1:45 AM	0	0	0	0	0	0	0	0	0	0	0	0	0
4/25/2024	2:00 AM	0	0	0	0	0	0	0	0	0	0	0	0	0
4/25/2024	2:15 AM	0	0	0	0	0	0	0	0	0	0	0	0	0
4/25/2024	2:30 AM	0	0	0	0	0	0	0	0	0	0	0	0	0
4/25/2024	2:45 AM	0	0	0	0	0	0	0	0	0	0	0	0	0
4/25/2024	3:00 AM	0	0	0	0	0	0	0	0	0	0	0	0	0
4/25/2024	3:15 AM	0	0	0	0	0	0	0	0	0	0	0	0	0
4/25/2024	3:30 AM	0	0	0	0	0	0	0	0	0	0	0	0	0
4/25/2024	3:45 AM	0	0	0	0	0	0	0	0	0	0	0	0	0
4/25/2024	4:00 AM	0	0	0	0	0	0	0	0	0	0	0	0	0
4/25/2024	4:15 AM	0	0	0	0	0	0	0	0	0	0	0	0	0
4/25/2024	4:30 AM	0	0	0	0	0	0	0	0	0	0	0	0	0
4/25/2024	4:45 AM	0	0	0	0	0	0	0	0	0	0	0	0	0
4/25/2024	5:00 AM	0	0	0	0	0	0	0	0	0	0	0	0	0
4/25/2024	5:15 AM	0	0	0	0	0	0	0	0	0	0	0	0	0
4/25/2024	5:30 AM	0	0	0	0	0	0	0	0	0	0	0	0	0
4/25/2024	5:45 AM	0	0	0	0	0	0	0	0	0	0	0	0	0
4/25/2024	6:00 AM	0	0	0	0	0	0	0	0	0	0	0	0	0
4/25/2024	6:15 AM	0	0	0	0	0	0	0	0	0	0	0	0	0
4/25/2024	6:30 AM	0	0	0	0	0	0	0	0	0	0	0	0	0
4/25/2024	6:45 AM	0	0	0	0	0	0	0	0	0	0	0	0	0
4/25/2024	7:00 AM	0	0	0	0	0	0	0	0	0	0	0	0	0
4/25/2024	7:15 AM	0	0	0	0	0	0	0	0	0	0	0	0	0
4/25/2024	7:30 AM	0	0	0	0	0	0	0	0	0	0	0	0	0
4/25/2024	7:45 AM	0	0	0	0	0	0	0	0	0	0	0	0	0
4/25/2024	8:00 AM	0	0	0	0	0	0	0	0	0	0	0	0	0
4/25/2024	8:15 AM	0	0	0	0	0	0	0	0	0	0	0	0	0
4/25/2024	8:30 AM	0	0	0	0	0	0	0	0	0	0	0	0	0
4/25/2024	8:45 AM	0	0	0	0	0	0	0	0	0	0	0	0	0
4/25/2024	9:00 AM	0	0	0	0	0	0	0	0	0	0	0	0	0
4/25/2024	9:15 AM	0	0	0	0	0	0	0	0	0	0	0	0	0
4/25/2024	9:30 AM	0	0	0	0	0	0	0	0	0	0	0	0	0
4/25/2024	9:45 AM	0	0	0	0	0	0	0	0	0	0	0	0	0
4/25/2024	10:00 AM	0	0	0	0	0	0	0	0	0	0	0	0	0
4/25/2024	10:15 AM	0	0	0	0	0	0	0	0	0	0	0	0	0
4/25/2024	10:30 AM	0	0	0	0	0	0	0	0	0	0	0	0	0
4/25/2024	10:45 AM	0	0	0	0	0	0	0	0	0	0	0	0	0
4/25/2024	11:00 AM	0	0	0	0	0	0	0	0	0	0	0	0	0
4/25/2024	11:15 AM	0	0	0	0	0	0	0	0	0	0	0	0	0
4/25/2024	11:30 AM	0	0	0	0	0	0	0	0	0	0	0	0	0
4/25/2024	11:45 AM	0	0	0	0	0	0	0	0	0	0	0	0	0
4/25/2024	12:00 PM	0	0	0	0	0	0	0	0	0	0	0	0	0
4/25/2024	12:15 PM	0	0	0	0	0	0	0	0	0	0	0	0	0
4/25/2024	12:30 PM	0	0	0	0	0	0	0	0	0	0	0	0	0
4/25/2024	12:45 PM	0	0	0	0	0	0	0	0	0	0	0	0	0
4/25/2024	1:00 PM	0	0	0	0	0	0	0	0	0	0	0	0	0
4/25/2024	1:15 PM	0	0	0	0	0	0	0	0	0	0	0	0	0
4/25/2024	1:30 PM	0	0	0	0	0	0	0	0	0	0	0	0	0
4/25/2024	1:45 PM	0	0	0	0	0	0	0	0	0	0	0	0	0
4/25/2024	2:00 PM	0	0	0	0	0	0	0	0	0	0	0	0	0
4/25/2024	2:15 PM	0	0	0	0	0	0	0	0	0	0	0	0	0
4/25/2024	2:30 PM	0	0	0	0	0	0	0	0	0	0	0	0	0
4/25/2024	2:45 PM	0	0	0	0	0	0	0	0	0	0	0	0	0
4/25/2024	3:00 PM	0	0	0	0	0	0	0	0	0	0	0	0	0
4/25/2024	3:15 PM	0	0	0	0	0	0	0	0	0	0	0	0	0
4/25/2024	3:30 PM	0	0	0	0	0	0	0	0	0	0	0	0	0
4/25/2024	3:45 PM	0	0	0	0	0	0	0	0	0	0	0	0	0
4/25/2024	4:00 PM	0	0	0	0	0	0	0	0	0	0	0	0	0
4/25/2024	4:15 PM	0	0	0	0	0	0	0	0	0	0	0	0	0
4/25/2024	4:30 PM	0	0	0	0	0	0	0	0	0	0	0	0	0
4/25/2024	4:45 PM	0	0	0	0	0	0	0	0	0	0	0	0	0
4/25/2024	5:00 PM	0	0	0	0	0	0	0	0	0	0	0	0	0
4/25/2024	5:15 PM	0	0	0	0	0	0	0	0	0	0	0	0	0
4/25/2024	5:30 PM	0	0	0	0	0	0	0	0	0	0	0	0	0
4/25/2024	5:45 PM	0	0	0	0	0	0	0	0	0	0	0	0	0
4/25/2024	6:00 PM	0	0	0	0	0	0	0	0	0	0	0	0	0
4/25/2024	6:15 PM	0	0	0	0	0	0	0	0	0	0	0	0	0
4/25/2024	6:30 PM	0	0	0	0	0	0	0	0	0	0	0	0	0
4/25/2024	6:45 PM	0	0	0	0	0	0	0	0	0	0	0	0	0
4/25/2024	7:00 PM	0	0	0	0	0	0	0	0	0	0	0	0	0
4/25/2024	7:15 PM	0	0	0	0	0	0	0	0	0	0	0	0	0
4/25/2024	7:30 PM	0	0	0	0	0	0	0	0	0	0	0	0	0
4/25/2024	7:45 PM	0	0	0	0	0	0	0	0	0	0	0	0	0
4/25/2024	8:00 PM	0	0	0	0	0	0	0	0	0	0	0	0	0
4/25/2024	8:15 PM	0	0	0	0	0	0	0	0	0	0	0	0	0
4/25/2024	8:30 PM	0	0	0	0	0	0	0	0	0	0	0	0	0
4/25/2024	8:45 PM	0	0	0	0	0	0	0	0	0	0	0	0	0
4/25/2024	9:00 PM	0	0	0	0	0	0	0	0	0	0	0	0	0
4/25/2024	9:15 PM	0	0	0	0	0	0	0	0	0	0	0	0	0
4/25/2024	9:30 PM	0	0	0	0	0	0	0	0	0	0	0	0	0
4/25/2024	9:45 PM	0	0	0	0	0	0	0	0	0	0	0	0	0
4/25/2024	10:00 PM	0	0	0	0	0	0	0	0	0	0	0	0	0
4/25/2024	10:15 PM	0	0	0	0	0	0	0	0	0	0	0	0	0
4/25/2024	10:30 PM	0	0	0	0	0	0	0	0	0	0	0	0	0
4/25/2024	10:45 PM	0	0	0	0	0	0	0	0	0	0	0	0	0
4/25/2024	11:00 PM	0	0	0	0	0	0	0	0	0	0	0	0	0
4/25/2024	11:15 PM	0	0	0	0	0	0	0	0	0	0	0	0	0
4/25/2024	11:30 PM	0	0	0	0	0	0	0	0	0	0	0	0	0
4/25/2024	11:45 PM	0	0	0	0	0	0	0	0	0	0	0	0	0

SB
File Name:
Start Date: 4/23/2024
Start Time: 0
Site Code: 62
Station ID: 1
Location 1: I-20 S/Bound On-Ramp, south of Bush River Rd
Location 2:

Date	Time	1	2	3	4	5	6	7	8	9	10	11	12	13
4/23/2024	12:00 AM	0	0	0	0	0	0	0	0	0	0	0	0	0
4/23/2024	12:15 AM	0	0	0	0	0	0	0	0	0	0	0	0	0
4/23/2024	12:30 AM	0	0	0	0	0	0	0	0	0	0	0	0	0
4/23/2024	12:45 AM	0	0	0	0	0	0	0	0	0	0	0	0	0
4/23/2024	1:00 AM	0	0	0	0	0	0	0	0	0	0	0	0	0
4/23/2024	1:15 AM	0	0	0	0	0	0	0	0	0	0	0	0	0
4/23/2024	1:30 AM	0	0	0	0	0	0	0	0	0	0	0	0	0
4/23/2024	1:45 AM	0	0	0	0	0	0	0	0	0	0	0	0	0
4/23/2024	2:00 AM	0	0	0	0	0	0	0	0	0	0	0	0	0
4/23/2024	2:15 AM	0	0	0	0	0	0	0	0	0	0	0	0	0
4/23/2024	2:30 AM	0	0	0	0	0	0	0	0	0	0	0	0	0
4/23/2024	2:45 AM	0	0	0	0	0	0	0	0	0	0	0	0	0
4/23/2024	3:00 AM	0	0	0	0	0	0	0	0	0	0	0	0	0
4/23/2024	3:15 AM	0	0	0	0	0	0	0	0	0	0	0	0	0
4/23/2024	3:30 AM	0	0	0	0	0	0	0	0	0	0	0	0	0
4/23/2024	3:45 AM	0	0	0	0	0	0	0	0	0	0	0	0	0
4/23/2024	4:00 AM	0	0	0	0	0	0	0	0	0	0	0	0	0
4/23/2024	4:15 AM	0	0	0	0	0	0	0	0	0	0	0	0	0
4/23/2024	4:30 AM	0	0	0	0	0	0	0	0	0	0	0	0	0
4/23/2024	4:45 AM	0	0	0	0	0	0	0	0	0	0	0	0	0
4/23/2024	5:00 AM	0	0	0	0	0	0	0	0	0	0	0	0	0
4/23/2024	5:15 AM	0	0	0	0	0	0	0	0	0	0	0	0	0
4/23/2024	5:30 AM	0	0	0	0	0	0	0	0	0	0	0	0	0
4/23/2024	5:45 AM	0	0	0	0	0	0	0	0	0	0	0	0	0
4/23/2024	6:00 AM	0	0	0	0	0	0	0	0	0	0	0	0	0
4/23/2024	6:15 AM	0	0	0	0	0	0	0	0	0	0	0	0	0
4/23/2024	6:30 AM	0	0	0	0	0	0	0	0	0	0	0	0	0
4/23/2024	6:45 AM	0	0	0	0	0	0	0	0	0	0	0	0	0
4/23/2024	7:00 AM	0	0	0	0	0	0	0	0	0	0	0	0	0
4/23/2024	7:15 AM	0	0	0	0	0	0	0	0	0	0	0	0	0
4/23/2024	7:30 AM	0	0	0	0	0	0	0	0	0	0	0	0	0
4/23/2024	7:45 AM	0	0	0	0	0	0	0	0	0	0	0	0	0
4/23/2024	8:00 AM	0	0	0	0	0	0	0	0	0	0	0	0	0
4/23/2024	8:15 AM	0	0	0	0	0	0	0	0	0	0	0	0	0
4/23/2024	8:30 AM	0	0	0	0	0	0	0	0	0	0	0	0	0
4/23/2024	8:45 AM	0	0	0	0	0	0	0	0	0	0	0	0	0
4/23/2024	9:00 AM	0	0	0	0	0	0	0	0	0	0	0	0	0
4/23/2024	9:15 AM	0	0	0	0	0	0	0	0	0	0	0	0	0
4/23/2024	9:30 AM	0	0	0	0	0	0	0	0	0	0	0	0	0
4/23/2024	9:45 AM	0	0	0	0	0	0	0	0	0	0	0	0	0
4/23/2024	10:00 AM	0	0	0	0	0	0	0	0	0	0	0	0	0
4/23/2024	10:15 AM	0	0	0	0	0	0	0	0	0	0	0	0	0
4/23/2024	10:30 AM	0	0	0	0	0	0	0	0	0	0	0	0	0
4/23/2024	10:45 AM	0	0	0	0	0	0	0	0	0	0	0	0	0
4/23/2024	11:00 AM	0	0	0	0	0	0	0	0	0	0	0	0	0
4/23/2024	11:15 AM	0	0	0	0	0	0	0	0	0	0	0	0	0
4/23/2024	11:30 AM	0	0	0	0	0	0	0	0	0	0	0	0	0
4/23/2024	11:45 AM	0	0	0	0	0	0	0	0	0	0	0	0	0
4/23/2024	12:00 PM	0	0	0	0	0	0	0	0	0	0	0	0	0
4/23/2024	12:15 PM	0	0	0	0	0	0	0	0	0	0	0	0	0
4/23/2024	12:30 PM	0	0	0	0	0	0	0	0	0	0	0	0	0
4/23/2024	12:45 PM	0	0	0	0	0	0	0	0	0	0	0	0	0
4/23/2024	1:00 PM	0	0	0	0	0	0	0	0	0	0	0	0	0
4/23/2024	1:15 PM	0	0	0	0	0	0	0	0	0	0	0	0	0
4/23/2024	1:30 PM	0	0	0	0	0	0	0	0	0	0	0	0	0
4/23/2024	1:45 PM	0	0	0	0	0	0	0	0	0	0	0	0	0
4/23/2024	2:00 PM	0	0	0	0	0	0	0	0	0	0	0	0	0
4/23/2024	2:15 PM	0	0	0	0	0	0	0	0	0	0	0	0	0
4/23/2024	2:30 PM	0	0	0	0	0	0	0	0	0	0	0	0	0
4/23/2024	2:45 PM	0	0	0	0	0	0	0	0	0	0	0	0	0
4/23/2024	3:00 PM	0	0	0	0	0	0	0	0	0	0	0	0	0
4/23/2024	3:15 PM	0	0	0	0	0	0	0	0	0	0	0	0	0
4/23/2024	3:30 PM	0	0	0	0	0	0	0	0	0	0	0	0	0
4/23/2024	3:45 PM	0	0	0	0	0	0	0	0	0	0	0	0	0
4/23/2024	4:00 PM	0	0	0	0	0	0	0	0	0	0	0	0	0
4/23/2024	4:15 PM	0	0	0	0	0	0	0	0	0	0	0	0	0
4/23/2024	4:30 PM	0	0	0	0	0	0	0	0	0	0	0	0	0
4/23/2024	4:45 PM	0	0	0	0	0	0	0	0	0	0	0	0	0
4/23/2024	5:00 PM	0	0	0	0	0	0	0	0	0	0	0	0	0
4/23/2024	5:15 PM	0	0	0	0	0	0	0	0	0	0	0	0	0
4/23/2024	5:30 PM	0	0	0	0	0	0	0	0	0	0	0	0	0
4/23/2024	5:45 PM	0	0	0	0	0	0	0	0	0	0	0	0	0
4/23/2024	6:00 PM	0	0	0	0	0	0	0	0	0	0	0	0	0
4/23/2024	6:15 PM	0	51	4	0	0	0	0	0	0	0	0	0	0
4/23/2024	6:30 PM	0	108	10	0	0	0	0	0	0	0	0	0	0
4/23/2024	6:45 PM	0	154	18	0	2	0	0	0	0	0	0	0	0
4/23/2024	7:00 PM	1	194	27	0	2	0	0	0	0	0	0	0	0
4/23/2024	7:15 PM	1	191	31	0	2	1	0	0	0	0	0	0	0
4/23/2024	7:30 PM	1	195	34	0	2	1	0	0	1	0	0	0	0
4/23/2024	7:45 PM	1	190	31	0	0	2	0	0	1	0	0	0	0
4/23/2024	8:00 PM	0	210	28	0	1	2	0	0	1	0	0	0	0
4/23/2024	8:15 PM	0	202	26	0	1	1	0	0	1	0	0	0	0
4/23/2024	8:30 PM	0	170	22	0	1	1	0	0	0	0	0	0	0
4/23/2024	8:45 PM	0	152	21	0	3	0	0	0	1	0	0	0	0
4/23/2024	9:00 PM	0	110	19	0	2	0	0	0	1	0	0	0	0
4/23/2024	9:15 PM	0	85	16	0	2	0	0	0	2	0	0	0	0
4/23/2024	9:30 PM	0	68	15	0	2	0	0	0	3	0	0	0	0
4/23/2024	9:45 PM	0	57	14	0	0	0	0	0	2	0	0	0	0
4/23/2024	10:00 PM	0	51	13	0	0	0	0	0	2	0	0	0	0
4/23/2024	10:15 PM	0	48	13	0	0	0	0	0	1	0	0	0	0
4/23/2024	10:30 PM	0	42	9	0	0	0	0	0	0	0	0	0	0
4/23/2024	10:45 PM	0	38	8	0	0	0	0	0	1	0	0	0	0
4/23/2024	11:00 PM	0	30	6	0	0	0	0	0	1	0	0	0	0
4/23/2024	11:15 PM	0	18	3	0	0	0	0	0	1	0	0	0	0
4/23/2024	11:30 PM	0	12	3	0	0	0	0	0	1	0	0	0	0
4/23/2024	11:45 PM	0	4	1	0	0	0	0	0	0	0	0	0	0

4/24/2024	12:00 AM	0	19	5	0	1	0	0	0	3	0	0	0	0
4/24/2024	12:15 AM	0	16	4	0	1	0	0	0	3	0	0	0	0
4/24/2024	12:30 AM	0	13	2	0	0	0	0	0	2	0	0	0	0
4/24/2024	12:45 AM	0	13	2	0	0	0	0	0	1	0	0	0	0
4/24/2024	1:00 AM	0	15	2	0	0	0	0	0	1	0	0	0	0
4/24/2024	1:15 AM	0	14	2	0	0	0	0	0	1	0	0	0	0
4/24/2024	1:30 AM	0	12	1	0	0	0	0	0	1	0	0	0	0
4/24/2024	1:45 AM	0	11	1	0	0	0	0	0	1	0	0	0	0
4/24/2024	2:00 AM	0	7	0	0	0	0	0	0	0	0	0	0	0
4/24/2024	2:15 AM	0	9	0	0	0	0	0	0	1	0	0	0	0
4/24/2024	2:30 AM	0	9	0	0	0	0	0	0	2	0	0	0	0
4/24/2024	2:45 AM	0	11	1	0	0	0	0	0	2	0	0	0	0
4/24/2024	3:00 AM	0	11	2	0	0	0	0	0	2	0	0	0	0
4/24/2024	3:15 AM	0	11	2	0	0	1	0	0	1	0	0	0	0
4/24/2024	3:30 AM	0	12	4	0	0	1	0	0	0	0	0	0	0
4/24/2024	3:45 AM	0	12	3	0	1	1	0	0	1	0	0	0	0
4/24/2024	4:00 AM	0	17	2	0	1	1	0	0	1	0	0	0	0
4/24/2024	4:15 AM	0	19	3	0	1	0	0	0	2	0	0	0	0
4/24/2024	4:30 AM	0	26	4	0	1	0	0	0	2	0	0	0	0
4/24/2024	4:45 AM	0	34	7	0	0	0	0	0	2	0	0	0	0
4/24/2024	5:00 AM	0	43	10	0	0	0	0	0	2	0	0	0	0
4/24/2024	5:15 AM	0	59	14	0	0	1	0	0	1	0	0	0	0
4/24/2024	5:30 AM	0	75	15	0	0	1	0	0	1	0	0	0	0
4/24/2024	5:45 AM	0	94	16	0	3	1	0	0	0	0	0	0	0
4/24/2024	6:00 AM	0	127	24	0	3	1	0	0	0	0	0	0	0
4/24/2024	6:15 AM	0	153	29	0	5	0	0	0	2	0	0	0	0
4/24/2024	6:30 AM	0	200	41	0	6	0	0	0	2	0	0	0	0
4/24/2024	6:45 AM	0	239	52	0	5	0	0	0	4	0	0	0	0
4/24/2024	7:00 AM	0	262	53	0	5	0	0	1	5	0	0	0	0
4/24/2024	7:15 AM	0	268	50	0	3	0	0	1	5	0	0	0	0
4/24/2024	7:30 AM	0	245	42	0	4	0	0	1	5	0	0	0	0
4/24/2024	7:45 AM	0	234	35	0	2	0	0	1	3	0	0	0	0
4/24/2024	8:00 AM	0	222	35	0	3	0	0	0	2	0	0	0	0
4/24/2024	8:15 AM	0	216	34	0	4	0	0	0	0	0	0	0	0
4/24/2024	8:30 AM	0	208	33	0	2	2	0	1	0	0	0	0	0
4/24/2024	8:45 AM	0	196	37	0	4	2	0	1	2	0	0	0	0
4/24/2024	9:00 AM	0	191	35	0	4	2	0	1	3	0	0	0	0
4/24/2024	9:15 AM	0	189	38	0	5	2	0	1	5	0	0	0	0
4/24/2024	9:30 AM	0	190	45	0	7	1	0	0	6	0	0	0	0
4/24/2024	9:45 AM	0	194	45	0	6	1	0	0	4	0	0	0	0
4/24/2024	10:00 AM	0	200	43	0	5	1	0	0	3	0	0	0	0
4/24/2024	10:15 AM	0	197	45	0	4	1	0	0	1	0	0	0	0
4/24/2024	10:30 AM	0	205	35	0	2	0	0	0	0	0	0	0	0
4/24/2024	10:45 AM	0	208	39	0	1	0	0	0	0	0	0	0	0
4/24/2024	11:00 AM	0	201	40	0	2	0	0	0	1	0	0	0	0
4/24/2024	11:15 AM	0	218	41	0	2	0	0	0	2	0	0	0	0
4/24/2024	11:30 AM	0	228	54	0	2	0	0	1	2	0	0	0	0
4/24/2024	11:45 AM	0	253	56	0	5	0	0	1	2	0	0	0	0
4/24/2024	12:00 PM	0	285	64	0	8	0	0	1	1	0	0	0	0
4/24/2024	12:15 PM	0	304	68	0	9	1	0	1	4	0	0	0	0
4/24/2024	12:30 PM	0	324	66	0	10	1	0	2	4	0	0	0	0
4/24/2024	12:45 PM	1	302	65	0	10	1	0	3	7	0	0	0	0
4/24/2024	1:00 PM	1	289	64	0	7	2	0	3	8	0	0	0	0
4/24/2024	1:15 PM	1	298	66	0	5	2	0	3	5	0	0	0	0
4/24/2024	1:30 PM	1	325	82	0	5	2	0	1	6	0	0	0	0
4/24/2024	1:45 PM	0	350	84	0	6	2	0	1	4	0	0	0	0
4/24/2024	2:00 PM	0	344	86	0	5	1	0	1	4	0	0	0	0
4/24/2024	2:15 PM	0	357	95	0	5	0	0	1	4	0	0	0	0
4/24/2024	2:30 PM	0	347	85	0	5	0	0	2	5	0	0	0	0
4/24/2024	2:45 PM	0	386	81	0	2	0	0	1	6	0	0	0	0
4/24/2024	3:00 PM	0	426	84	0	2	0	0	1	5	0	0	0	0
4/24/2024	3:15 PM	0	442	84	0	2	0	0	1	5	0	0	0	0
4/24/2024	3:30 PM	0	451	77	0	2	1	0	0	3	0	0	0	0
4/24/2024	3:45 PM	0	483	92	0	4	1	0	1	1	0	0	0	0
4/24/2024	4:00 PM	0	505	97	1	4	2	0	2	2	0	0	0	0
4/24/2024	4:15 PM	0	583	100	1	5	2	0	2	3	0	0	0	0
4/24/2024	4:30 PM	0	629	116	1	4	1	0	2	4	0	0	0	0
4/24/2024	4:45 PM	0	621	108	1	2	1	0	2	4	0	0	0	0
4/24/2024	5:00 PM	0	610	107	0	5	1	0	1	4	0	0	0	0
4/24/2024	5:15 PM	2	492	90	0	4	1	0	3	2	0	0	0	0
4/24/2024	5:30 PM	3	410	72	0	4	2	0	3	1	0	0	0	0
4/24/2024	5:45 PM	3	331	57	0	4	2	0	2	2	0	0	0	0
4/24/2024	6:00 PM	3	284	41	0	1	2	0	2	1	0	0	0	0
4/24/2024	6:15 PM	1	274	38	0	1	3	0	0	1	0	0	0	0
4/24/2024	6:30 PM	0	259	37	1	2	3	0	0	1	0	0	0	0
4/24/2024	6:45 PM	0	247	38	1	1	3	0	0	0	0	0	0	0
4/24/2024	7:00 PM	0	215	36	1	2	2	0	0	0	0	0	0	0
4/24/2024	7:15 PM	0	200	30	1	2	2	0	0	1	0	0	0	0
4/24/2024	7:30 PM	0	199	27	0	1	1	0	0	2	0	0	0	0
4/24/2024	7:45 PM	0	207	26	0	2	1	0	0	2	0	0	0	0
4/24/2024	8:00 PM	0	237	28	0	1	1	0	0	2	0	0	0	0
4/24/2024	8:15 PM	0	245	34	0	1	0	0	0	1	0	0	0	0
4/24/2024	8:30 PM	0	214	29	0	1	0	0	0	0	0	0	0	0
4/24/2024	8:45 PM	0	169	25	0	0	0	0	0	0	0	0	0	0
4/24/2024	9:00 PM	0	126	19	0	0	0	0	0	0	0	0	0	0
4/24/2024	9:15 PM	0	95	16	0	0	0	0	0	0	0	0	0	0
4/24/2024	9:30 PM	0	88	16	0	0	0	0	0	0	0	0	0	0
4/24/2024	9:45 PM	0	81	15	0	0	0	0	0	0	0	0	0	0
4/24/2024	10:00 PM	0	72	16	0	0	0	0	0	0	0	0	0	0
4/24/2024	10:15 PM	0	58	12	0	0	0	0	0	1	0	0	0	0
4/24/2024	10:30 PM	0	53	12	0	0	0	0	0	1	0	0	0	0
4/24/2024	10:45 PM	0	46	11	0	0	0	0	0	1	0	0	0	0
4/24/2024	11:00 PM	0	34	8	0	0	0	0	0	1	0	0	0	0
4/24/2024	11:15 PM	0	20	5	0	0	0	0	0	0	0	0	0	0
4/24/2024	11:30 PM	0	8	2	0	0	0	0	0	0	0	0	0	0
4/24/2024	11:45 PM	0	5	1	0	0	0	0	0	0	0	0	0	0

4/25/2024	12:00 AM	0	25	2	0	0	0	0	0	0	0	0	0
4/25/2024	12:15 AM	0	18	0	0	0	0	0	0	1	0	0	0
4/25/2024	12:30 AM	0	11	0	0	0	0	0	0	1	0	0	0
4/25/2024	12:45 AM	0	7	1	0	0	0	0	0	1	0	0	0
4/25/2024	1:00 AM	0	10	3	0	0	0	0	0	1	0	0	0
4/25/2024	1:15 AM	0	10	3	0	0	0	0	0	0	0	0	0
4/25/2024	1:30 AM	0	9	3	0	0	0	0	0	0	0	0	0
4/25/2024	1:45 AM	0	6	2	0	0	0	0	0	2	0	0	0
4/25/2024	2:00 AM	0	5	1	0	0	0	0	0	2	0	0	0
4/25/2024	2:15 AM	0	6	2	0	0	0	0	0	2	0	0	0
4/25/2024	2:30 AM	0	11	3	0	0	0	0	0	2	0	0	0
4/25/2024	2:45 AM	0	11	3	0	0	0	0	0	0	0	0	0
4/25/2024	3:00 AM	0	12	2	0	0	0	0	0	1	0	0	0
4/25/2024	3:15 AM	0	12	1	0	0	0	0	0	1	0	0	0
4/25/2024	3:30 AM	0	9	0	0	0	0	0	0	1	0	0	0
4/25/2024	3:45 AM	0	15	2	0	0	0	0	0	1	0	0	0
4/25/2024	4:00 AM	0	15	3	0	0	0	0	0	0	0	0	0
4/25/2024	4:15 AM	0	17	5	0	0	0	0	0	0	0	0	0
4/25/2024	4:30 AM	0	24	8	0	0	0	0	0	0	0	0	0
4/25/2024	4:45 AM	0	33	10	0	0	0	0	0	1	0	0	0
4/25/2024	5:00 AM	0	36	11	0	0	0	0	0	1	0	0	0
4/25/2024	5:15 AM	0	54	13	0	0	0	0	0	1	0	0	0
4/25/2024	5:30 AM	0	68	14	0	1	0	0	0	3	0	0	0
4/25/2024	5:45 AM	0	88	17	0	1	0	0	0	2	0	0	0
4/25/2024	6:00 AM	0	126	25	0	1	0	0	0	2	0	0	0
4/25/2024	6:15 AM	0	155	32	0	1	0	0	0	2	0	0	0
4/25/2024	6:30 AM	0	217	41	0	1	0	0	0	0	0	0	0
4/25/2024	6:45 AM	0	253	49	0	2	0	0	0	0	0	0	0
4/25/2024	7:00 AM	0	291	51	0	5	0	0	0	1	0	0	0
4/25/2024	7:15 AM	0	295	51	0	7	0	0	1	1	0	0	0
4/25/2024	7:30 AM	0	260	45	0	6	0	0	1	2	0	0	0
4/25/2024	7:45 AM	0	248	38	0	5	0	0	1	2	0	0	0
4/25/2024	8:00 AM	1	216	35	0	4	1	0	1	1	0	0	0
4/25/2024	8:15 AM	1	203	31	0	3	2	0	0	1	0	0	0
4/25/2024	8:30 AM	1	185	37	0	3	3	0	0	1	0	0	0
4/25/2024	8:45 AM	1	168	40	0	5	3	0	0	1	0	0	0
4/25/2024	9:00 AM	0	159	38	0	3	2	0	0	1	0	0	0
4/25/2024	9:15 AM	0	167	44	0	3	1	0	0	1	0	0	0
4/25/2024	9:30 AM	0	185	42	0	3	0	0	0	1	0	0	0
4/25/2024	9:45 AM	0	195	40	0	2	1	0	0	2	0	0	0
4/25/2024	10:00 AM	0	205	46	0	3	2	0	0	2	0	0	0
4/25/2024	10:15 AM	0	208	44	0	6	3	0	0	3	0	0	0
4/25/2024	10:30 AM	0	217	42	0	9	3	0	0	3	0	0	0
4/25/2024	10:45 AM	0	226	47	0	9	3	0	0	3	0	0	0
4/25/2024	11:00 AM	0	226	57	0	8	3	1	0	4	0	0	0
4/25/2024	11:15 AM	0	244	61	0	4	3	1	1	3	0	0	0
4/25/2024	11:30 AM	0	257	70	0	2	4	1	2	3	0	0	0
4/25/2024	11:45 AM	0	259	67	0	1	3	1	3	2	0	0	0
4/25/2024	12:00 PM	0	282	61	0	1	3	0	3	1	0	0	0
4/25/2024	12:15 PM	0	298	63	0	2	4	0	3	1	0	0	0
4/25/2024	12:30 PM	0	313	65	0	1	4	0	2	3	0	0	0
4/25/2024	12:45 PM	0	346	78	0	1	4	0	1	3	0	0	0
4/25/2024	1:00 PM	0	364	87	0	3	3	0	1	4	0	0	0
4/25/2024	1:15 PM	0	381	93	0	4	2	1	0	4	0	0	0
4/25/2024	1:30 PM	0	393	93	0	4	1	1	1	2	0	0	0
4/25/2024	1:45 PM	0	382	79	0	4	1	2	1	4	0	0	0
4/25/2024	2:00 PM	0	388	72	0	4	1	2	1	3	0	0	0
4/25/2024	2:15 PM	1	361	64	1	2	0	1	1	3	0	0	0
4/25/2024	2:30 PM	1	367	65	1	4	0	3	0	2	0	0	0
4/25/2024	2:45 PM	1	392	71	1	4	1	3	1	1	0	0	0
4/25/2024	3:00 PM	1	415	73	1	4	2	3	1	1	0	0	0
4/25/2024	3:15 PM	0	488	81	0	5	3	3	1	2	0	0	0
4/25/2024	3:30 PM	0	503	81	0	5	4	1	1	2	0	0	0
4/25/2024	3:45 PM	0	525	89	0	8	3	0	0	1	0	0	0
4/25/2024	4:00 PM	0	532	100	0	7	3	0	0	2	0	0	0
4/25/2024	4:15 PM	0	570	99	0	6	2	0	0	2	0	0	0
4/25/2024	4:30 PM	0	627	110	0	4	1	0	0	3	0	0	0
4/25/2024	4:45 PM	0	628	105	0	2	1	0	0	3	0	0	0
4/25/2024	5:00 PM	0	606	87	0	1	0	0	0	3	0	0	0
4/25/2024	5:15 PM	0	499	78	0	1	1	0	0	3	0	0	0
4/25/2024	5:30 PM	2	410	62	0	1	1	0	0	2	0	0	0
4/25/2024	5:45 PM	2	344	58	0	2	1	0	1	3	0	0	0
4/25/2024	6:00 PM	2	311	56	0	3	1	0	1	3	0	0	0
4/25/2024	6:15 PM	2	229	43	0	3	0	0	1	2	0	0	0
4/25/2024	6:30 PM	0	141	27	0	3	0	0	1	2	0	0	0
4/25/2024	6:45 PM	0	74	12	0	1	0	0	0	1	0	0	0
4/25/2024	7:00 PM	0	0	0	0	0	0	0	0	0	0	0	0
4/25/2024	7:15 PM	0	0	0	0	0	0	0	0	0	0	0	0
4/25/2024	7:30 PM	0	0	0	0	0	0	0	0	0	0	0	0
4/25/2024	7:45 PM	0	0	0	0	0	0	0	0	0	0	0	0
4/25/2024	8:00 PM	0	0	0	0	0	0	0	0	0	0	0	0
4/25/2024	8:15 PM	0	0	0	0	0	0	0	0	0	0	0	0
4/25/2024	8:30 PM	0	0	0	0	0	0	0	0	0	0	0	0
4/25/2024	8:45 PM	0	0	0	0	0	0	0	0	0	0	0	0
4/25/2024	9:00 PM	0	0	0	0	0	0	0	0	0	0	0	0
4/25/2024	9:15 PM	0	0	0	0	0	0	0	0	0	0	0	0
4/25/2024	9:30 PM	0	0	0	0	0	0	0	0	0	0	0	0
4/25/2024	9:45 PM	0	0	0	0	0	0	0	0	0	0	0	0
4/25/2024	10:00 PM	0	0	0	0	0	0	0	0	0	0	0	0
4/25/2024	10:15 PM	0	0	0	0	0	0	0	0	0	0	0	0
4/25/2024	10:30 PM	0	0	0	0	0	0	0	0	0	0	0	0
4/25/2024	10:45 PM	0	0	0	0	0	0	0	0	0	0	0	0
4/25/2024	11:00 PM	0	0	0	0	0	0	0	0	0	0	0	0
4/25/2024	11:15 PM	0	0	0	0	0	0	0	0	0	0	0	0
4/25/2024	11:30 PM	0	0	0	0	0	0	0	0	0	0	0	0
4/25/2024	11:45 PM	0	0	0	0	0	0	0	0	0	0	0	0

Bi-Directional Class Count || SB WB 15min

Columbia, SC

Marr Traffic DATA COLLECTION
www.marrtraffic.com

Site 63
I-20 On/Off-Ramp,
south of Bush River Rd

Date
Tuesday, April 23, 2024

Lat/Long
34.030182°, -81.120985°

Weather
Fair
58°F

Click here for Detailed Weather

Click here for Map

0000 - 2400 (Weekday 24h Session) (04-23-2024)
SB WB 15min

	Southbound (Movement 63.1)													15min	60min
Time	1	2	3	4	5	6	7	8	9	10	11	12	13	Total	Total
0000 - 0015	0	0	0	0	0	0	0	0	0	0	0	0	0	**0**	
0015 - 0030	0	0	0	0	0	0	0	0	0	0	0	0	0	**0**	
0030 - 0045	0	0	0	0	0	0	0	0	0	0	0	0	0	**0**	
0045 - 0100	0	0	0	0	0	0	0	0	0	0	0	0	0	**0**	**0**
0100 - 0115	0	0	0	0	0	0	0	0	0	0	0	0	0	**0**	
0115 - 0130	0	0	0	0	0	0	0	0	0	0	0	0	0	**0**	
0130 - 0145	0	0	0	0	0	0	0	0	0	0	0	0	0	**0**	
0145 - 0200	0	0	0	0	0	0	0	0	0	0	0	0	0	**0**	**0**
0200 - 0215	0	0	0	0	0	0	0	0	0	0	0	0	0	**0**	
0215 - 0230	0	0	0	0	0	0	0	0	0	0	0	0	0	**0**	
0230 - 0245	0	0	0	0	0	0	0	0	0	0	0	0	0	**0**	
0245 - 0300	0	0	0	0	0	0	0	0	0	0	0	0	0	**0**	**0**
0300 - 0315	0	0	0	0	0	0	0	0	0	0	0	0	0	**0**	
0315 - 0330	0	0	0	0	0	0	0	0	0	0	0	0	0	**0**	
0330 - 0345	0	0	0	0	0	0	0	0	0	0	0	0	0	**0**	
0345 - 0400	0	0	0	0	0	0	0	0	0	0	0	0	0	**0**	**0**
0400 - 0415	0	0	0	0	0	0	0	0	0	0	0	0	0	**0**	
0415 - 0430	0	0	0	0	0	0	0	0	0	0	0	0	0	**0**	
0430 - 0445	0	0	0	0	0	0	0	0	0	0	0	0	0	**0**	
0445 - 0500	0	0	0	0	0	0	0	0	0	0	0	0	0	**0**	**0**
0500 - 0515	0	0	0	0	0	0	0	0	0	0	0	0	0	**0**	
0515 - 0530	0	0	0	0	0	0	0	0	0	0	0	0	0	**0**	
0530 - 0545	0	0	0	0	0	0	0	0	0	0	0	0	0	**0**	
0545 - 0600	0	0	0	0	0	0	0	0	0	0	0	0	0	**0**	**0**
0600 - 0615	0	0	0	0	0	0	0	0	0	0	0	0	0	**0**	
0615 - 0630	0	0	0	0	0	0	0	0	0	0	0	0	0	**0**	
0630 - 0645	0	0	0	0	0	0	0	0	0	0	0	0	0	**0**	
0645 - 0700	0	0	0	0	0	0	0	0	0	0	0	0	0	**0**	**0**
0700 - 0715	0	0	0	0	0	0	0	0	0	0	0	0	0	**0**	
0715 - 0730	0	0	0	0	0	0	0	0	0	0	0	0	0	**0**	
0730 - 0745	0	0	0	0	0	0	0	0	0	0	0	0	0	**0**	
0745 - 0800	0	0	0	0	0	0	0	0	0	0	0	0	0	**0**	**0**
0800 - 0815	0	0	0	0	0	0	0	0	0	0	0	0	0	**0**	
0815 - 0830	0	0	0	0	0	0	0	0	0	0	0	0	0	**0**	
0830 - 0845	0	0	0	0	0	0	0	0	0	0	0	0	0	**0**	
0845 - 0900	0	0	0	0	0	0	0	0	0	0	0	0	0	**0**	**0**
0900 - 0915	0	0	0	0	0	0	0	0	0	0	0	0	0	**0**	
0915 - 0930	0	0	0	0	0	0	0	0	0	0	0	0	0	**0**	
0930 - 0945	0	0	0	0	0	0	0	0	0	0	0	0	0	**0**	
0945 - 1000	0	0	0	0	0	0	0	0	0	0	0	0	0	**0**	**0**
1000 - 1015	0	0	0	0	0	0	0	0	0	0	0	0	0	**0**	
1015 - 1030	0	0	0	0	0	0	0	0	0	0	0	0	0	**0**	
1030 - 1045	0	0	0	0	0	0	0	0	0	0	0	0	0	**0**	
1045 - 1100	0	0	0	0	0	0	0	0	0	0	0	0	0	**0**	**0**
1100 - 1115	0	0	0	0	0	0	0	0	0	0	0	0	0	**0**	
1115 - 1130	0	0	0	0	0	0	0	0	0	0	0	0	0	**0**	
1130 - 1145	0	0	0	0	0	0	0	0	0	0	0	0	0	**0**	
1145 - 1200	0	0	0	0	0	0	0	0	0	0	0	0	0	**0**	**0**
1200 - 1215	0	0	0	0	0	0	0	0	0	0	0	0	0	**0**	
1215 - 1230	0	0	0	0	0	0	0	0	0	0	0	0	0	**0**	
1230 - 1245	0	0	0	0	0	0	0	0	0	0	0	0	0	**0**	
1245 - 1300	0	0	0	0	0	0	0	0	0	0	0	0	0	**0**	**0**
1300 - 1315	0	0	0	0	0	0	0	0	0	0	0	0	0	**0**	
1315 - 1330	0	0	0	0	0	0	0	0	0	0	0	0	0	**0**	
1330 - 1345	0	0	0	0	0	0	0	0	0	0	0	0	0	**0**	
1345 - 1400	0	0	0	0	0	0	0	0	0	0	0	0	0	**0**	**0**
1400 - 1415	0	0	0	0	0	0	0	0	0	0	0	0	0	**0**	
1415 - 1430	0	0	0	0	0	0	0	0	0	0	0	0	0	**0**	
1430 - 1445	0	0	0	0	0	0	0	0	0	0	0	0	0	**0**	
1445 - 1500	0	0	0	0	0	0	0	0	0	0	0	0	0	**0**	**0**
1500 - 1515	0	0	0	0	0	0	0	0	0	0	0	0	0	**0**	
1515 - 1530	0	0	0	0	0	0	0	0	0	0	0	0	0	**0**	
1530 - 1545	0	0	0	0	0	0	0	0	0	0	0	0	0	**0**	
1545 - 1600	0	0	0	0	0	0	0	0	0	0	0	0	0	**0**	**0**
1600 - 1615	0	0	0	0	0	0	0	0	0	0	0	0	0	**0**	
1615 - 1630	0	0	0	0	0	0	0	0	0	0	0	0	0	**0**	
1630 - 1645	0	0	0	0	0	0	0	0	0	0	0	0	0	**0**	
1645 - 1700	0	0	0	0	0	0	0	0	0	0	0	0	0	**0**	**0**
1700 - 1715	0	0	0	0	0	0	0	0	0	0	0	0	0	**0**	
1715 - 1730	0	0	0	0	0	0	0	0	0	0	0	0	0	**0**	
1730 - 1745	0	0	0	0	0	0	0	0	0	0	0	0	0	**0**	
1745 - 1800	0	0	0	0	0	0	0	0	0	0	0	0	0	**0**	**0**
1800 - 1815	0	0	0	0	0	0	0	0	0	0	0	0	0	**0**	
1815 - 1830	0	0	0	0	0	0	0	0	0	0	0	0	0	**0**	
1830 - 1845	0	0	0	0	0	0	0	0	0	0	0	0	0	**0**	
1845 - 1900	0	0	0	0	0	0	0	0	0	0	0	0	0	**0**	**0**
1900 - 1915	0	26	3	0	0	0	0	0	1	0	0	0	0	**30**	
1915 - 1930	0	21	4	0	0	0	0	0	0	0	0	0	0	**25**	
1930 - 1945	0	23	2	0	0	0	0	0	0	0	0	0	0	**25**	
1945 - 2000	0	22	6	0	0	0	0	0	0	0	0	0	0	**28**	**108**
2000 - 2015	0	28	3	0	0	0	0	0	0	0	0	0	0	**31**	
2015 - 2030	0	19	1	0	0	0	0	0	0	0	0	0	0	**20**	
2030 - 2045	0	21	1	0	0	0	0	0	0	0	0	0	0	**22**	
2045 - 2100	0	10	1	0	1	0	0	0	0	0	0	0	0	**12**	**85**
2100 - 2115	0	29	4	0	0	0	0	0	0	0	0	0	0	**33**	
2115 - 2130	0	23	3	0	0	0	0	0	0	0	0	0	0	**26**	
2130 - 2145	0	19	2	0	1	0	0	0	0	0	0	0	0	**22**	
2145 - 2200	0	10	1	0	0	0	0	0	0	0	0	0	0	**11**	**92**
2200 - 2215	0	10	1	0	0	0	0	0	0	0	0	0	0	**11**	
2215 - 2230	0	12	2	0	1	0	0	0	0	0	0	0	0	**15**	
2230 - 2245	0	13	3	0	1	0	0	0	0	0	0	0	0	**17**	
2245 - 2300	0	10	1	0	0	0	0	0	0	0	0	0	0	**11**	**54**
2300 - 2315	0	8	1	0	0	0	0	0	0	0	0	0	0	**9**	
2315 - 2330	0	7	0	0	0	0	0	0	0	0	0	0	0	**7**	
2330 - 2345	0	5	1	0	0	0	0	0	0	0	0	0	0	**6**	
2345 - 0000	0	0	0	0	0	0	0	0	0	0	0	0	0	**0**	**22**

Session Total	0	316	40	0	4	0	0	0	1	0	0	0	0	**361**
Session Average	0.00	3.29	0.42	0.00	0.04	0.00	0.00	0.00	0.01	0.00	0.00	0.00	0.00	**3.76**
Session Percentage	0.00	87.53	11.08	0.00	1.11	0.00	0.00	0.00	0.28	0.00	0.00	0.00	0.00	

AM Peak Hour	-	-	-	-	-	-	-	-	-	-	-	-	-	**-**
AM Peak Volume	0	0	0	0	0	0	0	0	0	0	0	0	0	**0**

Noon Peak Hour	-	-	-	-	-	-	-	-	-	-	-	-	-	**-**
Noon Peak Volume	0	0	0	0	0	0	0	0	0	0	0	0	0	**0**

PM Peak Hour	-	1915 - 2015	1900 - 2000	-	-	-	-	-	1815 - 1915	-	-	-	-	**1915 - 2015**
PM Peak Volume	0	94	15	0	0	0	0	0	1	0	0	0	0	**109**

Site 63
I-20 On/Off-Ramp,
south of Bush River Rd

Date
Wednesday, April 24, 2024

Lat/Long
34.030182°, -81.120985°

Weather
Fair
66°F

Click here for Detailed Weather

0000 - 2400 (Weekday 24h Session) (04-24-2024)
SB WB 15min

	Southbound (Movement 63.1)													15min	60min
Time	1	2	3	4	5	6	7	8	9	10	11	12	13	Total	Total
0000 - 0015	0	6	2	0	0	0	0	0	0	0	0	0	0	**8**	
0015 - 0030	0	0	0	0	0	0	0	0	0	0	0	0	0	**0**	
0030 - 0045	0	4	1	0	0	0	0	0	0	0	0	0	0	**5**	
0045 - 0100	0	2	0	0	0	0	0	0	0	0	0	0	0	**2**	**15**
0100 - 0115	0	4	2	0	1	0	0	0	0	0	0	0	0	**7**	
0115 - 0130	0	1	1	0	0	0	0	0	0	0	0	0	0	**2**	
0130 - 0145	0	1	1	0	0	0	0	0	0	0	0	0	0	**2**	
0145 - 0200	0	2	1	0	1	0	0	0	0	0	0	0	0	**4**	**15**
0200 - 0215	0	2	0	0	0	0	0	0	0	0	0	0	0	**2**	
0215 - 0230	0	4	0	0	0	0	0	0	0	0	0	0	0	**4**	
0230 - 0245	0	1	0	0	0	0	0	0	0	0	0	0	0	**1**	
0245 - 0300	0	2	1	0	0	0	0	0	0	0	0	0	0	**3**	**10**
0300 - 0315	0	2	1	0	0	0	0	0	0	0	0	0	0	**3**	
0315 - 0330	0	2	0	0	0	0	0	0	0	0	0	0	0	**2**	
0330 - 0345	0	1	0	0	0	0	0	0	0	0	0	0	0	**1**	
0345 - 0400	0	2	1	0	0	0	0	0	0	0	0	0	0	**3**	**9**
0400 - 0415	0	3	1	0	0	0	0	0	0	0	0	0	0	**4**	
0415 - 0430	0	5	1	0	1	0	0	0	1	0	0	0	0	**8**	
0430 - 0445	0	5	2	0	0	0	0	0	0	0	0	0	0	**7**	
0445 - 0500	0	2	1	0	0	0	0	0	1	0	0	0	0	**4**	**23**
0500 - 0515	0	3	1	0	0	0	0	0	1	0	0	0	0	**5**	
0515 - 0530	0	5	2	0	0	0	0	0	0	0	0	0	0	**7**	
0530 - 0545	0	14	5	0	1	0	0	0	0	0	0	0	0	**20**	
0545 - 0600	0	6	2	0	0	0	0	0	0	0	0	0	0	**8**	**40**
0600 - 0615	0	9	3	0	0	0	0	0	1	0	0	0	0	**13**	
0615 - 0630	0	21	3	0	0	0	0	0	0	0	0	0	0	**24**	
0630 - 0645	0	26	7	0	0	0	0	0	0	0	0	0	0	**33**	
0645 - 0700	1	21	5	0	1	0	0	0	1	0	0	0	0	**29**	**99**
0700 - 0715	0	35	7	0	0	0	0	0	0	0	0	0	0	**42**	
0715 - 0730	0	44	11	0	0	1	0	0	0	0	0	0	0	**56**	
0730 - 0745	0	43	14	0	0	0	0	0	0	0	0	0	0	**57**	
0745 - 0800	0	49	8	0	1	0	0	0	0	0	0	0	0	**58**	**213**
0800 - 0815	0	33	11	0	1	0	0	0	0	0	0	0	0	**45**	
0815 - 0830	0	32	4	0	1	0	0	0	0	0	0	0	0	**37**	
0830 - 0845	0	34	7	0	1	0	0	0	0	0	0	0	0	**42**	
0845 - 0900	0	33	3	0	0	0	0	0	0	0	0	0	0	**36**	**160**
0900 - 0915	0	24	4	0	1	0	0	0	1	0	0	0	0	**30**	
0915 - 0930	0	26	7	0	0	1	0	0	0	0	0	0	0	**34**	
0930 - 0945	0	24	7	0	0	0	0	0	0	0	0	0	0	**31**	
0945 - 1000	0	20	4	0	0	0	0	0	1	0	0	0	0	**25**	**120**
1000 - 1015	0	25	10	0	0	0	0	0	0	0	0	0	0	**35**	
1015 - 1030	0	25	4	0	1	0	0	0	0	0	0	0	0	**30**	
1030 - 1045	0	44	9	0	0	1	0	0	0	0	0	0	0	**54**	
1045 - 1100	0	33	5	1	0	0	0	0	0	0	0	0	0	**39**	**158**
1100 - 1115	0	32	4	0	0	0	0	0	0	0	0	0	0	**36**	
1115 - 1130	0	35	3	0	0	0	0	0	0	0	0	0	0	**38**	
1130 - 1145	1	49	9	0	0	0	0	0	0	0	0	0	0	**59**	
1145 - 1200	0	45	7	0	1	0	0	0	0	0	0	0	0	**53**	**186**
1200 - 1215	0	31	9	0	2	0	0	0	0	0	0	0	0	**42**	
1215 - 1230	0	38	12	0	1	0	0	0	1	0	0	0	0	**52**	
1230 - 1245	0	49	8	0	0	0	0	1	0	0	0	0	0	**58**	
1245 - 1300	0	43	10	0	0	0	0	0	1	0	0	0	0	**54**	**206**
1300 - 1315	0	50	9	0	1	0	0	0	0	0	0	0	0	**60**	
1315 - 1330	0	51	4	0	0	1	0	0	0	0	0	0	0	**56**	
1330 - 1345	0	40	6	0	0	0	0	0	2	0	0	0	0	**48**	
1345 - 1400	0	44	7	0	0	1	0	0	0	0	0	0	0	**52**	**216**
1400 - 1415	0	52	2	0	1	0	0	0	0	0	0	0	0	**55**	
1415 - 1430	0	51	7	0	3	0	0	0	0	0	0	0	0	**61**	
1430 - 1445	0	40	5	0	0	0	0	0	0	0	0	0	0	**45**	
1445 - 1500	0	34	6	0	1	0	0	0	0	0	0	0	0	**41**	**202**
1500 - 1515	0	40	8	0	0	0	0	0	0	0	0	0	0	**48**	
1515 - 1530	0	42	9	0	1	0	0	0	0	0	0	0	0	**52**	
1530 - 1545	0	63	7	0	1	0	0	0	0	0	0	0	0	**71**	
1545 - 1600	0	44	7	0	1	0	0	0	0	0	0	0	0	**52**	**223**
1600 - 1615	0	89	15	0	0	1	0	1	2	0	0	0	0	**108**	
1615 - 1630	0	91	8	0	0	0	0	0	0	0	0	0	0	**99**	
1630 - 1645	0	94	14	0	0	0	0	0	0	0	0	0	0	**108**	
1645 - 1700	0	82	9	0	1	0	0	1	1	0	0	0	0	**94**	**409**
1700 - 1715	0	135	10	0	0	0	0	0	1	0	0	0	0	**146**	
1715 - 1730	0	94	8	0	0	0	0	0	2	0	0	0	0	**104**	
1730 - 1745	0	85	6	0	0	0	0	0	0	0	0	0	0	**91**	
1745 - 1800	0	50	5	0	0	0	0	0	0	0	0	0	0	**55**	**396**
1800 - 1815	0	54	2	0	0	0	0	0	0	0	0	0	0	**56**	
1815 - 1830	0	40	3	0	0	0	0	0	0	0	0	0	0	**43**	
1830 - 1845	1	42	3	0	1	0	0	0	2	0	0	0	0	**49**	
1845 - 1900	0	33	4	0	0	0	0	0	1	0	0	0	0	**38**	**186**
1900 - 1915	1	35	0	0	0	0	0	0	0	0	0	0	0	**36**	
1915 - 1930	0	30	5	0	1	0	0	0	0	0	0	0	0	**36**	
1930 - 1945	1	23	2	0	2	0	0	0	0	0	0	0	0	**28**	
1945 - 2000	0	31	3	0	0	0	0	0	0	0	0	0	0	**34**	**134**
2000 - 2015	0	29	7	0	0	0	0	0	0	0	0	0	0	**36**	
2015 - 2030	0	22	3	0	1	0	0	0	0	0	0	0	0	**26**	
2030 - 2045	0	35	3	0	0	0	0	0	1	0	0	0	0	**39**	
2045 - 2100	0	27	4	0	0	0	0	0	0	0	0	0	0	**31**	**132**
2100 - 2115	0	33	3	0	0	0	0	0	0	0	0	0	0	**36**	
2115 - 2130	0	36	4	0	0	0	0	0	0	0	0	0	0	**40**	
2130 - 2145	0	15	2	0	0	0	0	0	0	0	0	0	0	**17**	
2145 - 2200	0	18	3	0	0	0	0	0	1	0	0	0	0	**22**	**115**
2200 - 2215	0	14	2	0	0	0	0	0	0	0	0	0	0	**16**	
2215 - 2230	0	4	0	0	0	0	0	0	0	0	0	0	0	**4**	
2230 - 2245	0	13	2	0	0	0	0	0	0	0	0	0	0	**15**	
2245 - 2300	0	10	2	0	0	0	0	0	0	0	0	0	0	**12**	**47**
2300 - 2315	0	8	2	0	0	0	0	0	1	0	0	0	0	**11**	
2315 - 2330	0	6	2	0	0	0	0	0	0	0	0	0	0	**8**	
2330 - 2345	0	11	3	0	0	0	0	0	0	0	0	0	0	**14**	
2345 - 0000	0	7	1	0	0	0	0	0	0	0	0	0	0	**8**	**41**

Session Total	5	2849	438	1	30	6	0	3	23	0	0	0	0	**3355**
Session Average	0.05	29.68	4.56	0.01	0.31	0.06	0.00	0.03	0.24	0.00	0.00	0.00	0.00	**34.95**
Session Percentage	0.15	84.92	13.06	0.03	0.89	0.18	0.00	0.09	0.69	0.00	0.00	0.00	0.00	

AM Peak Hour	0600 - 0700	0700 - 0800	0715 - 0815	-	0745 - 0845	0630 - 0730	-	-	0600 - 0700	-	-	-	-	**0715 - 0815**
AM Peak Volume	1	171	44	0	4	1	0	0	2	0	0	0	0	**216**

Noon Peak Hour	1045 - 1145	1230 - 1330	1200 - 1300	1000 - 1100	1400 - 1500	1300 - 1400	-	1145 - 1245	1245 - 1345	-	-	-	-	**1230 - 1330**
Noon Peak Volume	1	193	39	1	5	2	0	1	3	0	0	0	0	**228**

PM Peak Hour	1815 - 1915	1630 - 1730	1600 - 1700	-	1500 - 1600	1515 - 1615	-	1600 - 1700	1630 - 1730	-	-	-	-	**1630 - 1730**
PM Peak Volume	2	405	46	0	3	1	0	2	4	0	0	0	0	**452**

Site 63
I-20 On/Off-Ramp,
south of Bush River Rd

Date
Thursday, April 25, 2024

Lat/Long
34.030182°, -81.120985°

Weather
Fair
67°F

Click here for Detailed Weather

0000 - 2400 (Weekday 24h Session) (04-25-2024)
SB WB 15min

	Southbound (Movement 63.1)													15min	60min
TIME	1	2	3	4	5	6	7	8	9	10	11	12	13	Total	Total
0000 - 0015	0	4	1	0	0	0	0	0	0	0	0	0	0	**5**	
0015 - 0030	0	0	0	0	0	0	0	0	0	0	0	0	0	**0**	
0030 - 0045	0	4	1	0	0	0	0	0	0	0	0	0	0	**5**	
0045 - 0100	0	4	1	0	0	0	0	0	0	0	0	0	0	**5**	**15**
0100 - 0115	0	2	1	0	0	0	0	0	0	0	0	0	0	**3**	
0115 - 0130	0	1	0	0	1	0	0	0	0	0	0	0	0	**2**	
0130 - 0145	0	5	0	0	0	0	0	0	0	0	0	0	0	**5**	
0145 - 0200	0	3	0	0	1	0	0	0	0	0	0	0	0	**4**	**14**
0200 - 0215	0	4	0	0	0	0	0	0	0	0	0	0	0	**4**	
0215 - 0230	0	4	1	0	0	0	0	0	0	0	0	0	0	**5**	
0230 - 0245	0	1	1	0	0	0	0	0	0	0	0	0	0	**2**	
0245 - 0300	0	1	0	0	0	0	0	0	0	0	0	0	0	**1**	**12**
0300 - 0315	0	2	1	0	1	0	0	0	0	0	0	0	0	**4**	
0315 - 0330	0	1	1	0	0	0	0	0	0	0	0	0	0	**2**	
0330 - 0345	0	3	1	0	0	0	0	0	0	0	0	0	0	**4**	
0345 - 0400	0	3	0	0	0	0	0	0	0	0	0	0	0	**3**	**13**
0400 - 0415	0	2	1	0	0	0	0	0	0	0	0	0	0	**3**	
0415 - 0430	0	4	1	0	0	0	0	0	0	0	0	0	0	**5**	
0430 - 0445	0	3	1	0	0	0	0	0	1	0	0	0	0	**5**	
0445 - 0500	0	2	1	0	0	0	0	0	1	0	0	0	0	**4**	**17**
0500 - 0515	0	8	1	0	1	0	0	0	0	0	0	0	0	**10**	
0515 - 0530	0	9	2	0	0	0	0	1	0	0	0	0	0	**12**	
0530 - 0545	0	11	2	0	0	0	0	0	0	0	0	0	0	**13**	
0545 - 0600	0	11	3	0	1	0	0	0	0	0	0	0	0	**15**	**50**
0600 - 0615	0	12	1	0	0	0	0	0	1	0	0	0	0	**14**	
0615 - 0630	0	17	3	0	0	0	0	0	0	0	0	0	0	**20**	
0630 - 0645	0	23	5	0	0	0	0	0	0	0	0	0	0	**28**	
0645 - 0700	0	24	6	0	0	0	0	0	0	0	0	0	0	**30**	**92**
0700 - 0715	0	33	8	0	0	1	0	0	0	0	0	0	0	**42**	
0715 - 0730	0	34	5	0	0	0	0	0	0	0	0	0	0	**39**	
0730 - 0745	0	51	11	0	0	0	0	0	0	0	0	0	0	**62**	
0745 - 0800	0	65	9	0	0	0	0	0	0	0	0	0	0	**74**	**217**
0800 - 0815	0	40	10	0	1	0	0	0	0	0	0	0	0	**51**	
0815 - 0830	0	44	7	0	1	0	0	0	0	0	0	0	0	**52**	
0830 - 0845	0	56	8	0	1	0	0	0	0	0	0	0	0	**65**	
0845 - 0900	0	39	12	0	0	0	0	0	0	0	0	0	0	**51**	**219**
0900 - 0915	0	29	5	0	2	0	0	0	1	0	0	0	0	**37**	
0915 - 0930	0	30	10	0	0	0	0	0	0	0	0	0	0	**40**	
0930 - 0945	0	31	5	0	0	0	0	0	0	0	0	0	0	**36**	
0945 - 1000	0	36	2	0	2	0	0	0	0	0	0	0	0	**40**	**153**
1000 - 1015	0	31	6	0	1	0	0	0	0	0	0	0	0	**38**	
1015 - 1030	0	33	6	0	1	0	0	0	0	0	0	0	0	**40**	
1030 - 1045	0	26	7	0	0	0	0	0	0	0	0	0	0	**33**	
1045 - 1100	0	28	7	0	1	0	0	0	0	0	0	0	0	**36**	**147**
1100 - 1115	0	26	3	0	0	0	0	0	0	0	0	0	0	**29**	
1115 - 1130	0	25	6	0	0	0	0	0	2	0	0	0	0	**33**	
1130 - 1145	0	31	7	0	0	0	0	0	0	0	0	0	0	**38**	
1145 - 1200	0	25	4	0	0	0	0	0	0	0	0	0	0	**29**	**129**
1200 - 1215	0	37	11	0	2	0	0	0	0	0	0	0	0	**50**	
1215 - 1230	0	40	5	0	0	0	0	0	0	0	0	0	0	**45**	
1230 - 1245	0	56	10	0	0	1	0	0	0	0	0	0	0	**67**	
1245 - 1300	0	50	8	0	1	0	0	0	0	0	0	0	0	**59**	**221**
1300 - 1315	0	55	13	0	2	1	0	0	2	0	0	0	0	**73**	
1315 - 1330	0	46	13	0	0	1	0	0	0	0	0	0	0	**60**	
1330 - 1345	0	47	10	0	0	0	0	0	0	0	0	0	0	**57**	
1345 - 1400	0	40	11	0	0	0	0	0	0	0	0	0	0	**51**	**241**
1400 - 1415	0	47	12	0	0	0	0	0	0	0	0	0	0	**59**	
1415 - 1430	0	48	8	1	0	0	0	0	0	0	0	0	0	**57**	
1430 - 1445	0	49	8	0	0	1	0	0	0	0	0	0	0	**58**	
1445 - 1500	0	39	10	0	0	0	0	0	0	0	0	0	0	**49**	**223**
1500 - 1515	0	47	10	0	1	0	0	0	1	0	0	0	0	**59**	
1515 - 1530	0	50	9	0	0	0	0	0	0	0	0	0	0	**59**	
1530 - 1545	0	37	8	0	0	0	0	0	1	0	0	0	0	**46**	
1545 - 1600	0	57	12	0	0	0	0	0	2	0	0	0	0	**71**	**235**
1600 - 1615	0	76	17	0	1	0	0	0	0	0	0	0	0	**94**	
1615 - 1630	0	61	12	0	1	0	0	0	1	0	0	0	0	**75**	
1630 - 1645	0	68	10	0	0	2	0	0	1	0	0	0	0	**81**	
1645 - 1700	0	61	15	0	0	0	0	0	0	0	0	0	0	**76**	**326**
1700 - 1715	0	106	31	0	0	0	0	0	0	0	0	0	0	**137**	
1715 - 1730	0	73	20	0	2	0	0	0	0	0	0	0	0	**95**	
1730 - 1745	0	68	11	0	0	0	0	0	0	0	0	0	0	**79**	
1745 - 1800	0	42	5	0	0	0	0	0	0	0	0	0	0	**47**	**358**
1800 - 1815	0	45	9	0	0	0	0	0	0	0	0	0	0	**54**	
1815 - 1830	0	34	6	0	0	0	0	0	0	0	0	0	0	**40**	
1830 - 1845	0	29	5	0	2	0	0	0	0	0	0	0	0	**36**	
1845 - 1900	0	34	7	0	0	0	0	0	0	0	0	0	0	**41**	**171**
1900 - 1915	0	0	0	0	0	0	0	0	0	0	0	0	0	**0**	
1915 - 1930	0	0	0	0	0	0	0	0	0	0	0	0	0	**0**	
1930 - 1945	0	0	0	0	0	0	0	0	0	0	0	0	0	**0**	
1945 - 2000	0	0	0	0	0	0	0	0	0	0	0	0	0	**0**	**0**
2000 - 2015	0	0	0	0	0	0	0	0	0	0	0	0	0	**0**	
2015 - 2030	0	0	0	0	0	0	0	0	0	0	0	0	0	**0**	
2030 - 2045	0	0	0	0	0	0	0	0	0	0	0	0	0	**0**	
2045 - 2100	0	0	0	0	0	0	0	0	0	0	0	0	0	**0**	**0**
2100 - 2115	0	0	0	0	0	0	0	0	0	0	0	0	0	**0**	
2115 - 2130	0	0	0	0	0	0	0	0	0	0	0	0	0	**0**	
2130 - 2145	0	0	0	0	0	0	0	0	0	0	0	0	0	**0**	
2145 - 2200	0	0	0	0	0	0	0	0	0	0	0	0	0	**0**	**0**
2200 - 2215	0	0	0	0	0	0	0	0	0	0	0	0	0	**0**	
2215 - 2230	0	0	0	0	0	0	0	0	0	0	0	0	0	**0**	
2230 - 2245	0	0	0	0	0	0	0	0	0	0	0	0	0	**0**	
2245 - 2300	0	0	0	0	0	0	0	0	0	0	0	0	0	**0**	**0**
2300 - 2315	0	0	0	0	0	0	0	0	0	0	0	0	0	**0**	
2315 - 2330	0	0	0	0	0	0	0	0	0	0	0	0	0	**0**	
2330 - 2345	0	0	0	0	0	0	0	0	0	0	0	0	0	**0**	
2345 - 0000	0	0	0	0	0	0	0	0	0	0	0	0	0	**0**	**0**

Session Total	0	2323	480	1	27	7	0	1	14	0	0	0	0	**2853**
Session Average	0.00	24.20	5.00	0.01	0.28	0.07	0.00	0.01	0.15	0.00	0.00	0.00	0.00	**29.72**
Session Percentage	0.00	81.42	16.82	0.04	0.95	0.25	0.00	0.04	0.49	0.00	0.00	0.00	0.00	

AM Peak Hour	-	0745 - 0845	0730 - 0830	-	0815 - 0915	0615 - 0715	-	0500 - 0600	0515 - 0615	-	-	-	-	**0745 - 0845**
AM Peak Hour Volume	0	205	37	0	4	1	0	1	1	0	0	0	0	**242**

Noon Peak Hour	-	1230 - 1330	1300 - 1400	1330 - 1430	1000 - 1100	1230 - 1330	-	-	1030 - 1130	-	-	-	-	**1230 - 1330**
Noon Peak Hour Volume	0	207	47	1	3	3	0	0	2	0	0	0	0	**259**

PM Peak Hour	-	1630 - 1730	1645 - 1745	-	1530 - 1630	1545 - 1645	-	-	1500 - 1600	-	-	-	-	**1630 - 1730**
PM Peak Hour Volume	0	308	77	0	2	2	0	0	4	0	0	0	0	**389**

Bi-Directional Class Count || SB WB Average 15min

Columbia, SC

Marr Traffic DATA COLLECTION
www.marrtraffic.com

Site 63
I-20 On/Off-Ramp,
south of Bush River Rd

Date
Tuesday, April 23, 2024

Lat/Long
34.030182°, -81.120985°

Weather
Fair
58°F

0000 - 2400 (Weekday 24h Session) (All Dates)
SB WB Average 15min

	SB WB Average 15min													15min	60min
Time	1	2	3	4	5	6	7	8	9	10	11	12	13	Total	Total
0000 - 0015	0	3	1	0	0	0	0	0	0	0	0	0	0	**4**	
0015 - 0030	0	0	0	0	0	0	0	0	0	0	0	0	0	**0**	
0030 - 0045	0	3	1	0	0	0	0	0	0	0	0	0	0	**3**	
0045 - 0100	0	2	0	0	0	0	0	0	0	0	0	0	0	**2**	**10**
0100 - 0115	0	2	1	0	0	0	0	0	0	0	0	0	0	**3**	
0115 - 0130	0	1	0	0	0	0	0	0	0	0	0	0	0	**1**	
0130 - 0145	0	2	0	0	0	0	0	0	0	0	0	0	0	**2**	
0145 - 0200	0	2	0	0	1	0	0	0	0	0	0	0	0	**3**	**10**
0200 - 0215	0	2	0	0	0	0	0	0	0	0	0	0	0	**2**	
0215 - 0230	0	3	0	0	0	0	0	0	0	0	0	0	0	**3**	
0230 - 0245	0	1	0	0	0	0	0	0	0	0	0	0	0	**1**	
0245 - 0300	0	1	0	0	0	0	0	0	0	0	0	0	0	**1**	**7**
0300 - 0315	0	1	1	0	0	0	0	0	0	0	0	0	0	**2**	
0315 - 0330	0	1	0	0	0	0	0	0	0	0	0	0	0	**1**	
0330 - 0345	0	1	0	0	0	0	0	0	0	0	0	0	0	**2**	
0345 - 0400	0	2	0	0	0	0	0	0	0	0	0	0	0	**2**	**7**
0400 - 0415	0	2	1	0	0	0	0	0	0	0	0	0	0	**2**	
0415 - 0430	0	3	1	0	0	0	0	0	0	0	0	0	0	**4**	
0430 - 0445	0	3	1	0	0	0	0	0	0	0	0	0	0	**4**	
0445 - 0500	0	1	1	0	0	0	0	0	1	0	0	0	0	**3**	**13**
0500 - 0515	0	4	1	0	0	0	0	0	0	0	0	0	0	**5**	
0515 - 0530	0	5	1	0	0	0	0	0	0	0	0	0	0	**6**	
0530 - 0545	0	8	2	0	0	0	0	0	0	0	0	0	0	**11**	
0545 - 0600	0	6	2	0	0	0	0	0	0	0	0	0	0	**8**	**30**
0600 - 0615	0	7	1	0	0	0	0	0	1	0	0	0	0	**9**	
0615 - 0630	0	13	2	0	0	0	0	0	0	0	0	0	0	**15**	
0630 - 0645	0	16	4	0	0	0	0	0	0	0	0	0	0	**20**	
0645 - 0700	0	15	4	0	0	0	0	0	0	0	0	0	0	**20**	**64**
0700 - 0715	0	23	5	0	0	0	0	0	0	0	0	0	0	**28**	
0715 - 0730	0	26	5	0	0	0	0	0	0	0	0	0	0	**32**	
0730 - 0745	0	31	8	0	0	0	0	0	0	0	0	0	0	**40**	
0745 - 0800	0	38	6	0	0	0	0	0	0	0	0	0	0	**44**	**143**
0800 - 0815	0	24	7	0	1	0	0	0	0	0	0	0	0	**32**	
0815 - 0830	0	25	4	0	1	0	0	0	0	0	0	0	0	**30**	
0830 - 0845	0	30	5	0	1	0	0	0	0	0	0	0	0	**36**	
0845 - 0900	0	24	5	0	0	0	0	0	0	0	0	0	0	**29**	**126**
0900 - 0915	0	18	3	0	1	0	0	0	1	0	0	0	0	**22**	
0915 - 0930	0	19	6	0	0	0	0	0	0	0	0	0	0	**25**	
0930 - 0945	0	18	4	0	0	0	0	0	0	0	0	0	0	**22**	
0945 - 1000	0	19	2	0	1	0	0	0	0	0	0	0	0	**22**	**91**
1000 - 1015	0	19	5	0	0	0	0	0	0	0	0	0	0	**24**	
1015 - 1030	0	19	3	0	1	0	0	0	0	0	0	0	0	**23**	
1030 - 1045	0	23	5	0	0	0	0	0	0	0	0	0	0	**29**	
1045 - 1100	0	20	4	0	0	0	0	0	0	0	0	0	0	**25**	**102**
1100 - 1115	0	19	2	0	0	0	0	0	0	0	0	0	0	**22**	
1115 - 1130	0	20	3	0	0	0	0	0	1	0	0	0	0	**24**	
1130 - 1145	0	27	5	0	0	0	0	0	0	0	0	0	0	**32**	
1145 - 1200	0	23	4	0	0	0	0	0	0	0	0	0	0	**27**	**105**
1200 - 1215	0	23	7	0	1	0	0	0	0	0	0	0	0	**31**	
1215 - 1230	0	26	6	0	0	0	0	0	0	0	0	0	0	**32**	
1230 - 1245	0	35	6	0	0	0	0	0	0	0	0	0	0	**42**	
1245 - 1300	0	31	6	0	0	0	0	0	0	0	0	0	0	**38**	**142**
1300 - 1315	0	35	7	0	1	0	0	0	1	0	0	0	0	**44**	
1315 - 1330	0	32	6	0	0	1	0	0	0	0	0	0	0	**39**	
1330 - 1345	0	29	5	0	0	0	0	0	1	0	0	0	0	**35**	
1345 - 1400	0	28	6	0	0	0	0	0	0	0	0	0	0	**34**	**152**
1400 - 1415	0	33	5	0	0	0	0	0	0	0	0	0	0	**38**	
1415 - 1430	0	33	5	0	1	0	0	0	0	0	0	0	0	**39**	
1430 - 1445	0	30	4	0	0	0	0	0	0	0	0	0	0	**34**	
1445 - 1500	0	24	5	0	0	0	0	0	0	0	0	0	0	**30**	**142**
1500 - 1515	0	29	6	0	0	0	0	0	0	0	0	0	0	**36**	
1515 - 1530	0	31	6	0	0	0	0	0	0	0	0	0	0	**37**	
1530 - 1545	0	33	5	0	0	0	0	0	0	0	0	0	0	**39**	
1545 - 1600	0	34	6	0	0	0	0	0	1	0	0	0	0	**41**	**153**
1600 - 1615	0	55	11	0	0	0	0	0	1	0	0	0	0	**67**	
1615 - 1630	0	51	7	0	0	0	0	0	0	0	0	0	0	**58**	
1630 - 1645	0	54	8	0	0	1	0	0	0	0	0	0	0	**63**	
1645 - 1700	0	48	8	0	0	0	0	0	0	0	0	0	0	**57**	**245**
1700 - 1715	0	80	14	0	0	0	0	0	0	0	0	0	0	**94**	
1715 - 1730	0	56	9	0	1	0	0	0	1	0	0	0	0	**66**	
1730 - 1745	0	51	6	0	0	0	0	0	0	0	0	0	0	**57**	
1745 - 1800	0	31	3	0	0	0	0	0	0	0	0	0	0	**34**	**251**
1800 - 1815	0	33	4	0	0	0	0	0	0	0	0	0	0	**37**	
1815 - 1830	0	25	3	0	0	0	0	0	0	0	0	0	0	**28**	
1830 - 1845	0	24	3	0	1	0	0	0	1	0	0	0	0	**28**	
1845 - 1900	0	22	4	0	0	0	0	0	0	0	0	0	0	**26**	**119**
1900 - 1915	0	20	1	0	0	0	0	0	0	0	0	0	0	**22**	
1915 - 1930	0	17	3	0	0	0	0	0	0	0	0	0	0	**20**	
1930 - 1945	0	15	1	0	1	0	0	0	0	0	0	0	0	**18**	
1945 - 2000	0	18	3	0	0	0	0	0	0	0	0	0	0	**21**	**81**
2000 - 2015	0	19	3	0	0	0	0	0	0	0	0	0	0	**22**	
2015 - 2030	0	14	1	0	0	0	0	0	0	0	0	0	0	**15**	
2030 - 2045	0	19	1	0	0	0	0	0	0	0	0	0	0	**20**	
2045 - 2100	0	12	2	0	0	0	0	0	0	0	0	0	0	**14**	**72**
2100 - 2115	0	21	2	0	0	0	0	0	0	0	0	0	0	**23**	
2115 - 2130	0	20	2	0	0	0	0	0	0	0	0	0	0	**22**	
2130 - 2145	0	11	1	0	0	0	0	0	0	0	0	0	0	**13**	
2145 - 2200	0	9	1	0	0	0	0	0	0	0	0	0	0	**11**	**69**
2200 - 2215	0	8	1	0	0	0	0	0	0	0	0	0	0	**9**	
2215 - 2230	0	5	1	0	0	0	0	0	0	0	0	0	0	**6**	
2230 - 2245	0	9	2	0	0	0	0	0	0	0	0	0	0	**11**	
2245 - 2300	0	7	1	0	0	0	0	0	0	0	0	0	0	**8**	**34**
2300 - 2315	0	5	1	0	0	0	0	0	0	0	0	0	0	**7**	
2315 - 2330	0	4	1	0	0	0	0	0	0	0	0	0	0	**5**	
2330 - 2345	0	5	1	0	0	0	0	0	0	0	0	0	0	**7**	
2345 - 0000	0	2	0	0	0	0	0	0	0	0	0	0	0	**3**	**21**

Session Total	2	1829	319	1	20	4	0	1	13	0	0	0	0	**2190**
Session Average	0.02	19.06	3.33	0.01	0.21	0.05	0.00	0.01	0.13	0.00	0.00	0.00	0.00	**22.81**
Session Percentage	0.08	83.54	14.58	0.03	0.93	0.20	0.00	0.06	0.58	0.00	0.00	0.00	0.00	

AM Peak Hour	0600 - 0700	0715 - 0815	0715 - 0815	-	0745 - 0845	0630 - 0730	-	0500 - 0600	0600 - 0700	-	-	-	-	**0715 - 0815**
AM Peak Volume	0	120	26	0	2	1	0	0	1	0	0	0	0	**147**

Noon Peak Hour	1045 - 1145	1230 - 1330	1215 - 1315	1000 - 1100	1130 - 1230	1230 - 1330	-	1145 - 1245	1245 - 1345	-	-	-	-	**1230 - 1330**
Noon Peak Volume	0	133	25	0	2	1	0	0	2	0	0	0	0	**162**

PM Peak Hour	1815 - 1915	1630 - 1730	1630 - 1730	-	1500 - 1600	1545 - 1645	-	1600 - 1700	1530 - 1630	-	-	-	-	**1630 - 1730**
PM Peak Volume	1	238	39	0	1	1	0	1	2	0	0	0	0	**280**

Bi-Directional Class Count || Volume Summary 15min

Columbia, SC

Marr Traffic DATA COLLECTION

www.marrtraffic.com

Site 63

I-20 On/Off-Ramp,
south of Bush River Rd

Date

Tuesday, April 23, 2024

Lat/Long

34.030182°, -81.120985°

Weather

Fair
58°F

Click here for Detailed Weather

0000 - 2400 (Weekday 24h Session) (04-23-2024)

Volume Summary 15min

TIME	Volume Summary 15min NB	SB	15min Total	60min Total
0000 - 0015	0	0	**0**	
0015 - 0030	0	0	**0**	
0030 - 0045	0	0	**0**	
0045 - 0100	0	0	**0**	**0**
0100 - 0115	0	0	**0**	
0115 - 0130	0	0	**0**	
0130 - 0145	0	0	**0**	
0145 - 0200	0	0	**0**	**0**
0200 - 0215	0	0	**0**	
0215 - 0230	0	0	**0**	
0230 - 0245	0	0	**0**	
0245 - 0300	0	0	**0**	**0**
0300 - 0315	0	0	**0**	
0315 - 0330	0	0	**0**	
0330 - 0345	0	0	**0**	
0345 - 0400	0	0	**0**	**0**
0400 - 0415	0	0	**0**	
0415 - 0430	0	0	**0**	
0430 - 0445	0	0	**0**	
0445 - 0500	0	0	**0**	**0**
0500 - 0515	0	0	**0**	
0515 - 0530	0	0	**0**	
0530 - 0545	0	0	**0**	
0545 - 0600	0	0	**0**	**0**
0600 - 0615	0	0	**0**	
0615 - 0630	0	0	**0**	
0630 - 0645	0	0	**0**	
0645 - 0700	0	0	**0**	**0**
0700 - 0715	0	0	**0**	
0715 - 0730	0	0	**0**	
0730 - 0745	0	0	**0**	
0745 - 0800	0	0	**0**	**0**
0800 - 0815	0	0	**0**	
0815 - 0830	0	0	**0**	
0830 - 0845	0	0	**0**	
0845 - 0900	0	0	**0**	**0**
0900 - 0915	0	0	**0**	
0915 - 0930	0	0	**0**	
0930 - 0945	0	0	**0**	
0945 - 1000	0	0	**0**	**0**
1000 - 1015	0	0	**0**	
1015 - 1030	0	0	**0**	
1030 - 1045	0	0	**0**	
1045 - 1100	0	0	**0**	**0**
1100 - 1115	0	0	**0**	
1115 - 1130	0	0	**0**	
1130 - 1145	0	0	**0**	
1145 - 1200	0	0	**0**	**0**

Time	Volume Summary 15min NB	SB	15min Total	60min Total
1200 - 1215	0	0	**0**	
1215 - 1230	0	0	**0**	
1230 - 1245	0	0	**0**	
1245 - 1300	0	0	**0**	**0**
1300 - 1315	0	0	**0**	
1315 - 1330	0	0	**0**	
1330 - 1345	0	0	**0**	
1345 - 1400	0	0	**0**	**0**
1400 - 1415	0	0	**0**	
1415 - 1430	0	0	**0**	
1430 - 1445	0	0	**0**	
1445 - 1500	0	0	**0**	**0**
1500 - 1515	0	0	**0**	
1515 - 1530	0	0	**0**	
1530 - 1545	0	0	**0**	
1545 - 1600	0	0	**0**	**0**
1600 - 1615	0	0	**0**	
1615 - 1630	0	0	**0**	
1630 - 1645	0	0	**0**	
1645 - 1700	0	0	**0**	**0**
1700 - 1715	0	0	**0**	
1715 - 1730	0	0	**0**	
1730 - 1745	0	0	**0**	
1745 - 1800	0	0	**0**	**0**
1800 - 1815	0	0	**0**	
1815 - 1830	0	0	**0**	
1830 - 1845	0	0	**0**	
1845 - 1900	0	0	**0**	**0**
1900 - 1915	0	30	**30**	
1915 - 1930	0	25	**25**	
1930 - 1945	0	25	**25**	
1945 - 2000	0	28	**28**	**108**
2000 - 2015	0	31	**31**	
2015 - 2030	0	20	**20**	
2030 - 2045	0	22	**22**	
2045 - 2100	0	12	**12**	**85**
2100 - 2115	0	33	**33**	
2115 - 2130	0	26	**26**	
2130 - 2145	0	22	**22**	
2145 - 2200	0	11	**11**	**92**
2200 - 2215	0	11	**11**	
2215 - 2230	0	15	**15**	
2230 - 2245	0	17	**17**	
2245 - 2300	0	11	**11**	**54**
2300 - 2315	0	9	**9**	
2315 - 2330	0	7	**7**	
2330 - 2345	0	6	**6**	
2345 - 0000	0	0	**0**	**22**

Session Total	0	361	**361**
Session Average	0.00	3.76	**3.76**
Session Percentage	0.00	100.00	

Site 63

I-20 On/Off-Ramp,
south of Bush River Rd

Date

Wednesday, April 24, 2024

Lat/Long

34.030182°, -81.120985°

Weather

Fair
66°F

Click here for Detailed Weather

0000 - 2400 (Weekday 24h Session) (04-24-2024)

Volume Summary 15min

TIME	Volume Summary 15min NB	SB	15min Total	60min Total
0000 - 0015	0	8	**8**	
0015 - 0030	0	0	**0**	
0030 - 0045	0	5	**5**	
0045 - 0100	0	2	**2**	**15**
0100 - 0115	0	7	**7**	
0115 - 0130	0	2	**2**	
0130 - 0145	0	2	**2**	
0145 - 0200	0	4	**4**	**15**
0200 - 0215	0	2	**2**	
0215 - 0230	0	4	**4**	
0230 - 0245	0	1	**1**	
0245 - 0300	0	3	**3**	**10**
0300 - 0315	0	3	**3**	
0315 - 0330	0	2	**2**	
0330 - 0345	0	1	**1**	
0345 - 0400	0	3	**3**	**9**
0400 - 0415	0	4	**4**	
0415 - 0430	0	8	**8**	
0430 - 0445	0	7	**7**	
0445 - 0500	0	4	**4**	**23**
0500 - 0515	0	5	**5**	
0515 - 0530	0	7	**7**	
0530 - 0545	0	20	**20**	
0545 - 0600	0	8	**8**	**40**
0600 - 0615	0	13	**13**	
0615 - 0630	0	24	**24**	
0630 - 0645	0	33	**33**	
0645 - 0700	0	29	**29**	**99**
0700 - 0715	0	42	**42**	
0715 - 0730	0	56	**56**	
0730 - 0745	0	57	**57**	
0745 - 0800	0	58	**58**	**213**
0800 - 0815	0	45	**45**	
0815 - 0830	0	37	**37**	
0830 - 0845	0	42	**42**	
0845 - 0900	0	36	**36**	**160**
0900 - 0915	0	30	**30**	
0915 - 0930	0	34	**34**	
0930 - 0945	0	31	**31**	
0945 - 1000	0	25	**25**	**120**
1000 - 1015	0	35	**35**	
1015 - 1030	0	30	**30**	
1030 - 1045	0	54	**54**	
1045 - 1100	0	39	**39**	**158**
1100 - 1115	0	36	**36**	
1115 - 1130	0	38	**38**	
1130 - 1145	0	59	**59**	
1145 - 1200	0	53	**53**	**186**

Time	Volume Summary 15min NB	SB	15min Total	60min Total
1200 - 1215	0	42	**42**	
1215 - 1230	0	52	**52**	
1230 - 1245	0	58	**58**	
1245 - 1300	0	54	**54**	**206**
1300 - 1315	0	60	**60**	
1315 - 1330	0	56	**56**	
1330 - 1345	0	48	**48**	
1345 - 1400	0	52	**52**	**216**
1400 - 1415	0	55	**55**	
1415 - 1430	0	61	**61**	
1430 - 1445	0	45	**45**	
1445 - 1500	0	41	**41**	**202**
1500 - 1515	0	48	**48**	
1515 - 1530	0	52	**52**	
1530 - 1545	0	71	**71**	
1545 - 1600	0	52	**52**	**223**
1600 - 1615	0	108	**108**	
1615 - 1630	0	99	**99**	
1630 - 1645	0	108	**108**	
1645 - 1700	0	94	**94**	**409**
1700 - 1715	0	146	**146**	
1715 - 1730	0	104	**104**	
1730 - 1745	0	91	**91**	
1745 - 1800	0	55	**55**	**396**
1800 - 1815	0	56	**56**	
1815 - 1830	0	43	**43**	
1830 - 1845	0	49	**49**	
1845 - 1900	0	38	**38**	**186**
1900 - 1915	0	36	**36**	
1915 - 1930	0	36	**36**	
1930 - 1945	0	28	**28**	
1945 - 2000	0	34	**34**	**134**
2000 - 2015	0	36	**36**	
2015 - 2030	0	26	**26**	
2030 - 2045	0	39	**39**	
2045 - 2100	0	31	**31**	**132**
2100 - 2115	0	36	**36**	
2115 - 2130	0	40	**40**	
2130 - 2145	0	17	**17**	
2145 - 2200	0	22	**22**	**115**
2200 - 2215	0	16	**16**	
2215 - 2230	0	4	**4**	
2230 - 2245	0	15	**15**	
2245 - 2300	0	12	**12**	**47**
2300 - 2315	0	11	**11**	
2315 - 2330	0	8	**8**	
2330 - 2345	0	14	**14**	
2345 - 0000	0	8	**8**	**41**

Session Total	0	3355	**3355**
Session Average	0.00	34.95	**34.95**
Session Percentage	0.00	100.00	

Site 63
I-20 On/Off-Ramp,
south of Bush River Rd

Date
Thursday, April 25, 2024

Lat/Long
34.030182°, -81.120985°

Weather
Fair
67°F

Click here for Detailed Weather

0000 - 2400 (Weekday 24h Session) (04-25-2024)
Volume Summary 15min

TIME	Volume Summary 15min NB	SB	15min Total	60min Total
0000 - 0015	0	5	**5**	
0015 - 0030	0	0	**0**	
0030 - 0045	0	5	**5**	
0045 - 0100	0	5	**5**	**15**
0100 - 0115	0	3	**3**	
0115 - 0130	0	2	**2**	
0130 - 0145	0	5	**5**	
0145 - 0200	0	4	**4**	**14**
0200 - 0215	0	4	**4**	
0215 - 0230	0	5	**5**	
0230 - 0245	0	2	**2**	
0245 - 0300	0	1	**1**	**12**
0300 - 0315	0	4	**4**	
0315 - 0330	0	2	**2**	
0330 - 0345	0	4	**4**	
0345 - 0400	0	3	**3**	**13**
0400 - 0415	0	3	**3**	
0415 - 0430	0	5	**5**	
0430 - 0445	0	5	**5**	
0445 - 0500	0	4	**4**	**17**
0500 - 0515	0	10	**10**	
0515 - 0530	0	12	**12**	
0530 - 0545	0	13	**13**	
0545 - 0600	0	15	**15**	**50**
0600 - 0615	0	14	**14**	
0615 - 0630	0	20	**20**	
0630 - 0645	0	28	**28**	
0645 - 0700	0	30	**30**	**92**
0700 - 0715	0	42	**42**	
0715 - 0730	0	39	**39**	
0730 - 0745	0	62	**62**	
0745 - 0800	0	74	**74**	**217**
0800 - 0815	0	51	**51**	
0815 - 0830	0	52	**52**	
0830 - 0845	0	65	**65**	
0845 - 0900	0	51	**51**	**219**
0900 - 0915	0	37	**37**	
0915 - 0930	0	40	**40**	
0930 - 0945	0	36	**36**	
0945 - 1000	0	40	**40**	**153**
1000 - 1015	0	38	**38**	
1015 - 1030	0	40	**40**	
1030 - 1045	0	33	**33**	
1045 - 1100	0	36	**36**	**147**
1100 - 1115	0	29	**29**	
1115 - 1130	0	33	**33**	
1130 - 1145	0	38	**38**	
1145 - 1200	0	29	**29**	**129**

Time	Volume Summary 15min NB	SB	15min Total	60min Total
1200 - 1215	0	50	**50**	
1215 - 1230	0	45	**45**	
1230 - 1245	0	67	**67**	
1245 - 1300	0	59	**59**	**221**
1300 - 1315	0	73	**73**	
1315 - 1330	0	60	**60**	
1330 - 1345	0	57	**57**	
1345 - 1400	0	51	**51**	**241**
1400 - 1415	0	59	**59**	
1415 - 1430	0	57	**57**	
1430 - 1445	0	58	**58**	
1445 - 1500	0	49	**49**	**223**
1500 - 1515	0	59	**59**	
1515 - 1530	0	59	**59**	
1530 - 1545	0	46	**46**	
1545 - 1600	0	71	**71**	**235**
1600 - 1615	0	94	**94**	
1615 - 1630	0	75	**75**	
1630 - 1645	0	81	**81**	
1645 - 1700	0	76	**76**	**326**
1700 - 1715	0	137	**137**	
1715 - 1730	0	95	**95**	
1730 - 1745	0	79	**79**	
1745 - 1800	0	47	**47**	**358**
1800 - 1815	0	54	**54**	
1815 - 1830	0	40	**40**	
1830 - 1845	0	36	**36**	
1845 - 1900	0	41	**41**	**171**
1900 - 1915	0	0	**0**	
1915 - 1930	0	0	**0**	
1930 - 1945	0	0	**0**	
1945 - 2000	0	0	**0**	**0**
2000 - 2015	0	0	**0**	
2015 - 2030	0	0	**0**	
2030 - 2045	0	0	**0**	
2045 - 2100	0	0	**0**	**0**
2100 - 2115	0	0	**0**	
2115 - 2130	0	0	**0**	
2130 - 2145	0	0	**0**	
2145 - 2200	0	0	**0**	**0**
2200 - 2215	0	0	**0**	
2215 - 2230	0	0	**0**	
2230 - 2245	0	0	**0**	
2245 - 2300	0	0	**0**	**0**
2300 - 2315	0	0	**0**	
2315 - 2330	0	0	**0**	
2330 - 2345	0	0	**0**	
2345 - 0000	0	0	**0**	**0**

Session Total	0	2853	**2853**
Session Average	0.00	29.72	**29.72**
Session Percentage	0.00	100.00	

Bi-Directional Class Count || SB WB 60min

Columbia, SC

Marr Traffic DATA COLLECTION

www.marrtraffic.com

Site 63
I-20 On/Off-Ramp,
south of Bush River Rd

Date
Tuesday, April 23, 2024

Lat/Long
34.030182°, -81.120985°

Weather
Fair
58°F

Click here for Detailed Weather

0000 - 2400 (Weekday 24h Session) (04-23-2024)
SB WB 60min

	Southbound (Movement 63.1)													
TIME	1	2	3	4	5	6	7	8	9	10	11	12	13	**Total**
0000 - 0100	0	0	0	0	0	0	0	0	0	0	0	0	0	**0**
0100 - 0200	0	0	0	0	0	0	0	0	0	0	0	0	0	**0**
0200 - 0300	0	0	0	0	0	0	0	0	0	0	0	0	0	**0**
0300 - 0400	0	0	0	0	0	0	0	0	0	0	0	0	0	**0**
0400 - 0500	0	0	0	0	0	0	0	0	0	0	0	0	0	**0**
0500 - 0600	0	0	0	0	0	0	0	0	0	0	0	0	0	**0**
0600 - 0700	0	0	0	0	0	0	0	0	0	0	0	0	0	**0**
0700 - 0800	0	0	0	0	0	0	0	0	0	0	0	0	0	**0**
0800 - 0900	0	0	0	0	0	0	0	0	0	0	0	0	0	**0**
0900 - 1000	0	0	0	0	0	0	0	0	0	0	0	0	0	**0**
1000 - 1100	0	0	0	0	0	0	0	0	0	0	0	0	0	**0**
1100 - 1200	0	0	0	0	0	0	0	0	0	0	0	0	0	**0**
1200 - 1300	0	0	0	0	0	0	0	0	0	0	0	0	0	**0**
1300 - 1400	0	0	0	0	0	0	0	0	0	0	0	0	0	**0**
1400 - 1500	0	0	0	0	0	0	0	0	0	0	0	0	0	**0**
1500 - 1600	0	0	0	0	0	0	0	0	0	0	0	0	0	**0**
1600 - 1700	0	0	0	0	0	0	0	0	0	0	0	0	0	**0**
1700 - 1800	0	0	0	0	0	0	0	0	0	0	0	0	0	**0**
1800 - 1900	0	0	0	0	0	0	0	0	0	0	0	0	0	**0**
1900 - 2000	0	92	15	0	0	0	0	0	1	0	0	0	0	**108**
2000 - 2100	0	78	6	0	1	0	0	0	0	0	0	0	0	**85**
2100 - 2200	0	81	10	0	1	0	0	0	0	0	0	0	0	**92**
2200 - 2300	0	45	7	0	2	0	0	0	0	0	0	0	0	**54**
2300 - 2400	0	20	2	0	0	0	0	0	0	0	0	0	0	**22**
Session Total	0	316	40	0	4	0	0	0	1	0	0	0	0	**361**
Session Average	0.00	13.17	1.67	0.00	0.17	0.00	0.00	0.00	0.04	0.00	0.00	0.00	0.00	**15.04**
Session Percentage	0.00	87.53	11.08	0.00	1.11	0.00	0.00	0.00	0.28	0.00	0.00	0.00	0.00	
AM Peak Hour	-	-	-	-	-	-	-	-	-	-	-	-	-	**-**
AM Peak Volume	0	0	0	0	0	0	0	0	0	0	0	0	0	**0**
Noon Peak Hour	-	-	-	-	-	-	-	-	-	-	-	-	-	**-**
Noon Peak Volume	0	0	0	0	0	0	0	0	0	0	0	0	0	**0**
PM Peak Hour	-	1900 - 2000	1900 - 2000	-	-	-	-	-	1900 - 2000	-	-	-	-	**1900 - 2000**
PM Peak Volume	0	92	15	0	0	0	0	0	1	0	0	0	0	**108**

Site 63
I-20 On/Off-Ramp,
south of Bush River Rd

Date
Wednesday, April 24, 2024

Lat/Long
34.030182°, -81.120985°

Weather
Fair
66°F

Click here for Detailed Weather

0000 - 2400 (Weekday 24h Session) (04-24-2024)
SB WB 60min

	Southbound (Movement 63.1)													
TIME	1	2	3	4	5	6	7	8	9	10	11	12	13	**Total**
0000 - 0100	0	12	3	0	0	0	0	0	0	0	0	0	0	**15**
0100 - 0200	0	8	5	0	2	0	0	0	0	0	0	0	0	**15**
0200 - 0300	0	9	1	0	0	0	0	0	0	0	0	0	0	**10**
0300 - 0400	0	7	2	0	0	0	0	0	0	0	0	0	0	**9**
0400 - 0500	0	15	5	0	1	0	0	0	2	0	0	0	0	**23**
0500 - 0600	0	28	10	0	1	0	0	0	1	0	0	0	0	**40**
0600 - 0700	1	77	18	0	1	0	0	0	2	0	0	0	0	**99**
0700 - 0800	0	171	40	0	1	1	0	0	0	0	0	0	0	**213**
0800 - 0900	0	132	25	0	3	0	0	0	0	0	0	0	0	**160**
0900 - 1000	0	94	22	0	1	1	0	0	2	0	0	0	0	**120**
1000 - 1100	0	127	28	1	1	1	0	0	0	0	0	0	0	**158**
1100 - 1200	1	161	23	0	1	0	0	0	0	0	0	0	0	**186**
1200 - 1300	0	161	39	0	3	0	0	1	2	0	0	0	0	**206**
1300 - 1400	0	185	26	0	1	2	0	0	2	0	0	0	0	**216**
1400 - 1500	0	177	20	0	5	0	0	0	0	0	0	0	0	**202**
1500 - 1600	0	189	31	0	3	0	0	0	0	0	0	0	0	**223**
1600 - 1700	0	356	46	0	1	1	0	2	3	0	0	0	0	**409**
1700 - 1800	0	364	29	0	0	0	0	0	3	0	0	0	0	**396**
1800 - 1900	1	169	12	0	1	0	0	0	3	0	0	0	0	**186**
1900 - 2000	2	119	10	0	3	0	0	0	0	0	0	0	0	**134**
2000 - 2100	0	113	17	0	1	0	0	0	1	0	0	0	0	**132**
2100 - 2200	0	102	12	0	0	0	0	0	1	0	0	0	0	**115**
2200 - 2300	0	41	6	0	0	0	0	0	0	0	0	0	0	**47**
2300 - 2400	0	32	8	0	0	0	0	0	1	0	0	0	0	**41**

Session Total	5	2849	438	1	30	6	0	3	23	0	0	0	0	**3355**
Session Average	0.21	118.71	18.25	0.04	1.25	0.25	0.00	0.13	0.96	0.00	0.00	0.00	0.00	**139.79**
Session Percentage	0.15	84.92	13.06	0.03	0.89	0.18	0.00	0.09	0.69	0.00	0.00	0.00	0.00	

AM Peak Hour	0600 - 0700	0700 - 0800	0700 - 0800	-	0800 - 0900	0700 - 0800	-	-	0600 - 0700	-	-	-	-	**0700 - 0800**
AM Peak Volume	1	171	40	0	3	1	0	0	2	0	0	0	0	**213**

Noon Peak Hour	1100 - 1200	1300 - 1400	1200 - 1300	1000 - 1100	1400 - 1500	1300 - 1400	-	1200 - 1300	1200 - 1300	-	-	-	-	**1300 - 1400**
Noon Peak Volume	1	185	39	1	5	2	0	1	2	0	0	0	0	**216**

PM Peak Hour	1900 - 2000	1700 - 1800	1600 - 1700	-	1500 - 1600	1600 - 1700	-	1600 - 1700	1600 - 1700	-	-	-	-	**1600 - 1700**
PM Peak Volume	2	364	46	0	3	1	0	2	3	0	0	0	0	**409**

Site 63
I-20 On/Off-Ramp,
south of Bush River Rd

Date
Thursday, April 25, 2024

Lat/Long
34.030182°, -81.120985°

Weather
Fair
67°F

Click here for Detailed Weather

0000 - 2400 (Weekday 24h Session) (04-25-2024)
SB WB 60min

	Southbound (Movement 63.1)													
TIME	1	2	3	4	5	6	7	8	9	10	11	12	13	**Total**
0000 - 0100	0	12	3	0	0	0	0	0	0	0	0	0	0	**15**
0100 - 0200	0	11	1	0	2	0	0	0	0	0	0	0	0	**14**
0200 - 0300	0	10	2	0	0	0	0	0	0	0	0	0	0	**12**
0300 - 0400	0	9	3	0	1	0	0	0	0	0	0	0	0	**13**
0400 - 0500	0	11	4	0	0	0	0	0	2	0	0	0	0	**17**
0500 - 0600	0	39	8	0	2	0	0	1	0	0	0	0	0	**50**
0600 - 0700	0	76	15	0	0	0	0	0	1	0	0	0	0	**92**
0700 - 0800	0	183	33	0	0	1	0	0	0	0	0	0	0	**217**
0800 - 0900	0	179	37	0	3	0	0	0	0	0	0	0	0	**219**
0900 - 1000	0	126	22	0	4	0	0	0	1	0	0	0	0	**153**
1000 - 1100	0	118	26	0	3	0	0	0	0	0	0	0	0	**147**
1100 - 1200	0	107	20	0	0	0	0	0	2	0	0	0	0	**129**
1200 - 1300	0	183	34	0	3	1	0	0	0	0	0	0	0	**221**
1300 - 1400	0	188	47	0	2	2	0	0	2	0	0	0	0	**241**
1400 - 1500	0	183	38	1	0	1	0	0	0	0	0	0	0	**223**
1500 - 1600	0	191	39	0	1	0	0	0	4	0	0	0	0	**235**
1600 - 1700	0	266	54	0	2	2	0	0	2	0	0	0	0	**326**
1700 - 1800	0	289	67	0	2	0	0	0	0	0	0	0	0	**358**
1800 - 1900	0	142	27	0	2	0	0	0	0	0	0	0	0	**171**
1900 - 2000	0	0	0	0	0	0	0	0	0	0	0	0	0	**0**
2000 - 2100	0	0	0	0	0	0	0	0	0	0	0	0	0	**0**
2100 - 2200	0	0	0	0	0	0	0	0	0	0	0	0	0	**0**
2200 - 2300	0	0	0	0	0	0	0	0	0	0	0	0	0	**0**
2300 - 2400	0	0	0	0	0	0	0	0	0	0	0	0	0	**0**

Session Total	0	2323	480	1	27	7	0	1	14	0	0	0	0	**2853**
Session Average	0.00	96.79	20.00	0.04	1.13	0.29	0.00	0.04	0.58	0.00	0.00	0.00	0.00	**118.88**
Session Percentage	0.00	81.42	16.82	0.04	0.95	0.25	0.00	0.04	0.49	0.00	0.00	0.00	0.00	

AM Peak Hour	-	0700 - 0800	0800 - 0900	-	0900 - 1000	0700 - 0800	-	0500 - 0600	0600 - 0700	-	-	-	-	**0800 - 0900**
AM Peak Hour Volume	0	183	37	0	4	1	0	1	1	0	0	0	0	**219**

Noon Peak Hour	-	1300 - 1400	1300 - 1400	1400 - 1500	1000 - 1100	1300 - 1400	-	-	1100 - 1200	-	-	-	-	**1300 - 1400**
Noon Peak Hour Volume	0	188	47	1	3	2	0	0	2	0	0	0	0	**241**

PM Peak Hour	-	1700 - 1800	1700 - 1800	-	1600 - 1700	1600 - 1700	-	-	1500 - 1600	-	-	-	-	**1700 - 1800**
PM Peak Hour Volume	0	289	67	0	2	2	0	0	4	0	0	0	0	**358**

Bi-Directional Class Count || Volume Summary 60min

Columbia, SC

Marr Traffic DATA COLLECTION

www.marrtraffic.com

Site 63

I-20 On/Off-Ramp,
south of Bush River Rd

Date

Tuesday, April 23, 2024

Lat/Long

34.030182°, -81.120985°

Weather

Fair
58°F

Click here for Detailed Weather

0000 - 2400 (Weekday 24h Session) (04-23-2024)

Volume Summary 60min

	Volume Summary 60min		
TIME	NB	SB	**Total**
0000 - 0100	0	0	**0**
0100 - 0200	0	0	**0**
0200 - 0300	0	0	**0**
0300 - 0400	0	0	**0**
0400 - 0500	0	0	**0**
0500 - 0600	0	0	**0**
0600 - 0700	0	0	**0**
0700 - 0800	0	0	**0**
0800 - 0900	0	0	**0**
0900 - 1000	0	0	**0**
1000 - 1100	0	0	**0**
1100 - 1200	0	0	**0**

	Volume Summary 60min		
Time	NB	SB	**Total**
1200 - 1300	0	0	**0**
1300 - 1400	0	0	**0**
1400 - 1500	0	0	**0**
1500 - 1600	0	0	**0**
1600 - 1700	0	0	**0**
1700 - 1800	0	0	**0**
1800 - 1900	0	0	**0**
1900 - 2000	0	108	**108**
2000 - 2100	0	85	**85**
2100 - 2200	0	92	**92**
2200 - 2300	0	54	**54**
2300 - 2400	0	22	**22**

Session Total	0	361	**361**
Session Average	0.00	15.04	**15.04**
Session Percentage	0.00	100.00	

Site 63

I-20 On/Off-Ramp,
south of Bush River Rd

Date

Wednesday, April 24, 2024

Lat/Long

34.030182°, -81.120985°

Weather

Fair
66°F

Click here for Detailed Weather

0000 - 2400 (Weekday 24h Session) (04-24-2024)

Volume Summary 60min

	Volume Summary 60min		
TIME	NB	SB	**Total**
0000 - 0100	0	15	**15**
0100 - 0200	0	15	**15**
0200 - 0300	0	10	**10**
0300 - 0400	0	9	**9**
0400 - 0500	0	23	**23**
0500 - 0600	0	40	**40**
0600 - 0700	0	99	**99**
0700 - 0800	0	213	**213**
0800 - 0900	0	160	**160**
0900 - 1000	0	120	**120**
1000 - 1100	0	158	**158**
1100 - 1200	0	186	**186**

Session Total	0	3355	**3355**
Session Average	0.00	139.79	**139.79**
Session Percentage	0.00	100.00	

	Volume Summary 60min		
Time	NB	SB	**Total**
1200 - 1300	0	206	**206**
1300 - 1400	0	216	**216**
1400 - 1500	0	202	**202**
1500 - 1600	0	223	**223**
1600 - 1700	0	409	**409**
1700 - 1800	0	396	**396**
1800 - 1900	0	186	**186**
1900 - 2000	0	134	**134**
2000 - 2100	0	132	**132**
2100 - 2200	0	115	**115**
2200 - 2300	0	47	**47**
2300 - 2400	0	41	**41**

Site 63

I-20 On/Off-Ramp,
south of Bush River Rd

Date

Thursday, April 25, 2024

Lat/Long

34.030182°, -81.120985°

Weather

Fair
67°F

Click here for Detailed Weather

0000 - 2400 (Weekday 24h Session) (04-25-2024)

Volume Summary 60min

	Volume Summary 60min		
TIME	NB	SB	**Total**
0000 - 0100	0	15	**15**
0100 - 0200	0	14	**14**
0200 - 0300	0	12	**12**
0300 - 0400	0	13	**13**
0400 - 0500	0	17	**17**
0500 - 0600	0	50	**50**
0600 - 0700	0	92	**92**
0700 - 0800	0	217	**217**
0800 - 0900	0	219	**219**
0900 - 1000	0	153	**153**
1000 - 1100	0	147	**147**
1100 - 1200	0	129	**129**

Session Total	0	2853	**2853**
Session Average	0.00	118.88	**118.88**
Session Percentage	0.00	100.00	

	Volume Summary 60min		
Time	NB	SB	**Total**
1200 - 1300	0	221	**221**
1300 - 1400	0	241	**241**
1400 - 1500	0	223	**223**
1500 - 1600	0	235	**235**
1600 - 1700	0	326	**326**
1700 - 1800	0	358	**358**
1800 - 1900	0	171	**171**
1900 - 2000	0	0	**0**
2000 - 2100	0	0	**0**
2100 - 2200	0	0	**0**
2200 - 2300	0	0	**0**
2300 - 2400	0	0	**0**

Bi-Directional Class Count || Graphical Analysis SB WB

Columbia, SC

Marr Traffic DATA COLLECTION

www.marrtraffic.com

Site 63

I-20 On/Off-Ramp,
south of Bush River Rd

Lat/Long

34.030182°, -81.120985°

0000 - 2400 (Weekday 24h Session)

Graphical Analysis SB WB

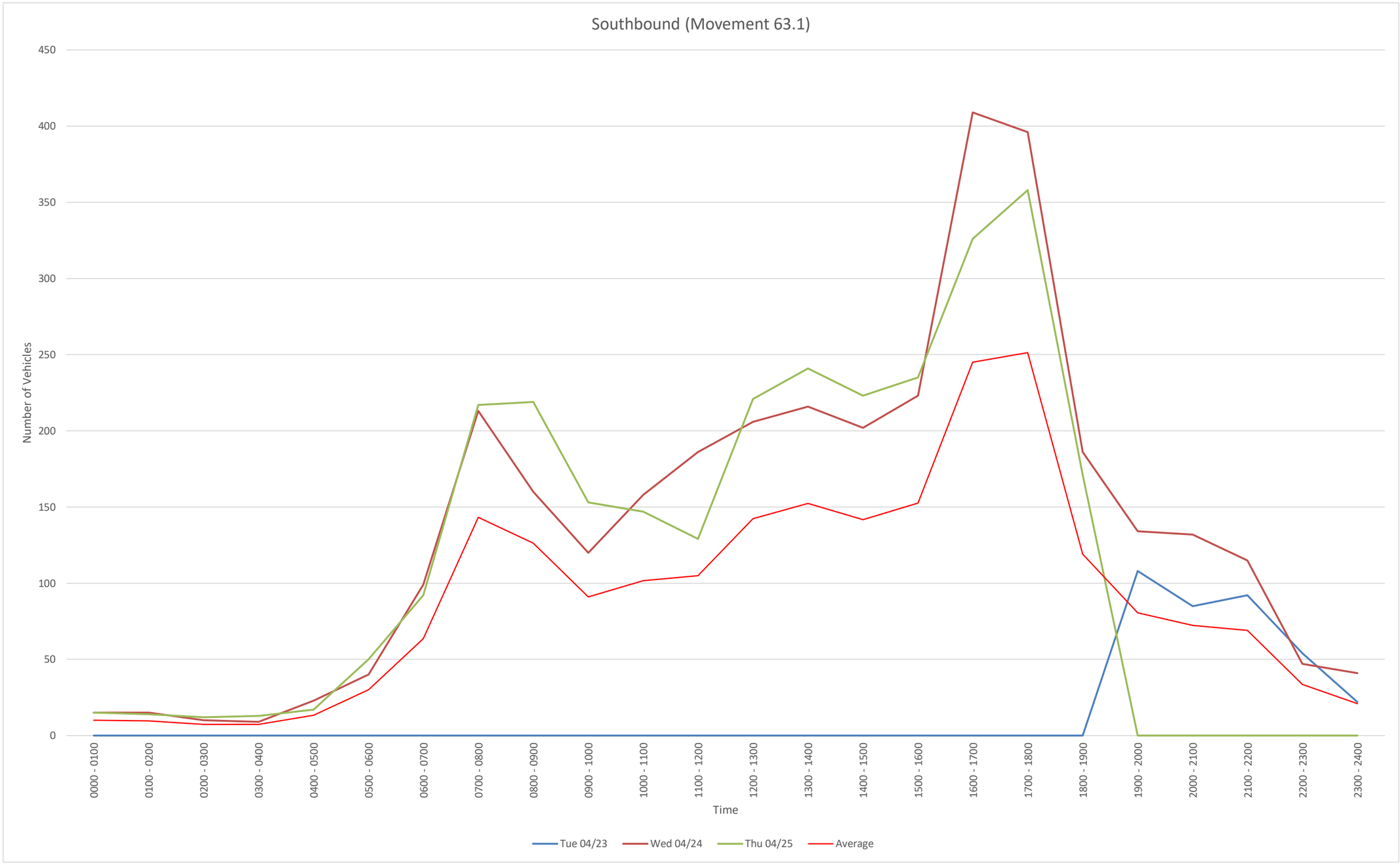

Time	Tue 04/23	Wed 04/24	Thu 04/25				
0000 - 0100	0	15	15				
0100 - 0200	0	15	14				
0200 - 0300	0	10	12				
0300 - 0400	0	9	13				
0400 - 0500	0	23	17				
0500 - 0600	0	40	50				
0600 - 0700	0	99	92				
0700 - 0800	0	213	217				
0800 - 0900	0	160	219				
0900 - 1000	0	120	153				
1000 - 1100	0	158	147				
1100 - 1200	0	186	129				
1200 - 1300	0	206	221				
1300 - 1400	0	216	241				
1400 - 1500	0	202	223				
1500 - 1600	0	223	235				
1600 - 1700	0	409	326				
1700 - 1800	0	396	358				
1800 - 1900	0	186	171				
1900 - 2000	108	134	0				
2000 - 2100	85	132	0				
2100 - 2200	92	115	0				
2200 - 2300	54	47	0				
2300 - 2400	22	41	0				
Daily Total	361	3355	2853				

NB
File Name:
Start Date: 4/23/2024
Start Time: 0
Site Code: 63
Station ID: 1
Location 1: I-20 On/Off-Ramp, south of Bush River Rd
Location 2:

Date	Time	1	2	3	4	5	6	7	8	9	10	11	12	13
4/23/2024	12:00 AM	0	0	0	0	0	0	0	0	0	0	0	0	0
4/23/2024	12:15 AM	0	0	0	0	0	0	0	0	0	0	0	0	0
4/23/2024	12:30 AM	0	0	0	0	0	0	0	0	0	0	0	0	0
4/23/2024	12:45 AM	0	0	0	0	0	0	0	0	0	0	0	0	0
4/23/2024	1:00 AM	0	0	0	0	0	0	0	0	0	0	0	0	0
4/23/2024	1:15 AM	0	0	0	0	0	0	0	0	0	0	0	0	0
4/23/2024	1:30 AM	0	0	0	0	0	0	0	0	0	0	0	0	0
4/23/2024	1:45 AM	0	0	0	0	0	0	0	0	0	0	0	0	0
4/23/2024	2:00 AM	0	0	0	0	0	0	0	0	0	0	0	0	0
4/23/2024	2:15 AM	0	0	0	0	0	0	0	0	0	0	0	0	0
4/23/2024	2:30 AM	0	0	0	0	0	0	0	0	0	0	0	0	0
4/23/2024	2:45 AM	0	0	0	0	0	0	0	0	0	0	0	0	0
4/23/2024	3:00 AM	0	0	0	0	0	0	0	0	0	0	0	0	0
4/23/2024	3:15 AM	0	0	0	0	0	0	0	0	0	0	0	0	0
4/23/2024	3:30 AM	0	0	0	0	0	0	0	0	0	0	0	0	0
4/23/2024	3:45 AM	0	0	0	0	0	0	0	0	0	0	0	0	0
4/23/2024	4:00 AM	0	0	0	0	0	0	0	0	0	0	0	0	0
4/23/2024	4:15 AM	0	0	0	0	0	0	0	0	0	0	0	0	0
4/23/2024	4:30 AM	0	0	0	0	0	0	0	0	0	0	0	0	0
4/23/2024	4:45 AM	0	0	0	0	0	0	0	0	0	0	0	0	0
4/23/2024	5:00 AM	0	0	0	0	0	0	0	0	0	0	0	0	0
4/23/2024	5:15 AM	0	0	0	0	0	0	0	0	0	0	0	0	0
4/23/2024	5:30 AM	0	0	0	0	0	0	0	0	0	0	0	0	0
4/23/2024	5:45 AM	0	0	0	0	0	0	0	0	0	0	0	0	0
4/23/2024	6:00 AM	0	0	0	0	0	0	0	0	0	0	0	0	0
4/23/2024	6:15 AM	0	0	0	0	0	0	0	0	0	0	0	0	0
4/23/2024	6:30 AM	0	0	0	0	0	0	0	0	0	0	0	0	0
4/23/2024	6:45 AM	0	0	0	0	0	0	0	0	0	0	0	0	0
4/23/2024	7:00 AM	0	0	0	0	0	0	0	0	0	0	0	0	0
4/23/2024	7:15 AM	0	0	0	0	0	0	0	0	0	0	0	0	0
4/23/2024	7:30 AM	0	0	0	0	0	0	0	0	0	0	0	0	0
4/23/2024	7:45 AM	0	0	0	0	0	0	0	0	0	0	0	0	0
4/23/2024	8:00 AM	0	0	0	0	0	0	0	0	0	0	0	0	0
4/23/2024	8:15 AM	0	0	0	0	0	0	0	0	0	0	0	0	0
4/23/2024	8:30 AM	0	0	0	0	0	0	0	0	0	0	0	0	0
4/23/2024	8:45 AM	0	0	0	0	0	0	0	0	0	0	0	0	0
4/23/2024	9:00 AM	0	0	0	0	0	0	0	0	0	0	0	0	0
4/23/2024	9:15 AM	0	0	0	0	0	0	0	0	0	0	0	0	0
4/23/2024	9:30 AM	0	0	0	0	0	0	0	0	0	0	0	0	0
4/23/2024	9:45 AM	0	0	0	0	0	0	0	0	0	0	0	0	0
4/23/2024	10:00 AM	0	0	0	0	0	0	0	0	0	0	0	0	0
4/23/2024	10:15 AM	0	0	0	0	0	0	0	0	0	0	0	0	0
4/23/2024	10:30 AM	0	0	0	0	0	0	0	0	0	0	0	0	0
4/23/2024	10:45 AM	0	0	0	0	0	0	0	0	0	0	0	0	0
4/23/2024	11:00 AM	0	0	0	0	0	0	0	0	0	0	0	0	0
4/23/2024	11:15 AM	0	0	0	0	0	0	0	0	0	0	0	0	0
4/23/2024	11:30 AM	0	0	0	0	0	0	0	0	0	0	0	0	0
4/23/2024	11:45 AM	0	0	0	0	0	0	0	0	0	0	0	0	0
4/23/2024	12:00 PM	0	0	0	0	0	0	0	0	0	0	0	0	0
4/23/2024	12:15 PM	0	0	0	0	0	0	0	0	0	0	0	0	0
4/23/2024	12:30 PM	0	0	0	0	0	0	0	0	0	0	0	0	0
4/23/2024	12:45 PM	0	0	0	0	0	0	0	0	0	0	0	0	0
4/23/2024	1:00 PM	0	0	0	0	0	0	0	0	0	0	0	0	0
4/23/2024	1:15 PM	0	0	0	0	0	0	0	0	0	0	0	0	0
4/23/2024	1:30 PM	0	0	0	0	0	0	0	0	0	0	0	0	0
4/23/2024	1:45 PM	0	0	0	0	0	0	0	0	0	0	0	0	0
4/23/2024	2:00 PM	0	0	0	0	0	0	0	0	0	0	0	0	0
4/23/2024	2:15 PM	0	0	0	0	0	0	0	0	0	0	0	0	0
4/23/2024	2:30 PM	0	0	0	0	0	0	0	0	0	0	0	0	0
4/23/2024	2:45 PM	0	0	0	0	0	0	0	0	0	0	0	0	0
4/23/2024	3:00 PM	0	0	0	0	0	0	0	0	0	0	0	0	0
4/23/2024	3:15 PM	0	0	0	0	0	0	0	0	0	0	0	0	0
4/23/2024	3:30 PM	0	0	0	0	0	0	0	0	0	0	0	0	0
4/23/2024	3:45 PM	0	0	0	0	0	0	0	0	0	0	0	0	0
4/23/2024	4:00 PM	0	0	0	0	0	0	0	0	0	0	0	0	0
4/23/2024	4:15 PM	0	0	0	0	0	0	0	0	0	0	0	0	0
4/23/2024	4:30 PM	0	0	0	0	0	0	0	0	0	0	0	0	0
4/23/2024	4:45 PM	0	0	0	0	0	0	0	0	0	0	0	0	0
4/23/2024	5:00 PM	0	0	0	0	0	0	0	0	0	0	0	0	0
4/23/2024	5:15 PM	0	0	0	0	0	0	0	0	0	0	0	0	0
4/23/2024	5:30 PM	0	0	0	0	0	0	0	0	0	0	0	0	0
4/23/2024	5:45 PM	0	0	0	0	0	0	0	0	0	0	0	0	0
4/23/2024	6:00 PM	0	0	0	0	0	0	0	0	0	0	0	0	0
4/23/2024	6:15 PM	0	0	0	0	0	0	0	0	0	0	0	0	0
4/23/2024	6:30 PM	0	0	0	0	0	0	0	0	0	0	0	0	0
4/23/2024	6:45 PM	0	0	0	0	0	0	0	0	0	0	0	0	0
4/23/2024	7:00 PM	0	0	0	0	0	0	0	0	0	0	0	0	0
4/23/2024	7:15 PM	0	0	0	0	0	0	0	0	0	0	0	0	0
4/23/2024	7:30 PM	0	0	0	0	0	0	0	0	0	0	0	0	0
4/23/2024	7:45 PM	0	0	0	0	0	0	0	0	0	0	0	0	0
4/23/2024	8:00 PM	0	0	0	0	0	0	0	0	0	0	0	0	0
4/23/2024	8:15 PM	0	0	0	0	0	0	0	0	0	0	0	0	0
4/23/2024	8:30 PM	0	0	0	0	0	0	0	0	0	0	0	0	0
4/23/2024	8:45 PM	0	0	0	0	0	0	0	0	0	0	0	0	0
4/23/2024	9:00 PM	0	0	0	0	0	0	0	0	0	0	0	0	0
4/23/2024	9:15 PM	0	0	0	0	0	0	0	0	0	0	0	0	0
4/23/2024	9:30 PM	0	0	0	0	0	0	0	0	0	0	0	0	0
4/23/2024	9:45 PM	0	0	0	0	0	0	0	0	0	0	0	0	0
4/23/2024	10:00 PM	0	0	0	0	0	0	0	0	0	0	0	0	0
4/23/2024	10:15 PM	0	0	0	0	0	0	0	0	0	0	0	0	0
4/23/2024	10:30 PM	0	0	0	0	0	0	0	0	0	0	0	0	0
4/23/2024	10:45 PM	0	0	0	0	0	0	0	0	0	0	0	0	0
4/23/2024	11:00 PM	0	0	0	0	0	0	0	0	0	0	0	0	0
4/23/2024	11:15 PM	0	0	0	0	0	0	0	0	0	0	0	0	0
4/23/2024	11:30 PM	0	0	0	0	0	0	0	0	0	0	0	0	0
4/23/2024	11:45 PM	0	0	0	0	0	0	0	0	0	0	0	0	0

4/24/2024	12:00 AM	0	0	0	0	0	0	0	0	0	0	0	0	0
4/24/2024	12:15 AM	0	0	0	0	0	0	0	0	0	0	0	0	0
4/24/2024	12:30 AM	0	0	0	0	0	0	0	0	0	0	0	0	0
4/24/2024	12:45 AM	0	0	0	0	0	0	0	0	0	0	0	0	0
4/24/2024	1:00 AM	0	0	0	0	0	0	0	0	0	0	0	0	0
4/24/2024	1:15 AM	0	0	0	0	0	0	0	0	0	0	0	0	0
4/24/2024	1:30 AM	0	0	0	0	0	0	0	0	0	0	0	0	0
4/24/2024	1:45 AM	0	0	0	0	0	0	0	0	0	0	0	0	0
4/24/2024	2:00 AM	0	0	0	0	0	0	0	0	0	0	0	0	0
4/24/2024	2:15 AM	0	0	0	0	0	0	0	0	0	0	0	0	0
4/24/2024	2:30 AM	0	0	0	0	0	0	0	0	0	0	0	0	0
4/24/2024	2:45 AM	0	0	0	0	0	0	0	0	0	0	0	0	0
4/24/2024	3:00 AM	0	0	0	0	0	0	0	0	0	0	0	0	0
4/24/2024	3:15 AM	0	0	0	0	0	0	0	0	0	0	0	0	0
4/24/2024	3:30 AM	0	0	0	0	0	0	0	0	0	0	0	0	0
4/24/2024	3:45 AM	0	0	0	0	0	0	0	0	0	0	0	0	0
4/24/2024	4:00 AM	0	0	0	0	0	0	0	0	0	0	0	0	0
4/24/2024	4:15 AM	0	0	0	0	0	0	0	0	0	0	0	0	0
4/24/2024	4:30 AM	0	0	0	0	0	0	0	0	0	0	0	0	0
4/24/2024	4:45 AM	0	0	0	0	0	0	0	0	0	0	0	0	0
4/24/2024	5:00 AM	0	0	0	0	0	0	0	0	0	0	0	0	0
4/24/2024	5:15 AM	0	0	0	0	0	0	0	0	0	0	0	0	0
4/24/2024	5:30 AM	0	0	0	0	0	0	0	0	0	0	0	0	0
4/24/2024	5:45 AM	0	0	0	0	0	0	0	0	0	0	0	0	0
4/24/2024	6:00 AM	0	0	0	0	0	0	0	0	0	0	0	0	0
4/24/2024	6:15 AM	0	0	0	0	0	0	0	0	0	0	0	0	0
4/24/2024	6:30 AM	0	0	0	0	0	0	0	0	0	0	0	0	0
4/24/2024	6:45 AM	0	0	0	0	0	0	0	0	0	0	0	0	0
4/24/2024	7:00 AM	0	0	0	0	0	0	0	0	0	0	0	0	0
4/24/2024	7:15 AM	0	0	0	0	0	0	0	0	0	0	0	0	0
4/24/2024	7:30 AM	0	0	0	0	0	0	0	0	0	0	0	0	0
4/24/2024	7:45 AM	0	0	0	0	0	0	0	0	0	0	0	0	0
4/24/2024	8:00 AM	0	0	0	0	0	0	0	0	0	0	0	0	0
4/24/2024	8:15 AM	0	0	0	0	0	0	0	0	0	0	0	0	0
4/24/2024	8:30 AM	0	0	0	0	0	0	0	0	0	0	0	0	0
4/24/2024	8:45 AM	0	0	0	0	0	0	0	0	0	0	0	0	0
4/24/2024	9:00 AM	0	0	0	0	0	0	0	0	0	0	0	0	0
4/24/2024	9:15 AM	0	0	0	0	0	0	0	0	0	0	0	0	0
4/24/2024	9:30 AM	0	0	0	0	0	0	0	0	0	0	0	0	0
4/24/2024	9:45 AM	0	0	0	0	0	0	0	0	0	0	0	0	0
4/24/2024	10:00 AM	0	0	0	0	0	0	0	0	0	0	0	0	0
4/24/2024	10:15 AM	0	0	0	0	0	0	0	0	0	0	0	0	0
4/24/2024	10:30 AM	0	0	0	0	0	0	0	0	0	0	0	0	0
4/24/2024	10:45 AM	0	0	0	0	0	0	0	0	0	0	0	0	0
4/24/2024	11:00 AM	0	0	0	0	0	0	0	0	0	0	0	0	0
4/24/2024	11:15 AM	0	0	0	0	0	0	0	0	0	0	0	0	0
4/24/2024	11:30 AM	0	0	0	0	0	0	0	0	0	0	0	0	0
4/24/2024	11:45 AM	0	0	0	0	0	0	0	0	0	0	0	0	0
4/24/2024	12:00 PM	0	0	0	0	0	0	0	0	0	0	0	0	0
4/24/2024	12:15 PM	0	0	0	0	0	0	0	0	0	0	0	0	0
4/24/2024	12:30 PM	0	0	0	0	0	0	0	0	0	0	0	0	0
4/24/2024	12:45 PM	0	0	0	0	0	0	0	0	0	0	0	0	0
4/24/2024	1:00 PM	0	0	0	0	0	0	0	0	0	0	0	0	0
4/24/2024	1:15 PM	0	0	0	0	0	0	0	0	0	0	0	0	0
4/24/2024	1:30 PM	0	0	0	0	0	0	0	0	0	0	0	0	0
4/24/2024	1:45 PM	0	0	0	0	0	0	0	0	0	0	0	0	0
4/24/2024	2:00 PM	0	0	0	0	0	0	0	0	0	0	0	0	0
4/24/2024	2:15 PM	0	0	0	0	0	0	0	0	0	0	0	0	0
4/24/2024	2:30 PM	0	0	0	0	0	0	0	0	0	0	0	0	0
4/24/2024	2:45 PM	0	0	0	0	0	0	0	0	0	0	0	0	0
4/24/2024	3:00 PM	0	0	0	0	0	0	0	0	0	0	0	0	0
4/24/2024	3:15 PM	0	0	0	0	0	0	0	0	0	0	0	0	0
4/24/2024	3:30 PM	0	0	0	0	0	0	0	0	0	0	0	0	0
4/24/2024	3:45 PM	0	0	0	0	0	0	0	0	0	0	0	0	0
4/24/2024	4:00 PM	0	0	0	0	0	0	0	0	0	0	0	0	0
4/24/2024	4:15 PM	0	0	0	0	0	0	0	0	0	0	0	0	0
4/24/2024	4:30 PM	0	0	0	0	0	0	0	0	0	0	0	0	0
4/24/2024	4:45 PM	0	0	0	0	0	0	0	0	0	0	0	0	0
4/24/2024	5:00 PM	0	0	0	0	0	0	0	0	0	0	0	0	0
4/24/2024	5:15 PM	0	0	0	0	0	0	0	0	0	0	0	0	0
4/24/2024	5:30 PM	0	0	0	0	0	0	0	0	0	0	0	0	0
4/24/2024	5:45 PM	0	0	0	0	0	0	0	0	0	0	0	0	0
4/24/2024	6:00 PM	0	0	0	0	0	0	0	0	0	0	0	0	0
4/24/2024	6:15 PM	0	0	0	0	0	0	0	0	0	0	0	0	0
4/24/2024	6:30 PM	0	0	0	0	0	0	0	0	0	0	0	0	0
4/24/2024	6:45 PM	0	0	0	0	0	0	0	0	0	0	0	0	0
4/24/2024	7:00 PM	0	0	0	0	0	0	0	0	0	0	0	0	0
4/24/2024	7:15 PM	0	0	0	0	0	0	0	0	0	0	0	0	0
4/24/2024	7:30 PM	0	0	0	0	0	0	0	0	0	0	0	0	0
4/24/2024	7:45 PM	0	0	0	0	0	0	0	0	0	0	0	0	0
4/24/2024	8:00 PM	0	0	0	0	0	0	0	0	0	0	0	0	0
4/24/2024	8:15 PM	0	0	0	0	0	0	0	0	0	0	0	0	0
4/24/2024	8:30 PM	0	0	0	0	0	0	0	0	0	0	0	0	0
4/24/2024	8:45 PM	0	0	0	0	0	0	0	0	0	0	0	0	0
4/24/2024	9:00 PM	0	0	0	0	0	0	0	0	0	0	0	0	0
4/24/2024	9:15 PM	0	0	0	0	0	0	0	0	0	0	0	0	0
4/24/2024	9:30 PM	0	0	0	0	0	0	0	0	0	0	0	0	0
4/24/2024	9:45 PM	0	0	0	0	0	0	0	0	0	0	0	0	0
4/24/2024	10:00 PM	0	0	0	0	0	0	0	0	0	0	0	0	0
4/24/2024	10:15 PM	0	0	0	0	0	0	0	0	0	0	0	0	0
4/24/2024	10:30 PM	0	0	0	0	0	0	0	0	0	0	0	0	0
4/24/2024	10:45 PM	0	0	0	0	0	0	0	0	0	0	0	0	0
4/24/2024	11:00 PM	0	0	0	0	0	0	0	0	0	0	0	0	0
4/24/2024	11:15 PM	0	0	0	0	0	0	0	0	0	0	0	0	0
4/24/2024	11:30 PM	0	0	0	0	0	0	0	0	0	0	0	0	0
4/24/2024	11:45 PM	0	0	0	0	0	0	0	0	0	0	0	0	0

4/25/2024	12:00 AM	0	0	0	0	0	0	0	0	0	0	0	0	0
4/25/2024	12:15 AM	0	0	0	0	0	0	0	0	0	0	0	0	0
4/25/2024	12:30 AM	0	0	0	0	0	0	0	0	0	0	0	0	0
4/25/2024	12:45 AM	0	0	0	0	0	0	0	0	0	0	0	0	0
4/25/2024	1:00 AM	0	0	0	0	0	0	0	0	0	0	0	0	0
4/25/2024	1:15 AM	0	0	0	0	0	0	0	0	0	0	0	0	0
4/25/2024	1:30 AM	0	0	0	0	0	0	0	0	0	0	0	0	0
4/25/2024	1:45 AM	0	0	0	0	0	0	0	0	0	0	0	0	0
4/25/2024	2:00 AM	0	0	0	0	0	0	0	0	0	0	0	0	0
4/25/2024	2:15 AM	0	0	0	0	0	0	0	0	0	0	0	0	0
4/25/2024	2:30 AM	0	0	0	0	0	0	0	0	0	0	0	0	0
4/25/2024	2:45 AM	0	0	0	0	0	0	0	0	0	0	0	0	0
4/25/2024	3:00 AM	0	0	0	0	0	0	0	0	0	0	0	0	0
4/25/2024	3:15 AM	0	0	0	0	0	0	0	0	0	0	0	0	0
4/25/2024	3:30 AM	0	0	0	0	0	0	0	0	0	0	0	0	0
4/25/2024	3:45 AM	0	0	0	0	0	0	0	0	0	0	0	0	0
4/25/2024	4:00 AM	0	0	0	0	0	0	0	0	0	0	0	0	0
4/25/2024	4:15 AM	0	0	0	0	0	0	0	0	0	0	0	0	0
4/25/2024	4:30 AM	0	0	0	0	0	0	0	0	0	0	0	0	0
4/25/2024	4:45 AM	0	0	0	0	0	0	0	0	0	0	0	0	0
4/25/2024	5:00 AM	0	0	0	0	0	0	0	0	0	0	0	0	0
4/25/2024	5:15 AM	0	0	0	0	0	0	0	0	0	0	0	0	0
4/25/2024	5:30 AM	0	0	0	0	0	0	0	0	0	0	0	0	0
4/25/2024	5:45 AM	0	0	0	0	0	0	0	0	0	0	0	0	0
4/25/2024	6:00 AM	0	0	0	0	0	0	0	0	0	0	0	0	0
4/25/2024	6:15 AM	0	0	0	0	0	0	0	0	0	0	0	0	0
4/25/2024	6:30 AM	0	0	0	0	0	0	0	0	0	0	0	0	0
4/25/2024	6:45 AM	0	0	0	0	0	0	0	0	0	0	0	0	0
4/25/2024	7:00 AM	0	0	0	0	0	0	0	0	0	0	0	0	0
4/25/2024	7:15 AM	0	0	0	0	0	0	0	0	0	0	0	0	0
4/25/2024	7:30 AM	0	0	0	0	0	0	0	0	0	0	0	0	0
4/25/2024	7:45 AM	0	0	0	0	0	0	0	0	0	0	0	0	0
4/25/2024	8:00 AM	0	0	0	0	0	0	0	0	0	0	0	0	0
4/25/2024	8:15 AM	0	0	0	0	0	0	0	0	0	0	0	0	0
4/25/2024	8:30 AM	0	0	0	0	0	0	0	0	0	0	0	0	0
4/25/2024	8:45 AM	0	0	0	0	0	0	0	0	0	0	0	0	0
4/25/2024	9:00 AM	0	0	0	0	0	0	0	0	0	0	0	0	0
4/25/2024	9:15 AM	0	0	0	0	0	0	0	0	0	0	0	0	0
4/25/2024	9:30 AM	0	0	0	0	0	0	0	0	0	0	0	0	0
4/25/2024	9:45 AM	0	0	0	0	0	0	0	0	0	0	0	0	0
4/25/2024	10:00 AM	0	0	0	0	0	0	0	0	0	0	0	0	0
4/25/2024	10:15 AM	0	0	0	0	0	0	0	0	0	0	0	0	0
4/25/2024	10:30 AM	0	0	0	0	0	0	0	0	0	0	0	0	0
4/25/2024	10:45 AM	0	0	0	0	0	0	0	0	0	0	0	0	0
4/25/2024	11:00 AM	0	0	0	0	0	0	0	0	0	0	0	0	0
4/25/2024	11:15 AM	0	0	0	0	0	0	0	0	0	0	0	0	0
4/25/2024	11:30 AM	0	0	0	0	0	0	0	0	0	0	0	0	0
4/25/2024	11:45 AM	0	0	0	0	0	0	0	0	0	0	0	0	0
4/25/2024	12:00 PM	0	0	0	0	0	0	0	0	0	0	0	0	0
4/25/2024	12:15 PM	0	0	0	0	0	0	0	0	0	0	0	0	0
4/25/2024	12:30 PM	0	0	0	0	0	0	0	0	0	0	0	0	0
4/25/2024	12:45 PM	0	0	0	0	0	0	0	0	0	0	0	0	0
4/25/2024	1:00 PM	0	0	0	0	0	0	0	0	0	0	0	0	0
4/25/2024	1:15 PM	0	0	0	0	0	0	0	0	0	0	0	0	0
4/25/2024	1:30 PM	0	0	0	0	0	0	0	0	0	0	0	0	0
4/25/2024	1:45 PM	0	0	0	0	0	0	0	0	0	0	0	0	0
4/25/2024	2:00 PM	0	0	0	0	0	0	0	0	0	0	0	0	0
4/25/2024	2:15 PM	0	0	0	0	0	0	0	0	0	0	0	0	0
4/25/2024	2:30 PM	0	0	0	0	0	0	0	0	0	0	0	0	0
4/25/2024	2:45 PM	0	0	0	0	0	0	0	0	0	0	0	0	0
4/25/2024	3:00 PM	0	0	0	0	0	0	0	0	0	0	0	0	0
4/25/2024	3:15 PM	0	0	0	0	0	0	0	0	0	0	0	0	0
4/25/2024	3:30 PM	0	0	0	0	0	0	0	0	0	0	0	0	0
4/25/2024	3:45 PM	0	0	0	0	0	0	0	0	0	0	0	0	0
4/25/2024	4:00 PM	0	0	0	0	0	0	0	0	0	0	0	0	0
4/25/2024	4:15 PM	0	0	0	0	0	0	0	0	0	0	0	0	0
4/25/2024	4:30 PM	0	0	0	0	0	0	0	0	0	0	0	0	0
4/25/2024	4:45 PM	0	0	0	0	0	0	0	0	0	0	0	0	0
4/25/2024	5:00 PM	0	0	0	0	0	0	0	0	0	0	0	0	0
4/25/2024	5:15 PM	0	0	0	0	0	0	0	0	0	0	0	0	0
4/25/2024	5:30 PM	0	0	0	0	0	0	0	0	0	0	0	0	0
4/25/2024	5:45 PM	0	0	0	0	0	0	0	0	0	0	0	0	0
4/25/2024	6:00 PM	0	0	0	0	0	0	0	0	0	0	0	0	0
4/25/2024	6:15 PM	0	0	0	0	0	0	0	0	0	0	0	0	0
4/25/2024	6:30 PM	0	0	0	0	0	0	0	0	0	0	0	0	0
4/25/2024	6:45 PM	0	0	0	0	0	0	0	0	0	0	0	0	0
4/25/2024	7:00 PM	0	0	0	0	0	0	0	0	0	0	0	0	0
4/25/2024	7:15 PM	0	0	0	0	0	0	0	0	0	0	0	0	0
4/25/2024	7:30 PM	0	0	0	0	0	0	0	0	0	0	0	0	0
4/25/2024	7:45 PM	0	0	0	0	0	0	0	0	0	0	0	0	0
4/25/2024	8:00 PM	0	0	0	0	0	0	0	0	0	0	0	0	0
4/25/2024	8:15 PM	0	0	0	0	0	0	0	0	0	0	0	0	0
4/25/2024	8:30 PM	0	0	0	0	0	0	0	0	0	0	0	0	0
4/25/2024	8:45 PM	0	0	0	0	0	0	0	0	0	0	0	0	0
4/25/2024	9:00 PM	0	0	0	0	0	0	0	0	0	0	0	0	0
4/25/2024	9:15 PM	0	0	0	0	0	0	0	0	0	0	0	0	0
4/25/2024	9:30 PM	0	0	0	0	0	0	0	0	0	0	0	0	0
4/25/2024	9:45 PM	0	0	0	0	0	0	0	0	0	0	0	0	0
4/25/2024	10:00 PM	0	0	0	0	0	0	0	0	0	0	0	0	0
4/25/2024	10:15 PM	0	0	0	0	0	0	0	0	0	0	0	0	0
4/25/2024	10:30 PM	0	0	0	0	0	0	0	0	0	0	0	0	0
4/25/2024	10:45 PM	0	0	0	0	0	0	0	0	0	0	0	0	0
4/25/2024	11:00 PM	0	0	0	0	0	0	0	0	0	0	0	0	0
4/25/2024	11:15 PM	0	0	0	0	0	0	0	0	0	0	0	0	0
4/25/2024	11:30 PM	0	0	0	0	0	0	0	0	0	0	0	0	0
4/25/2024	11:45 PM	0	0	0	0	0	0	0	0	0	0	0	0	0

SB
File Name:
Start Date: 4/23/2024
Start Time: 0
Site Code: 63
Station ID: 1
Location 1: I-20 On/Off-Ramp, south of Bush River Rd
Location 2:

Date	Time	1	2	3	4	5	6	7	8	9	10	11	12	13
4/23/2024	12:00 AM	0	0	0	0	0	0	0	0	0	0	0	0	0
4/23/2024	12:15 AM	0	0	0	0	0	0	0	0	0	0	0	0	0
4/23/2024	12:30 AM	0	0	0	0	0	0	0	0	0	0	0	0	0
4/23/2024	12:45 AM	0	0	0	0	0	0	0	0	0	0	0	0	0
4/23/2024	1:00 AM	0	0	0	0	0	0	0	0	0	0	0	0	0
4/23/2024	1:15 AM	0	0	0	0	0	0	0	0	0	0	0	0	0
4/23/2024	1:30 AM	0	0	0	0	0	0	0	0	0	0	0	0	0
4/23/2024	1:45 AM	0	0	0	0	0	0	0	0	0	0	0	0	0
4/23/2024	2:00 AM	0	0	0	0	0	0	0	0	0	0	0	0	0
4/23/2024	2:15 AM	0	0	0	0	0	0	0	0	0	0	0	0	0
4/23/2024	2:30 AM	0	0	0	0	0	0	0	0	0	0	0	0	0
4/23/2024	2:45 AM	0	0	0	0	0	0	0	0	0	0	0	0	0
4/23/2024	3:00 AM	0	0	0	0	0	0	0	0	0	0	0	0	0
4/23/2024	3:15 AM	0	0	0	0	0	0	0	0	0	0	0	0	0
4/23/2024	3:30 AM	0	0	0	0	0	0	0	0	0	0	0	0	0
4/23/2024	3:45 AM	0	0	0	0	0	0	0	0	0	0	0	0	0
4/23/2024	4:00 AM	0	0	0	0	0	0	0	0	0	0	0	0	0
4/23/2024	4:15 AM	0	0	0	0	0	0	0	0	0	0	0	0	0
4/23/2024	4:30 AM	0	0	0	0	0	0	0	0	0	0	0	0	0
4/23/2024	4:45 AM	0	0	0	0	0	0	0	0	0	0	0	0	0
4/23/2024	5:00 AM	0	0	0	0	0	0	0	0	0	0	0	0	0
4/23/2024	5:15 AM	0	0	0	0	0	0	0	0	0	0	0	0	0
4/23/2024	5:30 AM	0	0	0	0	0	0	0	0	0	0	0	0	0
4/23/2024	5:45 AM	0	0	0	0	0	0	0	0	0	0	0	0	0
4/23/2024	6:00 AM	0	0	0	0	0	0	0	0	0	0	0	0	0
4/23/2024	6:15 AM	0	0	0	0	0	0	0	0	0	0	0	0	0
4/23/2024	6:30 AM	0	0	0	0	0	0	0	0	0	0	0	0	0
4/23/2024	6:45 AM	0	0	0	0	0	0	0	0	0	0	0	0	0
4/23/2024	7:00 AM	0	0	0	0	0	0	0	0	0	0	0	0	0
4/23/2024	7:15 AM	0	0	0	0	0	0	0	0	0	0	0	0	0
4/23/2024	7:30 AM	0	0	0	0	0	0	0	0	0	0	0	0	0
4/23/2024	7:45 AM	0	0	0	0	0	0	0	0	0	0	0	0	0
4/23/2024	8:00 AM	0	0	0	0	0	0	0	0	0	0	0	0	0
4/23/2024	8:15 AM	0	0	0	0	0	0	0	0	0	0	0	0	0
4/23/2024	8:30 AM	0	0	0	0	0	0	0	0	0	0	0	0	0
4/23/2024	8:45 AM	0	0	0	0	0	0	0	0	0	0	0	0	0
4/23/2024	9:00 AM	0	0	0	0	0	0	0	0	0	0	0	0	0
4/23/2024	9:15 AM	0	0	0	0	0	0	0	0	0	0	0	0	0
4/23/2024	9:30 AM	0	0	0	0	0	0	0	0	0	0	0	0	0
4/23/2024	9:45 AM	0	0	0	0	0	0	0	0	0	0	0	0	0
4/23/2024	10:00 AM	0	0	0	0	0	0	0	0	0	0	0	0	0
4/23/2024	10:15 AM	0	0	0	0	0	0	0	0	0	0	0	0	0
4/23/2024	10:30 AM	0	0	0	0	0	0	0	0	0	0	0	0	0
4/23/2024	10:45 AM	0	0	0	0	0	0	0	0	0	0	0	0	0
4/23/2024	11:00 AM	0	0	0	0	0	0	0	0	0	0	0	0	0
4/23/2024	11:15 AM	0	0	0	0	0	0	0	0	0	0	0	0	0
4/23/2024	11:30 AM	0	0	0	0	0	0	0	0	0	0	0	0	0
4/23/2024	11:45 AM	0	0	0	0	0	0	0	0	0	0	0	0	0
4/23/2024	12:00 PM	0	0	0	0	0	0	0	0	0	0	0	0	0
4/23/2024	12:15 PM	0	0	0	0	0	0	0	0	0	0	0	0	0
4/23/2024	12:30 PM	0	0	0	0	0	0	0	0	0	0	0	0	0
4/23/2024	12:45 PM	0	0	0	0	0	0	0	0	0	0	0	0	0
4/23/2024	1:00 PM	0	0	0	0	0	0	0	0	0	0	0	0	0
4/23/2024	1:15 PM	0	0	0	0	0	0	0	0	0	0	0	0	0
4/23/2024	1:30 PM	0	0	0	0	0	0	0	0	0	0	0	0	0
4/23/2024	1:45 PM	0	0	0	0	0	0	0	0	0	0	0	0	0
4/23/2024	2:00 PM	0	0	0	0	0	0	0	0	0	0	0	0	0
4/23/2024	2:15 PM	0	0	0	0	0	0	0	0	0	0	0	0	0
4/23/2024	2:30 PM	0	0	0	0	0	0	0	0	0	0	0	0	0
4/23/2024	2:45 PM	0	0	0	0	0	0	0	0	0	0	0	0	0
4/23/2024	3:00 PM	0	0	0	0	0	0	0	0	0	0	0	0	0
4/23/2024	3:15 PM	0	0	0	0	0	0	0	0	0	0	0	0	0
4/23/2024	3:30 PM	0	0	0	0	0	0	0	0	0	0	0	0	0
4/23/2024	3:45 PM	0	0	0	0	0	0	0	0	0	0	0	0	0
4/23/2024	4:00 PM	0	0	0	0	0	0	0	0	0	0	0	0	0
4/23/2024	4:15 PM	0	0	0	0	0	0	0	0	0	0	0	0	0
4/23/2024	4:30 PM	0	0	0	0	0	0	0	0	0	0	0	0	0
4/23/2024	4:45 PM	0	0	0	0	0	0	0	0	0	0	0	0	0
4/23/2024	5:00 PM	0	0	0	0	0	0	0	0	0	0	0	0	0
4/23/2024	5:15 PM	0	0	0	0	0	0	0	0	0	0	0	0	0
4/23/2024	5:30 PM	0	0	0	0	0	0	0	0	0	0	0	0	0
4/23/2024	5:45 PM	0	0	0	0	0	0	0	0	0	0	0	0	0
4/23/2024	6:00 PM	0	0	0	0	0	0	0	0	0	0	0	0	0
4/23/2024	6:15 PM	0	0	0	0	0	0	0	0	0	0	0	0	0
4/23/2024	6:30 PM	0	0	0	0	0	0	0	0	0	0	0	0	0
4/23/2024	6:45 PM	0	0	0	0	0	0	0	0	0	0	0	0	0
4/23/2024	7:00 PM	0	26	3	0	0	0	0	0	1	0	0	0	0
4/23/2024	7:15 PM	0	21	4	0	0	0	0	0	0	0	0	0	0
4/23/2024	7:30 PM	0	23	2	0	0	0	0	0	0	0	0	0	0
4/23/2024	7:45 PM	0	22	6	0	0	0	0	0	0	0	0	0	0
4/23/2024	8:00 PM	0	28	3	0	0	0	0	0	0	0	0	0	0
4/23/2024	8:15 PM	0	19	1	0	0	0	0	0	0	0	0	0	0
4/23/2024	8:30 PM	0	21	1	0	0	0	0	0	0	0	0	0	0
4/23/2024	8:45 PM	0	10	1	0	1	0	0	0	0	0	0	0	0
4/23/2024	9:00 PM	0	29	4	0	0	0	0	0	0	0	0	0	0
4/23/2024	9:15 PM	0	23	3	0	0	0	0	0	0	0	0	0	0
4/23/2024	9:30 PM	0	19	2	0	1	0	0	0	0	0	0	0	0
4/23/2024	9:45 PM	0	10	1	0	0	0	0	0	0	0	0	0	0
4/23/2024	10:00 PM	0	10	1	0	0	0	0	0	0	0	0	0	0
4/23/2024	10:15 PM	0	12	2	0	1	0	0	0	0	0	0	0	0
4/23/2024	10:30 PM	0	13	3	0	1	0	0	0	0	0	0	0	0
4/23/2024	10:45 PM	0	10	1	0	0	0	0	0	0	0	0	0	0
4/23/2024	11:00 PM	0	8	1	0	0	0	0	0	0	0	0	0	0
4/23/2024	11:15 PM	0	7	0	0	0	0	0	0	0	0	0	0	0
4/23/2024	11:30 PM	0	5	1	0	0	0	0	0	0	0	0	0	0
4/23/2024	11:45 PM	0	0	0	0	0	0	0	0	0	0	0	0	0

4/24/2024	12:00 AM	0	6	2	0	0	0	0	0	0	0	0	0	0
4/24/2024	12:15 AM	0	0	0	0	0	0	0	0	0	0	0	0	0
4/24/2024	12:30 AM	0	4	1	0	0	0	0	0	0	0	0	0	0
4/24/2024	12:45 AM	0	2	0	0	0	0	0	0	0	0	0	0	0
4/24/2024	1:00 AM	0	4	2	0	1	0	0	0	0	0	0	0	0
4/24/2024	1:15 AM	0	1	1	0	0	0	0	0	0	0	0	0	0
4/24/2024	1:30 AM	0	1	1	0	0	0	0	0	0	0	0	0	0
4/24/2024	1:45 AM	0	2	1	0	1	0	0	0	0	0	0	0	0
4/24/2024	2:00 AM	0	2	0	0	0	0	0	0	0	0	0	0	0
4/24/2024	2:15 AM	0	4	0	0	0	0	0	0	0	0	0	0	0
4/24/2024	2:30 AM	0	1	0	0	0	0	0	0	0	0	0	0	0
4/24/2024	2:45 AM	0	2	1	0	0	0	0	0	0	0	0	0	0
4/24/2024	3:00 AM	0	2	1	0	0	0	0	0	0	0	0	0	0
4/24/2024	3:15 AM	0	2	0	0	0	0	0	0	0	0	0	0	0
4/24/2024	3:30 AM	0	1	0	0	0	0	0	0	0	0	0	0	0
4/24/2024	3:45 AM	0	2	1	0	0	0	0	0	0	0	0	0	0
4/24/2024	4:00 AM	0	3	1	0	0	0	0	0	0	0	0	0	0
4/24/2024	4:15 AM	0	5	1	0	1	0	0	0	1	0	0	0	0
4/24/2024	4:30 AM	0	5	2	0	0	0	0	0	0	0	0	0	0
4/24/2024	4:45 AM	0	2	1	0	0	0	0	0	1	0	0	0	0
4/24/2024	5:00 AM	0	3	1	0	0	0	0	0	1	0	0	0	0
4/24/2024	5:15 AM	0	5	2	0	0	0	0	0	0	0	0	0	0
4/24/2024	5:30 AM	0	14	5	0	1	0	0	0	0	0	0	0	0
4/24/2024	5:45 AM	0	6	2	0	0	0	0	0	0	0	0	0	0
4/24/2024	6:00 AM	0	9	3	0	0	0	0	0	1	0	0	0	0
4/24/2024	6:15 AM	0	21	3	0	0	0	0	0	0	0	0	0	0
4/24/2024	6:30 AM	0	26	7	0	0	0	0	0	0	0	0	0	0
4/24/2024	6:45 AM	1	21	5	0	1	0	0	0	1	0	0	0	0
4/24/2024	7:00 AM	0	35	7	0	0	0	0	0	0	0	0	0	0
4/24/2024	7:15 AM	0	44	11	0	0	1	0	0	0	0	0	0	0
4/24/2024	7:30 AM	0	43	14	0	0	0	0	0	0	0	0	0	0
4/24/2024	7:45 AM	0	49	8	0	1	0	0	0	0	0	0	0	0
4/24/2024	8:00 AM	0	33	11	0	1	0	0	0	0	0	0	0	0
4/24/2024	8:15 AM	0	32	4	0	1	0	0	0	0	0	0	0	0
4/24/2024	8:30 AM	0	34	7	0	1	0	0	0	0	0	0	0	0
4/24/2024	8:45 AM	0	33	3	0	0	0	0	0	0	0	0	0	0
4/24/2024	9:00 AM	0	24	4	0	1	0	0	0	1	0	0	0	0
4/24/2024	9:15 AM	0	26	7	0	0	1	0	0	0	0	0	0	0
4/24/2024	9:30 AM	0	24	7	0	0	0	0	0	0	0	0	0	0
4/24/2024	9:45 AM	0	20	4	0	0	0	0	0	1	0	0	0	0
4/24/2024	10:00 AM	0	25	10	0	0	0	0	0	0	0	0	0	0
4/24/2024	10:15 AM	0	25	4	0	1	0	0	0	0	0	0	0	0
4/24/2024	10:30 AM	0	44	9	0	0	1	0	0	0	0	0	0	0
4/24/2024	10:45 AM	0	33	5	1	0	0	0	0	0	0	0	0	0
4/24/2024	11:00 AM	0	32	4	0	0	0	0	0	0	0	0	0	0
4/24/2024	11:15 AM	0	35	3	0	0	0	0	0	0	0	0	0	0
4/24/2024	11:30 AM	1	49	9	0	0	0	0	0	0	0	0	0	0
4/24/2024	11:45 AM	0	45	7	0	1	0	0	0	0	0	0	0	0
4/24/2024	12:00 PM	0	31	9	0	2	0	0	0	0	0	0	0	0
4/24/2024	12:15 PM	0	38	12	0	1	0	0	0	1	0	0	0	0
4/24/2024	12:30 PM	0	49	8	0	0	0	0	1	0	0	0	0	0
4/24/2024	12:45 PM	0	43	10	0	0	0	0	0	1	0	0	0	0
4/24/2024	1:00 PM	0	50	9	0	1	0	0	0	0	0	0	0	0
4/24/2024	1:15 PM	0	51	4	0	0	1	0	0	0	0	0	0	0
4/24/2024	1:30 PM	0	40	6	0	0	0	0	0	2	0	0	0	0
4/24/2024	1:45 PM	0	44	7	0	0	1	0	0	0	0	0	0	0
4/24/2024	2:00 PM	0	52	2	0	1	0	0	0	0	0	0	0	0
4/24/2024	2:15 PM	0	51	7	0	3	0	0	0	0	0	0	0	0
4/24/2024	2:30 PM	0	40	5	0	0	0	0	0	0	0	0	0	0
4/24/2024	2:45 PM	0	34	6	0	1	0	0	0	0	0	0	0	0
4/24/2024	3:00 PM	0	40	8	0	0	0	0	0	0	0	0	0	0
4/24/2024	3:15 PM	0	42	9	0	1	0	0	0	0	0	0	0	0
4/24/2024	3:30 PM	0	63	7	0	1	0	0	0	0	0	0	0	0
4/24/2024	3:45 PM	0	44	7	0	1	0	0	0	0	0	0	0	0
4/24/2024	4:00 PM	0	89	15	0	0	1	0	1	2	0	0	0	0
4/24/2024	4:15 PM	0	91	8	0	0	0	0	0	0	0	0	0	0
4/24/2024	4:30 PM	0	94	14	0	0	0	0	0	0	0	0	0	0
4/24/2024	4:45 PM	0	82	9	0	1	0	0	1	1	0	0	0	0
4/24/2024	5:00 PM	0	135	10	0	0	0	0	0	1	0	0	0	0
4/24/2024	5:15 PM	0	94	8	0	0	0	0	0	2	0	0	0	0
4/24/2024	5:30 PM	0	85	6	0	0	0	0	0	0	0	0	0	0
4/24/2024	5:45 PM	0	50	5	0	0	0	0	0	0	0	0	0	0
4/24/2024	6:00 PM	0	54	2	0	0	0	0	0	0	0	0	0	0
4/24/2024	6:15 PM	0	40	3	0	0	0	0	0	0	0	0	0	0
4/24/2024	6:30 PM	1	42	3	0	1	0	0	0	2	0	0	0	0
4/24/2024	6:45 PM	0	33	4	0	0	0	0	0	1	0	0	0	0
4/24/2024	7:00 PM	1	35	0	0	0	0	0	0	0	0	0	0	0
4/24/2024	7:15 PM	0	30	5	0	1	0	0	0	0	0	0	0	0
4/24/2024	7:30 PM	1	23	2	0	2	0	0	0	0	0	0	0	0
4/24/2024	7:45 PM	0	31	3	0	0	0	0	0	0	0	0	0	0
4/24/2024	8:00 PM	0	29	7	0	0	0	0	0	0	0	0	0	0
4/24/2024	8:15 PM	0	22	3	0	1	0	0	0	0	0	0	0	0
4/24/2024	8:30 PM	0	35	3	0	0	0	0	0	1	0	0	0	0
4/24/2024	8:45 PM	0	27	4	0	0	0	0	0	0	0	0	0	0
4/24/2024	9:00 PM	0	33	3	0	0	0	0	0	0	0	0	0	0
4/24/2024	9:15 PM	0	36	4	0	0	0	0	0	0	0	0	0	0
4/24/2024	9:30 PM	0	15	2	0	0	0	0	0	0	0	0	0	0
4/24/2024	9:45 PM	0	18	3	0	0	0	0	0	1	0	0	0	0
4/24/2024	10:00 PM	0	14	2	0	0	0	0	0	0	0	0	0	0
4/24/2024	10:15 PM	0	4	0	0	0	0	0	0	0	0	0	0	0
4/24/2024	10:30 PM	0	13	2	0	0	0	0	0	0	0	0	0	0
4/24/2024	10:45 PM	0	10	2	0	0	0	0	0	0	0	0	0	0
4/24/2024	11:00 PM	0	8	2	0	0	0	0	0	1	0	0	0	0
4/24/2024	11:15 PM	0	6	2	0	0	0	0	0	0	0	0	0	0
4/24/2024	11:30 PM	0	11	3	0	0	0	0	0	0	0	0	0	0
4/24/2024	11:45 PM	0	7	1	0	0	0	0	0	0	0	0	0	0

4/25/2024	12:00 AM	0	4	1	0	0	0	0	0	0	0	0	0
4/25/2024	12:15 AM	0	0	0	0	0	0	0	0	0	0	0	0
4/25/2024	12:30 AM	0	4	1	0	0	0	0	0	0	0	0	0
4/25/2024	12:45 AM	0	4	1	0	0	0	0	0	0	0	0	0
4/25/2024	1:00 AM	0	2	1	0	0	0	0	0	0	0	0	0
4/25/2024	1:15 AM	0	1	0	0	1	0	0	0	0	0	0	0
4/25/2024	1:30 AM	0	5	0	0	0	0	0	0	0	0	0	0
4/25/2024	1:45 AM	0	3	0	0	1	0	0	0	0	0	0	0
4/25/2024	2:00 AM	0	4	0	0	0	0	0	0	0	0	0	0
4/25/2024	2:15 AM	0	4	1	0	0	0	0	0	0	0	0	0
4/25/2024	2:30 AM	0	1	1	0	0	0	0	0	0	0	0	0
4/25/2024	2:45 AM	0	1	0	0	0	0	0	0	0	0	0	0
4/25/2024	3:00 AM	0	2	1	0	1	0	0	0	0	0	0	0
4/25/2024	3:15 AM	0	1	1	0	0	0	0	0	0	0	0	0
4/25/2024	3:30 AM	0	3	1	0	0	0	0	0	0	0	0	0
4/25/2024	3:45 AM	0	3	0	0	0	0	0	0	0	0	0	0
4/25/2024	4:00 AM	0	2	1	0	0	0	0	0	0	0	0	0
4/25/2024	4:15 AM	0	4	1	0	0	0	0	0	0	0	0	0
4/25/2024	4:30 AM	0	3	1	0	0	0	0	0	1	0	0	0
4/25/2024	4:45 AM	0	2	1	0	0	0	0	0	1	0	0	0
4/25/2024	5:00 AM	0	8	1	0	1	0	0	0	0	0	0	0
4/25/2024	5:15 AM	0	9	2	0	0	0	0	1	0	0	0	0
4/25/2024	5:30 AM	0	11	2	0	0	0	0	0	0	0	0	0
4/25/2024	5:45 AM	0	11	3	0	1	0	0	0	0	0	0	0
4/25/2024	6:00 AM	0	12	1	0	0	0	0	0	1	0	0	0
4/25/2024	6:15 AM	0	17	3	0	0	0	0	0	0	0	0	0
4/25/2024	6:30 AM	0	23	5	0	0	0	0	0	0	0	0	0
4/25/2024	6:45 AM	0	24	6	0	0	0	0	0	0	0	0	0
4/25/2024	7:00 AM	0	33	8	0	0	1	0	0	0	0	0	0
4/25/2024	7:15 AM	0	34	5	0	0	0	0	0	0	0	0	0
4/25/2024	7:30 AM	0	51	11	0	0	0	0	0	0	0	0	0
4/25/2024	7:45 AM	0	65	9	0	0	0	0	0	0	0	0	0
4/25/2024	8:00 AM	0	40	10	0	1	0	0	0	0	0	0	0
4/25/2024	8:15 AM	0	44	7	0	1	0	0	0	0	0	0	0
4/25/2024	8:30 AM	0	56	8	0	1	0	0	0	0	0	0	0
4/25/2024	8:45 AM	0	39	12	0	0	0	0	0	0	0	0	0
4/25/2024	9:00 AM	0	29	5	0	2	0	0	0	1	0	0	0
4/25/2024	9:15 AM	0	30	10	0	0	0	0	0	0	0	0	0
4/25/2024	9:30 AM	0	31	5	0	0	0	0	0	0	0	0	0
4/25/2024	9:45 AM	0	36	2	0	2	0	0	0	0	0	0	0
4/25/2024	10:00 AM	0	31	6	0	1	0	0	0	0	0	0	0
4/25/2024	10:15 AM	0	33	6	0	1	0	0	0	0	0	0	0
4/25/2024	10:30 AM	0	26	7	0	0	0	0	0	0	0	0	0
4/25/2024	10:45 AM	0	28	7	0	1	0	0	0	0	0	0	0
4/25/2024	11:00 AM	0	26	3	0	0	0	0	0	0	0	0	0
4/25/2024	11:15 AM	0	25	6	0	0	0	0	0	2	0	0	0
4/25/2024	11:30 AM	0	31	7	0	0	0	0	0	0	0	0	0
4/25/2024	11:45 AM	0	25	4	0	0	0	0	0	0	0	0	0
4/25/2024	12:00 PM	0	37	11	0	2	0	0	0	0	0	0	0
4/25/2024	12:15 PM	0	40	5	0	0	0	0	0	0	0	0	0
4/25/2024	12:30 PM	0	56	10	0	0	1	0	0	0	0	0	0
4/25/2024	12:45 PM	0	50	8	0	1	0	0	0	0	0	0	0
4/25/2024	1:00 PM	0	55	13	0	2	1	0	0	2	0	0	0
4/25/2024	1:15 PM	0	46	13	0	0	1	0	0	0	0	0	0
4/25/2024	1:30 PM	0	47	10	0	0	0	0	0	0	0	0	0
4/25/2024	1:45 PM	0	40	11	0	0	0	0	0	0	0	0	0
4/25/2024	2:00 PM	0	47	12	0	0	0	0	0	0	0	0	0
4/25/2024	2:15 PM	0	48	8	1	0	0	0	0	0	0	0	0
4/25/2024	2:30 PM	0	49	8	0	0	1	0	0	0	0	0	0
4/25/2024	2:45 PM	0	39	10	0	0	0	0	0	0	0	0	0
4/25/2024	3:00 PM	0	47	10	0	1	0	0	0	1	0	0	0
4/25/2024	3:15 PM	0	50	9	0	0	0	0	0	0	0	0	0
4/25/2024	3:30 PM	0	37	8	0	0	0	0	0	1	0	0	0
4/25/2024	3:45 PM	0	57	12	0	0	0	0	0	2	0	0	0
4/25/2024	4:00 PM	0	76	17	0	1	0	0	0	0	0	0	0
4/25/2024	4:15 PM	0	61	12	0	1	0	0	0	1	0	0	0
4/25/2024	4:30 PM	0	68	10	0	0	2	0	0	1	0	0	0
4/25/2024	4:45 PM	0	61	15	0	0	0	0	0	0	0	0	0
4/25/2024	5:00 PM	0	106	31	0	0	0	0	0	0	0	0	0
4/25/2024	5:15 PM	0	73	20	0	2	0	0	0	0	0	0	0
4/25/2024	5:30 PM	0	68	11	0	0	0	0	0	0	0	0	0
4/25/2024	5:45 PM	0	42	5	0	0	0	0	0	0	0	0	0
4/25/2024	6:00 PM	0	45	9	0	0	0	0	0	0	0	0	0
4/25/2024	6:15 PM	0	34	6	0	0	0	0	0	0	0	0	0
4/25/2024	6:30 PM	0	29	5	0	2	0	0	0	0	0	0	0
4/25/2024	6:45 PM	0	34	7	0	0	0	0	0	0	0	0	0
4/25/2024	7:00 PM	0	0	0	0	0	0	0	0	0	0	0	0
4/25/2024	7:15 PM	0	0	0	0	0	0	0	0	0	0	0	0
4/25/2024	7:30 PM	0	0	0	0	0	0	0	0	0	0	0	0
4/25/2024	7:45 PM	0	0	0	0	0	0	0	0	0	0	0	0
4/25/2024	8:00 PM	0	0	0	0	0	0	0	0	0	0	0	0
4/25/2024	8:15 PM	0	0	0	0	0	0	0	0	0	0	0	0
4/25/2024	8:30 PM	0	0	0	0	0	0	0	0	0	0	0	0
4/25/2024	8:45 PM	0	0	0	0	0	0	0	0	0	0	0	0
4/25/2024	9:00 PM	0	0	0	0	0	0	0	0	0	0	0	0
4/25/2024	9:15 PM	0	0	0	0	0	0	0	0	0	0	0	0
4/25/2024	9:30 PM	0	0	0	0	0	0	0	0	0	0	0	0
4/25/2024	9:45 PM	0	0	0	0	0	0	0	0	0	0	0	0
4/25/2024	10:00 PM	0	0	0	0	0	0	0	0	0	0	0	0
4/25/2024	10:15 PM	0	0	0	0	0	0	0	0	0	0	0	0
4/25/2024	10:30 PM	0	0	0	0	0	0	0	0	0	0	0	0
4/25/2024	10:45 PM	0	0	0	0	0	0	0	0	0	0	0	0
4/25/2024	11:00 PM	0	0	0	0	0	0	0	0	0	0	0	0
4/25/2024	11:15 PM	0	0	0	0	0	0	0	0	0	0	0	0
4/25/2024	11:30 PM	0	0	0	0	0	0	0	0	0	0	0	0
4/25/2024	11:45 PM	0	0	0	0	0	0	0	0	0	0	0	0

NB
File Name:
Start Date: 4/23/2024
Start Time: 0
Site Code: 63
Station ID: 1
Location 1: I-20 On/Off-Ramp, south of Bush River Rd
Location 2:

Date	Time	1	2	3	4	5	6	7	8	9	10	11	12	13
4/23/2024	12:00 AM	0	0	0	0	0	0	0	0	0	0	0	0	0
4/23/2024	12:15 AM	0	0	0	0	0	0	0	0	0	0	0	0	0
4/23/2024	12:30 AM	0	0	0	0	0	0	0	0	0	0	0	0	0
4/23/2024	12:45 AM	0	0	0	0	0	0	0	0	0	0	0	0	0
4/23/2024	1:00 AM	0	0	0	0	0	0	0	0	0	0	0	0	0
4/23/2024	1:15 AM	0	0	0	0	0	0	0	0	0	0	0	0	0
4/23/2024	1:30 AM	0	0	0	0	0	0	0	0	0	0	0	0	0
4/23/2024	1:45 AM	0	0	0	0	0	0	0	0	0	0	0	0	0
4/23/2024	2:00 AM	0	0	0	0	0	0	0	0	0	0	0	0	0
4/23/2024	2:15 AM	0	0	0	0	0	0	0	0	0	0	0	0	0
4/23/2024	2:30 AM	0	0	0	0	0	0	0	0	0	0	0	0	0
4/23/2024	2:45 AM	0	0	0	0	0	0	0	0	0	0	0	0	0
4/23/2024	3:00 AM	0	0	0	0	0	0	0	0	0	0	0	0	0
4/23/2024	3:15 AM	0	0	0	0	0	0	0	0	0	0	0	0	0
4/23/2024	3:30 AM	0	0	0	0	0	0	0	0	0	0	0	0	0
4/23/2024	3:45 AM	0	0	0	0	0	0	0	0	0	0	0	0	0
4/23/2024	4:00 AM	0	0	0	0	0	0	0	0	0	0	0	0	0
4/23/2024	4:15 AM	0	0	0	0	0	0	0	0	0	0	0	0	0
4/23/2024	4:30 AM	0	0	0	0	0	0	0	0	0	0	0	0	0
4/23/2024	4:45 AM	0	0	0	0	0	0	0	0	0	0	0	0	0
4/23/2024	5:00 AM	0	0	0	0	0	0	0	0	0	0	0	0	0
4/23/2024	5:15 AM	0	0	0	0	0	0	0	0	0	0	0	0	0
4/23/2024	5:30 AM	0	0	0	0	0	0	0	0	0	0	0	0	0
4/23/2024	5:45 AM	0	0	0	0	0	0	0	0	0	0	0	0	0
4/23/2024	6:00 AM	0	0	0	0	0	0	0	0	0	0	0	0	0
4/23/2024	6:15 AM	0	0	0	0	0	0	0	0	0	0	0	0	0
4/23/2024	6:30 AM	0	0	0	0	0	0	0	0	0	0	0	0	0
4/23/2024	6:45 AM	0	0	0	0	0	0	0	0	0	0	0	0	0
4/23/2024	7:00 AM	0	0	0	0	0	0	0	0	0	0	0	0	0
4/23/2024	7:15 AM	0	0	0	0	0	0	0	0	0	0	0	0	0
4/23/2024	7:30 AM	0	0	0	0	0	0	0	0	0	0	0	0	0
4/23/2024	7:45 AM	0	0	0	0	0	0	0	0	0	0	0	0	0
4/23/2024	8:00 AM	0	0	0	0	0	0	0	0	0	0	0	0	0
4/23/2024	8:15 AM	0	0	0	0	0	0	0	0	0	0	0	0	0
4/23/2024	8:30 AM	0	0	0	0	0	0	0	0	0	0	0	0	0
4/23/2024	8:45 AM	0	0	0	0	0	0	0	0	0	0	0	0	0
4/23/2024	9:00 AM	0	0	0	0	0	0	0	0	0	0	0	0	0
4/23/2024	9:15 AM	0	0	0	0	0	0	0	0	0	0	0	0	0
4/23/2024	9:30 AM	0	0	0	0	0	0	0	0	0	0	0	0	0
4/23/2024	9:45 AM	0	0	0	0	0	0	0	0	0	0	0	0	0
4/23/2024	10:00 AM	0	0	0	0	0	0	0	0	0	0	0	0	0
4/23/2024	10:15 AM	0	0	0	0	0	0	0	0	0	0	0	0	0
4/23/2024	10:30 AM	0	0	0	0	0	0	0	0	0	0	0	0	0
4/23/2024	10:45 AM	0	0	0	0	0	0	0	0	0	0	0	0	0
4/23/2024	11:00 AM	0	0	0	0	0	0	0	0	0	0	0	0	0
4/23/2024	11:15 AM	0	0	0	0	0	0	0	0	0	0	0	0	0
4/23/2024	11:30 AM	0	0	0	0	0	0	0	0	0	0	0	0	0
4/23/2024	11:45 AM	0	0	0	0	0	0	0	0	0	0	0	0	0
4/23/2024	12:00 PM	0	0	0	0	0	0	0	0	0	0	0	0	0
4/23/2024	12:15 PM	0	0	0	0	0	0	0	0	0	0	0	0	0
4/23/2024	12:30 PM	0	0	0	0	0	0	0	0	0	0	0	0	0
4/23/2024	12:45 PM	0	0	0	0	0	0	0	0	0	0	0	0	0
4/23/2024	1:00 PM	0	0	0	0	0	0	0	0	0	0	0	0	0
4/23/2024	1:15 PM	0	0	0	0	0	0	0	0	0	0	0	0	0
4/23/2024	1:30 PM	0	0	0	0	0	0	0	0	0	0	0	0	0
4/23/2024	1:45 PM	0	0	0	0	0	0	0	0	0	0	0	0	0
4/23/2024	2:00 PM	0	0	0	0	0	0	0	0	0	0	0	0	0
4/23/2024	2:15 PM	0	0	0	0	0	0	0	0	0	0	0	0	0
4/23/2024	2:30 PM	0	0	0	0	0	0	0	0	0	0	0	0	0
4/23/2024	2:45 PM	0	0	0	0	0	0	0	0	0	0	0	0	0
4/23/2024	3:00 PM	0	0	0	0	0	0	0	0	0	0	0	0	0
4/23/2024	3:15 PM	0	0	0	0	0	0	0	0	0	0	0	0	0
4/23/2024	3:30 PM	0	0	0	0	0	0	0	0	0	0	0	0	0
4/23/2024	3:45 PM	0	0	0	0	0	0	0	0	0	0	0	0	0
4/23/2024	4:00 PM	0	0	0	0	0	0	0	0	0	0	0	0	0
4/23/2024	4:15 PM	0	0	0	0	0	0	0	0	0	0	0	0	0
4/23/2024	4:30 PM	0	0	0	0	0	0	0	0	0	0	0	0	0
4/23/2024	4:45 PM	0	0	0	0	0	0	0	0	0	0	0	0	0
4/23/2024	5:00 PM	0	0	0	0	0	0	0	0	0	0	0	0	0
4/23/2024	5:15 PM	0	0	0	0	0	0	0	0	0	0	0	0	0
4/23/2024	5:30 PM	0	0	0	0	0	0	0	0	0	0	0	0	0
4/23/2024	5:45 PM	0	0	0	0	0	0	0	0	0	0	0	0	0
4/23/2024	6:00 PM	0	0	0	0	0	0	0	0	0	0	0	0	0
4/23/2024	6:15 PM	0	0	0	0	0	0	0	0	0	0	0	0	0
4/23/2024	6:30 PM	0	0	0	0	0	0	0	0	0	0	0	0	0
4/23/2024	6:45 PM	0	0	0	0	0	0	0	0	0	0	0	0	0
4/23/2024	7:00 PM	0	0	0	0	0	0	0	0	0	0	0	0	0
4/23/2024	7:15 PM	0	0	0	0	0	0	0	0	0	0	0	0	0
4/23/2024	7:30 PM	0	0	0	0	0	0	0	0	0	0	0	0	0
4/23/2024	7:45 PM	0	0	0	0	0	0	0	0	0	0	0	0	0
4/23/2024	8:00 PM	0	0	0	0	0	0	0	0	0	0	0	0	0
4/23/2024	8:15 PM	0	0	0	0	0	0	0	0	0	0	0	0	0
4/23/2024	8:30 PM	0	0	0	0	0	0	0	0	0	0	0	0	0
4/23/2024	8:45 PM	0	0	0	0	0	0	0	0	0	0	0	0	0
4/23/2024	9:00 PM	0	0	0	0	0	0	0	0	0	0	0	0	0
4/23/2024	9:15 PM	0	0	0	0	0	0	0	0	0	0	0	0	0
4/23/2024	9:30 PM	0	0	0	0	0	0	0	0	0	0	0	0	0
4/23/2024	9:45 PM	0	0	0	0	0	0	0	0	0	0	0	0	0
4/23/2024	10:00 PM	0	0	0	0	0	0	0	0	0	0	0	0	0
4/23/2024	10:15 PM	0	0	0	0	0	0	0	0	0	0	0	0	0
4/23/2024	10:30 PM	0	0	0	0	0	0	0	0	0	0	0	0	0
4/23/2024	10:45 PM	0	0	0	0	0	0	0	0	0	0	0	0	0
4/23/2024	11:00 PM	0	0	0	0	0	0	0	0	0	0	0	0	0
4/23/2024	11:15 PM	0	0	0	0	0	0	0	0	0	0	0	0	0
4/23/2024	11:30 PM	0	0	0	0	0	0	0	0	0	0	0	0	0
4/23/2024	11:45 PM	0	0	0	0	0	0	0	0	0	0	0	0	0

4/24/2024	12:00 AM	0	0	0	0	0	0	0	0	0	0	0	0	0
4/24/2024	12:15 AM	0	0	0	0	0	0	0	0	0	0	0	0	0
4/24/2024	12:30 AM	0	0	0	0	0	0	0	0	0	0	0	0	0
4/24/2024	12:45 AM	0	0	0	0	0	0	0	0	0	0	0	0	0
4/24/2024	1:00 AM	0	0	0	0	0	0	0	0	0	0	0	0	0
4/24/2024	1:15 AM	0	0	0	0	0	0	0	0	0	0	0	0	0
4/24/2024	1:30 AM	0	0	0	0	0	0	0	0	0	0	0	0	0
4/24/2024	1:45 AM	0	0	0	0	0	0	0	0	0	0	0	0	0
4/24/2024	2:00 AM	0	0	0	0	0	0	0	0	0	0	0	0	0
4/24/2024	2:15 AM	0	0	0	0	0	0	0	0	0	0	0	0	0
4/24/2024	2:30 AM	0	0	0	0	0	0	0	0	0	0	0	0	0
4/24/2024	2:45 AM	0	0	0	0	0	0	0	0	0	0	0	0	0
4/24/2024	3:00 AM	0	0	0	0	0	0	0	0	0	0	0	0	0
4/24/2024	3:15 AM	0	0	0	0	0	0	0	0	0	0	0	0	0
4/24/2024	3:30 AM	0	0	0	0	0	0	0	0	0	0	0	0	0
4/24/2024	3:45 AM	0	0	0	0	0	0	0	0	0	0	0	0	0
4/24/2024	4:00 AM	0	0	0	0	0	0	0	0	0	0	0	0	0
4/24/2024	4:15 AM	0	0	0	0	0	0	0	0	0	0	0	0	0
4/24/2024	4:30 AM	0	0	0	0	0	0	0	0	0	0	0	0	0
4/24/2024	4:45 AM	0	0	0	0	0	0	0	0	0	0	0	0	0
4/24/2024	5:00 AM	0	0	0	0	0	0	0	0	0	0	0	0	0
4/24/2024	5:15 AM	0	0	0	0	0	0	0	0	0	0	0	0	0
4/24/2024	5:30 AM	0	0	0	0	0	0	0	0	0	0	0	0	0
4/24/2024	5:45 AM	0	0	0	0	0	0	0	0	0	0	0	0	0
4/24/2024	6:00 AM	0	0	0	0	0	0	0	0	0	0	0	0	0
4/24/2024	6:15 AM	0	0	0	0	0	0	0	0	0	0	0	0	0
4/24/2024	6:30 AM	0	0	0	0	0	0	0	0	0	0	0	0	0
4/24/2024	6:45 AM	0	0	0	0	0	0	0	0	0	0	0	0	0
4/24/2024	7:00 AM	0	0	0	0	0	0	0	0	0	0	0	0	0
4/24/2024	7:15 AM	0	0	0	0	0	0	0	0	0	0	0	0	0
4/24/2024	7:30 AM	0	0	0	0	0	0	0	0	0	0	0	0	0
4/24/2024	7:45 AM	0	0	0	0	0	0	0	0	0	0	0	0	0
4/24/2024	8:00 AM	0	0	0	0	0	0	0	0	0	0	0	0	0
4/24/2024	8:15 AM	0	0	0	0	0	0	0	0	0	0	0	0	0
4/24/2024	8:30 AM	0	0	0	0	0	0	0	0	0	0	0	0	0
4/24/2024	8:45 AM	0	0	0	0	0	0	0	0	0	0	0	0	0
4/24/2024	9:00 AM	0	0	0	0	0	0	0	0	0	0	0	0	0
4/24/2024	9:15 AM	0	0	0	0	0	0	0	0	0	0	0	0	0
4/24/2024	9:30 AM	0	0	0	0	0	0	0	0	0	0	0	0	0
4/24/2024	9:45 AM	0	0	0	0	0	0	0	0	0	0	0	0	0
4/24/2024	10:00 AM	0	0	0	0	0	0	0	0	0	0	0	0	0
4/24/2024	10:15 AM	0	0	0	0	0	0	0	0	0	0	0	0	0
4/24/2024	10:30 AM	0	0	0	0	0	0	0	0	0	0	0	0	0
4/24/2024	10:45 AM	0	0	0	0	0	0	0	0	0	0	0	0	0
4/24/2024	11:00 AM	0	0	0	0	0	0	0	0	0	0	0	0	0
4/24/2024	11:15 AM	0	0	0	0	0	0	0	0	0	0	0	0	0
4/24/2024	11:30 AM	0	0	0	0	0	0	0	0	0	0	0	0	0
4/24/2024	11:45 AM	0	0	0	0	0	0	0	0	0	0	0	0	0
4/24/2024	12:00 PM	0	0	0	0	0	0	0	0	0	0	0	0	0
4/24/2024	12:15 PM	0	0	0	0	0	0	0	0	0	0	0	0	0
4/24/2024	12:30 PM	0	0	0	0	0	0	0	0	0	0	0	0	0
4/24/2024	12:45 PM	0	0	0	0	0	0	0	0	0	0	0	0	0
4/24/2024	1:00 PM	0	0	0	0	0	0	0	0	0	0	0	0	0
4/24/2024	1:15 PM	0	0	0	0	0	0	0	0	0	0	0	0	0
4/24/2024	1:30 PM	0	0	0	0	0	0	0	0	0	0	0	0	0
4/24/2024	1:45 PM	0	0	0	0	0	0	0	0	0	0	0	0	0
4/24/2024	2:00 PM	0	0	0	0	0	0	0	0	0	0	0	0	0
4/24/2024	2:15 PM	0	0	0	0	0	0	0	0	0	0	0	0	0
4/24/2024	2:30 PM	0	0	0	0	0	0	0	0	0	0	0	0	0
4/24/2024	2:45 PM	0	0	0	0	0	0	0	0	0	0	0	0	0
4/24/2024	3:00 PM	0	0	0	0	0	0	0	0	0	0	0	0	0
4/24/2024	3:15 PM	0	0	0	0	0	0	0	0	0	0	0	0	0
4/24/2024	3:30 PM	0	0	0	0	0	0	0	0	0	0	0	0	0
4/24/2024	3:45 PM	0	0	0	0	0	0	0	0	0	0	0	0	0
4/24/2024	4:00 PM	0	0	0	0	0	0	0	0	0	0	0	0	0
4/24/2024	4:15 PM	0	0	0	0	0	0	0	0	0	0	0	0	0
4/24/2024	4:30 PM	0	0	0	0	0	0	0	0	0	0	0	0	0
4/24/2024	4:45 PM	0	0	0	0	0	0	0	0	0	0	0	0	0
4/24/2024	5:00 PM	0	0	0	0	0	0	0	0	0	0	0	0	0
4/24/2024	5:15 PM	0	0	0	0	0	0	0	0	0	0	0	0	0
4/24/2024	5:30 PM	0	0	0	0	0	0	0	0	0	0	0	0	0
4/24/2024	5:45 PM	0	0	0	0	0	0	0	0	0	0	0	0	0
4/24/2024	6:00 PM	0	0	0	0	0	0	0	0	0	0	0	0	0
4/24/2024	6:15 PM	0	0	0	0	0	0	0	0	0	0	0	0	0
4/24/2024	6:30 PM	0	0	0	0	0	0	0	0	0	0	0	0	0
4/24/2024	6:45 PM	0	0	0	0	0	0	0	0	0	0	0	0	0
4/24/2024	7:00 PM	0	0	0	0	0	0	0	0	0	0	0	0	0
4/24/2024	7:15 PM	0	0	0	0	0	0	0	0	0	0	0	0	0
4/24/2024	7:30 PM	0	0	0	0	0	0	0	0	0	0	0	0	0
4/24/2024	7:45 PM	0	0	0	0	0	0	0	0	0	0	0	0	0
4/24/2024	8:00 PM	0	0	0	0	0	0	0	0	0	0	0	0	0
4/24/2024	8:15 PM	0	0	0	0	0	0	0	0	0	0	0	0	0
4/24/2024	8:30 PM	0	0	0	0	0	0	0	0	0	0	0	0	0
4/24/2024	8:45 PM	0	0	0	0	0	0	0	0	0	0	0	0	0
4/24/2024	9:00 PM	0	0	0	0	0	0	0	0	0	0	0	0	0
4/24/2024	9:15 PM	0	0	0	0	0	0	0	0	0	0	0	0	0
4/24/2024	9:30 PM	0	0	0	0	0	0	0	0	0	0	0	0	0
4/24/2024	9:45 PM	0	0	0	0	0	0	0	0	0	0	0	0	0
4/24/2024	10:00 PM	0	0	0	0	0	0	0	0	0	0	0	0	0
4/24/2024	10:15 PM	0	0	0	0	0	0	0	0	0	0	0	0	0
4/24/2024	10:30 PM	0	0	0	0	0	0	0	0	0	0	0	0	0
4/24/2024	10:45 PM	0	0	0	0	0	0	0	0	0	0	0	0	0
4/24/2024	11:00 PM	0	0	0	0	0	0	0	0	0	0	0	0	0
4/24/2024	11:15 PM	0	0	0	0	0	0	0	0	0	0	0	0	0
4/24/2024	11:30 PM	0	0	0	0	0	0	0	0	0	0	0	0	0
4/24/2024	11:45 PM	0	0	0	0	0	0	0	0	0	0	0	0	0

4/25/2024	12:00 AM	0	0	0	0	0	0	0	0	0	0	0	0	0
4/25/2024	12:15 AM	0	0	0	0	0	0	0	0	0	0	0	0	0
4/25/2024	12:30 AM	0	0	0	0	0	0	0	0	0	0	0	0	0
4/25/2024	12:45 AM	0	0	0	0	0	0	0	0	0	0	0	0	0
4/25/2024	1:00 AM	0	0	0	0	0	0	0	0	0	0	0	0	0
4/25/2024	1:15 AM	0	0	0	0	0	0	0	0	0	0	0	0	0
4/25/2024	1:30 AM	0	0	0	0	0	0	0	0	0	0	0	0	0
4/25/2024	1:45 AM	0	0	0	0	0	0	0	0	0	0	0	0	0
4/25/2024	2:00 AM	0	0	0	0	0	0	0	0	0	0	0	0	0
4/25/2024	2:15 AM	0	0	0	0	0	0	0	0	0	0	0	0	0
4/25/2024	2:30 AM	0	0	0	0	0	0	0	0	0	0	0	0	0
4/25/2024	2:45 AM	0	0	0	0	0	0	0	0	0	0	0	0	0
4/25/2024	3:00 AM	0	0	0	0	0	0	0	0	0	0	0	0	0
4/25/2024	3:15 AM	0	0	0	0	0	0	0	0	0	0	0	0	0
4/25/2024	3:30 AM	0	0	0	0	0	0	0	0	0	0	0	0	0
4/25/2024	3:45 AM	0	0	0	0	0	0	0	0	0	0	0	0	0
4/25/2024	4:00 AM	0	0	0	0	0	0	0	0	0	0	0	0	0
4/25/2024	4:15 AM	0	0	0	0	0	0	0	0	0	0	0	0	0
4/25/2024	4:30 AM	0	0	0	0	0	0	0	0	0	0	0	0	0
4/25/2024	4:45 AM	0	0	0	0	0	0	0	0	0	0	0	0	0
4/25/2024	5:00 AM	0	0	0	0	0	0	0	0	0	0	0	0	0
4/25/2024	5:15 AM	0	0	0	0	0	0	0	0	0	0	0	0	0
4/25/2024	5:30 AM	0	0	0	0	0	0	0	0	0	0	0	0	0
4/25/2024	5:45 AM	0	0	0	0	0	0	0	0	0	0	0	0	0
4/25/2024	6:00 AM	0	0	0	0	0	0	0	0	0	0	0	0	0
4/25/2024	6:15 AM	0	0	0	0	0	0	0	0	0	0	0	0	0
4/25/2024	6:30 AM	0	0	0	0	0	0	0	0	0	0	0	0	0
4/25/2024	6:45 AM	0	0	0	0	0	0	0	0	0	0	0	0	0
4/25/2024	7:00 AM	0	0	0	0	0	0	0	0	0	0	0	0	0
4/25/2024	7:15 AM	0	0	0	0	0	0	0	0	0	0	0	0	0
4/25/2024	7:30 AM	0	0	0	0	0	0	0	0	0	0	0	0	0
4/25/2024	7:45 AM	0	0	0	0	0	0	0	0	0	0	0	0	0
4/25/2024	8:00 AM	0	0	0	0	0	0	0	0	0	0	0	0	0
4/25/2024	8:15 AM	0	0	0	0	0	0	0	0	0	0	0	0	0
4/25/2024	8:30 AM	0	0	0	0	0	0	0	0	0	0	0	0	0
4/25/2024	8:45 AM	0	0	0	0	0	0	0	0	0	0	0	0	0
4/25/2024	9:00 AM	0	0	0	0	0	0	0	0	0	0	0	0	0
4/25/2024	9:15 AM	0	0	0	0	0	0	0	0	0	0	0	0	0
4/25/2024	9:30 AM	0	0	0	0	0	0	0	0	0	0	0	0	0
4/25/2024	9:45 AM	0	0	0	0	0	0	0	0	0	0	0	0	0
4/25/2024	10:00 AM	0	0	0	0	0	0	0	0	0	0	0	0	0
4/25/2024	10:15 AM	0	0	0	0	0	0	0	0	0	0	0	0	0
4/25/2024	10:30 AM	0	0	0	0	0	0	0	0	0	0	0	0	0
4/25/2024	10:45 AM	0	0	0	0	0	0	0	0	0	0	0	0	0
4/25/2024	11:00 AM	0	0	0	0	0	0	0	0	0	0	0	0	0
4/25/2024	11:15 AM	0	0	0	0	0	0	0	0	0	0	0	0	0
4/25/2024	11:30 AM	0	0	0	0	0	0	0	0	0	0	0	0	0
4/25/2024	11:45 AM	0	0	0	0	0	0	0	0	0	0	0	0	0
4/25/2024	12:00 PM	0	0	0	0	0	0	0	0	0	0	0	0	0
4/25/2024	12:15 PM	0	0	0	0	0	0	0	0	0	0	0	0	0
4/25/2024	12:30 PM	0	0	0	0	0	0	0	0	0	0	0	0	0
4/25/2024	12:45 PM	0	0	0	0	0	0	0	0	0	0	0	0	0
4/25/2024	1:00 PM	0	0	0	0	0	0	0	0	0	0	0	0	0
4/25/2024	1:15 PM	0	0	0	0	0	0	0	0	0	0	0	0	0
4/25/2024	1:30 PM	0	0	0	0	0	0	0	0	0	0	0	0	0
4/25/2024	1:45 PM	0	0	0	0	0	0	0	0	0	0	0	0	0
4/25/2024	2:00 PM	0	0	0	0	0	0	0	0	0	0	0	0	0
4/25/2024	2:15 PM	0	0	0	0	0	0	0	0	0	0	0	0	0
4/25/2024	2:30 PM	0	0	0	0	0	0	0	0	0	0	0	0	0
4/25/2024	2:45 PM	0	0	0	0	0	0	0	0	0	0	0	0	0
4/25/2024	3:00 PM	0	0	0	0	0	0	0	0	0	0	0	0	0
4/25/2024	3:15 PM	0	0	0	0	0	0	0	0	0	0	0	0	0
4/25/2024	3:30 PM	0	0	0	0	0	0	0	0	0	0	0	0	0
4/25/2024	3:45 PM	0	0	0	0	0	0	0	0	0	0	0	0	0
4/25/2024	4:00 PM	0	0	0	0	0	0	0	0	0	0	0	0	0
4/25/2024	4:15 PM	0	0	0	0	0	0	0	0	0	0	0	0	0
4/25/2024	4:30 PM	0	0	0	0	0	0	0	0	0	0	0	0	0
4/25/2024	4:45 PM	0	0	0	0	0	0	0	0	0	0	0	0	0
4/25/2024	5:00 PM	0	0	0	0	0	0	0	0	0	0	0	0	0
4/25/2024	5:15 PM	0	0	0	0	0	0	0	0	0	0	0	0	0
4/25/2024	5:30 PM	0	0	0	0	0	0	0	0	0	0	0	0	0
4/25/2024	5:45 PM	0	0	0	0	0	0	0	0	0	0	0	0	0
4/25/2024	6:00 PM	0	0	0	0	0	0	0	0	0	0	0	0	0
4/25/2024	6:15 PM	0	0	0	0	0	0	0	0	0	0	0	0	0
4/25/2024	6:30 PM	0	0	0	0	0	0	0	0	0	0	0	0	0
4/25/2024	6:45 PM	0	0	0	0	0	0	0	0	0	0	0	0	0
4/25/2024	7:00 PM	0	0	0	0	0	0	0	0	0	0	0	0	0
4/25/2024	7:15 PM	0	0	0	0	0	0	0	0	0	0	0	0	0
4/25/2024	7:30 PM	0	0	0	0	0	0	0	0	0	0	0	0	0
4/25/2024	7:45 PM	0	0	0	0	0	0	0	0	0	0	0	0	0
4/25/2024	8:00 PM	0	0	0	0	0	0	0	0	0	0	0	0	0
4/25/2024	8:15 PM	0	0	0	0	0	0	0	0	0	0	0	0	0
4/25/2024	8:30 PM	0	0	0	0	0	0	0	0	0	0	0	0	0
4/25/2024	8:45 PM	0	0	0	0	0	0	0	0	0	0	0	0	0
4/25/2024	9:00 PM	0	0	0	0	0	0	0	0	0	0	0	0	0
4/25/2024	9:15 PM	0	0	0	0	0	0	0	0	0	0	0	0	0
4/25/2024	9:30 PM	0	0	0	0	0	0	0	0	0	0	0	0	0
4/25/2024	9:45 PM	0	0	0	0	0	0	0	0	0	0	0	0	0
4/25/2024	10:00 PM	0	0	0	0	0	0	0	0	0	0	0	0	0
4/25/2024	10:15 PM	0	0	0	0	0	0	0	0	0	0	0	0	0
4/25/2024	10:30 PM	0	0	0	0	0	0	0	0	0	0	0	0	0
4/25/2024	10:45 PM	0	0	0	0	0	0	0	0	0	0	0	0	0
4/25/2024	11:00 PM	0	0	0	0	0	0	0	0	0	0	0	0	0
4/25/2024	11:15 PM	0	0	0	0	0	0	0	0	0	0	0	0	0
4/25/2024	11:30 PM	0	0	0	0	0	0	0	0	0	0	0	0	0
4/25/2024	11:45 PM	0	0	0	0	0	0	0	0	0	0	0	0	0

SB
File Name:
Start Date: 4/23/2024
Start Time: 0
Site Code: 63
Station ID: 1
Location 1: I-20 On/Off-Ramp, south of Bush River Rd
Location 2:

Date	Time	1	2	3	4	5	6	7	8	9	10	11	12	13
4/23/2024	12:00 AM	0	0	0	0	0	0	0	0	0	0	0	0	0
4/23/2024	12:15 AM	0	0	0	0	0	0	0	0	0	0	0	0	0
4/23/2024	12:30 AM	0	0	0	0	0	0	0	0	0	0	0	0	0
4/23/2024	12:45 AM	0	0	0	0	0	0	0	0	0	0	0	0	0
4/23/2024	1:00 AM	0	0	0	0	0	0	0	0	0	0	0	0	0
4/23/2024	1:15 AM	0	0	0	0	0	0	0	0	0	0	0	0	0
4/23/2024	1:30 AM	0	0	0	0	0	0	0	0	0	0	0	0	0
4/23/2024	1:45 AM	0	0	0	0	0	0	0	0	0	0	0	0	0
4/23/2024	2:00 AM	0	0	0	0	0	0	0	0	0	0	0	0	0
4/23/2024	2:15 AM	0	0	0	0	0	0	0	0	0	0	0	0	0
4/23/2024	2:30 AM	0	0	0	0	0	0	0	0	0	0	0	0	0
4/23/2024	2:45 AM	0	0	0	0	0	0	0	0	0	0	0	0	0
4/23/2024	3:00 AM	0	0	0	0	0	0	0	0	0	0	0	0	0
4/23/2024	3:15 AM	0	0	0	0	0	0	0	0	0	0	0	0	0
4/23/2024	3:30 AM	0	0	0	0	0	0	0	0	0	0	0	0	0
4/23/2024	3:45 AM	0	0	0	0	0	0	0	0	0	0	0	0	0
4/23/2024	4:00 AM	0	0	0	0	0	0	0	0	0	0	0	0	0
4/23/2024	4:15 AM	0	0	0	0	0	0	0	0	0	0	0	0	0
4/23/2024	4:30 AM	0	0	0	0	0	0	0	0	0	0	0	0	0
4/23/2024	4:45 AM	0	0	0	0	0	0	0	0	0	0	0	0	0
4/23/2024	5:00 AM	0	0	0	0	0	0	0	0	0	0	0	0	0
4/23/2024	5:15 AM	0	0	0	0	0	0	0	0	0	0	0	0	0
4/23/2024	5:30 AM	0	0	0	0	0	0	0	0	0	0	0	0	0
4/23/2024	5:45 AM	0	0	0	0	0	0	0	0	0	0	0	0	0
4/23/2024	6:00 AM	0	0	0	0	0	0	0	0	0	0	0	0	0
4/23/2024	6:15 AM	0	0	0	0	0	0	0	0	0	0	0	0	0
4/23/2024	6:30 AM	0	0	0	0	0	0	0	0	0	0	0	0	0
4/23/2024	6:45 AM	0	0	0	0	0	0	0	0	0	0	0	0	0
4/23/2024	7:00 AM	0	0	0	0	0	0	0	0	0	0	0	0	0
4/23/2024	7:15 AM	0	0	0	0	0	0	0	0	0	0	0	0	0
4/23/2024	7:30 AM	0	0	0	0	0	0	0	0	0	0	0	0	0
4/23/2024	7:45 AM	0	0	0	0	0	0	0	0	0	0	0	0	0
4/23/2024	8:00 AM	0	0	0	0	0	0	0	0	0	0	0	0	0
4/23/2024	8:15 AM	0	0	0	0	0	0	0	0	0	0	0	0	0
4/23/2024	8:30 AM	0	0	0	0	0	0	0	0	0	0	0	0	0
4/23/2024	8:45 AM	0	0	0	0	0	0	0	0	0	0	0	0	0
4/23/2024	9:00 AM	0	0	0	0	0	0	0	0	0	0	0	0	0
4/23/2024	9:15 AM	0	0	0	0	0	0	0	0	0	0	0	0	0
4/23/2024	9:30 AM	0	0	0	0	0	0	0	0	0	0	0	0	0
4/23/2024	9:45 AM	0	0	0	0	0	0	0	0	0	0	0	0	0
4/23/2024	10:00 AM	0	0	0	0	0	0	0	0	0	0	0	0	0
4/23/2024	10:15 AM	0	0	0	0	0	0	0	0	0	0	0	0	0
4/23/2024	10:30 AM	0	0	0	0	0	0	0	0	0	0	0	0	0
4/23/2024	10:45 AM	0	0	0	0	0	0	0	0	0	0	0	0	0
4/23/2024	11:00 AM	0	0	0	0	0	0	0	0	0	0	0	0	0
4/23/2024	11:15 AM	0	0	0	0	0	0	0	0	0	0	0	0	0
4/23/2024	11:30 AM	0	0	0	0	0	0	0	0	0	0	0	0	0
4/23/2024	11:45 AM	0	0	0	0	0	0	0	0	0	0	0	0	0
4/23/2024	12:00 PM	0	0	0	0	0	0	0	0	0	0	0	0	0
4/23/2024	12:15 PM	0	0	0	0	0	0	0	0	0	0	0	0	0
4/23/2024	12:30 PM	0	0	0	0	0	0	0	0	0	0	0	0	0
4/23/2024	12:45 PM	0	0	0	0	0	0	0	0	0	0	0	0	0
4/23/2024	1:00 PM	0	0	0	0	0	0	0	0	0	0	0	0	0
4/23/2024	1:15 PM	0	0	0	0	0	0	0	0	0	0	0	0	0
4/23/2024	1:30 PM	0	0	0	0	0	0	0	0	0	0	0	0	0
4/23/2024	1:45 PM	0	0	0	0	0	0	0	0	0	0	0	0	0
4/23/2024	2:00 PM	0	0	0	0	0	0	0	0	0	0	0	0	0
4/23/2024	2:15 PM	0	0	0	0	0	0	0	0	0	0	0	0	0
4/23/2024	2:30 PM	0	0	0	0	0	0	0	0	0	0	0	0	0
4/23/2024	2:45 PM	0	0	0	0	0	0	0	0	0	0	0	0	0
4/23/2024	3:00 PM	0	0	0	0	0	0	0	0	0	0	0	0	0
4/23/2024	3:15 PM	0	0	0	0	0	0	0	0	0	0	0	0	0
4/23/2024	3:30 PM	0	0	0	0	0	0	0	0	0	0	0	0	0
4/23/2024	3:45 PM	0	0	0	0	0	0	0	0	0	0	0	0	0
4/23/2024	4:00 PM	0	0	0	0	0	0	0	0	0	0	0	0	0
4/23/2024	4:15 PM	0	0	0	0	0	0	0	0	0	0	0	0	0
4/23/2024	4:30 PM	0	0	0	0	0	0	0	0	0	0	0	0	0
4/23/2024	4:45 PM	0	0	0	0	0	0	0	0	0	0	0	0	0
4/23/2024	5:00 PM	0	0	0	0	0	0	0	0	0	0	0	0	0
4/23/2024	5:15 PM	0	0	0	0	0	0	0	0	0	0	0	0	0
4/23/2024	5:30 PM	0	0	0	0	0	0	0	0	0	0	0	0	0
4/23/2024	5:45 PM	0	0	0	0	0	0	0	0	0	0	0	0	0
4/23/2024	6:00 PM	0	0	0	0	0	0	0	0	0	0	0	0	0
4/23/2024	6:15 PM	0	26	3	0	0	0	0	0	1	0	0	0	0
4/23/2024	6:30 PM	0	47	7	0	0	0	0	0	1	0	0	0	0
4/23/2024	6:45 PM	0	70	9	0	0	0	0	0	1	0	0	0	0
4/23/2024	7:00 PM	0	92	15	0	0	0	0	0	1	0	0	0	0
4/23/2024	7:15 PM	0	94	15	0	0	0	0	0	0	0	0	0	0
4/23/2024	7:30 PM	0	92	12	0	0	0	0	0	0	0	0	0	0
4/23/2024	7:45 PM	0	90	11	0	0	0	0	0	0	0	0	0	0
4/23/2024	8:00 PM	0	78	6	0	1	0	0	0	0	0	0	0	0
4/23/2024	8:15 PM	0	79	7	0	1	0	0	0	0	0	0	0	0
4/23/2024	8:30 PM	0	83	9	0	1	0	0	0	0	0	0	0	0
4/23/2024	8:45 PM	0	81	10	0	2	0	0	0	0	0	0	0	0
4/23/2024	9:00 PM	0	81	10	0	1	0	0	0	0	0	0	0	0
4/23/2024	9:15 PM	0	62	7	0	1	0	0	0	0	0	0	0	0
4/23/2024	9:30 PM	0	51	6	0	2	0	0	0	0	0	0	0	0
4/23/2024	9:45 PM	0	45	7	0	2	0	0	0	0	0	0	0	0
4/23/2024	10:00 PM	0	45	7	0	2	0	0	0	0	0	0	0	0
4/23/2024	10:15 PM	0	43	7	0	2	0	0	0	0	0	0	0	0
4/23/2024	10:30 PM	0	38	5	0	1	0	0	0	0	0	0	0	0
4/23/2024	10:45 PM	0	30	3	0	0	0	0	0	0	0	0	0	0
4/23/2024	11:00 PM	0	20	2	0	0	0	0	0	0	0	0	0	0
4/23/2024	11:15 PM	0	12	1	0	0	0	0	0	0	0	0	0	0
4/23/2024	11:30 PM	0	5	1	0	0	0	0	0	0	0	0	0	0
4/23/2024	11:45 PM	0	0	0	0	0	0	0	0	0	0	0	0	0

4/24/2024	12:00 AM	0	12	3	0	0	0	0	0	0	0	0	0
4/24/2024	12:15 AM	0	10	3	0	1	0	0	0	0	0	0	0
4/24/2024	12:30 AM	0	11	4	0	1	0	0	0	0	0	0	0
4/24/2024	12:45 AM	0	8	4	0	1	0	0	0	0	0	0	0
4/24/2024	1:00 AM	0	8	5	0	2	0	0	0	0	0	0	0
4/24/2024	1:15 AM	0	6	3	0	1	0	0	0	0	0	0	0
4/24/2024	1:30 AM	0	9	2	0	1	0	0	0	0	0	0	0
4/24/2024	1:45 AM	0	9	1	0	1	0	0	0	0	0	0	0
4/24/2024	2:00 AM	0	9	1	0	0	0	0	0	0	0	0	0
4/24/2024	2:15 AM	0	9	2	0	0	0	0	0	0	0	0	0
4/24/2024	2:30 AM	0	7	2	0	0	0	0	0	0	0	0	0
4/24/2024	2:45 AM	0	7	2	0	0	0	0	0	0	0	0	0
4/24/2024	3:00 AM	0	7	2	0	0	0	0	0	0	0	0	0
4/24/2024	3:15 AM	0	8	2	0	0	0	0	0	0	0	0	0
4/24/2024	3:30 AM	0	11	3	0	1	0	0	0	1	0	0	0	0
4/24/2024	3:45 AM	0	15	5	0	1	0	0	0	1	0	0	0	0
4/24/2024	4:00 AM	0	15	5	0	1	0	0	0	2	0	0	0	0
4/24/2024	4:15 AM	0	15	5	0	1	0	0	0	3	0	0	0	0
4/24/2024	4:30 AM	0	15	6	0	0	0	0	0	2	0	0	0	0
4/24/2024	4:45 AM	0	24	9	0	1	0	0	0	2	0	0	0	0
4/24/2024	5:00 AM	0	28	10	0	1	0	0	0	1	0	0	0	0
4/24/2024	5:15 AM	0	34	12	0	1	0	0	0	1	0	0	0	0
4/24/2024	5:30 AM	0	50	13	0	1	0	0	0	1	0	0	0	0
4/24/2024	5:45 AM	0	62	15	0	0	0	0	0	1	0	0	0	0
4/24/2024	6:00 AM	1	77	18	0	1	0	0	0	2	0	0	0	0
4/24/2024	6:15 AM	1	103	22	0	1	0	0	0	1	0	0	0	0
4/24/2024	6:30 AM	1	126	30	0	1	1	0	0	1	0	0	0	0
4/24/2024	6:45 AM	1	143	37	0	1	1	0	0	1	0	0	0	0
4/24/2024	7:00 AM	0	171	40	0	1	1	0	0	0	0	0	0	0
4/24/2024	7:15 AM	0	169	44	0	2	1	0	0	0	0	0	0	0
4/24/2024	7:30 AM	0	157	37	0	3	0	0	0	0	0	0	0	0
4/24/2024	7:45 AM	0	148	30	0	4	0	0	0	0	0	0	0	0
4/24/2024	8:00 AM	0	132	25	0	3	0	0	0	0	0	0	0	0
4/24/2024	8:15 AM	0	123	18	0	3	0	0	0	1	0	0	0	0
4/24/2024	8:30 AM	0	117	21	0	2	1	0	0	1	0	0	0	0
4/24/2024	8:45 AM	0	107	21	0	1	1	0	0	1	0	0	0	0
4/24/2024	9:00 AM	0	94	22	0	1	1	0	0	2	0	0	0	0
4/24/2024	9:15 AM	0	95	28	0	0	1	0	0	1	0	0	0	0
4/24/2024	9:30 AM	0	94	25	0	1	0	0	0	1	0	0	0	0
4/24/2024	9:45 AM	0	114	27	0	1	1	0	0	1	0	0	0	0
4/24/2024	10:00 AM	0	127	28	1	1	1	0	0	0	0	0	0	0
4/24/2024	10:15 AM	0	134	22	1	1	1	0	0	0	0	0	0	0
4/24/2024	10:30 AM	0	144	21	1	0	1	0	0	0	0	0	0	0
4/24/2024	10:45 AM	1	149	21	1	0	0	0	0	0	0	0	0	0
4/24/2024	11:00 AM	1	161	23	0	1	0	0	0	0	0	0	0	0
4/24/2024	11:15 AM	1	160	28	0	3	0	0	0	0	0	0	0	0
4/24/2024	11:30 AM	1	163	37	0	4	0	0	0	1	0	0	0	0
4/24/2024	11:45 AM	0	163	36	0	4	0	0	1	1	0	0	0	0
4/24/2024	12:00 PM	0	161	39	0	3	0	0	1	2	0	0	0	0
4/24/2024	12:15 PM	0	180	39	0	2	0	0	1	2	0	0	0	0
4/24/2024	12:30 PM	0	193	31	0	1	1	0	1	1	0	0	0	0
4/24/2024	12:45 PM	0	184	29	0	1	1	0	0	3	0	0	0	0
4/24/2024	1:00 PM	0	185	26	0	1	2	0	0	2	0	0	0	0
4/24/2024	1:15 PM	0	187	19	0	1	2	0	0	2	0	0	0	0
4/24/2024	1:30 PM	0	187	22	0	4	1	0	0	2	0	0	0	0
4/24/2024	1:45 PM	0	187	21	0	4	1	0	0	0	0	0	0	0
4/24/2024	2:00 PM	0	177	20	0	5	0	0	0	0	0	0	0	0
4/24/2024	2:15 PM	0	165	26	0	4	0	0	0	0	0	0	0	0
4/24/2024	2:30 PM	0	156	28	0	2	0	0	0	0	0	0	0	0
4/24/2024	2:45 PM	0	179	30	0	3	0	0	0	0	0	0	0	0
4/24/2024	3:00 PM	0	189	31	0	3	0	0	0	0	0	0	0	0
4/24/2024	3:15 PM	0	238	38	0	3	1	0	1	2	0	0	0	0
4/24/2024	3:30 PM	0	287	37	0	2	1	0	1	2	0	0	0	0
4/24/2024	3:45 PM	0	318	44	0	1	1	0	1	2	0	0	0	0
4/24/2024	4:00 PM	0	356	46	0	1	1	0	2	3	0	0	0	0
4/24/2024	4:15 PM	0	402	41	0	1	0	0	1	2	0	0	0	0
4/24/2024	4:30 PM	0	405	41	0	1	0	0	1	4	0	0	0	0
4/24/2024	4:45 PM	0	396	33	0	1	0	0	1	4	0	0	0	0
4/24/2024	5:00 PM	0	364	29	0	0	0	0	0	3	0	0	0	0
4/24/2024	5:15 PM	0	283	21	0	0	0	0	0	2	0	0	0	0
4/24/2024	5:30 PM	0	229	16	0	0	0	0	0	0	0	0	0	0
4/24/2024	5:45 PM	1	186	13	0	1	0	0	0	2	0	0	0	0
4/24/2024	6:00 PM	1	169	12	0	1	0	0	0	3	0	0	0	0
4/24/2024	6:15 PM	2	150	10	0	1	0	0	0	3	0	0	0	0
4/24/2024	6:30 PM	2	140	12	0	2	0	0	0	3	0	0	0	0
4/24/2024	6:45 PM	2	121	11	0	3	0	0	0	1	0	0	0	0
4/24/2024	7:00 PM	2	119	10	0	3	0	0	0	0	0	0	0	0
4/24/2024	7:15 PM	1	113	17	0	3	0	0	0	0	0	0	0	0
4/24/2024	7:30 PM	1	105	15	0	3	0	0	0	0	0	0	0	0
4/24/2024	7:45 PM	0	117	16	0	1	0	0	0	1	0	0	0	0
4/24/2024	8:00 PM	0	113	17	0	1	0	0	0	1	0	0	0	0
4/24/2024	8:15 PM	0	117	13	0	1	0	0	0	1	0	0	0	0
4/24/2024	8:30 PM	0	131	14	0	0	0	0	0	1	0	0	0	0
4/24/2024	8:45 PM	0	111	13	0	0	0	0	0	0	0	0	0	0
4/24/2024	9:00 PM	0	102	12	0	0	0	0	0	1	0	0	0	0
4/24/2024	9:15 PM	0	83	11	0	0	0	0	0	1	0	0	0	0
4/24/2024	9:30 PM	0	51	7	0	0	0	0	0	1	0	0	0	0
4/24/2024	9:45 PM	0	49	7	0	0	0	0	0	1	0	0	0	0
4/24/2024	10:00 PM	0	41	6	0	0	0	0	0	0	0	0	0	0
4/24/2024	10:15 PM	0	35	6	0	0	0	0	0	1	0	0	0	0
4/24/2024	10:30 PM	0	37	8	0	0	0	0	0	1	0	0	0	0
4/24/2024	10:45 PM	0	35	9	0	0	0	0	0	1	0	0	0	0
4/24/2024	11:00 PM	0	32	8	0	0	0	0	0	1	0	0	0	0
4/24/2024	11:15 PM	0	24	6	0	0	0	0	0	0	0	0	0	0
4/24/2024	11:30 PM	0	18	4	0	0	0	0	0	0	0	0	0	0
4/24/2024	11:45 PM	0	7	1	0	0	0	0	0	0	0	0	0	0

4/25/2024	12:00 AM	0	12	3	0	0	0	0	0	0	0	0	0
4/25/2024	12:15 AM	0	10	3	0	0	0	0	0	0	0	0	0
4/25/2024	12:30 AM	0	11	3	0	1	0	0	0	0	0	0	0
4/25/2024	12:45 AM	0	12	2	0	1	0	0	0	0	0	0	0
4/25/2024	1:00 AM	0	11	1	0	2	0	0	0	0	0	0	0
4/25/2024	1:15 AM	0	13	0	0	2	0	0	0	0	0	0	0
4/25/2024	1:30 AM	0	16	1	0	1	0	0	0	0	0	0	0
4/25/2024	1:45 AM	0	12	2	0	1	0	0	0	0	0	0	0
4/25/2024	2:00 AM	0	10	2	0	0	0	0	0	0	0	0	0
4/25/2024	2:15 AM	0	8	3	0	1	0	0	0	0	0	0	0
4/25/2024	2:30 AM	0	5	3	0	1	0	0	0	0	0	0	0
4/25/2024	2:45 AM	0	7	3	0	1	0	0	0	0	0	0	0
4/25/2024	3:00 AM	0	9	3	0	1	0	0	0	0	0	0	0
4/25/2024	3:15 AM	0	9	3	0	0	0	0	0	0	0	0	0
4/25/2024	3:30 AM	0	12	3	0	0	0	0	0	0	0	0	0
4/25/2024	3:45 AM	0	12	3	0	0	0	0	0	1	0	0	0
4/25/2024	4:00 AM	0	11	4	0	0	0	0	0	2	0	0	0
4/25/2024	4:15 AM	0	17	4	0	1	0	0	0	2	0	0	0
4/25/2024	4:30 AM	0	22	5	0	1	0	0	1	2	0	0	0
4/25/2024	4:45 AM	0	30	6	0	1	0	0	1	1	0	0	0
4/25/2024	5:00 AM	0	39	8	0	2	0	0	1	0	0	0	0
4/25/2024	5:15 AM	0	43	8	0	1	0	0	1	1	0	0	0
4/25/2024	5:30 AM	0	51	9	0	1	0	0	0	1	0	0	0
4/25/2024	5:45 AM	0	63	12	0	1	0	0	0	1	0	0	0
4/25/2024	6:00 AM	0	76	15	0	0	0	0	0	1	0	0	0
4/25/2024	6:15 AM	0	97	22	0	0	1	0	0	0	0	0	0
4/25/2024	6:30 AM	0	114	24	0	0	1	0	0	0	0	0	0
4/25/2024	6:45 AM	0	142	30	0	0	1	0	0	0	0	0	0
4/25/2024	7:00 AM	0	183	33	0	0	1	0	0	0	0	0	0
4/25/2024	7:15 AM	0	190	35	0	1	0	0	0	0	0	0	0
4/25/2024	7:30 AM	0	200	37	0	2	0	0	0	0	0	0	0
4/25/2024	7:45 AM	0	205	34	0	3	0	0	0	0	0	0	0
4/25/2024	8:00 AM	0	179	37	0	3	0	0	0	0	0	0	0
4/25/2024	8:15 AM	0	168	32	0	4	0	0	0	1	0	0	0
4/25/2024	8:30 AM	0	154	35	0	3	0	0	0	1	0	0	0
4/25/2024	8:45 AM	0	129	32	0	2	0	0	0	1	0	0	0
4/25/2024	9:00 AM	0	126	22	0	4	0	0	0	1	0	0	0
4/25/2024	9:15 AM	0	128	23	0	3	0	0	0	0	0	0	0
4/25/2024	9:30 AM	0	131	19	0	4	0	0	0	0	0	0	0
4/25/2024	9:45 AM	0	126	21	0	4	0	0	0	0	0	0	0
4/25/2024	10:00 AM	0	118	26	0	3	0	0	0	0	0	0	0
4/25/2024	10:15 AM	0	113	23	0	2	0	0	0	0	0	0	0
4/25/2024	10:30 AM	0	105	23	0	1	0	0	0	2	0	0	0
4/25/2024	10:45 AM	0	110	23	0	1	0	0	0	2	0	0	0
4/25/2024	11:00 AM	0	107	20	0	0	0	0	0	2	0	0	0
4/25/2024	11:15 AM	0	118	28	0	2	0	0	0	2	0	0	0
4/25/2024	11:30 AM	0	133	27	0	2	0	0	0	0	0	0	0
4/25/2024	11:45 AM	0	158	30	0	2	1	0	0	0	0	0	0
4/25/2024	12:00 PM	0	183	34	0	3	1	0	0	0	0	0	0
4/25/2024	12:15 PM	0	201	36	0	3	2	0	0	2	0	0	0
4/25/2024	12:30 PM	0	207	44	0	3	3	0	0	2	0	0	0
4/25/2024	12:45 PM	0	198	44	0	3	2	0	0	2	0	0	0
4/25/2024	1:00 PM	0	188	47	0	2	2	0	0	2	0	0	0
4/25/2024	1:15 PM	0	180	46	0	0	1	0	0	0	0	0	0
4/25/2024	1:30 PM	0	182	41	1	0	0	0	0	0	0	0	0
4/25/2024	1:45 PM	0	184	39	1	0	1	0	0	0	0	0	0
4/25/2024	2:00 PM	0	183	38	1	0	1	0	0	0	0	0	0
4/25/2024	2:15 PM	0	183	36	1	1	1	0	0	1	0	0	0
4/25/2024	2:30 PM	0	185	37	0	1	1	0	0	1	0	0	0
4/25/2024	2:45 PM	0	173	37	0	1	0	0	0	2	0	0	0
4/25/2024	3:00 PM	0	191	39	0	1	0	0	0	4	0	0	0
4/25/2024	3:15 PM	0	220	46	0	1	0	0	0	3	0	0	0
4/25/2024	3:30 PM	0	231	49	0	2	0	0	0	4	0	0	0
4/25/2024	3:45 PM	0	262	51	0	2	2	0	0	4	0	0	0
4/25/2024	4:00 PM	0	266	54	0	2	2	0	0	2	0	0	0
4/25/2024	4:15 PM	0	296	68	0	1	2	0	0	2	0	0	0
4/25/2024	4:30 PM	0	308	76	0	2	2	0	0	1	0	0	0
4/25/2024	4:45 PM	0	308	77	0	2	0	0	0	0	0	0	0
4/25/2024	5:00 PM	0	289	67	0	2	0	0	0	0	0	0	0
4/25/2024	5:15 PM	0	228	45	0	2	0	0	0	0	0	0	0
4/25/2024	5:30 PM	0	189	31	0	0	0	0	0	0	0	0	0
4/25/2024	5:45 PM	0	150	25	0	2	0	0	0	0	0	0	0
4/25/2024	6:00 PM	0	142	27	0	2	0	0	0	0	0	0	0
4/25/2024	6:15 PM	0	97	18	0	2	0	0	0	0	0	0	0
4/25/2024	6:30 PM	0	63	12	0	2	0	0	0	0	0	0	0
4/25/2024	6:45 PM	0	34	7	0	0	0	0	0	0	0	0	0
4/25/2024	7:00 PM	0	0	0	0	0	0	0	0	0	0	0	0
4/25/2024	7:15 PM	0	0	0	0	0	0	0	0	0	0	0	0
4/25/2024	7:30 PM	0	0	0	0	0	0	0	0	0	0	0	0
4/25/2024	7:45 PM	0	0	0	0	0	0	0	0	0	0	0	0
4/25/2024	8:00 PM	0	0	0	0	0	0	0	0	0	0	0	0
4/25/2024	8:15 PM	0	0	0	0	0	0	0	0	0	0	0	0
4/25/2024	8:30 PM	0	0	0	0	0	0	0	0	0	0	0	0
4/25/2024	8:45 PM	0	0	0	0	0	0	0	0	0	0	0	0
4/25/2024	9:00 PM	0	0	0	0	0	0	0	0	0	0	0	0
4/25/2024	9:15 PM	0	0	0	0	0	0	0	0	0	0	0	0
4/25/2024	9:30 PM	0	0	0	0	0	0	0	0	0	0	0	0
4/25/2024	9:45 PM	0	0	0	0	0	0	0	0	0	0	0	0
4/25/2024	10:00 PM	0	0	0	0	0	0	0	0	0	0	0	0
4/25/2024	10:15 PM	0	0	0	0	0	0	0	0	0	0	0	0
4/25/2024	10:30 PM	0	0	0	0	0	0	0	0	0	0	0	0
4/25/2024	10:45 PM	0	0	0	0	0	0	0	0	0	0	0	0
4/25/2024	11:00 PM	0	0	0	0	0	0	0	0	0	0	0	0
4/25/2024	11:15 PM	0	0	0	0	0	0	0	0	0	0	0	0
4/25/2024	11:30 PM	0	0	0	0	0	0	0	0	0	0	0	0
4/25/2024	11:45 PM	0	0	0	0	0	0	0	0	0	0	0	0

Bi-Directional Class Count || NB EB 15min

Columbia, SC

Marr Traffic DATA COLLECTION
www.marrtraffic.com

Site 64
I-20 On/Off-Ramp,
south of Bush River Rd

Date
Tuesday, April 23, 2024

Lat/Long
34.029915°, -81.121303°

Weather
Fair
58°F

Click here for Detailed Weather

Click here for Map

0000 - 2400 (Weekday 24h Session) (04-23-2024)
NB EB 15min

	Northbound (Movement 64.1)													15min	60min
Time	1	2	3	4	5	6	7	8	9	10	11	12	13	Total	Total
0000 - 0015	0	0	0	0	0	0	0	0	0	0	0	0	0	**0**	
0015 - 0030	0	0	0	0	0	0	0	0	0	0	0	0	0	**0**	
0030 - 0045	0	0	0	0	0	0	0	0	0	0	0	0	0	**0**	
0045 - 0100	0	0	0	0	0	0	0	0	0	0	0	0	0	**0**	**0**
0100 - 0115	0	0	0	0	0	0	0	0	0	0	0	0	0	**0**	
0115 - 0130	0	0	0	0	0	0	0	0	0	0	0	0	0	**0**	
0130 - 0145	0	0	0	0	0	0	0	0	0	0	0	0	0	**0**	
0145 - 0200	0	0	0	0	0	0	0	0	0	0	0	0	0	**0**	**0**
0200 - 0215	0	0	0	0	0	0	0	0	0	0	0	0	0	**0**	
0215 - 0230	0	0	0	0	0	0	0	0	0	0	0	0	0	**0**	
0230 - 0245	0	0	0	0	0	0	0	0	0	0	0	0	0	**0**	
0245 - 0300	0	0	0	0	0	0	0	0	0	0	0	0	0	**0**	**0**
0300 - 0315	0	0	0	0	0	0	0	0	0	0	0	0	0	**0**	
0315 - 0330	0	0	0	0	0	0	0	0	0	0	0	0	0	**0**	
0330 - 0345	0	0	0	0	0	0	0	0	0	0	0	0	0	**0**	
0345 - 0400	0	0	0	0	0	0	0	0	0	0	0	0	0	**0**	**0**
0400 - 0415	0	0	0	0	0	0	0	0	0	0	0	0	0	**0**	
0415 - 0430	0	0	0	0	0	0	0	0	0	0	0	0	0	**0**	
0430 - 0445	0	0	0	0	0	0	0	0	0	0	0	0	0	**0**	
0445 - 0500	0	0	0	0	0	0	0	0	0	0	0	0	0	**0**	**0**
0500 - 0515	0	0	0	0	0	0	0	0	0	0	0	0	0	**0**	
0515 - 0530	0	0	0	0	0	0	0	0	0	0	0	0	0	**0**	
0530 - 0545	0	0	0	0	0	0	0	0	0	0	0	0	0	**0**	
0545 - 0600	0	0	0	0	0	0	0	0	0	0	0	0	0	**0**	**0**
0600 - 0615	0	0	0	0	0	0	0	0	0	0	0	0	0	**0**	
0615 - 0630	0	0	0	0	0	0	0	0	0	0	0	0	0	**0**	
0630 - 0645	0	0	0	0	0	0	0	0	0	0	0	0	0	**0**	
0645 - 0700	0	0	0	0	0	0	0	0	0	0	0	0	0	**0**	**0**
0700 - 0715	0	0	0	0	0	0	0	0	0	0	0	0	0	**0**	
0715 - 0730	0	0	0	0	0	0	0	0	0	0	0	0	0	**0**	
0730 - 0745	0	0	0	0	0	0	0	0	0	0	0	0	0	**0**	
0745 - 0800	0	0	0	0	0	0	0	0	0	0	0	0	0	**0**	**0**
0800 - 0815	0	0	0	0	0	0	0	0	0	0	0	0	0	**0**	
0815 - 0830	0	0	0	0	0	0	0	0	0	0	0	0	0	**0**	
0830 - 0845	0	0	0	0	0	0	0	0	0	0	0	0	0	**0**	
0845 - 0900	0	0	0	0	0	0	0	0	0	0	0	0	0	**0**	**0**
0900 - 0915	0	0	0	0	0	0	0	0	0	0	0	0	0	**0**	
0915 - 0930	0	0	0	0	0	0	0	0	0	0	0	0	0	**0**	
0930 - 0945	0	0	0	0	0	0	0	0	0	0	0	0	0	**0**	
0945 - 1000	0	0	0	0	0	0	0	0	0	0	0	0	0	**0**	**0**
1000 - 1015	0	0	0	0	0	0	0	0	0	0	0	0	0	**0**	
1015 - 1030	0	0	0	0	0	0	0	0	0	0	0	0	0	**0**	
1030 - 1045	0	0	0	0	0	0	0	0	0	0	0	0	0	**0**	
1045 - 1100	0	0	0	0	0	0	0	0	0	0	0	0	0	**0**	**0**
1100 - 1115	0	0	0	0	0	0	0	0	0	0	0	0	0	**0**	
1115 - 1130	0	0	0	0	0	0	0	0	0	0	0	0	0	**0**	
1130 - 1145	0	0	0	0	0	0	0	0	0	0	0	0	0	**0**	
1145 - 1200	0	0	0	0	0	0	0	0	0	0	0	0	0	**0**	**0**
1200 - 1215	0	0	0	0	0	0	0	0	0	0	0	0	0	**0**	
1215 - 1230	0	0	0	0	0	0	0	0	0	0	0	0	0	**0**	
1230 - 1245	0	0	0	0	0	0	0	0	0	0	0	0	0	**0**	
1245 - 1300	0	0	0	0	0	0	0	0	0	0	0	0	0	**0**	**0**
1300 - 1315	0	0	0	0	0	0	0	0	0	0	0	0	0	**0**	
1315 - 1330	0	0	0	0	0	0	0	0	0	0	0	0	0	**0**	
1330 - 1345	0	0	0	0	0	0	0	0	0	0	0	0	0	**0**	
1345 - 1400	0	0	0	0	0	0	0	0	0	0	0	0	0	**0**	**0**
1400 - 1415	0	0	0	0	0	0	0	0	0	0	0	0	0	**0**	
1415 - 1430	0	0	0	0	0	0	0	0	0	0	0	0	0	**0**	
1430 - 1445	0	0	0	0	0	0	0	0	0	0	0	0	0	**0**	
1445 - 1500	0	0	0	0	0	0	0	0	0	0	0	0	0	**0**	**0**
1500 - 1515	0	0	0	0	0	0	0	0	0	0	0	0	0	**0**	
1515 - 1530	0	0	0	0	0	0	0	0	0	0	0	0	0	**0**	
1530 - 1545	0	0	0	0	0	0	0	0	0	0	0	0	0	**0**	
1545 - 1600	0	0	0	0	0	0	0	0	0	0	0	0	0	**0**	**0**
1600 - 1615	0	0	0	0	0	0	0	0	0	0	0	0	0	**0**	
1615 - 1630	0	0	0	0	0	0	0	0	0	0	0	0	0	**0**	
1630 - 1645	0	0	0	0	0	0	0	0	0	0	0	0	0	**0**	
1645 - 1700	0	0	0	0	0	0	0	0	0	0	0	0	0	**0**	**0**
1700 - 1715	0	0	0	0	0	0	0	0	0	0	0	0	0	**0**	
1715 - 1730	0	0	0	0	0	0	0	0	0	0	0	0	0	**0**	
1730 - 1745	0	0	0	0	0	0	0	0	0	0	0	0	0	**0**	
1745 - 1800	0	0	0	0	0	0	0	0	0	0	0	0	0	**0**	**0**
1800 - 1815	0	0	0	0	0	0	0	0	0	0	0	0	0	**0**	
1815 - 1830	0	0	0	0	0	0	0	0	0	0	0	0	0	**0**	
1830 - 1845	0	0	0	0	0	0	0	0	0	0	0	0	0	**0**	
1845 - 1900	0	0	0	0	0	0	0	0	0	0	0	0	0	**0**	**0**
1900 - 1915	0	59	9	0	1	0	0	0	1	0	0	0	0	**70**	
1915 - 1930	0	45	10	0	0	0	0	0	0	0	0	0	0	**55**	
1930 - 1945	0	42	5	0	2	0	0	0	1	0	0	0	0	**50**	
1945 - 2000	0	45	10	0	0	0	0	0	1	0	0	0	0	**56**	**231**
2000 - 2015	0	33	11	0	0	0	0	0	0	0	0	0	0	**44**	
2015 - 2030	0	32	4	0	0	0	0	0	0	0	0	0	0	**36**	
2030 - 2045	0	30	2	0	0	0	0	0	1	0	0	0	0	**33**	
2045 - 2100	0	29	2	0	0	0	0	0	0	0	0	0	0	**31**	**144**
2100 - 2115	0	29	2	0	0	0	0	0	0	0	0	0	0	**31**	
2115 - 2130	0	26	2	0	0	0	0	0	0	0	0	0	0	**28**	
2130 - 2145	0	18	3	0	1	0	0	0	0	0	0	0	0	**22**	
2145 - 2200	0	23	2	0	0	0	0	0	0	0	0	0	0	**25**	**106**
2200 - 2215	0	15	2	0	0	0	0	0	1	0	0	0	0	**18**	
2215 - 2230	0	13	1	0	1	0	0	0	0	0	0	0	0	**15**	
2230 - 2245	0	11	0	0	1	0	0	0	1	0	0	0	0	**13**	
2245 - 2300	0	12	1	0	0	0	0	0	0	0	0	0	0	**13**	**59**
2300 - 2315	0	7	1	0	0	0	0	0	0	0	0	0	0	**8**	
2315 - 2330	0	13	1	0	0	0	0	0	0	0	0	0	0	**14**	
2330 - 2345	0	9	0	0	0	0	0	0	2	0	0	0	0	**11**	
2345 - 0000	0	10	0	0	0	0	0	0	0	0	0	0	0	**10**	**43**

Session Total	0	501	68	0	6	0	0	0	8	0	0	0	0	**583**
Session Average	0.00	5.22	0.71	0.00	0.06	0.00	0.00	0.00	0.08	0.00	0.00	0.00	0.00	**6.07**
Session Percentage	0.00	85.93	11.66	0.00	1.03	0.00	0.00	0.00	1.37	0.00	0.00	0.00	0.00	

AM Peak Hour	-	-	-	-	-	-	-	-	-	-	-	-	-	**-**
AM Peak Volume	0	0	0	0	0	0	0	0	0	0	0	0	0	**0**

Noon Peak Hour	-	-	-	-	-	-	-	-	-	-	-	-	-	**-**
Noon Peak Volume	0	0	0	0	0	0	0	0	0	0	0	0	0	**0**

PM Peak Hour	-	1900 - 2000	1915 - 2015	-	1845 - 1945	-	-	-	1900 - 2000	-	-	-	-	**1900 - 2000**
PM Peak Volume	0	191	36	0	3	0	0	0	3	0	0	0	0	**231**

Site 64
I-20 On/Off-Ramp,
south of Bush River Rd

Date
Wednesday, April 24, 2024

Lat/Long
34.029915°, -81.121303°

Weather
Fair
66°F

Click here for Detailed Weather

0000 - 2400 (Weekday 24h Session) (04-24-2024)
NB EB 15min

	Northbound (Movement 64.1)													15min	60min
Time	1	2	3	4	5	6	7	8	9	10	11	12	13	Total	Total
0000 - 0015	0	7	0	0	0	0	0	0	0	0	0	0	0	**7**	
0015 - 0030	0	12	1	0	0	0	0	0	1	0	0	0	0	**14**	
0030 - 0045	0	3	1	0	1	0	0	0	1	0	0	0	0	**6**	
0045 - 0100	0	3	1	0	0	0	0	1	0	0	0	0	0	**5**	**32**
0100 - 0115	0	5	0	0	0	0	0	0	0	0	0	0	0	**5**	
0115 - 0130	0	2	0	0	0	0	0	0	0	0	0	0	0	**2**	
0130 - 0145	0	4	0	0	0	0	0	0	0	0	0	0	0	**4**	
0145 - 0200	0	1	0	0	0	0	0	0	0	0	0	0	0	**1**	**12**
0200 - 0215	0	2	1	0	0	0	0	0	0	0	0	0	0	**3**	
0215 - 0230	0	4	1	0	0	0	0	0	0	0	0	0	0	**5**	
0230 - 0245	0	2	0	0	0	1	0	0	1	0	0	0	0	**4**	
0245 - 0300	0	0	0	0	0	0	0	0	0	0	0	0	0	**0**	**12**
0300 - 0315	0	3	0	0	0	0	0	0	0	0	0	0	0	**3**	
0315 - 0330	0	3	0	0	0	0	0	0	2	0	0	0	0	**5**	
0330 - 0345	0	4	0	0	0	0	0	0	0	0	0	0	0	**4**	
0345 - 0400	0	4	0	0	0	0	0	0	0	0	0	0	0	**4**	**16**
0400 - 0415	0	1	0	0	0	2	0	0	0	0	0	0	0	**3**	
0415 - 0430	0	1	0	0	0	0	0	0	1	0	0	0	0	**2**	
0430 - 0445	0	4	0	0	2	0	0	0	0	0	0	0	0	**6**	
0445 - 0500	0	8	1	0	0	0	0	0	1	0	0	0	0	**10**	**21**
0500 - 0515	0	11	0	0	1	0	0	0	0	0	0	0	0	**12**	
0515 - 0530	0	11	0	0	0	0	0	0	0	0	0	0	0	**11**	
0530 - 0545	0	15	2	0	0	0	0	0	0	0	0	0	0	**17**	
0545 - 0600	0	30	2	0	2	0	0	0	1	0	0	0	0	**35**	**75**
0600 - 0615	0	27	2	0	0	0	0	0	1	0	0	0	0	**30**	
0615 - 0630	0	48	10	1	0	1	0	0	0	0	0	0	0	**60**	
0630 - 0645	0	58	15	0	0	0	0	0	1	0	0	0	0	**74**	
0645 - 0700	0	89	16	0	1	3	0	1	0	0	0	0	0	**110**	**274**
0700 - 0715	0	102	25	0	2	2	0	0	0	0	0	0	0	**131**	
0715 - 0730	0	154	28	0	0	1	0	0	1	0	0	0	0	**184**	
0730 - 0745	0	178	34	0	2	0	0	1	1	0	0	0	0	**216**	
0745 - 0800	1	231	33	0	4	1	0	2	2	0	0	0	0	**274**	**805**
0800 - 0815	0	197	42	0	1	2	0	0	1	1	0	0	0	**244**	
0815 - 0830	0	209	42	0	0	0	0	1	0	0	0	0	0	**252**	
0830 - 0845	0	156	30	0	2	0	0	0	1	0	0	0	0	**189**	
0845 - 0900	0	145	29	0	0	0	0	0	0	0	0	0	0	**174**	**859**
0900 - 0915	0	93	18	0	1	1	0	0	1	0	0	0	0	**114**	
0915 - 0930	0	88	13	0	1	1	0	0	3	0	0	0	0	**106**	
0930 - 0945	0	72	11	0	1	1	0	0	1	0	0	0	0	**86**	
0945 - 1000	0	82	13	0	1	0	0	0	2	0	0	0	0	**98**	**404**
1000 - 1015	0	72	17	0	1	0	0	0	0	0	0	0	0	**90**	
1015 - 1030	1	61	15	0	3	0	0	0	1	0	0	0	0	**81**	
1030 - 1045	0	62	11	0	0	0	0	0	1	0	0	0	0	**74**	
1045 - 1100	0	69	12	0	2	0	0	0	1	0	0	0	0	**84**	**329**
1100 - 1115	0	72	10	0	4	0	0	0	3	0	0	0	0	**89**	
1115 - 1130	0	93	12	0	1	0	0	0	0	0	0	0	0	**106**	
1130 - 1145	2	70	6	0	2	0	0	0	0	0	0	0	0	**80**	
1145 - 1200	1	66	7	0	0	0	0	0	0	0	0	0	0	**74**	**349**
1200 - 1215	0	65	13	0	0	0	1	2	0	0	0	0	0	**81**	
1215 - 1230	1	93	14	0	1	0	0	0	1	0	0	0	0	**110**	
1230 - 1245	0	85	18	0	1	0	0	0	0	0	0	0	0	**104**	
1245 - 1300	0	81	12	0	1	0	0	0	1	0	0	0	0	**95**	**390**
1300 - 1315	0	78	8	0	0	1	0	1	0	0	0	0	0	**88**	
1315 - 1330	0	79	14	0	3	0	0	0	1	0	0	0	0	**97**	
1330 - 1345	0	76	11	0	0	0	0	0	0	0	0	0	0	**87**	
1345 - 1400	0	81	10	0	0	0	1	0	0	0	0	0	0	**92**	**364**
1400 - 1415	0	74	21	0	2	0	0	0	2	0	0	0	0	**99**	
1415 - 1430	0	73	8	0	1	0	0	0	0	0	0	0	0	**82**	
1430 - 1445	1	60	12	0	0	0	0	0	0	0	0	0	0	**73**	
1445 - 1500	0	81	20	0	2	0	0	0	2	0	0	0	0	**105**	**359**
1500 - 1515	0	80	14	0	0	0	0	0	2	0	0	0	0	**96**	
1515 - 1530	0	77	15	1	1	1	0	0	1	0	0	0	0	**96**	
1530 - 1545	0	79	12	1	1	1	0	0	0	0	0	0	0	**94**	
1545 - 1600	0	97	12	0	0	0	0	0	1	0	0	0	0	**110**	**396**
1600 - 1615	0	89	18	0	1	0	0	0	1	0	0	0	0	**109**	
1615 - 1630	0	98	11	1	0	1	0	0	1	0	0	0	0	**112**	
1630 - 1645	0	87	26	0	0	0	0	0	1	0	0	0	0	**114**	
1645 - 1700	0	114	19	0	0	0	0	1	2	0	0	0	0	**136**	**471**
1700 - 1715	0	98	18	0	2	1	1	0	2	0	0	0	0	**122**	
1715 - 1730	0	103	19	0	0	0	0	0	0	0	0	0	0	**122**	
1730 - 1745	0	106	25	0	1	0	0	0	0	0	0	0	0	**132**	
1745 - 1800	2	109	19	0	1	0	0	0	0	0	0	0	0	**131**	**507**
1800 - 1815	1	82	14	0	0	0	0	0	1	0	0	0	0	**98**	
1815 - 1830	0	79	15	0	1	0	0	0	2	0	0	0	0	**97**	
1830 - 1845	0	56	9	0	1	0	0	0	0	0	0	0	0	**66**	
1845 - 1900	0	71	9	0	0	0	0	0	0	0	0	0	0	**80**	**341**
1900 - 1915	1	52	13	0	1	0	0	0	0	0	0	0	0	**67**	
1915 - 1930	0	52	13	0	0	0	0	0	0	0	0	0	0	**65**	
1930 - 1945	0	46	12	0	0	0	0	0	2	0	0	0	0	**60**	
1945 - 2000	0	52	7	0	0	0	0	0	0	0	0	0	0	**59**	**251**
2000 - 2015	0	35	10	0	1	0	0	0	0	0	0	0	0	**46**	
2015 - 2030	0	51	7	0	1	0	0	0	0	0	0	0	0	**59**	
2030 - 2045	0	34	3	0	0	0	0	0	0	0	0	0	0	**37**	
2045 - 2100	0	36	3	0	1	0	0	0	0	0	0	0	0	**40**	**182**
2100 - 2115	0	22	2	0	0	0	0	0	0	0	0	0	0	**24**	
2115 - 2130	0	31	2	0	2	0	0	0	0	0	0	0	0	**35**	
2130 - 2145	0	14	1	0	0	0	0	0	0	0	0	0	0	**15**	
2145 - 2200	0	14	1	0	0	0	0	0	4	0	0	0	0	**19**	**93**
2200 - 2215	0	23	2	0	0	0	0	0	0	0	0	0	0	**25**	
2215 - 2230	0	16	2	0	0	0	0	0	0	0	0	0	0	**18**	
2230 - 2245	0	7	0	0	0	0	0	0	0	0	0	0	0	**7**	
2245 - 2300	0	10	1	0	0	0	0	0	0	0	0	0	0	**11**	**61**
2300 - 2315	0	8	0	0	0	0	0	0	0	0	0	0	0	**8**	
2315 - 2330	0	12	1	0	0	0	0	0	0	0	0	0	0	**13**	
2330 - 2345	0	8	0	0	0	0	0	0	0	0	0	0	0	**8**	
2345 - 0000	0	11	0	0	0	0	0	0	1	0	0	0	0	**12**	**41**

Session Total	11	5519	957	4	61	21	3	10	57	1	0	0	0	**6644**
Session Average	0.11	57.49	9.97	0.04	0.64	0.22	0.03	0.10	0.59	0.01	0.00	0.00	0.00	**69.21**
Session Percentage	0.17	83.07	14.40	0.06	0.92	0.32	0.05	0.15	0.86	0.02	0.00	0.00	0.00	

AM Peak Hour	0700 - 0800	0730 - 0830	0730 - 0830	0530 - 0630	0700 - 0800	0615 - 0715	-	0730 - 0830	0900 - 1000	0715 - 0815	-	-	-	**0730 - 0830**
AM Peak Volume	1	815	151	1	8	6	0	4	7	1	0	0	0	**986**

Noon Peak Hour	1130 - 1230	1215 - 1315	1400 - 1500	1445 - 1545	1015 - 1115	1445 - 1545	1115 - 1215	1115 - 1215	1015 - 1115	-	-	-	-	**1215 - 1315**
Noon Peak Volume	4	337	61	2	9	2	1	2	6	0	0	0	0	**397**

PM Peak Hour	1715 - 1815	1645 - 1745	1630 - 1730	1500 - 1600	1700 - 1800	1500 - 1600	1615 - 1715	1600 - 1700	1615 - 1715	-	-	-	-	**1645 - 1745**
PM Peak Volume	3	421	82	2	4	2	1	1	6	0	0	0	0	**512**

Site 64
I-20 On/Off-Ramp,
south of Bush River Rd

Date
Thursday, April 25, 2024

Lat/Long
34.029915°, -81.121303°

Weather
Fair
67°F

Click here for Detailed Weather

0000 - 2400 (Weekday 24h Session) (04-25-2024)
NB EB 15min

	Northbound (Movement 64.1)													15min	60min
TIME	1	2	3	4	5	6	7	8	9	10	11	12	13	Total	Total
0000 - 0015	0	6	0	0	0	0	0	0	0	0	0	0	0	**6**	
0015 - 0030	0	6	1	0	0	0	0	0	0	0	0	0	0	**7**	
0030 - 0045	0	5	0	0	0	0	0	0	0	0	0	0	0	**5**	
0045 - 0100	0	8	0	0	0	0	0	0	0	0	0	0	0	**8**	**26**
0100 - 0115	0	3	0	0	0	0	0	0	0	0	0	0	0	**3**	
0115 - 0130	0	0	0	0	0	1	0	0	0	0	0	0	0	**1**	
0130 - 0145	0	5	0	0	0	0	0	0	1	0	0	0	0	**6**	
0145 - 0200	0	5	0	0	0	0	0	0	0	0	0	0	0	**5**	**15**
0200 - 0215	0	2	0	0	0	0	0	0	0	0	0	0	0	**2**	
0215 - 0230	0	2	0	0	0	0	0	0	0	0	0	0	0	**2**	
0230 - 0245	0	4	1	0	0	0	0	0	0	0	0	0	0	**5**	
0245 - 0300	0	3	1	0	0	0	0	0	1	0	0	0	0	**5**	**14**
0300 - 0315	0	4	1	0	0	0	0	0	0	0	0	0	0	**5**	
0315 - 0330	0	3	0	0	0	0	0	0	1	0	0	0	0	**4**	
0330 - 0345	0	5	0	0	0	0	0	0	1	0	0	0	0	**6**	
0345 - 0400	0	0	0	0	0	0	0	0	0	0	0	0	0	**0**	**15**
0400 - 0415	0	3	2	0	0	0	0	0	0	0	0	0	0	**5**	
0415 - 0430	0	0	0	0	0	0	0	0	0	0	0	0	0	**0**	
0430 - 0445	0	5	1	0	0	0	0	0	0	0	0	0	0	**6**	
0445 - 0500	0	12	1	0	0	0	0	0	0	0	0	0	0	**13**	**24**
0500 - 0515	0	6	0	0	0	0	0	0	0	0	0	0	0	**6**	
0515 - 0530	0	9	0	0	0	0	0	0	0	0	0	0	0	**9**	
0530 - 0545	0	17	2	0	0	0	0	0	0	0	0	0	0	**19**	
0545 - 0600	0	33	2	0	0	0	0	0	0	0	0	0	0	**35**	**69**
0600 - 0615	0	25	4	0	1	0	0	0	0	0	0	0	0	**30**	
0615 - 0630	0	43	13	0	1	0	0	0	1	0	0	0	0	**58**	
0630 - 0645	0	64	22	0	1	0	0	0	1	0	0	0	0	**88**	
0645 - 0700	0	93	23	0	2	0	0	0	0	0	0	0	0	**118**	**294**
0700 - 0715	0	105	17	0	2	3	0	0	0	0	0	0	0	**127**	
0715 - 0730	0	126	31	0	3	1	0	0	2	0	0	0	0	**163**	
0730 - 0745	0	226	37	0	2	1	0	0	2	0	0	0	0	**268**	
0745 - 0800	1	230	35	0	5	1	0	0	0	0	0	0	0	**272**	**830**
0800 - 0815	0	198	46	0	3	0	0	0	1	0	0	0	0	**248**	
0815 - 0830	0	194	39	0	0	0	0	1	0	0	0	0	0	**234**	
0830 - 0845	0	141	27	0	3	0	0	0	0	0	0	0	0	**171**	
0845 - 0900	0	122	17	0	2	3	0	0	1	0	0	0	0	**145**	**798**
0900 - 0915	0	76	30	0	2	1	0	1	1	0	0	0	0	**111**	
0915 - 0930	0	80	18	0	1	2	0	0	1	0	0	0	0	**102**	
0930 - 0945	0	72	21	0	2	0	0	0	0	0	0	0	0	**95**	
0945 - 1000	2	82	6	0	1	1	0	0	0	0	0	0	0	**92**	**400**
1000 - 1015	0	82	15	0	1	1	0	0	0	0	0	0	0	**99**	
1015 - 1030	0	60	22	0	0	0	0	0	0	0	0	0	0	**82**	
1030 - 1045	0	73	16	0	2	1	0	0	0	0	0	0	0	**92**	
1045 - 1100	0	75	25	0	1	4	0	0	1	0	0	0	0	**106**	**379**
1100 - 1115	0	83	17	0	1	1	0	0	0	0	0	0	0	**102**	
1115 - 1130	0	82	17	0	1	0	0	1	0	0	0	0	0	**101**	
1130 - 1145	0	76	13	0	1	1	0	0	1	1	0	0	0	**93**	
1145 - 1200	0	62	15	0	0	3	0	0	1	0	0	0	0	**81**	**377**
1200 - 1215	0	74	14	0	0	1	0	1	0	0	0	0	0	**90**	
1215 - 1230	0	66	21	0	0	1	0	0	1	0	0	0	0	**89**	
1230 - 1245	0	89	23	0	2	0	0	1	0	0	0	0	0	**115**	
1245 - 1300	0	77	21	0	1	0	0	0	0	0	0	0	0	**99**	**393**
1300 - 1315	0	74	19	0	3	0	0	1	0	0	0	0	0	**97**	
1315 - 1330	0	72	17	0	1	0	0	0	0	0	0	0	0	**90**	
1330 - 1345	0	82	23	0	0	0	0	0	0	0	0	0	0	**105**	
1345 - 1400	0	58	18	0	0	4	0	0	0	0	0	0	0	**80**	**372**
1400 - 1415	0	67	11	0	3	0	0	1	1	0	0	0	0	**83**	
1415 - 1430	0	67	19	0	1	1	0	0	2	0	0	0	0	**90**	
1430 - 1445	0	70	20	0	0	1	0	0	5	0	0	0	0	**96**	
1445 - 1500	0	59	17	0	0	1	0	0	2	0	0	0	0	**79**	**348**
1500 - 1515	0	45	21	0	0	1	0	0	0	0	0	0	0	**67**	
1515 - 1530	0	72	21	0	0	2	0	0	0	0	0	0	0	**95**	
1530 - 1545	0	84	9	0	0	2	0	0	0	0	0	0	0	**95**	
1545 - 1600	0	81	21	1	0	1	0	0	1	0	0	0	0	**105**	**362**
1600 - 1615	1	104	31	0	0	0	0	0	1	0	0	0	0	**137**	
1615 - 1630	0	105	20	0	1	1	0	0	0	0	0	0	0	**127**	
1630 - 1645	0	108	17	0	0	0	0	0	1	0	0	0	0	**126**	
1645 - 1700	0	76	14	0	1	0	0	0	0	0	0	0	0	**91**	**481**
1700 - 1715	0	105	22	0	0	0	0	0	1	0	0	0	0	**128**	
1715 - 1730	2	117	29	0	0	1	0	0	0	0	0	0	0	**149**	
1730 - 1745	0	106	20	0	0	0	0	0	0	0	0	0	0	**126**	
1745 - 1800	0	120	27	0	0	0	0	0	2	0	0	0	0	**149**	**552**
1800 - 1815	0	97	17	0	1	2	0	0	2	0	0	0	0	**119**	
1815 - 1830	1	79	15	0	0	0	0	0	0	0	0	0	0	**95**	
1830 - 1845	1	91	16	0	1	0	0	0	0	0	0	0	0	**109**	
1845 - 1900	0	61	9	0	0	0	0	0	0	0	0	0	0	**70**	**393**
1900 - 1915	0	0	0	0	0	0	0	0	0	0	0	0	0	**0**	
1915 - 1930	0	0	0	0	0	0	0	0	0	0	0	0	0	**0**	
1930 - 1945	0	0	0	0	0	0	0	0	0	0	0	0	0	**0**	
1945 - 2000	0	0	0	0	0	0	0	0	0	0	0	0	0	**0**	**0**
2000 - 2015	0	0	0	0	0	0	0	0	0	0	0	0	0	**0**	
2015 - 2030	0	0	0	0	0	0	0	0	0	0	0	0	0	**0**	
2030 - 2045	0	0	0	0	0	0	0	0	0	0	0	0	0	**0**	
2045 - 2100	0	0	0	0	0	0	0	0	0	0	0	0	0	**0**	**0**
2100 - 2115	0	0	0	0	0	0	0	0	0	0	0	0	0	**0**	
2115 - 2130	0	0	0	0	0	0	0	0	0	0	0	0	0	**0**	
2130 - 2145	0	0	0	0	0	0	0	0	0	0	0	0	0	**0**	
2145 - 2200	0	0	0	0	0	0	0	0	0	0	0	0	0	**0**	**0**
2200 - 2215	0	0	0	0	0	0	0	0	0	0	0	0	0	**0**	
2215 - 2230	0	0	0	0	0	0	0	0	0	0	0	0	0	**0**	
2230 - 2245	0	0	0	0	0	0	0	0	0	0	0	0	0	**0**	
2245 - 2300	0	0	0	0	0	0	0	0	0	0	0	0	0	**0**	**0**
2300 - 2315	0	0	0	0	0	0	0	0	0	0	0	0	0	**0**	
2315 - 2330	0	0	0	0	0	0	0	0	0	0	0	0	0	**0**	
2330 - 2345	0	0	0	0	0	0	0	0	0	0	0	0	0	**0**	
2345 - 0000	0	0	0	0	0	0	0	0	0	0	0	0	0	**0**	**0**

Session Total	8	4922	1070	1	53	44	0	7	36	1	0	0	0	**6142**
Session Average	0.08	51.27	11.15	0.01	0.55	0.46	0.00	0.07	0.38	0.01	0.00	0.00	0.00	**63.98**
Session Percentage	0.13	80.14	17.42	0.02	0.86	0.72	0.00	0.11	0.59	0.02	0.00	0.00	0.00	

AM Peak Hour	0900 - 1000	0730 - 0830	0730 - 0830	-	0715 - 0815	0700 - 0800	-	0815 - 0915	0715 - 0815	-	-	-	-	**0730 - 0830**
AM Peak Hour Volume	2	848	157	0	13	6	0	2	5	0	0	0	0	**1022**

Noon Peak Hour	-	1045 - 1145	1215 - 1315	-	1230 - 1330	1000 - 1100	-	1115 - 1215	1400 - 1500	1045 - 1145	-	-	-	**1045 - 1145**
Noon Peak Hour Volume	0	316	84	0	7	6	0	2	10	1	0	0	0	**402**

PM Peak Hour	1630 - 1730	1700 - 1800	1700 - 1800	1500 - 1600	1600 - 1700	1500 - 1600	-	-	1715 - 1815	-	-	-	-	**1700 - 1800**
PM Peak Hour Volume	2	448	98	1	2	6	0	0	4	0	0	0	0	**552**

Bi-Directional Class Count || NB EB Average 15min

Columbia, SC

Marr Traffic DATA COLLECTION
www.marrtraffic.com

Site 64
I-20 On/Off-Ramp,
south of Bush River Rd

Date
Tuesday, April 23, 2024

Lat/Long
34.029915°, -81.121303°

Weather
Fair
58°F

0000 - 2400 (Weekday 24h Session) (All Dates)
NB EB Average 15min

	NB EB Average 15min													15min	60min
Time	1	2	3	4	5	6	7	8	9	10	11	12	13	Total	Total
0000 - 0015	0	4	0	0	0	0	0	0	0	0	0	0	0	**4**	
0015 - 0030	0	6	1	0	0	0	0	0	0	0	0	0	0	**7**	
0030 - 0045	0	3	0	0	0	0	0	0	0	0	0	0	0	**4**	
0045 - 0100	0	4	0	0	0	0	0	0	0	0	0	0	0	**4**	**19**
0100 - 0115	0	3	0	0	0	0	0	0	0	0	0	0	0	**3**	
0115 - 0130	0	1	0	0	0	0	0	0	0	0	0	0	0	**1**	
0130 - 0145	0	3	0	0	0	0	0	0	0	0	0	0	0	**3**	
0145 - 0200	0	2	0	0	0	0	0	0	0	0	0	0	0	**2**	**9**
0200 - 0215	0	1	0	0	0	0	0	0	0	0	0	0	0	**2**	
0215 - 0230	0	2	0	0	0	0	0	0	0	0	0	0	0	**2**	
0230 - 0245	0	2	0	0	0	0	0	0	0	0	0	0	0	**3**	
0245 - 0300	0	1	0	0	0	0	0	0	0	0	0	0	0	**2**	**9**
0300 - 0315	0	2	0	0	0	0	0	0	0	0	0	0	0	**3**	
0315 - 0330	0	2	0	0	0	0	0	0	1	0	0	0	0	**3**	
0330 - 0345	0	3	0	0	0	0	0	0	0	0	0	0	0	**3**	
0345 - 0400	0	1	0	0	0	0	0	0	0	0	0	0	0	**1**	**10**
0400 - 0415	0	1	1	0	0	1	0	0	0	0	0	0	0	**3**	
0415 - 0430	0	0	0	0	0	0	0	0	0	0	0	0	0	**1**	
0430 - 0445	0	3	0	0	1	0	0	0	0	0	0	0	0	**4**	
0445 - 0500	0	7	1	0	0	0	0	0	0	0	0	0	0	**8**	**15**
0500 - 0515	0	6	0	0	0	0	0	0	0	0	0	0	0	**6**	
0515 - 0530	0	7	0	0	0	0	0	0	0	0	0	0	0	**7**	
0530 - 0545	0	11	1	0	0	0	0	0	0	0	0	0	0	**12**	
0545 - 0600	0	21	1	0	1	0	0	0	0	0	0	0	0	**23**	**48**
0600 - 0615	0	17	2	0	0	0	0	0	0	0	0	0	0	**20**	
0615 - 0630	0	30	8	0	0	0	0	0	0	0	0	0	0	**39**	
0630 - 0645	0	41	12	0	0	0	0	0	1	0	0	0	0	**54**	
0645 - 0700	0	61	13	0	1	1	0	0	0	0	0	0	0	**76**	**189**
0700 - 0715	0	69	14	0	1	2	0	0	0	0	0	0	0	**86**	
0715 - 0730	0	93	20	0	1	1	0	0	1	0	0	0	0	**116**	
0730 - 0745	0	135	24	0	1	0	0	0	1	0	0	0	0	**161**	
0745 - 0800	1	154	23	0	3	1	0	1	1	0	0	0	0	**182**	**545**
0800 - 0815	0	132	29	0	1	1	0	0	1	0	0	0	0	**164**	
0815 - 0830	0	134	27	0	0	0	0	1	0	0	0	0	0	**162**	
0830 - 0845	0	99	19	0	2	0	0	0	0	0	0	0	0	**120**	
0845 - 0900	0	89	15	0	1	1	0	0	0	0	0	0	0	**106**	**552**
0900 - 0915	0	56	16	0	1	1	0	0	1	0	0	0	0	**75**	
0915 - 0930	0	56	10	0	1	1	0	0	1	0	0	0	0	**69**	
0930 - 0945	0	48	11	0	1	0	0	0	0	0	0	0	0	**60**	
0945 - 1000	1	55	6	0	1	0	0	0	1	0	0	0	0	**63**	**268**
1000 - 1015	0	51	11	0	1	0	0	0	0	0	0	0	0	**63**	
1015 - 1030	0	40	12	0	1	0	0	0	0	0	0	0	0	**54**	
1030 - 1045	0	45	9	0	1	0	0	0	0	0	0	0	0	**55**	
1045 - 1100	0	48	12	0	1	1	0	0	1	0	0	0	0	**63**	**236**
1100 - 1115	0	52	9	0	2	0	0	0	1	0	0	0	0	**64**	
1115 - 1130	0	58	10	0	1	0	0	0	0	0	0	0	0	**69**	
1130 - 1145	1	49	6	0	1	0	0	0	0	0	0	0	0	**58**	
1145 - 1200	0	43	7	0	0	1	0	0	0	0	0	0	0	**52**	**242**
1200 - 1215	0	46	9	0	0	0	0	1	0	0	0	0	0	**57**	
1215 - 1230	0	53	12	0	0	0	0	0	1	0	0	0	0	**66**	
1230 - 1245	0	58	14	0	1	0	0	0	0	0	0	0	0	**73**	
1245 - 1300	0	53	11	0	1	0	0	0	0	0	0	0	0	**65**	**261**
1300 - 1315	0	51	9	0	1	0	0	1	0	0	0	0	0	**62**	
1315 - 1330	0	50	10	0	1	0	0	0	0	0	0	0	0	**62**	
1330 - 1345	0	53	11	0	0	0	0	0	0	0	0	0	0	**64**	
1345 - 1400	0	46	9	0	0	1	0	0	0	0	0	0	0	**57**	**245**
1400 - 1415	0	47	11	0	2	0	0	0	1	0	0	0	0	**61**	
1415 - 1430	0	47	9	0	1	0	0	0	1	0	0	0	0	**57**	
1430 - 1445	0	43	11	0	0	0	0	0	2	0	0	0	0	**56**	
1445 - 1500	0	47	12	0	1	0	0	0	1	0	0	0	0	**61**	**236**
1500 - 1515	0	42	12	0	0	0	0	0	1	0	0	0	0	**54**	
1515 - 1530	0	50	12	0	0	1	0	0	0	0	0	0	0	**64**	
1530 - 1545	0	54	7	0	0	1	0	0	0	0	0	0	0	**63**	
1545 - 1600	0	59	11	0	0	0	0	0	1	0	0	0	0	**72**	**253**
1600 - 1615	0	64	16	0	0	0	0	0	1	0	0	0	0	**82**	
1615 - 1630	0	68	10	0	0	1	0	0	0	0	0	0	0	**80**	
1630 - 1645	0	65	14	0	0	0	0	0	1	0	0	0	0	**80**	
1645 - 1700	0	63	11	0	0	0	0	0	1	0	0	0	0	**76**	**317**
1700 - 1715	0	68	13	0	1	0	0	0	1	0	0	0	0	**83**	
1715 - 1730	1	73	16	0	0	0	0	0	0	0	0	0	0	**90**	
1730 - 1745	0	71	15	0	0	0	0	0	0	0	0	0	0	**86**	
1745 - 1800	1	76	15	0	0	0	0	0	1	0	0	0	0	**93**	**353**
1800 - 1815	0	60	10	0	0	1	0	0	1	0	0	0	0	**72**	
1815 - 1830	0	53	10	0	0	0	0	0	1	0	0	0	0	**64**	
1830 - 1845	0	49	8	0	1	0	0	0	0	0	0	0	0	**58**	
1845 - 1900	0	44	6	0	0	0	0	0	0	0	0	0	0	**50**	**245**
1900 - 1915	0	37	7	0	1	0	0	0	0	0	0	0	0	**46**	
1915 - 1930	0	32	8	0	0	0	0	0	0	0	0	0	0	**40**	
1930 - 1945	0	29	6	0	1	0	0	0	1	0	0	0	0	**37**	
1945 - 2000	0	32	6	0	0	0	0	0	0	0	0	0	0	**38**	**161**
2000 - 2015	0	23	7	0	0	0	0	0	0	0	0	0	0	**30**	
2015 - 2030	0	28	4	0	0	0	0	0	0	0	0	0	0	**32**	
2030 - 2045	0	21	2	0	0	0	0	0	0	0	0	0	0	**23**	
2045 - 2100	0	22	2	0	0	0	0	0	0	0	0	0	0	**24**	**109**
2100 - 2115	0	17	1	0	0	0	0	0	0	0	0	0	0	**18**	
2115 - 2130	0	19	1	0	1	0	0	0	0	0	0	0	0	**21**	
2130 - 2145	0	11	1	0	0	0	0	0	0	0	0	0	0	**12**	
2145 - 2200	0	12	1	0	0	0	0	0	1	0	0	0	0	**15**	**66**
2200 - 2215	0	13	1	0	0	0	0	0	0	0	0	0	0	**14**	
2215 - 2230	0	10	1	0	0	0	0	0	0	0	0	0	0	**11**	
2230 - 2245	0	6	0	0	0	0	0	0	0	0	0	0	0	**7**	
2245 - 2300	0	7	1	0	0	0	0	0	0	0	0	0	0	**8**	**40**
2300 - 2315	0	5	0	0	0	0	0	0	0	0	0	0	0	**5**	
2315 - 2330	0	8	1	0	0	0	0	0	0	0	0	0	0	**9**	
2330 - 2345	0	6	0	0	0	0	0	0	1	0	0	0	0	**6**	
2345 - 0000	0	7	0	0	0	0	0	0	0	0	0	0	0	**7**	**28**

Session Total	6	3647	698	2	40	22	1	6	34	1	0	0	0	**4456**
Session Average	0.07	37.99	7.27	0.02	0.42	0.23	0.01	0.06	0.35	0.01	0.00	0.00	0.00	**46.42**
Session Percentage	0.14	81.85	15.67	0.04	0.90	0.49	0.02	0.13	0.76	0.01	0.00	0.00	0.00	

AM Peak Hour	0930 - 1030	0730 - 0830	0730 - 0830	0530 - 0630	0700 - 0800	0645 - 0745	-	0730 - 0830	0715 - 0815	0715 - 0815	-	-	-	**0730 - 0830**
AM Peak Volume	1	554	103	0	7	4	0	2	3	0	0	0	0	**669**

Noon Peak Hour	1130 - 1230	1215 - 1315	1430 - 1530	1445 - 1545	1045 - 1145	1445 - 1545	1115 - 1215	1115 - 1215	1400 - 1500	1045 - 1145	-	-	-	**1215 - 1315**
Noon Peak Volume	1	214	47	1	4	3	0	1	5	0	0	0	0	**266**

PM Peak Hour	1715 - 1815	1700 - 1800	1700 - 1800	1500 - 1600	1745 - 1845	1500 - 1600	1615 - 1715	1600 - 1700	1615 - 1715	-	-	-	-	**1700 - 1800**
PM Peak Volume	2	288	60	1	2	3	0	0	3	0	0	0	0	**353**

Bi-Directional Class Count || Volume Summary 15min

Columbia, SC

Marr Traffic DATA COLLECTION

www.marrtraffic.com

Site 64

I-20 On/Off-Ramp,
south of Bush River Rd

Date

Tuesday, April 23, 2024

Lat/Long

34.029915°, -81.121303°

Weather

Fair
58°F

Click here for Detailed Weather

0000 - 2400 (Weekday 24h Session) (04-23-2024)

Volume Summary 15min

TIME	Volume Summary 15min NB	SB	15min Total	60min Total
0000 - 0015	0	0	**0**	
0015 - 0030	0	0	**0**	
0030 - 0045	0	0	**0**	
0045 - 0100	0	0	**0**	**0**
0100 - 0115	0	0	**0**	
0115 - 0130	0	0	**0**	
0130 - 0145	0	0	**0**	
0145 - 0200	0	0	**0**	**0**
0200 - 0215	0	0	**0**	
0215 - 0230	0	0	**0**	
0230 - 0245	0	0	**0**	
0245 - 0300	0	0	**0**	**0**
0300 - 0315	0	0	**0**	
0315 - 0330	0	0	**0**	
0330 - 0345	0	0	**0**	
0345 - 0400	0	0	**0**	**0**
0400 - 0415	0	0	**0**	
0415 - 0430	0	0	**0**	
0430 - 0445	0	0	**0**	
0445 - 0500	0	0	**0**	**0**
0500 - 0515	0	0	**0**	
0515 - 0530	0	0	**0**	
0530 - 0545	0	0	**0**	
0545 - 0600	0	0	**0**	**0**
0600 - 0615	0	0	**0**	
0615 - 0630	0	0	**0**	
0630 - 0645	0	0	**0**	
0645 - 0700	0	0	**0**	**0**
0700 - 0715	0	0	**0**	
0715 - 0730	0	0	**0**	
0730 - 0745	0	0	**0**	
0745 - 0800	0	0	**0**	**0**
0800 - 0815	0	0	**0**	
0815 - 0830	0	0	**0**	
0830 - 0845	0	0	**0**	
0845 - 0900	0	0	**0**	**0**
0900 - 0915	0	0	**0**	
0915 - 0930	0	0	**0**	
0930 - 0945	0	0	**0**	
0945 - 1000	0	0	**0**	**0**
1000 - 1015	0	0	**0**	
1015 - 1030	0	0	**0**	
1030 - 1045	0	0	**0**	
1045 - 1100	0	0	**0**	**0**
1100 - 1115	0	0	**0**	
1115 - 1130	0	0	**0**	
1130 - 1145	0	0	**0**	
1145 - 1200	0	0	**0**	**0**

Time	Volume Summary 15min NB	SB	15min Total	60min Total
1200 - 1215	0	0	**0**	
1215 - 1230	0	0	**0**	
1230 - 1245	0	0	**0**	
1245 - 1300	0	0	**0**	**0**
1300 - 1315	0	0	**0**	
1315 - 1330	0	0	**0**	
1330 - 1345	0	0	**0**	
1345 - 1400	0	0	**0**	**0**
1400 - 1415	0	0	**0**	
1415 - 1430	0	0	**0**	
1430 - 1445	0	0	**0**	
1445 - 1500	0	0	**0**	**0**
1500 - 1515	0	0	**0**	
1515 - 1530	0	0	**0**	
1530 - 1545	0	0	**0**	
1545 - 1600	0	0	**0**	**0**
1600 - 1615	0	0	**0**	
1615 - 1630	0	0	**0**	
1630 - 1645	0	0	**0**	
1645 - 1700	0	0	**0**	**0**
1700 - 1715	0	0	**0**	
1715 - 1730	0	0	**0**	
1730 - 1745	0	0	**0**	
1745 - 1800	0	0	**0**	**0**
1800 - 1815	0	0	**0**	
1815 - 1830	0	0	**0**	
1830 - 1845	0	0	**0**	
1845 - 1900	0	0	**0**	**0**
1900 - 1915	70	0	**70**	
1915 - 1930	55	0	**55**	
1930 - 1945	50	0	**50**	
1945 - 2000	56	0	**56**	**231**
2000 - 2015	44	0	**44**	
2015 - 2030	36	0	**36**	
2030 - 2045	33	0	**33**	
2045 - 2100	31	0	**31**	**144**
2100 - 2115	31	0	**31**	
2115 - 2130	28	0	**28**	
2130 - 2145	22	0	**22**	
2145 - 2200	25	0	**25**	**106**
2200 - 2215	18	0	**18**	
2215 - 2230	15	0	**15**	
2230 - 2245	13	0	**13**	
2245 - 2300	13	0	**13**	**59**
2300 - 2315	8	0	**8**	
2315 - 2330	14	0	**14**	
2330 - 2345	11	0	**11**	
2345 - 0000	10	0	**10**	**43**

Session Total	583	0	**583**
Session Average	6.07	0.00	**6.07**
Session Percentage	100.00	0.00	

Site 64

I-20 On/Off-Ramp,
south of Bush River Rd

Date

Wednesday, April 24, 2024

Lat/Long

34.029915°, -81.121303°

Weather

Fair
66°F

Click here for Detailed Weather

0000 - 2400 (Weekday 24h Session) (04-24-2024)

Volume Summary 15min

TIME	Volume Summary 15min NB	SB	15min Total	60min Total
0000 - 0015	7	0	**7**	
0015 - 0030	14	0	**14**	
0030 - 0045	6	0	**6**	
0045 - 0100	5	0	**5**	**32**
0100 - 0115	5	0	**5**	
0115 - 0130	2	0	**2**	
0130 - 0145	4	0	**4**	
0145 - 0200	1	0	**1**	**12**
0200 - 0215	3	0	**3**	
0215 - 0230	5	0	**5**	
0230 - 0245	4	0	**4**	
0245 - 0300	0	0	**0**	**12**
0300 - 0315	3	0	**3**	
0315 - 0330	5	0	**5**	
0330 - 0345	4	0	**4**	
0345 - 0400	4	0	**4**	**16**
0400 - 0415	3	0	**3**	
0415 - 0430	2	0	**2**	
0430 - 0445	6	0	**6**	
0445 - 0500	10	0	**10**	**21**
0500 - 0515	12	0	**12**	
0515 - 0530	11	0	**11**	
0530 - 0545	17	0	**17**	
0545 - 0600	35	0	**35**	**75**
0600 - 0615	30	0	**30**	
0615 - 0630	60	0	**60**	
0630 - 0645	74	0	**74**	
0645 - 0700	110	0	**110**	**274**
0700 - 0715	131	0	**131**	
0715 - 0730	184	0	**184**	
0730 - 0745	216	0	**216**	
0745 - 0800	274	0	**274**	**805**
0800 - 0815	244	0	**244**	
0815 - 0830	252	0	**252**	
0830 - 0845	189	0	**189**	
0845 - 0900	174	0	**174**	**859**
0900 - 0915	114	0	**114**	
0915 - 0930	106	0	**106**	
0930 - 0945	86	0	**86**	
0945 - 1000	98	0	**98**	**404**
1000 - 1015	90	0	**90**	
1015 - 1030	81	0	**81**	
1030 - 1045	74	0	**74**	
1045 - 1100	84	0	**84**	**329**
1100 - 1115	89	0	**89**	
1115 - 1130	106	0	**106**	
1130 - 1145	80	0	**80**	
1145 - 1200	74	0	**74**	**349**

Time	Volume Summary 15min NB	SB	15min Total	60min Total
1200 - 1215	81	0	**81**	
1215 - 1230	110	0	**110**	
1230 - 1245	104	0	**104**	
1245 - 1300	95	0	**95**	**390**
1300 - 1315	88	0	**88**	
1315 - 1330	97	0	**97**	
1330 - 1345	87	0	**87**	
1345 - 1400	92	0	**92**	**364**
1400 - 1415	99	0	**99**	
1415 - 1430	82	0	**82**	
1430 - 1445	73	0	**73**	
1445 - 1500	105	0	**105**	**359**
1500 - 1515	96	0	**96**	
1515 - 1530	96	0	**96**	
1530 - 1545	94	0	**94**	
1545 - 1600	110	0	**110**	**396**
1600 - 1615	109	0	**109**	
1615 - 1630	112	0	**112**	
1630 - 1645	114	0	**114**	
1645 - 1700	136	0	**136**	**471**
1700 - 1715	122	0	**122**	
1715 - 1730	122	0	**122**	
1730 - 1745	132	0	**132**	
1745 - 1800	131	0	**131**	**507**
1800 - 1815	98	0	**98**	
1815 - 1830	97	0	**97**	
1830 - 1845	66	0	**66**	
1845 - 1900	80	0	**80**	**341**
1900 - 1915	67	0	**67**	
1915 - 1930	65	0	**65**	
1930 - 1945	60	0	**60**	
1945 - 2000	59	0	**59**	**251**
2000 - 2015	46	0	**46**	
2015 - 2030	59	0	**59**	
2030 - 2045	37	0	**37**	
2045 - 2100	40	0	**40**	**182**
2100 - 2115	24	0	**24**	
2115 - 2130	35	0	**35**	
2130 - 2145	15	0	**15**	
2145 - 2200	19	0	**19**	**93**
2200 - 2215	25	0	**25**	
2215 - 2230	18	0	**18**	
2230 - 2245	7	0	**7**	
2245 - 2300	11	0	**11**	**61**
2300 - 2315	8	0	**8**	
2315 - 2330	13	0	**13**	
2330 - 2345	8	0	**8**	
2345 - 0000	12	0	**12**	**41**

Session Total	6644	0	**6644**
Session Average	69.21	0.00	**69.21**
Session Percentage	100.00	0.00	

Site 64

I-20 On/Off-Ramp,
south of Bush River Rd

Date

Thursday, April 25, 2024

Lat/Long

34.029915°, -81.121303°

Weather

Fair
67°F

Click here for Detailed Weather

0000 - 2400 (Weekday 24h Session) (04-25-2024)

Volume Summary 15min

TIME	Volume Summary 15min NB	SB	15min Total	60min Total
0000 - 0015	6	0	**6**	
0015 - 0030	7	0	**7**	
0030 - 0045	5	0	**5**	
0045 - 0100	8	0	**8**	**26**
0100 - 0115	3	0	**3**	
0115 - 0130	1	0	**1**	
0130 - 0145	6	0	**6**	
0145 - 0200	5	0	**5**	**15**
0200 - 0215	2	0	**2**	
0215 - 0230	2	0	**2**	
0230 - 0245	5	0	**5**	
0245 - 0300	5	0	**5**	**14**
0300 - 0315	5	0	**5**	
0315 - 0330	4	0	**4**	
0330 - 0345	6	0	**6**	
0345 - 0400	0	0	**0**	**15**
0400 - 0415	5	0	**5**	
0415 - 0430	0	0	**0**	
0430 - 0445	6	0	**6**	
0445 - 0500	13	0	**13**	**24**
0500 - 0515	6	0	**6**	
0515 - 0530	9	0	**9**	
0530 - 0545	19	0	**19**	
0545 - 0600	35	0	**35**	**69**
0600 - 0615	30	0	**30**	
0615 - 0630	58	0	**58**	
0630 - 0645	88	0	**88**	
0645 - 0700	118	0	**118**	**294**
0700 - 0715	127	0	**127**	
0715 - 0730	163	0	**163**	
0730 - 0745	268	0	**268**	
0745 - 0800	272	0	**272**	**830**
0800 - 0815	248	0	**248**	
0815 - 0830	234	0	**234**	
0830 - 0845	171	0	**171**	
0845 - 0900	145	0	**145**	**798**
0900 - 0915	111	0	**111**	
0915 - 0930	102	0	**102**	
0930 - 0945	95	0	**95**	
0945 - 1000	92	0	**92**	**400**
1000 - 1015	99	0	**99**	
1015 - 1030	82	0	**82**	
1030 - 1045	92	0	**92**	
1045 - 1100	106	0	**106**	**379**
1100 - 1115	102	0	**102**	
1115 - 1130	101	0	**101**	
1130 - 1145	93	0	**93**	
1145 - 1200	81	0	**81**	**377**

Time	Volume Summary 15min NB	SB	15min Total	60min Total
1200 - 1215	90	0	**90**	
1215 - 1230	89	0	**89**	
1230 - 1245	115	0	**115**	
1245 - 1300	99	0	**99**	**393**
1300 - 1315	97	0	**97**	
1315 - 1330	90	0	**90**	
1330 - 1345	105	0	**105**	
1345 - 1400	80	0	**80**	**372**
1400 - 1415	83	0	**83**	
1415 - 1430	90	0	**90**	
1430 - 1445	96	0	**96**	
1445 - 1500	79	0	**79**	**348**
1500 - 1515	67	0	**67**	
1515 - 1530	95	0	**95**	
1530 - 1545	95	0	**95**	
1545 - 1600	105	0	**105**	**362**
1600 - 1615	137	0	**137**	
1615 - 1630	127	0	**127**	
1630 - 1645	126	0	**126**	
1645 - 1700	91	0	**91**	**481**
1700 - 1715	128	0	**128**	
1715 - 1730	149	0	**149**	
1730 - 1745	126	0	**126**	
1745 - 1800	149	0	**149**	**552**
1800 - 1815	119	0	**119**	
1815 - 1830	95	0	**95**	
1830 - 1845	109	0	**109**	
1845 - 1900	70	0	**70**	**393**
1900 - 1915	0	0	**0**	
1915 - 1930	0	0	**0**	
1930 - 1945	0	0	**0**	
1945 - 2000	0	0	**0**	**0**
2000 - 2015	0	0	**0**	
2015 - 2030	0	0	**0**	
2030 - 2045	0	0	**0**	
2045 - 2100	0	0	**0**	**0**
2100 - 2115	0	0	**0**	
2115 - 2130	0	0	**0**	
2130 - 2145	0	0	**0**	
2145 - 2200	0	0	**0**	**0**
2200 - 2215	0	0	**0**	
2215 - 2230	0	0	**0**	
2230 - 2245	0	0	**0**	
2245 - 2300	0	0	**0**	**0**
2300 - 2315	0	0	**0**	
2315 - 2330	0	0	**0**	
2330 - 2345	0	0	**0**	
2345 - 0000	0	0	**0**	**0**

Session Total	6142	0	**6142**
Session Average	63.98	0.00	**63.98**
Session Percentage	100.00	0.00	

Bi-Directional Class Count || NB EB 60min

Columbia, SC

Marr Traffic DATA COLLECTION

www.marrtraffic.com

Site 64
I-20 On/Off-Ramp,
south of Bush River Rd

Date
Tuesday, April 23, 2024

Lat/Long
34.029915°, -81.121303°

Weather
Fair
58°F

Click here for Detailed Weather

0000 - 2400 (Weekday 24h Session) (04-23-2024)
NB EB 60min

	Northbound (Movement 64.1)													
TIME	1	2	3	4	5	6	7	8	9	10	11	12	13	**Total**
0000 - 0100	0	0	0	0	0	0	0	0	0	0	0	0	0	**0**
0100 - 0200	0	0	0	0	0	0	0	0	0	0	0	0	0	**0**
0200 - 0300	0	0	0	0	0	0	0	0	0	0	0	0	0	**0**
0300 - 0400	0	0	0	0	0	0	0	0	0	0	0	0	0	**0**
0400 - 0500	0	0	0	0	0	0	0	0	0	0	0	0	0	**0**
0500 - 0600	0	0	0	0	0	0	0	0	0	0	0	0	0	**0**
0600 - 0700	0	0	0	0	0	0	0	0	0	0	0	0	0	**0**
0700 - 0800	0	0	0	0	0	0	0	0	0	0	0	0	0	**0**
0800 - 0900	0	0	0	0	0	0	0	0	0	0	0	0	0	**0**
0900 - 1000	0	0	0	0	0	0	0	0	0	0	0	0	0	**0**
1000 - 1100	0	0	0	0	0	0	0	0	0	0	0	0	0	**0**
1100 - 1200	0	0	0	0	0	0	0	0	0	0	0	0	0	**0**
1200 - 1300	0	0	0	0	0	0	0	0	0	0	0	0	0	**0**
1300 - 1400	0	0	0	0	0	0	0	0	0	0	0	0	0	**0**
1400 - 1500	0	0	0	0	0	0	0	0	0	0	0	0	0	**0**
1500 - 1600	0	0	0	0	0	0	0	0	0	0	0	0	0	**0**
1600 - 1700	0	0	0	0	0	0	0	0	0	0	0	0	0	**0**
1700 - 1800	0	0	0	0	0	0	0	0	0	0	0	0	0	**0**
1800 - 1900	0	0	0	0	0	0	0	0	0	0	0	0	0	**0**
1900 - 2000	0	191	34	0	3	0	0	0	3	0	0	0	0	**231**
2000 - 2100	0	124	19	0	0	0	0	0	1	0	0	0	0	**144**
2100 - 2200	0	96	9	0	1	0	0	0	0	0	0	0	0	**106**
2200 - 2300	0	51	4	0	2	0	0	0	2	0	0	0	0	**59**
2300 - 2400	0	39	2	0	0	0	0	0	2	0	0	0	0	**43**
Session Total	0	501	68	0	6	0	0	0	8	0	0	0	0	**583**
Session Average	0.00	20.88	2.83	0.00	0.25	0.00	0.00	0.00	0.33	0.00	0.00	0.00	0.00	**24.29**
Session Percentage	0.00	85.93	11.66	0.00	1.03	0.00	0.00	0.00	1.37	0.00	0.00	0.00	0.00	
AM Peak Hour	-	-	-	-	-	-	-	-	-	-	-	-	-	**-**
AM Peak Volume	0	0	0	0	0	0	0	0	0	0	0	0	0	**0**
Noon Peak Hour	-	-	-	-	-	-	-	-	-	-	-	-	-	**-**
Noon Peak Volume	0	0	0	0	0	0	0	0	0	0	0	0	0	**0**
PM Peak Hour	-	1900 - 2000	1900 - 2000	-	1900 - 2000	-	-	-	1900 - 2000	-	-	-	-	**1900 - 2000**
PM Peak Volume	0	191	34	0	3	0	0	0	3	0	0	0	0	**231**

Site 64
I-20 On/Off-Ramp,
south of Bush River Rd

Date
Wednesday, April 24, 2024

Lat/Long
34.029915°, -81.121303°

Weather
Fair
66°F

Click here for Detailed Weather

0000 - 2400 (Weekday 24h Session) (04-24-2024)
NB EB 60min

	Northbound (Movement 64.1)													
TIME	1	2	3	4	5	6	7	8	9	10	11	12	13	**Total**
0000 - 0100	0	25	3	0	1	0	0	1	2	0	0	0	0	**32**
0100 - 0200	0	12	0	0	0	0	0	0	0	0	0	0	0	**12**
0200 - 0300	0	8	2	0	0	1	0	0	1	0	0	0	0	**12**
0300 - 0400	0	14	0	0	0	0	0	0	2	0	0	0	0	**16**
0400 - 0500	0	14	1	0	2	2	0	0	2	0	0	0	0	**21**
0500 - 0600	0	67	4	0	3	0	0	0	1	0	0	0	0	**75**
0600 - 0700	0	222	43	1	1	4	0	1	2	0	0	0	0	**274**
0700 - 0800	1	665	120	0	8	4	0	3	4	0	0	0	0	**805**
0800 - 0900	0	707	143	0	3	2	0	1	2	1	0	0	0	**859**
0900 - 1000	0	335	55	0	4	3	0	0	7	0	0	0	0	**404**
1000 - 1100	1	264	55	0	6	0	0	0	3	0	0	0	0	**329**
1100 - 1200	3	301	35	0	7	0	0	0	3	0	0	0	0	**349**
1200 - 1300	1	324	57	0	3	0	1	2	2	0	0	0	0	**390**
1300 - 1400	0	314	43	0	3	1	1	1	1	0	0	0	0	**364**
1400 - 1500	1	288	61	0	5	0	0	0	4	0	0	0	0	**359**
1500 - 1600	0	333	53	2	2	2	0	0	4	0	0	0	0	**396**
1600 - 1700	0	388	74	1	1	1	0	1	5	0	0	0	0	**471**
1700 - 1800	2	416	81	0	4	1	1	0	2	0	0	0	0	**507**
1800 - 1900	1	288	47	0	2	0	0	0	3	0	0	0	0	**341**
1900 - 2000	1	202	45	0	1	0	0	0	2	0	0	0	0	**251**
2000 - 2100	0	156	23	0	3	0	0	0	0	0	0	0	0	**182**
2100 - 2200	0	81	6	0	2	0	0	0	4	0	0	0	0	**93**
2200 - 2300	0	56	5	0	0	0	0	0	0	0	0	0	0	**61**
2300 - 2400	0	39	1	0	0	0	0	0	1	0	0	0	0	**41**

Session Total	11	5519	957	4	61	21	3	10	57	1	0	0	0	**6644**
Session Average	0.46	229.96	39.88	0.17	2.54	0.88	0.13	0.42	2.38	0.04	0.00	0.00	0.00	**276.83**
Session Percentage	0.17	83.07	14.40	0.06	0.92	0.32	0.05	0.15	0.86	0.02	0.00	0.00	0.00	

AM Peak Hour	0700 - 0800	0800 - 0900	0800 - 0900	0600 - 0700	0700 - 0800	0600 - 0700	-	0700 - 0800	0900 - 1000	0800 - 0900	-	-	-	**0800 - 0900**
AM Peak Volume	1	707	143	1	8	4	0	3	7	1	0	0	0	**859**

Noon Peak Hour	1100 - 1200	1200 - 1300	1400 - 1500	-	1100 - 1200	1300 - 1400	1200 - 1300	1200 - 1300	1400 - 1500	-	-	-	-	**1200 - 1300**
Noon Peak Volume	3	324	61	0	7	1	1	2	4	0	0	0	0	**390**

PM Peak Hour	1700 - 1800	1700 - 1800	1700 - 1800	1500 - 1600	1700 - 1800	1500 - 1600	1700 - 1800	1600 - 1700	1600 - 1700	-	-	-	-	**1700 - 1800**
PM Peak Volume	2	416	81	2	4	2	1	1	5	0	0	0	0	**507**

Site 64
I-20 On/Off-Ramp,
south of Bush River Rd

Date
Thursday, April 25, 2024

Lat/Long
34.029915°, -81.121303°

Weather
Fair
67°F

Click here for Detailed Weather

0000 - 2400 (Weekday 24h Session) (04-25-2024)
NB EB 60min

	Northbound (Movement 64.1)													
TIME	1	2	3	4	5	6	7	8	9	10	11	12	13	**Total**
0000 - 0100	0	25	1	0	0	0	0	0	0	0	0	0	0	**26**
0100 - 0200	0	13	0	0	0	1	0	0	1	0	0	0	0	**15**
0200 - 0300	0	11	2	0	0	0	0	0	1	0	0	0	0	**14**
0300 - 0400	0	12	1	0	0	0	0	0	2	0	0	0	0	**15**
0400 - 0500	0	20	4	0	0	0	0	0	0	0	0	0	0	**24**
0500 - 0600	0	65	4	0	0	0	0	0	0	0	0	0	0	**69**
0600 - 0700	0	225	62	0	5	0	0	0	2	0	0	0	0	**294**
0700 - 0800	1	687	120	0	12	6	0	0	4	0	0	0	0	**830**
0800 - 0900	0	655	129	0	8	3	0	1	2	0	0	0	0	**798**
0900 - 1000	2	310	75	0	6	4	0	1	2	0	0	0	0	**400**
1000 - 1100	0	290	78	0	4	6	0	0	1	0	0	0	0	**379**
1100 - 1200	0	303	62	0	3	5	0	1	2	1	0	0	0	**377**
1200 - 1300	0	306	79	0	3	2	0	2	1	0	0	0	0	**393**
1300 - 1400	0	286	77	0	4	4	0	1	0	0	0	0	0	**372**
1400 - 1500	0	263	67	0	4	3	0	1	10	0	0	0	0	**348**
1500 - 1600	0	282	72	1	0	6	0	0	1	0	0	0	0	**362**
1600 - 1700	1	393	82	0	2	1	0	0	2	0	0	0	0	**481**
1700 - 1800	2	448	98	0	0	1	0	0	3	0	0	0	0	**552**
1800 - 1900	2	328	57	0	2	2	0	0	2	0	0	0	0	**393**
1900 - 2000	0	0	0	0	0	0	0	0	0	0	0	0	0	**0**
2000 - 2100	0	0	0	0	0	0	0	0	0	0	0	0	0	**0**
2100 - 2200	0	0	0	0	0	0	0	0	0	0	0	0	0	**0**
2200 - 2300	0	0	0	0	0	0	0	0	0	0	0	0	0	**0**
2300 - 2400	0	0	0	0	0	0	0	0	0	0	0	0	0	**0**

Session Total	8	4922	1070	1	53	44	0	7	36	1	0	0	0	**6142**
Session Average	0.33	205.08	44.58	0.04	2.21	1.83	0.00	0.29	1.50	0.04	0.00	0.00	0.00	**255.92**
Session Percentage	0.13	80.14	17.42	0.02	0.86	0.72	0.00	0.11	0.59	0.02	0.00	0.00	0.00	

AM Peak Hour	0900 - 1000	0700 - 0800	0800 - 0900	-	0700 - 0800	0700 - 0800	-	0800 - 0900	0700 - 0800	-	-	-	-	**0700 - 0800**
AM Peak Hour Volume	2	687	129	0	12	6	0	1	4	0	0	0	0	**830**

Noon Peak Hour	-	1200 - 1300	1200 - 1300	-	1000 - 1100	1000 - 1100	-	1200 - 1300	1400 - 1500	1100 - 1200	-	-	-	**1200 - 1300**
Noon Peak Hour Volume	0	306	79	0	4	6	0	2	10	1	0	0	0	**393**

PM Peak Hour	1700 - 1800	1700 - 1800	1700 - 1800	1500 - 1600	1600 - 1700	1500 - 1600	-	-	1700 - 1800	-	-	-	-	**1700 - 1800**
PM Peak Hour Volume	2	448	98	1	2	6	0	0	3	0	0	0	0	**552**

Bi-Directional Class Count || Volume Summary 60min

Columbia, SC

Marr Traffic DATA COLLECTION

www.marrtraffic.com

Site 64

I-20 On/Off-Ramp,
south of Bush River Rd

Date

Tuesday, April 23, 2024

Lat/Long

34.029915°, -81.121303°

Weather

Fair
58°F

Click here for Detailed Weather

0000 - 2400 (Weekday 24h Session) (04-23-2024)

Volume Summary 60min

	Volume Summary 60min		
TIME	NB	SB	**Total**
0000 - 0100	0	0	**0**
0100 - 0200	0	0	**0**
0200 - 0300	0	0	**0**
0300 - 0400	0	0	**0**
0400 - 0500	0	0	**0**
0500 - 0600	0	0	**0**
0600 - 0700	0	0	**0**
0700 - 0800	0	0	**0**
0800 - 0900	0	0	**0**
0900 - 1000	0	0	**0**
1000 - 1100	0	0	**0**
1100 - 1200	0	0	**0**

	Volume Summary 60min		
Time	NB	SB	**Total**
1200 - 1300	0	0	**0**
1300 - 1400	0	0	**0**
1400 - 1500	0	0	**0**
1500 - 1600	0	0	**0**
1600 - 1700	0	0	**0**
1700 - 1800	0	0	**0**
1800 - 1900	0	0	**0**
1900 - 2000	231	0	**231**
2000 - 2100	144	0	**144**
2100 - 2200	106	0	**106**
2200 - 2300	59	0	**59**
2300 - 2400	43	0	**43**

Session Total	583	0	**583**
Session Average	24.29	0.00	**24.29**
Session Percentage	100.00	0.00	

Site 64

I-20 On/Off-Ramp,
south of Bush River Rd

Date

Wednesday, April 24, 2024

Lat/Long

34.029915°, -81.121303°

Weather

Fair
66°F

Click here for Detailed Weather

0000 - 2400 (Weekday 24h Session) (04-24-2024)

Volume Summary 60min

	Volume Summary 60min		
TIME	NB	SB	**Total**
0000 - 0100	32	0	**32**
0100 - 0200	12	0	**12**
0200 - 0300	12	0	**12**
0300 - 0400	16	0	**16**
0400 - 0500	21	0	**21**
0500 - 0600	75	0	**75**
0600 - 0700	274	0	**274**
0700 - 0800	805	0	**805**
0800 - 0900	859	0	**859**
0900 - 1000	404	0	**404**
1000 - 1100	329	0	**329**
1100 - 1200	349	0	**349**

	Volume Summary 60min		
Time	NB	SB	**Total**
1200 - 1300	390	0	**390**
1300 - 1400	364	0	**364**
1400 - 1500	359	0	**359**
1500 - 1600	396	0	**396**
1600 - 1700	471	0	**471**
1700 - 1800	507	0	**507**
1800 - 1900	341	0	**341**
1900 - 2000	251	0	**251**
2000 - 2100	182	0	**182**
2100 - 2200	93	0	**93**
2200 - 2300	61	0	**61**
2300 - 2400	41	0	**41**

Session Total	6644	0	**6644**
Session Average	276.83	0.00	**276.83**
Session Percentage	100.00	0.00	

Site 64

I-20 On/Off-Ramp,
south of Bush River Rd

Date

Thursday, April 25, 2024

Lat/Long

34.029915°, -81.121303°

Weather

Fair
67°F

Click here for Detailed Weather

0000 - 2400 (Weekday 24h Session) (04-25-2024)

Volume Summary 60min

	Volume Summary 60min		
TIME	NB	SB	**Total**
0000 - 0100	26	0	**26**
0100 - 0200	15	0	**15**
0200 - 0300	14	0	**14**
0300 - 0400	15	0	**15**
0400 - 0500	24	0	**24**
0500 - 0600	69	0	**69**
0600 - 0700	294	0	**294**
0700 - 0800	830	0	**830**
0800 - 0900	798	0	**798**
0900 - 1000	400	0	**400**
1000 - 1100	379	0	**379**
1100 - 1200	377	0	**377**

Session Total	6142	0	**6142**
Session Average	255.92	0.00	**255.92**
Session Percentage	100.00	0.00	

	Volume Summary 60min		
Time	NB	SB	**Total**
1200 - 1300	393	0	**393**
1300 - 1400	372	0	**372**
1400 - 1500	348	0	**348**
1500 - 1600	362	0	**362**
1600 - 1700	481	0	**481**
1700 - 1800	552	0	**552**
1800 - 1900	393	0	**393**
1900 - 2000	0	0	**0**
2000 - 2100	0	0	**0**
2100 - 2200	0	0	**0**
2200 - 2300	0	0	**0**
2300 - 2400	0	0	**0**

Bi-Directional Class Count || Graphical Analysis NB EB

Columbia, SC

Marr Traffic DATA COLLECTION

www.marrtraffic.com

Site 64

I-20 On/Off-Ramp,
south of Bush River Rd

Lat/Long

34.029915°, -81.121303°

0000 - 2400 (Weekday 24h Session)

Graphical Analysis NB EB

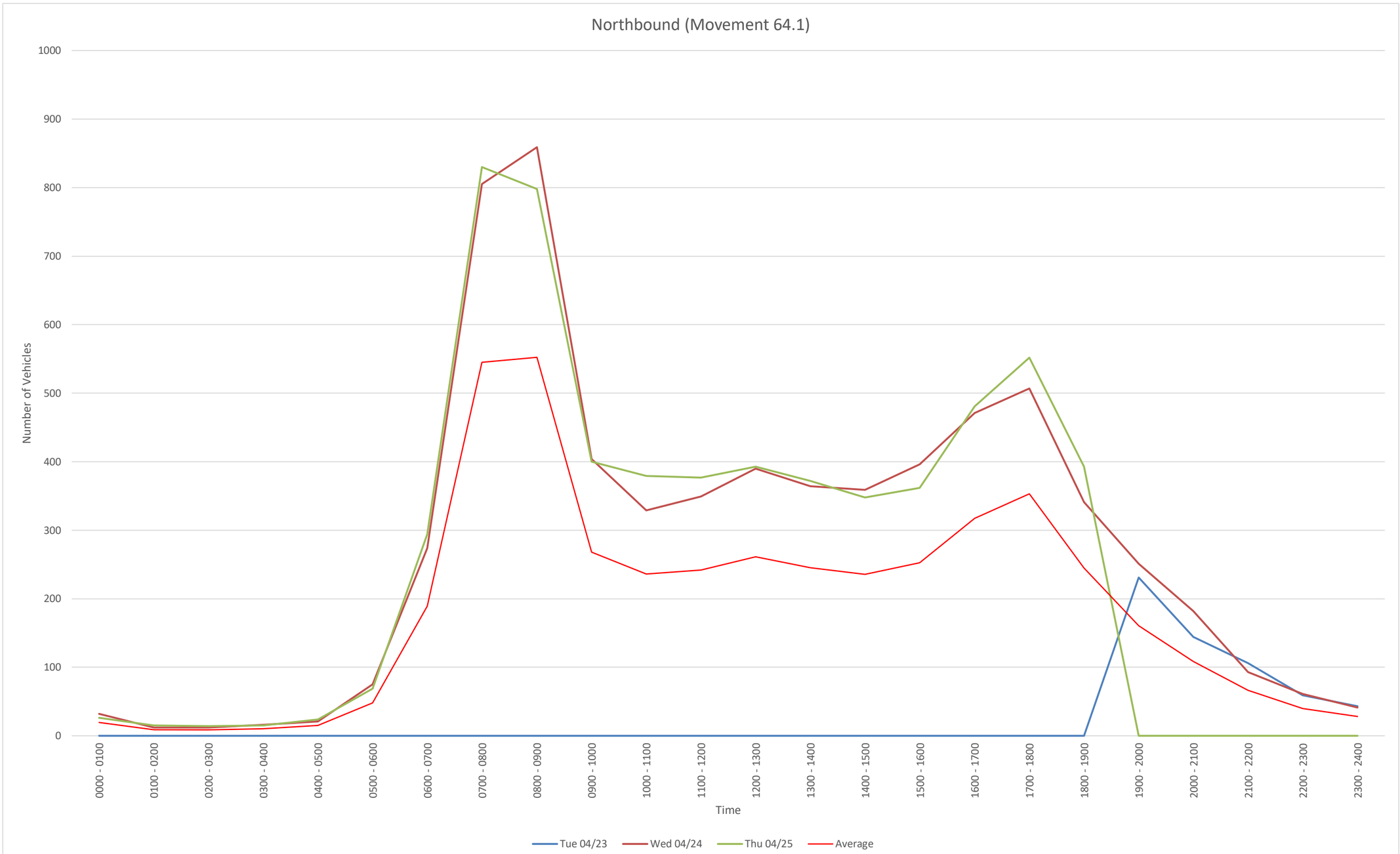

Time	Tue 04/23	Wed 04/24	Thu 04/25				
0000 - 0100	0	32	26				
0100 - 0200	0	12	15				
0200 - 0300	0	12	14				
0300 - 0400	0	16	15				
0400 - 0500	0	21	24				
0500 - 0600	0	75	69				
0600 - 0700	0	274	294				
0700 - 0800	0	805	830				
0800 - 0900	0	859	798				
0900 - 1000	0	404	400				
1000 - 1100	0	329	379				
1100 - 1200	0	349	377				
1200 - 1300	0	390	393				
1300 - 1400	0	364	372				
1400 - 1500	0	359	348				
1500 - 1600	0	396	362				
1600 - 1700	0	471	481				
1700 - 1800	0	507	552				
1800 - 1900	0	341	393				
1900 - 2000	231	251	0				
2000 - 2100	144	182	0				
2100 - 2200	106	93	0				
2200 - 2300	59	61	0				
2300 - 2400	43	41	0				
Daily Total	583	6644	6142				

NB
File Name:
Start Date: 4/23/2024
Start Time: 0
Site Code: 64
Station ID: 1
Location 1: I-20 On/Off-Ramp, south of Bush River Rd
Location 2:

Date	Time	1	2	3	4	5	6	7	8	9	10	11	12	13
4/23/2024	12:00 AM	0	0	0	0	0	0	0	0	0	0	0	0	0
4/23/2024	12:15 AM	0	0	0	0	0	0	0	0	0	0	0	0	0
4/23/2024	12:30 AM	0	0	0	0	0	0	0	0	0	0	0	0	0
4/23/2024	12:45 AM	0	0	0	0	0	0	0	0	0	0	0	0	0
4/23/2024	1:00 AM	0	0	0	0	0	0	0	0	0	0	0	0	0
4/23/2024	1:15 AM	0	0	0	0	0	0	0	0	0	0	0	0	0
4/23/2024	1:30 AM	0	0	0	0	0	0	0	0	0	0	0	0	0
4/23/2024	1:45 AM	0	0	0	0	0	0	0	0	0	0	0	0	0
4/23/2024	2:00 AM	0	0	0	0	0	0	0	0	0	0	0	0	0
4/23/2024	2:15 AM	0	0	0	0	0	0	0	0	0	0	0	0	0
4/23/2024	2:30 AM	0	0	0	0	0	0	0	0	0	0	0	0	0
4/23/2024	2:45 AM	0	0	0	0	0	0	0	0	0	0	0	0	0
4/23/2024	3:00 AM	0	0	0	0	0	0	0	0	0	0	0	0	0
4/23/2024	3:15 AM	0	0	0	0	0	0	0	0	0	0	0	0	0
4/23/2024	3:30 AM	0	0	0	0	0	0	0	0	0	0	0	0	0
4/23/2024	3:45 AM	0	0	0	0	0	0	0	0	0	0	0	0	0
4/23/2024	4:00 AM	0	0	0	0	0	0	0	0	0	0	0	0	0
4/23/2024	4:15 AM	0	0	0	0	0	0	0	0	0	0	0	0	0
4/23/2024	4:30 AM	0	0	0	0	0	0	0	0	0	0	0	0	0
4/23/2024	4:45 AM	0	0	0	0	0	0	0	0	0	0	0	0	0
4/23/2024	5:00 AM	0	0	0	0	0	0	0	0	0	0	0	0	0
4/23/2024	5:15 AM	0	0	0	0	0	0	0	0	0	0	0	0	0
4/23/2024	5:30 AM	0	0	0	0	0	0	0	0	0	0	0	0	0
4/23/2024	5:45 AM	0	0	0	0	0	0	0	0	0	0	0	0	0
4/23/2024	6:00 AM	0	0	0	0	0	0	0	0	0	0	0	0	0
4/23/2024	6:15 AM	0	0	0	0	0	0	0	0	0	0	0	0	0
4/23/2024	6:30 AM	0	0	0	0	0	0	0	0	0	0	0	0	0
4/23/2024	6:45 AM	0	0	0	0	0	0	0	0	0	0	0	0	0
4/23/2024	7:00 AM	0	0	0	0	0	0	0	0	0	0	0	0	0
4/23/2024	7:15 AM	0	0	0	0	0	0	0	0	0	0	0	0	0
4/23/2024	7:30 AM	0	0	0	0	0	0	0	0	0	0	0	0	0
4/23/2024	7:45 AM	0	0	0	0	0	0	0	0	0	0	0	0	0
4/23/2024	8:00 AM	0	0	0	0	0	0	0	0	0	0	0	0	0
4/23/2024	8:15 AM	0	0	0	0	0	0	0	0	0	0	0	0	0
4/23/2024	8:30 AM	0	0	0	0	0	0	0	0	0	0	0	0	0
4/23/2024	8:45 AM	0	0	0	0	0	0	0	0	0	0	0	0	0
4/23/2024	9:00 AM	0	0	0	0	0	0	0	0	0	0	0	0	0
4/23/2024	9:15 AM	0	0	0	0	0	0	0	0	0	0	0	0	0
4/23/2024	9:30 AM	0	0	0	0	0	0	0	0	0	0	0	0	0
4/23/2024	9:45 AM	0	0	0	0	0	0	0	0	0	0	0	0	0
4/23/2024	10:00 AM	0	0	0	0	0	0	0	0	0	0	0	0	0
4/23/2024	10:15 AM	0	0	0	0	0	0	0	0	0	0	0	0	0
4/23/2024	10:30 AM	0	0	0	0	0	0	0	0	0	0	0	0	0
4/23/2024	10:45 AM	0	0	0	0	0	0	0	0	0	0	0	0	0
4/23/2024	11:00 AM	0	0	0	0	0	0	0	0	0	0	0	0	0
4/23/2024	11:15 AM	0	0	0	0	0	0	0	0	0	0	0	0	0
4/23/2024	11:30 AM	0	0	0	0	0	0	0	0	0	0	0	0	0
4/23/2024	11:45 AM	0	0	0	0	0	0	0	0	0	0	0	0	0
4/23/2024	12:00 PM	0	0	0	0	0	0	0	0	0	0	0	0	0
4/23/2024	12:15 PM	0	0	0	0	0	0	0	0	0	0	0	0	0
4/23/2024	12:30 PM	0	0	0	0	0	0	0	0	0	0	0	0	0
4/23/2024	12:45 PM	0	0	0	0	0	0	0	0	0	0	0	0	0
4/23/2024	1:00 PM	0	0	0	0	0	0	0	0	0	0	0	0	0
4/23/2024	1:15 PM	0	0	0	0	0	0	0	0	0	0	0	0	0
4/23/2024	1:30 PM	0	0	0	0	0	0	0	0	0	0	0	0	0
4/23/2024	1:45 PM	0	0	0	0	0	0	0	0	0	0	0	0	0
4/23/2024	2:00 PM	0	0	0	0	0	0	0	0	0	0	0	0	0
4/23/2024	2:15 PM	0	0	0	0	0	0	0	0	0	0	0	0	0
4/23/2024	2:30 PM	0	0	0	0	0	0	0	0	0	0	0	0	0
4/23/2024	2:45 PM	0	0	0	0	0	0	0	0	0	0	0	0	0
4/23/2024	3:00 PM	0	0	0	0	0	0	0	0	0	0	0	0	0
4/23/2024	3:15 PM	0	0	0	0	0	0	0	0	0	0	0	0	0
4/23/2024	3:30 PM	0	0	0	0	0	0	0	0	0	0	0	0	0
4/23/2024	3:45 PM	0	0	0	0	0	0	0	0	0	0	0	0	0
4/23/2024	4:00 PM	0	0	0	0	0	0	0	0	0	0	0	0	0
4/23/2024	4:15 PM	0	0	0	0	0	0	0	0	0	0	0	0	0
4/23/2024	4:30 PM	0	0	0	0	0	0	0	0	0	0	0	0	0
4/23/2024	4:45 PM	0	0	0	0	0	0	0	0	0	0	0	0	0
4/23/2024	5:00 PM	0	0	0	0	0	0	0	0	0	0	0	0	0
4/23/2024	5:15 PM	0	0	0	0	0	0	0	0	0	0	0	0	0
4/23/2024	5:30 PM	0	0	0	0	0	0	0	0	0	0	0	0	0
4/23/2024	5:45 PM	0	0	0	0	0	0	0	0	0	0	0	0	0
4/23/2024	6:00 PM	0	0	0	0	0	0	0	0	0	0	0	0	0
4/23/2024	6:15 PM	0	0	0	0	0	0	0	0	0	0	0	0	0
4/23/2024	6:30 PM	0	0	0	0	0	0	0	0	0	0	0	0	0
4/23/2024	6:45 PM	0	0	0	0	0	0	0	0	0	0	0	0	0
4/23/2024	7:00 PM	0	59	9	0	1	0	0	0	1	0	0	0	0
4/23/2024	7:15 PM	0	45	10	0	0	0	0	0	0	0	0	0	0
4/23/2024	7:30 PM	0	42	5	0	2	0	0	0	1	0	0	0	0
4/23/2024	7:45 PM	0	45	10	0	0	0	0	0	1	0	0	0	0
4/23/2024	8:00 PM	0	33	11	0	0	0	0	0	0	0	0	0	0
4/23/2024	8:15 PM	0	32	4	0	0	0	0	0	0	0	0	0	0
4/23/2024	8:30 PM	0	30	2	0	0	0	0	0	1	0	0	0	0
4/23/2024	8:45 PM	0	29	2	0	0	0	0	0	0	0	0	0	0
4/23/2024	9:00 PM	0	29	2	0	0	0	0	0	0	0	0	0	0
4/23/2024	9:15 PM	0	26	2	0	0	0	0	0	0	0	0	0	0
4/23/2024	9:30 PM	0	18	3	0	1	0	0	0	0	0	0	0	0
4/23/2024	9:45 PM	0	23	2	0	0	0	0	0	0	0	0	0	0
4/23/2024	10:00 PM	0	15	2	0	0	0	0	0	1	0	0	0	0
4/23/2024	10:15 PM	0	13	1	0	1	0	0	0	0	0	0	0	0
4/23/2024	10:30 PM	0	11	0	0	1	0	0	0	1	0	0	0	0
4/23/2024	10:45 PM	0	12	1	0	0	0	0	0	0	0	0	0	0
4/23/2024	11:00 PM	0	7	1	0	0	0	0	0	0	0	0	0	0
4/23/2024	11:15 PM	0	13	1	0	0	0	0	0	0	0	0	0	0
4/23/2024	11:30 PM	0	9	0	0	0	0	0	0	2	0	0	0	0
4/23/2024	11:45 PM	0	10	0	0	0	0	0	0	0	0	0	0	0

4/24/2024	12:00 AM	0	7	0	0	0	0	0	0	0	0	0	0	0
4/24/2024	12:15 AM	0	12	1	0	0	0	0	0	1	0	0	0	0
4/24/2024	12:30 AM	0	3	1	0	1	0	0	0	1	0	0	0	0
4/24/2024	12:45 AM	0	3	1	0	0	0	0	1	0	0	0	0	0
4/24/2024	1:00 AM	0	5	0	0	0	0	0	0	0	0	0	0	0
4/24/2024	1:15 AM	0	2	0	0	0	0	0	0	0	0	0	0	0
4/24/2024	1:30 AM	0	4	0	0	0	0	0	0	0	0	0	0	0
4/24/2024	1:45 AM	0	1	0	0	0	0	0	0	0	0	0	0	0
4/24/2024	2:00 AM	0	2	1	0	0	0	0	0	0	0	0	0	0
4/24/2024	2:15 AM	0	4	1	0	0	0	0	0	0	0	0	0	0
4/24/2024	2:30 AM	0	2	0	0	0	1	0	0	1	0	0	0	0
4/24/2024	2:45 AM	0	0	0	0	0	0	0	0	0	0	0	0	0
4/24/2024	3:00 AM	0	3	0	0	0	0	0	0	0	0	0	0	0
4/24/2024	3:15 AM	0	3	0	0	0	0	0	0	2	0	0	0	0
4/24/2024	3:30 AM	0	4	0	0	0	0	0	0	0	0	0	0	0
4/24/2024	3:45 AM	0	4	0	0	0	0	0	0	0	0	0	0	0
4/24/2024	4:00 AM	0	1	0	0	0	2	0	0	0	0	0	0	0
4/24/2024	4:15 AM	0	1	0	0	0	0	0	0	1	0	0	0	0
4/24/2024	4:30 AM	0	4	0	0	2	0	0	0	0	0	0	0	0
4/24/2024	4:45 AM	0	8	1	0	0	0	0	0	1	0	0	0	0
4/24/2024	5:00 AM	0	11	0	0	1	0	0	0	0	0	0	0	0
4/24/2024	5:15 AM	0	11	0	0	0	0	0	0	0	0	0	0	0
4/24/2024	5:30 AM	0	15	2	0	0	0	0	0	0	0	0	0	0
4/24/2024	5:45 AM	0	30	2	0	2	0	0	0	1	0	0	0	0
4/24/2024	6:00 AM	0	27	2	0	0	0	0	0	1	0	0	0	0
4/24/2024	6:15 AM	0	48	10	1	0	1	0	0	0	0	0	0	0
4/24/2024	6:30 AM	0	58	15	0	0	0	0	0	1	0	0	0	0
4/24/2024	6:45 AM	0	89	16	0	1	3	0	1	0	0	0	0	0
4/24/2024	7:00 AM	0	102	25	0	2	2	0	0	0	0	0	0	0
4/24/2024	7:15 AM	0	154	28	0	0	1	0	0	1	0	0	0	0
4/24/2024	7:30 AM	0	178	34	0	2	0	0	1	1	0	0	0	0
4/24/2024	7:45 AM	1	231	33	0	4	1	0	2	2	0	0	0	0
4/24/2024	8:00 AM	0	197	42	0	1	2	0	0	1	1	0	0	0
4/24/2024	8:15 AM	0	209	42	0	0	0	0	1	0	0	0	0	0
4/24/2024	8:30 AM	0	156	30	0	2	0	0	0	1	0	0	0	0
4/24/2024	8:45 AM	0	145	29	0	0	0	0	0	0	0	0	0	0
4/24/2024	9:00 AM	0	93	18	0	1	1	0	0	1	0	0	0	0
4/24/2024	9:15 AM	0	88	13	0	1	1	0	0	3	0	0	0	0
4/24/2024	9:30 AM	0	72	11	0	1	1	0	0	1	0	0	0	0
4/24/2024	9:45 AM	0	82	13	0	1	0	0	0	2	0	0	0	0
4/24/2024	10:00 AM	0	72	17	0	1	0	0	0	0	0	0	0	0
4/24/2024	10:15 AM	1	61	15	0	3	0	0	0	1	0	0	0	0
4/24/2024	10:30 AM	0	62	11	0	0	0	0	0	1	0	0	0	0
4/24/2024	10:45 AM	0	69	12	0	2	0	0	0	1	0	0	0	0
4/24/2024	11:00 AM	0	72	10	0	4	0	0	0	3	0	0	0	0
4/24/2024	11:15 AM	0	93	12	0	1	0	0	0	0	0	0	0	0
4/24/2024	11:30 AM	2	70	6	0	2	0	0	0	0	0	0	0	0
4/24/2024	11:45 AM	1	66	7	0	0	0	0	0	0	0	0	0	0
4/24/2024	12:00 PM	0	65	13	0	0	0	1	2	0	0	0	0	0
4/24/2024	12:15 PM	1	93	14	0	1	0	0	0	1	0	0	0	0
4/24/2024	12:30 PM	0	85	18	0	1	0	0	0	0	0	0	0	0
4/24/2024	12:45 PM	0	81	12	0	1	0	0	0	1	0	0	0	0
4/24/2024	1:00 PM	0	78	8	0	0	1	0	1	0	0	0	0	0
4/24/2024	1:15 PM	0	79	14	0	3	0	0	0	1	0	0	0	0
4/24/2024	1:30 PM	0	76	11	0	0	0	0	0	0	0	0	0	0
4/24/2024	1:45 PM	0	81	10	0	0	0	1	0	0	0	0	0	0
4/24/2024	2:00 PM	0	74	21	0	2	0	0	0	2	0	0	0	0
4/24/2024	2:15 PM	0	73	8	0	1	0	0	0	0	0	0	0	0
4/24/2024	2:30 PM	1	60	12	0	0	0	0	0	0	0	0	0	0
4/24/2024	2:45 PM	0	81	20	0	2	0	0	0	2	0	0	0	0
4/24/2024	3:00 PM	0	80	14	0	0	0	0	0	2	0	0	0	0
4/24/2024	3:15 PM	0	77	15	1	1	1	0	0	1	0	0	0	0
4/24/2024	3:30 PM	0	79	12	1	1	1	0	0	0	0	0	0	0
4/24/2024	3:45 PM	0	97	12	0	0	0	0	0	1	0	0	0	0
4/24/2024	4:00 PM	0	89	18	0	1	0	0	0	1	0	0	0	0
4/24/2024	4:15 PM	0	98	11	1	0	1	0	0	1	0	0	0	0
4/24/2024	4:30 PM	0	87	26	0	0	0	0	0	1	0	0	0	0
4/24/2024	4:45 PM	0	114	19	0	0	0	0	1	2	0	0	0	0
4/24/2024	5:00 PM	0	98	18	0	2	1	1	0	2	0	0	0	0
4/24/2024	5:15 PM	0	103	19	0	0	0	0	0	0	0	0	0	0
4/24/2024	5:30 PM	0	106	25	0	1	0	0	0	0	0	0	0	0
4/24/2024	5:45 PM	2	109	19	0	1	0	0	0	0	0	0	0	0
4/24/2024	6:00 PM	1	82	14	0	0	0	0	0	1	0	0	0	0
4/24/2024	6:15 PM	0	79	15	0	1	0	0	0	2	0	0	0	0
4/24/2024	6:30 PM	0	56	9	0	1	0	0	0	0	0	0	0	0
4/24/2024	6:45 PM	0	71	9	0	0	0	0	0	0	0	0	0	0
4/24/2024	7:00 PM	1	52	13	0	1	0	0	0	0	0	0	0	0
4/24/2024	7:15 PM	0	52	13	0	0	0	0	0	0	0	0	0	0
4/24/2024	7:30 PM	0	46	12	0	0	0	0	0	2	0	0	0	0
4/24/2024	7:45 PM	0	52	7	0	0	0	0	0	0	0	0	0	0
4/24/2024	8:00 PM	0	35	10	0	1	0	0	0	0	0	0	0	0
4/24/2024	8:15 PM	0	51	7	0	1	0	0	0	0	0	0	0	0
4/24/2024	8:30 PM	0	34	3	0	0	0	0	0	0	0	0	0	0
4/24/2024	8:45 PM	0	36	3	0	1	0	0	0	0	0	0	0	0
4/24/2024	9:00 PM	0	22	2	0	0	0	0	0	0	0	0	0	0
4/24/2024	9:15 PM	0	31	2	0	2	0	0	0	0	0	0	0	0
4/24/2024	9:30 PM	0	14	1	0	0	0	0	0	0	0	0	0	0
4/24/2024	9:45 PM	0	14	1	0	0	0	0	0	4	0	0	0	0
4/24/2024	10:00 PM	0	23	2	0	0	0	0	0	0	0	0	0	0
4/24/2024	10:15 PM	0	16	2	0	0	0	0	0	0	0	0	0	0
4/24/2024	10:30 PM	0	7	0	0	0	0	0	0	0	0	0	0	0
4/24/2024	10:45 PM	0	10	1	0	0	0	0	0	0	0	0	0	0
4/24/2024	11:00 PM	0	8	0	0	0	0	0	0	0	0	0	0	0
4/24/2024	11:15 PM	0	12	1	0	0	0	0	0	0	0	0	0	0
4/24/2024	11:30 PM	0	8	0	0	0	0	0	0	0	0	0	0	0
4/24/2024	11:45 PM	0	11	0	0	0	0	0	0	1	0	0	0	0

4/25/2024	12:00 AM	0	6	0	0	0	0	0	0	0	0	0	0	0
4/25/2024	12:15 AM	0	6	1	0	0	0	0	0	0	0	0	0	0
4/25/2024	12:30 AM	0	5	0	0	0	0	0	0	0	0	0	0	0
4/25/2024	12:45 AM	0	8	0	0	0	0	0	0	0	0	0	0	0
4/25/2024	1:00 AM	0	3	0	0	0	0	0	0	0	0	0	0	0
4/25/2024	1:15 AM	0	0	0	0	0	1	0	0	0	0	0	0	0
4/25/2024	1:30 AM	0	5	0	0	0	0	0	0	1	0	0	0	0
4/25/2024	1:45 AM	0	5	0	0	0	0	0	0	0	0	0	0	0
4/25/2024	2:00 AM	0	2	0	0	0	0	0	0	0	0	0	0	0
4/25/2024	2:15 AM	0	2	0	0	0	0	0	0	0	0	0	0	0
4/25/2024	2:30 AM	0	4	1	0	0	0	0	0	0	0	0	0	0
4/25/2024	2:45 AM	0	3	1	0	0	0	0	0	1	0	0	0	0
4/25/2024	3:00 AM	0	4	1	0	0	0	0	0	0	0	0	0	0
4/25/2024	3:15 AM	0	3	0	0	0	0	0	0	1	0	0	0	0
4/25/2024	3:30 AM	0	5	0	0	0	0	0	0	1	0	0	0	0
4/25/2024	3:45 AM	0	0	0	0	0	0	0	0	0	0	0	0	0
4/25/2024	4:00 AM	0	3	2	0	0	0	0	0	0	0	0	0	0
4/25/2024	4:15 AM	0	0	0	0	0	0	0	0	0	0	0	0	0
4/25/2024	4:30 AM	0	5	1	0	0	0	0	0	0	0	0	0	0
4/25/2024	4:45 AM	0	12	1	0	0	0	0	0	0	0	0	0	0
4/25/2024	5:00 AM	0	6	0	0	0	0	0	0	0	0	0	0	0
4/25/2024	5:15 AM	0	9	0	0	0	0	0	0	0	0	0	0	0
4/25/2024	5:30 AM	0	17	2	0	0	0	0	0	0	0	0	0	0
4/25/2024	5:45 AM	0	33	2	0	0	0	0	0	0	0	0	0	0
4/25/2024	6:00 AM	0	25	4	0	1	0	0	0	0	0	0	0	0
4/25/2024	6:15 AM	0	43	13	0	1	0	0	0	1	0	0	0	0
4/25/2024	6:30 AM	0	64	22	0	1	0	0	0	1	0	0	0	0
4/25/2024	6:45 AM	0	93	23	0	2	0	0	0	0	0	0	0	0
4/25/2024	7:00 AM	0	105	17	0	2	3	0	0	0	0	0	0	0
4/25/2024	7:15 AM	0	126	31	0	3	1	0	0	2	0	0	0	0
4/25/2024	7:30 AM	0	226	37	0	2	1	0	0	2	0	0	0	0
4/25/2024	7:45 AM	1	230	35	0	5	1	0	0	0	0	0	0	0
4/25/2024	8:00 AM	0	198	46	0	3	0	0	0	1	0	0	0	0
4/25/2024	8:15 AM	0	194	39	0	0	0	0	1	0	0	0	0	0
4/25/2024	8:30 AM	0	141	27	0	3	0	0	0	0	0	0	0	0
4/25/2024	8:45 AM	0	122	17	0	2	3	0	0	1	0	0	0	0
4/25/2024	9:00 AM	0	76	30	0	2	1	0	1	1	0	0	0	0
4/25/2024	9:15 AM	0	80	18	0	1	2	0	0	1	0	0	0	0
4/25/2024	9:30 AM	0	72	21	0	2	0	0	0	0	0	0	0	0
4/25/2024	9:45 AM	2	82	6	0	1	1	0	0	0	0	0	0	0
4/25/2024	10:00 AM	0	82	15	0	1	1	0	0	0	0	0	0	0
4/25/2024	10:15 AM	0	60	22	0	0	0	0	0	0	0	0	0	0
4/25/2024	10:30 AM	0	73	16	0	2	1	0	0	0	0	0	0	0
4/25/2024	10:45 AM	0	75	25	0	1	4	0	0	1	0	0	0	0
4/25/2024	11:00 AM	0	83	17	0	1	1	0	0	0	0	0	0	0
4/25/2024	11:15 AM	0	82	17	0	1	0	0	1	0	0	0	0	0
4/25/2024	11:30 AM	0	76	13	0	1	1	0	0	1	1	0	0	0
4/25/2024	11:45 AM	0	62	15	0	0	3	0	0	1	0	0	0	0
4/25/2024	12:00 PM	0	74	14	0	0	1	0	1	0	0	0	0	0
4/25/2024	12:15 PM	0	66	21	0	0	1	0	0	1	0	0	0	0
4/25/2024	12:30 PM	0	89	23	0	2	0	0	1	0	0	0	0	0
4/25/2024	12:45 PM	0	77	21	0	1	0	0	0	0	0	0	0	0
4/25/2024	1:00 PM	0	74	19	0	3	0	0	1	0	0	0	0	0
4/25/2024	1:15 PM	0	72	17	0	1	0	0	0	0	0	0	0	0
4/25/2024	1:30 PM	0	82	23	0	0	0	0	0	0	0	0	0	0
4/25/2024	1:45 PM	0	58	18	0	0	4	0	0	0	0	0	0	0
4/25/2024	2:00 PM	0	67	11	0	3	0	0	1	1	0	0	0	0
4/25/2024	2:15 PM	0	67	19	0	1	1	0	0	2	0	0	0	0
4/25/2024	2:30 PM	0	70	20	0	0	1	0	0	5	0	0	0	0
4/25/2024	2:45 PM	0	59	17	0	0	1	0	0	2	0	0	0	0
4/25/2024	3:00 PM	0	45	21	0	0	1	0	0	0	0	0	0	0
4/25/2024	3:15 PM	0	72	21	0	0	2	0	0	0	0	0	0	0
4/25/2024	3:30 PM	0	84	9	0	0	2	0	0	0	0	0	0	0
4/25/2024	3:45 PM	0	81	21	1	0	1	0	0	1	0	0	0	0
4/25/2024	4:00 PM	1	104	31	0	0	0	0	0	1	0	0	0	0
4/25/2024	4:15 PM	0	105	20	0	1	1	0	0	0	0	0	0	0
4/25/2024	4:30 PM	0	108	17	0	0	0	0	0	1	0	0	0	0
4/25/2024	4:45 PM	0	76	14	0	1	0	0	0	0	0	0	0	0
4/25/2024	5:00 PM	0	105	22	0	0	0	0	0	1	0	0	0	0
4/25/2024	5:15 PM	2	117	29	0	0	1	0	0	0	0	0	0	0
4/25/2024	5:30 PM	0	106	20	0	0	0	0	0	0	0	0	0	0
4/25/2024	5:45 PM	0	120	27	0	0	0	0	0	2	0	0	0	0
4/25/2024	6:00 PM	0	97	17	0	1	2	0	0	2	0	0	0	0
4/25/2024	6:15 PM	1	79	15	0	0	0	0	0	0	0	0	0	0
4/25/2024	6:30 PM	1	91	16	0	1	0	0	0	0	0	0	0	0
4/25/2024	6:45 PM	0	61	9	0	0	0	0	0	0	0	0	0	0
4/25/2024	7:00 PM	0	0	0	0	0	0	0	0	0	0	0	0	0
4/25/2024	7:15 PM	0	0	0	0	0	0	0	0	0	0	0	0	0
4/25/2024	7:30 PM	0	0	0	0	0	0	0	0	0	0	0	0	0
4/25/2024	7:45 PM	0	0	0	0	0	0	0	0	0	0	0	0	0
4/25/2024	8:00 PM	0	0	0	0	0	0	0	0	0	0	0	0	0
4/25/2024	8:15 PM	0	0	0	0	0	0	0	0	0	0	0	0	0
4/25/2024	8:30 PM	0	0	0	0	0	0	0	0	0	0	0	0	0
4/25/2024	8:45 PM	0	0	0	0	0	0	0	0	0	0	0	0	0
4/25/2024	9:00 PM	0	0	0	0	0	0	0	0	0	0	0	0	0
4/25/2024	9:15 PM	0	0	0	0	0	0	0	0	0	0	0	0	0
4/25/2024	9:30 PM	0	0	0	0	0	0	0	0	0	0	0	0	0
4/25/2024	9:45 PM	0	0	0	0	0	0	0	0	0	0	0	0	0
4/25/2024	10:00 PM	0	0	0	0	0	0	0	0	0	0	0	0	0
4/25/2024	10:15 PM	0	0	0	0	0	0	0	0	0	0	0	0	0
4/25/2024	10:30 PM	0	0	0	0	0	0	0	0	0	0	0	0	0
4/25/2024	10:45 PM	0	0	0	0	0	0	0	0	0	0	0	0	0
4/25/2024	11:00 PM	0	0	0	0	0	0	0	0	0	0	0	0	0
4/25/2024	11:15 PM	0	0	0	0	0	0	0	0	0	0	0	0	0
4/25/2024	11:30 PM	0	0	0	0	0	0	0	0	0	0	0	0	0
4/25/2024	11:45 PM	0	0	0	0	0	0	0	0	0	0	0	0	0

SB
File Name:
Start Date: 4/23/2024
Start Time: 0
Site Code: 64
Station ID: 1
Location 1: I-20 On/Off-Ramp, south of Bush River Rd
Location 2:

Date	Time	1	2	3	4	5	6	7	8	9	10	11	12	13
4/23/2024	12:00 AM	0	0	0	0	0	0	0	0	0	0	0	0	0
4/23/2024	12:15 AM	0	0	0	0	0	0	0	0	0	0	0	0	0
4/23/2024	12:30 AM	0	0	0	0	0	0	0	0	0	0	0	0	0
4/23/2024	12:45 AM	0	0	0	0	0	0	0	0	0	0	0	0	0
4/23/2024	1:00 AM	0	0	0	0	0	0	0	0	0	0	0	0	0
4/23/2024	1:15 AM	0	0	0	0	0	0	0	0	0	0	0	0	0
4/23/2024	1:30 AM	0	0	0	0	0	0	0	0	0	0	0	0	0
4/23/2024	1:45 AM	0	0	0	0	0	0	0	0	0	0	0	0	0
4/23/2024	2:00 AM	0	0	0	0	0	0	0	0	0	0	0	0	0
4/23/2024	2:15 AM	0	0	0	0	0	0	0	0	0	0	0	0	0
4/23/2024	2:30 AM	0	0	0	0	0	0	0	0	0	0	0	0	0
4/23/2024	2:45 AM	0	0	0	0	0	0	0	0	0	0	0	0	0
4/23/2024	3:00 AM	0	0	0	0	0	0	0	0	0	0	0	0	0
4/23/2024	3:15 AM	0	0	0	0	0	0	0	0	0	0	0	0	0
4/23/2024	3:30 AM	0	0	0	0	0	0	0	0	0	0	0	0	0
4/23/2024	3:45 AM	0	0	0	0	0	0	0	0	0	0	0	0	0
4/23/2024	4:00 AM	0	0	0	0	0	0	0	0	0	0	0	0	0
4/23/2024	4:15 AM	0	0	0	0	0	0	0	0	0	0	0	0	0
4/23/2024	4:30 AM	0	0	0	0	0	0	0	0	0	0	0	0	0
4/23/2024	4:45 AM	0	0	0	0	0	0	0	0	0	0	0	0	0
4/23/2024	5:00 AM	0	0	0	0	0	0	0	0	0	0	0	0	0
4/23/2024	5:15 AM	0	0	0	0	0	0	0	0	0	0	0	0	0
4/23/2024	5:30 AM	0	0	0	0	0	0	0	0	0	0	0	0	0
4/23/2024	5:45 AM	0	0	0	0	0	0	0	0	0	0	0	0	0
4/23/2024	6:00 AM	0	0	0	0	0	0	0	0	0	0	0	0	0
4/23/2024	6:15 AM	0	0	0	0	0	0	0	0	0	0	0	0	0
4/23/2024	6:30 AM	0	0	0	0	0	0	0	0	0	0	0	0	0
4/23/2024	6:45 AM	0	0	0	0	0	0	0	0	0	0	0	0	0
4/23/2024	7:00 AM	0	0	0	0	0	0	0	0	0	0	0	0	0
4/23/2024	7:15 AM	0	0	0	0	0	0	0	0	0	0	0	0	0
4/23/2024	7:30 AM	0	0	0	0	0	0	0	0	0	0	0	0	0
4/23/2024	7:45 AM	0	0	0	0	0	0	0	0	0	0	0	0	0
4/23/2024	8:00 AM	0	0	0	0	0	0	0	0	0	0	0	0	0
4/23/2024	8:15 AM	0	0	0	0	0	0	0	0	0	0	0	0	0
4/23/2024	8:30 AM	0	0	0	0	0	0	0	0	0	0	0	0	0
4/23/2024	8:45 AM	0	0	0	0	0	0	0	0	0	0	0	0	0
4/23/2024	9:00 AM	0	0	0	0	0	0	0	0	0	0	0	0	0
4/23/2024	9:15 AM	0	0	0	0	0	0	0	0	0	0	0	0	0
4/23/2024	9:30 AM	0	0	0	0	0	0	0	0	0	0	0	0	0
4/23/2024	9:45 AM	0	0	0	0	0	0	0	0	0	0	0	0	0
4/23/2024	10:00 AM	0	0	0	0	0	0	0	0	0	0	0	0	0
4/23/2024	10:15 AM	0	0	0	0	0	0	0	0	0	0	0	0	0
4/23/2024	10:30 AM	0	0	0	0	0	0	0	0	0	0	0	0	0
4/23/2024	10:45 AM	0	0	0	0	0	0	0	0	0	0	0	0	0
4/23/2024	11:00 AM	0	0	0	0	0	0	0	0	0	0	0	0	0
4/23/2024	11:15 AM	0	0	0	0	0	0	0	0	0	0	0	0	0
4/23/2024	11:30 AM	0	0	0	0	0	0	0	0	0	0	0	0	0
4/23/2024	11:45 AM	0	0	0	0	0	0	0	0	0	0	0	0	0
4/23/2024	12:00 PM	0	0	0	0	0	0	0	0	0	0	0	0	0
4/23/2024	12:15 PM	0	0	0	0	0	0	0	0	0	0	0	0	0
4/23/2024	12:30 PM	0	0	0	0	0	0	0	0	0	0	0	0	0
4/23/2024	12:45 PM	0	0	0	0	0	0	0	0	0	0	0	0	0
4/23/2024	1:00 PM	0	0	0	0	0	0	0	0	0	0	0	0	0
4/23/2024	1:15 PM	0	0	0	0	0	0	0	0	0	0	0	0	0
4/23/2024	1:30 PM	0	0	0	0	0	0	0	0	0	0	0	0	0
4/23/2024	1:45 PM	0	0	0	0	0	0	0	0	0	0	0	0	0
4/23/2024	2:00 PM	0	0	0	0	0	0	0	0	0	0	0	0	0
4/23/2024	2:15 PM	0	0	0	0	0	0	0	0	0	0	0	0	0
4/23/2024	2:30 PM	0	0	0	0	0	0	0	0	0	0	0	0	0
4/23/2024	2:45 PM	0	0	0	0	0	0	0	0	0	0	0	0	0
4/23/2024	3:00 PM	0	0	0	0	0	0	0	0	0	0	0	0	0
4/23/2024	3:15 PM	0	0	0	0	0	0	0	0	0	0	0	0	0
4/23/2024	3:30 PM	0	0	0	0	0	0	0	0	0	0	0	0	0
4/23/2024	3:45 PM	0	0	0	0	0	0	0	0	0	0	0	0	0
4/23/2024	4:00 PM	0	0	0	0	0	0	0	0	0	0	0	0	0
4/23/2024	4:15 PM	0	0	0	0	0	0	0	0	0	0	0	0	0
4/23/2024	4:30 PM	0	0	0	0	0	0	0	0	0	0	0	0	0
4/23/2024	4:45 PM	0	0	0	0	0	0	0	0	0	0	0	0	0
4/23/2024	5:00 PM	0	0	0	0	0	0	0	0	0	0	0	0	0
4/23/2024	5:15 PM	0	0	0	0	0	0	0	0	0	0	0	0	0
4/23/2024	5:30 PM	0	0	0	0	0	0	0	0	0	0	0	0	0
4/23/2024	5:45 PM	0	0	0	0	0	0	0	0	0	0	0	0	0
4/23/2024	6:00 PM	0	0	0	0	0	0	0	0	0	0	0	0	0
4/23/2024	6:15 PM	0	0	0	0	0	0	0	0	0	0	0	0	0
4/23/2024	6:30 PM	0	0	0	0	0	0	0	0	0	0	0	0	0
4/23/2024	6:45 PM	0	0	0	0	0	0	0	0	0	0	0	0	0
4/23/2024	7:00 PM	0	0	0	0	0	0	0	0	0	0	0	0	0
4/23/2024	7:15 PM	0	0	0	0	0	0	0	0	0	0	0	0	0
4/23/2024	7:30 PM	0	0	0	0	0	0	0	0	0	0	0	0	0
4/23/2024	7:45 PM	0	0	0	0	0	0	0	0	0	0	0	0	0
4/23/2024	8:00 PM	0	0	0	0	0	0	0	0	0	0	0	0	0
4/23/2024	8:15 PM	0	0	0	0	0	0	0	0	0	0	0	0	0
4/23/2024	8:30 PM	0	0	0	0	0	0	0	0	0	0	0	0	0
4/23/2024	8:45 PM	0	0	0	0	0	0	0	0	0	0	0	0	0
4/23/2024	9:00 PM	0	0	0	0	0	0	0	0	0	0	0	0	0
4/23/2024	9:15 PM	0	0	0	0	0	0	0	0	0	0	0	0	0
4/23/2024	9:30 PM	0	0	0	0	0	0	0	0	0	0	0	0	0
4/23/2024	9:45 PM	0	0	0	0	0	0	0	0	0	0	0	0	0
4/23/2024	10:00 PM	0	0	0	0	0	0	0	0	0	0	0	0	0
4/23/2024	10:15 PM	0	0	0	0	0	0	0	0	0	0	0	0	0
4/23/2024	10:30 PM	0	0	0	0	0	0	0	0	0	0	0	0	0
4/23/2024	10:45 PM	0	0	0	0	0	0	0	0	0	0	0	0	0
4/23/2024	11:00 PM	0	0	0	0	0	0	0	0	0	0	0	0	0
4/23/2024	11:15 PM	0	0	0	0	0	0	0	0	0	0	0	0	0
4/23/2024	11:30 PM	0	0	0	0	0	0	0	0	0	0	0	0	0
4/23/2024	11:45 PM	0	0	0	0	0	0	0	0	0	0	0	0	0

4/24/2024	12:00 AM	0	0	0	0	0	0	0	0	0	0	0	0	0
4/24/2024	12:15 AM	0	0	0	0	0	0	0	0	0	0	0	0	0
4/24/2024	12:30 AM	0	0	0	0	0	0	0	0	0	0	0	0	0
4/24/2024	12:45 AM	0	0	0	0	0	0	0	0	0	0	0	0	0
4/24/2024	1:00 AM	0	0	0	0	0	0	0	0	0	0	0	0	0
4/24/2024	1:15 AM	0	0	0	0	0	0	0	0	0	0	0	0	0
4/24/2024	1:30 AM	0	0	0	0	0	0	0	0	0	0	0	0	0
4/24/2024	1:45 AM	0	0	0	0	0	0	0	0	0	0	0	0	0
4/24/2024	2:00 AM	0	0	0	0	0	0	0	0	0	0	0	0	0
4/24/2024	2:15 AM	0	0	0	0	0	0	0	0	0	0	0	0	0
4/24/2024	2:30 AM	0	0	0	0	0	0	0	0	0	0	0	0	0
4/24/2024	2:45 AM	0	0	0	0	0	0	0	0	0	0	0	0	0
4/24/2024	3:00 AM	0	0	0	0	0	0	0	0	0	0	0	0	0
4/24/2024	3:15 AM	0	0	0	0	0	0	0	0	0	0	0	0	0
4/24/2024	3:30 AM	0	0	0	0	0	0	0	0	0	0	0	0	0
4/24/2024	3:45 AM	0	0	0	0	0	0	0	0	0	0	0	0	0
4/24/2024	4:00 AM	0	0	0	0	0	0	0	0	0	0	0	0	0
4/24/2024	4:15 AM	0	0	0	0	0	0	0	0	0	0	0	0	0
4/24/2024	4:30 AM	0	0	0	0	0	0	0	0	0	0	0	0	0
4/24/2024	4:45 AM	0	0	0	0	0	0	0	0	0	0	0	0	0
4/24/2024	5:00 AM	0	0	0	0	0	0	0	0	0	0	0	0	0
4/24/2024	5:15 AM	0	0	0	0	0	0	0	0	0	0	0	0	0
4/24/2024	5:30 AM	0	0	0	0	0	0	0	0	0	0	0	0	0
4/24/2024	5:45 AM	0	0	0	0	0	0	0	0	0	0	0	0	0
4/24/2024	6:00 AM	0	0	0	0	0	0	0	0	0	0	0	0	0
4/24/2024	6:15 AM	0	0	0	0	0	0	0	0	0	0	0	0	0
4/24/2024	6:30 AM	0	0	0	0	0	0	0	0	0	0	0	0	0
4/24/2024	6:45 AM	0	0	0	0	0	0	0	0	0	0	0	0	0
4/24/2024	7:00 AM	0	0	0	0	0	0	0	0	0	0	0	0	0
4/24/2024	7:15 AM	0	0	0	0	0	0	0	0	0	0	0	0	0
4/24/2024	7:30 AM	0	0	0	0	0	0	0	0	0	0	0	0	0
4/24/2024	7:45 AM	0	0	0	0	0	0	0	0	0	0	0	0	0
4/24/2024	8:00 AM	0	0	0	0	0	0	0	0	0	0	0	0	0
4/24/2024	8:15 AM	0	0	0	0	0	0	0	0	0	0	0	0	0
4/24/2024	8:30 AM	0	0	0	0	0	0	0	0	0	0	0	0	0
4/24/2024	8:45 AM	0	0	0	0	0	0	0	0	0	0	0	0	0
4/24/2024	9:00 AM	0	0	0	0	0	0	0	0	0	0	0	0	0
4/24/2024	9:15 AM	0	0	0	0	0	0	0	0	0	0	0	0	0
4/24/2024	9:30 AM	0	0	0	0	0	0	0	0	0	0	0	0	0
4/24/2024	9:45 AM	0	0	0	0	0	0	0	0	0	0	0	0	0
4/24/2024	10:00 AM	0	0	0	0	0	0	0	0	0	0	0	0	0
4/24/2024	10:15 AM	0	0	0	0	0	0	0	0	0	0	0	0	0
4/24/2024	10:30 AM	0	0	0	0	0	0	0	0	0	0	0	0	0
4/24/2024	10:45 AM	0	0	0	0	0	0	0	0	0	0	0	0	0
4/24/2024	11:00 AM	0	0	0	0	0	0	0	0	0	0	0	0	0
4/24/2024	11:15 AM	0	0	0	0	0	0	0	0	0	0	0	0	0
4/24/2024	11:30 AM	0	0	0	0	0	0	0	0	0	0	0	0	0
4/24/2024	11:45 AM	0	0	0	0	0	0	0	0	0	0	0	0	0
4/24/2024	12:00 PM	0	0	0	0	0	0	0	0	0	0	0	0	0
4/24/2024	12:15 PM	0	0	0	0	0	0	0	0	0	0	0	0	0
4/24/2024	12:30 PM	0	0	0	0	0	0	0	0	0	0	0	0	0
4/24/2024	12:45 PM	0	0	0	0	0	0	0	0	0	0	0	0	0
4/24/2024	1:00 PM	0	0	0	0	0	0	0	0	0	0	0	0	0
4/24/2024	1:15 PM	0	0	0	0	0	0	0	0	0	0	0	0	0
4/24/2024	1:30 PM	0	0	0	0	0	0	0	0	0	0	0	0	0
4/24/2024	1:45 PM	0	0	0	0	0	0	0	0	0	0	0	0	0
4/24/2024	2:00 PM	0	0	0	0	0	0	0	0	0	0	0	0	0
4/24/2024	2:15 PM	0	0	0	0	0	0	0	0	0	0	0	0	0
4/24/2024	2:30 PM	0	0	0	0	0	0	0	0	0	0	0	0	0
4/24/2024	2:45 PM	0	0	0	0	0	0	0	0	0	0	0	0	0
4/24/2024	3:00 PM	0	0	0	0	0	0	0	0	0	0	0	0	0
4/24/2024	3:15 PM	0	0	0	0	0	0	0	0	0	0	0	0	0
4/24/2024	3:30 PM	0	0	0	0	0	0	0	0	0	0	0	0	0
4/24/2024	3:45 PM	0	0	0	0	0	0	0	0	0	0	0	0	0
4/24/2024	4:00 PM	0	0	0	0	0	0	0	0	0	0	0	0	0
4/24/2024	4:15 PM	0	0	0	0	0	0	0	0	0	0	0	0	0
4/24/2024	4:30 PM	0	0	0	0	0	0	0	0	0	0	0	0	0
4/24/2024	4:45 PM	0	0	0	0	0	0	0	0	0	0	0	0	0
4/24/2024	5:00 PM	0	0	0	0	0	0	0	0	0	0	0	0	0
4/24/2024	5:15 PM	0	0	0	0	0	0	0	0	0	0	0	0	0
4/24/2024	5:30 PM	0	0	0	0	0	0	0	0	0	0	0	0	0
4/24/2024	5:45 PM	0	0	0	0	0	0	0	0	0	0	0	0	0
4/24/2024	6:00 PM	0	0	0	0	0	0	0	0	0	0	0	0	0
4/24/2024	6:15 PM	0	0	0	0	0	0	0	0	0	0	0	0	0
4/24/2024	6:30 PM	0	0	0	0	0	0	0	0	0	0	0	0	0
4/24/2024	6:45 PM	0	0	0	0	0	0	0	0	0	0	0	0	0
4/24/2024	7:00 PM	0	0	0	0	0	0	0	0	0	0	0	0	0
4/24/2024	7:15 PM	0	0	0	0	0	0	0	0	0	0	0	0	0
4/24/2024	7:30 PM	0	0	0	0	0	0	0	0	0	0	0	0	0
4/24/2024	7:45 PM	0	0	0	0	0	0	0	0	0	0	0	0	0
4/24/2024	8:00 PM	0	0	0	0	0	0	0	0	0	0	0	0	0
4/24/2024	8:15 PM	0	0	0	0	0	0	0	0	0	0	0	0	0
4/24/2024	8:30 PM	0	0	0	0	0	0	0	0	0	0	0	0	0
4/24/2024	8:45 PM	0	0	0	0	0	0	0	0	0	0	0	0	0
4/24/2024	9:00 PM	0	0	0	0	0	0	0	0	0	0	0	0	0
4/24/2024	9:15 PM	0	0	0	0	0	0	0	0	0	0	0	0	0
4/24/2024	9:30 PM	0	0	0	0	0	0	0	0	0	0	0	0	0
4/24/2024	9:45 PM	0	0	0	0	0	0	0	0	0	0	0	0	0
4/24/2024	10:00 PM	0	0	0	0	0	0	0	0	0	0	0	0	0
4/24/2024	10:15 PM	0	0	0	0	0	0	0	0	0	0	0	0	0
4/24/2024	10:30 PM	0	0	0	0	0	0	0	0	0	0	0	0	0
4/24/2024	10:45 PM	0	0	0	0	0	0	0	0	0	0	0	0	0
4/24/2024	11:00 PM	0	0	0	0	0	0	0	0	0	0	0	0	0
4/24/2024	11:15 PM	0	0	0	0	0	0	0	0	0	0	0	0	0
4/24/2024	11:30 PM	0	0	0	0	0	0	0	0	0	0	0	0	0
4/24/2024	11:45 PM	0	0	0	0	0	0	0	0	0	0	0	0	0

4/25/2024	12:00 AM	0	0	0	0	0	0	0	0	0	0	0	0	0
4/25/2024	12:15 AM	0	0	0	0	0	0	0	0	0	0	0	0	0
4/25/2024	12:30 AM	0	0	0	0	0	0	0	0	0	0	0	0	0
4/25/2024	12:45 AM	0	0	0	0	0	0	0	0	0	0	0	0	0
4/25/2024	1:00 AM	0	0	0	0	0	0	0	0	0	0	0	0	0
4/25/2024	1:15 AM	0	0	0	0	0	0	0	0	0	0	0	0	0
4/25/2024	1:30 AM	0	0	0	0	0	0	0	0	0	0	0	0	0
4/25/2024	1:45 AM	0	0	0	0	0	0	0	0	0	0	0	0	0
4/25/2024	2:00 AM	0	0	0	0	0	0	0	0	0	0	0	0	0
4/25/2024	2:15 AM	0	0	0	0	0	0	0	0	0	0	0	0	0
4/25/2024	2:30 AM	0	0	0	0	0	0	0	0	0	0	0	0	0
4/25/2024	2:45 AM	0	0	0	0	0	0	0	0	0	0	0	0	0
4/25/2024	3:00 AM	0	0	0	0	0	0	0	0	0	0	0	0	0
4/25/2024	3:15 AM	0	0	0	0	0	0	0	0	0	0	0	0	0
4/25/2024	3:30 AM	0	0	0	0	0	0	0	0	0	0	0	0	0
4/25/2024	3:45 AM	0	0	0	0	0	0	0	0	0	0	0	0	0
4/25/2024	4:00 AM	0	0	0	0	0	0	0	0	0	0	0	0	0
4/25/2024	4:15 AM	0	0	0	0	0	0	0	0	0	0	0	0	0
4/25/2024	4:30 AM	0	0	0	0	0	0	0	0	0	0	0	0	0
4/25/2024	4:45 AM	0	0	0	0	0	0	0	0	0	0	0	0	0
4/25/2024	5:00 AM	0	0	0	0	0	0	0	0	0	0	0	0	0
4/25/2024	5:15 AM	0	0	0	0	0	0	0	0	0	0	0	0	0
4/25/2024	5:30 AM	0	0	0	0	0	0	0	0	0	0	0	0	0
4/25/2024	5:45 AM	0	0	0	0	0	0	0	0	0	0	0	0	0
4/25/2024	6:00 AM	0	0	0	0	0	0	0	0	0	0	0	0	0
4/25/2024	6:15 AM	0	0	0	0	0	0	0	0	0	0	0	0	0
4/25/2024	6:30 AM	0	0	0	0	0	0	0	0	0	0	0	0	0
4/25/2024	6:45 AM	0	0	0	0	0	0	0	0	0	0	0	0	0
4/25/2024	7:00 AM	0	0	0	0	0	0	0	0	0	0	0	0	0
4/25/2024	7:15 AM	0	0	0	0	0	0	0	0	0	0	0	0	0
4/25/2024	7:30 AM	0	0	0	0	0	0	0	0	0	0	0	0	0
4/25/2024	7:45 AM	0	0	0	0	0	0	0	0	0	0	0	0	0
4/25/2024	8:00 AM	0	0	0	0	0	0	0	0	0	0	0	0	0
4/25/2024	8:15 AM	0	0	0	0	0	0	0	0	0	0	0	0	0
4/25/2024	8:30 AM	0	0	0	0	0	0	0	0	0	0	0	0	0
4/25/2024	8:45 AM	0	0	0	0	0	0	0	0	0	0	0	0	0
4/25/2024	9:00 AM	0	0	0	0	0	0	0	0	0	0	0	0	0
4/25/2024	9:15 AM	0	0	0	0	0	0	0	0	0	0	0	0	0
4/25/2024	9:30 AM	0	0	0	0	0	0	0	0	0	0	0	0	0
4/25/2024	9:45 AM	0	0	0	0	0	0	0	0	0	0	0	0	0
4/25/2024	10:00 AM	0	0	0	0	0	0	0	0	0	0	0	0	0
4/25/2024	10:15 AM	0	0	0	0	0	0	0	0	0	0	0	0	0
4/25/2024	10:30 AM	0	0	0	0	0	0	0	0	0	0	0	0	0
4/25/2024	10:45 AM	0	0	0	0	0	0	0	0	0	0	0	0	0
4/25/2024	11:00 AM	0	0	0	0	0	0	0	0	0	0	0	0	0
4/25/2024	11:15 AM	0	0	0	0	0	0	0	0	0	0	0	0	0
4/25/2024	11:30 AM	0	0	0	0	0	0	0	0	0	0	0	0	0
4/25/2024	11:45 AM	0	0	0	0	0	0	0	0	0	0	0	0	0
4/25/2024	12:00 PM	0	0	0	0	0	0	0	0	0	0	0	0	0
4/25/2024	12:15 PM	0	0	0	0	0	0	0	0	0	0	0	0	0
4/25/2024	12:30 PM	0	0	0	0	0	0	0	0	0	0	0	0	0
4/25/2024	12:45 PM	0	0	0	0	0	0	0	0	0	0	0	0	0
4/25/2024	1:00 PM	0	0	0	0	0	0	0	0	0	0	0	0	0
4/25/2024	1:15 PM	0	0	0	0	0	0	0	0	0	0	0	0	0
4/25/2024	1:30 PM	0	0	0	0	0	0	0	0	0	0	0	0	0
4/25/2024	1:45 PM	0	0	0	0	0	0	0	0	0	0	0	0	0
4/25/2024	2:00 PM	0	0	0	0	0	0	0	0	0	0	0	0	0
4/25/2024	2:15 PM	0	0	0	0	0	0	0	0	0	0	0	0	0
4/25/2024	2:30 PM	0	0	0	0	0	0	0	0	0	0	0	0	0
4/25/2024	2:45 PM	0	0	0	0	0	0	0	0	0	0	0	0	0
4/25/2024	3:00 PM	0	0	0	0	0	0	0	0	0	0	0	0	0
4/25/2024	3:15 PM	0	0	0	0	0	0	0	0	0	0	0	0	0
4/25/2024	3:30 PM	0	0	0	0	0	0	0	0	0	0	0	0	0
4/25/2024	3:45 PM	0	0	0	0	0	0	0	0	0	0	0	0	0
4/25/2024	4:00 PM	0	0	0	0	0	0	0	0	0	0	0	0	0
4/25/2024	4:15 PM	0	0	0	0	0	0	0	0	0	0	0	0	0
4/25/2024	4:30 PM	0	0	0	0	0	0	0	0	0	0	0	0	0
4/25/2024	4:45 PM	0	0	0	0	0	0	0	0	0	0	0	0	0
4/25/2024	5:00 PM	0	0	0	0	0	0	0	0	0	0	0	0	0
4/25/2024	5:15 PM	0	0	0	0	0	0	0	0	0	0	0	0	0
4/25/2024	5:30 PM	0	0	0	0	0	0	0	0	0	0	0	0	0
4/25/2024	5:45 PM	0	0	0	0	0	0	0	0	0	0	0	0	0
4/25/2024	6:00 PM	0	0	0	0	0	0	0	0	0	0	0	0	0
4/25/2024	6:15 PM	0	0	0	0	0	0	0	0	0	0	0	0	0
4/25/2024	6:30 PM	0	0	0	0	0	0	0	0	0	0	0	0	0
4/25/2024	6:45 PM	0	0	0	0	0	0	0	0	0	0	0	0	0
4/25/2024	7:00 PM	0	0	0	0	0	0	0	0	0	0	0	0	0
4/25/2024	7:15 PM	0	0	0	0	0	0	0	0	0	0	0	0	0
4/25/2024	7:30 PM	0	0	0	0	0	0	0	0	0	0	0	0	0
4/25/2024	7:45 PM	0	0	0	0	0	0	0	0	0	0	0	0	0
4/25/2024	8:00 PM	0	0	0	0	0	0	0	0	0	0	0	0	0
4/25/2024	8:15 PM	0	0	0	0	0	0	0	0	0	0	0	0	0
4/25/2024	8:30 PM	0	0	0	0	0	0	0	0	0	0	0	0	0
4/25/2024	8:45 PM	0	0	0	0	0	0	0	0	0	0	0	0	0
4/25/2024	9:00 PM	0	0	0	0	0	0	0	0	0	0	0	0	0
4/25/2024	9:15 PM	0	0	0	0	0	0	0	0	0	0	0	0	0
4/25/2024	9:30 PM	0	0	0	0	0	0	0	0	0	0	0	0	0
4/25/2024	9:45 PM	0	0	0	0	0	0	0	0	0	0	0	0	0
4/25/2024	10:00 PM	0	0	0	0	0	0	0	0	0	0	0	0	0
4/25/2024	10:15 PM	0	0	0	0	0	0	0	0	0	0	0	0	0
4/25/2024	10:30 PM	0	0	0	0	0	0	0	0	0	0	0	0	0
4/25/2024	10:45 PM	0	0	0	0	0	0	0	0	0	0	0	0	0
4/25/2024	11:00 PM	0	0	0	0	0	0	0	0	0	0	0	0	0
4/25/2024	11:15 PM	0	0	0	0	0	0	0	0	0	0	0	0	0
4/25/2024	11:30 PM	0	0	0	0	0	0	0	0	0	0	0	0	0
4/25/2024	11:45 PM	0	0	0	0	0	0	0	0	0	0	0	0	0

NB
File Name:
Start Date: 4/23/2024
Start Time: 0
Site Code: 64
Station ID: 1
Location 1: I-20 On/Off-Ramp, south of Bush River Rd
Location 2:

Date	Time	1	2	3	4	5	6	7	8	9	10	11	12	13
4/23/2024	12:00 AM	0	0	0	0	0	0	0	0	0	0	0	0	0
4/23/2024	12:15 AM	0	0	0	0	0	0	0	0	0	0	0	0	0
4/23/2024	12:30 AM	0	0	0	0	0	0	0	0	0	0	0	0	0
4/23/2024	12:45 AM	0	0	0	0	0	0	0	0	0	0	0	0	0
4/23/2024	1:00 AM	0	0	0	0	0	0	0	0	0	0	0	0	0
4/23/2024	1:15 AM	0	0	0	0	0	0	0	0	0	0	0	0	0
4/23/2024	1:30 AM	0	0	0	0	0	0	0	0	0	0	0	0	0
4/23/2024	1:45 AM	0	0	0	0	0	0	0	0	0	0	0	0	0
4/23/2024	2:00 AM	0	0	0	0	0	0	0	0	0	0	0	0	0
4/23/2024	2:15 AM	0	0	0	0	0	0	0	0	0	0	0	0	0
4/23/2024	2:30 AM	0	0	0	0	0	0	0	0	0	0	0	0	0
4/23/2024	2:45 AM	0	0	0	0	0	0	0	0	0	0	0	0	0
4/23/2024	3:00 AM	0	0	0	0	0	0	0	0	0	0	0	0	0
4/23/2024	3:15 AM	0	0	0	0	0	0	0	0	0	0	0	0	0
4/23/2024	3:30 AM	0	0	0	0	0	0	0	0	0	0	0	0	0
4/23/2024	3:45 AM	0	0	0	0	0	0	0	0	0	0	0	0	0
4/23/2024	4:00 AM	0	0	0	0	0	0	0	0	0	0	0	0	0
4/23/2024	4:15 AM	0	0	0	0	0	0	0	0	0	0	0	0	0
4/23/2024	4:30 AM	0	0	0	0	0	0	0	0	0	0	0	0	0
4/23/2024	4:45 AM	0	0	0	0	0	0	0	0	0	0	0	0	0
4/23/2024	5:00 AM	0	0	0	0	0	0	0	0	0	0	0	0	0
4/23/2024	5:15 AM	0	0	0	0	0	0	0	0	0	0	0	0	0
4/23/2024	5:30 AM	0	0	0	0	0	0	0	0	0	0	0	0	0
4/23/2024	5:45 AM	0	0	0	0	0	0	0	0	0	0	0	0	0
4/23/2024	6:00 AM	0	0	0	0	0	0	0	0	0	0	0	0	0
4/23/2024	6:15 AM	0	0	0	0	0	0	0	0	0	0	0	0	0
4/23/2024	6:30 AM	0	0	0	0	0	0	0	0	0	0	0	0	0
4/23/2024	6:45 AM	0	0	0	0	0	0	0	0	0	0	0	0	0
4/23/2024	7:00 AM	0	0	0	0	0	0	0	0	0	0	0	0	0
4/23/2024	7:15 AM	0	0	0	0	0	0	0	0	0	0	0	0	0
4/23/2024	7:30 AM	0	0	0	0	0	0	0	0	0	0	0	0	0
4/23/2024	7:45 AM	0	0	0	0	0	0	0	0	0	0	0	0	0
4/23/2024	8:00 AM	0	0	0	0	0	0	0	0	0	0	0	0	0
4/23/2024	8:15 AM	0	0	0	0	0	0	0	0	0	0	0	0	0
4/23/2024	8:30 AM	0	0	0	0	0	0	0	0	0	0	0	0	0
4/23/2024	8:45 AM	0	0	0	0	0	0	0	0	0	0	0	0	0
4/23/2024	9:00 AM	0	0	0	0	0	0	0	0	0	0	0	0	0
4/23/2024	9:15 AM	0	0	0	0	0	0	0	0	0	0	0	0	0
4/23/2024	9:30 AM	0	0	0	0	0	0	0	0	0	0	0	0	0
4/23/2024	9:45 AM	0	0	0	0	0	0	0	0	0	0	0	0	0
4/23/2024	10:00 AM	0	0	0	0	0	0	0	0	0	0	0	0	0
4/23/2024	10:15 AM	0	0	0	0	0	0	0	0	0	0	0	0	0
4/23/2024	10:30 AM	0	0	0	0	0	0	0	0	0	0	0	0	0
4/23/2024	10:45 AM	0	0	0	0	0	0	0	0	0	0	0	0	0
4/23/2024	11:00 AM	0	0	0	0	0	0	0	0	0	0	0	0	0
4/23/2024	11:15 AM	0	0	0	0	0	0	0	0	0	0	0	0	0
4/23/2024	11:30 AM	0	0	0	0	0	0	0	0	0	0	0	0	0
4/23/2024	11:45 AM	0	0	0	0	0	0	0	0	0	0	0	0	0
4/23/2024	12:00 PM	0	0	0	0	0	0	0	0	0	0	0	0	0
4/23/2024	12:15 PM	0	0	0	0	0	0	0	0	0	0	0	0	0
4/23/2024	12:30 PM	0	0	0	0	0	0	0	0	0	0	0	0	0
4/23/2024	12:45 PM	0	0	0	0	0	0	0	0	0	0	0	0	0
4/23/2024	1:00 PM	0	0	0	0	0	0	0	0	0	0	0	0	0
4/23/2024	1:15 PM	0	0	0	0	0	0	0	0	0	0	0	0	0
4/23/2024	1:30 PM	0	0	0	0	0	0	0	0	0	0	0	0	0
4/23/2024	1:45 PM	0	0	0	0	0	0	0	0	0	0	0	0	0
4/23/2024	2:00 PM	0	0	0	0	0	0	0	0	0	0	0	0	0
4/23/2024	2:15 PM	0	0	0	0	0	0	0	0	0	0	0	0	0
4/23/2024	2:30 PM	0	0	0	0	0	0	0	0	0	0	0	0	0
4/23/2024	2:45 PM	0	0	0	0	0	0	0	0	0	0	0	0	0
4/23/2024	3:00 PM	0	0	0	0	0	0	0	0	0	0	0	0	0
4/23/2024	3:15 PM	0	0	0	0	0	0	0	0	0	0	0	0	0
4/23/2024	3:30 PM	0	0	0	0	0	0	0	0	0	0	0	0	0
4/23/2024	3:45 PM	0	0	0	0	0	0	0	0	0	0	0	0	0
4/23/2024	4:00 PM	0	0	0	0	0	0	0	0	0	0	0	0	0
4/23/2024	4:15 PM	0	0	0	0	0	0	0	0	0	0	0	0	0
4/23/2024	4:30 PM	0	0	0	0	0	0	0	0	0	0	0	0	0
4/23/2024	4:45 PM	0	0	0	0	0	0	0	0	0	0	0	0	0
4/23/2024	5:00 PM	0	0	0	0	0	0	0	0	0	0	0	0	0
4/23/2024	5:15 PM	0	0	0	0	0	0	0	0	0	0	0	0	0
4/23/2024	5:30 PM	0	0	0	0	0	0	0	0	0	0	0	0	0
4/23/2024	5:45 PM	0	0	0	0	0	0	0	0	0	0	0	0	0
4/23/2024	6:00 PM	0	0	0	0	0	0	0	0	0	0	0	0	0
4/23/2024	6:15 PM	0	59	9	0	1	0	0	0	1	0	0	0	0
4/23/2024	6:30 PM	0	104	19	0	1	0	0	0	1	0	0	0	0
4/23/2024	6:45 PM	0	146	24	0	3	0	0	0	2	0	0	0	0
4/23/2024	7:00 PM	0	191	34	0	3	0	0	0	3	0	0	0	0
4/23/2024	7:15 PM	0	165	36	0	2	0	0	0	2	0	0	0	0
4/23/2024	7:30 PM	0	152	30	0	2	0	0	0	2	0	0	0	0
4/23/2024	7:45 PM	0	140	27	0	0	0	0	0	2	0	0	0	0
4/23/2024	8:00 PM	0	124	19	0	0	0	0	0	1	0	0	0	0
4/23/2024	8:15 PM	0	120	10	0	0	0	0	0	1	0	0	0	0
4/23/2024	8:30 PM	0	114	8	0	0	0	0	0	1	0	0	0	0
4/23/2024	8:45 PM	0	102	9	0	1	0	0	0	0	0	0	0	0
4/23/2024	9:00 PM	0	96	9	0	1	0	0	0	0	0	0	0	0
4/23/2024	9:15 PM	0	82	9	0	1	0	0	0	1	0	0	0	0
4/23/2024	9:30 PM	0	69	8	0	2	0	0	0	1	0	0	0	0
4/23/2024	9:45 PM	0	62	5	0	2	0	0	0	2	0	0	0	0
4/23/2024	10:00 PM	0	51	4	0	2	0	0	0	2	0	0	0	0
4/23/2024	10:15 PM	0	43	3	0	2	0	0	0	1	0	0	0	0
4/23/2024	10:30 PM	0	43	3	0	1	0	0	0	1	0	0	0	0
4/23/2024	10:45 PM	0	41	3	0	0	0	0	0	2	0	0	0	0
4/23/2024	11:00 PM	0	39	2	0	0	0	0	0	2	0	0	0	0
4/23/2024	11:15 PM	0	39	1	0	0	0	0	0	2	0	0	0	0
4/23/2024	11:30 PM	0	38	1	0	0	0	0	0	3	0	0	0	0
4/23/2024	11:45 PM	0	32	2	0	1	0	0	0	2	0	0	0	0

4/24/2024	12:00 AM	0	25	3	0	1	0	0	1	2	0	0	0	0
4/24/2024	12:15 AM	0	23	3	0	1	0	0	1	2	0	0	0	0
4/24/2024	12:30 AM	0	13	2	0	1	0	0	1	1	0	0	0	0
4/24/2024	12:45 AM	0	14	1	0	0	0	0	1	0	0	0	0	0
4/24/2024	1:00 AM	0	12	0	0	0	0	0	0	0	0	0	0	0
4/24/2024	1:15 AM	0	9	1	0	0	0	0	0	0	0	0	0	0
4/24/2024	1:30 AM	0	11	2	0	0	0	0	0	0	0	0	0	0
4/24/2024	1:45 AM	0	9	2	0	0	1	0	0	1	0	0	0	0
4/24/2024	2:00 AM	0	8	2	0	0	1	0	0	1	0	0	0	0
4/24/2024	2:15 AM	0	9	1	0	0	1	0	0	1	0	0	0	0
4/24/2024	2:30 AM	0	8	0	0	0	1	0	0	3	0	0	0	0
4/24/2024	2:45 AM	0	10	0	0	0	0	0	0	2	0	0	0	0
4/24/2024	3:00 AM	0	14	0	0	0	0	0	0	2	0	0	0	0
4/24/2024	3:15 AM	0	12	0	0	0	2	0	0	2	0	0	0	0
4/24/2024	3:30 AM	0	10	0	0	0	2	0	0	1	0	0	0	0
4/24/2024	3:45 AM	0	10	0	0	2	2	0	0	1	0	0	0	0
4/24/2024	4:00 AM	0	14	1	0	2	2	0	0	2	0	0	0	0
4/24/2024	4:15 AM	0	24	1	0	3	0	0	0	2	0	0	0	0
4/24/2024	4:30 AM	0	34	1	0	3	0	0	0	1	0	0	0	0
4/24/2024	4:45 AM	0	45	3	0	1	0	0	0	1	0	0	0	0
4/24/2024	5:00 AM	0	67	4	0	3	0	0	0	1	0	0	0	0
4/24/2024	5:15 AM	0	83	6	0	2	0	0	0	2	0	0	0	0
4/24/2024	5:30 AM	0	120	16	1	2	1	0	0	2	0	0	0	0
4/24/2024	5:45 AM	0	163	29	1	2	1	0	0	3	0	0	0	0
4/24/2024	6:00 AM	0	222	43	1	1	4	0	1	2	0	0	0	0
4/24/2024	6:15 AM	0	297	66	1	3	6	0	1	1	0	0	0	0
4/24/2024	6:30 AM	0	403	84	0	3	6	0	1	2	0	0	0	0
4/24/2024	6:45 AM	0	523	103	0	5	6	0	2	2	0	0	0	0
4/24/2024	7:00 AM	1	665	120	0	8	4	0	3	4	0	0	0	0
4/24/2024	7:15 AM	1	760	137	0	7	4	0	3	5	1	0	0	0
4/24/2024	7:30 AM	1	815	151	0	7	3	0	4	4	1	0	0	0
4/24/2024	7:45 AM	1	793	147	0	7	3	0	3	4	1	0	0	0
4/24/2024	8:00 AM	0	707	143	0	3	2	0	1	2	1	0	0	0
4/24/2024	8:15 AM	0	603	119	0	3	1	0	1	2	0	0	0	0
4/24/2024	8:30 AM	0	482	90	0	4	2	0	0	5	0	0	0	0
4/24/2024	8:45 AM	0	398	71	0	3	3	0	0	5	0	0	0	0
4/24/2024	9:00 AM	0	335	55	0	4	3	0	0	7	0	0	0	0
4/24/2024	9:15 AM	0	314	54	0	4	2	0	0	6	0	0	0	0
4/24/2024	9:30 AM	1	287	56	0	6	1	0	0	4	0	0	0	0
4/24/2024	9:45 AM	1	277	56	0	5	0	0	0	4	0	0	0	0
4/24/2024	10:00 AM	1	264	55	0	6	0	0	0	3	0	0	0	0
4/24/2024	10:15 AM	1	264	48	0	9	0	0	0	6	0	0	0	0
4/24/2024	10:30 AM	0	296	45	0	7	0	0	0	5	0	0	0	0
4/24/2024	10:45 AM	2	304	40	0	9	0	0	0	4	0	0	0	0
4/24/2024	11:00 AM	3	301	35	0	7	0	0	0	3	0	0	0	0
4/24/2024	11:15 AM	3	294	38	0	3	0	1	2	0	0	0	0	0
4/24/2024	11:30 AM	4	294	40	0	3	0	1	2	1	0	0	0	0
4/24/2024	11:45 AM	2	309	52	0	2	0	1	2	1	0	0	0	0
4/24/2024	12:00 PM	1	324	57	0	3	0	1	2	2	0	0	0	0
4/24/2024	12:15 PM	1	337	52	0	3	1	0	1	2	0	0	0	0
4/24/2024	12:30 PM	0	323	52	0	5	1	0	1	2	0	0	0	0
4/24/2024	12:45 PM	0	314	45	0	4	1	0	1	2	0	0	0	0
4/24/2024	1:00 PM	0	314	43	0	3	1	1	1	1	0	0	0	0
4/24/2024	1:15 PM	0	310	56	0	5	0	1	0	3	0	0	0	0
4/24/2024	1:30 PM	0	304	50	0	3	0	1	0	2	0	0	0	0
4/24/2024	1:45 PM	1	288	51	0	3	0	1	0	2	0	0	0	0
4/24/2024	2:00 PM	1	288	61	0	5	0	0	0	4	0	0	0	0
4/24/2024	2:15 PM	1	294	54	0	3	0	0	0	4	0	0	0	0
4/24/2024	2:30 PM	1	298	61	1	3	1	0	0	5	0	0	0	0
4/24/2024	2:45 PM	0	317	61	2	4	2	0	0	5	0	0	0	0
4/24/2024	3:00 PM	0	333	53	2	2	2	0	0	4	0	0	0	0
4/24/2024	3:15 PM	0	342	57	2	3	2	0	0	3	0	0	0	0
4/24/2024	3:30 PM	0	363	53	2	2	2	0	0	3	0	0	0	0
4/24/2024	3:45 PM	0	371	67	1	1	1	0	0	4	0	0	0	0
4/24/2024	4:00 PM	0	388	74	1	1	1	0	1	5	0	0	0	0
4/24/2024	4:15 PM	0	397	74	1	2	2	1	1	6	0	0	0	0
4/24/2024	4:30 PM	0	402	82	0	2	1	1	1	5	0	0	0	0
4/24/2024	4:45 PM	0	421	81	0	3	1	1	1	4	0	0	0	0
4/24/2024	5:00 PM	2	416	81	0	4	1	1	0	2	0	0	0	0
4/24/2024	5:15 PM	3	400	77	0	2	0	0	0	1	0	0	0	0
4/24/2024	5:30 PM	3	376	73	0	3	0	0	0	3	0	0	0	0
4/24/2024	5:45 PM	3	326	57	0	3	0	0	0	3	0	0	0	0
4/24/2024	6:00 PM	1	288	47	0	2	0	0	0	3	0	0	0	0
4/24/2024	6:15 PM	1	258	46	0	3	0	0	0	2	0	0	0	0
4/24/2024	6:30 PM	1	231	44	0	2	0	0	0	0	0	0	0	0
4/24/2024	6:45 PM	1	221	47	0	1	0	0	0	2	0	0	0	0
4/24/2024	7:00 PM	1	202	45	0	1	0	0	0	2	0	0	0	0
4/24/2024	7:15 PM	0	185	42	0	1	0	0	0	2	0	0	0	0
4/24/2024	7:30 PM	0	184	36	0	2	0	0	0	2	0	0	0	0
4/24/2024	7:45 PM	0	172	27	0	2	0	0	0	0	0	0	0	0
4/24/2024	8:00 PM	0	156	23	0	3	0	0	0	0	0	0	0	0
4/24/2024	8:15 PM	0	143	15	0	2	0	0	0	0	0	0	0	0
4/24/2024	8:30 PM	0	123	10	0	3	0	0	0	0	0	0	0	0
4/24/2024	8:45 PM	0	103	8	0	3	0	0	0	0	0	0	0	0
4/24/2024	9:00 PM	0	81	6	0	2	0	0	0	4	0	0	0	0
4/24/2024	9:15 PM	0	82	6	0	2	0	0	0	4	0	0	0	0
4/24/2024	9:30 PM	0	67	6	0	0	0	0	0	4	0	0	0	0
4/24/2024	9:45 PM	0	60	5	0	0	0	0	0	4	0	0	0	0
4/24/2024	10:00 PM	0	56	5	0	0	0	0	0	0	0	0	0	0
4/24/2024	10:15 PM	0	41	3	0	0	0	0	0	0	0	0	0	0
4/24/2024	10:30 PM	0	37	2	0	0	0	0	0	0	0	0	0	0
4/24/2024	10:45 PM	0	38	2	0	0	0	0	0	0	0	0	0	0
4/24/2024	11:00 PM	0	39	1	0	0	0	0	0	1	0	0	0	0
4/24/2024	11:15 PM	0	37	1	0	0	0	0	0	1	0	0	0	0
4/24/2024	11:30 PM	0	31	1	0	0	0	0	0	1	0	0	0	0
4/24/2024	11:45 PM	0	28	1	0	0	0	0	0	1	0	0	0	0

4/25/2024	12:00 AM	0	25	1	0	0	0	0	0	0	0	0	0
4/25/2024	12:15 AM	0	22	1	0	0	0	0	0	0	0	0	0
4/25/2024	12:30 AM	0	16	0	0	0	1	0	0	0	0	0	0
4/25/2024	12:45 AM	0	16	0	0	0	1	0	0	1	0	0	0
4/25/2024	1:00 AM	0	13	0	0	0	1	0	0	1	0	0	0
4/25/2024	1:15 AM	0	12	0	0	0	1	0	0	1	0	0	0
4/25/2024	1:30 AM	0	14	0	0	0	0	0	0	1	0	0	0
4/25/2024	1:45 AM	0	13	1	0	0	0	0	0	0	0	0	0
4/25/2024	2:00 AM	0	11	2	0	0	0	0	0	1	0	0	0
4/25/2024	2:15 AM	0	13	3	0	0	0	0	0	1	0	0	0
4/25/2024	2:30 AM	0	14	3	0	0	0	0	0	2	0	0	0
4/25/2024	2:45 AM	0	15	2	0	0	0	0	0	3	0	0	0
4/25/2024	3:00 AM	0	12	1	0	0	0	0	0	2	0	0	0
4/25/2024	3:15 AM	0	11	2	0	0	0	0	0	2	0	0	0
4/25/2024	3:30 AM	0	8	2	0	0	0	0	0	1	0	0	0
4/25/2024	3:45 AM	0	8	3	0	0	0	0	0	0	0	0	0
4/25/2024	4:00 AM	0	20	4	0	0	0	0	0	0	0	0	0
4/25/2024	4:15 AM	0	23	2	0	0	0	0	0	0	0	0	0
4/25/2024	4:30 AM	0	32	2	0	0	0	0	0	0	0	0	0
4/25/2024	4:45 AM	0	44	3	0	0	0	0	0	0	0	0	0
4/25/2024	5:00 AM	0	65	4	0	0	0	0	0	0	0	0	0
4/25/2024	5:15 AM	0	84	8	0	1	0	0	0	0	0	0	0
4/25/2024	5:30 AM	0	118	21	0	2	0	0	0	1	0	0	0
4/25/2024	5:45 AM	0	165	41	0	3	0	0	0	2	0	0	0
4/25/2024	6:00 AM	0	225	62	0	5	0	0	0	2	0	0	0
4/25/2024	6:15 AM	0	305	75	0	6	3	0	0	2	0	0	0
4/25/2024	6:30 AM	0	388	93	0	8	4	0	0	3	0	0	0
4/25/2024	6:45 AM	0	550	108	0	9	5	0	0	4	0	0	0
4/25/2024	7:00 AM	1	687	120	0	12	6	0	0	4	0	0	0
4/25/2024	7:15 AM	1	780	149	0	13	3	0	0	5	0	0	0
4/25/2024	7:30 AM	1	848	157	0	10	2	0	1	3	0	0	0
4/25/2024	7:45 AM	1	763	147	0	11	1	0	1	1	0	0	0
4/25/2024	8:00 AM	0	655	129	0	8	3	0	1	2	0	0	0
4/25/2024	8:15 AM	0	533	113	0	7	4	0	2	2	0	0	0
4/25/2024	8:30 AM	0	419	92	0	8	6	0	1	3	0	0	0
4/25/2024	8:45 AM	0	350	86	0	7	6	0	1	3	0	0	0
4/25/2024	9:00 AM	2	310	75	0	6	4	0	1	2	0	0	0
4/25/2024	9:15 AM	2	316	60	0	5	4	0	0	1	0	0	0
4/25/2024	9:30 AM	2	296	64	0	4	2	0	0	0	0	0	0
4/25/2024	9:45 AM	2	297	59	0	4	3	0	0	0	0	0	0
4/25/2024	10:00 AM	0	290	78	0	4	6	0	0	1	0	0	0
4/25/2024	10:15 AM	0	291	80	0	4	6	0	0	1	0	0	0
4/25/2024	10:30 AM	0	313	75	0	5	6	0	1	1	0	0	0
4/25/2024	10:45 AM	0	316	72	0	4	6	0	1	2	1	0	0
4/25/2024	11:00 AM	0	303	62	0	3	5	0	1	2	1	0	0
4/25/2024	11:15 AM	0	294	59	0	2	5	0	2	2	1	0	0
4/25/2024	11:30 AM	0	278	63	0	1	6	0	1	3	1	0	0
4/25/2024	11:45 AM	0	291	73	0	2	5	0	2	2	0	0	0
4/25/2024	12:00 PM	0	306	79	0	3	2	0	2	1	0	0	0
4/25/2024	12:15 PM	0	306	84	0	6	1	0	2	1	0	0	0
4/25/2024	12:30 PM	0	312	80	0	7	0	0	2	0	0	0	0
4/25/2024	12:45 PM	0	305	80	0	5	0	0	1	0	0	0	0
4/25/2024	1:00 PM	0	286	77	0	4	4	0	1	0	0	0	0
4/25/2024	1:15 PM	0	279	69	0	4	4	0	1	1	0	0	0
4/25/2024	1:30 PM	0	274	71	0	4	5	0	1	3	0	0	0
4/25/2024	1:45 PM	0	262	68	0	4	6	0	1	8	0	0	0
4/25/2024	2:00 PM	0	263	67	0	4	3	0	1	10	0	0	0
4/25/2024	2:15 PM	0	241	77	0	1	4	0	0	9	0	0	0
4/25/2024	2:30 PM	0	246	79	0	0	5	0	0	7	0	0	0
4/25/2024	2:45 PM	0	260	68	0	0	6	0	0	2	0	0	0
4/25/2024	3:00 PM	0	282	72	1	0	6	0	0	1	0	0	0
4/25/2024	3:15 PM	1	341	82	1	0	5	0	0	2	0	0	0
4/25/2024	3:30 PM	1	374	81	1	1	4	0	0	2	0	0	0
4/25/2024	3:45 PM	1	398	89	1	1	2	0	0	3	0	0	0
4/25/2024	4:00 PM	1	393	82	0	2	1	0	0	2	0	0	0
4/25/2024	4:15 PM	0	394	73	0	2	1	0	0	2	0	0	0
4/25/2024	4:30 PM	2	406	82	0	1	1	0	0	2	0	0	0
4/25/2024	4:45 PM	2	404	85	0	1	1	0	0	1	0	0	0
4/25/2024	5:00 PM	2	448	98	0	0	1	0	0	3	0	0	0
4/25/2024	5:15 PM	2	440	93	0	1	3	0	0	4	0	0	0
4/25/2024	5:30 PM	1	402	79	0	1	2	0	0	4	0	0	0
4/25/2024	5:45 PM	2	387	75	0	2	2	0	0	4	0	0	0
4/25/2024	6:00 PM	2	328	57	0	2	2	0	0	2	0	0	0
4/25/2024	6:15 PM	2	231	40	0	1	0	0	0	0	0	0	0
4/25/2024	6:30 PM	1	152	25	0	1	0	0	0	0	0	0	0
4/25/2024	6:45 PM	0	61	9	0	0	0	0	0	0	0	0	0
4/25/2024	7:00 PM	0	0	0	0	0	0	0	0	0	0	0	0
4/25/2024	7:15 PM	0	0	0	0	0	0	0	0	0	0	0	0
4/25/2024	7:30 PM	0	0	0	0	0	0	0	0	0	0	0	0
4/25/2024	7:45 PM	0	0	0	0	0	0	0	0	0	0	0	0
4/25/2024	8:00 PM	0	0	0	0	0	0	0	0	0	0	0	0
4/25/2024	8:15 PM	0	0	0	0	0	0	0	0	0	0	0	0
4/25/2024	8:30 PM	0	0	0	0	0	0	0	0	0	0	0	0
4/25/2024	8:45 PM	0	0	0	0	0	0	0	0	0	0	0	0
4/25/2024	9:00 PM	0	0	0	0	0	0	0	0	0	0	0	0
4/25/2024	9:15 PM	0	0	0	0	0	0	0	0	0	0	0	0
4/25/2024	9:30 PM	0	0	0	0	0	0	0	0	0	0	0	0
4/25/2024	9:45 PM	0	0	0	0	0	0	0	0	0	0	0	0
4/25/2024	10:00 PM	0	0	0	0	0	0	0	0	0	0	0	0
4/25/2024	10:15 PM	0	0	0	0	0	0	0	0	0	0	0	0
4/25/2024	10:30 PM	0	0	0	0	0	0	0	0	0	0	0	0
4/25/2024	10:45 PM	0	0	0	0	0	0	0	0	0	0	0	0
4/25/2024	11:00 PM	0	0	0	0	0	0	0	0	0	0	0	0
4/25/2024	11:15 PM	0	0	0	0	0	0	0	0	0	0	0	0
4/25/2024	11:30 PM	0	0	0	0	0	0	0	0	0	0	0	0
4/25/2024	11:45 PM	0	0	0	0	0	0	0	0	0	0	0	0

SB
File Name:
Start Date: 4/23/2024
Start Time: 0
Site Code: 64
Station ID: 1
Location 1: I-20 On/Off-Ramp, south of Bush River Rd
Location 2:

Date	Time	1	2	3	4	5	6	7	8	9	10	11	12	13
4/23/2024	12:00 AM	0	0	0	0	0	0	0	0	0	0	0	0	0
4/23/2024	12:15 AM	0	0	0	0	0	0	0	0	0	0	0	0	0
4/23/2024	12:30 AM	0	0	0	0	0	0	0	0	0	0	0	0	0
4/23/2024	12:45 AM	0	0	0	0	0	0	0	0	0	0	0	0	0
4/23/2024	1:00 AM	0	0	0	0	0	0	0	0	0	0	0	0	0
4/23/2024	1:15 AM	0	0	0	0	0	0	0	0	0	0	0	0	0
4/23/2024	1:30 AM	0	0	0	0	0	0	0	0	0	0	0	0	0
4/23/2024	1:45 AM	0	0	0	0	0	0	0	0	0	0	0	0	0
4/23/2024	2:00 AM	0	0	0	0	0	0	0	0	0	0	0	0	0
4/23/2024	2:15 AM	0	0	0	0	0	0	0	0	0	0	0	0	0
4/23/2024	2:30 AM	0	0	0	0	0	0	0	0	0	0	0	0	0
4/23/2024	2:45 AM	0	0	0	0	0	0	0	0	0	0	0	0	0
4/23/2024	3:00 AM	0	0	0	0	0	0	0	0	0	0	0	0	0
4/23/2024	3:15 AM	0	0	0	0	0	0	0	0	0	0	0	0	0
4/23/2024	3:30 AM	0	0	0	0	0	0	0	0	0	0	0	0	0
4/23/2024	3:45 AM	0	0	0	0	0	0	0	0	0	0	0	0	0
4/23/2024	4:00 AM	0	0	0	0	0	0	0	0	0	0	0	0	0
4/23/2024	4:15 AM	0	0	0	0	0	0	0	0	0	0	0	0	0
4/23/2024	4:30 AM	0	0	0	0	0	0	0	0	0	0	0	0	0
4/23/2024	4:45 AM	0	0	0	0	0	0	0	0	0	0	0	0	0
4/23/2024	5:00 AM	0	0	0	0	0	0	0	0	0	0	0	0	0
4/23/2024	5:15 AM	0	0	0	0	0	0	0	0	0	0	0	0	0
4/23/2024	5:30 AM	0	0	0	0	0	0	0	0	0	0	0	0	0
4/23/2024	5:45 AM	0	0	0	0	0	0	0	0	0	0	0	0	0
4/23/2024	6:00 AM	0	0	0	0	0	0	0	0	0	0	0	0	0
4/23/2024	6:15 AM	0	0	0	0	0	0	0	0	0	0	0	0	0
4/23/2024	6:30 AM	0	0	0	0	0	0	0	0	0	0	0	0	0
4/23/2024	6:45 AM	0	0	0	0	0	0	0	0	0	0	0	0	0
4/23/2024	7:00 AM	0	0	0	0	0	0	0	0	0	0	0	0	0
4/23/2024	7:15 AM	0	0	0	0	0	0	0	0	0	0	0	0	0
4/23/2024	7:30 AM	0	0	0	0	0	0	0	0	0	0	0	0	0
4/23/2024	7:45 AM	0	0	0	0	0	0	0	0	0	0	0	0	0
4/23/2024	8:00 AM	0	0	0	0	0	0	0	0	0	0	0	0	0
4/23/2024	8:15 AM	0	0	0	0	0	0	0	0	0	0	0	0	0
4/23/2024	8:30 AM	0	0	0	0	0	0	0	0	0	0	0	0	0
4/23/2024	8:45 AM	0	0	0	0	0	0	0	0	0	0	0	0	0
4/23/2024	9:00 AM	0	0	0	0	0	0	0	0	0	0	0	0	0
4/23/2024	9:15 AM	0	0	0	0	0	0	0	0	0	0	0	0	0
4/23/2024	9:30 AM	0	0	0	0	0	0	0	0	0	0	0	0	0
4/23/2024	9:45 AM	0	0	0	0	0	0	0	0	0	0	0	0	0
4/23/2024	10:00 AM	0	0	0	0	0	0	0	0	0	0	0	0	0
4/23/2024	10:15 AM	0	0	0	0	0	0	0	0	0	0	0	0	0
4/23/2024	10:30 AM	0	0	0	0	0	0	0	0	0	0	0	0	0
4/23/2024	10:45 AM	0	0	0	0	0	0	0	0	0	0	0	0	0
4/23/2024	11:00 AM	0	0	0	0	0	0	0	0	0	0	0	0	0
4/23/2024	11:15 AM	0	0	0	0	0	0	0	0	0	0	0	0	0
4/23/2024	11:30 AM	0	0	0	0	0	0	0	0	0	0	0	0	0
4/23/2024	11:45 AM	0	0	0	0	0	0	0	0	0	0	0	0	0
4/23/2024	12:00 PM	0	0	0	0	0	0	0	0	0	0	0	0	0
4/23/2024	12:15 PM	0	0	0	0	0	0	0	0	0	0	0	0	0
4/23/2024	12:30 PM	0	0	0	0	0	0	0	0	0	0	0	0	0
4/23/2024	12:45 PM	0	0	0	0	0	0	0	0	0	0	0	0	0
4/23/2024	1:00 PM	0	0	0	0	0	0	0	0	0	0	0	0	0
4/23/2024	1:15 PM	0	0	0	0	0	0	0	0	0	0	0	0	0
4/23/2024	1:30 PM	0	0	0	0	0	0	0	0	0	0	0	0	0
4/23/2024	1:45 PM	0	0	0	0	0	0	0	0	0	0	0	0	0
4/23/2024	2:00 PM	0	0	0	0	0	0	0	0	0	0	0	0	0
4/23/2024	2:15 PM	0	0	0	0	0	0	0	0	0	0	0	0	0
4/23/2024	2:30 PM	0	0	0	0	0	0	0	0	0	0	0	0	0
4/23/2024	2:45 PM	0	0	0	0	0	0	0	0	0	0	0	0	0
4/23/2024	3:00 PM	0	0	0	0	0	0	0	0	0	0	0	0	0
4/23/2024	3:15 PM	0	0	0	0	0	0	0	0	0	0	0	0	0
4/23/2024	3:30 PM	0	0	0	0	0	0	0	0	0	0	0	0	0
4/23/2024	3:45 PM	0	0	0	0	0	0	0	0	0	0	0	0	0
4/23/2024	4:00 PM	0	0	0	0	0	0	0	0	0	0	0	0	0
4/23/2024	4:15 PM	0	0	0	0	0	0	0	0	0	0	0	0	0
4/23/2024	4:30 PM	0	0	0	0	0	0	0	0	0	0	0	0	0
4/23/2024	4:45 PM	0	0	0	0	0	0	0	0	0	0	0	0	0
4/23/2024	5:00 PM	0	0	0	0	0	0	0	0	0	0	0	0	0
4/23/2024	5:15 PM	0	0	0	0	0	0	0	0	0	0	0	0	0
4/23/2024	5:30 PM	0	0	0	0	0	0	0	0	0	0	0	0	0
4/23/2024	5:45 PM	0	0	0	0	0	0	0	0	0	0	0	0	0
4/23/2024	6:00 PM	0	0	0	0	0	0	0	0	0	0	0	0	0
4/23/2024	6:15 PM	0	0	0	0	0	0	0	0	0	0	0	0	0
4/23/2024	6:30 PM	0	0	0	0	0	0	0	0	0	0	0	0	0
4/23/2024	6:45 PM	0	0	0	0	0	0	0	0	0	0	0	0	0
4/23/2024	7:00 PM	0	0	0	0	0	0	0	0	0	0	0	0	0
4/23/2024	7:15 PM	0	0	0	0	0	0	0	0	0	0	0	0	0
4/23/2024	7:30 PM	0	0	0	0	0	0	0	0	0	0	0	0	0
4/23/2024	7:45 PM	0	0	0	0	0	0	0	0	0	0	0	0	0
4/23/2024	8:00 PM	0	0	0	0	0	0	0	0	0	0	0	0	0
4/23/2024	8:15 PM	0	0	0	0	0	0	0	0	0	0	0	0	0
4/23/2024	8:30 PM	0	0	0	0	0	0	0	0	0	0	0	0	0
4/23/2024	8:45 PM	0	0	0	0	0	0	0	0	0	0	0	0	0
4/23/2024	9:00 PM	0	0	0	0	0	0	0	0	0	0	0	0	0
4/23/2024	9:15 PM	0	0	0	0	0	0	0	0	0	0	0	0	0
4/23/2024	9:30 PM	0	0	0	0	0	0	0	0	0	0	0	0	0
4/23/2024	9:45 PM	0	0	0	0	0	0	0	0	0	0	0	0	0
4/23/2024	10:00 PM	0	0	0	0	0	0	0	0	0	0	0	0	0
4/23/2024	10:15 PM	0	0	0	0	0	0	0	0	0	0	0	0	0
4/23/2024	10:30 PM	0	0	0	0	0	0	0	0	0	0	0	0	0
4/23/2024	10:45 PM	0	0	0	0	0	0	0	0	0	0	0	0	0
4/23/2024	11:00 PM	0	0	0	0	0	0	0	0	0	0	0	0	0
4/23/2024	11:15 PM	0	0	0	0	0	0	0	0	0	0	0	0	0
4/23/2024	11:30 PM	0	0	0	0	0	0	0	0	0	0	0	0	0
4/23/2024	11:45 PM	0	0	0	0	0	0	0	0	0	0	0	0	0

4/24/2024	12:00 AM	0	0	0	0	0	0	0	0	0	0	0	0	0
4/24/2024	12:15 AM	0	0	0	0	0	0	0	0	0	0	0	0	0
4/24/2024	12:30 AM	0	0	0	0	0	0	0	0	0	0	0	0	0
4/24/2024	12:45 AM	0	0	0	0	0	0	0	0	0	0	0	0	0
4/24/2024	1:00 AM	0	0	0	0	0	0	0	0	0	0	0	0	0
4/24/2024	1:15 AM	0	0	0	0	0	0	0	0	0	0	0	0	0
4/24/2024	1:30 AM	0	0	0	0	0	0	0	0	0	0	0	0	0
4/24/2024	1:45 AM	0	0	0	0	0	0	0	0	0	0	0	0	0
4/24/2024	2:00 AM	0	0	0	0	0	0	0	0	0	0	0	0	0
4/24/2024	2:15 AM	0	0	0	0	0	0	0	0	0	0	0	0	0
4/24/2024	2:30 AM	0	0	0	0	0	0	0	0	0	0	0	0	0
4/24/2024	2:45 AM	0	0	0	0	0	0	0	0	0	0	0	0	0
4/24/2024	3:00 AM	0	0	0	0	0	0	0	0	0	0	0	0	0
4/24/2024	3:15 AM	0	0	0	0	0	0	0	0	0	0	0	0	0
4/24/2024	3:30 AM	0	0	0	0	0	0	0	0	0	0	0	0	0
4/24/2024	3:45 AM	0	0	0	0	0	0	0	0	0	0	0	0	0
4/24/2024	4:00 AM	0	0	0	0	0	0	0	0	0	0	0	0	0
4/24/2024	4:15 AM	0	0	0	0	0	0	0	0	0	0	0	0	0
4/24/2024	4:30 AM	0	0	0	0	0	0	0	0	0	0	0	0	0
4/24/2024	4:45 AM	0	0	0	0	0	0	0	0	0	0	0	0	0
4/24/2024	5:00 AM	0	0	0	0	0	0	0	0	0	0	0	0	0
4/24/2024	5:15 AM	0	0	0	0	0	0	0	0	0	0	0	0	0
4/24/2024	5:30 AM	0	0	0	0	0	0	0	0	0	0	0	0	0
4/24/2024	5:45 AM	0	0	0	0	0	0	0	0	0	0	0	0	0
4/24/2024	6:00 AM	0	0	0	0	0	0	0	0	0	0	0	0	0
4/24/2024	6:15 AM	0	0	0	0	0	0	0	0	0	0	0	0	0
4/24/2024	6:30 AM	0	0	0	0	0	0	0	0	0	0	0	0	0
4/24/2024	6:45 AM	0	0	0	0	0	0	0	0	0	0	0	0	0
4/24/2024	7:00 AM	0	0	0	0	0	0	0	0	0	0	0	0	0
4/24/2024	7:15 AM	0	0	0	0	0	0	0	0	0	0	0	0	0
4/24/2024	7:30 AM	0	0	0	0	0	0	0	0	0	0	0	0	0
4/24/2024	7:45 AM	0	0	0	0	0	0	0	0	0	0	0	0	0
4/24/2024	8:00 AM	0	0	0	0	0	0	0	0	0	0	0	0	0
4/24/2024	8:15 AM	0	0	0	0	0	0	0	0	0	0	0	0	0
4/24/2024	8:30 AM	0	0	0	0	0	0	0	0	0	0	0	0	0
4/24/2024	8:45 AM	0	0	0	0	0	0	0	0	0	0	0	0	0
4/24/2024	9:00 AM	0	0	0	0	0	0	0	0	0	0	0	0	0
4/24/2024	9:15 AM	0	0	0	0	0	0	0	0	0	0	0	0	0
4/24/2024	9:30 AM	0	0	0	0	0	0	0	0	0	0	0	0	0
4/24/2024	9:45 AM	0	0	0	0	0	0	0	0	0	0	0	0	0
4/24/2024	10:00 AM	0	0	0	0	0	0	0	0	0	0	0	0	0
4/24/2024	10:15 AM	0	0	0	0	0	0	0	0	0	0	0	0	0
4/24/2024	10:30 AM	0	0	0	0	0	0	0	0	0	0	0	0	0
4/24/2024	10:45 AM	0	0	0	0	0	0	0	0	0	0	0	0	0
4/24/2024	11:00 AM	0	0	0	0	0	0	0	0	0	0	0	0	0
4/24/2024	11:15 AM	0	0	0	0	0	0	0	0	0	0	0	0	0
4/24/2024	11:30 AM	0	0	0	0	0	0	0	0	0	0	0	0	0
4/24/2024	11:45 AM	0	0	0	0	0	0	0	0	0	0	0	0	0
4/24/2024	12:00 PM	0	0	0	0	0	0	0	0	0	0	0	0	0
4/24/2024	12:15 PM	0	0	0	0	0	0	0	0	0	0	0	0	0
4/24/2024	12:30 PM	0	0	0	0	0	0	0	0	0	0	0	0	0
4/24/2024	12:45 PM	0	0	0	0	0	0	0	0	0	0	0	0	0
4/24/2024	1:00 PM	0	0	0	0	0	0	0	0	0	0	0	0	0
4/24/2024	1:15 PM	0	0	0	0	0	0	0	0	0	0	0	0	0
4/24/2024	1:30 PM	0	0	0	0	0	0	0	0	0	0	0	0	0
4/24/2024	1:45 PM	0	0	0	0	0	0	0	0	0	0	0	0	0
4/24/2024	2:00 PM	0	0	0	0	0	0	0	0	0	0	0	0	0
4/24/2024	2:15 PM	0	0	0	0	0	0	0	0	0	0	0	0	0
4/24/2024	2:30 PM	0	0	0	0	0	0	0	0	0	0	0	0	0
4/24/2024	2:45 PM	0	0	0	0	0	0	0	0	0	0	0	0	0
4/24/2024	3:00 PM	0	0	0	0	0	0	0	0	0	0	0	0	0
4/24/2024	3:15 PM	0	0	0	0	0	0	0	0	0	0	0	0	0
4/24/2024	3:30 PM	0	0	0	0	0	0	0	0	0	0	0	0	0
4/24/2024	3:45 PM	0	0	0	0	0	0	0	0	0	0	0	0	0
4/24/2024	4:00 PM	0	0	0	0	0	0	0	0	0	0	0	0	0
4/24/2024	4:15 PM	0	0	0	0	0	0	0	0	0	0	0	0	0
4/24/2024	4:30 PM	0	0	0	0	0	0	0	0	0	0	0	0	0
4/24/2024	4:45 PM	0	0	0	0	0	0	0	0	0	0	0	0	0
4/24/2024	5:00 PM	0	0	0	0	0	0	0	0	0	0	0	0	0
4/24/2024	5:15 PM	0	0	0	0	0	0	0	0	0	0	0	0	0
4/24/2024	5:30 PM	0	0	0	0	0	0	0	0	0	0	0	0	0
4/24/2024	5:45 PM	0	0	0	0	0	0	0	0	0	0	0	0	0
4/24/2024	6:00 PM	0	0	0	0	0	0	0	0	0	0	0	0	0
4/24/2024	6:15 PM	0	0	0	0	0	0	0	0	0	0	0	0	0
4/24/2024	6:30 PM	0	0	0	0	0	0	0	0	0	0	0	0	0
4/24/2024	6:45 PM	0	0	0	0	0	0	0	0	0	0	0	0	0
4/24/2024	7:00 PM	0	0	0	0	0	0	0	0	0	0	0	0	0
4/24/2024	7:15 PM	0	0	0	0	0	0	0	0	0	0	0	0	0
4/24/2024	7:30 PM	0	0	0	0	0	0	0	0	0	0	0	0	0
4/24/2024	7:45 PM	0	0	0	0	0	0	0	0	0	0	0	0	0
4/24/2024	8:00 PM	0	0	0	0	0	0	0	0	0	0	0	0	0
4/24/2024	8:15 PM	0	0	0	0	0	0	0	0	0	0	0	0	0
4/24/2024	8:30 PM	0	0	0	0	0	0	0	0	0	0	0	0	0
4/24/2024	8:45 PM	0	0	0	0	0	0	0	0	0	0	0	0	0
4/24/2024	9:00 PM	0	0	0	0	0	0	0	0	0	0	0	0	0
4/24/2024	9:15 PM	0	0	0	0	0	0	0	0	0	0	0	0	0
4/24/2024	9:30 PM	0	0	0	0	0	0	0	0	0	0	0	0	0
4/24/2024	9:45 PM	0	0	0	0	0	0	0	0	0	0	0	0	0
4/24/2024	10:00 PM	0	0	0	0	0	0	0	0	0	0	0	0	0
4/24/2024	10:15 PM	0	0	0	0	0	0	0	0	0	0	0	0	0
4/24/2024	10:30 PM	0	0	0	0	0	0	0	0	0	0	0	0	0
4/24/2024	10:45 PM	0	0	0	0	0	0	0	0	0	0	0	0	0
4/24/2024	11:00 PM	0	0	0	0	0	0	0	0	0	0	0	0	0
4/24/2024	11:15 PM	0	0	0	0	0	0	0	0	0	0	0	0	0
4/24/2024	11:30 PM	0	0	0	0	0	0	0	0	0	0	0	0	0
4/24/2024	11:45 PM	0	0	0	0	0	0	0	0	0	0	0	0	0

4/25/2024	12:00 AM	0	0	0	0	0	0	0	0	0	0	0	0	0
4/25/2024	12:15 AM	0	0	0	0	0	0	0	0	0	0	0	0	0
4/25/2024	12:30 AM	0	0	0	0	0	0	0	0	0	0	0	0	0
4/25/2024	12:45 AM	0	0	0	0	0	0	0	0	0	0	0	0	0
4/25/2024	1:00 AM	0	0	0	0	0	0	0	0	0	0	0	0	0
4/25/2024	1:15 AM	0	0	0	0	0	0	0	0	0	0	0	0	0
4/25/2024	1:30 AM	0	0	0	0	0	0	0	0	0	0	0	0	0
4/25/2024	1:45 AM	0	0	0	0	0	0	0	0	0	0	0	0	0
4/25/2024	2:00 AM	0	0	0	0	0	0	0	0	0	0	0	0	0
4/25/2024	2:15 AM	0	0	0	0	0	0	0	0	0	0	0	0	0
4/25/2024	2:30 AM	0	0	0	0	0	0	0	0	0	0	0	0	0
4/25/2024	2:45 AM	0	0	0	0	0	0	0	0	0	0	0	0	0
4/25/2024	3:00 AM	0	0	0	0	0	0	0	0	0	0	0	0	0
4/25/2024	3:15 AM	0	0	0	0	0	0	0	0	0	0	0	0	0
4/25/2024	3:30 AM	0	0	0	0	0	0	0	0	0	0	0	0	0
4/25/2024	3:45 AM	0	0	0	0	0	0	0	0	0	0	0	0	0
4/25/2024	4:00 AM	0	0	0	0	0	0	0	0	0	0	0	0	0
4/25/2024	4:15 AM	0	0	0	0	0	0	0	0	0	0	0	0	0
4/25/2024	4:30 AM	0	0	0	0	0	0	0	0	0	0	0	0	0
4/25/2024	4:45 AM	0	0	0	0	0	0	0	0	0	0	0	0	0
4/25/2024	5:00 AM	0	0	0	0	0	0	0	0	0	0	0	0	0
4/25/2024	5:15 AM	0	0	0	0	0	0	0	0	0	0	0	0	0
4/25/2024	5:30 AM	0	0	0	0	0	0	0	0	0	0	0	0	0
4/25/2024	5:45 AM	0	0	0	0	0	0	0	0	0	0	0	0	0
4/25/2024	6:00 AM	0	0	0	0	0	0	0	0	0	0	0	0	0
4/25/2024	6:15 AM	0	0	0	0	0	0	0	0	0	0	0	0	0
4/25/2024	6:30 AM	0	0	0	0	0	0	0	0	0	0	0	0	0
4/25/2024	6:45 AM	0	0	0	0	0	0	0	0	0	0	0	0	0
4/25/2024	7:00 AM	0	0	0	0	0	0	0	0	0	0	0	0	0
4/25/2024	7:15 AM	0	0	0	0	0	0	0	0	0	0	0	0	0
4/25/2024	7:30 AM	0	0	0	0	0	0	0	0	0	0	0	0	0
4/25/2024	7:45 AM	0	0	0	0	0	0	0	0	0	0	0	0	0
4/25/2024	8:00 AM	0	0	0	0	0	0	0	0	0	0	0	0	0
4/25/2024	8:15 AM	0	0	0	0	0	0	0	0	0	0	0	0	0
4/25/2024	8:30 AM	0	0	0	0	0	0	0	0	0	0	0	0	0
4/25/2024	8:45 AM	0	0	0	0	0	0	0	0	0	0	0	0	0
4/25/2024	9:00 AM	0	0	0	0	0	0	0	0	0	0	0	0	0
4/25/2024	9:15 AM	0	0	0	0	0	0	0	0	0	0	0	0	0
4/25/2024	9:30 AM	0	0	0	0	0	0	0	0	0	0	0	0	0
4/25/2024	9:45 AM	0	0	0	0	0	0	0	0	0	0	0	0	0
4/25/2024	10:00 AM	0	0	0	0	0	0	0	0	0	0	0	0	0
4/25/2024	10:15 AM	0	0	0	0	0	0	0	0	0	0	0	0	0
4/25/2024	10:30 AM	0	0	0	0	0	0	0	0	0	0	0	0	0
4/25/2024	10:45 AM	0	0	0	0	0	0	0	0	0	0	0	0	0
4/25/2024	11:00 AM	0	0	0	0	0	0	0	0	0	0	0	0	0
4/25/2024	11:15 AM	0	0	0	0	0	0	0	0	0	0	0	0	0
4/25/2024	11:30 AM	0	0	0	0	0	0	0	0	0	0	0	0	0
4/25/2024	11:45 AM	0	0	0	0	0	0	0	0	0	0	0	0	0
4/25/2024	12:00 PM	0	0	0	0	0	0	0	0	0	0	0	0	0
4/25/2024	12:15 PM	0	0	0	0	0	0	0	0	0	0	0	0	0
4/25/2024	12:30 PM	0	0	0	0	0	0	0	0	0	0	0	0	0
4/25/2024	12:45 PM	0	0	0	0	0	0	0	0	0	0	0	0	0
4/25/2024	1:00 PM	0	0	0	0	0	0	0	0	0	0	0	0	0
4/25/2024	1:15 PM	0	0	0	0	0	0	0	0	0	0	0	0	0
4/25/2024	1:30 PM	0	0	0	0	0	0	0	0	0	0	0	0	0
4/25/2024	1:45 PM	0	0	0	0	0	0	0	0	0	0	0	0	0
4/25/2024	2:00 PM	0	0	0	0	0	0	0	0	0	0	0	0	0
4/25/2024	2:15 PM	0	0	0	0	0	0	0	0	0	0	0	0	0
4/25/2024	2:30 PM	0	0	0	0	0	0	0	0	0	0	0	0	0
4/25/2024	2:45 PM	0	0	0	0	0	0	0	0	0	0	0	0	0
4/25/2024	3:00 PM	0	0	0	0	0	0	0	0	0	0	0	0	0
4/25/2024	3:15 PM	0	0	0	0	0	0	0	0	0	0	0	0	0
4/25/2024	3:30 PM	0	0	0	0	0	0	0	0	0	0	0	0	0
4/25/2024	3:45 PM	0	0	0	0	0	0	0	0	0	0	0	0	0
4/25/2024	4:00 PM	0	0	0	0	0	0	0	0	0	0	0	0	0
4/25/2024	4:15 PM	0	0	0	0	0	0	0	0	0	0	0	0	0
4/25/2024	4:30 PM	0	0	0	0	0	0	0	0	0	0	0	0	0
4/25/2024	4:45 PM	0	0	0	0	0	0	0	0	0	0	0	0	0
4/25/2024	5:00 PM	0	0	0	0	0	0	0	0	0	0	0	0	0
4/25/2024	5:15 PM	0	0	0	0	0	0	0	0	0	0	0	0	0
4/25/2024	5:30 PM	0	0	0	0	0	0	0	0	0	0	0	0	0
4/25/2024	5:45 PM	0	0	0	0	0	0	0	0	0	0	0	0	0
4/25/2024	6:00 PM	0	0	0	0	0	0	0	0	0	0	0	0	0
4/25/2024	6:15 PM	0	0	0	0	0	0	0	0	0	0	0	0	0
4/25/2024	6:30 PM	0	0	0	0	0	0	0	0	0	0	0	0	0
4/25/2024	6:45 PM	0	0	0	0	0	0	0	0	0	0	0	0	0
4/25/2024	7:00 PM	0	0	0	0	0	0	0	0	0	0	0	0	0
4/25/2024	7:15 PM	0	0	0	0	0	0	0	0	0	0	0	0	0
4/25/2024	7:30 PM	0	0	0	0	0	0	0	0	0	0	0	0	0
4/25/2024	7:45 PM	0	0	0	0	0	0	0	0	0	0	0	0	0
4/25/2024	8:00 PM	0	0	0	0	0	0	0	0	0	0	0	0	0
4/25/2024	8:15 PM	0	0	0	0	0	0	0	0	0	0	0	0	0
4/25/2024	8:30 PM	0	0	0	0	0	0	0	0	0	0	0	0	0
4/25/2024	8:45 PM	0	0	0	0	0	0	0	0	0	0	0	0	0
4/25/2024	9:00 PM	0	0	0	0	0	0	0	0	0	0	0	0	0
4/25/2024	9:15 PM	0	0	0	0	0	0	0	0	0	0	0	0	0
4/25/2024	9:30 PM	0	0	0	0	0	0	0	0	0	0	0	0	0
4/25/2024	9:45 PM	0	0	0	0	0	0	0	0	0	0	0	0	0
4/25/2024	10:00 PM	0	0	0	0	0	0	0	0	0	0	0	0	0
4/25/2024	10:15 PM	0	0	0	0	0	0	0	0	0	0	0	0	0
4/25/2024	10:30 PM	0	0	0	0	0	0	0	0	0	0	0	0	0
4/25/2024	10:45 PM	0	0	0	0	0	0	0	0	0	0	0	0	0
4/25/2024	11:00 PM	0	0	0	0	0	0	0	0	0	0	0	0	0
4/25/2024	11:15 PM	0	0	0	0	0	0	0	0	0	0	0	0	0
4/25/2024	11:30 PM	0	0	0	0	0	0	0	0	0	0	0	0	0
4/25/2024	11:45 PM	0	0	0	0	0	0	0	0	0	0	0	0	0

Bi-Directional Class Count || SB WB 15min

Columbia, SC

Marr Traffic DATA COLLECTION
www.marrtraffic.com

Site 65
I-20 S/Bound Off-Ramp,
north of Bush River Rd

Date
Tuesday, April 23, 2024

Lat/Long
34.032566°, -81.121140°

Weather
Fair
58°F

Click here for Detailed Weather

Click here for Map

0000 - 2400 (Weekday 24h Session) (04-23-2024)
SB WB 15min

	Southbound (Movement 65.1)													15min	60min
Time	1	2	3	4	5	6	7	8	9	10	11	12	13	Total	Total
0000 - 0015	0	0	0	0	0	0	0	0	0	0	0	0	0	**0**	
0015 - 0030	0	0	0	0	0	0	0	0	0	0	0	0	0	**0**	
0030 - 0045	0	0	0	0	0	0	0	0	0	0	0	0	0	**0**	
0045 - 0100	0	0	0	0	0	0	0	0	0	0	0	0	0	**0**	**0**
0100 - 0115	0	0	0	0	0	0	0	0	0	0	0	0	0	**0**	
0115 - 0130	0	0	0	0	0	0	0	0	0	0	0	0	0	**0**	
0130 - 0145	0	0	0	0	0	0	0	0	0	0	0	0	0	**0**	
0145 - 0200	0	0	0	0	0	0	0	0	0	0	0	0	0	**0**	**0**
0200 - 0215	0	0	0	0	0	0	0	0	0	0	0	0	0	**0**	
0215 - 0230	0	0	0	0	0	0	0	0	0	0	0	0	0	**0**	
0230 - 0245	0	0	0	0	0	0	0	0	0	0	0	0	0	**0**	
0245 - 0300	0	0	0	0	0	0	0	0	0	0	0	0	0	**0**	**0**
0300 - 0315	0	0	0	0	0	0	0	0	0	0	0	0	0	**0**	
0315 - 0330	0	0	0	0	0	0	0	0	0	0	0	0	0	**0**	
0330 - 0345	0	0	0	0	0	0	0	0	0	0	0	0	0	**0**	
0345 - 0400	0	0	0	0	0	0	0	0	0	0	0	0	0	**0**	**0**
0400 - 0415	0	0	0	0	0	0	0	0	0	0	0	0	0	**0**	
0415 - 0430	0	0	0	0	0	0	0	0	0	0	0	0	0	**0**	
0430 - 0445	0	0	0	0	0	0	0	0	0	0	0	0	0	**0**	
0445 - 0500	0	0	0	0	0	0	0	0	0	0	0	0	0	**0**	**0**
0500 - 0515	0	0	0	0	0	0	0	0	0	0	0	0	0	**0**	
0515 - 0530	0	0	0	0	0	0	0	0	0	0	0	0	0	**0**	
0530 - 0545	0	0	0	0	0	0	0	0	0	0	0	0	0	**0**	
0545 - 0600	0	0	0	0	0	0	0	0	0	0	0	0	0	**0**	**0**
0600 - 0615	0	0	0	0	0	0	0	0	0	0	0	0	0	**0**	
0615 - 0630	0	0	0	0	0	0	0	0	0	0	0	0	0	**0**	
0630 - 0645	0	0	0	0	0	0	0	0	0	0	0	0	0	**0**	
0645 - 0700	0	0	0	0	0	0	0	0	0	0	0	0	0	**0**	**0**
0700 - 0715	0	0	0	0	0	0	0	0	0	0	0	0	0	**0**	
0715 - 0730	0	0	0	0	0	0	0	0	0	0	0	0	0	**0**	
0730 - 0745	0	0	0	0	0	0	0	0	0	0	0	0	0	**0**	
0745 - 0800	0	0	0	0	0	0	0	0	0	0	0	0	0	**0**	**0**
0800 - 0815	0	0	0	0	0	0	0	0	0	0	0	0	0	**0**	
0815 - 0830	0	0	0	0	0	0	0	0	0	0	0	0	0	**0**	
0830 - 0845	0	0	0	0	0	0	0	0	0	0	0	0	0	**0**	
0845 - 0900	0	0	0	0	0	0	0	0	0	0	0	0	0	**0**	**0**
0900 - 0915	0	0	0	0	0	0	0	0	0	0	0	0	0	**0**	
0915 - 0930	0	0	0	0	0	0	0	0	0	0	0	0	0	**0**	
0930 - 0945	0	0	0	0	0	0	0	0	0	0	0	0	0	**0**	
0945 - 1000	0	0	0	0	0	0	0	0	0	0	0	0	0	**0**	**0**
1000 - 1015	0	0	0	0	0	0	0	0	0	0	0	0	0	**0**	
1015 - 1030	0	0	0	0	0	0	0	0	0	0	0	0	0	**0**	
1030 - 1045	0	0	0	0	0	0	0	0	0	0	0	0	0	**0**	
1045 - 1100	0	0	0	0	0	0	0	0	0	0	0	0	0	**0**	**0**
1100 - 1115	0	0	0	0	0	0	0	0	0	0	0	0	0	**0**	
1115 - 1130	0	0	0	0	0	0	0	0	0	0	0	0	0	**0**	
1130 - 1145	0	0	0	0	0	0	0	0	0	0	0	0	0	**0**	
1145 - 1200	0	0	0	0	0	0	0	0	0	0	0	0	0	**0**	**0**
1200 - 1215	0	0	0	0	0	0	0	0	0	0	0	0	0	**0**	
1215 - 1230	0	0	0	0	0	0	0	0	0	0	0	0	0	**0**	
1230 - 1245	0	0	0	0	0	0	0	0	0	0	0	0	0	**0**	
1245 - 1300	0	0	0	0	0	0	0	0	0	0	0	0	0	**0**	**0**
1300 - 1315	0	0	0	0	0	0	0	0	0	0	0	0	0	**0**	
1315 - 1330	0	0	0	0	0	0	0	0	0	0	0	0	0	**0**	
1330 - 1345	0	0	0	0	0	0	0	0	0	0	0	0	0	**0**	
1345 - 1400	0	0	0	0	0	0	0	0	0	0	0	0	0	**0**	**0**
1400 - 1415	0	0	0	0	0	0	0	0	0	0	0	0	0	**0**	
1415 - 1430	0	0	0	0	0	0	0	0	0	0	0	0	0	**0**	
1430 - 1445	0	0	0	0	0	0	0	0	0	0	0	0	0	**0**	
1445 - 1500	0	0	0	0	0	0	0	0	0	0	0	0	0	**0**	**0**
1500 - 1515	0	0	0	0	0	0	0	0	0	0	0	0	0	**0**	
1515 - 1530	0	0	0	0	0	0	0	0	0	0	0	0	0	**0**	
1530 - 1545	0	0	0	0	0	0	0	0	0	0	0	0	0	**0**	
1545 - 1600	0	0	0	0	0	0	0	0	0	0	0	0	0	**0**	**0**
1600 - 1615	0	0	0	0	0	0	0	0	0	0	0	0	0	**0**	
1615 - 1630	0	0	0	0	0	0	0	0	0	0	0	0	0	**0**	
1630 - 1645	0	0	0	0	0	0	0	0	0	0	0	0	0	**0**	
1645 - 1700	0	0	0	0	0	0	0	0	0	0	0	0	0	**0**	**0**
1700 - 1715	0	0	0	0	0	0	0	0	0	0	0	0	0	**0**	
1715 - 1730	0	0	0	0	0	0	0	0	0	0	0	0	0	**0**	
1730 - 1745	0	0	0	0	0	0	0	0	0	0	0	0	0	**0**	
1745 - 1800	0	0	0	0	0	0	0	0	0	0	0	0	0	**0**	**0**
1800 - 1815	0	0	0	0	0	0	0	0	0	0	0	0	0	**0**	
1815 - 1830	0	0	0	0	0	0	0	0	0	0	0	0	0	**0**	
1830 - 1845	0	0	0	0	0	0	0	0	0	0	0	0	0	**0**	
1845 - 1900	0	0	0	0	0	0	0	0	0	0	0	0	0	**0**	**0**
1900 - 1915	0	41	9	0	1	0	0	0	0	0	0	0	0	**51**	
1915 - 1930	0	46	8	0	1	2	0	0	0	0	0	0	0	**57**	
1930 - 1945	0	37	8	0	0	2	0	0	0	0	0	0	0	**47**	
1945 - 2000	0	38	8	0	1	2	0	0	0	0	0	0	0	**49**	**204**
2000 - 2015	0	18	4	0	0	0	0	0	0	0	0	0	0	**22**	
2015 - 2030	0	30	7	0	0	0	0	0	0	0	0	0	0	**37**	
2030 - 2045	0	25	6	0	0	2	0	0	1	0	0	0	0	**34**	
2045 - 2100	0	19	6	0	0	1	0	0	0	0	0	0	0	**26**	**119**
2100 - 2115	0	18	4	0	0	0	0	0	0	0	0	0	0	**22**	
2115 - 2130	0	22	6	0	0	1	0	0	0	0	0	0	0	**29**	
2130 - 2145	0	17	3	0	1	1	0	0	0	0	0	0	0	**22**	
2145 - 2200	0	13	3	0	0	1	0	0	0	0	0	0	0	**17**	**90**
2200 - 2215	0	19	3	0	0	3	0	0	0	0	0	0	0	**25**	
2215 - 2230	0	19	4	0	1	1	0	0	0	0	0	0	0	**25**	
2230 - 2245	0	15	5	0	0	0	0	0	0	0	0	0	0	**20**	
2245 - 2300	0	21	4	0	0	1	0	0	0	0	0	0	0	**26**	**96**
2300 - 2315	0	9	2	0	0	0	0	0	0	0	0	0	0	**11**	
2315 - 2330	0	11	2	0	0	2	0	0	0	0	0	0	0	**15**	
2330 - 2345	0	10	2	0	0	2	0	0	0	0	0	0	0	**14**	
2345 - 0000	0	4	1	0	0	0	0	0	0	0	0	0	0	**5**	**45**

Session Total	0	432	95	0	5	21	0	0	1	0	0	0	0	**554**
Session Average	0.00	4.50	0.99	0.00	0.05	0.22	0.00	0.00	0.01	0.00	0.00	0.00	0.00	**5.77**
Session Percentage	0.00	77.98	17.15	0.00	0.90	3.79	0.00	0.00	0.18	0.00	0.00	0.00	0.00	

AM Peak Hour	-	-	-	-	-	-	-	-	-	-	-	-	-	**-**
AM Peak Volume	0	0	0	0	0	0	0	0	0	0	0	0	0	**0**

Noon Peak Hour	-	-	-	-	-	-	-	-	-	-	-	-	-	**-**
Noon Peak Volume	0	0	0	0	0	0	0	0	0	0	0	0	0	**0**

PM Peak Hour	-	1900 - 2000	1900 - 2000	-	1900 - 2000	1900 - 2000	-	-	1945 - 2045	-	-	-	-	**1900 - 2000**
PM Peak Volume	0	162	33	0	3	6	0	0	1	0	0	0	0	**204**

Site 65
I-20 S/Bound Off-Ramp,
north of Bush River Rd

Date
Wednesday, April 24, 2024

Lat/Long
34.032566°, -81.121140°

Weather
Fair
66°F

Click here for Detailed Weather

0000 - 2400 (Weekday 24h Session) (04-24-2024)
SB WB 15min

	Southbound (Movement 65.1)													15min	60min
Time	1	2	3	4	5	6	7	8	9	10	11	12	13	Total	Total
0000 - 0015	0	9	1	0	1	2	0	0	0	0	0	0	0	**13**	
0015 - 0030	0	6	0	0	1	2	0	0	0	0	0	0	0	**9**	
0030 - 0045	0	6	1	0	0	0	0	0	0	0	0	0	0	**7**	
0045 - 0100	0	4	0	0	2	2	0	0	1	0	0	0	0	**9**	**38**
0100 - 0115	0	2	0	0	2	1	0	1	0	0	0	0	0	**6**	
0115 - 0130	0	7	1	0	0	1	0	0	0	0	0	0	0	**9**	
0130 - 0145	0	4	0	0	1	0	0	0	0	0	0	0	0	**5**	
0145 - 0200	0	4	0	0	0	0	0	0	0	0	0	0	0	**4**	**24**
0200 - 0215	0	6	1	0	0	0	0	0	0	0	0	0	0	**7**	
0215 - 0230	0	5	2	0	0	1	0	0	1	0	0	0	0	**9**	
0230 - 0245	0	2	0	0	0	0	0	0	0	0	0	0	0	**2**	
0245 - 0300	0	4	0	0	0	1	0	0	0	0	0	0	0	**5**	**23**
0300 - 0315	0	4	0	0	0	0	0	0	0	0	0	0	0	**4**	
0315 - 0330	0	4	1	0	0	1	0	0	0	0	0	0	0	**6**	
0330 - 0345	0	2	0	0	0	0	0	0	0	0	0	0	0	**2**	
0345 - 0400	0	5	0	0	0	1	0	0	0	0	0	0	0	**6**	**18**
0400 - 0415	0	6	0	0	0	0	0	0	1	0	0	0	0	**7**	
0415 - 0430	0	3	1	0	1	0	0	0	0	0	0	0	0	**5**	
0430 - 0445	0	4	0	0	0	0	0	0	0	0	0	0	0	**4**	
0445 - 0500	0	7	1	0	0	0	0	0	1	0	0	0	0	**9**	**25**
0500 - 0515	0	12	2	0	1	0	0	0	1	0	0	0	0	**16**	
0515 - 0530	0	8	1	0	1	1	0	0	0	0	0	0	0	**11**	
0530 - 0545	0	9	3	0	1	1	0	0	0	0	0	0	0	**14**	
0545 - 0600	0	13	2	0	0	0	0	0	1	0	0	0	0	**16**	**57**
0600 - 0615	0	12	2	0	0	0	0	0	0	0	0	0	0	**14**	
0615 - 0630	0	24	9	0	1	0	0	0	0	0	0	0	0	**34**	
0630 - 0645	0	39	11	0	1	3	0	0	0	0	0	0	0	**54**	
0645 - 0700	0	36	11	0	1	1	0	0	3	0	0	0	0	**52**	**154**
0700 - 0715	0	46	10	0	3	0	0	0	0	0	0	0	0	**59**	
0715 - 0730	0	72	17	0	0	2	0	0	1	0	0	0	0	**92**	
0730 - 0745	0	100	23	0	1	5	1	0	0	0	0	0	0	**130**	
0745 - 0800	0	120	23	0	2	1	0	0	1	0	0	0	0	**147**	**428**
0800 - 0815	0	113	14	0	0	2	0	0	0	0	0	0	0	**129**	
0815 - 0830	0	111	13	0	3	3	1	0	1	0	0	0	0	**132**	
0830 - 0845	0	147	19	0	2	2	0	0	0	0	0	0	0	**170**	
0845 - 0900	0	99	12	0	1	1	0	0	2	0	0	0	0	**115**	**546**
0900 - 0915	0	55	8	0	0	2	0	0	1	0	0	0	0	**66**	
0915 - 0930	0	46	9	0	1	3	0	2	2	0	0	0	0	**63**	
0930 - 0945	0	54	10	0	0	3	0	0	0	0	0	0	0	**67**	
0945 - 1000	0	54	9	0	0	1	0	0	2	0	0	0	0	**66**	**262**
1000 - 1015	0	44	8	0	2	1	1	0	0	0	0	0	0	**56**	
1015 - 1030	0	44	12	0	2	4	1	0	1	0	0	0	0	**64**	
1030 - 1045	0	45	11	0	1	1	0	0	0	0	0	0	0	**58**	
1045 - 1100	0	46	10	1	0	1	0	0	1	0	0	0	0	**59**	**237**
1100 - 1115	0	46	11	0	2	1	0	0	0	0	0	0	0	**60**	
1115 - 1130	0	43	11	0	0	3	1	0	0	0	0	0	0	**58**	
1130 - 1145	0	52	19	0	0	0	2	0	1	0	0	0	0	**74**	
1145 - 1200	0	54	17	1	2	0	1	0	1	0	0	0	0	**76**	**268**
1200 - 1215	0	42	13	0	3	2	1	0	2	0	0	0	0	**63**	
1215 - 1230	0	65	8	0	0	2	1	0	1	0	0	0	0	**77**	
1230 - 1245	0	65	12	0	1	0	0	0	1	0	0	0	0	**79**	
1245 - 1300	0	72	18	0	0	1	0	0	1	0	0	0	0	**92**	**311**
1300 - 1315	0	61	12	0	0	1	2	0	1	0	0	0	0	**77**	
1315 - 1330	0	63	14	0	2	1	0	1	1	0	0	0	0	**82**	
1330 - 1345	0	51	7	0	0	0	1	1	1	0	0	0	0	**61**	
1345 - 1400	0	69	13	0	0	2	0	0	1	0	0	0	0	**85**	**305**
1400 - 1415	0	49	7	0	3	0	0	0	0	0	0	0	0	**59**	
1415 - 1430	0	64	10	0	0	0	1	0	1	0	0	0	0	**76**	
1430 - 1445	0	40	10	0	2	0	0	0	0	0	0	0	0	**52**	
1445 - 1500	0	55	11	0	0	1	1	0	2	0	0	0	0	**70**	**257**
1500 - 1515	0	55	9	0	1	1	0	0	0	0	0	0	0	**66**	
1515 - 1530	0	56	16	0	0	0	0	0	0	0	0	0	0	**72**	
1530 - 1545	0	39	10	0	1	0	0	0	0	0	0	0	0	**50**	
1545 - 1600	1	60	9	0	0	2	1	0	0	0	0	0	0	**73**	**261**
1600 - 1615	0	59	10	0	1	6	1	0	4	0	0	0	0	**81**	
1615 - 1630	0	73	14	0	2	2	0	0	1	0	0	0	0	**92**	
1630 - 1645	1	52	17	1	1	3	0	1	3	0	0	0	0	**79**	
1645 - 1700	0	69	14	1	3	3	0	0	1	0	0	0	0	**91**	**343**
1700 - 1715	0	73	13	0	0	2	0	0	6	0	0	0	0	**94**	
1715 - 1730	0	79	12	0	1	0	0	0	1	0	0	0	0	**93**	
1730 - 1745	0	74	12	0	1	1	0	0	0	0	0	0	0	**88**	
1745 - 1800	0	86	15	0	1	0	0	0	1	0	0	0	0	**103**	**378**
1800 - 1815	0	78	11	0	1	0	0	0	0	0	0	0	0	**90**	
1815 - 1830	0	57	9	0	0	3	0	0	0	0	0	0	0	**69**	
1830 - 1845	0	52	8	0	2	1	0	0	1	0	0	0	0	**64**	
1845 - 1900	0	57	12	0	0	0	0	0	0	0	0	0	0	**69**	**292**
1900 - 1915	1	37	12	0	0	0	0	0	1	0	0	0	0	**51**	
1915 - 1930	0	33	9	0	1	0	0	0	0	0	0	0	0	**43**	
1930 - 1945	0	29	7	0	1	3	0	0	0	0	0	0	0	**40**	
1945 - 2000	0	26	7	1	0	1	0	0	0	0	0	0	0	**35**	**169**
2000 - 2015	0	20	5	0	1	0	0	0	0	0	0	0	0	**26**	
2015 - 2030	0	30	10	0	1	0	0	0	1	0	0	0	0	**42**	
2030 - 2045	0	26	12	0	0	0	0	0	0	0	0	0	0	**38**	
2045 - 2100	0	16	5	0	0	0	0	0	0	0	0	0	0	**21**	**127**
2100 - 2115	0	21	6	0	2	1	0	0	1	0	0	0	0	**31**	
2115 - 2130	0	23	6	0	0	3	0	0	0	0	0	0	0	**32**	
2130 - 2145	0	16	6	0	0	0	0	0	1	0	0	0	0	**23**	
2145 - 2200	0	23	10	0	0	0	0	0	0	0	0	0	0	**33**	**119**
2200 - 2215	0	12	4	0	1	1	0	0	0	0	0	0	0	**18**	
2215 - 2230	0	14	3	0	0	0	0	0	1	0	0	0	0	**18**	
2230 - 2245	0	16	5	0	0	0	0	0	0	0	0	0	0	**21**	
2245 - 2300	0	12	3	0	0	0	0	0	0	0	0	0	0	**15**	**72**
2300 - 2315	0	13	5	0	1	0	0	0	0	0	0	0	0	**19**	
2315 - 2330	0	8	1	0	0	0	0	0	0	0	0	0	0	**9**	
2330 - 2345	0	9	2	0	0	0	0	0	0	0	0	0	0	**11**	
2345 - 0000	0	7	2	0	0	1	0	0	0	0	0	0	0	**10**	**49**

Session Total	3	3744	762	5	70	98	17	6	58	0	0	0	0	**4763**
Session Average	0.03	39.00	7.94	0.05	0.73	1.02	0.18	0.06	0.60	0.00	0.00	0.00	0.00	**49.61**
Session Percentage	0.06	78.61	16.00	0.10	1.47	2.06	0.36	0.13	1.22	0.00	0.00	0.00	0.00	

AM Peak Hour	-	0745 - 0845	0715 - 0815	-	0745 - 0845	0730 - 0830	0730 - 0830	0830 - 0930	0830 - 0930	-	-	-	-	**0745 - 0845**
AM Peak Volume	0	491	77	0	7	11	2	2	5	0	0	0	0	**578**

Noon Peak Hour	-	1215 - 1315	1115 - 1215	1000 - 1100	1145 - 1245	1000 - 1100	1115 - 1215	1245 - 1345	1130 - 1230	-	-	-	-	**1230 - 1330**
Noon Peak Volume	0	263	60	1	6	7	5	2	5	0	0	0	0	**330**

PM Peak Hour	1545 - 1645	1715 - 1815	1615 - 1715	1600 - 1700	1600 - 1700	1600 - 1700	1515 - 1615	1545 - 1645	1615 - 1715	-	-	-	-	**1700 - 1800**
PM Peak Volume	2	317	58	2	7	14	2	1	11	0	0	0	0	**378**

Site 65
I-20 S/Bound Off-Ramp,
north of Bush River Rd

Date
Thursday, April 25, 2024

Lat/Long
34.032566°, -81.121140°

Weather
Fair
67°F

Click here for Detailed Weather

0000 - 2400 (Weekday 24h Session) (04-25-2024)
SB WB 15min

	Southbound (Movement 65.1)													15min	60min
TIME	1	2	3	4	5	6	7	8	9	10	11	12	13	Total	Total
0000 - 0015	0	9	2	0	0	3	0	0	0	0	0	0	0	**14**	
0015 - 0030	0	6	1	0	0	0	0	0	0	0	0	0	0	**7**	
0030 - 0045	0	9	2	0	0	1	0	0	0	0	0	0	0	**12**	
0045 - 0100	0	5	1	0	0	2	0	0	0	0	0	0	0	**8**	**41**
0100 - 0115	0	2	0	0	0	0	0	0	0	0	0	0	0	**2**	
0115 - 0130	0	5	1	0	0	0	0	0	0	0	0	0	0	**6**	
0130 - 0145	0	3	0	0	0	3	0	0	0	0	0	0	0	**6**	
0145 - 0200	0	4	1	0	0	1	0	0	0	0	0	0	0	**6**	**20**
0200 - 0215	0	1	0	0	0	1	0	0	0	0	0	0	0	**2**	
0215 - 0230	0	5	0	0	0	4	0	0	0	0	0	0	0	**9**	
0230 - 0245	0	2	0	0	1	1	0	0	0	0	0	0	0	**4**	
0245 - 0300	0	3	0	0	0	0	0	0	0	0	0	0	0	**3**	**18**
0300 - 0315	0	2	0	0	0	2	0	0	0	0	0	0	0	**4**	
0315 - 0330	0	2	0	0	0	0	0	0	0	0	0	0	0	**2**	
0330 - 0345	0	0	0	0	0	0	0	0	0	0	0	0	0	**0**	
0345 - 0400	0	1	0	0	0	0	0	0	0	0	0	0	0	**1**	**7**
0400 - 0415	0	6	0	0	0	0	0	0	0	0	0	0	0	**6**	
0415 - 0430	0	6	1	0	0	0	0	0	1	0	0	0	0	**8**	
0430 - 0445	0	6	0	0	1	0	0	0	0	0	0	0	0	**7**	
0445 - 0500	0	8	1	0	0	0	0	0	1	0	0	0	0	**10**	**31**
0500 - 0515	0	6	0	0	0	0	0	0	0	0	0	0	0	**6**	
0515 - 0530	0	12	3	0	0	0	0	0	1	0	0	0	0	**16**	
0530 - 0545	0	10	4	0	0	0	0	0	0	0	0	0	0	**14**	
0545 - 0600	0	14	3	0	0	1	0	0	1	0	0	0	0	**19**	**55**
0600 - 0615	0	15	5	0	2	0	0	0	1	0	0	0	0	**23**	
0615 - 0630	0	20	9	0	1	1	1	0	3	0	0	0	0	**35**	
0630 - 0645	0	26	7	0	0	3	2	0	0	0	0	0	0	**38**	
0645 - 0700	0	41	8	0	1	3	2	0	0	0	0	0	0	**55**	**151**
0700 - 0715	0	46	10	0	0	3	2	0	1	0	0	0	0	**62**	
0715 - 0730	0	71	15	0	3	2	1	0	3	0	0	0	0	**95**	
0730 - 0745	0	76	12	0	0	3	1	0	1	0	0	0	0	**93**	
0745 - 0800	0	106	15	0	0	2	0	0	0	0	0	0	0	**123**	**373**
0800 - 0815	0	108	18	0	0	3	1	0	2	0	0	0	0	**132**	
0815 - 0830	0	141	20	0	0	3	1	0	3	0	0	0	0	**168**	
0830 - 0845	0	123	15	0	0	2	2	0	1	0	0	0	0	**143**	
0845 - 0900	0	75	12	0	1	2	1	0	1	0	0	0	0	**92**	**535**
0900 - 0915	0	58	15	0	1	1	0	0	2	0	0	0	0	**77**	
0915 - 0930	0	43	10	0	0	4	1	0	4	0	0	0	0	**62**	
0930 - 0945	1	66	12	0	1	2	1	0	0	0	0	0	0	**83**	
0945 - 1000	0	55	9	0	1	1	0	0	1	0	0	0	0	**67**	**289**
1000 - 1015	0	35	9	0	1	1	0	0	3	0	0	0	0	**49**	
1015 - 1030	0	43	10	1	2	4	2	0	0	0	0	0	0	**62**	
1030 - 1045	0	49	11	0	0	3	0	0	0	0	0	0	0	**63**	
1045 - 1100	0	53	11	0	1	2	0	0	1	0	0	0	0	**68**	**242**
1100 - 1115	0	46	13	0	1	4	1	0	4	0	0	0	0	**69**	
1115 - 1130	0	57	14	0	2	2	1	0	0	0	0	0	0	**76**	
1130 - 1145	0	51	15	0	1	3	1	0	0	0	0	0	0	**71**	
1145 - 1200	0	58	12	0	2	1	0	0	2	0	0	0	0	**75**	**291**
1200 - 1215	0	60	10	0	1	1	1	0	3	0	0	0	0	**76**	
1215 - 1230	0	55	11	0	1	4	1	1	1	0	0	0	0	**74**	
1230 - 1245	0	63	16	0	2	4	1	0	1	0	0	0	0	**87**	
1245 - 1300	0	62	11	0	2	2	0	0	2	0	0	0	0	**79**	**316**
1300 - 1315	0	66	12	0	0	1	1	0	1	0	0	0	0	**81**	
1315 - 1330	1	57	12	0	2	3	1	0	0	0	0	0	0	**76**	
1330 - 1345	0	49	8	0	2	3	1	0	1	0	0	0	0	**64**	
1345 - 1400	0	53	12	0	2	2	1	0	1	0	0	0	0	**71**	**292**
1400 - 1415	0	61	11	0	0	1	0	0	0	0	0	0	0	**73**	
1415 - 1430	0	53	11	1	1	2	1	1	2	0	0	0	0	**72**	
1430 - 1445	0	57	13	0	0	0	0	0	0	0	0	0	0	**70**	
1445 - 1500	1	58	14	0	1	2	0	0	1	0	0	0	0	**77**	**292**
1500 - 1515	0	47	10	0	2	2	0	0	0	0	0	0	0	**61**	
1515 - 1530	0	50	11	0	0	3	0	0	0	0	0	0	0	**64**	
1530 - 1545	0	45	10	0	2	1	0	0	1	0	0	0	0	**59**	
1545 - 1600	0	72	17	0	4	0	0	1	2	0	0	0	0	**96**	**280**
1600 - 1615	1	90	21	0	0	3	1	0	0	0	0	0	0	**116**	
1615 - 1630	0	77	19	1	1	1	0	1	2	0	0	0	0	**102**	
1630 - 1645	0	65	11	0	0	4	0	0	3	0	0	0	0	**83**	
1645 - 1700	0	86	20	0	0	4	1	0	3	0	0	0	0	**114**	**415**
1700 - 1715	0	67	11	0	0	8	1	0	1	0	0	0	0	**88**	
1715 - 1730	1	70	12	1	1	5	0	0	2	0	0	0	0	**92**	
1730 - 1745	0	80	13	0	1	3	0	0	1	0	0	0	0	**98**	
1745 - 1800	0	96	17	0	0	4	0	1	3	0	0	0	0	**121**	**399**
1800 - 1815	4	85	19	0	1	2	0	0	0	0	0	0	0	**111**	
1815 - 1830	0	63	10	0	0	1	0	0	0	0	0	0	0	**74**	
1830 - 1845	0	67	11	0	2	2	0	0	1	0	0	0	0	**83**	
1845 - 1900	0	38	5	0	0	0	0	0	0	0	0	0	0	**43**	**311**
1900 - 1915	0	0	0	0	0	0	0	0	0	0	0	0	0	**0**	
1915 - 1930	0	0	0	0	0	0	0	0	0	0	0	0	0	**0**	
1930 - 1945	0	0	0	0	0	0	0	0	0	0	0	0	0	**0**	
1945 - 2000	0	0	0	0	0	0	0	0	0	0	0	0	0	**0**	**0**
2000 - 2015	0	0	0	0	0	0	0	0	0	0	0	0	0	**0**	
2015 - 2030	0	0	0	0	0	0	0	0	0	0	0	0	0	**0**	
2030 - 2045	0	0	0	0	0	0	0	0	0	0	0	0	0	**0**	
2045 - 2100	0	0	0	0	0	0	0	0	0	0	0	0	0	**0**	**0**
2100 - 2115	0	0	0	0	0	0	0	0	0	0	0	0	0	**0**	
2115 - 2130	0	0	0	0	0	0	0	0	0	0	0	0	0	**0**	
2130 - 2145	0	0	0	0	0	0	0	0	0	0	0	0	0	**0**	
2145 - 2200	0	0	0	0	0	0	0	0	0	0	0	0	0	**0**	**0**
2200 - 2215	0	0	0	0	0	0	0	0	0	0	0	0	0	**0**	
2215 - 2230	0	0	0	0	0	0	0	0	0	0	0	0	0	**0**	
2230 - 2245	0	0	0	0	0	0	0	0	0	0	0	0	0	**0**	
2245 - 2300	0	0	0	0	0	0	0	0	0	0	0	0	0	**0**	**0**
2300 - 2315	0	0	0	0	0	0	0	0	0	0	0	0	0	**0**	
2315 - 2330	0	0	0	0	0	0	0	0	0	0	0	0	0	**0**	
2330 - 2345	0	0	0	0	0	0	0	0	0	0	0	0	0	**0**	
2345 - 0000	0	0	0	0	0	0	0	0	0	0	0	0	0	**0**	**0**

Session Total	9	3381	665	4	51	142	32	5	69	0	0	0	0	**4358**
Session Average	0.09	35.22	6.93	0.04	0.53	1.48	0.33	0.05	0.72	0.00	0.00	0.00	0.00	**45.40**
Session Percentage	0.21	77.58	15.26	0.09	1.17	3.26	0.73	0.11	1.58	0.00	0.00	0.00	0.00	

AM Peak Hour	0845 - 0945	0745 - 0845	0745 - 0845	0930 - 1030	0930 - 1030	0630 - 0730	0615 - 0715	-	0830 - 0930	-	-	-	-	**0745 - 0845**
AM Peak Hour Volume	1	478	68	1	5	11	7	0	8	0	0	0	0	**566**

Noon Peak Hour	1230 - 1330	1230 - 1330	1100 - 1200	1000 - 1100	1100 - 1200	1015 - 1115	1300 - 1400	1130 - 1230	1145 - 1245	-	-	-	-	**1230 - 1330**
Noon Peak Hour Volume	1	248	54	1	6	13	4	1	7	0	0	0	0	**323**

PM Peak Hour	1715 - 1815	1715 - 1815	1600 - 1700	1530 - 1630	1500 - 1600	1630 - 1730	1600 - 1700	1530 - 1630	1615 - 1715	-	-	-	-	**1715 - 1815**
PM Peak Hour Volume	5	331	71	1	8	21	2	2	9	0	0	0	0	**422**

Bi-Directional Class Count || SB WB Average 15min

Columbia, SC

Marr Traffic DATA COLLECTION
www.marrtraffic.com

Site 65
I-20 S/Bound Off-Ramp,
north of Bush River Rd

Date
Tuesday, April 23, 2024

Lat/Long
34.032566°, -81.121140°

Weather
Fair
58°F

0000 - 2400 (Weekday 24h Session) (All Dates)
SB WB Average 15min

	SB WB Average 15min													15min	60min
Time	1	2	3	4	5	6	7	8	9	10	11	12	13	Total	Total
0000 - 0015	0	6	1	0	0	2	0	0	0	0	0	0	0	**9**	
0015 - 0030	0	4	0	0	0	1	0	0	0	0	0	0	0	**5**	
0030 - 0045	0	5	1	0	0	0	0	0	0	0	0	0	0	**6**	
0045 - 0100	0	3	0	0	1	1	0	0	0	0	0	0	0	**6**	**26**
0100 - 0115	0	1	0	0	1	0	0	0	0	0	0	0	0	**3**	
0115 - 0130	0	4	1	0	0	0	0	0	0	0	0	0	0	**5**	
0130 - 0145	0	2	0	0	0	1	0	0	0	0	0	0	0	**4**	
0145 - 0200	0	3	0	0	0	0	0	0	0	0	0	0	0	**3**	**15**
0200 - 0215	0	2	0	0	0	0	0	0	0	0	0	0	0	**3**	
0215 - 0230	0	3	1	0	0	2	0	0	0	0	0	0	0	**6**	
0230 - 0245	0	1	0	0	0	0	0	0	0	0	0	0	0	**2**	
0245 - 0300	0	2	0	0	0	0	0	0	0	0	0	0	0	**3**	**14**
0300 - 0315	0	2	0	0	0	1	0	0	0	0	0	0	0	**3**	
0315 - 0330	0	2	0	0	0	0	0	0	0	0	0	0	0	**3**	
0330 - 0345	0	1	0	0	0	0	0	0	0	0	0	0	0	**1**	
0345 - 0400	0	2	0	0	0	0	0	0	0	0	0	0	0	**2**	**8**
0400 - 0415	0	4	0	0	0	0	0	0	0	0	0	0	0	**4**	
0415 - 0430	0	3	1	0	0	0	0	0	0	0	0	0	0	**4**	
0430 - 0445	0	3	0	0	0	0	0	0	0	0	0	0	0	**4**	
0445 - 0500	0	5	1	0	0	0	0	0	1	0	0	0	0	**6**	**19**
0500 - 0515	0	6	1	0	0	0	0	0	0	0	0	0	0	**7**	
0515 - 0530	0	7	1	0	0	0	0	0	0	0	0	0	0	**9**	
0530 - 0545	0	6	2	0	0	0	0	0	0	0	0	0	0	**9**	
0545 - 0600	0	9	2	0	0	0	0	0	1	0	0	0	0	**12**	**37**
0600 - 0615	0	9	2	0	1	0	0	0	0	0	0	0	0	**12**	
0615 - 0630	0	15	6	0	1	0	0	0	1	0	0	0	0	**23**	
0630 - 0645	0	22	6	0	0	2	1	0	0	0	0	0	0	**31**	
0645 - 0700	0	26	6	0	1	1	1	0	1	0	0	0	0	**36**	**102**
0700 - 0715	0	31	7	0	1	1	1	0	0	0	0	0	0	**40**	
0715 - 0730	0	48	11	0	1	1	0	0	1	0	0	0	0	**62**	
0730 - 0745	0	59	12	0	0	3	1	0	0	0	0	0	0	**74**	
0745 - 0800	0	75	13	0	1	1	0	0	0	0	0	0	0	**90**	**267**
0800 - 0815	0	74	11	0	0	2	0	0	1	0	0	0	0	**87**	
0815 - 0830	0	84	11	0	1	2	1	0	1	0	0	0	0	**100**	
0830 - 0845	0	90	11	0	1	1	1	0	0	0	0	0	0	**104**	
0845 - 0900	0	58	8	0	1	1	0	0	1	0	0	0	0	**69**	**360**
0900 - 0915	0	38	8	0	0	1	0	0	1	0	0	0	0	**48**	
0915 - 0930	0	30	6	0	0	2	0	1	2	0	0	0	0	**42**	
0930 - 0945	0	40	7	0	0	2	0	0	0	0	0	0	0	**50**	
0945 - 1000	0	36	6	0	0	1	0	0	1	0	0	0	0	**44**	**184**
1000 - 1015	0	26	6	0	1	1	0	0	1	0	0	0	0	**35**	
1015 - 1030	0	29	7	0	1	3	1	0	0	0	0	0	0	**42**	
1030 - 1045	0	31	7	0	0	1	0	0	0	0	0	0	0	**40**	
1045 - 1100	0	33	7	0	0	1	0	0	1	0	0	0	0	**42**	**160**
1100 - 1115	0	31	8	0	1	2	0	0	1	0	0	0	0	**43**	
1115 - 1130	0	33	8	0	1	2	1	0	0	0	0	0	0	**45**	
1130 - 1145	0	34	11	0	0	1	1	0	0	0	0	0	0	**48**	
1145 - 1200	0	37	10	0	1	0	0	0	1	0	0	0	0	**50**	**186**
1200 - 1215	0	34	8	0	1	1	1	0	2	0	0	0	0	**46**	
1215 - 1230	0	40	6	0	0	2	1	0	1	0	0	0	0	**50**	
1230 - 1245	0	43	9	0	1	1	0	0	1	0	0	0	0	**55**	
1245 - 1300	0	45	10	0	1	1	0	0	1	0	0	0	0	**57**	**209**
1300 - 1315	0	42	8	0	0	1	1	0	1	0	0	0	0	**53**	
1315 - 1330	0	40	9	0	1	1	0	0	0	0	0	0	0	**53**	
1330 - 1345	0	33	5	0	1	1	1	0	1	0	0	0	0	**42**	
1345 - 1400	0	41	8	0	1	1	0	0	1	0	0	0	0	**52**	**199**
1400 - 1415	0	37	6	0	1	0	0	0	0	0	0	0	0	**44**	
1415 - 1430	0	39	7	0	0	1	1	0	1	0	0	0	0	**49**	
1430 - 1445	0	32	8	0	1	0	0	0	0	0	0	0	0	**41**	
1445 - 1500	0	38	8	0	0	1	0	0	1	0	0	0	0	**49**	**183**
1500 - 1515	0	34	6	0	1	1	0	0	0	0	0	0	0	**42**	
1515 - 1530	0	35	9	0	0	1	0	0	0	0	0	0	0	**45**	
1530 - 1545	0	28	7	0	1	0	0	0	0	0	0	0	0	**36**	
1545 - 1600	0	44	9	0	1	1	0	0	1	0	0	0	0	**56**	**180**
1600 - 1615	0	50	10	0	0	3	1	0	1	0	0	0	0	**66**	
1615 - 1630	0	50	11	0	1	1	0	0	1	0	0	0	0	**65**	
1630 - 1645	0	39	9	0	0	2	0	0	2	0	0	0	0	**54**	
1645 - 1700	0	52	11	0	1	2	0	0	1	0	0	0	0	**68**	**253**
1700 - 1715	0	47	8	0	0	3	0	0	2	0	0	0	0	**61**	
1715 - 1730	0	50	8	0	1	2	0	0	1	0	0	0	0	**62**	
1730 - 1745	0	51	8	0	1	1	0	0	0	0	0	0	0	**62**	
1745 - 1800	0	61	11	0	0	1	0	0	1	0	0	0	0	**75**	**259**
1800 - 1815	1	54	10	0	1	1	0	0	0	0	0	0	0	**67**	
1815 - 1830	0	40	6	0	0	1	0	0	0	0	0	0	0	**48**	
1830 - 1845	0	40	6	0	1	1	0	0	1	0	0	0	0	**49**	
1845 - 1900	0	32	6	0	0	0	0	0	0	0	0	0	0	**37**	**201**
1900 - 1915	0	26	7	0	0	0	0	0	0	0	0	0	0	**34**	
1915 - 1930	0	26	6	0	1	1	0	0	0	0	0	0	0	**33**	
1930 - 1945	0	22	5	0	0	2	0	0	0	0	0	0	0	**29**	
1945 - 2000	0	21	5	0	0	1	0	0	0	0	0	0	0	**28**	**124**
2000 - 2015	0	13	3	0	0	0	0	0	0	0	0	0	0	**16**	
2015 - 2030	0	20	6	0	0	0	0	0	0	0	0	0	0	**26**	
2030 - 2045	0	17	6	0	0	1	0	0	0	0	0	0	0	**24**	
2045 - 2100	0	12	4	0	0	0	0	0	0	0	0	0	0	**16**	**82**
2100 - 2115	0	13	3	0	1	0	0	0	0	0	0	0	0	**18**	
2115 - 2130	0	15	4	0	0	1	0	0	0	0	0	0	0	**20**	
2130 - 2145	0	11	3	0	0	0	0	0	0	0	0	0	0	**15**	
2145 - 2200	0	12	4	0	0	0	0	0	0	0	0	0	0	**17**	**70**
2200 - 2215	0	10	2	0	0	1	0	0	0	0	0	0	0	**14**	
2215 - 2230	0	11	2	0	0	0	0	0	0	0	0	0	0	**14**	
2230 - 2245	0	10	3	0	0	0	0	0	0	0	0	0	0	**14**	
2245 - 2300	0	11	2	0	0	0	0	0	0	0	0	0	0	**14**	**56**
2300 - 2315	0	7	2	0	0	0	0	0	0	0	0	0	0	**10**	
2315 - 2330	0	6	1	0	0	1	0	0	0	0	0	0	0	**8**	
2330 - 2345	0	6	1	0	0	1	0	0	0	0	0	0	0	**8**	
2345 - 0000	0	4	1	0	0	0	0	0	0	0	0	0	0	**5**	**31**

Session Total	4	2519	507	3	42	87	16	4	43	0	0	0	0	**3225**
Session Average	0.04	26.24	5.28	0.03	0.44	0.91	0.17	0.04	0.44	0.00	0.00	0.00	0.00	**33.59**
Session Percentage	0.12	78.11	15.73	0.09	1.30	2.70	0.51	0.11	1.32	0.00	0.00	0.00	0.00	

AM Peak Hour	0845 - 0945	0745 - 0845	0730 - 0830	0930 - 1030	0630 - 0730	0730 - 0830	0630 - 0730	0830 - 0930	0830 - 0930	-	-	-	-	**0745 - 0845**
AM Peak Volume	0	323	46	0	3	7	2	1	4	0	0	0	0	**381**

Noon Peak Hour	1230 - 1330	1215 - 1315	1100 - 1200	1000 - 1100	1145 - 1245	1015 - 1115	1115 - 1215	1245 - 1345	1145 - 1245	-	-	-	-	**1230 - 1330**
Noon Peak Volume	0	170	37	1	4	7	3	1	4	0	0	0	0	**218**

PM Peak Hour	1715 - 1815	1715 - 1815	1600 - 1700	1600 - 1700	1530 - 1630	1630 - 1730	1515 - 1615	1545 - 1645	1615 - 1715	-	-	-	-	**1715 - 1815**
PM Peak Volume	2	216	42	1	4	10	1	1	7	0	0	0	0	**265**

Bi-Directional Class Count || Volume Summary 15min

Columbia, SC

Marr Traffic DATA COLLECTION

www.marrtraffic.com

Site 65

I-20 S/Bound Off-Ramp,
north of Bush River Rd

Date

Tuesday, April 23, 2024

Lat/Long

34.032566°, -81.121140°

Weather

Fair
58°F

Click here for Detailed Weather

0000 - 2400 (Weekday 24h Session) (04-23-2024)

Volume Summary 15min

TIME	Volume Summary 15min NB	Volume Summary 15min SB	15min Total	60min Total
0000 - 0015	0	0	**0**	
0015 - 0030	0	0	**0**	
0030 - 0045	0	0	**0**	
0045 - 0100	0	0	**0**	**0**
0100 - 0115	0	0	**0**	
0115 - 0130	0	0	**0**	
0130 - 0145	0	0	**0**	
0145 - 0200	0	0	**0**	**0**
0200 - 0215	0	0	**0**	
0215 - 0230	0	0	**0**	
0230 - 0245	0	0	**0**	
0245 - 0300	0	0	**0**	**0**
0300 - 0315	0	0	**0**	
0315 - 0330	0	0	**0**	
0330 - 0345	0	0	**0**	
0345 - 0400	0	0	**0**	**0**
0400 - 0415	0	0	**0**	
0415 - 0430	0	0	**0**	
0430 - 0445	0	0	**0**	
0445 - 0500	0	0	**0**	**0**
0500 - 0515	0	0	**0**	
0515 - 0530	0	0	**0**	
0530 - 0545	0	0	**0**	
0545 - 0600	0	0	**0**	**0**
0600 - 0615	0	0	**0**	
0615 - 0630	0	0	**0**	
0630 - 0645	0	0	**0**	
0645 - 0700	0	0	**0**	**0**
0700 - 0715	0	0	**0**	
0715 - 0730	0	0	**0**	
0730 - 0745	0	0	**0**	
0745 - 0800	0	0	**0**	**0**
0800 - 0815	0	0	**0**	
0815 - 0830	0	0	**0**	
0830 - 0845	0	0	**0**	
0845 - 0900	0	0	**0**	**0**
0900 - 0915	0	0	**0**	
0915 - 0930	0	0	**0**	
0930 - 0945	0	0	**0**	
0945 - 1000	0	0	**0**	**0**
1000 - 1015	0	0	**0**	
1015 - 1030	0	0	**0**	
1030 - 1045	0	0	**0**	
1045 - 1100	0	0	**0**	**0**
1100 - 1115	0	0	**0**	
1115 - 1130	0	0	**0**	
1130 - 1145	0	0	**0**	
1145 - 1200	0	0	**0**	**0**

Time	Volume Summary 15min NB	Volume Summary 15min SB	15min Total	60min Total
1200 - 1215	0	0	**0**	
1215 - 1230	0	0	**0**	
1230 - 1245	0	0	**0**	
1245 - 1300	0	0	**0**	**0**
1300 - 1315	0	0	**0**	
1315 - 1330	0	0	**0**	
1330 - 1345	0	0	**0**	
1345 - 1400	0	0	**0**	**0**
1400 - 1415	0	0	**0**	
1415 - 1430	0	0	**0**	
1430 - 1445	0	0	**0**	
1445 - 1500	0	0	**0**	**0**
1500 - 1515	0	0	**0**	
1515 - 1530	0	0	**0**	
1530 - 1545	0	0	**0**	
1545 - 1600	0	0	**0**	**0**
1600 - 1615	0	0	**0**	
1615 - 1630	0	0	**0**	
1630 - 1645	0	0	**0**	
1645 - 1700	0	0	**0**	**0**
1700 - 1715	0	0	**0**	
1715 - 1730	0	0	**0**	
1730 - 1745	0	0	**0**	
1745 - 1800	0	0	**0**	**0**
1800 - 1815	0	0	**0**	
1815 - 1830	0	0	**0**	
1830 - 1845	0	0	**0**	
1845 - 1900	0	0	**0**	**0**
1900 - 1915	0	51	**51**	
1915 - 1930	0	57	**57**	
1930 - 1945	0	47	**47**	
1945 - 2000	0	49	**49**	**204**
2000 - 2015	0	22	**22**	
2015 - 2030	0	37	**37**	
2030 - 2045	0	34	**34**	
2045 - 2100	0	26	**26**	**119**
2100 - 2115	0	22	**22**	
2115 - 2130	0	29	**29**	
2130 - 2145	0	22	**22**	
2145 - 2200	0	17	**17**	**90**
2200 - 2215	0	25	**25**	
2215 - 2230	0	25	**25**	
2230 - 2245	0	20	**20**	
2245 - 2300	0	26	**26**	**96**
2300 - 2315	0	11	**11**	
2315 - 2330	0	15	**15**	
2330 - 2345	0	14	**14**	
2345 - 0000	0	5	**5**	**45**

Session Total	0	554	**554**
Session Average	0.00	5.77	**5.77**
Session Percentage	0.00	100.00	

Site 65
I-20 S/Bound Off-Ramp,
north of Bush River Rd

Date
Wednesday, April 24, 2024

Lat/Long
34.032566°, -81.121140°

Weather
Fair
66°F

Click here for Detailed Weather

0000 - 2400 (Weekday 24h Session) (04-24-2024)
Volume Summary 15min

TIME	Volume Summary 15min NB	SB	15min Total	60min Total
0000 - 0015	0	13	**13**	
0015 - 0030	0	9	**9**	
0030 - 0045	0	7	**7**	
0045 - 0100	0	9	**9**	**38**
0100 - 0115	0	6	**6**	
0115 - 0130	0	9	**9**	
0130 - 0145	0	5	**5**	
0145 - 0200	0	4	**4**	**24**
0200 - 0215	0	7	**7**	
0215 - 0230	0	9	**9**	
0230 - 0245	0	2	**2**	
0245 - 0300	0	5	**5**	**23**
0300 - 0315	0	4	**4**	
0315 - 0330	0	6	**6**	
0330 - 0345	0	2	**2**	
0345 - 0400	0	6	**6**	**18**
0400 - 0415	0	7	**7**	
0415 - 0430	0	5	**5**	
0430 - 0445	0	4	**4**	
0445 - 0500	0	9	**9**	**25**
0500 - 0515	0	16	**16**	
0515 - 0530	0	11	**11**	
0530 - 0545	0	14	**14**	
0545 - 0600	0	16	**16**	**57**
0600 - 0615	0	14	**14**	
0615 - 0630	0	34	**34**	
0630 - 0645	0	54	**54**	
0645 - 0700	0	52	**52**	**154**
0700 - 0715	0	59	**59**	
0715 - 0730	0	92	**92**	
0730 - 0745	0	130	**130**	
0745 - 0800	0	147	**147**	**428**
0800 - 0815	0	129	**129**	
0815 - 0830	0	132	**132**	
0830 - 0845	0	170	**170**	
0845 - 0900	0	115	**115**	**546**
0900 - 0915	0	66	**66**	
0915 - 0930	0	63	**63**	
0930 - 0945	0	67	**67**	
0945 - 1000	0	66	**66**	**262**
1000 - 1015	0	56	**56**	
1015 - 1030	0	64	**64**	
1030 - 1045	0	58	**58**	
1045 - 1100	0	59	**59**	**237**
1100 - 1115	0	60	**60**	
1115 - 1130	0	58	**58**	
1130 - 1145	0	74	**74**	
1145 - 1200	0	76	**76**	**268**

Time	Volume Summary 15min NB	SB	15min Total	60min Total
1200 - 1215	0	63	**63**	
1215 - 1230	0	77	**77**	
1230 - 1245	0	79	**79**	
1245 - 1300	0	92	**92**	**311**
1300 - 1315	0	77	**77**	
1315 - 1330	0	82	**82**	
1330 - 1345	0	61	**61**	
1345 - 1400	0	85	**85**	**305**
1400 - 1415	0	59	**59**	
1415 - 1430	0	76	**76**	
1430 - 1445	0	52	**52**	
1445 - 1500	0	70	**70**	**257**
1500 - 1515	0	66	**66**	
1515 - 1530	0	72	**72**	
1530 - 1545	0	50	**50**	
1545 - 1600	0	73	**73**	**261**
1600 - 1615	0	81	**81**	
1615 - 1630	0	92	**92**	
1630 - 1645	0	79	**79**	
1645 - 1700	0	91	**91**	**343**
1700 - 1715	0	94	**94**	
1715 - 1730	0	93	**93**	
1730 - 1745	0	88	**88**	
1745 - 1800	0	103	**103**	**378**
1800 - 1815	0	90	**90**	
1815 - 1830	0	69	**69**	
1830 - 1845	0	64	**64**	
1845 - 1900	0	69	**69**	**292**
1900 - 1915	0	51	**51**	
1915 - 1930	0	43	**43**	
1930 - 1945	0	40	**40**	
1945 - 2000	0	35	**35**	**169**
2000 - 2015	0	26	**26**	
2015 - 2030	0	42	**42**	
2030 - 2045	0	38	**38**	
2045 - 2100	0	21	**21**	**127**
2100 - 2115	0	31	**31**	
2115 - 2130	0	32	**32**	
2130 - 2145	0	23	**23**	
2145 - 2200	0	33	**33**	**119**
2200 - 2215	0	18	**18**	
2215 - 2230	0	18	**18**	
2230 - 2245	0	21	**21**	
2245 - 2300	0	15	**15**	**72**
2300 - 2315	0	19	**19**	
2315 - 2330	0	9	**9**	
2330 - 2345	0	11	**11**	
2345 - 0000	0	10	**10**	**49**

Session Total	0	4763	**4763**
Session Average	0.00	49.61	**49.61**
Session Percentage	0.00	100.00	

Site 65
I-20 S/Bound Off-Ramp,
north of Bush River Rd

Date
Thursday, April 25, 2024

Lat/Long
34.032566°, -81.121140°

Weather
Fair
67°F

Click here for Detailed Weather

0000 - 2400 (Weekday 24h Session) (04-25-2024)
Volume Summary 15min

TIME	Volume Summary 15min NB	SB	15min Total	60min Total
0000 - 0015	0	14	**14**	
0015 - 0030	0	7	**7**	
0030 - 0045	0	12	**12**	
0045 - 0100	0	8	**8**	**41**
0100 - 0115	0	2	**2**	
0115 - 0130	0	6	**6**	
0130 - 0145	0	6	**6**	
0145 - 0200	0	6	**6**	**20**
0200 - 0215	0	2	**2**	
0215 - 0230	0	9	**9**	
0230 - 0245	0	4	**4**	
0245 - 0300	0	3	**3**	**18**
0300 - 0315	0	4	**4**	
0315 - 0330	0	2	**2**	
0330 - 0345	0	0	**0**	
0345 - 0400	0	1	**1**	**7**
0400 - 0415	0	6	**6**	
0415 - 0430	0	8	**8**	
0430 - 0445	0	7	**7**	
0445 - 0500	0	10	**10**	**31**
0500 - 0515	0	6	**6**	
0515 - 0530	0	16	**16**	
0530 - 0545	0	14	**14**	
0545 - 0600	0	19	**19**	**55**
0600 - 0615	0	23	**23**	
0615 - 0630	0	35	**35**	
0630 - 0645	0	38	**38**	
0645 - 0700	0	55	**55**	**151**
0700 - 0715	0	62	**62**	
0715 - 0730	0	95	**95**	
0730 - 0745	0	93	**93**	
0745 - 0800	0	123	**123**	**373**
0800 - 0815	0	132	**132**	
0815 - 0830	0	168	**168**	
0830 - 0845	0	143	**143**	
0845 - 0900	0	92	**92**	**535**
0900 - 0915	0	77	**77**	
0915 - 0930	0	62	**62**	
0930 - 0945	0	83	**83**	
0945 - 1000	0	67	**67**	**289**
1000 - 1015	0	49	**49**	
1015 - 1030	0	62	**62**	
1030 - 1045	0	63	**63**	
1045 - 1100	0	68	**68**	**242**
1100 - 1115	0	69	**69**	
1115 - 1130	0	76	**76**	
1130 - 1145	0	71	**71**	
1145 - 1200	0	75	**75**	**291**

Time	Volume Summary 15min NB	SB	15min Total	60min Total
1200 - 1215	0	76	**76**	
1215 - 1230	0	74	**74**	
1230 - 1245	0	87	**87**	
1245 - 1300	0	79	**79**	**316**
1300 - 1315	0	81	**81**	
1315 - 1330	0	76	**76**	
1330 - 1345	0	64	**64**	
1345 - 1400	0	71	**71**	**292**
1400 - 1415	0	73	**73**	
1415 - 1430	0	72	**72**	
1430 - 1445	0	70	**70**	
1445 - 1500	0	77	**77**	**292**
1500 - 1515	0	61	**61**	
1515 - 1530	0	64	**64**	
1530 - 1545	0	59	**59**	
1545 - 1600	0	96	**96**	**280**
1600 - 1615	0	116	**116**	
1615 - 1630	0	102	**102**	
1630 - 1645	0	83	**83**	
1645 - 1700	0	114	**114**	**415**
1700 - 1715	0	88	**88**	
1715 - 1730	0	92	**92**	
1730 - 1745	0	98	**98**	
1745 - 1800	0	121	**121**	**399**
1800 - 1815	0	111	**111**	
1815 - 1830	0	74	**74**	
1830 - 1845	0	83	**83**	
1845 - 1900	0	43	**43**	**311**
1900 - 1915	0	0	**0**	
1915 - 1930	0	0	**0**	
1930 - 1945	0	0	**0**	
1945 - 2000	0	0	**0**	**0**
2000 - 2015	0	0	**0**	
2015 - 2030	0	0	**0**	
2030 - 2045	0	0	**0**	
2045 - 2100	0	0	**0**	**0**
2100 - 2115	0	0	**0**	
2115 - 2130	0	0	**0**	
2130 - 2145	0	0	**0**	
2145 - 2200	0	0	**0**	**0**
2200 - 2215	0	0	**0**	
2215 - 2230	0	0	**0**	
2230 - 2245	0	0	**0**	
2245 - 2300	0	0	**0**	**0**
2300 - 2315	0	0	**0**	
2315 - 2330	0	0	**0**	
2330 - 2345	0	0	**0**	
2345 - 0000	0	0	**0**	**0**

Session Total	0	4358	**4358**
Session Average	0.00	45.40	**45.40**
Session Percentage	0.00	100.00	

Bi-Directional Class Count || SB WB 60min

Columbia, SC

Marr Traffic DATA COLLECTION

www.marrtraffic.com

Site 65
I-20 S/Bound Off-Ramp,
north of Bush River Rd

Date
Tuesday, April 23, 2024

Lat/Long
34.032566°, -81.121140°

Weather
Fair
58°F

Click here for Detailed Weather

0000 - 2400 (Weekday 24h Session) (04-23-2024)
SB WB 60min

	Southbound (Movement 65.1)													
TIME	1	2	3	4	5	6	7	8	9	10	11	12	13	**Total**
0000 - 0100	0	0	0	0	0	0	0	0	0	0	0	0	0	**0**
0100 - 0200	0	0	0	0	0	0	0	0	0	0	0	0	0	**0**
0200 - 0300	0	0	0	0	0	0	0	0	0	0	0	0	0	**0**
0300 - 0400	0	0	0	0	0	0	0	0	0	0	0	0	0	**0**
0400 - 0500	0	0	0	0	0	0	0	0	0	0	0	0	0	**0**
0500 - 0600	0	0	0	0	0	0	0	0	0	0	0	0	0	**0**
0600 - 0700	0	0	0	0	0	0	0	0	0	0	0	0	0	**0**
0700 - 0800	0	0	0	0	0	0	0	0	0	0	0	0	0	**0**
0800 - 0900	0	0	0	0	0	0	0	0	0	0	0	0	0	**0**
0900 - 1000	0	0	0	0	0	0	0	0	0	0	0	0	0	**0**
1000 - 1100	0	0	0	0	0	0	0	0	0	0	0	0	0	**0**
1100 - 1200	0	0	0	0	0	0	0	0	0	0	0	0	0	**0**
1200 - 1300	0	0	0	0	0	0	0	0	0	0	0	0	0	**0**
1300 - 1400	0	0	0	0	0	0	0	0	0	0	0	0	0	**0**
1400 - 1500	0	0	0	0	0	0	0	0	0	0	0	0	0	**0**
1500 - 1600	0	0	0	0	0	0	0	0	0	0	0	0	0	**0**
1600 - 1700	0	0	0	0	0	0	0	0	0	0	0	0	0	**0**
1700 - 1800	0	0	0	0	0	0	0	0	0	0	0	0	0	**0**
1800 - 1900	0	0	0	0	0	0	0	0	0	0	0	0	0	**0**
1900 - 2000	0	162	33	0	3	6	0	0	0	0	0	0	0	**204**
2000 - 2100	0	92	23	0	0	3	0	0	1	0	0	0	0	**119**
2100 - 2200	0	70	16	0	1	3	0	0	0	0	0	0	0	**90**
2200 - 2300	0	74	16	0	1	5	0	0	0	0	0	0	0	**96**
2300 - 2400	0	34	7	0	0	4	0	0	0	0	0	0	0	**45**
Session Total	0	432	95	0	5	21	0	0	1	0	0	0	0	**554**
Session Average	0.00	18.00	3.96	0.00	0.21	0.88	0.00	0.00	0.04	0.00	0.00	0.00	0.00	**23.08**
Session Percentage	0.00	77.98	17.15	0.00	0.90	3.79	0.00	0.00	0.18	0.00	0.00	0.00	0.00	
AM Peak Hour	-	-	-	-	-	-	-	-	-	-	-	-	-	**-**
AM Peak Volume	0	0	0	0	0	0	0	0	0	0	0	0	0	**0**
Noon Peak Hour	-	-	-	-	-	-	-	-	-	-	-	-	-	**-**
Noon Peak Volume	0	0	0	0	0	0	0	0	0	0	0	0	0	**0**
PM Peak Hour	-	1900 - 2000	1900 - 2000	-	1900 - 2000	1900 - 2000	-	-	-	-	-	-	-	**1900 - 2000**
PM Peak Volume	0	162	33	0	3	6	0	0	0	0	0	0	0	**204**

Site 65
I-20 S/Bound Off-Ramp,
north of Bush River Rd

Date
Wednesday, April 24, 2024

Lat/Long
34.032566°, -81.121140°

Weather
Fair
66°F

Click here for Detailed Weather

0000 - 2400 (Weekday 24h Session) (04-24-2024)
SB WB 60min

	Southbound (Movement 65.1)													
TIME	1	2	3	4	5	6	7	8	9	10	11	12	13	**Total**
0000 - 0100	0	25	2	0	4	6	0	0	1	0	0	0	0	**38**
0100 - 0200	0	17	1	0	3	2	0	1	0	0	0	0	0	**24**
0200 - 0300	0	17	3	0	0	2	0	0	1	0	0	0	0	**23**
0300 - 0400	0	15	1	0	0	2	0	0	0	0	0	0	0	**18**
0400 - 0500	0	20	2	0	1	0	0	0	2	0	0	0	0	**25**
0500 - 0600	0	42	8	0	3	2	0	0	2	0	0	0	0	**57**
0600 - 0700	0	111	33	0	3	4	0	0	3	0	0	0	0	**154**
0700 - 0800	0	338	73	0	6	8	1	0	2	0	0	0	0	**428**
0800 - 0900	0	470	58	0	6	8	1	0	3	0	0	0	0	**546**
0900 - 1000	0	209	36	0	1	9	0	2	5	0	0	0	0	**262**
1000 - 1100	0	179	41	1	5	7	2	0	2	0	0	0	0	**237**
1100 - 1200	0	195	58	1	4	4	4	0	2	0	0	0	0	**268**
1200 - 1300	0	244	51	0	4	5	2	0	5	0	0	0	0	**311**
1300 - 1400	0	244	46	0	2	4	3	2	4	0	0	0	0	**305**
1400 - 1500	0	208	38	0	5	1	2	0	3	0	0	0	0	**257**
1500 - 1600	1	210	44	0	2	3	1	0	0	0	0	0	0	**261**
1600 - 1700	1	253	55	2	7	14	1	1	9	0	0	0	0	**343**
1700 - 1800	0	312	52	0	3	3	0	0	8	0	0	0	0	**378**
1800 - 1900	0	244	40	0	3	4	0	0	1	0	0	0	0	**292**
1900 - 2000	1	125	35	1	2	4	0	0	1	0	0	0	0	**169**
2000 - 2100	0	92	32	0	2	0	0	0	1	0	0	0	0	**127**
2100 - 2200	0	83	28	0	2	4	0	0	2	0	0	0	0	**119**
2200 - 2300	0	54	15	0	1	1	0	0	1	0	0	0	0	**72**
2300 - 2400	0	37	10	0	1	1	0	0	0	0	0	0	0	**49**

Session Total	3	3744	762	5	70	98	17	6	58	0	0	0	0	**4763**
Session Average	0.13	156.00	31.75	0.21	2.92	4.08	0.71	0.25	2.42	0.00	0.00	0.00	0.00	**198.46**
Session Percentage	0.06	78.61	16.00	0.10	1.47	2.06	0.36	0.13	1.22	0.00	0.00	0.00	0.00	

AM Peak Hour	-	0800 - 0900	0700 - 0800	-	0700 - 0800	0900 - 1000	0700 - 0800	0900 - 1000	0900 - 1000	-	-	-	-	**0800 - 0900**
AM Peak Volume	0	470	73	0	6	9	1	2	5	0	0	0	0	**546**

Noon Peak Hour	-	1200 - 1300	1100 - 1200	1000 - 1100	1000 - 1100	1000 - 1100	1100 - 1200	1300 - 1400	1200 - 1300	-	-	-	-	**1200 - 1300**
Noon Peak Volume	0	244	58	1	5	7	4	2	5	0	0	0	0	**311**

PM Peak Hour	1500 - 1600	1700 - 1800	1600 - 1700	1600 - 1700	1600 - 1700	1600 - 1700	1500 - 1600	1600 - 1700	1600 - 1700	-	-	-	-	**1700 - 1800**
PM Peak Volume	1	312	55	2	7	14	1	1	9	0	0	0	0	**378**

Site 65
I-20 S/Bound Off-Ramp,
north of Bush River Rd

Date
Thursday, April 25, 2024

Lat/Long
34.032566°, -81.121140°

Weather
Fair
67°F

Click here for Detailed Weather

0000 - 2400 (Weekday 24h Session) (04-25-2024)
SB WB 60min

	Southbound (Movement 65.1)													
TIME	1	2	3	4	5	6	7	8	9	10	11	12	13	**Total**
0000 - 0100	0	29	6	0	0	6	0	0	0	0	0	0	0	**41**
0100 - 0200	0	14	2	0	0	4	0	0	0	0	0	0	0	**20**
0200 - 0300	0	11	0	0	1	6	0	0	0	0	0	0	0	**18**
0300 - 0400	0	5	0	0	0	2	0	0	0	0	0	0	0	**7**
0400 - 0500	0	26	2	0	1	0	0	0	2	0	0	0	0	**31**
0500 - 0600	0	42	10	0	0	1	0	0	2	0	0	0	0	**55**
0600 - 0700	0	102	29	0	4	7	5	0	4	0	0	0	0	**151**
0700 - 0800	0	299	52	0	3	10	4	0	5	0	0	0	0	**373**
0800 - 0900	0	447	65	0	1	10	5	0	7	0	0	0	0	**535**
0900 - 1000	1	222	46	0	3	8	2	0	7	0	0	0	0	**289**
1000 - 1100	0	180	41	1	4	10	2	0	4	0	0	0	0	**242**
1100 - 1200	0	212	54	0	6	10	3	0	6	0	0	0	0	**291**
1200 - 1300	0	240	48	0	6	11	3	1	7	0	0	0	0	**316**
1300 - 1400	1	225	44	0	6	9	4	0	3	0	0	0	0	**292**
1400 - 1500	1	229	49	1	2	5	1	1	3	0	0	0	0	**292**
1500 - 1600	0	214	48	0	8	6	0	1	3	0	0	0	0	**280**
1600 - 1700	1	318	71	1	1	12	2	1	8	0	0	0	0	**415**
1700 - 1800	1	313	53	1	2	20	1	1	7	0	0	0	0	**399**
1800 - 1900	4	253	45	0	3	5	0	0	1	0	0	0	0	**311**
1900 - 2000	0	0	0	0	0	0	0	0	0	0	0	0	0	**0**
2000 - 2100	0	0	0	0	0	0	0	0	0	0	0	0	0	**0**
2100 - 2200	0	0	0	0	0	0	0	0	0	0	0	0	0	**0**
2200 - 2300	0	0	0	0	0	0	0	0	0	0	0	0	0	**0**
2300 - 2400	0	0	0	0	0	0	0	0	0	0	0	0	0	**0**

Session Total	9	3381	665	4	51	142	32	5	69	0	0	0	0	**4358**
Session Average	0.38	140.88	27.71	0.17	2.13	5.92	1.33	0.21	2.88	0.00	0.00	0.00	0.00	**181.58**
Session Percentage	0.21	77.58	15.26	0.09	1.17	3.26	0.73	0.11	1.58	0.00	0.00	0.00	0.00	

AM Peak Hour	0900 - 1000	0800 - 0900	0800 - 0900	-	0600 - 0700	0700 - 0800	0600 - 0700	-	0800 - 0900	-	-	-	-	**0800 - 0900**
AM Peak Hour Volume	1	447	65	0	4	10	5	0	7	0	0	0	0	**535**

Noon Peak Hour	1300 - 1400	1200 - 1300	1100 - 1200	1000 - 1100	1100 - 1200	1200 - 1300	1300 - 1400	1200 - 1300	1200 - 1300	-	-	-	-	**1200 - 1300**
Noon Peak Hour Volume	1	240	54	1	6	11	4	1	7	0	0	0	0	**316**

PM Peak Hour	1800 - 1900	1600 - 1700	1600 - 1700	1600 - 1700	1500 - 1600	1700 - 1800	1600 - 1700	1500 - 1600	1600 - 1700	-	-	-	-	**1600 - 1700**
PM Peak Hour Volume	4	318	71	1	8	20	2	1	8	0	0	0	0	**415**

Bi-Directional Class Count || Volume Summary 60min

Columbia, SC

Marr Traffic DATA COLLECTION

www.marrtraffic.com

Site 65

I-20 S/Bound Off-Ramp,
north of Bush River Rd

Date

Tuesday, April 23, 2024

Lat/Long

34.032566°, -81.121140°

Weather

Fair
58°F

Click here for Detailed Weather

0000 - 2400 (Weekday 24h Session) (04-23-2024)

Volume Summary 60min

	Volume Summary 60min		
TIME	NB	SB	**Total**
0000 - 0100	0	0	**0**
0100 - 0200	0	0	**0**
0200 - 0300	0	0	**0**
0300 - 0400	0	0	**0**
0400 - 0500	0	0	**0**
0500 - 0600	0	0	**0**
0600 - 0700	0	0	**0**
0700 - 0800	0	0	**0**
0800 - 0900	0	0	**0**
0900 - 1000	0	0	**0**
1000 - 1100	0	0	**0**
1100 - 1200	0	0	**0**

	Volume Summary 60min		
Time	NB	SB	**Total**
1200 - 1300	0	0	**0**
1300 - 1400	0	0	**0**
1400 - 1500	0	0	**0**
1500 - 1600	0	0	**0**
1600 - 1700	0	0	**0**
1700 - 1800	0	0	**0**
1800 - 1900	0	0	**0**
1900 - 2000	0	204	**204**
2000 - 2100	0	119	**119**
2100 - 2200	0	90	**90**
2200 - 2300	0	96	**96**
2300 - 2400	0	45	**45**

Session Total	0	554	**554**
Session Average	0.00	23.08	**23.08**
Session Percentage	0.00	100.00	

Site 65

I-20 S/Bound Off-Ramp,
north of Bush River Rd

Date

Wednesday, April 24, 2024

Lat/Long

34.032566°, -81.121140°

Weather

Fair
66°F

Click here for Detailed Weather

0000 - 2400 (Weekday 24h Session) (04-24-2024)

Volume Summary 60min

	Volume Summary 60min		
TIME	NB	SB	**Total**
0000 - 0100	0	38	**38**
0100 - 0200	0	24	**24**
0200 - 0300	0	23	**23**
0300 - 0400	0	18	**18**
0400 - 0500	0	25	**25**
0500 - 0600	0	57	**57**
0600 - 0700	0	154	**154**
0700 - 0800	0	428	**428**
0800 - 0900	0	546	**546**
0900 - 1000	0	262	**262**
1000 - 1100	0	237	**237**
1100 - 1200	0	268	**268**

Session Total	0	4763	**4763**
Session Average	0.00	198.46	**198.46**
Session Percentage	0.00	100.00	

	Volume Summary 60min		
Time	NB	SB	**Total**
1200 - 1300	0	311	**311**
1300 - 1400	0	305	**305**
1400 - 1500	0	257	**257**
1500 - 1600	0	261	**261**
1600 - 1700	0	343	**343**
1700 - 1800	0	378	**378**
1800 - 1900	0	292	**292**
1900 - 2000	0	169	**169**
2000 - 2100	0	127	**127**
2100 - 2200	0	119	**119**
2200 - 2300	0	72	**72**
2300 - 2400	0	49	**49**

Site 65

I-20 S/Bound Off-Ramp,
north of Bush River Rd

Date

Thursday, April 25, 2024

Lat/Long

34.032566°, -81.121140°

Weather

Fair
67°F

Click here for Detailed Weather

0000 - 2400 (Weekday 24h Session) (04-25-2024)

Volume Summary 60min

	Volume Summary 60min		
TIME	NB	SB	**Total**
0000 - 0100	0	41	**41**
0100 - 0200	0	20	**20**
0200 - 0300	0	18	**18**
0300 - 0400	0	7	**7**
0400 - 0500	0	31	**31**
0500 - 0600	0	55	**55**
0600 - 0700	0	151	**151**
0700 - 0800	0	373	**373**
0800 - 0900	0	535	**535**
0900 - 1000	0	289	**289**
1000 - 1100	0	242	**242**
1100 - 1200	0	291	**291**

Session Total	0	4358	**4358**
Session Average	0.00	181.58	**181.58**
Session Percentage	0.00	100.00	

	Volume Summary 60min		
Time	NB	SB	**Total**
1200 - 1300	0	316	**316**
1300 - 1400	0	292	**292**
1400 - 1500	0	292	**292**
1500 - 1600	0	280	**280**
1600 - 1700	0	415	**415**
1700 - 1800	0	399	**399**
1800 - 1900	0	311	**311**
1900 - 2000	0	0	**0**
2000 - 2100	0	0	**0**
2100 - 2200	0	0	**0**
2200 - 2300	0	0	**0**
2300 - 2400	0	0	**0**

Bi-Directional Class Count || Graphical Analysis SB WB

Columbia, SC

www.marrtraffic.com

Site 65

I-20 S/Bound Off-Ramp,
north of Bush River Rd

Lat/Long

34.032566°, -81.121140°

0000 - 2400 (Weekday 24h Session)

Graphical Analysis SB WB

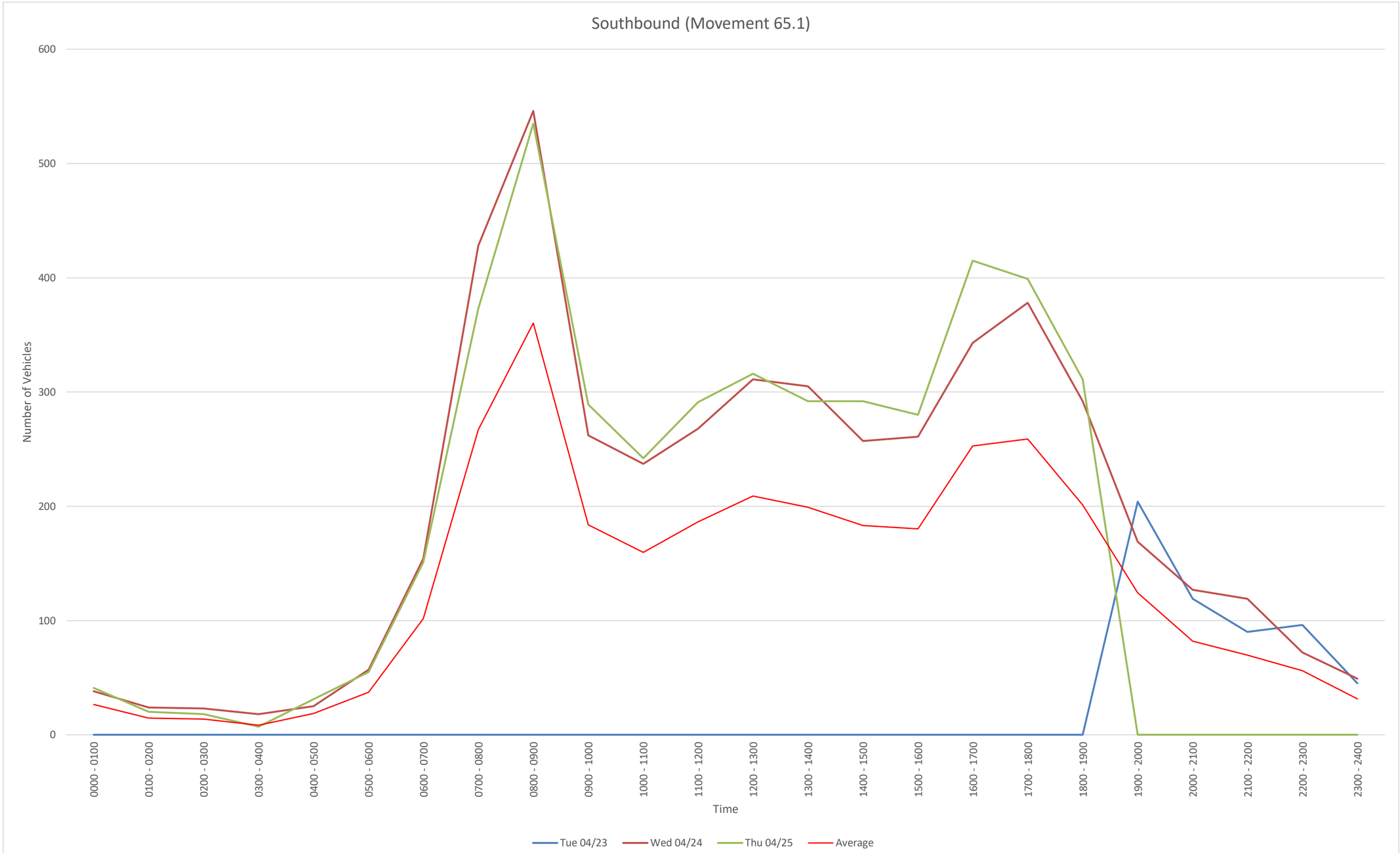

Time	Tue 04/23	Wed 04/24	Thu 04/25				
0000 - 0100	0	38	41				
0100 - 0200	0	24	20				
0200 - 0300	0	23	18				
0300 - 0400	0	18	7				
0400 - 0500	0	25	31				
0500 - 0600	0	57	55				
0600 - 0700	0	154	151				
0700 - 0800	0	428	373				
0800 - 0900	0	546	535				
0900 - 1000	0	262	289				
1000 - 1100	0	237	242				
1100 - 1200	0	268	291				
1200 - 1300	0	311	316				
1300 - 1400	0	305	292				
1400 - 1500	0	257	292				
1500 - 1600	0	261	280				
1600 - 1700	0	343	415				
1700 - 1800	0	378	399				
1800 - 1900	0	292	311				
1900 - 2000	204	169	0				
2000 - 2100	119	127	0				
2100 - 2200	90	119	0				
2200 - 2300	96	72	0				
2300 - 2400	45	49	0				
Daily Total	554	4763	4358				

NB
File Name:
Start Date: 4/23/2024
Start Time: 0
Site Code: 65
Station ID: 1
Location 1: I-20 S/Bound Off-Ramp, north of Bush River Rd
Location 2:

Date	Time	1	2	3	4	5	6	7	8	9	10	11	12	13
4/23/2024	12:00 AM	0	0	0	0	0	0	0	0	0	0	0	0	0
4/23/2024	12:15 AM	0	0	0	0	0	0	0	0	0	0	0	0	0
4/23/2024	12:30 AM	0	0	0	0	0	0	0	0	0	0	0	0	0
4/23/2024	12:45 AM	0	0	0	0	0	0	0	0	0	0	0	0	0
4/23/2024	1:00 AM	0	0	0	0	0	0	0	0	0	0	0	0	0
4/23/2024	1:15 AM	0	0	0	0	0	0	0	0	0	0	0	0	0
4/23/2024	1:30 AM	0	0	0	0	0	0	0	0	0	0	0	0	0
4/23/2024	1:45 AM	0	0	0	0	0	0	0	0	0	0	0	0	0
4/23/2024	2:00 AM	0	0	0	0	0	0	0	0	0	0	0	0	0
4/23/2024	2:15 AM	0	0	0	0	0	0	0	0	0	0	0	0	0
4/23/2024	2:30 AM	0	0	0	0	0	0	0	0	0	0	0	0	0
4/23/2024	2:45 AM	0	0	0	0	0	0	0	0	0	0	0	0	0
4/23/2024	3:00 AM	0	0	0	0	0	0	0	0	0	0	0	0	0
4/23/2024	3:15 AM	0	0	0	0	0	0	0	0	0	0	0	0	0
4/23/2024	3:30 AM	0	0	0	0	0	0	0	0	0	0	0	0	0
4/23/2024	3:45 AM	0	0	0	0	0	0	0	0	0	0	0	0	0
4/23/2024	4:00 AM	0	0	0	0	0	0	0	0	0	0	0	0	0
4/23/2024	4:15 AM	0	0	0	0	0	0	0	0	0	0	0	0	0
4/23/2024	4:30 AM	0	0	0	0	0	0	0	0	0	0	0	0	0
4/23/2024	4:45 AM	0	0	0	0	0	0	0	0	0	0	0	0	0
4/23/2024	5:00 AM	0	0	0	0	0	0	0	0	0	0	0	0	0
4/23/2024	5:15 AM	0	0	0	0	0	0	0	0	0	0	0	0	0
4/23/2024	5:30 AM	0	0	0	0	0	0	0	0	0	0	0	0	0
4/23/2024	5:45 AM	0	0	0	0	0	0	0	0	0	0	0	0	0
4/23/2024	6:00 AM	0	0	0	0	0	0	0	0	0	0	0	0	0
4/23/2024	6:15 AM	0	0	0	0	0	0	0	0	0	0	0	0	0
4/23/2024	6:30 AM	0	0	0	0	0	0	0	0	0	0	0	0	0
4/23/2024	6:45 AM	0	0	0	0	0	0	0	0	0	0	0	0	0
4/23/2024	7:00 AM	0	0	0	0	0	0	0	0	0	0	0	0	0
4/23/2024	7:15 AM	0	0	0	0	0	0	0	0	0	0	0	0	0
4/23/2024	7:30 AM	0	0	0	0	0	0	0	0	0	0	0	0	0
4/23/2024	7:45 AM	0	0	0	0	0	0	0	0	0	0	0	0	0
4/23/2024	8:00 AM	0	0	0	0	0	0	0	0	0	0	0	0	0
4/23/2024	8:15 AM	0	0	0	0	0	0	0	0	0	0	0	0	0
4/23/2024	8:30 AM	0	0	0	0	0	0	0	0	0	0	0	0	0
4/23/2024	8:45 AM	0	0	0	0	0	0	0	0	0	0	0	0	0
4/23/2024	9:00 AM	0	0	0	0	0	0	0	0	0	0	0	0	0
4/23/2024	9:15 AM	0	0	0	0	0	0	0	0	0	0	0	0	0
4/23/2024	9:30 AM	0	0	0	0	0	0	0	0	0	0	0	0	0
4/23/2024	9:45 AM	0	0	0	0	0	0	0	0	0	0	0	0	0
4/23/2024	10:00 AM	0	0	0	0	0	0	0	0	0	0	0	0	0
4/23/2024	10:15 AM	0	0	0	0	0	0	0	0	0	0	0	0	0
4/23/2024	10:30 AM	0	0	0	0	0	0	0	0	0	0	0	0	0
4/23/2024	10:45 AM	0	0	0	0	0	0	0	0	0	0	0	0	0
4/23/2024	11:00 AM	0	0	0	0	0	0	0	0	0	0	0	0	0
4/23/2024	11:15 AM	0	0	0	0	0	0	0	0	0	0	0	0	0
4/23/2024	11:30 AM	0	0	0	0	0	0	0	0	0	0	0	0	0
4/23/2024	11:45 AM	0	0	0	0	0	0	0	0	0	0	0	0	0
4/23/2024	12:00 PM	0	0	0	0	0	0	0	0	0	0	0	0	0
4/23/2024	12:15 PM	0	0	0	0	0	0	0	0	0	0	0	0	0
4/23/2024	12:30 PM	0	0	0	0	0	0	0	0	0	0	0	0	0
4/23/2024	12:45 PM	0	0	0	0	0	0	0	0	0	0	0	0	0
4/23/2024	1:00 PM	0	0	0	0	0	0	0	0	0	0	0	0	0
4/23/2024	1:15 PM	0	0	0	0	0	0	0	0	0	0	0	0	0
4/23/2024	1:30 PM	0	0	0	0	0	0	0	0	0	0	0	0	0
4/23/2024	1:45 PM	0	0	0	0	0	0	0	0	0	0	0	0	0
4/23/2024	2:00 PM	0	0	0	0	0	0	0	0	0	0	0	0	0
4/23/2024	2:15 PM	0	0	0	0	0	0	0	0	0	0	0	0	0
4/23/2024	2:30 PM	0	0	0	0	0	0	0	0	0	0	0	0	0
4/23/2024	2:45 PM	0	0	0	0	0	0	0	0	0	0	0	0	0
4/23/2024	3:00 PM	0	0	0	0	0	0	0	0	0	0	0	0	0
4/23/2024	3:15 PM	0	0	0	0	0	0	0	0	0	0	0	0	0
4/23/2024	3:30 PM	0	0	0	0	0	0	0	0	0	0	0	0	0
4/23/2024	3:45 PM	0	0	0	0	0	0	0	0	0	0	0	0	0
4/23/2024	4:00 PM	0	0	0	0	0	0	0	0	0	0	0	0	0
4/23/2024	4:15 PM	0	0	0	0	0	0	0	0	0	0	0	0	0
4/23/2024	4:30 PM	0	0	0	0	0	0	0	0	0	0	0	0	0
4/23/2024	4:45 PM	0	0	0	0	0	0	0	0	0	0	0	0	0
4/23/2024	5:00 PM	0	0	0	0	0	0	0	0	0	0	0	0	0
4/23/2024	5:15 PM	0	0	0	0	0	0	0	0	0	0	0	0	0
4/23/2024	5:30 PM	0	0	0	0	0	0	0	0	0	0	0	0	0
4/23/2024	5:45 PM	0	0	0	0	0	0	0	0	0	0	0	0	0
4/23/2024	6:00 PM	0	0	0	0	0	0	0	0	0	0	0	0	0
4/23/2024	6:15 PM	0	0	0	0	0	0	0	0	0	0	0	0	0
4/23/2024	6:30 PM	0	0	0	0	0	0	0	0	0	0	0	0	0
4/23/2024	6:45 PM	0	0	0	0	0	0	0	0	0	0	0	0	0
4/23/2024	7:00 PM	0	0	0	0	0	0	0	0	0	0	0	0	0
4/23/2024	7:15 PM	0	0	0	0	0	0	0	0	0	0	0	0	0
4/23/2024	7:30 PM	0	0	0	0	0	0	0	0	0	0	0	0	0
4/23/2024	7:45 PM	0	0	0	0	0	0	0	0	0	0	0	0	0
4/23/2024	8:00 PM	0	0	0	0	0	0	0	0	0	0	0	0	0
4/23/2024	8:15 PM	0	0	0	0	0	0	0	0	0	0	0	0	0
4/23/2024	8:30 PM	0	0	0	0	0	0	0	0	0	0	0	0	0
4/23/2024	8:45 PM	0	0	0	0	0	0	0	0	0	0	0	0	0
4/23/2024	9:00 PM	0	0	0	0	0	0	0	0	0	0	0	0	0
4/23/2024	9:15 PM	0	0	0	0	0	0	0	0	0	0	0	0	0
4/23/2024	9:30 PM	0	0	0	0	0	0	0	0	0	0	0	0	0
4/23/2024	9:45 PM	0	0	0	0	0	0	0	0	0	0	0	0	0
4/23/2024	10:00 PM	0	0	0	0	0	0	0	0	0	0	0	0	0
4/23/2024	10:15 PM	0	0	0	0	0	0	0	0	0	0	0	0	0
4/23/2024	10:30 PM	0	0	0	0	0	0	0	0	0	0	0	0	0
4/23/2024	10:45 PM	0	0	0	0	0	0	0	0	0	0	0	0	0
4/23/2024	11:00 PM	0	0	0	0	0	0	0	0	0	0	0	0	0
4/23/2024	11:15 PM	0	0	0	0	0	0	0	0	0	0	0	0	0
4/23/2024	11:30 PM	0	0	0	0	0	0	0	0	0	0	0	0	0
4/23/2024	11:45 PM	0	0	0	0	0	0	0	0	0	0	0	0	0

4/24/2024	12:00 AM	0	0	0	0	0	0	0	0	0	0	0	0	0
4/24/2024	12:15 AM	0	0	0	0	0	0	0	0	0	0	0	0	0
4/24/2024	12:30 AM	0	0	0	0	0	0	0	0	0	0	0	0	0
4/24/2024	12:45 AM	0	0	0	0	0	0	0	0	0	0	0	0	0
4/24/2024	1:00 AM	0	0	0	0	0	0	0	0	0	0	0	0	0
4/24/2024	1:15 AM	0	0	0	0	0	0	0	0	0	0	0	0	0
4/24/2024	1:30 AM	0	0	0	0	0	0	0	0	0	0	0	0	0
4/24/2024	1:45 AM	0	0	0	0	0	0	0	0	0	0	0	0	0
4/24/2024	2:00 AM	0	0	0	0	0	0	0	0	0	0	0	0	0
4/24/2024	2:15 AM	0	0	0	0	0	0	0	0	0	0	0	0	0
4/24/2024	2:30 AM	0	0	0	0	0	0	0	0	0	0	0	0	0
4/24/2024	2:45 AM	0	0	0	0	0	0	0	0	0	0	0	0	0
4/24/2024	3:00 AM	0	0	0	0	0	0	0	0	0	0	0	0	0
4/24/2024	3:15 AM	0	0	0	0	0	0	0	0	0	0	0	0	0
4/24/2024	3:30 AM	0	0	0	0	0	0	0	0	0	0	0	0	0
4/24/2024	3:45 AM	0	0	0	0	0	0	0	0	0	0	0	0	0
4/24/2024	4:00 AM	0	0	0	0	0	0	0	0	0	0	0	0	0
4/24/2024	4:15 AM	0	0	0	0	0	0	0	0	0	0	0	0	0
4/24/2024	4:30 AM	0	0	0	0	0	0	0	0	0	0	0	0	0
4/24/2024	4:45 AM	0	0	0	0	0	0	0	0	0	0	0	0	0
4/24/2024	5:00 AM	0	0	0	0	0	0	0	0	0	0	0	0	0
4/24/2024	5:15 AM	0	0	0	0	0	0	0	0	0	0	0	0	0
4/24/2024	5:30 AM	0	0	0	0	0	0	0	0	0	0	0	0	0
4/24/2024	5:45 AM	0	0	0	0	0	0	0	0	0	0	0	0	0
4/24/2024	6:00 AM	0	0	0	0	0	0	0	0	0	0	0	0	0
4/24/2024	6:15 AM	0	0	0	0	0	0	0	0	0	0	0	0	0
4/24/2024	6:30 AM	0	0	0	0	0	0	0	0	0	0	0	0	0
4/24/2024	6:45 AM	0	0	0	0	0	0	0	0	0	0	0	0	0
4/24/2024	7:00 AM	0	0	0	0	0	0	0	0	0	0	0	0	0
4/24/2024	7:15 AM	0	0	0	0	0	0	0	0	0	0	0	0	0
4/24/2024	7:30 AM	0	0	0	0	0	0	0	0	0	0	0	0	0
4/24/2024	7:45 AM	0	0	0	0	0	0	0	0	0	0	0	0	0
4/24/2024	8:00 AM	0	0	0	0	0	0	0	0	0	0	0	0	0
4/24/2024	8:15 AM	0	0	0	0	0	0	0	0	0	0	0	0	0
4/24/2024	8:30 AM	0	0	0	0	0	0	0	0	0	0	0	0	0
4/24/2024	8:45 AM	0	0	0	0	0	0	0	0	0	0	0	0	0
4/24/2024	9:00 AM	0	0	0	0	0	0	0	0	0	0	0	0	0
4/24/2024	9:15 AM	0	0	0	0	0	0	0	0	0	0	0	0	0
4/24/2024	9:30 AM	0	0	0	0	0	0	0	0	0	0	0	0	0
4/24/2024	9:45 AM	0	0	0	0	0	0	0	0	0	0	0	0	0
4/24/2024	10:00 AM	0	0	0	0	0	0	0	0	0	0	0	0	0
4/24/2024	10:15 AM	0	0	0	0	0	0	0	0	0	0	0	0	0
4/24/2024	10:30 AM	0	0	0	0	0	0	0	0	0	0	0	0	0
4/24/2024	10:45 AM	0	0	0	0	0	0	0	0	0	0	0	0	0
4/24/2024	11:00 AM	0	0	0	0	0	0	0	0	0	0	0	0	0
4/24/2024	11:15 AM	0	0	0	0	0	0	0	0	0	0	0	0	0
4/24/2024	11:30 AM	0	0	0	0	0	0	0	0	0	0	0	0	0
4/24/2024	11:45 AM	0	0	0	0	0	0	0	0	0	0	0	0	0
4/24/2024	12:00 PM	0	0	0	0	0	0	0	0	0	0	0	0	0
4/24/2024	12:15 PM	0	0	0	0	0	0	0	0	0	0	0	0	0
4/24/2024	12:30 PM	0	0	0	0	0	0	0	0	0	0	0	0	0
4/24/2024	12:45 PM	0	0	0	0	0	0	0	0	0	0	0	0	0
4/24/2024	1:00 PM	0	0	0	0	0	0	0	0	0	0	0	0	0
4/24/2024	1:15 PM	0	0	0	0	0	0	0	0	0	0	0	0	0
4/24/2024	1:30 PM	0	0	0	0	0	0	0	0	0	0	0	0	0
4/24/2024	1:45 PM	0	0	0	0	0	0	0	0	0	0	0	0	0
4/24/2024	2:00 PM	0	0	0	0	0	0	0	0	0	0	0	0	0
4/24/2024	2:15 PM	0	0	0	0	0	0	0	0	0	0	0	0	0
4/24/2024	2:30 PM	0	0	0	0	0	0	0	0	0	0	0	0	0
4/24/2024	2:45 PM	0	0	0	0	0	0	0	0	0	0	0	0	0
4/24/2024	3:00 PM	0	0	0	0	0	0	0	0	0	0	0	0	0
4/24/2024	3:15 PM	0	0	0	0	0	0	0	0	0	0	0	0	0
4/24/2024	3:30 PM	0	0	0	0	0	0	0	0	0	0	0	0	0
4/24/2024	3:45 PM	0	0	0	0	0	0	0	0	0	0	0	0	0
4/24/2024	4:00 PM	0	0	0	0	0	0	0	0	0	0	0	0	0
4/24/2024	4:15 PM	0	0	0	0	0	0	0	0	0	0	0	0	0
4/24/2024	4:30 PM	0	0	0	0	0	0	0	0	0	0	0	0	0
4/24/2024	4:45 PM	0	0	0	0	0	0	0	0	0	0	0	0	0
4/24/2024	5:00 PM	0	0	0	0	0	0	0	0	0	0	0	0	0
4/24/2024	5:15 PM	0	0	0	0	0	0	0	0	0	0	0	0	0
4/24/2024	5:30 PM	0	0	0	0	0	0	0	0	0	0	0	0	0
4/24/2024	5:45 PM	0	0	0	0	0	0	0	0	0	0	0	0	0
4/24/2024	6:00 PM	0	0	0	0	0	0	0	0	0	0	0	0	0
4/24/2024	6:15 PM	0	0	0	0	0	0	0	0	0	0	0	0	0
4/24/2024	6:30 PM	0	0	0	0	0	0	0	0	0	0	0	0	0
4/24/2024	6:45 PM	0	0	0	0	0	0	0	0	0	0	0	0	0
4/24/2024	7:00 PM	0	0	0	0	0	0	0	0	0	0	0	0	0
4/24/2024	7:15 PM	0	0	0	0	0	0	0	0	0	0	0	0	0
4/24/2024	7:30 PM	0	0	0	0	0	0	0	0	0	0	0	0	0
4/24/2024	7:45 PM	0	0	0	0	0	0	0	0	0	0	0	0	0
4/24/2024	8:00 PM	0	0	0	0	0	0	0	0	0	0	0	0	0
4/24/2024	8:15 PM	0	0	0	0	0	0	0	0	0	0	0	0	0
4/24/2024	8:30 PM	0	0	0	0	0	0	0	0	0	0	0	0	0
4/24/2024	8:45 PM	0	0	0	0	0	0	0	0	0	0	0	0	0
4/24/2024	9:00 PM	0	0	0	0	0	0	0	0	0	0	0	0	0
4/24/2024	9:15 PM	0	0	0	0	0	0	0	0	0	0	0	0	0
4/24/2024	9:30 PM	0	0	0	0	0	0	0	0	0	0	0	0	0
4/24/2024	9:45 PM	0	0	0	0	0	0	0	0	0	0	0	0	0
4/24/2024	10:00 PM	0	0	0	0	0	0	0	0	0	0	0	0	0
4/24/2024	10:15 PM	0	0	0	0	0	0	0	0	0	0	0	0	0
4/24/2024	10:30 PM	0	0	0	0	0	0	0	0	0	0	0	0	0
4/24/2024	10:45 PM	0	0	0	0	0	0	0	0	0	0	0	0	0
4/24/2024	11:00 PM	0	0	0	0	0	0	0	0	0	0	0	0	0
4/24/2024	11:15 PM	0	0	0	0	0	0	0	0	0	0	0	0	0
4/24/2024	11:30 PM	0	0	0	0	0	0	0	0	0	0	0	0	0
4/24/2024	11:45 PM	0	0	0	0	0	0	0	0	0	0	0	0	0

4/25/2024	12:00 AM	0	0	0	0	0	0	0	0	0	0	0	0	0
4/25/2024	12:15 AM	0	0	0	0	0	0	0	0	0	0	0	0	0
4/25/2024	12:30 AM	0	0	0	0	0	0	0	0	0	0	0	0	0
4/25/2024	12:45 AM	0	0	0	0	0	0	0	0	0	0	0	0	0
4/25/2024	1:00 AM	0	0	0	0	0	0	0	0	0	0	0	0	0
4/25/2024	1:15 AM	0	0	0	0	0	0	0	0	0	0	0	0	0
4/25/2024	1:30 AM	0	0	0	0	0	0	0	0	0	0	0	0	0
4/25/2024	1:45 AM	0	0	0	0	0	0	0	0	0	0	0	0	0
4/25/2024	2:00 AM	0	0	0	0	0	0	0	0	0	0	0	0	0
4/25/2024	2:15 AM	0	0	0	0	0	0	0	0	0	0	0	0	0
4/25/2024	2:30 AM	0	0	0	0	0	0	0	0	0	0	0	0	0
4/25/2024	2:45 AM	0	0	0	0	0	0	0	0	0	0	0	0	0
4/25/2024	3:00 AM	0	0	0	0	0	0	0	0	0	0	0	0	0
4/25/2024	3:15 AM	0	0	0	0	0	0	0	0	0	0	0	0	0
4/25/2024	3:30 AM	0	0	0	0	0	0	0	0	0	0	0	0	0
4/25/2024	3:45 AM	0	0	0	0	0	0	0	0	0	0	0	0	0
4/25/2024	4:00 AM	0	0	0	0	0	0	0	0	0	0	0	0	0
4/25/2024	4:15 AM	0	0	0	0	0	0	0	0	0	0	0	0	0
4/25/2024	4:30 AM	0	0	0	0	0	0	0	0	0	0	0	0	0
4/25/2024	4:45 AM	0	0	0	0	0	0	0	0	0	0	0	0	0
4/25/2024	5:00 AM	0	0	0	0	0	0	0	0	0	0	0	0	0
4/25/2024	5:15 AM	0	0	0	0	0	0	0	0	0	0	0	0	0
4/25/2024	5:30 AM	0	0	0	0	0	0	0	0	0	0	0	0	0
4/25/2024	5:45 AM	0	0	0	0	0	0	0	0	0	0	0	0	0
4/25/2024	6:00 AM	0	0	0	0	0	0	0	0	0	0	0	0	0
4/25/2024	6:15 AM	0	0	0	0	0	0	0	0	0	0	0	0	0
4/25/2024	6:30 AM	0	0	0	0	0	0	0	0	0	0	0	0	0
4/25/2024	6:45 AM	0	0	0	0	0	0	0	0	0	0	0	0	0
4/25/2024	7:00 AM	0	0	0	0	0	0	0	0	0	0	0	0	0
4/25/2024	7:15 AM	0	0	0	0	0	0	0	0	0	0	0	0	0
4/25/2024	7:30 AM	0	0	0	0	0	0	0	0	0	0	0	0	0
4/25/2024	7:45 AM	0	0	0	0	0	0	0	0	0	0	0	0	0
4/25/2024	8:00 AM	0	0	0	0	0	0	0	0	0	0	0	0	0
4/25/2024	8:15 AM	0	0	0	0	0	0	0	0	0	0	0	0	0
4/25/2024	8:30 AM	0	0	0	0	0	0	0	0	0	0	0	0	0
4/25/2024	8:45 AM	0	0	0	0	0	0	0	0	0	0	0	0	0
4/25/2024	9:00 AM	0	0	0	0	0	0	0	0	0	0	0	0	0
4/25/2024	9:15 AM	0	0	0	0	0	0	0	0	0	0	0	0	0
4/25/2024	9:30 AM	0	0	0	0	0	0	0	0	0	0	0	0	0
4/25/2024	9:45 AM	0	0	0	0	0	0	0	0	0	0	0	0	0
4/25/2024	10:00 AM	0	0	0	0	0	0	0	0	0	0	0	0	0
4/25/2024	10:15 AM	0	0	0	0	0	0	0	0	0	0	0	0	0
4/25/2024	10:30 AM	0	0	0	0	0	0	0	0	0	0	0	0	0
4/25/2024	10:45 AM	0	0	0	0	0	0	0	0	0	0	0	0	0
4/25/2024	11:00 AM	0	0	0	0	0	0	0	0	0	0	0	0	0
4/25/2024	11:15 AM	0	0	0	0	0	0	0	0	0	0	0	0	0
4/25/2024	11:30 AM	0	0	0	0	0	0	0	0	0	0	0	0	0
4/25/2024	11:45 AM	0	0	0	0	0	0	0	0	0	0	0	0	0
4/25/2024	12:00 PM	0	0	0	0	0	0	0	0	0	0	0	0	0
4/25/2024	12:15 PM	0	0	0	0	0	0	0	0	0	0	0	0	0
4/25/2024	12:30 PM	0	0	0	0	0	0	0	0	0	0	0	0	0
4/25/2024	12:45 PM	0	0	0	0	0	0	0	0	0	0	0	0	0
4/25/2024	1:00 PM	0	0	0	0	0	0	0	0	0	0	0	0	0
4/25/2024	1:15 PM	0	0	0	0	0	0	0	0	0	0	0	0	0
4/25/2024	1:30 PM	0	0	0	0	0	0	0	0	0	0	0	0	0
4/25/2024	1:45 PM	0	0	0	0	0	0	0	0	0	0	0	0	0
4/25/2024	2:00 PM	0	0	0	0	0	0	0	0	0	0	0	0	0
4/25/2024	2:15 PM	0	0	0	0	0	0	0	0	0	0	0	0	0
4/25/2024	2:30 PM	0	0	0	0	0	0	0	0	0	0	0	0	0
4/25/2024	2:45 PM	0	0	0	0	0	0	0	0	0	0	0	0	0
4/25/2024	3:00 PM	0	0	0	0	0	0	0	0	0	0	0	0	0
4/25/2024	3:15 PM	0	0	0	0	0	0	0	0	0	0	0	0	0
4/25/2024	3:30 PM	0	0	0	0	0	0	0	0	0	0	0	0	0
4/25/2024	3:45 PM	0	0	0	0	0	0	0	0	0	0	0	0	0
4/25/2024	4:00 PM	0	0	0	0	0	0	0	0	0	0	0	0	0
4/25/2024	4:15 PM	0	0	0	0	0	0	0	0	0	0	0	0	0
4/25/2024	4:30 PM	0	0	0	0	0	0	0	0	0	0	0	0	0
4/25/2024	4:45 PM	0	0	0	0	0	0	0	0	0	0	0	0	0
4/25/2024	5:00 PM	0	0	0	0	0	0	0	0	0	0	0	0	0
4/25/2024	5:15 PM	0	0	0	0	0	0	0	0	0	0	0	0	0
4/25/2024	5:30 PM	0	0	0	0	0	0	0	0	0	0	0	0	0
4/25/2024	5:45 PM	0	0	0	0	0	0	0	0	0	0	0	0	0
4/25/2024	6:00 PM	0	0	0	0	0	0	0	0	0	0	0	0	0
4/25/2024	6:15 PM	0	0	0	0	0	0	0	0	0	0	0	0	0
4/25/2024	6:30 PM	0	0	0	0	0	0	0	0	0	0	0	0	0
4/25/2024	6:45 PM	0	0	0	0	0	0	0	0	0	0	0	0	0
4/25/2024	7:00 PM	0	0	0	0	0	0	0	0	0	0	0	0	0
4/25/2024	7:15 PM	0	0	0	0	0	0	0	0	0	0	0	0	0
4/25/2024	7:30 PM	0	0	0	0	0	0	0	0	0	0	0	0	0
4/25/2024	7:45 PM	0	0	0	0	0	0	0	0	0	0	0	0	0
4/25/2024	8:00 PM	0	0	0	0	0	0	0	0	0	0	0	0	0
4/25/2024	8:15 PM	0	0	0	0	0	0	0	0	0	0	0	0	0
4/25/2024	8:30 PM	0	0	0	0	0	0	0	0	0	0	0	0	0
4/25/2024	8:45 PM	0	0	0	0	0	0	0	0	0	0	0	0	0
4/25/2024	9:00 PM	0	0	0	0	0	0	0	0	0	0	0	0	0
4/25/2024	9:15 PM	0	0	0	0	0	0	0	0	0	0	0	0	0
4/25/2024	9:30 PM	0	0	0	0	0	0	0	0	0	0	0	0	0
4/25/2024	9:45 PM	0	0	0	0	0	0	0	0	0	0	0	0	0
4/25/2024	10:00 PM	0	0	0	0	0	0	0	0	0	0	0	0	0
4/25/2024	10:15 PM	0	0	0	0	0	0	0	0	0	0	0	0	0
4/25/2024	10:30 PM	0	0	0	0	0	0	0	0	0	0	0	0	0
4/25/2024	10:45 PM	0	0	0	0	0	0	0	0	0	0	0	0	0
4/25/2024	11:00 PM	0	0	0	0	0	0	0	0	0	0	0	0	0
4/25/2024	11:15 PM	0	0	0	0	0	0	0	0	0	0	0	0	0
4/25/2024	11:30 PM	0	0	0	0	0	0	0	0	0	0	0	0	0
4/25/2024	11:45 PM	0	0	0	0	0	0	0	0	0	0	0	0	0

SB
File Name:
Start Date: 4/23/2024
Start Time: 0
Site Code: 65
Station ID: 1
Location 1: I-20 S/Bound Off-Ramp, north of Bush River Rd
Location 2:

Date	Time	1	2	3	4	5	6	7	8	9	10	11	12	13
4/23/2024	12:00 AM	0	0	0	0	0	0	0	0	0	0	0	0	0
4/23/2024	12:15 AM	0	0	0	0	0	0	0	0	0	0	0	0	0
4/23/2024	12:30 AM	0	0	0	0	0	0	0	0	0	0	0	0	0
4/23/2024	12:45 AM	0	0	0	0	0	0	0	0	0	0	0	0	0
4/23/2024	1:00 AM	0	0	0	0	0	0	0	0	0	0	0	0	0
4/23/2024	1:15 AM	0	0	0	0	0	0	0	0	0	0	0	0	0
4/23/2024	1:30 AM	0	0	0	0	0	0	0	0	0	0	0	0	0
4/23/2024	1:45 AM	0	0	0	0	0	0	0	0	0	0	0	0	0
4/23/2024	2:00 AM	0	0	0	0	0	0	0	0	0	0	0	0	0
4/23/2024	2:15 AM	0	0	0	0	0	0	0	0	0	0	0	0	0
4/23/2024	2:30 AM	0	0	0	0	0	0	0	0	0	0	0	0	0
4/23/2024	2:45 AM	0	0	0	0	0	0	0	0	0	0	0	0	0
4/23/2024	3:00 AM	0	0	0	0	0	0	0	0	0	0	0	0	0
4/23/2024	3:15 AM	0	0	0	0	0	0	0	0	0	0	0	0	0
4/23/2024	3:30 AM	0	0	0	0	0	0	0	0	0	0	0	0	0
4/23/2024	3:45 AM	0	0	0	0	0	0	0	0	0	0	0	0	0
4/23/2024	4:00 AM	0	0	0	0	0	0	0	0	0	0	0	0	0
4/23/2024	4:15 AM	0	0	0	0	0	0	0	0	0	0	0	0	0
4/23/2024	4:30 AM	0	0	0	0	0	0	0	0	0	0	0	0	0
4/23/2024	4:45 AM	0	0	0	0	0	0	0	0	0	0	0	0	0
4/23/2024	5:00 AM	0	0	0	0	0	0	0	0	0	0	0	0	0
4/23/2024	5:15 AM	0	0	0	0	0	0	0	0	0	0	0	0	0
4/23/2024	5:30 AM	0	0	0	0	0	0	0	0	0	0	0	0	0
4/23/2024	5:45 AM	0	0	0	0	0	0	0	0	0	0	0	0	0
4/23/2024	6:00 AM	0	0	0	0	0	0	0	0	0	0	0	0	0
4/23/2024	6:15 AM	0	0	0	0	0	0	0	0	0	0	0	0	0
4/23/2024	6:30 AM	0	0	0	0	0	0	0	0	0	0	0	0	0
4/23/2024	6:45 AM	0	0	0	0	0	0	0	0	0	0	0	0	0
4/23/2024	7:00 AM	0	0	0	0	0	0	0	0	0	0	0	0	0
4/23/2024	7:15 AM	0	0	0	0	0	0	0	0	0	0	0	0	0
4/23/2024	7:30 AM	0	0	0	0	0	0	0	0	0	0	0	0	0
4/23/2024	7:45 AM	0	0	0	0	0	0	0	0	0	0	0	0	0
4/23/2024	8:00 AM	0	0	0	0	0	0	0	0	0	0	0	0	0
4/23/2024	8:15 AM	0	0	0	0	0	0	0	0	0	0	0	0	0
4/23/2024	8:30 AM	0	0	0	0	0	0	0	0	0	0	0	0	0
4/23/2024	8:45 AM	0	0	0	0	0	0	0	0	0	0	0	0	0
4/23/2024	9:00 AM	0	0	0	0	0	0	0	0	0	0	0	0	0
4/23/2024	9:15 AM	0	0	0	0	0	0	0	0	0	0	0	0	0
4/23/2024	9:30 AM	0	0	0	0	0	0	0	0	0	0	0	0	0
4/23/2024	9:45 AM	0	0	0	0	0	0	0	0	0	0	0	0	0
4/23/2024	10:00 AM	0	0	0	0	0	0	0	0	0	0	0	0	0
4/23/2024	10:15 AM	0	0	0	0	0	0	0	0	0	0	0	0	0
4/23/2024	10:30 AM	0	0	0	0	0	0	0	0	0	0	0	0	0
4/23/2024	10:45 AM	0	0	0	0	0	0	0	0	0	0	0	0	0
4/23/2024	11:00 AM	0	0	0	0	0	0	0	0	0	0	0	0	0
4/23/2024	11:15 AM	0	0	0	0	0	0	0	0	0	0	0	0	0
4/23/2024	11:30 AM	0	0	0	0	0	0	0	0	0	0	0	0	0
4/23/2024	11:45 AM	0	0	0	0	0	0	0	0	0	0	0	0	0
4/23/2024	12:00 PM	0	0	0	0	0	0	0	0	0	0	0	0	0
4/23/2024	12:15 PM	0	0	0	0	0	0	0	0	0	0	0	0	0
4/23/2024	12:30 PM	0	0	0	0	0	0	0	0	0	0	0	0	0
4/23/2024	12:45 PM	0	0	0	0	0	0	0	0	0	0	0	0	0
4/23/2024	1:00 PM	0	0	0	0	0	0	0	0	0	0	0	0	0
4/23/2024	1:15 PM	0	0	0	0	0	0	0	0	0	0	0	0	0
4/23/2024	1:30 PM	0	0	0	0	0	0	0	0	0	0	0	0	0
4/23/2024	1:45 PM	0	0	0	0	0	0	0	0	0	0	0	0	0
4/23/2024	2:00 PM	0	0	0	0	0	0	0	0	0	0	0	0	0
4/23/2024	2:15 PM	0	0	0	0	0	0	0	0	0	0	0	0	0
4/23/2024	2:30 PM	0	0	0	0	0	0	0	0	0	0	0	0	0
4/23/2024	2:45 PM	0	0	0	0	0	0	0	0	0	0	0	0	0
4/23/2024	3:00 PM	0	0	0	0	0	0	0	0	0	0	0	0	0
4/23/2024	3:15 PM	0	0	0	0	0	0	0	0	0	0	0	0	0
4/23/2024	3:30 PM	0	0	0	0	0	0	0	0	0	0	0	0	0
4/23/2024	3:45 PM	0	0	0	0	0	0	0	0	0	0	0	0	0
4/23/2024	4:00 PM	0	0	0	0	0	0	0	0	0	0	0	0	0
4/23/2024	4:15 PM	0	0	0	0	0	0	0	0	0	0	0	0	0
4/23/2024	4:30 PM	0	0	0	0	0	0	0	0	0	0	0	0	0
4/23/2024	4:45 PM	0	0	0	0	0	0	0	0	0	0	0	0	0
4/23/2024	5:00 PM	0	0	0	0	0	0	0	0	0	0	0	0	0
4/23/2024	5:15 PM	0	0	0	0	0	0	0	0	0	0	0	0	0
4/23/2024	5:30 PM	0	0	0	0	0	0	0	0	0	0	0	0	0
4/23/2024	5:45 PM	0	0	0	0	0	0	0	0	0	0	0	0	0
4/23/2024	6:00 PM	0	0	0	0	0	0	0	0	0	0	0	0	0
4/23/2024	6:15 PM	0	0	0	0	0	0	0	0	0	0	0	0	0
4/23/2024	6:30 PM	0	0	0	0	0	0	0	0	0	0	0	0	0
4/23/2024	6:45 PM	0	0	0	0	0	0	0	0	0	0	0	0	0
4/23/2024	7:00 PM	0	41	9	0	1	0	0	0	0	0	0	0	0
4/23/2024	7:15 PM	0	46	8	0	1	2	0	0	0	0	0	0	0
4/23/2024	7:30 PM	0	37	8	0	0	2	0	0	0	0	0	0	0
4/23/2024	7:45 PM	0	38	8	0	1	2	0	0	0	0	0	0	0
4/23/2024	8:00 PM	0	18	4	0	0	0	0	0	0	0	0	0	0
4/23/2024	8:15 PM	0	30	7	0	0	0	0	0	0	0	0	0	0
4/23/2024	8:30 PM	0	25	6	0	0	2	0	0	1	0	0	0	0
4/23/2024	8:45 PM	0	19	6	0	0	1	0	0	0	0	0	0	0
4/23/2024	9:00 PM	0	18	4	0	0	0	0	0	0	0	0	0	0
4/23/2024	9:15 PM	0	22	6	0	0	1	0	0	0	0	0	0	0
4/23/2024	9:30 PM	0	17	3	0	1	1	0	0	0	0	0	0	0
4/23/2024	9:45 PM	0	13	3	0	0	1	0	0	0	0	0	0	0
4/23/2024	10:00 PM	0	19	3	0	0	3	0	0	0	0	0	0	0
4/23/2024	10:15 PM	0	19	4	0	1	1	0	0	0	0	0	0	0
4/23/2024	10:30 PM	0	15	5	0	0	0	0	0	0	0	0	0	0
4/23/2024	10:45 PM	0	21	4	0	0	1	0	0	0	0	0	0	0
4/23/2024	11:00 PM	0	9	2	0	0	0	0	0	0	0	0	0	0
4/23/2024	11:15 PM	0	11	2	0	0	2	0	0	0	0	0	0	0
4/23/2024	11:30 PM	0	10	2	0	0	2	0	0	0	0	0	0	0
4/23/2024	11:45 PM	0	4	1	0	0	0	0	0	0	0	0	0	0

4/24/2024	12:00 AM	0	9	1	0	1	2	0	0	0	0	0	0	0
4/24/2024	12:15 AM	0	6	0	0	1	2	0	0	0	0	0	0	0
4/24/2024	12:30 AM	0	6	1	0	0	0	0	0	0	0	0	0	0
4/24/2024	12:45 AM	0	4	0	0	2	2	0	0	1	0	0	0	0
4/24/2024	1:00 AM	0	2	0	0	2	1	0	1	0	0	0	0	0
4/24/2024	1:15 AM	0	7	1	0	0	1	0	0	0	0	0	0	0
4/24/2024	1:30 AM	0	4	0	0	1	0	0	0	0	0	0	0	0
4/24/2024	1:45 AM	0	4	0	0	0	0	0	0	0	0	0	0	0
4/24/2024	2:00 AM	0	6	1	0	0	0	0	0	0	0	0	0	0
4/24/2024	2:15 AM	0	5	2	0	0	1	0	0	1	0	0	0	0
4/24/2024	2:30 AM	0	2	0	0	0	0	0	0	0	0	0	0	0
4/24/2024	2:45 AM	0	4	0	0	0	1	0	0	0	0	0	0	0
4/24/2024	3:00 AM	0	4	0	0	0	0	0	0	0	0	0	0	0
4/24/2024	3:15 AM	0	4	1	0	0	1	0	0	0	0	0	0	0
4/24/2024	3:30 AM	0	2	0	0	0	0	0	0	0	0	0	0	0
4/24/2024	3:45 AM	0	5	0	0	0	1	0	0	0	0	0	0	0
4/24/2024	4:00 AM	0	6	0	0	0	0	0	0	1	0	0	0	0
4/24/2024	4:15 AM	0	3	1	0	1	0	0	0	0	0	0	0	0
4/24/2024	4:30 AM	0	4	0	0	0	0	0	0	0	0	0	0	0
4/24/2024	4:45 AM	0	7	1	0	0	0	0	0	1	0	0	0	0
4/24/2024	5:00 AM	0	12	2	0	1	0	0	0	1	0	0	0	0
4/24/2024	5:15 AM	0	8	1	0	1	1	0	0	0	0	0	0	0
4/24/2024	5:30 AM	0	9	3	0	1	1	0	0	0	0	0	0	0
4/24/2024	5:45 AM	0	13	2	0	0	0	0	0	1	0	0	0	0
4/24/2024	6:00 AM	0	12	2	0	0	0	0	0	0	0	0	0	0
4/24/2024	6:15 AM	0	24	9	0	1	0	0	0	0	0	0	0	0
4/24/2024	6:30 AM	0	39	11	0	1	3	0	0	0	0	0	0	0
4/24/2024	6:45 AM	0	36	11	0	1	1	0	0	3	0	0	0	0
4/24/2024	7:00 AM	0	46	10	0	3	0	0	0	0	0	0	0	0
4/24/2024	7:15 AM	0	72	17	0	0	2	0	0	1	0	0	0	0
4/24/2024	7:30 AM	0	100	23	0	1	5	1	0	0	0	0	0	0
4/24/2024	7:45 AM	0	120	23	0	2	1	0	0	1	0	0	0	0
4/24/2024	8:00 AM	0	113	14	0	0	2	0	0	0	0	0	0	0
4/24/2024	8:15 AM	0	111	13	0	3	3	1	0	1	0	0	0	0
4/24/2024	8:30 AM	0	147	19	0	2	2	0	0	0	0	0	0	0
4/24/2024	8:45 AM	0	99	12	0	1	1	0	0	2	0	0	0	0
4/24/2024	9:00 AM	0	55	8	0	0	2	0	0	1	0	0	0	0
4/24/2024	9:15 AM	0	46	9	0	1	3	0	2	2	0	0	0	0
4/24/2024	9:30 AM	0	54	10	0	0	3	0	0	0	0	0	0	0
4/24/2024	9:45 AM	0	54	9	0	0	1	0	0	2	0	0	0	0
4/24/2024	10:00 AM	0	44	8	0	2	1	1	0	0	0	0	0	0
4/24/2024	10:15 AM	0	44	12	0	2	4	1	0	1	0	0	0	0
4/24/2024	10:30 AM	0	45	11	0	1	1	0	0	0	0	0	0	0
4/24/2024	10:45 AM	0	46	10	1	0	1	0	0	1	0	0	0	0
4/24/2024	11:00 AM	0	46	11	0	2	1	0	0	0	0	0	0	0
4/24/2024	11:15 AM	0	43	11	0	0	3	1	0	0	0	0	0	0
4/24/2024	11:30 AM	0	52	19	0	0	0	2	0	1	0	0	0	0
4/24/2024	11:45 AM	0	54	17	1	2	0	1	0	1	0	0	0	0
4/24/2024	12:00 PM	0	42	13	0	3	2	1	0	2	0	0	0	0
4/24/2024	12:15 PM	0	65	8	0	0	2	1	0	1	0	0	0	0
4/24/2024	12:30 PM	0	65	12	0	1	0	0	0	1	0	0	0	0
4/24/2024	12:45 PM	0	72	18	0	0	1	0	0	1	0	0	0	0
4/24/2024	1:00 PM	0	61	12	0	0	1	2	0	1	0	0	0	0
4/24/2024	1:15 PM	0	63	14	0	2	1	0	1	1	0	0	0	0
4/24/2024	1:30 PM	0	51	7	0	0	0	1	1	1	0	0	0	0
4/24/2024	1:45 PM	0	69	13	0	0	2	0	0	1	0	0	0	0
4/24/2024	2:00 PM	0	49	7	0	3	0	0	0	0	0	0	0	0
4/24/2024	2:15 PM	0	64	10	0	0	0	1	0	1	0	0	0	0
4/24/2024	2:30 PM	0	40	10	0	2	0	0	0	0	0	0	0	0
4/24/2024	2:45 PM	0	55	11	0	0	1	1	0	2	0	0	0	0
4/24/2024	3:00 PM	0	55	9	0	1	1	0	0	0	0	0	0	0
4/24/2024	3:15 PM	0	56	16	0	0	0	0	0	0	0	0	0	0
4/24/2024	3:30 PM	0	39	10	0	1	0	0	0	0	0	0	0	0
4/24/2024	3:45 PM	1	60	9	0	0	2	1	0	0	0	0	0	0
4/24/2024	4:00 PM	0	59	10	0	1	6	1	0	4	0	0	0	0
4/24/2024	4:15 PM	0	73	14	0	2	2	0	0	1	0	0	0	0
4/24/2024	4:30 PM	1	52	17	1	1	3	0	1	3	0	0	0	0
4/24/2024	4:45 PM	0	69	14	1	3	3	0	0	1	0	0	0	0
4/24/2024	5:00 PM	0	73	13	0	0	2	0	0	6	0	0	0	0
4/24/2024	5:15 PM	0	79	12	0	1	0	0	0	1	0	0	0	0
4/24/2024	5:30 PM	0	74	12	0	1	1	0	0	0	0	0	0	0
4/24/2024	5:45 PM	0	86	15	0	1	0	0	0	1	0	0	0	0
4/24/2024	6:00 PM	0	78	11	0	1	0	0	0	0	0	0	0	0
4/24/2024	6:15 PM	0	57	9	0	0	3	0	0	0	0	0	0	0
4/24/2024	6:30 PM	0	52	8	0	2	1	0	0	1	0	0	0	0
4/24/2024	6:45 PM	0	57	12	0	0	0	0	0	0	0	0	0	0
4/24/2024	7:00 PM	1	37	12	0	0	0	0	0	1	0	0	0	0
4/24/2024	7:15 PM	0	33	9	0	1	0	0	0	0	0	0	0	0
4/24/2024	7:30 PM	0	29	7	0	1	3	0	0	0	0	0	0	0
4/24/2024	7:45 PM	0	26	7	1	0	1	0	0	0	0	0	0	0
4/24/2024	8:00 PM	0	20	5	0	1	0	0	0	0	0	0	0	0
4/24/2024	8:15 PM	0	30	10	0	1	0	0	0	1	0	0	0	0
4/24/2024	8:30 PM	0	26	12	0	0	0	0	0	0	0	0	0	0
4/24/2024	8:45 PM	0	16	5	0	0	0	0	0	0	0	0	0	0
4/24/2024	9:00 PM	0	21	6	0	2	1	0	0	1	0	0	0	0
4/24/2024	9:15 PM	0	23	6	0	0	3	0	0	0	0	0	0	0
4/24/2024	9:30 PM	0	16	6	0	0	0	0	0	1	0	0	0	0
4/24/2024	9:45 PM	0	23	10	0	0	0	0	0	0	0	0	0	0
4/24/2024	10:00 PM	0	12	4	0	1	1	0	0	0	0	0	0	0
4/24/2024	10:15 PM	0	14	3	0	0	0	0	0	1	0	0	0	0
4/24/2024	10:30 PM	0	16	5	0	0	0	0	0	0	0	0	0	0
4/24/2024	10:45 PM	0	12	3	0	0	0	0	0	0	0	0	0	0
4/24/2024	11:00 PM	0	13	5	0	1	0	0	0	0	0	0	0	0
4/24/2024	11:15 PM	0	8	1	0	0	0	0	0	0	0	0	0	0
4/24/2024	11:30 PM	0	9	2	0	0	0	0	0	0	0	0	0	0
4/24/2024	11:45 PM	0	7	2	0	0	1	0	0	0	0	0	0	0

4/25/2024	12:00 AM	0	9	2	0	0	3	0	0	0	0	0	0	0
4/25/2024	12:15 AM	0	6	1	0	0	0	0	0	0	0	0	0	0
4/25/2024	12:30 AM	0	9	2	0	0	1	0	0	0	0	0	0	0
4/25/2024	12:45 AM	0	5	1	0	0	2	0	0	0	0	0	0	0
4/25/2024	1:00 AM	0	2	0	0	0	0	0	0	0	0	0	0	0
4/25/2024	1:15 AM	0	5	1	0	0	0	0	0	0	0	0	0	0
4/25/2024	1:30 AM	0	3	0	0	0	3	0	0	0	0	0	0	0
4/25/2024	1:45 AM	0	4	1	0	0	1	0	0	0	0	0	0	0
4/25/2024	2:00 AM	0	1	0	0	0	1	0	0	0	0	0	0	0
4/25/2024	2:15 AM	0	5	0	0	0	4	0	0	0	0	0	0	0
4/25/2024	2:30 AM	0	2	0	0	1	1	0	0	0	0	0	0	0
4/25/2024	2:45 AM	0	3	0	0	0	0	0	0	0	0	0	0	0
4/25/2024	3:00 AM	0	2	0	0	0	2	0	0	0	0	0	0	0
4/25/2024	3:15 AM	0	2	0	0	0	0	0	0	0	0	0	0	0
4/25/2024	3:30 AM	0	0	0	0	0	0	0	0	0	0	0	0	0
4/25/2024	3:45 AM	0	1	0	0	0	0	0	0	0	0	0	0	0
4/25/2024	4:00 AM	0	6	0	0	0	0	0	0	0	0	0	0	0
4/25/2024	4:15 AM	0	6	1	0	0	0	0	0	1	0	0	0	0
4/25/2024	4:30 AM	0	6	0	0	1	0	0	0	0	0	0	0	0
4/25/2024	4:45 AM	0	8	1	0	0	0	0	0	1	0	0	0	0
4/25/2024	5:00 AM	0	6	0	0	0	0	0	0	0	0	0	0	0
4/25/2024	5:15 AM	0	12	3	0	0	0	0	0	1	0	0	0	0
4/25/2024	5:30 AM	0	10	4	0	0	0	0	0	0	0	0	0	0
4/25/2024	5:45 AM	0	14	3	0	0	1	0	0	1	0	0	0	0
4/25/2024	6:00 AM	0	15	5	0	2	0	0	0	1	0	0	0	0
4/25/2024	6:15 AM	0	20	9	0	1	1	1	0	3	0	0	0	0
4/25/2024	6:30 AM	0	26	7	0	0	3	2	0	0	0	0	0	0
4/25/2024	6:45 AM	0	41	8	0	1	3	2	0	0	0	0	0	0
4/25/2024	7:00 AM	0	46	10	0	0	3	2	0	1	0	0	0	0
4/25/2024	7:15 AM	0	71	15	0	3	2	1	0	3	0	0	0	0
4/25/2024	7:30 AM	0	76	12	0	0	3	1	0	1	0	0	0	0
4/25/2024	7:45 AM	0	106	15	0	0	2	0	0	0	0	0	0	0
4/25/2024	8:00 AM	0	108	18	0	0	3	1	0	2	0	0	0	0
4/25/2024	8:15 AM	0	141	20	0	0	3	1	0	3	0	0	0	0
4/25/2024	8:30 AM	0	123	15	0	0	2	2	0	1	0	0	0	0
4/25/2024	8:45 AM	0	75	12	0	1	2	1	0	1	0	0	0	0
4/25/2024	9:00 AM	0	58	15	0	1	1	0	0	2	0	0	0	0
4/25/2024	9:15 AM	0	43	10	0	0	4	1	0	4	0	0	0	0
4/25/2024	9:30 AM	1	66	12	0	1	2	1	0	0	0	0	0	0
4/25/2024	9:45 AM	0	55	9	0	1	1	0	0	1	0	0	0	0
4/25/2024	10:00 AM	0	35	9	0	1	1	0	0	3	0	0	0	0
4/25/2024	10:15 AM	0	43	10	1	2	4	2	0	0	0	0	0	0
4/25/2024	10:30 AM	0	49	11	0	0	3	0	0	0	0	0	0	0
4/25/2024	10:45 AM	0	53	11	0	1	2	0	0	1	0	0	0	0
4/25/2024	11:00 AM	0	46	13	0	1	4	1	0	4	0	0	0	0
4/25/2024	11:15 AM	0	57	14	0	2	2	1	0	0	0	0	0	0
4/25/2024	11:30 AM	0	51	15	0	1	3	1	0	0	0	0	0	0
4/25/2024	11:45 AM	0	58	12	0	2	1	0	0	2	0	0	0	0
4/25/2024	12:00 PM	0	60	10	0	1	1	1	0	3	0	0	0	0
4/25/2024	12:15 PM	0	55	11	0	1	4	1	1	1	0	0	0	0
4/25/2024	12:30 PM	0	63	16	0	2	4	1	0	1	0	0	0	0
4/25/2024	12:45 PM	0	62	11	0	2	2	0	0	2	0	0	0	0
4/25/2024	1:00 PM	0	66	12	0	0	1	1	0	1	0	0	0	0
4/25/2024	1:15 PM	1	57	12	0	2	3	1	0	0	0	0	0	0
4/25/2024	1:30 PM	0	49	8	0	2	3	1	0	1	0	0	0	0
4/25/2024	1:45 PM	0	53	12	0	2	2	1	0	1	0	0	0	0
4/25/2024	2:00 PM	0	61	11	0	0	1	0	0	0	0	0	0	0
4/25/2024	2:15 PM	0	53	11	1	1	2	1	1	2	0	0	0	0
4/25/2024	2:30 PM	0	57	13	0	0	0	0	0	0	0	0	0	0
4/25/2024	2:45 PM	1	58	14	0	1	2	0	0	1	0	0	0	0
4/25/2024	3:00 PM	0	47	10	0	2	2	0	0	0	0	0	0	0
4/25/2024	3:15 PM	0	50	11	0	0	3	0	0	0	0	0	0	0
4/25/2024	3:30 PM	0	45	10	0	2	1	0	0	1	0	0	0	0
4/25/2024	3:45 PM	0	72	17	0	4	0	0	1	2	0	0	0	0
4/25/2024	4:00 PM	1	90	21	0	0	3	1	0	0	0	0	0	0
4/25/2024	4:15 PM	0	77	19	1	1	1	0	1	2	0	0	0	0
4/25/2024	4:30 PM	0	65	11	0	0	4	0	0	3	0	0	0	0
4/25/2024	4:45 PM	0	86	20	0	0	4	1	0	3	0	0	0	0
4/25/2024	5:00 PM	0	67	11	0	0	8	1	0	1	0	0	0	0
4/25/2024	5:15 PM	1	70	12	1	1	5	0	0	2	0	0	0	0
4/25/2024	5:30 PM	0	80	13	0	1	3	0	0	1	0	0	0	0
4/25/2024	5:45 PM	0	96	17	0	0	4	0	1	3	0	0	0	0
4/25/2024	6:00 PM	4	85	19	0	1	2	0	0	0	0	0	0	0
4/25/2024	6:15 PM	0	63	10	0	0	1	0	0	0	0	0	0	0
4/25/2024	6:30 PM	0	67	11	0	2	2	0	0	1	0	0	0	0
4/25/2024	6:45 PM	0	38	5	0	0	0	0	0	0	0	0	0	0
4/25/2024	7:00 PM	0	0	0	0	0	0	0	0	0	0	0	0	0
4/25/2024	7:15 PM	0	0	0	0	0	0	0	0	0	0	0	0	0
4/25/2024	7:30 PM	0	0	0	0	0	0	0	0	0	0	0	0	0
4/25/2024	7:45 PM	0	0	0	0	0	0	0	0	0	0	0	0	0
4/25/2024	8:00 PM	0	0	0	0	0	0	0	0	0	0	0	0	0
4/25/2024	8:15 PM	0	0	0	0	0	0	0	0	0	0	0	0	0
4/25/2024	8:30 PM	0	0	0	0	0	0	0	0	0	0	0	0	0
4/25/2024	8:45 PM	0	0	0	0	0	0	0	0	0	0	0	0	0
4/25/2024	9:00 PM	0	0	0	0	0	0	0	0	0	0	0	0	0
4/25/2024	9:15 PM	0	0	0	0	0	0	0	0	0	0	0	0	0
4/25/2024	9:30 PM	0	0	0	0	0	0	0	0	0	0	0	0	0
4/25/2024	9:45 PM	0	0	0	0	0	0	0	0	0	0	0	0	0
4/25/2024	10:00 PM	0	0	0	0	0	0	0	0	0	0	0	0	0
4/25/2024	10:15 PM	0	0	0	0	0	0	0	0	0	0	0	0	0
4/25/2024	10:30 PM	0	0	0	0	0	0	0	0	0	0	0	0	0
4/25/2024	10:45 PM	0	0	0	0	0	0	0	0	0	0	0	0	0
4/25/2024	11:00 PM	0	0	0	0	0	0	0	0	0	0	0	0	0
4/25/2024	11:15 PM	0	0	0	0	0	0	0	0	0	0	0	0	0
4/25/2024	11:30 PM	0	0	0	0	0	0	0	0	0	0	0	0	0
4/25/2024	11:45 PM	0	0	0	0	0	0	0	0	0	0	0	0	0

NB
File Name:
Start Date: 4/23/2024
Start Time: 0
Site Code: 65
Station ID: 1
Location 1: I-20 S/Bound Off-Ramp, north of Bush River Rd
Location 2:

Date	Time	1	2	3	4	5	6	7	8	9	10	11	12	13
4/23/2024	12:00 AM	0	0	0	0	0	0	0	0	0	0	0	0	0
4/23/2024	12:15 AM	0	0	0	0	0	0	0	0	0	0	0	0	0
4/23/2024	12:30 AM	0	0	0	0	0	0	0	0	0	0	0	0	0
4/23/2024	12:45 AM	0	0	0	0	0	0	0	0	0	0	0	0	0
4/23/2024	1:00 AM	0	0	0	0	0	0	0	0	0	0	0	0	0
4/23/2024	1:15 AM	0	0	0	0	0	0	0	0	0	0	0	0	0
4/23/2024	1:30 AM	0	0	0	0	0	0	0	0	0	0	0	0	0
4/23/2024	1:45 AM	0	0	0	0	0	0	0	0	0	0	0	0	0
4/23/2024	2:00 AM	0	0	0	0	0	0	0	0	0	0	0	0	0
4/23/2024	2:15 AM	0	0	0	0	0	0	0	0	0	0	0	0	0
4/23/2024	2:30 AM	0	0	0	0	0	0	0	0	0	0	0	0	0
4/23/2024	2:45 AM	0	0	0	0	0	0	0	0	0	0	0	0	0
4/23/2024	3:00 AM	0	0	0	0	0	0	0	0	0	0	0	0	0
4/23/2024	3:15 AM	0	0	0	0	0	0	0	0	0	0	0	0	0
4/23/2024	3:30 AM	0	0	0	0	0	0	0	0	0	0	0	0	0
4/23/2024	3:45 AM	0	0	0	0	0	0	0	0	0	0	0	0	0
4/23/2024	4:00 AM	0	0	0	0	0	0	0	0	0	0	0	0	0
4/23/2024	4:15 AM	0	0	0	0	0	0	0	0	0	0	0	0	0
4/23/2024	4:30 AM	0	0	0	0	0	0	0	0	0	0	0	0	0
4/23/2024	4:45 AM	0	0	0	0	0	0	0	0	0	0	0	0	0
4/23/2024	5:00 AM	0	0	0	0	0	0	0	0	0	0	0	0	0
4/23/2024	5:15 AM	0	0	0	0	0	0	0	0	0	0	0	0	0
4/23/2024	5:30 AM	0	0	0	0	0	0	0	0	0	0	0	0	0
4/23/2024	5:45 AM	0	0	0	0	0	0	0	0	0	0	0	0	0
4/23/2024	6:00 AM	0	0	0	0	0	0	0	0	0	0	0	0	0
4/23/2024	6:15 AM	0	0	0	0	0	0	0	0	0	0	0	0	0
4/23/2024	6:30 AM	0	0	0	0	0	0	0	0	0	0	0	0	0
4/23/2024	6:45 AM	0	0	0	0	0	0	0	0	0	0	0	0	0
4/23/2024	7:00 AM	0	0	0	0	0	0	0	0	0	0	0	0	0
4/23/2024	7:15 AM	0	0	0	0	0	0	0	0	0	0	0	0	0
4/23/2024	7:30 AM	0	0	0	0	0	0	0	0	0	0	0	0	0
4/23/2024	7:45 AM	0	0	0	0	0	0	0	0	0	0	0	0	0
4/23/2024	8:00 AM	0	0	0	0	0	0	0	0	0	0	0	0	0
4/23/2024	8:15 AM	0	0	0	0	0	0	0	0	0	0	0	0	0
4/23/2024	8:30 AM	0	0	0	0	0	0	0	0	0	0	0	0	0
4/23/2024	8:45 AM	0	0	0	0	0	0	0	0	0	0	0	0	0
4/23/2024	9:00 AM	0	0	0	0	0	0	0	0	0	0	0	0	0
4/23/2024	9:15 AM	0	0	0	0	0	0	0	0	0	0	0	0	0
4/23/2024	9:30 AM	0	0	0	0	0	0	0	0	0	0	0	0	0
4/23/2024	9:45 AM	0	0	0	0	0	0	0	0	0	0	0	0	0
4/23/2024	10:00 AM	0	0	0	0	0	0	0	0	0	0	0	0	0
4/23/2024	10:15 AM	0	0	0	0	0	0	0	0	0	0	0	0	0
4/23/2024	10:30 AM	0	0	0	0	0	0	0	0	0	0	0	0	0
4/23/2024	10:45 AM	0	0	0	0	0	0	0	0	0	0	0	0	0
4/23/2024	11:00 AM	0	0	0	0	0	0	0	0	0	0	0	0	0
4/23/2024	11:15 AM	0	0	0	0	0	0	0	0	0	0	0	0	0
4/23/2024	11:30 AM	0	0	0	0	0	0	0	0	0	0	0	0	0
4/23/2024	11:45 AM	0	0	0	0	0	0	0	0	0	0	0	0	0
4/23/2024	12:00 PM	0	0	0	0	0	0	0	0	0	0	0	0	0
4/23/2024	12:15 PM	0	0	0	0	0	0	0	0	0	0	0	0	0
4/23/2024	12:30 PM	0	0	0	0	0	0	0	0	0	0	0	0	0
4/23/2024	12:45 PM	0	0	0	0	0	0	0	0	0	0	0	0	0
4/23/2024	1:00 PM	0	0	0	0	0	0	0	0	0	0	0	0	0
4/23/2024	1:15 PM	0	0	0	0	0	0	0	0	0	0	0	0	0
4/23/2024	1:30 PM	0	0	0	0	0	0	0	0	0	0	0	0	0
4/23/2024	1:45 PM	0	0	0	0	0	0	0	0	0	0	0	0	0
4/23/2024	2:00 PM	0	0	0	0	0	0	0	0	0	0	0	0	0
4/23/2024	2:15 PM	0	0	0	0	0	0	0	0	0	0	0	0	0
4/23/2024	2:30 PM	0	0	0	0	0	0	0	0	0	0	0	0	0
4/23/2024	2:45 PM	0	0	0	0	0	0	0	0	0	0	0	0	0
4/23/2024	3:00 PM	0	0	0	0	0	0	0	0	0	0	0	0	0
4/23/2024	3:15 PM	0	0	0	0	0	0	0	0	0	0	0	0	0
4/23/2024	3:30 PM	0	0	0	0	0	0	0	0	0	0	0	0	0
4/23/2024	3:45 PM	0	0	0	0	0	0	0	0	0	0	0	0	0
4/23/2024	4:00 PM	0	0	0	0	0	0	0	0	0	0	0	0	0
4/23/2024	4:15 PM	0	0	0	0	0	0	0	0	0	0	0	0	0
4/23/2024	4:30 PM	0	0	0	0	0	0	0	0	0	0	0	0	0
4/23/2024	4:45 PM	0	0	0	0	0	0	0	0	0	0	0	0	0
4/23/2024	5:00 PM	0	0	0	0	0	0	0	0	0	0	0	0	0
4/23/2024	5:15 PM	0	0	0	0	0	0	0	0	0	0	0	0	0
4/23/2024	5:30 PM	0	0	0	0	0	0	0	0	0	0	0	0	0
4/23/2024	5:45 PM	0	0	0	0	0	0	0	0	0	0	0	0	0
4/23/2024	6:00 PM	0	0	0	0	0	0	0	0	0	0	0	0	0
4/23/2024	6:15 PM	0	0	0	0	0	0	0	0	0	0	0	0	0
4/23/2024	6:30 PM	0	0	0	0	0	0	0	0	0	0	0	0	0
4/23/2024	6:45 PM	0	0	0	0	0	0	0	0	0	0	0	0	0
4/23/2024	7:00 PM	0	0	0	0	0	0	0	0	0	0	0	0	0
4/23/2024	7:15 PM	0	0	0	0	0	0	0	0	0	0	0	0	0
4/23/2024	7:30 PM	0	0	0	0	0	0	0	0	0	0	0	0	0
4/23/2024	7:45 PM	0	0	0	0	0	0	0	0	0	0	0	0	0
4/23/2024	8:00 PM	0	0	0	0	0	0	0	0	0	0	0	0	0
4/23/2024	8:15 PM	0	0	0	0	0	0	0	0	0	0	0	0	0
4/23/2024	8:30 PM	0	0	0	0	0	0	0	0	0	0	0	0	0
4/23/2024	8:45 PM	0	0	0	0	0	0	0	0	0	0	0	0	0
4/23/2024	9:00 PM	0	0	0	0	0	0	0	0	0	0	0	0	0
4/23/2024	9:15 PM	0	0	0	0	0	0	0	0	0	0	0	0	0
4/23/2024	9:30 PM	0	0	0	0	0	0	0	0	0	0	0	0	0
4/23/2024	9:45 PM	0	0	0	0	0	0	0	0	0	0	0	0	0
4/23/2024	10:00 PM	0	0	0	0	0	0	0	0	0	0	0	0	0
4/23/2024	10:15 PM	0	0	0	0	0	0	0	0	0	0	0	0	0
4/23/2024	10:30 PM	0	0	0	0	0	0	0	0	0	0	0	0	0
4/23/2024	10:45 PM	0	0	0	0	0	0	0	0	0	0	0	0	0
4/23/2024	11:00 PM	0	0	0	0	0	0	0	0	0	0	0	0	0
4/23/2024	11:15 PM	0	0	0	0	0	0	0	0	0	0	0	0	0
4/23/2024	11:30 PM	0	0	0	0	0	0	0	0	0	0	0	0	0
4/23/2024	11:45 PM	0	0	0	0	0	0	0	0	0	0	0	0	0

4/24/2024	12:00 AM	0	0	0	0	0	0	0	0	0	0	0	0	0
4/24/2024	12:15 AM	0	0	0	0	0	0	0	0	0	0	0	0	0
4/24/2024	12:30 AM	0	0	0	0	0	0	0	0	0	0	0	0	0
4/24/2024	12:45 AM	0	0	0	0	0	0	0	0	0	0	0	0	0
4/24/2024	1:00 AM	0	0	0	0	0	0	0	0	0	0	0	0	0
4/24/2024	1:15 AM	0	0	0	0	0	0	0	0	0	0	0	0	0
4/24/2024	1:30 AM	0	0	0	0	0	0	0	0	0	0	0	0	0
4/24/2024	1:45 AM	0	0	0	0	0	0	0	0	0	0	0	0	0
4/24/2024	2:00 AM	0	0	0	0	0	0	0	0	0	0	0	0	0
4/24/2024	2:15 AM	0	0	0	0	0	0	0	0	0	0	0	0	0
4/24/2024	2:30 AM	0	0	0	0	0	0	0	0	0	0	0	0	0
4/24/2024	2:45 AM	0	0	0	0	0	0	0	0	0	0	0	0	0
4/24/2024	3:00 AM	0	0	0	0	0	0	0	0	0	0	0	0	0
4/24/2024	3:15 AM	0	0	0	0	0	0	0	0	0	0	0	0	0
4/24/2024	3:30 AM	0	0	0	0	0	0	0	0	0	0	0	0	0
4/24/2024	3:45 AM	0	0	0	0	0	0	0	0	0	0	0	0	0
4/24/2024	4:00 AM	0	0	0	0	0	0	0	0	0	0	0	0	0
4/24/2024	4:15 AM	0	0	0	0	0	0	0	0	0	0	0	0	0
4/24/2024	4:30 AM	0	0	0	0	0	0	0	0	0	0	0	0	0
4/24/2024	4:45 AM	0	0	0	0	0	0	0	0	0	0	0	0	0
4/24/2024	5:00 AM	0	0	0	0	0	0	0	0	0	0	0	0	0
4/24/2024	5:15 AM	0	0	0	0	0	0	0	0	0	0	0	0	0
4/24/2024	5:30 AM	0	0	0	0	0	0	0	0	0	0	0	0	0
4/24/2024	5:45 AM	0	0	0	0	0	0	0	0	0	0	0	0	0
4/24/2024	6:00 AM	0	0	0	0	0	0	0	0	0	0	0	0	0
4/24/2024	6:15 AM	0	0	0	0	0	0	0	0	0	0	0	0	0
4/24/2024	6:30 AM	0	0	0	0	0	0	0	0	0	0	0	0	0
4/24/2024	6:45 AM	0	0	0	0	0	0	0	0	0	0	0	0	0
4/24/2024	7:00 AM	0	0	0	0	0	0	0	0	0	0	0	0	0
4/24/2024	7:15 AM	0	0	0	0	0	0	0	0	0	0	0	0	0
4/24/2024	7:30 AM	0	0	0	0	0	0	0	0	0	0	0	0	0
4/24/2024	7:45 AM	0	0	0	0	0	0	0	0	0	0	0	0	0
4/24/2024	8:00 AM	0	0	0	0	0	0	0	0	0	0	0	0	0
4/24/2024	8:15 AM	0	0	0	0	0	0	0	0	0	0	0	0	0
4/24/2024	8:30 AM	0	0	0	0	0	0	0	0	0	0	0	0	0
4/24/2024	8:45 AM	0	0	0	0	0	0	0	0	0	0	0	0	0
4/24/2024	9:00 AM	0	0	0	0	0	0	0	0	0	0	0	0	0
4/24/2024	9:15 AM	0	0	0	0	0	0	0	0	0	0	0	0	0
4/24/2024	9:30 AM	0	0	0	0	0	0	0	0	0	0	0	0	0
4/24/2024	9:45 AM	0	0	0	0	0	0	0	0	0	0	0	0	0
4/24/2024	10:00 AM	0	0	0	0	0	0	0	0	0	0	0	0	0
4/24/2024	10:15 AM	0	0	0	0	0	0	0	0	0	0	0	0	0
4/24/2024	10:30 AM	0	0	0	0	0	0	0	0	0	0	0	0	0
4/24/2024	10:45 AM	0	0	0	0	0	0	0	0	0	0	0	0	0
4/24/2024	11:00 AM	0	0	0	0	0	0	0	0	0	0	0	0	0
4/24/2024	11:15 AM	0	0	0	0	0	0	0	0	0	0	0	0	0
4/24/2024	11:30 AM	0	0	0	0	0	0	0	0	0	0	0	0	0
4/24/2024	11:45 AM	0	0	0	0	0	0	0	0	0	0	0	0	0
4/24/2024	12:00 PM	0	0	0	0	0	0	0	0	0	0	0	0	0
4/24/2024	12:15 PM	0	0	0	0	0	0	0	0	0	0	0	0	0
4/24/2024	12:30 PM	0	0	0	0	0	0	0	0	0	0	0	0	0
4/24/2024	12:45 PM	0	0	0	0	0	0	0	0	0	0	0	0	0
4/24/2024	1:00 PM	0	0	0	0	0	0	0	0	0	0	0	0	0
4/24/2024	1:15 PM	0	0	0	0	0	0	0	0	0	0	0	0	0
4/24/2024	1:30 PM	0	0	0	0	0	0	0	0	0	0	0	0	0
4/24/2024	1:45 PM	0	0	0	0	0	0	0	0	0	0	0	0	0
4/24/2024	2:00 PM	0	0	0	0	0	0	0	0	0	0	0	0	0
4/24/2024	2:15 PM	0	0	0	0	0	0	0	0	0	0	0	0	0
4/24/2024	2:30 PM	0	0	0	0	0	0	0	0	0	0	0	0	0
4/24/2024	2:45 PM	0	0	0	0	0	0	0	0	0	0	0	0	0
4/24/2024	3:00 PM	0	0	0	0	0	0	0	0	0	0	0	0	0
4/24/2024	3:15 PM	0	0	0	0	0	0	0	0	0	0	0	0	0
4/24/2024	3:30 PM	0	0	0	0	0	0	0	0	0	0	0	0	0
4/24/2024	3:45 PM	0	0	0	0	0	0	0	0	0	0	0	0	0
4/24/2024	4:00 PM	0	0	0	0	0	0	0	0	0	0	0	0	0
4/24/2024	4:15 PM	0	0	0	0	0	0	0	0	0	0	0	0	0
4/24/2024	4:30 PM	0	0	0	0	0	0	0	0	0	0	0	0	0
4/24/2024	4:45 PM	0	0	0	0	0	0	0	0	0	0	0	0	0
4/24/2024	5:00 PM	0	0	0	0	0	0	0	0	0	0	0	0	0
4/24/2024	5:15 PM	0	0	0	0	0	0	0	0	0	0	0	0	0
4/24/2024	5:30 PM	0	0	0	0	0	0	0	0	0	0	0	0	0
4/24/2024	5:45 PM	0	0	0	0	0	0	0	0	0	0	0	0	0
4/24/2024	6:00 PM	0	0	0	0	0	0	0	0	0	0	0	0	0
4/24/2024	6:15 PM	0	0	0	0	0	0	0	0	0	0	0	0	0
4/24/2024	6:30 PM	0	0	0	0	0	0	0	0	0	0	0	0	0
4/24/2024	6:45 PM	0	0	0	0	0	0	0	0	0	0	0	0	0
4/24/2024	7:00 PM	0	0	0	0	0	0	0	0	0	0	0	0	0
4/24/2024	7:15 PM	0	0	0	0	0	0	0	0	0	0	0	0	0
4/24/2024	7:30 PM	0	0	0	0	0	0	0	0	0	0	0	0	0
4/24/2024	7:45 PM	0	0	0	0	0	0	0	0	0	0	0	0	0
4/24/2024	8:00 PM	0	0	0	0	0	0	0	0	0	0	0	0	0
4/24/2024	8:15 PM	0	0	0	0	0	0	0	0	0	0	0	0	0
4/24/2024	8:30 PM	0	0	0	0	0	0	0	0	0	0	0	0	0
4/24/2024	8:45 PM	0	0	0	0	0	0	0	0	0	0	0	0	0
4/24/2024	9:00 PM	0	0	0	0	0	0	0	0	0	0	0	0	0
4/24/2024	9:15 PM	0	0	0	0	0	0	0	0	0	0	0	0	0
4/24/2024	9:30 PM	0	0	0	0	0	0	0	0	0	0	0	0	0
4/24/2024	9:45 PM	0	0	0	0	0	0	0	0	0	0	0	0	0
4/24/2024	10:00 PM	0	0	0	0	0	0	0	0	0	0	0	0	0
4/24/2024	10:15 PM	0	0	0	0	0	0	0	0	0	0	0	0	0
4/24/2024	10:30 PM	0	0	0	0	0	0	0	0	0	0	0	0	0
4/24/2024	10:45 PM	0	0	0	0	0	0	0	0	0	0	0	0	0
4/24/2024	11:00 PM	0	0	0	0	0	0	0	0	0	0	0	0	0
4/24/2024	11:15 PM	0	0	0	0	0	0	0	0	0	0	0	0	0
4/24/2024	11:30 PM	0	0	0	0	0	0	0	0	0	0	0	0	0
4/24/2024	11:45 PM	0	0	0	0	0	0	0	0	0	0	0	0	0

4/25/2024	12:00 AM	0	0	0	0	0	0	0	0	0	0	0	0	0
4/25/2024	12:15 AM	0	0	0	0	0	0	0	0	0	0	0	0	0
4/25/2024	12:30 AM	0	0	0	0	0	0	0	0	0	0	0	0	0
4/25/2024	12:45 AM	0	0	0	0	0	0	0	0	0	0	0	0	0
4/25/2024	1:00 AM	0	0	0	0	0	0	0	0	0	0	0	0	0
4/25/2024	1:15 AM	0	0	0	0	0	0	0	0	0	0	0	0	0
4/25/2024	1:30 AM	0	0	0	0	0	0	0	0	0	0	0	0	0
4/25/2024	1:45 AM	0	0	0	0	0	0	0	0	0	0	0	0	0
4/25/2024	2:00 AM	0	0	0	0	0	0	0	0	0	0	0	0	0
4/25/2024	2:15 AM	0	0	0	0	0	0	0	0	0	0	0	0	0
4/25/2024	2:30 AM	0	0	0	0	0	0	0	0	0	0	0	0	0
4/25/2024	2:45 AM	0	0	0	0	0	0	0	0	0	0	0	0	0
4/25/2024	3:00 AM	0	0	0	0	0	0	0	0	0	0	0	0	0
4/25/2024	3:15 AM	0	0	0	0	0	0	0	0	0	0	0	0	0
4/25/2024	3:30 AM	0	0	0	0	0	0	0	0	0	0	0	0	0
4/25/2024	3:45 AM	0	0	0	0	0	0	0	0	0	0	0	0	0
4/25/2024	4:00 AM	0	0	0	0	0	0	0	0	0	0	0	0	0
4/25/2024	4:15 AM	0	0	0	0	0	0	0	0	0	0	0	0	0
4/25/2024	4:30 AM	0	0	0	0	0	0	0	0	0	0	0	0	0
4/25/2024	4:45 AM	0	0	0	0	0	0	0	0	0	0	0	0	0
4/25/2024	5:00 AM	0	0	0	0	0	0	0	0	0	0	0	0	0
4/25/2024	5:15 AM	0	0	0	0	0	0	0	0	0	0	0	0	0
4/25/2024	5:30 AM	0	0	0	0	0	0	0	0	0	0	0	0	0
4/25/2024	5:45 AM	0	0	0	0	0	0	0	0	0	0	0	0	0
4/25/2024	6:00 AM	0	0	0	0	0	0	0	0	0	0	0	0	0
4/25/2024	6:15 AM	0	0	0	0	0	0	0	0	0	0	0	0	0
4/25/2024	6:30 AM	0	0	0	0	0	0	0	0	0	0	0	0	0
4/25/2024	6:45 AM	0	0	0	0	0	0	0	0	0	0	0	0	0
4/25/2024	7:00 AM	0	0	0	0	0	0	0	0	0	0	0	0	0
4/25/2024	7:15 AM	0	0	0	0	0	0	0	0	0	0	0	0	0
4/25/2024	7:30 AM	0	0	0	0	0	0	0	0	0	0	0	0	0
4/25/2024	7:45 AM	0	0	0	0	0	0	0	0	0	0	0	0	0
4/25/2024	8:00 AM	0	0	0	0	0	0	0	0	0	0	0	0	0
4/25/2024	8:15 AM	0	0	0	0	0	0	0	0	0	0	0	0	0
4/25/2024	8:30 AM	0	0	0	0	0	0	0	0	0	0	0	0	0
4/25/2024	8:45 AM	0	0	0	0	0	0	0	0	0	0	0	0	0
4/25/2024	9:00 AM	0	0	0	0	0	0	0	0	0	0	0	0	0
4/25/2024	9:15 AM	0	0	0	0	0	0	0	0	0	0	0	0	0
4/25/2024	9:30 AM	0	0	0	0	0	0	0	0	0	0	0	0	0
4/25/2024	9:45 AM	0	0	0	0	0	0	0	0	0	0	0	0	0
4/25/2024	10:00 AM	0	0	0	0	0	0	0	0	0	0	0	0	0
4/25/2024	10:15 AM	0	0	0	0	0	0	0	0	0	0	0	0	0
4/25/2024	10:30 AM	0	0	0	0	0	0	0	0	0	0	0	0	0
4/25/2024	10:45 AM	0	0	0	0	0	0	0	0	0	0	0	0	0
4/25/2024	11:00 AM	0	0	0	0	0	0	0	0	0	0	0	0	0
4/25/2024	11:15 AM	0	0	0	0	0	0	0	0	0	0	0	0	0
4/25/2024	11:30 AM	0	0	0	0	0	0	0	0	0	0	0	0	0
4/25/2024	11:45 AM	0	0	0	0	0	0	0	0	0	0	0	0	0
4/25/2024	12:00 PM	0	0	0	0	0	0	0	0	0	0	0	0	0
4/25/2024	12:15 PM	0	0	0	0	0	0	0	0	0	0	0	0	0
4/25/2024	12:30 PM	0	0	0	0	0	0	0	0	0	0	0	0	0
4/25/2024	12:45 PM	0	0	0	0	0	0	0	0	0	0	0	0	0
4/25/2024	1:00 PM	0	0	0	0	0	0	0	0	0	0	0	0	0
4/25/2024	1:15 PM	0	0	0	0	0	0	0	0	0	0	0	0	0
4/25/2024	1:30 PM	0	0	0	0	0	0	0	0	0	0	0	0	0
4/25/2024	1:45 PM	0	0	0	0	0	0	0	0	0	0	0	0	0
4/25/2024	2:00 PM	0	0	0	0	0	0	0	0	0	0	0	0	0
4/25/2024	2:15 PM	0	0	0	0	0	0	0	0	0	0	0	0	0
4/25/2024	2:30 PM	0	0	0	0	0	0	0	0	0	0	0	0	0
4/25/2024	2:45 PM	0	0	0	0	0	0	0	0	0	0	0	0	0
4/25/2024	3:00 PM	0	0	0	0	0	0	0	0	0	0	0	0	0
4/25/2024	3:15 PM	0	0	0	0	0	0	0	0	0	0	0	0	0
4/25/2024	3:30 PM	0	0	0	0	0	0	0	0	0	0	0	0	0
4/25/2024	3:45 PM	0	0	0	0	0	0	0	0	0	0	0	0	0
4/25/2024	4:00 PM	0	0	0	0	0	0	0	0	0	0	0	0	0
4/25/2024	4:15 PM	0	0	0	0	0	0	0	0	0	0	0	0	0
4/25/2024	4:30 PM	0	0	0	0	0	0	0	0	0	0	0	0	0
4/25/2024	4:45 PM	0	0	0	0	0	0	0	0	0	0	0	0	0
4/25/2024	5:00 PM	0	0	0	0	0	0	0	0	0	0	0	0	0
4/25/2024	5:15 PM	0	0	0	0	0	0	0	0	0	0	0	0	0
4/25/2024	5:30 PM	0	0	0	0	0	0	0	0	0	0	0	0	0
4/25/2024	5:45 PM	0	0	0	0	0	0	0	0	0	0	0	0	0
4/25/2024	6:00 PM	0	0	0	0	0	0	0	0	0	0	0	0	0
4/25/2024	6:15 PM	0	0	0	0	0	0	0	0	0	0	0	0	0
4/25/2024	6:30 PM	0	0	0	0	0	0	0	0	0	0	0	0	0
4/25/2024	6:45 PM	0	0	0	0	0	0	0	0	0	0	0	0	0
4/25/2024	7:00 PM	0	0	0	0	0	0	0	0	0	0	0	0	0
4/25/2024	7:15 PM	0	0	0	0	0	0	0	0	0	0	0	0	0
4/25/2024	7:30 PM	0	0	0	0	0	0	0	0	0	0	0	0	0
4/25/2024	7:45 PM	0	0	0	0	0	0	0	0	0	0	0	0	0
4/25/2024	8:00 PM	0	0	0	0	0	0	0	0	0	0	0	0	0
4/25/2024	8:15 PM	0	0	0	0	0	0	0	0	0	0	0	0	0
4/25/2024	8:30 PM	0	0	0	0	0	0	0	0	0	0	0	0	0
4/25/2024	8:45 PM	0	0	0	0	0	0	0	0	0	0	0	0	0
4/25/2024	9:00 PM	0	0	0	0	0	0	0	0	0	0	0	0	0
4/25/2024	9:15 PM	0	0	0	0	0	0	0	0	0	0	0	0	0
4/25/2024	9:30 PM	0	0	0	0	0	0	0	0	0	0	0	0	0
4/25/2024	9:45 PM	0	0	0	0	0	0	0	0	0	0	0	0	0
4/25/2024	10:00 PM	0	0	0	0	0	0	0	0	0	0	0	0	0
4/25/2024	10:15 PM	0	0	0	0	0	0	0	0	0	0	0	0	0
4/25/2024	10:30 PM	0	0	0	0	0	0	0	0	0	0	0	0	0
4/25/2024	10:45 PM	0	0	0	0	0	0	0	0	0	0	0	0	0
4/25/2024	11:00 PM	0	0	0	0	0	0	0	0	0	0	0	0	0
4/25/2024	11:15 PM	0	0	0	0	0	0	0	0	0	0	0	0	0
4/25/2024	11:30 PM	0	0	0	0	0	0	0	0	0	0	0	0	0
4/25/2024	11:45 PM	0	0	0	0	0	0	0	0	0	0	0	0	0

SB
File Name:
Start Date: 4/23/2024
Start Time: 0
Site Code: 65
Station ID: 1
Location 1: I-20 S/Bound Off-Ramp, north of Bush River Rd
Location 2:

Date	Time	1	2	3	4	5	6	7	8	9	10	11	12	13
4/23/2024	12:00 AM	0	0	0	0	0	0	0	0	0	0	0	0	0
4/23/2024	12:15 AM	0	0	0	0	0	0	0	0	0	0	0	0	0
4/23/2024	12:30 AM	0	0	0	0	0	0	0	0	0	0	0	0	0
4/23/2024	12:45 AM	0	0	0	0	0	0	0	0	0	0	0	0	0
4/23/2024	1:00 AM	0	0	0	0	0	0	0	0	0	0	0	0	0
4/23/2024	1:15 AM	0	0	0	0	0	0	0	0	0	0	0	0	0
4/23/2024	1:30 AM	0	0	0	0	0	0	0	0	0	0	0	0	0
4/23/2024	1:45 AM	0	0	0	0	0	0	0	0	0	0	0	0	0
4/23/2024	2:00 AM	0	0	0	0	0	0	0	0	0	0	0	0	0
4/23/2024	2:15 AM	0	0	0	0	0	0	0	0	0	0	0	0	0
4/23/2024	2:30 AM	0	0	0	0	0	0	0	0	0	0	0	0	0
4/23/2024	2:45 AM	0	0	0	0	0	0	0	0	0	0	0	0	0
4/23/2024	3:00 AM	0	0	0	0	0	0	0	0	0	0	0	0	0
4/23/2024	3:15 AM	0	0	0	0	0	0	0	0	0	0	0	0	0
4/23/2024	3:30 AM	0	0	0	0	0	0	0	0	0	0	0	0	0
4/23/2024	3:45 AM	0	0	0	0	0	0	0	0	0	0	0	0	0
4/23/2024	4:00 AM	0	0	0	0	0	0	0	0	0	0	0	0	0
4/23/2024	4:15 AM	0	0	0	0	0	0	0	0	0	0	0	0	0
4/23/2024	4:30 AM	0	0	0	0	0	0	0	0	0	0	0	0	0
4/23/2024	4:45 AM	0	0	0	0	0	0	0	0	0	0	0	0	0
4/23/2024	5:00 AM	0	0	0	0	0	0	0	0	0	0	0	0	0
4/23/2024	5:15 AM	0	0	0	0	0	0	0	0	0	0	0	0	0
4/23/2024	5:30 AM	0	0	0	0	0	0	0	0	0	0	0	0	0
4/23/2024	5:45 AM	0	0	0	0	0	0	0	0	0	0	0	0	0
4/23/2024	6:00 AM	0	0	0	0	0	0	0	0	0	0	0	0	0
4/23/2024	6:15 AM	0	0	0	0	0	0	0	0	0	0	0	0	0
4/23/2024	6:30 AM	0	0	0	0	0	0	0	0	0	0	0	0	0
4/23/2024	6:45 AM	0	0	0	0	0	0	0	0	0	0	0	0	0
4/23/2024	7:00 AM	0	0	0	0	0	0	0	0	0	0	0	0	0
4/23/2024	7:15 AM	0	0	0	0	0	0	0	0	0	0	0	0	0
4/23/2024	7:30 AM	0	0	0	0	0	0	0	0	0	0	0	0	0
4/23/2024	7:45 AM	0	0	0	0	0	0	0	0	0	0	0	0	0
4/23/2024	8:00 AM	0	0	0	0	0	0	0	0	0	0	0	0	0
4/23/2024	8:15 AM	0	0	0	0	0	0	0	0	0	0	0	0	0
4/23/2024	8:30 AM	0	0	0	0	0	0	0	0	0	0	0	0	0
4/23/2024	8:45 AM	0	0	0	0	0	0	0	0	0	0	0	0	0
4/23/2024	9:00 AM	0	0	0	0	0	0	0	0	0	0	0	0	0
4/23/2024	9:15 AM	0	0	0	0	0	0	0	0	0	0	0	0	0
4/23/2024	9:30 AM	0	0	0	0	0	0	0	0	0	0	0	0	0
4/23/2024	9:45 AM	0	0	0	0	0	0	0	0	0	0	0	0	0
4/23/2024	10:00 AM	0	0	0	0	0	0	0	0	0	0	0	0	0
4/23/2024	10:15 AM	0	0	0	0	0	0	0	0	0	0	0	0	0
4/23/2024	10:30 AM	0	0	0	0	0	0	0	0	0	0	0	0	0
4/23/2024	10:45 AM	0	0	0	0	0	0	0	0	0	0	0	0	0
4/23/2024	11:00 AM	0	0	0	0	0	0	0	0	0	0	0	0	0
4/23/2024	11:15 AM	0	0	0	0	0	0	0	0	0	0	0	0	0
4/23/2024	11:30 AM	0	0	0	0	0	0	0	0	0	0	0	0	0
4/23/2024	11:45 AM	0	0	0	0	0	0	0	0	0	0	0	0	0
4/23/2024	12:00 PM	0	0	0	0	0	0	0	0	0	0	0	0	0
4/23/2024	12:15 PM	0	0	0	0	0	0	0	0	0	0	0	0	0
4/23/2024	12:30 PM	0	0	0	0	0	0	0	0	0	0	0	0	0
4/23/2024	12:45 PM	0	0	0	0	0	0	0	0	0	0	0	0	0
4/23/2024	1:00 PM	0	0	0	0	0	0	0	0	0	0	0	0	0
4/23/2024	1:15 PM	0	0	0	0	0	0	0	0	0	0	0	0	0
4/23/2024	1:30 PM	0	0	0	0	0	0	0	0	0	0	0	0	0
4/23/2024	1:45 PM	0	0	0	0	0	0	0	0	0	0	0	0	0
4/23/2024	2:00 PM	0	0	0	0	0	0	0	0	0	0	0	0	0
4/23/2024	2:15 PM	0	0	0	0	0	0	0	0	0	0	0	0	0
4/23/2024	2:30 PM	0	0	0	0	0	0	0	0	0	0	0	0	0
4/23/2024	2:45 PM	0	0	0	0	0	0	0	0	0	0	0	0	0
4/23/2024	3:00 PM	0	0	0	0	0	0	0	0	0	0	0	0	0
4/23/2024	3:15 PM	0	0	0	0	0	0	0	0	0	0	0	0	0
4/23/2024	3:30 PM	0	0	0	0	0	0	0	0	0	0	0	0	0
4/23/2024	3:45 PM	0	0	0	0	0	0	0	0	0	0	0	0	0
4/23/2024	4:00 PM	0	0	0	0	0	0	0	0	0	0	0	0	0
4/23/2024	4:15 PM	0	0	0	0	0	0	0	0	0	0	0	0	0
4/23/2024	4:30 PM	0	0	0	0	0	0	0	0	0	0	0	0	0
4/23/2024	4:45 PM	0	0	0	0	0	0	0	0	0	0	0	0	0
4/23/2024	5:00 PM	0	0	0	0	0	0	0	0	0	0	0	0	0
4/23/2024	5:15 PM	0	0	0	0	0	0	0	0	0	0	0	0	0
4/23/2024	5:30 PM	0	0	0	0	0	0	0	0	0	0	0	0	0
4/23/2024	5:45 PM	0	0	0	0	0	0	0	0	0	0	0	0	0
4/23/2024	6:00 PM	0	0	0	0	0	0	0	0	0	0	0	0	0
4/23/2024	6:15 PM	0	41	9	0	1	0	0	0	0	0	0	0	0
4/23/2024	6:30 PM	0	87	17	0	2	2	0	0	0	0	0	0	0
4/23/2024	6:45 PM	0	124	25	0	2	4	0	0	0	0	0	0	0
4/23/2024	7:00 PM	0	162	33	0	3	6	0	0	0	0	0	0	0
4/23/2024	7:15 PM	0	139	28	0	2	6	0	0	0	0	0	0	0
4/23/2024	7:30 PM	0	123	27	0	1	4	0	0	0	0	0	0	0
4/23/2024	7:45 PM	0	111	25	0	1	4	0	0	1	0	0	0	0
4/23/2024	8:00 PM	0	92	23	0	0	3	0	0	1	0	0	0	0
4/23/2024	8:15 PM	0	92	23	0	0	3	0	0	1	0	0	0	0
4/23/2024	8:30 PM	0	84	22	0	0	4	0	0	1	0	0	0	0
4/23/2024	8:45 PM	0	76	19	0	1	3	0	0	0	0	0	0	0
4/23/2024	9:00 PM	0	70	16	0	1	3	0	0	0	0	0	0	0
4/23/2024	9:15 PM	0	71	15	0	1	6	0	0	0	0	0	0	0
4/23/2024	9:30 PM	0	68	13	0	2	6	0	0	0	0	0	0	0
4/23/2024	9:45 PM	0	66	15	0	1	5	0	0	0	0	0	0	0
4/23/2024	10:00 PM	0	74	16	0	1	5	0	0	0	0	0	0	0
4/23/2024	10:15 PM	0	64	15	0	1	2	0	0	0	0	0	0	0
4/23/2024	10:30 PM	0	56	13	0	0	3	0	0	0	0	0	0	0
4/23/2024	10:45 PM	0	51	10	0	0	5	0	0	0	0	0	0	0
4/23/2024	11:00 PM	0	34	7	0	0	4	0	0	0	0	0	0	0
4/23/2024	11:15 PM	0	25	5	0	0	4	0	0	0	0	0	0	0
4/23/2024	11:30 PM	0	14	3	0	0	2	0	0	0	0	0	0	0
4/23/2024	11:45 PM	0	4	1	0	0	0	0	0	0	0	0	0	0

4/24/2024	12:00 AM	0	25	2	0	4	6	0	0	1	0	0	0	0
4/24/2024	12:15 AM	0	18	1	0	5	5	0	1	1	0	0	0	0
4/24/2024	12:30 AM	0	19	2	0	4	4	0	1	1	0	0	0	0
4/24/2024	12:45 AM	0	17	1	0	5	4	0	1	1	0	0	0	0
4/24/2024	1:00 AM	0	17	1	0	3	2	0	1	0	0	0	0	0
4/24/2024	1:15 AM	0	21	2	0	1	1	0	0	0	0	0	0	0
4/24/2024	1:30 AM	0	19	3	0	1	1	0	0	1	0	0	0	0
4/24/2024	1:45 AM	0	17	3	0	0	1	0	0	1	0	0	0	0
4/24/2024	2:00 AM	0	17	3	0	0	2	0	0	1	0	0	0	0
4/24/2024	2:15 AM	0	15	2	0	0	2	0	0	1	0	0	0	0
4/24/2024	2:30 AM	0	14	1	0	0	2	0	0	0	0	0	0	0
4/24/2024	2:45 AM	0	14	1	0	0	2	0	0	0	0	0	0	0
4/24/2024	3:00 AM	0	15	1	0	0	2	0	0	0	0	0	0	0
4/24/2024	3:15 AM	0	17	1	0	0	2	0	0	1	0	0	0	0
4/24/2024	3:30 AM	0	16	1	0	1	1	0	0	1	0	0	0	0
4/24/2024	3:45 AM	0	18	1	0	1	1	0	0	1	0	0	0	0
4/24/2024	4:00 AM	0	20	2	0	1	0	0	0	2	0	0	0	0
4/24/2024	4:15 AM	0	26	4	0	2	0	0	0	2	0	0	0	0
4/24/2024	4:30 AM	0	31	4	0	2	1	0	0	2	0	0	0	0
4/24/2024	4:45 AM	0	36	7	0	3	2	0	0	2	0	0	0	0
4/24/2024	5:00 AM	0	42	8	0	3	2	0	0	2	0	0	0	0
4/24/2024	5:15 AM	0	42	8	0	2	2	0	0	1	0	0	0	0
4/24/2024	5:30 AM	0	58	16	0	2	1	0	0	1	0	0	0	0
4/24/2024	5:45 AM	0	88	24	0	2	3	0	0	1	0	0	0	0
4/24/2024	6:00 AM	0	111	33	0	3	4	0	0	3	0	0	0	0
4/24/2024	6:15 AM	0	145	41	0	6	4	0	0	3	0	0	0	0
4/24/2024	6:30 AM	0	193	49	0	5	6	0	0	4	0	0	0	0
4/24/2024	6:45 AM	0	254	61	0	5	8	1	0	4	0	0	0	0
4/24/2024	7:00 AM	0	338	73	0	6	8	1	0	2	0	0	0	0
4/24/2024	7:15 AM	0	405	77	0	3	10	1	0	2	0	0	0	0
4/24/2024	7:30 AM	0	444	73	0	6	11	2	0	2	0	0	0	0
4/24/2024	7:45 AM	0	491	69	0	7	8	1	0	2	0	0	0	0
4/24/2024	8:00 AM	0	470	58	0	6	8	1	0	3	0	0	0	0
4/24/2024	8:15 AM	0	412	52	0	6	8	1	0	4	0	0	0	0
4/24/2024	8:30 AM	0	347	48	0	4	8	0	2	5	0	0	0	0
4/24/2024	8:45 AM	0	254	39	0	2	9	0	2	5	0	0	0	0
4/24/2024	9:00 AM	0	209	36	0	1	9	0	2	5	0	0	0	0
4/24/2024	9:15 AM	0	198	36	0	3	8	1	2	4	0	0	0	0
4/24/2024	9:30 AM	0	196	39	0	4	9	2	0	3	0	0	0	0
4/24/2024	9:45 AM	0	187	40	0	5	7	2	0	3	0	0	0	0
4/24/2024	10:00 AM	0	179	41	1	5	7	2	0	2	0	0	0	0
4/24/2024	10:15 AM	0	181	44	1	5	7	1	0	2	0	0	0	0
4/24/2024	10:30 AM	0	180	43	1	3	6	1	0	1	0	0	0	0
4/24/2024	10:45 AM	0	187	51	1	2	5	3	0	2	0	0	0	0
4/24/2024	11:00 AM	0	195	58	1	4	4	4	0	2	0	0	0	0
4/24/2024	11:15 AM	0	191	60	1	5	5	5	0	4	0	0	0	0
4/24/2024	11:30 AM	0	213	57	1	5	4	5	0	5	0	0	0	0
4/24/2024	11:45 AM	0	226	50	1	6	4	3	0	5	0	0	0	0
4/24/2024	12:00 PM	0	244	51	0	4	5	2	0	5	0	0	0	0
4/24/2024	12:15 PM	0	263	50	0	1	4	3	0	4	0	0	0	0
4/24/2024	12:30 PM	0	261	56	0	3	3	2	1	4	0	0	0	0
4/24/2024	12:45 PM	0	247	51	0	2	3	3	2	4	0	0	0	0
4/24/2024	1:00 PM	0	244	46	0	2	4	3	2	4	0	0	0	0
4/24/2024	1:15 PM	0	232	41	0	5	3	1	2	3	0	0	0	0
4/24/2024	1:30 PM	0	233	37	0	3	2	2	1	3	0	0	0	0
4/24/2024	1:45 PM	0	222	40	0	5	2	1	0	2	0	0	0	0
4/24/2024	2:00 PM	0	208	38	0	5	1	2	0	3	0	0	0	0
4/24/2024	2:15 PM	0	214	40	0	3	2	2	0	3	0	0	0	0
4/24/2024	2:30 PM	0	206	46	0	3	2	1	0	2	0	0	0	0
4/24/2024	2:45 PM	0	205	46	0	2	2	1	0	2	0	0	0	0
4/24/2024	3:00 PM	1	210	44	0	2	3	1	0	0	0	0	0	0
4/24/2024	3:15 PM	1	214	45	0	2	8	2	0	4	0	0	0	0
4/24/2024	3:30 PM	1	231	43	0	4	10	2	0	5	0	0	0	0
4/24/2024	3:45 PM	2	244	50	1	4	13	2	1	8	0	0	0	0
4/24/2024	4:00 PM	1	253	55	2	7	14	1	1	9	0	0	0	0
4/24/2024	4:15 PM	1	267	58	2	6	10	0	1	11	0	0	0	0
4/24/2024	4:30 PM	1	273	56	2	5	8	0	1	11	0	0	0	0
4/24/2024	4:45 PM	0	295	51	1	5	6	0	0	8	0	0	0	0
4/24/2024	5:00 PM	0	312	52	0	3	3	0	0	8	0	0	0	0
4/24/2024	5:15 PM	0	317	50	0	4	1	0	0	2	0	0	0	0
4/24/2024	5:30 PM	0	295	47	0	3	4	0	0	1	0	0	0	0
4/24/2024	5:45 PM	0	273	43	0	4	4	0	0	2	0	0	0	0
4/24/2024	6:00 PM	0	244	40	0	3	4	0	0	1	0	0	0	0
4/24/2024	6:15 PM	1	203	41	0	2	4	0	0	2	0	0	0	0
4/24/2024	6:30 PM	1	179	41	0	3	1	0	0	2	0	0	0	0
4/24/2024	6:45 PM	1	156	40	0	2	3	0	0	1	0	0	0	0
4/24/2024	7:00 PM	1	125	35	1	2	4	0	0	1	0	0	0	0
4/24/2024	7:15 PM	0	108	28	1	3	4	0	0	0	0	0	0	0
4/24/2024	7:30 PM	0	105	29	1	3	4	0	0	1	0	0	0	0
4/24/2024	7:45 PM	0	102	34	1	2	1	0	0	1	0	0	0	0
4/24/2024	8:00 PM	0	92	32	0	2	0	0	0	1	0	0	0	0
4/24/2024	8:15 PM	0	93	33	0	3	1	0	0	2	0	0	0	0
4/24/2024	8:30 PM	0	86	29	0	2	4	0	0	1	0	0	0	0
4/24/2024	8:45 PM	0	76	23	0	2	4	0	0	2	0	0	0	0
4/24/2024	9:00 PM	0	83	28	0	2	4	0	0	2	0	0	0	0
4/24/2024	9:15 PM	0	74	26	0	1	4	0	0	1	0	0	0	0
4/24/2024	9:30 PM	0	65	23	0	1	1	0	0	2	0	0	0	0
4/24/2024	9:45 PM	0	65	22	0	1	1	0	0	1	0	0	0	0
4/24/2024	10:00 PM	0	54	15	0	1	1	0	0	1	0	0	0	0
4/24/2024	10:15 PM	0	55	16	0	1	0	0	0	1	0	0	0	0
4/24/2024	10:30 PM	0	49	14	0	1	0	0	0	0	0	0	0	0
4/24/2024	10:45 PM	0	42	11	0	1	0	0	0	0	0	0	0	0
4/24/2024	11:00 PM	0	37	10	0	1	1	0	0	0	0	0	0	0
4/24/2024	11:15 PM	0	24	5	0	0	1	0	0	0	0	0	0	0
4/24/2024	11:30 PM	0	16	4	0	0	1	0	0	0	0	0	0	0
4/24/2024	11:45 PM	0	7	2	0	0	1	0	0	0	0	0	0	0

4/25/2024	12:00 AM	0	29	6	0	0	6	0	0	0	0	0	0	0
4/25/2024	12:15 AM	0	22	4	0	0	3	0	0	0	0	0	0	0
4/25/2024	12:30 AM	0	21	4	0	0	3	0	0	0	0	0	0	0
4/25/2024	12:45 AM	0	15	2	0	0	5	0	0	0	0	0	0	0
4/25/2024	1:00 AM	0	14	2	0	0	4	0	0	0	0	0	0	0
4/25/2024	1:15 AM	0	13	2	0	0	5	0	0	0	0	0	0	0
4/25/2024	1:30 AM	0	13	1	0	0	9	0	0	0	0	0	0	0
4/25/2024	1:45 AM	0	12	1	0	1	7	0	0	0	0	0	0	0
4/25/2024	2:00 AM	0	11	0	0	1	6	0	0	0	0	0	0	0
4/25/2024	2:15 AM	0	12	0	0	1	7	0	0	0	0	0	0	0
4/25/2024	2:30 AM	0	9	0	0	1	3	0	0	0	0	0	0	0
4/25/2024	2:45 AM	0	7	0	0	0	2	0	0	0	0	0	0	0
4/25/2024	3:00 AM	0	5	0	0	0	2	0	0	0	0	0	0	0
4/25/2024	3:15 AM	0	9	0	0	0	0	0	0	0	0	0	0	0
4/25/2024	3:30 AM	0	13	1	0	0	0	0	0	1	0	0	0	0
4/25/2024	3:45 AM	0	19	1	0	1	0	0	0	1	0	0	0	0
4/25/2024	4:00 AM	0	26	2	0	1	0	0	0	2	0	0	0	0
4/25/2024	4:15 AM	0	26	2	0	1	0	0	0	2	0	0	0	0
4/25/2024	4:30 AM	0	32	4	0	1	0	0	0	2	0	0	0	0
4/25/2024	4:45 AM	0	36	8	0	0	0	0	0	2	0	0	0	0
4/25/2024	5:00 AM	0	42	10	0	0	1	0	0	2	0	0	0	0
4/25/2024	5:15 AM	0	51	15	0	2	1	0	0	3	0	0	0	0
4/25/2024	5:30 AM	0	59	21	0	3	2	1	0	5	0	0	0	0
4/25/2024	5:45 AM	0	75	24	0	3	5	3	0	5	0	0	0	0
4/25/2024	6:00 AM	0	102	29	0	4	7	5	0	4	0	0	0	0
4/25/2024	6:15 AM	0	133	34	0	2	10	7	0	4	0	0	0	0
4/25/2024	6:30 AM	0	184	40	0	4	11	7	0	4	0	0	0	0
4/25/2024	6:45 AM	0	234	45	0	4	11	6	0	5	0	0	0	0
4/25/2024	7:00 AM	0	299	52	0	3	10	4	0	5	0	0	0	0
4/25/2024	7:15 AM	0	361	60	0	3	10	3	0	6	0	0	0	0
4/25/2024	7:30 AM	0	431	65	0	0	11	3	0	6	0	0	0	0
4/25/2024	7:45 AM	0	478	68	0	0	10	4	0	6	0	0	0	0
4/25/2024	8:00 AM	0	447	65	0	1	10	5	0	7	0	0	0	0
4/25/2024	8:15 AM	0	397	62	0	2	8	4	0	7	0	0	0	0
4/25/2024	8:30 AM	0	299	52	0	2	9	4	0	8	0	0	0	0
4/25/2024	8:45 AM	1	242	49	0	3	9	3	0	7	0	0	0	0
4/25/2024	9:00 AM	1	222	46	0	3	8	2	0	7	0	0	0	0
4/25/2024	9:15 AM	1	199	40	0	3	8	2	0	8	0	0	0	0
4/25/2024	9:30 AM	1	199	40	1	5	8	3	0	4	0	0	0	0
4/25/2024	9:45 AM	0	182	39	1	4	9	2	0	4	0	0	0	0
4/25/2024	10:00 AM	0	180	41	1	4	10	2	0	4	0	0	0	0
4/25/2024	10:15 AM	0	191	45	1	4	13	3	0	5	0	0	0	0
4/25/2024	10:30 AM	0	205	49	0	4	11	2	0	5	0	0	0	0
4/25/2024	10:45 AM	0	207	53	0	5	11	3	0	5	0	0	0	0
4/25/2024	11:00 AM	0	212	54	0	6	10	3	0	6	0	0	0	0
4/25/2024	11:15 AM	0	226	51	0	6	7	3	0	5	0	0	0	0
4/25/2024	11:30 AM	0	224	48	0	5	9	3	1	6	0	0	0	0
4/25/2024	11:45 AM	0	236	49	0	6	10	3	1	7	0	0	0	0
4/25/2024	12:00 PM	0	240	48	0	6	11	3	1	7	0	0	0	0
4/25/2024	12:15 PM	0	246	50	0	5	11	3	1	5	0	0	0	0
4/25/2024	12:30 PM	1	248	51	0	6	10	3	0	4	0	0	0	0
4/25/2024	12:45 PM	1	234	43	0	6	9	3	0	4	0	0	0	0
4/25/2024	1:00 PM	1	225	44	0	6	9	4	0	3	0	0	0	0
4/25/2024	1:15 PM	1	220	43	0	6	9	3	0	2	0	0	0	0
4/25/2024	1:30 PM	0	216	42	1	5	8	3	1	4	0	0	0	0
4/25/2024	1:45 PM	0	224	47	1	3	5	2	1	3	0	0	0	0
4/25/2024	2:00 PM	1	229	49	1	2	5	1	1	3	0	0	0	0
4/25/2024	2:15 PM	1	215	48	1	4	6	1	1	3	0	0	0	0
4/25/2024	2:30 PM	1	212	48	0	3	7	0	0	1	0	0	0	0
4/25/2024	2:45 PM	1	200	45	0	5	8	0	0	2	0	0	0	0
4/25/2024	3:00 PM	0	214	48	0	8	6	0	1	3	0	0	0	0
4/25/2024	3:15 PM	1	257	59	0	6	7	1	1	3	0	0	0	0
4/25/2024	3:30 PM	1	284	67	1	7	5	1	2	5	0	0	0	0
4/25/2024	3:45 PM	1	304	68	1	5	8	1	2	7	0	0	0	0
4/25/2024	4:00 PM	1	318	71	1	1	12	2	1	8	0	0	0	0
4/25/2024	4:15 PM	0	295	61	1	1	17	2	1	9	0	0	0	0
4/25/2024	4:30 PM	1	288	54	1	1	21	2	0	9	0	0	0	0
4/25/2024	4:45 PM	1	303	56	1	2	20	2	0	7	0	0	0	0
4/25/2024	5:00 PM	1	313	53	1	2	20	1	1	7	0	0	0	0
4/25/2024	5:15 PM	5	331	61	1	3	14	0	1	6	0	0	0	0
4/25/2024	5:30 PM	4	324	59	0	2	10	0	1	4	0	0	0	0
4/25/2024	5:45 PM	4	311	57	0	3	9	0	1	4	0	0	0	0
4/25/2024	6:00 PM	4	253	45	0	3	5	0	0	1	0	0	0	0
4/25/2024	6:15 PM	0	168	26	0	2	3	0	0	1	0	0	0	0
4/25/2024	6:30 PM	0	105	16	0	2	2	0	0	1	0	0	0	0
4/25/2024	6:45 PM	0	38	5	0	0	0	0	0	0	0	0	0	0
4/25/2024	7:00 PM	0	0	0	0	0	0	0	0	0	0	0	0	0
4/25/2024	7:15 PM	0	0	0	0	0	0	0	0	0	0	0	0	0
4/25/2024	7:30 PM	0	0	0	0	0	0	0	0	0	0	0	0	0
4/25/2024	7:45 PM	0	0	0	0	0	0	0	0	0	0	0	0	0
4/25/2024	8:00 PM	0	0	0	0	0	0	0	0	0	0	0	0	0
4/25/2024	8:15 PM	0	0	0	0	0	0	0	0	0	0	0	0	0
4/25/2024	8:30 PM	0	0	0	0	0	0	0	0	0	0	0	0	0
4/25/2024	8:45 PM	0	0	0	0	0	0	0	0	0	0	0	0	0
4/25/2024	9:00 PM	0	0	0	0	0	0	0	0	0	0	0	0	0
4/25/2024	9:15 PM	0	0	0	0	0	0	0	0	0	0	0	0	0
4/25/2024	9:30 PM	0	0	0	0	0	0	0	0	0	0	0	0	0
4/25/2024	9:45 PM	0	0	0	0	0	0	0	0	0	0	0	0	0
4/25/2024	10:00 PM	0	0	0	0	0	0	0	0	0	0	0	0	0
4/25/2024	10:15 PM	0	0	0	0	0	0	0	0	0	0	0	0	0
4/25/2024	10:30 PM	0	0	0	0	0	0	0	0	0	0	0	0	0
4/25/2024	10:45 PM	0	0	0	0	0	0	0	0	0	0	0	0	0
4/25/2024	11:00 PM	0	0	0	0	0	0	0	0	0	0	0	0	0
4/25/2024	11:15 PM	0	0	0	0	0	0	0	0	0	0	0	0	0
4/25/2024	11:30 PM	0	0	0	0	0	0	0	0	0	0	0	0	0
4/25/2024	11:45 PM	0	0	0	0	0	0	0	0	0	0	0	0	0

Bi-Directional Class Count || NB EB 15min

Columbia, SC

Marr Traffic DATA COLLECTION
www.marrtraffic.com

Site 66
I-20 E/Bound On-Ramp,
east of US-176 Broad River Rd

Date
Tuesday, April 30, 2024

Lat/Long
34.040140°, -81.091247°

Weather
Mostly Cloudy
70°F

Click here for Detailed Weather

Click here for Map

0000 - 2400 (Weekday 24h Session) (04-30-2024)
NB EB 15min

	Eastbound (Movement 66.1)													15min	60min
Time	1	2	3	4	5	6	7	8	9	10	11	12	13	Total	Total
0000 - 0015	0	0	0	0	0	0	0	0	0	0	0	0	0	**0**	
0015 - 0030	0	0	0	0	0	0	0	0	0	0	0	0	0	**0**	
0030 - 0045	0	0	0	0	0	0	0	0	0	0	0	0	0	**0**	
0045 - 0100	0	0	0	0	0	0	0	0	0	0	0	0	0	**0**	**0**
0100 - 0115	0	0	0	0	0	0	0	0	0	0	0	0	0	**0**	
0115 - 0130	0	0	0	0	0	0	0	0	0	0	0	0	0	**0**	
0130 - 0145	0	0	0	0	0	0	0	0	0	0	0	0	0	**0**	
0145 - 0200	0	0	0	0	0	0	0	0	0	0	0	0	0	**0**	**0**
0200 - 0215	0	0	0	0	0	0	0	0	0	0	0	0	0	**0**	
0215 - 0230	0	0	0	0	0	0	0	0	0	0	0	0	0	**0**	
0230 - 0245	0	0	0	0	0	0	0	0	0	0	0	0	0	**0**	
0245 - 0300	0	0	0	0	0	0	0	0	0	0	0	0	0	**0**	**0**
0300 - 0315	0	0	0	0	0	0	0	0	0	0	0	0	0	**0**	
0315 - 0330	0	0	0	0	0	0	0	0	0	0	0	0	0	**0**	
0330 - 0345	0	0	0	0	0	0	0	0	0	0	0	0	0	**0**	
0345 - 0400	0	0	0	0	0	0	0	0	0	0	0	0	0	**0**	**0**
0400 - 0415	0	0	0	0	0	0	0	0	0	0	0	0	0	**0**	
0415 - 0430	0	0	0	0	0	0	0	0	0	0	0	0	0	**0**	
0430 - 0445	0	0	0	0	0	0	0	0	0	0	0	0	0	**0**	
0445 - 0500	0	0	0	0	0	0	0	0	0	0	0	0	0	**0**	**0**
0500 - 0515	0	0	0	0	0	0	0	0	0	0	0	0	0	**0**	
0515 - 0530	0	0	0	0	0	0	0	0	0	0	0	0	0	**0**	
0530 - 0545	0	0	0	0	0	0	0	0	0	0	0	0	0	**0**	
0545 - 0600	0	0	0	0	0	0	0	0	0	0	0	0	0	**0**	**0**
0600 - 0615	0	0	0	0	0	0	0	0	0	0	0	0	0	**0**	
0615 - 0630	0	0	0	0	0	0	0	0	0	0	0	0	0	**0**	
0630 - 0645	0	0	0	0	0	0	0	0	0	0	0	0	0	**0**	
0645 - 0700	0	0	0	0	0	0	0	0	0	0	0	0	0	**0**	**0**
0700 - 0715	0	0	0	0	0	0	0	0	0	0	0	0	0	**0**	
0715 - 0730	0	0	0	0	0	0	0	0	0	0	0	0	0	**0**	
0730 - 0745	0	0	0	0	0	0	0	0	0	0	0	0	0	**0**	
0745 - 0800	0	0	0	0	0	0	0	0	0	0	0	0	0	**0**	**0**
0800 - 0815	0	0	0	0	0	0	0	0	0	0	0	0	0	**0**	
0815 - 0830	0	0	0	0	0	0	0	0	0	0	0	0	0	**0**	
0830 - 0845	0	0	0	0	0	0	0	0	0	0	0	0	0	**0**	
0845 - 0900	0	0	0	0	0	0	0	0	0	0	0	0	0	**0**	**0**
0900 - 0915	0	0	0	0	0	0	0	0	0	0	0	0	0	**0**	
0915 - 0930	0	0	0	0	0	0	0	0	0	0	0	0	0	**0**	
0930 - 0945	0	0	0	0	0	0	0	0	0	0	0	0	0	**0**	
0945 - 1000	0	0	0	0	0	0	0	0	0	0	0	0	0	**0**	**0**
1000 - 1015	0	0	0	0	0	0	0	0	0	0	0	0	0	**0**	
1015 - 1030	0	0	0	0	0	0	0	0	0	0	0	0	0	**0**	
1030 - 1045	0	0	0	0	0	0	0	0	0	0	0	0	0	**0**	
1045 - 1100	0	0	0	0	0	0	0	0	0	0	0	0	0	**0**	**0**
1100 - 1115	0	0	0	0	0	0	0	0	0	0	0	0	0	**0**	
1115 - 1130	0	0	0	0	0	0	0	0	0	0	0	0	0	**0**	
1130 - 1145	0	0	0	0	0	0	0	0	0	0	0	0	0	**0**	
1145 - 1200	0	0	0	0	0	0	0	0	0	0	0	0	0	**0**	**0**
1200 - 1215	0	0	0	0	0	0	0	0	0	0	0	0	0	**0**	
1215 - 1230	0	0	0	0	0	0	0	0	0	0	0	0	0	**0**	
1230 - 1245	0	0	0	0	0	0	0	0	0	0	0	0	0	**0**	
1245 - 1300	0	0	0	0	0	0	0	0	0	0	0	0	0	**0**	**0**
1300 - 1315	0	0	0	0	0	0	0	0	0	0	0	0	0	**0**	
1315 - 1330	0	0	0	0	0	0	0	0	0	0	0	0	0	**0**	
1330 - 1345	0	0	0	0	0	0	0	0	0	0	0	0	0	**0**	
1345 - 1400	0	0	0	0	0	0	0	0	0	0	0	0	0	**0**	**0**
1400 - 1415	0	0	0	0	0	0	0	0	0	0	0	0	0	**0**	
1415 - 1430	0	0	0	0	0	0	0	0	0	0	0	0	0	**0**	
1430 - 1445	0	0	0	0	0	0	0	0	0	0	0	0	0	**0**	
1445 - 1500	0	0	0	0	0	0	0	0	0	0	0	0	0	**0**	**0**
1500 - 1515	0	0	0	0	0	0	0	0	0	0	0	0	0	**0**	
1515 - 1530	0	0	0	0	0	0	0	0	0	0	0	0	0	**0**	
1530 - 1545	0	0	0	0	0	0	0	0	0	0	0	0	0	**0**	
1545 - 1600	0	0	0	0	0	0	0	0	0	0	0	0	0	**0**	**0**
1600 - 1615	0	0	0	0	0	0	0	0	0	0	0	0	0	**0**	
1615 - 1630	0	0	0	0	0	0	0	0	0	0	0	0	0	**0**	
1630 - 1645	0	0	0	0	0	0	0	0	0	0	0	0	0	**0**	
1645 - 1700	0	0	0	0	0	0	0	0	0	0	0	0	0	**0**	**0**
1700 - 1715	0	0	0	0	0	0	0	0	0	0	0	0	0	**0**	
1715 - 1730	0	0	0	0	0	0	0	0	0	0	0	0	0	**0**	
1730 - 1745	0	0	0	0	0	0	0	0	0	0	0	0	0	**0**	
1745 - 1800	0	0	0	0	0	0	0	0	0	0	0	0	0	**0**	**0**
1800 - 1815	0	0	0	0	0	0	0	0	0	0	0	0	0	**0**	
1815 - 1830	0	0	0	0	0	0	0	0	0	0	0	0	0	**0**	
1830 - 1845	0	0	0	0	0	0	0	0	0	0	0	0	0	**0**	
1845 - 1900	0	0	0	0	0	0	0	0	0	0	0	0	0	**0**	**0**
1900 - 1915	0	145	7	0	0	0	0	0	0	0	0	0	0	**152**	
1915 - 1930	0	128	5	0	0	0	0	0	0	0	0	0	0	**133**	
1930 - 1945	0	94	2	0	1	0	0	0	0	0	0	0	0	**97**	
1945 - 2000	0	120	5	0	2	0	0	0	0	0	0	0	0	**127**	**509**
2000 - 2015	0	115	4	0	0	0	0	0	0	0	0	0	0	**119**	
2015 - 2030	0	130	4	0	1	0	0	0	0	0	0	0	0	**135**	
2030 - 2045	0	108	3	0	0	0	0	0	0	0	0	0	0	**111**	
2045 - 2100	0	86	4	0	0	0	0	0	0	0	0	0	0	**90**	**455**
2100 - 2115	0	94	3	0	1	0	0	0	0	0	0	0	0	**98**	
2115 - 2130	0	72	0	0	1	0	0	0	1	0	0	0	0	**74**	
2130 - 2145	0	88	3	0	0	0	0	0	0	0	0	0	0	**91**	
2145 - 2200	0	49	0	0	0	0	0	0	0	0	0	0	0	**49**	**312**
2200 - 2215	0	58	0	0	1	0	0	0	0	0	0	0	0	**59**	
2215 - 2230	0	58	1	0	1	0	0	0	1	0	0	0	0	**61**	
2230 - 2245	0	61	1	0	1	0	0	0	0	0	0	0	0	**63**	
2245 - 2300	0	46	0	0	0	0	0	0	0	0	0	0	0	**46**	**229**
2300 - 2315	0	38	0	0	1	0	0	0	0	0	0	0	0	**39**	
2315 - 2330	0	56	2	0	0	0	0	0	1	0	0	0	0	**59**	
2330 - 2345	0	40	1	0	0	0	0	0	0	0	0	0	0	**41**	
2345 - 0000	0	28	0	0	0	0	0	0	0	0	0	0	0	**28**	**167**

Session Total	0	1614	45	0	10	0	0	0	3	0	0	0	0	**1672**
Session Average	0.00	16.81	0.47	0.00	0.10	0.00	0.00	0.00	0.03	0.00	0.00	0.00	0.00	**17.42**
Session Percentage	0.00	96.53	2.69	0.00	0.60	0.00	0.00	0.00	0.18	0.00	0.00	0.00	0.00	

AM Peak Hour	-	-	-	-	-	-	-	-	-	-	-	-	-	**-**
AM Peak Volume	0	0	0	0	0	0	0	0	0	0	0	0	0	**0**

Noon Peak Hour	-	-	-	-	-	-	-	-	-	-	-	-	-	**-**
Noon Peak Volume	0	0	0	0	0	0	0	0	0	0	0	0	0	**0**

PM Peak Hour	-	1900 - 2000	1900 - 2000	-	1930 - 2030	-	-	-	-	-	-	-	-	**1900 - 2000**
PM Peak Volume	0	487	19	0	4	0	0	0	0	0	0	0	0	**509**

Site 66
I-20 E/Bound On-Ramp,
east of US-176 Broad River Rd

Date
Wednesday, May 1, 2024

Lat/Long
34.040140°, -81.091247°

Weather
Partly Cloudy
71°F

Click here for Detailed Weather

0000 - 2400 (Weekday 24h Session) (05-01-2024)
NB EB 15min

	Eastbound (Movement 66.1)													15min	60min
Time	1	2	3	4	5	6	7	8	9	10	11	12	13	Total	Total
0000 - 0015	0	22	5	0	1	0	0	0	1	0	0	0	0	**29**	
0015 - 0030	0	17	3	0	0	0	0	0	0	0	0	0	0	**20**	
0030 - 0045	0	15	3	0	0	0	0	0	0	0	0	0	0	**18**	
0045 - 0100	0	17	6	0	1	0	0	0	0	0	0	0	0	**24**	**91**
0100 - 0115	0	18	3	0	0	0	0	0	0	0	0	0	0	**21**	
0115 - 0130	0	13	2	0	0	0	0	0	0	0	0	0	0	**15**	
0130 - 0145	0	18	3	0	0	0	0	0	1	0	0	0	0	**22**	
0145 - 0200	0	20	3	0	0	0	0	0	0	0	0	0	0	**23**	**81**
0200 - 0215	0	8	1	0	0	0	0	0	0	0	0	0	0	**9**	
0215 - 0230	0	11	1	0	1	0	0	0	0	0	0	0	0	**13**	
0230 - 0245	0	13	2	0	0	0	0	0	0	0	0	0	0	**15**	
0245 - 0300	0	16	2	0	0	0	0	0	0	0	0	0	0	**18**	**55**
0300 - 0315	0	9	3	0	0	3	0	0	0	0	0	0	0	**15**	
0315 - 0330	0	14	3	0	0	0	0	0	1	0	0	0	0	**18**	
0330 - 0345	0	14	2	0	0	0	0	0	2	0	0	0	0	**18**	
0345 - 0400	0	4	1	0	0	0	0	0	1	0	0	0	0	**6**	**57**
0400 - 0415	0	20	5	0	1	0	0	0	0	0	0	0	0	**26**	
0415 - 0430	0	22	4	0	2	0	0	0	0	0	0	0	0	**28**	
0430 - 0445	0	27	5	1	0	0	0	0	0	0	0	0	0	**33**	
0445 - 0500	0	26	7	0	1	0	0	0	0	0	0	0	0	**34**	**121**
0500 - 0515	0	26	4	0	0	0	0	0	0	0	0	0	0	**30**	
0515 - 0530	0	54	6	0	1	0	0	0	0	0	0	0	0	**61**	
0530 - 0545	0	57	5	0	2	0	0	0	0	0	0	0	0	**64**	
0545 - 0600	0	39	3	0	1	0	0	0	0	0	0	0	0	**43**	**198**
0600 - 0615	0	52	15	0	1	1	0	0	0	0	0	0	0	**69**	
0615 - 0630	0	60	18	0	3	0	0	0	0	0	0	0	0	**81**	
0630 - 0645	0	108	16	0	1	0	0	0	0	0	0	0	0	**125**	
0645 - 0700	0	112	27	2	1	0	0	2	2	0	0	0	0	**146**	**421**
0700 - 0715	0	119	28	1	2	0	0	0	1	0	0	0	0	**151**	
0715 - 0730	0	181	27	1	0	2	0	1	2	0	0	0	0	**214**	
0730 - 0745	0	157	23	0	3	2	0	0	2	1	0	0	0	**188**	
0745 - 0800	0	170	32	1	1	0	0	0	1	0	0	0	0	**205**	**758**
0800 - 0815	0	173	29	0	5	1	0	2	0	0	0	0	0	**210**	
0815 - 0830	1	142	46	2	6	1	0	0	0	0	0	0	0	**198**	
0830 - 0845	1	129	29	13	6	1	0	2	0	0	0	0	0	**181**	
0845 - 0900	0	116	30	1	6	0	0	0	2	0	0	0	0	**155**	**744**
0900 - 0915	0	116	26	0	3	0	1	0	0	0	0	0	0	**146**	
0915 - 0930	0	95	17	0	3	1	0	0	0	0	0	0	0	**116**	
0930 - 0945	0	102	28	0	1	1	0	1	0	0	0	0	0	**133**	
0945 - 1000	0	119	18	0	3	0	0	0	0	0	0	0	0	**140**	**535**
1000 - 1015	0	96	22	0	5	4	0	0	0	0	0	0	0	**127**	
1015 - 1030	0	91	33	1	4	3	0	0	0	0	0	0	0	**132**	
1030 - 1045	0	100	19	0	1	0	0	1	0	0	0	0	0	**121**	
1045 - 1100	0	104	21	0	3	1	0	0	1	0	0	0	0	**130**	**510**
1100 - 1115	0	119	26	2	1	0	0	2	0	0	0	0	0	**150**	
1115 - 1130	1	112	30	0	3	1	0	1	0	0	0	0	0	**148**	
1130 - 1145	1	126	25	0	2	0	0	0	1	0	0	0	0	**155**	
1145 - 1200	0	130	29	0	4	2	1	1	0	0	0	0	0	**167**	**620**
1200 - 1215	0	111	21	1	6	3	0	1	0	0	0	0	0	**143**	
1215 - 1230	0	116	29	1	5	3	0	0	0	0	0	0	0	**154**	
1230 - 1245	0	113	25	0	5	0	0	2	0	0	0	0	0	**145**	
1245 - 1300	1	108	27	0	2	2	0	0	0	0	0	0	0	**140**	**582**
1300 - 1315	0	136	26	0	2	1	1	0	0	0	0	0	0	**166**	
1315 - 1330	0	139	18	0	4	1	0	0	0	0	0	0	0	**162**	
1330 - 1345	0	123	23	0	4	1	0	0	0	0	0	0	0	**151**	
1345 - 1400	0	180	20	2	3	0	0	1	0	0	0	0	0	**206**	**685**
1400 - 1415	0	146	23	0	4	2	0	1	1	0	0	0	0	**177**	
1415 - 1430	1	129	26	4	3	1	0	0	1	0	0	0	0	**165**	
1430 - 1445	0	135	15	1	3	2	0	0	1	0	0	0	0	**157**	
1445 - 1500	0	145	23	0	5	0	1	0	0	0	0	0	0	**174**	**673**
1500 - 1515	0	147	35	0	1	1	0	1	0	0	0	0	0	**185**	
1515 - 1530	0	162	22	2	3	1	0	0	0	0	0	0	0	**190**	
1530 - 1545	0	168	24	3	6	1	0	1	0	0	0	0	0	**203**	
1545 - 1600	0	189	28	0	2	0	0	0	0	0	0	0	0	**219**	**797**
1600 - 1615	0	157	37	1	4	0	0	0	0	0	0	0	0	**199**	
1615 - 1630	0	171	31	3	2	2	0	1	0	0	0	0	0	**210**	
1630 - 1645	1	165	23	4	0	1	1	1	0	0	0	0	0	**196**	
1645 - 1700	1	168	20	1	4	0	0	0	0	0	0	0	0	**194**	**799**
1700 - 1715	0	196	23	3	1	0	0	0	1	0	0	0	0	**224**	
1715 - 1730	1	164	28	0	2	0	0	1	0	0	0	0	0	**196**	
1730 - 1745	0	185	23	1	1	0	0	0	0	0	0	0	0	**210**	
1745 - 1800	0	147	103	1	0	2	0	0	0	0	0	0	0	**253**	**883**
1800 - 1815	1	173	18	0	0	0	0	0	2	0	0	0	0	**194**	
1815 - 1830	0	148	20	0	0	1	0	0	0	0	0	0	0	**169**	
1830 - 1845	0	149	21	2	2	0	0	0	1	0	0	0	0	**175**	
1845 - 1900	0	129	14	0	1	0	0	0	0	0	0	0	0	**144**	**682**
1900 - 1915	0	96	20	0	2	0	0	0	0	0	0	0	0	**118**	
1915 - 1930	7	143	20	1	0	0	0	0	0	0	0	0	0	**171**	
1930 - 1945	0	106	19	0	0	0	0	0	0	0	0	0	0	**125**	
1945 - 2000	0	125	19	0	2	1	0	0	1	0	0	0	0	**148**	**562**
2000 - 2015	0	161	17	0	2	0	0	0	0	0	0	0	0	**180**	
2015 - 2030	0	122	15	0	2	0	0	0	0	0	0	0	0	**139**	
2030 - 2045	0	130	16	0	3	0	0	0	1	0	0	0	0	**150**	
2045 - 2100	0	140	16	1	2	0	0	0	0	0	0	0	0	**159**	**628**
2100 - 2115	1	86	16	0	1	0	0	0	0	0	0	0	0	**104**	
2115 - 2130	0	69	9	0	1	0	0	0	0	0	0	0	0	**79**	
2130 - 2145	0	92	10	0	3	0	0	0	0	0	0	0	0	**105**	
2145 - 2200	0	61	7	0	0	0	0	0	0	0	0	0	0	**68**	**356**
2200 - 2215	0	57	8	0	0	0	0	0	0	0	0	0	0	**65**	
2215 - 2230	0	54	5	0	1	0	0	1	0	0	0	0	0	**61**	
2230 - 2245	0	61	6	0	0	0	0	0	1	0	0	0	0	**68**	
2245 - 2300	0	54	4	0	1	0	0	0	0	0	0	0	0	**59**	**253**
2300 - 2315	0	47	2	0	0	0	0	0	1	0	0	0	0	**50**	
2315 - 2330	0	27	3	0	2	0	0	0	0	0	0	0	0	**32**	
2330 - 2345	0	50	2	0	2	0	0	0	0	0	0	0	0	**54**	
2345 - 0000	0	31	1	0	1	0	0	0	0	0	0	0	0	**33**	**169**

Session Total	18	9240	1657	57	179	50	5	24	29	1	0	0	0	**11260**
Session Average	0.19	96.25	17.26	0.59	1.86	0.52	0.05	0.25	0.30	0.01	0.00	0.00	0.00	**117.29**
Session Percentage	0.16	82.06	14.72	0.51	1.59	0.44	0.04	0.21	0.26	0.01	0.00	0.00	0.00	

AM Peak Hour	0745 - 0845	0715 - 0815	0745 - 0845	0745 - 0845	0800 - 0900	0930 - 1030	0815 - 0915	0745 - 0845	0645 - 0745	0645 - 0745	-	-	-	**0715 - 0815**
AM Peak Volume	2	681	136	16	23	8	1	4	7	1	0	0	0	**817**

Noon Peak Hour	1045 - 1145	1445 - 1545	1100 - 1200	1345 - 1445	1145 - 1245	1000 - 1100	1100 - 1200	1030 - 1130	1345 - 1445	-	-	-	-	**1445 - 1545**
Noon Peak Volume	2	622	110	7	20	8	1	4	3	0	0	0	0	**752**

PM Peak Hour	1830 - 1930	1645 - 1745	1700 - 1800	1615 - 1715	1515 - 1615	1500 - 1600	1545 - 1645	1500 - 1600	1745 - 1845	-	-	-	-	**1700 - 1800**
PM Peak Volume	7	713	177	11	15	3	1	2	3	0	0	0	0	**883**

Site 66
I-20 E/Bound On-Ramp,
east of US-176 Broad River Rd

Date
Thursday, May 2, 2024

Lat/Long
34.040140°, -81.091247°

Weather
Fair
74°F

Click here for Detailed Weather

0000 - 2400 (Weekday 24h Session) (05-02-2024)
NB EB 15min

	Eastbound (Movement 66.1)													15min	60min
TIME	1	2	3	4	5	6	7	8	9	10	11	12	13	Total	Total
0000 - 0015	1	29	4	0	0	0	0	0	0	1	0	0	0	**35**	
0015 - 0030	0	26	1	0	0	0	0	0	0	0	0	0	0	**27**	
0030 - 0045	0	27	3	0	0	0	0	0	0	0	0	0	0	**30**	
0045 - 0100	0	28	2	0	0	0	0	0	0	0	0	0	0	**30**	**122**
0100 - 0115	0	20	2	0	0	0	0	0	0	0	0	0	0	**22**	
0115 - 0130	0	13	1	0	0	0	0	0	0	0	0	0	0	**14**	
0130 - 0145	0	13	0	0	1	0	0	0	0	0	0	0	0	**14**	
0145 - 0200	0	15	3	0	1	0	0	0	0	0	0	0	0	**19**	**69**
0200 - 0215	0	17	4	0	1	0	0	0	1	0	0	0	0	**23**	
0215 - 0230	0	13	2	0	0	0	0	0	1	0	0	0	0	**16**	
0230 - 0245	0	19	3	0	0	0	0	0	1	0	0	0	0	**23**	
0245 - 0300	0	14	2	0	0	0	0	0	0	0	0	0	0	**16**	**78**
0300 - 0315	0	5	2	0	0	0	0	0	1	0	0	0	0	**8**	
0315 - 0330	0	13	0	0	0	0	0	0	1	0	0	0	0	**14**	
0330 - 0345	0	6	1	0	0	0	0	0	0	0	0	0	0	**7**	
0345 - 0400	0	9	1	0	2	1	0	0	0	0	0	0	0	**13**	**42**
0400 - 0415	0	16	3	1	1	0	0	0	0	0	0	0	0	**21**	
0415 - 0430	0	16	3	0	0	0	0	0	0	0	0	0	0	**19**	
0430 - 0445	0	25	5	0	1	0	0	0	1	0	0	0	0	**32**	
0445 - 0500	0	21	2	0	2	0	0	1	0	0	0	0	0	**26**	**98**
0500 - 0515	0	35	9	0	0	1	0	0	1	0	0	0	0	**46**	
0515 - 0530	0	47	4	2	1	3	0	0	1	0	0	0	0	**58**	
0530 - 0545	0	52	7	0	1	0	0	0	0	0	0	0	0	**60**	
0545 - 0600	0	37	10	0	1	1	0	0	0	0	0	0	0	**49**	**213**
0600 - 0615	0	55	7	0	1	1	0	0	0	0	0	0	0	**64**	
0615 - 0630	0	65	13	0	3	1	0	0	1	0	0	0	0	**83**	
0630 - 0645	0	104	21	0	2	0	0	1	0	0	0	0	0	**128**	
0645 - 0700	0	125	35	1	1	1	0	2	3	0	0	0	0	**168**	**443**
0700 - 0715	0	141	21	0	2	1	1	0	0	0	0	0	0	**166**	
0715 - 0730	0	169	32	2	2	3	0	0	2	0	0	0	0	**210**	
0730 - 0745	0	149	26	0	4	3	0	0	0	1	0	0	0	**183**	
0745 - 0800	0	164	25	0	4	2	1	0	0	0	0	0	0	**196**	**755**
0800 - 0815	0	152	24	1	3	3	0	0	1	0	0	0	0	**184**	
0815 - 0830	2	129	22	3	7	1	0	0	1	0	0	0	0	**165**	
0830 - 0845	0	132	21	11	2	2	0	3	1	0	0	0	0	**172**	
0845 - 0900	0	118	24	3	4	3	0	1	0	0	0	0	0	**153**	**674**
0900 - 0915	1	92	26	1	2	1	1	0	0	0	0	0	0	**124**	
0915 - 0930	2	107	16	0	0	3	1	1	1	0	0	0	0	**131**	
0930 - 0945	0	98	21	2	3	1	0	0	1	0	0	0	0	**126**	
0945 - 1000	2	95	17	0	3	1	0	0	0	0	0	0	0	**118**	**499**
1000 - 1015	0	92	23	0	4	2	0	0	1	1	0	0	0	**123**	
1015 - 1030	0	83	17	0	3	2	0	0	2	0	0	0	0	**107**	
1030 - 1045	0	112	15	0	5	0	0	0	0	0	0	0	0	**132**	
1045 - 1100	0	95	23	0	1	1	0	0	0	0	0	0	0	**120**	**482**
1100 - 1115	0	99	16	0	3	2	0	1	0	0	0	0	0	**121**	
1115 - 1130	0	96	21	2	2	0	0	0	0	0	0	0	0	**121**	
1130 - 1145	2	100	25	0	3	1	0	0	0	1	0	0	0	**132**	
1145 - 1200	0	103	33	1	2	1	0	0	0	0	0	0	0	**140**	**514**
1200 - 1215	0	102	14	1	2	1	0	0	0	0	0	0	0	**120**	
1215 - 1230	1	105	31	1	7	1	1	0	0	0	0	0	0	**147**	
1230 - 1245	2	125	29	0	4	0	1	0	0	0	0	0	0	**161**	
1245 - 1300	0	129	24	1	5	2	0	0	1	0	0	0	0	**162**	**590**
1300 - 1315	0	127	33	3	2	2	0	0	3	0	0	0	0	**170**	
1315 - 1330	0	119	23	2	4	1	1	0	1	0	0	0	0	**151**	
1330 - 1345	0	115	27	0	3	0	0	0	2	0	0	0	0	**147**	
1345 - 1400	0	123	27	0	4	0	2	0	0	0	0	0	0	**156**	**624**
1400 - 1415	0	101	23	0	2	0	0	0	1	0	0	0	0	**127**	
1415 - 1430	1	141	26	1	4	3	0	0	1	0	0	0	0	**177**	
1430 - 1445	0	151	24	0	3	1	0	0	0	0	0	0	0	**179**	
1445 - 1500	1	126	30	1	1	0	0	0	1	0	0	0	0	**160**	**643**
1500 - 1515	0	123	36	0	7	2	0	1	1	0	0	0	0	**170**	
1515 - 1530	0	166	21	2	2	1	0	0	0	0	0	0	0	**192**	
1530 - 1545	0	145	16	0	3	1	0	0	0	0	0	0	0	**165**	
1545 - 1600	0	181	24	0	0	2	0	1	0	0	0	0	0	**208**	**735**
1600 - 1615	0	128	21	0	1	1	0	0	3	0	0	0	0	**154**	
1615 - 1630	0	157	30	0	4	3	0	0	1	0	0	0	0	**195**	
1630 - 1645	1	164	30	1	4	0	0	2	0	0	0	0	0	**202**	
1645 - 1700	0	208	34	2	2	3	0	0	0	0	0	0	0	**249**	**800**
1700 - 1715	0	194	24	3	2	0	0	0	0	0	0	0	0	**223**	
1715 - 1730	0	161	23	2	2	0	0	0	0	0	0	0	0	**188**	
1730 - 1745	0	149	32	2	5	2	0	1	1	0	0	0	0	**192**	
1745 - 1800	1	180	22	0	3	2	0	0	0	0	0	0	0	**208**	**811**
1800 - 1815	0	114	22	0	2	1	0	0	1	0	0	0	0	**140**	
1815 - 1830	0	100	13	0	1	0	0	1	0	0	0	0	0	**115**	
1830 - 1845	1	167	31	1	1	0	0	0	0	0	0	0	0	**201**	
1845 - 1900	0	146	28	0	3	0	0	1	0	0	0	0	0	**178**	**634**
1900 - 1915	0	0	0	0	0	0	0	0	0	0	0	0	0	**0**	
1915 - 1930	0	0	0	0	0	0	0	0	0	0	0	0	0	**0**	
1930 - 1945	0	0	0	0	0	0	0	0	0	0	0	0	0	**0**	
1945 - 2000	0	0	0	0	0	0	0	0	0	0	0	0	0	**0**	**0**
2000 - 2015	0	0	0	0	0	0	0	0	0	0	0	0	0	**0**	
2015 - 2030	0	0	0	0	0	0	0	0	0	0	0	0	0	**0**	
2030 - 2045	0	0	0	0	0	0	0	0	0	0	0	0	0	**0**	
2045 - 2100	0	0	0	0	0	0	0	0	0	0	0	0	0	**0**	**0**
2100 - 2115	0	0	0	0	0	0	0	0	0	0	0	0	0	**0**	
2115 - 2130	0	0	0	0	0	0	0	0	0	0	0	0	0	**0**	
2130 - 2145	0	0	0	0	0	0	0	0	0	0	0	0	0	**0**	
2145 - 2200	0	0	0	0	0	0	0	0	0	0	0	0	0	**0**	**0**
2200 - 2215	0	0	0	0	0	0	0	0	0	0	0	0	0	**0**	
2215 - 2230	0	0	0	0	0	0	0	0	0	0	0	0	0	**0**	
2230 - 2245	0	0	0	0	0	0	0	0	0	0	0	0	0	**0**	
2245 - 2300	0	0	0	0	0	0	0	0	0	0	0	0	0	**0**	**0**
2300 - 2315	0	0	0	0	0	0	0	0	0	0	0	0	0	**0**	
2315 - 2330	0	0	0	0	0	0	0	0	0	0	0	0	0	**0**	
2330 - 2345	0	0	0	0	0	0	0	0	0	0	0	0	0	**0**	
2345 - 0000	0	0	0	0	0	0	0	0	0	0	0	0	0	**0**	**0**

Session Total	18	7138	1316	53	161	71	9	17	39	4	0	0	0	**8826**
Session Average	0.19	74.35	13.71	0.55	1.68	0.74	0.09	0.18	0.41	0.04	0.00	0.00	0.00	**91.94**
Session Percentage	0.20	80.87	14.91	0.60	1.82	0.80	0.10	0.19	0.44	0.05	0.00	0.00	0.00	

AM Peak Hour	0900 - 1000	0715 - 0815	0645 - 0745	0800 - 0900	0730 - 0830	0715 - 0815	0700 - 0800	0830 - 0930	0630 - 0730	0645 - 0745	-	-	-	**0715 - 0815**
AM Peak Hour Volume	5	634	114	18	18	11	2	5	5	1	0	0	0	**773**

Noon Peak Hour	1130 - 1230	1430 - 1530	1215 - 1315	1230 - 1330	1200 - 1300	1415 - 1515	1300 - 1400	1015 - 1115	1245 - 1345	1000 - 1100	-	-	-	**1430 - 1530**
Noon Peak Hour Volume	3	566	117	6	18	6	3	1	7	1	0	0	0	**701**

PM Peak Hour	1745 - 1845	1630 - 1730	1615 - 1715	1645 - 1745	1500 - 1600	1530 - 1630	-	1545 - 1645	1530 - 1630	-	-	-	-	**1615 - 1715**
PM Peak Hour Volume	2	727	118	9	12	7	0	3	4	0	0	0	0	**869**

Bi-Directional Class Count || NB EB Average 15min

Columbia, SC

Marr Traffic DATA COLLECTION
www.marrtraffic.com

Site 66
I-20 E/Bound On-Ramp,
east of US-176 Broad River Rd

Date
Tuesday, April 30, 2024

Lat/Long
34.040140°, -81.091247°

Weather
Mostly Cloudy
70°F

0000 - 2400 (Weekday 24h Session) (All Dates)
NB EB Average 15min

	NB EB Average 15min													15min	60min
Time	1	2	3	4	5	6	7	8	9	10	11	12	13	Total	Total
0000 - 0015	0	17	3	0	0	0	0	0	0	0	0	0	0	**21**	
0015 - 0030	0	14	1	0	0	0	0	0	0	0	0	0	0	**16**	
0030 - 0045	0	14	2	0	0	0	0	0	0	0	0	0	0	**16**	
0045 - 0100	0	15	3	0	0	0	0	0	0	0	0	0	0	**18**	**71**
0100 - 0115	0	13	2	0	0	0	0	0	0	0	0	0	0	**14**	
0115 - 0130	0	9	1	0	0	0	0	0	0	0	0	0	0	**10**	
0130 - 0145	0	10	1	0	0	0	0	0	0	0	0	0	0	**12**	
0145 - 0200	0	12	2	0	0	0	0	0	0	0	0	0	0	**14**	**50**
0200 - 0215	0	8	2	0	0	0	0	0	0	0	0	0	0	**11**	
0215 - 0230	0	8	1	0	0	0	0	0	0	0	0	0	0	**10**	
0230 - 0245	0	11	2	0	0	0	0	0	0	0	0	0	0	**13**	
0245 - 0300	0	10	1	0	0	0	0	0	0	0	0	0	0	**11**	**44**
0300 - 0315	0	5	2	0	0	1	0	0	0	0	0	0	0	**8**	
0315 - 0330	0	9	1	0	0	0	0	0	1	0	0	0	0	**11**	
0330 - 0345	0	7	1	0	0	0	0	0	1	0	0	0	0	**8**	
0345 - 0400	0	4	1	0	1	0	0	0	0	0	0	0	0	**6**	**33**
0400 - 0415	0	12	3	0	1	0	0	0	0	0	0	0	0	**16**	
0415 - 0430	0	13	2	0	1	0	0	0	0	0	0	0	0	**16**	
0430 - 0445	0	17	3	0	0	0	0	0	0	0	0	0	0	**22**	
0445 - 0500	0	16	3	0	1	0	0	0	0	0	0	0	0	**20**	**73**
0500 - 0515	0	20	4	0	0	0	0	0	0	0	0	0	0	**25**	
0515 - 0530	0	34	3	1	1	1	0	0	0	0	0	0	0	**40**	
0530 - 0545	0	36	4	0	1	0	0	0	0	0	0	0	0	**41**	
0545 - 0600	0	25	4	0	1	0	0	0	0	0	0	0	0	**31**	**137**
0600 - 0615	0	36	7	0	1	1	0	0	0	0	0	0	0	**44**	
0615 - 0630	0	42	10	0	2	0	0	0	0	0	0	0	0	**55**	
0630 - 0645	0	71	12	0	1	0	0	0	0	0	0	0	0	**84**	
0645 - 0700	0	79	21	1	1	0	0	1	2	0	0	0	0	**105**	**288**
0700 - 0715	0	87	16	0	1	0	0	0	0	0	0	0	0	**106**	
0715 - 0730	0	117	20	1	1	2	0	0	1	0	0	0	0	**141**	
0730 - 0745	0	102	16	0	2	2	0	0	1	1	0	0	0	**124**	
0745 - 0800	0	111	19	0	2	1	0	0	0	0	0	0	0	**134**	**504**
0800 - 0815	0	108	18	0	3	1	0	1	0	0	0	0	0	**131**	
0815 - 0830	1	90	23	2	4	1	0	0	0	0	0	0	0	**121**	
0830 - 0845	0	87	17	8	3	1	0	2	0	0	0	0	0	**118**	
0845 - 0900	0	78	18	1	3	1	0	0	1	0	0	0	0	**103**	**473**
0900 - 0915	0	69	17	0	2	0	1	0	0	0	0	0	0	**90**	
0915 - 0930	1	67	11	0	1	1	0	0	0	0	0	0	0	**82**	
0930 - 0945	0	67	16	1	1	1	0	0	0	0	0	0	0	**86**	
0945 - 1000	1	71	12	0	2	0	0	0	0	0	0	0	0	**86**	**345**
1000 - 1015	0	63	15	0	3	2	0	0	0	0	0	0	0	**83**	
1015 - 1030	0	58	17	0	2	2	0	0	1	0	0	0	0	**80**	
1030 - 1045	0	71	11	0	2	0	0	0	0	0	0	0	0	**84**	
1045 - 1100	0	66	15	0	1	1	0	0	0	0	0	0	0	**83**	**331**
1100 - 1115	0	73	14	1	1	1	0	1	0	0	0	0	0	**90**	
1115 - 1130	0	69	17	1	2	0	0	0	0	0	0	0	0	**90**	
1130 - 1145	1	75	17	0	2	0	0	0	0	0	0	0	0	**96**	
1145 - 1200	0	78	21	0	2	1	0	0	0	0	0	0	0	**102**	**378**
1200 - 1215	0	71	12	1	3	1	0	0	0	0	0	0	0	**88**	
1215 - 1230	0	74	20	1	4	1	0	0	0	0	0	0	0	**100**	
1230 - 1245	1	79	18	0	3	0	0	1	0	0	0	0	0	**102**	
1245 - 1300	0	79	17	0	2	1	0	0	0	0	0	0	0	**101**	**391**
1300 - 1315	0	88	20	1	1	1	0	0	1	0	0	0	0	**112**	
1315 - 1330	0	86	14	1	3	1	0	0	0	0	0	0	0	**104**	
1330 - 1345	0	79	17	0	2	0	0	0	1	0	0	0	0	**99**	
1345 - 1400	0	101	16	1	2	0	1	0	0	0	0	0	0	**121**	**436**
1400 - 1415	0	82	15	0	2	1	0	0	1	0	0	0	0	**101**	
1415 - 1430	1	90	17	2	2	1	0	0	1	0	0	0	0	**114**	
1430 - 1445	0	95	13	0	2	1	0	0	0	0	0	0	0	**112**	
1445 - 1500	0	90	18	0	2	0	0	0	0	0	0	0	0	**111**	**439**
1500 - 1515	0	90	24	0	3	1	0	1	0	0	0	0	0	**118**	
1515 - 1530	0	109	14	1	2	1	0	0	0	0	0	0	0	**127**	
1530 - 1545	0	104	13	1	3	1	0	0	0	0	0	0	0	**123**	
1545 - 1600	0	123	17	0	1	1	0	0	0	0	0	0	0	**142**	**511**
1600 - 1615	0	95	19	0	2	0	0	0	1	0	0	0	0	**118**	
1615 - 1630	0	109	20	1	2	2	0	0	0	0	0	0	0	**135**	
1630 - 1645	1	110	18	2	1	0	0	1	0	0	0	0	0	**133**	
1645 - 1700	0	125	18	1	2	1	0	0	0	0	0	0	0	**148**	**533**
1700 - 1715	0	130	16	2	1	0	0	0	0	0	0	0	0	**149**	
1715 - 1730	0	108	17	1	1	0	0	0	0	0	0	0	0	**128**	
1730 - 1745	0	111	18	1	2	1	0	0	0	0	0	0	0	**134**	
1745 - 1800	0	109	42	0	1	1	0	0	0	0	0	0	0	**154**	**565**
1800 - 1815	0	96	13	0	1	0	0	0	1	0	0	0	0	**111**	
1815 - 1830	0	83	11	0	0	0	0	0	0	0	0	0	0	**95**	
1830 - 1845	0	105	17	1	1	0	0	0	0	0	0	0	0	**125**	
1845 - 1900	0	92	14	0	1	0	0	0	0	0	0	0	0	**107**	**439**
1900 - 1915	0	80	9	0	1	0	0	0	0	0	0	0	0	**90**	
1915 - 1930	2	90	8	0	0	0	0	0	0	0	0	0	0	**101**	
1930 - 1945	0	67	7	0	0	0	0	0	0	0	0	0	0	**74**	
1945 - 2000	0	82	8	0	1	0	0	0	0	0	0	0	0	**92**	**357**
2000 - 2015	0	92	7	0	1	0	0	0	0	0	0	0	0	**100**	
2015 - 2030	0	84	6	0	1	0	0	0	0	0	0	0	0	**91**	
2030 - 2045	0	79	6	0	1	0	0	0	0	0	0	0	0	**87**	
2045 - 2100	0	75	7	0	1	0	0	0	0	0	0	0	0	**83**	**361**
2100 - 2115	0	60	6	0	1	0	0	0	0	0	0	0	0	**67**	
2115 - 2130	0	47	3	0	1	0	0	0	0	0	0	0	0	**51**	
2130 - 2145	0	60	4	0	1	0	0	0	0	0	0	0	0	**65**	
2145 - 2200	0	37	2	0	0	0	0	0	0	0	0	0	0	**39**	**223**
2200 - 2215	0	38	3	0	0	0	0	0	0	0	0	0	0	**41**	
2215 - 2230	0	37	2	0	1	0	0	0	0	0	0	0	0	**41**	
2230 - 2245	0	41	2	0	0	0	0	0	0	0	0	0	0	**44**	
2245 - 2300	0	33	1	0	0	0	0	0	0	0	0	0	0	**35**	**161**
2300 - 2315	0	28	1	0	0	0	0	0	0	0	0	0	0	**30**	
2315 - 2330	0	28	2	0	1	0	0	0	0	0	0	0	0	**30**	
2330 - 2345	0	30	1	0	1	0	0	0	0	0	0	0	0	**32**	
2345 - 0000	0	20	0	0	0	0	0	0	0	0	0	0	0	**20**	**112**

Session Total	12	5997	1006	37	117	40	5	14	24	2	0	0	0	**7253**
Session Average	0.13	62.47	10.48	0.38	1.22	0.42	0.05	0.14	0.25	0.02	0.00	0.00	0.00	**75.55**
Session Percentage	0.17	82.69	13.87	0.51	1.61	0.56	0.06	0.19	0.33	0.02	0.00	0.00	0.00	

AM Peak Hour	0815 - 0915	0715 - 0815	0745 - 0845	0800 - 0900	0800 - 0900	0715 - 0815	0830 - 0930	0800 - 0900	0645 - 0745	0645 - 0745	-	-	-	**0715 - 0815**
AM Peak Volume	2	438	76	11	13	5	1	3	4	1	0	0	0	**530**

Noon Peak Hour	1045 - 1145	1445 - 1545	1215 - 1315	1345 - 1445	1200 - 1300	1000 - 1100	1300 - 1400	1030 - 1130	1245 - 1345	1000 - 1100	-	-	-	**1445 - 1545**
Noon Peak Volume	1	394	75	3	12	4	1	2	2	0	0	0	0	**480**

PM Peak Hour	1830 - 1930	1645 - 1745	1700 - 1800	1615 - 1715	1500 - 1600	1600 - 1700	1545 - 1645	1545 - 1645	1530 - 1630	-	-	-	-	**1700 - 1800**
PM Peak Volume	3	475	93	6	8	3	0	2	1	0	0	0	0	**565**

Bi-Directional Class Count || Volume Summary 15min

Columbia, SC

Marr Traffic DATA COLLECTION

www.marrtraffic.com

Site 66

I-20 E/Bound On-Ramp,
east of US-176 Broad River Rd

Date

Tuesday, April 30, 2024

Lat/Long

34.040140°, -81.091247°

Weather

Mostly Cloudy
70°F

Click here for Detailed Weather

0000 - 2400 (Weekday 24h Session) (04-30-2024)

Volume Summary 15min

	Volume Summary 15min		15min	60min
TIME	EB	WB	**Total**	**Total**
0000 - 0015	0	0	**0**	
0015 - 0030	0	0	**0**	
0030 - 0045	0	0	**0**	
0045 - 0100	0	0	**0**	**0**
0100 - 0115	0	0	**0**	
0115 - 0130	0	0	**0**	
0130 - 0145	0	0	**0**	
0145 - 0200	0	0	**0**	**0**
0200 - 0215	0	0	**0**	
0215 - 0230	0	0	**0**	
0230 - 0245	0	0	**0**	
0245 - 0300	0	0	**0**	**0**
0300 - 0315	0	0	**0**	
0315 - 0330	0	0	**0**	
0330 - 0345	0	0	**0**	
0345 - 0400	0	0	**0**	**0**
0400 - 0415	0	0	**0**	
0415 - 0430	0	0	**0**	
0430 - 0445	0	0	**0**	
0445 - 0500	0	0	**0**	**0**
0500 - 0515	0	0	**0**	
0515 - 0530	0	0	**0**	
0530 - 0545	0	0	**0**	
0545 - 0600	0	0	**0**	**0**
0600 - 0615	0	0	**0**	
0615 - 0630	0	0	**0**	
0630 - 0645	0	0	**0**	
0645 - 0700	0	0	**0**	**0**
0700 - 0715	0	0	**0**	
0715 - 0730	0	0	**0**	
0730 - 0745	0	0	**0**	
0745 - 0800	0	0	**0**	**0**
0800 - 0815	0	0	**0**	
0815 - 0830	0	0	**0**	
0830 - 0845	0	0	**0**	
0845 - 0900	0	0	**0**	**0**
0900 - 0915	0	0	**0**	
0915 - 0930	0	0	**0**	
0930 - 0945	0	0	**0**	
0945 - 1000	0	0	**0**	**0**
1000 - 1015	0	0	**0**	
1015 - 1030	0	0	**0**	
1030 - 1045	0	0	**0**	
1045 - 1100	0	0	**0**	**0**
1100 - 1115	0	0	**0**	
1115 - 1130	0	0	**0**	
1130 - 1145	0	0	**0**	
1145 - 1200	0	0	**0**	**0**

	Volume Summary 15min		15min	60min
Time	EB	WB	**Total**	**Total**
1200 - 1215	0	0	**0**	
1215 - 1230	0	0	**0**	
1230 - 1245	0	0	**0**	
1245 - 1300	0	0	**0**	**0**
1300 - 1315	0	0	**0**	
1315 - 1330	0	0	**0**	
1330 - 1345	0	0	**0**	
1345 - 1400	0	0	**0**	**0**
1400 - 1415	0	0	**0**	
1415 - 1430	0	0	**0**	
1430 - 1445	0	0	**0**	
1445 - 1500	0	0	**0**	**0**
1500 - 1515	0	0	**0**	
1515 - 1530	0	0	**0**	
1530 - 1545	0	0	**0**	
1545 - 1600	0	0	**0**	**0**
1600 - 1615	0	0	**0**	
1615 - 1630	0	0	**0**	
1630 - 1645	0	0	**0**	
1645 - 1700	0	0	**0**	**0**
1700 - 1715	0	0	**0**	
1715 - 1730	0	0	**0**	
1730 - 1745	0	0	**0**	
1745 - 1800	0	0	**0**	**0**
1800 - 1815	0	0	**0**	
1815 - 1830	0	0	**0**	
1830 - 1845	0	0	**0**	
1845 - 1900	0	0	**0**	**0**
1900 - 1915	152	0	**152**	
1915 - 1930	133	0	**133**	
1930 - 1945	97	0	**97**	
1945 - 2000	127	0	**127**	**509**
2000 - 2015	119	0	**119**	
2015 - 2030	135	0	**135**	
2030 - 2045	111	0	**111**	
2045 - 2100	90	0	**90**	**455**
2100 - 2115	98	0	**98**	
2115 - 2130	74	0	**74**	
2130 - 2145	91	0	**91**	
2145 - 2200	49	0	**49**	**312**
2200 - 2215	59	0	**59**	
2215 - 2230	61	0	**61**	
2230 - 2245	63	0	**63**	
2245 - 2300	46	0	**46**	**229**
2300 - 2315	39	0	**39**	
2315 - 2330	59	0	**59**	
2330 - 2345	41	0	**41**	
2345 - 0000	28	0	**28**	**167**

Session Total	1672	0	**1672**
Session Average	17.42	0.00	**17.42**
Session Percentage	100.00	0.00	

Site 66
I-20 E/Bound On-Ramp,
east of US-176 Broad River Rd

Date
Wednesday, May 1, 2024

Lat/Long
34.040140°, -81.091247°

Weather
Partly Cloudy
71°F

Click here for Detailed Weather

0000 - 2400 (Weekday 24h Session) (05-01-2024)
Volume Summary 15min

TIME	Volume Summary 15min EB	WB	15min Total	60min Total
0000 - 0015	29	0	**29**	
0015 - 0030	20	0	**20**	
0030 - 0045	18	0	**18**	
0045 - 0100	24	0	**24**	**91**
0100 - 0115	21	0	**21**	
0115 - 0130	15	0	**15**	
0130 - 0145	22	0	**22**	
0145 - 0200	23	0	**23**	**81**
0200 - 0215	9	0	**9**	
0215 - 0230	13	0	**13**	
0230 - 0245	15	0	**15**	
0245 - 0300	18	0	**18**	**55**
0300 - 0315	15	0	**15**	
0315 - 0330	18	0	**18**	
0330 - 0345	18	0	**18**	
0345 - 0400	6	0	**6**	**57**
0400 - 0415	26	0	**26**	
0415 - 0430	28	0	**28**	
0430 - 0445	33	0	**33**	
0445 - 0500	34	0	**34**	**121**
0500 - 0515	30	0	**30**	
0515 - 0530	61	0	**61**	
0530 - 0545	64	0	**64**	
0545 - 0600	43	0	**43**	**198**
0600 - 0615	69	0	**69**	
0615 - 0630	81	0	**81**	
0630 - 0645	125	0	**125**	
0645 - 0700	146	0	**146**	**421**
0700 - 0715	151	0	**151**	
0715 - 0730	214	0	**214**	
0730 - 0745	188	0	**188**	
0745 - 0800	205	0	**205**	**758**
0800 - 0815	210	0	**210**	
0815 - 0830	198	0	**198**	
0830 - 0845	181	0	**181**	
0845 - 0900	155	0	**155**	**744**
0900 - 0915	146	0	**146**	
0915 - 0930	116	0	**116**	
0930 - 0945	133	0	**133**	
0945 - 1000	140	0	**140**	**535**
1000 - 1015	127	0	**127**	
1015 - 1030	132	0	**132**	
1030 - 1045	121	0	**121**	
1045 - 1100	130	0	**130**	**510**
1100 - 1115	150	0	**150**	
1115 - 1130	148	0	**148**	
1130 - 1145	155	0	**155**	
1145 - 1200	167	0	**167**	**620**

Time	Volume Summary 15min EB	WB	15min Total	60min Total
1200 - 1215	143	0	**143**	
1215 - 1230	154	0	**154**	
1230 - 1245	145	0	**145**	
1245 - 1300	140	0	**140**	**582**
1300 - 1315	166	0	**166**	
1315 - 1330	162	0	**162**	
1330 - 1345	151	0	**151**	
1345 - 1400	206	0	**206**	**685**
1400 - 1415	177	0	**177**	
1415 - 1430	165	0	**165**	
1430 - 1445	157	0	**157**	
1445 - 1500	174	0	**174**	**673**
1500 - 1515	185	0	**185**	
1515 - 1530	190	0	**190**	
1530 - 1545	203	0	**203**	
1545 - 1600	219	0	**219**	**797**
1600 - 1615	199	0	**199**	
1615 - 1630	210	0	**210**	
1630 - 1645	196	0	**196**	
1645 - 1700	194	0	**194**	**799**
1700 - 1715	224	0	**224**	
1715 - 1730	196	0	**196**	
1730 - 1745	210	0	**210**	
1745 - 1800	253	0	**253**	**883**
1800 - 1815	194	0	**194**	
1815 - 1830	169	0	**169**	
1830 - 1845	175	0	**175**	
1845 - 1900	144	0	**144**	**682**
1900 - 1915	118	0	**118**	
1915 - 1930	171	0	**171**	
1930 - 1945	125	0	**125**	
1945 - 2000	148	0	**148**	**562**
2000 - 2015	180	0	**180**	
2015 - 2030	139	0	**139**	
2030 - 2045	150	0	**150**	
2045 - 2100	159	0	**159**	**628**
2100 - 2115	104	0	**104**	
2115 - 2130	79	0	**79**	
2130 - 2145	105	0	**105**	
2145 - 2200	68	0	**68**	**356**
2200 - 2215	65	0	**65**	
2215 - 2230	61	0	**61**	
2230 - 2245	68	0	**68**	
2245 - 2300	59	0	**59**	**253**
2300 - 2315	50	0	**50**	
2315 - 2330	32	0	**32**	
2330 - 2345	54	0	**54**	
2345 - 0000	33	0	**33**	**169**

Session Total	11260	0	**11260**
Session Average	117.29	0.00	**117.29**
Session Percentage	100.00	0.00	

Site 66
I-20 E/Bound On-Ramp,
east of US-176 Broad River Rd

Date
Thursday, May 2, 2024

Lat/Long
34.040140°, -81.091247°

Weather
Fair
74°F

Click here for Detailed Weather

0000 - 2400 (Weekday 24h Session) (05-02-2024)
Volume Summary 15min

TIME	Volume Summary 15min EB	WB	15min Total	60min Total
0000 - 0015	35	0	**35**	
0015 - 0030	27	0	**27**	
0030 - 0045	30	0	**30**	
0045 - 0100	30	0	**30**	**122**
0100 - 0115	22	0	**22**	
0115 - 0130	14	0	**14**	
0130 - 0145	14	0	**14**	
0145 - 0200	19	0	**19**	**69**
0200 - 0215	23	0	**23**	
0215 - 0230	16	0	**16**	
0230 - 0245	23	0	**23**	
0245 - 0300	16	0	**16**	**78**
0300 - 0315	8	0	**8**	
0315 - 0330	14	0	**14**	
0330 - 0345	7	0	**7**	
0345 - 0400	13	0	**13**	**42**
0400 - 0415	21	0	**21**	
0415 - 0430	19	0	**19**	
0430 - 0445	32	0	**32**	
0445 - 0500	26	0	**26**	**98**
0500 - 0515	46	0	**46**	
0515 - 0530	58	0	**58**	
0530 - 0545	60	0	**60**	
0545 - 0600	49	0	**49**	**213**
0600 - 0615	64	0	**64**	
0615 - 0630	83	0	**83**	
0630 - 0645	128	0	**128**	
0645 - 0700	168	0	**168**	**443**
0700 - 0715	166	0	**166**	
0715 - 0730	210	0	**210**	
0730 - 0745	183	0	**183**	
0745 - 0800	196	0	**196**	**755**
0800 - 0815	184	0	**184**	
0815 - 0830	165	0	**165**	
0830 - 0845	172	0	**172**	
0845 - 0900	153	0	**153**	**674**
0900 - 0915	124	0	**124**	
0915 - 0930	131	0	**131**	
0930 - 0945	126	0	**126**	
0945 - 1000	118	0	**118**	**499**
1000 - 1015	123	0	**123**	
1015 - 1030	107	0	**107**	
1030 - 1045	132	0	**132**	
1045 - 1100	120	0	**120**	**482**
1100 - 1115	121	0	**121**	
1115 - 1130	121	0	**121**	
1130 - 1145	132	0	**132**	
1145 - 1200	140	0	**140**	**514**

Time	Volume Summary 15min EB	WB	15min Total	60min Total
1200 - 1215	120	0	**120**	
1215 - 1230	147	0	**147**	
1230 - 1245	161	0	**161**	
1245 - 1300	162	0	**162**	**590**
1300 - 1315	170	0	**170**	
1315 - 1330	151	0	**151**	
1330 - 1345	147	0	**147**	
1345 - 1400	156	0	**156**	**624**
1400 - 1415	127	0	**127**	
1415 - 1430	177	0	**177**	
1430 - 1445	179	0	**179**	
1445 - 1500	160	0	**160**	**643**
1500 - 1515	170	0	**170**	
1515 - 1530	192	0	**192**	
1530 - 1545	165	0	**165**	
1545 - 1600	208	0	**208**	**735**
1600 - 1615	154	0	**154**	
1615 - 1630	195	0	**195**	
1630 - 1645	202	0	**202**	
1645 - 1700	249	0	**249**	**800**
1700 - 1715	223	0	**223**	
1715 - 1730	188	0	**188**	
1730 - 1745	192	0	**192**	
1745 - 1800	208	0	**208**	**811**
1800 - 1815	140	0	**140**	
1815 - 1830	115	0	**115**	
1830 - 1845	201	0	**201**	
1845 - 1900	178	0	**178**	**634**
1900 - 1915	0	0	**0**	
1915 - 1930	0	0	**0**	
1930 - 1945	0	0	**0**	
1945 - 2000	0	0	**0**	**0**
2000 - 2015	0	0	**0**	
2015 - 2030	0	0	**0**	
2030 - 2045	0	0	**0**	
2045 - 2100	0	0	**0**	**0**
2100 - 2115	0	0	**0**	
2115 - 2130	0	0	**0**	
2130 - 2145	0	0	**0**	
2145 - 2200	0	0	**0**	**0**
2200 - 2215	0	0	**0**	
2215 - 2230	0	0	**0**	
2230 - 2245	0	0	**0**	
2245 - 2300	0	0	**0**	**0**
2300 - 2315	0	0	**0**	
2315 - 2330	0	0	**0**	
2330 - 2345	0	0	**0**	
2345 - 0000	0	0	**0**	**0**

Session Total	8826	0	**8826**
Session Average	91.94	0.00	**91.94**
Session Percentage	100.00	0.00	

Bi-Directional Class Count || NB EB 60min

Columbia, SC

Marr Traffic DATA COLLECTION

www.marrtraffic.com

Site 66
I-20 E/Bound On-Ramp,
east of US-176 Broad River Rd

Date
Tuesday, April 30, 2024

Lat/Long
34.040140°, -81.091247°

Weather
Mostly Cloudy
70°F

Click here for Detailed Weather

0000 - 2400 (Weekday 24h Session) (04-30-2024)
NB EB 60min

	Eastbound (Movement 66.1)													
TIME	1	2	3	4	5	6	7	8	9	10	11	12	13	**Total**
0000 - 0100	0	0	0	0	0	0	0	0	0	0	0	0	0	**0**
0100 - 0200	0	0	0	0	0	0	0	0	0	0	0	0	0	**0**
0200 - 0300	0	0	0	0	0	0	0	0	0	0	0	0	0	**0**
0300 - 0400	0	0	0	0	0	0	0	0	0	0	0	0	0	**0**
0400 - 0500	0	0	0	0	0	0	0	0	0	0	0	0	0	**0**
0500 - 0600	0	0	0	0	0	0	0	0	0	0	0	0	0	**0**
0600 - 0700	0	0	0	0	0	0	0	0	0	0	0	0	0	**0**
0700 - 0800	0	0	0	0	0	0	0	0	0	0	0	0	0	**0**
0800 - 0900	0	0	0	0	0	0	0	0	0	0	0	0	0	**0**
0900 - 1000	0	0	0	0	0	0	0	0	0	0	0	0	0	**0**
1000 - 1100	0	0	0	0	0	0	0	0	0	0	0	0	0	**0**
1100 - 1200	0	0	0	0	0	0	0	0	0	0	0	0	0	**0**
1200 - 1300	0	0	0	0	0	0	0	0	0	0	0	0	0	**0**
1300 - 1400	0	0	0	0	0	0	0	0	0	0	0	0	0	**0**
1400 - 1500	0	0	0	0	0	0	0	0	0	0	0	0	0	**0**
1500 - 1600	0	0	0	0	0	0	0	0	0	0	0	0	0	**0**
1600 - 1700	0	0	0	0	0	0	0	0	0	0	0	0	0	**0**
1700 - 1800	0	0	0	0	0	0	0	0	0	0	0	0	0	**0**
1800 - 1900	0	0	0	0	0	0	0	0	0	0	0	0	0	**0**
1900 - 2000	0	487	19	0	3	0	0	0	0	0	0	0	0	**509**
2000 - 2100	0	439	15	0	1	0	0	0	0	0	0	0	0	**455**
2100 - 2200	0	303	6	0	2	0	0	0	1	0	0	0	0	**312**
2200 - 2300	0	223	2	0	3	0	0	0	1	0	0	0	0	**229**
2300 - 2400	0	162	3	0	1	0	0	0	1	0	0	0	0	**167**
Session Total	0	1614	45	0	10	0	0	0	3	0	0	0	0	**1672**
Session Average	0.00	67.25	1.88	0.00	0.42	0.00	0.00	0.00	0.13	0.00	0.00	0.00	0.00	**69.67**
Session Percentage	0.00	96.53	2.69	0.00	0.60	0.00	0.00	0.00	0.18	0.00	0.00	0.00	0.00	
AM Peak Hour	-	-	-	-	-	-	-	-	-	-	-	-	-	**-**
AM Peak Volume	0	0	0	0	0	0	0	0	0	0	0	0	0	**0**
Noon Peak Hour	-	-	-	-	-	-	-	-	-	-	-	-	-	**-**
Noon Peak Volume	0	0	0	0	0	0	0	0	0	0	0	0	0	**0**
PM Peak Hour	-	1900 - 2000	1900 - 2000	-	1900 - 2000	-	-	-	-	-	-	-	-	**1900 - 2000**
PM Peak Volume	0	487	19	0	3	0	0	0	0	0	0	0	0	**509**

Site 66
I-20 E/Bound On-Ramp,
east of US-176 Broad River Rd

Date
Wednesday, May 1, 2024

Lat/Long
34.040140°, -81.091247°

Weather
Partly Cloudy
71°F

Click here for Detailed Weather

0000 - 2400 (Weekday 24h Session) (05-01-2024)
NB EB 60min

	Eastbound (Movement 66.1)													
TIME	1	2	3	4	5	6	7	8	9	10	11	12	13	**Total**
0000 - 0100	0	71	17	0	2	0	0	0	1	0	0	0	0	**91**
0100 - 0200	0	69	11	0	0	0	0	0	1	0	0	0	0	**81**
0200 - 0300	0	48	6	0	1	0	0	0	0	0	0	0	0	**55**
0300 - 0400	0	41	9	0	0	3	0	0	4	0	0	0	0	**57**
0400 - 0500	0	95	21	1	4	0	0	0	0	0	0	0	0	**121**
0500 - 0600	0	176	18	0	4	0	0	0	0	0	0	0	0	**198**
0600 - 0700	0	332	76	2	6	1	0	2	2	0	0	0	0	**421**
0700 - 0800	0	627	110	3	6	4	0	1	6	1	0	0	0	**758**
0800 - 0900	2	560	134	16	23	3	0	4	2	0	0	0	0	**744**
0900 - 1000	0	432	89	0	10	2	1	1	0	0	0	0	0	**535**
1000 - 1100	0	391	95	1	13	8	0	1	1	0	0	0	0	**510**
1100 - 1200	2	487	110	2	10	3	1	4	1	0	0	0	0	**620**
1200 - 1300	1	448	102	2	18	8	0	3	0	0	0	0	0	**582**
1300 - 1400	0	578	87	2	13	3	1	1	0	0	0	0	0	**685**
1400 - 1500	1	555	87	5	15	5	1	1	3	0	0	0	0	**673**
1500 - 1600	0	666	109	5	12	3	0	2	0	0	0	0	0	**797**
1600 - 1700	2	661	111	9	10	3	1	2	0	0	0	0	0	**799**
1700 - 1800	1	692	177	5	4	2	0	1	1	0	0	0	0	**883**
1800 - 1900	1	599	73	2	3	1	0	0	3	0	0	0	0	**682**
1900 - 2000	7	470	78	1	4	1	0	0	1	0	0	0	0	**562**
2000 - 2100	0	553	64	1	9	0	0	0	1	0	0	0	0	**628**
2100 - 2200	1	308	42	0	5	0	0	0	0	0	0	0	0	**356**
2200 - 2300	0	226	23	0	2	0	0	1	1	0	0	0	0	**253**
2300 - 2400	0	155	8	0	5	0	0	0	1	0	0	0	0	**169**

Session Total	18	9240	1657	57	179	50	5	24	29	1	0	0	0	**11260**
Session Average	0.75	385.00	69.04	2.38	7.46	2.08	0.21	1.00	1.21	0.04	0.00	0.00	0.00	**469.17**
Session Percentage	0.16	82.06	14.72	0.51	1.59	0.44	0.04	0.21	0.26	0.01	0.00	0.00	0.00	

AM Peak Hour	0800 - 0900	0700 - 0800	0800 - 0900	0800 - 0900	0800 - 0900	0700 - 0800	0900 - 1000	0800 - 0900	0700 - 0800	0700 - 0800	-	-	-	**0700 - 0800**
AM Peak Volume	2	627	134	16	23	4	1	4	6	1	0	0	0	**758**

Noon Peak Hour	1100 - 1200	1300 - 1400	1100 - 1200	1400 - 1500	1200 - 1300	1000 - 1100	1100 - 1200	1100 - 1200	1400 - 1500	-	-	-	-	**1300 - 1400**
Noon Peak Volume	2	578	110	5	18	8	1	4	3	0	0	0	0	**685**

PM Peak Hour	1900 - 2000	1700 - 1800	1700 - 1800	1600 - 1700	1500 - 1600	1500 - 1600	1600 - 1700	1500 - 1600	1800 - 1900	-	-	-	-	**1700 - 1800**
PM Peak Volume	7	692	177	9	12	3	1	2	3	0	0	0	0	**883**

Site 66
I-20 E/Bound On-Ramp,
east of US-176 Broad River Rd

Date
Thursday, May 2, 2024

Lat/Long
34.040140°, -81.091247°

Weather
Fair
74°F

Click here for Detailed Weather

0000 - 2400 (Weekday 24h Session) (05-02-2024)
NB EB 60min

	Eastbound (Movement 66.1)													
TIME	1	2	3	4	5	6	7	8	9	10	11	12	13	**Total**
0000 - 0100	1	110	10	0	0	0	0	0	0	1	0	0	0	**122**
0100 - 0200	0	61	6	0	2	0	0	0	0	0	0	0	0	**69**
0200 - 0300	0	63	11	0	1	0	0	0	3	0	0	0	0	**78**
0300 - 0400	0	33	4	0	2	1	0	0	2	0	0	0	0	**42**
0400 - 0500	0	78	13	1	4	0	0	1	1	0	0	0	0	**98**
0500 - 0600	0	171	30	2	3	5	0	0	2	0	0	0	0	**213**
0600 - 0700	0	349	76	1	7	3	0	3	4	0	0	0	0	**443**
0700 - 0800	0	623	104	2	12	9	2	0	2	1	0	0	0	**755**
0800 - 0900	2	531	91	18	16	9	0	4	3	0	0	0	0	**674**
0900 - 1000	5	392	80	3	8	6	2	1	2	0	0	0	0	**499**
1000 - 1100	0	382	78	0	13	5	0	0	3	1	0	0	0	**482**
1100 - 1200	2	398	95	3	10	4	0	1	0	1	0	0	0	**514**
1200 - 1300	3	461	98	3	18	4	2	0	1	0	0	0	0	**590**
1300 - 1400	0	484	110	5	13	3	3	0	6	0	0	0	0	**624**
1400 - 1500	2	519	103	2	10	4	0	0	3	0	0	0	0	**643**
1500 - 1600	0	615	97	2	12	6	0	2	1	0	0	0	0	**735**
1600 - 1700	1	657	115	3	11	7	0	2	4	0	0	0	0	**800**
1700 - 1800	1	684	101	7	12	4	0	1	1	0	0	0	0	**811**
1800 - 1900	1	527	94	1	7	1	0	2	1	0	0	0	0	**634**
1900 - 2000	0	0	0	0	0	0	0	0	0	0	0	0	0	**0**
2000 - 2100	0	0	0	0	0	0	0	0	0	0	0	0	0	**0**
2100 - 2200	0	0	0	0	0	0	0	0	0	0	0	0	0	**0**
2200 - 2300	0	0	0	0	0	0	0	0	0	0	0	0	0	**0**
2300 - 2400	0	0	0	0	0	0	0	0	0	0	0	0	0	**0**

Session Total	18	7138	1316	53	161	71	9	17	39	4	0	0	0	**8826**
Session Average	0.75	297.42	54.83	2.21	6.71	2.96	0.38	0.71	1.63	0.17	0.00	0.00	0.00	**367.75**
Session Percentage	0.20	80.87	14.91	0.60	1.82	0.80	0.10	0.19	0.44	0.05	0.00	0.00	0.00	

AM Peak Hour	0900 - 1000	0700 - 0800	0700 - 0800	0800 - 0900	0800 - 0900	0700 - 0800	0700 - 0800	0800 - 0900	0600 - 0700	0700 - 0800	-	-	-	**0700 - 0800**
AM Peak Hour Volume	5	623	104	18	16	9	2	4	4	1	0	0	0	**755**

Noon Peak Hour	1200 - 1300	1400 - 1500	1300 - 1400	1300 - 1400	1200 - 1300	1000 - 1100	1300 - 1400	1100 - 1200	1300 - 1400	1000 - 1100	-	-	-	**1400 - 1500**
Noon Peak Hour Volume	3	519	110	5	18	5	3	1	6	1	0	0	0	**643**

PM Peak Hour	1600 - 1700	1700 - 1800	1600 - 1700	1700 - 1800	1500 - 1600	1600 - 1700	-	1500 - 1600	1600 - 1700	-	-	-	-	**1700 - 1800**
PM Peak Hour Volume	1	684	115	7	12	7	0	2	4	0	0	0	0	**811**

Bi-Directional Class Count || Volume Summary 60min

Columbia, SC

Marr Traffic DATA COLLECTION

www.marrtraffic.com

Site 66

I-20 E/Bound On-Ramp,
east of US-176 Broad River Rd

Date

Tuesday, April 30, 2024

Lat/Long

34.040140°, -81.091247°

Weather

Mostly Cloudy
70°F

Click here for Detailed Weather

0000 - 2400 (Weekday 24h Session) (04-30-2024)

Volume Summary 60min

	Volume Summary 60min		
TIME	EB	WB	**Total**
0000 - 0100	0	0	**0**
0100 - 0200	0	0	**0**
0200 - 0300	0	0	**0**
0300 - 0400	0	0	**0**
0400 - 0500	0	0	**0**
0500 - 0600	0	0	**0**
0600 - 0700	0	0	**0**
0700 - 0800	0	0	**0**
0800 - 0900	0	0	**0**
0900 - 1000	0	0	**0**
1000 - 1100	0	0	**0**
1100 - 1200	0	0	**0**

	Volume Summary 60min		
Time	EB	WB	**Total**
1200 - 1300	0	0	**0**
1300 - 1400	0	0	**0**
1400 - 1500	0	0	**0**
1500 - 1600	0	0	**0**
1600 - 1700	0	0	**0**
1700 - 1800	0	0	**0**
1800 - 1900	0	0	**0**
1900 - 2000	509	0	**509**
2000 - 2100	455	0	**455**
2100 - 2200	312	0	**312**
2200 - 2300	229	0	**229**
2300 - 2400	167	0	**167**

Session Total	1672	0	**1672**
Session Average	69.67	0.00	**69.67**
Session Percentage	100.00	0.00	

Site 66

I-20 E/Bound On-Ramp,
east of US-176 Broad River Rd

Date

Wednesday, May 1, 2024

Lat/Long

34.040140°, -81.091247°

Weather

Partly Cloudy
71°F

Click here for Detailed Weather

0000 - 2400 (Weekday 24h Session) (05-01-2024)

Volume Summary 60min

	Volume Summary 60min		
TIME	EB	WB	**Total**
0000 - 0100	91	0	**91**
0100 - 0200	81	0	**81**
0200 - 0300	55	0	**55**
0300 - 0400	57	0	**57**
0400 - 0500	121	0	**121**
0500 - 0600	198	0	**198**
0600 - 0700	421	0	**421**
0700 - 0800	758	0	**758**
0800 - 0900	744	0	**744**
0900 - 1000	535	0	**535**
1000 - 1100	510	0	**510**
1100 - 1200	620	0	**620**

	Volume Summary 60min		
Time	EB	WB	**Total**
1200 - 1300	582	0	**582**
1300 - 1400	685	0	**685**
1400 - 1500	673	0	**673**
1500 - 1600	797	0	**797**
1600 - 1700	799	0	**799**
1700 - 1800	883	0	**883**
1800 - 1900	682	0	**682**
1900 - 2000	562	0	**562**
2000 - 2100	628	0	**628**
2100 - 2200	356	0	**356**
2200 - 2300	253	0	**253**
2300 - 2400	169	0	**169**

Session Total	11260	0	**11260**
Session Average	469.17	0.00	**469.17**
Session Percentage	100.00	0.00	

Site 66

I-20 E/Bound On-Ramp,
east of US-176 Broad River Rd

Date

Thursday, May 2, 2024

Lat/Long

34.040140°, -81.091247°

Weather

Fair
74°F

Click here for Detailed Weather

0000 - 2400 (Weekday 24h Session) (05-02-2024)

Volume Summary 60min

	Volume Summary 60min		
TIME	EB	WB	**Total**
0000 - 0100	122	0	**122**
0100 - 0200	69	0	**69**
0200 - 0300	78	0	**78**
0300 - 0400	42	0	**42**
0400 - 0500	98	0	**98**
0500 - 0600	213	0	**213**
0600 - 0700	443	0	**443**
0700 - 0800	755	0	**755**
0800 - 0900	674	0	**674**
0900 - 1000	499	0	**499**
1000 - 1100	482	0	**482**
1100 - 1200	514	0	**514**

Session Total	8826	0	**8826**
Session Average	367.75	0.00	**367.75**
Session Percentage	100.00	0.00	

	Volume Summary 60min		
Time	EB	WB	**Total**
1200 - 1300	590	0	**590**
1300 - 1400	624	0	**624**
1400 - 1500	643	0	**643**
1500 - 1600	735	0	**735**
1600 - 1700	800	0	**800**
1700 - 1800	811	0	**811**
1800 - 1900	634	0	**634**
1900 - 2000	0	0	**0**
2000 - 2100	0	0	**0**
2100 - 2200	0	0	**0**
2200 - 2300	0	0	**0**
2300 - 2400	0	0	**0**

Bi-Directional Class Count || Graphical Analysis NB EB

Columbia, SC

Marr Traffic DATA COLLECTION

www.marrtraffic.com

Site 66

I-20 E/Bound On-Ramp,
east of US-176 Broad River Rd

Lat/Long

34.040140°, -81.091247°

0000 - 2400 (Weekday 24h Session)

Graphical Analysis NB EB

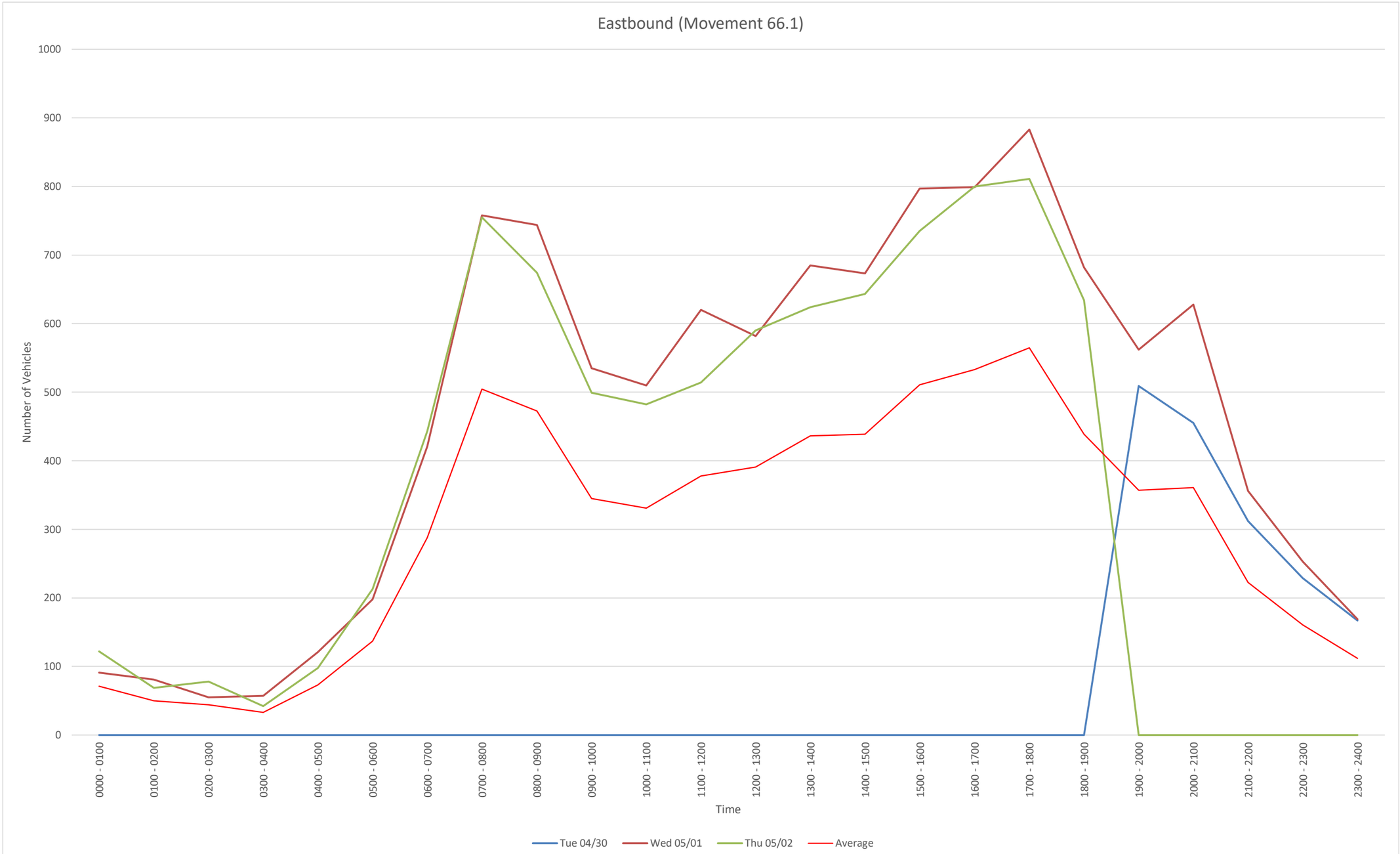

Time	Tue 04/30	Wed 05/01	Thu 05/02				
0000 - 0100	0	91	122				
0100 - 0200	0	81	69				
0200 - 0300	0	55	78				
0300 - 0400	0	57	42				
0400 - 0500	0	121	98				
0500 - 0600	0	198	213				
0600 - 0700	0	421	443				
0700 - 0800	0	758	755				
0800 - 0900	0	744	674				
0900 - 1000	0	535	499				
1000 - 1100	0	510	482				
1100 - 1200	0	620	514				
1200 - 1300	0	582	590				
1300 - 1400	0	685	624				
1400 - 1500	0	673	643				
1500 - 1600	0	797	735				
1600 - 1700	0	799	800				
1700 - 1800	0	883	811				
1800 - 1900	0	682	634				
1900 - 2000	509	562	0				
2000 - 2100	455	628	0				
2100 - 2200	312	356	0				
2200 - 2300	229	253	0				
2300 - 2400	167	169	0				
Daily Total	1672	11260	8826				

EB
File Name:
Start Date: 4/30/2024
Start Time: 0
Site Code: 66
Station ID: 1
Location 1: I-20 E/Bound On-Ramp, east of US-176 Broad River Rd
Location 2:

Date	Time	1	2	3	4	5	6	7	8	9	10	11	12	13
4/30/2024	12:00 AM	0	0	0	0	0	0	0	0	0	0	0	0	0
4/30/2024	12:15 AM	0	0	0	0	0	0	0	0	0	0	0	0	0
4/30/2024	12:30 AM	0	0	0	0	0	0	0	0	0	0	0	0	0
4/30/2024	12:45 AM	0	0	0	0	0	0	0	0	0	0	0	0	0
4/30/2024	1:00 AM	0	0	0	0	0	0	0	0	0	0	0	0	0
4/30/2024	1:15 AM	0	0	0	0	0	0	0	0	0	0	0	0	0
4/30/2024	1:30 AM	0	0	0	0	0	0	0	0	0	0	0	0	0
4/30/2024	1:45 AM	0	0	0	0	0	0	0	0	0	0	0	0	0
4/30/2024	2:00 AM	0	0	0	0	0	0	0	0	0	0	0	0	0
4/30/2024	2:15 AM	0	0	0	0	0	0	0	0	0	0	0	0	0
4/30/2024	2:30 AM	0	0	0	0	0	0	0	0	0	0	0	0	0
4/30/2024	2:45 AM	0	0	0	0	0	0	0	0	0	0	0	0	0
4/30/2024	3:00 AM	0	0	0	0	0	0	0	0	0	0	0	0	0
4/30/2024	3:15 AM	0	0	0	0	0	0	0	0	0	0	0	0	0
4/30/2024	3:30 AM	0	0	0	0	0	0	0	0	0	0	0	0	0
4/30/2024	3:45 AM	0	0	0	0	0	0	0	0	0	0	0	0	0
4/30/2024	4:00 AM	0	0	0	0	0	0	0	0	0	0	0	0	0
4/30/2024	4:15 AM	0	0	0	0	0	0	0	0	0	0	0	0	0
4/30/2024	4:30 AM	0	0	0	0	0	0	0	0	0	0	0	0	0
4/30/2024	4:45 AM	0	0	0	0	0	0	0	0	0	0	0	0	0
4/30/2024	5:00 AM	0	0	0	0	0	0	0	0	0	0	0	0	0
4/30/2024	5:15 AM	0	0	0	0	0	0	0	0	0	0	0	0	0
4/30/2024	5:30 AM	0	0	0	0	0	0	0	0	0	0	0	0	0
4/30/2024	5:45 AM	0	0	0	0	0	0	0	0	0	0	0	0	0
4/30/2024	6:00 AM	0	0	0	0	0	0	0	0	0	0	0	0	0
4/30/2024	6:15 AM	0	0	0	0	0	0	0	0	0	0	0	0	0
4/30/2024	6:30 AM	0	0	0	0	0	0	0	0	0	0	0	0	0
4/30/2024	6:45 AM	0	0	0	0	0	0	0	0	0	0	0	0	0
4/30/2024	7:00 AM	0	0	0	0	0	0	0	0	0	0	0	0	0
4/30/2024	7:15 AM	0	0	0	0	0	0	0	0	0	0	0	0	0
4/30/2024	7:30 AM	0	0	0	0	0	0	0	0	0	0	0	0	0
4/30/2024	7:45 AM	0	0	0	0	0	0	0	0	0	0	0	0	0
4/30/2024	8:00 AM	0	0	0	0	0	0	0	0	0	0	0	0	0
4/30/2024	8:15 AM	0	0	0	0	0	0	0	0	0	0	0	0	0
4/30/2024	8:30 AM	0	0	0	0	0	0	0	0	0	0	0	0	0
4/30/2024	8:45 AM	0	0	0	0	0	0	0	0	0	0	0	0	0
4/30/2024	9:00 AM	0	0	0	0	0	0	0	0	0	0	0	0	0
4/30/2024	9:15 AM	0	0	0	0	0	0	0	0	0	0	0	0	0
4/30/2024	9:30 AM	0	0	0	0	0	0	0	0	0	0	0	0	0
4/30/2024	9:45 AM	0	0	0	0	0	0	0	0	0	0	0	0	0
4/30/2024	10:00 AM	0	0	0	0	0	0	0	0	0	0	0	0	0
4/30/2024	10:15 AM	0	0	0	0	0	0	0	0	0	0	0	0	0
4/30/2024	10:30 AM	0	0	0	0	0	0	0	0	0	0	0	0	0
4/30/2024	10:45 AM	0	0	0	0	0	0	0	0	0	0	0	0	0
4/30/2024	11:00 AM	0	0	0	0	0	0	0	0	0	0	0	0	0
4/30/2024	11:15 AM	0	0	0	0	0	0	0	0	0	0	0	0	0
4/30/2024	11:30 AM	0	0	0	0	0	0	0	0	0	0	0	0	0
4/30/2024	11:45 AM	0	0	0	0	0	0	0	0	0	0	0	0	0
4/30/2024	12:00 PM	0	0	0	0	0	0	0	0	0	0	0	0	0
4/30/2024	12:15 PM	0	0	0	0	0	0	0	0	0	0	0	0	0
4/30/2024	12:30 PM	0	0	0	0	0	0	0	0	0	0	0	0	0
4/30/2024	12:45 PM	0	0	0	0	0	0	0	0	0	0	0	0	0
4/30/2024	1:00 PM	0	0	0	0	0	0	0	0	0	0	0	0	0
4/30/2024	1:15 PM	0	0	0	0	0	0	0	0	0	0	0	0	0
4/30/2024	1:30 PM	0	0	0	0	0	0	0	0	0	0	0	0	0
4/30/2024	1:45 PM	0	0	0	0	0	0	0	0	0	0	0	0	0
4/30/2024	2:00 PM	0	0	0	0	0	0	0	0	0	0	0	0	0
4/30/2024	2:15 PM	0	0	0	0	0	0	0	0	0	0	0	0	0
4/30/2024	2:30 PM	0	0	0	0	0	0	0	0	0	0	0	0	0
4/30/2024	2:45 PM	0	0	0	0	0	0	0	0	0	0	0	0	0
4/30/2024	3:00 PM	0	0	0	0	0	0	0	0	0	0	0	0	0
4/30/2024	3:15 PM	0	0	0	0	0	0	0	0	0	0	0	0	0
4/30/2024	3:30 PM	0	0	0	0	0	0	0	0	0	0	0	0	0
4/30/2024	3:45 PM	0	0	0	0	0	0	0	0	0	0	0	0	0
4/30/2024	4:00 PM	0	0	0	0	0	0	0	0	0	0	0	0	0
4/30/2024	4:15 PM	0	0	0	0	0	0	0	0	0	0	0	0	0
4/30/2024	4:30 PM	0	0	0	0	0	0	0	0	0	0	0	0	0
4/30/2024	4:45 PM	0	0	0	0	0	0	0	0	0	0	0	0	0
4/30/2024	5:00 PM	0	0	0	0	0	0	0	0	0	0	0	0	0
4/30/2024	5:15 PM	0	0	0	0	0	0	0	0	0	0	0	0	0
4/30/2024	5:30 PM	0	0	0	0	0	0	0	0	0	0	0	0	0
4/30/2024	5:45 PM	0	0	0	0	0	0	0	0	0	0	0	0	0
4/30/2024	6:00 PM	0	0	0	0	0	0	0	0	0	0	0	0	0
4/30/2024	6:15 PM	0	0	0	0	0	0	0	0	0	0	0	0	0
4/30/2024	6:30 PM	0	0	0	0	0	0	0	0	0	0	0	0	0
4/30/2024	6:45 PM	0	0	0	0	0	0	0	0	0	0	0	0	0
4/30/2024	7:00 PM	0	145	7	0	0	0	0	0	0	0	0	0	0
4/30/2024	7:15 PM	0	128	5	0	0	0	0	0	0	0	0	0	0
4/30/2024	7:30 PM	0	94	2	0	1	0	0	0	0	0	0	0	0
4/30/2024	7:45 PM	0	120	5	0	2	0	0	0	0	0	0	0	0
4/30/2024	8:00 PM	0	115	4	0	0	0	0	0	0	0	0	0	0
4/30/2024	8:15 PM	0	130	4	0	1	0	0	0	0	0	0	0	0
4/30/2024	8:30 PM	0	108	3	0	0	0	0	0	0	0	0	0	0
4/30/2024	8:45 PM	0	86	4	0	0	0	0	0	0	0	0	0	0
4/30/2024	9:00 PM	0	94	3	0	1	0	0	0	0	0	0	0	0
4/30/2024	9:15 PM	0	72	0	0	1	0	0	0	1	0	0	0	0
4/30/2024	9:30 PM	0	88	3	0	0	0	0	0	0	0	0	0	0
4/30/2024	9:45 PM	0	49	0	0	0	0	0	0	0	0	0	0	0
4/30/2024	10:00 PM	0	58	0	0	1	0	0	0	0	0	0	0	0
4/30/2024	10:15 PM	0	58	1	0	1	0	0	0	1	0	0	0	0
4/30/2024	10:30 PM	0	61	1	0	1	0	0	0	0	0	0	0	0
4/30/2024	10:45 PM	0	46	0	0	0	0	0	0	0	0	0	0	0
4/30/2024	11:00 PM	0	38	0	0	1	0	0	0	0	0	0	0	0
4/30/2024	11:15 PM	0	56	2	0	0	0	0	0	1	0	0	0	0
4/30/2024	11:30 PM	0	40	1	0	0	0	0	0	0	0	0	0	0
4/30/2024	11:45 PM	0	28	0	0	0	0	0	0	0	0	0	0	0

5/1/2024	12:00 AM	0	22	5	0	1	0	0	0	1	0	0	0	0
5/1/2024	12:15 AM	0	17	3	0	0	0	0	0	0	0	0	0	0
5/1/2024	12:30 AM	0	15	3	0	0	0	0	0	0	0	0	0	0
5/1/2024	12:45 AM	0	17	6	0	1	0	0	0	0	0	0	0	0
5/1/2024	1:00 AM	0	18	3	0	0	0	0	0	0	0	0	0	0
5/1/2024	1:15 AM	0	13	2	0	0	0	0	0	0	0	0	0	0
5/1/2024	1:30 AM	0	18	3	0	0	0	0	0	1	0	0	0	0
5/1/2024	1:45 AM	0	20	3	0	0	0	0	0	0	0	0	0	0
5/1/2024	2:00 AM	0	8	1	0	0	0	0	0	0	0	0	0	0
5/1/2024	2:15 AM	0	11	1	0	1	0	0	0	0	0	0	0	0
5/1/2024	2:30 AM	0	13	2	0	0	0	0	0	0	0	0	0	0
5/1/2024	2:45 AM	0	16	2	0	0	0	0	0	0	0	0	0	0
5/1/2024	3:00 AM	0	9	3	0	0	3	0	0	0	0	0	0	0
5/1/2024	3:15 AM	0	14	3	0	0	0	0	0	1	0	0	0	0
5/1/2024	3:30 AM	0	14	2	0	0	0	0	0	2	0	0	0	0
5/1/2024	3:45 AM	0	4	1	0	0	0	0	0	1	0	0	0	0
5/1/2024	4:00 AM	0	20	5	0	1	0	0	0	0	0	0	0	0
5/1/2024	4:15 AM	0	22	4	0	2	0	0	0	0	0	0	0	0
5/1/2024	4:30 AM	0	27	5	1	0	0	0	0	0	0	0	0	0
5/1/2024	4:45 AM	0	26	7	0	1	0	0	0	0	0	0	0	0
5/1/2024	5:00 AM	0	26	4	0	0	0	0	0	0	0	0	0	0
5/1/2024	5:15 AM	0	54	6	0	1	0	0	0	0	0	0	0	0
5/1/2024	5:30 AM	0	57	5	0	2	0	0	0	0	0	0	0	0
5/1/2024	5:45 AM	0	39	3	0	1	0	0	0	0	0	0	0	0
5/1/2024	6:00 AM	0	52	15	0	1	1	0	0	0	0	0	0	0
5/1/2024	6:15 AM	0	60	18	0	3	0	0	0	0	0	0	0	0
5/1/2024	6:30 AM	0	108	16	0	1	0	0	0	0	0	0	0	0
5/1/2024	6:45 AM	0	112	27	2	1	0	0	2	2	0	0	0	0
5/1/2024	7:00 AM	0	119	28	1	2	0	0	0	1	0	0	0	0
5/1/2024	7:15 AM	0	181	27	1	0	2	0	1	2	0	0	0	0
5/1/2024	7:30 AM	0	157	23	0	3	2	0	0	2	1	0	0	0
5/1/2024	7:45 AM	0	170	32	1	1	0	0	0	1	0	0	0	0
5/1/2024	8:00 AM	0	173	29	0	5	1	0	2	0	0	0	0	0
5/1/2024	8:15 AM	1	142	46	2	6	1	0	0	0	0	0	0	0
5/1/2024	8:30 AM	1	129	29	13	6	1	0	2	0	0	0	0	0
5/1/2024	8:45 AM	0	116	30	1	6	0	0	0	2	0	0	0	0
5/1/2024	9:00 AM	0	116	26	0	3	0	1	0	0	0	0	0	0
5/1/2024	9:15 AM	0	95	17	0	3	1	0	0	0	0	0	0	0
5/1/2024	9:30 AM	0	102	28	0	1	1	0	1	0	0	0	0	0
5/1/2024	9:45 AM	0	119	18	0	3	0	0	0	0	0	0	0	0
5/1/2024	10:00 AM	0	96	22	0	5	4	0	0	0	0	0	0	0
5/1/2024	10:15 AM	0	91	33	1	4	3	0	0	0	0	0	0	0
5/1/2024	10:30 AM	0	100	19	0	1	0	0	1	0	0	0	0	0
5/1/2024	10:45 AM	0	104	21	0	3	1	0	0	1	0	0	0	0
5/1/2024	11:00 AM	0	119	26	2	1	0	0	2	0	0	0	0	0
5/1/2024	11:15 AM	1	112	30	0	3	1	0	1	0	0	0	0	0
5/1/2024	11:30 AM	1	126	25	0	2	0	0	0	1	0	0	0	0
5/1/2024	11:45 AM	0	130	29	0	4	2	1	1	0	0	0	0	0
5/1/2024	12:00 PM	0	111	21	1	6	3	0	1	0	0	0	0	0
5/1/2024	12:15 PM	0	116	29	1	5	3	0	0	0	0	0	0	0
5/1/2024	12:30 PM	0	113	25	0	5	0	0	2	0	0	0	0	0
5/1/2024	12:45 PM	1	108	27	0	2	2	0	0	0	0	0	0	0
5/1/2024	1:00 PM	0	136	26	0	2	1	1	0	0	0	0	0	0
5/1/2024	1:15 PM	0	139	18	0	4	1	0	0	0	0	0	0	0
5/1/2024	1:30 PM	0	123	23	0	4	1	0	0	0	0	0	0	0
5/1/2024	1:45 PM	0	180	20	2	3	0	0	1	0	0	0	0	0
5/1/2024	2:00 PM	0	146	23	0	4	2	0	1	1	0	0	0	0
5/1/2024	2:15 PM	1	129	26	4	3	1	0	0	1	0	0	0	0
5/1/2024	2:30 PM	0	135	15	1	3	2	0	0	1	0	0	0	0
5/1/2024	2:45 PM	0	145	23	0	5	0	1	0	0	0	0	0	0
5/1/2024	3:00 PM	0	147	35	0	1	1	0	1	0	0	0	0	0
5/1/2024	3:15 PM	0	162	22	2	3	1	0	0	0	0	0	0	0
5/1/2024	3:30 PM	0	168	24	3	6	1	0	1	0	0	0	0	0
5/1/2024	3:45 PM	0	189	28	0	2	0	0	0	0	0	0	0	0
5/1/2024	4:00 PM	0	157	37	1	4	0	0	0	0	0	0	0	0
5/1/2024	4:15 PM	0	171	31	3	2	2	0	1	0	0	0	0	0
5/1/2024	4:30 PM	1	165	23	4	0	1	1	1	0	0	0	0	0
5/1/2024	4:45 PM	1	168	20	1	4	0	0	0	0	0	0	0	0
5/1/2024	5:00 PM	0	196	23	3	1	0	0	0	1	0	0	0	0
5/1/2024	5:15 PM	1	164	28	0	2	0	0	1	0	0	0	0	0
5/1/2024	5:30 PM	0	185	23	1	1	0	0	0	0	0	0	0	0
5/1/2024	5:45 PM	0	147	103	1	0	2	0	0	0	0	0	0	0
5/1/2024	6:00 PM	1	173	18	0	0	0	0	0	2	0	0	0	0
5/1/2024	6:15 PM	0	148	20	0	0	1	0	0	0	0	0	0	0
5/1/2024	6:30 PM	0	149	21	2	2	0	0	0	1	0	0	0	0
5/1/2024	6:45 PM	0	129	14	0	1	0	0	0	0	0	0	0	0
5/1/2024	7:00 PM	0	96	20	0	2	0	0	0	0	0	0	0	0
5/1/2024	7:15 PM	7	143	20	1	0	0	0	0	0	0	0	0	0
5/1/2024	7:30 PM	0	106	19	0	0	0	0	0	0	0	0	0	0
5/1/2024	7:45 PM	0	125	19	0	2	1	0	0	1	0	0	0	0
5/1/2024	8:00 PM	0	161	17	0	2	0	0	0	0	0	0	0	0
5/1/2024	8:15 PM	0	122	15	0	2	0	0	0	0	0	0	0	0
5/1/2024	8:30 PM	0	130	16	0	3	0	0	0	1	0	0	0	0
5/1/2024	8:45 PM	0	140	16	1	2	0	0	0	0	0	0	0	0
5/1/2024	9:00 PM	1	86	16	0	1	0	0	0	0	0	0	0	0
5/1/2024	9:15 PM	0	69	9	0	1	0	0	0	0	0	0	0	0
5/1/2024	9:30 PM	0	92	10	0	3	0	0	0	0	0	0	0	0
5/1/2024	9:45 PM	0	61	7	0	0	0	0	0	0	0	0	0	0
5/1/2024	10:00 PM	0	57	8	0	0	0	0	0	0	0	0	0	0
5/1/2024	10:15 PM	0	54	5	0	1	0	0	1	0	0	0	0	0
5/1/2024	10:30 PM	0	61	6	0	0	0	0	0	1	0	0	0	0
5/1/2024	10:45 PM	0	54	4	0	1	0	0	0	0	0	0	0	0
5/1/2024	11:00 PM	0	47	2	0	0	0	0	0	1	0	0	0	0
5/1/2024	11:15 PM	0	27	3	0	2	0	0	0	0	0	0	0	0
5/1/2024	11:30 PM	0	50	2	0	2	0	0	0	0	0	0	0	0
5/1/2024	11:45 PM	0	31	1	0	1	0	0	0	0	0	0	0	0

5/2/2024	12:00 AM	1	29	4	0	0	0	0	0	0	1	0	0	0
5/2/2024	12:15 AM	0	26	1	0	0	0	0	0	0	0	0	0	0
5/2/2024	12:30 AM	0	27	3	0	0	0	0	0	0	0	0	0	0
5/2/2024	12:45 AM	0	28	2	0	0	0	0	0	0	0	0	0	0
5/2/2024	1:00 AM	0	20	2	0	0	0	0	0	0	0	0	0	0
5/2/2024	1:15 AM	0	13	1	0	0	0	0	0	0	0	0	0	0
5/2/2024	1:30 AM	0	13	0	0	1	0	0	0	0	0	0	0	0
5/2/2024	1:45 AM	0	15	3	0	1	0	0	0	0	0	0	0	0
5/2/2024	2:00 AM	0	17	4	0	1	0	0	0	1	0	0	0	0
5/2/2024	2:15 AM	0	13	2	0	0	0	0	0	1	0	0	0	0
5/2/2024	2:30 AM	0	19	3	0	0	0	0	0	1	0	0	0	0
5/2/2024	2:45 AM	0	14	2	0	0	0	0	0	0	0	0	0	0
5/2/2024	3:00 AM	0	5	2	0	0	0	0	0	1	0	0	0	0
5/2/2024	3:15 AM	0	13	0	0	0	0	0	0	1	0	0	0	0
5/2/2024	3:30 AM	0	6	1	0	0	0	0	0	0	0	0	0	0
5/2/2024	3:45 AM	0	9	1	0	2	1	0	0	0	0	0	0	0
5/2/2024	4:00 AM	0	16	3	1	1	0	0	0	0	0	0	0	0
5/2/2024	4:15 AM	0	16	3	0	0	0	0	0	0	0	0	0	0
5/2/2024	4:30 AM	0	25	5	0	1	0	0	0	1	0	0	0	0
5/2/2024	4:45 AM	0	21	2	0	2	0	0	1	0	0	0	0	0
5/2/2024	5:00 AM	0	35	9	0	0	1	0	0	1	0	0	0	0
5/2/2024	5:15 AM	0	47	4	2	1	3	0	0	1	0	0	0	0
5/2/2024	5:30 AM	0	52	7	0	1	0	0	0	0	0	0	0	0
5/2/2024	5:45 AM	0	37	10	0	1	1	0	0	0	0	0	0	0
5/2/2024	6:00 AM	0	55	7	0	1	1	0	0	0	0	0	0	0
5/2/2024	6:15 AM	0	65	13	0	3	1	0	0	1	0	0	0	0
5/2/2024	6:30 AM	0	104	21	0	2	0	0	1	0	0	0	0	0
5/2/2024	6:45 AM	0	125	35	1	1	1	0	2	3	0	0	0	0
5/2/2024	7:00 AM	0	141	21	0	2	1	1	0	0	0	0	0	0
5/2/2024	7:15 AM	0	169	32	2	2	3	0	0	2	0	0	0	0
5/2/2024	7:30 AM	0	149	26	0	4	3	0	0	0	1	0	0	0
5/2/2024	7:45 AM	0	164	25	0	4	2	1	0	0	0	0	0	0
5/2/2024	8:00 AM	0	152	24	1	3	3	0	0	1	0	0	0	0
5/2/2024	8:15 AM	2	129	22	3	7	1	0	0	1	0	0	0	0
5/2/2024	8:30 AM	0	132	21	11	2	2	0	3	1	0	0	0	0
5/2/2024	8:45 AM	0	118	24	3	4	3	0	1	0	0	0	0	0
5/2/2024	9:00 AM	1	92	26	1	2	1	1	0	0	0	0	0	0
5/2/2024	9:15 AM	2	107	16	0	0	3	1	1	1	0	0	0	0
5/2/2024	9:30 AM	0	98	21	2	3	1	0	0	1	0	0	0	0
5/2/2024	9:45 AM	2	95	17	0	3	1	0	0	0	0	0	0	0
5/2/2024	10:00 AM	0	92	23	0	4	2	0	0	1	1	0	0	0
5/2/2024	10:15 AM	0	83	17	0	3	2	0	0	2	0	0	0	0
5/2/2024	10:30 AM	0	112	15	0	5	0	0	0	0	0	0	0	0
5/2/2024	10:45 AM	0	95	23	0	1	1	0	0	0	0	0	0	0
5/2/2024	11:00 AM	0	99	16	0	3	2	0	1	0	0	0	0	0
5/2/2024	11:15 AM	0	96	21	2	2	0	0	0	0	0	0	0	0
5/2/2024	11:30 AM	2	100	25	0	3	1	0	0	0	1	0	0	0
5/2/2024	11:45 AM	0	103	33	1	2	1	0	0	0	0	0	0	0
5/2/2024	12:00 PM	0	102	14	1	2	1	0	0	0	0	0	0	0
5/2/2024	12:15 PM	1	105	31	1	7	1	1	0	0	0	0	0	0
5/2/2024	12:30 PM	2	125	29	0	4	0	1	0	0	0	0	0	0
5/2/2024	12:45 PM	0	129	24	1	5	2	0	0	1	0	0	0	0
5/2/2024	1:00 PM	0	127	33	3	2	2	0	0	3	0	0	0	0
5/2/2024	1:15 PM	0	119	23	2	4	1	1	0	1	0	0	0	0
5/2/2024	1:30 PM	0	115	27	0	3	0	0	0	2	0	0	0	0
5/2/2024	1:45 PM	0	123	27	0	4	0	2	0	0	0	0	0	0
5/2/2024	2:00 PM	0	101	23	0	2	0	0	0	1	0	0	0	0
5/2/2024	2:15 PM	1	141	26	1	4	3	0	0	1	0	0	0	0
5/2/2024	2:30 PM	0	151	24	0	3	1	0	0	0	0	0	0	0
5/2/2024	2:45 PM	1	126	30	1	1	0	0	0	1	0	0	0	0
5/2/2024	3:00 PM	0	123	36	0	7	2	0	1	1	0	0	0	0
5/2/2024	3:15 PM	0	166	21	2	2	1	0	0	0	0	0	0	0
5/2/2024	3:30 PM	0	145	16	0	3	1	0	0	0	0	0	0	0
5/2/2024	3:45 PM	0	181	24	0	0	2	0	1	0	0	0	0	0
5/2/2024	4:00 PM	0	128	21	0	1	1	0	0	3	0	0	0	0
5/2/2024	4:15 PM	0	157	30	0	4	3	0	0	1	0	0	0	0
5/2/2024	4:30 PM	1	164	30	1	4	0	0	2	0	0	0	0	0
5/2/2024	4:45 PM	0	208	34	2	2	3	0	0	0	0	0	0	0
5/2/2024	5:00 PM	0	194	24	3	2	0	0	0	0	0	0	0	0
5/2/2024	5:15 PM	0	161	23	2	2	0	0	0	0	0	0	0	0
5/2/2024	5:30 PM	0	149	32	2	5	2	0	1	1	0	0	0	0
5/2/2024	5:45 PM	1	180	22	0	3	2	0	0	0	0	0	0	0
5/2/2024	6:00 PM	0	114	22	0	2	1	0	0	1	0	0	0	0
5/2/2024	6:15 PM	0	100	13	0	1	0	0	1	0	0	0	0	0
5/2/2024	6:30 PM	1	167	31	1	1	0	0	0	0	0	0	0	0
5/2/2024	6:45 PM	0	146	28	0	3	0	0	1	0	0	0	0	0
5/2/2024	7:00 PM	0	0	0	0	0	0	0	0	0	0	0	0	0
5/2/2024	7:15 PM	0	0	0	0	0	0	0	0	0	0	0	0	0
5/2/2024	7:30 PM	0	0	0	0	0	0	0	0	0	0	0	0	0
5/2/2024	7:45 PM	0	0	0	0	0	0	0	0	0	0	0	0	0
5/2/2024	8:00 PM	0	0	0	0	0	0	0	0	0	0	0	0	0
5/2/2024	8:15 PM	0	0	0	0	0	0	0	0	0	0	0	0	0
5/2/2024	8:30 PM	0	0	0	0	0	0	0	0	0	0	0	0	0
5/2/2024	8:45 PM	0	0	0	0	0	0	0	0	0	0	0	0	0
5/2/2024	9:00 PM	0	0	0	0	0	0	0	0	0	0	0	0	0
5/2/2024	9:15 PM	0	0	0	0	0	0	0	0	0	0	0	0	0
5/2/2024	9:30 PM	0	0	0	0	0	0	0	0	0	0	0	0	0
5/2/2024	9:45 PM	0	0	0	0	0	0	0	0	0	0	0	0	0
5/2/2024	10:00 PM	0	0	0	0	0	0	0	0	0	0	0	0	0
5/2/2024	10:15 PM	0	0	0	0	0	0	0	0	0	0	0	0	0
5/2/2024	10:30 PM	0	0	0	0	0	0	0	0	0	0	0	0	0
5/2/2024	10:45 PM	0	0	0	0	0	0	0	0	0	0	0	0	0
5/2/2024	11:00 PM	0	0	0	0	0	0	0	0	0	0	0	0	0
5/2/2024	11:15 PM	0	0	0	0	0	0	0	0	0	0	0	0	0
5/2/2024	11:30 PM	0	0	0	0	0	0	0	0	0	0	0	0	0
5/2/2024	11:45 PM	0	0	0	0	0	0	0	0	0	0	0	0	0

WB
File Name:
Start Date: 4/30/2024
Start Time: 0
Site Code: 66
Station ID: 1
Location 1: I-20 E/Bound On-Ramp, east of US-176 Broad River Rd
Location 2:

Date	Time	1	2	3	4	5	6	7	8	9	10	11	12	13
4/30/2024	12:00 AM	0	0	0	0	0	0	0	0	0	0	0	0	0
4/30/2024	12:15 AM	0	0	0	0	0	0	0	0	0	0	0	0	0
4/30/2024	12:30 AM	0	0	0	0	0	0	0	0	0	0	0	0	0
4/30/2024	12:45 AM	0	0	0	0	0	0	0	0	0	0	0	0	0
4/30/2024	1:00 AM	0	0	0	0	0	0	0	0	0	0	0	0	0
4/30/2024	1:15 AM	0	0	0	0	0	0	0	0	0	0	0	0	0
4/30/2024	1:30 AM	0	0	0	0	0	0	0	0	0	0	0	0	0
4/30/2024	1:45 AM	0	0	0	0	0	0	0	0	0	0	0	0	0
4/30/2024	2:00 AM	0	0	0	0	0	0	0	0	0	0	0	0	0
4/30/2024	2:15 AM	0	0	0	0	0	0	0	0	0	0	0	0	0
4/30/2024	2:30 AM	0	0	0	0	0	0	0	0	0	0	0	0	0
4/30/2024	2:45 AM	0	0	0	0	0	0	0	0	0	0	0	0	0
4/30/2024	3:00 AM	0	0	0	0	0	0	0	0	0	0	0	0	0
4/30/2024	3:15 AM	0	0	0	0	0	0	0	0	0	0	0	0	0
4/30/2024	3:30 AM	0	0	0	0	0	0	0	0	0	0	0	0	0
4/30/2024	3:45 AM	0	0	0	0	0	0	0	0	0	0	0	0	0
4/30/2024	4:00 AM	0	0	0	0	0	0	0	0	0	0	0	0	0
4/30/2024	4:15 AM	0	0	0	0	0	0	0	0	0	0	0	0	0
4/30/2024	4:30 AM	0	0	0	0	0	0	0	0	0	0	0	0	0
4/30/2024	4:45 AM	0	0	0	0	0	0	0	0	0	0	0	0	0
4/30/2024	5:00 AM	0	0	0	0	0	0	0	0	0	0	0	0	0
4/30/2024	5:15 AM	0	0	0	0	0	0	0	0	0	0	0	0	0
4/30/2024	5:30 AM	0	0	0	0	0	0	0	0	0	0	0	0	0
4/30/2024	5:45 AM	0	0	0	0	0	0	0	0	0	0	0	0	0
4/30/2024	6:00 AM	0	0	0	0	0	0	0	0	0	0	0	0	0
4/30/2024	6:15 AM	0	0	0	0	0	0	0	0	0	0	0	0	0
4/30/2024	6:30 AM	0	0	0	0	0	0	0	0	0	0	0	0	0
4/30/2024	6:45 AM	0	0	0	0	0	0	0	0	0	0	0	0	0
4/30/2024	7:00 AM	0	0	0	0	0	0	0	0	0	0	0	0	0
4/30/2024	7:15 AM	0	0	0	0	0	0	0	0	0	0	0	0	0
4/30/2024	7:30 AM	0	0	0	0	0	0	0	0	0	0	0	0	0
4/30/2024	7:45 AM	0	0	0	0	0	0	0	0	0	0	0	0	0
4/30/2024	8:00 AM	0	0	0	0	0	0	0	0	0	0	0	0	0
4/30/2024	8:15 AM	0	0	0	0	0	0	0	0	0	0	0	0	0
4/30/2024	8:30 AM	0	0	0	0	0	0	0	0	0	0	0	0	0
4/30/2024	8:45 AM	0	0	0	0	0	0	0	0	0	0	0	0	0
4/30/2024	9:00 AM	0	0	0	0	0	0	0	0	0	0	0	0	0
4/30/2024	9:15 AM	0	0	0	0	0	0	0	0	0	0	0	0	0
4/30/2024	9:30 AM	0	0	0	0	0	0	0	0	0	0	0	0	0
4/30/2024	9:45 AM	0	0	0	0	0	0	0	0	0	0	0	0	0
4/30/2024	10:00 AM	0	0	0	0	0	0	0	0	0	0	0	0	0
4/30/2024	10:15 AM	0	0	0	0	0	0	0	0	0	0	0	0	0
4/30/2024	10:30 AM	0	0	0	0	0	0	0	0	0	0	0	0	0
4/30/2024	10:45 AM	0	0	0	0	0	0	0	0	0	0	0	0	0
4/30/2024	11:00 AM	0	0	0	0	0	0	0	0	0	0	0	0	0
4/30/2024	11:15 AM	0	0	0	0	0	0	0	0	0	0	0	0	0
4/30/2024	11:30 AM	0	0	0	0	0	0	0	0	0	0	0	0	0
4/30/2024	11:45 AM	0	0	0	0	0	0	0	0	0	0	0	0	0
4/30/2024	12:00 PM	0	0	0	0	0	0	0	0	0	0	0	0	0
4/30/2024	12:15 PM	0	0	0	0	0	0	0	0	0	0	0	0	0
4/30/2024	12:30 PM	0	0	0	0	0	0	0	0	0	0	0	0	0
4/30/2024	12:45 PM	0	0	0	0	0	0	0	0	0	0	0	0	0
4/30/2024	1:00 PM	0	0	0	0	0	0	0	0	0	0	0	0	0
4/30/2024	1:15 PM	0	0	0	0	0	0	0	0	0	0	0	0	0
4/30/2024	1:30 PM	0	0	0	0	0	0	0	0	0	0	0	0	0
4/30/2024	1:45 PM	0	0	0	0	0	0	0	0	0	0	0	0	0
4/30/2024	2:00 PM	0	0	0	0	0	0	0	0	0	0	0	0	0
4/30/2024	2:15 PM	0	0	0	0	0	0	0	0	0	0	0	0	0
4/30/2024	2:30 PM	0	0	0	0	0	0	0	0	0	0	0	0	0
4/30/2024	2:45 PM	0	0	0	0	0	0	0	0	0	0	0	0	0
4/30/2024	3:00 PM	0	0	0	0	0	0	0	0	0	0	0	0	0
4/30/2024	3:15 PM	0	0	0	0	0	0	0	0	0	0	0	0	0
4/30/2024	3:30 PM	0	0	0	0	0	0	0	0	0	0	0	0	0
4/30/2024	3:45 PM	0	0	0	0	0	0	0	0	0	0	0	0	0
4/30/2024	4:00 PM	0	0	0	0	0	0	0	0	0	0	0	0	0
4/30/2024	4:15 PM	0	0	0	0	0	0	0	0	0	0	0	0	0
4/30/2024	4:30 PM	0	0	0	0	0	0	0	0	0	0	0	0	0
4/30/2024	4:45 PM	0	0	0	0	0	0	0	0	0	0	0	0	0
4/30/2024	5:00 PM	0	0	0	0	0	0	0	0	0	0	0	0	0
4/30/2024	5:15 PM	0	0	0	0	0	0	0	0	0	0	0	0	0
4/30/2024	5:30 PM	0	0	0	0	0	0	0	0	0	0	0	0	0
4/30/2024	5:45 PM	0	0	0	0	0	0	0	0	0	0	0	0	0
4/30/2024	6:00 PM	0	0	0	0	0	0	0	0	0	0	0	0	0
4/30/2024	6:15 PM	0	0	0	0	0	0	0	0	0	0	0	0	0
4/30/2024	6:30 PM	0	0	0	0	0	0	0	0	0	0	0	0	0
4/30/2024	6:45 PM	0	0	0	0	0	0	0	0	0	0	0	0	0
4/30/2024	7:00 PM	0	0	0	0	0	0	0	0	0	0	0	0	0
4/30/2024	7:15 PM	0	0	0	0	0	0	0	0	0	0	0	0	0
4/30/2024	7:30 PM	0	0	0	0	0	0	0	0	0	0	0	0	0
4/30/2024	7:45 PM	0	0	0	0	0	0	0	0	0	0	0	0	0
4/30/2024	8:00 PM	0	0	0	0	0	0	0	0	0	0	0	0	0
4/30/2024	8:15 PM	0	0	0	0	0	0	0	0	0	0	0	0	0
4/30/2024	8:30 PM	0	0	0	0	0	0	0	0	0	0	0	0	0
4/30/2024	8:45 PM	0	0	0	0	0	0	0	0	0	0	0	0	0
4/30/2024	9:00 PM	0	0	0	0	0	0	0	0	0	0	0	0	0
4/30/2024	9:15 PM	0	0	0	0	0	0	0	0	0	0	0	0	0
4/30/2024	9:30 PM	0	0	0	0	0	0	0	0	0	0	0	0	0
4/30/2024	9:45 PM	0	0	0	0	0	0	0	0	0	0	0	0	0
4/30/2024	10:00 PM	0	0	0	0	0	0	0	0	0	0	0	0	0
4/30/2024	10:15 PM	0	0	0	0	0	0	0	0	0	0	0	0	0
4/30/2024	10:30 PM	0	0	0	0	0	0	0	0	0	0	0	0	0
4/30/2024	10:45 PM	0	0	0	0	0	0	0	0	0	0	0	0	0
4/30/2024	11:00 PM	0	0	0	0	0	0	0	0	0	0	0	0	0
4/30/2024	11:15 PM	0	0	0	0	0	0	0	0	0	0	0	0	0
4/30/2024	11:30 PM	0	0	0	0	0	0	0	0	0	0	0	0	0
4/30/2024	11:45 PM	0	0	0	0	0	0	0	0	0	0	0	0	0

5/1/2024	12:00 AM	0	0	0	0	0	0	0	0	0	0	0	0	0
5/1/2024	12:15 AM	0	0	0	0	0	0	0	0	0	0	0	0	0
5/1/2024	12:30 AM	0	0	0	0	0	0	0	0	0	0	0	0	0
5/1/2024	12:45 AM	0	0	0	0	0	0	0	0	0	0	0	0	0
5/1/2024	1:00 AM	0	0	0	0	0	0	0	0	0	0	0	0	0
5/1/2024	1:15 AM	0	0	0	0	0	0	0	0	0	0	0	0	0
5/1/2024	1:30 AM	0	0	0	0	0	0	0	0	0	0	0	0	0
5/1/2024	1:45 AM	0	0	0	0	0	0	0	0	0	0	0	0	0
5/1/2024	2:00 AM	0	0	0	0	0	0	0	0	0	0	0	0	0
5/1/2024	2:15 AM	0	0	0	0	0	0	0	0	0	0	0	0	0
5/1/2024	2:30 AM	0	0	0	0	0	0	0	0	0	0	0	0	0
5/1/2024	2:45 AM	0	0	0	0	0	0	0	0	0	0	0	0	0
5/1/2024	3:00 AM	0	0	0	0	0	0	0	0	0	0	0	0	0
5/1/2024	3:15 AM	0	0	0	0	0	0	0	0	0	0	0	0	0
5/1/2024	3:30 AM	0	0	0	0	0	0	0	0	0	0	0	0	0
5/1/2024	3:45 AM	0	0	0	0	0	0	0	0	0	0	0	0	0
5/1/2024	4:00 AM	0	0	0	0	0	0	0	0	0	0	0	0	0
5/1/2024	4:15 AM	0	0	0	0	0	0	0	0	0	0	0	0	0
5/1/2024	4:30 AM	0	0	0	0	0	0	0	0	0	0	0	0	0
5/1/2024	4:45 AM	0	0	0	0	0	0	0	0	0	0	0	0	0
5/1/2024	5:00 AM	0	0	0	0	0	0	0	0	0	0	0	0	0
5/1/2024	5:15 AM	0	0	0	0	0	0	0	0	0	0	0	0	0
5/1/2024	5:30 AM	0	0	0	0	0	0	0	0	0	0	0	0	0
5/1/2024	5:45 AM	0	0	0	0	0	0	0	0	0	0	0	0	0
5/1/2024	6:00 AM	0	0	0	0	0	0	0	0	0	0	0	0	0
5/1/2024	6:15 AM	0	0	0	0	0	0	0	0	0	0	0	0	0
5/1/2024	6:30 AM	0	0	0	0	0	0	0	0	0	0	0	0	0
5/1/2024	6:45 AM	0	0	0	0	0	0	0	0	0	0	0	0	0
5/1/2024	7:00 AM	0	0	0	0	0	0	0	0	0	0	0	0	0
5/1/2024	7:15 AM	0	0	0	0	0	0	0	0	0	0	0	0	0
5/1/2024	7:30 AM	0	0	0	0	0	0	0	0	0	0	0	0	0
5/1/2024	7:45 AM	0	0	0	0	0	0	0	0	0	0	0	0	0
5/1/2024	8:00 AM	0	0	0	0	0	0	0	0	0	0	0	0	0
5/1/2024	8:15 AM	0	0	0	0	0	0	0	0	0	0	0	0	0
5/1/2024	8:30 AM	0	0	0	0	0	0	0	0	0	0	0	0	0
5/1/2024	8:45 AM	0	0	0	0	0	0	0	0	0	0	0	0	0
5/1/2024	9:00 AM	0	0	0	0	0	0	0	0	0	0	0	0	0
5/1/2024	9:15 AM	0	0	0	0	0	0	0	0	0	0	0	0	0
5/1/2024	9:30 AM	0	0	0	0	0	0	0	0	0	0	0	0	0
5/1/2024	9:45 AM	0	0	0	0	0	0	0	0	0	0	0	0	0
5/1/2024	10:00 AM	0	0	0	0	0	0	0	0	0	0	0	0	0
5/1/2024	10:15 AM	0	0	0	0	0	0	0	0	0	0	0	0	0
5/1/2024	10:30 AM	0	0	0	0	0	0	0	0	0	0	0	0	0
5/1/2024	10:45 AM	0	0	0	0	0	0	0	0	0	0	0	0	0
5/1/2024	11:00 AM	0	0	0	0	0	0	0	0	0	0	0	0	0
5/1/2024	11:15 AM	0	0	0	0	0	0	0	0	0	0	0	0	0
5/1/2024	11:30 AM	0	0	0	0	0	0	0	0	0	0	0	0	0
5/1/2024	11:45 AM	0	0	0	0	0	0	0	0	0	0	0	0	0
5/1/2024	12:00 PM	0	0	0	0	0	0	0	0	0	0	0	0	0
5/1/2024	12:15 PM	0	0	0	0	0	0	0	0	0	0	0	0	0
5/1/2024	12:30 PM	0	0	0	0	0	0	0	0	0	0	0	0	0
5/1/2024	12:45 PM	0	0	0	0	0	0	0	0	0	0	0	0	0
5/1/2024	1:00 PM	0	0	0	0	0	0	0	0	0	0	0	0	0
5/1/2024	1:15 PM	0	0	0	0	0	0	0	0	0	0	0	0	0
5/1/2024	1:30 PM	0	0	0	0	0	0	0	0	0	0	0	0	0
5/1/2024	1:45 PM	0	0	0	0	0	0	0	0	0	0	0	0	0
5/1/2024	2:00 PM	0	0	0	0	0	0	0	0	0	0	0	0	0
5/1/2024	2:15 PM	0	0	0	0	0	0	0	0	0	0	0	0	0
5/1/2024	2:30 PM	0	0	0	0	0	0	0	0	0	0	0	0	0
5/1/2024	2:45 PM	0	0	0	0	0	0	0	0	0	0	0	0	0
5/1/2024	3:00 PM	0	0	0	0	0	0	0	0	0	0	0	0	0
5/1/2024	3:15 PM	0	0	0	0	0	0	0	0	0	0	0	0	0
5/1/2024	3:30 PM	0	0	0	0	0	0	0	0	0	0	0	0	0
5/1/2024	3:45 PM	0	0	0	0	0	0	0	0	0	0	0	0	0
5/1/2024	4:00 PM	0	0	0	0	0	0	0	0	0	0	0	0	0
5/1/2024	4:15 PM	0	0	0	0	0	0	0	0	0	0	0	0	0
5/1/2024	4:30 PM	0	0	0	0	0	0	0	0	0	0	0	0	0
5/1/2024	4:45 PM	0	0	0	0	0	0	0	0	0	0	0	0	0
5/1/2024	5:00 PM	0	0	0	0	0	0	0	0	0	0	0	0	0
5/1/2024	5:15 PM	0	0	0	0	0	0	0	0	0	0	0	0	0
5/1/2024	5:30 PM	0	0	0	0	0	0	0	0	0	0	0	0	0
5/1/2024	5:45 PM	0	0	0	0	0	0	0	0	0	0	0	0	0
5/1/2024	6:00 PM	0	0	0	0	0	0	0	0	0	0	0	0	0
5/1/2024	6:15 PM	0	0	0	0	0	0	0	0	0	0	0	0	0
5/1/2024	6:30 PM	0	0	0	0	0	0	0	0	0	0	0	0	0
5/1/2024	6:45 PM	0	0	0	0	0	0	0	0	0	0	0	0	0
5/1/2024	7:00 PM	0	0	0	0	0	0	0	0	0	0	0	0	0
5/1/2024	7:15 PM	0	0	0	0	0	0	0	0	0	0	0	0	0
5/1/2024	7:30 PM	0	0	0	0	0	0	0	0	0	0	0	0	0
5/1/2024	7:45 PM	0	0	0	0	0	0	0	0	0	0	0	0	0
5/1/2024	8:00 PM	0	0	0	0	0	0	0	0	0	0	0	0	0
5/1/2024	8:15 PM	0	0	0	0	0	0	0	0	0	0	0	0	0
5/1/2024	8:30 PM	0	0	0	0	0	0	0	0	0	0	0	0	0
5/1/2024	8:45 PM	0	0	0	0	0	0	0	0	0	0	0	0	0
5/1/2024	9:00 PM	0	0	0	0	0	0	0	0	0	0	0	0	0
5/1/2024	9:15 PM	0	0	0	0	0	0	0	0	0	0	0	0	0
5/1/2024	9:30 PM	0	0	0	0	0	0	0	0	0	0	0	0	0
5/1/2024	9:45 PM	0	0	0	0	0	0	0	0	0	0	0	0	0
5/1/2024	10:00 PM	0	0	0	0	0	0	0	0	0	0	0	0	0
5/1/2024	10:15 PM	0	0	0	0	0	0	0	0	0	0	0	0	0
5/1/2024	10:30 PM	0	0	0	0	0	0	0	0	0	0	0	0	0
5/1/2024	10:45 PM	0	0	0	0	0	0	0	0	0	0	0	0	0
5/1/2024	11:00 PM	0	0	0	0	0	0	0	0	0	0	0	0	0
5/1/2024	11:15 PM	0	0	0	0	0	0	0	0	0	0	0	0	0
5/1/2024	11:30 PM	0	0	0	0	0	0	0	0	0	0	0	0	0
5/1/2024	11:45 PM	0	0	0	0	0	0	0	0	0	0	0	0	0

5/2/2024	12:00 AM	0	0	0	0	0	0	0	0	0	0	0	0	0
5/2/2024	12:15 AM	0	0	0	0	0	0	0	0	0	0	0	0	0
5/2/2024	12:30 AM	0	0	0	0	0	0	0	0	0	0	0	0	0
5/2/2024	12:45 AM	0	0	0	0	0	0	0	0	0	0	0	0	0
5/2/2024	1:00 AM	0	0	0	0	0	0	0	0	0	0	0	0	0
5/2/2024	1:15 AM	0	0	0	0	0	0	0	0	0	0	0	0	0
5/2/2024	1:30 AM	0	0	0	0	0	0	0	0	0	0	0	0	0
5/2/2024	1:45 AM	0	0	0	0	0	0	0	0	0	0	0	0	0
5/2/2024	2:00 AM	0	0	0	0	0	0	0	0	0	0	0	0	0
5/2/2024	2:15 AM	0	0	0	0	0	0	0	0	0	0	0	0	0
5/2/2024	2:30 AM	0	0	0	0	0	0	0	0	0	0	0	0	0
5/2/2024	2:45 AM	0	0	0	0	0	0	0	0	0	0	0	0	0
5/2/2024	3:00 AM	0	0	0	0	0	0	0	0	0	0	0	0	0
5/2/2024	3:15 AM	0	0	0	0	0	0	0	0	0	0	0	0	0
5/2/2024	3:30 AM	0	0	0	0	0	0	0	0	0	0	0	0	0
5/2/2024	3:45 AM	0	0	0	0	0	0	0	0	0	0	0	0	0
5/2/2024	4:00 AM	0	0	0	0	0	0	0	0	0	0	0	0	0
5/2/2024	4:15 AM	0	0	0	0	0	0	0	0	0	0	0	0	0
5/2/2024	4:30 AM	0	0	0	0	0	0	0	0	0	0	0	0	0
5/2/2024	4:45 AM	0	0	0	0	0	0	0	0	0	0	0	0	0
5/2/2024	5:00 AM	0	0	0	0	0	0	0	0	0	0	0	0	0
5/2/2024	5:15 AM	0	0	0	0	0	0	0	0	0	0	0	0	0
5/2/2024	5:30 AM	0	0	0	0	0	0	0	0	0	0	0	0	0
5/2/2024	5:45 AM	0	0	0	0	0	0	0	0	0	0	0	0	0
5/2/2024	6:00 AM	0	0	0	0	0	0	0	0	0	0	0	0	0
5/2/2024	6:15 AM	0	0	0	0	0	0	0	0	0	0	0	0	0
5/2/2024	6:30 AM	0	0	0	0	0	0	0	0	0	0	0	0	0
5/2/2024	6:45 AM	0	0	0	0	0	0	0	0	0	0	0	0	0
5/2/2024	7:00 AM	0	0	0	0	0	0	0	0	0	0	0	0	0
5/2/2024	7:15 AM	0	0	0	0	0	0	0	0	0	0	0	0	0
5/2/2024	7:30 AM	0	0	0	0	0	0	0	0	0	0	0	0	0
5/2/2024	7:45 AM	0	0	0	0	0	0	0	0	0	0	0	0	0
5/2/2024	8:00 AM	0	0	0	0	0	0	0	0	0	0	0	0	0
5/2/2024	8:15 AM	0	0	0	0	0	0	0	0	0	0	0	0	0
5/2/2024	8:30 AM	0	0	0	0	0	0	0	0	0	0	0	0	0
5/2/2024	8:45 AM	0	0	0	0	0	0	0	0	0	0	0	0	0
5/2/2024	9:00 AM	0	0	0	0	0	0	0	0	0	0	0	0	0
5/2/2024	9:15 AM	0	0	0	0	0	0	0	0	0	0	0	0	0
5/2/2024	9:30 AM	0	0	0	0	0	0	0	0	0	0	0	0	0
5/2/2024	9:45 AM	0	0	0	0	0	0	0	0	0	0	0	0	0
5/2/2024	10:00 AM	0	0	0	0	0	0	0	0	0	0	0	0	0
5/2/2024	10:15 AM	0	0	0	0	0	0	0	0	0	0	0	0	0
5/2/2024	10:30 AM	0	0	0	0	0	0	0	0	0	0	0	0	0
5/2/2024	10:45 AM	0	0	0	0	0	0	0	0	0	0	0	0	0
5/2/2024	11:00 AM	0	0	0	0	0	0	0	0	0	0	0	0	0
5/2/2024	11:15 AM	0	0	0	0	0	0	0	0	0	0	0	0	0
5/2/2024	11:30 AM	0	0	0	0	0	0	0	0	0	0	0	0	0
5/2/2024	11:45 AM	0	0	0	0	0	0	0	0	0	0	0	0	0
5/2/2024	12:00 PM	0	0	0	0	0	0	0	0	0	0	0	0	0
5/2/2024	12:15 PM	0	0	0	0	0	0	0	0	0	0	0	0	0
5/2/2024	12:30 PM	0	0	0	0	0	0	0	0	0	0	0	0	0
5/2/2024	12:45 PM	0	0	0	0	0	0	0	0	0	0	0	0	0
5/2/2024	1:00 PM	0	0	0	0	0	0	0	0	0	0	0	0	0
5/2/2024	1:15 PM	0	0	0	0	0	0	0	0	0	0	0	0	0
5/2/2024	1:30 PM	0	0	0	0	0	0	0	0	0	0	0	0	0
5/2/2024	1:45 PM	0	0	0	0	0	0	0	0	0	0	0	0	0
5/2/2024	2:00 PM	0	0	0	0	0	0	0	0	0	0	0	0	0
5/2/2024	2:15 PM	0	0	0	0	0	0	0	0	0	0	0	0	0
5/2/2024	2:30 PM	0	0	0	0	0	0	0	0	0	0	0	0	0
5/2/2024	2:45 PM	0	0	0	0	0	0	0	0	0	0	0	0	0
5/2/2024	3:00 PM	0	0	0	0	0	0	0	0	0	0	0	0	0
5/2/2024	3:15 PM	0	0	0	0	0	0	0	0	0	0	0	0	0
5/2/2024	3:30 PM	0	0	0	0	0	0	0	0	0	0	0	0	0
5/2/2024	3:45 PM	0	0	0	0	0	0	0	0	0	0	0	0	0
5/2/2024	4:00 PM	0	0	0	0	0	0	0	0	0	0	0	0	0
5/2/2024	4:15 PM	0	0	0	0	0	0	0	0	0	0	0	0	0
5/2/2024	4:30 PM	0	0	0	0	0	0	0	0	0	0	0	0	0
5/2/2024	4:45 PM	0	0	0	0	0	0	0	0	0	0	0	0	0
5/2/2024	5:00 PM	0	0	0	0	0	0	0	0	0	0	0	0	0
5/2/2024	5:15 PM	0	0	0	0	0	0	0	0	0	0	0	0	0
5/2/2024	5:30 PM	0	0	0	0	0	0	0	0	0	0	0	0	0
5/2/2024	5:45 PM	0	0	0	0	0	0	0	0	0	0	0	0	0
5/2/2024	6:00 PM	0	0	0	0	0	0	0	0	0	0	0	0	0
5/2/2024	6:15 PM	0	0	0	0	0	0	0	0	0	0	0	0	0
5/2/2024	6:30 PM	0	0	0	0	0	0	0	0	0	0	0	0	0
5/2/2024	6:45 PM	0	0	0	0	0	0	0	0	0	0	0	0	0
5/2/2024	7:00 PM	0	0	0	0	0	0	0	0	0	0	0	0	0
5/2/2024	7:15 PM	0	0	0	0	0	0	0	0	0	0	0	0	0
5/2/2024	7:30 PM	0	0	0	0	0	0	0	0	0	0	0	0	0
5/2/2024	7:45 PM	0	0	0	0	0	0	0	0	0	0	0	0	0
5/2/2024	8:00 PM	0	0	0	0	0	0	0	0	0	0	0	0	0
5/2/2024	8:15 PM	0	0	0	0	0	0	0	0	0	0	0	0	0
5/2/2024	8:30 PM	0	0	0	0	0	0	0	0	0	0	0	0	0
5/2/2024	8:45 PM	0	0	0	0	0	0	0	0	0	0	0	0	0
5/2/2024	9:00 PM	0	0	0	0	0	0	0	0	0	0	0	0	0
5/2/2024	9:15 PM	0	0	0	0	0	0	0	0	0	0	0	0	0
5/2/2024	9:30 PM	0	0	0	0	0	0	0	0	0	0	0	0	0
5/2/2024	9:45 PM	0	0	0	0	0	0	0	0	0	0	0	0	0
5/2/2024	10:00 PM	0	0	0	0	0	0	0	0	0	0	0	0	0
5/2/2024	10:15 PM	0	0	0	0	0	0	0	0	0	0	0	0	0
5/2/2024	10:30 PM	0	0	0	0	0	0	0	0	0	0	0	0	0
5/2/2024	10:45 PM	0	0	0	0	0	0	0	0	0	0	0	0	0
5/2/2024	11:00 PM	0	0	0	0	0	0	0	0	0	0	0	0	0
5/2/2024	11:15 PM	0	0	0	0	0	0	0	0	0	0	0	0	0
5/2/2024	11:30 PM	0	0	0	0	0	0	0	0	0	0	0	0	0
5/2/2024	11:45 PM	0	0	0	0	0	0	0	0	0	0	0	0	0

EB
File Name:
Start Date: 4/30/2024
Start Time: 0
Site Code: 66
Station ID: 1
Location 1: I-20 E/Bound On-Ramp, east of US-176 Broad River Rd
Location 2:

Date	Time	1	2	3	4	5	6	7	8	9	10	11	12	13
4/30/2024	12:00 AM	0	0	0	0	0	0	0	0	0	0	0	0	0
4/30/2024	12:15 AM	0	0	0	0	0	0	0	0	0	0	0	0	0
4/30/2024	12:30 AM	0	0	0	0	0	0	0	0	0	0	0	0	0
4/30/2024	12:45 AM	0	0	0	0	0	0	0	0	0	0	0	0	0
4/30/2024	1:00 AM	0	0	0	0	0	0	0	0	0	0	0	0	0
4/30/2024	1:15 AM	0	0	0	0	0	0	0	0	0	0	0	0	0
4/30/2024	1:30 AM	0	0	0	0	0	0	0	0	0	0	0	0	0
4/30/2024	1:45 AM	0	0	0	0	0	0	0	0	0	0	0	0	0
4/30/2024	2:00 AM	0	0	0	0	0	0	0	0	0	0	0	0	0
4/30/2024	2:15 AM	0	0	0	0	0	0	0	0	0	0	0	0	0
4/30/2024	2:30 AM	0	0	0	0	0	0	0	0	0	0	0	0	0
4/30/2024	2:45 AM	0	0	0	0	0	0	0	0	0	0	0	0	0
4/30/2024	3:00 AM	0	0	0	0	0	0	0	0	0	0	0	0	0
4/30/2024	3:15 AM	0	0	0	0	0	0	0	0	0	0	0	0	0
4/30/2024	3:30 AM	0	0	0	0	0	0	0	0	0	0	0	0	0
4/30/2024	3:45 AM	0	0	0	0	0	0	0	0	0	0	0	0	0
4/30/2024	4:00 AM	0	0	0	0	0	0	0	0	0	0	0	0	0
4/30/2024	4:15 AM	0	0	0	0	0	0	0	0	0	0	0	0	0
4/30/2024	4:30 AM	0	0	0	0	0	0	0	0	0	0	0	0	0
4/30/2024	4:45 AM	0	0	0	0	0	0	0	0	0	0	0	0	0
4/30/2024	5:00 AM	0	0	0	0	0	0	0	0	0	0	0	0	0
4/30/2024	5:15 AM	0	0	0	0	0	0	0	0	0	0	0	0	0
4/30/2024	5:30 AM	0	0	0	0	0	0	0	0	0	0	0	0	0
4/30/2024	5:45 AM	0	0	0	0	0	0	0	0	0	0	0	0	0
4/30/2024	6:00 AM	0	0	0	0	0	0	0	0	0	0	0	0	0
4/30/2024	6:15 AM	0	0	0	0	0	0	0	0	0	0	0	0	0
4/30/2024	6:30 AM	0	0	0	0	0	0	0	0	0	0	0	0	0
4/30/2024	6:45 AM	0	0	0	0	0	0	0	0	0	0	0	0	0
4/30/2024	7:00 AM	0	0	0	0	0	0	0	0	0	0	0	0	0
4/30/2024	7:15 AM	0	0	0	0	0	0	0	0	0	0	0	0	0
4/30/2024	7:30 AM	0	0	0	0	0	0	0	0	0	0	0	0	0
4/30/2024	7:45 AM	0	0	0	0	0	0	0	0	0	0	0	0	0
4/30/2024	8:00 AM	0	0	0	0	0	0	0	0	0	0	0	0	0
4/30/2024	8:15 AM	0	0	0	0	0	0	0	0	0	0	0	0	0
4/30/2024	8:30 AM	0	0	0	0	0	0	0	0	0	0	0	0	0
4/30/2024	8:45 AM	0	0	0	0	0	0	0	0	0	0	0	0	0
4/30/2024	9:00 AM	0	0	0	0	0	0	0	0	0	0	0	0	0
4/30/2024	9:15 AM	0	0	0	0	0	0	0	0	0	0	0	0	0
4/30/2024	9:30 AM	0	0	0	0	0	0	0	0	0	0	0	0	0
4/30/2024	9:45 AM	0	0	0	0	0	0	0	0	0	0	0	0	0
4/30/2024	10:00 AM	0	0	0	0	0	0	0	0	0	0	0	0	0
4/30/2024	10:15 AM	0	0	0	0	0	0	0	0	0	0	0	0	0
4/30/2024	10:30 AM	0	0	0	0	0	0	0	0	0	0	0	0	0
4/30/2024	10:45 AM	0	0	0	0	0	0	0	0	0	0	0	0	0
4/30/2024	11:00 AM	0	0	0	0	0	0	0	0	0	0	0	0	0
4/30/2024	11:15 AM	0	0	0	0	0	0	0	0	0	0	0	0	0
4/30/2024	11:30 AM	0	0	0	0	0	0	0	0	0	0	0	0	0
4/30/2024	11:45 AM	0	0	0	0	0	0	0	0	0	0	0	0	0
4/30/2024	12:00 PM	0	0	0	0	0	0	0	0	0	0	0	0	0
4/30/2024	12:15 PM	0	0	0	0	0	0	0	0	0	0	0	0	0
4/30/2024	12:30 PM	0	0	0	0	0	0	0	0	0	0	0	0	0
4/30/2024	12:45 PM	0	0	0	0	0	0	0	0	0	0	0	0	0
4/30/2024	1:00 PM	0	0	0	0	0	0	0	0	0	0	0	0	0
4/30/2024	1:15 PM	0	0	0	0	0	0	0	0	0	0	0	0	0
4/30/2024	1:30 PM	0	0	0	0	0	0	0	0	0	0	0	0	0
4/30/2024	1:45 PM	0	0	0	0	0	0	0	0	0	0	0	0	0
4/30/2024	2:00 PM	0	0	0	0	0	0	0	0	0	0	0	0	0
4/30/2024	2:15 PM	0	0	0	0	0	0	0	0	0	0	0	0	0
4/30/2024	2:30 PM	0	0	0	0	0	0	0	0	0	0	0	0	0
4/30/2024	2:45 PM	0	0	0	0	0	0	0	0	0	0	0	0	0
4/30/2024	3:00 PM	0	0	0	0	0	0	0	0	0	0	0	0	0
4/30/2024	3:15 PM	0	0	0	0	0	0	0	0	0	0	0	0	0
4/30/2024	3:30 PM	0	0	0	0	0	0	0	0	0	0	0	0	0
4/30/2024	3:45 PM	0	0	0	0	0	0	0	0	0	0	0	0	0
4/30/2024	4:00 PM	0	0	0	0	0	0	0	0	0	0	0	0	0
4/30/2024	4:15 PM	0	0	0	0	0	0	0	0	0	0	0	0	0
4/30/2024	4:30 PM	0	0	0	0	0	0	0	0	0	0	0	0	0
4/30/2024	4:45 PM	0	0	0	0	0	0	0	0	0	0	0	0	0
4/30/2024	5:00 PM	0	0	0	0	0	0	0	0	0	0	0	0	0
4/30/2024	5:15 PM	0	0	0	0	0	0	0	0	0	0	0	0	0
4/30/2024	5:30 PM	0	0	0	0	0	0	0	0	0	0	0	0	0
4/30/2024	5:45 PM	0	0	0	0	0	0	0	0	0	0	0	0	0
4/30/2024	6:00 PM	0	0	0	0	0	0	0	0	0	0	0	0	0
4/30/2024	6:15 PM	0	145	7	0	0	0	0	0	0	0	0	0	0
4/30/2024	6:30 PM	0	273	12	0	0	0	0	0	0	0	0	0	0
4/30/2024	6:45 PM	0	367	14	0	1	0	0	0	0	0	0	0	0
4/30/2024	7:00 PM	0	487	19	0	3	0	0	0	0	0	0	0	0
4/30/2024	7:15 PM	0	457	16	0	3	0	0	0	0	0	0	0	0
4/30/2024	7:30 PM	0	459	15	0	4	0	0	0	0	0	0	0	0
4/30/2024	7:45 PM	0	473	16	0	3	0	0	0	0	0	0	0	0
4/30/2024	8:00 PM	0	439	15	0	1	0	0	0	0	0	0	0	0
4/30/2024	8:15 PM	0	418	14	0	2	0	0	0	0	0	0	0	0
4/30/2024	8:30 PM	0	360	10	0	2	0	0	0	1	0	0	0	0
4/30/2024	8:45 PM	0	340	10	0	2	0	0	0	1	0	0	0	0
4/30/2024	9:00 PM	0	303	6	0	2	0	0	0	1	0	0	0	0
4/30/2024	9:15 PM	0	267	3	0	2	0	0	0	1	0	0	0	0
4/30/2024	9:30 PM	0	253	4	0	2	0	0	0	1	0	0	0	0
4/30/2024	9:45 PM	0	226	2	0	3	0	0	0	1	0	0	0	0
4/30/2024	10:00 PM	0	223	2	0	3	0	0	0	1	0	0	0	0
4/30/2024	10:15 PM	0	203	2	0	3	0	0	0	1	0	0	0	0
4/30/2024	10:30 PM	0	201	3	0	2	0	0	0	1	0	0	0	0
4/30/2024	10:45 PM	0	180	3	0	1	0	0	0	1	0	0	0	0
4/30/2024	11:00 PM	0	162	3	0	1	0	0	0	1	0	0	0	0
4/30/2024	11:15 PM	0	146	8	0	1	0	0	0	2	0	0	0	0
4/30/2024	11:30 PM	0	107	9	0	1	0	0	0	1	0	0	0	0
4/30/2024	11:45 PM	0	82	11	0	1	0	0	0	1	0	0	0	0

5/1/2024	12:00 AM	0	71	17	0	2	0	0	0	1	0	0	0	0
5/1/2024	12:15 AM	0	67	15	0	1	0	0	0	0	0	0	0	0
5/1/2024	12:30 AM	0	63	14	0	1	0	0	0	0	0	0	0	0
5/1/2024	12:45 AM	0	66	14	0	1	0	0	0	1	0	0	0	0
5/1/2024	1:00 AM	0	69	11	0	0	0	0	0	1	0	0	0	0
5/1/2024	1:15 AM	0	59	9	0	0	0	0	0	1	0	0	0	0
5/1/2024	1:30 AM	0	57	8	0	1	0	0	0	1	0	0	0	0
5/1/2024	1:45 AM	0	52	7	0	1	0	0	0	0	0	0	0	0
5/1/2024	2:00 AM	0	48	6	0	1	0	0	0	0	0	0	0	0
5/1/2024	2:15 AM	0	49	8	0	1	3	0	0	0	0	0	0	0
5/1/2024	2:30 AM	0	52	10	0	0	3	0	0	1	0	0	0	0
5/1/2024	2:45 AM	0	53	10	0	0	3	0	0	3	0	0	0	0
5/1/2024	3:00 AM	0	41	9	0	0	3	0	0	4	0	0	0	0
5/1/2024	3:15 AM	0	52	11	0	1	0	0	0	4	0	0	0	0
5/1/2024	3:30 AM	0	60	12	0	3	0	0	0	3	0	0	0	0
5/1/2024	3:45 AM	0	73	15	1	3	0	0	0	1	0	0	0	0
5/1/2024	4:00 AM	0	95	21	1	4	0	0	0	0	0	0	0	0
5/1/2024	4:15 AM	0	101	20	1	3	0	0	0	0	0	0	0	0
5/1/2024	4:30 AM	0	133	22	1	2	0	0	0	0	0	0	0	0
5/1/2024	4:45 AM	0	163	22	0	4	0	0	0	0	0	0	0	0
5/1/2024	5:00 AM	0	176	18	0	4	0	0	0	0	0	0	0	0
5/1/2024	5:15 AM	0	202	29	0	5	1	0	0	0	0	0	0	0
5/1/2024	5:30 AM	0	208	41	0	7	1	0	0	0	0	0	0	0
5/1/2024	5:45 AM	0	259	52	0	6	1	0	0	0	0	0	0	0
5/1/2024	6:00 AM	0	332	76	2	6	1	0	2	2	0	0	0	0
5/1/2024	6:15 AM	0	399	89	3	7	0	0	2	3	0	0	0	0
5/1/2024	6:30 AM	0	520	98	4	4	2	0	3	5	0	0	0	0
5/1/2024	6:45 AM	0	569	105	4	6	4	0	3	7	1	0	0	0
5/1/2024	7:00 AM	0	627	110	3	6	4	0	1	6	1	0	0	0
5/1/2024	7:15 AM	0	681	111	2	9	5	0	3	5	1	0	0	0
5/1/2024	7:30 AM	1	642	130	3	15	4	0	2	3	1	0	0	0
5/1/2024	7:45 AM	2	614	136	16	18	3	0	4	1	0	0	0	0
5/1/2024	8:00 AM	2	560	134	16	23	3	0	4	2	0	0	0	0
5/1/2024	8:15 AM	2	503	131	16	21	2	1	2	2	0	0	0	0
5/1/2024	8:30 AM	1	456	102	14	18	2	1	2	2	0	0	0	0
5/1/2024	8:45 AM	0	429	101	1	13	2	1	1	2	0	0	0	0
5/1/2024	9:00 AM	0	432	89	0	10	2	1	1	0	0	0	0	0
5/1/2024	9:15 AM	0	412	85	0	12	6	0	1	0	0	0	0	0
5/1/2024	9:30 AM	0	408	101	1	13	8	0	1	0	0	0	0	0
5/1/2024	9:45 AM	0	406	92	1	13	7	0	1	0	0	0	0	0
5/1/2024	10:00 AM	0	391	95	1	13	8	0	1	1	0	0	0	0
5/1/2024	10:15 AM	0	414	99	3	9	4	0	3	1	0	0	0	0
5/1/2024	10:30 AM	1	435	96	2	8	2	0	4	1	0	0	0	0
5/1/2024	10:45 AM	2	461	102	2	9	2	0	3	2	0	0	0	0
5/1/2024	11:00 AM	2	487	110	2	10	3	1	4	1	0	0	0	0
5/1/2024	11:15 AM	2	479	105	1	15	6	1	3	1	0	0	0	0
5/1/2024	11:30 AM	1	483	104	2	17	8	1	2	1	0	0	0	0
5/1/2024	11:45 AM	0	470	104	2	20	8	1	4	0	0	0	0	0
5/1/2024	12:00 PM	1	448	102	2	18	8	0	3	0	0	0	0	0
5/1/2024	12:15 PM	1	473	107	1	14	6	1	2	0	0	0	0	0
5/1/2024	12:30 PM	1	496	96	0	13	4	1	2	0	0	0	0	0
5/1/2024	12:45 PM	1	506	94	0	12	5	1	0	0	0	0	0	0
5/1/2024	1:00 PM	0	578	87	2	13	3	1	1	0	0	0	0	0
5/1/2024	1:15 PM	0	588	84	2	15	4	0	2	1	0	0	0	0
5/1/2024	1:30 PM	1	578	92	6	14	4	0	2	2	0	0	0	0
5/1/2024	1:45 PM	1	590	84	7	13	5	0	2	3	0	0	0	0
5/1/2024	2:00 PM	1	555	87	5	15	5	1	1	3	0	0	0	0
5/1/2024	2:15 PM	1	556	99	5	12	4	1	1	2	0	0	0	0
5/1/2024	2:30 PM	0	589	95	3	12	4	1	1	1	0	0	0	0
5/1/2024	2:45 PM	0	622	104	5	15	3	1	2	0	0	0	0	0
5/1/2024	3:00 PM	0	666	109	5	12	3	0	2	0	0	0	0	0
5/1/2024	3:15 PM	0	676	111	6	15	2	0	1	0	0	0	0	0
5/1/2024	3:30 PM	0	685	120	7	14	3	0	2	0	0	0	0	0
5/1/2024	3:45 PM	1	682	119	8	8	3	1	2	0	0	0	0	0
5/1/2024	4:00 PM	2	661	111	9	10	3	1	2	0	0	0	0	0
5/1/2024	4:15 PM	2	700	97	11	7	3	1	2	1	0	0	0	0
5/1/2024	4:30 PM	3	693	94	8	7	1	1	2	1	0	0	0	0
5/1/2024	4:45 PM	2	713	94	5	8	0	0	1	1	0	0	0	0
5/1/2024	5:00 PM	1	692	177	5	4	2	0	1	1	0	0	0	0
5/1/2024	5:15 PM	2	669	172	2	3	2	0	1	2	0	0	0	0
5/1/2024	5:30 PM	1	653	164	2	1	3	0	0	2	0	0	0	0
5/1/2024	5:45 PM	1	617	162	3	2	3	0	0	3	0	0	0	0
5/1/2024	6:00 PM	1	599	73	2	3	1	0	0	3	0	0	0	0
5/1/2024	6:15 PM	0	522	75	2	5	1	0	0	1	0	0	0	0
5/1/2024	6:30 PM	7	517	75	3	5	0	0	0	1	0	0	0	0
5/1/2024	6:45 PM	7	474	73	1	3	0	0	0	0	0	0	0	0
5/1/2024	7:00 PM	7	470	78	1	4	1	0	0	1	0	0	0	0
5/1/2024	7:15 PM	7	535	75	1	4	1	0	0	1	0	0	0	0
5/1/2024	7:30 PM	0	514	70	0	6	1	0	0	1	0	0	0	0
5/1/2024	7:45 PM	0	538	67	0	9	1	0	0	2	0	0	0	0
5/1/2024	8:00 PM	0	553	64	1	9	0	0	0	1	0	0	0	0
5/1/2024	8:15 PM	1	478	63	1	8	0	0	0	1	0	0	0	0
5/1/2024	8:30 PM	1	425	57	1	7	0	0	0	1	0	0	0	0
5/1/2024	8:45 PM	1	387	51	1	7	0	0	0	0	0	0	0	0
5/1/2024	9:00 PM	1	308	42	0	5	0	0	0	0	0	0	0	0
5/1/2024	9:15 PM	0	279	34	0	4	0	0	0	0	0	0	0	0
5/1/2024	9:30 PM	0	264	30	0	4	0	0	1	0	0	0	0	0
5/1/2024	9:45 PM	0	233	26	0	1	0	0	1	1	0	0	0	0
5/1/2024	10:00 PM	0	226	23	0	2	0	0	1	1	0	0	0	0
5/1/2024	10:15 PM	0	216	17	0	2	0	0	1	2	0	0	0	0
5/1/2024	10:30 PM	0	189	15	0	3	0	0	0	2	0	0	0	0
5/1/2024	10:45 PM	0	178	11	0	5	0	0	0	1	0	0	0	0
5/1/2024	11:00 PM	0	155	8	0	5	0	0	0	1	0	0	0	0
5/1/2024	11:15 PM	1	137	10	0	5	0	0	0	0	1	0	0	0
5/1/2024	11:30 PM	1	136	8	0	3	0	0	0	0	1	0	0	0
5/1/2024	11:45 PM	1	113	9	0	1	0	0	0	0	1	0	0	0

5/2/2024	12:00 AM	1	110	10	0	0	0	0	0	0	1	0	0	0
5/2/2024	12:15 AM	0	101	8	0	0	0	0	0	0	0	0	0	0
5/2/2024	12:30 AM	0	88	8	0	0	0	0	0	0	0	0	0	0
5/2/2024	12:45 AM	0	74	5	0	1	0	0	0	0	0	0	0	0
5/2/2024	1:00 AM	0	61	6	0	2	0	0	0	0	0	0	0	0
5/2/2024	1:15 AM	0	58	8	0	3	0	0	0	1	0	0	0	0
5/2/2024	1:30 AM	0	58	9	0	3	0	0	0	2	0	0	0	0
5/2/2024	1:45 AM	0	64	12	0	2	0	0	0	3	0	0	0	0
5/2/2024	2:00 AM	0	63	11	0	1	0	0	0	3	0	0	0	0
5/2/2024	2:15 AM	0	51	9	0	0	0	0	0	3	0	0	0	0
5/2/2024	2:30 AM	0	51	7	0	0	0	0	0	3	0	0	0	0
5/2/2024	2:45 AM	0	38	5	0	0	0	0	0	2	0	0	0	0
5/2/2024	3:00 AM	0	33	4	0	2	1	0	0	2	0	0	0	0
5/2/2024	3:15 AM	0	44	5	1	3	1	0	0	1	0	0	0	0
5/2/2024	3:30 AM	0	47	8	1	3	1	0	0	0	0	0	0	0
5/2/2024	3:45 AM	0	66	12	1	4	1	0	0	1	0	0	0	0
5/2/2024	4:00 AM	0	78	13	1	4	0	0	1	1	0	0	0	0
5/2/2024	4:15 AM	0	97	19	0	3	1	0	1	2	0	0	0	0
5/2/2024	4:30 AM	0	128	20	2	4	4	0	1	3	0	0	0	0
5/2/2024	4:45 AM	0	155	22	2	4	4	0	1	2	0	0	0	0
5/2/2024	5:00 AM	0	171	30	2	3	5	0	0	2	0	0	0	0
5/2/2024	5:15 AM	0	191	28	2	4	5	0	0	1	0	0	0	0
5/2/2024	5:30 AM	0	209	37	0	6	3	0	0	1	0	0	0	0
5/2/2024	5:45 AM	0	261	51	0	7	3	0	1	1	0	0	0	0
5/2/2024	6:00 AM	0	349	76	1	7	3	0	3	4	0	0	0	0
5/2/2024	6:15 AM	0	435	90	1	8	3	1	3	4	0	0	0	0
5/2/2024	6:30 AM	0	539	109	3	7	5	1	3	5	0	0	0	0
5/2/2024	6:45 AM	0	584	114	3	9	8	1	2	5	1	0	0	0
5/2/2024	7:00 AM	0	623	104	2	12	9	2	0	2	1	0	0	0
5/2/2024	7:15 AM	0	634	107	3	13	11	1	0	3	1	0	0	0
5/2/2024	7:30 AM	2	594	97	4	18	9	1	0	2	1	0	0	0
5/2/2024	7:45 AM	2	577	92	15	16	8	1	3	3	0	0	0	0
5/2/2024	8:00 AM	2	531	91	18	16	9	0	4	3	0	0	0	0
5/2/2024	8:15 AM	3	471	93	18	15	7	1	4	2	0	0	0	0
5/2/2024	8:30 AM	3	449	87	15	8	9	2	5	2	0	0	0	0
5/2/2024	8:45 AM	3	415	87	6	9	8	2	2	2	0	0	0	0
5/2/2024	9:00 AM	5	392	80	3	8	6	2	1	2	0	0	0	0
5/2/2024	9:15 AM	4	392	77	2	10	7	1	1	3	1	0	0	0
5/2/2024	9:30 AM	2	368	78	2	13	6	0	0	4	1	0	0	0
5/2/2024	9:45 AM	2	382	72	0	15	5	0	0	3	1	0	0	0
5/2/2024	10:00 AM	0	382	78	0	13	5	0	0	3	1	0	0	0
5/2/2024	10:15 AM	0	389	71	0	12	5	0	1	2	0	0	0	0
5/2/2024	10:30 AM	0	402	75	2	11	3	0	1	0	0	0	0	0
5/2/2024	10:45 AM	2	390	85	2	9	4	0	1	0	1	0	0	0
5/2/2024	11:00 AM	2	398	95	3	10	4	0	1	0	1	0	0	0
5/2/2024	11:15 AM	2	401	93	4	9	3	0	0	0	1	0	0	0
5/2/2024	11:30 AM	3	410	103	3	14	4	1	0	0	1	0	0	0
5/2/2024	11:45 AM	3	435	107	3	15	3	2	0	0	0	0	0	0
5/2/2024	12:00 PM	3	461	98	3	18	4	2	0	1	0	0	0	0
5/2/2024	12:15 PM	3	486	117	5	18	5	2	0	4	0	0	0	0
5/2/2024	12:30 PM	2	500	109	6	15	5	2	0	5	0	0	0	0
5/2/2024	12:45 PM	0	490	107	6	14	5	1	0	7	0	0	0	0
5/2/2024	1:00 PM	0	484	110	5	13	3	3	0	6	0	0	0	0
5/2/2024	1:15 PM	0	458	100	2	13	1	3	0	4	0	0	0	0
5/2/2024	1:30 PM	1	480	103	1	13	3	2	0	4	0	0	0	0
5/2/2024	1:45 PM	1	516	100	1	13	4	2	0	2	0	0	0	0
5/2/2024	2:00 PM	2	519	103	2	10	4	0	0	3	0	0	0	0
5/2/2024	2:15 PM	2	541	116	2	15	6	0	1	3	0	0	0	0
5/2/2024	2:30 PM	1	566	111	3	13	4	0	1	2	0	0	0	0
5/2/2024	2:45 PM	1	560	103	3	13	4	0	1	2	0	0	0	0
5/2/2024	3:00 PM	0	615	97	2	12	6	0	2	1	0	0	0	0
5/2/2024	3:15 PM	0	620	82	2	6	5	0	1	3	0	0	0	0
5/2/2024	3:30 PM	0	611	91	0	8	7	0	1	4	0	0	0	0
5/2/2024	3:45 PM	1	630	105	1	9	6	0	3	4	0	0	0	0
5/2/2024	4:00 PM	1	657	115	3	11	7	0	2	4	0	0	0	0
5/2/2024	4:15 PM	1	723	118	6	12	6	0	2	1	0	0	0	0
5/2/2024	4:30 PM	1	727	111	8	10	3	0	2	0	0	0	0	0
5/2/2024	4:45 PM	0	712	113	9	11	5	0	1	1	0	0	0	0
5/2/2024	5:00 PM	1	684	101	7	12	4	0	1	1	0	0	0	0
5/2/2024	5:15 PM	1	604	99	4	12	5	0	1	2	0	0	0	0
5/2/2024	5:30 PM	1	543	89	2	11	5	0	2	2	0	0	0	0
5/2/2024	5:45 PM	2	561	88	1	7	3	0	1	1	0	0	0	0
5/2/2024	6:00 PM	1	527	94	1	7	1	0	2	1	0	0	0	0
5/2/2024	6:15 PM	1	413	72	1	5	0	0	2	0	0	0	0	0
5/2/2024	6:30 PM	1	313	59	1	4	0	0	1	0	0	0	0	0
5/2/2024	6:45 PM	0	146	28	0	3	0	0	1	0	0	0	0	0
5/2/2024	7:00 PM	0	0	0	0	0	0	0	0	0	0	0	0	0
5/2/2024	7:15 PM	0	0	0	0	0	0	0	0	0	0	0	0	0
5/2/2024	7:30 PM	0	0	0	0	0	0	0	0	0	0	0	0	0
5/2/2024	7:45 PM	0	0	0	0	0	0	0	0	0	0	0	0	0
5/2/2024	8:00 PM	0	0	0	0	0	0	0	0	0	0	0	0	0
5/2/2024	8:15 PM	0	0	0	0	0	0	0	0	0	0	0	0	0
5/2/2024	8:30 PM	0	0	0	0	0	0	0	0	0	0	0	0	0
5/2/2024	8:45 PM	0	0	0	0	0	0	0	0	0	0	0	0	0
5/2/2024	9:00 PM	0	0	0	0	0	0	0	0	0	0	0	0	0
5/2/2024	9:15 PM	0	0	0	0	0	0	0	0	0	0	0	0	0
5/2/2024	9:30 PM	0	0	0	0	0	0	0	0	0	0	0	0	0
5/2/2024	9:45 PM	0	0	0	0	0	0	0	0	0	0	0	0	0
5/2/2024	10:00 PM	0	0	0	0	0	0	0	0	0	0	0	0	0
5/2/2024	10:15 PM	0	0	0	0	0	0	0	0	0	0	0	0	0
5/2/2024	10:30 PM	0	0	0	0	0	0	0	0	0	0	0	0	0
5/2/2024	10:45 PM	0	0	0	0	0	0	0	0	0	0	0	0	0
5/2/2024	11:00 PM	0	0	0	0	0	0	0	0	0	0	0	0	0
5/2/2024	11:15 PM	0	0	0	0	0	0	0	0	0	0	0	0	0
5/2/2024	11:30 PM	0	0	0	0	0	0	0	0	0	0	0	0	0
5/2/2024	11:45 PM	0	0	0	0	0	0	0	0	0	0	0	0	0

WB
File Name:
Start Date: 4/30/2024
Start Time: 0
Site Code: 66
Station ID: 1
Location 1: I-20 E/Bound On-Ramp, east of US-176 Broad River Rd
Location 2:

Date	Time	1	2	3	4	5	6	7	8	9	10	11	12	13
4/30/2024	12:00 AM	0	0	0	0	0	0	0	0	0	0	0	0	0
4/30/2024	12:15 AM	0	0	0	0	0	0	0	0	0	0	0	0	0
4/30/2024	12:30 AM	0	0	0	0	0	0	0	0	0	0	0	0	0
4/30/2024	12:45 AM	0	0	0	0	0	0	0	0	0	0	0	0	0
4/30/2024	1:00 AM	0	0	0	0	0	0	0	0	0	0	0	0	0
4/30/2024	1:15 AM	0	0	0	0	0	0	0	0	0	0	0	0	0
4/30/2024	1:30 AM	0	0	0	0	0	0	0	0	0	0	0	0	0
4/30/2024	1:45 AM	0	0	0	0	0	0	0	0	0	0	0	0	0
4/30/2024	2:00 AM	0	0	0	0	0	0	0	0	0	0	0	0	0
4/30/2024	2:15 AM	0	0	0	0	0	0	0	0	0	0	0	0	0
4/30/2024	2:30 AM	0	0	0	0	0	0	0	0	0	0	0	0	0
4/30/2024	2:45 AM	0	0	0	0	0	0	0	0	0	0	0	0	0
4/30/2024	3:00 AM	0	0	0	0	0	0	0	0	0	0	0	0	0
4/30/2024	3:15 AM	0	0	0	0	0	0	0	0	0	0	0	0	0
4/30/2024	3:30 AM	0	0	0	0	0	0	0	0	0	0	0	0	0
4/30/2024	3:45 AM	0	0	0	0	0	0	0	0	0	0	0	0	0
4/30/2024	4:00 AM	0	0	0	0	0	0	0	0	0	0	0	0	0
4/30/2024	4:15 AM	0	0	0	0	0	0	0	0	0	0	0	0	0
4/30/2024	4:30 AM	0	0	0	0	0	0	0	0	0	0	0	0	0
4/30/2024	4:45 AM	0	0	0	0	0	0	0	0	0	0	0	0	0
4/30/2024	5:00 AM	0	0	0	0	0	0	0	0	0	0	0	0	0
4/30/2024	5:15 AM	0	0	0	0	0	0	0	0	0	0	0	0	0
4/30/2024	5:30 AM	0	0	0	0	0	0	0	0	0	0	0	0	0
4/30/2024	5:45 AM	0	0	0	0	0	0	0	0	0	0	0	0	0
4/30/2024	6:00 AM	0	0	0	0	0	0	0	0	0	0	0	0	0
4/30/2024	6:15 AM	0	0	0	0	0	0	0	0	0	0	0	0	0
4/30/2024	6:30 AM	0	0	0	0	0	0	0	0	0	0	0	0	0
4/30/2024	6:45 AM	0	0	0	0	0	0	0	0	0	0	0	0	0
4/30/2024	7:00 AM	0	0	0	0	0	0	0	0	0	0	0	0	0
4/30/2024	7:15 AM	0	0	0	0	0	0	0	0	0	0	0	0	0
4/30/2024	7:30 AM	0	0	0	0	0	0	0	0	0	0	0	0	0
4/30/2024	7:45 AM	0	0	0	0	0	0	0	0	0	0	0	0	0
4/30/2024	8:00 AM	0	0	0	0	0	0	0	0	0	0	0	0	0
4/30/2024	8:15 AM	0	0	0	0	0	0	0	0	0	0	0	0	0
4/30/2024	8:30 AM	0	0	0	0	0	0	0	0	0	0	0	0	0
4/30/2024	8:45 AM	0	0	0	0	0	0	0	0	0	0	0	0	0
4/30/2024	9:00 AM	0	0	0	0	0	0	0	0	0	0	0	0	0
4/30/2024	9:15 AM	0	0	0	0	0	0	0	0	0	0	0	0	0
4/30/2024	9:30 AM	0	0	0	0	0	0	0	0	0	0	0	0	0
4/30/2024	9:45 AM	0	0	0	0	0	0	0	0	0	0	0	0	0
4/30/2024	10:00 AM	0	0	0	0	0	0	0	0	0	0	0	0	0
4/30/2024	10:15 AM	0	0	0	0	0	0	0	0	0	0	0	0	0
4/30/2024	10:30 AM	0	0	0	0	0	0	0	0	0	0	0	0	0
4/30/2024	10:45 AM	0	0	0	0	0	0	0	0	0	0	0	0	0
4/30/2024	11:00 AM	0	0	0	0	0	0	0	0	0	0	0	0	0
4/30/2024	11:15 AM	0	0	0	0	0	0	0	0	0	0	0	0	0
4/30/2024	11:30 AM	0	0	0	0	0	0	0	0	0	0	0	0	0
4/30/2024	11:45 AM	0	0	0	0	0	0	0	0	0	0	0	0	0
4/30/2024	12:00 PM	0	0	0	0	0	0	0	0	0	0	0	0	0
4/30/2024	12:15 PM	0	0	0	0	0	0	0	0	0	0	0	0	0
4/30/2024	12:30 PM	0	0	0	0	0	0	0	0	0	0	0	0	0
4/30/2024	12:45 PM	0	0	0	0	0	0	0	0	0	0	0	0	0
4/30/2024	1:00 PM	0	0	0	0	0	0	0	0	0	0	0	0	0
4/30/2024	1:15 PM	0	0	0	0	0	0	0	0	0	0	0	0	0
4/30/2024	1:30 PM	0	0	0	0	0	0	0	0	0	0	0	0	0
4/30/2024	1:45 PM	0	0	0	0	0	0	0	0	0	0	0	0	0
4/30/2024	2:00 PM	0	0	0	0	0	0	0	0	0	0	0	0	0
4/30/2024	2:15 PM	0	0	0	0	0	0	0	0	0	0	0	0	0
4/30/2024	2:30 PM	0	0	0	0	0	0	0	0	0	0	0	0	0
4/30/2024	2:45 PM	0	0	0	0	0	0	0	0	0	0	0	0	0
4/30/2024	3:00 PM	0	0	0	0	0	0	0	0	0	0	0	0	0
4/30/2024	3:15 PM	0	0	0	0	0	0	0	0	0	0	0	0	0
4/30/2024	3:30 PM	0	0	0	0	0	0	0	0	0	0	0	0	0
4/30/2024	3:45 PM	0	0	0	0	0	0	0	0	0	0	0	0	0
4/30/2024	4:00 PM	0	0	0	0	0	0	0	0	0	0	0	0	0
4/30/2024	4:15 PM	0	0	0	0	0	0	0	0	0	0	0	0	0
4/30/2024	4:30 PM	0	0	0	0	0	0	0	0	0	0	0	0	0
4/30/2024	4:45 PM	0	0	0	0	0	0	0	0	0	0	0	0	0
4/30/2024	5:00 PM	0	0	0	0	0	0	0	0	0	0	0	0	0
4/30/2024	5:15 PM	0	0	0	0	0	0	0	0	0	0	0	0	0
4/30/2024	5:30 PM	0	0	0	0	0	0	0	0	0	0	0	0	0
4/30/2024	5:45 PM	0	0	0	0	0	0	0	0	0	0	0	0	0
4/30/2024	6:00 PM	0	0	0	0	0	0	0	0	0	0	0	0	0
4/30/2024	6:15 PM	0	0	0	0	0	0	0	0	0	0	0	0	0
4/30/2024	6:30 PM	0	0	0	0	0	0	0	0	0	0	0	0	0
4/30/2024	6:45 PM	0	0	0	0	0	0	0	0	0	0	0	0	0
4/30/2024	7:00 PM	0	0	0	0	0	0	0	0	0	0	0	0	0
4/30/2024	7:15 PM	0	0	0	0	0	0	0	0	0	0	0	0	0
4/30/2024	7:30 PM	0	0	0	0	0	0	0	0	0	0	0	0	0
4/30/2024	7:45 PM	0	0	0	0	0	0	0	0	0	0	0	0	0
4/30/2024	8:00 PM	0	0	0	0	0	0	0	0	0	0	0	0	0
4/30/2024	8:15 PM	0	0	0	0	0	0	0	0	0	0	0	0	0
4/30/2024	8:30 PM	0	0	0	0	0	0	0	0	0	0	0	0	0
4/30/2024	8:45 PM	0	0	0	0	0	0	0	0	0	0	0	0	0
4/30/2024	9:00 PM	0	0	0	0	0	0	0	0	0	0	0	0	0
4/30/2024	9:15 PM	0	0	0	0	0	0	0	0	0	0	0	0	0
4/30/2024	9:30 PM	0	0	0	0	0	0	0	0	0	0	0	0	0
4/30/2024	9:45 PM	0	0	0	0	0	0	0	0	0	0	0	0	0
4/30/2024	10:00 PM	0	0	0	0	0	0	0	0	0	0	0	0	0
4/30/2024	10:15 PM	0	0	0	0	0	0	0	0	0	0	0	0	0
4/30/2024	10:30 PM	0	0	0	0	0	0	0	0	0	0	0	0	0
4/30/2024	10:45 PM	0	0	0	0	0	0	0	0	0	0	0	0	0
4/30/2024	11:00 PM	0	0	0	0	0	0	0	0	0	0	0	0	0
4/30/2024	11:15 PM	0	0	0	0	0	0	0	0	0	0	0	0	0
4/30/2024	11:30 PM	0	0	0	0	0	0	0	0	0	0	0	0	0
4/30/2024	11:45 PM	0	0	0	0	0	0	0	0	0	0	0	0	0

5/1/2024	12:00 AM	0	0	0	0	0	0	0	0	0	0	0	0	0
5/1/2024	12:15 AM	0	0	0	0	0	0	0	0	0	0	0	0	0
5/1/2024	12:30 AM	0	0	0	0	0	0	0	0	0	0	0	0	0
5/1/2024	12:45 AM	0	0	0	0	0	0	0	0	0	0	0	0	0
5/1/2024	1:00 AM	0	0	0	0	0	0	0	0	0	0	0	0	0
5/1/2024	1:15 AM	0	0	0	0	0	0	0	0	0	0	0	0	0
5/1/2024	1:30 AM	0	0	0	0	0	0	0	0	0	0	0	0	0
5/1/2024	1:45 AM	0	0	0	0	0	0	0	0	0	0	0	0	0
5/1/2024	2:00 AM	0	0	0	0	0	0	0	0	0	0	0	0	0
5/1/2024	2:15 AM	0	0	0	0	0	0	0	0	0	0	0	0	0
5/1/2024	2:30 AM	0	0	0	0	0	0	0	0	0	0	0	0	0
5/1/2024	2:45 AM	0	0	0	0	0	0	0	0	0	0	0	0	0
5/1/2024	3:00 AM	0	0	0	0	0	0	0	0	0	0	0	0	0
5/1/2024	3:15 AM	0	0	0	0	0	0	0	0	0	0	0	0	0
5/1/2024	3:30 AM	0	0	0	0	0	0	0	0	0	0	0	0	0
5/1/2024	3:45 AM	0	0	0	0	0	0	0	0	0	0	0	0	0
5/1/2024	4:00 AM	0	0	0	0	0	0	0	0	0	0	0	0	0
5/1/2024	4:15 AM	0	0	0	0	0	0	0	0	0	0	0	0	0
5/1/2024	4:30 AM	0	0	0	0	0	0	0	0	0	0	0	0	0
5/1/2024	4:45 AM	0	0	0	0	0	0	0	0	0	0	0	0	0
5/1/2024	5:00 AM	0	0	0	0	0	0	0	0	0	0	0	0	0
5/1/2024	5:15 AM	0	0	0	0	0	0	0	0	0	0	0	0	0
5/1/2024	5:30 AM	0	0	0	0	0	0	0	0	0	0	0	0	0
5/1/2024	5:45 AM	0	0	0	0	0	0	0	0	0	0	0	0	0
5/1/2024	6:00 AM	0	0	0	0	0	0	0	0	0	0	0	0	0
5/1/2024	6:15 AM	0	0	0	0	0	0	0	0	0	0	0	0	0
5/1/2024	6:30 AM	0	0	0	0	0	0	0	0	0	0	0	0	0
5/1/2024	6:45 AM	0	0	0	0	0	0	0	0	0	0	0	0	0
5/1/2024	7:00 AM	0	0	0	0	0	0	0	0	0	0	0	0	0
5/1/2024	7:15 AM	0	0	0	0	0	0	0	0	0	0	0	0	0
5/1/2024	7:30 AM	0	0	0	0	0	0	0	0	0	0	0	0	0
5/1/2024	7:45 AM	0	0	0	0	0	0	0	0	0	0	0	0	0
5/1/2024	8:00 AM	0	0	0	0	0	0	0	0	0	0	0	0	0
5/1/2024	8:15 AM	0	0	0	0	0	0	0	0	0	0	0	0	0
5/1/2024	8:30 AM	0	0	0	0	0	0	0	0	0	0	0	0	0
5/1/2024	8:45 AM	0	0	0	0	0	0	0	0	0	0	0	0	0
5/1/2024	9:00 AM	0	0	0	0	0	0	0	0	0	0	0	0	0
5/1/2024	9:15 AM	0	0	0	0	0	0	0	0	0	0	0	0	0
5/1/2024	9:30 AM	0	0	0	0	0	0	0	0	0	0	0	0	0
5/1/2024	9:45 AM	0	0	0	0	0	0	0	0	0	0	0	0	0
5/1/2024	10:00 AM	0	0	0	0	0	0	0	0	0	0	0	0	0
5/1/2024	10:15 AM	0	0	0	0	0	0	0	0	0	0	0	0	0
5/1/2024	10:30 AM	0	0	0	0	0	0	0	0	0	0	0	0	0
5/1/2024	10:45 AM	0	0	0	0	0	0	0	0	0	0	0	0	0
5/1/2024	11:00 AM	0	0	0	0	0	0	0	0	0	0	0	0	0
5/1/2024	11:15 AM	0	0	0	0	0	0	0	0	0	0	0	0	0
5/1/2024	11:30 AM	0	0	0	0	0	0	0	0	0	0	0	0	0
5/1/2024	11:45 AM	0	0	0	0	0	0	0	0	0	0	0	0	0
5/1/2024	12:00 PM	0	0	0	0	0	0	0	0	0	0	0	0	0
5/1/2024	12:15 PM	0	0	0	0	0	0	0	0	0	0	0	0	0
5/1/2024	12:30 PM	0	0	0	0	0	0	0	0	0	0	0	0	0
5/1/2024	12:45 PM	0	0	0	0	0	0	0	0	0	0	0	0	0
5/1/2024	1:00 PM	0	0	0	0	0	0	0	0	0	0	0	0	0
5/1/2024	1:15 PM	0	0	0	0	0	0	0	0	0	0	0	0	0
5/1/2024	1:30 PM	0	0	0	0	0	0	0	0	0	0	0	0	0
5/1/2024	1:45 PM	0	0	0	0	0	0	0	0	0	0	0	0	0
5/1/2024	2:00 PM	0	0	0	0	0	0	0	0	0	0	0	0	0
5/1/2024	2:15 PM	0	0	0	0	0	0	0	0	0	0	0	0	0
5/1/2024	2:30 PM	0	0	0	0	0	0	0	0	0	0	0	0	0
5/1/2024	2:45 PM	0	0	0	0	0	0	0	0	0	0	0	0	0
5/1/2024	3:00 PM	0	0	0	0	0	0	0	0	0	0	0	0	0
5/1/2024	3:15 PM	0	0	0	0	0	0	0	0	0	0	0	0	0
5/1/2024	3:30 PM	0	0	0	0	0	0	0	0	0	0	0	0	0
5/1/2024	3:45 PM	0	0	0	0	0	0	0	0	0	0	0	0	0
5/1/2024	4:00 PM	0	0	0	0	0	0	0	0	0	0	0	0	0
5/1/2024	4:15 PM	0	0	0	0	0	0	0	0	0	0	0	0	0
5/1/2024	4:30 PM	0	0	0	0	0	0	0	0	0	0	0	0	0
5/1/2024	4:45 PM	0	0	0	0	0	0	0	0	0	0	0	0	0
5/1/2024	5:00 PM	0	0	0	0	0	0	0	0	0	0	0	0	0
5/1/2024	5:15 PM	0	0	0	0	0	0	0	0	0	0	0	0	0
5/1/2024	5:30 PM	0	0	0	0	0	0	0	0	0	0	0	0	0
5/1/2024	5:45 PM	0	0	0	0	0	0	0	0	0	0	0	0	0
5/1/2024	6:00 PM	0	0	0	0	0	0	0	0	0	0	0	0	0
5/1/2024	6:15 PM	0	0	0	0	0	0	0	0	0	0	0	0	0
5/1/2024	6:30 PM	0	0	0	0	0	0	0	0	0	0	0	0	0
5/1/2024	6:45 PM	0	0	0	0	0	0	0	0	0	0	0	0	0
5/1/2024	7:00 PM	0	0	0	0	0	0	0	0	0	0	0	0	0
5/1/2024	7:15 PM	0	0	0	0	0	0	0	0	0	0	0	0	0
5/1/2024	7:30 PM	0	0	0	0	0	0	0	0	0	0	0	0	0
5/1/2024	7:45 PM	0	0	0	0	0	0	0	0	0	0	0	0	0
5/1/2024	8:00 PM	0	0	0	0	0	0	0	0	0	0	0	0	0
5/1/2024	8:15 PM	0	0	0	0	0	0	0	0	0	0	0	0	0
5/1/2024	8:30 PM	0	0	0	0	0	0	0	0	0	0	0	0	0
5/1/2024	8:45 PM	0	0	0	0	0	0	0	0	0	0	0	0	0
5/1/2024	9:00 PM	0	0	0	0	0	0	0	0	0	0	0	0	0
5/1/2024	9:15 PM	0	0	0	0	0	0	0	0	0	0	0	0	0
5/1/2024	9:30 PM	0	0	0	0	0	0	0	0	0	0	0	0	0
5/1/2024	9:45 PM	0	0	0	0	0	0	0	0	0	0	0	0	0
5/1/2024	10:00 PM	0	0	0	0	0	0	0	0	0	0	0	0	0
5/1/2024	10:15 PM	0	0	0	0	0	0	0	0	0	0	0	0	0
5/1/2024	10:30 PM	0	0	0	0	0	0	0	0	0	0	0	0	0
5/1/2024	10:45 PM	0	0	0	0	0	0	0	0	0	0	0	0	0
5/1/2024	11:00 PM	0	0	0	0	0	0	0	0	0	0	0	0	0
5/1/2024	11:15 PM	0	0	0	0	0	0	0	0	0	0	0	0	0
5/1/2024	11:30 PM	0	0	0	0	0	0	0	0	0	0	0	0	0
5/1/2024	11:45 PM	0	0	0	0	0	0	0	0	0	0	0	0	0

5/2/2024	12:00 AM	0	0	0	0	0	0	0	0	0	0	0	0	0
5/2/2024	12:15 AM	0	0	0	0	0	0	0	0	0	0	0	0	0
5/2/2024	12:30 AM	0	0	0	0	0	0	0	0	0	0	0	0	0
5/2/2024	12:45 AM	0	0	0	0	0	0	0	0	0	0	0	0	0
5/2/2024	1:00 AM	0	0	0	0	0	0	0	0	0	0	0	0	0
5/2/2024	1:15 AM	0	0	0	0	0	0	0	0	0	0	0	0	0
5/2/2024	1:30 AM	0	0	0	0	0	0	0	0	0	0	0	0	0
5/2/2024	1:45 AM	0	0	0	0	0	0	0	0	0	0	0	0	0
5/2/2024	2:00 AM	0	0	0	0	0	0	0	0	0	0	0	0	0
5/2/2024	2:15 AM	0	0	0	0	0	0	0	0	0	0	0	0	0
5/2/2024	2:30 AM	0	0	0	0	0	0	0	0	0	0	0	0	0
5/2/2024	2:45 AM	0	0	0	0	0	0	0	0	0	0	0	0	0
5/2/2024	3:00 AM	0	0	0	0	0	0	0	0	0	0	0	0	0
5/2/2024	3:15 AM	0	0	0	0	0	0	0	0	0	0	0	0	0
5/2/2024	3:30 AM	0	0	0	0	0	0	0	0	0	0	0	0	0
5/2/2024	3:45 AM	0	0	0	0	0	0	0	0	0	0	0	0	0
5/2/2024	4:00 AM	0	0	0	0	0	0	0	0	0	0	0	0	0
5/2/2024	4:15 AM	0	0	0	0	0	0	0	0	0	0	0	0	0
5/2/2024	4:30 AM	0	0	0	0	0	0	0	0	0	0	0	0	0
5/2/2024	4:45 AM	0	0	0	0	0	0	0	0	0	0	0	0	0
5/2/2024	5:00 AM	0	0	0	0	0	0	0	0	0	0	0	0	0
5/2/2024	5:15 AM	0	0	0	0	0	0	0	0	0	0	0	0	0
5/2/2024	5:30 AM	0	0	0	0	0	0	0	0	0	0	0	0	0
5/2/2024	5:45 AM	0	0	0	0	0	0	0	0	0	0	0	0	0
5/2/2024	6:00 AM	0	0	0	0	0	0	0	0	0	0	0	0	0
5/2/2024	6:15 AM	0	0	0	0	0	0	0	0	0	0	0	0	0
5/2/2024	6:30 AM	0	0	0	0	0	0	0	0	0	0	0	0	0
5/2/2024	6:45 AM	0	0	0	0	0	0	0	0	0	0	0	0	0
5/2/2024	7:00 AM	0	0	0	0	0	0	0	0	0	0	0	0	0
5/2/2024	7:15 AM	0	0	0	0	0	0	0	0	0	0	0	0	0
5/2/2024	7:30 AM	0	0	0	0	0	0	0	0	0	0	0	0	0
5/2/2024	7:45 AM	0	0	0	0	0	0	0	0	0	0	0	0	0
5/2/2024	8:00 AM	0	0	0	0	0	0	0	0	0	0	0	0	0
5/2/2024	8:15 AM	0	0	0	0	0	0	0	0	0	0	0	0	0
5/2/2024	8:30 AM	0	0	0	0	0	0	0	0	0	0	0	0	0
5/2/2024	8:45 AM	0	0	0	0	0	0	0	0	0	0	0	0	0
5/2/2024	9:00 AM	0	0	0	0	0	0	0	0	0	0	0	0	0
5/2/2024	9:15 AM	0	0	0	0	0	0	0	0	0	0	0	0	0
5/2/2024	9:30 AM	0	0	0	0	0	0	0	0	0	0	0	0	0
5/2/2024	9:45 AM	0	0	0	0	0	0	0	0	0	0	0	0	0
5/2/2024	10:00 AM	0	0	0	0	0	0	0	0	0	0	0	0	0
5/2/2024	10:15 AM	0	0	0	0	0	0	0	0	0	0	0	0	0
5/2/2024	10:30 AM	0	0	0	0	0	0	0	0	0	0	0	0	0
5/2/2024	10:45 AM	0	0	0	0	0	0	0	0	0	0	0	0	0
5/2/2024	11:00 AM	0	0	0	0	0	0	0	0	0	0	0	0	0
5/2/2024	11:15 AM	0	0	0	0	0	0	0	0	0	0	0	0	0
5/2/2024	11:30 AM	0	0	0	0	0	0	0	0	0	0	0	0	0
5/2/2024	11:45 AM	0	0	0	0	0	0	0	0	0	0	0	0	0
5/2/2024	12:00 PM	0	0	0	0	0	0	0	0	0	0	0	0	0
5/2/2024	12:15 PM	0	0	0	0	0	0	0	0	0	0	0	0	0
5/2/2024	12:30 PM	0	0	0	0	0	0	0	0	0	0	0	0	0
5/2/2024	12:45 PM	0	0	0	0	0	0	0	0	0	0	0	0	0
5/2/2024	1:00 PM	0	0	0	0	0	0	0	0	0	0	0	0	0
5/2/2024	1:15 PM	0	0	0	0	0	0	0	0	0	0	0	0	0
5/2/2024	1:30 PM	0	0	0	0	0	0	0	0	0	0	0	0	0
5/2/2024	1:45 PM	0	0	0	0	0	0	0	0	0	0	0	0	0
5/2/2024	2:00 PM	0	0	0	0	0	0	0	0	0	0	0	0	0
5/2/2024	2:15 PM	0	0	0	0	0	0	0	0	0	0	0	0	0
5/2/2024	2:30 PM	0	0	0	0	0	0	0	0	0	0	0	0	0
5/2/2024	2:45 PM	0	0	0	0	0	0	0	0	0	0	0	0	0
5/2/2024	3:00 PM	0	0	0	0	0	0	0	0	0	0	0	0	0
5/2/2024	3:15 PM	0	0	0	0	0	0	0	0	0	0	0	0	0
5/2/2024	3:30 PM	0	0	0	0	0	0	0	0	0	0	0	0	0
5/2/2024	3:45 PM	0	0	0	0	0	0	0	0	0	0	0	0	0
5/2/2024	4:00 PM	0	0	0	0	0	0	0	0	0	0	0	0	0
5/2/2024	4:15 PM	0	0	0	0	0	0	0	0	0	0	0	0	0
5/2/2024	4:30 PM	0	0	0	0	0	0	0	0	0	0	0	0	0
5/2/2024	4:45 PM	0	0	0	0	0	0	0	0	0	0	0	0	0
5/2/2024	5:00 PM	0	0	0	0	0	0	0	0	0	0	0	0	0
5/2/2024	5:15 PM	0	0	0	0	0	0	0	0	0	0	0	0	0
5/2/2024	5:30 PM	0	0	0	0	0	0	0	0	0	0	0	0	0
5/2/2024	5:45 PM	0	0	0	0	0	0	0	0	0	0	0	0	0
5/2/2024	6:00 PM	0	0	0	0	0	0	0	0	0	0	0	0	0
5/2/2024	6:15 PM	0	0	0	0	0	0	0	0	0	0	0	0	0
5/2/2024	6:30 PM	0	0	0	0	0	0	0	0	0	0	0	0	0
5/2/2024	6:45 PM	0	0	0	0	0	0	0	0	0	0	0	0	0
5/2/2024	7:00 PM	0	0	0	0	0	0	0	0	0	0	0	0	0
5/2/2024	7:15 PM	0	0	0	0	0	0	0	0	0	0	0	0	0
5/2/2024	7:30 PM	0	0	0	0	0	0	0	0	0	0	0	0	0
5/2/2024	7:45 PM	0	0	0	0	0	0	0	0	0	0	0	0	0
5/2/2024	8:00 PM	0	0	0	0	0	0	0	0	0	0	0	0	0
5/2/2024	8:15 PM	0	0	0	0	0	0	0	0	0	0	0	0	0
5/2/2024	8:30 PM	0	0	0	0	0	0	0	0	0	0	0	0	0
5/2/2024	8:45 PM	0	0	0	0	0	0	0	0	0	0	0	0	0
5/2/2024	9:00 PM	0	0	0	0	0	0	0	0	0	0	0	0	0
5/2/2024	9:15 PM	0	0	0	0	0	0	0	0	0	0	0	0	0
5/2/2024	9:30 PM	0	0	0	0	0	0	0	0	0	0	0	0	0
5/2/2024	9:45 PM	0	0	0	0	0	0	0	0	0	0	0	0	0
5/2/2024	10:00 PM	0	0	0	0	0	0	0	0	0	0	0	0	0
5/2/2024	10:15 PM	0	0	0	0	0	0	0	0	0	0	0	0	0
5/2/2024	10:30 PM	0	0	0	0	0	0	0	0	0	0	0	0	0
5/2/2024	10:45 PM	0	0	0	0	0	0	0	0	0	0	0	0	0
5/2/2024	11:00 PM	0	0	0	0	0	0	0	0	0	0	0	0	0
5/2/2024	11:15 PM	0	0	0	0	0	0	0	0	0	0	0	0	0
5/2/2024	11:30 PM	0	0	0	0	0	0	0	0	0	0	0	0	0
5/2/2024	11:45 PM	0	0	0	0	0	0	0	0	0	0	0	0	0

Bi-Directional Class Count || SB WB 15min

Columbia, SC

Marr Traffic DATA COLLECTION
www.marrtraffic.com

Site 67
I-20 W/Bound Off-Ramp,
east of US-176 Broad River Rd

Date
Tuesday, April 23, 2024

Lat/Long
34.041074°, -81.090422°

Weather
Fair
58°F

Click here for Detailed Weather

Click here for Map

0000 - 2400 (Weekday 24h Session) (04-23-2024)
SB WB 15min

	Westbound (Movement 67.1)													15min	60min
Time	1	2	3	4	5	6	7	8	9	10	11	12	13	Total	Total
0000 - 0015	0	0	0	0	0	0	0	0	0	0	0	0	0	**0**	
0015 - 0030	0	0	0	0	0	0	0	0	0	0	0	0	0	**0**	
0030 - 0045	0	0	0	0	0	0	0	0	0	0	0	0	0	**0**	
0045 - 0100	0	0	0	0	0	0	0	0	0	0	0	0	0	**0**	**0**
0100 - 0115	0	0	0	0	0	0	0	0	0	0	0	0	0	**0**	
0115 - 0130	0	0	0	0	0	0	0	0	0	0	0	0	0	**0**	
0130 - 0145	0	0	0	0	0	0	0	0	0	0	0	0	0	**0**	
0145 - 0200	0	0	0	0	0	0	0	0	0	0	0	0	0	**0**	**0**
0200 - 0215	0	0	0	0	0	0	0	0	0	0	0	0	0	**0**	
0215 - 0230	0	0	0	0	0	0	0	0	0	0	0	0	0	**0**	
0230 - 0245	0	0	0	0	0	0	0	0	0	0	0	0	0	**0**	
0245 - 0300	0	0	0	0	0	0	0	0	0	0	0	0	0	**0**	**0**
0300 - 0315	0	0	0	0	0	0	0	0	0	0	0	0	0	**0**	
0315 - 0330	0	0	0	0	0	0	0	0	0	0	0	0	0	**0**	
0330 - 0345	0	0	0	0	0	0	0	0	0	0	0	0	0	**0**	
0345 - 0400	0	0	0	0	0	0	0	0	0	0	0	0	0	**0**	**0**
0400 - 0415	0	0	0	0	0	0	0	0	0	0	0	0	0	**0**	
0415 - 0430	0	0	0	0	0	0	0	0	0	0	0	0	0	**0**	
0430 - 0445	0	0	0	0	0	0	0	0	0	0	0	0	0	**0**	
0445 - 0500	0	0	0	0	0	0	0	0	0	0	0	0	0	**0**	**0**
0500 - 0515	0	0	0	0	0	0	0	0	0	0	0	0	0	**0**	
0515 - 0530	0	0	0	0	0	0	0	0	0	0	0	0	0	**0**	
0530 - 0545	0	0	0	0	0	0	0	0	0	0	0	0	0	**0**	
0545 - 0600	0	0	0	0	0	0	0	0	0	0	0	0	0	**0**	**0**
0600 - 0615	0	0	0	0	0	0	0	0	0	0	0	0	0	**0**	
0615 - 0630	0	0	0	0	0	0	0	0	0	0	0	0	0	**0**	
0630 - 0645	0	0	0	0	0	0	0	0	0	0	0	0	0	**0**	
0645 - 0700	0	0	0	0	0	0	0	0	0	0	0	0	0	**0**	**0**
0700 - 0715	0	0	0	0	0	0	0	0	0	0	0	0	0	**0**	
0715 - 0730	0	0	0	0	0	0	0	0	0	0	0	0	0	**0**	
0730 - 0745	0	0	0	0	0	0	0	0	0	0	0	0	0	**0**	
0745 - 0800	0	0	0	0	0	0	0	0	0	0	0	0	0	**0**	**0**
0800 - 0815	0	0	0	0	0	0	0	0	0	0	0	0	0	**0**	
0815 - 0830	0	0	0	0	0	0	0	0	0	0	0	0	0	**0**	
0830 - 0845	0	0	0	0	0	0	0	0	0	0	0	0	0	**0**	
0845 - 0900	0	0	0	0	0	0	0	0	0	0	0	0	0	**0**	**0**
0900 - 0915	0	0	0	0	0	0	0	0	0	0	0	0	0	**0**	
0915 - 0930	0	0	0	0	0	0	0	0	0	0	0	0	0	**0**	
0930 - 0945	0	0	0	0	0	0	0	0	0	0	0	0	0	**0**	
0945 - 1000	0	0	0	0	0	0	0	0	0	0	0	0	0	**0**	**0**
1000 - 1015	0	0	0	0	0	0	0	0	0	0	0	0	0	**0**	
1015 - 1030	0	0	0	0	0	0	0	0	0	0	0	0	0	**0**	
1030 - 1045	0	0	0	0	0	0	0	0	0	0	0	0	0	**0**	
1045 - 1100	0	0	0	0	0	0	0	0	0	0	0	0	0	**0**	**0**
1100 - 1115	0	0	0	0	0	0	0	0	0	0	0	0	0	**0**	
1115 - 1130	0	0	0	0	0	0	0	0	0	0	0	0	0	**0**	
1130 - 1145	0	0	0	0	0	0	0	0	0	0	0	0	0	**0**	
1145 - 1200	0	0	0	0	0	0	0	0	0	0	0	0	0	**0**	**0**
1200 - 1215	0	0	0	0	0	0	0	0	0	0	0	0	0	**0**	
1215 - 1230	0	0	0	0	0	0	0	0	0	0	0	0	0	**0**	
1230 - 1245	0	0	0	0	0	0	0	0	0	0	0	0	0	**0**	
1245 - 1300	0	0	0	0	0	0	0	0	0	0	0	0	0	**0**	**0**
1300 - 1315	0	0	0	0	0	0	0	0	0	0	0	0	0	**0**	
1315 - 1330	0	0	0	0	0	0	0	0	0	0	0	0	0	**0**	
1330 - 1345	0	0	0	0	0	0	0	0	0	0	0	0	0	**0**	
1345 - 1400	0	0	0	0	0	0	0	0	0	0	0	0	0	**0**	**0**
1400 - 1415	0	0	0	0	0	0	0	0	0	0	0	0	0	**0**	
1415 - 1430	0	0	0	0	0	0	0	0	0	0	0	0	0	**0**	
1430 - 1445	0	0	0	0	0	0	0	0	0	0	0	0	0	**0**	
1445 - 1500	0	0	0	0	0	0	0	0	0	0	0	0	0	**0**	**0**
1500 - 1515	0	0	0	0	0	0	0	0	0	0	0	0	0	**0**	
1515 - 1530	0	0	0	0	0	0	0	0	0	0	0	0	0	**0**	
1530 - 1545	0	0	0	0	0	0	0	0	0	0	0	0	0	**0**	
1545 - 1600	0	0	0	0	0	0	0	0	0	0	0	0	0	**0**	**0**
1600 - 1615	0	0	0	0	0	0	0	0	0	0	0	0	0	**0**	
1615 - 1630	0	0	0	0	0	0	0	0	0	0	0	0	0	**0**	
1630 - 1645	0	0	0	0	0	0	0	0	0	0	0	0	0	**0**	
1645 - 1700	0	0	0	0	0	0	0	0	0	0	0	0	0	**0**	**0**
1700 - 1715	0	0	0	0	0	0	0	0	0	0	0	0	0	**0**	
1715 - 1730	0	0	0	0	0	0	0	0	0	0	0	0	0	**0**	
1730 - 1745	0	0	0	0	0	0	0	0	0	0	0	0	0	**0**	
1745 - 1800	0	0	0	0	0	0	0	0	0	0	0	0	0	**0**	**0**
1800 - 1815	0	0	0	0	0	0	0	0	0	0	0	0	0	**0**	
1815 - 1830	0	0	0	0	0	0	0	0	0	0	0	0	0	**0**	
1830 - 1845	0	0	0	0	0	0	0	0	0	0	0	0	0	**0**	
1845 - 1900	0	0	0	0	0	0	0	0	0	0	0	0	0	**0**	**0**
1900 - 1915	0	117	18	0	0	2	0	0	0	0	0	0	0	**137**	
1915 - 1930	0	134	17	0	1	1	0	0	2	0	0	0	0	**155**	
1930 - 1945	0	94	13	0	0	0	0	0	0	0	0	0	0	**107**	
1945 - 2000	1	139	17	0	1	0	0	0	0	0	0	0	0	**158**	**557**
2000 - 2015	0	97	9	0	0	1	0	0	0	0	0	0	0	**107**	
2015 - 2030	0	87	16	0	1	0	0	0	1	0	0	0	0	**105**	
2030 - 2045	0	95	13	0	0	0	0	2	0	0	0	0	0	**110**	
2045 - 2100	0	95	11	0	0	0	0	0	0	0	0	0	0	**106**	**428**
2100 - 2115	0	72	9	0	0	0	0	0	0	0	0	0	0	**81**	
2115 - 2130	0	82	13	0	0	0	0	0	0	0	0	0	0	**95**	
2130 - 2145	0	70	10	0	0	0	0	0	0	0	0	0	0	**80**	
2145 - 2200	0	58	10	0	1	0	0	0	0	0	0	0	0	**69**	**325**
2200 - 2215	0	55	10	0	0	0	0	0	0	0	0	0	0	**65**	
2215 - 2230	0	61	13	0	1	0	0	0	0	0	0	0	0	**75**	
2230 - 2245	0	51	7	0	0	0	0	0	1	0	0	0	0	**59**	
2245 - 2300	0	56	11	0	0	0	0	0	0	0	0	0	0	**67**	**266**
2300 - 2315	0	47	8	0	0	0	0	0	0	0	0	0	0	**55**	
2315 - 2330	0	42	10	0	0	0	0	0	0	0	0	0	0	**52**	
2330 - 2345	0	34	11	0	0	0	0	0	1	0	0	0	0	**46**	
2345 - 0000	0	29	15	0	0	0	0	0	0	0	0	0	0	**44**	**197**

Session Total	1	1515	241	0	5	4	0	2	5	0	0	0	0	**1773**
Session Average	0.01	15.78	2.51	0.00	0.05	0.04	0.00	0.02	0.05	0.00	0.00	0.00	0.00	**18.47**
Session Percentage	0.06	85.45	13.59	0.00	0.28	0.23	0.00	0.11	0.28	0.00	0.00	0.00	0.00	

AM Peak Hour	-	-	-	-	-	-	-	-	-	-	-	-	-	**-**
AM Peak Volume	0	0	0	0	0	0	0	0	0	0	0	0	0	**0**

Noon Peak Hour	-	-	-	-	-	-	-	-	-	-	-	-	-	**-**
Noon Peak Volume	0	0	0	0	0	0	0	0	0	0	0	0	0	**0**

PM Peak Hour	1900 - 2000	1900 - 2000	1900 - 2000	-	1900 - 2000	1830 - 1930	-	1945 - 2045	1830 - 1930	-	-	-	-	**1900 - 2000**
PM Peak Volume	1	484	65	0	2	3	0	2	2	0	0	0	0	**557**

Site 67
I-20 W/Bound Off-Ramp,
east of US-176 Broad River Rd

Date
Wednesday, April 24, 2024

Lat/Long
34.041074°, -81.090422°

Weather
Fair
66°F

Click here for Detailed Weather

0000 - 2400 (Weekday 24h Session) (04-24-2024)
SB WB 15min

	Westbound (Movement 67.1)													15min	60min
Time	1	2	3	4	5	6	7	8	9	10	11	12	13	Total	Total
0000 - 0015	0	29	12	0	0	0	0	0	0	0	0	0	0	**41**	
0015 - 0030	0	29	7	0	0	0	0	0	0	0	0	0	0	**36**	
0030 - 0045	0	23	9	0	0	0	0	0	0	0	0	0	0	**32**	
0045 - 0100	0	20	6	0	0	0	0	0	0	0	0	0	0	**26**	**135**
0100 - 0115	0	22	6	0	0	0	0	0	0	0	0	0	0	**28**	
0115 - 0130	0	23	6	0	0	0	0	0	0	0	0	0	0	**29**	
0130 - 0145	0	13	3	0	1	0	0	0	1	0	0	0	0	**18**	
0145 - 0200	0	14	3	0	1	0	0	0	0	0	0	0	0	**18**	**93**
0200 - 0215	0	8	2	0	1	0	0	0	0	0	0	0	0	**11**	
0215 - 0230	0	17	3	0	0	0	0	0	0	0	0	0	0	**20**	
0230 - 0245	0	15	4	0	0	0	0	0	0	0	0	0	0	**19**	
0245 - 0300	0	10	2	0	0	0	0	0	0	0	0	0	0	**12**	**62**
0300 - 0315	0	6	0	0	0	0	0	0	0	0	0	0	0	**6**	
0315 - 0330	0	23	6	0	0	0	0	0	0	0	0	0	0	**29**	
0330 - 0345	0	12	2	0	0	0	0	0	0	0	0	0	0	**14**	
0345 - 0400	0	9	2	0	0	0	0	0	0	0	0	0	0	**11**	**60**
0400 - 0415	0	11	2	0	0	0	0	0	0	0	0	0	0	**13**	
0415 - 0430	0	14	3	0	0	0	0	0	0	0	0	0	0	**17**	
0430 - 0445	0	17	4	0	0	0	0	1	0	0	0	0	0	**22**	
0445 - 0500	0	24	6	0	0	0	0	0	0	0	0	0	0	**30**	**82**
0500 - 0515	0	23	6	0	0	0	0	0	0	0	0	0	0	**29**	
0515 - 0530	0	32	8	0	1	0	0	0	0	0	0	0	0	**41**	
0530 - 0545	0	40	11	0	1	0	0	0	0	0	0	0	0	**52**	
0545 - 0600	0	40	8	0	2	0	0	0	0	0	0	0	0	**50**	**172**
0600 - 0615	0	54	12	1	2	0	0	0	0	0	0	0	0	**69**	
0615 - 0630	0	79	17	8	0	0	0	0	0	0	0	0	0	**104**	
0630 - 0645	0	78	19	4	2	1	0	0	1	0	0	0	0	**105**	
0645 - 0700	0	196	41	3	2	1	0	0	0	0	0	0	0	**243**	**521**
0700 - 0715	0	154	30	0	5	2	0	0	1	0	0	0	0	**192**	
0715 - 0730	0	226	46	0	2	2	0	0	1	0	0	0	0	**277**	
0730 - 0745	0	216	27	1	3	3	0	0	0	0	0	0	0	**250**	
0745 - 0800	0	241	28	1	3	3	0	2	3	0	0	0	0	**281**	**1000**
0800 - 0815	0	144	21	1	6	5	0	0	2	0	0	0	0	**179**	
0815 - 0830	0	125	14	2	2	1	0	0	0	0	0	0	0	**144**	
0830 - 0845	1	180	30	1	3	5	0	1	0	0	0	0	0	**221**	
0845 - 0900	0	156	34	0	5	0	0	2	1	0	0	0	0	**198**	**742**
0900 - 0915	0	133	23	2	5	1	0	0	1	0	0	0	0	**165**	
0915 - 0930	0	84	25	1	2	4	0	0	1	0	0	0	0	**117**	
0930 - 0945	0	134	31	1	2	4	0	0	1	0	0	0	0	**173**	
0945 - 1000	0	148	35	1	5	1	0	1	0	0	0	0	0	**191**	**646**
1000 - 1015	0	109	26	0	1	5	0	1	1	0	0	0	0	**143**	
1015 - 1030	0	88	23	1	4	5	1	2	0	0	0	0	0	**124**	
1030 - 1045	0	102	27	0	4	3	2	0	0	0	0	0	0	**138**	
1045 - 1100	0	117	27	0	4	1	0	0	1	0	0	0	0	**150**	**555**
1100 - 1115	0	112	19	1	3	3	0	0	0	0	0	0	0	**138**	
1115 - 1130	0	114	17	3	2	0	0	0	3	0	0	0	0	**139**	
1130 - 1145	0	137	28	1	5	2	0	0	1	0	0	0	0	**174**	
1145 - 1200	0	122	31	0	0	6	0	0	2	0	0	0	0	**161**	**612**
1200 - 1215	1	136	32	1	5	1	0	1	1	0	0	0	0	**178**	
1215 - 1230	1	119	26	1	1	0	0	0	0	0	0	0	0	**148**	
1230 - 1245	1	112	32	0	2	5	0	0	2	0	0	0	0	**154**	
1245 - 1300	0	118	26	0	4	2	1	0	0	0	0	0	0	**151**	**631**
1300 - 1315	1	124	34	0	2	0	0	0	0	0	0	0	0	**161**	
1315 - 1330	0	136	23	1	2	4	0	0	0	0	0	0	0	**166**	
1330 - 1345	2	140	22	4	2	3	0	0	1	0	0	0	0	**174**	
1345 - 1400	0	138	26	0	2	0	0	0	1	0	0	0	0	**167**	**668**
1400 - 1415	0	120	36	5	4	2	0	0	4	0	0	0	0	**171**	
1415 - 1430	1	120	21	3	2	1	0	0	1	0	0	0	0	**149**	
1430 - 1445	0	123	33	0	3	4	1	0	1	0	0	0	0	**165**	
1445 - 1500	0	134	24	0	2	3	0	1	2	0	0	0	0	**166**	**651**
1500 - 1515	1	124	34	1	1	2	0	0	0	0	0	0	0	**163**	
1515 - 1530	0	179	35	1	4	0	0	1	2	0	0	0	0	**222**	
1530 - 1545	0	187	52	1	3	3	0	1	0	0	0	0	0	**247**	
1545 - 1600	1	157	47	4	3	5	0	0	1	0	0	0	0	**218**	**850**
1600 - 1615	1	202	39	0	3	2	0	0	2	0	0	0	0	**249**	
1615 - 1630	0	211	39	0	4	4	0	0	1	0	0	0	0	**259**	
1630 - 1645	0	223	41	2	1	1	0	2	0	0	0	0	0	**270**	
1645 - 1700	0	220	44	0	2	1	0	0	0	0	0	0	0	**267**	**1045**
1700 - 1715	0	213	52	1	3	1	0	0	0	0	0	0	0	**270**	
1715 - 1730	0	238	44	0	2	0	0	0	0	0	0	0	0	**284**	
1730 - 1745	0	224	56	0	3	0	0	0	0	0	0	0	0	**283**	
1745 - 1800	0	207	60	0	1	0	0	0	0	0	0	0	0	**268**	**1105**
1800 - 1815	0	163	42	1	1	3	0	0	0	0	0	0	0	**210**	
1815 - 1830	0	152	44	0	3	1	0	0	0	0	0	0	0	**200**	
1830 - 1845	0	150	42	0	2	1	0	0	1	0	0	0	0	**196**	
1845 - 1900	0	142	37	0	0	0	0	0	0	0	0	0	0	**179**	**785**
1900 - 1915	0	153	42	1	3	0	0	0	0	0	0	0	0	**199**	
1915 - 1930	1	128	28	0	1	0	0	0	0	0	0	0	0	**158**	
1930 - 1945	0	127	21	0	1	0	0	0	0	0	0	0	0	**149**	
1945 - 2000	0	129	23	0	1	0	0	0	0	0	0	0	0	**153**	**659**
2000 - 2015	0	129	16	0	0	1	0	0	1	0	0	0	0	**147**	
2015 - 2030	0	111	14	0	1	0	0	0	0	0	0	0	0	**126**	
2030 - 2045	0	86	11	0	0	0	0	0	0	0	0	0	0	**97**	
2045 - 2100	0	89	28	0	0	0	0	0	0	0	0	0	0	**117**	**487**
2100 - 2115	0	111	20	0	0	0	0	0	0	0	0	0	0	**131**	
2115 - 2130	0	78	18	0	0	0	0	0	0	0	0	0	0	**96**	
2130 - 2145	0	67	12	0	0	0	0	0	0	0	0	0	0	**79**	
2145 - 2200	0	49	12	0	0	0	0	0	0	0	0	0	0	**61**	**367**
2200 - 2215	0	53	13	0	0	0	0	0	0	0	0	0	0	**66**	
2215 - 2230	0	68	16	0	0	0	0	0	0	0	0	0	0	**84**	
2230 - 2245	0	66	12	0	0	0	0	0	0	0	0	0	0	**78**	
2245 - 2300	0	51	11	1	2	0	0	0	0	0	0	0	0	**65**	**293**
2300 - 2315	0	44	13	0	1	0	0	0	0	0	0	0	0	**58**	
2315 - 2330	0	38	6	0	0	0	0	0	0	0	0	0	0	**44**	
2330 - 2345	0	50	6	1	0	0	0	0	0	0	0	0	0	**57**	
2345 - 0000	0	42	5	0	0	0	0	0	0	0	0	0	0	**47**	**206**

Session Total	12	9904	2122	62	156	108	5	16	42	0	0	0	0	**12427**
Session Average	0.13	103.17	22.10	0.65	1.63	1.13	0.05	0.17	0.44	0.00	0.00	0.00	0.00	**129.45**
Session Percentage	0.10	79.70	17.08	0.50	1.26	0.87	0.04	0.13	0.34	0.00	0.00	0.00	0.00	

AM Peak Hour	0745 - 0845	0700 - 0800	0645 - 0745	0600 - 0700	0800 - 0900	0930 - 1030	0945 - 1045	0930 - 1030	0715 - 0815	-	-	-	-	**0700 - 0800**
AM Peak Volume	1	837	144	16	16	15	3	4	6	0	0	0	0	**1000**

Noon Peak Hour	1145 - 1245	1445 - 1545	1445 - 1545	1330 - 1430	1015 - 1115	1000 - 1100	1000 - 1100	1000 - 1100	1400 - 1500	-	-	-	-	**1445 - 1545**
Noon Peak Volume	3	624	145	12	15	14	3	3	8	0	0	0	0	**798**

PM Peak Hour	1500 - 1600	1645 - 1745	1700 - 1800	1500 - 1600	1515 - 1615	1530 - 1630	-	1500 - 1600	1515 - 1615	-	-	-	-	**1700 - 1800**
PM Peak Volume	2	895	212	7	13	14	0	2	5	0	0	0	0	**1105**

Site 67
I-20 W/Bound Off-Ramp,
east of US-176 Broad River Rd

Date
Thursday, April 25, 2024

Lat/Long
34.041074°, -81.090422°

Weather
Fair
67°F

Click here for Detailed Weather

0000 - 2400 (Weekday 24h Session) (04-25-2024)
SB WB 15min

	Westbound (Movement 67.1)													15min	60min
TIME	1	2	3	4	5	6	7	8	9	10	11	12	13	Total	Total
0000 - 0015	0	30	8	0	0	0	0	0	0	0	0	0	0	**38**	
0015 - 0030	0	30	10	0	0	0	0	0	0	0	0	0	0	**40**	
0030 - 0045	0	20	5	0	1	0	0	0	0	0	0	0	0	**26**	
0045 - 0100	0	24	6	0	0	0	0	0	0	0	0	0	0	**30**	**134**
0100 - 0115	0	15	3	0	0	0	0	0	0	0	0	0	0	**18**	
0115 - 0130	0	19	3	0	1	0	0	0	0	0	0	0	0	**23**	
0130 - 0145	0	19	3	0	0	0	0	0	0	0	0	0	0	**22**	
0145 - 0200	0	9	2	0	0	0	0	0	0	0	0	0	0	**11**	**74**
0200 - 0215	0	16	3	0	0	0	0	0	0	0	0	0	0	**19**	
0215 - 0230	0	16	3	0	0	0	0	0	0	0	0	0	0	**19**	
0230 - 0245	0	14	4	0	1	0	0	0	0	0	0	0	0	**19**	
0245 - 0300	0	11	2	0	0	1	0	0	0	0	0	0	0	**14**	**71**
0300 - 0315	0	18	4	0	0	1	0	0	0	0	0	0	0	**23**	
0315 - 0330	0	4	2	0	0	0	0	0	0	0	0	0	0	**6**	
0330 - 0345	0	12	3	0	0	0	0	0	1	0	0	0	0	**16**	
0345 - 0400	0	13	3	0	0	0	0	0	0	0	0	0	0	**16**	**61**
0400 - 0415	0	7	1	0	1	0	0	0	0	0	0	0	0	**9**	
0415 - 0430	0	9	2	0	0	0	0	0	0	0	0	0	0	**11**	
0430 - 0445	0	17	3	0	2	0	0	0	0	0	0	0	0	**22**	
0445 - 0500	0	27	4	0	2	0	0	1	0	0	0	0	0	**34**	**76**
0500 - 0515	0	22	4	0	0	0	0	0	0	0	0	0	0	**26**	
0515 - 0530	0	42	10	0	0	0	0	0	0	0	0	0	0	**52**	
0530 - 0545	0	37	8	0	3	0	0	0	2	0	0	0	0	**50**	
0545 - 0600	0	39	11	3	1	0	0	0	0	0	0	0	0	**54**	**182**
0600 - 0615	0	42	14	0	1	1	0	0	0	0	0	0	0	**58**	
0615 - 0630	0	86	14	5	0	0	0	0	0	0	0	0	0	**105**	
0630 - 0645	0	98	16	6	2	0	0	0	0	0	0	0	0	**122**	
0645 - 0700	0	133	37	1	1	2	1	0	1	0	0	0	0	**176**	**461**
0700 - 0715	0	149	23	0	2	2	0	0	1	0	0	0	0	**177**	
0715 - 0730	0	218	35	0	0	2	0	0	2	0	0	0	0	**257**	
0730 - 0745	0	170	28	2	2	3	0	0	1	0	0	0	0	**206**	
0745 - 0800	0	236	45	1	4	5	0	0	1	0	0	0	0	**292**	**932**
0800 - 0815	0	185	29	1	3	0	0	0	1	0	0	0	0	**219**	
0815 - 0830	1	156	35	2	0	0	0	0	0	0	0	0	0	**194**	
0830 - 0845	0	206	38	1	2	1	0	0	0	0	0	0	0	**248**	
0845 - 0900	0	159	36	0	4	1	0	0	0	0	0	0	0	**200**	**861**
0900 - 0915	0	134	28	2	3	0	0	0	1	0	0	0	0	**168**	
0915 - 0930	0	106	33	2	1	0	0	0	0	0	0	0	0	**142**	
0930 - 0945	1	105	37	0	4	2	0	0	2	0	0	0	0	**151**	
0945 - 1000	0	124	34	1	2	0	0	0	2	0	0	0	0	**163**	**624**
1000 - 1015	0	111	25	0	1	0	0	0	1	0	0	0	0	**138**	
1015 - 1030	0	105	28	1	1	1	1	0	0	0	0	0	0	**137**	
1030 - 1045	0	105	36	1	1	0	0	0	2	0	0	0	0	**145**	
1045 - 1100	0	117	27	1	2	1	0	0	0	0	0	0	0	**148**	**568**
1100 - 1115	0	107	31	0	1	1	0	0	1	0	0	0	0	**141**	
1115 - 1130	0	139	23	0	5	2	0	0	1	0	0	0	0	**170**	
1130 - 1145	1	131	23	2	3	1	0	0	2	0	0	0	0	**163**	
1145 - 1200	0	134	29	0	2	1	0	0	1	0	0	0	0	**167**	**641**
1200 - 1215	0	141	28	0	3	0	0	0	0	0	0	0	0	**172**	
1215 - 1230	0	131	23	2	5	1	0	0	0	0	0	0	0	**162**	
1230 - 1245	1	130	35	1	2	0	0	0	0	0	0	0	0	**169**	
1245 - 1300	0	118	20	0	1	0	0	0	0	0	0	0	0	**139**	**642**
1300 - 1315	0	143	30	2	3	0	0	0	2	0	0	0	0	**180**	
1315 - 1330	0	132	24	1	0	0	1	0	0	0	0	0	0	**158**	
1330 - 1345	0	135	34	2	4	1	0	0	0	0	0	0	0	**176**	
1345 - 1400	0	151	35	2	2	1	0	0	0	0	0	0	0	**191**	**705**
1400 - 1415	0	145	28	6	0	1	1	0	1	0	0	0	0	**182**	
1415 - 1430	0	146	27	2	1	2	0	0	0	0	0	0	0	**178**	
1430 - 1445	0	134	22	1	1	2	0	0	0	0	0	0	0	**160**	
1445 - 1500	0	173	23	0	4	0	0	0	0	0	0	0	0	**200**	**720**
1500 - 1515	1	170	22	1	3	1	0	0	0	0	0	0	0	**198**	
1515 - 1530	0	179	31	2	2	1	0	0	1	0	0	0	0	**216**	
1530 - 1545	0	194	32	1	1	1	0	0	0	0	0	0	0	**229**	
1545 - 1600	0	199	28	1	2	2	0	0	0	0	0	0	0	**232**	**875**
1600 - 1615	0	150	31	2	5	3	0	3	1	0	0	0	0	**195**	
1615 - 1630	0	188	39	1	1	0	0	0	0	0	0	0	0	**229**	
1630 - 1645	0	177	42	2	1	0	0	0	0	0	0	0	0	**222**	
1645 - 1700	0	165	26	0	2	0	0	0	0	0	0	0	0	**193**	**839**
1700 - 1715	1	168	23	0	0	1	0	1	0	0	0	0	0	**194**	
1715 - 1730	2	186	25	0	0	0	0	0	0	0	0	0	0	**213**	
1730 - 1745	0	188	25	1	0	0	0	0	1	0	0	0	0	**215**	
1745 - 1800	1	187	38	0	1	0	0	0	0	0	0	0	0	**227**	**849**
1800 - 1815	0	152	37	1	0	0	0	0	0	0	0	0	0	**190**	
1815 - 1830	2	160	15	0	1	1	0	0	0	0	0	0	0	**179**	
1830 - 1845	0	131	22	0	1	2	0	0	0	0	0	0	0	**156**	
1845 - 1900	0	128	14	1	2	0	0	0	0	0	0	0	0	**145**	**670**
1900 - 1915	0	0	0	0	0	0	0	0	0	0	0	0	0	**0**	
1915 - 1930	0	0	0	0	0	0	0	0	0	0	0	0	0	**0**	
1930 - 1945	0	0	0	0	0	0	0	0	0	0	0	0	0	**0**	
1945 - 2000	0	0	0	0	0	0	0	0	0	0	0	0	0	**0**	**0**
2000 - 2015	0	0	0	0	0	0	0	0	0	0	0	0	0	**0**	
2015 - 2030	0	0	0	0	0	0	0	0	0	0	0	0	0	**0**	
2030 - 2045	0	0	0	0	0	0	0	0	0	0	0	0	0	**0**	
2045 - 2100	0	0	0	0	0	0	0	0	0	0	0	0	0	**0**	**0**
2100 - 2115	0	0	0	0	0	0	0	0	0	0	0	0	0	**0**	
2115 - 2130	0	0	0	0	0	0	0	0	0	0	0	0	0	**0**	
2130 - 2145	0	0	0	0	0	0	0	0	0	0	0	0	0	**0**	
2145 - 2200	0	0	0	0	0	0	0	0	0	0	0	0	0	**0**	**0**
2200 - 2215	0	0	0	0	0	0	0	0	0	0	0	0	0	**0**	
2215 - 2230	0	0	0	0	0	0	0	0	0	0	0	0	0	**0**	
2230 - 2245	0	0	0	0	0	0	0	0	0	0	0	0	0	**0**	
2245 - 2300	0	0	0	0	0	0	0	0	0	0	0	0	0	**0**	**0**
2300 - 2315	0	0	0	0	0	0	0	0	0	0	0	0	0	**0**	
2315 - 2330	0	0	0	0	0	0	0	0	0	0	0	0	0	**0**	
2330 - 2345	0	0	0	0	0	0	0	0	0	0	0	0	0	**0**	
2345 - 0000	0	0	0	0	0	0	0	0	0	0	0	0	0	**0**	**0**

Session Total	11	8127	1590	64	107	48	4	5	29	0	0	0	0	**9985**
Session Average	0.11	84.66	16.56	0.67	1.11	0.50	0.04	0.05	0.30	0.00	0.00	0.00	0.00	**104.01**
Session Percentage	0.11	81.39	15.92	0.64	1.07	0.48	0.04	0.05	0.29	0.00	0.00	0.00	0.00	

AM Peak Hour	0730 - 0830	0715 - 0815	0745 - 0845	0545 - 0645	0845 - 0945	0700 - 0800	0600 - 0700	-	0645 - 0745	-	-	-	-	**0715 - 0815**
AM Peak Hour Volume	1	809	147	14	12	12	1	0	5	0	0	0	0	**974**

Noon Peak Hour	1045 - 1145	1445 - 1545	1330 - 1430	1330 - 1430	1115 - 1215	1345 - 1445	1315 - 1415	-	1100 - 1200	-	-	-	-	**1445 - 1545**
Noon Peak Hour Volume	1	716	124	12	13	6	2	0	5	0	0	0	0	**843**

PM Peak Hour	1700 - 1800	1500 - 1600	1545 - 1645	1515 - 1615	1515 - 1615	1515 - 1615	-	1515 - 1615	1515 - 1615	-	-	-	-	**1530 - 1630**
PM Peak Hour Volume	4	742	140	6	10	7	0	3	2	0	0	0	0	**885**

Bi-Directional Class Count || SB WB Average 15min

Columbia, SC

Marr Traffic DATA COLLECTION
www.marrtraffic.com

Site 67
I-20 W/Bound Off-Ramp,
east of US-176 Broad River Rd

Date
Tuesday, April 23, 2024

Lat/Long
34.041074°, -81.090422°

Weather
Fair
58°F

0000 - 2400 (Weekday 24h Session) (All Dates)
SB WB Average 15min

	SB WB Average 15min													15min	60min
Time	1	2	3	4	5	6	7	8	9	10	11	12	13	Total	Total
0000 - 0015	0	20	7	0	0	0	0	0	0	0	0	0	0	**26**	
0015 - 0030	0	20	6	0	0	0	0	0	0	0	0	0	0	**25**	
0030 - 0045	0	14	5	0	0	0	0	0	0	0	0	0	0	**19**	
0045 - 0100	0	15	4	0	0	0	0	0	0	0	0	0	0	**19**	**90**
0100 - 0115	0	12	3	0	0	0	0	0	0	0	0	0	0	**15**	
0115 - 0130	0	14	3	0	0	0	0	0	0	0	0	0	0	**17**	
0130 - 0145	0	11	2	0	0	0	0	0	0	0	0	0	0	**13**	
0145 - 0200	0	8	2	0	0	0	0	0	0	0	0	0	0	**10**	**56**
0200 - 0215	0	8	2	0	0	0	0	0	0	0	0	0	0	**10**	
0215 - 0230	0	11	2	0	0	0	0	0	0	0	0	0	0	**13**	
0230 - 0245	0	10	3	0	0	0	0	0	0	0	0	0	0	**13**	
0245 - 0300	0	7	1	0	0	0	0	0	0	0	0	0	0	**9**	**44**
0300 - 0315	0	8	1	0	0	0	0	0	0	0	0	0	0	**10**	
0315 - 0330	0	9	3	0	0	0	0	0	0	0	0	0	0	**12**	
0330 - 0345	0	8	2	0	0	0	0	0	0	0	0	0	0	**10**	
0345 - 0400	0	7	2	0	0	0	0	0	0	0	0	0	0	**9**	**40**
0400 - 0415	0	6	1	0	0	0	0	0	0	0	0	0	0	**7**	
0415 - 0430	0	8	2	0	0	0	0	0	0	0	0	0	0	**9**	
0430 - 0445	0	11	2	0	1	0	0	0	0	0	0	0	0	**15**	
0445 - 0500	0	17	3	0	1	0	0	0	0	0	0	0	0	**21**	**53**
0500 - 0515	0	15	3	0	0	0	0	0	0	0	0	0	0	**18**	
0515 - 0530	0	25	6	0	0	0	0	0	0	0	0	0	0	**31**	
0530 - 0545	0	26	6	0	1	0	0	0	1	0	0	0	0	**34**	
0545 - 0600	0	26	6	1	1	0	0	0	0	0	0	0	0	**35**	**118**
0600 - 0615	0	32	9	0	1	0	0	0	0	0	0	0	0	**42**	
0615 - 0630	0	55	10	4	0	0	0	0	0	0	0	0	0	**70**	
0630 - 0645	0	59	12	3	1	0	0	0	0	0	0	0	0	**76**	
0645 - 0700	0	110	26	1	1	1	0	0	0	0	0	0	0	**140**	**327**
0700 - 0715	0	101	18	0	2	1	0	0	1	0	0	0	0	**123**	
0715 - 0730	0	148	27	0	1	1	0	0	1	0	0	0	0	**178**	
0730 - 0745	0	129	18	1	2	2	0	0	0	0	0	0	0	**152**	
0745 - 0800	0	159	24	1	2	3	0	1	1	0	0	0	0	**191**	**644**
0800 - 0815	0	110	17	1	3	2	0	0	1	0	0	0	0	**133**	
0815 - 0830	0	94	16	1	1	0	0	0	0	0	0	0	0	**113**	
0830 - 0845	0	129	23	1	2	2	0	0	0	0	0	0	0	**156**	
0845 - 0900	0	105	23	0	3	0	0	1	0	0	0	0	0	**133**	**534**
0900 - 0915	0	89	17	1	3	0	0	0	1	0	0	0	0	**111**	
0915 - 0930	0	63	19	1	1	1	0	0	0	0	0	0	0	**86**	
0930 - 0945	0	80	23	0	2	2	0	0	1	0	0	0	0	**108**	
0945 - 1000	0	91	23	1	2	0	0	0	1	0	0	0	0	**118**	**423**
1000 - 1015	0	73	17	0	1	2	0	0	1	0	0	0	0	**94**	
1015 - 1030	0	64	17	1	2	2	1	1	0	0	0	0	0	**87**	
1030 - 1045	0	69	21	0	2	1	1	0	1	0	0	0	0	**94**	
1045 - 1100	0	78	18	0	2	1	0	0	0	0	0	0	0	**99**	**374**
1100 - 1115	0	73	17	0	1	1	0	0	0	0	0	0	0	**93**	
1115 - 1130	0	84	13	1	2	1	0	0	1	0	0	0	0	**103**	
1130 - 1145	0	89	17	1	3	1	0	0	1	0	0	0	0	**112**	
1145 - 1200	0	85	20	0	1	2	0	0	1	0	0	0	0	**109**	**418**
1200 - 1215	0	92	20	0	3	0	0	0	0	0	0	0	0	**117**	
1215 - 1230	0	83	16	1	2	0	0	0	0	0	0	0	0	**103**	
1230 - 1245	1	81	22	0	1	2	0	0	1	0	0	0	0	**108**	
1245 - 1300	0	79	15	0	2	1	0	0	0	0	0	0	0	**97**	**424**
1300 - 1315	0	89	21	1	2	0	0	0	1	0	0	0	0	**114**	
1315 - 1330	0	89	16	1	1	1	0	0	0	0	0	0	0	**108**	
1330 - 1345	1	92	19	2	2	1	0	0	0	0	0	0	0	**117**	
1345 - 1400	0	96	20	1	1	0	0	0	0	0	0	0	0	**119**	**458**
1400 - 1415	0	88	21	4	1	1	0	0	2	0	0	0	0	**118**	
1415 - 1430	0	89	16	2	1	1	0	0	0	0	0	0	0	**109**	
1430 - 1445	0	86	18	0	1	2	0	0	0	0	0	0	0	**108**	
1445 - 1500	0	102	16	0	2	1	0	0	1	0	0	0	0	**122**	**457**
1500 - 1515	1	98	19	1	1	1	0	0	0	0	0	0	0	**120**	
1515 - 1530	0	119	22	1	2	0	0	0	1	0	0	0	0	**146**	
1530 - 1545	0	127	28	1	1	1	0	0	0	0	0	0	0	**159**	
1545 - 1600	0	119	25	2	2	2	0	0	0	0	0	0	0	**150**	**575**
1600 - 1615	0	117	23	1	3	2	0	1	1	0	0	0	0	**148**	
1615 - 1630	0	133	26	0	2	1	0	0	0	0	0	0	0	**163**	
1630 - 1645	0	133	28	1	1	0	0	1	0	0	0	0	0	**164**	
1645 - 1700	0	128	23	0	1	0	0	0	0	0	0	0	0	**153**	**628**
1700 - 1715	0	127	25	0	1	1	0	0	0	0	0	0	0	**155**	
1715 - 1730	1	141	23	0	1	0	0	0	0	0	0	0	0	**166**	
1730 - 1745	0	137	27	0	1	0	0	0	0	0	0	0	0	**166**	
1745 - 1800	0	131	33	0	1	0	0	0	0	0	0	0	0	**165**	**651**
1800 - 1815	0	105	26	1	0	1	0	0	0	0	0	0	0	**133**	
1815 - 1830	1	104	20	0	1	1	0	0	0	0	0	0	0	**126**	
1830 - 1845	0	94	21	0	1	1	0	0	0	0	0	0	0	**117**	
1845 - 1900	0	90	17	0	1	0	0	0	0	0	0	0	0	**108**	**485**
1900 - 1915	0	90	20	0	1	1	0	0	0	0	0	0	0	**112**	
1915 - 1930	0	87	15	0	1	0	0	0	1	0	0	0	0	**104**	
1930 - 1945	0	74	11	0	0	0	0	0	0	0	0	0	0	**85**	
1945 - 2000	0	89	13	0	1	0	0	0	0	0	0	0	0	**104**	**405**
2000 - 2015	0	75	8	0	0	1	0	0	0	0	0	0	0	**85**	
2015 - 2030	0	66	10	0	1	0	0	0	0	0	0	0	0	**77**	
2030 - 2045	0	60	8	0	0	0	0	1	0	0	0	0	0	**69**	
2045 - 2100	0	61	13	0	0	0	0	0	0	0	0	0	0	**74**	**305**
2100 - 2115	0	61	10	0	0	0	0	0	0	0	0	0	0	**71**	
2115 - 2130	0	53	10	0	0	0	0	0	0	0	0	0	0	**64**	
2130 - 2145	0	46	7	0	0	0	0	0	0	0	0	0	0	**53**	
2145 - 2200	0	36	7	0	0	0	0	0	0	0	0	0	0	**43**	**231**
2200 - 2215	0	36	8	0	0	0	0	0	0	0	0	0	0	**44**	
2215 - 2230	0	43	10	0	0	0	0	0	0	0	0	0	0	**53**	
2230 - 2245	0	39	6	0	0	0	0	0	0	0	0	0	0	**46**	
2245 - 2300	0	36	7	0	1	0	0	0	0	0	0	0	0	**44**	**186**
2300 - 2315	0	30	7	0	0	0	0	0	0	0	0	0	0	**38**	
2315 - 2330	0	27	5	0	0	0	0	0	0	0	0	0	0	**32**	
2330 - 2345	0	28	6	0	0	0	0	0	0	0	0	0	0	**34**	
2345 - 0000	0	24	7	0	0	0	0	0	0	0	0	0	0	**30**	**134**

Session Total	8	6515	1318	42	89	53	3	8	25	0	0	0	0	**8062**
Session Average	0.08	67.87	13.73	0.44	0.93	0.56	0.03	0.08	0.26	0.00	0.00	0.00	0.00	**83.98**
Session Percentage	0.10	80.82	16.34	0.52	1.11	0.66	0.04	0.10	0.31	0.00	0.00	0.00	0.00	

AM Peak Hour	0745 - 0845	0715 - 0815	0645 - 0745	0600 - 0700	0845 - 0945	0715 - 0815	0945 - 1045	0930 - 1030	0715 - 0815	-	-	-	-	**0715 - 0815**
AM Peak Volume	1	545	89	9	9	8	1	1	4	0	0	0	0	**654**

Noon Peak Hour	1145 - 1245	1445 - 1545	1445 - 1545	1330 - 1430	1115 - 1215	1000 - 1100	1000 - 1100	1000 - 1100	1100 - 1200	-	-	-	-	**1445 - 1545**
Noon Peak Volume	1	447	84	8	8	5	1	1	4	0	0	0	0	**547**

PM Peak Hour	1700 - 1800	1700 - 1800	1715 - 1815	1500 - 1600	1515 - 1615	1530 - 1630	-	1515 - 1615	1515 - 1615	-	-	-	-	**1700 - 1800**
PM Peak Volume	1	537	109	4	8	7	0	2	2	0	0	0	0	**651**

Bi-Directional Class Count || Volume Summary 15min

Columbia, SC

Marr Traffic DATA COLLECTION

www.marrtraffic.com

Site 67

I-20 W/Bound Off-Ramp,
east of US-176 Broad River Rd

Date

Tuesday, April 23, 2024

Lat/Long

34.041074°, -81.090422°

Weather

Fair
58°F

Click here for Detailed Weather

0000 - 2400 (Weekday 24h Session) (04-23-2024)

Volume Summary 15min

	Volume Summary 15min		15min	60min
TIME	EB	WB	Total	Total
0000 - 0015	0	0	**0**	
0015 - 0030	0	0	**0**	
0030 - 0045	0	0	**0**	
0045 - 0100	0	0	**0**	**0**
0100 - 0115	0	0	**0**	
0115 - 0130	0	0	**0**	
0130 - 0145	0	0	**0**	
0145 - 0200	0	0	**0**	**0**
0200 - 0215	0	0	**0**	
0215 - 0230	0	0	**0**	
0230 - 0245	0	0	**0**	
0245 - 0300	0	0	**0**	**0**
0300 - 0315	0	0	**0**	
0315 - 0330	0	0	**0**	
0330 - 0345	0	0	**0**	
0345 - 0400	0	0	**0**	**0**
0400 - 0415	0	0	**0**	
0415 - 0430	0	0	**0**	
0430 - 0445	0	0	**0**	
0445 - 0500	0	0	**0**	**0**
0500 - 0515	0	0	**0**	
0515 - 0530	0	0	**0**	
0530 - 0545	0	0	**0**	
0545 - 0600	0	0	**0**	**0**
0600 - 0615	0	0	**0**	
0615 - 0630	0	0	**0**	
0630 - 0645	0	0	**0**	
0645 - 0700	0	0	**0**	**0**
0700 - 0715	0	0	**0**	
0715 - 0730	0	0	**0**	
0730 - 0745	0	0	**0**	
0745 - 0800	0	0	**0**	**0**
0800 - 0815	0	0	**0**	
0815 - 0830	0	0	**0**	
0830 - 0845	0	0	**0**	
0845 - 0900	0	0	**0**	**0**
0900 - 0915	0	0	**0**	
0915 - 0930	0	0	**0**	
0930 - 0945	0	0	**0**	
0945 - 1000	0	0	**0**	**0**
1000 - 1015	0	0	**0**	
1015 - 1030	0	0	**0**	
1030 - 1045	0	0	**0**	
1045 - 1100	0	0	**0**	**0**
1100 - 1115	0	0	**0**	
1115 - 1130	0	0	**0**	
1130 - 1145	0	0	**0**	
1145 - 1200	0	0	**0**	**0**

	Volume Summary 15min		15min	60min
Time	EB	WB	Total	Total
1200 - 1215	0	0	**0**	
1215 - 1230	0	0	**0**	
1230 - 1245	0	0	**0**	
1245 - 1300	0	0	**0**	**0**
1300 - 1315	0	0	**0**	
1315 - 1330	0	0	**0**	
1330 - 1345	0	0	**0**	
1345 - 1400	0	0	**0**	**0**
1400 - 1415	0	0	**0**	
1415 - 1430	0	0	**0**	
1430 - 1445	0	0	**0**	
1445 - 1500	0	0	**0**	**0**
1500 - 1515	0	0	**0**	
1515 - 1530	0	0	**0**	
1530 - 1545	0	0	**0**	
1545 - 1600	0	0	**0**	**0**
1600 - 1615	0	0	**0**	
1615 - 1630	0	0	**0**	
1630 - 1645	0	0	**0**	
1645 - 1700	0	0	**0**	**0**
1700 - 1715	0	0	**0**	
1715 - 1730	0	0	**0**	
1730 - 1745	0	0	**0**	
1745 - 1800	0	0	**0**	**0**
1800 - 1815	0	0	**0**	
1815 - 1830	0	0	**0**	
1830 - 1845	0	0	**0**	
1845 - 1900	0	0	**0**	**0**
1900 - 1915	0	137	**137**	
1915 - 1930	0	155	**155**	
1930 - 1945	0	107	**107**	
1945 - 2000	0	158	**158**	**557**
2000 - 2015	0	107	**107**	
2015 - 2030	0	105	**105**	
2030 - 2045	0	110	**110**	
2045 - 2100	0	106	**106**	**428**
2100 - 2115	0	81	**81**	
2115 - 2130	0	95	**95**	
2130 - 2145	0	80	**80**	
2145 - 2200	0	69	**69**	**325**
2200 - 2215	0	65	**65**	
2215 - 2230	0	75	**75**	
2230 - 2245	0	59	**59**	
2245 - 2300	0	67	**67**	**266**
2300 - 2315	0	55	**55**	
2315 - 2330	0	52	**52**	
2330 - 2345	0	46	**46**	
2345 - 0000	0	44	**44**	**197**

Session Total	0	1773	**1773**
Session Average	0.00	18.47	**18.47**
Session Percentage	0.00	100.00	

Site 67
I-20 W/Bound Off-Ramp,
east of US-176 Broad River Rd

Date
Wednesday, April 24, 2024

Lat/Long
34.041074°, -81.090422°

Weather
Fair
66°F

Click here for Detailed Weather

0000 - 2400 (Weekday 24h Session) (04-24-2024)

Volume Summary 15min

TIME	Volume Summary 15min EB	Volume Summary 15min WB	15min Total	60min Total
0000 - 0015	0	41	**41**	
0015 - 0030	0	36	**36**	
0030 - 0045	0	32	**32**	
0045 - 0100	0	26	**26**	**135**
0100 - 0115	0	28	**28**	
0115 - 0130	0	29	**29**	
0130 - 0145	0	18	**18**	
0145 - 0200	0	18	**18**	**93**
0200 - 0215	0	11	**11**	
0215 - 0230	0	20	**20**	
0230 - 0245	0	19	**19**	
0245 - 0300	0	12	**12**	**62**
0300 - 0315	0	6	**6**	
0315 - 0330	0	29	**29**	
0330 - 0345	0	14	**14**	
0345 - 0400	0	11	**11**	**60**
0400 - 0415	0	13	**13**	
0415 - 0430	0	17	**17**	
0430 - 0445	0	22	**22**	
0445 - 0500	0	30	**30**	**82**
0500 - 0515	0	29	**29**	
0515 - 0530	0	41	**41**	
0530 - 0545	0	52	**52**	
0545 - 0600	0	50	**50**	**172**
0600 - 0615	0	69	**69**	
0615 - 0630	0	104	**104**	
0630 - 0645	0	105	**105**	
0645 - 0700	0	243	**243**	**521**
0700 - 0715	0	192	**192**	
0715 - 0730	0	277	**277**	
0730 - 0745	0	250	**250**	
0745 - 0800	0	281	**281**	**1000**
0800 - 0815	0	179	**179**	
0815 - 0830	0	144	**144**	
0830 - 0845	0	221	**221**	
0845 - 0900	0	198	**198**	**742**
0900 - 0915	0	165	**165**	
0915 - 0930	0	117	**117**	
0930 - 0945	0	173	**173**	
0945 - 1000	0	191	**191**	**646**
1000 - 1015	0	143	**143**	
1015 - 1030	0	124	**124**	
1030 - 1045	0	138	**138**	
1045 - 1100	0	150	**150**	**555**
1100 - 1115	0	138	**138**	
1115 - 1130	0	139	**139**	
1130 - 1145	0	174	**174**	
1145 - 1200	0	161	**161**	**612**

Time	Volume Summary 15min EB	Volume Summary 15min WB	15min Total	60min Total
1200 - 1215	0	178	**178**	
1215 - 1230	0	148	**148**	
1230 - 1245	0	154	**154**	
1245 - 1300	0	151	**151**	**631**
1300 - 1315	0	161	**161**	
1315 - 1330	0	166	**166**	
1330 - 1345	0	174	**174**	
1345 - 1400	0	167	**167**	**668**
1400 - 1415	0	171	**171**	
1415 - 1430	0	149	**149**	
1430 - 1445	0	165	**165**	
1445 - 1500	0	166	**166**	**651**
1500 - 1515	0	163	**163**	
1515 - 1530	0	222	**222**	
1530 - 1545	0	247	**247**	
1545 - 1600	0	218	**218**	**850**
1600 - 1615	0	249	**249**	
1615 - 1630	0	259	**259**	
1630 - 1645	0	270	**270**	
1645 - 1700	0	267	**267**	**1045**
1700 - 1715	0	270	**270**	
1715 - 1730	0	284	**284**	
1730 - 1745	0	283	**283**	
1745 - 1800	0	268	**268**	**1105**
1800 - 1815	0	210	**210**	
1815 - 1830	0	200	**200**	
1830 - 1845	0	196	**196**	
1845 - 1900	0	179	**179**	**785**
1900 - 1915	0	199	**199**	
1915 - 1930	0	158	**158**	
1930 - 1945	0	149	**149**	
1945 - 2000	0	153	**153**	**659**
2000 - 2015	0	147	**147**	
2015 - 2030	0	126	**126**	
2030 - 2045	0	97	**97**	
2045 - 2100	0	117	**117**	**487**
2100 - 2115	0	131	**131**	
2115 - 2130	0	96	**96**	
2130 - 2145	0	79	**79**	
2145 - 2200	0	61	**61**	**367**
2200 - 2215	0	66	**66**	
2215 - 2230	0	84	**84**	
2230 - 2245	0	78	**78**	
2245 - 2300	0	65	**65**	**293**
2300 - 2315	0	58	**58**	
2315 - 2330	0	44	**44**	
2330 - 2345	0	57	**57**	
2345 - 0000	0	47	**47**	**206**

Session Total	0	12427	**12427**
Session Average	0.00	129.45	**129.45**
Session Percentage	0.00	100.00	

Site 67
I-20 W/Bound Off-Ramp,
east of US-176 Broad River Rd

Date
Thursday, April 25, 2024

Lat/Long
34.041074°, -81.090422°

Weather
Fair
67°F

Click here for Detailed Weather

0000 - 2400 (Weekday 24h Session) (04-25-2024)

Volume Summary 15min

TIME	Volume Summary 15min EB	Volume Summary 15min WB	15min Total	60min Total
0000 - 0015	0	38	**38**	
0015 - 0030	0	40	**40**	
0030 - 0045	0	26	**26**	
0045 - 0100	0	30	**30**	**134**
0100 - 0115	0	18	**18**	
0115 - 0130	0	23	**23**	
0130 - 0145	0	22	**22**	
0145 - 0200	0	11	**11**	**74**
0200 - 0215	0	19	**19**	
0215 - 0230	0	19	**19**	
0230 - 0245	0	19	**19**	
0245 - 0300	0	14	**14**	**71**
0300 - 0315	0	23	**23**	
0315 - 0330	0	6	**6**	
0330 - 0345	0	16	**16**	
0345 - 0400	0	16	**16**	**61**
0400 - 0415	0	9	**9**	
0415 - 0430	0	11	**11**	
0430 - 0445	0	22	**22**	
0445 - 0500	0	34	**34**	**76**
0500 - 0515	0	26	**26**	
0515 - 0530	0	52	**52**	
0530 - 0545	0	50	**50**	
0545 - 0600	0	54	**54**	**182**
0600 - 0615	0	58	**58**	
0615 - 0630	0	105	**105**	
0630 - 0645	0	122	**122**	
0645 - 0700	0	176	**176**	**461**
0700 - 0715	0	177	**177**	
0715 - 0730	0	257	**257**	
0730 - 0745	0	206	**206**	
0745 - 0800	0	292	**292**	**932**
0800 - 0815	0	219	**219**	
0815 - 0830	0	194	**194**	
0830 - 0845	0	248	**248**	
0845 - 0900	0	200	**200**	**861**
0900 - 0915	0	168	**168**	
0915 - 0930	0	142	**142**	
0930 - 0945	0	151	**151**	
0945 - 1000	0	163	**163**	**624**
1000 - 1015	0	138	**138**	
1015 - 1030	0	137	**137**	
1030 - 1045	0	145	**145**	
1045 - 1100	0	148	**148**	**568**
1100 - 1115	0	141	**141**	
1115 - 1130	0	170	**170**	
1130 - 1145	0	163	**163**	
1145 - 1200	0	167	**167**	**641**

Time	Volume Summary 15min EB	Volume Summary 15min WB	15min Total	60min Total
1200 - 1215	0	172	**172**	
1215 - 1230	0	162	**162**	
1230 - 1245	0	169	**169**	
1245 - 1300	0	139	**139**	**642**
1300 - 1315	0	180	**180**	
1315 - 1330	0	158	**158**	
1330 - 1345	0	176	**176**	
1345 - 1400	0	191	**191**	**705**
1400 - 1415	0	182	**182**	
1415 - 1430	0	178	**178**	
1430 - 1445	0	160	**160**	
1445 - 1500	0	200	**200**	**720**
1500 - 1515	0	198	**198**	
1515 - 1530	0	216	**216**	
1530 - 1545	0	229	**229**	
1545 - 1600	0	232	**232**	**875**
1600 - 1615	0	195	**195**	
1615 - 1630	0	229	**229**	
1630 - 1645	0	222	**222**	
1645 - 1700	0	193	**193**	**839**
1700 - 1715	0	194	**194**	
1715 - 1730	0	213	**213**	
1730 - 1745	0	215	**215**	
1745 - 1800	0	227	**227**	**849**
1800 - 1815	0	190	**190**	
1815 - 1830	0	179	**179**	
1830 - 1845	0	156	**156**	
1845 - 1900	0	145	**145**	**670**
1900 - 1915	0	0	**0**	
1915 - 1930	0	0	**0**	
1930 - 1945	0	0	**0**	
1945 - 2000	0	0	**0**	**0**
2000 - 2015	0	0	**0**	
2015 - 2030	0	0	**0**	
2030 - 2045	0	0	**0**	
2045 - 2100	0	0	**0**	**0**
2100 - 2115	0	0	**0**	
2115 - 2130	0	0	**0**	
2130 - 2145	0	0	**0**	
2145 - 2200	0	0	**0**	**0**
2200 - 2215	0	0	**0**	
2215 - 2230	0	0	**0**	
2230 - 2245	0	0	**0**	
2245 - 2300	0	0	**0**	**0**
2300 - 2315	0	0	**0**	
2315 - 2330	0	0	**0**	
2330 - 2345	0	0	**0**	
2345 - 0000	0	0	**0**	**0**

Session Total	0	9985	**9985**
Session Average	0.00	104.01	**104.01**
Session Percentage	0.00	100.00	

Bi-Directional Class Count || SB WB 60min

Columbia, SC

Marr Traffic DATA COLLECTION

www.marrtraffic.com

Site 67
I-20 W/Bound Off-Ramp,
east of US-176 Broad River Rd

Date
Tuesday, April 23, 2024

Lat/Long
34.041074°, -81.090422°

Weather
Fair
58°F

Click here for Detailed Weather

0000 - 2400 (Weekday 24h Session) (04-23-2024)
SB WB 60min

	Westbound (Movement 67.1)													
TIME	1	2	3	4	5	6	7	8	9	10	11	12	13	**Total**
0000 - 0100	0	0	0	0	0	0	0	0	0	0	0	0	0	**0**
0100 - 0200	0	0	0	0	0	0	0	0	0	0	0	0	0	**0**
0200 - 0300	0	0	0	0	0	0	0	0	0	0	0	0	0	**0**
0300 - 0400	0	0	0	0	0	0	0	0	0	0	0	0	0	**0**
0400 - 0500	0	0	0	0	0	0	0	0	0	0	0	0	0	**0**
0500 - 0600	0	0	0	0	0	0	0	0	0	0	0	0	0	**0**
0600 - 0700	0	0	0	0	0	0	0	0	0	0	0	0	0	**0**
0700 - 0800	0	0	0	0	0	0	0	0	0	0	0	0	0	**0**
0800 - 0900	0	0	0	0	0	0	0	0	0	0	0	0	0	**0**
0900 - 1000	0	0	0	0	0	0	0	0	0	0	0	0	0	**0**
1000 - 1100	0	0	0	0	0	0	0	0	0	0	0	0	0	**0**
1100 - 1200	0	0	0	0	0	0	0	0	0	0	0	0	0	**0**
1200 - 1300	0	0	0	0	0	0	0	0	0	0	0	0	0	**0**
1300 - 1400	0	0	0	0	0	0	0	0	0	0	0	0	0	**0**
1400 - 1500	0	0	0	0	0	0	0	0	0	0	0	0	0	**0**
1500 - 1600	0	0	0	0	0	0	0	0	0	0	0	0	0	**0**
1600 - 1700	0	0	0	0	0	0	0	0	0	0	0	0	0	**0**
1700 - 1800	0	0	0	0	0	0	0	0	0	0	0	0	0	**0**
1800 - 1900	0	0	0	0	0	0	0	0	0	0	0	0	0	**0**
1900 - 2000	1	484	65	0	2	3	0	0	2	0	0	0	0	**557**
2000 - 2100	0	374	49	0	1	1	0	2	1	0	0	0	0	**428**
2100 - 2200	0	282	42	0	1	0	0	0	0	0	0	0	0	**325**
2200 - 2300	0	223	41	0	1	0	0	0	1	0	0	0	0	**266**
2300 - 2400	0	152	44	0	0	0	0	0	1	0	0	0	0	**197**

Session Total	1	1515	241	0	5	4	0	2	5	0	0	0	0	**1773**
Session Average	0.04	63.13	10.04	0.00	0.21	0.17	0.00	0.08	0.21	0.00	0.00	0.00	0.00	**73.88**
Session Percentage	0.06	85.45	13.59	0.00	0.28	0.23	0.00	0.11	0.28	0.00	0.00	0.00	0.00	

AM Peak Hour	-	-	-	-	-	-	-	-	-	-	-	-	-	**-**
AM Peak Volume	0	0	0	0	0	0	0	0	0	0	0	0	0	**0**

Noon Peak Hour	-	-	-	-	-	-	-	-	-	-	-	-	-	**-**
Noon Peak Volume	0	0	0	0	0	0	0	0	0	0	0	0	0	**0**

PM Peak Hour	1900 - 2000	1900 - 2000	1900 - 2000	-	1900 - 2000	1900 - 2000	-	-	1900 - 2000	-	-	-	-	**1900 - 2000**
PM Peak Volume	1	484	65	0	2	3	0	0	2	0	0	0	0	**557**

Site 67
I-20 W/Bound Off-Ramp,
east of US-176 Broad River Rd

Date
Wednesday, April 24, 2024

Weather
Fair
66°F

Lat/Long
34.041074°, -81.090422°

Click here for Detailed Weather

0000 - 2400 (Weekday 24h Session) (04-24-2024)
SB WB 60min

	Westbound (Movement 67.1)													
TIME	1	2	3	4	5	6	7	8	9	10	11	12	13	**Total**
0000 - 0100	0	101	34	0	0	0	0	0	0	0	0	0	0	**135**
0100 - 0200	0	72	18	0	2	0	0	0	1	0	0	0	0	**93**
0200 - 0300	0	50	11	0	1	0	0	0	0	0	0	0	0	**62**
0300 - 0400	0	50	10	0	0	0	0	0	0	0	0	0	0	**60**
0400 - 0500	0	66	15	0	0	0	0	1	0	0	0	0	0	**82**
0500 - 0600	0	135	33	0	4	0	0	0	0	0	0	0	0	**172**
0600 - 0700	0	407	89	16	6	2	0	0	1	0	0	0	0	**521**
0700 - 0800	0	837	131	2	13	10	0	2	5	0	0	0	0	**1000**
0800 - 0900	1	605	99	4	16	11	0	3	3	0	0	0	0	**742**
0900 - 1000	0	499	114	5	14	10	0	1	3	0	0	0	0	**646**
1000 - 1100	0	416	103	1	13	14	3	3	2	0	0	0	0	**555**
1100 - 1200	0	485	95	5	10	11	0	0	6	0	0	0	0	**612**
1200 - 1300	3	485	116	2	12	8	1	1	3	0	0	0	0	**631**
1300 - 1400	3	538	105	5	8	7	0	0	2	0	0	0	0	**668**
1400 - 1500	1	497	114	8	11	10	1	1	8	0	0	0	0	**651**
1500 - 1600	2	647	168	7	11	10	0	2	3	0	0	0	0	**850**
1600 - 1700	1	856	163	2	10	8	0	2	3	0	0	0	0	**1045**
1700 - 1800	0	882	212	1	9	1	0	0	0	0	0	0	0	**1105**
1800 - 1900	0	607	165	1	6	5	0	0	1	0	0	0	0	**785**
1900 - 2000	1	537	114	1	6	0	0	0	0	0	0	0	0	**659**
2000 - 2100	0	415	69	0	1	1	0	0	1	0	0	0	0	**487**
2100 - 2200	0	305	62	0	0	0	0	0	0	0	0	0	0	**367**
2200 - 2300	0	238	52	1	2	0	0	0	0	0	0	0	0	**293**
2300 - 2400	0	174	30	1	1	0	0	0	0	0	0	0	0	**206**

Session Total	12	9904	2122	62	156	108	5	16	42	0	0	0	0	**12427**
Session Average	0.50	412.67	88.42	2.58	6.50	4.50	0.21	0.67	1.75	0.00	0.00	0.00	0.00	**517.79**
Session Percentage	0.10	79.70	17.08	0.50	1.26	0.87	0.04	0.13	0.34	0.00	0.00	0.00	0.00	

AM Peak Hour	0800 - 0900	0700 - 0800	0700 - 0800	0600 - 0700	0800 - 0900	0800 - 0900	-	0800 - 0900	0700 - 0800	-	-	-	-	**0700 - 0800**
AM Peak Volume	1	837	131	16	16	11	0	3	5	0	0	0	0	**1000**

Noon Peak Hour	1200 - 1300	1300 - 1400	1200 - 1300	1400 - 1500	1000 - 1100	1000 - 1100	1000 - 1100	1000 - 1100	1400 - 1500	-	-	-	-	**1300 - 1400**
Noon Peak Volume	3	538	116	8	13	14	3	3	8	0	0	0	0	**668**

PM Peak Hour	1500 - 1600	1700 - 1800	1700 - 1800	1500 - 1600	1500 - 1600	1500 - 1600	-	1500 - 1600	1500 - 1600	-	-	-	-	**1700 - 1800**
PM Peak Volume	2	882	212	7	11	10	0	2	3	0	0	0	0	**1105**

Site 67
I-20 W/Bound Off-Ramp,
east of US-176 Broad River Rd

Date
Thursday, April 25, 2024

Weather
Fair
67°F

Lat/Long
34.041074°, -81.090422°

Click here for Detailed Weather

0000 - 2400 (Weekday 24h Session) (04-25-2024)
SB WB 60min

	Westbound (Movement 67.1)													
TIME	1	2	3	4	5	6	7	8	9	10	11	12	13	**Total**
0000 - 0100	0	104	29	0	1	0	0	0	0	0	0	0	0	**134**
0100 - 0200	0	62	11	0	1	0	0	0	0	0	0	0	0	**74**
0200 - 0300	0	57	12	0	1	1	0	0	0	0	0	0	0	**71**
0300 - 0400	0	47	12	0	0	1	0	0	1	0	0	0	0	**61**
0400 - 0500	0	60	10	0	5	0	0	1	0	0	0	0	0	**76**
0500 - 0600	0	140	33	3	4	0	0	0	2	0	0	0	0	**182**
0600 - 0700	0	359	81	12	4	3	1	0	1	0	0	0	0	**461**
0700 - 0800	0	773	131	3	8	12	0	0	5	0	0	0	0	**932**
0800 - 0900	1	706	138	4	9	2	0	0	1	0	0	0	0	**861**
0900 - 1000	1	469	132	5	10	2	0	0	5	0	0	0	0	**624**
1000 - 1100	0	438	116	3	5	2	1	0	3	0	0	0	0	**568**
1100 - 1200	1	511	106	2	11	5	0	0	5	0	0	0	0	**641**
1200 - 1300	1	520	106	3	11	1	0	0	0	0	0	0	0	**642**
1300 - 1400	0	561	123	7	9	2	1	0	2	0	0	0	0	**705**
1400 - 1500	0	598	100	9	6	5	1	0	1	0	0	0	0	**720**
1500 - 1600	1	742	113	5	8	5	0	0	1	0	0	0	0	**875**
1600 - 1700	0	680	138	5	9	3	0	3	1	0	0	0	0	**839**
1700 - 1800	4	729	111	1	1	1	0	1	1	0	0	0	0	**849**
1800 - 1900	2	571	88	2	4	3	0	0	0	0	0	0	0	**670**
1900 - 2000	0	0	0	0	0	0	0	0	0	0	0	0	0	**0**
2000 - 2100	0	0	0	0	0	0	0	0	0	0	0	0	0	**0**
2100 - 2200	0	0	0	0	0	0	0	0	0	0	0	0	0	**0**
2200 - 2300	0	0	0	0	0	0	0	0	0	0	0	0	0	**0**
2300 - 2400	0	0	0	0	0	0	0	0	0	0	0	0	0	**0**

Session Total	11	8127	1590	64	107	48	4	5	29	0	0	0	0	**9985**
Session Average	0.46	338.63	66.25	2.67	4.46	2.00	0.17	0.21	1.21	0.00	0.00	0.00	0.00	**416.04**
Session Percentage	0.11	81.39	15.92	0.64	1.07	0.48	0.04	0.05	0.29	0.00	0.00	0.00	0.00	

AM Peak Hour	0800 - 0900	0700 - 0800	0800 - 0900	0600 - 0700	0900 - 1000	0700 - 0800	0600 - 0700	-	0700 - 0800	-	-	-	-	**0700 - 0800**
AM Peak Hour Volume	1	773	138	12	10	12	1	0	5	0	0	0	0	**932**

Noon Peak Hour	1100 - 1200	1400 - 1500	1300 - 1400	1400 - 1500	1100 - 1200	1100 - 1200	1000 - 1100	-	1100 - 1200	-	-	-	-	**1400 - 1500**
Noon Peak Hour Volume	1	598	123	9	11	5	1	0	5	0	0	0	0	**720**

PM Peak Hour	1700 - 1800	1500 - 1600	1600 - 1700	1500 - 1600	1600 - 1700	1500 - 1600	-	1600 - 1700	1500 - 1600	-	-	-	-	**1500 - 1600**
PM Peak Hour Volume	4	742	138	5	9	5	0	3	1	0	0	0	0	**875**

Bi-Directional Class Count || Volume Summary 60min

Columbia, SC

Marr Traffic DATA COLLECTION

www.marrtraffic.com

Site 67

I-20 W/Bound Off-Ramp,
east of US-176 Broad River Rd

Date

Tuesday, April 23, 2024

Lat/Long

34.041074°, -81.090422°

Weather

Fair
58°F

Click here for Detailed Weather

0000 - 2400 (Weekday 24h Session) (04-23-2024)

Volume Summary 60min

	Volume Summary 60min		
TIME	EB	WB	**Total**
0000 - 0100	0	0	**0**
0100 - 0200	0	0	**0**
0200 - 0300	0	0	**0**
0300 - 0400	0	0	**0**
0400 - 0500	0	0	**0**
0500 - 0600	0	0	**0**
0600 - 0700	0	0	**0**
0700 - 0800	0	0	**0**
0800 - 0900	0	0	**0**
0900 - 1000	0	0	**0**
1000 - 1100	0	0	**0**
1100 - 1200	0	0	**0**

	Volume Summary 60min		
Time	EB	WB	**Total**
1200 - 1300	0	0	**0**
1300 - 1400	0	0	**0**
1400 - 1500	0	0	**0**
1500 - 1600	0	0	**0**
1600 - 1700	0	0	**0**
1700 - 1800	0	0	**0**
1800 - 1900	0	0	**0**
1900 - 2000	0	557	**557**
2000 - 2100	0	428	**428**
2100 - 2200	0	325	**325**
2200 - 2300	0	266	**266**
2300 - 2400	0	197	**197**

Session Total	0	1773	**1773**
Session Average	0.00	73.88	**73.88**
Session Percentage	0.00	100.00	

Site 67

I-20 W/Bound Off-Ramp,
east of US-176 Broad River Rd

Date

Wednesday, April 24, 2024

Lat/Long

34.041074°, -81.090422°

Weather

Fair
66°F

Click here for Detailed Weather

0000 - 2400 (Weekday 24h Session) (04-24-2024)

Volume Summary 60min

	Volume Summary 60min		
TIME	EB	WB	**Total**
0000 - 0100	0	135	**135**
0100 - 0200	0	93	**93**
0200 - 0300	0	62	**62**
0300 - 0400	0	60	**60**
0400 - 0500	0	82	**82**
0500 - 0600	0	172	**172**
0600 - 0700	0	521	**521**
0700 - 0800	0	1000	**1000**
0800 - 0900	0	742	**742**
0900 - 1000	0	646	**646**
1000 - 1100	0	555	**555**
1100 - 1200	0	612	**612**

Session Total	0	12427	**12427**
Session Average	0.00	517.79	**517.79**
Session Percentage	0.00	100.00	

	Volume Summary 60min		
Time	EB	WB	**Total**
1200 - 1300	0	631	**631**
1300 - 1400	0	668	**668**
1400 - 1500	0	651	**651**
1500 - 1600	0	850	**850**
1600 - 1700	0	1045	**1045**
1700 - 1800	0	1105	**1105**
1800 - 1900	0	785	**785**
1900 - 2000	0	659	**659**
2000 - 2100	0	487	**487**
2100 - 2200	0	367	**367**
2200 - 2300	0	293	**293**
2300 - 2400	0	206	**206**

Site 67

I-20 W/Bound Off-Ramp,
east of US-176 Broad River Rd

Date

Thursday, April 25, 2024

Lat/Long

34.041074°, -81.090422°

Weather

Fair
67°F

Click here for Detailed Weather

0000 - 2400 (Weekday 24h Session) (04-25-2024)

Volume Summary 60min

	Volume Summary 60min		
TIME	EB	WB	**Total**
0000 - 0100	0	134	**134**
0100 - 0200	0	74	**74**
0200 - 0300	0	71	**71**
0300 - 0400	0	61	**61**
0400 - 0500	0	76	**76**
0500 - 0600	0	182	**182**
0600 - 0700	0	461	**461**
0700 - 0800	0	932	**932**
0800 - 0900	0	861	**861**
0900 - 1000	0	624	**624**
1000 - 1100	0	568	**568**
1100 - 1200	0	641	**641**

	Volume Summary 60min		
Time	EB	WB	**Total**
1200 - 1300	0	642	**642**
1300 - 1400	0	705	**705**
1400 - 1500	0	720	**720**
1500 - 1600	0	875	**875**
1600 - 1700	0	839	**839**
1700 - 1800	0	849	**849**
1800 - 1900	0	670	**670**
1900 - 2000	0	0	**0**
2000 - 2100	0	0	**0**
2100 - 2200	0	0	**0**
2200 - 2300	0	0	**0**
2300 - 2400	0	0	**0**

Session Total	0	9985	**9985**
Session Average	0.00	416.04	**416.04**
Session Percentage	0.00	100.00	

Bi-Directional Class Count || Graphical Analysis SB WB

Columbia, SC

Marr Traffic DATA COLLECTION

www.marrtraffic.com

Site 67

I-20 W/Bound Off-Ramp,
east of US-176 Broad River Rd

Lat/Long

34.041074°, -81.090422°

0000 - 2400 (Weekday 24h Session)

Graphical Analysis SB WB

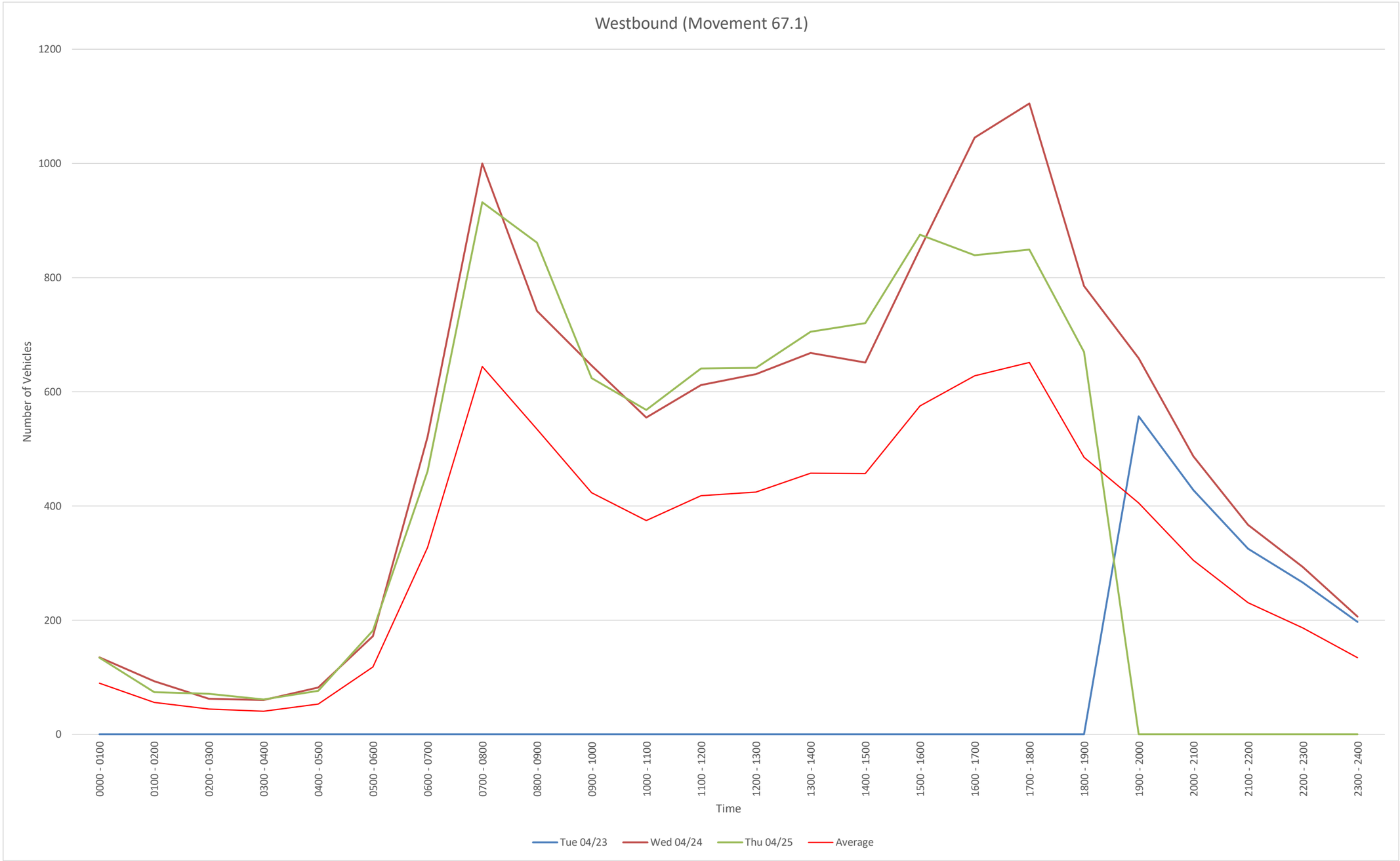

Time	Tue 04/23	Wed 04/24	Thu 04/25				
0000 - 0100	0	135	134				
0100 - 0200	0	93	74				
0200 - 0300	0	62	71				
0300 - 0400	0	60	61				
0400 - 0500	0	82	76				
0500 - 0600	0	172	182				
0600 - 0700	0	521	461				
0700 - 0800	0	1000	932				
0800 - 0900	0	742	861				
0900 - 1000	0	646	624				
1000 - 1100	0	555	568				
1100 - 1200	0	612	641				
1200 - 1300	0	631	642				
1300 - 1400	0	668	705				
1400 - 1500	0	651	720				
1500 - 1600	0	850	875				
1600 - 1700	0	1045	839				
1700 - 1800	0	1105	849				
1800 - 1900	0	785	670				
1900 - 2000	557	659	0				
2000 - 2100	428	487	0				
2100 - 2200	325	367	0				
2200 - 2300	266	293	0				
2300 - 2400	197	206	0				
Daily Total	1773	12427	9985				

EB
File Name:
Start Date: 4/23/2024
Start Time: 0
Site Code: 67
Station ID: 1
Location 1: I-20 W/Bound Off-Ramp, east of US-176 Broad River Rd
Location 2:

Date	Time	1	2	3	4	5	6	7	8	9	10	11	12	13
4/23/2024	12:00 AM	0	0	0	0	0	0	0	0	0	0	0	0	0
4/23/2024	12:15 AM	0	0	0	0	0	0	0	0	0	0	0	0	0
4/23/2024	12:30 AM	0	0	0	0	0	0	0	0	0	0	0	0	0
4/23/2024	12:45 AM	0	0	0	0	0	0	0	0	0	0	0	0	0
4/23/2024	1:00 AM	0	0	0	0	0	0	0	0	0	0	0	0	0
4/23/2024	1:15 AM	0	0	0	0	0	0	0	0	0	0	0	0	0
4/23/2024	1:30 AM	0	0	0	0	0	0	0	0	0	0	0	0	0
4/23/2024	1:45 AM	0	0	0	0	0	0	0	0	0	0	0	0	0
4/23/2024	2:00 AM	0	0	0	0	0	0	0	0	0	0	0	0	0
4/23/2024	2:15 AM	0	0	0	0	0	0	0	0	0	0	0	0	0
4/23/2024	2:30 AM	0	0	0	0	0	0	0	0	0	0	0	0	0
4/23/2024	2:45 AM	0	0	0	0	0	0	0	0	0	0	0	0	0
4/23/2024	3:00 AM	0	0	0	0	0	0	0	0	0	0	0	0	0
4/23/2024	3:15 AM	0	0	0	0	0	0	0	0	0	0	0	0	0
4/23/2024	3:30 AM	0	0	0	0	0	0	0	0	0	0	0	0	0
4/23/2024	3:45 AM	0	0	0	0	0	0	0	0	0	0	0	0	0
4/23/2024	4:00 AM	0	0	0	0	0	0	0	0	0	0	0	0	0
4/23/2024	4:15 AM	0	0	0	0	0	0	0	0	0	0	0	0	0
4/23/2024	4:30 AM	0	0	0	0	0	0	0	0	0	0	0	0	0
4/23/2024	4:45 AM	0	0	0	0	0	0	0	0	0	0	0	0	0
4/23/2024	5:00 AM	0	0	0	0	0	0	0	0	0	0	0	0	0
4/23/2024	5:15 AM	0	0	0	0	0	0	0	0	0	0	0	0	0
4/23/2024	5:30 AM	0	0	0	0	0	0	0	0	0	0	0	0	0
4/23/2024	5:45 AM	0	0	0	0	0	0	0	0	0	0	0	0	0
4/23/2024	6:00 AM	0	0	0	0	0	0	0	0	0	0	0	0	0
4/23/2024	6:15 AM	0	0	0	0	0	0	0	0	0	0	0	0	0
4/23/2024	6:30 AM	0	0	0	0	0	0	0	0	0	0	0	0	0
4/23/2024	6:45 AM	0	0	0	0	0	0	0	0	0	0	0	0	0
4/23/2024	7:00 AM	0	0	0	0	0	0	0	0	0	0	0	0	0
4/23/2024	7:15 AM	0	0	0	0	0	0	0	0	0	0	0	0	0
4/23/2024	7:30 AM	0	0	0	0	0	0	0	0	0	0	0	0	0
4/23/2024	7:45 AM	0	0	0	0	0	0	0	0	0	0	0	0	0
4/23/2024	8:00 AM	0	0	0	0	0	0	0	0	0	0	0	0	0
4/23/2024	8:15 AM	0	0	0	0	0	0	0	0	0	0	0	0	0
4/23/2024	8:30 AM	0	0	0	0	0	0	0	0	0	0	0	0	0
4/23/2024	8:45 AM	0	0	0	0	0	0	0	0	0	0	0	0	0
4/23/2024	9:00 AM	0	0	0	0	0	0	0	0	0	0	0	0	0
4/23/2024	9:15 AM	0	0	0	0	0	0	0	0	0	0	0	0	0
4/23/2024	9:30 AM	0	0	0	0	0	0	0	0	0	0	0	0	0
4/23/2024	9:45 AM	0	0	0	0	0	0	0	0	0	0	0	0	0
4/23/2024	10:00 AM	0	0	0	0	0	0	0	0	0	0	0	0	0
4/23/2024	10:15 AM	0	0	0	0	0	0	0	0	0	0	0	0	0
4/23/2024	10:30 AM	0	0	0	0	0	0	0	0	0	0	0	0	0
4/23/2024	10:45 AM	0	0	0	0	0	0	0	0	0	0	0	0	0
4/23/2024	11:00 AM	0	0	0	0	0	0	0	0	0	0	0	0	0
4/23/2024	11:15 AM	0	0	0	0	0	0	0	0	0	0	0	0	0
4/23/2024	11:30 AM	0	0	0	0	0	0	0	0	0	0	0	0	0
4/23/2024	11:45 AM	0	0	0	0	0	0	0	0	0	0	0	0	0
4/23/2024	12:00 PM	0	0	0	0	0	0	0	0	0	0	0	0	0
4/23/2024	12:15 PM	0	0	0	0	0	0	0	0	0	0	0	0	0
4/23/2024	12:30 PM	0	0	0	0	0	0	0	0	0	0	0	0	0
4/23/2024	12:45 PM	0	0	0	0	0	0	0	0	0	0	0	0	0
4/23/2024	1:00 PM	0	0	0	0	0	0	0	0	0	0	0	0	0
4/23/2024	1:15 PM	0	0	0	0	0	0	0	0	0	0	0	0	0
4/23/2024	1:30 PM	0	0	0	0	0	0	0	0	0	0	0	0	0
4/23/2024	1:45 PM	0	0	0	0	0	0	0	0	0	0	0	0	0
4/23/2024	2:00 PM	0	0	0	0	0	0	0	0	0	0	0	0	0
4/23/2024	2:15 PM	0	0	0	0	0	0	0	0	0	0	0	0	0
4/23/2024	2:30 PM	0	0	0	0	0	0	0	0	0	0	0	0	0
4/23/2024	2:45 PM	0	0	0	0	0	0	0	0	0	0	0	0	0
4/23/2024	3:00 PM	0	0	0	0	0	0	0	0	0	0	0	0	0
4/23/2024	3:15 PM	0	0	0	0	0	0	0	0	0	0	0	0	0
4/23/2024	3:30 PM	0	0	0	0	0	0	0	0	0	0	0	0	0
4/23/2024	3:45 PM	0	0	0	0	0	0	0	0	0	0	0	0	0
4/23/2024	4:00 PM	0	0	0	0	0	0	0	0	0	0	0	0	0
4/23/2024	4:15 PM	0	0	0	0	0	0	0	0	0	0	0	0	0
4/23/2024	4:30 PM	0	0	0	0	0	0	0	0	0	0	0	0	0
4/23/2024	4:45 PM	0	0	0	0	0	0	0	0	0	0	0	0	0
4/23/2024	5:00 PM	0	0	0	0	0	0	0	0	0	0	0	0	0
4/23/2024	5:15 PM	0	0	0	0	0	0	0	0	0	0	0	0	0
4/23/2024	5:30 PM	0	0	0	0	0	0	0	0	0	0	0	0	0
4/23/2024	5:45 PM	0	0	0	0	0	0	0	0	0	0	0	0	0
4/23/2024	6:00 PM	0	0	0	0	0	0	0	0	0	0	0	0	0
4/23/2024	6:15 PM	0	0	0	0	0	0	0	0	0	0	0	0	0
4/23/2024	6:30 PM	0	0	0	0	0	0	0	0	0	0	0	0	0
4/23/2024	6:45 PM	0	0	0	0	0	0	0	0	0	0	0	0	0
4/23/2024	7:00 PM	0	0	0	0	0	0	0	0	0	0	0	0	0
4/23/2024	7:15 PM	0	0	0	0	0	0	0	0	0	0	0	0	0
4/23/2024	7:30 PM	0	0	0	0	0	0	0	0	0	0	0	0	0
4/23/2024	7:45 PM	0	0	0	0	0	0	0	0	0	0	0	0	0
4/23/2024	8:00 PM	0	0	0	0	0	0	0	0	0	0	0	0	0
4/23/2024	8:15 PM	0	0	0	0	0	0	0	0	0	0	0	0	0
4/23/2024	8:30 PM	0	0	0	0	0	0	0	0	0	0	0	0	0
4/23/2024	8:45 PM	0	0	0	0	0	0	0	0	0	0	0	0	0
4/23/2024	9:00 PM	0	0	0	0	0	0	0	0	0	0	0	0	0
4/23/2024	9:15 PM	0	0	0	0	0	0	0	0	0	0	0	0	0
4/23/2024	9:30 PM	0	0	0	0	0	0	0	0	0	0	0	0	0
4/23/2024	9:45 PM	0	0	0	0	0	0	0	0	0	0	0	0	0
4/23/2024	10:00 PM	0	0	0	0	0	0	0	0	0	0	0	0	0
4/23/2024	10:15 PM	0	0	0	0	0	0	0	0	0	0	0	0	0
4/23/2024	10:30 PM	0	0	0	0	0	0	0	0	0	0	0	0	0
4/23/2024	10:45 PM	0	0	0	0	0	0	0	0	0	0	0	0	0
4/23/2024	11:00 PM	0	0	0	0	0	0	0	0	0	0	0	0	0
4/23/2024	11:15 PM	0	0	0	0	0	0	0	0	0	0	0	0	0
4/23/2024	11:30 PM	0	0	0	0	0	0	0	0	0	0	0	0	0
4/23/2024	11:45 PM	0	0	0	0	0	0	0	0	0	0	0	0	0

4/24/2024	12:00 AM	0	0	0	0	0	0	0	0	0	0	0	0	0
4/24/2024	12:15 AM	0	0	0	0	0	0	0	0	0	0	0	0	0
4/24/2024	12:30 AM	0	0	0	0	0	0	0	0	0	0	0	0	0
4/24/2024	12:45 AM	0	0	0	0	0	0	0	0	0	0	0	0	0
4/24/2024	1:00 AM	0	0	0	0	0	0	0	0	0	0	0	0	0
4/24/2024	1:15 AM	0	0	0	0	0	0	0	0	0	0	0	0	0
4/24/2024	1:30 AM	0	0	0	0	0	0	0	0	0	0	0	0	0
4/24/2024	1:45 AM	0	0	0	0	0	0	0	0	0	0	0	0	0
4/24/2024	2:00 AM	0	0	0	0	0	0	0	0	0	0	0	0	0
4/24/2024	2:15 AM	0	0	0	0	0	0	0	0	0	0	0	0	0
4/24/2024	2:30 AM	0	0	0	0	0	0	0	0	0	0	0	0	0
4/24/2024	2:45 AM	0	0	0	0	0	0	0	0	0	0	0	0	0
4/24/2024	3:00 AM	0	0	0	0	0	0	0	0	0	0	0	0	0
4/24/2024	3:15 AM	0	0	0	0	0	0	0	0	0	0	0	0	0
4/24/2024	3:30 AM	0	0	0	0	0	0	0	0	0	0	0	0	0
4/24/2024	3:45 AM	0	0	0	0	0	0	0	0	0	0	0	0	0
4/24/2024	4:00 AM	0	0	0	0	0	0	0	0	0	0	0	0	0
4/24/2024	4:15 AM	0	0	0	0	0	0	0	0	0	0	0	0	0
4/24/2024	4:30 AM	0	0	0	0	0	0	0	0	0	0	0	0	0
4/24/2024	4:45 AM	0	0	0	0	0	0	0	0	0	0	0	0	0
4/24/2024	5:00 AM	0	0	0	0	0	0	0	0	0	0	0	0	0
4/24/2024	5:15 AM	0	0	0	0	0	0	0	0	0	0	0	0	0
4/24/2024	5:30 AM	0	0	0	0	0	0	0	0	0	0	0	0	0
4/24/2024	5:45 AM	0	0	0	0	0	0	0	0	0	0	0	0	0
4/24/2024	6:00 AM	0	0	0	0	0	0	0	0	0	0	0	0	0
4/24/2024	6:15 AM	0	0	0	0	0	0	0	0	0	0	0	0	0
4/24/2024	6:30 AM	0	0	0	0	0	0	0	0	0	0	0	0	0
4/24/2024	6:45 AM	0	0	0	0	0	0	0	0	0	0	0	0	0
4/24/2024	7:00 AM	0	0	0	0	0	0	0	0	0	0	0	0	0
4/24/2024	7:15 AM	0	0	0	0	0	0	0	0	0	0	0	0	0
4/24/2024	7:30 AM	0	0	0	0	0	0	0	0	0	0	0	0	0
4/24/2024	7:45 AM	0	0	0	0	0	0	0	0	0	0	0	0	0
4/24/2024	8:00 AM	0	0	0	0	0	0	0	0	0	0	0	0	0
4/24/2024	8:15 AM	0	0	0	0	0	0	0	0	0	0	0	0	0
4/24/2024	8:30 AM	0	0	0	0	0	0	0	0	0	0	0	0	0
4/24/2024	8:45 AM	0	0	0	0	0	0	0	0	0	0	0	0	0
4/24/2024	9:00 AM	0	0	0	0	0	0	0	0	0	0	0	0	0
4/24/2024	9:15 AM	0	0	0	0	0	0	0	0	0	0	0	0	0
4/24/2024	9:30 AM	0	0	0	0	0	0	0	0	0	0	0	0	0
4/24/2024	9:45 AM	0	0	0	0	0	0	0	0	0	0	0	0	0
4/24/2024	10:00 AM	0	0	0	0	0	0	0	0	0	0	0	0	0
4/24/2024	10:15 AM	0	0	0	0	0	0	0	0	0	0	0	0	0
4/24/2024	10:30 AM	0	0	0	0	0	0	0	0	0	0	0	0	0
4/24/2024	10:45 AM	0	0	0	0	0	0	0	0	0	0	0	0	0
4/24/2024	11:00 AM	0	0	0	0	0	0	0	0	0	0	0	0	0
4/24/2024	11:15 AM	0	0	0	0	0	0	0	0	0	0	0	0	0
4/24/2024	11:30 AM	0	0	0	0	0	0	0	0	0	0	0	0	0
4/24/2024	11:45 AM	0	0	0	0	0	0	0	0	0	0	0	0	0
4/24/2024	12:00 PM	0	0	0	0	0	0	0	0	0	0	0	0	0
4/24/2024	12:15 PM	0	0	0	0	0	0	0	0	0	0	0	0	0
4/24/2024	12:30 PM	0	0	0	0	0	0	0	0	0	0	0	0	0
4/24/2024	12:45 PM	0	0	0	0	0	0	0	0	0	0	0	0	0
4/24/2024	1:00 PM	0	0	0	0	0	0	0	0	0	0	0	0	0
4/24/2024	1:15 PM	0	0	0	0	0	0	0	0	0	0	0	0	0
4/24/2024	1:30 PM	0	0	0	0	0	0	0	0	0	0	0	0	0
4/24/2024	1:45 PM	0	0	0	0	0	0	0	0	0	0	0	0	0
4/24/2024	2:00 PM	0	0	0	0	0	0	0	0	0	0	0	0	0
4/24/2024	2:15 PM	0	0	0	0	0	0	0	0	0	0	0	0	0
4/24/2024	2:30 PM	0	0	0	0	0	0	0	0	0	0	0	0	0
4/24/2024	2:45 PM	0	0	0	0	0	0	0	0	0	0	0	0	0
4/24/2024	3:00 PM	0	0	0	0	0	0	0	0	0	0	0	0	0
4/24/2024	3:15 PM	0	0	0	0	0	0	0	0	0	0	0	0	0
4/24/2024	3:30 PM	0	0	0	0	0	0	0	0	0	0	0	0	0
4/24/2024	3:45 PM	0	0	0	0	0	0	0	0	0	0	0	0	0
4/24/2024	4:00 PM	0	0	0	0	0	0	0	0	0	0	0	0	0
4/24/2024	4:15 PM	0	0	0	0	0	0	0	0	0	0	0	0	0
4/24/2024	4:30 PM	0	0	0	0	0	0	0	0	0	0	0	0	0
4/24/2024	4:45 PM	0	0	0	0	0	0	0	0	0	0	0	0	0
4/24/2024	5:00 PM	0	0	0	0	0	0	0	0	0	0	0	0	0
4/24/2024	5:15 PM	0	0	0	0	0	0	0	0	0	0	0	0	0
4/24/2024	5:30 PM	0	0	0	0	0	0	0	0	0	0	0	0	0
4/24/2024	5:45 PM	0	0	0	0	0	0	0	0	0	0	0	0	0
4/24/2024	6:00 PM	0	0	0	0	0	0	0	0	0	0	0	0	0
4/24/2024	6:15 PM	0	0	0	0	0	0	0	0	0	0	0	0	0
4/24/2024	6:30 PM	0	0	0	0	0	0	0	0	0	0	0	0	0
4/24/2024	6:45 PM	0	0	0	0	0	0	0	0	0	0	0	0	0
4/24/2024	7:00 PM	0	0	0	0	0	0	0	0	0	0	0	0	0
4/24/2024	7:15 PM	0	0	0	0	0	0	0	0	0	0	0	0	0
4/24/2024	7:30 PM	0	0	0	0	0	0	0	0	0	0	0	0	0
4/24/2024	7:45 PM	0	0	0	0	0	0	0	0	0	0	0	0	0
4/24/2024	8:00 PM	0	0	0	0	0	0	0	0	0	0	0	0	0
4/24/2024	8:15 PM	0	0	0	0	0	0	0	0	0	0	0	0	0
4/24/2024	8:30 PM	0	0	0	0	0	0	0	0	0	0	0	0	0
4/24/2024	8:45 PM	0	0	0	0	0	0	0	0	0	0	0	0	0
4/24/2024	9:00 PM	0	0	0	0	0	0	0	0	0	0	0	0	0
4/24/2024	9:15 PM	0	0	0	0	0	0	0	0	0	0	0	0	0
4/24/2024	9:30 PM	0	0	0	0	0	0	0	0	0	0	0	0	0
4/24/2024	9:45 PM	0	0	0	0	0	0	0	0	0	0	0	0	0
4/24/2024	10:00 PM	0	0	0	0	0	0	0	0	0	0	0	0	0
4/24/2024	10:15 PM	0	0	0	0	0	0	0	0	0	0	0	0	0
4/24/2024	10:30 PM	0	0	0	0	0	0	0	0	0	0	0	0	0
4/24/2024	10:45 PM	0	0	0	0	0	0	0	0	0	0	0	0	0
4/24/2024	11:00 PM	0	0	0	0	0	0	0	0	0	0	0	0	0
4/24/2024	11:15 PM	0	0	0	0	0	0	0	0	0	0	0	0	0
4/24/2024	11:30 PM	0	0	0	0	0	0	0	0	0	0	0	0	0
4/24/2024	11:45 PM	0	0	0	0	0	0	0	0	0	0	0	0	0

4/25/2024	12:00 AM	0	0	0	0	0	0	0	0	0	0	0	0	0
4/25/2024	12:15 AM	0	0	0	0	0	0	0	0	0	0	0	0	0
4/25/2024	12:30 AM	0	0	0	0	0	0	0	0	0	0	0	0	0
4/25/2024	12:45 AM	0	0	0	0	0	0	0	0	0	0	0	0	0
4/25/2024	1:00 AM	0	0	0	0	0	0	0	0	0	0	0	0	0
4/25/2024	1:15 AM	0	0	0	0	0	0	0	0	0	0	0	0	0
4/25/2024	1:30 AM	0	0	0	0	0	0	0	0	0	0	0	0	0
4/25/2024	1:45 AM	0	0	0	0	0	0	0	0	0	0	0	0	0
4/25/2024	2:00 AM	0	0	0	0	0	0	0	0	0	0	0	0	0
4/25/2024	2:15 AM	0	0	0	0	0	0	0	0	0	0	0	0	0
4/25/2024	2:30 AM	0	0	0	0	0	0	0	0	0	0	0	0	0
4/25/2024	2:45 AM	0	0	0	0	0	0	0	0	0	0	0	0	0
4/25/2024	3:00 AM	0	0	0	0	0	0	0	0	0	0	0	0	0
4/25/2024	3:15 AM	0	0	0	0	0	0	0	0	0	0	0	0	0
4/25/2024	3:30 AM	0	0	0	0	0	0	0	0	0	0	0	0	0
4/25/2024	3:45 AM	0	0	0	0	0	0	0	0	0	0	0	0	0
4/25/2024	4:00 AM	0	0	0	0	0	0	0	0	0	0	0	0	0
4/25/2024	4:15 AM	0	0	0	0	0	0	0	0	0	0	0	0	0
4/25/2024	4:30 AM	0	0	0	0	0	0	0	0	0	0	0	0	0
4/25/2024	4:45 AM	0	0	0	0	0	0	0	0	0	0	0	0	0
4/25/2024	5:00 AM	0	0	0	0	0	0	0	0	0	0	0	0	0
4/25/2024	5:15 AM	0	0	0	0	0	0	0	0	0	0	0	0	0
4/25/2024	5:30 AM	0	0	0	0	0	0	0	0	0	0	0	0	0
4/25/2024	5:45 AM	0	0	0	0	0	0	0	0	0	0	0	0	0
4/25/2024	6:00 AM	0	0	0	0	0	0	0	0	0	0	0	0	0
4/25/2024	6:15 AM	0	0	0	0	0	0	0	0	0	0	0	0	0
4/25/2024	6:30 AM	0	0	0	0	0	0	0	0	0	0	0	0	0
4/25/2024	6:45 AM	0	0	0	0	0	0	0	0	0	0	0	0	0
4/25/2024	7:00 AM	0	0	0	0	0	0	0	0	0	0	0	0	0
4/25/2024	7:15 AM	0	0	0	0	0	0	0	0	0	0	0	0	0
4/25/2024	7:30 AM	0	0	0	0	0	0	0	0	0	0	0	0	0
4/25/2024	7:45 AM	0	0	0	0	0	0	0	0	0	0	0	0	0
4/25/2024	8:00 AM	0	0	0	0	0	0	0	0	0	0	0	0	0
4/25/2024	8:15 AM	0	0	0	0	0	0	0	0	0	0	0	0	0
4/25/2024	8:30 AM	0	0	0	0	0	0	0	0	0	0	0	0	0
4/25/2024	8:45 AM	0	0	0	0	0	0	0	0	0	0	0	0	0
4/25/2024	9:00 AM	0	0	0	0	0	0	0	0	0	0	0	0	0
4/25/2024	9:15 AM	0	0	0	0	0	0	0	0	0	0	0	0	0
4/25/2024	9:30 AM	0	0	0	0	0	0	0	0	0	0	0	0	0
4/25/2024	9:45 AM	0	0	0	0	0	0	0	0	0	0	0	0	0
4/25/2024	10:00 AM	0	0	0	0	0	0	0	0	0	0	0	0	0
4/25/2024	10:15 AM	0	0	0	0	0	0	0	0	0	0	0	0	0
4/25/2024	10:30 AM	0	0	0	0	0	0	0	0	0	0	0	0	0
4/25/2024	10:45 AM	0	0	0	0	0	0	0	0	0	0	0	0	0
4/25/2024	11:00 AM	0	0	0	0	0	0	0	0	0	0	0	0	0
4/25/2024	11:15 AM	0	0	0	0	0	0	0	0	0	0	0	0	0
4/25/2024	11:30 AM	0	0	0	0	0	0	0	0	0	0	0	0	0
4/25/2024	11:45 AM	0	0	0	0	0	0	0	0	0	0	0	0	0
4/25/2024	12:00 PM	0	0	0	0	0	0	0	0	0	0	0	0	0
4/25/2024	12:15 PM	0	0	0	0	0	0	0	0	0	0	0	0	0
4/25/2024	12:30 PM	0	0	0	0	0	0	0	0	0	0	0	0	0
4/25/2024	12:45 PM	0	0	0	0	0	0	0	0	0	0	0	0	0
4/25/2024	1:00 PM	0	0	0	0	0	0	0	0	0	0	0	0	0
4/25/2024	1:15 PM	0	0	0	0	0	0	0	0	0	0	0	0	0
4/25/2024	1:30 PM	0	0	0	0	0	0	0	0	0	0	0	0	0
4/25/2024	1:45 PM	0	0	0	0	0	0	0	0	0	0	0	0	0
4/25/2024	2:00 PM	0	0	0	0	0	0	0	0	0	0	0	0	0
4/25/2024	2:15 PM	0	0	0	0	0	0	0	0	0	0	0	0	0
4/25/2024	2:30 PM	0	0	0	0	0	0	0	0	0	0	0	0	0
4/25/2024	2:45 PM	0	0	0	0	0	0	0	0	0	0	0	0	0
4/25/2024	3:00 PM	0	0	0	0	0	0	0	0	0	0	0	0	0
4/25/2024	3:15 PM	0	0	0	0	0	0	0	0	0	0	0	0	0
4/25/2024	3:30 PM	0	0	0	0	0	0	0	0	0	0	0	0	0
4/25/2024	3:45 PM	0	0	0	0	0	0	0	0	0	0	0	0	0
4/25/2024	4:00 PM	0	0	0	0	0	0	0	0	0	0	0	0	0
4/25/2024	4:15 PM	0	0	0	0	0	0	0	0	0	0	0	0	0
4/25/2024	4:30 PM	0	0	0	0	0	0	0	0	0	0	0	0	0
4/25/2024	4:45 PM	0	0	0	0	0	0	0	0	0	0	0	0	0
4/25/2024	5:00 PM	0	0	0	0	0	0	0	0	0	0	0	0	0
4/25/2024	5:15 PM	0	0	0	0	0	0	0	0	0	0	0	0	0
4/25/2024	5:30 PM	0	0	0	0	0	0	0	0	0	0	0	0	0
4/25/2024	5:45 PM	0	0	0	0	0	0	0	0	0	0	0	0	0
4/25/2024	6:00 PM	0	0	0	0	0	0	0	0	0	0	0	0	0
4/25/2024	6:15 PM	0	0	0	0	0	0	0	0	0	0	0	0	0
4/25/2024	6:30 PM	0	0	0	0	0	0	0	0	0	0	0	0	0
4/25/2024	6:45 PM	0	0	0	0	0	0	0	0	0	0	0	0	0
4/25/2024	7:00 PM	0	0	0	0	0	0	0	0	0	0	0	0	0
4/25/2024	7:15 PM	0	0	0	0	0	0	0	0	0	0	0	0	0
4/25/2024	7:30 PM	0	0	0	0	0	0	0	0	0	0	0	0	0
4/25/2024	7:45 PM	0	0	0	0	0	0	0	0	0	0	0	0	0
4/25/2024	8:00 PM	0	0	0	0	0	0	0	0	0	0	0	0	0
4/25/2024	8:15 PM	0	0	0	0	0	0	0	0	0	0	0	0	0
4/25/2024	8:30 PM	0	0	0	0	0	0	0	0	0	0	0	0	0
4/25/2024	8:45 PM	0	0	0	0	0	0	0	0	0	0	0	0	0
4/25/2024	9:00 PM	0	0	0	0	0	0	0	0	0	0	0	0	0
4/25/2024	9:15 PM	0	0	0	0	0	0	0	0	0	0	0	0	0
4/25/2024	9:30 PM	0	0	0	0	0	0	0	0	0	0	0	0	0
4/25/2024	9:45 PM	0	0	0	0	0	0	0	0	0	0	0	0	0
4/25/2024	10:00 PM	0	0	0	0	0	0	0	0	0	0	0	0	0
4/25/2024	10:15 PM	0	0	0	0	0	0	0	0	0	0	0	0	0
4/25/2024	10:30 PM	0	0	0	0	0	0	0	0	0	0	0	0	0
4/25/2024	10:45 PM	0	0	0	0	0	0	0	0	0	0	0	0	0
4/25/2024	11:00 PM	0	0	0	0	0	0	0	0	0	0	0	0	0
4/25/2024	11:15 PM	0	0	0	0	0	0	0	0	0	0	0	0	0
4/25/2024	11:30 PM	0	0	0	0	0	0	0	0	0	0	0	0	0
4/25/2024	11:45 PM	0	0	0	0	0	0	0	0	0	0	0	0	0

WB
File Name:
Start Date: 4/23/2024
Start Time: 0
Site Code: 67
Station ID: 1
Location 1: I-20 W/Bound Off-Ramp, east of US-176 Broad River Rd
Location 2:

Date	Time	1	2	3	4	5	6	7	8	9	10	11	12	13
4/23/2024	12:00 AM	0	0	0	0	0	0	0	0	0	0	0	0	0
4/23/2024	12:15 AM	0	0	0	0	0	0	0	0	0	0	0	0	0
4/23/2024	12:30 AM	0	0	0	0	0	0	0	0	0	0	0	0	0
4/23/2024	12:45 AM	0	0	0	0	0	0	0	0	0	0	0	0	0
4/23/2024	1:00 AM	0	0	0	0	0	0	0	0	0	0	0	0	0
4/23/2024	1:15 AM	0	0	0	0	0	0	0	0	0	0	0	0	0
4/23/2024	1:30 AM	0	0	0	0	0	0	0	0	0	0	0	0	0
4/23/2024	1:45 AM	0	0	0	0	0	0	0	0	0	0	0	0	0
4/23/2024	2:00 AM	0	0	0	0	0	0	0	0	0	0	0	0	0
4/23/2024	2:15 AM	0	0	0	0	0	0	0	0	0	0	0	0	0
4/23/2024	2:30 AM	0	0	0	0	0	0	0	0	0	0	0	0	0
4/23/2024	2:45 AM	0	0	0	0	0	0	0	0	0	0	0	0	0
4/23/2024	3:00 AM	0	0	0	0	0	0	0	0	0	0	0	0	0
4/23/2024	3:15 AM	0	0	0	0	0	0	0	0	0	0	0	0	0
4/23/2024	3:30 AM	0	0	0	0	0	0	0	0	0	0	0	0	0
4/23/2024	3:45 AM	0	0	0	0	0	0	0	0	0	0	0	0	0
4/23/2024	4:00 AM	0	0	0	0	0	0	0	0	0	0	0	0	0
4/23/2024	4:15 AM	0	0	0	0	0	0	0	0	0	0	0	0	0
4/23/2024	4:30 AM	0	0	0	0	0	0	0	0	0	0	0	0	0
4/23/2024	4:45 AM	0	0	0	0	0	0	0	0	0	0	0	0	0
4/23/2024	5:00 AM	0	0	0	0	0	0	0	0	0	0	0	0	0
4/23/2024	5:15 AM	0	0	0	0	0	0	0	0	0	0	0	0	0
4/23/2024	5:30 AM	0	0	0	0	0	0	0	0	0	0	0	0	0
4/23/2024	5:45 AM	0	0	0	0	0	0	0	0	0	0	0	0	0
4/23/2024	6:00 AM	0	0	0	0	0	0	0	0	0	0	0	0	0
4/23/2024	6:15 AM	0	0	0	0	0	0	0	0	0	0	0	0	0
4/23/2024	6:30 AM	0	0	0	0	0	0	0	0	0	0	0	0	0
4/23/2024	6:45 AM	0	0	0	0	0	0	0	0	0	0	0	0	0
4/23/2024	7:00 AM	0	0	0	0	0	0	0	0	0	0	0	0	0
4/23/2024	7:15 AM	0	0	0	0	0	0	0	0	0	0	0	0	0
4/23/2024	7:30 AM	0	0	0	0	0	0	0	0	0	0	0	0	0
4/23/2024	7:45 AM	0	0	0	0	0	0	0	0	0	0	0	0	0
4/23/2024	8:00 AM	0	0	0	0	0	0	0	0	0	0	0	0	0
4/23/2024	8:15 AM	0	0	0	0	0	0	0	0	0	0	0	0	0
4/23/2024	8:30 AM	0	0	0	0	0	0	0	0	0	0	0	0	0
4/23/2024	8:45 AM	0	0	0	0	0	0	0	0	0	0	0	0	0
4/23/2024	9:00 AM	0	0	0	0	0	0	0	0	0	0	0	0	0
4/23/2024	9:15 AM	0	0	0	0	0	0	0	0	0	0	0	0	0
4/23/2024	9:30 AM	0	0	0	0	0	0	0	0	0	0	0	0	0
4/23/2024	9:45 AM	0	0	0	0	0	0	0	0	0	0	0	0	0
4/23/2024	10:00 AM	0	0	0	0	0	0	0	0	0	0	0	0	0
4/23/2024	10:15 AM	0	0	0	0	0	0	0	0	0	0	0	0	0
4/23/2024	10:30 AM	0	0	0	0	0	0	0	0	0	0	0	0	0
4/23/2024	10:45 AM	0	0	0	0	0	0	0	0	0	0	0	0	0
4/23/2024	11:00 AM	0	0	0	0	0	0	0	0	0	0	0	0	0
4/23/2024	11:15 AM	0	0	0	0	0	0	0	0	0	0	0	0	0
4/23/2024	11:30 AM	0	0	0	0	0	0	0	0	0	0	0	0	0
4/23/2024	11:45 AM	0	0	0	0	0	0	0	0	0	0	0	0	0
4/23/2024	12:00 PM	0	0	0	0	0	0	0	0	0	0	0	0	0
4/23/2024	12:15 PM	0	0	0	0	0	0	0	0	0	0	0	0	0
4/23/2024	12:30 PM	0	0	0	0	0	0	0	0	0	0	0	0	0
4/23/2024	12:45 PM	0	0	0	0	0	0	0	0	0	0	0	0	0
4/23/2024	1:00 PM	0	0	0	0	0	0	0	0	0	0	0	0	0
4/23/2024	1:15 PM	0	0	0	0	0	0	0	0	0	0	0	0	0
4/23/2024	1:30 PM	0	0	0	0	0	0	0	0	0	0	0	0	0
4/23/2024	1:45 PM	0	0	0	0	0	0	0	0	0	0	0	0	0
4/23/2024	2:00 PM	0	0	0	0	0	0	0	0	0	0	0	0	0
4/23/2024	2:15 PM	0	0	0	0	0	0	0	0	0	0	0	0	0
4/23/2024	2:30 PM	0	0	0	0	0	0	0	0	0	0	0	0	0
4/23/2024	2:45 PM	0	0	0	0	0	0	0	0	0	0	0	0	0
4/23/2024	3:00 PM	0	0	0	0	0	0	0	0	0	0	0	0	0
4/23/2024	3:15 PM	0	0	0	0	0	0	0	0	0	0	0	0	0
4/23/2024	3:30 PM	0	0	0	0	0	0	0	0	0	0	0	0	0
4/23/2024	3:45 PM	0	0	0	0	0	0	0	0	0	0	0	0	0
4/23/2024	4:00 PM	0	0	0	0	0	0	0	0	0	0	0	0	0
4/23/2024	4:15 PM	0	0	0	0	0	0	0	0	0	0	0	0	0
4/23/2024	4:30 PM	0	0	0	0	0	0	0	0	0	0	0	0	0
4/23/2024	4:45 PM	0	0	0	0	0	0	0	0	0	0	0	0	0
4/23/2024	5:00 PM	0	0	0	0	0	0	0	0	0	0	0	0	0
4/23/2024	5:15 PM	0	0	0	0	0	0	0	0	0	0	0	0	0
4/23/2024	5:30 PM	0	0	0	0	0	0	0	0	0	0	0	0	0
4/23/2024	5:45 PM	0	0	0	0	0	0	0	0	0	0	0	0	0
4/23/2024	6:00 PM	0	0	0	0	0	0	0	0	0	0	0	0	0
4/23/2024	6:15 PM	0	0	0	0	0	0	0	0	0	0	0	0	0
4/23/2024	6:30 PM	0	0	0	0	0	0	0	0	0	0	0	0	0
4/23/2024	6:45 PM	0	0	0	0	0	0	0	0	0	0	0	0	0
4/23/2024	7:00 PM	0	117	18	0	0	2	0	0	0	0	0	0	0
4/23/2024	7:15 PM	0	134	17	0	1	1	0	0	2	0	0	0	0
4/23/2024	7:30 PM	0	94	13	0	0	0	0	0	0	0	0	0	0
4/23/2024	7:45 PM	1	139	17	0	1	0	0	0	0	0	0	0	0
4/23/2024	8:00 PM	0	97	9	0	0	1	0	0	0	0	0	0	0
4/23/2024	8:15 PM	0	87	16	0	1	0	0	0	1	0	0	0	0
4/23/2024	8:30 PM	0	95	13	0	0	0	0	2	0	0	0	0	0
4/23/2024	8:45 PM	0	95	11	0	0	0	0	0	0	0	0	0	0
4/23/2024	9:00 PM	0	72	9	0	0	0	0	0	0	0	0	0	0
4/23/2024	9:15 PM	0	82	13	0	0	0	0	0	0	0	0	0	0
4/23/2024	9:30 PM	0	70	10	0	0	0	0	0	0	0	0	0	0
4/23/2024	9:45 PM	0	58	10	0	1	0	0	0	0	0	0	0	0
4/23/2024	10:00 PM	0	55	10	0	0	0	0	0	0	0	0	0	0
4/23/2024	10:15 PM	0	61	13	0	1	0	0	0	0	0	0	0	0
4/23/2024	10:30 PM	0	51	7	0	0	0	0	0	1	0	0	0	0
4/23/2024	10:45 PM	0	56	11	0	0	0	0	0	0	0	0	0	0
4/23/2024	11:00 PM	0	47	8	0	0	0	0	0	0	0	0	0	0
4/23/2024	11:15 PM	0	42	10	0	0	0	0	0	0	0	0	0	0
4/23/2024	11:30 PM	0	34	11	0	0	0	0	0	1	0	0	0	0
4/23/2024	11:45 PM	0	29	15	0	0	0	0	0	0	0	0	0	0

4/24/2024	12:00 AM	0	29	12	0	0	0	0	0	0	0	0	0
4/24/2024	12:15 AM	0	29	7	0	0	0	0	0	0	0	0	0
4/24/2024	12:30 AM	0	23	9	0	0	0	0	0	0	0	0	0
4/24/2024	12:45 AM	0	20	6	0	0	0	0	0	0	0	0	0
4/24/2024	1:00 AM	0	22	6	0	0	0	0	0	0	0	0	0
4/24/2024	1:15 AM	0	23	6	0	0	0	0	0	0	0	0	0
4/24/2024	1:30 AM	0	13	3	0	1	0	0	0	1	0	0	0
4/24/2024	1:45 AM	0	14	3	0	1	0	0	0	0	0	0	0
4/24/2024	2:00 AM	0	8	2	0	1	0	0	0	0	0	0	0
4/24/2024	2:15 AM	0	17	3	0	0	0	0	0	0	0	0	0
4/24/2024	2:30 AM	0	15	4	0	0	0	0	0	0	0	0	0
4/24/2024	2:45 AM	0	10	2	0	0	0	0	0	0	0	0	0
4/24/2024	3:00 AM	0	6	0	0	0	0	0	0	0	0	0	0
4/24/2024	3:15 AM	0	23	6	0	0	0	0	0	0	0	0	0
4/24/2024	3:30 AM	0	12	2	0	0	0	0	0	0	0	0	0
4/24/2024	3:45 AM	0	9	2	0	0	0	0	0	0	0	0	0
4/24/2024	4:00 AM	0	11	2	0	0	0	0	0	0	0	0	0
4/24/2024	4:15 AM	0	14	3	0	0	0	0	0	0	0	0	0
4/24/2024	4:30 AM	0	17	4	0	0	0	0	1	0	0	0	0
4/24/2024	4:45 AM	0	24	6	0	0	0	0	0	0	0	0	0
4/24/2024	5:00 AM	0	23	6	0	0	0	0	0	0	0	0	0
4/24/2024	5:15 AM	0	32	8	0	1	0	0	0	0	0	0	0
4/24/2024	5:30 AM	0	40	11	0	1	0	0	0	0	0	0	0
4/24/2024	5:45 AM	0	40	8	0	2	0	0	0	0	0	0	0
4/24/2024	6:00 AM	0	54	12	1	2	0	0	0	0	0	0	0
4/24/2024	6:15 AM	0	79	17	8	0	0	0	0	0	0	0	0
4/24/2024	6:30 AM	0	78	19	4	2	1	0	0	1	0	0	0
4/24/2024	6:45 AM	0	196	41	3	2	1	0	0	0	0	0	0
4/24/2024	7:00 AM	0	154	30	0	5	2	0	0	1	0	0	0
4/24/2024	7:15 AM	0	226	46	0	2	2	0	0	1	0	0	0
4/24/2024	7:30 AM	0	216	27	1	3	3	0	0	0	0	0	0
4/24/2024	7:45 AM	0	241	28	1	3	3	0	2	3	0	0	0
4/24/2024	8:00 AM	0	144	21	1	6	5	0	0	2	0	0	0
4/24/2024	8:15 AM	0	125	14	2	2	1	0	0	0	0	0	0
4/24/2024	8:30 AM	1	180	30	1	3	5	0	1	0	0	0	0
4/24/2024	8:45 AM	0	156	34	0	5	0	0	2	1	0	0	0
4/24/2024	9:00 AM	0	133	23	2	5	1	0	0	1	0	0	0
4/24/2024	9:15 AM	0	84	25	1	2	4	0	0	1	0	0	0
4/24/2024	9:30 AM	0	134	31	1	2	4	0	0	1	0	0	0
4/24/2024	9:45 AM	0	148	35	1	5	1	0	1	0	0	0	0
4/24/2024	10:00 AM	0	109	26	0	1	5	0	1	1	0	0	0
4/24/2024	10:15 AM	0	88	23	1	4	5	1	2	0	0	0	0
4/24/2024	10:30 AM	0	102	27	0	4	3	2	0	0	0	0	0
4/24/2024	10:45 AM	0	117	27	0	4	1	0	0	1	0	0	0
4/24/2024	11:00 AM	0	112	19	1	3	3	0	0	0	0	0	0
4/24/2024	11:15 AM	0	114	17	3	2	0	0	0	3	0	0	0
4/24/2024	11:30 AM	0	137	28	1	5	2	0	0	1	0	0	0
4/24/2024	11:45 AM	0	122	31	0	0	6	0	0	2	0	0	0
4/24/2024	12:00 PM	1	136	32	1	5	1	0	1	1	0	0	0
4/24/2024	12:15 PM	1	119	26	1	1	0	0	0	0	0	0	0
4/24/2024	12:30 PM	1	112	32	0	2	5	0	0	2	0	0	0
4/24/2024	12:45 PM	0	118	26	0	4	2	1	0	0	0	0	0
4/24/2024	1:00 PM	1	124	34	0	2	0	0	0	0	0	0	0
4/24/2024	1:15 PM	0	136	23	1	2	4	0	0	0	0	0	0
4/24/2024	1:30 PM	2	140	22	4	2	3	0	0	1	0	0	0
4/24/2024	1:45 PM	0	138	26	0	2	0	0	0	1	0	0	0
4/24/2024	2:00 PM	0	120	36	5	4	2	0	0	4	0	0	0
4/24/2024	2:15 PM	1	120	21	3	2	1	0	0	1	0	0	0
4/24/2024	2:30 PM	0	123	33	0	3	4	1	0	1	0	0	0
4/24/2024	2:45 PM	0	134	24	0	2	3	0	1	2	0	0	0
4/24/2024	3:00 PM	1	124	34	1	1	2	0	0	0	0	0	0
4/24/2024	3:15 PM	0	179	35	1	4	0	0	1	2	0	0	0
4/24/2024	3:30 PM	0	187	52	1	3	3	0	1	0	0	0	0
4/24/2024	3:45 PM	1	157	47	4	3	5	0	0	1	0	0	0
4/24/2024	4:00 PM	1	202	39	0	3	2	0	0	2	0	0	0
4/24/2024	4:15 PM	0	211	39	0	4	4	0	0	1	0	0	0
4/24/2024	4:30 PM	0	223	41	2	1	1	0	2	0	0	0	0
4/24/2024	4:45 PM	0	220	44	0	2	1	0	0	0	0	0	0
4/24/2024	5:00 PM	0	213	52	1	3	1	0	0	0	0	0	0
4/24/2024	5:15 PM	0	238	44	0	2	0	0	0	0	0	0	0
4/24/2024	5:30 PM	0	224	56	0	3	0	0	0	0	0	0	0
4/24/2024	5:45 PM	0	207	60	0	1	0	0	0	0	0	0	0
4/24/2024	6:00 PM	0	163	42	1	1	3	0	0	0	0	0	0
4/24/2024	6:15 PM	0	152	44	0	3	1	0	0	0	0	0	0
4/24/2024	6:30 PM	0	150	42	0	2	1	0	0	1	0	0	0
4/24/2024	6:45 PM	0	142	37	0	0	0	0	0	0	0	0	0
4/24/2024	7:00 PM	0	153	42	1	3	0	0	0	0	0	0	0
4/24/2024	7:15 PM	1	128	28	0	1	0	0	0	0	0	0	0
4/24/2024	7:30 PM	0	127	21	0	1	0	0	0	0	0	0	0
4/24/2024	7:45 PM	0	129	23	0	1	0	0	0	0	0	0	0
4/24/2024	8:00 PM	0	129	16	0	0	1	0	0	1	0	0	0
4/24/2024	8:15 PM	0	111	14	0	1	0	0	0	0	0	0	0
4/24/2024	8:30 PM	0	86	11	0	0	0	0	0	0	0	0	0
4/24/2024	8:45 PM	0	89	28	0	0	0	0	0	0	0	0	0
4/24/2024	9:00 PM	0	111	20	0	0	0	0	0	0	0	0	0
4/24/2024	9:15 PM	0	78	18	0	0	0	0	0	0	0	0	0
4/24/2024	9:30 PM	0	67	12	0	0	0	0	0	0	0	0	0
4/24/2024	9:45 PM	0	49	12	0	0	0	0	0	0	0	0	0
4/24/2024	10:00 PM	0	53	13	0	0	0	0	0	0	0	0	0
4/24/2024	10:15 PM	0	68	16	0	0	0	0	0	0	0	0	0
4/24/2024	10:30 PM	0	66	12	0	0	0	0	0	0	0	0	0
4/24/2024	10:45 PM	0	51	11	1	2	0	0	0	0	0	0	0
4/24/2024	11:00 PM	0	44	13	0	1	0	0	0	0	0	0	0
4/24/2024	11:15 PM	0	38	6	0	0	0	0	0	0	0	0	0
4/24/2024	11:30 PM	0	50	6	1	0	0	0	0	0	0	0	0
4/24/2024	11:45 PM	0	42	5	0	0	0	0	0	0	0	0	0

4/25/2024	12:00 AM	0	30	8	0	0	0	0	0	0	0	0	0
4/25/2024	12:15 AM	0	30	10	0	0	0	0	0	0	0	0	0
4/25/2024	12:30 AM	0	20	5	0	1	0	0	0	0	0	0	0
4/25/2024	12:45 AM	0	24	6	0	0	0	0	0	0	0	0	0
4/25/2024	1:00 AM	0	15	3	0	0	0	0	0	0	0	0	0
4/25/2024	1:15 AM	0	19	3	0	1	0	0	0	0	0	0	0
4/25/2024	1:30 AM	0	19	3	0	0	0	0	0	0	0	0	0
4/25/2024	1:45 AM	0	9	2	0	0	0	0	0	0	0	0	0
4/25/2024	2:00 AM	0	16	3	0	0	0	0	0	0	0	0	0
4/25/2024	2:15 AM	0	16	3	0	0	0	0	0	0	0	0	0
4/25/2024	2:30 AM	0	14	4	0	1	0	0	0	0	0	0	0
4/25/2024	2:45 AM	0	11	2	0	0	1	0	0	0	0	0	0
4/25/2024	3:00 AM	0	18	4	0	0	1	0	0	0	0	0	0
4/25/2024	3:15 AM	0	4	2	0	0	0	0	0	0	0	0	0
4/25/2024	3:30 AM	0	12	3	0	0	0	0	0	1	0	0	0
4/25/2024	3:45 AM	0	13	3	0	0	0	0	0	0	0	0	0
4/25/2024	4:00 AM	0	7	1	0	1	0	0	0	0	0	0	0
4/25/2024	4:15 AM	0	9	2	0	0	0	0	0	0	0	0	0
4/25/2024	4:30 AM	0	17	3	0	2	0	0	0	0	0	0	0
4/25/2024	4:45 AM	0	27	4	0	2	0	0	1	0	0	0	0
4/25/2024	5:00 AM	0	22	4	0	0	0	0	0	0	0	0	0
4/25/2024	5:15 AM	0	42	10	0	0	0	0	0	0	0	0	0
4/25/2024	5:30 AM	0	37	8	0	3	0	0	0	2	0	0	0
4/25/2024	5:45 AM	0	39	11	3	1	0	0	0	0	0	0	0
4/25/2024	6:00 AM	0	42	14	0	1	1	0	0	0	0	0	0
4/25/2024	6:15 AM	0	86	14	5	0	0	0	0	0	0	0	0
4/25/2024	6:30 AM	0	98	16	6	2	0	0	0	0	0	0	0
4/25/2024	6:45 AM	0	133	37	1	1	2	1	0	1	0	0	0
4/25/2024	7:00 AM	0	149	23	0	2	2	0	0	1	0	0	0
4/25/2024	7:15 AM	0	218	35	0	0	2	0	0	2	0	0	0
4/25/2024	7:30 AM	0	170	28	2	2	3	0	0	1	0	0	0
4/25/2024	7:45 AM	0	236	45	1	4	5	0	0	1	0	0	0
4/25/2024	8:00 AM	0	185	29	1	3	0	0	0	1	0	0	0
4/25/2024	8:15 AM	1	156	35	2	0	0	0	0	0	0	0	0
4/25/2024	8:30 AM	0	206	38	1	2	1	0	0	0	0	0	0
4/25/2024	8:45 AM	0	159	36	0	4	1	0	0	0	0	0	0
4/25/2024	9:00 AM	0	134	28	2	3	0	0	0	1	0	0	0
4/25/2024	9:15 AM	0	106	33	2	1	0	0	0	0	0	0	0
4/25/2024	9:30 AM	1	105	37	0	4	2	0	0	2	0	0	0
4/25/2024	9:45 AM	0	124	34	1	2	0	0	0	2	0	0	0
4/25/2024	10:00 AM	0	111	25	0	1	0	0	0	1	0	0	0
4/25/2024	10:15 AM	0	105	28	1	1	1	1	0	0	0	0	0
4/25/2024	10:30 AM	0	105	36	1	1	0	0	0	2	0	0	0
4/25/2024	10:45 AM	0	117	27	1	2	1	0	0	0	0	0	0
4/25/2024	11:00 AM	0	107	31	0	1	1	0	0	1	0	0	0
4/25/2024	11:15 AM	0	139	23	0	5	2	0	0	1	0	0	0
4/25/2024	11:30 AM	1	131	23	2	3	1	0	0	2	0	0	0
4/25/2024	11:45 AM	0	134	29	0	2	1	0	0	1	0	0	0
4/25/2024	12:00 PM	0	141	28	0	3	0	0	0	0	0	0	0
4/25/2024	12:15 PM	0	131	23	2	5	1	0	0	0	0	0	0
4/25/2024	12:30 PM	1	130	35	1	2	0	0	0	0	0	0	0
4/25/2024	12:45 PM	0	118	20	0	1	0	0	0	0	0	0	0
4/25/2024	1:00 PM	0	143	30	2	3	0	0	0	2	0	0	0
4/25/2024	1:15 PM	0	132	24	1	0	0	1	0	0	0	0	0
4/25/2024	1:30 PM	0	135	34	2	4	1	0	0	0	0	0	0
4/25/2024	1:45 PM	0	151	35	2	2	1	0	0	0	0	0	0
4/25/2024	2:00 PM	0	145	28	6	0	1	1	0	1	0	0	0
4/25/2024	2:15 PM	0	146	27	2	1	2	0	0	0	0	0	0
4/25/2024	2:30 PM	0	134	22	1	1	2	0	0	0	0	0	0
4/25/2024	2:45 PM	0	173	23	0	4	0	0	0	0	0	0	0
4/25/2024	3:00 PM	1	170	22	1	3	1	0	0	0	0	0	0
4/25/2024	3:15 PM	0	179	31	2	2	1	0	0	1	0	0	0
4/25/2024	3:30 PM	0	194	32	1	1	1	0	0	0	0	0	0
4/25/2024	3:45 PM	0	199	28	1	2	2	0	0	0	0	0	0
4/25/2024	4:00 PM	0	150	31	2	5	3	0	3	1	0	0	0
4/25/2024	4:15 PM	0	188	39	1	1	0	0	0	0	0	0	0
4/25/2024	4:30 PM	0	177	42	2	1	0	0	0	0	0	0	0
4/25/2024	4:45 PM	0	165	26	0	2	0	0	0	0	0	0	0
4/25/2024	5:00 PM	1	168	23	0	0	1	0	1	0	0	0	0
4/25/2024	5:15 PM	2	186	25	0	0	0	0	0	0	0	0	0
4/25/2024	5:30 PM	0	188	25	1	0	0	0	0	1	0	0	0
4/25/2024	5:45 PM	1	187	38	0	1	0	0	0	0	0	0	0
4/25/2024	6:00 PM	0	152	37	1	0	0	0	0	0	0	0	0
4/25/2024	6:15 PM	2	160	15	0	1	1	0	0	0	0	0	0
4/25/2024	6:30 PM	0	131	22	0	1	2	0	0	0	0	0	0
4/25/2024	6:45 PM	0	128	14	1	2	0	0	0	0	0	0	0
4/25/2024	7:00 PM	0	0	0	0	0	0	0	0	0	0	0	0
4/25/2024	7:15 PM	0	0	0	0	0	0	0	0	0	0	0	0
4/25/2024	7:30 PM	0	0	0	0	0	0	0	0	0	0	0	0
4/25/2024	7:45 PM	0	0	0	0	0	0	0	0	0	0	0	0
4/25/2024	8:00 PM	0	0	0	0	0	0	0	0	0	0	0	0
4/25/2024	8:15 PM	0	0	0	0	0	0	0	0	0	0	0	0
4/25/2024	8:30 PM	0	0	0	0	0	0	0	0	0	0	0	0
4/25/2024	8:45 PM	0	0	0	0	0	0	0	0	0	0	0	0
4/25/2024	9:00 PM	0	0	0	0	0	0	0	0	0	0	0	0
4/25/2024	9:15 PM	0	0	0	0	0	0	0	0	0	0	0	0
4/25/2024	9:30 PM	0	0	0	0	0	0	0	0	0	0	0	0
4/25/2024	9:45 PM	0	0	0	0	0	0	0	0	0	0	0	0
4/25/2024	10:00 PM	0	0	0	0	0	0	0	0	0	0	0	0
4/25/2024	10:15 PM	0	0	0	0	0	0	0	0	0	0	0	0
4/25/2024	10:30 PM	0	0	0	0	0	0	0	0	0	0	0	0
4/25/2024	10:45 PM	0	0	0	0	0	0	0	0	0	0	0	0
4/25/2024	11:00 PM	0	0	0	0	0	0	0	0	0	0	0	0
4/25/2024	11:15 PM	0	0	0	0	0	0	0	0	0	0	0	0
4/25/2024	11:30 PM	0	0	0	0	0	0	0	0	0	0	0	0
4/25/2024	11:45 PM	0	0	0	0	0	0	0	0	0	0	0	0

EB
File Name:
Start Date: 4/23/2024
Start Time: 0
Site Code: 67
Station ID: 1
Location 1: I-20 W/Bound Off-Ramp, east of US-176 Broad River Rd
Location 2:

Date	Time	1	2	3	4	5	6	7	8	9	10	11	12	13
4/23/2024	12:00 AM	0	0	0	0	0	0	0	0	0	0	0	0	0
4/23/2024	12:15 AM	0	0	0	0	0	0	0	0	0	0	0	0	0
4/23/2024	12:30 AM	0	0	0	0	0	0	0	0	0	0	0	0	0
4/23/2024	12:45 AM	0	0	0	0	0	0	0	0	0	0	0	0	0
4/23/2024	1:00 AM	0	0	0	0	0	0	0	0	0	0	0	0	0
4/23/2024	1:15 AM	0	0	0	0	0	0	0	0	0	0	0	0	0
4/23/2024	1:30 AM	0	0	0	0	0	0	0	0	0	0	0	0	0
4/23/2024	1:45 AM	0	0	0	0	0	0	0	0	0	0	0	0	0
4/23/2024	2:00 AM	0	0	0	0	0	0	0	0	0	0	0	0	0
4/23/2024	2:15 AM	0	0	0	0	0	0	0	0	0	0	0	0	0
4/23/2024	2:30 AM	0	0	0	0	0	0	0	0	0	0	0	0	0
4/23/2024	2:45 AM	0	0	0	0	0	0	0	0	0	0	0	0	0
4/23/2024	3:00 AM	0	0	0	0	0	0	0	0	0	0	0	0	0
4/23/2024	3:15 AM	0	0	0	0	0	0	0	0	0	0	0	0	0
4/23/2024	3:30 AM	0	0	0	0	0	0	0	0	0	0	0	0	0
4/23/2024	3:45 AM	0	0	0	0	0	0	0	0	0	0	0	0	0
4/23/2024	4:00 AM	0	0	0	0	0	0	0	0	0	0	0	0	0
4/23/2024	4:15 AM	0	0	0	0	0	0	0	0	0	0	0	0	0
4/23/2024	4:30 AM	0	0	0	0	0	0	0	0	0	0	0	0	0
4/23/2024	4:45 AM	0	0	0	0	0	0	0	0	0	0	0	0	0
4/23/2024	5:00 AM	0	0	0	0	0	0	0	0	0	0	0	0	0
4/23/2024	5:15 AM	0	0	0	0	0	0	0	0	0	0	0	0	0
4/23/2024	5:30 AM	0	0	0	0	0	0	0	0	0	0	0	0	0
4/23/2024	5:45 AM	0	0	0	0	0	0	0	0	0	0	0	0	0
4/23/2024	6:00 AM	0	0	0	0	0	0	0	0	0	0	0	0	0
4/23/2024	6:15 AM	0	0	0	0	0	0	0	0	0	0	0	0	0
4/23/2024	6:30 AM	0	0	0	0	0	0	0	0	0	0	0	0	0
4/23/2024	6:45 AM	0	0	0	0	0	0	0	0	0	0	0	0	0
4/23/2024	7:00 AM	0	0	0	0	0	0	0	0	0	0	0	0	0
4/23/2024	7:15 AM	0	0	0	0	0	0	0	0	0	0	0	0	0
4/23/2024	7:30 AM	0	0	0	0	0	0	0	0	0	0	0	0	0
4/23/2024	7:45 AM	0	0	0	0	0	0	0	0	0	0	0	0	0
4/23/2024	8:00 AM	0	0	0	0	0	0	0	0	0	0	0	0	0
4/23/2024	8:15 AM	0	0	0	0	0	0	0	0	0	0	0	0	0
4/23/2024	8:30 AM	0	0	0	0	0	0	0	0	0	0	0	0	0
4/23/2024	8:45 AM	0	0	0	0	0	0	0	0	0	0	0	0	0
4/23/2024	9:00 AM	0	0	0	0	0	0	0	0	0	0	0	0	0
4/23/2024	9:15 AM	0	0	0	0	0	0	0	0	0	0	0	0	0
4/23/2024	9:30 AM	0	0	0	0	0	0	0	0	0	0	0	0	0
4/23/2024	9:45 AM	0	0	0	0	0	0	0	0	0	0	0	0	0
4/23/2024	10:00 AM	0	0	0	0	0	0	0	0	0	0	0	0	0
4/23/2024	10:15 AM	0	0	0	0	0	0	0	0	0	0	0	0	0
4/23/2024	10:30 AM	0	0	0	0	0	0	0	0	0	0	0	0	0
4/23/2024	10:45 AM	0	0	0	0	0	0	0	0	0	0	0	0	0
4/23/2024	11:00 AM	0	0	0	0	0	0	0	0	0	0	0	0	0
4/23/2024	11:15 AM	0	0	0	0	0	0	0	0	0	0	0	0	0
4/23/2024	11:30 AM	0	0	0	0	0	0	0	0	0	0	0	0	0
4/23/2024	11:45 AM	0	0	0	0	0	0	0	0	0	0	0	0	0
4/23/2024	12:00 PM	0	0	0	0	0	0	0	0	0	0	0	0	0
4/23/2024	12:15 PM	0	0	0	0	0	0	0	0	0	0	0	0	0
4/23/2024	12:30 PM	0	0	0	0	0	0	0	0	0	0	0	0	0
4/23/2024	12:45 PM	0	0	0	0	0	0	0	0	0	0	0	0	0
4/23/2024	1:00 PM	0	0	0	0	0	0	0	0	0	0	0	0	0
4/23/2024	1:15 PM	0	0	0	0	0	0	0	0	0	0	0	0	0
4/23/2024	1:30 PM	0	0	0	0	0	0	0	0	0	0	0	0	0
4/23/2024	1:45 PM	0	0	0	0	0	0	0	0	0	0	0	0	0
4/23/2024	2:00 PM	0	0	0	0	0	0	0	0	0	0	0	0	0
4/23/2024	2:15 PM	0	0	0	0	0	0	0	0	0	0	0	0	0
4/23/2024	2:30 PM	0	0	0	0	0	0	0	0	0	0	0	0	0
4/23/2024	2:45 PM	0	0	0	0	0	0	0	0	0	0	0	0	0
4/23/2024	3:00 PM	0	0	0	0	0	0	0	0	0	0	0	0	0
4/23/2024	3:15 PM	0	0	0	0	0	0	0	0	0	0	0	0	0
4/23/2024	3:30 PM	0	0	0	0	0	0	0	0	0	0	0	0	0
4/23/2024	3:45 PM	0	0	0	0	0	0	0	0	0	0	0	0	0
4/23/2024	4:00 PM	0	0	0	0	0	0	0	0	0	0	0	0	0
4/23/2024	4:15 PM	0	0	0	0	0	0	0	0	0	0	0	0	0
4/23/2024	4:30 PM	0	0	0	0	0	0	0	0	0	0	0	0	0
4/23/2024	4:45 PM	0	0	0	0	0	0	0	0	0	0	0	0	0
4/23/2024	5:00 PM	0	0	0	0	0	0	0	0	0	0	0	0	0
4/23/2024	5:15 PM	0	0	0	0	0	0	0	0	0	0	0	0	0
4/23/2024	5:30 PM	0	0	0	0	0	0	0	0	0	0	0	0	0
4/23/2024	5:45 PM	0	0	0	0	0	0	0	0	0	0	0	0	0
4/23/2024	6:00 PM	0	0	0	0	0	0	0	0	0	0	0	0	0
4/23/2024	6:15 PM	0	0	0	0	0	0	0	0	0	0	0	0	0
4/23/2024	6:30 PM	0	0	0	0	0	0	0	0	0	0	0	0	0
4/23/2024	6:45 PM	0	0	0	0	0	0	0	0	0	0	0	0	0
4/23/2024	7:00 PM	0	0	0	0	0	0	0	0	0	0	0	0	0
4/23/2024	7:15 PM	0	0	0	0	0	0	0	0	0	0	0	0	0
4/23/2024	7:30 PM	0	0	0	0	0	0	0	0	0	0	0	0	0
4/23/2024	7:45 PM	0	0	0	0	0	0	0	0	0	0	0	0	0
4/23/2024	8:00 PM	0	0	0	0	0	0	0	0	0	0	0	0	0
4/23/2024	8:15 PM	0	0	0	0	0	0	0	0	0	0	0	0	0
4/23/2024	8:30 PM	0	0	0	0	0	0	0	0	0	0	0	0	0
4/23/2024	8:45 PM	0	0	0	0	0	0	0	0	0	0	0	0	0
4/23/2024	9:00 PM	0	0	0	0	0	0	0	0	0	0	0	0	0
4/23/2024	9:15 PM	0	0	0	0	0	0	0	0	0	0	0	0	0
4/23/2024	9:30 PM	0	0	0	0	0	0	0	0	0	0	0	0	0
4/23/2024	9:45 PM	0	0	0	0	0	0	0	0	0	0	0	0	0
4/23/2024	10:00 PM	0	0	0	0	0	0	0	0	0	0	0	0	0
4/23/2024	10:15 PM	0	0	0	0	0	0	0	0	0	0	0	0	0
4/23/2024	10:30 PM	0	0	0	0	0	0	0	0	0	0	0	0	0
4/23/2024	10:45 PM	0	0	0	0	0	0	0	0	0	0	0	0	0
4/23/2024	11:00 PM	0	0	0	0	0	0	0	0	0	0	0	0	0
4/23/2024	11:15 PM	0	0	0	0	0	0	0	0	0	0	0	0	0
4/23/2024	11:30 PM	0	0	0	0	0	0	0	0	0	0	0	0	0
4/23/2024	11:45 PM	0	0	0	0	0	0	0	0	0	0	0	0	0

4/24/2024	12:00 AM	0	0	0	0	0	0	0	0	0	0	0	0	0
4/24/2024	12:15 AM	0	0	0	0	0	0	0	0	0	0	0	0	0
4/24/2024	12:30 AM	0	0	0	0	0	0	0	0	0	0	0	0	0
4/24/2024	12:45 AM	0	0	0	0	0	0	0	0	0	0	0	0	0
4/24/2024	1:00 AM	0	0	0	0	0	0	0	0	0	0	0	0	0
4/24/2024	1:15 AM	0	0	0	0	0	0	0	0	0	0	0	0	0
4/24/2024	1:30 AM	0	0	0	0	0	0	0	0	0	0	0	0	0
4/24/2024	1:45 AM	0	0	0	0	0	0	0	0	0	0	0	0	0
4/24/2024	2:00 AM	0	0	0	0	0	0	0	0	0	0	0	0	0
4/24/2024	2:15 AM	0	0	0	0	0	0	0	0	0	0	0	0	0
4/24/2024	2:30 AM	0	0	0	0	0	0	0	0	0	0	0	0	0
4/24/2024	2:45 AM	0	0	0	0	0	0	0	0	0	0	0	0	0
4/24/2024	3:00 AM	0	0	0	0	0	0	0	0	0	0	0	0	0
4/24/2024	3:15 AM	0	0	0	0	0	0	0	0	0	0	0	0	0
4/24/2024	3:30 AM	0	0	0	0	0	0	0	0	0	0	0	0	0
4/24/2024	3:45 AM	0	0	0	0	0	0	0	0	0	0	0	0	0
4/24/2024	4:00 AM	0	0	0	0	0	0	0	0	0	0	0	0	0
4/24/2024	4:15 AM	0	0	0	0	0	0	0	0	0	0	0	0	0
4/24/2024	4:30 AM	0	0	0	0	0	0	0	0	0	0	0	0	0
4/24/2024	4:45 AM	0	0	0	0	0	0	0	0	0	0	0	0	0
4/24/2024	5:00 AM	0	0	0	0	0	0	0	0	0	0	0	0	0
4/24/2024	5:15 AM	0	0	0	0	0	0	0	0	0	0	0	0	0
4/24/2024	5:30 AM	0	0	0	0	0	0	0	0	0	0	0	0	0
4/24/2024	5:45 AM	0	0	0	0	0	0	0	0	0	0	0	0	0
4/24/2024	6:00 AM	0	0	0	0	0	0	0	0	0	0	0	0	0
4/24/2024	6:15 AM	0	0	0	0	0	0	0	0	0	0	0	0	0
4/24/2024	6:30 AM	0	0	0	0	0	0	0	0	0	0	0	0	0
4/24/2024	6:45 AM	0	0	0	0	0	0	0	0	0	0	0	0	0
4/24/2024	7:00 AM	0	0	0	0	0	0	0	0	0	0	0	0	0
4/24/2024	7:15 AM	0	0	0	0	0	0	0	0	0	0	0	0	0
4/24/2024	7:30 AM	0	0	0	0	0	0	0	0	0	0	0	0	0
4/24/2024	7:45 AM	0	0	0	0	0	0	0	0	0	0	0	0	0
4/24/2024	8:00 AM	0	0	0	0	0	0	0	0	0	0	0	0	0
4/24/2024	8:15 AM	0	0	0	0	0	0	0	0	0	0	0	0	0
4/24/2024	8:30 AM	0	0	0	0	0	0	0	0	0	0	0	0	0
4/24/2024	8:45 AM	0	0	0	0	0	0	0	0	0	0	0	0	0
4/24/2024	9:00 AM	0	0	0	0	0	0	0	0	0	0	0	0	0
4/24/2024	9:15 AM	0	0	0	0	0	0	0	0	0	0	0	0	0
4/24/2024	9:30 AM	0	0	0	0	0	0	0	0	0	0	0	0	0
4/24/2024	9:45 AM	0	0	0	0	0	0	0	0	0	0	0	0	0
4/24/2024	10:00 AM	0	0	0	0	0	0	0	0	0	0	0	0	0
4/24/2024	10:15 AM	0	0	0	0	0	0	0	0	0	0	0	0	0
4/24/2024	10:30 AM	0	0	0	0	0	0	0	0	0	0	0	0	0
4/24/2024	10:45 AM	0	0	0	0	0	0	0	0	0	0	0	0	0
4/24/2024	11:00 AM	0	0	0	0	0	0	0	0	0	0	0	0	0
4/24/2024	11:15 AM	0	0	0	0	0	0	0	0	0	0	0	0	0
4/24/2024	11:30 AM	0	0	0	0	0	0	0	0	0	0	0	0	0
4/24/2024	11:45 AM	0	0	0	0	0	0	0	0	0	0	0	0	0
4/24/2024	12:00 PM	0	0	0	0	0	0	0	0	0	0	0	0	0
4/24/2024	12:15 PM	0	0	0	0	0	0	0	0	0	0	0	0	0
4/24/2024	12:30 PM	0	0	0	0	0	0	0	0	0	0	0	0	0
4/24/2024	12:45 PM	0	0	0	0	0	0	0	0	0	0	0	0	0
4/24/2024	1:00 PM	0	0	0	0	0	0	0	0	0	0	0	0	0
4/24/2024	1:15 PM	0	0	0	0	0	0	0	0	0	0	0	0	0
4/24/2024	1:30 PM	0	0	0	0	0	0	0	0	0	0	0	0	0
4/24/2024	1:45 PM	0	0	0	0	0	0	0	0	0	0	0	0	0
4/24/2024	2:00 PM	0	0	0	0	0	0	0	0	0	0	0	0	0
4/24/2024	2:15 PM	0	0	0	0	0	0	0	0	0	0	0	0	0
4/24/2024	2:30 PM	0	0	0	0	0	0	0	0	0	0	0	0	0
4/24/2024	2:45 PM	0	0	0	0	0	0	0	0	0	0	0	0	0
4/24/2024	3:00 PM	0	0	0	0	0	0	0	0	0	0	0	0	0
4/24/2024	3:15 PM	0	0	0	0	0	0	0	0	0	0	0	0	0
4/24/2024	3:30 PM	0	0	0	0	0	0	0	0	0	0	0	0	0
4/24/2024	3:45 PM	0	0	0	0	0	0	0	0	0	0	0	0	0
4/24/2024	4:00 PM	0	0	0	0	0	0	0	0	0	0	0	0	0
4/24/2024	4:15 PM	0	0	0	0	0	0	0	0	0	0	0	0	0
4/24/2024	4:30 PM	0	0	0	0	0	0	0	0	0	0	0	0	0
4/24/2024	4:45 PM	0	0	0	0	0	0	0	0	0	0	0	0	0
4/24/2024	5:00 PM	0	0	0	0	0	0	0	0	0	0	0	0	0
4/24/2024	5:15 PM	0	0	0	0	0	0	0	0	0	0	0	0	0
4/24/2024	5:30 PM	0	0	0	0	0	0	0	0	0	0	0	0	0
4/24/2024	5:45 PM	0	0	0	0	0	0	0	0	0	0	0	0	0
4/24/2024	6:00 PM	0	0	0	0	0	0	0	0	0	0	0	0	0
4/24/2024	6:15 PM	0	0	0	0	0	0	0	0	0	0	0	0	0
4/24/2024	6:30 PM	0	0	0	0	0	0	0	0	0	0	0	0	0
4/24/2024	6:45 PM	0	0	0	0	0	0	0	0	0	0	0	0	0
4/24/2024	7:00 PM	0	0	0	0	0	0	0	0	0	0	0	0	0
4/24/2024	7:15 PM	0	0	0	0	0	0	0	0	0	0	0	0	0
4/24/2024	7:30 PM	0	0	0	0	0	0	0	0	0	0	0	0	0
4/24/2024	7:45 PM	0	0	0	0	0	0	0	0	0	0	0	0	0
4/24/2024	8:00 PM	0	0	0	0	0	0	0	0	0	0	0	0	0
4/24/2024	8:15 PM	0	0	0	0	0	0	0	0	0	0	0	0	0
4/24/2024	8:30 PM	0	0	0	0	0	0	0	0	0	0	0	0	0
4/24/2024	8:45 PM	0	0	0	0	0	0	0	0	0	0	0	0	0
4/24/2024	9:00 PM	0	0	0	0	0	0	0	0	0	0	0	0	0
4/24/2024	9:15 PM	0	0	0	0	0	0	0	0	0	0	0	0	0
4/24/2024	9:30 PM	0	0	0	0	0	0	0	0	0	0	0	0	0
4/24/2024	9:45 PM	0	0	0	0	0	0	0	0	0	0	0	0	0
4/24/2024	10:00 PM	0	0	0	0	0	0	0	0	0	0	0	0	0
4/24/2024	10:15 PM	0	0	0	0	0	0	0	0	0	0	0	0	0
4/24/2024	10:30 PM	0	0	0	0	0	0	0	0	0	0	0	0	0
4/24/2024	10:45 PM	0	0	0	0	0	0	0	0	0	0	0	0	0
4/24/2024	11:00 PM	0	0	0	0	0	0	0	0	0	0	0	0	0
4/24/2024	11:15 PM	0	0	0	0	0	0	0	0	0	0	0	0	0
4/24/2024	11:30 PM	0	0	0	0	0	0	0	0	0	0	0	0	0
4/24/2024	11:45 PM	0	0	0	0	0	0	0	0	0	0	0	0	0

4/25/2024	12:00 AM	0	0	0	0	0	0	0	0	0	0	0	0	0
4/25/2024	12:15 AM	0	0	0	0	0	0	0	0	0	0	0	0	0
4/25/2024	12:30 AM	0	0	0	0	0	0	0	0	0	0	0	0	0
4/25/2024	12:45 AM	0	0	0	0	0	0	0	0	0	0	0	0	0
4/25/2024	1:00 AM	0	0	0	0	0	0	0	0	0	0	0	0	0
4/25/2024	1:15 AM	0	0	0	0	0	0	0	0	0	0	0	0	0
4/25/2024	1:30 AM	0	0	0	0	0	0	0	0	0	0	0	0	0
4/25/2024	1:45 AM	0	0	0	0	0	0	0	0	0	0	0	0	0
4/25/2024	2:00 AM	0	0	0	0	0	0	0	0	0	0	0	0	0
4/25/2024	2:15 AM	0	0	0	0	0	0	0	0	0	0	0	0	0
4/25/2024	2:30 AM	0	0	0	0	0	0	0	0	0	0	0	0	0
4/25/2024	2:45 AM	0	0	0	0	0	0	0	0	0	0	0	0	0
4/25/2024	3:00 AM	0	0	0	0	0	0	0	0	0	0	0	0	0
4/25/2024	3:15 AM	0	0	0	0	0	0	0	0	0	0	0	0	0
4/25/2024	3:30 AM	0	0	0	0	0	0	0	0	0	0	0	0	0
4/25/2024	3:45 AM	0	0	0	0	0	0	0	0	0	0	0	0	0
4/25/2024	4:00 AM	0	0	0	0	0	0	0	0	0	0	0	0	0
4/25/2024	4:15 AM	0	0	0	0	0	0	0	0	0	0	0	0	0
4/25/2024	4:30 AM	0	0	0	0	0	0	0	0	0	0	0	0	0
4/25/2024	4:45 AM	0	0	0	0	0	0	0	0	0	0	0	0	0
4/25/2024	5:00 AM	0	0	0	0	0	0	0	0	0	0	0	0	0
4/25/2024	5:15 AM	0	0	0	0	0	0	0	0	0	0	0	0	0
4/25/2024	5:30 AM	0	0	0	0	0	0	0	0	0	0	0	0	0
4/25/2024	5:45 AM	0	0	0	0	0	0	0	0	0	0	0	0	0
4/25/2024	6:00 AM	0	0	0	0	0	0	0	0	0	0	0	0	0
4/25/2024	6:15 AM	0	0	0	0	0	0	0	0	0	0	0	0	0
4/25/2024	6:30 AM	0	0	0	0	0	0	0	0	0	0	0	0	0
4/25/2024	6:45 AM	0	0	0	0	0	0	0	0	0	0	0	0	0
4/25/2024	7:00 AM	0	0	0	0	0	0	0	0	0	0	0	0	0
4/25/2024	7:15 AM	0	0	0	0	0	0	0	0	0	0	0	0	0
4/25/2024	7:30 AM	0	0	0	0	0	0	0	0	0	0	0	0	0
4/25/2024	7:45 AM	0	0	0	0	0	0	0	0	0	0	0	0	0
4/25/2024	8:00 AM	0	0	0	0	0	0	0	0	0	0	0	0	0
4/25/2024	8:15 AM	0	0	0	0	0	0	0	0	0	0	0	0	0
4/25/2024	8:30 AM	0	0	0	0	0	0	0	0	0	0	0	0	0
4/25/2024	8:45 AM	0	0	0	0	0	0	0	0	0	0	0	0	0
4/25/2024	9:00 AM	0	0	0	0	0	0	0	0	0	0	0	0	0
4/25/2024	9:15 AM	0	0	0	0	0	0	0	0	0	0	0	0	0
4/25/2024	9:30 AM	0	0	0	0	0	0	0	0	0	0	0	0	0
4/25/2024	9:45 AM	0	0	0	0	0	0	0	0	0	0	0	0	0
4/25/2024	10:00 AM	0	0	0	0	0	0	0	0	0	0	0	0	0
4/25/2024	10:15 AM	0	0	0	0	0	0	0	0	0	0	0	0	0
4/25/2024	10:30 AM	0	0	0	0	0	0	0	0	0	0	0	0	0
4/25/2024	10:45 AM	0	0	0	0	0	0	0	0	0	0	0	0	0
4/25/2024	11:00 AM	0	0	0	0	0	0	0	0	0	0	0	0	0
4/25/2024	11:15 AM	0	0	0	0	0	0	0	0	0	0	0	0	0
4/25/2024	11:30 AM	0	0	0	0	0	0	0	0	0	0	0	0	0
4/25/2024	11:45 AM	0	0	0	0	0	0	0	0	0	0	0	0	0
4/25/2024	12:00 PM	0	0	0	0	0	0	0	0	0	0	0	0	0
4/25/2024	12:15 PM	0	0	0	0	0	0	0	0	0	0	0	0	0
4/25/2024	12:30 PM	0	0	0	0	0	0	0	0	0	0	0	0	0
4/25/2024	12:45 PM	0	0	0	0	0	0	0	0	0	0	0	0	0
4/25/2024	1:00 PM	0	0	0	0	0	0	0	0	0	0	0	0	0
4/25/2024	1:15 PM	0	0	0	0	0	0	0	0	0	0	0	0	0
4/25/2024	1:30 PM	0	0	0	0	0	0	0	0	0	0	0	0	0
4/25/2024	1:45 PM	0	0	0	0	0	0	0	0	0	0	0	0	0
4/25/2024	2:00 PM	0	0	0	0	0	0	0	0	0	0	0	0	0
4/25/2024	2:15 PM	0	0	0	0	0	0	0	0	0	0	0	0	0
4/25/2024	2:30 PM	0	0	0	0	0	0	0	0	0	0	0	0	0
4/25/2024	2:45 PM	0	0	0	0	0	0	0	0	0	0	0	0	0
4/25/2024	3:00 PM	0	0	0	0	0	0	0	0	0	0	0	0	0
4/25/2024	3:15 PM	0	0	0	0	0	0	0	0	0	0	0	0	0
4/25/2024	3:30 PM	0	0	0	0	0	0	0	0	0	0	0	0	0
4/25/2024	3:45 PM	0	0	0	0	0	0	0	0	0	0	0	0	0
4/25/2024	4:00 PM	0	0	0	0	0	0	0	0	0	0	0	0	0
4/25/2024	4:15 PM	0	0	0	0	0	0	0	0	0	0	0	0	0
4/25/2024	4:30 PM	0	0	0	0	0	0	0	0	0	0	0	0	0
4/25/2024	4:45 PM	0	0	0	0	0	0	0	0	0	0	0	0	0
4/25/2024	5:00 PM	0	0	0	0	0	0	0	0	0	0	0	0	0
4/25/2024	5:15 PM	0	0	0	0	0	0	0	0	0	0	0	0	0
4/25/2024	5:30 PM	0	0	0	0	0	0	0	0	0	0	0	0	0
4/25/2024	5:45 PM	0	0	0	0	0	0	0	0	0	0	0	0	0
4/25/2024	6:00 PM	0	0	0	0	0	0	0	0	0	0	0	0	0
4/25/2024	6:15 PM	0	0	0	0	0	0	0	0	0	0	0	0	0
4/25/2024	6:30 PM	0	0	0	0	0	0	0	0	0	0	0	0	0
4/25/2024	6:45 PM	0	0	0	0	0	0	0	0	0	0	0	0	0
4/25/2024	7:00 PM	0	0	0	0	0	0	0	0	0	0	0	0	0
4/25/2024	7:15 PM	0	0	0	0	0	0	0	0	0	0	0	0	0
4/25/2024	7:30 PM	0	0	0	0	0	0	0	0	0	0	0	0	0
4/25/2024	7:45 PM	0	0	0	0	0	0	0	0	0	0	0	0	0
4/25/2024	8:00 PM	0	0	0	0	0	0	0	0	0	0	0	0	0
4/25/2024	8:15 PM	0	0	0	0	0	0	0	0	0	0	0	0	0
4/25/2024	8:30 PM	0	0	0	0	0	0	0	0	0	0	0	0	0
4/25/2024	8:45 PM	0	0	0	0	0	0	0	0	0	0	0	0	0
4/25/2024	9:00 PM	0	0	0	0	0	0	0	0	0	0	0	0	0
4/25/2024	9:15 PM	0	0	0	0	0	0	0	0	0	0	0	0	0
4/25/2024	9:30 PM	0	0	0	0	0	0	0	0	0	0	0	0	0
4/25/2024	9:45 PM	0	0	0	0	0	0	0	0	0	0	0	0	0
4/25/2024	10:00 PM	0	0	0	0	0	0	0	0	0	0	0	0	0
4/25/2024	10:15 PM	0	0	0	0	0	0	0	0	0	0	0	0	0
4/25/2024	10:30 PM	0	0	0	0	0	0	0	0	0	0	0	0	0
4/25/2024	10:45 PM	0	0	0	0	0	0	0	0	0	0	0	0	0
4/25/2024	11:00 PM	0	0	0	0	0	0	0	0	0	0	0	0	0
4/25/2024	11:15 PM	0	0	0	0	0	0	0	0	0	0	0	0	0
4/25/2024	11:30 PM	0	0	0	0	0	0	0	0	0	0	0	0	0
4/25/2024	11:45 PM	0	0	0	0	0	0	0	0	0	0	0	0	0

WB
File Name:
Start Date: 4/23/2024
Start Time: 0
Site Code: 67
Station ID: 1
Location 1: I-20 W/Bound Off-Ramp, east of US-176 Broad River Rd
Location 2:

Date	Time	1	2	3	4	5	6	7	8	9	10	11	12	13
4/23/2024	12:00 AM	0	0	0	0	0	0	0	0	0	0	0	0	0
4/23/2024	12:15 AM	0	0	0	0	0	0	0	0	0	0	0	0	0
4/23/2024	12:30 AM	0	0	0	0	0	0	0	0	0	0	0	0	0
4/23/2024	12:45 AM	0	0	0	0	0	0	0	0	0	0	0	0	0
4/23/2024	1:00 AM	0	0	0	0	0	0	0	0	0	0	0	0	0
4/23/2024	1:15 AM	0	0	0	0	0	0	0	0	0	0	0	0	0
4/23/2024	1:30 AM	0	0	0	0	0	0	0	0	0	0	0	0	0
4/23/2024	1:45 AM	0	0	0	0	0	0	0	0	0	0	0	0	0
4/23/2024	2:00 AM	0	0	0	0	0	0	0	0	0	0	0	0	0
4/23/2024	2:15 AM	0	0	0	0	0	0	0	0	0	0	0	0	0
4/23/2024	2:30 AM	0	0	0	0	0	0	0	0	0	0	0	0	0
4/23/2024	2:45 AM	0	0	0	0	0	0	0	0	0	0	0	0	0
4/23/2024	3:00 AM	0	0	0	0	0	0	0	0	0	0	0	0	0
4/23/2024	3:15 AM	0	0	0	0	0	0	0	0	0	0	0	0	0
4/23/2024	3:30 AM	0	0	0	0	0	0	0	0	0	0	0	0	0
4/23/2024	3:45 AM	0	0	0	0	0	0	0	0	0	0	0	0	0
4/23/2024	4:00 AM	0	0	0	0	0	0	0	0	0	0	0	0	0
4/23/2024	4:15 AM	0	0	0	0	0	0	0	0	0	0	0	0	0
4/23/2024	4:30 AM	0	0	0	0	0	0	0	0	0	0	0	0	0
4/23/2024	4:45 AM	0	0	0	0	0	0	0	0	0	0	0	0	0
4/23/2024	5:00 AM	0	0	0	0	0	0	0	0	0	0	0	0	0
4/23/2024	5:15 AM	0	0	0	0	0	0	0	0	0	0	0	0	0
4/23/2024	5:30 AM	0	0	0	0	0	0	0	0	0	0	0	0	0
4/23/2024	5:45 AM	0	0	0	0	0	0	0	0	0	0	0	0	0
4/23/2024	6:00 AM	0	0	0	0	0	0	0	0	0	0	0	0	0
4/23/2024	6:15 AM	0	0	0	0	0	0	0	0	0	0	0	0	0
4/23/2024	6:30 AM	0	0	0	0	0	0	0	0	0	0	0	0	0
4/23/2024	6:45 AM	0	0	0	0	0	0	0	0	0	0	0	0	0
4/23/2024	7:00 AM	0	0	0	0	0	0	0	0	0	0	0	0	0
4/23/2024	7:15 AM	0	0	0	0	0	0	0	0	0	0	0	0	0
4/23/2024	7:30 AM	0	0	0	0	0	0	0	0	0	0	0	0	0
4/23/2024	7:45 AM	0	0	0	0	0	0	0	0	0	0	0	0	0
4/23/2024	8:00 AM	0	0	0	0	0	0	0	0	0	0	0	0	0
4/23/2024	8:15 AM	0	0	0	0	0	0	0	0	0	0	0	0	0
4/23/2024	8:30 AM	0	0	0	0	0	0	0	0	0	0	0	0	0
4/23/2024	8:45 AM	0	0	0	0	0	0	0	0	0	0	0	0	0
4/23/2024	9:00 AM	0	0	0	0	0	0	0	0	0	0	0	0	0
4/23/2024	9:15 AM	0	0	0	0	0	0	0	0	0	0	0	0	0
4/23/2024	9:30 AM	0	0	0	0	0	0	0	0	0	0	0	0	0
4/23/2024	9:45 AM	0	0	0	0	0	0	0	0	0	0	0	0	0
4/23/2024	10:00 AM	0	0	0	0	0	0	0	0	0	0	0	0	0
4/23/2024	10:15 AM	0	0	0	0	0	0	0	0	0	0	0	0	0
4/23/2024	10:30 AM	0	0	0	0	0	0	0	0	0	0	0	0	0
4/23/2024	10:45 AM	0	0	0	0	0	0	0	0	0	0	0	0	0
4/23/2024	11:00 AM	0	0	0	0	0	0	0	0	0	0	0	0	0
4/23/2024	11:15 AM	0	0	0	0	0	0	0	0	0	0	0	0	0
4/23/2024	11:30 AM	0	0	0	0	0	0	0	0	0	0	0	0	0
4/23/2024	11:45 AM	0	0	0	0	0	0	0	0	0	0	0	0	0
4/23/2024	12:00 PM	0	0	0	0	0	0	0	0	0	0	0	0	0
4/23/2024	12:15 PM	0	0	0	0	0	0	0	0	0	0	0	0	0
4/23/2024	12:30 PM	0	0	0	0	0	0	0	0	0	0	0	0	0
4/23/2024	12:45 PM	0	0	0	0	0	0	0	0	0	0	0	0	0
4/23/2024	1:00 PM	0	0	0	0	0	0	0	0	0	0	0	0	0
4/23/2024	1:15 PM	0	0	0	0	0	0	0	0	0	0	0	0	0
4/23/2024	1:30 PM	0	0	0	0	0	0	0	0	0	0	0	0	0
4/23/2024	1:45 PM	0	0	0	0	0	0	0	0	0	0	0	0	0
4/23/2024	2:00 PM	0	0	0	0	0	0	0	0	0	0	0	0	0
4/23/2024	2:15 PM	0	0	0	0	0	0	0	0	0	0	0	0	0
4/23/2024	2:30 PM	0	0	0	0	0	0	0	0	0	0	0	0	0
4/23/2024	2:45 PM	0	0	0	0	0	0	0	0	0	0	0	0	0
4/23/2024	3:00 PM	0	0	0	0	0	0	0	0	0	0	0	0	0
4/23/2024	3:15 PM	0	0	0	0	0	0	0	0	0	0	0	0	0
4/23/2024	3:30 PM	0	0	0	0	0	0	0	0	0	0	0	0	0
4/23/2024	3:45 PM	0	0	0	0	0	0	0	0	0	0	0	0	0
4/23/2024	4:00 PM	0	0	0	0	0	0	0	0	0	0	0	0	0
4/23/2024	4:15 PM	0	0	0	0	0	0	0	0	0	0	0	0	0
4/23/2024	4:30 PM	0	0	0	0	0	0	0	0	0	0	0	0	0
4/23/2024	4:45 PM	0	0	0	0	0	0	0	0	0	0	0	0	0
4/23/2024	5:00 PM	0	0	0	0	0	0	0	0	0	0	0	0	0
4/23/2024	5:15 PM	0	0	0	0	0	0	0	0	0	0	0	0	0
4/23/2024	5:30 PM	0	0	0	0	0	0	0	0	0	0	0	0	0
4/23/2024	5:45 PM	0	0	0	0	0	0	0	0	0	0	0	0	0
4/23/2024	6:00 PM	0	0	0	0	0	0	0	0	0	0	0	0	0
4/23/2024	6:15 PM	0	117	18	0	0	2	0	0	0	0	0	0	0
4/23/2024	6:30 PM	0	251	35	0	1	3	0	0	2	0	0	0	0
4/23/2024	6:45 PM	0	345	48	0	1	3	0	0	2	0	0	0	0
4/23/2024	7:00 PM	1	484	65	0	2	3	0	0	2	0	0	0	0
4/23/2024	7:15 PM	1	464	56	0	2	2	0	0	2	0	0	0	0
4/23/2024	7:30 PM	1	417	55	0	2	1	0	0	1	0	0	0	0
4/23/2024	7:45 PM	1	418	55	0	2	1	0	2	1	0	0	0	0
4/23/2024	8:00 PM	0	374	49	0	1	1	0	2	1	0	0	0	0
4/23/2024	8:15 PM	0	349	49	0	1	0	0	2	1	0	0	0	0
4/23/2024	8:30 PM	0	344	46	0	0	0	0	2	0	0	0	0	0
4/23/2024	8:45 PM	0	319	43	0	0	0	0	0	0	0	0	0	0
4/23/2024	9:00 PM	0	282	42	0	1	0	0	0	0	0	0	0	0
4/23/2024	9:15 PM	0	265	43	0	1	0	0	0	0	0	0	0	0
4/23/2024	9:30 PM	0	244	43	0	2	0	0	0	0	0	0	0	0
4/23/2024	9:45 PM	0	225	40	0	2	0	0	0	1	0	0	0	0
4/23/2024	10:00 PM	0	223	41	0	1	0	0	0	1	0	0	0	0
4/23/2024	10:15 PM	0	215	39	0	1	0	0	0	1	0	0	0	0
4/23/2024	10:30 PM	0	196	36	0	0	0	0	0	1	0	0	0	0
4/23/2024	10:45 PM	0	179	40	0	0	0	0	0	1	0	0	0	0
4/23/2024	11:00 PM	0	152	44	0	0	0	0	0	1	0	0	0	0
4/23/2024	11:15 PM	0	105	36	0	0	0	0	0	1	0	0	0	0
4/23/2024	11:30 PM	0	63	26	0	0	0	0	0	1	0	0	0	0
4/23/2024	11:45 PM	0	29	15	0	0	0	0	0	0	0	0	0	0

4/24/2024	12:00 AM	0	101	34	0	0	0	0	0	0	0	0	0	0
4/24/2024	12:15 AM	0	94	28	0	0	0	0	0	0	0	0	0	0
4/24/2024	12:30 AM	0	88	27	0	0	0	0	0	0	0	0	0	0
4/24/2024	12:45 AM	0	78	21	0	1	0	0	0	1	0	0	0	0
4/24/2024	1:00 AM	0	72	18	0	2	0	0	0	1	0	0	0	0
4/24/2024	1:15 AM	0	58	14	0	3	0	0	0	1	0	0	0	0
4/24/2024	1:30 AM	0	52	11	0	3	0	0	0	1	0	0	0	0
4/24/2024	1:45 AM	0	54	12	0	2	0	0	0	0	0	0	0	0
4/24/2024	2:00 AM	0	50	11	0	1	0	0	0	0	0	0	0	0
4/24/2024	2:15 AM	0	48	9	0	0	0	0	0	0	0	0	0	0
4/24/2024	2:30 AM	0	54	12	0	0	0	0	0	0	0	0	0	0
4/24/2024	2:45 AM	0	51	10	0	0	0	0	0	0	0	0	0	0
4/24/2024	3:00 AM	0	50	10	0	0	0	0	0	0	0	0	0	0
4/24/2024	3:15 AM	0	55	12	0	0	0	0	0	0	0	0	0	0
4/24/2024	3:30 AM	0	46	9	0	0	0	0	0	0	0	0	0	0
4/24/2024	3:45 AM	0	51	11	0	0	0	0	1	0	0	0	0	0
4/24/2024	4:00 AM	0	66	15	0	0	0	0	1	0	0	0	0	0
4/24/2024	4:15 AM	0	78	19	0	0	0	0	1	0	0	0	0	0
4/24/2024	4:30 AM	0	96	24	0	1	0	0	1	0	0	0	0	0
4/24/2024	4:45 AM	0	119	31	0	2	0	0	0	0	0	0	0	0
4/24/2024	5:00 AM	0	135	33	0	4	0	0	0	0	0	0	0	0
4/24/2024	5:15 AM	0	166	39	1	6	0	0	0	0	0	0	0	0
4/24/2024	5:30 AM	0	213	48	9	5	0	0	0	0	0	0	0	0
4/24/2024	5:45 AM	0	251	56	13	6	1	0	0	1	0	0	0	0
4/24/2024	6:00 AM	0	407	89	16	6	2	0	0	1	0	0	0	0
4/24/2024	6:15 AM	0	507	107	15	9	4	0	0	2	0	0	0	0
4/24/2024	6:30 AM	0	654	136	7	11	6	0	0	3	0	0	0	0
4/24/2024	6:45 AM	0	792	144	4	12	8	0	0	2	0	0	0	0
4/24/2024	7:00 AM	0	837	131	2	13	10	0	2	5	0	0	0	0
4/24/2024	7:15 AM	0	827	122	3	14	13	0	2	6	0	0	0	0
4/24/2024	7:30 AM	0	726	90	5	14	12	0	2	5	0	0	0	0
4/24/2024	7:45 AM	1	690	93	5	14	14	0	3	5	0	0	0	0
4/24/2024	8:00 AM	1	605	99	4	16	11	0	3	3	0	0	0	0
4/24/2024	8:15 AM	1	594	101	5	15	7	0	3	2	0	0	0	0
4/24/2024	8:30 AM	1	553	112	4	15	10	0	3	3	0	0	0	0
4/24/2024	8:45 AM	0	507	113	4	14	9	0	2	4	0	0	0	0
4/24/2024	9:00 AM	0	499	114	5	14	10	0	1	3	0	0	0	0
4/24/2024	9:15 AM	0	475	117	3	10	14	0	2	3	0	0	0	0
4/24/2024	9:30 AM	0	479	115	3	12	15	1	4	2	0	0	0	0
4/24/2024	9:45 AM	0	447	111	2	14	14	3	4	1	0	0	0	0
4/24/2024	10:00 AM	0	416	103	1	13	14	3	3	2	0	0	0	0
4/24/2024	10:15 AM	0	419	96	2	15	12	3	2	1	0	0	0	0
4/24/2024	10:30 AM	0	445	90	4	13	7	2	0	4	0	0	0	0
4/24/2024	10:45 AM	0	480	91	5	14	6	0	0	5	0	0	0	0
4/24/2024	11:00 AM	0	485	95	5	10	11	0	0	6	0	0	0	0
4/24/2024	11:15 AM	1	509	108	5	12	9	0	1	7	0	0	0	0
4/24/2024	11:30 AM	2	514	117	3	11	9	0	1	4	0	0	0	0
4/24/2024	11:45 AM	3	489	121	2	8	12	0	1	5	0	0	0	0
4/24/2024	12:00 PM	3	485	116	2	12	8	1	1	3	0	0	0	0
4/24/2024	12:15 PM	3	473	118	1	9	7	1	0	2	0	0	0	0
4/24/2024	12:30 PM	2	490	115	1	10	11	1	0	2	0	0	0	0
4/24/2024	12:45 PM	3	518	105	5	10	9	1	0	1	0	0	0	0
4/24/2024	1:00 PM	3	538	105	5	8	7	0	0	2	0	0	0	0
4/24/2024	1:15 PM	2	534	107	10	10	9	0	0	6	0	0	0	0
4/24/2024	1:30 PM	3	518	105	12	10	6	0	0	7	0	0	0	0
4/24/2024	1:45 PM	1	501	116	8	11	7	1	0	7	0	0	0	0
4/24/2024	2:00 PM	1	497	114	8	11	10	1	1	8	0	0	0	0
4/24/2024	2:15 PM	2	501	112	4	8	10	1	1	4	0	0	0	0
4/24/2024	2:30 PM	1	560	126	2	10	9	1	2	5	0	0	0	0
4/24/2024	2:45 PM	1	624	145	3	10	8	0	3	4	0	0	0	0
4/24/2024	3:00 PM	2	647	168	7	11	10	0	2	3	0	0	0	0
4/24/2024	3:15 PM	2	725	173	6	13	10	0	2	5	0	0	0	0
4/24/2024	3:30 PM	2	757	177	5	13	14	0	1	4	0	0	0	0
4/24/2024	3:45 PM	2	793	166	6	11	12	0	2	4	0	0	0	0
4/24/2024	4:00 PM	1	856	163	2	10	8	0	2	3	0	0	0	0
4/24/2024	4:15 PM	0	867	176	3	10	7	0	2	1	0	0	0	0
4/24/2024	4:30 PM	0	894	181	3	8	3	0	2	0	0	0	0	0
4/24/2024	4:45 PM	0	895	196	1	10	2	0	0	0	0	0	0	0
4/24/2024	5:00 PM	0	882	212	1	9	1	0	0	0	0	0	0	0
4/24/2024	5:15 PM	0	832	202	1	7	3	0	0	0	0	0	0	0
4/24/2024	5:30 PM	0	746	202	1	8	4	0	0	0	0	0	0	0
4/24/2024	5:45 PM	0	672	188	1	7	5	0	0	1	0	0	0	0
4/24/2024	6:00 PM	0	607	165	1	6	5	0	0	1	0	0	0	0
4/24/2024	6:15 PM	0	597	165	1	8	2	0	0	1	0	0	0	0
4/24/2024	6:30 PM	1	573	149	1	6	1	0	0	1	0	0	0	0
4/24/2024	6:45 PM	1	550	128	1	5	0	0	0	0	0	0	0	0
4/24/2024	7:00 PM	1	537	114	1	6	0	0	0	0	0	0	0	0
4/24/2024	7:15 PM	1	513	88	0	3	1	0	0	1	0	0	0	0
4/24/2024	7:30 PM	0	496	74	0	3	1	0	0	1	0	0	0	0
4/24/2024	7:45 PM	0	455	64	0	2	1	0	0	1	0	0	0	0
4/24/2024	8:00 PM	0	415	69	0	1	1	0	0	1	0	0	0	0
4/24/2024	8:15 PM	0	397	73	0	1	0	0	0	0	0	0	0	0
4/24/2024	8:30 PM	0	364	77	0	0	0	0	0	0	0	0	0	0
4/24/2024	8:45 PM	0	345	78	0	0	0	0	0	0	0	0	0	0
4/24/2024	9:00 PM	0	305	62	0	0	0	0	0	0	0	0	0	0
4/24/2024	9:15 PM	0	247	55	0	0	0	0	0	0	0	0	0	0
4/24/2024	9:30 PM	0	237	53	0	0	0	0	0	0	0	0	0	0
4/24/2024	9:45 PM	0	236	53	0	0	0	0	0	0	0	0	0	0
4/24/2024	10:00 PM	0	238	52	1	2	0	0	0	0	0	0	0	0
4/24/2024	10:15 PM	0	229	52	1	3	0	0	0	0	0	0	0	0
4/24/2024	10:30 PM	0	199	42	1	3	0	0	0	0	0	0	0	0
4/24/2024	10:45 PM	0	183	36	2	3	0	0	0	0	0	0	0	0
4/24/2024	11:00 PM	0	174	30	1	1	0	0	0	0	0	0	0	0
4/24/2024	11:15 PM	0	130	17	1	0	0	0	0	0	0	0	0	0
4/24/2024	11:30 PM	0	92	11	1	0	0	0	0	0	0	0	0	0
4/24/2024	11:45 PM	0	42	5	0	0	0	0	0	0	0	0	0	0

4/25/2024	12:00 AM	0	104	29	0	1	0	0	0	0	0	0	0	0
4/25/2024	12:15 AM	0	89	24	0	1	0	0	0	0	0	0	0	0
4/25/2024	12:30 AM	0	78	17	0	2	0	0	0	0	0	0	0	0
4/25/2024	12:45 AM	0	77	15	0	1	0	0	0	0	0	0	0	0
4/25/2024	1:00 AM	0	62	11	0	1	0	0	0	0	0	0	0	0
4/25/2024	1:15 AM	0	63	11	0	1	0	0	0	0	0	0	0	0
4/25/2024	1:30 AM	0	60	11	0	0	0	0	0	0	0	0	0	0
4/25/2024	1:45 AM	0	55	12	0	1	0	0	0	0	0	0	0	0
4/25/2024	2:00 AM	0	57	12	0	1	1	0	0	0	0	0	0	0
4/25/2024	2:15 AM	0	59	13	0	1	2	0	0	0	0	0	0	0
4/25/2024	2:30 AM	0	47	12	0	1	2	0	0	0	0	0	0	0
4/25/2024	2:45 AM	0	45	11	0	0	2	0	0	1	0	0	0	0
4/25/2024	3:00 AM	0	47	12	0	0	1	0	0	1	0	0	0	0
4/25/2024	3:15 AM	0	36	9	0	1	0	0	0	1	0	0	0	0
4/25/2024	3:30 AM	0	41	9	0	1	0	0	0	1	0	0	0	0
4/25/2024	3:45 AM	0	46	9	0	3	0	0	0	0	0	0	0	0
4/25/2024	4:00 AM	0	60	10	0	5	0	0	1	0	0	0	0	0
4/25/2024	4:15 AM	0	75	13	0	4	0	0	1	0	0	0	0	0
4/25/2024	4:30 AM	0	108	21	0	4	0	0	1	0	0	0	0	0
4/25/2024	4:45 AM	0	128	26	0	5	0	0	1	2	0	0	0	0
4/25/2024	5:00 AM	0	140	33	3	4	0	0	0	2	0	0	0	0
4/25/2024	5:15 AM	0	160	43	3	5	1	0	0	2	0	0	0	0
4/25/2024	5:30 AM	0	204	47	8	5	1	0	0	2	0	0	0	0
4/25/2024	5:45 AM	0	265	55	14	4	1	0	0	0	0	0	0	0
4/25/2024	6:00 AM	0	359	81	12	4	3	1	0	1	0	0	0	0
4/25/2024	6:15 AM	0	466	90	12	5	4	1	0	2	0	0	0	0
4/25/2024	6:30 AM	0	598	111	7	5	6	1	0	4	0	0	0	0
4/25/2024	6:45 AM	0	670	123	3	5	9	1	0	5	0	0	0	0
4/25/2024	7:00 AM	0	773	131	3	8	12	0	0	5	0	0	0	0
4/25/2024	7:15 AM	0	809	137	4	9	10	0	0	5	0	0	0	0
4/25/2024	7:30 AM	1	747	137	6	9	8	0	0	3	0	0	0	0
4/25/2024	7:45 AM	1	783	147	5	9	6	0	0	2	0	0	0	0
4/25/2024	8:00 AM	1	706	138	4	9	2	0	0	1	0	0	0	0
4/25/2024	8:15 AM	1	655	137	5	9	2	0	0	1	0	0	0	0
4/25/2024	8:30 AM	0	605	135	5	10	2	0	0	1	0	0	0	0
4/25/2024	8:45 AM	1	504	134	4	12	3	0	0	3	0	0	0	0
4/25/2024	9:00 AM	1	469	132	5	10	2	0	0	5	0	0	0	0
4/25/2024	9:15 AM	1	446	129	3	8	2	0	0	5	0	0	0	0
4/25/2024	9:30 AM	1	445	124	2	8	3	1	0	5	0	0	0	0
4/25/2024	9:45 AM	0	445	123	3	5	1	1	0	5	0	0	0	0
4/25/2024	10:00 AM	0	438	116	3	5	2	1	0	3	0	0	0	0
4/25/2024	10:15 AM	0	434	122	3	5	3	1	0	3	0	0	0	0
4/25/2024	10:30 AM	0	468	117	2	9	4	0	0	4	0	0	0	0
4/25/2024	10:45 AM	1	494	104	3	11	5	0	0	4	0	0	0	0
4/25/2024	11:00 AM	1	511	106	2	11	5	0	0	5	0	0	0	0
4/25/2024	11:15 AM	1	545	103	2	13	4	0	0	4	0	0	0	0
4/25/2024	11:30 AM	1	537	103	4	13	3	0	0	3	0	0	0	0
4/25/2024	11:45 AM	1	536	115	3	12	2	0	0	1	0	0	0	0
4/25/2024	12:00 PM	1	520	106	3	11	1	0	0	0	0	0	0	0
4/25/2024	12:15 PM	1	522	108	5	11	1	0	0	2	0	0	0	0
4/25/2024	12:30 PM	1	523	109	4	6	0	1	0	2	0	0	0	0
4/25/2024	12:45 PM	0	528	108	5	8	1	1	0	2	0	0	0	0
4/25/2024	1:00 PM	0	561	123	7	9	2	1	0	2	0	0	0	0
4/25/2024	1:15 PM	0	563	121	11	6	3	2	0	1	0	0	0	0
4/25/2024	1:30 PM	0	577	124	12	7	5	1	0	1	0	0	0	0
4/25/2024	1:45 PM	0	576	112	11	4	6	1	0	1	0	0	0	0
4/25/2024	2:00 PM	0	598	100	9	6	5	1	0	1	0	0	0	0
4/25/2024	2:15 PM	1	623	94	4	9	5	0	0	0	0	0	0	0
4/25/2024	2:30 PM	1	656	98	4	10	4	0	0	1	0	0	0	0
4/25/2024	2:45 PM	1	716	108	4	10	3	0	0	1	0	0	0	0
4/25/2024	3:00 PM	1	742	113	5	8	5	0	0	1	0	0	0	0
4/25/2024	3:15 PM	0	722	122	6	10	7	0	3	2	0	0	0	0
4/25/2024	3:30 PM	0	731	130	5	9	6	0	3	1	0	0	0	0
4/25/2024	3:45 PM	0	714	140	6	9	5	0	3	1	0	0	0	0
4/25/2024	4:00 PM	0	680	138	5	9	3	0	3	1	0	0	0	0
4/25/2024	4:15 PM	1	698	130	3	4	1	0	1	0	0	0	0	0
4/25/2024	4:30 PM	3	696	116	2	3	1	0	1	0	0	0	0	0
4/25/2024	4:45 PM	3	707	99	1	2	1	0	1	1	0	0	0	0
4/25/2024	5:00 PM	4	729	111	1	1	1	0	1	1	0	0	0	0
4/25/2024	5:15 PM	3	713	125	2	1	0	0	0	1	0	0	0	0
4/25/2024	5:30 PM	3	687	115	2	2	1	0	0	1	0	0	0	0
4/25/2024	5:45 PM	3	630	112	1	3	3	0	0	0	0	0	0	0
4/25/2024	6:00 PM	2	571	88	2	4	3	0	0	0	0	0	0	0
4/25/2024	6:15 PM	2	419	51	1	4	3	0	0	0	0	0	0	0
4/25/2024	6:30 PM	0	259	36	1	3	2	0	0	0	0	0	0	0
4/25/2024	6:45 PM	0	128	14	1	2	0	0	0	0	0	0	0	0
4/25/2024	7:00 PM	0	0	0	0	0	0	0	0	0	0	0	0	0
4/25/2024	7:15 PM	0	0	0	0	0	0	0	0	0	0	0	0	0
4/25/2024	7:30 PM	0	0	0	0	0	0	0	0	0	0	0	0	0
4/25/2024	7:45 PM	0	0	0	0	0	0	0	0	0	0	0	0	0
4/25/2024	8:00 PM	0	0	0	0	0	0	0	0	0	0	0	0	0
4/25/2024	8:15 PM	0	0	0	0	0	0	0	0	0	0	0	0	0
4/25/2024	8:30 PM	0	0	0	0	0	0	0	0	0	0	0	0	0
4/25/2024	8:45 PM	0	0	0	0	0	0	0	0	0	0	0	0	0
4/25/2024	9:00 PM	0	0	0	0	0	0	0	0	0	0	0	0	0
4/25/2024	9:15 PM	0	0	0	0	0	0	0	0	0	0	0	0	0
4/25/2024	9:30 PM	0	0	0	0	0	0	0	0	0	0	0	0	0
4/25/2024	9:45 PM	0	0	0	0	0	0	0	0	0	0	0	0	0
4/25/2024	10:00 PM	0	0	0	0	0	0	0	0	0	0	0	0	0
4/25/2024	10:15 PM	0	0	0	0	0	0	0	0	0	0	0	0	0
4/25/2024	10:30 PM	0	0	0	0	0	0	0	0	0	0	0	0	0
4/25/2024	10:45 PM	0	0	0	0	0	0	0	0	0	0	0	0	0
4/25/2024	11:00 PM	0	0	0	0	0	0	0	0	0	0	0	0	0
4/25/2024	11:15 PM	0	0	0	0	0	0	0	0	0	0	0	0	0
4/25/2024	11:30 PM	0	0	0	0	0	0	0	0	0	0	0	0	0
4/25/2024	11:45 PM	0	0	0	0	0	0	0	0	0	0	0	0	0

Bi-Directional Class Count || NB EB 15min

Columbia, SC

Marr Traffic DATA COLLECTION
www.marrtraffic.com

Site 68
I-20 E/Bound Off-Ramp,
west of US-176 Broad River Rd

Date
Tuesday, April 30, 2024

Lat/Long
34.038440°, -81.095204°

Weather
Mostly Cloudy
70°F

Click here for Detailed Weather

Click here for Map

0000 - 2400 (Weekday 24h Session) (04-30-2024)
NB EB 15min

	Eastbound (Movement 68.1)													15min	60min
Time	1	2	3	4	5	6	7	8	9	10	11	12	13	Total	Total
0000 - 0015	0	0	0	0	0	0	0	0	0	0	0	0	0	**0**	
0015 - 0030	0	0	0	0	0	0	0	0	0	0	0	0	0	**0**	
0030 - 0045	0	0	0	0	0	0	0	0	0	0	0	0	0	**0**	
0045 - 0100	0	0	0	0	0	0	0	0	0	0	0	0	0	**0**	**0**
0100 - 0115	0	0	0	0	0	0	0	0	0	0	0	0	0	**0**	
0115 - 0130	0	0	0	0	0	0	0	0	0	0	0	0	0	**0**	
0130 - 0145	0	0	0	0	0	0	0	0	0	0	0	0	0	**0**	
0145 - 0200	0	0	0	0	0	0	0	0	0	0	0	0	0	**0**	**0**
0200 - 0215	0	0	0	0	0	0	0	0	0	0	0	0	0	**0**	
0215 - 0230	0	0	0	0	0	0	0	0	0	0	0	0	0	**0**	
0230 - 0245	0	0	0	0	0	0	0	0	0	0	0	0	0	**0**	
0245 - 0300	0	0	0	0	0	0	0	0	0	0	0	0	0	**0**	**0**
0300 - 0315	0	0	0	0	0	0	0	0	0	0	0	0	0	**0**	
0315 - 0330	0	0	0	0	0	0	0	0	0	0	0	0	0	**0**	
0330 - 0345	0	0	0	0	0	0	0	0	0	0	0	0	0	**0**	
0345 - 0400	0	0	0	0	0	0	0	0	0	0	0	0	0	**0**	**0**
0400 - 0415	0	0	0	0	0	0	0	0	0	0	0	0	0	**0**	
0415 - 0430	0	0	0	0	0	0	0	0	0	0	0	0	0	**0**	
0430 - 0445	0	0	0	0	0	0	0	0	0	0	0	0	0	**0**	
0445 - 0500	0	0	0	0	0	0	0	0	0	0	0	0	0	**0**	**0**
0500 - 0515	0	0	0	0	0	0	0	0	0	0	0	0	0	**0**	
0515 - 0530	0	0	0	0	0	0	0	0	0	0	0	0	0	**0**	
0530 - 0545	0	0	0	0	0	0	0	0	0	0	0	0	0	**0**	
0545 - 0600	0	0	0	0	0	0	0	0	0	0	0	0	0	**0**	**0**
0600 - 0615	0	0	0	0	0	0	0	0	0	0	0	0	0	**0**	
0615 - 0630	0	0	0	0	0	0	0	0	0	0	0	0	0	**0**	
0630 - 0645	0	0	0	0	0	0	0	0	0	0	0	0	0	**0**	
0645 - 0700	0	0	0	0	0	0	0	0	0	0	0	0	0	**0**	**0**
0700 - 0715	0	0	0	0	0	0	0	0	0	0	0	0	0	**0**	
0715 - 0730	0	0	0	0	0	0	0	0	0	0	0	0	0	**0**	
0730 - 0745	0	0	0	0	0	0	0	0	0	0	0	0	0	**0**	
0745 - 0800	0	0	0	0	0	0	0	0	0	0	0	0	0	**0**	**0**
0800 - 0815	0	0	0	0	0	0	0	0	0	0	0	0	0	**0**	
0815 - 0830	0	0	0	0	0	0	0	0	0	0	0	0	0	**0**	
0830 - 0845	0	0	0	0	0	0	0	0	0	0	0	0	0	**0**	
0845 - 0900	0	0	0	0	0	0	0	0	0	0	0	0	0	**0**	**0**
0900 - 0915	0	0	0	0	0	0	0	0	0	0	0	0	0	**0**	
0915 - 0930	0	0	0	0	0	0	0	0	0	0	0	0	0	**0**	
0930 - 0945	0	0	0	0	0	0	0	0	0	0	0	0	0	**0**	
0945 - 1000	0	0	0	0	0	0	0	0	0	0	0	0	0	**0**	**0**
1000 - 1015	0	0	0	0	0	0	0	0	0	0	0	0	0	**0**	
1015 - 1030	0	0	0	0	0	0	0	0	0	0	0	0	0	**0**	
1030 - 1045	0	0	0	0	0	0	0	0	0	0	0	0	0	**0**	
1045 - 1100	0	0	0	0	0	0	0	0	0	0	0	0	0	**0**	**0**
1100 - 1115	0	0	0	0	0	0	0	0	0	0	0	0	0	**0**	
1115 - 1130	0	0	0	0	0	0	0	0	0	0	0	0	0	**0**	
1130 - 1145	0	0	0	0	0	0	0	0	0	0	0	0	0	**0**	
1145 - 1200	0	0	0	0	0	0	0	0	0	0	0	0	0	**0**	**0**
1200 - 1215	0	0	0	0	0	0	0	0	0	0	0	0	0	**0**	
1215 - 1230	0	0	0	0	0	0	0	0	0	0	0	0	0	**0**	
1230 - 1245	0	0	0	0	0	0	0	0	0	0	0	0	0	**0**	
1245 - 1300	0	0	0	0	0	0	0	0	0	0	0	0	0	**0**	**0**
1300 - 1315	0	0	0	0	0	0	0	0	0	0	0	0	0	**0**	
1315 - 1330	0	0	0	0	0	0	0	0	0	0	0	0	0	**0**	
1330 - 1345	0	0	0	0	0	0	0	0	0	0	0	0	0	**0**	
1345 - 1400	0	0	0	0	0	0	0	0	0	0	0	0	0	**0**	**0**
1400 - 1415	0	0	0	0	0	0	0	0	0	0	0	0	0	**0**	
1415 - 1430	0	0	0	0	0	0	0	0	0	0	0	0	0	**0**	
1430 - 1445	0	0	0	0	0	0	0	0	0	0	0	0	0	**0**	
1445 - 1500	0	0	0	0	0	0	0	0	0	0	0	0	0	**0**	**0**
1500 - 1515	0	0	0	0	0	0	0	0	0	0	0	0	0	**0**	
1515 - 1530	0	0	0	0	0	0	0	0	0	0	0	0	0	**0**	
1530 - 1545	0	0	0	0	0	0	0	0	0	0	0	0	0	**0**	
1545 - 1600	0	0	0	0	0	0	0	0	0	0	0	0	0	**0**	**0**
1600 - 1615	0	0	0	0	0	0	0	0	0	0	0	0	0	**0**	
1615 - 1630	0	0	0	0	0	0	0	0	0	0	0	0	0	**0**	
1630 - 1645	0	0	0	0	0	0	0	0	0	0	0	0	0	**0**	
1645 - 1700	0	0	0	0	0	0	0	0	0	0	0	0	0	**0**	**0**
1700 - 1715	0	0	0	0	0	0	0	0	0	0	0	0	0	**0**	
1715 - 1730	0	0	0	0	0	0	0	0	0	0	0	0	0	**0**	
1730 - 1745	0	0	0	0	0	0	0	0	0	0	0	0	0	**0**	
1745 - 1800	0	0	0	0	0	0	0	0	0	0	0	0	0	**0**	**0**
1800 - 1815	0	0	0	0	0	0	0	0	0	0	0	0	0	**0**	
1815 - 1830	0	0	0	0	0	0	0	0	0	0	0	0	0	**0**	
1830 - 1845	0	0	0	0	0	0	0	0	0	0	0	0	0	**0**	
1845 - 1900	0	0	0	0	0	0	0	0	0	0	0	0	0	**0**	**0**
1900 - 1915	0	41	4	0	0	0	0	0	0	0	0	0	0	**45**	
1915 - 1930	0	54	2	0	0	0	0	0	0	0	0	0	0	**56**	
1930 - 1945	0	52	3	0	1	0	0	0	0	0	0	0	0	**56**	
1945 - 2000	0	61	2	0	0	0	0	0	0	0	0	0	0	**63**	**220**
2000 - 2015	0	42	1	0	0	0	0	0	0	0	0	0	0	**43**	
2015 - 2030	0	39	0	0	0	0	0	0	0	0	0	0	0	**39**	
2030 - 2045	0	44	2	0	0	0	0	0	0	0	0	0	0	**46**	
2045 - 2100	0	37	0	0	1	1	0	0	1	0	0	0	0	**40**	**168**
2100 - 2115	0	39	1	0	0	0	0	0	0	0	0	0	0	**40**	
2115 - 2130	0	30	1	0	0	0	0	0	0	0	0	0	0	**31**	
2130 - 2145	0	34	0	0	0	0	0	0	0	0	0	0	0	**34**	
2145 - 2200	0	31	0	0	0	0	0	0	0	0	0	0	0	**31**	**136**
2200 - 2215	0	29	1	0	0	0	0	0	1	0	0	0	0	**31**	
2215 - 2230	0	30	2	0	0	0	0	0	0	0	0	0	0	**32**	
2230 - 2245	0	22	0	0	0	0	0	0	0	0	0	0	0	**22**	
2245 - 2300	0	16	0	0	0	0	0	0	0	0	0	0	0	**16**	**101**
2300 - 2315	0	16	1	0	0	0	0	0	0	0	0	0	0	**17**	
2315 - 2330	0	24	1	0	0	0	0	0	0	0	0	0	0	**25**	
2330 - 2345	0	17	0	0	0	0	0	0	0	0	0	0	0	**17**	
2345 - 0000	0	18	0	0	0	0	0	0	0	0	0	0	0	**18**	**77**

Session Total	0	676	21	0	2	1	0	0	2	0	0	0	0	**702**
Session Average	0.00	7.04	0.22	0.00	0.02	0.01	0.00	0.00	0.02	0.00	0.00	0.00	0.00	**7.31**
Session Percentage	0.00	96.30	2.99	0.00	0.28	0.14	0.00	0.00	0.28	0.00	0.00	0.00	0.00	

AM Peak Hour	-	-	-	-	-	-	-	-	-	-	-	-	-	**-**
AM Peak Volume	0	0	0	0	0	0	0	0	0	0	0	0	0	**0**

Noon Peak Hour	-	-	-	-	-	-	-	-	-	-	-	-	-	**-**
Noon Peak Volume	0	0	0	0	0	0	0	0	0	0	0	0	0	**0**

PM Peak Hour	-	1915 - 2015	1900 - 2000	-	1845 - 1945	-	-	-	-	-	-	-	-	**1900 - 2000**
PM Peak Volume	0	209	11	0	1	0	0	0	0	0	0	0	0	**220**

Site 68
I-20 E/Bound Off-Ramp,
west of US-176 Broad River Rd

Date
Wednesday, May 1, 2024

Lat/Long
34.038440°, -81.095204°

Weather
Partly Cloudy
71°F

Click here for Detailed Weather

0000 - 2400 (Weekday 24h Session) (05-01-2024)
NB EB 15min

	Eastbound (Movement 68.1)													15min	60min
Time	1	2	3	4	5	6	7	8	9	10	11	12	13	Total	Total
0000 - 0015	0	18	0	0	0	0	0	0	0	0	0	0	0	**18**	
0015 - 0030	0	16	1	0	0	0	0	0	2	0	0	0	0	**19**	
0030 - 0045	0	15	0	0	0	0	0	0	0	0	0	0	0	**15**	
0045 - 0100	0	10	0	0	0	0	0	0	0	0	0	0	0	**10**	**62**
0100 - 0115	0	8	1	0	0	0	0	0	0	0	0	0	0	**9**	
0115 - 0130	0	8	1	0	0	0	0	0	0	0	0	0	0	**9**	
0130 - 0145	0	8	0	0	0	0	0	0	0	0	0	0	0	**8**	
0145 - 0200	0	6	0	0	0	0	0	0	0	0	0	0	0	**6**	**32**
0200 - 0215	0	11	2	0	0	0	0	0	0	0	0	0	0	**13**	
0215 - 0230	0	3	1	0	0	0	0	0	1	0	0	0	0	**5**	
0230 - 0245	0	6	2	0	0	0	0	0	0	0	0	0	0	**8**	
0245 - 0300	0	5	1	0	0	0	0	0	0	0	0	0	0	**6**	**32**
0300 - 0315	0	7	1	0	0	0	0	0	0	0	0	0	0	**8**	
0315 - 0330	0	8	1	0	1	0	0	0	0	0	0	0	0	**10**	
0330 - 0345	0	3	1	0	0	0	0	0	0	0	0	0	0	**4**	
0345 - 0400	0	7	1	0	1	0	0	0	1	0	0	0	0	**10**	**32**
0400 - 0415	0	8	0	0	0	0	0	0	0	0	0	0	0	**8**	
0415 - 0430	0	5	1	0	0	0	0	0	0	0	0	0	0	**6**	
0430 - 0445	0	5	1	0	2	0	0	0	0	0	0	0	0	**8**	
0445 - 0500	0	7	2	0	0	0	0	0	1	0	0	0	0	**10**	**32**
0500 - 0515	0	10	1	0	1	0	0	1	0	0	0	0	0	**13**	
0515 - 0530	0	12	1	0	0	0	0	0	0	0	0	0	0	**13**	
0530 - 0545	0	13	2	1	0	0	0	0	0	0	0	0	0	**16**	
0545 - 0600	0	13	3	0	0	0	0	0	0	0	0	0	0	**16**	**58**
0600 - 0615	0	16	4	0	2	0	0	0	1	0	0	0	0	**23**	
0615 - 0630	0	31	5	1	0	1	0	0	0	0	0	0	0	**38**	
0630 - 0645	0	36	12	0	0	0	0	0	0	0	0	0	0	**48**	
0645 - 0700	0	34	16	0	1	2	0	0	0	0	0	0	0	**53**	**162**
0700 - 0715	0	51	9	1	0	0	0	0	1	0	0	0	0	**62**	
0715 - 0730	0	60	13	0	2	0	0	0	0	0	0	0	0	**75**	
0730 - 0745	0	65	15	0	1	0	0	0	1	0	0	0	0	**82**	
0745 - 0800	0	74	12	0	0	0	0	0	0	0	0	0	0	**86**	**305**
0800 - 0815	0	57	14	0	2	0	0	0	1	0	0	0	0	**74**	
0815 - 0830	0	53	14	0	1	0	0	1	1	0	0	0	0	**70**	
0830 - 0845	0	38	14	0	3	0	0	0	9	0	0	0	0	**64**	
0845 - 0900	0	53	24	0	0	1	0	0	1	0	0	0	0	**79**	**287**
0900 - 0915	0	32	8	1	0	0	0	0	1	0	0	0	0	**42**	
0915 - 0930	0	47	17	0	1	0	0	0	1	0	0	0	0	**66**	
0930 - 0945	0	42	12	0	2	0	0	0	0	0	0	0	0	**56**	
0945 - 1000	0	95	34	0	2	1	0	0	0	0	0	0	0	**132**	**296**
1000 - 1015	1	46	15	0	2	0	0	0	0	0	0	0	0	**64**	
1015 - 1030	0	28	11	0	3	0	0	0	0	0	0	0	0	**42**	
1030 - 1045	0	28	17	0	2	0	0	0	1	0	0	0	0	**48**	
1045 - 1100	0	44	7	0	0	0	0	0	1	0	0	0	0	**52**	**206**
1100 - 1115	0	38	11	0	0	0	0	0	1	0	0	0	0	**50**	
1115 - 1130	0	36	8	0	0	0	0	0	0	0	0	0	0	**44**	
1130 - 1145	0	53	14	0	2	0	0	0	0	0	0	0	0	**69**	
1145 - 1200	0	51	7	0	1	0	0	1	1	0	0	0	0	**61**	**224**
1200 - 1215	0	54	8	0	4	0	0	0	0	0	0	0	0	**66**	
1215 - 1230	0	48	12	0	0	0	0	0	2	0	0	0	0	**62**	
1230 - 1245	0	54	17	0	0	0	0	0	2	0	0	0	0	**73**	
1245 - 1300	0	50	10	0	1	1	0	0	0	0	0	0	0	**62**	**263**
1300 - 1315	0	51	18	0	1	0	0	0	0	0	0	0	0	**70**	
1315 - 1330	0	39	14	0	1	0	0	0	0	0	0	0	0	**54**	
1330 - 1345	0	56	9	0	1	0	0	0	1	0	0	0	0	**67**	
1345 - 1400	1	50	11	0	1	0	0	0	1	0	0	0	0	**64**	**255**
1400 - 1415	1	53	9	0	0	0	0	1	0	0	0	0	0	**64**	
1415 - 1430	2	54	15	0	0	1	0	0	0	0	0	0	0	**72**	
1430 - 1445	0	66	17	0	3	0	0	1	0	0	0	0	0	**87**	
1445 - 1500	0	46	13	0	1	0	0	0	0	0	0	0	0	**60**	**283**
1500 - 1515	0	65	18	1	0	0	0	0	0	0	0	0	0	**84**	
1515 - 1530	0	62	13	1	1	0	0	1	1	0	0	0	0	**79**	
1530 - 1545	0	50	7	0	1	0	0	0	0	0	0	0	0	**58**	
1545 - 1600	0	62	8	0	2	0	0	0	0	0	0	0	0	**72**	**293**
1600 - 1615	0	56	3	0	2	0	0	0	0	1	0	0	0	**62**	
1615 - 1630	0	60	8	3	1	1	0	0	0	0	0	0	0	**73**	
1630 - 1645	0	62	11	0	1	1	0	0	0	0	0	0	0	**75**	
1645 - 1700	0	50	13	0	1	0	0	0	0	0	0	0	0	**64**	**274**
1700 - 1715	0	49	11	0	0	0	0	0	0	0	0	0	0	**60**	
1715 - 1730	0	67	13	0	0	1	0	1	0	0	0	0	0	**82**	
1730 - 1745	0	66	10	0	0	0	0	0	1	0	0	0	0	**77**	
1745 - 1800	1	65	12	0	1	0	0	0	1	0	0	0	0	**80**	**299**
1800 - 1815	0	47	9	0	0	0	0	0	1	0	0	0	0	**57**	
1815 - 1830	1	57	9	0	0	0	0	0	1	0	0	0	0	**68**	
1830 - 1845	0	50	13	0	0	0	0	0	2	0	0	0	0	**65**	
1845 - 1900	0	61	6	0	0	0	0	0	0	0	0	0	0	**67**	**257**
1900 - 1915	0	61	7	1	1	0	0	0	0	0	0	0	0	**70**	
1915 - 1930	0	48	11	0	0	1	0	0	0	0	0	0	0	**60**	
1930 - 1945	0	47	5	0	1	1	0	0	0	0	0	0	0	**54**	
1945 - 2000	0	53	4	0	1	0	0	0	0	0	0	0	0	**58**	**242**
2000 - 2015	0	33	5	0	0	0	0	0	0	0	0	0	0	**38**	
2015 - 2030	0	46	5	0	0	0	0	0	0	0	0	0	0	**51**	
2030 - 2045	0	45	3	0	0	0	0	0	0	0	0	0	0	**48**	
2045 - 2100	0	35	8	0	0	0	0	0	0	0	0	0	0	**43**	**180**
2100 - 2115	1	38	6	0	2	0	0	0	0	0	0	0	0	**47**	
2115 - 2130	0	41	3	0	0	0	0	0	0	0	0	0	0	**44**	
2130 - 2145	0	22	6	0	1	0	0	1	0	0	0	0	0	**30**	
2145 - 2200	0	32	5	0	0	0	0	0	0	0	0	0	0	**37**	**158**
2200 - 2215	0	27	4	0	0	0	0	0	0	0	0	0	0	**31**	
2215 - 2230	0	35	4	0	0	0	0	0	0	0	0	0	0	**39**	
2230 - 2245	1	21	4	0	0	0	0	0	1	0	0	0	0	**27**	
2245 - 2300	0	22	1	0	0	0	0	0	0	0	0	0	0	**23**	**120**
2300 - 2315	0	24	2	0	0	0	0	0	0	0	0	0	0	**26**	
2315 - 2330	0	22	2	0	0	0	0	0	0	0	0	0	0	**24**	
2330 - 2345	0	14	0	0	0	1	0	0	2	0	0	0	0	**17**	
2345 - 0000	0	17	1	0	0	0	0	0	0	0	0	0	0	**18**	**85**

Session Total	9	3553	740	10	61	13	0	8	42	1	0	0	0	**4437**
Session Average	0.09	37.01	7.71	0.10	0.64	0.14	0.00	0.08	0.44	0.01	0.00	0.00	0.00	**46.22**
Session Percentage	0.20	80.08	16.68	0.23	1.37	0.29	0.00	0.18	0.95	0.02	0.00	0.00	0.00	

AM Peak Hour	0915 - 1015	0715 - 0815	0915 - 1015	0530 - 0630	0930 - 1030	0600 - 0700	-	0500 - 0600	0800 - 0900	-	-	-	-	**0915 - 1015**
AM Peak Volume	1	256	78	2	9	3	0	1	12	0	0	0	0	**318**

Noon Peak Hour	1330 - 1430	1430 - 1530	1415 - 1515	1430 - 1530	1000 - 1100	1200 - 1300	-	1345 - 1445	1145 - 1245	-	-	-	-	**1430 - 1530**
Noon Peak Volume	4	239	63	2	7	1	0	2	5	0	0	0	0	**310**

PM Peak Hour	1730 - 1830	1700 - 1800	1630 - 1730	1530 - 1630	1515 - 1615	1545 - 1645	-	1500 - 1600	1745 - 1845	1515 - 1615	-	-	-	**1700 - 1800**
PM Peak Volume	2	247	48	3	6	2	0	1	5	1	0	0	0	**299**

Site 68
I-20 E/Bound Off-Ramp,
west of US-176 Broad River Rd

Date
Thursday, May 2, 2024

Lat/Long
34.038440°, -81.095204°

Weather
Fair
74°F

Click here for Detailed Weather

0000 - 2400 (Weekday 24h Session) (05-02-2024)
NB EB 15min

	Eastbound (Movement 68.1)													15min	60min
TIME	1	2	3	4	5	6	7	8	9	10	11	12	13	Total	Total
0000 - 0015	0	16	3	0	1	1	0	0	0	0	0	0	0	**21**	
0015 - 0030	0	13	2	0	0	0	0	0	0	0	0	0	0	**15**	
0030 - 0045	0	12	2	0	0	0	0	0	0	0	0	0	0	**14**	
0045 - 0100	0	7	2	0	0	0	0	0	0	0	0	0	0	**9**	**59**
0100 - 0115	0	5	2	0	0	0	0	0	0	0	0	0	0	**7**	
0115 - 0130	0	5	2	0	1	1	0	0	0	0	0	0	0	**9**	
0130 - 0145	0	11	3	0	0	0	0	0	1	0	0	0	0	**15**	
0145 - 0200	0	6	2	0	0	0	0	0	1	0	0	0	0	**9**	**40**
0200 - 0215	0	7	2	0	0	0	0	0	0	0	0	0	0	**9**	
0215 - 0230	0	10	2	0	1	0	0	0	1	0	0	0	0	**14**	
0230 - 0245	0	8	3	0	1	0	0	0	0	0	0	0	0	**12**	
0245 - 0300	0	4	1	0	0	0	0	0	0	0	0	0	0	**5**	**40**
0300 - 0315	0	9	3	0	0	0	0	0	0	0	0	0	0	**12**	
0315 - 0330	0	4	1	0	0	0	0	0	0	0	0	0	0	**5**	
0330 - 0345	0	2	0	0	0	0	0	0	0	0	0	0	0	**2**	
0345 - 0400	0	4	0	0	0	0	0	0	0	0	0	0	0	**4**	**23**
0400 - 0415	0	4	2	1	0	0	0	0	0	0	0	0	0	**7**	
0415 - 0430	0	7	2	0	0	0	0	1	0	0	0	0	0	**10**	
0430 - 0445	0	5	2	0	0	0	0	0	0	0	0	0	0	**7**	
0445 - 0500	0	8	3	0	0	0	0	0	0	0	0	0	0	**11**	**35**
0500 - 0515	0	10	2	1	0	0	0	0	0	0	0	0	0	**13**	
0515 - 0530	0	8	2	0	1	0	0	0	1	0	0	0	0	**12**	
0530 - 0545	0	4	1	0	0	0	0	0	0	0	0	0	0	**5**	
0545 - 0600	0	13	4	0	0	0	0	0	0	0	0	0	0	**17**	**47**
0600 - 0615	0	12	3	0	0	0	0	0	0	0	0	0	0	**15**	
0615 - 0630	0	25	11	1	1	0	0	0	0	0	0	0	0	**38**	
0630 - 0645	0	42	15	0	2	1	0	1	0	0	0	0	0	**61**	
0645 - 0700	0	44	17	0	1	2	0	1	0	0	0	0	0	**65**	**179**
0700 - 0715	0	40	16	1	3	1	0	0	0	0	0	0	0	**61**	
0715 - 0730	0	66	12	0	1	1	0	1	0	0	0	0	0	**81**	
0730 - 0745	0	53	15	1	3	0	0	2	2	0	0	0	0	**76**	
0745 - 0800	0	63	16	0	1	0	0	1	1	0	0	0	0	**82**	**300**
0800 - 0815	0	56	12	0	2	0	0	0	0	0	0	0	0	**70**	
0815 - 0830	0	61	10	0	1	0	0	0	0	0	0	0	0	**72**	
0830 - 0845	0	57	12	1	2	0	0	0	0	0	0	0	0	**72**	
0845 - 0900	0	60	10	0	4	0	0	0	1	0	0	0	0	**75**	**289**
0900 - 0915	0	48	13	0	1	0	0	0	0	0	0	0	0	**62**	
0915 - 0930	0	38	7	0	1	0	0	0	0	0	0	0	0	**46**	
0930 - 0945	0	41	10	0	2	0	0	0	0	0	0	0	0	**53**	
0945 - 1000	0	47	13	0	1	0	0	0	0	0	0	0	0	**61**	**222**
1000 - 1015	0	41	6	0	0	0	0	0	0	0	0	0	0	**47**	
1015 - 1030	0	38	9	0	2	0	0	0	0	0	0	0	0	**49**	
1030 - 1045	0	40	7	0	1	0	0	0	0	0	0	0	0	**48**	
1045 - 1100	0	39	6	0	2	0	0	0	0	0	0	0	0	**47**	**191**
1100 - 1115	0	44	12	0	1	0	0	0	0	0	0	0	0	**57**	
1115 - 1130	0	46	10	1	2	0	0	1	0	0	0	0	0	**60**	
1130 - 1145	0	53	10	0	1	0	0	1	0	0	0	0	0	**65**	
1145 - 1200	0	53	13	0	1	0	0	0	0	0	0	0	0	**67**	**249**
1200 - 1215	0	56	11	0	3	0	0	0	0	0	0	0	0	**70**	
1215 - 1230	1	63	9	0	0	0	0	1	0	0	0	0	0	**74**	
1230 - 1245	0	55	18	0	1	0	0	0	0	0	0	0	0	**74**	
1245 - 1300	0	63	10	0	4	0	0	2	0	0	0	0	0	**79**	**297**
1300 - 1315	0	58	16	0	3	0	0	0	0	0	0	0	0	**77**	
1315 - 1330	0	50	18	0	2	0	0	1	0	0	0	0	0	**71**	
1330 - 1345	0	56	14	0	0	0	0	0	0	0	0	0	0	**70**	
1345 - 1400	0	56	10	1	4	0	0	1	0	0	0	0	0	**72**	**290**
1400 - 1415	0	64	10	0	1	0	0	1	0	0	0	0	0	**76**	
1415 - 1430	0	54	12	0	1	0	0	0	0	0	0	0	0	**67**	
1430 - 1445	0	41	11	0	0	0	0	0	1	0	0	0	0	**53**	
1445 - 1500	0	49	14	0	1	0	0	0	1	0	0	0	0	**65**	**261**
1500 - 1515	0	42	5	2	0	0	0	0	0	1	0	0	0	**50**	
1515 - 1530	0	81	27	1	3	2	0	0	0	2	0	0	0	**116**	
1530 - 1545	0	95	24	0	2	1	2	0	0	0	0	0	0	**124**	
1545 - 1600	0	84	14	0	2	1	0	0	0	0	0	0	0	**101**	**391**
1600 - 1615	0	67	11	1	2	0	0	0	2	0	0	0	0	**83**	
1615 - 1630	0	78	12	1	1	2	0	0	0	0	0	0	0	**94**	
1630 - 1645	0	42	8	0	0	0	0	0	0	0	0	0	0	**50**	
1645 - 1700	0	46	10	0	2	0	0	0	0	0	0	0	0	**58**	**285**
1700 - 1715	0	41	7	0	1	0	0	0	0	0	0	0	0	**49**	
1715 - 1730	0	36	5	0	0	1	0	0	0	0	0	0	0	**42**	
1730 - 1745	0	48	12	0	0	0	0	1	0	0	0	0	0	**61**	
1745 - 1800	1	81	15	0	0	0	0	0	0	0	0	0	0	**97**	**249**
1800 - 1815	0	76	15	0	0	0	0	0	1	0	0	0	0	**92**	
1815 - 1830	0	96	17	0	2	0	0	1	0	0	0	0	0	**116**	
1830 - 1845	0	61	14	0	0	0	0	0	0	0	0	0	0	**75**	
1845 - 1900	0	47	8	0	0	0	0	0	0	0	0	0	0	**55**	**338**
1900 - 1915	0	0	0	0	0	0	0	0	0	0	0	0	0	**0**	
1915 - 1930	0	0	0	0	0	0	0	0	0	0	0	0	0	**0**	
1930 - 1945	0	0	0	0	0	0	0	0	0	0	0	0	0	**0**	
1945 - 2000	0	0	0	0	0	0	0	0	0	0	0	0	0	**0**	**0**
2000 - 2015	0	0	0	0	0	0	0	0	0	0	0	0	0	**0**	
2015 - 2030	0	0	0	0	0	0	0	0	0	0	0	0	0	**0**	
2030 - 2045	0	0	0	0	0	0	0	0	0	0	0	0	0	**0**	
2045 - 2100	0	0	0	0	0	0	0	0	0	0	0	0	0	**0**	**0**
2100 - 2115	0	0	0	0	0	0	0	0	0	0	0	0	0	**0**	
2115 - 2130	0	0	0	0	0	0	0	0	0	0	0	0	0	**0**	
2130 - 2145	0	0	0	0	0	0	0	0	0	0	0	0	0	**0**	
2145 - 2200	0	0	0	0	0	0	0	0	0	0	0	0	0	**0**	**0**
2200 - 2215	0	0	0	0	0	0	0	0	0	0	0	0	0	**0**	
2215 - 2230	0	0	0	0	0	0	0	0	0	0	0	0	0	**0**	
2230 - 2245	0	0	0	0	0	0	0	0	0	0	0	0	0	**0**	
2245 - 2300	0	0	0	0	0	0	0	0	0	0	0	0	0	**0**	**0**
2300 - 2315	0	0	0	0	0	0	0	0	0	0	0	0	0	**0**	
2315 - 2330	0	0	0	0	0	0	0	0	0	0	0	0	0	**0**	
2330 - 2345	0	0	0	0	0	0	0	0	0	0	0	0	0	**0**	
2345 - 0000	0	0	0	0	0	0	0	0	0	0	0	0	0	**0**	**0**

Session Total	2	2975	670	13	76	14	2	17	13	3	0	0	0	**3785**
Session Average	0.02	30.99	6.98	0.14	0.79	0.15	0.02	0.18	0.14	0.03	0.00	0.00	0.00	**39.43**
Session Percentage	0.05	78.60	17.70	0.34	2.01	0.37	0.05	0.45	0.34	0.08	0.00	0.00	0.00	

AM Peak Hour	-	0715 - 0815	0630 - 0730	0615 - 0715	0800 - 0900	0630 - 0730	-	0645 - 0745	0700 - 0800	-	-	-	-	**0715 - 0815**
AM Peak Hour Volume	0	238	60	2	9	5	0	4	3	0	0	0	0	**309**

Noon Peak Hour	1130 - 1230	1445 - 1545	1445 - 1545	1430 - 1530	1230 - 1330	1445 - 1545	1445 - 1545	1200 - 1300	1400 - 1500	1430 - 1530	-	-	-	**1445 - 1545**
Noon Peak Hour Volume	1	267	70	3	10	3	2	3	2	3	0	0	0	**355**

PM Peak Hour	1700 - 1800	1515 - 1615	1515 - 1615	1500 - 1600	1515 - 1615	1500 - 1600	1500 - 1600	1730 - 1830	1515 - 1615	1500 - 1600	-	-	-	**1515 - 1615**
PM Peak Hour Volume	1	327	76	3	9	4	2	2	2	3	0	0	0	**424**

Bi-Directional Class Count || NB EB Average 15min

Columbia, SC

Marr Traffic DATA COLLECTION
www.marrtraffic.com

Site 68
I-20 E/Bound Off-Ramp,
west of US-176 Broad River Rd

Date
Tuesday, April 30, 2024

Lat/Long
34.038440°, -81.095204°

Weather
Mostly Cloudy
70°F

0000 - 2400 (Weekday 24h Session) (All Dates)
NB EB Average 15min

	NB EB Average 15min													15min	60min
Time	1	2	3	4	5	6	7	8	9	10	11	12	13	Total	Total
0000 - 0015	0	11	1	0	0	0	0	0	0	0	0	0	0	**13**	
0015 - 0030	0	10	1	0	0	0	0	0	1	0	0	0	0	**11**	
0030 - 0045	0	9	1	0	0	0	0	0	0	0	0	0	0	**10**	
0045 - 0100	0	6	1	0	0	0	0	0	0	0	0	0	0	**6**	**40**
0100 - 0115	0	4	1	0	0	0	0	0	0	0	0	0	0	**5**	
0115 - 0130	0	4	1	0	0	0	0	0	0	0	0	0	0	**6**	
0130 - 0145	0	6	1	0	0	0	0	0	0	0	0	0	0	**8**	
0145 - 0200	0	4	1	0	0	0	0	0	0	0	0	0	0	**5**	**24**
0200 - 0215	0	6	1	0	0	0	0	0	0	0	0	0	0	**7**	
0215 - 0230	0	4	1	0	0	0	0	0	1	0	0	0	0	**6**	
0230 - 0245	0	5	2	0	0	0	0	0	0	0	0	0	0	**7**	
0245 - 0300	0	3	1	0	0	0	0	0	0	0	0	0	0	**4**	**24**
0300 - 0315	0	5	1	0	0	0	0	0	0	0	0	0	0	**7**	
0315 - 0330	0	4	1	0	0	0	0	0	0	0	0	0	0	**5**	
0330 - 0345	0	2	0	0	0	0	0	0	0	0	0	0	0	**2**	
0345 - 0400	0	4	0	0	0	0	0	0	0	0	0	0	0	**5**	**18**
0400 - 0415	0	4	1	0	0	0	0	0	0	0	0	0	0	**5**	
0415 - 0430	0	4	1	0	0	0	0	0	0	0	0	0	0	**5**	
0430 - 0445	0	3	1	0	1	0	0	0	0	0	0	0	0	**5**	
0445 - 0500	0	5	2	0	0	0	0	0	0	0	0	0	0	**7**	**22**
0500 - 0515	0	7	1	0	0	0	0	0	0	0	0	0	0	**9**	
0515 - 0530	0	7	1	0	0	0	0	0	0	0	0	0	0	**8**	
0530 - 0545	0	6	1	0	0	0	0	0	0	0	0	0	0	**7**	
0545 - 0600	0	9	2	0	0	0	0	0	0	0	0	0	0	**11**	**35**
0600 - 0615	0	9	2	0	1	0	0	0	0	0	0	0	0	**13**	
0615 - 0630	0	19	5	1	0	0	0	0	0	0	0	0	0	**25**	
0630 - 0645	0	26	9	0	1	0	0	0	0	0	0	0	0	**36**	
0645 - 0700	0	26	11	0	1	1	0	0	0	0	0	0	0	**39**	**114**
0700 - 0715	0	30	8	1	1	0	0	0	0	0	0	0	0	**41**	
0715 - 0730	0	42	8	0	1	0	0	0	0	0	0	0	0	**52**	
0730 - 0745	0	39	10	0	1	0	0	1	1	0	0	0	0	**53**	
0745 - 0800	0	46	9	0	0	0	0	0	0	0	0	0	0	**56**	**202**
0800 - 0815	0	38	9	0	1	0	0	0	0	0	0	0	0	**48**	
0815 - 0830	0	38	8	0	1	0	0	0	0	0	0	0	0	**47**	
0830 - 0845	0	32	9	0	2	0	0	0	3	0	0	0	0	**45**	
0845 - 0900	0	38	11	0	1	0	0	0	1	0	0	0	0	**51**	**192**
0900 - 0915	0	27	7	0	0	0	0	0	0	0	0	0	0	**35**	
0915 - 0930	0	28	8	0	1	0	0	0	0	0	0	0	0	**37**	
0930 - 0945	0	28	7	0	1	0	0	0	0	0	0	0	0	**36**	
0945 - 1000	0	47	16	0	1	0	0	0	0	0	0	0	0	**64**	**173**
1000 - 1015	0	29	7	0	1	0	0	0	0	0	0	0	0	**37**	
1015 - 1030	0	22	7	0	2	0	0	0	0	0	0	0	0	**30**	
1030 - 1045	0	23	8	0	1	0	0	0	0	0	0	0	0	**32**	
1045 - 1100	0	28	4	0	1	0	0	0	0	0	0	0	0	**33**	**132**
1100 - 1115	0	27	8	0	0	0	0	0	0	0	0	0	0	**36**	
1115 - 1130	0	27	6	0	1	0	0	0	0	0	0	0	0	**35**	
1130 - 1145	0	35	8	0	1	0	0	0	0	0	0	0	0	**45**	
1145 - 1200	0	35	7	0	1	0	0	0	0	0	0	0	0	**43**	**158**
1200 - 1215	0	37	6	0	2	0	0	0	0	0	0	0	0	**45**	
1215 - 1230	0	37	7	0	0	0	0	0	1	0	0	0	0	**45**	
1230 - 1245	0	36	12	0	0	0	0	0	1	0	0	0	0	**49**	
1245 - 1300	0	38	7	0	2	0	0	1	0	0	0	0	0	**47**	**187**
1300 - 1315	0	36	11	0	1	0	0	0	0	0	0	0	0	**49**	
1315 - 1330	0	30	11	0	1	0	0	0	0	0	0	0	0	**42**	
1330 - 1345	0	37	8	0	0	0	0	0	0	0	0	0	0	**46**	
1345 - 1400	0	35	7	0	2	0	0	0	0	0	0	0	0	**45**	**182**
1400 - 1415	0	39	6	0	0	0	0	1	0	0	0	0	0	**47**	
1415 - 1430	1	36	9	0	0	0	0	0	0	0	0	0	0	**46**	
1430 - 1445	0	36	9	0	1	0	0	0	0	0	0	0	0	**47**	
1445 - 1500	0	32	9	0	1	0	0	0	0	0	0	0	0	**42**	**181**
1500 - 1515	0	36	8	1	0	0	0	0	0	0	0	0	0	**45**	
1515 - 1530	0	48	13	1	1	1	0	0	0	1	0	0	0	**65**	
1530 - 1545	0	48	10	0	1	0	1	0	0	0	0	0	0	**61**	
1545 - 1600	0	49	7	0	1	0	0	0	0	0	0	0	0	**58**	**228**
1600 - 1615	0	41	5	0	1	0	0	0	1	0	0	0	0	**48**	
1615 - 1630	0	46	7	1	1	1	0	0	0	0	0	0	0	**56**	
1630 - 1645	0	35	6	0	0	0	0	0	0	0	0	0	0	**42**	
1645 - 1700	0	32	8	0	1	0	0	0	0	0	0	0	0	**41**	**186**
1700 - 1715	0	30	6	0	0	0	0	0	0	0	0	0	0	**36**	
1715 - 1730	0	34	6	0	0	1	0	0	0	0	0	0	0	**41**	
1730 - 1745	0	38	7	0	0	0	0	0	0	0	0	0	0	**46**	
1745 - 1800	1	49	9	0	0	0	0	0	0	0	0	0	0	**59**	**183**
1800 - 1815	0	41	8	0	0	0	0	0	1	0	0	0	0	**50**	
1815 - 1830	0	51	9	0	1	0	0	0	0	0	0	0	0	**61**	
1830 - 1845	0	37	9	0	0	0	0	0	1	0	0	0	0	**47**	
1845 - 1900	0	36	5	0	0	0	0	0	0	0	0	0	0	**41**	**198**
1900 - 1915	0	34	4	0	0	0	0	0	0	0	0	0	0	**38**	
1915 - 1930	0	34	4	0	0	0	0	0	0	0	0	0	0	**39**	
1930 - 1945	0	33	3	0	1	0	0	0	0	0	0	0	0	**37**	
1945 - 2000	0	38	2	0	0	0	0	0	0	0	0	0	0	**40**	**154**
2000 - 2015	0	25	2	0	0	0	0	0	0	0	0	0	0	**27**	
2015 - 2030	0	28	2	0	0	0	0	0	0	0	0	0	0	**30**	
2030 - 2045	0	30	2	0	0	0	0	0	0	0	0	0	0	**31**	
2045 - 2100	0	24	3	0	0	0	0	0	0	0	0	0	0	**28**	**116**
2100 - 2115	0	26	2	0	1	0	0	0	0	0	0	0	0	**29**	
2115 - 2130	0	24	1	0	0	0	0	0	0	0	0	0	0	**25**	
2130 - 2145	0	19	2	0	0	0	0	0	0	0	0	0	0	**21**	
2145 - 2200	0	21	2	0	0	0	0	0	0	0	0	0	0	**23**	**98**
2200 - 2215	0	19	2	0	0	0	0	0	0	0	0	0	0	**21**	
2215 - 2230	0	22	2	0	0	0	0	0	0	0	0	0	0	**24**	
2230 - 2245	0	14	1	0	0	0	0	0	0	0	0	0	0	**16**	
2245 - 2300	0	13	0	0	0	0	0	0	0	0	0	0	0	**13**	**74**
2300 - 2315	0	13	1	0	0	0	0	0	0	0	0	0	0	**14**	
2315 - 2330	0	15	1	0	0	0	0	0	0	0	0	0	0	**16**	
2330 - 2345	0	10	0	0	0	0	0	0	1	0	0	0	0	**11**	
2345 - 0000	0	12	0	0	0	0	0	0	0	0	0	0	0	**12**	**54**

Session Total	4	2401	477	8	46	9	1	8	19	1	0	0	0	**2975**
Session Average	0.04	25.01	4.97	0.08	0.48	0.10	0.01	0.09	0.20	0.01	0.00	0.00	0.00	**30.99**
Session Percentage	0.12	80.73	16.04	0.26	1.56	0.31	0.02	0.28	0.64	0.04	0.00	0.00	0.00	

AM Peak Hour	0915 - 1015	0715 - 0815	0900 - 1000	0615 - 0715	0800 - 0900	0615 - 0715	-	0645 - 0745	0800 - 0900	-	-	-	-	**0715 - 0815**
AM Peak Volume	0	165	38	1	5	2	0	1	4	0	0	0	0	**209**

Noon Peak Hour	1330 - 1430	1445 - 1545	1445 - 1545	1430 - 1530	1115 - 1215	1445 - 1545	1445 - 1545	1315 - 1415	1145 - 1245	1430 - 1530	-	-	-	**1445 - 1545**
Noon Peak Volume	1	163	40	2	5	1	1	1	2	1	0	0	0	**212**

PM Peak Hour	1730 - 1830	1515 - 1615	1500 - 1600	1500 - 1600	1515 - 1615	1530 - 1630	1500 - 1600	1645 - 1745	1745 - 1845	1500 - 1600	-	-	-	**1515 - 1615**
PM Peak Volume	1	186	39	2	5	2	1	1	2	1	0	0	0	**232**

Bi-Directional Class Count || Volume Summary 15min

Columbia, SC

Marr Traffic DATA COLLECTION

www.marrtraffic.com

Site 68

I-20 E/Bound Off-Ramp,
west of US-176 Broad River Rd

Date

Tuesday, April 30, 2024

Lat/Long

34.038440°, -81.095204°

Weather

Mostly Cloudy
70°F

Click here for Detailed Weather

0000 - 2400 (Weekday 24h Session) (04-30-2024)

Volume Summary 15min

	Volume Summary 15min		15min	60min
TIME	EB	WB	Total	Total
0000 - 0015	0	0	**0**	
0015 - 0030	0	0	**0**	
0030 - 0045	0	0	**0**	
0045 - 0100	0	0	**0**	**0**
0100 - 0115	0	0	**0**	
0115 - 0130	0	0	**0**	
0130 - 0145	0	0	**0**	
0145 - 0200	0	0	**0**	**0**
0200 - 0215	0	0	**0**	
0215 - 0230	0	0	**0**	
0230 - 0245	0	0	**0**	
0245 - 0300	0	0	**0**	**0**
0300 - 0315	0	0	**0**	
0315 - 0330	0	0	**0**	
0330 - 0345	0	0	**0**	
0345 - 0400	0	0	**0**	**0**
0400 - 0415	0	0	**0**	
0415 - 0430	0	0	**0**	
0430 - 0445	0	0	**0**	
0445 - 0500	0	0	**0**	**0**
0500 - 0515	0	0	**0**	
0515 - 0530	0	0	**0**	
0530 - 0545	0	0	**0**	
0545 - 0600	0	0	**0**	**0**
0600 - 0615	0	0	**0**	
0615 - 0630	0	0	**0**	
0630 - 0645	0	0	**0**	
0645 - 0700	0	0	**0**	**0**
0700 - 0715	0	0	**0**	
0715 - 0730	0	0	**0**	
0730 - 0745	0	0	**0**	
0745 - 0800	0	0	**0**	**0**
0800 - 0815	0	0	**0**	
0815 - 0830	0	0	**0**	
0830 - 0845	0	0	**0**	
0845 - 0900	0	0	**0**	**0**
0900 - 0915	0	0	**0**	
0915 - 0930	0	0	**0**	
0930 - 0945	0	0	**0**	
0945 - 1000	0	0	**0**	**0**
1000 - 1015	0	0	**0**	
1015 - 1030	0	0	**0**	
1030 - 1045	0	0	**0**	
1045 - 1100	0	0	**0**	**0**
1100 - 1115	0	0	**0**	
1115 - 1130	0	0	**0**	
1130 - 1145	0	0	**0**	
1145 - 1200	0	0	**0**	**0**

	Volume Summary 15min		15min	60min
Time	EB	WB	Total	Total
1200 - 1215	0	0	**0**	
1215 - 1230	0	0	**0**	
1230 - 1245	0	0	**0**	
1245 - 1300	0	0	**0**	**0**
1300 - 1315	0	0	**0**	
1315 - 1330	0	0	**0**	
1330 - 1345	0	0	**0**	
1345 - 1400	0	0	**0**	**0**
1400 - 1415	0	0	**0**	
1415 - 1430	0	0	**0**	
1430 - 1445	0	0	**0**	
1445 - 1500	0	0	**0**	**0**
1500 - 1515	0	0	**0**	
1515 - 1530	0	0	**0**	
1530 - 1545	0	0	**0**	
1545 - 1600	0	0	**0**	**0**
1600 - 1615	0	0	**0**	
1615 - 1630	0	0	**0**	
1630 - 1645	0	0	**0**	
1645 - 1700	0	0	**0**	**0**
1700 - 1715	0	0	**0**	
1715 - 1730	0	0	**0**	
1730 - 1745	0	0	**0**	
1745 - 1800	0	0	**0**	**0**
1800 - 1815	0	0	**0**	
1815 - 1830	0	0	**0**	
1830 - 1845	0	0	**0**	
1845 - 1900	0	0	**0**	**0**
1900 - 1915	45	0	**45**	
1915 - 1930	56	0	**56**	
1930 - 1945	56	0	**56**	
1945 - 2000	63	0	**63**	**220**
2000 - 2015	43	0	**43**	
2015 - 2030	39	0	**39**	
2030 - 2045	46	0	**46**	
2045 - 2100	40	0	**40**	**168**
2100 - 2115	40	0	**40**	
2115 - 2130	31	0	**31**	
2130 - 2145	34	0	**34**	
2145 - 2200	31	0	**31**	**136**
2200 - 2215	31	0	**31**	
2215 - 2230	32	0	**32**	
2230 - 2245	22	0	**22**	
2245 - 2300	16	0	**16**	**101**
2300 - 2315	17	0	**17**	
2315 - 2330	25	0	**25**	
2330 - 2345	17	0	**17**	
2345 - 0000	18	0	**18**	**77**

Session Total	702	0	**702**
Session Average	7.31	0.00	**7.31**
Session Percentage	100.00	0.00	

Site 68
I-20 E/Bound Off-Ramp,
west of US-176 Broad River Rd

Date
Wednesday, May 1, 2024

Lat/Long
34.038440°, -81.095204°

Weather
Partly Cloudy
71°F

Click here for Detailed Weather

0000 - 2400 (Weekday 24h Session) (05-01-2024)

Volume Summary 15min

TIME	Volume Summary 15min EB	WB	15min Total	60min Total
0000 - 0015	18	0	**18**	
0015 - 0030	19	0	**19**	
0030 - 0045	15	0	**15**	
0045 - 0100	10	0	**10**	**62**
0100 - 0115	9	0	**9**	
0115 - 0130	9	0	**9**	
0130 - 0145	8	0	**8**	
0145 - 0200	6	0	**6**	**32**
0200 - 0215	13	0	**13**	
0215 - 0230	5	0	**5**	
0230 - 0245	8	0	**8**	
0245 - 0300	6	0	**6**	**32**
0300 - 0315	8	0	**8**	
0315 - 0330	10	0	**10**	
0330 - 0345	4	0	**4**	
0345 - 0400	10	0	**10**	**32**
0400 - 0415	8	0	**8**	
0415 - 0430	6	0	**6**	
0430 - 0445	8	0	**8**	
0445 - 0500	10	0	**10**	**32**
0500 - 0515	13	0	**13**	
0515 - 0530	13	0	**13**	
0530 - 0545	16	0	**16**	
0545 - 0600	16	0	**16**	**58**
0600 - 0615	23	0	**23**	
0615 - 0630	38	0	**38**	
0630 - 0645	48	0	**48**	
0645 - 0700	53	0	**53**	**162**
0700 - 0715	62	0	**62**	
0715 - 0730	75	0	**75**	
0730 - 0745	82	0	**82**	
0745 - 0800	86	0	**86**	**305**
0800 - 0815	74	0	**74**	
0815 - 0830	70	0	**70**	
0830 - 0845	64	0	**64**	
0845 - 0900	79	0	**79**	**287**
0900 - 0915	42	0	**42**	
0915 - 0930	66	0	**66**	
0930 - 0945	56	0	**56**	
0945 - 1000	132	0	**132**	**296**
1000 - 1015	64	0	**64**	
1015 - 1030	42	0	**42**	
1030 - 1045	48	0	**48**	
1045 - 1100	52	0	**52**	**206**
1100 - 1115	50	0	**50**	
1115 - 1130	44	0	**44**	
1130 - 1145	69	0	**69**	
1145 - 1200	61	0	**61**	**224**

Time	Volume Summary 15min EB	WB	15min Total	60min Total
1200 - 1215	66	0	**66**	
1215 - 1230	62	0	**62**	
1230 - 1245	73	0	**73**	
1245 - 1300	62	0	**62**	**263**
1300 - 1315	70	0	**70**	
1315 - 1330	54	0	**54**	
1330 - 1345	67	0	**67**	
1345 - 1400	64	0	**64**	**255**
1400 - 1415	64	0	**64**	
1415 - 1430	72	0	**72**	
1430 - 1445	87	0	**87**	
1445 - 1500	60	0	**60**	**283**
1500 - 1515	84	0	**84**	
1515 - 1530	79	0	**79**	
1530 - 1545	58	0	**58**	
1545 - 1600	72	0	**72**	**293**
1600 - 1615	62	0	**62**	
1615 - 1630	73	0	**73**	
1630 - 1645	75	0	**75**	
1645 - 1700	64	0	**64**	**274**
1700 - 1715	60	0	**60**	
1715 - 1730	82	0	**82**	
1730 - 1745	77	0	**77**	
1745 - 1800	80	0	**80**	**299**
1800 - 1815	57	0	**57**	
1815 - 1830	68	0	**68**	
1830 - 1845	65	0	**65**	
1845 - 1900	67	0	**67**	**257**
1900 - 1915	70	0	**70**	
1915 - 1930	60	0	**60**	
1930 - 1945	54	0	**54**	
1945 - 2000	58	0	**58**	**242**
2000 - 2015	38	0	**38**	
2015 - 2030	51	0	**51**	
2030 - 2045	48	0	**48**	
2045 - 2100	43	0	**43**	**180**
2100 - 2115	47	0	**47**	
2115 - 2130	44	0	**44**	
2130 - 2145	30	0	**30**	
2145 - 2200	37	0	**37**	**158**
2200 - 2215	31	0	**31**	
2215 - 2230	39	0	**39**	
2230 - 2245	27	0	**27**	
2245 - 2300	23	0	**23**	**120**
2300 - 2315	26	0	**26**	
2315 - 2330	24	0	**24**	
2330 - 2345	17	0	**17**	
2345 - 0000	18	0	**18**	**85**

Session Total	4437	0	**4437**
Session Average	46.22	0.00	**46.22**
Session Percentage	100.00	0.00	

Site 68
I-20 E/Bound Off-Ramp,
west of US-176 Broad River Rd

Date
Thursday, May 2, 2024

Lat/Long
34.038440°, -81.095204°

Weather
Fair
74°F

Click here for Detailed Weather

0000 - 2400 (Weekday 24h Session) (05-02-2024)

Volume Summary 15min

TIME	Volume Summary 15min EB	WB	15min Total	60min Total
0000 - 0015	21	0	**21**	
0015 - 0030	15	0	**15**	
0030 - 0045	14	0	**14**	
0045 - 0100	9	0	**9**	**59**
0100 - 0115	7	0	**7**	
0115 - 0130	9	0	**9**	
0130 - 0145	15	0	**15**	
0145 - 0200	9	0	**9**	**40**
0200 - 0215	9	0	**9**	
0215 - 0230	14	0	**14**	
0230 - 0245	12	0	**12**	
0245 - 0300	5	0	**5**	**40**
0300 - 0315	12	0	**12**	
0315 - 0330	5	0	**5**	
0330 - 0345	2	0	**2**	
0345 - 0400	4	0	**4**	**23**
0400 - 0415	7	0	**7**	
0415 - 0430	10	0	**10**	
0430 - 0445	7	0	**7**	
0445 - 0500	11	0	**11**	**35**
0500 - 0515	13	0	**13**	
0515 - 0530	12	0	**12**	
0530 - 0545	5	0	**5**	
0545 - 0600	17	0	**17**	**47**
0600 - 0615	15	0	**15**	
0615 - 0630	38	0	**38**	
0630 - 0645	61	0	**61**	
0645 - 0700	65	0	**65**	**179**
0700 - 0715	61	0	**61**	
0715 - 0730	81	0	**81**	
0730 - 0745	76	0	**76**	
0745 - 0800	82	0	**82**	**300**
0800 - 0815	70	0	**70**	
0815 - 0830	72	0	**72**	
0830 - 0845	72	0	**72**	
0845 - 0900	75	0	**75**	**289**
0900 - 0915	62	0	**62**	
0915 - 0930	46	0	**46**	
0930 - 0945	53	0	**53**	
0945 - 1000	61	0	**61**	**222**
1000 - 1015	47	0	**47**	
1015 - 1030	49	0	**49**	
1030 - 1045	48	0	**48**	
1045 - 1100	47	0	**47**	**191**
1100 - 1115	57	0	**57**	
1115 - 1130	60	0	**60**	
1130 - 1145	65	0	**65**	
1145 - 1200	67	0	**67**	**249**

Time	Volume Summary 15min EB	WB	15min Total	60min Total
1200 - 1215	70	0	**70**	
1215 - 1230	74	0	**74**	
1230 - 1245	74	0	**74**	
1245 - 1300	79	0	**79**	**297**
1300 - 1315	77	0	**77**	
1315 - 1330	71	0	**71**	
1330 - 1345	70	0	**70**	
1345 - 1400	72	0	**72**	**290**
1400 - 1415	76	0	**76**	
1415 - 1430	67	0	**67**	
1430 - 1445	53	0	**53**	
1445 - 1500	65	0	**65**	**261**
1500 - 1515	50	0	**50**	
1515 - 1530	116	0	**116**	
1530 - 1545	124	0	**124**	
1545 - 1600	101	0	**101**	**391**
1600 - 1615	83	0	**83**	
1615 - 1630	94	0	**94**	
1630 - 1645	50	0	**50**	
1645 - 1700	58	0	**58**	**285**
1700 - 1715	49	0	**49**	
1715 - 1730	42	0	**42**	
1730 - 1745	61	0	**61**	
1745 - 1800	97	0	**97**	**249**
1800 - 1815	92	0	**92**	
1815 - 1830	116	0	**116**	
1830 - 1845	75	0	**75**	
1845 - 1900	55	0	**55**	**338**
1900 - 1915	0	0	**0**	
1915 - 1930	0	0	**0**	
1930 - 1945	0	0	**0**	
1945 - 2000	0	0	**0**	**0**
2000 - 2015	0	0	**0**	
2015 - 2030	0	0	**0**	
2030 - 2045	0	0	**0**	
2045 - 2100	0	0	**0**	**0**
2100 - 2115	0	0	**0**	
2115 - 2130	0	0	**0**	
2130 - 2145	0	0	**0**	
2145 - 2200	0	0	**0**	**0**
2200 - 2215	0	0	**0**	
2215 - 2230	0	0	**0**	
2230 - 2245	0	0	**0**	
2245 - 2300	0	0	**0**	**0**
2300 - 2315	0	0	**0**	
2315 - 2330	0	0	**0**	
2330 - 2345	0	0	**0**	
2345 - 0000	0	0	**0**	**0**

Session Total	3785	0	**3785**
Session Average	39.43	0.00	**39.43**
Session Percentage	100.00	0.00	

Bi-Directional Class Count || NB EB 60min

Columbia, SC

Marr Traffic DATA COLLECTION

www.marrtraffic.com

Site 68
I-20 E/Bound Off-Ramp,
west of US-176 Broad River Rd

Date
Tuesday, April 30, 2024

Lat/Long
34.038440°, -81.095204°

Weather
Mostly Cloudy
70°F

Click here for Detailed Weather

0000 - 2400 (Weekday 24h Session) (04-30-2024)
NB EB 60min

	Eastbound (Movement 68.1)													
TIME	1	2	3	4	5	6	7	8	9	10	11	12	13	**Total**
0000 - 0100	0	0	0	0	0	0	0	0	0	0	0	0	0	**0**
0100 - 0200	0	0	0	0	0	0	0	0	0	0	0	0	0	**0**
0200 - 0300	0	0	0	0	0	0	0	0	0	0	0	0	0	**0**
0300 - 0400	0	0	0	0	0	0	0	0	0	0	0	0	0	**0**
0400 - 0500	0	0	0	0	0	0	0	0	0	0	0	0	0	**0**
0500 - 0600	0	0	0	0	0	0	0	0	0	0	0	0	0	**0**
0600 - 0700	0	0	0	0	0	0	0	0	0	0	0	0	0	**0**
0700 - 0800	0	0	0	0	0	0	0	0	0	0	0	0	0	**0**
0800 - 0900	0	0	0	0	0	0	0	0	0	0	0	0	0	**0**
0900 - 1000	0	0	0	0	0	0	0	0	0	0	0	0	0	**0**
1000 - 1100	0	0	0	0	0	0	0	0	0	0	0	0	0	**0**
1100 - 1200	0	0	0	0	0	0	0	0	0	0	0	0	0	**0**
1200 - 1300	0	0	0	0	0	0	0	0	0	0	0	0	0	**0**
1300 - 1400	0	0	0	0	0	0	0	0	0	0	0	0	0	**0**
1400 - 1500	0	0	0	0	0	0	0	0	0	0	0	0	0	**0**
1500 - 1600	0	0	0	0	0	0	0	0	0	0	0	0	0	**0**
1600 - 1700	0	0	0	0	0	0	0	0	0	0	0	0	0	**0**
1700 - 1800	0	0	0	0	0	0	0	0	0	0	0	0	0	**0**
1800 - 1900	0	0	0	0	0	0	0	0	0	0	0	0	0	**0**
1900 - 2000	0	208	11	0	1	0	0	0	0	0	0	0	0	**220**
2000 - 2100	0	162	3	0	1	1	0	0	1	0	0	0	0	**168**
2100 - 2200	0	134	2	0	0	0	0	0	0	0	0	0	0	**136**
2200 - 2300	0	97	3	0	0	0	0	0	1	0	0	0	0	**101**
2300 - 2400	0	75	2	0	0	0	0	0	0	0	0	0	0	**77**
Session Total	0	676	21	0	2	1	0	0	2	0	0	0	0	**702**
Session Average	0.00	28.17	0.88	0.00	0.08	0.04	0.00	0.00	0.08	0.00	0.00	0.00	0.00	**29.25**
Session Percentage	0.00	96.30	2.99	0.00	0.28	0.14	0.00	0.00	0.28	0.00	0.00	0.00	0.00	
AM Peak Hour	-	-	-	-	-	-	-	-	-	-	-	-	-	**-**
AM Peak Volume	0	0	0	0	0	0	0	0	0	0	0	0	0	**0**
Noon Peak Hour	-	-	-	-	-	-	-	-	-	-	-	-	-	**-**
Noon Peak Volume	0	0	0	0	0	0	0	0	0	0	0	0	0	**0**
PM Peak Hour	-	1900 - 2000	1900 - 2000	-	1900 - 2000	-	-	-	-	-	-	-	-	**1900 - 2000**
PM Peak Volume	0	208	11	0	1	0	0	0	0	0	0	0	0	**220**

Site 68
I-20 E/Bound Off-Ramp,
west of US-176 Broad River Rd

Date
Wednesday, May 1, 2024

Lat/Long
34.038440°, -81.095204°

Weather
Partly Cloudy
71°F

Click here for Detailed Weather

0000 - 2400 (Weekday 24h Session) (05-01-2024)
NB EB 60min

	Eastbound (Movement 68.1)													
TIME	1	2	3	4	5	6	7	8	9	10	11	12	13	**Total**
0000 - 0100	0	59	1	0	0	0	0	0	2	0	0	0	0	**62**
0100 - 0200	0	30	2	0	0	0	0	0	0	0	0	0	0	**32**
0200 - 0300	0	25	6	0	0	0	0	0	1	0	0	0	0	**32**
0300 - 0400	0	25	4	0	2	0	0	0	1	0	0	0	0	**32**
0400 - 0500	0	25	4	0	2	0	0	0	1	0	0	0	0	**32**
0500 - 0600	0	48	7	1	1	0	0	1	0	0	0	0	0	**58**
0600 - 0700	0	117	37	1	3	3	0	0	1	0	0	0	0	**162**
0700 - 0800	0	250	49	1	3	0	0	0	2	0	0	0	0	**305**
0800 - 0900	0	201	66	0	6	1	0	1	12	0	0	0	0	**287**
0900 - 1000	0	216	71	1	5	1	0	0	2	0	0	0	0	**296**
1000 - 1100	1	146	50	0	7	0	0	0	2	0	0	0	0	**206**
1100 - 1200	0	178	40	0	3	0	0	1	2	0	0	0	0	**224**
1200 - 1300	0	206	47	0	5	1	0	0	4	0	0	0	0	**263**
1300 - 1400	1	196	52	0	4	0	0	0	2	0	0	0	0	**255**
1400 - 1500	3	219	54	0	4	1	0	2	0	0	0	0	0	**283**
1500 - 1600	0	239	46	2	4	0	0	1	1	0	0	0	0	**293**
1600 - 1700	0	228	35	3	5	2	0	0	0	1	0	0	0	**274**
1700 - 1800	1	247	46	0	1	1	0	1	2	0	0	0	0	**299**
1800 - 1900	1	215	37	0	0	0	0	0	4	0	0	0	0	**257**
1900 - 2000	0	209	27	1	3	2	0	0	0	0	0	0	0	**242**
2000 - 2100	0	159	21	0	0	0	0	0	0	0	0	0	0	**180**
2100 - 2200	1	133	20	0	3	0	0	1	0	0	0	0	0	**158**
2200 - 2300	1	105	13	0	0	0	0	0	1	0	0	0	0	**120**
2300 - 2400	0	77	5	0	0	1	0	0	2	0	0	0	0	**85**

Session Total	9	3553	740	10	61	13	0	8	42	1	0	0	0	**4437**
Session Average	0.38	148.04	30.83	0.42	2.54	0.54	0.00	0.33	1.75	0.04	0.00	0.00	0.00	**184.88**
Session Percentage	0.20	80.08	16.68	0.23	1.37	0.29	0.00	0.18	0.95	0.02	0.00	0.00	0.00	

AM Peak Hour	-	0700 - 0800	0900 - 1000	0500 - 0600	0800 - 0900	0600 - 0700	-	0500 - 0600	0800 - 0900	-	-	-	-	**0700 - 0800**
AM Peak Volume	0	250	71	1	6	3	0	1	12	0	0	0	0	**305**

Noon Peak Hour	1400 - 1500	1400 - 1500	1400 - 1500	-	1000 - 1100	1200 - 1300	-	1400 - 1500	1200 - 1300	-	-	-	-	**1400 - 1500**
Noon Peak Volume	3	219	54	0	7	1	0	2	4	0	0	0	0	**283**

PM Peak Hour	1700 - 1800	1700 - 1800	1500 - 1600	1600 - 1700	1600 - 1700	1600 - 1700	-	1500 - 1600	1800 - 1900	1600 - 1700	-	-	-	**1700 - 1800**
PM Peak Volume	1	247	46	3	5	2	0	1	4	1	0	0	0	**299**

Site 68
I-20 E/Bound Off-Ramp,
west of US-176 Broad River Rd

Date
Thursday, May 2, 2024

Lat/Long
34.038440°, -81.095204°

Weather
Fair
74°F

Click here for Detailed Weather

0000 - 2400 (Weekday 24h Session) (05-02-2024)
NB EB 60min

	Eastbound (Movement 68.1)													
TIME	1	2	3	4	5	6	7	8	9	10	11	12	13	**Total**
0000 - 0100	0	48	9	0	1	1	0	0	0	0	0	0	0	**59**
0100 - 0200	0	27	9	0	1	1	0	0	2	0	0	0	0	**40**
0200 - 0300	0	29	8	0	2	0	0	0	1	0	0	0	0	**40**
0300 - 0400	0	19	4	0	0	0	0	0	0	0	0	0	0	**23**
0400 - 0500	0	24	9	1	0	0	0	1	0	0	0	0	0	**35**
0500 - 0600	0	35	9	1	1	0	0	0	1	0	0	0	0	**47**
0600 - 0700	0	123	46	1	4	3	0	2	0	0	0	0	0	**179**
0700 - 0800	0	222	59	2	8	2	0	4	3	0	0	0	0	**300**
0800 - 0900	0	234	44	1	9	0	0	0	1	0	0	0	0	**289**
0900 - 1000	0	174	43	0	5	0	0	0	0	0	0	0	0	**222**
1000 - 1100	0	158	28	0	5	0	0	0	0	0	0	0	0	**191**
1100 - 1200	0	196	45	1	5	0	0	2	0	0	0	0	0	**249**
1200 - 1300	1	237	48	0	8	0	0	3	0	0	0	0	0	**297**
1300 - 1400	0	220	58	1	9	0	0	2	0	0	0	0	0	**290**
1400 - 1500	0	208	47	0	3	0	0	1	2	0	0	0	0	**261**
1500 - 1600	0	302	70	3	7	4	2	0	0	3	0	0	0	**391**
1600 - 1700	0	233	41	2	5	2	0	0	2	0	0	0	0	**285**
1700 - 1800	1	206	39	0	1	1	0	1	0	0	0	0	0	**249**
1800 - 1900	0	280	54	0	2	0	0	1	1	0	0	0	0	**338**
1900 - 2000	0	0	0	0	0	0	0	0	0	0	0	0	0	**0**
2000 - 2100	0	0	0	0	0	0	0	0	0	0	0	0	0	**0**
2100 - 2200	0	0	0	0	0	0	0	0	0	0	0	0	0	**0**
2200 - 2300	0	0	0	0	0	0	0	0	0	0	0	0	0	**0**
2300 - 2400	0	0	0	0	0	0	0	0	0	0	0	0	0	**0**

Session Total	2	2975	670	13	76	14	2	17	13	3	0	0	0	**3785**
Session Average	0.08	123.96	27.92	0.54	3.17	0.58	0.08	0.71	0.54	0.13	0.00	0.00	0.00	**157.71**
Session Percentage	0.05	78.60	17.70	0.34	2.01	0.37	0.05	0.45	0.34	0.08	0.00	0.00	0.00	

AM Peak Hour	-	0800 - 0900	0700 - 0800	0700 - 0800	0800 - 0900	0600 - 0700	-	0700 - 0800	0700 - 0800	-	-	-	-	**0700 - 0800**
AM Peak Hour Volume	0	234	59	2	9	3	0	4	3	0	0	0	0	**300**

Noon Peak Hour	1200 - 1300	1200 - 1300	1300 - 1400	1100 - 1200	1300 - 1400	-	-	1200 - 1300	1400 - 1500	-	-	-	-	**1200 - 1300**
Noon Peak Hour Volume	1	237	58	1	9	0	0	3	2	0	0	0	0	**297**

PM Peak Hour	1700 - 1800	1500 - 1600	1500 - 1600	1500 - 1600	1500 - 1600	1500 - 1600	1500 - 1600	1700 - 1800	1600 - 1700	1500 - 1600	-	-	-	**1500 - 1600**
PM Peak Hour Volume	1	302	70	3	7	4	2	1	2	3	0	0	0	**391**

Bi-Directional Class Count || Volume Summary 60min

Columbia, SC

Marr Traffic DATA COLLECTION

www.marrtraffic.com

Site 68

I-20 E/Bound Off-Ramp,
west of US-176 Broad River Rd

Date

Tuesday, April 30, 2024

Lat/Long

34.038440°, -81.095204°

Weather

Mostly Cloudy
70°F

Click here for Detailed Weather

0000 - 2400 (Weekday 24h Session) (04-30-2024)

Volume Summary 60min

	Volume Summary 60min		
TIME	EB	WB	**Total**
0000 - 0100	0	0	**0**
0100 - 0200	0	0	**0**
0200 - 0300	0	0	**0**
0300 - 0400	0	0	**0**
0400 - 0500	0	0	**0**
0500 - 0600	0	0	**0**
0600 - 0700	0	0	**0**
0700 - 0800	0	0	**0**
0800 - 0900	0	0	**0**
0900 - 1000	0	0	**0**
1000 - 1100	0	0	**0**
1100 - 1200	0	0	**0**

	Volume Summary 60min		
Time	EB	WB	**Total**
1200 - 1300	0	0	**0**
1300 - 1400	0	0	**0**
1400 - 1500	0	0	**0**
1500 - 1600	0	0	**0**
1600 - 1700	0	0	**0**
1700 - 1800	0	0	**0**
1800 - 1900	0	0	**0**
1900 - 2000	220	0	**220**
2000 - 2100	168	0	**168**
2100 - 2200	136	0	**136**
2200 - 2300	101	0	**101**
2300 - 2400	77	0	**77**

Session Total	702	0	**702**
Session Average	29.25	0.00	**29.25**
Session Percentage	100.00	0.00	

Site 68

I-20 E/Bound Off-Ramp,
west of US-176 Broad River Rd

Date

Wednesday, May 1, 2024

Lat/Long

34.038440°, -81.095204°

Weather

Partly Cloudy
71°F

Click here for Detailed Weather

0000 - 2400 (Weekday 24h Session) (05-01-2024)

Volume Summary 60min

	Volume Summary 60min		
TIME	EB	WB	**Total**
0000 - 0100	62	0	**62**
0100 - 0200	32	0	**32**
0200 - 0300	32	0	**32**
0300 - 0400	32	0	**32**
0400 - 0500	32	0	**32**
0500 - 0600	58	0	**58**
0600 - 0700	162	0	**162**
0700 - 0800	305	0	**305**
0800 - 0900	287	0	**287**
0900 - 1000	296	0	**296**
1000 - 1100	206	0	**206**
1100 - 1200	224	0	**224**

	Volume Summary 60min		
Time	EB	WB	**Total**
1200 - 1300	263	0	**263**
1300 - 1400	255	0	**255**
1400 - 1500	283	0	**283**
1500 - 1600	293	0	**293**
1600 - 1700	274	0	**274**
1700 - 1800	299	0	**299**
1800 - 1900	257	0	**257**
1900 - 2000	242	0	**242**
2000 - 2100	180	0	**180**
2100 - 2200	158	0	**158**
2200 - 2300	120	0	**120**
2300 - 2400	85	0	**85**

Session Total	4437	0	**4437**
Session Average	184.88	0.00	**184.88**
Session Percentage	100.00	0.00	

Site 68

I-20 E/Bound Off-Ramp,
west of US-176 Broad River Rd

Date

Thursday, May 2, 2024

Lat/Long

34.038440°, -81.095204°

Weather

Fair
74°F

Click here for Detailed Weather

0000 - 2400 (Weekday 24h Session) (05-02-2024)

Volume Summary 60min

	Volume Summary 60min		
TIME	EB	WB	**Total**
0000 - 0100	59	0	**59**
0100 - 0200	40	0	**40**
0200 - 0300	40	0	**40**
0300 - 0400	23	0	**23**
0400 - 0500	35	0	**35**
0500 - 0600	47	0	**47**
0600 - 0700	179	0	**179**
0700 - 0800	300	0	**300**
0800 - 0900	289	0	**289**
0900 - 1000	222	0	**222**
1000 - 1100	191	0	**191**
1100 - 1200	249	0	**249**

Session Total	3785	0	**3785**
Session Average	157.71	0.00	**157.71**
Session Percentage	100.00	0.00	

	Volume Summary 60min		
Time	EB	WB	**Total**
1200 - 1300	297	0	**297**
1300 - 1400	290	0	**290**
1400 - 1500	261	0	**261**
1500 - 1600	391	0	**391**
1600 - 1700	285	0	**285**
1700 - 1800	249	0	**249**
1800 - 1900	338	0	**338**
1900 - 2000	0	0	**0**
2000 - 2100	0	0	**0**
2100 - 2200	0	0	**0**
2200 - 2300	0	0	**0**
2300 - 2400	0	0	**0**

Bi-Directional Class Count || Graphical Analysis NB EB

Columbia, SC

Marr Traffic DATA COLLECTION

www.marrtraffic.com

Site 68

I-20 E/Bound Off-Ramp,
west of US-176 Broad River Rd

Lat/Long

34.038440°, -81.095204°

0000 - 2400 (Weekday 24h Session)

Graphical Analysis NB EB

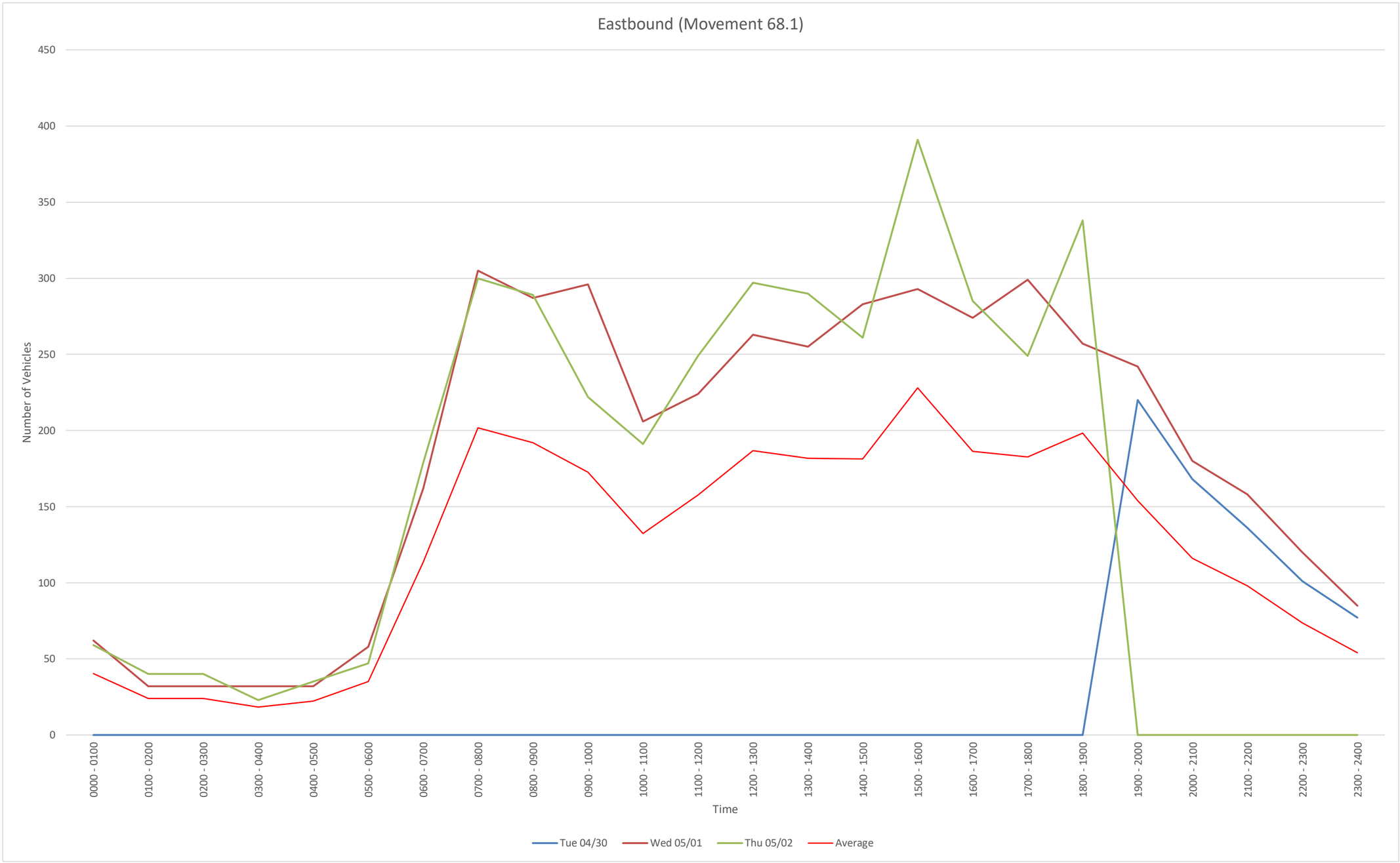

Time	Tue 04/30	Wed 05/01	Thu 05/02				
0000 - 0100	0	62	59				
0100 - 0200	0	32	40				
0200 - 0300	0	32	40				
0300 - 0400	0	32	23				
0400 - 0500	0	32	35				
0500 - 0600	0	58	47				
0600 - 0700	0	162	179				
0700 - 0800	0	305	300				
0800 - 0900	0	287	289				
0900 - 1000	0	296	222				
1000 - 1100	0	206	191				
1100 - 1200	0	224	249				
1200 - 1300	0	263	297				
1300 - 1400	0	255	290				
1400 - 1500	0	283	261				
1500 - 1600	0	293	391				
1600 - 1700	0	274	285				
1700 - 1800	0	299	249				
1800 - 1900	0	257	338				
1900 - 2000	220	242	0				
2000 - 2100	168	180	0				
2100 - 2200	136	158	0				
2200 - 2300	101	120	0				
2300 - 2400	77	85	0				
Daily Total	702	4437	3785				

EB
File Name:
Start Date: 4/30/2024
Start Time: 0
Site Code: 68
Station ID: 1
Location 1: I-20 E/Bound Off-Ramp, west of US-176 Broad River Rd
Location 2:

Date	Time	1	2	3	4	5	6	7	8	9	10	11	12	13
4/30/2024	12:00 AM	0	0	0	0	0	0	0	0	0	0	0	0	0
4/30/2024	12:15 AM	0	0	0	0	0	0	0	0	0	0	0	0	0
4/30/2024	12:30 AM	0	0	0	0	0	0	0	0	0	0	0	0	0
4/30/2024	12:45 AM	0	0	0	0	0	0	0	0	0	0	0	0	0
4/30/2024	1:00 AM	0	0	0	0	0	0	0	0	0	0	0	0	0
4/30/2024	1:15 AM	0	0	0	0	0	0	0	0	0	0	0	0	0
4/30/2024	1:30 AM	0	0	0	0	0	0	0	0	0	0	0	0	0
4/30/2024	1:45 AM	0	0	0	0	0	0	0	0	0	0	0	0	0
4/30/2024	2:00 AM	0	0	0	0	0	0	0	0	0	0	0	0	0
4/30/2024	2:15 AM	0	0	0	0	0	0	0	0	0	0	0	0	0
4/30/2024	2:30 AM	0	0	0	0	0	0	0	0	0	0	0	0	0
4/30/2024	2:45 AM	0	0	0	0	0	0	0	0	0	0	0	0	0
4/30/2024	3:00 AM	0	0	0	0	0	0	0	0	0	0	0	0	0
4/30/2024	3:15 AM	0	0	0	0	0	0	0	0	0	0	0	0	0
4/30/2024	3:30 AM	0	0	0	0	0	0	0	0	0	0	0	0	0
4/30/2024	3:45 AM	0	0	0	0	0	0	0	0	0	0	0	0	0
4/30/2024	4:00 AM	0	0	0	0	0	0	0	0	0	0	0	0	0
4/30/2024	4:15 AM	0	0	0	0	0	0	0	0	0	0	0	0	0
4/30/2024	4:30 AM	0	0	0	0	0	0	0	0	0	0	0	0	0
4/30/2024	4:45 AM	0	0	0	0	0	0	0	0	0	0	0	0	0
4/30/2024	5:00 AM	0	0	0	0	0	0	0	0	0	0	0	0	0
4/30/2024	5:15 AM	0	0	0	0	0	0	0	0	0	0	0	0	0
4/30/2024	5:30 AM	0	0	0	0	0	0	0	0	0	0	0	0	0
4/30/2024	5:45 AM	0	0	0	0	0	0	0	0	0	0	0	0	0
4/30/2024	6:00 AM	0	0	0	0	0	0	0	0	0	0	0	0	0
4/30/2024	6:15 AM	0	0	0	0	0	0	0	0	0	0	0	0	0
4/30/2024	6:30 AM	0	0	0	0	0	0	0	0	0	0	0	0	0
4/30/2024	6:45 AM	0	0	0	0	0	0	0	0	0	0	0	0	0
4/30/2024	7:00 AM	0	0	0	0	0	0	0	0	0	0	0	0	0
4/30/2024	7:15 AM	0	0	0	0	0	0	0	0	0	0	0	0	0
4/30/2024	7:30 AM	0	0	0	0	0	0	0	0	0	0	0	0	0
4/30/2024	7:45 AM	0	0	0	0	0	0	0	0	0	0	0	0	0
4/30/2024	8:00 AM	0	0	0	0	0	0	0	0	0	0	0	0	0
4/30/2024	8:15 AM	0	0	0	0	0	0	0	0	0	0	0	0	0
4/30/2024	8:30 AM	0	0	0	0	0	0	0	0	0	0	0	0	0
4/30/2024	8:45 AM	0	0	0	0	0	0	0	0	0	0	0	0	0
4/30/2024	9:00 AM	0	0	0	0	0	0	0	0	0	0	0	0	0
4/30/2024	9:15 AM	0	0	0	0	0	0	0	0	0	0	0	0	0
4/30/2024	9:30 AM	0	0	0	0	0	0	0	0	0	0	0	0	0
4/30/2024	9:45 AM	0	0	0	0	0	0	0	0	0	0	0	0	0
4/30/2024	10:00 AM	0	0	0	0	0	0	0	0	0	0	0	0	0
4/30/2024	10:15 AM	0	0	0	0	0	0	0	0	0	0	0	0	0
4/30/2024	10:30 AM	0	0	0	0	0	0	0	0	0	0	0	0	0
4/30/2024	10:45 AM	0	0	0	0	0	0	0	0	0	0	0	0	0
4/30/2024	11:00 AM	0	0	0	0	0	0	0	0	0	0	0	0	0
4/30/2024	11:15 AM	0	0	0	0	0	0	0	0	0	0	0	0	0
4/30/2024	11:30 AM	0	0	0	0	0	0	0	0	0	0	0	0	0
4/30/2024	11:45 AM	0	0	0	0	0	0	0	0	0	0	0	0	0
4/30/2024	12:00 PM	0	0	0	0	0	0	0	0	0	0	0	0	0
4/30/2024	12:15 PM	0	0	0	0	0	0	0	0	0	0	0	0	0
4/30/2024	12:30 PM	0	0	0	0	0	0	0	0	0	0	0	0	0
4/30/2024	12:45 PM	0	0	0	0	0	0	0	0	0	0	0	0	0
4/30/2024	1:00 PM	0	0	0	0	0	0	0	0	0	0	0	0	0
4/30/2024	1:15 PM	0	0	0	0	0	0	0	0	0	0	0	0	0
4/30/2024	1:30 PM	0	0	0	0	0	0	0	0	0	0	0	0	0
4/30/2024	1:45 PM	0	0	0	0	0	0	0	0	0	0	0	0	0
4/30/2024	2:00 PM	0	0	0	0	0	0	0	0	0	0	0	0	0
4/30/2024	2:15 PM	0	0	0	0	0	0	0	0	0	0	0	0	0
4/30/2024	2:30 PM	0	0	0	0	0	0	0	0	0	0	0	0	0
4/30/2024	2:45 PM	0	0	0	0	0	0	0	0	0	0	0	0	0
4/30/2024	3:00 PM	0	0	0	0	0	0	0	0	0	0	0	0	0
4/30/2024	3:15 PM	0	0	0	0	0	0	0	0	0	0	0	0	0
4/30/2024	3:30 PM	0	0	0	0	0	0	0	0	0	0	0	0	0
4/30/2024	3:45 PM	0	0	0	0	0	0	0	0	0	0	0	0	0
4/30/2024	4:00 PM	0	0	0	0	0	0	0	0	0	0	0	0	0
4/30/2024	4:15 PM	0	0	0	0	0	0	0	0	0	0	0	0	0
4/30/2024	4:30 PM	0	0	0	0	0	0	0	0	0	0	0	0	0
4/30/2024	4:45 PM	0	0	0	0	0	0	0	0	0	0	0	0	0
4/30/2024	5:00 PM	0	0	0	0	0	0	0	0	0	0	0	0	0
4/30/2024	5:15 PM	0	0	0	0	0	0	0	0	0	0	0	0	0
4/30/2024	5:30 PM	0	0	0	0	0	0	0	0	0	0	0	0	0
4/30/2024	5:45 PM	0	0	0	0	0	0	0	0	0	0	0	0	0
4/30/2024	6:00 PM	0	0	0	0	0	0	0	0	0	0	0	0	0
4/30/2024	6:15 PM	0	0	0	0	0	0	0	0	0	0	0	0	0
4/30/2024	6:30 PM	0	0	0	0	0	0	0	0	0	0	0	0	0
4/30/2024	6:45 PM	0	0	0	0	0	0	0	0	0	0	0	0	0
4/30/2024	7:00 PM	0	41	4	0	0	0	0	0	0	0	0	0	0
4/30/2024	7:15 PM	0	54	2	0	0	0	0	0	0	0	0	0	0
4/30/2024	7:30 PM	0	52	3	0	1	0	0	0	0	0	0	0	0
4/30/2024	7:45 PM	0	61	2	0	0	0	0	0	0	0	0	0	0
4/30/2024	8:00 PM	0	42	1	0	0	0	0	0	0	0	0	0	0
4/30/2024	8:15 PM	0	39	0	0	0	0	0	0	0	0	0	0	0
4/30/2024	8:30 PM	0	44	2	0	0	0	0	0	0	0	0	0	0
4/30/2024	8:45 PM	0	37	0	0	1	1	0	0	1	0	0	0	0
4/30/2024	9:00 PM	0	39	1	0	0	0	0	0	0	0	0	0	0
4/30/2024	9:15 PM	0	30	1	0	0	0	0	0	0	0	0	0	0
4/30/2024	9:30 PM	0	34	0	0	0	0	0	0	0	0	0	0	0
4/30/2024	9:45 PM	0	31	0	0	0	0	0	0	0	0	0	0	0
4/30/2024	10:00 PM	0	29	1	0	0	0	0	0	1	0	0	0	0
4/30/2024	10:15 PM	0	30	2	0	0	0	0	0	0	0	0	0	0
4/30/2024	10:30 PM	0	22	0	0	0	0	0	0	0	0	0	0	0
4/30/2024	10:45 PM	0	16	0	0	0	0	0	0	0	0	0	0	0
4/30/2024	11:00 PM	0	16	1	0	0	0	0	0	0	0	0	0	0
4/30/2024	11:15 PM	0	24	1	0	0	0	0	0	0	0	0	0	0
4/30/2024	11:30 PM	0	17	0	0	0	0	0	0	0	0	0	0	0
4/30/2024	11:45 PM	0	18	0	0	0	0	0	0	0	0	0	0	0

5/1/2024	12:00 AM	0	18	0	0	0	0	0	0	0	0	0	0	0
5/1/2024	12:15 AM	0	16	1	0	0	0	0	0	2	0	0	0	0
5/1/2024	12:30 AM	0	15	0	0	0	0	0	0	0	0	0	0	0
5/1/2024	12:45 AM	0	10	0	0	0	0	0	0	0	0	0	0	0
5/1/2024	1:00 AM	0	8	1	0	0	0	0	0	0	0	0	0	0
5/1/2024	1:15 AM	0	8	1	0	0	0	0	0	0	0	0	0	0
5/1/2024	1:30 AM	0	8	0	0	0	0	0	0	0	0	0	0	0
5/1/2024	1:45 AM	0	6	0	0	0	0	0	0	0	0	0	0	0
5/1/2024	2:00 AM	0	11	2	0	0	0	0	0	0	0	0	0	0
5/1/2024	2:15 AM	0	3	1	0	0	0	0	0	1	0	0	0	0
5/1/2024	2:30 AM	0	6	2	0	0	0	0	0	0	0	0	0	0
5/1/2024	2:45 AM	0	5	1	0	0	0	0	0	0	0	0	0	0
5/1/2024	3:00 AM	0	7	1	0	0	0	0	0	0	0	0	0	0
5/1/2024	3:15 AM	0	8	1	0	1	0	0	0	0	0	0	0	0
5/1/2024	3:30 AM	0	3	1	0	0	0	0	0	0	0	0	0	0
5/1/2024	3:45 AM	0	7	1	0	1	0	0	0	1	0	0	0	0
5/1/2024	4:00 AM	0	8	0	0	0	0	0	0	0	0	0	0	0
5/1/2024	4:15 AM	0	5	1	0	0	0	0	0	0	0	0	0	0
5/1/2024	4:30 AM	0	5	1	0	2	0	0	0	0	0	0	0	0
5/1/2024	4:45 AM	0	7	2	0	0	0	0	0	1	0	0	0	0
5/1/2024	5:00 AM	0	10	1	0	1	0	0	1	0	0	0	0	0
5/1/2024	5:15 AM	0	12	1	0	0	0	0	0	0	0	0	0	0
5/1/2024	5:30 AM	0	13	2	1	0	0	0	0	0	0	0	0	0
5/1/2024	5:45 AM	0	13	3	0	0	0	0	0	0	0	0	0	0
5/1/2024	6:00 AM	0	16	4	0	2	0	0	0	1	0	0	0	0
5/1/2024	6:15 AM	0	31	5	1	0	1	0	0	0	0	0	0	0
5/1/2024	6:30 AM	0	36	12	0	0	0	0	0	0	0	0	0	0
5/1/2024	6:45 AM	0	34	16	0	1	2	0	0	0	0	0	0	0
5/1/2024	7:00 AM	0	51	9	1	0	0	0	0	1	0	0	0	0
5/1/2024	7:15 AM	0	60	13	0	2	0	0	0	0	0	0	0	0
5/1/2024	7:30 AM	0	65	15	0	1	0	0	0	1	0	0	0	0
5/1/2024	7:45 AM	0	74	12	0	0	0	0	0	0	0	0	0	0
5/1/2024	8:00 AM	0	57	14	0	2	0	0	0	1	0	0	0	0
5/1/2024	8:15 AM	0	53	14	0	1	0	0	1	1	0	0	0	0
5/1/2024	8:30 AM	0	38	14	0	3	0	0	0	9	0	0	0	0
5/1/2024	8:45 AM	0	53	24	0	0	1	0	0	1	0	0	0	0
5/1/2024	9:00 AM	0	32	8	1	0	0	0	0	1	0	0	0	0
5/1/2024	9:15 AM	0	47	17	0	1	0	0	0	1	0	0	0	0
5/1/2024	9:30 AM	0	42	12	0	2	0	0	0	0	0	0	0	0
5/1/2024	9:45 AM	0	95	34	0	2	1	0	0	0	0	0	0	0
5/1/2024	10:00 AM	1	46	15	0	2	0	0	0	0	0	0	0	0
5/1/2024	10:15 AM	0	28	11	0	3	0	0	0	0	0	0	0	0
5/1/2024	10:30 AM	0	28	17	0	2	0	0	0	1	0	0	0	0
5/1/2024	10:45 AM	0	44	7	0	0	0	0	0	1	0	0	0	0
5/1/2024	11:00 AM	0	38	11	0	0	0	0	0	1	0	0	0	0
5/1/2024	11:15 AM	0	36	8	0	0	0	0	0	0	0	0	0	0
5/1/2024	11:30 AM	0	53	14	0	2	0	0	0	0	0	0	0	0
5/1/2024	11:45 AM	0	51	7	0	1	0	0	1	1	0	0	0	0
5/1/2024	12:00 PM	0	54	8	0	4	0	0	0	0	0	0	0	0
5/1/2024	12:15 PM	0	48	12	0	0	0	0	0	2	0	0	0	0
5/1/2024	12:30 PM	0	54	17	0	0	0	0	0	2	0	0	0	0
5/1/2024	12:45 PM	0	50	10	0	1	1	0	0	0	0	0	0	0
5/1/2024	1:00 PM	0	51	18	0	1	0	0	0	0	0	0	0	0
5/1/2024	1:15 PM	0	39	14	0	1	0	0	0	0	0	0	0	0
5/1/2024	1:30 PM	0	56	9	0	1	0	0	0	1	0	0	0	0
5/1/2024	1:45 PM	1	50	11	0	1	0	0	0	1	0	0	0	0
5/1/2024	2:00 PM	1	53	9	0	0	0	0	1	0	0	0	0	0
5/1/2024	2:15 PM	2	54	15	0	0	1	0	0	0	0	0	0	0
5/1/2024	2:30 PM	0	66	17	0	3	0	0	1	0	0	0	0	0
5/1/2024	2:45 PM	0	46	13	0	1	0	0	0	0	0	0	0	0
5/1/2024	3:00 PM	0	65	18	1	0	0	0	0	0	0	0	0	0
5/1/2024	3:15 PM	0	62	13	1	1	0	0	1	1	0	0	0	0
5/1/2024	3:30 PM	0	50	7	0	1	0	0	0	0	0	0	0	0
5/1/2024	3:45 PM	0	62	8	0	2	0	0	0	0	0	0	0	0
5/1/2024	4:00 PM	0	56	3	0	2	0	0	0	0	1	0	0	0
5/1/2024	4:15 PM	0	60	8	3	1	1	0	0	0	0	0	0	0
5/1/2024	4:30 PM	0	62	11	0	1	1	0	0	0	0	0	0	0
5/1/2024	4:45 PM	0	50	13	0	1	0	0	0	0	0	0	0	0
5/1/2024	5:00 PM	0	49	11	0	0	0	0	0	0	0	0	0	0
5/1/2024	5:15 PM	0	67	13	0	0	1	0	1	0	0	0	0	0
5/1/2024	5:30 PM	0	66	10	0	0	0	0	0	1	0	0	0	0
5/1/2024	5:45 PM	1	65	12	0	1	0	0	0	1	0	0	0	0
5/1/2024	6:00 PM	0	47	9	0	0	0	0	0	1	0	0	0	0
5/1/2024	6:15 PM	1	57	9	0	0	0	0	0	1	0	0	0	0
5/1/2024	6:30 PM	0	50	13	0	0	0	0	0	2	0	0	0	0
5/1/2024	6:45 PM	0	61	6	0	0	0	0	0	0	0	0	0	0
5/1/2024	7:00 PM	0	61	7	1	1	0	0	0	0	0	0	0	0
5/1/2024	7:15 PM	0	48	11	0	0	1	0	0	0	0	0	0	0
5/1/2024	7:30 PM	0	47	5	0	1	1	0	0	0	0	0	0	0
5/1/2024	7:45 PM	0	53	4	0	1	0	0	0	0	0	0	0	0
5/1/2024	8:00 PM	0	33	5	0	0	0	0	0	0	0	0	0	0
5/1/2024	8:15 PM	0	46	5	0	0	0	0	0	0	0	0	0	0
5/1/2024	8:30 PM	0	45	3	0	0	0	0	0	0	0	0	0	0
5/1/2024	8:45 PM	0	35	8	0	0	0	0	0	0	0	0	0	0
5/1/2024	9:00 PM	1	38	6	0	2	0	0	0	0	0	0	0	0
5/1/2024	9:15 PM	0	41	3	0	0	0	0	0	0	0	0	0	0
5/1/2024	9:30 PM	0	22	6	0	1	0	0	1	0	0	0	0	0
5/1/2024	9:45 PM	0	32	5	0	0	0	0	0	0	0	0	0	0
5/1/2024	10:00 PM	0	27	4	0	0	0	0	0	0	0	0	0	0
5/1/2024	10:15 PM	0	35	4	0	0	0	0	0	0	0	0	0	0
5/1/2024	10:30 PM	1	21	4	0	0	0	0	0	1	0	0	0	0
5/1/2024	10:45 PM	0	22	1	0	0	0	0	0	0	0	0	0	0
5/1/2024	11:00 PM	0	24	2	0	0	0	0	0	0	0	0	0	0
5/1/2024	11:15 PM	0	22	2	0	0	0	0	0	0	0	0	0	0
5/1/2024	11:30 PM	0	14	0	0	0	1	0	0	2	0	0	0	0
5/1/2024	11:45 PM	0	17	1	0	0	0	0	0	0	0	0	0	0

5/2/2024	12:00 AM	0	16	3	0	1	1	0	0	0	0	0	0	0
5/2/2024	12:15 AM	0	13	2	0	0	0	0	0	0	0	0	0	0
5/2/2024	12:30 AM	0	12	2	0	0	0	0	0	0	0	0	0	0
5/2/2024	12:45 AM	0	7	2	0	0	0	0	0	0	0	0	0	0
5/2/2024	1:00 AM	0	5	2	0	0	0	0	0	0	0	0	0	0
5/2/2024	1:15 AM	0	5	2	0	1	1	0	0	0	0	0	0	0
5/2/2024	1:30 AM	0	11	3	0	0	0	0	0	1	0	0	0	0
5/2/2024	1:45 AM	0	6	2	0	0	0	0	0	1	0	0	0	0
5/2/2024	2:00 AM	0	7	2	0	0	0	0	0	0	0	0	0	0
5/2/2024	2:15 AM	0	10	2	0	1	0	0	0	1	0	0	0	0
5/2/2024	2:30 AM	0	8	3	0	1	0	0	0	0	0	0	0	0
5/2/2024	2:45 AM	0	4	1	0	0	0	0	0	0	0	0	0	0
5/2/2024	3:00 AM	0	9	3	0	0	0	0	0	0	0	0	0	0
5/2/2024	3:15 AM	0	4	1	0	0	0	0	0	0	0	0	0	0
5/2/2024	3:30 AM	0	2	0	0	0	0	0	0	0	0	0	0	0
5/2/2024	3:45 AM	0	4	0	0	0	0	0	0	0	0	0	0	0
5/2/2024	4:00 AM	0	4	2	1	0	0	0	0	0	0	0	0	0
5/2/2024	4:15 AM	0	7	2	0	0	0	0	1	0	0	0	0	0
5/2/2024	4:30 AM	0	5	2	0	0	0	0	0	0	0	0	0	0
5/2/2024	4:45 AM	0	8	3	0	0	0	0	0	0	0	0	0	0
5/2/2024	5:00 AM	0	10	2	1	0	0	0	0	0	0	0	0	0
5/2/2024	5:15 AM	0	8	2	0	1	0	0	0	1	0	0	0	0
5/2/2024	5:30 AM	0	4	1	0	0	0	0	0	0	0	0	0	0
5/2/2024	5:45 AM	0	13	4	0	0	0	0	0	0	0	0	0	0
5/2/2024	6:00 AM	0	12	3	0	0	0	0	0	0	0	0	0	0
5/2/2024	6:15 AM	0	25	11	1	1	0	0	0	0	0	0	0	0
5/2/2024	6:30 AM	0	42	15	0	2	1	0	1	0	0	0	0	0
5/2/2024	6:45 AM	0	44	17	0	1	2	0	1	0	0	0	0	0
5/2/2024	7:00 AM	0	40	16	1	3	1	0	0	0	0	0	0	0
5/2/2024	7:15 AM	0	66	12	0	1	1	0	1	0	0	0	0	0
5/2/2024	7:30 AM	0	53	15	1	3	0	0	2	2	0	0	0	0
5/2/2024	7:45 AM	0	63	16	0	1	0	0	1	1	0	0	0	0
5/2/2024	8:00 AM	0	56	12	0	2	0	0	0	0	0	0	0	0
5/2/2024	8:15 AM	0	61	10	0	1	0	0	0	0	0	0	0	0
5/2/2024	8:30 AM	0	57	12	1	2	0	0	0	0	0	0	0	0
5/2/2024	8:45 AM	0	60	10	0	4	0	0	0	1	0	0	0	0
5/2/2024	9:00 AM	0	48	13	0	1	0	0	0	0	0	0	0	0
5/2/2024	9:15 AM	0	38	7	0	1	0	0	0	0	0	0	0	0
5/2/2024	9:30 AM	0	41	10	0	2	0	0	0	0	0	0	0	0
5/2/2024	9:45 AM	0	47	13	0	1	0	0	0	0	0	0	0	0
5/2/2024	10:00 AM	0	41	6	0	0	0	0	0	0	0	0	0	0
5/2/2024	10:15 AM	0	38	9	0	2	0	0	0	0	0	0	0	0
5/2/2024	10:30 AM	0	40	7	0	1	0	0	0	0	0	0	0	0
5/2/2024	10:45 AM	0	39	6	0	2	0	0	0	0	0	0	0	0
5/2/2024	11:00 AM	0	44	12	0	1	0	0	0	0	0	0	0	0
5/2/2024	11:15 AM	0	46	10	1	2	0	0	1	0	0	0	0	0
5/2/2024	11:30 AM	0	53	10	0	1	0	0	1	0	0	0	0	0
5/2/2024	11:45 AM	0	53	13	0	1	0	0	0	0	0	0	0	0
5/2/2024	12:00 PM	0	56	11	0	3	0	0	0	0	0	0	0	0
5/2/2024	12:15 PM	1	63	9	0	0	0	0	1	0	0	0	0	0
5/2/2024	12:30 PM	0	55	18	0	1	0	0	0	0	0	0	0	0
5/2/2024	12:45 PM	0	63	10	0	4	0	0	2	0	0	0	0	0
5/2/2024	1:00 PM	0	58	16	0	3	0	0	0	0	0	0	0	0
5/2/2024	1:15 PM	0	50	18	0	2	0	0	1	0	0	0	0	0
5/2/2024	1:30 PM	0	56	14	0	0	0	0	0	0	0	0	0	0
5/2/2024	1:45 PM	0	56	10	1	4	0	0	1	0	0	0	0	0
5/2/2024	2:00 PM	0	64	10	0	1	0	0	1	0	0	0	0	0
5/2/2024	2:15 PM	0	54	12	0	1	0	0	0	0	0	0	0	0
5/2/2024	2:30 PM	0	41	11	0	0	0	0	0	1	0	0	0	0
5/2/2024	2:45 PM	0	49	14	0	1	0	0	0	1	0	0	0	0
5/2/2024	3:00 PM	0	42	5	2	0	0	0	0	0	1	0	0	0
5/2/2024	3:15 PM	0	81	27	1	3	2	0	0	0	2	0	0	0
5/2/2024	3:30 PM	0	95	24	0	2	1	2	0	0	0	0	0	0
5/2/2024	3:45 PM	0	84	14	0	2	1	0	0	0	0	0	0	0
5/2/2024	4:00 PM	0	67	11	1	2	0	0	0	2	0	0	0	0
5/2/2024	4:15 PM	0	78	12	1	1	2	0	0	0	0	0	0	0
5/2/2024	4:30 PM	0	42	8	0	0	0	0	0	0	0	0	0	0
5/2/2024	4:45 PM	0	46	10	0	2	0	0	0	0	0	0	0	0
5/2/2024	5:00 PM	0	41	7	0	1	0	0	0	0	0	0	0	0
5/2/2024	5:15 PM	0	36	5	0	0	1	0	0	0	0	0	0	0
5/2/2024	5:30 PM	0	48	12	0	0	0	0	1	0	0	0	0	0
5/2/2024	5:45 PM	1	81	15	0	0	0	0	0	0	0	0	0	0
5/2/2024	6:00 PM	0	76	15	0	0	0	0	0	1	0	0	0	0
5/2/2024	6:15 PM	0	96	17	0	2	0	0	1	0	0	0	0	0
5/2/2024	6:30 PM	0	61	14	0	0	0	0	0	0	0	0	0	0
5/2/2024	6:45 PM	0	47	8	0	0	0	0	0	0	0	0	0	0
5/2/2024	7:00 PM	0	0	0	0	0	0	0	0	0	0	0	0	0
5/2/2024	7:15 PM	0	0	0	0	0	0	0	0	0	0	0	0	0
5/2/2024	7:30 PM	0	0	0	0	0	0	0	0	0	0	0	0	0
5/2/2024	7:45 PM	0	0	0	0	0	0	0	0	0	0	0	0	0
5/2/2024	8:00 PM	0	0	0	0	0	0	0	0	0	0	0	0	0
5/2/2024	8:15 PM	0	0	0	0	0	0	0	0	0	0	0	0	0
5/2/2024	8:30 PM	0	0	0	0	0	0	0	0	0	0	0	0	0
5/2/2024	8:45 PM	0	0	0	0	0	0	0	0	0	0	0	0	0
5/2/2024	9:00 PM	0	0	0	0	0	0	0	0	0	0	0	0	0
5/2/2024	9:15 PM	0	0	0	0	0	0	0	0	0	0	0	0	0
5/2/2024	9:30 PM	0	0	0	0	0	0	0	0	0	0	0	0	0
5/2/2024	9:45 PM	0	0	0	0	0	0	0	0	0	0	0	0	0
5/2/2024	10:00 PM	0	0	0	0	0	0	0	0	0	0	0	0	0
5/2/2024	10:15 PM	0	0	0	0	0	0	0	0	0	0	0	0	0
5/2/2024	10:30 PM	0	0	0	0	0	0	0	0	0	0	0	0	0
5/2/2024	10:45 PM	0	0	0	0	0	0	0	0	0	0	0	0	0
5/2/2024	11:00 PM	0	0	0	0	0	0	0	0	0	0	0	0	0
5/2/2024	11:15 PM	0	0	0	0	0	0	0	0	0	0	0	0	0
5/2/2024	11:30 PM	0	0	0	0	0	0	0	0	0	0	0	0	0
5/2/2024	11:45 PM	0	0	0	0	0	0	0	0	0	0	0	0	0

WB
File Name:
Start Date: 4/30/2024
Start Time: 0
Site Code: 68
Station ID: 1
Location 1: I-20 E/Bound Off-Ramp, west of US-176 Broad River Rd
Location 2:

Date	Time	1	2	3	4	5	6	7	8	9	10	11	12	13
4/30/2024	12:00 AM	0	0	0	0	0	0	0	0	0	0	0	0	0
4/30/2024	12:15 AM	0	0	0	0	0	0	0	0	0	0	0	0	0
4/30/2024	12:30 AM	0	0	0	0	0	0	0	0	0	0	0	0	0
4/30/2024	12:45 AM	0	0	0	0	0	0	0	0	0	0	0	0	0
4/30/2024	1:00 AM	0	0	0	0	0	0	0	0	0	0	0	0	0
4/30/2024	1:15 AM	0	0	0	0	0	0	0	0	0	0	0	0	0
4/30/2024	1:30 AM	0	0	0	0	0	0	0	0	0	0	0	0	0
4/30/2024	1:45 AM	0	0	0	0	0	0	0	0	0	0	0	0	0
4/30/2024	2:00 AM	0	0	0	0	0	0	0	0	0	0	0	0	0
4/30/2024	2:15 AM	0	0	0	0	0	0	0	0	0	0	0	0	0
4/30/2024	2:30 AM	0	0	0	0	0	0	0	0	0	0	0	0	0
4/30/2024	2:45 AM	0	0	0	0	0	0	0	0	0	0	0	0	0
4/30/2024	3:00 AM	0	0	0	0	0	0	0	0	0	0	0	0	0
4/30/2024	3:15 AM	0	0	0	0	0	0	0	0	0	0	0	0	0
4/30/2024	3:30 AM	0	0	0	0	0	0	0	0	0	0	0	0	0
4/30/2024	3:45 AM	0	0	0	0	0	0	0	0	0	0	0	0	0
4/30/2024	4:00 AM	0	0	0	0	0	0	0	0	0	0	0	0	0
4/30/2024	4:15 AM	0	0	0	0	0	0	0	0	0	0	0	0	0
4/30/2024	4:30 AM	0	0	0	0	0	0	0	0	0	0	0	0	0
4/30/2024	4:45 AM	0	0	0	0	0	0	0	0	0	0	0	0	0
4/30/2024	5:00 AM	0	0	0	0	0	0	0	0	0	0	0	0	0
4/30/2024	5:15 AM	0	0	0	0	0	0	0	0	0	0	0	0	0
4/30/2024	5:30 AM	0	0	0	0	0	0	0	0	0	0	0	0	0
4/30/2024	5:45 AM	0	0	0	0	0	0	0	0	0	0	0	0	0
4/30/2024	6:00 AM	0	0	0	0	0	0	0	0	0	0	0	0	0
4/30/2024	6:15 AM	0	0	0	0	0	0	0	0	0	0	0	0	0
4/30/2024	6:30 AM	0	0	0	0	0	0	0	0	0	0	0	0	0
4/30/2024	6:45 AM	0	0	0	0	0	0	0	0	0	0	0	0	0
4/30/2024	7:00 AM	0	0	0	0	0	0	0	0	0	0	0	0	0
4/30/2024	7:15 AM	0	0	0	0	0	0	0	0	0	0	0	0	0
4/30/2024	7:30 AM	0	0	0	0	0	0	0	0	0	0	0	0	0
4/30/2024	7:45 AM	0	0	0	0	0	0	0	0	0	0	0	0	0
4/30/2024	8:00 AM	0	0	0	0	0	0	0	0	0	0	0	0	0
4/30/2024	8:15 AM	0	0	0	0	0	0	0	0	0	0	0	0	0
4/30/2024	8:30 AM	0	0	0	0	0	0	0	0	0	0	0	0	0
4/30/2024	8:45 AM	0	0	0	0	0	0	0	0	0	0	0	0	0
4/30/2024	9:00 AM	0	0	0	0	0	0	0	0	0	0	0	0	0
4/30/2024	9:15 AM	0	0	0	0	0	0	0	0	0	0	0	0	0
4/30/2024	9:30 AM	0	0	0	0	0	0	0	0	0	0	0	0	0
4/30/2024	9:45 AM	0	0	0	0	0	0	0	0	0	0	0	0	0
4/30/2024	10:00 AM	0	0	0	0	0	0	0	0	0	0	0	0	0
4/30/2024	10:15 AM	0	0	0	0	0	0	0	0	0	0	0	0	0
4/30/2024	10:30 AM	0	0	0	0	0	0	0	0	0	0	0	0	0
4/30/2024	10:45 AM	0	0	0	0	0	0	0	0	0	0	0	0	0
4/30/2024	11:00 AM	0	0	0	0	0	0	0	0	0	0	0	0	0
4/30/2024	11:15 AM	0	0	0	0	0	0	0	0	0	0	0	0	0
4/30/2024	11:30 AM	0	0	0	0	0	0	0	0	0	0	0	0	0
4/30/2024	11:45 AM	0	0	0	0	0	0	0	0	0	0	0	0	0
4/30/2024	12:00 PM	0	0	0	0	0	0	0	0	0	0	0	0	0
4/30/2024	12:15 PM	0	0	0	0	0	0	0	0	0	0	0	0	0
4/30/2024	12:30 PM	0	0	0	0	0	0	0	0	0	0	0	0	0
4/30/2024	12:45 PM	0	0	0	0	0	0	0	0	0	0	0	0	0
4/30/2024	1:00 PM	0	0	0	0	0	0	0	0	0	0	0	0	0
4/30/2024	1:15 PM	0	0	0	0	0	0	0	0	0	0	0	0	0
4/30/2024	1:30 PM	0	0	0	0	0	0	0	0	0	0	0	0	0
4/30/2024	1:45 PM	0	0	0	0	0	0	0	0	0	0	0	0	0
4/30/2024	2:00 PM	0	0	0	0	0	0	0	0	0	0	0	0	0
4/30/2024	2:15 PM	0	0	0	0	0	0	0	0	0	0	0	0	0
4/30/2024	2:30 PM	0	0	0	0	0	0	0	0	0	0	0	0	0
4/30/2024	2:45 PM	0	0	0	0	0	0	0	0	0	0	0	0	0
4/30/2024	3:00 PM	0	0	0	0	0	0	0	0	0	0	0	0	0
4/30/2024	3:15 PM	0	0	0	0	0	0	0	0	0	0	0	0	0
4/30/2024	3:30 PM	0	0	0	0	0	0	0	0	0	0	0	0	0
4/30/2024	3:45 PM	0	0	0	0	0	0	0	0	0	0	0	0	0
4/30/2024	4:00 PM	0	0	0	0	0	0	0	0	0	0	0	0	0
4/30/2024	4:15 PM	0	0	0	0	0	0	0	0	0	0	0	0	0
4/30/2024	4:30 PM	0	0	0	0	0	0	0	0	0	0	0	0	0
4/30/2024	4:45 PM	0	0	0	0	0	0	0	0	0	0	0	0	0
4/30/2024	5:00 PM	0	0	0	0	0	0	0	0	0	0	0	0	0
4/30/2024	5:15 PM	0	0	0	0	0	0	0	0	0	0	0	0	0
4/30/2024	5:30 PM	0	0	0	0	0	0	0	0	0	0	0	0	0
4/30/2024	5:45 PM	0	0	0	0	0	0	0	0	0	0	0	0	0
4/30/2024	6:00 PM	0	0	0	0	0	0	0	0	0	0	0	0	0
4/30/2024	6:15 PM	0	0	0	0	0	0	0	0	0	0	0	0	0
4/30/2024	6:30 PM	0	0	0	0	0	0	0	0	0	0	0	0	0
4/30/2024	6:45 PM	0	0	0	0	0	0	0	0	0	0	0	0	0
4/30/2024	7:00 PM	0	0	0	0	0	0	0	0	0	0	0	0	0
4/30/2024	7:15 PM	0	0	0	0	0	0	0	0	0	0	0	0	0
4/30/2024	7:30 PM	0	0	0	0	0	0	0	0	0	0	0	0	0
4/30/2024	7:45 PM	0	0	0	0	0	0	0	0	0	0	0	0	0
4/30/2024	8:00 PM	0	0	0	0	0	0	0	0	0	0	0	0	0
4/30/2024	8:15 PM	0	0	0	0	0	0	0	0	0	0	0	0	0
4/30/2024	8:30 PM	0	0	0	0	0	0	0	0	0	0	0	0	0
4/30/2024	8:45 PM	0	0	0	0	0	0	0	0	0	0	0	0	0
4/30/2024	9:00 PM	0	0	0	0	0	0	0	0	0	0	0	0	0
4/30/2024	9:15 PM	0	0	0	0	0	0	0	0	0	0	0	0	0
4/30/2024	9:30 PM	0	0	0	0	0	0	0	0	0	0	0	0	0
4/30/2024	9:45 PM	0	0	0	0	0	0	0	0	0	0	0	0	0
4/30/2024	10:00 PM	0	0	0	0	0	0	0	0	0	0	0	0	0
4/30/2024	10:15 PM	0	0	0	0	0	0	0	0	0	0	0	0	0
4/30/2024	10:30 PM	0	0	0	0	0	0	0	0	0	0	0	0	0
4/30/2024	10:45 PM	0	0	0	0	0	0	0	0	0	0	0	0	0
4/30/2024	11:00 PM	0	0	0	0	0	0	0	0	0	0	0	0	0
4/30/2024	11:15 PM	0	0	0	0	0	0	0	0	0	0	0	0	0
4/30/2024	11:30 PM	0	0	0	0	0	0	0	0	0	0	0	0	0
4/30/2024	11:45 PM	0	0	0	0	0	0	0	0	0	0	0	0	0

5/1/2024	12:00 AM	0	0	0	0	0	0	0	0	0	0	0	0	0
5/1/2024	12:15 AM	0	0	0	0	0	0	0	0	0	0	0	0	0
5/1/2024	12:30 AM	0	0	0	0	0	0	0	0	0	0	0	0	0
5/1/2024	12:45 AM	0	0	0	0	0	0	0	0	0	0	0	0	0
5/1/2024	1:00 AM	0	0	0	0	0	0	0	0	0	0	0	0	0
5/1/2024	1:15 AM	0	0	0	0	0	0	0	0	0	0	0	0	0
5/1/2024	1:30 AM	0	0	0	0	0	0	0	0	0	0	0	0	0
5/1/2024	1:45 AM	0	0	0	0	0	0	0	0	0	0	0	0	0
5/1/2024	2:00 AM	0	0	0	0	0	0	0	0	0	0	0	0	0
5/1/2024	2:15 AM	0	0	0	0	0	0	0	0	0	0	0	0	0
5/1/2024	2:30 AM	0	0	0	0	0	0	0	0	0	0	0	0	0
5/1/2024	2:45 AM	0	0	0	0	0	0	0	0	0	0	0	0	0
5/1/2024	3:00 AM	0	0	0	0	0	0	0	0	0	0	0	0	0
5/1/2024	3:15 AM	0	0	0	0	0	0	0	0	0	0	0	0	0
5/1/2024	3:30 AM	0	0	0	0	0	0	0	0	0	0	0	0	0
5/1/2024	3:45 AM	0	0	0	0	0	0	0	0	0	0	0	0	0
5/1/2024	4:00 AM	0	0	0	0	0	0	0	0	0	0	0	0	0
5/1/2024	4:15 AM	0	0	0	0	0	0	0	0	0	0	0	0	0
5/1/2024	4:30 AM	0	0	0	0	0	0	0	0	0	0	0	0	0
5/1/2024	4:45 AM	0	0	0	0	0	0	0	0	0	0	0	0	0
5/1/2024	5:00 AM	0	0	0	0	0	0	0	0	0	0	0	0	0
5/1/2024	5:15 AM	0	0	0	0	0	0	0	0	0	0	0	0	0
5/1/2024	5:30 AM	0	0	0	0	0	0	0	0	0	0	0	0	0
5/1/2024	5:45 AM	0	0	0	0	0	0	0	0	0	0	0	0	0
5/1/2024	6:00 AM	0	0	0	0	0	0	0	0	0	0	0	0	0
5/1/2024	6:15 AM	0	0	0	0	0	0	0	0	0	0	0	0	0
5/1/2024	6:30 AM	0	0	0	0	0	0	0	0	0	0	0	0	0
5/1/2024	6:45 AM	0	0	0	0	0	0	0	0	0	0	0	0	0
5/1/2024	7:00 AM	0	0	0	0	0	0	0	0	0	0	0	0	0
5/1/2024	7:15 AM	0	0	0	0	0	0	0	0	0	0	0	0	0
5/1/2024	7:30 AM	0	0	0	0	0	0	0	0	0	0	0	0	0
5/1/2024	7:45 AM	0	0	0	0	0	0	0	0	0	0	0	0	0
5/1/2024	8:00 AM	0	0	0	0	0	0	0	0	0	0	0	0	0
5/1/2024	8:15 AM	0	0	0	0	0	0	0	0	0	0	0	0	0
5/1/2024	8:30 AM	0	0	0	0	0	0	0	0	0	0	0	0	0
5/1/2024	8:45 AM	0	0	0	0	0	0	0	0	0	0	0	0	0
5/1/2024	9:00 AM	0	0	0	0	0	0	0	0	0	0	0	0	0
5/1/2024	9:15 AM	0	0	0	0	0	0	0	0	0	0	0	0	0
5/1/2024	9:30 AM	0	0	0	0	0	0	0	0	0	0	0	0	0
5/1/2024	9:45 AM	0	0	0	0	0	0	0	0	0	0	0	0	0
5/1/2024	10:00 AM	0	0	0	0	0	0	0	0	0	0	0	0	0
5/1/2024	10:15 AM	0	0	0	0	0	0	0	0	0	0	0	0	0
5/1/2024	10:30 AM	0	0	0	0	0	0	0	0	0	0	0	0	0
5/1/2024	10:45 AM	0	0	0	0	0	0	0	0	0	0	0	0	0
5/1/2024	11:00 AM	0	0	0	0	0	0	0	0	0	0	0	0	0
5/1/2024	11:15 AM	0	0	0	0	0	0	0	0	0	0	0	0	0
5/1/2024	11:30 AM	0	0	0	0	0	0	0	0	0	0	0	0	0
5/1/2024	11:45 AM	0	0	0	0	0	0	0	0	0	0	0	0	0
5/1/2024	12:00 PM	0	0	0	0	0	0	0	0	0	0	0	0	0
5/1/2024	12:15 PM	0	0	0	0	0	0	0	0	0	0	0	0	0
5/1/2024	12:30 PM	0	0	0	0	0	0	0	0	0	0	0	0	0
5/1/2024	12:45 PM	0	0	0	0	0	0	0	0	0	0	0	0	0
5/1/2024	1:00 PM	0	0	0	0	0	0	0	0	0	0	0	0	0
5/1/2024	1:15 PM	0	0	0	0	0	0	0	0	0	0	0	0	0
5/1/2024	1:30 PM	0	0	0	0	0	0	0	0	0	0	0	0	0
5/1/2024	1:45 PM	0	0	0	0	0	0	0	0	0	0	0	0	0
5/1/2024	2:00 PM	0	0	0	0	0	0	0	0	0	0	0	0	0
5/1/2024	2:15 PM	0	0	0	0	0	0	0	0	0	0	0	0	0
5/1/2024	2:30 PM	0	0	0	0	0	0	0	0	0	0	0	0	0
5/1/2024	2:45 PM	0	0	0	0	0	0	0	0	0	0	0	0	0
5/1/2024	3:00 PM	0	0	0	0	0	0	0	0	0	0	0	0	0
5/1/2024	3:15 PM	0	0	0	0	0	0	0	0	0	0	0	0	0
5/1/2024	3:30 PM	0	0	0	0	0	0	0	0	0	0	0	0	0
5/1/2024	3:45 PM	0	0	0	0	0	0	0	0	0	0	0	0	0
5/1/2024	4:00 PM	0	0	0	0	0	0	0	0	0	0	0	0	0
5/1/2024	4:15 PM	0	0	0	0	0	0	0	0	0	0	0	0	0
5/1/2024	4:30 PM	0	0	0	0	0	0	0	0	0	0	0	0	0
5/1/2024	4:45 PM	0	0	0	0	0	0	0	0	0	0	0	0	0
5/1/2024	5:00 PM	0	0	0	0	0	0	0	0	0	0	0	0	0
5/1/2024	5:15 PM	0	0	0	0	0	0	0	0	0	0	0	0	0
5/1/2024	5:30 PM	0	0	0	0	0	0	0	0	0	0	0	0	0
5/1/2024	5:45 PM	0	0	0	0	0	0	0	0	0	0	0	0	0
5/1/2024	6:00 PM	0	0	0	0	0	0	0	0	0	0	0	0	0
5/1/2024	6:15 PM	0	0	0	0	0	0	0	0	0	0	0	0	0
5/1/2024	6:30 PM	0	0	0	0	0	0	0	0	0	0	0	0	0
5/1/2024	6:45 PM	0	0	0	0	0	0	0	0	0	0	0	0	0
5/1/2024	7:00 PM	0	0	0	0	0	0	0	0	0	0	0	0	0
5/1/2024	7:15 PM	0	0	0	0	0	0	0	0	0	0	0	0	0
5/1/2024	7:30 PM	0	0	0	0	0	0	0	0	0	0	0	0	0
5/1/2024	7:45 PM	0	0	0	0	0	0	0	0	0	0	0	0	0
5/1/2024	8:00 PM	0	0	0	0	0	0	0	0	0	0	0	0	0
5/1/2024	8:15 PM	0	0	0	0	0	0	0	0	0	0	0	0	0
5/1/2024	8:30 PM	0	0	0	0	0	0	0	0	0	0	0	0	0
5/1/2024	8:45 PM	0	0	0	0	0	0	0	0	0	0	0	0	0
5/1/2024	9:00 PM	0	0	0	0	0	0	0	0	0	0	0	0	0
5/1/2024	9:15 PM	0	0	0	0	0	0	0	0	0	0	0	0	0
5/1/2024	9:30 PM	0	0	0	0	0	0	0	0	0	0	0	0	0
5/1/2024	9:45 PM	0	0	0	0	0	0	0	0	0	0	0	0	0
5/1/2024	10:00 PM	0	0	0	0	0	0	0	0	0	0	0	0	0
5/1/2024	10:15 PM	0	0	0	0	0	0	0	0	0	0	0	0	0
5/1/2024	10:30 PM	0	0	0	0	0	0	0	0	0	0	0	0	0
5/1/2024	10:45 PM	0	0	0	0	0	0	0	0	0	0	0	0	0
5/1/2024	11:00 PM	0	0	0	0	0	0	0	0	0	0	0	0	0
5/1/2024	11:15 PM	0	0	0	0	0	0	0	0	0	0	0	0	0
5/1/2024	11:30 PM	0	0	0	0	0	0	0	0	0	0	0	0	0
5/1/2024	11:45 PM	0	0	0	0	0	0	0	0	0	0	0	0	0

5/2/2024	12:00 AM	0	0	0	0	0	0	0	0	0	0	0	0	0
5/2/2024	12:15 AM	0	0	0	0	0	0	0	0	0	0	0	0	0
5/2/2024	12:30 AM	0	0	0	0	0	0	0	0	0	0	0	0	0
5/2/2024	12:45 AM	0	0	0	0	0	0	0	0	0	0	0	0	0
5/2/2024	1:00 AM	0	0	0	0	0	0	0	0	0	0	0	0	0
5/2/2024	1:15 AM	0	0	0	0	0	0	0	0	0	0	0	0	0
5/2/2024	1:30 AM	0	0	0	0	0	0	0	0	0	0	0	0	0
5/2/2024	1:45 AM	0	0	0	0	0	0	0	0	0	0	0	0	0
5/2/2024	2:00 AM	0	0	0	0	0	0	0	0	0	0	0	0	0
5/2/2024	2:15 AM	0	0	0	0	0	0	0	0	0	0	0	0	0
5/2/2024	2:30 AM	0	0	0	0	0	0	0	0	0	0	0	0	0
5/2/2024	2:45 AM	0	0	0	0	0	0	0	0	0	0	0	0	0
5/2/2024	3:00 AM	0	0	0	0	0	0	0	0	0	0	0	0	0
5/2/2024	3:15 AM	0	0	0	0	0	0	0	0	0	0	0	0	0
5/2/2024	3:30 AM	0	0	0	0	0	0	0	0	0	0	0	0	0
5/2/2024	3:45 AM	0	0	0	0	0	0	0	0	0	0	0	0	0
5/2/2024	4:00 AM	0	0	0	0	0	0	0	0	0	0	0	0	0
5/2/2024	4:15 AM	0	0	0	0	0	0	0	0	0	0	0	0	0
5/2/2024	4:30 AM	0	0	0	0	0	0	0	0	0	0	0	0	0
5/2/2024	4:45 AM	0	0	0	0	0	0	0	0	0	0	0	0	0
5/2/2024	5:00 AM	0	0	0	0	0	0	0	0	0	0	0	0	0
5/2/2024	5:15 AM	0	0	0	0	0	0	0	0	0	0	0	0	0
5/2/2024	5:30 AM	0	0	0	0	0	0	0	0	0	0	0	0	0
5/2/2024	5:45 AM	0	0	0	0	0	0	0	0	0	0	0	0	0
5/2/2024	6:00 AM	0	0	0	0	0	0	0	0	0	0	0	0	0
5/2/2024	6:15 AM	0	0	0	0	0	0	0	0	0	0	0	0	0
5/2/2024	6:30 AM	0	0	0	0	0	0	0	0	0	0	0	0	0
5/2/2024	6:45 AM	0	0	0	0	0	0	0	0	0	0	0	0	0
5/2/2024	7:00 AM	0	0	0	0	0	0	0	0	0	0	0	0	0
5/2/2024	7:15 AM	0	0	0	0	0	0	0	0	0	0	0	0	0
5/2/2024	7:30 AM	0	0	0	0	0	0	0	0	0	0	0	0	0
5/2/2024	7:45 AM	0	0	0	0	0	0	0	0	0	0	0	0	0
5/2/2024	8:00 AM	0	0	0	0	0	0	0	0	0	0	0	0	0
5/2/2024	8:15 AM	0	0	0	0	0	0	0	0	0	0	0	0	0
5/2/2024	8:30 AM	0	0	0	0	0	0	0	0	0	0	0	0	0
5/2/2024	8:45 AM	0	0	0	0	0	0	0	0	0	0	0	0	0
5/2/2024	9:00 AM	0	0	0	0	0	0	0	0	0	0	0	0	0
5/2/2024	9:15 AM	0	0	0	0	0	0	0	0	0	0	0	0	0
5/2/2024	9:30 AM	0	0	0	0	0	0	0	0	0	0	0	0	0
5/2/2024	9:45 AM	0	0	0	0	0	0	0	0	0	0	0	0	0
5/2/2024	10:00 AM	0	0	0	0	0	0	0	0	0	0	0	0	0
5/2/2024	10:15 AM	0	0	0	0	0	0	0	0	0	0	0	0	0
5/2/2024	10:30 AM	0	0	0	0	0	0	0	0	0	0	0	0	0
5/2/2024	10:45 AM	0	0	0	0	0	0	0	0	0	0	0	0	0
5/2/2024	11:00 AM	0	0	0	0	0	0	0	0	0	0	0	0	0
5/2/2024	11:15 AM	0	0	0	0	0	0	0	0	0	0	0	0	0
5/2/2024	11:30 AM	0	0	0	0	0	0	0	0	0	0	0	0	0
5/2/2024	11:45 AM	0	0	0	0	0	0	0	0	0	0	0	0	0
5/2/2024	12:00 PM	0	0	0	0	0	0	0	0	0	0	0	0	0
5/2/2024	12:15 PM	0	0	0	0	0	0	0	0	0	0	0	0	0
5/2/2024	12:30 PM	0	0	0	0	0	0	0	0	0	0	0	0	0
5/2/2024	12:45 PM	0	0	0	0	0	0	0	0	0	0	0	0	0
5/2/2024	1:00 PM	0	0	0	0	0	0	0	0	0	0	0	0	0
5/2/2024	1:15 PM	0	0	0	0	0	0	0	0	0	0	0	0	0
5/2/2024	1:30 PM	0	0	0	0	0	0	0	0	0	0	0	0	0
5/2/2024	1:45 PM	0	0	0	0	0	0	0	0	0	0	0	0	0
5/2/2024	2:00 PM	0	0	0	0	0	0	0	0	0	0	0	0	0
5/2/2024	2:15 PM	0	0	0	0	0	0	0	0	0	0	0	0	0
5/2/2024	2:30 PM	0	0	0	0	0	0	0	0	0	0	0	0	0
5/2/2024	2:45 PM	0	0	0	0	0	0	0	0	0	0	0	0	0
5/2/2024	3:00 PM	0	0	0	0	0	0	0	0	0	0	0	0	0
5/2/2024	3:15 PM	0	0	0	0	0	0	0	0	0	0	0	0	0
5/2/2024	3:30 PM	0	0	0	0	0	0	0	0	0	0	0	0	0
5/2/2024	3:45 PM	0	0	0	0	0	0	0	0	0	0	0	0	0
5/2/2024	4:00 PM	0	0	0	0	0	0	0	0	0	0	0	0	0
5/2/2024	4:15 PM	0	0	0	0	0	0	0	0	0	0	0	0	0
5/2/2024	4:30 PM	0	0	0	0	0	0	0	0	0	0	0	0	0
5/2/2024	4:45 PM	0	0	0	0	0	0	0	0	0	0	0	0	0
5/2/2024	5:00 PM	0	0	0	0	0	0	0	0	0	0	0	0	0
5/2/2024	5:15 PM	0	0	0	0	0	0	0	0	0	0	0	0	0
5/2/2024	5:30 PM	0	0	0	0	0	0	0	0	0	0	0	0	0
5/2/2024	5:45 PM	0	0	0	0	0	0	0	0	0	0	0	0	0
5/2/2024	6:00 PM	0	0	0	0	0	0	0	0	0	0	0	0	0
5/2/2024	6:15 PM	0	0	0	0	0	0	0	0	0	0	0	0	0
5/2/2024	6:30 PM	0	0	0	0	0	0	0	0	0	0	0	0	0
5/2/2024	6:45 PM	0	0	0	0	0	0	0	0	0	0	0	0	0
5/2/2024	7:00 PM	0	0	0	0	0	0	0	0	0	0	0	0	0
5/2/2024	7:15 PM	0	0	0	0	0	0	0	0	0	0	0	0	0
5/2/2024	7:30 PM	0	0	0	0	0	0	0	0	0	0	0	0	0
5/2/2024	7:45 PM	0	0	0	0	0	0	0	0	0	0	0	0	0
5/2/2024	8:00 PM	0	0	0	0	0	0	0	0	0	0	0	0	0
5/2/2024	8:15 PM	0	0	0	0	0	0	0	0	0	0	0	0	0
5/2/2024	8:30 PM	0	0	0	0	0	0	0	0	0	0	0	0	0
5/2/2024	8:45 PM	0	0	0	0	0	0	0	0	0	0	0	0	0
5/2/2024	9:00 PM	0	0	0	0	0	0	0	0	0	0	0	0	0
5/2/2024	9:15 PM	0	0	0	0	0	0	0	0	0	0	0	0	0
5/2/2024	9:30 PM	0	0	0	0	0	0	0	0	0	0	0	0	0
5/2/2024	9:45 PM	0	0	0	0	0	0	0	0	0	0	0	0	0
5/2/2024	10:00 PM	0	0	0	0	0	0	0	0	0	0	0	0	0
5/2/2024	10:15 PM	0	0	0	0	0	0	0	0	0	0	0	0	0
5/2/2024	10:30 PM	0	0	0	0	0	0	0	0	0	0	0	0	0
5/2/2024	10:45 PM	0	0	0	0	0	0	0	0	0	0	0	0	0
5/2/2024	11:00 PM	0	0	0	0	0	0	0	0	0	0	0	0	0
5/2/2024	11:15 PM	0	0	0	0	0	0	0	0	0	0	0	0	0
5/2/2024	11:30 PM	0	0	0	0	0	0	0	0	0	0	0	0	0
5/2/2024	11:45 PM	0	0	0	0	0	0	0	0	0	0	0	0	0

EB
File Name:
Start Date: 4/30/2024
Start Time: 0
Site Code: 68
Station ID: 1
Location 1: I-20 E/Bound Off-Ramp, west of US-176 Broad River Rd
Location 2:

Date	Time	1	2	3	4	5	6	7	8	9	10	11	12	13
4/30/2024	12:00 AM	0	0	0	0	0	0	0	0	0	0	0	0	0
4/30/2024	12:15 AM	0	0	0	0	0	0	0	0	0	0	0	0	0
4/30/2024	12:30 AM	0	0	0	0	0	0	0	0	0	0	0	0	0
4/30/2024	12:45 AM	0	0	0	0	0	0	0	0	0	0	0	0	0
4/30/2024	1:00 AM	0	0	0	0	0	0	0	0	0	0	0	0	0
4/30/2024	1:15 AM	0	0	0	0	0	0	0	0	0	0	0	0	0
4/30/2024	1:30 AM	0	0	0	0	0	0	0	0	0	0	0	0	0
4/30/2024	1:45 AM	0	0	0	0	0	0	0	0	0	0	0	0	0
4/30/2024	2:00 AM	0	0	0	0	0	0	0	0	0	0	0	0	0
4/30/2024	2:15 AM	0	0	0	0	0	0	0	0	0	0	0	0	0
4/30/2024	2:30 AM	0	0	0	0	0	0	0	0	0	0	0	0	0
4/30/2024	2:45 AM	0	0	0	0	0	0	0	0	0	0	0	0	0
4/30/2024	3:00 AM	0	0	0	0	0	0	0	0	0	0	0	0	0
4/30/2024	3:15 AM	0	0	0	0	0	0	0	0	0	0	0	0	0
4/30/2024	3:30 AM	0	0	0	0	0	0	0	0	0	0	0	0	0
4/30/2024	3:45 AM	0	0	0	0	0	0	0	0	0	0	0	0	0
4/30/2024	4:00 AM	0	0	0	0	0	0	0	0	0	0	0	0	0
4/30/2024	4:15 AM	0	0	0	0	0	0	0	0	0	0	0	0	0
4/30/2024	4:30 AM	0	0	0	0	0	0	0	0	0	0	0	0	0
4/30/2024	4:45 AM	0	0	0	0	0	0	0	0	0	0	0	0	0
4/30/2024	5:00 AM	0	0	0	0	0	0	0	0	0	0	0	0	0
4/30/2024	5:15 AM	0	0	0	0	0	0	0	0	0	0	0	0	0
4/30/2024	5:30 AM	0	0	0	0	0	0	0	0	0	0	0	0	0
4/30/2024	5:45 AM	0	0	0	0	0	0	0	0	0	0	0	0	0
4/30/2024	6:00 AM	0	0	0	0	0	0	0	0	0	0	0	0	0
4/30/2024	6:15 AM	0	0	0	0	0	0	0	0	0	0	0	0	0
4/30/2024	6:30 AM	0	0	0	0	0	0	0	0	0	0	0	0	0
4/30/2024	6:45 AM	0	0	0	0	0	0	0	0	0	0	0	0	0
4/30/2024	7:00 AM	0	0	0	0	0	0	0	0	0	0	0	0	0
4/30/2024	7:15 AM	0	0	0	0	0	0	0	0	0	0	0	0	0
4/30/2024	7:30 AM	0	0	0	0	0	0	0	0	0	0	0	0	0
4/30/2024	7:45 AM	0	0	0	0	0	0	0	0	0	0	0	0	0
4/30/2024	8:00 AM	0	0	0	0	0	0	0	0	0	0	0	0	0
4/30/2024	8:15 AM	0	0	0	0	0	0	0	0	0	0	0	0	0
4/30/2024	8:30 AM	0	0	0	0	0	0	0	0	0	0	0	0	0
4/30/2024	8:45 AM	0	0	0	0	0	0	0	0	0	0	0	0	0
4/30/2024	9:00 AM	0	0	0	0	0	0	0	0	0	0	0	0	0
4/30/2024	9:15 AM	0	0	0	0	0	0	0	0	0	0	0	0	0
4/30/2024	9:30 AM	0	0	0	0	0	0	0	0	0	0	0	0	0
4/30/2024	9:45 AM	0	0	0	0	0	0	0	0	0	0	0	0	0
4/30/2024	10:00 AM	0	0	0	0	0	0	0	0	0	0	0	0	0
4/30/2024	10:15 AM	0	0	0	0	0	0	0	0	0	0	0	0	0
4/30/2024	10:30 AM	0	0	0	0	0	0	0	0	0	0	0	0	0
4/30/2024	10:45 AM	0	0	0	0	0	0	0	0	0	0	0	0	0
4/30/2024	11:00 AM	0	0	0	0	0	0	0	0	0	0	0	0	0
4/30/2024	11:15 AM	0	0	0	0	0	0	0	0	0	0	0	0	0
4/30/2024	11:30 AM	0	0	0	0	0	0	0	0	0	0	0	0	0
4/30/2024	11:45 AM	0	0	0	0	0	0	0	0	0	0	0	0	0
4/30/2024	12:00 PM	0	0	0	0	0	0	0	0	0	0	0	0	0
4/30/2024	12:15 PM	0	0	0	0	0	0	0	0	0	0	0	0	0
4/30/2024	12:30 PM	0	0	0	0	0	0	0	0	0	0	0	0	0
4/30/2024	12:45 PM	0	0	0	0	0	0	0	0	0	0	0	0	0
4/30/2024	1:00 PM	0	0	0	0	0	0	0	0	0	0	0	0	0
4/30/2024	1:15 PM	0	0	0	0	0	0	0	0	0	0	0	0	0
4/30/2024	1:30 PM	0	0	0	0	0	0	0	0	0	0	0	0	0
4/30/2024	1:45 PM	0	0	0	0	0	0	0	0	0	0	0	0	0
4/30/2024	2:00 PM	0	0	0	0	0	0	0	0	0	0	0	0	0
4/30/2024	2:15 PM	0	0	0	0	0	0	0	0	0	0	0	0	0
4/30/2024	2:30 PM	0	0	0	0	0	0	0	0	0	0	0	0	0
4/30/2024	2:45 PM	0	0	0	0	0	0	0	0	0	0	0	0	0
4/30/2024	3:00 PM	0	0	0	0	0	0	0	0	0	0	0	0	0
4/30/2024	3:15 PM	0	0	0	0	0	0	0	0	0	0	0	0	0
4/30/2024	3:30 PM	0	0	0	0	0	0	0	0	0	0	0	0	0
4/30/2024	3:45 PM	0	0	0	0	0	0	0	0	0	0	0	0	0
4/30/2024	4:00 PM	0	0	0	0	0	0	0	0	0	0	0	0	0
4/30/2024	4:15 PM	0	0	0	0	0	0	0	0	0	0	0	0	0
4/30/2024	4:30 PM	0	0	0	0	0	0	0	0	0	0	0	0	0
4/30/2024	4:45 PM	0	0	0	0	0	0	0	0	0	0	0	0	0
4/30/2024	5:00 PM	0	0	0	0	0	0	0	0	0	0	0	0	0
4/30/2024	5:15 PM	0	0	0	0	0	0	0	0	0	0	0	0	0
4/30/2024	5:30 PM	0	0	0	0	0	0	0	0	0	0	0	0	0
4/30/2024	5:45 PM	0	0	0	0	0	0	0	0	0	0	0	0	0
4/30/2024	6:00 PM	0	0	0	0	0	0	0	0	0	0	0	0	0
4/30/2024	6:15 PM	0	41	4	0	0	0	0	0	0	0	0	0	0
4/30/2024	6:30 PM	0	95	6	0	0	0	0	0	0	0	0	0	0
4/30/2024	6:45 PM	0	147	9	0	1	0	0	0	0	0	0	0	0
4/30/2024	7:00 PM	0	208	11	0	1	0	0	0	0	0	0	0	0
4/30/2024	7:15 PM	0	209	8	0	1	0	0	0	0	0	0	0	0
4/30/2024	7:30 PM	0	194	6	0	1	0	0	0	0	0	0	0	0
4/30/2024	7:45 PM	0	186	5	0	0	0	0	0	0	0	0	0	0
4/30/2024	8:00 PM	0	162	3	0	1	1	0	0	1	0	0	0	0
4/30/2024	8:15 PM	0	159	3	0	1	1	0	0	1	0	0	0	0
4/30/2024	8:30 PM	0	150	4	0	1	1	0	0	1	0	0	0	0
4/30/2024	8:45 PM	0	140	2	0	1	1	0	0	1	0	0	0	0
4/30/2024	9:00 PM	0	134	2	0	0	0	0	0	0	0	0	0	0
4/30/2024	9:15 PM	0	124	2	0	0	0	0	0	1	0	0	0	0
4/30/2024	9:30 PM	0	124	3	0	0	0	0	0	1	0	0	0	0
4/30/2024	9:45 PM	0	112	3	0	0	0	0	0	1	0	0	0	0
4/30/2024	10:00 PM	0	97	3	0	0	0	0	0	1	0	0	0	0
4/30/2024	10:15 PM	0	84	3	0	0	0	0	0	0	0	0	0	0
4/30/2024	10:30 PM	0	78	2	0	0	0	0	0	0	0	0	0	0
4/30/2024	10:45 PM	0	73	2	0	0	0	0	0	0	0	0	0	0
4/30/2024	11:00 PM	0	75	2	0	0	0	0	0	0	0	0	0	0
4/30/2024	11:15 PM	0	77	1	0	0	0	0	0	0	0	0	0	0
4/30/2024	11:30 PM	0	69	1	0	0	0	0	0	2	0	0	0	0
4/30/2024	11:45 PM	0	67	1	0	0	0	0	0	2	0	0	0	0

5/1/2024	12:00 AM	0	59	1	0	0	0	0	0	2	0	0	0	0
5/1/2024	12:15 AM	0	49	2	0	0	0	0	0	2	0	0	0	0
5/1/2024	12:30 AM	0	41	2	0	0	0	0	0	0	0	0	0	0
5/1/2024	12:45 AM	0	34	2	0	0	0	0	0	0	0	0	0	0
5/1/2024	1:00 AM	0	30	2	0	0	0	0	0	0	0	0	0	0
5/1/2024	1:15 AM	0	33	3	0	0	0	0	0	0	0	0	0	0
5/1/2024	1:30 AM	0	28	3	0	0	0	0	0	1	0	0	0	0
5/1/2024	1:45 AM	0	26	5	0	0	0	0	0	1	0	0	0	0
5/1/2024	2:00 AM	0	25	6	0	0	0	0	0	1	0	0	0	0
5/1/2024	2:15 AM	0	21	5	0	0	0	0	0	1	0	0	0	0
5/1/2024	2:30 AM	0	26	5	0	1	0	0	0	0	0	0	0	0
5/1/2024	2:45 AM	0	23	4	0	1	0	0	0	0	0	0	0	0
5/1/2024	3:00 AM	0	25	4	0	2	0	0	0	1	0	0	0	0
5/1/2024	3:15 AM	0	26	3	0	2	0	0	0	1	0	0	0	0
5/1/2024	3:30 AM	0	23	3	0	1	0	0	0	1	0	0	0	0
5/1/2024	3:45 AM	0	25	3	0	3	0	0	0	1	0	0	0	0
5/1/2024	4:00 AM	0	25	4	0	2	0	0	0	1	0	0	0	0
5/1/2024	4:15 AM	0	27	5	0	3	0	0	1	1	0	0	0	0
5/1/2024	4:30 AM	0	34	5	0	3	0	0	1	1	0	0	0	0
5/1/2024	4:45 AM	0	42	6	1	1	0	0	1	1	0	0	0	0
5/1/2024	5:00 AM	0	48	7	1	1	0	0	1	0	0	0	0	0
5/1/2024	5:15 AM	0	54	10	1	2	0	0	0	1	0	0	0	0
5/1/2024	5:30 AM	0	73	14	2	2	1	0	0	1	0	0	0	0
5/1/2024	5:45 AM	0	96	24	1	2	1	0	0	1	0	0	0	0
5/1/2024	6:00 AM	0	117	37	1	3	3	0	0	1	0	0	0	0
5/1/2024	6:15 AM	0	152	42	2	1	3	0	0	1	0	0	0	0
5/1/2024	6:30 AM	0	181	50	1	3	2	0	0	1	0	0	0	0
5/1/2024	6:45 AM	0	210	53	1	4	2	0	0	2	0	0	0	0
5/1/2024	7:00 AM	0	250	49	1	3	0	0	0	2	0	0	0	0
5/1/2024	7:15 AM	0	256	54	0	5	0	0	0	2	0	0	0	0
5/1/2024	7:30 AM	0	249	55	0	4	0	0	1	3	0	0	0	0
5/1/2024	7:45 AM	0	222	54	0	6	0	0	1	11	0	0	0	0
5/1/2024	8:00 AM	0	201	66	0	6	1	0	1	12	0	0	0	0
5/1/2024	8:15 AM	0	176	60	1	4	1	0	1	12	0	0	0	0
5/1/2024	8:30 AM	0	170	63	1	4	1	0	0	12	0	0	0	0
5/1/2024	8:45 AM	0	174	61	1	3	1	0	0	3	0	0	0	0
5/1/2024	9:00 AM	0	216	71	1	5	1	0	0	2	0	0	0	0
5/1/2024	9:15 AM	1	230	78	0	7	1	0	0	1	0	0	0	0
5/1/2024	9:30 AM	1	211	72	0	9	1	0	0	0	0	0	0	0
5/1/2024	9:45 AM	1	197	77	0	9	1	0	0	1	0	0	0	0
5/1/2024	10:00 AM	1	146	50	0	7	0	0	0	2	0	0	0	0
5/1/2024	10:15 AM	0	138	46	0	5	0	0	0	3	0	0	0	0
5/1/2024	10:30 AM	0	146	43	0	2	0	0	0	3	0	0	0	0
5/1/2024	10:45 AM	0	171	40	0	2	0	0	0	2	0	0	0	0
5/1/2024	11:00 AM	0	178	40	0	3	0	0	1	2	0	0	0	0
5/1/2024	11:15 AM	0	194	37	0	7	0	0	1	1	0	0	0	0
5/1/2024	11:30 AM	0	206	41	0	7	0	0	1	3	0	0	0	0
5/1/2024	11:45 AM	0	207	44	0	5	0	0	1	5	0	0	0	0
5/1/2024	12:00 PM	0	206	47	0	5	1	0	0	4	0	0	0	0
5/1/2024	12:15 PM	0	203	57	0	2	1	0	0	4	0	0	0	0
5/1/2024	12:30 PM	0	194	59	0	3	1	0	0	2	0	0	0	0
5/1/2024	12:45 PM	0	196	51	0	4	1	0	0	1	0	0	0	0
5/1/2024	1:00 PM	1	196	52	0	4	0	0	0	2	0	0	0	0
5/1/2024	1:15 PM	2	198	43	0	3	0	0	1	2	0	0	0	0
5/1/2024	1:30 PM	4	213	44	0	2	1	0	1	2	0	0	0	0
5/1/2024	1:45 PM	4	223	52	0	4	1	0	2	1	0	0	0	0
5/1/2024	2:00 PM	3	219	54	0	4	1	0	2	0	0	0	0	0
5/1/2024	2:15 PM	2	231	63	1	4	1	0	1	0	0	0	0	0
5/1/2024	2:30 PM	0	239	61	2	5	0	0	2	1	0	0	0	0
5/1/2024	2:45 PM	0	223	51	2	3	0	0	1	1	0	0	0	0
5/1/2024	3:00 PM	0	239	46	2	4	0	0	1	1	0	0	0	0
5/1/2024	3:15 PM	0	230	31	1	6	0	0	1	1	1	0	0	0
5/1/2024	3:30 PM	0	228	26	3	6	1	0	0	0	1	0	0	0
5/1/2024	3:45 PM	0	240	30	3	6	2	0	0	0	1	0	0	0
5/1/2024	4:00 PM	0	228	35	3	5	2	0	0	0	1	0	0	0
5/1/2024	4:15 PM	0	221	43	3	3	2	0	0	0	0	0	0	0
5/1/2024	4:30 PM	0	228	48	0	2	2	0	1	0	0	0	0	0
5/1/2024	4:45 PM	0	232	47	0	1	1	0	1	1	0	0	0	0
5/1/2024	5:00 PM	1	247	46	0	1	1	0	1	2	0	0	0	0
5/1/2024	5:15 PM	1	245	44	0	1	1	0	1	3	0	0	0	0
5/1/2024	5:30 PM	2	235	40	0	1	0	0	0	4	0	0	0	0
5/1/2024	5:45 PM	2	219	43	0	1	0	0	0	5	0	0	0	0
5/1/2024	6:00 PM	1	215	37	0	0	0	0	0	4	0	0	0	0
5/1/2024	6:15 PM	1	229	35	1	1	0	0	0	3	0	0	0	0
5/1/2024	6:30 PM	0	220	37	1	1	1	0	0	2	0	0	0	0
5/1/2024	6:45 PM	0	217	29	1	2	2	0	0	0	0	0	0	0
5/1/2024	7:00 PM	0	209	27	1	3	2	0	0	0	0	0	0	0
5/1/2024	7:15 PM	0	181	25	0	2	2	0	0	0	0	0	0	0
5/1/2024	7:30 PM	0	179	19	0	2	1	0	0	0	0	0	0	0
5/1/2024	7:45 PM	0	177	17	0	1	0	0	0	0	0	0	0	0
5/1/2024	8:00 PM	0	159	21	0	0	0	0	0	0	0	0	0	0
5/1/2024	8:15 PM	1	164	22	0	2	0	0	0	0	0	0	0	0
5/1/2024	8:30 PM	1	159	20	0	2	0	0	0	0	0	0	0	0
5/1/2024	8:45 PM	1	136	23	0	3	0	0	1	0	0	0	0	0
5/1/2024	9:00 PM	1	133	20	0	3	0	0	1	0	0	0	0	0
5/1/2024	9:15 PM	0	122	18	0	1	0	0	1	0	0	0	0	0
5/1/2024	9:30 PM	0	116	19	0	1	0	0	1	0	0	0	0	0
5/1/2024	9:45 PM	1	115	17	0	0	0	0	0	1	0	0	0	0
5/1/2024	10:00 PM	1	105	13	0	0	0	0	0	1	0	0	0	0
5/1/2024	10:15 PM	1	102	11	0	0	0	0	0	1	0	0	0	0
5/1/2024	10:30 PM	1	89	9	0	0	0	0	0	1	0	0	0	0
5/1/2024	10:45 PM	0	82	5	0	0	1	0	0	2	0	0	0	0
5/1/2024	11:00 PM	0	77	5	0	0	1	0	0	2	0	0	0	0
5/1/2024	11:15 PM	0	69	6	0	1	2	0	0	2	0	0	0	0
5/1/2024	11:30 PM	0	60	6	0	1	2	0	0	2	0	0	0	0
5/1/2024	11:45 PM	0	58	8	0	1	1	0	0	0	0	0	0	0

5/2/2024	12:00 AM	0	48	9	0	1	1	0	0	0	0	0	0	0
5/2/2024	12:15 AM	0	37	8	0	0	0	0	0	0	0	0	0	0
5/2/2024	12:30 AM	0	29	8	0	1	1	0	0	0	0	0	0	0
5/2/2024	12:45 AM	0	28	9	0	1	1	0	0	1	0	0	0	0
5/2/2024	1:00 AM	0	27	9	0	1	1	0	0	2	0	0	0	0
5/2/2024	1:15 AM	0	29	9	0	1	1	0	0	2	0	0	0	0
5/2/2024	1:30 AM	0	34	9	0	1	0	0	0	3	0	0	0	0
5/2/2024	1:45 AM	0	31	9	0	2	0	0	0	2	0	0	0	0
5/2/2024	2:00 AM	0	29	8	0	2	0	0	0	1	0	0	0	0
5/2/2024	2:15 AM	0	31	9	0	2	0	0	0	1	0	0	0	0
5/2/2024	2:30 AM	0	25	8	0	1	0	0	0	0	0	0	0	0
5/2/2024	2:45 AM	0	19	5	0	0	0	0	0	0	0	0	0	0
5/2/2024	3:00 AM	0	19	4	0	0	0	0	0	0	0	0	0	0
5/2/2024	3:15 AM	0	14	3	1	0	0	0	0	0	0	0	0	0
5/2/2024	3:30 AM	0	17	4	1	0	0	0	1	0	0	0	0	0
5/2/2024	3:45 AM	0	20	6	1	0	0	0	1	0	0	0	0	0
5/2/2024	4:00 AM	0	24	9	1	0	0	0	1	0	0	0	0	0
5/2/2024	4:15 AM	0	30	9	1	0	0	0	1	0	0	0	0	0
5/2/2024	4:30 AM	0	31	9	1	1	0	0	0	1	0	0	0	0
5/2/2024	4:45 AM	0	30	8	1	1	0	0	0	1	0	0	0	0
5/2/2024	5:00 AM	0	35	9	1	1	0	0	0	1	0	0	0	0
5/2/2024	5:15 AM	0	37	10	0	1	0	0	0	1	0	0	0	0
5/2/2024	5:30 AM	0	54	19	1	1	0	0	0	0	0	0	0	0
5/2/2024	5:45 AM	0	92	33	1	3	1	0	1	0	0	0	0	0
5/2/2024	6:00 AM	0	123	46	1	4	3	0	2	0	0	0	0	0
5/2/2024	6:15 AM	0	151	59	2	7	4	0	2	0	0	0	0	0
5/2/2024	6:30 AM	0	192	60	1	7	5	0	3	0	0	0	0	0
5/2/2024	6:45 AM	0	203	60	2	8	4	0	4	2	0	0	0	0
5/2/2024	7:00 AM	0	222	59	2	8	2	0	4	3	0	0	0	0
5/2/2024	7:15 AM	0	238	55	1	7	1	0	4	3	0	0	0	0
5/2/2024	7:30 AM	0	233	53	1	7	0	0	3	3	0	0	0	0
5/2/2024	7:45 AM	0	237	50	1	6	0	0	1	1	0	0	0	0
5/2/2024	8:00 AM	0	234	44	1	9	0	0	0	1	0	0	0	0
5/2/2024	8:15 AM	0	226	45	1	8	0	0	0	1	0	0	0	0
5/2/2024	8:30 AM	0	203	42	1	8	0	0	0	1	0	0	0	0
5/2/2024	8:45 AM	0	187	40	0	8	0	0	0	1	0	0	0	0
5/2/2024	9:00 AM	0	174	43	0	5	0	0	0	0	0	0	0	0
5/2/2024	9:15 AM	0	167	36	0	4	0	0	0	0	0	0	0	0
5/2/2024	9:30 AM	0	167	38	0	5	0	0	0	0	0	0	0	0
5/2/2024	9:45 AM	0	166	35	0	4	0	0	0	0	0	0	0	0
5/2/2024	10:00 AM	0	158	28	0	5	0	0	0	0	0	0	0	0
5/2/2024	10:15 AM	0	161	34	0	6	0	0	0	0	0	0	0	0
5/2/2024	10:30 AM	0	169	35	1	6	0	0	1	0	0	0	0	0
5/2/2024	10:45 AM	0	182	38	1	6	0	0	2	0	0	0	0	0
5/2/2024	11:00 AM	0	196	45	1	5	0	0	2	0	0	0	0	0
5/2/2024	11:15 AM	0	208	44	1	7	0	0	2	0	0	0	0	0
5/2/2024	11:30 AM	1	225	43	0	5	0	0	2	0	0	0	0	0
5/2/2024	11:45 AM	1	227	51	0	5	0	0	1	0	0	0	0	0
5/2/2024	12:00 PM	1	237	48	0	8	0	0	3	0	0	0	0	0
5/2/2024	12:15 PM	1	239	53	0	8	0	0	3	0	0	0	0	0
5/2/2024	12:30 PM	0	226	62	0	10	0	0	3	0	0	0	0	0
5/2/2024	12:45 PM	0	227	58	0	9	0	0	3	0	0	0	0	0
5/2/2024	1:00 PM	0	220	58	1	9	0	0	2	0	0	0	0	0
5/2/2024	1:15 PM	0	226	52	1	7	0	0	3	0	0	0	0	0
5/2/2024	1:30 PM	0	230	46	1	6	0	0	2	0	0	0	0	0
5/2/2024	1:45 PM	0	215	43	1	6	0	0	2	1	0	0	0	0
5/2/2024	2:00 PM	0	208	47	0	3	0	0	1	2	0	0	0	0
5/2/2024	2:15 PM	0	186	42	2	2	0	0	0	2	1	0	0	0
5/2/2024	2:30 PM	0	213	57	3	4	2	0	0	2	3	0	0	0
5/2/2024	2:45 PM	0	267	70	3	6	3	2	0	1	3	0	0	0
5/2/2024	3:00 PM	0	302	70	3	7	4	2	0	0	3	0	0	0
5/2/2024	3:15 PM	0	327	76	2	9	4	2	0	2	2	0	0	0
5/2/2024	3:30 PM	0	324	61	2	7	4	2	0	2	0	0	0	0
5/2/2024	3:45 PM	0	271	45	2	5	3	0	0	2	0	0	0	0
5/2/2024	4:00 PM	0	233	41	2	5	2	0	0	2	0	0	0	0
5/2/2024	4:15 PM	0	207	37	1	4	2	0	0	0	0	0	0	0
5/2/2024	4:30 PM	0	165	30	0	3	1	0	0	0	0	0	0	0
5/2/2024	4:45 PM	0	171	34	0	3	1	0	1	0	0	0	0	0
5/2/2024	5:00 PM	1	206	39	0	1	1	0	1	0	0	0	0	0
5/2/2024	5:15 PM	1	241	47	0	0	1	0	1	1	0	0	0	0
5/2/2024	5:30 PM	1	301	59	0	2	0	0	2	1	0	0	0	0
5/2/2024	5:45 PM	1	314	61	0	2	0	0	1	1	0	0	0	0
5/2/2024	6:00 PM	0	280	54	0	2	0	0	1	1	0	0	0	0
5/2/2024	6:15 PM	0	204	39	0	2	0	0	1	0	0	0	0	0
5/2/2024	6:30 PM	0	108	22	0	0	0	0	0	0	0	0	0	0
5/2/2024	6:45 PM	0	47	8	0	0	0	0	0	0	0	0	0	0
5/2/2024	7:00 PM	0	0	0	0	0	0	0	0	0	0	0	0	0
5/2/2024	7:15 PM	0	0	0	0	0	0	0	0	0	0	0	0	0
5/2/2024	7:30 PM	0	0	0	0	0	0	0	0	0	0	0	0	0
5/2/2024	7:45 PM	0	0	0	0	0	0	0	0	0	0	0	0	0
5/2/2024	8:00 PM	0	0	0	0	0	0	0	0	0	0	0	0	0
5/2/2024	8:15 PM	0	0	0	0	0	0	0	0	0	0	0	0	0
5/2/2024	8:30 PM	0	0	0	0	0	0	0	0	0	0	0	0	0
5/2/2024	8:45 PM	0	0	0	0	0	0	0	0	0	0	0	0	0
5/2/2024	9:00 PM	0	0	0	0	0	0	0	0	0	0	0	0	0
5/2/2024	9:15 PM	0	0	0	0	0	0	0	0	0	0	0	0	0
5/2/2024	9:30 PM	0	0	0	0	0	0	0	0	0	0	0	0	0
5/2/2024	9:45 PM	0	0	0	0	0	0	0	0	0	0	0	0	0
5/2/2024	10:00 PM	0	0	0	0	0	0	0	0	0	0	0	0	0
5/2/2024	10:15 PM	0	0	0	0	0	0	0	0	0	0	0	0	0
5/2/2024	10:30 PM	0	0	0	0	0	0	0	0	0	0	0	0	0
5/2/2024	10:45 PM	0	0	0	0	0	0	0	0	0	0	0	0	0
5/2/2024	11:00 PM	0	0	0	0	0	0	0	0	0	0	0	0	0
5/2/2024	11:15 PM	0	0	0	0	0	0	0	0	0	0	0	0	0
5/2/2024	11:30 PM	0	0	0	0	0	0	0	0	0	0	0	0	0
5/2/2024	11:45 PM	0	0	0	0	0	0	0	0	0	0	0	0	0

WB
File Name:
Start Date: 4/30/2024
Start Time: 0
Site Code: 68
Station ID: 1
Location 1: I-20 E/Bound Off-Ramp, west of US-176 Broad River Rd
Location 2:

Date	Time	1	2	3	4	5	6	7	8	9	10	11	12	13
4/30/2024	12:00 AM	0	0	0	0	0	0	0	0	0	0	0	0	0
4/30/2024	12:15 AM	0	0	0	0	0	0	0	0	0	0	0	0	0
4/30/2024	12:30 AM	0	0	0	0	0	0	0	0	0	0	0	0	0
4/30/2024	12:45 AM	0	0	0	0	0	0	0	0	0	0	0	0	0
4/30/2024	1:00 AM	0	0	0	0	0	0	0	0	0	0	0	0	0
4/30/2024	1:15 AM	0	0	0	0	0	0	0	0	0	0	0	0	0
4/30/2024	1:30 AM	0	0	0	0	0	0	0	0	0	0	0	0	0
4/30/2024	1:45 AM	0	0	0	0	0	0	0	0	0	0	0	0	0
4/30/2024	2:00 AM	0	0	0	0	0	0	0	0	0	0	0	0	0
4/30/2024	2:15 AM	0	0	0	0	0	0	0	0	0	0	0	0	0
4/30/2024	2:30 AM	0	0	0	0	0	0	0	0	0	0	0	0	0
4/30/2024	2:45 AM	0	0	0	0	0	0	0	0	0	0	0	0	0
4/30/2024	3:00 AM	0	0	0	0	0	0	0	0	0	0	0	0	0
4/30/2024	3:15 AM	0	0	0	0	0	0	0	0	0	0	0	0	0
4/30/2024	3:30 AM	0	0	0	0	0	0	0	0	0	0	0	0	0
4/30/2024	3:45 AM	0	0	0	0	0	0	0	0	0	0	0	0	0
4/30/2024	4:00 AM	0	0	0	0	0	0	0	0	0	0	0	0	0
4/30/2024	4:15 AM	0	0	0	0	0	0	0	0	0	0	0	0	0
4/30/2024	4:30 AM	0	0	0	0	0	0	0	0	0	0	0	0	0
4/30/2024	4:45 AM	0	0	0	0	0	0	0	0	0	0	0	0	0
4/30/2024	5:00 AM	0	0	0	0	0	0	0	0	0	0	0	0	0
4/30/2024	5:15 AM	0	0	0	0	0	0	0	0	0	0	0	0	0
4/30/2024	5:30 AM	0	0	0	0	0	0	0	0	0	0	0	0	0
4/30/2024	5:45 AM	0	0	0	0	0	0	0	0	0	0	0	0	0
4/30/2024	6:00 AM	0	0	0	0	0	0	0	0	0	0	0	0	0
4/30/2024	6:15 AM	0	0	0	0	0	0	0	0	0	0	0	0	0
4/30/2024	6:30 AM	0	0	0	0	0	0	0	0	0	0	0	0	0
4/30/2024	6:45 AM	0	0	0	0	0	0	0	0	0	0	0	0	0
4/30/2024	7:00 AM	0	0	0	0	0	0	0	0	0	0	0	0	0
4/30/2024	7:15 AM	0	0	0	0	0	0	0	0	0	0	0	0	0
4/30/2024	7:30 AM	0	0	0	0	0	0	0	0	0	0	0	0	0
4/30/2024	7:45 AM	0	0	0	0	0	0	0	0	0	0	0	0	0
4/30/2024	8:00 AM	0	0	0	0	0	0	0	0	0	0	0	0	0
4/30/2024	8:15 AM	0	0	0	0	0	0	0	0	0	0	0	0	0
4/30/2024	8:30 AM	0	0	0	0	0	0	0	0	0	0	0	0	0
4/30/2024	8:45 AM	0	0	0	0	0	0	0	0	0	0	0	0	0
4/30/2024	9:00 AM	0	0	0	0	0	0	0	0	0	0	0	0	0
4/30/2024	9:15 AM	0	0	0	0	0	0	0	0	0	0	0	0	0
4/30/2024	9:30 AM	0	0	0	0	0	0	0	0	0	0	0	0	0
4/30/2024	9:45 AM	0	0	0	0	0	0	0	0	0	0	0	0	0
4/30/2024	10:00 AM	0	0	0	0	0	0	0	0	0	0	0	0	0
4/30/2024	10:15 AM	0	0	0	0	0	0	0	0	0	0	0	0	0
4/30/2024	10:30 AM	0	0	0	0	0	0	0	0	0	0	0	0	0
4/30/2024	10:45 AM	0	0	0	0	0	0	0	0	0	0	0	0	0
4/30/2024	11:00 AM	0	0	0	0	0	0	0	0	0	0	0	0	0
4/30/2024	11:15 AM	0	0	0	0	0	0	0	0	0	0	0	0	0
4/30/2024	11:30 AM	0	0	0	0	0	0	0	0	0	0	0	0	0
4/30/2024	11:45 AM	0	0	0	0	0	0	0	0	0	0	0	0	0
4/30/2024	12:00 PM	0	0	0	0	0	0	0	0	0	0	0	0	0
4/30/2024	12:15 PM	0	0	0	0	0	0	0	0	0	0	0	0	0
4/30/2024	12:30 PM	0	0	0	0	0	0	0	0	0	0	0	0	0
4/30/2024	12:45 PM	0	0	0	0	0	0	0	0	0	0	0	0	0
4/30/2024	1:00 PM	0	0	0	0	0	0	0	0	0	0	0	0	0
4/30/2024	1:15 PM	0	0	0	0	0	0	0	0	0	0	0	0	0
4/30/2024	1:30 PM	0	0	0	0	0	0	0	0	0	0	0	0	0
4/30/2024	1:45 PM	0	0	0	0	0	0	0	0	0	0	0	0	0
4/30/2024	2:00 PM	0	0	0	0	0	0	0	0	0	0	0	0	0
4/30/2024	2:15 PM	0	0	0	0	0	0	0	0	0	0	0	0	0
4/30/2024	2:30 PM	0	0	0	0	0	0	0	0	0	0	0	0	0
4/30/2024	2:45 PM	0	0	0	0	0	0	0	0	0	0	0	0	0
4/30/2024	3:00 PM	0	0	0	0	0	0	0	0	0	0	0	0	0
4/30/2024	3:15 PM	0	0	0	0	0	0	0	0	0	0	0	0	0
4/30/2024	3:30 PM	0	0	0	0	0	0	0	0	0	0	0	0	0
4/30/2024	3:45 PM	0	0	0	0	0	0	0	0	0	0	0	0	0
4/30/2024	4:00 PM	0	0	0	0	0	0	0	0	0	0	0	0	0
4/30/2024	4:15 PM	0	0	0	0	0	0	0	0	0	0	0	0	0
4/30/2024	4:30 PM	0	0	0	0	0	0	0	0	0	0	0	0	0
4/30/2024	4:45 PM	0	0	0	0	0	0	0	0	0	0	0	0	0
4/30/2024	5:00 PM	0	0	0	0	0	0	0	0	0	0	0	0	0
4/30/2024	5:15 PM	0	0	0	0	0	0	0	0	0	0	0	0	0
4/30/2024	5:30 PM	0	0	0	0	0	0	0	0	0	0	0	0	0
4/30/2024	5:45 PM	0	0	0	0	0	0	0	0	0	0	0	0	0
4/30/2024	6:00 PM	0	0	0	0	0	0	0	0	0	0	0	0	0
4/30/2024	6:15 PM	0	0	0	0	0	0	0	0	0	0	0	0	0
4/30/2024	6:30 PM	0	0	0	0	0	0	0	0	0	0	0	0	0
4/30/2024	6:45 PM	0	0	0	0	0	0	0	0	0	0	0	0	0
4/30/2024	7:00 PM	0	0	0	0	0	0	0	0	0	0	0	0	0
4/30/2024	7:15 PM	0	0	0	0	0	0	0	0	0	0	0	0	0
4/30/2024	7:30 PM	0	0	0	0	0	0	0	0	0	0	0	0	0
4/30/2024	7:45 PM	0	0	0	0	0	0	0	0	0	0	0	0	0
4/30/2024	8:00 PM	0	0	0	0	0	0	0	0	0	0	0	0	0
4/30/2024	8:15 PM	0	0	0	0	0	0	0	0	0	0	0	0	0
4/30/2024	8:30 PM	0	0	0	0	0	0	0	0	0	0	0	0	0
4/30/2024	8:45 PM	0	0	0	0	0	0	0	0	0	0	0	0	0
4/30/2024	9:00 PM	0	0	0	0	0	0	0	0	0	0	0	0	0
4/30/2024	9:15 PM	0	0	0	0	0	0	0	0	0	0	0	0	0
4/30/2024	9:30 PM	0	0	0	0	0	0	0	0	0	0	0	0	0
4/30/2024	9:45 PM	0	0	0	0	0	0	0	0	0	0	0	0	0
4/30/2024	10:00 PM	0	0	0	0	0	0	0	0	0	0	0	0	0
4/30/2024	10:15 PM	0	0	0	0	0	0	0	0	0	0	0	0	0
4/30/2024	10:30 PM	0	0	0	0	0	0	0	0	0	0	0	0	0
4/30/2024	10:45 PM	0	0	0	0	0	0	0	0	0	0	0	0	0
4/30/2024	11:00 PM	0	0	0	0	0	0	0	0	0	0	0	0	0
4/30/2024	11:15 PM	0	0	0	0	0	0	0	0	0	0	0	0	0
4/30/2024	11:30 PM	0	0	0	0	0	0	0	0	0	0	0	0	0
4/30/2024	11:45 PM	0	0	0	0	0	0	0	0	0	0	0	0	0

5/1/2024	12:00 AM	0	0	0	0	0	0	0	0	0	0	0	0	0
5/1/2024	12:15 AM	0	0	0	0	0	0	0	0	0	0	0	0	0
5/1/2024	12:30 AM	0	0	0	0	0	0	0	0	0	0	0	0	0
5/1/2024	12:45 AM	0	0	0	0	0	0	0	0	0	0	0	0	0
5/1/2024	1:00 AM	0	0	0	0	0	0	0	0	0	0	0	0	0
5/1/2024	1:15 AM	0	0	0	0	0	0	0	0	0	0	0	0	0
5/1/2024	1:30 AM	0	0	0	0	0	0	0	0	0	0	0	0	0
5/1/2024	1:45 AM	0	0	0	0	0	0	0	0	0	0	0	0	0
5/1/2024	2:00 AM	0	0	0	0	0	0	0	0	0	0	0	0	0
5/1/2024	2:15 AM	0	0	0	0	0	0	0	0	0	0	0	0	0
5/1/2024	2:30 AM	0	0	0	0	0	0	0	0	0	0	0	0	0
5/1/2024	2:45 AM	0	0	0	0	0	0	0	0	0	0	0	0	0
5/1/2024	3:00 AM	0	0	0	0	0	0	0	0	0	0	0	0	0
5/1/2024	3:15 AM	0	0	0	0	0	0	0	0	0	0	0	0	0
5/1/2024	3:30 AM	0	0	0	0	0	0	0	0	0	0	0	0	0
5/1/2024	3:45 AM	0	0	0	0	0	0	0	0	0	0	0	0	0
5/1/2024	4:00 AM	0	0	0	0	0	0	0	0	0	0	0	0	0
5/1/2024	4:15 AM	0	0	0	0	0	0	0	0	0	0	0	0	0
5/1/2024	4:30 AM	0	0	0	0	0	0	0	0	0	0	0	0	0
5/1/2024	4:45 AM	0	0	0	0	0	0	0	0	0	0	0	0	0
5/1/2024	5:00 AM	0	0	0	0	0	0	0	0	0	0	0	0	0
5/1/2024	5:15 AM	0	0	0	0	0	0	0	0	0	0	0	0	0
5/1/2024	5:30 AM	0	0	0	0	0	0	0	0	0	0	0	0	0
5/1/2024	5:45 AM	0	0	0	0	0	0	0	0	0	0	0	0	0
5/1/2024	6:00 AM	0	0	0	0	0	0	0	0	0	0	0	0	0
5/1/2024	6:15 AM	0	0	0	0	0	0	0	0	0	0	0	0	0
5/1/2024	6:30 AM	0	0	0	0	0	0	0	0	0	0	0	0	0
5/1/2024	6:45 AM	0	0	0	0	0	0	0	0	0	0	0	0	0
5/1/2024	7:00 AM	0	0	0	0	0	0	0	0	0	0	0	0	0
5/1/2024	7:15 AM	0	0	0	0	0	0	0	0	0	0	0	0	0
5/1/2024	7:30 AM	0	0	0	0	0	0	0	0	0	0	0	0	0
5/1/2024	7:45 AM	0	0	0	0	0	0	0	0	0	0	0	0	0
5/1/2024	8:00 AM	0	0	0	0	0	0	0	0	0	0	0	0	0
5/1/2024	8:15 AM	0	0	0	0	0	0	0	0	0	0	0	0	0
5/1/2024	8:30 AM	0	0	0	0	0	0	0	0	0	0	0	0	0
5/1/2024	8:45 AM	0	0	0	0	0	0	0	0	0	0	0	0	0
5/1/2024	9:00 AM	0	0	0	0	0	0	0	0	0	0	0	0	0
5/1/2024	9:15 AM	0	0	0	0	0	0	0	0	0	0	0	0	0
5/1/2024	9:30 AM	0	0	0	0	0	0	0	0	0	0	0	0	0
5/1/2024	9:45 AM	0	0	0	0	0	0	0	0	0	0	0	0	0
5/1/2024	10:00 AM	0	0	0	0	0	0	0	0	0	0	0	0	0
5/1/2024	10:15 AM	0	0	0	0	0	0	0	0	0	0	0	0	0
5/1/2024	10:30 AM	0	0	0	0	0	0	0	0	0	0	0	0	0
5/1/2024	10:45 AM	0	0	0	0	0	0	0	0	0	0	0	0	0
5/1/2024	11:00 AM	0	0	0	0	0	0	0	0	0	0	0	0	0
5/1/2024	11:15 AM	0	0	0	0	0	0	0	0	0	0	0	0	0
5/1/2024	11:30 AM	0	0	0	0	0	0	0	0	0	0	0	0	0
5/1/2024	11:45 AM	0	0	0	0	0	0	0	0	0	0	0	0	0
5/1/2024	12:00 PM	0	0	0	0	0	0	0	0	0	0	0	0	0
5/1/2024	12:15 PM	0	0	0	0	0	0	0	0	0	0	0	0	0
5/1/2024	12:30 PM	0	0	0	0	0	0	0	0	0	0	0	0	0
5/1/2024	12:45 PM	0	0	0	0	0	0	0	0	0	0	0	0	0
5/1/2024	1:00 PM	0	0	0	0	0	0	0	0	0	0	0	0	0
5/1/2024	1:15 PM	0	0	0	0	0	0	0	0	0	0	0	0	0
5/1/2024	1:30 PM	0	0	0	0	0	0	0	0	0	0	0	0	0
5/1/2024	1:45 PM	0	0	0	0	0	0	0	0	0	0	0	0	0
5/1/2024	2:00 PM	0	0	0	0	0	0	0	0	0	0	0	0	0
5/1/2024	2:15 PM	0	0	0	0	0	0	0	0	0	0	0	0	0
5/1/2024	2:30 PM	0	0	0	0	0	0	0	0	0	0	0	0	0
5/1/2024	2:45 PM	0	0	0	0	0	0	0	0	0	0	0	0	0
5/1/2024	3:00 PM	0	0	0	0	0	0	0	0	0	0	0	0	0
5/1/2024	3:15 PM	0	0	0	0	0	0	0	0	0	0	0	0	0
5/1/2024	3:30 PM	0	0	0	0	0	0	0	0	0	0	0	0	0
5/1/2024	3:45 PM	0	0	0	0	0	0	0	0	0	0	0	0	0
5/1/2024	4:00 PM	0	0	0	0	0	0	0	0	0	0	0	0	0
5/1/2024	4:15 PM	0	0	0	0	0	0	0	0	0	0	0	0	0
5/1/2024	4:30 PM	0	0	0	0	0	0	0	0	0	0	0	0	0
5/1/2024	4:45 PM	0	0	0	0	0	0	0	0	0	0	0	0	0
5/1/2024	5:00 PM	0	0	0	0	0	0	0	0	0	0	0	0	0
5/1/2024	5:15 PM	0	0	0	0	0	0	0	0	0	0	0	0	0
5/1/2024	5:30 PM	0	0	0	0	0	0	0	0	0	0	0	0	0
5/1/2024	5:45 PM	0	0	0	0	0	0	0	0	0	0	0	0	0
5/1/2024	6:00 PM	0	0	0	0	0	0	0	0	0	0	0	0	0
5/1/2024	6:15 PM	0	0	0	0	0	0	0	0	0	0	0	0	0
5/1/2024	6:30 PM	0	0	0	0	0	0	0	0	0	0	0	0	0
5/1/2024	6:45 PM	0	0	0	0	0	0	0	0	0	0	0	0	0
5/1/2024	7:00 PM	0	0	0	0	0	0	0	0	0	0	0	0	0
5/1/2024	7:15 PM	0	0	0	0	0	0	0	0	0	0	0	0	0
5/1/2024	7:30 PM	0	0	0	0	0	0	0	0	0	0	0	0	0
5/1/2024	7:45 PM	0	0	0	0	0	0	0	0	0	0	0	0	0
5/1/2024	8:00 PM	0	0	0	0	0	0	0	0	0	0	0	0	0
5/1/2024	8:15 PM	0	0	0	0	0	0	0	0	0	0	0	0	0
5/1/2024	8:30 PM	0	0	0	0	0	0	0	0	0	0	0	0	0
5/1/2024	8:45 PM	0	0	0	0	0	0	0	0	0	0	0	0	0
5/1/2024	9:00 PM	0	0	0	0	0	0	0	0	0	0	0	0	0
5/1/2024	9:15 PM	0	0	0	0	0	0	0	0	0	0	0	0	0
5/1/2024	9:30 PM	0	0	0	0	0	0	0	0	0	0	0	0	0
5/1/2024	9:45 PM	0	0	0	0	0	0	0	0	0	0	0	0	0
5/1/2024	10:00 PM	0	0	0	0	0	0	0	0	0	0	0	0	0
5/1/2024	10:15 PM	0	0	0	0	0	0	0	0	0	0	0	0	0
5/1/2024	10:30 PM	0	0	0	0	0	0	0	0	0	0	0	0	0
5/1/2024	10:45 PM	0	0	0	0	0	0	0	0	0	0	0	0	0
5/1/2024	11:00 PM	0	0	0	0	0	0	0	0	0	0	0	0	0
5/1/2024	11:15 PM	0	0	0	0	0	0	0	0	0	0	0	0	0
5/1/2024	11:30 PM	0	0	0	0	0	0	0	0	0	0	0	0	0
5/1/2024	11:45 PM	0	0	0	0	0	0	0	0	0	0	0	0	0

5/2/2024	12:00 AM	0	0	0	0	0	0	0	0	0	0	0	0	0
5/2/2024	12:15 AM	0	0	0	0	0	0	0	0	0	0	0	0	0
5/2/2024	12:30 AM	0	0	0	0	0	0	0	0	0	0	0	0	0
5/2/2024	12:45 AM	0	0	0	0	0	0	0	0	0	0	0	0	0
5/2/2024	1:00 AM	0	0	0	0	0	0	0	0	0	0	0	0	0
5/2/2024	1:15 AM	0	0	0	0	0	0	0	0	0	0	0	0	0
5/2/2024	1:30 AM	0	0	0	0	0	0	0	0	0	0	0	0	0
5/2/2024	1:45 AM	0	0	0	0	0	0	0	0	0	0	0	0	0
5/2/2024	2:00 AM	0	0	0	0	0	0	0	0	0	0	0	0	0
5/2/2024	2:15 AM	0	0	0	0	0	0	0	0	0	0	0	0	0
5/2/2024	2:30 AM	0	0	0	0	0	0	0	0	0	0	0	0	0
5/2/2024	2:45 AM	0	0	0	0	0	0	0	0	0	0	0	0	0
5/2/2024	3:00 AM	0	0	0	0	0	0	0	0	0	0	0	0	0
5/2/2024	3:15 AM	0	0	0	0	0	0	0	0	0	0	0	0	0
5/2/2024	3:30 AM	0	0	0	0	0	0	0	0	0	0	0	0	0
5/2/2024	3:45 AM	0	0	0	0	0	0	0	0	0	0	0	0	0
5/2/2024	4:00 AM	0	0	0	0	0	0	0	0	0	0	0	0	0
5/2/2024	4:15 AM	0	0	0	0	0	0	0	0	0	0	0	0	0
5/2/2024	4:30 AM	0	0	0	0	0	0	0	0	0	0	0	0	0
5/2/2024	4:45 AM	0	0	0	0	0	0	0	0	0	0	0	0	0
5/2/2024	5:00 AM	0	0	0	0	0	0	0	0	0	0	0	0	0
5/2/2024	5:15 AM	0	0	0	0	0	0	0	0	0	0	0	0	0
5/2/2024	5:30 AM	0	0	0	0	0	0	0	0	0	0	0	0	0
5/2/2024	5:45 AM	0	0	0	0	0	0	0	0	0	0	0	0	0
5/2/2024	6:00 AM	0	0	0	0	0	0	0	0	0	0	0	0	0
5/2/2024	6:15 AM	0	0	0	0	0	0	0	0	0	0	0	0	0
5/2/2024	6:30 AM	0	0	0	0	0	0	0	0	0	0	0	0	0
5/2/2024	6:45 AM	0	0	0	0	0	0	0	0	0	0	0	0	0
5/2/2024	7:00 AM	0	0	0	0	0	0	0	0	0	0	0	0	0
5/2/2024	7:15 AM	0	0	0	0	0	0	0	0	0	0	0	0	0
5/2/2024	7:30 AM	0	0	0	0	0	0	0	0	0	0	0	0	0
5/2/2024	7:45 AM	0	0	0	0	0	0	0	0	0	0	0	0	0
5/2/2024	8:00 AM	0	0	0	0	0	0	0	0	0	0	0	0	0
5/2/2024	8:15 AM	0	0	0	0	0	0	0	0	0	0	0	0	0
5/2/2024	8:30 AM	0	0	0	0	0	0	0	0	0	0	0	0	0
5/2/2024	8:45 AM	0	0	0	0	0	0	0	0	0	0	0	0	0
5/2/2024	9:00 AM	0	0	0	0	0	0	0	0	0	0	0	0	0
5/2/2024	9:15 AM	0	0	0	0	0	0	0	0	0	0	0	0	0
5/2/2024	9:30 AM	0	0	0	0	0	0	0	0	0	0	0	0	0
5/2/2024	9:45 AM	0	0	0	0	0	0	0	0	0	0	0	0	0
5/2/2024	10:00 AM	0	0	0	0	0	0	0	0	0	0	0	0	0
5/2/2024	10:15 AM	0	0	0	0	0	0	0	0	0	0	0	0	0
5/2/2024	10:30 AM	0	0	0	0	0	0	0	0	0	0	0	0	0
5/2/2024	10:45 AM	0	0	0	0	0	0	0	0	0	0	0	0	0
5/2/2024	11:00 AM	0	0	0	0	0	0	0	0	0	0	0	0	0
5/2/2024	11:15 AM	0	0	0	0	0	0	0	0	0	0	0	0	0
5/2/2024	11:30 AM	0	0	0	0	0	0	0	0	0	0	0	0	0
5/2/2024	11:45 AM	0	0	0	0	0	0	0	0	0	0	0	0	0
5/2/2024	12:00 PM	0	0	0	0	0	0	0	0	0	0	0	0	0
5/2/2024	12:15 PM	0	0	0	0	0	0	0	0	0	0	0	0	0
5/2/2024	12:30 PM	0	0	0	0	0	0	0	0	0	0	0	0	0
5/2/2024	12:45 PM	0	0	0	0	0	0	0	0	0	0	0	0	0
5/2/2024	1:00 PM	0	0	0	0	0	0	0	0	0	0	0	0	0
5/2/2024	1:15 PM	0	0	0	0	0	0	0	0	0	0	0	0	0
5/2/2024	1:30 PM	0	0	0	0	0	0	0	0	0	0	0	0	0
5/2/2024	1:45 PM	0	0	0	0	0	0	0	0	0	0	0	0	0
5/2/2024	2:00 PM	0	0	0	0	0	0	0	0	0	0	0	0	0
5/2/2024	2:15 PM	0	0	0	0	0	0	0	0	0	0	0	0	0
5/2/2024	2:30 PM	0	0	0	0	0	0	0	0	0	0	0	0	0
5/2/2024	2:45 PM	0	0	0	0	0	0	0	0	0	0	0	0	0
5/2/2024	3:00 PM	0	0	0	0	0	0	0	0	0	0	0	0	0
5/2/2024	3:15 PM	0	0	0	0	0	0	0	0	0	0	0	0	0
5/2/2024	3:30 PM	0	0	0	0	0	0	0	0	0	0	0	0	0
5/2/2024	3:45 PM	0	0	0	0	0	0	0	0	0	0	0	0	0
5/2/2024	4:00 PM	0	0	0	0	0	0	0	0	0	0	0	0	0
5/2/2024	4:15 PM	0	0	0	0	0	0	0	0	0	0	0	0	0
5/2/2024	4:30 PM	0	0	0	0	0	0	0	0	0	0	0	0	0
5/2/2024	4:45 PM	0	0	0	0	0	0	0	0	0	0	0	0	0
5/2/2024	5:00 PM	0	0	0	0	0	0	0	0	0	0	0	0	0
5/2/2024	5:15 PM	0	0	0	0	0	0	0	0	0	0	0	0	0
5/2/2024	5:30 PM	0	0	0	0	0	0	0	0	0	0	0	0	0
5/2/2024	5:45 PM	0	0	0	0	0	0	0	0	0	0	0	0	0
5/2/2024	6:00 PM	0	0	0	0	0	0	0	0	0	0	0	0	0
5/2/2024	6:15 PM	0	0	0	0	0	0	0	0	0	0	0	0	0
5/2/2024	6:30 PM	0	0	0	0	0	0	0	0	0	0	0	0	0
5/2/2024	6:45 PM	0	0	0	0	0	0	0	0	0	0	0	0	0
5/2/2024	7:00 PM	0	0	0	0	0	0	0	0	0	0	0	0	0
5/2/2024	7:15 PM	0	0	0	0	0	0	0	0	0	0	0	0	0
5/2/2024	7:30 PM	0	0	0	0	0	0	0	0	0	0	0	0	0
5/2/2024	7:45 PM	0	0	0	0	0	0	0	0	0	0	0	0	0
5/2/2024	8:00 PM	0	0	0	0	0	0	0	0	0	0	0	0	0
5/2/2024	8:15 PM	0	0	0	0	0	0	0	0	0	0	0	0	0
5/2/2024	8:30 PM	0	0	0	0	0	0	0	0	0	0	0	0	0
5/2/2024	8:45 PM	0	0	0	0	0	0	0	0	0	0	0	0	0
5/2/2024	9:00 PM	0	0	0	0	0	0	0	0	0	0	0	0	0
5/2/2024	9:15 PM	0	0	0	0	0	0	0	0	0	0	0	0	0
5/2/2024	9:30 PM	0	0	0	0	0	0	0	0	0	0	0	0	0
5/2/2024	9:45 PM	0	0	0	0	0	0	0	0	0	0	0	0	0
5/2/2024	10:00 PM	0	0	0	0	0	0	0	0	0	0	0	0	0
5/2/2024	10:15 PM	0	0	0	0	0	0	0	0	0	0	0	0	0
5/2/2024	10:30 PM	0	0	0	0	0	0	0	0	0	0	0	0	0
5/2/2024	10:45 PM	0	0	0	0	0	0	0	0	0	0	0	0	0
5/2/2024	11:00 PM	0	0	0	0	0	0	0	0	0	0	0	0	0
5/2/2024	11:15 PM	0	0	0	0	0	0	0	0	0	0	0	0	0
5/2/2024	11:30 PM	0	0	0	0	0	0	0	0	0	0	0	0	0
5/2/2024	11:45 PM	0	0	0	0	0	0	0	0	0	0	0	0	0

Bi-Directional Class Count || SB WB 15min

Columbia, SC

Marr Traffic DATA COLLECTION
www.marrtraffic.com

Site 69
I-20 W/Bound On-Ramp,
west of US-176 Broad River Rd

Date
Tuesday, April 23, 2024

Lat/Long
34.039361°, -81.095730°

Weather
Fair
58°F

Click here for Detailed Weather

Click here for Map

0000 - 2400 (Weekday 24h Session) (04-23-2024)
SB WB 15min

	Westbound (Movement 69.1)													15min	60min
Time	1	2	3	4	5	6	7	8	9	10	11	12	13	Total	Total
0000 - 0015	0	0	0	0	0	0	0	0	0	0	0	0	0	**0**	
0015 - 0030	0	0	0	0	0	0	0	0	0	0	0	0	0	**0**	
0030 - 0045	0	0	0	0	0	0	0	0	0	0	0	0	0	**0**	
0045 - 0100	0	0	0	0	0	0	0	0	0	0	0	0	0	**0**	**0**
0100 - 0115	0	0	0	0	0	0	0	0	0	0	0	0	0	**0**	
0115 - 0130	0	0	0	0	0	0	0	0	0	0	0	0	0	**0**	
0130 - 0145	0	0	0	0	0	0	0	0	0	0	0	0	0	**0**	
0145 - 0200	0	0	0	0	0	0	0	0	0	0	0	0	0	**0**	**0**
0200 - 0215	0	0	0	0	0	0	0	0	0	0	0	0	0	**0**	
0215 - 0230	0	0	0	0	0	0	0	0	0	0	0	0	0	**0**	
0230 - 0245	0	0	0	0	0	0	0	0	0	0	0	0	0	**0**	
0245 - 0300	0	0	0	0	0	0	0	0	0	0	0	0	0	**0**	**0**
0300 - 0315	0	0	0	0	0	0	0	0	0	0	0	0	0	**0**	
0315 - 0330	0	0	0	0	0	0	0	0	0	0	0	0	0	**0**	
0330 - 0345	0	0	0	0	0	0	0	0	0	0	0	0	0	**0**	
0345 - 0400	0	0	0	0	0	0	0	0	0	0	0	0	0	**0**	**0**
0400 - 0415	0	0	0	0	0	0	0	0	0	0	0	0	0	**0**	
0415 - 0430	0	0	0	0	0	0	0	0	0	0	0	0	0	**0**	
0430 - 0445	0	0	0	0	0	0	0	0	0	0	0	0	0	**0**	
0445 - 0500	0	0	0	0	0	0	0	0	0	0	0	0	0	**0**	**0**
0500 - 0515	0	0	0	0	0	0	0	0	0	0	0	0	0	**0**	
0515 - 0530	0	0	0	0	0	0	0	0	0	0	0	0	0	**0**	
0530 - 0545	0	0	0	0	0	0	0	0	0	0	0	0	0	**0**	
0545 - 0600	0	0	0	0	0	0	0	0	0	0	0	0	0	**0**	**0**
0600 - 0615	0	0	0	0	0	0	0	0	0	0	0	0	0	**0**	
0615 - 0630	0	0	0	0	0	0	0	0	0	0	0	0	0	**0**	
0630 - 0645	0	0	0	0	0	0	0	0	0	0	0	0	0	**0**	
0645 - 0700	0	0	0	0	0	0	0	0	0	0	0	0	0	**0**	**0**
0700 - 0715	0	0	0	0	0	0	0	0	0	0	0	0	0	**0**	
0715 - 0730	0	0	0	0	0	0	0	0	0	0	0	0	0	**0**	
0730 - 0745	0	0	0	0	0	0	0	0	0	0	0	0	0	**0**	
0745 - 0800	0	0	0	0	0	0	0	0	0	0	0	0	0	**0**	**0**
0800 - 0815	0	0	0	0	0	0	0	0	0	0	0	0	0	**0**	
0815 - 0830	0	0	0	0	0	0	0	0	0	0	0	0	0	**0**	
0830 - 0845	0	0	0	0	0	0	0	0	0	0	0	0	0	**0**	
0845 - 0900	0	0	0	0	0	0	0	0	0	0	0	0	0	**0**	**0**
0900 - 0915	0	0	0	0	0	0	0	0	0	0	0	0	0	**0**	
0915 - 0930	0	0	0	0	0	0	0	0	0	0	0	0	0	**0**	
0930 - 0945	0	0	0	0	0	0	0	0	0	0	0	0	0	**0**	
0945 - 1000	0	0	0	0	0	0	0	0	0	0	0	0	0	**0**	**0**
1000 - 1015	0	0	0	0	0	0	0	0	0	0	0	0	0	**0**	
1015 - 1030	0	0	0	0	0	0	0	0	0	0	0	0	0	**0**	
1030 - 1045	0	0	0	0	0	0	0	0	0	0	0	0	0	**0**	
1045 - 1100	0	0	0	0	0	0	0	0	0	0	0	0	0	**0**	**0**
1100 - 1115	0	0	0	0	0	0	0	0	0	0	0	0	0	**0**	
1115 - 1130	0	0	0	0	0	0	0	0	0	0	0	0	0	**0**	
1130 - 1145	0	0	0	0	0	0	0	0	0	0	0	0	0	**0**	
1145 - 1200	0	0	0	0	0	0	0	0	0	0	0	0	0	**0**	**0**
1200 - 1215	0	0	0	0	0	0	0	0	0	0	0	0	0	**0**	
1215 - 1230	0	0	0	0	0	0	0	0	0	0	0	0	0	**0**	
1230 - 1245	0	0	0	0	0	0	0	0	0	0	0	0	0	**0**	
1245 - 1300	0	0	0	0	0	0	0	0	0	0	0	0	0	**0**	**0**
1300 - 1315	0	0	0	0	0	0	0	0	0	0	0	0	0	**0**	
1315 - 1330	0	0	0	0	0	0	0	0	0	0	0	0	0	**0**	
1330 - 1345	0	0	0	0	0	0	0	0	0	0	0	0	0	**0**	
1345 - 1400	0	0	0	0	0	0	0	0	0	0	0	0	0	**0**	**0**
1400 - 1415	0	0	0	0	0	0	0	0	0	0	0	0	0	**0**	
1415 - 1430	0	0	0	0	0	0	0	0	0	0	0	0	0	**0**	
1430 - 1445	0	0	0	0	0	0	0	0	0	0	0	0	0	**0**	
1445 - 1500	0	0	0	0	0	0	0	0	0	0	0	0	0	**0**	**0**
1500 - 1515	0	0	0	0	0	0	0	0	0	0	0	0	0	**0**	
1515 - 1530	0	0	0	0	0	0	0	0	0	0	0	0	0	**0**	
1530 - 1545	0	0	0	0	0	0	0	0	0	0	0	0	0	**0**	
1545 - 1600	0	0	0	0	0	0	0	0	0	0	0	0	0	**0**	**0**
1600 - 1615	0	0	0	0	0	0	0	0	0	0	0	0	0	**0**	
1615 - 1630	0	0	0	0	0	0	0	0	0	0	0	0	0	**0**	
1630 - 1645	0	0	0	0	0	0	0	0	0	0	0	0	0	**0**	
1645 - 1700	0	0	0	0	0	0	0	0	0	0	0	0	0	**0**	**0**
1700 - 1715	0	0	0	0	0	0	0	0	0	0	0	0	0	**0**	
1715 - 1730	0	0	0	0	0	0	0	0	0	0	0	0	0	**0**	
1730 - 1745	0	0	0	0	0	0	0	0	0	0	0	0	0	**0**	
1745 - 1800	0	0	0	0	0	0	0	0	0	0	0	0	0	**0**	**0**
1800 - 1815	0	0	0	0	0	0	0	0	0	0	0	0	0	**0**	
1815 - 1830	0	0	0	0	0	0	0	0	0	0	0	0	0	**0**	
1830 - 1845	0	0	0	0	0	0	0	0	0	0	0	0	0	**0**	
1845 - 1900	0	0	0	0	0	0	0	0	0	0	0	0	0	**0**	**0**
1900 - 1915	1	56	7	0	0	0	0	0	0	0	0	0	0	**64**	
1915 - 1930	0	41	4	0	3	1	0	0	0	0	0	0	0	**49**	
1930 - 1945	0	39	3	0	0	0	0	0	0	0	0	0	0	**42**	
1945 - 2000	0	46	6	0	0	0	0	0	1	0	0	0	0	**53**	**208**
2000 - 2015	0	43	6	0	0	0	0	0	0	0	0	0	0	**49**	
2015 - 2030	0	45	4	0	1	0	0	0	0	0	0	0	0	**50**	
2030 - 2045	0	32	2	0	1	0	0	0	0	0	0	0	0	**35**	
2045 - 2100	0	27	2	0	0	0	0	0	1	0	0	0	0	**30**	**164**
2100 - 2115	0	28	2	0	0	0	0	0	0	0	0	0	0	**30**	
2115 - 2130	0	24	7	0	0	0	0	0	0	0	0	0	0	**31**	
2130 - 2145	0	30	1	0	0	0	0	0	0	0	0	0	0	**31**	
2145 - 2200	0	20	5	0	0	0	0	0	0	0	0	0	0	**25**	**117**
2200 - 2215	0	25	5	0	0	0	0	0	0	0	0	0	0	**30**	
2215 - 2230	0	21	0	0	0	0	0	0	0	0	0	0	0	**21**	
2230 - 2245	0	14	1	0	0	0	0	0	1	0	0	0	0	**16**	
2245 - 2300	0	15	1	0	1	0	0	0	0	0	0	0	0	**17**	**84**
2300 - 2315	0	20	2	0	0	0	0	0	0	0	0	0	0	**22**	
2315 - 2330	0	9	1	0	0	0	0	0	0	0	0	0	0	**10**	
2330 - 2345	0	11	2	0	0	0	0	0	0	0	0	0	0	**13**	
2345 - 0000	0	7	0	0	1	0	0	0	0	0	0	0	0	**8**	**53**

Session Total	1	553	61	0	7	1	0	0	3	0	0	0	0	**626**
Session Average	0.01	5.76	0.64	0.00	0.07	0.01	0.00	0.00	0.03	0.00	0.00	0.00	0.00	**6.52**
Session Percentage	0.16	88.34	9.74	0.00	1.12	0.16	0.00	0.00	0.48	0.00	0.00	0.00	0.00	

AM Peak Hour	-	-	-	-	-	-	-	-	-	-	-	-	-	-
AM Peak Volume	0	0	0	0	0	0	0	0	0	0	0	0	0	**0**

Noon Peak Hour	-	-	-	-	-	-	-	-	-	-	-	-	-	-
Noon Peak Volume	0	0	0	0	0	0	0	0	0	0	0	0	0	**0**

PM Peak Hour	1815 - 1915	1900 - 2000	1900 - 2000	-	1830 - 1930	1830 - 1930	-	-	1900 - 2000	-	-	-	-	**1900 - 2000**
PM Peak Volume	1	182	20	0	3	1	0	0	1	0	0	0	0	**208**

Site 69
I-20 W/Bound On-Ramp,
west of US-176 Broad River Rd

Date
Wednesday, April 24, 2024

Lat/Long
34.039361°, -81.095730°

Weather
Fair
66°F

Click here for Detailed Weather

0000 - 2400 (Weekday 24h Session) (04-24-2024)
SB WB 15min

	Westbound (Movement 69.1)													15min	60min
Time	1	2	3	4	5	6	7	8	9	10	11	12	13	Total	Total
0000 - 0015	0	11	0	0	0	1	0	0	0	1	0	0	0	**13**	
0015 - 0030	0	10	1	0	0	0	0	0	0	0	0	0	0	**11**	
0030 - 0045	0	5	1	0	0	0	0	0	1	0	0	0	0	**7**	
0045 - 0100	0	14	1	0	0	0	0	0	0	0	0	0	0	**15**	**46**
0100 - 0115	0	7	0	0	0	0	0	0	0	0	0	0	0	**7**	
0115 - 0130	0	7	2	0	0	0	0	0	1	1	0	0	0	**11**	
0130 - 0145	0	4	0	0	1	0	0	0	1	0	0	0	0	**6**	
0145 - 0200	0	5	0	0	0	0	0	0	0	0	0	0	0	**5**	**29**
0200 - 0215	0	5	1	0	0	0	0	1	0	0	0	0	0	**7**	
0215 - 0230	0	5	2	0	0	0	0	0	0	0	0	0	0	**7**	
0230 - 0245	0	4	0	0	0	0	0	0	0	0	0	0	0	**4**	
0245 - 0300	0	10	1	0	0	0	0	0	0	0	0	0	0	**11**	**29**
0300 - 0315	0	5	2	0	0	0	0	0	0	0	0	0	0	**7**	
0315 - 0330	0	0	0	0	0	0	0	0	1	0	0	0	0	**1**	
0330 - 0345	0	7	0	0	0	0	0	0	0	0	0	0	0	**7**	
0345 - 0400	0	10	2	0	1	0	0	0	0	0	0	0	0	**13**	**28**
0400 - 0415	0	10	1	0	0	0	0	0	0	0	0	0	0	**11**	
0415 - 0430	0	12	0	0	0	1	0	0	0	0	0	0	0	**13**	
0430 - 0445	0	18	2	0	0	0	0	0	1	0	0	0	0	**21**	
0445 - 0500	0	10	1	0	0	0	0	0	0	0	0	0	0	**11**	**56**
0500 - 0515	0	15	4	0	0	1	0	0	0	0	0	0	0	**20**	
0515 - 0530	0	18	3	0	0	0	0	0	0	0	0	0	0	**21**	
0530 - 0545	0	34	4	0	0	0	0	0	0	0	0	0	0	**38**	
0545 - 0600	0	36	7	0	0	0	0	0	1	0	0	0	0	**44**	**123**
0600 - 0615	0	20	3	0	0	0	0	0	1	0	0	0	0	**24**	
0615 - 0630	0	52	8	0	1	0	0	1	1	0	0	0	0	**63**	
0630 - 0645	0	56	10	0	0	0	0	0	0	0	0	0	0	**66**	
0645 - 0700	0	63	2	0	1	1	0	0	1	0	0	0	0	**68**	**221**
0700 - 0715	0	67	16	0	1	0	0	0	0	0	0	0	0	**84**	
0715 - 0730	0	51	9	0	1	0	0	0	0	0	0	0	0	**61**	
0730 - 0745	0	64	12	0	1	0	0	0	0	0	0	0	0	**77**	
0745 - 0800	0	72	7	0	1	0	0	1	0	0	0	0	0	**81**	**303**
0800 - 0815	0	73	16	0	4	3	0	0	1	0	0	0	0	**97**	
0815 - 0830	0	48	12	0	1	0	0	0	1	0	0	0	0	**62**	
0830 - 0845	0	44	18	1	2	1	0	1	4	0	0	0	0	**71**	
0845 - 0900	0	53	11	0	3	0	0	0	0	0	0	0	0	**67**	**297**
0900 - 0915	0	53	10	0	2	0	0	0	0	0	0	0	0	**65**	
0915 - 0930	0	45	8	0	3	1	0	0	0	0	0	0	0	**57**	
0930 - 0945	0	45	18	2	2	1	0	0	1	0	0	0	0	**69**	
0945 - 1000	0	37	14	0	2	1	0	0	0	0	0	0	0	**54**	**245**
1000 - 1015	0	43	14	0	2	0	0	3	0	0	0	0	0	**62**	
1015 - 1030	0	37	11	0	4	0	0	0	1	0	0	0	0	**53**	
1030 - 1045	0	49	10	0	2	0	1	0	1	0	0	0	0	**63**	
1045 - 1100	0	46	14	0	3	0	0	1	1	0	0	0	0	**65**	**243**
1100 - 1115	0	46	6	0	4	0	0	0	2	0	0	0	0	**58**	
1115 - 1130	0	36	5	0	1	0	1	0	2	0	0	0	0	**45**	
1130 - 1145	0	44	17	0	1	0	0	1	0	0	0	0	0	**63**	
1145 - 1200	0	52	11	0	0	1	0	0	1	0	0	0	0	**65**	**231**
1200 - 1215	0	56	8	3	0	1	0	0	0	0	0	0	0	**68**	
1215 - 1230	0	55	15	0	0	0	0	0	0	0	0	0	0	**70**	
1230 - 1245	0	32	9	0	1	1	0	0	0	0	0	0	0	**43**	
1245 - 1300	1	42	15	0	1	0	1	1	0	0	0	0	0	**61**	**242**
1300 - 1315	0	38	10	0	1	0	0	0	0	0	0	0	0	**49**	
1315 - 1330	0	38	14	0	0	0	0	1	1	0	0	0	0	**54**	
1330 - 1345	0	47	9	0	0	1	0	1	1	0	0	0	0	**59**	
1345 - 1400	0	42	7	0	1	0	0	0	0	0	0	0	0	**50**	**212**
1400 - 1415	0	56	10	0	3	1	0	4	0	1	0	0	0	**75**	
1415 - 1430	0	41	6	0	0	0	0	0	0	0	0	0	0	**47**	
1430 - 1445	0	36	12	0	0	2	0	0	1	0	0	0	0	**51**	
1445 - 1500	0	37	11	0	1	1	0	2	0	0	0	0	0	**52**	**225**
1500 - 1515	0	43	8	0	1	2	0	0	0	0	0	0	0	**54**	
1515 - 1530	0	34	10	0	0	0	0	0	0	0	0	0	0	**44**	
1530 - 1545	0	49	20	0	1	0	0	1	1	0	0	0	0	**72**	
1545 - 1600	1	57	15	0	0	1	0	0	0	0	0	0	0	**74**	**244**
1600 - 1615	0	46	12	0	0	0	0	0	0	0	0	0	0	**58**	
1615 - 1630	0	57	15	0	0	0	0	0	0	0	0	0	0	**72**	
1630 - 1645	0	43	16	0	0	0	0	0	0	0	0	0	0	**59**	
1645 - 1700	0	60	17	0	0	0	0	0	0	0	0	0	0	**77**	**266**
1700 - 1715	0	59	15	0	2	0	0	0	1	0	0	0	0	**77**	
1715 - 1730	0	49	11	0	0	0	0	0	0	0	0	0	0	**60**	
1730 - 1745	1	45	20	0	1	0	0	0	0	0	0	0	0	**67**	
1745 - 1800	0	46	4	0	2	0	0	0	0	0	0	0	0	**52**	**256**
1800 - 1815	1	45	9	0	1	0	0	0	0	0	0	0	0	**56**	
1815 - 1830	0	58	7	0	1	0	0	0	0	0	0	0	0	**66**	
1830 - 1845	0	46	8	0	0	0	0	0	0	0	0	0	0	**54**	
1845 - 1900	0	42	9	0	0	0	0	0	0	0	0	0	0	**51**	**227**
1900 - 1915	3	41	7	0	1	0	0	0	0	0	0	0	0	**52**	
1915 - 1930	0	32	6	0	1	0	0	0	0	0	0	0	0	**39**	
1930 - 1945	0	41	10	0	0	0	0	0	0	0	0	0	0	**51**	
1945 - 2000	0	40	7	0	0	1	0	0	0	0	0	0	0	**48**	**190**
2000 - 2015	0	34	6	0	0	0	0	0	0	0	0	0	0	**40**	
2015 - 2030	0	42	6	0	2	0	0	0	0	0	0	0	0	**50**	
2030 - 2045	0	40	7	0	1	0	0	0	0	0	0	0	0	**48**	
2045 - 2100	0	35	6	0	0	0	0	0	0	0	0	0	0	**41**	**179**
2100 - 2115	0	47	3	0	0	0	0	0	1	0	0	0	0	**51**	
2115 - 2130	0	35	2	0	0	0	0	0	0	0	0	0	0	**37**	
2130 - 2145	0	33	4	0	1	0	0	0	1	0	0	0	0	**39**	
2145 - 2200	0	20	0	0	0	0	0	0	0	0	0	0	0	**20**	**147**
2200 - 2215	0	22	2	0	0	0	0	0	0	0	0	0	0	**24**	
2215 - 2230	1	22	2	0	0	0	0	0	1	0	0	0	0	**26**	
2230 - 2245	0	23	6	0	0	0	0	0	0	0	0	0	0	**29**	
2245 - 2300	0	21	0	0	0	0	0	0	0	0	0	0	0	**21**	**100**
2300 - 2315	0	18	2	0	0	0	0	0	0	0	0	0	0	**20**	
2315 - 2330	0	16	2	0	1	0	0	0	0	0	0	0	0	**19**	
2330 - 2345	0	16	1	0	0	0	0	0	1	0	0	0	0	**18**	
2345 - 0000	0	15	1	0	0	0	0	0	1	0	0	0	0	**17**	**74**

Session Total	8	3350	699	6	68	23	3	19	34	3	0	0	0	**4213**
Session Average	0.08	34.90	7.28	0.06	0.71	0.24	0.03	0.20	0.35	0.03	0.00	0.00	0.00	**43.89**
Session Percentage	0.19	79.52	16.59	0.14	1.61	0.55	0.07	0.45	0.81	0.07	0.00	0.00	0.00	

AM Peak Hour	-	0715 - 0815	0800 - 0900	0845 - 0945	0800 - 0900	0745 - 0845	0945 - 1045	0915 - 1015	0745 - 0845	-	-	-	-	**0730 - 0830**
AM Peak Volume	0	260	57	2	10	4	1	3	6	0	0	0	0	**317**

Noon Peak Hour	1200 - 1300	1130 - 1230	1130 - 1230	1115 - 1215	1015 - 1115	1415 - 1515	1030 - 1130	1315 - 1415	1030 - 1130	1315 - 1415	-	-	-	**1130 - 1230**
Noon Peak Volume	1	207	51	3	13	5	2	6	6	1	0	0	0	**266**

PM Peak Hour	1815 - 1915	1615 - 1715	1615 - 1715	-	1700 - 1800	1500 - 1600	-	1500 - 1600	1500 - 1600	-	-	-	-	**1615 - 1715**
PM Peak Volume	3	219	63	0	5	3	0	1	1	0	0	0	0	**285**

Site 69
I-20 W/Bound On-Ramp,
west of US-176 Broad River Rd

Date
Thursday, April 25, 2024

Lat/Long
34.039361°, -81.095730°

Weather
Fair
67°F

Click here for Detailed Weather

0000 - 2400 (Weekday 24h Session) (04-25-2024)
SB WB 15min

	Westbound (Movement 69.1)													15min	60min
TIME	1	2	3	4	5	6	7	8	9	10	11	12	13	Total	Total
0000 - 0015	0	11	3	0	0	1	0	0	0	0	0	0	0	**15**	
0015 - 0030	0	8	1	0	0	0	0	0	0	0	0	0	0	**9**	
0030 - 0045	0	11	2	0	0	0	0	0	0	0	0	0	0	**13**	
0045 - 0100	0	12	1	0	0	0	0	0	0	0	0	0	0	**13**	**50**
0100 - 0115	0	8	1	0	0	0	0	0	0	0	0	0	0	**9**	
0115 - 0130	0	6	1	0	0	0	0	0	0	0	0	0	0	**7**	
0130 - 0145	0	9	3	0	0	0	0	0	0	0	0	0	0	**12**	
0145 - 0200	0	6	0	0	0	0	0	0	0	0	0	0	0	**6**	**34**
0200 - 0215	0	6	1	0	0	0	0	0	0	0	0	0	0	**7**	
0215 - 0230	0	7	1	0	0	0	0	0	0	0	0	0	0	**8**	
0230 - 0245	0	6	2	0	0	0	0	0	0	0	0	0	0	**8**	
0245 - 0300	0	3	0	0	0	0	0	0	0	0	0	0	0	**3**	**26**
0300 - 0315	0	3	0	0	0	0	0	0	0	0	0	0	0	**3**	
0315 - 0330	0	5	4	0	0	0	0	0	0	0	0	0	0	**9**	
0330 - 0345	0	5	5	0	0	0	0	0	0	0	0	0	0	**10**	
0345 - 0400	0	12	6	0	0	0	0	0	0	0	0	0	0	**18**	**40**
0400 - 0415	0	7	2	0	0	0	0	0	0	0	0	0	0	**9**	
0415 - 0430	0	7	3	0	0	0	0	0	0	0	0	0	0	**10**	
0430 - 0445	0	14	3	0	0	0	0	0	0	0	0	0	0	**17**	
0445 - 0500	0	8	2	0	3	0	0	0	0	0	0	0	0	**13**	**49**
0500 - 0515	0	11	7	0	1	0	0	0	0	0	0	0	0	**19**	
0515 - 0530	0	13	7	0	0	0	0	0	0	0	0	0	0	**20**	
0530 - 0545	0	20	3	0	0	0	0	0	0	0	0	0	0	**23**	
0545 - 0600	0	28	5	0	0	0	0	0	0	0	0	0	0	**33**	**95**
0600 - 0615	0	23	4	1	1	0	0	0	0	0	0	0	0	**29**	
0615 - 0630	0	43	5	0	0	0	0	0	0	0	0	0	0	**48**	
0630 - 0645	0	51	6	0	0	0	0	0	0	0	0	0	0	**57**	
0645 - 0700	1	63	13	0	2	1	0	0	0	0	0	0	0	**80**	**214**
0700 - 0715	0	63	7	1	0	0	0	0	0	0	0	0	0	**71**	
0715 - 0730	0	61	12	0	1	0	0	0	0	0	0	0	0	**74**	
0730 - 0745	0	56	8	0	0	0	0	0	0	0	0	0	0	**64**	
0745 - 0800	0	66	7	1	3	1	0	0	1	0	0	0	0	**79**	**288**
0800 - 0815	0	43	12	0	0	1	0	0	1	0	0	0	0	**57**	
0815 - 0830	0	61	11	0	1	0	0	0	0	0	0	0	0	**73**	
0830 - 0845	0	45	10	0	3	1	0	0	1	0	0	0	0	**60**	
0845 - 0900	1	55	16	0	0	0	0	0	0	0	0	0	0	**72**	**262**
0900 - 0915	0	34	11	0	0	0	0	0	2	0	0	0	0	**47**	
0915 - 0930	0	32	10	1	0	0	0	0	1	0	0	0	0	**44**	
0930 - 0945	0	34	8	0	0	1	0	0	1	0	0	0	0	**44**	
0945 - 1000	0	41	8	0	0	0	0	1	1	0	0	0	0	**51**	**186**
1000 - 1015	0	44	6	0	1	0	0	0	0	0	0	0	0	**51**	
1015 - 1030	0	48	6	0	0	0	0	1	0	0	0	0	0	**55**	
1030 - 1045	0	42	8	0	3	0	0	0	1	0	0	0	0	**54**	
1045 - 1100	0	41	3	0	2	1	0	0	0	0	0	0	0	**47**	**207**
1100 - 1115	0	43	11	0	4	1	0	0	1	0	0	0	0	**60**	
1115 - 1130	0	40	13	0	1	0	0	0	1	0	0	0	0	**55**	
1130 - 1145	0	48	6	0	2	0	0	0	1	0	0	0	0	**57**	
1145 - 1200	0	44	3	0	1	0	0	1	0	0	0	0	0	**49**	**221**
1200 - 1215	0	54	10	0	1	0	0	0	1	0	0	0	0	**66**	
1215 - 1230	0	44	6	0	0	0	0	0	0	0	0	0	0	**50**	
1230 - 1245	1	33	8	0	2	0	0	0	0	0	0	0	0	**44**	
1245 - 1300	0	49	6	0	1	1	0	0	0	0	0	0	0	**57**	**217**
1300 - 1315	0	61	5	0	1	0	0	0	2	0	0	0	0	**69**	
1315 - 1330	0	52	10	0	1	0	0	0	0	0	0	0	0	**63**	
1330 - 1345	0	51	6	0	1	0	0	0	0	0	0	0	0	**58**	
1345 - 1400	0	45	7	0	2	1	0	0	0	0	0	0	0	**55**	**245**
1400 - 1415	0	29	5	0	2	0	0	0	0	0	0	0	0	**36**	
1415 - 1430	0	45	5	1	0	0	0	0	0	0	0	0	0	**51**	
1430 - 1445	0	52	5	1	0	0	0	0	1	0	0	0	0	**59**	
1445 - 1500	1	57	8	0	1	0	0	0	0	0	0	0	0	**67**	**213**
1500 - 1515	0	51	3	1	0	0	0	0	0	0	0	0	0	**55**	
1515 - 1530	0	41	8	0	0	0	0	0	0	0	0	0	0	**49**	
1530 - 1545	0	44	4	0	1	0	0	0	1	0	0	0	0	**50**	
1545 - 1600	0	56	2	0	1	0	0	3	0	0	0	0	0	**62**	**216**
1600 - 1615	0	45	11	0	0	0	0	0	0	0	0	0	0	**56**	
1615 - 1630	0	58	5	0	0	0	0	0	0	0	0	0	0	**63**	
1630 - 1645	0	60	6	0	0	0	0	1	1	0	0	0	0	**68**	
1645 - 1700	0	55	4	0	1	0	0	2	2	0	0	0	0	**64**	**251**
1700 - 1715	0	50	8	0	0	0	0	0	0	0	0	0	0	**58**	
1715 - 1730	0	54	7	0	0	0	0	0	0	0	0	0	0	**61**	
1730 - 1745	0	47	6	0	1	0	0	0	0	0	0	0	0	**54**	
1745 - 1800	0	44	5	0	1	0	0	0	1	0	0	0	0	**51**	**224**
1800 - 1815	0	47	4	0	0	0	0	0	1	0	0	0	0	**52**	
1815 - 1830	0	51	2	0	0	0	0	0	0	0	0	0	0	**53**	
1830 - 1845	0	52	6	0	0	0	0	0	0	0	0	0	0	**58**	
1845 - 1900	0	42	3	0	0	0	0	0	0	0	0	0	0	**45**	**208**
1900 - 1915	0	0	0	0	0	0	0	0	0	0	0	0	0	**0**	
1915 - 1930	0	0	0	0	0	0	0	0	0	0	0	0	0	**0**	
1930 - 1945	0	0	0	0	0	0	0	0	0	0	0	0	0	**0**	
1945 - 2000	0	0	0	0	0	0	0	0	0	0	0	0	0	**0**	**0**
2000 - 2015	0	0	0	0	0	0	0	0	0	0	0	0	0	**0**	
2015 - 2030	0	0	0	0	0	0	0	0	0	0	0	0	0	**0**	
2030 - 2045	0	0	0	0	0	0	0	0	0	0	0	0	0	**0**	
2045 - 2100	0	0	0	0	0	0	0	0	0	0	0	0	0	**0**	**0**
2100 - 2115	0	0	0	0	0	0	0	0	0	0	0	0	0	**0**	
2115 - 2130	0	0	0	0	0	0	0	0	0	0	0	0	0	**0**	
2130 - 2145	0	0	0	0	0	0	0	0	0	0	0	0	0	**0**	
2145 - 2200	0	0	0	0	0	0	0	0	0	0	0	0	0	**0**	**0**
2200 - 2215	0	0	0	0	0	0	0	0	0	0	0	0	0	**0**	
2215 - 2230	0	0	0	0	0	0	0	0	0	0	0	0	0	**0**	
2230 - 2245	0	0	0	0	0	0	0	0	0	0	0	0	0	**0**	
2245 - 2300	0	0	0	0	0	0	0	0	0	0	0	0	0	**0**	**0**
2300 - 2315	0	0	0	0	0	0	0	0	0	0	0	0	0	**0**	
2315 - 2330	0	0	0	0	0	0	0	0	0	0	0	0	0	**0**	
2330 - 2345	0	0	0	0	0	0	0	0	0	0	0	0	0	**0**	
2345 - 0000	0	0	0	0	0	0	0	0	0	0	0	0	0	**0**	**0**

Session Total	4	2716	432	7	46	10	0	9	22	0	0	0	0	**3246**
Session Average	0.04	28.29	4.50	0.07	0.48	0.10	0.00	0.09	0.23	0.00	0.00	0.00	0.00	**33.81**
Session Percentage	0.12	83.67	13.31	0.22	1.42	0.31	0.00	0.28	0.68	0.00	0.00	0.00	0.00	

AM Peak Hour	0600 - 0700	0700 - 0800	0800 - 0900	0700 - 0800	0745 - 0845	0745 - 0845	-	0930 - 1030	0900 - 1000	-	-	-	-	**0645 - 0745**
AM Peak Hour Volume	1	246	49	2	7	3	0	2	5	0	0	0	0	**289**

Noon Peak Hour	1145 - 1245	1245 - 1345	1030 - 1130	1415 - 1515	1030 - 1130	1015 - 1115	-	1000 - 1100	1030 - 1130	-	-	-	-	**1245 - 1345**
Noon Peak Hour Volume	1	213	35	3	10	2	0	1	3	0	0	0	0	**247**

PM Peak Hour	-	1615 - 1715	1600 - 1700	1500 - 1600	1500 - 1600	-	-	1545 - 1645	1600 - 1700	-	-	-	-	**1615 - 1715**
PM Peak Hour Volume	0	223	26	1	2	0	0	4	3	0	0	0	0	**253**

Bi-Directional Class Count || SB WB Average 15min

Columbia, SC

Marr Traffic DATA COLLECTION
www.marrtraffic.com

Site 69
I-20 W/Bound On-Ramp,
west of US-176 Broad River Rd

Date
Tuesday, April 23, 2024

Lat/Long
34.039361°, -81.095730°

Weather
Fair
58°F

0000 - 2400 (Weekday 24h Session) (All Dates)
SB WB Average 15min

	SB WB Average 15min													15min	60min
Time	1	2	3	4	5	6	7	8	9	10	11	12	13	Total	Total
0000 - 0015	0	7	1	0	0	1	0	0	0	0	0	0	0	**9**	
0015 - 0030	0	6	1	0	0	0	0	0	0	0	0	0	0	**7**	
0030 - 0045	0	5	1	0	0	0	0	0	0	0	0	0	0	**7**	
0045 - 0100	0	9	1	0	0	0	0	0	0	0	0	0	0	**9**	**32**
0100 - 0115	0	5	0	0	0	0	0	0	0	0	0	0	0	**5**	
0115 - 0130	0	4	1	0	0	0	0	0	0	0	0	0	0	**6**	
0130 - 0145	0	4	1	0	0	0	0	0	0	0	0	0	0	**6**	
0145 - 0200	0	4	0	0	0	0	0	0	0	0	0	0	0	**4**	**21**
0200 - 0215	0	4	1	0	0	0	0	0	0	0	0	0	0	**5**	
0215 - 0230	0	4	1	0	0	0	0	0	0	0	0	0	0	**5**	
0230 - 0245	0	3	1	0	0	0	0	0	0	0	0	0	0	**4**	
0245 - 0300	0	4	0	0	0	0	0	0	0	0	0	0	0	**5**	**18**
0300 - 0315	0	3	1	0	0	0	0	0	0	0	0	0	0	**3**	
0315 - 0330	0	2	1	0	0	0	0	0	0	0	0	0	0	**3**	
0330 - 0345	0	4	2	0	0	0	0	0	0	0	0	0	0	**6**	
0345 - 0400	0	7	3	0	0	0	0	0	0	0	0	0	0	**10**	**23**
0400 - 0415	0	6	1	0	0	0	0	0	0	0	0	0	0	**7**	
0415 - 0430	0	6	1	0	0	0	0	0	0	0	0	0	0	**8**	
0430 - 0445	0	11	2	0	0	0	0	0	0	0	0	0	0	**13**	
0445 - 0500	0	6	1	0	1	0	0	0	0	0	0	0	0	**8**	**35**
0500 - 0515	0	9	4	0	0	0	0	0	0	0	0	0	0	**13**	
0515 - 0530	0	10	3	0	0	0	0	0	0	0	0	0	0	**14**	
0530 - 0545	0	18	2	0	0	0	0	0	0	0	0	0	0	**20**	
0545 - 0600	0	21	4	0	0	0	0	0	0	0	0	0	0	**26**	**73**
0600 - 0615	0	14	2	0	0	0	0	0	0	0	0	0	0	**18**	
0615 - 0630	0	32	4	0	0	0	0	0	0	0	0	0	0	**37**	
0630 - 0645	0	36	5	0	0	0	0	0	0	0	0	0	0	**41**	
0645 - 0700	0	42	5	0	1	1	0	0	0	0	0	0	0	**49**	**145**
0700 - 0715	0	43	8	0	0	0	0	0	0	0	0	0	0	**52**	
0715 - 0730	0	37	7	0	1	0	0	0	0	0	0	0	0	**45**	
0730 - 0745	0	40	7	0	0	0	0	0	0	0	0	0	0	**47**	
0745 - 0800	0	46	5	0	1	0	0	0	0	0	0	0	0	**53**	**197**
0800 - 0815	0	39	9	0	1	1	0	0	1	0	0	0	0	**51**	
0815 - 0830	0	36	8	0	1	0	0	0	0	0	0	0	0	**45**	
0830 - 0845	0	30	9	0	2	1	0	0	2	0	0	0	0	**44**	
0845 - 0900	0	36	9	0	1	0	0	0	0	0	0	0	0	**46**	**186**
0900 - 0915	0	29	7	0	1	0	0	0	1	0	0	0	0	**37**	
0915 - 0930	0	26	6	0	1	0	0	0	0	0	0	0	0	**34**	
0930 - 0945	0	26	9	1	1	1	0	0	1	0	0	0	0	**38**	
0945 - 1000	0	26	7	0	1	0	0	0	0	0	0	0	0	**35**	**144**
1000 - 1015	0	29	7	0	1	0	0	1	0	0	0	0	0	**38**	
1015 - 1030	0	28	6	0	1	0	0	0	0	0	0	0	0	**36**	
1030 - 1045	0	30	6	0	2	0	0	0	1	0	0	0	0	**39**	
1045 - 1100	0	29	6	0	2	0	0	0	0	0	0	0	0	**37**	**150**
1100 - 1115	0	30	6	0	3	0	0	0	1	0	0	0	0	**39**	
1115 - 1130	0	25	6	0	1	0	0	0	1	0	0	0	0	**33**	
1130 - 1145	0	31	8	0	1	0	0	0	0	0	0	0	0	**40**	
1145 - 1200	0	32	5	0	0	0	0	0	0	0	0	0	0	**38**	**151**
1200 - 1215	0	37	6	1	0	0	0	0	0	0	0	0	0	**45**	
1215 - 1230	0	33	7	0	0	0	0	0	0	0	0	0	0	**40**	
1230 - 1245	0	22	6	0	1	0	0	0	0	0	0	0	0	**29**	
1245 - 1300	0	30	7	0	1	0	0	0	0	0	0	0	0	**39**	**153**
1300 - 1315	0	33	5	0	1	0	0	0	1	0	0	0	0	**39**	
1315 - 1330	0	30	8	0	0	0	0	0	0	0	0	0	0	**39**	
1330 - 1345	0	33	5	0	0	0	0	0	0	0	0	0	0	**39**	
1345 - 1400	0	29	5	0	1	0	0	0	0	0	0	0	0	**35**	**152**
1400 - 1415	0	28	5	0	2	0	0	1	0	0	0	0	0	**37**	
1415 - 1430	0	29	4	0	0	0	0	0	0	0	0	0	0	**33**	
1430 - 1445	0	29	6	0	0	1	0	0	1	0	0	0	0	**37**	
1445 - 1500	0	31	6	0	1	0	0	1	0	0	0	0	0	**40**	**146**
1500 - 1515	0	31	4	0	0	1	0	0	0	0	0	0	0	**36**	
1515 - 1530	0	25	6	0	0	0	0	0	0	0	0	0	0	**31**	
1530 - 1545	0	31	8	0	1	0	0	0	1	0	0	0	0	**41**	
1545 - 1600	0	38	6	0	0	0	0	1	0	0	0	0	0	**45**	**153**
1600 - 1615	0	30	8	0	0	0	0	0	0	0	0	0	0	**38**	
1615 - 1630	0	38	7	0	0	0	0	0	0	0	0	0	0	**45**	
1630 - 1645	0	34	7	0	0	0	0	0	0	0	0	0	0	**42**	
1645 - 1700	0	38	7	0	0	0	0	1	1	0	0	0	0	**47**	**172**
1700 - 1715	0	36	8	0	1	0	0	0	0	0	0	0	0	**45**	
1715 - 1730	0	34	6	0	0	0	0	0	0	0	0	0	0	**40**	
1730 - 1745	0	31	9	0	1	0	0	0	0	0	0	0	0	**40**	
1745 - 1800	0	30	3	0	1	0	0	0	0	0	0	0	0	**34**	**160**
1800 - 1815	0	31	4	0	0	0	0	0	0	0	0	0	0	**36**	
1815 - 1830	0	36	3	0	0	0	0	0	0	0	0	0	0	**40**	
1830 - 1845	0	33	5	0	0	0	0	0	0	0	0	0	0	**37**	
1845 - 1900	0	28	4	0	0	0	0	0	0	0	0	0	0	**32**	**145**
1900 - 1915	1	32	5	0	0	0	0	0	0	0	0	0	0	**39**	
1915 - 1930	0	24	3	0	1	0	0	0	0	0	0	0	0	**29**	
1930 - 1945	0	27	4	0	0	0	0	0	0	0	0	0	0	**31**	
1945 - 2000	0	29	4	0	0	0	0	0	0	0	0	0	0	**34**	**133**
2000 - 2015	0	26	4	0	0	0	0	0	0	0	0	0	0	**30**	
2015 - 2030	0	29	3	0	1	0	0	0	0	0	0	0	0	**33**	
2030 - 2045	0	24	3	0	1	0	0	0	0	0	0	0	0	**28**	
2045 - 2100	0	21	3	0	0	0	0	0	0	0	0	0	0	**24**	**114**
2100 - 2115	0	25	2	0	0	0	0	0	0	0	0	0	0	**27**	
2115 - 2130	0	20	3	0	0	0	0	0	0	0	0	0	0	**23**	
2130 - 2145	0	21	2	0	0	0	0	0	0	0	0	0	0	**23**	
2145 - 2200	0	13	2	0	0	0	0	0	0	0	0	0	0	**15**	**88**
2200 - 2215	0	16	2	0	0	0	0	0	0	0	0	0	0	**18**	
2215 - 2230	0	14	1	0	0	0	0	0	0	0	0	0	0	**16**	
2230 - 2245	0	12	2	0	0	0	0	0	0	0	0	0	0	**15**	
2245 - 2300	0	12	0	0	0	0	0	0	0	0	0	0	0	**13**	**61**
2300 - 2315	0	13	1	0	0	0	0	0	0	0	0	0	0	**14**	
2315 - 2330	0	8	1	0	0	0	0	0	0	0	0	0	0	**10**	
2330 - 2345	0	9	1	0	0	0	0	0	0	0	0	0	0	**10**	
2345 - 0000	0	7	0	0	0	0	0	0	0	0	0	0	0	**8**	**42**

Session Total	4	2206	397	4	40	11	1	9	20	1	0	0	0	**2695**
Session Average	0.05	22.98	4.14	0.05	0.42	0.12	0.01	0.10	0.20	0.01	0.00	0.00	0.00	**28.07**
Session Percentage	0.16	81.87	14.74	0.16	1.50	0.42	0.04	0.35	0.73	0.04	0.00	0.00	0.00	

AM Peak Hour	0600 - 0700	0700 - 0800	0800 - 0900	0845 - 0945	0745 - 0845	0745 - 0845	0945 - 1045	0930 - 1030	0745 - 0845	-	-	-	-	**0700 - 0800**
AM Peak Volume	0	167	35	1	5	2	0	2	3	0	0	0	0	**197**

Noon Peak Hour	1200 - 1300	1130 - 1230	1200 - 1300	1115 - 1215	1015 - 1115	1415 - 1515	1030 - 1130	1315 - 1415	1030 - 1130	1315 - 1415	-	-	-	**1130 - 1230**
Noon Peak Volume	1	132	26	1	7	2	1	2	3	0	0	0	0	**163**

PM Peak Hour	1815 - 1915	1615 - 1715	1645 - 1745	1500 - 1600	1700 - 1800	1500 - 1600	-	1500 - 1600	1615 - 1715	-	-	-	-	**1615 - 1715**
PM Peak Volume	1	147	29	0	2	1	0	1	1	0	0	0	0	**179**

Bi-Directional Class Count || Volume Summary 15min

Columbia, SC

Marr Traffic DATA COLLECTION

www.marrtraffic.com

Site 69

I-20 W/Bound On-Ramp,
west of US-176 Broad River Rd

Date

Tuesday, April 23, 2024

Lat/Long

34.039361°, -81.095730°

Weather

Fair
58°F

Click here for Detailed Weather

0000 - 2400 (Weekday 24h Session) (04-23-2024)

Volume Summary 15min

	Volume Summary 15min		15min	60min
TIME	EB	WB	Total	Total
0000 - 0015	0	0	**0**	
0015 - 0030	0	0	**0**	
0030 - 0045	0	0	**0**	
0045 - 0100	0	0	**0**	**0**
0100 - 0115	0	0	**0**	
0115 - 0130	0	0	**0**	
0130 - 0145	0	0	**0**	
0145 - 0200	0	0	**0**	**0**
0200 - 0215	0	0	**0**	
0215 - 0230	0	0	**0**	
0230 - 0245	0	0	**0**	
0245 - 0300	0	0	**0**	**0**
0300 - 0315	0	0	**0**	
0315 - 0330	0	0	**0**	
0330 - 0345	0	0	**0**	
0345 - 0400	0	0	**0**	**0**
0400 - 0415	0	0	**0**	
0415 - 0430	0	0	**0**	
0430 - 0445	0	0	**0**	
0445 - 0500	0	0	**0**	**0**
0500 - 0515	0	0	**0**	
0515 - 0530	0	0	**0**	
0530 - 0545	0	0	**0**	
0545 - 0600	0	0	**0**	**0**
0600 - 0615	0	0	**0**	
0615 - 0630	0	0	**0**	
0630 - 0645	0	0	**0**	
0645 - 0700	0	0	**0**	**0**
0700 - 0715	0	0	**0**	
0715 - 0730	0	0	**0**	
0730 - 0745	0	0	**0**	
0745 - 0800	0	0	**0**	**0**
0800 - 0815	0	0	**0**	
0815 - 0830	0	0	**0**	
0830 - 0845	0	0	**0**	
0845 - 0900	0	0	**0**	**0**
0900 - 0915	0	0	**0**	
0915 - 0930	0	0	**0**	
0930 - 0945	0	0	**0**	
0945 - 1000	0	0	**0**	**0**
1000 - 1015	0	0	**0**	
1015 - 1030	0	0	**0**	
1030 - 1045	0	0	**0**	
1045 - 1100	0	0	**0**	**0**
1100 - 1115	0	0	**0**	
1115 - 1130	0	0	**0**	
1130 - 1145	0	0	**0**	
1145 - 1200	0	0	**0**	**0**

	Volume Summary 15min		15min	60min
Time	EB	WB	Total	Total
1200 - 1215	0	0	**0**	
1215 - 1230	0	0	**0**	
1230 - 1245	0	0	**0**	
1245 - 1300	0	0	**0**	**0**
1300 - 1315	0	0	**0**	
1315 - 1330	0	0	**0**	
1330 - 1345	0	0	**0**	
1345 - 1400	0	0	**0**	**0**
1400 - 1415	0	0	**0**	
1415 - 1430	0	0	**0**	
1430 - 1445	0	0	**0**	
1445 - 1500	0	0	**0**	**0**
1500 - 1515	0	0	**0**	
1515 - 1530	0	0	**0**	
1530 - 1545	0	0	**0**	
1545 - 1600	0	0	**0**	**0**
1600 - 1615	0	0	**0**	
1615 - 1630	0	0	**0**	
1630 - 1645	0	0	**0**	
1645 - 1700	0	0	**0**	**0**
1700 - 1715	0	0	**0**	
1715 - 1730	0	0	**0**	
1730 - 1745	0	0	**0**	
1745 - 1800	0	0	**0**	**0**
1800 - 1815	0	0	**0**	
1815 - 1830	0	0	**0**	
1830 - 1845	0	0	**0**	
1845 - 1900	0	0	**0**	**0**
1900 - 1915	0	64	**64**	
1915 - 1930	0	49	**49**	
1930 - 1945	0	42	**42**	
1945 - 2000	0	53	**53**	**208**
2000 - 2015	0	49	**49**	
2015 - 2030	0	50	**50**	
2030 - 2045	0	35	**35**	
2045 - 2100	0	30	**30**	**164**
2100 - 2115	0	30	**30**	
2115 - 2130	0	31	**31**	
2130 - 2145	0	31	**31**	
2145 - 2200	0	25	**25**	**117**
2200 - 2215	0	30	**30**	
2215 - 2230	0	21	**21**	
2230 - 2245	0	16	**16**	
2245 - 2300	0	17	**17**	**84**
2300 - 2315	0	22	**22**	
2315 - 2330	0	10	**10**	
2330 - 2345	0	13	**13**	
2345 - 0000	0	8	**8**	**53**

Session Total	0	626	**626**
Session Average	0.00	6.52	**6.52**
Session Percentage	0.00	100.00	

Site 69

I-20 W/Bound On-Ramp,
west of US-176 Broad River Rd

Date

Wednesday, April 24, 2024

Lat/Long

34.039361°, -81.095730°

Weather

Fair
66°F

Click here for Detailed Weather

0000 - 2400 (Weekday 24h Session) (04-24-2024)

Volume Summary 15min

	Volume Summary 15min		15min	60min
TIME	EB	WB	Total	Total
0000 - 0015	0	13	**13**	
0015 - 0030	0	11	**11**	
0030 - 0045	0	7	**7**	
0045 - 0100	0	15	**15**	**46**
0100 - 0115	0	7	**7**	
0115 - 0130	0	11	**11**	
0130 - 0145	0	6	**6**	
0145 - 0200	0	5	**5**	**29**
0200 - 0215	0	7	**7**	
0215 - 0230	0	7	**7**	
0230 - 0245	0	4	**4**	
0245 - 0300	0	11	**11**	**29**
0300 - 0315	0	7	**7**	
0315 - 0330	0	1	**1**	
0330 - 0345	0	7	**7**	
0345 - 0400	0	13	**13**	**28**
0400 - 0415	0	11	**11**	
0415 - 0430	0	13	**13**	
0430 - 0445	0	21	**21**	
0445 - 0500	0	11	**11**	**56**
0500 - 0515	0	20	**20**	
0515 - 0530	0	21	**21**	
0530 - 0545	0	38	**38**	
0545 - 0600	0	44	**44**	**123**
0600 - 0615	0	24	**24**	
0615 - 0630	0	63	**63**	
0630 - 0645	0	66	**66**	
0645 - 0700	0	68	**68**	**221**
0700 - 0715	0	84	**84**	
0715 - 0730	0	61	**61**	
0730 - 0745	0	77	**77**	
0745 - 0800	0	81	**81**	**303**
0800 - 0815	0	97	**97**	
0815 - 0830	0	62	**62**	
0830 - 0845	0	71	**71**	
0845 - 0900	0	67	**67**	**297**
0900 - 0915	0	65	**65**	
0915 - 0930	0	57	**57**	
0930 - 0945	0	69	**69**	
0945 - 1000	0	54	**54**	**245**
1000 - 1015	0	62	**62**	
1015 - 1030	0	53	**53**	
1030 - 1045	0	63	**63**	
1045 - 1100	0	65	**65**	**243**
1100 - 1115	0	58	**58**	
1115 - 1130	0	45	**45**	
1130 - 1145	0	63	**63**	
1145 - 1200	0	65	**65**	**231**

	Volume Summary 15min		15min	60min
Time	EB	WB	Total	Total
1200 - 1215	0	68	**68**	
1215 - 1230	0	70	**70**	
1230 - 1245	0	43	**43**	
1245 - 1300	0	61	**61**	**242**
1300 - 1315	0	49	**49**	
1315 - 1330	0	54	**54**	
1330 - 1345	0	59	**59**	
1345 - 1400	0	50	**50**	**212**
1400 - 1415	0	75	**75**	
1415 - 1430	0	47	**47**	
1430 - 1445	0	51	**51**	
1445 - 1500	0	52	**52**	**225**
1500 - 1515	0	54	**54**	
1515 - 1530	0	44	**44**	
1530 - 1545	0	72	**72**	
1545 - 1600	0	74	**74**	**244**
1600 - 1615	0	58	**58**	
1615 - 1630	0	72	**72**	
1630 - 1645	0	59	**59**	
1645 - 1700	0	77	**77**	**266**
1700 - 1715	0	77	**77**	
1715 - 1730	0	60	**60**	
1730 - 1745	0	67	**67**	
1745 - 1800	0	52	**52**	**256**
1800 - 1815	0	56	**56**	
1815 - 1830	0	66	**66**	
1830 - 1845	0	54	**54**	
1845 - 1900	0	51	**51**	**227**
1900 - 1915	0	52	**52**	
1915 - 1930	0	39	**39**	
1930 - 1945	0	51	**51**	
1945 - 2000	0	48	**48**	**190**
2000 - 2015	0	40	**40**	
2015 - 2030	0	50	**50**	
2030 - 2045	0	48	**48**	
2045 - 2100	0	41	**41**	**179**
2100 - 2115	0	51	**51**	
2115 - 2130	0	37	**37**	
2130 - 2145	0	39	**39**	
2145 - 2200	0	20	**20**	**147**
2200 - 2215	0	24	**24**	
2215 - 2230	0	26	**26**	
2230 - 2245	0	29	**29**	
2245 - 2300	0	21	**21**	**100**
2300 - 2315	0	20	**20**	
2315 - 2330	0	19	**19**	
2330 - 2345	0	18	**18**	
2345 - 0000	0	17	**17**	**74**

Session Total	0	4213	**4213**
Session Average	0.00	43.89	**43.89**
Session Percentage	0.00	100.00	

Site 69
I-20 W/Bound On-Ramp,
west of US-176 Broad River Rd

Date
Thursday, April 25, 2024

Lat/Long
34.039361°, -81.095730°

Weather
Fair
67°F

Click here for Detailed Weather

0000 - 2400 (Weekday 24h Session) (04-25-2024)

Volume Summary 15min

TIME	Volume Summary 15min EB	Volume Summary 15min WB	15min Total	60min Total
0000 - 0015	0	15	**15**	
0015 - 0030	0	9	**9**	
0030 - 0045	0	13	**13**	
0045 - 0100	0	13	**13**	**50**
0100 - 0115	0	9	**9**	
0115 - 0130	0	7	**7**	
0130 - 0145	0	12	**12**	
0145 - 0200	0	6	**6**	**34**
0200 - 0215	0	7	**7**	
0215 - 0230	0	8	**8**	
0230 - 0245	0	8	**8**	
0245 - 0300	0	3	**3**	**26**
0300 - 0315	0	3	**3**	
0315 - 0330	0	9	**9**	
0330 - 0345	0	10	**10**	
0345 - 0400	0	18	**18**	**40**
0400 - 0415	0	9	**9**	
0415 - 0430	0	10	**10**	
0430 - 0445	0	17	**17**	
0445 - 0500	0	13	**13**	**49**
0500 - 0515	0	19	**19**	
0515 - 0530	0	20	**20**	
0530 - 0545	0	23	**23**	
0545 - 0600	0	33	**33**	**95**
0600 - 0615	0	29	**29**	
0615 - 0630	0	48	**48**	
0630 - 0645	0	57	**57**	
0645 - 0700	0	80	**80**	**214**
0700 - 0715	0	71	**71**	
0715 - 0730	0	74	**74**	
0730 - 0745	0	64	**64**	
0745 - 0800	0	79	**79**	**288**
0800 - 0815	0	57	**57**	
0815 - 0830	0	73	**73**	
0830 - 0845	0	60	**60**	
0845 - 0900	0	72	**72**	**262**
0900 - 0915	0	47	**47**	
0915 - 0930	0	44	**44**	
0930 - 0945	0	44	**44**	
0945 - 1000	0	51	**51**	**186**
1000 - 1015	0	51	**51**	
1015 - 1030	0	55	**55**	
1030 - 1045	0	54	**54**	
1045 - 1100	0	47	**47**	**207**
1100 - 1115	0	60	**60**	
1115 - 1130	0	55	**55**	
1130 - 1145	0	57	**57**	
1145 - 1200	0	49	**49**	**221**

Time	Volume Summary 15min EB	Volume Summary 15min WB	15min Total	60min Total
1200 - 1215	0	66	**66**	
1215 - 1230	0	50	**50**	
1230 - 1245	0	44	**44**	
1245 - 1300	0	57	**57**	**217**
1300 - 1315	0	69	**69**	
1315 - 1330	0	63	**63**	
1330 - 1345	0	58	**58**	
1345 - 1400	0	55	**55**	**245**
1400 - 1415	0	36	**36**	
1415 - 1430	0	51	**51**	
1430 - 1445	0	59	**59**	
1445 - 1500	0	67	**67**	**213**
1500 - 1515	0	55	**55**	
1515 - 1530	0	49	**49**	
1530 - 1545	0	50	**50**	
1545 - 1600	0	62	**62**	**216**
1600 - 1615	0	56	**56**	
1615 - 1630	0	63	**63**	
1630 - 1645	0	68	**68**	
1645 - 1700	0	64	**64**	**251**
1700 - 1715	0	58	**58**	
1715 - 1730	0	61	**61**	
1730 - 1745	0	54	**54**	
1745 - 1800	0	51	**51**	**224**
1800 - 1815	0	52	**52**	
1815 - 1830	0	53	**53**	
1830 - 1845	0	58	**58**	
1845 - 1900	0	45	**45**	**208**
1900 - 1915	0	0	**0**	
1915 - 1930	0	0	**0**	
1930 - 1945	0	0	**0**	
1945 - 2000	0	0	**0**	**0**
2000 - 2015	0	0	**0**	
2015 - 2030	0	0	**0**	
2030 - 2045	0	0	**0**	
2045 - 2100	0	0	**0**	**0**
2100 - 2115	0	0	**0**	
2115 - 2130	0	0	**0**	
2130 - 2145	0	0	**0**	
2145 - 2200	0	0	**0**	**0**
2200 - 2215	0	0	**0**	
2215 - 2230	0	0	**0**	
2230 - 2245	0	0	**0**	
2245 - 2300	0	0	**0**	**0**
2300 - 2315	0	0	**0**	
2315 - 2330	0	0	**0**	
2330 - 2345	0	0	**0**	
2345 - 0000	0	0	**0**	**0**

Session Total	0	3246	**3246**
Session Average	0.00	33.81	**33.81**
Session Percentage	0.00	100.00	

Bi-Directional Class Count || SB WB 60min

Columbia, SC

Marr Traffic DATA COLLECTION

www.marrtraffic.com

Site 69
I-20 W/Bound On-Ramp,
west of US-176 Broad River Rd

Date
Tuesday, April 23, 2024

Lat/Long
34.039361°, -81.095730°

Weather
Fair
58°F

Click here for Detailed Weather

0000 - 2400 (Weekday 24h Session) (04-23-2024)
SB WB 60min

	Westbound (Movement 69.1)													
TIME	1	2	3	4	5	6	7	8	9	10	11	12	13	**Total**
0000 - 0100	0	0	0	0	0	0	0	0	0	0	0	0	0	**0**
0100 - 0200	0	0	0	0	0	0	0	0	0	0	0	0	0	**0**
0200 - 0300	0	0	0	0	0	0	0	0	0	0	0	0	0	**0**
0300 - 0400	0	0	0	0	0	0	0	0	0	0	0	0	0	**0**
0400 - 0500	0	0	0	0	0	0	0	0	0	0	0	0	0	**0**
0500 - 0600	0	0	0	0	0	0	0	0	0	0	0	0	0	**0**
0600 - 0700	0	0	0	0	0	0	0	0	0	0	0	0	0	**0**
0700 - 0800	0	0	0	0	0	0	0	0	0	0	0	0	0	**0**
0800 - 0900	0	0	0	0	0	0	0	0	0	0	0	0	0	**0**
0900 - 1000	0	0	0	0	0	0	0	0	0	0	0	0	0	**0**
1000 - 1100	0	0	0	0	0	0	0	0	0	0	0	0	0	**0**
1100 - 1200	0	0	0	0	0	0	0	0	0	0	0	0	0	**0**
1200 - 1300	0	0	0	0	0	0	0	0	0	0	0	0	0	**0**
1300 - 1400	0	0	0	0	0	0	0	0	0	0	0	0	0	**0**
1400 - 1500	0	0	0	0	0	0	0	0	0	0	0	0	0	**0**
1500 - 1600	0	0	0	0	0	0	0	0	0	0	0	0	0	**0**
1600 - 1700	0	0	0	0	0	0	0	0	0	0	0	0	0	**0**
1700 - 1800	0	0	0	0	0	0	0	0	0	0	0	0	0	**0**
1800 - 1900	0	0	0	0	0	0	0	0	0	0	0	0	0	**0**
1900 - 2000	1	182	20	0	3	1	0	0	1	0	0	0	0	**208**
2000 - 2100	0	147	14	0	2	0	0	0	1	0	0	0	0	**164**
2100 - 2200	0	102	15	0	0	0	0	0	0	0	0	0	0	**117**
2200 - 2300	0	75	7	0	1	0	0	0	1	0	0	0	0	**84**
2300 - 2400	0	47	5	0	1	0	0	0	0	0	0	0	0	**53**
Session Total	1	553	61	0	7	1	0	0	3	0	0	0	0	**626**
Session Average	0.04	23.04	2.54	0.00	0.29	0.04	0.00	0.00	0.13	0.00	0.00	0.00	0.00	**26.08**
Session Percentage	0.16	88.34	9.74	0.00	1.12	0.16	0.00	0.00	0.48	0.00	0.00	0.00	0.00	
AM Peak Hour	-	-	-	-	-	-	-	-	-	-	-	-	-	**-**
AM Peak Volume	0	0	0	0	0	0	0	0	0	0	0	0	0	**0**
Noon Peak Hour	-	-	-	-	-	-	-	-	-	-	-	-	-	**-**
Noon Peak Volume	0	0	0	0	0	0	0	0	0	0	0	0	0	**0**
PM Peak Hour	1900 - 2000	1900 - 2000	1900 - 2000	-	1900 - 2000	1900 - 2000	-	-	1900 - 2000	-	-	-	-	**1900 - 2000**
PM Peak Volume	1	182	20	0	3	1	0	0	1	0	0	0	0	**208**

Site 69
I-20 W/Bound On-Ramp,
west of US-176 Broad River Rd

Date
Wednesday, April 24, 2024

Lat/Long
34.039361°, -81.095730°

Weather
Fair
66°F

Click here for Detailed Weather

0000 - 2400 (Weekday 24h Session) (04-24-2024)
SB WB 60min

	Westbound (Movement 69.1)													
TIME	1	2	3	4	5	6	7	8	9	10	11	12	13	**Total**
0000 - 0100	0	40	3	0	0	1	0	0	1	1	0	0	0	**46**
0100 - 0200	0	23	2	0	1	0	0	0	2	1	0	0	0	**29**
0200 - 0300	0	24	4	0	0	0	0	1	0	0	0	0	0	**29**
0300 - 0400	0	22	4	0	1	0	0	0	1	0	0	0	0	**28**
0400 - 0500	0	50	4	0	0	1	0	0	1	0	0	0	0	**56**
0500 - 0600	0	103	18	0	0	1	0	0	1	0	0	0	0	**123**
0600 - 0700	0	191	23	0	2	1	0	1	3	0	0	0	0	**221**
0700 - 0800	0	254	44	0	4	0	0	1	0	0	0	0	0	**303**
0800 - 0900	0	218	57	1	10	4	0	1	6	0	0	0	0	**297**
0900 - 1000	0	180	50	2	9	3	0	0	1	0	0	0	0	**245**
1000 - 1100	0	175	49	0	11	0	1	4	3	0	0	0	0	**243**
1100 - 1200	0	178	39	0	6	1	1	1	5	0	0	0	0	**231**
1200 - 1300	1	185	47	3	2	2	1	1	0	0	0	0	0	**242**
1300 - 1400	0	165	40	0	2	1	0	2	2	0	0	0	0	**212**
1400 - 1500	0	170	39	0	4	4	0	6	1	1	0	0	0	**225**
1500 - 1600	1	183	53	0	2	3	0	1	1	0	0	0	0	**244**
1600 - 1700	0	206	60	0	0	0	0	0	0	0	0	0	0	**266**
1700 - 1800	1	199	50	0	5	0	0	0	1	0	0	0	0	**256**
1800 - 1900	1	191	33	0	2	0	0	0	0	0	0	0	0	**227**
1900 - 2000	3	154	30	0	2	1	0	0	0	0	0	0	0	**190**
2000 - 2100	0	151	25	0	3	0	0	0	0	0	0	0	0	**179**
2100 - 2200	0	135	9	0	1	0	0	0	2	0	0	0	0	**147**
2200 - 2300	1	88	10	0	0	0	0	0	1	0	0	0	0	**100**
2300 - 2400	0	65	6	0	1	0	0	0	2	0	0	0	0	**74**

Session Total	8	3350	699	6	68	23	3	19	34	3	0	0	0	**4213**
Session Average	0.33	139.58	29.13	0.25	2.83	0.96	0.13	0.79	1.42	0.13	0.00	0.00	0.00	**175.54**
Session Percentage	0.19	79.52	16.59	0.14	1.61	0.55	0.07	0.45	0.81	0.07	0.00	0.00	0.00	

AM Peak Hour	-	0700 - 0800	0800 - 0900	0900 - 1000	0800 - 0900	0800 - 0900	-	0600 - 0700	0800 - 0900	-	-	-	-	**0700 - 0800**
AM Peak Volume	0	254	57	2	10	4	0	1	6	0	0	0	0	**303**

Noon Peak Hour	1200 - 1300	1200 - 1300	1000 - 1100	1200 - 1300	1000 - 1100	1400 - 1500	1000 - 1100	1400 - 1500	1100 - 1200	1400 - 1500	-	-	-	**1000 - 1100**
Noon Peak Volume	1	185	49	3	11	4	1	6	5	1	0	0	0	**243**

PM Peak Hour	1900 - 2000	1600 - 1700	1600 - 1700	-	1700 - 1800	1500 - 1600	-	1500 - 1600	1500 - 1600	-	-	-	-	**1600 - 1700**
PM Peak Volume	3	206	60	0	5	3	0	1	1	0	0	0	0	**266**

Site 69
I-20 W/Bound On-Ramp,
west of US-176 Broad River Rd

Date
Thursday, April 25, 2024

Lat/Long
34.039361°, -81.095730°

Weather
Fair
67°F

Click here for Detailed Weather

0000 - 2400 (Weekday 24h Session) (04-25-2024)
SB WB 60min

	Westbound (Movement 69.1)													
TIME	1	2	3	4	5	6	7	8	9	10	11	12	13	**Total**
0000 - 0100	0	42	7	0	0	1	0	0	0	0	0	0	0	**50**
0100 - 0200	0	29	5	0	0	0	0	0	0	0	0	0	0	**34**
0200 - 0300	0	22	4	0	0	0	0	0	0	0	0	0	0	**26**
0300 - 0400	0	25	15	0	0	0	0	0	0	0	0	0	0	**40**
0400 - 0500	0	36	10	0	3	0	0	0	0	0	0	0	0	**49**
0500 - 0600	0	72	22	0	1	0	0	0	0	0	0	0	0	**95**
0600 - 0700	1	180	28	1	3	1	0	0	0	0	0	0	0	**214**
0700 - 0800	0	246	34	2	4	1	0	0	1	0	0	0	0	**288**
0800 - 0900	1	204	49	0	4	2	0	0	2	0	0	0	0	**262**
0900 - 1000	0	141	37	1	0	1	0	1	5	0	0	0	0	**186**
1000 - 1100	0	175	23	0	6	1	0	1	1	0	0	0	0	**207**
1100 - 1200	0	175	33	0	8	1	0	1	3	0	0	0	0	**221**
1200 - 1300	1	180	30	0	4	1	0	0	1	0	0	0	0	**217**
1300 - 1400	0	209	28	0	5	1	0	0	2	0	0	0	0	**245**
1400 - 1500	1	183	23	2	3	0	0	0	1	0	0	0	0	**213**
1500 - 1600	0	192	17	1	2	0	0	3	1	0	0	0	0	**216**
1600 - 1700	0	218	26	0	1	0	0	3	3	0	0	0	0	**251**
1700 - 1800	0	195	26	0	2	0	0	0	1	0	0	0	0	**224**
1800 - 1900	0	192	15	0	0	0	0	0	1	0	0	0	0	**208**
1900 - 2000	0	0	0	0	0	0	0	0	0	0	0	0	0	**0**
2000 - 2100	0	0	0	0	0	0	0	0	0	0	0	0	0	**0**
2100 - 2200	0	0	0	0	0	0	0	0	0	0	0	0	0	**0**
2200 - 2300	0	0	0	0	0	0	0	0	0	0	0	0	0	**0**
2300 - 2400	0	0	0	0	0	0	0	0	0	0	0	0	0	**0**

Session Total	4	2716	432	7	46	10	0	9	22	0	0	0	0	**3246**
Session Average	0.17	113.17	18.00	0.29	1.92	0.42	0.00	0.38	0.92	0.00	0.00	0.00	0.00	**135.25**
Session Percentage	0.12	83.67	13.31	0.22	1.42	0.31	0.00	0.28	0.68	0.00	0.00	0.00	0.00	

AM Peak Hour	0600 - 0700	0700 - 0800	0800 - 0900	0700 - 0800	0700 - 0800	0800 - 0900	-	0900 - 1000	0900 - 1000	-	-	-	-	**0700 - 0800**
AM Peak Hour Volume	1	246	49	2	4	2	0	1	5	0	0	0	0	**288**

Noon Peak Hour	1200 - 1300	1300 - 1400	1100 - 1200	1400 - 1500	1100 - 1200	1000 - 1100	-	1000 - 1100	1100 - 1200	-	-	-	-	**1300 - 1400**
Noon Peak Hour Volume	1	209	33	2	8	1	0	1	3	0	0	0	0	**245**

PM Peak Hour	-	1600 - 1700	1600 - 1700	1500 - 1600	1500 - 1600	-	-	1500 - 1600	1600 - 1700	-	-	-	-	**1600 - 1700**
PM Peak Hour Volume	0	218	26	1	2	0	0	3	3	0	0	0	0	**251**

Bi-Directional Class Count || Volume Summary 60min

Columbia, SC

Marr Traffic DATA COLLECTION

www.marrtraffic.com

Site 69

I-20 W/Bound On-Ramp,
west of US-176 Broad River Rd

Date

Tuesday, April 23, 2024

Lat/Long

34.039361°, -81.095730°

Weather

Fair
58°F

Click here for Detailed Weather

0000 - 2400 (Weekday 24h Session) (04-23-2024)

Volume Summary 60min

	Volume Summary 60min		
TIME	EB	WB	**Total**
0000 - 0100	0	0	**0**
0100 - 0200	0	0	**0**
0200 - 0300	0	0	**0**
0300 - 0400	0	0	**0**
0400 - 0500	0	0	**0**
0500 - 0600	0	0	**0**
0600 - 0700	0	0	**0**
0700 - 0800	0	0	**0**
0800 - 0900	0	0	**0**
0900 - 1000	0	0	**0**
1000 - 1100	0	0	**0**
1100 - 1200	0	0	**0**

	Volume Summary 60min		
Time	EB	WB	**Total**
1200 - 1300	0	0	**0**
1300 - 1400	0	0	**0**
1400 - 1500	0	0	**0**
1500 - 1600	0	0	**0**
1600 - 1700	0	0	**0**
1700 - 1800	0	0	**0**
1800 - 1900	0	0	**0**
1900 - 2000	0	208	**208**
2000 - 2100	0	164	**164**
2100 - 2200	0	117	**117**
2200 - 2300	0	84	**84**
2300 - 2400	0	53	**53**

Session Total	0	626	**626**
Session Average	0.00	26.08	**26.08**
Session Percentage	0.00	100.00	

Site 69

I-20 W/Bound On-Ramp,
west of US-176 Broad River Rd

Date

Wednesday, April 24, 2024

Lat/Long

34.039361°, -81.095730°

Weather

Fair
66°F

Click here for Detailed Weather

0000 - 2400 (Weekday 24h Session) (04-24-2024)

Volume Summary 60min

	Volume Summary 60min		
TIME	EB	WB	**Total**
0000 - 0100	0	46	**46**
0100 - 0200	0	29	**29**
0200 - 0300	0	29	**29**
0300 - 0400	0	28	**28**
0400 - 0500	0	56	**56**
0500 - 0600	0	123	**123**
0600 - 0700	0	221	**221**
0700 - 0800	0	303	**303**
0800 - 0900	0	297	**297**
0900 - 1000	0	245	**245**
1000 - 1100	0	243	**243**
1100 - 1200	0	231	**231**

Session Total	0	4213	**4213**
Session Average	0.00	175.54	**175.54**
Session Percentage	0.00	100.00	

	Volume Summary 60min		
Time	EB	WB	**Total**
1200 - 1300	0	242	**242**
1300 - 1400	0	212	**212**
1400 - 1500	0	225	**225**
1500 - 1600	0	244	**244**
1600 - 1700	0	266	**266**
1700 - 1800	0	256	**256**
1800 - 1900	0	227	**227**
1900 - 2000	0	190	**190**
2000 - 2100	0	179	**179**
2100 - 2200	0	147	**147**
2200 - 2300	0	100	**100**
2300 - 2400	0	74	**74**

Site 69

I-20 W/Bound On-Ramp,
west of US-176 Broad River Rd

Date

Thursday, April 25, 2024

Lat/Long

34.039361°, -81.095730°

Weather

Fair
67°F

Click here for Detailed Weather

0000 - 2400 (Weekday 24h Session) (04-25-2024)

Volume Summary 60min

	Volume Summary 60min		
TIME	EB	WB	**Total**
0000 - 0100	0	50	**50**
0100 - 0200	0	34	**34**
0200 - 0300	0	26	**26**
0300 - 0400	0	40	**40**
0400 - 0500	0	49	**49**
0500 - 0600	0	95	**95**
0600 - 0700	0	214	**214**
0700 - 0800	0	288	**288**
0800 - 0900	0	262	**262**
0900 - 1000	0	186	**186**
1000 - 1100	0	207	**207**
1100 - 1200	0	221	**221**

Session Total	0	3246	**3246**
Session Average	0.00	135.25	**135.25**
Session Percentage	0.00	100.00	

	Volume Summary 60min		
Time	EB	WB	**Total**
1200 - 1300	0	217	**217**
1300 - 1400	0	245	**245**
1400 - 1500	0	213	**213**
1500 - 1600	0	216	**216**
1600 - 1700	0	251	**251**
1700 - 1800	0	224	**224**
1800 - 1900	0	208	**208**
1900 - 2000	0	0	**0**
2000 - 2100	0	0	**0**
2100 - 2200	0	0	**0**
2200 - 2300	0	0	**0**
2300 - 2400	0	0	**0**

Bi-Directional Class Count || Graphical Analysis SB WB

Columbia, SC

Marr Traffic DATA COLLECTION

www.marrtraffic.com

Site 69

I-20 W/Bound On-Ramp,
west of US-176 Broad River Rd

Lat/Long

34.039361°, -81.095730°

0000 - 2400 (Weekday 24h Session)

Graphical Analysis SB WB

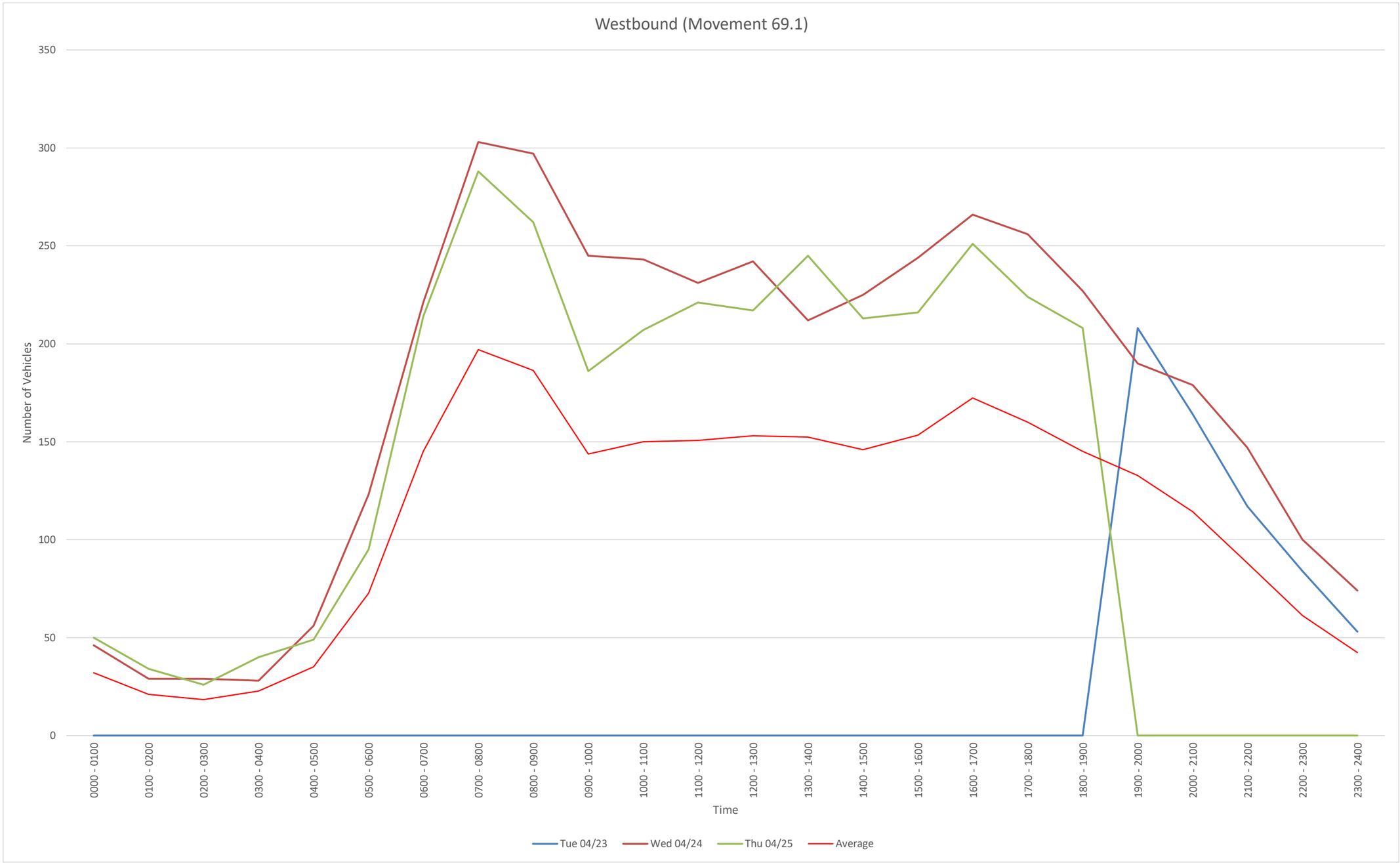

Time	Tue 04/23	Wed 04/24	Thu 04/25				
0000 - 0100	0	46	50				
0100 - 0200	0	29	34				
0200 - 0300	0	29	26				
0300 - 0400	0	28	40				
0400 - 0500	0	56	49				
0500 - 0600	0	123	95				
0600 - 0700	0	221	214				
0700 - 0800	0	303	288				
0800 - 0900	0	297	262				
0900 - 1000	0	245	186				
1000 - 1100	0	243	207				
1100 - 1200	0	231	221				
1200 - 1300	0	242	217				
1300 - 1400	0	212	245				
1400 - 1500	0	225	213				
1500 - 1600	0	244	216				
1600 - 1700	0	266	251				
1700 - 1800	0	256	224				
1800 - 1900	0	227	208				
1900 - 2000	208	190	0				
2000 - 2100	164	179	0				
2100 - 2200	117	147	0				
2200 - 2300	84	100	0				
2300 - 2400	53	74	0				
Daily Total	626	4213	3246				

EB
File Name:
Start Date: 4/23/2024
Start Time: 0
Site Code: 69
Station ID: 1
Location 1: I-20 W/Bound On-Ramp, west of US-176 Broad River Rd
Location 2:

Date	Time	1	2	3	4	5	6	7	8	9	10	11	12	13
4/23/2024	12:00 AM	0	0	0	0	0	0	0	0	0	0	0	0	0
4/23/2024	12:15 AM	0	0	0	0	0	0	0	0	0	0	0	0	0
4/23/2024	12:30 AM	0	0	0	0	0	0	0	0	0	0	0	0	0
4/23/2024	12:45 AM	0	0	0	0	0	0	0	0	0	0	0	0	0
4/23/2024	1:00 AM	0	0	0	0	0	0	0	0	0	0	0	0	0
4/23/2024	1:15 AM	0	0	0	0	0	0	0	0	0	0	0	0	0
4/23/2024	1:30 AM	0	0	0	0	0	0	0	0	0	0	0	0	0
4/23/2024	1:45 AM	0	0	0	0	0	0	0	0	0	0	0	0	0
4/23/2024	2:00 AM	0	0	0	0	0	0	0	0	0	0	0	0	0
4/23/2024	2:15 AM	0	0	0	0	0	0	0	0	0	0	0	0	0
4/23/2024	2:30 AM	0	0	0	0	0	0	0	0	0	0	0	0	0
4/23/2024	2:45 AM	0	0	0	0	0	0	0	0	0	0	0	0	0
4/23/2024	3:00 AM	0	0	0	0	0	0	0	0	0	0	0	0	0
4/23/2024	3:15 AM	0	0	0	0	0	0	0	0	0	0	0	0	0
4/23/2024	3:30 AM	0	0	0	0	0	0	0	0	0	0	0	0	0
4/23/2024	3:45 AM	0	0	0	0	0	0	0	0	0	0	0	0	0
4/23/2024	4:00 AM	0	0	0	0	0	0	0	0	0	0	0	0	0
4/23/2024	4:15 AM	0	0	0	0	0	0	0	0	0	0	0	0	0
4/23/2024	4:30 AM	0	0	0	0	0	0	0	0	0	0	0	0	0
4/23/2024	4:45 AM	0	0	0	0	0	0	0	0	0	0	0	0	0
4/23/2024	5:00 AM	0	0	0	0	0	0	0	0	0	0	0	0	0
4/23/2024	5:15 AM	0	0	0	0	0	0	0	0	0	0	0	0	0
4/23/2024	5:30 AM	0	0	0	0	0	0	0	0	0	0	0	0	0
4/23/2024	5:45 AM	0	0	0	0	0	0	0	0	0	0	0	0	0
4/23/2024	6:00 AM	0	0	0	0	0	0	0	0	0	0	0	0	0
4/23/2024	6:15 AM	0	0	0	0	0	0	0	0	0	0	0	0	0
4/23/2024	6:30 AM	0	0	0	0	0	0	0	0	0	0	0	0	0
4/23/2024	6:45 AM	0	0	0	0	0	0	0	0	0	0	0	0	0
4/23/2024	7:00 AM	0	0	0	0	0	0	0	0	0	0	0	0	0
4/23/2024	7:15 AM	0	0	0	0	0	0	0	0	0	0	0	0	0
4/23/2024	7:30 AM	0	0	0	0	0	0	0	0	0	0	0	0	0
4/23/2024	7:45 AM	0	0	0	0	0	0	0	0	0	0	0	0	0
4/23/2024	8:00 AM	0	0	0	0	0	0	0	0	0	0	0	0	0
4/23/2024	8:15 AM	0	0	0	0	0	0	0	0	0	0	0	0	0
4/23/2024	8:30 AM	0	0	0	0	0	0	0	0	0	0	0	0	0
4/23/2024	8:45 AM	0	0	0	0	0	0	0	0	0	0	0	0	0
4/23/2024	9:00 AM	0	0	0	0	0	0	0	0	0	0	0	0	0
4/23/2024	9:15 AM	0	0	0	0	0	0	0	0	0	0	0	0	0
4/23/2024	9:30 AM	0	0	0	0	0	0	0	0	0	0	0	0	0
4/23/2024	9:45 AM	0	0	0	0	0	0	0	0	0	0	0	0	0
4/23/2024	10:00 AM	0	0	0	0	0	0	0	0	0	0	0	0	0
4/23/2024	10:15 AM	0	0	0	0	0	0	0	0	0	0	0	0	0
4/23/2024	10:30 AM	0	0	0	0	0	0	0	0	0	0	0	0	0
4/23/2024	10:45 AM	0	0	0	0	0	0	0	0	0	0	0	0	0
4/23/2024	11:00 AM	0	0	0	0	0	0	0	0	0	0	0	0	0
4/23/2024	11:15 AM	0	0	0	0	0	0	0	0	0	0	0	0	0
4/23/2024	11:30 AM	0	0	0	0	0	0	0	0	0	0	0	0	0
4/23/2024	11:45 AM	0	0	0	0	0	0	0	0	0	0	0	0	0
4/23/2024	12:00 PM	0	0	0	0	0	0	0	0	0	0	0	0	0
4/23/2024	12:15 PM	0	0	0	0	0	0	0	0	0	0	0	0	0
4/23/2024	12:30 PM	0	0	0	0	0	0	0	0	0	0	0	0	0
4/23/2024	12:45 PM	0	0	0	0	0	0	0	0	0	0	0	0	0
4/23/2024	1:00 PM	0	0	0	0	0	0	0	0	0	0	0	0	0
4/23/2024	1:15 PM	0	0	0	0	0	0	0	0	0	0	0	0	0
4/23/2024	1:30 PM	0	0	0	0	0	0	0	0	0	0	0	0	0
4/23/2024	1:45 PM	0	0	0	0	0	0	0	0	0	0	0	0	0
4/23/2024	2:00 PM	0	0	0	0	0	0	0	0	0	0	0	0	0
4/23/2024	2:15 PM	0	0	0	0	0	0	0	0	0	0	0	0	0
4/23/2024	2:30 PM	0	0	0	0	0	0	0	0	0	0	0	0	0
4/23/2024	2:45 PM	0	0	0	0	0	0	0	0	0	0	0	0	0
4/23/2024	3:00 PM	0	0	0	0	0	0	0	0	0	0	0	0	0
4/23/2024	3:15 PM	0	0	0	0	0	0	0	0	0	0	0	0	0
4/23/2024	3:30 PM	0	0	0	0	0	0	0	0	0	0	0	0	0
4/23/2024	3:45 PM	0	0	0	0	0	0	0	0	0	0	0	0	0
4/23/2024	4:00 PM	0	0	0	0	0	0	0	0	0	0	0	0	0
4/23/2024	4:15 PM	0	0	0	0	0	0	0	0	0	0	0	0	0
4/23/2024	4:30 PM	0	0	0	0	0	0	0	0	0	0	0	0	0
4/23/2024	4:45 PM	0	0	0	0	0	0	0	0	0	0	0	0	0
4/23/2024	5:00 PM	0	0	0	0	0	0	0	0	0	0	0	0	0
4/23/2024	5:15 PM	0	0	0	0	0	0	0	0	0	0	0	0	0
4/23/2024	5:30 PM	0	0	0	0	0	0	0	0	0	0	0	0	0
4/23/2024	5:45 PM	0	0	0	0	0	0	0	0	0	0	0	0	0
4/23/2024	6:00 PM	0	0	0	0	0	0	0	0	0	0	0	0	0
4/23/2024	6:15 PM	0	0	0	0	0	0	0	0	0	0	0	0	0
4/23/2024	6:30 PM	0	0	0	0	0	0	0	0	0	0	0	0	0
4/23/2024	6:45 PM	0	0	0	0	0	0	0	0	0	0	0	0	0
4/23/2024	7:00 PM	0	0	0	0	0	0	0	0	0	0	0	0	0
4/23/2024	7:15 PM	0	0	0	0	0	0	0	0	0	0	0	0	0
4/23/2024	7:30 PM	0	0	0	0	0	0	0	0	0	0	0	0	0
4/23/2024	7:45 PM	0	0	0	0	0	0	0	0	0	0	0	0	0
4/23/2024	8:00 PM	0	0	0	0	0	0	0	0	0	0	0	0	0
4/23/2024	8:15 PM	0	0	0	0	0	0	0	0	0	0	0	0	0
4/23/2024	8:30 PM	0	0	0	0	0	0	0	0	0	0	0	0	0
4/23/2024	8:45 PM	0	0	0	0	0	0	0	0	0	0	0	0	0
4/23/2024	9:00 PM	0	0	0	0	0	0	0	0	0	0	0	0	0
4/23/2024	9:15 PM	0	0	0	0	0	0	0	0	0	0	0	0	0
4/23/2024	9:30 PM	0	0	0	0	0	0	0	0	0	0	0	0	0
4/23/2024	9:45 PM	0	0	0	0	0	0	0	0	0	0	0	0	0
4/23/2024	10:00 PM	0	0	0	0	0	0	0	0	0	0	0	0	0
4/23/2024	10:15 PM	0	0	0	0	0	0	0	0	0	0	0	0	0
4/23/2024	10:30 PM	0	0	0	0	0	0	0	0	0	0	0	0	0
4/23/2024	10:45 PM	0	0	0	0	0	0	0	0	0	0	0	0	0
4/23/2024	11:00 PM	0	0	0	0	0	0	0	0	0	0	0	0	0
4/23/2024	11:15 PM	0	0	0	0	0	0	0	0	0	0	0	0	0
4/23/2024	11:30 PM	0	0	0	0	0	0	0	0	0	0	0	0	0
4/23/2024	11:45 PM	0	0	0	0	0	0	0	0	0	0	0	0	0

4/24/2024	12:00 AM	0	0	0	0	0	0	0	0	0	0	0	0	0
4/24/2024	12:15 AM	0	0	0	0	0	0	0	0	0	0	0	0	0
4/24/2024	12:30 AM	0	0	0	0	0	0	0	0	0	0	0	0	0
4/24/2024	12:45 AM	0	0	0	0	0	0	0	0	0	0	0	0	0
4/24/2024	1:00 AM	0	0	0	0	0	0	0	0	0	0	0	0	0
4/24/2024	1:15 AM	0	0	0	0	0	0	0	0	0	0	0	0	0
4/24/2024	1:30 AM	0	0	0	0	0	0	0	0	0	0	0	0	0
4/24/2024	1:45 AM	0	0	0	0	0	0	0	0	0	0	0	0	0
4/24/2024	2:00 AM	0	0	0	0	0	0	0	0	0	0	0	0	0
4/24/2024	2:15 AM	0	0	0	0	0	0	0	0	0	0	0	0	0
4/24/2024	2:30 AM	0	0	0	0	0	0	0	0	0	0	0	0	0
4/24/2024	2:45 AM	0	0	0	0	0	0	0	0	0	0	0	0	0
4/24/2024	3:00 AM	0	0	0	0	0	0	0	0	0	0	0	0	0
4/24/2024	3:15 AM	0	0	0	0	0	0	0	0	0	0	0	0	0
4/24/2024	3:30 AM	0	0	0	0	0	0	0	0	0	0	0	0	0
4/24/2024	3:45 AM	0	0	0	0	0	0	0	0	0	0	0	0	0
4/24/2024	4:00 AM	0	0	0	0	0	0	0	0	0	0	0	0	0
4/24/2024	4:15 AM	0	0	0	0	0	0	0	0	0	0	0	0	0
4/24/2024	4:30 AM	0	0	0	0	0	0	0	0	0	0	0	0	0
4/24/2024	4:45 AM	0	0	0	0	0	0	0	0	0	0	0	0	0
4/24/2024	5:00 AM	0	0	0	0	0	0	0	0	0	0	0	0	0
4/24/2024	5:15 AM	0	0	0	0	0	0	0	0	0	0	0	0	0
4/24/2024	5:30 AM	0	0	0	0	0	0	0	0	0	0	0	0	0
4/24/2024	5:45 AM	0	0	0	0	0	0	0	0	0	0	0	0	0
4/24/2024	6:00 AM	0	0	0	0	0	0	0	0	0	0	0	0	0
4/24/2024	6:15 AM	0	0	0	0	0	0	0	0	0	0	0	0	0
4/24/2024	6:30 AM	0	0	0	0	0	0	0	0	0	0	0	0	0
4/24/2024	6:45 AM	0	0	0	0	0	0	0	0	0	0	0	0	0
4/24/2024	7:00 AM	0	0	0	0	0	0	0	0	0	0	0	0	0
4/24/2024	7:15 AM	0	0	0	0	0	0	0	0	0	0	0	0	0
4/24/2024	7:30 AM	0	0	0	0	0	0	0	0	0	0	0	0	0
4/24/2024	7:45 AM	0	0	0	0	0	0	0	0	0	0	0	0	0
4/24/2024	8:00 AM	0	0	0	0	0	0	0	0	0	0	0	0	0
4/24/2024	8:15 AM	0	0	0	0	0	0	0	0	0	0	0	0	0
4/24/2024	8:30 AM	0	0	0	0	0	0	0	0	0	0	0	0	0
4/24/2024	8:45 AM	0	0	0	0	0	0	0	0	0	0	0	0	0
4/24/2024	9:00 AM	0	0	0	0	0	0	0	0	0	0	0	0	0
4/24/2024	9:15 AM	0	0	0	0	0	0	0	0	0	0	0	0	0
4/24/2024	9:30 AM	0	0	0	0	0	0	0	0	0	0	0	0	0
4/24/2024	9:45 AM	0	0	0	0	0	0	0	0	0	0	0	0	0
4/24/2024	10:00 AM	0	0	0	0	0	0	0	0	0	0	0	0	0
4/24/2024	10:15 AM	0	0	0	0	0	0	0	0	0	0	0	0	0
4/24/2024	10:30 AM	0	0	0	0	0	0	0	0	0	0	0	0	0
4/24/2024	10:45 AM	0	0	0	0	0	0	0	0	0	0	0	0	0
4/24/2024	11:00 AM	0	0	0	0	0	0	0	0	0	0	0	0	0
4/24/2024	11:15 AM	0	0	0	0	0	0	0	0	0	0	0	0	0
4/24/2024	11:30 AM	0	0	0	0	0	0	0	0	0	0	0	0	0
4/24/2024	11:45 AM	0	0	0	0	0	0	0	0	0	0	0	0	0
4/24/2024	12:00 PM	0	0	0	0	0	0	0	0	0	0	0	0	0
4/24/2024	12:15 PM	0	0	0	0	0	0	0	0	0	0	0	0	0
4/24/2024	12:30 PM	0	0	0	0	0	0	0	0	0	0	0	0	0
4/24/2024	12:45 PM	0	0	0	0	0	0	0	0	0	0	0	0	0
4/24/2024	1:00 PM	0	0	0	0	0	0	0	0	0	0	0	0	0
4/24/2024	1:15 PM	0	0	0	0	0	0	0	0	0	0	0	0	0
4/24/2024	1:30 PM	0	0	0	0	0	0	0	0	0	0	0	0	0
4/24/2024	1:45 PM	0	0	0	0	0	0	0	0	0	0	0	0	0
4/24/2024	2:00 PM	0	0	0	0	0	0	0	0	0	0	0	0	0
4/24/2024	2:15 PM	0	0	0	0	0	0	0	0	0	0	0	0	0
4/24/2024	2:30 PM	0	0	0	0	0	0	0	0	0	0	0	0	0
4/24/2024	2:45 PM	0	0	0	0	0	0	0	0	0	0	0	0	0
4/24/2024	3:00 PM	0	0	0	0	0	0	0	0	0	0	0	0	0
4/24/2024	3:15 PM	0	0	0	0	0	0	0	0	0	0	0	0	0
4/24/2024	3:30 PM	0	0	0	0	0	0	0	0	0	0	0	0	0
4/24/2024	3:45 PM	0	0	0	0	0	0	0	0	0	0	0	0	0
4/24/2024	4:00 PM	0	0	0	0	0	0	0	0	0	0	0	0	0
4/24/2024	4:15 PM	0	0	0	0	0	0	0	0	0	0	0	0	0
4/24/2024	4:30 PM	0	0	0	0	0	0	0	0	0	0	0	0	0
4/24/2024	4:45 PM	0	0	0	0	0	0	0	0	0	0	0	0	0
4/24/2024	5:00 PM	0	0	0	0	0	0	0	0	0	0	0	0	0
4/24/2024	5:15 PM	0	0	0	0	0	0	0	0	0	0	0	0	0
4/24/2024	5:30 PM	0	0	0	0	0	0	0	0	0	0	0	0	0
4/24/2024	5:45 PM	0	0	0	0	0	0	0	0	0	0	0	0	0
4/24/2024	6:00 PM	0	0	0	0	0	0	0	0	0	0	0	0	0
4/24/2024	6:15 PM	0	0	0	0	0	0	0	0	0	0	0	0	0
4/24/2024	6:30 PM	0	0	0	0	0	0	0	0	0	0	0	0	0
4/24/2024	6:45 PM	0	0	0	0	0	0	0	0	0	0	0	0	0
4/24/2024	7:00 PM	0	0	0	0	0	0	0	0	0	0	0	0	0
4/24/2024	7:15 PM	0	0	0	0	0	0	0	0	0	0	0	0	0
4/24/2024	7:30 PM	0	0	0	0	0	0	0	0	0	0	0	0	0
4/24/2024	7:45 PM	0	0	0	0	0	0	0	0	0	0	0	0	0
4/24/2024	8:00 PM	0	0	0	0	0	0	0	0	0	0	0	0	0
4/24/2024	8:15 PM	0	0	0	0	0	0	0	0	0	0	0	0	0
4/24/2024	8:30 PM	0	0	0	0	0	0	0	0	0	0	0	0	0
4/24/2024	8:45 PM	0	0	0	0	0	0	0	0	0	0	0	0	0
4/24/2024	9:00 PM	0	0	0	0	0	0	0	0	0	0	0	0	0
4/24/2024	9:15 PM	0	0	0	0	0	0	0	0	0	0	0	0	0
4/24/2024	9:30 PM	0	0	0	0	0	0	0	0	0	0	0	0	0
4/24/2024	9:45 PM	0	0	0	0	0	0	0	0	0	0	0	0	0
4/24/2024	10:00 PM	0	0	0	0	0	0	0	0	0	0	0	0	0
4/24/2024	10:15 PM	0	0	0	0	0	0	0	0	0	0	0	0	0
4/24/2024	10:30 PM	0	0	0	0	0	0	0	0	0	0	0	0	0
4/24/2024	10:45 PM	0	0	0	0	0	0	0	0	0	0	0	0	0
4/24/2024	11:00 PM	0	0	0	0	0	0	0	0	0	0	0	0	0
4/24/2024	11:15 PM	0	0	0	0	0	0	0	0	0	0	0	0	0
4/24/2024	11:30 PM	0	0	0	0	0	0	0	0	0	0	0	0	0
4/24/2024	11:45 PM	0	0	0	0	0	0	0	0	0	0	0	0	0

4/25/2024	12:00 AM	0	0	0	0	0	0	0	0	0	0	0	0	0
4/25/2024	12:15 AM	0	0	0	0	0	0	0	0	0	0	0	0	0
4/25/2024	12:30 AM	0	0	0	0	0	0	0	0	0	0	0	0	0
4/25/2024	12:45 AM	0	0	0	0	0	0	0	0	0	0	0	0	0
4/25/2024	1:00 AM	0	0	0	0	0	0	0	0	0	0	0	0	0
4/25/2024	1:15 AM	0	0	0	0	0	0	0	0	0	0	0	0	0
4/25/2024	1:30 AM	0	0	0	0	0	0	0	0	0	0	0	0	0
4/25/2024	1:45 AM	0	0	0	0	0	0	0	0	0	0	0	0	0
4/25/2024	2:00 AM	0	0	0	0	0	0	0	0	0	0	0	0	0
4/25/2024	2:15 AM	0	0	0	0	0	0	0	0	0	0	0	0	0
4/25/2024	2:30 AM	0	0	0	0	0	0	0	0	0	0	0	0	0
4/25/2024	2:45 AM	0	0	0	0	0	0	0	0	0	0	0	0	0
4/25/2024	3:00 AM	0	0	0	0	0	0	0	0	0	0	0	0	0
4/25/2024	3:15 AM	0	0	0	0	0	0	0	0	0	0	0	0	0
4/25/2024	3:30 AM	0	0	0	0	0	0	0	0	0	0	0	0	0
4/25/2024	3:45 AM	0	0	0	0	0	0	0	0	0	0	0	0	0
4/25/2024	4:00 AM	0	0	0	0	0	0	0	0	0	0	0	0	0
4/25/2024	4:15 AM	0	0	0	0	0	0	0	0	0	0	0	0	0
4/25/2024	4:30 AM	0	0	0	0	0	0	0	0	0	0	0	0	0
4/25/2024	4:45 AM	0	0	0	0	0	0	0	0	0	0	0	0	0
4/25/2024	5:00 AM	0	0	0	0	0	0	0	0	0	0	0	0	0
4/25/2024	5:15 AM	0	0	0	0	0	0	0	0	0	0	0	0	0
4/25/2024	5:30 AM	0	0	0	0	0	0	0	0	0	0	0	0	0
4/25/2024	5:45 AM	0	0	0	0	0	0	0	0	0	0	0	0	0
4/25/2024	6:00 AM	0	0	0	0	0	0	0	0	0	0	0	0	0
4/25/2024	6:15 AM	0	0	0	0	0	0	0	0	0	0	0	0	0
4/25/2024	6:30 AM	0	0	0	0	0	0	0	0	0	0	0	0	0
4/25/2024	6:45 AM	0	0	0	0	0	0	0	0	0	0	0	0	0
4/25/2024	7:00 AM	0	0	0	0	0	0	0	0	0	0	0	0	0
4/25/2024	7:15 AM	0	0	0	0	0	0	0	0	0	0	0	0	0
4/25/2024	7:30 AM	0	0	0	0	0	0	0	0	0	0	0	0	0
4/25/2024	7:45 AM	0	0	0	0	0	0	0	0	0	0	0	0	0
4/25/2024	8:00 AM	0	0	0	0	0	0	0	0	0	0	0	0	0
4/25/2024	8:15 AM	0	0	0	0	0	0	0	0	0	0	0	0	0
4/25/2024	8:30 AM	0	0	0	0	0	0	0	0	0	0	0	0	0
4/25/2024	8:45 AM	0	0	0	0	0	0	0	0	0	0	0	0	0
4/25/2024	9:00 AM	0	0	0	0	0	0	0	0	0	0	0	0	0
4/25/2024	9:15 AM	0	0	0	0	0	0	0	0	0	0	0	0	0
4/25/2024	9:30 AM	0	0	0	0	0	0	0	0	0	0	0	0	0
4/25/2024	9:45 AM	0	0	0	0	0	0	0	0	0	0	0	0	0
4/25/2024	10:00 AM	0	0	0	0	0	0	0	0	0	0	0	0	0
4/25/2024	10:15 AM	0	0	0	0	0	0	0	0	0	0	0	0	0
4/25/2024	10:30 AM	0	0	0	0	0	0	0	0	0	0	0	0	0
4/25/2024	10:45 AM	0	0	0	0	0	0	0	0	0	0	0	0	0
4/25/2024	11:00 AM	0	0	0	0	0	0	0	0	0	0	0	0	0
4/25/2024	11:15 AM	0	0	0	0	0	0	0	0	0	0	0	0	0
4/25/2024	11:30 AM	0	0	0	0	0	0	0	0	0	0	0	0	0
4/25/2024	11:45 AM	0	0	0	0	0	0	0	0	0	0	0	0	0
4/25/2024	12:00 PM	0	0	0	0	0	0	0	0	0	0	0	0	0
4/25/2024	12:15 PM	0	0	0	0	0	0	0	0	0	0	0	0	0
4/25/2024	12:30 PM	0	0	0	0	0	0	0	0	0	0	0	0	0
4/25/2024	12:45 PM	0	0	0	0	0	0	0	0	0	0	0	0	0
4/25/2024	1:00 PM	0	0	0	0	0	0	0	0	0	0	0	0	0
4/25/2024	1:15 PM	0	0	0	0	0	0	0	0	0	0	0	0	0
4/25/2024	1:30 PM	0	0	0	0	0	0	0	0	0	0	0	0	0
4/25/2024	1:45 PM	0	0	0	0	0	0	0	0	0	0	0	0	0
4/25/2024	2:00 PM	0	0	0	0	0	0	0	0	0	0	0	0	0
4/25/2024	2:15 PM	0	0	0	0	0	0	0	0	0	0	0	0	0
4/25/2024	2:30 PM	0	0	0	0	0	0	0	0	0	0	0	0	0
4/25/2024	2:45 PM	0	0	0	0	0	0	0	0	0	0	0	0	0
4/25/2024	3:00 PM	0	0	0	0	0	0	0	0	0	0	0	0	0
4/25/2024	3:15 PM	0	0	0	0	0	0	0	0	0	0	0	0	0
4/25/2024	3:30 PM	0	0	0	0	0	0	0	0	0	0	0	0	0
4/25/2024	3:45 PM	0	0	0	0	0	0	0	0	0	0	0	0	0
4/25/2024	4:00 PM	0	0	0	0	0	0	0	0	0	0	0	0	0
4/25/2024	4:15 PM	0	0	0	0	0	0	0	0	0	0	0	0	0
4/25/2024	4:30 PM	0	0	0	0	0	0	0	0	0	0	0	0	0
4/25/2024	4:45 PM	0	0	0	0	0	0	0	0	0	0	0	0	0
4/25/2024	5:00 PM	0	0	0	0	0	0	0	0	0	0	0	0	0
4/25/2024	5:15 PM	0	0	0	0	0	0	0	0	0	0	0	0	0
4/25/2024	5:30 PM	0	0	0	0	0	0	0	0	0	0	0	0	0
4/25/2024	5:45 PM	0	0	0	0	0	0	0	0	0	0	0	0	0
4/25/2024	6:00 PM	0	0	0	0	0	0	0	0	0	0	0	0	0
4/25/2024	6:15 PM	0	0	0	0	0	0	0	0	0	0	0	0	0
4/25/2024	6:30 PM	0	0	0	0	0	0	0	0	0	0	0	0	0
4/25/2024	6:45 PM	0	0	0	0	0	0	0	0	0	0	0	0	0
4/25/2024	7:00 PM	0	0	0	0	0	0	0	0	0	0	0	0	0
4/25/2024	7:15 PM	0	0	0	0	0	0	0	0	0	0	0	0	0
4/25/2024	7:30 PM	0	0	0	0	0	0	0	0	0	0	0	0	0
4/25/2024	7:45 PM	0	0	0	0	0	0	0	0	0	0	0	0	0
4/25/2024	8:00 PM	0	0	0	0	0	0	0	0	0	0	0	0	0
4/25/2024	8:15 PM	0	0	0	0	0	0	0	0	0	0	0	0	0
4/25/2024	8:30 PM	0	0	0	0	0	0	0	0	0	0	0	0	0
4/25/2024	8:45 PM	0	0	0	0	0	0	0	0	0	0	0	0	0
4/25/2024	9:00 PM	0	0	0	0	0	0	0	0	0	0	0	0	0
4/25/2024	9:15 PM	0	0	0	0	0	0	0	0	0	0	0	0	0
4/25/2024	9:30 PM	0	0	0	0	0	0	0	0	0	0	0	0	0
4/25/2024	9:45 PM	0	0	0	0	0	0	0	0	0	0	0	0	0
4/25/2024	10:00 PM	0	0	0	0	0	0	0	0	0	0	0	0	0
4/25/2024	10:15 PM	0	0	0	0	0	0	0	0	0	0	0	0	0
4/25/2024	10:30 PM	0	0	0	0	0	0	0	0	0	0	0	0	0
4/25/2024	10:45 PM	0	0	0	0	0	0	0	0	0	0	0	0	0
4/25/2024	11:00 PM	0	0	0	0	0	0	0	0	0	0	0	0	0
4/25/2024	11:15 PM	0	0	0	0	0	0	0	0	0	0	0	0	0
4/25/2024	11:30 PM	0	0	0	0	0	0	0	0	0	0	0	0	0
4/25/2024	11:45 PM	0	0	0	0	0	0	0	0	0	0	0	0	0

WB
File Name:
Start Date: 4/23/2024
Start Time: 0
Site Code: 69
Station ID: 1
Location 1: I-20 W/Bound On-Ramp, west of US-176 Broad River Rd
Location 2:

Date	Time	1	2	3	4	5	6	7	8	9	10	11	12	13
4/23/2024	12:00 AM	0	0	0	0	0	0	0	0	0	0	0	0	0
4/23/2024	12:15 AM	0	0	0	0	0	0	0	0	0	0	0	0	0
4/23/2024	12:30 AM	0	0	0	0	0	0	0	0	0	0	0	0	0
4/23/2024	12:45 AM	0	0	0	0	0	0	0	0	0	0	0	0	0
4/23/2024	1:00 AM	0	0	0	0	0	0	0	0	0	0	0	0	0
4/23/2024	1:15 AM	0	0	0	0	0	0	0	0	0	0	0	0	0
4/23/2024	1:30 AM	0	0	0	0	0	0	0	0	0	0	0	0	0
4/23/2024	1:45 AM	0	0	0	0	0	0	0	0	0	0	0	0	0
4/23/2024	2:00 AM	0	0	0	0	0	0	0	0	0	0	0	0	0
4/23/2024	2:15 AM	0	0	0	0	0	0	0	0	0	0	0	0	0
4/23/2024	2:30 AM	0	0	0	0	0	0	0	0	0	0	0	0	0
4/23/2024	2:45 AM	0	0	0	0	0	0	0	0	0	0	0	0	0
4/23/2024	3:00 AM	0	0	0	0	0	0	0	0	0	0	0	0	0
4/23/2024	3:15 AM	0	0	0	0	0	0	0	0	0	0	0	0	0
4/23/2024	3:30 AM	0	0	0	0	0	0	0	0	0	0	0	0	0
4/23/2024	3:45 AM	0	0	0	0	0	0	0	0	0	0	0	0	0
4/23/2024	4:00 AM	0	0	0	0	0	0	0	0	0	0	0	0	0
4/23/2024	4:15 AM	0	0	0	0	0	0	0	0	0	0	0	0	0
4/23/2024	4:30 AM	0	0	0	0	0	0	0	0	0	0	0	0	0
4/23/2024	4:45 AM	0	0	0	0	0	0	0	0	0	0	0	0	0
4/23/2024	5:00 AM	0	0	0	0	0	0	0	0	0	0	0	0	0
4/23/2024	5:15 AM	0	0	0	0	0	0	0	0	0	0	0	0	0
4/23/2024	5:30 AM	0	0	0	0	0	0	0	0	0	0	0	0	0
4/23/2024	5:45 AM	0	0	0	0	0	0	0	0	0	0	0	0	0
4/23/2024	6:00 AM	0	0	0	0	0	0	0	0	0	0	0	0	0
4/23/2024	6:15 AM	0	0	0	0	0	0	0	0	0	0	0	0	0
4/23/2024	6:30 AM	0	0	0	0	0	0	0	0	0	0	0	0	0
4/23/2024	6:45 AM	0	0	0	0	0	0	0	0	0	0	0	0	0
4/23/2024	7:00 AM	0	0	0	0	0	0	0	0	0	0	0	0	0
4/23/2024	7:15 AM	0	0	0	0	0	0	0	0	0	0	0	0	0
4/23/2024	7:30 AM	0	0	0	0	0	0	0	0	0	0	0	0	0
4/23/2024	7:45 AM	0	0	0	0	0	0	0	0	0	0	0	0	0
4/23/2024	8:00 AM	0	0	0	0	0	0	0	0	0	0	0	0	0
4/23/2024	8:15 AM	0	0	0	0	0	0	0	0	0	0	0	0	0
4/23/2024	8:30 AM	0	0	0	0	0	0	0	0	0	0	0	0	0
4/23/2024	8:45 AM	0	0	0	0	0	0	0	0	0	0	0	0	0
4/23/2024	9:00 AM	0	0	0	0	0	0	0	0	0	0	0	0	0
4/23/2024	9:15 AM	0	0	0	0	0	0	0	0	0	0	0	0	0
4/23/2024	9:30 AM	0	0	0	0	0	0	0	0	0	0	0	0	0
4/23/2024	9:45 AM	0	0	0	0	0	0	0	0	0	0	0	0	0
4/23/2024	10:00 AM	0	0	0	0	0	0	0	0	0	0	0	0	0
4/23/2024	10:15 AM	0	0	0	0	0	0	0	0	0	0	0	0	0
4/23/2024	10:30 AM	0	0	0	0	0	0	0	0	0	0	0	0	0
4/23/2024	10:45 AM	0	0	0	0	0	0	0	0	0	0	0	0	0
4/23/2024	11:00 AM	0	0	0	0	0	0	0	0	0	0	0	0	0
4/23/2024	11:15 AM	0	0	0	0	0	0	0	0	0	0	0	0	0
4/23/2024	11:30 AM	0	0	0	0	0	0	0	0	0	0	0	0	0
4/23/2024	11:45 AM	0	0	0	0	0	0	0	0	0	0	0	0	0
4/23/2024	12:00 PM	0	0	0	0	0	0	0	0	0	0	0	0	0
4/23/2024	12:15 PM	0	0	0	0	0	0	0	0	0	0	0	0	0
4/23/2024	12:30 PM	0	0	0	0	0	0	0	0	0	0	0	0	0
4/23/2024	12:45 PM	0	0	0	0	0	0	0	0	0	0	0	0	0
4/23/2024	1:00 PM	0	0	0	0	0	0	0	0	0	0	0	0	0
4/23/2024	1:15 PM	0	0	0	0	0	0	0	0	0	0	0	0	0
4/23/2024	1:30 PM	0	0	0	0	0	0	0	0	0	0	0	0	0
4/23/2024	1:45 PM	0	0	0	0	0	0	0	0	0	0	0	0	0
4/23/2024	2:00 PM	0	0	0	0	0	0	0	0	0	0	0	0	0
4/23/2024	2:15 PM	0	0	0	0	0	0	0	0	0	0	0	0	0
4/23/2024	2:30 PM	0	0	0	0	0	0	0	0	0	0	0	0	0
4/23/2024	2:45 PM	0	0	0	0	0	0	0	0	0	0	0	0	0
4/23/2024	3:00 PM	0	0	0	0	0	0	0	0	0	0	0	0	0
4/23/2024	3:15 PM	0	0	0	0	0	0	0	0	0	0	0	0	0
4/23/2024	3:30 PM	0	0	0	0	0	0	0	0	0	0	0	0	0
4/23/2024	3:45 PM	0	0	0	0	0	0	0	0	0	0	0	0	0
4/23/2024	4:00 PM	0	0	0	0	0	0	0	0	0	0	0	0	0
4/23/2024	4:15 PM	0	0	0	0	0	0	0	0	0	0	0	0	0
4/23/2024	4:30 PM	0	0	0	0	0	0	0	0	0	0	0	0	0
4/23/2024	4:45 PM	0	0	0	0	0	0	0	0	0	0	0	0	0
4/23/2024	5:00 PM	0	0	0	0	0	0	0	0	0	0	0	0	0
4/23/2024	5:15 PM	0	0	0	0	0	0	0	0	0	0	0	0	0
4/23/2024	5:30 PM	0	0	0	0	0	0	0	0	0	0	0	0	0
4/23/2024	5:45 PM	0	0	0	0	0	0	0	0	0	0	0	0	0
4/23/2024	6:00 PM	0	0	0	0	0	0	0	0	0	0	0	0	0
4/23/2024	6:15 PM	0	0	0	0	0	0	0	0	0	0	0	0	0
4/23/2024	6:30 PM	0	0	0	0	0	0	0	0	0	0	0	0	0
4/23/2024	6:45 PM	0	0	0	0	0	0	0	0	0	0	0	0	0
4/23/2024	7:00 PM	1	56	7	0	0	0	0	0	0	0	0	0	0
4/23/2024	7:15 PM	0	41	4	0	3	1	0	0	0	0	0	0	0
4/23/2024	7:30 PM	0	39	3	0	0	0	0	0	0	0	0	0	0
4/23/2024	7:45 PM	0	46	6	0	0	0	0	0	1	0	0	0	0
4/23/2024	8:00 PM	0	43	6	0	0	0	0	0	0	0	0	0	0
4/23/2024	8:15 PM	0	45	4	0	1	0	0	0	0	0	0	0	0
4/23/2024	8:30 PM	0	32	2	0	1	0	0	0	0	0	0	0	0
4/23/2024	8:45 PM	0	27	2	0	0	0	0	0	1	0	0	0	0
4/23/2024	9:00 PM	0	28	2	0	0	0	0	0	0	0	0	0	0
4/23/2024	9:15 PM	0	24	7	0	0	0	0	0	0	0	0	0	0
4/23/2024	9:30 PM	0	30	1	0	0	0	0	0	0	0	0	0	0
4/23/2024	9:45 PM	0	20	5	0	0	0	0	0	0	0	0	0	0
4/23/2024	10:00 PM	0	25	5	0	0	0	0	0	0	0	0	0	0
4/23/2024	10:15 PM	0	21	0	0	0	0	0	0	0	0	0	0	0
4/23/2024	10:30 PM	0	14	1	0	0	0	0	0	1	0	0	0	0
4/23/2024	10:45 PM	0	15	1	0	1	0	0	0	0	0	0	0	0
4/23/2024	11:00 PM	0	20	2	0	0	0	0	0	0	0	0	0	0
4/23/2024	11:15 PM	0	9	1	0	0	0	0	0	0	0	0	0	0
4/23/2024	11:30 PM	0	11	2	0	0	0	0	0	0	0	0	0	0
4/23/2024	11:45 PM	0	7	0	0	1	0	0	0	0	0	0	0	0

4/24/2024	12:00 AM	0	11	0	0	0	1	0	0	0	1	0	0	0
4/24/2024	12:15 AM	0	10	1	0	0	0	0	0	0	0	0	0	0
4/24/2024	12:30 AM	0	5	1	0	0	0	0	0	1	0	0	0	0
4/24/2024	12:45 AM	0	14	1	0	0	0	0	0	0	0	0	0	0
4/24/2024	1:00 AM	0	7	0	0	0	0	0	0	0	0	0	0	0
4/24/2024	1:15 AM	0	7	2	0	0	0	0	0	1	1	0	0	0
4/24/2024	1:30 AM	0	4	0	0	1	0	0	0	1	0	0	0	0
4/24/2024	1:45 AM	0	5	0	0	0	0	0	0	0	0	0	0	0
4/24/2024	2:00 AM	0	5	1	0	0	0	0	1	0	0	0	0	0
4/24/2024	2:15 AM	0	5	2	0	0	0	0	0	0	0	0	0	0
4/24/2024	2:30 AM	0	4	0	0	0	0	0	0	0	0	0	0	0
4/24/2024	2:45 AM	0	10	1	0	0	0	0	0	0	0	0	0	0
4/24/2024	3:00 AM	0	5	2	0	0	0	0	0	0	0	0	0	0
4/24/2024	3:15 AM	0	0	0	0	0	0	0	0	1	0	0	0	0
4/24/2024	3:30 AM	0	7	0	0	0	0	0	0	0	0	0	0	0
4/24/2024	3:45 AM	0	10	2	0	1	0	0	0	0	0	0	0	0
4/24/2024	4:00 AM	0	10	1	0	0	0	0	0	0	0	0	0	0
4/24/2024	4:15 AM	0	12	0	0	0	1	0	0	0	0	0	0	0
4/24/2024	4:30 AM	0	18	2	0	0	0	0	0	1	0	0	0	0
4/24/2024	4:45 AM	0	10	1	0	0	0	0	0	0	0	0	0	0
4/24/2024	5:00 AM	0	15	4	0	0	1	0	0	0	0	0	0	0
4/24/2024	5:15 AM	0	18	3	0	0	0	0	0	0	0	0	0	0
4/24/2024	5:30 AM	0	34	4	0	0	0	0	0	0	0	0	0	0
4/24/2024	5:45 AM	0	36	7	0	0	0	0	0	1	0	0	0	0
4/24/2024	6:00 AM	0	20	3	0	0	0	0	0	1	0	0	0	0
4/24/2024	6:15 AM	0	52	8	0	1	0	0	1	1	0	0	0	0
4/24/2024	6:30 AM	0	56	10	0	0	0	0	0	0	0	0	0	0
4/24/2024	6:45 AM	0	63	2	0	1	1	0	0	1	0	0	0	0
4/24/2024	7:00 AM	0	67	16	0	1	0	0	0	0	0	0	0	0
4/24/2024	7:15 AM	0	51	9	0	1	0	0	0	0	0	0	0	0
4/24/2024	7:30 AM	0	64	12	0	1	0	0	0	0	0	0	0	0
4/24/2024	7:45 AM	0	72	7	0	1	0	0	1	0	0	0	0	0
4/24/2024	8:00 AM	0	73	16	0	4	3	0	0	1	0	0	0	0
4/24/2024	8:15 AM	0	48	12	0	1	0	0	0	1	0	0	0	0
4/24/2024	8:30 AM	0	44	18	1	2	1	0	1	4	0	0	0	0
4/24/2024	8:45 AM	0	53	11	0	3	0	0	0	0	0	0	0	0
4/24/2024	9:00 AM	0	53	10	0	2	0	0	0	0	0	0	0	0
4/24/2024	9:15 AM	0	45	8	0	3	1	0	0	0	0	0	0	0
4/24/2024	9:30 AM	0	45	18	2	2	1	0	0	1	0	0	0	0
4/24/2024	9:45 AM	0	37	14	0	2	1	0	0	0	0	0	0	0
4/24/2024	10:00 AM	0	43	14	0	2	0	0	3	0	0	0	0	0
4/24/2024	10:15 AM	0	37	11	0	4	0	0	0	1	0	0	0	0
4/24/2024	10:30 AM	0	49	10	0	2	0	1	0	1	0	0	0	0
4/24/2024	10:45 AM	0	46	14	0	3	0	0	1	1	0	0	0	0
4/24/2024	11:00 AM	0	46	6	0	4	0	0	0	2	0	0	0	0
4/24/2024	11:15 AM	0	36	5	0	1	0	1	0	2	0	0	0	0
4/24/2024	11:30 AM	0	44	17	0	1	0	0	1	0	0	0	0	0
4/24/2024	11:45 AM	0	52	11	0	0	1	0	0	1	0	0	0	0
4/24/2024	12:00 PM	0	56	8	3	0	1	0	0	0	0	0	0	0
4/24/2024	12:15 PM	0	55	15	0	0	0	0	0	0	0	0	0	0
4/24/2024	12:30 PM	0	32	9	0	1	1	0	0	0	0	0	0	0
4/24/2024	12:45 PM	1	42	15	0	1	0	1	1	0	0	0	0	0
4/24/2024	1:00 PM	0	38	10	0	1	0	0	0	0	0	0	0	0
4/24/2024	1:15 PM	0	38	14	0	0	0	0	1	1	0	0	0	0
4/24/2024	1:30 PM	0	47	9	0	0	1	0	1	1	0	0	0	0
4/24/2024	1:45 PM	0	42	7	0	1	0	0	0	0	0	0	0	0
4/24/2024	2:00 PM	0	56	10	0	3	1	0	4	0	1	0	0	0
4/24/2024	2:15 PM	0	41	6	0	0	0	0	0	0	0	0	0	0
4/24/2024	2:30 PM	0	36	12	0	0	2	0	0	1	0	0	0	0
4/24/2024	2:45 PM	0	37	11	0	1	1	0	2	0	0	0	0	0
4/24/2024	3:00 PM	0	43	8	0	1	2	0	0	0	0	0	0	0
4/24/2024	3:15 PM	0	34	10	0	0	0	0	0	0	0	0	0	0
4/24/2024	3:30 PM	0	49	20	0	1	0	0	1	1	0	0	0	0
4/24/2024	3:45 PM	1	57	15	0	0	1	0	0	0	0	0	0	0
4/24/2024	4:00 PM	0	46	12	0	0	0	0	0	0	0	0	0	0
4/24/2024	4:15 PM	0	57	15	0	0	0	0	0	0	0	0	0	0
4/24/2024	4:30 PM	0	43	16	0	0	0	0	0	0	0	0	0	0
4/24/2024	4:45 PM	0	60	17	0	0	0	0	0	0	0	0	0	0
4/24/2024	5:00 PM	0	59	15	0	2	0	0	0	1	0	0	0	0
4/24/2024	5:15 PM	0	49	11	0	0	0	0	0	0	0	0	0	0
4/24/2024	5:30 PM	1	45	20	0	1	0	0	0	0	0	0	0	0
4/24/2024	5:45 PM	0	46	4	0	2	0	0	0	0	0	0	0	0
4/24/2024	6:00 PM	1	45	9	0	1	0	0	0	0	0	0	0	0
4/24/2024	6:15 PM	0	58	7	0	1	0	0	0	0	0	0	0	0
4/24/2024	6:30 PM	0	46	8	0	0	0	0	0	0	0	0	0	0
4/24/2024	6:45 PM	0	42	9	0	0	0	0	0	0	0	0	0	0
4/24/2024	7:00 PM	3	41	7	0	1	0	0	0	0	0	0	0	0
4/24/2024	7:15 PM	0	32	6	0	1	0	0	0	0	0	0	0	0
4/24/2024	7:30 PM	0	41	10	0	0	0	0	0	0	0	0	0	0
4/24/2024	7:45 PM	0	40	7	0	0	1	0	0	0	0	0	0	0
4/24/2024	8:00 PM	0	34	6	0	0	0	0	0	0	0	0	0	0
4/24/2024	8:15 PM	0	42	6	0	2	0	0	0	0	0	0	0	0
4/24/2024	8:30 PM	0	40	7	0	1	0	0	0	0	0	0	0	0
4/24/2024	8:45 PM	0	35	6	0	0	0	0	0	0	0	0	0	0
4/24/2024	9:00 PM	0	47	3	0	0	0	0	0	1	0	0	0	0
4/24/2024	9:15 PM	0	35	2	0	0	0	0	0	0	0	0	0	0
4/24/2024	9:30 PM	0	33	4	0	1	0	0	0	1	0	0	0	0
4/24/2024	9:45 PM	0	20	0	0	0	0	0	0	0	0	0	0	0
4/24/2024	10:00 PM	0	22	2	0	0	0	0	0	0	0	0	0	0
4/24/2024	10:15 PM	1	22	2	0	0	0	0	0	1	0	0	0	0
4/24/2024	10:30 PM	0	23	6	0	0	0	0	0	0	0	0	0	0
4/24/2024	10:45 PM	0	21	0	0	0	0	0	0	0	0	0	0	0
4/24/2024	11:00 PM	0	18	2	0	0	0	0	0	0	0	0	0	0
4/24/2024	11:15 PM	0	16	2	0	1	0	0	0	0	0	0	0	0
4/24/2024	11:30 PM	0	16	1	0	0	0	0	0	1	0	0	0	0
4/24/2024	11:45 PM	0	15	1	0	0	0	0	0	1	0	0	0	0

4/25/2024	12:00 AM	0	11	3	0	0	1	0	0	0	0	0	0
4/25/2024	12:15 AM	0	8	1	0	0	0	0	0	0	0	0	0
4/25/2024	12:30 AM	0	11	2	0	0	0	0	0	0	0	0	0
4/25/2024	12:45 AM	0	12	1	0	0	0	0	0	0	0	0	0
4/25/2024	1:00 AM	0	8	1	0	0	0	0	0	0	0	0	0
4/25/2024	1:15 AM	0	6	1	0	0	0	0	0	0	0	0	0
4/25/2024	1:30 AM	0	9	3	0	0	0	0	0	0	0	0	0
4/25/2024	1:45 AM	0	6	0	0	0	0	0	0	0	0	0	0
4/25/2024	2:00 AM	0	6	1	0	0	0	0	0	0	0	0	0
4/25/2024	2:15 AM	0	7	1	0	0	0	0	0	0	0	0	0
4/25/2024	2:30 AM	0	6	2	0	0	0	0	0	0	0	0	0
4/25/2024	2:45 AM	0	3	0	0	0	0	0	0	0	0	0	0
4/25/2024	3:00 AM	0	3	0	0	0	0	0	0	0	0	0	0
4/25/2024	3:15 AM	0	5	4	0	0	0	0	0	0	0	0	0
4/25/2024	3:30 AM	0	5	5	0	0	0	0	0	0	0	0	0
4/25/2024	3:45 AM	0	12	6	0	0	0	0	0	0	0	0	0
4/25/2024	4:00 AM	0	7	2	0	0	0	0	0	0	0	0	0
4/25/2024	4:15 AM	0	7	3	0	0	0	0	0	0	0	0	0
4/25/2024	4:30 AM	0	14	3	0	0	0	0	0	0	0	0	0
4/25/2024	4:45 AM	0	8	2	0	3	0	0	0	0	0	0	0
4/25/2024	5:00 AM	0	11	7	0	1	0	0	0	0	0	0	0
4/25/2024	5:15 AM	0	13	7	0	0	0	0	0	0	0	0	0
4/25/2024	5:30 AM	0	20	3	0	0	0	0	0	0	0	0	0
4/25/2024	5:45 AM	0	28	5	0	0	0	0	0	0	0	0	0
4/25/2024	6:00 AM	0	23	4	1	1	0	0	0	0	0	0	0
4/25/2024	6:15 AM	0	43	5	0	0	0	0	0	0	0	0	0
4/25/2024	6:30 AM	0	51	6	0	0	0	0	0	0	0	0	0
4/25/2024	6:45 AM	1	63	13	0	2	1	0	0	0	0	0	0
4/25/2024	7:00 AM	0	63	7	1	0	0	0	0	0	0	0	0
4/25/2024	7:15 AM	0	61	12	0	1	0	0	0	0	0	0	0
4/25/2024	7:30 AM	0	56	8	0	0	0	0	0	0	0	0	0
4/25/2024	7:45 AM	0	66	7	1	3	1	0	0	1	0	0	0
4/25/2024	8:00 AM	0	43	12	0	0	1	0	0	1	0	0	0
4/25/2024	8:15 AM	0	61	11	0	1	0	0	0	0	0	0	0
4/25/2024	8:30 AM	0	45	10	0	3	1	0	0	1	0	0	0
4/25/2024	8:45 AM	1	55	16	0	0	0	0	0	0	0	0	0
4/25/2024	9:00 AM	0	34	11	0	0	0	0	0	2	0	0	0
4/25/2024	9:15 AM	0	32	10	1	0	0	0	0	1	0	0	0
4/25/2024	9:30 AM	0	34	8	0	0	1	0	0	1	0	0	0
4/25/2024	9:45 AM	0	41	8	0	0	0	0	1	1	0	0	0
4/25/2024	10:00 AM	0	44	6	0	1	0	0	0	0	0	0	0
4/25/2024	10:15 AM	0	48	6	0	0	0	0	1	0	0	0	0
4/25/2024	10:30 AM	0	42	8	0	3	0	0	0	1	0	0	0
4/25/2024	10:45 AM	0	41	3	0	2	1	0	0	0	0	0	0
4/25/2024	11:00 AM	0	43	11	0	4	1	0	0	1	0	0	0
4/25/2024	11:15 AM	0	40	13	0	1	0	0	0	1	0	0	0
4/25/2024	11:30 AM	0	48	6	0	2	0	0	0	1	0	0	0
4/25/2024	11:45 AM	0	44	3	0	1	0	0	1	0	0	0	0
4/25/2024	12:00 PM	0	54	10	0	1	0	0	0	1	0	0	0
4/25/2024	12:15 PM	0	44	6	0	0	0	0	0	0	0	0	0
4/25/2024	12:30 PM	1	33	8	0	2	0	0	0	0	0	0	0
4/25/2024	12:45 PM	0	49	6	0	1	1	0	0	0	0	0	0
4/25/2024	1:00 PM	0	61	5	0	1	0	0	0	2	0	0	0
4/25/2024	1:15 PM	0	52	10	0	1	0	0	0	0	0	0	0
4/25/2024	1:30 PM	0	51	6	0	1	0	0	0	0	0	0	0
4/25/2024	1:45 PM	0	45	7	0	2	1	0	0	0	0	0	0
4/25/2024	2:00 PM	0	29	5	0	2	0	0	0	0	0	0	0
4/25/2024	2:15 PM	0	45	5	1	0	0	0	0	0	0	0	0
4/25/2024	2:30 PM	0	52	5	1	0	0	0	0	1	0	0	0
4/25/2024	2:45 PM	1	57	8	0	1	0	0	0	0	0	0	0
4/25/2024	3:00 PM	0	51	3	1	0	0	0	0	0	0	0	0
4/25/2024	3:15 PM	0	41	8	0	0	0	0	0	0	0	0	0
4/25/2024	3:30 PM	0	44	4	0	1	0	0	0	1	0	0	0
4/25/2024	3:45 PM	0	56	2	0	1	0	0	3	0	0	0	0
4/25/2024	4:00 PM	0	45	11	0	0	0	0	0	0	0	0	0
4/25/2024	4:15 PM	0	58	5	0	0	0	0	0	0	0	0	0
4/25/2024	4:30 PM	0	60	6	0	0	0	0	1	1	0	0	0
4/25/2024	4:45 PM	0	55	4	0	1	0	0	2	2	0	0	0
4/25/2024	5:00 PM	0	50	8	0	0	0	0	0	0	0	0	0
4/25/2024	5:15 PM	0	54	7	0	0	0	0	0	0	0	0	0
4/25/2024	5:30 PM	0	47	6	0	1	0	0	0	0	0	0	0
4/25/2024	5:45 PM	0	44	5	0	1	0	0	0	1	0	0	0
4/25/2024	6:00 PM	0	47	4	0	0	0	0	0	1	0	0	0
4/25/2024	6:15 PM	0	51	2	0	0	0	0	0	0	0	0	0
4/25/2024	6:30 PM	0	52	6	0	0	0	0	0	0	0	0	0
4/25/2024	6:45 PM	0	42	3	0	0	0	0	0	0	0	0	0
4/25/2024	7:00 PM	0	0	0	0	0	0	0	0	0	0	0	0
4/25/2024	7:15 PM	0	0	0	0	0	0	0	0	0	0	0	0
4/25/2024	7:30 PM	0	0	0	0	0	0	0	0	0	0	0	0
4/25/2024	7:45 PM	0	0	0	0	0	0	0	0	0	0	0	0
4/25/2024	8:00 PM	0	0	0	0	0	0	0	0	0	0	0	0
4/25/2024	8:15 PM	0	0	0	0	0	0	0	0	0	0	0	0
4/25/2024	8:30 PM	0	0	0	0	0	0	0	0	0	0	0	0
4/25/2024	8:45 PM	0	0	0	0	0	0	0	0	0	0	0	0
4/25/2024	9:00 PM	0	0	0	0	0	0	0	0	0	0	0	0
4/25/2024	9:15 PM	0	0	0	0	0	0	0	0	0	0	0	0
4/25/2024	9:30 PM	0	0	0	0	0	0	0	0	0	0	0	0
4/25/2024	9:45 PM	0	0	0	0	0	0	0	0	0	0	0	0
4/25/2024	10:00 PM	0	0	0	0	0	0	0	0	0	0	0	0
4/25/2024	10:15 PM	0	0	0	0	0	0	0	0	0	0	0	0
4/25/2024	10:30 PM	0	0	0	0	0	0	0	0	0	0	0	0
4/25/2024	10:45 PM	0	0	0	0	0	0	0	0	0	0	0	0
4/25/2024	11:00 PM	0	0	0	0	0	0	0	0	0	0	0	0
4/25/2024	11:15 PM	0	0	0	0	0	0	0	0	0	0	0	0
4/25/2024	11:30 PM	0	0	0	0	0	0	0	0	0	0	0	0
4/25/2024	11:45 PM	0	0	0	0	0	0	0	0	0	0	0	0

EB
File Name:
Start Date: 4/23/2024
Start Time: 0
Site Code: 69
Station ID: 1
Location 1: I-20 W/Bound On-Ramp, west of US-176 Broad River Rd
Location 2:

Date	Time	1	2	3	4	5	6	7	8	9	10	11	12	13
4/23/2024	12:00 AM	0	0	0	0	0	0	0	0	0	0	0	0	0
4/23/2024	12:15 AM	0	0	0	0	0	0	0	0	0	0	0	0	0
4/23/2024	12:30 AM	0	0	0	0	0	0	0	0	0	0	0	0	0
4/23/2024	12:45 AM	0	0	0	0	0	0	0	0	0	0	0	0	0
4/23/2024	1:00 AM	0	0	0	0	0	0	0	0	0	0	0	0	0
4/23/2024	1:15 AM	0	0	0	0	0	0	0	0	0	0	0	0	0
4/23/2024	1:30 AM	0	0	0	0	0	0	0	0	0	0	0	0	0
4/23/2024	1:45 AM	0	0	0	0	0	0	0	0	0	0	0	0	0
4/23/2024	2:00 AM	0	0	0	0	0	0	0	0	0	0	0	0	0
4/23/2024	2:15 AM	0	0	0	0	0	0	0	0	0	0	0	0	0
4/23/2024	2:30 AM	0	0	0	0	0	0	0	0	0	0	0	0	0
4/23/2024	2:45 AM	0	0	0	0	0	0	0	0	0	0	0	0	0
4/23/2024	3:00 AM	0	0	0	0	0	0	0	0	0	0	0	0	0
4/23/2024	3:15 AM	0	0	0	0	0	0	0	0	0	0	0	0	0
4/23/2024	3:30 AM	0	0	0	0	0	0	0	0	0	0	0	0	0
4/23/2024	3:45 AM	0	0	0	0	0	0	0	0	0	0	0	0	0
4/23/2024	4:00 AM	0	0	0	0	0	0	0	0	0	0	0	0	0
4/23/2024	4:15 AM	0	0	0	0	0	0	0	0	0	0	0	0	0
4/23/2024	4:30 AM	0	0	0	0	0	0	0	0	0	0	0	0	0
4/23/2024	4:45 AM	0	0	0	0	0	0	0	0	0	0	0	0	0
4/23/2024	5:00 AM	0	0	0	0	0	0	0	0	0	0	0	0	0
4/23/2024	5:15 AM	0	0	0	0	0	0	0	0	0	0	0	0	0
4/23/2024	5:30 AM	0	0	0	0	0	0	0	0	0	0	0	0	0
4/23/2024	5:45 AM	0	0	0	0	0	0	0	0	0	0	0	0	0
4/23/2024	6:00 AM	0	0	0	0	0	0	0	0	0	0	0	0	0
4/23/2024	6:15 AM	0	0	0	0	0	0	0	0	0	0	0	0	0
4/23/2024	6:30 AM	0	0	0	0	0	0	0	0	0	0	0	0	0
4/23/2024	6:45 AM	0	0	0	0	0	0	0	0	0	0	0	0	0
4/23/2024	7:00 AM	0	0	0	0	0	0	0	0	0	0	0	0	0
4/23/2024	7:15 AM	0	0	0	0	0	0	0	0	0	0	0	0	0
4/23/2024	7:30 AM	0	0	0	0	0	0	0	0	0	0	0	0	0
4/23/2024	7:45 AM	0	0	0	0	0	0	0	0	0	0	0	0	0
4/23/2024	8:00 AM	0	0	0	0	0	0	0	0	0	0	0	0	0
4/23/2024	8:15 AM	0	0	0	0	0	0	0	0	0	0	0	0	0
4/23/2024	8:30 AM	0	0	0	0	0	0	0	0	0	0	0	0	0
4/23/2024	8:45 AM	0	0	0	0	0	0	0	0	0	0	0	0	0
4/23/2024	9:00 AM	0	0	0	0	0	0	0	0	0	0	0	0	0
4/23/2024	9:15 AM	0	0	0	0	0	0	0	0	0	0	0	0	0
4/23/2024	9:30 AM	0	0	0	0	0	0	0	0	0	0	0	0	0
4/23/2024	9:45 AM	0	0	0	0	0	0	0	0	0	0	0	0	0
4/23/2024	10:00 AM	0	0	0	0	0	0	0	0	0	0	0	0	0
4/23/2024	10:15 AM	0	0	0	0	0	0	0	0	0	0	0	0	0
4/23/2024	10:30 AM	0	0	0	0	0	0	0	0	0	0	0	0	0
4/23/2024	10:45 AM	0	0	0	0	0	0	0	0	0	0	0	0	0
4/23/2024	11:00 AM	0	0	0	0	0	0	0	0	0	0	0	0	0
4/23/2024	11:15 AM	0	0	0	0	0	0	0	0	0	0	0	0	0
4/23/2024	11:30 AM	0	0	0	0	0	0	0	0	0	0	0	0	0
4/23/2024	11:45 AM	0	0	0	0	0	0	0	0	0	0	0	0	0
4/23/2024	12:00 PM	0	0	0	0	0	0	0	0	0	0	0	0	0
4/23/2024	12:15 PM	0	0	0	0	0	0	0	0	0	0	0	0	0
4/23/2024	12:30 PM	0	0	0	0	0	0	0	0	0	0	0	0	0
4/23/2024	12:45 PM	0	0	0	0	0	0	0	0	0	0	0	0	0
4/23/2024	1:00 PM	0	0	0	0	0	0	0	0	0	0	0	0	0
4/23/2024	1:15 PM	0	0	0	0	0	0	0	0	0	0	0	0	0
4/23/2024	1:30 PM	0	0	0	0	0	0	0	0	0	0	0	0	0
4/23/2024	1:45 PM	0	0	0	0	0	0	0	0	0	0	0	0	0
4/23/2024	2:00 PM	0	0	0	0	0	0	0	0	0	0	0	0	0
4/23/2024	2:15 PM	0	0	0	0	0	0	0	0	0	0	0	0	0
4/23/2024	2:30 PM	0	0	0	0	0	0	0	0	0	0	0	0	0
4/23/2024	2:45 PM	0	0	0	0	0	0	0	0	0	0	0	0	0
4/23/2024	3:00 PM	0	0	0	0	0	0	0	0	0	0	0	0	0
4/23/2024	3:15 PM	0	0	0	0	0	0	0	0	0	0	0	0	0
4/23/2024	3:30 PM	0	0	0	0	0	0	0	0	0	0	0	0	0
4/23/2024	3:45 PM	0	0	0	0	0	0	0	0	0	0	0	0	0
4/23/2024	4:00 PM	0	0	0	0	0	0	0	0	0	0	0	0	0
4/23/2024	4:15 PM	0	0	0	0	0	0	0	0	0	0	0	0	0
4/23/2024	4:30 PM	0	0	0	0	0	0	0	0	0	0	0	0	0
4/23/2024	4:45 PM	0	0	0	0	0	0	0	0	0	0	0	0	0
4/23/2024	5:00 PM	0	0	0	0	0	0	0	0	0	0	0	0	0
4/23/2024	5:15 PM	0	0	0	0	0	0	0	0	0	0	0	0	0
4/23/2024	5:30 PM	0	0	0	0	0	0	0	0	0	0	0	0	0
4/23/2024	5:45 PM	0	0	0	0	0	0	0	0	0	0	0	0	0
4/23/2024	6:00 PM	0	0	0	0	0	0	0	0	0	0	0	0	0
4/23/2024	6:15 PM	0	0	0	0	0	0	0	0	0	0	0	0	0
4/23/2024	6:30 PM	0	0	0	0	0	0	0	0	0	0	0	0	0
4/23/2024	6:45 PM	0	0	0	0	0	0	0	0	0	0	0	0	0
4/23/2024	7:00 PM	0	0	0	0	0	0	0	0	0	0	0	0	0
4/23/2024	7:15 PM	0	0	0	0	0	0	0	0	0	0	0	0	0
4/23/2024	7:30 PM	0	0	0	0	0	0	0	0	0	0	0	0	0
4/23/2024	7:45 PM	0	0	0	0	0	0	0	0	0	0	0	0	0
4/23/2024	8:00 PM	0	0	0	0	0	0	0	0	0	0	0	0	0
4/23/2024	8:15 PM	0	0	0	0	0	0	0	0	0	0	0	0	0
4/23/2024	8:30 PM	0	0	0	0	0	0	0	0	0	0	0	0	0
4/23/2024	8:45 PM	0	0	0	0	0	0	0	0	0	0	0	0	0
4/23/2024	9:00 PM	0	0	0	0	0	0	0	0	0	0	0	0	0
4/23/2024	9:15 PM	0	0	0	0	0	0	0	0	0	0	0	0	0
4/23/2024	9:30 PM	0	0	0	0	0	0	0	0	0	0	0	0	0
4/23/2024	9:45 PM	0	0	0	0	0	0	0	0	0	0	0	0	0
4/23/2024	10:00 PM	0	0	0	0	0	0	0	0	0	0	0	0	0
4/23/2024	10:15 PM	0	0	0	0	0	0	0	0	0	0	0	0	0
4/23/2024	10:30 PM	0	0	0	0	0	0	0	0	0	0	0	0	0
4/23/2024	10:45 PM	0	0	0	0	0	0	0	0	0	0	0	0	0
4/23/2024	11:00 PM	0	0	0	0	0	0	0	0	0	0	0	0	0
4/23/2024	11:15 PM	0	0	0	0	0	0	0	0	0	0	0	0	0
4/23/2024	11:30 PM	0	0	0	0	0	0	0	0	0	0	0	0	0
4/23/2024	11:45 PM	0	0	0	0	0	0	0	0	0	0	0	0	0

4/24/2024	12:00 AM	0	0	0	0	0	0	0	0	0	0	0	0	0
4/24/2024	12:15 AM	0	0	0	0	0	0	0	0	0	0	0	0	0
4/24/2024	12:30 AM	0	0	0	0	0	0	0	0	0	0	0	0	0
4/24/2024	12:45 AM	0	0	0	0	0	0	0	0	0	0	0	0	0
4/24/2024	1:00 AM	0	0	0	0	0	0	0	0	0	0	0	0	0
4/24/2024	1:15 AM	0	0	0	0	0	0	0	0	0	0	0	0	0
4/24/2024	1:30 AM	0	0	0	0	0	0	0	0	0	0	0	0	0
4/24/2024	1:45 AM	0	0	0	0	0	0	0	0	0	0	0	0	0
4/24/2024	2:00 AM	0	0	0	0	0	0	0	0	0	0	0	0	0
4/24/2024	2:15 AM	0	0	0	0	0	0	0	0	0	0	0	0	0
4/24/2024	2:30 AM	0	0	0	0	0	0	0	0	0	0	0	0	0
4/24/2024	2:45 AM	0	0	0	0	0	0	0	0	0	0	0	0	0
4/24/2024	3:00 AM	0	0	0	0	0	0	0	0	0	0	0	0	0
4/24/2024	3:15 AM	0	0	0	0	0	0	0	0	0	0	0	0	0
4/24/2024	3:30 AM	0	0	0	0	0	0	0	0	0	0	0	0	0
4/24/2024	3:45 AM	0	0	0	0	0	0	0	0	0	0	0	0	0
4/24/2024	4:00 AM	0	0	0	0	0	0	0	0	0	0	0	0	0
4/24/2024	4:15 AM	0	0	0	0	0	0	0	0	0	0	0	0	0
4/24/2024	4:30 AM	0	0	0	0	0	0	0	0	0	0	0	0	0
4/24/2024	4:45 AM	0	0	0	0	0	0	0	0	0	0	0	0	0
4/24/2024	5:00 AM	0	0	0	0	0	0	0	0	0	0	0	0	0
4/24/2024	5:15 AM	0	0	0	0	0	0	0	0	0	0	0	0	0
4/24/2024	5:30 AM	0	0	0	0	0	0	0	0	0	0	0	0	0
4/24/2024	5:45 AM	0	0	0	0	0	0	0	0	0	0	0	0	0
4/24/2024	6:00 AM	0	0	0	0	0	0	0	0	0	0	0	0	0
4/24/2024	6:15 AM	0	0	0	0	0	0	0	0	0	0	0	0	0
4/24/2024	6:30 AM	0	0	0	0	0	0	0	0	0	0	0	0	0
4/24/2024	6:45 AM	0	0	0	0	0	0	0	0	0	0	0	0	0
4/24/2024	7:00 AM	0	0	0	0	0	0	0	0	0	0	0	0	0
4/24/2024	7:15 AM	0	0	0	0	0	0	0	0	0	0	0	0	0
4/24/2024	7:30 AM	0	0	0	0	0	0	0	0	0	0	0	0	0
4/24/2024	7:45 AM	0	0	0	0	0	0	0	0	0	0	0	0	0
4/24/2024	8:00 AM	0	0	0	0	0	0	0	0	0	0	0	0	0
4/24/2024	8:15 AM	0	0	0	0	0	0	0	0	0	0	0	0	0
4/24/2024	8:30 AM	0	0	0	0	0	0	0	0	0	0	0	0	0
4/24/2024	8:45 AM	0	0	0	0	0	0	0	0	0	0	0	0	0
4/24/2024	9:00 AM	0	0	0	0	0	0	0	0	0	0	0	0	0
4/24/2024	9:15 AM	0	0	0	0	0	0	0	0	0	0	0	0	0
4/24/2024	9:30 AM	0	0	0	0	0	0	0	0	0	0	0	0	0
4/24/2024	9:45 AM	0	0	0	0	0	0	0	0	0	0	0	0	0
4/24/2024	10:00 AM	0	0	0	0	0	0	0	0	0	0	0	0	0
4/24/2024	10:15 AM	0	0	0	0	0	0	0	0	0	0	0	0	0
4/24/2024	10:30 AM	0	0	0	0	0	0	0	0	0	0	0	0	0
4/24/2024	10:45 AM	0	0	0	0	0	0	0	0	0	0	0	0	0
4/24/2024	11:00 AM	0	0	0	0	0	0	0	0	0	0	0	0	0
4/24/2024	11:15 AM	0	0	0	0	0	0	0	0	0	0	0	0	0
4/24/2024	11:30 AM	0	0	0	0	0	0	0	0	0	0	0	0	0
4/24/2024	11:45 AM	0	0	0	0	0	0	0	0	0	0	0	0	0
4/24/2024	12:00 PM	0	0	0	0	0	0	0	0	0	0	0	0	0
4/24/2024	12:15 PM	0	0	0	0	0	0	0	0	0	0	0	0	0
4/24/2024	12:30 PM	0	0	0	0	0	0	0	0	0	0	0	0	0
4/24/2024	12:45 PM	0	0	0	0	0	0	0	0	0	0	0	0	0
4/24/2024	1:00 PM	0	0	0	0	0	0	0	0	0	0	0	0	0
4/24/2024	1:15 PM	0	0	0	0	0	0	0	0	0	0	0	0	0
4/24/2024	1:30 PM	0	0	0	0	0	0	0	0	0	0	0	0	0
4/24/2024	1:45 PM	0	0	0	0	0	0	0	0	0	0	0	0	0
4/24/2024	2:00 PM	0	0	0	0	0	0	0	0	0	0	0	0	0
4/24/2024	2:15 PM	0	0	0	0	0	0	0	0	0	0	0	0	0
4/24/2024	2:30 PM	0	0	0	0	0	0	0	0	0	0	0	0	0
4/24/2024	2:45 PM	0	0	0	0	0	0	0	0	0	0	0	0	0
4/24/2024	3:00 PM	0	0	0	0	0	0	0	0	0	0	0	0	0
4/24/2024	3:15 PM	0	0	0	0	0	0	0	0	0	0	0	0	0
4/24/2024	3:30 PM	0	0	0	0	0	0	0	0	0	0	0	0	0
4/24/2024	3:45 PM	0	0	0	0	0	0	0	0	0	0	0	0	0
4/24/2024	4:00 PM	0	0	0	0	0	0	0	0	0	0	0	0	0
4/24/2024	4:15 PM	0	0	0	0	0	0	0	0	0	0	0	0	0
4/24/2024	4:30 PM	0	0	0	0	0	0	0	0	0	0	0	0	0
4/24/2024	4:45 PM	0	0	0	0	0	0	0	0	0	0	0	0	0
4/24/2024	5:00 PM	0	0	0	0	0	0	0	0	0	0	0	0	0
4/24/2024	5:15 PM	0	0	0	0	0	0	0	0	0	0	0	0	0
4/24/2024	5:30 PM	0	0	0	0	0	0	0	0	0	0	0	0	0
4/24/2024	5:45 PM	0	0	0	0	0	0	0	0	0	0	0	0	0
4/24/2024	6:00 PM	0	0	0	0	0	0	0	0	0	0	0	0	0
4/24/2024	6:15 PM	0	0	0	0	0	0	0	0	0	0	0	0	0
4/24/2024	6:30 PM	0	0	0	0	0	0	0	0	0	0	0	0	0
4/24/2024	6:45 PM	0	0	0	0	0	0	0	0	0	0	0	0	0
4/24/2024	7:00 PM	0	0	0	0	0	0	0	0	0	0	0	0	0
4/24/2024	7:15 PM	0	0	0	0	0	0	0	0	0	0	0	0	0
4/24/2024	7:30 PM	0	0	0	0	0	0	0	0	0	0	0	0	0
4/24/2024	7:45 PM	0	0	0	0	0	0	0	0	0	0	0	0	0
4/24/2024	8:00 PM	0	0	0	0	0	0	0	0	0	0	0	0	0
4/24/2024	8:15 PM	0	0	0	0	0	0	0	0	0	0	0	0	0
4/24/2024	8:30 PM	0	0	0	0	0	0	0	0	0	0	0	0	0
4/24/2024	8:45 PM	0	0	0	0	0	0	0	0	0	0	0	0	0
4/24/2024	9:00 PM	0	0	0	0	0	0	0	0	0	0	0	0	0
4/24/2024	9:15 PM	0	0	0	0	0	0	0	0	0	0	0	0	0
4/24/2024	9:30 PM	0	0	0	0	0	0	0	0	0	0	0	0	0
4/24/2024	9:45 PM	0	0	0	0	0	0	0	0	0	0	0	0	0
4/24/2024	10:00 PM	0	0	0	0	0	0	0	0	0	0	0	0	0
4/24/2024	10:15 PM	0	0	0	0	0	0	0	0	0	0	0	0	0
4/24/2024	10:30 PM	0	0	0	0	0	0	0	0	0	0	0	0	0
4/24/2024	10:45 PM	0	0	0	0	0	0	0	0	0	0	0	0	0
4/24/2024	11:00 PM	0	0	0	0	0	0	0	0	0	0	0	0	0
4/24/2024	11:15 PM	0	0	0	0	0	0	0	0	0	0	0	0	0
4/24/2024	11:30 PM	0	0	0	0	0	0	0	0	0	0	0	0	0
4/24/2024	11:45 PM	0	0	0	0	0	0	0	0	0	0	0	0	0

4/25/2024	12:00 AM	0	0	0	0	0	0	0	0	0	0	0	0	0
4/25/2024	12:15 AM	0	0	0	0	0	0	0	0	0	0	0	0	0
4/25/2024	12:30 AM	0	0	0	0	0	0	0	0	0	0	0	0	0
4/25/2024	12:45 AM	0	0	0	0	0	0	0	0	0	0	0	0	0
4/25/2024	1:00 AM	0	0	0	0	0	0	0	0	0	0	0	0	0
4/25/2024	1:15 AM	0	0	0	0	0	0	0	0	0	0	0	0	0
4/25/2024	1:30 AM	0	0	0	0	0	0	0	0	0	0	0	0	0
4/25/2024	1:45 AM	0	0	0	0	0	0	0	0	0	0	0	0	0
4/25/2024	2:00 AM	0	0	0	0	0	0	0	0	0	0	0	0	0
4/25/2024	2:15 AM	0	0	0	0	0	0	0	0	0	0	0	0	0
4/25/2024	2:30 AM	0	0	0	0	0	0	0	0	0	0	0	0	0
4/25/2024	2:45 AM	0	0	0	0	0	0	0	0	0	0	0	0	0
4/25/2024	3:00 AM	0	0	0	0	0	0	0	0	0	0	0	0	0
4/25/2024	3:15 AM	0	0	0	0	0	0	0	0	0	0	0	0	0
4/25/2024	3:30 AM	0	0	0	0	0	0	0	0	0	0	0	0	0
4/25/2024	3:45 AM	0	0	0	0	0	0	0	0	0	0	0	0	0
4/25/2024	4:00 AM	0	0	0	0	0	0	0	0	0	0	0	0	0
4/25/2024	4:15 AM	0	0	0	0	0	0	0	0	0	0	0	0	0
4/25/2024	4:30 AM	0	0	0	0	0	0	0	0	0	0	0	0	0
4/25/2024	4:45 AM	0	0	0	0	0	0	0	0	0	0	0	0	0
4/25/2024	5:00 AM	0	0	0	0	0	0	0	0	0	0	0	0	0
4/25/2024	5:15 AM	0	0	0	0	0	0	0	0	0	0	0	0	0
4/25/2024	5:30 AM	0	0	0	0	0	0	0	0	0	0	0	0	0
4/25/2024	5:45 AM	0	0	0	0	0	0	0	0	0	0	0	0	0
4/25/2024	6:00 AM	0	0	0	0	0	0	0	0	0	0	0	0	0
4/25/2024	6:15 AM	0	0	0	0	0	0	0	0	0	0	0	0	0
4/25/2024	6:30 AM	0	0	0	0	0	0	0	0	0	0	0	0	0
4/25/2024	6:45 AM	0	0	0	0	0	0	0	0	0	0	0	0	0
4/25/2024	7:00 AM	0	0	0	0	0	0	0	0	0	0	0	0	0
4/25/2024	7:15 AM	0	0	0	0	0	0	0	0	0	0	0	0	0
4/25/2024	7:30 AM	0	0	0	0	0	0	0	0	0	0	0	0	0
4/25/2024	7:45 AM	0	0	0	0	0	0	0	0	0	0	0	0	0
4/25/2024	8:00 AM	0	0	0	0	0	0	0	0	0	0	0	0	0
4/25/2024	8:15 AM	0	0	0	0	0	0	0	0	0	0	0	0	0
4/25/2024	8:30 AM	0	0	0	0	0	0	0	0	0	0	0	0	0
4/25/2024	8:45 AM	0	0	0	0	0	0	0	0	0	0	0	0	0
4/25/2024	9:00 AM	0	0	0	0	0	0	0	0	0	0	0	0	0
4/25/2024	9:15 AM	0	0	0	0	0	0	0	0	0	0	0	0	0
4/25/2024	9:30 AM	0	0	0	0	0	0	0	0	0	0	0	0	0
4/25/2024	9:45 AM	0	0	0	0	0	0	0	0	0	0	0	0	0
4/25/2024	10:00 AM	0	0	0	0	0	0	0	0	0	0	0	0	0
4/25/2024	10:15 AM	0	0	0	0	0	0	0	0	0	0	0	0	0
4/25/2024	10:30 AM	0	0	0	0	0	0	0	0	0	0	0	0	0
4/25/2024	10:45 AM	0	0	0	0	0	0	0	0	0	0	0	0	0
4/25/2024	11:00 AM	0	0	0	0	0	0	0	0	0	0	0	0	0
4/25/2024	11:15 AM	0	0	0	0	0	0	0	0	0	0	0	0	0
4/25/2024	11:30 AM	0	0	0	0	0	0	0	0	0	0	0	0	0
4/25/2024	11:45 AM	0	0	0	0	0	0	0	0	0	0	0	0	0
4/25/2024	12:00 PM	0	0	0	0	0	0	0	0	0	0	0	0	0
4/25/2024	12:15 PM	0	0	0	0	0	0	0	0	0	0	0	0	0
4/25/2024	12:30 PM	0	0	0	0	0	0	0	0	0	0	0	0	0
4/25/2024	12:45 PM	0	0	0	0	0	0	0	0	0	0	0	0	0
4/25/2024	1:00 PM	0	0	0	0	0	0	0	0	0	0	0	0	0
4/25/2024	1:15 PM	0	0	0	0	0	0	0	0	0	0	0	0	0
4/25/2024	1:30 PM	0	0	0	0	0	0	0	0	0	0	0	0	0
4/25/2024	1:45 PM	0	0	0	0	0	0	0	0	0	0	0	0	0
4/25/2024	2:00 PM	0	0	0	0	0	0	0	0	0	0	0	0	0
4/25/2024	2:15 PM	0	0	0	0	0	0	0	0	0	0	0	0	0
4/25/2024	2:30 PM	0	0	0	0	0	0	0	0	0	0	0	0	0
4/25/2024	2:45 PM	0	0	0	0	0	0	0	0	0	0	0	0	0
4/25/2024	3:00 PM	0	0	0	0	0	0	0	0	0	0	0	0	0
4/25/2024	3:15 PM	0	0	0	0	0	0	0	0	0	0	0	0	0
4/25/2024	3:30 PM	0	0	0	0	0	0	0	0	0	0	0	0	0
4/25/2024	3:45 PM	0	0	0	0	0	0	0	0	0	0	0	0	0
4/25/2024	4:00 PM	0	0	0	0	0	0	0	0	0	0	0	0	0
4/25/2024	4:15 PM	0	0	0	0	0	0	0	0	0	0	0	0	0
4/25/2024	4:30 PM	0	0	0	0	0	0	0	0	0	0	0	0	0
4/25/2024	4:45 PM	0	0	0	0	0	0	0	0	0	0	0	0	0
4/25/2024	5:00 PM	0	0	0	0	0	0	0	0	0	0	0	0	0
4/25/2024	5:15 PM	0	0	0	0	0	0	0	0	0	0	0	0	0
4/25/2024	5:30 PM	0	0	0	0	0	0	0	0	0	0	0	0	0
4/25/2024	5:45 PM	0	0	0	0	0	0	0	0	0	0	0	0	0
4/25/2024	6:00 PM	0	0	0	0	0	0	0	0	0	0	0	0	0
4/25/2024	6:15 PM	0	0	0	0	0	0	0	0	0	0	0	0	0
4/25/2024	6:30 PM	0	0	0	0	0	0	0	0	0	0	0	0	0
4/25/2024	6:45 PM	0	0	0	0	0	0	0	0	0	0	0	0	0
4/25/2024	7:00 PM	0	0	0	0	0	0	0	0	0	0	0	0	0
4/25/2024	7:15 PM	0	0	0	0	0	0	0	0	0	0	0	0	0
4/25/2024	7:30 PM	0	0	0	0	0	0	0	0	0	0	0	0	0
4/25/2024	7:45 PM	0	0	0	0	0	0	0	0	0	0	0	0	0
4/25/2024	8:00 PM	0	0	0	0	0	0	0	0	0	0	0	0	0
4/25/2024	8:15 PM	0	0	0	0	0	0	0	0	0	0	0	0	0
4/25/2024	8:30 PM	0	0	0	0	0	0	0	0	0	0	0	0	0
4/25/2024	8:45 PM	0	0	0	0	0	0	0	0	0	0	0	0	0
4/25/2024	9:00 PM	0	0	0	0	0	0	0	0	0	0	0	0	0
4/25/2024	9:15 PM	0	0	0	0	0	0	0	0	0	0	0	0	0
4/25/2024	9:30 PM	0	0	0	0	0	0	0	0	0	0	0	0	0
4/25/2024	9:45 PM	0	0	0	0	0	0	0	0	0	0	0	0	0
4/25/2024	10:00 PM	0	0	0	0	0	0	0	0	0	0	0	0	0
4/25/2024	10:15 PM	0	0	0	0	0	0	0	0	0	0	0	0	0
4/25/2024	10:30 PM	0	0	0	0	0	0	0	0	0	0	0	0	0
4/25/2024	10:45 PM	0	0	0	0	0	0	0	0	0	0	0	0	0
4/25/2024	11:00 PM	0	0	0	0	0	0	0	0	0	0	0	0	0
4/25/2024	11:15 PM	0	0	0	0	0	0	0	0	0	0	0	0	0
4/25/2024	11:30 PM	0	0	0	0	0	0	0	0	0	0	0	0	0
4/25/2024	11:45 PM	0	0	0	0	0	0	0	0	0	0	0	0	0

WB
File Name:
Start Date: 4/23/2024
Start Time: 0
Site Code: 69
Station ID: 1
Location 1: I-20 W/Bound On-Ramp, west of US-176 Broad River Rd
Location 2:

Date	Time	1	2	3	4	5	6	7	8	9	10	11	12	13
4/23/2024	12:00 AM	0	0	0	0	0	0	0	0	0	0	0	0	0
4/23/2024	12:15 AM	0	0	0	0	0	0	0	0	0	0	0	0	0
4/23/2024	12:30 AM	0	0	0	0	0	0	0	0	0	0	0	0	0
4/23/2024	12:45 AM	0	0	0	0	0	0	0	0	0	0	0	0	0
4/23/2024	1:00 AM	0	0	0	0	0	0	0	0	0	0	0	0	0
4/23/2024	1:15 AM	0	0	0	0	0	0	0	0	0	0	0	0	0
4/23/2024	1:30 AM	0	0	0	0	0	0	0	0	0	0	0	0	0
4/23/2024	1:45 AM	0	0	0	0	0	0	0	0	0	0	0	0	0
4/23/2024	2:00 AM	0	0	0	0	0	0	0	0	0	0	0	0	0
4/23/2024	2:15 AM	0	0	0	0	0	0	0	0	0	0	0	0	0
4/23/2024	2:30 AM	0	0	0	0	0	0	0	0	0	0	0	0	0
4/23/2024	2:45 AM	0	0	0	0	0	0	0	0	0	0	0	0	0
4/23/2024	3:00 AM	0	0	0	0	0	0	0	0	0	0	0	0	0
4/23/2024	3:15 AM	0	0	0	0	0	0	0	0	0	0	0	0	0
4/23/2024	3:30 AM	0	0	0	0	0	0	0	0	0	0	0	0	0
4/23/2024	3:45 AM	0	0	0	0	0	0	0	0	0	0	0	0	0
4/23/2024	4:00 AM	0	0	0	0	0	0	0	0	0	0	0	0	0
4/23/2024	4:15 AM	0	0	0	0	0	0	0	0	0	0	0	0	0
4/23/2024	4:30 AM	0	0	0	0	0	0	0	0	0	0	0	0	0
4/23/2024	4:45 AM	0	0	0	0	0	0	0	0	0	0	0	0	0
4/23/2024	5:00 AM	0	0	0	0	0	0	0	0	0	0	0	0	0
4/23/2024	5:15 AM	0	0	0	0	0	0	0	0	0	0	0	0	0
4/23/2024	5:30 AM	0	0	0	0	0	0	0	0	0	0	0	0	0
4/23/2024	5:45 AM	0	0	0	0	0	0	0	0	0	0	0	0	0
4/23/2024	6:00 AM	0	0	0	0	0	0	0	0	0	0	0	0	0
4/23/2024	6:15 AM	0	0	0	0	0	0	0	0	0	0	0	0	0
4/23/2024	6:30 AM	0	0	0	0	0	0	0	0	0	0	0	0	0
4/23/2024	6:45 AM	0	0	0	0	0	0	0	0	0	0	0	0	0
4/23/2024	7:00 AM	0	0	0	0	0	0	0	0	0	0	0	0	0
4/23/2024	7:15 AM	0	0	0	0	0	0	0	0	0	0	0	0	0
4/23/2024	7:30 AM	0	0	0	0	0	0	0	0	0	0	0	0	0
4/23/2024	7:45 AM	0	0	0	0	0	0	0	0	0	0	0	0	0
4/23/2024	8:00 AM	0	0	0	0	0	0	0	0	0	0	0	0	0
4/23/2024	8:15 AM	0	0	0	0	0	0	0	0	0	0	0	0	0
4/23/2024	8:30 AM	0	0	0	0	0	0	0	0	0	0	0	0	0
4/23/2024	8:45 AM	0	0	0	0	0	0	0	0	0	0	0	0	0
4/23/2024	9:00 AM	0	0	0	0	0	0	0	0	0	0	0	0	0
4/23/2024	9:15 AM	0	0	0	0	0	0	0	0	0	0	0	0	0
4/23/2024	9:30 AM	0	0	0	0	0	0	0	0	0	0	0	0	0
4/23/2024	9:45 AM	0	0	0	0	0	0	0	0	0	0	0	0	0
4/23/2024	10:00 AM	0	0	0	0	0	0	0	0	0	0	0	0	0
4/23/2024	10:15 AM	0	0	0	0	0	0	0	0	0	0	0	0	0
4/23/2024	10:30 AM	0	0	0	0	0	0	0	0	0	0	0	0	0
4/23/2024	10:45 AM	0	0	0	0	0	0	0	0	0	0	0	0	0
4/23/2024	11:00 AM	0	0	0	0	0	0	0	0	0	0	0	0	0
4/23/2024	11:15 AM	0	0	0	0	0	0	0	0	0	0	0	0	0
4/23/2024	11:30 AM	0	0	0	0	0	0	0	0	0	0	0	0	0
4/23/2024	11:45 AM	0	0	0	0	0	0	0	0	0	0	0	0	0
4/23/2024	12:00 PM	0	0	0	0	0	0	0	0	0	0	0	0	0
4/23/2024	12:15 PM	0	0	0	0	0	0	0	0	0	0	0	0	0
4/23/2024	12:30 PM	0	0	0	0	0	0	0	0	0	0	0	0	0
4/23/2024	12:45 PM	0	0	0	0	0	0	0	0	0	0	0	0	0
4/23/2024	1:00 PM	0	0	0	0	0	0	0	0	0	0	0	0	0
4/23/2024	1:15 PM	0	0	0	0	0	0	0	0	0	0	0	0	0
4/23/2024	1:30 PM	0	0	0	0	0	0	0	0	0	0	0	0	0
4/23/2024	1:45 PM	0	0	0	0	0	0	0	0	0	0	0	0	0
4/23/2024	2:00 PM	0	0	0	0	0	0	0	0	0	0	0	0	0
4/23/2024	2:15 PM	0	0	0	0	0	0	0	0	0	0	0	0	0
4/23/2024	2:30 PM	0	0	0	0	0	0	0	0	0	0	0	0	0
4/23/2024	2:45 PM	0	0	0	0	0	0	0	0	0	0	0	0	0
4/23/2024	3:00 PM	0	0	0	0	0	0	0	0	0	0	0	0	0
4/23/2024	3:15 PM	0	0	0	0	0	0	0	0	0	0	0	0	0
4/23/2024	3:30 PM	0	0	0	0	0	0	0	0	0	0	0	0	0
4/23/2024	3:45 PM	0	0	0	0	0	0	0	0	0	0	0	0	0
4/23/2024	4:00 PM	0	0	0	0	0	0	0	0	0	0	0	0	0
4/23/2024	4:15 PM	0	0	0	0	0	0	0	0	0	0	0	0	0
4/23/2024	4:30 PM	0	0	0	0	0	0	0	0	0	0	0	0	0
4/23/2024	4:45 PM	0	0	0	0	0	0	0	0	0	0	0	0	0
4/23/2024	5:00 PM	0	0	0	0	0	0	0	0	0	0	0	0	0
4/23/2024	5:15 PM	0	0	0	0	0	0	0	0	0	0	0	0	0
4/23/2024	5:30 PM	0	0	0	0	0	0	0	0	0	0	0	0	0
4/23/2024	5:45 PM	0	0	0	0	0	0	0	0	0	0	0	0	0
4/23/2024	6:00 PM	0	0	0	0	0	0	0	0	0	0	0	0	0
4/23/2024	6:15 PM	1	56	7	0	0	0	0	0	0	0	0	0	0
4/23/2024	6:30 PM	1	97	11	0	3	1	0	0	0	0	0	0	0
4/23/2024	6:45 PM	1	136	14	0	3	1	0	0	0	0	0	0	0
4/23/2024	7:00 PM	1	182	20	0	3	1	0	0	1	0	0	0	0
4/23/2024	7:15 PM	0	169	19	0	3	1	0	0	1	0	0	0	0
4/23/2024	7:30 PM	0	173	19	0	1	0	0	0	1	0	0	0	0
4/23/2024	7:45 PM	0	166	18	0	2	0	0	0	1	0	0	0	0
4/23/2024	8:00 PM	0	147	14	0	2	0	0	0	1	0	0	0	0
4/23/2024	8:15 PM	0	132	10	0	2	0	0	0	1	0	0	0	0
4/23/2024	8:30 PM	0	111	13	0	1	0	0	0	1	0	0	0	0
4/23/2024	8:45 PM	0	109	12	0	0	0	0	0	1	0	0	0	0
4/23/2024	9:00 PM	0	102	15	0	0	0	0	0	0	0	0	0	0
4/23/2024	9:15 PM	0	99	18	0	0	0	0	0	0	0	0	0	0
4/23/2024	9:30 PM	0	96	11	0	0	0	0	0	0	0	0	0	0
4/23/2024	9:45 PM	0	80	11	0	0	0	0	0	1	0	0	0	0
4/23/2024	10:00 PM	0	75	7	0	1	0	0	0	1	0	0	0	0
4/23/2024	10:15 PM	0	70	4	0	1	0	0	0	1	0	0	0	0
4/23/2024	10:30 PM	0	58	5	0	1	0	0	0	1	0	0	0	0
4/23/2024	10:45 PM	0	55	6	0	1	0	0	0	0	0	0	0	0
4/23/2024	11:00 PM	0	47	5	0	1	0	0	0	0	0	0	0	0
4/23/2024	11:15 PM	0	27	3	0	1	0	0	0	0	0	0	0	0
4/23/2024	11:30 PM	0	18	2	0	1	0	0	0	0	0	0	0	0
4/23/2024	11:45 PM	0	7	0	0	1	0	0	0	0	0	0	0	0

4/24/2024	12:00 AM	0	40	3	0	0	1	0	0	1	1	0	0	0
4/24/2024	12:15 AM	0	36	3	0	0	0	0	0	1	0	0	0	0
4/24/2024	12:30 AM	0	33	4	0	0	0	0	0	2	1	0	0	0
4/24/2024	12:45 AM	0	32	3	0	1	0	0	0	2	1	0	0	0
4/24/2024	1:00 AM	0	23	2	0	1	0	0	0	2	1	0	0	0
4/24/2024	1:15 AM	0	21	3	0	1	0	0	1	2	1	0	0	0
4/24/2024	1:30 AM	0	19	3	0	1	0	0	1	1	0	0	0	0
4/24/2024	1:45 AM	0	19	3	0	0	0	0	1	0	0	0	0	0
4/24/2024	2:00 AM	0	24	4	0	0	0	0	1	0	0	0	0	0
4/24/2024	2:15 AM	0	24	5	0	0	0	0	0	0	0	0	0	0
4/24/2024	2:30 AM	0	19	3	0	0	0	0	0	1	0	0	0	0
4/24/2024	2:45 AM	0	22	3	0	0	0	0	0	1	0	0	0	0
4/24/2024	3:00 AM	0	22	4	0	1	0	0	0	1	0	0	0	0
4/24/2024	3:15 AM	0	27	3	0	1	0	0	0	1	0	0	0	0
4/24/2024	3:30 AM	0	39	3	0	1	1	0	0	0	0	0	0	0
4/24/2024	3:45 AM	0	50	5	0	1	1	0	0	1	0	0	0	0
4/24/2024	4:00 AM	0	50	4	0	0	1	0	0	1	0	0	0	0
4/24/2024	4:15 AM	0	55	7	0	0	2	0	0	1	0	0	0	0
4/24/2024	4:30 AM	0	61	10	0	0	1	0	0	1	0	0	0	0
4/24/2024	4:45 AM	0	77	12	0	0	1	0	0	0	0	0	0	0
4/24/2024	5:00 AM	0	103	18	0	0	1	0	0	1	0	0	0	0
4/24/2024	5:15 AM	0	108	17	0	0	0	0	0	2	0	0	0	0
4/24/2024	5:30 AM	0	142	22	0	1	0	0	1	3	0	0	0	0
4/24/2024	5:45 AM	0	164	28	0	1	0	0	1	3	0	0	0	0
4/24/2024	6:00 AM	0	191	23	0	2	1	0	1	3	0	0	0	0
4/24/2024	6:15 AM	0	238	36	0	3	1	0	1	2	0	0	0	0
4/24/2024	6:30 AM	0	237	37	0	3	1	0	0	1	0	0	0	0
4/24/2024	6:45 AM	0	245	39	0	4	1	0	0	1	0	0	0	0
4/24/2024	7:00 AM	0	254	44	0	4	0	0	1	0	0	0	0	0
4/24/2024	7:15 AM	0	260	44	0	7	3	0	1	1	0	0	0	0
4/24/2024	7:30 AM	0	257	47	0	7	3	0	1	2	0	0	0	0
4/24/2024	7:45 AM	0	237	53	1	8	4	0	2	6	0	0	0	0
4/24/2024	8:00 AM	0	218	57	1	10	4	0	1	6	0	0	0	0
4/24/2024	8:15 AM	0	198	51	1	8	1	0	1	5	0	0	0	0
4/24/2024	8:30 AM	0	195	47	1	10	2	0	1	4	0	0	0	0
4/24/2024	8:45 AM	0	196	47	2	10	2	0	0	1	0	0	0	0
4/24/2024	9:00 AM	0	180	50	2	9	3	0	0	1	0	0	0	0
4/24/2024	9:15 AM	0	170	54	2	9	3	0	3	1	0	0	0	0
4/24/2024	9:30 AM	0	162	57	2	10	2	0	3	2	0	0	0	0
4/24/2024	9:45 AM	0	166	49	0	10	1	1	3	2	0	0	0	0
4/24/2024	10:00 AM	0	175	49	0	11	0	1	4	3	0	0	0	0
4/24/2024	10:15 AM	0	178	41	0	13	0	1	1	5	0	0	0	0
4/24/2024	10:30 AM	0	177	35	0	10	0	2	1	6	0	0	0	0
4/24/2024	10:45 AM	0	172	42	0	9	0	1	2	5	0	0	0	0
4/24/2024	11:00 AM	0	178	39	0	6	1	1	1	5	0	0	0	0
4/24/2024	11:15 AM	0	188	41	3	2	2	1	1	3	0	0	0	0
4/24/2024	11:30 AM	0	207	51	3	1	2	0	1	1	0	0	0	0
4/24/2024	11:45 AM	0	195	43	3	1	3	0	0	1	0	0	0	0
4/24/2024	12:00 PM	1	185	47	3	2	2	1	1	0	0	0	0	0
4/24/2024	12:15 PM	1	167	49	0	3	1	1	1	0	0	0	0	0
4/24/2024	12:30 PM	1	150	48	0	3	1	1	2	1	0	0	0	0
4/24/2024	12:45 PM	1	165	48	0	2	1	1	3	2	0	0	0	0
4/24/2024	1:00 PM	0	165	40	0	2	1	0	2	2	0	0	0	0
4/24/2024	1:15 PM	0	183	40	0	4	2	0	6	2	1	0	0	0
4/24/2024	1:30 PM	0	186	32	0	4	2	0	5	1	1	0	0	0
4/24/2024	1:45 PM	0	175	35	0	4	3	0	4	1	1	0	0	0
4/24/2024	2:00 PM	0	170	39	0	4	4	0	6	1	1	0	0	0
4/24/2024	2:15 PM	0	157	37	0	2	5	0	2	1	0	0	0	0
4/24/2024	2:30 PM	0	150	41	0	2	5	0	2	1	0	0	0	0
4/24/2024	2:45 PM	0	163	49	0	3	3	0	3	1	0	0	0	0
4/24/2024	3:00 PM	1	183	53	0	2	3	0	1	1	0	0	0	0
4/24/2024	3:15 PM	1	186	57	0	1	1	0	1	1	0	0	0	0
4/24/2024	3:30 PM	1	209	62	0	1	1	0	1	1	0	0	0	0
4/24/2024	3:45 PM	1	203	58	0	0	1	0	0	0	0	0	0	0
4/24/2024	4:00 PM	0	206	60	0	0	0	0	0	0	0	0	0	0
4/24/2024	4:15 PM	0	219	63	0	2	0	0	0	1	0	0	0	0
4/24/2024	4:30 PM	0	211	59	0	2	0	0	0	1	0	0	0	0
4/24/2024	4:45 PM	1	213	63	0	3	0	0	0	1	0	0	0	0
4/24/2024	5:00 PM	1	199	50	0	5	0	0	0	1	0	0	0	0
4/24/2024	5:15 PM	2	185	44	0	4	0	0	0	0	0	0	0	0
4/24/2024	5:30 PM	2	194	40	0	5	0	0	0	0	0	0	0	0
4/24/2024	5:45 PM	1	195	28	0	4	0	0	0	0	0	0	0	0
4/24/2024	6:00 PM	1	191	33	0	2	0	0	0	0	0	0	0	0
4/24/2024	6:15 PM	3	187	31	0	2	0	0	0	0	0	0	0	0
4/24/2024	6:30 PM	3	161	30	0	2	0	0	0	0	0	0	0	0
4/24/2024	6:45 PM	3	156	32	0	2	0	0	0	0	0	0	0	0
4/24/2024	7:00 PM	3	154	30	0	2	1	0	0	0	0	0	0	0
4/24/2024	7:15 PM	0	147	29	0	1	1	0	0	0	0	0	0	0
4/24/2024	7:30 PM	0	157	29	0	2	1	0	0	0	0	0	0	0
4/24/2024	7:45 PM	0	156	26	0	3	1	0	0	0	0	0	0	0
4/24/2024	8:00 PM	0	151	25	0	3	0	0	0	0	0	0	0	0
4/24/2024	8:15 PM	0	164	22	0	3	0	0	0	1	0	0	0	0
4/24/2024	8:30 PM	0	157	18	0	1	0	0	0	1	0	0	0	0
4/24/2024	8:45 PM	0	150	15	0	1	0	0	0	2	0	0	0	0
4/24/2024	9:00 PM	0	135	9	0	1	0	0	0	2	0	0	0	0
4/24/2024	9:15 PM	0	110	8	0	1	0	0	0	1	0	0	0	0
4/24/2024	9:30 PM	1	97	8	0	1	0	0	0	2	0	0	0	0
4/24/2024	9:45 PM	1	87	10	0	0	0	0	0	1	0	0	0	0
4/24/2024	10:00 PM	1	88	10	0	0	0	0	0	1	0	0	0	0
4/24/2024	10:15 PM	1	84	10	0	0	0	0	0	1	0	0	0	0
4/24/2024	10:30 PM	0	78	10	0	1	0	0	0	0	0	0	0	0
4/24/2024	10:45 PM	0	71	5	0	1	0	0	0	1	0	0	0	0
4/24/2024	11:00 PM	0	65	6	0	1	0	0	0	2	0	0	0	0
4/24/2024	11:15 PM	0	47	4	0	1	0	0	0	2	0	0	0	0
4/24/2024	11:30 PM	0	31	2	0	0	0	0	0	2	0	0	0	0
4/24/2024	11:45 PM	0	15	1	0	0	0	0	0	1	0	0	0	0

4/25/2024	12:00 AM	0	42	7	0	0	1	0	0	0	0	0	0
4/25/2024	12:15 AM	0	39	5	0	0	0	0	0	0	0	0	0
4/25/2024	12:30 AM	0	37	5	0	0	0	0	0	0	0	0	0
4/25/2024	12:45 AM	0	35	6	0	0	0	0	0	0	0	0	0
4/25/2024	1:00 AM	0	29	5	0	0	0	0	0	0	0	0	0
4/25/2024	1:15 AM	0	27	5	0	0	0	0	0	0	0	0	0
4/25/2024	1:30 AM	0	28	5	0	0	0	0	0	0	0	0	0
4/25/2024	1:45 AM	0	25	4	0	0	0	0	0	0	0	0	0
4/25/2024	2:00 AM	0	22	4	0	0	0	0	0	0	0	0	0
4/25/2024	2:15 AM	0	19	3	0	0	0	0	0	0	0	0	0
4/25/2024	2:30 AM	0	17	6	0	0	0	0	0	0	0	0	0
4/25/2024	2:45 AM	0	16	9	0	0	0	0	0	0	0	0	0
4/25/2024	3:00 AM	0	25	15	0	0	0	0	0	0	0	0	0
4/25/2024	3:15 AM	0	29	17	0	0	0	0	0	0	0	0	0
4/25/2024	3:30 AM	0	31	16	0	0	0	0	0	0	0	0	0
4/25/2024	3:45 AM	0	40	14	0	0	0	0	0	0	0	0	0
4/25/2024	4:00 AM	0	36	10	0	3	0	0	0	0	0	0	0
4/25/2024	4:15 AM	0	40	15	0	4	0	0	0	0	0	0	0
4/25/2024	4:30 AM	0	46	19	0	4	0	0	0	0	0	0	0
4/25/2024	4:45 AM	0	52	19	0	4	0	0	0	0	0	0	0
4/25/2024	5:00 AM	0	72	22	0	1	0	0	0	0	0	0	0
4/25/2024	5:15 AM	0	84	19	1	1	0	0	0	0	0	0	0
4/25/2024	5:30 AM	0	114	17	1	1	0	0	0	0	0	0	0
4/25/2024	5:45 AM	0	145	20	1	1	0	0	0	0	0	0	0
4/25/2024	6:00 AM	1	180	28	1	3	1	0	0	0	0	0	0
4/25/2024	6:15 AM	1	220	31	1	2	1	0	0	0	0	0	0
4/25/2024	6:30 AM	1	238	38	1	3	1	0	0	0	0	0	0
4/25/2024	6:45 AM	1	243	40	1	3	1	0	0	0	0	0	0
4/25/2024	7:00 AM	0	246	34	2	4	1	0	0	1	0	0	0
4/25/2024	7:15 AM	0	226	39	1	4	2	0	0	2	0	0	0
4/25/2024	7:30 AM	0	226	38	1	4	2	0	0	2	0	0	0
4/25/2024	7:45 AM	0	215	40	1	7	3	0	0	3	0	0	0
4/25/2024	8:00 AM	1	204	49	0	4	2	0	0	2	0	0	0
4/25/2024	8:15 AM	1	195	48	0	4	1	0	0	3	0	0	0
4/25/2024	8:30 AM	1	166	47	1	3	1	0	0	4	0	0	0
4/25/2024	8:45 AM	1	155	45	1	0	1	0	0	4	0	0	0
4/25/2024	9:00 AM	0	141	37	1	0	1	0	1	5	0	0	0
4/25/2024	9:15 AM	0	151	32	1	1	1	0	1	3	0	0	0
4/25/2024	9:30 AM	0	167	28	0	1	1	0	2	2	0	0	0
4/25/2024	9:45 AM	0	175	28	0	4	0	0	2	2	0	0	0
4/25/2024	10:00 AM	0	175	23	0	6	1	0	1	1	0	0	0
4/25/2024	10:15 AM	0	174	28	0	9	2	0	1	2	0	0	0
4/25/2024	10:30 AM	0	166	35	0	10	2	0	0	3	0	0	0
4/25/2024	10:45 AM	0	172	33	0	9	2	0	0	3	0	0	0
4/25/2024	11:00 AM	0	175	33	0	8	1	0	1	3	0	0	0
4/25/2024	11:15 AM	0	186	32	0	5	0	0	1	3	0	0	0
4/25/2024	11:30 AM	0	190	25	0	4	0	0	1	2	0	0	0
4/25/2024	11:45 AM	1	175	27	0	4	0	0	1	1	0	0	0
4/25/2024	12:00 PM	1	180	30	0	4	1	0	0	1	0	0	0
4/25/2024	12:15 PM	1	187	25	0	4	1	0	0	2	0	0	0
4/25/2024	12:30 PM	1	195	29	0	5	1	0	0	2	0	0	0
4/25/2024	12:45 PM	0	213	27	0	4	1	0	0	2	0	0	0
4/25/2024	1:00 PM	0	209	28	0	5	1	0	0	2	0	0	0
4/25/2024	1:15 PM	0	177	28	0	6	1	0	0	0	0	0	0
4/25/2024	1:30 PM	0	170	23	1	5	1	0	0	0	0	0	0
4/25/2024	1:45 PM	0	171	22	2	4	1	0	0	1	0	0	0
4/25/2024	2:00 PM	1	183	23	2	3	0	0	0	1	0	0	0
4/25/2024	2:15 PM	1	205	21	3	1	0	0	0	1	0	0	0
4/25/2024	2:30 PM	1	201	24	2	1	0	0	0	1	0	0	0
4/25/2024	2:45 PM	1	193	23	1	2	0	0	0	1	0	0	0
4/25/2024	3:00 PM	0	192	17	1	2	0	0	3	1	0	0	0
4/25/2024	3:15 PM	0	186	25	0	2	0	0	3	1	0	0	0
4/25/2024	3:30 PM	0	203	22	0	2	0	0	3	1	0	0	0
4/25/2024	3:45 PM	0	219	24	0	1	0	0	4	1	0	0	0
4/25/2024	4:00 PM	0	218	26	0	1	0	0	3	3	0	0	0
4/25/2024	4:15 PM	0	223	23	0	1	0	0	3	3	0	0	0
4/25/2024	4:30 PM	0	219	25	0	1	0	0	3	3	0	0	0
4/25/2024	4:45 PM	0	206	25	0	2	0	0	2	2	0	0	0
4/25/2024	5:00 PM	0	195	26	0	2	0	0	0	1	0	0	0
4/25/2024	5:15 PM	0	192	22	0	2	0	0	0	2	0	0	0
4/25/2024	5:30 PM	0	189	17	0	2	0	0	0	2	0	0	0
4/25/2024	5:45 PM	0	194	17	0	1	0	0	0	2	0	0	0
4/25/2024	6:00 PM	0	192	15	0	0	0	0	0	1	0	0	0
4/25/2024	6:15 PM	0	145	11	0	0	0	0	0	0	0	0	0
4/25/2024	6:30 PM	0	94	9	0	0	0	0	0	0	0	0	0
4/25/2024	6:45 PM	0	42	3	0	0	0	0	0	0	0	0	0
4/25/2024	7:00 PM	0	0	0	0	0	0	0	0	0	0	0	0
4/25/2024	7:15 PM	0	0	0	0	0	0	0	0	0	0	0	0
4/25/2024	7:30 PM	0	0	0	0	0	0	0	0	0	0	0	0
4/25/2024	7:45 PM	0	0	0	0	0	0	0	0	0	0	0	0
4/25/2024	8:00 PM	0	0	0	0	0	0	0	0	0	0	0	0
4/25/2024	8:15 PM	0	0	0	0	0	0	0	0	0	0	0	0
4/25/2024	8:30 PM	0	0	0	0	0	0	0	0	0	0	0	0
4/25/2024	8:45 PM	0	0	0	0	0	0	0	0	0	0	0	0
4/25/2024	9:00 PM	0	0	0	0	0	0	0	0	0	0	0	0
4/25/2024	9:15 PM	0	0	0	0	0	0	0	0	0	0	0	0
4/25/2024	9:30 PM	0	0	0	0	0	0	0	0	0	0	0	0
4/25/2024	9:45 PM	0	0	0	0	0	0	0	0	0	0	0	0
4/25/2024	10:00 PM	0	0	0	0	0	0	0	0	0	0	0	0
4/25/2024	10:15 PM	0	0	0	0	0	0	0	0	0	0	0	0
4/25/2024	10:30 PM	0	0	0	0	0	0	0	0	0	0	0	0
4/25/2024	10:45 PM	0	0	0	0	0	0	0	0	0	0	0	0
4/25/2024	11:00 PM	0	0	0	0	0	0	0	0	0	0	0	0
4/25/2024	11:15 PM	0	0	0	0	0	0	0	0	0	0	0	0
4/25/2024	11:30 PM	0	0	0	0	0	0	0	0	0	0	0	0
4/25/2024	11:45 PM	0	0	0	0	0	0	0	0	0	0	0	0

Bi-Directional Class Count || NB EB 15min

Columbia, SC

Marr Traffic DATA COLLECTION
www.marrtraffic.com

Site 70
I-126 N/Bound On-Ramp,
north of US-176 E/Bound On-Ramp

Date
Tuesday, April 23, 2024

Lat/Long
34.009509°, -81.051154°

Weather
Fair
58°F

Click here for Detailed Weather

Click here for Map

0000 - 2400 (Weekday 24h Session) (04-23-2024)
NB EB 15min

	Northbound (Movement 70.1)													15min	60min
Time	1	2	3	4	5	6	7	8	9	10	11	12	13	Total	Total
0000 - 0015	0	0	0	0	0	0	0	0	0	0	0	0	0	**0**	
0015 - 0030	0	0	0	0	0	0	0	0	0	0	0	0	0	**0**	
0030 - 0045	0	0	0	0	0	0	0	0	0	0	0	0	0	**0**	
0045 - 0100	0	0	0	0	0	0	0	0	0	0	0	0	0	**0**	**0**
0100 - 0115	0	0	0	0	0	0	0	0	0	0	0	0	0	**0**	
0115 - 0130	0	0	0	0	0	0	0	0	0	0	0	0	0	**0**	
0130 - 0145	0	0	0	0	0	0	0	0	0	0	0	0	0	**0**	
0145 - 0200	0	0	0	0	0	0	0	0	0	0	0	0	0	**0**	**0**
0200 - 0215	0	0	0	0	0	0	0	0	0	0	0	0	0	**0**	
0215 - 0230	0	0	0	0	0	0	0	0	0	0	0	0	0	**0**	
0230 - 0245	0	0	0	0	0	0	0	0	0	0	0	0	0	**0**	
0245 - 0300	0	0	0	0	0	0	0	0	0	0	0	0	0	**0**	**0**
0300 - 0315	0	0	0	0	0	0	0	0	0	0	0	0	0	**0**	
0315 - 0330	0	0	0	0	0	0	0	0	0	0	0	0	0	**0**	
0330 - 0345	0	0	0	0	0	0	0	0	0	0	0	0	0	**0**	
0345 - 0400	0	0	0	0	0	0	0	0	0	0	0	0	0	**0**	**0**
0400 - 0415	0	0	0	0	0	0	0	0	0	0	0	0	0	**0**	
0415 - 0430	0	0	0	0	0	0	0	0	0	0	0	0	0	**0**	
0430 - 0445	0	0	0	0	0	0	0	0	0	0	0	0	0	**0**	
0445 - 0500	0	0	0	0	0	0	0	0	0	0	0	0	0	**0**	**0**
0500 - 0515	0	0	0	0	0	0	0	0	0	0	0	0	0	**0**	
0515 - 0530	0	0	0	0	0	0	0	0	0	0	0	0	0	**0**	
0530 - 0545	0	0	0	0	0	0	0	0	0	0	0	0	0	**0**	
0545 - 0600	0	0	0	0	0	0	0	0	0	0	0	0	0	**0**	**0**
0600 - 0615	0	0	0	0	0	0	0	0	0	0	0	0	0	**0**	
0615 - 0630	0	0	0	0	0	0	0	0	0	0	0	0	0	**0**	
0630 - 0645	0	0	0	0	0	0	0	0	0	0	0	0	0	**0**	
0645 - 0700	0	0	0	0	0	0	0	0	0	0	0	0	0	**0**	**0**
0700 - 0715	0	0	0	0	0	0	0	0	0	0	0	0	0	**0**	
0715 - 0730	0	0	0	0	0	0	0	0	0	0	0	0	0	**0**	
0730 - 0745	0	0	0	0	0	0	0	0	0	0	0	0	0	**0**	
0745 - 0800	0	0	0	0	0	0	0	0	0	0	0	0	0	**0**	**0**
0800 - 0815	0	0	0	0	0	0	0	0	0	0	0	0	0	**0**	
0815 - 0830	0	0	0	0	0	0	0	0	0	0	0	0	0	**0**	
0830 - 0845	0	0	0	0	0	0	0	0	0	0	0	0	0	**0**	
0845 - 0900	0	0	0	0	0	0	0	0	0	0	0	0	0	**0**	**0**
0900 - 0915	0	0	0	0	0	0	0	0	0	0	0	0	0	**0**	
0915 - 0930	0	0	0	0	0	0	0	0	0	0	0	0	0	**0**	
0930 - 0945	0	0	0	0	0	0	0	0	0	0	0	0	0	**0**	
0945 - 1000	0	0	0	0	0	0	0	0	0	0	0	0	0	**0**	**0**
1000 - 1015	0	0	0	0	0	0	0	0	0	0	0	0	0	**0**	
1015 - 1030	0	0	0	0	0	0	0	0	0	0	0	0	0	**0**	
1030 - 1045	0	0	0	0	0	0	0	0	0	0	0	0	0	**0**	
1045 - 1100	0	0	0	0	0	0	0	0	0	0	0	0	0	**0**	**0**
1100 - 1115	0	0	0	0	0	0	0	0	0	0	0	0	0	**0**	
1115 - 1130	0	0	0	0	0	0	0	0	0	0	0	0	0	**0**	
1130 - 1145	0	0	0	0	0	0	0	0	0	0	0	0	0	**0**	
1145 - 1200	0	0	0	0	0	0	0	0	0	0	0	0	0	**0**	**0**
1200 - 1215	0	0	0	0	0	0	0	0	0	0	0	0	0	**0**	
1215 - 1230	0	0	0	0	0	0	0	0	0	0	0	0	0	**0**	
1230 - 1245	0	0	0	0	0	0	0	0	0	0	0	0	0	**0**	
1245 - 1300	0	0	0	0	0	0	0	0	0	0	0	0	0	**0**	**0**
1300 - 1315	0	0	0	0	0	0	0	0	0	0	0	0	0	**0**	
1315 - 1330	0	0	0	0	0	0	0	0	0	0	0	0	0	**0**	
1330 - 1345	0	0	0	0	0	0	0	0	0	0	0	0	0	**0**	
1345 - 1400	0	0	0	0	0	0	0	0	0	0	0	0	0	**0**	**0**
1400 - 1415	0	0	0	0	0	0	0	0	0	0	0	0	0	**0**	
1415 - 1430	0	0	0	0	0	0	0	0	0	0	0	0	0	**0**	
1430 - 1445	0	0	0	0	0	0	0	0	0	0	0	0	0	**0**	
1445 - 1500	0	0	0	0	0	0	0	0	0	0	0	0	0	**0**	**0**
1500 - 1515	0	0	0	0	0	0	0	0	0	0	0	0	0	**0**	
1515 - 1530	0	0	0	0	0	0	0	0	0	0	0	0	0	**0**	
1530 - 1545	0	0	0	0	0	0	0	0	0	0	0	0	0	**0**	
1545 - 1600	0	0	0	0	0	0	0	0	0	0	0	0	0	**0**	**0**
1600 - 1615	0	0	0	0	0	0	0	0	0	0	0	0	0	**0**	
1615 - 1630	0	0	0	0	0	0	0	0	0	0	0	0	0	**0**	
1630 - 1645	0	0	0	0	0	0	0	0	0	0	0	0	0	**0**	
1645 - 1700	0	0	0	0	0	0	0	0	0	0	0	0	0	**0**	**0**
1700 - 1715	0	0	0	0	0	0	0	0	0	0	0	0	0	**0**	
1715 - 1730	0	0	0	0	0	0	0	0	0	0	0	0	0	**0**	
1730 - 1745	0	0	0	0	0	0	0	0	0	0	0	0	0	**0**	
1745 - 1800	0	0	0	0	0	0	0	0	0	0	0	0	0	**0**	**0**
1800 - 1815	0	0	0	0	0	0	0	0	0	0	0	0	0	**0**	
1815 - 1830	0	0	0	0	0	0	0	0	0	0	0	0	0	**0**	
1830 - 1845	0	0	0	0	0	0	0	0	0	0	0	0	0	**0**	
1845 - 1900	0	0	0	0	0	0	0	0	0	0	0	0	0	**0**	**0**
1900 - 1915	0	0	0	0	0	0	0	0	0	0	0	0	0	**0**	
1915 - 1930	0	0	0	0	0	0	0	0	0	0	0	0	0	**0**	
1930 - 1945	0	0	0	0	0	0	0	0	0	0	0	0	0	**0**	
1945 - 2000	0	0	0	0	0	0	0	0	0	0	0	0	0	**0**	**0**
2000 - 2015	0	0	0	0	0	0	0	0	0	0	0	0	0	**0**	
2015 - 2030	0	0	0	0	0	0	0	0	0	0	0	0	0	**0**	
2030 - 2045	0	172	18	0	0	0	0	0	0	0	0	0	0	**190**	
2045 - 2100	1	167	15	0	2	0	0	0	0	0	1	0	0	**186**	**376**
2100 - 2115	2	164	9	0	1	0	0	0	0	0	0	0	0	**176**	
2115 - 2130	0	139	2	0	1	0	2	0	0	0	0	0	0	**144**	
2130 - 2145	0	119	8	0	0	0	0	0	2	0	0	0	0	**129**	
2145 - 2200	0	96	4	0	0	0	0	0	0	0	0	0	0	**100**	**549**
2200 - 2215	0	108	6	0	0	0	2	0	0	0	0	0	0	**116**	
2215 - 2230	1	222	11	0	0	0	0	0	0	0	0	0	0	**234**	
2230 - 2245	0	104	7	0	1	0	0	0	0	0	0	0	0	**112**	
2245 - 2300	0	59	1	0	0	0	0	0	0	0	0	0	0	**60**	**522**
2300 - 2315	0	75	2	0	0	0	0	0	0	0	0	0	0	**77**	
2315 - 2330	0	53	1	0	2	0	0	0	0	0	0	0	0	**56**	
2330 - 2345	1	41	3	0	0	0	1	0	0	0	0	0	0	**46**	
2345 - 0000	0	48	2	0	0	0	1	0	1	0	0	0	0	**52**	**231**

Session Total	5	1567	89	0	7	0	6	0	3	0	1	0	0	**1678**
Session Average	0.05	16.32	0.93	0.00	0.07	0.00	0.06	0.00	0.03	0.00	0.01	0.00	0.00	**17.48**
Session Percentage	0.30	93.38	5.30	0.00	0.42	0.00	0.36	0.00	0.18	0.00	0.06	0.00	0.00	

AM Peak Hour	-	-	-	-	-	-	-	-	-	-	-	-	-	**-**
AM Peak Volume	0	0	0	0	0	0	0	0	0	0	0	0	0	**0**

Noon Peak Hour	-	-	-	-	-	-	-	-	-	-	-	-	-	**-**
Noon Peak Volume	0	0	0	0	0	0	0	0	0	0	0	0	0	**0**

PM Peak Hour	-	1945 - 2045	1945 - 2045	-	-	-	-	-	-	-	-	-	-	**1945 - 2045**
PM Peak Volume	0	172	18	0	0	0	0	0	0	0	0	0	0	**190**

Site 70
I-126 N/Bound On-Ramp,
north of US-176 E/Bound On-Ramp

Date
Wednesday, April 24, 2024

Lat/Long
34.009509°, -81.051154°

Weather
Fair
66°F

Click here for Detailed Weather

0000 - 2400 (Weekday 24h Session) (04-24-2024)
NB EB 15min

	Northbound (Movement 70.1)													15min	60min
Time	1	2	3	4	5	6	7	8	9	10	11	12	13	Total	Total
0000 - 0015	0	39	4	0	0	0	1	0	0	0	0	0	0	**44**	
0015 - 0030	0	43	2	1	0	0	1	0	0	0	0	0	0	**47**	
0030 - 0045	0	34	4	0	0	0	0	0	1	0	0	0	0	**39**	
0045 - 0100	0	28	2	0	1	0	0	0	0	0	0	0	0	**31**	**161**
0100 - 0115	0	24	2	0	2	0	0	0	0	0	0	0	0	**28**	
0115 - 0130	0	20	2	0	0	0	2	0	0	0	0	0	0	**24**	
0130 - 0145	0	20	1	0	0	0	1	0	0	0	0	0	0	**22**	
0145 - 0200	1	22	2	0	0	0	1	0	0	0	0	0	0	**26**	**100**
0200 - 0215	0	16	1	0	0	0	0	0	0	0	0	0	0	**17**	
0215 - 0230	0	18	1	0	2	0	1	0	1	0	0	0	0	**23**	
0230 - 0245	0	16	3	0	0	1	0	0	0	0	0	0	0	**20**	
0245 - 0300	0	8	0	0	1	0	0	0	0	0	0	0	0	**9**	**69**
0300 - 0315	0	13	1	0	0	0	0	0	0	0	0	0	0	**14**	
0315 - 0330	0	11	0	0	0	0	1	0	0	0	0	0	0	**12**	
0330 - 0345	0	10	2	0	0	0	1	0	0	0	0	0	0	**13**	
0345 - 0400	0	8	1	0	0	0	1	0	0	0	0	0	0	**10**	**49**
0400 - 0415	0	11	0	0	0	1	0	0	1	0	0	0	0	**13**	
0415 - 0430	0	16	1	0	0	0	0	0	0	0	0	0	0	**17**	
0430 - 0445	0	13	2	0	0	0	1	1	0	0	0	0	0	**17**	
0445 - 0500	0	21	0	0	0	0	0	2	0	0	0	0	0	**23**	**70**
0500 - 0515	0	14	5	0	2	0	0	1	0	0	0	0	0	**22**	
0515 - 0530	0	29	3	0	1	0	0	0	1	0	0	0	0	**34**	
0530 - 0545	0	31	2	0	2	1	1	0	0	1	0	0	0	**38**	
0545 - 0600	0	35	6	0	1	0	0	0	1	0	0	0	0	**43**	**137**
0600 - 0615	0	57	6	0	3	1	0	1	1	0	0	0	0	**69**	
0615 - 0630	0	65	14	0	1	1	0	0	0	0	0	0	0	**81**	
0630 - 0645	1	110	16	0	3	1	0	0	1	0	0	0	0	**132**	
0645 - 0700	0	98	17	1	6	0	0	1	0	0	0	0	0	**123**	**405**
0700 - 0715	0	138	29	0	4	0	1	2	0	0	0	0	0	**174**	
0715 - 0730	0	199	38	1	4	0	0	2	0	0	0	0	0	**244**	
0730 - 0745	1	193	47	1	5	1	0	0	0	0	0	0	0	**248**	
0745 - 0800	0	242	35	0	7	1	1	1	1	0	0	0	0	**288**	**954**
0800 - 0815	0	219	35	2	5	1	0	0	1	0	0	0	0	**263**	
0815 - 0830	0	221	32	0	2	0	0	1	1	0	0	0	0	**257**	
0830 - 0845	0	214	35	1	7	0	1	2	1	0	0	0	0	**261**	
0845 - 0900	1	215	56	1	2	2	0	0	1	0	0	0	0	**278**	**1059**
0900 - 0915	0	186	31	1	4	0	0	0	2	0	0	0	0	**224**	
0915 - 0930	1	177	46	0	5	1	2	0	4	0	0	0	0	**236**	
0930 - 0945	0	198	42	0	5	0	1	0	1	0	0	0	0	**247**	
0945 - 1000	0	195	37	0	7	1	2	1	1	0	0	0	0	**244**	**951**
1000 - 1015	0	182	52	2	4	0	1	0	1	0	0	0	0	**242**	
1015 - 1030	0	189	32	0	4	0	0	0	2	0	0	0	0	**227**	
1030 - 1045	1	192	43	2	2	0	1	1	0	0	0	0	0	**242**	
1045 - 1100	0	216	52	0	2	2	2	2	1	0	0	0	0	**277**	**988**
1100 - 1115	0	190	45	3	4	1	3	0	0	0	0	0	0	**246**	
1115 - 1130	0	208	37	0	1	0	2	0	1	0	0	0	0	**249**	
1130 - 1145	0	247	48	2	5	0	1	0	1	0	0	0	0	**304**	
1145 - 1200	0	230	36	3	2	0	0	1	3	0	0	0	0	**275**	**1074**
1200 - 1215	2	247	45	0	8	0	0	3	1	0	0	0	0	**306**	
1215 - 1230	0	180	48	3	9	0	0	0	1	0	0	0	0	**241**	
1230 - 1245	0	267	47	0	1	1	0	0	0	0	0	0	0	**316**	
1245 - 1300	0	299	40	1	2	0	0	1	0	0	0	0	0	**343**	**1206**
1300 - 1315	0	291	40	1	1	2	0	1	3	1	0	0	0	**340**	
1315 - 1330	0	287	52	0	3	0	0	0	0	0	0	0	0	**342**	
1330 - 1345	0	279	49	0	5	1	0	0	0	0	0	0	0	**334**	
1345 - 1400	0	273	46	0	4	0	0	0	2	0	0	0	0	**325**	**1341**
1400 - 1415	0	300	39	0	7	1	0	0	1	0	0	0	0	**348**	
1415 - 1430	0	336	61	0	0	0	0	0	4	0	0	0	0	**401**	
1430 - 1445	0	272	47	3	7	0	1	1	1	0	0	0	0	**332**	
1445 - 1500	0	318	36	2	4	0	0	0	2	0	0	0	0	**362**	**1443**
1500 - 1515	1	333	75	0	5	0	0	0	1	0	0	0	0	**415**	
1515 - 1530	0	341	66	1	2	0	0	0	2	0	0	0	0	**412**	
1530 - 1545	1	364	84	2	2	0	2	0	0	0	0	0	0	**455**	
1545 - 1600	1	386	75	1	4	0	0	0	2	0	0	0	0	**469**	**1751**
1600 - 1615	0	437	88	0	4	0	1	0	0	0	0	0	0	**530**	
1615 - 1630	3	477	89	0	9	1	2	0	0	0	0	0	0	**581**	
1630 - 1645	2	540	71	1	3	0	0	0	0	0	0	0	0	**617**	
1645 - 1700	0	517	75	1	4	1	0	2	0	0	0	0	0	**600**	**2328**
1700 - 1715	0	565	94	1	1	0	0	0	1	0	0	0	0	**662**	
1715 - 1730	0	562	81	0	1	0	0	0	0	0	0	0	0	**644**	
1730 - 1745	2	389	60	0	0	1	0	1	3	0	0	0	0	**456**	
1745 - 1800	0	324	30	1	0	0	0	0	0	0	0	0	0	**355**	**2117**
1800 - 1815	1	328	32	2	2	0	0	0	2	0	0	0	0	**367**	
1815 - 1830	1	197	31	1	0	0	0	0	1	0	0	0	0	**231**	
1830 - 1845	0	261	30	0	0	0	0	0	0	0	0	0	0	**291**	
1845 - 1900	0	240	24	1	2	0	0	0	0	0	0	0	0	**267**	**1156**
1900 - 1915	0	228	28	0	2	1	0	0	0	0	0	0	0	**259**	
1915 - 1930	0	237	23	1	0	0	1	0	0	0	0	0	0	**262**	
1930 - 1945	0	207	10	0	0	0	0	0	0	0	0	0	0	**217**	
1945 - 2000	2	247	18	0	2	0	0	0	0	0	0	0	0	**269**	**1007**
2000 - 2015	1	193	19	0	1	0	0	0	0	0	0	0	0	**214**	
2015 - 2030	2	197	21	0	4	0	1	0	0	0	0	0	0	**225**	
2030 - 2045	3	190	21	1	1	0	1	0	0	0	0	0	0	**217**	
2045 - 2100	0	143	34	0	0	0	1	0	0	0	0	0	0	**178**	**834**
2100 - 2115	0	133	4	0	0	1	0	1	0	0	0	0	0	**139**	
2115 - 2130	2	159	6	1	0	0	0	0	0	0	0	0	0	**168**	
2130 - 2145	1	108	11	0	0	0	0	0	0	0	0	0	0	**120**	
2145 - 2200	0	132	12	0	1	0	1	0	0	0	0	0	0	**146**	**573**
2200 - 2215	0	102	9	0	0	0	1	0	0	0	0	0	0	**112**	
2215 - 2230	0	191	10	0	0	0	0	0	0	0	0	0	0	**201**	
2230 - 2245	0	157	5	0	0	0	2	0	0	0	0	0	0	**164**	
2245 - 2300	0	81	7	0	0	0	0	0	0	0	0	0	0	**88**	**565**
2300 - 2315	0	76	9	0	0	0	0	0	0	0	0	0	0	**85**	
2315 - 2330	3	70	4	0	0	0	0	0	0	0	0	0	0	**77**	
2330 - 2345	0	49	4	0	0	0	1	0	0	0	0	0	0	**54**	
2345 - 0000	0	48	0	0	0	0	0	0	0	0	0	0	0	**48**	**264**

Session Total	34	17439	2718	46	207	26	45	29	56	2	0	0	0	**20602**
Session Average	0.35	181.66	28.31	0.48	2.16	0.27	0.47	0.30	0.58	0.02	0.00	0.00	0.00	**214.60**
Session Percentage	0.17	84.65	13.19	0.22	1.00	0.13	0.22	0.14	0.27	0.01	0.00	0.00	0.00	

AM Peak Hour	0830 - 0930	0745 - 0845	0915 - 1015	0715 - 0815	0715 - 0815	0530 - 0630	0915 - 1015	0630 - 0730	0830 - 0930	0500 - 0600	-	-	-	**0745 - 0845**
AM Peak Volume	2	896	177	4	21	3	6	5	8	1	0	0	0	**1069**

Noon Peak Hour	1115 - 1215	1445 - 1545	1445 - 1545	1100 - 1200	1130 - 1230	1015 - 1115	1030 - 1130	1115 - 1215	1345 - 1445	1215 - 1315	-	-	-	**1445 - 1545**
Noon Peak Volume	2	1356	261	8	24	3	8	4	8	1	0	0	0	**1644**

PM Peak Hour	1945 - 2045	1630 - 1730	1530 - 1630	1500 - 1600	1545 - 1645	1600 - 1700	1530 - 1630	1645 - 1745	1730 - 1830	-	-	-	-	**1630 - 1730**
PM Peak Volume	8	2184	336	4	20	2	5	3	6	0	0	0	0	**2523**

Site 70
I-126 N/Bound On-Ramp,
north of US-176 E/Bound On-Ramp

Date
Thursday, April 25, 2024

Lat/Long
34.009509°, -81.051154°

Weather
Fair
67°F

Click here for Detailed Weather

0000 - 2400 (Weekday 24h Session) (04-25-2024)
NB EB 15min

	Northbound (Movement 70.1)													15min	60min
TIME	1	2	3	4	5	6	7	8	9	10	11	12	13	Total	Total
0000 - 0015	0	34	4	0	0	0	0	0	1	0	0	0	0	**39**	
0015 - 0030	0	34	1	0	2	0	1	0	0	0	0	0	0	**38**	
0030 - 0045	0	35	1	1	1	0	1	0	0	0	0	0	0	**39**	
0045 - 0100	0	19	0	0	0	0	1	0	0	0	0	0	0	**20**	**136**
0100 - 0115	0	26	0	0	1	0	2	0	0	0	0	0	0	**29**	
0115 - 0130	0	31	1	0	0	0	0	0	0	0	0	0	0	**32**	
0130 - 0145	0	34	0	0	0	0	0	0	0	0	0	0	0	**34**	
0145 - 0200	0	28	2	0	2	0	0	0	0	0	0	0	0	**32**	**127**
0200 - 0215	0	30	0	0	0	0	0	0	0	0	0	0	0	**30**	
0215 - 0230	0	16	0	0	0	0	0	0	1	0	0	0	0	**17**	
0230 - 0245	0	6	0	0	0	0	1	0	1	0	0	0	0	**8**	
0245 - 0300	0	14	0	0	0	0	1	0	0	0	0	0	0	**15**	**70**
0300 - 0315	0	8	0	0	0	0	0	0	0	0	0	0	0	**8**	
0315 - 0330	0	12	0	0	0	1	2	0	0	0	0	0	0	**15**	
0330 - 0345	0	11	1	0	0	0	1	0	0	0	0	0	0	**13**	
0345 - 0400	0	11	0	0	0	0	0	0	0	0	0	0	0	**11**	**47**
0400 - 0415	0	13	2	0	0	0	0	0	1	0	0	0	0	**16**	
0415 - 0430	0	19	0	0	0	1	0	1	0	0	0	0	0	**21**	
0430 - 0445	0	22	2	0	1	1	0	0	1	0	0	0	0	**27**	
0445 - 0500	0	22	1	0	0	0	0	3	1	0	0	0	0	**27**	**91**
0500 - 0515	0	25	0	0	0	0	0	1	0	0	0	0	0	**26**	
0515 - 0530	0	30	2	0	1	0	0	0	0	0	0	0	0	**33**	
0530 - 0545	0	41	6	1	0	0	0	1	0	0	0	0	0	**49**	
0545 - 0600	0	52	6	0	0	0	0	0	0	0	0	0	0	**58**	**166**
0600 - 0615	1	52	3	0	5	1	0	0	0	0	0	0	0	**62**	
0615 - 0630	1	67	7	0	0	0	1	1	1	0	0	0	0	**78**	
0630 - 0645	0	92	17	0	1	0	0	0	1	0	0	0	0	**111**	
0645 - 0700	0	129	18	1	4	0	0	0	1	0	0	0	0	**153**	**404**
0700 - 0715	0	129	25	0	2	2	0	1	1	0	0	0	0	**160**	
0715 - 0730	0	188	22	1	11	1	0	0	0	4	0	0	0	**227**	
0730 - 0745	0	220	27	0	3	0	1	2	0	0	0	0	0	**253**	
0745 - 0800	0	235	14	0	5	1	0	0	1	0	0	0	0	**256**	**896**
0800 - 0815	0	220	28	0	0	1	1	0	0	0	0	0	0	**250**	
0815 - 0830	1	198	28	2	4	0	0	0	0	0	0	0	0	**233**	
0830 - 0845	0	248	32	1	10	1	1	0	1	0	0	0	0	**294**	
0845 - 0900	0	215	22	1	4	0	1	1	2	0	0	0	0	**246**	**1023**
0900 - 0915	0	171	37	4	2	1	0	0	4	0	0	0	0	**219**	
0915 - 0930	0	169	34	0	4	1	0	0	0	0	0	0	0	**208**	
0930 - 0945	0	197	39	1	5	2	1	0	0	0	0	0	0	**245**	
0945 - 1000	1	197	50	2	3	4	1	0	1	0	0	0	0	**259**	**931**
1000 - 1015	0	195	40	1	6	1	2	0	2	0	0	0	0	**247**	
1015 - 1030	0	190	56	0	7	0	2	0	0	0	0	0	0	**255**	
1030 - 1045	1	185	30	2	4	0	0	1	2	0	0	0	0	**225**	
1045 - 1100	0	215	46	0	6	0	1	1	1	0	0	0	0	**270**	**997**
1100 - 1115	0	229	33	2	9	1	1	2	1	0	0	0	0	**278**	
1115 - 1130	0	225	46	0	5	0	2	2	0	0	0	0	0	**280**	
1130 - 1145	0	235	53	0	5	0	0	0	1	0	0	0	0	**294**	
1145 - 1200	0	229	48	1	2	1	0	0	3	0	0	0	0	**284**	**1136**
1200 - 1215	0	239	59	0	3	1	0	0	1	0	0	0	0	**303**	
1215 - 1230	0	273	63	0	4	1	3	0	2	0	0	0	0	**346**	
1230 - 1245	0	283	65	1	1	0	0	0	0	0	0	0	0	**350**	
1245 - 1300	0	275	50	1	2	0	0	0	1	0	0	0	0	**329**	**1328**
1300 - 1315	2	312	65	0	5	1	0	0	0	0	0	0	0	**385**	
1315 - 1330	0	280	57	1	5	0	1	0	2	0	0	0	0	**346**	
1330 - 1345	0	303	53	1	3	3	2	2	4	0	0	0	0	**371**	
1345 - 1400	0	243	59	1	3	2	0	0	0	0	0	0	0	**308**	**1410**
1400 - 1415	1	303	55	0	5	0	2	0	1	0	0	0	0	**367**	
1415 - 1430	1	288	64	0	2	0	1	0	0	0	0	0	0	**356**	
1430 - 1445	0	293	67	1	3	0	3	1	2	0	0	0	0	**370**	
1445 - 1500	1	346	68	0	4	0	3	2	2	0	0	0	0	**426**	**1519**
1500 - 1515	0	342	52	1	3	0	1	1	1	0	0	0	0	**401**	
1515 - 1530	3	363	66	1	2	0	4	0	2	0	0	0	0	**441**	
1530 - 1545	1	354	66	0	2	0	3	0	4	0	0	0	0	**430**	
1545 - 1600	2	362	64	1	7	0	3	0	1	0	0	0	0	**440**	**1712**
1600 - 1615	0	467	93	1	8	0	0	0	1	0	0	0	0	**570**	
1615 - 1630	0	464	92	0	13	0	1	1	3	0	0	0	0	**574**	
1630 - 1645	1	493	82	1	2	0	0	0	1	0	0	0	0	**580**	
1645 - 1700	0	499	91	0	4	0	0	0	1	0	0	0	0	**595**	**2319**
1700 - 1715	1	561	75	0	0	0	0	0	0	0	0	0	0	**637**	
1715 - 1730	0	552	86	0	0	0	0	0	0	0	0	0	0	**638**	
1730 - 1745	5	488	55	0	1	0	0	0	1	0	0	0	0	**550**	
1745 - 1800	1	423	57	1	2	0	0	0	0	0	0	0	0	**484**	**2309**
1800 - 1815	0	366	44	2	0	0	0	1	1	0	0	0	0	**414**	
1815 - 1830	0	264	37	0	4	0	0	0	0	0	0	0	0	**305**	
1830 - 1845	2	241	31	1	4	0	0	0	1	0	0	0	0	**280**	
1845 - 1900	1	256	27	0	3	0	0	0	0	0	0	0	0	**287**	**1286**
1900 - 1915	0	0	0	0	0	0	0	0	0	0	0	0	0	**0**	
1915 - 1930	0	0	0	0	0	0	0	0	0	0	0	0	0	**0**	
1930 - 1945	0	0	0	0	0	0	0	0	0	0	0	0	0	**0**	
1945 - 2000	0	0	0	0	0	0	0	0	0	0	0	0	0	**0**	**0**
2000 - 2015	0	0	0	0	0	0	0	0	0	0	0	0	0	**0**	
2015 - 2030	0	0	0	0	0	0	0	0	0	0	0	0	0	**0**	
2030 - 2045	0	0	0	0	0	0	0	0	0	0	0	0	0	**0**	
2045 - 2100	0	0	0	0	0	0	0	0	0	0	0	0	0	**0**	**0**
2100 - 2115	0	0	0	0	0	0	0	0	0	0	0	0	0	**0**	
2115 - 2130	0	0	0	0	0	0	0	0	0	0	0	0	0	**0**	
2130 - 2145	0	0	0	0	0	0	0	0	0	0	0	0	0	**0**	
2145 - 2200	0	0	0	0	0	0	0	0	0	0	0	0	0	**0**	**0**
2200 - 2215	0	0	0	0	0	0	0	0	0	0	0	0	0	**0**	
2215 - 2230	0	0	0	0	0	0	0	0	0	0	0	0	0	**0**	
2230 - 2245	0	0	0	0	0	0	0	0	0	0	0	0	0	**0**	
2245 - 2300	0	0	0	0	0	0	0	0	0	0	0	0	0	**0**	**0**
2300 - 2315	0	0	0	0	0	0	0	0	0	0	0	0	0	**0**	
2315 - 2330	0	0	0	0	0	0	0	0	0	0	0	0	0	**0**	
2330 - 2345	0	0	0	0	0	0	0	0	0	0	0	0	0	**0**	
2345 - 0000	0	0	0	0	0	0	0	0	0	0	0	0	0	**0**	**0**

Session Total	27	14936	2527	36	210	29	52	25	61	4	0	0	0	**17907**
Session Average	0.28	155.58	26.32	0.38	2.19	0.30	0.54	0.26	0.64	0.04	0.00	0.00	0.00	**186.53**
Session Percentage	0.15	83.41	14.11	0.20	1.17	0.16	0.29	0.14	0.34	0.02	0.00	0.00	0.00	

AM Peak Hour	0530 - 0630	0745 - 0845	0930 - 1030	0815 - 0915	0700 - 0800	0900 - 1000	0930 - 1030	0645 - 0745	0815 - 0915	0630 - 0730	-	-	-	**0745 - 0845**
AM Peak Hour Volume	2	901	185	8	21	8	6	3	7	4	0	0	0	**1033**

Noon Peak Hour	1445 - 1545	1445 - 1545	1400 - 1500	1015 - 1115	1015 - 1115	1300 - 1400	1430 - 1530	1030 - 1130	1445 - 1545	-	-	-	-	**1445 - 1545**
Noon Peak Hour Volume	5	1405	254	4	26	6	11	6	9	0	0	0	0	**1698**

PM Peak Hour	1700 - 1800	1630 - 1730	1600 - 1700	1745 - 1845	1530 - 1630	-	1500 - 1600	1500 - 1600	1530 - 1630	-	-	-	-	**1630 - 1730**
PM Peak Hour Volume	7	2105	358	4	30	0	11	1	9	0	0	0	0	**2450**

Bi-Directional Class Count || NB EB Average 15min

Columbia, SC

Marr Traffic DATA COLLECTION
www.marrtraffic.com

Site 70
I-126 N/Bound On-Ramp,
north of US-176 E/Bound On-Ramp

Date
Tuesday, April 23, 2024

Lat/Long
34.009509°, -81.051154°

Weather
Fair
58°F

0000 - 2400 (Weekday 24h Session) (All Dates)
NB EB Average 15min

	NB EB Average 15min													15min	60min
Time	1	2	3	4	5	6	7	8	9	10	11	12	13	Total	Total
0000 - 0015	0	24	3	0	0	0	0	0	0	0	0	0	0	**28**	
0015 - 0030	0	26	1	0	1	0	1	0	0	0	0	0	0	**28**	
0030 - 0045	0	23	2	0	0	0	0	0	0	0	0	0	0	**26**	
0045 - 0100	0	16	1	0	0	0	0	0	0	0	0	0	0	**17**	**99**
0100 - 0115	0	17	1	0	1	0	1	0	0	0	0	0	0	**19**	
0115 - 0130	0	17	1	0	0	0	1	0	0	0	0	0	0	**19**	
0130 - 0145	0	18	0	0	0	0	0	0	0	0	0	0	0	**19**	
0145 - 0200	0	17	1	0	1	0	0	0	0	0	0	0	0	**19**	**76**
0200 - 0215	0	15	0	0	0	0	0	0	0	0	0	0	0	**16**	
0215 - 0230	0	11	0	0	1	0	0	0	1	0	0	0	0	**13**	
0230 - 0245	0	7	1	0	0	0	0	0	0	0	0	0	0	**9**	
0245 - 0300	0	7	0	0	0	0	0	0	0	0	0	0	0	**8**	**46**
0300 - 0315	0	7	0	0	0	0	0	0	0	0	0	0	0	**7**	
0315 - 0330	0	8	0	0	0	0	1	0	0	0	0	0	0	**9**	
0330 - 0345	0	7	1	0	0	0	1	0	0	0	0	0	0	**9**	
0345 - 0400	0	6	0	0	0	0	0	0	0	0	0	0	0	**7**	**32**
0400 - 0415	0	8	1	0	0	0	0	0	1	0	0	0	0	**10**	
0415 - 0430	0	12	0	0	0	0	0	0	0	0	0	0	0	**13**	
0430 - 0445	0	12	1	0	0	0	0	0	0	0	0	0	0	**15**	
0445 - 0500	0	14	0	0	0	0	0	2	0	0	0	0	0	**17**	**54**
0500 - 0515	0	13	2	0	1	0	0	1	0	0	0	0	0	**16**	
0515 - 0530	0	20	2	0	1	0	0	0	0	0	0	0	0	**22**	
0530 - 0545	0	24	3	0	1	0	0	0	0	0	0	0	0	**29**	
0545 - 0600	0	29	4	0	0	0	0	0	0	0	0	0	0	**34**	**101**
0600 - 0615	0	36	3	0	3	1	0	0	0	0	0	0	0	**44**	
0615 - 0630	0	44	7	0	0	0	0	0	0	0	0	0	0	**53**	
0630 - 0645	0	67	11	0	1	0	0	0	1	0	0	0	0	**81**	
0645 - 0700	0	76	12	1	3	0	0	0	0	0	0	0	0	**92**	**270**
0700 - 0715	0	89	18	0	2	1	0	1	0	0	0	0	0	**111**	
0715 - 0730	0	129	20	1	5	0	0	1	0	1	0	0	0	**157**	
0730 - 0745	0	138	25	0	3	0	0	1	0	0	0	0	0	**167**	
0745 - 0800	0	159	16	0	4	1	0	0	1	0	0	0	0	**181**	**617**
0800 - 0815	0	146	21	1	2	1	0	0	0	0	0	0	0	**171**	
0815 - 0830	0	140	20	1	2	0	0	0	0	0	0	0	0	**163**	
0830 - 0845	0	154	22	1	6	0	1	1	1	0	0	0	0	**185**	
0845 - 0900	0	143	26	1	2	1	0	0	1	0	0	0	0	**175**	**694**
0900 - 0915	0	119	23	2	2	0	0	0	2	0	0	0	0	**148**	
0915 - 0930	0	115	27	0	3	1	1	0	1	0	0	0	0	**148**	
0930 - 0945	0	132	27	0	3	1	1	0	0	0	0	0	0	**164**	
0945 - 1000	0	131	29	1	3	2	1	0	1	0	0	0	0	**168**	**627**
1000 - 1015	0	126	31	1	3	0	1	0	1	0	0	0	0	**163**	
1015 - 1030	0	126	29	0	4	0	1	0	1	0	0	0	0	**161**	
1030 - 1045	1	126	24	1	2	0	0	1	1	0	0	0	0	**156**	
1045 - 1100	0	144	33	0	3	1	1	1	1	0	0	0	0	**182**	**662**
1100 - 1115	0	140	26	2	4	1	1	1	0	0	0	0	0	**175**	
1115 - 1130	0	144	28	0	2	0	1	1	0	0	0	0	0	**176**	
1130 - 1145	0	161	34	1	3	0	0	0	1	0	0	0	0	**199**	
1145 - 1200	0	153	28	1	1	0	0	0	2	0	0	0	0	**186**	**737**
1200 - 1215	1	162	35	0	4	0	0	1	1	0	0	0	0	**203**	
1215 - 1230	0	151	37	1	4	0	1	0	1	0	0	0	0	**196**	
1230 - 1245	0	183	37	0	1	0	0	0	0	0	0	0	0	**222**	
1245 - 1300	0	191	30	1	1	0	0	0	0	0	0	0	0	**224**	**845**
1300 - 1315	1	201	35	0	2	1	0	0	1	0	0	0	0	**242**	
1315 - 1330	0	189	36	0	3	0	0	0	1	0	0	0	0	**229**	
1330 - 1345	0	194	34	0	3	1	1	1	1	0	0	0	0	**235**	
1345 - 1400	0	172	35	0	2	1	0	0	1	0	0	0	0	**211**	**917**
1400 - 1415	0	201	31	0	4	0	1	0	1	0	0	0	0	**238**	
1415 - 1430	0	208	42	0	1	0	0	0	1	0	0	0	0	**252**	
1430 - 1445	0	188	38	1	3	0	1	1	1	0	0	0	0	**234**	
1445 - 1500	0	221	35	1	3	0	1	1	1	0	0	0	0	**263**	**987**
1500 - 1515	0	225	42	0	3	0	0	0	1	0	0	0	0	**272**	
1515 - 1530	1	235	44	1	1	0	1	0	1	0	0	0	0	**284**	
1530 - 1545	1	239	50	1	1	0	2	0	1	0	0	0	0	**295**	
1545 - 1600	1	249	46	1	4	0	1	0	1	0	0	0	0	**303**	**1154**
1600 - 1615	0	301	60	0	4	0	0	0	0	0	0	0	0	**367**	
1615 - 1630	1	314	60	0	7	0	1	0	1	0	0	0	0	**385**	
1630 - 1645	1	344	51	1	2	0	0	0	0	0	0	0	0	**399**	
1645 - 1700	0	339	55	0	3	0	0	1	0	0	0	0	0	**398**	**1549**
1700 - 1715	0	375	56	0	0	0	0	0	0	0	0	0	0	**433**	
1715 - 1730	0	371	56	0	0	0	0	0	0	0	0	0	0	**427**	
1730 - 1745	2	292	38	0	0	0	0	0	1	0	0	0	0	**335**	
1745 - 1800	0	249	29	1	1	0	0	0	0	0	0	0	0	**280**	**1475**
1800 - 1815	0	231	25	1	1	0	0	0	1	0	0	0	0	**260**	
1815 - 1830	0	154	23	0	1	0	0	0	0	0	0	0	0	**179**	
1830 - 1845	1	167	20	0	1	0	0	0	0	0	0	0	0	**190**	
1845 - 1900	0	165	17	0	2	0	0	0	0	0	0	0	0	**185**	**814**
1900 - 1915	0	76	9	0	1	0	0	0	0	0	0	0	0	**86**	
1915 - 1930	0	79	8	0	0	0	0	0	0	0	0	0	0	**87**	
1930 - 1945	0	69	3	0	0	0	0	0	0	0	0	0	0	**72**	
1945 - 2000	1	82	6	0	1	0	0	0	0	0	0	0	0	**90**	**336**
2000 - 2015	0	64	6	0	0	0	0	0	0	0	0	0	0	**71**	
2015 - 2030	1	66	7	0	1	0	0	0	0	0	0	0	0	**75**	
2030 - 2045	1	121	13	0	0	0	0	0	0	0	0	0	0	**136**	
2045 - 2100	0	103	16	0	1	0	0	0	0	0	0	0	0	**121**	**403**
2100 - 2115	1	99	4	0	0	0	0	0	0	0	0	0	0	**105**	
2115 - 2130	1	99	3	0	0	0	1	0	0	0	0	0	0	**104**	
2130 - 2145	0	76	6	0	0	0	0	0	1	0	0	0	0	**83**	
2145 - 2200	0	76	5	0	0	0	0	0	0	0	0	0	0	**82**	**374**
2200 - 2215	0	70	5	0	0	0	1	0	0	0	0	0	0	**76**	
2215 - 2230	0	138	7	0	0	0	0	0	0	0	0	0	0	**145**	
2230 - 2245	0	87	4	0	0	0	1	0	0	0	0	0	0	**92**	
2245 - 2300	0	47	3	0	0	0	0	0	0	0	0	0	0	**49**	**362**
2300 - 2315	0	50	4	0	0	0	0	0	0	0	0	0	0	**54**	
2315 - 2330	1	41	2	0	1	0	0	0	0	0	0	0	0	**44**	
2330 - 2345	0	30	2	0	0	0	1	0	0	0	0	0	0	**33**	
2345 - 0000	0	32	1	0	0	0	0	0	0	0	0	0	0	**33**	**165**

Session Total	22	11314	1778	27	141	18	34	18	40	2	0	0	0	**13396**
Session Average	0.23	117.85	18.52	0.28	1.47	0.19	0.36	0.19	0.42	0.02	0.00	0.00	0.00	**139.54**
Session Percentage	0.16	84.46	13.27	0.20	1.06	0.14	0.26	0.13	0.30	0.01	0.00	0.00	0.00	

AM Peak Hour	0545 - 0645	0745 - 0845	0930 - 1030	0815 - 0915	0700 - 0800	0915 - 1015	0915 - 1015	0645 - 0745	0830 - 0930	0630 - 0730	-	-	-	**0745 - 0845**
AM Peak Volume	1	599	116	4	14	3	3	3	5	1	0	0	0	**701**

Noon Peak Hour	1445 - 1545	1445 - 1545	1445 - 1545	1100 - 1200	1130 - 1230	1300 - 1400	1445 - 1545	1030 - 1130	1445 - 1545	1215 - 1315	-	-	-	**1445 - 1545**
Noon Peak Volume	2	920	171	4	13	3	4	3	5	0	0	0	0	**1114**

PM Peak Hour	1730 - 1830	1630 - 1730	1600 - 1700	1745 - 1845	1545 - 1645	1600 - 1700	1500 - 1600	1600 - 1700	1500 - 1600	-	-	-	-	**1630 - 1730**
PM Peak Volume	3	1430	227	3	17	1	4	1	4	0	0	0	0	**1658**

Bi-Directional Class Count || Volume Summary 15min

Columbia, SC

Marr Traffic DATA COLLECTION

www.marrtraffic.com

Site 70

I-126 N/Bound On-Ramp,
north of US-176 E/Bound On-Ramp

Date

Tuesday, April 23, 2024

Lat/Long

34.009509°, -81.051154°

Weather

Fair
58°F

Click here for Detailed Weather

0000 - 2400 (Weekday 24h Session) (04-23-2024)

Volume Summary 15min

TIME	Volume Summary 15min NB	SB	15min Total	60min Total
0000 - 0015	0	0	**0**	
0015 - 0030	0	0	**0**	
0030 - 0045	0	0	**0**	
0045 - 0100	0	0	**0**	**0**
0100 - 0115	0	0	**0**	
0115 - 0130	0	0	**0**	
0130 - 0145	0	0	**0**	
0145 - 0200	0	0	**0**	**0**
0200 - 0215	0	0	**0**	
0215 - 0230	0	0	**0**	
0230 - 0245	0	0	**0**	
0245 - 0300	0	0	**0**	**0**
0300 - 0315	0	0	**0**	
0315 - 0330	0	0	**0**	
0330 - 0345	0	0	**0**	
0345 - 0400	0	0	**0**	**0**
0400 - 0415	0	0	**0**	
0415 - 0430	0	0	**0**	
0430 - 0445	0	0	**0**	
0445 - 0500	0	0	**0**	**0**
0500 - 0515	0	0	**0**	
0515 - 0530	0	0	**0**	
0530 - 0545	0	0	**0**	
0545 - 0600	0	0	**0**	**0**
0600 - 0615	0	0	**0**	
0615 - 0630	0	0	**0**	
0630 - 0645	0	0	**0**	
0645 - 0700	0	0	**0**	**0**
0700 - 0715	0	0	**0**	
0715 - 0730	0	0	**0**	
0730 - 0745	0	0	**0**	
0745 - 0800	0	0	**0**	**0**
0800 - 0815	0	0	**0**	
0815 - 0830	0	0	**0**	
0830 - 0845	0	0	**0**	
0845 - 0900	0	0	**0**	**0**
0900 - 0915	0	0	**0**	
0915 - 0930	0	0	**0**	
0930 - 0945	0	0	**0**	
0945 - 1000	0	0	**0**	**0**
1000 - 1015	0	0	**0**	
1015 - 1030	0	0	**0**	
1030 - 1045	0	0	**0**	
1045 - 1100	0	0	**0**	**0**
1100 - 1115	0	0	**0**	
1115 - 1130	0	0	**0**	
1130 - 1145	0	0	**0**	
1145 - 1200	0	0	**0**	**0**

Time	Volume Summary 15min NB	SB	15min Total	60min Total
1200 - 1215	0	0	**0**	
1215 - 1230	0	0	**0**	
1230 - 1245	0	0	**0**	
1245 - 1300	0	0	**0**	**0**
1300 - 1315	0	0	**0**	
1315 - 1330	0	0	**0**	
1330 - 1345	0	0	**0**	
1345 - 1400	0	0	**0**	**0**
1400 - 1415	0	0	**0**	
1415 - 1430	0	0	**0**	
1430 - 1445	0	0	**0**	
1445 - 1500	0	0	**0**	**0**
1500 - 1515	0	0	**0**	
1515 - 1530	0	0	**0**	
1530 - 1545	0	0	**0**	
1545 - 1600	0	0	**0**	**0**
1600 - 1615	0	0	**0**	
1615 - 1630	0	0	**0**	
1630 - 1645	0	0	**0**	
1645 - 1700	0	0	**0**	**0**
1700 - 1715	0	0	**0**	
1715 - 1730	0	0	**0**	
1730 - 1745	0	0	**0**	
1745 - 1800	0	0	**0**	**0**
1800 - 1815	0	0	**0**	
1815 - 1830	0	0	**0**	
1830 - 1845	0	0	**0**	
1845 - 1900	0	0	**0**	**0**
1900 - 1915	0	0	**0**	
1915 - 1930	0	0	**0**	
1930 - 1945	0	0	**0**	
1945 - 2000	0	0	**0**	**0**
2000 - 2015	0	0	**0**	
2015 - 2030	0	0	**0**	
2030 - 2045	190	0	**190**	
2045 - 2100	186	0	**186**	**376**
2100 - 2115	176	0	**176**	
2115 - 2130	144	0	**144**	
2130 - 2145	129	0	**129**	
2145 - 2200	100	0	**100**	**549**
2200 - 2215	116	0	**116**	
2215 - 2230	234	0	**234**	
2230 - 2245	112	0	**112**	
2245 - 2300	60	0	**60**	**522**
2300 - 2315	77	0	**77**	
2315 - 2330	56	0	**56**	
2330 - 2345	46	0	**46**	
2345 - 0000	52	0	**52**	**231**

Session Total	1678	0	**1678**
Session Average	17.48	0.00	**17.48**
Session Percentage	100.00	0.00	

Site 70

I-126 N/Bound On-Ramp,
north of US-176 E/Bound On-Ramp

Date

Wednesday, April 24, 2024

Lat/Long

34.009509°, -81.051154°

Weather

Fair
66°F

Click here for Detailed Weather

0000 - 2400 (Weekday 24h Session) (04-24-2024)

Volume Summary 15min

TIME	Volume Summary 15min NB	SB	15min Total	60min Total
0000 - 0015	44	0	**44**	
0015 - 0030	47	0	**47**	
0030 - 0045	39	0	**39**	
0045 - 0100	31	0	**31**	**161**
0100 - 0115	28	0	**28**	
0115 - 0130	24	0	**24**	
0130 - 0145	22	0	**22**	
0145 - 0200	26	0	**26**	**100**
0200 - 0215	17	0	**17**	
0215 - 0230	23	0	**23**	
0230 - 0245	20	0	**20**	
0245 - 0300	9	0	**9**	**69**
0300 - 0315	14	0	**14**	
0315 - 0330	12	0	**12**	
0330 - 0345	13	0	**13**	
0345 - 0400	10	0	**10**	**49**
0400 - 0415	13	0	**13**	
0415 - 0430	17	0	**17**	
0430 - 0445	17	0	**17**	
0445 - 0500	23	0	**23**	**70**
0500 - 0515	22	0	**22**	
0515 - 0530	34	0	**34**	
0530 - 0545	38	0	**38**	
0545 - 0600	43	0	**43**	**137**
0600 - 0615	69	0	**69**	
0615 - 0630	81	0	**81**	
0630 - 0645	132	0	**132**	
0645 - 0700	123	0	**123**	**405**
0700 - 0715	174	0	**174**	
0715 - 0730	244	0	**244**	
0730 - 0745	248	0	**248**	
0745 - 0800	288	0	**288**	**954**
0800 - 0815	263	0	**263**	
0815 - 0830	257	0	**257**	
0830 - 0845	261	0	**261**	
0845 - 0900	278	0	**278**	**1059**
0900 - 0915	224	0	**224**	
0915 - 0930	236	0	**236**	
0930 - 0945	247	0	**247**	
0945 - 1000	244	0	**244**	**951**
1000 - 1015	242	0	**242**	
1015 - 1030	227	0	**227**	
1030 - 1045	242	0	**242**	
1045 - 1100	277	0	**277**	**988**
1100 - 1115	246	0	**246**	
1115 - 1130	249	0	**249**	
1130 - 1145	304	0	**304**	
1145 - 1200	275	0	**275**	**1074**

Time	Volume Summary 15min NB	SB	15min Total	60min Total
1200 - 1215	306	0	**306**	
1215 - 1230	241	0	**241**	
1230 - 1245	316	0	**316**	
1245 - 1300	343	0	**343**	**1206**
1300 - 1315	340	0	**340**	
1315 - 1330	342	0	**342**	
1330 - 1345	334	0	**334**	
1345 - 1400	325	0	**325**	**1341**
1400 - 1415	348	0	**348**	
1415 - 1430	401	0	**401**	
1430 - 1445	332	0	**332**	
1445 - 1500	362	0	**362**	**1443**
1500 - 1515	415	0	**415**	
1515 - 1530	412	0	**412**	
1530 - 1545	455	0	**455**	
1545 - 1600	469	0	**469**	**1751**
1600 - 1615	530	0	**530**	
1615 - 1630	581	0	**581**	
1630 - 1645	617	0	**617**	
1645 - 1700	600	0	**600**	**2328**
1700 - 1715	662	0	**662**	
1715 - 1730	644	0	**644**	
1730 - 1745	456	0	**456**	
1745 - 1800	355	0	**355**	**2117**
1800 - 1815	367	0	**367**	
1815 - 1830	231	0	**231**	
1830 - 1845	291	0	**291**	
1845 - 1900	267	0	**267**	**1156**
1900 - 1915	259	0	**259**	
1915 - 1930	262	0	**262**	
1930 - 1945	217	0	**217**	
1945 - 2000	269	0	**269**	**1007**
2000 - 2015	214	0	**214**	
2015 - 2030	225	0	**225**	
2030 - 2045	217	0	**217**	
2045 - 2100	178	0	**178**	**834**
2100 - 2115	139	0	**139**	
2115 - 2130	168	0	**168**	
2130 - 2145	120	0	**120**	
2145 - 2200	146	0	**146**	**573**
2200 - 2215	112	0	**112**	
2215 - 2230	201	0	**201**	
2230 - 2245	164	0	**164**	
2245 - 2300	88	0	**88**	**565**
2300 - 2315	85	0	**85**	
2315 - 2330	77	0	**77**	
2330 - 2345	54	0	**54**	
2345 - 0000	48	0	**48**	**264**

Session Total	20602	0	**20602**
Session Average	214.60	0.00	**214.60**
Session Percentage	100.00	0.00	

Site 70

I-126 N/Bound On-Ramp,
north of US-176 E/Bound On-Ramp

Date

Thursday, April 25, 2024

Lat/Long

34.009509°, -81.051154°

Weather

Fair
67°F

Click here for Detailed Weather

0000 - 2400 (Weekday 24h Session) (04-25-2024)

Volume Summary 15min

TIME	Volume Summary 15min NB	SB	15min Total	60min Total
0000 - 0015	39	0	**39**	
0015 - 0030	38	0	**38**	
0030 - 0045	39	0	**39**	
0045 - 0100	20	0	**20**	**136**
0100 - 0115	29	0	**29**	
0115 - 0130	32	0	**32**	
0130 - 0145	34	0	**34**	
0145 - 0200	32	0	**32**	**127**
0200 - 0215	30	0	**30**	
0215 - 0230	17	0	**17**	
0230 - 0245	8	0	**8**	
0245 - 0300	15	0	**15**	**70**
0300 - 0315	8	0	**8**	
0315 - 0330	15	0	**15**	
0330 - 0345	13	0	**13**	
0345 - 0400	11	0	**11**	**47**
0400 - 0415	16	0	**16**	
0415 - 0430	21	0	**21**	
0430 - 0445	27	0	**27**	
0445 - 0500	27	0	**27**	**91**
0500 - 0515	26	0	**26**	
0515 - 0530	33	0	**33**	
0530 - 0545	49	0	**49**	
0545 - 0600	58	0	**58**	**166**
0600 - 0615	62	0	**62**	
0615 - 0630	78	0	**78**	
0630 - 0645	111	0	**111**	
0645 - 0700	153	0	**153**	**404**
0700 - 0715	160	0	**160**	
0715 - 0730	227	0	**227**	
0730 - 0745	253	0	**253**	
0745 - 0800	256	0	**256**	**896**
0800 - 0815	250	0	**250**	
0815 - 0830	233	0	**233**	
0830 - 0845	294	0	**294**	
0845 - 0900	246	0	**246**	**1023**
0900 - 0915	219	0	**219**	
0915 - 0930	208	0	**208**	
0930 - 0945	245	0	**245**	
0945 - 1000	259	0	**259**	**931**
1000 - 1015	247	0	**247**	
1015 - 1030	255	0	**255**	
1030 - 1045	225	0	**225**	
1045 - 1100	270	0	**270**	**997**
1100 - 1115	278	0	**278**	
1115 - 1130	280	0	**280**	
1130 - 1145	294	0	**294**	
1145 - 1200	284	0	**284**	**1136**

Time	Volume Summary 15min NB	SB	15min Total	60min Total
1200 - 1215	303	0	**303**	
1215 - 1230	346	0	**346**	
1230 - 1245	350	0	**350**	
1245 - 1300	329	0	**329**	**1328**
1300 - 1315	385	0	**385**	
1315 - 1330	346	0	**346**	
1330 - 1345	371	0	**371**	
1345 - 1400	308	0	**308**	**1410**
1400 - 1415	367	0	**367**	
1415 - 1430	356	0	**356**	
1430 - 1445	370	0	**370**	
1445 - 1500	426	0	**426**	**1519**
1500 - 1515	401	0	**401**	
1515 - 1530	441	0	**441**	
1530 - 1545	430	0	**430**	
1545 - 1600	440	0	**440**	**1712**
1600 - 1615	570	0	**570**	
1615 - 1630	574	0	**574**	
1630 - 1645	580	0	**580**	
1645 - 1700	595	0	**595**	**2319**
1700 - 1715	637	0	**637**	
1715 - 1730	638	0	**638**	
1730 - 1745	550	0	**550**	
1745 - 1800	484	0	**484**	**2309**
1800 - 1815	414	0	**414**	
1815 - 1830	305	0	**305**	
1830 - 1845	280	0	**280**	
1845 - 1900	287	0	**287**	**1286**
1900 - 1915	0	0	**0**	
1915 - 1930	0	0	**0**	
1930 - 1945	0	0	**0**	
1945 - 2000	0	0	**0**	**0**
2000 - 2015	0	0	**0**	
2015 - 2030	0	0	**0**	
2030 - 2045	0	0	**0**	
2045 - 2100	0	0	**0**	**0**
2100 - 2115	0	0	**0**	
2115 - 2130	0	0	**0**	
2130 - 2145	0	0	**0**	
2145 - 2200	0	0	**0**	**0**
2200 - 2215	0	0	**0**	
2215 - 2230	0	0	**0**	
2230 - 2245	0	0	**0**	
2245 - 2300	0	0	**0**	**0**
2300 - 2315	0	0	**0**	
2315 - 2330	0	0	**0**	
2330 - 2345	0	0	**0**	
2345 - 0000	0	0	**0**	**0**

Session Total	17907	0	**17907**
Session Average	186.53	0.00	**186.53**
Session Percentage	100.00	0.00	

Bi-Directional Class Count || NB EB 60min

Columbia, SC

Marr Traffic DATA COLLECTION

www.marrtraffic.com

Site 70
I-126 N/Bound On-Ramp,
north of US-176 E/Bound On-Ramp

Date
Tuesday, April 23, 2024

Lat/Long
34.009509°, -81.051154°

Weather
Fair
58°F

Click here for Detailed Weather

0000 - 2400 (Weekday 24h Session) (04-23-2024)
NB EB 60min

	Northbound (Movement 70.1)													
TIME	1	2	3	4	5	6	7	8	9	10	11	12	13	**Total**
0000 - 0100	0	0	0	0	0	0	0	0	0	0	0	0	0	**0**
0100 - 0200	0	0	0	0	0	0	0	0	0	0	0	0	0	**0**
0200 - 0300	0	0	0	0	0	0	0	0	0	0	0	0	0	**0**
0300 - 0400	0	0	0	0	0	0	0	0	0	0	0	0	0	**0**
0400 - 0500	0	0	0	0	0	0	0	0	0	0	0	0	0	**0**
0500 - 0600	0	0	0	0	0	0	0	0	0	0	0	0	0	**0**
0600 - 0700	0	0	0	0	0	0	0	0	0	0	0	0	0	**0**
0700 - 0800	0	0	0	0	0	0	0	0	0	0	0	0	0	**0**
0800 - 0900	0	0	0	0	0	0	0	0	0	0	0	0	0	**0**
0900 - 1000	0	0	0	0	0	0	0	0	0	0	0	0	0	**0**
1000 - 1100	0	0	0	0	0	0	0	0	0	0	0	0	0	**0**
1100 - 1200	0	0	0	0	0	0	0	0	0	0	0	0	0	**0**
1200 - 1300	0	0	0	0	0	0	0	0	0	0	0	0	0	**0**
1300 - 1400	0	0	0	0	0	0	0	0	0	0	0	0	0	**0**
1400 - 1500	0	0	0	0	0	0	0	0	0	0	0	0	0	**0**
1500 - 1600	0	0	0	0	0	0	0	0	0	0	0	0	0	**0**
1600 - 1700	0	0	0	0	0	0	0	0	0	0	0	0	0	**0**
1700 - 1800	0	0	0	0	0	0	0	0	0	0	0	0	0	**0**
1800 - 1900	0	0	0	0	0	0	0	0	0	0	0	0	0	**0**
1900 - 2000	0	0	0	0	0	0	0	0	0	0	0	0	0	**0**
2000 - 2100	1	339	33	0	2	0	0	0	0	0	1	0	0	**376**
2100 - 2200	2	518	23	0	2	0	2	0	2	0	0	0	0	**549**
2200 - 2300	1	493	25	0	1	0	2	0	0	0	0	0	0	**522**
2300 - 2400	1	217	8	0	2	0	2	0	1	0	0	0	0	**231**
Session Total	5	1567	89	0	7	0	6	0	3	0	1	0	0	**1678**
Session Average	0.21	65.29	3.71	0.00	0.29	0.00	0.25	0.00	0.13	0.00	0.04	0.00	0.00	**69.92**
Session Percentage	0.30	93.38	5.30	0.00	0.42	0.00	0.36	0.00	0.18	0.00	0.06	0.00	0.00	
AM Peak Hour	-	-	-	-	-	-	-	-	-	-	-	-	-	**-**
AM Peak Volume	0	0	0	0	0	0	0	0	0	0	0	0	0	**0**
Noon Peak Hour	-	-	-	-	-	-	-	-	-	-	-	-	-	**-**
Noon Peak Volume	0	0	0	0	0	0	0	0	0	0	0	0	0	**0**
PM Peak Hour	-	-	-	-	-	-	-	-	-	-	-	-	-	**-**
PM Peak Volume	0	0	0	0	0	0	0	0	0	0	0	0	0	**0**

Site 70
I-126 N/Bound On-Ramp,
north of US-176 E/Bound On-Ramp

Date
Wednesday, April 24, 2024

Lat/Long
34.009509°, -81.051154°

Weather
Fair
66°F

Click here for Detailed Weather

0000 - 2400 (Weekday 24h Session) (04-24-2024)
NB EB 60min

	Northbound (Movement 70.1)													
TIME	1	2	3	4	5	6	7	8	9	10	11	12	13	**Total**
0000 - 0100	0	144	12	1	1	0	2	0	1	0	0	0	0	**161**
0100 - 0200	1	86	7	0	2	0	4	0	0	0	0	0	0	**100**
0200 - 0300	0	58	5	0	3	1	1	0	1	0	0	0	0	**69**
0300 - 0400	0	42	4	0	0	0	3	0	0	0	0	0	0	**49**
0400 - 0500	0	61	3	0	0	1	1	3	1	0	0	0	0	**70**
0500 - 0600	0	109	16	0	6	1	1	1	2	1	0	0	0	**137**
0600 - 0700	1	330	53	1	13	3	0	2	2	0	0	0	0	**405**
0700 - 0800	1	772	149	2	20	2	2	5	1	0	0	0	0	**954**
0800 - 0900	1	869	158	4	16	3	1	3	4	0	0	0	0	**1059**
0900 - 1000	1	756	156	1	21	2	5	1	8	0	0	0	0	**951**
1000 - 1100	1	779	179	4	12	2	4	3	4	0	0	0	0	**988**
1100 - 1200	0	875	166	8	12	1	6	1	5	0	0	0	0	**1074**
1200 - 1300	2	993	180	4	20	1	0	4	2	0	0	0	0	**1206**
1300 - 1400	0	1130	187	1	13	3	0	1	5	1	0	0	0	**1341**
1400 - 1500	0	1226	183	5	18	1	1	1	8	0	0	0	0	**1443**
1500 - 1600	3	1424	300	4	13	0	2	0	5	0	0	0	0	**1751**
1600 - 1700	5	1971	323	2	20	2	3	2	0	0	0	0	0	**2328**
1700 - 1800	2	1840	265	2	2	1	0	1	4	0	0	0	0	**2117**
1800 - 1900	2	1026	117	4	4	0	0	0	3	0	0	0	0	**1156**
1900 - 2000	2	919	79	1	4	1	1	0	0	0	0	0	0	**1007**
2000 - 2100	6	723	95	1	6	0	3	0	0	0	0	0	0	**834**
2100 - 2200	3	532	33	1	1	1	1	1	0	0	0	0	0	**573**
2200 - 2300	0	531	31	0	0	0	3	0	0	0	0	0	0	**565**
2300 - 2400	3	243	17	0	0	0	1	0	0	0	0	0	0	**264**

Session Total	34	17439	2718	46	207	26	45	29	56	2	0	0	0	**20602**
Session Average	1.42	726.63	113.25	1.92	8.63	1.08	1.88	1.21	2.33	0.08	0.00	0.00	0.00	**858.42**
Session Percentage	0.17	84.65	13.19	0.22	1.00	0.13	0.22	0.14	0.27	0.01	0.00	0.00	0.00	

AM Peak Hour	0600 - 0700	0800 - 0900	0800 - 0900	0800 - 0900	0900 - 1000	0600 - 0700	0900 - 1000	0700 - 0800	0900 - 1000	0500 - 0600	-	-	-	**0800 - 0900**
AM Peak Volume	1	869	158	4	21	3	5	5	8	1	0	0	0	**1059**

Noon Peak Hour	1200 - 1300	1400 - 1500	1300 - 1400	1100 - 1200	1200 - 1300	1300 - 1400	1100 - 1200	1200 - 1300	1400 - 1500	1300 - 1400	-	-	-	**1400 - 1500**
Noon Peak Volume	2	1226	187	8	20	3	6	4	8	1	0	0	0	**1443**

PM Peak Hour	1600 - 1700	1600 - 1700	1600 - 1700	1500 - 1600	1600 - 1700	1600 - 1700	1600 - 1700	1600 - 1700	1500 - 1600	-	-	-	-	**1600 - 1700**
PM Peak Volume	5	1971	323	4	20	2	3	2	5	0	0	0	0	**2328**

Site 70
I-126 N/Bound On-Ramp,
north of US-176 E/Bound On-Ramp

Date
Thursday, April 25, 2024

Lat/Long
34.009509°, -81.051154°

Weather
Fair
67°F

Click here for Detailed Weather

0000 - 2400 (Weekday 24h Session) (04-25-2024)
NB EB 60min

	Northbound (Movement 70.1)													
TIME	1	2	3	4	5	6	7	8	9	10	11	12	13	**Total**
0000 - 0100	0	122	6	1	3	0	3	0	1	0	0	0	0	**136**
0100 - 0200	0	119	3	0	3	0	2	0	0	0	0	0	0	**127**
0200 - 0300	0	66	0	0	0	0	2	0	2	0	0	0	0	**70**
0300 - 0400	0	42	1	0	0	1	3	0	0	0	0	0	0	**47**
0400 - 0500	0	76	5	0	1	2	0	4	3	0	0	0	0	**91**
0500 - 0600	0	148	14	1	1	0	0	2	0	0	0	0	0	**166**
0600 - 0700	2	340	45	1	10	1	1	1	3	0	0	0	0	**404**
0700 - 0800	0	772	88	1	21	4	1	3	2	4	0	0	0	**896**
0800 - 0900	1	881	110	4	18	2	3	1	3	0	0	0	0	**1023**
0900 - 1000	1	734	160	7	14	8	2	0	5	0	0	0	0	**931**
1000 - 1100	1	785	172	3	23	1	5	2	5	0	0	0	0	**997**
1100 - 1200	0	918	180	3	21	2	3	4	5	0	0	0	0	**1136**
1200 - 1300	0	1070	237	2	10	2	3	0	4	0	0	0	0	**1328**
1300 - 1400	2	1138	234	3	16	6	3	2	6	0	0	0	0	**1410**
1400 - 1500	3	1230	254	1	14	0	9	3	5	0	0	0	0	**1519**
1500 - 1600	6	1421	248	3	14	0	11	1	8	0	0	0	0	**1712**
1600 - 1700	1	1923	358	2	27	0	1	1	6	0	0	0	0	**2319**
1700 - 1800	7	2024	273	1	3	0	0	0	1	0	0	0	0	**2309**
1800 - 1900	3	1127	139	3	11	0	0	1	2	0	0	0	0	**1286**
1900 - 2000	0	0	0	0	0	0	0	0	0	0	0	0	0	**0**
2000 - 2100	0	0	0	0	0	0	0	0	0	0	0	0	0	**0**
2100 - 2200	0	0	0	0	0	0	0	0	0	0	0	0	0	**0**
2200 - 2300	0	0	0	0	0	0	0	0	0	0	0	0	0	**0**
2300 - 2400	0	0	0	0	0	0	0	0	0	0	0	0	0	**0**

Session Total	27	14936	2527	36	210	29	52	25	61	4	0	0	0	**17907**
Session Average	1.13	622.33	105.29	1.50	8.75	1.21	2.17	1.04	2.54	0.17	0.00	0.00	0.00	**746.13**
Session Percentage	0.15	83.41	14.11	0.20	1.17	0.16	0.29	0.14	0.34	0.02	0.00	0.00	0.00	

AM Peak Hour	0600 - 0700	0800 - 0900	0900 - 1000	0900 - 1000	0700 - 0800	0900 - 1000	0800 - 0900	0700 - 0800	0900 - 1000	0700 - 0800	-	-	-	**0800 - 0900**
AM Peak Hour Volume	2	881	160	7	21	8	3	3	5	4	0	0	0	**1023**

Noon Peak Hour	1400 - 1500	1400 - 1500	1400 - 1500	1000 - 1100	1000 - 1100	1300 - 1400	1400 - 1500	1100 - 1200	1300 - 1400	-	-	-	-	**1400 - 1500**
Noon Peak Hour Volume	3	1230	254	3	23	6	9	4	6	0	0	0	0	**1519**

PM Peak Hour	1700 - 1800	1700 - 1800	1600 - 1700	1500 - 1600	1600 - 1700	-	1500 - 1600	1500 - 1600	1500 - 1600	-	-	-	-	**1600 - 1700**
PM Peak Hour Volume	7	2024	358	3	27	0	11	1	8	0	0	0	0	**2319**

Bi-Directional Class Count || Volume Summary 60min

Columbia, SC

Marr Traffic DATA COLLECTION

www.marrtraffic.com

Site 70

I-126 N/Bound On-Ramp,
north of US-176 E/Bound On-Ramp

Date

Tuesday, April 23, 2024

Lat/Long

34.009509°, -81.051154°

Weather

Fair
58°F

Click here for Detailed Weather

0000 - 2400 (Weekday 24h Session) (04-23-2024)

Volume Summary 60min

	Volume Summary 60min		
TIME	NB	SB	**Total**
0000 - 0100	0	0	**0**
0100 - 0200	0	0	**0**
0200 - 0300	0	0	**0**
0300 - 0400	0	0	**0**
0400 - 0500	0	0	**0**
0500 - 0600	0	0	**0**
0600 - 0700	0	0	**0**
0700 - 0800	0	0	**0**
0800 - 0900	0	0	**0**
0900 - 1000	0	0	**0**
1000 - 1100	0	0	**0**
1100 - 1200	0	0	**0**

	Volume Summary 60min		
Time	NB	SB	**Total**
1200 - 1300	0	0	**0**
1300 - 1400	0	0	**0**
1400 - 1500	0	0	**0**
1500 - 1600	0	0	**0**
1600 - 1700	0	0	**0**
1700 - 1800	0	0	**0**
1800 - 1900	0	0	**0**
1900 - 2000	0	0	**0**
2000 - 2100	376	0	**376**
2100 - 2200	549	0	**549**
2200 - 2300	522	0	**522**
2300 - 2400	231	0	**231**

Session Total	1678	0	**1678**
Session Average	69.92	0.00	**69.92**
Session Percentage	100.00	0.00	

Site 70

I-126 N/Bound On-Ramp,
north of US-176 E/Bound On-Ramp

Date

Wednesday, April 24, 2024

Lat/Long

34.009509°, -81.051154°

Weather

Fair
66°F

Click here for Detailed Weather

0000 - 2400 (Weekday 24h Session) (04-24-2024)

Volume Summary 60min

	Volume Summary 60min		
TIME	NB	SB	**Total**
0000 - 0100	161	0	**161**
0100 - 0200	100	0	**100**
0200 - 0300	69	0	**69**
0300 - 0400	49	0	**49**
0400 - 0500	70	0	**70**
0500 - 0600	137	0	**137**
0600 - 0700	405	0	**405**
0700 - 0800	954	0	**954**
0800 - 0900	1059	0	**1059**
0900 - 1000	951	0	**951**
1000 - 1100	988	0	**988**
1100 - 1200	1074	0	**1074**

Session Total	20602	0	**20602**
Session Average	858.42	0.00	**858.42**
Session Percentage	100.00	0.00	

	Volume Summary 60min		
Time	NB	SB	**Total**
1200 - 1300	1206	0	**1206**
1300 - 1400	1341	0	**1341**
1400 - 1500	1443	0	**1443**
1500 - 1600	1751	0	**1751**
1600 - 1700	2328	0	**2328**
1700 - 1800	2117	0	**2117**
1800 - 1900	1156	0	**1156**
1900 - 2000	1007	0	**1007**
2000 - 2100	834	0	**834**
2100 - 2200	573	0	**573**
2200 - 2300	565	0	**565**
2300 - 2400	264	0	**264**

Site 70

I-126 N/Bound On-Ramp,
north of US-176 E/Bound On-Ramp

Date

Thursday, April 25, 2024

Lat/Long

34.009509°, -81.051154°

Weather

Fair
67°F

Click here for Detailed Weather

0000 - 2400 (Weekday 24h Session) (04-25-2024)

Volume Summary 60min

	Volume Summary 60min		
TIME	NB	SB	**Total**
0000 - 0100	136	0	**136**
0100 - 0200	127	0	**127**
0200 - 0300	70	0	**70**
0300 - 0400	47	0	**47**
0400 - 0500	91	0	**91**
0500 - 0600	166	0	**166**
0600 - 0700	404	0	**404**
0700 - 0800	896	0	**896**
0800 - 0900	1023	0	**1023**
0900 - 1000	931	0	**931**
1000 - 1100	997	0	**997**
1100 - 1200	1136	0	**1136**

	Volume Summary 60min		
Time	NB	SB	**Total**
1200 - 1300	1328	0	**1328**
1300 - 1400	1410	0	**1410**
1400 - 1500	1519	0	**1519**
1500 - 1600	1712	0	**1712**
1600 - 1700	2319	0	**2319**
1700 - 1800	2309	0	**2309**
1800 - 1900	1286	0	**1286**
1900 - 2000	0	0	**0**
2000 - 2100	0	0	**0**
2100 - 2200	0	0	**0**
2200 - 2300	0	0	**0**
2300 - 2400	0	0	**0**

Session Total	17907	0	**17907**
Session Average	746.13	0.00	**746.13**
Session Percentage	100.00	0.00	

Bi-Directional Class Count || Graphical Analysis NB EB

Columbia, SC

Marr Traffic DATA COLLECTION

www.marrtraffic.com

Site 70

I-126 N/Bound On-Ramp,
north of US-176 E/Bound On-Ramp

Lat/Long

34.009509°, -81.051154°

0000 - 2400 (Weekday 24h Session)

Graphical Analysis NB EB

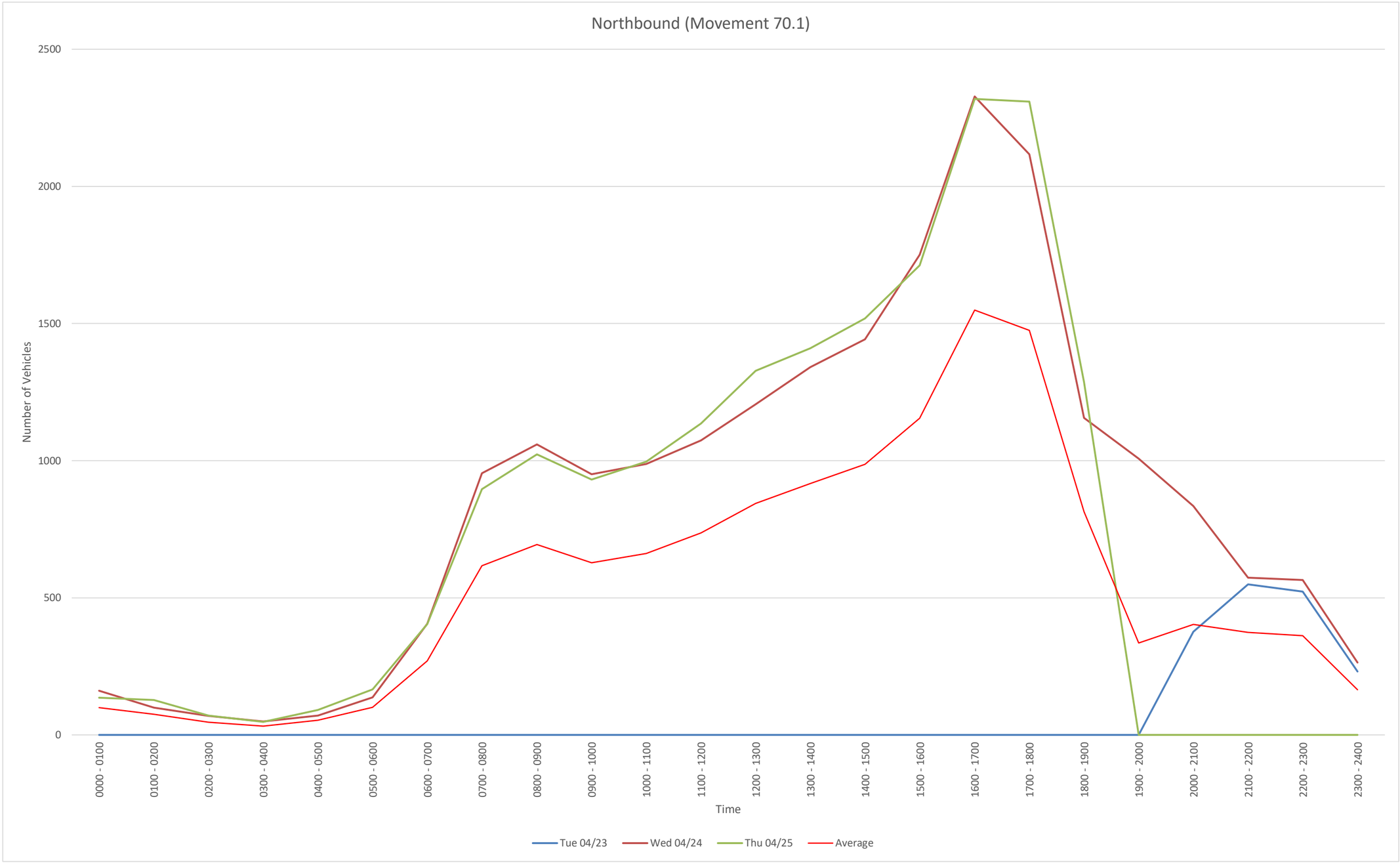

Time	Tue 04/23	Wed 04/24	Thu 04/25				
0000 - 0100	0	161	136				
0100 - 0200	0	100	127				
0200 - 0300	0	69	70				
0300 - 0400	0	49	47				
0400 - 0500	0	70	91				
0500 - 0600	0	137	166				
0600 - 0700	0	405	404				
0700 - 0800	0	954	896				
0800 - 0900	0	1059	1023				
0900 - 1000	0	951	931				
1000 - 1100	0	988	997				
1100 - 1200	0	1074	1136				
1200 - 1300	0	1206	1328				
1300 - 1400	0	1341	1410				
1400 - 1500	0	1443	1519				
1500 - 1600	0	1751	1712				
1600 - 1700	0	2328	2319				
1700 - 1800	0	2117	2309				
1800 - 1900	0	1156	1286				
1900 - 2000	0	1007	0				
2000 - 2100	376	834	0				
2100 - 2200	549	573	0				
2200 - 2300	522	565	0				
2300 - 2400	231	264	0				
Daily Total	1678	20602	17907				

NB
File Name:
Start Date: 4/23/2024
Start Time: 0
Site Code: 70
Station ID: 1
Location 1: I-126 N/Bound On-Ramp, north of US-176 E/Bound On-Ramp
Location 2:

Date	Time	1	2	3	4	5	6	7	8	9	10	11	12	13
4/23/2024	12:00 AM	0	0	0	0	0	0	0	0	0	0	0	0	0
4/23/2024	12:15 AM	0	0	0	0	0	0	0	0	0	0	0	0	0
4/23/2024	12:30 AM	0	0	0	0	0	0	0	0	0	0	0	0	0
4/23/2024	12:45 AM	0	0	0	0	0	0	0	0	0	0	0	0	0
4/23/2024	1:00 AM	0	0	0	0	0	0	0	0	0	0	0	0	0
4/23/2024	1:15 AM	0	0	0	0	0	0	0	0	0	0	0	0	0
4/23/2024	1:30 AM	0	0	0	0	0	0	0	0	0	0	0	0	0
4/23/2024	1:45 AM	0	0	0	0	0	0	0	0	0	0	0	0	0
4/23/2024	2:00 AM	0	0	0	0	0	0	0	0	0	0	0	0	0
4/23/2024	2:15 AM	0	0	0	0	0	0	0	0	0	0	0	0	0
4/23/2024	2:30 AM	0	0	0	0	0	0	0	0	0	0	0	0	0
4/23/2024	2:45 AM	0	0	0	0	0	0	0	0	0	0	0	0	0
4/23/2024	3:00 AM	0	0	0	0	0	0	0	0	0	0	0	0	0
4/23/2024	3:15 AM	0	0	0	0	0	0	0	0	0	0	0	0	0
4/23/2024	3:30 AM	0	0	0	0	0	0	0	0	0	0	0	0	0
4/23/2024	3:45 AM	0	0	0	0	0	0	0	0	0	0	0	0	0
4/23/2024	4:00 AM	0	0	0	0	0	0	0	0	0	0	0	0	0
4/23/2024	4:15 AM	0	0	0	0	0	0	0	0	0	0	0	0	0
4/23/2024	4:30 AM	0	0	0	0	0	0	0	0	0	0	0	0	0
4/23/2024	4:45 AM	0	0	0	0	0	0	0	0	0	0	0	0	0
4/23/2024	5:00 AM	0	0	0	0	0	0	0	0	0	0	0	0	0
4/23/2024	5:15 AM	0	0	0	0	0	0	0	0	0	0	0	0	0
4/23/2024	5:30 AM	0	0	0	0	0	0	0	0	0	0	0	0	0
4/23/2024	5:45 AM	0	0	0	0	0	0	0	0	0	0	0	0	0
4/23/2024	6:00 AM	0	0	0	0	0	0	0	0	0	0	0	0	0
4/23/2024	6:15 AM	0	0	0	0	0	0	0	0	0	0	0	0	0
4/23/2024	6:30 AM	0	0	0	0	0	0	0	0	0	0	0	0	0
4/23/2024	6:45 AM	0	0	0	0	0	0	0	0	0	0	0	0	0
4/23/2024	7:00 AM	0	0	0	0	0	0	0	0	0	0	0	0	0
4/23/2024	7:15 AM	0	0	0	0	0	0	0	0	0	0	0	0	0
4/23/2024	7:30 AM	0	0	0	0	0	0	0	0	0	0	0	0	0
4/23/2024	7:45 AM	0	0	0	0	0	0	0	0	0	0	0	0	0
4/23/2024	8:00 AM	0	0	0	0	0	0	0	0	0	0	0	0	0
4/23/2024	8:15 AM	0	0	0	0	0	0	0	0	0	0	0	0	0
4/23/2024	8:30 AM	0	0	0	0	0	0	0	0	0	0	0	0	0
4/23/2024	8:45 AM	0	0	0	0	0	0	0	0	0	0	0	0	0
4/23/2024	9:00 AM	0	0	0	0	0	0	0	0	0	0	0	0	0
4/23/2024	9:15 AM	0	0	0	0	0	0	0	0	0	0	0	0	0
4/23/2024	9:30 AM	0	0	0	0	0	0	0	0	0	0	0	0	0
4/23/2024	9:45 AM	0	0	0	0	0	0	0	0	0	0	0	0	0
4/23/2024	10:00 AM	0	0	0	0	0	0	0	0	0	0	0	0	0
4/23/2024	10:15 AM	0	0	0	0	0	0	0	0	0	0	0	0	0
4/23/2024	10:30 AM	0	0	0	0	0	0	0	0	0	0	0	0	0
4/23/2024	10:45 AM	0	0	0	0	0	0	0	0	0	0	0	0	0
4/23/2024	11:00 AM	0	0	0	0	0	0	0	0	0	0	0	0	0
4/23/2024	11:15 AM	0	0	0	0	0	0	0	0	0	0	0	0	0
4/23/2024	11:30 AM	0	0	0	0	0	0	0	0	0	0	0	0	0
4/23/2024	11:45 AM	0	0	0	0	0	0	0	0	0	0	0	0	0
4/23/2024	12:00 PM	0	0	0	0	0	0	0	0	0	0	0	0	0
4/23/2024	12:15 PM	0	0	0	0	0	0	0	0	0	0	0	0	0
4/23/2024	12:30 PM	0	0	0	0	0	0	0	0	0	0	0	0	0
4/23/2024	12:45 PM	0	0	0	0	0	0	0	0	0	0	0	0	0
4/23/2024	1:00 PM	0	0	0	0	0	0	0	0	0	0	0	0	0
4/23/2024	1:15 PM	0	0	0	0	0	0	0	0	0	0	0	0	0
4/23/2024	1:30 PM	0	0	0	0	0	0	0	0	0	0	0	0	0
4/23/2024	1:45 PM	0	0	0	0	0	0	0	0	0	0	0	0	0
4/23/2024	2:00 PM	0	0	0	0	0	0	0	0	0	0	0	0	0
4/23/2024	2:15 PM	0	0	0	0	0	0	0	0	0	0	0	0	0
4/23/2024	2:30 PM	0	0	0	0	0	0	0	0	0	0	0	0	0
4/23/2024	2:45 PM	0	0	0	0	0	0	0	0	0	0	0	0	0
4/23/2024	3:00 PM	0	0	0	0	0	0	0	0	0	0	0	0	0
4/23/2024	3:15 PM	0	0	0	0	0	0	0	0	0	0	0	0	0
4/23/2024	3:30 PM	0	0	0	0	0	0	0	0	0	0	0	0	0
4/23/2024	3:45 PM	0	0	0	0	0	0	0	0	0	0	0	0	0
4/23/2024	4:00 PM	0	0	0	0	0	0	0	0	0	0	0	0	0
4/23/2024	4:15 PM	0	0	0	0	0	0	0	0	0	0	0	0	0
4/23/2024	4:30 PM	0	0	0	0	0	0	0	0	0	0	0	0	0
4/23/2024	4:45 PM	0	0	0	0	0	0	0	0	0	0	0	0	0
4/23/2024	5:00 PM	0	0	0	0	0	0	0	0	0	0	0	0	0
4/23/2024	5:15 PM	0	0	0	0	0	0	0	0	0	0	0	0	0
4/23/2024	5:30 PM	0	0	0	0	0	0	0	0	0	0	0	0	0
4/23/2024	5:45 PM	0	0	0	0	0	0	0	0	0	0	0	0	0
4/23/2024	6:00 PM	0	0	0	0	0	0	0	0	0	0	0	0	0
4/23/2024	6:15 PM	0	0	0	0	0	0	0	0	0	0	0	0	0
4/23/2024	6:30 PM	0	0	0	0	0	0	0	0	0	0	0	0	0
4/23/2024	6:45 PM	0	0	0	0	0	0	0	0	0	0	0	0	0
4/23/2024	7:00 PM	0	0	0	0	0	0	0	0	0	0	0	0	0
4/23/2024	7:15 PM	0	0	0	0	0	0	0	0	0	0	0	0	0
4/23/2024	7:30 PM	0	0	0	0	0	0	0	0	0	0	0	0	0
4/23/2024	7:45 PM	0	0	0	0	0	0	0	0	0	0	0	0	0
4/23/2024	8:00 PM	0	0	0	0	0	0	0	0	0	0	0	0	0
4/23/2024	8:15 PM	0	0	0	0	0	0	0	0	0	0	0	0	0
4/23/2024	8:30 PM	0	172	18	0	0	0	0	0	0	0	0	0	0
4/23/2024	8:45 PM	1	167	15	0	2	0	0	0	0	0	1	0	0
4/23/2024	9:00 PM	2	164	9	0	1	0	0	0	0	0	0	0	0
4/23/2024	9:15 PM	0	139	2	0	1	0	2	0	0	0	0	0	0
4/23/2024	9:30 PM	0	119	8	0	0	0	0	0	2	0	0	0	0
4/23/2024	9:45 PM	0	96	4	0	0	0	0	0	0	0	0	0	0
4/23/2024	10:00 PM	0	108	6	0	0	0	2	0	0	0	0	0	0
4/23/2024	10:15 PM	1	222	11	0	0	0	0	0	0	0	0	0	0
4/23/2024	10:30 PM	0	104	7	0	1	0	0	0	0	0	0	0	0
4/23/2024	10:45 PM	0	59	1	0	0	0	0	0	0	0	0	0	0
4/23/2024	11:00 PM	0	75	2	0	0	0	0	0	0	0	0	0	0
4/23/2024	11:15 PM	0	53	1	0	2	0	0	0	0	0	0	0	0
4/23/2024	11:30 PM	1	41	3	0	0	0	1	0	0	0	0	0	0
4/23/2024	11:45 PM	0	48	2	0	0	0	1	0	1	0	0	0	0

4/24/2024	12:00 AM	0	39	4	0	0	0	1	0	0	0	0	0	0
4/24/2024	12:15 AM	0	43	2	1	0	0	1	0	0	0	0	0	0
4/24/2024	12:30 AM	0	34	4	0	0	0	0	0	1	0	0	0	0
4/24/2024	12:45 AM	0	28	2	0	1	0	0	0	0	0	0	0	0
4/24/2024	1:00 AM	0	24	2	0	2	0	0	0	0	0	0	0	0
4/24/2024	1:15 AM	0	20	2	0	0	0	2	0	0	0	0	0	0
4/24/2024	1:30 AM	0	20	1	0	0	0	1	0	0	0	0	0	0
4/24/2024	1:45 AM	1	22	2	0	0	0	1	0	0	0	0	0	0
4/24/2024	2:00 AM	0	16	1	0	0	0	0	0	0	0	0	0	0
4/24/2024	2:15 AM	0	18	1	0	2	0	1	0	1	0	0	0	0
4/24/2024	2:30 AM	0	16	3	0	0	1	0	0	0	0	0	0	0
4/24/2024	2:45 AM	0	8	0	0	1	0	0	0	0	0	0	0	0
4/24/2024	3:00 AM	0	13	1	0	0	0	0	0	0	0	0	0	0
4/24/2024	3:15 AM	0	11	0	0	0	0	1	0	0	0	0	0	0
4/24/2024	3:30 AM	0	10	2	0	0	0	1	0	0	0	0	0	0
4/24/2024	3:45 AM	0	8	1	0	0	0	1	0	0	0	0	0	0
4/24/2024	4:00 AM	0	11	0	0	0	1	0	0	1	0	0	0	0
4/24/2024	4:15 AM	0	16	1	0	0	0	0	0	0	0	0	0	0
4/24/2024	4:30 AM	0	13	2	0	0	0	1	1	0	0	0	0	0
4/24/2024	4:45 AM	0	21	0	0	0	0	0	2	0	0	0	0	0
4/24/2024	5:00 AM	0	14	5	0	2	0	0	1	0	0	0	0	0
4/24/2024	5:15 AM	0	29	3	0	1	0	0	0	1	0	0	0	0
4/24/2024	5:30 AM	0	31	2	0	2	1	1	0	0	1	0	0	0
4/24/2024	5:45 AM	0	35	6	0	1	0	0	0	1	0	0	0	0
4/24/2024	6:00 AM	0	57	6	0	3	1	0	1	1	0	0	0	0
4/24/2024	6:15 AM	0	65	14	0	1	1	0	0	0	0	0	0	0
4/24/2024	6:30 AM	1	110	16	0	3	1	0	0	1	0	0	0	0
4/24/2024	6:45 AM	0	98	17	1	6	0	0	1	0	0	0	0	0
4/24/2024	7:00 AM	0	138	29	0	4	0	1	2	0	0	0	0	0
4/24/2024	7:15 AM	0	199	38	1	4	0	0	2	0	0	0	0	0
4/24/2024	7:30 AM	1	193	47	1	5	1	0	0	0	0	0	0	0
4/24/2024	7:45 AM	0	242	35	0	7	1	1	1	1	0	0	0	0
4/24/2024	8:00 AM	0	219	35	2	5	1	0	0	1	0	0	0	0
4/24/2024	8:15 AM	0	221	32	0	2	0	0	1	1	0	0	0	0
4/24/2024	8:30 AM	0	214	35	1	7	0	1	2	1	0	0	0	0
4/24/2024	8:45 AM	1	215	56	1	2	2	0	0	1	0	0	0	0
4/24/2024	9:00 AM	0	186	31	1	4	0	0	0	2	0	0	0	0
4/24/2024	9:15 AM	1	177	46	0	5	1	2	0	4	0	0	0	0
4/24/2024	9:30 AM	0	198	42	0	5	0	1	0	1	0	0	0	0
4/24/2024	9:45 AM	0	195	37	0	7	1	2	1	1	0	0	0	0
4/24/2024	10:00 AM	0	182	52	2	4	0	1	0	1	0	0	0	0
4/24/2024	10:15 AM	0	189	32	0	4	0	0	0	2	0	0	0	0
4/24/2024	10:30 AM	1	192	43	2	2	0	1	1	0	0	0	0	0
4/24/2024	10:45 AM	0	216	52	0	2	2	2	2	1	0	0	0	0
4/24/2024	11:00 AM	0	190	45	3	4	1	3	0	0	0	0	0	0
4/24/2024	11:15 AM	0	208	37	0	1	0	2	0	1	0	0	0	0
4/24/2024	11:30 AM	0	247	48	2	5	0	1	0	1	0	0	0	0
4/24/2024	11:45 AM	0	230	36	3	2	0	0	1	3	0	0	0	0
4/24/2024	12:00 PM	2	247	45	0	8	0	0	3	1	0	0	0	0
4/24/2024	12:15 PM	0	180	48	3	9	0	0	0	1	0	0	0	0
4/24/2024	12:30 PM	0	267	47	0	1	1	0	0	0	0	0	0	0
4/24/2024	12:45 PM	0	299	40	1	2	0	0	1	0	0	0	0	0
4/24/2024	1:00 PM	0	291	40	1	1	2	0	1	3	1	0	0	0
4/24/2024	1:15 PM	0	287	52	0	3	0	0	0	0	0	0	0	0
4/24/2024	1:30 PM	0	279	49	0	5	1	0	0	0	0	0	0	0
4/24/2024	1:45 PM	0	273	46	0	4	0	0	0	2	0	0	0	0
4/24/2024	2:00 PM	0	300	39	0	7	1	0	0	1	0	0	0	0
4/24/2024	2:15 PM	0	336	61	0	0	0	0	0	4	0	0	0	0
4/24/2024	2:30 PM	0	272	47	3	7	0	1	1	1	0	0	0	0
4/24/2024	2:45 PM	0	318	36	2	4	0	0	0	2	0	0	0	0
4/24/2024	3:00 PM	1	333	75	0	5	0	0	0	1	0	0	0	0
4/24/2024	3:15 PM	0	341	66	1	2	0	0	0	2	0	0	0	0
4/24/2024	3:30 PM	1	364	84	2	2	0	2	0	0	0	0	0	0
4/24/2024	3:45 PM	1	386	75	1	4	0	0	0	2	0	0	0	0
4/24/2024	4:00 PM	0	437	88	0	4	0	1	0	0	0	0	0	0
4/24/2024	4:15 PM	3	477	89	0	9	1	2	0	0	0	0	0	0
4/24/2024	4:30 PM	2	540	71	1	3	0	0	0	0	0	0	0	0
4/24/2024	4:45 PM	0	517	75	1	4	1	0	2	0	0	0	0	0
4/24/2024	5:00 PM	0	565	94	1	1	0	0	0	1	0	0	0	0
4/24/2024	5:15 PM	0	562	81	0	1	0	0	0	0	0	0	0	0
4/24/2024	5:30 PM	2	389	60	0	0	1	0	1	3	0	0	0	0
4/24/2024	5:45 PM	0	324	30	1	0	0	0	0	0	0	0	0	0
4/24/2024	6:00 PM	1	328	32	2	2	0	0	0	2	0	0	0	0
4/24/2024	6:15 PM	1	197	31	1	0	0	0	0	1	0	0	0	0
4/24/2024	6:30 PM	0	261	30	0	0	0	0	0	0	0	0	0	0
4/24/2024	6:45 PM	0	240	24	1	2	0	0	0	0	0	0	0	0
4/24/2024	7:00 PM	0	228	28	0	2	1	0	0	0	0	0	0	0
4/24/2024	7:15 PM	0	237	23	1	0	0	1	0	0	0	0	0	0
4/24/2024	7:30 PM	0	207	10	0	0	0	0	0	0	0	0	0	0
4/24/2024	7:45 PM	2	247	18	0	2	0	0	0	0	0	0	0	0
4/24/2024	8:00 PM	1	193	19	0	1	0	0	0	0	0	0	0	0
4/24/2024	8:15 PM	2	197	21	0	4	0	1	0	0	0	0	0	0
4/24/2024	8:30 PM	3	190	21	1	1	0	1	0	0	0	0	0	0
4/24/2024	8:45 PM	0	143	34	0	0	0	1	0	0	0	0	0	0
4/24/2024	9:00 PM	0	133	4	0	0	1	0	1	0	0	0	0	0
4/24/2024	9:15 PM	2	159	6	1	0	0	0	0	0	0	0	0	0
4/24/2024	9:30 PM	1	108	11	0	0	0	0	0	0	0	0	0	0
4/24/2024	9:45 PM	0	132	12	0	1	0	1	0	0	0	0	0	0
4/24/2024	10:00 PM	0	102	9	0	0	0	1	0	0	0	0	0	0
4/24/2024	10:15 PM	0	191	10	0	0	0	0	0	0	0	0	0	0
4/24/2024	10:30 PM	0	157	5	0	0	0	2	0	0	0	0	0	0
4/24/2024	10:45 PM	0	81	7	0	0	0	0	0	0	0	0	0	0
4/24/2024	11:00 PM	0	76	9	0	0	0	0	0	0	0	0	0	0
4/24/2024	11:15 PM	3	70	4	0	0	0	0	0	0	0	0	0	0
4/24/2024	11:30 PM	0	49	4	0	0	0	1	0	0	0	0	0	0
4/24/2024	11:45 PM	0	48	0	0	0	0	0	0	0	0	0	0	0

4/25/2024	12:00 AM	0	34	4	0	0	0	0	0	1	0	0	0	0
4/25/2024	12:15 AM	0	34	1	0	2	0	1	0	0	0	0	0	0
4/25/2024	12:30 AM	0	35	1	1	1	0	1	0	0	0	0	0	0
4/25/2024	12:45 AM	0	19	0	0	0	0	1	0	0	0	0	0	0
4/25/2024	1:00 AM	0	26	0	0	1	0	2	0	0	0	0	0	0
4/25/2024	1:15 AM	0	31	1	0	0	0	0	0	0	0	0	0	0
4/25/2024	1:30 AM	0	34	0	0	0	0	0	0	0	0	0	0	0
4/25/2024	1:45 AM	0	28	2	0	2	0	0	0	0	0	0	0	0
4/25/2024	2:00 AM	0	30	0	0	0	0	0	0	0	0	0	0	0
4/25/2024	2:15 AM	0	16	0	0	0	0	0	0	1	0	0	0	0
4/25/2024	2:30 AM	0	6	0	0	0	0	1	0	1	0	0	0	0
4/25/2024	2:45 AM	0	14	0	0	0	0	1	0	0	0	0	0	0
4/25/2024	3:00 AM	0	8	0	0	0	0	0	0	0	0	0	0	0
4/25/2024	3:15 AM	0	12	0	0	0	1	2	0	0	0	0	0	0
4/25/2024	3:30 AM	0	11	1	0	0	0	1	0	0	0	0	0	0
4/25/2024	3:45 AM	0	11	0	0	0	0	0	0	0	0	0	0	0
4/25/2024	4:00 AM	0	13	2	0	0	0	0	0	1	0	0	0	0
4/25/2024	4:15 AM	0	19	0	0	0	1	0	1	0	0	0	0	0
4/25/2024	4:30 AM	0	22	2	0	1	1	0	0	1	0	0	0	0
4/25/2024	4:45 AM	0	22	1	0	0	0	0	3	1	0	0	0	0
4/25/2024	5:00 AM	0	25	0	0	0	0	0	1	0	0	0	0	0
4/25/2024	5:15 AM	0	30	2	0	1	0	0	0	0	0	0	0	0
4/25/2024	5:30 AM	0	41	6	1	0	0	0	1	0	0	0	0	0
4/25/2024	5:45 AM	0	52	6	0	0	0	0	0	0	0	0	0	0
4/25/2024	6:00 AM	1	52	3	0	5	1	0	0	0	0	0	0	0
4/25/2024	6:15 AM	1	67	7	0	0	0	1	1	1	0	0	0	0
4/25/2024	6:30 AM	0	92	17	0	1	0	0	0	1	0	0	0	0
4/25/2024	6:45 AM	0	129	18	1	4	0	0	0	1	0	0	0	0
4/25/2024	7:00 AM	0	129	25	0	2	2	0	1	1	0	0	0	0
4/25/2024	7:15 AM	0	188	22	1	11	1	0	0	0	4	0	0	0
4/25/2024	7:30 AM	0	220	27	0	3	0	1	2	0	0	0	0	0
4/25/2024	7:45 AM	0	235	14	0	5	1	0	0	1	0	0	0	0
4/25/2024	8:00 AM	0	220	28	0	0	1	1	0	0	0	0	0	0
4/25/2024	8:15 AM	1	198	28	2	4	0	0	0	0	0	0	0	0
4/25/2024	8:30 AM	0	248	32	1	10	1	1	0	1	0	0	0	0
4/25/2024	8:45 AM	0	215	22	1	4	0	1	1	2	0	0	0	0
4/25/2024	9:00 AM	0	171	37	4	2	1	0	0	4	0	0	0	0
4/25/2024	9:15 AM	0	169	34	0	4	1	0	0	0	0	0	0	0
4/25/2024	9:30 AM	0	197	39	1	5	2	1	0	0	0	0	0	0
4/25/2024	9:45 AM	1	197	50	2	3	4	1	0	1	0	0	0	0
4/25/2024	10:00 AM	0	195	40	1	6	1	2	0	2	0	0	0	0
4/25/2024	10:15 AM	0	190	56	0	7	0	2	0	0	0	0	0	0
4/25/2024	10:30 AM	1	185	30	2	4	0	0	1	2	0	0	0	0
4/25/2024	10:45 AM	0	215	46	0	6	0	1	1	1	0	0	0	0
4/25/2024	11:00 AM	0	229	33	2	9	1	1	2	1	0	0	0	0
4/25/2024	11:15 AM	0	225	46	0	5	0	2	2	0	0	0	0	0
4/25/2024	11:30 AM	0	235	53	0	5	0	0	0	1	0	0	0	0
4/25/2024	11:45 AM	0	229	48	1	2	1	0	0	3	0	0	0	0
4/25/2024	12:00 PM	0	239	59	0	3	1	0	0	1	0	0	0	0
4/25/2024	12:15 PM	0	273	63	0	4	1	3	0	2	0	0	0	0
4/25/2024	12:30 PM	0	283	65	1	1	0	0	0	0	0	0	0	0
4/25/2024	12:45 PM	0	275	50	1	2	0	0	0	1	0	0	0	0
4/25/2024	1:00 PM	2	312	65	0	5	1	0	0	0	0	0	0	0
4/25/2024	1:15 PM	0	280	57	1	5	0	1	0	2	0	0	0	0
4/25/2024	1:30 PM	0	303	53	1	3	3	2	2	4	0	0	0	0
4/25/2024	1:45 PM	0	243	59	1	3	2	0	0	0	0	0	0	0
4/25/2024	2:00 PM	1	303	55	0	5	0	2	0	1	0	0	0	0
4/25/2024	2:15 PM	1	288	64	0	2	0	1	0	0	0	0	0	0
4/25/2024	2:30 PM	0	293	67	1	3	0	3	1	2	0	0	0	0
4/25/2024	2:45 PM	1	346	68	0	4	0	3	2	2	0	0	0	0
4/25/2024	3:00 PM	0	342	52	1	3	0	1	1	1	0	0	0	0
4/25/2024	3:15 PM	3	363	66	1	2	0	4	0	2	0	0	0	0
4/25/2024	3:30 PM	1	354	66	0	2	0	3	0	4	0	0	0	0
4/25/2024	3:45 PM	2	362	64	1	7	0	3	0	1	0	0	0	0
4/25/2024	4:00 PM	0	467	93	1	8	0	0	0	1	0	0	0	0
4/25/2024	4:15 PM	0	464	92	0	13	0	1	1	3	0	0	0	0
4/25/2024	4:30 PM	1	493	82	1	2	0	0	0	1	0	0	0	0
4/25/2024	4:45 PM	0	499	91	0	4	0	0	0	1	0	0	0	0
4/25/2024	5:00 PM	1	561	75	0	0	0	0	0	0	0	0	0	0
4/25/2024	5:15 PM	0	552	86	0	0	0	0	0	0	0	0	0	0
4/25/2024	5:30 PM	5	488	55	0	1	0	0	0	1	0	0	0	0
4/25/2024	5:45 PM	1	423	57	1	2	0	0	0	0	0	0	0	0
4/25/2024	6:00 PM	0	366	44	2	0	0	0	1	1	0	0	0	0
4/25/2024	6:15 PM	0	264	37	0	4	0	0	0	0	0	0	0	0
4/25/2024	6:30 PM	2	241	31	1	4	0	0	0	1	0	0	0	0
4/25/2024	6:45 PM	1	256	27	0	3	0	0	0	0	0	0	0	0
4/25/2024	7:00 PM	0	0	0	0	0	0	0	0	0	0	0	0	0
4/25/2024	7:15 PM	0	0	0	0	0	0	0	0	0	0	0	0	0
4/25/2024	7:30 PM	0	0	0	0	0	0	0	0	0	0	0	0	0
4/25/2024	7:45 PM	0	0	0	0	0	0	0	0	0	0	0	0	0
4/25/2024	8:00 PM	0	0	0	0	0	0	0	0	0	0	0	0	0
4/25/2024	8:15 PM	0	0	0	0	0	0	0	0	0	0	0	0	0
4/25/2024	8:30 PM	0	0	0	0	0	0	0	0	0	0	0	0	0
4/25/2024	8:45 PM	0	0	0	0	0	0	0	0	0	0	0	0	0
4/25/2024	9:00 PM	0	0	0	0	0	0	0	0	0	0	0	0	0
4/25/2024	9:15 PM	0	0	0	0	0	0	0	0	0	0	0	0	0
4/25/2024	9:30 PM	0	0	0	0	0	0	0	0	0	0	0	0	0
4/25/2024	9:45 PM	0	0	0	0	0	0	0	0	0	0	0	0	0
4/25/2024	10:00 PM	0	0	0	0	0	0	0	0	0	0	0	0	0
4/25/2024	10:15 PM	0	0	0	0	0	0	0	0	0	0	0	0	0
4/25/2024	10:30 PM	0	0	0	0	0	0	0	0	0	0	0	0	0
4/25/2024	10:45 PM	0	0	0	0	0	0	0	0	0	0	0	0	0
4/25/2024	11:00 PM	0	0	0	0	0	0	0	0	0	0	0	0	0
4/25/2024	11:15 PM	0	0	0	0	0	0	0	0	0	0	0	0	0
4/25/2024	11:30 PM	0	0	0	0	0	0	0	0	0	0	0	0	0
4/25/2024	11:45 PM	0	0	0	0	0	0	0	0	0	0	0	0	0

SB
File Name:
Start Date: 4/23/2024
Start Time: 0
Site Code: 70
Station ID: 1
Location 1: I-126 N/Bound On-Ramp, north of US-176 E/Bound On-Ramp
Location 2:

Date	Time	1	2	3	4	5	6	7	8	9	10	11	12	13
4/23/2024	12:00 AM	0	0	0	0	0	0	0	0	0	0	0	0	0
4/23/2024	12:15 AM	0	0	0	0	0	0	0	0	0	0	0	0	0
4/23/2024	12:30 AM	0	0	0	0	0	0	0	0	0	0	0	0	0
4/23/2024	12:45 AM	0	0	0	0	0	0	0	0	0	0	0	0	0
4/23/2024	1:00 AM	0	0	0	0	0	0	0	0	0	0	0	0	0
4/23/2024	1:15 AM	0	0	0	0	0	0	0	0	0	0	0	0	0
4/23/2024	1:30 AM	0	0	0	0	0	0	0	0	0	0	0	0	0
4/23/2024	1:45 AM	0	0	0	0	0	0	0	0	0	0	0	0	0
4/23/2024	2:00 AM	0	0	0	0	0	0	0	0	0	0	0	0	0
4/23/2024	2:15 AM	0	0	0	0	0	0	0	0	0	0	0	0	0
4/23/2024	2:30 AM	0	0	0	0	0	0	0	0	0	0	0	0	0
4/23/2024	2:45 AM	0	0	0	0	0	0	0	0	0	0	0	0	0
4/23/2024	3:00 AM	0	0	0	0	0	0	0	0	0	0	0	0	0
4/23/2024	3:15 AM	0	0	0	0	0	0	0	0	0	0	0	0	0
4/23/2024	3:30 AM	0	0	0	0	0	0	0	0	0	0	0	0	0
4/23/2024	3:45 AM	0	0	0	0	0	0	0	0	0	0	0	0	0
4/23/2024	4:00 AM	0	0	0	0	0	0	0	0	0	0	0	0	0
4/23/2024	4:15 AM	0	0	0	0	0	0	0	0	0	0	0	0	0
4/23/2024	4:30 AM	0	0	0	0	0	0	0	0	0	0	0	0	0
4/23/2024	4:45 AM	0	0	0	0	0	0	0	0	0	0	0	0	0
4/23/2024	5:00 AM	0	0	0	0	0	0	0	0	0	0	0	0	0
4/23/2024	5:15 AM	0	0	0	0	0	0	0	0	0	0	0	0	0
4/23/2024	5:30 AM	0	0	0	0	0	0	0	0	0	0	0	0	0
4/23/2024	5:45 AM	0	0	0	0	0	0	0	0	0	0	0	0	0
4/23/2024	6:00 AM	0	0	0	0	0	0	0	0	0	0	0	0	0
4/23/2024	6:15 AM	0	0	0	0	0	0	0	0	0	0	0	0	0
4/23/2024	6:30 AM	0	0	0	0	0	0	0	0	0	0	0	0	0
4/23/2024	6:45 AM	0	0	0	0	0	0	0	0	0	0	0	0	0
4/23/2024	7:00 AM	0	0	0	0	0	0	0	0	0	0	0	0	0
4/23/2024	7:15 AM	0	0	0	0	0	0	0	0	0	0	0	0	0
4/23/2024	7:30 AM	0	0	0	0	0	0	0	0	0	0	0	0	0
4/23/2024	7:45 AM	0	0	0	0	0	0	0	0	0	0	0	0	0
4/23/2024	8:00 AM	0	0	0	0	0	0	0	0	0	0	0	0	0
4/23/2024	8:15 AM	0	0	0	0	0	0	0	0	0	0	0	0	0
4/23/2024	8:30 AM	0	0	0	0	0	0	0	0	0	0	0	0	0
4/23/2024	8:45 AM	0	0	0	0	0	0	0	0	0	0	0	0	0
4/23/2024	9:00 AM	0	0	0	0	0	0	0	0	0	0	0	0	0
4/23/2024	9:15 AM	0	0	0	0	0	0	0	0	0	0	0	0	0
4/23/2024	9:30 AM	0	0	0	0	0	0	0	0	0	0	0	0	0
4/23/2024	9:45 AM	0	0	0	0	0	0	0	0	0	0	0	0	0
4/23/2024	10:00 AM	0	0	0	0	0	0	0	0	0	0	0	0	0
4/23/2024	10:15 AM	0	0	0	0	0	0	0	0	0	0	0	0	0
4/23/2024	10:30 AM	0	0	0	0	0	0	0	0	0	0	0	0	0
4/23/2024	10:45 AM	0	0	0	0	0	0	0	0	0	0	0	0	0
4/23/2024	11:00 AM	0	0	0	0	0	0	0	0	0	0	0	0	0
4/23/2024	11:15 AM	0	0	0	0	0	0	0	0	0	0	0	0	0
4/23/2024	11:30 AM	0	0	0	0	0	0	0	0	0	0	0	0	0
4/23/2024	11:45 AM	0	0	0	0	0	0	0	0	0	0	0	0	0
4/23/2024	12:00 PM	0	0	0	0	0	0	0	0	0	0	0	0	0
4/23/2024	12:15 PM	0	0	0	0	0	0	0	0	0	0	0	0	0
4/23/2024	12:30 PM	0	0	0	0	0	0	0	0	0	0	0	0	0
4/23/2024	12:45 PM	0	0	0	0	0	0	0	0	0	0	0	0	0
4/23/2024	1:00 PM	0	0	0	0	0	0	0	0	0	0	0	0	0
4/23/2024	1:15 PM	0	0	0	0	0	0	0	0	0	0	0	0	0
4/23/2024	1:30 PM	0	0	0	0	0	0	0	0	0	0	0	0	0
4/23/2024	1:45 PM	0	0	0	0	0	0	0	0	0	0	0	0	0
4/23/2024	2:00 PM	0	0	0	0	0	0	0	0	0	0	0	0	0
4/23/2024	2:15 PM	0	0	0	0	0	0	0	0	0	0	0	0	0
4/23/2024	2:30 PM	0	0	0	0	0	0	0	0	0	0	0	0	0
4/23/2024	2:45 PM	0	0	0	0	0	0	0	0	0	0	0	0	0
4/23/2024	3:00 PM	0	0	0	0	0	0	0	0	0	0	0	0	0
4/23/2024	3:15 PM	0	0	0	0	0	0	0	0	0	0	0	0	0
4/23/2024	3:30 PM	0	0	0	0	0	0	0	0	0	0	0	0	0
4/23/2024	3:45 PM	0	0	0	0	0	0	0	0	0	0	0	0	0
4/23/2024	4:00 PM	0	0	0	0	0	0	0	0	0	0	0	0	0
4/23/2024	4:15 PM	0	0	0	0	0	0	0	0	0	0	0	0	0
4/23/2024	4:30 PM	0	0	0	0	0	0	0	0	0	0	0	0	0
4/23/2024	4:45 PM	0	0	0	0	0	0	0	0	0	0	0	0	0
4/23/2024	5:00 PM	0	0	0	0	0	0	0	0	0	0	0	0	0
4/23/2024	5:15 PM	0	0	0	0	0	0	0	0	0	0	0	0	0
4/23/2024	5:30 PM	0	0	0	0	0	0	0	0	0	0	0	0	0
4/23/2024	5:45 PM	0	0	0	0	0	0	0	0	0	0	0	0	0
4/23/2024	6:00 PM	0	0	0	0	0	0	0	0	0	0	0	0	0
4/23/2024	6:15 PM	0	0	0	0	0	0	0	0	0	0	0	0	0
4/23/2024	6:30 PM	0	0	0	0	0	0	0	0	0	0	0	0	0
4/23/2024	6:45 PM	0	0	0	0	0	0	0	0	0	0	0	0	0
4/23/2024	7:00 PM	0	0	0	0	0	0	0	0	0	0	0	0	0
4/23/2024	7:15 PM	0	0	0	0	0	0	0	0	0	0	0	0	0
4/23/2024	7:30 PM	0	0	0	0	0	0	0	0	0	0	0	0	0
4/23/2024	7:45 PM	0	0	0	0	0	0	0	0	0	0	0	0	0
4/23/2024	8:00 PM	0	0	0	0	0	0	0	0	0	0	0	0	0
4/23/2024	8:15 PM	0	0	0	0	0	0	0	0	0	0	0	0	0
4/23/2024	8:30 PM	0	0	0	0	0	0	0	0	0	0	0	0	0
4/23/2024	8:45 PM	0	0	0	0	0	0	0	0	0	0	0	0	0
4/23/2024	9:00 PM	0	0	0	0	0	0	0	0	0	0	0	0	0
4/23/2024	9:15 PM	0	0	0	0	0	0	0	0	0	0	0	0	0
4/23/2024	9:30 PM	0	0	0	0	0	0	0	0	0	0	0	0	0
4/23/2024	9:45 PM	0	0	0	0	0	0	0	0	0	0	0	0	0
4/23/2024	10:00 PM	0	0	0	0	0	0	0	0	0	0	0	0	0
4/23/2024	10:15 PM	0	0	0	0	0	0	0	0	0	0	0	0	0
4/23/2024	10:30 PM	0	0	0	0	0	0	0	0	0	0	0	0	0
4/23/2024	10:45 PM	0	0	0	0	0	0	0	0	0	0	0	0	0
4/23/2024	11:00 PM	0	0	0	0	0	0	0	0	0	0	0	0	0
4/23/2024	11:15 PM	0	0	0	0	0	0	0	0	0	0	0	0	0
4/23/2024	11:30 PM	0	0	0	0	0	0	0	0	0	0	0	0	0
4/23/2024	11:45 PM	0	0	0	0	0	0	0	0	0	0	0	0	0

4/24/2024	12:00 AM	0	0	0	0	0	0	0	0	0	0	0	0	0
4/24/2024	12:15 AM	0	0	0	0	0	0	0	0	0	0	0	0	0
4/24/2024	12:30 AM	0	0	0	0	0	0	0	0	0	0	0	0	0
4/24/2024	12:45 AM	0	0	0	0	0	0	0	0	0	0	0	0	0
4/24/2024	1:00 AM	0	0	0	0	0	0	0	0	0	0	0	0	0
4/24/2024	1:15 AM	0	0	0	0	0	0	0	0	0	0	0	0	0
4/24/2024	1:30 AM	0	0	0	0	0	0	0	0	0	0	0	0	0
4/24/2024	1:45 AM	0	0	0	0	0	0	0	0	0	0	0	0	0
4/24/2024	2:00 AM	0	0	0	0	0	0	0	0	0	0	0	0	0
4/24/2024	2:15 AM	0	0	0	0	0	0	0	0	0	0	0	0	0
4/24/2024	2:30 AM	0	0	0	0	0	0	0	0	0	0	0	0	0
4/24/2024	2:45 AM	0	0	0	0	0	0	0	0	0	0	0	0	0
4/24/2024	3:00 AM	0	0	0	0	0	0	0	0	0	0	0	0	0
4/24/2024	3:15 AM	0	0	0	0	0	0	0	0	0	0	0	0	0
4/24/2024	3:30 AM	0	0	0	0	0	0	0	0	0	0	0	0	0
4/24/2024	3:45 AM	0	0	0	0	0	0	0	0	0	0	0	0	0
4/24/2024	4:00 AM	0	0	0	0	0	0	0	0	0	0	0	0	0
4/24/2024	4:15 AM	0	0	0	0	0	0	0	0	0	0	0	0	0
4/24/2024	4:30 AM	0	0	0	0	0	0	0	0	0	0	0	0	0
4/24/2024	4:45 AM	0	0	0	0	0	0	0	0	0	0	0	0	0
4/24/2024	5:00 AM	0	0	0	0	0	0	0	0	0	0	0	0	0
4/24/2024	5:15 AM	0	0	0	0	0	0	0	0	0	0	0	0	0
4/24/2024	5:30 AM	0	0	0	0	0	0	0	0	0	0	0	0	0
4/24/2024	5:45 AM	0	0	0	0	0	0	0	0	0	0	0	0	0
4/24/2024	6:00 AM	0	0	0	0	0	0	0	0	0	0	0	0	0
4/24/2024	6:15 AM	0	0	0	0	0	0	0	0	0	0	0	0	0
4/24/2024	6:30 AM	0	0	0	0	0	0	0	0	0	0	0	0	0
4/24/2024	6:45 AM	0	0	0	0	0	0	0	0	0	0	0	0	0
4/24/2024	7:00 AM	0	0	0	0	0	0	0	0	0	0	0	0	0
4/24/2024	7:15 AM	0	0	0	0	0	0	0	0	0	0	0	0	0
4/24/2024	7:30 AM	0	0	0	0	0	0	0	0	0	0	0	0	0
4/24/2024	7:45 AM	0	0	0	0	0	0	0	0	0	0	0	0	0
4/24/2024	8:00 AM	0	0	0	0	0	0	0	0	0	0	0	0	0
4/24/2024	8:15 AM	0	0	0	0	0	0	0	0	0	0	0	0	0
4/24/2024	8:30 AM	0	0	0	0	0	0	0	0	0	0	0	0	0
4/24/2024	8:45 AM	0	0	0	0	0	0	0	0	0	0	0	0	0
4/24/2024	9:00 AM	0	0	0	0	0	0	0	0	0	0	0	0	0
4/24/2024	9:15 AM	0	0	0	0	0	0	0	0	0	0	0	0	0
4/24/2024	9:30 AM	0	0	0	0	0	0	0	0	0	0	0	0	0
4/24/2024	9:45 AM	0	0	0	0	0	0	0	0	0	0	0	0	0
4/24/2024	10:00 AM	0	0	0	0	0	0	0	0	0	0	0	0	0
4/24/2024	10:15 AM	0	0	0	0	0	0	0	0	0	0	0	0	0
4/24/2024	10:30 AM	0	0	0	0	0	0	0	0	0	0	0	0	0
4/24/2024	10:45 AM	0	0	0	0	0	0	0	0	0	0	0	0	0
4/24/2024	11:00 AM	0	0	0	0	0	0	0	0	0	0	0	0	0
4/24/2024	11:15 AM	0	0	0	0	0	0	0	0	0	0	0	0	0
4/24/2024	11:30 AM	0	0	0	0	0	0	0	0	0	0	0	0	0
4/24/2024	11:45 AM	0	0	0	0	0	0	0	0	0	0	0	0	0
4/24/2024	12:00 PM	0	0	0	0	0	0	0	0	0	0	0	0	0
4/24/2024	12:15 PM	0	0	0	0	0	0	0	0	0	0	0	0	0
4/24/2024	12:30 PM	0	0	0	0	0	0	0	0	0	0	0	0	0
4/24/2024	12:45 PM	0	0	0	0	0	0	0	0	0	0	0	0	0
4/24/2024	1:00 PM	0	0	0	0	0	0	0	0	0	0	0	0	0
4/24/2024	1:15 PM	0	0	0	0	0	0	0	0	0	0	0	0	0
4/24/2024	1:30 PM	0	0	0	0	0	0	0	0	0	0	0	0	0
4/24/2024	1:45 PM	0	0	0	0	0	0	0	0	0	0	0	0	0
4/24/2024	2:00 PM	0	0	0	0	0	0	0	0	0	0	0	0	0
4/24/2024	2:15 PM	0	0	0	0	0	0	0	0	0	0	0	0	0
4/24/2024	2:30 PM	0	0	0	0	0	0	0	0	0	0	0	0	0
4/24/2024	2:45 PM	0	0	0	0	0	0	0	0	0	0	0	0	0
4/24/2024	3:00 PM	0	0	0	0	0	0	0	0	0	0	0	0	0
4/24/2024	3:15 PM	0	0	0	0	0	0	0	0	0	0	0	0	0
4/24/2024	3:30 PM	0	0	0	0	0	0	0	0	0	0	0	0	0
4/24/2024	3:45 PM	0	0	0	0	0	0	0	0	0	0	0	0	0
4/24/2024	4:00 PM	0	0	0	0	0	0	0	0	0	0	0	0	0
4/24/2024	4:15 PM	0	0	0	0	0	0	0	0	0	0	0	0	0
4/24/2024	4:30 PM	0	0	0	0	0	0	0	0	0	0	0	0	0
4/24/2024	4:45 PM	0	0	0	0	0	0	0	0	0	0	0	0	0
4/24/2024	5:00 PM	0	0	0	0	0	0	0	0	0	0	0	0	0
4/24/2024	5:15 PM	0	0	0	0	0	0	0	0	0	0	0	0	0
4/24/2024	5:30 PM	0	0	0	0	0	0	0	0	0	0	0	0	0
4/24/2024	5:45 PM	0	0	0	0	0	0	0	0	0	0	0	0	0
4/24/2024	6:00 PM	0	0	0	0	0	0	0	0	0	0	0	0	0
4/24/2024	6:15 PM	0	0	0	0	0	0	0	0	0	0	0	0	0
4/24/2024	6:30 PM	0	0	0	0	0	0	0	0	0	0	0	0	0
4/24/2024	6:45 PM	0	0	0	0	0	0	0	0	0	0	0	0	0
4/24/2024	7:00 PM	0	0	0	0	0	0	0	0	0	0	0	0	0
4/24/2024	7:15 PM	0	0	0	0	0	0	0	0	0	0	0	0	0
4/24/2024	7:30 PM	0	0	0	0	0	0	0	0	0	0	0	0	0
4/24/2024	7:45 PM	0	0	0	0	0	0	0	0	0	0	0	0	0
4/24/2024	8:00 PM	0	0	0	0	0	0	0	0	0	0	0	0	0
4/24/2024	8:15 PM	0	0	0	0	0	0	0	0	0	0	0	0	0
4/24/2024	8:30 PM	0	0	0	0	0	0	0	0	0	0	0	0	0
4/24/2024	8:45 PM	0	0	0	0	0	0	0	0	0	0	0	0	0
4/24/2024	9:00 PM	0	0	0	0	0	0	0	0	0	0	0	0	0
4/24/2024	9:15 PM	0	0	0	0	0	0	0	0	0	0	0	0	0
4/24/2024	9:30 PM	0	0	0	0	0	0	0	0	0	0	0	0	0
4/24/2024	9:45 PM	0	0	0	0	0	0	0	0	0	0	0	0	0
4/24/2024	10:00 PM	0	0	0	0	0	0	0	0	0	0	0	0	0
4/24/2024	10:15 PM	0	0	0	0	0	0	0	0	0	0	0	0	0
4/24/2024	10:30 PM	0	0	0	0	0	0	0	0	0	0	0	0	0
4/24/2024	10:45 PM	0	0	0	0	0	0	0	0	0	0	0	0	0
4/24/2024	11:00 PM	0	0	0	0	0	0	0	0	0	0	0	0	0
4/24/2024	11:15 PM	0	0	0	0	0	0	0	0	0	0	0	0	0
4/24/2024	11:30 PM	0	0	0	0	0	0	0	0	0	0	0	0	0
4/24/2024	11:45 PM	0	0	0	0	0	0	0	0	0	0	0	0	0

4/25/2024	12:00 AM	0	0	0	0	0	0	0	0	0	0	0	0	0
4/25/2024	12:15 AM	0	0	0	0	0	0	0	0	0	0	0	0	0
4/25/2024	12:30 AM	0	0	0	0	0	0	0	0	0	0	0	0	0
4/25/2024	12:45 AM	0	0	0	0	0	0	0	0	0	0	0	0	0
4/25/2024	1:00 AM	0	0	0	0	0	0	0	0	0	0	0	0	0
4/25/2024	1:15 AM	0	0	0	0	0	0	0	0	0	0	0	0	0
4/25/2024	1:30 AM	0	0	0	0	0	0	0	0	0	0	0	0	0
4/25/2024	1:45 AM	0	0	0	0	0	0	0	0	0	0	0	0	0
4/25/2024	2:00 AM	0	0	0	0	0	0	0	0	0	0	0	0	0
4/25/2024	2:15 AM	0	0	0	0	0	0	0	0	0	0	0	0	0
4/25/2024	2:30 AM	0	0	0	0	0	0	0	0	0	0	0	0	0
4/25/2024	2:45 AM	0	0	0	0	0	0	0	0	0	0	0	0	0
4/25/2024	3:00 AM	0	0	0	0	0	0	0	0	0	0	0	0	0
4/25/2024	3:15 AM	0	0	0	0	0	0	0	0	0	0	0	0	0
4/25/2024	3:30 AM	0	0	0	0	0	0	0	0	0	0	0	0	0
4/25/2024	3:45 AM	0	0	0	0	0	0	0	0	0	0	0	0	0
4/25/2024	4:00 AM	0	0	0	0	0	0	0	0	0	0	0	0	0
4/25/2024	4:15 AM	0	0	0	0	0	0	0	0	0	0	0	0	0
4/25/2024	4:30 AM	0	0	0	0	0	0	0	0	0	0	0	0	0
4/25/2024	4:45 AM	0	0	0	0	0	0	0	0	0	0	0	0	0
4/25/2024	5:00 AM	0	0	0	0	0	0	0	0	0	0	0	0	0
4/25/2024	5:15 AM	0	0	0	0	0	0	0	0	0	0	0	0	0
4/25/2024	5:30 AM	0	0	0	0	0	0	0	0	0	0	0	0	0
4/25/2024	5:45 AM	0	0	0	0	0	0	0	0	0	0	0	0	0
4/25/2024	6:00 AM	0	0	0	0	0	0	0	0	0	0	0	0	0
4/25/2024	6:15 AM	0	0	0	0	0	0	0	0	0	0	0	0	0
4/25/2024	6:30 AM	0	0	0	0	0	0	0	0	0	0	0	0	0
4/25/2024	6:45 AM	0	0	0	0	0	0	0	0	0	0	0	0	0
4/25/2024	7:00 AM	0	0	0	0	0	0	0	0	0	0	0	0	0
4/25/2024	7:15 AM	0	0	0	0	0	0	0	0	0	0	0	0	0
4/25/2024	7:30 AM	0	0	0	0	0	0	0	0	0	0	0	0	0
4/25/2024	7:45 AM	0	0	0	0	0	0	0	0	0	0	0	0	0
4/25/2024	8:00 AM	0	0	0	0	0	0	0	0	0	0	0	0	0
4/25/2024	8:15 AM	0	0	0	0	0	0	0	0	0	0	0	0	0
4/25/2024	8:30 AM	0	0	0	0	0	0	0	0	0	0	0	0	0
4/25/2024	8:45 AM	0	0	0	0	0	0	0	0	0	0	0	0	0
4/25/2024	9:00 AM	0	0	0	0	0	0	0	0	0	0	0	0	0
4/25/2024	9:15 AM	0	0	0	0	0	0	0	0	0	0	0	0	0
4/25/2024	9:30 AM	0	0	0	0	0	0	0	0	0	0	0	0	0
4/25/2024	9:45 AM	0	0	0	0	0	0	0	0	0	0	0	0	0
4/25/2024	10:00 AM	0	0	0	0	0	0	0	0	0	0	0	0	0
4/25/2024	10:15 AM	0	0	0	0	0	0	0	0	0	0	0	0	0
4/25/2024	10:30 AM	0	0	0	0	0	0	0	0	0	0	0	0	0
4/25/2024	10:45 AM	0	0	0	0	0	0	0	0	0	0	0	0	0
4/25/2024	11:00 AM	0	0	0	0	0	0	0	0	0	0	0	0	0
4/25/2024	11:15 AM	0	0	0	0	0	0	0	0	0	0	0	0	0
4/25/2024	11:30 AM	0	0	0	0	0	0	0	0	0	0	0	0	0
4/25/2024	11:45 AM	0	0	0	0	0	0	0	0	0	0	0	0	0
4/25/2024	12:00 PM	0	0	0	0	0	0	0	0	0	0	0	0	0
4/25/2024	12:15 PM	0	0	0	0	0	0	0	0	0	0	0	0	0
4/25/2024	12:30 PM	0	0	0	0	0	0	0	0	0	0	0	0	0
4/25/2024	12:45 PM	0	0	0	0	0	0	0	0	0	0	0	0	0
4/25/2024	1:00 PM	0	0	0	0	0	0	0	0	0	0	0	0	0
4/25/2024	1:15 PM	0	0	0	0	0	0	0	0	0	0	0	0	0
4/25/2024	1:30 PM	0	0	0	0	0	0	0	0	0	0	0	0	0
4/25/2024	1:45 PM	0	0	0	0	0	0	0	0	0	0	0	0	0
4/25/2024	2:00 PM	0	0	0	0	0	0	0	0	0	0	0	0	0
4/25/2024	2:15 PM	0	0	0	0	0	0	0	0	0	0	0	0	0
4/25/2024	2:30 PM	0	0	0	0	0	0	0	0	0	0	0	0	0
4/25/2024	2:45 PM	0	0	0	0	0	0	0	0	0	0	0	0	0
4/25/2024	3:00 PM	0	0	0	0	0	0	0	0	0	0	0	0	0
4/25/2024	3:15 PM	0	0	0	0	0	0	0	0	0	0	0	0	0
4/25/2024	3:30 PM	0	0	0	0	0	0	0	0	0	0	0	0	0
4/25/2024	3:45 PM	0	0	0	0	0	0	0	0	0	0	0	0	0
4/25/2024	4:00 PM	0	0	0	0	0	0	0	0	0	0	0	0	0
4/25/2024	4:15 PM	0	0	0	0	0	0	0	0	0	0	0	0	0
4/25/2024	4:30 PM	0	0	0	0	0	0	0	0	0	0	0	0	0
4/25/2024	4:45 PM	0	0	0	0	0	0	0	0	0	0	0	0	0
4/25/2024	5:00 PM	0	0	0	0	0	0	0	0	0	0	0	0	0
4/25/2024	5:15 PM	0	0	0	0	0	0	0	0	0	0	0	0	0
4/25/2024	5:30 PM	0	0	0	0	0	0	0	0	0	0	0	0	0
4/25/2024	5:45 PM	0	0	0	0	0	0	0	0	0	0	0	0	0
4/25/2024	6:00 PM	0	0	0	0	0	0	0	0	0	0	0	0	0
4/25/2024	6:15 PM	0	0	0	0	0	0	0	0	0	0	0	0	0
4/25/2024	6:30 PM	0	0	0	0	0	0	0	0	0	0	0	0	0
4/25/2024	6:45 PM	0	0	0	0	0	0	0	0	0	0	0	0	0
4/25/2024	7:00 PM	0	0	0	0	0	0	0	0	0	0	0	0	0
4/25/2024	7:15 PM	0	0	0	0	0	0	0	0	0	0	0	0	0
4/25/2024	7:30 PM	0	0	0	0	0	0	0	0	0	0	0	0	0
4/25/2024	7:45 PM	0	0	0	0	0	0	0	0	0	0	0	0	0
4/25/2024	8:00 PM	0	0	0	0	0	0	0	0	0	0	0	0	0
4/25/2024	8:15 PM	0	0	0	0	0	0	0	0	0	0	0	0	0
4/25/2024	8:30 PM	0	0	0	0	0	0	0	0	0	0	0	0	0
4/25/2024	8:45 PM	0	0	0	0	0	0	0	0	0	0	0	0	0
4/25/2024	9:00 PM	0	0	0	0	0	0	0	0	0	0	0	0	0
4/25/2024	9:15 PM	0	0	0	0	0	0	0	0	0	0	0	0	0
4/25/2024	9:30 PM	0	0	0	0	0	0	0	0	0	0	0	0	0
4/25/2024	9:45 PM	0	0	0	0	0	0	0	0	0	0	0	0	0
4/25/2024	10:00 PM	0	0	0	0	0	0	0	0	0	0	0	0	0
4/25/2024	10:15 PM	0	0	0	0	0	0	0	0	0	0	0	0	0
4/25/2024	10:30 PM	0	0	0	0	0	0	0	0	0	0	0	0	0
4/25/2024	10:45 PM	0	0	0	0	0	0	0	0	0	0	0	0	0
4/25/2024	11:00 PM	0	0	0	0	0	0	0	0	0	0	0	0	0
4/25/2024	11:15 PM	0	0	0	0	0	0	0	0	0	0	0	0	0
4/25/2024	11:30 PM	0	0	0	0	0	0	0	0	0	0	0	0	0
4/25/2024	11:45 PM	0	0	0	0	0	0	0	0	0	0	0	0	0

NB
File Name:
Start Date: 4/23/2024
Start Time: 0
Site Code: 70
Station ID: 1
Location 1: I-126 N/Bound On-Ramp, north of US-176 E/Bound On-Ramp
Location 2:

Date	Time	1	2	3	4	5	6	7	8	9	10	11	12	13
4/23/2024	12:00 AM	0	0	0	0	0	0	0	0	0	0	0	0	0
4/23/2024	12:15 AM	0	0	0	0	0	0	0	0	0	0	0	0	0
4/23/2024	12:30 AM	0	0	0	0	0	0	0	0	0	0	0	0	0
4/23/2024	12:45 AM	0	0	0	0	0	0	0	0	0	0	0	0	0
4/23/2024	1:00 AM	0	0	0	0	0	0	0	0	0	0	0	0	0
4/23/2024	1:15 AM	0	0	0	0	0	0	0	0	0	0	0	0	0
4/23/2024	1:30 AM	0	0	0	0	0	0	0	0	0	0	0	0	0
4/23/2024	1:45 AM	0	0	0	0	0	0	0	0	0	0	0	0	0
4/23/2024	2:00 AM	0	0	0	0	0	0	0	0	0	0	0	0	0
4/23/2024	2:15 AM	0	0	0	0	0	0	0	0	0	0	0	0	0
4/23/2024	2:30 AM	0	0	0	0	0	0	0	0	0	0	0	0	0
4/23/2024	2:45 AM	0	0	0	0	0	0	0	0	0	0	0	0	0
4/23/2024	3:00 AM	0	0	0	0	0	0	0	0	0	0	0	0	0
4/23/2024	3:15 AM	0	0	0	0	0	0	0	0	0	0	0	0	0
4/23/2024	3:30 AM	0	0	0	0	0	0	0	0	0	0	0	0	0
4/23/2024	3:45 AM	0	0	0	0	0	0	0	0	0	0	0	0	0
4/23/2024	4:00 AM	0	0	0	0	0	0	0	0	0	0	0	0	0
4/23/2024	4:15 AM	0	0	0	0	0	0	0	0	0	0	0	0	0
4/23/2024	4:30 AM	0	0	0	0	0	0	0	0	0	0	0	0	0
4/23/2024	4:45 AM	0	0	0	0	0	0	0	0	0	0	0	0	0
4/23/2024	5:00 AM	0	0	0	0	0	0	0	0	0	0	0	0	0
4/23/2024	5:15 AM	0	0	0	0	0	0	0	0	0	0	0	0	0
4/23/2024	5:30 AM	0	0	0	0	0	0	0	0	0	0	0	0	0
4/23/2024	5:45 AM	0	0	0	0	0	0	0	0	0	0	0	0	0
4/23/2024	6:00 AM	0	0	0	0	0	0	0	0	0	0	0	0	0
4/23/2024	6:15 AM	0	0	0	0	0	0	0	0	0	0	0	0	0
4/23/2024	6:30 AM	0	0	0	0	0	0	0	0	0	0	0	0	0
4/23/2024	6:45 AM	0	0	0	0	0	0	0	0	0	0	0	0	0
4/23/2024	7:00 AM	0	0	0	0	0	0	0	0	0	0	0	0	0
4/23/2024	7:15 AM	0	0	0	0	0	0	0	0	0	0	0	0	0
4/23/2024	7:30 AM	0	0	0	0	0	0	0	0	0	0	0	0	0
4/23/2024	7:45 AM	0	0	0	0	0	0	0	0	0	0	0	0	0
4/23/2024	8:00 AM	0	0	0	0	0	0	0	0	0	0	0	0	0
4/23/2024	8:15 AM	0	0	0	0	0	0	0	0	0	0	0	0	0
4/23/2024	8:30 AM	0	0	0	0	0	0	0	0	0	0	0	0	0
4/23/2024	8:45 AM	0	0	0	0	0	0	0	0	0	0	0	0	0
4/23/2024	9:00 AM	0	0	0	0	0	0	0	0	0	0	0	0	0
4/23/2024	9:15 AM	0	0	0	0	0	0	0	0	0	0	0	0	0
4/23/2024	9:30 AM	0	0	0	0	0	0	0	0	0	0	0	0	0
4/23/2024	9:45 AM	0	0	0	0	0	0	0	0	0	0	0	0	0
4/23/2024	10:00 AM	0	0	0	0	0	0	0	0	0	0	0	0	0
4/23/2024	10:15 AM	0	0	0	0	0	0	0	0	0	0	0	0	0
4/23/2024	10:30 AM	0	0	0	0	0	0	0	0	0	0	0	0	0
4/23/2024	10:45 AM	0	0	0	0	0	0	0	0	0	0	0	0	0
4/23/2024	11:00 AM	0	0	0	0	0	0	0	0	0	0	0	0	0
4/23/2024	11:15 AM	0	0	0	0	0	0	0	0	0	0	0	0	0
4/23/2024	11:30 AM	0	0	0	0	0	0	0	0	0	0	0	0	0
4/23/2024	11:45 AM	0	0	0	0	0	0	0	0	0	0	0	0	0
4/23/2024	12:00 PM	0	0	0	0	0	0	0	0	0	0	0	0	0
4/23/2024	12:15 PM	0	0	0	0	0	0	0	0	0	0	0	0	0
4/23/2024	12:30 PM	0	0	0	0	0	0	0	0	0	0	0	0	0
4/23/2024	12:45 PM	0	0	0	0	0	0	0	0	0	0	0	0	0
4/23/2024	1:00 PM	0	0	0	0	0	0	0	0	0	0	0	0	0
4/23/2024	1:15 PM	0	0	0	0	0	0	0	0	0	0	0	0	0
4/23/2024	1:30 PM	0	0	0	0	0	0	0	0	0	0	0	0	0
4/23/2024	1:45 PM	0	0	0	0	0	0	0	0	0	0	0	0	0
4/23/2024	2:00 PM	0	0	0	0	0	0	0	0	0	0	0	0	0
4/23/2024	2:15 PM	0	0	0	0	0	0	0	0	0	0	0	0	0
4/23/2024	2:30 PM	0	0	0	0	0	0	0	0	0	0	0	0	0
4/23/2024	2:45 PM	0	0	0	0	0	0	0	0	0	0	0	0	0
4/23/2024	3:00 PM	0	0	0	0	0	0	0	0	0	0	0	0	0
4/23/2024	3:15 PM	0	0	0	0	0	0	0	0	0	0	0	0	0
4/23/2024	3:30 PM	0	0	0	0	0	0	0	0	0	0	0	0	0
4/23/2024	3:45 PM	0	0	0	0	0	0	0	0	0	0	0	0	0
4/23/2024	4:00 PM	0	0	0	0	0	0	0	0	0	0	0	0	0
4/23/2024	4:15 PM	0	0	0	0	0	0	0	0	0	0	0	0	0
4/23/2024	4:30 PM	0	0	0	0	0	0	0	0	0	0	0	0	0
4/23/2024	4:45 PM	0	0	0	0	0	0	0	0	0	0	0	0	0
4/23/2024	5:00 PM	0	0	0	0	0	0	0	0	0	0	0	0	0
4/23/2024	5:15 PM	0	0	0	0	0	0	0	0	0	0	0	0	0
4/23/2024	5:30 PM	0	0	0	0	0	0	0	0	0	0	0	0	0
4/23/2024	5:45 PM	0	0	0	0	0	0	0	0	0	0	0	0	0
4/23/2024	6:00 PM	0	0	0	0	0	0	0	0	0	0	0	0	0
4/23/2024	6:15 PM	0	0	0	0	0	0	0	0	0	0	0	0	0
4/23/2024	6:30 PM	0	0	0	0	0	0	0	0	0	0	0	0	0
4/23/2024	6:45 PM	0	0	0	0	0	0	0	0	0	0	0	0	0
4/23/2024	7:00 PM	0	0	0	0	0	0	0	0	0	0	0	0	0
4/23/2024	7:15 PM	0	0	0	0	0	0	0	0	0	0	0	0	0
4/23/2024	7:30 PM	0	0	0	0	0	0	0	0	0	0	0	0	0
4/23/2024	7:45 PM	0	172	18	0	0	0	0	0	0	0	0	0	0
4/23/2024	8:00 PM	1	339	33	0	2	0	0	0	0	0	1	0	0
4/23/2024	8:15 PM	3	503	42	0	3	0	0	0	0	0	1	0	0
4/23/2024	8:30 PM	3	642	44	0	4	0	2	0	0	0	1	0	0
4/23/2024	8:45 PM	3	589	34	0	4	0	2	0	2	0	1	0	0
4/23/2024	9:00 PM	2	518	23	0	2	0	2	0	2	0	0	0	0
4/23/2024	9:15 PM	0	462	20	0	1	0	4	0	2	0	0	0	0
4/23/2024	9:30 PM	1	545	29	0	0	0	2	0	2	0	0	0	0
4/23/2024	9:45 PM	1	530	28	0	1	0	2	0	0	0	0	0	0
4/23/2024	10:00 PM	1	493	25	0	1	0	2	0	0	0	0	0	0
4/23/2024	10:15 PM	1	460	21	0	1	0	0	0	0	0	0	0	0
4/23/2024	10:30 PM	0	291	11	0	3	0	0	0	0	0	0	0	0
4/23/2024	10:45 PM	1	228	7	0	2	0	1	0	0	0	0	0	0
4/23/2024	11:00 PM	1	217	8	0	2	0	2	0	1	0	0	0	0
4/23/2024	11:15 PM	1	181	10	0	2	0	3	0	1	0	0	0	0
4/23/2024	11:30 PM	1	171	11	1	0	0	4	0	1	0	0	0	0
4/23/2024	11:45 PM	0	164	12	1	0	0	3	0	2	0	0	0	0

4/24/2024	12:00 AM	0	144	12	1	1	0	2	0	1	0	0	0	0
4/24/2024	12:15 AM	0	129	10	1	3	0	1	0	1	0	0	0	0
4/24/2024	12:30 AM	0	106	10	0	3	0	2	0	1	0	0	0	0
4/24/2024	12:45 AM	0	92	7	0	3	0	3	0	0	0	0	0	0
4/24/2024	1:00 AM	1	86	7	0	2	0	4	0	0	0	0	0	0
4/24/2024	1:15 AM	1	78	6	0	0	0	4	0	0	0	0	0	0
4/24/2024	1:30 AM	1	76	5	0	2	0	3	0	1	0	0	0	0
4/24/2024	1:45 AM	1	72	7	0	2	1	2	0	1	0	0	0	0
4/24/2024	2:00 AM	0	58	5	0	3	1	1	0	1	0	0	0	0
4/24/2024	2:15 AM	0	55	5	0	3	1	1	0	1	0	0	0	0
4/24/2024	2:30 AM	0	48	4	0	1	1	1	0	0	0	0	0	0
4/24/2024	2:45 AM	0	42	3	0	1	0	2	0	0	0	0	0	0
4/24/2024	3:00 AM	0	42	4	0	0	0	3	0	0	0	0	0	0
4/24/2024	3:15 AM	0	40	3	0	0	1	3	0	1	0	0	0	0
4/24/2024	3:30 AM	0	45	4	0	0	1	2	0	1	0	0	0	0
4/24/2024	3:45 AM	0	48	4	0	0	1	2	1	1	0	0	0	0
4/24/2024	4:00 AM	0	61	3	0	0	1	1	3	1	0	0	0	0
4/24/2024	4:15 AM	0	64	8	0	2	0	1	4	0	0	0	0	0
4/24/2024	4:30 AM	0	77	10	0	3	0	1	4	1	0	0	0	0
4/24/2024	4:45 AM	0	95	10	0	5	1	1	3	1	1	0	0	0
4/24/2024	5:00 AM	0	109	16	0	6	1	1	1	2	1	0	0	0
4/24/2024	5:15 AM	0	152	17	0	7	2	1	1	3	1	0	0	0
4/24/2024	5:30 AM	0	188	28	0	7	3	1	1	2	1	0	0	0
4/24/2024	5:45 AM	1	267	42	0	8	3	0	1	3	0	0	0	0
4/24/2024	6:00 AM	1	330	53	1	13	3	0	2	2	0	0	0	0
4/24/2024	6:15 AM	1	411	76	1	14	2	1	3	1	0	0	0	0
4/24/2024	6:30 AM	1	545	100	2	17	1	1	5	1	0	0	0	0
4/24/2024	6:45 AM	1	628	131	3	19	1	1	5	0	0	0	0	0
4/24/2024	7:00 AM	1	772	149	2	20	2	2	5	1	0	0	0	0
4/24/2024	7:15 AM	1	853	155	4	21	3	1	3	2	0	0	0	0
4/24/2024	7:30 AM	1	875	149	3	19	3	1	2	3	0	0	0	0
4/24/2024	7:45 AM	0	896	137	3	21	2	2	4	4	0	0	0	0
4/24/2024	8:00 AM	1	869	158	4	16	3	1	3	4	0	0	0	0
4/24/2024	8:15 AM	1	836	154	3	15	2	1	3	5	0	0	0	0
4/24/2024	8:30 AM	2	792	168	3	18	3	3	2	8	0	0	0	0
4/24/2024	8:45 AM	2	776	175	2	16	3	3	0	8	0	0	0	0
4/24/2024	9:00 AM	1	756	156	1	21	2	5	1	8	0	0	0	0
4/24/2024	9:15 AM	1	752	177	2	21	2	6	1	7	0	0	0	0
4/24/2024	9:30 AM	0	764	163	2	20	1	4	1	5	0	0	0	0
4/24/2024	9:45 AM	1	758	164	4	17	1	4	2	4	0	0	0	0
4/24/2024	10:00 AM	1	779	179	4	12	2	4	3	4	0	0	0	0
4/24/2024	10:15 AM	1	787	172	5	12	3	6	3	3	0	0	0	0
4/24/2024	10:30 AM	1	806	177	5	9	3	8	3	2	0	0	0	0
4/24/2024	10:45 AM	0	861	182	5	12	3	8	2	3	0	0	0	0
4/24/2024	11:00 AM	0	875	166	8	12	1	6	1	5	0	0	0	0
4/24/2024	11:15 AM	2	932	166	5	16	0	3	4	6	0	0	0	0
4/24/2024	11:30 AM	2	904	177	8	24	0	1	4	6	0	0	0	0
4/24/2024	11:45 AM	2	924	176	6	20	1	0	4	5	0	0	0	0
4/24/2024	12:00 PM	2	993	180	4	20	1	0	4	2	0	0	0	0
4/24/2024	12:15 PM	0	1037	175	5	13	3	0	2	4	1	0	0	0
4/24/2024	12:30 PM	0	1144	179	2	7	3	0	2	3	1	0	0	0
4/24/2024	12:45 PM	0	1156	181	2	11	3	0	2	3	1	0	0	0
4/24/2024	1:00 PM	0	1130	187	1	13	3	0	1	5	1	0	0	0
4/24/2024	1:15 PM	0	1139	186	0	19	2	0	0	3	0	0	0	0
4/24/2024	1:30 PM	0	1188	195	0	16	2	0	0	7	0	0	0	0
4/24/2024	1:45 PM	0	1181	193	3	18	1	1	1	8	0	0	0	0
4/24/2024	2:00 PM	0	1226	183	5	18	1	1	1	8	0	0	0	0
4/24/2024	2:15 PM	1	1259	219	5	16	0	1	1	8	0	0	0	0
4/24/2024	2:30 PM	1	1264	224	6	18	0	1	1	6	0	0	0	0
4/24/2024	2:45 PM	2	1356	261	5	13	0	2	0	5	0	0	0	0
4/24/2024	3:00 PM	3	1424	300	4	13	0	2	0	5	0	0	0	0
4/24/2024	3:15 PM	2	1528	313	4	12	0	3	0	4	0	0	0	0
4/24/2024	3:30 PM	5	1664	336	3	19	1	5	0	2	0	0	0	0
4/24/2024	3:45 PM	6	1840	323	2	20	1	3	0	2	0	0	0	0
4/24/2024	4:00 PM	5	1971	323	2	20	2	3	2	0	0	0	0	0
4/24/2024	4:15 PM	5	2099	329	3	17	2	2	2	1	0	0	0	0
4/24/2024	4:30 PM	2	2184	321	3	9	1	0	2	1	0	0	0	0
4/24/2024	4:45 PM	2	2033	310	2	6	2	0	3	4	0	0	0	0
4/24/2024	5:00 PM	2	1840	265	2	2	1	0	1	4	0	0	0	0
4/24/2024	5:15 PM	3	1603	203	3	3	1	0	1	5	0	0	0	0
4/24/2024	5:30 PM	4	1238	153	4	2	1	0	1	6	0	0	0	0
4/24/2024	5:45 PM	2	1110	123	4	2	0	0	0	3	0	0	0	0
4/24/2024	6:00 PM	2	1026	117	4	4	0	0	0	3	0	0	0	0
4/24/2024	6:15 PM	1	926	113	2	4	1	0	0	1	0	0	0	0
4/24/2024	6:30 PM	0	966	105	2	4	1	1	0	0	0	0	0	0
4/24/2024	6:45 PM	0	912	85	2	4	1	1	0	0	0	0	0	0
4/24/2024	7:00 PM	2	919	79	1	4	1	1	0	0	0	0	0	0
4/24/2024	7:15 PM	3	884	70	1	3	0	1	0	0	0	0	0	0
4/24/2024	7:30 PM	5	844	68	0	7	0	1	0	0	0	0	0	0
4/24/2024	7:45 PM	8	827	79	1	8	0	2	0	0	0	0	0	0
4/24/2024	8:00 PM	6	723	95	1	6	0	3	0	0	0	0	0	0
4/24/2024	8:15 PM	5	663	80	1	5	1	3	1	0	0	0	0	0
4/24/2024	8:30 PM	5	625	65	2	1	1	2	1	0	0	0	0	0
4/24/2024	8:45 PM	3	543	55	1	0	1	1	1	0	0	0	0	0
4/24/2024	9:00 PM	3	532	33	1	1	1	1	1	0	0	0	0	0
4/24/2024	9:15 PM	3	501	38	1	1	0	2	0	0	0	0	0	0
4/24/2024	9:30 PM	1	533	42	0	1	0	2	0	0	0	0	0	0
4/24/2024	9:45 PM	0	582	36	0	1	0	4	0	0	0	0	0	0
4/24/2024	10:00 PM	0	531	31	0	0	0	3	0	0	0	0	0	0
4/24/2024	10:15 PM	0	505	31	0	0	0	2	0	0	0	0	0	0
4/24/2024	10:30 PM	3	384	25	0	0	0	2	0	0	0	0	0	0
4/24/2024	10:45 PM	3	276	24	0	0	0	1	0	0	0	0	0	0
4/24/2024	11:00 PM	3	243	17	0	0	0	1	0	0	0	0	0	0
4/24/2024	11:15 PM	3	201	12	0	0	0	1	0	1	0	0	0	0
4/24/2024	11:30 PM	0	165	9	0	2	0	2	0	1	0	0	0	0
4/24/2024	11:45 PM	0	151	6	1	3	0	2	0	1	0	0	0	0

4/25/2024	12:00 AM	0	122	6	1	3	0	3	0	1	0	0	0	0
4/25/2024	12:15 AM	0	114	2	1	4	0	5	0	0	0	0	0	0
4/25/2024	12:30 AM	0	111	2	1	2	0	4	0	0	0	0	0	0
4/25/2024	12:45 AM	0	110	1	0	1	0	3	0	0	0	0	0	0
4/25/2024	1:00 AM	0	119	3	0	3	0	2	0	0	0	0	0	0
4/25/2024	1:15 AM	0	123	3	0	2	0	0	0	0	0	0	0	0
4/25/2024	1:30 AM	0	108	2	0	2	0	0	0	1	0	0	0	0
4/25/2024	1:45 AM	0	80	2	0	2	0	1	0	2	0	0	0	0
4/25/2024	2:00 AM	0	66	0	0	0	0	2	0	2	0	0	0	0
4/25/2024	2:15 AM	0	44	0	0	0	0	2	0	2	0	0	0	0
4/25/2024	2:30 AM	0	40	0	0	0	1	4	0	1	0	0	0	0
4/25/2024	2:45 AM	0	45	1	0	0	1	4	0	0	0	0	0	0
4/25/2024	3:00 AM	0	42	1	0	0	1	3	0	0	0	0	0	0
4/25/2024	3:15 AM	0	47	3	0	0	1	3	0	1	0	0	0	0
4/25/2024	3:30 AM	0	54	3	0	0	1	1	1	1	0	0	0	0
4/25/2024	3:45 AM	0	65	4	0	1	2	0	1	2	0	0	0	0
4/25/2024	4:00 AM	0	76	5	0	1	2	0	4	3	0	0	0	0
4/25/2024	4:15 AM	0	88	3	0	1	2	0	5	2	0	0	0	0
4/25/2024	4:30 AM	0	99	5	0	2	1	0	4	2	0	0	0	0
4/25/2024	4:45 AM	0	118	9	1	1	0	0	5	1	0	0	0	0
4/25/2024	5:00 AM	0	148	14	1	1	0	0	2	0	0	0	0	0
4/25/2024	5:15 AM	1	175	17	1	6	1	0	1	0	0	0	0	0
4/25/2024	5:30 AM	2	212	22	1	5	1	1	2	1	0	0	0	0
4/25/2024	5:45 AM	2	263	33	0	6	1	1	1	2	0	0	0	0
4/25/2024	6:00 AM	2	340	45	1	10	1	1	1	3	0	0	0	0
4/25/2024	6:15 AM	1	417	67	1	7	2	1	2	4	0	0	0	0
4/25/2024	6:30 AM	0	538	82	2	18	3	0	1	3	4	0	0	0
4/25/2024	6:45 AM	0	666	92	2	20	3	1	3	2	4	0	0	0
4/25/2024	7:00 AM	0	772	88	1	21	4	1	3	2	4	0	0	0
4/25/2024	7:15 AM	0	863	91	1	19	3	2	2	1	4	0	0	0
4/25/2024	7:30 AM	1	873	97	2	12	2	2	2	1	0	0	0	0
4/25/2024	7:45 AM	1	901	102	3	19	3	2	0	2	0	0	0	0
4/25/2024	8:00 AM	1	881	110	4	18	2	3	1	3	0	0	0	0
4/25/2024	8:15 AM	1	832	119	8	20	2	2	1	7	0	0	0	0
4/25/2024	8:30 AM	0	803	125	6	20	3	2	1	7	0	0	0	0
4/25/2024	8:45 AM	0	752	132	6	15	4	2	1	6	0	0	0	0
4/25/2024	9:00 AM	1	734	160	7	14	8	2	0	5	0	0	0	0
4/25/2024	9:15 AM	1	758	163	4	18	8	4	0	3	0	0	0	0
4/25/2024	9:30 AM	1	779	185	4	21	7	6	0	3	0	0	0	0
4/25/2024	9:45 AM	2	767	176	5	20	5	5	1	5	0	0	0	0
4/25/2024	10:00 AM	1	785	172	3	23	1	5	2	5	0	0	0	0
4/25/2024	10:15 AM	1	819	165	4	26	1	4	4	4	0	0	0	0
4/25/2024	10:30 AM	1	854	155	4	24	1	4	6	4	0	0	0	0
4/25/2024	10:45 AM	0	904	178	2	25	1	4	5	3	0	0	0	0
4/25/2024	11:00 AM	0	918	180	3	21	2	3	4	5	0	0	0	0
4/25/2024	11:15 AM	0	928	206	1	15	2	2	2	5	0	0	0	0
4/25/2024	11:30 AM	0	976	223	1	14	3	3	0	7	0	0	0	0
4/25/2024	11:45 AM	0	1024	235	2	10	3	3	0	6	0	0	0	0
4/25/2024	12:00 PM	0	1070	237	2	10	2	3	0	4	0	0	0	0
4/25/2024	12:15 PM	2	1143	243	2	12	2	3	0	3	0	0	0	0
4/25/2024	12:30 PM	2	1150	237	3	13	1	1	0	3	0	0	0	0
4/25/2024	12:45 PM	2	1170	225	3	15	4	3	2	7	0	0	0	0
4/25/2024	1:00 PM	2	1138	234	3	16	6	3	2	6	0	0	0	0
4/25/2024	1:15 PM	1	1129	224	3	16	5	5	2	7	0	0	0	0
4/25/2024	1:30 PM	2	1137	231	2	13	5	5	2	5	0	0	0	0
4/25/2024	1:45 PM	2	1127	245	2	13	2	6	1	3	0	0	0	0
4/25/2024	2:00 PM	3	1230	254	1	14	0	9	3	5	0	0	0	0
4/25/2024	2:15 PM	2	1269	251	2	12	0	8	4	5	0	0	0	0
4/25/2024	2:30 PM	4	1344	253	3	12	0	11	4	7	0	0	0	0
4/25/2024	2:45 PM	5	1405	252	2	11	0	11	3	9	0	0	0	0
4/25/2024	3:00 PM	6	1421	248	3	14	0	11	1	8	0	0	0	0
4/25/2024	3:15 PM	6	1546	289	3	19	0	10	0	8	0	0	0	0
4/25/2024	3:30 PM	3	1647	315	2	30	0	7	1	9	0	0	0	0
4/25/2024	3:45 PM	3	1786	331	3	30	0	4	1	6	0	0	0	0
4/25/2024	4:00 PM	1	1923	358	2	27	0	1	1	6	0	0	0	0
4/25/2024	4:15 PM	2	2017	340	1	19	0	1	1	5	0	0	0	0
4/25/2024	4:30 PM	2	2105	334	1	6	0	0	0	2	0	0	0	0
4/25/2024	4:45 PM	6	2100	307	0	5	0	0	0	2	0	0	0	0
4/25/2024	5:00 PM	7	2024	273	1	3	0	0	0	1	0	0	0	0
4/25/2024	5:15 PM	6	1829	242	3	3	0	0	1	2	0	0	0	0
4/25/2024	5:30 PM	6	1541	193	3	7	0	0	1	2	0	0	0	0
4/25/2024	5:45 PM	3	1294	169	4	10	0	0	1	2	0	0	0	0
4/25/2024	6:00 PM	3	1127	139	3	11	0	0	1	2	0	0	0	0
4/25/2024	6:15 PM	3	761	95	1	11	0	0	0	1	0	0	0	0
4/25/2024	6:30 PM	3	497	58	1	7	0	0	0	1	0	0	0	0
4/25/2024	6:45 PM	1	256	27	0	3	0	0	0	0	0	0	0	0
4/25/2024	7:00 PM	0	0	0	0	0	0	0	0	0	0	0	0	0
4/25/2024	7:15 PM	0	0	0	0	0	0	0	0	0	0	0	0	0
4/25/2024	7:30 PM	0	0	0	0	0	0	0	0	0	0	0	0	0
4/25/2024	7:45 PM	0	0	0	0	0	0	0	0	0	0	0	0	0
4/25/2024	8:00 PM	0	0	0	0	0	0	0	0	0	0	0	0	0
4/25/2024	8:15 PM	0	0	0	0	0	0	0	0	0	0	0	0	0
4/25/2024	8:30 PM	0	0	0	0	0	0	0	0	0	0	0	0	0
4/25/2024	8:45 PM	0	0	0	0	0	0	0	0	0	0	0	0	0
4/25/2024	9:00 PM	0	0	0	0	0	0	0	0	0	0	0	0	0
4/25/2024	9:15 PM	0	0	0	0	0	0	0	0	0	0	0	0	0
4/25/2024	9:30 PM	0	0	0	0	0	0	0	0	0	0	0	0	0
4/25/2024	9:45 PM	0	0	0	0	0	0	0	0	0	0	0	0	0
4/25/2024	10:00 PM	0	0	0	0	0	0	0	0	0	0	0	0	0
4/25/2024	10:15 PM	0	0	0	0	0	0	0	0	0	0	0	0	0
4/25/2024	10:30 PM	0	0	0	0	0	0	0	0	0	0	0	0	0
4/25/2024	10:45 PM	0	0	0	0	0	0	0	0	0	0	0	0	0
4/25/2024	11:00 PM	0	0	0	0	0	0	0	0	0	0	0	0	0
4/25/2024	11:15 PM	0	0	0	0	0	0	0	0	0	0	0	0	0
4/25/2024	11:30 PM	0	0	0	0	0	0	0	0	0	0	0	0	0
4/25/2024	11:45 PM	0	0	0	0	0	0	0	0	0	0	0	0	0

SB
File Name:
Start Date: 4/23/2024
Start Time: 0
Site Code: 70
Station ID: 1
Location 1: I-126 N/Bound On-Ramp, north of US-176 E/Bound On-Ramp
Location 2:

Date	Time	1	2	3	4	5	6	7	8	9	10	11	12	13
4/23/2024	12:00 AM	0	0	0	0	0	0	0	0	0	0	0	0	0
4/23/2024	12:15 AM	0	0	0	0	0	0	0	0	0	0	0	0	0
4/23/2024	12:30 AM	0	0	0	0	0	0	0	0	0	0	0	0	0
4/23/2024	12:45 AM	0	0	0	0	0	0	0	0	0	0	0	0	0
4/23/2024	1:00 AM	0	0	0	0	0	0	0	0	0	0	0	0	0
4/23/2024	1:15 AM	0	0	0	0	0	0	0	0	0	0	0	0	0
4/23/2024	1:30 AM	0	0	0	0	0	0	0	0	0	0	0	0	0
4/23/2024	1:45 AM	0	0	0	0	0	0	0	0	0	0	0	0	0
4/23/2024	2:00 AM	0	0	0	0	0	0	0	0	0	0	0	0	0
4/23/2024	2:15 AM	0	0	0	0	0	0	0	0	0	0	0	0	0
4/23/2024	2:30 AM	0	0	0	0	0	0	0	0	0	0	0	0	0
4/23/2024	2:45 AM	0	0	0	0	0	0	0	0	0	0	0	0	0
4/23/2024	3:00 AM	0	0	0	0	0	0	0	0	0	0	0	0	0
4/23/2024	3:15 AM	0	0	0	0	0	0	0	0	0	0	0	0	0
4/23/2024	3:30 AM	0	0	0	0	0	0	0	0	0	0	0	0	0
4/23/2024	3:45 AM	0	0	0	0	0	0	0	0	0	0	0	0	0
4/23/2024	4:00 AM	0	0	0	0	0	0	0	0	0	0	0	0	0
4/23/2024	4:15 AM	0	0	0	0	0	0	0	0	0	0	0	0	0
4/23/2024	4:30 AM	0	0	0	0	0	0	0	0	0	0	0	0	0
4/23/2024	4:45 AM	0	0	0	0	0	0	0	0	0	0	0	0	0
4/23/2024	5:00 AM	0	0	0	0	0	0	0	0	0	0	0	0	0
4/23/2024	5:15 AM	0	0	0	0	0	0	0	0	0	0	0	0	0
4/23/2024	5:30 AM	0	0	0	0	0	0	0	0	0	0	0	0	0
4/23/2024	5:45 AM	0	0	0	0	0	0	0	0	0	0	0	0	0
4/23/2024	6:00 AM	0	0	0	0	0	0	0	0	0	0	0	0	0
4/23/2024	6:15 AM	0	0	0	0	0	0	0	0	0	0	0	0	0
4/23/2024	6:30 AM	0	0	0	0	0	0	0	0	0	0	0	0	0
4/23/2024	6:45 AM	0	0	0	0	0	0	0	0	0	0	0	0	0
4/23/2024	7:00 AM	0	0	0	0	0	0	0	0	0	0	0	0	0
4/23/2024	7:15 AM	0	0	0	0	0	0	0	0	0	0	0	0	0
4/23/2024	7:30 AM	0	0	0	0	0	0	0	0	0	0	0	0	0
4/23/2024	7:45 AM	0	0	0	0	0	0	0	0	0	0	0	0	0
4/23/2024	8:00 AM	0	0	0	0	0	0	0	0	0	0	0	0	0
4/23/2024	8:15 AM	0	0	0	0	0	0	0	0	0	0	0	0	0
4/23/2024	8:30 AM	0	0	0	0	0	0	0	0	0	0	0	0	0
4/23/2024	8:45 AM	0	0	0	0	0	0	0	0	0	0	0	0	0
4/23/2024	9:00 AM	0	0	0	0	0	0	0	0	0	0	0	0	0
4/23/2024	9:15 AM	0	0	0	0	0	0	0	0	0	0	0	0	0
4/23/2024	9:30 AM	0	0	0	0	0	0	0	0	0	0	0	0	0
4/23/2024	9:45 AM	0	0	0	0	0	0	0	0	0	0	0	0	0
4/23/2024	10:00 AM	0	0	0	0	0	0	0	0	0	0	0	0	0
4/23/2024	10:15 AM	0	0	0	0	0	0	0	0	0	0	0	0	0
4/23/2024	10:30 AM	0	0	0	0	0	0	0	0	0	0	0	0	0
4/23/2024	10:45 AM	0	0	0	0	0	0	0	0	0	0	0	0	0
4/23/2024	11:00 AM	0	0	0	0	0	0	0	0	0	0	0	0	0
4/23/2024	11:15 AM	0	0	0	0	0	0	0	0	0	0	0	0	0
4/23/2024	11:30 AM	0	0	0	0	0	0	0	0	0	0	0	0	0
4/23/2024	11:45 AM	0	0	0	0	0	0	0	0	0	0	0	0	0
4/23/2024	12:00 PM	0	0	0	0	0	0	0	0	0	0	0	0	0
4/23/2024	12:15 PM	0	0	0	0	0	0	0	0	0	0	0	0	0
4/23/2024	12:30 PM	0	0	0	0	0	0	0	0	0	0	0	0	0
4/23/2024	12:45 PM	0	0	0	0	0	0	0	0	0	0	0	0	0
4/23/2024	1:00 PM	0	0	0	0	0	0	0	0	0	0	0	0	0
4/23/2024	1:15 PM	0	0	0	0	0	0	0	0	0	0	0	0	0
4/23/2024	1:30 PM	0	0	0	0	0	0	0	0	0	0	0	0	0
4/23/2024	1:45 PM	0	0	0	0	0	0	0	0	0	0	0	0	0
4/23/2024	2:00 PM	0	0	0	0	0	0	0	0	0	0	0	0	0
4/23/2024	2:15 PM	0	0	0	0	0	0	0	0	0	0	0	0	0
4/23/2024	2:30 PM	0	0	0	0	0	0	0	0	0	0	0	0	0
4/23/2024	2:45 PM	0	0	0	0	0	0	0	0	0	0	0	0	0
4/23/2024	3:00 PM	0	0	0	0	0	0	0	0	0	0	0	0	0
4/23/2024	3:15 PM	0	0	0	0	0	0	0	0	0	0	0	0	0
4/23/2024	3:30 PM	0	0	0	0	0	0	0	0	0	0	0	0	0
4/23/2024	3:45 PM	0	0	0	0	0	0	0	0	0	0	0	0	0
4/23/2024	4:00 PM	0	0	0	0	0	0	0	0	0	0	0	0	0
4/23/2024	4:15 PM	0	0	0	0	0	0	0	0	0	0	0	0	0
4/23/2024	4:30 PM	0	0	0	0	0	0	0	0	0	0	0	0	0
4/23/2024	4:45 PM	0	0	0	0	0	0	0	0	0	0	0	0	0
4/23/2024	5:00 PM	0	0	0	0	0	0	0	0	0	0	0	0	0
4/23/2024	5:15 PM	0	0	0	0	0	0	0	0	0	0	0	0	0
4/23/2024	5:30 PM	0	0	0	0	0	0	0	0	0	0	0	0	0
4/23/2024	5:45 PM	0	0	0	0	0	0	0	0	0	0	0	0	0
4/23/2024	6:00 PM	0	0	0	0	0	0	0	0	0	0	0	0	0
4/23/2024	6:15 PM	0	0	0	0	0	0	0	0	0	0	0	0	0
4/23/2024	6:30 PM	0	0	0	0	0	0	0	0	0	0	0	0	0
4/23/2024	6:45 PM	0	0	0	0	0	0	0	0	0	0	0	0	0
4/23/2024	7:00 PM	0	0	0	0	0	0	0	0	0	0	0	0	0
4/23/2024	7:15 PM	0	0	0	0	0	0	0	0	0	0	0	0	0
4/23/2024	7:30 PM	0	0	0	0	0	0	0	0	0	0	0	0	0
4/23/2024	7:45 PM	0	0	0	0	0	0	0	0	0	0	0	0	0
4/23/2024	8:00 PM	0	0	0	0	0	0	0	0	0	0	0	0	0
4/23/2024	8:15 PM	0	0	0	0	0	0	0	0	0	0	0	0	0
4/23/2024	8:30 PM	0	0	0	0	0	0	0	0	0	0	0	0	0
4/23/2024	8:45 PM	0	0	0	0	0	0	0	0	0	0	0	0	0
4/23/2024	9:00 PM	0	0	0	0	0	0	0	0	0	0	0	0	0
4/23/2024	9:15 PM	0	0	0	0	0	0	0	0	0	0	0	0	0
4/23/2024	9:30 PM	0	0	0	0	0	0	0	0	0	0	0	0	0
4/23/2024	9:45 PM	0	0	0	0	0	0	0	0	0	0	0	0	0
4/23/2024	10:00 PM	0	0	0	0	0	0	0	0	0	0	0	0	0
4/23/2024	10:15 PM	0	0	0	0	0	0	0	0	0	0	0	0	0
4/23/2024	10:30 PM	0	0	0	0	0	0	0	0	0	0	0	0	0
4/23/2024	10:45 PM	0	0	0	0	0	0	0	0	0	0	0	0	0
4/23/2024	11:00 PM	0	0	0	0	0	0	0	0	0	0	0	0	0
4/23/2024	11:15 PM	0	0	0	0	0	0	0	0	0	0	0	0	0
4/23/2024	11:30 PM	0	0	0	0	0	0	0	0	0	0	0	0	0
4/23/2024	11:45 PM	0	0	0	0	0	0	0	0	0	0	0	0	0

4/24/2024	12:00 AM	0	0	0	0	0	0	0	0	0	0	0	0	0
4/24/2024	12:15 AM	0	0	0	0	0	0	0	0	0	0	0	0	0
4/24/2024	12:30 AM	0	0	0	0	0	0	0	0	0	0	0	0	0
4/24/2024	12:45 AM	0	0	0	0	0	0	0	0	0	0	0	0	0
4/24/2024	1:00 AM	0	0	0	0	0	0	0	0	0	0	0	0	0
4/24/2024	1:15 AM	0	0	0	0	0	0	0	0	0	0	0	0	0
4/24/2024	1:30 AM	0	0	0	0	0	0	0	0	0	0	0	0	0
4/24/2024	1:45 AM	0	0	0	0	0	0	0	0	0	0	0	0	0
4/24/2024	2:00 AM	0	0	0	0	0	0	0	0	0	0	0	0	0
4/24/2024	2:15 AM	0	0	0	0	0	0	0	0	0	0	0	0	0
4/24/2024	2:30 AM	0	0	0	0	0	0	0	0	0	0	0	0	0
4/24/2024	2:45 AM	0	0	0	0	0	0	0	0	0	0	0	0	0
4/24/2024	3:00 AM	0	0	0	0	0	0	0	0	0	0	0	0	0
4/24/2024	3:15 AM	0	0	0	0	0	0	0	0	0	0	0	0	0
4/24/2024	3:30 AM	0	0	0	0	0	0	0	0	0	0	0	0	0
4/24/2024	3:45 AM	0	0	0	0	0	0	0	0	0	0	0	0	0
4/24/2024	4:00 AM	0	0	0	0	0	0	0	0	0	0	0	0	0
4/24/2024	4:15 AM	0	0	0	0	0	0	0	0	0	0	0	0	0
4/24/2024	4:30 AM	0	0	0	0	0	0	0	0	0	0	0	0	0
4/24/2024	4:45 AM	0	0	0	0	0	0	0	0	0	0	0	0	0
4/24/2024	5:00 AM	0	0	0	0	0	0	0	0	0	0	0	0	0
4/24/2024	5:15 AM	0	0	0	0	0	0	0	0	0	0	0	0	0
4/24/2024	5:30 AM	0	0	0	0	0	0	0	0	0	0	0	0	0
4/24/2024	5:45 AM	0	0	0	0	0	0	0	0	0	0	0	0	0
4/24/2024	6:00 AM	0	0	0	0	0	0	0	0	0	0	0	0	0
4/24/2024	6:15 AM	0	0	0	0	0	0	0	0	0	0	0	0	0
4/24/2024	6:30 AM	0	0	0	0	0	0	0	0	0	0	0	0	0
4/24/2024	6:45 AM	0	0	0	0	0	0	0	0	0	0	0	0	0
4/24/2024	7:00 AM	0	0	0	0	0	0	0	0	0	0	0	0	0
4/24/2024	7:15 AM	0	0	0	0	0	0	0	0	0	0	0	0	0
4/24/2024	7:30 AM	0	0	0	0	0	0	0	0	0	0	0	0	0
4/24/2024	7:45 AM	0	0	0	0	0	0	0	0	0	0	0	0	0
4/24/2024	8:00 AM	0	0	0	0	0	0	0	0	0	0	0	0	0
4/24/2024	8:15 AM	0	0	0	0	0	0	0	0	0	0	0	0	0
4/24/2024	8:30 AM	0	0	0	0	0	0	0	0	0	0	0	0	0
4/24/2024	8:45 AM	0	0	0	0	0	0	0	0	0	0	0	0	0
4/24/2024	9:00 AM	0	0	0	0	0	0	0	0	0	0	0	0	0
4/24/2024	9:15 AM	0	0	0	0	0	0	0	0	0	0	0	0	0
4/24/2024	9:30 AM	0	0	0	0	0	0	0	0	0	0	0	0	0
4/24/2024	9:45 AM	0	0	0	0	0	0	0	0	0	0	0	0	0
4/24/2024	10:00 AM	0	0	0	0	0	0	0	0	0	0	0	0	0
4/24/2024	10:15 AM	0	0	0	0	0	0	0	0	0	0	0	0	0
4/24/2024	10:30 AM	0	0	0	0	0	0	0	0	0	0	0	0	0
4/24/2024	10:45 AM	0	0	0	0	0	0	0	0	0	0	0	0	0
4/24/2024	11:00 AM	0	0	0	0	0	0	0	0	0	0	0	0	0
4/24/2024	11:15 AM	0	0	0	0	0	0	0	0	0	0	0	0	0
4/24/2024	11:30 AM	0	0	0	0	0	0	0	0	0	0	0	0	0
4/24/2024	11:45 AM	0	0	0	0	0	0	0	0	0	0	0	0	0
4/24/2024	12:00 PM	0	0	0	0	0	0	0	0	0	0	0	0	0
4/24/2024	12:15 PM	0	0	0	0	0	0	0	0	0	0	0	0	0
4/24/2024	12:30 PM	0	0	0	0	0	0	0	0	0	0	0	0	0
4/24/2024	12:45 PM	0	0	0	0	0	0	0	0	0	0	0	0	0
4/24/2024	1:00 PM	0	0	0	0	0	0	0	0	0	0	0	0	0
4/24/2024	1:15 PM	0	0	0	0	0	0	0	0	0	0	0	0	0
4/24/2024	1:30 PM	0	0	0	0	0	0	0	0	0	0	0	0	0
4/24/2024	1:45 PM	0	0	0	0	0	0	0	0	0	0	0	0	0
4/24/2024	2:00 PM	0	0	0	0	0	0	0	0	0	0	0	0	0
4/24/2024	2:15 PM	0	0	0	0	0	0	0	0	0	0	0	0	0
4/24/2024	2:30 PM	0	0	0	0	0	0	0	0	0	0	0	0	0
4/24/2024	2:45 PM	0	0	0	0	0	0	0	0	0	0	0	0	0
4/24/2024	3:00 PM	0	0	0	0	0	0	0	0	0	0	0	0	0
4/24/2024	3:15 PM	0	0	0	0	0	0	0	0	0	0	0	0	0
4/24/2024	3:30 PM	0	0	0	0	0	0	0	0	0	0	0	0	0
4/24/2024	3:45 PM	0	0	0	0	0	0	0	0	0	0	0	0	0
4/24/2024	4:00 PM	0	0	0	0	0	0	0	0	0	0	0	0	0
4/24/2024	4:15 PM	0	0	0	0	0	0	0	0	0	0	0	0	0
4/24/2024	4:30 PM	0	0	0	0	0	0	0	0	0	0	0	0	0
4/24/2024	4:45 PM	0	0	0	0	0	0	0	0	0	0	0	0	0
4/24/2024	5:00 PM	0	0	0	0	0	0	0	0	0	0	0	0	0
4/24/2024	5:15 PM	0	0	0	0	0	0	0	0	0	0	0	0	0
4/24/2024	5:30 PM	0	0	0	0	0	0	0	0	0	0	0	0	0
4/24/2024	5:45 PM	0	0	0	0	0	0	0	0	0	0	0	0	0
4/24/2024	6:00 PM	0	0	0	0	0	0	0	0	0	0	0	0	0
4/24/2024	6:15 PM	0	0	0	0	0	0	0	0	0	0	0	0	0
4/24/2024	6:30 PM	0	0	0	0	0	0	0	0	0	0	0	0	0
4/24/2024	6:45 PM	0	0	0	0	0	0	0	0	0	0	0	0	0
4/24/2024	7:00 PM	0	0	0	0	0	0	0	0	0	0	0	0	0
4/24/2024	7:15 PM	0	0	0	0	0	0	0	0	0	0	0	0	0
4/24/2024	7:30 PM	0	0	0	0	0	0	0	0	0	0	0	0	0
4/24/2024	7:45 PM	0	0	0	0	0	0	0	0	0	0	0	0	0
4/24/2024	8:00 PM	0	0	0	0	0	0	0	0	0	0	0	0	0
4/24/2024	8:15 PM	0	0	0	0	0	0	0	0	0	0	0	0	0
4/24/2024	8:30 PM	0	0	0	0	0	0	0	0	0	0	0	0	0
4/24/2024	8:45 PM	0	0	0	0	0	0	0	0	0	0	0	0	0
4/24/2024	9:00 PM	0	0	0	0	0	0	0	0	0	0	0	0	0
4/24/2024	9:15 PM	0	0	0	0	0	0	0	0	0	0	0	0	0
4/24/2024	9:30 PM	0	0	0	0	0	0	0	0	0	0	0	0	0
4/24/2024	9:45 PM	0	0	0	0	0	0	0	0	0	0	0	0	0
4/24/2024	10:00 PM	0	0	0	0	0	0	0	0	0	0	0	0	0
4/24/2024	10:15 PM	0	0	0	0	0	0	0	0	0	0	0	0	0
4/24/2024	10:30 PM	0	0	0	0	0	0	0	0	0	0	0	0	0
4/24/2024	10:45 PM	0	0	0	0	0	0	0	0	0	0	0	0	0
4/24/2024	11:00 PM	0	0	0	0	0	0	0	0	0	0	0	0	0
4/24/2024	11:15 PM	0	0	0	0	0	0	0	0	0	0	0	0	0
4/24/2024	11:30 PM	0	0	0	0	0	0	0	0	0	0	0	0	0
4/24/2024	11:45 PM	0	0	0	0	0	0	0	0	0	0	0	0	0

4/25/2024	12:00 AM	0	0	0	0	0	0	0	0	0	0	0	0	0
4/25/2024	12:15 AM	0	0	0	0	0	0	0	0	0	0	0	0	0
4/25/2024	12:30 AM	0	0	0	0	0	0	0	0	0	0	0	0	0
4/25/2024	12:45 AM	0	0	0	0	0	0	0	0	0	0	0	0	0
4/25/2024	1:00 AM	0	0	0	0	0	0	0	0	0	0	0	0	0
4/25/2024	1:15 AM	0	0	0	0	0	0	0	0	0	0	0	0	0
4/25/2024	1:30 AM	0	0	0	0	0	0	0	0	0	0	0	0	0
4/25/2024	1:45 AM	0	0	0	0	0	0	0	0	0	0	0	0	0
4/25/2024	2:00 AM	0	0	0	0	0	0	0	0	0	0	0	0	0
4/25/2024	2:15 AM	0	0	0	0	0	0	0	0	0	0	0	0	0
4/25/2024	2:30 AM	0	0	0	0	0	0	0	0	0	0	0	0	0
4/25/2024	2:45 AM	0	0	0	0	0	0	0	0	0	0	0	0	0
4/25/2024	3:00 AM	0	0	0	0	0	0	0	0	0	0	0	0	0
4/25/2024	3:15 AM	0	0	0	0	0	0	0	0	0	0	0	0	0
4/25/2024	3:30 AM	0	0	0	0	0	0	0	0	0	0	0	0	0
4/25/2024	3:45 AM	0	0	0	0	0	0	0	0	0	0	0	0	0
4/25/2024	4:00 AM	0	0	0	0	0	0	0	0	0	0	0	0	0
4/25/2024	4:15 AM	0	0	0	0	0	0	0	0	0	0	0	0	0
4/25/2024	4:30 AM	0	0	0	0	0	0	0	0	0	0	0	0	0
4/25/2024	4:45 AM	0	0	0	0	0	0	0	0	0	0	0	0	0
4/25/2024	5:00 AM	0	0	0	0	0	0	0	0	0	0	0	0	0
4/25/2024	5:15 AM	0	0	0	0	0	0	0	0	0	0	0	0	0
4/25/2024	5:30 AM	0	0	0	0	0	0	0	0	0	0	0	0	0
4/25/2024	5:45 AM	0	0	0	0	0	0	0	0	0	0	0	0	0
4/25/2024	6:00 AM	0	0	0	0	0	0	0	0	0	0	0	0	0
4/25/2024	6:15 AM	0	0	0	0	0	0	0	0	0	0	0	0	0
4/25/2024	6:30 AM	0	0	0	0	0	0	0	0	0	0	0	0	0
4/25/2024	6:45 AM	0	0	0	0	0	0	0	0	0	0	0	0	0
4/25/2024	7:00 AM	0	0	0	0	0	0	0	0	0	0	0	0	0
4/25/2024	7:15 AM	0	0	0	0	0	0	0	0	0	0	0	0	0
4/25/2024	7:30 AM	0	0	0	0	0	0	0	0	0	0	0	0	0
4/25/2024	7:45 AM	0	0	0	0	0	0	0	0	0	0	0	0	0
4/25/2024	8:00 AM	0	0	0	0	0	0	0	0	0	0	0	0	0
4/25/2024	8:15 AM	0	0	0	0	0	0	0	0	0	0	0	0	0
4/25/2024	8:30 AM	0	0	0	0	0	0	0	0	0	0	0	0	0
4/25/2024	8:45 AM	0	0	0	0	0	0	0	0	0	0	0	0	0
4/25/2024	9:00 AM	0	0	0	0	0	0	0	0	0	0	0	0	0
4/25/2024	9:15 AM	0	0	0	0	0	0	0	0	0	0	0	0	0
4/25/2024	9:30 AM	0	0	0	0	0	0	0	0	0	0	0	0	0
4/25/2024	9:45 AM	0	0	0	0	0	0	0	0	0	0	0	0	0
4/25/2024	10:00 AM	0	0	0	0	0	0	0	0	0	0	0	0	0
4/25/2024	10:15 AM	0	0	0	0	0	0	0	0	0	0	0	0	0
4/25/2024	10:30 AM	0	0	0	0	0	0	0	0	0	0	0	0	0
4/25/2024	10:45 AM	0	0	0	0	0	0	0	0	0	0	0	0	0
4/25/2024	11:00 AM	0	0	0	0	0	0	0	0	0	0	0	0	0
4/25/2024	11:15 AM	0	0	0	0	0	0	0	0	0	0	0	0	0
4/25/2024	11:30 AM	0	0	0	0	0	0	0	0	0	0	0	0	0
4/25/2024	11:45 AM	0	0	0	0	0	0	0	0	0	0	0	0	0
4/25/2024	12:00 PM	0	0	0	0	0	0	0	0	0	0	0	0	0
4/25/2024	12:15 PM	0	0	0	0	0	0	0	0	0	0	0	0	0
4/25/2024	12:30 PM	0	0	0	0	0	0	0	0	0	0	0	0	0
4/25/2024	12:45 PM	0	0	0	0	0	0	0	0	0	0	0	0	0
4/25/2024	1:00 PM	0	0	0	0	0	0	0	0	0	0	0	0	0
4/25/2024	1:15 PM	0	0	0	0	0	0	0	0	0	0	0	0	0
4/25/2024	1:30 PM	0	0	0	0	0	0	0	0	0	0	0	0	0
4/25/2024	1:45 PM	0	0	0	0	0	0	0	0	0	0	0	0	0
4/25/2024	2:00 PM	0	0	0	0	0	0	0	0	0	0	0	0	0
4/25/2024	2:15 PM	0	0	0	0	0	0	0	0	0	0	0	0	0
4/25/2024	2:30 PM	0	0	0	0	0	0	0	0	0	0	0	0	0
4/25/2024	2:45 PM	0	0	0	0	0	0	0	0	0	0	0	0	0
4/25/2024	3:00 PM	0	0	0	0	0	0	0	0	0	0	0	0	0
4/25/2024	3:15 PM	0	0	0	0	0	0	0	0	0	0	0	0	0
4/25/2024	3:30 PM	0	0	0	0	0	0	0	0	0	0	0	0	0
4/25/2024	3:45 PM	0	0	0	0	0	0	0	0	0	0	0	0	0
4/25/2024	4:00 PM	0	0	0	0	0	0	0	0	0	0	0	0	0
4/25/2024	4:15 PM	0	0	0	0	0	0	0	0	0	0	0	0	0
4/25/2024	4:30 PM	0	0	0	0	0	0	0	0	0	0	0	0	0
4/25/2024	4:45 PM	0	0	0	0	0	0	0	0	0	0	0	0	0
4/25/2024	5:00 PM	0	0	0	0	0	0	0	0	0	0	0	0	0
4/25/2024	5:15 PM	0	0	0	0	0	0	0	0	0	0	0	0	0
4/25/2024	5:30 PM	0	0	0	0	0	0	0	0	0	0	0	0	0
4/25/2024	5:45 PM	0	0	0	0	0	0	0	0	0	0	0	0	0
4/25/2024	6:00 PM	0	0	0	0	0	0	0	0	0	0	0	0	0
4/25/2024	6:15 PM	0	0	0	0	0	0	0	0	0	0	0	0	0
4/25/2024	6:30 PM	0	0	0	0	0	0	0	0	0	0	0	0	0
4/25/2024	6:45 PM	0	0	0	0	0	0	0	0	0	0	0	0	0
4/25/2024	7:00 PM	0	0	0	0	0	0	0	0	0	0	0	0	0
4/25/2024	7:15 PM	0	0	0	0	0	0	0	0	0	0	0	0	0
4/25/2024	7:30 PM	0	0	0	0	0	0	0	0	0	0	0	0	0
4/25/2024	7:45 PM	0	0	0	0	0	0	0	0	0	0	0	0	0
4/25/2024	8:00 PM	0	0	0	0	0	0	0	0	0	0	0	0	0
4/25/2024	8:15 PM	0	0	0	0	0	0	0	0	0	0	0	0	0
4/25/2024	8:30 PM	0	0	0	0	0	0	0	0	0	0	0	0	0
4/25/2024	8:45 PM	0	0	0	0	0	0	0	0	0	0	0	0	0
4/25/2024	9:00 PM	0	0	0	0	0	0	0	0	0	0	0	0	0
4/25/2024	9:15 PM	0	0	0	0	0	0	0	0	0	0	0	0	0
4/25/2024	9:30 PM	0	0	0	0	0	0	0	0	0	0	0	0	0
4/25/2024	9:45 PM	0	0	0	0	0	0	0	0	0	0	0	0	0
4/25/2024	10:00 PM	0	0	0	0	0	0	0	0	0	0	0	0	0
4/25/2024	10:15 PM	0	0	0	0	0	0	0	0	0	0	0	0	0
4/25/2024	10:30 PM	0	0	0	0	0	0	0	0	0	0	0	0	0
4/25/2024	10:45 PM	0	0	0	0	0	0	0	0	0	0	0	0	0
4/25/2024	11:00 PM	0	0	0	0	0	0	0	0	0	0	0	0	0
4/25/2024	11:15 PM	0	0	0	0	0	0	0	0	0	0	0	0	0
4/25/2024	11:30 PM	0	0	0	0	0	0	0	0	0	0	0	0	0
4/25/2024	11:45 PM	0	0	0	0	0	0	0	0	0	0	0	0	0

Bi-Directional Class Count || SB WB 15min

Columbia, SC

Marr Traffic DATA COLLECTION
www.marrtraffic.com

Site 71
I-126 W/Bound On-Ramp,
west of Driveway

Date
Tuesday, April 23, 2024

Lat/Long
34.009745°, -81.050970°

Weather
Fair
58°F

Click here for Detailed Weather

Click here for Map

0000 - 2400 (Weekday 24h Session) (04-23-2024)
SB WB 15min

	Westbound (Movement 71.1)													15min	60min
Time	1	2	3	4	5	6	7	8	9	10	11	12	13	Total	Total
0000 - 0015	0	0	0	0	0	0	0	0	0	0	0	0	0	**0**	
0015 - 0030	0	0	0	0	0	0	0	0	0	0	0	0	0	**0**	
0030 - 0045	0	0	0	0	0	0	0	0	0	0	0	0	0	**0**	
0045 - 0100	0	0	0	0	0	0	0	0	0	0	0	0	0	**0**	**0**
0100 - 0115	0	0	0	0	0	0	0	0	0	0	0	0	0	**0**	
0115 - 0130	0	0	0	0	0	0	0	0	0	0	0	0	0	**0**	
0130 - 0145	0	0	0	0	0	0	0	0	0	0	0	0	0	**0**	
0145 - 0200	0	0	0	0	0	0	0	0	0	0	0	0	0	**0**	**0**
0200 - 0215	0	0	0	0	0	0	0	0	0	0	0	0	0	**0**	
0215 - 0230	0	0	0	0	0	0	0	0	0	0	0	0	0	**0**	
0230 - 0245	0	0	0	0	0	0	0	0	0	0	0	0	0	**0**	
0245 - 0300	0	0	0	0	0	0	0	0	0	0	0	0	0	**0**	**0**
0300 - 0315	0	0	0	0	0	0	0	0	0	0	0	0	0	**0**	
0315 - 0330	0	0	0	0	0	0	0	0	0	0	0	0	0	**0**	
0330 - 0345	0	0	0	0	0	0	0	0	0	0	0	0	0	**0**	
0345 - 0400	0	0	0	0	0	0	0	0	0	0	0	0	0	**0**	**0**
0400 - 0415	0	0	0	0	0	0	0	0	0	0	0	0	0	**0**	
0415 - 0430	0	0	0	0	0	0	0	0	0	0	0	0	0	**0**	
0430 - 0445	0	0	0	0	0	0	0	0	0	0	0	0	0	**0**	
0445 - 0500	0	0	0	0	0	0	0	0	0	0	0	0	0	**0**	**0**
0500 - 0515	0	0	0	0	0	0	0	0	0	0	0	0	0	**0**	
0515 - 0530	0	0	0	0	0	0	0	0	0	0	0	0	0	**0**	
0530 - 0545	0	0	0	0	0	0	0	0	0	0	0	0	0	**0**	
0545 - 0600	0	0	0	0	0	0	0	0	0	0	0	0	0	**0**	**0**
0600 - 0615	0	0	0	0	0	0	0	0	0	0	0	0	0	**0**	
0615 - 0630	0	0	0	0	0	0	0	0	0	0	0	0	0	**0**	
0630 - 0645	0	0	0	0	0	0	0	0	0	0	0	0	0	**0**	
0645 - 0700	0	0	0	0	0	0	0	0	0	0	0	0	0	**0**	**0**
0700 - 0715	0	0	0	0	0	0	0	0	0	0	0	0	0	**0**	
0715 - 0730	0	0	0	0	0	0	0	0	0	0	0	0	0	**0**	
0730 - 0745	0	0	0	0	0	0	0	0	0	0	0	0	0	**0**	
0745 - 0800	0	0	0	0	0	0	0	0	0	0	0	0	0	**0**	**0**
0800 - 0815	0	0	0	0	0	0	0	0	0	0	0	0	0	**0**	
0815 - 0830	0	0	0	0	0	0	0	0	0	0	0	0	0	**0**	
0830 - 0845	0	0	0	0	0	0	0	0	0	0	0	0	0	**0**	
0845 - 0900	0	0	0	0	0	0	0	0	0	0	0	0	0	**0**	**0**
0900 - 0915	0	0	0	0	0	0	0	0	0	0	0	0	0	**0**	
0915 - 0930	0	0	0	0	0	0	0	0	0	0	0	0	0	**0**	
0930 - 0945	0	0	0	0	0	0	0	0	0	0	0	0	0	**0**	
0945 - 1000	0	0	0	0	0	0	0	0	0	0	0	0	0	**0**	**0**
1000 - 1015	0	0	0	0	0	0	0	0	0	0	0	0	0	**0**	
1015 - 1030	0	0	0	0	0	0	0	0	0	0	0	0	0	**0**	
1030 - 1045	0	0	0	0	0	0	0	0	0	0	0	0	0	**0**	
1045 - 1100	0	0	0	0	0	0	0	0	0	0	0	0	0	**0**	**0**
1100 - 1115	0	0	0	0	0	0	0	0	0	0	0	0	0	**0**	
1115 - 1130	0	0	0	0	0	0	0	0	0	0	0	0	0	**0**	
1130 - 1145	0	0	0	0	0	0	0	0	0	0	0	0	0	**0**	
1145 - 1200	0	0	0	0	0	0	0	0	0	0	0	0	0	**0**	**0**
1200 - 1215	0	0	0	0	0	0	0	0	0	0	0	0	0	**0**	
1215 - 1230	0	0	0	0	0	0	0	0	0	0	0	0	0	**0**	
1230 - 1245	0	0	0	0	0	0	0	0	0	0	0	0	0	**0**	
1245 - 1300	0	0	0	0	0	0	0	0	0	0	0	0	0	**0**	**0**
1300 - 1315	0	0	0	0	0	0	0	0	0	0	0	0	0	**0**	
1315 - 1330	0	0	0	0	0	0	0	0	0	0	0	0	0	**0**	
1330 - 1345	0	0	0	0	0	0	0	0	0	0	0	0	0	**0**	
1345 - 1400	0	0	0	0	0	0	0	0	0	0	0	0	0	**0**	**0**
1400 - 1415	0	0	0	0	0	0	0	0	0	0	0	0	0	**0**	
1415 - 1430	0	0	0	0	0	0	0	0	0	0	0	0	0	**0**	
1430 - 1445	0	0	0	0	0	0	0	0	0	0	0	0	0	**0**	
1445 - 1500	0	0	0	0	0	0	0	0	0	0	0	0	0	**0**	**0**
1500 - 1515	0	0	0	0	0	0	0	0	0	0	0	0	0	**0**	
1515 - 1530	0	0	0	0	0	0	0	0	0	0	0	0	0	**0**	
1530 - 1545	0	0	0	0	0	0	0	0	0	0	0	0	0	**0**	
1545 - 1600	0	0	0	0	0	0	0	0	0	0	0	0	0	**0**	**0**
1600 - 1615	0	0	0	0	0	0	0	0	0	0	0	0	0	**0**	
1615 - 1630	0	0	0	0	0	0	0	0	0	0	0	0	0	**0**	
1630 - 1645	0	0	0	0	0	0	0	0	0	0	0	0	0	**0**	
1645 - 1700	0	0	0	0	0	0	0	0	0	0	0	0	0	**0**	**0**
1700 - 1715	0	0	0	0	0	0	0	0	0	0	0	0	0	**0**	
1715 - 1730	0	0	0	0	0	0	0	0	0	0	0	0	0	**0**	
1730 - 1745	0	0	0	0	0	0	0	0	0	0	0	0	0	**0**	
1745 - 1800	0	0	0	0	0	0	0	0	0	0	0	0	0	**0**	**0**
1800 - 1815	0	0	0	0	0	0	0	0	0	0	0	0	0	**0**	
1815 - 1830	0	0	0	0	0	0	0	0	0	0	0	0	0	**0**	
1830 - 1845	0	0	0	0	0	0	0	0	0	0	0	0	0	**0**	
1845 - 1900	0	0	0	0	0	0	0	0	0	0	0	0	0	**0**	**0**
1900 - 1915	0	0	0	0	0	0	0	0	0	0	0	0	0	**0**	
1915 - 1930	0	0	0	0	0	0	0	0	0	0	0	0	0	**0**	
1930 - 1945	0	0	0	0	0	0	0	0	0	0	0	0	0	**0**	
1945 - 2000	0	0	0	0	0	0	0	0	0	0	0	0	0	**0**	**0**
2000 - 2015	0	0	0	0	0	0	0	0	0	0	0	0	0	**0**	
2015 - 2030	0	0	0	0	0	0	0	0	0	0	0	0	0	**0**	
2030 - 2045	0	288	22	1	3	0	2	0	0	0	0	0	0	**316**	
2045 - 2100	1	281	23	0	4	0	3	0	0	0	1	0	0	**313**	**629**
2100 - 2115	2	266	14	1	2	0	1	0	1	0	0	0	0	**287**	
2115 - 2130	1	218	7	1	2	0	2	0	0	0	0	0	0	**231**	
2130 - 2145	0	195	12	1	0	0	0	0	2	0	0	0	0	**210**	
2145 - 2200	0	158	5	0	2	0	0	0	0	0	0	0	0	**165**	**893**
2200 - 2215	0	166	7	1	0	0	3	0	0	0	0	0	0	**177**	
2215 - 2230	2	317	17	0	1	0	0	0	0	1	0	0	0	**338**	
2230 - 2245	0	165	9	0	1	0	0	0	0	1	0	0	0	**176**	
2245 - 2300	0	97	2	0	0	0	0	0	0	1	0	0	0	**100**	**791**
2300 - 2315	0	114	5	0	1	0	1	0	0	0	0	0	0	**121**	
2315 - 2330	0	96	2	0	2	0	1	0	0	0	0	0	0	**101**	
2330 - 2345	1	75	4	0	0	0	3	0	1	0	0	0	0	**84**	
2345 - 0000	0	74	3	0	0	0	1	0	1	0	0	0	0	**79**	**385**

Session Total	7	2510	132	5	18	0	17	0	5	3	1	0	0	**2698**
Session Average	0.07	26.15	1.38	0.05	0.19	0.00	0.18	0.00	0.05	0.03	0.01	0.00	0.00	**28.10**
Session Percentage	0.26	93.03	4.89	0.19	0.67	0.00	0.63	0.00	0.19	0.11	0.04	0.00	0.00	

AM Peak Hour	-	-	-	-	-	-	-	-	-	-	-	-	-	-
AM Peak Volume	0	0	0	0	0	0	0	0	0	0	0	0	0	**0**

Noon Peak Hour	-	-	-	-	-	-	-	-	-	-	-	-	-	-
Noon Peak Volume	0	0	0	0	0	0	0	0	0	0	0	0	0	**0**

PM Peak Hour	-	1945 - 2045	1945 - 2045	1945 - 2045	1945 - 2045	-	1945 - 2045	-	-	-	-	-	-	**1945 - 2045**
PM Peak Volume	0	288	22	1	3	0	2	0	0	0	0	0	0	**316**

Site 71
I-126 W/Bound On-Ramp,
west of Driveway

Date
Wednesday, April 24, 2024

Lat/Long
34.009745°, -81.050970°

Weather
Fair
66°F

Click here for Detailed Weather

0000 - 2400 (Weekday 24h Session) (04-24-2024)
SB WB 15min

	Westbound (Movement 71.1)													15min	60min
Time	1	2	3	4	5	6	7	8	9	10	11	12	13	Total	Total
0000 - 0015	0	64	7	0	1	0	2	0	1	0	0	0	0	**75**	
0015 - 0030	0	62	3	2	0	0	1	0	0	0	0	0	0	**68**	
0030 - 0045	0	49	8	0	0	0	0	0	1	0	0	0	0	**58**	
0045 - 0100	0	43	2	0	2	0	0	0	0	1	0	0	0	**48**	**249**
0100 - 0115	0	47	3	0	2	0	0	0	0	0	0	0	0	**52**	
0115 - 0130	0	35	3	0	0	0	5	0	0	0	0	0	0	**43**	
0130 - 0145	0	38	1	0	0	0	2	0	0	0	0	0	0	**41**	
0145 - 0200	1	35	3	0	0	0	2	0	0	0	0	0	0	**41**	**177**
0200 - 0215	0	32	1	0	0	0	0	0	1	1	0	0	0	**35**	
0215 - 0230	0	31	2	0	2	0	1	0	2	0	0	0	0	**38**	
0230 - 0245	0	22	4	0	1	1	1	1	0	0	0	0	0	**30**	
0245 - 0300	0	18	0	0	1	0	0	0	1	0	0	0	0	**20**	**123**
0300 - 0315	0	24	4	0	1	0	0	0	1	0	0	0	0	**30**	
0315 - 0330	0	21	1	0	0	0	3	0	0	0	0	0	0	**25**	
0330 - 0345	0	22	2	0	1	0	1	0	1	0	0	1	0	**28**	
0345 - 0400	0	17	2	0	2	0	3	0	0	0	0	0	0	**24**	**107**
0400 - 0415	0	22	0	0	0	1	0	0	1	1	0	0	0	**25**	
0415 - 0430	0	28	1	0	0	0	0	0	0	0	0	0	0	**29**	
0430 - 0445	0	26	4	0	1	0	2	1	0	0	0	0	0	**34**	
0445 - 0500	0	33	1	0	0	0	0	4	0	0	0	0	0	**38**	**126**
0500 - 0515	0	26	7	0	3	0	1	1	0	0	0	0	0	**38**	
0515 - 0530	0	58	5	0	2	0	0	0	1	0	0	0	0	**66**	
0530 - 0545	0	64	4	0	3	1	1	0	1	1	0	0	0	**75**	
0545 - 0600	0	79	8	0	2	0	0	0	1	0	0	0	0	**90**	**269**
0600 - 0615	0	102	13	0	3	1	0	1	1	0	0	0	0	**121**	
0615 - 0630	0	124	23	1	2	3	0	0	0	0	0	0	0	**153**	
0630 - 0645	1	200	28	1	4	1	0	0	1	0	0	0	0	**236**	
0645 - 0700	0	197	35	2	8	0	0	1	0	0	0	0	0	**243**	**753**
0700 - 0715	0	256	43	1	7	0	1	2	0	0	0	0	0	**310**	
0715 - 0730	1	390	69	1	8	3	0	2	1	0	0	0	0	**475**	
0730 - 0745	1	412	68	2	10	2	0	0	0	0	0	0	0	**495**	
0745 - 0800	1	443	67	2	10	1	1	1	3	0	0	0	0	**529**	**1809**
0800 - 0815	1	409	65	2	8	3	1	0	2	0	0	0	0	**491**	
0815 - 0830	0	421	81	4	5	1	0	3	2	0	0	0	0	**517**	
0830 - 0845	0	412	86	1	10	3	1	2	2	0	0	0	0	**517**	
0845 - 0900	2	411	88	2	5	3	0	1	1	0	0	0	0	**513**	**2038**
0900 - 0915	1	360	55	2	8	0	0	2	3	0	0	0	0	**431**	
0915 - 0930	2	333	66	2	8	2	3	1	4	0	0	0	0	**421**	
0930 - 0945	1	384	67	3	6	0	1	0	3	0	0	0	0	**465**	
0945 - 1000	0	388	75	2	8	1	2	1	1	0	0	0	0	**478**	**1795**
1000 - 1015	0	358	97	4	6	1	1	0	1	0	0	0	0	**468**	
1015 - 1030	0	391	73	2	8	2	0	0	4	0	0	0	0	**480**	
1030 - 1045	1	380	78	4	3	0	1	2	0	0	0	0	0	**469**	
1045 - 1100	0	411	93	0	6	2	2	2	1	0	0	0	0	**517**	**1934**
1100 - 1115	0	371	78	4	8	1	3	0	0	0	0	0	0	**465**	
1115 - 1130	0	446	85	2	6	1	2	0	2	0	0	0	0	**544**	
1130 - 1145	0	448	88	3	8	0	3	1	2	0	0	0	0	**553**	
1145 - 1200	0	459	77	5	5	0	0	1	4	0	0	0	0	**551**	**2113**
1200 - 1215	2	480	92	1	13	2	0	3	2	0	0	0	0	**595**	
1215 - 1230	0	401	86	6	10	0	0	0	1	0	0	0	0	**504**	
1230 - 1245	1	504	86	0	4	2	0	1	1	0	0	0	0	**599**	
1245 - 1300	1	535	78	1	6	1	0	1	0	0	0	0	0	**623**	**2321**
1300 - 1315	0	521	76	1	7	2	0	1	3	1	0	0	0	**612**	
1315 - 1330	0	555	85	2	8	0	0	0	1	0	0	0	0	**651**	
1330 - 1345	0	523	84	3	10	2	0	3	1	0	0	0	0	**626**	
1345 - 1400	0	515	82	0	6	0	0	1	3	0	0	0	0	**607**	**2496**
1400 - 1415	0	560	96	0	12	2	0	1	1	1	0	0	0	**673**	
1415 - 1430	0	610	105	1	4	3	0	0	5	0	0	0	0	**728**	
1430 - 1445	2	555	89	5	10	0	1	1	3	0	0	0	0	**666**	
1445 - 1500	0	605	71	4	4	0	0	1	3	0	0	0	0	**688**	**2755**
1500 - 1515	1	643	121	1	7	0	0	1	2	0	0	0	0	**776**	
1515 - 1530	0	656	120	3	2	0	0	0	3	0	0	0	0	**784**	
1530 - 1545	1	707	140	4	4	0	2	0	2	0	0	0	0	**860**	
1545 - 1600	1	728	143	1	6	1	0	0	3	0	0	0	0	**883**	**3303**
1600 - 1615	0	865	154	1	10	0	1	0	0	0	0	0	0	**1031**	
1615 - 1630	3	896	163	1	11	2	2	0	0	0	0	0	0	**1078**	
1630 - 1645	2	1015	141	3	4	0	0	0	0	0	0	0	0	**1165**	
1645 - 1700	1	970	136	2	7	1	0	2	0	0	0	0	0	**1119**	**4393**
1700 - 1715	0	1087	150	1	1	0	0	0	1	0	0	0	0	**1240**	
1715 - 1730	1	1037	134	1	3	0	0	0	0	0	0	0	0	**1176**	
1730 - 1745	2	737	120	2	1	1	0	1	3	1	0	0	0	**868**	
1745 - 1800	0	674	76	2	5	1	0	0	0	0	0	0	0	**758**	**4042**
1800 - 1815	1	580	71	3	5	0	0	0	3	0	0	0	0	**663**	
1815 - 1830	1	439	53	5	4	2	0	3	1	0	0	0	0	**508**	
1830 - 1845	0	488	49	1	2	0	0	0	0	0	0	0	0	**540**	
1845 - 1900	0	407	39	3	2	0	0	0	0	0	0	0	0	**451**	**2162**
1900 - 1915	0	406	49	3	3	1	0	0	0	0	0	0	0	**462**	
1915 - 1930	0	406	41	2	0	0	1	0	0	0	0	0	0	**450**	
1930 - 1945	1	388	21	1	1	0	0	0	0	0	0	0	0	**412**	
1945 - 2000	2	417	35	1	3	0	0	0	1	0	0	0	0	**459**	**1783**
2000 - 2015	1	342	38	0	2	0	0	0	0	0	0	0	0	**383**	
2015 - 2030	3	338	31	2	5	1	1	0	1	0	0	0	0	**382**	
2030 - 2045	3	335	31	1	3	0	1	0	0	0	0	0	0	**374**	
2045 - 2100	0	257	44	1	1	0	1	0	1	0	0	0	0	**305**	**1444**
2100 - 2115	0	239	13	1	0	1	0	1	1	0	0	0	0	**256**	
2115 - 2130	3	264	14	2	0	1	0	0	0	0	0	0	0	**284**	
2130 - 2145	1	232	13	2	1	1	0	0	1	0	0	0	0	**251**	
2145 - 2200	2	262	16	2	1	0	1	0	0	0	0	0	0	**284**	**1075**
2200 - 2215	0	208	12	3	0	1	1	0	0	0	0	0	0	**225**	
2215 - 2230	2	292	11	0	0	2	0	0	1	0	0	0	0	**308**	
2230 - 2245	0	230	7	0	1	0	2	0	0	0	0	0	0	**240**	
2245 - 2300	0	156	8	0	0	0	0	0	0	0	0	0	0	**164**	**937**
2300 - 2315	0	118	10	0	0	0	0	0	1	0	0	0	0	**129**	
2315 - 2330	3	126	7	0	1	0	0	0	1	0	0	0	0	**138**	
2330 - 2345	2	99	6	0	0	1	1	0	0	0	0	0	0	**109**	
2345 - 0000	0	74	2	0	2	0	0	0	2	0	0	0	0	**80**	**456**

Session Total	56	32884	4923	133	376	65	62	51	102	7	0	1	0	**38660**
Session Average	0.58	342.54	51.28	1.39	3.92	0.68	0.65	0.53	1.06	0.07	0.00	0.01	0.00	**402.71**
Session Percentage	0.14	85.06	12.73	0.34	0.97	0.17	0.16	0.13	0.26	0.02	0.00	0.00	0.00	

AM Peak Hour	0845 - 0945	0730 - 0830	0945 - 1045	0945 - 1045	0715 - 0815	0800 - 0900	0915 - 1015	0815 - 0915	0845 - 0945	0500 - 0600	-	-	-	**0745 - 0845**
AM Peak Volume	6	1685	323	12	36	10	7	8	11	1	0	0	0	**2054**

Noon Peak Hour	1200 - 1300	1445 - 1545	1445 - 1545	1130 - 1230	1130 - 1230	1330 - 1430	1045 - 1145	1115 - 1215	1415 - 1515	1215 - 1315	-	-	-	**1445 - 1545**
Noon Peak Volume	4	2611	452	15	36	7	10	5	13	1	0	0	0	**3108**

PM Peak Hour	1945 - 2045	1630 - 1730	1545 - 1645	1730 - 1830	1600 - 1700	1730 - 1830	1530 - 1630	1730 - 1830	1500 - 1600	1645 - 1745	-	-	-	**1630 - 1730**
PM Peak Volume	9	4109	601	12	32	4	5	4	10	1	0	0	0	**4700**

Site 71
I-126 W/Bound On-Ramp,
west of Driveway

Date
Thursday, April 25, 2024

Lat/Long
34.009745°, -81.050970°

Weather
Fair
67°F

Click here for Detailed Weather

0000 - 2400 (Weekday 24h Session) (04-25-2024)
SB WB 15min

	Westbound (Movement 71.1)													15min	60min
TIME	1	2	3	4	5	6	7	8	9	10	11	12	13	Total	Total
0000 - 0015	0	76	4	0	1	0	0	0	1	0	0	0	0	**82**	
0015 - 0030	0	65	2	0	3	1	1	0	0	0	0	0	0	**72**	
0030 - 0045	0	52	1	2	2	0	2	0	0	0	0	0	0	**59**	
0045 - 0100	0	35	0	0	0	0	1	0	1	0	0	0	0	**37**	**250**
0100 - 0115	0	46	1	0	2	0	3	0	0	0	0	0	0	**52**	
0115 - 0130	0	46	2	0	1	0	0	0	1	0	0	0	0	**50**	
0130 - 0145	0	47	1	0	0	0	0	0	0	0	0	0	0	**48**	
0145 - 0200	0	38	2	0	3	0	0	0	0	0	0	0	0	**43**	**193**
0200 - 0215	0	47	3	0	0	0	0	0	0	0	0	0	0	**50**	
0215 - 0230	0	21	0	0	0	0	0	0	1	0	0	0	0	**22**	
0230 - 0245	0	12	2	0	0	1	1	0	1	0	0	0	0	**17**	
0245 - 0300	0	23	0	0	2	0	1	0	1	0	0	0	0	**27**	**116**
0300 - 0315	0	16	1	0	1	0	1	1	3	0	0	0	0	**23**	
0315 - 0330	0	19	0	0	0	1	2	1	1	0	0	0	0	**24**	
0330 - 0345	0	26	2	0	1	0	1	0	0	0	0	0	0	**30**	
0345 - 0400	0	21	2	0	1	0	0	1	2	0	0	0	0	**27**	**104**
0400 - 0415	0	20	3	0	0	0	0	0	1	0	0	0	0	**24**	
0415 - 0430	0	30	1	0	0	1	0	1	0	0	0	0	0	**33**	
0430 - 0445	0	41	3	0	3	1	0	0	1	0	0	0	0	**49**	
0445 - 0500	0	36	4	0	1	0	0	3	2	0	0	0	0	**46**	**152**
0500 - 0515	0	46	1	0	1	0	0	1	0	0	0	0	0	**49**	
0515 - 0530	0	49	3	0	2	0	0	0	0	0	0	0	0	**54**	
0530 - 0545	0	79	8	1	0	0	0	1	0	0	0	0	0	**89**	
0545 - 0600	0	95	8	0	1	0	0	0	1	0	0	0	0	**105**	**297**
0600 - 0615	1	100	11	0	7	1	0	0	1	0	0	0	0	**121**	
0615 - 0630	1	119	13	1	3	0	1	2	1	0	0	0	0	**141**	
0630 - 0645	0	163	28	1	2	2	0	0	4	0	0	0	0	**200**	
0645 - 0700	0	236	29	2	5	0	0	0	1	0	0	0	0	**273**	**735**
0700 - 0715	0	239	36	1	5	3	0	1	1	0	0	0	0	**286**	
0715 - 0730	0	346	38	2	11	1	0	0	0	4	0	0	0	**402**	
0730 - 0745	2	422	48	0	8	1	1	3	1	0	0	0	0	**486**	
0745 - 0800	1	441	39	1	9	1	0	0	1	0	0	0	0	**493**	**1667**
0800 - 0815	0	427	62	0	2	1	2	0	1	0	0	0	0	**495**	
0815 - 0830	1	375	62	4	5	2	0	1	0	0	0	0	0	**450**	
0830 - 0845	0	435	65	1	11	3	1	0	2	0	0	0	0	**518**	
0845 - 0900	0	448	49	2	6	1	2	2	2	0	0	0	0	**512**	**1975**
0900 - 0915	0	346	53	10	3	1	0	0	6	1	0	0	0	**420**	
0915 - 0930	0	334	66	2	7	1	0	0	0	0	0	0	0	**410**	
0930 - 0945	0	390	72	2	9	2	1	0	2	0	0	0	0	**478**	
0945 - 1000	1	411	80	3	7	4	2	0	2	0	0	0	0	**510**	**1818**
1000 - 1015	0	411	69	1	6	4	2	1	3	0	0	0	0	**497**	
1015 - 1030	0	408	95	3	11	2	2	0	2	1	0	0	0	**524**	
1030 - 1045	1	393	65	3	6	2	0	3	4	0	0	0	0	**477**	
1045 - 1100	2	398	86	0	11	0	2	2	4	0	0	0	0	**505**	**2003**
1100 - 1115	1	453	78	5	12	1	1	2	1	0	0	0	0	**554**	
1115 - 1130	0	445	96	3	8	0	2	2	0	0	0	0	0	**556**	
1130 - 1145	0	474	92	3	6	1	3	0	2	0	0	0	0	**581**	
1145 - 1200	0	479	91	4	8	3	1	1	4	0	0	0	0	**591**	**2282**
1200 - 1215	0	471	113	2	4	2	0	0	1	0	0	0	0	**593**	
1215 - 1230	0	515	120	0	7	2	3	0	2	0	0	0	0	**649**	
1230 - 1245	0	543	107	7	4	1	0	1	2	0	0	0	0	**665**	
1245 - 1300	0	503	97	2	3	1	1	0	3	0	0	0	0	**610**	**2517**
1300 - 1315	2	592	110	2	7	2	0	0	2	0	0	0	0	**717**	
1315 - 1330	0	565	104	4	11	0	1	0	4	1	0	0	0	**690**	
1330 - 1345	0	560	96	3	6	3	2	2	6	0	0	0	0	**678**	
1345 - 1400	1	498	89	3	9	2	0	1	0	0	0	0	0	**603**	**2688**
1400 - 1415	1	586	101	0	8	0	4	2	1	0	0	0	0	**703**	
1415 - 1430	1	590	115	2	5	0	1	1	0	0	0	0	0	**715**	
1430 - 1445	0	558	113	1	5	0	4	2	3	0	0	0	0	**686**	
1445 - 1500	1	662	122	1	7	1	3	2	3	0	0	0	0	**802**	**2906**
1500 - 1515	0	648	99	5	9	0	1	1	1	0	0	0	0	**764**	
1515 - 1530	3	720	133	2	7	0	4	1	4	0	0	0	0	**874**	
1530 - 1545	1	720	128	1	11	0	3	1	4	0	0	0	0	**869**	
1545 - 1600	2	694	144	3	12	1	3	4	1	1	0	0	0	**865**	**3372**
1600 - 1615	1	853	176	1	10	2	0	1	2	0	0	0	0	**1046**	
1615 - 1630	3	871	169	0	15	0	1	2	3	0	0	0	0	**1064**	
1630 - 1645	2	960	162	3	4	0	0	0	1	0	0	0	0	**1132**	
1645 - 1700	1	946	160	2	5	0	1	0	1	0	0	0	0	**1116**	**4358**
1700 - 1715	2	1051	125	0	1	0	2	0	0	0	0	0	0	**1181**	
1715 - 1730	1	988	143	1	3	0	0	0	0	1	0	0	0	**1137**	
1730 - 1745	5	843	104	2	3	0	0	0	1	0	0	0	0	**958**	
1745 - 1800	1	683	91	2	3	0	0	0	0	2	0	0	0	**782**	**4058**
1800 - 1815	1	643	82	2	2	0	0	1	2	1	0	0	0	**734**	
1815 - 1830	1	479	66	4	5	0	0	0	0	1	0	0	0	**556**	
1830 - 1845	3	467	54	2	8	0	0	1	1	0	0	0	0	**536**	
1845 - 1900	2	445	39	4	5	0	0	0	0	0	0	0	0	**495**	**2321**
1900 - 1915	0	0	0	0	0	0	0	0	0	0	0	0	0	**0**	
1915 - 1930	0	0	0	0	0	0	0	0	0	0	0	0	0	**0**	
1930 - 1945	0	0	0	0	0	0	0	0	0	0	0	0	0	**0**	
1945 - 2000	0	0	0	0	0	0	0	0	0	0	0	0	0	**0**	**0**
2000 - 2015	0	0	0	0	0	0	0	0	0	0	0	0	0	**0**	
2015 - 2030	0	0	0	0	0	0	0	0	0	0	0	0	0	**0**	
2030 - 2045	0	0	0	0	0	0	0	0	0	0	0	0	0	**0**	
2045 - 2100	0	0	0	0	0	0	0	0	0	0	0	0	0	**0**	**0**
2100 - 2115	0	0	0	0	0	0	0	0	0	0	0	0	0	**0**	
2115 - 2130	0	0	0	0	0	0	0	0	0	0	0	0	0	**0**	
2130 - 2145	0	0	0	0	0	0	0	0	0	0	0	0	0	**0**	
2145 - 2200	0	0	0	0	0	0	0	0	0	0	0	0	0	**0**	**0**
2200 - 2215	0	0	0	0	0	0	0	0	0	0	0	0	0	**0**	
2215 - 2230	0	0	0	0	0	0	0	0	0	0	0	0	0	**0**	
2230 - 2245	0	0	0	0	0	0	0	0	0	0	0	0	0	**0**	
2245 - 2300	0	0	0	0	0	0	0	0	0	0	0	0	0	**0**	**0**
2300 - 2315	0	0	0	0	0	0	0	0	0	0	0	0	0	**0**	
2315 - 2330	0	0	0	0	0	0	0	0	0	0	0	0	0	**0**	
2330 - 2345	0	0	0	0	0	0	0	0	0	0	0	0	0	**0**	
2345 - 0000	0	0	0	0	0	0	0	0	0	0	0	0	0	**0**	**0**

Session Total	46	28333	4639	118	372	59	70	52	110	13	0	0	0	**33812**
Session Average	0.48	295.14	48.32	1.23	3.88	0.61	0.73	0.54	1.15	0.14	0.00	0.00	0.00	**352.21**
Session Percentage	0.14	83.80	13.72	0.35	1.10	0.17	0.21	0.15	0.33	0.04	0.00	0.00	0.00	

AM Peak Hour	0730 - 0830	0800 - 0900	0930 - 1030	0815 - 0915	0700 - 0800	0930 - 1030	0930 - 1030	0645 - 0745	0945 - 1045	0630 - 0730	-	-	-	**0930 - 1030**
AM Peak Hour Volume	4	1685	316	17	33	12	7	4	11	4	0	0	0	**2009**

Noon Peak Hour	1445 - 1545	1445 - 1545	1445 - 1545	1100 - 1200	1015 - 1115	1000 - 1100	1400 - 1500	1030 - 1130	1245 - 1345	1000 - 1100	-	-	-	**1445 - 1545**
Noon Peak Hour Volume	5	2750	482	15	40	8	12	9	15	1	0	0	0	**3309**

PM Peak Hour	1645 - 1745	1630 - 1730	1600 - 1700	1800 - 1900	1530 - 1630	1515 - 1615	1500 - 1600	1530 - 1630	1515 - 1615	1715 - 1815	-	-	-	**1630 - 1730**
PM Peak Hour Volume	9	3945	667	12	48	3	11	8	11	4	0	0	0	**4566**

Bi-Directional Class Count || SB WB Average 15min

Columbia, SC

Marr Traffic DATA COLLECTION
www.marrtraffic.com

Site 71
I-126 W/Bound On-Ramp,
west of Driveway

Date
Tuesday, April 23, 2024

Lat/Long
34.009745°, -81.050970°

Weather
Fair
58°F

0000 - 2400 (Weekday 24h Session) (All Dates)
SB WB Average 15min

	SB WB Average 15min													15min	60min
Time	1	2	3	4	5	6	7	8	9	10	11	12	13	Total	Total
0000 - 0015	0	47	4	0	1	0	1	0	1	0	0	0	0	**52**	
0015 - 0030	0	42	2	1	1	0	1	0	0	0	0	0	0	**47**	
0030 - 0045	0	34	3	1	1	0	1	0	0	0	0	0	0	**39**	
0045 - 0100	0	26	1	0	1	0	0	0	0	0	0	0	0	**28**	**166**
0100 - 0115	0	31	1	0	1	0	1	0	0	0	0	0	0	**35**	
0115 - 0130	0	27	2	0	0	0	2	0	0	0	0	0	0	**31**	
0130 - 0145	0	28	1	0	0	0	1	0	0	0	0	0	0	**30**	
0145 - 0200	0	24	2	0	1	0	1	0	0	0	0	0	0	**28**	**123**
0200 - 0215	0	26	1	0	0	0	0	0	0	0	0	0	0	**28**	
0215 - 0230	0	17	1	0	1	0	0	0	1	0	0	0	0	**20**	
0230 - 0245	0	11	2	0	0	1	1	0	0	0	0	0	0	**16**	
0245 - 0300	0	14	0	0	1	0	0	0	1	0	0	0	0	**16**	**80**
0300 - 0315	0	13	2	0	1	0	0	0	1	0	0	0	0	**18**	
0315 - 0330	0	13	0	0	0	0	2	0	0	0	0	0	0	**16**	
0330 - 0345	0	16	1	0	1	0	1	0	0	0	0	0	0	**19**	
0345 - 0400	0	13	1	0	1	0	1	0	1	0	0	0	0	**17**	**70**
0400 - 0415	0	14	1	0	0	0	0	0	1	0	0	0	0	**16**	
0415 - 0430	0	19	1	0	0	0	0	0	0	0	0	0	0	**21**	
0430 - 0445	0	22	2	0	1	0	1	0	0	0	0	0	0	**28**	
0445 - 0500	0	23	2	0	0	0	0	2	1	0	0	0	0	**28**	**93**
0500 - 0515	0	24	3	0	1	0	0	1	0	0	0	0	0	**29**	
0515 - 0530	0	36	3	0	1	0	0	0	0	0	0	0	0	**40**	
0530 - 0545	0	48	4	0	1	0	0	0	0	0	0	0	0	**55**	
0545 - 0600	0	58	5	0	1	0	0	0	1	0	0	0	0	**65**	**189**
0600 - 0615	0	67	8	0	3	1	0	0	1	0	0	0	0	**81**	
0615 - 0630	0	81	12	1	2	1	0	1	0	0	0	0	0	**98**	
0630 - 0645	0	121	19	1	2	1	0	0	2	0	0	0	0	**145**	
0645 - 0700	0	144	21	1	4	0	0	0	0	0	0	0	0	**172**	**496**
0700 - 0715	0	165	26	1	4	1	0	1	0	0	0	0	0	**199**	
0715 - 0730	0	245	36	1	6	1	0	1	0	1	0	0	0	**292**	
0730 - 0745	1	278	39	1	6	1	0	1	0	0	0	0	0	**327**	
0745 - 0800	1	295	35	1	6	1	0	0	1	0	0	0	0	**341**	**1159**
0800 - 0815	0	279	42	1	3	1	1	0	1	0	0	0	0	**329**	
0815 - 0830	0	265	48	3	3	1	0	1	1	0	0	0	0	**322**	
0830 - 0845	0	282	50	1	7	2	1	1	1	0	0	0	0	**345**	
0845 - 0900	1	286	46	1	4	1	1	1	1	0	0	0	0	**342**	**1338**
0900 - 0915	0	235	36	4	4	0	0	1	3	0	0	0	0	**284**	
0915 - 0930	1	222	44	1	5	1	1	0	1	0	0	0	0	**277**	
0930 - 0945	0	258	46	2	5	1	1	0	2	0	0	0	0	**314**	
0945 - 1000	0	266	52	2	5	2	1	0	1	0	0	0	0	**329**	**1204**
1000 - 1015	0	256	55	2	4	2	1	0	1	0	0	0	0	**322**	
1015 - 1030	0	266	56	2	6	1	1	0	2	0	0	0	0	**335**	
1030 - 1045	1	258	48	2	3	1	0	2	1	0	0	0	0	**315**	
1045 - 1100	1	270	60	0	6	1	1	1	2	0	0	0	0	**341**	**1312**
1100 - 1115	0	275	52	3	7	1	1	1	0	0	0	0	0	**340**	
1115 - 1130	0	297	60	2	5	0	1	1	1	0	0	0	0	**367**	
1130 - 1145	0	307	60	2	5	0	2	0	1	0	0	0	0	**378**	
1145 - 1200	0	313	56	3	4	1	0	1	3	0	0	0	0	**381**	**1465**
1200 - 1215	1	317	68	1	6	1	0	1	1	0	0	0	0	**396**	
1215 - 1230	0	305	69	2	6	1	1	0	1	0	0	0	0	**384**	
1230 - 1245	0	349	64	2	3	1	0	1	1	0	0	0	0	**421**	
1245 - 1300	0	346	58	1	3	1	0	0	1	0	0	0	0	**411**	**1613**
1300 - 1315	1	371	62	1	5	1	0	0	2	0	0	0	0	**443**	
1315 - 1330	0	373	63	2	6	0	0	0	2	0	0	0	0	**447**	
1330 - 1345	0	361	60	2	5	2	1	2	2	0	0	0	0	**435**	
1345 - 1400	0	338	57	1	5	1	0	1	1	0	0	0	0	**403**	**1728**
1400 - 1415	0	382	66	0	7	1	1	1	1	0	0	0	0	**459**	
1415 - 1430	0	400	73	1	3	1	0	0	2	0	0	0	0	**481**	
1430 - 1445	1	371	67	2	5	0	2	1	2	0	0	0	0	**451**	
1445 - 1500	0	422	64	2	4	0	1	1	2	0	0	0	0	**497**	**1887**
1500 - 1515	0	430	73	2	5	0	0	1	1	0	0	0	0	**513**	
1515 - 1530	1	459	84	2	3	0	1	0	2	0	0	0	0	**553**	
1530 - 1545	1	476	89	2	5	0	2	0	2	0	0	0	0	**576**	
1545 - 1600	1	474	96	1	6	1	1	1	1	0	0	0	0	**583**	**2225**
1600 - 1615	0	573	110	1	7	1	0	0	1	0	0	0	0	**692**	
1615 - 1630	2	589	111	0	9	1	1	1	1	0	0	0	0	**714**	
1630 - 1645	1	658	101	2	3	0	0	0	0	0	0	0	0	**766**	
1645 - 1700	1	639	99	1	4	0	0	1	0	0	0	0	0	**745**	**2917**
1700 - 1715	1	713	92	0	1	0	1	0	0	0	0	0	0	**807**	
1715 - 1730	1	675	92	1	2	0	0	0	0	0	0	0	0	**771**	
1730 - 1745	2	527	75	1	1	0	0	0	1	0	0	0	0	**609**	
1745 - 1800	0	452	56	1	3	0	0	0	0	1	0	0	0	**513**	**2700**
1800 - 1815	1	408	51	2	2	0	0	0	2	0	0	0	0	**466**	
1815 - 1830	1	306	40	3	3	1	0	1	0	0	0	0	0	**355**	
1830 - 1845	1	318	34	1	3	0	0	0	0	0	0	0	0	**359**	
1845 - 1900	1	284	26	2	2	0	0	0	0	0	0	0	0	**315**	**1494**
1900 - 1915	0	135	16	1	1	0	0	0	0	0	0	0	0	**154**	
1915 - 1930	0	135	14	1	0	0	0	0	0	0	0	0	0	**150**	
1930 - 1945	0	129	7	0	0	0	0	0	0	0	0	0	0	**137**	
1945 - 2000	1	139	12	0	1	0	0	0	0	0	0	0	0	**153**	**594**
2000 - 2015	0	114	13	0	1	0	0	0	0	0	0	0	0	**128**	
2015 - 2030	1	113	10	1	2	0	0	0	0	0	0	0	0	**127**	
2030 - 2045	1	208	18	1	2	0	1	0	0	0	0	0	0	**230**	
2045 - 2100	0	179	22	0	2	0	1	0	0	0	0	0	0	**206**	**691**
2100 - 2115	1	168	9	1	1	0	0	0	1	0	0	0	0	**181**	
2115 - 2130	1	161	7	1	1	0	1	0	0	0	0	0	0	**172**	
2130 - 2145	0	142	8	1	0	0	0	0	1	0	0	0	0	**154**	
2145 - 2200	1	140	7	1	1	0	0	0	0	0	0	0	0	**150**	**656**
2200 - 2215	0	125	6	1	0	0	1	0	0	0	0	0	0	**134**	
2215 - 2230	1	203	9	0	0	1	0	0	0	0	0	0	0	**215**	
2230 - 2245	0	132	5	0	1	0	1	0	0	0	0	0	0	**139**	
2245 - 2300	0	84	3	0	0	0	0	0	0	0	0	0	0	**88**	**576**
2300 - 2315	0	77	5	0	0	0	0	0	0	0	0	0	0	**83**	
2315 - 2330	1	74	3	0	1	0	0	0	0	0	0	0	0	**80**	
2330 - 2345	1	58	3	0	0	0	1	0	0	0	0	0	0	**64**	
2345 - 0000	0	49	2	0	1	0	0	0	1	0	0	0	0	**53**	**280**

Session Total	36	21242	3231	85	255	41	50	34	72	8	0	0	0	**25057**
Session Average	0.38	221.27	33.66	0.89	2.66	0.43	0.52	0.36	0.75	0.08	0.00	0.00	0.00	**261.01**
Session Percentage	0.15	84.78	12.90	0.34	1.02	0.16	0.20	0.14	0.29	0.03	0.00	0.00	0.00	

AM Peak Hour	0715 - 0815	0745 - 0845	0945 - 1045	0815 - 0915	0700 - 0800	0800 - 0900	0915 - 1015	0815 - 0915	0845 - 0945	0630 - 0730	-	-	-	**0800 - 0900**
AM Peak Volume	2	1121	211	9	23	6	4	4	7	1	0	0	0	**1338**

Noon Peak Hour	1430 - 1530	1445 - 1545	1445 - 1545	1100 - 1200	1315 - 1415	1000 - 1100	1045 - 1145	1030 - 1130	1430 - 1530	1230 - 1330	-	-	-	**1445 - 1545**
Noon Peak Volume	2	1787	311	10	23	4	6	4	7	1	0	0	0	**2139**

PM Peak Hour	1545 - 1645	1630 - 1730	1600 - 1700	1800 - 1900	1530 - 1630	1530 - 1630	1500 - 1600	1500 - 1600	1500 - 1600	1715 - 1815	-	-	-	**1630 - 1730**
PM Peak Volume	5	2685	420	8	26	2	4	3	7	2	0	0	0	**3089**

Bi-Directional Class Count || Volume Summary 15min

Columbia, SC

Marr Traffic DATA COLLECTION

www.marrtraffic.com

Site 71

I-126 W/Bound On-Ramp,
west of Driveway

Date

Tuesday, April 23, 2024

Lat/Long

34.009745°, -81.050970°

Weather

Fair
58°F

Click here for Detailed Weather

0000 - 2400 (Weekday 24h Session) (04-23-2024)

Volume Summary 15min

TIME	Volume Summary 15min EB	Volume Summary 15min WB	15min Total	60min Total
0000 - 0015	0	0	**0**	
0015 - 0030	0	0	**0**	
0030 - 0045	0	0	**0**	
0045 - 0100	0	0	**0**	**0**
0100 - 0115	0	0	**0**	
0115 - 0130	0	0	**0**	
0130 - 0145	0	0	**0**	
0145 - 0200	0	0	**0**	**0**
0200 - 0215	0	0	**0**	
0215 - 0230	0	0	**0**	
0230 - 0245	0	0	**0**	
0245 - 0300	0	0	**0**	**0**
0300 - 0315	0	0	**0**	
0315 - 0330	0	0	**0**	
0330 - 0345	0	0	**0**	
0345 - 0400	0	0	**0**	**0**
0400 - 0415	0	0	**0**	
0415 - 0430	0	0	**0**	
0430 - 0445	0	0	**0**	
0445 - 0500	0	0	**0**	**0**
0500 - 0515	0	0	**0**	
0515 - 0530	0	0	**0**	
0530 - 0545	0	0	**0**	
0545 - 0600	0	0	**0**	**0**
0600 - 0615	0	0	**0**	
0615 - 0630	0	0	**0**	
0630 - 0645	0	0	**0**	
0645 - 0700	0	0	**0**	**0**
0700 - 0715	0	0	**0**	
0715 - 0730	0	0	**0**	
0730 - 0745	0	0	**0**	
0745 - 0800	0	0	**0**	**0**
0800 - 0815	0	0	**0**	
0815 - 0830	0	0	**0**	
0830 - 0845	0	0	**0**	
0845 - 0900	0	0	**0**	**0**
0900 - 0915	0	0	**0**	
0915 - 0930	0	0	**0**	
0930 - 0945	0	0	**0**	
0945 - 1000	0	0	**0**	**0**
1000 - 1015	0	0	**0**	
1015 - 1030	0	0	**0**	
1030 - 1045	0	0	**0**	
1045 - 1100	0	0	**0**	**0**
1100 - 1115	0	0	**0**	
1115 - 1130	0	0	**0**	
1130 - 1145	0	0	**0**	
1145 - 1200	0	0	**0**	**0**

Time	Volume Summary 15min EB	Volume Summary 15min WB	15min Total	60min Total
1200 - 1215	0	0	**0**	
1215 - 1230	0	0	**0**	
1230 - 1245	0	0	**0**	
1245 - 1300	0	0	**0**	**0**
1300 - 1315	0	0	**0**	
1315 - 1330	0	0	**0**	
1330 - 1345	0	0	**0**	
1345 - 1400	0	0	**0**	**0**
1400 - 1415	0	0	**0**	
1415 - 1430	0	0	**0**	
1430 - 1445	0	0	**0**	
1445 - 1500	0	0	**0**	**0**
1500 - 1515	0	0	**0**	
1515 - 1530	0	0	**0**	
1530 - 1545	0	0	**0**	
1545 - 1600	0	0	**0**	**0**
1600 - 1615	0	0	**0**	
1615 - 1630	0	0	**0**	
1630 - 1645	0	0	**0**	
1645 - 1700	0	0	**0**	**0**
1700 - 1715	0	0	**0**	
1715 - 1730	0	0	**0**	
1730 - 1745	0	0	**0**	
1745 - 1800	0	0	**0**	**0**
1800 - 1815	0	0	**0**	
1815 - 1830	0	0	**0**	
1830 - 1845	0	0	**0**	
1845 - 1900	0	0	**0**	**0**
1900 - 1915	0	0	**0**	
1915 - 1930	0	0	**0**	
1930 - 1945	0	0	**0**	
1945 - 2000	0	0	**0**	**0**
2000 - 2015	0	0	**0**	
2015 - 2030	0	0	**0**	
2030 - 2045	0	316	**316**	
2045 - 2100	0	313	**313**	**629**
2100 - 2115	0	287	**287**	
2115 - 2130	0	231	**231**	
2130 - 2145	0	210	**210**	
2145 - 2200	0	165	**165**	**893**
2200 - 2215	0	177	**177**	
2215 - 2230	0	338	**338**	
2230 - 2245	0	176	**176**	
2245 - 2300	0	100	**100**	**791**
2300 - 2315	0	121	**121**	
2315 - 2330	0	101	**101**	
2330 - 2345	0	84	**84**	
2345 - 0000	0	79	**79**	**385**

Session Total	0	2698	**2698**
Session Average	0.00	28.10	**28.10**
Session Percentage	0.00	100.00	

Site 71
I-126 W/Bound On-Ramp,
west of Driveway

Date
Wednesday, April 24, 2024

Lat/Long
34.009745°, -81.050970°

Weather
Fair
66°F

Click here for Detailed Weather

0000 - 2400 (Weekday 24h Session) (04-24-2024)

Volume Summary 15min

TIME	Volume Summary 15min EB	Volume Summary 15min WB	15min Total	60min Total
0000 - 0015	0	75	**75**	
0015 - 0030	0	68	**68**	
0030 - 0045	0	58	**58**	
0045 - 0100	0	48	**48**	**249**
0100 - 0115	0	52	**52**	
0115 - 0130	0	43	**43**	
0130 - 0145	0	41	**41**	
0145 - 0200	0	41	**41**	**177**
0200 - 0215	0	35	**35**	
0215 - 0230	0	38	**38**	
0230 - 0245	0	30	**30**	
0245 - 0300	0	20	**20**	**123**
0300 - 0315	0	30	**30**	
0315 - 0330	0	25	**25**	
0330 - 0345	0	28	**28**	
0345 - 0400	0	24	**24**	**107**
0400 - 0415	0	25	**25**	
0415 - 0430	0	29	**29**	
0430 - 0445	0	34	**34**	
0445 - 0500	0	38	**38**	**126**
0500 - 0515	0	38	**38**	
0515 - 0530	0	66	**66**	
0530 - 0545	0	75	**75**	
0545 - 0600	0	90	**90**	**269**
0600 - 0615	0	121	**121**	
0615 - 0630	0	153	**153**	
0630 - 0645	0	236	**236**	
0645 - 0700	0	243	**243**	**753**
0700 - 0715	0	310	**310**	
0715 - 0730	0	475	**475**	
0730 - 0745	0	495	**495**	
0745 - 0800	0	529	**529**	**1809**
0800 - 0815	0	491	**491**	
0815 - 0830	0	517	**517**	
0830 - 0845	0	517	**517**	
0845 - 0900	0	513	**513**	**2038**
0900 - 0915	0	431	**431**	
0915 - 0930	0	421	**421**	
0930 - 0945	0	465	**465**	
0945 - 1000	0	478	**478**	**1795**
1000 - 1015	0	468	**468**	
1015 - 1030	0	480	**480**	
1030 - 1045	0	469	**469**	
1045 - 1100	0	517	**517**	**1934**
1100 - 1115	0	465	**465**	
1115 - 1130	0	544	**544**	
1130 - 1145	0	553	**553**	
1145 - 1200	0	551	**551**	**2113**

Time	Volume Summary 15min EB	Volume Summary 15min WB	15min Total	60min Total
1200 - 1215	0	595	**595**	
1215 - 1230	0	504	**504**	
1230 - 1245	0	599	**599**	
1245 - 1300	0	623	**623**	**2321**
1300 - 1315	0	612	**612**	
1315 - 1330	0	651	**651**	
1330 - 1345	0	626	**626**	
1345 - 1400	0	607	**607**	**2496**
1400 - 1415	0	673	**673**	
1415 - 1430	0	728	**728**	
1430 - 1445	0	666	**666**	
1445 - 1500	0	688	**688**	**2755**
1500 - 1515	0	776	**776**	
1515 - 1530	0	784	**784**	
1530 - 1545	0	860	**860**	
1545 - 1600	0	883	**883**	**3303**
1600 - 1615	0	1031	**1031**	
1615 - 1630	0	1078	**1078**	
1630 - 1645	0	1165	**1165**	
1645 - 1700	0	1119	**1119**	**4393**
1700 - 1715	0	1240	**1240**	
1715 - 1730	0	1176	**1176**	
1730 - 1745	0	868	**868**	
1745 - 1800	0	758	**758**	**4042**
1800 - 1815	0	663	**663**	
1815 - 1830	0	508	**508**	
1830 - 1845	0	540	**540**	
1845 - 1900	0	451	**451**	**2162**
1900 - 1915	0	462	**462**	
1915 - 1930	0	450	**450**	
1930 - 1945	0	412	**412**	
1945 - 2000	0	459	**459**	**1783**
2000 - 2015	0	383	**383**	
2015 - 2030	0	382	**382**	
2030 - 2045	0	374	**374**	
2045 - 2100	0	305	**305**	**1444**
2100 - 2115	0	256	**256**	
2115 - 2130	0	284	**284**	
2130 - 2145	0	251	**251**	
2145 - 2200	0	284	**284**	**1075**
2200 - 2215	0	225	**225**	
2215 - 2230	0	308	**308**	
2230 - 2245	0	240	**240**	
2245 - 2300	0	164	**164**	**937**
2300 - 2315	0	129	**129**	
2315 - 2330	0	138	**138**	
2330 - 2345	0	109	**109**	
2345 - 0000	0	80	**80**	**456**

Session Total	0	38660	**38660**
Session Average	0.00	402.71	**402.71**
Session Percentage	0.00	100.00	

Site 71
I-126 W/Bound On-Ramp,
west of Driveway

Date
Thursday, April 25, 2024

Lat/Long
34.009745°, -81.050970°

Weather
Fair
67°F

Click here for Detailed Weather

0000 - 2400 (Weekday 24h Session) (04-25-2024)
Volume Summary 15min

TIME	Volume Summary 15min EB	Volume Summary 15min WB	15min Total	60min Total
0000 - 0015	0	82	**82**	
0015 - 0030	0	72	**72**	
0030 - 0045	0	59	**59**	
0045 - 0100	0	37	**37**	**250**
0100 - 0115	0	52	**52**	
0115 - 0130	0	50	**50**	
0130 - 0145	0	48	**48**	
0145 - 0200	0	43	**43**	**193**
0200 - 0215	0	50	**50**	
0215 - 0230	0	22	**22**	
0230 - 0245	0	17	**17**	
0245 - 0300	0	27	**27**	**116**
0300 - 0315	0	23	**23**	
0315 - 0330	0	24	**24**	
0330 - 0345	0	30	**30**	
0345 - 0400	0	27	**27**	**104**
0400 - 0415	0	24	**24**	
0415 - 0430	0	33	**33**	
0430 - 0445	0	49	**49**	
0445 - 0500	0	46	**46**	**152**
0500 - 0515	0	49	**49**	
0515 - 0530	0	54	**54**	
0530 - 0545	0	89	**89**	
0545 - 0600	0	105	**105**	**297**
0600 - 0615	0	121	**121**	
0615 - 0630	0	141	**141**	
0630 - 0645	0	200	**200**	
0645 - 0700	0	273	**273**	**735**
0700 - 0715	0	286	**286**	
0715 - 0730	0	402	**402**	
0730 - 0745	0	486	**486**	
0745 - 0800	0	493	**493**	**1667**
0800 - 0815	0	495	**495**	
0815 - 0830	0	450	**450**	
0830 - 0845	0	518	**518**	
0845 - 0900	0	512	**512**	**1975**
0900 - 0915	0	420	**420**	
0915 - 0930	0	410	**410**	
0930 - 0945	0	478	**478**	
0945 - 1000	0	510	**510**	**1818**
1000 - 1015	0	497	**497**	
1015 - 1030	0	524	**524**	
1030 - 1045	0	477	**477**	
1045 - 1100	0	505	**505**	**2003**
1100 - 1115	0	554	**554**	
1115 - 1130	0	556	**556**	
1130 - 1145	0	581	**581**	
1145 - 1200	0	591	**591**	**2282**

Time	Volume Summary 15min EB	Volume Summary 15min WB	15min Total	60min Total
1200 - 1215	0	593	**593**	
1215 - 1230	0	649	**649**	
1230 - 1245	0	665	**665**	
1245 - 1300	0	610	**610**	**2517**
1300 - 1315	0	717	**717**	
1315 - 1330	0	690	**690**	
1330 - 1345	0	678	**678**	
1345 - 1400	0	603	**603**	**2688**
1400 - 1415	0	703	**703**	
1415 - 1430	0	715	**715**	
1430 - 1445	0	686	**686**	
1445 - 1500	0	802	**802**	**2906**
1500 - 1515	0	764	**764**	
1515 - 1530	0	874	**874**	
1530 - 1545	0	869	**869**	
1545 - 1600	0	865	**865**	**3372**
1600 - 1615	0	1046	**1046**	
1615 - 1630	0	1064	**1064**	
1630 - 1645	0	1132	**1132**	
1645 - 1700	0	1116	**1116**	**4358**
1700 - 1715	0	1181	**1181**	
1715 - 1730	0	1137	**1137**	
1730 - 1745	0	958	**958**	
1745 - 1800	0	782	**782**	**4058**
1800 - 1815	0	734	**734**	
1815 - 1830	0	556	**556**	
1830 - 1845	0	536	**536**	
1845 - 1900	0	495	**495**	**2321**
1900 - 1915	0	0	**0**	
1915 - 1930	0	0	**0**	
1930 - 1945	0	0	**0**	
1945 - 2000	0	0	**0**	**0**
2000 - 2015	0	0	**0**	
2015 - 2030	0	0	**0**	
2030 - 2045	0	0	**0**	
2045 - 2100	0	0	**0**	**0**
2100 - 2115	0	0	**0**	
2115 - 2130	0	0	**0**	
2130 - 2145	0	0	**0**	
2145 - 2200	0	0	**0**	**0**
2200 - 2215	0	0	**0**	
2215 - 2230	0	0	**0**	
2230 - 2245	0	0	**0**	
2245 - 2300	0	0	**0**	**0**
2300 - 2315	0	0	**0**	
2315 - 2330	0	0	**0**	
2330 - 2345	0	0	**0**	
2345 - 0000	0	0	**0**	**0**

Session Total	0	33812	**33812**
Session Average	0.00	352.21	**352.21**
Session Percentage	0.00	100.00	

Bi-Directional Class Count || SB WB 60min

Columbia, SC

Marr Traffic DATA COLLECTION

www.marrtraffic.com

Site 71
I-126 W/Bound On-Ramp,
west of Driveway

Date
Tuesday, April 23, 2024

Lat/Long
34.009745°, -81.050970°

Weather
Fair
58°F

Click here for Detailed Weather

0000 - 2400 (Weekday 24h Session) (04-23-2024)
SB WB 60min

	Westbound (Movement 71.1)													
TIME	1	2	3	4	5	6	7	8	9	10	11	12	13	**Total**
0000 - 0100	0	0	0	0	0	0	0	0	0	0	0	0	0	**0**
0100 - 0200	0	0	0	0	0	0	0	0	0	0	0	0	0	**0**
0200 - 0300	0	0	0	0	0	0	0	0	0	0	0	0	0	**0**
0300 - 0400	0	0	0	0	0	0	0	0	0	0	0	0	0	**0**
0400 - 0500	0	0	0	0	0	0	0	0	0	0	0	0	0	**0**
0500 - 0600	0	0	0	0	0	0	0	0	0	0	0	0	0	**0**
0600 - 0700	0	0	0	0	0	0	0	0	0	0	0	0	0	**0**
0700 - 0800	0	0	0	0	0	0	0	0	0	0	0	0	0	**0**
0800 - 0900	0	0	0	0	0	0	0	0	0	0	0	0	0	**0**
0900 - 1000	0	0	0	0	0	0	0	0	0	0	0	0	0	**0**
1000 - 1100	0	0	0	0	0	0	0	0	0	0	0	0	0	**0**
1100 - 1200	0	0	0	0	0	0	0	0	0	0	0	0	0	**0**
1200 - 1300	0	0	0	0	0	0	0	0	0	0	0	0	0	**0**
1300 - 1400	0	0	0	0	0	0	0	0	0	0	0	0	0	**0**
1400 - 1500	0	0	0	0	0	0	0	0	0	0	0	0	0	**0**
1500 - 1600	0	0	0	0	0	0	0	0	0	0	0	0	0	**0**
1600 - 1700	0	0	0	0	0	0	0	0	0	0	0	0	0	**0**
1700 - 1800	0	0	0	0	0	0	0	0	0	0	0	0	0	**0**
1800 - 1900	0	0	0	0	0	0	0	0	0	0	0	0	0	**0**
1900 - 2000	0	0	0	0	0	0	0	0	0	0	0	0	0	**0**
2000 - 2100	1	569	45	1	7	0	5	0	0	0	1	0	0	**629**
2100 - 2200	3	837	38	3	6	0	3	0	3	0	0	0	0	**893**
2200 - 2300	2	745	35	1	2	0	3	0	0	3	0	0	0	**791**
2300 - 2400	1	359	14	0	3	0	6	0	2	0	0	0	0	**385**
Session Total	7	2510	132	5	18	0	17	0	5	3	1	0	0	**2698**
Session Average	0.29	104.58	5.50	0.21	0.75	0.00	0.71	0.00	0.21	0.13	0.04	0.00	0.00	**112.42**
Session Percentage	0.26	93.03	4.89	0.19	0.67	0.00	0.63	0.00	0.19	0.11	0.04	0.00	0.00	
AM Peak Hour	-	-	-	-	-	-	-	-	-	-	-	-	-	-
AM Peak Volume	0	0	0	0	0	0	0	0	0	0	0	0	0	**0**
Noon Peak Hour	-	-	-	-	-	-	-	-	-	-	-	-	-	-
Noon Peak Volume	0	0	0	0	0	0	0	0	0	0	0	0	0	**0**
PM Peak Hour	-	-	-	-	-	-	-	-	-	-	-	-	-	-
PM Peak Volume	0	0	0	0	0	0	0	0	0	0	0	0	0	**0**

Site 71
I-126 W/Bound On-Ramp,
west of Driveway

Date
Wednesday, April 24, 2024

Weather
Fair
66°F

Lat/Long
34.009745°, -81.050970°

Click here for Detailed Weather

0000 - 2400 (Weekday 24h Session) (04-24-2024)
SB WB 60min

	Westbound (Movement 71.1)													
TIME	1	2	3	4	5	6	7	8	9	10	11	12	13	**Total**
0000 - 0100	0	218	20	2	3	0	3	0	2	1	0	0	0	**249**
0100 - 0200	1	155	10	0	2	0	9	0	0	0	0	0	0	**177**
0200 - 0300	0	103	7	0	4	1	2	1	4	1	0	0	0	**123**
0300 - 0400	0	84	9	0	4	0	7	0	2	0	0	1	0	**107**
0400 - 0500	0	109	6	0	1	1	2	5	1	1	0	0	0	**126**
0500 - 0600	0	227	24	0	10	1	2	1	3	1	0	0	0	**269**
0600 - 0700	1	623	99	4	17	5	0	2	2	0	0	0	0	**753**
0700 - 0800	3	1501	247	6	35	6	2	5	4	0	0	0	0	**1809**
0800 - 0900	3	1653	320	9	28	10	2	6	7	0	0	0	0	**2038**
0900 - 1000	4	1465	263	9	30	3	6	4	11	0	0	0	0	**1795**
1000 - 1100	1	1540	341	10	23	5	4	4	6	0	0	0	0	**1934**
1100 - 1200	0	1724	328	14	27	2	8	2	8	0	0	0	0	**2113**
1200 - 1300	4	1920	342	8	33	5	0	5	4	0	0	0	0	**2321**
1300 - 1400	0	2114	327	6	31	4	0	5	8	1	0	0	0	**2496**
1400 - 1500	2	2330	361	10	30	5	1	3	12	1	0	0	0	**2755**
1500 - 1600	3	2734	524	9	19	1	2	1	10	0	0	0	0	**3303**
1600 - 1700	6	3746	594	7	32	3	3	2	0	0	0	0	0	**4393**
1700 - 1800	3	3535	480	6	10	2	0	1	4	1	0	0	0	**4042**
1800 - 1900	2	1914	212	12	13	2	0	3	4	0	0	0	0	**2162**
1900 - 2000	3	1617	146	7	7	1	1	0	1	0	0	0	0	**1783**
2000 - 2100	7	1272	144	4	11	1	3	0	2	0	0	0	0	**1444**
2100 - 2200	6	997	56	7	2	3	1	1	2	0	0	0	0	**1075**
2200 - 2300	2	886	38	3	1	3	3	0	1	0	0	0	0	**937**
2300 - 2400	5	417	25	0	3	1	1	0	4	0	0	0	0	**456**

Session Total	56	32884	4923	133	376	65	62	51	102	7	0	1	0	**38660**
Session Average	2.33	1370.17	205.13	5.54	15.67	2.71	2.58	2.13	4.25	0.29	0.00	0.04	0.00	**1610.83**
Session Percentage	0.14	85.06	12.73	0.34	0.97	0.17	0.16	0.13	0.26	0.02	0.00	0.00	0.00	

AM Peak Hour	0900 - 1000	0800 - 0900	0800 - 0900	0800 - 0900	0700 - 0800	0800 - 0900	0900 - 1000	0800 - 0900	0900 - 1000	0500 - 0600	-	-	-	**0800 - 0900**
AM Peak Volume	4	1653	320	9	35	10	6	6	11	1	0	0	0	**2038**

Noon Peak Hour	1200 - 1300	1400 - 1500	1400 - 1500	1100 - 1200	1200 - 1300	1000 - 1100	1100 - 1200	1200 - 1300	1400 - 1500	1300 - 1400	-	-	-	**1400 - 1500**
Noon Peak Volume	4	2330	361	14	33	5	8	5	12	1	0	0	0	**2755**

PM Peak Hour	1600 - 1700	1600 - 1700	1600 - 1700	1800 - 1900	1600 - 1700	1600 - 1700	1600 - 1700	1800 - 1900	1500 - 1600	1700 - 1800	-	-	-	**1600 - 1700**
PM Peak Volume	6	3746	594	12	32	3	3	3	10	1	0	0	0	**4393**

Site 71
I-126 W/Bound On-Ramp,
west of Driveway

Date
Thursday, April 25, 2024

Weather
Fair
67°F

Lat/Long
34.009745°, -81.050970°

Click here for Detailed Weather

0000 - 2400 (Weekday 24h Session) (04-25-2024)
SB WB 60min

	Westbound (Movement 71.1)													
TIME	1	2	3	4	5	6	7	8	9	10	11	12	13	**Total**
0000 - 0100	0	228	7	2	6	1	4	0	2	0	0	0	0	**250**
0100 - 0200	0	177	6	0	6	0	3	0	1	0	0	0	0	**193**
0200 - 0300	0	103	5	0	2	1	2	0	3	0	0	0	0	**116**
0300 - 0400	0	82	5	0	3	1	4	3	6	0	0	0	0	**104**
0400 - 0500	0	127	11	0	4	2	0	4	4	0	0	0	0	**152**
0500 - 0600	0	269	20	1	4	0	0	2	1	0	0	0	0	**297**
0600 - 0700	2	618	81	4	17	3	1	2	7	0	0	0	0	**735**
0700 - 0800	3	1448	161	4	33	6	1	4	3	4	0	0	0	**1667**
0800 - 0900	1	1685	238	7	24	7	5	3	5	0	0	0	0	**1975**
0900 - 1000	1	1481	271	17	26	8	3	0	10	1	0	0	0	**1818**
1000 - 1100	3	1610	315	7	34	8	6	6	13	1	0	0	0	**2003**
1100 - 1200	1	1851	357	15	34	5	7	5	7	0	0	0	0	**2282**
1200 - 1300	0	2032	437	11	18	6	4	1	8	0	0	0	0	**2517**
1300 - 1400	3	2215	399	12	33	7	3	3	12	1	0	0	0	**2688**
1400 - 1500	3	2396	451	4	25	1	12	7	7	0	0	0	0	**2906**
1500 - 1600	6	2782	504	11	39	1	11	7	10	1	0	0	0	**3372**
1600 - 1700	7	3630	667	6	34	2	2	3	7	0	0	0	0	**4358**
1700 - 1800	9	3565	463	5	10	0	2	0	1	3	0	0	0	**4058**
1800 - 1900	7	2034	241	12	20	0	0	2	3	2	0	0	0	**2321**
1900 - 2000	0	0	0	0	0	0	0	0	0	0	0	0	0	**0**
2000 - 2100	0	0	0	0	0	0	0	0	0	0	0	0	0	**0**
2100 - 2200	0	0	0	0	0	0	0	0	0	0	0	0	0	**0**
2200 - 2300	0	0	0	0	0	0	0	0	0	0	0	0	0	**0**
2300 - 2400	0	0	0	0	0	0	0	0	0	0	0	0	0	**0**

Session Total	46	28333	4639	118	372	59	70	52	110	13	0	0	0	**33812**
Session Average	1.92	1180.54	193.29	4.92	15.50	2.46	2.92	2.17	4.58	0.54	0.00	0.00	0.00	**1408.83**
Session Percentage	0.14	83.80	13.72	0.35	1.10	0.17	0.21	0.15	0.33	0.04	0.00	0.00	0.00	

AM Peak Hour	0700 - 0800	0800 - 0900	0900 - 1000	0900 - 1000	0700 - 0800	0900 - 1000	0800 - 0900	0700 - 0800	0900 - 1000	0700 - 0800	-	-	-	**0800 - 0900**
AM Peak Hour Volume	3	1685	271	17	33	8	5	4	10	4	0	0	0	**1975**

Noon Peak Hour	1000 - 1100	1400 - 1500	1400 - 1500	1100 - 1200	1000 - 1100	1000 - 1100	1400 - 1500	1400 - 1500	1000 - 1100	1000 - 1100	-	-	-	**1400 - 1500**
Noon Peak Hour Volume	3	2396	451	15	34	8	12	7	13	1	0	0	0	**2906**

PM Peak Hour	1700 - 1800	1600 - 1700	1600 - 1700	1800 - 1900	1500 - 1600	1600 - 1700	1500 - 1600	1500 - 1600	1500 - 1600	1700 - 1800	-	-	-	**1600 - 1700**
PM Peak Hour Volume	9	3630	667	12	39	2	11	7	10	3	0	0	0	**4358**

Bi-Directional Class Count || Volume Summary 60min

Columbia, SC

Marr Traffic DATA COLLECTION

www.marrtraffic.com

Site 71

I-126 W/Bound On-Ramp,
west of Driveway

Date

Tuesday, April 23, 2024

Lat/Long

34.009745°, -81.050970°

Weather

Fair
58°F

Click here for Detailed Weather

0000 - 2400 (Weekday 24h Session) (04-23-2024)

Volume Summary 60min

	Volume Summary 60min		
TIME	EB	WB	**Total**
0000 - 0100	0	0	**0**
0100 - 0200	0	0	**0**
0200 - 0300	0	0	**0**
0300 - 0400	0	0	**0**
0400 - 0500	0	0	**0**
0500 - 0600	0	0	**0**
0600 - 0700	0	0	**0**
0700 - 0800	0	0	**0**
0800 - 0900	0	0	**0**
0900 - 1000	0	0	**0**
1000 - 1100	0	0	**0**
1100 - 1200	0	0	**0**

	Volume Summary 60min		
Time	EB	WB	**Total**
1200 - 1300	0	0	**0**
1300 - 1400	0	0	**0**
1400 - 1500	0	0	**0**
1500 - 1600	0	0	**0**
1600 - 1700	0	0	**0**
1700 - 1800	0	0	**0**
1800 - 1900	0	0	**0**
1900 - 2000	0	0	**0**
2000 - 2100	0	629	**629**
2100 - 2200	0	893	**893**
2200 - 2300	0	791	**791**
2300 - 2400	0	385	**385**

Session Total	0	2698	**2698**
Session Average	0.00	112.42	**112.42**
Session Percentage	0.00	100.00	

Site 71

I-126 W/Bound On-Ramp,
west of Driveway

Date

Wednesday, April 24, 2024

Lat/Long

34.009745°, -81.050970°

Weather

Fair
66°F

Click here for Detailed Weather

0000 - 2400 (Weekday 24h Session) (04-24-2024)

Volume Summary 60min

	Volume Summary 60min		
TIME	EB	WB	**Total**
0000 - 0100	0	249	**249**
0100 - 0200	0	177	**177**
0200 - 0300	0	123	**123**
0300 - 0400	0	107	**107**
0400 - 0500	0	126	**126**
0500 - 0600	0	269	**269**
0600 - 0700	0	753	**753**
0700 - 0800	0	1809	**1809**
0800 - 0900	0	2038	**2038**
0900 - 1000	0	1795	**1795**
1000 - 1100	0	1934	**1934**
1100 - 1200	0	2113	**2113**

	Volume Summary 60min		
Time	EB	WB	**Total**
1200 - 1300	0	2321	**2321**
1300 - 1400	0	2496	**2496**
1400 - 1500	0	2755	**2755**
1500 - 1600	0	3303	**3303**
1600 - 1700	0	4393	**4393**
1700 - 1800	0	4042	**4042**
1800 - 1900	0	2162	**2162**
1900 - 2000	0	1783	**1783**
2000 - 2100	0	1444	**1444**
2100 - 2200	0	1075	**1075**
2200 - 2300	0	937	**937**
2300 - 2400	0	456	**456**

Session Total	0	38660	**38660**
Session Average	0.00	1610.83	**1610.83**
Session Percentage	0.00	100.00	

Site 71

I-126 W/Bound On-Ramp,
west of Driveway

Date

Thursday, April 25, 2024

Lat/Long

34.009745°, -81.050970°

Weather

Fair
67°F

Click here for Detailed Weather

0000 - 2400 (Weekday 24h Session) (04-25-2024)

Volume Summary 60min

	Volume Summary 60min		
TIME	EB	WB	**Total**
0000 - 0100	0	250	**250**
0100 - 0200	0	193	**193**
0200 - 0300	0	116	**116**
0300 - 0400	0	104	**104**
0400 - 0500	0	152	**152**
0500 - 0600	0	297	**297**
0600 - 0700	0	735	**735**
0700 - 0800	0	1667	**1667**
0800 - 0900	0	1975	**1975**
0900 - 1000	0	1818	**1818**
1000 - 1100	0	2003	**2003**
1100 - 1200	0	2282	**2282**

Session Total	0	33812	**33812**
Session Average	0.00	1408.83	**1408.83**
Session Percentage	0.00	100.00	

	Volume Summary 60min		
Time	EB	WB	**Total**
1200 - 1300	0	2517	**2517**
1300 - 1400	0	2688	**2688**
1400 - 1500	0	2906	**2906**
1500 - 1600	0	3372	**3372**
1600 - 1700	0	4358	**4358**
1700 - 1800	0	4058	**4058**
1800 - 1900	0	2321	**2321**
1900 - 2000	0	0	**0**
2000 - 2100	0	0	**0**
2100 - 2200	0	0	**0**
2200 - 2300	0	0	**0**
2300 - 2400	0	0	**0**

Bi-Directional Class Count || Graphical Analysis SB WB

Columbia, SC

Marr Traffic DATA COLLECTION

www.marrtraffic.com

Site 71

I-126 W/Bound On-Ramp,
west of Driveway

Lat/Long

34.009745°, -81.050970°

0000 - 2400 (Weekday 24h Session)

Graphical Analysis SB WB

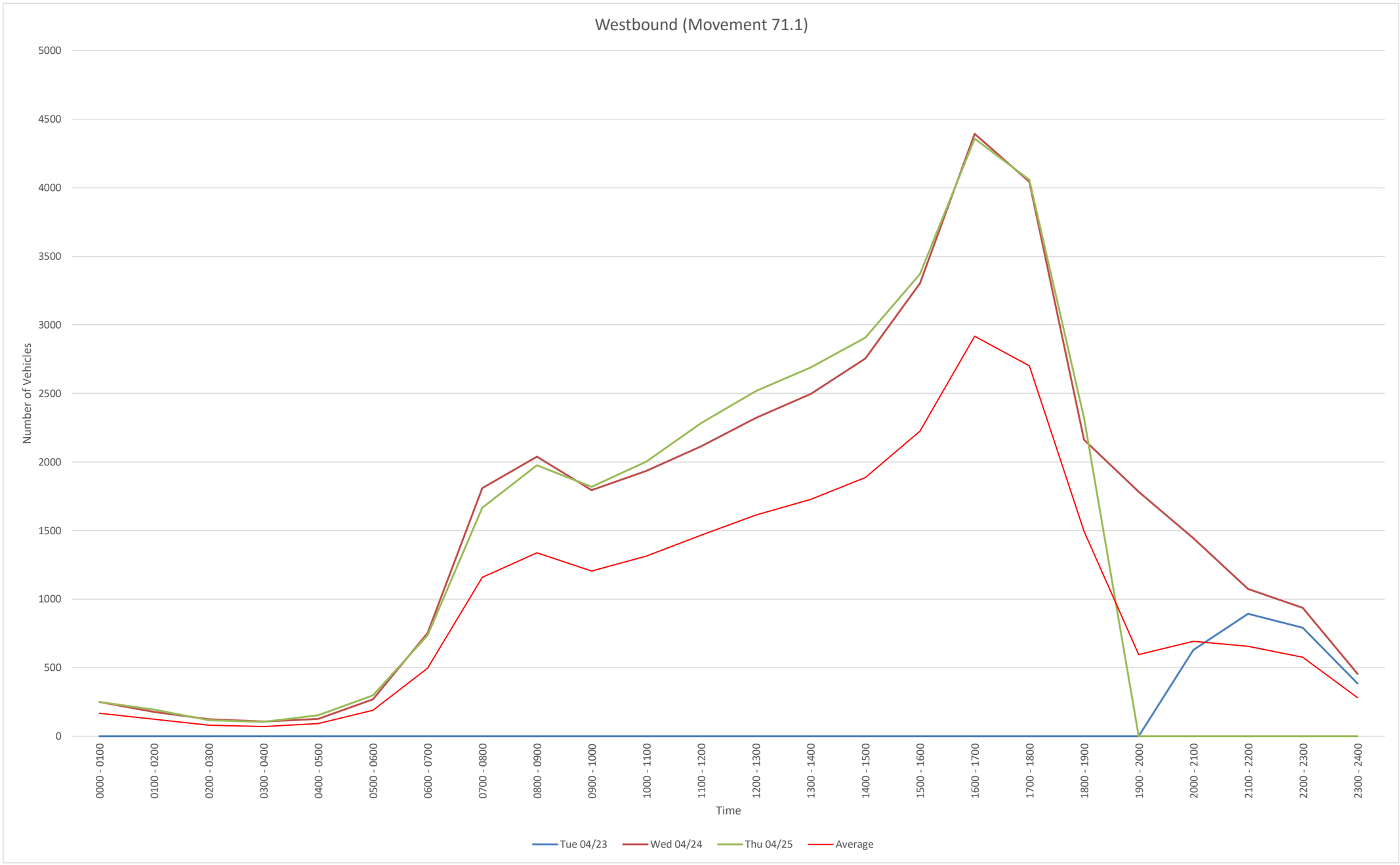

Time	Tue 04/23	Wed 04/24	Thu 04/25				
0000 - 0100	0	249	250				
0100 - 0200	0	177	193				
0200 - 0300	0	123	116				
0300 - 0400	0	107	104				
0400 - 0500	0	126	152				
0500 - 0600	0	269	297				
0600 - 0700	0	753	735				
0700 - 0800	0	1809	1667				
0800 - 0900	0	2038	1975				
0900 - 1000	0	1795	1818				
1000 - 1100	0	1934	2003				
1100 - 1200	0	2113	2282				
1200 - 1300	0	2321	2517				
1300 - 1400	0	2496	2688				
1400 - 1500	0	2755	2906				
1500 - 1600	0	3303	3372				
1600 - 1700	0	4393	4358				
1700 - 1800	0	4042	4058				
1800 - 1900	0	2162	2321				
1900 - 2000	0	1783	0				
2000 - 2100	629	1444	0				
2100 - 2200	893	1075	0				
2200 - 2300	791	937	0				
2300 - 2400	385	456	0				
Daily Total	2698	38660	33812				

EB
File Name:
Start Date: 4/23/2024
Start Time: 0
Site Code: 71
Station ID: 1
Location 1: I-126 W/Bound On-Ramp, west of Driveway
Location 2:

Date	Time	1	2	3	4	5	6	7	8	9	10	11	12	13
4/23/2024	12:00 AM	0	0	0	0	0	0	0	0	0	0	0	0	0
4/23/2024	12:15 AM	0	0	0	0	0	0	0	0	0	0	0	0	0
4/23/2024	12:30 AM	0	0	0	0	0	0	0	0	0	0	0	0	0
4/23/2024	12:45 AM	0	0	0	0	0	0	0	0	0	0	0	0	0
4/23/2024	1:00 AM	0	0	0	0	0	0	0	0	0	0	0	0	0
4/23/2024	1:15 AM	0	0	0	0	0	0	0	0	0	0	0	0	0
4/23/2024	1:30 AM	0	0	0	0	0	0	0	0	0	0	0	0	0
4/23/2024	1:45 AM	0	0	0	0	0	0	0	0	0	0	0	0	0
4/23/2024	2:00 AM	0	0	0	0	0	0	0	0	0	0	0	0	0
4/23/2024	2:15 AM	0	0	0	0	0	0	0	0	0	0	0	0	0
4/23/2024	2:30 AM	0	0	0	0	0	0	0	0	0	0	0	0	0
4/23/2024	2:45 AM	0	0	0	0	0	0	0	0	0	0	0	0	0
4/23/2024	3:00 AM	0	0	0	0	0	0	0	0	0	0	0	0	0
4/23/2024	3:15 AM	0	0	0	0	0	0	0	0	0	0	0	0	0
4/23/2024	3:30 AM	0	0	0	0	0	0	0	0	0	0	0	0	0
4/23/2024	3:45 AM	0	0	0	0	0	0	0	0	0	0	0	0	0
4/23/2024	4:00 AM	0	0	0	0	0	0	0	0	0	0	0	0	0
4/23/2024	4:15 AM	0	0	0	0	0	0	0	0	0	0	0	0	0
4/23/2024	4:30 AM	0	0	0	0	0	0	0	0	0	0	0	0	0
4/23/2024	4:45 AM	0	0	0	0	0	0	0	0	0	0	0	0	0
4/23/2024	5:00 AM	0	0	0	0	0	0	0	0	0	0	0	0	0
4/23/2024	5:15 AM	0	0	0	0	0	0	0	0	0	0	0	0	0
4/23/2024	5:30 AM	0	0	0	0	0	0	0	0	0	0	0	0	0
4/23/2024	5:45 AM	0	0	0	0	0	0	0	0	0	0	0	0	0
4/23/2024	6:00 AM	0	0	0	0	0	0	0	0	0	0	0	0	0
4/23/2024	6:15 AM	0	0	0	0	0	0	0	0	0	0	0	0	0
4/23/2024	6:30 AM	0	0	0	0	0	0	0	0	0	0	0	0	0
4/23/2024	6:45 AM	0	0	0	0	0	0	0	0	0	0	0	0	0
4/23/2024	7:00 AM	0	0	0	0	0	0	0	0	0	0	0	0	0
4/23/2024	7:15 AM	0	0	0	0	0	0	0	0	0	0	0	0	0
4/23/2024	7:30 AM	0	0	0	0	0	0	0	0	0	0	0	0	0
4/23/2024	7:45 AM	0	0	0	0	0	0	0	0	0	0	0	0	0
4/23/2024	8:00 AM	0	0	0	0	0	0	0	0	0	0	0	0	0
4/23/2024	8:15 AM	0	0	0	0	0	0	0	0	0	0	0	0	0
4/23/2024	8:30 AM	0	0	0	0	0	0	0	0	0	0	0	0	0
4/23/2024	8:45 AM	0	0	0	0	0	0	0	0	0	0	0	0	0
4/23/2024	9:00 AM	0	0	0	0	0	0	0	0	0	0	0	0	0
4/23/2024	9:15 AM	0	0	0	0	0	0	0	0	0	0	0	0	0
4/23/2024	9:30 AM	0	0	0	0	0	0	0	0	0	0	0	0	0
4/23/2024	9:45 AM	0	0	0	0	0	0	0	0	0	0	0	0	0
4/23/2024	10:00 AM	0	0	0	0	0	0	0	0	0	0	0	0	0
4/23/2024	10:15 AM	0	0	0	0	0	0	0	0	0	0	0	0	0
4/23/2024	10:30 AM	0	0	0	0	0	0	0	0	0	0	0	0	0
4/23/2024	10:45 AM	0	0	0	0	0	0	0	0	0	0	0	0	0
4/23/2024	11:00 AM	0	0	0	0	0	0	0	0	0	0	0	0	0
4/23/2024	11:15 AM	0	0	0	0	0	0	0	0	0	0	0	0	0
4/23/2024	11:30 AM	0	0	0	0	0	0	0	0	0	0	0	0	0
4/23/2024	11:45 AM	0	0	0	0	0	0	0	0	0	0	0	0	0
4/23/2024	12:00 PM	0	0	0	0	0	0	0	0	0	0	0	0	0
4/23/2024	12:15 PM	0	0	0	0	0	0	0	0	0	0	0	0	0
4/23/2024	12:30 PM	0	0	0	0	0	0	0	0	0	0	0	0	0
4/23/2024	12:45 PM	0	0	0	0	0	0	0	0	0	0	0	0	0
4/23/2024	1:00 PM	0	0	0	0	0	0	0	0	0	0	0	0	0
4/23/2024	1:15 PM	0	0	0	0	0	0	0	0	0	0	0	0	0
4/23/2024	1:30 PM	0	0	0	0	0	0	0	0	0	0	0	0	0
4/23/2024	1:45 PM	0	0	0	0	0	0	0	0	0	0	0	0	0
4/23/2024	2:00 PM	0	0	0	0	0	0	0	0	0	0	0	0	0
4/23/2024	2:15 PM	0	0	0	0	0	0	0	0	0	0	0	0	0
4/23/2024	2:30 PM	0	0	0	0	0	0	0	0	0	0	0	0	0
4/23/2024	2:45 PM	0	0	0	0	0	0	0	0	0	0	0	0	0
4/23/2024	3:00 PM	0	0	0	0	0	0	0	0	0	0	0	0	0
4/23/2024	3:15 PM	0	0	0	0	0	0	0	0	0	0	0	0	0
4/23/2024	3:30 PM	0	0	0	0	0	0	0	0	0	0	0	0	0
4/23/2024	3:45 PM	0	0	0	0	0	0	0	0	0	0	0	0	0
4/23/2024	4:00 PM	0	0	0	0	0	0	0	0	0	0	0	0	0
4/23/2024	4:15 PM	0	0	0	0	0	0	0	0	0	0	0	0	0
4/23/2024	4:30 PM	0	0	0	0	0	0	0	0	0	0	0	0	0
4/23/2024	4:45 PM	0	0	0	0	0	0	0	0	0	0	0	0	0
4/23/2024	5:00 PM	0	0	0	0	0	0	0	0	0	0	0	0	0
4/23/2024	5:15 PM	0	0	0	0	0	0	0	0	0	0	0	0	0
4/23/2024	5:30 PM	0	0	0	0	0	0	0	0	0	0	0	0	0
4/23/2024	5:45 PM	0	0	0	0	0	0	0	0	0	0	0	0	0
4/23/2024	6:00 PM	0	0	0	0	0	0	0	0	0	0	0	0	0
4/23/2024	6:15 PM	0	0	0	0	0	0	0	0	0	0	0	0	0
4/23/2024	6:30 PM	0	0	0	0	0	0	0	0	0	0	0	0	0
4/23/2024	6:45 PM	0	0	0	0	0	0	0	0	0	0	0	0	0
4/23/2024	7:00 PM	0	0	0	0	0	0	0	0	0	0	0	0	0
4/23/2024	7:15 PM	0	0	0	0	0	0	0	0	0	0	0	0	0
4/23/2024	7:30 PM	0	0	0	0	0	0	0	0	0	0	0	0	0
4/23/2024	7:45 PM	0	0	0	0	0	0	0	0	0	0	0	0	0
4/23/2024	8:00 PM	0	0	0	0	0	0	0	0	0	0	0	0	0
4/23/2024	8:15 PM	0	0	0	0	0	0	0	0	0	0	0	0	0
4/23/2024	8:30 PM	0	0	0	0	0	0	0	0	0	0	0	0	0
4/23/2024	8:45 PM	0	0	0	0	0	0	0	0	0	0	0	0	0
4/23/2024	9:00 PM	0	0	0	0	0	0	0	0	0	0	0	0	0
4/23/2024	9:15 PM	0	0	0	0	0	0	0	0	0	0	0	0	0
4/23/2024	9:30 PM	0	0	0	0	0	0	0	0	0	0	0	0	0
4/23/2024	9:45 PM	0	0	0	0	0	0	0	0	0	0	0	0	0
4/23/2024	10:00 PM	0	0	0	0	0	0	0	0	0	0	0	0	0
4/23/2024	10:15 PM	0	0	0	0	0	0	0	0	0	0	0	0	0
4/23/2024	10:30 PM	0	0	0	0	0	0	0	0	0	0	0	0	0
4/23/2024	10:45 PM	0	0	0	0	0	0	0	0	0	0	0	0	0
4/23/2024	11:00 PM	0	0	0	0	0	0	0	0	0	0	0	0	0
4/23/2024	11:15 PM	0	0	0	0	0	0	0	0	0	0	0	0	0
4/23/2024	11:30 PM	0	0	0	0	0	0	0	0	0	0	0	0	0
4/23/2024	11:45 PM	0	0	0	0	0	0	0	0	0	0	0	0	0

4/24/2024	12:00 AM	0	0	0	0	0	0	0	0	0	0	0	0	0
4/24/2024	12:15 AM	0	0	0	0	0	0	0	0	0	0	0	0	0
4/24/2024	12:30 AM	0	0	0	0	0	0	0	0	0	0	0	0	0
4/24/2024	12:45 AM	0	0	0	0	0	0	0	0	0	0	0	0	0
4/24/2024	1:00 AM	0	0	0	0	0	0	0	0	0	0	0	0	0
4/24/2024	1:15 AM	0	0	0	0	0	0	0	0	0	0	0	0	0
4/24/2024	1:30 AM	0	0	0	0	0	0	0	0	0	0	0	0	0
4/24/2024	1:45 AM	0	0	0	0	0	0	0	0	0	0	0	0	0
4/24/2024	2:00 AM	0	0	0	0	0	0	0	0	0	0	0	0	0
4/24/2024	2:15 AM	0	0	0	0	0	0	0	0	0	0	0	0	0
4/24/2024	2:30 AM	0	0	0	0	0	0	0	0	0	0	0	0	0
4/24/2024	2:45 AM	0	0	0	0	0	0	0	0	0	0	0	0	0
4/24/2024	3:00 AM	0	0	0	0	0	0	0	0	0	0	0	0	0
4/24/2024	3:15 AM	0	0	0	0	0	0	0	0	0	0	0	0	0
4/24/2024	3:30 AM	0	0	0	0	0	0	0	0	0	0	0	0	0
4/24/2024	3:45 AM	0	0	0	0	0	0	0	0	0	0	0	0	0
4/24/2024	4:00 AM	0	0	0	0	0	0	0	0	0	0	0	0	0
4/24/2024	4:15 AM	0	0	0	0	0	0	0	0	0	0	0	0	0
4/24/2024	4:30 AM	0	0	0	0	0	0	0	0	0	0	0	0	0
4/24/2024	4:45 AM	0	0	0	0	0	0	0	0	0	0	0	0	0
4/24/2024	5:00 AM	0	0	0	0	0	0	0	0	0	0	0	0	0
4/24/2024	5:15 AM	0	0	0	0	0	0	0	0	0	0	0	0	0
4/24/2024	5:30 AM	0	0	0	0	0	0	0	0	0	0	0	0	0
4/24/2024	5:45 AM	0	0	0	0	0	0	0	0	0	0	0	0	0
4/24/2024	6:00 AM	0	0	0	0	0	0	0	0	0	0	0	0	0
4/24/2024	6:15 AM	0	0	0	0	0	0	0	0	0	0	0	0	0
4/24/2024	6:30 AM	0	0	0	0	0	0	0	0	0	0	0	0	0
4/24/2024	6:45 AM	0	0	0	0	0	0	0	0	0	0	0	0	0
4/24/2024	7:00 AM	0	0	0	0	0	0	0	0	0	0	0	0	0
4/24/2024	7:15 AM	0	0	0	0	0	0	0	0	0	0	0	0	0
4/24/2024	7:30 AM	0	0	0	0	0	0	0	0	0	0	0	0	0
4/24/2024	7:45 AM	0	0	0	0	0	0	0	0	0	0	0	0	0
4/24/2024	8:00 AM	0	0	0	0	0	0	0	0	0	0	0	0	0
4/24/2024	8:15 AM	0	0	0	0	0	0	0	0	0	0	0	0	0
4/24/2024	8:30 AM	0	0	0	0	0	0	0	0	0	0	0	0	0
4/24/2024	8:45 AM	0	0	0	0	0	0	0	0	0	0	0	0	0
4/24/2024	9:00 AM	0	0	0	0	0	0	0	0	0	0	0	0	0
4/24/2024	9:15 AM	0	0	0	0	0	0	0	0	0	0	0	0	0
4/24/2024	9:30 AM	0	0	0	0	0	0	0	0	0	0	0	0	0
4/24/2024	9:45 AM	0	0	0	0	0	0	0	0	0	0	0	0	0
4/24/2024	10:00 AM	0	0	0	0	0	0	0	0	0	0	0	0	0
4/24/2024	10:15 AM	0	0	0	0	0	0	0	0	0	0	0	0	0
4/24/2024	10:30 AM	0	0	0	0	0	0	0	0	0	0	0	0	0
4/24/2024	10:45 AM	0	0	0	0	0	0	0	0	0	0	0	0	0
4/24/2024	11:00 AM	0	0	0	0	0	0	0	0	0	0	0	0	0
4/24/2024	11:15 AM	0	0	0	0	0	0	0	0	0	0	0	0	0
4/24/2024	11:30 AM	0	0	0	0	0	0	0	0	0	0	0	0	0
4/24/2024	11:45 AM	0	0	0	0	0	0	0	0	0	0	0	0	0
4/24/2024	12:00 PM	0	0	0	0	0	0	0	0	0	0	0	0	0
4/24/2024	12:15 PM	0	0	0	0	0	0	0	0	0	0	0	0	0
4/24/2024	12:30 PM	0	0	0	0	0	0	0	0	0	0	0	0	0
4/24/2024	12:45 PM	0	0	0	0	0	0	0	0	0	0	0	0	0
4/24/2024	1:00 PM	0	0	0	0	0	0	0	0	0	0	0	0	0
4/24/2024	1:15 PM	0	0	0	0	0	0	0	0	0	0	0	0	0
4/24/2024	1:30 PM	0	0	0	0	0	0	0	0	0	0	0	0	0
4/24/2024	1:45 PM	0	0	0	0	0	0	0	0	0	0	0	0	0
4/24/2024	2:00 PM	0	0	0	0	0	0	0	0	0	0	0	0	0
4/24/2024	2:15 PM	0	0	0	0	0	0	0	0	0	0	0	0	0
4/24/2024	2:30 PM	0	0	0	0	0	0	0	0	0	0	0	0	0
4/24/2024	2:45 PM	0	0	0	0	0	0	0	0	0	0	0	0	0
4/24/2024	3:00 PM	0	0	0	0	0	0	0	0	0	0	0	0	0
4/24/2024	3:15 PM	0	0	0	0	0	0	0	0	0	0	0	0	0
4/24/2024	3:30 PM	0	0	0	0	0	0	0	0	0	0	0	0	0
4/24/2024	3:45 PM	0	0	0	0	0	0	0	0	0	0	0	0	0
4/24/2024	4:00 PM	0	0	0	0	0	0	0	0	0	0	0	0	0
4/24/2024	4:15 PM	0	0	0	0	0	0	0	0	0	0	0	0	0
4/24/2024	4:30 PM	0	0	0	0	0	0	0	0	0	0	0	0	0
4/24/2024	4:45 PM	0	0	0	0	0	0	0	0	0	0	0	0	0
4/24/2024	5:00 PM	0	0	0	0	0	0	0	0	0	0	0	0	0
4/24/2024	5:15 PM	0	0	0	0	0	0	0	0	0	0	0	0	0
4/24/2024	5:30 PM	0	0	0	0	0	0	0	0	0	0	0	0	0
4/24/2024	5:45 PM	0	0	0	0	0	0	0	0	0	0	0	0	0
4/24/2024	6:00 PM	0	0	0	0	0	0	0	0	0	0	0	0	0
4/24/2024	6:15 PM	0	0	0	0	0	0	0	0	0	0	0	0	0
4/24/2024	6:30 PM	0	0	0	0	0	0	0	0	0	0	0	0	0
4/24/2024	6:45 PM	0	0	0	0	0	0	0	0	0	0	0	0	0
4/24/2024	7:00 PM	0	0	0	0	0	0	0	0	0	0	0	0	0
4/24/2024	7:15 PM	0	0	0	0	0	0	0	0	0	0	0	0	0
4/24/2024	7:30 PM	0	0	0	0	0	0	0	0	0	0	0	0	0
4/24/2024	7:45 PM	0	0	0	0	0	0	0	0	0	0	0	0	0
4/24/2024	8:00 PM	0	0	0	0	0	0	0	0	0	0	0	0	0
4/24/2024	8:15 PM	0	0	0	0	0	0	0	0	0	0	0	0	0
4/24/2024	8:30 PM	0	0	0	0	0	0	0	0	0	0	0	0	0
4/24/2024	8:45 PM	0	0	0	0	0	0	0	0	0	0	0	0	0
4/24/2024	9:00 PM	0	0	0	0	0	0	0	0	0	0	0	0	0
4/24/2024	9:15 PM	0	0	0	0	0	0	0	0	0	0	0	0	0
4/24/2024	9:30 PM	0	0	0	0	0	0	0	0	0	0	0	0	0
4/24/2024	9:45 PM	0	0	0	0	0	0	0	0	0	0	0	0	0
4/24/2024	10:00 PM	0	0	0	0	0	0	0	0	0	0	0	0	0
4/24/2024	10:15 PM	0	0	0	0	0	0	0	0	0	0	0	0	0
4/24/2024	10:30 PM	0	0	0	0	0	0	0	0	0	0	0	0	0
4/24/2024	10:45 PM	0	0	0	0	0	0	0	0	0	0	0	0	0
4/24/2024	11:00 PM	0	0	0	0	0	0	0	0	0	0	0	0	0
4/24/2024	11:15 PM	0	0	0	0	0	0	0	0	0	0	0	0	0
4/24/2024	11:30 PM	0	0	0	0	0	0	0	0	0	0	0	0	0
4/24/2024	11:45 PM	0	0	0	0	0	0	0	0	0	0	0	0	0

4/25/2024	12:00 AM	0	0	0	0	0	0	0	0	0	0	0	0	0
4/25/2024	12:15 AM	0	0	0	0	0	0	0	0	0	0	0	0	0
4/25/2024	12:30 AM	0	0	0	0	0	0	0	0	0	0	0	0	0
4/25/2024	12:45 AM	0	0	0	0	0	0	0	0	0	0	0	0	0
4/25/2024	1:00 AM	0	0	0	0	0	0	0	0	0	0	0	0	0
4/25/2024	1:15 AM	0	0	0	0	0	0	0	0	0	0	0	0	0
4/25/2024	1:30 AM	0	0	0	0	0	0	0	0	0	0	0	0	0
4/25/2024	1:45 AM	0	0	0	0	0	0	0	0	0	0	0	0	0
4/25/2024	2:00 AM	0	0	0	0	0	0	0	0	0	0	0	0	0
4/25/2024	2:15 AM	0	0	0	0	0	0	0	0	0	0	0	0	0
4/25/2024	2:30 AM	0	0	0	0	0	0	0	0	0	0	0	0	0
4/25/2024	2:45 AM	0	0	0	0	0	0	0	0	0	0	0	0	0
4/25/2024	3:00 AM	0	0	0	0	0	0	0	0	0	0	0	0	0
4/25/2024	3:15 AM	0	0	0	0	0	0	0	0	0	0	0	0	0
4/25/2024	3:30 AM	0	0	0	0	0	0	0	0	0	0	0	0	0
4/25/2024	3:45 AM	0	0	0	0	0	0	0	0	0	0	0	0	0
4/25/2024	4:00 AM	0	0	0	0	0	0	0	0	0	0	0	0	0
4/25/2024	4:15 AM	0	0	0	0	0	0	0	0	0	0	0	0	0
4/25/2024	4:30 AM	0	0	0	0	0	0	0	0	0	0	0	0	0
4/25/2024	4:45 AM	0	0	0	0	0	0	0	0	0	0	0	0	0
4/25/2024	5:00 AM	0	0	0	0	0	0	0	0	0	0	0	0	0
4/25/2024	5:15 AM	0	0	0	0	0	0	0	0	0	0	0	0	0
4/25/2024	5:30 AM	0	0	0	0	0	0	0	0	0	0	0	0	0
4/25/2024	5:45 AM	0	0	0	0	0	0	0	0	0	0	0	0	0
4/25/2024	6:00 AM	0	0	0	0	0	0	0	0	0	0	0	0	0
4/25/2024	6:15 AM	0	0	0	0	0	0	0	0	0	0	0	0	0
4/25/2024	6:30 AM	0	0	0	0	0	0	0	0	0	0	0	0	0
4/25/2024	6:45 AM	0	0	0	0	0	0	0	0	0	0	0	0	0
4/25/2024	7:00 AM	0	0	0	0	0	0	0	0	0	0	0	0	0
4/25/2024	7:15 AM	0	0	0	0	0	0	0	0	0	0	0	0	0
4/25/2024	7:30 AM	0	0	0	0	0	0	0	0	0	0	0	0	0
4/25/2024	7:45 AM	0	0	0	0	0	0	0	0	0	0	0	0	0
4/25/2024	8:00 AM	0	0	0	0	0	0	0	0	0	0	0	0	0
4/25/2024	8:15 AM	0	0	0	0	0	0	0	0	0	0	0	0	0
4/25/2024	8:30 AM	0	0	0	0	0	0	0	0	0	0	0	0	0
4/25/2024	8:45 AM	0	0	0	0	0	0	0	0	0	0	0	0	0
4/25/2024	9:00 AM	0	0	0	0	0	0	0	0	0	0	0	0	0
4/25/2024	9:15 AM	0	0	0	0	0	0	0	0	0	0	0	0	0
4/25/2024	9:30 AM	0	0	0	0	0	0	0	0	0	0	0	0	0
4/25/2024	9:45 AM	0	0	0	0	0	0	0	0	0	0	0	0	0
4/25/2024	10:00 AM	0	0	0	0	0	0	0	0	0	0	0	0	0
4/25/2024	10:15 AM	0	0	0	0	0	0	0	0	0	0	0	0	0
4/25/2024	10:30 AM	0	0	0	0	0	0	0	0	0	0	0	0	0
4/25/2024	10:45 AM	0	0	0	0	0	0	0	0	0	0	0	0	0
4/25/2024	11:00 AM	0	0	0	0	0	0	0	0	0	0	0	0	0
4/25/2024	11:15 AM	0	0	0	0	0	0	0	0	0	0	0	0	0
4/25/2024	11:30 AM	0	0	0	0	0	0	0	0	0	0	0	0	0
4/25/2024	11:45 AM	0	0	0	0	0	0	0	0	0	0	0	0	0
4/25/2024	12:00 PM	0	0	0	0	0	0	0	0	0	0	0	0	0
4/25/2024	12:15 PM	0	0	0	0	0	0	0	0	0	0	0	0	0
4/25/2024	12:30 PM	0	0	0	0	0	0	0	0	0	0	0	0	0
4/25/2024	12:45 PM	0	0	0	0	0	0	0	0	0	0	0	0	0
4/25/2024	1:00 PM	0	0	0	0	0	0	0	0	0	0	0	0	0
4/25/2024	1:15 PM	0	0	0	0	0	0	0	0	0	0	0	0	0
4/25/2024	1:30 PM	0	0	0	0	0	0	0	0	0	0	0	0	0
4/25/2024	1:45 PM	0	0	0	0	0	0	0	0	0	0	0	0	0
4/25/2024	2:00 PM	0	0	0	0	0	0	0	0	0	0	0	0	0
4/25/2024	2:15 PM	0	0	0	0	0	0	0	0	0	0	0	0	0
4/25/2024	2:30 PM	0	0	0	0	0	0	0	0	0	0	0	0	0
4/25/2024	2:45 PM	0	0	0	0	0	0	0	0	0	0	0	0	0
4/25/2024	3:00 PM	0	0	0	0	0	0	0	0	0	0	0	0	0
4/25/2024	3:15 PM	0	0	0	0	0	0	0	0	0	0	0	0	0
4/25/2024	3:30 PM	0	0	0	0	0	0	0	0	0	0	0	0	0
4/25/2024	3:45 PM	0	0	0	0	0	0	0	0	0	0	0	0	0
4/25/2024	4:00 PM	0	0	0	0	0	0	0	0	0	0	0	0	0
4/25/2024	4:15 PM	0	0	0	0	0	0	0	0	0	0	0	0	0
4/25/2024	4:30 PM	0	0	0	0	0	0	0	0	0	0	0	0	0
4/25/2024	4:45 PM	0	0	0	0	0	0	0	0	0	0	0	0	0
4/25/2024	5:00 PM	0	0	0	0	0	0	0	0	0	0	0	0	0
4/25/2024	5:15 PM	0	0	0	0	0	0	0	0	0	0	0	0	0
4/25/2024	5:30 PM	0	0	0	0	0	0	0	0	0	0	0	0	0
4/25/2024	5:45 PM	0	0	0	0	0	0	0	0	0	0	0	0	0
4/25/2024	6:00 PM	0	0	0	0	0	0	0	0	0	0	0	0	0
4/25/2024	6:15 PM	0	0	0	0	0	0	0	0	0	0	0	0	0
4/25/2024	6:30 PM	0	0	0	0	0	0	0	0	0	0	0	0	0
4/25/2024	6:45 PM	0	0	0	0	0	0	0	0	0	0	0	0	0
4/25/2024	7:00 PM	0	0	0	0	0	0	0	0	0	0	0	0	0
4/25/2024	7:15 PM	0	0	0	0	0	0	0	0	0	0	0	0	0
4/25/2024	7:30 PM	0	0	0	0	0	0	0	0	0	0	0	0	0
4/25/2024	7:45 PM	0	0	0	0	0	0	0	0	0	0	0	0	0
4/25/2024	8:00 PM	0	0	0	0	0	0	0	0	0	0	0	0	0
4/25/2024	8:15 PM	0	0	0	0	0	0	0	0	0	0	0	0	0
4/25/2024	8:30 PM	0	0	0	0	0	0	0	0	0	0	0	0	0
4/25/2024	8:45 PM	0	0	0	0	0	0	0	0	0	0	0	0	0
4/25/2024	9:00 PM	0	0	0	0	0	0	0	0	0	0	0	0	0
4/25/2024	9:15 PM	0	0	0	0	0	0	0	0	0	0	0	0	0
4/25/2024	9:30 PM	0	0	0	0	0	0	0	0	0	0	0	0	0
4/25/2024	9:45 PM	0	0	0	0	0	0	0	0	0	0	0	0	0
4/25/2024	10:00 PM	0	0	0	0	0	0	0	0	0	0	0	0	0
4/25/2024	10:15 PM	0	0	0	0	0	0	0	0	0	0	0	0	0
4/25/2024	10:30 PM	0	0	0	0	0	0	0	0	0	0	0	0	0
4/25/2024	10:45 PM	0	0	0	0	0	0	0	0	0	0	0	0	0
4/25/2024	11:00 PM	0	0	0	0	0	0	0	0	0	0	0	0	0
4/25/2024	11:15 PM	0	0	0	0	0	0	0	0	0	0	0	0	0
4/25/2024	11:30 PM	0	0	0	0	0	0	0	0	0	0	0	0	0
4/25/2024	11:45 PM	0	0	0	0	0	0	0	0	0	0	0	0	0

WB
File Name:
Start Date: 4/23/2024
Start Time: 0
Site Code: 71
Station ID: 1
Location 1: I-126 W/Bound On-Ramp, west of Driveway
Location 2:

Date	Time	1	2	3	4	5	6	7	8	9	10	11	12	13
4/23/2024	12:00 AM	0	0	0	0	0	0	0	0	0	0	0	0	0
4/23/2024	12:15 AM	0	0	0	0	0	0	0	0	0	0	0	0	0
4/23/2024	12:30 AM	0	0	0	0	0	0	0	0	0	0	0	0	0
4/23/2024	12:45 AM	0	0	0	0	0	0	0	0	0	0	0	0	0
4/23/2024	1:00 AM	0	0	0	0	0	0	0	0	0	0	0	0	0
4/23/2024	1:15 AM	0	0	0	0	0	0	0	0	0	0	0	0	0
4/23/2024	1:30 AM	0	0	0	0	0	0	0	0	0	0	0	0	0
4/23/2024	1:45 AM	0	0	0	0	0	0	0	0	0	0	0	0	0
4/23/2024	2:00 AM	0	0	0	0	0	0	0	0	0	0	0	0	0
4/23/2024	2:15 AM	0	0	0	0	0	0	0	0	0	0	0	0	0
4/23/2024	2:30 AM	0	0	0	0	0	0	0	0	0	0	0	0	0
4/23/2024	2:45 AM	0	0	0	0	0	0	0	0	0	0	0	0	0
4/23/2024	3:00 AM	0	0	0	0	0	0	0	0	0	0	0	0	0
4/23/2024	3:15 AM	0	0	0	0	0	0	0	0	0	0	0	0	0
4/23/2024	3:30 AM	0	0	0	0	0	0	0	0	0	0	0	0	0
4/23/2024	3:45 AM	0	0	0	0	0	0	0	0	0	0	0	0	0
4/23/2024	4:00 AM	0	0	0	0	0	0	0	0	0	0	0	0	0
4/23/2024	4:15 AM	0	0	0	0	0	0	0	0	0	0	0	0	0
4/23/2024	4:30 AM	0	0	0	0	0	0	0	0	0	0	0	0	0
4/23/2024	4:45 AM	0	0	0	0	0	0	0	0	0	0	0	0	0
4/23/2024	5:00 AM	0	0	0	0	0	0	0	0	0	0	0	0	0
4/23/2024	5:15 AM	0	0	0	0	0	0	0	0	0	0	0	0	0
4/23/2024	5:30 AM	0	0	0	0	0	0	0	0	0	0	0	0	0
4/23/2024	5:45 AM	0	0	0	0	0	0	0	0	0	0	0	0	0
4/23/2024	6:00 AM	0	0	0	0	0	0	0	0	0	0	0	0	0
4/23/2024	6:15 AM	0	0	0	0	0	0	0	0	0	0	0	0	0
4/23/2024	6:30 AM	0	0	0	0	0	0	0	0	0	0	0	0	0
4/23/2024	6:45 AM	0	0	0	0	0	0	0	0	0	0	0	0	0
4/23/2024	7:00 AM	0	0	0	0	0	0	0	0	0	0	0	0	0
4/23/2024	7:15 AM	0	0	0	0	0	0	0	0	0	0	0	0	0
4/23/2024	7:30 AM	0	0	0	0	0	0	0	0	0	0	0	0	0
4/23/2024	7:45 AM	0	0	0	0	0	0	0	0	0	0	0	0	0
4/23/2024	8:00 AM	0	0	0	0	0	0	0	0	0	0	0	0	0
4/23/2024	8:15 AM	0	0	0	0	0	0	0	0	0	0	0	0	0
4/23/2024	8:30 AM	0	0	0	0	0	0	0	0	0	0	0	0	0
4/23/2024	8:45 AM	0	0	0	0	0	0	0	0	0	0	0	0	0
4/23/2024	9:00 AM	0	0	0	0	0	0	0	0	0	0	0	0	0
4/23/2024	9:15 AM	0	0	0	0	0	0	0	0	0	0	0	0	0
4/23/2024	9:30 AM	0	0	0	0	0	0	0	0	0	0	0	0	0
4/23/2024	9:45 AM	0	0	0	0	0	0	0	0	0	0	0	0	0
4/23/2024	10:00 AM	0	0	0	0	0	0	0	0	0	0	0	0	0
4/23/2024	10:15 AM	0	0	0	0	0	0	0	0	0	0	0	0	0
4/23/2024	10:30 AM	0	0	0	0	0	0	0	0	0	0	0	0	0
4/23/2024	10:45 AM	0	0	0	0	0	0	0	0	0	0	0	0	0
4/23/2024	11:00 AM	0	0	0	0	0	0	0	0	0	0	0	0	0
4/23/2024	11:15 AM	0	0	0	0	0	0	0	0	0	0	0	0	0
4/23/2024	11:30 AM	0	0	0	0	0	0	0	0	0	0	0	0	0
4/23/2024	11:45 AM	0	0	0	0	0	0	0	0	0	0	0	0	0
4/23/2024	12:00 PM	0	0	0	0	0	0	0	0	0	0	0	0	0
4/23/2024	12:15 PM	0	0	0	0	0	0	0	0	0	0	0	0	0
4/23/2024	12:30 PM	0	0	0	0	0	0	0	0	0	0	0	0	0
4/23/2024	12:45 PM	0	0	0	0	0	0	0	0	0	0	0	0	0
4/23/2024	1:00 PM	0	0	0	0	0	0	0	0	0	0	0	0	0
4/23/2024	1:15 PM	0	0	0	0	0	0	0	0	0	0	0	0	0
4/23/2024	1:30 PM	0	0	0	0	0	0	0	0	0	0	0	0	0
4/23/2024	1:45 PM	0	0	0	0	0	0	0	0	0	0	0	0	0
4/23/2024	2:00 PM	0	0	0	0	0	0	0	0	0	0	0	0	0
4/23/2024	2:15 PM	0	0	0	0	0	0	0	0	0	0	0	0	0
4/23/2024	2:30 PM	0	0	0	0	0	0	0	0	0	0	0	0	0
4/23/2024	2:45 PM	0	0	0	0	0	0	0	0	0	0	0	0	0
4/23/2024	3:00 PM	0	0	0	0	0	0	0	0	0	0	0	0	0
4/23/2024	3:15 PM	0	0	0	0	0	0	0	0	0	0	0	0	0
4/23/2024	3:30 PM	0	0	0	0	0	0	0	0	0	0	0	0	0
4/23/2024	3:45 PM	0	0	0	0	0	0	0	0	0	0	0	0	0
4/23/2024	4:00 PM	0	0	0	0	0	0	0	0	0	0	0	0	0
4/23/2024	4:15 PM	0	0	0	0	0	0	0	0	0	0	0	0	0
4/23/2024	4:30 PM	0	0	0	0	0	0	0	0	0	0	0	0	0
4/23/2024	4:45 PM	0	0	0	0	0	0	0	0	0	0	0	0	0
4/23/2024	5:00 PM	0	0	0	0	0	0	0	0	0	0	0	0	0
4/23/2024	5:15 PM	0	0	0	0	0	0	0	0	0	0	0	0	0
4/23/2024	5:30 PM	0	0	0	0	0	0	0	0	0	0	0	0	0
4/23/2024	5:45 PM	0	0	0	0	0	0	0	0	0	0	0	0	0
4/23/2024	6:00 PM	0	0	0	0	0	0	0	0	0	0	0	0	0
4/23/2024	6:15 PM	0	0	0	0	0	0	0	0	0	0	0	0	0
4/23/2024	6:30 PM	0	0	0	0	0	0	0	0	0	0	0	0	0
4/23/2024	6:45 PM	0	0	0	0	0	0	0	0	0	0	0	0	0
4/23/2024	7:00 PM	0	0	0	0	0	0	0	0	0	0	0	0	0
4/23/2024	7:15 PM	0	0	0	0	0	0	0	0	0	0	0	0	0
4/23/2024	7:30 PM	0	0	0	0	0	0	0	0	0	0	0	0	0
4/23/2024	7:45 PM	0	0	0	0	0	0	0	0	0	0	0	0	0
4/23/2024	8:00 PM	0	0	0	0	0	0	0	0	0	0	0	0	0
4/23/2024	8:15 PM	0	0	0	0	0	0	0	0	0	0	0	0	0
4/23/2024	8:30 PM	0	288	22	1	3	0	2	0	0	0	0	0	0
4/23/2024	8:45 PM	1	281	23	0	4	0	3	0	0	0	1	0	0
4/23/2024	9:00 PM	2	266	14	1	2	0	1	0	1	0	0	0	0
4/23/2024	9:15 PM	1	218	7	1	2	0	2	0	0	0	0	0	0
4/23/2024	9:30 PM	0	195	12	1	0	0	0	0	2	0	0	0	0
4/23/2024	9:45 PM	0	158	5	0	2	0	0	0	0	0	0	0	0
4/23/2024	10:00 PM	0	166	7	1	0	0	3	0	0	0	0	0	0
4/23/2024	10:15 PM	2	317	17	0	1	0	0	0	0	1	0	0	0
4/23/2024	10:30 PM	0	165	9	0	1	0	0	0	0	1	0	0	0
4/23/2024	10:45 PM	0	97	2	0	0	0	0	0	0	1	0	0	0
4/23/2024	11:00 PM	0	114	5	0	1	0	1	0	0	0	0	0	0
4/23/2024	11:15 PM	0	96	2	0	2	0	1	0	0	0	0	0	0
4/23/2024	11:30 PM	1	75	4	0	0	0	3	0	1	0	0	0	0
4/23/2024	11:45 PM	0	74	3	0	0	0	1	0	1	0	0	0	0

4/24/2024	12:00 AM	0	64	7	0	1	0	2	0	1	0	0	0	0
4/24/2024	12:15 AM	0	62	3	2	0	0	1	0	0	0	0	0	0
4/24/2024	12:30 AM	0	49	8	0	0	0	0	0	1	0	0	0	0
4/24/2024	12:45 AM	0	43	2	0	2	0	0	0	0	1	0	0	0
4/24/2024	1:00 AM	0	47	3	0	2	0	0	0	0	0	0	0	0
4/24/2024	1:15 AM	0	35	3	0	0	0	5	0	0	0	0	0	0
4/24/2024	1:30 AM	0	38	1	0	0	0	2	0	0	0	0	0	0
4/24/2024	1:45 AM	1	35	3	0	0	0	2	0	0	0	0	0	0
4/24/2024	2:00 AM	0	32	1	0	0	0	0	0	1	1	0	0	0
4/24/2024	2:15 AM	0	31	2	0	2	0	1	0	2	0	0	0	0
4/24/2024	2:30 AM	0	22	4	0	1	1	1	1	0	0	0	0	0
4/24/2024	2:45 AM	0	18	0	0	1	0	0	0	1	0	0	0	0
4/24/2024	3:00 AM	0	24	4	0	1	0	0	0	1	0	0	0	0
4/24/2024	3:15 AM	0	21	1	0	0	0	3	0	0	0	0	0	0
4/24/2024	3:30 AM	0	22	2	0	1	0	1	0	1	0	0	1	0
4/24/2024	3:45 AM	0	17	2	0	2	0	3	0	0	0	0	0	0
4/24/2024	4:00 AM	0	22	0	0	0	1	0	0	1	1	0	0	0
4/24/2024	4:15 AM	0	28	1	0	0	0	0	0	0	0	0	0	0
4/24/2024	4:30 AM	0	26	4	0	1	0	2	1	0	0	0	0	0
4/24/2024	4:45 AM	0	33	1	0	0	0	0	4	0	0	0	0	0
4/24/2024	5:00 AM	0	26	7	0	3	0	1	1	0	0	0	0	0
4/24/2024	5:15 AM	0	58	5	0	2	0	0	0	1	0	0	0	0
4/24/2024	5:30 AM	0	64	4	0	3	1	1	0	1	1	0	0	0
4/24/2024	5:45 AM	0	79	8	0	2	0	0	0	1	0	0	0	0
4/24/2024	6:00 AM	0	102	13	0	3	1	0	1	1	0	0	0	0
4/24/2024	6:15 AM	0	124	23	1	2	3	0	0	0	0	0	0	0
4/24/2024	6:30 AM	1	200	28	1	4	1	0	0	1	0	0	0	0
4/24/2024	6:45 AM	0	197	35	2	8	0	0	1	0	0	0	0	0
4/24/2024	7:00 AM	0	256	43	1	7	0	1	2	0	0	0	0	0
4/24/2024	7:15 AM	1	390	69	1	8	3	0	2	1	0	0	0	0
4/24/2024	7:30 AM	1	412	68	2	10	2	0	0	0	0	0	0	0
4/24/2024	7:45 AM	1	443	67	2	10	1	1	1	3	0	0	0	0
4/24/2024	8:00 AM	1	409	65	2	8	3	1	0	2	0	0	0	0
4/24/2024	8:15 AM	0	421	81	4	5	1	0	3	2	0	0	0	0
4/24/2024	8:30 AM	0	412	86	1	10	3	1	2	2	0	0	0	0
4/24/2024	8:45 AM	2	411	88	2	5	3	0	1	1	0	0	0	0
4/24/2024	9:00 AM	1	360	55	2	8	0	0	2	3	0	0	0	0
4/24/2024	9:15 AM	2	333	66	2	8	2	3	1	4	0	0	0	0
4/24/2024	9:30 AM	1	384	67	3	6	0	1	0	3	0	0	0	0
4/24/2024	9:45 AM	0	388	75	2	8	1	2	1	1	0	0	0	0
4/24/2024	10:00 AM	0	358	97	4	6	1	1	0	1	0	0	0	0
4/24/2024	10:15 AM	0	391	73	2	8	2	0	0	4	0	0	0	0
4/24/2024	10:30 AM	1	380	78	4	3	0	1	2	0	0	0	0	0
4/24/2024	10:45 AM	0	411	93	0	6	2	2	2	1	0	0	0	0
4/24/2024	11:00 AM	0	371	78	4	8	1	3	0	0	0	0	0	0
4/24/2024	11:15 AM	0	446	85	2	6	1	2	0	2	0	0	0	0
4/24/2024	11:30 AM	0	448	88	3	8	0	3	1	2	0	0	0	0
4/24/2024	11:45 AM	0	459	77	5	5	0	0	1	4	0	0	0	0
4/24/2024	12:00 PM	2	480	92	1	13	2	0	3	2	0	0	0	0
4/24/2024	12:15 PM	0	401	86	6	10	0	0	0	1	0	0	0	0
4/24/2024	12:30 PM	1	504	86	0	4	2	0	1	1	0	0	0	0
4/24/2024	12:45 PM	1	535	78	1	6	1	0	1	0	0	0	0	0
4/24/2024	1:00 PM	0	521	76	1	7	2	0	1	3	1	0	0	0
4/24/2024	1:15 PM	0	555	85	2	8	0	0	0	1	0	0	0	0
4/24/2024	1:30 PM	0	523	84	3	10	2	0	3	1	0	0	0	0
4/24/2024	1:45 PM	0	515	82	0	6	0	0	1	3	0	0	0	0
4/24/2024	2:00 PM	0	560	96	0	12	2	0	1	1	1	0	0	0
4/24/2024	2:15 PM	0	610	105	1	4	3	0	0	5	0	0	0	0
4/24/2024	2:30 PM	2	555	89	5	10	0	1	1	3	0	0	0	0
4/24/2024	2:45 PM	0	605	71	4	4	0	0	1	3	0	0	0	0
4/24/2024	3:00 PM	1	643	121	1	7	0	0	1	2	0	0	0	0
4/24/2024	3:15 PM	0	656	120	3	2	0	0	0	3	0	0	0	0
4/24/2024	3:30 PM	1	707	140	4	4	0	2	0	2	0	0	0	0
4/24/2024	3:45 PM	1	728	143	1	6	1	0	0	3	0	0	0	0
4/24/2024	4:00 PM	0	865	154	1	10	0	1	0	0	0	0	0	0
4/24/2024	4:15 PM	3	896	163	1	11	2	2	0	0	0	0	0	0
4/24/2024	4:30 PM	2	1015	141	3	4	0	0	0	0	0	0	0	0
4/24/2024	4:45 PM	1	970	136	2	7	1	0	2	0	0	0	0	0
4/24/2024	5:00 PM	0	1087	150	1	1	0	0	0	1	0	0	0	0
4/24/2024	5:15 PM	1	1037	134	1	3	0	0	0	0	0	0	0	0
4/24/2024	5:30 PM	2	737	120	2	1	1	0	1	3	1	0	0	0
4/24/2024	5:45 PM	0	674	76	2	5	1	0	0	0	0	0	0	0
4/24/2024	6:00 PM	1	580	71	3	5	0	0	0	3	0	0	0	0
4/24/2024	6:15 PM	1	439	53	5	4	2	0	3	1	0	0	0	0
4/24/2024	6:30 PM	0	488	49	1	2	0	0	0	0	0	0	0	0
4/24/2024	6:45 PM	0	407	39	3	2	0	0	0	0	0	0	0	0
4/24/2024	7:00 PM	0	406	49	3	3	1	0	0	0	0	0	0	0
4/24/2024	7:15 PM	0	406	41	2	0	0	1	0	0	0	0	0	0
4/24/2024	7:30 PM	1	388	21	1	1	0	0	0	0	0	0	0	0
4/24/2024	7:45 PM	2	417	35	1	3	0	0	0	1	0	0	0	0
4/24/2024	8:00 PM	1	342	38	0	2	0	0	0	0	0	0	0	0
4/24/2024	8:15 PM	3	338	31	2	5	1	1	0	1	0	0	0	0
4/24/2024	8:30 PM	3	335	31	1	3	0	1	0	0	0	0	0	0
4/24/2024	8:45 PM	0	257	44	1	1	0	1	0	1	0	0	0	0
4/24/2024	9:00 PM	0	239	13	1	0	1	0	1	1	0	0	0	0
4/24/2024	9:15 PM	3	264	14	2	0	1	0	0	0	0	0	0	0
4/24/2024	9:30 PM	1	232	13	2	1	1	0	0	1	0	0	0	0
4/24/2024	9:45 PM	2	262	16	2	1	0	1	0	0	0	0	0	0
4/24/2024	10:00 PM	0	208	12	3	0	1	1	0	0	0	0	0	0
4/24/2024	10:15 PM	2	292	11	0	0	2	0	0	1	0	0	0	0
4/24/2024	10:30 PM	0	230	7	0	1	0	2	0	0	0	0	0	0
4/24/2024	10:45 PM	0	156	8	0	0	0	0	0	0	0	0	0	0
4/24/2024	11:00 PM	0	118	10	0	0	0	0	0	1	0	0	0	0
4/24/2024	11:15 PM	3	126	7	0	1	0	0	0	1	0	0	0	0
4/24/2024	11:30 PM	2	99	6	0	0	1	1	0	0	0	0	0	0
4/24/2024	11:45 PM	0	74	2	0	2	0	0	0	2	0	0	0	0

4/25/2024	12:00 AM	0	76	4	0	1	0	0	0	1	0	0	0	0
4/25/2024	12:15 AM	0	65	2	0	3	1	1	0	0	0	0	0	0
4/25/2024	12:30 AM	0	52	1	2	2	0	2	0	0	0	0	0	0
4/25/2024	12:45 AM	0	35	0	0	0	0	1	0	1	0	0	0	0
4/25/2024	1:00 AM	0	46	1	0	2	0	3	0	0	0	0	0	0
4/25/2024	1:15 AM	0	46	2	0	1	0	0	0	1	0	0	0	0
4/25/2024	1:30 AM	0	47	1	0	0	0	0	0	0	0	0	0	0
4/25/2024	1:45 AM	0	38	2	0	3	0	0	0	0	0	0	0	0
4/25/2024	2:00 AM	0	47	3	0	0	0	0	0	0	0	0	0	0
4/25/2024	2:15 AM	0	21	0	0	0	0	0	0	1	0	0	0	0
4/25/2024	2:30 AM	0	12	2	0	0	1	1	0	1	0	0	0	0
4/25/2024	2:45 AM	0	23	0	0	2	0	1	0	1	0	0	0	0
4/25/2024	3:00 AM	0	16	1	0	1	0	1	1	3	0	0	0	0
4/25/2024	3:15 AM	0	19	0	0	0	1	2	1	1	0	0	0	0
4/25/2024	3:30 AM	0	26	2	0	1	0	1	0	0	0	0	0	0
4/25/2024	3:45 AM	0	21	2	0	1	0	0	1	2	0	0	0	0
4/25/2024	4:00 AM	0	20	3	0	0	0	0	0	1	0	0	0	0
4/25/2024	4:15 AM	0	30	1	0	0	1	0	1	0	0	0	0	0
4/25/2024	4:30 AM	0	41	3	0	3	1	0	0	1	0	0	0	0
4/25/2024	4:45 AM	0	36	4	0	1	0	0	3	2	0	0	0	0
4/25/2024	5:00 AM	0	46	1	0	1	0	0	1	0	0	0	0	0
4/25/2024	5:15 AM	0	49	3	0	2	0	0	0	0	0	0	0	0
4/25/2024	5:30 AM	0	79	8	1	0	0	0	1	0	0	0	0	0
4/25/2024	5:45 AM	0	95	8	0	1	0	0	0	1	0	0	0	0
4/25/2024	6:00 AM	1	100	11	0	7	1	0	0	1	0	0	0	0
4/25/2024	6:15 AM	1	119	13	1	3	0	1	2	1	0	0	0	0
4/25/2024	6:30 AM	0	163	28	1	2	2	0	0	4	0	0	0	0
4/25/2024	6:45 AM	0	236	29	2	5	0	0	0	1	0	0	0	0
4/25/2024	7:00 AM	0	239	36	1	5	3	0	1	1	0	0	0	0
4/25/2024	7:15 AM	0	346	38	2	11	1	0	0	0	4	0	0	0
4/25/2024	7:30 AM	2	422	48	0	8	1	1	3	1	0	0	0	0
4/25/2024	7:45 AM	1	441	39	1	9	1	0	0	1	0	0	0	0
4/25/2024	8:00 AM	0	427	62	0	2	1	2	0	1	0	0	0	0
4/25/2024	8:15 AM	1	375	62	4	5	2	0	1	0	0	0	0	0
4/25/2024	8:30 AM	0	435	65	1	11	3	1	0	2	0	0	0	0
4/25/2024	8:45 AM	0	448	49	2	6	1	2	2	2	0	0	0	0
4/25/2024	9:00 AM	0	346	53	10	3	1	0	0	6	1	0	0	0
4/25/2024	9:15 AM	0	334	66	2	7	1	0	0	0	0	0	0	0
4/25/2024	9:30 AM	0	390	72	2	9	2	1	0	2	0	0	0	0
4/25/2024	9:45 AM	1	411	80	3	7	4	2	0	2	0	0	0	0
4/25/2024	10:00 AM	0	411	69	1	6	4	2	1	3	0	0	0	0
4/25/2024	10:15 AM	0	408	95	3	11	2	2	0	2	1	0	0	0
4/25/2024	10:30 AM	1	393	65	3	6	2	0	3	4	0	0	0	0
4/25/2024	10:45 AM	2	398	86	0	11	0	2	2	4	0	0	0	0
4/25/2024	11:00 AM	1	453	78	5	12	1	1	2	1	0	0	0	0
4/25/2024	11:15 AM	0	445	96	3	8	0	2	2	0	0	0	0	0
4/25/2024	11:30 AM	0	474	92	3	6	1	3	0	2	0	0	0	0
4/25/2024	11:45 AM	0	479	91	4	8	3	1	1	4	0	0	0	0
4/25/2024	12:00 PM	0	471	113	2	4	2	0	0	1	0	0	0	0
4/25/2024	12:15 PM	0	515	120	0	7	2	3	0	2	0	0	0	0
4/25/2024	12:30 PM	0	543	107	7	4	1	0	1	2	0	0	0	0
4/25/2024	12:45 PM	0	503	97	2	3	1	1	0	3	0	0	0	0
4/25/2024	1:00 PM	2	592	110	2	7	2	0	0	2	0	0	0	0
4/25/2024	1:15 PM	0	565	104	4	11	0	1	0	4	1	0	0	0
4/25/2024	1:30 PM	0	560	96	3	6	3	2	2	6	0	0	0	0
4/25/2024	1:45 PM	1	498	89	3	9	2	0	1	0	0	0	0	0
4/25/2024	2:00 PM	1	586	101	0	8	0	4	2	1	0	0	0	0
4/25/2024	2:15 PM	1	590	115	2	5	0	1	1	0	0	0	0	0
4/25/2024	2:30 PM	0	558	113	1	5	0	4	2	3	0	0	0	0
4/25/2024	2:45 PM	1	662	122	1	7	1	3	2	3	0	0	0	0
4/25/2024	3:00 PM	0	648	99	5	9	0	1	1	1	0	0	0	0
4/25/2024	3:15 PM	3	720	133	2	7	0	4	1	4	0	0	0	0
4/25/2024	3:30 PM	1	720	128	1	11	0	3	1	4	0	0	0	0
4/25/2024	3:45 PM	2	694	144	3	12	1	3	4	1	1	0	0	0
4/25/2024	4:00 PM	1	853	176	1	10	2	0	1	2	0	0	0	0
4/25/2024	4:15 PM	3	871	169	0	15	0	1	2	3	0	0	0	0
4/25/2024	4:30 PM	2	960	162	3	4	0	0	0	1	0	0	0	0
4/25/2024	4:45 PM	1	946	160	2	5	0	1	0	1	0	0	0	0
4/25/2024	5:00 PM	2	1051	125	0	1	0	2	0	0	0	0	0	0
4/25/2024	5:15 PM	1	988	143	1	3	0	0	0	0	1	0	0	0
4/25/2024	5:30 PM	5	843	104	2	3	0	0	0	1	0	0	0	0
4/25/2024	5:45 PM	1	683	91	2	3	0	0	0	0	2	0	0	0
4/25/2024	6:00 PM	1	643	82	2	2	0	0	1	2	1	0	0	0
4/25/2024	6:15 PM	1	479	66	4	5	0	0	0	0	1	0	0	0
4/25/2024	6:30 PM	3	467	54	2	8	0	0	1	1	0	0	0	0
4/25/2024	6:45 PM	2	445	39	4	5	0	0	0	0	0	0	0	0
4/25/2024	7:00 PM	0	0	0	0	0	0	0	0	0	0	0	0	0
4/25/2024	7:15 PM	0	0	0	0	0	0	0	0	0	0	0	0	0
4/25/2024	7:30 PM	0	0	0	0	0	0	0	0	0	0	0	0	0
4/25/2024	7:45 PM	0	0	0	0	0	0	0	0	0	0	0	0	0
4/25/2024	8:00 PM	0	0	0	0	0	0	0	0	0	0	0	0	0
4/25/2024	8:15 PM	0	0	0	0	0	0	0	0	0	0	0	0	0
4/25/2024	8:30 PM	0	0	0	0	0	0	0	0	0	0	0	0	0
4/25/2024	8:45 PM	0	0	0	0	0	0	0	0	0	0	0	0	0
4/25/2024	9:00 PM	0	0	0	0	0	0	0	0	0	0	0	0	0
4/25/2024	9:15 PM	0	0	0	0	0	0	0	0	0	0	0	0	0
4/25/2024	9:30 PM	0	0	0	0	0	0	0	0	0	0	0	0	0
4/25/2024	9:45 PM	0	0	0	0	0	0	0	0	0	0	0	0	0
4/25/2024	10:00 PM	0	0	0	0	0	0	0	0	0	0	0	0	0
4/25/2024	10:15 PM	0	0	0	0	0	0	0	0	0	0	0	0	0
4/25/2024	10:30 PM	0	0	0	0	0	0	0	0	0	0	0	0	0
4/25/2024	10:45 PM	0	0	0	0	0	0	0	0	0	0	0	0	0
4/25/2024	11:00 PM	0	0	0	0	0	0	0	0	0	0	0	0	0
4/25/2024	11:15 PM	0	0	0	0	0	0	0	0	0	0	0	0	0
4/25/2024	11:30 PM	0	0	0	0	0	0	0	0	0	0	0	0	0
4/25/2024	11:45 PM	0	0	0	0	0	0	0	0	0	0	0	0	0

EB
File Name:
Start Date: 4/23/2024
Start Time: 0
Site Code: 71
Station ID: 1
Location 1: I-126 W/Bound On-Ramp, west of Driveway
Location 2:

Date	Time	1	2	3	4	5	6	7	8	9	10	11	12	13
4/23/2024	12:00 AM	0	0	0	0	0	0	0	0	0	0	0	0	0
4/23/2024	12:15 AM	0	0	0	0	0	0	0	0	0	0	0	0	0
4/23/2024	12:30 AM	0	0	0	0	0	0	0	0	0	0	0	0	0
4/23/2024	12:45 AM	0	0	0	0	0	0	0	0	0	0	0	0	0
4/23/2024	1:00 AM	0	0	0	0	0	0	0	0	0	0	0	0	0
4/23/2024	1:15 AM	0	0	0	0	0	0	0	0	0	0	0	0	0
4/23/2024	1:30 AM	0	0	0	0	0	0	0	0	0	0	0	0	0
4/23/2024	1:45 AM	0	0	0	0	0	0	0	0	0	0	0	0	0
4/23/2024	2:00 AM	0	0	0	0	0	0	0	0	0	0	0	0	0
4/23/2024	2:15 AM	0	0	0	0	0	0	0	0	0	0	0	0	0
4/23/2024	2:30 AM	0	0	0	0	0	0	0	0	0	0	0	0	0
4/23/2024	2:45 AM	0	0	0	0	0	0	0	0	0	0	0	0	0
4/23/2024	3:00 AM	0	0	0	0	0	0	0	0	0	0	0	0	0
4/23/2024	3:15 AM	0	0	0	0	0	0	0	0	0	0	0	0	0
4/23/2024	3:30 AM	0	0	0	0	0	0	0	0	0	0	0	0	0
4/23/2024	3:45 AM	0	0	0	0	0	0	0	0	0	0	0	0	0
4/23/2024	4:00 AM	0	0	0	0	0	0	0	0	0	0	0	0	0
4/23/2024	4:15 AM	0	0	0	0	0	0	0	0	0	0	0	0	0
4/23/2024	4:30 AM	0	0	0	0	0	0	0	0	0	0	0	0	0
4/23/2024	4:45 AM	0	0	0	0	0	0	0	0	0	0	0	0	0
4/23/2024	5:00 AM	0	0	0	0	0	0	0	0	0	0	0	0	0
4/23/2024	5:15 AM	0	0	0	0	0	0	0	0	0	0	0	0	0
4/23/2024	5:30 AM	0	0	0	0	0	0	0	0	0	0	0	0	0
4/23/2024	5:45 AM	0	0	0	0	0	0	0	0	0	0	0	0	0
4/23/2024	6:00 AM	0	0	0	0	0	0	0	0	0	0	0	0	0
4/23/2024	6:15 AM	0	0	0	0	0	0	0	0	0	0	0	0	0
4/23/2024	6:30 AM	0	0	0	0	0	0	0	0	0	0	0	0	0
4/23/2024	6:45 AM	0	0	0	0	0	0	0	0	0	0	0	0	0
4/23/2024	7:00 AM	0	0	0	0	0	0	0	0	0	0	0	0	0
4/23/2024	7:15 AM	0	0	0	0	0	0	0	0	0	0	0	0	0
4/23/2024	7:30 AM	0	0	0	0	0	0	0	0	0	0	0	0	0
4/23/2024	7:45 AM	0	0	0	0	0	0	0	0	0	0	0	0	0
4/23/2024	8:00 AM	0	0	0	0	0	0	0	0	0	0	0	0	0
4/23/2024	8:15 AM	0	0	0	0	0	0	0	0	0	0	0	0	0
4/23/2024	8:30 AM	0	0	0	0	0	0	0	0	0	0	0	0	0
4/23/2024	8:45 AM	0	0	0	0	0	0	0	0	0	0	0	0	0
4/23/2024	9:00 AM	0	0	0	0	0	0	0	0	0	0	0	0	0
4/23/2024	9:15 AM	0	0	0	0	0	0	0	0	0	0	0	0	0
4/23/2024	9:30 AM	0	0	0	0	0	0	0	0	0	0	0	0	0
4/23/2024	9:45 AM	0	0	0	0	0	0	0	0	0	0	0	0	0
4/23/2024	10:00 AM	0	0	0	0	0	0	0	0	0	0	0	0	0
4/23/2024	10:15 AM	0	0	0	0	0	0	0	0	0	0	0	0	0
4/23/2024	10:30 AM	0	0	0	0	0	0	0	0	0	0	0	0	0
4/23/2024	10:45 AM	0	0	0	0	0	0	0	0	0	0	0	0	0
4/23/2024	11:00 AM	0	0	0	0	0	0	0	0	0	0	0	0	0
4/23/2024	11:15 AM	0	0	0	0	0	0	0	0	0	0	0	0	0
4/23/2024	11:30 AM	0	0	0	0	0	0	0	0	0	0	0	0	0
4/23/2024	11:45 AM	0	0	0	0	0	0	0	0	0	0	0	0	0
4/23/2024	12:00 PM	0	0	0	0	0	0	0	0	0	0	0	0	0
4/23/2024	12:15 PM	0	0	0	0	0	0	0	0	0	0	0	0	0
4/23/2024	12:30 PM	0	0	0	0	0	0	0	0	0	0	0	0	0
4/23/2024	12:45 PM	0	0	0	0	0	0	0	0	0	0	0	0	0
4/23/2024	1:00 PM	0	0	0	0	0	0	0	0	0	0	0	0	0
4/23/2024	1:15 PM	0	0	0	0	0	0	0	0	0	0	0	0	0
4/23/2024	1:30 PM	0	0	0	0	0	0	0	0	0	0	0	0	0
4/23/2024	1:45 PM	0	0	0	0	0	0	0	0	0	0	0	0	0
4/23/2024	2:00 PM	0	0	0	0	0	0	0	0	0	0	0	0	0
4/23/2024	2:15 PM	0	0	0	0	0	0	0	0	0	0	0	0	0
4/23/2024	2:30 PM	0	0	0	0	0	0	0	0	0	0	0	0	0
4/23/2024	2:45 PM	0	0	0	0	0	0	0	0	0	0	0	0	0
4/23/2024	3:00 PM	0	0	0	0	0	0	0	0	0	0	0	0	0
4/23/2024	3:15 PM	0	0	0	0	0	0	0	0	0	0	0	0	0
4/23/2024	3:30 PM	0	0	0	0	0	0	0	0	0	0	0	0	0
4/23/2024	3:45 PM	0	0	0	0	0	0	0	0	0	0	0	0	0
4/23/2024	4:00 PM	0	0	0	0	0	0	0	0	0	0	0	0	0
4/23/2024	4:15 PM	0	0	0	0	0	0	0	0	0	0	0	0	0
4/23/2024	4:30 PM	0	0	0	0	0	0	0	0	0	0	0	0	0
4/23/2024	4:45 PM	0	0	0	0	0	0	0	0	0	0	0	0	0
4/23/2024	5:00 PM	0	0	0	0	0	0	0	0	0	0	0	0	0
4/23/2024	5:15 PM	0	0	0	0	0	0	0	0	0	0	0	0	0
4/23/2024	5:30 PM	0	0	0	0	0	0	0	0	0	0	0	0	0
4/23/2024	5:45 PM	0	0	0	0	0	0	0	0	0	0	0	0	0
4/23/2024	6:00 PM	0	0	0	0	0	0	0	0	0	0	0	0	0
4/23/2024	6:15 PM	0	0	0	0	0	0	0	0	0	0	0	0	0
4/23/2024	6:30 PM	0	0	0	0	0	0	0	0	0	0	0	0	0
4/23/2024	6:45 PM	0	0	0	0	0	0	0	0	0	0	0	0	0
4/23/2024	7:00 PM	0	0	0	0	0	0	0	0	0	0	0	0	0
4/23/2024	7:15 PM	0	0	0	0	0	0	0	0	0	0	0	0	0
4/23/2024	7:30 PM	0	0	0	0	0	0	0	0	0	0	0	0	0
4/23/2024	7:45 PM	0	0	0	0	0	0	0	0	0	0	0	0	0
4/23/2024	8:00 PM	0	0	0	0	0	0	0	0	0	0	0	0	0
4/23/2024	8:15 PM	0	0	0	0	0	0	0	0	0	0	0	0	0
4/23/2024	8:30 PM	0	0	0	0	0	0	0	0	0	0	0	0	0
4/23/2024	8:45 PM	0	0	0	0	0	0	0	0	0	0	0	0	0
4/23/2024	9:00 PM	0	0	0	0	0	0	0	0	0	0	0	0	0
4/23/2024	9:15 PM	0	0	0	0	0	0	0	0	0	0	0	0	0
4/23/2024	9:30 PM	0	0	0	0	0	0	0	0	0	0	0	0	0
4/23/2024	9:45 PM	0	0	0	0	0	0	0	0	0	0	0	0	0
4/23/2024	10:00 PM	0	0	0	0	0	0	0	0	0	0	0	0	0
4/23/2024	10:15 PM	0	0	0	0	0	0	0	0	0	0	0	0	0
4/23/2024	10:30 PM	0	0	0	0	0	0	0	0	0	0	0	0	0
4/23/2024	10:45 PM	0	0	0	0	0	0	0	0	0	0	0	0	0
4/23/2024	11:00 PM	0	0	0	0	0	0	0	0	0	0	0	0	0
4/23/2024	11:15 PM	0	0	0	0	0	0	0	0	0	0	0	0	0
4/23/2024	11:30 PM	0	0	0	0	0	0	0	0	0	0	0	0	0
4/23/2024	11:45 PM	0	0	0	0	0	0	0	0	0	0	0	0	0

4/24/2024	12:00 AM	0	0	0	0	0	0	0	0	0	0	0	0	0
4/24/2024	12:15 AM	0	0	0	0	0	0	0	0	0	0	0	0	0
4/24/2024	12:30 AM	0	0	0	0	0	0	0	0	0	0	0	0	0
4/24/2024	12:45 AM	0	0	0	0	0	0	0	0	0	0	0	0	0
4/24/2024	1:00 AM	0	0	0	0	0	0	0	0	0	0	0	0	0
4/24/2024	1:15 AM	0	0	0	0	0	0	0	0	0	0	0	0	0
4/24/2024	1:30 AM	0	0	0	0	0	0	0	0	0	0	0	0	0
4/24/2024	1:45 AM	0	0	0	0	0	0	0	0	0	0	0	0	0
4/24/2024	2:00 AM	0	0	0	0	0	0	0	0	0	0	0	0	0
4/24/2024	2:15 AM	0	0	0	0	0	0	0	0	0	0	0	0	0
4/24/2024	2:30 AM	0	0	0	0	0	0	0	0	0	0	0	0	0
4/24/2024	2:45 AM	0	0	0	0	0	0	0	0	0	0	0	0	0
4/24/2024	3:00 AM	0	0	0	0	0	0	0	0	0	0	0	0	0
4/24/2024	3:15 AM	0	0	0	0	0	0	0	0	0	0	0	0	0
4/24/2024	3:30 AM	0	0	0	0	0	0	0	0	0	0	0	0	0
4/24/2024	3:45 AM	0	0	0	0	0	0	0	0	0	0	0	0	0
4/24/2024	4:00 AM	0	0	0	0	0	0	0	0	0	0	0	0	0
4/24/2024	4:15 AM	0	0	0	0	0	0	0	0	0	0	0	0	0
4/24/2024	4:30 AM	0	0	0	0	0	0	0	0	0	0	0	0	0
4/24/2024	4:45 AM	0	0	0	0	0	0	0	0	0	0	0	0	0
4/24/2024	5:00 AM	0	0	0	0	0	0	0	0	0	0	0	0	0
4/24/2024	5:15 AM	0	0	0	0	0	0	0	0	0	0	0	0	0
4/24/2024	5:30 AM	0	0	0	0	0	0	0	0	0	0	0	0	0
4/24/2024	5:45 AM	0	0	0	0	0	0	0	0	0	0	0	0	0
4/24/2024	6:00 AM	0	0	0	0	0	0	0	0	0	0	0	0	0
4/24/2024	6:15 AM	0	0	0	0	0	0	0	0	0	0	0	0	0
4/24/2024	6:30 AM	0	0	0	0	0	0	0	0	0	0	0	0	0
4/24/2024	6:45 AM	0	0	0	0	0	0	0	0	0	0	0	0	0
4/24/2024	7:00 AM	0	0	0	0	0	0	0	0	0	0	0	0	0
4/24/2024	7:15 AM	0	0	0	0	0	0	0	0	0	0	0	0	0
4/24/2024	7:30 AM	0	0	0	0	0	0	0	0	0	0	0	0	0
4/24/2024	7:45 AM	0	0	0	0	0	0	0	0	0	0	0	0	0
4/24/2024	8:00 AM	0	0	0	0	0	0	0	0	0	0	0	0	0
4/24/2024	8:15 AM	0	0	0	0	0	0	0	0	0	0	0	0	0
4/24/2024	8:30 AM	0	0	0	0	0	0	0	0	0	0	0	0	0
4/24/2024	8:45 AM	0	0	0	0	0	0	0	0	0	0	0	0	0
4/24/2024	9:00 AM	0	0	0	0	0	0	0	0	0	0	0	0	0
4/24/2024	9:15 AM	0	0	0	0	0	0	0	0	0	0	0	0	0
4/24/2024	9:30 AM	0	0	0	0	0	0	0	0	0	0	0	0	0
4/24/2024	9:45 AM	0	0	0	0	0	0	0	0	0	0	0	0	0
4/24/2024	10:00 AM	0	0	0	0	0	0	0	0	0	0	0	0	0
4/24/2024	10:15 AM	0	0	0	0	0	0	0	0	0	0	0	0	0
4/24/2024	10:30 AM	0	0	0	0	0	0	0	0	0	0	0	0	0
4/24/2024	10:45 AM	0	0	0	0	0	0	0	0	0	0	0	0	0
4/24/2024	11:00 AM	0	0	0	0	0	0	0	0	0	0	0	0	0
4/24/2024	11:15 AM	0	0	0	0	0	0	0	0	0	0	0	0	0
4/24/2024	11:30 AM	0	0	0	0	0	0	0	0	0	0	0	0	0
4/24/2024	11:45 AM	0	0	0	0	0	0	0	0	0	0	0	0	0
4/24/2024	12:00 PM	0	0	0	0	0	0	0	0	0	0	0	0	0
4/24/2024	12:15 PM	0	0	0	0	0	0	0	0	0	0	0	0	0
4/24/2024	12:30 PM	0	0	0	0	0	0	0	0	0	0	0	0	0
4/24/2024	12:45 PM	0	0	0	0	0	0	0	0	0	0	0	0	0
4/24/2024	1:00 PM	0	0	0	0	0	0	0	0	0	0	0	0	0
4/24/2024	1:15 PM	0	0	0	0	0	0	0	0	0	0	0	0	0
4/24/2024	1:30 PM	0	0	0	0	0	0	0	0	0	0	0	0	0
4/24/2024	1:45 PM	0	0	0	0	0	0	0	0	0	0	0	0	0
4/24/2024	2:00 PM	0	0	0	0	0	0	0	0	0	0	0	0	0
4/24/2024	2:15 PM	0	0	0	0	0	0	0	0	0	0	0	0	0
4/24/2024	2:30 PM	0	0	0	0	0	0	0	0	0	0	0	0	0
4/24/2024	2:45 PM	0	0	0	0	0	0	0	0	0	0	0	0	0
4/24/2024	3:00 PM	0	0	0	0	0	0	0	0	0	0	0	0	0
4/24/2024	3:15 PM	0	0	0	0	0	0	0	0	0	0	0	0	0
4/24/2024	3:30 PM	0	0	0	0	0	0	0	0	0	0	0	0	0
4/24/2024	3:45 PM	0	0	0	0	0	0	0	0	0	0	0	0	0
4/24/2024	4:00 PM	0	0	0	0	0	0	0	0	0	0	0	0	0
4/24/2024	4:15 PM	0	0	0	0	0	0	0	0	0	0	0	0	0
4/24/2024	4:30 PM	0	0	0	0	0	0	0	0	0	0	0	0	0
4/24/2024	4:45 PM	0	0	0	0	0	0	0	0	0	0	0	0	0
4/24/2024	5:00 PM	0	0	0	0	0	0	0	0	0	0	0	0	0
4/24/2024	5:15 PM	0	0	0	0	0	0	0	0	0	0	0	0	0
4/24/2024	5:30 PM	0	0	0	0	0	0	0	0	0	0	0	0	0
4/24/2024	5:45 PM	0	0	0	0	0	0	0	0	0	0	0	0	0
4/24/2024	6:00 PM	0	0	0	0	0	0	0	0	0	0	0	0	0
4/24/2024	6:15 PM	0	0	0	0	0	0	0	0	0	0	0	0	0
4/24/2024	6:30 PM	0	0	0	0	0	0	0	0	0	0	0	0	0
4/24/2024	6:45 PM	0	0	0	0	0	0	0	0	0	0	0	0	0
4/24/2024	7:00 PM	0	0	0	0	0	0	0	0	0	0	0	0	0
4/24/2024	7:15 PM	0	0	0	0	0	0	0	0	0	0	0	0	0
4/24/2024	7:30 PM	0	0	0	0	0	0	0	0	0	0	0	0	0
4/24/2024	7:45 PM	0	0	0	0	0	0	0	0	0	0	0	0	0
4/24/2024	8:00 PM	0	0	0	0	0	0	0	0	0	0	0	0	0
4/24/2024	8:15 PM	0	0	0	0	0	0	0	0	0	0	0	0	0
4/24/2024	8:30 PM	0	0	0	0	0	0	0	0	0	0	0	0	0
4/24/2024	8:45 PM	0	0	0	0	0	0	0	0	0	0	0	0	0
4/24/2024	9:00 PM	0	0	0	0	0	0	0	0	0	0	0	0	0
4/24/2024	9:15 PM	0	0	0	0	0	0	0	0	0	0	0	0	0
4/24/2024	9:30 PM	0	0	0	0	0	0	0	0	0	0	0	0	0
4/24/2024	9:45 PM	0	0	0	0	0	0	0	0	0	0	0	0	0
4/24/2024	10:00 PM	0	0	0	0	0	0	0	0	0	0	0	0	0
4/24/2024	10:15 PM	0	0	0	0	0	0	0	0	0	0	0	0	0
4/24/2024	10:30 PM	0	0	0	0	0	0	0	0	0	0	0	0	0
4/24/2024	10:45 PM	0	0	0	0	0	0	0	0	0	0	0	0	0
4/24/2024	11:00 PM	0	0	0	0	0	0	0	0	0	0	0	0	0
4/24/2024	11:15 PM	0	0	0	0	0	0	0	0	0	0	0	0	0
4/24/2024	11:30 PM	0	0	0	0	0	0	0	0	0	0	0	0	0
4/24/2024	11:45 PM	0	0	0	0	0	0	0	0	0	0	0	0	0

4/25/2024	12:00 AM	0	0	0	0	0	0	0	0	0	0	0	0	0
4/25/2024	12:15 AM	0	0	0	0	0	0	0	0	0	0	0	0	0
4/25/2024	12:30 AM	0	0	0	0	0	0	0	0	0	0	0	0	0
4/25/2024	12:45 AM	0	0	0	0	0	0	0	0	0	0	0	0	0
4/25/2024	1:00 AM	0	0	0	0	0	0	0	0	0	0	0	0	0
4/25/2024	1:15 AM	0	0	0	0	0	0	0	0	0	0	0	0	0
4/25/2024	1:30 AM	0	0	0	0	0	0	0	0	0	0	0	0	0
4/25/2024	1:45 AM	0	0	0	0	0	0	0	0	0	0	0	0	0
4/25/2024	2:00 AM	0	0	0	0	0	0	0	0	0	0	0	0	0
4/25/2024	2:15 AM	0	0	0	0	0	0	0	0	0	0	0	0	0
4/25/2024	2:30 AM	0	0	0	0	0	0	0	0	0	0	0	0	0
4/25/2024	2:45 AM	0	0	0	0	0	0	0	0	0	0	0	0	0
4/25/2024	3:00 AM	0	0	0	0	0	0	0	0	0	0	0	0	0
4/25/2024	3:15 AM	0	0	0	0	0	0	0	0	0	0	0	0	0
4/25/2024	3:30 AM	0	0	0	0	0	0	0	0	0	0	0	0	0
4/25/2024	3:45 AM	0	0	0	0	0	0	0	0	0	0	0	0	0
4/25/2024	4:00 AM	0	0	0	0	0	0	0	0	0	0	0	0	0
4/25/2024	4:15 AM	0	0	0	0	0	0	0	0	0	0	0	0	0
4/25/2024	4:30 AM	0	0	0	0	0	0	0	0	0	0	0	0	0
4/25/2024	4:45 AM	0	0	0	0	0	0	0	0	0	0	0	0	0
4/25/2024	5:00 AM	0	0	0	0	0	0	0	0	0	0	0	0	0
4/25/2024	5:15 AM	0	0	0	0	0	0	0	0	0	0	0	0	0
4/25/2024	5:30 AM	0	0	0	0	0	0	0	0	0	0	0	0	0
4/25/2024	5:45 AM	0	0	0	0	0	0	0	0	0	0	0	0	0
4/25/2024	6:00 AM	0	0	0	0	0	0	0	0	0	0	0	0	0
4/25/2024	6:15 AM	0	0	0	0	0	0	0	0	0	0	0	0	0
4/25/2024	6:30 AM	0	0	0	0	0	0	0	0	0	0	0	0	0
4/25/2024	6:45 AM	0	0	0	0	0	0	0	0	0	0	0	0	0
4/25/2024	7:00 AM	0	0	0	0	0	0	0	0	0	0	0	0	0
4/25/2024	7:15 AM	0	0	0	0	0	0	0	0	0	0	0	0	0
4/25/2024	7:30 AM	0	0	0	0	0	0	0	0	0	0	0	0	0
4/25/2024	7:45 AM	0	0	0	0	0	0	0	0	0	0	0	0	0
4/25/2024	8:00 AM	0	0	0	0	0	0	0	0	0	0	0	0	0
4/25/2024	8:15 AM	0	0	0	0	0	0	0	0	0	0	0	0	0
4/25/2024	8:30 AM	0	0	0	0	0	0	0	0	0	0	0	0	0
4/25/2024	8:45 AM	0	0	0	0	0	0	0	0	0	0	0	0	0
4/25/2024	9:00 AM	0	0	0	0	0	0	0	0	0	0	0	0	0
4/25/2024	9:15 AM	0	0	0	0	0	0	0	0	0	0	0	0	0
4/25/2024	9:30 AM	0	0	0	0	0	0	0	0	0	0	0	0	0
4/25/2024	9:45 AM	0	0	0	0	0	0	0	0	0	0	0	0	0
4/25/2024	10:00 AM	0	0	0	0	0	0	0	0	0	0	0	0	0
4/25/2024	10:15 AM	0	0	0	0	0	0	0	0	0	0	0	0	0
4/25/2024	10:30 AM	0	0	0	0	0	0	0	0	0	0	0	0	0
4/25/2024	10:45 AM	0	0	0	0	0	0	0	0	0	0	0	0	0
4/25/2024	11:00 AM	0	0	0	0	0	0	0	0	0	0	0	0	0
4/25/2024	11:15 AM	0	0	0	0	0	0	0	0	0	0	0	0	0
4/25/2024	11:30 AM	0	0	0	0	0	0	0	0	0	0	0	0	0
4/25/2024	11:45 AM	0	0	0	0	0	0	0	0	0	0	0	0	0
4/25/2024	12:00 PM	0	0	0	0	0	0	0	0	0	0	0	0	0
4/25/2024	12:15 PM	0	0	0	0	0	0	0	0	0	0	0	0	0
4/25/2024	12:30 PM	0	0	0	0	0	0	0	0	0	0	0	0	0
4/25/2024	12:45 PM	0	0	0	0	0	0	0	0	0	0	0	0	0
4/25/2024	1:00 PM	0	0	0	0	0	0	0	0	0	0	0	0	0
4/25/2024	1:15 PM	0	0	0	0	0	0	0	0	0	0	0	0	0
4/25/2024	1:30 PM	0	0	0	0	0	0	0	0	0	0	0	0	0
4/25/2024	1:45 PM	0	0	0	0	0	0	0	0	0	0	0	0	0
4/25/2024	2:00 PM	0	0	0	0	0	0	0	0	0	0	0	0	0
4/25/2024	2:15 PM	0	0	0	0	0	0	0	0	0	0	0	0	0
4/25/2024	2:30 PM	0	0	0	0	0	0	0	0	0	0	0	0	0
4/25/2024	2:45 PM	0	0	0	0	0	0	0	0	0	0	0	0	0
4/25/2024	3:00 PM	0	0	0	0	0	0	0	0	0	0	0	0	0
4/25/2024	3:15 PM	0	0	0	0	0	0	0	0	0	0	0	0	0
4/25/2024	3:30 PM	0	0	0	0	0	0	0	0	0	0	0	0	0
4/25/2024	3:45 PM	0	0	0	0	0	0	0	0	0	0	0	0	0
4/25/2024	4:00 PM	0	0	0	0	0	0	0	0	0	0	0	0	0
4/25/2024	4:15 PM	0	0	0	0	0	0	0	0	0	0	0	0	0
4/25/2024	4:30 PM	0	0	0	0	0	0	0	0	0	0	0	0	0
4/25/2024	4:45 PM	0	0	0	0	0	0	0	0	0	0	0	0	0
4/25/2024	5:00 PM	0	0	0	0	0	0	0	0	0	0	0	0	0
4/25/2024	5:15 PM	0	0	0	0	0	0	0	0	0	0	0	0	0
4/25/2024	5:30 PM	0	0	0	0	0	0	0	0	0	0	0	0	0
4/25/2024	5:45 PM	0	0	0	0	0	0	0	0	0	0	0	0	0
4/25/2024	6:00 PM	0	0	0	0	0	0	0	0	0	0	0	0	0
4/25/2024	6:15 PM	0	0	0	0	0	0	0	0	0	0	0	0	0
4/25/2024	6:30 PM	0	0	0	0	0	0	0	0	0	0	0	0	0
4/25/2024	6:45 PM	0	0	0	0	0	0	0	0	0	0	0	0	0
4/25/2024	7:00 PM	0	0	0	0	0	0	0	0	0	0	0	0	0
4/25/2024	7:15 PM	0	0	0	0	0	0	0	0	0	0	0	0	0
4/25/2024	7:30 PM	0	0	0	0	0	0	0	0	0	0	0	0	0
4/25/2024	7:45 PM	0	0	0	0	0	0	0	0	0	0	0	0	0
4/25/2024	8:00 PM	0	0	0	0	0	0	0	0	0	0	0	0	0
4/25/2024	8:15 PM	0	0	0	0	0	0	0	0	0	0	0	0	0
4/25/2024	8:30 PM	0	0	0	0	0	0	0	0	0	0	0	0	0
4/25/2024	8:45 PM	0	0	0	0	0	0	0	0	0	0	0	0	0
4/25/2024	9:00 PM	0	0	0	0	0	0	0	0	0	0	0	0	0
4/25/2024	9:15 PM	0	0	0	0	0	0	0	0	0	0	0	0	0
4/25/2024	9:30 PM	0	0	0	0	0	0	0	0	0	0	0	0	0
4/25/2024	9:45 PM	0	0	0	0	0	0	0	0	0	0	0	0	0
4/25/2024	10:00 PM	0	0	0	0	0	0	0	0	0	0	0	0	0
4/25/2024	10:15 PM	0	0	0	0	0	0	0	0	0	0	0	0	0
4/25/2024	10:30 PM	0	0	0	0	0	0	0	0	0	0	0	0	0
4/25/2024	10:45 PM	0	0	0	0	0	0	0	0	0	0	0	0	0
4/25/2024	11:00 PM	0	0	0	0	0	0	0	0	0	0	0	0	0
4/25/2024	11:15 PM	0	0	0	0	0	0	0	0	0	0	0	0	0
4/25/2024	11:30 PM	0	0	0	0	0	0	0	0	0	0	0	0	0
4/25/2024	11:45 PM	0	0	0	0	0	0	0	0	0	0	0	0	0

WB
File Name:
Start Date: 4/23/2024
Start Time: 0
Site Code: 71
Station ID: 1
Location 1: I-126 W/Bound On-Ramp, west of Driveway
Location 2:

Date	Time	1	2	3	4	5	6	7	8	9	10	11	12	13
4/23/2024	12:00 AM	0	0	0	0	0	0	0	0	0	0	0	0	0
4/23/2024	12:15 AM	0	0	0	0	0	0	0	0	0	0	0	0	0
4/23/2024	12:30 AM	0	0	0	0	0	0	0	0	0	0	0	0	0
4/23/2024	12:45 AM	0	0	0	0	0	0	0	0	0	0	0	0	0
4/23/2024	1:00 AM	0	0	0	0	0	0	0	0	0	0	0	0	0
4/23/2024	1:15 AM	0	0	0	0	0	0	0	0	0	0	0	0	0
4/23/2024	1:30 AM	0	0	0	0	0	0	0	0	0	0	0	0	0
4/23/2024	1:45 AM	0	0	0	0	0	0	0	0	0	0	0	0	0
4/23/2024	2:00 AM	0	0	0	0	0	0	0	0	0	0	0	0	0
4/23/2024	2:15 AM	0	0	0	0	0	0	0	0	0	0	0	0	0
4/23/2024	2:30 AM	0	0	0	0	0	0	0	0	0	0	0	0	0
4/23/2024	2:45 AM	0	0	0	0	0	0	0	0	0	0	0	0	0
4/23/2024	3:00 AM	0	0	0	0	0	0	0	0	0	0	0	0	0
4/23/2024	3:15 AM	0	0	0	0	0	0	0	0	0	0	0	0	0
4/23/2024	3:30 AM	0	0	0	0	0	0	0	0	0	0	0	0	0
4/23/2024	3:45 AM	0	0	0	0	0	0	0	0	0	0	0	0	0
4/23/2024	4:00 AM	0	0	0	0	0	0	0	0	0	0	0	0	0
4/23/2024	4:15 AM	0	0	0	0	0	0	0	0	0	0	0	0	0
4/23/2024	4:30 AM	0	0	0	0	0	0	0	0	0	0	0	0	0
4/23/2024	4:45 AM	0	0	0	0	0	0	0	0	0	0	0	0	0
4/23/2024	5:00 AM	0	0	0	0	0	0	0	0	0	0	0	0	0
4/23/2024	5:15 AM	0	0	0	0	0	0	0	0	0	0	0	0	0
4/23/2024	5:30 AM	0	0	0	0	0	0	0	0	0	0	0	0	0
4/23/2024	5:45 AM	0	0	0	0	0	0	0	0	0	0	0	0	0
4/23/2024	6:00 AM	0	0	0	0	0	0	0	0	0	0	0	0	0
4/23/2024	6:15 AM	0	0	0	0	0	0	0	0	0	0	0	0	0
4/23/2024	6:30 AM	0	0	0	0	0	0	0	0	0	0	0	0	0
4/23/2024	6:45 AM	0	0	0	0	0	0	0	0	0	0	0	0	0
4/23/2024	7:00 AM	0	0	0	0	0	0	0	0	0	0	0	0	0
4/23/2024	7:15 AM	0	0	0	0	0	0	0	0	0	0	0	0	0
4/23/2024	7:30 AM	0	0	0	0	0	0	0	0	0	0	0	0	0
4/23/2024	7:45 AM	0	0	0	0	0	0	0	0	0	0	0	0	0
4/23/2024	8:00 AM	0	0	0	0	0	0	0	0	0	0	0	0	0
4/23/2024	8:15 AM	0	0	0	0	0	0	0	0	0	0	0	0	0
4/23/2024	8:30 AM	0	0	0	0	0	0	0	0	0	0	0	0	0
4/23/2024	8:45 AM	0	0	0	0	0	0	0	0	0	0	0	0	0
4/23/2024	9:00 AM	0	0	0	0	0	0	0	0	0	0	0	0	0
4/23/2024	9:15 AM	0	0	0	0	0	0	0	0	0	0	0	0	0
4/23/2024	9:30 AM	0	0	0	0	0	0	0	0	0	0	0	0	0
4/23/2024	9:45 AM	0	0	0	0	0	0	0	0	0	0	0	0	0
4/23/2024	10:00 AM	0	0	0	0	0	0	0	0	0	0	0	0	0
4/23/2024	10:15 AM	0	0	0	0	0	0	0	0	0	0	0	0	0
4/23/2024	10:30 AM	0	0	0	0	0	0	0	0	0	0	0	0	0
4/23/2024	10:45 AM	0	0	0	0	0	0	0	0	0	0	0	0	0
4/23/2024	11:00 AM	0	0	0	0	0	0	0	0	0	0	0	0	0
4/23/2024	11:15 AM	0	0	0	0	0	0	0	0	0	0	0	0	0
4/23/2024	11:30 AM	0	0	0	0	0	0	0	0	0	0	0	0	0
4/23/2024	11:45 AM	0	0	0	0	0	0	0	0	0	0	0	0	0
4/23/2024	12:00 PM	0	0	0	0	0	0	0	0	0	0	0	0	0
4/23/2024	12:15 PM	0	0	0	0	0	0	0	0	0	0	0	0	0
4/23/2024	12:30 PM	0	0	0	0	0	0	0	0	0	0	0	0	0
4/23/2024	12:45 PM	0	0	0	0	0	0	0	0	0	0	0	0	0
4/23/2024	1:00 PM	0	0	0	0	0	0	0	0	0	0	0	0	0
4/23/2024	1:15 PM	0	0	0	0	0	0	0	0	0	0	0	0	0
4/23/2024	1:30 PM	0	0	0	0	0	0	0	0	0	0	0	0	0
4/23/2024	1:45 PM	0	0	0	0	0	0	0	0	0	0	0	0	0
4/23/2024	2:00 PM	0	0	0	0	0	0	0	0	0	0	0	0	0
4/23/2024	2:15 PM	0	0	0	0	0	0	0	0	0	0	0	0	0
4/23/2024	2:30 PM	0	0	0	0	0	0	0	0	0	0	0	0	0
4/23/2024	2:45 PM	0	0	0	0	0	0	0	0	0	0	0	0	0
4/23/2024	3:00 PM	0	0	0	0	0	0	0	0	0	0	0	0	0
4/23/2024	3:15 PM	0	0	0	0	0	0	0	0	0	0	0	0	0
4/23/2024	3:30 PM	0	0	0	0	0	0	0	0	0	0	0	0	0
4/23/2024	3:45 PM	0	0	0	0	0	0	0	0	0	0	0	0	0
4/23/2024	4:00 PM	0	0	0	0	0	0	0	0	0	0	0	0	0
4/23/2024	4:15 PM	0	0	0	0	0	0	0	0	0	0	0	0	0
4/23/2024	4:30 PM	0	0	0	0	0	0	0	0	0	0	0	0	0
4/23/2024	4:45 PM	0	0	0	0	0	0	0	0	0	0	0	0	0
4/23/2024	5:00 PM	0	0	0	0	0	0	0	0	0	0	0	0	0
4/23/2024	5:15 PM	0	0	0	0	0	0	0	0	0	0	0	0	0
4/23/2024	5:30 PM	0	0	0	0	0	0	0	0	0	0	0	0	0
4/23/2024	5:45 PM	0	0	0	0	0	0	0	0	0	0	0	0	0
4/23/2024	6:00 PM	0	0	0	0	0	0	0	0	0	0	0	0	0
4/23/2024	6:15 PM	0	0	0	0	0	0	0	0	0	0	0	0	0
4/23/2024	6:30 PM	0	0	0	0	0	0	0	0	0	0	0	0	0
4/23/2024	6:45 PM	0	0	0	0	0	0	0	0	0	0	0	0	0
4/23/2024	7:00 PM	0	0	0	0	0	0	0	0	0	0	0	0	0
4/23/2024	7:15 PM	0	0	0	0	0	0	0	0	0	0	0	0	0
4/23/2024	7:30 PM	0	0	0	0	0	0	0	0	0	0	0	0	0
4/23/2024	7:45 PM	0	288	22	1	3	0	2	0	0	0	0	0	0
4/23/2024	8:00 PM	1	569	45	1	7	0	5	0	0	0	1	0	0
4/23/2024	8:15 PM	3	835	59	2	9	0	6	0	1	0	1	0	0
4/23/2024	8:30 PM	4	1053	66	3	11	0	8	0	1	0	1	0	0
4/23/2024	8:45 PM	4	960	56	3	8	0	6	0	3	0	1	0	0
4/23/2024	9:00 PM	3	837	38	3	6	0	3	0	3	0	0	0	0
4/23/2024	9:15 PM	1	737	31	3	4	0	5	0	2	0	0	0	0
4/23/2024	9:30 PM	2	836	41	2	3	0	3	0	2	1	0	0	0
4/23/2024	9:45 PM	2	806	38	1	4	0	3	0	0	2	0	0	0
4/23/2024	10:00 PM	2	745	35	1	2	0	3	0	0	3	0	0	0
4/23/2024	10:15 PM	2	693	33	0	3	0	1	0	0	3	0	0	0
4/23/2024	10:30 PM	0	472	18	0	4	0	2	0	0	2	0	0	0
4/23/2024	10:45 PM	1	382	13	0	3	0	5	0	1	1	0	0	0
4/23/2024	11:00 PM	1	359	14	0	3	0	6	0	2	0	0	0	0
4/23/2024	11:15 PM	1	245	9	0	2	0	5	0	2	0	0	0	0
4/23/2024	11:30 PM	1	149	7	0	0	0	4	0	2	0	0	0	0
4/23/2024	11:45 PM	0	74	3	0	0	0	1	0	1	0	0	0	0

4/24/2024	12:00 AM	0	218	20	2	3	0	3	0	2	1	0	0	0
4/24/2024	12:15 AM	0	201	16	2	4	0	1	0	1	1	0	0	0
4/24/2024	12:30 AM	0	174	16	0	4	0	5	0	1	1	0	0	0
4/24/2024	12:45 AM	0	163	9	0	4	0	7	0	0	1	0	0	0
4/24/2024	1:00 AM	1	155	10	0	2	0	9	0	0	0	0	0	0
4/24/2024	1:15 AM	1	140	8	0	0	0	9	0	1	1	0	0	0
4/24/2024	1:30 AM	1	136	7	0	2	0	5	0	3	1	0	0	0
4/24/2024	1:45 AM	1	120	10	0	3	1	4	1	3	1	0	0	0
4/24/2024	2:00 AM	0	103	7	0	4	1	2	1	4	1	0	0	0
4/24/2024	2:15 AM	0	95	10	0	5	1	2	1	4	0	0	0	0
4/24/2024	2:30 AM	0	85	9	0	3	1	4	1	2	0	0	0	0
4/24/2024	2:45 AM	0	85	7	0	3	0	4	0	3	0	0	1	0
4/24/2024	3:00 AM	0	84	9	0	4	0	7	0	2	0	0	1	0
4/24/2024	3:15 AM	0	82	5	0	3	1	7	0	2	1	0	1	0
4/24/2024	3:30 AM	0	89	5	0	3	1	4	0	2	1	0	1	0
4/24/2024	3:45 AM	0	93	7	0	3	1	5	1	1	1	0	0	0
4/24/2024	4:00 AM	0	109	6	0	1	1	2	5	1	1	0	0	0
4/24/2024	4:15 AM	0	113	13	0	4	0	3	6	0	0	0	0	0
4/24/2024	4:30 AM	0	143	17	0	6	0	3	6	1	0	0	0	0
4/24/2024	4:45 AM	0	181	17	0	8	1	2	5	2	1	0	0	0
4/24/2024	5:00 AM	0	227	24	0	10	1	2	1	3	1	0	0	0
4/24/2024	5:15 AM	0	303	30	0	10	2	1	1	4	1	0	0	0
4/24/2024	5:30 AM	0	369	48	1	10	5	1	1	3	1	0	0	0
4/24/2024	5:45 AM	1	505	72	2	11	5	0	1	3	0	0	0	0
4/24/2024	6:00 AM	1	623	99	4	17	5	0	2	2	0	0	0	0
4/24/2024	6:15 AM	1	777	129	5	21	4	1	3	1	0	0	0	0
4/24/2024	6:30 AM	2	1043	175	5	27	4	1	5	2	0	0	0	0
4/24/2024	6:45 AM	2	1255	215	6	33	5	1	5	1	0	0	0	0
4/24/2024	7:00 AM	3	1501	247	6	35	6	2	5	4	0	0	0	0
4/24/2024	7:15 AM	4	1654	269	7	36	9	2	3	6	0	0	0	0
4/24/2024	7:30 AM	3	1685	281	10	33	7	2	4	7	0	0	0	0
4/24/2024	7:45 AM	2	1685	299	9	33	8	3	6	9	0	0	0	0
4/24/2024	8:00 AM	3	1653	320	9	28	10	2	6	7	0	0	0	0
4/24/2024	8:15 AM	3	1604	310	9	28	7	1	8	8	0	0	0	0
4/24/2024	8:30 AM	5	1516	295	7	31	8	4	6	10	0	0	0	0
4/24/2024	8:45 AM	6	1488	276	9	27	5	4	4	11	0	0	0	0
4/24/2024	9:00 AM	4	1465	263	9	30	3	6	4	11	0	0	0	0
4/24/2024	9:15 AM	3	1463	305	11	28	4	7	2	9	0	0	0	0
4/24/2024	9:30 AM	1	1521	312	11	28	4	4	1	9	0	0	0	0
4/24/2024	9:45 AM	1	1517	323	12	25	4	4	3	6	0	0	0	0
4/24/2024	10:00 AM	1	1540	341	10	23	5	4	4	6	0	0	0	0
4/24/2024	10:15 AM	1	1553	322	10	25	5	6	4	5	0	0	0	0
4/24/2024	10:30 AM	1	1608	334	10	23	4	8	4	3	0	0	0	0
4/24/2024	10:45 AM	0	1676	344	9	28	4	10	3	5	0	0	0	0
4/24/2024	11:00 AM	0	1724	328	14	27	2	8	2	8	0	0	0	0
4/24/2024	11:15 AM	2	1833	342	11	32	3	5	5	10	0	0	0	0
4/24/2024	11:30 AM	2	1788	343	15	36	2	3	5	9	0	0	0	0
4/24/2024	11:45 AM	3	1844	341	12	32	4	0	5	8	0	0	0	0
4/24/2024	12:00 PM	4	1920	342	8	33	5	0	5	4	0	0	0	0
4/24/2024	12:15 PM	2	1961	326	8	27	5	0	3	5	1	0	0	0
4/24/2024	12:30 PM	2	2115	325	4	25	5	0	3	5	1	0	0	0
4/24/2024	12:45 PM	1	2134	323	7	31	5	0	5	5	1	0	0	0
4/24/2024	1:00 PM	0	2114	327	6	31	4	0	5	8	1	0	0	0
4/24/2024	1:15 PM	0	2153	347	5	36	4	0	5	6	1	0	0	0
4/24/2024	1:30 PM	0	2208	367	4	32	7	0	5	10	1	0	0	0
4/24/2024	1:45 PM	2	2240	372	6	32	5	1	3	12	1	0	0	0
4/24/2024	2:00 PM	2	2330	361	10	30	5	1	3	12	1	0	0	0
4/24/2024	2:15 PM	3	2413	386	11	25	3	1	3	13	0	0	0	0
4/24/2024	2:30 PM	3	2459	401	13	23	0	1	3	11	0	0	0	0
4/24/2024	2:45 PM	2	2611	452	12	17	0	2	2	10	0	0	0	0
4/24/2024	3:00 PM	3	2734	524	9	19	1	2	1	10	0	0	0	0
4/24/2024	3:15 PM	2	2956	557	9	22	1	3	0	8	0	0	0	0
4/24/2024	3:30 PM	5	3196	600	7	31	3	5	0	5	0	0	0	0
4/24/2024	3:45 PM	6	3504	601	6	31	3	3	0	3	0	0	0	0
4/24/2024	4:00 PM	6	3746	594	7	32	3	3	2	0	0	0	0	0
4/24/2024	4:15 PM	6	3968	590	7	23	3	2	2	1	0	0	0	0
4/24/2024	4:30 PM	4	4109	561	7	15	1	0	2	1	0	0	0	0
4/24/2024	4:45 PM	4	3831	540	6	12	2	0	3	4	1	0	0	0
4/24/2024	5:00 PM	3	3535	480	6	10	2	0	1	4	1	0	0	0
4/24/2024	5:15 PM	4	3028	401	8	14	2	0	1	6	1	0	0	0
4/24/2024	5:30 PM	4	2430	320	12	15	4	0	4	7	1	0	0	0
4/24/2024	5:45 PM	2	2181	249	11	16	3	0	3	4	0	0	0	0
4/24/2024	6:00 PM	2	1914	212	12	13	2	0	3	4	0	0	0	0
4/24/2024	6:15 PM	1	1740	190	12	11	3	0	3	1	0	0	0	0
4/24/2024	6:30 PM	0	1707	178	9	7	1	1	0	0	0	0	0	0
4/24/2024	6:45 PM	1	1607	150	9	6	1	1	0	0	0	0	0	0
4/24/2024	7:00 PM	3	1617	146	7	7	1	1	0	1	0	0	0	0
4/24/2024	7:15 PM	4	1553	135	4	6	0	1	0	1	0	0	0	0
4/24/2024	7:30 PM	7	1485	125	4	11	1	1	0	2	0	0	0	0
4/24/2024	7:45 PM	9	1432	135	4	13	1	2	0	2	0	0	0	0
4/24/2024	8:00 PM	7	1272	144	4	11	1	3	0	2	0	0	0	0
4/24/2024	8:15 PM	6	1169	119	5	9	2	3	1	3	0	0	0	0
4/24/2024	8:30 PM	6	1095	102	5	4	2	2	1	2	0	0	0	0
4/24/2024	8:45 PM	4	992	84	6	2	3	1	1	3	0	0	0	0
4/24/2024	9:00 PM	6	997	56	7	2	3	1	1	2	0	0	0	0
4/24/2024	9:15 PM	6	966	55	9	2	3	2	0	1	0	0	0	0
4/24/2024	9:30 PM	5	994	52	7	2	4	2	0	2	0	0	0	0
4/24/2024	9:45 PM	4	992	46	5	2	3	4	0	1	0	0	0	0
4/24/2024	10:00 PM	2	886	38	3	1	3	3	0	1	0	0	0	0
4/24/2024	10:15 PM	2	796	36	0	1	2	2	0	2	0	0	0	0
4/24/2024	10:30 PM	3	630	32	0	2	0	2	0	2	0	0	0	0
4/24/2024	10:45 PM	5	499	31	0	1	1	1	0	2	0	0	0	0
4/24/2024	11:00 PM	5	417	25	0	3	1	1	0	4	0	0	0	0
4/24/2024	11:15 PM	5	299	15	0	3	1	1	0	3	0	0	0	0
4/24/2024	11:30 PM	2	173	8	0	2	1	1	0	2	0	0	0	0
4/24/2024	11:45 PM	0	74	2	0	2	0	0	0	2	0	0	0	0

4/25/2024	12:00 AM	0	228	7	2	6	1	4	0	2	0	0	0	0
4/25/2024	12:15 AM	0	198	4	2	7	1	7	0	1	0	0	0	0
4/25/2024	12:30 AM	0	179	4	2	5	0	6	0	2	0	0	0	0
4/25/2024	12:45 AM	0	174	4	0	3	0	4	0	2	0	0	0	0
4/25/2024	1:00 AM	0	177	6	0	6	0	3	0	1	0	0	0	0
4/25/2024	1:15 AM	0	178	8	0	4	0	0	0	1	0	0	0	0
4/25/2024	1:30 AM	0	153	6	0	3	0	0	0	1	0	0	0	0
4/25/2024	1:45 AM	0	118	7	0	3	1	1	0	2	0	0	0	0
4/25/2024	2:00 AM	0	103	5	0	2	1	2	0	3	0	0	0	0
4/25/2024	2:15 AM	0	72	3	0	3	1	3	1	6	0	0	0	0
4/25/2024	2:30 AM	0	70	3	0	3	2	5	2	6	0	0	0	0
4/25/2024	2:45 AM	0	84	3	0	4	1	5	2	5	0	0	0	0
4/25/2024	3:00 AM	0	82	5	0	3	1	4	3	6	0	0	0	0
4/25/2024	3:15 AM	0	86	7	0	2	1	3	2	4	0	0	0	0
4/25/2024	3:30 AM	0	97	8	0	2	1	1	2	3	0	0	0	0
4/25/2024	3:45 AM	0	112	9	0	4	2	0	2	4	0	0	0	0
4/25/2024	4:00 AM	0	127	11	0	4	2	0	4	4	0	0	0	0
4/25/2024	4:15 AM	0	153	9	0	5	2	0	5	3	0	0	0	0
4/25/2024	4:30 AM	0	172	11	0	7	1	0	4	3	0	0	0	0
4/25/2024	4:45 AM	0	210	16	1	4	0	0	5	2	0	0	0	0
4/25/2024	5:00 AM	0	269	20	1	4	0	0	2	1	0	0	0	0
4/25/2024	5:15 AM	1	323	30	1	10	1	0	1	2	0	0	0	0
4/25/2024	5:30 AM	2	393	40	2	11	1	1	3	3	0	0	0	0
4/25/2024	5:45 AM	2	477	60	2	13	3	1	2	7	0	0	0	0
4/25/2024	6:00 AM	2	618	81	4	17	3	1	2	7	0	0	0	0
4/25/2024	6:15 AM	1	757	106	5	15	5	1	3	7	0	0	0	0
4/25/2024	6:30 AM	0	984	131	6	23	6	0	1	6	4	0	0	0
4/25/2024	6:45 AM	2	1243	151	5	29	5	1	4	3	4	0	0	0
4/25/2024	7:00 AM	3	1448	161	4	33	6	1	4	3	4	0	0	0
4/25/2024	7:15 AM	3	1636	187	3	30	4	3	3	3	4	0	0	0
4/25/2024	7:30 AM	4	1665	211	5	24	5	3	4	3	0	0	0	0
4/25/2024	7:45 AM	2	1678	228	6	27	7	3	1	4	0	0	0	0
4/25/2024	8:00 AM	1	1685	238	7	24	7	5	3	5	0	0	0	0
4/25/2024	8:15 AM	1	1604	229	17	25	7	3	3	10	1	0	0	0
4/25/2024	8:30 AM	0	1563	233	15	27	6	3	2	10	1	0	0	0
4/25/2024	8:45 AM	0	1518	240	16	25	5	3	2	10	1	0	0	0
4/25/2024	9:00 AM	1	1481	271	17	26	8	3	0	10	1	0	0	0
4/25/2024	9:15 AM	1	1546	287	8	29	11	5	1	7	0	0	0	0
4/25/2024	9:30 AM	1	1620	316	9	33	12	7	1	9	1	0	0	0
4/25/2024	9:45 AM	2	1623	309	10	30	12	6	4	11	1	0	0	0
4/25/2024	10:00 AM	3	1610	315	7	34	8	6	6	13	1	0	0	0
4/25/2024	10:15 AM	4	1652	324	11	40	5	5	7	11	1	0	0	0
4/25/2024	10:30 AM	4	1689	325	11	37	3	5	9	9	0	0	0	0
4/25/2024	10:45 AM	3	1770	352	11	37	2	8	6	7	0	0	0	0
4/25/2024	11:00 AM	1	1851	357	15	34	5	7	5	7	0	0	0	0
4/25/2024	11:15 AM	0	1869	392	12	26	6	6	3	7	0	0	0	0
4/25/2024	11:30 AM	0	1939	416	9	25	8	7	1	9	0	0	0	0
4/25/2024	11:45 AM	0	2008	431	13	23	8	4	2	9	0	0	0	0
4/25/2024	12:00 PM	0	2032	437	11	18	6	4	1	8	0	0	0	0
4/25/2024	12:15 PM	2	2153	434	11	21	6	4	1	9	0	0	0	0
4/25/2024	12:30 PM	2	2203	418	15	25	4	2	1	11	1	0	0	0
4/25/2024	12:45 PM	2	2220	407	11	27	6	4	2	15	1	0	0	0
4/25/2024	1:00 PM	3	2215	399	12	33	7	3	3	12	1	0	0	0
4/25/2024	1:15 PM	2	2209	390	10	34	5	7	5	11	1	0	0	0
4/25/2024	1:30 PM	3	2234	401	8	28	5	7	6	7	0	0	0	0
4/25/2024	1:45 PM	3	2232	418	6	27	2	9	6	4	0	0	0	0
4/25/2024	2:00 PM	3	2396	451	4	25	1	12	7	7	0	0	0	0
4/25/2024	2:15 PM	2	2458	449	9	26	1	9	6	7	0	0	0	0
4/25/2024	2:30 PM	4	2588	467	9	28	1	12	6	11	0	0	0	0
4/25/2024	2:45 PM	5	2750	482	9	34	1	11	5	12	0	0	0	0
4/25/2024	3:00 PM	6	2782	504	11	39	1	11	7	10	1	0	0	0
4/25/2024	3:15 PM	7	2987	581	7	40	3	10	7	11	1	0	0	0
4/25/2024	3:30 PM	7	3138	617	5	48	3	7	8	10	1	0	0	0
4/25/2024	3:45 PM	8	3378	651	7	41	3	4	7	7	1	0	0	0
4/25/2024	4:00 PM	7	3630	667	6	34	2	2	3	7	0	0	0	0
4/25/2024	4:15 PM	8	3828	616	5	25	0	4	2	5	0	0	0	0
4/25/2024	4:30 PM	6	3945	590	6	13	0	3	0	2	1	0	0	0
4/25/2024	4:45 PM	9	3828	532	5	12	0	3	0	2	1	0	0	0
4/25/2024	5:00 PM	9	3565	463	5	10	0	2	0	1	3	0	0	0
4/25/2024	5:15 PM	8	3157	420	7	11	0	0	1	3	4	0	0	0
4/25/2024	5:30 PM	8	2648	343	10	13	0	0	1	3	4	0	0	0
4/25/2024	5:45 PM	6	2272	293	10	18	0	0	2	3	4	0	0	0
4/25/2024	6:00 PM	7	2034	241	12	20	0	0	2	3	2	0	0	0
4/25/2024	6:15 PM	6	1391	159	10	18	0	0	1	1	1	0	0	0
4/25/2024	6:30 PM	5	912	93	6	13	0	0	1	1	0	0	0	0
4/25/2024	6:45 PM	2	445	39	4	5	0	0	0	0	0	0	0	0
4/25/2024	7:00 PM	0	0	0	0	0	0	0	0	0	0	0	0	0
4/25/2024	7:15 PM	0	0	0	0	0	0	0	0	0	0	0	0	0
4/25/2024	7:30 PM	0	0	0	0	0	0	0	0	0	0	0	0	0
4/25/2024	7:45 PM	0	0	0	0	0	0	0	0	0	0	0	0	0
4/25/2024	8:00 PM	0	0	0	0	0	0	0	0	0	0	0	0	0
4/25/2024	8:15 PM	0	0	0	0	0	0	0	0	0	0	0	0	0
4/25/2024	8:30 PM	0	0	0	0	0	0	0	0	0	0	0	0	0
4/25/2024	8:45 PM	0	0	0	0	0	0	0	0	0	0	0	0	0
4/25/2024	9:00 PM	0	0	0	0	0	0	0	0	0	0	0	0	0
4/25/2024	9:15 PM	0	0	0	0	0	0	0	0	0	0	0	0	0
4/25/2024	9:30 PM	0	0	0	0	0	0	0	0	0	0	0	0	0
4/25/2024	9:45 PM	0	0	0	0	0	0	0	0	0	0	0	0	0
4/25/2024	10:00 PM	0	0	0	0	0	0	0	0	0	0	0	0	0
4/25/2024	10:15 PM	0	0	0	0	0	0	0	0	0	0	0	0	0
4/25/2024	10:30 PM	0	0	0	0	0	0	0	0	0	0	0	0	0
4/25/2024	10:45 PM	0	0	0	0	0	0	0	0	0	0	0	0	0
4/25/2024	11:00 PM	0	0	0	0	0	0	0	0	0	0	0	0	0
4/25/2024	11:15 PM	0	0	0	0	0	0	0	0	0	0	0	0	0
4/25/2024	11:30 PM	0	0	0	0	0	0	0	0	0	0	0	0	0
4/25/2024	11:45 PM	0	0	0	0	0	0	0	0	0	0	0	0	0

Bi-Directional Class Count || NB EB 15min

Columbia, SC

Marr Traffic DATA COLLECTION
www.marrtraffic.com

Site 72
US-321 Elmwood Ave E/Bound On-Ramp,
east of US-321 Hugher St S/Bound On-Ramp

Date
Tuesday, April 30, 2024

Lat/Long
34.009109°, -81.051419°

Click here for Map

Weather
Mostly Cloudy
70°F

Click here for Detailed Weather

0000 - 2400 (Weekday 24h Session) (04-30-2024)
NB EB 15min

	Eastbound (Movement 72.1)													15min	60min
Time	1	2	3	4	5	6	7	8	9	10	11	12	13	Total	Total
0000 - 0015	0	0	0	0	0	0	0	0	0	0	0	0	0	**0**	
0015 - 0030	0	0	0	0	0	0	0	0	0	0	0	0	0	**0**	
0030 - 0045	0	0	0	0	0	0	0	0	0	0	0	0	0	**0**	
0045 - 0100	0	0	0	0	0	0	0	0	0	0	0	0	0	**0**	**0**
0100 - 0115	0	0	0	0	0	0	0	0	0	0	0	0	0	**0**	
0115 - 0130	0	0	0	0	0	0	0	0	0	0	0	0	0	**0**	
0130 - 0145	0	0	0	0	0	0	0	0	0	0	0	0	0	**0**	
0145 - 0200	0	0	0	0	0	0	0	0	0	0	0	0	0	**0**	**0**
0200 - 0215	0	0	0	0	0	0	0	0	0	0	0	0	0	**0**	
0215 - 0230	0	0	0	0	0	0	0	0	0	0	0	0	0	**0**	
0230 - 0245	0	0	0	0	0	0	0	0	0	0	0	0	0	**0**	
0245 - 0300	0	0	0	0	0	0	0	0	0	0	0	0	0	**0**	**0**
0300 - 0315	0	0	0	0	0	0	0	0	0	0	0	0	0	**0**	
0315 - 0330	0	0	0	0	0	0	0	0	0	0	0	0	0	**0**	
0330 - 0345	0	0	0	0	0	0	0	0	0	0	0	0	0	**0**	
0345 - 0400	0	0	0	0	0	0	0	0	0	0	0	0	0	**0**	**0**
0400 - 0415	0	0	0	0	0	0	0	0	0	0	0	0	0	**0**	
0415 - 0430	0	0	0	0	0	0	0	0	0	0	0	0	0	**0**	
0430 - 0445	0	0	0	0	0	0	0	0	0	0	0	0	0	**0**	
0445 - 0500	0	0	0	0	0	0	0	0	0	0	0	0	0	**0**	**0**
0500 - 0515	0	0	0	0	0	0	0	0	0	0	0	0	0	**0**	
0515 - 0530	0	0	0	0	0	0	0	0	0	0	0	0	0	**0**	
0530 - 0545	0	0	0	0	0	0	0	0	0	0	0	0	0	**0**	
0545 - 0600	0	0	0	0	0	0	0	0	0	0	0	0	0	**0**	**0**
0600 - 0615	0	0	0	0	0	0	0	0	0	0	0	0	0	**0**	
0615 - 0630	0	0	0	0	0	0	0	0	0	0	0	0	0	**0**	
0630 - 0645	0	0	0	0	0	0	0	0	0	0	0	0	0	**0**	
0645 - 0700	0	0	0	0	0	0	0	0	0	0	0	0	0	**0**	**0**
0700 - 0715	0	0	0	0	0	0	0	0	0	0	0	0	0	**0**	
0715 - 0730	0	0	0	0	0	0	0	0	0	0	0	0	0	**0**	
0730 - 0745	0	0	0	0	0	0	0	0	0	0	0	0	0	**0**	
0745 - 0800	0	0	0	0	0	0	0	0	0	0	0	0	0	**0**	**0**
0800 - 0815	0	0	0	0	0	0	0	0	0	0	0	0	0	**0**	
0815 - 0830	0	0	0	0	0	0	0	0	0	0	0	0	0	**0**	
0830 - 0845	0	0	0	0	0	0	0	0	0	0	0	0	0	**0**	
0845 - 0900	0	0	0	0	0	0	0	0	0	0	0	0	0	**0**	**0**
0900 - 0915	0	0	0	0	0	0	0	0	0	0	0	0	0	**0**	
0915 - 0930	0	0	0	0	0	0	0	0	0	0	0	0	0	**0**	
0930 - 0945	0	0	0	0	0	0	0	0	0	0	0	0	0	**0**	
0945 - 1000	0	0	0	0	0	0	0	0	0	0	0	0	0	**0**	**0**
1000 - 1015	0	0	0	0	0	0	0	0	0	0	0	0	0	**0**	
1015 - 1030	0	0	0	0	0	0	0	0	0	0	0	0	0	**0**	
1030 - 1045	0	0	0	0	0	0	0	0	0	0	0	0	0	**0**	
1045 - 1100	0	0	0	0	0	0	0	0	0	0	0	0	0	**0**	**0**
1100 - 1115	0	0	0	0	0	0	0	0	0	0	0	0	0	**0**	
1115 - 1130	0	0	0	0	0	0	0	0	0	0	0	0	0	**0**	
1130 - 1145	0	0	0	0	0	0	0	0	0	0	0	0	0	**0**	
1145 - 1200	0	0	0	0	0	0	0	0	0	0	0	0	0	**0**	**0**
1200 - 1215	0	0	0	0	0	0	0	0	0	0	0	0	0	**0**	
1215 - 1230	0	0	0	0	0	0	0	0	0	0	0	0	0	**0**	
1230 - 1245	0	0	0	0	0	0	0	0	0	0	0	0	0	**0**	
1245 - 1300	0	0	0	0	0	0	0	0	0	0	0	0	0	**0**	**0**
1300 - 1315	0	0	0	0	0	0	0	0	0	0	0	0	0	**0**	
1315 - 1330	0	0	0	0	0	0	0	0	0	0	0	0	0	**0**	
1330 - 1345	0	0	0	0	0	0	0	0	0	0	0	0	0	**0**	
1345 - 1400	0	0	0	0	0	0	0	0	0	0	0	0	0	**0**	**0**
1400 - 1415	0	0	0	0	0	0	0	0	0	0	0	0	0	**0**	
1415 - 1430	0	0	0	0	0	0	0	0	0	0	0	0	0	**0**	
1430 - 1445	0	0	0	0	0	0	0	0	0	0	0	0	0	**0**	
1445 - 1500	0	0	0	0	0	0	0	0	0	0	0	0	0	**0**	**0**
1500 - 1515	0	0	0	0	0	0	0	0	0	0	0	0	0	**0**	
1515 - 1530	0	0	0	0	0	0	0	0	0	0	0	0	0	**0**	
1530 - 1545	0	0	0	0	0	0	0	0	0	0	0	0	0	**0**	
1545 - 1600	0	0	0	0	0	0	0	0	0	0	0	0	0	**0**	**0**
1600 - 1615	0	0	0	0	0	0	0	0	0	0	0	0	0	**0**	
1615 - 1630	0	0	0	0	0	0	0	0	0	0	0	0	0	**0**	
1630 - 1645	0	0	0	0	0	0	0	0	0	0	0	0	0	**0**	
1645 - 1700	0	0	0	0	0	0	0	0	0	0	0	0	0	**0**	**0**
1700 - 1715	0	0	0	0	0	0	0	0	0	0	0	0	0	**0**	
1715 - 1730	0	0	0	0	0	0	0	0	0	0	0	0	0	**0**	
1730 - 1745	0	0	0	0	0	0	0	0	0	0	0	0	0	**0**	
1745 - 1800	0	0	0	0	0	0	0	0	0	0	0	0	0	**0**	**0**
1800 - 1815	0	0	0	0	0	0	0	0	0	0	0	0	0	**0**	
1815 - 1830	0	0	0	0	0	0	0	0	0	0	0	0	0	**0**	
1830 - 1845	0	0	0	0	0	0	0	0	0	0	0	0	0	**0**	
1845 - 1900	0	0	0	0	0	0	0	0	0	0	0	0	0	**0**	**0**
1900 - 1915	0	262	29	2	0	2	0	0	2	0	0	0	0	**297**	
1915 - 1930	7	271	36	0	4	0	0	0	1	0	0	0	0	**319**	
1930 - 1945	1	242	16	2	1	0	0	0	0	0	0	0	0	**262**	
1945 - 2000	0	151	21	0	2	0	0	0	0	0	0	0	0	**174**	**1052**
2000 - 2015	0	229	33	1	3	0	0	0	1	0	0	0	0	**267**	
2015 - 2030	0	212	30	0	0	0	0	0	0	0	0	0	0	**242**	
2030 - 2045	0	171	39	1	2	0	0	0	0	0	0	0	0	**213**	
2045 - 2100	1	194	32	0	2	0	0	0	1	0	0	0	0	**230**	**952**
2100 - 2115	0	174	38	0	0	0	0	0	1	0	0	0	0	**213**	
2115 - 2130	0	174	28	0	2	0	0	0	0	0	0	0	0	**204**	
2130 - 2145	0	145	27	3	5	0	0	0	0	0	0	0	0	**180**	
2145 - 2200	0	123	23	0	1	0	0	0	2	0	0	0	0	**149**	**746**
2200 - 2215	0	131	28	0	2	0	0	0	0	0	0	0	0	**161**	
2215 - 2230	0	110	23	0	3	0	0	0	1	0	0	0	0	**137**	
2230 - 2245	0	118	18	0	1	0	0	0	1	0	0	0	0	**138**	
2245 - 2300	0	94	19	0	1	0	0	0	1	0	0	0	0	**115**	**551**
2300 - 2315	0	79	18	0	3	0	0	0	0	0	0	0	0	**100**	
2315 - 2330	0	65	15	0	0	0	0	0	0	0	0	0	0	**80**	
2330 - 2345	0	74	16	0	1	0	0	0	1	0	0	0	0	**92**	
2345 - 0000	0	51	10	0	0	0	0	0	1	0	0	0	0	**62**	**334**

Session Total	9	3070	499	9	33	2	0	0	13	0	0	0	0	**3635**
Session Average	0.09	31.98	5.20	0.09	0.34	0.02	0.00	0.00	0.14	0.00	0.00	0.00	0.00	**37.86**
Session Percentage	0.25	84.46	13.73	0.25	0.91	0.06	0.00	0.00	0.36	0.00	0.00	0.00	0.00	

AM Peak Hour	-	-	-	-	-	-	-	-	-	-	-	-	-	**-**
AM Peak Volume	0	0	0	0	0	0	0	0	0	0	0	0	0	**0**

Noon Peak Hour	-	-	-	-	-	-	-	-	-	-	-	-	-	**-**
Noon Peak Volume	0	0	0	0	0	0	0	0	0	0	0	0	0	**0**

PM Peak Hour	1845 - 1945	1900 - 2000	1945 - 2045	1845 - 1945	1915 - 2015	1815 - 1915	-	-	1830 - 1930	-	-	-	-	**1900 - 2000**
PM Peak Volume	8	926	123	4	10	2	0	0	3	0	0	0	0	**1052**

Site 72
US-321 Elmwood Ave E/Bound On-Ramp,
east of US-321 Hugher St S/Bound On-Ramp

Date
Wednesday, May 1, 2024

Lat/Long
34.009109°, -81.051419°

Weather
Partly Cloudy
71°F

Click here for Detailed Weather

0000 - 2400 (Weekday 24h Session) (05-01-2024)
NB EB 15min

	Eastbound (Movement 72.1)													15min	60min
Time	1	2	3	4	5	6	7	8	9	10	11	12	13	Total	Total
0000 - 0015	0	50	5	0	1	0	0	0	0	0	0	0	0	**56**	
0015 - 0030	0	46	3	0	0	0	0	0	0	0	0	0	0	**49**	
0030 - 0045	0	32	3	0	1	0	0	0	0	0	0	0	0	**36**	
0045 - 0100	0	25	3	0	0	0	0	0	1	0	0	0	0	**29**	**170**
0100 - 0115	0	34	2	0	1	1	0	0	1	0	0	0	0	**39**	
0115 - 0130	0	28	1	0	0	0	0	0	1	0	0	0	0	**30**	
0130 - 0145	0	23	5	0	0	0	0	0	1	0	0	0	0	**29**	
0145 - 0200	0	23	2	0	1	0	0	0	0	0	0	0	0	**26**	**124**
0200 - 0215	0	20	1	0	0	0	0	0	0	0	0	0	0	**21**	
0215 - 0230	0	25	0	0	1	1	0	0	0	0	0	0	0	**27**	
0230 - 0245	0	22	2	0	0	0	0	0	0	0	0	0	0	**24**	
0245 - 0300	0	21	1	0	1	0	0	1	0	0	0	0	0	**24**	**96**
0300 - 0315	0	19	2	0	0	0	0	0	0	0	0	0	0	**21**	
0315 - 0330	0	20	1	0	0	0	0	0	0	0	0	0	0	**21**	
0330 - 0345	0	18	1	0	1	2	0	0	1	0	0	0	0	**23**	
0345 - 0400	0	23	2	0	1	0	0	0	0	0	0	0	0	**26**	**91**
0400 - 0415	1	33	3	0	1	0	0	0	0	0	0	0	0	**38**	
0415 - 0430	0	35	2	0	2	0	0	0	0	0	0	0	0	**39**	
0430 - 0445	0	42	4	0	4	0	0	0	4	0	0	0	0	**54**	
0445 - 0500	0	69	7	0	3	2	0	0	1	0	0	0	0	**82**	**213**
0500 - 0515	0	68	8	0	2	0	0	0	0	0	0	0	0	**78**	
0515 - 0530	1	101	11	0	7	1	0	0	1	0	0	0	0	**122**	
0530 - 0545	0	146	16	0	5	1	0	0	1	0	0	1	0	**170**	
0545 - 0600	1	167	19	1	6	9	0	0	2	0	0	0	0	**205**	**575**
0600 - 0615	0	179	35	1	2	4	0	1	5	0	0	0	0	**227**	
0615 - 0630	1	267	54	0	2	2	0	0	1	0	0	0	0	**327**	
0630 - 0645	1	493	94	0	3	1	0	1	0	0	0	0	0	**593**	
0645 - 0700	0	591	113	2	7	4	0	2	1	0	0	0	0	**720**	**1867**
0700 - 0715	2	590	119	3	4	6	0	1	4	0	1	0	0	**730**	
0715 - 0730	1	844	139	7	4	3	0	0	3	0	0	0	0	**1001**	
0730 - 0745	1	911	154	1	5	2	0	1	1	0	0	1	0	**1077**	
0745 - 0800	0	1013	147	3	4	1	1	0	2	0	0	0	0	**1171**	**3979**
0800 - 0815	0	1042	154	3	4	2	0	3	2	0	0	0	0	**1210**	
0815 - 0830	1	1021	156	2	7	3	0	0	2	0	0	0	0	**1192**	
0830 - 0845	0	1008	134	1	8	1	0	2	5	0	0	0	0	**1159**	
0845 - 0900	5	878	119	3	4	1	0	1	5	0	0	0	0	**1016**	**4577**
0900 - 0915	1	653	113	8	11	4	0	1	6	0	0	0	0	**797**	
0915 - 0930	0	537	106	2	6	2	0	0	4	0	0	0	0	**657**	
0930 - 0945	0	550	92	7	13	2	0	0	2	0	0	0	0	**666**	
0945 - 1000	1	539	81	1	8	1	0	0	2	0	0	0	0	**633**	**2753**
1000 - 1015	0	458	89	2	4	5	0	0	3	0	0	0	0	**561**	
1015 - 1030	1	452	83	0	4	0	0	0	3	0	0	0	0	**543**	
1030 - 1045	1	496	93	1	10	4	0	1	3	0	0	0	0	**609**	
1045 - 1100	0	447	70	1	7	3	0	1	4	0	0	0	0	**533**	**2246**
1100 - 1115	1	442	71	1	6	5	0	1	2	0	0	0	0	**529**	
1115 - 1130	0	452	79	1	7	2	0	0	3	0	0	0	0	**544**	
1130 - 1145	1	430	87	0	5	2	0	0	4	0	0	0	0	**529**	
1145 - 1200	0	495	75	1	8	3	0	0	3	0	0	0	0	**585**	**2187**
1200 - 1215	1	459	85	2	7	0	0	0	3	0	0	0	0	**557**	
1215 - 1230	0	486	80	1	6	3	0	0	2	0	0	0	0	**578**	
1230 - 1245	1	502	91	1	17	1	0	0	1	1	0	0	0	**615**	
1245 - 1300	0	532	103	0	12	4	0	0	2	0	0	0	0	**653**	**2403**
1300 - 1315	1	521	96	4	9	2	0	6	4	0	0	0	0	**643**	
1315 - 1330	1	508	79	0	8	1	0	2	3	0	0	0	0	**602**	
1330 - 1345	0	513	74	1	4	4	0	1	5	0	0	0	0	**602**	
1345 - 1400	0	502	87	1	12	2	1	1	2	0	0	0	0	**608**	**2455**
1400 - 1415	0	529	73	4	7	6	1	0	3	0	0	0	0	**623**	
1415 - 1430	2	558	89	2	2	1	0	2	8	1	0	0	0	**665**	
1430 - 1445	1	506	87	1	13	6	1	0	1	0	0	0	0	**616**	
1445 - 1500	0	495	74	3	10	2	0	0	2	0	0	0	0	**586**	**2490**
1500 - 1515	1	457	68	3	5	0	2	1	1	0	0	0	0	**538**	
1515 - 1530	0	479	60	0	11	3	0	0	2	0	0	0	0	**555**	
1530 - 1545	2	537	80	0	5	3	0	0	2	0	0	0	0	**629**	
1545 - 1600	0	478	67	3	7	1	0	0	2	0	0	0	0	**558**	**2280**
1600 - 1615	1	489	63	3	9	0	0	0	0	0	0	0	0	**565**	
1615 - 1630	0	500	56	3	7	2	0	1	3	0	0	0	0	**572**	
1630 - 1645	0	547	53	1	5	0	0	0	1	0	0	0	0	**607**	
1645 - 1700	2	558	65	2	2	0	0	0	1	0	0	0	0	**630**	**2374**
1700 - 1715	1	549	63	1	6	1	0	0	0	0	0	0	0	**621**	
1715 - 1730	0	542	73	1	4	0	0	0	2	0	0	0	0	**622**	
1730 - 1745	0	445	70	1	3	1	0	0	2	0	0	0	0	**522**	
1745 - 1800	2	488	69	0	3	2	0	1	0	0	0	0	0	**565**	**2330**
1800 - 1815	2	454	60	2	3	0	0	0	0	0	0	0	0	**521**	
1815 - 1830	1	436	45	0	3	1	0	0	1	0	0	0	0	**487**	
1830 - 1845	1	416	49	2	2	0	0	0	0	0	0	0	0	**470**	
1845 - 1900	2	378	44	0	2	0	0	0	0	0	0	0	0	**426**	**1904**
1900 - 1915	0	335	33	2	2	1	0	2	1	0	0	0	0	**376**	
1915 - 1930	0	324	37	0	0	0	0	0	0	0	0	0	0	**361**	
1930 - 1945	0	325	28	1	0	0	2	0	0	0	0	0	0	**356**	
1945 - 2000	0	240	27	0	2	0	0	1	1	1	0	0	0	**272**	**1365**
2000 - 2015	0	276	23	1	3	0	1	0	1	0	0	0	0	**305**	
2015 - 2030	1	289	23	0	1	0	0	0	1	0	0	0	0	**315**	
2030 - 2045	3	326	17	1	0	2	0	0	2	0	0	0	0	**351**	
2045 - 2100	1	318	13	0	3	1	0	0	0	0	0	0	0	**336**	**1307**
2100 - 2115	0	229	13	0	0	2	0	0	0	0	0	0	0	**244**	
2115 - 2130	1	193	12	1	0	3	0	0	0	0	0	0	0	**210**	
2130 - 2145	0	201	12	1	1	0	0	0	0	1	0	0	0	**216**	
2145 - 2200	0	177	11	0	0	4	0	0	0	0	0	0	0	**192**	**862**
2200 - 2215	1	139	6	0	1	1	0	0	1	0	0	0	0	**149**	
2215 - 2230	0	140	5	0	3	1	0	0	0	0	0	0	0	**149**	
2230 - 2245	0	134	7	0	1	1	0	0	0	0	0	0	0	**143**	
2245 - 2300	0	121	2	0	3	0	0	0	0	0	0	0	0	**126**	**567**
2300 - 2315	0	112	2	0	1	3	0	0	1	0	0	0	0	**119**	
2315 - 2330	0	76	2	0	2	3	0	0	2	0	0	0	0	**85**	
2330 - 2345	0	74	1	0	1	0	0	0	0	0	0	0	0	**76**	
2345 - 0000	0	75	1	0	0	1	0	0	0	0	0	0	0	**77**	**357**

Session Total	50	33846	4839	101	389	149	9	35	147	4	1	2	0	**39572**
Session Average	0.52	352.56	50.41	1.05	4.05	1.55	0.09	0.36	1.53	0.04	0.01	0.02	0.00	**412.21**
Session Percentage	0.13	85.53	12.23	0.26	0.98	0.38	0.02	0.09	0.37	0.01	0.00	0.01	0.00	

AM Peak Hour	0815 - 0915	0745 - 0845	0730 - 0830	0845 - 0945	0900 - 1000	0530 - 0630	0700 - 0800	0800 - 0900	0830 - 0930	-	0615 - 0715	0500 - 0600	-	**0745 - 0845**
AM Peak Volume	7	4084	611	20	38	16	1	6	20	0	1	1	0	**4732**

Noon Peak Hour	1415 - 1515	1330 - 1430	1215 - 1315	1400 - 1500	1230 - 1330	1345 - 1445	1345 - 1445	1300 - 1400	1330 - 1430	1145 - 1245	-	-	-	**1230 - 1330**
Noon Peak Volume	4	2102	370	10	46	15	3	10	18	1	0	0	0	**2513**

PM Peak Hour	1745 - 1845	1630 - 1730	1500 - 1600	1545 - 1645	1515 - 1615	1500 - 1600	1915 - 2015	1900 - 2000	1500 - 1600	1900 - 2000	-	-	-	**1630 - 1730**
PM Peak Volume	6	2196	275	10	32	7	3	3	7	1	0	0	0	**2480**

Site 72
US-321 Elmwood Ave E/Bound On-Ramp,
east of US-321 Hugher St S/Bound On-Ramp

Date
Thursday, May 2, 2024

Lat/Long
34.009109°, -81.051419°

Weather
Fair
74°F

Click here for Detailed Weather

0000 - 2400 (Weekday 24h Session) (05-02-2024)
NB EB 15min

	Eastbound (Movement 72.1)													15min	60min
TIME	1	2	3	4	5	6	7	8	9	10	11	12	13	Total	Total
0000 - 0015	0	55	4	0	0	2	0	0	1	0	0	0	0	**62**	
0015 - 0030	0	36	2	0	1	1	0	0	1	0	0	0	0	**41**	
0030 - 0045	0	33	0	0	4	0	0	0	0	0	0	0	0	**37**	
0045 - 0100	0	40	1	0	0	1	0	0	0	0	0	0	0	**42**	**182**
0100 - 0115	0	33	0	0	0	1	0	0	1	0	0	0	0	**35**	
0115 - 0130	0	20	4	0	1	1	0	0	0	0	0	0	0	**26**	
0130 - 0145	1	19	1	0	1	2	0	0	1	0	0	0	0	**25**	
0145 - 0200	0	18	1	0	1	1	0	0	0	0	0	0	0	**21**	**107**
0200 - 0215	0	17	2	0	0	3	0	0	1	0	0	0	0	**23**	
0215 - 0230	0	21	2	0	1	0	0	0	1	0	0	0	0	**25**	
0230 - 0245	0	23	2	0	1	0	0	0	1	0	0	0	0	**27**	
0245 - 0300	0	18	0	0	0	1	0	0	0	0	0	0	0	**19**	**94**
0300 - 0315	0	16	0	0	0	3	0	0	2	0	0	0	0	**21**	
0315 - 0330	0	21	2	0	0	0	0	0	1	0	0	0	0	**24**	
0330 - 0345	0	23	5	0	0	1	0	0	1	0	0	0	0	**30**	
0345 - 0400	0	20	2	0	4	0	1	0	0	0	0	0	0	**27**	**102**
0400 - 0415	0	30	0	0	1	0	0	0	0	0	0	0	0	**31**	
0415 - 0430	0	39	1	0	1	0	0	0	1	0	0	0	0	**42**	
0430 - 0445	0	40	3	0	1	0	0	0	0	0	0	0	0	**44**	
0445 - 0500	0	60	9	0	1	3	0	0	1	0	0	0	0	**74**	**191**
0500 - 0515	0	65	11	0	5	3	0	0	3	0	0	0	0	**87**	
0515 - 0530	1	107	9	0	6	9	0	0	10	0	0	0	0	**142**	
0530 - 0545	1	152	22	1	2	8	0	0	1	0	0	0	0	**187**	
0545 - 0600	1	172	22	1	0	2	0	0	1	0	0	0	0	**199**	**615**
0600 - 0615	0	158	26	1	1	4	0	0	1	0	0	0	0	**191**	
0615 - 0630	0	301	46	0	4	2	0	0	0	0	2	0	0	**355**	
0630 - 0645	1	488	86	1	2	5	0	0	2	0	0	0	0	**585**	
0645 - 0700	3	594	122	2	6	4	0	1	6	0	1	0	0	**739**	**1870**
0700 - 0715	2	658	113	2	5	3	0	0	3	0	0	0	0	**786**	
0715 - 0730	2	809	138	2	2	4	0	2	3	0	0	0	0	**962**	
0730 - 0745	0	955	155	0	4	2	0	0	4	0	0	0	0	**1120**	
0745 - 0800	1	1117	172	1	6	2	0	0	6	0	0	0	0	**1305**	**4173**
0800 - 0815	0	963	143	1	8	3	0	0	1	0	0	0	0	**1119**	
0815 - 0830	1	1083	131	4	4	2	0	1	4	0	0	0	0	**1230**	
0830 - 0845	1	880	145	2	5	1	0	0	4	0	0	0	0	**1038**	
0845 - 0900	0	734	103	3	6	3	0	0	5	0	0	0	0	**854**	**4241**
0900 - 0915	0	616	102	5	8	4	0	0	2	0	0	0	0	**737**	
0915 - 0930	0	574	102	5	9	1	0	0	3	0	0	0	0	**694**	
0930 - 0945	1	561	123	4	9	0	0	0	4	0	0	0	0	**702**	
0945 - 1000	1	558	121	0	7	3	0	1	5	0	0	0	0	**696**	**2829**
1000 - 1015	1	489	99	2	5	3	0	0	2	0	0	0	0	**601**	
1015 - 1030	0	438	101	2	8	5	0	0	3	0	0	0	0	**557**	
1030 - 1045	0	491	93	4	7	3	0	0	8	0	0	0	0	**606**	
1045 - 1100	0	446	101	0	15	0	0	0	1	0	0	0	0	**563**	**2327**
1100 - 1115	1	426	90	2	8	0	0	1	5	0	0	0	0	**533**	
1115 - 1130	1	449	98	1	10	6	0	2	5	0	0	0	0	**572**	
1130 - 1145	0	484	74	2	4	4	0	1	1	0	0	0	0	**570**	
1145 - 1200	3	489	85	1	11	1	0	2	7	0	0	0	0	**599**	**2274**
1200 - 1215	0	527	110	2	14	0	0	5	9	1	0	0	0	**668**	
1215 - 1230	1	607	107	0	5	4	0	0	6	0	0	0	0	**730**	
1230 - 1245	0	595	101	3	5	5	1	1	6	0	0	0	0	**717**	
1245 - 1300	0	616	101	3	16	2	1	0	7	0	0	0	0	**746**	**2861**
1300 - 1315	1	566	112	3	15	1	0	2	8	0	0	0	0	**708**	
1315 - 1330	2	555	107	1	14	1	0	1	18	0	0	0	0	**699**	
1330 - 1345	1	591	90	2	9	1	0	4	5	0	0	0	0	**703**	
1345 - 1400	2	605	87	5	10	3	0	1	8	0	0	0	0	**721**	**2831**
1400 - 1415	2	522	87	3	10	2	0	4	5	0	0	0	0	**635**	
1415 - 1430	0	613	90	0	14	4	0	1	7	0	0	0	0	**729**	
1430 - 1445	2	613	89	4	13	3	0	0	6	0	0	0	0	**730**	
1445 - 1500	3	600	96	4	10	3	0	2	7	0	0	0	0	**725**	**2819**
1500 - 1515	2	561	98	0	9	4	1	3	8	0	0	0	0	**686**	
1515 - 1530	0	585	117	0	10	1	0	1	6	0	0	0	0	**720**	
1530 - 1545	1	777	115	1	14	2	3	2	13	0	0	0	0	**928**	
1545 - 1600	0	622	106	2	18	2	0	4	14	0	0	0	0	**768**	**3102**
1600 - 1615	1	608	116	4	16	3	0	0	11	0	0	0	0	**759**	
1615 - 1630	0	684	115	1	8	1	1	1	3	0	0	0	0	**814**	
1630 - 1645	2	727	115	1	9	3	1	0	6	0	0	0	0	**864**	
1645 - 1700	0	642	111	2	10	0	0	3	6	0	0	0	0	**774**	**3211**
1700 - 1715	1	636	94	1	4	0	0	1	2	0	0	0	0	**739**	
1715 - 1730	0	602	100	3	6	2	0	0	6	0	0	0	0	**719**	
1730 - 1745	0	625	113	2	10	0	0	1	1	1	0	0	0	**753**	
1745 - 1800	3	677	105	1	9	2	0	1	3	0	0	0	0	**801**	**3012**
1800 - 1815	1	581	90	0	4	0	0	2	6	0	0	0	0	**684**	
1815 - 1830	1	765	109	4	9	0	0	0	5	0	0	0	0	**893**	
1830 - 1845	1	688	69	0	5	2	1	0	6	0	0	0	0	**772**	
1845 - 1900	1	436	36	2	2	0	0	1	1	0	0	0	0	**479**	**2828**
1900 - 1915	0	0	0	0	0	0	0	0	0	0	0	0	0	**0**	
1915 - 1930	0	0	0	0	0	0	0	0	0	0	0	0	0	**0**	
1930 - 1945	0	0	0	0	0	0	0	0	0	0	0	0	0	**0**	
1945 - 2000	0	0	0	0	0	0	0	0	0	0	0	0	0	**0**	**0**
2000 - 2015	0	0	0	0	0	0	0	0	0	0	0	0	0	**0**	
2015 - 2030	0	0	0	0	0	0	0	0	0	0	0	0	0	**0**	
2030 - 2045	0	0	0	0	0	0	0	0	0	0	0	0	0	**0**	
2045 - 2100	0	0	0	0	0	0	0	0	0	0	0	0	0	**0**	**0**
2100 - 2115	0	0	0	0	0	0	0	0	0	0	0	0	0	**0**	
2115 - 2130	0	0	0	0	0	0	0	0	0	0	0	0	0	**0**	
2130 - 2145	0	0	0	0	0	0	0	0	0	0	0	0	0	**0**	
2145 - 2200	0	0	0	0	0	0	0	0	0	0	0	0	0	**0**	**0**
2200 - 2215	0	0	0	0	0	0	0	0	0	0	0	0	0	**0**	
2215 - 2230	0	0	0	0	0	0	0	0	0	0	0	0	0	**0**	
2230 - 2245	0	0	0	0	0	0	0	0	0	0	0	0	0	**0**	
2245 - 2300	0	0	0	0	0	0	0	0	0	0	0	0	0	**0**	**0**
2300 - 2315	0	0	0	0	0	0	0	0	0	0	0	0	0	**0**	
2315 - 2330	0	0	0	0	0	0	0	0	0	0	0	0	0	**0**	
2330 - 2345	0	0	0	0	0	0	0	0	0	0	0	0	0	**0**	
2345 - 0000	0	0	0	0	0	0	0	0	0	0	0	0	0	**0**	**0**

Session Total	51	33065	5460	103	463	158	10	52	302	2	3	0	0	**39669**
Session Average	0.53	344.43	56.88	1.07	4.82	1.65	0.10	0.54	3.15	0.02	0.03	0.00	0.00	**413.22**
Session Percentage	0.13	83.35	13.76	0.26	1.17	0.40	0.03	0.13	0.76	0.01	0.01	0.00	0.00	

AM Peak Hour	0630 - 0730	0730 - 0830	0715 - 0815	0845 - 0945	0900 - 1000	0515 - 0615	-	0630 - 0730	0945 - 1045	-	0600 - 0700	-	-	**0730 - 0830**
AM Peak Hour Volume	8	4118	608	17	33	23	0	3	18	0	3	0	0	**4774**

Noon Peak Hour	1315 - 1415	1445 - 1545	1445 - 1545	1345 - 1445	1245 - 1345	1415 - 1515	1445 - 1545	1115 - 1215	1230 - 1330	1115 - 1215	-	-	-	**1445 - 1545**
Noon Peak Hour Volume	7	2523	426	12	54	14	4	10	39	1	0	0	0	**3059**

PM Peak Hour	1745 - 1845	1745 - 1845	1600 - 1700	1530 - 1630	1515 - 1615	1500 - 1600	1500 - 1600	1500 - 1600	1515 - 1615	1645 - 1745	-	-	-	**1530 - 1630**
PM Peak Hour Volume	6	2711	457	8	58	9	4	10	44	1	0	0	0	**3269**

Bi-Directional Class Count || NB EB Average 15min

Columbia, SC

Marr Traffic DATA COLLECTION
www.marrtraffic.com

Site 72
US-321 Elmwood Ave E/Bound On-Ramp,
east of US-321 Hugher St S/Bound On-Ramp

Date
Tuesday, April 30, 2024

Lat/Long
34.009109°, -81.051419°

Weather
Mostly Cloudy
70°F

0000 - 2400 (Weekday 24h Session) (All Dates)
NB EB Average 15min

	NB EB Average 15min													15min	60min
Time	1	2	3	4	5	6	7	8	9	10	11	12	13	Total	Total
0000 - 0015	0	35	3	0	0	1	0	0	0	0	0	0	0	**39**	
0015 - 0030	0	27	2	0	0	0	0	0	0	0	0	0	0	**30**	
0030 - 0045	0	22	1	0	2	0	0	0	0	0	0	0	0	**24**	
0045 - 0100	0	22	1	0	0	0	0	0	0	0	0	0	0	**24**	**117**
0100 - 0115	0	22	1	0	0	1	0	0	1	0	0	0	0	**25**	
0115 - 0130	0	16	2	0	0	0	0	0	0	0	0	0	0	**19**	
0130 - 0145	0	14	2	0	0	1	0	0	1	0	0	0	0	**18**	
0145 - 0200	0	14	1	0	1	0	0	0	0	0	0	0	0	**16**	**77**
0200 - 0215	0	12	1	0	0	1	0	0	0	0	0	0	0	**15**	
0215 - 0230	0	15	1	0	1	0	0	0	0	0	0	0	0	**17**	
0230 - 0245	0	15	1	0	0	0	0	0	0	0	0	0	0	**17**	
0245 - 0300	0	13	0	0	0	0	0	0	0	0	0	0	0	**14**	**63**
0300 - 0315	0	12	1	0	0	1	0	0	1	0	0	0	0	**14**	
0315 - 0330	0	14	1	0	0	0	0	0	0	0	0	0	0	**15**	
0330 - 0345	0	14	2	0	0	1	0	0	1	0	0	0	0	**18**	
0345 - 0400	0	14	1	0	2	0	0	0	0	0	0	0	0	**18**	**64**
0400 - 0415	0	21	1	0	1	0	0	0	0	0	0	0	0	**23**	
0415 - 0430	0	25	1	0	1	0	0	0	0	0	0	0	0	**27**	
0430 - 0445	0	27	2	0	2	0	0	0	1	0	0	0	0	**33**	
0445 - 0500	0	43	5	0	1	2	0	0	1	0	0	0	0	**52**	**135**
0500 - 0515	0	44	6	0	2	1	0	0	1	0	0	0	0	**55**	
0515 - 0530	1	69	7	0	4	3	0	0	4	0	0	0	0	**88**	
0530 - 0545	0	99	13	0	2	3	0	0	1	0	0	0	0	**119**	
0545 - 0600	1	113	14	1	2	4	0	0	1	0	0	0	0	**135**	**397**
0600 - 0615	0	112	20	1	1	3	0	0	2	0	0	0	0	**139**	
0615 - 0630	0	189	33	0	2	1	0	0	0	0	1	0	0	**227**	
0630 - 0645	1	327	60	0	2	2	0	0	1	0	0	0	0	**393**	
0645 - 0700	1	395	78	1	4	3	0	1	2	0	0	0	0	**486**	**1246**
0700 - 0715	1	416	77	2	3	3	0	0	2	0	0	0	0	**505**	
0715 - 0730	1	551	92	3	2	2	0	1	2	0	0	0	0	**654**	
0730 - 0745	0	622	103	0	3	1	0	0	2	0	0	0	0	**732**	
0745 - 0800	0	710	106	1	3	1	0	0	3	0	0	0	0	**825**	**2717**
0800 - 0815	0	668	99	1	4	2	0	1	1	0	0	0	0	**776**	
0815 - 0830	1	701	96	2	4	2	0	0	2	0	0	0	0	**807**	
0830 - 0845	0	629	93	1	4	1	0	1	3	0	0	0	0	**732**	
0845 - 0900	2	537	74	2	3	1	0	0	3	0	0	0	0	**623**	**2939**
0900 - 0915	0	423	72	4	6	3	0	0	3	0	0	0	0	**511**	
0915 - 0930	0	370	69	2	5	1	0	0	2	0	0	0	0	**450**	
0930 - 0945	0	370	72	4	7	1	0	0	2	0	0	0	0	**456**	
0945 - 1000	1	366	67	0	5	1	0	0	2	0	0	0	0	**443**	**1861**
1000 - 1015	0	316	63	1	3	3	0	0	2	0	0	0	0	**387**	
1015 - 1030	0	297	61	1	4	2	0	0	2	0	0	0	0	**367**	
1030 - 1045	0	329	62	2	6	2	0	0	4	0	0	0	0	**405**	
1045 - 1100	0	298	57	0	7	1	0	0	2	0	0	0	0	**365**	**1524**
1100 - 1115	1	289	54	1	5	2	0	1	2	0	0	0	0	**354**	
1115 - 1130	0	300	59	1	6	3	0	1	3	0	0	0	0	**372**	
1130 - 1145	0	305	54	1	3	2	0	0	2	0	0	0	0	**366**	
1145 - 1200	1	328	53	1	6	1	0	1	3	0	0	0	0	**395**	**1487**
1200 - 1215	0	329	65	1	7	0	0	2	4	0	0	0	0	**408**	
1215 - 1230	0	364	62	0	4	2	0	0	3	0	0	0	0	**436**	
1230 - 1245	0	366	64	1	7	2	0	0	2	0	0	0	0	**444**	
1245 - 1300	0	383	68	1	9	2	0	0	3	0	0	0	0	**466**	**1755**
1300 - 1315	1	362	69	2	8	1	0	3	4	0	0	0	0	**450**	
1315 - 1330	1	354	62	0	7	1	0	1	7	0	0	0	0	**434**	
1330 - 1345	0	368	55	1	4	2	0	2	3	0	0	0	0	**435**	
1345 - 1400	1	369	58	2	7	2	0	1	3	0	0	0	0	**443**	**1762**
1400 - 1415	1	350	53	2	6	3	0	1	3	0	0	0	0	**419**	
1415 - 1430	1	390	60	1	5	2	0	1	5	0	0	0	0	**465**	
1430 - 1445	1	373	59	2	9	3	0	0	2	0	0	0	0	**449**	
1445 - 1500	1	365	57	2	7	2	0	1	3	0	0	0	0	**437**	**1770**
1500 - 1515	1	339	55	1	5	1	1	1	3	0	0	0	0	**408**	
1515 - 1530	0	355	59	0	7	1	0	0	3	0	0	0	0	**425**	
1530 - 1545	1	438	65	0	6	2	1	1	5	0	0	0	0	**519**	
1545 - 1600	0	367	58	2	8	1	0	1	5	0	0	0	0	**442**	**1794**
1600 - 1615	1	366	60	2	8	1	0	0	4	0	0	0	0	**441**	
1615 - 1630	0	395	57	1	5	1	0	1	2	0	0	0	0	**462**	
1630 - 1645	1	425	56	1	5	1	0	0	2	0	0	0	0	**490**	
1645 - 1700	1	400	59	1	4	0	0	1	2	0	0	0	0	**468**	**1862**
1700 - 1715	1	395	52	1	3	0	0	0	1	0	0	0	0	**453**	
1715 - 1730	0	381	58	1	3	1	0	0	3	0	0	0	0	**447**	
1730 - 1745	0	357	61	1	4	0	0	0	1	0	0	0	0	**425**	
1745 - 1800	2	388	58	0	4	1	0	1	1	0	0	0	0	**455**	**1781**
1800 - 1815	1	345	50	1	2	0	0	1	2	0	0	0	0	**402**	
1815 - 1830	1	400	51	1	4	0	0	0	2	0	0	0	0	**460**	
1830 - 1845	1	368	39	1	2	1	0	0	2	0	0	0	0	**414**	
1845 - 1900	1	271	27	1	1	0	0	0	0	0	0	0	0	**302**	**1577**
1900 - 1915	0	199	21	1	1	1	0	1	1	0	0	0	0	**224**	
1915 - 1930	2	198	24	0	1	0	0	0	0	0	0	0	0	**227**	
1930 - 1945	0	189	15	1	0	0	1	0	0	0	0	0	0	**206**	
1945 - 2000	0	130	16	0	1	0	0	0	0	0	0	0	0	**149**	**806**
2000 - 2015	0	168	19	1	2	0	0	0	1	0	0	0	0	**191**	
2015 - 2030	0	167	18	0	0	0	0	0	0	0	0	0	0	**186**	
2030 - 2045	1	166	19	1	1	1	0	0	1	0	0	0	0	**188**	
2045 - 2100	1	171	15	0	2	0	0	0	0	0	0	0	0	**189**	**753**
2100 - 2115	0	134	17	0	0	1	0	0	0	0	0	0	0	**152**	
2115 - 2130	0	122	13	0	1	1	0	0	0	0	0	0	0	**138**	
2130 - 2145	0	115	13	1	2	0	0	0	0	0	0	0	0	**132**	
2145 - 2200	0	100	11	0	0	1	0	0	1	0	0	0	0	**114**	**536**
2200 - 2215	0	90	11	0	1	0	0	0	0	0	0	0	0	**103**	
2215 - 2230	0	83	9	0	2	0	0	0	0	0	0	0	0	**95**	
2230 - 2245	0	84	8	0	1	0	0	0	0	0	0	0	0	**94**	
2245 - 2300	0	72	7	0	1	0	0	0	0	0	0	0	0	**80**	**373**
2300 - 2315	0	64	7	0	1	1	0	0	0	0	0	0	0	**73**	
2315 - 2330	0	47	6	0	1	1	0	0	1	0	0	0	0	**55**	
2330 - 2345	0	49	6	0	1	0	0	0	0	0	0	0	0	**56**	
2345 - 0000	0	42	4	0	0	0	0	0	0	0	0	0	0	**46**	**230**

Session Total	37	23327	3599	71	295	103	6	29	154	2	1	1	0	**27625**
Session Average	0.38	242.99	37.49	0.74	3.07	1.07	0.07	0.30	1.60	0.02	0.01	0.01	0.00	**287.76**
Session Percentage	0.13	84.44	13.03	0.26	1.07	0.37	0.02	0.10	0.56	0.01	0.00	0.00	0.00	

AM Peak Hour	0630 - 0730	0745 - 0845	0730 - 0830	0845 - 0945	0900 - 1000	0515 - 0615	0700 - 0800	0645 - 0745	0830 - 0930	-	0615 - 0715	0500 - 0600	-	**0730 - 0830**
AM Peak Volume	4	2709	404	12	24	13	0	2	11	0	1	0	0	**3141**

Noon Peak Hour	1415 - 1515	1445 - 1545	1215 - 1315	1400 - 1500	1230 - 1330	1345 - 1445	1445 - 1545	1300 - 1400	1300 - 1400	1145 - 1245	-	-	-	**1215 - 1315**
Noon Peak Volume	4	1497	264	7	32	9	2	6	18	1	0	0	0	**1797**

PM Peak Hour	1745 - 1845	1615 - 1715	1515 - 1615	1545 - 1645	1515 - 1615	1500 - 1600	1500 - 1600	1500 - 1600	1515 - 1615	1645 - 1745	-	-	-	**1615 - 1715**
PM Peak Volume	4	1614	241	6	30	5	2	4	17	0	0	0	0	**1874**

Bi-Directional Class Count || Volume Summary 15min

Columbia, SC

Marr Traffic DATA COLLECTION

www.marrtraffic.com

Site 72

US-321 Elmwood Ave E/Bound On-Ramp,
east of US-321 Hugher St S/Bound On-Ramp

Date

Tuesday, April 30, 2024

Lat/Long

34.009109°, -81.051419°

Weather

Mostly Cloudy
70°F

Click here for Detailed Weather

0000 - 2400 (Weekday 24h Session) (04-30-2024)

Volume Summary 15min

TIME	Volume Summary 15min EB	Volume Summary 15min WB	15min Total	60min Total
0000 - 0015	0	0	**0**	
0015 - 0030	0	0	**0**	
0030 - 0045	0	0	**0**	
0045 - 0100	0	0	**0**	**0**
0100 - 0115	0	0	**0**	
0115 - 0130	0	0	**0**	
0130 - 0145	0	0	**0**	
0145 - 0200	0	0	**0**	**0**
0200 - 0215	0	0	**0**	
0215 - 0230	0	0	**0**	
0230 - 0245	0	0	**0**	
0245 - 0300	0	0	**0**	**0**
0300 - 0315	0	0	**0**	
0315 - 0330	0	0	**0**	
0330 - 0345	0	0	**0**	
0345 - 0400	0	0	**0**	**0**
0400 - 0415	0	0	**0**	
0415 - 0430	0	0	**0**	
0430 - 0445	0	0	**0**	
0445 - 0500	0	0	**0**	**0**
0500 - 0515	0	0	**0**	
0515 - 0530	0	0	**0**	
0530 - 0545	0	0	**0**	
0545 - 0600	0	0	**0**	**0**
0600 - 0615	0	0	**0**	
0615 - 0630	0	0	**0**	
0630 - 0645	0	0	**0**	
0645 - 0700	0	0	**0**	**0**
0700 - 0715	0	0	**0**	
0715 - 0730	0	0	**0**	
0730 - 0745	0	0	**0**	
0745 - 0800	0	0	**0**	**0**
0800 - 0815	0	0	**0**	
0815 - 0830	0	0	**0**	
0830 - 0845	0	0	**0**	
0845 - 0900	0	0	**0**	**0**
0900 - 0915	0	0	**0**	
0915 - 0930	0	0	**0**	
0930 - 0945	0	0	**0**	
0945 - 1000	0	0	**0**	**0**
1000 - 1015	0	0	**0**	
1015 - 1030	0	0	**0**	
1030 - 1045	0	0	**0**	
1045 - 1100	0	0	**0**	**0**
1100 - 1115	0	0	**0**	
1115 - 1130	0	0	**0**	
1130 - 1145	0	0	**0**	
1145 - 1200	0	0	**0**	**0**

Time	Volume Summary 15min EB	Volume Summary 15min WB	15min Total	60min Total
1200 - 1215	0	0	**0**	
1215 - 1230	0	0	**0**	
1230 - 1245	0	0	**0**	
1245 - 1300	0	0	**0**	**0**
1300 - 1315	0	0	**0**	
1315 - 1330	0	0	**0**	
1330 - 1345	0	0	**0**	
1345 - 1400	0	0	**0**	**0**
1400 - 1415	0	0	**0**	
1415 - 1430	0	0	**0**	
1430 - 1445	0	0	**0**	
1445 - 1500	0	0	**0**	**0**
1500 - 1515	0	0	**0**	
1515 - 1530	0	0	**0**	
1530 - 1545	0	0	**0**	
1545 - 1600	0	0	**0**	**0**
1600 - 1615	0	0	**0**	
1615 - 1630	0	0	**0**	
1630 - 1645	0	0	**0**	
1645 - 1700	0	0	**0**	**0**
1700 - 1715	0	0	**0**	
1715 - 1730	0	0	**0**	
1730 - 1745	0	0	**0**	
1745 - 1800	0	0	**0**	**0**
1800 - 1815	0	0	**0**	
1815 - 1830	0	0	**0**	
1830 - 1845	0	0	**0**	
1845 - 1900	0	0	**0**	**0**
1900 - 1915	297	0	**297**	
1915 - 1930	319	0	**319**	
1930 - 1945	262	0	**262**	
1945 - 2000	174	0	**174**	**1052**
2000 - 2015	267	0	**267**	
2015 - 2030	242	0	**242**	
2030 - 2045	213	0	**213**	
2045 - 2100	230	0	**230**	**952**
2100 - 2115	213	0	**213**	
2115 - 2130	204	0	**204**	
2130 - 2145	180	0	**180**	
2145 - 2200	149	0	**149**	**746**
2200 - 2215	161	0	**161**	
2215 - 2230	137	0	**137**	
2230 - 2245	138	0	**138**	
2245 - 2300	115	0	**115**	**551**
2300 - 2315	100	0	**100**	
2315 - 2330	80	0	**80**	
2330 - 2345	92	0	**92**	
2345 - 0000	62	0	**62**	**334**

Session Total	3635	0	**3635**
Session Average	37.86	0.00	**37.86**
Session Percentage	100.00	0.00	

Site 72

US-321 Elmwood Ave E/Bound On-Ramp,
east of US-321 Hugher St S/Bound On-Ramp

Date

Wednesday, May 1, 2024

Lat/Long

34.009109°, -81.051419°

Weather

Partly Cloudy
71°F

Click here for Detailed Weather

0000 - 2400 (Weekday 24h Session) (05-01-2024)

Volume Summary 15min

TIME	Volume Summary 15min EB	WB	15min Total	60min Total
0000 - 0015	56	0	**56**	
0015 - 0030	49	0	**49**	
0030 - 0045	36	0	**36**	
0045 - 0100	29	0	**29**	**170**
0100 - 0115	39	0	**39**	
0115 - 0130	30	0	**30**	
0130 - 0145	29	0	**29**	
0145 - 0200	26	0	**26**	**124**
0200 - 0215	21	0	**21**	
0215 - 0230	27	0	**27**	
0230 - 0245	24	0	**24**	
0245 - 0300	24	0	**24**	**96**
0300 - 0315	21	0	**21**	
0315 - 0330	21	0	**21**	
0330 - 0345	23	0	**23**	
0345 - 0400	26	0	**26**	**91**
0400 - 0415	38	0	**38**	
0415 - 0430	39	0	**39**	
0430 - 0445	54	0	**54**	
0445 - 0500	82	0	**82**	**213**
0500 - 0515	78	0	**78**	
0515 - 0530	122	0	**122**	
0530 - 0545	170	0	**170**	
0545 - 0600	205	0	**205**	**575**
0600 - 0615	227	0	**227**	
0615 - 0630	327	0	**327**	
0630 - 0645	593	0	**593**	
0645 - 0700	720	0	**720**	**1867**
0700 - 0715	730	0	**730**	
0715 - 0730	1001	0	**1001**	
0730 - 0745	1077	0	**1077**	
0745 - 0800	1171	0	**1171**	**3979**
0800 - 0815	1210	0	**1210**	
0815 - 0830	1192	0	**1192**	
0830 - 0845	1159	0	**1159**	
0845 - 0900	1016	0	**1016**	**4577**
0900 - 0915	797	0	**797**	
0915 - 0930	657	0	**657**	
0930 - 0945	666	0	**666**	
0945 - 1000	633	0	**633**	**2753**
1000 - 1015	561	0	**561**	
1015 - 1030	543	0	**543**	
1030 - 1045	609	0	**609**	
1045 - 1100	533	0	**533**	**2246**
1100 - 1115	529	0	**529**	
1115 - 1130	544	0	**544**	
1130 - 1145	529	0	**529**	
1145 - 1200	585	0	**585**	**2187**

Time	Volume Summary 15min EB	WB	15min Total	60min Total
1200 - 1215	557	0	**557**	
1215 - 1230	578	0	**578**	
1230 - 1245	615	0	**615**	
1245 - 1300	653	0	**653**	**2403**
1300 - 1315	643	0	**643**	
1315 - 1330	602	0	**602**	
1330 - 1345	602	0	**602**	
1345 - 1400	608	0	**608**	**2455**
1400 - 1415	623	0	**623**	
1415 - 1430	665	0	**665**	
1430 - 1445	616	0	**616**	
1445 - 1500	586	0	**586**	**2490**
1500 - 1515	538	0	**538**	
1515 - 1530	555	0	**555**	
1530 - 1545	629	0	**629**	
1545 - 1600	558	0	**558**	**2280**
1600 - 1615	565	0	**565**	
1615 - 1630	572	0	**572**	
1630 - 1645	607	0	**607**	
1645 - 1700	630	0	**630**	**2374**
1700 - 1715	621	0	**621**	
1715 - 1730	622	0	**622**	
1730 - 1745	522	0	**522**	
1745 - 1800	565	0	**565**	**2330**
1800 - 1815	521	0	**521**	
1815 - 1830	487	0	**487**	
1830 - 1845	470	0	**470**	
1845 - 1900	426	0	**426**	**1904**
1900 - 1915	376	0	**376**	
1915 - 1930	361	0	**361**	
1930 - 1945	356	0	**356**	
1945 - 2000	272	0	**272**	**1365**
2000 - 2015	305	0	**305**	
2015 - 2030	315	0	**315**	
2030 - 2045	351	0	**351**	
2045 - 2100	336	0	**336**	**1307**
2100 - 2115	244	0	**244**	
2115 - 2130	210	0	**210**	
2130 - 2145	216	0	**216**	
2145 - 2200	192	0	**192**	**862**
2200 - 2215	149	0	**149**	
2215 - 2230	149	0	**149**	
2230 - 2245	143	0	**143**	
2245 - 2300	126	0	**126**	**567**
2300 - 2315	119	0	**119**	
2315 - 2330	85	0	**85**	
2330 - 2345	76	0	**76**	
2345 - 0000	77	0	**77**	**357**

Session Total	39572	0	**39572**
Session Average	412.21	0.00	**412.21**
Session Percentage	100.00	0.00	

Site 72

US-321 Elmwood Ave E/Bound On-Ramp,
east of US-321 Hugher St S/Bound On-Ramp

Date

Thursday, May 2, 2024

Lat/Long

34.009109°, -81.051419°

Weather

Fair
74°F

Click here for Detailed Weather

0000 - 2400 (Weekday 24h Session) (05-02-2024)

Volume Summary 15min

TIME	Volume Summary 15min EB	WB	15min Total	60min Total
0000 - 0015	62	0	**62**	
0015 - 0030	41	0	**41**	
0030 - 0045	37	0	**37**	
0045 - 0100	42	0	**42**	**182**
0100 - 0115	35	0	**35**	
0115 - 0130	26	0	**26**	
0130 - 0145	25	0	**25**	
0145 - 0200	21	0	**21**	**107**
0200 - 0215	23	0	**23**	
0215 - 0230	25	0	**25**	
0230 - 0245	27	0	**27**	
0245 - 0300	19	0	**19**	**94**
0300 - 0315	21	0	**21**	
0315 - 0330	24	0	**24**	
0330 - 0345	30	0	**30**	
0345 - 0400	27	0	**27**	**102**
0400 - 0415	31	0	**31**	
0415 - 0430	42	0	**42**	
0430 - 0445	44	0	**44**	
0445 - 0500	74	0	**74**	**191**
0500 - 0515	87	0	**87**	
0515 - 0530	142	0	**142**	
0530 - 0545	187	0	**187**	
0545 - 0600	199	0	**199**	**615**
0600 - 0615	191	0	**191**	
0615 - 0630	355	0	**355**	
0630 - 0645	585	0	**585**	
0645 - 0700	739	0	**739**	**1870**
0700 - 0715	786	0	**786**	
0715 - 0730	962	0	**962**	
0730 - 0745	1120	0	**1120**	
0745 - 0800	1305	0	**1305**	**4173**
0800 - 0815	1119	0	**1119**	
0815 - 0830	1230	0	**1230**	
0830 - 0845	1038	0	**1038**	
0845 - 0900	854	0	**854**	**4241**
0900 - 0915	737	0	**737**	
0915 - 0930	694	0	**694**	
0930 - 0945	702	0	**702**	
0945 - 1000	696	0	**696**	**2829**
1000 - 1015	601	0	**601**	
1015 - 1030	557	0	**557**	
1030 - 1045	606	0	**606**	
1045 - 1100	563	0	**563**	**2327**
1100 - 1115	533	0	**533**	
1115 - 1130	572	0	**572**	
1130 - 1145	570	0	**570**	
1145 - 1200	599	0	**599**	**2274**

Time	Volume Summary 15min EB	WB	15min Total	60min Total
1200 - 1215	668	0	**668**	
1215 - 1230	730	0	**730**	
1230 - 1245	717	0	**717**	
1245 - 1300	746	0	**746**	**2861**
1300 - 1315	708	0	**708**	
1315 - 1330	699	0	**699**	
1330 - 1345	703	0	**703**	
1345 - 1400	721	0	**721**	**2831**
1400 - 1415	635	0	**635**	
1415 - 1430	729	0	**729**	
1430 - 1445	730	0	**730**	
1445 - 1500	725	0	**725**	**2819**
1500 - 1515	686	0	**686**	
1515 - 1530	720	0	**720**	
1530 - 1545	928	0	**928**	
1545 - 1600	768	0	**768**	**3102**
1600 - 1615	759	0	**759**	
1615 - 1630	814	0	**814**	
1630 - 1645	864	0	**864**	
1645 - 1700	774	0	**774**	**3211**
1700 - 1715	739	0	**739**	
1715 - 1730	719	0	**719**	
1730 - 1745	753	0	**753**	
1745 - 1800	801	0	**801**	**3012**
1800 - 1815	684	0	**684**	
1815 - 1830	893	0	**893**	
1830 - 1845	772	0	**772**	
1845 - 1900	479	0	**479**	**2828**
1900 - 1915	0	0	**0**	
1915 - 1930	0	0	**0**	
1930 - 1945	0	0	**0**	
1945 - 2000	0	0	**0**	**0**
2000 - 2015	0	0	**0**	
2015 - 2030	0	0	**0**	
2030 - 2045	0	0	**0**	
2045 - 2100	0	0	**0**	**0**
2100 - 2115	0	0	**0**	
2115 - 2130	0	0	**0**	
2130 - 2145	0	0	**0**	
2145 - 2200	0	0	**0**	**0**
2200 - 2215	0	0	**0**	
2215 - 2230	0	0	**0**	
2230 - 2245	0	0	**0**	
2245 - 2300	0	0	**0**	**0**
2300 - 2315	0	0	**0**	
2315 - 2330	0	0	**0**	
2330 - 2345	0	0	**0**	
2345 - 0000	0	0	**0**	**0**

Session Total	39669	0	**39669**
Session Average	413.22	0.00	**413.22**
Session Percentage	100.00	0.00	

Bi-Directional Class Count || NB EB 60min

Columbia, SC

Marr Traffic DATA COLLECTION

www.marrtraffic.com

Site 72
US-321 Elmwood Ave E/Bound On-Ramp,
east of US-321 Hugher St S/Bound On-Ramp

Date
Tuesday, April 30, 2024

Lat/Long
34.009109°, -81.051419°

Weather
Mostly Cloudy
70°F

Click here for Detailed Weather

0000 - 2400 (Weekday 24h Session) (04-30-2024)
NB EB 60min

	Eastbound (Movement 72.1)													
TIME	1	2	3	4	5	6	7	8	9	10	11	12	13	**Total**
0000 - 0100	0	0	0	0	0	0	0	0	0	0	0	0	0	**0**
0100 - 0200	0	0	0	0	0	0	0	0	0	0	0	0	0	**0**
0200 - 0300	0	0	0	0	0	0	0	0	0	0	0	0	0	**0**
0300 - 0400	0	0	0	0	0	0	0	0	0	0	0	0	0	**0**
0400 - 0500	0	0	0	0	0	0	0	0	0	0	0	0	0	**0**
0500 - 0600	0	0	0	0	0	0	0	0	0	0	0	0	0	**0**
0600 - 0700	0	0	0	0	0	0	0	0	0	0	0	0	0	**0**
0700 - 0800	0	0	0	0	0	0	0	0	0	0	0	0	0	**0**
0800 - 0900	0	0	0	0	0	0	0	0	0	0	0	0	0	**0**
0900 - 1000	0	0	0	0	0	0	0	0	0	0	0	0	0	**0**
1000 - 1100	0	0	0	0	0	0	0	0	0	0	0	0	0	**0**
1100 - 1200	0	0	0	0	0	0	0	0	0	0	0	0	0	**0**
1200 - 1300	0	0	0	0	0	0	0	0	0	0	0	0	0	**0**
1300 - 1400	0	0	0	0	0	0	0	0	0	0	0	0	0	**0**
1400 - 1500	0	0	0	0	0	0	0	0	0	0	0	0	0	**0**
1500 - 1600	0	0	0	0	0	0	0	0	0	0	0	0	0	**0**
1600 - 1700	0	0	0	0	0	0	0	0	0	0	0	0	0	**0**
1700 - 1800	0	0	0	0	0	0	0	0	0	0	0	0	0	**0**
1800 - 1900	0	0	0	0	0	0	0	0	0	0	0	0	0	**0**
1900 - 2000	8	926	102	4	7	2	0	0	3	0	0	0	0	**1052**
2000 - 2100	1	806	134	2	7	0	0	0	2	0	0	0	0	**952**
2100 - 2200	0	616	116	3	8	0	0	0	3	0	0	0	0	**746**
2200 - 2300	0	453	88	0	7	0	0	0	3	0	0	0	0	**551**
2300 - 2400	0	269	59	0	4	0	0	0	2	0	0	0	0	**334**
Session Total	9	3070	499	9	33	2	0	0	13	0	0	0	0	**3635**
Session Average	0.38	127.92	20.79	0.38	1.38	0.08	0.00	0.00	0.54	0.00	0.00	0.00	0.00	**151.46**
Session Percentage	0.25	84.46	13.73	0.25	0.91	0.06	0.00	0.00	0.36	0.00	0.00	0.00	0.00	
AM Peak Hour	-	-	-	-	-	-	-	-	-	-	-	-	-	**-**
AM Peak Volume	0	0	0	0	0	0	0	0	0	0	0	0	0	**0**
Noon Peak Hour	-	-	-	-	-	-	-	-	-	-	-	-	-	**-**
Noon Peak Volume	0	0	0	0	0	0	0	0	0	0	0	0	0	**0**
PM Peak Hour	1900 - 2000	1900 - 2000	1900 - 2000	1900 - 2000	1900 - 2000	1900 - 2000	-	-	1900 - 2000	-	-	-	-	**1900 - 2000**
PM Peak Volume	8	926	102	4	7	2	0	0	3	0	0	0	0	**1052**

Site 72

US-321 Elmwood Ave E/Bound On-Ramp,
east of US-321 Hugher St S/Bound On-Ramp

Date

Wednesday, May 1, 2024

Weather

Partly Cloudy
71°F

Lat/Long

34.009109°, -81.051419°

Click here for Detailed Weather

0000 - 2400 (Weekday 24h Session) (05-01-2024)

NB EB 60min

	Eastbound (Movement 72.1)													
TIME	1	2	3	4	5	6	7	8	9	10	11	12	13	**Total**
0000 - 0100	0	153	14	0	2	0	0	0	1	0	0	0	0	**170**
0100 - 0200	0	108	10	0	2	1	0	0	3	0	0	0	0	**124**
0200 - 0300	0	88	4	0	2	1	0	1	0	0	0	0	0	**96**
0300 - 0400	0	80	6	0	2	2	0	0	1	0	0	0	0	**91**
0400 - 0500	1	179	16	0	10	2	0	0	5	0	0	0	0	**213**
0500 - 0600	2	482	54	1	20	11	0	0	4	0	0	1	0	**575**
0600 - 0700	2	1530	296	3	14	11	0	4	7	0	0	0	0	**1867**
0700 - 0800	4	3358	559	14	17	12	1	2	10	0	1	1	0	**3979**
0800 - 0900	6	3949	563	9	23	7	0	6	14	0	0	0	0	**4577**
0900 - 1000	2	2279	392	18	38	9	0	1	14	0	0	0	0	**2753**
1000 - 1100	2	1853	335	4	25	12	0	2	13	0	0	0	0	**2246**
1100 - 1200	2	1819	312	3	26	12	0	1	12	0	0	0	0	**2187**
1200 - 1300	2	1979	359	4	42	8	0	0	8	1	0	0	0	**2403**
1300 - 1400	2	2044	336	6	33	9	1	10	14	0	0	0	0	**2455**
1400 - 1500	3	2088	323	10	32	15	2	2	14	1	0	0	0	**2490**
1500 - 1600	3	1951	275	6	28	7	2	1	7	0	0	0	0	**2280**
1600 - 1700	3	2094	237	9	23	2	0	1	5	0	0	0	0	**2374**
1700 - 1800	3	2024	275	3	16	4	0	1	4	0	0	0	0	**2330**
1800 - 1900	6	1684	198	4	10	1	0	0	1	0	0	0	0	**1904**
1900 - 2000	0	1224	125	3	4	1	2	3	2	1	0	0	0	**1365**
2000 - 2100	5	1209	76	2	7	3	1	0	4	0	0	0	0	**1307**
2100 - 2200	1	800	48	2	1	9	0	0	0	1	0	0	0	**862**
2200 - 2300	1	534	20	0	8	3	0	0	1	0	0	0	0	**567**
2300 - 2400	0	337	6	0	4	7	0	0	3	0	0	0	0	**357**

Session Total	50	33846	4839	101	389	149	9	35	147	4	1	2	0	**39572**
Session Average	2.08	1410.25	201.63	4.21	16.21	6.21	0.38	1.46	6.13	0.17	0.04	0.08	0.00	**1648.83**
Session Percentage	0.13	85.53	12.23	0.26	0.98	0.38	0.02	0.09	0.37	0.01	0.00	0.01	0.00	

AM Peak Hour	0800 - 0900	0800 - 0900	0800 - 0900	0900 - 1000	0900 - 1000	0700 - 0800	0700 - 0800	0800 - 0900	0800 - 0900	-	0700 - 0800	0500 - 0600	-	**0800 - 0900**
AM Peak Volume	6	3949	563	18	38	12	1	6	14	0	1	1	0	**4577**

Noon Peak Hour	1400 - 1500	1400 - 1500	1200 - 1300	1400 - 1500	1200 - 1300	1400 - 1500	1400 - 1500	1300 - 1400	1300 - 1400	1200 - 1300	-	-	-	**1400 - 1500**
Noon Peak Volume	3	2088	359	10	42	15	2	10	14	1	0	0	0	**2490**

PM Peak Hour	1800 - 1900	1600 - 1700	1500 - 1600	1600 - 1700	1500 - 1600	1500 - 1600	1500 - 1600	1900 - 2000	1500 - 1600	1900 - 2000	-	-	-	**1600 - 1700**
PM Peak Volume	6	2094	275	9	28	7	2	3	7	1	0	0	0	**2374**

Site 72

US-321 Elmwood Ave E/Bound On-Ramp,
east of US-321 Hugher St S/Bound On-Ramp

Date

Thursday, May 2, 2024

Weather

Fair
74°F

Lat/Long

34.009109°, -81.051419°

Click here for Detailed Weather

0000 - 2400 (Weekday 24h Session) (05-02-2024)

NB EB 60min

	Eastbound (Movement 72.1)													
TIME	1	2	3	4	5	6	7	8	9	10	11	12	13	**Total**
0000 - 0100	0	164	7	0	5	4	0	0	2	0	0	0	0	**182**
0100 - 0200	1	90	6	0	3	5	0	0	2	0	0	0	0	**107**
0200 - 0300	0	79	6	0	2	4	0	0	3	0	0	0	0	**94**
0300 - 0400	0	80	9	0	4	4	1	0	4	0	0	0	0	**102**
0400 - 0500	0	169	13	0	4	3	0	0	2	0	0	0	0	**191**
0500 - 0600	3	496	64	2	13	22	0	0	15	0	0	0	0	**615**
0600 - 0700	4	1541	280	4	13	15	0	1	9	0	3	0	0	**1870**
0700 - 0800	5	3539	578	5	17	11	0	2	16	0	0	0	0	**4173**
0800 - 0900	2	3660	522	10	23	9	0	1	14	0	0	0	0	**4241**
0900 - 1000	2	2309	448	14	33	8	0	1	14	0	0	0	0	**2829**
1000 - 1100	1	1864	394	8	35	11	0	0	14	0	0	0	0	**2327**
1100 - 1200	5	1848	347	6	33	11	0	6	18	0	0	0	0	**2274**
1200 - 1300	1	2345	419	8	40	11	2	6	28	1	0	0	0	**2861**
1300 - 1400	6	2317	396	11	48	6	0	8	39	0	0	0	0	**2831**
1400 - 1500	7	2348	362	11	47	12	0	7	25	0	0	0	0	**2819**
1500 - 1600	3	2545	436	3	51	9	4	10	41	0	0	0	0	**3102**
1600 - 1700	3	2661	457	8	43	7	2	4	26	0	0	0	0	**3211**
1700 - 1800	4	2540	412	7	29	4	0	3	12	1	0	0	0	**3012**
1800 - 1900	4	2470	304	6	20	2	1	3	18	0	0	0	0	**2828**
1900 - 2000	0	0	0	0	0	0	0	0	0	0	0	0	0	**0**
2000 - 2100	0	0	0	0	0	0	0	0	0	0	0	0	0	**0**
2100 - 2200	0	0	0	0	0	0	0	0	0	0	0	0	0	**0**
2200 - 2300	0	0	0	0	0	0	0	0	0	0	0	0	0	**0**
2300 - 2400	0	0	0	0	0	0	0	0	0	0	0	0	0	**0**

Session Total	51	33065	5460	103	463	158	10	52	302	2	3	0	0	**39669**
Session Average	2.13	1377.71	227.50	4.29	19.29	6.58	0.42	2.17	12.58	0.08	0.13	0.00	0.00	**1652.88**
Session Percentage	0.13	83.35	13.76	0.26	1.17	0.40	0.03	0.13	0.76	0.01	0.01	0.00	0.00	

AM Peak Hour	0700 - 0800	0800 - 0900	0700 - 0800	0900 - 1000	0900 - 1000	0500 - 0600	-	0700 - 0800	0700 - 0800	-	0600 - 0700	-	-	**0800 - 0900**
AM Peak Hour Volume	5	3660	578	14	33	22	0	2	16	0	3	0	0	**4241**

Noon Peak Hour	1400 - 1500	1400 - 1500	1200 - 1300	1300 - 1400	1300 - 1400	1400 - 1500	1200 - 1300	1300 - 1400	1300 - 1400	1200 - 1300	-	-	-	**1200 - 1300**
Noon Peak Hour Volume	7	2348	419	11	48	12	2	8	39	1	0	0	0	**2861**

PM Peak Hour	1700 - 1800	1600 - 1700	1600 - 1700	1600 - 1700	1500 - 1600	1500 - 1600	1500 - 1600	1500 - 1600	1500 - 1600	1700 - 1800	-	-	-	**1600 - 1700**
PM Peak Hour Volume	4	2661	457	8	51	9	4	10	41	1	0	0	0	**3211**

Bi-Directional Class Count || Volume Summary 60min

Columbia, SC

Marr Traffic DATA COLLECTION

www.marrtraffic.com

Site 72

US-321 Elmwood Ave E/Bound On-Ramp,
east of US-321 Hugher St S/Bound On-Ramp

Date

Tuesday, April 30, 2024

Lat/Long

34.009109°, -81.051419°

Weather

Mostly Cloudy
70°F

Click here for Detailed Weather

0000 - 2400 (Weekday 24h Session) (04-30-2024)

Volume Summary 60min

	Volume Summary 60min		
TIME	EB	WB	**Total**
0000 - 0100	0	0	**0**
0100 - 0200	0	0	**0**
0200 - 0300	0	0	**0**
0300 - 0400	0	0	**0**
0400 - 0500	0	0	**0**
0500 - 0600	0	0	**0**
0600 - 0700	0	0	**0**
0700 - 0800	0	0	**0**
0800 - 0900	0	0	**0**
0900 - 1000	0	0	**0**
1000 - 1100	0	0	**0**
1100 - 1200	0	0	**0**

	Volume Summary 60min		
Time	EB	WB	**Total**
1200 - 1300	0	0	**0**
1300 - 1400	0	0	**0**
1400 - 1500	0	0	**0**
1500 - 1600	0	0	**0**
1600 - 1700	0	0	**0**
1700 - 1800	0	0	**0**
1800 - 1900	0	0	**0**
1900 - 2000	1052	0	**1052**
2000 - 2100	952	0	**952**
2100 - 2200	746	0	**746**
2200 - 2300	551	0	**551**
2300 - 2400	334	0	**334**

Session Total	3635	0	**3635**
Session Average	151.46	0.00	**151.46**
Session Percentage	100.00	0.00	

Site 72

US-321 Elmwood Ave E/Bound On-Ramp,
east of US-321 Hugher St S/Bound On-Ramp

Date

Wednesday, May 1, 2024

Lat/Long

34.009109°, -81.051419°

Weather

Partly Cloudy
71°F

Click here for Detailed Weather

0000 - 2400 (Weekday 24h Session) (05-01-2024)

Volume Summary 60min

	Volume Summary 60min		
TIME	EB	WB	**Total**
0000 - 0100	170	0	**170**
0100 - 0200	124	0	**124**
0200 - 0300	96	0	**96**
0300 - 0400	91	0	**91**
0400 - 0500	213	0	**213**
0500 - 0600	575	0	**575**
0600 - 0700	1867	0	**1867**
0700 - 0800	3979	0	**3979**
0800 - 0900	4577	0	**4577**
0900 - 1000	2753	0	**2753**
1000 - 1100	2246	0	**2246**
1100 - 1200	2187	0	**2187**

Session Total	39572	0	**39572**
Session Average	1648.83	0.00	**1648.83**
Session Percentage	100.00	0.00	

	Volume Summary 60min		
Time	EB	WB	**Total**
1200 - 1300	2403	0	**2403**
1300 - 1400	2455	0	**2455**
1400 - 1500	2490	0	**2490**
1500 - 1600	2280	0	**2280**
1600 - 1700	2374	0	**2374**
1700 - 1800	2330	0	**2330**
1800 - 1900	1904	0	**1904**
1900 - 2000	1365	0	**1365**
2000 - 2100	1307	0	**1307**
2100 - 2200	862	0	**862**
2200 - 2300	567	0	**567**
2300 - 2400	357	0	**357**

Site 72

US-321 Elmwood Ave E/Bound On-Ramp,
east of US-321 Hugher St S/Bound On-Ramp

Date

Thursday, May 2, 2024

Lat/Long

34.009109°, -81.051419°

Weather

Fair
74°F

Click here for Detailed Weather

0000 - 2400 (Weekday 24h Session) (05-02-2024)

Volume Summary 60min

	Volume Summary 60min		
TIME	EB	WB	**Total**
0000 - 0100	182	0	**182**
0100 - 0200	107	0	**107**
0200 - 0300	94	0	**94**
0300 - 0400	102	0	**102**
0400 - 0500	191	0	**191**
0500 - 0600	615	0	**615**
0600 - 0700	1870	0	**1870**
0700 - 0800	4173	0	**4173**
0800 - 0900	4241	0	**4241**
0900 - 1000	2829	0	**2829**
1000 - 1100	2327	0	**2327**
1100 - 1200	2274	0	**2274**

Session Total	39669	0	**39669**
Session Average	1652.88	0.00	**1652.88**
Session Percentage	100.00	0.00	

	Volume Summary 60min		
Time	EB	WB	**Total**
1200 - 1300	2861	0	**2861**
1300 - 1400	2831	0	**2831**
1400 - 1500	2819	0	**2819**
1500 - 1600	3102	0	**3102**
1600 - 1700	3211	0	**3211**
1700 - 1800	3012	0	**3012**
1800 - 1900	2828	0	**2828**
1900 - 2000	0	0	**0**
2000 - 2100	0	0	**0**
2100 - 2200	0	0	**0**
2200 - 2300	0	0	**0**
2300 - 2400	0	0	**0**

Bi-Directional Class Count || Graphical Analysis NB EB

Columbia, SC

Marr Traffic DATA COLLECTION

www.marrtraffic.com

Site 72

US-321 Elmwood Ave E/Bound On-Ramp,
east of US-321 Hugher St S/Bound On-Ramp

Lat/Long

34.009109°, -81.051419°

0000 - 2400 (Weekday 24h Session)

Graphical Analysis NB EB

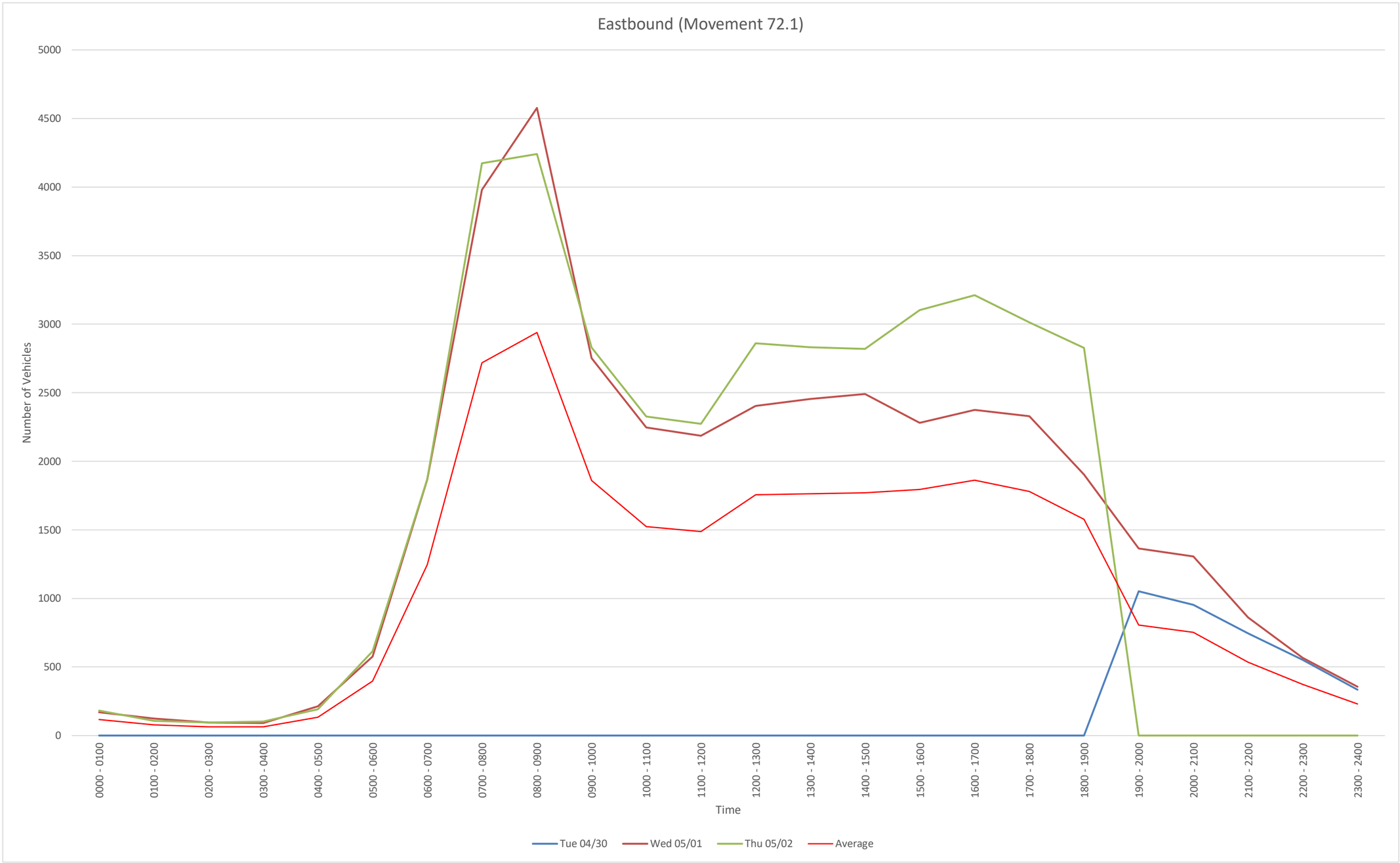

Time	Tue 04/30	Wed 05/01	Thu 05/02				
0000 - 0100	0	170	182				
0100 - 0200	0	124	107				
0200 - 0300	0	96	94				
0300 - 0400	0	91	102				
0400 - 0500	0	213	191				
0500 - 0600	0	575	615				
0600 - 0700	0	1867	1870				
0700 - 0800	0	3979	4173				
0800 - 0900	0	4577	4241				
0900 - 1000	0	2753	2829				
1000 - 1100	0	2246	2327				
1100 - 1200	0	2187	2274				
1200 - 1300	0	2403	2861				
1300 - 1400	0	2455	2831				
1400 - 1500	0	2490	2819				
1500 - 1600	0	2280	3102				
1600 - 1700	0	2374	3211				
1700 - 1800	0	2330	3012				
1800 - 1900	0	1904	2828				
1900 - 2000	1052	1365	0				
2000 - 2100	952	1307	0				
2100 - 2200	746	862	0				
2200 - 2300	551	567	0				
2300 - 2400	334	357	0				
Daily Total	3635	39572	39669				

EB
File Name:
Start Date: 4/30/2024
Start Time: 0
Site Code: 72
Station ID: 1
Location 1: US-321 Elmwood Ave E/Bound On-Ramp, east of US-321 Hugher St S/Bound On-Ramp
Location 2:

Date	Time	1	2	3	4	5	6	7	8	9	10	11	12	13
4/30/2024	12:00 AM	0	0	0	0	0	0	0	0	0	0	0	0	0
4/30/2024	12:15 AM	0	0	0	0	0	0	0	0	0	0	0	0	0
4/30/2024	12:30 AM	0	0	0	0	0	0	0	0	0	0	0	0	0
4/30/2024	12:45 AM	0	0	0	0	0	0	0	0	0	0	0	0	0
4/30/2024	1:00 AM	0	0	0	0	0	0	0	0	0	0	0	0	0
4/30/2024	1:15 AM	0	0	0	0	0	0	0	0	0	0	0	0	0
4/30/2024	1:30 AM	0	0	0	0	0	0	0	0	0	0	0	0	0
4/30/2024	1:45 AM	0	0	0	0	0	0	0	0	0	0	0	0	0
4/30/2024	2:00 AM	0	0	0	0	0	0	0	0	0	0	0	0	0
4/30/2024	2:15 AM	0	0	0	0	0	0	0	0	0	0	0	0	0
4/30/2024	2:30 AM	0	0	0	0	0	0	0	0	0	0	0	0	0
4/30/2024	2:45 AM	0	0	0	0	0	0	0	0	0	0	0	0	0
4/30/2024	3:00 AM	0	0	0	0	0	0	0	0	0	0	0	0	0
4/30/2024	3:15 AM	0	0	0	0	0	0	0	0	0	0	0	0	0
4/30/2024	3:30 AM	0	0	0	0	0	0	0	0	0	0	0	0	0
4/30/2024	3:45 AM	0	0	0	0	0	0	0	0	0	0	0	0	0
4/30/2024	4:00 AM	0	0	0	0	0	0	0	0	0	0	0	0	0
4/30/2024	4:15 AM	0	0	0	0	0	0	0	0	0	0	0	0	0
4/30/2024	4:30 AM	0	0	0	0	0	0	0	0	0	0	0	0	0
4/30/2024	4:45 AM	0	0	0	0	0	0	0	0	0	0	0	0	0
4/30/2024	5:00 AM	0	0	0	0	0	0	0	0	0	0	0	0	0
4/30/2024	5:15 AM	0	0	0	0	0	0	0	0	0	0	0	0	0
4/30/2024	5:30 AM	0	0	0	0	0	0	0	0	0	0	0	0	0
4/30/2024	5:45 AM	0	0	0	0	0	0	0	0	0	0	0	0	0
4/30/2024	6:00 AM	0	0	0	0	0	0	0	0	0	0	0	0	0
4/30/2024	6:15 AM	0	0	0	0	0	0	0	0	0	0	0	0	0
4/30/2024	6:30 AM	0	0	0	0	0	0	0	0	0	0	0	0	0
4/30/2024	6:45 AM	0	0	0	0	0	0	0	0	0	0	0	0	0
4/30/2024	7:00 AM	0	0	0	0	0	0	0	0	0	0	0	0	0
4/30/2024	7:15 AM	0	0	0	0	0	0	0	0	0	0	0	0	0
4/30/2024	7:30 AM	0	0	0	0	0	0	0	0	0	0	0	0	0
4/30/2024	7:45 AM	0	0	0	0	0	0	0	0	0	0	0	0	0
4/30/2024	8:00 AM	0	0	0	0	0	0	0	0	0	0	0	0	0
4/30/2024	8:15 AM	0	0	0	0	0	0	0	0	0	0	0	0	0
4/30/2024	8:30 AM	0	0	0	0	0	0	0	0	0	0	0	0	0
4/30/2024	8:45 AM	0	0	0	0	0	0	0	0	0	0	0	0	0
4/30/2024	9:00 AM	0	0	0	0	0	0	0	0	0	0	0	0	0
4/30/2024	9:15 AM	0	0	0	0	0	0	0	0	0	0	0	0	0
4/30/2024	9:30 AM	0	0	0	0	0	0	0	0	0	0	0	0	0
4/30/2024	9:45 AM	0	0	0	0	0	0	0	0	0	0	0	0	0
4/30/2024	10:00 AM	0	0	0	0	0	0	0	0	0	0	0	0	0
4/30/2024	10:15 AM	0	0	0	0	0	0	0	0	0	0	0	0	0
4/30/2024	10:30 AM	0	0	0	0	0	0	0	0	0	0	0	0	0
4/30/2024	10:45 AM	0	0	0	0	0	0	0	0	0	0	0	0	0
4/30/2024	11:00 AM	0	0	0	0	0	0	0	0	0	0	0	0	0
4/30/2024	11:15 AM	0	0	0	0	0	0	0	0	0	0	0	0	0
4/30/2024	11:30 AM	0	0	0	0	0	0	0	0	0	0	0	0	0
4/30/2024	11:45 AM	0	0	0	0	0	0	0	0	0	0	0	0	0
4/30/2024	12:00 PM	0	0	0	0	0	0	0	0	0	0	0	0	0
4/30/2024	12:15 PM	0	0	0	0	0	0	0	0	0	0	0	0	0
4/30/2024	12:30 PM	0	0	0	0	0	0	0	0	0	0	0	0	0
4/30/2024	12:45 PM	0	0	0	0	0	0	0	0	0	0	0	0	0
4/30/2024	1:00 PM	0	0	0	0	0	0	0	0	0	0	0	0	0
4/30/2024	1:15 PM	0	0	0	0	0	0	0	0	0	0	0	0	0
4/30/2024	1:30 PM	0	0	0	0	0	0	0	0	0	0	0	0	0
4/30/2024	1:45 PM	0	0	0	0	0	0	0	0	0	0	0	0	0
4/30/2024	2:00 PM	0	0	0	0	0	0	0	0	0	0	0	0	0
4/30/2024	2:15 PM	0	0	0	0	0	0	0	0	0	0	0	0	0
4/30/2024	2:30 PM	0	0	0	0	0	0	0	0	0	0	0	0	0
4/30/2024	2:45 PM	0	0	0	0	0	0	0	0	0	0	0	0	0
4/30/2024	3:00 PM	0	0	0	0	0	0	0	0	0	0	0	0	0
4/30/2024	3:15 PM	0	0	0	0	0	0	0	0	0	0	0	0	0
4/30/2024	3:30 PM	0	0	0	0	0	0	0	0	0	0	0	0	0
4/30/2024	3:45 PM	0	0	0	0	0	0	0	0	0	0	0	0	0
4/30/2024	4:00 PM	0	0	0	0	0	0	0	0	0	0	0	0	0
4/30/2024	4:15 PM	0	0	0	0	0	0	0	0	0	0	0	0	0
4/30/2024	4:30 PM	0	0	0	0	0	0	0	0	0	0	0	0	0
4/30/2024	4:45 PM	0	0	0	0	0	0	0	0	0	0	0	0	0
4/30/2024	5:00 PM	0	0	0	0	0	0	0	0	0	0	0	0	0
4/30/2024	5:15 PM	0	0	0	0	0	0	0	0	0	0	0	0	0
4/30/2024	5:30 PM	0	0	0	0	0	0	0	0	0	0	0	0	0
4/30/2024	5:45 PM	0	0	0	0	0	0	0	0	0	0	0	0	0
4/30/2024	6:00 PM	0	0	0	0	0	0	0	0	0	0	0	0	0
4/30/2024	6:15 PM	0	0	0	0	0	0	0	0	0	0	0	0	0
4/30/2024	6:30 PM	0	0	0	0	0	0	0	0	0	0	0	0	0
4/30/2024	6:45 PM	0	0	0	0	0	0	0	0	0	0	0	0	0
4/30/2024	7:00 PM	0	262	29	2	0	2	0	0	2	0	0	0	0
4/30/2024	7:15 PM	7	271	36	0	4	0	0	0	1	0	0	0	0
4/30/2024	7:30 PM	1	242	16	2	1	0	0	0	0	0	0	0	0
4/30/2024	7:45 PM	0	151	21	0	2	0	0	0	0	0	0	0	0
4/30/2024	8:00 PM	0	229	33	1	3	0	0	0	1	0	0	0	0
4/30/2024	8:15 PM	0	212	30	0	0	0	0	0	0	0	0	0	0
4/30/2024	8:30 PM	0	171	39	1	2	0	0	0	0	0	0	0	0
4/30/2024	8:45 PM	1	194	32	0	2	0	0	0	1	0	0	0	0
4/30/2024	9:00 PM	0	174	38	0	0	0	0	0	1	0	0	0	0
4/30/2024	9:15 PM	0	174	28	0	2	0	0	0	0	0	0	0	0
4/30/2024	9:30 PM	0	145	27	3	5	0	0	0	0	0	0	0	0
4/30/2024	9:45 PM	0	123	23	0	1	0	0	0	2	0	0	0	0
4/30/2024	10:00 PM	0	131	28	0	2	0	0	0	0	0	0	0	0
4/30/2024	10:15 PM	0	110	23	0	3	0	0	0	1	0	0	0	0
4/30/2024	10:30 PM	0	118	18	0	1	0	0	0	1	0	0	0	0
4/30/2024	10:45 PM	0	94	19	0	1	0	0	0	1	0	0	0	0
4/30/2024	11:00 PM	0	79	18	0	3	0	0	0	0	0	0	0	0
4/30/2024	11:15 PM	0	65	15	0	0	0	0	0	0	0	0	0	0
4/30/2024	11:30 PM	0	74	16	0	1	0	0	0	1	0	0	0	0
4/30/2024	11:45 PM	0	51	10	0	0	0	0	0	1	0	0	0	0

5/1/2024	12:00 AM	0	50	5	0	1	0	0	0	0	0	0	0
5/1/2024	12:15 AM	0	46	3	0	0	0	0	0	0	0	0	0
5/1/2024	12:30 AM	0	32	3	0	1	0	0	0	0	0	0	0
5/1/2024	12:45 AM	0	25	3	0	0	0	0	0	1	0	0	0
5/1/2024	1:00 AM	0	34	2	0	1	1	0	0	1	0	0	0
5/1/2024	1:15 AM	0	28	1	0	0	0	0	0	1	0	0	0
5/1/2024	1:30 AM	0	23	5	0	0	0	0	0	1	0	0	0
5/1/2024	1:45 AM	0	23	2	0	1	0	0	0	0	0	0	0
5/1/2024	2:00 AM	0	20	1	0	0	0	0	0	0	0	0	0
5/1/2024	2:15 AM	0	25	0	0	1	1	0	0	0	0	0	0
5/1/2024	2:30 AM	0	22	2	0	0	0	0	0	0	0	0	0
5/1/2024	2:45 AM	0	21	1	0	1	0	0	1	0	0	0	0
5/1/2024	3:00 AM	0	19	2	0	0	0	0	0	0	0	0	0
5/1/2024	3:15 AM	0	20	1	0	0	0	0	0	0	0	0	0
5/1/2024	3:30 AM	0	18	1	0	1	2	0	0	1	0	0	0
5/1/2024	3:45 AM	0	23	2	0	1	0	0	0	0	0	0	0
5/1/2024	4:00 AM	1	33	3	0	1	0	0	0	0	0	0	0
5/1/2024	4:15 AM	0	35	2	0	2	0	0	0	0	0	0	0
5/1/2024	4:30 AM	0	42	4	0	4	0	0	0	4	0	0	0
5/1/2024	4:45 AM	0	69	7	0	3	2	0	0	1	0	0	0
5/1/2024	5:00 AM	0	68	8	0	2	0	0	0	0	0	0	0
5/1/2024	5:15 AM	1	101	11	0	7	1	0	0	1	0	0	0
5/1/2024	5:30 AM	0	146	16	0	5	1	0	0	1	0	0	1	0
5/1/2024	5:45 AM	1	167	19	1	6	9	0	0	2	0	0	0	0
5/1/2024	6:00 AM	0	179	35	1	2	4	0	1	5	0	0	0	0
5/1/2024	6:15 AM	1	267	54	0	2	2	0	0	1	0	0	0	0
5/1/2024	6:30 AM	1	493	94	0	3	1	0	1	0	0	0	0	0
5/1/2024	6:45 AM	0	591	113	2	7	4	0	2	1	0	0	0	0
5/1/2024	7:00 AM	2	590	119	3	4	6	0	1	4	0	1	0	0
5/1/2024	7:15 AM	1	844	139	7	4	3	0	0	3	0	0	0	0
5/1/2024	7:30 AM	1	911	154	1	5	2	0	1	1	0	0	1	0
5/1/2024	7:45 AM	0	1013	147	3	4	1	1	0	2	0	0	0	0
5/1/2024	8:00 AM	0	1042	154	3	4	2	0	3	2	0	0	0	0
5/1/2024	8:15 AM	1	1021	156	2	7	3	0	0	2	0	0	0	0
5/1/2024	8:30 AM	0	1008	134	1	8	1	0	2	5	0	0	0	0
5/1/2024	8:45 AM	5	878	119	3	4	1	0	1	5	0	0	0	0
5/1/2024	9:00 AM	1	653	113	8	11	4	0	1	6	0	0	0	0
5/1/2024	9:15 AM	0	537	106	2	6	2	0	0	4	0	0	0	0
5/1/2024	9:30 AM	0	550	92	7	13	2	0	0	2	0	0	0	0
5/1/2024	9:45 AM	1	539	81	1	8	1	0	0	2	0	0	0	0
5/1/2024	10:00 AM	0	458	89	2	4	5	0	0	3	0	0	0	0
5/1/2024	10:15 AM	1	452	83	0	4	0	0	0	3	0	0	0	0
5/1/2024	10:30 AM	1	496	93	1	10	4	0	1	3	0	0	0	0
5/1/2024	10:45 AM	0	447	70	1	7	3	0	1	4	0	0	0	0
5/1/2024	11:00 AM	1	442	71	1	6	5	0	1	2	0	0	0	0
5/1/2024	11:15 AM	0	452	79	1	7	2	0	0	3	0	0	0	0
5/1/2024	11:30 AM	1	430	87	0	5	2	0	0	4	0	0	0	0
5/1/2024	11:45 AM	0	495	75	1	8	3	0	0	3	0	0	0	0
5/1/2024	12:00 PM	1	459	85	2	7	0	0	0	3	0	0	0	0
5/1/2024	12:15 PM	0	486	80	1	6	3	0	0	2	0	0	0	0
5/1/2024	12:30 PM	1	502	91	1	17	1	0	0	1	1	0	0	0
5/1/2024	12:45 PM	0	532	103	0	12	4	0	0	2	0	0	0	0
5/1/2024	1:00 PM	1	521	96	4	9	2	0	6	4	0	0	0	0
5/1/2024	1:15 PM	1	508	79	0	8	1	0	2	3	0	0	0	0
5/1/2024	1:30 PM	0	513	74	1	4	4	0	1	5	0	0	0	0
5/1/2024	1:45 PM	0	502	87	1	12	2	1	1	2	0	0	0	0
5/1/2024	2:00 PM	0	529	73	4	7	6	1	0	3	0	0	0	0
5/1/2024	2:15 PM	2	558	89	2	2	1	0	2	8	1	0	0	0
5/1/2024	2:30 PM	1	506	87	1	13	6	1	0	1	0	0	0	0
5/1/2024	2:45 PM	0	495	74	3	10	2	0	0	2	0	0	0	0
5/1/2024	3:00 PM	1	457	68	3	5	0	2	1	1	0	0	0	0
5/1/2024	3:15 PM	0	479	60	0	11	3	0	0	2	0	0	0	0
5/1/2024	3:30 PM	2	537	80	0	5	3	0	0	2	0	0	0	0
5/1/2024	3:45 PM	0	478	67	3	7	1	0	0	2	0	0	0	0
5/1/2024	4:00 PM	1	489	63	3	9	0	0	0	0	0	0	0	0
5/1/2024	4:15 PM	0	500	56	3	7	2	0	1	3	0	0	0	0
5/1/2024	4:30 PM	0	547	53	1	5	0	0	0	1	0	0	0	0
5/1/2024	4:45 PM	2	558	65	2	2	0	0	0	1	0	0	0	0
5/1/2024	5:00 PM	1	549	63	1	6	1	0	0	0	0	0	0	0
5/1/2024	5:15 PM	0	542	73	1	4	0	0	0	2	0	0	0	0
5/1/2024	5:30 PM	0	445	70	1	3	1	0	0	2	0	0	0	0
5/1/2024	5:45 PM	2	488	69	0	3	2	0	1	0	0	0	0	0
5/1/2024	6:00 PM	2	454	60	2	3	0	0	0	0	0	0	0	0
5/1/2024	6:15 PM	1	436	45	0	3	1	0	0	1	0	0	0	0
5/1/2024	6:30 PM	1	416	49	2	2	0	0	0	0	0	0	0	0
5/1/2024	6:45 PM	2	378	44	0	2	0	0	0	0	0	0	0	0
5/1/2024	7:00 PM	0	335	33	2	2	1	0	2	1	0	0	0	0
5/1/2024	7:15 PM	0	324	37	0	0	0	0	0	0	0	0	0	0
5/1/2024	7:30 PM	0	325	28	1	0	0	2	0	0	0	0	0	0
5/1/2024	7:45 PM	0	240	27	0	2	0	0	1	1	1	0	0	0
5/1/2024	8:00 PM	0	276	23	1	3	0	1	0	1	0	0	0	0
5/1/2024	8:15 PM	1	289	23	0	1	0	0	0	1	0	0	0	0
5/1/2024	8:30 PM	3	326	17	1	0	2	0	0	2	0	0	0	0
5/1/2024	8:45 PM	1	318	13	0	3	1	0	0	0	0	0	0	0
5/1/2024	9:00 PM	0	229	13	0	0	2	0	0	0	0	0	0	0
5/1/2024	9:15 PM	1	193	12	1	0	3	0	0	0	0	0	0	0
5/1/2024	9:30 PM	0	201	12	1	1	0	0	0	0	1	0	0	0
5/1/2024	9:45 PM	0	177	11	0	0	4	0	0	0	0	0	0	0
5/1/2024	10:00 PM	1	139	6	0	1	1	0	0	1	0	0	0	0
5/1/2024	10:15 PM	0	140	5	0	3	1	0	0	0	0	0	0	0
5/1/2024	10:30 PM	0	134	7	0	1	1	0	0	0	0	0	0	0
5/1/2024	10:45 PM	0	121	2	0	3	0	0	0	0	0	0	0	0
5/1/2024	11:00 PM	0	112	2	0	1	3	0	0	1	0	0	0	0
5/1/2024	11:15 PM	0	76	2	0	2	3	0	0	2	0	0	0	0
5/1/2024	11:30 PM	0	74	1	0	1	0	0	0	0	0	0	0	0
5/1/2024	11:45 PM	0	75	1	0	0	1	0	0	0	0	0	0	0

5/2/2024	12:00 AM	0	55	4	0	0	2	0	0	1	0	0	0	0
5/2/2024	12:15 AM	0	36	2	0	1	1	0	0	1	0	0	0	0
5/2/2024	12:30 AM	0	33	0	0	4	0	0	0	0	0	0	0	0
5/2/2024	12:45 AM	0	40	1	0	0	1	0	0	0	0	0	0	0
5/2/2024	1:00 AM	0	33	0	0	0	1	0	0	1	0	0	0	0
5/2/2024	1:15 AM	0	20	4	0	1	1	0	0	0	0	0	0	0
5/2/2024	1:30 AM	1	19	1	0	1	2	0	0	1	0	0	0	0
5/2/2024	1:45 AM	0	18	1	0	1	1	0	0	0	0	0	0	0
5/2/2024	2:00 AM	0	17	2	0	0	3	0	0	1	0	0	0	0
5/2/2024	2:15 AM	0	21	2	0	1	0	0	0	1	0	0	0	0
5/2/2024	2:30 AM	0	23	2	0	1	0	0	0	1	0	0	0	0
5/2/2024	2:45 AM	0	18	0	0	0	1	0	0	0	0	0	0	0
5/2/2024	3:00 AM	0	16	0	0	0	3	0	0	2	0	0	0	0
5/2/2024	3:15 AM	0	21	2	0	0	0	0	0	1	0	0	0	0
5/2/2024	3:30 AM	0	23	5	0	0	1	0	0	1	0	0	0	0
5/2/2024	3:45 AM	0	20	2	0	4	0	1	0	0	0	0	0	0
5/2/2024	4:00 AM	0	30	0	0	1	0	0	0	0	0	0	0	0
5/2/2024	4:15 AM	0	39	1	0	1	0	0	0	1	0	0	0	0
5/2/2024	4:30 AM	0	40	3	0	1	0	0	0	0	0	0	0	0
5/2/2024	4:45 AM	0	60	9	0	1	3	0	0	1	0	0	0	0
5/2/2024	5:00 AM	0	65	11	0	5	3	0	0	3	0	0	0	0
5/2/2024	5:15 AM	1	107	9	0	6	9	0	0	10	0	0	0	0
5/2/2024	5:30 AM	1	152	22	1	2	8	0	0	1	0	0	0	0
5/2/2024	5:45 AM	1	172	22	1	0	2	0	0	1	0	0	0	0
5/2/2024	6:00 AM	0	158	26	1	1	4	0	0	1	0	0	0	0
5/2/2024	6:15 AM	0	301	46	0	4	2	0	0	0	0	2	0	0
5/2/2024	6:30 AM	1	488	86	1	2	5	0	0	2	0	0	0	0
5/2/2024	6:45 AM	3	594	122	2	6	4	0	1	6	0	1	0	0
5/2/2024	7:00 AM	2	658	113	2	5	3	0	0	3	0	0	0	0
5/2/2024	7:15 AM	2	809	138	2	2	4	0	2	3	0	0	0	0
5/2/2024	7:30 AM	0	955	155	0	4	2	0	0	4	0	0	0	0
5/2/2024	7:45 AM	1	1117	172	1	6	2	0	0	6	0	0	0	0
5/2/2024	8:00 AM	0	963	143	1	8	3	0	0	1	0	0	0	0
5/2/2024	8:15 AM	1	1083	131	4	4	2	0	1	4	0	0	0	0
5/2/2024	8:30 AM	1	880	145	2	5	1	0	0	4	0	0	0	0
5/2/2024	8:45 AM	0	734	103	3	6	3	0	0	5	0	0	0	0
5/2/2024	9:00 AM	0	616	102	5	8	4	0	0	2	0	0	0	0
5/2/2024	9:15 AM	0	574	102	5	9	1	0	0	3	0	0	0	0
5/2/2024	9:30 AM	1	561	123	4	9	0	0	0	4	0	0	0	0
5/2/2024	9:45 AM	1	558	121	0	7	3	0	1	5	0	0	0	0
5/2/2024	10:00 AM	1	489	99	2	5	3	0	0	2	0	0	0	0
5/2/2024	10:15 AM	0	438	101	2	8	5	0	0	3	0	0	0	0
5/2/2024	10:30 AM	0	491	93	4	7	3	0	0	8	0	0	0	0
5/2/2024	10:45 AM	0	446	101	0	15	0	0	0	1	0	0	0	0
5/2/2024	11:00 AM	1	426	90	2	8	0	0	1	5	0	0	0	0
5/2/2024	11:15 AM	1	449	98	1	10	6	0	2	5	0	0	0	0
5/2/2024	11:30 AM	0	484	74	2	4	4	0	1	1	0	0	0	0
5/2/2024	11:45 AM	3	489	85	1	11	1	0	2	7	0	0	0	0
5/2/2024	12:00 PM	0	527	110	2	14	0	0	5	9	1	0	0	0
5/2/2024	12:15 PM	1	607	107	0	5	4	0	0	6	0	0	0	0
5/2/2024	12:30 PM	0	595	101	3	5	5	1	1	6	0	0	0	0
5/2/2024	12:45 PM	0	616	101	3	16	2	1	0	7	0	0	0	0
5/2/2024	1:00 PM	1	566	112	3	15	1	0	2	8	0	0	0	0
5/2/2024	1:15 PM	2	555	107	1	14	1	0	1	18	0	0	0	0
5/2/2024	1:30 PM	1	591	90	2	9	1	0	4	5	0	0	0	0
5/2/2024	1:45 PM	2	605	87	5	10	3	0	1	8	0	0	0	0
5/2/2024	2:00 PM	2	522	87	3	10	2	0	4	5	0	0	0	0
5/2/2024	2:15 PM	0	613	90	0	14	4	0	1	7	0	0	0	0
5/2/2024	2:30 PM	2	613	89	4	13	3	0	0	6	0	0	0	0
5/2/2024	2:45 PM	3	600	96	4	10	3	0	2	7	0	0	0	0
5/2/2024	3:00 PM	2	561	98	0	9	4	1	3	8	0	0	0	0
5/2/2024	3:15 PM	0	585	117	0	10	1	0	1	6	0	0	0	0
5/2/2024	3:30 PM	1	777	115	1	14	2	3	2	13	0	0	0	0
5/2/2024	3:45 PM	0	622	106	2	18	2	0	4	14	0	0	0	0
5/2/2024	4:00 PM	1	608	116	4	16	3	0	0	11	0	0	0	0
5/2/2024	4:15 PM	0	684	115	1	8	1	1	1	3	0	0	0	0
5/2/2024	4:30 PM	2	727	115	1	9	3	1	0	6	0	0	0	0
5/2/2024	4:45 PM	0	642	111	2	10	0	0	3	6	0	0	0	0
5/2/2024	5:00 PM	1	636	94	1	4	0	0	1	2	0	0	0	0
5/2/2024	5:15 PM	0	602	100	3	6	2	0	0	6	0	0	0	0
5/2/2024	5:30 PM	0	625	113	2	10	0	0	1	1	1	0	0	0
5/2/2024	5:45 PM	3	677	105	1	9	2	0	1	3	0	0	0	0
5/2/2024	6:00 PM	1	581	90	0	4	0	0	2	6	0	0	0	0
5/2/2024	6:15 PM	1	765	109	4	9	0	0	0	5	0	0	0	0
5/2/2024	6:30 PM	1	688	69	0	5	2	1	0	6	0	0	0	0
5/2/2024	6:45 PM	1	436	36	2	2	0	0	1	1	0	0	0	0
5/2/2024	7:00 PM	0	0	0	0	0	0	0	0	0	0	0	0	0
5/2/2024	7:15 PM	0	0	0	0	0	0	0	0	0	0	0	0	0
5/2/2024	7:30 PM	0	0	0	0	0	0	0	0	0	0	0	0	0
5/2/2024	7:45 PM	0	0	0	0	0	0	0	0	0	0	0	0	0
5/2/2024	8:00 PM	0	0	0	0	0	0	0	0	0	0	0	0	0
5/2/2024	8:15 PM	0	0	0	0	0	0	0	0	0	0	0	0	0
5/2/2024	8:30 PM	0	0	0	0	0	0	0	0	0	0	0	0	0
5/2/2024	8:45 PM	0	0	0	0	0	0	0	0	0	0	0	0	0
5/2/2024	9:00 PM	0	0	0	0	0	0	0	0	0	0	0	0	0
5/2/2024	9:15 PM	0	0	0	0	0	0	0	0	0	0	0	0	0
5/2/2024	9:30 PM	0	0	0	0	0	0	0	0	0	0	0	0	0
5/2/2024	9:45 PM	0	0	0	0	0	0	0	0	0	0	0	0	0
5/2/2024	10:00 PM	0	0	0	0	0	0	0	0	0	0	0	0	0
5/2/2024	10:15 PM	0	0	0	0	0	0	0	0	0	0	0	0	0
5/2/2024	10:30 PM	0	0	0	0	0	0	0	0	0	0	0	0	0
5/2/2024	10:45 PM	0	0	0	0	0	0	0	0	0	0	0	0	0
5/2/2024	11:00 PM	0	0	0	0	0	0	0	0	0	0	0	0	0
5/2/2024	11:15 PM	0	0	0	0	0	0	0	0	0	0	0	0	0
5/2/2024	11:30 PM	0	0	0	0	0	0	0	0	0	0	0	0	0
5/2/2024	11:45 PM	0	0	0	0	0	0	0	0	0	0	0	0	0

WB
File Name:
Start Date: 4/30/2024
Start Time: 0
Site Code: 72
Station ID: 1
Location 1: US-321 Elmwood Ave E/Bound On-Ramp, east of US-321 Hugher St S/Bound On-Ramp
Location 2:

Date	Time	1	2	3	4	5	6	7	8	9	10	11	12	13
4/30/2024	12:00 AM	0	0	0	0	0	0	0	0	0	0	0	0	0
4/30/2024	12:15 AM	0	0	0	0	0	0	0	0	0	0	0	0	0
4/30/2024	12:30 AM	0	0	0	0	0	0	0	0	0	0	0	0	0
4/30/2024	12:45 AM	0	0	0	0	0	0	0	0	0	0	0	0	0
4/30/2024	1:00 AM	0	0	0	0	0	0	0	0	0	0	0	0	0
4/30/2024	1:15 AM	0	0	0	0	0	0	0	0	0	0	0	0	0
4/30/2024	1:30 AM	0	0	0	0	0	0	0	0	0	0	0	0	0
4/30/2024	1:45 AM	0	0	0	0	0	0	0	0	0	0	0	0	0
4/30/2024	2:00 AM	0	0	0	0	0	0	0	0	0	0	0	0	0
4/30/2024	2:15 AM	0	0	0	0	0	0	0	0	0	0	0	0	0
4/30/2024	2:30 AM	0	0	0	0	0	0	0	0	0	0	0	0	0
4/30/2024	2:45 AM	0	0	0	0	0	0	0	0	0	0	0	0	0
4/30/2024	3:00 AM	0	0	0	0	0	0	0	0	0	0	0	0	0
4/30/2024	3:15 AM	0	0	0	0	0	0	0	0	0	0	0	0	0
4/30/2024	3:30 AM	0	0	0	0	0	0	0	0	0	0	0	0	0
4/30/2024	3:45 AM	0	0	0	0	0	0	0	0	0	0	0	0	0
4/30/2024	4:00 AM	0	0	0	0	0	0	0	0	0	0	0	0	0
4/30/2024	4:15 AM	0	0	0	0	0	0	0	0	0	0	0	0	0
4/30/2024	4:30 AM	0	0	0	0	0	0	0	0	0	0	0	0	0
4/30/2024	4:45 AM	0	0	0	0	0	0	0	0	0	0	0	0	0
4/30/2024	5:00 AM	0	0	0	0	0	0	0	0	0	0	0	0	0
4/30/2024	5:15 AM	0	0	0	0	0	0	0	0	0	0	0	0	0
4/30/2024	5:30 AM	0	0	0	0	0	0	0	0	0	0	0	0	0
4/30/2024	5:45 AM	0	0	0	0	0	0	0	0	0	0	0	0	0
4/30/2024	6:00 AM	0	0	0	0	0	0	0	0	0	0	0	0	0
4/30/2024	6:15 AM	0	0	0	0	0	0	0	0	0	0	0	0	0
4/30/2024	6:30 AM	0	0	0	0	0	0	0	0	0	0	0	0	0
4/30/2024	6:45 AM	0	0	0	0	0	0	0	0	0	0	0	0	0
4/30/2024	7:00 AM	0	0	0	0	0	0	0	0	0	0	0	0	0
4/30/2024	7:15 AM	0	0	0	0	0	0	0	0	0	0	0	0	0
4/30/2024	7:30 AM	0	0	0	0	0	0	0	0	0	0	0	0	0
4/30/2024	7:45 AM	0	0	0	0	0	0	0	0	0	0	0	0	0
4/30/2024	8:00 AM	0	0	0	0	0	0	0	0	0	0	0	0	0
4/30/2024	8:15 AM	0	0	0	0	0	0	0	0	0	0	0	0	0
4/30/2024	8:30 AM	0	0	0	0	0	0	0	0	0	0	0	0	0
4/30/2024	8:45 AM	0	0	0	0	0	0	0	0	0	0	0	0	0
4/30/2024	9:00 AM	0	0	0	0	0	0	0	0	0	0	0	0	0
4/30/2024	9:15 AM	0	0	0	0	0	0	0	0	0	0	0	0	0
4/30/2024	9:30 AM	0	0	0	0	0	0	0	0	0	0	0	0	0
4/30/2024	9:45 AM	0	0	0	0	0	0	0	0	0	0	0	0	0
4/30/2024	10:00 AM	0	0	0	0	0	0	0	0	0	0	0	0	0
4/30/2024	10:15 AM	0	0	0	0	0	0	0	0	0	0	0	0	0
4/30/2024	10:30 AM	0	0	0	0	0	0	0	0	0	0	0	0	0
4/30/2024	10:45 AM	0	0	0	0	0	0	0	0	0	0	0	0	0
4/30/2024	11:00 AM	0	0	0	0	0	0	0	0	0	0	0	0	0
4/30/2024	11:15 AM	0	0	0	0	0	0	0	0	0	0	0	0	0
4/30/2024	11:30 AM	0	0	0	0	0	0	0	0	0	0	0	0	0
4/30/2024	11:45 AM	0	0	0	0	0	0	0	0	0	0	0	0	0
4/30/2024	12:00 PM	0	0	0	0	0	0	0	0	0	0	0	0	0
4/30/2024	12:15 PM	0	0	0	0	0	0	0	0	0	0	0	0	0
4/30/2024	12:30 PM	0	0	0	0	0	0	0	0	0	0	0	0	0
4/30/2024	12:45 PM	0	0	0	0	0	0	0	0	0	0	0	0	0
4/30/2024	1:00 PM	0	0	0	0	0	0	0	0	0	0	0	0	0
4/30/2024	1:15 PM	0	0	0	0	0	0	0	0	0	0	0	0	0
4/30/2024	1:30 PM	0	0	0	0	0	0	0	0	0	0	0	0	0
4/30/2024	1:45 PM	0	0	0	0	0	0	0	0	0	0	0	0	0
4/30/2024	2:00 PM	0	0	0	0	0	0	0	0	0	0	0	0	0
4/30/2024	2:15 PM	0	0	0	0	0	0	0	0	0	0	0	0	0
4/30/2024	2:30 PM	0	0	0	0	0	0	0	0	0	0	0	0	0
4/30/2024	2:45 PM	0	0	0	0	0	0	0	0	0	0	0	0	0
4/30/2024	3:00 PM	0	0	0	0	0	0	0	0	0	0	0	0	0
4/30/2024	3:15 PM	0	0	0	0	0	0	0	0	0	0	0	0	0
4/30/2024	3:30 PM	0	0	0	0	0	0	0	0	0	0	0	0	0
4/30/2024	3:45 PM	0	0	0	0	0	0	0	0	0	0	0	0	0
4/30/2024	4:00 PM	0	0	0	0	0	0	0	0	0	0	0	0	0
4/30/2024	4:15 PM	0	0	0	0	0	0	0	0	0	0	0	0	0
4/30/2024	4:30 PM	0	0	0	0	0	0	0	0	0	0	0	0	0
4/30/2024	4:45 PM	0	0	0	0	0	0	0	0	0	0	0	0	0
4/30/2024	5:00 PM	0	0	0	0	0	0	0	0	0	0	0	0	0
4/30/2024	5:15 PM	0	0	0	0	0	0	0	0	0	0	0	0	0
4/30/2024	5:30 PM	0	0	0	0	0	0	0	0	0	0	0	0	0
4/30/2024	5:45 PM	0	0	0	0	0	0	0	0	0	0	0	0	0
4/30/2024	6:00 PM	0	0	0	0	0	0	0	0	0	0	0	0	0
4/30/2024	6:15 PM	0	0	0	0	0	0	0	0	0	0	0	0	0
4/30/2024	6:30 PM	0	0	0	0	0	0	0	0	0	0	0	0	0
4/30/2024	6:45 PM	0	0	0	0	0	0	0	0	0	0	0	0	0
4/30/2024	7:00 PM	0	0	0	0	0	0	0	0	0	0	0	0	0
4/30/2024	7:15 PM	0	0	0	0	0	0	0	0	0	0	0	0	0
4/30/2024	7:30 PM	0	0	0	0	0	0	0	0	0	0	0	0	0
4/30/2024	7:45 PM	0	0	0	0	0	0	0	0	0	0	0	0	0
4/30/2024	8:00 PM	0	0	0	0	0	0	0	0	0	0	0	0	0
4/30/2024	8:15 PM	0	0	0	0	0	0	0	0	0	0	0	0	0
4/30/2024	8:30 PM	0	0	0	0	0	0	0	0	0	0	0	0	0
4/30/2024	8:45 PM	0	0	0	0	0	0	0	0	0	0	0	0	0
4/30/2024	9:00 PM	0	0	0	0	0	0	0	0	0	0	0	0	0
4/30/2024	9:15 PM	0	0	0	0	0	0	0	0	0	0	0	0	0
4/30/2024	9:30 PM	0	0	0	0	0	0	0	0	0	0	0	0	0
4/30/2024	9:45 PM	0	0	0	0	0	0	0	0	0	0	0	0	0
4/30/2024	10:00 PM	0	0	0	0	0	0	0	0	0	0	0	0	0
4/30/2024	10:15 PM	0	0	0	0	0	0	0	0	0	0	0	0	0
4/30/2024	10:30 PM	0	0	0	0	0	0	0	0	0	0	0	0	0
4/30/2024	10:45 PM	0	0	0	0	0	0	0	0	0	0	0	0	0
4/30/2024	11:00 PM	0	0	0	0	0	0	0	0	0	0	0	0	0
4/30/2024	11:15 PM	0	0	0	0	0	0	0	0	0	0	0	0	0
4/30/2024	11:30 PM	0	0	0	0	0	0	0	0	0	0	0	0	0
4/30/2024	11:45 PM	0	0	0	0	0	0	0	0	0	0	0	0	0

5/1/2024	12:00 AM	0	0	0	0	0	0	0	0	0	0	0	0	0
5/1/2024	12:15 AM	0	0	0	0	0	0	0	0	0	0	0	0	0
5/1/2024	12:30 AM	0	0	0	0	0	0	0	0	0	0	0	0	0
5/1/2024	12:45 AM	0	0	0	0	0	0	0	0	0	0	0	0	0
5/1/2024	1:00 AM	0	0	0	0	0	0	0	0	0	0	0	0	0
5/1/2024	1:15 AM	0	0	0	0	0	0	0	0	0	0	0	0	0
5/1/2024	1:30 AM	0	0	0	0	0	0	0	0	0	0	0	0	0
5/1/2024	1:45 AM	0	0	0	0	0	0	0	0	0	0	0	0	0
5/1/2024	2:00 AM	0	0	0	0	0	0	0	0	0	0	0	0	0
5/1/2024	2:15 AM	0	0	0	0	0	0	0	0	0	0	0	0	0
5/1/2024	2:30 AM	0	0	0	0	0	0	0	0	0	0	0	0	0
5/1/2024	2:45 AM	0	0	0	0	0	0	0	0	0	0	0	0	0
5/1/2024	3:00 AM	0	0	0	0	0	0	0	0	0	0	0	0	0
5/1/2024	3:15 AM	0	0	0	0	0	0	0	0	0	0	0	0	0
5/1/2024	3:30 AM	0	0	0	0	0	0	0	0	0	0	0	0	0
5/1/2024	3:45 AM	0	0	0	0	0	0	0	0	0	0	0	0	0
5/1/2024	4:00 AM	0	0	0	0	0	0	0	0	0	0	0	0	0
5/1/2024	4:15 AM	0	0	0	0	0	0	0	0	0	0	0	0	0
5/1/2024	4:30 AM	0	0	0	0	0	0	0	0	0	0	0	0	0
5/1/2024	4:45 AM	0	0	0	0	0	0	0	0	0	0	0	0	0
5/1/2024	5:00 AM	0	0	0	0	0	0	0	0	0	0	0	0	0
5/1/2024	5:15 AM	0	0	0	0	0	0	0	0	0	0	0	0	0
5/1/2024	5:30 AM	0	0	0	0	0	0	0	0	0	0	0	0	0
5/1/2024	5:45 AM	0	0	0	0	0	0	0	0	0	0	0	0	0
5/1/2024	6:00 AM	0	0	0	0	0	0	0	0	0	0	0	0	0
5/1/2024	6:15 AM	0	0	0	0	0	0	0	0	0	0	0	0	0
5/1/2024	6:30 AM	0	0	0	0	0	0	0	0	0	0	0	0	0
5/1/2024	6:45 AM	0	0	0	0	0	0	0	0	0	0	0	0	0
5/1/2024	7:00 AM	0	0	0	0	0	0	0	0	0	0	0	0	0
5/1/2024	7:15 AM	0	0	0	0	0	0	0	0	0	0	0	0	0
5/1/2024	7:30 AM	0	0	0	0	0	0	0	0	0	0	0	0	0
5/1/2024	7:45 AM	0	0	0	0	0	0	0	0	0	0	0	0	0
5/1/2024	8:00 AM	0	0	0	0	0	0	0	0	0	0	0	0	0
5/1/2024	8:15 AM	0	0	0	0	0	0	0	0	0	0	0	0	0
5/1/2024	8:30 AM	0	0	0	0	0	0	0	0	0	0	0	0	0
5/1/2024	8:45 AM	0	0	0	0	0	0	0	0	0	0	0	0	0
5/1/2024	9:00 AM	0	0	0	0	0	0	0	0	0	0	0	0	0
5/1/2024	9:15 AM	0	0	0	0	0	0	0	0	0	0	0	0	0
5/1/2024	9:30 AM	0	0	0	0	0	0	0	0	0	0	0	0	0
5/1/2024	9:45 AM	0	0	0	0	0	0	0	0	0	0	0	0	0
5/1/2024	10:00 AM	0	0	0	0	0	0	0	0	0	0	0	0	0
5/1/2024	10:15 AM	0	0	0	0	0	0	0	0	0	0	0	0	0
5/1/2024	10:30 AM	0	0	0	0	0	0	0	0	0	0	0	0	0
5/1/2024	10:45 AM	0	0	0	0	0	0	0	0	0	0	0	0	0
5/1/2024	11:00 AM	0	0	0	0	0	0	0	0	0	0	0	0	0
5/1/2024	11:15 AM	0	0	0	0	0	0	0	0	0	0	0	0	0
5/1/2024	11:30 AM	0	0	0	0	0	0	0	0	0	0	0	0	0
5/1/2024	11:45 AM	0	0	0	0	0	0	0	0	0	0	0	0	0
5/1/2024	12:00 PM	0	0	0	0	0	0	0	0	0	0	0	0	0
5/1/2024	12:15 PM	0	0	0	0	0	0	0	0	0	0	0	0	0
5/1/2024	12:30 PM	0	0	0	0	0	0	0	0	0	0	0	0	0
5/1/2024	12:45 PM	0	0	0	0	0	0	0	0	0	0	0	0	0
5/1/2024	1:00 PM	0	0	0	0	0	0	0	0	0	0	0	0	0
5/1/2024	1:15 PM	0	0	0	0	0	0	0	0	0	0	0	0	0
5/1/2024	1:30 PM	0	0	0	0	0	0	0	0	0	0	0	0	0
5/1/2024	1:45 PM	0	0	0	0	0	0	0	0	0	0	0	0	0
5/1/2024	2:00 PM	0	0	0	0	0	0	0	0	0	0	0	0	0
5/1/2024	2:15 PM	0	0	0	0	0	0	0	0	0	0	0	0	0
5/1/2024	2:30 PM	0	0	0	0	0	0	0	0	0	0	0	0	0
5/1/2024	2:45 PM	0	0	0	0	0	0	0	0	0	0	0	0	0
5/1/2024	3:00 PM	0	0	0	0	0	0	0	0	0	0	0	0	0
5/1/2024	3:15 PM	0	0	0	0	0	0	0	0	0	0	0	0	0
5/1/2024	3:30 PM	0	0	0	0	0	0	0	0	0	0	0	0	0
5/1/2024	3:45 PM	0	0	0	0	0	0	0	0	0	0	0	0	0
5/1/2024	4:00 PM	0	0	0	0	0	0	0	0	0	0	0	0	0
5/1/2024	4:15 PM	0	0	0	0	0	0	0	0	0	0	0	0	0
5/1/2024	4:30 PM	0	0	0	0	0	0	0	0	0	0	0	0	0
5/1/2024	4:45 PM	0	0	0	0	0	0	0	0	0	0	0	0	0
5/1/2024	5:00 PM	0	0	0	0	0	0	0	0	0	0	0	0	0
5/1/2024	5:15 PM	0	0	0	0	0	0	0	0	0	0	0	0	0
5/1/2024	5:30 PM	0	0	0	0	0	0	0	0	0	0	0	0	0
5/1/2024	5:45 PM	0	0	0	0	0	0	0	0	0	0	0	0	0
5/1/2024	6:00 PM	0	0	0	0	0	0	0	0	0	0	0	0	0
5/1/2024	6:15 PM	0	0	0	0	0	0	0	0	0	0	0	0	0
5/1/2024	6:30 PM	0	0	0	0	0	0	0	0	0	0	0	0	0
5/1/2024	6:45 PM	0	0	0	0	0	0	0	0	0	0	0	0	0
5/1/2024	7:00 PM	0	0	0	0	0	0	0	0	0	0	0	0	0
5/1/2024	7:15 PM	0	0	0	0	0	0	0	0	0	0	0	0	0
5/1/2024	7:30 PM	0	0	0	0	0	0	0	0	0	0	0	0	0
5/1/2024	7:45 PM	0	0	0	0	0	0	0	0	0	0	0	0	0
5/1/2024	8:00 PM	0	0	0	0	0	0	0	0	0	0	0	0	0
5/1/2024	8:15 PM	0	0	0	0	0	0	0	0	0	0	0	0	0
5/1/2024	8:30 PM	0	0	0	0	0	0	0	0	0	0	0	0	0
5/1/2024	8:45 PM	0	0	0	0	0	0	0	0	0	0	0	0	0
5/1/2024	9:00 PM	0	0	0	0	0	0	0	0	0	0	0	0	0
5/1/2024	9:15 PM	0	0	0	0	0	0	0	0	0	0	0	0	0
5/1/2024	9:30 PM	0	0	0	0	0	0	0	0	0	0	0	0	0
5/1/2024	9:45 PM	0	0	0	0	0	0	0	0	0	0	0	0	0
5/1/2024	10:00 PM	0	0	0	0	0	0	0	0	0	0	0	0	0
5/1/2024	10:15 PM	0	0	0	0	0	0	0	0	0	0	0	0	0
5/1/2024	10:30 PM	0	0	0	0	0	0	0	0	0	0	0	0	0
5/1/2024	10:45 PM	0	0	0	0	0	0	0	0	0	0	0	0	0
5/1/2024	11:00 PM	0	0	0	0	0	0	0	0	0	0	0	0	0
5/1/2024	11:15 PM	0	0	0	0	0	0	0	0	0	0	0	0	0
5/1/2024	11:30 PM	0	0	0	0	0	0	0	0	0	0	0	0	0
5/1/2024	11:45 PM	0	0	0	0	0	0	0	0	0	0	0	0	0

5/2/2024	12:00 AM	0	0	0	0	0	0	0	0	0	0	0	0	0
5/2/2024	12:15 AM	0	0	0	0	0	0	0	0	0	0	0	0	0
5/2/2024	12:30 AM	0	0	0	0	0	0	0	0	0	0	0	0	0
5/2/2024	12:45 AM	0	0	0	0	0	0	0	0	0	0	0	0	0
5/2/2024	1:00 AM	0	0	0	0	0	0	0	0	0	0	0	0	0
5/2/2024	1:15 AM	0	0	0	0	0	0	0	0	0	0	0	0	0
5/2/2024	1:30 AM	0	0	0	0	0	0	0	0	0	0	0	0	0
5/2/2024	1:45 AM	0	0	0	0	0	0	0	0	0	0	0	0	0
5/2/2024	2:00 AM	0	0	0	0	0	0	0	0	0	0	0	0	0
5/2/2024	2:15 AM	0	0	0	0	0	0	0	0	0	0	0	0	0
5/2/2024	2:30 AM	0	0	0	0	0	0	0	0	0	0	0	0	0
5/2/2024	2:45 AM	0	0	0	0	0	0	0	0	0	0	0	0	0
5/2/2024	3:00 AM	0	0	0	0	0	0	0	0	0	0	0	0	0
5/2/2024	3:15 AM	0	0	0	0	0	0	0	0	0	0	0	0	0
5/2/2024	3:30 AM	0	0	0	0	0	0	0	0	0	0	0	0	0
5/2/2024	3:45 AM	0	0	0	0	0	0	0	0	0	0	0	0	0
5/2/2024	4:00 AM	0	0	0	0	0	0	0	0	0	0	0	0	0
5/2/2024	4:15 AM	0	0	0	0	0	0	0	0	0	0	0	0	0
5/2/2024	4:30 AM	0	0	0	0	0	0	0	0	0	0	0	0	0
5/2/2024	4:45 AM	0	0	0	0	0	0	0	0	0	0	0	0	0
5/2/2024	5:00 AM	0	0	0	0	0	0	0	0	0	0	0	0	0
5/2/2024	5:15 AM	0	0	0	0	0	0	0	0	0	0	0	0	0
5/2/2024	5:30 AM	0	0	0	0	0	0	0	0	0	0	0	0	0
5/2/2024	5:45 AM	0	0	0	0	0	0	0	0	0	0	0	0	0
5/2/2024	6:00 AM	0	0	0	0	0	0	0	0	0	0	0	0	0
5/2/2024	6:15 AM	0	0	0	0	0	0	0	0	0	0	0	0	0
5/2/2024	6:30 AM	0	0	0	0	0	0	0	0	0	0	0	0	0
5/2/2024	6:45 AM	0	0	0	0	0	0	0	0	0	0	0	0	0
5/2/2024	7:00 AM	0	0	0	0	0	0	0	0	0	0	0	0	0
5/2/2024	7:15 AM	0	0	0	0	0	0	0	0	0	0	0	0	0
5/2/2024	7:30 AM	0	0	0	0	0	0	0	0	0	0	0	0	0
5/2/2024	7:45 AM	0	0	0	0	0	0	0	0	0	0	0	0	0
5/2/2024	8:00 AM	0	0	0	0	0	0	0	0	0	0	0	0	0
5/2/2024	8:15 AM	0	0	0	0	0	0	0	0	0	0	0	0	0
5/2/2024	8:30 AM	0	0	0	0	0	0	0	0	0	0	0	0	0
5/2/2024	8:45 AM	0	0	0	0	0	0	0	0	0	0	0	0	0
5/2/2024	9:00 AM	0	0	0	0	0	0	0	0	0	0	0	0	0
5/2/2024	9:15 AM	0	0	0	0	0	0	0	0	0	0	0	0	0
5/2/2024	9:30 AM	0	0	0	0	0	0	0	0	0	0	0	0	0
5/2/2024	9:45 AM	0	0	0	0	0	0	0	0	0	0	0	0	0
5/2/2024	10:00 AM	0	0	0	0	0	0	0	0	0	0	0	0	0
5/2/2024	10:15 AM	0	0	0	0	0	0	0	0	0	0	0	0	0
5/2/2024	10:30 AM	0	0	0	0	0	0	0	0	0	0	0	0	0
5/2/2024	10:45 AM	0	0	0	0	0	0	0	0	0	0	0	0	0
5/2/2024	11:00 AM	0	0	0	0	0	0	0	0	0	0	0	0	0
5/2/2024	11:15 AM	0	0	0	0	0	0	0	0	0	0	0	0	0
5/2/2024	11:30 AM	0	0	0	0	0	0	0	0	0	0	0	0	0
5/2/2024	11:45 AM	0	0	0	0	0	0	0	0	0	0	0	0	0
5/2/2024	12:00 PM	0	0	0	0	0	0	0	0	0	0	0	0	0
5/2/2024	12:15 PM	0	0	0	0	0	0	0	0	0	0	0	0	0
5/2/2024	12:30 PM	0	0	0	0	0	0	0	0	0	0	0	0	0
5/2/2024	12:45 PM	0	0	0	0	0	0	0	0	0	0	0	0	0
5/2/2024	1:00 PM	0	0	0	0	0	0	0	0	0	0	0	0	0
5/2/2024	1:15 PM	0	0	0	0	0	0	0	0	0	0	0	0	0
5/2/2024	1:30 PM	0	0	0	0	0	0	0	0	0	0	0	0	0
5/2/2024	1:45 PM	0	0	0	0	0	0	0	0	0	0	0	0	0
5/2/2024	2:00 PM	0	0	0	0	0	0	0	0	0	0	0	0	0
5/2/2024	2:15 PM	0	0	0	0	0	0	0	0	0	0	0	0	0
5/2/2024	2:30 PM	0	0	0	0	0	0	0	0	0	0	0	0	0
5/2/2024	2:45 PM	0	0	0	0	0	0	0	0	0	0	0	0	0
5/2/2024	3:00 PM	0	0	0	0	0	0	0	0	0	0	0	0	0
5/2/2024	3:15 PM	0	0	0	0	0	0	0	0	0	0	0	0	0
5/2/2024	3:30 PM	0	0	0	0	0	0	0	0	0	0	0	0	0
5/2/2024	3:45 PM	0	0	0	0	0	0	0	0	0	0	0	0	0
5/2/2024	4:00 PM	0	0	0	0	0	0	0	0	0	0	0	0	0
5/2/2024	4:15 PM	0	0	0	0	0	0	0	0	0	0	0	0	0
5/2/2024	4:30 PM	0	0	0	0	0	0	0	0	0	0	0	0	0
5/2/2024	4:45 PM	0	0	0	0	0	0	0	0	0	0	0	0	0
5/2/2024	5:00 PM	0	0	0	0	0	0	0	0	0	0	0	0	0
5/2/2024	5:15 PM	0	0	0	0	0	0	0	0	0	0	0	0	0
5/2/2024	5:30 PM	0	0	0	0	0	0	0	0	0	0	0	0	0
5/2/2024	5:45 PM	0	0	0	0	0	0	0	0	0	0	0	0	0
5/2/2024	6:00 PM	0	0	0	0	0	0	0	0	0	0	0	0	0
5/2/2024	6:15 PM	0	0	0	0	0	0	0	0	0	0	0	0	0
5/2/2024	6:30 PM	0	0	0	0	0	0	0	0	0	0	0	0	0
5/2/2024	6:45 PM	0	0	0	0	0	0	0	0	0	0	0	0	0
5/2/2024	7:00 PM	0	0	0	0	0	0	0	0	0	0	0	0	0
5/2/2024	7:15 PM	0	0	0	0	0	0	0	0	0	0	0	0	0
5/2/2024	7:30 PM	0	0	0	0	0	0	0	0	0	0	0	0	0
5/2/2024	7:45 PM	0	0	0	0	0	0	0	0	0	0	0	0	0
5/2/2024	8:00 PM	0	0	0	0	0	0	0	0	0	0	0	0	0
5/2/2024	8:15 PM	0	0	0	0	0	0	0	0	0	0	0	0	0
5/2/2024	8:30 PM	0	0	0	0	0	0	0	0	0	0	0	0	0
5/2/2024	8:45 PM	0	0	0	0	0	0	0	0	0	0	0	0	0
5/2/2024	9:00 PM	0	0	0	0	0	0	0	0	0	0	0	0	0
5/2/2024	9:15 PM	0	0	0	0	0	0	0	0	0	0	0	0	0
5/2/2024	9:30 PM	0	0	0	0	0	0	0	0	0	0	0	0	0
5/2/2024	9:45 PM	0	0	0	0	0	0	0	0	0	0	0	0	0
5/2/2024	10:00 PM	0	0	0	0	0	0	0	0	0	0	0	0	0
5/2/2024	10:15 PM	0	0	0	0	0	0	0	0	0	0	0	0	0
5/2/2024	10:30 PM	0	0	0	0	0	0	0	0	0	0	0	0	0
5/2/2024	10:45 PM	0	0	0	0	0	0	0	0	0	0	0	0	0
5/2/2024	11:00 PM	0	0	0	0	0	0	0	0	0	0	0	0	0
5/2/2024	11:15 PM	0	0	0	0	0	0	0	0	0	0	0	0	0
5/2/2024	11:30 PM	0	0	0	0	0	0	0	0	0	0	0	0	0
5/2/2024	11:45 PM	0	0	0	0	0	0	0	0	0	0	0	0	0

EB
File Name:
Start Date: 4/30/2024
Start Time: 0
Site Code: 72
Station ID: 1
Location 1: US-321 Elmwood Ave E/Bound On-Ramp, east of US-321 Hugher St S/Bound On-Ramp
Location 2:

Date	Time	1	2	3	4	5	6	7	8	9	10	11	12	13
4/30/2024	12:00 AM	0	0	0	0	0	0	0	0	0	0	0	0	0
4/30/2024	12:15 AM	0	0	0	0	0	0	0	0	0	0	0	0	0
4/30/2024	12:30 AM	0	0	0	0	0	0	0	0	0	0	0	0	0
4/30/2024	12:45 AM	0	0	0	0	0	0	0	0	0	0	0	0	0
4/30/2024	1:00 AM	0	0	0	0	0	0	0	0	0	0	0	0	0
4/30/2024	1:15 AM	0	0	0	0	0	0	0	0	0	0	0	0	0
4/30/2024	1:30 AM	0	0	0	0	0	0	0	0	0	0	0	0	0
4/30/2024	1:45 AM	0	0	0	0	0	0	0	0	0	0	0	0	0
4/30/2024	2:00 AM	0	0	0	0	0	0	0	0	0	0	0	0	0
4/30/2024	2:15 AM	0	0	0	0	0	0	0	0	0	0	0	0	0
4/30/2024	2:30 AM	0	0	0	0	0	0	0	0	0	0	0	0	0
4/30/2024	2:45 AM	0	0	0	0	0	0	0	0	0	0	0	0	0
4/30/2024	3:00 AM	0	0	0	0	0	0	0	0	0	0	0	0	0
4/30/2024	3:15 AM	0	0	0	0	0	0	0	0	0	0	0	0	0
4/30/2024	3:30 AM	0	0	0	0	0	0	0	0	0	0	0	0	0
4/30/2024	3:45 AM	0	0	0	0	0	0	0	0	0	0	0	0	0
4/30/2024	4:00 AM	0	0	0	0	0	0	0	0	0	0	0	0	0
4/30/2024	4:15 AM	0	0	0	0	0	0	0	0	0	0	0	0	0
4/30/2024	4:30 AM	0	0	0	0	0	0	0	0	0	0	0	0	0
4/30/2024	4:45 AM	0	0	0	0	0	0	0	0	0	0	0	0	0
4/30/2024	5:00 AM	0	0	0	0	0	0	0	0	0	0	0	0	0
4/30/2024	5:15 AM	0	0	0	0	0	0	0	0	0	0	0	0	0
4/30/2024	5:30 AM	0	0	0	0	0	0	0	0	0	0	0	0	0
4/30/2024	5:45 AM	0	0	0	0	0	0	0	0	0	0	0	0	0
4/30/2024	6:00 AM	0	0	0	0	0	0	0	0	0	0	0	0	0
4/30/2024	6:15 AM	0	0	0	0	0	0	0	0	0	0	0	0	0
4/30/2024	6:30 AM	0	0	0	0	0	0	0	0	0	0	0	0	0
4/30/2024	6:45 AM	0	0	0	0	0	0	0	0	0	0	0	0	0
4/30/2024	7:00 AM	0	0	0	0	0	0	0	0	0	0	0	0	0
4/30/2024	7:15 AM	0	0	0	0	0	0	0	0	0	0	0	0	0
4/30/2024	7:30 AM	0	0	0	0	0	0	0	0	0	0	0	0	0
4/30/2024	7:45 AM	0	0	0	0	0	0	0	0	0	0	0	0	0
4/30/2024	8:00 AM	0	0	0	0	0	0	0	0	0	0	0	0	0
4/30/2024	8:15 AM	0	0	0	0	0	0	0	0	0	0	0	0	0
4/30/2024	8:30 AM	0	0	0	0	0	0	0	0	0	0	0	0	0
4/30/2024	8:45 AM	0	0	0	0	0	0	0	0	0	0	0	0	0
4/30/2024	9:00 AM	0	0	0	0	0	0	0	0	0	0	0	0	0
4/30/2024	9:15 AM	0	0	0	0	0	0	0	0	0	0	0	0	0
4/30/2024	9:30 AM	0	0	0	0	0	0	0	0	0	0	0	0	0
4/30/2024	9:45 AM	0	0	0	0	0	0	0	0	0	0	0	0	0
4/30/2024	10:00 AM	0	0	0	0	0	0	0	0	0	0	0	0	0
4/30/2024	10:15 AM	0	0	0	0	0	0	0	0	0	0	0	0	0
4/30/2024	10:30 AM	0	0	0	0	0	0	0	0	0	0	0	0	0
4/30/2024	10:45 AM	0	0	0	0	0	0	0	0	0	0	0	0	0
4/30/2024	11:00 AM	0	0	0	0	0	0	0	0	0	0	0	0	0
4/30/2024	11:15 AM	0	0	0	0	0	0	0	0	0	0	0	0	0
4/30/2024	11:30 AM	0	0	0	0	0	0	0	0	0	0	0	0	0
4/30/2024	11:45 AM	0	0	0	0	0	0	0	0	0	0	0	0	0
4/30/2024	12:00 PM	0	0	0	0	0	0	0	0	0	0	0	0	0
4/30/2024	12:15 PM	0	0	0	0	0	0	0	0	0	0	0	0	0
4/30/2024	12:30 PM	0	0	0	0	0	0	0	0	0	0	0	0	0
4/30/2024	12:45 PM	0	0	0	0	0	0	0	0	0	0	0	0	0
4/30/2024	1:00 PM	0	0	0	0	0	0	0	0	0	0	0	0	0
4/30/2024	1:15 PM	0	0	0	0	0	0	0	0	0	0	0	0	0
4/30/2024	1:30 PM	0	0	0	0	0	0	0	0	0	0	0	0	0
4/30/2024	1:45 PM	0	0	0	0	0	0	0	0	0	0	0	0	0
4/30/2024	2:00 PM	0	0	0	0	0	0	0	0	0	0	0	0	0
4/30/2024	2:15 PM	0	0	0	0	0	0	0	0	0	0	0	0	0
4/30/2024	2:30 PM	0	0	0	0	0	0	0	0	0	0	0	0	0
4/30/2024	2:45 PM	0	0	0	0	0	0	0	0	0	0	0	0	0
4/30/2024	3:00 PM	0	0	0	0	0	0	0	0	0	0	0	0	0
4/30/2024	3:15 PM	0	0	0	0	0	0	0	0	0	0	0	0	0
4/30/2024	3:30 PM	0	0	0	0	0	0	0	0	0	0	0	0	0
4/30/2024	3:45 PM	0	0	0	0	0	0	0	0	0	0	0	0	0
4/30/2024	4:00 PM	0	0	0	0	0	0	0	0	0	0	0	0	0
4/30/2024	4:15 PM	0	0	0	0	0	0	0	0	0	0	0	0	0
4/30/2024	4:30 PM	0	0	0	0	0	0	0	0	0	0	0	0	0
4/30/2024	4:45 PM	0	0	0	0	0	0	0	0	0	0	0	0	0
4/30/2024	5:00 PM	0	0	0	0	0	0	0	0	0	0	0	0	0
4/30/2024	5:15 PM	0	0	0	0	0	0	0	0	0	0	0	0	0
4/30/2024	5:30 PM	0	0	0	0	0	0	0	0	0	0	0	0	0
4/30/2024	5:45 PM	0	0	0	0	0	0	0	0	0	0	0	0	0
4/30/2024	6:00 PM	0	0	0	0	0	0	0	0	0	0	0	0	0
4/30/2024	6:15 PM	0	262	29	2	0	2	0	0	2	0	0	0	0
4/30/2024	6:30 PM	7	533	65	2	4	2	0	0	3	0	0	0	0
4/30/2024	6:45 PM	8	775	81	4	5	2	0	0	3	0	0	0	0
4/30/2024	7:00 PM	8	926	102	4	7	2	0	0	3	0	0	0	0
4/30/2024	7:15 PM	8	893	106	3	10	0	0	0	2	0	0	0	0
4/30/2024	7:30 PM	1	834	100	3	6	0	0	0	1	0	0	0	0
4/30/2024	7:45 PM	0	763	123	2	7	0	0	0	1	0	0	0	0
4/30/2024	8:00 PM	1	806	134	2	7	0	0	0	2	0	0	0	0
4/30/2024	8:15 PM	1	751	139	1	4	0	0	0	2	0	0	0	0
4/30/2024	8:30 PM	1	713	137	1	6	0	0	0	2	0	0	0	0
4/30/2024	8:45 PM	1	687	125	3	9	0	0	0	2	0	0	0	0
4/30/2024	9:00 PM	0	616	116	3	8	0	0	0	3	0	0	0	0
4/30/2024	9:15 PM	0	573	106	3	10	0	0	0	2	0	0	0	0
4/30/2024	9:30 PM	0	509	101	3	11	0	0	0	3	0	0	0	0
4/30/2024	9:45 PM	0	482	92	0	7	0	0	0	4	0	0	0	0
4/30/2024	10:00 PM	0	453	88	0	7	0	0	0	3	0	0	0	0
4/30/2024	10:15 PM	0	401	78	0	8	0	0	0	3	0	0	0	0
4/30/2024	10:30 PM	0	356	70	0	5	0	0	0	2	0	0	0	0
4/30/2024	10:45 PM	0	312	68	0	5	0	0	0	2	0	0	0	0
4/30/2024	11:00 PM	0	269	59	0	4	0	0	0	2	0	0	0	0
4/30/2024	11:15 PM	0	240	46	0	2	0	0	0	2	0	0	0	0
4/30/2024	11:30 PM	0	221	34	0	2	0	0	0	2	0	0	0	0
4/30/2024	11:45 PM	0	179	21	0	2	0	0	0	1	0	0	0	0

5/1/2024	12:00 AM	0	153	14	0	2	0	0	0	1	0	0	0	0
5/1/2024	12:15 AM	0	137	11	0	2	1	0	0	2	0	0	0	0
5/1/2024	12:30 AM	0	119	9	0	2	1	0	0	3	0	0	0	0
5/1/2024	12:45 AM	0	110	11	0	1	1	0	0	4	0	0	0	0
5/1/2024	1:00 AM	0	108	10	0	2	1	0	0	3	0	0	0	0
5/1/2024	1:15 AM	0	94	9	0	1	0	0	0	2	0	0	0	0
5/1/2024	1:30 AM	0	91	8	0	2	1	0	0	1	0	0	0	0
5/1/2024	1:45 AM	0	90	5	0	2	1	0	0	0	0	0	0	0
5/1/2024	2:00 AM	0	88	4	0	2	1	0	1	0	0	0	0	0
5/1/2024	2:15 AM	0	87	5	0	2	1	0	1	0	0	0	0	0
5/1/2024	2:30 AM	0	82	6	0	1	0	0	1	0	0	0	0	0
5/1/2024	2:45 AM	0	78	5	0	2	2	0	1	1	0	0	0	0
5/1/2024	3:00 AM	0	80	6	0	2	2	0	0	1	0	0	0	0
5/1/2024	3:15 AM	1	94	7	0	3	2	0	0	1	0	0	0	0
5/1/2024	3:30 AM	1	109	8	0	5	2	0	0	1	0	0	0	0
5/1/2024	3:45 AM	1	133	11	0	8	0	0	0	4	0	0	0	0
5/1/2024	4:00 AM	1	179	16	0	10	2	0	0	5	0	0	0	0
5/1/2024	4:15 AM	0	214	21	0	11	2	0	0	5	0	0	0	0
5/1/2024	4:30 AM	1	280	30	0	16	3	0	0	6	0	0	0	0
5/1/2024	4:45 AM	1	384	42	0	17	4	0	0	3	0	0	1	0
5/1/2024	5:00 AM	2	482	54	1	20	11	0	0	4	0	0	1	0
5/1/2024	5:15 AM	2	593	81	2	20	15	0	1	9	0	0	1	0
5/1/2024	5:30 AM	2	759	124	2	15	16	0	1	9	0	0	1	0
5/1/2024	5:45 AM	3	1106	202	2	13	16	0	2	8	0	0	0	0
5/1/2024	6:00 AM	2	1530	296	3	14	11	0	4	7	0	0	0	0
5/1/2024	6:15 AM	4	1941	380	5	16	13	0	4	6	0	1	0	0
5/1/2024	6:30 AM	4	2518	465	12	18	14	0	4	8	0	1	0	0
5/1/2024	6:45 AM	4	2936	525	13	20	15	0	4	9	0	1	1	0
5/1/2024	7:00 AM	4	3358	559	14	17	12	1	2	10	0	1	1	0
5/1/2024	7:15 AM	2	3810	594	14	17	8	1	4	8	0	0	1	0
5/1/2024	7:30 AM	2	3987	611	9	20	8	1	4	7	0	0	1	0
5/1/2024	7:45 AM	1	4084	591	9	23	7	1	5	11	0	0	0	0
5/1/2024	8:00 AM	6	3949	563	9	23	7	0	6	14	0	0	0	0
5/1/2024	8:15 AM	7	3560	522	14	30	9	0	4	18	0	0	0	0
5/1/2024	8:30 AM	6	3076	472	14	29	8	0	4	20	0	0	0	0
5/1/2024	8:45 AM	6	2618	430	20	34	9	0	2	17	0	0	0	0
5/1/2024	9:00 AM	2	2279	392	18	38	9	0	1	14	0	0	0	0
5/1/2024	9:15 AM	1	2084	368	12	31	10	0	0	11	0	0	0	0
5/1/2024	9:30 AM	2	1999	345	10	29	8	0	0	10	0	0	0	0
5/1/2024	9:45 AM	3	1945	346	4	26	10	0	1	11	0	0	0	0
5/1/2024	10:00 AM	2	1853	335	4	25	12	0	2	13	0	0	0	0
5/1/2024	10:15 AM	3	1837	317	3	27	12	0	3	12	0	0	0	0
5/1/2024	10:30 AM	2	1837	313	4	30	14	0	3	12	0	0	0	0
5/1/2024	10:45 AM	2	1771	307	3	25	12	0	2	13	0	0	0	0
5/1/2024	11:00 AM	2	1819	312	3	26	12	0	1	12	0	0	0	0
5/1/2024	11:15 AM	2	1836	326	4	27	7	0	0	13	0	0	0	0
5/1/2024	11:30 AM	2	1870	327	4	26	8	0	0	12	0	0	0	0
5/1/2024	11:45 AM	2	1942	331	5	38	7	0	0	9	1	0	0	0
5/1/2024	12:00 PM	2	1979	359	4	42	8	0	0	8	1	0	0	0
5/1/2024	12:15 PM	2	2041	370	6	44	10	0	6	9	1	0	0	0
5/1/2024	12:30 PM	3	2063	369	5	46	8	0	8	10	1	0	0	0
5/1/2024	12:45 PM	2	2074	352	5	33	11	0	9	14	0	0	0	0
5/1/2024	1:00 PM	2	2044	336	6	33	9	1	10	14	0	0	0	0
5/1/2024	1:15 PM	1	2052	313	6	31	13	2	4	13	0	0	0	0
5/1/2024	1:30 PM	2	2102	323	8	25	13	2	4	18	1	0	0	0
5/1/2024	1:45 PM	3	2095	336	8	34	15	3	3	14	1	0	0	0
5/1/2024	2:00 PM	3	2088	323	10	32	15	2	2	14	1	0	0	0
5/1/2024	2:15 PM	4	2016	318	9	30	9	3	3	12	1	0	0	0
5/1/2024	2:30 PM	2	1937	289	7	39	11	3	1	6	0	0	0	0
5/1/2024	2:45 PM	3	1968	282	6	31	8	2	1	7	0	0	0	0
5/1/2024	3:00 PM	3	1951	275	6	28	7	2	1	7	0	0	0	0
5/1/2024	3:15 PM	3	1983	270	6	32	7	0	0	6	0	0	0	0
5/1/2024	3:30 PM	3	2004	266	9	28	6	0	1	7	0	0	0	0
5/1/2024	3:45 PM	1	2014	239	10	28	3	0	1	6	0	0	0	0
5/1/2024	4:00 PM	3	2094	237	9	23	2	0	1	5	0	0	0	0
5/1/2024	4:15 PM	3	2154	237	7	20	3	0	1	5	0	0	0	0
5/1/2024	4:30 PM	3	2196	254	5	17	1	0	0	4	0	0	0	0
5/1/2024	4:45 PM	3	2094	271	5	15	2	0	0	5	0	0	0	0
5/1/2024	5:00 PM	3	2024	275	3	16	4	0	1	4	0	0	0	0
5/1/2024	5:15 PM	4	1929	272	4	13	3	0	1	4	0	0	0	0
5/1/2024	5:30 PM	5	1823	244	3	12	4	0	1	3	0	0	0	0
5/1/2024	5:45 PM	6	1794	223	4	11	3	0	1	1	0	0	0	0
5/1/2024	6:00 PM	6	1684	198	4	10	1	0	0	1	0	0	0	0
5/1/2024	6:15 PM	4	1565	171	4	9	2	0	2	2	0	0	0	0
5/1/2024	6:30 PM	3	1453	163	4	6	1	0	2	1	0	0	0	0
5/1/2024	6:45 PM	2	1362	142	3	4	1	2	2	1	0	0	0	0
5/1/2024	7:00 PM	0	1224	125	3	4	1	2	3	2	1	0	0	0
5/1/2024	7:15 PM	0	1165	115	2	5	0	3	1	2	1	0	0	0
5/1/2024	7:30 PM	1	1130	101	2	6	0	3	1	3	1	0	0	0
5/1/2024	7:45 PM	4	1131	90	2	6	2	1	1	5	1	0	0	0
5/1/2024	8:00 PM	5	1209	76	2	7	3	1	0	4	0	0	0	0
5/1/2024	8:15 PM	5	1162	66	1	4	5	0	0	3	0	0	0	0
5/1/2024	8:30 PM	5	1066	55	2	3	8	0	0	2	0	0	0	0
5/1/2024	8:45 PM	2	941	50	2	4	6	0	0	0	1	0	0	0
5/1/2024	9:00 PM	1	800	48	2	1	9	0	0	0	1	0	0	0
5/1/2024	9:15 PM	2	710	41	2	2	8	0	0	1	1	0	0	0
5/1/2024	9:30 PM	1	657	34	1	5	6	0	0	1	1	0	0	0
5/1/2024	9:45 PM	1	590	29	0	5	7	0	0	1	0	0	0	0
5/1/2024	10:00 PM	1	534	20	0	8	3	0	0	1	0	0	0	0
5/1/2024	10:15 PM	0	507	16	0	8	5	0	0	1	0	0	0	0
5/1/2024	10:30 PM	0	443	13	0	7	7	0	0	3	0	0	0	0
5/1/2024	10:45 PM	0	383	7	0	7	6	0	0	3	0	0	0	0
5/1/2024	11:00 PM	0	337	6	0	4	7	0	0	3	0	0	0	0
5/1/2024	11:15 PM	0	280	8	0	3	6	0	0	3	0	0	0	0
5/1/2024	11:30 PM	0	240	8	0	2	4	0	0	2	0	0	0	0
5/1/2024	11:45 PM	0	199	7	0	5	4	0	0	2	0	0	0	0

5/2/2024	12:00 AM	0	164	7	0	5	4	0	0	2	0	0	0	0
5/2/2024	12:15 AM	0	142	3	0	5	3	0	0	2	0	0	0	0
5/2/2024	12:30 AM	0	126	5	0	5	3	0	0	1	0	0	0	0
5/2/2024	12:45 AM	1	112	6	0	2	5	0	0	2	0	0	0	0
5/2/2024	1:00 AM	1	90	6	0	3	5	0	0	2	0	0	0	0
5/2/2024	1:15 AM	1	74	8	0	3	7	0	0	2	0	0	0	0
5/2/2024	1:30 AM	1	75	6	0	3	6	0	0	3	0	0	0	0
5/2/2024	1:45 AM	0	79	7	0	3	4	0	0	3	0	0	0	0
5/2/2024	2:00 AM	0	79	6	0	2	4	0	0	3	0	0	0	0
5/2/2024	2:15 AM	0	78	4	0	2	4	0	0	4	0	0	0	0
5/2/2024	2:30 AM	0	78	4	0	1	4	0	0	4	0	0	0	0
5/2/2024	2:45 AM	0	78	7	0	0	5	0	0	4	0	0	0	0
5/2/2024	3:00 AM	0	80	9	0	4	4	1	0	4	0	0	0	0
5/2/2024	3:15 AM	0	94	9	0	5	1	1	0	2	0	0	0	0
5/2/2024	3:30 AM	0	112	8	0	6	1	1	0	2	0	0	0	0
5/2/2024	3:45 AM	0	129	6	0	7	0	1	0	1	0	0	0	0
5/2/2024	4:00 AM	0	169	13	0	4	3	0	0	2	0	0	0	0
5/2/2024	4:15 AM	0	204	24	0	8	6	0	0	5	0	0	0	0
5/2/2024	4:30 AM	1	272	32	0	13	15	0	0	14	0	0	0	0
5/2/2024	4:45 AM	2	384	51	1	14	23	0	0	15	0	0	0	0
5/2/2024	5:00 AM	3	496	64	2	13	22	0	0	15	0	0	0	0
5/2/2024	5:15 AM	3	589	79	3	9	23	0	0	13	0	0	0	0
5/2/2024	5:30 AM	2	783	116	3	7	16	0	0	3	0	2	0	0
5/2/2024	5:45 AM	2	1119	180	3	7	13	0	0	4	0	2	0	0
5/2/2024	6:00 AM	4	1541	280	4	13	15	0	1	9	0	3	0	0
5/2/2024	6:15 AM	6	2041	367	5	17	14	0	1	11	0	3	0	0
5/2/2024	6:30 AM	8	2549	459	7	15	16	0	3	14	0	1	0	0
5/2/2024	6:45 AM	7	3016	528	6	17	13	0	3	16	0	1	0	0
5/2/2024	7:00 AM	5	3539	578	5	17	11	0	2	16	0	0	0	0
5/2/2024	7:15 AM	3	3844	608	4	20	11	0	2	14	0	0	0	0
5/2/2024	7:30 AM	2	4118	601	6	22	9	0	1	15	0	0	0	0
5/2/2024	7:45 AM	3	4043	591	8	23	8	0	1	15	0	0	0	0
5/2/2024	8:00 AM	2	3660	522	10	23	9	0	1	14	0	0	0	0
5/2/2024	8:15 AM	2	3313	481	14	23	10	0	1	15	0	0	0	0
5/2/2024	8:30 AM	1	2804	452	15	28	9	0	0	14	0	0	0	0
5/2/2024	8:45 AM	1	2485	430	17	32	8	0	0	14	0	0	0	0
5/2/2024	9:00 AM	2	2309	448	14	33	8	0	1	14	0	0	0	0
5/2/2024	9:15 AM	3	2182	445	11	30	7	0	1	14	0	0	0	0
5/2/2024	9:30 AM	3	2046	444	8	29	11	0	1	14	0	0	0	0
5/2/2024	9:45 AM	2	1976	414	8	27	14	0	1	18	0	0	0	0
5/2/2024	10:00 AM	1	1864	394	8	35	11	0	0	14	0	0	0	0
5/2/2024	10:15 AM	1	1801	385	8	38	8	0	1	17	0	0	0	0
5/2/2024	10:30 AM	2	1812	382	7	40	9	0	3	19	0	0	0	0
5/2/2024	10:45 AM	2	1805	363	5	37	10	0	4	12	0	0	0	0
5/2/2024	11:00 AM	5	1848	347	6	33	11	0	6	18	0	0	0	0
5/2/2024	11:15 AM	4	1949	367	6	39	11	0	10	22	1	0	0	0
5/2/2024	11:30 AM	4	2107	376	5	34	9	0	8	23	1	0	0	0
5/2/2024	11:45 AM	4	2218	403	6	35	10	1	8	28	1	0	0	0
5/2/2024	12:00 PM	1	2345	419	8	40	11	2	6	28	1	0	0	0
5/2/2024	12:15 PM	2	2384	421	9	41	12	2	3	27	0	0	0	0
5/2/2024	12:30 PM	3	2332	421	10	50	9	2	4	39	0	0	0	0
5/2/2024	12:45 PM	4	2328	410	9	54	5	1	7	38	0	0	0	0
5/2/2024	1:00 PM	6	2317	396	11	48	6	0	8	39	0	0	0	0
5/2/2024	1:15 PM	7	2273	371	11	43	7	0	10	36	0	0	0	0
5/2/2024	1:30 PM	5	2331	354	10	43	10	0	10	25	0	0	0	0
5/2/2024	1:45 PM	6	2353	353	12	47	12	0	6	26	0	0	0	0
5/2/2024	2:00 PM	7	2348	362	11	47	12	0	7	25	0	0	0	0
5/2/2024	2:15 PM	7	2387	373	8	46	14	1	6	28	0	0	0	0
5/2/2024	2:30 PM	7	2359	400	8	42	11	1	6	27	0	0	0	0
5/2/2024	2:45 PM	6	2523	426	5	43	10	4	8	34	0	0	0	0
5/2/2024	3:00 PM	3	2545	436	3	51	9	4	10	41	0	0	0	0
5/2/2024	3:15 PM	2	2592	454	7	58	8	3	7	44	0	0	0	0
5/2/2024	3:30 PM	2	2691	452	8	56	8	4	7	41	0	0	0	0
5/2/2024	3:45 PM	3	2641	452	8	51	9	2	5	34	0	0	0	0
5/2/2024	4:00 PM	3	2661	457	8	43	7	2	4	26	0	0	0	0
5/2/2024	4:15 PM	3	2689	435	5	31	4	2	5	17	0	0	0	0
5/2/2024	4:30 PM	3	2607	420	7	29	5	1	4	20	0	0	0	0
5/2/2024	4:45 PM	1	2505	418	8	30	2	0	5	15	1	0	0	0
5/2/2024	5:00 PM	4	2540	412	7	29	4	0	3	12	1	0	0	0
5/2/2024	5:15 PM	4	2485	408	6	29	4	0	4	16	1	0	0	0
5/2/2024	5:30 PM	5	2648	417	7	32	2	0	4	15	1	0	0	0
5/2/2024	5:45 PM	6	2711	373	5	27	4	1	3	20	0	0	0	0
5/2/2024	6:00 PM	4	2470	304	6	20	2	1	3	18	0	0	0	0
5/2/2024	6:15 PM	3	1889	214	6	16	2	1	1	12	0	0	0	0
5/2/2024	6:30 PM	2	1124	105	2	7	2	1	1	7	0	0	0	0
5/2/2024	6:45 PM	1	436	36	2	2	0	0	1	1	0	0	0	0
5/2/2024	7:00 PM	0	0	0	0	0	0	0	0	0	0	0	0	0
5/2/2024	7:15 PM	0	0	0	0	0	0	0	0	0	0	0	0	0
5/2/2024	7:30 PM	0	0	0	0	0	0	0	0	0	0	0	0	0
5/2/2024	7:45 PM	0	0	0	0	0	0	0	0	0	0	0	0	0
5/2/2024	8:00 PM	0	0	0	0	0	0	0	0	0	0	0	0	0
5/2/2024	8:15 PM	0	0	0	0	0	0	0	0	0	0	0	0	0
5/2/2024	8:30 PM	0	0	0	0	0	0	0	0	0	0	0	0	0
5/2/2024	8:45 PM	0	0	0	0	0	0	0	0	0	0	0	0	0
5/2/2024	9:00 PM	0	0	0	0	0	0	0	0	0	0	0	0	0
5/2/2024	9:15 PM	0	0	0	0	0	0	0	0	0	0	0	0	0
5/2/2024	9:30 PM	0	0	0	0	0	0	0	0	0	0	0	0	0
5/2/2024	9:45 PM	0	0	0	0	0	0	0	0	0	0	0	0	0
5/2/2024	10:00 PM	0	0	0	0	0	0	0	0	0	0	0	0	0
5/2/2024	10:15 PM	0	0	0	0	0	0	0	0	0	0	0	0	0
5/2/2024	10:30 PM	0	0	0	0	0	0	0	0	0	0	0	0	0
5/2/2024	10:45 PM	0	0	0	0	0	0	0	0	0	0	0	0	0
5/2/2024	11:00 PM	0	0	0	0	0	0	0	0	0	0	0	0	0
5/2/2024	11:15 PM	0	0	0	0	0	0	0	0	0	0	0	0	0
5/2/2024	11:30 PM	0	0	0	0	0	0	0	0	0	0	0	0	0
5/2/2024	11:45 PM	0	0	0	0	0	0	0	0	0	0	0	0	0

WB
File Name:
Start Date: 4/30/2024
Start Time: 0
Site Code: 72
Station ID: 1
Location 1: US-321 Elmwood Ave E/Bound On-Ramp, east of US-321 Hugher St S/Bound On-Ramp
Location 2:

Date	Time	1	2	3	4	5	6	7	8	9	10	11	12	13
4/30/2024	12:00 AM	0	0	0	0	0	0	0	0	0	0	0	0	0
4/30/2024	12:15 AM	0	0	0	0	0	0	0	0	0	0	0	0	0
4/30/2024	12:30 AM	0	0	0	0	0	0	0	0	0	0	0	0	0
4/30/2024	12:45 AM	0	0	0	0	0	0	0	0	0	0	0	0	0
4/30/2024	1:00 AM	0	0	0	0	0	0	0	0	0	0	0	0	0
4/30/2024	1:15 AM	0	0	0	0	0	0	0	0	0	0	0	0	0
4/30/2024	1:30 AM	0	0	0	0	0	0	0	0	0	0	0	0	0
4/30/2024	1:45 AM	0	0	0	0	0	0	0	0	0	0	0	0	0
4/30/2024	2:00 AM	0	0	0	0	0	0	0	0	0	0	0	0	0
4/30/2024	2:15 AM	0	0	0	0	0	0	0	0	0	0	0	0	0
4/30/2024	2:30 AM	0	0	0	0	0	0	0	0	0	0	0	0	0
4/30/2024	2:45 AM	0	0	0	0	0	0	0	0	0	0	0	0	0
4/30/2024	3:00 AM	0	0	0	0	0	0	0	0	0	0	0	0	0
4/30/2024	3:15 AM	0	0	0	0	0	0	0	0	0	0	0	0	0
4/30/2024	3:30 AM	0	0	0	0	0	0	0	0	0	0	0	0	0
4/30/2024	3:45 AM	0	0	0	0	0	0	0	0	0	0	0	0	0
4/30/2024	4:00 AM	0	0	0	0	0	0	0	0	0	0	0	0	0
4/30/2024	4:15 AM	0	0	0	0	0	0	0	0	0	0	0	0	0
4/30/2024	4:30 AM	0	0	0	0	0	0	0	0	0	0	0	0	0
4/30/2024	4:45 AM	0	0	0	0	0	0	0	0	0	0	0	0	0
4/30/2024	5:00 AM	0	0	0	0	0	0	0	0	0	0	0	0	0
4/30/2024	5:15 AM	0	0	0	0	0	0	0	0	0	0	0	0	0
4/30/2024	5:30 AM	0	0	0	0	0	0	0	0	0	0	0	0	0
4/30/2024	5:45 AM	0	0	0	0	0	0	0	0	0	0	0	0	0
4/30/2024	6:00 AM	0	0	0	0	0	0	0	0	0	0	0	0	0
4/30/2024	6:15 AM	0	0	0	0	0	0	0	0	0	0	0	0	0
4/30/2024	6:30 AM	0	0	0	0	0	0	0	0	0	0	0	0	0
4/30/2024	6:45 AM	0	0	0	0	0	0	0	0	0	0	0	0	0
4/30/2024	7:00 AM	0	0	0	0	0	0	0	0	0	0	0	0	0
4/30/2024	7:15 AM	0	0	0	0	0	0	0	0	0	0	0	0	0
4/30/2024	7:30 AM	0	0	0	0	0	0	0	0	0	0	0	0	0
4/30/2024	7:45 AM	0	0	0	0	0	0	0	0	0	0	0	0	0
4/30/2024	8:00 AM	0	0	0	0	0	0	0	0	0	0	0	0	0
4/30/2024	8:15 AM	0	0	0	0	0	0	0	0	0	0	0	0	0
4/30/2024	8:30 AM	0	0	0	0	0	0	0	0	0	0	0	0	0
4/30/2024	8:45 AM	0	0	0	0	0	0	0	0	0	0	0	0	0
4/30/2024	9:00 AM	0	0	0	0	0	0	0	0	0	0	0	0	0
4/30/2024	9:15 AM	0	0	0	0	0	0	0	0	0	0	0	0	0
4/30/2024	9:30 AM	0	0	0	0	0	0	0	0	0	0	0	0	0
4/30/2024	9:45 AM	0	0	0	0	0	0	0	0	0	0	0	0	0
4/30/2024	10:00 AM	0	0	0	0	0	0	0	0	0	0	0	0	0
4/30/2024	10:15 AM	0	0	0	0	0	0	0	0	0	0	0	0	0
4/30/2024	10:30 AM	0	0	0	0	0	0	0	0	0	0	0	0	0
4/30/2024	10:45 AM	0	0	0	0	0	0	0	0	0	0	0	0	0
4/30/2024	11:00 AM	0	0	0	0	0	0	0	0	0	0	0	0	0
4/30/2024	11:15 AM	0	0	0	0	0	0	0	0	0	0	0	0	0
4/30/2024	11:30 AM	0	0	0	0	0	0	0	0	0	0	0	0	0
4/30/2024	11:45 AM	0	0	0	0	0	0	0	0	0	0	0	0	0
4/30/2024	12:00 PM	0	0	0	0	0	0	0	0	0	0	0	0	0
4/30/2024	12:15 PM	0	0	0	0	0	0	0	0	0	0	0	0	0
4/30/2024	12:30 PM	0	0	0	0	0	0	0	0	0	0	0	0	0
4/30/2024	12:45 PM	0	0	0	0	0	0	0	0	0	0	0	0	0
4/30/2024	1:00 PM	0	0	0	0	0	0	0	0	0	0	0	0	0
4/30/2024	1:15 PM	0	0	0	0	0	0	0	0	0	0	0	0	0
4/30/2024	1:30 PM	0	0	0	0	0	0	0	0	0	0	0	0	0
4/30/2024	1:45 PM	0	0	0	0	0	0	0	0	0	0	0	0	0
4/30/2024	2:00 PM	0	0	0	0	0	0	0	0	0	0	0	0	0
4/30/2024	2:15 PM	0	0	0	0	0	0	0	0	0	0	0	0	0
4/30/2024	2:30 PM	0	0	0	0	0	0	0	0	0	0	0	0	0
4/30/2024	2:45 PM	0	0	0	0	0	0	0	0	0	0	0	0	0
4/30/2024	3:00 PM	0	0	0	0	0	0	0	0	0	0	0	0	0
4/30/2024	3:15 PM	0	0	0	0	0	0	0	0	0	0	0	0	0
4/30/2024	3:30 PM	0	0	0	0	0	0	0	0	0	0	0	0	0
4/30/2024	3:45 PM	0	0	0	0	0	0	0	0	0	0	0	0	0
4/30/2024	4:00 PM	0	0	0	0	0	0	0	0	0	0	0	0	0
4/30/2024	4:15 PM	0	0	0	0	0	0	0	0	0	0	0	0	0
4/30/2024	4:30 PM	0	0	0	0	0	0	0	0	0	0	0	0	0
4/30/2024	4:45 PM	0	0	0	0	0	0	0	0	0	0	0	0	0
4/30/2024	5:00 PM	0	0	0	0	0	0	0	0	0	0	0	0	0
4/30/2024	5:15 PM	0	0	0	0	0	0	0	0	0	0	0	0	0
4/30/2024	5:30 PM	0	0	0	0	0	0	0	0	0	0	0	0	0
4/30/2024	5:45 PM	0	0	0	0	0	0	0	0	0	0	0	0	0
4/30/2024	6:00 PM	0	0	0	0	0	0	0	0	0	0	0	0	0
4/30/2024	6:15 PM	0	0	0	0	0	0	0	0	0	0	0	0	0
4/30/2024	6:30 PM	0	0	0	0	0	0	0	0	0	0	0	0	0
4/30/2024	6:45 PM	0	0	0	0	0	0	0	0	0	0	0	0	0
4/30/2024	7:00 PM	0	0	0	0	0	0	0	0	0	0	0	0	0
4/30/2024	7:15 PM	0	0	0	0	0	0	0	0	0	0	0	0	0
4/30/2024	7:30 PM	0	0	0	0	0	0	0	0	0	0	0	0	0
4/30/2024	7:45 PM	0	0	0	0	0	0	0	0	0	0	0	0	0
4/30/2024	8:00 PM	0	0	0	0	0	0	0	0	0	0	0	0	0
4/30/2024	8:15 PM	0	0	0	0	0	0	0	0	0	0	0	0	0
4/30/2024	8:30 PM	0	0	0	0	0	0	0	0	0	0	0	0	0
4/30/2024	8:45 PM	0	0	0	0	0	0	0	0	0	0	0	0	0
4/30/2024	9:00 PM	0	0	0	0	0	0	0	0	0	0	0	0	0
4/30/2024	9:15 PM	0	0	0	0	0	0	0	0	0	0	0	0	0
4/30/2024	9:30 PM	0	0	0	0	0	0	0	0	0	0	0	0	0
4/30/2024	9:45 PM	0	0	0	0	0	0	0	0	0	0	0	0	0
4/30/2024	10:00 PM	0	0	0	0	0	0	0	0	0	0	0	0	0
4/30/2024	10:15 PM	0	0	0	0	0	0	0	0	0	0	0	0	0
4/30/2024	10:30 PM	0	0	0	0	0	0	0	0	0	0	0	0	0
4/30/2024	10:45 PM	0	0	0	0	0	0	0	0	0	0	0	0	0
4/30/2024	11:00 PM	0	0	0	0	0	0	0	0	0	0	0	0	0
4/30/2024	11:15 PM	0	0	0	0	0	0	0	0	0	0	0	0	0
4/30/2024	11:30 PM	0	0	0	0	0	0	0	0	0	0	0	0	0
4/30/2024	11:45 PM	0	0	0	0	0	0	0	0	0	0	0	0	0

5/1/2024	12:00 AM	0	0	0	0	0	0	0	0	0	0	0	0	0
5/1/2024	12:15 AM	0	0	0	0	0	0	0	0	0	0	0	0	0
5/1/2024	12:30 AM	0	0	0	0	0	0	0	0	0	0	0	0	0
5/1/2024	12:45 AM	0	0	0	0	0	0	0	0	0	0	0	0	0
5/1/2024	1:00 AM	0	0	0	0	0	0	0	0	0	0	0	0	0
5/1/2024	1:15 AM	0	0	0	0	0	0	0	0	0	0	0	0	0
5/1/2024	1:30 AM	0	0	0	0	0	0	0	0	0	0	0	0	0
5/1/2024	1:45 AM	0	0	0	0	0	0	0	0	0	0	0	0	0
5/1/2024	2:00 AM	0	0	0	0	0	0	0	0	0	0	0	0	0
5/1/2024	2:15 AM	0	0	0	0	0	0	0	0	0	0	0	0	0
5/1/2024	2:30 AM	0	0	0	0	0	0	0	0	0	0	0	0	0
5/1/2024	2:45 AM	0	0	0	0	0	0	0	0	0	0	0	0	0
5/1/2024	3:00 AM	0	0	0	0	0	0	0	0	0	0	0	0	0
5/1/2024	3:15 AM	0	0	0	0	0	0	0	0	0	0	0	0	0
5/1/2024	3:30 AM	0	0	0	0	0	0	0	0	0	0	0	0	0
5/1/2024	3:45 AM	0	0	0	0	0	0	0	0	0	0	0	0	0
5/1/2024	4:00 AM	0	0	0	0	0	0	0	0	0	0	0	0	0
5/1/2024	4:15 AM	0	0	0	0	0	0	0	0	0	0	0	0	0
5/1/2024	4:30 AM	0	0	0	0	0	0	0	0	0	0	0	0	0
5/1/2024	4:45 AM	0	0	0	0	0	0	0	0	0	0	0	0	0
5/1/2024	5:00 AM	0	0	0	0	0	0	0	0	0	0	0	0	0
5/1/2024	5:15 AM	0	0	0	0	0	0	0	0	0	0	0	0	0
5/1/2024	5:30 AM	0	0	0	0	0	0	0	0	0	0	0	0	0
5/1/2024	5:45 AM	0	0	0	0	0	0	0	0	0	0	0	0	0
5/1/2024	6:00 AM	0	0	0	0	0	0	0	0	0	0	0	0	0
5/1/2024	6:15 AM	0	0	0	0	0	0	0	0	0	0	0	0	0
5/1/2024	6:30 AM	0	0	0	0	0	0	0	0	0	0	0	0	0
5/1/2024	6:45 AM	0	0	0	0	0	0	0	0	0	0	0	0	0
5/1/2024	7:00 AM	0	0	0	0	0	0	0	0	0	0	0	0	0
5/1/2024	7:15 AM	0	0	0	0	0	0	0	0	0	0	0	0	0
5/1/2024	7:30 AM	0	0	0	0	0	0	0	0	0	0	0	0	0
5/1/2024	7:45 AM	0	0	0	0	0	0	0	0	0	0	0	0	0
5/1/2024	8:00 AM	0	0	0	0	0	0	0	0	0	0	0	0	0
5/1/2024	8:15 AM	0	0	0	0	0	0	0	0	0	0	0	0	0
5/1/2024	8:30 AM	0	0	0	0	0	0	0	0	0	0	0	0	0
5/1/2024	8:45 AM	0	0	0	0	0	0	0	0	0	0	0	0	0
5/1/2024	9:00 AM	0	0	0	0	0	0	0	0	0	0	0	0	0
5/1/2024	9:15 AM	0	0	0	0	0	0	0	0	0	0	0	0	0
5/1/2024	9:30 AM	0	0	0	0	0	0	0	0	0	0	0	0	0
5/1/2024	9:45 AM	0	0	0	0	0	0	0	0	0	0	0	0	0
5/1/2024	10:00 AM	0	0	0	0	0	0	0	0	0	0	0	0	0
5/1/2024	10:15 AM	0	0	0	0	0	0	0	0	0	0	0	0	0
5/1/2024	10:30 AM	0	0	0	0	0	0	0	0	0	0	0	0	0
5/1/2024	10:45 AM	0	0	0	0	0	0	0	0	0	0	0	0	0
5/1/2024	11:00 AM	0	0	0	0	0	0	0	0	0	0	0	0	0
5/1/2024	11:15 AM	0	0	0	0	0	0	0	0	0	0	0	0	0
5/1/2024	11:30 AM	0	0	0	0	0	0	0	0	0	0	0	0	0
5/1/2024	11:45 AM	0	0	0	0	0	0	0	0	0	0	0	0	0
5/1/2024	12:00 PM	0	0	0	0	0	0	0	0	0	0	0	0	0
5/1/2024	12:15 PM	0	0	0	0	0	0	0	0	0	0	0	0	0
5/1/2024	12:30 PM	0	0	0	0	0	0	0	0	0	0	0	0	0
5/1/2024	12:45 PM	0	0	0	0	0	0	0	0	0	0	0	0	0
5/1/2024	1:00 PM	0	0	0	0	0	0	0	0	0	0	0	0	0
5/1/2024	1:15 PM	0	0	0	0	0	0	0	0	0	0	0	0	0
5/1/2024	1:30 PM	0	0	0	0	0	0	0	0	0	0	0	0	0
5/1/2024	1:45 PM	0	0	0	0	0	0	0	0	0	0	0	0	0
5/1/2024	2:00 PM	0	0	0	0	0	0	0	0	0	0	0	0	0
5/1/2024	2:15 PM	0	0	0	0	0	0	0	0	0	0	0	0	0
5/1/2024	2:30 PM	0	0	0	0	0	0	0	0	0	0	0	0	0
5/1/2024	2:45 PM	0	0	0	0	0	0	0	0	0	0	0	0	0
5/1/2024	3:00 PM	0	0	0	0	0	0	0	0	0	0	0	0	0
5/1/2024	3:15 PM	0	0	0	0	0	0	0	0	0	0	0	0	0
5/1/2024	3:30 PM	0	0	0	0	0	0	0	0	0	0	0	0	0
5/1/2024	3:45 PM	0	0	0	0	0	0	0	0	0	0	0	0	0
5/1/2024	4:00 PM	0	0	0	0	0	0	0	0	0	0	0	0	0
5/1/2024	4:15 PM	0	0	0	0	0	0	0	0	0	0	0	0	0
5/1/2024	4:30 PM	0	0	0	0	0	0	0	0	0	0	0	0	0
5/1/2024	4:45 PM	0	0	0	0	0	0	0	0	0	0	0	0	0
5/1/2024	5:00 PM	0	0	0	0	0	0	0	0	0	0	0	0	0
5/1/2024	5:15 PM	0	0	0	0	0	0	0	0	0	0	0	0	0
5/1/2024	5:30 PM	0	0	0	0	0	0	0	0	0	0	0	0	0
5/1/2024	5:45 PM	0	0	0	0	0	0	0	0	0	0	0	0	0
5/1/2024	6:00 PM	0	0	0	0	0	0	0	0	0	0	0	0	0
5/1/2024	6:15 PM	0	0	0	0	0	0	0	0	0	0	0	0	0
5/1/2024	6:30 PM	0	0	0	0	0	0	0	0	0	0	0	0	0
5/1/2024	6:45 PM	0	0	0	0	0	0	0	0	0	0	0	0	0
5/1/2024	7:00 PM	0	0	0	0	0	0	0	0	0	0	0	0	0
5/1/2024	7:15 PM	0	0	0	0	0	0	0	0	0	0	0	0	0
5/1/2024	7:30 PM	0	0	0	0	0	0	0	0	0	0	0	0	0
5/1/2024	7:45 PM	0	0	0	0	0	0	0	0	0	0	0	0	0
5/1/2024	8:00 PM	0	0	0	0	0	0	0	0	0	0	0	0	0
5/1/2024	8:15 PM	0	0	0	0	0	0	0	0	0	0	0	0	0
5/1/2024	8:30 PM	0	0	0	0	0	0	0	0	0	0	0	0	0
5/1/2024	8:45 PM	0	0	0	0	0	0	0	0	0	0	0	0	0
5/1/2024	9:00 PM	0	0	0	0	0	0	0	0	0	0	0	0	0
5/1/2024	9:15 PM	0	0	0	0	0	0	0	0	0	0	0	0	0
5/1/2024	9:30 PM	0	0	0	0	0	0	0	0	0	0	0	0	0
5/1/2024	9:45 PM	0	0	0	0	0	0	0	0	0	0	0	0	0
5/1/2024	10:00 PM	0	0	0	0	0	0	0	0	0	0	0	0	0
5/1/2024	10:15 PM	0	0	0	0	0	0	0	0	0	0	0	0	0
5/1/2024	10:30 PM	0	0	0	0	0	0	0	0	0	0	0	0	0
5/1/2024	10:45 PM	0	0	0	0	0	0	0	0	0	0	0	0	0
5/1/2024	11:00 PM	0	0	0	0	0	0	0	0	0	0	0	0	0
5/1/2024	11:15 PM	0	0	0	0	0	0	0	0	0	0	0	0	0
5/1/2024	11:30 PM	0	0	0	0	0	0	0	0	0	0	0	0	0
5/1/2024	11:45 PM	0	0	0	0	0	0	0	0	0	0	0	0	0

5/2/2024	12:00 AM	0	0	0	0	0	0	0	0	0	0	0	0	0
5/2/2024	12:15 AM	0	0	0	0	0	0	0	0	0	0	0	0	0
5/2/2024	12:30 AM	0	0	0	0	0	0	0	0	0	0	0	0	0
5/2/2024	12:45 AM	0	0	0	0	0	0	0	0	0	0	0	0	0
5/2/2024	1:00 AM	0	0	0	0	0	0	0	0	0	0	0	0	0
5/2/2024	1:15 AM	0	0	0	0	0	0	0	0	0	0	0	0	0
5/2/2024	1:30 AM	0	0	0	0	0	0	0	0	0	0	0	0	0
5/2/2024	1:45 AM	0	0	0	0	0	0	0	0	0	0	0	0	0
5/2/2024	2:00 AM	0	0	0	0	0	0	0	0	0	0	0	0	0
5/2/2024	2:15 AM	0	0	0	0	0	0	0	0	0	0	0	0	0
5/2/2024	2:30 AM	0	0	0	0	0	0	0	0	0	0	0	0	0
5/2/2024	2:45 AM	0	0	0	0	0	0	0	0	0	0	0	0	0
5/2/2024	3:00 AM	0	0	0	0	0	0	0	0	0	0	0	0	0
5/2/2024	3:15 AM	0	0	0	0	0	0	0	0	0	0	0	0	0
5/2/2024	3:30 AM	0	0	0	0	0	0	0	0	0	0	0	0	0
5/2/2024	3:45 AM	0	0	0	0	0	0	0	0	0	0	0	0	0
5/2/2024	4:00 AM	0	0	0	0	0	0	0	0	0	0	0	0	0
5/2/2024	4:15 AM	0	0	0	0	0	0	0	0	0	0	0	0	0
5/2/2024	4:30 AM	0	0	0	0	0	0	0	0	0	0	0	0	0
5/2/2024	4:45 AM	0	0	0	0	0	0	0	0	0	0	0	0	0
5/2/2024	5:00 AM	0	0	0	0	0	0	0	0	0	0	0	0	0
5/2/2024	5:15 AM	0	0	0	0	0	0	0	0	0	0	0	0	0
5/2/2024	5:30 AM	0	0	0	0	0	0	0	0	0	0	0	0	0
5/2/2024	5:45 AM	0	0	0	0	0	0	0	0	0	0	0	0	0
5/2/2024	6:00 AM	0	0	0	0	0	0	0	0	0	0	0	0	0
5/2/2024	6:15 AM	0	0	0	0	0	0	0	0	0	0	0	0	0
5/2/2024	6:30 AM	0	0	0	0	0	0	0	0	0	0	0	0	0
5/2/2024	6:45 AM	0	0	0	0	0	0	0	0	0	0	0	0	0
5/2/2024	7:00 AM	0	0	0	0	0	0	0	0	0	0	0	0	0
5/2/2024	7:15 AM	0	0	0	0	0	0	0	0	0	0	0	0	0
5/2/2024	7:30 AM	0	0	0	0	0	0	0	0	0	0	0	0	0
5/2/2024	7:45 AM	0	0	0	0	0	0	0	0	0	0	0	0	0
5/2/2024	8:00 AM	0	0	0	0	0	0	0	0	0	0	0	0	0
5/2/2024	8:15 AM	0	0	0	0	0	0	0	0	0	0	0	0	0
5/2/2024	8:30 AM	0	0	0	0	0	0	0	0	0	0	0	0	0
5/2/2024	8:45 AM	0	0	0	0	0	0	0	0	0	0	0	0	0
5/2/2024	9:00 AM	0	0	0	0	0	0	0	0	0	0	0	0	0
5/2/2024	9:15 AM	0	0	0	0	0	0	0	0	0	0	0	0	0
5/2/2024	9:30 AM	0	0	0	0	0	0	0	0	0	0	0	0	0
5/2/2024	9:45 AM	0	0	0	0	0	0	0	0	0	0	0	0	0
5/2/2024	10:00 AM	0	0	0	0	0	0	0	0	0	0	0	0	0
5/2/2024	10:15 AM	0	0	0	0	0	0	0	0	0	0	0	0	0
5/2/2024	10:30 AM	0	0	0	0	0	0	0	0	0	0	0	0	0
5/2/2024	10:45 AM	0	0	0	0	0	0	0	0	0	0	0	0	0
5/2/2024	11:00 AM	0	0	0	0	0	0	0	0	0	0	0	0	0
5/2/2024	11:15 AM	0	0	0	0	0	0	0	0	0	0	0	0	0
5/2/2024	11:30 AM	0	0	0	0	0	0	0	0	0	0	0	0	0
5/2/2024	11:45 AM	0	0	0	0	0	0	0	0	0	0	0	0	0
5/2/2024	12:00 PM	0	0	0	0	0	0	0	0	0	0	0	0	0
5/2/2024	12:15 PM	0	0	0	0	0	0	0	0	0	0	0	0	0
5/2/2024	12:30 PM	0	0	0	0	0	0	0	0	0	0	0	0	0
5/2/2024	12:45 PM	0	0	0	0	0	0	0	0	0	0	0	0	0
5/2/2024	1:00 PM	0	0	0	0	0	0	0	0	0	0	0	0	0
5/2/2024	1:15 PM	0	0	0	0	0	0	0	0	0	0	0	0	0
5/2/2024	1:30 PM	0	0	0	0	0	0	0	0	0	0	0	0	0
5/2/2024	1:45 PM	0	0	0	0	0	0	0	0	0	0	0	0	0
5/2/2024	2:00 PM	0	0	0	0	0	0	0	0	0	0	0	0	0
5/2/2024	2:15 PM	0	0	0	0	0	0	0	0	0	0	0	0	0
5/2/2024	2:30 PM	0	0	0	0	0	0	0	0	0	0	0	0	0
5/2/2024	2:45 PM	0	0	0	0	0	0	0	0	0	0	0	0	0
5/2/2024	3:00 PM	0	0	0	0	0	0	0	0	0	0	0	0	0
5/2/2024	3:15 PM	0	0	0	0	0	0	0	0	0	0	0	0	0
5/2/2024	3:30 PM	0	0	0	0	0	0	0	0	0	0	0	0	0
5/2/2024	3:45 PM	0	0	0	0	0	0	0	0	0	0	0	0	0
5/2/2024	4:00 PM	0	0	0	0	0	0	0	0	0	0	0	0	0
5/2/2024	4:15 PM	0	0	0	0	0	0	0	0	0	0	0	0	0
5/2/2024	4:30 PM	0	0	0	0	0	0	0	0	0	0	0	0	0
5/2/2024	4:45 PM	0	0	0	0	0	0	0	0	0	0	0	0	0
5/2/2024	5:00 PM	0	0	0	0	0	0	0	0	0	0	0	0	0
5/2/2024	5:15 PM	0	0	0	0	0	0	0	0	0	0	0	0	0
5/2/2024	5:30 PM	0	0	0	0	0	0	0	0	0	0	0	0	0
5/2/2024	5:45 PM	0	0	0	0	0	0	0	0	0	0	0	0	0
5/2/2024	6:00 PM	0	0	0	0	0	0	0	0	0	0	0	0	0
5/2/2024	6:15 PM	0	0	0	0	0	0	0	0	0	0	0	0	0
5/2/2024	6:30 PM	0	0	0	0	0	0	0	0	0	0	0	0	0
5/2/2024	6:45 PM	0	0	0	0	0	0	0	0	0	0	0	0	0
5/2/2024	7:00 PM	0	0	0	0	0	0	0	0	0	0	0	0	0
5/2/2024	7:15 PM	0	0	0	0	0	0	0	0	0	0	0	0	0
5/2/2024	7:30 PM	0	0	0	0	0	0	0	0	0	0	0	0	0
5/2/2024	7:45 PM	0	0	0	0	0	0	0	0	0	0	0	0	0
5/2/2024	8:00 PM	0	0	0	0	0	0	0	0	0	0	0	0	0
5/2/2024	8:15 PM	0	0	0	0	0	0	0	0	0	0	0	0	0
5/2/2024	8:30 PM	0	0	0	0	0	0	0	0	0	0	0	0	0
5/2/2024	8:45 PM	0	0	0	0	0	0	0	0	0	0	0	0	0
5/2/2024	9:00 PM	0	0	0	0	0	0	0	0	0	0	0	0	0
5/2/2024	9:15 PM	0	0	0	0	0	0	0	0	0	0	0	0	0
5/2/2024	9:30 PM	0	0	0	0	0	0	0	0	0	0	0	0	0
5/2/2024	9:45 PM	0	0	0	0	0	0	0	0	0	0	0	0	0
5/2/2024	10:00 PM	0	0	0	0	0	0	0	0	0	0	0	0	0
5/2/2024	10:15 PM	0	0	0	0	0	0	0	0	0	0	0	0	0
5/2/2024	10:30 PM	0	0	0	0	0	0	0	0	0	0	0	0	0
5/2/2024	10:45 PM	0	0	0	0	0	0	0	0	0	0	0	0	0
5/2/2024	11:00 PM	0	0	0	0	0	0	0	0	0	0	0	0	0
5/2/2024	11:15 PM	0	0	0	0	0	0	0	0	0	0	0	0	0
5/2/2024	11:30 PM	0	0	0	0	0	0	0	0	0	0	0	0	0
5/2/2024	11:45 PM	0	0	0	0	0	0	0	0	0	0	0	0	0

Bi-Directional Class Count || SB WB 15min

Columbia, SC

Marr Traffic DATA COLLECTION
www.marrtraffic.com

Site 73
US-321 Hugher St S/Bound On-Ramp,
south of US-321 Elmwood Ave E/Bound On-Ramp

Date
Tuesday, April 30, 2024

Lat/Long
34.008892°, -81.051254°

Weather
Mostly Cloudy
70°F

Click here for Detailed Weather

Click here for Map

0000 - 2400 (Weekday 24h Session) (04-30-2024)
SB WB 15min

	Southbound (Movement 73.1)													15min	60min
Time	1	2	3	4	5	6	7	8	9	10	11	12	13	Total	Total
0000 - 0015	0	0	0	0	0	0	0	0	0	0	0	0	0	**0**	
0015 - 0030	0	0	0	0	0	0	0	0	0	0	0	0	0	**0**	
0030 - 0045	0	0	0	0	0	0	0	0	0	0	0	0	0	**0**	
0045 - 0100	0	0	0	0	0	0	0	0	0	0	0	0	0	**0**	**0**
0100 - 0115	0	0	0	0	0	0	0	0	0	0	0	0	0	**0**	
0115 - 0130	0	0	0	0	0	0	0	0	0	0	0	0	0	**0**	
0130 - 0145	0	0	0	0	0	0	0	0	0	0	0	0	0	**0**	
0145 - 0200	0	0	0	0	0	0	0	0	0	0	0	0	0	**0**	**0**
0200 - 0215	0	0	0	0	0	0	0	0	0	0	0	0	0	**0**	
0215 - 0230	0	0	0	0	0	0	0	0	0	0	0	0	0	**0**	
0230 - 0245	0	0	0	0	0	0	0	0	0	0	0	0	0	**0**	
0245 - 0300	0	0	0	0	0	0	0	0	0	0	0	0	0	**0**	**0**
0300 - 0315	0	0	0	0	0	0	0	0	0	0	0	0	0	**0**	
0315 - 0330	0	0	0	0	0	0	0	0	0	0	0	0	0	**0**	
0330 - 0345	0	0	0	0	0	0	0	0	0	0	0	0	0	**0**	
0345 - 0400	0	0	0	0	0	0	0	0	0	0	0	0	0	**0**	**0**
0400 - 0415	0	0	0	0	0	0	0	0	0	0	0	0	0	**0**	
0415 - 0430	0	0	0	0	0	0	0	0	0	0	0	0	0	**0**	
0430 - 0445	0	0	0	0	0	0	0	0	0	0	0	0	0	**0**	
0445 - 0500	0	0	0	0	0	0	0	0	0	0	0	0	0	**0**	**0**
0500 - 0515	0	0	0	0	0	0	0	0	0	0	0	0	0	**0**	
0515 - 0530	0	0	0	0	0	0	0	0	0	0	0	0	0	**0**	
0530 - 0545	0	0	0	0	0	0	0	0	0	0	0	0	0	**0**	
0545 - 0600	0	0	0	0	0	0	0	0	0	0	0	0	0	**0**	**0**
0600 - 0615	0	0	0	0	0	0	0	0	0	0	0	0	0	**0**	
0615 - 0630	0	0	0	0	0	0	0	0	0	0	0	0	0	**0**	
0630 - 0645	0	0	0	0	0	0	0	0	0	0	0	0	0	**0**	
0645 - 0700	0	0	0	0	0	0	0	0	0	0	0	0	0	**0**	**0**
0700 - 0715	0	0	0	0	0	0	0	0	0	0	0	0	0	**0**	
0715 - 0730	0	0	0	0	0	0	0	0	0	0	0	0	0	**0**	
0730 - 0745	0	0	0	0	0	0	0	0	0	0	0	0	0	**0**	
0745 - 0800	0	0	0	0	0	0	0	0	0	0	0	0	0	**0**	**0**
0800 - 0815	0	0	0	0	0	0	0	0	0	0	0	0	0	**0**	
0815 - 0830	0	0	0	0	0	0	0	0	0	0	0	0	0	**0**	
0830 - 0845	0	0	0	0	0	0	0	0	0	0	0	0	0	**0**	
0845 - 0900	0	0	0	0	0	0	0	0	0	0	0	0	0	**0**	**0**
0900 - 0915	0	0	0	0	0	0	0	0	0	0	0	0	0	**0**	
0915 - 0930	0	0	0	0	0	0	0	0	0	0	0	0	0	**0**	
0930 - 0945	0	0	0	0	0	0	0	0	0	0	0	0	0	**0**	
0945 - 1000	0	0	0	0	0	0	0	0	0	0	0	0	0	**0**	**0**
1000 - 1015	0	0	0	0	0	0	0	0	0	0	0	0	0	**0**	
1015 - 1030	0	0	0	0	0	0	0	0	0	0	0	0	0	**0**	
1030 - 1045	0	0	0	0	0	0	0	0	0	0	0	0	0	**0**	
1045 - 1100	0	0	0	0	0	0	0	0	0	0	0	0	0	**0**	**0**
1100 - 1115	0	0	0	0	0	0	0	0	0	0	0	0	0	**0**	
1115 - 1130	0	0	0	0	0	0	0	0	0	0	0	0	0	**0**	
1130 - 1145	0	0	0	0	0	0	0	0	0	0	0	0	0	**0**	
1145 - 1200	0	0	0	0	0	0	0	0	0	0	0	0	0	**0**	**0**
1200 - 1215	0	0	0	0	0	0	0	0	0	0	0	0	0	**0**	
1215 - 1230	0	0	0	0	0	0	0	0	0	0	0	0	0	**0**	
1230 - 1245	0	0	0	0	0	0	0	0	0	0	0	0	0	**0**	
1245 - 1300	0	0	0	0	0	0	0	0	0	0	0	0	0	**0**	**0**
1300 - 1315	0	0	0	0	0	0	0	0	0	0	0	0	0	**0**	
1315 - 1330	0	0	0	0	0	0	0	0	0	0	0	0	0	**0**	
1330 - 1345	0	0	0	0	0	0	0	0	0	0	0	0	0	**0**	
1345 - 1400	0	0	0	0	0	0	0	0	0	0	0	0	0	**0**	**0**
1400 - 1415	0	0	0	0	0	0	0	0	0	0	0	0	0	**0**	
1415 - 1430	0	0	0	0	0	0	0	0	0	0	0	0	0	**0**	
1430 - 1445	0	0	0	0	0	0	0	0	0	0	0	0	0	**0**	
1445 - 1500	0	0	0	0	0	0	0	0	0	0	0	0	0	**0**	**0**
1500 - 1515	0	0	0	0	0	0	0	0	0	0	0	0	0	**0**	
1515 - 1530	0	0	0	0	0	0	0	0	0	0	0	0	0	**0**	
1530 - 1545	0	0	0	0	0	0	0	0	0	0	0	0	0	**0**	
1545 - 1600	0	0	0	0	0	0	0	0	0	0	0	0	0	**0**	**0**
1600 - 1615	0	0	0	0	0	0	0	0	0	0	0	0	0	**0**	
1615 - 1630	0	0	0	0	0	0	0	0	0	0	0	0	0	**0**	
1630 - 1645	0	0	0	0	0	0	0	0	0	0	0	0	0	**0**	
1645 - 1700	0	0	0	0	0	0	0	0	0	0	0	0	0	**0**	**0**
1700 - 1715	0	0	0	0	0	0	0	0	0	0	0	0	0	**0**	
1715 - 1730	0	0	0	0	0	0	0	0	0	0	0	0	0	**0**	
1730 - 1745	0	0	0	0	0	0	0	0	0	0	0	0	0	**0**	
1745 - 1800	0	0	0	0	0	0	0	0	0	0	0	0	0	**0**	**0**
1800 - 1815	0	0	0	0	0	0	0	0	0	0	0	0	0	**0**	
1815 - 1830	0	0	0	0	0	0	0	0	0	0	0	0	0	**0**	
1830 - 1845	0	0	0	0	0	0	0	0	0	0	0	0	0	**0**	
1845 - 1900	0	0	0	0	0	0	0	0	0	0	0	0	0	**0**	**0**
1900 - 1915	0	151	22	0	0	1	0	0	0	0	0	0	0	**174**	
1915 - 1930	1	156	20	0	3	0	0	0	1	0	0	0	0	**181**	
1930 - 1945	1	146	10	0	0	0	0	0	0	0	0	0	0	**157**	
1945 - 2000	0	89	16	0	0	0	0	0	0	0	0	0	0	**105**	**617**
2000 - 2015	0	138	26	0	2	0	0	0	1	0	0	0	0	**167**	
2015 - 2030	0	123	19	0	0	0	0	0	0	0	0	0	0	**142**	
2030 - 2045	0	111	27	0	1	0	0	0	0	0	0	0	0	**139**	
2045 - 2100	1	113	24	0	1	0	0	0	0	0	0	0	0	**139**	**587**
2100 - 2115	0	110	27	0	0	0	0	0	1	0	0	0	0	**138**	
2115 - 2130	0	107	20	0	2	0	0	0	0	0	0	0	0	**129**	
2130 - 2145	0	101	21	0	4	0	0	0	0	0	0	0	0	**126**	
2145 - 2200	0	84	18	0	1	0	0	0	2	0	0	0	0	**105**	**498**
2200 - 2215	0	82	21	0	0	0	0	0	0	0	0	0	0	**103**	
2215 - 2230	0	66	17	0	2	0	0	0	1	0	0	0	0	**86**	
2230 - 2245	0	75	13	0	1	0	0	0	1	0	0	0	0	**90**	
2245 - 2300	0	61	13	0	0	0	0	0	1	0	0	0	0	**75**	**354**
2300 - 2315	0	50	11	0	2	0	0	0	0	0	0	0	0	**63**	
2315 - 2330	0	28	10	0	0	0	0	0	0	0	0	0	0	**38**	
2330 - 2345	0	46	12	0	1	0	0	0	1	0	0	0	0	**60**	
2345 - 0000	0	33	7	0	0	0	0	0	1	0	0	0	0	**41**	**202**

Session Total	3	1870	354	0	20	1	0	0	10	0	0	0	0	**2258**
Session Average	0.03	19.48	3.69	0.00	0.21	0.01	0.00	0.00	0.10	0.00	0.00	0.00	0.00	**23.52**
Session Percentage	0.13	82.82	15.68	0.00	0.89	0.04	0.00	0.00	0.44	0.00	0.00	0.00	0.00	

AM Peak Hour	-	-	-	-	-	-	-	-	-	-	-	-	-	-
AM Peak Volume	0	0	0	0	0	0	0	0	0	0	0	0	0	**0**

Noon Peak Hour	-	-	-	-	-	-	-	-	-	-	-	-	-	-
Noon Peak Volume	0	0	0	0	0	0	0	0	0	0	0	0	0	**0**

PM Peak Hour	1845 - 1945	1900 - 2000	1945 - 2045	-	1915 - 2015	1815 - 1915	-	-	1915 - 2015	-	-	-	-	**1900 - 2000**
PM Peak Volume	2	542	88	0	5	1	0	0	2	0	0	0	0	**617**

Site 73
US-321 Hugher St S/Bound On-Ramp,
south of US-321 Elmwood Ave E/Bound On-Ramp

Date
Wednesday, May 1, 2024

Lat/Long
34.008892°, -81.051254°

Weather
Partly Cloudy
71°F

Click here for Detailed Weather

0000 - 2400 (Weekday 24h Session) (05-01-2024)
SB WB 15min

	Southbound (Movement 73.1)													15min	60min
Time	1	2	3	4	5	6	7	8	9	10	11	12	13	Total	Total
0000 - 0015	0	37	3	0	0	0	0	0	0	0	0	0	0	**40**	
0015 - 0030	0	24	1	0	0	0	0	0	0	0	0	0	0	**25**	
0030 - 0045	0	22	1	0	0	0	0	0	0	0	0	0	0	**23**	
0045 - 0100	0	21	1	0	0	0	0	0	1	0	0	0	0	**23**	**111**
0100 - 0115	0	15	2	0	1	1	0	0	1	0	0	0	0	**20**	
0115 - 0130	0	17	1	0	0	0	0	0	1	0	0	0	0	**19**	
0130 - 0145	0	15	3	0	0	0	0	0	1	0	0	0	0	**19**	
0145 - 0200	0	16	2	0	0	0	0	0	0	0	0	0	0	**18**	**76**
0200 - 0215	0	7	0	0	0	0	0	0	0	0	0	0	0	**7**	
0215 - 0230	0	18	0	0	0	0	0	0	0	0	0	0	0	**18**	
0230 - 0245	0	13	2	0	0	0	0	0	0	0	0	0	0	**15**	
0245 - 0300	0	15	0	0	0	0	0	1	0	0	0	0	0	**16**	**56**
0300 - 0315	0	14	1	0	0	0	0	0	0	0	0	0	0	**15**	
0315 - 0330	0	14	1	0	0	0	0	0	0	0	0	0	0	**15**	
0330 - 0345	0	9	1	0	1	1	0	0	1	0	0	0	0	**13**	
0345 - 0400	0	16	2	0	1	0	0	0	0	0	0	0	0	**19**	**62**
0400 - 0415	0	17	2	0	0	0	0	0	0	0	0	0	0	**19**	
0415 - 0430	0	17	2	0	0	0	0	0	0	0	0	0	0	**19**	
0430 - 0445	0	23	1	0	2	0	0	0	4	0	0	0	0	**30**	
0445 - 0500	0	35	4	0	2	2	0	0	1	0	0	0	0	**44**	**112**
0500 - 0515	0	40	3	0	2	0	0	0	0	0	0	0	0	**45**	
0515 - 0530	1	56	7	0	3	1	0	0	1	0	0	0	0	**69**	
0530 - 0545	0	85	10	0	5	1	0	0	1	0	0	1	0	**103**	
0545 - 0600	1	72	16	0	3	9	0	0	2	0	0	0	0	**103**	**320**
0600 - 0615	0	72	18	0	0	4	0	1	5	0	0	0	0	**100**	
0615 - 0630	1	112	40	0	2	2	0	0	1	0	0	0	0	**158**	
0630 - 0645	1	169	65	0	1	1	0	0	0	0	0	0	0	**237**	
0645 - 0700	0	223	65	1	4	3	0	1	0	0	0	0	0	**297**	**792**
0700 - 0715	2	237	69	3	2	5	0	1	4	0	1	0	0	**324**	
0715 - 0730	0	307	92	6	1	2	0	0	3	0	0	0	0	**411**	
0730 - 0745	1	361	87	1	2	1	0	1	1	0	0	1	0	**456**	
0745 - 0800	0	418	80	1	2	1	0	0	1	0	0	0	0	**503**	**1694**
0800 - 0815	0	444	82	2	2	1	0	3	0	0	0	0	0	**534**	
0815 - 0830	1	447	81	1	6	2	0	0	2	0	0	0	0	**540**	
0830 - 0845	0	444	76	0	5	1	0	1	5	0	0	0	0	**532**	
0845 - 0900	3	409	66	2	1	1	0	0	5	0	0	0	0	**487**	**2093**
0900 - 0915	1	283	55	6	7	2	0	0	5	0	0	0	0	**359**	
0915 - 0930	0	235	49	1	2	2	0	0	3	0	0	0	0	**292**	
0930 - 0945	0	252	47	5	9	2	0	0	1	0	0	0	0	**316**	
0945 - 1000	0	242	41	0	8	1	0	0	1	0	0	0	0	**293**	**1260**
1000 - 1015	0	217	47	0	2	2	0	0	2	0	0	0	0	**270**	
1015 - 1030	0	188	42	0	2	0	0	0	2	0	0	0	0	**234**	
1030 - 1045	0	229	41	0	3	3	0	1	3	0	0	0	0	**280**	
1045 - 1100	0	203	30	0	5	3	0	1	3	0	0	0	0	**245**	**1029**
1100 - 1115	0	218	39	0	5	4	0	0	2	0	0	0	0	**268**	
1115 - 1130	0	211	41	0	5	1	0	0	3	0	0	0	0	**261**	
1130 - 1145	0	202	48	0	3	1	0	0	4	0	0	0	0	**258**	
1145 - 1200	0	254	46	0	5	3	0	0	2	0	0	0	0	**310**	**1097**
1200 - 1215	1	228	45	0	2	0	0	0	3	0	0	0	0	**279**	
1215 - 1230	0	270	48	0	3	3	0	0	2	0	0	0	0	**326**	
1230 - 1245	1	251	53	0	7	1	0	0	1	0	0	0	0	**314**	
1245 - 1300	0	233	57	0	7	4	0	0	1	0	0	0	0	**302**	**1221**
1300 - 1315	1	266	41	0	6	2	0	2	2	0	0	0	0	**320**	
1315 - 1330	1	259	44	0	3	1	0	2	3	0	0	0	0	**313**	
1330 - 1345	0	272	32	0	1	3	0	1	4	0	0	0	0	**313**	
1345 - 1400	0	279	51	0	7	2	0	0	1	0	0	0	0	**340**	**1286**
1400 - 1415	0	278	40	0	4	6	0	0	3	0	0	0	0	**331**	
1415 - 1430	1	315	58	0	1	1	0	1	5	0	0	0	0	**382**	
1430 - 1445	1	256	56	0	6	4	0	0	1	0	0	0	0	**324**	
1445 - 1500	0	228	35	1	5	2	0	0	2	0	0	0	0	**273**	**1310**
1500 - 1515	0	249	45	1	1	0	0	1	1	0	0	0	0	**298**	
1515 - 1530	0	248	32	0	6	2	0	0	0	0	0	0	0	**288**	
1530 - 1545	1	287	47	0	4	3	0	0	2	0	0	0	0	**344**	
1545 - 1600	0	242	39	2	3	0	0	0	2	0	0	0	0	**288**	**1218**
1600 - 1615	1	253	32	1	7	0	0	0	0	0	0	0	0	**294**	
1615 - 1630	0	253	36	1	4	2	0	1	1	0	0	0	0	**298**	
1630 - 1645	0	303	40	0	3	0	0	0	0	0	0	0	0	**346**	
1645 - 1700	2	297	43	1	0	0	0	0	1	0	0	0	0	**344**	**1282**
1700 - 1715	1	279	33	0	3	1	0	0	0	0	0	0	0	**317**	
1715 - 1730	0	286	41	0	2	0	0	0	2	0	0	0	0	**331**	
1730 - 1745	0	223	44	0	1	1	0	0	1	0	0	0	0	**270**	
1745 - 1800	2	272	42	0	1	2	0	0	0	0	0	0	0	**319**	**1237**
1800 - 1815	2	213	39	0	3	0	0	0	0	0	0	0	0	**257**	
1815 - 1830	1	226	30	0	1	1	0	0	1	0	0	0	0	**260**	
1830 - 1845	1	205	22	0	1	0	0	0	0	0	0	0	0	**229**	
1845 - 1900	2	204	25	0	1	0	0	0	0	0	0	0	0	**232**	**978**
1900 - 1915	0	192	20	0	1	0	0	1	1	0	0	0	0	**215**	
1915 - 1930	0	189	24	0	0	0	0	0	0	0	0	0	0	**213**	
1930 - 1945	0	179	16	0	0	0	0	0	0	0	0	0	0	**195**	
1945 - 2000	0	134	17	0	1	0	0	1	1	0	0	0	0	**154**	**777**
2000 - 2015	0	162	10	0	2	0	0	0	1	0	0	0	0	**175**	
2015 - 2030	0	170	19	0	1	0	0	0	1	0	0	0	0	**191**	
2030 - 2045	3	189	15	0	0	0	0	0	0	0	0	0	0	**207**	
2045 - 2100	1	179	8	0	2	0	0	0	0	0	0	0	0	**190**	**763**
2100 - 2115	0	160	9	0	0	0	0	0	0	0	0	0	0	**169**	
2115 - 2130	1	117	9	1	0	0	0	0	0	0	0	0	0	**128**	
2130 - 2145	0	134	8	0	0	0	0	0	0	0	0	0	0	**142**	
2145 - 2200	0	114	8	0	0	1	0	0	0	0	0	0	0	**123**	**562**
2200 - 2215	1	91	5	0	1	0	0	0	1	0	0	0	0	**99**	
2215 - 2230	0	94	2	0	2	0	0	0	0	0	0	0	0	**98**	
2230 - 2245	0	77	5	0	1	0	0	0	0	0	0	0	0	**83**	
2245 - 2300	0	75	1	0	1	0	0	0	0	0	0	0	0	**77**	**357**
2300 - 2315	0	65	2	0	0	1	0	0	0	0	0	0	0	**68**	
2315 - 2330	0	49	1	0	2	0	0	0	1	0	0	0	0	**53**	
2330 - 2345	0	44	1	0	1	0	0	0	0	0	0	0	0	**46**	
2345 - 0000	0	50	1	0	0	0	0	0	0	0	0	0	0	**51**	**218**

Session Total	37	16634	2744	37	212	106	0	21	117	0	1	2	0	**19911**
Session Average	0.39	173.27	28.58	0.39	2.21	1.10	0.00	0.22	1.22	0.00	0.01	0.02	0.00	**207.41**
Session Percentage	0.19	83.54	13.78	0.19	1.06	0.53	0.00	0.11	0.59	0.00	0.01	0.01	0.00	

AM Peak Hour	0815 - 0915	0745 - 0845	0715 - 0815	0845 - 0945	0900 - 1000	0530 - 0630	-	0715 - 0815	0830 - 0930	-	0615 - 0715	0500 - 0600	-	**0745 - 0845**
AM Peak Volume	5	1753	341	14	26	16	0	4	18	0	1	1	0	**2109**

Noon Peak Hour	1230 - 1330	1330 - 1430	1345 - 1445	1415 - 1515	1215 - 1315	1345 - 1445	-	1245 - 1345	1330 - 1430	-	-	-	-	**1345 - 1445**
Noon Peak Volume	3	1144	205	2	23	13	0	5	13	0	0	0	0	**1377**

PM Peak Hour	1745 - 1845	1630 - 1730	1715 - 1815	1530 - 1630	1515 - 1615	1500 - 1600	-	1900 - 2000	1500 - 1600	-	-	-	-	**1630 - 1730**
PM Peak Volume	6	1165	166	4	20	5	0	2	5	0	0	0	0	**1338**

Site 73
US-321 Hugher St S/Bound On-Ramp,
south of US-321 Elmwood Ave E/Bound On-Ramp

Date
Thursday, May 2, 2024

Lat/Long
34.008892°, -81.051254°

Weather
Fair
74°F

Click here for Detailed Weather

0000 - 2400 (Weekday 24h Session) (05-02-2024)
SB WB 15min

	Southbound (Movement 73.1)													15min	60min
TIME	1	2	3	4	5	6	7	8	9	10	11	12	13	Total	Total
0000 - 0015	0	33	3	0	0	0	0	0	1	0	0	0	0	**37**	
0015 - 0030	0	20	1	0	1	1	0	0	0	0	0	0	0	**23**	
0030 - 0045	0	20	0	0	2	0	0	0	0	0	0	0	0	**22**	
0045 - 0100	0	33	1	0	0	0	0	0	0	0	0	0	0	**34**	**116**
0100 - 0115	0	18	0	0	0	0	0	0	0	0	0	0	0	**18**	
0115 - 0130	0	12	3	0	0	0	0	0	0	0	0	0	0	**15**	
0130 - 0145	0	11	1	0	0	0	0	0	0	0	0	0	0	**12**	
0145 - 0200	0	12	1	0	0	0	0	0	0	0	0	0	0	**13**	**58**
0200 - 0215	0	10	2	0	0	0	0	0	1	0	0	0	0	**13**	
0215 - 0230	0	14	1	0	1	0	0	0	1	0	0	0	0	**17**	
0230 - 0245	0	12	2	0	1	0	0	0	1	0	0	0	0	**16**	
0245 - 0300	0	9	0	0	0	0	0	0	0	0	0	0	0	**9**	**55**
0300 - 0315	0	9	0	0	0	0	0	0	1	0	0	0	0	**10**	
0315 - 0330	0	13	1	0	0	0	0	0	1	0	0	0	0	**15**	
0330 - 0345	0	16	3	0	0	0	0	0	0	0	0	0	0	**19**	
0345 - 0400	0	15	2	0	1	0	1	0	0	0	0	0	0	**19**	**63**
0400 - 0415	0	17	0	0	1	0	0	0	0	0	0	0	0	**18**	
0415 - 0430	0	23	0	0	0	0	0	0	0	0	0	0	0	**23**	
0430 - 0445	0	22	1	0	0	0	0	0	0	0	0	0	0	**23**	
0445 - 0500	0	28	4	0	0	3	0	0	1	0	0	0	0	**36**	**100**
0500 - 0515	0	33	5	0	1	2	0	0	3	0	0	0	0	**44**	
0515 - 0530	1	54	4	0	6	9	0	0	9	0	0	0	0	**83**	
0530 - 0545	1	84	16	0	2	8	0	0	1	0	0	0	0	**112**	
0545 - 0600	1	85	10	0	0	2	0	0	1	0	0	0	0	**99**	**338**
0600 - 0615	0	72	16	0	0	4	0	0	1	0	0	0	0	**93**	
0615 - 0630	0	126	26	0	1	2	0	0	0	0	2	0	0	**157**	
0630 - 0645	0	173	54	1	1	4	0	0	2	0	0	0	0	**235**	
0645 - 0700	1	227	63	0	2	2	0	0	5	0	1	0	0	**301**	**786**
0700 - 0715	1	290	53	2	4	2	0	0	3	0	0	0	0	**355**	
0715 - 0730	0	335	74	1	1	4	0	2	3	0	0	0	0	**420**	
0730 - 0745	0	390	89	0	3	2	0	0	3	0	0	0	0	**487**	
0745 - 0800	0	425	91	0	5	2	0	0	5	0	0	0	0	**528**	**1790**
0800 - 0815	0	419	62	1	3	2	0	0	1	0	0	0	0	**488**	
0815 - 0830	1	504	68	3	4	2	0	1	4	0	0	0	0	**587**	
0830 - 0845	0	412	72	1	3	0	0	0	3	0	0	0	0	**491**	
0845 - 0900	0	344	45	2	1	3	0	0	3	0	0	0	0	**398**	**1964**
0900 - 0915	0	295	50	4	4	4	0	0	2	0	0	0	0	**359**	
0915 - 0930	0	275	49	3	5	1	0	0	2	0	0	0	0	**335**	
0930 - 0945	0	263	64	3	7	0	0	0	3	0	0	0	0	**340**	
0945 - 1000	0	255	66	0	6	2	0	1	5	0	0	0	0	**335**	**1369**
1000 - 1015	0	236	50	0	2	3	0	0	2	0	0	0	0	**293**	
1015 - 1030	0	194	53	2	2	4	0	0	2	0	0	0	0	**257**	
1030 - 1045	0	231	52	0	3	3	0	0	5	0	0	0	0	**294**	
1045 - 1100	0	262	49	0	9	0	0	0	1	0	0	0	0	**321**	**1165**
1100 - 1115	0	197	42	1	5	0	0	0	4	0	0	0	0	**249**	
1115 - 1130	1	228	57	0	8	5	0	2	4	0	0	0	0	**305**	
1130 - 1145	0	238	37	0	2	3	0	1	1	0	0	0	0	**282**	
1145 - 1200	3	234	50	1	9	0	0	1	7	0	0	0	0	**305**	**1141**
1200 - 1215	0	297	68	1	10	0	0	4	9	1	0	0	0	**390**	
1215 - 1230	0	323	70	0	4	3	0	0	5	0	0	0	0	**405**	
1230 - 1245	0	290	59	0	4	5	0	0	4	0	0	0	0	**362**	
1245 - 1300	0	307	54	0	10	2	1	0	5	0	0	0	0	**379**	**1536**
1300 - 1315	1	324	67	0	10	0	0	2	8	0	0	0	0	**412**	
1315 - 1330	1	312	62	1	10	0	0	1	14	0	0	0	0	**401**	
1330 - 1345	0	340	50	1	7	1	0	0	5	0	0	0	0	**404**	
1345 - 1400	2	311	54	3	8	3	0	1	8	0	0	0	0	**390**	**1607**
1400 - 1415	1	291	66	0	9	2	0	2	5	0	0	0	0	**376**	
1415 - 1430	0	365	54	0	10	3	0	1	6	0	0	0	0	**439**	
1430 - 1445	1	346	42	3	12	3	0	0	3	0	0	0	0	**410**	
1445 - 1500	2	348	65	2	6	2	0	2	6	0	0	0	0	**433**	**1658**
1500 - 1515	2	332	62	0	6	4	1	2	8	0	0	0	0	**417**	
1515 - 1530	0	301	62	0	8	1	0	1	4	0	0	0	0	**377**	
1530 - 1545	0	372	44	1	6	1	2	1	6	0	0	0	0	**433**	
1545 - 1600	0	353	62	1	13	0	0	1	8	0	0	0	0	**438**	**1665**
1600 - 1615	0	320	64	1	6	3	0	0	6	0	0	0	0	**400**	
1615 - 1630	0	301	53	0	6	0	1	1	3	0	0	0	0	**365**	
1630 - 1645	2	297	51	0	7	1	0	0	2	0	0	0	0	**360**	
1645 - 1700	0	251	46	1	9	0	0	1	5	0	0	0	0	**313**	**1438**
1700 - 1715	0	254	40	0	2	0	0	0	1	0	0	0	0	**297**	
1715 - 1730	0	262	41	1	2	1	0	0	5	0	0	0	0	**312**	
1730 - 1745	0	228	42	0	6	0	0	0	0	0	0	0	0	**276**	
1745 - 1800	0	245	46	0	6	1	0	0	1	0	0	0	0	**299**	**1184**
1800 - 1815	0	253	46	0	2	0	0	1	4	0	0	0	0	**306**	
1815 - 1830	0	345	40	0	6	0	0	0	2	0	0	0	0	**393**	
1830 - 1845	1	278	25	0	3	1	0	0	4	0	0	0	0	**312**	
1845 - 1900	1	284	22	0	1	0	0	1	1	0	0	0	0	**310**	**1321**
1900 - 1915	0	0	0	0	0	0	0	0	0	0	0	0	0	**0**	
1915 - 1930	0	0	0	0	0	0	0	0	0	0	0	0	0	**0**	
1930 - 1945	0	0	0	0	0	0	0	0	0	0	0	0	0	**0**	
1945 - 2000	0	0	0	0	0	0	0	0	0	0	0	0	0	**0**	**0**
2000 - 2015	0	0	0	0	0	0	0	0	0	0	0	0	0	**0**	
2015 - 2030	0	0	0	0	0	0	0	0	0	0	0	0	0	**0**	
2030 - 2045	0	0	0	0	0	0	0	0	0	0	0	0	0	**0**	
2045 - 2100	0	0	0	0	0	0	0	0	0	0	0	0	0	**0**	**0**
2100 - 2115	0	0	0	0	0	0	0	0	0	0	0	0	0	**0**	
2115 - 2130	0	0	0	0	0	0	0	0	0	0	0	0	0	**0**	
2130 - 2145	0	0	0	0	0	0	0	0	0	0	0	0	0	**0**	
2145 - 2200	0	0	0	0	0	0	0	0	0	0	0	0	0	**0**	**0**
2200 - 2215	0	0	0	0	0	0	0	0	0	0	0	0	0	**0**	
2215 - 2230	0	0	0	0	0	0	0	0	0	0	0	0	0	**0**	
2230 - 2245	0	0	0	0	0	0	0	0	0	0	0	0	0	**0**	
2245 - 2300	0	0	0	0	0	0	0	0	0	0	0	0	0	**0**	**0**
2300 - 2315	0	0	0	0	0	0	0	0	0	0	0	0	0	**0**	
2315 - 2330	0	0	0	0	0	0	0	0	0	0	0	0	0	**0**	
2330 - 2345	0	0	0	0	0	0	0	0	0	0	0	0	0	**0**	
2345 - 0000	0	0	0	0	0	0	0	0	0	0	0	0	0	**0**	**0**

Session Total	24	15758	2850	41	295	116	6	30	230	1	3	0	0	**19354**
Session Average	0.25	164.15	29.69	0.43	3.07	1.21	0.06	0.31	2.40	0.01	0.03	0.00	0.00	**201.60**
Session Percentage	0.12	81.42	14.73	0.21	1.52	0.60	0.03	0.16	1.19	0.01	0.02	0.00	0.00	

AM Peak Hour	0500 - 0600	0745 - 0845	0715 - 0815	0845 - 0945	0900 - 1000	0515 - 0615	-	0630 - 0730	0500 - 0600	-	0600 - 0700	-	-	**0745 - 0845**
AM Peak Hour Volume	3	1760	316	12	22	23	0	2	14	0	3	0	0	**2094**

Noon Peak Hour	1415 - 1515	1415 - 1515	1200 - 1300	1345 - 1445	1345 - 1445	1415 - 1515	1445 - 1545	1115 - 1215	1300 - 1400	1115 - 1215	-	-	-	**1415 - 1515**
Noon Peak Hour Volume	5	1391	251	6	39	12	3	8	35	1	0	0	0	**1699**

PM Peak Hour	1500 - 1600	1500 - 1600	1515 - 1615	1515 - 1615	1500 - 1600	1500 - 1600	1500 - 1600	1500 - 1600	1500 - 1600	-	-	-	-	**1500 - 1600**
PM Peak Hour Volume	2	1358	232	3	33	6	3	5	26	0	0	0	0	**1665**

Bi-Directional Class Count || SB WB Average 15min

Columbia, SC

Marr Traffic DATA COLLECTION
www.marrtraffic.com

Site 73
US-321 Hugher St S/Bound On-Ramp,
south of US-321 Elmwood Ave E/Bound On-Ramp

Date
Tuesday, April 30, 2024

Lat/Long
34.008892°, -81.051254°

Weather
Mostly Cloudy
70°F

0000 - 2400 (Weekday 24h Session) (All Dates)
SB WB Average 15min

	SB WB Average 15min													15min	60min
Time	1	2	3	4	5	6	7	8	9	10	11	12	13	Total	Total
0000 - 0015	0	23	2	0	0	0	0	0	0	0	0	0	0	**26**	
0015 - 0030	0	15	1	0	0	0	0	0	0	0	0	0	0	**16**	
0030 - 0045	0	14	0	0	1	0	0	0	0	0	0	0	0	**15**	
0045 - 0100	0	18	1	0	0	0	0	0	0	0	0	0	0	**19**	**76**
0100 - 0115	0	11	1	0	0	0	0	0	0	0	0	0	0	**13**	
0115 - 0130	0	10	1	0	0	0	0	0	0	0	0	0	0	**11**	
0130 - 0145	0	9	1	0	0	0	0	0	0	0	0	0	0	**10**	
0145 - 0200	0	9	1	0	0	0	0	0	0	0	0	0	0	**10**	**45**
0200 - 0215	0	6	1	0	0	0	0	0	0	0	0	0	0	**7**	
0215 - 0230	0	11	0	0	0	0	0	0	0	0	0	0	0	**12**	
0230 - 0245	0	8	1	0	0	0	0	0	0	0	0	0	0	**10**	
0245 - 0300	0	8	0	0	0	0	0	0	0	0	0	0	0	**8**	**37**
0300 - 0315	0	8	0	0	0	0	0	0	0	0	0	0	0	**8**	
0315 - 0330	0	9	1	0	0	0	0	0	0	0	0	0	0	**10**	
0330 - 0345	0	8	1	0	0	0	0	0	0	0	0	0	0	**11**	
0345 - 0400	0	10	1	0	1	0	0	0	0	0	0	0	0	**13**	**42**
0400 - 0415	0	11	1	0	0	0	0	0	0	0	0	0	0	**12**	
0415 - 0430	0	13	1	0	0	0	0	0	0	0	0	0	0	**14**	
0430 - 0445	0	15	1	0	1	0	0	0	1	0	0	0	0	**18**	
0445 - 0500	0	21	3	0	1	2	0	0	1	0	0	0	0	**27**	**71**
0500 - 0515	0	24	3	0	1	1	0	0	1	0	0	0	0	**30**	
0515 - 0530	1	37	4	0	3	3	0	0	3	0	0	0	0	**51**	
0530 - 0545	0	56	9	0	2	3	0	0	1	0	0	0	0	**72**	
0545 - 0600	1	52	9	0	1	4	0	0	1	0	0	0	0	**67**	**219**
0600 - 0615	0	48	11	0	0	3	0	0	2	0	0	0	0	**64**	
0615 - 0630	0	79	22	0	1	1	0	0	0	0	1	0	0	**105**	
0630 - 0645	0	114	40	0	1	2	0	0	1	0	0	0	0	**157**	
0645 - 0700	0	150	43	0	2	2	0	0	2	0	0	0	0	**199**	**526**
0700 - 0715	1	176	41	2	2	2	0	0	2	0	0	0	0	**226**	
0715 - 0730	0	214	55	2	1	2	0	1	2	0	0	0	0	**277**	
0730 - 0745	0	250	59	0	2	1	0	0	1	0	0	0	0	**314**	
0745 - 0800	0	281	57	0	2	1	0	0	2	0	0	0	0	**344**	**1161**
0800 - 0815	0	288	48	1	2	1	0	1	0	0	0	0	0	**341**	
0815 - 0830	1	317	50	1	3	1	0	0	2	0	0	0	0	**376**	
0830 - 0845	0	285	49	0	3	0	0	0	3	0	0	0	0	**341**	
0845 - 0900	1	251	37	1	1	1	0	0	3	0	0	0	0	**295**	**1352**
0900 - 0915	0	193	35	3	4	2	0	0	2	0	0	0	0	**239**	
0915 - 0930	0	170	33	1	2	1	0	0	2	0	0	0	0	**209**	
0930 - 0945	0	172	37	3	5	1	0	0	1	0	0	0	0	**219**	
0945 - 1000	0	166	36	0	5	1	0	0	2	0	0	0	0	**209**	**876**
1000 - 1015	0	151	32	0	1	2	0	0	1	0	0	0	0	**188**	
1015 - 1030	0	127	32	1	1	1	0	0	1	0	0	0	0	**164**	
1030 - 1045	0	153	31	0	2	2	0	0	3	0	0	0	0	**191**	
1045 - 1100	0	155	26	0	5	1	0	0	1	0	0	0	0	**189**	**731**
1100 - 1115	0	138	27	0	3	1	0	0	2	0	0	0	0	**172**	
1115 - 1130	0	146	33	0	4	2	0	1	2	0	0	0	0	**189**	
1130 - 1145	0	147	28	0	2	1	0	0	2	0	0	0	0	**180**	
1145 - 1200	1	163	32	0	5	1	0	0	3	0	0	0	0	**205**	**746**
1200 - 1215	0	175	38	0	4	0	0	1	4	0	0	0	0	**223**	
1215 - 1230	0	198	39	0	2	2	0	0	2	0	0	0	0	**244**	
1230 - 1245	0	180	37	0	4	2	0	0	2	0	0	0	0	**225**	
1245 - 1300	0	180	37	0	6	2	0	0	2	0	0	0	0	**227**	**919**
1300 - 1315	1	197	36	0	5	1	0	1	3	0	0	0	0	**244**	
1315 - 1330	1	190	35	0	4	0	0	1	6	0	0	0	0	**238**	
1330 - 1345	0	204	27	0	3	1	0	0	3	0	0	0	0	**239**	
1345 - 1400	1	197	35	1	5	2	0	0	3	0	0	0	0	**243**	**964**
1400 - 1415	0	190	35	0	4	3	0	1	3	0	0	0	0	**236**	
1415 - 1430	0	227	37	0	4	1	0	1	4	0	0	0	0	**274**	
1430 - 1445	1	201	33	1	6	2	0	0	1	0	0	0	0	**245**	
1445 - 1500	1	192	33	1	4	1	0	1	3	0	0	0	0	**235**	**989**
1500 - 1515	1	194	36	0	2	1	0	1	3	0	0	0	0	**238**	
1515 - 1530	0	183	31	0	5	1	0	0	1	0	0	0	0	**222**	
1530 - 1545	0	220	30	0	3	1	1	0	3	0	0	0	0	**259**	
1545 - 1600	0	198	34	1	5	0	0	0	3	0	0	0	0	**242**	**961**
1600 - 1615	0	191	32	1	4	1	0	0	2	0	0	0	0	**231**	
1615 - 1630	0	185	30	0	3	1	0	1	1	0	0	0	0	**221**	
1630 - 1645	1	200	30	0	3	0	0	0	1	0	0	0	0	**235**	
1645 - 1700	1	183	30	1	3	0	0	0	2	0	0	0	0	**219**	**907**
1700 - 1715	0	178	24	0	2	0	0	0	0	0	0	0	0	**205**	
1715 - 1730	0	183	27	0	1	0	0	0	2	0	0	0	0	**214**	
1730 - 1745	0	150	29	0	2	0	0	0	0	0	0	0	0	**182**	
1745 - 1800	1	172	29	0	2	1	0	0	0	0	0	0	0	**206**	**807**
1800 - 1815	1	155	28	0	2	0	0	0	1	0	0	0	0	**188**	
1815 - 1830	0	190	23	0	2	0	0	0	1	0	0	0	0	**218**	
1830 - 1845	1	161	16	0	1	0	0	0	1	0	0	0	0	**180**	
1845 - 1900	1	163	16	0	1	0	0	0	0	0	0	0	0	**181**	**766**
1900 - 1915	0	114	14	0	0	0	0	0	0	0	0	0	0	**130**	
1915 - 1930	0	115	15	0	1	0	0	0	0	0	0	0	0	**131**	
1930 - 1945	0	108	9	0	0	0	0	0	0	0	0	0	0	**117**	
1945 - 2000	0	74	11	0	0	0	0	0	0	0	0	0	0	**86**	**465**
2000 - 2015	0	100	12	0	1	0	0	0	1	0	0	0	0	**114**	
2015 - 2030	0	98	13	0	0	0	0	0	0	0	0	0	0	**111**	
2030 - 2045	1	100	14	0	0	0	0	0	0	0	0	0	0	**115**	
2045 - 2100	1	97	11	0	1	0	0	0	0	0	0	0	0	**110**	**450**
2100 - 2115	0	90	12	0	0	0	0	0	0	0	0	0	0	**102**	
2115 - 2130	0	75	10	0	1	0	0	0	0	0	0	0	0	**86**	
2130 - 2145	0	78	10	0	1	0	0	0	0	0	0	0	0	**89**	
2145 - 2200	0	66	9	0	0	0	0	0	1	0	0	0	0	**76**	**353**
2200 - 2215	0	58	9	0	0	0	0	0	0	0	0	0	0	**67**	
2215 - 2230	0	53	6	0	1	0	0	0	0	0	0	0	0	**61**	
2230 - 2245	0	51	6	0	1	0	0	0	0	0	0	0	0	**58**	
2245 - 2300	0	45	5	0	0	0	0	0	0	0	0	0	0	**51**	**237**
2300 - 2315	0	38	4	0	1	0	0	0	0	0	0	0	0	**44**	
2315 - 2330	0	26	4	0	1	0	0	0	0	0	0	0	0	**30**	
2330 - 2345	0	30	4	0	1	0	0	0	0	0	0	0	0	**35**	
2345 - 0000	0	28	3	0	0	0	0	0	0	0	0	0	0	**31**	**140**

Session Total	21	11421	1983	26	176	74	2	17	119	0	1	1	0	**13841**
Session Average	0.22	118.97	20.65	0.27	1.83	0.77	0.02	0.18	1.24	0.00	0.01	0.01	0.00	**144.18**
Session Percentage	0.15	82.51	14.32	0.19	1.27	0.54	0.01	0.12	0.86	0.00	0.01	0.00	0.00	

AM Peak Hour	0615 - 0715	0745 - 0845	0715 - 0815	0845 - 0945	0900 - 1000	0515 - 0615	-	0715 - 0815	0815 - 0915	-	0615 - 0715	0500 - 0600	-	**0745 - 0845**
AM Peak Volume	2	1171	219	9	16	13	0	2	10	0	1	0	0	**1401**

Noon Peak Hour	1415 - 1515	1330 - 1430	1200 - 1300	1415 - 1515	1230 - 1330	1345 - 1445	1445 - 1545	1300 - 1400	1300 - 1400	1115 - 1215	-	-	-	**1345 - 1445**
Noon Peak Volume	2	817	151	2	19	8	1	3	15	0	0	0	0	**997**

PM Peak Hour	1800 - 1900	1500 - 1600	1500 - 1600	1530 - 1630	1515 - 1615	1500 - 1600	1500 - 1600	1500 - 1600	1500 - 1600	-	-	-	-	**1500 - 1600**
PM Peak Volume	3	795	131	2	18	4	1	2	10	0	0	0	0	**961**

Bi-Directional Class Count || Volume Summary 15min

Columbia, SC

Marr Traffic DATA COLLECTION

www.marrtraffic.com

Site 73

US-321 Hugher St S/Bound On-Ramp,
south of US-321 Elmwood Ave E/Bound On-Ramp

Date

Tuesday, April 30, 2024

Lat/Long

34.008892°, -81.051254°

Weather

Mostly Cloudy
70°F

Click here for Detailed Weather

0000 - 2400 (Weekday 24h Session) (04-30-2024)

Volume Summary 15min

TIME	Volume Summary 15min		15min Total	60min Total
	NB	SB		
0000 - 0015	0	0	**0**	
0015 - 0030	0	0	**0**	
0030 - 0045	0	0	**0**	
0045 - 0100	0	0	**0**	**0**
0100 - 0115	0	0	**0**	
0115 - 0130	0	0	**0**	
0130 - 0145	0	0	**0**	
0145 - 0200	0	0	**0**	**0**
0200 - 0215	0	0	**0**	
0215 - 0230	0	0	**0**	
0230 - 0245	0	0	**0**	
0245 - 0300	0	0	**0**	**0**
0300 - 0315	0	0	**0**	
0315 - 0330	0	0	**0**	
0330 - 0345	0	0	**0**	
0345 - 0400	0	0	**0**	**0**
0400 - 0415	0	0	**0**	
0415 - 0430	0	0	**0**	
0430 - 0445	0	0	**0**	
0445 - 0500	0	0	**0**	**0**
0500 - 0515	0	0	**0**	
0515 - 0530	0	0	**0**	
0530 - 0545	0	0	**0**	
0545 - 0600	0	0	**0**	**0**
0600 - 0615	0	0	**0**	
0615 - 0630	0	0	**0**	
0630 - 0645	0	0	**0**	
0645 - 0700	0	0	**0**	**0**
0700 - 0715	0	0	**0**	
0715 - 0730	0	0	**0**	
0730 - 0745	0	0	**0**	
0745 - 0800	0	0	**0**	**0**
0800 - 0815	0	0	**0**	
0815 - 0830	0	0	**0**	
0830 - 0845	0	0	**0**	
0845 - 0900	0	0	**0**	**0**
0900 - 0915	0	0	**0**	
0915 - 0930	0	0	**0**	
0930 - 0945	0	0	**0**	
0945 - 1000	0	0	**0**	**0**
1000 - 1015	0	0	**0**	
1015 - 1030	0	0	**0**	
1030 - 1045	0	0	**0**	
1045 - 1100	0	0	**0**	**0**
1100 - 1115	0	0	**0**	
1115 - 1130	0	0	**0**	
1130 - 1145	0	0	**0**	
1145 - 1200	0	0	**0**	**0**

Time	Volume Summary 15min		15min Total	60min Total
	NB	SB		
1200 - 1215	0	0	**0**	
1215 - 1230	0	0	**0**	
1230 - 1245	0	0	**0**	
1245 - 1300	0	0	**0**	**0**
1300 - 1315	0	0	**0**	
1315 - 1330	0	0	**0**	
1330 - 1345	0	0	**0**	
1345 - 1400	0	0	**0**	**0**
1400 - 1415	0	0	**0**	
1415 - 1430	0	0	**0**	
1430 - 1445	0	0	**0**	
1445 - 1500	0	0	**0**	**0**
1500 - 1515	0	0	**0**	
1515 - 1530	0	0	**0**	
1530 - 1545	0	0	**0**	
1545 - 1600	0	0	**0**	**0**
1600 - 1615	0	0	**0**	
1615 - 1630	0	0	**0**	
1630 - 1645	0	0	**0**	
1645 - 1700	0	0	**0**	**0**
1700 - 1715	0	0	**0**	
1715 - 1730	0	0	**0**	
1730 - 1745	0	0	**0**	
1745 - 1800	0	0	**0**	**0**
1800 - 1815	0	0	**0**	
1815 - 1830	0	0	**0**	
1830 - 1845	0	0	**0**	
1845 - 1900	0	0	**0**	**0**
1900 - 1915	0	174	**174**	
1915 - 1930	0	181	**181**	
1930 - 1945	0	157	**157**	
1945 - 2000	0	105	**105**	**617**
2000 - 2015	0	167	**167**	
2015 - 2030	0	142	**142**	
2030 - 2045	0	139	**139**	
2045 - 2100	0	139	**139**	**587**
2100 - 2115	0	138	**138**	
2115 - 2130	0	129	**129**	
2130 - 2145	0	126	**126**	
2145 - 2200	0	105	**105**	**498**
2200 - 2215	0	103	**103**	
2215 - 2230	0	86	**86**	
2230 - 2245	0	90	**90**	
2245 - 2300	0	75	**75**	**354**
2300 - 2315	0	63	**63**	
2315 - 2330	0	38	**38**	
2330 - 2345	0	60	**60**	
2345 - 0000	0	41	**41**	**202**

Session Total	0	2258	**2258**
Session Average	0.00	23.52	**23.52**
Session Percentage	0.00	100.00	

Site 73

US-321 Hugher St S/Bound On-Ramp,
south of US-321 Elmwood Ave E/Bound On-Ramp

Date

Wednesday, May 1, 2024

Lat/Long

34.008892°, -81.051254°

Weather

Partly Cloudy
71°F

Click here for Detailed Weather

0000 - 2400 (Weekday 24h Session) (05-01-2024)

Volume Summary 15min

TIME	Volume Summary 15min NB	SB	15min Total	60min Total
0000 - 0015	0	40	**40**	
0015 - 0030	0	25	**25**	
0030 - 0045	0	23	**23**	
0045 - 0100	0	23	**23**	**111**
0100 - 0115	0	20	**20**	
0115 - 0130	0	19	**19**	
0130 - 0145	0	19	**19**	
0145 - 0200	0	18	**18**	**76**
0200 - 0215	0	7	**7**	
0215 - 0230	0	18	**18**	
0230 - 0245	0	15	**15**	
0245 - 0300	0	16	**16**	**56**
0300 - 0315	0	15	**15**	
0315 - 0330	0	15	**15**	
0330 - 0345	0	13	**13**	
0345 - 0400	0	19	**19**	**62**
0400 - 0415	0	19	**19**	
0415 - 0430	0	19	**19**	
0430 - 0445	0	30	**30**	
0445 - 0500	0	44	**44**	**112**
0500 - 0515	0	45	**45**	
0515 - 0530	0	69	**69**	
0530 - 0545	0	103	**103**	
0545 - 0600	0	103	**103**	**320**
0600 - 0615	0	100	**100**	
0615 - 0630	0	158	**158**	
0630 - 0645	0	237	**237**	
0645 - 0700	0	297	**297**	**792**
0700 - 0715	0	324	**324**	
0715 - 0730	0	411	**411**	
0730 - 0745	0	456	**456**	
0745 - 0800	0	503	**503**	**1694**
0800 - 0815	0	534	**534**	
0815 - 0830	0	540	**540**	
0830 - 0845	0	532	**532**	
0845 - 0900	0	487	**487**	**2093**
0900 - 0915	0	359	**359**	
0915 - 0930	0	292	**292**	
0930 - 0945	0	316	**316**	
0945 - 1000	0	293	**293**	**1260**
1000 - 1015	0	270	**270**	
1015 - 1030	0	234	**234**	
1030 - 1045	0	280	**280**	
1045 - 1100	0	245	**245**	**1029**
1100 - 1115	0	268	**268**	
1115 - 1130	0	261	**261**	
1130 - 1145	0	258	**258**	
1145 - 1200	0	310	**310**	**1097**

Time	Volume Summary 15min NB	SB	15min Total	60min Total
1200 - 1215	0	279	**279**	
1215 - 1230	0	326	**326**	
1230 - 1245	0	314	**314**	
1245 - 1300	0	302	**302**	**1221**
1300 - 1315	0	320	**320**	
1315 - 1330	0	313	**313**	
1330 - 1345	0	313	**313**	
1345 - 1400	0	340	**340**	**1286**
1400 - 1415	0	331	**331**	
1415 - 1430	0	382	**382**	
1430 - 1445	0	324	**324**	
1445 - 1500	0	273	**273**	**1310**
1500 - 1515	0	298	**298**	
1515 - 1530	0	288	**288**	
1530 - 1545	0	344	**344**	
1545 - 1600	0	288	**288**	**1218**
1600 - 1615	0	294	**294**	
1615 - 1630	0	298	**298**	
1630 - 1645	0	346	**346**	
1645 - 1700	0	344	**344**	**1282**
1700 - 1715	0	317	**317**	
1715 - 1730	0	331	**331**	
1730 - 1745	0	270	**270**	
1745 - 1800	0	319	**319**	**1237**
1800 - 1815	0	257	**257**	
1815 - 1830	0	260	**260**	
1830 - 1845	0	229	**229**	
1845 - 1900	0	232	**232**	**978**
1900 - 1915	0	215	**215**	
1915 - 1930	0	213	**213**	
1930 - 1945	0	195	**195**	
1945 - 2000	0	154	**154**	**777**
2000 - 2015	0	175	**175**	
2015 - 2030	0	191	**191**	
2030 - 2045	0	207	**207**	
2045 - 2100	0	190	**190**	**763**
2100 - 2115	0	169	**169**	
2115 - 2130	0	128	**128**	
2130 - 2145	0	142	**142**	
2145 - 2200	0	123	**123**	**562**
2200 - 2215	0	99	**99**	
2215 - 2230	0	98	**98**	
2230 - 2245	0	83	**83**	
2245 - 2300	0	77	**77**	**357**
2300 - 2315	0	68	**68**	
2315 - 2330	0	53	**53**	
2330 - 2345	0	46	**46**	
2345 - 0000	0	51	**51**	**218**

Session Total	0	19911	**19911**
Session Average	0.00	207.41	**207.41**
Session Percentage	0.00	100.00	

Site 73

US-321 Hugher St S/Bound On-Ramp,
south of US-321 Elmwood Ave E/Bound On-Ramp

Date

Thursday, May 2, 2024

Lat/Long

34.008892°, -81.051254°

Weather

Fair
74°F

Click here for Detailed Weather

0000 - 2400 (Weekday 24h Session) (05-02-2024)

Volume Summary 15min

TIME	Volume Summary 15min NB	SB	15min Total	60min Total
0000 - 0015	0	37	**37**	
0015 - 0030	0	23	**23**	
0030 - 0045	0	22	**22**	
0045 - 0100	0	34	**34**	**116**
0100 - 0115	0	18	**18**	
0115 - 0130	0	15	**15**	
0130 - 0145	0	12	**12**	
0145 - 0200	0	13	**13**	**58**
0200 - 0215	0	13	**13**	
0215 - 0230	0	17	**17**	
0230 - 0245	0	16	**16**	
0245 - 0300	0	9	**9**	**55**
0300 - 0315	0	10	**10**	
0315 - 0330	0	15	**15**	
0330 - 0345	0	19	**19**	
0345 - 0400	0	19	**19**	**63**
0400 - 0415	0	18	**18**	
0415 - 0430	0	23	**23**	
0430 - 0445	0	23	**23**	
0445 - 0500	0	36	**36**	**100**
0500 - 0515	0	44	**44**	
0515 - 0530	0	83	**83**	
0530 - 0545	0	112	**112**	
0545 - 0600	0	99	**99**	**338**
0600 - 0615	0	93	**93**	
0615 - 0630	0	157	**157**	
0630 - 0645	0	235	**235**	
0645 - 0700	0	301	**301**	**786**
0700 - 0715	0	355	**355**	
0715 - 0730	0	420	**420**	
0730 - 0745	0	487	**487**	
0745 - 0800	0	528	**528**	**1790**
0800 - 0815	0	488	**488**	
0815 - 0830	0	587	**587**	
0830 - 0845	0	491	**491**	
0845 - 0900	0	398	**398**	**1964**
0900 - 0915	0	359	**359**	
0915 - 0930	0	335	**335**	
0930 - 0945	0	340	**340**	
0945 - 1000	0	335	**335**	**1369**
1000 - 1015	0	293	**293**	
1015 - 1030	0	257	**257**	
1030 - 1045	0	294	**294**	
1045 - 1100	0	321	**321**	**1165**
1100 - 1115	0	249	**249**	
1115 - 1130	0	305	**305**	
1130 - 1145	0	282	**282**	
1145 - 1200	0	305	**305**	**1141**

Time	Volume Summary 15min NB	SB	15min Total	60min Total
1200 - 1215	0	390	**390**	
1215 - 1230	0	405	**405**	
1230 - 1245	0	362	**362**	
1245 - 1300	0	379	**379**	**1536**
1300 - 1315	0	412	**412**	
1315 - 1330	0	401	**401**	
1330 - 1345	0	404	**404**	
1345 - 1400	0	390	**390**	**1607**
1400 - 1415	0	376	**376**	
1415 - 1430	0	439	**439**	
1430 - 1445	0	410	**410**	
1445 - 1500	0	433	**433**	**1658**
1500 - 1515	0	417	**417**	
1515 - 1530	0	377	**377**	
1530 - 1545	0	433	**433**	
1545 - 1600	0	438	**438**	**1665**
1600 - 1615	0	400	**400**	
1615 - 1630	0	365	**365**	
1630 - 1645	0	360	**360**	
1645 - 1700	0	313	**313**	**1438**
1700 - 1715	0	297	**297**	
1715 - 1730	0	312	**312**	
1730 - 1745	0	276	**276**	
1745 - 1800	0	299	**299**	**1184**
1800 - 1815	0	306	**306**	
1815 - 1830	0	393	**393**	
1830 - 1845	0	312	**312**	
1845 - 1900	0	310	**310**	**1321**
1900 - 1915	0	0	**0**	
1915 - 1930	0	0	**0**	
1930 - 1945	0	0	**0**	
1945 - 2000	0	0	**0**	**0**
2000 - 2015	0	0	**0**	
2015 - 2030	0	0	**0**	
2030 - 2045	0	0	**0**	
2045 - 2100	0	0	**0**	**0**
2100 - 2115	0	0	**0**	
2115 - 2130	0	0	**0**	
2130 - 2145	0	0	**0**	
2145 - 2200	0	0	**0**	**0**
2200 - 2215	0	0	**0**	
2215 - 2230	0	0	**0**	
2230 - 2245	0	0	**0**	
2245 - 2300	0	0	**0**	**0**
2300 - 2315	0	0	**0**	
2315 - 2330	0	0	**0**	
2330 - 2345	0	0	**0**	
2345 - 0000	0	0	**0**	**0**

Session Total	0	19354	**19354**
Session Average	0.00	201.60	**201.60**
Session Percentage	0.00	100.00	

Bi-Directional Class Count || SB WB 60min

Columbia, SC

Marr Traffic DATA COLLECTION

www.marrtraffic.com

Site 73
US-321 Hugher St S/Bound On-Ramp,
south of US-321 Elmwood Ave E/Bound On-Ramp

Date
Tuesday, April 30, 2024

Lat/Long
34.008892°, -81.051254°

Weather
Mostly Cloudy
70°F

Click here for Detailed Weather

0000 - 2400 (Weekday 24h Session) (04-30-2024)
SB WB 60min

	Southbound (Movement 73.1)													
TIME	1	2	3	4	5	6	7	8	9	10	11	12	13	**Total**
0000 - 0100	0	0	0	0	0	0	0	0	0	0	0	0	0	**0**
0100 - 0200	0	0	0	0	0	0	0	0	0	0	0	0	0	**0**
0200 - 0300	0	0	0	0	0	0	0	0	0	0	0	0	0	**0**
0300 - 0400	0	0	0	0	0	0	0	0	0	0	0	0	0	**0**
0400 - 0500	0	0	0	0	0	0	0	0	0	0	0	0	0	**0**
0500 - 0600	0	0	0	0	0	0	0	0	0	0	0	0	0	**0**
0600 - 0700	0	0	0	0	0	0	0	0	0	0	0	0	0	**0**
0700 - 0800	0	0	0	0	0	0	0	0	0	0	0	0	0	**0**
0800 - 0900	0	0	0	0	0	0	0	0	0	0	0	0	0	**0**
0900 - 1000	0	0	0	0	0	0	0	0	0	0	0	0	0	**0**
1000 - 1100	0	0	0	0	0	0	0	0	0	0	0	0	0	**0**
1100 - 1200	0	0	0	0	0	0	0	0	0	0	0	0	0	**0**
1200 - 1300	0	0	0	0	0	0	0	0	0	0	0	0	0	**0**
1300 - 1400	0	0	0	0	0	0	0	0	0	0	0	0	0	**0**
1400 - 1500	0	0	0	0	0	0	0	0	0	0	0	0	0	**0**
1500 - 1600	0	0	0	0	0	0	0	0	0	0	0	0	0	**0**
1600 - 1700	0	0	0	0	0	0	0	0	0	0	0	0	0	**0**
1700 - 1800	0	0	0	0	0	0	0	0	0	0	0	0	0	**0**
1800 - 1900	0	0	0	0	0	0	0	0	0	0	0	0	0	**0**
1900 - 2000	2	542	68	0	3	1	0	0	1	0	0	0	0	**617**
2000 - 2100	1	485	96	0	4	0	0	0	1	0	0	0	0	**587**
2100 - 2200	0	402	86	0	7	0	0	0	3	0	0	0	0	**498**
2200 - 2300	0	284	64	0	3	0	0	0	3	0	0	0	0	**354**
2300 - 2400	0	157	40	0	3	0	0	0	2	0	0	0	0	**202**
Session Total	3	1870	354	0	20	1	0	0	10	0	0	0	0	**2258**
Session Average	0.13	77.92	14.75	0.00	0.83	0.04	0.00	0.00	0.42	0.00	0.00	0.00	0.00	**94.08**
Session Percentage	0.13	82.82	15.68	0.00	0.89	0.04	0.00	0.00	0.44	0.00	0.00	0.00	0.00	
AM Peak Hour	-	-	-	-	-	-	-	-	-	-	-	-	-	**-**
AM Peak Volume	0	0	0	0	0	0	0	0	0	0	0	0	0	**0**
Noon Peak Hour	-	-	-	-	-	-	-	-	-	-	-	-	-	**-**
Noon Peak Volume	0	0	0	0	0	0	0	0	0	0	0	0	0	**0**
PM Peak Hour	1900 - 2000	1900 - 2000	1900 - 2000	-	1900 - 2000	1900 - 2000	-	-	1900 - 2000	-	-	-	-	**1900 - 2000**
PM Peak Volume	2	542	68	0	3	1	0	0	1	0	0	0	0	**617**

Site 73

US-321 Hugher St S/Bound On-Ramp,
south of US-321 Elmwood Ave E/Bound On-Ramp

Date

Wednesday, May 1, 2024

Lat/Long

34.008892°, -81.051254°

Weather

Partly Cloudy
71°F

Click here for Detailed Weather

0000 - 2400 (Weekday 24h Session) (05-01-2024)

SB WB 60min

	Southbound (Movement 73.1)													
TIME	1	2	3	4	5	6	7	8	9	10	11	12	13	**Total**
0000 - 0100	0	104	6	0	0	0	0	0	1	0	0	0	0	**111**
0100 - 0200	0	63	8	0	1	1	0	0	3	0	0	0	0	**76**
0200 - 0300	0	53	2	0	0	0	0	1	0	0	0	0	0	**56**
0300 - 0400	0	53	5	0	2	1	0	0	1	0	0	0	0	**62**
0400 - 0500	0	92	9	0	4	2	0	0	5	0	0	0	0	**112**
0500 - 0600	2	253	36	0	13	11	0	0	4	0	0	1	0	**320**
0600 - 0700	2	576	188	1	7	10	0	2	6	0	0	0	0	**792**
0700 - 0800	3	1323	328	11	7	9	0	2	9	0	1	1	0	**1694**
0800 - 0900	4	1744	305	5	14	5	0	4	12	0	0	0	0	**2093**
0900 - 1000	1	1012	192	12	26	7	0	0	10	0	0	0	0	**1260**
1000 - 1100	0	837	160	0	12	8	0	2	10	0	0	0	0	**1029**
1100 - 1200	0	885	174	0	18	9	0	0	11	0	0	0	0	**1097**
1200 - 1300	2	982	203	0	19	8	0	0	7	0	0	0	0	**1221**
1300 - 1400	2	1076	168	0	17	8	0	5	10	0	0	0	0	**1286**
1400 - 1500	2	1077	189	1	16	13	0	1	11	0	0	0	0	**1310**
1500 - 1600	1	1026	163	3	14	5	0	1	5	0	0	0	0	**1218**
1600 - 1700	3	1106	151	3	14	2	0	1	2	0	0	0	0	**1282**
1700 - 1800	3	1060	160	0	7	4	0	0	3	0	0	0	0	**1237**
1800 - 1900	6	848	116	0	6	1	0	0	1	0	0	0	0	**978**
1900 - 2000	0	694	77	0	2	0	0	2	2	0	0	0	0	**777**
2000 - 2100	4	700	52	0	5	0	0	0	2	0	0	0	0	**763**
2100 - 2200	1	525	34	1	0	1	0	0	0	0	0	0	0	**562**
2200 - 2300	1	337	13	0	5	0	0	0	1	0	0	0	0	**357**
2300 - 2400	0	208	5	0	3	1	0	0	1	0	0	0	0	**218**

Session Total	37	16634	2744	37	212	106	0	21	117	0	1	2	0	**19911**
Session Average	1.54	693.08	114.33	1.54	8.83	4.42	0.00	0.88	4.88	0.00	0.04	0.08	0.00	**829.63**
Session Percentage	0.19	83.54	13.78	0.19	1.06	0.53	0.00	0.11	0.59	0.00	0.01	0.01	0.00	

AM Peak Hour	0800 - 0900	0800 - 0900	0700 - 0800	0900 - 1000	0900 - 1000	0500 - 0600	-	0800 - 0900	0800 - 0900	-	0700 - 0800	0500 - 0600	-	**0800 - 0900**
AM Peak Volume	4	1744	328	12	26	11	0	4	12	0	1	1	0	**2093**

Noon Peak Hour	1200 - 1300	1400 - 1500	1200 - 1300	1400 - 1500	1200 - 1300	1400 - 1500	-	1300 - 1400	1100 - 1200	-	-	-	-	**1400 - 1500**
Noon Peak Volume	2	1077	203	1	19	13	0	5	11	0	0	0	0	**1310**

PM Peak Hour	1800 - 1900	1600 - 1700	1500 - 1600	1500 - 1600	1500 - 1600	1500 - 1600	-	1900 - 2000	1500 - 1600	-	-	-	-	**1600 - 1700**
PM Peak Volume	6	1106	163	3	14	5	0	2	5	0	0	0	0	**1282**

Site 73
US-321 Hugher St S/Bound On-Ramp,
south of US-321 Elmwood Ave E/Bound On-Ramp

Date
Thursday, May 2, 2024

Lat/Long
34.008892°, -81.051254°

Weather
Fair
74°F

Click here for Detailed Weather

0000 - 2400 (Weekday 24h Session) (05-02-2024)
SB WB 60min

	Southbound (Movement 73.1)													
TIME	1	2	3	4	5	6	7	8	9	10	11	12	13	**Total**
0000 - 0100	0	106	5	0	3	1	0	0	1	0	0	0	0	**116**
0100 - 0200	0	53	5	0	0	0	0	0	0	0	0	0	0	**58**
0200 - 0300	0	45	5	0	2	0	0	0	3	0	0	0	0	**55**
0300 - 0400	0	53	6	0	1	0	1	0	2	0	0	0	0	**63**
0400 - 0500	0	90	5	0	1	3	0	0	1	0	0	0	0	**100**
0500 - 0600	3	256	35	0	9	21	0	0	14	0	0	0	0	**338**
0600 - 0700	1	598	159	1	4	12	0	0	8	0	3	0	0	**786**
0700 - 0800	1	1440	307	3	13	10	0	2	14	0	0	0	0	**1790**
0800 - 0900	1	1679	247	7	11	7	0	1	11	0	0	0	0	**1964**
0900 - 1000	0	1088	229	10	22	7	0	1	12	0	0	0	0	**1369**
1000 - 1100	0	923	204	2	16	10	0	0	10	0	0	0	0	**1165**
1100 - 1200	4	897	186	2	24	8	0	4	16	0	0	0	0	**1141**
1200 - 1300	0	1217	251	1	28	10	1	4	23	1	0	0	0	**1536**
1300 - 1400	4	1287	233	5	35	4	0	4	35	0	0	0	0	**1607**
1400 - 1500	4	1350	227	5	37	10	0	5	20	0	0	0	0	**1658**
1500 - 1600	2	1358	230	2	33	6	3	5	26	0	0	0	0	**1665**
1600 - 1700	2	1169	214	2	28	4	1	2	16	0	0	0	0	**1438**
1700 - 1800	0	989	169	1	16	2	0	0	7	0	0	0	0	**1184**
1800 - 1900	2	1160	133	0	12	1	0	2	11	0	0	0	0	**1321**
1900 - 2000	0	0	0	0	0	0	0	0	0	0	0	0	0	**0**
2000 - 2100	0	0	0	0	0	0	0	0	0	0	0	0	0	**0**
2100 - 2200	0	0	0	0	0	0	0	0	0	0	0	0	0	**0**
2200 - 2300	0	0	0	0	0	0	0	0	0	0	0	0	0	**0**
2300 - 2400	0	0	0	0	0	0	0	0	0	0	0	0	0	**0**

Session Total	24	15758	2850	41	295	116	6	30	230	1	3	0	0	**19354**
Session Average	1.00	656.58	118.75	1.71	12.29	4.83	0.25	1.25	9.58	0.04	0.13	0.00	0.00	**806.42**
Session Percentage	0.12	81.42	14.73	0.21	1.52	0.60	0.03	0.16	1.19	0.01	0.02	0.00	0.00	

AM Peak Hour	0500 - 0600	0800 - 0900	0700 - 0800	0900 - 1000	0900 - 1000	0500 - 0600	-	0700 - 0800	0500 - 0600	-	0600 - 0700	-	-	**0800 - 0900**
AM Peak Hour Volume	3	1679	307	10	22	21	0	2	14	0	3	0	0	**1964**

Noon Peak Hour	1100 - 1200	1400 - 1500	1200 - 1300	1300 - 1400	1400 - 1500	1000 - 1100	1200 - 1300	1400 - 1500	1300 - 1400	1200 - 1300	-	-	-	**1400 - 1500**
Noon Peak Hour Volume	4	1350	251	5	37	10	1	5	35	1	0	0	0	**1658**

PM Peak Hour	1500 - 1600	1500 - 1600	1500 - 1600	1500 - 1600	1500 - 1600	1500 - 1600	1500 - 1600	1500 - 1600	1500 - 1600	-	-	-	-	**1500 - 1600**
PM Peak Hour Volume	2	1358	230	2	33	6	3	5	26	0	0	0	0	**1665**

Bi-Directional Class Count || Volume Summary 60min

Columbia, SC

Marr Traffic DATA COLLECTION

www.marrtraffic.com

Site 73

US-321 Hugher St S/Bound On-Ramp,
south of US-321 Elmwood Ave E/Bound On-Ramp

Date

Tuesday, April 30, 2024

Lat/Long

34.008892°, -81.051254°

Weather

Mostly Cloudy
70°F

Click here for Detailed Weather

0000 - 2400 (Weekday 24h Session) (04-30-2024)

Volume Summary 60min

	Volume Summary 60min		
TIME	NB	SB	**Total**
0000 - 0100	0	0	**0**
0100 - 0200	0	0	**0**
0200 - 0300	0	0	**0**
0300 - 0400	0	0	**0**
0400 - 0500	0	0	**0**
0500 - 0600	0	0	**0**
0600 - 0700	0	0	**0**
0700 - 0800	0	0	**0**
0800 - 0900	0	0	**0**
0900 - 1000	0	0	**0**
1000 - 1100	0	0	**0**
1100 - 1200	0	0	**0**

	Volume Summary 60min		
Time	NB	SB	**Total**
1200 - 1300	0	0	**0**
1300 - 1400	0	0	**0**
1400 - 1500	0	0	**0**
1500 - 1600	0	0	**0**
1600 - 1700	0	0	**0**
1700 - 1800	0	0	**0**
1800 - 1900	0	0	**0**
1900 - 2000	0	617	**617**
2000 - 2100	0	587	**587**
2100 - 2200	0	498	**498**
2200 - 2300	0	354	**354**
2300 - 2400	0	202	**202**

Session Total	0	2258	**2258**
Session Average	0.00	94.08	**94.08**
Session Percentage	0.00	100.00	

Site 73

US-321 Hugher St S/Bound On-Ramp,
south of US-321 Elmwood Ave E/Bound On-Ramp

Date

Wednesday, May 1, 2024

Lat/Long

34.008892°, -81.051254°

Weather

Partly Cloudy
71°F

Click here for Detailed Weather

0000 - 2400 (Weekday 24h Session) (05-01-2024)

Volume Summary 60min

	Volume Summary 60min		
TIME	NB	SB	**Total**
0000 - 0100	0	111	**111**
0100 - 0200	0	76	**76**
0200 - 0300	0	56	**56**
0300 - 0400	0	62	**62**
0400 - 0500	0	112	**112**
0500 - 0600	0	320	**320**
0600 - 0700	0	792	**792**
0700 - 0800	0	1694	**1694**
0800 - 0900	0	2093	**2093**
0900 - 1000	0	1260	**1260**
1000 - 1100	0	1029	**1029**
1100 - 1200	0	1097	**1097**

Session Total	0	19911	**19911**
Session Average	0.00	829.63	**829.63**
Session Percentage	0.00	100.00	

	Volume Summary 60min		
Time	NB	SB	**Total**
1200 - 1300	0	1221	**1221**
1300 - 1400	0	1286	**1286**
1400 - 1500	0	1310	**1310**
1500 - 1600	0	1218	**1218**
1600 - 1700	0	1282	**1282**
1700 - 1800	0	1237	**1237**
1800 - 1900	0	978	**978**
1900 - 2000	0	777	**777**
2000 - 2100	0	763	**763**
2100 - 2200	0	562	**562**
2200 - 2300	0	357	**357**
2300 - 2400	0	218	**218**

Site 73

US-321 Hugher St S/Bound On-Ramp,
south of US-321 Elmwood Ave E/Bound On-Ramp

Date

Thursday, May 2, 2024

Lat/Long

34.008892°, -81.051254°

Weather

Fair
74°F

Click here for Detailed Weather

0000 - 2400 (Weekday 24h Session) (05-02-2024)

Volume Summary 60min

	Volume Summary 60min		
TIME	NB	SB	**Total**
0000 - 0100	0	116	**116**
0100 - 0200	0	58	**58**
0200 - 0300	0	55	**55**
0300 - 0400	0	63	**63**
0400 - 0500	0	100	**100**
0500 - 0600	0	338	**338**
0600 - 0700	0	786	**786**
0700 - 0800	0	1790	**1790**
0800 - 0900	0	1964	**1964**
0900 - 1000	0	1369	**1369**
1000 - 1100	0	1165	**1165**
1100 - 1200	0	1141	**1141**

Session Total	0	19354	**19354**
Session Average	0.00	806.42	**806.42**
Session Percentage	0.00	100.00	

	Volume Summary 60min		
Time	NB	SB	**Total**
1200 - 1300	0	1536	**1536**
1300 - 1400	0	1607	**1607**
1400 - 1500	0	1658	**1658**
1500 - 1600	0	1665	**1665**
1600 - 1700	0	1438	**1438**
1700 - 1800	0	1184	**1184**
1800 - 1900	0	1321	**1321**
1900 - 2000	0	0	**0**
2000 - 2100	0	0	**0**
2100 - 2200	0	0	**0**
2200 - 2300	0	0	**0**
2300 - 2400	0	0	**0**

Bi-Directional Class Count || Graphical Analysis SB WB

Columbia, SC

Marr Traffic DATA COLLECTION

www.marrtraffic.com

Site 73

US-321 Hugher St S/Bound On-Ramp,
south of US-321 Elmwood Ave E/Bound On-Ramp

Lat/Long

34.008892°, -81.051254°

0000 - 2400 (Weekday 24h Session)

Graphical Analysis SB WB

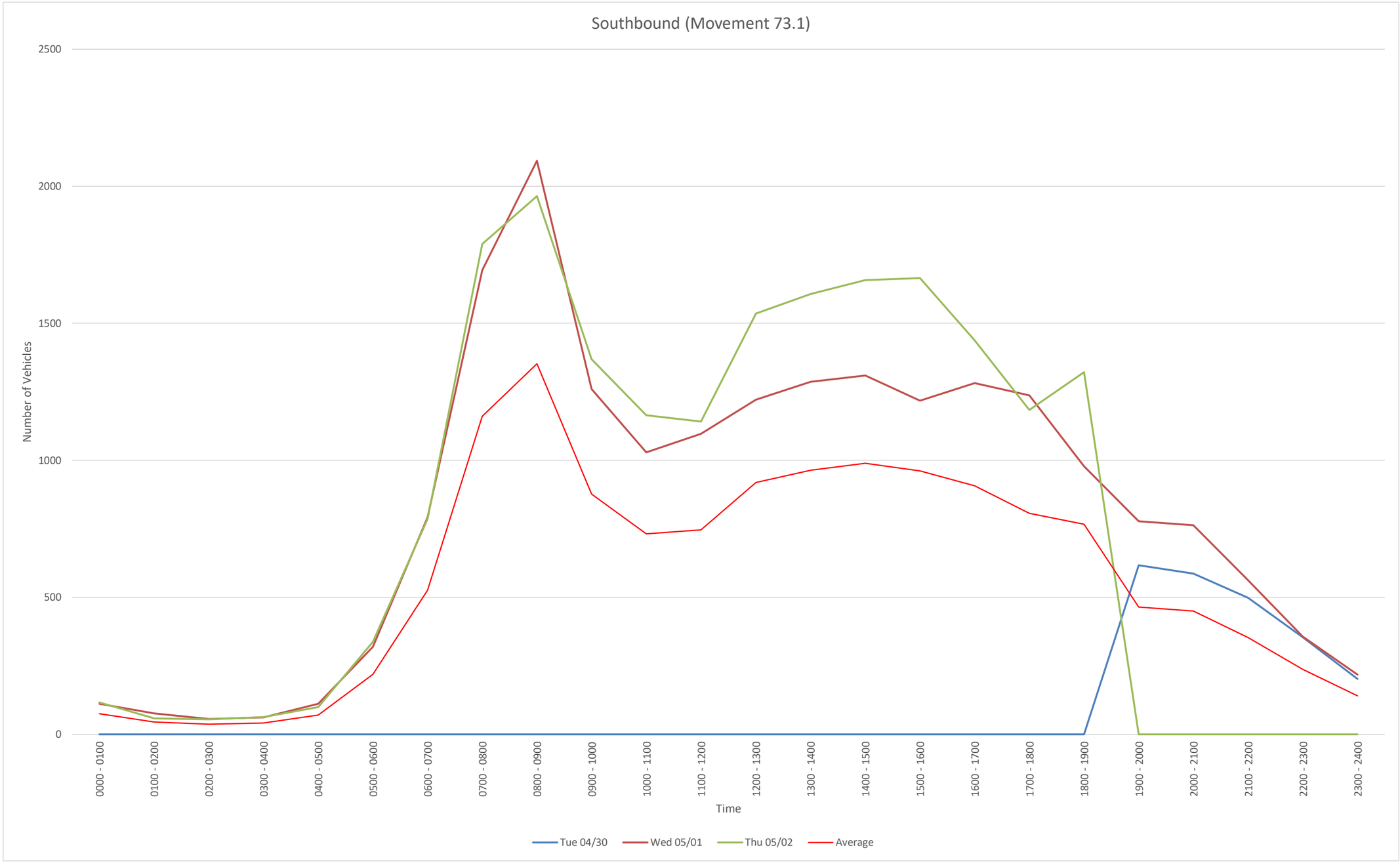

Time	Tue 04/30	Wed 05/01	Thu 05/02				
0000 - 0100	0	111	116				
0100 - 0200	0	76	58				
0200 - 0300	0	56	55				
0300 - 0400	0	62	63				
0400 - 0500	0	112	100				
0500 - 0600	0	320	338				
0600 - 0700	0	792	786				
0700 - 0800	0	1694	1790				
0800 - 0900	0	2093	1964				
0900 - 1000	0	1260	1369				
1000 - 1100	0	1029	1165				
1100 - 1200	0	1097	1141				
1200 - 1300	0	1221	1536				
1300 - 1400	0	1286	1607				
1400 - 1500	0	1310	1658				
1500 - 1600	0	1218	1665				
1600 - 1700	0	1282	1438				
1700 - 1800	0	1237	1184				
1800 - 1900	0	978	1321				
1900 - 2000	617	777	0				
2000 - 2100	587	763	0				
2100 - 2200	498	562	0				
2200 - 2300	354	357	0				
2300 - 2400	202	218	0				

Daily Total	2258	19911	19354				

NB
File Name:
Start Date: 4/30/2024
Start Time: 0
Site Code: 73
Station ID: 1
Location 1: US-321 Hugher St S/Bound On-Ramp, south of US-321 Elmwood Ave E/Bound On-Ramp
Location 2:

Date	Time	1	2	3	4	5	6	7	8	9	10	11	12	13
4/30/2024	12:00 AM	0	0	0	0	0	0	0	0	0	0	0	0	0
4/30/2024	12:15 AM	0	0	0	0	0	0	0	0	0	0	0	0	0
4/30/2024	12:30 AM	0	0	0	0	0	0	0	0	0	0	0	0	0
4/30/2024	12:45 AM	0	0	0	0	0	0	0	0	0	0	0	0	0
4/30/2024	1:00 AM	0	0	0	0	0	0	0	0	0	0	0	0	0
4/30/2024	1:15 AM	0	0	0	0	0	0	0	0	0	0	0	0	0
4/30/2024	1:30 AM	0	0	0	0	0	0	0	0	0	0	0	0	0
4/30/2024	1:45 AM	0	0	0	0	0	0	0	0	0	0	0	0	0
4/30/2024	2:00 AM	0	0	0	0	0	0	0	0	0	0	0	0	0
4/30/2024	2:15 AM	0	0	0	0	0	0	0	0	0	0	0	0	0
4/30/2024	2:30 AM	0	0	0	0	0	0	0	0	0	0	0	0	0
4/30/2024	2:45 AM	0	0	0	0	0	0	0	0	0	0	0	0	0
4/30/2024	3:00 AM	0	0	0	0	0	0	0	0	0	0	0	0	0
4/30/2024	3:15 AM	0	0	0	0	0	0	0	0	0	0	0	0	0
4/30/2024	3:30 AM	0	0	0	0	0	0	0	0	0	0	0	0	0
4/30/2024	3:45 AM	0	0	0	0	0	0	0	0	0	0	0	0	0
4/30/2024	4:00 AM	0	0	0	0	0	0	0	0	0	0	0	0	0
4/30/2024	4:15 AM	0	0	0	0	0	0	0	0	0	0	0	0	0
4/30/2024	4:30 AM	0	0	0	0	0	0	0	0	0	0	0	0	0
4/30/2024	4:45 AM	0	0	0	0	0	0	0	0	0	0	0	0	0
4/30/2024	5:00 AM	0	0	0	0	0	0	0	0	0	0	0	0	0
4/30/2024	5:15 AM	0	0	0	0	0	0	0	0	0	0	0	0	0
4/30/2024	5:30 AM	0	0	0	0	0	0	0	0	0	0	0	0	0
4/30/2024	5:45 AM	0	0	0	0	0	0	0	0	0	0	0	0	0
4/30/2024	6:00 AM	0	0	0	0	0	0	0	0	0	0	0	0	0
4/30/2024	6:15 AM	0	0	0	0	0	0	0	0	0	0	0	0	0
4/30/2024	6:30 AM	0	0	0	0	0	0	0	0	0	0	0	0	0
4/30/2024	6:45 AM	0	0	0	0	0	0	0	0	0	0	0	0	0
4/30/2024	7:00 AM	0	0	0	0	0	0	0	0	0	0	0	0	0
4/30/2024	7:15 AM	0	0	0	0	0	0	0	0	0	0	0	0	0
4/30/2024	7:30 AM	0	0	0	0	0	0	0	0	0	0	0	0	0
4/30/2024	7:45 AM	0	0	0	0	0	0	0	0	0	0	0	0	0
4/30/2024	8:00 AM	0	0	0	0	0	0	0	0	0	0	0	0	0
4/30/2024	8:15 AM	0	0	0	0	0	0	0	0	0	0	0	0	0
4/30/2024	8:30 AM	0	0	0	0	0	0	0	0	0	0	0	0	0
4/30/2024	8:45 AM	0	0	0	0	0	0	0	0	0	0	0	0	0
4/30/2024	9:00 AM	0	0	0	0	0	0	0	0	0	0	0	0	0
4/30/2024	9:15 AM	0	0	0	0	0	0	0	0	0	0	0	0	0
4/30/2024	9:30 AM	0	0	0	0	0	0	0	0	0	0	0	0	0
4/30/2024	9:45 AM	0	0	0	0	0	0	0	0	0	0	0	0	0
4/30/2024	10:00 AM	0	0	0	0	0	0	0	0	0	0	0	0	0
4/30/2024	10:15 AM	0	0	0	0	0	0	0	0	0	0	0	0	0
4/30/2024	10:30 AM	0	0	0	0	0	0	0	0	0	0	0	0	0
4/30/2024	10:45 AM	0	0	0	0	0	0	0	0	0	0	0	0	0
4/30/2024	11:00 AM	0	0	0	0	0	0	0	0	0	0	0	0	0
4/30/2024	11:15 AM	0	0	0	0	0	0	0	0	0	0	0	0	0
4/30/2024	11:30 AM	0	0	0	0	0	0	0	0	0	0	0	0	0
4/30/2024	11:45 AM	0	0	0	0	0	0	0	0	0	0	0	0	0
4/30/2024	12:00 PM	0	0	0	0	0	0	0	0	0	0	0	0	0
4/30/2024	12:15 PM	0	0	0	0	0	0	0	0	0	0	0	0	0
4/30/2024	12:30 PM	0	0	0	0	0	0	0	0	0	0	0	0	0
4/30/2024	12:45 PM	0	0	0	0	0	0	0	0	0	0	0	0	0
4/30/2024	1:00 PM	0	0	0	0	0	0	0	0	0	0	0	0	0
4/30/2024	1:15 PM	0	0	0	0	0	0	0	0	0	0	0	0	0
4/30/2024	1:30 PM	0	0	0	0	0	0	0	0	0	0	0	0	0
4/30/2024	1:45 PM	0	0	0	0	0	0	0	0	0	0	0	0	0
4/30/2024	2:00 PM	0	0	0	0	0	0	0	0	0	0	0	0	0
4/30/2024	2:15 PM	0	0	0	0	0	0	0	0	0	0	0	0	0
4/30/2024	2:30 PM	0	0	0	0	0	0	0	0	0	0	0	0	0
4/30/2024	2:45 PM	0	0	0	0	0	0	0	0	0	0	0	0	0
4/30/2024	3:00 PM	0	0	0	0	0	0	0	0	0	0	0	0	0
4/30/2024	3:15 PM	0	0	0	0	0	0	0	0	0	0	0	0	0
4/30/2024	3:30 PM	0	0	0	0	0	0	0	0	0	0	0	0	0
4/30/2024	3:45 PM	0	0	0	0	0	0	0	0	0	0	0	0	0
4/30/2024	4:00 PM	0	0	0	0	0	0	0	0	0	0	0	0	0
4/30/2024	4:15 PM	0	0	0	0	0	0	0	0	0	0	0	0	0
4/30/2024	4:30 PM	0	0	0	0	0	0	0	0	0	0	0	0	0
4/30/2024	4:45 PM	0	0	0	0	0	0	0	0	0	0	0	0	0
4/30/2024	5:00 PM	0	0	0	0	0	0	0	0	0	0	0	0	0
4/30/2024	5:15 PM	0	0	0	0	0	0	0	0	0	0	0	0	0
4/30/2024	5:30 PM	0	0	0	0	0	0	0	0	0	0	0	0	0
4/30/2024	5:45 PM	0	0	0	0	0	0	0	0	0	0	0	0	0
4/30/2024	6:00 PM	0	0	0	0	0	0	0	0	0	0	0	0	0
4/30/2024	6:15 PM	0	0	0	0	0	0	0	0	0	0	0	0	0
4/30/2024	6:30 PM	0	0	0	0	0	0	0	0	0	0	0	0	0
4/30/2024	6:45 PM	0	0	0	0	0	0	0	0	0	0	0	0	0
4/30/2024	7:00 PM	0	0	0	0	0	0	0	0	0	0	0	0	0
4/30/2024	7:15 PM	0	0	0	0	0	0	0	0	0	0	0	0	0
4/30/2024	7:30 PM	0	0	0	0	0	0	0	0	0	0	0	0	0
4/30/2024	7:45 PM	0	0	0	0	0	0	0	0	0	0	0	0	0
4/30/2024	8:00 PM	0	0	0	0	0	0	0	0	0	0	0	0	0
4/30/2024	8:15 PM	0	0	0	0	0	0	0	0	0	0	0	0	0
4/30/2024	8:30 PM	0	0	0	0	0	0	0	0	0	0	0	0	0
4/30/2024	8:45 PM	0	0	0	0	0	0	0	0	0	0	0	0	0
4/30/2024	9:00 PM	0	0	0	0	0	0	0	0	0	0	0	0	0
4/30/2024	9:15 PM	0	0	0	0	0	0	0	0	0	0	0	0	0
4/30/2024	9:30 PM	0	0	0	0	0	0	0	0	0	0	0	0	0
4/30/2024	9:45 PM	0	0	0	0	0	0	0	0	0	0	0	0	0
4/30/2024	10:00 PM	0	0	0	0	0	0	0	0	0	0	0	0	0
4/30/2024	10:15 PM	0	0	0	0	0	0	0	0	0	0	0	0	0
4/30/2024	10:30 PM	0	0	0	0	0	0	0	0	0	0	0	0	0
4/30/2024	10:45 PM	0	0	0	0	0	0	0	0	0	0	0	0	0
4/30/2024	11:00 PM	0	0	0	0	0	0	0	0	0	0	0	0	0
4/30/2024	11:15 PM	0	0	0	0	0	0	0	0	0	0	0	0	0
4/30/2024	11:30 PM	0	0	0	0	0	0	0	0	0	0	0	0	0
4/30/2024	11:45 PM	0	0	0	0	0	0	0	0	0	0	0	0	0

5/1/2024	12:00 AM	0	0	0	0	0	0	0	0	0	0	0	0	0
5/1/2024	12:15 AM	0	0	0	0	0	0	0	0	0	0	0	0	0
5/1/2024	12:30 AM	0	0	0	0	0	0	0	0	0	0	0	0	0
5/1/2024	12:45 AM	0	0	0	0	0	0	0	0	0	0	0	0	0
5/1/2024	1:00 AM	0	0	0	0	0	0	0	0	0	0	0	0	0
5/1/2024	1:15 AM	0	0	0	0	0	0	0	0	0	0	0	0	0
5/1/2024	1:30 AM	0	0	0	0	0	0	0	0	0	0	0	0	0
5/1/2024	1:45 AM	0	0	0	0	0	0	0	0	0	0	0	0	0
5/1/2024	2:00 AM	0	0	0	0	0	0	0	0	0	0	0	0	0
5/1/2024	2:15 AM	0	0	0	0	0	0	0	0	0	0	0	0	0
5/1/2024	2:30 AM	0	0	0	0	0	0	0	0	0	0	0	0	0
5/1/2024	2:45 AM	0	0	0	0	0	0	0	0	0	0	0	0	0
5/1/2024	3:00 AM	0	0	0	0	0	0	0	0	0	0	0	0	0
5/1/2024	3:15 AM	0	0	0	0	0	0	0	0	0	0	0	0	0
5/1/2024	3:30 AM	0	0	0	0	0	0	0	0	0	0	0	0	0
5/1/2024	3:45 AM	0	0	0	0	0	0	0	0	0	0	0	0	0
5/1/2024	4:00 AM	0	0	0	0	0	0	0	0	0	0	0	0	0
5/1/2024	4:15 AM	0	0	0	0	0	0	0	0	0	0	0	0	0
5/1/2024	4:30 AM	0	0	0	0	0	0	0	0	0	0	0	0	0
5/1/2024	4:45 AM	0	0	0	0	0	0	0	0	0	0	0	0	0
5/1/2024	5:00 AM	0	0	0	0	0	0	0	0	0	0	0	0	0
5/1/2024	5:15 AM	0	0	0	0	0	0	0	0	0	0	0	0	0
5/1/2024	5:30 AM	0	0	0	0	0	0	0	0	0	0	0	0	0
5/1/2024	5:45 AM	0	0	0	0	0	0	0	0	0	0	0	0	0
5/1/2024	6:00 AM	0	0	0	0	0	0	0	0	0	0	0	0	0
5/1/2024	6:15 AM	0	0	0	0	0	0	0	0	0	0	0	0	0
5/1/2024	6:30 AM	0	0	0	0	0	0	0	0	0	0	0	0	0
5/1/2024	6:45 AM	0	0	0	0	0	0	0	0	0	0	0	0	0
5/1/2024	7:00 AM	0	0	0	0	0	0	0	0	0	0	0	0	0
5/1/2024	7:15 AM	0	0	0	0	0	0	0	0	0	0	0	0	0
5/1/2024	7:30 AM	0	0	0	0	0	0	0	0	0	0	0	0	0
5/1/2024	7:45 AM	0	0	0	0	0	0	0	0	0	0	0	0	0
5/1/2024	8:00 AM	0	0	0	0	0	0	0	0	0	0	0	0	0
5/1/2024	8:15 AM	0	0	0	0	0	0	0	0	0	0	0	0	0
5/1/2024	8:30 AM	0	0	0	0	0	0	0	0	0	0	0	0	0
5/1/2024	8:45 AM	0	0	0	0	0	0	0	0	0	0	0	0	0
5/1/2024	9:00 AM	0	0	0	0	0	0	0	0	0	0	0	0	0
5/1/2024	9:15 AM	0	0	0	0	0	0	0	0	0	0	0	0	0
5/1/2024	9:30 AM	0	0	0	0	0	0	0	0	0	0	0	0	0
5/1/2024	9:45 AM	0	0	0	0	0	0	0	0	0	0	0	0	0
5/1/2024	10:00 AM	0	0	0	0	0	0	0	0	0	0	0	0	0
5/1/2024	10:15 AM	0	0	0	0	0	0	0	0	0	0	0	0	0
5/1/2024	10:30 AM	0	0	0	0	0	0	0	0	0	0	0	0	0
5/1/2024	10:45 AM	0	0	0	0	0	0	0	0	0	0	0	0	0
5/1/2024	11:00 AM	0	0	0	0	0	0	0	0	0	0	0	0	0
5/1/2024	11:15 AM	0	0	0	0	0	0	0	0	0	0	0	0	0
5/1/2024	11:30 AM	0	0	0	0	0	0	0	0	0	0	0	0	0
5/1/2024	11:45 AM	0	0	0	0	0	0	0	0	0	0	0	0	0
5/1/2024	12:00 PM	0	0	0	0	0	0	0	0	0	0	0	0	0
5/1/2024	12:15 PM	0	0	0	0	0	0	0	0	0	0	0	0	0
5/1/2024	12:30 PM	0	0	0	0	0	0	0	0	0	0	0	0	0
5/1/2024	12:45 PM	0	0	0	0	0	0	0	0	0	0	0	0	0
5/1/2024	1:00 PM	0	0	0	0	0	0	0	0	0	0	0	0	0
5/1/2024	1:15 PM	0	0	0	0	0	0	0	0	0	0	0	0	0
5/1/2024	1:30 PM	0	0	0	0	0	0	0	0	0	0	0	0	0
5/1/2024	1:45 PM	0	0	0	0	0	0	0	0	0	0	0	0	0
5/1/2024	2:00 PM	0	0	0	0	0	0	0	0	0	0	0	0	0
5/1/2024	2:15 PM	0	0	0	0	0	0	0	0	0	0	0	0	0
5/1/2024	2:30 PM	0	0	0	0	0	0	0	0	0	0	0	0	0
5/1/2024	2:45 PM	0	0	0	0	0	0	0	0	0	0	0	0	0
5/1/2024	3:00 PM	0	0	0	0	0	0	0	0	0	0	0	0	0
5/1/2024	3:15 PM	0	0	0	0	0	0	0	0	0	0	0	0	0
5/1/2024	3:30 PM	0	0	0	0	0	0	0	0	0	0	0	0	0
5/1/2024	3:45 PM	0	0	0	0	0	0	0	0	0	0	0	0	0
5/1/2024	4:00 PM	0	0	0	0	0	0	0	0	0	0	0	0	0
5/1/2024	4:15 PM	0	0	0	0	0	0	0	0	0	0	0	0	0
5/1/2024	4:30 PM	0	0	0	0	0	0	0	0	0	0	0	0	0
5/1/2024	4:45 PM	0	0	0	0	0	0	0	0	0	0	0	0	0
5/1/2024	5:00 PM	0	0	0	0	0	0	0	0	0	0	0	0	0
5/1/2024	5:15 PM	0	0	0	0	0	0	0	0	0	0	0	0	0
5/1/2024	5:30 PM	0	0	0	0	0	0	0	0	0	0	0	0	0
5/1/2024	5:45 PM	0	0	0	0	0	0	0	0	0	0	0	0	0
5/1/2024	6:00 PM	0	0	0	0	0	0	0	0	0	0	0	0	0
5/1/2024	6:15 PM	0	0	0	0	0	0	0	0	0	0	0	0	0
5/1/2024	6:30 PM	0	0	0	0	0	0	0	0	0	0	0	0	0
5/1/2024	6:45 PM	0	0	0	0	0	0	0	0	0	0	0	0	0
5/1/2024	7:00 PM	0	0	0	0	0	0	0	0	0	0	0	0	0
5/1/2024	7:15 PM	0	0	0	0	0	0	0	0	0	0	0	0	0
5/1/2024	7:30 PM	0	0	0	0	0	0	0	0	0	0	0	0	0
5/1/2024	7:45 PM	0	0	0	0	0	0	0	0	0	0	0	0	0
5/1/2024	8:00 PM	0	0	0	0	0	0	0	0	0	0	0	0	0
5/1/2024	8:15 PM	0	0	0	0	0	0	0	0	0	0	0	0	0
5/1/2024	8:30 PM	0	0	0	0	0	0	0	0	0	0	0	0	0
5/1/2024	8:45 PM	0	0	0	0	0	0	0	0	0	0	0	0	0
5/1/2024	9:00 PM	0	0	0	0	0	0	0	0	0	0	0	0	0
5/1/2024	9:15 PM	0	0	0	0	0	0	0	0	0	0	0	0	0
5/1/2024	9:30 PM	0	0	0	0	0	0	0	0	0	0	0	0	0
5/1/2024	9:45 PM	0	0	0	0	0	0	0	0	0	0	0	0	0
5/1/2024	10:00 PM	0	0	0	0	0	0	0	0	0	0	0	0	0
5/1/2024	10:15 PM	0	0	0	0	0	0	0	0	0	0	0	0	0
5/1/2024	10:30 PM	0	0	0	0	0	0	0	0	0	0	0	0	0
5/1/2024	10:45 PM	0	0	0	0	0	0	0	0	0	0	0	0	0
5/1/2024	11:00 PM	0	0	0	0	0	0	0	0	0	0	0	0	0
5/1/2024	11:15 PM	0	0	0	0	0	0	0	0	0	0	0	0	0
5/1/2024	11:30 PM	0	0	0	0	0	0	0	0	0	0	0	0	0
5/1/2024	11:45 PM	0	0	0	0	0	0	0	0	0	0	0	0	0

5/2/2024	12:00 AM	0	0	0	0	0	0	0	0	0	0	0	0	0
5/2/2024	12:15 AM	0	0	0	0	0	0	0	0	0	0	0	0	0
5/2/2024	12:30 AM	0	0	0	0	0	0	0	0	0	0	0	0	0
5/2/2024	12:45 AM	0	0	0	0	0	0	0	0	0	0	0	0	0
5/2/2024	1:00 AM	0	0	0	0	0	0	0	0	0	0	0	0	0
5/2/2024	1:15 AM	0	0	0	0	0	0	0	0	0	0	0	0	0
5/2/2024	1:30 AM	0	0	0	0	0	0	0	0	0	0	0	0	0
5/2/2024	1:45 AM	0	0	0	0	0	0	0	0	0	0	0	0	0
5/2/2024	2:00 AM	0	0	0	0	0	0	0	0	0	0	0	0	0
5/2/2024	2:15 AM	0	0	0	0	0	0	0	0	0	0	0	0	0
5/2/2024	2:30 AM	0	0	0	0	0	0	0	0	0	0	0	0	0
5/2/2024	2:45 AM	0	0	0	0	0	0	0	0	0	0	0	0	0
5/2/2024	3:00 AM	0	0	0	0	0	0	0	0	0	0	0	0	0
5/2/2024	3:15 AM	0	0	0	0	0	0	0	0	0	0	0	0	0
5/2/2024	3:30 AM	0	0	0	0	0	0	0	0	0	0	0	0	0
5/2/2024	3:45 AM	0	0	0	0	0	0	0	0	0	0	0	0	0
5/2/2024	4:00 AM	0	0	0	0	0	0	0	0	0	0	0	0	0
5/2/2024	4:15 AM	0	0	0	0	0	0	0	0	0	0	0	0	0
5/2/2024	4:30 AM	0	0	0	0	0	0	0	0	0	0	0	0	0
5/2/2024	4:45 AM	0	0	0	0	0	0	0	0	0	0	0	0	0
5/2/2024	5:00 AM	0	0	0	0	0	0	0	0	0	0	0	0	0
5/2/2024	5:15 AM	0	0	0	0	0	0	0	0	0	0	0	0	0
5/2/2024	5:30 AM	0	0	0	0	0	0	0	0	0	0	0	0	0
5/2/2024	5:45 AM	0	0	0	0	0	0	0	0	0	0	0	0	0
5/2/2024	6:00 AM	0	0	0	0	0	0	0	0	0	0	0	0	0
5/2/2024	6:15 AM	0	0	0	0	0	0	0	0	0	0	0	0	0
5/2/2024	6:30 AM	0	0	0	0	0	0	0	0	0	0	0	0	0
5/2/2024	6:45 AM	0	0	0	0	0	0	0	0	0	0	0	0	0
5/2/2024	7:00 AM	0	0	0	0	0	0	0	0	0	0	0	0	0
5/2/2024	7:15 AM	0	0	0	0	0	0	0	0	0	0	0	0	0
5/2/2024	7:30 AM	0	0	0	0	0	0	0	0	0	0	0	0	0
5/2/2024	7:45 AM	0	0	0	0	0	0	0	0	0	0	0	0	0
5/2/2024	8:00 AM	0	0	0	0	0	0	0	0	0	0	0	0	0
5/2/2024	8:15 AM	0	0	0	0	0	0	0	0	0	0	0	0	0
5/2/2024	8:30 AM	0	0	0	0	0	0	0	0	0	0	0	0	0
5/2/2024	8:45 AM	0	0	0	0	0	0	0	0	0	0	0	0	0
5/2/2024	9:00 AM	0	0	0	0	0	0	0	0	0	0	0	0	0
5/2/2024	9:15 AM	0	0	0	0	0	0	0	0	0	0	0	0	0
5/2/2024	9:30 AM	0	0	0	0	0	0	0	0	0	0	0	0	0
5/2/2024	9:45 AM	0	0	0	0	0	0	0	0	0	0	0	0	0
5/2/2024	10:00 AM	0	0	0	0	0	0	0	0	0	0	0	0	0
5/2/2024	10:15 AM	0	0	0	0	0	0	0	0	0	0	0	0	0
5/2/2024	10:30 AM	0	0	0	0	0	0	0	0	0	0	0	0	0
5/2/2024	10:45 AM	0	0	0	0	0	0	0	0	0	0	0	0	0
5/2/2024	11:00 AM	0	0	0	0	0	0	0	0	0	0	0	0	0
5/2/2024	11:15 AM	0	0	0	0	0	0	0	0	0	0	0	0	0
5/2/2024	11:30 AM	0	0	0	0	0	0	0	0	0	0	0	0	0
5/2/2024	11:45 AM	0	0	0	0	0	0	0	0	0	0	0	0	0
5/2/2024	12:00 PM	0	0	0	0	0	0	0	0	0	0	0	0	0
5/2/2024	12:15 PM	0	0	0	0	0	0	0	0	0	0	0	0	0
5/2/2024	12:30 PM	0	0	0	0	0	0	0	0	0	0	0	0	0
5/2/2024	12:45 PM	0	0	0	0	0	0	0	0	0	0	0	0	0
5/2/2024	1:00 PM	0	0	0	0	0	0	0	0	0	0	0	0	0
5/2/2024	1:15 PM	0	0	0	0	0	0	0	0	0	0	0	0	0
5/2/2024	1:30 PM	0	0	0	0	0	0	0	0	0	0	0	0	0
5/2/2024	1:45 PM	0	0	0	0	0	0	0	0	0	0	0	0	0
5/2/2024	2:00 PM	0	0	0	0	0	0	0	0	0	0	0	0	0
5/2/2024	2:15 PM	0	0	0	0	0	0	0	0	0	0	0	0	0
5/2/2024	2:30 PM	0	0	0	0	0	0	0	0	0	0	0	0	0
5/2/2024	2:45 PM	0	0	0	0	0	0	0	0	0	0	0	0	0
5/2/2024	3:00 PM	0	0	0	0	0	0	0	0	0	0	0	0	0
5/2/2024	3:15 PM	0	0	0	0	0	0	0	0	0	0	0	0	0
5/2/2024	3:30 PM	0	0	0	0	0	0	0	0	0	0	0	0	0
5/2/2024	3:45 PM	0	0	0	0	0	0	0	0	0	0	0	0	0
5/2/2024	4:00 PM	0	0	0	0	0	0	0	0	0	0	0	0	0
5/2/2024	4:15 PM	0	0	0	0	0	0	0	0	0	0	0	0	0
5/2/2024	4:30 PM	0	0	0	0	0	0	0	0	0	0	0	0	0
5/2/2024	4:45 PM	0	0	0	0	0	0	0	0	0	0	0	0	0
5/2/2024	5:00 PM	0	0	0	0	0	0	0	0	0	0	0	0	0
5/2/2024	5:15 PM	0	0	0	0	0	0	0	0	0	0	0	0	0
5/2/2024	5:30 PM	0	0	0	0	0	0	0	0	0	0	0	0	0
5/2/2024	5:45 PM	0	0	0	0	0	0	0	0	0	0	0	0	0
5/2/2024	6:00 PM	0	0	0	0	0	0	0	0	0	0	0	0	0
5/2/2024	6:15 PM	0	0	0	0	0	0	0	0	0	0	0	0	0
5/2/2024	6:30 PM	0	0	0	0	0	0	0	0	0	0	0	0	0
5/2/2024	6:45 PM	0	0	0	0	0	0	0	0	0	0	0	0	0
5/2/2024	7:00 PM	0	0	0	0	0	0	0	0	0	0	0	0	0
5/2/2024	7:15 PM	0	0	0	0	0	0	0	0	0	0	0	0	0
5/2/2024	7:30 PM	0	0	0	0	0	0	0	0	0	0	0	0	0
5/2/2024	7:45 PM	0	0	0	0	0	0	0	0	0	0	0	0	0
5/2/2024	8:00 PM	0	0	0	0	0	0	0	0	0	0	0	0	0
5/2/2024	8:15 PM	0	0	0	0	0	0	0	0	0	0	0	0	0
5/2/2024	8:30 PM	0	0	0	0	0	0	0	0	0	0	0	0	0
5/2/2024	8:45 PM	0	0	0	0	0	0	0	0	0	0	0	0	0
5/2/2024	9:00 PM	0	0	0	0	0	0	0	0	0	0	0	0	0
5/2/2024	9:15 PM	0	0	0	0	0	0	0	0	0	0	0	0	0
5/2/2024	9:30 PM	0	0	0	0	0	0	0	0	0	0	0	0	0
5/2/2024	9:45 PM	0	0	0	0	0	0	0	0	0	0	0	0	0
5/2/2024	10:00 PM	0	0	0	0	0	0	0	0	0	0	0	0	0
5/2/2024	10:15 PM	0	0	0	0	0	0	0	0	0	0	0	0	0
5/2/2024	10:30 PM	0	0	0	0	0	0	0	0	0	0	0	0	0
5/2/2024	10:45 PM	0	0	0	0	0	0	0	0	0	0	0	0	0
5/2/2024	11:00 PM	0	0	0	0	0	0	0	0	0	0	0	0	0
5/2/2024	11:15 PM	0	0	0	0	0	0	0	0	0	0	0	0	0
5/2/2024	11:30 PM	0	0	0	0	0	0	0	0	0	0	0	0	0
5/2/2024	11:45 PM	0	0	0	0	0	0	0	0	0	0	0	0	0

SB
File Name:
Start Date: 4/30/2024
Start Time: 0
Site Code: 73
Station ID: 1
Location 1: US-321 Hugher St S/Bound On-Ramp, south of US-321 Elmwood Ave E/Bound On-Ramp
Location 2:

Date	Time	1	2	3	4	5	6	7	8	9	10	11	12	13
4/30/2024	12:00 AM	0	0	0	0	0	0	0	0	0	0	0	0	0
4/30/2024	12:15 AM	0	0	0	0	0	0	0	0	0	0	0	0	0
4/30/2024	12:30 AM	0	0	0	0	0	0	0	0	0	0	0	0	0
4/30/2024	12:45 AM	0	0	0	0	0	0	0	0	0	0	0	0	0
4/30/2024	1:00 AM	0	0	0	0	0	0	0	0	0	0	0	0	0
4/30/2024	1:15 AM	0	0	0	0	0	0	0	0	0	0	0	0	0
4/30/2024	1:30 AM	0	0	0	0	0	0	0	0	0	0	0	0	0
4/30/2024	1:45 AM	0	0	0	0	0	0	0	0	0	0	0	0	0
4/30/2024	2:00 AM	0	0	0	0	0	0	0	0	0	0	0	0	0
4/30/2024	2:15 AM	0	0	0	0	0	0	0	0	0	0	0	0	0
4/30/2024	2:30 AM	0	0	0	0	0	0	0	0	0	0	0	0	0
4/30/2024	2:45 AM	0	0	0	0	0	0	0	0	0	0	0	0	0
4/30/2024	3:00 AM	0	0	0	0	0	0	0	0	0	0	0	0	0
4/30/2024	3:15 AM	0	0	0	0	0	0	0	0	0	0	0	0	0
4/30/2024	3:30 AM	0	0	0	0	0	0	0	0	0	0	0	0	0
4/30/2024	3:45 AM	0	0	0	0	0	0	0	0	0	0	0	0	0
4/30/2024	4:00 AM	0	0	0	0	0	0	0	0	0	0	0	0	0
4/30/2024	4:15 AM	0	0	0	0	0	0	0	0	0	0	0	0	0
4/30/2024	4:30 AM	0	0	0	0	0	0	0	0	0	0	0	0	0
4/30/2024	4:45 AM	0	0	0	0	0	0	0	0	0	0	0	0	0
4/30/2024	5:00 AM	0	0	0	0	0	0	0	0	0	0	0	0	0
4/30/2024	5:15 AM	0	0	0	0	0	0	0	0	0	0	0	0	0
4/30/2024	5:30 AM	0	0	0	0	0	0	0	0	0	0	0	0	0
4/30/2024	5:45 AM	0	0	0	0	0	0	0	0	0	0	0	0	0
4/30/2024	6:00 AM	0	0	0	0	0	0	0	0	0	0	0	0	0
4/30/2024	6:15 AM	0	0	0	0	0	0	0	0	0	0	0	0	0
4/30/2024	6:30 AM	0	0	0	0	0	0	0	0	0	0	0	0	0
4/30/2024	6:45 AM	0	0	0	0	0	0	0	0	0	0	0	0	0
4/30/2024	7:00 AM	0	0	0	0	0	0	0	0	0	0	0	0	0
4/30/2024	7:15 AM	0	0	0	0	0	0	0	0	0	0	0	0	0
4/30/2024	7:30 AM	0	0	0	0	0	0	0	0	0	0	0	0	0
4/30/2024	7:45 AM	0	0	0	0	0	0	0	0	0	0	0	0	0
4/30/2024	8:00 AM	0	0	0	0	0	0	0	0	0	0	0	0	0
4/30/2024	8:15 AM	0	0	0	0	0	0	0	0	0	0	0	0	0
4/30/2024	8:30 AM	0	0	0	0	0	0	0	0	0	0	0	0	0
4/30/2024	8:45 AM	0	0	0	0	0	0	0	0	0	0	0	0	0
4/30/2024	9:00 AM	0	0	0	0	0	0	0	0	0	0	0	0	0
4/30/2024	9:15 AM	0	0	0	0	0	0	0	0	0	0	0	0	0
4/30/2024	9:30 AM	0	0	0	0	0	0	0	0	0	0	0	0	0
4/30/2024	9:45 AM	0	0	0	0	0	0	0	0	0	0	0	0	0
4/30/2024	10:00 AM	0	0	0	0	0	0	0	0	0	0	0	0	0
4/30/2024	10:15 AM	0	0	0	0	0	0	0	0	0	0	0	0	0
4/30/2024	10:30 AM	0	0	0	0	0	0	0	0	0	0	0	0	0
4/30/2024	10:45 AM	0	0	0	0	0	0	0	0	0	0	0	0	0
4/30/2024	11:00 AM	0	0	0	0	0	0	0	0	0	0	0	0	0
4/30/2024	11:15 AM	0	0	0	0	0	0	0	0	0	0	0	0	0
4/30/2024	11:30 AM	0	0	0	0	0	0	0	0	0	0	0	0	0
4/30/2024	11:45 AM	0	0	0	0	0	0	0	0	0	0	0	0	0
4/30/2024	12:00 PM	0	0	0	0	0	0	0	0	0	0	0	0	0
4/30/2024	12:15 PM	0	0	0	0	0	0	0	0	0	0	0	0	0
4/30/2024	12:30 PM	0	0	0	0	0	0	0	0	0	0	0	0	0
4/30/2024	12:45 PM	0	0	0	0	0	0	0	0	0	0	0	0	0
4/30/2024	1:00 PM	0	0	0	0	0	0	0	0	0	0	0	0	0
4/30/2024	1:15 PM	0	0	0	0	0	0	0	0	0	0	0	0	0
4/30/2024	1:30 PM	0	0	0	0	0	0	0	0	0	0	0	0	0
4/30/2024	1:45 PM	0	0	0	0	0	0	0	0	0	0	0	0	0
4/30/2024	2:00 PM	0	0	0	0	0	0	0	0	0	0	0	0	0
4/30/2024	2:15 PM	0	0	0	0	0	0	0	0	0	0	0	0	0
4/30/2024	2:30 PM	0	0	0	0	0	0	0	0	0	0	0	0	0
4/30/2024	2:45 PM	0	0	0	0	0	0	0	0	0	0	0	0	0
4/30/2024	3:00 PM	0	0	0	0	0	0	0	0	0	0	0	0	0
4/30/2024	3:15 PM	0	0	0	0	0	0	0	0	0	0	0	0	0
4/30/2024	3:30 PM	0	0	0	0	0	0	0	0	0	0	0	0	0
4/30/2024	3:45 PM	0	0	0	0	0	0	0	0	0	0	0	0	0
4/30/2024	4:00 PM	0	0	0	0	0	0	0	0	0	0	0	0	0
4/30/2024	4:15 PM	0	0	0	0	0	0	0	0	0	0	0	0	0
4/30/2024	4:30 PM	0	0	0	0	0	0	0	0	0	0	0	0	0
4/30/2024	4:45 PM	0	0	0	0	0	0	0	0	0	0	0	0	0
4/30/2024	5:00 PM	0	0	0	0	0	0	0	0	0	0	0	0	0
4/30/2024	5:15 PM	0	0	0	0	0	0	0	0	0	0	0	0	0
4/30/2024	5:30 PM	0	0	0	0	0	0	0	0	0	0	0	0	0
4/30/2024	5:45 PM	0	0	0	0	0	0	0	0	0	0	0	0	0
4/30/2024	6:00 PM	0	0	0	0	0	0	0	0	0	0	0	0	0
4/30/2024	6:15 PM	0	0	0	0	0	0	0	0	0	0	0	0	0
4/30/2024	6:30 PM	0	0	0	0	0	0	0	0	0	0	0	0	0
4/30/2024	6:45 PM	0	0	0	0	0	0	0	0	0	0	0	0	0
4/30/2024	7:00 PM	0	151	22	0	0	1	0	0	0	0	0	0	0
4/30/2024	7:15 PM	1	156	20	0	3	0	0	0	1	0	0	0	0
4/30/2024	7:30 PM	1	146	10	0	0	0	0	0	0	0	0	0	0
4/30/2024	7:45 PM	0	89	16	0	0	0	0	0	0	0	0	0	0
4/30/2024	8:00 PM	0	138	26	0	2	0	0	0	1	0	0	0	0
4/30/2024	8:15 PM	0	123	19	0	0	0	0	0	0	0	0	0	0
4/30/2024	8:30 PM	0	111	27	0	1	0	0	0	0	0	0	0	0
4/30/2024	8:45 PM	1	113	24	0	1	0	0	0	0	0	0	0	0
4/30/2024	9:00 PM	0	110	27	0	0	0	0	0	1	0	0	0	0
4/30/2024	9:15 PM	0	107	20	0	2	0	0	0	0	0	0	0	0
4/30/2024	9:30 PM	0	101	21	0	4	0	0	0	0	0	0	0	0
4/30/2024	9:45 PM	0	84	18	0	1	0	0	0	2	0	0	0	0
4/30/2024	10:00 PM	0	82	21	0	0	0	0	0	0	0	0	0	0
4/30/2024	10:15 PM	0	66	17	0	2	0	0	0	1	0	0	0	0
4/30/2024	10:30 PM	0	75	13	0	1	0	0	0	1	0	0	0	0
4/30/2024	10:45 PM	0	61	13	0	0	0	0	0	1	0	0	0	0
4/30/2024	11:00 PM	0	50	11	0	2	0	0	0	0	0	0	0	0
4/30/2024	11:15 PM	0	28	10	0	0	0	0	0	0	0	0	0	0
4/30/2024	11:30 PM	0	46	12	0	1	0	0	0	1	0	0	0	0
4/30/2024	11:45 PM	0	33	7	0	0	0	0	0	1	0	0	0	0

5/1/2024	12:00 AM	0	37	3	0	0	0	0	0	0	0	0	0
5/1/2024	12:15 AM	0	24	1	0	0	0	0	0	0	0	0	0
5/1/2024	12:30 AM	0	22	1	0	0	0	0	0	0	0	0	0
5/1/2024	12:45 AM	0	21	1	0	0	0	0	0	1	0	0	0
5/1/2024	1:00 AM	0	15	2	0	1	1	0	0	1	0	0	0
5/1/2024	1:15 AM	0	17	1	0	0	0	0	0	1	0	0	0
5/1/2024	1:30 AM	0	15	3	0	0	0	0	0	1	0	0	0
5/1/2024	1:45 AM	0	16	2	0	0	0	0	0	0	0	0	0
5/1/2024	2:00 AM	0	7	0	0	0	0	0	0	0	0	0	0
5/1/2024	2:15 AM	0	18	0	0	0	0	0	0	0	0	0	0
5/1/2024	2:30 AM	0	13	2	0	0	0	0	0	0	0	0	0
5/1/2024	2:45 AM	0	15	0	0	0	0	0	1	0	0	0	0
5/1/2024	3:00 AM	0	14	1	0	0	0	0	0	0	0	0	0
5/1/2024	3:15 AM	0	14	1	0	0	0	0	0	0	0	0	0
5/1/2024	3:30 AM	0	9	1	0	1	1	0	0	1	0	0	0
5/1/2024	3:45 AM	0	16	2	0	1	0	0	0	0	0	0	0
5/1/2024	4:00 AM	0	17	2	0	0	0	0	0	0	0	0	0
5/1/2024	4:15 AM	0	17	2	0	0	0	0	0	0	0	0	0
5/1/2024	4:30 AM	0	23	1	0	2	0	0	0	4	0	0	0
5/1/2024	4:45 AM	0	35	4	0	2	2	0	0	1	0	0	0
5/1/2024	5:00 AM	0	40	3	0	2	0	0	0	0	0	0	0
5/1/2024	5:15 AM	1	56	7	0	3	1	0	0	1	0	0	0
5/1/2024	5:30 AM	0	85	10	0	5	1	0	0	1	0	0	1	0
5/1/2024	5:45 AM	1	72	16	0	3	9	0	0	2	0	0	0	0
5/1/2024	6:00 AM	0	72	18	0	0	4	0	1	5	0	0	0	0
5/1/2024	6:15 AM	1	112	40	0	2	2	0	0	1	0	0	0	0
5/1/2024	6:30 AM	1	169	65	0	1	1	0	0	0	0	0	0	0
5/1/2024	6:45 AM	0	223	65	1	4	3	0	1	0	0	0	0	0
5/1/2024	7:00 AM	2	237	69	3	2	5	0	1	4	0	1	0	0
5/1/2024	7:15 AM	0	307	92	6	1	2	0	0	3	0	0	0	0
5/1/2024	7:30 AM	1	361	87	1	2	1	0	1	1	0	0	1	0
5/1/2024	7:45 AM	0	418	80	1	2	1	0	0	1	0	0	0	0
5/1/2024	8:00 AM	0	444	82	2	2	1	0	3	0	0	0	0	0
5/1/2024	8:15 AM	1	447	81	1	6	2	0	0	2	0	0	0	0
5/1/2024	8:30 AM	0	444	76	0	5	1	0	1	5	0	0	0	0
5/1/2024	8:45 AM	3	409	66	2	1	1	0	0	5	0	0	0	0
5/1/2024	9:00 AM	1	283	55	6	7	2	0	0	5	0	0	0	0
5/1/2024	9:15 AM	0	235	49	1	2	2	0	0	3	0	0	0	0
5/1/2024	9:30 AM	0	252	47	5	9	2	0	0	1	0	0	0	0
5/1/2024	9:45 AM	0	242	41	0	8	1	0	0	1	0	0	0	0
5/1/2024	10:00 AM	0	217	47	0	2	2	0	0	2	0	0	0	0
5/1/2024	10:15 AM	0	188	42	0	2	0	0	0	2	0	0	0	0
5/1/2024	10:30 AM	0	229	41	0	3	3	0	1	3	0	0	0	0
5/1/2024	10:45 AM	0	203	30	0	5	3	0	1	3	0	0	0	0
5/1/2024	11:00 AM	0	218	39	0	5	4	0	0	2	0	0	0	0
5/1/2024	11:15 AM	0	211	41	0	5	1	0	0	3	0	0	0	0
5/1/2024	11:30 AM	0	202	48	0	3	1	0	0	4	0	0	0	0
5/1/2024	11:45 AM	0	254	46	0	5	3	0	0	2	0	0	0	0
5/1/2024	12:00 PM	1	228	45	0	2	0	0	0	3	0	0	0	0
5/1/2024	12:15 PM	0	270	48	0	3	3	0	0	2	0	0	0	0
5/1/2024	12:30 PM	1	251	53	0	7	1	0	0	1	0	0	0	0
5/1/2024	12:45 PM	0	233	57	0	7	4	0	0	1	0	0	0	0
5/1/2024	1:00 PM	1	266	41	0	6	2	0	2	2	0	0	0	0
5/1/2024	1:15 PM	1	259	44	0	3	1	0	2	3	0	0	0	0
5/1/2024	1:30 PM	0	272	32	0	1	3	0	1	4	0	0	0	0
5/1/2024	1:45 PM	0	279	51	0	7	2	0	0	1	0	0	0	0
5/1/2024	2:00 PM	0	278	40	0	4	6	0	0	3	0	0	0	0
5/1/2024	2:15 PM	1	315	58	0	1	1	0	1	5	0	0	0	0
5/1/2024	2:30 PM	1	256	56	0	6	4	0	0	1	0	0	0	0
5/1/2024	2:45 PM	0	228	35	1	5	2	0	0	2	0	0	0	0
5/1/2024	3:00 PM	0	249	45	1	1	0	0	1	1	0	0	0	0
5/1/2024	3:15 PM	0	248	32	0	6	2	0	0	0	0	0	0	0
5/1/2024	3:30 PM	1	287	47	0	4	3	0	0	2	0	0	0	0
5/1/2024	3:45 PM	0	242	39	2	3	0	0	0	2	0	0	0	0
5/1/2024	4:00 PM	1	253	32	1	7	0	0	0	0	0	0	0	0
5/1/2024	4:15 PM	0	253	36	1	4	2	0	1	1	0	0	0	0
5/1/2024	4:30 PM	0	303	40	0	3	0	0	0	0	0	0	0	0
5/1/2024	4:45 PM	2	297	43	1	0	0	0	0	1	0	0	0	0
5/1/2024	5:00 PM	1	279	33	0	3	1	0	0	0	0	0	0	0
5/1/2024	5:15 PM	0	286	41	0	2	0	0	0	2	0	0	0	0
5/1/2024	5:30 PM	0	223	44	0	1	1	0	0	1	0	0	0	0
5/1/2024	5:45 PM	2	272	42	0	1	2	0	0	0	0	0	0	0
5/1/2024	6:00 PM	2	213	39	0	3	0	0	0	0	0	0	0	0
5/1/2024	6:15 PM	1	226	30	0	1	1	0	0	1	0	0	0	0
5/1/2024	6:30 PM	1	205	22	0	1	0	0	0	0	0	0	0	0
5/1/2024	6:45 PM	2	204	25	0	1	0	0	0	0	0	0	0	0
5/1/2024	7:00 PM	0	192	20	0	1	0	0	1	1	0	0	0	0
5/1/2024	7:15 PM	0	189	24	0	0	0	0	0	0	0	0	0	0
5/1/2024	7:30 PM	0	179	16	0	0	0	0	0	0	0	0	0	0
5/1/2024	7:45 PM	0	134	17	0	1	0	0	1	1	0	0	0	0
5/1/2024	8:00 PM	0	162	10	0	2	0	0	0	1	0	0	0	0
5/1/2024	8:15 PM	0	170	19	0	1	0	0	0	1	0	0	0	0
5/1/2024	8:30 PM	3	189	15	0	0	0	0	0	0	0	0	0	0
5/1/2024	8:45 PM	1	179	8	0	2	0	0	0	0	0	0	0	0
5/1/2024	9:00 PM	0	160	9	0	0	0	0	0	0	0	0	0	0
5/1/2024	9:15 PM	1	117	9	1	0	0	0	0	0	0	0	0	0
5/1/2024	9:30 PM	0	134	8	0	0	0	0	0	0	0	0	0	0
5/1/2024	9:45 PM	0	114	8	0	0	1	0	0	0	0	0	0	0
5/1/2024	10:00 PM	1	91	5	0	1	0	0	0	1	0	0	0	0
5/1/2024	10:15 PM	0	94	2	0	2	0	0	0	0	0	0	0	0
5/1/2024	10:30 PM	0	77	5	0	1	0	0	0	0	0	0	0	0
5/1/2024	10:45 PM	0	75	1	0	1	0	0	0	0	0	0	0	0
5/1/2024	11:00 PM	0	65	2	0	0	1	0	0	0	0	0	0	0
5/1/2024	11:15 PM	0	49	1	0	2	0	0	0	1	0	0	0	0
5/1/2024	11:30 PM	0	44	1	0	1	0	0	0	0	0	0	0	0
5/1/2024	11:45 PM	0	50	1	0	0	0	0	0	0	0	0	0	0

5/2/2024	12:00 AM	0	33	3	0	0	0	0	0	1	0	0	0	0
5/2/2024	12:15 AM	0	20	1	0	1	1	0	0	0	0	0	0	0
5/2/2024	12:30 AM	0	20	0	0	2	0	0	0	0	0	0	0	0
5/2/2024	12:45 AM	0	33	1	0	0	0	0	0	0	0	0	0	0
5/2/2024	1:00 AM	0	18	0	0	0	0	0	0	0	0	0	0	0
5/2/2024	1:15 AM	0	12	3	0	0	0	0	0	0	0	0	0	0
5/2/2024	1:30 AM	0	11	1	0	0	0	0	0	0	0	0	0	0
5/2/2024	1:45 AM	0	12	1	0	0	0	0	0	0	0	0	0	0
5/2/2024	2:00 AM	0	10	2	0	0	0	0	0	1	0	0	0	0
5/2/2024	2:15 AM	0	14	1	0	1	0	0	0	1	0	0	0	0
5/2/2024	2:30 AM	0	12	2	0	1	0	0	0	1	0	0	0	0
5/2/2024	2:45 AM	0	9	0	0	0	0	0	0	0	0	0	0	0
5/2/2024	3:00 AM	0	9	0	0	0	0	0	0	1	0	0	0	0
5/2/2024	3:15 AM	0	13	1	0	0	0	0	0	1	0	0	0	0
5/2/2024	3:30 AM	0	16	3	0	0	0	0	0	0	0	0	0	0
5/2/2024	3:45 AM	0	15	2	0	1	0	1	0	0	0	0	0	0
5/2/2024	4:00 AM	0	17	0	0	1	0	0	0	0	0	0	0	0
5/2/2024	4:15 AM	0	23	0	0	0	0	0	0	0	0	0	0	0
5/2/2024	4:30 AM	0	22	1	0	0	0	0	0	0	0	0	0	0
5/2/2024	4:45 AM	0	28	4	0	0	3	0	0	1	0	0	0	0
5/2/2024	5:00 AM	0	33	5	0	1	2	0	0	3	0	0	0	0
5/2/2024	5:15 AM	1	54	4	0	6	9	0	0	9	0	0	0	0
5/2/2024	5:30 AM	1	84	16	0	2	8	0	0	1	0	0	0	0
5/2/2024	5:45 AM	1	85	10	0	0	2	0	0	1	0	0	0	0
5/2/2024	6:00 AM	0	72	16	0	0	4	0	0	1	0	0	0	0
5/2/2024	6:15 AM	0	126	26	0	1	2	0	0	0	0	2	0	0
5/2/2024	6:30 AM	0	173	54	1	1	4	0	0	2	0	0	0	0
5/2/2024	6:45 AM	1	227	63	0	2	2	0	0	5	0	1	0	0
5/2/2024	7:00 AM	1	290	53	2	4	2	0	0	3	0	0	0	0
5/2/2024	7:15 AM	0	335	74	1	1	4	0	2	3	0	0	0	0
5/2/2024	7:30 AM	0	390	89	0	3	2	0	0	3	0	0	0	0
5/2/2024	7:45 AM	0	425	91	0	5	2	0	0	5	0	0	0	0
5/2/2024	8:00 AM	0	419	62	1	3	2	0	0	1	0	0	0	0
5/2/2024	8:15 AM	1	504	68	3	4	2	0	1	4	0	0	0	0
5/2/2024	8:30 AM	0	412	72	1	3	0	0	0	3	0	0	0	0
5/2/2024	8:45 AM	0	344	45	2	1	3	0	0	3	0	0	0	0
5/2/2024	9:00 AM	0	295	50	4	4	4	0	0	2	0	0	0	0
5/2/2024	9:15 AM	0	275	49	3	5	1	0	0	2	0	0	0	0
5/2/2024	9:30 AM	0	263	64	3	7	0	0	0	3	0	0	0	0
5/2/2024	9:45 AM	0	255	66	0	6	2	0	1	5	0	0	0	0
5/2/2024	10:00 AM	0	236	50	0	2	3	0	0	2	0	0	0	0
5/2/2024	10:15 AM	0	194	53	2	2	4	0	0	2	0	0	0	0
5/2/2024	10:30 AM	0	231	52	0	3	3	0	0	5	0	0	0	0
5/2/2024	10:45 AM	0	262	49	0	9	0	0	0	1	0	0	0	0
5/2/2024	11:00 AM	0	197	42	1	5	0	0	0	4	0	0	0	0
5/2/2024	11:15 AM	1	228	57	0	8	5	0	2	4	0	0	0	0
5/2/2024	11:30 AM	0	238	37	0	2	3	0	1	1	0	0	0	0
5/2/2024	11:45 AM	3	234	50	1	9	0	0	1	7	0	0	0	0
5/2/2024	12:00 PM	0	297	68	1	10	0	0	4	9	1	0	0	0
5/2/2024	12:15 PM	0	323	70	0	4	3	0	0	5	0	0	0	0
5/2/2024	12:30 PM	0	290	59	0	4	5	0	0	4	0	0	0	0
5/2/2024	12:45 PM	0	307	54	0	10	2	1	0	5	0	0	0	0
5/2/2024	1:00 PM	1	324	67	0	10	0	0	2	8	0	0	0	0
5/2/2024	1:15 PM	1	312	62	1	10	0	0	1	14	0	0	0	0
5/2/2024	1:30 PM	0	340	50	1	7	1	0	0	5	0	0	0	0
5/2/2024	1:45 PM	2	311	54	3	8	3	0	1	8	0	0	0	0
5/2/2024	2:00 PM	1	291	66	0	9	2	0	2	5	0	0	0	0
5/2/2024	2:15 PM	0	365	54	0	10	3	0	1	6	0	0	0	0
5/2/2024	2:30 PM	1	346	42	3	12	3	0	0	3	0	0	0	0
5/2/2024	2:45 PM	2	348	65	2	6	2	0	2	6	0	0	0	0
5/2/2024	3:00 PM	2	332	62	0	6	4	1	2	8	0	0	0	0
5/2/2024	3:15 PM	0	301	62	0	8	1	0	1	4	0	0	0	0
5/2/2024	3:30 PM	0	372	44	1	6	1	2	1	6	0	0	0	0
5/2/2024	3:45 PM	0	353	62	1	13	0	0	1	8	0	0	0	0
5/2/2024	4:00 PM	0	320	64	1	6	3	0	0	6	0	0	0	0
5/2/2024	4:15 PM	0	301	53	0	6	0	1	1	3	0	0	0	0
5/2/2024	4:30 PM	2	297	51	0	7	1	0	0	2	0	0	0	0
5/2/2024	4:45 PM	0	251	46	1	9	0	0	1	5	0	0	0	0
5/2/2024	5:00 PM	0	254	40	0	2	0	0	0	1	0	0	0	0
5/2/2024	5:15 PM	0	262	41	1	2	1	0	0	5	0	0	0	0
5/2/2024	5:30 PM	0	228	42	0	6	0	0	0	0	0	0	0	0
5/2/2024	5:45 PM	0	245	46	0	6	1	0	0	1	0	0	0	0
5/2/2024	6:00 PM	0	253	46	0	2	0	0	1	4	0	0	0	0
5/2/2024	6:15 PM	0	345	40	0	6	0	0	0	2	0	0	0	0
5/2/2024	6:30 PM	1	278	25	0	3	1	0	0	4	0	0	0	0
5/2/2024	6:45 PM	1	284	22	0	1	0	0	1	1	0	0	0	0
5/2/2024	7:00 PM	0	0	0	0	0	0	0	0	0	0	0	0	0
5/2/2024	7:15 PM	0	0	0	0	0	0	0	0	0	0	0	0	0
5/2/2024	7:30 PM	0	0	0	0	0	0	0	0	0	0	0	0	0
5/2/2024	7:45 PM	0	0	0	0	0	0	0	0	0	0	0	0	0
5/2/2024	8:00 PM	0	0	0	0	0	0	0	0	0	0	0	0	0
5/2/2024	8:15 PM	0	0	0	0	0	0	0	0	0	0	0	0	0
5/2/2024	8:30 PM	0	0	0	0	0	0	0	0	0	0	0	0	0
5/2/2024	8:45 PM	0	0	0	0	0	0	0	0	0	0	0	0	0
5/2/2024	9:00 PM	0	0	0	0	0	0	0	0	0	0	0	0	0
5/2/2024	9:15 PM	0	0	0	0	0	0	0	0	0	0	0	0	0
5/2/2024	9:30 PM	0	0	0	0	0	0	0	0	0	0	0	0	0
5/2/2024	9:45 PM	0	0	0	0	0	0	0	0	0	0	0	0	0
5/2/2024	10:00 PM	0	0	0	0	0	0	0	0	0	0	0	0	0
5/2/2024	10:15 PM	0	0	0	0	0	0	0	0	0	0	0	0	0
5/2/2024	10:30 PM	0	0	0	0	0	0	0	0	0	0	0	0	0
5/2/2024	10:45 PM	0	0	0	0	0	0	0	0	0	0	0	0	0
5/2/2024	11:00 PM	0	0	0	0	0	0	0	0	0	0	0	0	0
5/2/2024	11:15 PM	0	0	0	0	0	0	0	0	0	0	0	0	0
5/2/2024	11:30 PM	0	0	0	0	0	0	0	0	0	0	0	0	0
5/2/2024	11:45 PM	0	0	0	0	0	0	0	0	0	0	0	0	0

NB
File Name:
Start Date: 4/30/2024
Start Time: 0
Site Code: 73
Station ID: 1
Location 1: US-321 Hugher St S/Bound On-Ramp, south of US-321 Elmwood Ave E/Bound On-Ramp
Location 2:

Date	Time	1	2	3	4	5	6	7	8	9	10	11	12	13
4/30/2024	12:00 AM	0	0	0	0	0	0	0	0	0	0	0	0	0
4/30/2024	12:15 AM	0	0	0	0	0	0	0	0	0	0	0	0	0
4/30/2024	12:30 AM	0	0	0	0	0	0	0	0	0	0	0	0	0
4/30/2024	12:45 AM	0	0	0	0	0	0	0	0	0	0	0	0	0
4/30/2024	1:00 AM	0	0	0	0	0	0	0	0	0	0	0	0	0
4/30/2024	1:15 AM	0	0	0	0	0	0	0	0	0	0	0	0	0
4/30/2024	1:30 AM	0	0	0	0	0	0	0	0	0	0	0	0	0
4/30/2024	1:45 AM	0	0	0	0	0	0	0	0	0	0	0	0	0
4/30/2024	2:00 AM	0	0	0	0	0	0	0	0	0	0	0	0	0
4/30/2024	2:15 AM	0	0	0	0	0	0	0	0	0	0	0	0	0
4/30/2024	2:30 AM	0	0	0	0	0	0	0	0	0	0	0	0	0
4/30/2024	2:45 AM	0	0	0	0	0	0	0	0	0	0	0	0	0
4/30/2024	3:00 AM	0	0	0	0	0	0	0	0	0	0	0	0	0
4/30/2024	3:15 AM	0	0	0	0	0	0	0	0	0	0	0	0	0
4/30/2024	3:30 AM	0	0	0	0	0	0	0	0	0	0	0	0	0
4/30/2024	3:45 AM	0	0	0	0	0	0	0	0	0	0	0	0	0
4/30/2024	4:00 AM	0	0	0	0	0	0	0	0	0	0	0	0	0
4/30/2024	4:15 AM	0	0	0	0	0	0	0	0	0	0	0	0	0
4/30/2024	4:30 AM	0	0	0	0	0	0	0	0	0	0	0	0	0
4/30/2024	4:45 AM	0	0	0	0	0	0	0	0	0	0	0	0	0
4/30/2024	5:00 AM	0	0	0	0	0	0	0	0	0	0	0	0	0
4/30/2024	5:15 AM	0	0	0	0	0	0	0	0	0	0	0	0	0
4/30/2024	5:30 AM	0	0	0	0	0	0	0	0	0	0	0	0	0
4/30/2024	5:45 AM	0	0	0	0	0	0	0	0	0	0	0	0	0
4/30/2024	6:00 AM	0	0	0	0	0	0	0	0	0	0	0	0	0
4/30/2024	6:15 AM	0	0	0	0	0	0	0	0	0	0	0	0	0
4/30/2024	6:30 AM	0	0	0	0	0	0	0	0	0	0	0	0	0
4/30/2024	6:45 AM	0	0	0	0	0	0	0	0	0	0	0	0	0
4/30/2024	7:00 AM	0	0	0	0	0	0	0	0	0	0	0	0	0
4/30/2024	7:15 AM	0	0	0	0	0	0	0	0	0	0	0	0	0
4/30/2024	7:30 AM	0	0	0	0	0	0	0	0	0	0	0	0	0
4/30/2024	7:45 AM	0	0	0	0	0	0	0	0	0	0	0	0	0
4/30/2024	8:00 AM	0	0	0	0	0	0	0	0	0	0	0	0	0
4/30/2024	8:15 AM	0	0	0	0	0	0	0	0	0	0	0	0	0
4/30/2024	8:30 AM	0	0	0	0	0	0	0	0	0	0	0	0	0
4/30/2024	8:45 AM	0	0	0	0	0	0	0	0	0	0	0	0	0
4/30/2024	9:00 AM	0	0	0	0	0	0	0	0	0	0	0	0	0
4/30/2024	9:15 AM	0	0	0	0	0	0	0	0	0	0	0	0	0
4/30/2024	9:30 AM	0	0	0	0	0	0	0	0	0	0	0	0	0
4/30/2024	9:45 AM	0	0	0	0	0	0	0	0	0	0	0	0	0
4/30/2024	10:00 AM	0	0	0	0	0	0	0	0	0	0	0	0	0
4/30/2024	10:15 AM	0	0	0	0	0	0	0	0	0	0	0	0	0
4/30/2024	10:30 AM	0	0	0	0	0	0	0	0	0	0	0	0	0
4/30/2024	10:45 AM	0	0	0	0	0	0	0	0	0	0	0	0	0
4/30/2024	11:00 AM	0	0	0	0	0	0	0	0	0	0	0	0	0
4/30/2024	11:15 AM	0	0	0	0	0	0	0	0	0	0	0	0	0
4/30/2024	11:30 AM	0	0	0	0	0	0	0	0	0	0	0	0	0
4/30/2024	11:45 AM	0	0	0	0	0	0	0	0	0	0	0	0	0
4/30/2024	12:00 PM	0	0	0	0	0	0	0	0	0	0	0	0	0
4/30/2024	12:15 PM	0	0	0	0	0	0	0	0	0	0	0	0	0
4/30/2024	12:30 PM	0	0	0	0	0	0	0	0	0	0	0	0	0
4/30/2024	12:45 PM	0	0	0	0	0	0	0	0	0	0	0	0	0
4/30/2024	1:00 PM	0	0	0	0	0	0	0	0	0	0	0	0	0
4/30/2024	1:15 PM	0	0	0	0	0	0	0	0	0	0	0	0	0
4/30/2024	1:30 PM	0	0	0	0	0	0	0	0	0	0	0	0	0
4/30/2024	1:45 PM	0	0	0	0	0	0	0	0	0	0	0	0	0
4/30/2024	2:00 PM	0	0	0	0	0	0	0	0	0	0	0	0	0
4/30/2024	2:15 PM	0	0	0	0	0	0	0	0	0	0	0	0	0
4/30/2024	2:30 PM	0	0	0	0	0	0	0	0	0	0	0	0	0
4/30/2024	2:45 PM	0	0	0	0	0	0	0	0	0	0	0	0	0
4/30/2024	3:00 PM	0	0	0	0	0	0	0	0	0	0	0	0	0
4/30/2024	3:15 PM	0	0	0	0	0	0	0	0	0	0	0	0	0
4/30/2024	3:30 PM	0	0	0	0	0	0	0	0	0	0	0	0	0
4/30/2024	3:45 PM	0	0	0	0	0	0	0	0	0	0	0	0	0
4/30/2024	4:00 PM	0	0	0	0	0	0	0	0	0	0	0	0	0
4/30/2024	4:15 PM	0	0	0	0	0	0	0	0	0	0	0	0	0
4/30/2024	4:30 PM	0	0	0	0	0	0	0	0	0	0	0	0	0
4/30/2024	4:45 PM	0	0	0	0	0	0	0	0	0	0	0	0	0
4/30/2024	5:00 PM	0	0	0	0	0	0	0	0	0	0	0	0	0
4/30/2024	5:15 PM	0	0	0	0	0	0	0	0	0	0	0	0	0
4/30/2024	5:30 PM	0	0	0	0	0	0	0	0	0	0	0	0	0
4/30/2024	5:45 PM	0	0	0	0	0	0	0	0	0	0	0	0	0
4/30/2024	6:00 PM	0	0	0	0	0	0	0	0	0	0	0	0	0
4/30/2024	6:15 PM	0	0	0	0	0	0	0	0	0	0	0	0	0
4/30/2024	6:30 PM	0	0	0	0	0	0	0	0	0	0	0	0	0
4/30/2024	6:45 PM	0	0	0	0	0	0	0	0	0	0	0	0	0
4/30/2024	7:00 PM	0	0	0	0	0	0	0	0	0	0	0	0	0
4/30/2024	7:15 PM	0	0	0	0	0	0	0	0	0	0	0	0	0
4/30/2024	7:30 PM	0	0	0	0	0	0	0	0	0	0	0	0	0
4/30/2024	7:45 PM	0	0	0	0	0	0	0	0	0	0	0	0	0
4/30/2024	8:00 PM	0	0	0	0	0	0	0	0	0	0	0	0	0
4/30/2024	8:15 PM	0	0	0	0	0	0	0	0	0	0	0	0	0
4/30/2024	8:30 PM	0	0	0	0	0	0	0	0	0	0	0	0	0
4/30/2024	8:45 PM	0	0	0	0	0	0	0	0	0	0	0	0	0
4/30/2024	9:00 PM	0	0	0	0	0	0	0	0	0	0	0	0	0
4/30/2024	9:15 PM	0	0	0	0	0	0	0	0	0	0	0	0	0
4/30/2024	9:30 PM	0	0	0	0	0	0	0	0	0	0	0	0	0
4/30/2024	9:45 PM	0	0	0	0	0	0	0	0	0	0	0	0	0
4/30/2024	10:00 PM	0	0	0	0	0	0	0	0	0	0	0	0	0
4/30/2024	10:15 PM	0	0	0	0	0	0	0	0	0	0	0	0	0
4/30/2024	10:30 PM	0	0	0	0	0	0	0	0	0	0	0	0	0
4/30/2024	10:45 PM	0	0	0	0	0	0	0	0	0	0	0	0	0
4/30/2024	11:00 PM	0	0	0	0	0	0	0	0	0	0	0	0	0
4/30/2024	11:15 PM	0	0	0	0	0	0	0	0	0	0	0	0	0
4/30/2024	11:30 PM	0	0	0	0	0	0	0	0	0	0	0	0	0
4/30/2024	11:45 PM	0	0	0	0	0	0	0	0	0	0	0	0	0

5/1/2024	12:00 AM	0	0	0	0	0	0	0	0	0	0	0	0	0
5/1/2024	12:15 AM	0	0	0	0	0	0	0	0	0	0	0	0	0
5/1/2024	12:30 AM	0	0	0	0	0	0	0	0	0	0	0	0	0
5/1/2024	12:45 AM	0	0	0	0	0	0	0	0	0	0	0	0	0
5/1/2024	1:00 AM	0	0	0	0	0	0	0	0	0	0	0	0	0
5/1/2024	1:15 AM	0	0	0	0	0	0	0	0	0	0	0	0	0
5/1/2024	1:30 AM	0	0	0	0	0	0	0	0	0	0	0	0	0
5/1/2024	1:45 AM	0	0	0	0	0	0	0	0	0	0	0	0	0
5/1/2024	2:00 AM	0	0	0	0	0	0	0	0	0	0	0	0	0
5/1/2024	2:15 AM	0	0	0	0	0	0	0	0	0	0	0	0	0
5/1/2024	2:30 AM	0	0	0	0	0	0	0	0	0	0	0	0	0
5/1/2024	2:45 AM	0	0	0	0	0	0	0	0	0	0	0	0	0
5/1/2024	3:00 AM	0	0	0	0	0	0	0	0	0	0	0	0	0
5/1/2024	3:15 AM	0	0	0	0	0	0	0	0	0	0	0	0	0
5/1/2024	3:30 AM	0	0	0	0	0	0	0	0	0	0	0	0	0
5/1/2024	3:45 AM	0	0	0	0	0	0	0	0	0	0	0	0	0
5/1/2024	4:00 AM	0	0	0	0	0	0	0	0	0	0	0	0	0
5/1/2024	4:15 AM	0	0	0	0	0	0	0	0	0	0	0	0	0
5/1/2024	4:30 AM	0	0	0	0	0	0	0	0	0	0	0	0	0
5/1/2024	4:45 AM	0	0	0	0	0	0	0	0	0	0	0	0	0
5/1/2024	5:00 AM	0	0	0	0	0	0	0	0	0	0	0	0	0
5/1/2024	5:15 AM	0	0	0	0	0	0	0	0	0	0	0	0	0
5/1/2024	5:30 AM	0	0	0	0	0	0	0	0	0	0	0	0	0
5/1/2024	5:45 AM	0	0	0	0	0	0	0	0	0	0	0	0	0
5/1/2024	6:00 AM	0	0	0	0	0	0	0	0	0	0	0	0	0
5/1/2024	6:15 AM	0	0	0	0	0	0	0	0	0	0	0	0	0
5/1/2024	6:30 AM	0	0	0	0	0	0	0	0	0	0	0	0	0
5/1/2024	6:45 AM	0	0	0	0	0	0	0	0	0	0	0	0	0
5/1/2024	7:00 AM	0	0	0	0	0	0	0	0	0	0	0	0	0
5/1/2024	7:15 AM	0	0	0	0	0	0	0	0	0	0	0	0	0
5/1/2024	7:30 AM	0	0	0	0	0	0	0	0	0	0	0	0	0
5/1/2024	7:45 AM	0	0	0	0	0	0	0	0	0	0	0	0	0
5/1/2024	8:00 AM	0	0	0	0	0	0	0	0	0	0	0	0	0
5/1/2024	8:15 AM	0	0	0	0	0	0	0	0	0	0	0	0	0
5/1/2024	8:30 AM	0	0	0	0	0	0	0	0	0	0	0	0	0
5/1/2024	8:45 AM	0	0	0	0	0	0	0	0	0	0	0	0	0
5/1/2024	9:00 AM	0	0	0	0	0	0	0	0	0	0	0	0	0
5/1/2024	9:15 AM	0	0	0	0	0	0	0	0	0	0	0	0	0
5/1/2024	9:30 AM	0	0	0	0	0	0	0	0	0	0	0	0	0
5/1/2024	9:45 AM	0	0	0	0	0	0	0	0	0	0	0	0	0
5/1/2024	10:00 AM	0	0	0	0	0	0	0	0	0	0	0	0	0
5/1/2024	10:15 AM	0	0	0	0	0	0	0	0	0	0	0	0	0
5/1/2024	10:30 AM	0	0	0	0	0	0	0	0	0	0	0	0	0
5/1/2024	10:45 AM	0	0	0	0	0	0	0	0	0	0	0	0	0
5/1/2024	11:00 AM	0	0	0	0	0	0	0	0	0	0	0	0	0
5/1/2024	11:15 AM	0	0	0	0	0	0	0	0	0	0	0	0	0
5/1/2024	11:30 AM	0	0	0	0	0	0	0	0	0	0	0	0	0
5/1/2024	11:45 AM	0	0	0	0	0	0	0	0	0	0	0	0	0
5/1/2024	12:00 PM	0	0	0	0	0	0	0	0	0	0	0	0	0
5/1/2024	12:15 PM	0	0	0	0	0	0	0	0	0	0	0	0	0
5/1/2024	12:30 PM	0	0	0	0	0	0	0	0	0	0	0	0	0
5/1/2024	12:45 PM	0	0	0	0	0	0	0	0	0	0	0	0	0
5/1/2024	1:00 PM	0	0	0	0	0	0	0	0	0	0	0	0	0
5/1/2024	1:15 PM	0	0	0	0	0	0	0	0	0	0	0	0	0
5/1/2024	1:30 PM	0	0	0	0	0	0	0	0	0	0	0	0	0
5/1/2024	1:45 PM	0	0	0	0	0	0	0	0	0	0	0	0	0
5/1/2024	2:00 PM	0	0	0	0	0	0	0	0	0	0	0	0	0
5/1/2024	2:15 PM	0	0	0	0	0	0	0	0	0	0	0	0	0
5/1/2024	2:30 PM	0	0	0	0	0	0	0	0	0	0	0	0	0
5/1/2024	2:45 PM	0	0	0	0	0	0	0	0	0	0	0	0	0
5/1/2024	3:00 PM	0	0	0	0	0	0	0	0	0	0	0	0	0
5/1/2024	3:15 PM	0	0	0	0	0	0	0	0	0	0	0	0	0
5/1/2024	3:30 PM	0	0	0	0	0	0	0	0	0	0	0	0	0
5/1/2024	3:45 PM	0	0	0	0	0	0	0	0	0	0	0	0	0
5/1/2024	4:00 PM	0	0	0	0	0	0	0	0	0	0	0	0	0
5/1/2024	4:15 PM	0	0	0	0	0	0	0	0	0	0	0	0	0
5/1/2024	4:30 PM	0	0	0	0	0	0	0	0	0	0	0	0	0
5/1/2024	4:45 PM	0	0	0	0	0	0	0	0	0	0	0	0	0
5/1/2024	5:00 PM	0	0	0	0	0	0	0	0	0	0	0	0	0
5/1/2024	5:15 PM	0	0	0	0	0	0	0	0	0	0	0	0	0
5/1/2024	5:30 PM	0	0	0	0	0	0	0	0	0	0	0	0	0
5/1/2024	5:45 PM	0	0	0	0	0	0	0	0	0	0	0	0	0
5/1/2024	6:00 PM	0	0	0	0	0	0	0	0	0	0	0	0	0
5/1/2024	6:15 PM	0	0	0	0	0	0	0	0	0	0	0	0	0
5/1/2024	6:30 PM	0	0	0	0	0	0	0	0	0	0	0	0	0
5/1/2024	6:45 PM	0	0	0	0	0	0	0	0	0	0	0	0	0
5/1/2024	7:00 PM	0	0	0	0	0	0	0	0	0	0	0	0	0
5/1/2024	7:15 PM	0	0	0	0	0	0	0	0	0	0	0	0	0
5/1/2024	7:30 PM	0	0	0	0	0	0	0	0	0	0	0	0	0
5/1/2024	7:45 PM	0	0	0	0	0	0	0	0	0	0	0	0	0
5/1/2024	8:00 PM	0	0	0	0	0	0	0	0	0	0	0	0	0
5/1/2024	8:15 PM	0	0	0	0	0	0	0	0	0	0	0	0	0
5/1/2024	8:30 PM	0	0	0	0	0	0	0	0	0	0	0	0	0
5/1/2024	8:45 PM	0	0	0	0	0	0	0	0	0	0	0	0	0
5/1/2024	9:00 PM	0	0	0	0	0	0	0	0	0	0	0	0	0
5/1/2024	9:15 PM	0	0	0	0	0	0	0	0	0	0	0	0	0
5/1/2024	9:30 PM	0	0	0	0	0	0	0	0	0	0	0	0	0
5/1/2024	9:45 PM	0	0	0	0	0	0	0	0	0	0	0	0	0
5/1/2024	10:00 PM	0	0	0	0	0	0	0	0	0	0	0	0	0
5/1/2024	10:15 PM	0	0	0	0	0	0	0	0	0	0	0	0	0
5/1/2024	10:30 PM	0	0	0	0	0	0	0	0	0	0	0	0	0
5/1/2024	10:45 PM	0	0	0	0	0	0	0	0	0	0	0	0	0
5/1/2024	11:00 PM	0	0	0	0	0	0	0	0	0	0	0	0	0
5/1/2024	11:15 PM	0	0	0	0	0	0	0	0	0	0	0	0	0
5/1/2024	11:30 PM	0	0	0	0	0	0	0	0	0	0	0	0	0
5/1/2024	11:45 PM	0	0	0	0	0	0	0	0	0	0	0	0	0

5/2/2024	12:00 AM	0	0	0	0	0	0	0	0	0	0	0	0	0
5/2/2024	12:15 AM	0	0	0	0	0	0	0	0	0	0	0	0	0
5/2/2024	12:30 AM	0	0	0	0	0	0	0	0	0	0	0	0	0
5/2/2024	12:45 AM	0	0	0	0	0	0	0	0	0	0	0	0	0
5/2/2024	1:00 AM	0	0	0	0	0	0	0	0	0	0	0	0	0
5/2/2024	1:15 AM	0	0	0	0	0	0	0	0	0	0	0	0	0
5/2/2024	1:30 AM	0	0	0	0	0	0	0	0	0	0	0	0	0
5/2/2024	1:45 AM	0	0	0	0	0	0	0	0	0	0	0	0	0
5/2/2024	2:00 AM	0	0	0	0	0	0	0	0	0	0	0	0	0
5/2/2024	2:15 AM	0	0	0	0	0	0	0	0	0	0	0	0	0
5/2/2024	2:30 AM	0	0	0	0	0	0	0	0	0	0	0	0	0
5/2/2024	2:45 AM	0	0	0	0	0	0	0	0	0	0	0	0	0
5/2/2024	3:00 AM	0	0	0	0	0	0	0	0	0	0	0	0	0
5/2/2024	3:15 AM	0	0	0	0	0	0	0	0	0	0	0	0	0
5/2/2024	3:30 AM	0	0	0	0	0	0	0	0	0	0	0	0	0
5/2/2024	3:45 AM	0	0	0	0	0	0	0	0	0	0	0	0	0
5/2/2024	4:00 AM	0	0	0	0	0	0	0	0	0	0	0	0	0
5/2/2024	4:15 AM	0	0	0	0	0	0	0	0	0	0	0	0	0
5/2/2024	4:30 AM	0	0	0	0	0	0	0	0	0	0	0	0	0
5/2/2024	4:45 AM	0	0	0	0	0	0	0	0	0	0	0	0	0
5/2/2024	5:00 AM	0	0	0	0	0	0	0	0	0	0	0	0	0
5/2/2024	5:15 AM	0	0	0	0	0	0	0	0	0	0	0	0	0
5/2/2024	5:30 AM	0	0	0	0	0	0	0	0	0	0	0	0	0
5/2/2024	5:45 AM	0	0	0	0	0	0	0	0	0	0	0	0	0
5/2/2024	6:00 AM	0	0	0	0	0	0	0	0	0	0	0	0	0
5/2/2024	6:15 AM	0	0	0	0	0	0	0	0	0	0	0	0	0
5/2/2024	6:30 AM	0	0	0	0	0	0	0	0	0	0	0	0	0
5/2/2024	6:45 AM	0	0	0	0	0	0	0	0	0	0	0	0	0
5/2/2024	7:00 AM	0	0	0	0	0	0	0	0	0	0	0	0	0
5/2/2024	7:15 AM	0	0	0	0	0	0	0	0	0	0	0	0	0
5/2/2024	7:30 AM	0	0	0	0	0	0	0	0	0	0	0	0	0
5/2/2024	7:45 AM	0	0	0	0	0	0	0	0	0	0	0	0	0
5/2/2024	8:00 AM	0	0	0	0	0	0	0	0	0	0	0	0	0
5/2/2024	8:15 AM	0	0	0	0	0	0	0	0	0	0	0	0	0
5/2/2024	8:30 AM	0	0	0	0	0	0	0	0	0	0	0	0	0
5/2/2024	8:45 AM	0	0	0	0	0	0	0	0	0	0	0	0	0
5/2/2024	9:00 AM	0	0	0	0	0	0	0	0	0	0	0	0	0
5/2/2024	9:15 AM	0	0	0	0	0	0	0	0	0	0	0	0	0
5/2/2024	9:30 AM	0	0	0	0	0	0	0	0	0	0	0	0	0
5/2/2024	9:45 AM	0	0	0	0	0	0	0	0	0	0	0	0	0
5/2/2024	10:00 AM	0	0	0	0	0	0	0	0	0	0	0	0	0
5/2/2024	10:15 AM	0	0	0	0	0	0	0	0	0	0	0	0	0
5/2/2024	10:30 AM	0	0	0	0	0	0	0	0	0	0	0	0	0
5/2/2024	10:45 AM	0	0	0	0	0	0	0	0	0	0	0	0	0
5/2/2024	11:00 AM	0	0	0	0	0	0	0	0	0	0	0	0	0
5/2/2024	11:15 AM	0	0	0	0	0	0	0	0	0	0	0	0	0
5/2/2024	11:30 AM	0	0	0	0	0	0	0	0	0	0	0	0	0
5/2/2024	11:45 AM	0	0	0	0	0	0	0	0	0	0	0	0	0
5/2/2024	12:00 PM	0	0	0	0	0	0	0	0	0	0	0	0	0
5/2/2024	12:15 PM	0	0	0	0	0	0	0	0	0	0	0	0	0
5/2/2024	12:30 PM	0	0	0	0	0	0	0	0	0	0	0	0	0
5/2/2024	12:45 PM	0	0	0	0	0	0	0	0	0	0	0	0	0
5/2/2024	1:00 PM	0	0	0	0	0	0	0	0	0	0	0	0	0
5/2/2024	1:15 PM	0	0	0	0	0	0	0	0	0	0	0	0	0
5/2/2024	1:30 PM	0	0	0	0	0	0	0	0	0	0	0	0	0
5/2/2024	1:45 PM	0	0	0	0	0	0	0	0	0	0	0	0	0
5/2/2024	2:00 PM	0	0	0	0	0	0	0	0	0	0	0	0	0
5/2/2024	2:15 PM	0	0	0	0	0	0	0	0	0	0	0	0	0
5/2/2024	2:30 PM	0	0	0	0	0	0	0	0	0	0	0	0	0
5/2/2024	2:45 PM	0	0	0	0	0	0	0	0	0	0	0	0	0
5/2/2024	3:00 PM	0	0	0	0	0	0	0	0	0	0	0	0	0
5/2/2024	3:15 PM	0	0	0	0	0	0	0	0	0	0	0	0	0
5/2/2024	3:30 PM	0	0	0	0	0	0	0	0	0	0	0	0	0
5/2/2024	3:45 PM	0	0	0	0	0	0	0	0	0	0	0	0	0
5/2/2024	4:00 PM	0	0	0	0	0	0	0	0	0	0	0	0	0
5/2/2024	4:15 PM	0	0	0	0	0	0	0	0	0	0	0	0	0
5/2/2024	4:30 PM	0	0	0	0	0	0	0	0	0	0	0	0	0
5/2/2024	4:45 PM	0	0	0	0	0	0	0	0	0	0	0	0	0
5/2/2024	5:00 PM	0	0	0	0	0	0	0	0	0	0	0	0	0
5/2/2024	5:15 PM	0	0	0	0	0	0	0	0	0	0	0	0	0
5/2/2024	5:30 PM	0	0	0	0	0	0	0	0	0	0	0	0	0
5/2/2024	5:45 PM	0	0	0	0	0	0	0	0	0	0	0	0	0
5/2/2024	6:00 PM	0	0	0	0	0	0	0	0	0	0	0	0	0
5/2/2024	6:15 PM	0	0	0	0	0	0	0	0	0	0	0	0	0
5/2/2024	6:30 PM	0	0	0	0	0	0	0	0	0	0	0	0	0
5/2/2024	6:45 PM	0	0	0	0	0	0	0	0	0	0	0	0	0
5/2/2024	7:00 PM	0	0	0	0	0	0	0	0	0	0	0	0	0
5/2/2024	7:15 PM	0	0	0	0	0	0	0	0	0	0	0	0	0
5/2/2024	7:30 PM	0	0	0	0	0	0	0	0	0	0	0	0	0
5/2/2024	7:45 PM	0	0	0	0	0	0	0	0	0	0	0	0	0
5/2/2024	8:00 PM	0	0	0	0	0	0	0	0	0	0	0	0	0
5/2/2024	8:15 PM	0	0	0	0	0	0	0	0	0	0	0	0	0
5/2/2024	8:30 PM	0	0	0	0	0	0	0	0	0	0	0	0	0
5/2/2024	8:45 PM	0	0	0	0	0	0	0	0	0	0	0	0	0
5/2/2024	9:00 PM	0	0	0	0	0	0	0	0	0	0	0	0	0
5/2/2024	9:15 PM	0	0	0	0	0	0	0	0	0	0	0	0	0
5/2/2024	9:30 PM	0	0	0	0	0	0	0	0	0	0	0	0	0
5/2/2024	9:45 PM	0	0	0	0	0	0	0	0	0	0	0	0	0
5/2/2024	10:00 PM	0	0	0	0	0	0	0	0	0	0	0	0	0
5/2/2024	10:15 PM	0	0	0	0	0	0	0	0	0	0	0	0	0
5/2/2024	10:30 PM	0	0	0	0	0	0	0	0	0	0	0	0	0
5/2/2024	10:45 PM	0	0	0	0	0	0	0	0	0	0	0	0	0
5/2/2024	11:00 PM	0	0	0	0	0	0	0	0	0	0	0	0	0
5/2/2024	11:15 PM	0	0	0	0	0	0	0	0	0	0	0	0	0
5/2/2024	11:30 PM	0	0	0	0	0	0	0	0	0	0	0	0	0
5/2/2024	11:45 PM	0	0	0	0	0	0	0	0	0	0	0	0	0

SB
File Name:
Start Date: 4/30/2024
Start Time: 0
Site Code: 73
Station ID: 1
Location 1: US-321 Hugher St S/Bound On-Ramp, south of US-321 Elmwood Ave E/Bound On-Ramp
Location 2:

Date	Time	1	2	3	4	5	6	7	8	9	10	11	12	13
4/30/2024	12:00 AM	0	0	0	0	0	0	0	0	0	0	0	0	0
4/30/2024	12:15 AM	0	0	0	0	0	0	0	0	0	0	0	0	0
4/30/2024	12:30 AM	0	0	0	0	0	0	0	0	0	0	0	0	0
4/30/2024	12:45 AM	0	0	0	0	0	0	0	0	0	0	0	0	0
4/30/2024	1:00 AM	0	0	0	0	0	0	0	0	0	0	0	0	0
4/30/2024	1:15 AM	0	0	0	0	0	0	0	0	0	0	0	0	0
4/30/2024	1:30 AM	0	0	0	0	0	0	0	0	0	0	0	0	0
4/30/2024	1:45 AM	0	0	0	0	0	0	0	0	0	0	0	0	0
4/30/2024	2:00 AM	0	0	0	0	0	0	0	0	0	0	0	0	0
4/30/2024	2:15 AM	0	0	0	0	0	0	0	0	0	0	0	0	0
4/30/2024	2:30 AM	0	0	0	0	0	0	0	0	0	0	0	0	0
4/30/2024	2:45 AM	0	0	0	0	0	0	0	0	0	0	0	0	0
4/30/2024	3:00 AM	0	0	0	0	0	0	0	0	0	0	0	0	0
4/30/2024	3:15 AM	0	0	0	0	0	0	0	0	0	0	0	0	0
4/30/2024	3:30 AM	0	0	0	0	0	0	0	0	0	0	0	0	0
4/30/2024	3:45 AM	0	0	0	0	0	0	0	0	0	0	0	0	0
4/30/2024	4:00 AM	0	0	0	0	0	0	0	0	0	0	0	0	0
4/30/2024	4:15 AM	0	0	0	0	0	0	0	0	0	0	0	0	0
4/30/2024	4:30 AM	0	0	0	0	0	0	0	0	0	0	0	0	0
4/30/2024	4:45 AM	0	0	0	0	0	0	0	0	0	0	0	0	0
4/30/2024	5:00 AM	0	0	0	0	0	0	0	0	0	0	0	0	0
4/30/2024	5:15 AM	0	0	0	0	0	0	0	0	0	0	0	0	0
4/30/2024	5:30 AM	0	0	0	0	0	0	0	0	0	0	0	0	0
4/30/2024	5:45 AM	0	0	0	0	0	0	0	0	0	0	0	0	0
4/30/2024	6:00 AM	0	0	0	0	0	0	0	0	0	0	0	0	0
4/30/2024	6:15 AM	0	0	0	0	0	0	0	0	0	0	0	0	0
4/30/2024	6:30 AM	0	0	0	0	0	0	0	0	0	0	0	0	0
4/30/2024	6:45 AM	0	0	0	0	0	0	0	0	0	0	0	0	0
4/30/2024	7:00 AM	0	0	0	0	0	0	0	0	0	0	0	0	0
4/30/2024	7:15 AM	0	0	0	0	0	0	0	0	0	0	0	0	0
4/30/2024	7:30 AM	0	0	0	0	0	0	0	0	0	0	0	0	0
4/30/2024	7:45 AM	0	0	0	0	0	0	0	0	0	0	0	0	0
4/30/2024	8:00 AM	0	0	0	0	0	0	0	0	0	0	0	0	0
4/30/2024	8:15 AM	0	0	0	0	0	0	0	0	0	0	0	0	0
4/30/2024	8:30 AM	0	0	0	0	0	0	0	0	0	0	0	0	0
4/30/2024	8:45 AM	0	0	0	0	0	0	0	0	0	0	0	0	0
4/30/2024	9:00 AM	0	0	0	0	0	0	0	0	0	0	0	0	0
4/30/2024	9:15 AM	0	0	0	0	0	0	0	0	0	0	0	0	0
4/30/2024	9:30 AM	0	0	0	0	0	0	0	0	0	0	0	0	0
4/30/2024	9:45 AM	0	0	0	0	0	0	0	0	0	0	0	0	0
4/30/2024	10:00 AM	0	0	0	0	0	0	0	0	0	0	0	0	0
4/30/2024	10:15 AM	0	0	0	0	0	0	0	0	0	0	0	0	0
4/30/2024	10:30 AM	0	0	0	0	0	0	0	0	0	0	0	0	0
4/30/2024	10:45 AM	0	0	0	0	0	0	0	0	0	0	0	0	0
4/30/2024	11:00 AM	0	0	0	0	0	0	0	0	0	0	0	0	0
4/30/2024	11:15 AM	0	0	0	0	0	0	0	0	0	0	0	0	0
4/30/2024	11:30 AM	0	0	0	0	0	0	0	0	0	0	0	0	0
4/30/2024	11:45 AM	0	0	0	0	0	0	0	0	0	0	0	0	0
4/30/2024	12:00 PM	0	0	0	0	0	0	0	0	0	0	0	0	0
4/30/2024	12:15 PM	0	0	0	0	0	0	0	0	0	0	0	0	0
4/30/2024	12:30 PM	0	0	0	0	0	0	0	0	0	0	0	0	0
4/30/2024	12:45 PM	0	0	0	0	0	0	0	0	0	0	0	0	0
4/30/2024	1:00 PM	0	0	0	0	0	0	0	0	0	0	0	0	0
4/30/2024	1:15 PM	0	0	0	0	0	0	0	0	0	0	0	0	0
4/30/2024	1:30 PM	0	0	0	0	0	0	0	0	0	0	0	0	0
4/30/2024	1:45 PM	0	0	0	0	0	0	0	0	0	0	0	0	0
4/30/2024	2:00 PM	0	0	0	0	0	0	0	0	0	0	0	0	0
4/30/2024	2:15 PM	0	0	0	0	0	0	0	0	0	0	0	0	0
4/30/2024	2:30 PM	0	0	0	0	0	0	0	0	0	0	0	0	0
4/30/2024	2:45 PM	0	0	0	0	0	0	0	0	0	0	0	0	0
4/30/2024	3:00 PM	0	0	0	0	0	0	0	0	0	0	0	0	0
4/30/2024	3:15 PM	0	0	0	0	0	0	0	0	0	0	0	0	0
4/30/2024	3:30 PM	0	0	0	0	0	0	0	0	0	0	0	0	0
4/30/2024	3:45 PM	0	0	0	0	0	0	0	0	0	0	0	0	0
4/30/2024	4:00 PM	0	0	0	0	0	0	0	0	0	0	0	0	0
4/30/2024	4:15 PM	0	0	0	0	0	0	0	0	0	0	0	0	0
4/30/2024	4:30 PM	0	0	0	0	0	0	0	0	0	0	0	0	0
4/30/2024	4:45 PM	0	0	0	0	0	0	0	0	0	0	0	0	0
4/30/2024	5:00 PM	0	0	0	0	0	0	0	0	0	0	0	0	0
4/30/2024	5:15 PM	0	0	0	0	0	0	0	0	0	0	0	0	0
4/30/2024	5:30 PM	0	0	0	0	0	0	0	0	0	0	0	0	0
4/30/2024	5:45 PM	0	0	0	0	0	0	0	0	0	0	0	0	0
4/30/2024	6:00 PM	0	0	0	0	0	0	0	0	0	0	0	0	0
4/30/2024	6:15 PM	0	151	22	0	0	1	0	0	0	0	0	0	0
4/30/2024	6:30 PM	1	307	42	0	3	1	0	0	1	0	0	0	0
4/30/2024	6:45 PM	2	453	52	0	3	1	0	0	1	0	0	0	0
4/30/2024	7:00 PM	2	542	68	0	3	1	0	0	1	0	0	0	0
4/30/2024	7:15 PM	2	529	72	0	5	0	0	0	2	0	0	0	0
4/30/2024	7:30 PM	1	496	71	0	2	0	0	0	1	0	0	0	0
4/30/2024	7:45 PM	0	461	88	0	3	0	0	0	1	0	0	0	0
4/30/2024	8:00 PM	1	485	96	0	4	0	0	0	1	0	0	0	0
4/30/2024	8:15 PM	1	457	97	0	2	0	0	0	1	0	0	0	0
4/30/2024	8:30 PM	1	441	98	0	4	0	0	0	1	0	0	0	0
4/30/2024	8:45 PM	1	431	92	0	7	0	0	0	1	0	0	0	0
4/30/2024	9:00 PM	0	402	86	0	7	0	0	0	3	0	0	0	0
4/30/2024	9:15 PM	0	374	80	0	7	0	0	0	2	0	0	0	0
4/30/2024	9:30 PM	0	333	77	0	7	0	0	0	3	0	0	0	0
4/30/2024	9:45 PM	0	307	69	0	4	0	0	0	4	0	0	0	0
4/30/2024	10:00 PM	0	284	64	0	3	0	0	0	3	0	0	0	0
4/30/2024	10:15 PM	0	252	54	0	5	0	0	0	3	0	0	0	0
4/30/2024	10:30 PM	0	214	47	0	3	0	0	0	2	0	0	0	0
4/30/2024	10:45 PM	0	185	46	0	3	0	0	0	2	0	0	0	0
4/30/2024	11:00 PM	0	157	40	0	3	0	0	0	2	0	0	0	0
4/30/2024	11:15 PM	0	107	29	0	1	0	0	0	2	0	0	0	0
4/30/2024	11:30 PM	0	79	19	0	1	0	0	0	2	0	0	0	0
4/30/2024	11:45 PM	0	33	7	0	0	0	0	0	1	0	0	0	0

5/1/2024	12:00 AM	0	104	6	0	0	0	0	0	1	0	0	0	0
5/1/2024	12:15 AM	0	82	5	0	1	1	0	0	2	0	0	0	0
5/1/2024	12:30 AM	0	75	5	0	1	1	0	0	3	0	0	0	0
5/1/2024	12:45 AM	0	68	7	0	1	1	0	0	4	0	0	0	0
5/1/2024	1:00 AM	0	63	8	0	1	1	0	0	3	0	0	0	0
5/1/2024	1:15 AM	0	55	6	0	0	0	0	0	2	0	0	0	0
5/1/2024	1:30 AM	0	56	5	0	0	0	0	0	1	0	0	0	0
5/1/2024	1:45 AM	0	54	4	0	0	0	0	0	0	0	0	0	0
5/1/2024	2:00 AM	0	53	2	0	0	0	0	1	0	0	0	0	0
5/1/2024	2:15 AM	0	60	3	0	0	0	0	1	0	0	0	0	0
5/1/2024	2:30 AM	0	56	4	0	0	0	0	1	0	0	0	0	0
5/1/2024	2:45 AM	0	52	3	0	1	1	0	1	1	0	0	0	0
5/1/2024	3:00 AM	0	53	5	0	2	1	0	0	1	0	0	0	0
5/1/2024	3:15 AM	0	56	6	0	2	1	0	0	1	0	0	0	0
5/1/2024	3:30 AM	0	59	7	0	2	1	0	0	1	0	0	0	0
5/1/2024	3:45 AM	0	73	7	0	3	0	0	0	4	0	0	0	0
5/1/2024	4:00 AM	0	92	9	0	4	2	0	0	5	0	0	0	0
5/1/2024	4:15 AM	0	115	10	0	6	2	0	0	5	0	0	0	0
5/1/2024	4:30 AM	1	154	15	0	9	3	0	0	6	0	0	0	0
5/1/2024	4:45 AM	1	216	24	0	12	4	0	0	3	0	0	1	0
5/1/2024	5:00 AM	2	253	36	0	13	11	0	0	4	0	0	1	0
5/1/2024	5:15 AM	2	285	51	0	11	15	0	1	9	0	0	1	0
5/1/2024	5:30 AM	2	341	84	0	10	16	0	1	9	0	0	1	0
5/1/2024	5:45 AM	3	425	139	0	6	16	0	1	8	0	0	0	0
5/1/2024	6:00 AM	2	576	188	1	7	10	0	2	6	0	0	0	0
5/1/2024	6:15 AM	4	741	239	4	9	11	0	2	5	0	1	0	0
5/1/2024	6:30 AM	3	936	291	10	8	11	0	2	7	0	1	0	0
5/1/2024	6:45 AM	3	1128	313	11	9	11	0	3	8	0	1	1	0
5/1/2024	7:00 AM	3	1323	328	11	7	9	0	2	9	0	1	1	0
5/1/2024	7:15 AM	1	1530	341	10	7	5	0	4	5	0	0	1	0
5/1/2024	7:30 AM	2	1670	330	5	12	5	0	4	4	0	0	1	0
5/1/2024	7:45 AM	1	1753	319	4	15	5	0	4	8	0	0	0	0
5/1/2024	8:00 AM	4	1744	305	5	14	5	0	4	12	0	0	0	0
5/1/2024	8:15 AM	5	1583	278	9	19	6	0	1	17	0	0	0	0
5/1/2024	8:30 AM	4	1371	246	9	15	6	0	1	18	0	0	0	0
5/1/2024	8:45 AM	4	1179	217	14	19	7	0	0	14	0	0	0	0
5/1/2024	9:00 AM	1	1012	192	12	26	7	0	0	10	0	0	0	0
5/1/2024	9:15 AM	0	946	184	6	21	7	0	0	7	0	0	0	0
5/1/2024	9:30 AM	0	899	177	5	21	5	0	0	6	0	0	0	0
5/1/2024	9:45 AM	0	876	171	0	15	6	0	1	8	0	0	0	0
5/1/2024	10:00 AM	0	837	160	0	12	8	0	2	10	0	0	0	0
5/1/2024	10:15 AM	0	838	152	0	15	10	0	2	10	0	0	0	0
5/1/2024	10:30 AM	0	861	151	0	18	11	0	2	11	0	0	0	0
5/1/2024	10:45 AM	0	834	158	0	18	9	0	1	12	0	0	0	0
5/1/2024	11:00 AM	0	885	174	0	18	9	0	0	11	0	0	0	0
5/1/2024	11:15 AM	1	895	180	0	15	5	0	0	12	0	0	0	0
5/1/2024	11:30 AM	1	954	187	0	13	7	0	0	11	0	0	0	0
5/1/2024	11:45 AM	2	1003	192	0	17	7	0	0	8	0	0	0	0
5/1/2024	12:00 PM	2	982	203	0	19	8	0	0	7	0	0	0	0
5/1/2024	12:15 PM	2	1020	199	0	23	10	0	2	6	0	0	0	0
5/1/2024	12:30 PM	3	1009	195	0	23	8	0	4	7	0	0	0	0
5/1/2024	12:45 PM	2	1030	174	0	17	10	0	5	10	0	0	0	0
5/1/2024	1:00 PM	2	1076	168	0	17	8	0	5	10	0	0	0	0
5/1/2024	1:15 PM	1	1088	167	0	15	12	0	3	11	0	0	0	0
5/1/2024	1:30 PM	1	1144	181	0	13	12	0	2	13	0	0	0	0
5/1/2024	1:45 PM	2	1128	205	0	18	13	0	1	10	0	0	0	0
5/1/2024	2:00 PM	2	1077	189	1	16	13	0	1	11	0	0	0	0
5/1/2024	2:15 PM	2	1048	194	2	13	7	0	2	9	0	0	0	0
5/1/2024	2:30 PM	1	981	168	2	18	8	0	1	4	0	0	0	0
5/1/2024	2:45 PM	1	1012	159	2	16	7	0	1	5	0	0	0	0
5/1/2024	3:00 PM	1	1026	163	3	14	5	0	1	5	0	0	0	0
5/1/2024	3:15 PM	2	1030	150	3	20	5	0	0	4	0	0	0	0
5/1/2024	3:30 PM	2	1035	154	4	18	5	0	1	5	0	0	0	0
5/1/2024	3:45 PM	1	1051	147	4	17	2	0	1	3	0	0	0	0
5/1/2024	4:00 PM	3	1106	151	3	14	2	0	1	2	0	0	0	0
5/1/2024	4:15 PM	3	1132	152	2	10	3	0	1	2	0	0	0	0
5/1/2024	4:30 PM	3	1165	157	1	8	1	0	0	3	0	0	0	0
5/1/2024	4:45 PM	3	1085	161	1	6	2	0	0	4	0	0	0	0
5/1/2024	5:00 PM	3	1060	160	0	7	4	0	0	3	0	0	0	0
5/1/2024	5:15 PM	4	994	166	0	7	3	0	0	3	0	0	0	0
5/1/2024	5:30 PM	5	934	155	0	6	4	0	0	2	0	0	0	0
5/1/2024	5:45 PM	6	916	133	0	6	3	0	0	1	0	0	0	0
5/1/2024	6:00 PM	6	848	116	0	6	1	0	0	1	0	0	0	0
5/1/2024	6:15 PM	4	827	97	0	4	1	0	1	2	0	0	0	0
5/1/2024	6:30 PM	3	790	91	0	3	0	0	1	1	0	0	0	0
5/1/2024	6:45 PM	2	764	85	0	2	0	0	1	1	0	0	0	0
5/1/2024	7:00 PM	0	694	77	0	2	0	0	2	2	0	0	0	0
5/1/2024	7:15 PM	0	664	67	0	3	0	0	1	2	0	0	0	0
5/1/2024	7:30 PM	0	645	62	0	4	0	0	1	3	0	0	0	0
5/1/2024	7:45 PM	3	655	61	0	4	0	0	1	3	0	0	0	0
5/1/2024	8:00 PM	4	700	52	0	5	0	0	0	2	0	0	0	0
5/1/2024	8:15 PM	4	698	51	0	3	0	0	0	1	0	0	0	0
5/1/2024	8:30 PM	5	645	41	1	2	0	0	0	0	0	0	0	0
5/1/2024	8:45 PM	2	590	34	1	2	0	0	0	0	0	0	0	0
5/1/2024	9:00 PM	1	525	34	1	0	1	0	0	0	0	0	0	0
5/1/2024	9:15 PM	2	456	30	1	1	1	0	0	1	0	0	0	0
5/1/2024	9:30 PM	1	433	23	0	3	1	0	0	1	0	0	0	0
5/1/2024	9:45 PM	1	376	20	0	4	1	0	0	1	0	0	0	0
5/1/2024	10:00 PM	1	337	13	0	5	0	0	0	1	0	0	0	0
5/1/2024	10:15 PM	0	311	10	0	4	1	0	0	0	0	0	0	0
5/1/2024	10:30 PM	0	266	9	0	4	1	0	0	1	0	0	0	0
5/1/2024	10:45 PM	0	233	5	0	4	1	0	0	1	0	0	0	0
5/1/2024	11:00 PM	0	208	5	0	3	1	0	0	1	0	0	0	0
5/1/2024	11:15 PM	0	143	3	0	3	0	0	0	1	0	0	0	0
5/1/2024	11:30 PM	0	94	2	0	1	0	0	0	0	0	0	0	0
5/1/2024	11:45 PM	0	50	1	0	0	0	0	0	0	0	0	0	0

5/2/2024	12:00 AM	0	106	5	0	3	1	0	0	1	0	0	0	0
5/2/2024	12:15 AM	0	91	2	0	3	1	0	0	0	0	0	0	0
5/2/2024	12:30 AM	0	83	4	0	2	0	0	0	0	0	0	0	0
5/2/2024	12:45 AM	0	74	5	0	0	0	0	0	0	0	0	0	0
5/2/2024	1:00 AM	0	53	5	0	0	0	0	0	0	0	0	0	0
5/2/2024	1:15 AM	0	45	7	0	0	0	0	0	1	0	0	0	0
5/2/2024	1:30 AM	0	47	5	0	1	0	0	0	2	0	0	0	0
5/2/2024	1:45 AM	0	48	6	0	2	0	0	0	3	0	0	0	0
5/2/2024	2:00 AM	0	45	5	0	2	0	0	0	3	0	0	0	0
5/2/2024	2:15 AM	0	44	3	0	2	0	0	0	3	0	0	0	0
5/2/2024	2:30 AM	0	43	3	0	1	0	0	0	3	0	0	0	0
5/2/2024	2:45 AM	0	47	4	0	0	0	0	0	2	0	0	0	0
5/2/2024	3:00 AM	0	53	6	0	1	0	1	0	2	0	0	0	0
5/2/2024	3:15 AM	0	61	6	0	2	0	1	0	1	0	0	0	0
5/2/2024	3:30 AM	0	71	5	0	2	0	1	0	0	0	0	0	0
5/2/2024	3:45 AM	0	77	3	0	2	0	1	0	0	0	0	0	0
5/2/2024	4:00 AM	0	90	5	0	1	3	0	0	1	0	0	0	0
5/2/2024	4:15 AM	0	106	10	0	1	5	0	0	4	0	0	0	0
5/2/2024	4:30 AM	1	137	14	0	7	14	0	0	13	0	0	0	0
5/2/2024	4:45 AM	2	199	29	0	9	22	0	0	14	0	0	0	0
5/2/2024	5:00 AM	3	256	35	0	9	21	0	0	14	0	0	0	0
5/2/2024	5:15 AM	3	295	46	0	8	23	0	0	12	0	0	0	0
5/2/2024	5:30 AM	2	367	68	0	3	16	0	0	3	0	2	0	0
5/2/2024	5:45 AM	1	456	106	1	2	12	0	0	4	0	2	0	0
5/2/2024	6:00 AM	1	598	159	1	4	12	0	0	8	0	3	0	0
5/2/2024	6:15 AM	2	816	196	3	8	10	0	0	10	0	3	0	0
5/2/2024	6:30 AM	2	1025	244	4	8	12	0	2	13	0	1	0	0
5/2/2024	6:45 AM	2	1242	279	3	10	10	0	2	14	0	1	0	0
5/2/2024	7:00 AM	1	1440	307	3	13	10	0	2	14	0	0	0	0
5/2/2024	7:15 AM	0	1569	316	2	12	10	0	2	12	0	0	0	0
5/2/2024	7:30 AM	1	1738	310	4	15	8	0	1	13	0	0	0	0
5/2/2024	7:45 AM	1	1760	293	5	15	6	0	1	13	0	0	0	0
5/2/2024	8:00 AM	1	1679	247	7	11	7	0	1	11	0	0	0	0
5/2/2024	8:15 AM	1	1555	235	10	12	9	0	1	12	0	0	0	0
5/2/2024	8:30 AM	0	1326	216	10	13	8	0	0	10	0	0	0	0
5/2/2024	8:45 AM	0	1177	208	12	17	8	0	0	10	0	0	0	0
5/2/2024	9:00 AM	0	1088	229	10	22	7	0	1	12	0	0	0	0
5/2/2024	9:15 AM	0	1029	229	6	20	6	0	1	12	0	0	0	0
5/2/2024	9:30 AM	0	948	233	5	17	9	0	1	12	0	0	0	0
5/2/2024	9:45 AM	0	916	221	2	13	12	0	1	14	0	0	0	0
5/2/2024	10:00 AM	0	923	204	2	16	10	0	0	10	0	0	0	0
5/2/2024	10:15 AM	0	884	196	3	19	7	0	0	12	0	0	0	0
5/2/2024	10:30 AM	1	918	200	1	25	8	0	2	14	0	0	0	0
5/2/2024	10:45 AM	1	925	185	1	24	8	0	3	10	0	0	0	0
5/2/2024	11:00 AM	4	897	186	2	24	8	0	4	16	0	0	0	0
5/2/2024	11:15 AM	4	997	212	2	29	8	0	8	21	1	0	0	0
5/2/2024	11:30 AM	3	1092	225	2	25	6	0	6	22	1	0	0	0
5/2/2024	11:45 AM	3	1144	247	2	27	8	0	5	25	1	0	0	0
5/2/2024	12:00 PM	0	1217	251	1	28	10	1	4	23	1	0	0	0
5/2/2024	12:15 PM	1	1244	250	0	28	10	1	2	22	0	0	0	0
5/2/2024	12:30 PM	2	1233	242	1	34	7	1	3	31	0	0	0	0
5/2/2024	12:45 PM	2	1283	233	2	37	3	1	3	32	0	0	0	0
5/2/2024	1:00 PM	4	1287	233	5	35	4	0	4	35	0	0	0	0
5/2/2024	1:15 PM	4	1254	232	5	34	6	0	4	32	0	0	0	0
5/2/2024	1:30 PM	3	1307	224	4	34	9	0	4	24	0	0	0	0
5/2/2024	1:45 PM	4	1313	216	6	39	11	0	4	22	0	0	0	0
5/2/2024	2:00 PM	4	1350	227	5	37	10	0	5	20	0	0	0	0
5/2/2024	2:15 PM	5	1391	223	5	34	12	1	5	23	0	0	0	0
5/2/2024	2:30 PM	5	1327	231	5	32	10	1	5	21	0	0	0	0
5/2/2024	2:45 PM	4	1353	233	3	26	8	3	6	24	0	0	0	0
5/2/2024	3:00 PM	2	1358	230	2	33	6	3	5	26	0	0	0	0
5/2/2024	3:15 PM	0	1346	232	3	33	5	2	3	24	0	0	0	0
5/2/2024	3:30 PM	0	1346	223	3	31	4	3	3	23	0	0	0	0
5/2/2024	3:45 PM	2	1271	230	2	32	4	1	2	19	0	0	0	0
5/2/2024	4:00 PM	2	1169	214	2	28	4	1	2	16	0	0	0	0
5/2/2024	4:15 PM	2	1103	190	1	24	1	1	2	11	0	0	0	0
5/2/2024	4:30 PM	2	1064	178	2	20	2	0	1	13	0	0	0	0
5/2/2024	4:45 PM	0	995	169	2	19	1	0	1	11	0	0	0	0
5/2/2024	5:00 PM	0	989	169	1	16	2	0	0	7	0	0	0	0
5/2/2024	5:15 PM	0	988	175	1	16	2	0	1	10	0	0	0	0
5/2/2024	5:30 PM	0	1071	174	0	20	1	0	1	7	0	0	0	0
5/2/2024	5:45 PM	1	1121	157	0	17	2	0	1	11	0	0	0	0
5/2/2024	6:00 PM	2	1160	133	0	12	1	0	2	11	0	0	0	0
5/2/2024	6:15 PM	2	907	87	0	10	1	0	1	7	0	0	0	0
5/2/2024	6:30 PM	2	562	47	0	4	1	0	1	5	0	0	0	0
5/2/2024	6:45 PM	1	284	22	0	1	0	0	1	1	0	0	0	0
5/2/2024	7:00 PM	0	0	0	0	0	0	0	0	0	0	0	0	0
5/2/2024	7:15 PM	0	0	0	0	0	0	0	0	0	0	0	0	0
5/2/2024	7:30 PM	0	0	0	0	0	0	0	0	0	0	0	0	0
5/2/2024	7:45 PM	0	0	0	0	0	0	0	0	0	0	0	0	0
5/2/2024	8:00 PM	0	0	0	0	0	0	0	0	0	0	0	0	0
5/2/2024	8:15 PM	0	0	0	0	0	0	0	0	0	0	0	0	0
5/2/2024	8:30 PM	0	0	0	0	0	0	0	0	0	0	0	0	0
5/2/2024	8:45 PM	0	0	0	0	0	0	0	0	0	0	0	0	0
5/2/2024	9:00 PM	0	0	0	0	0	0	0	0	0	0	0	0	0
5/2/2024	9:15 PM	0	0	0	0	0	0	0	0	0	0	0	0	0
5/2/2024	9:30 PM	0	0	0	0	0	0	0	0	0	0	0	0	0
5/2/2024	9:45 PM	0	0	0	0	0	0	0	0	0	0	0	0	0
5/2/2024	10:00 PM	0	0	0	0	0	0	0	0	0	0	0	0	0
5/2/2024	10:15 PM	0	0	0	0	0	0	0	0	0	0	0	0	0
5/2/2024	10:30 PM	0	0	0	0	0	0	0	0	0	0	0	0	0
5/2/2024	10:45 PM	0	0	0	0	0	0	0	0	0	0	0	0	0
5/2/2024	11:00 PM	0	0	0	0	0	0	0	0	0	0	0	0	0
5/2/2024	11:15 PM	0	0	0	0	0	0	0	0	0	0	0	0	0
5/2/2024	11:30 PM	0	0	0	0	0	0	0	0	0	0	0	0	0
5/2/2024	11:45 PM	0	0	0	0	0	0	0	0	0	0	0	0	0

Bi-Directional Class Count || NB EB 15min

Columbia, SC

Marr Traffic DATA COLLECTION
www.marrtraffic.com

Site 74 Lane 1 EB
I-20,
west of US-378 Sunset Blvd S/Bound Off-Ramp

Date
Sunday, April 21, 2024

Lat/Long
34.008085°, -81.156669°

Weather
Cloudy
66°F

Click here for Detailed Weather

Click here for Map

0000 - 2400 (Sunday 24h Session) (04-21-2024)
NB EB 15min

	Eastbound (Movement 74 Lane 1 EB.1)													15min	60min
Time	1	2	3	4	5	6	7	8	9	10	11	12	13	Total	Total
0000 - 0015	0	15	1	0	0	0	0	0	0	0	0	0	0	**16**	
0015 - 0030	0	6	0	0	0	0	0	0	0	0	0	0	0	**6**	
0030 - 0045	0	10	1	0	0	0	0	0	0	0	0	0	0	**11**	
0045 - 0100	0	9	0	0	0	0	0	0	0	0	0	0	0	**9**	**42**
0100 - 0115	0	7	1	0	0	0	0	0	0	0	0	0	0	**8**	
0115 - 0130	0	7	0	0	0	0	0	0	0	0	0	0	0	**7**	
0130 - 0145	0	8	1	1	0	0	0	0	0	0	0	0	0	**10**	
0145 - 0200	0	4	0	0	0	0	0	0	0	0	0	0	0	**4**	**29**
0200 - 0215	0	5	1	0	0	0	0	0	0	0	0	0	0	**6**	
0215 - 0230	0	1	0	0	0	0	0	0	0	0	0	0	0	**1**	
0230 - 0245	0	1	0	0	0	0	0	0	0	0	0	0	0	**1**	
0245 - 0300	0	5	0	0	0	0	0	0	0	0	0	0	0	**5**	**13**
0300 - 0315	0	2	1	0	0	0	0	0	0	0	0	0	0	**3**	
0315 - 0330	0	5	1	0	0	0	0	0	0	0	0	0	0	**6**	
0330 - 0345	0	2	2	0	0	0	0	0	0	0	0	0	0	**4**	
0345 - 0400	0	6	0	0	0	0	0	0	0	0	0	0	0	**6**	**19**
0400 - 0415	0	1	0	0	0	0	0	0	0	0	0	0	0	**1**	
0415 - 0430	0	3	1	0	0	0	0	0	0	0	0	0	0	**4**	
0430 - 0445	0	5	0	0	0	0	0	0	0	0	0	0	0	**5**	
0445 - 0500	0	2	0	0	0	0	0	0	0	0	0	0	0	**2**	**12**
0500 - 0515	0	8	2	0	0	0	0	0	0	0	0	0	0	**10**	
0515 - 0530	0	4	0	0	0	0	0	0	1	0	0	0	0	**5**	
0530 - 0545	0	3	0	0	0	0	0	0	0	0	0	0	0	**3**	
0545 - 0600	0	5	0	0	0	0	0	0	0	0	0	0	0	**5**	**23**
0600 - 0615	0	7	1	0	0	0	0	0	0	0	0	0	0	**8**	
0615 - 0630	0	12	1	0	0	0	0	0	0	0	0	0	0	**13**	
0630 - 0645	0	18	3	0	0	0	0	0	0	0	0	0	0	**21**	
0645 - 0700	0	21	2	0	0	0	0	0	0	0	0	0	0	**23**	**65**
0700 - 0715	0	24	7	0	2	0	0	0	0	0	0	0	0	**33**	
0715 - 0730	0	23	6	0	0	0	0	0	0	0	0	0	0	**29**	
0730 - 0745	0	16	5	0	0	0	0	0	0	0	0	0	0	**21**	
0745 - 0800	0	46	8	0	0	0	0	0	0	0	0	0	0	**54**	**137**
0800 - 0815	0	28	3	0	0	0	0	0	0	0	0	0	0	**31**	
0815 - 0830	0	32	5	0	1	0	0	0	0	0	0	0	0	**38**	
0830 - 0845	0	41	8	0	0	0	0	0	0	0	0	0	0	**49**	
0845 - 0900	0	49	9	0	0	0	0	0	0	0	0	0	0	**58**	**176**
0900 - 0915	5	54	12	0	0	0	0	0	0	0	0	0	0	**71**	
0915 - 0930	0	59	7	0	3	0	0	0	1	0	0	0	0	**70**	
0930 - 0945	0	53	8	0	0	0	0	0	0	0	0	0	0	**61**	
0945 - 1000	0	70	13	0	0	0	0	0	0	0	0	0	0	**83**	**285**
1000 - 1015	20	78	11	0	0	0	0	0	0	0	0	0	0	**109**	
1015 - 1030	0	77	11	0	0	0	0	0	0	0	0	0	0	**88**	
1030 - 1045	1	87	21	0	1	0	0	0	1	0	0	0	0	**111**	
1045 - 1100	8	76	25	0	0	0	0	0	0	0	0	0	0	**109**	**417**
1100 - 1115	14	66	10	0	0	0	0	0	0	0	0	0	0	**90**	
1115 - 1130	0	91	11	0	2	0	0	0	0	0	0	0	0	**104**	
1130 - 1145	0	116	30	0	1	0	0	0	0	0	0	0	0	**147**	
1145 - 1200	0	82	20	0	1	0	0	1	0	0	0	0	0	**104**	**445**
1200 - 1215	0	111	22	0	1	0	0	0	0	0	0	0	0	**134**	
1215 - 1230	0	127	25	0	0	0	0	0	0	0	0	0	0	**152**	
1230 - 1245	0	125	25	0	0	0	0	0	0	0	0	0	0	**150**	
1245 - 1300	0	143	18	0	2	0	0	0	0	0	0	0	0	**163**	**599**
1300 - 1315	0	87	23	0	0	0	0	0	0	0	0	0	0	**110**	
1315 - 1330	1	129	34	0	0	0	0	0	0	0	0	0	0	**164**	
1330 - 1345	0	138	23	0	0	0	0	0	0	0	0	0	0	**161**	
1345 - 1400	0	122	29	0	1	0	0	0	0	0	0	0	0	**152**	**587**
1400 - 1415	0	131	22	1	1	0	0	0	0	0	0	0	0	**155**	
1415 - 1430	0	115	27	0	0	0	0	0	0	0	0	0	0	**142**	
1430 - 1445	0	140	36	0	1	0	0	0	0	0	0	0	0	**177**	
1445 - 1500	1	116	22	0	0	0	0	0	0	0	0	0	0	**139**	**613**
1500 - 1515	1	89	21	0	2	0	0	0	1	0	0	0	0	**114**	
1515 - 1530	0	96	20	0	0	0	0	1	0	0	0	0	0	**117**	
1530 - 1545	1	89	27	0	1	0	0	0	0	0	0	0	0	**118**	
1545 - 1600	0	121	20	0	0	0	0	0	0	0	0	0	0	**141**	**490**
1600 - 1615	5	134	29	0	0	0	0	0	0	0	0	0	0	**168**	
1615 - 1630	0	128	24	0	0	0	0	0	0	0	0	0	0	**152**	
1630 - 1645	0	147	32	0	1	0	0	1	0	1	0	0	0	**182**	
1645 - 1700	0	148	34	0	0	0	0	1	0	0	0	0	0	**183**	**685**
1700 - 1715	0	119	22	0	0	0	0	1	0	0	0	0	0	**142**	
1715 - 1730	0	111	19	1	0	0	0	0	0	0	0	0	0	**131**	
1730 - 1745	0	129	19	0	0	0	0	0	0	0	0	0	0	**148**	
1745 - 1800	0	113	11	0	0	0	0	0	0	0	0	0	0	**124**	**545**
1800 - 1815	0	112	13	0	0	0	0	2	0	0	0	0	0	**127**	
1815 - 1830	0	103	19	0	1	0	0	0	0	0	0	0	0	**123**	
1830 - 1845	0	106	17	0	0	0	0	0	0	0	0	0	0	**123**	
1845 - 1900	0	76	13	0	0	0	0	0	1	0	0	0	0	**90**	**463**
1900 - 1915	0	86	11	0	1	0	0	0	0	0	0	0	0	**98**	
1915 - 1930	0	92	16	0	0	0	0	0	0	0	0	0	0	**108**	
1930 - 1945	0	83	9	0	0	0	0	0	0	0	0	0	0	**92**	
1945 - 2000	2	93	14	0	0	0	0	0	0	0	0	0	0	**109**	**407**
2000 - 2015	0	68	12	0	0	0	0	0	0	0	0	0	0	**80**	
2015 - 2030	0	53	10	0	0	0	0	0	0	0	0	0	0	**63**	
2030 - 2045	0	58	3	0	0	0	0	0	0	0	0	0	0	**61**	
2045 - 2100	1	42	1	0	0	0	0	0	1	0	0	0	0	**45**	**249**
2100 - 2115	0	42	1	0	0	0	0	0	0	0	0	0	0	**43**	
2115 - 2130	0	52	2	0	0	0	0	0	1	0	0	0	0	**55**	
2130 - 2145	0	37	0	0	0	0	0	0	0	0	0	0	0	**37**	
2145 - 2200	0	26	2	0	0	0	0	0	1	0	0	0	0	**29**	**164**
2200 - 2215	0	28	4	0	0	0	0	0	0	0	0	0	0	**32**	
2215 - 2230	0	22	0	0	0	0	0	0	0	0	0	0	0	**22**	
2230 - 2245	0	21	0	0	0	0	0	0	0	0	0	0	0	**21**	
2245 - 2300	0	20	0	0	0	0	0	0	0	0	0	0	0	**20**	**95**
2300 - 2315	0	22	1	0	0	0	0	0	1	0	0	0	0	**24**	
2315 - 2330	0	20	1	0	0	0	0	0	1	0	0	0	0	**22**	
2330 - 2345	0	8	0	0	0	0	0	0	0	0	0	0	0	**8**	
2345 - 0000	0	16	0	0	0	0	0	0	0	0	0	0	0	**16**	**70**

Session Total	60	5544	982	3	23	0	0	7	10	1	0	0	0	**6630**
Session Average	0.63	57.75	10.23	0.03	0.24	0.00	0.00	0.07	0.10	0.01	0.00	0.00	0.00	**69.06**
Session Percentage	0.90	83.62	14.81	0.05	0.35	0.00	0.00	0.11	0.15	0.02	0.00	0.00	0.00	

AM Peak Hour	0945 - 1045	0945 - 1045	0945 - 1045	-	0830 - 0930	-	-	-	0500 - 0600	-	-	-	-	**0945 - 1045**
AM Peak Volume	21	312	56	0	3	0	0	0	1	0	0	0	0	**391**

Noon Peak Hour	1000 - 1100	1315 - 1415	1345 - 1445	1315 - 1415	1115 - 1215	-	-	1100 - 1200	1000 - 1100	-	-	-	-	**1315 - 1415**
Noon Peak Volume	29	520	114	1	5	0	0	1	1	0	0	0	0	**632**

PM Peak Hour	1515 - 1615	1600 - 1700	1600 - 1700	1630 - 1730	1500 - 1600	-	-	1615 - 1715	1500 - 1600	1545 - 1645	-	-	-	**1600 - 1700**
PM Peak Volume	6	557	119	1	3	0	0	3	1	1	0	0	0	**685**

Site 74 Lane 1 EB
I-20,
west of US-378 Sunset Blvd S/Bound Off-Ramp

Date
Monday, April 22, 2024

Lat/Long
34.008085°, -81.156669°

Weather
Mostly Cloudy
57°F

Click here for Detailed Weather

0000 - 2400 (Weekday 24h Session) (04-22-2024)
NB EB 15min

	Eastbound (Movement 74 Lane 1 EB.1)													15min	60min
Time	1	2	3	4	5	6	7	8	9	10	11	12	13	Total	Total
0000 - 0015	0	11	0	0	0	0	0	0	0	0	0	0	0	**11**	
0015 - 0030	0	12	0	0	0	0	0	0	0	0	0	0	0	**12**	
0030 - 0045	0	18	1	0	0	0	0	0	0	0	0	0	0	**19**	
0045 - 0100	0	7	0	0	0	0	0	0	0	0	0	0	0	**7**	**49**
0100 - 0115	0	13	2	0	0	0	0	0	0	0	0	0	0	**15**	
0115 - 0130	0	9	0	0	0	0	0	0	0	0	0	0	0	**9**	
0130 - 0145	0	10	1	0	0	0	0	0	0	0	0	0	0	**11**	
0145 - 0200	0	8	0	0	0	0	0	0	0	0	0	0	0	**8**	**43**
0200 - 0215	0	11	2	0	0	0	0	0	0	0	0	0	0	**13**	
0215 - 0230	0	5	0	0	0	0	0	0	0	0	0	0	0	**5**	
0230 - 0245	0	6	1	0	0	0	0	0	0	0	0	0	0	**7**	
0245 - 0300	0	6	0	0	0	0	0	0	0	0	0	0	0	**6**	**31**
0300 - 0315	0	3	0	0	0	0	0	0	0	0	0	0	0	**3**	
0315 - 0330	0	1	0	0	0	0	0	0	0	0	0	0	0	**1**	
0330 - 0345	0	6	2	0	0	0	0	0	0	0	0	0	0	**8**	
0345 - 0400	0	3	1	0	0	0	0	0	0	0	0	0	0	**4**	**16**
0400 - 0415	0	9	1	0	0	0	0	0	0	0	0	0	0	**10**	
0415 - 0430	0	13	1	0	0	0	0	0	0	0	0	0	0	**14**	
0430 - 0445	0	18	2	0	0	0	0	0	0	0	0	0	0	**20**	
0445 - 0500	0	16	1	0	0	0	0	0	0	0	0	0	0	**17**	**61**
0500 - 0515	0	24	5	0	0	0	0	0	0	0	0	0	0	**29**	
0515 - 0530	0	20	4	0	0	0	0	0	0	0	0	0	0	**24**	
0530 - 0545	0	42	10	0	0	0	0	0	0	0	0	0	0	**52**	
0545 - 0600	0	26	11	0	0	0	0	0	0	0	0	0	0	**37**	**142**
0600 - 0615	0	54	18	0	0	0	0	0	0	0	0	0	0	**72**	
0615 - 0630	0	48	14	0	0	0	0	0	0	0	0	0	0	**62**	
0630 - 0645	0	131	24	0	1	0	0	0	0	0	0	0	0	**156**	
0645 - 0700	0	138	26	0	0	0	0	0	0	0	0	0	0	**164**	**454**
0700 - 0715	0	254	47	0	1	0	0	0	1	0	0	0	0	**303**	
0715 - 0730	0	313	66	0	2	0	0	0	0	0	0	0	0	**381**	
0730 - 0745	0	349	68	0	2	0	0	0	0	0	0	0	0	**419**	
0745 - 0800	0	295	79	0	1	0	0	0	0	0	0	0	0	**375**	**1478**
0800 - 0815	0	268	43	0	1	0	0	0	0	0	0	0	0	**312**	
0815 - 0830	1	264	41	0	1	0	0	0	0	0	0	0	0	**307**	
0830 - 0845	0	207	50	1	0	0	0	0	0	0	0	0	0	**258**	
0845 - 0900	0	162	49	0	1	0	0	0	0	0	0	0	0	**212**	**1089**
0900 - 0915	0	134	16	0	2	0	0	0	0	0	0	0	0	**152**	
0915 - 0930	0	96	34	0	1	0	0	0	0	0	0	0	0	**131**	
0930 - 0945	0	102	22	0	3	0	0	0	0	0	0	0	0	**127**	
0945 - 1000	0	115	21	1	4	0	0	1	2	0	0	0	0	**144**	**554**
1000 - 1015	0	95	22	0	0	0	0	2	0	0	0	0	0	**119**	
1015 - 1030	0	96	14	0	1	0	0	1	0	0	0	0	0	**112**	
1030 - 1045	0	97	20	0	3	0	0	0	0	0	0	0	0	**120**	
1045 - 1100	0	76	21	0	0	0	0	0	0	0	0	0	0	**97**	**448**
1100 - 1115	0	65	20	0	0	0	0	1	0	0	0	0	0	**86**	
1115 - 1130	0	76	9	0	2	0	0	1	0	0	0	0	0	**88**	
1130 - 1145	0	63	15	0	3	0	0	0	1	0	0	0	0	**82**	
1145 - 1200	0	83	26	0	1	0	0	1	1	0	0	0	0	**112**	**368**
1200 - 1215	0	85	18	0	1	0	0	1	0	0	0	0	0	**105**	
1215 - 1230	0	62	21	0	1	0	0	3	0	0	0	0	0	**87**	
1230 - 1245	0	75	23	0	0	0	0	0	0	0	0	0	0	**98**	
1245 - 1300	1	64	15	0	0	0	0	1	0	0	0	0	0	**81**	**371**
1300 - 1315	0	60	19	0	1	0	0	1	0	0	0	0	0	**81**	
1315 - 1330	0	95	27	0	0	0	0	0	0	0	0	0	0	**122**	
1330 - 1345	0	85	18	0	3	0	0	0	0	0	0	0	0	**106**	
1345 - 1400	0	72	15	0	1	0	0	1	1	0	0	0	0	**90**	**399**
1400 - 1415	0	92	26	0	0	0	0	1	0	0	0	0	0	**119**	
1415 - 1430	5	101	19	0	2	0	0	0	1	0	0	0	0	**128**	
1430 - 1445	0	92	20	0	0	0	0	1	0	0	0	0	0	**113**	
1445 - 1500	0	114	20	1	0	0	0	0	0	0	0	0	0	**135**	**495**
1500 - 1515	1	76	22	1	2	0	0	0	1	0	0	0	0	**103**	
1515 - 1530	1	105	28	0	2	0	0	0	1	0	0	0	0	**137**	
1530 - 1545	0	119	31	0	1	0	0	2	1	0	0	0	0	**154**	
1545 - 1600	0	131	25	0	1	0	0	1	2	0	0	0	0	**160**	**554**
1600 - 1615	1	139	21	0	3	0	0	0	0	0	0	0	0	**164**	
1615 - 1630	0	135	18	0	0	0	0	0	0	0	0	0	0	**153**	
1630 - 1645	0	112	29	0	0	1	0	1	0	0	0	0	0	**143**	
1645 - 1700	0	155	28	0	1	0	0	0	0	0	0	0	0	**184**	**644**
1700 - 1715	1	168	41	0	2	0	0	3	1	0	0	0	0	**216**	
1715 - 1730	0	179	40	0	0	0	0	1	0	0	0	0	0	**220**	
1730 - 1745	1	107	27	0	0	1	0	0	0	0	0	0	0	**136**	
1745 - 1800	0	86	20	0	0	0	0	0	1	0	0	0	0	**107**	**679**
1800 - 1815	0	113	26	0	0	0	0	1	0	0	0	0	0	**140**	
1815 - 1830	0	95	14	0	1	0	0	0	1	0	0	0	0	**111**	
1830 - 1845	0	78	18	0	0	0	0	0	0	0	0	0	0	**96**	
1845 - 1900	0	58	10	0	0	0	0	0	0	0	0	0	0	**68**	**415**
1900 - 1915	0	50	3	0	0	0	0	0	1	0	0	0	0	**54**	
1915 - 1930	0	64	6	0	0	0	0	0	0	0	0	0	0	**70**	
1930 - 1945	0	45	7	0	0	0	0	2	0	0	0	0	0	**54**	
1945 - 2000	0	62	9	0	0	0	0	0	0	0	0	0	0	**71**	**249**
2000 - 2015	0	46	5	0	0	0	0	0	0	0	0	0	0	**51**	
2015 - 2030	0	31	2	0	0	0	0	0	1	0	0	0	0	**34**	
2030 - 2045	0	23	2	0	0	0	0	0	2	0	0	0	0	**27**	
2045 - 2100	0	19	4	0	0	0	0	0	1	0	0	0	0	**24**	**136**
2100 - 2115	0	17	1	0	1	0	0	0	2	0	0	0	0	**21**	
2115 - 2130	0	20	5	0	0	0	0	0	0	0	0	0	0	**25**	
2130 - 2145	0	16	0	0	0	0	0	0	0	0	0	0	0	**16**	
2145 - 2200	0	15	0	0	0	0	0	0	2	0	0	0	0	**17**	**79**
2200 - 2215	0	19	0	0	0	0	0	0	0	0	0	0	0	**19**	
2215 - 2230	0	16	1	0	0	0	0	0	0	0	0	0	0	**17**	
2230 - 2245	0	11	0	0	0	0	0	0	1	0	0	0	0	**12**	
2245 - 2300	0	7	0	0	0	0	0	0	0	0	0	0	0	**7**	**55**
2300 - 2315	0	12	0	0	0	0	0	0	0	0	0	0	0	**12**	
2315 - 2330	0	10	1	0	0	0	0	0	0	0	0	0	0	**11**	
2330 - 2345	0	3	0	0	0	0	0	0	1	0	0	0	0	**4**	
2345 - 0000	0	4	0	0	0	0	0	0	0	0	0	0	0	**4**	**31**

Session Total	12	7221	1495	4	53	2	0	27	26	0	0	0	0	**8840**
Session Average	0.13	75.22	15.57	0.04	0.55	0.02	0.00	0.28	0.27	0.00	0.00	0.00	0.00	**92.08**
Session Percentage	0.14	81.69	16.91	0.05	0.60	0.02	0.00	0.31	0.29	0.00	0.00	0.00	0.00	

AM Peak Hour	0730 - 0830	0715 - 0815	0700 - 0800	0745 - 0845	0900 - 1000	-	-	0930 - 1030	0900 - 1000	-	-	-	-	**0715 - 0815**
AM Peak Volume	1	1225	260	1	10	0	0	4	2	0	0	0	0	**1487**

Noon Peak Hour	1415 - 1515	1445 - 1545	1445 - 1545	1415 - 1515	1115 - 1215	-	-	1130 - 1230	1445 - 1545	-	-	-	-	**1445 - 1545**
Noon Peak Volume	6	414	101	2	7	0	0	5	3	0	0	0	0	**529**

PM Peak Hour	1500 - 1600	1630 - 1730	1630 - 1730	1500 - 1600	1515 - 1615	1545 - 1645	-	1630 - 1730	1500 - 1600	-	-	-	-	**1630 - 1730**
PM Peak Volume	2	614	138	1	7	1	0	5	5	0	0	0	0	**763**

Site 74 Lane 1 EB
I-20,
west of US-378 Sunset Blvd S/Bound Off-Ramp

Date
Tuesday, April 23, 2024

Lat/Long
34.008085°, -81.156669°

Weather
Fair
58°F

Click here for Detailed Weather

0000 - 2400 (Weekday 24h Session) (04-23-2024)
NB EB 15min

	Eastbound (Movement 74 Lane 1 EB.1)													15min	60min
TIME	1	2	3	4	5	6	7	8	9	10	11	12	13	Total	Total
0000 - 0015	0	2	0	0	0	0	0	0	0	0	0	0	0	**2**	
0015 - 0030	0	0	1	0	0	0	0	0	0	0	0	0	0	**1**	
0030 - 0045	0	3	0	0	0	0	0	0	0	0	0	0	0	**3**	
0045 - 0100	0	0	0	0	0	0	0	0	1	0	0	0	0	**1**	**7**
0100 - 0115	0	0	0	0	0	0	0	0	0	0	0	0	0	**0**	
0115 - 0130	0	1	0	0	0	0	0	0	2	0	0	0	0	**3**	
0130 - 0145	0	1	0	0	0	0	0	0	0	0	0	0	0	**1**	
0145 - 0200	0	0	0	0	0	0	0	0	0	0	0	0	0	**0**	**4**
0200 - 0215	0	0	0	0	0	0	0	0	1	0	0	0	0	**1**	
0215 - 0230	0	2	0	0	0	0	0	0	0	0	0	0	0	**2**	
0230 - 0245	0	1	0	0	0	0	0	0	0	0	0	0	0	**1**	
0245 - 0300	0	2	0	0	0	0	0	0	0	0	0	0	0	**2**	**6**
0300 - 0315	0	6	0	0	0	0	0	0	0	0	0	0	0	**6**	
0315 - 0330	0	5	0	0	0	0	0	0	0	0	0	0	0	**5**	
0330 - 0345	0	5	1	0	0	0	0	0	0	0	0	0	0	**6**	
0345 - 0400	0	5	0	0	0	0	0	0	0	0	0	0	0	**5**	**22**
0400 - 0415	0	4	0	0	0	0	0	0	0	0	0	0	0	**4**	
0415 - 0430	0	2	0	0	1	0	0	0	1	0	0	0	0	**4**	
0430 - 0445	0	11	0	0	0	0	0	0	0	0	0	0	0	**11**	
0445 - 0500	0	8	0	0	0	0	0	0	1	0	0	0	0	**9**	**28**
0500 - 0515	0	11	0	0	0	0	0	0	0	0	0	0	0	**11**	
0515 - 0530	0	13	1	0	1	0	0	0	0	0	0	0	0	**15**	
0530 - 0545	0	36	2	0	0	0	0	0	0	0	0	0	0	**38**	
0545 - 0600	0	33	0	0	0	0	0	0	0	0	0	0	0	**33**	**97**
0600 - 0615	0	71	11	0	0	0	0	0	0	0	0	0	0	**82**	
0615 - 0630	0	105	34	0	0	0	0	0	0	0	0	0	0	**139**	
0630 - 0645	0	171	51	0	2	0	0	0	0	0	0	0	0	**224**	
0645 - 0700	0	177	53	0	4	0	0	0	0	0	0	0	0	**234**	**679**
0700 - 0715	1	189	59	0	1	0	0	0	0	0	0	0	0	**250**	
0715 - 0730	0	279	58	0	4	0	0	1	1	0	0	0	0	**343**	
0730 - 0745	0	265	73	0	3	0	0	0	0	0	0	0	0	**341**	
0745 - 0800	0	220	52	0	0	0	0	2	0	0	0	0	0	**274**	**1208**
0800 - 0815	1	274	66	0	3	0	0	0	0	0	0	0	0	**344**	
0815 - 0830	1	286	61	0	2	0	0	5	0	0	0	0	0	**355**	
0830 - 0845	1	195	64	0	4	1	0	1	1	0	0	0	0	**267**	
0845 - 0900	0	140	48	0	3	0	0	1	0	0	0	0	0	**192**	**1158**
0900 - 0915	0	103	23	0	0	0	0	0	0	0	0	0	0	**126**	
0915 - 0930	0	106	36	0	4	0	0	0	0	0	0	0	0	**146**	
0930 - 0945	0	120	22	0	3	0	0	0	2	0	0	0	0	**147**	
0945 - 1000	0	84	29	1	0	0	0	1	0	0	0	0	0	**115**	**534**
1000 - 1015	1	83	24	0	1	0	0	0	2	0	0	0	0	**111**	
1015 - 1030	1	81	16	0	1	0	0	0	0	0	0	0	0	**99**	
1030 - 1045	0	93	22	0	2	0	0	0	2	0	0	0	0	**119**	
1045 - 1100	0	76	26	0	3	0	0	0	1	0	0	0	0	**106**	**435**
1100 - 1115	0	80	21	0	3	0	0	0	1	0	0	0	0	**105**	
1115 - 1130	1	63	28	0	1	0	0	0	0	0	0	0	0	**93**	
1130 - 1145	0	69	26	0	1	0	0	0	0	0	0	0	0	**96**	
1145 - 1200	0	67	20	0	2	0	0	0	1	0	0	0	0	**90**	**384**
1200 - 1215	1	86	18	1	4	0	0	0	0	0	0	0	0	**110**	
1215 - 1230	0	66	21	0	0	0	0	1	0	0	0	0	0	**88**	
1230 - 1245	0	67	14	0	0	0	0	0	0	0	0	0	0	**81**	
1245 - 1300	0	74	20	0	0	0	0	0	1	0	0	0	0	**95**	**374**
1300 - 1315	0	69	18	0	0	0	0	0	1	0	0	0	0	**88**	
1315 - 1330	0	98	27	1	2	0	0	0	0	0	0	0	0	**128**	
1330 - 1345	0	77	17	0	1	0	0	0	1	0	0	0	0	**96**	
1345 - 1400	0	79	20	0	1	0	0	0	0	0	0	0	0	**100**	**412**
1400 - 1415	0	94	25	0	0	0	0	0	2	0	0	0	0	**121**	
1415 - 1430	0	74	29	0	2	0	0	0	1	0	0	0	0	**106**	
1430 - 1445	0	92	26	0	0	0	0	0	1	1	0	0	0	**120**	
1445 - 1500	1	109	31	2	2	0	0	0	0	0	0	0	0	**145**	**492**
1500 - 1515	0	95	28	0	2	0	0	0	0	0	0	0	0	**125**	
1515 - 1530	0	94	31	0	2	0	0	1	0	0	0	0	0	**128**	
1530 - 1545	1	123	46	0	4	0	0	0	2	0	0	0	0	**176**	
1545 - 1600	0	116	33	0	2	0	0	1	0	0	0	0	0	**152**	**581**
1600 - 1615	1	130	32	0	0	0	0	0	0	0	0	0	0	**163**	
1615 - 1630	0	118	45	0	0	0	0	0	0	0	0	0	0	**163**	
1630 - 1645	0	141	34	0	2	0	0	0	0	0	0	0	0	**177**	
1645 - 1700	0	153	46	1	2	0	0	0	0	0	0	0	0	**202**	**705**
1700 - 1715	1	132	48	0	1	0	0	0	0	0	0	0	0	**182**	
1715 - 1730	0	168	45	0	0	0	0	0	0	0	0	0	0	**213**	
1730 - 1745	0	124	37	0	0	0	0	0	0	0	0	0	0	**161**	
1745 - 1800	1	111	22	0	1	0	0	0	0	0	0	0	0	**135**	**691**
1800 - 1815	1	86	20	3	1	0	0	0	0	0	0	0	0	**111**	
1815 - 1830	0	112	15	0	2	0	0	0	0	0	0	0	0	**129**	
1830 - 1845	2	77	21	0	0	0	0	1	2	0	0	0	0	**103**	
1845 - 1900	0	67	19	0	2	0	0	0	0	0	0	0	0	**88**	**431**
1900 - 1915	0	52	7	0	2	0	0	0	0	0	0	0	0	**61**	
1915 - 1930	0	60	13	0	1	0	0	0	1	0	0	0	0	**75**	
1930 - 1945	0	40	11	0	0	0	0	0	0	0	0	0	0	**51**	
1945 - 2000	0	69	16	0	0	0	0	0	0	0	0	0	0	**85**	**272**
2000 - 2015	0	34	12	0	1	0	0	0	0	0	0	0	0	**47**	
2015 - 2030	0	36	3	0	0	0	0	0	0	0	0	0	0	**39**	
2030 - 2045	0	26	5	0	0	0	0	0	1	0	0	0	0	**32**	
2045 - 2100	0	23	6	0	0	0	0	0	1	0	0	0	0	**30**	**148**
2100 - 2115	0	30	10	0	0	0	0	0	0	0	0	0	0	**40**	
2115 - 2130	0	17	5	0	0	0	0	0	0	0	0	0	0	**22**	
2130 - 2145	0	20	3	0	0	0	0	0	0	0	0	0	0	**23**	
2145 - 2200	0	11	1	0	0	0	0	0	0	0	0	0	0	**12**	**97**
2200 - 2215	0	24	3	0	1	0	0	0	0	0	0	0	0	**28**	
2215 - 2230	0	9	0	0	0	0	0	0	2	0	0	0	0	**11**	
2230 - 2245	0	5	1	0	0	0	0	0	0	0	0	0	0	**6**	
2245 - 2300	0	3	0	0	0	0	0	0	0	0	0	0	0	**3**	**48**
2300 - 2315	0	3	0	0	0	0	0	0	0	0	0	0	0	**3**	
2315 - 2330	0	3	0	0	0	0	0	0	0	0	0	0	0	**3**	
2330 - 2345	0	6	1	0	0	0	0	0	0	0	0	0	0	**7**	
2345 - 0000	0	4	0	0	0	0	0	0	0	0	0	0	0	**4**	**17**

Session Total	16	6855	1813	9	87	1	0	15	33	1	0	0	0	**8830**
Session Average	0.17	71.41	18.89	0.09	0.91	0.01	0.00	0.16	0.34	0.01	0.00	0.00	0.00	**91.98**
Session Percentage	0.18	77.63	20.53	0.10	0.99	0.01	0.00	0.17	0.37	0.01	0.00	0.00	0.00	

AM Peak Hour	0745 - 0845	0730 - 0830	0730 - 0830	0900 - 1000	0645 - 0745	0745 - 0845	-	0745 - 0845	0915 - 1015	-	-	-	-	**0730 - 0830**
AM Peak Hour Volume	3	1045	252	1	12	1	0	8	4	0	0	0	0	**1314**

Noon Peak Hour	1000 - 1100	1445 - 1545	1445 - 1545	1400 - 1500	1445 - 1545	-	-	1130 - 1230	1000 - 1100	1345 - 1445	-	-	-	**1445 - 1545**
Noon Peak Hour Volume	2	421	136	2	10	0	0	1	5	1	0	0	0	**574**

PM Peak Hour	1745 - 1845	1630 - 1730	1645 - 1745	1715 - 1815	1500 - 1600	-	-	1500 - 1600	1830 - 1930	-	-	-	-	**1630 - 1730**
PM Peak Hour Volume	4	594	176	3	10	0	0	2	3	0	0	0	0	**774**

Site 74 Lane 1 EB
I-20,
west of US-378 Sunset Blvd S/Bound Off-Ramp

Date
Wednesday, April 24, 2024

Lat/Long
34.008085°, -81.156669°

Weather
Fair
66°F

Click here for Detailed Weather

0000 - 2400 (Weekday 24h Session) (04-24-2024)
NB EB 15min

	Eastbound (Movement 74 Lane 1 EB.1)													15min	60min
TIME	1	2	3	4	5	6	7	8	9	10	11	12	13	Total	Total
0000 - 0015	0	1	0	0	0	0	0	0	0	0	0	0	0	**1**	
0015 - 0030	0	0	0	0	0	0	0	0	0	0	0	0	0	**0**	
0030 - 0045	0	0	0	0	0	0	0	0	0	0	0	0	0	**0**	
0045 - 0100	0	0	0	0	0	0	0	0	0	0	0	0	0	**0**	**1**
0100 - 0115	0	1	0	0	0	0	0	0	0	0	0	0	0	**1**	
0115 - 0130	0	1	0	0	0	0	0	0	0	0	0	0	0	**1**	
0130 - 0145	0	2	0	0	0	0	0	0	0	0	0	0	0	**2**	
0145 - 0200	0	4	1	0	0	0	0	0	0	0	0	0	0	**5**	**9**
0200 - 0215	0	1	0	0	0	0	0	0	0	0	0	0	0	**1**	
0215 - 0230	0	5	0	0	0	0	0	0	0	0	0	0	0	**5**	
0230 - 0245	0	4	0	0	0	0	0	0	0	0	0	0	0	**4**	
0245 - 0300	0	1	0	0	0	0	0	0	0	0	0	0	0	**1**	**11**
0300 - 0315	0	2	0	0	0	0	0	0	0	0	0	0	0	**2**	
0315 - 0330	0	2	1	0	0	0	0	0	1	0	0	0	0	**4**	
0330 - 0345	2	3	0	0	0	0	0	0	0	0	0	0	0	**5**	
0345 - 0400	0	2	0	0	0	0	0	0	0	0	0	0	0	**2**	**13**
0400 - 0415	0	4	1	0	0	0	0	0	0	0	0	0	0	**5**	
0415 - 0430	0	2	0	0	0	0	0	0	0	0	0	0	0	**2**	
0430 - 0445	0	7	1	0	1	0	0	0	0	0	0	0	0	**9**	
0445 - 0500	0	11	4	0	1	0	0	0	0	0	0	0	0	**16**	**32**
0500 - 0515	0	15	3	0	0	0	0	0	0	0	0	0	0	**18**	
0515 - 0530	0	24	5	0	0	0	0	0	0	0	0	0	0	**29**	
0530 - 0545	0	40	8	0	0	0	0	0	0	0	0	0	0	**48**	
0545 - 0600	0	34	10	0	0	0	0	0	0	0	0	0	0	**44**	**139**
0600 - 0615	0	50	7	0	1	0	0	0	0	0	0	0	0	**58**	
0615 - 0630	0	98	18	0	2	0	0	0	0	0	0	0	0	**118**	
0630 - 0645	0	152	55	0	0	0	0	0	0	0	0	0	0	**207**	
0645 - 0700	0	198	62	0	7	0	0	0	0	0	0	0	0	**267**	**650**
0700 - 0715	1	212	93	0	1	0	0	0	0	0	0	0	0	**307**	
0715 - 0730	0	283	60	0	6	0	0	0	0	0	0	0	0	**349**	
0730 - 0745	0	283	74	0	3	0	0	0	0	0	0	0	0	**360**	
0745 - 0800	0	274	76	0	2	0	0	0	1	0	0	0	0	**353**	**1369**
0800 - 0815	1	253	65	0	1	0	0	1	0	0	0	0	0	**321**	
0815 - 0830	0	266	59	0	2	0	0	1	0	0	0	0	0	**328**	
0830 - 0845	2	190	49	0	2	1	0	2	1	0	0	0	0	**247**	
0845 - 0900	3	125	58	0	1	0	0	2	1	0	0	0	0	**190**	**1086**
0900 - 0915	0	121	45	1	2	0	0	0	2	0	0	0	0	**171**	
0915 - 0930	0	94	23	0	1	0	0	1	0	0	0	0	0	**119**	
0930 - 0945	1	101	33	0	2	0	0	0	0	0	0	0	0	**137**	
0945 - 1000	0	85	20	0	1	0	0	0	0	0	0	0	0	**106**	**533**
1000 - 1015	1	92	30	0	3	0	0	0	0	0	0	0	0	**126**	
1015 - 1030	0	62	28	0	0	0	0	0	1	0	0	0	0	**91**	
1030 - 1045	0	71	25	0	0	0	0	1	0	0	0	0	0	**97**	
1045 - 1100	0	69	20	0	1	0	0	1	0	0	0	0	0	**91**	**405**
1100 - 1115	0	73	23	0	1	1	0	0	0	0	0	0	0	**98**	
1115 - 1130	0	80	16	0	2	0	0	0	1	0	0	0	0	**99**	
1130 - 1145	1	71	26	0	2	0	0	0	0	0	0	0	0	**100**	
1145 - 1200	0	70	19	1	0	0	0	1	0	0	0	0	0	**91**	**388**
1200 - 1215	1	76	25	0	1	0	0	0	0	0	0	0	0	**103**	
1215 - 1230	0	64	19	0	3	0	0	1	0	0	0	0	0	**87**	
1230 - 1245	0	89	15	0	1	0	0	1	1	0	0	0	0	**107**	
1245 - 1300	1	91	22	0	4	0	0	0	0	0	0	0	0	**118**	**415**
1300 - 1315	0	85	25	0	2	0	0	1	1	0	0	0	0	**114**	
1315 - 1330	0	63	37	0	1	0	0	1	0	0	0	0	0	**102**	
1330 - 1345	0	95	33	0	4	0	0	0	0	0	0	0	0	**132**	
1345 - 1400	0	105	40	0	1	0	0	0	1	0	0	0	0	**147**	**495**
1400 - 1415	0	81	21	0	1	0	0	1	0	0	0	0	0	**104**	
1415 - 1430	0	84	16	0	3	0	0	0	1	0	0	0	0	**104**	
1430 - 1445	1	97	22	0	2	0	0	0	0	1	0	0	0	**123**	
1445 - 1500	2	98	29	0	5	0	0	1	1	0	0	0	0	**136**	**467**
1500 - 1515	2	115	37	0	4	0	0	1	1	0	0	0	0	**160**	
1515 - 1530	0	113	36	0	1	1	0	1	0	0	0	0	0	**152**	
1530 - 1545	0	112	34	0	1	0	0	0	0	0	0	0	0	**147**	
1545 - 1600	1	127	41	0	2	0	0	0	0	0	0	0	0	**171**	**630**
1600 - 1615	0	151	27	0	3	0	0	0	0	0	0	0	0	**181**	
1615 - 1630	0	101	30	0	1	0	0	0	0	0	0	0	0	**132**	
1630 - 1645	1	129	40	0	2	0	0	2	0	0	0	0	0	**174**	
1645 - 1700	0	139	42	0	2	0	0	0	1	0	0	0	0	**184**	**671**
1700 - 1715	0	181	53	0	1	0	0	1	0	0	0	0	0	**236**	
1715 - 1730	0	165	34	0	1	0	0	0	1	0	0	0	0	**201**	
1730 - 1745	1	124	44	0	0	1	0	0	0	0	0	0	0	**170**	
1745 - 1800	0	115	33	0	3	0	0	0	0	0	0	0	0	**151**	**758**
1800 - 1815	0	97	38	0	1	0	0	0	4	0	0	0	0	**140**	
1815 - 1830	1	107	24	0	4	0	0	0	0	0	0	0	0	**136**	
1830 - 1845	0	105	22	0	0	0	0	0	1	0	0	0	0	**128**	
1845 - 1900	1	95	19	0	1	0	0	1	1	0	0	0	0	**118**	**522**
1900 - 1915	4	63	18	0	1	0	0	2	0	0	0	0	0	**88**	
1915 - 1930	0	78	8	0	0	0	0	0	0	0	0	0	0	**86**	
1930 - 1945	1	56	13	0	0	0	0	0	0	0	0	0	0	**70**	
1945 - 2000	1	57	17	0	0	0	0	0	0	0	0	0	0	**75**	**319**
2000 - 2015	1	49	12	0	2	0	0	0	0	0	0	0	0	**64**	
2015 - 2030	0	41	9	0	0	0	0	1	0	0	0	0	0	**51**	
2030 - 2045	0	34	4	0	0	0	0	0	0	0	0	0	0	**38**	
2045 - 2100	0	29	4	0	0	0	0	0	0	0	0	0	0	**33**	**186**
2100 - 2115	0	25	5	0	1	0	0	0	0	0	0	0	0	**31**	
2115 - 2130	0	11	6	0	0	0	0	0	0	0	0	0	0	**17**	
2130 - 2145	0	15	5	0	1	0	0	0	0	0	0	0	0	**21**	
2145 - 2200	0	10	4	0	0	0	0	1	0	0	0	0	0	**15**	**84**
2200 - 2215	0	12	7	0	0	0	0	0	0	0	0	0	0	**19**	
2215 - 2230	0	9	2	0	0	0	0	0	0	0	0	0	0	**11**	
2230 - 2245	0	6	2	0	0	0	0	0	0	0	0	0	0	**8**	
2245 - 2300	0	11	6	0	0	0	0	0	0	0	0	0	0	**17**	**55**
2300 - 2315	0	10	2	0	0	0	0	0	0	0	0	0	0	**12**	
2315 - 2330	0	8	1	0	0	0	0	0	0	0	0	0	0	**9**	
2330 - 2345	0	3	0	0	0	0	0	0	0	0	0	0	0	**3**	
2345 - 0000	0	6	0	0	0	0	0	0	0	0	0	0	0	**6**	**30**

Session Total	31	7076	2001	2	105	4	0	26	22	1	0	0	0	**9268**
Session Average	0.32	73.71	20.84	0.02	1.09	0.04	0.00	0.27	0.23	0.01	0.00	0.00	0.00	**96.54**
Session Percentage	0.33	76.35	21.59	0.02	1.13	0.04	0.00	0.28	0.24	0.01	0.00	0.00	0.00	

AM Peak Hour	0800 - 0900	0715 - 0815	0700 - 0800	0815 - 0915	0645 - 0745	0745 - 0845	-	0800 - 0900	0815 - 0915	-	-	-	-	**0715 - 0815**
AM Peak Hour Volume	6	1093	303	1	17	1	0	6	4	0	0	0	0	**1383**

Noon Peak Hour	1415 - 1515	1445 - 1545	1445 - 1545	1100 - 1200	1415 - 1515	1015 - 1115	-	1145 - 1245	1415 - 1515	1345 - 1445	-	-	-	**1445 - 1545**
Noon Peak Hour Volume	5	438	136	1	14	1	0	3	3	1	0	0	0	**595**

PM Peak Hour	1815 - 1915	1630 - 1730	1645 - 1745	-	1500 - 1600	1500 - 1600	-	1615 - 1715	1800 - 1900	-	-	-	-	**1630 - 1730**
PM Peak Hour Volume	6	614	173	0	8	1	0	3	6	0	0	0	0	**795**

Site 74 Lane 1 EB
I-20,
west of US-378 Sunset Blvd S/Bound Off-Ramp

Date
Thursday, April 25, 2024

Lat/Long
34.008085°, -81.156669°

Weather
Fair
67°F

Click here for Detailed Weather

0000 - 2400 (Weekday 24h Session) (04-25-2024)
NB EB 15min

	Eastbound (Movement 74 Lane 1 EB.1)													15min	60min
TIME	1	2	3	4	5	6	7	8	9	10	11	12	13	Total	Total
0000 - 0015	0	4	2	0	0	0	0	0	0	0	0	0	0	**6**	
0015 - 0030	0	1	0	0	0	0	0	0	0	0	0	0	0	**1**	
0030 - 0045	0	1	0	0	0	0	0	0	0	0	0	0	0	**1**	
0045 - 0100	0	5	3	0	0	0	0	0	0	0	0	0	0	**8**	**16**
0100 - 0115	0	4	0	0	0	0	0	0	0	0	0	0	0	**4**	
0115 - 0130	0	2	0	0	0	0	0	1	0	0	0	0	0	**3**	
0130 - 0145	0	2	0	0	0	0	0	0	0	0	0	0	0	**2**	
0145 - 0200	0	1	1	0	0	0	0	0	0	0	0	0	0	**2**	**11**
0200 - 0215	0	3	0	0	0	0	0	0	0	0	0	0	0	**3**	
0215 - 0230	0	2	0	0	0	0	0	0	0	0	0	0	0	**2**	
0230 - 0245	0	5	0	0	0	0	0	0	0	0	0	0	0	**5**	
0245 - 0300	0	3	0	0	0	0	0	0	0	0	0	0	0	**3**	**13**
0300 - 0315	0	2	0	0	0	0	0	0	0	0	0	0	0	**2**	
0315 - 0330	0	2	0	0	0	0	0	0	0	0	0	0	0	**2**	
0330 - 0345	0	4	0	0	0	0	0	0	0	0	0	0	0	**4**	
0345 - 0400	0	2	0	0	1	0	0	0	0	0	0	0	0	**3**	**11**
0400 - 0415	0	4	1	0	0	0	0	0	0	0	0	0	0	**5**	
0415 - 0430	0	4	0	0	0	0	0	0	1	0	0	0	0	**5**	
0430 - 0445	0	6	2	0	0	0	0	0	1	0	0	0	0	**9**	
0445 - 0500	0	9	3	0	0	0	0	0	0	0	0	0	0	**12**	**31**
0500 - 0515	0	8	4	0	0	0	0	0	0	0	0	0	0	**12**	
0515 - 0530	0	20	9	0	0	0	0	0	0	0	0	0	0	**29**	
0530 - 0545	0	36	11	0	1	0	0	0	1	0	0	0	0	**49**	
0545 - 0600	0	35	12	0	0	0	0	0	0	0	0	0	0	**47**	**137**
0600 - 0615	0	49	28	0	0	0	0	0	0	0	0	0	0	**77**	
0615 - 0630	0	77	52	0	0	0	0	0	0	0	0	0	0	**129**	
0630 - 0645	0	147	69	0	1	1	0	0	1	0	0	0	0	**219**	
0645 - 0700	0	202	75	0	5	0	0	1	0	0	0	0	0	**283**	**708**
0700 - 0715	1	209	62	0	1	0	0	0	0	0	0	0	0	**273**	
0715 - 0730	2	284	84	0	4	0	0	0	0	0	0	0	0	**374**	
0730 - 0745	0	330	81	0	6	0	0	1	0	0	0	0	0	**418**	
0745 - 0800	0	325	75	0	1	0	0	1	0	0	0	0	0	**402**	**1467**
0800 - 0815	0	278	75	0	3	0	0	0	0	0	0	0	0	**356**	
0815 - 0830	2	262	60	0	3	0	0	0	0	0	0	0	0	**327**	
0830 - 0845	2	196	57	0	3	0	0	4	0	0	0	0	0	**262**	
0845 - 0900	1	170	56	0	5	0	0	0	3	0	0	0	0	**235**	**1180**
0900 - 0915	0	112	41	0	4	0	0	0	0	1	0	0	0	**158**	
0915 - 0930	0	142	33	0	1	0	0	0	0	0	0	0	0	**176**	
0930 - 0945	0	140	37	0	0	0	0	0	2	0	0	0	0	**179**	
0945 - 1000	0	86	29	0	1	0	0	0	2	0	0	0	0	**118**	**631**
1000 - 1015	0	93	34	0	1	0	0	1	0	0	0	0	0	**129**	
1015 - 1030	0	72	34	0	1	0	0	0	1	0	0	0	0	**108**	
1030 - 1045	0	96	23	0	1	0	0	2	2	0	0	0	0	**124**	
1045 - 1100	1	92	27	0	1	0	0	0	0	0	0	0	0	**121**	**482**
1100 - 1115	0	88	25	0	3	0	0	0	1	0	0	0	0	**117**	
1115 - 1130	0	94	31	0	1	0	0	1	0	0	0	0	0	**127**	
1130 - 1145	0	92	32	0	3	0	0	0	0	0	0	0	0	**127**	
1145 - 1200	1	59	27	0	1	0	0	1	2	0	0	0	0	**91**	**462**
1200 - 1215	0	72	31	0	0	1	0	0	0	0	0	0	0	**104**	
1215 - 1230	0	93	23	0	1	0	0	1	1	0	0	0	0	**119**	
1230 - 1245	2	93	30	0	1	1	0	0	0	0	0	0	0	**127**	
1245 - 1300	0	99	30	0	1	0	0	0	2	0	0	0	0	**132**	**482**
1300 - 1315	1	90	29	0	1	0	1	0	1	0	0	0	0	**123**	
1315 - 1330	1	96	30	0	1	0	0	1	0	0	0	0	0	**129**	
1330 - 1345	1	88	39	1	3	0	0	1	1	0	0	0	0	**134**	
1345 - 1400	0	115	25	0	4	0	0	0	1	0	0	0	0	**145**	**531**
1400 - 1415	0	106	26	0	2	0	0	0	1	0	0	0	0	**135**	
1415 - 1430	2	109	34	0	5	0	0	1	0	0	0	0	0	**151**	
1430 - 1445	1	117	22	0	1	0	0	0	0	0	0	0	0	**141**	
1445 - 1500	0	93	30	0	0	0	0	0	1	0	0	0	0	**124**	**551**
1500 - 1515	1	112	28	0	3	0	0	1	1	0	0	0	0	**146**	
1515 - 1530	0	128	50	0	1	0	0	1	0	0	0	0	0	**180**	
1530 - 1545	1	139	29	0	1	0	0	0	1	0	0	0	0	**171**	
1545 - 1600	1	159	39	0	1	0	0	0	1	0	0	0	0	**201**	**698**
1600 - 1615	0	142	31	0	0	0	0	0	1	0	0	0	0	**174**	
1615 - 1630	0	158	43	0	3	0	0	1	1	0	0	0	0	**206**	
1630 - 1645	0	161	42	0	2	0	0	0	1	0	0	0	0	**206**	
1645 - 1700	1	156	42	0	2	0	0	1	1	0	0	0	0	**203**	**789**
1700 - 1715	1	155	58	0	2	0	0	0	0	0	0	0	0	**216**	
1715 - 1730	1	199	61	0	1	0	0	0	1	0	0	0	0	**263**	
1730 - 1745	1	156	44	0	0	0	0	0	0	0	0	0	0	**201**	
1745 - 1800	0	117	34	0	1	0	0	1	0	0	0	0	0	**153**	**833**
1800 - 1815	0	129	26	0	3	0	0	0	1	0	0	0	0	**159**	
1815 - 1830	0	107	27	0	0	0	0	0	0	0	0	0	0	**134**	
1830 - 1845	0	94	27	0	2	0	0	0	0	0	0	0	0	**123**	
1845 - 1900	0	96	28	1	2	0	0	1	0	0	0	0	0	**128**	**544**
1900 - 1915	0	95	15	0	1	0	0	1	0	0	0	0	0	**112**	
1915 - 1930	0	96	17	0	0	0	0	0	0	0	0	0	0	**113**	
1930 - 1945	1	59	14	0	1	0	0	0	0	0	0	0	0	**75**	
1945 - 2000	0	69	11	0	1	0	0	1	0	0	0	0	0	**82**	**382**
2000 - 2015	0	49	13	0	0	0	0	0	0	0	0	0	0	**62**	
2015 - 2030	0	44	12	0	0	0	0	0	1	0	0	0	0	**57**	
2030 - 2045	0	33	7	0	0	0	0	0	0	0	0	0	0	**40**	
2045 - 2100	0	38	4	0	1	0	0	0	0	0	0	0	0	**43**	**202**
2100 - 2115	0	25	6	0	0	0	0	0	0	0	0	0	0	**31**	
2115 - 2130	0	25	6	0	2	0	0	0	0	0	0	0	0	**33**	
2130 - 2145	0	30	5	0	0	0	0	0	0	0	0	0	0	**35**	
2145 - 2200	0	32	7	0	0	0	0	0	0	0	0	0	0	**39**	**138**
2200 - 2215	0	25	6	0	1	0	0	0	0	0	0	0	0	**32**	
2215 - 2230	0	18	5	0	1	0	0	1	0	0	0	0	0	**25**	
2230 - 2245	0	10	4	0	1	0	0	0	0	0	0	0	0	**15**	
2245 - 2300	0	12	6	0	0	0	0	0	0	0	0	0	0	**18**	**90**
2300 - 2315	0	7	3	0	0	0	0	0	0	0	0	0	0	**10**	
2315 - 2330	0	6	3	0	0	0	0	0	0	0	0	0	0	**9**	
2330 - 2345	0	7	2	0	0	0	0	0	0	0	0	0	0	**9**	
2345 - 0000	0	6	3	0	0	0	0	0	0	0	0	0	0	**9**	**37**

Session Total	26	7925	2302	2	105	3	1	26	35	1	0	0	0	**10426**
Session Average	0.27	82.55	23.98	0.02	1.09	0.03	0.01	0.27	0.36	0.01	0.00	0.00	0.00	**108.60**
Session Percentage	0.25	76.01	22.08	0.02	1.01	0.03	0.01	0.25	0.34	0.01	0.00	0.00	0.00	

AM Peak Hour	0800 - 0900	0715 - 0815	0715 - 0815	-	0645 - 0745	0545 - 0645	-	0745 - 0845	0845 - 0945	0815 - 0915	-	-	-	**0715 - 0815**
AM Peak Hour Volume	5	1217	315	0	16	1	0	5	5	1	0	0	0	**1550**

Noon Peak Hour	1230 - 1330	1445 - 1545	1445 - 1545	1245 - 1345	1330 - 1430	1145 - 1245	1215 - 1315	1000 - 1100	1015 - 1115	-	-	-	-	**1445 - 1545**
Noon Peak Hour Volume	4	472	137	1	14	2	1	3	4	0	0	0	0	**621**

PM Peak Hour	1645 - 1745	1630 - 1730	1645 - 1745	1800 - 1900	1615 - 1715	-	-	1500 - 1600	1530 - 1630	-	-	-	-	**1630 - 1730**
PM Peak Hour Volume	4	671	205	1	9	0	0	2	4	0	0	0	0	**888**

Site 74 Lane 1 EB
I-20,
west of US-378 Sunset Blvd S/Bound Off-Ramp

Date
Friday, April 26, 2024

Lat/Long
34.008085°, -81.156669°

Weather
Cloudy
69°F

Click here for Detailed Weather

0000 - 2400 (Weekday 24h Session) (04-26-2024)
NB EB 15min

	Eastbound (Movement 74 Lane 1 EB.1)													15min	60min
TIME	1	2	3	4	5	6	7	8	9	10	11	12	13	Total	Total
0000 - 0015	0	8	0	0	0	0	0	0	1	0	0	0	0	**9**	
0015 - 0030	0	11	1	0	0	0	0	0	0	0	0	0	0	**12**	
0030 - 0045	0	9	1	0	0	0	0	0	1	0	0	0	0	**11**	
0045 - 0100	0	5	0	0	0	0	0	0	0	0	0	0	0	**5**	**37**
0100 - 0115	0	2	0	0	0	0	0	0	0	0	0	0	0	**2**	
0115 - 0130	0	6	0	0	0	0	0	0	0	0	0	0	0	**6**	
0130 - 0145	0	4	0	0	0	0	0	0	0	0	0	0	0	**4**	
0145 - 0200	0	5	0	0	0	0	0	0	0	0	0	0	0	**5**	**17**
0200 - 0215	0	4	0	0	0	0	0	0	0	0	0	0	0	**4**	
0215 - 0230	0	2	0	0	0	0	0	0	0	0	0	0	0	**2**	
0230 - 0245	0	6	0	0	0	0	0	0	0	0	0	0	0	**6**	
0245 - 0300	0	3	0	0	0	0	0	0	0	0	0	0	0	**3**	**15**
0300 - 0315	0	6	0	0	0	0	0	0	0	0	0	0	0	**6**	
0315 - 0330	0	5	2	0	0	0	0	0	0	0	0	0	0	**7**	
0330 - 0345	0	7	1	0	0	0	0	0	0	0	0	0	0	**8**	
0345 - 0400	0	4	0	0	0	0	0	0	0	0	0	0	0	**4**	**25**
0400 - 0415	0	5	1	0	0	0	0	0	0	0	0	0	0	**6**	
0415 - 0430	1	9	1	0	0	0	0	0	0	0	0	0	0	**11**	
0430 - 0445	0	10	2	0	0	0	0	0	0	0	0	0	0	**12**	
0445 - 0500	0	13	0	0	0	0	0	0	0	0	0	0	0	**13**	**42**
0500 - 0515	0	18	3	0	0	0	0	0	0	0	0	0	0	**21**	
0515 - 0530	0	23	2	0	1	0	0	0	0	0	0	0	0	**26**	
0530 - 0545	0	31	2	0	1	0	0	0	0	0	0	0	0	**34**	
0545 - 0600	0	49	10	0	0	0	0	0	0	0	0	0	0	**59**	**140**
0600 - 0615	0	59	9	0	1	0	0	0	0	0	0	0	0	**69**	
0615 - 0630	0	84	34	0	0	0	0	0	0	0	0	0	0	**118**	
0630 - 0645	0	117	56	0	2	0	0	0	0	0	0	0	0	**175**	
0645 - 0700	1	156	45	0	1	1	0	0	0	0	0	0	0	**204**	**566**
0700 - 0715	0	188	55	0	1	0	0	1	0	0	0	0	0	**245**	
0715 - 0730	4	306	71	0	7	0	0	0	0	0	0	0	0	**388**	
0730 - 0745	0	328	66	1	0	0	0	0	0	0	0	0	0	**395**	
0745 - 0800	1	311	80	0	4	0	0	0	0	0	0	0	0	**396**	**1424**
0800 - 0815	1	240	63	1	1	0	0	1	0	0	0	0	0	**307**	
0815 - 0830	1	231	52	0	4	0	0	1	0	0	0	0	0	**289**	
0830 - 0845	1	206	48	2	4	0	0	0	3	0	0	0	0	**264**	
0845 - 0900	0	188	57	0	3	1	0	1	0	0	0	0	0	**250**	**1110**
0900 - 0915	0	141	37	0	1	0	0	0	0	0	0	0	0	**179**	
0915 - 0930	0	121	49	0	0	0	0	0	0	0	0	0	0	**170**	
0930 - 0945	0	145	36	0	1	0	0	1	1	0	0	0	0	**184**	
0945 - 1000	2	103	31	0	0	0	0	1	1	0	0	0	0	**138**	**671**
1000 - 1015	1	125	30	0	3	0	0	0	0	0	0	0	0	**159**	
1015 - 1030	0	118	32	0	2	0	0	0	0	0	0	0	0	**152**	
1030 - 1045	2	102	37	0	4	0	0	0	0	0	0	0	0	**145**	
1045 - 1100	0	108	29	0	2	0	0	0	0	0	0	0	0	**139**	**595**
1100 - 1115	6	112	29	0	0	0	0	0	1	0	0	0	0	**148**	
1115 - 1130	2	134	23	0	2	0	0	1	0	0	0	0	0	**162**	
1130 - 1145	0	104	35	0	3	0	0	0	0	0	0	0	0	**142**	
1145 - 1200	2	138	33	0	0	0	0	1	1	0	0	0	0	**175**	**627**
1200 - 1215	1	128	38	0	3	0	0	2	1	0	0	0	0	**173**	
1215 - 1230	1	115	27	1	1	0	0	0	2	0	0	0	0	**147**	
1230 - 1245	6	125	40	0	2	0	0	0	1	0	0	0	0	**174**	
1245 - 1300	0	133	42	0	0	0	0	0	0	0	0	0	0	**175**	**669**
1300 - 1315	1	112	23	0	3	0	0	1	0	0	0	0	0	**140**	
1315 - 1330	5	127	38	1	0	0	0	0	0	0	0	0	0	**171**	
1330 - 1345	0	135	33	0	2	0	0	0	0	0	0	0	0	**170**	
1345 - 1400	4	142	33	0	2	0	0	0	1	0	0	0	0	**182**	**663**
1400 - 1415	0	124	42	0	2	0	0	0	0	0	0	0	0	**168**	
1415 - 1430	0	136	34	0	6	0	0	1	1	0	0	0	0	**178**	
1430 - 1445	0	122	29	0	2	0	0	0	2	0	0	0	0	**155**	
1445 - 1500	2	144	33	0	1	0	0	0	0	0	0	0	0	**180**	**681**
1500 - 1515	0	146	32	0	2	0	0	0	1	0	0	0	0	**181**	
1515 - 1530	22	196	52	0	1	0	0	0	1	0	0	0	0	**272**	
1530 - 1545	5	206	55	1	4	0	0	0	0	0	0	0	0	**271**	
1545 - 1600	1	210	44	0	4	0	0	2	0	0	0	0	0	**261**	**985**
1600 - 1615	0	193	46	0	0	1	0	2	0	0	0	0	0	**242**	
1615 - 1630	0	190	42	0	1	0	0	0	0	0	0	0	0	**233**	
1630 - 1645	5	178	39	0	3	0	0	1	0	0	0	0	0	**226**	
1645 - 1700	2	226	55	0	1	0	0	0	0	0	0	0	0	**284**	**985**
1700 - 1715	6	169	41	0	1	1	0	0	0	0	0	0	0	**218**	
1715 - 1730	4	179	36	0	2	0	0	0	0	0	0	0	0	**221**	
1730 - 1745	3	146	47	0	0	0	0	0	0	0	0	0	0	**196**	
1745 - 1800	4	160	33	0	0	0	0	0	0	0	0	0	0	**197**	**832**
1800 - 1815	2	146	40	0	2	0	0	0	0	0	0	0	0	**190**	
1815 - 1830	0	170	28	0	1	0	0	0	0	0	0	0	0	**199**	
1830 - 1845	3	163	29	0	0	0	0	1	0	0	0	0	0	**196**	
1845 - 1900	6	124	19	0	0	0	0	0	0	0	0	0	0	**149**	**734**
1900 - 1915	9	107	24	0	0	0	0	0	0	0	0	0	0	**140**	
1915 - 1930	2	104	20	0	1	0	0	0	0	0	0	0	0	**127**	
1930 - 1945	3	94	15	0	0	0	0	0	0	0	0	0	0	**112**	
1945 - 2000	1	99	21	0	1	0	0	0	0	0	0	0	0	**122**	**501**
2000 - 2015	1	77	14	0	1	0	0	0	0	0	0	0	0	**93**	
2015 - 2030	0	62	15	0	0	0	0	0	0	0	0	0	0	**77**	
2030 - 2045	0	59	17	0	1	0	0	0	0	0	0	0	0	**77**	
2045 - 2100	0	51	17	0	1	0	0	0	0	0	0	0	0	**69**	**316**
2100 - 2115	0	45	11	0	1	0	0	0	0	0	0	0	0	**57**	
2115 - 2130	0	37	8	0	0	0	0	0	1	0	0	0	0	**46**	
2130 - 2145	0	20	6	0	0	0	0	0	0	0	0	0	0	**26**	
2145 - 2200	0	39	8	0	0	0	0	0	0	0	0	0	0	**47**	**176**
2200 - 2215	0	34	5	0	0	0	0	0	1	0	0	0	0	**40**	
2215 - 2230	0	30	6	0	0	0	0	0	0	0	0	0	0	**36**	
2230 - 2245	4	22	4	0	0	0	0	0	0	0	0	0	0	**30**	
2245 - 2300	0	20	3	0	0	0	0	0	0	0	0	0	0	**23**	**129**
2300 - 2315	0	24	2	0	0	0	0	0	0	0	0	0	0	**26**	
2315 - 2330	0	21	3	0	0	0	0	0	0	0	0	0	0	**24**	
2330 - 2345	0	23	2	0	0	0	0	0	0	0	0	0	0	**25**	
2345 - 0000	0	12	0	0	0	0	0	0	0	0	0	0	0	**12**	**87**

Session Total	128	9435	2314	7	100	4	0	18	21	0	0	0	0	**12027**
Session Average	1.33	98.28	24.10	0.07	1.04	0.04	0.00	0.19	0.22	0.00	0.00	0.00	0.00	**125.28**
Session Percentage	1.06	78.45	19.24	0.06	0.83	0.03	0.00	0.15	0.17	0.00	0.00	0.00	0.00	

AM Peak Hour	0715 - 0815	0715 - 0815	0715 - 0815	0745 - 0845	0745 - 0845	0600 - 0700	-	0800 - 0900	0745 - 0845	-	-	-	-	**0715 - 0815**
AM Peak Hour Volume	6	1185	280	3	13	1	0	3	3	0	0	0	0	**1486**

Noon Peak Hour	1445 - 1545	1445 - 1545	1445 - 1545	1130 - 1230	1330 - 1430	-	-	1115 - 1215	1145 - 1245	-	-	-	-	**1445 - 1545**
Noon Peak Hour Volume	29	692	172	1	12	0	0	4	5	0	0	0	0	**904**

PM Peak Hour	1500 - 1600	1515 - 1615	1515 - 1615	1500 - 1600	1500 - 1600	1515 - 1615	-	1545 - 1645	1500 - 1600	-	-	-	-	**1515 - 1615**
PM Peak Hour Volume	28	805	197	1	11	1	0	5	2	0	0	0	0	**1046**

Site 74 Lane 1 EB
I-20,
west of US-378 Sunset Blvd S/Bound Off-Ramp

Date
Saturday, April 27, 2024

Lat/Long
34.008085°, -81.156669°

Weather
Mostly Cloudy
69°F

Click here for Detailed Weather

0000 - 2400 (Saturday 24h Session) (04-27-2024)
NB EB 15min

	Eastbound (Movement 74 Lane 1 EB.1)													15min	60min
TIME	1	2	3	4	5	6	7	8	9	10	11	12	13	Total	Total
0000 - 0015	0	10	1	0	0	0	0	0	0	0	0	0	0	**11**	
0015 - 0030	0	14	2	0	0	0	0	0	0	0	0	0	0	**16**	
0030 - 0045	0	9	1	0	0	0	0	0	0	0	0	0	0	**10**	
0045 - 0100	0	7	0	0	0	0	0	0	0	0	0	0	0	**7**	**44**
0100 - 0115	0	8	0	0	2	0	0	0	0	0	0	0	0	**10**	
0115 - 0130	0	6	1	0	0	0	0	0	0	0	0	0	0	**7**	
0130 - 0145	0	5	0	0	1	0	0	0	0	0	0	0	0	**6**	
0145 - 0200	0	6	0	0	0	0	0	0	0	0	0	0	0	**6**	**29**
0200 - 0215	0	3	0	0	0	0	0	0	0	0	0	0	0	**3**	
0215 - 0230	0	5	0	0	0	0	0	0	0	0	0	0	0	**5**	
0230 - 0245	0	2	0	0	0	0	0	0	0	0	0	0	0	**2**	
0245 - 0300	7	4	0	0	0	0	0	0	0	0	0	0	0	**11**	**21**
0300 - 0315	0	2	0	0	0	0	0	0	0	0	0	0	0	**2**	
0315 - 0330	0	4	0	0	0	0	0	0	0	0	0	0	0	**4**	
0330 - 0345	0	3	1	0	0	0	0	0	0	0	0	0	0	**4**	
0345 - 0400	0	2	0	0	0	0	0	0	0	0	0	0	0	**2**	**12**
0400 - 0415	0	2	0	0	0	0	0	0	0	0	0	0	0	**2**	
0415 - 0430	0	8	2	0	0	0	0	0	0	0	0	0	0	**10**	
0430 - 0445	0	5	0	0	0	0	0	0	0	0	0	0	0	**5**	
0445 - 0500	0	4	1	0	0	0	0	0	0	0	0	0	0	**5**	**22**
0500 - 0515	0	7	0	0	0	0	0	0	0	0	0	0	0	**7**	
0515 - 0530	0	6	1	0	0	0	0	0	0	0	0	0	0	**7**	
0530 - 0545	0	12	4	0	1	0	0	0	0	0	0	0	0	**17**	
0545 - 0600	2	14	3	0	0	0	0	0	0	0	0	0	0	**19**	**50**
0600 - 0615	0	10	1	0	0	0	0	0	0	0	0	0	0	**11**	
0615 - 0630	0	41	5	0	0	0	0	0	0	0	0	0	0	**46**	
0630 - 0645	1	37	9	0	0	0	0	0	0	0	0	0	0	**47**	
0645 - 0700	0	27	10	0	0	0	0	0	0	0	0	0	0	**37**	**141**
0700 - 0715	0	35	15	0	0	0	0	1	0	0	0	0	0	**51**	
0715 - 0730	0	65	19	0	1	0	0	0	0	0	0	0	0	**85**	
0730 - 0745	1	65	24	0	0	0	0	0	0	0	0	0	0	**90**	
0745 - 0800	1	90	15	0	1	0	0	0	0	0	0	0	0	**107**	**333**
0800 - 0815	0	63	16	0	1	0	0	0	0	0	0	0	0	**80**	
0815 - 0830	2	74	18	0	1	0	0	0	0	0	0	0	0	**95**	
0830 - 0845	1	79	13	0	0	0	0	0	0	0	0	0	0	**93**	
0845 - 0900	0	82	25	0	0	0	0	0	0	0	0	0	0	**107**	**375**
0900 - 0915	1	91	25	0	1	0	0	0	0	0	0	0	0	**118**	
0915 - 0930	0	102	22	0	0	0	0	1	0	0	0	0	0	**125**	
0930 - 0945	1	118	27	0	0	0	0	0	0	0	0	0	0	**146**	
0945 - 1000	0	117	31	0	0	0	0	0	1	0	0	0	0	**149**	**538**
1000 - 1015	1	105	23	0	2	0	0	0	0	0	0	0	0	**131**	
1015 - 1030	8	121	24	0	0	0	0	1	0	0	0	0	0	**154**	
1030 - 1045	10	126	27	0	1	0	0	0	0	0	0	0	0	**164**	
1045 - 1100	8	101	31	0	1	0	0	0	0	0	0	0	0	**141**	**590**
1100 - 1115	2	109	22	0	0	0	0	0	0	0	0	0	0	**133**	
1115 - 1130	16	106	28	0	2	0	0	0	1	0	0	0	0	**153**	
1130 - 1145	2	116	30	0	0	0	0	1	0	0	0	0	0	**149**	
1145 - 1200	2	129	29	0	1	0	0	0	0	0	0	0	0	**161**	**596**
1200 - 1215	1	146	22	0	0	0	0	1	0	0	0	0	0	**170**	
1215 - 1230	4	130	21	0	0	0	0	0	0	0	0	0	0	**155**	
1230 - 1245	1	137	26	0	1	0	0	0	1	0	0	0	0	**166**	
1245 - 1300	4	131	25	1	0	0	0	0	0	0	0	0	0	**161**	**652**
1300 - 1315	3	122	23	1	1	0	0	0	0	0	0	0	0	**150**	
1315 - 1330	16	129	22	0	0	0	0	0	0	0	0	0	0	**167**	
1330 - 1345	4	133	25	0	0	0	0	0	0	0	0	0	0	**162**	
1345 - 1400	3	119	19	0	1	0	0	0	0	0	0	0	0	**142**	**621**
1400 - 1415	5	123	28	0	0	0	0	1	0	0	0	0	0	**157**	
1415 - 1430	0	115	16	0	0	0	0	0	0	0	0	0	0	**131**	
1430 - 1445	1	126	26	0	1	0	0	0	0	0	0	0	0	**154**	
1445 - 1500	1	124	25	0	0	0	0	0	0	0	0	0	0	**150**	**592**
1500 - 1515	4	114	13	0	1	0	0	1	0	0	0	0	0	**133**	
1515 - 1530	0	115	28	0	0	0	0	0	0	0	0	0	0	**143**	
1530 - 1545	7	111	25	0	0	0	0	2	0	0	0	0	0	**145**	
1545 - 1600	7	106	18	0	0	0	0	0	0	0	0	0	0	**131**	**552**
1600 - 1615	0	98	17	0	1	0	0	0	0	0	0	0	0	**116**	
1615 - 1630	3	129	22	0	3	0	0	0	1	0	0	0	0	**158**	
1630 - 1645	1	115	19	0	1	0	0	0	0	0	0	0	0	**136**	
1645 - 1700	0	119	17	0	0	0	0	0	0	0	0	0	0	**136**	**546**
1700 - 1715	0	118	10	0	3	0	0	0	0	0	0	0	0	**131**	
1715 - 1730	3	109	17	0	1	0	0	0	0	0	0	0	0	**130**	
1730 - 1745	0	96	16	0	1	0	0	1	0	0	0	0	0	**114**	
1745 - 1800	0	84	25	1	1	0	0	1	0	0	0	0	0	**112**	**487**
1800 - 1815	0	74	14	1	0	0	0	0	0	0	0	0	0	**89**	
1815 - 1830	0	99	20	0	0	0	0	2	0	0	0	0	0	**121**	
1830 - 1845	0	103	17	0	0	0	0	0	1	0	0	0	0	**121**	
1845 - 1900	0	93	10	0	0	0	0	0	0	0	0	0	0	**103**	**434**
1900 - 1915	1	97	12	0	1	0	0	0	0	0	0	0	0	**111**	
1915 - 1930	0	82	9	0	0	0	0	0	0	0	0	0	0	**91**	
1930 - 1945	1	79	9	0	0	0	0	0	0	0	0	0	0	**89**	
1945 - 2000	1	81	16	0	0	0	0	0	1	0	0	0	0	**99**	**390**
2000 - 2015	1	57	12	0	0	0	0	0	0	0	0	0	0	**70**	
2015 - 2030	0	49	6	0	0	0	0	1	0	0	0	0	0	**56**	
2030 - 2045	0	38	2	0	0	0	0	0	0	0	0	0	0	**40**	
2045 - 2100	0	53	3	0	0	0	0	1	0	0	0	0	0	**57**	**223**
2100 - 2115	0	61	2	0	0	0	0	0	0	0	0	0	0	**63**	
2115 - 2130	0	45	4	0	0	0	0	0	0	0	0	0	0	**49**	
2130 - 2145	0	40	2	0	1	0	0	0	0	0	0	0	0	**43**	
2145 - 2200	0	37	1	0	0	0	0	0	0	0	0	0	0	**38**	**193**
2200 - 2215	0	36	3	0	0	0	0	0	0	0	0	0	0	**39**	
2215 - 2230	0	33	2	1	0	0	0	0	0	0	0	0	0	**36**	
2230 - 2245	0	50	3	0	1	0	0	0	0	0	0	0	0	**54**	
2245 - 2300	0	26	2	0	0	0	0	0	0	0	0	0	0	**28**	**157**
2300 - 2315	0	15	1	0	0	0	0	0	0	0	0	0	0	**16**	
2315 - 2330	0	19	2	0	0	0	0	0	1	0	0	0	0	**22**	
2330 - 2345	0	17	3	0	0	0	0	0	0	0	0	0	0	**20**	
2345 - 0000	0	19	2	0	0	0	0	0	0	0	0	0	0	**21**	**79**

Session Total	138	6309	1168	5	35	0	0	15	7	0	0	0	0	**7677**
Session Average	1.44	65.72	12.17	0.05	0.36	0.00	0.00	0.16	0.07	0.00	0.00	0.00	0.00	**79.97**
Session Percentage	1.80	82.18	15.21	0.07	0.46	0.00	0.00	0.20	0.09	0.00	0.00	0.00	0.00	

AM Peak Hour	0945 - 1045	0945 - 1045	0900 - 1000	-	0715 - 0815	-	-	0615 - 0715	0900 - 1000	-	-	-	-	**0945 - 1045**
AM Peak Hour Volume	19	469	105	0	3	0	0	1	1	0	0	0	0	**598**

Noon Peak Hour	1030 - 1130	1200 - 1300	1045 - 1145	1215 - 1315	1000 - 1100	-	-	1445 - 1545	1030 - 1130	-	-	-	-	**1145 - 1245**
Noon Peak Hour Volume	36	544	111	2	4	0	0	3	1	0	0	0	0	**652**

PM Peak Hour	1500 - 1600	1615 - 1715	1515 - 1615	1715 - 1815	1615 - 1715	-	-	1730 - 1830	1530 - 1630	-	-	-	-	**1615 - 1715**
PM Peak Hour Volume	18	481	88	2	7	0	0	4	1	0	0	0	0	**561**

Bi-Directional Class Count || NB EB Average 15min

Columbia, SC

Marr Traffic DATA COLLECTION
www.marrtraffic.com

Site 74 Lane 1 EB
I-20,
west of US-378 Sunset Blvd S/Bound Off-Ramp

Date
Sunday, April 21, 2024

Lat/Long
34.008085°, -81.156669°

Weather
Cloudy
66°F

0000 - 2400 (Weekday 24h Session) (All Dates)
NB EB Average 15min

	NB EB Average 15min													15min	60min
Time	1	2	3	4	5	6	7	8	9	10	11	12	13	Total	Total
0000 - 0015	0	7	1	0	0	0	0	0	0	0	0	0	0	**8**	
0015 - 0030	0	6	1	0	0	0	0	0	0	0	0	0	0	**7**	
0030 - 0045	0	7	1	0	0	0	0	0	0	0	0	0	0	**8**	
0045 - 0100	0	5	0	0	0	0	0	0	0	0	0	0	0	**5**	**28**
0100 - 0115	0	5	0	0	0	0	0	0	0	0	0	0	0	**6**	
0115 - 0130	0	5	0	0	0	0	0	0	0	0	0	0	0	**5**	
0130 - 0145	0	5	0	0	0	0	0	0	0	0	0	0	0	**5**	
0145 - 0200	0	4	0	0	0	0	0	0	0	0	0	0	0	**4**	**20**
0200 - 0215	0	4	0	0	0	0	0	0	0	0	0	0	0	**4**	
0215 - 0230	0	3	0	0	0	0	0	0	0	0	0	0	0	**3**	
0230 - 0245	0	4	0	0	0	0	0	0	0	0	0	0	0	**4**	
0245 - 0300	1	3	0	0	0	0	0	0	0	0	0	0	0	**4**	**16**
0300 - 0315	0	3	0	0	0	0	0	0	0	0	0	0	0	**3**	
0315 - 0330	0	3	1	0	0	0	0	0	0	0	0	0	0	**4**	
0330 - 0345	0	4	1	0	0	0	0	0	0	0	0	0	0	**6**	
0345 - 0400	0	3	0	0	0	0	0	0	0	0	0	0	0	**4**	**17**
0400 - 0415	0	4	1	0	0	0	0	0	0	0	0	0	0	**5**	
0415 - 0430	0	6	1	0	0	0	0	0	0	0	0	0	0	**7**	
0430 - 0445	0	9	1	0	0	0	0	0	0	0	0	0	0	**10**	
0445 - 0500	0	9	1	0	0	0	0	0	0	0	0	0	0	**11**	**33**
0500 - 0515	0	13	2	0	0	0	0	0	0	0	0	0	0	**15**	
0515 - 0530	0	16	3	0	0	0	0	0	0	0	0	0	0	**19**	
0530 - 0545	0	29	5	0	0	0	0	0	0	0	0	0	0	**34**	
0545 - 0600	0	28	7	0	0	0	0	0	0	0	0	0	0	**35**	**104**
0600 - 0615	0	43	11	0	0	0	0	0	0	0	0	0	0	**54**	
0615 - 0630	0	66	23	0	0	0	0	0	0	0	0	0	0	**89**	
0630 - 0645	0	110	38	0	1	0	0	0	0	0	0	0	0	**150**	
0645 - 0700	0	131	39	0	2	0	0	0	0	0	0	0	0	**173**	**466**
0700 - 0715	0	159	48	0	1	0	0	0	0	0	0	0	0	**209**	
0715 - 0730	1	222	52	0	3	0	0	0	0	0	0	0	0	**278**	
0730 - 0745	0	234	56	0	2	0	0	0	0	0	0	0	0	**292**	
0745 - 0800	0	223	55	0	1	0	0	0	0	0	0	0	0	**280**	**1059**
0800 - 0815	0	201	47	0	1	0	0	0	0	0	0	0	0	**250**	
0815 - 0830	1	202	42	0	2	0	0	1	0	0	0	0	0	**248**	
0830 - 0845	1	159	41	0	2	0	0	1	1	0	0	0	0	**206**	
0845 - 0900	1	131	43	0	2	0	0	1	1	0	0	0	0	**178**	**882**
0900 - 0915	1	108	28	0	1	0	0	0	0	0	0	0	0	**139**	
0915 - 0930	0	103	29	0	1	0	0	0	0	0	0	0	0	**134**	
0930 - 0945	0	111	26	0	1	0	0	0	1	0	0	0	0	**140**	
0945 - 1000	0	94	25	0	1	0	0	0	1	0	0	0	0	**122**	**535**
1000 - 1015	3	96	25	0	1	0	0	0	0	0	0	0	0	**126**	
1015 - 1030	1	90	23	0	1	0	0	0	0	0	0	0	0	**115**	
1030 - 1045	2	96	25	0	2	0	0	0	1	0	0	0	0	**126**	
1045 - 1100	2	85	26	0	1	0	0	0	0	0	0	0	0	**115**	**482**
1100 - 1115	3	85	21	0	1	0	0	0	0	0	0	0	0	**111**	
1115 - 1130	3	92	21	0	2	0	0	0	0	0	0	0	0	**118**	
1130 - 1145	0	90	28	0	2	0	0	0	0	0	0	0	0	**120**	
1145 - 1200	1	90	25	0	1	0	0	1	1	0	0	0	0	**118**	**467**
1200 - 1215	1	101	25	0	1	0	0	1	0	0	0	0	0	**128**	
1215 - 1230	1	94	22	0	1	0	0	1	0	0	0	0	0	**119**	
1230 - 1245	1	102	25	0	1	0	0	0	0	0	0	0	0	**129**	
1245 - 1300	1	105	25	0	1	0	0	0	0	0	0	0	0	**132**	**509**
1300 - 1315	1	89	23	0	1	0	0	0	0	0	0	0	0	**115**	
1315 - 1330	3	105	31	0	1	0	0	0	0	0	0	0	0	**140**	
1330 - 1345	1	107	27	0	2	0	0	0	0	0	0	0	0	**137**	
1345 - 1400	1	108	26	0	2	0	0	0	1	0	0	0	0	**137**	**530**
1400 - 1415	1	107	27	0	1	0	0	0	0	0	0	0	0	**137**	
1415 - 1430	1	105	25	0	3	0	0	0	1	0	0	0	0	**134**	
1430 - 1445	0	112	26	0	1	0	0	0	0	0	0	0	0	**140**	
1445 - 1500	1	114	27	0	1	0	0	0	0	0	0	0	0	**144**	**556**
1500 - 1515	1	107	26	0	2	0	0	0	1	0	0	0	0	**137**	
1515 - 1530	3	121	35	0	1	0	0	1	0	0	0	0	0	**161**	
1530 - 1545	2	128	35	0	2	0	0	1	1	0	0	0	0	**169**	
1545 - 1600	1	139	31	0	1	0	0	1	0	0	0	0	0	**174**	**641**
1600 - 1615	1	141	29	0	1	0	0	0	0	0	0	0	0	**173**	
1615 - 1630	0	137	32	0	1	0	0	0	0	0	0	0	0	**171**	
1630 - 1645	1	140	34	0	2	0	0	1	0	0	0	0	0	**178**	
1645 - 1700	0	157	38	0	1	0	0	0	0	0	0	0	0	**197**	**718**
1700 - 1715	1	149	39	0	1	0	0	1	0	0	0	0	0	**192**	
1715 - 1730	1	159	36	0	1	0	0	0	0	0	0	0	0	**197**	
1730 - 1745	1	126	33	0	0	0	0	0	0	0	0	0	0	**161**	
1745 - 1800	1	112	25	0	1	0	0	0	0	0	0	0	0	**140**	**689**
1800 - 1815	0	108	25	1	1	0	0	0	1	0	0	0	0	**137**	
1815 - 1830	0	113	21	0	1	0	0	0	0	0	0	0	0	**136**	
1830 - 1845	1	104	22	0	0	0	0	0	1	0	0	0	0	**127**	
1845 - 1900	1	87	17	0	1	0	0	0	0	0	0	0	0	**106**	**506**
1900 - 1915	2	79	13	0	1	0	0	0	0	0	0	0	0	**95**	
1915 - 1930	0	82	13	0	0	0	0	0	0	0	0	0	0	**96**	
1930 - 1945	1	65	11	0	0	0	0	0	0	0	0	0	0	**78**	
1945 - 2000	1	76	15	0	0	0	0	0	0	0	0	0	0	**92**	**360**
2000 - 2015	0	54	11	0	1	0	0	0	0	0	0	0	0	**67**	
2015 - 2030	0	45	8	0	0	0	0	0	0	0	0	0	0	**54**	
2030 - 2045	0	39	6	0	0	0	0	0	0	0	0	0	0	**45**	
2045 - 2100	0	36	6	0	0	0	0	0	0	0	0	0	0	**43**	**209**
2100 - 2115	0	35	5	0	0	0	0	0	0	0	0	0	0	**41**	
2115 - 2130	0	30	5	0	0	0	0	0	0	0	0	0	0	**35**	
2130 - 2145	0	25	3	0	0	0	0	0	0	0	0	0	0	**29**	
2145 - 2200	0	24	3	0	0	0	0	0	0	0	0	0	0	**28**	**133**
2200 - 2215	0	25	4	0	0	0	0	0	0	0	0	0	0	**30**	
2215 - 2230	0	20	2	0	0	0	0	0	0	0	0	0	0	**23**	
2230 - 2245	1	18	2	0	0	0	0	0	0	0	0	0	0	**21**	
2245 - 2300	0	14	2	0	0	0	0	0	0	0	0	0	0	**17**	**90**
2300 - 2315	0	13	1	0	0	0	0	0	0	0	0	0	0	**15**	
2315 - 2330	0	12	2	0	0	0	0	0	0	0	0	0	0	**14**	
2330 - 2345	0	10	1	0	0	0	0	0	0	0	0	0	0	**11**	
2345 - 0000	0	10	1	0	0	0	0	0	0	0	0	0	0	**10**	**50**

Session Total	59	7195	1725	5	73	2	0	19	22	1	0	0	0	**9100**
Session Average	0.61	74.95	17.97	0.05	0.76	0.02	0.00	0.20	0.23	0.01	0.00	0.00	0.00	**94.79**
Session Percentage	0.65	79.07	18.96	0.05	0.80	0.02	0.00	0.21	0.24	0.01	0.00	0.00	0.00	

AM Peak Hour	0945 - 1045	0715 - 0815	0700 - 0800	0745 - 0845	0645 - 0745	0800 - 0900	-	0800 - 0900	0930 - 1030	0815 - 0915	-	-	-	**0715 - 0815**
AM Peak Volume	7	879	211	1	9	0	0	3	2	0	0	0	0	**1101**

Noon Peak Hour	1030 - 1130	1445 - 1545	1445 - 1545	1245 - 1345	1415 - 1515	1145 - 1245	1215 - 1315	1130 - 1230	1345 - 1445	1345 - 1445	-	-	-	**1445 - 1545**
Noon Peak Volume	10	470	123	1	7	0	0	2	2	0	0	0	0	**612**

PM Peak Hour	1500 - 1600	1630 - 1730	1630 - 1730	1715 - 1815	1500 - 1600	1645 - 1745	-	1500 - 1600	1500 - 1600	1545 - 1645	-	-	-	**1630 - 1730**
PM Peak Volume	8	604	146	1	6	0	0	2	2	0	0	0	0	**763**

Bi-Directional Class Count || Volume Summary 15min

Columbia, SC

Marr Traffic DATA COLLECTION

www.marrtraffic.com

Site 74 Lane 1 EB

I-20,
west of US-378 Sunset Blvd S/Bound Off-Ramp

Date

Sunday, April 21, 2024

Lat/Long

34.008085°, -81.156669°

Weather

Cloudy
66°F

Click here for Detailed Weather

0000 - 2400 (Sunday 24h Session) (04-21-2024)

Volume Summary 15min

TIME	Volume Summary 15min EB	WB	15min Total	60min Total
0000 - 0015	16	0	**16**	
0015 - 0030	6	0	**6**	
0030 - 0045	11	0	**11**	
0045 - 0100	9	0	**9**	**42**
0100 - 0115	8	0	**8**	
0115 - 0130	7	0	**7**	
0130 - 0145	10	0	**10**	
0145 - 0200	4	0	**4**	**29**
0200 - 0215	6	0	**6**	
0215 - 0230	1	0	**1**	
0230 - 0245	1	0	**1**	
0245 - 0300	5	0	**5**	**13**
0300 - 0315	3	0	**3**	
0315 - 0330	6	0	**6**	
0330 - 0345	4	0	**4**	
0345 - 0400	6	0	**6**	**19**
0400 - 0415	1	0	**1**	
0415 - 0430	4	0	**4**	
0430 - 0445	5	0	**5**	
0445 - 0500	2	0	**2**	**12**
0500 - 0515	10	0	**10**	
0515 - 0530	5	0	**5**	
0530 - 0545	3	0	**3**	
0545 - 0600	5	0	**5**	**23**
0600 - 0615	8	0	**8**	
0615 - 0630	13	0	**13**	
0630 - 0645	21	0	**21**	
0645 - 0700	23	0	**23**	**65**
0700 - 0715	33	0	**33**	
0715 - 0730	29	0	**29**	
0730 - 0745	21	0	**21**	
0745 - 0800	54	0	**54**	**137**
0800 - 0815	31	0	**31**	
0815 - 0830	38	0	**38**	
0830 - 0845	49	0	**49**	
0845 - 0900	58	0	**58**	**176**
0900 - 0915	71	0	**71**	
0915 - 0930	70	0	**70**	
0930 - 0945	61	0	**61**	
0945 - 1000	83	0	**83**	**285**
1000 - 1015	109	0	**109**	
1015 - 1030	88	0	**88**	
1030 - 1045	111	0	**111**	
1045 - 1100	109	0	**109**	**417**
1100 - 1115	90	0	**90**	
1115 - 1130	104	0	**104**	
1130 - 1145	147	0	**147**	
1145 - 1200	104	0	**104**	**445**

Time	Volume Summary 15min EB	WB	15min Total	60min Total
1200 - 1215	134	0	**134**	
1215 - 1230	152	0	**152**	
1230 - 1245	150	0	**150**	
1245 - 1300	163	0	**163**	**599**
1300 - 1315	110	0	**110**	
1315 - 1330	164	0	**164**	
1330 - 1345	161	0	**161**	
1345 - 1400	152	0	**152**	**587**
1400 - 1415	155	0	**155**	
1415 - 1430	142	0	**142**	
1430 - 1445	177	0	**177**	
1445 - 1500	139	0	**139**	**613**
1500 - 1515	114	0	**114**	
1515 - 1530	117	0	**117**	
1530 - 1545	118	0	**118**	
1545 - 1600	141	0	**141**	**490**
1600 - 1615	168	0	**168**	
1615 - 1630	152	0	**152**	
1630 - 1645	182	0	**182**	
1645 - 1700	183	0	**183**	**685**
1700 - 1715	142	0	**142**	
1715 - 1730	131	0	**131**	
1730 - 1745	148	0	**148**	
1745 - 1800	124	0	**124**	**545**
1800 - 1815	127	0	**127**	
1815 - 1830	123	0	**123**	
1830 - 1845	123	0	**123**	
1845 - 1900	90	0	**90**	**463**
1900 - 1915	98	0	**98**	
1915 - 1930	108	0	**108**	
1930 - 1945	92	0	**92**	
1945 - 2000	109	0	**109**	**407**
2000 - 2015	80	0	**80**	
2015 - 2030	63	0	**63**	
2030 - 2045	61	0	**61**	
2045 - 2100	45	0	**45**	**249**
2100 - 2115	43	0	**43**	
2115 - 2130	55	0	**55**	
2130 - 2145	37	0	**37**	
2145 - 2200	29	0	**29**	**164**
2200 - 2215	32	0	**32**	
2215 - 2230	22	0	**22**	
2230 - 2245	21	0	**21**	
2245 - 2300	20	0	**20**	**95**
2300 - 2315	24	0	**24**	
2315 - 2330	22	0	**22**	
2330 - 2345	8	0	**8**	
2345 - 0000	16	0	**16**	**70**

Session Total	6630	0	**6630**
Session Average	69.06	0.00	**69.06**
Session Percentage	100.00	0.00	

Site 74 Lane 1 EB

I-20,
west of US-378 Sunset Blvd S/Bound Off-Ramp

Date

Monday, April 22, 2024

Lat/Long

34.008085°, -81.156669°

Weather

Mostly Cloudy
57°F

Click here for Detailed Weather

0000 - 2400 (Weekday 24h Session) (04-22-2024)

Volume Summary 15min

TIME	Volume Summary 15min EB	WB	15min Total	60min Total
0000 - 0015	11	0	**11**	
0015 - 0030	12	0	**12**	
0030 - 0045	19	0	**19**	
0045 - 0100	7	0	**7**	**49**
0100 - 0115	15	0	**15**	
0115 - 0130	9	0	**9**	
0130 - 0145	11	0	**11**	
0145 - 0200	8	0	**8**	**43**
0200 - 0215	13	0	**13**	
0215 - 0230	5	0	**5**	
0230 - 0245	7	0	**7**	
0245 - 0300	6	0	**6**	**31**
0300 - 0315	3	0	**3**	
0315 - 0330	1	0	**1**	
0330 - 0345	8	0	**8**	
0345 - 0400	4	0	**4**	**16**
0400 - 0415	10	0	**10**	
0415 - 0430	14	0	**14**	
0430 - 0445	20	0	**20**	
0445 - 0500	17	0	**17**	**61**
0500 - 0515	29	0	**29**	
0515 - 0530	24	0	**24**	
0530 - 0545	52	0	**52**	
0545 - 0600	37	0	**37**	**142**
0600 - 0615	72	0	**72**	
0615 - 0630	62	0	**62**	
0630 - 0645	156	0	**156**	
0645 - 0700	164	0	**164**	**454**
0700 - 0715	303	0	**303**	
0715 - 0730	381	0	**381**	
0730 - 0745	419	0	**419**	
0745 - 0800	375	0	**375**	**1478**
0800 - 0815	312	0	**312**	
0815 - 0830	307	0	**307**	
0830 - 0845	258	0	**258**	
0845 - 0900	212	0	**212**	**1089**
0900 - 0915	152	0	**152**	
0915 - 0930	131	0	**131**	
0930 - 0945	127	0	**127**	
0945 - 1000	144	0	**144**	**554**
1000 - 1015	119	0	**119**	
1015 - 1030	112	0	**112**	
1030 - 1045	120	0	**120**	
1045 - 1100	97	0	**97**	**448**
1100 - 1115	86	0	**86**	
1115 - 1130	88	0	**88**	
1130 - 1145	82	0	**82**	
1145 - 1200	112	0	**112**	**368**

Time	Volume Summary 15min EB	WB	15min Total	60min Total
1200 - 1215	105	0	**105**	
1215 - 1230	87	0	**87**	
1230 - 1245	98	0	**98**	
1245 - 1300	81	0	**81**	**371**
1300 - 1315	81	0	**81**	
1315 - 1330	122	0	**122**	
1330 - 1345	106	0	**106**	
1345 - 1400	90	0	**90**	**399**
1400 - 1415	119	0	**119**	
1415 - 1430	128	0	**128**	
1430 - 1445	113	0	**113**	
1445 - 1500	135	0	**135**	**495**
1500 - 1515	103	0	**103**	
1515 - 1530	137	0	**137**	
1530 - 1545	154	0	**154**	
1545 - 1600	160	0	**160**	**554**
1600 - 1615	164	0	**164**	
1615 - 1630	153	0	**153**	
1630 - 1645	143	0	**143**	
1645 - 1700	184	0	**184**	**644**
1700 - 1715	216	0	**216**	
1715 - 1730	220	0	**220**	
1730 - 1745	136	0	**136**	
1745 - 1800	107	0	**107**	**679**
1800 - 1815	140	0	**140**	
1815 - 1830	111	0	**111**	
1830 - 1845	96	0	**96**	
1845 - 1900	68	0	**68**	**415**
1900 - 1915	54	0	**54**	
1915 - 1930	70	0	**70**	
1930 - 1945	54	0	**54**	
1945 - 2000	71	0	**71**	**249**
2000 - 2015	51	0	**51**	
2015 - 2030	34	0	**34**	
2030 - 2045	27	0	**27**	
2045 - 2100	24	0	**24**	**136**
2100 - 2115	21	0	**21**	
2115 - 2130	25	0	**25**	
2130 - 2145	16	0	**16**	
2145 - 2200	17	0	**17**	**79**
2200 - 2215	19	0	**19**	
2215 - 2230	17	0	**17**	
2230 - 2245	12	0	**12**	
2245 - 2300	7	0	**7**	**55**
2300 - 2315	12	0	**12**	
2315 - 2330	11	0	**11**	
2330 - 2345	4	0	**4**	
2345 - 0000	4	0	**4**	**31**

Session Total	8840	0	**8840**
Session Average	92.08	0.00	**92.08**
Session Percentage	100.00	0.00	

Site 74 Lane 1 EB

I-20,
west of US-378 Sunset Blvd S/Bound Off-Ramp

Date

Tuesday, April 23, 2024

Lat/Long

34.008085°, -81.156669°

Weather

Fair
58°F

Click here for Detailed Weather

0000 - 2400 (Weekday 24h Session) (04-23-2024)

Volume Summary 15min

TIME	Volume Summary 15min EB	Volume Summary 15min WB	15min Total	60min Total
0000 - 0015	2	0	**2**	
0015 - 0030	1	0	**1**	
0030 - 0045	3	0	**3**	
0045 - 0100	1	0	**1**	**7**
0100 - 0115	0	0	**0**	
0115 - 0130	3	0	**3**	
0130 - 0145	1	0	**1**	
0145 - 0200	0	0	**0**	**4**
0200 - 0215	1	0	**1**	
0215 - 0230	2	0	**2**	
0230 - 0245	1	0	**1**	
0245 - 0300	2	0	**2**	**6**
0300 - 0315	6	0	**6**	
0315 - 0330	5	0	**5**	
0330 - 0345	6	0	**6**	
0345 - 0400	5	0	**5**	**22**
0400 - 0415	4	0	**4**	
0415 - 0430	4	0	**4**	
0430 - 0445	11	0	**11**	
0445 - 0500	9	0	**9**	**28**
0500 - 0515	11	0	**11**	
0515 - 0530	15	0	**15**	
0530 - 0545	38	0	**38**	
0545 - 0600	33	0	**33**	**97**
0600 - 0615	82	0	**82**	
0615 - 0630	139	0	**139**	
0630 - 0645	224	0	**224**	
0645 - 0700	234	0	**234**	**679**
0700 - 0715	250	0	**250**	
0715 - 0730	343	0	**343**	
0730 - 0745	341	0	**341**	
0745 - 0800	274	0	**274**	**1208**
0800 - 0815	344	0	**344**	
0815 - 0830	355	0	**355**	
0830 - 0845	267	0	**267**	
0845 - 0900	192	0	**192**	**1158**
0900 - 0915	126	0	**126**	
0915 - 0930	146	0	**146**	
0930 - 0945	147	0	**147**	
0945 - 1000	115	0	**115**	**534**
1000 - 1015	111	0	**111**	
1015 - 1030	99	0	**99**	
1030 - 1045	119	0	**119**	
1045 - 1100	106	0	**106**	**435**
1100 - 1115	105	0	**105**	
1115 - 1130	93	0	**93**	
1130 - 1145	96	0	**96**	
1145 - 1200	90	0	**90**	**384**

Time	Volume Summary 15min EB	Volume Summary 15min WB	15min Total	60min Total
1200 - 1215	110	0	**110**	
1215 - 1230	88	0	**88**	
1230 - 1245	81	0	**81**	
1245 - 1300	95	0	**95**	**374**
1300 - 1315	88	0	**88**	
1315 - 1330	128	0	**128**	
1330 - 1345	96	0	**96**	
1345 - 1400	100	0	**100**	**412**
1400 - 1415	121	0	**121**	
1415 - 1430	106	0	**106**	
1430 - 1445	120	0	**120**	
1445 - 1500	145	0	**145**	**492**
1500 - 1515	125	0	**125**	
1515 - 1530	128	0	**128**	
1530 - 1545	176	0	**176**	
1545 - 1600	152	0	**152**	**581**
1600 - 1615	163	0	**163**	
1615 - 1630	163	0	**163**	
1630 - 1645	177	0	**177**	
1645 - 1700	202	0	**202**	**705**
1700 - 1715	182	0	**182**	
1715 - 1730	213	0	**213**	
1730 - 1745	161	0	**161**	
1745 - 1800	135	0	**135**	**691**
1800 - 1815	111	0	**111**	
1815 - 1830	129	0	**129**	
1830 - 1845	103	0	**103**	
1845 - 1900	88	0	**88**	**431**
1900 - 1915	61	0	**61**	
1915 - 1930	75	0	**75**	
1930 - 1945	51	0	**51**	
1945 - 2000	85	0	**85**	**272**
2000 - 2015	47	0	**47**	
2015 - 2030	39	0	**39**	
2030 - 2045	32	0	**32**	
2045 - 2100	30	0	**30**	**148**
2100 - 2115	40	0	**40**	
2115 - 2130	22	0	**22**	
2130 - 2145	23	0	**23**	
2145 - 2200	12	0	**12**	**97**
2200 - 2215	28	0	**28**	
2215 - 2230	11	0	**11**	
2230 - 2245	6	0	**6**	
2245 - 2300	3	0	**3**	**48**
2300 - 2315	3	0	**3**	
2315 - 2330	3	0	**3**	
2330 - 2345	7	0	**7**	
2345 - 0000	4	0	**4**	**17**

Session Total	8830	0	**8830**
Session Average	91.98	0.00	**91.98**
Session Percentage	100.00	0.00	

Site 74 Lane 1 EB

I-20,
west of US-378 Sunset Blvd S/Bound Off-Ramp

Date

Wednesday, April 24, 2024

Lat/Long

34.008085°, -81.156669°

Weather

Fair
66°F

Click here for Detailed Weather

0000 - 2400 (Weekday 24h Session) (04-24-2024)

Volume Summary 15min

TIME	Volume Summary 15min EB	Volume Summary 15min WB	15min Total	60min Total
0000 - 0015	1	0	**1**	
0015 - 0030	0	0	**0**	
0030 - 0045	0	0	**0**	
0045 - 0100	0	0	**0**	**1**
0100 - 0115	1	0	**1**	
0115 - 0130	1	0	**1**	
0130 - 0145	2	0	**2**	
0145 - 0200	5	0	**5**	**9**
0200 - 0215	1	0	**1**	
0215 - 0230	5	0	**5**	
0230 - 0245	4	0	**4**	
0245 - 0300	1	0	**1**	**11**
0300 - 0315	2	0	**2**	
0315 - 0330	4	0	**4**	
0330 - 0345	5	0	**5**	
0345 - 0400	2	0	**2**	**13**
0400 - 0415	5	0	**5**	
0415 - 0430	2	0	**2**	
0430 - 0445	9	0	**9**	
0445 - 0500	16	0	**16**	**32**
0500 - 0515	18	0	**18**	
0515 - 0530	29	0	**29**	
0530 - 0545	48	0	**48**	
0545 - 0600	44	0	**44**	**139**
0600 - 0615	58	0	**58**	
0615 - 0630	118	0	**118**	
0630 - 0645	207	0	**207**	
0645 - 0700	267	0	**267**	**650**
0700 - 0715	307	0	**307**	
0715 - 0730	349	0	**349**	
0730 - 0745	360	0	**360**	
0745 - 0800	353	0	**353**	**1369**
0800 - 0815	321	0	**321**	
0815 - 0830	328	0	**328**	
0830 - 0845	247	0	**247**	
0845 - 0900	190	0	**190**	**1086**
0900 - 0915	171	0	**171**	
0915 - 0930	119	0	**119**	
0930 - 0945	137	0	**137**	
0945 - 1000	106	0	**106**	**533**
1000 - 1015	126	0	**126**	
1015 - 1030	91	0	**91**	
1030 - 1045	97	0	**97**	
1045 - 1100	91	0	**91**	**405**
1100 - 1115	98	0	**98**	
1115 - 1130	99	0	**99**	
1130 - 1145	100	0	**100**	
1145 - 1200	91	0	**91**	**388**

Time	Volume Summary 15min EB	Volume Summary 15min WB	15min Total	60min Total
1200 - 1215	103	0	**103**	
1215 - 1230	87	0	**87**	
1230 - 1245	107	0	**107**	
1245 - 1300	118	0	**118**	**415**
1300 - 1315	114	0	**114**	
1315 - 1330	102	0	**102**	
1330 - 1345	132	0	**132**	
1345 - 1400	147	0	**147**	**495**
1400 - 1415	104	0	**104**	
1415 - 1430	104	0	**104**	
1430 - 1445	123	0	**123**	
1445 - 1500	136	0	**136**	**467**
1500 - 1515	160	0	**160**	
1515 - 1530	152	0	**152**	
1530 - 1545	147	0	**147**	
1545 - 1600	171	0	**171**	**630**
1600 - 1615	181	0	**181**	
1615 - 1630	132	0	**132**	
1630 - 1645	174	0	**174**	
1645 - 1700	184	0	**184**	**671**
1700 - 1715	236	0	**236**	
1715 - 1730	201	0	**201**	
1730 - 1745	170	0	**170**	
1745 - 1800	151	0	**151**	**758**
1800 - 1815	140	0	**140**	
1815 - 1830	136	0	**136**	
1830 - 1845	128	0	**128**	
1845 - 1900	118	0	**118**	**522**
1900 - 1915	88	0	**88**	
1915 - 1930	86	0	**86**	
1930 - 1945	70	0	**70**	
1945 - 2000	75	0	**75**	**319**
2000 - 2015	64	0	**64**	
2015 - 2030	51	0	**51**	
2030 - 2045	38	0	**38**	
2045 - 2100	33	0	**33**	**186**
2100 - 2115	31	0	**31**	
2115 - 2130	17	0	**17**	
2130 - 2145	21	0	**21**	
2145 - 2200	15	0	**15**	**84**
2200 - 2215	19	0	**19**	
2215 - 2230	11	0	**11**	
2230 - 2245	8	0	**8**	
2245 - 2300	17	0	**17**	**55**
2300 - 2315	12	0	**12**	
2315 - 2330	9	0	**9**	
2330 - 2345	3	0	**3**	
2345 - 0000	6	0	**6**	**30**

Session Total	9268	0	**9268**
Session Average	96.54	0.00	**96.54**
Session Percentage	100.00	0.00	

Site 74 Lane 1 EB

I-20,
west of US-378 Sunset Blvd S/Bound Off-Ramp

Date

Thursday, April 25, 2024

Lat/Long

34.008085°, -81.156669°

Weather

Fair
67°F

Click here for Detailed Weather

0000 - 2400 (Weekday 24h Session) (04-25-2024)

Volume Summary 15min

TIME	Volume Summary 15min EB	Volume Summary 15min WB	15min Total	60min Total
0000 - 0015	6	0	**6**	
0015 - 0030	1	0	**1**	
0030 - 0045	1	0	**1**	
0045 - 0100	8	0	**8**	**16**
0100 - 0115	4	0	**4**	
0115 - 0130	3	0	**3**	
0130 - 0145	2	0	**2**	
0145 - 0200	2	0	**2**	**11**
0200 - 0215	3	0	**3**	
0215 - 0230	2	0	**2**	
0230 - 0245	5	0	**5**	
0245 - 0300	3	0	**3**	**13**
0300 - 0315	2	0	**2**	
0315 - 0330	2	0	**2**	
0330 - 0345	4	0	**4**	
0345 - 0400	3	0	**3**	**11**
0400 - 0415	5	0	**5**	
0415 - 0430	5	0	**5**	
0430 - 0445	9	0	**9**	
0445 - 0500	12	0	**12**	**31**
0500 - 0515	12	0	**12**	
0515 - 0530	29	0	**29**	
0530 - 0545	49	0	**49**	
0545 - 0600	47	0	**47**	**137**
0600 - 0615	77	0	**77**	
0615 - 0630	129	0	**129**	
0630 - 0645	219	0	**219**	
0645 - 0700	283	0	**283**	**708**
0700 - 0715	273	0	**273**	
0715 - 0730	374	0	**374**	
0730 - 0745	418	0	**418**	
0745 - 0800	402	0	**402**	**1467**
0800 - 0815	356	0	**356**	
0815 - 0830	327	0	**327**	
0830 - 0845	262	0	**262**	
0845 - 0900	235	0	**235**	**1180**
0900 - 0915	158	0	**158**	
0915 - 0930	176	0	**176**	
0930 - 0945	179	0	**179**	
0945 - 1000	118	0	**118**	**631**
1000 - 1015	129	0	**129**	
1015 - 1030	108	0	**108**	
1030 - 1045	124	0	**124**	
1045 - 1100	121	0	**121**	**482**
1100 - 1115	117	0	**117**	
1115 - 1130	127	0	**127**	
1130 - 1145	127	0	**127**	
1145 - 1200	91	0	**91**	**462**

Time	Volume Summary 15min EB	Volume Summary 15min WB	15min Total	60min Total
1200 - 1215	104	0	**104**	
1215 - 1230	119	0	**119**	
1230 - 1245	127	0	**127**	
1245 - 1300	132	0	**132**	**482**
1300 - 1315	123	0	**123**	
1315 - 1330	129	0	**129**	
1330 - 1345	134	0	**134**	
1345 - 1400	145	0	**145**	**531**
1400 - 1415	135	0	**135**	
1415 - 1430	151	0	**151**	
1430 - 1445	141	0	**141**	
1445 - 1500	124	0	**124**	**551**
1500 - 1515	146	0	**146**	
1515 - 1530	180	0	**180**	
1530 - 1545	171	0	**171**	
1545 - 1600	201	0	**201**	**698**
1600 - 1615	174	0	**174**	
1615 - 1630	206	0	**206**	
1630 - 1645	206	0	**206**	
1645 - 1700	203	0	**203**	**789**
1700 - 1715	216	0	**216**	
1715 - 1730	263	0	**263**	
1730 - 1745	201	0	**201**	
1745 - 1800	153	0	**153**	**833**
1800 - 1815	159	0	**159**	
1815 - 1830	134	0	**134**	
1830 - 1845	123	0	**123**	
1845 - 1900	128	0	**128**	**544**
1900 - 1915	112	0	**112**	
1915 - 1930	113	0	**113**	
1930 - 1945	75	0	**75**	
1945 - 2000	82	0	**82**	**382**
2000 - 2015	62	0	**62**	
2015 - 2030	57	0	**57**	
2030 - 2045	40	0	**40**	
2045 - 2100	43	0	**43**	**202**
2100 - 2115	31	0	**31**	
2115 - 2130	33	0	**33**	
2130 - 2145	35	0	**35**	
2145 - 2200	39	0	**39**	**138**
2200 - 2215	32	0	**32**	
2215 - 2230	25	0	**25**	
2230 - 2245	15	0	**15**	
2245 - 2300	18	0	**18**	**90**
2300 - 2315	10	0	**10**	
2315 - 2330	9	0	**9**	
2330 - 2345	9	0	**9**	
2345 - 0000	9	0	**9**	**37**

Session Total	10426	0	**10426**
Session Average	108.60	0.00	**108.60**
Session Percentage	100.00	0.00	

Site 74 Lane 1 EB

I-20,
west of US-378 Sunset Blvd S/Bound Off-Ramp

Date

Friday, April 26, 2024

Lat/Long

34.008085°, -81.156669°

Weather

Cloudy
69°F

Click here for Detailed Weather

0000 - 2400 (Weekday 24h Session) (04-26-2024)

Volume Summary 15min

TIME	Volume Summary 15min EB	Volume Summary 15min WB	15min Total	60min Total
0000 - 0015	9	0	**9**	
0015 - 0030	12	0	**12**	
0030 - 0045	11	0	**11**	
0045 - 0100	5	0	**5**	**37**
0100 - 0115	2	0	**2**	
0115 - 0130	6	0	**6**	
0130 - 0145	4	0	**4**	
0145 - 0200	5	0	**5**	**17**
0200 - 0215	4	0	**4**	
0215 - 0230	2	0	**2**	
0230 - 0245	6	0	**6**	
0245 - 0300	3	0	**3**	**15**
0300 - 0315	6	0	**6**	
0315 - 0330	7	0	**7**	
0330 - 0345	8	0	**8**	
0345 - 0400	4	0	**4**	**25**
0400 - 0415	6	0	**6**	
0415 - 0430	11	0	**11**	
0430 - 0445	12	0	**12**	
0445 - 0500	13	0	**13**	**42**
0500 - 0515	21	0	**21**	
0515 - 0530	26	0	**26**	
0530 - 0545	34	0	**34**	
0545 - 0600	59	0	**59**	**140**
0600 - 0615	69	0	**69**	
0615 - 0630	118	0	**118**	
0630 - 0645	175	0	**175**	
0645 - 0700	204	0	**204**	**566**
0700 - 0715	245	0	**245**	
0715 - 0730	388	0	**388**	
0730 - 0745	395	0	**395**	
0745 - 0800	396	0	**396**	**1424**
0800 - 0815	307	0	**307**	
0815 - 0830	289	0	**289**	
0830 - 0845	264	0	**264**	
0845 - 0900	250	0	**250**	**1110**
0900 - 0915	179	0	**179**	
0915 - 0930	170	0	**170**	
0930 - 0945	184	0	**184**	
0945 - 1000	138	0	**138**	**671**
1000 - 1015	159	0	**159**	
1015 - 1030	152	0	**152**	
1030 - 1045	145	0	**145**	
1045 - 1100	139	0	**139**	**595**
1100 - 1115	148	0	**148**	
1115 - 1130	162	0	**162**	
1130 - 1145	142	0	**142**	
1145 - 1200	175	0	**175**	**627**

Time	Volume Summary 15min EB	Volume Summary 15min WB	15min Total	60min Total
1200 - 1215	173	0	**173**	
1215 - 1230	147	0	**147**	
1230 - 1245	174	0	**174**	
1245 - 1300	175	0	**175**	**669**
1300 - 1315	140	0	**140**	
1315 - 1330	171	0	**171**	
1330 - 1345	170	0	**170**	
1345 - 1400	182	0	**182**	**663**
1400 - 1415	168	0	**168**	
1415 - 1430	178	0	**178**	
1430 - 1445	155	0	**155**	
1445 - 1500	180	0	**180**	**681**
1500 - 1515	181	0	**181**	
1515 - 1530	272	0	**272**	
1530 - 1545	271	0	**271**	
1545 - 1600	261	0	**261**	**985**
1600 - 1615	242	0	**242**	
1615 - 1630	233	0	**233**	
1630 - 1645	226	0	**226**	
1645 - 1700	284	0	**284**	**985**
1700 - 1715	218	0	**218**	
1715 - 1730	221	0	**221**	
1730 - 1745	196	0	**196**	
1745 - 1800	197	0	**197**	**832**
1800 - 1815	190	0	**190**	
1815 - 1830	199	0	**199**	
1830 - 1845	196	0	**196**	
1845 - 1900	149	0	**149**	**734**
1900 - 1915	140	0	**140**	
1915 - 1930	127	0	**127**	
1930 - 1945	112	0	**112**	
1945 - 2000	122	0	**122**	**501**
2000 - 2015	93	0	**93**	
2015 - 2030	77	0	**77**	
2030 - 2045	77	0	**77**	
2045 - 2100	69	0	**69**	**316**
2100 - 2115	57	0	**57**	
2115 - 2130	46	0	**46**	
2130 - 2145	26	0	**26**	
2145 - 2200	47	0	**47**	**176**
2200 - 2215	40	0	**40**	
2215 - 2230	36	0	**36**	
2230 - 2245	30	0	**30**	
2245 - 2300	23	0	**23**	**129**
2300 - 2315	26	0	**26**	
2315 - 2330	24	0	**24**	
2330 - 2345	25	0	**25**	
2345 - 0000	12	0	**12**	**87**

Session Total	12027	0	**12027**
Session Average	125.28	0.00	**125.28**
Session Percentage	100.00	0.00	

Site 74 Lane 1 EB

I-20,
west of US-378 Sunset Blvd S/Bound Off-Ramp

Date

Saturday, April 27, 2024

Lat/Long

34.008085°, -81.156669°

Weather

Mostly Cloudy
69°F

Click here for Detailed Weather

0000 - 2400 (Saturday 24h Session) (04-27-2024)

Volume Summary 15min

TIME	Volume Summary 15min EB	WB	15min Total	60min Total
0000 - 0015	11	0	**11**	
0015 - 0030	16	0	**16**	
0030 - 0045	10	0	**10**	
0045 - 0100	7	0	**7**	**44**
0100 - 0115	10	0	**10**	
0115 - 0130	7	0	**7**	
0130 - 0145	6	0	**6**	
0145 - 0200	6	0	**6**	**29**
0200 - 0215	3	0	**3**	
0215 - 0230	5	0	**5**	
0230 - 0245	2	0	**2**	
0245 - 0300	11	0	**11**	**21**
0300 - 0315	2	0	**2**	
0315 - 0330	4	0	**4**	
0330 - 0345	4	0	**4**	
0345 - 0400	2	0	**2**	**12**
0400 - 0415	2	0	**2**	
0415 - 0430	10	0	**10**	
0430 - 0445	5	0	**5**	
0445 - 0500	5	0	**5**	**22**
0500 - 0515	7	0	**7**	
0515 - 0530	7	0	**7**	
0530 - 0545	17	0	**17**	
0545 - 0600	19	0	**19**	**50**
0600 - 0615	11	0	**11**	
0615 - 0630	46	0	**46**	
0630 - 0645	47	0	**47**	
0645 - 0700	37	0	**37**	**141**
0700 - 0715	51	0	**51**	
0715 - 0730	85	0	**85**	
0730 - 0745	90	0	**90**	
0745 - 0800	107	0	**107**	**333**
0800 - 0815	80	0	**80**	
0815 - 0830	95	0	**95**	
0830 - 0845	93	0	**93**	
0845 - 0900	107	0	**107**	**375**
0900 - 0915	118	0	**118**	
0915 - 0930	125	0	**125**	
0930 - 0945	146	0	**146**	
0945 - 1000	149	0	**149**	**538**
1000 - 1015	131	0	**131**	
1015 - 1030	154	0	**154**	
1030 - 1045	164	0	**164**	
1045 - 1100	141	0	**141**	**590**
1100 - 1115	133	0	**133**	
1115 - 1130	153	0	**153**	
1130 - 1145	149	0	**149**	
1145 - 1200	161	0	**161**	**596**

Time	Volume Summary 15min EB	WB	15min Total	60min Total
1200 - 1215	170	0	**170**	
1215 - 1230	155	0	**155**	
1230 - 1245	166	0	**166**	
1245 - 1300	161	0	**161**	**652**
1300 - 1315	150	0	**150**	
1315 - 1330	167	0	**167**	
1330 - 1345	162	0	**162**	
1345 - 1400	142	0	**142**	**621**
1400 - 1415	157	0	**157**	
1415 - 1430	131	0	**131**	
1430 - 1445	154	0	**154**	
1445 - 1500	150	0	**150**	**592**
1500 - 1515	133	0	**133**	
1515 - 1530	143	0	**143**	
1530 - 1545	145	0	**145**	
1545 - 1600	131	0	**131**	**552**
1600 - 1615	116	0	**116**	
1615 - 1630	158	0	**158**	
1630 - 1645	136	0	**136**	
1645 - 1700	136	0	**136**	**546**
1700 - 1715	131	0	**131**	
1715 - 1730	130	0	**130**	
1730 - 1745	114	0	**114**	
1745 - 1800	112	0	**112**	**487**
1800 - 1815	89	0	**89**	
1815 - 1830	121	0	**121**	
1830 - 1845	121	0	**121**	
1845 - 1900	103	0	**103**	**434**
1900 - 1915	111	0	**111**	
1915 - 1930	91	0	**91**	
1930 - 1945	89	0	**89**	
1945 - 2000	99	0	**99**	**390**
2000 - 2015	70	0	**70**	
2015 - 2030	56	0	**56**	
2030 - 2045	40	0	**40**	
2045 - 2100	57	0	**57**	**223**
2100 - 2115	63	0	**63**	
2115 - 2130	49	0	**49**	
2130 - 2145	43	0	**43**	
2145 - 2200	38	0	**38**	**193**
2200 - 2215	39	0	**39**	
2215 - 2230	36	0	**36**	
2230 - 2245	54	0	**54**	
2245 - 2300	28	0	**28**	**157**
2300 - 2315	16	0	**16**	
2315 - 2330	22	0	**22**	
2330 - 2345	20	0	**20**	
2345 - 0000	21	0	**21**	**79**

Session Total	7677	0	**7677**
Session Average	79.97	0.00	**79.97**
Session Percentage	100.00	0.00	

Bi-Directional Class Count || NB EB 60min

Columbia, SC

Marr Traffic DATA COLLECTION

www.marrtraffic.com

Site 74 Lane 1 EB
I-20,
west of US-378 Sunset Blvd S/Bound Off-Ramp

Date
Sunday, April 21, 2024

Lat/Long
34.008085°, -81.156669°

Weather
Cloudy
66°F

Click here for Detailed Weather

0000 - 2400 (Sunday 24h Session) (04-21-2024)
NB EB 60min

	Eastbound (Movement 74 Lane 1 EB.1)													
TIME	1	2	3	4	5	6	7	8	9	10	11	12	13	**Total**
0000 - 0100	0	40	2	0	0	0	0	0	0	0	0	0	0	**42**
0100 - 0200	0	26	2	1	0	0	0	0	0	0	0	0	0	**29**
0200 - 0300	0	12	1	0	0	0	0	0	0	0	0	0	0	**13**
0300 - 0400	0	15	4	0	0	0	0	0	0	0	0	0	0	**19**
0400 - 0500	0	11	1	0	0	0	0	0	0	0	0	0	0	**12**
0500 - 0600	0	20	2	0	0	0	0	0	1	0	0	0	0	**23**
0600 - 0700	0	58	7	0	0	0	0	0	0	0	0	0	0	**65**
0700 - 0800	0	109	26	0	2	0	0	0	0	0	0	0	0	**137**
0800 - 0900	0	150	25	0	1	0	0	0	0	0	0	0	0	**176**
0900 - 1000	5	236	40	0	3	0	0	0	1	0	0	0	0	**285**
1000 - 1100	29	318	68	0	1	0	0	0	1	0	0	0	0	**417**
1100 - 1200	14	355	71	0	4	0	0	1	0	0	0	0	0	**445**
1200 - 1300	0	506	90	0	3	0	0	0	0	0	0	0	0	**599**
1300 - 1400	1	476	109	0	1	0	0	0	0	0	0	0	0	**587**
1400 - 1500	1	502	107	1	2	0	0	0	0	0	0	0	0	**613**
1500 - 1600	2	395	88	0	3	0	0	1	1	0	0	0	0	**490**
1600 - 1700	5	557	119	0	1	0	0	2	0	1	0	0	0	**685**
1700 - 1800	0	472	71	1	0	0	0	1	0	0	0	0	0	**545**
1800 - 1900	0	397	62	0	1	0	0	2	1	0	0	0	0	**463**
1900 - 2000	2	354	50	0	1	0	0	0	0	0	0	0	0	**407**
2000 - 2100	1	221	26	0	0	0	0	0	1	0	0	0	0	**249**
2100 - 2200	0	157	5	0	0	0	0	0	2	0	0	0	0	**164**
2200 - 2300	0	91	4	0	0	0	0	0	0	0	0	0	0	**95**
2300 - 2400	0	66	2	0	0	0	0	0	2	0	0	0	0	**70**

Session Total	60	5544	982	3	23	0	0	7	10	1	0	0	0	**6630**
Session Average	2.50	231.00	40.92	0.13	0.96	0.00	0.00	0.29	0.42	0.04	0.00	0.00	0.00	**276.25**
Session Percentage	0.90	83.62	14.81	0.05	0.35	0.00	0.00	0.11	0.15	0.02	0.00	0.00	0.00	

AM Peak Hour	0900 - 1000	0900 - 1000	0900 - 1000	-	0900 - 1000	-	-	-	0500 - 0600	-	-	-	-	**0900 - 1000**
AM Peak Volume	5	236	40	0	3	0	0	0	1	0	0	0	0	**285**

Noon Peak Hour	1000 - 1100	1200 - 1300	1300 - 1400	1400 - 1500	1100 - 1200	-	-	1100 - 1200	1000 - 1100	-	-	-	-	**1400 - 1500**
Noon Peak Volume	29	506	109	1	4	0	0	1	1	0	0	0	0	**613**

PM Peak Hour	1600 - 1700	1600 - 1700	1600 - 1700	1700 - 1800	1500 - 1600	-	-	1600 - 1700	1500 - 1600	1600 - 1700	-	-	-	**1600 - 1700**
PM Peak Volume	5	557	119	1	3	0	0	2	1	1	0	0	0	**685**

Site 74 Lane 1 EB

I-20,
west of US-378 Sunset Blvd S/Bound Off-Ramp

Date

Monday, April 22, 2024

Lat/Long

34.008085°, -81.156669°

Weather

Mostly Cloudy
57°F

Click here for Detailed Weather

0000 - 2400 (Weekday 24h Session) (04-22-2024)

NB EB 60min

	Eastbound (Movement 74 Lane 1 EB.1)													
TIME	1	2	3	4	5	6	7	8	9	10	11	12	13	**Total**
0000 - 0100	0	48	1	0	0	0	0	0	0	0	0	0	0	**49**
0100 - 0200	0	40	3	0	0	0	0	0	0	0	0	0	0	**43**
0200 - 0300	0	28	3	0	0	0	0	0	0	0	0	0	0	**31**
0300 - 0400	0	13	3	0	0	0	0	0	0	0	0	0	0	**16**
0400 - 0500	0	56	5	0	0	0	0	0	0	0	0	0	0	**61**
0500 - 0600	0	112	30	0	0	0	0	0	0	0	0	0	0	**142**
0600 - 0700	0	371	82	0	1	0	0	0	0	0	0	0	0	**454**
0700 - 0800	0	1211	260	0	6	0	0	0	1	0	0	0	0	**1478**
0800 - 0900	1	901	183	1	3	0	0	0	0	0	0	0	0	**1089**
0900 - 1000	0	447	93	1	10	0	0	1	2	0	0	0	0	**554**
1000 - 1100	0	364	77	0	4	0	0	3	0	0	0	0	0	**448**
1100 - 1200	0	287	70	0	6	0	0	3	2	0	0	0	0	**368**
1200 - 1300	1	286	77	0	2	0	0	5	0	0	0	0	0	**371**
1300 - 1400	0	312	79	0	5	0	0	2	1	0	0	0	0	**399**
1400 - 1500	5	399	85	1	2	0	0	2	1	0	0	0	0	**495**
1500 - 1600	2	431	106	1	6	0	0	3	5	0	0	0	0	**554**
1600 - 1700	1	541	96	0	4	1	0	1	0	0	0	0	0	**644**
1700 - 1800	2	540	128	0	2	1	0	4	2	0	0	0	0	**679**
1800 - 1900	0	344	68	0	1	0	0	1	1	0	0	0	0	**415**
1900 - 2000	0	221	25	0	0	0	0	2	1	0	0	0	0	**249**
2000 - 2100	0	119	13	0	0	0	0	0	4	0	0	0	0	**136**
2100 - 2200	0	68	6	0	1	0	0	0	4	0	0	0	0	**79**
2200 - 2300	0	53	1	0	0	0	0	0	1	0	0	0	0	**55**
2300 - 2400	0	29	1	0	0	0	0	0	1	0	0	0	0	**31**

Session Total	12	7221	1495	4	53	2	0	27	26	0	0	0	0	**8840**
Session Average	0.50	300.88	62.29	0.17	2.21	0.08	0.00	1.13	1.08	0.00	0.00	0.00	0.00	**368.33**
Session Percentage	0.14	81.69	16.91	0.05	0.60	0.02	0.00	0.31	0.29	0.00	0.00	0.00	0.00	

AM Peak Hour	0800 - 0900	0700 - 0800	0700 - 0800	0800 - 0900	0900 - 1000	-	-	0900 - 1000	0900 - 1000	-	-	-	-	**0700 - 0800**
AM Peak Volume	1	1211	260	1	10	0	0	1	2	0	0	0	0	**1478**

Noon Peak Hour	1400 - 1500	1400 - 1500	1400 - 1500	1400 - 1500	1100 - 1200	-	-	1200 - 1300	1100 - 1200	-	-	-	-	**1400 - 1500**
Noon Peak Volume	5	399	85	1	6	0	0	5	2	0	0	0	0	**495**

PM Peak Hour	1500 - 1600	1600 - 1700	1700 - 1800	1500 - 1600	1500 - 1600	1600 - 1700	-	1700 - 1800	1500 - 1600	-	-	-	-	**1700 - 1800**
PM Peak Volume	2	541	128	1	6	1	0	4	5	0	0	0	0	**679**

Site 74 Lane 1 EB
I-20,
west of US-378 Sunset Blvd S/Bound Off-Ramp

Date
Tuesday, April 23, 2024

Lat/Long
34.008085°, -81.156669°

Weather
Fair
58°F

Click here for Detailed Weather

0000 - 2400 (Weekday 24h Session) (04-23-2024)
NB EB 60min

	Eastbound (Movement 74 Lane 1 EB.1)													
TIME	1	2	3	4	5	6	7	8	9	10	11	12	13	**Total**
0000 - 0100	0	5	1	0	0	0	0	0	1	0	0	0	0	**7**
0100 - 0200	0	2	0	0	0	0	0	0	2	0	0	0	0	**4**
0200 - 0300	0	5	0	0	0	0	0	0	1	0	0	0	0	**6**
0300 - 0400	0	21	1	0	0	0	0	0	0	0	0	0	0	**22**
0400 - 0500	0	25	0	0	1	0	0	0	2	0	0	0	0	**28**
0500 - 0600	0	93	3	0	1	0	0	0	0	0	0	0	0	**97**
0600 - 0700	0	524	149	0	6	0	0	0	0	0	0	0	0	**679**
0700 - 0800	1	953	242	0	8	0	0	3	1	0	0	0	0	**1208**
0800 - 0900	3	895	239	0	12	1	0	7	1	0	0	0	0	**1158**
0900 - 1000	0	413	110	1	7	0	0	1	2	0	0	0	0	**534**
1000 - 1100	2	333	88	0	7	0	0	0	5	0	0	0	0	**435**
1100 - 1200	1	279	95	0	7	0	0	0	2	0	0	0	0	**384**
1200 - 1300	1	293	73	1	4	0	0	1	1	0	0	0	0	**374**
1300 - 1400	0	323	82	1	4	0	0	0	2	0	0	0	0	**412**
1400 - 1500	1	369	111	2	4	0	0	0	4	1	0	0	0	**492**
1500 - 1600	1	428	138	0	10	0	0	2	2	0	0	0	0	**581**
1600 - 1700	1	542	157	1	4	0	0	0	0	0	0	0	0	**705**
1700 - 1800	2	535	152	0	2	0	0	0	0	0	0	0	0	**691**
1800 - 1900	3	342	75	3	5	0	0	1	2	0	0	0	0	**431**
1900 - 2000	0	221	47	0	3	0	0	0	1	0	0	0	0	**272**
2000 - 2100	0	119	26	0	1	0	0	0	2	0	0	0	0	**148**
2100 - 2200	0	78	19	0	0	0	0	0	0	0	0	0	0	**97**
2200 - 2300	0	41	4	0	1	0	0	0	2	0	0	0	0	**48**
2300 - 2400	0	16	1	0	0	0	0	0	0	0	0	0	0	**17**

Session Total	16	6855	1813	9	87	1	0	15	33	1	0	0	0	**8830**
Session Average	0.67	285.63	75.54	0.38	3.63	0.04	0.00	0.63	1.38	0.04	0.00	0.00	0.00	**367.92**
Session Percentage	0.18	77.63	20.53	0.10	0.99	0.01	0.00	0.17	0.37	0.01	0.00	0.00	0.00	

AM Peak Hour	0800 - 0900	0700 - 0800	0700 - 0800	0900 - 1000	0800 - 0900	0800 - 0900	-	0800 - 0900	0900 - 1000	-	-	-	-	**0700 - 0800**
AM Peak Hour Volume	3	953	242	1	12	1	0	7	2	0	0	0	0	**1208**

Noon Peak Hour	1000 - 1100	1400 - 1500	1400 - 1500	1400 - 1500	1000 - 1100	-	-	1200 - 1300	1000 - 1100	1400 - 1500	-	-	-	**1400 - 1500**
Noon Peak Hour Volume	2	369	111	2	7	0	0	1	5	1	0	0	0	**492**

PM Peak Hour	1800 - 1900	1600 - 1700	1600 - 1700	1800 - 1900	1500 - 1600	-	-	1500 - 1600	1500 - 1600	-	-	-	-	**1600 - 1700**
PM Peak Hour Volume	3	542	157	3	10	0	0	2	2	0	0	0	0	**705**

Site 74 Lane 1 EB

I-20,
west of US-378 Sunset Blvd S/Bound Off-Ramp

Date

Wednesday, April 24, 2024

Lat/Long

34.008085°, -81.156669°

Weather

Fair
66°F

Click here for Detailed Weather

0000 - 2400 (Weekday 24h Session) (04-24-2024)

NB EB 60min

	Eastbound (Movement 74 Lane 1 EB.1)													
TIME	1	2	3	4	5	6	7	8	9	10	11	12	13	**Total**
0000 - 0100	0	1	0	0	0	0	0	0	0	0	0	0	0	**1**
0100 - 0200	0	8	1	0	0	0	0	0	0	0	0	0	0	**9**
0200 - 0300	0	11	0	0	0	0	0	0	0	0	0	0	0	**11**
0300 - 0400	2	9	1	0	0	0	0	0	1	0	0	0	0	**13**
0400 - 0500	0	24	6	0	2	0	0	0	0	0	0	0	0	**32**
0500 - 0600	0	113	26	0	0	0	0	0	0	0	0	0	0	**139**
0600 - 0700	0	498	142	0	10	0	0	0	0	0	0	0	0	**650**
0700 - 0800	1	1052	303	0	12	0	0	0	1	0	0	0	0	**1369**
0800 - 0900	6	834	231	0	6	1	0	6	2	0	0	0	0	**1086**
0900 - 1000	1	401	121	1	6	0	0	1	2	0	0	0	0	**533**
1000 - 1100	1	294	103	0	4	0	0	2	1	0	0	0	0	**405**
1100 - 1200	1	294	84	1	5	1	0	1	1	0	0	0	0	**388**
1200 - 1300	2	320	81	0	9	0	0	2	1	0	0	0	0	**415**
1300 - 1400	0	348	135	0	8	0	0	2	2	0	0	0	0	**495**
1400 - 1500	3	360	88	0	11	0	0	2	2	1	0	0	0	**467**
1500 - 1600	3	467	148	0	8	1	0	2	1	0	0	0	0	**630**
1600 - 1700	1	520	139	0	8	0	0	2	1	0	0	0	0	**671**
1700 - 1800	1	585	164	0	5	1	0	1	1	0	0	0	0	**758**
1800 - 1900	2	404	103	0	6	0	0	1	6	0	0	0	0	**522**
1900 - 2000	6	254	56	0	1	0	0	2	0	0	0	0	0	**319**
2000 - 2100	1	153	29	0	2	0	0	1	0	0	0	0	0	**186**
2100 - 2200	0	61	20	0	2	0	0	1	0	0	0	0	0	**84**
2200 - 2300	0	38	17	0	0	0	0	0	0	0	0	0	0	**55**
2300 - 2400	0	27	3	0	0	0	0	0	0	0	0	0	0	**30**

Session Total	31	7076	2001	2	105	4	0	26	22	1	0	0	0	**9268**
Session Average	1.29	294.83	83.38	0.08	4.38	0.17	0.00	1.08	0.92	0.04	0.00	0.00	0.00	**386.17**
Session Percentage	0.33	76.35	21.59	0.02	1.13	0.04	0.00	0.28	0.24	0.01	0.00	0.00	0.00	

AM Peak Hour	0800 - 0900	0700 - 0800	0700 - 0800	0900 - 1000	0700 - 0800	0800 - 0900	-	0800 - 0900	0800 - 0900	-	-	-	-	**0700 - 0800**
AM Peak Hour Volume	6	1052	303	1	12	1	0	6	2	0	0	0	0	**1369**

Noon Peak Hour	1400 - 1500	1400 - 1500	1300 - 1400	1100 - 1200	1400 - 1500	1100 - 1200	-	1000 - 1100	1300 - 1400	1400 - 1500	-	-	-	**1300 - 1400**
Noon Peak Hour Volume	3	360	135	1	11	1	0	2	2	1	0	0	0	**495**

PM Peak Hour	1900 - 2000	1700 - 1800	1700 - 1800	-	1500 - 1600	1500 - 1600	-	1500 - 1600	1800 - 1900	-	-	-	-	**1700 - 1800**
PM Peak Hour Volume	6	585	164	0	8	1	0	2	6	0	0	0	0	**758**

Site 74 Lane 1 EB
I-20,
west of US-378 Sunset Blvd S/Bound Off-Ramp

Date
Thursday, April 25, 2024

Lat/Long
34.008085°, -81.156669°

Weather
Fair
67°F

Click here for Detailed Weather

0000 - 2400 (Weekday 24h Session) (04-25-2024)
NB EB 60min

	Eastbound (Movement 74 Lane 1 EB.1)													
TIME	1	2	3	4	5	6	7	8	9	10	11	12	13	**Total**
0000 - 0100	0	11	5	0	0	0	0	0	0	0	0	0	0	**16**
0100 - 0200	0	9	1	0	0	0	0	1	0	0	0	0	0	**11**
0200 - 0300	0	13	0	0	0	0	0	0	0	0	0	0	0	**13**
0300 - 0400	0	10	0	0	1	0	0	0	0	0	0	0	0	**11**
0400 - 0500	0	23	6	0	0	0	0	0	2	0	0	0	0	**31**
0500 - 0600	0	99	36	0	1	0	0	0	1	0	0	0	0	**137**
0600 - 0700	0	475	224	0	6	1	0	1	1	0	0	0	0	**708**
0700 - 0800	3	1148	302	0	12	0	0	2	0	0	0	0	0	**1467**
0800 - 0900	5	906	248	0	14	0	0	4	3	0	0	0	0	**1180**
0900 - 1000	0	480	140	0	6	0	0	0	4	1	0	0	0	**631**
1000 - 1100	1	353	118	0	4	0	0	3	3	0	0	0	0	**482**
1100 - 1200	1	333	115	0	8	0	0	2	3	0	0	0	0	**462**
1200 - 1300	2	357	114	0	3	2	0	1	3	0	0	0	0	**482**
1300 - 1400	3	389	123	1	9	0	1	2	3	0	0	0	0	**531**
1400 - 1500	3	425	112	0	8	0	0	1	2	0	0	0	0	**551**
1500 - 1600	3	538	146	0	6	0	0	2	3	0	0	0	0	**698**
1600 - 1700	1	617	158	0	7	0	0	2	4	0	0	0	0	**789**
1700 - 1800	3	627	197	0	4	0	0	1	1	0	0	0	0	**833**
1800 - 1900	0	426	108	1	7	0	0	1	1	0	0	0	0	**544**
1900 - 2000	1	319	57	0	3	0	0	2	0	0	0	0	0	**382**
2000 - 2100	0	164	36	0	1	0	0	0	1	0	0	0	0	**202**
2100 - 2200	0	112	24	0	2	0	0	0	0	0	0	0	0	**138**
2200 - 2300	0	65	21	0	3	0	0	1	0	0	0	0	0	**90**
2300 - 2400	0	26	11	0	0	0	0	0	0	0	0	0	0	**37**

Session Total	26	7925	2302	2	105	3	1	26	35	1	0	0	0	**10426**
Session Average	1.08	330.21	95.92	0.08	4.38	0.13	0.04	1.08	1.46	0.04	0.00	0.00	0.00	**434.42**
Session Percentage	0.25	76.01	22.08	0.02	1.01	0.03	0.01	0.25	0.34	0.01	0.00	0.00	0.00	

AM Peak Hour	0800 - 0900	0700 - 0800	0700 - 0800	-	0800 - 0900	0600 - 0700	-	0800 - 0900	0900 - 1000	0900 - 1000	-	-	-	**0700 - 0800**
AM Peak Hour Volume	5	1148	302	0	14	1	0	4	4	1	0	0	0	**1467**

Noon Peak Hour	1300 - 1400	1400 - 1500	1300 - 1400	1300 - 1400	1300 - 1400	1200 - 1300	1300 - 1400	1000 - 1100	1000 - 1100	-	-	-	-	**1400 - 1500**
Noon Peak Hour Volume	3	425	123	1	9	2	1	3	3	0	0	0	0	**551**

PM Peak Hour	1500 - 1600	1700 - 1800	1700 - 1800	1800 - 1900	1600 - 1700	-	-	1500 - 1600	1600 - 1700	-	-	-	-	**1700 - 1800**
PM Peak Hour Volume	3	627	197	1	7	0	0	2	4	0	0	0	0	**833**

Site 74 Lane 1 EB

I-20,
west of US-378 Sunset Blvd S/Bound Off-Ramp

Date

Friday, April 26, 2024

Lat/Long

34.008085°, -81.156669°

Weather

Cloudy
69°F

Click here for Detailed Weather

0000 - 2400 (Weekday 24h Session) (04-26-2024)

NB EB 60min

	Eastbound (Movement 74 Lane 1 EB.1)													
TIME	1	2	3	4	5	6	7	8	9	10	11	12	13	**Total**
0000 - 0100	0	33	2	0	0	0	0	0	2	0	0	0	0	**37**
0100 - 0200	0	17	0	0	0	0	0	0	0	0	0	0	0	**17**
0200 - 0300	0	15	0	0	0	0	0	0	0	0	0	0	0	**15**
0300 - 0400	0	22	3	0	0	0	0	0	0	0	0	0	0	**25**
0400 - 0500	1	37	4	0	0	0	0	0	0	0	0	0	0	**42**
0500 - 0600	0	121	17	0	2	0	0	0	0	0	0	0	0	**140**
0600 - 0700	1	416	144	0	4	1	0	0	0	0	0	0	0	**566**
0700 - 0800	5	1133	272	1	12	0	0	1	0	0	0	0	0	**1424**
0800 - 0900	3	865	220	3	12	1	0	3	3	0	0	0	0	**1110**
0900 - 1000	2	510	153	0	2	0	0	2	2	0	0	0	0	**671**
1000 - 1100	3	453	128	0	11	0	0	0	0	0	0	0	0	**595**
1100 - 1200	10	488	120	0	5	0	0	2	2	0	0	0	0	**627**
1200 - 1300	8	501	147	1	6	0	0	2	4	0	0	0	0	**669**
1300 - 1400	10	516	127	1	7	0	0	1	1	0	0	0	0	**663**
1400 - 1500	2	526	138	0	11	0	0	1	3	0	0	0	0	**681**
1500 - 1600	28	758	183	1	11	0	0	2	2	0	0	0	0	**985**
1600 - 1700	7	787	182	0	5	1	0	3	0	0	0	0	0	**985**
1700 - 1800	17	654	157	0	3	1	0	0	0	0	0	0	0	**832**
1800 - 1900	11	603	116	0	3	0	0	1	0	0	0	0	0	**734**
1900 - 2000	15	404	80	0	2	0	0	0	0	0	0	0	0	**501**
2000 - 2100	1	249	63	0	3	0	0	0	0	0	0	0	0	**316**
2100 - 2200	0	141	33	0	1	0	0	0	1	0	0	0	0	**176**
2200 - 2300	4	106	18	0	0	0	0	0	1	0	0	0	0	**129**
2300 - 2400	0	80	7	0	0	0	0	0	0	0	0	0	0	**87**

Session Total	128	9435	2314	7	100	4	0	18	21	0	0	0	0	**12027**
Session Average	5.33	393.13	96.42	0.29	4.17	0.17	0.00	0.75	0.88	0.00	0.00	0.00	0.00	**501.13**
Session Percentage	1.06	78.45	19.24	0.06	0.83	0.03	0.00	0.15	0.17	0.00	0.00	0.00	0.00	

AM Peak Hour	0700 - 0800	0700 - 0800	0700 - 0800	0800 - 0900	0700 - 0800	0600 - 0700	-	0800 - 0900	0800 - 0900	-	-	-	-	**0700 - 0800**
AM Peak Hour Volume	5	1133	272	3	12	1	0	3	3	0	0	0	0	**1424**

Noon Peak Hour	1100 - 1200	1400 - 1500	1200 - 1300	1200 - 1300	1000 - 1100	-	-	1100 - 1200	1200 - 1300	-	-	-	-	**1400 - 1500**
Noon Peak Hour Volume	10	526	147	1	11	0	0	2	4	0	0	0	0	**681**

PM Peak Hour	1500 - 1600	1600 - 1700	1500 - 1600	1500 - 1600	1500 - 1600	1600 - 1700	-	1600 - 1700	1500 - 1600	-	-	-	-	**1500 - 1600**
PM Peak Hour Volume	28	787	183	1	11	1	0	3	2	0	0	0	0	**985**

Site 74 Lane 1 EB
I-20,
west of US-378 Sunset Blvd S/Bound Off-Ramp

Date
Saturday, April 27, 2024

Lat/Long
34.008085°, -81.156669°

Weather
Mostly Cloudy
69°F

Click here for Detailed Weather

0000 - 2400 (Saturday 24h Session) (04-27-2024)
NB EB 60min

	Eastbound (Movement 74 Lane 1 EB.1)													
TIME	1	2	3	4	5	6	7	8	9	10	11	12	13	**Total**
0000 - 0100	0	40	4	0	0	0	0	0	0	0	0	0	0	**44**
0100 - 0200	0	25	1	0	3	0	0	0	0	0	0	0	0	**29**
0200 - 0300	7	14	0	0	0	0	0	0	0	0	0	0	0	**21**
0300 - 0400	0	11	1	0	0	0	0	0	0	0	0	0	0	**12**
0400 - 0500	0	19	3	0	0	0	0	0	0	0	0	0	0	**22**
0500 - 0600	2	39	8	0	1	0	0	0	0	0	0	0	0	**50**
0600 - 0700	1	115	25	0	0	0	0	0	0	0	0	0	0	**141**
0700 - 0800	2	255	73	0	2	0	0	1	0	0	0	0	0	**333**
0800 - 0900	3	298	72	0	2	0	0	0	0	0	0	0	0	**375**
0900 - 1000	2	428	105	0	1	0	0	1	1	0	0	0	0	**538**
1000 - 1100	27	453	105	0	4	0	0	1	0	0	0	0	0	**590**
1100 - 1200	22	460	109	0	3	0	0	1	1	0	0	0	0	**596**
1200 - 1300	10	544	94	1	1	0	0	1	1	0	0	0	0	**652**
1300 - 1400	26	503	89	1	2	0	0	0	0	0	0	0	0	**621**
1400 - 1500	7	488	95	0	1	0	0	1	0	0	0	0	0	**592**
1500 - 1600	18	446	84	0	1	0	0	3	0	0	0	0	0	**552**
1600 - 1700	4	461	75	0	5	0	0	0	1	0	0	0	0	**546**
1700 - 1800	3	407	68	1	6	0	0	2	0	0	0	0	0	**487**
1800 - 1900	0	369	61	1	0	0	0	2	1	0	0	0	0	**434**
1900 - 2000	3	339	46	0	1	0	0	0	1	0	0	0	0	**390**
2000 - 2100	1	197	23	0	0	0	0	2	0	0	0	0	0	**223**
2100 - 2200	0	183	9	0	1	0	0	0	0	0	0	0	0	**193**
2200 - 2300	0	145	10	1	1	0	0	0	0	0	0	0	0	**157**
2300 - 2400	0	70	8	0	0	0	0	0	1	0	0	0	0	**79**

Session Total	138	6309	1168	5	35	0	0	15	7	0	0	0	0	**7677**
Session Average	5.75	262.88	48.67	0.21	1.46	0.00	0.00	0.63	0.29	0.00	0.00	0.00	0.00	**319.88**
Session Percentage	1.80	82.18	15.21	0.07	0.46	0.00	0.00	0.20	0.09	0.00	0.00	0.00	0.00	

AM Peak Hour	0800 - 0900	0900 - 1000	0900 - 1000	-	0700 - 0800	-	-	0700 - 0800	0900 - 1000	-	-	-	-	**0900 - 1000**
AM Peak Hour Volume	3	428	105	0	2	0	0	1	1	0	0	0	0	**538**

Noon Peak Hour	1000 - 1100	1200 - 1300	1100 - 1200	1200 - 1300	1000 - 1100	-	-	1000 - 1100	1100 - 1200	-	-	-	-	**1200 - 1300**
Noon Peak Hour Volume	27	544	109	1	4	0	0	1	1	0	0	0	0	**652**

PM Peak Hour	1500 - 1600	1600 - 1700	1500 - 1600	1700 - 1800	1700 - 1800	-	-	1500 - 1600	1600 - 1700	-	-	-	-	**1500 - 1600**
PM Peak Hour Volume	18	461	84	1	6	0	0	3	1	0	0	0	0	**552**

Bi-Directional Class Count || Volume Summary 60min

Columbia, SC

Marr Traffic DATA COLLECTION

www.marrtraffic.com

Site 74 Lane 1 EB

I-20,
west of US-378 Sunset Blvd S/Bound Off-Ramp

Date

Sunday, April 21, 2024

Lat/Long

34.008085°, -81.156669°

Weather

Cloudy
66°F

Click here for Detailed Weather

0000 - 2400 (Sunday 24h Session) (04-21-2024)

Volume Summary 60min

	Volume Summary 60min		
TIME	EB	WB	**Total**
0000 - 0100	42	0	**42**
0100 - 0200	29	0	**29**
0200 - 0300	13	0	**13**
0300 - 0400	19	0	**19**
0400 - 0500	12	0	**12**
0500 - 0600	23	0	**23**
0600 - 0700	65	0	**65**
0700 - 0800	137	0	**137**
0800 - 0900	176	0	**176**
0900 - 1000	285	0	**285**
1000 - 1100	417	0	**417**
1100 - 1200	445	0	**445**

	Volume Summary 60min		
Time	EB	WB	**Total**
1200 - 1300	599	0	**599**
1300 - 1400	587	0	**587**
1400 - 1500	613	0	**613**
1500 - 1600	490	0	**490**
1600 - 1700	685	0	**685**
1700 - 1800	545	0	**545**
1800 - 1900	463	0	**463**
1900 - 2000	407	0	**407**
2000 - 2100	249	0	**249**
2100 - 2200	164	0	**164**
2200 - 2300	95	0	**95**
2300 - 2400	70	0	**70**

Session Total	6630	0	**6630**
Session Average	276.25	0.00	**276.25**
Session Percentage	100.00	0.00	

Site 74 Lane 1 EB

I-20,
west of US-378 Sunset Blvd S/Bound Off-Ramp

Date

Monday, April 22, 2024

Lat/Long

34.008085°, -81.156669°

Weather

Mostly Cloudy
57°F

Click here for Detailed Weather

0000 - 2400 (Weekday 24h Session) (04-22-2024)

Volume Summary 60min

	Volume Summary 60min		
TIME	EB	WB	**Total**
0000 - 0100	49	0	**49**
0100 - 0200	43	0	**43**
0200 - 0300	31	0	**31**
0300 - 0400	16	0	**16**
0400 - 0500	61	0	**61**
0500 - 0600	142	0	**142**
0600 - 0700	454	0	**454**
0700 - 0800	1478	0	**1478**
0800 - 0900	1089	0	**1089**
0900 - 1000	554	0	**554**
1000 - 1100	448	0	**448**
1100 - 1200	368	0	**368**

	Volume Summary 60min		
Time	EB	WB	**Total**
1200 - 1300	371	0	**371**
1300 - 1400	399	0	**399**
1400 - 1500	495	0	**495**
1500 - 1600	554	0	**554**
1600 - 1700	644	0	**644**
1700 - 1800	679	0	**679**
1800 - 1900	415	0	**415**
1900 - 2000	249	0	**249**
2000 - 2100	136	0	**136**
2100 - 2200	79	0	**79**
2200 - 2300	55	0	**55**
2300 - 2400	31	0	**31**

Session Total	8840	0	**8840**
Session Average	368.33	0.00	**368.33**
Session Percentage	100.00	0.00	

Site 74 Lane 1 EB

I-20,
west of US-378 Sunset Blvd S/Bound Off-Ramp

Date

Tuesday, April 23, 2024

Lat/Long

34.008085°, -81.156669°

Weather

Fair
58°F

Click here for Detailed Weather

0000 - 2400 (Weekday 24h Session) (04-23-2024)

Volume Summary 60min

	Volume Summary 60min		
TIME	EB	WB	**Total**
0000 - 0100	7	0	**7**
0100 - 0200	4	0	**4**
0200 - 0300	6	0	**6**
0300 - 0400	22	0	**22**
0400 - 0500	28	0	**28**
0500 - 0600	97	0	**97**
0600 - 0700	679	0	**679**
0700 - 0800	1208	0	**1208**
0800 - 0900	1158	0	**1158**
0900 - 1000	534	0	**534**
1000 - 1100	435	0	**435**
1100 - 1200	384	0	**384**

Session Total	8830	0	**8830**
Session Average	367.92	0.00	**367.92**
Session Percentage	100.00	0.00	

	Volume Summary 60min		
Time	EB	WB	**Total**
1200 - 1300	374	0	**374**
1300 - 1400	412	0	**412**
1400 - 1500	492	0	**492**
1500 - 1600	581	0	**581**
1600 - 1700	705	0	**705**
1700 - 1800	691	0	**691**
1800 - 1900	431	0	**431**
1900 - 2000	272	0	**272**
2000 - 2100	148	0	**148**
2100 - 2200	97	0	**97**
2200 - 2300	48	0	**48**
2300 - 2400	17	0	**17**

Site 74 Lane 1 EB

I-20,
west of US-378 Sunset Blvd S/Bound Off-Ramp

Date

Wednesday, April 24, 2024

Lat/Long

34.008085°, -81.156669°

Weather

Fair
66°F

Click here for Detailed Weather

0000 - 2400 (Weekday 24h Session) (04-24-2024)

Volume Summary 60min

	Volume Summary 60min		
TIME	EB	WB	**Total**
0000 - 0100	1	0	**1**
0100 - 0200	9	0	**9**
0200 - 0300	11	0	**11**
0300 - 0400	13	0	**13**
0400 - 0500	32	0	**32**
0500 - 0600	139	0	**139**
0600 - 0700	650	0	**650**
0700 - 0800	1369	0	**1369**
0800 - 0900	1086	0	**1086**
0900 - 1000	533	0	**533**
1000 - 1100	405	0	**405**
1100 - 1200	388	0	**388**

Session Total	9268	0	**9268**
Session Average	386.17	0.00	**386.17**
Session Percentage	100.00	0.00	

	Volume Summary 60min		
Time	EB	WB	**Total**
1200 - 1300	415	0	**415**
1300 - 1400	495	0	**495**
1400 - 1500	467	0	**467**
1500 - 1600	630	0	**630**
1600 - 1700	671	0	**671**
1700 - 1800	758	0	**758**
1800 - 1900	522	0	**522**
1900 - 2000	319	0	**319**
2000 - 2100	186	0	**186**
2100 - 2200	84	0	**84**
2200 - 2300	55	0	**55**
2300 - 2400	30	0	**30**

Site 74 Lane 1 EB

I-20,
west of US-378 Sunset Blvd S/Bound Off-Ramp

Date

Thursday, April 25, 2024

Lat/Long

34.008085°, -81.156669°

Weather

Fair
67°F

Click here for Detailed Weather

0000 - 2400 (Weekday 24h Session) (04-25-2024)

Volume Summary 60min

	Volume Summary 60min		
TIME	EB	WB	**Total**
0000 - 0100	16	0	**16**
0100 - 0200	11	0	**11**
0200 - 0300	13	0	**13**
0300 - 0400	11	0	**11**
0400 - 0500	31	0	**31**
0500 - 0600	137	0	**137**
0600 - 0700	708	0	**708**
0700 - 0800	1467	0	**1467**
0800 - 0900	1180	0	**1180**
0900 - 1000	631	0	**631**
1000 - 1100	482	0	**482**
1100 - 1200	462	0	**462**

Session Total	10426	0	**10426**
Session Average	434.42	0.00	**434.42**
Session Percentage	100.00	0.00	

	Volume Summary 60min		
Time	EB	WB	**Total**
1200 - 1300	482	0	**482**
1300 - 1400	531	0	**531**
1400 - 1500	551	0	**551**
1500 - 1600	698	0	**698**
1600 - 1700	789	0	**789**
1700 - 1800	833	0	**833**
1800 - 1900	544	0	**544**
1900 - 2000	382	0	**382**
2000 - 2100	202	0	**202**
2100 - 2200	138	0	**138**
2200 - 2300	90	0	**90**
2300 - 2400	37	0	**37**

Site 74 Lane 1 EB

I-20,
west of US-378 Sunset Blvd S/Bound Off-Ramp

Date

Friday, April 26, 2024

Lat/Long

34.008085°, -81.156669°

Weather

Cloudy
69°F

Click here for Detailed Weather

0000 - 2400 (Weekday 24h Session) (04-26-2024)

Volume Summary 60min

	Volume Summary 60min		
TIME	EB	WB	**Total**
0000 - 0100	37	0	**37**
0100 - 0200	17	0	**17**
0200 - 0300	15	0	**15**
0300 - 0400	25	0	**25**
0400 - 0500	42	0	**42**
0500 - 0600	140	0	**140**
0600 - 0700	566	0	**566**
0700 - 0800	1424	0	**1424**
0800 - 0900	1110	0	**1110**
0900 - 1000	671	0	**671**
1000 - 1100	595	0	**595**
1100 - 1200	627	0	**627**
1200 - 1300	669	0	**669**
1300 - 1400	663	0	**663**
1400 - 1500	681	0	**681**
1500 - 1600	985	0	**985**
1600 - 1700	985	0	**985**
1700 - 1800	832	0	**832**
1800 - 1900	734	0	**734**
1900 - 2000	501	0	**501**
2000 - 2100	316	0	**316**
2100 - 2200	176	0	**176**
2200 - 2300	129	0	**129**
2300 - 2400	87	0	**87**
Session Total	12027	0	**12027**
Session Average	501.13	0.00	**501.13**
Session Percentage	100.00	0.00	

Site 74 Lane 1 EB

I-20,
west of US-378 Sunset Blvd S/Bound Off-Ramp

Date

Saturday, April 27, 2024

Lat/Long

34.008085°, -81.156669°

Weather

Mostly Cloudy
69°F

Click here for Detailed Weather

0000 - 2400 (Saturday 24h Session) (04-27-2024)

Volume Summary 60min

	Volume Summary 60min		
TIME	EB	WB	**Total**
0000 - 0100	44	0	**44**
0100 - 0200	29	0	**29**
0200 - 0300	21	0	**21**
0300 - 0400	12	0	**12**
0400 - 0500	22	0	**22**
0500 - 0600	50	0	**50**
0600 - 0700	141	0	**141**
0700 - 0800	333	0	**333**
0800 - 0900	375	0	**375**
0900 - 1000	538	0	**538**
1000 - 1100	590	0	**590**
1100 - 1200	596	0	**596**

	Volume Summary 60min		
Time	EB	WB	**Total**
1200 - 1300	652	0	**652**
1300 - 1400	621	0	**621**
1400 - 1500	592	0	**592**
1500 - 1600	552	0	**552**
1600 - 1700	546	0	**546**
1700 - 1800	487	0	**487**
1800 - 1900	434	0	**434**
1900 - 2000	390	0	**390**
2000 - 2100	223	0	**223**
2100 - 2200	193	0	**193**
2200 - 2300	157	0	**157**
2300 - 2400	79	0	**79**

Session Total	7677	0	**7677**
Session Average	319.88	0.00	**319.88**
Session Percentage	100.00	0.00	

Bi-Directional Class Count || Graphical Analysis NB EB

Columbia, SC

Marr Traffic DATA COLLECTION

www.marrtraffic.com

Site 74 Lane 1 EB

I-20,
west of US-378 Sunset Blvd S/Bound Off-Ramp

Lat/Long

34.008085°, -81.156669°

0000 - 2400 (Weekday 24h Session)

Graphical Analysis NB EB

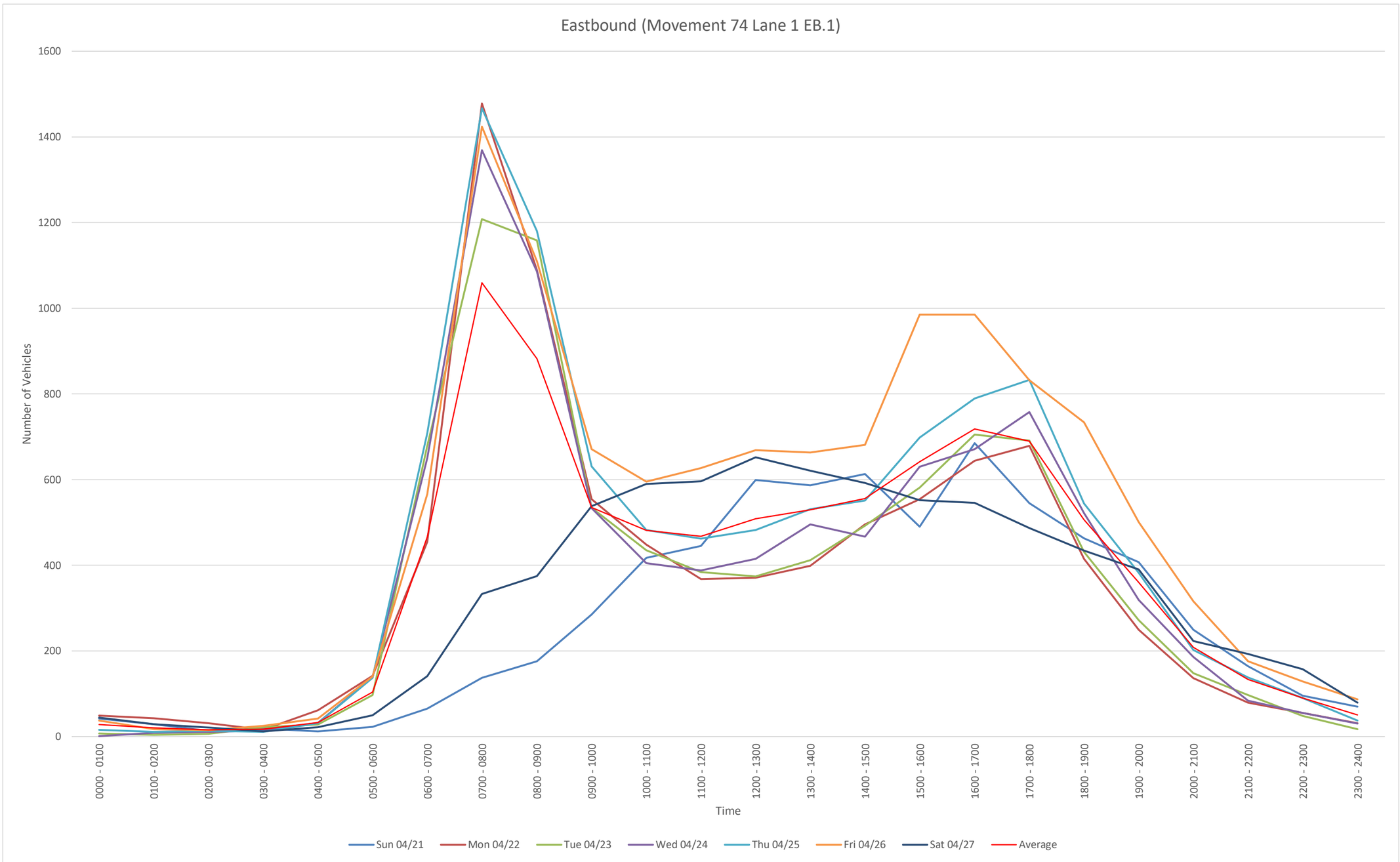

EB
File Name:
Start Date: 4/21/2024
Start Time: 0
Site Code: 74 Lane 1 EB
Station ID: 1
Location 1: I-20, west of US-378 Sunset Blvd S/Bound Off-Ramp
Location 2:

Date	Time	1	2	3	4	5	6	7	8	9	10	11	12	13
4/21/2024	12:00 AM	0	15	1	0	0	0	0	0	0	0	0	0	0
4/21/2024	12:15 AM	0	6	0	0	0	0	0	0	0	0	0	0	0
4/21/2024	12:30 AM	0	10	1	0	0	0	0	0	0	0	0	0	0
4/21/2024	12:45 AM	0	9	0	0	0	0	0	0	0	0	0	0	0
4/21/2024	1:00 AM	0	7	1	0	0	0	0	0	0	0	0	0	0
4/21/2024	1:15 AM	0	7	0	0	0	0	0	0	0	0	0	0	0
4/21/2024	1:30 AM	0	8	1	1	0	0	0	0	0	0	0	0	0
4/21/2024	1:45 AM	0	4	0	0	0	0	0	0	0	0	0	0	0
4/21/2024	2:00 AM	0	5	1	0	0	0	0	0	0	0	0	0	0
4/21/2024	2:15 AM	0	1	0	0	0	0	0	0	0	0	0	0	0
4/21/2024	2:30 AM	0	1	0	0	0	0	0	0	0	0	0	0	0
4/21/2024	2:45 AM	0	5	0	0	0	0	0	0	0	0	0	0	0
4/21/2024	3:00 AM	0	2	1	0	0	0	0	0	0	0	0	0	0
4/21/2024	3:15 AM	0	5	1	0	0	0	0	0	0	0	0	0	0
4/21/2024	3:30 AM	0	2	2	0	0	0	0	0	0	0	0	0	0
4/21/2024	3:45 AM	0	6	0	0	0	0	0	0	0	0	0	0	0
4/21/2024	4:00 AM	0	1	0	0	0	0	0	0	0	0	0	0	0
4/21/2024	4:15 AM	0	3	1	0	0	0	0	0	0	0	0	0	0
4/21/2024	4:30 AM	0	5	0	0	0	0	0	0	0	0	0	0	0
4/21/2024	4:45 AM	0	2	0	0	0	0	0	0	0	0	0	0	0
4/21/2024	5:00 AM	0	8	2	0	0	0	0	0	0	0	0	0	0
4/21/2024	5:15 AM	0	4	0	0	0	0	0	0	1	0	0	0	0
4/21/2024	5:30 AM	0	3	0	0	0	0	0	0	0	0	0	0	0
4/21/2024	5:45 AM	0	5	0	0	0	0	0	0	0	0	0	0	0
4/21/2024	6:00 AM	0	7	1	0	0	0	0	0	0	0	0	0	0
4/21/2024	6:15 AM	0	12	1	0	0	0	0	0	0	0	0	0	0
4/21/2024	6:30 AM	0	18	3	0	0	0	0	0	0	0	0	0	0
4/21/2024	6:45 AM	0	21	2	0	0	0	0	0	0	0	0	0	0
4/21/2024	7:00 AM	0	24	7	0	2	0	0	0	0	0	0	0	0
4/21/2024	7:15 AM	0	23	6	0	0	0	0	0	0	0	0	0	0
4/21/2024	7:30 AM	0	16	5	0	0	0	0	0	0	0	0	0	0
4/21/2024	7:45 AM	0	46	8	0	0	0	0	0	0	0	0	0	0
4/21/2024	8:00 AM	0	28	3	0	0	0	0	0	0	0	0	0	0
4/21/2024	8:15 AM	0	32	5	0	1	0	0	0	0	0	0	0	0
4/21/2024	8:30 AM	0	41	8	0	0	0	0	0	0	0	0	0	0
4/21/2024	8:45 AM	0	49	9	0	0	0	0	0	0	0	0	0	0
4/21/2024	9:00 AM	5	54	12	0	0	0	0	0	0	0	0	0	0
4/21/2024	9:15 AM	0	59	7	0	3	0	0	0	1	0	0	0	0
4/21/2024	9:30 AM	0	53	8	0	0	0	0	0	0	0	0	0	0
4/21/2024	9:45 AM	0	70	13	0	0	0	0	0	0	0	0	0	0
4/21/2024	10:00 AM	20	78	11	0	0	0	0	0	0	0	0	0	0
4/21/2024	10:15 AM	0	77	11	0	0	0	0	0	0	0	0	0	0
4/21/2024	10:30 AM	1	87	21	0	1	0	0	0	1	0	0	0	0
4/21/2024	10:45 AM	8	76	25	0	0	0	0	0	0	0	0	0	0
4/21/2024	11:00 AM	14	66	10	0	0	0	0	0	0	0	0	0	0
4/21/2024	11:15 AM	0	91	11	0	2	0	0	0	0	0	0	0	0
4/21/2024	11:30 AM	0	116	30	0	1	0	0	0	0	0	0	0	0
4/21/2024	11:45 AM	0	82	20	0	1	0	0	1	0	0	0	0	0
4/21/2024	12:00 PM	0	111	22	0	1	0	0	0	0	0	0	0	0
4/21/2024	12:15 PM	0	127	25	0	0	0	0	0	0	0	0	0	0
4/21/2024	12:30 PM	0	125	25	0	0	0	0	0	0	0	0	0	0
4/21/2024	12:45 PM	0	143	18	0	2	0	0	0	0	0	0	0	0
4/21/2024	1:00 PM	0	87	23	0	0	0	0	0	0	0	0	0	0
4/21/2024	1:15 PM	1	129	34	0	0	0	0	0	0	0	0	0	0
4/21/2024	1:30 PM	0	138	23	0	0	0	0	0	0	0	0	0	0
4/21/2024	1:45 PM	0	122	29	0	1	0	0	0	0	0	0	0	0
4/21/2024	2:00 PM	0	131	22	1	1	0	0	0	0	0	0	0	0
4/21/2024	2:15 PM	0	115	27	0	0	0	0	0	0	0	0	0	0
4/21/2024	2:30 PM	0	140	36	0	1	0	0	0	0	0	0	0	0
4/21/2024	2:45 PM	1	116	22	0	0	0	0	0	0	0	0	0	0
4/21/2024	3:00 PM	1	89	21	0	2	0	0	0	1	0	0	0	0
4/21/2024	3:15 PM	0	96	20	0	0	0	0	1	0	0	0	0	0
4/21/2024	3:30 PM	1	89	27	0	1	0	0	0	0	0	0	0	0
4/21/2024	3:45 PM	0	121	20	0	0	0	0	0	0	0	0	0	0
4/21/2024	4:00 PM	5	134	29	0	0	0	0	0	0	0	0	0	0
4/21/2024	4:15 PM	0	128	24	0	0	0	0	0	0	0	0	0	0
4/21/2024	4:30 PM	0	147	32	0	1	0	0	1	0	1	0	0	0
4/21/2024	4:45 PM	0	148	34	0	0	0	0	1	0	0	0	0	0
4/21/2024	5:00 PM	0	119	22	0	0	0	0	1	0	0	0	0	0
4/21/2024	5:15 PM	0	111	19	1	0	0	0	0	0	0	0	0	0
4/21/2024	5:30 PM	0	129	19	0	0	0	0	0	0	0	0	0	0
4/21/2024	5:45 PM	0	113	11	0	0	0	0	0	0	0	0	0	0
4/21/2024	6:00 PM	0	112	13	0	0	0	0	2	0	0	0	0	0
4/21/2024	6:15 PM	0	103	19	0	1	0	0	0	0	0	0	0	0
4/21/2024	6:30 PM	0	106	17	0	0	0	0	0	0	0	0	0	0
4/21/2024	6:45 PM	0	76	13	0	0	0	0	0	1	0	0	0	0
4/21/2024	7:00 PM	0	86	11	0	1	0	0	0	0	0	0	0	0
4/21/2024	7:15 PM	0	92	16	0	0	0	0	0	0	0	0	0	0
4/21/2024	7:30 PM	0	83	9	0	0	0	0	0	0	0	0	0	0
4/21/2024	7:45 PM	2	93	14	0	0	0	0	0	0	0	0	0	0
4/21/2024	8:00 PM	0	68	12	0	0	0	0	0	0	0	0	0	0
4/21/2024	8:15 PM	0	53	10	0	0	0	0	0	0	0	0	0	0
4/21/2024	8:30 PM	0	58	3	0	0	0	0	0	0	0	0	0	0
4/21/2024	8:45 PM	1	42	1	0	0	0	0	0	1	0	0	0	0
4/21/2024	9:00 PM	0	42	1	0	0	0	0	0	0	0	0	0	0
4/21/2024	9:15 PM	0	52	2	0	0	0	0	0	1	0	0	0	0
4/21/2024	9:30 PM	0	37	0	0	0	0	0	0	0	0	0	0	0
4/21/2024	9:45 PM	0	26	2	0	0	0	0	0	1	0	0	0	0
4/21/2024	10:00 PM	0	28	4	0	0	0	0	0	0	0	0	0	0
4/21/2024	10:15 PM	0	22	0	0	0	0	0	0	0	0	0	0	0
4/21/2024	10:30 PM	0	21	0	0	0	0	0	0	0	0	0	0	0
4/21/2024	10:45 PM	0	20	0	0	0	0	0	0	0	0	0	0	0
4/21/2024	11:00 PM	0	22	1	0	0	0	0	0	1	0	0	0	0
4/21/2024	11:15 PM	0	20	1	0	0	0	0	0	1	0	0	0	0
4/21/2024	11:30 PM	0	8	0	0	0	0	0	0	0	0	0	0	0
4/21/2024	11:45 PM	0	16	0	0	0	0	0	0	0	0	0	0	0

4/22/2024	12:00 AM	0	11	0	0	0	0	0	0	0	0	0	0
4/22/2024	12:15 AM	0	12	0	0	0	0	0	0	0	0	0	0
4/22/2024	12:30 AM	0	18	1	0	0	0	0	0	0	0	0	0
4/22/2024	12:45 AM	0	7	0	0	0	0	0	0	0	0	0	0
4/22/2024	1:00 AM	0	13	2	0	0	0	0	0	0	0	0	0
4/22/2024	1:15 AM	0	9	0	0	0	0	0	0	0	0	0	0
4/22/2024	1:30 AM	0	10	1	0	0	0	0	0	0	0	0	0
4/22/2024	1:45 AM	0	8	0	0	0	0	0	0	0	0	0	0
4/22/2024	2:00 AM	0	11	2	0	0	0	0	0	0	0	0	0
4/22/2024	2:15 AM	0	5	0	0	0	0	0	0	0	0	0	0
4/22/2024	2:30 AM	0	6	1	0	0	0	0	0	0	0	0	0
4/22/2024	2:45 AM	0	6	0	0	0	0	0	0	0	0	0	0
4/22/2024	3:00 AM	0	3	0	0	0	0	0	0	0	0	0	0
4/22/2024	3:15 AM	0	1	0	0	0	0	0	0	0	0	0	0
4/22/2024	3:30 AM	0	6	2	0	0	0	0	0	0	0	0	0
4/22/2024	3:45 AM	0	3	1	0	0	0	0	0	0	0	0	0
4/22/2024	4:00 AM	0	9	1	0	0	0	0	0	0	0	0	0
4/22/2024	4:15 AM	0	13	1	0	0	0	0	0	0	0	0	0
4/22/2024	4:30 AM	0	18	2	0	0	0	0	0	0	0	0	0
4/22/2024	4:45 AM	0	16	1	0	0	0	0	0	0	0	0	0
4/22/2024	5:00 AM	0	24	5	0	0	0	0	0	0	0	0	0
4/22/2024	5:15 AM	0	20	4	0	0	0	0	0	0	0	0	0
4/22/2024	5:30 AM	0	42	10	0	0	0	0	0	0	0	0	0
4/22/2024	5:45 AM	0	26	11	0	0	0	0	0	0	0	0	0
4/22/2024	6:00 AM	0	54	18	0	0	0	0	0	0	0	0	0
4/22/2024	6:15 AM	0	48	14	0	0	0	0	0	0	0	0	0
4/22/2024	6:30 AM	0	131	24	0	1	0	0	0	0	0	0	0
4/22/2024	6:45 AM	0	138	26	0	0	0	0	0	0	0	0	0
4/22/2024	7:00 AM	0	254	47	0	1	0	0	0	1	0	0	0
4/22/2024	7:15 AM	0	313	66	0	2	0	0	0	0	0	0	0
4/22/2024	7:30 AM	0	349	68	0	2	0	0	0	0	0	0	0
4/22/2024	7:45 AM	0	295	79	0	1	0	0	0	0	0	0	0
4/22/2024	8:00 AM	0	268	43	0	1	0	0	0	0	0	0	0
4/22/2024	8:15 AM	1	264	41	0	1	0	0	0	0	0	0	0
4/22/2024	8:30 AM	0	207	50	1	0	0	0	0	0	0	0	0
4/22/2024	8:45 AM	0	162	49	0	1	0	0	0	0	0	0	0
4/22/2024	9:00 AM	0	134	16	0	2	0	0	0	0	0	0	0
4/22/2024	9:15 AM	0	96	34	0	1	0	0	0	0	0	0	0
4/22/2024	9:30 AM	0	102	22	0	3	0	0	0	0	0	0	0
4/22/2024	9:45 AM	0	115	21	1	4	0	0	1	2	0	0	0
4/22/2024	10:00 AM	0	95	22	0	0	0	0	2	0	0	0	0
4/22/2024	10:15 AM	0	96	14	0	1	0	0	1	0	0	0	0
4/22/2024	10:30 AM	0	97	20	0	3	0	0	0	0	0	0	0
4/22/2024	10:45 AM	0	76	21	0	0	0	0	0	0	0	0	0
4/22/2024	11:00 AM	0	65	20	0	0	0	0	1	0	0	0	0
4/22/2024	11:15 AM	0	76	9	0	2	0	0	1	0	0	0	0
4/22/2024	11:30 AM	0	63	15	0	3	0	0	0	1	0	0	0
4/22/2024	11:45 AM	0	83	26	0	1	0	0	1	1	0	0	0
4/22/2024	12:00 PM	0	85	18	0	1	0	0	1	0	0	0	0
4/22/2024	12:15 PM	0	62	21	0	1	0	0	3	0	0	0	0
4/22/2024	12:30 PM	0	75	23	0	0	0	0	0	0	0	0	0
4/22/2024	12:45 PM	1	64	15	0	0	0	0	1	0	0	0	0
4/22/2024	1:00 PM	0	60	19	0	1	0	0	1	0	0	0	0
4/22/2024	1:15 PM	0	95	27	0	0	0	0	0	0	0	0	0
4/22/2024	1:30 PM	0	85	18	0	3	0	0	0	0	0	0	0
4/22/2024	1:45 PM	0	72	15	0	1	0	0	1	1	0	0	0
4/22/2024	2:00 PM	0	92	26	0	0	0	0	1	0	0	0	0
4/22/2024	2:15 PM	5	101	19	0	2	0	0	0	1	0	0	0
4/22/2024	2:30 PM	0	92	20	0	0	0	0	1	0	0	0	0
4/22/2024	2:45 PM	0	114	20	1	0	0	0	0	0	0	0	0
4/22/2024	3:00 PM	1	76	22	1	2	0	0	0	1	0	0	0
4/22/2024	3:15 PM	1	105	28	0	2	0	0	0	1	0	0	0
4/22/2024	3:30 PM	0	119	31	0	1	0	0	2	1	0	0	0
4/22/2024	3:45 PM	0	131	25	0	1	0	0	1	2	0	0	0
4/22/2024	4:00 PM	1	139	21	0	3	0	0	0	0	0	0	0
4/22/2024	4:15 PM	0	135	18	0	0	0	0	0	0	0	0	0
4/22/2024	4:30 PM	0	112	29	0	0	1	0	1	0	0	0	0
4/22/2024	4:45 PM	0	155	28	0	1	0	0	0	0	0	0	0
4/22/2024	5:00 PM	1	168	41	0	2	0	0	3	1	0	0	0
4/22/2024	5:15 PM	0	179	40	0	0	0	0	1	0	0	0	0
4/22/2024	5:30 PM	1	107	27	0	0	1	0	0	0	0	0	0
4/22/2024	5:45 PM	0	86	20	0	0	0	0	0	1	0	0	0
4/22/2024	6:00 PM	0	113	26	0	0	0	0	1	0	0	0	0
4/22/2024	6:15 PM	0	95	14	0	1	0	0	0	1	0	0	0
4/22/2024	6:30 PM	0	78	18	0	0	0	0	0	0	0	0	0
4/22/2024	6:45 PM	0	58	10	0	0	0	0	0	0	0	0	0
4/22/2024	7:00 PM	0	50	3	0	0	0	0	0	1	0	0	0
4/22/2024	7:15 PM	0	64	6	0	0	0	0	0	0	0	0	0
4/22/2024	7:30 PM	0	45	7	0	0	0	0	2	0	0	0	0
4/22/2024	7:45 PM	0	62	9	0	0	0	0	0	0	0	0	0
4/22/2024	8:00 PM	0	46	5	0	0	0	0	0	0	0	0	0
4/22/2024	8:15 PM	0	31	2	0	0	0	0	0	1	0	0	0
4/22/2024	8:30 PM	0	23	2	0	0	0	0	0	2	0	0	0
4/22/2024	8:45 PM	0	19	4	0	0	0	0	0	1	0	0	0
4/22/2024	9:00 PM	0	17	1	0	1	0	0	0	2	0	0	0
4/22/2024	9:15 PM	0	20	5	0	0	0	0	0	0	0	0	0
4/22/2024	9:30 PM	0	16	0	0	0	0	0	0	0	0	0	0
4/22/2024	9:45 PM	0	15	0	0	0	0	0	0	2	0	0	0
4/22/2024	10:00 PM	0	19	0	0	0	0	0	0	0	0	0	0
4/22/2024	10:15 PM	0	16	1	0	0	0	0	0	0	0	0	0
4/22/2024	10:30 PM	0	11	0	0	0	0	0	0	1	0	0	0
4/22/2024	10:45 PM	0	7	0	0	0	0	0	0	0	0	0	0
4/22/2024	11:00 PM	0	12	0	0	0	0	0	0	0	0	0	0
4/22/2024	11:15 PM	0	10	1	0	0	0	0	0	0	0	0	0
4/22/2024	11:30 PM	0	3	0	0	0	0	0	0	1	0	0	0
4/22/2024	11:45 PM	0	4	0	0	0	0	0	0	0	0	0	0

4/23/2024	12:00 AM	0	2	0	0	0	0	0	0	0	0	0	0
4/23/2024	12:15 AM	0	0	1	0	0	0	0	0	0	0	0	0
4/23/2024	12:30 AM	0	3	0	0	0	0	0	0	0	0	0	0
4/23/2024	12:45 AM	0	0	0	0	0	0	0	0	1	0	0	0
4/23/2024	1:00 AM	0	0	0	0	0	0	0	0	0	0	0	0
4/23/2024	1:15 AM	0	1	0	0	0	0	0	0	2	0	0	0
4/23/2024	1:30 AM	0	1	0	0	0	0	0	0	0	0	0	0
4/23/2024	1:45 AM	0	0	0	0	0	0	0	0	0	0	0	0
4/23/2024	2:00 AM	0	0	0	0	0	0	0	0	1	0	0	0
4/23/2024	2:15 AM	0	2	0	0	0	0	0	0	0	0	0	0
4/23/2024	2:30 AM	0	1	0	0	0	0	0	0	0	0	0	0
4/23/2024	2:45 AM	0	2	0	0	0	0	0	0	0	0	0	0
4/23/2024	3:00 AM	0	6	0	0	0	0	0	0	0	0	0	0
4/23/2024	3:15 AM	0	5	0	0	0	0	0	0	0	0	0	0
4/23/2024	3:30 AM	0	5	1	0	0	0	0	0	0	0	0	0
4/23/2024	3:45 AM	0	5	0	0	0	0	0	0	0	0	0	0
4/23/2024	4:00 AM	0	4	0	0	0	0	0	0	0	0	0	0
4/23/2024	4:15 AM	0	2	0	0	1	0	0	0	1	0	0	0
4/23/2024	4:30 AM	0	11	0	0	0	0	0	0	0	0	0	0
4/23/2024	4:45 AM	0	8	0	0	0	0	0	0	1	0	0	0
4/23/2024	5:00 AM	0	11	0	0	0	0	0	0	0	0	0	0
4/23/2024	5:15 AM	0	13	1	0	1	0	0	0	0	0	0	0
4/23/2024	5:30 AM	0	36	2	0	0	0	0	0	0	0	0	0
4/23/2024	5:45 AM	0	33	0	0	0	0	0	0	0	0	0	0
4/23/2024	6:00 AM	0	71	11	0	0	0	0	0	0	0	0	0
4/23/2024	6:15 AM	0	105	34	0	0	0	0	0	0	0	0	0
4/23/2024	6:30 AM	0	171	51	0	2	0	0	0	0	0	0	0
4/23/2024	6:45 AM	0	177	53	0	4	0	0	0	0	0	0	0
4/23/2024	7:00 AM	1	189	59	0	1	0	0	0	0	0	0	0
4/23/2024	7:15 AM	0	279	58	0	4	0	0	1	1	0	0	0
4/23/2024	7:30 AM	0	265	73	0	3	0	0	0	0	0	0	0
4/23/2024	7:45 AM	0	220	52	0	0	0	0	2	0	0	0	0
4/23/2024	8:00 AM	1	274	66	0	3	0	0	0	0	0	0	0
4/23/2024	8:15 AM	1	286	61	0	2	0	0	5	0	0	0	0
4/23/2024	8:30 AM	1	195	64	0	4	1	0	1	1	0	0	0
4/23/2024	8:45 AM	0	140	48	0	3	0	0	1	0	0	0	0
4/23/2024	9:00 AM	0	103	23	0	0	0	0	0	0	0	0	0
4/23/2024	9:15 AM	0	106	36	0	4	0	0	0	0	0	0	0
4/23/2024	9:30 AM	0	120	22	0	3	0	0	0	2	0	0	0
4/23/2024	9:45 AM	0	84	29	1	0	0	0	1	0	0	0	0
4/23/2024	10:00 AM	1	83	24	0	1	0	0	0	2	0	0	0
4/23/2024	10:15 AM	1	81	16	0	1	0	0	0	0	0	0	0
4/23/2024	10:30 AM	0	93	22	0	2	0	0	0	2	0	0	0
4/23/2024	10:45 AM	0	76	26	0	3	0	0	0	1	0	0	0
4/23/2024	11:00 AM	0	80	21	0	3	0	0	0	1	0	0	0
4/23/2024	11:15 AM	1	63	28	0	1	0	0	0	0	0	0	0
4/23/2024	11:30 AM	0	69	26	0	1	0	0	0	0	0	0	0
4/23/2024	11:45 AM	0	67	20	0	2	0	0	0	1	0	0	0
4/23/2024	12:00 PM	1	86	18	1	4	0	0	0	0	0	0	0
4/23/2024	12:15 PM	0	66	21	0	0	0	0	1	0	0	0	0
4/23/2024	12:30 PM	0	67	14	0	0	0	0	0	0	0	0	0
4/23/2024	12:45 PM	0	74	20	0	0	0	0	0	1	0	0	0
4/23/2024	1:00 PM	0	69	18	0	0	0	0	0	1	0	0	0
4/23/2024	1:15 PM	0	98	27	1	2	0	0	0	0	0	0	0
4/23/2024	1:30 PM	0	77	17	0	1	0	0	0	1	0	0	0
4/23/2024	1:45 PM	0	79	20	0	1	0	0	0	0	0	0	0
4/23/2024	2:00 PM	0	94	25	0	0	0	0	0	2	0	0	0
4/23/2024	2:15 PM	0	74	29	0	2	0	0	0	1	0	0	0
4/23/2024	2:30 PM	0	92	26	0	0	0	0	0	1	1	0	0
4/23/2024	2:45 PM	1	109	31	2	2	0	0	0	0	0	0	0
4/23/2024	3:00 PM	0	95	28	0	2	0	0	0	0	0	0	0
4/23/2024	3:15 PM	0	94	31	0	2	0	0	1	0	0	0	0
4/23/2024	3:30 PM	1	123	46	0	4	0	0	0	2	0	0	0
4/23/2024	3:45 PM	0	116	33	0	2	0	0	1	0	0	0	0
4/23/2024	4:00 PM	1	130	32	0	0	0	0	0	0	0	0	0
4/23/2024	4:15 PM	0	118	45	0	0	0	0	0	0	0	0	0
4/23/2024	4:30 PM	0	141	34	0	2	0	0	0	0	0	0	0
4/23/2024	4:45 PM	0	153	46	1	2	0	0	0	0	0	0	0
4/23/2024	5:00 PM	1	132	48	0	1	0	0	0	0	0	0	0
4/23/2024	5:15 PM	0	168	45	0	0	0	0	0	0	0	0	0
4/23/2024	5:30 PM	0	124	37	0	0	0	0	0	0	0	0	0
4/23/2024	5:45 PM	1	111	22	0	1	0	0	0	0	0	0	0
4/23/2024	6:00 PM	1	86	20	3	1	0	0	0	0	0	0	0
4/23/2024	6:15 PM	0	112	15	0	2	0	0	0	0	0	0	0
4/23/2024	6:30 PM	2	77	21	0	0	0	0	1	2	0	0	0
4/23/2024	6:45 PM	0	67	19	0	2	0	0	0	0	0	0	0
4/23/2024	7:00 PM	0	52	7	0	2	0	0	0	0	0	0	0
4/23/2024	7:15 PM	0	60	13	0	1	0	0	0	1	0	0	0
4/23/2024	7:30 PM	0	40	11	0	0	0	0	0	0	0	0	0
4/23/2024	7:45 PM	0	69	16	0	0	0	0	0	0	0	0	0
4/23/2024	8:00 PM	0	34	12	0	1	0	0	0	0	0	0	0
4/23/2024	8:15 PM	0	36	3	0	0	0	0	0	0	0	0	0
4/23/2024	8:30 PM	0	26	5	0	0	0	0	0	1	0	0	0
4/23/2024	8:45 PM	0	23	6	0	0	0	0	0	1	0	0	0
4/23/2024	9:00 PM	0	30	10	0	0	0	0	0	0	0	0	0
4/23/2024	9:15 PM	0	17	5	0	0	0	0	0	0	0	0	0
4/23/2024	9:30 PM	0	20	3	0	0	0	0	0	0	0	0	0
4/23/2024	9:45 PM	0	11	1	0	0	0	0	0	0	0	0	0
4/23/2024	10:00 PM	0	24	3	0	1	0	0	0	0	0	0	0
4/23/2024	10:15 PM	0	9	0	0	0	0	0	0	2	0	0	0
4/23/2024	10:30 PM	0	5	1	0	0	0	0	0	0	0	0	0
4/23/2024	10:45 PM	0	3	0	0	0	0	0	0	0	0	0	0
4/23/2024	11:00 PM	0	3	0	0	0	0	0	0	0	0	0	0
4/23/2024	11:15 PM	0	3	0	0	0	0	0	0	0	0	0	0
4/23/2024	11:30 PM	0	6	1	0	0	0	0	0	0	0	0	0
4/23/2024	11:45 PM	0	4	0	0	0	0	0	0	0	0	0	0

4/24/2024	12:00 AM	0	1	0	0	0	0	0	0	0	0	0	0
4/24/2024	12:15 AM	0	0	0	0	0	0	0	0	0	0	0	0
4/24/2024	12:30 AM	0	0	0	0	0	0	0	0	0	0	0	0
4/24/2024	12:45 AM	0	0	0	0	0	0	0	0	0	0	0	0
4/24/2024	1:00 AM	0	1	0	0	0	0	0	0	0	0	0	0
4/24/2024	1:15 AM	0	1	0	0	0	0	0	0	0	0	0	0
4/24/2024	1:30 AM	0	2	0	0	0	0	0	0	0	0	0	0
4/24/2024	1:45 AM	0	4	1	0	0	0	0	0	0	0	0	0
4/24/2024	2:00 AM	0	1	0	0	0	0	0	0	0	0	0	0
4/24/2024	2:15 AM	0	5	0	0	0	0	0	0	0	0	0	0
4/24/2024	2:30 AM	0	4	0	0	0	0	0	0	0	0	0	0
4/24/2024	2:45 AM	0	1	0	0	0	0	0	0	0	0	0	0
4/24/2024	3:00 AM	0	2	0	0	0	0	0	0	0	0	0	0
4/24/2024	3:15 AM	0	2	1	0	0	0	0	0	1	0	0	0
4/24/2024	3:30 AM	2	3	0	0	0	0	0	0	0	0	0	0
4/24/2024	3:45 AM	0	2	0	0	0	0	0	0	0	0	0	0
4/24/2024	4:00 AM	0	4	1	0	0	0	0	0	0	0	0	0
4/24/2024	4:15 AM	0	2	0	0	0	0	0	0	0	0	0	0
4/24/2024	4:30 AM	0	7	1	0	1	0	0	0	0	0	0	0
4/24/2024	4:45 AM	0	11	4	0	1	0	0	0	0	0	0	0
4/24/2024	5:00 AM	0	15	3	0	0	0	0	0	0	0	0	0
4/24/2024	5:15 AM	0	24	5	0	0	0	0	0	0	0	0	0
4/24/2024	5:30 AM	0	40	8	0	0	0	0	0	0	0	0	0
4/24/2024	5:45 AM	0	34	10	0	0	0	0	0	0	0	0	0
4/24/2024	6:00 AM	0	50	7	0	1	0	0	0	0	0	0	0
4/24/2024	6:15 AM	0	98	18	0	2	0	0	0	0	0	0	0
4/24/2024	6:30 AM	0	152	55	0	0	0	0	0	0	0	0	0
4/24/2024	6:45 AM	0	198	62	0	7	0	0	0	0	0	0	0
4/24/2024	7:00 AM	1	212	93	0	1	0	0	0	0	0	0	0
4/24/2024	7:15 AM	0	283	60	0	6	0	0	0	0	0	0	0
4/24/2024	7:30 AM	0	283	74	0	3	0	0	0	0	0	0	0
4/24/2024	7:45 AM	0	274	76	0	2	0	0	0	1	0	0	0
4/24/2024	8:00 AM	1	253	65	0	1	0	0	1	0	0	0	0
4/24/2024	8:15 AM	0	266	59	0	2	0	0	1	0	0	0	0
4/24/2024	8:30 AM	2	190	49	0	2	1	0	2	1	0	0	0
4/24/2024	8:45 AM	3	125	58	0	1	0	0	2	1	0	0	0
4/24/2024	9:00 AM	0	121	45	1	2	0	0	0	2	0	0	0
4/24/2024	9:15 AM	0	94	23	0	1	0	0	1	0	0	0	0
4/24/2024	9:30 AM	1	101	33	0	2	0	0	0	0	0	0	0
4/24/2024	9:45 AM	0	85	20	0	1	0	0	0	0	0	0	0
4/24/2024	10:00 AM	1	92	30	0	3	0	0	0	0	0	0	0
4/24/2024	10:15 AM	0	62	28	0	0	0	0	0	1	0	0	0
4/24/2024	10:30 AM	0	71	25	0	0	0	0	1	0	0	0	0
4/24/2024	10:45 AM	0	69	20	0	1	0	0	1	0	0	0	0
4/24/2024	11:00 AM	0	73	23	0	1	1	0	0	0	0	0	0
4/24/2024	11:15 AM	0	80	16	0	2	0	0	0	1	0	0	0
4/24/2024	11:30 AM	1	71	26	0	2	0	0	0	0	0	0	0
4/24/2024	11:45 AM	0	70	19	1	0	0	0	1	0	0	0	0
4/24/2024	12:00 PM	1	76	25	0	1	0	0	0	0	0	0	0
4/24/2024	12:15 PM	0	64	19	0	3	0	0	1	0	0	0	0
4/24/2024	12:30 PM	0	89	15	0	1	0	0	1	1	0	0	0
4/24/2024	12:45 PM	1	91	22	0	4	0	0	0	0	0	0	0
4/24/2024	1:00 PM	0	85	25	0	2	0	0	1	1	0	0	0
4/24/2024	1:15 PM	0	63	37	0	1	0	0	1	0	0	0	0
4/24/2024	1:30 PM	0	95	33	0	4	0	0	0	0	0	0	0
4/24/2024	1:45 PM	0	105	40	0	1	0	0	0	1	0	0	0
4/24/2024	2:00 PM	0	81	21	0	1	0	0	1	0	0	0	0
4/24/2024	2:15 PM	0	84	16	0	3	0	0	0	1	0	0	0
4/24/2024	2:30 PM	1	97	22	0	2	0	0	0	0	1	0	0
4/24/2024	2:45 PM	2	98	29	0	5	0	0	1	1	0	0	0
4/24/2024	3:00 PM	2	115	37	0	4	0	0	1	1	0	0	0
4/24/2024	3:15 PM	0	113	36	0	1	1	0	1	0	0	0	0
4/24/2024	3:30 PM	0	112	34	0	1	0	0	0	0	0	0	0
4/24/2024	3:45 PM	1	127	41	0	2	0	0	0	0	0	0	0
4/24/2024	4:00 PM	0	151	27	0	3	0	0	0	0	0	0	0
4/24/2024	4:15 PM	0	101	30	0	1	0	0	0	0	0	0	0
4/24/2024	4:30 PM	1	129	40	0	2	0	0	2	0	0	0	0
4/24/2024	4:45 PM	0	139	42	0	2	0	0	0	1	0	0	0
4/24/2024	5:00 PM	0	181	53	0	1	0	0	1	0	0	0	0
4/24/2024	5:15 PM	0	165	34	0	1	0	0	0	1	0	0	0
4/24/2024	5:30 PM	1	124	44	0	0	1	0	0	0	0	0	0
4/24/2024	5:45 PM	0	115	33	0	3	0	0	0	0	0	0	0
4/24/2024	6:00 PM	0	97	38	0	1	0	0	0	4	0	0	0
4/24/2024	6:15 PM	1	107	24	0	4	0	0	0	0	0	0	0
4/24/2024	6:30 PM	0	105	22	0	0	0	0	0	1	0	0	0
4/24/2024	6:45 PM	1	95	19	0	1	0	0	1	1	0	0	0
4/24/2024	7:00 PM	4	63	18	0	1	0	0	2	0	0	0	0
4/24/2024	7:15 PM	0	78	8	0	0	0	0	0	0	0	0	0
4/24/2024	7:30 PM	1	56	13	0	0	0	0	0	0	0	0	0
4/24/2024	7:45 PM	1	57	17	0	0	0	0	0	0	0	0	0
4/24/2024	8:00 PM	1	49	12	0	2	0	0	0	0	0	0	0
4/24/2024	8:15 PM	0	41	9	0	0	0	0	1	0	0	0	0
4/24/2024	8:30 PM	0	34	4	0	0	0	0	0	0	0	0	0
4/24/2024	8:45 PM	0	29	4	0	0	0	0	0	0	0	0	0
4/24/2024	9:00 PM	0	25	5	0	1	0	0	0	0	0	0	0
4/24/2024	9:15 PM	0	11	6	0	0	0	0	0	0	0	0	0
4/24/2024	9:30 PM	0	15	5	0	1	0	0	0	0	0	0	0
4/24/2024	9:45 PM	0	10	4	0	0	0	0	1	0	0	0	0
4/24/2024	10:00 PM	0	12	7	0	0	0	0	0	0	0	0	0
4/24/2024	10:15 PM	0	9	2	0	0	0	0	0	0	0	0	0
4/24/2024	10:30 PM	0	6	2	0	0	0	0	0	0	0	0	0
4/24/2024	10:45 PM	0	11	6	0	0	0	0	0	0	0	0	0
4/24/2024	11:00 PM	0	10	2	0	0	0	0	0	0	0	0	0
4/24/2024	11:15 PM	0	8	1	0	0	0	0	0	0	0	0	0
4/24/2024	11:30 PM	0	3	0	0	0	0	0	0	0	0	0	0
4/24/2024	11:45 PM	0	6	0	0	0	0	0	0	0	0	0	0

4/25/2024	12:00 AM	0	4	2	0	0	0	0	0	0	0	0	0
4/25/2024	12:15 AM	0	1	0	0	0	0	0	0	0	0	0	0
4/25/2024	12:30 AM	0	1	0	0	0	0	0	0	0	0	0	0
4/25/2024	12:45 AM	0	5	3	0	0	0	0	0	0	0	0	0
4/25/2024	1:00 AM	0	4	0	0	0	0	0	0	0	0	0	0
4/25/2024	1:15 AM	0	2	0	0	0	0	0	1	0	0	0	0
4/25/2024	1:30 AM	0	2	0	0	0	0	0	0	0	0	0	0
4/25/2024	1:45 AM	0	1	1	0	0	0	0	0	0	0	0	0
4/25/2024	2:00 AM	0	3	0	0	0	0	0	0	0	0	0	0
4/25/2024	2:15 AM	0	2	0	0	0	0	0	0	0	0	0	0
4/25/2024	2:30 AM	0	5	0	0	0	0	0	0	0	0	0	0
4/25/2024	2:45 AM	0	3	0	0	0	0	0	0	0	0	0	0
4/25/2024	3:00 AM	0	2	0	0	0	0	0	0	0	0	0	0
4/25/2024	3:15 AM	0	2	0	0	0	0	0	0	0	0	0	0
4/25/2024	3:30 AM	0	4	0	0	0	0	0	0	0	0	0	0
4/25/2024	3:45 AM	0	2	0	0	1	0	0	0	0	0	0	0
4/25/2024	4:00 AM	0	4	1	0	0	0	0	0	0	0	0	0
4/25/2024	4:15 AM	0	4	0	0	0	0	0	0	1	0	0	0
4/25/2024	4:30 AM	0	6	2	0	0	0	0	0	1	0	0	0
4/25/2024	4:45 AM	0	9	3	0	0	0	0	0	0	0	0	0
4/25/2024	5:00 AM	0	8	4	0	0	0	0	0	0	0	0	0
4/25/2024	5:15 AM	0	20	9	0	0	0	0	0	0	0	0	0
4/25/2024	5:30 AM	0	36	11	0	1	0	0	0	1	0	0	0
4/25/2024	5:45 AM	0	35	12	0	0	0	0	0	0	0	0	0
4/25/2024	6:00 AM	0	49	28	0	0	0	0	0	0	0	0	0
4/25/2024	6:15 AM	0	77	52	0	0	0	0	0	0	0	0	0
4/25/2024	6:30 AM	0	147	69	0	1	1	0	0	1	0	0	0
4/25/2024	6:45 AM	0	202	75	0	5	0	0	1	0	0	0	0
4/25/2024	7:00 AM	1	209	62	0	1	0	0	0	0	0	0	0
4/25/2024	7:15 AM	2	284	84	0	4	0	0	0	0	0	0	0
4/25/2024	7:30 AM	0	330	81	0	6	0	0	1	0	0	0	0
4/25/2024	7:45 AM	0	325	75	0	1	0	0	1	0	0	0	0
4/25/2024	8:00 AM	0	278	75	0	3	0	0	0	0	0	0	0
4/25/2024	8:15 AM	2	262	60	0	3	0	0	0	0	0	0	0
4/25/2024	8:30 AM	2	196	57	0	3	0	0	4	0	0	0	0
4/25/2024	8:45 AM	1	170	56	0	5	0	0	0	3	0	0	0
4/25/2024	9:00 AM	0	112	41	0	4	0	0	0	0	1	0	0
4/25/2024	9:15 AM	0	142	33	0	1	0	0	0	0	0	0	0
4/25/2024	9:30 AM	0	140	37	0	0	0	0	0	2	0	0	0
4/25/2024	9:45 AM	0	86	29	0	1	0	0	0	2	0	0	0
4/25/2024	10:00 AM	0	93	34	0	1	0	0	1	0	0	0	0
4/25/2024	10:15 AM	0	72	34	0	1	0	0	0	1	0	0	0
4/25/2024	10:30 AM	0	96	23	0	1	0	0	2	2	0	0	0
4/25/2024	10:45 AM	1	92	27	0	1	0	0	0	0	0	0	0
4/25/2024	11:00 AM	0	88	25	0	3	0	0	0	1	0	0	0
4/25/2024	11:15 AM	0	94	31	0	1	0	0	1	0	0	0	0
4/25/2024	11:30 AM	0	92	32	0	3	0	0	0	0	0	0	0
4/25/2024	11:45 AM	1	59	27	0	1	0	0	1	2	0	0	0
4/25/2024	12:00 PM	0	72	31	0	0	1	0	0	0	0	0	0
4/25/2024	12:15 PM	0	93	23	0	1	0	0	1	1	0	0	0
4/25/2024	12:30 PM	2	93	30	0	1	1	0	0	0	0	0	0
4/25/2024	12:45 PM	0	99	30	0	1	0	0	0	2	0	0	0
4/25/2024	1:00 PM	1	90	29	0	1	0	1	0	1	0	0	0
4/25/2024	1:15 PM	1	96	30	0	1	0	0	1	0	0	0	0
4/25/2024	1:30 PM	1	88	39	1	3	0	0	1	1	0	0	0
4/25/2024	1:45 PM	0	115	25	0	4	0	0	0	1	0	0	0
4/25/2024	2:00 PM	0	106	26	0	2	0	0	0	1	0	0	0
4/25/2024	2:15 PM	2	109	34	0	5	0	0	1	0	0	0	0
4/25/2024	2:30 PM	1	117	22	0	1	0	0	0	0	0	0	0
4/25/2024	2:45 PM	0	93	30	0	0	0	0	0	1	0	0	0
4/25/2024	3:00 PM	1	112	28	0	3	0	0	1	1	0	0	0
4/25/2024	3:15 PM	0	128	50	0	1	0	0	1	0	0	0	0
4/25/2024	3:30 PM	1	139	29	0	1	0	0	0	1	0	0	0
4/25/2024	3:45 PM	1	159	39	0	1	0	0	0	1	0	0	0
4/25/2024	4:00 PM	0	142	31	0	0	0	0	0	1	0	0	0
4/25/2024	4:15 PM	0	158	43	0	3	0	0	1	1	0	0	0
4/25/2024	4:30 PM	0	161	42	0	2	0	0	0	1	0	0	0
4/25/2024	4:45 PM	1	156	42	0	2	0	0	1	1	0	0	0
4/25/2024	5:00 PM	1	155	58	0	2	0	0	0	0	0	0	0
4/25/2024	5:15 PM	1	199	61	0	1	0	0	0	1	0	0	0
4/25/2024	5:30 PM	1	156	44	0	0	0	0	0	0	0	0	0
4/25/2024	5:45 PM	0	117	34	0	1	0	0	1	0	0	0	0
4/25/2024	6:00 PM	0	129	26	0	3	0	0	0	1	0	0	0
4/25/2024	6:15 PM	0	107	27	0	0	0	0	0	0	0	0	0
4/25/2024	6:30 PM	0	94	27	0	2	0	0	0	0	0	0	0
4/25/2024	6:45 PM	0	96	28	1	2	0	0	1	0	0	0	0
4/25/2024	7:00 PM	0	95	15	0	1	0	0	1	0	0	0	0
4/25/2024	7:15 PM	0	96	17	0	0	0	0	0	0	0	0	0
4/25/2024	7:30 PM	1	59	14	0	1	0	0	0	0	0	0	0
4/25/2024	7:45 PM	0	69	11	0	1	0	0	1	0	0	0	0
4/25/2024	8:00 PM	0	49	13	0	0	0	0	0	0	0	0	0
4/25/2024	8:15 PM	0	44	12	0	0	0	0	0	1	0	0	0
4/25/2024	8:30 PM	0	33	7	0	0	0	0	0	0	0	0	0
4/25/2024	8:45 PM	0	38	4	0	1	0	0	0	0	0	0	0
4/25/2024	9:00 PM	0	25	6	0	0	0	0	0	0	0	0	0
4/25/2024	9:15 PM	0	25	6	0	2	0	0	0	0	0	0	0
4/25/2024	9:30 PM	0	30	5	0	0	0	0	0	0	0	0	0
4/25/2024	9:45 PM	0	32	7	0	0	0	0	0	0	0	0	0
4/25/2024	10:00 PM	0	25	6	0	1	0	0	0	0	0	0	0
4/25/2024	10:15 PM	0	18	5	0	1	0	0	1	0	0	0	0
4/25/2024	10:30 PM	0	10	4	0	1	0	0	0	0	0	0	0
4/25/2024	10:45 PM	0	12	6	0	0	0	0	0	0	0	0	0
4/25/2024	11:00 PM	0	7	3	0	0	0	0	0	0	0	0	0
4/25/2024	11:15 PM	0	6	3	0	0	0	0	0	0	0	0	0
4/25/2024	11:30 PM	0	7	2	0	0	0	0	0	0	0	0	0
4/25/2024	11:45 PM	0	6	3	0	0	0	0	0	0	0	0	0

4/26/2024	12:00 AM	0	8	0	0	0	0	0	0	1	0	0	0	0
4/26/2024	12:15 AM	0	11	1	0	0	0	0	0	0	0	0	0	0
4/26/2024	12:30 AM	0	9	1	0	0	0	0	0	1	0	0	0	0
4/26/2024	12:45 AM	0	5	0	0	0	0	0	0	0	0	0	0	0
4/26/2024	1:00 AM	0	2	0	0	0	0	0	0	0	0	0	0	0
4/26/2024	1:15 AM	0	6	0	0	0	0	0	0	0	0	0	0	0
4/26/2024	1:30 AM	0	4	0	0	0	0	0	0	0	0	0	0	0
4/26/2024	1:45 AM	0	5	0	0	0	0	0	0	0	0	0	0	0
4/26/2024	2:00 AM	0	4	0	0	0	0	0	0	0	0	0	0	0
4/26/2024	2:15 AM	0	2	0	0	0	0	0	0	0	0	0	0	0
4/26/2024	2:30 AM	0	6	0	0	0	0	0	0	0	0	0	0	0
4/26/2024	2:45 AM	0	3	0	0	0	0	0	0	0	0	0	0	0
4/26/2024	3:00 AM	0	6	0	0	0	0	0	0	0	0	0	0	0
4/26/2024	3:15 AM	0	5	2	0	0	0	0	0	0	0	0	0	0
4/26/2024	3:30 AM	0	7	1	0	0	0	0	0	0	0	0	0	0
4/26/2024	3:45 AM	0	4	0	0	0	0	0	0	0	0	0	0	0
4/26/2024	4:00 AM	0	5	1	0	0	0	0	0	0	0	0	0	0
4/26/2024	4:15 AM	1	9	1	0	0	0	0	0	0	0	0	0	0
4/26/2024	4:30 AM	0	10	2	0	0	0	0	0	0	0	0	0	0
4/26/2024	4:45 AM	0	13	0	0	0	0	0	0	0	0	0	0	0
4/26/2024	5:00 AM	0	18	3	0	0	0	0	0	0	0	0	0	0
4/26/2024	5:15 AM	0	23	2	0	1	0	0	0	0	0	0	0	0
4/26/2024	5:30 AM	0	31	2	0	1	0	0	0	0	0	0	0	0
4/26/2024	5:45 AM	0	49	10	0	0	0	0	0	0	0	0	0	0
4/26/2024	6:00 AM	0	59	9	0	1	0	0	0	0	0	0	0	0
4/26/2024	6:15 AM	0	84	34	0	0	0	0	0	0	0	0	0	0
4/26/2024	6:30 AM	0	117	56	0	2	0	0	0	0	0	0	0	0
4/26/2024	6:45 AM	1	156	45	0	1	1	0	0	0	0	0	0	0
4/26/2024	7:00 AM	0	188	55	0	1	0	0	1	0	0	0	0	0
4/26/2024	7:15 AM	4	306	71	0	7	0	0	0	0	0	0	0	0
4/26/2024	7:30 AM	0	328	66	1	0	0	0	0	0	0	0	0	0
4/26/2024	7:45 AM	1	311	80	0	4	0	0	0	0	0	0	0	0
4/26/2024	8:00 AM	1	240	63	1	1	0	0	1	0	0	0	0	0
4/26/2024	8:15 AM	1	231	52	0	4	0	0	1	0	0	0	0	0
4/26/2024	8:30 AM	1	206	48	2	4	0	0	0	3	0	0	0	0
4/26/2024	8:45 AM	0	188	57	0	3	1	0	1	0	0	0	0	0
4/26/2024	9:00 AM	0	141	37	0	1	0	0	0	0	0	0	0	0
4/26/2024	9:15 AM	0	121	49	0	0	0	0	0	0	0	0	0	0
4/26/2024	9:30 AM	0	145	36	0	1	0	0	1	1	0	0	0	0
4/26/2024	9:45 AM	2	103	31	0	0	0	0	1	1	0	0	0	0
4/26/2024	10:00 AM	1	125	30	0	3	0	0	0	0	0	0	0	0
4/26/2024	10:15 AM	0	118	32	0	2	0	0	0	0	0	0	0	0
4/26/2024	10:30 AM	2	102	37	0	4	0	0	0	0	0	0	0	0
4/26/2024	10:45 AM	0	108	29	0	2	0	0	0	0	0	0	0	0
4/26/2024	11:00 AM	6	112	29	0	0	0	0	0	1	0	0	0	0
4/26/2024	11:15 AM	2	134	23	0	2	0	0	1	0	0	0	0	0
4/26/2024	11:30 AM	0	104	35	0	3	0	0	0	0	0	0	0	0
4/26/2024	11:45 AM	2	138	33	0	0	0	0	1	1	0	0	0	0
4/26/2024	12:00 PM	1	128	38	0	3	0	0	2	1	0	0	0	0
4/26/2024	12:15 PM	1	115	27	1	1	0	0	0	2	0	0	0	0
4/26/2024	12:30 PM	6	125	40	0	2	0	0	0	1	0	0	0	0
4/26/2024	12:45 PM	0	133	42	0	0	0	0	0	0	0	0	0	0
4/26/2024	1:00 PM	1	112	23	0	3	0	0	1	0	0	0	0	0
4/26/2024	1:15 PM	5	127	38	1	0	0	0	0	0	0	0	0	0
4/26/2024	1:30 PM	0	135	33	0	2	0	0	0	0	0	0	0	0
4/26/2024	1:45 PM	4	142	33	0	2	0	0	0	1	0	0	0	0
4/26/2024	2:00 PM	0	124	42	0	2	0	0	0	0	0	0	0	0
4/26/2024	2:15 PM	0	136	34	0	6	0	0	1	1	0	0	0	0
4/26/2024	2:30 PM	0	122	29	0	2	0	0	0	2	0	0	0	0
4/26/2024	2:45 PM	2	144	33	0	1	0	0	0	0	0	0	0	0
4/26/2024	3:00 PM	0	146	32	0	2	0	0	0	1	0	0	0	0
4/26/2024	3:15 PM	22	196	52	0	1	0	0	0	1	0	0	0	0
4/26/2024	3:30 PM	5	206	55	1	4	0	0	0	0	0	0	0	0
4/26/2024	3:45 PM	1	210	44	0	4	0	0	2	0	0	0	0	0
4/26/2024	4:00 PM	0	193	46	0	0	1	0	2	0	0	0	0	0
4/26/2024	4:15 PM	0	190	42	0	1	0	0	0	0	0	0	0	0
4/26/2024	4:30 PM	5	178	39	0	3	0	0	1	0	0	0	0	0
4/26/2024	4:45 PM	2	226	55	0	1	0	0	0	0	0	0	0	0
4/26/2024	5:00 PM	6	169	41	0	1	1	0	0	0	0	0	0	0
4/26/2024	5:15 PM	4	179	36	0	2	0	0	0	0	0	0	0	0
4/26/2024	5:30 PM	3	146	47	0	0	0	0	0	0	0	0	0	0
4/26/2024	5:45 PM	4	160	33	0	0	0	0	0	0	0	0	0	0
4/26/2024	6:00 PM	2	146	40	0	2	0	0	0	0	0	0	0	0
4/26/2024	6:15 PM	0	170	28	0	1	0	0	0	0	0	0	0	0
4/26/2024	6:30 PM	3	163	29	0	0	0	0	1	0	0	0	0	0
4/26/2024	6:45 PM	6	124	19	0	0	0	0	0	0	0	0	0	0
4/26/2024	7:00 PM	9	107	24	0	0	0	0	0	0	0	0	0	0
4/26/2024	7:15 PM	2	104	20	0	1	0	0	0	0	0	0	0	0
4/26/2024	7:30 PM	3	94	15	0	0	0	0	0	0	0	0	0	0
4/26/2024	7:45 PM	1	99	21	0	1	0	0	0	0	0	0	0	0
4/26/2024	8:00 PM	1	77	14	0	1	0	0	0	0	0	0	0	0
4/26/2024	8:15 PM	0	62	15	0	0	0	0	0	0	0	0	0	0
4/26/2024	8:30 PM	0	59	17	0	1	0	0	0	0	0	0	0	0
4/26/2024	8:45 PM	0	51	17	0	1	0	0	0	0	0	0	0	0
4/26/2024	9:00 PM	0	45	11	0	1	0	0	0	0	0	0	0	0
4/26/2024	9:15 PM	0	37	8	0	0	0	0	0	1	0	0	0	0
4/26/2024	9:30 PM	0	20	6	0	0	0	0	0	0	0	0	0	0
4/26/2024	9:45 PM	0	39	8	0	0	0	0	0	0	0	0	0	0
4/26/2024	10:00 PM	0	34	5	0	0	0	0	0	1	0	0	0	0
4/26/2024	10:15 PM	0	30	6	0	0	0	0	0	0	0	0	0	0
4/26/2024	10:30 PM	4	22	4	0	0	0	0	0	0	0	0	0	0
4/26/2024	10:45 PM	0	20	3	0	0	0	0	0	0	0	0	0	0
4/26/2024	11:00 PM	0	24	2	0	0	0	0	0	0	0	0	0	0
4/26/2024	11:15 PM	0	21	3	0	0	0	0	0	0	0	0	0	0
4/26/2024	11:30 PM	0	23	2	0	0	0	0	0	0	0	0	0	0
4/26/2024	11:45 PM	0	12	0	0	0	0	0	0	0	0	0	0	0

4/27/2024	12:00 AM	0	10	1	0	0	0	0	0	0	0	0	0
4/27/2024	12:15 AM	0	14	2	0	0	0	0	0	0	0	0	0
4/27/2024	12:30 AM	0	9	1	0	0	0	0	0	0	0	0	0
4/27/2024	12:45 AM	0	7	0	0	0	0	0	0	0	0	0	0
4/27/2024	1:00 AM	0	8	0	0	2	0	0	0	0	0	0	0
4/27/2024	1:15 AM	0	6	1	0	0	0	0	0	0	0	0	0
4/27/2024	1:30 AM	0	5	0	0	1	0	0	0	0	0	0	0
4/27/2024	1:45 AM	0	6	0	0	0	0	0	0	0	0	0	0
4/27/2024	2:00 AM	0	3	0	0	0	0	0	0	0	0	0	0
4/27/2024	2:15 AM	0	5	0	0	0	0	0	0	0	0	0	0
4/27/2024	2:30 AM	0	2	0	0	0	0	0	0	0	0	0	0
4/27/2024	2:45 AM	7	4	0	0	0	0	0	0	0	0	0	0
4/27/2024	3:00 AM	0	2	0	0	0	0	0	0	0	0	0	0
4/27/2024	3:15 AM	0	4	0	0	0	0	0	0	0	0	0	0
4/27/2024	3:30 AM	0	3	1	0	0	0	0	0	0	0	0	0
4/27/2024	3:45 AM	0	2	0	0	0	0	0	0	0	0	0	0
4/27/2024	4:00 AM	0	2	0	0	0	0	0	0	0	0	0	0
4/27/2024	4:15 AM	0	8	2	0	0	0	0	0	0	0	0	0
4/27/2024	4:30 AM	0	5	0	0	0	0	0	0	0	0	0	0
4/27/2024	4:45 AM	0	4	1	0	0	0	0	0	0	0	0	0
4/27/2024	5:00 AM	0	7	0	0	0	0	0	0	0	0	0	0
4/27/2024	5:15 AM	0	6	1	0	0	0	0	0	0	0	0	0
4/27/2024	5:30 AM	0	12	4	0	1	0	0	0	0	0	0	0
4/27/2024	5:45 AM	2	14	3	0	0	0	0	0	0	0	0	0
4/27/2024	6:00 AM	0	10	1	0	0	0	0	0	0	0	0	0
4/27/2024	6:15 AM	0	41	5	0	0	0	0	0	0	0	0	0
4/27/2024	6:30 AM	1	37	9	0	0	0	0	0	0	0	0	0
4/27/2024	6:45 AM	0	27	10	0	0	0	0	0	0	0	0	0
4/27/2024	7:00 AM	0	35	15	0	0	0	0	1	0	0	0	0
4/27/2024	7:15 AM	0	65	19	0	1	0	0	0	0	0	0	0
4/27/2024	7:30 AM	1	65	24	0	0	0	0	0	0	0	0	0
4/27/2024	7:45 AM	1	90	15	0	1	0	0	0	0	0	0	0
4/27/2024	8:00 AM	0	63	16	0	1	0	0	0	0	0	0	0
4/27/2024	8:15 AM	2	74	18	0	1	0	0	0	0	0	0	0
4/27/2024	8:30 AM	1	79	13	0	0	0	0	0	0	0	0	0
4/27/2024	8:45 AM	0	82	25	0	0	0	0	0	0	0	0	0
4/27/2024	9:00 AM	1	91	25	0	1	0	0	0	0	0	0	0
4/27/2024	9:15 AM	0	102	22	0	0	0	0	1	0	0	0	0
4/27/2024	9:30 AM	1	118	27	0	0	0	0	0	0	0	0	0
4/27/2024	9:45 AM	0	117	31	0	0	0	0	0	1	0	0	0
4/27/2024	10:00 AM	1	105	23	0	2	0	0	0	0	0	0	0
4/27/2024	10:15 AM	8	121	24	0	0	0	0	1	0	0	0	0
4/27/2024	10:30 AM	10	126	27	0	1	0	0	0	0	0	0	0
4/27/2024	10:45 AM	8	101	31	0	1	0	0	0	0	0	0	0
4/27/2024	11:00 AM	2	109	22	0	0	0	0	0	0	0	0	0
4/27/2024	11:15 AM	16	106	28	0	2	0	0	0	1	0	0	0
4/27/2024	11:30 AM	2	116	30	0	0	0	0	1	0	0	0	0
4/27/2024	11:45 AM	2	129	29	0	1	0	0	0	0	0	0	0
4/27/2024	12:00 PM	1	146	22	0	0	0	0	1	0	0	0	0
4/27/2024	12:15 PM	4	130	21	0	0	0	0	0	0	0	0	0
4/27/2024	12:30 PM	1	137	26	0	1	0	0	0	1	0	0	0
4/27/2024	12:45 PM	4	131	25	1	0	0	0	0	0	0	0	0
4/27/2024	1:00 PM	3	122	23	1	1	0	0	0	0	0	0	0
4/27/2024	1:15 PM	16	129	22	0	0	0	0	0	0	0	0	0
4/27/2024	1:30 PM	4	133	25	0	0	0	0	0	0	0	0	0
4/27/2024	1:45 PM	3	119	19	0	1	0	0	0	0	0	0	0
4/27/2024	2:00 PM	5	123	28	0	0	0	0	1	0	0	0	0
4/27/2024	2:15 PM	0	115	16	0	0	0	0	0	0	0	0	0
4/27/2024	2:30 PM	1	126	26	0	1	0	0	0	0	0	0	0
4/27/2024	2:45 PM	1	124	25	0	0	0	0	0	0	0	0	0
4/27/2024	3:00 PM	4	114	13	0	1	0	0	1	0	0	0	0
4/27/2024	3:15 PM	0	115	28	0	0	0	0	0	0	0	0	0
4/27/2024	3:30 PM	7	111	25	0	0	0	0	2	0	0	0	0
4/27/2024	3:45 PM	7	106	18	0	0	0	0	0	0	0	0	0
4/27/2024	4:00 PM	0	98	17	0	1	0	0	0	0	0	0	0
4/27/2024	4:15 PM	3	129	22	0	3	0	0	0	1	0	0	0
4/27/2024	4:30 PM	1	115	19	0	1	0	0	0	0	0	0	0
4/27/2024	4:45 PM	0	119	17	0	0	0	0	0	0	0	0	0
4/27/2024	5:00 PM	0	118	10	0	3	0	0	0	0	0	0	0
4/27/2024	5:15 PM	3	109	17	0	1	0	0	0	0	0	0	0
4/27/2024	5:30 PM	0	96	16	0	1	0	0	1	0	0	0	0
4/27/2024	5:45 PM	0	84	25	1	1	0	0	1	0	0	0	0
4/27/2024	6:00 PM	0	74	14	1	0	0	0	0	0	0	0	0
4/27/2024	6:15 PM	0	99	20	0	0	0	0	2	0	0	0	0
4/27/2024	6:30 PM	0	103	17	0	0	0	0	0	1	0	0	0
4/27/2024	6:45 PM	0	93	10	0	0	0	0	0	0	0	0	0
4/27/2024	7:00 PM	1	97	12	0	1	0	0	0	0	0	0	0
4/27/2024	7:15 PM	0	82	9	0	0	0	0	0	0	0	0	0
4/27/2024	7:30 PM	1	79	9	0	0	0	0	0	0	0	0	0
4/27/2024	7:45 PM	1	81	16	0	0	0	0	0	1	0	0	0
4/27/2024	8:00 PM	1	57	12	0	0	0	0	0	0	0	0	0
4/27/2024	8:15 PM	0	49	6	0	0	0	0	1	0	0	0	0
4/27/2024	8:30 PM	0	38	2	0	0	0	0	0	0	0	0	0
4/27/2024	8:45 PM	0	53	3	0	0	0	0	1	0	0	0	0
4/27/2024	9:00 PM	0	61	2	0	0	0	0	0	0	0	0	0
4/27/2024	9:15 PM	0	45	4	0	0	0	0	0	0	0	0	0
4/27/2024	9:30 PM	0	40	2	0	1	0	0	0	0	0	0	0
4/27/2024	9:45 PM	0	37	1	0	0	0	0	0	0	0	0	0
4/27/2024	10:00 PM	0	36	3	0	0	0	0	0	0	0	0	0
4/27/2024	10:15 PM	0	33	2	1	0	0	0	0	0	0	0	0
4/27/2024	10:30 PM	0	50	3	0	1	0	0	0	0	0	0	0
4/27/2024	10:45 PM	0	26	2	0	0	0	0	0	0	0	0	0
4/27/2024	11:00 PM	0	15	1	0	0	0	0	0	0	0	0	0
4/27/2024	11:15 PM	0	19	2	0	0	0	0	0	1	0	0	0
4/27/2024	11:30 PM	0	17	3	0	0	0	0	0	0	0	0	0
4/27/2024	11:45 PM	0	19	2	0	0	0	0	0	0	0	0	0

WB
File Name:
Start Date: 4/21/2024
Start Time: 0
Site Code: 74 Lane 1 EB
Station ID: 1
Location 1: I-20, west of US-378 Sunset Blvd S/Bound Off-Ramp
Location 2:

Date	Time	1	2	3	4	5	6	7	8	9	10	11	12	13
4/21/2024	12:00 AM	0	0	0	0	0	0	0	0	0	0	0	0	0
4/21/2024	12:15 AM	0	0	0	0	0	0	0	0	0	0	0	0	0
4/21/2024	12:30 AM	0	0	0	0	0	0	0	0	0	0	0	0	0
4/21/2024	12:45 AM	0	0	0	0	0	0	0	0	0	0	0	0	0
4/21/2024	1:00 AM	0	0	0	0	0	0	0	0	0	0	0	0	0
4/21/2024	1:15 AM	0	0	0	0	0	0	0	0	0	0	0	0	0
4/21/2024	1:30 AM	0	0	0	0	0	0	0	0	0	0	0	0	0
4/21/2024	1:45 AM	0	0	0	0	0	0	0	0	0	0	0	0	0
4/21/2024	2:00 AM	0	0	0	0	0	0	0	0	0	0	0	0	0
4/21/2024	2:15 AM	0	0	0	0	0	0	0	0	0	0	0	0	0
4/21/2024	2:30 AM	0	0	0	0	0	0	0	0	0	0	0	0	0
4/21/2024	2:45 AM	0	0	0	0	0	0	0	0	0	0	0	0	0
4/21/2024	3:00 AM	0	0	0	0	0	0	0	0	0	0	0	0	0
4/21/2024	3:15 AM	0	0	0	0	0	0	0	0	0	0	0	0	0
4/21/2024	3:30 AM	0	0	0	0	0	0	0	0	0	0	0	0	0
4/21/2024	3:45 AM	0	0	0	0	0	0	0	0	0	0	0	0	0
4/21/2024	4:00 AM	0	0	0	0	0	0	0	0	0	0	0	0	0
4/21/2024	4:15 AM	0	0	0	0	0	0	0	0	0	0	0	0	0
4/21/2024	4:30 AM	0	0	0	0	0	0	0	0	0	0	0	0	0
4/21/2024	4:45 AM	0	0	0	0	0	0	0	0	0	0	0	0	0
4/21/2024	5:00 AM	0	0	0	0	0	0	0	0	0	0	0	0	0
4/21/2024	5:15 AM	0	0	0	0	0	0	0	0	0	0	0	0	0
4/21/2024	5:30 AM	0	0	0	0	0	0	0	0	0	0	0	0	0
4/21/2024	5:45 AM	0	0	0	0	0	0	0	0	0	0	0	0	0
4/21/2024	6:00 AM	0	0	0	0	0	0	0	0	0	0	0	0	0
4/21/2024	6:15 AM	0	0	0	0	0	0	0	0	0	0	0	0	0
4/21/2024	6:30 AM	0	0	0	0	0	0	0	0	0	0	0	0	0
4/21/2024	6:45 AM	0	0	0	0	0	0	0	0	0	0	0	0	0
4/21/2024	7:00 AM	0	0	0	0	0	0	0	0	0	0	0	0	0
4/21/2024	7:15 AM	0	0	0	0	0	0	0	0	0	0	0	0	0
4/21/2024	7:30 AM	0	0	0	0	0	0	0	0	0	0	0	0	0
4/21/2024	7:45 AM	0	0	0	0	0	0	0	0	0	0	0	0	0
4/21/2024	8:00 AM	0	0	0	0	0	0	0	0	0	0	0	0	0
4/21/2024	8:15 AM	0	0	0	0	0	0	0	0	0	0	0	0	0
4/21/2024	8:30 AM	0	0	0	0	0	0	0	0	0	0	0	0	0
4/21/2024	8:45 AM	0	0	0	0	0	0	0	0	0	0	0	0	0
4/21/2024	9:00 AM	0	0	0	0	0	0	0	0	0	0	0	0	0
4/21/2024	9:15 AM	0	0	0	0	0	0	0	0	0	0	0	0	0
4/21/2024	9:30 AM	0	0	0	0	0	0	0	0	0	0	0	0	0
4/21/2024	9:45 AM	0	0	0	0	0	0	0	0	0	0	0	0	0
4/21/2024	10:00 AM	0	0	0	0	0	0	0	0	0	0	0	0	0
4/21/2024	10:15 AM	0	0	0	0	0	0	0	0	0	0	0	0	0
4/21/2024	10:30 AM	0	0	0	0	0	0	0	0	0	0	0	0	0
4/21/2024	10:45 AM	0	0	0	0	0	0	0	0	0	0	0	0	0
4/21/2024	11:00 AM	0	0	0	0	0	0	0	0	0	0	0	0	0
4/21/2024	11:15 AM	0	0	0	0	0	0	0	0	0	0	0	0	0
4/21/2024	11:30 AM	0	0	0	0	0	0	0	0	0	0	0	0	0
4/21/2024	11:45 AM	0	0	0	0	0	0	0	0	0	0	0	0	0
4/21/2024	12:00 PM	0	0	0	0	0	0	0	0	0	0	0	0	0
4/21/2024	12:15 PM	0	0	0	0	0	0	0	0	0	0	0	0	0
4/21/2024	12:30 PM	0	0	0	0	0	0	0	0	0	0	0	0	0
4/21/2024	12:45 PM	0	0	0	0	0	0	0	0	0	0	0	0	0
4/21/2024	1:00 PM	0	0	0	0	0	0	0	0	0	0	0	0	0
4/21/2024	1:15 PM	0	0	0	0	0	0	0	0	0	0	0	0	0
4/21/2024	1:30 PM	0	0	0	0	0	0	0	0	0	0	0	0	0
4/21/2024	1:45 PM	0	0	0	0	0	0	0	0	0	0	0	0	0
4/21/2024	2:00 PM	0	0	0	0	0	0	0	0	0	0	0	0	0
4/21/2024	2:15 PM	0	0	0	0	0	0	0	0	0	0	0	0	0
4/21/2024	2:30 PM	0	0	0	0	0	0	0	0	0	0	0	0	0
4/21/2024	2:45 PM	0	0	0	0	0	0	0	0	0	0	0	0	0
4/21/2024	3:00 PM	0	0	0	0	0	0	0	0	0	0	0	0	0
4/21/2024	3:15 PM	0	0	0	0	0	0	0	0	0	0	0	0	0
4/21/2024	3:30 PM	0	0	0	0	0	0	0	0	0	0	0	0	0
4/21/2024	3:45 PM	0	0	0	0	0	0	0	0	0	0	0	0	0
4/21/2024	4:00 PM	0	0	0	0	0	0	0	0	0	0	0	0	0
4/21/2024	4:15 PM	0	0	0	0	0	0	0	0	0	0	0	0	0
4/21/2024	4:30 PM	0	0	0	0	0	0	0	0	0	0	0	0	0
4/21/2024	4:45 PM	0	0	0	0	0	0	0	0	0	0	0	0	0
4/21/2024	5:00 PM	0	0	0	0	0	0	0	0	0	0	0	0	0
4/21/2024	5:15 PM	0	0	0	0	0	0	0	0	0	0	0	0	0
4/21/2024	5:30 PM	0	0	0	0	0	0	0	0	0	0	0	0	0
4/21/2024	5:45 PM	0	0	0	0	0	0	0	0	0	0	0	0	0
4/21/2024	6:00 PM	0	0	0	0	0	0	0	0	0	0	0	0	0
4/21/2024	6:15 PM	0	0	0	0	0	0	0	0	0	0	0	0	0
4/21/2024	6:30 PM	0	0	0	0	0	0	0	0	0	0	0	0	0
4/21/2024	6:45 PM	0	0	0	0	0	0	0	0	0	0	0	0	0
4/21/2024	7:00 PM	0	0	0	0	0	0	0	0	0	0	0	0	0
4/21/2024	7:15 PM	0	0	0	0	0	0	0	0	0	0	0	0	0
4/21/2024	7:30 PM	0	0	0	0	0	0	0	0	0	0	0	0	0
4/21/2024	7:45 PM	0	0	0	0	0	0	0	0	0	0	0	0	0
4/21/2024	8:00 PM	0	0	0	0	0	0	0	0	0	0	0	0	0
4/21/2024	8:15 PM	0	0	0	0	0	0	0	0	0	0	0	0	0
4/21/2024	8:30 PM	0	0	0	0	0	0	0	0	0	0	0	0	0
4/21/2024	8:45 PM	0	0	0	0	0	0	0	0	0	0	0	0	0
4/21/2024	9:00 PM	0	0	0	0	0	0	0	0	0	0	0	0	0
4/21/2024	9:15 PM	0	0	0	0	0	0	0	0	0	0	0	0	0
4/21/2024	9:30 PM	0	0	0	0	0	0	0	0	0	0	0	0	0
4/21/2024	9:45 PM	0	0	0	0	0	0	0	0	0	0	0	0	0
4/21/2024	10:00 PM	0	0	0	0	0	0	0	0	0	0	0	0	0
4/21/2024	10:15 PM	0	0	0	0	0	0	0	0	0	0	0	0	0
4/21/2024	10:30 PM	0	0	0	0	0	0	0	0	0	0	0	0	0
4/21/2024	10:45 PM	0	0	0	0	0	0	0	0	0	0	0	0	0
4/21/2024	11:00 PM	0	0	0	0	0	0	0	0	0	0	0	0	0
4/21/2024	11:15 PM	0	0	0	0	0	0	0	0	0	0	0	0	0
4/21/2024	11:30 PM	0	0	0	0	0	0	0	0	0	0	0	0	0
4/21/2024	11:45 PM	0	0	0	0	0	0	0	0	0	0	0	0	0

4/22/2024	12:00 AM	0	0	0	0	0	0	0	0	0	0	0	0	0
4/22/2024	12:15 AM	0	0	0	0	0	0	0	0	0	0	0	0	0
4/22/2024	12:30 AM	0	0	0	0	0	0	0	0	0	0	0	0	0
4/22/2024	12:45 AM	0	0	0	0	0	0	0	0	0	0	0	0	0
4/22/2024	1:00 AM	0	0	0	0	0	0	0	0	0	0	0	0	0
4/22/2024	1:15 AM	0	0	0	0	0	0	0	0	0	0	0	0	0
4/22/2024	1:30 AM	0	0	0	0	0	0	0	0	0	0	0	0	0
4/22/2024	1:45 AM	0	0	0	0	0	0	0	0	0	0	0	0	0
4/22/2024	2:00 AM	0	0	0	0	0	0	0	0	0	0	0	0	0
4/22/2024	2:15 AM	0	0	0	0	0	0	0	0	0	0	0	0	0
4/22/2024	2:30 AM	0	0	0	0	0	0	0	0	0	0	0	0	0
4/22/2024	2:45 AM	0	0	0	0	0	0	0	0	0	0	0	0	0
4/22/2024	3:00 AM	0	0	0	0	0	0	0	0	0	0	0	0	0
4/22/2024	3:15 AM	0	0	0	0	0	0	0	0	0	0	0	0	0
4/22/2024	3:30 AM	0	0	0	0	0	0	0	0	0	0	0	0	0
4/22/2024	3:45 AM	0	0	0	0	0	0	0	0	0	0	0	0	0
4/22/2024	4:00 AM	0	0	0	0	0	0	0	0	0	0	0	0	0
4/22/2024	4:15 AM	0	0	0	0	0	0	0	0	0	0	0	0	0
4/22/2024	4:30 AM	0	0	0	0	0	0	0	0	0	0	0	0	0
4/22/2024	4:45 AM	0	0	0	0	0	0	0	0	0	0	0	0	0
4/22/2024	5:00 AM	0	0	0	0	0	0	0	0	0	0	0	0	0
4/22/2024	5:15 AM	0	0	0	0	0	0	0	0	0	0	0	0	0
4/22/2024	5:30 AM	0	0	0	0	0	0	0	0	0	0	0	0	0
4/22/2024	5:45 AM	0	0	0	0	0	0	0	0	0	0	0	0	0
4/22/2024	6:00 AM	0	0	0	0	0	0	0	0	0	0	0	0	0
4/22/2024	6:15 AM	0	0	0	0	0	0	0	0	0	0	0	0	0
4/22/2024	6:30 AM	0	0	0	0	0	0	0	0	0	0	0	0	0
4/22/2024	6:45 AM	0	0	0	0	0	0	0	0	0	0	0	0	0
4/22/2024	7:00 AM	0	0	0	0	0	0	0	0	0	0	0	0	0
4/22/2024	7:15 AM	0	0	0	0	0	0	0	0	0	0	0	0	0
4/22/2024	7:30 AM	0	0	0	0	0	0	0	0	0	0	0	0	0
4/22/2024	7:45 AM	0	0	0	0	0	0	0	0	0	0	0	0	0
4/22/2024	8:00 AM	0	0	0	0	0	0	0	0	0	0	0	0	0
4/22/2024	8:15 AM	0	0	0	0	0	0	0	0	0	0	0	0	0
4/22/2024	8:30 AM	0	0	0	0	0	0	0	0	0	0	0	0	0
4/22/2024	8:45 AM	0	0	0	0	0	0	0	0	0	0	0	0	0
4/22/2024	9:00 AM	0	0	0	0	0	0	0	0	0	0	0	0	0
4/22/2024	9:15 AM	0	0	0	0	0	0	0	0	0	0	0	0	0
4/22/2024	9:30 AM	0	0	0	0	0	0	0	0	0	0	0	0	0
4/22/2024	9:45 AM	0	0	0	0	0	0	0	0	0	0	0	0	0
4/22/2024	10:00 AM	0	0	0	0	0	0	0	0	0	0	0	0	0
4/22/2024	10:15 AM	0	0	0	0	0	0	0	0	0	0	0	0	0
4/22/2024	10:30 AM	0	0	0	0	0	0	0	0	0	0	0	0	0
4/22/2024	10:45 AM	0	0	0	0	0	0	0	0	0	0	0	0	0
4/22/2024	11:00 AM	0	0	0	0	0	0	0	0	0	0	0	0	0
4/22/2024	11:15 AM	0	0	0	0	0	0	0	0	0	0	0	0	0
4/22/2024	11:30 AM	0	0	0	0	0	0	0	0	0	0	0	0	0
4/22/2024	11:45 AM	0	0	0	0	0	0	0	0	0	0	0	0	0
4/22/2024	12:00 PM	0	0	0	0	0	0	0	0	0	0	0	0	0
4/22/2024	12:15 PM	0	0	0	0	0	0	0	0	0	0	0	0	0
4/22/2024	12:30 PM	0	0	0	0	0	0	0	0	0	0	0	0	0
4/22/2024	12:45 PM	0	0	0	0	0	0	0	0	0	0	0	0	0
4/22/2024	1:00 PM	0	0	0	0	0	0	0	0	0	0	0	0	0
4/22/2024	1:15 PM	0	0	0	0	0	0	0	0	0	0	0	0	0
4/22/2024	1:30 PM	0	0	0	0	0	0	0	0	0	0	0	0	0
4/22/2024	1:45 PM	0	0	0	0	0	0	0	0	0	0	0	0	0
4/22/2024	2:00 PM	0	0	0	0	0	0	0	0	0	0	0	0	0
4/22/2024	2:15 PM	0	0	0	0	0	0	0	0	0	0	0	0	0
4/22/2024	2:30 PM	0	0	0	0	0	0	0	0	0	0	0	0	0
4/22/2024	2:45 PM	0	0	0	0	0	0	0	0	0	0	0	0	0
4/22/2024	3:00 PM	0	0	0	0	0	0	0	0	0	0	0	0	0
4/22/2024	3:15 PM	0	0	0	0	0	0	0	0	0	0	0	0	0
4/22/2024	3:30 PM	0	0	0	0	0	0	0	0	0	0	0	0	0
4/22/2024	3:45 PM	0	0	0	0	0	0	0	0	0	0	0	0	0
4/22/2024	4:00 PM	0	0	0	0	0	0	0	0	0	0	0	0	0
4/22/2024	4:15 PM	0	0	0	0	0	0	0	0	0	0	0	0	0
4/22/2024	4:30 PM	0	0	0	0	0	0	0	0	0	0	0	0	0
4/22/2024	4:45 PM	0	0	0	0	0	0	0	0	0	0	0	0	0
4/22/2024	5:00 PM	0	0	0	0	0	0	0	0	0	0	0	0	0
4/22/2024	5:15 PM	0	0	0	0	0	0	0	0	0	0	0	0	0
4/22/2024	5:30 PM	0	0	0	0	0	0	0	0	0	0	0	0	0
4/22/2024	5:45 PM	0	0	0	0	0	0	0	0	0	0	0	0	0
4/22/2024	6:00 PM	0	0	0	0	0	0	0	0	0	0	0	0	0
4/22/2024	6:15 PM	0	0	0	0	0	0	0	0	0	0	0	0	0
4/22/2024	6:30 PM	0	0	0	0	0	0	0	0	0	0	0	0	0
4/22/2024	6:45 PM	0	0	0	0	0	0	0	0	0	0	0	0	0
4/22/2024	7:00 PM	0	0	0	0	0	0	0	0	0	0	0	0	0
4/22/2024	7:15 PM	0	0	0	0	0	0	0	0	0	0	0	0	0
4/22/2024	7:30 PM	0	0	0	0	0	0	0	0	0	0	0	0	0
4/22/2024	7:45 PM	0	0	0	0	0	0	0	0	0	0	0	0	0
4/22/2024	8:00 PM	0	0	0	0	0	0	0	0	0	0	0	0	0
4/22/2024	8:15 PM	0	0	0	0	0	0	0	0	0	0	0	0	0
4/22/2024	8:30 PM	0	0	0	0	0	0	0	0	0	0	0	0	0
4/22/2024	8:45 PM	0	0	0	0	0	0	0	0	0	0	0	0	0
4/22/2024	9:00 PM	0	0	0	0	0	0	0	0	0	0	0	0	0
4/22/2024	9:15 PM	0	0	0	0	0	0	0	0	0	0	0	0	0
4/22/2024	9:30 PM	0	0	0	0	0	0	0	0	0	0	0	0	0
4/22/2024	9:45 PM	0	0	0	0	0	0	0	0	0	0	0	0	0
4/22/2024	10:00 PM	0	0	0	0	0	0	0	0	0	0	0	0	0
4/22/2024	10:15 PM	0	0	0	0	0	0	0	0	0	0	0	0	0
4/22/2024	10:30 PM	0	0	0	0	0	0	0	0	0	0	0	0	0
4/22/2024	10:45 PM	0	0	0	0	0	0	0	0	0	0	0	0	0
4/22/2024	11:00 PM	0	0	0	0	0	0	0	0	0	0	0	0	0
4/22/2024	11:15 PM	0	0	0	0	0	0	0	0	0	0	0	0	0
4/22/2024	11:30 PM	0	0	0	0	0	0	0	0	0	0	0	0	0
4/22/2024	11:45 PM	0	0	0	0	0	0	0	0	0	0	0	0	0

4/23/2024	12:00 AM	0	0	0	0	0	0	0	0	0	0	0	0	0
4/23/2024	12:15 AM	0	0	0	0	0	0	0	0	0	0	0	0	0
4/23/2024	12:30 AM	0	0	0	0	0	0	0	0	0	0	0	0	0
4/23/2024	12:45 AM	0	0	0	0	0	0	0	0	0	0	0	0	0
4/23/2024	1:00 AM	0	0	0	0	0	0	0	0	0	0	0	0	0
4/23/2024	1:15 AM	0	0	0	0	0	0	0	0	0	0	0	0	0
4/23/2024	1:30 AM	0	0	0	0	0	0	0	0	0	0	0	0	0
4/23/2024	1:45 AM	0	0	0	0	0	0	0	0	0	0	0	0	0
4/23/2024	2:00 AM	0	0	0	0	0	0	0	0	0	0	0	0	0
4/23/2024	2:15 AM	0	0	0	0	0	0	0	0	0	0	0	0	0
4/23/2024	2:30 AM	0	0	0	0	0	0	0	0	0	0	0	0	0
4/23/2024	2:45 AM	0	0	0	0	0	0	0	0	0	0	0	0	0
4/23/2024	3:00 AM	0	0	0	0	0	0	0	0	0	0	0	0	0
4/23/2024	3:15 AM	0	0	0	0	0	0	0	0	0	0	0	0	0
4/23/2024	3:30 AM	0	0	0	0	0	0	0	0	0	0	0	0	0
4/23/2024	3:45 AM	0	0	0	0	0	0	0	0	0	0	0	0	0
4/23/2024	4:00 AM	0	0	0	0	0	0	0	0	0	0	0	0	0
4/23/2024	4:15 AM	0	0	0	0	0	0	0	0	0	0	0	0	0
4/23/2024	4:30 AM	0	0	0	0	0	0	0	0	0	0	0	0	0
4/23/2024	4:45 AM	0	0	0	0	0	0	0	0	0	0	0	0	0
4/23/2024	5:00 AM	0	0	0	0	0	0	0	0	0	0	0	0	0
4/23/2024	5:15 AM	0	0	0	0	0	0	0	0	0	0	0	0	0
4/23/2024	5:30 AM	0	0	0	0	0	0	0	0	0	0	0	0	0
4/23/2024	5:45 AM	0	0	0	0	0	0	0	0	0	0	0	0	0
4/23/2024	6:00 AM	0	0	0	0	0	0	0	0	0	0	0	0	0
4/23/2024	6:15 AM	0	0	0	0	0	0	0	0	0	0	0	0	0
4/23/2024	6:30 AM	0	0	0	0	0	0	0	0	0	0	0	0	0
4/23/2024	6:45 AM	0	0	0	0	0	0	0	0	0	0	0	0	0
4/23/2024	7:00 AM	0	0	0	0	0	0	0	0	0	0	0	0	0
4/23/2024	7:15 AM	0	0	0	0	0	0	0	0	0	0	0	0	0
4/23/2024	7:30 AM	0	0	0	0	0	0	0	0	0	0	0	0	0
4/23/2024	7:45 AM	0	0	0	0	0	0	0	0	0	0	0	0	0
4/23/2024	8:00 AM	0	0	0	0	0	0	0	0	0	0	0	0	0
4/23/2024	8:15 AM	0	0	0	0	0	0	0	0	0	0	0	0	0
4/23/2024	8:30 AM	0	0	0	0	0	0	0	0	0	0	0	0	0
4/23/2024	8:45 AM	0	0	0	0	0	0	0	0	0	0	0	0	0
4/23/2024	9:00 AM	0	0	0	0	0	0	0	0	0	0	0	0	0
4/23/2024	9:15 AM	0	0	0	0	0	0	0	0	0	0	0	0	0
4/23/2024	9:30 AM	0	0	0	0	0	0	0	0	0	0	0	0	0
4/23/2024	9:45 AM	0	0	0	0	0	0	0	0	0	0	0	0	0
4/23/2024	10:00 AM	0	0	0	0	0	0	0	0	0	0	0	0	0
4/23/2024	10:15 AM	0	0	0	0	0	0	0	0	0	0	0	0	0
4/23/2024	10:30 AM	0	0	0	0	0	0	0	0	0	0	0	0	0
4/23/2024	10:45 AM	0	0	0	0	0	0	0	0	0	0	0	0	0
4/23/2024	11:00 AM	0	0	0	0	0	0	0	0	0	0	0	0	0
4/23/2024	11:15 AM	0	0	0	0	0	0	0	0	0	0	0	0	0
4/23/2024	11:30 AM	0	0	0	0	0	0	0	0	0	0	0	0	0
4/23/2024	11:45 AM	0	0	0	0	0	0	0	0	0	0	0	0	0
4/23/2024	12:00 PM	0	0	0	0	0	0	0	0	0	0	0	0	0
4/23/2024	12:15 PM	0	0	0	0	0	0	0	0	0	0	0	0	0
4/23/2024	12:30 PM	0	0	0	0	0	0	0	0	0	0	0	0	0
4/23/2024	12:45 PM	0	0	0	0	0	0	0	0	0	0	0	0	0
4/23/2024	1:00 PM	0	0	0	0	0	0	0	0	0	0	0	0	0
4/23/2024	1:15 PM	0	0	0	0	0	0	0	0	0	0	0	0	0
4/23/2024	1:30 PM	0	0	0	0	0	0	0	0	0	0	0	0	0
4/23/2024	1:45 PM	0	0	0	0	0	0	0	0	0	0	0	0	0
4/23/2024	2:00 PM	0	0	0	0	0	0	0	0	0	0	0	0	0
4/23/2024	2:15 PM	0	0	0	0	0	0	0	0	0	0	0	0	0
4/23/2024	2:30 PM	0	0	0	0	0	0	0	0	0	0	0	0	0
4/23/2024	2:45 PM	0	0	0	0	0	0	0	0	0	0	0	0	0
4/23/2024	3:00 PM	0	0	0	0	0	0	0	0	0	0	0	0	0
4/23/2024	3:15 PM	0	0	0	0	0	0	0	0	0	0	0	0	0
4/23/2024	3:30 PM	0	0	0	0	0	0	0	0	0	0	0	0	0
4/23/2024	3:45 PM	0	0	0	0	0	0	0	0	0	0	0	0	0
4/23/2024	4:00 PM	0	0	0	0	0	0	0	0	0	0	0	0	0
4/23/2024	4:15 PM	0	0	0	0	0	0	0	0	0	0	0	0	0
4/23/2024	4:30 PM	0	0	0	0	0	0	0	0	0	0	0	0	0
4/23/2024	4:45 PM	0	0	0	0	0	0	0	0	0	0	0	0	0
4/23/2024	5:00 PM	0	0	0	0	0	0	0	0	0	0	0	0	0
4/23/2024	5:15 PM	0	0	0	0	0	0	0	0	0	0	0	0	0
4/23/2024	5:30 PM	0	0	0	0	0	0	0	0	0	0	0	0	0
4/23/2024	5:45 PM	0	0	0	0	0	0	0	0	0	0	0	0	0
4/23/2024	6:00 PM	0	0	0	0	0	0	0	0	0	0	0	0	0
4/23/2024	6:15 PM	0	0	0	0	0	0	0	0	0	0	0	0	0
4/23/2024	6:30 PM	0	0	0	0	0	0	0	0	0	0	0	0	0
4/23/2024	6:45 PM	0	0	0	0	0	0	0	0	0	0	0	0	0
4/23/2024	7:00 PM	0	0	0	0	0	0	0	0	0	0	0	0	0
4/23/2024	7:15 PM	0	0	0	0	0	0	0	0	0	0	0	0	0
4/23/2024	7:30 PM	0	0	0	0	0	0	0	0	0	0	0	0	0
4/23/2024	7:45 PM	0	0	0	0	0	0	0	0	0	0	0	0	0
4/23/2024	8:00 PM	0	0	0	0	0	0	0	0	0	0	0	0	0
4/23/2024	8:15 PM	0	0	0	0	0	0	0	0	0	0	0	0	0
4/23/2024	8:30 PM	0	0	0	0	0	0	0	0	0	0	0	0	0
4/23/2024	8:45 PM	0	0	0	0	0	0	0	0	0	0	0	0	0
4/23/2024	9:00 PM	0	0	0	0	0	0	0	0	0	0	0	0	0
4/23/2024	9:15 PM	0	0	0	0	0	0	0	0	0	0	0	0	0
4/23/2024	9:30 PM	0	0	0	0	0	0	0	0	0	0	0	0	0
4/23/2024	9:45 PM	0	0	0	0	0	0	0	0	0	0	0	0	0
4/23/2024	10:00 PM	0	0	0	0	0	0	0	0	0	0	0	0	0
4/23/2024	10:15 PM	0	0	0	0	0	0	0	0	0	0	0	0	0
4/23/2024	10:30 PM	0	0	0	0	0	0	0	0	0	0	0	0	0
4/23/2024	10:45 PM	0	0	0	0	0	0	0	0	0	0	0	0	0
4/23/2024	11:00 PM	0	0	0	0	0	0	0	0	0	0	0	0	0
4/23/2024	11:15 PM	0	0	0	0	0	0	0	0	0	0	0	0	0
4/23/2024	11:30 PM	0	0	0	0	0	0	0	0	0	0	0	0	0
4/23/2024	11:45 PM	0	0	0	0	0	0	0	0	0	0	0	0	0

4/24/2024	12:00 AM	0	0	0	0	0	0	0	0	0	0	0	0	0
4/24/2024	12:15 AM	0	0	0	0	0	0	0	0	0	0	0	0	0
4/24/2024	12:30 AM	0	0	0	0	0	0	0	0	0	0	0	0	0
4/24/2024	12:45 AM	0	0	0	0	0	0	0	0	0	0	0	0	0
4/24/2024	1:00 AM	0	0	0	0	0	0	0	0	0	0	0	0	0
4/24/2024	1:15 AM	0	0	0	0	0	0	0	0	0	0	0	0	0
4/24/2024	1:30 AM	0	0	0	0	0	0	0	0	0	0	0	0	0
4/24/2024	1:45 AM	0	0	0	0	0	0	0	0	0	0	0	0	0
4/24/2024	2:00 AM	0	0	0	0	0	0	0	0	0	0	0	0	0
4/24/2024	2:15 AM	0	0	0	0	0	0	0	0	0	0	0	0	0
4/24/2024	2:30 AM	0	0	0	0	0	0	0	0	0	0	0	0	0
4/24/2024	2:45 AM	0	0	0	0	0	0	0	0	0	0	0	0	0
4/24/2024	3:00 AM	0	0	0	0	0	0	0	0	0	0	0	0	0
4/24/2024	3:15 AM	0	0	0	0	0	0	0	0	0	0	0	0	0
4/24/2024	3:30 AM	0	0	0	0	0	0	0	0	0	0	0	0	0
4/24/2024	3:45 AM	0	0	0	0	0	0	0	0	0	0	0	0	0
4/24/2024	4:00 AM	0	0	0	0	0	0	0	0	0	0	0	0	0
4/24/2024	4:15 AM	0	0	0	0	0	0	0	0	0	0	0	0	0
4/24/2024	4:30 AM	0	0	0	0	0	0	0	0	0	0	0	0	0
4/24/2024	4:45 AM	0	0	0	0	0	0	0	0	0	0	0	0	0
4/24/2024	5:00 AM	0	0	0	0	0	0	0	0	0	0	0	0	0
4/24/2024	5:15 AM	0	0	0	0	0	0	0	0	0	0	0	0	0
4/24/2024	5:30 AM	0	0	0	0	0	0	0	0	0	0	0	0	0
4/24/2024	5:45 AM	0	0	0	0	0	0	0	0	0	0	0	0	0
4/24/2024	6:00 AM	0	0	0	0	0	0	0	0	0	0	0	0	0
4/24/2024	6:15 AM	0	0	0	0	0	0	0	0	0	0	0	0	0
4/24/2024	6:30 AM	0	0	0	0	0	0	0	0	0	0	0	0	0
4/24/2024	6:45 AM	0	0	0	0	0	0	0	0	0	0	0	0	0
4/24/2024	7:00 AM	0	0	0	0	0	0	0	0	0	0	0	0	0
4/24/2024	7:15 AM	0	0	0	0	0	0	0	0	0	0	0	0	0
4/24/2024	7:30 AM	0	0	0	0	0	0	0	0	0	0	0	0	0
4/24/2024	7:45 AM	0	0	0	0	0	0	0	0	0	0	0	0	0
4/24/2024	8:00 AM	0	0	0	0	0	0	0	0	0	0	0	0	0
4/24/2024	8:15 AM	0	0	0	0	0	0	0	0	0	0	0	0	0
4/24/2024	8:30 AM	0	0	0	0	0	0	0	0	0	0	0	0	0
4/24/2024	8:45 AM	0	0	0	0	0	0	0	0	0	0	0	0	0
4/24/2024	9:00 AM	0	0	0	0	0	0	0	0	0	0	0	0	0
4/24/2024	9:15 AM	0	0	0	0	0	0	0	0	0	0	0	0	0
4/24/2024	9:30 AM	0	0	0	0	0	0	0	0	0	0	0	0	0
4/24/2024	9:45 AM	0	0	0	0	0	0	0	0	0	0	0	0	0
4/24/2024	10:00 AM	0	0	0	0	0	0	0	0	0	0	0	0	0
4/24/2024	10:15 AM	0	0	0	0	0	0	0	0	0	0	0	0	0
4/24/2024	10:30 AM	0	0	0	0	0	0	0	0	0	0	0	0	0
4/24/2024	10:45 AM	0	0	0	0	0	0	0	0	0	0	0	0	0
4/24/2024	11:00 AM	0	0	0	0	0	0	0	0	0	0	0	0	0
4/24/2024	11:15 AM	0	0	0	0	0	0	0	0	0	0	0	0	0
4/24/2024	11:30 AM	0	0	0	0	0	0	0	0	0	0	0	0	0
4/24/2024	11:45 AM	0	0	0	0	0	0	0	0	0	0	0	0	0
4/24/2024	12:00 PM	0	0	0	0	0	0	0	0	0	0	0	0	0
4/24/2024	12:15 PM	0	0	0	0	0	0	0	0	0	0	0	0	0
4/24/2024	12:30 PM	0	0	0	0	0	0	0	0	0	0	0	0	0
4/24/2024	12:45 PM	0	0	0	0	0	0	0	0	0	0	0	0	0
4/24/2024	1:00 PM	0	0	0	0	0	0	0	0	0	0	0	0	0
4/24/2024	1:15 PM	0	0	0	0	0	0	0	0	0	0	0	0	0
4/24/2024	1:30 PM	0	0	0	0	0	0	0	0	0	0	0	0	0
4/24/2024	1:45 PM	0	0	0	0	0	0	0	0	0	0	0	0	0
4/24/2024	2:00 PM	0	0	0	0	0	0	0	0	0	0	0	0	0
4/24/2024	2:15 PM	0	0	0	0	0	0	0	0	0	0	0	0	0
4/24/2024	2:30 PM	0	0	0	0	0	0	0	0	0	0	0	0	0
4/24/2024	2:45 PM	0	0	0	0	0	0	0	0	0	0	0	0	0
4/24/2024	3:00 PM	0	0	0	0	0	0	0	0	0	0	0	0	0
4/24/2024	3:15 PM	0	0	0	0	0	0	0	0	0	0	0	0	0
4/24/2024	3:30 PM	0	0	0	0	0	0	0	0	0	0	0	0	0
4/24/2024	3:45 PM	0	0	0	0	0	0	0	0	0	0	0	0	0
4/24/2024	4:00 PM	0	0	0	0	0	0	0	0	0	0	0	0	0
4/24/2024	4:15 PM	0	0	0	0	0	0	0	0	0	0	0	0	0
4/24/2024	4:30 PM	0	0	0	0	0	0	0	0	0	0	0	0	0
4/24/2024	4:45 PM	0	0	0	0	0	0	0	0	0	0	0	0	0
4/24/2024	5:00 PM	0	0	0	0	0	0	0	0	0	0	0	0	0
4/24/2024	5:15 PM	0	0	0	0	0	0	0	0	0	0	0	0	0
4/24/2024	5:30 PM	0	0	0	0	0	0	0	0	0	0	0	0	0
4/24/2024	5:45 PM	0	0	0	0	0	0	0	0	0	0	0	0	0
4/24/2024	6:00 PM	0	0	0	0	0	0	0	0	0	0	0	0	0
4/24/2024	6:15 PM	0	0	0	0	0	0	0	0	0	0	0	0	0
4/24/2024	6:30 PM	0	0	0	0	0	0	0	0	0	0	0	0	0
4/24/2024	6:45 PM	0	0	0	0	0	0	0	0	0	0	0	0	0
4/24/2024	7:00 PM	0	0	0	0	0	0	0	0	0	0	0	0	0
4/24/2024	7:15 PM	0	0	0	0	0	0	0	0	0	0	0	0	0
4/24/2024	7:30 PM	0	0	0	0	0	0	0	0	0	0	0	0	0
4/24/2024	7:45 PM	0	0	0	0	0	0	0	0	0	0	0	0	0
4/24/2024	8:00 PM	0	0	0	0	0	0	0	0	0	0	0	0	0
4/24/2024	8:15 PM	0	0	0	0	0	0	0	0	0	0	0	0	0
4/24/2024	8:30 PM	0	0	0	0	0	0	0	0	0	0	0	0	0
4/24/2024	8:45 PM	0	0	0	0	0	0	0	0	0	0	0	0	0
4/24/2024	9:00 PM	0	0	0	0	0	0	0	0	0	0	0	0	0
4/24/2024	9:15 PM	0	0	0	0	0	0	0	0	0	0	0	0	0
4/24/2024	9:30 PM	0	0	0	0	0	0	0	0	0	0	0	0	0
4/24/2024	9:45 PM	0	0	0	0	0	0	0	0	0	0	0	0	0
4/24/2024	10:00 PM	0	0	0	0	0	0	0	0	0	0	0	0	0
4/24/2024	10:15 PM	0	0	0	0	0	0	0	0	0	0	0	0	0
4/24/2024	10:30 PM	0	0	0	0	0	0	0	0	0	0	0	0	0
4/24/2024	10:45 PM	0	0	0	0	0	0	0	0	0	0	0	0	0
4/24/2024	11:00 PM	0	0	0	0	0	0	0	0	0	0	0	0	0
4/24/2024	11:15 PM	0	0	0	0	0	0	0	0	0	0	0	0	0
4/24/2024	11:30 PM	0	0	0	0	0	0	0	0	0	0	0	0	0
4/24/2024	11:45 PM	0	0	0	0	0	0	0	0	0	0	0	0	0

4/25/2024	12:00 AM	0	0	0	0	0	0	0	0	0	0	0	0	0
4/25/2024	12:15 AM	0	0	0	0	0	0	0	0	0	0	0	0	0
4/25/2024	12:30 AM	0	0	0	0	0	0	0	0	0	0	0	0	0
4/25/2024	12:45 AM	0	0	0	0	0	0	0	0	0	0	0	0	0
4/25/2024	1:00 AM	0	0	0	0	0	0	0	0	0	0	0	0	0
4/25/2024	1:15 AM	0	0	0	0	0	0	0	0	0	0	0	0	0
4/25/2024	1:30 AM	0	0	0	0	0	0	0	0	0	0	0	0	0
4/25/2024	1:45 AM	0	0	0	0	0	0	0	0	0	0	0	0	0
4/25/2024	2:00 AM	0	0	0	0	0	0	0	0	0	0	0	0	0
4/25/2024	2:15 AM	0	0	0	0	0	0	0	0	0	0	0	0	0
4/25/2024	2:30 AM	0	0	0	0	0	0	0	0	0	0	0	0	0
4/25/2024	2:45 AM	0	0	0	0	0	0	0	0	0	0	0	0	0
4/25/2024	3:00 AM	0	0	0	0	0	0	0	0	0	0	0	0	0
4/25/2024	3:15 AM	0	0	0	0	0	0	0	0	0	0	0	0	0
4/25/2024	3:30 AM	0	0	0	0	0	0	0	0	0	0	0	0	0
4/25/2024	3:45 AM	0	0	0	0	0	0	0	0	0	0	0	0	0
4/25/2024	4:00 AM	0	0	0	0	0	0	0	0	0	0	0	0	0
4/25/2024	4:15 AM	0	0	0	0	0	0	0	0	0	0	0	0	0
4/25/2024	4:30 AM	0	0	0	0	0	0	0	0	0	0	0	0	0
4/25/2024	4:45 AM	0	0	0	0	0	0	0	0	0	0	0	0	0
4/25/2024	5:00 AM	0	0	0	0	0	0	0	0	0	0	0	0	0
4/25/2024	5:15 AM	0	0	0	0	0	0	0	0	0	0	0	0	0
4/25/2024	5:30 AM	0	0	0	0	0	0	0	0	0	0	0	0	0
4/25/2024	5:45 AM	0	0	0	0	0	0	0	0	0	0	0	0	0
4/25/2024	6:00 AM	0	0	0	0	0	0	0	0	0	0	0	0	0
4/25/2024	6:15 AM	0	0	0	0	0	0	0	0	0	0	0	0	0
4/25/2024	6:30 AM	0	0	0	0	0	0	0	0	0	0	0	0	0
4/25/2024	6:45 AM	0	0	0	0	0	0	0	0	0	0	0	0	0
4/25/2024	7:00 AM	0	0	0	0	0	0	0	0	0	0	0	0	0
4/25/2024	7:15 AM	0	0	0	0	0	0	0	0	0	0	0	0	0
4/25/2024	7:30 AM	0	0	0	0	0	0	0	0	0	0	0	0	0
4/25/2024	7:45 AM	0	0	0	0	0	0	0	0	0	0	0	0	0
4/25/2024	8:00 AM	0	0	0	0	0	0	0	0	0	0	0	0	0
4/25/2024	8:15 AM	0	0	0	0	0	0	0	0	0	0	0	0	0
4/25/2024	8:30 AM	0	0	0	0	0	0	0	0	0	0	0	0	0
4/25/2024	8:45 AM	0	0	0	0	0	0	0	0	0	0	0	0	0
4/25/2024	9:00 AM	0	0	0	0	0	0	0	0	0	0	0	0	0
4/25/2024	9:15 AM	0	0	0	0	0	0	0	0	0	0	0	0	0
4/25/2024	9:30 AM	0	0	0	0	0	0	0	0	0	0	0	0	0
4/25/2024	9:45 AM	0	0	0	0	0	0	0	0	0	0	0	0	0
4/25/2024	10:00 AM	0	0	0	0	0	0	0	0	0	0	0	0	0
4/25/2024	10:15 AM	0	0	0	0	0	0	0	0	0	0	0	0	0
4/25/2024	10:30 AM	0	0	0	0	0	0	0	0	0	0	0	0	0
4/25/2024	10:45 AM	0	0	0	0	0	0	0	0	0	0	0	0	0
4/25/2024	11:00 AM	0	0	0	0	0	0	0	0	0	0	0	0	0
4/25/2024	11:15 AM	0	0	0	0	0	0	0	0	0	0	0	0	0
4/25/2024	11:30 AM	0	0	0	0	0	0	0	0	0	0	0	0	0
4/25/2024	11:45 AM	0	0	0	0	0	0	0	0	0	0	0	0	0
4/25/2024	12:00 PM	0	0	0	0	0	0	0	0	0	0	0	0	0
4/25/2024	12:15 PM	0	0	0	0	0	0	0	0	0	0	0	0	0
4/25/2024	12:30 PM	0	0	0	0	0	0	0	0	0	0	0	0	0
4/25/2024	12:45 PM	0	0	0	0	0	0	0	0	0	0	0	0	0
4/25/2024	1:00 PM	0	0	0	0	0	0	0	0	0	0	0	0	0
4/25/2024	1:15 PM	0	0	0	0	0	0	0	0	0	0	0	0	0
4/25/2024	1:30 PM	0	0	0	0	0	0	0	0	0	0	0	0	0
4/25/2024	1:45 PM	0	0	0	0	0	0	0	0	0	0	0	0	0
4/25/2024	2:00 PM	0	0	0	0	0	0	0	0	0	0	0	0	0
4/25/2024	2:15 PM	0	0	0	0	0	0	0	0	0	0	0	0	0
4/25/2024	2:30 PM	0	0	0	0	0	0	0	0	0	0	0	0	0
4/25/2024	2:45 PM	0	0	0	0	0	0	0	0	0	0	0	0	0
4/25/2024	3:00 PM	0	0	0	0	0	0	0	0	0	0	0	0	0
4/25/2024	3:15 PM	0	0	0	0	0	0	0	0	0	0	0	0	0
4/25/2024	3:30 PM	0	0	0	0	0	0	0	0	0	0	0	0	0
4/25/2024	3:45 PM	0	0	0	0	0	0	0	0	0	0	0	0	0
4/25/2024	4:00 PM	0	0	0	0	0	0	0	0	0	0	0	0	0
4/25/2024	4:15 PM	0	0	0	0	0	0	0	0	0	0	0	0	0
4/25/2024	4:30 PM	0	0	0	0	0	0	0	0	0	0	0	0	0
4/25/2024	4:45 PM	0	0	0	0	0	0	0	0	0	0	0	0	0
4/25/2024	5:00 PM	0	0	0	0	0	0	0	0	0	0	0	0	0
4/25/2024	5:15 PM	0	0	0	0	0	0	0	0	0	0	0	0	0
4/25/2024	5:30 PM	0	0	0	0	0	0	0	0	0	0	0	0	0
4/25/2024	5:45 PM	0	0	0	0	0	0	0	0	0	0	0	0	0
4/25/2024	6:00 PM	0	0	0	0	0	0	0	0	0	0	0	0	0
4/25/2024	6:15 PM	0	0	0	0	0	0	0	0	0	0	0	0	0
4/25/2024	6:30 PM	0	0	0	0	0	0	0	0	0	0	0	0	0
4/25/2024	6:45 PM	0	0	0	0	0	0	0	0	0	0	0	0	0
4/25/2024	7:00 PM	0	0	0	0	0	0	0	0	0	0	0	0	0
4/25/2024	7:15 PM	0	0	0	0	0	0	0	0	0	0	0	0	0
4/25/2024	7:30 PM	0	0	0	0	0	0	0	0	0	0	0	0	0
4/25/2024	7:45 PM	0	0	0	0	0	0	0	0	0	0	0	0	0
4/25/2024	8:00 PM	0	0	0	0	0	0	0	0	0	0	0	0	0
4/25/2024	8:15 PM	0	0	0	0	0	0	0	0	0	0	0	0	0
4/25/2024	8:30 PM	0	0	0	0	0	0	0	0	0	0	0	0	0
4/25/2024	8:45 PM	0	0	0	0	0	0	0	0	0	0	0	0	0
4/25/2024	9:00 PM	0	0	0	0	0	0	0	0	0	0	0	0	0
4/25/2024	9:15 PM	0	0	0	0	0	0	0	0	0	0	0	0	0
4/25/2024	9:30 PM	0	0	0	0	0	0	0	0	0	0	0	0	0
4/25/2024	9:45 PM	0	0	0	0	0	0	0	0	0	0	0	0	0
4/25/2024	10:00 PM	0	0	0	0	0	0	0	0	0	0	0	0	0
4/25/2024	10:15 PM	0	0	0	0	0	0	0	0	0	0	0	0	0
4/25/2024	10:30 PM	0	0	0	0	0	0	0	0	0	0	0	0	0
4/25/2024	10:45 PM	0	0	0	0	0	0	0	0	0	0	0	0	0
4/25/2024	11:00 PM	0	0	0	0	0	0	0	0	0	0	0	0	0
4/25/2024	11:15 PM	0	0	0	0	0	0	0	0	0	0	0	0	0
4/25/2024	11:30 PM	0	0	0	0	0	0	0	0	0	0	0	0	0
4/25/2024	11:45 PM	0	0	0	0	0	0	0	0	0	0	0	0	0

4/26/2024	12:00 AM	0	0	0	0	0	0	0	0	0	0	0	0	0
4/26/2024	12:15 AM	0	0	0	0	0	0	0	0	0	0	0	0	0
4/26/2024	12:30 AM	0	0	0	0	0	0	0	0	0	0	0	0	0
4/26/2024	12:45 AM	0	0	0	0	0	0	0	0	0	0	0	0	0
4/26/2024	1:00 AM	0	0	0	0	0	0	0	0	0	0	0	0	0
4/26/2024	1:15 AM	0	0	0	0	0	0	0	0	0	0	0	0	0
4/26/2024	1:30 AM	0	0	0	0	0	0	0	0	0	0	0	0	0
4/26/2024	1:45 AM	0	0	0	0	0	0	0	0	0	0	0	0	0
4/26/2024	2:00 AM	0	0	0	0	0	0	0	0	0	0	0	0	0
4/26/2024	2:15 AM	0	0	0	0	0	0	0	0	0	0	0	0	0
4/26/2024	2:30 AM	0	0	0	0	0	0	0	0	0	0	0	0	0
4/26/2024	2:45 AM	0	0	0	0	0	0	0	0	0	0	0	0	0
4/26/2024	3:00 AM	0	0	0	0	0	0	0	0	0	0	0	0	0
4/26/2024	3:15 AM	0	0	0	0	0	0	0	0	0	0	0	0	0
4/26/2024	3:30 AM	0	0	0	0	0	0	0	0	0	0	0	0	0
4/26/2024	3:45 AM	0	0	0	0	0	0	0	0	0	0	0	0	0
4/26/2024	4:00 AM	0	0	0	0	0	0	0	0	0	0	0	0	0
4/26/2024	4:15 AM	0	0	0	0	0	0	0	0	0	0	0	0	0
4/26/2024	4:30 AM	0	0	0	0	0	0	0	0	0	0	0	0	0
4/26/2024	4:45 AM	0	0	0	0	0	0	0	0	0	0	0	0	0
4/26/2024	5:00 AM	0	0	0	0	0	0	0	0	0	0	0	0	0
4/26/2024	5:15 AM	0	0	0	0	0	0	0	0	0	0	0	0	0
4/26/2024	5:30 AM	0	0	0	0	0	0	0	0	0	0	0	0	0
4/26/2024	5:45 AM	0	0	0	0	0	0	0	0	0	0	0	0	0
4/26/2024	6:00 AM	0	0	0	0	0	0	0	0	0	0	0	0	0
4/26/2024	6:15 AM	0	0	0	0	0	0	0	0	0	0	0	0	0
4/26/2024	6:30 AM	0	0	0	0	0	0	0	0	0	0	0	0	0
4/26/2024	6:45 AM	0	0	0	0	0	0	0	0	0	0	0	0	0
4/26/2024	7:00 AM	0	0	0	0	0	0	0	0	0	0	0	0	0
4/26/2024	7:15 AM	0	0	0	0	0	0	0	0	0	0	0	0	0
4/26/2024	7:30 AM	0	0	0	0	0	0	0	0	0	0	0	0	0
4/26/2024	7:45 AM	0	0	0	0	0	0	0	0	0	0	0	0	0
4/26/2024	8:00 AM	0	0	0	0	0	0	0	0	0	0	0	0	0
4/26/2024	8:15 AM	0	0	0	0	0	0	0	0	0	0	0	0	0
4/26/2024	8:30 AM	0	0	0	0	0	0	0	0	0	0	0	0	0
4/26/2024	8:45 AM	0	0	0	0	0	0	0	0	0	0	0	0	0
4/26/2024	9:00 AM	0	0	0	0	0	0	0	0	0	0	0	0	0
4/26/2024	9:15 AM	0	0	0	0	0	0	0	0	0	0	0	0	0
4/26/2024	9:30 AM	0	0	0	0	0	0	0	0	0	0	0	0	0
4/26/2024	9:45 AM	0	0	0	0	0	0	0	0	0	0	0	0	0
4/26/2024	10:00 AM	0	0	0	0	0	0	0	0	0	0	0	0	0
4/26/2024	10:15 AM	0	0	0	0	0	0	0	0	0	0	0	0	0
4/26/2024	10:30 AM	0	0	0	0	0	0	0	0	0	0	0	0	0
4/26/2024	10:45 AM	0	0	0	0	0	0	0	0	0	0	0	0	0
4/26/2024	11:00 AM	0	0	0	0	0	0	0	0	0	0	0	0	0
4/26/2024	11:15 AM	0	0	0	0	0	0	0	0	0	0	0	0	0
4/26/2024	11:30 AM	0	0	0	0	0	0	0	0	0	0	0	0	0
4/26/2024	11:45 AM	0	0	0	0	0	0	0	0	0	0	0	0	0
4/26/2024	12:00 PM	0	0	0	0	0	0	0	0	0	0	0	0	0
4/26/2024	12:15 PM	0	0	0	0	0	0	0	0	0	0	0	0	0
4/26/2024	12:30 PM	0	0	0	0	0	0	0	0	0	0	0	0	0
4/26/2024	12:45 PM	0	0	0	0	0	0	0	0	0	0	0	0	0
4/26/2024	1:00 PM	0	0	0	0	0	0	0	0	0	0	0	0	0
4/26/2024	1:15 PM	0	0	0	0	0	0	0	0	0	0	0	0	0
4/26/2024	1:30 PM	0	0	0	0	0	0	0	0	0	0	0	0	0
4/26/2024	1:45 PM	0	0	0	0	0	0	0	0	0	0	0	0	0
4/26/2024	2:00 PM	0	0	0	0	0	0	0	0	0	0	0	0	0
4/26/2024	2:15 PM	0	0	0	0	0	0	0	0	0	0	0	0	0
4/26/2024	2:30 PM	0	0	0	0	0	0	0	0	0	0	0	0	0
4/26/2024	2:45 PM	0	0	0	0	0	0	0	0	0	0	0	0	0
4/26/2024	3:00 PM	0	0	0	0	0	0	0	0	0	0	0	0	0
4/26/2024	3:15 PM	0	0	0	0	0	0	0	0	0	0	0	0	0
4/26/2024	3:30 PM	0	0	0	0	0	0	0	0	0	0	0	0	0
4/26/2024	3:45 PM	0	0	0	0	0	0	0	0	0	0	0	0	0
4/26/2024	4:00 PM	0	0	0	0	0	0	0	0	0	0	0	0	0
4/26/2024	4:15 PM	0	0	0	0	0	0	0	0	0	0	0	0	0
4/26/2024	4:30 PM	0	0	0	0	0	0	0	0	0	0	0	0	0
4/26/2024	4:45 PM	0	0	0	0	0	0	0	0	0	0	0	0	0
4/26/2024	5:00 PM	0	0	0	0	0	0	0	0	0	0	0	0	0
4/26/2024	5:15 PM	0	0	0	0	0	0	0	0	0	0	0	0	0
4/26/2024	5:30 PM	0	0	0	0	0	0	0	0	0	0	0	0	0
4/26/2024	5:45 PM	0	0	0	0	0	0	0	0	0	0	0	0	0
4/26/2024	6:00 PM	0	0	0	0	0	0	0	0	0	0	0	0	0
4/26/2024	6:15 PM	0	0	0	0	0	0	0	0	0	0	0	0	0
4/26/2024	6:30 PM	0	0	0	0	0	0	0	0	0	0	0	0	0
4/26/2024	6:45 PM	0	0	0	0	0	0	0	0	0	0	0	0	0
4/26/2024	7:00 PM	0	0	0	0	0	0	0	0	0	0	0	0	0
4/26/2024	7:15 PM	0	0	0	0	0	0	0	0	0	0	0	0	0
4/26/2024	7:30 PM	0	0	0	0	0	0	0	0	0	0	0	0	0
4/26/2024	7:45 PM	0	0	0	0	0	0	0	0	0	0	0	0	0
4/26/2024	8:00 PM	0	0	0	0	0	0	0	0	0	0	0	0	0
4/26/2024	8:15 PM	0	0	0	0	0	0	0	0	0	0	0	0	0
4/26/2024	8:30 PM	0	0	0	0	0	0	0	0	0	0	0	0	0
4/26/2024	8:45 PM	0	0	0	0	0	0	0	0	0	0	0	0	0
4/26/2024	9:00 PM	0	0	0	0	0	0	0	0	0	0	0	0	0
4/26/2024	9:15 PM	0	0	0	0	0	0	0	0	0	0	0	0	0
4/26/2024	9:30 PM	0	0	0	0	0	0	0	0	0	0	0	0	0
4/26/2024	9:45 PM	0	0	0	0	0	0	0	0	0	0	0	0	0
4/26/2024	10:00 PM	0	0	0	0	0	0	0	0	0	0	0	0	0
4/26/2024	10:15 PM	0	0	0	0	0	0	0	0	0	0	0	0	0
4/26/2024	10:30 PM	0	0	0	0	0	0	0	0	0	0	0	0	0
4/26/2024	10:45 PM	0	0	0	0	0	0	0	0	0	0	0	0	0
4/26/2024	11:00 PM	0	0	0	0	0	0	0	0	0	0	0	0	0
4/26/2024	11:15 PM	0	0	0	0	0	0	0	0	0	0	0	0	0
4/26/2024	11:30 PM	0	0	0	0	0	0	0	0	0	0	0	0	0
4/26/2024	11:45 PM	0	0	0	0	0	0	0	0	0	0	0	0	0

4/27/2024	12:00 AM	0	0	0	0	0	0	0	0	0	0	0	0	0
4/27/2024	12:15 AM	0	0	0	0	0	0	0	0	0	0	0	0	0
4/27/2024	12:30 AM	0	0	0	0	0	0	0	0	0	0	0	0	0
4/27/2024	12:45 AM	0	0	0	0	0	0	0	0	0	0	0	0	0
4/27/2024	1:00 AM	0	0	0	0	0	0	0	0	0	0	0	0	0
4/27/2024	1:15 AM	0	0	0	0	0	0	0	0	0	0	0	0	0
4/27/2024	1:30 AM	0	0	0	0	0	0	0	0	0	0	0	0	0
4/27/2024	1:45 AM	0	0	0	0	0	0	0	0	0	0	0	0	0
4/27/2024	2:00 AM	0	0	0	0	0	0	0	0	0	0	0	0	0
4/27/2024	2:15 AM	0	0	0	0	0	0	0	0	0	0	0	0	0
4/27/2024	2:30 AM	0	0	0	0	0	0	0	0	0	0	0	0	0
4/27/2024	2:45 AM	0	0	0	0	0	0	0	0	0	0	0	0	0
4/27/2024	3:00 AM	0	0	0	0	0	0	0	0	0	0	0	0	0
4/27/2024	3:15 AM	0	0	0	0	0	0	0	0	0	0	0	0	0
4/27/2024	3:30 AM	0	0	0	0	0	0	0	0	0	0	0	0	0
4/27/2024	3:45 AM	0	0	0	0	0	0	0	0	0	0	0	0	0
4/27/2024	4:00 AM	0	0	0	0	0	0	0	0	0	0	0	0	0
4/27/2024	4:15 AM	0	0	0	0	0	0	0	0	0	0	0	0	0
4/27/2024	4:30 AM	0	0	0	0	0	0	0	0	0	0	0	0	0
4/27/2024	4:45 AM	0	0	0	0	0	0	0	0	0	0	0	0	0
4/27/2024	5:00 AM	0	0	0	0	0	0	0	0	0	0	0	0	0
4/27/2024	5:15 AM	0	0	0	0	0	0	0	0	0	0	0	0	0
4/27/2024	5:30 AM	0	0	0	0	0	0	0	0	0	0	0	0	0
4/27/2024	5:45 AM	0	0	0	0	0	0	0	0	0	0	0	0	0
4/27/2024	6:00 AM	0	0	0	0	0	0	0	0	0	0	0	0	0
4/27/2024	6:15 AM	0	0	0	0	0	0	0	0	0	0	0	0	0
4/27/2024	6:30 AM	0	0	0	0	0	0	0	0	0	0	0	0	0
4/27/2024	6:45 AM	0	0	0	0	0	0	0	0	0	0	0	0	0
4/27/2024	7:00 AM	0	0	0	0	0	0	0	0	0	0	0	0	0
4/27/2024	7:15 AM	0	0	0	0	0	0	0	0	0	0	0	0	0
4/27/2024	7:30 AM	0	0	0	0	0	0	0	0	0	0	0	0	0
4/27/2024	7:45 AM	0	0	0	0	0	0	0	0	0	0	0	0	0
4/27/2024	8:00 AM	0	0	0	0	0	0	0	0	0	0	0	0	0
4/27/2024	8:15 AM	0	0	0	0	0	0	0	0	0	0	0	0	0
4/27/2024	8:30 AM	0	0	0	0	0	0	0	0	0	0	0	0	0
4/27/2024	8:45 AM	0	0	0	0	0	0	0	0	0	0	0	0	0
4/27/2024	9:00 AM	0	0	0	0	0	0	0	0	0	0	0	0	0
4/27/2024	9:15 AM	0	0	0	0	0	0	0	0	0	0	0	0	0
4/27/2024	9:30 AM	0	0	0	0	0	0	0	0	0	0	0	0	0
4/27/2024	9:45 AM	0	0	0	0	0	0	0	0	0	0	0	0	0
4/27/2024	10:00 AM	0	0	0	0	0	0	0	0	0	0	0	0	0
4/27/2024	10:15 AM	0	0	0	0	0	0	0	0	0	0	0	0	0
4/27/2024	10:30 AM	0	0	0	0	0	0	0	0	0	0	0	0	0
4/27/2024	10:45 AM	0	0	0	0	0	0	0	0	0	0	0	0	0
4/27/2024	11:00 AM	0	0	0	0	0	0	0	0	0	0	0	0	0
4/27/2024	11:15 AM	0	0	0	0	0	0	0	0	0	0	0	0	0
4/27/2024	11:30 AM	0	0	0	0	0	0	0	0	0	0	0	0	0
4/27/2024	11:45 AM	0	0	0	0	0	0	0	0	0	0	0	0	0
4/27/2024	12:00 PM	0	0	0	0	0	0	0	0	0	0	0	0	0
4/27/2024	12:15 PM	0	0	0	0	0	0	0	0	0	0	0	0	0
4/27/2024	12:30 PM	0	0	0	0	0	0	0	0	0	0	0	0	0
4/27/2024	12:45 PM	0	0	0	0	0	0	0	0	0	0	0	0	0
4/27/2024	1:00 PM	0	0	0	0	0	0	0	0	0	0	0	0	0
4/27/2024	1:15 PM	0	0	0	0	0	0	0	0	0	0	0	0	0
4/27/2024	1:30 PM	0	0	0	0	0	0	0	0	0	0	0	0	0
4/27/2024	1:45 PM	0	0	0	0	0	0	0	0	0	0	0	0	0
4/27/2024	2:00 PM	0	0	0	0	0	0	0	0	0	0	0	0	0
4/27/2024	2:15 PM	0	0	0	0	0	0	0	0	0	0	0	0	0
4/27/2024	2:30 PM	0	0	0	0	0	0	0	0	0	0	0	0	0
4/27/2024	2:45 PM	0	0	0	0	0	0	0	0	0	0	0	0	0
4/27/2024	3:00 PM	0	0	0	0	0	0	0	0	0	0	0	0	0
4/27/2024	3:15 PM	0	0	0	0	0	0	0	0	0	0	0	0	0
4/27/2024	3:30 PM	0	0	0	0	0	0	0	0	0	0	0	0	0
4/27/2024	3:45 PM	0	0	0	0	0	0	0	0	0	0	0	0	0
4/27/2024	4:00 PM	0	0	0	0	0	0	0	0	0	0	0	0	0
4/27/2024	4:15 PM	0	0	0	0	0	0	0	0	0	0	0	0	0
4/27/2024	4:30 PM	0	0	0	0	0	0	0	0	0	0	0	0	0
4/27/2024	4:45 PM	0	0	0	0	0	0	0	0	0	0	0	0	0
4/27/2024	5:00 PM	0	0	0	0	0	0	0	0	0	0	0	0	0
4/27/2024	5:15 PM	0	0	0	0	0	0	0	0	0	0	0	0	0
4/27/2024	5:30 PM	0	0	0	0	0	0	0	0	0	0	0	0	0
4/27/2024	5:45 PM	0	0	0	0	0	0	0	0	0	0	0	0	0
4/27/2024	6:00 PM	0	0	0	0	0	0	0	0	0	0	0	0	0
4/27/2024	6:15 PM	0	0	0	0	0	0	0	0	0	0	0	0	0
4/27/2024	6:30 PM	0	0	0	0	0	0	0	0	0	0	0	0	0
4/27/2024	6:45 PM	0	0	0	0	0	0	0	0	0	0	0	0	0
4/27/2024	7:00 PM	0	0	0	0	0	0	0	0	0	0	0	0	0
4/27/2024	7:15 PM	0	0	0	0	0	0	0	0	0	0	0	0	0
4/27/2024	7:30 PM	0	0	0	0	0	0	0	0	0	0	0	0	0
4/27/2024	7:45 PM	0	0	0	0	0	0	0	0	0	0	0	0	0
4/27/2024	8:00 PM	0	0	0	0	0	0	0	0	0	0	0	0	0
4/27/2024	8:15 PM	0	0	0	0	0	0	0	0	0	0	0	0	0
4/27/2024	8:30 PM	0	0	0	0	0	0	0	0	0	0	0	0	0
4/27/2024	8:45 PM	0	0	0	0	0	0	0	0	0	0	0	0	0
4/27/2024	9:00 PM	0	0	0	0	0	0	0	0	0	0	0	0	0
4/27/2024	9:15 PM	0	0	0	0	0	0	0	0	0	0	0	0	0
4/27/2024	9:30 PM	0	0	0	0	0	0	0	0	0	0	0	0	0
4/27/2024	9:45 PM	0	0	0	0	0	0	0	0	0	0	0	0	0
4/27/2024	10:00 PM	0	0	0	0	0	0	0	0	0	0	0	0	0
4/27/2024	10:15 PM	0	0	0	0	0	0	0	0	0	0	0	0	0
4/27/2024	10:30 PM	0	0	0	0	0	0	0	0	0	0	0	0	0
4/27/2024	10:45 PM	0	0	0	0	0	0	0	0	0	0	0	0	0
4/27/2024	11:00 PM	0	0	0	0	0	0	0	0	0	0	0	0	0
4/27/2024	11:15 PM	0	0	0	0	0	0	0	0	0	0	0	0	0
4/27/2024	11:30 PM	0	0	0	0	0	0	0	0	0	0	0	0	0
4/27/2024	11:45 PM	0	0	0	0	0	0	0	0	0	0	0	0	0

EB
File Name:
Start Date: 4/21/2024
Start Time: 0
Site Code: 74 Lane 1 EB
Station ID: 1
Location 1: I-20, west of US-378 Sunset Blvd S/Bound Off-Ramp
Location 2:

Date	Time	1	2	3	4	5	6	7	8	9	10	11	12	13
4/21/2024	12:00 AM	0	40	2	0	0	0	0	0	0	0	0	0	0
4/21/2024	12:15 AM	0	32	2	0	0	0	0	0	0	0	0	0	0
4/21/2024	12:30 AM	0	33	2	0	0	0	0	0	0	0	0	0	0
4/21/2024	12:45 AM	0	31	2	1	0	0	0	0	0	0	0	0	0
4/21/2024	1:00 AM	0	26	2	1	0	0	0	0	0	0	0	0	0
4/21/2024	1:15 AM	0	24	2	1	0	0	0	0	0	0	0	0	0
4/21/2024	1:30 AM	0	18	2	1	0	0	0	0	0	0	0	0	0
4/21/2024	1:45 AM	0	11	1	0	0	0	0	0	0	0	0	0	0
4/21/2024	2:00 AM	0	12	1	0	0	0	0	0	0	0	0	0	0
4/21/2024	2:15 AM	0	9	1	0	0	0	0	0	0	0	0	0	0
4/21/2024	2:30 AM	0	13	2	0	0	0	0	0	0	0	0	0	0
4/21/2024	2:45 AM	0	14	4	0	0	0	0	0	0	0	0	0	0
4/21/2024	3:00 AM	0	15	4	0	0	0	0	0	0	0	0	0	0
4/21/2024	3:15 AM	0	14	3	0	0	0	0	0	0	0	0	0	0
4/21/2024	3:30 AM	0	12	3	0	0	0	0	0	0	0	0	0	0
4/21/2024	3:45 AM	0	15	1	0	0	0	0	0	0	0	0	0	0
4/21/2024	4:00 AM	0	11	1	0	0	0	0	0	0	0	0	0	0
4/21/2024	4:15 AM	0	18	3	0	0	0	0	0	0	0	0	0	0
4/21/2024	4:30 AM	0	19	2	0	0	0	0	0	1	0	0	0	0
4/21/2024	4:45 AM	0	17	2	0	0	0	0	0	1	0	0	0	0
4/21/2024	5:00 AM	0	20	2	0	0	0	0	0	1	0	0	0	0
4/21/2024	5:15 AM	0	19	1	0	0	0	0	0	1	0	0	0	0
4/21/2024	5:30 AM	0	27	2	0	0	0	0	0	0	0	0	0	0
4/21/2024	5:45 AM	0	42	5	0	0	0	0	0	0	0	0	0	0
4/21/2024	6:00 AM	0	58	7	0	0	0	0	0	0	0	0	0	0
4/21/2024	6:15 AM	0	75	13	0	2	0	0	0	0	0	0	0	0
4/21/2024	6:30 AM	0	86	18	0	2	0	0	0	0	0	0	0	0
4/21/2024	6:45 AM	0	84	20	0	2	0	0	0	0	0	0	0	0
4/21/2024	7:00 AM	0	109	26	0	2	0	0	0	0	0	0	0	0
4/21/2024	7:15 AM	0	113	22	0	0	0	0	0	0	0	0	0	0
4/21/2024	7:30 AM	0	122	21	0	1	0	0	0	0	0	0	0	0
4/21/2024	7:45 AM	0	147	24	0	1	0	0	0	0	0	0	0	0
4/21/2024	8:00 AM	0	150	25	0	1	0	0	0	0	0	0	0	0
4/21/2024	8:15 AM	5	176	34	0	1	0	0	0	0	0	0	0	0
4/21/2024	8:30 AM	5	203	36	0	3	0	0	0	1	0	0	0	0
4/21/2024	8:45 AM	5	215	36	0	3	0	0	0	1	0	0	0	0
4/21/2024	9:00 AM	5	236	40	0	3	0	0	0	1	0	0	0	0
4/21/2024	9:15 AM	20	260	39	0	3	0	0	0	1	0	0	0	0
4/21/2024	9:30 AM	20	278	43	0	0	0	0	0	0	0	0	0	0
4/21/2024	9:45 AM	21	312	56	0	1	0	0	0	1	0	0	0	0
4/21/2024	10:00 AM	29	318	68	0	1	0	0	0	1	0	0	0	0
4/21/2024	10:15 AM	23	306	67	0	1	0	0	0	1	0	0	0	0
4/21/2024	10:30 AM	23	320	67	0	3	0	0	0	1	0	0	0	0
4/21/2024	10:45 AM	22	349	76	0	3	0	0	0	0	0	0	0	0
4/21/2024	11:00 AM	14	355	71	0	4	0	0	1	0	0	0	0	0
4/21/2024	11:15 AM	0	400	83	0	5	0	0	1	0	0	0	0	0
4/21/2024	11:30 AM	0	436	97	0	3	0	0	1	0	0	0	0	0
4/21/2024	11:45 AM	0	445	92	0	2	0	0	1	0	0	0	0	0
4/21/2024	12:00 PM	0	506	90	0	3	0	0	0	0	0	0	0	0
4/21/2024	12:15 PM	0	482	91	0	2	0	0	0	0	0	0	0	0
4/21/2024	12:30 PM	1	484	100	0	2	0	0	0	0	0	0	0	0
4/21/2024	12:45 PM	1	497	98	0	2	0	0	0	0	0	0	0	0
4/21/2024	1:00 PM	1	476	109	0	1	0	0	0	0	0	0	0	0
4/21/2024	1:15 PM	1	520	108	1	2	0	0	0	0	0	0	0	0
4/21/2024	1:30 PM	0	506	101	1	2	0	0	0	0	0	0	0	0
4/21/2024	1:45 PM	0	508	114	1	3	0	0	0	0	0	0	0	0
4/21/2024	2:00 PM	1	502	107	1	2	0	0	0	0	0	0	0	0
4/21/2024	2:15 PM	2	460	106	0	3	0	0	0	1	0	0	0	0
4/21/2024	2:30 PM	2	441	99	0	3	0	0	1	1	0	0	0	0
4/21/2024	2:45 PM	3	390	90	0	3	0	0	1	1	0	0	0	0
4/21/2024	3:00 PM	2	395	88	0	3	0	0	1	1	0	0	0	0
4/21/2024	3:15 PM	6	440	96	0	1	0	0	1	0	0	0	0	0
4/21/2024	3:30 PM	6	472	100	0	1	0	0	0	0	0	0	0	0
4/21/2024	3:45 PM	5	530	105	0	1	0	0	1	0	1	0	0	0
4/21/2024	4:00 PM	5	557	119	0	1	0	0	2	0	1	0	0	0
4/21/2024	4:15 PM	0	542	112	0	1	0	0	3	0	1	0	0	0
4/21/2024	4:30 PM	0	525	107	1	1	0	0	3	0	1	0	0	0
4/21/2024	4:45 PM	0	507	94	1	0	0	0	2	0	0	0	0	0
4/21/2024	5:00 PM	0	472	71	1	0	0	0	1	0	0	0	0	0
4/21/2024	5:15 PM	0	465	62	1	0	0	0	2	0	0	0	0	0
4/21/2024	5:30 PM	0	457	62	0	1	0	0	2	0	0	0	0	0
4/21/2024	5:45 PM	0	434	60	0	1	0	0	2	0	0	0	0	0
4/21/2024	6:00 PM	0	397	62	0	1	0	0	2	1	0	0	0	0
4/21/2024	6:15 PM	0	371	60	0	2	0	0	0	1	0	0	0	0
4/21/2024	6:30 PM	0	360	57	0	1	0	0	0	1	0	0	0	0
4/21/2024	6:45 PM	0	337	49	0	1	0	0	0	1	0	0	0	0
4/21/2024	7:00 PM	2	354	50	0	1	0	0	0	0	0	0	0	0
4/21/2024	7:15 PM	2	336	51	0	0	0	0	0	0	0	0	0	0
4/21/2024	7:30 PM	2	297	45	0	0	0	0	0	0	0	0	0	0
4/21/2024	7:45 PM	2	272	39	0	0	0	0	0	0	0	0	0	0
4/21/2024	8:00 PM	1	221	26	0	0	0	0	0	1	0	0	0	0
4/21/2024	8:15 PM	1	195	15	0	0	0	0	0	1	0	0	0	0
4/21/2024	8:30 PM	1	194	7	0	0	0	0	0	2	0	0	0	0
4/21/2024	8:45 PM	1	173	4	0	0	0	0	0	2	0	0	0	0
4/21/2024	9:00 PM	0	157	5	0	0	0	0	0	2	0	0	0	0
4/21/2024	9:15 PM	0	143	8	0	0	0	0	0	2	0	0	0	0
4/21/2024	9:30 PM	0	113	6	0	0	0	0	0	1	0	0	0	0
4/21/2024	9:45 PM	0	97	6	0	0	0	0	0	1	0	0	0	0
4/21/2024	10:00 PM	0	91	4	0	0	0	0	0	0	0	0	0	0
4/21/2024	10:15 PM	0	85	1	0	0	0	0	0	1	0	0	0	0
4/21/2024	10:30 PM	0	83	2	0	0	0	0	0	2	0	0	0	0
4/21/2024	10:45 PM	0	70	2	0	0	0	0	0	2	0	0	0	0
4/21/2024	11:00 PM	0	66	2	0	0	0	0	0	2	0	0	0	0
4/21/2024	11:15 PM	0	55	1	0	0	0	0	0	1	0	0	0	0
4/21/2024	11:30 PM	0	47	0	0	0	0	0	0	0	0	0	0	0
4/21/2024	11:45 PM	0	57	1	0	0	0	0	0	0	0	0	0	0

4/22/2024	12:00 AM	0	48	1	0	0	0	0	0	0	0	0	0
4/22/2024	12:15 AM	0	50	3	0	0	0	0	0	0	0	0	0
4/22/2024	12:30 AM	0	47	3	0	0	0	0	0	0	0	0	0
4/22/2024	12:45 AM	0	39	3	0	0	0	0	0	0	0	0	0
4/22/2024	1:00 AM	0	40	3	0	0	0	0	0	0	0	0	0
4/22/2024	1:15 AM	0	38	3	0	0	0	0	0	0	0	0	0
4/22/2024	1:30 AM	0	34	3	0	0	0	0	0	0	0	0	0
4/22/2024	1:45 AM	0	30	3	0	0	0	0	0	0	0	0	0
4/22/2024	2:00 AM	0	28	3	0	0	0	0	0	0	0	0	0
4/22/2024	2:15 AM	0	20	1	0	0	0	0	0	0	0	0	0
4/22/2024	2:30 AM	0	16	1	0	0	0	0	0	0	0	0	0
4/22/2024	2:45 AM	0	16	2	0	0	0	0	0	0	0	0	0
4/22/2024	3:00 AM	0	13	3	0	0	0	0	0	0	0	0	0
4/22/2024	3:15 AM	0	19	4	0	0	0	0	0	0	0	0	0
4/22/2024	3:30 AM	0	31	5	0	0	0	0	0	0	0	0	0
4/22/2024	3:45 AM	0	43	5	0	0	0	0	0	0	0	0	0
4/22/2024	4:00 AM	0	56	5	0	0	0	0	0	0	0	0	0
4/22/2024	4:15 AM	0	71	9	0	0	0	0	0	0	0	0	0
4/22/2024	4:30 AM	0	78	12	0	0	0	0	0	0	0	0	0
4/22/2024	4:45 AM	0	102	20	0	0	0	0	0	0	0	0	0
4/22/2024	5:00 AM	0	112	30	0	0	0	0	0	0	0	0	0
4/22/2024	5:15 AM	0	142	43	0	0	0	0	0	0	0	0	0
4/22/2024	5:30 AM	0	170	53	0	0	0	0	0	0	0	0	0
4/22/2024	5:45 AM	0	259	67	0	1	0	0	0	0	0	0	0
4/22/2024	6:00 AM	0	371	82	0	1	0	0	0	0	0	0	0
4/22/2024	6:15 AM	0	571	111	0	2	0	0	0	1	0	0	0
4/22/2024	6:30 AM	0	836	163	0	4	0	0	0	1	0	0	0
4/22/2024	6:45 AM	0	1054	207	0	5	0	0	0	1	0	0	0
4/22/2024	7:00 AM	0	1211	260	0	6	0	0	0	1	0	0	0
4/22/2024	7:15 AM	0	1225	256	0	6	0	0	0	0	0	0	0
4/22/2024	7:30 AM	1	1176	231	0	5	0	0	0	0	0	0	0
4/22/2024	7:45 AM	1	1034	213	1	3	0	0	0	0	0	0	0
4/22/2024	8:00 AM	1	901	183	1	3	0	0	0	0	0	0	0
4/22/2024	8:15 AM	1	767	156	1	4	0	0	0	0	0	0	0
4/22/2024	8:30 AM	0	599	149	1	4	0	0	0	0	0	0	0
4/22/2024	8:45 AM	0	494	121	0	7	0	0	0	0	0	0	0
4/22/2024	9:00 AM	0	447	93	1	10	0	0	1	2	0	0	0
4/22/2024	9:15 AM	0	408	99	1	8	0	0	3	2	0	0	0
4/22/2024	9:30 AM	0	408	79	1	8	0	0	4	2	0	0	0
4/22/2024	9:45 AM	0	403	77	1	8	0	0	4	2	0	0	0
4/22/2024	10:00 AM	0	364	77	0	4	0	0	3	0	0	0	0
4/22/2024	10:15 AM	0	334	75	0	4	0	0	2	0	0	0	0
4/22/2024	10:30 AM	0	314	70	0	5	0	0	2	0	0	0	0
4/22/2024	10:45 AM	0	280	65	0	5	0	0	2	1	0	0	0
4/22/2024	11:00 AM	0	287	70	0	6	0	0	3	2	0	0	0
4/22/2024	11:15 AM	0	307	68	0	7	0	0	3	2	0	0	0
4/22/2024	11:30 AM	0	293	80	0	6	0	0	5	2	0	0	0
4/22/2024	11:45 AM	0	305	88	0	3	0	0	5	1	0	0	0
4/22/2024	12:00 PM	1	286	77	0	2	0	0	5	0	0	0	0
4/22/2024	12:15 PM	1	261	78	0	2	0	0	5	0	0	0	0
4/22/2024	12:30 PM	1	294	84	0	1	0	0	2	0	0	0	0
4/22/2024	12:45 PM	1	304	79	0	4	0	0	2	0	0	0	0
4/22/2024	1:00 PM	0	312	79	0	5	0	0	2	1	0	0	0
4/22/2024	1:15 PM	0	344	86	0	4	0	0	2	1	0	0	0
4/22/2024	1:30 PM	5	350	78	0	6	0	0	2	2	0	0	0
4/22/2024	1:45 PM	5	357	80	0	3	0	0	3	2	0	0	0
4/22/2024	2:00 PM	5	399	85	1	2	0	0	2	1	0	0	0
4/22/2024	2:15 PM	6	383	81	2	4	0	0	1	2	0	0	0
4/22/2024	2:30 PM	2	387	90	2	4	0	0	1	2	0	0	0
4/22/2024	2:45 PM	2	414	101	2	5	0	0	2	3	0	0	0
4/22/2024	3:00 PM	2	431	106	1	6	0	0	3	5	0	0	0
4/22/2024	3:15 PM	2	494	105	0	7	0	0	3	4	0	0	0
4/22/2024	3:30 PM	1	524	95	0	5	0	0	3	3	0	0	0
4/22/2024	3:45 PM	1	517	93	0	4	1	0	2	2	0	0	0
4/22/2024	4:00 PM	1	541	96	0	4	1	0	1	0	0	0	0
4/22/2024	4:15 PM	1	570	116	0	3	1	0	4	1	0	0	0
4/22/2024	4:30 PM	1	614	138	0	3	1	0	5	1	0	0	0
4/22/2024	4:45 PM	2	609	136	0	3	1	0	4	1	0	0	0
4/22/2024	5:00 PM	2	540	128	0	2	1	0	4	2	0	0	0
4/22/2024	5:15 PM	1	485	113	0	0	1	0	2	1	0	0	0
4/22/2024	5:30 PM	1	401	87	0	1	1	0	1	2	0	0	0
4/22/2024	5:45 PM	0	372	78	0	1	0	0	1	2	0	0	0
4/22/2024	6:00 PM	0	344	68	0	1	0	0	1	1	0	0	0
4/22/2024	6:15 PM	0	281	45	0	1	0	0	0	2	0	0	0
4/22/2024	6:30 PM	0	250	37	0	0	0	0	0	1	0	0	0
4/22/2024	6:45 PM	0	217	26	0	0	0	0	2	1	0	0	0
4/22/2024	7:00 PM	0	221	25	0	0	0	0	2	1	0	0	0
4/22/2024	7:15 PM	0	217	27	0	0	0	0	2	0	0	0	0
4/22/2024	7:30 PM	0	184	23	0	0	0	0	2	1	0	0	0
4/22/2024	7:45 PM	0	162	18	0	0	0	0	0	3	0	0	0
4/22/2024	8:00 PM	0	119	13	0	0	0	0	0	4	0	0	0
4/22/2024	8:15 PM	0	90	9	0	1	0	0	0	6	0	0	0
4/22/2024	8:30 PM	0	79	12	0	1	0	0	0	5	0	0	0
4/22/2024	8:45 PM	0	72	10	0	1	0	0	0	3	0	0	0
4/22/2024	9:00 PM	0	68	6	0	1	0	0	0	4	0	0	0
4/22/2024	9:15 PM	0	70	5	0	0	0	0	0	2	0	0	0
4/22/2024	9:30 PM	0	66	1	0	0	0	0	0	2	0	0	0
4/22/2024	9:45 PM	0	61	1	0	0	0	0	0	3	0	0	0
4/22/2024	10:00 PM	0	53	1	0	0	0	0	0	1	0	0	0
4/22/2024	10:15 PM	0	46	1	0	0	0	0	0	1	0	0	0
4/22/2024	10:30 PM	0	40	1	0	0	0	0	0	1	0	0	0
4/22/2024	10:45 PM	0	32	1	0	0	0	0	0	1	0	0	0
4/22/2024	11:00 PM	0	29	1	0	0	0	0	0	1	0	0	0
4/22/2024	11:15 PM	0	19	1	0	0	0	0	0	1	0	0	0
4/22/2024	11:30 PM	0	9	1	0	0	0	0	0	1	0	0	0
4/22/2024	11:45 PM	0	9	1	0	0	0	0	0	0	0	0	0

4/23/2024	12:00 AM	0	5	1	0	0	0	0	0	1	0	0	0	0
4/23/2024	12:15 AM	0	3	1	0	0	0	0	0	1	0	0	0	0
4/23/2024	12:30 AM	0	4	0	0	0	0	0	0	3	0	0	0	0
4/23/2024	12:45 AM	0	2	0	0	0	0	0	0	3	0	0	0	0
4/23/2024	1:00 AM	0	2	0	0	0	0	0	0	2	0	0	0	0
4/23/2024	1:15 AM	0	2	0	0	0	0	0	0	3	0	0	0	0
4/23/2024	1:30 AM	0	3	0	0	0	0	0	0	1	0	0	0	0
4/23/2024	1:45 AM	0	3	0	0	0	0	0	0	1	0	0	0	0
4/23/2024	2:00 AM	0	5	0	0	0	0	0	0	1	0	0	0	0
4/23/2024	2:15 AM	0	11	0	0	0	0	0	0	0	0	0	0	0
4/23/2024	2:30 AM	0	14	0	0	0	0	0	0	0	0	0	0	0
4/23/2024	2:45 AM	0	18	1	0	0	0	0	0	0	0	0	0	0
4/23/2024	3:00 AM	0	21	1	0	0	0	0	0	0	0	0	0	0
4/23/2024	3:15 AM	0	19	1	0	0	0	0	0	0	0	0	0	0
4/23/2024	3:30 AM	0	16	1	0	1	0	0	0	1	0	0	0	0
4/23/2024	3:45 AM	0	22	0	0	1	0	0	0	1	0	0	0	0
4/23/2024	4:00 AM	0	25	0	0	1	0	0	0	2	0	0	0	0
4/23/2024	4:15 AM	0	32	0	0	1	0	0	0	2	0	0	0	0
4/23/2024	4:30 AM	0	43	1	0	1	0	0	0	1	0	0	0	0
4/23/2024	4:45 AM	0	68	3	0	1	0	0	0	1	0	0	0	0
4/23/2024	5:00 AM	0	93	3	0	1	0	0	0	0	0	0	0	0
4/23/2024	5:15 AM	0	153	14	0	1	0	0	0	0	0	0	0	0
4/23/2024	5:30 AM	0	245	47	0	0	0	0	0	0	0	0	0	0
4/23/2024	5:45 AM	0	380	96	0	2	0	0	0	0	0	0	0	0
4/23/2024	6:00 AM	0	524	149	0	6	0	0	0	0	0	0	0	0
4/23/2024	6:15 AM	1	642	197	0	7	0	0	0	0	0	0	0	0
4/23/2024	6:30 AM	1	816	221	0	11	0	0	1	1	0	0	0	0
4/23/2024	6:45 AM	1	910	243	0	12	0	0	1	1	0	0	0	0
4/23/2024	7:00 AM	1	953	242	0	8	0	0	3	1	0	0	0	0
4/23/2024	7:15 AM	1	1038	249	0	10	0	0	3	1	0	0	0	0
4/23/2024	7:30 AM	2	1045	252	0	8	0	0	7	0	0	0	0	0
4/23/2024	7:45 AM	3	975	243	0	9	1	0	8	1	0	0	0	0
4/23/2024	8:00 AM	3	895	239	0	12	1	0	7	1	0	0	0	0
4/23/2024	8:15 AM	2	724	196	0	9	1	0	7	1	0	0	0	0
4/23/2024	8:30 AM	1	544	171	0	11	1	0	2	1	0	0	0	0
4/23/2024	8:45 AM	0	469	129	0	10	0	0	1	2	0	0	0	0
4/23/2024	9:00 AM	0	413	110	1	7	0	0	1	2	0	0	0	0
4/23/2024	9:15 AM	1	393	111	1	8	0	0	1	4	0	0	0	0
4/23/2024	9:30 AM	2	368	91	1	5	0	0	1	4	0	0	0	0
4/23/2024	9:45 AM	2	341	91	1	4	0	0	1	4	0	0	0	0
4/23/2024	10:00 AM	2	333	88	0	7	0	0	0	5	0	0	0	0
4/23/2024	10:15 AM	1	330	85	0	9	0	0	0	4	0	0	0	0
4/23/2024	10:30 AM	1	312	97	0	9	0	0	0	4	0	0	0	0
4/23/2024	10:45 AM	1	288	101	0	8	0	0	0	2	0	0	0	0
4/23/2024	11:00 AM	1	279	95	0	7	0	0	0	2	0	0	0	0
4/23/2024	11:15 AM	2	285	92	1	8	0	0	0	1	0	0	0	0
4/23/2024	11:30 AM	1	288	85	1	7	0	0	1	1	0	0	0	0
4/23/2024	11:45 AM	1	286	73	1	6	0	0	1	1	0	0	0	0
4/23/2024	12:00 PM	1	293	73	1	4	0	0	1	1	0	0	0	0
4/23/2024	12:15 PM	0	276	73	0	0	0	0	1	2	0	0	0	0
4/23/2024	12:30 PM	0	308	79	1	2	0	0	0	2	0	0	0	0
4/23/2024	12:45 PM	0	318	82	1	3	0	0	0	3	0	0	0	0
4/23/2024	1:00 PM	0	323	82	1	4	0	0	0	2	0	0	0	0
4/23/2024	1:15 PM	0	348	89	1	4	0	0	0	3	0	0	0	0
4/23/2024	1:30 PM	0	324	91	0	4	0	0	0	4	0	0	0	0
4/23/2024	1:45 PM	0	339	100	0	3	0	0	0	4	1	0	0	0
4/23/2024	2:00 PM	1	369	111	2	4	0	0	0	4	1	0	0	0
4/23/2024	2:15 PM	1	370	114	2	6	0	0	0	2	1	0	0	0
4/23/2024	2:30 PM	1	390	116	2	6	0	0	1	1	1	0	0	0
4/23/2024	2:45 PM	2	421	136	2	10	0	0	1	2	0	0	0	0
4/23/2024	3:00 PM	1	428	138	0	10	0	0	2	2	0	0	0	0
4/23/2024	3:15 PM	2	463	142	0	8	0	0	2	2	0	0	0	0
4/23/2024	3:30 PM	2	487	156	0	6	0	0	1	2	0	0	0	0
4/23/2024	3:45 PM	1	505	144	0	4	0	0	1	0	0	0	0	0
4/23/2024	4:00 PM	1	542	157	1	4	0	0	0	0	0	0	0	0
4/23/2024	4:15 PM	1	544	173	1	5	0	0	0	0	0	0	0	0
4/23/2024	4:30 PM	1	594	173	1	5	0	0	0	0	0	0	0	0
4/23/2024	4:45 PM	1	577	176	1	3	0	0	0	0	0	0	0	0
4/23/2024	5:00 PM	2	535	152	0	2	0	0	0	0	0	0	0	0
4/23/2024	5:15 PM	2	489	124	3	2	0	0	0	0	0	0	0	0
4/23/2024	5:30 PM	2	433	94	3	4	0	0	0	0	0	0	0	0
4/23/2024	5:45 PM	4	386	78	3	4	0	0	1	2	0	0	0	0
4/23/2024	6:00 PM	3	342	75	3	5	0	0	1	2	0	0	0	0
4/23/2024	6:15 PM	2	308	62	0	6	0	0	1	2	0	0	0	0
4/23/2024	6:30 PM	2	256	60	0	5	0	0	1	3	0	0	0	0
4/23/2024	6:45 PM	0	219	50	0	5	0	0	0	1	0	0	0	0
4/23/2024	7:00 PM	0	221	47	0	3	0	0	0	1	0	0	0	0
4/23/2024	7:15 PM	0	203	52	0	2	0	0	0	1	0	0	0	0
4/23/2024	7:30 PM	0	179	42	0	1	0	0	0	0	0	0	0	0
4/23/2024	7:45 PM	0	165	36	0	1	0	0	0	1	0	0	0	0
4/23/2024	8:00 PM	0	119	26	0	1	0	0	0	2	0	0	0	0
4/23/2024	8:15 PM	0	115	24	0	0	0	0	0	2	0	0	0	0
4/23/2024	8:30 PM	0	96	26	0	0	0	0	0	2	0	0	0	0
4/23/2024	8:45 PM	0	90	24	0	0	0	0	0	1	0	0	0	0
4/23/2024	9:00 PM	0	78	19	0	0	0	0	0	0	0	0	0	0
4/23/2024	9:15 PM	0	72	12	0	1	0	0	0	0	0	0	0	0
4/23/2024	9:30 PM	0	64	7	0	1	0	0	0	2	0	0	0	0
4/23/2024	9:45 PM	0	49	5	0	1	0	0	0	2	0	0	0	0
4/23/2024	10:00 PM	0	41	4	0	1	0	0	0	2	0	0	0	0
4/23/2024	10:15 PM	0	20	1	0	0	0	0	0	2	0	0	0	0
4/23/2024	10:30 PM	0	14	1	0	0	0	0	0	0	0	0	0	0
4/23/2024	10:45 PM	0	15	1	0	0	0	0	0	0	0	0	0	0
4/23/2024	11:00 PM	0	16	1	0	0	0	0	0	0	0	0	0	0
4/23/2024	11:15 PM	0	14	1	0	0	0	0	0	0	0	0	0	0
4/23/2024	11:30 PM	0	11	1	0	0	0	0	0	0	0	0	0	0
4/23/2024	11:45 PM	0	5	0	0	0	0	0	0	0	0	0	0	0

4/24/2024	12:00 AM	0	1	0	0	0	0	0	0	0	0	0	0
4/24/2024	12:15 AM	0	1	0	0	0	0	0	0	0	0	0	0
4/24/2024	12:30 AM	0	2	0	0	0	0	0	0	0	0	0	0
4/24/2024	12:45 AM	0	4	0	0	0	0	0	0	0	0	0	0
4/24/2024	1:00 AM	0	8	1	0	0	0	0	0	0	0	0	0
4/24/2024	1:15 AM	0	8	1	0	0	0	0	0	0	0	0	0
4/24/2024	1:30 AM	0	12	1	0	0	0	0	0	0	0	0	0
4/24/2024	1:45 AM	0	14	1	0	0	0	0	0	0	0	0	0
4/24/2024	2:00 AM	0	11	0	0	0	0	0	0	0	0	0	0
4/24/2024	2:15 AM	0	12	0	0	0	0	0	0	0	0	0	0
4/24/2024	2:30 AM	0	9	1	0	0	0	0	0	1	0	0	0
4/24/2024	2:45 AM	2	8	1	0	0	0	0	0	1	0	0	0
4/24/2024	3:00 AM	2	9	1	0	0	0	0	0	1	0	0	0
4/24/2024	3:15 AM	2	11	2	0	0	0	0	0	1	0	0	0
4/24/2024	3:30 AM	2	11	1	0	0	0	0	0	0	0	0	0
4/24/2024	3:45 AM	0	15	2	0	1	0	0	0	0	0	0	0
4/24/2024	4:00 AM	0	24	6	0	2	0	0	0	0	0	0	0
4/24/2024	4:15 AM	0	35	8	0	2	0	0	0	0	0	0	0
4/24/2024	4:30 AM	0	57	13	0	2	0	0	0	0	0	0	0
4/24/2024	4:45 AM	0	90	20	0	1	0	0	0	0	0	0	0
4/24/2024	5:00 AM	0	113	26	0	0	0	0	0	0	0	0	0
4/24/2024	5:15 AM	0	148	30	0	1	0	0	0	0	0	0	0
4/24/2024	5:30 AM	0	222	43	0	3	0	0	0	0	0	0	0
4/24/2024	5:45 AM	0	334	90	0	3	0	0	0	0	0	0	0
4/24/2024	6:00 AM	0	498	142	0	10	0	0	0	0	0	0	0
4/24/2024	6:15 AM	1	660	228	0	10	0	0	0	0	0	0	0
4/24/2024	6:30 AM	1	845	270	0	14	0	0	0	0	0	0	0
4/24/2024	6:45 AM	1	976	289	0	17	0	0	0	0	0	0	0
4/24/2024	7:00 AM	1	1052	303	0	12	0	0	0	1	0	0	0
4/24/2024	7:15 AM	1	1093	275	0	12	0	0	1	1	0	0	0
4/24/2024	7:30 AM	1	1076	274	0	8	0	0	2	1	0	0	0
4/24/2024	7:45 AM	3	983	249	0	7	1	0	4	2	0	0	0
4/24/2024	8:00 AM	6	834	231	0	6	1	0	6	2	0	0	0
4/24/2024	8:15 AM	5	702	211	1	7	1	0	5	4	0	0	0
4/24/2024	8:30 AM	5	530	175	1	6	1	0	5	4	0	0	0
4/24/2024	8:45 AM	4	441	159	1	6	0	0	3	3	0	0	0
4/24/2024	9:00 AM	1	401	121	1	6	0	0	1	2	0	0	0
4/24/2024	9:15 AM	2	372	106	0	7	0	0	1	0	0	0	0
4/24/2024	9:30 AM	2	340	111	0	6	0	0	0	1	0	0	0
4/24/2024	9:45 AM	1	310	103	0	4	0	0	1	1	0	0	0
4/24/2024	10:00 AM	1	294	103	0	4	0	0	2	1	0	0	0
4/24/2024	10:15 AM	0	275	96	0	2	1	0	2	1	0	0	0
4/24/2024	10:30 AM	0	293	84	0	4	1	0	2	1	0	0	0
4/24/2024	10:45 AM	1	293	85	0	6	1	0	1	1	0	0	0
4/24/2024	11:00 AM	1	294	84	1	5	1	0	1	1	0	0	0
4/24/2024	11:15 AM	2	297	86	1	5	0	0	1	1	0	0	0
4/24/2024	11:30 AM	2	281	89	1	6	0	0	2	0	0	0	0
4/24/2024	11:45 AM	1	299	78	1	5	0	0	3	1	0	0	0
4/24/2024	12:00 PM	2	320	81	0	9	0	0	2	1	0	0	0
4/24/2024	12:15 PM	1	329	81	0	10	0	0	3	2	0	0	0
4/24/2024	12:30 PM	1	328	99	0	8	0	0	3	2	0	0	0
4/24/2024	12:45 PM	1	334	117	0	11	0	0	2	1	0	0	0
4/24/2024	1:00 PM	0	348	135	0	8	0	0	2	2	0	0	0
4/24/2024	1:15 PM	0	344	131	0	7	0	0	2	1	0	0	0
4/24/2024	1:30 PM	0	365	110	0	9	0	0	1	2	0	0	0
4/24/2024	1:45 PM	1	367	99	0	7	0	0	1	2	1	0	0
4/24/2024	2:00 PM	3	360	88	0	11	0	0	2	2	1	0	0
4/24/2024	2:15 PM	5	394	104	0	14	0	0	2	3	1	0	0
4/24/2024	2:30 PM	5	423	124	0	12	1	0	3	2	1	0	0
4/24/2024	2:45 PM	4	438	136	0	11	1	0	3	2	0	0	0
4/24/2024	3:00 PM	3	467	148	0	8	1	0	2	1	0	0	0
4/24/2024	3:15 PM	1	503	138	0	7	1	0	1	0	0	0	0
4/24/2024	3:30 PM	1	491	132	0	7	0	0	0	0	0	0	0
4/24/2024	3:45 PM	2	508	138	0	8	0	0	2	0	0	0	0
4/24/2024	4:00 PM	1	520	139	0	8	0	0	2	1	0	0	0
4/24/2024	4:15 PM	1	550	165	0	6	0	0	3	1	0	0	0
4/24/2024	4:30 PM	1	614	169	0	6	0	0	3	2	0	0	0
4/24/2024	4:45 PM	1	609	173	0	4	1	0	1	2	0	0	0
4/24/2024	5:00 PM	1	585	164	0	5	1	0	1	1	0	0	0
4/24/2024	5:15 PM	1	501	149	0	5	1	0	0	5	0	0	0
4/24/2024	5:30 PM	2	443	139	0	8	1	0	0	4	0	0	0
4/24/2024	5:45 PM	1	424	117	0	8	0	0	0	5	0	0	0
4/24/2024	6:00 PM	2	404	103	0	6	0	0	1	6	0	0	0
4/24/2024	6:15 PM	6	370	83	0	6	0	0	3	2	0	0	0
4/24/2024	6:30 PM	5	341	67	0	2	0	0	3	2	0	0	0
4/24/2024	6:45 PM	6	292	58	0	2	0	0	3	1	0	0	0
4/24/2024	7:00 PM	6	254	56	0	1	0	0	2	0	0	0	0
4/24/2024	7:15 PM	3	240	50	0	2	0	0	0	0	0	0	0
4/24/2024	7:30 PM	3	203	51	0	2	0	0	1	0	0	0	0
4/24/2024	7:45 PM	2	181	42	0	2	0	0	1	0	0	0	0
4/24/2024	8:00 PM	1	153	29	0	2	0	0	1	0	0	0	0
4/24/2024	8:15 PM	0	129	22	0	1	0	0	1	0	0	0	0
4/24/2024	8:30 PM	0	99	19	0	1	0	0	0	0	0	0	0
4/24/2024	8:45 PM	0	80	20	0	2	0	0	0	0	0	0	0
4/24/2024	9:00 PM	0	61	20	0	2	0	0	1	0	0	0	0
4/24/2024	9:15 PM	0	48	22	0	1	0	0	1	0	0	0	0
4/24/2024	9:30 PM	0	46	18	0	1	0	0	1	0	0	0	0
4/24/2024	9:45 PM	0	37	15	0	0	0	0	1	0	0	0	0
4/24/2024	10:00 PM	0	38	17	0	0	0	0	0	0	0	0	0
4/24/2024	10:15 PM	0	36	12	0	0	0	0	0	0	0	0	0
4/24/2024	10:30 PM	0	35	11	0	0	0	0	0	0	0	0	0
4/24/2024	10:45 PM	0	32	9	0	0	0	0	0	0	0	0	0
4/24/2024	11:00 PM	0	27	3	0	0	0	0	0	0	0	0	0
4/24/2024	11:15 PM	0	21	3	0	0	0	0	0	0	0	0	0
4/24/2024	11:30 PM	0	14	2	0	0	0	0	0	0	0	0	0
4/24/2024	11:45 PM	0	12	2	0	0	0	0	0	0	0	0	0

4/25/2024	12:00 AM	0	11	5	0	0	0	0	0	0	0	0	0
4/25/2024	12:15 AM	0	11	3	0	0	0	0	0	0	0	0	0
4/25/2024	12:30 AM	0	12	3	0	0	0	0	1	0	0	0	0
4/25/2024	12:45 AM	0	13	3	0	0	0	0	1	0	0	0	0
4/25/2024	1:00 AM	0	9	1	0	0	0	0	1	0	0	0	0
4/25/2024	1:15 AM	0	8	1	0	0	0	0	1	0	0	0	0
4/25/2024	1:30 AM	0	8	1	0	0	0	0	0	0	0	0	0
4/25/2024	1:45 AM	0	11	1	0	0	0	0	0	0	0	0	0
4/25/2024	2:00 AM	0	13	0	0	0	0	0	0	0	0	0	0
4/25/2024	2:15 AM	0	12	0	0	0	0	0	0	0	0	0	0
4/25/2024	2:30 AM	0	12	0	0	0	0	0	0	0	0	0	0
4/25/2024	2:45 AM	0	11	0	0	0	0	0	0	0	0	0	0
4/25/2024	3:00 AM	0	10	0	0	1	0	0	0	0	0	0	0
4/25/2024	3:15 AM	0	12	1	0	1	0	0	0	0	0	0	0
4/25/2024	3:30 AM	0	14	1	0	1	0	0	0	1	0	0	0
4/25/2024	3:45 AM	0	16	3	0	1	0	0	0	2	0	0	0
4/25/2024	4:00 AM	0	23	6	0	0	0	0	0	2	0	0	0
4/25/2024	4:15 AM	0	27	9	0	0	0	0	0	2	0	0	0
4/25/2024	4:30 AM	0	43	18	0	0	0	0	0	1	0	0	0
4/25/2024	4:45 AM	0	73	27	0	1	0	0	0	1	0	0	0
4/25/2024	5:00 AM	0	99	36	0	1	0	0	0	1	0	0	0
4/25/2024	5:15 AM	0	140	60	0	1	0	0	0	1	0	0	0
4/25/2024	5:30 AM	0	197	103	0	1	0	0	0	1	0	0	0
4/25/2024	5:45 AM	0	308	161	0	1	1	0	0	1	0	0	0
4/25/2024	6:00 AM	0	475	224	0	6	1	0	1	1	0	0	0
4/25/2024	6:15 AM	1	635	258	0	7	1	0	1	1	0	0	0
4/25/2024	6:30 AM	3	842	290	0	11	1	0	1	1	0	0	0
4/25/2024	6:45 AM	3	1025	302	0	16	0	0	2	0	0	0	0
4/25/2024	7:00 AM	3	1148	302	0	12	0	0	2	0	0	0	0
4/25/2024	7:15 AM	2	1217	315	0	14	0	0	2	0	0	0	0
4/25/2024	7:30 AM	2	1195	291	0	13	0	0	2	0	0	0	0
4/25/2024	7:45 AM	4	1061	267	0	10	0	0	5	0	0	0	0
4/25/2024	8:00 AM	5	906	248	0	14	0	0	4	3	0	0	0
4/25/2024	8:15 AM	5	740	214	0	15	0	0	4	3	1	0	0	0
4/25/2024	8:30 AM	3	620	187	0	13	0	0	4	3	1	0	0	0
4/25/2024	8:45 AM	1	564	167	0	10	0	0	0	5	1	0	0	0
4/25/2024	9:00 AM	0	480	140	0	6	0	0	0	4	1	0	0	0
4/25/2024	9:15 AM	0	461	133	0	3	0	0	1	4	0	0	0	0
4/25/2024	9:30 AM	0	391	134	0	3	0	0	1	5	0	0	0	0
4/25/2024	9:45 AM	0	347	120	0	4	0	0	3	5	0	0	0	0
4/25/2024	10:00 AM	1	353	118	0	4	0	0	3	3	0	0	0	0
4/25/2024	10:15 AM	1	348	109	0	6	0	0	2	4	0	0	0	0
4/25/2024	10:30 AM	1	370	106	0	6	0	0	3	3	0	0	0	0
4/25/2024	10:45 AM	1	366	115	0	8	0	0	1	1	0	0	0	0
4/25/2024	11:00 AM	1	333	115	0	8	0	0	2	3	0	0	0	0
4/25/2024	11:15 AM	1	317	121	0	5	1	0	2	2	0	0	0	0
4/25/2024	11:30 AM	1	316	113	0	5	1	0	2	3	0	0	0	0
4/25/2024	11:45 AM	3	317	111	0	3	2	0	2	3	0	0	0	0
4/25/2024	12:00 PM	2	357	114	0	3	2	0	1	3	0	0	0	0
4/25/2024	12:15 PM	3	375	112	0	4	1	1	1	4	0	0	0	0
4/25/2024	12:30 PM	4	378	119	0	4	1	1	1	3	0	0	0	0
4/25/2024	12:45 PM	3	373	128	1	6	0	1	2	4	0	0	0	0
4/25/2024	1:00 PM	3	389	123	1	9	0	1	2	3	0	0	0	0
4/25/2024	1:15 PM	2	405	120	1	10	0	0	2	3	0	0	0	0
4/25/2024	1:30 PM	3	418	124	1	14	0	0	2	3	0	0	0	0
4/25/2024	1:45 PM	3	447	107	0	12	0	0	1	2	0	0	0	0
4/25/2024	2:00 PM	3	425	112	0	8	0	0	1	2	0	0	0	0
4/25/2024	2:15 PM	4	431	114	0	9	0	0	2	2	0	0	0	0
4/25/2024	2:30 PM	2	450	130	0	5	0	0	2	2	0	0	0	0
4/25/2024	2:45 PM	2	472	137	0	5	0	0	2	3	0	0	0	0
4/25/2024	3:00 PM	3	538	146	0	6	0	0	2	3	0	0	0	0
4/25/2024	3:15 PM	2	568	149	0	3	0	0	1	3	0	0	0	0
4/25/2024	3:30 PM	2	598	142	0	5	0	0	1	4	0	0	0	0
4/25/2024	3:45 PM	1	620	155	0	6	0	0	1	4	0	0	0	0
4/25/2024	4:00 PM	1	617	158	0	7	0	0	2	4	0	0	0	0
4/25/2024	4:15 PM	2	630	185	0	9	0	0	2	3	0	0	0	0
4/25/2024	4:30 PM	3	671	203	0	7	0	0	1	3	0	0	0	0
4/25/2024	4:45 PM	4	666	205	0	5	0	0	1	2	0	0	0	0
4/25/2024	5:00 PM	3	627	197	0	4	0	0	1	1	0	0	0	0
4/25/2024	5:15 PM	2	601	165	0	5	0	0	1	2	0	0	0	0
4/25/2024	5:30 PM	1	509	131	0	4	0	0	1	1	0	0	0	0
4/25/2024	5:45 PM	0	447	114	0	6	0	0	1	1	0	0	0	0
4/25/2024	6:00 PM	0	426	108	1	7	0	0	1	1	0	0	0	0
4/25/2024	6:15 PM	0	392	97	1	5	0	0	2	0	0	0	0	0
4/25/2024	6:30 PM	0	381	87	1	5	0	0	2	0	0	0	0	0
4/25/2024	6:45 PM	1	346	74	1	4	0	0	2	0	0	0	0	0
4/25/2024	7:00 PM	1	319	57	0	3	0	0	2	0	0	0	0	0
4/25/2024	7:15 PM	1	273	55	0	2	0	0	1	0	0	0	0	0
4/25/2024	7:30 PM	1	221	50	0	2	0	0	1	1	0	0	0	0
4/25/2024	7:45 PM	0	195	43	0	1	0	0	1	1	0	0	0	0
4/25/2024	8:00 PM	0	164	36	0	1	0	0	0	1	0	0	0	0
4/25/2024	8:15 PM	0	140	29	0	1	0	0	0	1	0	0	0	0
4/25/2024	8:30 PM	0	121	23	0	3	0	0	0	0	0	0	0	0
4/25/2024	8:45 PM	0	118	21	0	3	0	0	0	0	0	0	0	0
4/25/2024	9:00 PM	0	112	24	0	2	0	0	0	0	0	0	0	0
4/25/2024	9:15 PM	0	112	24	0	3	0	0	0	0	0	0	0	0
4/25/2024	9:30 PM	0	105	23	0	2	0	0	1	0	0	0	0	0
4/25/2024	9:45 PM	0	85	22	0	3	0	0	1	0	0	0	0	0
4/25/2024	10:00 PM	0	65	21	0	3	0	0	1	0	0	0	0	0
4/25/2024	10:15 PM	0	47	18	0	2	0	0	1	0	0	0	0	0
4/25/2024	10:30 PM	0	35	16	0	1	0	0	0	0	0	0	0	0
4/25/2024	10:45 PM	0	32	14	0	0	0	0	0	0	0	0	0	0
4/25/2024	11:00 PM	0	26	11	0	0	0	0	0	0	0	0	0	0
4/25/2024	11:15 PM	0	19	8	0	0	0	0	0	0	0	0	0	0
4/25/2024	11:30 PM	0	13	5	0	0	0	0	0	0	0	0	0	0
4/25/2024	11:45 PM	0	6	3	0	0	0	0	0	0	0	0	0	0

4/26/2024	12:00 AM	0	33	2	0	0	0	0	0	2	0	0	0	0
4/26/2024	12:15 AM	0	27	2	0	0	0	0	0	1	0	0	0	0
4/26/2024	12:30 AM	0	22	1	0	0	0	0	0	1	0	0	0	0
4/26/2024	12:45 AM	0	17	0	0	0	0	0	0	0	0	0	0	0
4/26/2024	1:00 AM	0	17	0	0	0	0	0	0	0	0	0	0	0
4/26/2024	1:15 AM	0	19	0	0	0	0	0	0	0	0	0	0	0
4/26/2024	1:30 AM	0	15	0	0	0	0	0	0	0	0	0	0	0
4/26/2024	1:45 AM	0	17	0	0	0	0	0	0	0	0	0	0	0
4/26/2024	2:00 AM	0	15	0	0	0	0	0	0	0	0	0	0	0
4/26/2024	2:15 AM	0	17	0	0	0	0	0	0	0	0	0	0	0
4/26/2024	2:30 AM	0	20	2	0	0	0	0	0	0	0	0	0	0
4/26/2024	2:45 AM	0	21	3	0	0	0	0	0	0	0	0	0	0
4/26/2024	3:00 AM	0	22	3	0	0	0	0	0	0	0	0	0	0
4/26/2024	3:15 AM	0	21	4	0	0	0	0	0	0	0	0	0	0
4/26/2024	3:30 AM	1	25	3	0	0	0	0	0	0	0	0	0	0
4/26/2024	3:45 AM	1	28	4	0	0	0	0	0	0	0	0	0	0
4/26/2024	4:00 AM	1	37	4	0	0	0	0	0	0	0	0	0	0
4/26/2024	4:15 AM	1	50	6	0	0	0	0	0	0	0	0	0	0
4/26/2024	4:30 AM	0	64	7	0	1	0	0	0	0	0	0	0	0
4/26/2024	4:45 AM	0	85	7	0	2	0	0	0	0	0	0	0	0
4/26/2024	5:00 AM	0	121	17	0	2	0	0	0	0	0	0	0	0
4/26/2024	5:15 AM	0	162	23	0	3	0	0	0	0	0	0	0	0
4/26/2024	5:30 AM	0	223	55	0	2	0	0	0	0	0	0	0	0
4/26/2024	5:45 AM	0	309	109	0	3	0	0	0	0	0	0	0	0
4/26/2024	6:00 AM	1	416	144	0	4	1	0	0	0	0	0	0	0
4/26/2024	6:15 AM	1	545	190	0	4	1	0	1	0	0	0	0	0
4/26/2024	6:30 AM	5	767	227	0	11	1	0	1	0	0	0	0	0
4/26/2024	6:45 AM	5	978	237	1	9	1	0	1	0	0	0	0	0
4/26/2024	7:00 AM	5	1133	272	1	12	0	0	1	0	0	0	0	0
4/26/2024	7:15 AM	6	1185	280	2	12	0	0	1	0	0	0	0	0
4/26/2024	7:30 AM	3	1110	261	2	9	0	0	2	0	0	0	0	0
4/26/2024	7:45 AM	4	988	243	3	13	0	0	2	3	0	0	0	0
4/26/2024	8:00 AM	3	865	220	3	12	1	0	3	3	0	0	0	0
4/26/2024	8:15 AM	2	766	194	2	12	1	0	2	3	0	0	0	0
4/26/2024	8:30 AM	1	656	191	2	8	1	0	1	3	0	0	0	0
4/26/2024	8:45 AM	0	595	179	0	5	1	0	2	1	0	0	0	0
4/26/2024	9:00 AM	2	510	153	0	2	0	0	2	2	0	0	0	0
4/26/2024	9:15 AM	3	494	146	0	4	0	0	2	2	0	0	0	0
4/26/2024	9:30 AM	3	491	129	0	6	0	0	2	2	0	0	0	0
4/26/2024	9:45 AM	5	448	130	0	9	0	0	1	1	0	0	0	0
4/26/2024	10:00 AM	3	453	128	0	11	0	0	0	0	0	0	0	0
4/26/2024	10:15 AM	8	440	127	0	8	0	0	0	1	0	0	0	0
4/26/2024	10:30 AM	10	456	118	0	8	0	0	1	1	0	0	0	0
4/26/2024	10:45 AM	8	458	116	0	7	0	0	1	1	0	0	0	0
4/26/2024	11:00 AM	10	488	120	0	5	0	0	2	2	0	0	0	0
4/26/2024	11:15 AM	5	504	129	0	8	0	0	4	2	0	0	0	0
4/26/2024	11:30 AM	4	485	133	1	7	0	0	3	4	0	0	0	0
4/26/2024	11:45 AM	10	506	138	1	6	0	0	3	5	0	0	0	0
4/26/2024	12:00 PM	8	501	147	1	6	0	0	2	4	0	0	0	0
4/26/2024	12:15 PM	8	485	132	1	6	0	0	1	3	0	0	0	0
4/26/2024	12:30 PM	12	497	143	1	5	0	0	1	1	0	0	0	0
4/26/2024	12:45 PM	6	507	136	1	5	0	0	1	0	0	0	0	0
4/26/2024	1:00 PM	10	516	127	1	7	0	0	1	1	0	0	0	0
4/26/2024	1:15 PM	9	528	146	1	6	0	0	0	1	0	0	0	0
4/26/2024	1:30 PM	4	537	142	0	12	0	0	1	2	0	0	0	0
4/26/2024	1:45 PM	4	524	138	0	12	0	0	1	4	0	0	0	0
4/26/2024	2:00 PM	2	526	138	0	11	0	0	1	3	0	0	0	0
4/26/2024	2:15 PM	2	548	128	0	11	0	0	1	4	0	0	0	0
4/26/2024	2:30 PM	24	608	146	0	6	0	0	0	4	0	0	0	0
4/26/2024	2:45 PM	29	692	172	1	8	0	0	0	2	0	0	0	0
4/26/2024	3:00 PM	28	758	183	1	11	0	0	2	2	0	0	0	0
4/26/2024	3:15 PM	28	805	197	1	9	1	0	4	1	0	0	0	0
4/26/2024	3:30 PM	6	799	187	1	9	1	0	4	0	0	0	0	0
4/26/2024	3:45 PM	6	771	171	0	8	1	0	5	0	0	0	0	0
4/26/2024	4:00 PM	7	787	182	0	5	1	0	3	0	0	0	0	0
4/26/2024	4:15 PM	13	763	177	0	6	1	0	1	0	0	0	0	0
4/26/2024	4:30 PM	17	752	171	0	7	1	0	1	0	0	0	0	0
4/26/2024	4:45 PM	15	720	179	0	4	1	0	0	0	0	0	0	0
4/26/2024	5:00 PM	17	654	157	0	3	1	0	0	0	0	0	0	0
4/26/2024	5:15 PM	13	631	156	0	4	0	0	0	0	0	0	0	0
4/26/2024	5:30 PM	9	622	148	0	3	0	0	0	0	0	0	0	0
4/26/2024	5:45 PM	9	639	130	0	3	0	0	1	0	0	0	0	0
4/26/2024	6:00 PM	11	603	116	0	3	0	0	1	0	0	0	0	0
4/26/2024	6:15 PM	18	564	100	0	1	0	0	1	0	0	0	0	0
4/26/2024	6:30 PM	20	498	92	0	1	0	0	1	0	0	0	0	0
4/26/2024	6:45 PM	20	429	78	0	1	0	0	0	0	0	0	0	0
4/26/2024	7:00 PM	15	404	80	0	2	0	0	0	0	0	0	0	0
4/26/2024	7:15 PM	7	374	70	0	3	0	0	0	0	0	0	0	0
4/26/2024	7:30 PM	5	332	65	0	2	0	0	0	0	0	0	0	0
4/26/2024	7:45 PM	2	297	67	0	3	0	0	0	0	0	0	0	0
4/26/2024	8:00 PM	1	249	63	0	3	0	0	0	0	0	0	0	0
4/26/2024	8:15 PM	0	217	60	0	3	0	0	0	0	0	0	0	0
4/26/2024	8:30 PM	0	192	53	0	3	0	0	0	1	0	0	0	0
4/26/2024	8:45 PM	0	153	42	0	2	0	0	0	1	0	0	0	0
4/26/2024	9:00 PM	0	141	33	0	1	0	0	0	1	0	0	0	0
4/26/2024	9:15 PM	0	130	27	0	0	0	0	0	2	0	0	0	0
4/26/2024	9:30 PM	0	123	25	0	0	0	0	0	1	0	0	0	0
4/26/2024	9:45 PM	4	125	23	0	0	0	0	0	1	0	0	0	0
4/26/2024	10:00 PM	4	106	18	0	0	0	0	0	1	0	0	0	0
4/26/2024	10:15 PM	4	96	15	0	0	0	0	0	0	0	0	0	0
4/26/2024	10:30 PM	4	87	12	0	0	0	0	0	0	0	0	0	0
4/26/2024	10:45 PM	0	88	10	0	0	0	0	0	0	0	0	0	0
4/26/2024	11:00 PM	0	80	7	0	0	0	0	0	0	0	0	0	0
4/26/2024	11:15 PM	0	56	5	0	0	0	0	0	0	0	0	0	0
4/26/2024	11:30 PM	0	35	2	0	0	0	0	0	0	0	0	0	0
4/26/2024	11:45 PM	0	12	0	0	0	0	0	0	0	0	0	0	0

4/27/2024	12:00 AM	0	40	4	0	0	0	0	0	0	0	0	0	0
4/27/2024	12:15 AM	0	38	3	0	2	0	0	0	0	0	0	0	0
4/27/2024	12:30 AM	0	30	2	0	2	0	0	0	0	0	0	0	0
4/27/2024	12:45 AM	0	26	1	0	3	0	0	0	0	0	0	0	0
4/27/2024	1:00 AM	0	25	1	0	3	0	0	0	0	0	0	0	0
4/27/2024	1:15 AM	0	20	1	0	1	0	0	0	0	0	0	0	0
4/27/2024	1:30 AM	0	19	0	0	1	0	0	0	0	0	0	0	0
4/27/2024	1:45 AM	0	16	0	0	0	0	0	0	0	0	0	0	0
4/27/2024	2:00 AM	7	14	0	0	0	0	0	0	0	0	0	0	0
4/27/2024	2:15 AM	7	13	0	0	0	0	0	0	0	0	0	0	0
4/27/2024	2:30 AM	7	12	0	0	0	0	0	0	0	0	0	0	0
4/27/2024	2:45 AM	7	13	1	0	0	0	0	0	0	0	0	0	0
4/27/2024	3:00 AM	0	11	1	0	0	0	0	0	0	0	0	0	0
4/27/2024	3:15 AM	0	11	1	0	0	0	0	0	0	0	0	0	0
4/27/2024	3:30 AM	0	15	3	0	0	0	0	0	0	0	0	0	0
4/27/2024	3:45 AM	0	17	2	0	0	0	0	0	0	0	0	0	0
4/27/2024	4:00 AM	0	19	3	0	0	0	0	0	0	0	0	0	0
4/27/2024	4:15 AM	0	24	3	0	0	0	0	0	0	0	0	0	0
4/27/2024	4:30 AM	0	22	2	0	0	0	0	0	0	0	0	0	0
4/27/2024	4:45 AM	0	29	6	0	1	0	0	0	0	0	0	0	0
4/27/2024	5:00 AM	2	39	8	0	1	0	0	0	0	0	0	0	0
4/27/2024	5:15 AM	2	42	9	0	1	0	0	0	0	0	0	0	0
4/27/2024	5:30 AM	2	77	13	0	1	0	0	0	0	0	0	0	0
4/27/2024	5:45 AM	3	102	18	0	0	0	0	0	0	0	0	0	0
4/27/2024	6:00 AM	1	115	25	0	0	0	0	0	0	0	0	0	0
4/27/2024	6:15 AM	1	140	39	0	0	0	0	1	0	0	0	0	0
4/27/2024	6:30 AM	1	164	53	0	1	0	0	1	0	0	0	0	0
4/27/2024	6:45 AM	1	192	68	0	1	0	0	1	0	0	0	0	0
4/27/2024	7:00 AM	2	255	73	0	2	0	0	1	0	0	0	0	0
4/27/2024	7:15 AM	2	283	74	0	3	0	0	0	0	0	0	0	0
4/27/2024	7:30 AM	4	292	73	0	3	0	0	0	0	0	0	0	0
4/27/2024	7:45 AM	4	306	62	0	3	0	0	0	0	0	0	0	0
4/27/2024	8:00 AM	3	298	72	0	2	0	0	0	0	0	0	0	0
4/27/2024	8:15 AM	4	326	81	0	2	0	0	0	0	0	0	0	0
4/27/2024	8:30 AM	2	354	85	0	1	0	0	1	0	0	0	0	0
4/27/2024	8:45 AM	2	393	99	0	1	0	0	1	0	0	0	0	0
4/27/2024	9:00 AM	2	428	105	0	1	0	0	1	1	0	0	0	0
4/27/2024	9:15 AM	2	442	103	0	2	0	0	1	1	0	0	0	0
4/27/2024	9:30 AM	10	461	105	0	2	0	0	1	1	0	0	0	0
4/27/2024	9:45 AM	19	469	105	0	3	0	0	1	1	0	0	0	0
4/27/2024	10:00 AM	27	453	105	0	4	0	0	1	0	0	0	0	0
4/27/2024	10:15 AM	28	457	104	0	2	0	0	1	0	0	0	0	0
4/27/2024	10:30 AM	36	442	108	0	4	0	0	0	1	0	0	0	0
4/27/2024	10:45 AM	28	432	111	0	3	0	0	1	1	0	0	0	0
4/27/2024	11:00 AM	22	460	109	0	3	0	0	1	1	0	0	0	0
4/27/2024	11:15 AM	21	497	109	0	3	0	0	2	1	0	0	0	0
4/27/2024	11:30 AM	9	521	102	0	1	0	0	2	0	0	0	0	0
4/27/2024	11:45 AM	8	542	98	0	2	0	0	1	1	0	0	0	0
4/27/2024	12:00 PM	10	544	94	1	1	0	0	1	1	0	0	0	0
4/27/2024	12:15 PM	12	520	95	2	2	0	0	0	1	0	0	0	0
4/27/2024	12:30 PM	24	519	96	2	2	0	0	0	1	0	0	0	0
4/27/2024	12:45 PM	27	515	95	2	1	0	0	0	0	0	0	0	0
4/27/2024	1:00 PM	26	503	89	1	2	0	0	0	0	0	0	0	0
4/27/2024	1:15 PM	28	504	94	0	1	0	0	1	0	0	0	0	0
4/27/2024	1:30 PM	12	490	88	0	1	0	0	1	0	0	0	0	0
4/27/2024	1:45 PM	9	483	89	0	2	0	0	1	0	0	0	0	0
4/27/2024	2:00 PM	7	488	95	0	1	0	0	1	0	0	0	0	0
4/27/2024	2:15 PM	6	479	80	0	2	0	0	1	0	0	0	0	0
4/27/2024	2:30 PM	6	479	92	0	2	0	0	1	0	0	0	0	0
4/27/2024	2:45 PM	12	464	91	0	1	0	0	3	0	0	0	0	0
4/27/2024	3:00 PM	18	446	84	0	1	0	0	3	0	0	0	0	0
4/27/2024	3:15 PM	14	430	88	0	1	0	0	2	0	0	0	0	0
4/27/2024	3:30 PM	17	444	82	0	4	0	0	2	1	0	0	0	0
4/27/2024	3:45 PM	11	448	76	0	5	0	0	0	1	0	0	0	0
4/27/2024	4:00 PM	4	461	75	0	5	0	0	0	1	0	0	0	0
4/27/2024	4:15 PM	4	481	68	0	7	0	0	0	1	0	0	0	0
4/27/2024	4:30 PM	4	461	63	0	5	0	0	0	0	0	0	0	0
4/27/2024	4:45 PM	3	442	60	0	5	0	0	1	0	0	0	0	0
4/27/2024	5:00 PM	3	407	68	1	6	0	0	2	0	0	0	0	0
4/27/2024	5:15 PM	3	363	72	2	3	0	0	2	0	0	0	0	0
4/27/2024	5:30 PM	0	353	75	2	2	0	0	4	0	0	0	0	0
4/27/2024	5:45 PM	0	360	76	2	1	0	0	3	1	0	0	0	0
4/27/2024	6:00 PM	0	369	61	1	0	0	0	2	1	0	0	0	0
4/27/2024	6:15 PM	1	392	59	0	1	0	0	2	1	0	0	0	0
4/27/2024	6:30 PM	1	375	48	0	1	0	0	0	1	0	0	0	0
4/27/2024	6:45 PM	2	351	40	0	1	0	0	0	0	0	0	0	0
4/27/2024	7:00 PM	3	339	46	0	1	0	0	0	1	0	0	0	0
4/27/2024	7:15 PM	3	299	46	0	0	0	0	0	1	0	0	0	0
4/27/2024	7:30 PM	3	266	43	0	0	0	0	1	1	0	0	0	0
4/27/2024	7:45 PM	2	225	36	0	0	0	0	1	1	0	0	0	0
4/27/2024	8:00 PM	1	197	23	0	0	0	0	2	0	0	0	0	0
4/27/2024	8:15 PM	0	201	13	0	0	0	0	2	0	0	0	0	0
4/27/2024	8:30 PM	0	197	11	0	0	0	0	1	0	0	0	0	0
4/27/2024	8:45 PM	0	199	11	0	1	0	0	1	0	0	0	0	0
4/27/2024	9:00 PM	0	183	9	0	1	0	0	0	0	0	0	0	0
4/27/2024	9:15 PM	0	158	10	0	1	0	0	0	0	0	0	0	0
4/27/2024	9:30 PM	0	146	8	1	1	0	0	0	0	0	0	0	0
4/27/2024	9:45 PM	0	156	9	1	1	0	0	0	0	0	0	0	0
4/27/2024	10:00 PM	0	145	10	1	1	0	0	0	0	0	0	0	0
4/27/2024	10:15 PM	0	124	8	1	1	0	0	0	0	0	0	0	0
4/27/2024	10:30 PM	0	110	8	0	1	0	0	0	1	0	0	0	0
4/27/2024	10:45 PM	0	77	8	0	0	0	0	0	1	0	0	0	0
4/27/2024	11:00 PM	0	70	8	0	0	0	0	0	1	0	0	0	0
4/27/2024	11:15 PM	0	55	7	0	0	0	0	0	1	0	0	0	0
4/27/2024	11:30 PM	0	36	5	0	0	0	0	0	0	0	0	0	0
4/27/2024	11:45 PM	0	19	2	0	0	0	0	0	0	0	0	0	0

WB
File Name:
Start Date: 4/21/2024
Start Time: 0
Site Code: 74 Lane 1 EB
Station ID: 1
Location 1: I-20, west of US-378 Sunset Blvd S/Bound Off-Ramp
Location 2:

Date	Time	1	2	3	4	5	6	7	8	9	10	11	12	13
4/21/2024	12:00 AM	0	0	0	0	0	0	0	0	0	0	0	0	0
4/21/2024	12:15 AM	0	0	0	0	0	0	0	0	0	0	0	0	0
4/21/2024	12:30 AM	0	0	0	0	0	0	0	0	0	0	0	0	0
4/21/2024	12:45 AM	0	0	0	0	0	0	0	0	0	0	0	0	0
4/21/2024	1:00 AM	0	0	0	0	0	0	0	0	0	0	0	0	0
4/21/2024	1:15 AM	0	0	0	0	0	0	0	0	0	0	0	0	0
4/21/2024	1:30 AM	0	0	0	0	0	0	0	0	0	0	0	0	0
4/21/2024	1:45 AM	0	0	0	0	0	0	0	0	0	0	0	0	0
4/21/2024	2:00 AM	0	0	0	0	0	0	0	0	0	0	0	0	0
4/21/2024	2:15 AM	0	0	0	0	0	0	0	0	0	0	0	0	0
4/21/2024	2:30 AM	0	0	0	0	0	0	0	0	0	0	0	0	0
4/21/2024	2:45 AM	0	0	0	0	0	0	0	0	0	0	0	0	0
4/21/2024	3:00 AM	0	0	0	0	0	0	0	0	0	0	0	0	0
4/21/2024	3:15 AM	0	0	0	0	0	0	0	0	0	0	0	0	0
4/21/2024	3:30 AM	0	0	0	0	0	0	0	0	0	0	0	0	0
4/21/2024	3:45 AM	0	0	0	0	0	0	0	0	0	0	0	0	0
4/21/2024	4:00 AM	0	0	0	0	0	0	0	0	0	0	0	0	0
4/21/2024	4:15 AM	0	0	0	0	0	0	0	0	0	0	0	0	0
4/21/2024	4:30 AM	0	0	0	0	0	0	0	0	0	0	0	0	0
4/21/2024	4:45 AM	0	0	0	0	0	0	0	0	0	0	0	0	0
4/21/2024	5:00 AM	0	0	0	0	0	0	0	0	0	0	0	0	0
4/21/2024	5:15 AM	0	0	0	0	0	0	0	0	0	0	0	0	0
4/21/2024	5:30 AM	0	0	0	0	0	0	0	0	0	0	0	0	0
4/21/2024	5:45 AM	0	0	0	0	0	0	0	0	0	0	0	0	0
4/21/2024	6:00 AM	0	0	0	0	0	0	0	0	0	0	0	0	0
4/21/2024	6:15 AM	0	0	0	0	0	0	0	0	0	0	0	0	0
4/21/2024	6:30 AM	0	0	0	0	0	0	0	0	0	0	0	0	0
4/21/2024	6:45 AM	0	0	0	0	0	0	0	0	0	0	0	0	0
4/21/2024	7:00 AM	0	0	0	0	0	0	0	0	0	0	0	0	0
4/21/2024	7:15 AM	0	0	0	0	0	0	0	0	0	0	0	0	0
4/21/2024	7:30 AM	0	0	0	0	0	0	0	0	0	0	0	0	0
4/21/2024	7:45 AM	0	0	0	0	0	0	0	0	0	0	0	0	0
4/21/2024	8:00 AM	0	0	0	0	0	0	0	0	0	0	0	0	0
4/21/2024	8:15 AM	0	0	0	0	0	0	0	0	0	0	0	0	0
4/21/2024	8:30 AM	0	0	0	0	0	0	0	0	0	0	0	0	0
4/21/2024	8:45 AM	0	0	0	0	0	0	0	0	0	0	0	0	0
4/21/2024	9:00 AM	0	0	0	0	0	0	0	0	0	0	0	0	0
4/21/2024	9:15 AM	0	0	0	0	0	0	0	0	0	0	0	0	0
4/21/2024	9:30 AM	0	0	0	0	0	0	0	0	0	0	0	0	0
4/21/2024	9:45 AM	0	0	0	0	0	0	0	0	0	0	0	0	0
4/21/2024	10:00 AM	0	0	0	0	0	0	0	0	0	0	0	0	0
4/21/2024	10:15 AM	0	0	0	0	0	0	0	0	0	0	0	0	0
4/21/2024	10:30 AM	0	0	0	0	0	0	0	0	0	0	0	0	0
4/21/2024	10:45 AM	0	0	0	0	0	0	0	0	0	0	0	0	0
4/21/2024	11:00 AM	0	0	0	0	0	0	0	0	0	0	0	0	0
4/21/2024	11:15 AM	0	0	0	0	0	0	0	0	0	0	0	0	0
4/21/2024	11:30 AM	0	0	0	0	0	0	0	0	0	0	0	0	0
4/21/2024	11:45 AM	0	0	0	0	0	0	0	0	0	0	0	0	0
4/21/2024	12:00 PM	0	0	0	0	0	0	0	0	0	0	0	0	0
4/21/2024	12:15 PM	0	0	0	0	0	0	0	0	0	0	0	0	0
4/21/2024	12:30 PM	0	0	0	0	0	0	0	0	0	0	0	0	0
4/21/2024	12:45 PM	0	0	0	0	0	0	0	0	0	0	0	0	0
4/21/2024	1:00 PM	0	0	0	0	0	0	0	0	0	0	0	0	0
4/21/2024	1:15 PM	0	0	0	0	0	0	0	0	0	0	0	0	0
4/21/2024	1:30 PM	0	0	0	0	0	0	0	0	0	0	0	0	0
4/21/2024	1:45 PM	0	0	0	0	0	0	0	0	0	0	0	0	0
4/21/2024	2:00 PM	0	0	0	0	0	0	0	0	0	0	0	0	0
4/21/2024	2:15 PM	0	0	0	0	0	0	0	0	0	0	0	0	0
4/21/2024	2:30 PM	0	0	0	0	0	0	0	0	0	0	0	0	0
4/21/2024	2:45 PM	0	0	0	0	0	0	0	0	0	0	0	0	0
4/21/2024	3:00 PM	0	0	0	0	0	0	0	0	0	0	0	0	0
4/21/2024	3:15 PM	0	0	0	0	0	0	0	0	0	0	0	0	0
4/21/2024	3:30 PM	0	0	0	0	0	0	0	0	0	0	0	0	0
4/21/2024	3:45 PM	0	0	0	0	0	0	0	0	0	0	0	0	0
4/21/2024	4:00 PM	0	0	0	0	0	0	0	0	0	0	0	0	0
4/21/2024	4:15 PM	0	0	0	0	0	0	0	0	0	0	0	0	0
4/21/2024	4:30 PM	0	0	0	0	0	0	0	0	0	0	0	0	0
4/21/2024	4:45 PM	0	0	0	0	0	0	0	0	0	0	0	0	0
4/21/2024	5:00 PM	0	0	0	0	0	0	0	0	0	0	0	0	0
4/21/2024	5:15 PM	0	0	0	0	0	0	0	0	0	0	0	0	0
4/21/2024	5:30 PM	0	0	0	0	0	0	0	0	0	0	0	0	0
4/21/2024	5:45 PM	0	0	0	0	0	0	0	0	0	0	0	0	0
4/21/2024	6:00 PM	0	0	0	0	0	0	0	0	0	0	0	0	0
4/21/2024	6:15 PM	0	0	0	0	0	0	0	0	0	0	0	0	0
4/21/2024	6:30 PM	0	0	0	0	0	0	0	0	0	0	0	0	0
4/21/2024	6:45 PM	0	0	0	0	0	0	0	0	0	0	0	0	0
4/21/2024	7:00 PM	0	0	0	0	0	0	0	0	0	0	0	0	0
4/21/2024	7:15 PM	0	0	0	0	0	0	0	0	0	0	0	0	0
4/21/2024	7:30 PM	0	0	0	0	0	0	0	0	0	0	0	0	0
4/21/2024	7:45 PM	0	0	0	0	0	0	0	0	0	0	0	0	0
4/21/2024	8:00 PM	0	0	0	0	0	0	0	0	0	0	0	0	0
4/21/2024	8:15 PM	0	0	0	0	0	0	0	0	0	0	0	0	0
4/21/2024	8:30 PM	0	0	0	0	0	0	0	0	0	0	0	0	0
4/21/2024	8:45 PM	0	0	0	0	0	0	0	0	0	0	0	0	0
4/21/2024	9:00 PM	0	0	0	0	0	0	0	0	0	0	0	0	0
4/21/2024	9:15 PM	0	0	0	0	0	0	0	0	0	0	0	0	0
4/21/2024	9:30 PM	0	0	0	0	0	0	0	0	0	0	0	0	0
4/21/2024	9:45 PM	0	0	0	0	0	0	0	0	0	0	0	0	0
4/21/2024	10:00 PM	0	0	0	0	0	0	0	0	0	0	0	0	0
4/21/2024	10:15 PM	0	0	0	0	0	0	0	0	0	0	0	0	0
4/21/2024	10:30 PM	0	0	0	0	0	0	0	0	0	0	0	0	0
4/21/2024	10:45 PM	0	0	0	0	0	0	0	0	0	0	0	0	0
4/21/2024	11:00 PM	0	0	0	0	0	0	0	0	0	0	0	0	0
4/21/2024	11:15 PM	0	0	0	0	0	0	0	0	0	0	0	0	0
4/21/2024	11:30 PM	0	0	0	0	0	0	0	0	0	0	0	0	0
4/21/2024	11:45 PM	0	0	0	0	0	0	0	0	0	0	0	0	0

4/22/2024	12:00 AM	0	0	0	0	0	0	0	0	0	0	0	0	0
4/22/2024	12:15 AM	0	0	0	0	0	0	0	0	0	0	0	0	0
4/22/2024	12:30 AM	0	0	0	0	0	0	0	0	0	0	0	0	0
4/22/2024	12:45 AM	0	0	0	0	0	0	0	0	0	0	0	0	0
4/22/2024	1:00 AM	0	0	0	0	0	0	0	0	0	0	0	0	0
4/22/2024	1:15 AM	0	0	0	0	0	0	0	0	0	0	0	0	0
4/22/2024	1:30 AM	0	0	0	0	0	0	0	0	0	0	0	0	0
4/22/2024	1:45 AM	0	0	0	0	0	0	0	0	0	0	0	0	0
4/22/2024	2:00 AM	0	0	0	0	0	0	0	0	0	0	0	0	0
4/22/2024	2:15 AM	0	0	0	0	0	0	0	0	0	0	0	0	0
4/22/2024	2:30 AM	0	0	0	0	0	0	0	0	0	0	0	0	0
4/22/2024	2:45 AM	0	0	0	0	0	0	0	0	0	0	0	0	0
4/22/2024	3:00 AM	0	0	0	0	0	0	0	0	0	0	0	0	0
4/22/2024	3:15 AM	0	0	0	0	0	0	0	0	0	0	0	0	0
4/22/2024	3:30 AM	0	0	0	0	0	0	0	0	0	0	0	0	0
4/22/2024	3:45 AM	0	0	0	0	0	0	0	0	0	0	0	0	0
4/22/2024	4:00 AM	0	0	0	0	0	0	0	0	0	0	0	0	0
4/22/2024	4:15 AM	0	0	0	0	0	0	0	0	0	0	0	0	0
4/22/2024	4:30 AM	0	0	0	0	0	0	0	0	0	0	0	0	0
4/22/2024	4:45 AM	0	0	0	0	0	0	0	0	0	0	0	0	0
4/22/2024	5:00 AM	0	0	0	0	0	0	0	0	0	0	0	0	0
4/22/2024	5:15 AM	0	0	0	0	0	0	0	0	0	0	0	0	0
4/22/2024	5:30 AM	0	0	0	0	0	0	0	0	0	0	0	0	0
4/22/2024	5:45 AM	0	0	0	0	0	0	0	0	0	0	0	0	0
4/22/2024	6:00 AM	0	0	0	0	0	0	0	0	0	0	0	0	0
4/22/2024	6:15 AM	0	0	0	0	0	0	0	0	0	0	0	0	0
4/22/2024	6:30 AM	0	0	0	0	0	0	0	0	0	0	0	0	0
4/22/2024	6:45 AM	0	0	0	0	0	0	0	0	0	0	0	0	0
4/22/2024	7:00 AM	0	0	0	0	0	0	0	0	0	0	0	0	0
4/22/2024	7:15 AM	0	0	0	0	0	0	0	0	0	0	0	0	0
4/22/2024	7:30 AM	0	0	0	0	0	0	0	0	0	0	0	0	0
4/22/2024	7:45 AM	0	0	0	0	0	0	0	0	0	0	0	0	0
4/22/2024	8:00 AM	0	0	0	0	0	0	0	0	0	0	0	0	0
4/22/2024	8:15 AM	0	0	0	0	0	0	0	0	0	0	0	0	0
4/22/2024	8:30 AM	0	0	0	0	0	0	0	0	0	0	0	0	0
4/22/2024	8:45 AM	0	0	0	0	0	0	0	0	0	0	0	0	0
4/22/2024	9:00 AM	0	0	0	0	0	0	0	0	0	0	0	0	0
4/22/2024	9:15 AM	0	0	0	0	0	0	0	0	0	0	0	0	0
4/22/2024	9:30 AM	0	0	0	0	0	0	0	0	0	0	0	0	0
4/22/2024	9:45 AM	0	0	0	0	0	0	0	0	0	0	0	0	0
4/22/2024	10:00 AM	0	0	0	0	0	0	0	0	0	0	0	0	0
4/22/2024	10:15 AM	0	0	0	0	0	0	0	0	0	0	0	0	0
4/22/2024	10:30 AM	0	0	0	0	0	0	0	0	0	0	0	0	0
4/22/2024	10:45 AM	0	0	0	0	0	0	0	0	0	0	0	0	0
4/22/2024	11:00 AM	0	0	0	0	0	0	0	0	0	0	0	0	0
4/22/2024	11:15 AM	0	0	0	0	0	0	0	0	0	0	0	0	0
4/22/2024	11:30 AM	0	0	0	0	0	0	0	0	0	0	0	0	0
4/22/2024	11:45 AM	0	0	0	0	0	0	0	0	0	0	0	0	0
4/22/2024	12:00 PM	0	0	0	0	0	0	0	0	0	0	0	0	0
4/22/2024	12:15 PM	0	0	0	0	0	0	0	0	0	0	0	0	0
4/22/2024	12:30 PM	0	0	0	0	0	0	0	0	0	0	0	0	0
4/22/2024	12:45 PM	0	0	0	0	0	0	0	0	0	0	0	0	0
4/22/2024	1:00 PM	0	0	0	0	0	0	0	0	0	0	0	0	0
4/22/2024	1:15 PM	0	0	0	0	0	0	0	0	0	0	0	0	0
4/22/2024	1:30 PM	0	0	0	0	0	0	0	0	0	0	0	0	0
4/22/2024	1:45 PM	0	0	0	0	0	0	0	0	0	0	0	0	0
4/22/2024	2:00 PM	0	0	0	0	0	0	0	0	0	0	0	0	0
4/22/2024	2:15 PM	0	0	0	0	0	0	0	0	0	0	0	0	0
4/22/2024	2:30 PM	0	0	0	0	0	0	0	0	0	0	0	0	0
4/22/2024	2:45 PM	0	0	0	0	0	0	0	0	0	0	0	0	0
4/22/2024	3:00 PM	0	0	0	0	0	0	0	0	0	0	0	0	0
4/22/2024	3:15 PM	0	0	0	0	0	0	0	0	0	0	0	0	0
4/22/2024	3:30 PM	0	0	0	0	0	0	0	0	0	0	0	0	0
4/22/2024	3:45 PM	0	0	0	0	0	0	0	0	0	0	0	0	0
4/22/2024	4:00 PM	0	0	0	0	0	0	0	0	0	0	0	0	0
4/22/2024	4:15 PM	0	0	0	0	0	0	0	0	0	0	0	0	0
4/22/2024	4:30 PM	0	0	0	0	0	0	0	0	0	0	0	0	0
4/22/2024	4:45 PM	0	0	0	0	0	0	0	0	0	0	0	0	0
4/22/2024	5:00 PM	0	0	0	0	0	0	0	0	0	0	0	0	0
4/22/2024	5:15 PM	0	0	0	0	0	0	0	0	0	0	0	0	0
4/22/2024	5:30 PM	0	0	0	0	0	0	0	0	0	0	0	0	0
4/22/2024	5:45 PM	0	0	0	0	0	0	0	0	0	0	0	0	0
4/22/2024	6:00 PM	0	0	0	0	0	0	0	0	0	0	0	0	0
4/22/2024	6:15 PM	0	0	0	0	0	0	0	0	0	0	0	0	0
4/22/2024	6:30 PM	0	0	0	0	0	0	0	0	0	0	0	0	0
4/22/2024	6:45 PM	0	0	0	0	0	0	0	0	0	0	0	0	0
4/22/2024	7:00 PM	0	0	0	0	0	0	0	0	0	0	0	0	0
4/22/2024	7:15 PM	0	0	0	0	0	0	0	0	0	0	0	0	0
4/22/2024	7:30 PM	0	0	0	0	0	0	0	0	0	0	0	0	0
4/22/2024	7:45 PM	0	0	0	0	0	0	0	0	0	0	0	0	0
4/22/2024	8:00 PM	0	0	0	0	0	0	0	0	0	0	0	0	0
4/22/2024	8:15 PM	0	0	0	0	0	0	0	0	0	0	0	0	0
4/22/2024	8:30 PM	0	0	0	0	0	0	0	0	0	0	0	0	0
4/22/2024	8:45 PM	0	0	0	0	0	0	0	0	0	0	0	0	0
4/22/2024	9:00 PM	0	0	0	0	0	0	0	0	0	0	0	0	0
4/22/2024	9:15 PM	0	0	0	0	0	0	0	0	0	0	0	0	0
4/22/2024	9:30 PM	0	0	0	0	0	0	0	0	0	0	0	0	0
4/22/2024	9:45 PM	0	0	0	0	0	0	0	0	0	0	0	0	0
4/22/2024	10:00 PM	0	0	0	0	0	0	0	0	0	0	0	0	0
4/22/2024	10:15 PM	0	0	0	0	0	0	0	0	0	0	0	0	0
4/22/2024	10:30 PM	0	0	0	0	0	0	0	0	0	0	0	0	0
4/22/2024	10:45 PM	0	0	0	0	0	0	0	0	0	0	0	0	0
4/22/2024	11:00 PM	0	0	0	0	0	0	0	0	0	0	0	0	0
4/22/2024	11:15 PM	0	0	0	0	0	0	0	0	0	0	0	0	0
4/22/2024	11:30 PM	0	0	0	0	0	0	0	0	0	0	0	0	0
4/22/2024	11:45 PM	0	0	0	0	0	0	0	0	0	0	0	0	0

4/23/2024	12:00 AM	0	0	0	0	0	0	0	0	0	0	0	0	0
4/23/2024	12:15 AM	0	0	0	0	0	0	0	0	0	0	0	0	0
4/23/2024	12:30 AM	0	0	0	0	0	0	0	0	0	0	0	0	0
4/23/2024	12:45 AM	0	0	0	0	0	0	0	0	0	0	0	0	0
4/23/2024	1:00 AM	0	0	0	0	0	0	0	0	0	0	0	0	0
4/23/2024	1:15 AM	0	0	0	0	0	0	0	0	0	0	0	0	0
4/23/2024	1:30 AM	0	0	0	0	0	0	0	0	0	0	0	0	0
4/23/2024	1:45 AM	0	0	0	0	0	0	0	0	0	0	0	0	0
4/23/2024	2:00 AM	0	0	0	0	0	0	0	0	0	0	0	0	0
4/23/2024	2:15 AM	0	0	0	0	0	0	0	0	0	0	0	0	0
4/23/2024	2:30 AM	0	0	0	0	0	0	0	0	0	0	0	0	0
4/23/2024	2:45 AM	0	0	0	0	0	0	0	0	0	0	0	0	0
4/23/2024	3:00 AM	0	0	0	0	0	0	0	0	0	0	0	0	0
4/23/2024	3:15 AM	0	0	0	0	0	0	0	0	0	0	0	0	0
4/23/2024	3:30 AM	0	0	0	0	0	0	0	0	0	0	0	0	0
4/23/2024	3:45 AM	0	0	0	0	0	0	0	0	0	0	0	0	0
4/23/2024	4:00 AM	0	0	0	0	0	0	0	0	0	0	0	0	0
4/23/2024	4:15 AM	0	0	0	0	0	0	0	0	0	0	0	0	0
4/23/2024	4:30 AM	0	0	0	0	0	0	0	0	0	0	0	0	0
4/23/2024	4:45 AM	0	0	0	0	0	0	0	0	0	0	0	0	0
4/23/2024	5:00 AM	0	0	0	0	0	0	0	0	0	0	0	0	0
4/23/2024	5:15 AM	0	0	0	0	0	0	0	0	0	0	0	0	0
4/23/2024	5:30 AM	0	0	0	0	0	0	0	0	0	0	0	0	0
4/23/2024	5:45 AM	0	0	0	0	0	0	0	0	0	0	0	0	0
4/23/2024	6:00 AM	0	0	0	0	0	0	0	0	0	0	0	0	0
4/23/2024	6:15 AM	0	0	0	0	0	0	0	0	0	0	0	0	0
4/23/2024	6:30 AM	0	0	0	0	0	0	0	0	0	0	0	0	0
4/23/2024	6:45 AM	0	0	0	0	0	0	0	0	0	0	0	0	0
4/23/2024	7:00 AM	0	0	0	0	0	0	0	0	0	0	0	0	0
4/23/2024	7:15 AM	0	0	0	0	0	0	0	0	0	0	0	0	0
4/23/2024	7:30 AM	0	0	0	0	0	0	0	0	0	0	0	0	0
4/23/2024	7:45 AM	0	0	0	0	0	0	0	0	0	0	0	0	0
4/23/2024	8:00 AM	0	0	0	0	0	0	0	0	0	0	0	0	0
4/23/2024	8:15 AM	0	0	0	0	0	0	0	0	0	0	0	0	0
4/23/2024	8:30 AM	0	0	0	0	0	0	0	0	0	0	0	0	0
4/23/2024	8:45 AM	0	0	0	0	0	0	0	0	0	0	0	0	0
4/23/2024	9:00 AM	0	0	0	0	0	0	0	0	0	0	0	0	0
4/23/2024	9:15 AM	0	0	0	0	0	0	0	0	0	0	0	0	0
4/23/2024	9:30 AM	0	0	0	0	0	0	0	0	0	0	0	0	0
4/23/2024	9:45 AM	0	0	0	0	0	0	0	0	0	0	0	0	0
4/23/2024	10:00 AM	0	0	0	0	0	0	0	0	0	0	0	0	0
4/23/2024	10:15 AM	0	0	0	0	0	0	0	0	0	0	0	0	0
4/23/2024	10:30 AM	0	0	0	0	0	0	0	0	0	0	0	0	0
4/23/2024	10:45 AM	0	0	0	0	0	0	0	0	0	0	0	0	0
4/23/2024	11:00 AM	0	0	0	0	0	0	0	0	0	0	0	0	0
4/23/2024	11:15 AM	0	0	0	0	0	0	0	0	0	0	0	0	0
4/23/2024	11:30 AM	0	0	0	0	0	0	0	0	0	0	0	0	0
4/23/2024	11:45 AM	0	0	0	0	0	0	0	0	0	0	0	0	0
4/23/2024	12:00 PM	0	0	0	0	0	0	0	0	0	0	0	0	0
4/23/2024	12:15 PM	0	0	0	0	0	0	0	0	0	0	0	0	0
4/23/2024	12:30 PM	0	0	0	0	0	0	0	0	0	0	0	0	0
4/23/2024	12:45 PM	0	0	0	0	0	0	0	0	0	0	0	0	0
4/23/2024	1:00 PM	0	0	0	0	0	0	0	0	0	0	0	0	0
4/23/2024	1:15 PM	0	0	0	0	0	0	0	0	0	0	0	0	0
4/23/2024	1:30 PM	0	0	0	0	0	0	0	0	0	0	0	0	0
4/23/2024	1:45 PM	0	0	0	0	0	0	0	0	0	0	0	0	0
4/23/2024	2:00 PM	0	0	0	0	0	0	0	0	0	0	0	0	0
4/23/2024	2:15 PM	0	0	0	0	0	0	0	0	0	0	0	0	0
4/23/2024	2:30 PM	0	0	0	0	0	0	0	0	0	0	0	0	0
4/23/2024	2:45 PM	0	0	0	0	0	0	0	0	0	0	0	0	0
4/23/2024	3:00 PM	0	0	0	0	0	0	0	0	0	0	0	0	0
4/23/2024	3:15 PM	0	0	0	0	0	0	0	0	0	0	0	0	0
4/23/2024	3:30 PM	0	0	0	0	0	0	0	0	0	0	0	0	0
4/23/2024	3:45 PM	0	0	0	0	0	0	0	0	0	0	0	0	0
4/23/2024	4:00 PM	0	0	0	0	0	0	0	0	0	0	0	0	0
4/23/2024	4:15 PM	0	0	0	0	0	0	0	0	0	0	0	0	0
4/23/2024	4:30 PM	0	0	0	0	0	0	0	0	0	0	0	0	0
4/23/2024	4:45 PM	0	0	0	0	0	0	0	0	0	0	0	0	0
4/23/2024	5:00 PM	0	0	0	0	0	0	0	0	0	0	0	0	0
4/23/2024	5:15 PM	0	0	0	0	0	0	0	0	0	0	0	0	0
4/23/2024	5:30 PM	0	0	0	0	0	0	0	0	0	0	0	0	0
4/23/2024	5:45 PM	0	0	0	0	0	0	0	0	0	0	0	0	0
4/23/2024	6:00 PM	0	0	0	0	0	0	0	0	0	0	0	0	0
4/23/2024	6:15 PM	0	0	0	0	0	0	0	0	0	0	0	0	0
4/23/2024	6:30 PM	0	0	0	0	0	0	0	0	0	0	0	0	0
4/23/2024	6:45 PM	0	0	0	0	0	0	0	0	0	0	0	0	0
4/23/2024	7:00 PM	0	0	0	0	0	0	0	0	0	0	0	0	0
4/23/2024	7:15 PM	0	0	0	0	0	0	0	0	0	0	0	0	0
4/23/2024	7:30 PM	0	0	0	0	0	0	0	0	0	0	0	0	0
4/23/2024	7:45 PM	0	0	0	0	0	0	0	0	0	0	0	0	0
4/23/2024	8:00 PM	0	0	0	0	0	0	0	0	0	0	0	0	0
4/23/2024	8:15 PM	0	0	0	0	0	0	0	0	0	0	0	0	0
4/23/2024	8:30 PM	0	0	0	0	0	0	0	0	0	0	0	0	0
4/23/2024	8:45 PM	0	0	0	0	0	0	0	0	0	0	0	0	0
4/23/2024	9:00 PM	0	0	0	0	0	0	0	0	0	0	0	0	0
4/23/2024	9:15 PM	0	0	0	0	0	0	0	0	0	0	0	0	0
4/23/2024	9:30 PM	0	0	0	0	0	0	0	0	0	0	0	0	0
4/23/2024	9:45 PM	0	0	0	0	0	0	0	0	0	0	0	0	0
4/23/2024	10:00 PM	0	0	0	0	0	0	0	0	0	0	0	0	0
4/23/2024	10:15 PM	0	0	0	0	0	0	0	0	0	0	0	0	0
4/23/2024	10:30 PM	0	0	0	0	0	0	0	0	0	0	0	0	0
4/23/2024	10:45 PM	0	0	0	0	0	0	0	0	0	0	0	0	0
4/23/2024	11:00 PM	0	0	0	0	0	0	0	0	0	0	0	0	0
4/23/2024	11:15 PM	0	0	0	0	0	0	0	0	0	0	0	0	0
4/23/2024	11:30 PM	0	0	0	0	0	0	0	0	0	0	0	0	0
4/23/2024	11:45 PM	0	0	0	0	0	0	0	0	0	0	0	0	0

4/24/2024	12:00 AM	0	0	0	0	0	0	0	0	0	0	0	0	0
4/24/2024	12:15 AM	0	0	0	0	0	0	0	0	0	0	0	0	0
4/24/2024	12:30 AM	0	0	0	0	0	0	0	0	0	0	0	0	0
4/24/2024	12:45 AM	0	0	0	0	0	0	0	0	0	0	0	0	0
4/24/2024	1:00 AM	0	0	0	0	0	0	0	0	0	0	0	0	0
4/24/2024	1:15 AM	0	0	0	0	0	0	0	0	0	0	0	0	0
4/24/2024	1:30 AM	0	0	0	0	0	0	0	0	0	0	0	0	0
4/24/2024	1:45 AM	0	0	0	0	0	0	0	0	0	0	0	0	0
4/24/2024	2:00 AM	0	0	0	0	0	0	0	0	0	0	0	0	0
4/24/2024	2:15 AM	0	0	0	0	0	0	0	0	0	0	0	0	0
4/24/2024	2:30 AM	0	0	0	0	0	0	0	0	0	0	0	0	0
4/24/2024	2:45 AM	0	0	0	0	0	0	0	0	0	0	0	0	0
4/24/2024	3:00 AM	0	0	0	0	0	0	0	0	0	0	0	0	0
4/24/2024	3:15 AM	0	0	0	0	0	0	0	0	0	0	0	0	0
4/24/2024	3:30 AM	0	0	0	0	0	0	0	0	0	0	0	0	0
4/24/2024	3:45 AM	0	0	0	0	0	0	0	0	0	0	0	0	0
4/24/2024	4:00 AM	0	0	0	0	0	0	0	0	0	0	0	0	0
4/24/2024	4:15 AM	0	0	0	0	0	0	0	0	0	0	0	0	0
4/24/2024	4:30 AM	0	0	0	0	0	0	0	0	0	0	0	0	0
4/24/2024	4:45 AM	0	0	0	0	0	0	0	0	0	0	0	0	0
4/24/2024	5:00 AM	0	0	0	0	0	0	0	0	0	0	0	0	0
4/24/2024	5:15 AM	0	0	0	0	0	0	0	0	0	0	0	0	0
4/24/2024	5:30 AM	0	0	0	0	0	0	0	0	0	0	0	0	0
4/24/2024	5:45 AM	0	0	0	0	0	0	0	0	0	0	0	0	0
4/24/2024	6:00 AM	0	0	0	0	0	0	0	0	0	0	0	0	0
4/24/2024	6:15 AM	0	0	0	0	0	0	0	0	0	0	0	0	0
4/24/2024	6:30 AM	0	0	0	0	0	0	0	0	0	0	0	0	0
4/24/2024	6:45 AM	0	0	0	0	0	0	0	0	0	0	0	0	0
4/24/2024	7:00 AM	0	0	0	0	0	0	0	0	0	0	0	0	0
4/24/2024	7:15 AM	0	0	0	0	0	0	0	0	0	0	0	0	0
4/24/2024	7:30 AM	0	0	0	0	0	0	0	0	0	0	0	0	0
4/24/2024	7:45 AM	0	0	0	0	0	0	0	0	0	0	0	0	0
4/24/2024	8:00 AM	0	0	0	0	0	0	0	0	0	0	0	0	0
4/24/2024	8:15 AM	0	0	0	0	0	0	0	0	0	0	0	0	0
4/24/2024	8:30 AM	0	0	0	0	0	0	0	0	0	0	0	0	0
4/24/2024	8:45 AM	0	0	0	0	0	0	0	0	0	0	0	0	0
4/24/2024	9:00 AM	0	0	0	0	0	0	0	0	0	0	0	0	0
4/24/2024	9:15 AM	0	0	0	0	0	0	0	0	0	0	0	0	0
4/24/2024	9:30 AM	0	0	0	0	0	0	0	0	0	0	0	0	0
4/24/2024	9:45 AM	0	0	0	0	0	0	0	0	0	0	0	0	0
4/24/2024	10:00 AM	0	0	0	0	0	0	0	0	0	0	0	0	0
4/24/2024	10:15 AM	0	0	0	0	0	0	0	0	0	0	0	0	0
4/24/2024	10:30 AM	0	0	0	0	0	0	0	0	0	0	0	0	0
4/24/2024	10:45 AM	0	0	0	0	0	0	0	0	0	0	0	0	0
4/24/2024	11:00 AM	0	0	0	0	0	0	0	0	0	0	0	0	0
4/24/2024	11:15 AM	0	0	0	0	0	0	0	0	0	0	0	0	0
4/24/2024	11:30 AM	0	0	0	0	0	0	0	0	0	0	0	0	0
4/24/2024	11:45 AM	0	0	0	0	0	0	0	0	0	0	0	0	0
4/24/2024	12:00 PM	0	0	0	0	0	0	0	0	0	0	0	0	0
4/24/2024	12:15 PM	0	0	0	0	0	0	0	0	0	0	0	0	0
4/24/2024	12:30 PM	0	0	0	0	0	0	0	0	0	0	0	0	0
4/24/2024	12:45 PM	0	0	0	0	0	0	0	0	0	0	0	0	0
4/24/2024	1:00 PM	0	0	0	0	0	0	0	0	0	0	0	0	0
4/24/2024	1:15 PM	0	0	0	0	0	0	0	0	0	0	0	0	0
4/24/2024	1:30 PM	0	0	0	0	0	0	0	0	0	0	0	0	0
4/24/2024	1:45 PM	0	0	0	0	0	0	0	0	0	0	0	0	0
4/24/2024	2:00 PM	0	0	0	0	0	0	0	0	0	0	0	0	0
4/24/2024	2:15 PM	0	0	0	0	0	0	0	0	0	0	0	0	0
4/24/2024	2:30 PM	0	0	0	0	0	0	0	0	0	0	0	0	0
4/24/2024	2:45 PM	0	0	0	0	0	0	0	0	0	0	0	0	0
4/24/2024	3:00 PM	0	0	0	0	0	0	0	0	0	0	0	0	0
4/24/2024	3:15 PM	0	0	0	0	0	0	0	0	0	0	0	0	0
4/24/2024	3:30 PM	0	0	0	0	0	0	0	0	0	0	0	0	0
4/24/2024	3:45 PM	0	0	0	0	0	0	0	0	0	0	0	0	0
4/24/2024	4:00 PM	0	0	0	0	0	0	0	0	0	0	0	0	0
4/24/2024	4:15 PM	0	0	0	0	0	0	0	0	0	0	0	0	0
4/24/2024	4:30 PM	0	0	0	0	0	0	0	0	0	0	0	0	0
4/24/2024	4:45 PM	0	0	0	0	0	0	0	0	0	0	0	0	0
4/24/2024	5:00 PM	0	0	0	0	0	0	0	0	0	0	0	0	0
4/24/2024	5:15 PM	0	0	0	0	0	0	0	0	0	0	0	0	0
4/24/2024	5:30 PM	0	0	0	0	0	0	0	0	0	0	0	0	0
4/24/2024	5:45 PM	0	0	0	0	0	0	0	0	0	0	0	0	0
4/24/2024	6:00 PM	0	0	0	0	0	0	0	0	0	0	0	0	0
4/24/2024	6:15 PM	0	0	0	0	0	0	0	0	0	0	0	0	0
4/24/2024	6:30 PM	0	0	0	0	0	0	0	0	0	0	0	0	0
4/24/2024	6:45 PM	0	0	0	0	0	0	0	0	0	0	0	0	0
4/24/2024	7:00 PM	0	0	0	0	0	0	0	0	0	0	0	0	0
4/24/2024	7:15 PM	0	0	0	0	0	0	0	0	0	0	0	0	0
4/24/2024	7:30 PM	0	0	0	0	0	0	0	0	0	0	0	0	0
4/24/2024	7:45 PM	0	0	0	0	0	0	0	0	0	0	0	0	0
4/24/2024	8:00 PM	0	0	0	0	0	0	0	0	0	0	0	0	0
4/24/2024	8:15 PM	0	0	0	0	0	0	0	0	0	0	0	0	0
4/24/2024	8:30 PM	0	0	0	0	0	0	0	0	0	0	0	0	0
4/24/2024	8:45 PM	0	0	0	0	0	0	0	0	0	0	0	0	0
4/24/2024	9:00 PM	0	0	0	0	0	0	0	0	0	0	0	0	0
4/24/2024	9:15 PM	0	0	0	0	0	0	0	0	0	0	0	0	0
4/24/2024	9:30 PM	0	0	0	0	0	0	0	0	0	0	0	0	0
4/24/2024	9:45 PM	0	0	0	0	0	0	0	0	0	0	0	0	0
4/24/2024	10:00 PM	0	0	0	0	0	0	0	0	0	0	0	0	0
4/24/2024	10:15 PM	0	0	0	0	0	0	0	0	0	0	0	0	0
4/24/2024	10:30 PM	0	0	0	0	0	0	0	0	0	0	0	0	0
4/24/2024	10:45 PM	0	0	0	0	0	0	0	0	0	0	0	0	0
4/24/2024	11:00 PM	0	0	0	0	0	0	0	0	0	0	0	0	0
4/24/2024	11:15 PM	0	0	0	0	0	0	0	0	0	0	0	0	0
4/24/2024	11:30 PM	0	0	0	0	0	0	0	0	0	0	0	0	0
4/24/2024	11:45 PM	0	0	0	0	0	0	0	0	0	0	0	0	0

4/25/2024	12:00 AM	0	0	0	0	0	0	0	0	0	0	0	0	0
4/25/2024	12:15 AM	0	0	0	0	0	0	0	0	0	0	0	0	0
4/25/2024	12:30 AM	0	0	0	0	0	0	0	0	0	0	0	0	0
4/25/2024	12:45 AM	0	0	0	0	0	0	0	0	0	0	0	0	0
4/25/2024	1:00 AM	0	0	0	0	0	0	0	0	0	0	0	0	0
4/25/2024	1:15 AM	0	0	0	0	0	0	0	0	0	0	0	0	0
4/25/2024	1:30 AM	0	0	0	0	0	0	0	0	0	0	0	0	0
4/25/2024	1:45 AM	0	0	0	0	0	0	0	0	0	0	0	0	0
4/25/2024	2:00 AM	0	0	0	0	0	0	0	0	0	0	0	0	0
4/25/2024	2:15 AM	0	0	0	0	0	0	0	0	0	0	0	0	0
4/25/2024	2:30 AM	0	0	0	0	0	0	0	0	0	0	0	0	0
4/25/2024	2:45 AM	0	0	0	0	0	0	0	0	0	0	0	0	0
4/25/2024	3:00 AM	0	0	0	0	0	0	0	0	0	0	0	0	0
4/25/2024	3:15 AM	0	0	0	0	0	0	0	0	0	0	0	0	0
4/25/2024	3:30 AM	0	0	0	0	0	0	0	0	0	0	0	0	0
4/25/2024	3:45 AM	0	0	0	0	0	0	0	0	0	0	0	0	0
4/25/2024	4:00 AM	0	0	0	0	0	0	0	0	0	0	0	0	0
4/25/2024	4:15 AM	0	0	0	0	0	0	0	0	0	0	0	0	0
4/25/2024	4:30 AM	0	0	0	0	0	0	0	0	0	0	0	0	0
4/25/2024	4:45 AM	0	0	0	0	0	0	0	0	0	0	0	0	0
4/25/2024	5:00 AM	0	0	0	0	0	0	0	0	0	0	0	0	0
4/25/2024	5:15 AM	0	0	0	0	0	0	0	0	0	0	0	0	0
4/25/2024	5:30 AM	0	0	0	0	0	0	0	0	0	0	0	0	0
4/25/2024	5:45 AM	0	0	0	0	0	0	0	0	0	0	0	0	0
4/25/2024	6:00 AM	0	0	0	0	0	0	0	0	0	0	0	0	0
4/25/2024	6:15 AM	0	0	0	0	0	0	0	0	0	0	0	0	0
4/25/2024	6:30 AM	0	0	0	0	0	0	0	0	0	0	0	0	0
4/25/2024	6:45 AM	0	0	0	0	0	0	0	0	0	0	0	0	0
4/25/2024	7:00 AM	0	0	0	0	0	0	0	0	0	0	0	0	0
4/25/2024	7:15 AM	0	0	0	0	0	0	0	0	0	0	0	0	0
4/25/2024	7:30 AM	0	0	0	0	0	0	0	0	0	0	0	0	0
4/25/2024	7:45 AM	0	0	0	0	0	0	0	0	0	0	0	0	0
4/25/2024	8:00 AM	0	0	0	0	0	0	0	0	0	0	0	0	0
4/25/2024	8:15 AM	0	0	0	0	0	0	0	0	0	0	0	0	0
4/25/2024	8:30 AM	0	0	0	0	0	0	0	0	0	0	0	0	0
4/25/2024	8:45 AM	0	0	0	0	0	0	0	0	0	0	0	0	0
4/25/2024	9:00 AM	0	0	0	0	0	0	0	0	0	0	0	0	0
4/25/2024	9:15 AM	0	0	0	0	0	0	0	0	0	0	0	0	0
4/25/2024	9:30 AM	0	0	0	0	0	0	0	0	0	0	0	0	0
4/25/2024	9:45 AM	0	0	0	0	0	0	0	0	0	0	0	0	0
4/25/2024	10:00 AM	0	0	0	0	0	0	0	0	0	0	0	0	0
4/25/2024	10:15 AM	0	0	0	0	0	0	0	0	0	0	0	0	0
4/25/2024	10:30 AM	0	0	0	0	0	0	0	0	0	0	0	0	0
4/25/2024	10:45 AM	0	0	0	0	0	0	0	0	0	0	0	0	0
4/25/2024	11:00 AM	0	0	0	0	0	0	0	0	0	0	0	0	0
4/25/2024	11:15 AM	0	0	0	0	0	0	0	0	0	0	0	0	0
4/25/2024	11:30 AM	0	0	0	0	0	0	0	0	0	0	0	0	0
4/25/2024	11:45 AM	0	0	0	0	0	0	0	0	0	0	0	0	0
4/25/2024	12:00 PM	0	0	0	0	0	0	0	0	0	0	0	0	0
4/25/2024	12:15 PM	0	0	0	0	0	0	0	0	0	0	0	0	0
4/25/2024	12:30 PM	0	0	0	0	0	0	0	0	0	0	0	0	0
4/25/2024	12:45 PM	0	0	0	0	0	0	0	0	0	0	0	0	0
4/25/2024	1:00 PM	0	0	0	0	0	0	0	0	0	0	0	0	0
4/25/2024	1:15 PM	0	0	0	0	0	0	0	0	0	0	0	0	0
4/25/2024	1:30 PM	0	0	0	0	0	0	0	0	0	0	0	0	0
4/25/2024	1:45 PM	0	0	0	0	0	0	0	0	0	0	0	0	0
4/25/2024	2:00 PM	0	0	0	0	0	0	0	0	0	0	0	0	0
4/25/2024	2:15 PM	0	0	0	0	0	0	0	0	0	0	0	0	0
4/25/2024	2:30 PM	0	0	0	0	0	0	0	0	0	0	0	0	0
4/25/2024	2:45 PM	0	0	0	0	0	0	0	0	0	0	0	0	0
4/25/2024	3:00 PM	0	0	0	0	0	0	0	0	0	0	0	0	0
4/25/2024	3:15 PM	0	0	0	0	0	0	0	0	0	0	0	0	0
4/25/2024	3:30 PM	0	0	0	0	0	0	0	0	0	0	0	0	0
4/25/2024	3:45 PM	0	0	0	0	0	0	0	0	0	0	0	0	0
4/25/2024	4:00 PM	0	0	0	0	0	0	0	0	0	0	0	0	0
4/25/2024	4:15 PM	0	0	0	0	0	0	0	0	0	0	0	0	0
4/25/2024	4:30 PM	0	0	0	0	0	0	0	0	0	0	0	0	0
4/25/2024	4:45 PM	0	0	0	0	0	0	0	0	0	0	0	0	0
4/25/2024	5:00 PM	0	0	0	0	0	0	0	0	0	0	0	0	0
4/25/2024	5:15 PM	0	0	0	0	0	0	0	0	0	0	0	0	0
4/25/2024	5:30 PM	0	0	0	0	0	0	0	0	0	0	0	0	0
4/25/2024	5:45 PM	0	0	0	0	0	0	0	0	0	0	0	0	0
4/25/2024	6:00 PM	0	0	0	0	0	0	0	0	0	0	0	0	0
4/25/2024	6:15 PM	0	0	0	0	0	0	0	0	0	0	0	0	0
4/25/2024	6:30 PM	0	0	0	0	0	0	0	0	0	0	0	0	0
4/25/2024	6:45 PM	0	0	0	0	0	0	0	0	0	0	0	0	0
4/25/2024	7:00 PM	0	0	0	0	0	0	0	0	0	0	0	0	0
4/25/2024	7:15 PM	0	0	0	0	0	0	0	0	0	0	0	0	0
4/25/2024	7:30 PM	0	0	0	0	0	0	0	0	0	0	0	0	0
4/25/2024	7:45 PM	0	0	0	0	0	0	0	0	0	0	0	0	0
4/25/2024	8:00 PM	0	0	0	0	0	0	0	0	0	0	0	0	0
4/25/2024	8:15 PM	0	0	0	0	0	0	0	0	0	0	0	0	0
4/25/2024	8:30 PM	0	0	0	0	0	0	0	0	0	0	0	0	0
4/25/2024	8:45 PM	0	0	0	0	0	0	0	0	0	0	0	0	0
4/25/2024	9:00 PM	0	0	0	0	0	0	0	0	0	0	0	0	0
4/25/2024	9:15 PM	0	0	0	0	0	0	0	0	0	0	0	0	0
4/25/2024	9:30 PM	0	0	0	0	0	0	0	0	0	0	0	0	0
4/25/2024	9:45 PM	0	0	0	0	0	0	0	0	0	0	0	0	0
4/25/2024	10:00 PM	0	0	0	0	0	0	0	0	0	0	0	0	0
4/25/2024	10:15 PM	0	0	0	0	0	0	0	0	0	0	0	0	0
4/25/2024	10:30 PM	0	0	0	0	0	0	0	0	0	0	0	0	0
4/25/2024	10:45 PM	0	0	0	0	0	0	0	0	0	0	0	0	0
4/25/2024	11:00 PM	0	0	0	0	0	0	0	0	0	0	0	0	0
4/25/2024	11:15 PM	0	0	0	0	0	0	0	0	0	0	0	0	0
4/25/2024	11:30 PM	0	0	0	0	0	0	0	0	0	0	0	0	0
4/25/2024	11:45 PM	0	0	0	0	0	0	0	0	0	0	0	0	0

4/26/2024	12:00 AM	0	0	0	0	0	0	0	0	0	0	0	0	0
4/26/2024	12:15 AM	0	0	0	0	0	0	0	0	0	0	0	0	0
4/26/2024	12:30 AM	0	0	0	0	0	0	0	0	0	0	0	0	0
4/26/2024	12:45 AM	0	0	0	0	0	0	0	0	0	0	0	0	0
4/26/2024	1:00 AM	0	0	0	0	0	0	0	0	0	0	0	0	0
4/26/2024	1:15 AM	0	0	0	0	0	0	0	0	0	0	0	0	0
4/26/2024	1:30 AM	0	0	0	0	0	0	0	0	0	0	0	0	0
4/26/2024	1:45 AM	0	0	0	0	0	0	0	0	0	0	0	0	0
4/26/2024	2:00 AM	0	0	0	0	0	0	0	0	0	0	0	0	0
4/26/2024	2:15 AM	0	0	0	0	0	0	0	0	0	0	0	0	0
4/26/2024	2:30 AM	0	0	0	0	0	0	0	0	0	0	0	0	0
4/26/2024	2:45 AM	0	0	0	0	0	0	0	0	0	0	0	0	0
4/26/2024	3:00 AM	0	0	0	0	0	0	0	0	0	0	0	0	0
4/26/2024	3:15 AM	0	0	0	0	0	0	0	0	0	0	0	0	0
4/26/2024	3:30 AM	0	0	0	0	0	0	0	0	0	0	0	0	0
4/26/2024	3:45 AM	0	0	0	0	0	0	0	0	0	0	0	0	0
4/26/2024	4:00 AM	0	0	0	0	0	0	0	0	0	0	0	0	0
4/26/2024	4:15 AM	0	0	0	0	0	0	0	0	0	0	0	0	0
4/26/2024	4:30 AM	0	0	0	0	0	0	0	0	0	0	0	0	0
4/26/2024	4:45 AM	0	0	0	0	0	0	0	0	0	0	0	0	0
4/26/2024	5:00 AM	0	0	0	0	0	0	0	0	0	0	0	0	0
4/26/2024	5:15 AM	0	0	0	0	0	0	0	0	0	0	0	0	0
4/26/2024	5:30 AM	0	0	0	0	0	0	0	0	0	0	0	0	0
4/26/2024	5:45 AM	0	0	0	0	0	0	0	0	0	0	0	0	0
4/26/2024	6:00 AM	0	0	0	0	0	0	0	0	0	0	0	0	0
4/26/2024	6:15 AM	0	0	0	0	0	0	0	0	0	0	0	0	0
4/26/2024	6:30 AM	0	0	0	0	0	0	0	0	0	0	0	0	0
4/26/2024	6:45 AM	0	0	0	0	0	0	0	0	0	0	0	0	0
4/26/2024	7:00 AM	0	0	0	0	0	0	0	0	0	0	0	0	0
4/26/2024	7:15 AM	0	0	0	0	0	0	0	0	0	0	0	0	0
4/26/2024	7:30 AM	0	0	0	0	0	0	0	0	0	0	0	0	0
4/26/2024	7:45 AM	0	0	0	0	0	0	0	0	0	0	0	0	0
4/26/2024	8:00 AM	0	0	0	0	0	0	0	0	0	0	0	0	0
4/26/2024	8:15 AM	0	0	0	0	0	0	0	0	0	0	0	0	0
4/26/2024	8:30 AM	0	0	0	0	0	0	0	0	0	0	0	0	0
4/26/2024	8:45 AM	0	0	0	0	0	0	0	0	0	0	0	0	0
4/26/2024	9:00 AM	0	0	0	0	0	0	0	0	0	0	0	0	0
4/26/2024	9:15 AM	0	0	0	0	0	0	0	0	0	0	0	0	0
4/26/2024	9:30 AM	0	0	0	0	0	0	0	0	0	0	0	0	0
4/26/2024	9:45 AM	0	0	0	0	0	0	0	0	0	0	0	0	0
4/26/2024	10:00 AM	0	0	0	0	0	0	0	0	0	0	0	0	0
4/26/2024	10:15 AM	0	0	0	0	0	0	0	0	0	0	0	0	0
4/26/2024	10:30 AM	0	0	0	0	0	0	0	0	0	0	0	0	0
4/26/2024	10:45 AM	0	0	0	0	0	0	0	0	0	0	0	0	0
4/26/2024	11:00 AM	0	0	0	0	0	0	0	0	0	0	0	0	0
4/26/2024	11:15 AM	0	0	0	0	0	0	0	0	0	0	0	0	0
4/26/2024	11:30 AM	0	0	0	0	0	0	0	0	0	0	0	0	0
4/26/2024	11:45 AM	0	0	0	0	0	0	0	0	0	0	0	0	0
4/26/2024	12:00 PM	0	0	0	0	0	0	0	0	0	0	0	0	0
4/26/2024	12:15 PM	0	0	0	0	0	0	0	0	0	0	0	0	0
4/26/2024	12:30 PM	0	0	0	0	0	0	0	0	0	0	0	0	0
4/26/2024	12:45 PM	0	0	0	0	0	0	0	0	0	0	0	0	0
4/26/2024	1:00 PM	0	0	0	0	0	0	0	0	0	0	0	0	0
4/26/2024	1:15 PM	0	0	0	0	0	0	0	0	0	0	0	0	0
4/26/2024	1:30 PM	0	0	0	0	0	0	0	0	0	0	0	0	0
4/26/2024	1:45 PM	0	0	0	0	0	0	0	0	0	0	0	0	0
4/26/2024	2:00 PM	0	0	0	0	0	0	0	0	0	0	0	0	0
4/26/2024	2:15 PM	0	0	0	0	0	0	0	0	0	0	0	0	0
4/26/2024	2:30 PM	0	0	0	0	0	0	0	0	0	0	0	0	0
4/26/2024	2:45 PM	0	0	0	0	0	0	0	0	0	0	0	0	0
4/26/2024	3:00 PM	0	0	0	0	0	0	0	0	0	0	0	0	0
4/26/2024	3:15 PM	0	0	0	0	0	0	0	0	0	0	0	0	0
4/26/2024	3:30 PM	0	0	0	0	0	0	0	0	0	0	0	0	0
4/26/2024	3:45 PM	0	0	0	0	0	0	0	0	0	0	0	0	0
4/26/2024	4:00 PM	0	0	0	0	0	0	0	0	0	0	0	0	0
4/26/2024	4:15 PM	0	0	0	0	0	0	0	0	0	0	0	0	0
4/26/2024	4:30 PM	0	0	0	0	0	0	0	0	0	0	0	0	0
4/26/2024	4:45 PM	0	0	0	0	0	0	0	0	0	0	0	0	0
4/26/2024	5:00 PM	0	0	0	0	0	0	0	0	0	0	0	0	0
4/26/2024	5:15 PM	0	0	0	0	0	0	0	0	0	0	0	0	0
4/26/2024	5:30 PM	0	0	0	0	0	0	0	0	0	0	0	0	0
4/26/2024	5:45 PM	0	0	0	0	0	0	0	0	0	0	0	0	0
4/26/2024	6:00 PM	0	0	0	0	0	0	0	0	0	0	0	0	0
4/26/2024	6:15 PM	0	0	0	0	0	0	0	0	0	0	0	0	0
4/26/2024	6:30 PM	0	0	0	0	0	0	0	0	0	0	0	0	0
4/26/2024	6:45 PM	0	0	0	0	0	0	0	0	0	0	0	0	0
4/26/2024	7:00 PM	0	0	0	0	0	0	0	0	0	0	0	0	0
4/26/2024	7:15 PM	0	0	0	0	0	0	0	0	0	0	0	0	0
4/26/2024	7:30 PM	0	0	0	0	0	0	0	0	0	0	0	0	0
4/26/2024	7:45 PM	0	0	0	0	0	0	0	0	0	0	0	0	0
4/26/2024	8:00 PM	0	0	0	0	0	0	0	0	0	0	0	0	0
4/26/2024	8:15 PM	0	0	0	0	0	0	0	0	0	0	0	0	0
4/26/2024	8:30 PM	0	0	0	0	0	0	0	0	0	0	0	0	0
4/26/2024	8:45 PM	0	0	0	0	0	0	0	0	0	0	0	0	0
4/26/2024	9:00 PM	0	0	0	0	0	0	0	0	0	0	0	0	0
4/26/2024	9:15 PM	0	0	0	0	0	0	0	0	0	0	0	0	0
4/26/2024	9:30 PM	0	0	0	0	0	0	0	0	0	0	0	0	0
4/26/2024	9:45 PM	0	0	0	0	0	0	0	0	0	0	0	0	0
4/26/2024	10:00 PM	0	0	0	0	0	0	0	0	0	0	0	0	0
4/26/2024	10:15 PM	0	0	0	0	0	0	0	0	0	0	0	0	0
4/26/2024	10:30 PM	0	0	0	0	0	0	0	0	0	0	0	0	0
4/26/2024	10:45 PM	0	0	0	0	0	0	0	0	0	0	0	0	0
4/26/2024	11:00 PM	0	0	0	0	0	0	0	0	0	0	0	0	0
4/26/2024	11:15 PM	0	0	0	0	0	0	0	0	0	0	0	0	0
4/26/2024	11:30 PM	0	0	0	0	0	0	0	0	0	0	0	0	0
4/26/2024	11:45 PM	0	0	0	0	0	0	0	0	0	0	0	0	0

4/27/2024	12:00 AM	0	0	0	0	0	0	0	0	0	0	0	0	0
4/27/2024	12:15 AM	0	0	0	0	0	0	0	0	0	0	0	0	0
4/27/2024	12:30 AM	0	0	0	0	0	0	0	0	0	0	0	0	0
4/27/2024	12:45 AM	0	0	0	0	0	0	0	0	0	0	0	0	0
4/27/2024	1:00 AM	0	0	0	0	0	0	0	0	0	0	0	0	0
4/27/2024	1:15 AM	0	0	0	0	0	0	0	0	0	0	0	0	0
4/27/2024	1:30 AM	0	0	0	0	0	0	0	0	0	0	0	0	0
4/27/2024	1:45 AM	0	0	0	0	0	0	0	0	0	0	0	0	0
4/27/2024	2:00 AM	0	0	0	0	0	0	0	0	0	0	0	0	0
4/27/2024	2:15 AM	0	0	0	0	0	0	0	0	0	0	0	0	0
4/27/2024	2:30 AM	0	0	0	0	0	0	0	0	0	0	0	0	0
4/27/2024	2:45 AM	0	0	0	0	0	0	0	0	0	0	0	0	0
4/27/2024	3:00 AM	0	0	0	0	0	0	0	0	0	0	0	0	0
4/27/2024	3:15 AM	0	0	0	0	0	0	0	0	0	0	0	0	0
4/27/2024	3:30 AM	0	0	0	0	0	0	0	0	0	0	0	0	0
4/27/2024	3:45 AM	0	0	0	0	0	0	0	0	0	0	0	0	0
4/27/2024	4:00 AM	0	0	0	0	0	0	0	0	0	0	0	0	0
4/27/2024	4:15 AM	0	0	0	0	0	0	0	0	0	0	0	0	0
4/27/2024	4:30 AM	0	0	0	0	0	0	0	0	0	0	0	0	0
4/27/2024	4:45 AM	0	0	0	0	0	0	0	0	0	0	0	0	0
4/27/2024	5:00 AM	0	0	0	0	0	0	0	0	0	0	0	0	0
4/27/2024	5:15 AM	0	0	0	0	0	0	0	0	0	0	0	0	0
4/27/2024	5:30 AM	0	0	0	0	0	0	0	0	0	0	0	0	0
4/27/2024	5:45 AM	0	0	0	0	0	0	0	0	0	0	0	0	0
4/27/2024	6:00 AM	0	0	0	0	0	0	0	0	0	0	0	0	0
4/27/2024	6:15 AM	0	0	0	0	0	0	0	0	0	0	0	0	0
4/27/2024	6:30 AM	0	0	0	0	0	0	0	0	0	0	0	0	0
4/27/2024	6:45 AM	0	0	0	0	0	0	0	0	0	0	0	0	0
4/27/2024	7:00 AM	0	0	0	0	0	0	0	0	0	0	0	0	0
4/27/2024	7:15 AM	0	0	0	0	0	0	0	0	0	0	0	0	0
4/27/2024	7:30 AM	0	0	0	0	0	0	0	0	0	0	0	0	0
4/27/2024	7:45 AM	0	0	0	0	0	0	0	0	0	0	0	0	0
4/27/2024	8:00 AM	0	0	0	0	0	0	0	0	0	0	0	0	0
4/27/2024	8:15 AM	0	0	0	0	0	0	0	0	0	0	0	0	0
4/27/2024	8:30 AM	0	0	0	0	0	0	0	0	0	0	0	0	0
4/27/2024	8:45 AM	0	0	0	0	0	0	0	0	0	0	0	0	0
4/27/2024	9:00 AM	0	0	0	0	0	0	0	0	0	0	0	0	0
4/27/2024	9:15 AM	0	0	0	0	0	0	0	0	0	0	0	0	0
4/27/2024	9:30 AM	0	0	0	0	0	0	0	0	0	0	0	0	0
4/27/2024	9:45 AM	0	0	0	0	0	0	0	0	0	0	0	0	0
4/27/2024	10:00 AM	0	0	0	0	0	0	0	0	0	0	0	0	0
4/27/2024	10:15 AM	0	0	0	0	0	0	0	0	0	0	0	0	0
4/27/2024	10:30 AM	0	0	0	0	0	0	0	0	0	0	0	0	0
4/27/2024	10:45 AM	0	0	0	0	0	0	0	0	0	0	0	0	0
4/27/2024	11:00 AM	0	0	0	0	0	0	0	0	0	0	0	0	0
4/27/2024	11:15 AM	0	0	0	0	0	0	0	0	0	0	0	0	0
4/27/2024	11:30 AM	0	0	0	0	0	0	0	0	0	0	0	0	0
4/27/2024	11:45 AM	0	0	0	0	0	0	0	0	0	0	0	0	0
4/27/2024	12:00 PM	0	0	0	0	0	0	0	0	0	0	0	0	0
4/27/2024	12:15 PM	0	0	0	0	0	0	0	0	0	0	0	0	0
4/27/2024	12:30 PM	0	0	0	0	0	0	0	0	0	0	0	0	0
4/27/2024	12:45 PM	0	0	0	0	0	0	0	0	0	0	0	0	0
4/27/2024	1:00 PM	0	0	0	0	0	0	0	0	0	0	0	0	0
4/27/2024	1:15 PM	0	0	0	0	0	0	0	0	0	0	0	0	0
4/27/2024	1:30 PM	0	0	0	0	0	0	0	0	0	0	0	0	0
4/27/2024	1:45 PM	0	0	0	0	0	0	0	0	0	0	0	0	0
4/27/2024	2:00 PM	0	0	0	0	0	0	0	0	0	0	0	0	0
4/27/2024	2:15 PM	0	0	0	0	0	0	0	0	0	0	0	0	0
4/27/2024	2:30 PM	0	0	0	0	0	0	0	0	0	0	0	0	0
4/27/2024	2:45 PM	0	0	0	0	0	0	0	0	0	0	0	0	0
4/27/2024	3:00 PM	0	0	0	0	0	0	0	0	0	0	0	0	0
4/27/2024	3:15 PM	0	0	0	0	0	0	0	0	0	0	0	0	0
4/27/2024	3:30 PM	0	0	0	0	0	0	0	0	0	0	0	0	0
4/27/2024	3:45 PM	0	0	0	0	0	0	0	0	0	0	0	0	0
4/27/2024	4:00 PM	0	0	0	0	0	0	0	0	0	0	0	0	0
4/27/2024	4:15 PM	0	0	0	0	0	0	0	0	0	0	0	0	0
4/27/2024	4:30 PM	0	0	0	0	0	0	0	0	0	0	0	0	0
4/27/2024	4:45 PM	0	0	0	0	0	0	0	0	0	0	0	0	0
4/27/2024	5:00 PM	0	0	0	0	0	0	0	0	0	0	0	0	0
4/27/2024	5:15 PM	0	0	0	0	0	0	0	0	0	0	0	0	0
4/27/2024	5:30 PM	0	0	0	0	0	0	0	0	0	0	0	0	0
4/27/2024	5:45 PM	0	0	0	0	0	0	0	0	0	0	0	0	0
4/27/2024	6:00 PM	0	0	0	0	0	0	0	0	0	0	0	0	0
4/27/2024	6:15 PM	0	0	0	0	0	0	0	0	0	0	0	0	0
4/27/2024	6:30 PM	0	0	0	0	0	0	0	0	0	0	0	0	0
4/27/2024	6:45 PM	0	0	0	0	0	0	0	0	0	0	0	0	0
4/27/2024	7:00 PM	0	0	0	0	0	0	0	0	0	0	0	0	0
4/27/2024	7:15 PM	0	0	0	0	0	0	0	0	0	0	0	0	0
4/27/2024	7:30 PM	0	0	0	0	0	0	0	0	0	0	0	0	0
4/27/2024	7:45 PM	0	0	0	0	0	0	0	0	0	0	0	0	0
4/27/2024	8:00 PM	0	0	0	0	0	0	0	0	0	0	0	0	0
4/27/2024	8:15 PM	0	0	0	0	0	0	0	0	0	0	0	0	0
4/27/2024	8:30 PM	0	0	0	0	0	0	0	0	0	0	0	0	0
4/27/2024	8:45 PM	0	0	0	0	0	0	0	0	0	0	0	0	0
4/27/2024	9:00 PM	0	0	0	0	0	0	0	0	0	0	0	0	0
4/27/2024	9:15 PM	0	0	0	0	0	0	0	0	0	0	0	0	0
4/27/2024	9:30 PM	0	0	0	0	0	0	0	0	0	0	0	0	0
4/27/2024	9:45 PM	0	0	0	0	0	0	0	0	0	0	0	0	0
4/27/2024	10:00 PM	0	0	0	0	0	0	0	0	0	0	0	0	0
4/27/2024	10:15 PM	0	0	0	0	0	0	0	0	0	0	0	0	0
4/27/2024	10:30 PM	0	0	0	0	0	0	0	0	0	0	0	0	0
4/27/2024	10:45 PM	0	0	0	0	0	0	0	0	0	0	0	0	0
4/27/2024	11:00 PM	0	0	0	0	0	0	0	0	0	0	0	0	0
4/27/2024	11:15 PM	0	0	0	0	0	0	0	0	0	0	0	0	0
4/27/2024	11:30 PM	0	0	0	0	0	0	0	0	0	0	0	0	0
4/27/2024	11:45 PM	0	0	0	0	0	0	0	0	0	0	0	0	0

Bi-Directional Class Count || SB WB 15min

Columbia, SC

Marr Traffic DATA COLLECTION
www.marrtraffic.com

Site 74 Lane 1 WB
I-20,
west of US-378 Sunset Blvd S/Bound Off-Ramp

Date
Sunday, April 21, 2024

Lat/Long
34.008085°, -81.156669°

Weather
Cloudy
66°F

Click here for Detailed Weather

Click here for Map

0000 - 2400 (Sunday 24h Session) (04-21-2024)
SB WB 15min

	Westbound (Movement 74 Lane 1 WB.1)													15min	60min
Time	1	2	3	4	5	6	7	8	9	10	11	12	13	Total	Total
0000 - 0015	0	24	7	0	0	0	0	0	2	0	0	0	0	**33**	
0015 - 0030	0	25	2	0	0	0	0	0	0	0	0	0	0	**27**	
0030 - 0045	0	12	0	0	0	0	0	0	0	0	0	0	0	**12**	
0045 - 0100	0	10	0	0	0	0	0	0	0	0	0	0	0	**10**	**82**
0100 - 0115	0	16	0	0	0	0	0	0	0	0	0	0	0	**16**	
0115 - 0130	0	6	0	0	0	0	0	0	0	0	0	0	0	**6**	
0130 - 0145	0	13	0	0	0	0	0	0	0	0	0	0	0	**13**	
0145 - 0200	0	13	2	0	0	0	0	0	0	0	0	0	0	**15**	**50**
0200 - 0215	0	11	0	0	0	0	0	0	0	0	0	0	0	**11**	
0215 - 0230	0	12	1	0	0	0	0	0	0	0	0	0	0	**13**	
0230 - 0245	0	12	0	0	0	0	0	0	0	0	0	0	0	**12**	
0245 - 0300	0	8	2	0	0	0	0	0	0	0	0	0	0	**10**	**46**
0300 - 0315	0	9	0	0	0	0	0	0	0	0	0	0	0	**9**	
0315 - 0330	0	8	0	0	0	0	0	0	0	0	0	0	0	**8**	
0330 - 0345	0	9	0	0	0	0	0	0	0	0	0	0	0	**9**	
0345 - 0400	0	9	0	0	0	0	0	0	0	0	0	0	0	**9**	**35**
0400 - 0415	0	7	0	0	0	0	0	0	0	0	0	0	0	**7**	
0415 - 0430	0	5	1	0	0	0	0	0	1	0	0	0	0	**7**	
0430 - 0445	0	11	1	0	0	0	0	0	0	0	0	0	0	**12**	
0445 - 0500	0	7	0	0	0	0	0	0	0	0	0	0	0	**7**	**33**
0500 - 0515	0	10	0	0	0	0	0	0	0	0	0	0	0	**10**	
0515 - 0530	0	14	3	1	0	0	0	0	1	0	0	0	0	**19**	
0530 - 0545	0	13	3	0	1	0	0	0	1	0	0	0	0	**18**	
0545 - 0600	0	15	1	0	0	0	0	0	0	0	0	0	0	**16**	**63**
0600 - 0615	0	11	1	0	0	0	0	0	0	0	0	0	0	**12**	
0615 - 0630	0	9	1	0	0	0	0	0	0	0	0	0	0	**10**	
0630 - 0645	0	21	3	0	0	0	0	0	0	0	0	0	0	**24**	
0645 - 0700	0	14	5	0	0	0	0	0	0	0	0	0	0	**19**	**65**
0700 - 0715	0	27	2	0	0	0	0	0	0	0	0	0	0	**29**	
0715 - 0730	0	19	3	0	1	0	0	0	0	0	0	0	0	**23**	
0730 - 0745	0	20	6	0	0	0	0	0	0	0	0	0	0	**26**	
0745 - 0800	2	20	3	0	0	0	0	0	0	0	0	0	0	**25**	**103**
0800 - 0815	3	19	5	0	0	0	0	0	0	0	0	0	0	**27**	
0815 - 0830	0	23	6	0	0	0	0	0	0	1	0	0	0	**30**	
0830 - 0845	1	36	3	0	0	0	0	0	0	0	0	0	0	**40**	
0845 - 0900	0	38	1	0	0	0	0	0	0	0	0	0	0	**39**	**136**
0900 - 0915	2	36	4	0	0	0	0	0	0	0	0	0	0	**42**	
0915 - 0930	4	51	13	0	0	0	0	0	0	0	0	0	0	**68**	
0930 - 0945	0	56	13	0	0	0	0	0	0	0	0	0	0	**69**	
0945 - 1000	0	60	14	0	0	0	0	0	0	0	0	0	0	**74**	**253**
1000 - 1015	0	60	16	0	1	0	0	0	0	0	0	0	0	**77**	
1015 - 1030	10	74	16	0	0	0	0	0	0	0	0	0	0	**100**	
1030 - 1045	0	91	15	0	1	0	0	0	0	0	0	0	0	**107**	
1045 - 1100	0	104	18	0	1	1	0	0	0	0	0	0	0	**124**	**408**
1100 - 1115	0	133	14	0	0	0	0	0	0	0	0	0	0	**147**	
1115 - 1130	0	95	25	0	0	0	0	0	0	0	0	0	0	**120**	
1130 - 1145	0	104	28	0	1	0	0	0	0	0	0	0	0	**133**	
1145 - 1200	0	116	37	0	0	0	0	0	0	0	0	0	0	**153**	**553**
1200 - 1215	3	134	21	0	0	0	0	0	0	0	0	0	0	**158**	
1215 - 1230	0	134	35	0	2	0	0	0	0	0	0	0	0	**171**	
1230 - 1245	8	126	33	0	0	0	0	0	0	0	0	0	0	**167**	
1245 - 1300	0	157	26	0	1	0	0	0	0	0	0	0	0	**184**	**680**
1300 - 1315	0	168	25	0	0	0	0	1	0	0	0	0	0	**194**	
1315 - 1330	0	170	36	0	0	0	0	0	0	0	0	0	0	**206**	
1330 - 1345	0	183	31	0	0	0	0	0	0	0	0	0	0	**214**	
1345 - 1400	0	170	29	0	0	0	0	1	0	0	0	0	0	**200**	**814**
1400 - 1415	0	156	29	0	1	0	0	0	0	0	0	0	0	**186**	
1415 - 1430	0	153	30	0	0	0	0	0	0	0	0	0	0	**183**	
1430 - 1445	0	154	31	0	0	0	0	0	0	0	0	0	0	**185**	
1445 - 1500	0	156	23	0	1	0	0	0	0	0	0	0	0	**180**	**734**
1500 - 1515	0	162	22	0	1	0	0	1	0	0	0	0	0	**186**	
1515 - 1530	0	141	22	0	0	0	0	0	0	0	0	0	0	**163**	
1530 - 1545	0	144	28	0	0	0	0	0	0	0	0	0	0	**172**	
1545 - 1600	0	169	32	0	1	0	0	1	1	0	0	0	0	**204**	**725**
1600 - 1615	0	146	33	0	0	0	0	1	0	0	0	0	0	**180**	
1615 - 1630	0	151	24	0	0	0	0	0	0	0	0	0	0	**175**	
1630 - 1645	0	146	30	0	0	0	0	1	0	1	0	0	0	**178**	
1645 - 1700	0	146	23	0	0	0	0	0	0	0	0	0	0	**169**	**702**
1700 - 1715	1	124	21	0	1	0	0	0	0	0	0	0	0	**147**	
1715 - 1730	0	133	21	0	0	0	0	0	0	0	0	0	0	**154**	
1730 - 1745	0	122	21	0	1	0	0	0	0	0	0	0	0	**144**	
1745 - 1800	0	131	24	0	0	0	0	0	0	0	0	0	0	**155**	**600**
1800 - 1815	1	110	23	0	0	0	0	0	0	0	0	0	0	**134**	
1815 - 1830	1	110	19	0	0	0	0	1	0	0	0	0	0	**131**	
1830 - 1845	0	95	24	0	0	0	0	1	0	0	0	0	0	**120**	
1845 - 1900	1	130	17	0	1	0	0	1	0	0	0	0	0	**150**	**535**
1900 - 1915	0	102	16	0	0	0	0	0	2	0	0	0	0	**120**	
1915 - 1930	0	87	10	0	0	0	0	0	0	0	0	0	0	**97**	
1930 - 1945	0	81	18	0	1	0	0	0	0	0	0	0	0	**100**	
1945 - 2000	0	92	14	0	1	0	0	0	0	0	0	0	0	**107**	**424**
2000 - 2015	0	69	10	0	3	0	0	0	0	0	1	0	0	**83**	
2015 - 2030	0	54	15	0	0	0	0	0	0	0	0	0	0	**69**	
2030 - 2045	0	55	12	0	1	0	0	0	0	0	0	0	0	**68**	
2045 - 2100	0	57	12	0	0	0	0	0	0	0	0	0	0	**69**	**289**
2100 - 2115	0	40	10	0	0	0	0	0	1	0	0	0	0	**51**	
2115 - 2130	0	40	9	0	0	0	0	0	0	0	0	0	0	**49**	
2130 - 2145	0	30	7	0	0	0	0	0	0	0	0	0	0	**37**	
2145 - 2200	0	28	7	0	0	0	0	0	2	0	0	0	0	**37**	**174**
2200 - 2215	0	30	10	0	0	0	0	0	1	0	0	0	0	**41**	
2215 - 2230	0	27	6	0	0	0	0	0	1	0	0	0	0	**34**	
2230 - 2245	0	21	5	0	0	0	0	0	0	0	0	0	0	**26**	
2245 - 2300	0	20	6	0	0	0	0	0	0	0	0	0	0	**26**	**127**
2300 - 2315	0	17	4	0	0	0	0	0	0	0	0	0	0	**21**	
2315 - 2330	0	11	1	0	0	0	0	0	0	0	0	0	0	**12**	
2330 - 2345	0	15	2	0	0	0	0	0	0	0	0	0	0	**17**	
2345 - 0000	0	10	2	0	0	0	0	0	0	0	0	0	0	**12**	**62**

Session Total	37	6423	1184	1	22	1	0	9	13	2	1	0	0	**7693**
Session Average	0.39	66.91	12.33	0.01	0.23	0.01	0.00	0.09	0.14	0.02	0.01	0.00	0.00	**80.14**
Session Percentage	0.48	83.49	15.39	0.01	0.29	0.01	0.00	0.12	0.17	0.03	0.01	0.00	0.00	

AM Peak Hour	0930 - 1030	0945 - 1045	0945 - 1045	0500 - 0600	0945 - 1045	-	-	-	0500 - 0600	0730 - 0830	-	-	-	**0945 - 1045**
AM Peak Volume	10	285	61	1	2	0	0	0	2	1	0	0	0	**358**

Noon Peak Hour	1145 - 1245	1300 - 1400	1145 - 1245	-	1000 - 1100	1000 - 1100	-	1300 - 1400	-	-	-	-	-	**1300 - 1400**
Noon Peak Volume	11	691	126	0	3	1	0	2	0	0	0	0	0	**814**

PM Peak Hour	1800 - 1900	1500 - 1600	1545 - 1645	-	1915 - 2015	-	-	1545 - 1645	1815 - 1915	1545 - 1645	1915 - 2015	-	-	**1545 - 1645**
PM Peak Volume	3	616	119	0	5	0	0	3	2	1	1	0	0	**737**

Site 74 Lane 1 WB
I-20,
west of US-378 Sunset Blvd S/Bound Off-Ramp

Date
Monday, April 22, 2024

Lat/Long
34.008085°, -81.156669°

Weather
Mostly Cloudy
57°F

Click here for Detailed Weather

0000 - 2400 (Weekday 24h Session) (04-22-2024)
SB WB 15min

	Westbound (Movement 74 Lane 1 WB.1)													15min	60min
Time	1	2	3	4	5	6	7	8	9	10	11	12	13	Total	Total
0000 - 0015	0	11	3	0	0	0	0	0	0	0	0	0	0	**14**	
0015 - 0030	0	14	1	0	0	0	0	0	0	0	0	0	0	**15**	
0030 - 0045	0	16	2	0	1	0	0	0	0	0	0	0	0	**19**	
0045 - 0100	0	11	1	0	0	0	0	0	0	0	0	0	0	**12**	**60**
0100 - 0115	0	7	0	0	0	0	0	0	0	0	0	0	0	**7**	
0115 - 0130	0	5	2	0	0	0	0	0	0	0	0	0	0	**7**	
0130 - 0145	0	6	0	0	0	0	0	0	0	0	0	0	0	**6**	
0145 - 0200	0	3	0	0	0	0	0	0	0	0	0	0	0	**3**	**23**
0200 - 0215	0	6	0	0	0	0	0	0	0	0	0	0	0	**6**	
0215 - 0230	0	10	3	0	0	0	0	0	0	0	0	0	0	**13**	
0230 - 0245	0	9	1	0	0	0	0	0	0	0	0	0	0	**10**	
0245 - 0300	0	7	1	0	0	0	0	0	0	0	0	0	0	**8**	**37**
0300 - 0315	0	8	0	0	0	0	0	0	0	0	0	0	0	**8**	
0315 - 0330	0	12	1	0	0	0	0	0	0	0	0	0	0	**13**	
0330 - 0345	0	11	3	0	0	0	0	0	0	0	0	0	0	**14**	
0345 - 0400	0	16	0	0	0	0	0	0	0	0	0	0	0	**16**	**51**
0400 - 0415	0	8	6	0	0	0	0	0	1	0	0	0	0	**15**	
0415 - 0430	0	11	4	0	0	0	0	0	0	0	0	0	0	**15**	
0430 - 0445	0	13	3	0	1	0	0	0	0	0	0	0	0	**17**	
0445 - 0500	0	14	1	0	0	0	0	0	0	0	0	0	0	**15**	**62**
0500 - 0515	0	24	8	0	0	0	0	0	0	0	0	0	0	**32**	
0515 - 0530	0	29	7	0	1	0	0	0	0	0	0	0	0	**37**	
0530 - 0545	0	35	14	0	0	0	0	0	0	0	0	0	0	**49**	
0545 - 0600	0	48	20	0	0	0	0	0	0	0	0	0	0	**68**	**186**
0600 - 0615	1	51	22	0	0	0	0	0	0	0	0	0	0	**74**	
0615 - 0630	0	83	19	0	0	0	0	0	0	0	0	0	0	**102**	
0630 - 0645	0	115	21	0	0	0	0	0	0	0	0	0	0	**136**	
0645 - 0700	0	120	28	0	0	0	0	0	0	0	0	0	0	**148**	**460**
0700 - 0715	0	122	24	0	1	0	0	0	0	0	0	0	0	**147**	
0715 - 0730	0	158	37	0	2	0	0	1	0	0	0	0	0	**198**	
0730 - 0745	0	158	33	0	1	0	0	0	1	0	0	0	0	**193**	
0745 - 0800	0	145	43	0	1	0	0	0	1	0	0	0	0	**190**	**728**
0800 - 0815	0	125	30	0	1	0	0	0	0	0	0	0	0	**156**	
0815 - 0830	1	91	34	0	1	1	0	1	0	0	0	0	0	**129**	
0830 - 0845	0	82	25	0	0	0	0	1	0	0	0	0	0	**108**	
0845 - 0900	0	78	17	0	1	0	0	1	0	0	0	0	0	**97**	**490**
0900 - 0915	0	72	31	0	1	0	0	0	0	0	0	0	0	**104**	
0915 - 0930	0	79	18	0	3	0	0	0	1	0	0	0	0	**101**	
0930 - 0945	0	59	22	0	2	0	0	2	1	0	0	0	0	**86**	
0945 - 1000	0	79	26	0	3	0	0	0	0	0	0	0	0	**108**	**399**
1000 - 1015	0	84	29	0	1	0	0	0	1	0	0	0	0	**115**	
1015 - 1030	0	80	25	0	2	0	0	0	0	0	0	0	0	**107**	
1030 - 1045	0	84	21	0	1	0	0	0	1	0	0	0	0	**107**	
1045 - 1100	0	77	28	0	1	0	0	0	0	0	0	0	0	**106**	**435**
1100 - 1115	1	85	21	1	0	0	0	0	0	0	0	0	0	**108**	
1115 - 1130	0	88	27	0	0	0	0	1	1	0	0	0	0	**117**	
1130 - 1145	0	96	34	0	1	0	0	0	0	0	0	0	0	**131**	
1145 - 1200	0	106	16	0	1	0	0	1	0	0	0	0	0	**124**	**480**
1200 - 1215	1	115	19	0	1	0	0	0	2	0	0	0	0	**138**	
1215 - 1230	1	112	31	0	2	0	0	0	0	0	0	0	0	**146**	
1230 - 1245	0	103	26	0	0	0	0	1	0	0	0	0	0	**130**	
1245 - 1300	0	102	26	0	0	0	0	0	0	0	0	0	0	**128**	**542**
1300 - 1315	3	107	23	1	1	0	0	0	0	0	0	0	0	**135**	
1315 - 1330	0	130	28	0	1	0	0	0	0	0	0	0	0	**159**	
1330 - 1345	0	125	32	0	0	0	0	1	0	0	0	0	0	**158**	
1345 - 1400	0	116	25	1	0	0	0	0	0	0	0	0	0	**142**	**594**
1400 - 1415	1	104	34	0	0	0	0	0	0	0	0	0	0	**139**	
1415 - 1430	0	126	38	0	1	0	0	0	0	0	0	0	0	**165**	
1430 - 1445	0	112	31	0	2	0	0	0	1	0	0	0	0	**146**	
1445 - 1500	0	139	33	0	0	0	0	1	0	0	0	0	0	**173**	**623**
1500 - 1515	0	165	42	0	0	0	0	0	0	0	0	0	0	**207**	
1515 - 1530	0	193	44	0	3	0	0	1	0	0	0	0	0	**241**	
1530 - 1545	1	211	49	0	2	0	0	0	0	0	0	0	0	**263**	
1545 - 1600	0	202	42	0	3	0	0	1	2	0	0	0	0	**250**	**961**
1600 - 1615	0	232	58	0	5	0	0	1	0	0	0	0	0	**296**	
1615 - 1630	0	249	56	0	6	0	0	1	1	0	0	0	0	**313**	
1630 - 1645	1	269	58	0	3	0	0	0	1	0	0	0	0	**332**	
1645 - 1700	0	263	61	0	4	0	0	1	0	0	0	0	0	**329**	**1270**
1700 - 1715	0	280	92	0	5	0	0	0	0	0	0	0	0	**377**	
1715 - 1730	0	308	93	0	3	0	0	3	0	0	0	0	0	**407**	
1730 - 1745	0	270	82	0	4	1	0	1	0	0	0	0	0	**358**	
1745 - 1800	1	270	70	0	3	0	0	0	0	0	0	0	0	**344**	**1486**
1800 - 1815	0	174	49	0	0	1	0	1	0	0	0	0	0	**225**	
1815 - 1830	0	146	43	0	3	0	0	1	0	0	0	0	0	**193**	
1830 - 1845	1	125	23	0	1	0	0	0	0	0	0	0	0	**150**	
1845 - 1900	0	115	39	0	0	1	0	0	0	0	0	0	0	**155**	**723**
1900 - 1915	0	108	24	0	0	0	0	1	0	0	0	0	0	**133**	
1915 - 1930	0	96	16	0	2	0	0	0	1	0	0	0	0	**115**	
1930 - 1945	0	75	24	0	2	0	0	0	0	0	0	0	0	**101**	
1945 - 2000	0	66	19	0	1	0	0	0	0	0	0	0	0	**86**	**435**
2000 - 2015	0	71	12	0	0	0	0	1	0	0	0	0	0	**84**	
2015 - 2030	0	41	11	0	0	0	0	0	0	0	0	0	0	**52**	
2030 - 2045	0	50	11	0	0	0	0	0	0	0	0	0	0	**61**	
2045 - 2100	0	40	15	0	0	0	0	0	0	0	0	0	0	**55**	**252**
2100 - 2115	0	37	15	0	1	0	0	0	2	0	0	0	0	**55**	
2115 - 2130	0	30	16	0	0	0	0	0	0	0	0	0	0	**46**	
2130 - 2145	0	20	12	0	1	0	0	0	0	0	0	0	0	**33**	
2145 - 2200	0	13	7	0	1	0	0	0	0	0	0	0	0	**21**	**155**
2200 - 2215	0	15	9	0	0	0	0	0	1	0	0	0	0	**25**	
2215 - 2230	0	20	11	0	0	0	0	0	0	0	0	0	0	**31**	
2230 - 2245	0	15	7	0	0	0	0	0	1	0	0	0	0	**23**	
2245 - 2300	0	10	6	0	0	0	0	0	0	0	0	0	0	**16**	**95**
2300 - 2315	0	11	7	0	0	0	0	0	0	0	0	0	0	**18**	
2315 - 2330	0	9	4	0	0	0	0	0	0	0	0	0	0	**13**	
2330 - 2345	0	7	3	0	0	0	0	0	0	0	0	0	0	**10**	
2345 - 0000	0	10	3	0	0	0	0	0	0	0	0	0	0	**13**	**54**

Session Total	13	8258	2191	3	88	4	0	24	20	0	0	0	0	**10601**
Session Average	0.14	86.02	22.82	0.03	0.92	0.04	0.00	0.25	0.21	0.00	0.00	0.00	0.00	**110.43**
Session Percentage	0.12	77.90	20.67	0.03	0.83	0.04	0.00	0.23	0.19	0.00	0.00	0.00	0.00	

AM Peak Hour	0515 - 0615	0715 - 0815	0715 - 0815	-	0900 - 1000	0730 - 0830	-	0800 - 0900	0915 - 1015	-	-	-	-	**0715 - 0815**
AM Peak Volume	1	586	143	0	9	1	0	3	3	0	0	0	0	**737**

Noon Peak Hour	1215 - 1315	1445 - 1545	1445 - 1545	1300 - 1400	1000 - 1100	-	-	1100 - 1200	1115 - 1215	-	-	-	-	**1445 - 1545**
Noon Peak Volume	4	708	168	2	5	0	0	2	3	0	0	0	0	**884**

PM Peak Hour	1745 - 1845	1700 - 1800	1700 - 1800	-	1600 - 1700	1715 - 1815	-	1645 - 1745	1545 - 1645	-	-	-	-	**1700 - 1800**
PM Peak Volume	2	1128	337	0	18	2	0	5	4	0	0	0	0	**1486**

Site 74 Lane 1 WB

I-20,
west of US-378 Sunset Blvd S/Bound Off-Ramp

Date

Tuesday, April 23, 2024

Lat/Long

34.008085°, -81.156669°

Weather

Fair
58°F

Click here for Detailed Weather

0000 - 2400 (Weekday 24h Session) (04-23-2024)

SB WB 15min

	Westbound (Movement 74 Lane 1 WB.1)													15min	60min
TIME	1	2	3	4	5	6	7	8	9	10	11	12	13	Total	Total
0000 - 0015	0	22	0	0	0	0	0	0	3	0	0	0	0	**25**	
0015 - 0030	0	21	0	0	0	0	0	0	2	0	0	0	0	**23**	
0030 - 0045	0	10	1	0	0	0	0	0	1	0	0	0	0	**12**	
0045 - 0100	0	12	0	0	0	0	0	0	0	0	0	0	0	**12**	**72**
0100 - 0115	0	7	2	0	0	0	0	0	1	0	0	0	0	**10**	
0115 - 0130	0	6	0	0	0	0	0	0	0	0	0	0	0	**6**	
0130 - 0145	0	6	0	0	0	0	0	0	0	0	0	0	0	**6**	
0145 - 0200	0	5	0	0	0	0	0	0	0	0	0	0	0	**5**	**27**
0200 - 0215	0	2	0	0	0	0	0	0	0	0	0	0	0	**2**	
0215 - 0230	0	0	0	0	0	0	0	0	0	0	0	0	0	**0**	
0230 - 0245	0	4	0	0	0	0	0	0	0	0	0	0	0	**4**	
0245 - 0300	0	1	0	0	1	0	0	0	0	0	0	0	0	**2**	**8**
0300 - 0315	0	0	0	0	0	0	0	0	0	0	0	0	0	**0**	
0315 - 0330	0	4	0	0	0	0	0	0	0	0	0	0	0	**4**	
0330 - 0345	0	2	0	0	0	0	0	0	0	0	0	0	0	**2**	
0345 - 0400	0	6	2	0	0	0	0	0	0	0	0	0	0	**8**	**14**
0400 - 0415	0	3	0	0	0	0	0	0	0	0	0	0	0	**3**	
0415 - 0430	0	4	0	0	0	0	0	0	0	0	0	0	0	**4**	
0430 - 0445	0	7	1	0	0	0	0	0	0	0	0	0	0	**8**	
0445 - 0500	0	3	0	0	0	0	0	0	0	0	0	0	0	**3**	**18**
0500 - 0515	0	14	0	0	0	0	0	0	0	0	0	0	0	**14**	
0515 - 0530	0	11	1	0	0	0	0	0	0	0	0	0	0	**12**	
0530 - 0545	0	16	2	0	0	0	0	0	0	0	0	0	0	**18**	
0545 - 0600	0	15	2	0	1	0	0	0	0	0	0	0	0	**18**	**62**
0600 - 0615	0	34	15	0	0	0	0	0	0	0	0	0	0	**49**	
0615 - 0630	0	81	29	0	0	0	0	0	0	0	0	0	0	**110**	
0630 - 0645	0	81	19	0	1	0	0	0	0	0	0	0	0	**101**	
0645 - 0700	0	85	31	0	0	0	0	0	0	0	0	0	0	**116**	**376**
0700 - 0715	0	106	21	0	0	0	0	0	0	0	0	0	0	**127**	
0715 - 0730	0	68	20	0	0	0	0	0	0	0	0	0	0	**88**	
0730 - 0745	0	90	18	1	2	0	0	0	0	0	0	0	0	**111**	
0745 - 0800	0	94	19	0	0	0	0	0	1	0	0	0	0	**114**	**440**
0800 - 0815	0	69	22	0	0	0	0	0	0	0	0	0	0	**91**	
0815 - 0830	0	82	21	0	0	0	0	0	0	0	0	0	0	**103**	
0830 - 0845	0	62	5	1	1	0	0	0	0	0	0	0	0	**69**	
0845 - 0900	0	60	10	1	0	0	0	0	0	0	0	0	0	**71**	**334**
0900 - 0915	0	71	30	1	1	0	0	0	0	0	0	0	0	**103**	
0915 - 0930	0	59	21	0	3	0	0	0	0	0	0	0	0	**83**	
0930 - 0945	0	58	16	0	1	0	0	0	0	0	0	0	0	**75**	
0945 - 1000	0	58	17	0	0	0	0	0	0	0	0	0	0	**75**	**336**
1000 - 1015	0	53	15	0	3	0	0	0	0	0	0	0	0	**71**	
1015 - 1030	0	47	18	0	0	0	0	0	1	0	0	0	0	**66**	
1030 - 1045	0	60	11	0	0	0	0	0	0	0	0	0	0	**71**	
1045 - 1100	0	62	24	0	0	0	0	0	0	0	0	0	0	**86**	**294**
1100 - 1115	0	66	20	0	0	0	0	0	0	0	0	0	0	**86**	
1115 - 1130	0	73	18	0	2	0	0	0	0	0	0	0	0	**93**	
1130 - 1145	2	67	19	0	0	0	0	0	0	0	0	0	0	**88**	
1145 - 1200	0	76	26	0	1	0	0	0	0	0	0	0	0	**103**	**370**
1200 - 1215	1	72	23	0	1	0	0	0	1	0	0	0	0	**98**	
1215 - 1230	1	76	17	0	1	0	0	0	1	0	0	0	0	**96**	
1230 - 1245	0	102	21	0	2	0	0	0	0	0	0	0	0	**125**	
1245 - 1300	0	87	20	0	1	0	0	1	1	0	0	0	0	**110**	**429**
1300 - 1315	1	99	27	0	1	0	0	0	0	0	0	0	0	**128**	
1315 - 1330	0	96	15	0	2	0	0	0	1	0	0	0	0	**114**	
1330 - 1345	0	96	13	0	2	0	0	0	2	0	0	0	0	**113**	
1345 - 1400	0	120	27	0	0	0	0	0	0	0	0	0	0	**147**	**502**
1400 - 1415	1	105	25	0	1	0	0	0	0	0	0	0	0	**132**	
1415 - 1430	0	129	28	0	1	0	0	0	0	0	0	0	0	**158**	
1430 - 1445	0	145	39	0	0	0	0	0	1	0	0	0	0	**185**	
1445 - 1500	0	137	48	0	2	0	0	0	1	0	0	0	0	**188**	**663**
1500 - 1515	0	162	37	0	2	0	0	0	1	0	0	0	0	**202**	
1515 - 1530	0	145	53	0	5	0	0	0	1	0	0	0	0	**204**	
1530 - 1545	2	186	59	0	6	1	0	2	0	0	0	0	0	**256**	
1545 - 1600	1	226	72	0	3	0	0	0	1	0	0	0	0	**303**	**965**
1600 - 1615	0	198	55	0	3	0	0	1	1	0	0	0	0	**258**	
1615 - 1630	1	276	76	0	7	0	0	1	0	0	0	0	0	**361**	
1630 - 1645	0	289	78	0	8	1	0	0	1	0	0	0	0	**377**	
1645 - 1700	0	288	87	0	6	0	0	3	0	0	0	0	0	**384**	**1380**
1700 - 1715	0	259	58	0	2	0	0	0	1	0	0	0	0	**320**	
1715 - 1730	0	326	105	0	5	0	0	0	1	0	0	0	0	**437**	
1730 - 1745	1	263	94	0	2	0	0	1	0	0	0	0	0	**361**	
1745 - 1800	1	277	88	0	2	0	0	3	0	0	0	0	0	**371**	**1489**
1800 - 1815	1	235	72	0	2	0	0	0	0	0	0	0	0	**310**	
1815 - 1830	0	163	37	1	1	0	0	0	1	0	0	0	0	**203**	
1830 - 1845	2	96	22	0	3	0	0	0	0	0	0	0	0	**123**	
1845 - 1900	0	110	27	0	2	0	0	0	0	0	0	0	0	**139**	**775**
1900 - 1915	0	99	20	0	2	1	0	0	0	0	0	0	0	**122**	
1915 - 1930	0	95	20	0	1	0	0	0	0	0	0	0	0	**116**	
1930 - 1945	0	77	19	0	1	0	0	0	0	0	0	0	0	**97**	
1945 - 2000	0	92	25	0	0	0	0	0	1	0	0	0	0	**118**	**453**
2000 - 2015	0	97	20	0	0	0	0	0	1	0	0	0	0	**118**	
2015 - 2030	0	90	16	0	0	0	0	0	0	0	0	0	0	**106**	
2030 - 2045	0	51	23	0	0	0	0	0	0	0	0	0	0	**74**	
2045 - 2100	0	45	10	0	0	0	0	0	0	0	0	0	0	**55**	**353**
2100 - 2115	0	25	6	0	0	0	0	0	0	0	0	0	0	**31**	
2115 - 2130	0	30	4	0	0	0	0	0	0	0	0	0	0	**34**	
2130 - 2145	0	25	4	0	0	0	0	0	0	0	0	0	0	**29**	
2145 - 2200	0	24	5	0	0	0	0	0	0	0	0	0	0	**29**	**123**
2200 - 2215	0	14	4	0	1	0	0	0	0	0	0	0	0	**19**	
2215 - 2230	0	15	6	0	0	0	0	0	0	0	0	0	0	**21**	
2230 - 2245	0	17	7	0	0	0	0	0	0	0	0	0	0	**24**	
2245 - 2300	0	12	2	0	0	0	0	0	0	0	0	0	0	**14**	**78**
2300 - 2315	0	10	2	0	1	0	0	0	0	0	0	0	0	**13**	
2315 - 2330	0	7	3	0	0	0	0	0	0	0	0	0	0	**10**	
2330 - 2345	0	5	2	0	0	0	0	0	0	0	0	0	0	**7**	
2345 - 0000	0	4	3	0	0	0	0	0	0	0	0	0	0	**7**	**37**

Session Total	15	7440	2000	5	96	3	0	12	27	0	0	0	0	**9598**
Session Average	0.16	77.50	20.83	0.05	1.00	0.03	0.00	0.13	0.28	0.00	0.00	0.00	0.00	**99.98**
Session Percentage	0.16	77.52	20.84	0.05	1.00	0.03	0.00	0.13	0.28	0.00	0.00	0.00	0.00	

AM Peak Hour	-	0700 - 0800	0615 - 0715	0815 - 0915	0915 - 1015	-	-	-	0700 - 0800	-	-	-	-	**0615 - 0715**
AM Peak Hour Volume	0	358	100	3	7	0	0	0	1	0	0	0	0	**454**

Noon Peak Hour	1130 - 1230	1445 - 1545	1445 - 1545	-	1445 - 1545	1445 - 1545	-	1445 - 1545	1245 - 1345	-	-	-	-	**1445 - 1545**
Noon Peak Hour Volume	4	630	197	0	15	1	0	2	4	0	0	0	0	**850**

PM Peak Hour	1530 - 1630	1630 - 1730	1715 - 1815	1730 - 1830	1600 - 1700	1500 - 1600	-	1600 - 1700	1500 - 1600	-	-	-	-	**1630 - 1730**
PM Peak Hour Volume	4	1162	359	1	24	1	0	5	3	0	0	0	0	**1518**

Site 74 Lane 1 WB
I-20,
west of US-378 Sunset Blvd S/Bound Off-Ramp

Date
Wednesday, April 24, 2024

Lat/Long
34.008085°, -81.156669°

Weather
Fair
66°F

Click here for Detailed Weather

0000 - 2400 (Weekday 24h Session) (04-24-2024)
SB WB 15min

	Westbound (Movement 74 Lane 1 WB.1)													15min	60min
TIME	1	2	3	4	5	6	7	8	9	10	11	12	13	Total	Total
0000 - 0015	0	19	2	0	0	0	0	0	0	0	0	0	0	**21**	
0015 - 0030	0	18	3	0	0	0	0	0	0	0	0	0	0	**21**	
0030 - 0045	0	15	4	0	1	0	0	0	0	0	0	0	0	**20**	
0045 - 0100	0	12	1	0	0	0	0	0	0	0	0	0	0	**13**	**75**
0100 - 0115	0	7	0	0	0	0	0	0	2	0	0	0	0	**9**	
0115 - 0130	0	8	0	0	0	0	0	0	1	0	0	0	0	**9**	
0130 - 0145	0	7	0	0	0	0	0	0	0	0	0	0	0	**7**	
0145 - 0200	0	8	1	0	0	0	0	0	0	0	0	0	0	**9**	**34**
0200 - 0215	0	13	2	0	1	0	0	0	1	0	0	0	0	**17**	
0215 - 0230	0	6	1	0	0	0	0	0	0	0	0	0	0	**7**	
0230 - 0245	0	7	1	0	0	0	0	0	0	0	0	0	0	**8**	
0245 - 0300	0	5	1	0	0	0	0	0	1	0	0	0	0	**7**	**39**
0300 - 0315	0	10	1	0	0	0	0	0	1	0	0	0	0	**12**	
0315 - 0330	0	3	0	0	0	0	0	0	0	0	0	0	0	**3**	
0330 - 0345	0	7	2	0	0	0	0	0	0	0	0	0	0	**9**	
0345 - 0400	0	7	0	0	0	0	0	0	0	0	0	0	0	**7**	**31**
0400 - 0415	0	10	1	0	0	1	0	0	3	0	0	0	0	**15**	
0415 - 0430	0	13	2	0	0	0	0	0	0	0	0	0	0	**15**	
0430 - 0445	0	18	5	0	0	0	0	0	0	0	0	0	0	**23**	
0445 - 0500	0	19	3	0	0	0	0	0	1	0	0	0	0	**23**	**76**
0500 - 0515	0	15	3	0	1	0	0	0	0	0	0	0	0	**19**	
0515 - 0530	0	16	2	0	0	0	0	0	2	0	0	0	0	**20**	
0530 - 0545	0	48	6	0	1	0	0	0	1	0	0	0	0	**56**	
0545 - 0600	0	59	5	0	0	0	0	0	2	0	0	0	0	**66**	**161**
0600 - 0615	0	30	10	0	0	0	0	0	0	0	0	0	0	**40**	
0615 - 0630	0	57	16	0	0	0	0	0	0	0	0	0	0	**73**	
0630 - 0645	1	59	10	0	0	0	0	0	0	0	0	0	0	**70**	
0645 - 0700	0	94	28	0	0	0	0	1	1	0	0	0	0	**124**	**307**
0700 - 0715	0	93	38	0	2	0	0	0	1	0	0	0	0	**134**	
0715 - 0730	0	108	30	0	0	0	0	1	0	0	0	0	0	**139**	
0730 - 0745	0	153	49	0	1	0	0	0	0	0	0	0	0	**203**	
0745 - 0800	0	142	41	0	3	0	0	0	1	0	0	0	0	**187**	**663**
0800 - 0815	0	91	30	0	0	0	0	0	0	0	0	0	0	**121**	
0815 - 0830	0	92	14	0	3	0	0	0	0	0	0	0	0	**109**	
0830 - 0845	0	101	31	0	2	0	0	1	0	0	0	0	0	**135**	
0845 - 0900	0	109	26	0	4	0	0	0	0	0	0	0	0	**139**	**504**
0900 - 0915	0	81	17	0	4	0	0	1	0	0	0	0	0	**103**	
0915 - 0930	0	60	18	0	2	0	0	0	0	0	0	0	0	**80**	
0930 - 0945	0	68	17	0	0	0	0	0	1	0	0	0	0	**86**	
0945 - 1000	0	119	31	0	1	1	0	0	1	0	0	0	0	**153**	**422**
1000 - 1015	0	76	18	1	6	0	0	0	1	0	0	0	0	**102**	
1015 - 1030	0	77	25	0	0	0	0	0	1	0	0	0	0	**103**	
1030 - 1045	1	92	24	0	1	0	0	0	1	0	0	0	0	**119**	
1045 - 1100	0	90	30	0	1	0	0	0	1	0	0	0	0	**122**	**446**
1100 - 1115	0	68	29	0	1	0	0	1	0	0	0	0	0	**99**	
1115 - 1130	0	76	18	0	0	0	0	0	0	0	0	0	0	**94**	
1130 - 1145	0	69	26	0	1	0	0	1	0	0	0	0	0	**97**	
1145 - 1200	0	78	23	0	3	0	0	2	1	0	0	0	0	**107**	**397**
1200 - 1215	0	78	24	0	1	0	0	0	0	0	0	0	0	**103**	
1215 - 1230	0	80	29	0	2	0	0	2	0	0	0	0	0	**113**	
1230 - 1245	0	85	27	0	3	0	0	1	0	0	0	0	0	**116**	
1245 - 1300	0	104	31	0	2	0	0	1	1	0	0	0	0	**139**	**471**
1300 - 1315	0	79	33	0	4	0	0	0	2	0	0	0	0	**118**	
1315 - 1330	0	85	23	0	1	0	0	0	1	0	0	0	0	**110**	
1330 - 1345	0	110	41	0	1	0	0	0	1	0	0	0	0	**153**	
1345 - 1400	0	110	47	0	4	0	0	2	0	0	0	0	0	**163**	**544**
1400 - 1415	0	125	35	0	3	0	0	0	2	0	0	0	0	**165**	
1415 - 1430	0	139	38	0	3	0	0	0	1	0	0	0	0	**181**	
1430 - 1445	0	129	38	1	1	0	0	0	0	0	0	0	0	**169**	
1445 - 1500	0	144	42	0	1	0	0	0	1	0	0	0	0	**188**	**703**
1500 - 1515	0	178	52	0	1	0	0	0	4	0	0	0	0	**235**	
1515 - 1530	0	208	69	0	4	0	0	1	2	0	0	0	0	**284**	
1530 - 1545	0	239	81	0	7	1	0	0	0	0	0	0	0	**328**	
1545 - 1600	0	223	86	0	8	1	0	3	1	0	0	0	0	**322**	**1169**
1600 - 1615	0	270	72	0	3	0	0	0	2	0	0	0	0	**347**	
1615 - 1630	0	240	74	0	8	0	0	0	0	0	0	0	0	**322**	
1630 - 1645	0	275	77	0	5	0	0	0	1	0	0	0	0	**358**	
1645 - 1700	1	273	89	0	9	0	0	1	1	0	0	0	0	**374**	**1401**
1700 - 1715	1	299	78	0	4	0	0	0	2	0	0	0	0	**384**	
1715 - 1730	0	283	78	0	2	1	0	3	0	0	0	0	0	**367**	
1730 - 1745	1	274	76	0	3	0	0	1	1	0	0	0	0	**356**	
1745 - 1800	0	276	95	0	5	0	0	3	1	0	0	0	0	**380**	**1487**
1800 - 1815	0	151	48	0	1	0	0	0	3	0	0	0	0	**203**	
1815 - 1830	1	168	50	2	0	0	0	0	0	0	0	0	0	**221**	
1830 - 1845	1	100	34	0	1	0	0	2	0	0	0	0	0	**138**	
1845 - 1900	1	114	25	0	3	0	0	0	3	0	0	0	0	**146**	**708**
1900 - 1915	0	96	17	0	1	1	0	1	0	0	0	0	0	**116**	
1915 - 1930	0	87	22	0	0	0	0	0	0	0	0	0	0	**109**	
1930 - 1945	0	82	27	0	0	0	0	0	1	0	0	0	0	**110**	
1945 - 2000	0	62	14	0	0	0	0	0	0	0	0	0	0	**76**	**411**
2000 - 2015	0	67	11	0	0	0	0	0	1	0	0	0	0	**79**	
2015 - 2030	0	70	8	0	0	0	0	0	0	0	0	0	0	**78**	
2030 - 2045	0	64	6	0	0	0	0	0	0	0	0	0	0	**70**	
2045 - 2100	0	62	4	0	0	0	0	0	0	0	0	0	0	**66**	**293**
2100 - 2115	0	38	5	0	0	0	0	0	1	0	0	0	0	**44**	
2115 - 2130	0	35	4	0	0	0	0	0	0	0	0	0	0	**39**	
2130 - 2145	0	30	2	0	0	0	0	0	0	0	0	0	0	**32**	
2145 - 2200	0	31	1	0	0	0	0	0	0	0	0	0	0	**32**	**147**
2200 - 2215	1	32	2	0	0	0	0	0	1	0	0	1	0	**37**	
2215 - 2230	1	31	3	0	1	0	0	0	0	0	0	0	0	**36**	
2230 - 2245	0	27	3	0	0	0	0	0	0	0	0	0	0	**30**	
2245 - 2300	0	21	0	0	0	0	0	0	0	0	0	0	0	**21**	**124**
2300 - 2315	0	18	0	0	0	0	0	0	0	0	0	0	0	**18**	
2315 - 2330	0	11	1	0	0	0	0	0	0	0	0	0	0	**12**	
2330 - 2345	0	6	0	0	0	0	0	0	0	0	0	0	0	**6**	
2345 - 0000	0	12	0	0	0	0	0	0	0	0	0	0	0	**12**	**48**

Session Total	10	8154	2267	4	131	6	0	29	59	0	0	1	0	**10661**
Session Average	0.10	84.94	23.61	0.04	1.36	0.06	0.00	0.30	0.61	0.00	0.00	0.01	0.00	**111.05**
Session Percentage	0.09	76.48	21.26	0.04	1.23	0.06	0.00	0.27	0.55	0.00	0.00	0.01	0.00	

AM Peak Hour	0545 - 0645	0700 - 0800	0700 - 0800	0915 - 1015	0815 - 0915	0900 - 1000	-	0630 - 0730	0500 - 0600	-	-	-	-	**0700 - 0800**
AM Peak Hour Volume	1	496	158	1	13	1	0	2	5	0	0	0	0	**663**

Noon Peak Hour	1000 - 1100	1445 - 1545	1445 - 1545	1000 - 1100	1445 - 1545	1445 - 1545	-	1130 - 1230	1430 - 1530	-	-	-	-	**1445 - 1545**
Noon Peak Hour Volume	1	769	244	1	13	1	0	5	7	0	0	0	0	**1035**

PM Peak Hour	1645 - 1745	1700 - 1800	1700 - 1800	1730 - 1830	1530 - 1630	1500 - 1600	-	1700 - 1800	1500 - 1600	-	-	-	-	**1700 - 1800**
PM Peak Hour Volume	3	1132	327	2	26	2	0	7	7	0	0	0	0	**1487**

Site 74 Lane 1 WB
I-20,
west of US-378 Sunset Blvd S/Bound Off-Ramp

Date
Thursday, April 25, 2024

Lat/Long
34.008085°, -81.156669°

Weather
Fair
67°F

Click here for Detailed Weather

0000 - 2400 (Weekday 24h Session) (04-25-2024)
SB WB 15min

	Westbound (Movement 74 Lane 1 WB.1)													15min	60min
TIME	1	2	3	4	5	6	7	8	9	10	11	12	13	Total	Total
0000 - 0015	0	13	3	0	0	0	0	0	0	0	0	0	0	**16**	
0015 - 0030	0	15	4	0	0	0	0	0	0	0	0	0	0	**19**	
0030 - 0045	0	8	2	0	0	0	0	0	0	0	0	0	0	**10**	
0045 - 0100	0	3	0	0	0	0	0	0	0	0	0	0	0	**3**	**48**
0100 - 0115	0	13	0	0	0	0	0	0	0	0	0	0	0	**13**	
0115 - 0130	0	6	0	0	0	0	0	0	0	0	0	0	0	**6**	
0130 - 0145	0	5	0	0	0	0	0	0	0	0	0	0	0	**5**	
0145 - 0200	0	5	0	0	0	0	0	0	0	0	0	0	0	**5**	**29**
0200 - 0215	0	6	0	0	0	0	0	0	0	0	0	0	0	**6**	
0215 - 0230	0	8	0	0	0	0	0	0	0	0	0	0	0	**8**	
0230 - 0245	0	7	0	0	0	0	0	0	0	0	0	0	0	**7**	
0245 - 0300	0	8	0	0	0	0	0	0	0	0	0	0	0	**8**	**29**
0300 - 0315	0	5	0	0	0	0	0	0	0	0	0	0	0	**5**	
0315 - 0330	0	10	0	0	0	0	0	0	0	0	0	0	0	**10**	
0330 - 0345	0	10	0	0	0	0	0	0	0	0	0	0	0	**10**	
0345 - 0400	0	9	1	0	0	0	0	0	0	0	0	0	0	**10**	**35**
0400 - 0415	0	13	1	0	0	0	0	0	0	0	0	0	0	**14**	
0415 - 0430	0	10	0	0	0	0	0	0	0	0	0	0	0	**10**	
0430 - 0445	0	14	1	0	0	0	0	0	0	0	0	0	0	**15**	
0445 - 0500	0	17	1	0	0	0	0	0	0	0	0	0	0	**18**	**57**
0500 - 0515	0	21	1	0	0	0	0	0	1	0	0	0	0	**23**	
0515 - 0530	0	20	0	1	1	0	0	0	0	0	0	0	0	**22**	
0530 - 0545	0	45	0	1	0	0	0	0	0	0	0	0	0	**46**	
0545 - 0600	0	50	1	0	0	0	0	0	0	0	0	0	0	**51**	**142**
0600 - 0615	0	52	3	0	2	0	0	0	0	0	0	0	0	**57**	
0615 - 0630	0	41	12	0	2	0	0	0	0	0	0	0	0	**55**	
0630 - 0645	1	74	20	0	0	0	0	0	0	0	0	0	0	**95**	
0645 - 0700	0	42	17	0	1	0	0	0	0	0	0	0	0	**60**	**267**
0700 - 0715	0	124	36	0	1	0	0	0	0	0	0	0	0	**161**	
0715 - 0730	0	142	26	0	1	0	0	0	0	0	0	0	0	**169**	
0730 - 0745	0	125	36	0	1	0	0	0	0	0	0	0	0	**162**	
0745 - 0800	0	174	30	0	1	0	0	0	0	0	0	0	0	**205**	**697**
0800 - 0815	0	99	35	0	0	0	0	1	1	0	0	0	0	**136**	
0815 - 0830	0	111	30	0	0	0	0	0	0	0	0	0	0	**141**	
0830 - 0845	0	119	29	0	1	0	0	0	0	0	0	0	0	**149**	
0845 - 0900	1	86	21	0	2	0	0	0	1	0	0	0	0	**111**	**537**
0900 - 0915	1	87	21	0	2	0	0	0	0	0	0	0	0	**111**	
0915 - 0930	0	74	20	0	2	0	0	0	0	0	0	0	0	**96**	
0930 - 0945	0	81	34	0	1	1	0	0	1	0	0	0	0	**118**	
0945 - 1000	1	84	29	0	1	0	0	1	1	0	0	0	0	**117**	**442**
1000 - 1015	0	83	31	0	0	0	0	0	0	0	0	0	0	**114**	
1015 - 1030	5	95	22	0	0	0	0	1	2	0	0	0	0	**125**	
1030 - 1045	0	92	24	0	2	0	0	1	0	0	0	0	0	**119**	
1045 - 1100	0	96	33	0	1	0	0	1	0	0	0	0	0	**131**	**489**
1100 - 1115	1	81	15	0	1	0	0	0	0	0	0	0	0	**98**	
1115 - 1130	1	91	34	1	1	0	0	0	0	0	0	0	0	**128**	
1130 - 1145	9	109	33	0	1	0	0	0	0	0	0	0	0	**152**	
1145 - 1200	3	111	37	1	1	0	0	0	1	1	0	0	0	**155**	**533**
1200 - 1215	1	105	31	0	4	0	0	0	2	0	0	0	0	**143**	
1215 - 1230	0	128	43	0	1	1	0	0	0	0	0	0	0	**173**	
1230 - 1245	0	121	48	0	0	0	0	0	0	0	0	0	0	**169**	
1245 - 1300	0	140	48	0	2	0	0	1	1	0	0	0	0	**192**	**677**
1300 - 1315	0	142	30	0	2	0	0	0	0	0	0	0	0	**174**	
1315 - 1330	0	121	29	0	2	0	0	0	2	0	0	0	0	**154**	
1330 - 1345	2	121	39	0	0	1	0	0	1	0	0	0	0	**164**	
1345 - 1400	3	137	28	0	4	0	0	1	0	0	0	0	0	**173**	**665**
1400 - 1415	0	124	41	0	2	0	0	1	1	0	0	0	0	**169**	
1415 - 1430	1	190	43	0	2	0	0	0	0	0	0	0	0	**236**	
1430 - 1445	0	159	43	1	2	0	0	0	1	0	0	0	0	**206**	
1445 - 1500	1	151	52	0	1	0	0	1	0	0	0	0	0	**206**	**817**
1500 - 1515	3	178	43	0	3	0	0	0	1	0	0	0	0	**228**	
1515 - 1530	0	201	67	0	5	0	0	2	3	0	1	0	0	**279**	
1530 - 1545	1	204	89	3	4	0	0	1	2	0	0	0	0	**304**	
1545 - 1600	0	209	70	0	2	0	0	1	2	0	0	0	0	**284**	**1095**
1600 - 1615	1	226	72	1	1	0	0	2	0	0	0	0	0	**303**	
1615 - 1630	0	261	78	0	12	0	0	0	0	0	0	0	0	**351**	
1630 - 1645	2	291	71	0	5	0	0	0	1	0	0	0	0	**370**	
1645 - 1700	0	268	47	0	0	0	0	0	0	0	0	0	0	**315**	**1339**
1700 - 1715	0	226	43	0	3	0	0	0	0	0	0	0	0	**272**	
1715 - 1730	1	254	73	0	5	2	0	0	0	0	0	0	0	**335**	
1730 - 1745	2	232	68	0	1	0	0	0	1	0	0	0	0	**304**	
1745 - 1800	2	237	77	0	2	0	0	0	3	0	0	0	0	**321**	**1232**
1800 - 1815	1	217	77	0	2	0	0	0	2	0	0	0	0	**299**	
1815 - 1830	2	163	41	0	2	0	0	1	0	0	0	0	0	**209**	
1830 - 1845	1	131	38	0	1	0	0	2	0	0	0	0	0	**173**	
1845 - 1900	1	123	37	1	2	0	0	1	0	1	0	0	0	**166**	**847**
1900 - 1915	1	128	30	0	1	0	0	0	0	0	0	0	0	**160**	
1915 - 1930	0	128	29	0	0	0	0	1	1	0	0	0	0	**159**	
1930 - 1945	0	102	26	0	0	0	0	2	0	0	0	0	0	**130**	
1945 - 2000	2	103	13	0	0	0	0	0	0	0	0	0	0	**118**	**567**
2000 - 2015	2	89	16	0	0	0	0	0	0	0	0	0	0	**107**	
2015 - 2030	2	78	24	0	0	0	0	0	1	0	0	0	0	**105**	
2030 - 2045	0	87	13	0	0	0	0	0	0	0	0	0	0	**100**	
2045 - 2100	0	89	11	1	1	0	0	0	2	0	0	0	0	**104**	**416**
2100 - 2115	0	52	5	0	0	0	0	0	0	0	0	0	0	**57**	
2115 - 2130	0	45	4	0	0	0	0	0	0	0	0	0	0	**49**	
2130 - 2145	1	36	2	0	0	0	0	0	0	0	0	0	0	**39**	
2145 - 2200	0	43	1	0	0	0	0	0	0	0	0	0	0	**44**	**189**
2200 - 2215	0	29	0	0	0	0	0	0	0	0	0	0	0	**29**	
2215 - 2230	0	47	2	0	0	0	0	0	0	0	0	0	0	**49**	
2230 - 2245	0	39	1	0	0	0	0	0	0	0	0	0	0	**40**	
2245 - 2300	0	21	0	0	1	0	0	0	0	0	0	0	0	**22**	**140**
2300 - 2315	0	15	0	0	1	0	0	0	2	0	0	0	0	**18**	
2315 - 2330	0	21	0	0	1	0	0	0	0	0	0	0	0	**22**	
2330 - 2345	0	13	0	0	0	0	0	0	0	0	0	0	0	**13**	
2345 - 0000	0	8	0	0	0	0	0	0	0	0	0	0	0	**8**	**61**

Session Total	56	8827	2286	11	103	5	0	22	37	2	1	0	0	**11350**
Session Average	0.58	91.95	23.81	0.11	1.07	0.05	0.00	0.23	0.39	0.02	0.01	0.00	0.00	**118.23**
Session Percentage	0.49	77.77	20.14	0.10	0.91	0.04	0.00	0.19	0.33	0.02	0.01	0.00	0.00	

AM Peak Hour	0930 - 1030	0700 - 0800	0730 - 0830	0500 - 0600	0830 - 0930	0845 - 0945	-	0945 - 1045	0930 - 1030	-	-	-	-	**0700 - 0800**
AM Peak Hour Volume	6	565	131	2	7	1	0	3	4	0	0	0	0	**697**

Noon Peak Hour	1100 - 1200	1445 - 1545	1445 - 1545	1445 - 1545	1445 - 1545	1130 - 1230	-	1445 - 1545	1445 - 1545	1100 - 1200	1430 - 1530	-	-	**1445 - 1545**
Noon Peak Hour Volume	14	734	251	3	13	1	0	4	6	1	1	0	0	**1017**

PM Peak Hour	1730 - 1830	1600 - 1700	1530 - 1630	1515 - 1615	1545 - 1645	1630 - 1730	-	1515 - 1615	1500 - 1600	1800 - 1900	1500 - 1600	-	-	**1600 - 1700**
PM Peak Hour Volume	7	1046	309	4	20	2	0	6	8	1	1	0	0	**1339**

Site 74 Lane 1 WB

I-20,
west of US-378 Sunset Blvd S/Bound Off-Ramp

Date

Friday, April 26, 2024

Lat/Long

34.008085°, -81.156669°

Weather

Cloudy
69°F

Click here for Detailed Weather

0000 - 2400 (Weekday 24h Session) (04-26-2024)

SB WB 15min

	Westbound (Movement 74 Lane 1 WB.1)													15min	60min
TIME	1	2	3	4	5	6	7	8	9	10	11	12	13	Total	Total
0000 - 0015	0	17	4	0	0	0	0	0	1	0	0	0	0	**22**	
0015 - 0030	0	3	0	0	0	0	0	0	0	0	0	0	0	**3**	
0030 - 0045	0	4	1	0	0	1	0	0	0	0	0	0	0	**6**	
0045 - 0100	0	14	4	0	0	0	0	0	1	0	0	0	0	**19**	**50**
0100 - 0115	0	4	1	0	0	0	0	0	0	0	0	0	0	**5**	
0115 - 0130	0	10	3	0	0	0	0	0	1	0	0	0	0	**14**	
0130 - 0145	0	6	2	0	0	0	0	0	0	0	0	0	0	**8**	
0145 - 0200	0	5	0	0	0	0	0	0	0	0	0	0	0	**5**	**32**
0200 - 0215	0	5	1	0	0	0	0	0	0	0	0	0	0	**6**	
0215 - 0230	0	2	0	0	0	0	0	0	0	0	0	0	0	**2**	
0230 - 0245	0	4	2	0	0	0	0	0	0	0	0	0	0	**6**	
0245 - 0300	0	8	2	0	0	0	0	0	0	0	0	0	0	**10**	**24**
0300 - 0315	0	5	0	0	0	0	0	0	1	0	0	0	0	**6**	
0315 - 0330	0	3	0	0	0	0	0	0	0	0	0	0	0	**3**	
0330 - 0345	0	6	2	0	0	0	0	0	0	0	0	0	0	**8**	
0345 - 0400	0	3	0	0	0	0	0	0	0	0	0	0	0	**3**	**20**
0400 - 0415	0	5	2	0	0	0	0	0	0	0	0	0	0	**7**	
0415 - 0430	0	6	3	0	0	0	0	0	0	0	0	0	0	**9**	
0430 - 0445	0	9	3	0	0	0	0	0	0	0	0	0	0	**12**	
0445 - 0500	0	11	6	0	0	0	0	0	0	0	0	0	0	**17**	**45**
0500 - 0515	0	4	0	0	0	0	0	0	0	0	0	0	0	**4**	
0515 - 0530	0	16	7	0	0	0	0	0	1	0	0	0	0	**24**	
0530 - 0545	0	21	9	0	1	0	0	0	0	0	0	0	0	**31**	
0545 - 0600	0	20	7	0	0	0	0	0	0	0	0	0	0	**27**	**86**
0600 - 0615	1	30	15	0	0	0	0	0	0	0	0	0	0	**46**	
0615 - 0630	0	48	20	0	0	0	0	0	0	0	0	0	0	**68**	
0630 - 0645	0	93	27	0	0	0	0	0	0	0	0	0	0	**120**	
0645 - 0700	0	90	25	0	0	0	0	0	0	0	0	0	0	**115**	**349**
0700 - 0715	0	110	23	0	4	0	0	0	0	0	0	0	0	**137**	
0715 - 0730	0	126	34	0	0	0	0	0	0	0	0	0	0	**160**	
0730 - 0745	1	150	42	0	2	0	0	0	0	0	0	0	0	**195**	
0745 - 0800	1	142	44	0	3	0	0	1	0	0	0	0	0	**191**	**683**
0800 - 0815	0	133	32	0	2	0	0	0	1	0	0	0	0	**168**	
0815 - 0830	1	94	31	0	1	0	0	1	1	0	0	0	0	**129**	
0830 - 0845	6	103	34	0	1	1	0	0	0	0	0	0	0	**145**	
0845 - 0900	0	87	27	0	3	0	0	0	0	0	0	0	0	**117**	**559**
0900 - 0915	0	79	24	0	2	0	0	0	0	0	0	0	0	**105**	
0915 - 0930	3	81	28	0	3	0	0	0	0	0	0	0	0	**115**	
0930 - 0945	1	80	26	0	1	0	0	2	0	0	0	0	0	**110**	
0945 - 1000	0	97	25	0	2	0	0	1	0	0	0	0	0	**125**	**455**
1000 - 1015	0	91	22	0	0	0	0	0	2	0	0	0	0	**115**	
1015 - 1030	0	107	26	0	0	0	0	0	0	0	0	0	0	**133**	
1030 - 1045	0	111	25	0	4	1	0	1	0	0	0	0	0	**142**	
1045 - 1100	0	123	39	0	2	0	0	1	0	0	0	0	0	**165**	**555**
1100 - 1115	1	98	21	0	1	0	0	1	2	0	0	0	0	**124**	
1115 - 1130	0	117	38	0	2	0	0	1	2	0	0	0	0	**160**	
1130 - 1145	0	126	39	0	3	0	0	1	1	0	0	0	0	**170**	
1145 - 1200	1	143	44	0	3	0	0	0	0	0	0	0	0	**191**	**645**
1200 - 1215	1	158	51	0	3	0	0	1	0	0	0	0	0	**214**	
1215 - 1230	0	167	55	0	3	0	0	0	0	0	0	0	0	**225**	
1230 - 1245	1	158	41	0	1	0	0	0	0	0	0	0	0	**201**	
1245 - 1300	1	168	51	0	4	0	0	0	2	0	0	0	0	**226**	**866**
1300 - 1315	4	166	55	0	4	0	0	0	0	0	0	0	0	**229**	
1315 - 1330	0	167	54	0	3	0	0	1	2	0	0	0	0	**227**	
1330 - 1345	2	169	52	0	1	1	0	2	1	0	0	0	0	**228**	
1345 - 1400	1	188	58	0	2	0	0	4	0	0	0	0	0	**253**	**937**
1400 - 1415	2	180	40	0	2	0	0	1	0	0	0	0	0	**225**	
1415 - 1430	4	188	59	0	5	0	0	1	0	0	0	0	0	**257**	
1430 - 1445	0	204	58	0	2	0	0	1	0	0	0	0	0	**265**	
1445 - 1500	0	201	62	0	5	0	0	1	1	0	0	0	0	**270**	**1017**
1500 - 1515	1	201	55	0	4	1	0	1	0	0	0	0	0	**263**	
1515 - 1530	2	202	67	0	4	0	0	0	3	0	0	0	0	**278**	
1530 - 1545	0	208	72	0	4	0	0	0	1	0	0	0	0	**285**	
1545 - 1600	0	242	75	1	3	1	0	0	0	0	0	0	0	**322**	**1148**
1600 - 1615	0	248	84	0	3	0	0	2	5	0	0	0	0	**342**	
1615 - 1630	4	271	80	0	7	0	0	1	0	0	0	0	0	**363**	
1630 - 1645	1	251	75	1	3	0	0	1	0	0	0	0	0	**332**	
1645 - 1700	2	267	73	0	1	0	0	0	1	0	0	0	0	**344**	**1381**
1700 - 1715	2	253	74	0	2	0	0	0	0	0	0	0	0	**331**	
1715 - 1730	1	287	76	0	1	0	0	0	0	0	0	0	0	**365**	
1730 - 1745	1	224	69	0	2	0	0	0	1	0	0	0	0	**297**	
1745 - 1800	0	203	52	0	4	2	0	1	3	0	0	0	0	**265**	**1258**
1800 - 1815	1	190	39	0	4	0	0	0	0	0	0	0	0	**234**	
1815 - 1830	1	182	38	2	0	0	0	2	0	0	0	0	0	**225**	
1830 - 1845	0	165	27	0	1	0	0	0	0	0	0	0	0	**193**	
1845 - 1900	2	141	37	0	3	0	0	0	0	0	0	0	0	**183**	**835**
1900 - 1915	2	137	27	0	3	0	0	0	1	0	0	0	0	**170**	
1915 - 1930	2	127	38	0	0	0	0	0	0	0	0	0	0	**167**	
1930 - 1945	1	116	23	1	1	0	0	0	0	0	0	0	0	**142**	
1945 - 2000	1	93	16	0	0	0	0	0	0	0	0	0	0	**110**	**589**
2000 - 2015	0	82	19	0	0	0	0	0	0	0	0	0	0	**101**	
2015 - 2030	0	90	23	0	0	0	0	0	1	0	0	0	0	**114**	
2030 - 2045	0	60	15	0	0	0	0	0	0	0	0	0	0	**75**	
2045 - 2100	0	63	19	0	0	0	0	0	0	0	0	0	0	**82**	**372**
2100 - 2115	0	56	21	0	1	0	0	0	0	0	0	0	0	**78**	
2115 - 2130	0	62	24	0	0	0	0	0	0	0	0	0	0	**86**	
2130 - 2145	0	58	20	0	1	0	0	0	0	0	0	0	0	**79**	
2145 - 2200	0	43	13	0	0	0	0	0	0	0	0	0	0	**56**	**299**
2200 - 2215	0	30	7	0	1	0	0	0	0	0	0	0	0	**38**	
2215 - 2230	0	45	9	0	0	0	0	0	0	0	0	0	0	**54**	
2230 - 2245	0	31	11	0	0	0	0	0	0	0	0	0	0	**42**	
2245 - 2300	0	32	10	0	0	0	0	0	0	0	0	0	0	**42**	**176**
2300 - 2315	0	38	14	0	0	0	0	0	0	0	0	0	0	**52**	
2315 - 2330	0	20	8	0	0	0	0	0	0	0	0	0	0	**28**	
2330 - 2345	0	16	7	0	0	0	0	0	0	0	0	0	0	**23**	
2345 - 0000	0	20	11	0	0	0	0	0	0	0	0	0	0	**31**	**134**

Session Total	56	9518	2734	5	128	8	0	30	36	0	0	0	0	**12515**
Session Average	0.58	99.15	28.48	0.05	1.33	0.08	0.00	0.31	0.38	0.00	0.00	0.00	0.00	**130.36**
Session Percentage	0.45	76.05	21.85	0.04	1.02	0.06	0.00	0.24	0.29	0.00	0.00	0.00	0.00	

AM Peak Hour	0830 - 0930	0715 - 0815	0715 - 0815	-	0700 - 0800	0745 - 0845	-	0900 - 1000	0730 - 0830	-	-	-	-	**0715 - 0815**
AM Peak Hour Volume	9	551	152	0	9	1	0	3	2	0	0	0	0	**714**

Noon Peak Hour	1330 - 1430	1445 - 1545	1445 - 1545	-	1445 - 1545	1000 - 1100	-	1315 - 1415	1045 - 1145	-	-	-	-	**1445 - 1545**
Noon Peak Hour Volume	9	812	256	0	17	1	0	8	5	0	0	0	0	**1096**

PM Peak Hour	1615 - 1715	1630 - 1730	1545 - 1645	1545 - 1645	1530 - 1630	1500 - 1600	-	1545 - 1645	1515 - 1615	-	-	-	-	**1600 - 1700**
PM Peak Hour Volume	9	1058	314	2	17	2	0	4	9	0	0	0	0	**1381**

Site 74 Lane 1 WB
I-20,
west of US-378 Sunset Blvd S/Bound Off-Ramp

Date
Saturday, April 27, 2024

Lat/Long
34.008085°, -81.156669°

Weather
Mostly Cloudy
69°F

Click here for Detailed Weather

0000 - 2400 (Saturday 24h Session) (04-27-2024)
SB WB 15min

	Westbound (Movement 74 Lane 1 WB.1)													15min	60min
TIME	1	2	3	4	5	6	7	8	9	10	11	12	13	Total	Total
0000 - 0015	0	29	4	0	1	0	0	0	0	0	0	0	0	**34**	
0015 - 0030	0	30	6	0	0	0	0	0	0	0	0	0	0	**36**	
0030 - 0045	0	27	7	0	0	0	0	0	0	0	0	0	0	**34**	
0045 - 0100	0	10	5	0	0	0	0	0	0	0	0	0	0	**15**	**119**
0100 - 0115	0	20	6	0	0	0	0	0	0	0	0	0	0	**26**	
0115 - 0130	0	14	7	0	0	0	0	0	1	0	0	0	0	**22**	
0130 - 0145	1	20	6	0	0	0	0	0	0	0	0	0	0	**27**	
0145 - 0200	0	15	4	0	0	0	0	0	0	0	0	0	0	**19**	**94**
0200 - 0215	0	12	5	0	0	0	0	0	0	0	0	0	0	**17**	
0215 - 0230	0	7	4	0	0	0	0	0	0	0	0	0	0	**11**	
0230 - 0245	0	12	4	0	0	0	0	0	0	0	0	0	0	**16**	
0245 - 0300	0	2	2	0	0	0	0	0	0	0	0	0	0	**4**	**48**
0300 - 0315	0	8	2	0	0	0	0	0	0	0	0	0	0	**10**	
0315 - 0330	0	2	2	0	0	0	0	0	1	0	0	0	0	**5**	
0330 - 0345	0	6	1	0	0	0	0	0	1	0	0	0	0	**8**	
0345 - 0400	0	5	1	0	0	0	0	0	1	0	0	0	0	**7**	**30**
0400 - 0415	0	8	2	0	1	0	0	0	0	0	0	0	0	**11**	
0415 - 0430	0	7	3	0	0	0	0	0	0	0	0	0	0	**10**	
0430 - 0445	0	8	6	0	0	0	0	0	0	0	0	0	0	**14**	
0445 - 0500	0	5	3	0	0	0	0	0	0	0	0	0	0	**8**	**43**
0500 - 0515	0	3	2	0	0	0	0	0	1	0	0	0	0	**6**	
0515 - 0530	3	19	8	0	0	0	0	0	3	0	0	0	0	**33**	
0530 - 0545	0	14	4	0	0	0	0	0	0	0	0	0	0	**18**	
0545 - 0600	0	15	3	0	0	0	0	0	0	0	0	0	0	**18**	**75**
0600 - 0615	0	8	3	0	0	0	0	0	1	0	0	0	0	**12**	
0615 - 0630	0	21	8	0	0	0	0	0	0	0	0	0	0	**29**	
0630 - 0645	0	29	11	0	0	0	0	0	0	0	0	0	0	**40**	
0645 - 0700	0	30	9	0	0	0	0	0	0	0	0	0	0	**39**	**120**
0700 - 0715	0	30	11	0	0	0	0	0	0	0	0	0	0	**41**	
0715 - 0730	0	45	5	0	0	0	0	0	0	1	0	0	0	**51**	
0730 - 0745	0	61	13	0	0	0	0	0	0	0	0	0	0	**74**	
0745 - 0800	2	55	12	0	1	0	0	0	0	0	0	0	0	**70**	**236**
0800 - 0815	0	50	13	0	1	0	0	0	0	0	0	0	0	**64**	
0815 - 0830	0	63	8	0	0	0	0	0	0	0	0	0	0	**71**	
0830 - 0845	0	69	17	0	0	0	0	0	0	0	0	0	0	**86**	
0845 - 0900	0	60	7	0	1	0	0	0	0	0	0	0	0	**68**	**289**
0900 - 0915	0	62	14	0	0	0	0	0	0	0	0	0	0	**76**	
0915 - 0930	0	79	22	0	0	0	0	0	0	0	0	0	0	**101**	
0930 - 0945	0	90	21	1	1	0	0	0	0	0	0	0	0	**113**	
0945 - 1000	0	84	19	0	0	0	0	0	0	0	0	0	0	**103**	**393**
1000 - 1015	0	93	19	0	0	0	0	0	0	0	0	0	0	**112**	
1015 - 1030	0	83	20	0	0	0	0	0	0	0	0	0	0	**103**	
1030 - 1045	2	101	21	0	2	0	0	0	0	0	0	0	0	**126**	
1045 - 1100	2	94	31	0	0	0	0	0	0	0	0	0	0	**127**	**468**
1100 - 1115	3	101	27	0	2	0	0	0	0	0	0	0	0	**133**	
1115 - 1130	0	99	29	0	1	0	0	0	0	0	0	0	0	**129**	
1130 - 1145	1	120	29	0	1	0	0	0	0	0	0	0	0	**151**	
1145 - 1200	1	106	30	0	1	0	0	2	0	0	0	0	0	**140**	**553**
1200 - 1215	0	119	26	0	1	0	0	0	0	0	0	0	0	**146**	
1215 - 1230	0	133	28	0	0	0	0	0	0	0	0	0	0	**161**	
1230 - 1245	1	95	33	0	0	0	0	0	0	0	0	0	0	**129**	
1245 - 1300	0	120	19	0	0	0	0	0	0	0	0	0	0	**139**	**575**
1300 - 1315	1	119	23	0	3	0	0	0	1	0	0	0	0	**147**	
1315 - 1330	2	128	40	0	0	0	0	1	0	0	0	0	0	**171**	
1330 - 1345	1	121	20	0	0	0	0	0	0	0	0	0	0	**142**	
1345 - 1400	0	123	31	0	1	0	0	1	0	0	0	0	0	**156**	**616**
1400 - 1415	1	129	25	0	0	0	0	0	0	0	0	0	0	**155**	
1415 - 1430	1	145	22	0	0	0	0	0	0	0	0	0	0	**168**	
1430 - 1445	6	112	25	0	0	0	0	0	0	0	0	0	0	**143**	
1445 - 1500	1	114	26	0	2	0	0	0	1	0	0	0	0	**144**	**610**
1500 - 1515	3	124	31	0	0	0	0	0	0	0	0	0	0	**158**	
1515 - 1530	4	137	26	0	1	0	0	0	0	0	0	0	0	**168**	
1530 - 1545	0	132	20	0	1	0	0	1	0	0	0	0	0	**154**	
1545 - 1600	1	134	48	0	0	0	0	0	0	0	0	0	0	**183**	**663**
1600 - 1615	0	163	24	0	1	0	0	0	0	0	0	0	0	**188**	
1615 - 1630	0	110	20	0	3	0	0	1	0	0	0	0	0	**134**	
1630 - 1645	10	117	23	0	1	0	0	0	0	0	0	0	0	**151**	
1645 - 1700	3	122	19	0	1	0	0	0	0	0	0	0	0	**145**	**618**
1700 - 1715	2	117	19	0	1	1	0	0	0	0	0	0	0	**140**	
1715 - 1730	2	112	15	0	0	0	0	0	0	0	0	0	0	**129**	
1730 - 1745	8	109	23	0	3	0	0	1	0	0	0	0	0	**144**	
1745 - 1800	0	91	20	0	0	0	0	0	0	0	0	0	0	**111**	**524**
1800 - 1815	2	112	16	0	1	0	0	0	0	0	0	0	0	**131**	
1815 - 1830	12	97	20	0	1	0	0	0	0	0	0	0	0	**130**	
1830 - 1845	3	111	24	0	1	0	0	0	0	0	0	0	0	**139**	
1845 - 1900	7	85	20	0	3	0	0	0	0	0	0	0	0	**115**	**515**
1900 - 1915	0	84	14	0	3	0	0	0	0	0	0	0	0	**101**	
1915 - 1930	0	91	14	0	2	0	0	0	0	0	0	0	0	**107**	
1930 - 1945	0	70	21	0	1	0	0	0	0	0	0	0	0	**92**	
1945 - 2000	1	88	16	0	0	0	0	0	0	0	0	0	0	**105**	**405**
2000 - 2015	0	70	10	0	0	0	0	0	0	0	0	0	0	**80**	
2015 - 2030	1	59	5	0	1	0	0	0	0	0	0	0	0	**66**	
2030 - 2045	0	52	6	0	0	0	0	0	0	0	0	0	0	**58**	
2045 - 2100	0	53	9	0	0	0	0	0	0	0	0	0	0	**62**	**266**
2100 - 2115	0	46	8	0	0	0	0	0	0	0	0	0	0	**54**	
2115 - 2130	0	31	10	0	0	0	0	0	0	0	0	0	0	**41**	
2130 - 2145	0	35	12	0	0	0	0	0	0	0	0	0	0	**47**	
2145 - 2200	0	22	13	0	0	0	0	0	0	0	0	0	0	**35**	**177**
2200 - 2215	0	21	11	0	0	0	0	0	0	0	0	0	0	**32**	
2215 - 2230	0	29	13	0	0	0	0	0	0	0	0	0	0	**42**	
2230 - 2245	0	31	11	0	0	0	0	0	0	0	0	0	0	**42**	
2245 - 2300	0	35	8	0	0	0	0	0	0	0	0	0	0	**43**	**159**
2300 - 2315	0	28	9	0	0	0	0	0	0	0	0	0	0	**37**	
2315 - 2330	0	10	8	0	0	0	0	0	0	0	0	0	0	**18**	
2330 - 2345	0	12	9	0	0	0	0	0	0	0	0	0	0	**21**	
2345 - 0000	0	18	10	0	0	0	0	0	0	0	0	0	0	**28**	**104**

Session Total	88	6147	1399	1	45	1	0	7	11	1	0	0	0	**7700**
Session Average	0.92	64.03	14.57	0.01	0.47	0.01	0.00	0.07	0.11	0.01	0.00	0.00	0.00	**80.21**
Session Percentage	1.14	79.83	18.17	0.01	0.58	0.01	0.00	0.09	0.14	0.01	0.00	0.00	0.00	

AM Peak Hour	0500 - 0600	0945 - 1045	0915 - 1015	0845 - 0945	0715 - 0815	-	-	-	0500 - 0600	0630 - 0730	-	-	-	**0945 - 1045**
AM Peak Hour Volume	3	361	81	1	2	0	0	0	4	1	0	0	0	**444**

Noon Peak Hour	1430 - 1530	1330 - 1430	1145 - 1245	-	1030 - 1130	-	-	1100 - 1200	1215 - 1315	-	-	-	-	**1315 - 1415**
Noon Peak Hour Volume	14	518	117	0	5	0	0	2	1	0	0	0	0	**624**

PM Peak Hour	1800 - 1900	1515 - 1615	1500 - 1600	-	1830 - 1930	1615 - 1715	-	1530 - 1630	-	-	-	-	-	**1515 - 1615**
PM Peak Hour Volume	24	566	125	0	9	1	0	2	0	0	0	0	0	**693**

Bi-Directional Class Count || SB WB Average 15min

Columbia, SC

Marr Traffic DATA COLLECTION
www.marrtraffic.com

Site 74 Lane 1 WB
I-20,
west of US-378 Sunset Blvd S/Bound Off-Ramp

Date
Sunday, April 21, 2024

Lat/Long
34.008085°, -81.156669°

Weather
Cloudy
66°F

0000 - 2400 (Weekday 24h Session) (All Dates)
SB WB Average 15min

	SB WB Average 15min													15min	60min
Time	1	2	3	4	5	6	7	8	9	10	11	12	13	Total	Total
0000 - 0015	0	19	3	0	0	0	0	0	1	0	0	0	0	**24**	
0015 - 0030	0	18	2	0	0	0	0	0	0	0	0	0	0	**21**	
0030 - 0045	0	13	2	0	0	0	0	0	0	0	0	0	0	**16**	
0045 - 0100	0	10	2	0	0	0	0	0	0	0	0	0	0	**12**	**72**
0100 - 0115	0	11	1	0	0	0	0	0	0	0	0	0	0	**12**	
0115 - 0130	0	8	2	0	0	0	0	0	0	0	0	0	0	**10**	
0130 - 0145	0	9	1	0	0	0	0	0	0	0	0	0	0	**10**	
0145 - 0200	0	8	1	0	0	0	0	0	0	0	0	0	0	**9**	**41**
0200 - 0215	0	8	1	0	0	0	0	0	0	0	0	0	0	**9**	
0215 - 0230	0	6	1	0	0	0	0	0	0	0	0	0	0	**8**	
0230 - 0245	0	8	1	0	0	0	0	0	0	0	0	0	0	**9**	
0245 - 0300	0	6	1	0	0	0	0	0	0	0	0	0	0	**7**	**33**
0300 - 0315	0	6	0	0	0	0	0	0	0	0	0	0	0	**7**	
0315 - 0330	0	6	0	0	0	0	0	0	0	0	0	0	0	**7**	
0330 - 0345	0	7	1	0	0	0	0	0	0	0	0	0	0	**9**	
0345 - 0400	0	8	1	0	0	0	0	0	0	0	0	0	0	**9**	**31**
0400 - 0415	0	8	2	0	0	0	0	0	1	0	0	0	0	**10**	
0415 - 0430	0	8	2	0	0	0	0	0	0	0	0	0	0	**10**	
0430 - 0445	0	11	3	0	0	0	0	0	0	0	0	0	0	**14**	
0445 - 0500	0	11	2	0	0	0	0	0	0	0	0	0	0	**13**	**48**
0500 - 0515	0	13	2	0	0	0	0	0	0	0	0	0	0	**15**	
0515 - 0530	0	18	4	0	0	0	0	0	1	0	0	0	0	**24**	
0530 - 0545	0	27	5	0	0	0	0	0	0	0	0	0	0	**34**	
0545 - 0600	0	32	6	0	0	0	0	0	0	0	0	0	0	**38**	**111**
0600 - 0615	0	31	10	0	0	0	0	0	0	0	0	0	0	**41**	
0615 - 0630	0	49	15	0	0	0	0	0	0	0	0	0	0	**64**	
0630 - 0645	0	67	16	0	0	0	0	0	0	0	0	0	0	**84**	
0645 - 0700	0	68	20	0	0	0	0	0	0	0	0	0	0	**89**	**278**
0700 - 0715	0	87	22	0	1	0	0	0	0	0	0	0	0	**111**	
0715 - 0730	0	95	22	0	1	0	0	0	0	0	0	0	0	**118**	
0730 - 0745	0	108	28	0	1	0	0	0	0	0	0	0	0	**138**	
0745 - 0800	1	110	27	0	1	0	0	0	0	0	0	0	0	**140**	**507**
0800 - 0815	0	84	24	0	1	0	0	0	0	0	0	0	0	**109**	
0815 - 0830	0	79	21	0	1	0	0	0	0	0	0	0	0	**102**	
0830 - 0845	1	82	21	0	1	0	0	0	0	0	0	0	0	**105**	
0845 - 0900	0	74	16	0	2	0	0	0	0	0	0	0	0	**92**	**407**
0900 - 0915	0	70	20	0	1	0	0	0	0	0	0	0	0	**92**	
0915 - 0930	1	69	20	0	2	0	0	0	0	0	0	0	0	**92**	
0930 - 0945	0	70	21	0	1	0	0	1	0	0	0	0	0	**94**	
0945 - 1000	0	83	23	0	1	0	0	0	0	0	0	0	0	**108**	**386**
1000 - 1015	0	77	21	0	2	0	0	0	1	0	0	0	0	**101**	
1015 - 1030	2	80	22	0	0	0	0	0	1	0	0	0	0	**105**	
1030 - 1045	0	90	20	0	2	0	0	0	0	0	0	0	0	**113**	
1045 - 1100	0	92	29	0	1	0	0	0	0	0	0	0	0	**123**	**442**
1100 - 1115	1	90	21	0	1	0	0	0	0	0	0	0	0	**114**	
1115 - 1130	0	91	27	0	1	0	0	0	0	0	0	0	0	**120**	
1130 - 1145	2	99	30	0	1	0	0	0	0	0	0	0	0	**132**	
1145 - 1200	1	105	30	0	1	0	0	1	0	0	0	0	0	**139**	**504**
1200 - 1215	1	112	28	0	2	0	0	0	1	0	0	0	0	**143**	
1215 - 1230	0	119	34	0	2	0	0	0	0	0	0	0	0	**155**	
1230 - 1245	1	113	33	0	1	0	0	0	0	0	0	0	0	**148**	
1245 - 1300	0	125	32	0	1	0	0	0	1	0	0	0	0	**160**	**606**
1300 - 1315	1	126	31	0	2	0	0	0	0	0	0	0	0	**161**	
1315 - 1330	0	128	32	0	1	0	0	0	1	0	0	0	0	**163**	
1330 - 1345	1	132	33	0	1	0	0	0	1	0	0	0	0	**167**	
1345 - 1400	1	138	35	0	2	0	0	1	0	0	0	0	0	**176**	**667**
1400 - 1415	1	132	33	0	1	0	0	0	0	0	0	0	0	**167**	
1415 - 1430	1	153	37	0	2	0	0	0	0	0	0	0	0	**193**	
1430 - 1445	1	145	38	0	1	0	0	0	0	0	0	0	0	**186**	
1445 - 1500	0	149	41	0	2	0	0	0	1	0	0	0	0	**193**	**738**
1500 - 1515	1	167	40	0	2	0	0	0	1	0	0	0	0	**211**	
1515 - 1530	1	175	50	0	3	0	0	1	1	0	0	0	0	**231**	
1530 - 1545	1	189	57	0	3	0	0	1	0	0	0	0	0	**252**	
1545 - 1600	0	201	61	0	3	0	0	1	1	0	0	0	0	**267**	**961**
1600 - 1615	0	212	57	0	2	0	0	1	1	0	0	0	0	**273**	
1615 - 1630	1	223	58	0	6	0	0	1	0	0	0	0	0	**288**	
1630 - 1645	2	234	59	0	4	0	0	0	1	0	0	0	0	**300**	
1645 - 1700	1	232	57	0	3	0	0	1	0	0	0	0	0	**294**	**1156**
1700 - 1715	1	223	55	0	3	0	0	0	0	0	0	0	0	**282**	
1715 - 1730	1	243	66	0	2	0	0	1	0	0	0	0	0	**313**	
1730 - 1745	2	213	62	0	2	0	0	1	0	0	0	0	0	**281**	
1745 - 1800	1	212	61	0	2	0	0	1	1	0	0	0	0	**278**	**1154**
1800 - 1815	1	170	46	0	1	0	0	0	1	0	0	0	0	**219**	
1815 - 1830	2	147	35	1	1	0	0	1	0	0	0	0	0	**187**	
1830 - 1845	1	118	27	0	1	0	0	1	0	0	0	0	0	**148**	
1845 - 1900	2	117	29	0	2	0	0	0	0	0	0	0	0	**151**	**705**
1900 - 1915	0	108	21	0	1	0	0	0	0	0	0	0	0	**132**	
1915 - 1930	0	102	21	0	1	0	0	0	0	0	0	0	0	**124**	
1930 - 1945	0	86	23	0	1	0	0	0	0	0	0	0	0	**110**	
1945 - 2000	1	85	17	0	0	0	0	0	0	0	0	0	0	**103**	**469**
2000 - 2015	0	78	14	0	0	0	0	0	0	0	0	0	0	**93**	
2015 - 2030	0	69	15	0	0	0	0	0	0	0	0	0	0	**84**	
2030 - 2045	0	60	12	0	0	0	0	0	0	0	0	0	0	**72**	
2045 - 2100	0	58	11	0	0	0	0	0	0	0	0	0	0	**70**	**320**
2100 - 2115	0	42	10	0	0	0	0	0	1	0	0	0	0	**53**	
2115 - 2130	0	39	10	0	0	0	0	0	0	0	0	0	0	**49**	
2130 - 2145	0	33	8	0	0	0	0	0	0	0	0	0	0	**42**	
2145 - 2200	0	29	7	0	0	0	0	0	0	0	0	0	0	**36**	**181**
2200 - 2215	0	24	6	0	0	0	0	0	0	0	0	0	0	**32**	
2215 - 2230	0	31	7	0	0	0	0	0	0	0	0	0	0	**38**	
2230 - 2245	0	26	6	0	0	0	0	0	0	0	0	0	0	**32**	
2245 - 2300	0	22	5	0	0	0	0	0	0	0	0	0	0	**26**	**128**
2300 - 2315	0	20	5	0	0	0	0	0	0	0	0	0	0	**25**	
2315 - 2330	0	13	4	0	0	0	0	0	0	0	0	0	0	**16**	
2330 - 2345	0	11	3	0	0	0	0	0	0	0	0	0	0	**14**	
2345 - 0000	0	12	4	0	0	0	0	0	0	0	0	0	0	**16**	**71**

Session Total	39	7824	2009	4	88	4	0	19	29	1	0	0	0	**10017**
Session Average	0.41	81.50	20.92	0.04	0.91	0.04	0.00	0.20	0.30	0.01	0.00	0.00	0.00	**104.34**
Session Percentage	0.39	78.11	20.05	0.04	0.87	0.04	0.00	0.19	0.29	0.01	0.00	0.00	0.00	

AM Peak Hour	0945 - 1045	0700 - 0800	0715 - 0815	0500 - 0600	0845 - 0945	0745 - 0845	-	0930 - 1030	0930 - 1030	0630 - 0730	-	-	-	**0700 - 0800**
AM Peak Volume	3	401	102	0	6	0	0	1	2	0	0	0	0	**507**

Noon Peak Hour	1015 - 1115	1445 - 1545	1445 - 1545	1100 - 1200	1445 - 1545	1445 - 1545	-	1315 - 1415	1430 - 1530	1100 - 1200	1430 - 1530	-	-	**1445 - 1545**
Noon Peak Volume	4	680	188	0	10	0	0	2	3	0	0	0	0	**887**

PM Peak Hour	1800 - 1900	1630 - 1730	1700 - 1800	1800 - 1900	1615 - 1715	1715 - 1815	-	1515 - 1615	1515 - 1615	1545 - 1645	1500 - 1600	-	-	**1630 - 1730**
PM Peak Volume	6	932	244	1	15	1	0	3	4	0	0	0	0	**1189**

Bi-Directional Class Count || Volume Summary 15min

Columbia, SC

Marr Traffic DATA COLLECTION

www.marrtraffic.com

Site 74 Lane 1 WB

I-20,
west of US-378 Sunset Blvd S/Bound Off-Ramp

Date

Sunday, April 21, 2024

Lat/Long

34.008085°, -81.156669°

Weather

Cloudy
66°F

Click here for Detailed Weather

0000 - 2400 (Sunday 24h Session) (04-21-2024)

Volume Summary 15min

TIME	Volume Summary 15min EB	Volume Summary 15min WB	15min Total	60min Total
0000 - 0015	0	33	**33**	
0015 - 0030	0	27	**27**	
0030 - 0045	0	12	**12**	
0045 - 0100	0	10	**10**	**82**
0100 - 0115	0	16	**16**	
0115 - 0130	0	6	**6**	
0130 - 0145	0	13	**13**	
0145 - 0200	0	15	**15**	**50**
0200 - 0215	0	11	**11**	
0215 - 0230	0	13	**13**	
0230 - 0245	0	12	**12**	
0245 - 0300	0	10	**10**	**46**
0300 - 0315	0	9	**9**	
0315 - 0330	0	8	**8**	
0330 - 0345	0	9	**9**	
0345 - 0400	0	9	**9**	**35**
0400 - 0415	0	7	**7**	
0415 - 0430	0	7	**7**	
0430 - 0445	0	12	**12**	
0445 - 0500	0	7	**7**	**33**
0500 - 0515	0	10	**10**	
0515 - 0530	0	19	**19**	
0530 - 0545	0	18	**18**	
0545 - 0600	0	16	**16**	**63**
0600 - 0615	0	12	**12**	
0615 - 0630	0	10	**10**	
0630 - 0645	0	24	**24**	
0645 - 0700	0	19	**19**	**65**
0700 - 0715	0	29	**29**	
0715 - 0730	0	23	**23**	
0730 - 0745	0	26	**26**	
0745 - 0800	0	25	**25**	**103**
0800 - 0815	0	27	**27**	
0815 - 0830	0	30	**30**	
0830 - 0845	0	40	**40**	
0845 - 0900	0	39	**39**	**136**
0900 - 0915	0	42	**42**	
0915 - 0930	0	68	**68**	
0930 - 0945	0	69	**69**	
0945 - 1000	0	74	**74**	**253**
1000 - 1015	0	77	**77**	
1015 - 1030	0	100	**100**	
1030 - 1045	0	107	**107**	
1045 - 1100	0	124	**124**	**408**
1100 - 1115	0	147	**147**	
1115 - 1130	0	120	**120**	
1130 - 1145	0	133	**133**	
1145 - 1200	0	153	**153**	**553**

Time	Volume Summary 15min EB	Volume Summary 15min WB	15min Total	60min Total
1200 - 1215	0	158	**158**	
1215 - 1230	0	171	**171**	
1230 - 1245	0	167	**167**	
1245 - 1300	0	184	**184**	**680**
1300 - 1315	0	194	**194**	
1315 - 1330	0	206	**206**	
1330 - 1345	0	214	**214**	
1345 - 1400	0	200	**200**	**814**
1400 - 1415	0	186	**186**	
1415 - 1430	0	183	**183**	
1430 - 1445	0	185	**185**	
1445 - 1500	0	180	**180**	**734**
1500 - 1515	0	186	**186**	
1515 - 1530	0	163	**163**	
1530 - 1545	0	172	**172**	
1545 - 1600	0	204	**204**	**725**
1600 - 1615	0	180	**180**	
1615 - 1630	0	175	**175**	
1630 - 1645	0	178	**178**	
1645 - 1700	0	169	**169**	**702**
1700 - 1715	0	147	**147**	
1715 - 1730	0	154	**154**	
1730 - 1745	0	144	**144**	
1745 - 1800	0	155	**155**	**600**
1800 - 1815	0	134	**134**	
1815 - 1830	0	131	**131**	
1830 - 1845	0	120	**120**	
1845 - 1900	0	150	**150**	**535**
1900 - 1915	0	120	**120**	
1915 - 1930	0	97	**97**	
1930 - 1945	0	100	**100**	
1945 - 2000	0	107	**107**	**424**
2000 - 2015	0	83	**83**	
2015 - 2030	0	69	**69**	
2030 - 2045	0	68	**68**	
2045 - 2100	0	69	**69**	**289**
2100 - 2115	0	51	**51**	
2115 - 2130	0	49	**49**	
2130 - 2145	0	37	**37**	
2145 - 2200	0	37	**37**	**174**
2200 - 2215	0	41	**41**	
2215 - 2230	0	34	**34**	
2230 - 2245	0	26	**26**	
2245 - 2300	0	26	**26**	**127**
2300 - 2315	0	21	**21**	
2315 - 2330	0	12	**12**	
2330 - 2345	0	17	**17**	
2345 - 0000	0	12	**12**	**62**

Session Total	0	7693	**7693**
Session Average	0.00	80.14	**80.14**
Session Percentage	0.00	100.00	

Site 74 Lane 1 WB

I-20,
west of US-378 Sunset Blvd S/Bound Off-Ramp

Date

Monday, April 22, 2024

Lat/Long

34.008085°, -81.156669°

Weather

Mostly Cloudy
57°F

Click here for Detailed Weather

0000 - 2400 (Weekday 24h Session) (04-22-2024)

Volume Summary 15min

TIME	Volume Summary 15min EB	WB	15min Total	60min Total
0000 - 0015	0	14	**14**	
0015 - 0030	0	15	**15**	
0030 - 0045	0	19	**19**	
0045 - 0100	0	12	**12**	**60**
0100 - 0115	0	7	**7**	
0115 - 0130	0	7	**7**	
0130 - 0145	0	6	**6**	
0145 - 0200	0	3	**3**	**23**
0200 - 0215	0	6	**6**	
0215 - 0230	0	13	**13**	
0230 - 0245	0	10	**10**	
0245 - 0300	0	8	**8**	**37**
0300 - 0315	0	8	**8**	
0315 - 0330	0	13	**13**	
0330 - 0345	0	14	**14**	
0345 - 0400	0	16	**16**	**51**
0400 - 0415	0	15	**15**	
0415 - 0430	0	15	**15**	
0430 - 0445	0	17	**17**	
0445 - 0500	0	15	**15**	**62**
0500 - 0515	0	32	**32**	
0515 - 0530	0	37	**37**	
0530 - 0545	0	49	**49**	
0545 - 0600	0	68	**68**	**186**
0600 - 0615	0	74	**74**	
0615 - 0630	0	102	**102**	
0630 - 0645	0	136	**136**	
0645 - 0700	0	148	**148**	**460**
0700 - 0715	0	147	**147**	
0715 - 0730	0	198	**198**	
0730 - 0745	0	193	**193**	
0745 - 0800	0	190	**190**	**728**
0800 - 0815	0	156	**156**	
0815 - 0830	0	129	**129**	
0830 - 0845	0	108	**108**	
0845 - 0900	0	97	**97**	**490**
0900 - 0915	0	104	**104**	
0915 - 0930	0	101	**101**	
0930 - 0945	0	86	**86**	
0945 - 1000	0	108	**108**	**399**
1000 - 1015	0	115	**115**	
1015 - 1030	0	107	**107**	
1030 - 1045	0	107	**107**	
1045 - 1100	0	106	**106**	**435**
1100 - 1115	0	108	**108**	
1115 - 1130	0	117	**117**	
1130 - 1145	0	131	**131**	
1145 - 1200	0	124	**124**	**480**

Time	Volume Summary 15min EB	WB	15min Total	60min Total
1200 - 1215	0	138	**138**	
1215 - 1230	0	146	**146**	
1230 - 1245	0	130	**130**	
1245 - 1300	0	128	**128**	**542**
1300 - 1315	0	135	**135**	
1315 - 1330	0	159	**159**	
1330 - 1345	0	158	**158**	
1345 - 1400	0	142	**142**	**594**
1400 - 1415	0	139	**139**	
1415 - 1430	0	165	**165**	
1430 - 1445	0	146	**146**	
1445 - 1500	0	173	**173**	**623**
1500 - 1515	0	207	**207**	
1515 - 1530	0	241	**241**	
1530 - 1545	0	263	**263**	
1545 - 1600	0	250	**250**	**961**
1600 - 1615	0	296	**296**	
1615 - 1630	0	313	**313**	
1630 - 1645	0	332	**332**	
1645 - 1700	0	329	**329**	**1270**
1700 - 1715	0	377	**377**	
1715 - 1730	0	407	**407**	
1730 - 1745	0	358	**358**	
1745 - 1800	0	344	**344**	**1486**
1800 - 1815	0	225	**225**	
1815 - 1830	0	193	**193**	
1830 - 1845	0	150	**150**	
1845 - 1900	0	155	**155**	**723**
1900 - 1915	0	133	**133**	
1915 - 1930	0	115	**115**	
1930 - 1945	0	101	**101**	
1945 - 2000	0	86	**86**	**435**
2000 - 2015	0	84	**84**	
2015 - 2030	0	52	**52**	
2030 - 2045	0	61	**61**	
2045 - 2100	0	55	**55**	**252**
2100 - 2115	0	55	**55**	
2115 - 2130	0	46	**46**	
2130 - 2145	0	33	**33**	
2145 - 2200	0	21	**21**	**155**
2200 - 2215	0	25	**25**	
2215 - 2230	0	31	**31**	
2230 - 2245	0	23	**23**	
2245 - 2300	0	16	**16**	**95**
2300 - 2315	0	18	**18**	
2315 - 2330	0	13	**13**	
2330 - 2345	0	10	**10**	
2345 - 0000	0	13	**13**	**54**

Session Total	0	10601	**10601**
Session Average	0.00	110.43	**110.43**
Session Percentage	0.00	100.00	

Site 74 Lane 1 WB

I-20,
west of US-378 Sunset Blvd S/Bound Off-Ramp

Date

Tuesday, April 23, 2024

Lat/Long

34.008085°, -81.156669°

Weather

Fair
58°F

Click here for Detailed Weather

0000 - 2400 (Weekday 24h Session) (04-23-2024)

Volume Summary 15min

TIME	Volume Summary 15min EB	Volume Summary 15min WB	15min Total	60min Total
0000 - 0015	0	25	**25**	
0015 - 0030	0	23	**23**	
0030 - 0045	0	12	**12**	
0045 - 0100	0	12	**12**	**72**
0100 - 0115	0	10	**10**	
0115 - 0130	0	6	**6**	
0130 - 0145	0	6	**6**	
0145 - 0200	0	5	**5**	**27**
0200 - 0215	0	2	**2**	
0215 - 0230	0	0	**0**	
0230 - 0245	0	4	**4**	
0245 - 0300	0	2	**2**	**8**
0300 - 0315	0	0	**0**	
0315 - 0330	0	4	**4**	
0330 - 0345	0	2	**2**	
0345 - 0400	0	8	**8**	**14**
0400 - 0415	0	3	**3**	
0415 - 0430	0	4	**4**	
0430 - 0445	0	8	**8**	
0445 - 0500	0	3	**3**	**18**
0500 - 0515	0	14	**14**	
0515 - 0530	0	12	**12**	
0530 - 0545	0	18	**18**	
0545 - 0600	0	18	**18**	**62**
0600 - 0615	0	49	**49**	
0615 - 0630	0	110	**110**	
0630 - 0645	0	101	**101**	
0645 - 0700	0	116	**116**	**376**
0700 - 0715	0	127	**127**	
0715 - 0730	0	88	**88**	
0730 - 0745	0	111	**111**	
0745 - 0800	0	114	**114**	**440**
0800 - 0815	0	91	**91**	
0815 - 0830	0	103	**103**	
0830 - 0845	0	69	**69**	
0845 - 0900	0	71	**71**	**334**
0900 - 0915	0	103	**103**	
0915 - 0930	0	83	**83**	
0930 - 0945	0	75	**75**	
0945 - 1000	0	75	**75**	**336**
1000 - 1015	0	71	**71**	
1015 - 1030	0	66	**66**	
1030 - 1045	0	71	**71**	
1045 - 1100	0	86	**86**	**294**
1100 - 1115	0	86	**86**	
1115 - 1130	0	93	**93**	
1130 - 1145	0	88	**88**	
1145 - 1200	0	103	**103**	**370**

Time	Volume Summary 15min EB	Volume Summary 15min WB	15min Total	60min Total
1200 - 1215	0	98	**98**	
1215 - 1230	0	96	**96**	
1230 - 1245	0	125	**125**	
1245 - 1300	0	110	**110**	**429**
1300 - 1315	0	128	**128**	
1315 - 1330	0	114	**114**	
1330 - 1345	0	113	**113**	
1345 - 1400	0	147	**147**	**502**
1400 - 1415	0	132	**132**	
1415 - 1430	0	158	**158**	
1430 - 1445	0	185	**185**	
1445 - 1500	0	188	**188**	**663**
1500 - 1515	0	202	**202**	
1515 - 1530	0	204	**204**	
1530 - 1545	0	256	**256**	
1545 - 1600	0	303	**303**	**965**
1600 - 1615	0	258	**258**	
1615 - 1630	0	361	**361**	
1630 - 1645	0	377	**377**	
1645 - 1700	0	384	**384**	**1380**
1700 - 1715	0	320	**320**	
1715 - 1730	0	437	**437**	
1730 - 1745	0	361	**361**	
1745 - 1800	0	371	**371**	**1489**
1800 - 1815	0	310	**310**	
1815 - 1830	0	203	**203**	
1830 - 1845	0	123	**123**	
1845 - 1900	0	139	**139**	**775**
1900 - 1915	0	122	**122**	
1915 - 1930	0	116	**116**	
1930 - 1945	0	97	**97**	
1945 - 2000	0	118	**118**	**453**
2000 - 2015	0	118	**118**	
2015 - 2030	0	106	**106**	
2030 - 2045	0	74	**74**	
2045 - 2100	0	55	**55**	**353**
2100 - 2115	0	31	**31**	
2115 - 2130	0	34	**34**	
2130 - 2145	0	29	**29**	
2145 - 2200	0	29	**29**	**123**
2200 - 2215	0	19	**19**	
2215 - 2230	0	21	**21**	
2230 - 2245	0	24	**24**	
2245 - 2300	0	14	**14**	**78**
2300 - 2315	0	13	**13**	
2315 - 2330	0	10	**10**	
2330 - 2345	0	7	**7**	
2345 - 0000	0	7	**7**	**37**

Session Total	0	9598	**9598**
Session Average	0.00	99.98	**99.98**
Session Percentage	0.00	100.00	

Site 74 Lane 1 WB

I-20,
west of US-378 Sunset Blvd S/Bound Off-Ramp

Date

Wednesday, April 24, 2024

Lat/Long

34.008085°, -81.156669°

Weather

Fair
66°F

Click here for Detailed Weather

0000 - 2400 (Weekday 24h Session) (04-24-2024)

Volume Summary 15min

TIME	Volume Summary 15min EB	Volume Summary 15min WB	15min Total	60min Total
0000 - 0015	0	21	**21**	
0015 - 0030	0	21	**21**	
0030 - 0045	0	20	**20**	
0045 - 0100	0	13	**13**	**75**
0100 - 0115	0	9	**9**	
0115 - 0130	0	9	**9**	
0130 - 0145	0	7	**7**	
0145 - 0200	0	9	**9**	**34**
0200 - 0215	0	17	**17**	
0215 - 0230	0	7	**7**	
0230 - 0245	0	8	**8**	
0245 - 0300	0	7	**7**	**39**
0300 - 0315	0	12	**12**	
0315 - 0330	0	3	**3**	
0330 - 0345	0	9	**9**	
0345 - 0400	0	7	**7**	**31**
0400 - 0415	0	15	**15**	
0415 - 0430	0	15	**15**	
0430 - 0445	0	23	**23**	
0445 - 0500	0	23	**23**	**76**
0500 - 0515	0	19	**19**	
0515 - 0530	0	20	**20**	
0530 - 0545	0	56	**56**	
0545 - 0600	0	66	**66**	**161**
0600 - 0615	0	40	**40**	
0615 - 0630	0	73	**73**	
0630 - 0645	0	70	**70**	
0645 - 0700	0	124	**124**	**307**
0700 - 0715	0	134	**134**	
0715 - 0730	0	139	**139**	
0730 - 0745	0	203	**203**	
0745 - 0800	0	187	**187**	**663**
0800 - 0815	0	121	**121**	
0815 - 0830	0	109	**109**	
0830 - 0845	0	135	**135**	
0845 - 0900	0	139	**139**	**504**
0900 - 0915	0	103	**103**	
0915 - 0930	0	80	**80**	
0930 - 0945	0	86	**86**	
0945 - 1000	0	153	**153**	**422**
1000 - 1015	0	102	**102**	
1015 - 1030	0	103	**103**	
1030 - 1045	0	119	**119**	
1045 - 1100	0	122	**122**	**446**
1100 - 1115	0	99	**99**	
1115 - 1130	0	94	**94**	
1130 - 1145	0	97	**97**	
1145 - 1200	0	107	**107**	**397**

Time	Volume Summary 15min EB	Volume Summary 15min WB	15min Total	60min Total
1200 - 1215	0	103	**103**	
1215 - 1230	0	113	**113**	
1230 - 1245	0	116	**116**	
1245 - 1300	0	139	**139**	**471**
1300 - 1315	0	118	**118**	
1315 - 1330	0	110	**110**	
1330 - 1345	0	153	**153**	
1345 - 1400	0	163	**163**	**544**
1400 - 1415	0	165	**165**	
1415 - 1430	0	181	**181**	
1430 - 1445	0	169	**169**	
1445 - 1500	0	188	**188**	**703**
1500 - 1515	0	235	**235**	
1515 - 1530	0	284	**284**	
1530 - 1545	0	328	**328**	
1545 - 1600	0	322	**322**	**1169**
1600 - 1615	0	347	**347**	
1615 - 1630	0	322	**322**	
1630 - 1645	0	358	**358**	
1645 - 1700	0	374	**374**	**1401**
1700 - 1715	0	384	**384**	
1715 - 1730	0	367	**367**	
1730 - 1745	0	356	**356**	
1745 - 1800	0	380	**380**	**1487**
1800 - 1815	0	203	**203**	
1815 - 1830	0	221	**221**	
1830 - 1845	0	138	**138**	
1845 - 1900	0	146	**146**	**708**
1900 - 1915	0	116	**116**	
1915 - 1930	0	109	**109**	
1930 - 1945	0	110	**110**	
1945 - 2000	0	76	**76**	**411**
2000 - 2015	0	79	**79**	
2015 - 2030	0	78	**78**	
2030 - 2045	0	70	**70**	
2045 - 2100	0	66	**66**	**293**
2100 - 2115	0	44	**44**	
2115 - 2130	0	39	**39**	
2130 - 2145	0	32	**32**	
2145 - 2200	0	32	**32**	**147**
2200 - 2215	0	37	**37**	
2215 - 2230	0	36	**36**	
2230 - 2245	0	30	**30**	
2245 - 2300	0	21	**21**	**124**
2300 - 2315	0	18	**18**	
2315 - 2330	0	12	**12**	
2330 - 2345	0	6	**6**	
2345 - 0000	0	12	**12**	**48**

Session Total	0	10661	**10661**
Session Average	0.00	111.05	**111.05**
Session Percentage	0.00	100.00	

Site 74 Lane 1 WB

I-20,
west of US-378 Sunset Blvd S/Bound Off-Ramp

Date

Thursday, April 25, 2024

Lat/Long

34.008085°, -81.156669°

Weather

Fair
67°F

Click here for Detailed Weather

0000 - 2400 (Weekday 24h Session) (04-25-2024)

Volume Summary 15min

TIME	Volume Summary 15min EB	Volume Summary 15min WB	15min Total	60min Total
0000 - 0015	0	16	**16**	
0015 - 0030	0	19	**19**	
0030 - 0045	0	10	**10**	
0045 - 0100	0	3	**3**	**48**
0100 - 0115	0	13	**13**	
0115 - 0130	0	6	**6**	
0130 - 0145	0	5	**5**	
0145 - 0200	0	5	**5**	**29**
0200 - 0215	0	6	**6**	
0215 - 0230	0	8	**8**	
0230 - 0245	0	7	**7**	
0245 - 0300	0	8	**8**	**29**
0300 - 0315	0	5	**5**	
0315 - 0330	0	10	**10**	
0330 - 0345	0	10	**10**	
0345 - 0400	0	10	**10**	**35**
0400 - 0415	0	14	**14**	
0415 - 0430	0	10	**10**	
0430 - 0445	0	15	**15**	
0445 - 0500	0	18	**18**	**57**
0500 - 0515	0	23	**23**	
0515 - 0530	0	22	**22**	
0530 - 0545	0	46	**46**	
0545 - 0600	0	51	**51**	**142**
0600 - 0615	0	57	**57**	
0615 - 0630	0	55	**55**	
0630 - 0645	0	95	**95**	
0645 - 0700	0	60	**60**	**267**
0700 - 0715	0	161	**161**	
0715 - 0730	0	169	**169**	
0730 - 0745	0	162	**162**	
0745 - 0800	0	205	**205**	**697**
0800 - 0815	0	136	**136**	
0815 - 0830	0	141	**141**	
0830 - 0845	0	149	**149**	
0845 - 0900	0	111	**111**	**537**
0900 - 0915	0	111	**111**	
0915 - 0930	0	96	**96**	
0930 - 0945	0	118	**118**	
0945 - 1000	0	117	**117**	**442**
1000 - 1015	0	114	**114**	
1015 - 1030	0	125	**125**	
1030 - 1045	0	119	**119**	
1045 - 1100	0	131	**131**	**489**
1100 - 1115	0	98	**98**	
1115 - 1130	0	128	**128**	
1130 - 1145	0	152	**152**	
1145 - 1200	0	155	**155**	**533**

Time	Volume Summary 15min EB	Volume Summary 15min WB	15min Total	60min Total
1200 - 1215	0	143	**143**	
1215 - 1230	0	173	**173**	
1230 - 1245	0	169	**169**	
1245 - 1300	0	192	**192**	**677**
1300 - 1315	0	174	**174**	
1315 - 1330	0	154	**154**	
1330 - 1345	0	164	**164**	
1345 - 1400	0	173	**173**	**665**
1400 - 1415	0	169	**169**	
1415 - 1430	0	236	**236**	
1430 - 1445	0	206	**206**	
1445 - 1500	0	206	**206**	**817**
1500 - 1515	0	228	**228**	
1515 - 1530	0	279	**279**	
1530 - 1545	0	304	**304**	
1545 - 1600	0	284	**284**	**1095**
1600 - 1615	0	303	**303**	
1615 - 1630	0	351	**351**	
1630 - 1645	0	370	**370**	
1645 - 1700	0	315	**315**	**1339**
1700 - 1715	0	272	**272**	
1715 - 1730	0	335	**335**	
1730 - 1745	0	304	**304**	
1745 - 1800	0	321	**321**	**1232**
1800 - 1815	0	299	**299**	
1815 - 1830	0	209	**209**	
1830 - 1845	0	173	**173**	
1845 - 1900	0	166	**166**	**847**
1900 - 1915	0	160	**160**	
1915 - 1930	0	159	**159**	
1930 - 1945	0	130	**130**	
1945 - 2000	0	118	**118**	**567**
2000 - 2015	0	107	**107**	
2015 - 2030	0	105	**105**	
2030 - 2045	0	100	**100**	
2045 - 2100	0	104	**104**	**416**
2100 - 2115	0	57	**57**	
2115 - 2130	0	49	**49**	
2130 - 2145	0	39	**39**	
2145 - 2200	0	44	**44**	**189**
2200 - 2215	0	29	**29**	
2215 - 2230	0	49	**49**	
2230 - 2245	0	40	**40**	
2245 - 2300	0	22	**22**	**140**
2300 - 2315	0	18	**18**	
2315 - 2330	0	22	**22**	
2330 - 2345	0	13	**13**	
2345 - 0000	0	8	**8**	**61**

Session Total	0	11350	**11350**
Session Average	0.00	118.23	**118.23**
Session Percentage	0.00	100.00	

Site 74 Lane 1 WB

I-20,
west of US-378 Sunset Blvd S/Bound Off-Ramp

Date

Friday, April 26, 2024

Lat/Long

34.008085°, -81.156669°

Weather

Cloudy
69°F

Click here for Detailed Weather

0000 - 2400 (Weekday 24h Session) (04-26-2024)

Volume Summary 15min

TIME	Volume Summary 15min EB	Volume Summary 15min WB	15min Total	60min Total
0000 - 0015	0	22	**22**	
0015 - 0030	0	3	**3**	
0030 - 0045	0	6	**6**	
0045 - 0100	0	19	**19**	**50**
0100 - 0115	0	5	**5**	
0115 - 0130	0	14	**14**	
0130 - 0145	0	8	**8**	
0145 - 0200	0	5	**5**	**32**
0200 - 0215	0	6	**6**	
0215 - 0230	0	2	**2**	
0230 - 0245	0	6	**6**	
0245 - 0300	0	10	**10**	**24**
0300 - 0315	0	6	**6**	
0315 - 0330	0	3	**3**	
0330 - 0345	0	8	**8**	
0345 - 0400	0	3	**3**	**20**
0400 - 0415	0	7	**7**	
0415 - 0430	0	9	**9**	
0430 - 0445	0	12	**12**	
0445 - 0500	0	17	**17**	**45**
0500 - 0515	0	4	**4**	
0515 - 0530	0	24	**24**	
0530 - 0545	0	31	**31**	
0545 - 0600	0	27	**27**	**86**
0600 - 0615	0	46	**46**	
0615 - 0630	0	68	**68**	
0630 - 0645	0	120	**120**	
0645 - 0700	0	115	**115**	**349**
0700 - 0715	0	137	**137**	
0715 - 0730	0	160	**160**	
0730 - 0745	0	195	**195**	
0745 - 0800	0	191	**191**	**683**
0800 - 0815	0	168	**168**	
0815 - 0830	0	129	**129**	
0830 - 0845	0	145	**145**	
0845 - 0900	0	117	**117**	**559**
0900 - 0915	0	105	**105**	
0915 - 0930	0	115	**115**	
0930 - 0945	0	110	**110**	
0945 - 1000	0	125	**125**	**455**
1000 - 1015	0	115	**115**	
1015 - 1030	0	133	**133**	
1030 - 1045	0	142	**142**	
1045 - 1100	0	165	**165**	**555**
1100 - 1115	0	124	**124**	
1115 - 1130	0	160	**160**	
1130 - 1145	0	170	**170**	
1145 - 1200	0	191	**191**	**645**

Time	Volume Summary 15min EB	Volume Summary 15min WB	15min Total	60min Total
1200 - 1215	0	214	**214**	
1215 - 1230	0	225	**225**	
1230 - 1245	0	201	**201**	
1245 - 1300	0	226	**226**	**866**
1300 - 1315	0	229	**229**	
1315 - 1330	0	227	**227**	
1330 - 1345	0	228	**228**	
1345 - 1400	0	253	**253**	**937**
1400 - 1415	0	225	**225**	
1415 - 1430	0	257	**257**	
1430 - 1445	0	265	**265**	
1445 - 1500	0	270	**270**	**1017**
1500 - 1515	0	263	**263**	
1515 - 1530	0	278	**278**	
1530 - 1545	0	285	**285**	
1545 - 1600	0	322	**322**	**1148**
1600 - 1615	0	342	**342**	
1615 - 1630	0	363	**363**	
1630 - 1645	0	332	**332**	
1645 - 1700	0	344	**344**	**1381**
1700 - 1715	0	331	**331**	
1715 - 1730	0	365	**365**	
1730 - 1745	0	297	**297**	
1745 - 1800	0	265	**265**	**1258**
1800 - 1815	0	234	**234**	
1815 - 1830	0	225	**225**	
1830 - 1845	0	193	**193**	
1845 - 1900	0	183	**183**	**835**
1900 - 1915	0	170	**170**	
1915 - 1930	0	167	**167**	
1930 - 1945	0	142	**142**	
1945 - 2000	0	110	**110**	**589**
2000 - 2015	0	101	**101**	
2015 - 2030	0	114	**114**	
2030 - 2045	0	75	**75**	
2045 - 2100	0	82	**82**	**372**
2100 - 2115	0	78	**78**	
2115 - 2130	0	86	**86**	
2130 - 2145	0	79	**79**	
2145 - 2200	0	56	**56**	**299**
2200 - 2215	0	38	**38**	
2215 - 2230	0	54	**54**	
2230 - 2245	0	42	**42**	
2245 - 2300	0	42	**42**	**176**
2300 - 2315	0	52	**52**	
2315 - 2330	0	28	**28**	
2330 - 2345	0	23	**23**	
2345 - 0000	0	31	**31**	**134**

Session Total	0	12515	**12515**
Session Average	0.00	130.36	**130.36**
Session Percentage	0.00	100.00	

Site 74 Lane 1 WB

I-20,
west of US-378 Sunset Blvd S/Bound Off-Ramp

Date

Saturday, April 27, 2024

Lat/Long

34.008085°, -81.156669°

Weather

Mostly Cloudy
69°F

Click here for Detailed Weather

0000 - 2400 (Saturday 24h Session) (04-27-2024)

Volume Summary 15min

	Volume Summary 15min		15min	60min
TIME	EB	WB	Total	Total
0000 - 0015	0	34	**34**	
0015 - 0030	0	36	**36**	
0030 - 0045	0	34	**34**	
0045 - 0100	0	15	**15**	**119**
0100 - 0115	0	26	**26**	
0115 - 0130	0	22	**22**	
0130 - 0145	0	27	**27**	
0145 - 0200	0	19	**19**	**94**
0200 - 0215	0	17	**17**	
0215 - 0230	0	11	**11**	
0230 - 0245	0	16	**16**	
0245 - 0300	0	4	**4**	**48**
0300 - 0315	0	10	**10**	
0315 - 0330	0	5	**5**	
0330 - 0345	0	8	**8**	
0345 - 0400	0	7	**7**	**30**
0400 - 0415	0	11	**11**	
0415 - 0430	0	10	**10**	
0430 - 0445	0	14	**14**	
0445 - 0500	0	8	**8**	**43**
0500 - 0515	0	6	**6**	
0515 - 0530	0	33	**33**	
0530 - 0545	0	18	**18**	
0545 - 0600	0	18	**18**	**75**
0600 - 0615	0	12	**12**	
0615 - 0630	0	29	**29**	
0630 - 0645	0	40	**40**	
0645 - 0700	0	39	**39**	**120**
0700 - 0715	0	41	**41**	
0715 - 0730	0	51	**51**	
0730 - 0745	0	74	**74**	
0745 - 0800	0	70	**70**	**236**
0800 - 0815	0	64	**64**	
0815 - 0830	0	71	**71**	
0830 - 0845	0	86	**86**	
0845 - 0900	0	68	**68**	**289**
0900 - 0915	0	76	**76**	
0915 - 0930	0	101	**101**	
0930 - 0945	0	113	**113**	
0945 - 1000	0	103	**103**	**393**
1000 - 1015	0	112	**112**	
1015 - 1030	0	103	**103**	
1030 - 1045	0	126	**126**	
1045 - 1100	0	127	**127**	**468**
1100 - 1115	0	133	**133**	
1115 - 1130	0	129	**129**	
1130 - 1145	0	151	**151**	
1145 - 1200	0	140	**140**	**553**

	Volume Summary 15min		15min	60min
Time	EB	WB	Total	Total
1200 - 1215	0	146	**146**	
1215 - 1230	0	161	**161**	
1230 - 1245	0	129	**129**	
1245 - 1300	0	139	**139**	**575**
1300 - 1315	0	147	**147**	
1315 - 1330	0	171	**171**	
1330 - 1345	0	142	**142**	
1345 - 1400	0	156	**156**	**616**
1400 - 1415	0	155	**155**	
1415 - 1430	0	168	**168**	
1430 - 1445	0	143	**143**	
1445 - 1500	0	144	**144**	**610**
1500 - 1515	0	158	**158**	
1515 - 1530	0	168	**168**	
1530 - 1545	0	154	**154**	
1545 - 1600	0	183	**183**	**663**
1600 - 1615	0	188	**188**	
1615 - 1630	0	134	**134**	
1630 - 1645	0	151	**151**	
1645 - 1700	0	145	**145**	**618**
1700 - 1715	0	140	**140**	
1715 - 1730	0	129	**129**	
1730 - 1745	0	144	**144**	
1745 - 1800	0	111	**111**	**524**
1800 - 1815	0	131	**131**	
1815 - 1830	0	130	**130**	
1830 - 1845	0	139	**139**	
1845 - 1900	0	115	**115**	**515**
1900 - 1915	0	101	**101**	
1915 - 1930	0	107	**107**	
1930 - 1945	0	92	**92**	
1945 - 2000	0	105	**105**	**405**
2000 - 2015	0	80	**80**	
2015 - 2030	0	66	**66**	
2030 - 2045	0	58	**58**	
2045 - 2100	0	62	**62**	**266**
2100 - 2115	0	54	**54**	
2115 - 2130	0	41	**41**	
2130 - 2145	0	47	**47**	
2145 - 2200	0	35	**35**	**177**
2200 - 2215	0	32	**32**	
2215 - 2230	0	42	**42**	
2230 - 2245	0	42	**42**	
2245 - 2300	0	43	**43**	**159**
2300 - 2315	0	37	**37**	
2315 - 2330	0	18	**18**	
2330 - 2345	0	21	**21**	
2345 - 0000	0	28	**28**	**104**

Session Total	0	7700	**7700**
Session Average	0.00	80.21	**80.21**
Session Percentage	0.00	100.00	

Bi-Directional Class Count || SB WB 60min

Columbia, SC

Marr Traffic DATA COLLECTION

www.marrtraffic.com

Site 74 Lane 1 WB
I-20,
west of US-378 Sunset Blvd S/Bound Off-Ramp

Date
Sunday, April 21, 2024

Lat/Long
34.008085°, -81.156669°

Weather
Cloudy
66°F

Click here for Detailed Weather

0000 - 2400 (Sunday 24h Session) (04-21-2024)
SB WB 60min

	Westbound (Movement 74 Lane 1 WB.1)													
TIME	1	2	3	4	5	6	7	8	9	10	11	12	13	**Total**
0000 - 0100	0	71	9	0	0	0	0	0	2	0	0	0	0	**82**
0100 - 0200	0	48	2	0	0	0	0	0	0	0	0	0	0	**50**
0200 - 0300	0	43	3	0	0	0	0	0	0	0	0	0	0	**46**
0300 - 0400	0	35	0	0	0	0	0	0	0	0	0	0	0	**35**
0400 - 0500	0	30	2	0	0	0	0	0	1	0	0	0	0	**33**
0500 - 0600	0	52	7	1	1	0	0	0	2	0	0	0	0	**63**
0600 - 0700	0	55	10	0	0	0	0	0	0	0	0	0	0	**65**
0700 - 0800	2	86	14	0	1	0	0	0	0	0	0	0	0	**103**
0800 - 0900	4	116	15	0	0	0	0	0	0	1	0	0	0	**136**
0900 - 1000	6	203	44	0	0	0	0	0	0	0	0	0	0	**253**
1000 - 1100	10	329	65	0	3	1	0	0	0	0	0	0	0	**408**
1100 - 1200	0	448	104	0	1	0	0	0	0	0	0	0	0	**553**
1200 - 1300	11	551	115	0	3	0	0	0	0	0	0	0	0	**680**
1300 - 1400	0	691	121	0	0	0	0	2	0	0	0	0	0	**814**
1400 - 1500	0	619	113	0	2	0	0	0	0	0	0	0	0	**734**
1500 - 1600	0	616	104	0	2	0	0	2	1	0	0	0	0	**725**
1600 - 1700	0	589	110	0	0	0	0	2	0	1	0	0	0	**702**
1700 - 1800	1	510	87	0	2	0	0	0	0	0	0	0	0	**600**
1800 - 1900	3	445	83	0	1	0	0	3	0	0	0	0	0	**535**
1900 - 2000	0	362	58	0	2	0	0	0	2	0	0	0	0	**424**
2000 - 2100	0	235	49	0	4	0	0	0	0	0	1	0	0	**289**
2100 - 2200	0	138	33	0	0	0	0	0	3	0	0	0	0	**174**
2200 - 2300	0	98	27	0	0	0	0	0	2	0	0	0	0	**127**
2300 - 2400	0	53	9	0	0	0	0	0	0	0	0	0	0	**62**

Session Total	37	6423	1184	1	22	1	0	9	13	2	1	0	0	**7693**
Session Average	1.54	267.63	49.33	0.04	0.92	0.04	0.00	0.38	0.54	0.08	0.04	0.00	0.00	**320.54**
Session Percentage	0.48	83.49	15.39	0.01	0.29	0.01	0.00	0.12	0.17	0.03	0.01	0.00	0.00	

AM Peak Hour	0900 - 1000	0900 - 1000	0900 - 1000	0500 - 0600	0500 - 0600	-	-	-	0500 - 0600	0800 - 0900	-	-	-	**0900 - 1000**
AM Peak Volume	6	203	44	1	1	0	0	0	2	1	0	0	0	**253**

Noon Peak Hour	1200 - 1300	1300 - 1400	1300 - 1400	-	1000 - 1100	1000 - 1100	-	1300 - 1400	-	-	-	-	-	**1300 - 1400**
Noon Peak Volume	11	691	121	0	3	1	0	2	0	0	0	0	0	**814**

PM Peak Hour	1800 - 1900	1500 - 1600	1600 - 1700	-	1500 - 1600	-	-	1800 - 1900	1900 - 2000	1600 - 1700	-	-	-	**1500 - 1600**
PM Peak Volume	3	616	110	0	2	0	0	3	2	1	0	0	0	**725**

Site 74 Lane 1 WB

I-20,
west of US-378 Sunset Blvd S/Bound Off-Ramp

Date

Monday, April 22, 2024

Lat/Long

34.008085°, -81.156669°

Weather

Mostly Cloudy
57°F

Click here for Detailed Weather

0000 - 2400 (Weekday 24h Session) (04-22-2024)

SB WB 60min

	Westbound (Movement 74 Lane 1 WB.1)													
TIME	1	2	3	4	5	6	7	8	9	10	11	12	13	**Total**
0000 - 0100	0	52	7	0	1	0	0	0	0	0	0	0	0	**60**
0100 - 0200	0	21	2	0	0	0	0	0	0	0	0	0	0	**23**
0200 - 0300	0	32	5	0	0	0	0	0	0	0	0	0	0	**37**
0300 - 0400	0	47	4	0	0	0	0	0	0	0	0	0	0	**51**
0400 - 0500	0	46	14	0	1	0	0	0	1	0	0	0	0	**62**
0500 - 0600	0	136	49	0	1	0	0	0	0	0	0	0	0	**186**
0600 - 0700	1	369	90	0	0	0	0	0	0	0	0	0	0	**460**
0700 - 0800	0	583	137	0	5	0	0	1	2	0	0	0	0	**728**
0800 - 0900	1	376	106	0	3	1	0	3	0	0	0	0	0	**490**
0900 - 1000	0	289	97	0	9	0	0	2	2	0	0	0	0	**399**
1000 - 1100	0	325	103	0	5	0	0	0	2	0	0	0	0	**435**
1100 - 1200	1	375	98	1	2	0	0	2	1	0	0	0	0	**480**
1200 - 1300	2	432	102	0	3	0	0	1	2	0	0	0	0	**542**
1300 - 1400	3	478	108	2	2	0	0	1	0	0	0	0	0	**594**
1400 - 1500	1	481	136	0	3	0	0	1	1	0	0	0	0	**623**
1500 - 1600	1	771	177	0	8	0	0	2	2	0	0	0	0	**961**
1600 - 1700	1	1013	233	0	18	0	0	3	2	0	0	0	0	**1270**
1700 - 1800	1	1128	337	0	15	1	0	4	0	0	0	0	0	**1486**
1800 - 1900	1	560	154	0	4	2	0	2	0	0	0	0	0	**723**
1900 - 2000	0	345	83	0	5	0	0	1	1	0	0	0	0	**435**
2000 - 2100	0	202	49	0	0	0	0	1	0	0	0	0	0	**252**
2100 - 2200	0	100	50	0	3	0	0	0	2	0	0	0	0	**155**
2200 - 2300	0	60	33	0	0	0	0	0	2	0	0	0	0	**95**
2300 - 2400	0	37	17	0	0	0	0	0	0	0	0	0	0	**54**

Session Total	13	8258	2191	3	88	4	0	24	20	0	0	0	0	**10601**
Session Average	0.54	344.08	91.29	0.13	3.67	0.17	0.00	1.00	0.83	0.00	0.00	0.00	0.00	**441.71**
Session Percentage	0.12	77.90	20.67	0.03	0.83	0.04	0.00	0.23	0.19	0.00	0.00	0.00	0.00	

AM Peak Hour	0600 - 0700	0700 - 0800	0700 - 0800	-	0900 - 1000	0800 - 0900	-	0800 - 0900	0700 - 0800	-	-	-	-	**0700 - 0800**
AM Peak Volume	1	583	137	0	9	1	0	3	2	0	0	0	0	**728**

Noon Peak Hour	1300 - 1400	1400 - 1500	1400 - 1500	1300 - 1400	1000 - 1100	-	-	1100 - 1200	1000 - 1100	-	-	-	-	**1400 - 1500**
Noon Peak Volume	3	481	136	2	5	0	0	2	2	0	0	0	0	**623**

PM Peak Hour	1500 - 1600	1700 - 1800	1700 - 1800	-	1600 - 1700	1800 - 1900	-	1700 - 1800	1500 - 1600	-	-	-	-	**1700 - 1800**
PM Peak Volume	1	1128	337	0	18	2	0	4	2	0	0	0	0	**1486**

Site 74 Lane 1 WB

I-20,
west of US-378 Sunset Blvd S/Bound Off-Ramp

Date

Tuesday, April 23, 2024

Lat/Long

34.008085°, -81.156669°

Weather

Fair
58°F

Click here for Detailed Weather

0000 - 2400 (Weekday 24h Session) (04-23-2024)

SB WB 60min

	Westbound (Movement 74 Lane 1 WB.1)													
TIME	1	2	3	4	5	6	7	8	9	10	11	12	13	**Total**
0000 - 0100	0	65	1	0	0	0	0	0	6	0	0	0	0	**72**
0100 - 0200	0	24	2	0	0	0	0	0	1	0	0	0	0	**27**
0200 - 0300	0	7	0	0	1	0	0	0	0	0	0	0	0	**8**
0300 - 0400	0	12	2	0	0	0	0	0	0	0	0	0	0	**14**
0400 - 0500	0	17	1	0	0	0	0	0	0	0	0	0	0	**18**
0500 - 0600	0	56	5	0	1	0	0	0	0	0	0	0	0	**62**
0600 - 0700	0	281	94	0	1	0	0	0	0	0	0	0	0	**376**
0700 - 0800	0	358	78	1	2	0	0	0	1	0	0	0	0	**440**
0800 - 0900	0	273	58	2	1	0	0	0	0	0	0	0	0	**334**
0900 - 1000	0	246	84	1	5	0	0	0	0	0	0	0	0	**336**
1000 - 1100	0	222	68	0	3	0	0	0	1	0	0	0	0	**294**
1100 - 1200	2	282	83	0	3	0	0	0	0	0	0	0	0	**370**
1200 - 1300	2	337	81	0	5	0	0	1	3	0	0	0	0	**429**
1300 - 1400	1	411	82	0	5	0	0	0	3	0	0	0	0	**502**
1400 - 1500	1	516	140	0	4	0	0	0	2	0	0	0	0	**663**
1500 - 1600	3	719	221	0	16	1	0	2	3	0	0	0	0	**965**
1600 - 1700	1	1051	296	0	24	1	0	5	2	0	0	0	0	**1380**
1700 - 1800	2	1125	345	0	11	0	0	4	2	0	0	0	0	**1489**
1800 - 1900	3	604	158	1	8	0	0	0	1	0	0	0	0	**775**
1900 - 2000	0	363	84	0	4	1	0	0	1	0	0	0	0	**453**
2000 - 2100	0	283	69	0	0	0	0	0	1	0	0	0	0	**353**
2100 - 2200	0	104	19	0	0	0	0	0	0	0	0	0	0	**123**
2200 - 2300	0	58	19	0	1	0	0	0	0	0	0	0	0	**78**
2300 - 2400	0	26	10	0	1	0	0	0	0	0	0	0	0	**37**

Session Total	15	7440	2000	5	96	3	0	12	27	0	0	0	0	**9598**
Session Average	0.63	310.00	83.33	0.21	4.00	0.13	0.00	0.50	1.13	0.00	0.00	0.00	0.00	**399.92**
Session Percentage	0.16	77.52	20.84	0.05	1.00	0.03	0.00	0.13	0.28	0.00	0.00	0.00	0.00	

AM Peak Hour	-	0700 - 0800	0600 - 0700	0800 - 0900	0900 - 1000	-	-	-	0700 - 0800	-	-	-	-	**0700 - 0800**
AM Peak Hour Volume	0	358	94	2	5	0	0	0	1	0	0	0	0	**440**

Noon Peak Hour	1100 - 1200	1400 - 1500	1400 - 1500	-	1200 - 1300	-	-	1200 - 1300	1200 - 1300	-	-	-	-	**1400 - 1500**
Noon Peak Hour Volume	2	516	140	0	5	0	0	1	3	0	0	0	0	**663**

PM Peak Hour	1500 - 1600	1700 - 1800	1700 - 1800	1800 - 1900	1600 - 1700	1500 - 1600	-	1600 - 1700	1500 - 1600	-	-	-	-	**1700 - 1800**
PM Peak Hour Volume	3	1125	345	1	24	1	0	5	3	0	0	0	0	**1489**

Site 74 Lane 1 WB

I-20,
west of US-378 Sunset Blvd S/Bound Off-Ramp

Date

Wednesday, April 24, 2024

Lat/Long

34.008085°, -81.156669°

Weather

Fair
66°F

Click here for Detailed Weather

0000 - 2400 (Weekday 24h Session) (04-24-2024)

SB WB 60min

	Westbound (Movement 74 Lane 1 WB.1)													
TIME	1	2	3	4	5	6	7	8	9	10	11	12	13	**Total**
0000 - 0100	0	64	10	0	1	0	0	0	0	0	0	0	0	**75**
0100 - 0200	0	30	1	0	0	0	0	0	3	0	0	0	0	**34**
0200 - 0300	0	31	5	0	1	0	0	0	2	0	0	0	0	**39**
0300 - 0400	0	27	3	0	0	0	0	0	1	0	0	0	0	**31**
0400 - 0500	0	60	11	0	0	1	0	0	4	0	0	0	0	**76**
0500 - 0600	0	138	16	0	2	0	0	0	5	0	0	0	0	**161**
0600 - 0700	1	240	64	0	0	0	0	1	1	0	0	0	0	**307**
0700 - 0800	0	496	158	0	6	0	0	1	2	0	0	0	0	**663**
0800 - 0900	0	393	101	0	9	0	0	1	0	0	0	0	0	**504**
0900 - 1000	0	328	83	0	7	1	0	1	2	0	0	0	0	**422**
1000 - 1100	1	335	97	1	8	0	0	0	4	0	0	0	0	**446**
1100 - 1200	0	291	96	0	5	0	0	4	1	0	0	0	0	**397**
1200 - 1300	0	347	111	0	8	0	0	4	1	0	0	0	0	**471**
1300 - 1400	0	384	144	0	10	0	0	2	4	0	0	0	0	**544**
1400 - 1500	0	537	153	1	8	0	0	0	4	0	0	0	0	**703**
1500 - 1600	0	848	288	0	20	2	0	4	7	0	0	0	0	**1169**
1600 - 1700	1	1058	312	0	25	0	0	1	4	0	0	0	0	**1401**
1700 - 1800	2	1132	327	0	14	1	0	7	4	0	0	0	0	**1487**
1800 - 1900	3	533	157	2	5	0	0	2	6	0	0	0	0	**708**
1900 - 2000	0	327	80	0	1	1	0	1	1	0	0	0	0	**411**
2000 - 2100	0	263	29	0	0	0	0	0	1	0	0	0	0	**293**
2100 - 2200	0	134	12	0	0	0	0	0	1	0	0	0	0	**147**
2200 - 2300	2	111	8	0	1	0	0	0	1	0	0	1	0	**124**
2300 - 2400	0	47	1	0	0	0	0	0	0	0	0	0	0	**48**

Session Total	10	8154	2267	4	131	6	0	29	59	0	0	1	0	**10661**
Session Average	0.42	339.75	94.46	0.17	5.46	0.25	0.00	1.21	2.46	0.00	0.00	0.04	0.00	**444.21**
Session Percentage	0.09	76.48	21.26	0.04	1.23	0.06	0.00	0.27	0.55	0.00	0.00	0.01	0.00	

AM Peak Hour	0600 - 0700	0700 - 0800	0700 - 0800	-	0800 - 0900	0900 - 1000	-	0600 - 0700	0500 - 0600	-	-	-	-	**0700 - 0800**
AM Peak Hour Volume	1	496	158	0	9	1	0	1	5	0	0	0	0	**663**

Noon Peak Hour	1000 - 1100	1400 - 1500	1400 - 1500	1000 - 1100	1300 - 1400	-	-	1100 - 1200	1000 - 1100	-	-	-	-	**1400 - 1500**
Noon Peak Hour Volume	1	537	153	1	10	0	0	4	4	0	0	0	0	**703**

PM Peak Hour	1800 - 1900	1700 - 1800	1700 - 1800	1800 - 1900	1600 - 1700	1500 - 1600	-	1700 - 1800	1500 - 1600	-	-	-	-	**1700 - 1800**
PM Peak Hour Volume	3	1132	327	2	25	2	0	7	7	0	0	0	0	**1487**

Site 74 Lane 1 WB

I-20,
west of US-378 Sunset Blvd S/Bound Off-Ramp

Date

Thursday, April 25, 2024

Lat/Long

34.008085°, -81.156669°

Weather

Fair
67°F

Click here for Detailed Weather

0000 - 2400 (Weekday 24h Session) (04-25-2024)

SB WB 60min

	Westbound (Movement 74 Lane 1 WB.1)													
TIME	1	2	3	4	5	6	7	8	9	10	11	12	13	**Total**
0000 - 0100	0	39	9	0	0	0	0	0	0	0	0	0	0	**48**
0100 - 0200	0	29	0	0	0	0	0	0	0	0	0	0	0	**29**
0200 - 0300	0	29	0	0	0	0	0	0	0	0	0	0	0	**29**
0300 - 0400	0	34	1	0	0	0	0	0	0	0	0	0	0	**35**
0400 - 0500	0	54	3	0	0	0	0	0	0	0	0	0	0	**57**
0500 - 0600	0	136	2	2	1	0	0	0	1	0	0	0	0	**142**
0600 - 0700	1	209	52	0	5	0	0	0	0	0	0	0	0	**267**
0700 - 0800	0	565	128	0	4	0	0	0	0	0	0	0	0	**697**
0800 - 0900	1	415	115	0	3	0	0	1	2	0	0	0	0	**537**
0900 - 1000	2	326	104	0	6	1	0	1	2	0	0	0	0	**442**
1000 - 1100	5	366	110	0	3	0	0	3	2	0	0	0	0	**489**
1100 - 1200	14	392	119	2	4	0	0	0	1	1	0	0	0	**533**
1200 - 1300	1	494	170	0	7	1	0	1	3	0	0	0	0	**677**
1300 - 1400	5	521	126	0	8	1	0	1	3	0	0	0	0	**665**
1400 - 1500	2	624	179	1	7	0	0	2	2	0	0	0	0	**817**
1500 - 1600	4	792	269	3	14	0	0	4	8	0	1	0	0	**1095**
1600 - 1700	3	1046	268	1	18	0	0	2	1	0	0	0	0	**1339**
1700 - 1800	5	949	261	0	11	2	0	0	4	0	0	0	0	**1232**
1800 - 1900	5	634	193	1	7	0	0	4	2	1	0	0	0	**847**
1900 - 2000	3	461	98	0	1	0	0	3	1	0	0	0	0	**567**
2000 - 2100	4	343	64	1	1	0	0	0	3	0	0	0	0	**416**
2100 - 2200	1	176	12	0	0	0	0	0	0	0	0	0	0	**189**
2200 - 2300	0	136	3	0	1	0	0	0	0	0	0	0	0	**140**
2300 - 2400	0	57	0	0	2	0	0	0	2	0	0	0	0	**61**

Session Total	56	8827	2286	11	103	5	0	22	37	2	1	0	0	**11350**
Session Average	2.33	367.79	95.25	0.46	4.29	0.21	0.00	0.92	1.54	0.08	0.04	0.00	0.00	**472.92**
Session Percentage	0.49	77.77	20.14	0.10	0.91	0.04	0.00	0.19	0.33	0.02	0.01	0.00	0.00	

AM Peak Hour	0900 - 1000	0700 - 0800	0700 - 0800	0500 - 0600	0900 - 1000	0900 - 1000	-	0800 - 0900	0800 - 0900	-	-	-	-	**0700 - 0800**
AM Peak Hour Volume	2	565	128	2	6	1	0	1	2	0	0	0	0	**697**

Noon Peak Hour	1100 - 1200	1400 - 1500	1400 - 1500	1100 - 1200	1300 - 1400	1200 - 1300	-	1000 - 1100	1200 - 1300	1100 - 1200	-	-	-	**1400 - 1500**
Noon Peak Hour Volume	14	624	179	2	8	1	0	3	3	1	0	0	0	**817**

PM Peak Hour	1700 - 1800	1600 - 1700	1500 - 1600	1500 - 1600	1600 - 1700	1700 - 1800	-	1500 - 1600	1500 - 1600	1800 - 1900	1500 - 1600	-	-	**1600 - 1700**
PM Peak Hour Volume	5	1046	269	3	18	2	0	4	8	1	1	0	0	**1339**

Site 74 Lane 1 WB

I-20,
west of US-378 Sunset Blvd S/Bound Off-Ramp

Date

Friday, April 26, 2024

Lat/Long

34.008085°, -81.156669°

Weather

Cloudy
69°F

Click here for Detailed Weather

0000 - 2400 (Weekday 24h Session) (04-26-2024)

SB WB 60min

	Westbound (Movement 74 Lane 1 WB.1)													
TIME	1	2	3	4	5	6	7	8	9	10	11	12	13	**Total**
0000 - 0100	0	38	9	0	0	1	0	0	2	0	0	0	0	**50**
0100 - 0200	0	25	6	0	0	0	0	0	1	0	0	0	0	**32**
0200 - 0300	0	19	5	0	0	0	0	0	0	0	0	0	0	**24**
0300 - 0400	0	17	2	0	0	0	0	0	1	0	0	0	0	**20**
0400 - 0500	0	31	14	0	0	0	0	0	0	0	0	0	0	**45**
0500 - 0600	0	61	23	0	1	0	0	0	1	0	0	0	0	**86**
0600 - 0700	1	261	87	0	0	0	0	0	0	0	0	0	0	**349**
0700 - 0800	2	528	143	0	9	0	0	1	0	0	0	0	0	**683**
0800 - 0900	7	417	124	0	7	1	0	1	2	0	0	0	0	**559**
0900 - 1000	4	337	103	0	8	0	0	3	0	0	0	0	0	**455**
1000 - 1100	0	432	112	0	6	1	0	2	2	0	0	0	0	**555**
1100 - 1200	2	484	142	0	9	0	0	3	5	0	0	0	0	**645**
1200 - 1300	3	651	198	0	11	0	0	1	2	0	0	0	0	**866**
1300 - 1400	7	690	219	0	10	1	0	7	3	0	0	0	0	**937**
1400 - 1500	6	773	219	0	14	0	0	4	1	0	0	0	0	**1017**
1500 - 1600	3	853	269	1	15	2	0	1	4	0	0	0	0	**1148**
1600 - 1700	7	1037	312	1	14	0	0	4	6	0	0	0	0	**1381**
1700 - 1800	4	967	271	0	9	2	0	1	4	0	0	0	0	**1258**
1800 - 1900	4	678	141	2	8	0	0	2	0	0	0	0	0	**835**
1900 - 2000	6	473	104	1	4	0	0	0	1	0	0	0	0	**589**
2000 - 2100	0	295	76	0	0	0	0	0	1	0	0	0	0	**372**
2100 - 2200	0	219	78	0	2	0	0	0	0	0	0	0	0	**299**
2200 - 2300	0	138	37	0	1	0	0	0	0	0	0	0	0	**176**
2300 - 2400	0	94	40	0	0	0	0	0	0	0	0	0	0	**134**

Session Total	56	9518	2734	5	128	8	0	30	36	0	0	0	0	**12515**
Session Average	2.33	396.58	113.92	0.21	5.33	0.33	0.00	1.25	1.50	0.00	0.00	0.00	0.00	**521.46**
Session Percentage	0.45	76.05	21.85	0.04	1.02	0.06	0.00	0.24	0.29	0.00	0.00	0.00	0.00	

AM Peak Hour	0800 - 0900	0700 - 0800	0700 - 0800	-	0700 - 0800	0800 - 0900	-	0900 - 1000	0800 - 0900	-	-	-	-	**0700 - 0800**
AM Peak Hour Volume	7	528	143	0	9	1	0	3	2	0	0	0	0	**683**

Noon Peak Hour	1300 - 1400	1400 - 1500	1300 - 1400	-	1400 - 1500	1000 - 1100	-	1300 - 1400	1100 - 1200	-	-	-	-	**1400 - 1500**
Noon Peak Hour Volume	7	773	219	0	14	1	0	7	5	0	0	0	0	**1017**

PM Peak Hour	1600 - 1700	1600 - 1700	1600 - 1700	1800 - 1900	1500 - 1600	1500 - 1600	-	1600 - 1700	1600 - 1700	-	-	-	-	**1600 - 1700**
PM Peak Hour Volume	7	1037	312	2	15	2	0	4	6	0	0	0	0	**1381**

Site 74 Lane 1 WB

I-20,
west of US-378 Sunset Blvd S/Bound Off-Ramp

Date

Saturday, April 27, 2024

Lat/Long

34.008085°, -81.156669°

Weather

Mostly Cloudy
69°F

Click here for Detailed Weather

0000 - 2400 (Saturday 24h Session) (04-27-2024)

SB WB 60min

	Westbound (Movement 74 Lane 1 WB.1)													
TIME	1	2	3	4	5	6	7	8	9	10	11	12	13	**Total**
0000 - 0100	0	96	22	0	1	0	0	0	0	0	0	0	0	**119**
0100 - 0200	1	69	23	0	0	0	0	0	1	0	0	0	0	**94**
0200 - 0300	0	33	15	0	0	0	0	0	0	0	0	0	0	**48**
0300 - 0400	0	21	6	0	0	0	0	0	3	0	0	0	0	**30**
0400 - 0500	0	28	14	0	1	0	0	0	0	0	0	0	0	**43**
0500 - 0600	3	51	17	0	0	0	0	0	4	0	0	0	0	**75**
0600 - 0700	0	88	31	0	0	0	0	0	1	0	0	0	0	**120**
0700 - 0800	2	191	41	0	1	0	0	0	0	1	0	0	0	**236**
0800 - 0900	0	242	45	0	2	0	0	0	0	0	0	0	0	**289**
0900 - 1000	0	315	76	1	1	0	0	0	0	0	0	0	0	**393**
1000 - 1100	4	371	91	0	2	0	0	0	0	0	0	0	0	**468**
1100 - 1200	5	426	115	0	5	0	0	2	0	0	0	0	0	**553**
1200 - 1300	1	467	106	0	1	0	0	0	0	0	0	0	0	**575**
1300 - 1400	4	491	114	0	4	0	0	2	1	0	0	0	0	**616**
1400 - 1500	9	500	98	0	2	0	0	0	1	0	0	0	0	**610**
1500 - 1600	8	527	125	0	2	0	0	1	0	0	0	0	0	**663**
1600 - 1700	13	512	86	0	6	0	0	1	0	0	0	0	0	**618**
1700 - 1800	12	429	77	0	4	1	0	1	0	0	0	0	0	**524**
1800 - 1900	24	405	80	0	6	0	0	0	0	0	0	0	0	**515**
1900 - 2000	1	333	65	0	6	0	0	0	0	0	0	0	0	**405**
2000 - 2100	1	234	30	0	1	0	0	0	0	0	0	0	0	**266**
2100 - 2200	0	134	43	0	0	0	0	0	0	0	0	0	0	**177**
2200 - 2300	0	116	43	0	0	0	0	0	0	0	0	0	0	**159**
2300 - 2400	0	68	36	0	0	0	0	0	0	0	0	0	0	**104**

Session Total	88	6147	1399	1	45	1	0	7	11	1	0	0	0	**7700**
Session Average	3.67	256.13	58.29	0.04	1.88	0.04	0.00	0.29	0.46	0.04	0.00	0.00	0.00	**320.83**
Session Percentage	1.14	79.83	18.17	0.01	0.58	0.01	0.00	0.09	0.14	0.01	0.00	0.00	0.00	

AM Peak Hour	0500 - 0600	0900 - 1000	0900 - 1000	0900 - 1000	0800 - 0900	-	-	-	0500 - 0600	0700 - 0800	-	-	-	**0900 - 1000**
AM Peak Hour Volume	3	315	76	1	2	0	0	0	4	1	0	0	0	**393**

Noon Peak Hour	1400 - 1500	1400 - 1500	1100 - 1200	-	1100 - 1200	-	-	1100 - 1200	1300 - 1400	-	-	-	-	**1300 - 1400**
Noon Peak Hour Volume	9	500	115	0	5	0	0	2	1	0	0	0	0	**616**

PM Peak Hour	1800 - 1900	1500 - 1600	1500 - 1600	-	1600 - 1700	1700 - 1800	-	1500 - 1600	-	-	-	-	-	**1500 - 1600**
PM Peak Hour Volume	24	527	125	0	6	1	0	1	0	0	0	0	0	**663**

Bi-Directional Class Count || Volume Summary 60min

Columbia, SC

Marr Traffic DATA COLLECTION

www.marrtraffic.com

Site 74 Lane 1 WB

I-20,
west of US-378 Sunset Blvd S/Bound Off-Ramp

Date

Sunday, April 21, 2024

Lat/Long

34.008085°, -81.156669°

Weather

Cloudy
66°F

Click here for Detailed Weather

0000 - 2400 (Sunday 24h Session) (04-21-2024)

Volume Summary 60min

	Volume Summary 60min		
TIME	EB	WB	**Total**
0000 - 0100	0	82	**82**
0100 - 0200	0	50	**50**
0200 - 0300	0	46	**46**
0300 - 0400	0	35	**35**
0400 - 0500	0	33	**33**
0500 - 0600	0	63	**63**
0600 - 0700	0	65	**65**
0700 - 0800	0	103	**103**
0800 - 0900	0	136	**136**
0900 - 1000	0	253	**253**
1000 - 1100	0	408	**408**
1100 - 1200	0	553	**553**

	Volume Summary 60min		
Time	EB	WB	**Total**
1200 - 1300	0	680	**680**
1300 - 1400	0	814	**814**
1400 - 1500	0	734	**734**
1500 - 1600	0	725	**725**
1600 - 1700	0	702	**702**
1700 - 1800	0	600	**600**
1800 - 1900	0	535	**535**
1900 - 2000	0	424	**424**
2000 - 2100	0	289	**289**
2100 - 2200	0	174	**174**
2200 - 2300	0	127	**127**
2300 - 2400	0	62	**62**

Session Total	0	7693	**7693**
Session Average	0.00	320.54	**320.54**
Session Percentage	0.00	100.00	

Site 74 Lane 1 WB

I-20,
west of US-378 Sunset Blvd S/Bound Off-Ramp

Date

Monday, April 22, 2024

Lat/Long

34.008085°, -81.156669°

Weather

Mostly Cloudy
57°F

Click here for Detailed Weather

0000 - 2400 (Weekday 24h Session) (04-22-2024)

Volume Summary 60min

	Volume Summary 60min		
TIME	EB	WB	**Total**
0000 - 0100	0	60	**60**
0100 - 0200	0	23	**23**
0200 - 0300	0	37	**37**
0300 - 0400	0	51	**51**
0400 - 0500	0	62	**62**
0500 - 0600	0	186	**186**
0600 - 0700	0	460	**460**
0700 - 0800	0	728	**728**
0800 - 0900	0	490	**490**
0900 - 1000	0	399	**399**
1000 - 1100	0	435	**435**
1100 - 1200	0	480	**480**

	Volume Summary 60min		
Time	EB	WB	**Total**
1200 - 1300	0	542	**542**
1300 - 1400	0	594	**594**
1400 - 1500	0	623	**623**
1500 - 1600	0	961	**961**
1600 - 1700	0	1270	**1270**
1700 - 1800	0	1486	**1486**
1800 - 1900	0	723	**723**
1900 - 2000	0	435	**435**
2000 - 2100	0	252	**252**
2100 - 2200	0	155	**155**
2200 - 2300	0	95	**95**
2300 - 2400	0	54	**54**

Session Total	0	10601	**10601**
Session Average	0.00	441.71	**441.71**
Session Percentage	0.00	100.00	

Site 74 Lane 1 WB

I-20,
west of US-378 Sunset Blvd S/Bound Off-Ramp

Date

Tuesday, April 23, 2024

Lat/Long

34.008085°, -81.156669°

Weather

Fair
58°F

Click here for Detailed Weather

0000 - 2400 (Weekday 24h Session) (04-23-2024)

Volume Summary 60min

	Volume Summary 60min		
TIME	EB	WB	**Total**
0000 - 0100	0	72	**72**
0100 - 0200	0	27	**27**
0200 - 0300	0	8	**8**
0300 - 0400	0	14	**14**
0400 - 0500	0	18	**18**
0500 - 0600	0	62	**62**
0600 - 0700	0	376	**376**
0700 - 0800	0	440	**440**
0800 - 0900	0	334	**334**
0900 - 1000	0	336	**336**
1000 - 1100	0	294	**294**
1100 - 1200	0	370	**370**

	Volume Summary 60min		
Time	EB	WB	**Total**
1200 - 1300	0	429	**429**
1300 - 1400	0	502	**502**
1400 - 1500	0	663	**663**
1500 - 1600	0	965	**965**
1600 - 1700	0	1380	**1380**
1700 - 1800	0	1489	**1489**
1800 - 1900	0	775	**775**
1900 - 2000	0	453	**453**
2000 - 2100	0	353	**353**
2100 - 2200	0	123	**123**
2200 - 2300	0	78	**78**
2300 - 2400	0	37	**37**

Session Total	0	9598	**9598**
Session Average	0.00	399.92	**399.92**
Session Percentage	0.00	100.00	

Site 74 Lane 1 WB

I-20,
west of US-378 Sunset Blvd S/Bound Off-Ramp

Date

Wednesday, April 24, 2024

Lat/Long

34.008085°, -81.156669°

Weather

Fair
66°F

Click here for Detailed Weather

0000 - 2400 (Weekday 24h Session) (04-24-2024)

Volume Summary 60min

	Volume Summary 60min		
TIME	EB	WB	**Total**
0000 - 0100	0	75	**75**
0100 - 0200	0	34	**34**
0200 - 0300	0	39	**39**
0300 - 0400	0	31	**31**
0400 - 0500	0	76	**76**
0500 - 0600	0	161	**161**
0600 - 0700	0	307	**307**
0700 - 0800	0	663	**663**
0800 - 0900	0	504	**504**
0900 - 1000	0	422	**422**
1000 - 1100	0	446	**446**
1100 - 1200	0	397	**397**

Session Total	0	10661	**10661**
Session Average	0.00	444.21	**444.21**
Session Percentage	0.00	100.00	

	Volume Summary 60min		
Time	EB	WB	**Total**
1200 - 1300	0	471	**471**
1300 - 1400	0	544	**544**
1400 - 1500	0	703	**703**
1500 - 1600	0	1169	**1169**
1600 - 1700	0	1401	**1401**
1700 - 1800	0	1487	**1487**
1800 - 1900	0	708	**708**
1900 - 2000	0	411	**411**
2000 - 2100	0	293	**293**
2100 - 2200	0	147	**147**
2200 - 2300	0	124	**124**
2300 - 2400	0	48	**48**

Site 74 Lane 1 WB

I-20,
west of US-378 Sunset Blvd S/Bound Off-Ramp

Date

Thursday, April 25, 2024

Lat/Long

34.008085°, -81.156669°

Weather

Fair
67°F

Click here for Detailed Weather

0000 - 2400 (Weekday 24h Session) (04-25-2024)

Volume Summary 60min

	Volume Summary 60min		
TIME	EB	WB	**Total**
0000 - 0100	0	48	**48**
0100 - 0200	0	29	**29**
0200 - 0300	0	29	**29**
0300 - 0400	0	35	**35**
0400 - 0500	0	57	**57**
0500 - 0600	0	142	**142**
0600 - 0700	0	267	**267**
0700 - 0800	0	697	**697**
0800 - 0900	0	537	**537**
0900 - 1000	0	442	**442**
1000 - 1100	0	489	**489**
1100 - 1200	0	533	**533**

	Volume Summary 60min		
Time	EB	WB	**Total**
1200 - 1300	0	677	**677**
1300 - 1400	0	665	**665**
1400 - 1500	0	817	**817**
1500 - 1600	0	1095	**1095**
1600 - 1700	0	1339	**1339**
1700 - 1800	0	1232	**1232**
1800 - 1900	0	847	**847**
1900 - 2000	0	567	**567**
2000 - 2100	0	416	**416**
2100 - 2200	0	189	**189**
2200 - 2300	0	140	**140**
2300 - 2400	0	61	**61**

Session Total	0	11350	**11350**
Session Average	0.00	472.92	**472.92**
Session Percentage	0.00	100.00	

Site 74 Lane 1 WB

I-20,
west of US-378 Sunset Blvd S/Bound Off-Ramp

Date

Friday, April 26, 2024

Lat/Long

34.008085°, -81.156669°

Weather

Cloudy
69°F

Click here for Detailed Weather

0000 - 2400 (Weekday 24h Session) (04-26-2024)

Volume Summary 60min

	Volume Summary 60min		
TIME	EB	WB	**Total**
0000 - 0100	0	50	**50**
0100 - 0200	0	32	**32**
0200 - 0300	0	24	**24**
0300 - 0400	0	20	**20**
0400 - 0500	0	45	**45**
0500 - 0600	0	86	**86**
0600 - 0700	0	349	**349**
0700 - 0800	0	683	**683**
0800 - 0900	0	559	**559**
0900 - 1000	0	455	**455**
1000 - 1100	0	555	**555**
1100 - 1200	0	645	**645**

	Volume Summary 60min		
Time	EB	WB	**Total**
1200 - 1300	0	866	**866**
1300 - 1400	0	937	**937**
1400 - 1500	0	1017	**1017**
1500 - 1600	0	1148	**1148**
1600 - 1700	0	1381	**1381**
1700 - 1800	0	1258	**1258**
1800 - 1900	0	835	**835**
1900 - 2000	0	589	**589**
2000 - 2100	0	372	**372**
2100 - 2200	0	299	**299**
2200 - 2300	0	176	**176**
2300 - 2400	0	134	**134**

Session Total	0	12515	**12515**
Session Average	0.00	521.46	**521.46**
Session Percentage	0.00	100.00	

Site 74 Lane 1 WB

I-20,
west of US-378 Sunset Blvd S/Bound Off-Ramp

Date

Saturday, April 27, 2024

Lat/Long

34.008085°, -81.156669°

Weather

Mostly Cloudy
69°F

Click here for Detailed Weather

0000 - 2400 (Saturday 24h Session) (04-27-2024)

Volume Summary 60min

	Volume Summary 60min		
TIME	EB	WB	**Total**
0000 - 0100	0	119	**119**
0100 - 0200	0	94	**94**
0200 - 0300	0	48	**48**
0300 - 0400	0	30	**30**
0400 - 0500	0	43	**43**
0500 - 0600	0	75	**75**
0600 - 0700	0	120	**120**
0700 - 0800	0	236	**236**
0800 - 0900	0	289	**289**
0900 - 1000	0	393	**393**
1000 - 1100	0	468	**468**
1100 - 1200	0	553	**553**

	Volume Summary 60min		
Time	EB	WB	**Total**
1200 - 1300	0	575	**575**
1300 - 1400	0	616	**616**
1400 - 1500	0	610	**610**
1500 - 1600	0	663	**663**
1600 - 1700	0	618	**618**
1700 - 1800	0	524	**524**
1800 - 1900	0	515	**515**
1900 - 2000	0	405	**405**
2000 - 2100	0	266	**266**
2100 - 2200	0	177	**177**
2200 - 2300	0	159	**159**
2300 - 2400	0	104	**104**

Session Total	0	7700	**7700**
Session Average	0.00	320.83	**320.83**
Session Percentage	0.00	100.00	

Bi-Directional Class Count || Graphical Analysis SB WB

Columbia, SC

Marr Traffic DATA COLLECTION

www.marrtraffic.com

Site 74 Lane 1 WB

I-20,
west of US-378 Sunset Blvd S/Bound Off-Ramp

Lat/Long

34.008085°, -81.156669°

0000 - 2400 (Weekday 24h Session)

Graphical Analysis SB WB

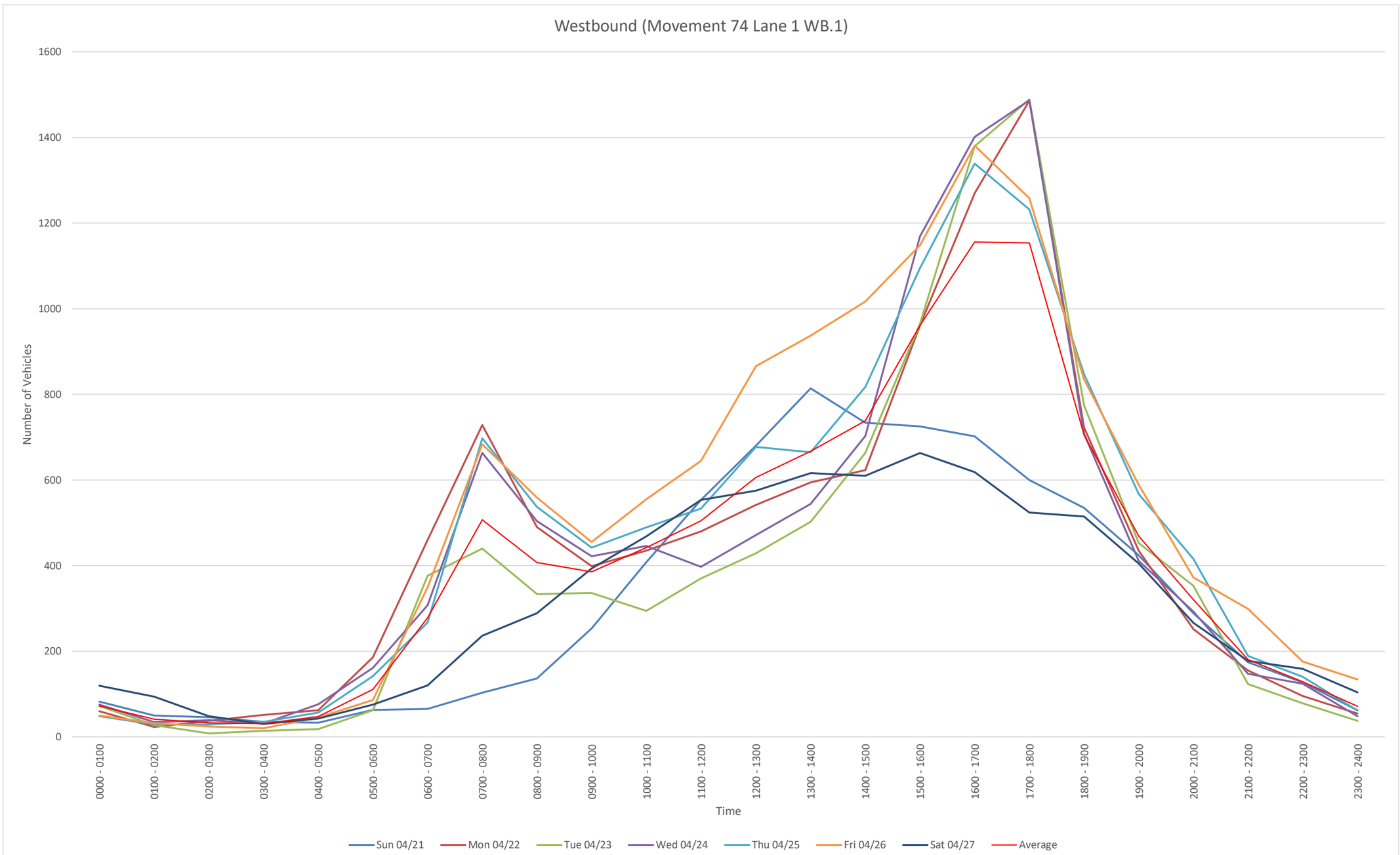

EB
File Name:
Start Date: 4/21/2024
Start Time: 0
Site Code: 74 Lane 1 WB
Station ID: 1
Location 1: I-20, west of US-378 Sunset Blvd S/Bound Off-Ramp
Location 2:

Date	Time	1	2	3	4	5	6	7	8	9	10	11	12	13
4/21/2024	12:00 AM	0	0	0	0	0	0	0	0	0	0	0	0	0
4/21/2024	12:15 AM	0	0	0	0	0	0	0	0	0	0	0	0	0
4/21/2024	12:30 AM	0	0	0	0	0	0	0	0	0	0	0	0	0
4/21/2024	12:45 AM	0	0	0	0	0	0	0	0	0	0	0	0	0
4/21/2024	1:00 AM	0	0	0	0	0	0	0	0	0	0	0	0	0
4/21/2024	1:15 AM	0	0	0	0	0	0	0	0	0	0	0	0	0
4/21/2024	1:30 AM	0	0	0	0	0	0	0	0	0	0	0	0	0
4/21/2024	1:45 AM	0	0	0	0	0	0	0	0	0	0	0	0	0
4/21/2024	2:00 AM	0	0	0	0	0	0	0	0	0	0	0	0	0
4/21/2024	2:15 AM	0	0	0	0	0	0	0	0	0	0	0	0	0
4/21/2024	2:30 AM	0	0	0	0	0	0	0	0	0	0	0	0	0
4/21/2024	2:45 AM	0	0	0	0	0	0	0	0	0	0	0	0	0
4/21/2024	3:00 AM	0	0	0	0	0	0	0	0	0	0	0	0	0
4/21/2024	3:15 AM	0	0	0	0	0	0	0	0	0	0	0	0	0
4/21/2024	3:30 AM	0	0	0	0	0	0	0	0	0	0	0	0	0
4/21/2024	3:45 AM	0	0	0	0	0	0	0	0	0	0	0	0	0
4/21/2024	4:00 AM	0	0	0	0	0	0	0	0	0	0	0	0	0
4/21/2024	4:15 AM	0	0	0	0	0	0	0	0	0	0	0	0	0
4/21/2024	4:30 AM	0	0	0	0	0	0	0	0	0	0	0	0	0
4/21/2024	4:45 AM	0	0	0	0	0	0	0	0	0	0	0	0	0
4/21/2024	5:00 AM	0	0	0	0	0	0	0	0	0	0	0	0	0
4/21/2024	5:15 AM	0	0	0	0	0	0	0	0	0	0	0	0	0
4/21/2024	5:30 AM	0	0	0	0	0	0	0	0	0	0	0	0	0
4/21/2024	5:45 AM	0	0	0	0	0	0	0	0	0	0	0	0	0
4/21/2024	6:00 AM	0	0	0	0	0	0	0	0	0	0	0	0	0
4/21/2024	6:15 AM	0	0	0	0	0	0	0	0	0	0	0	0	0
4/21/2024	6:30 AM	0	0	0	0	0	0	0	0	0	0	0	0	0
4/21/2024	6:45 AM	0	0	0	0	0	0	0	0	0	0	0	0	0
4/21/2024	7:00 AM	0	0	0	0	0	0	0	0	0	0	0	0	0
4/21/2024	7:15 AM	0	0	0	0	0	0	0	0	0	0	0	0	0
4/21/2024	7:30 AM	0	0	0	0	0	0	0	0	0	0	0	0	0
4/21/2024	7:45 AM	0	0	0	0	0	0	0	0	0	0	0	0	0
4/21/2024	8:00 AM	0	0	0	0	0	0	0	0	0	0	0	0	0
4/21/2024	8:15 AM	0	0	0	0	0	0	0	0	0	0	0	0	0
4/21/2024	8:30 AM	0	0	0	0	0	0	0	0	0	0	0	0	0
4/21/2024	8:45 AM	0	0	0	0	0	0	0	0	0	0	0	0	0
4/21/2024	9:00 AM	0	0	0	0	0	0	0	0	0	0	0	0	0
4/21/2024	9:15 AM	0	0	0	0	0	0	0	0	0	0	0	0	0
4/21/2024	9:30 AM	0	0	0	0	0	0	0	0	0	0	0	0	0
4/21/2024	9:45 AM	0	0	0	0	0	0	0	0	0	0	0	0	0
4/21/2024	10:00 AM	0	0	0	0	0	0	0	0	0	0	0	0	0
4/21/2024	10:15 AM	0	0	0	0	0	0	0	0	0	0	0	0	0
4/21/2024	10:30 AM	0	0	0	0	0	0	0	0	0	0	0	0	0
4/21/2024	10:45 AM	0	0	0	0	0	0	0	0	0	0	0	0	0
4/21/2024	11:00 AM	0	0	0	0	0	0	0	0	0	0	0	0	0
4/21/2024	11:15 AM	0	0	0	0	0	0	0	0	0	0	0	0	0
4/21/2024	11:30 AM	0	0	0	0	0	0	0	0	0	0	0	0	0
4/21/2024	11:45 AM	0	0	0	0	0	0	0	0	0	0	0	0	0
4/21/2024	12:00 PM	0	0	0	0	0	0	0	0	0	0	0	0	0
4/21/2024	12:15 PM	0	0	0	0	0	0	0	0	0	0	0	0	0
4/21/2024	12:30 PM	0	0	0	0	0	0	0	0	0	0	0	0	0
4/21/2024	12:45 PM	0	0	0	0	0	0	0	0	0	0	0	0	0
4/21/2024	1:00 PM	0	0	0	0	0	0	0	0	0	0	0	0	0
4/21/2024	1:15 PM	0	0	0	0	0	0	0	0	0	0	0	0	0
4/21/2024	1:30 PM	0	0	0	0	0	0	0	0	0	0	0	0	0
4/21/2024	1:45 PM	0	0	0	0	0	0	0	0	0	0	0	0	0
4/21/2024	2:00 PM	0	0	0	0	0	0	0	0	0	0	0	0	0
4/21/2024	2:15 PM	0	0	0	0	0	0	0	0	0	0	0	0	0
4/21/2024	2:30 PM	0	0	0	0	0	0	0	0	0	0	0	0	0
4/21/2024	2:45 PM	0	0	0	0	0	0	0	0	0	0	0	0	0
4/21/2024	3:00 PM	0	0	0	0	0	0	0	0	0	0	0	0	0
4/21/2024	3:15 PM	0	0	0	0	0	0	0	0	0	0	0	0	0
4/21/2024	3:30 PM	0	0	0	0	0	0	0	0	0	0	0	0	0
4/21/2024	3:45 PM	0	0	0	0	0	0	0	0	0	0	0	0	0
4/21/2024	4:00 PM	0	0	0	0	0	0	0	0	0	0	0	0	0
4/21/2024	4:15 PM	0	0	0	0	0	0	0	0	0	0	0	0	0
4/21/2024	4:30 PM	0	0	0	0	0	0	0	0	0	0	0	0	0
4/21/2024	4:45 PM	0	0	0	0	0	0	0	0	0	0	0	0	0
4/21/2024	5:00 PM	0	0	0	0	0	0	0	0	0	0	0	0	0
4/21/2024	5:15 PM	0	0	0	0	0	0	0	0	0	0	0	0	0
4/21/2024	5:30 PM	0	0	0	0	0	0	0	0	0	0	0	0	0
4/21/2024	5:45 PM	0	0	0	0	0	0	0	0	0	0	0	0	0
4/21/2024	6:00 PM	0	0	0	0	0	0	0	0	0	0	0	0	0
4/21/2024	6:15 PM	0	0	0	0	0	0	0	0	0	0	0	0	0
4/21/2024	6:30 PM	0	0	0	0	0	0	0	0	0	0	0	0	0
4/21/2024	6:45 PM	0	0	0	0	0	0	0	0	0	0	0	0	0
4/21/2024	7:00 PM	0	0	0	0	0	0	0	0	0	0	0	0	0
4/21/2024	7:15 PM	0	0	0	0	0	0	0	0	0	0	0	0	0
4/21/2024	7:30 PM	0	0	0	0	0	0	0	0	0	0	0	0	0
4/21/2024	7:45 PM	0	0	0	0	0	0	0	0	0	0	0	0	0
4/21/2024	8:00 PM	0	0	0	0	0	0	0	0	0	0	0	0	0
4/21/2024	8:15 PM	0	0	0	0	0	0	0	0	0	0	0	0	0
4/21/2024	8:30 PM	0	0	0	0	0	0	0	0	0	0	0	0	0
4/21/2024	8:45 PM	0	0	0	0	0	0	0	0	0	0	0	0	0
4/21/2024	9:00 PM	0	0	0	0	0	0	0	0	0	0	0	0	0
4/21/2024	9:15 PM	0	0	0	0	0	0	0	0	0	0	0	0	0
4/21/2024	9:30 PM	0	0	0	0	0	0	0	0	0	0	0	0	0
4/21/2024	9:45 PM	0	0	0	0	0	0	0	0	0	0	0	0	0
4/21/2024	10:00 PM	0	0	0	0	0	0	0	0	0	0	0	0	0
4/21/2024	10:15 PM	0	0	0	0	0	0	0	0	0	0	0	0	0
4/21/2024	10:30 PM	0	0	0	0	0	0	0	0	0	0	0	0	0
4/21/2024	10:45 PM	0	0	0	0	0	0	0	0	0	0	0	0	0
4/21/2024	11:00 PM	0	0	0	0	0	0	0	0	0	0	0	0	0
4/21/2024	11:15 PM	0	0	0	0	0	0	0	0	0	0	0	0	0
4/21/2024	11:30 PM	0	0	0	0	0	0	0	0	0	0	0	0	0
4/21/2024	11:45 PM	0	0	0	0	0	0	0	0	0	0	0	0	0

4/22/2024	12:00 AM	0	0	0	0	0	0	0	0	0	0	0	0	0
4/22/2024	12:15 AM	0	0	0	0	0	0	0	0	0	0	0	0	0
4/22/2024	12:30 AM	0	0	0	0	0	0	0	0	0	0	0	0	0
4/22/2024	12:45 AM	0	0	0	0	0	0	0	0	0	0	0	0	0
4/22/2024	1:00 AM	0	0	0	0	0	0	0	0	0	0	0	0	0
4/22/2024	1:15 AM	0	0	0	0	0	0	0	0	0	0	0	0	0
4/22/2024	1:30 AM	0	0	0	0	0	0	0	0	0	0	0	0	0
4/22/2024	1:45 AM	0	0	0	0	0	0	0	0	0	0	0	0	0
4/22/2024	2:00 AM	0	0	0	0	0	0	0	0	0	0	0	0	0
4/22/2024	2:15 AM	0	0	0	0	0	0	0	0	0	0	0	0	0
4/22/2024	2:30 AM	0	0	0	0	0	0	0	0	0	0	0	0	0
4/22/2024	2:45 AM	0	0	0	0	0	0	0	0	0	0	0	0	0
4/22/2024	3:00 AM	0	0	0	0	0	0	0	0	0	0	0	0	0
4/22/2024	3:15 AM	0	0	0	0	0	0	0	0	0	0	0	0	0
4/22/2024	3:30 AM	0	0	0	0	0	0	0	0	0	0	0	0	0
4/22/2024	3:45 AM	0	0	0	0	0	0	0	0	0	0	0	0	0
4/22/2024	4:00 AM	0	0	0	0	0	0	0	0	0	0	0	0	0
4/22/2024	4:15 AM	0	0	0	0	0	0	0	0	0	0	0	0	0
4/22/2024	4:30 AM	0	0	0	0	0	0	0	0	0	0	0	0	0
4/22/2024	4:45 AM	0	0	0	0	0	0	0	0	0	0	0	0	0
4/22/2024	5:00 AM	0	0	0	0	0	0	0	0	0	0	0	0	0
4/22/2024	5:15 AM	0	0	0	0	0	0	0	0	0	0	0	0	0
4/22/2024	5:30 AM	0	0	0	0	0	0	0	0	0	0	0	0	0
4/22/2024	5:45 AM	0	0	0	0	0	0	0	0	0	0	0	0	0
4/22/2024	6:00 AM	0	0	0	0	0	0	0	0	0	0	0	0	0
4/22/2024	6:15 AM	0	0	0	0	0	0	0	0	0	0	0	0	0
4/22/2024	6:30 AM	0	0	0	0	0	0	0	0	0	0	0	0	0
4/22/2024	6:45 AM	0	0	0	0	0	0	0	0	0	0	0	0	0
4/22/2024	7:00 AM	0	0	0	0	0	0	0	0	0	0	0	0	0
4/22/2024	7:15 AM	0	0	0	0	0	0	0	0	0	0	0	0	0
4/22/2024	7:30 AM	0	0	0	0	0	0	0	0	0	0	0	0	0
4/22/2024	7:45 AM	0	0	0	0	0	0	0	0	0	0	0	0	0
4/22/2024	8:00 AM	0	0	0	0	0	0	0	0	0	0	0	0	0
4/22/2024	8:15 AM	0	0	0	0	0	0	0	0	0	0	0	0	0
4/22/2024	8:30 AM	0	0	0	0	0	0	0	0	0	0	0	0	0
4/22/2024	8:45 AM	0	0	0	0	0	0	0	0	0	0	0	0	0
4/22/2024	9:00 AM	0	0	0	0	0	0	0	0	0	0	0	0	0
4/22/2024	9:15 AM	0	0	0	0	0	0	0	0	0	0	0	0	0
4/22/2024	9:30 AM	0	0	0	0	0	0	0	0	0	0	0	0	0
4/22/2024	9:45 AM	0	0	0	0	0	0	0	0	0	0	0	0	0
4/22/2024	10:00 AM	0	0	0	0	0	0	0	0	0	0	0	0	0
4/22/2024	10:15 AM	0	0	0	0	0	0	0	0	0	0	0	0	0
4/22/2024	10:30 AM	0	0	0	0	0	0	0	0	0	0	0	0	0
4/22/2024	10:45 AM	0	0	0	0	0	0	0	0	0	0	0	0	0
4/22/2024	11:00 AM	0	0	0	0	0	0	0	0	0	0	0	0	0
4/22/2024	11:15 AM	0	0	0	0	0	0	0	0	0	0	0	0	0
4/22/2024	11:30 AM	0	0	0	0	0	0	0	0	0	0	0	0	0
4/22/2024	11:45 AM	0	0	0	0	0	0	0	0	0	0	0	0	0
4/22/2024	12:00 PM	0	0	0	0	0	0	0	0	0	0	0	0	0
4/22/2024	12:15 PM	0	0	0	0	0	0	0	0	0	0	0	0	0
4/22/2024	12:30 PM	0	0	0	0	0	0	0	0	0	0	0	0	0
4/22/2024	12:45 PM	0	0	0	0	0	0	0	0	0	0	0	0	0
4/22/2024	1:00 PM	0	0	0	0	0	0	0	0	0	0	0	0	0
4/22/2024	1:15 PM	0	0	0	0	0	0	0	0	0	0	0	0	0
4/22/2024	1:30 PM	0	0	0	0	0	0	0	0	0	0	0	0	0
4/22/2024	1:45 PM	0	0	0	0	0	0	0	0	0	0	0	0	0
4/22/2024	2:00 PM	0	0	0	0	0	0	0	0	0	0	0	0	0
4/22/2024	2:15 PM	0	0	0	0	0	0	0	0	0	0	0	0	0
4/22/2024	2:30 PM	0	0	0	0	0	0	0	0	0	0	0	0	0
4/22/2024	2:45 PM	0	0	0	0	0	0	0	0	0	0	0	0	0
4/22/2024	3:00 PM	0	0	0	0	0	0	0	0	0	0	0	0	0
4/22/2024	3:15 PM	0	0	0	0	0	0	0	0	0	0	0	0	0
4/22/2024	3:30 PM	0	0	0	0	0	0	0	0	0	0	0	0	0
4/22/2024	3:45 PM	0	0	0	0	0	0	0	0	0	0	0	0	0
4/22/2024	4:00 PM	0	0	0	0	0	0	0	0	0	0	0	0	0
4/22/2024	4:15 PM	0	0	0	0	0	0	0	0	0	0	0	0	0
4/22/2024	4:30 PM	0	0	0	0	0	0	0	0	0	0	0	0	0
4/22/2024	4:45 PM	0	0	0	0	0	0	0	0	0	0	0	0	0
4/22/2024	5:00 PM	0	0	0	0	0	0	0	0	0	0	0	0	0
4/22/2024	5:15 PM	0	0	0	0	0	0	0	0	0	0	0	0	0
4/22/2024	5:30 PM	0	0	0	0	0	0	0	0	0	0	0	0	0
4/22/2024	5:45 PM	0	0	0	0	0	0	0	0	0	0	0	0	0
4/22/2024	6:00 PM	0	0	0	0	0	0	0	0	0	0	0	0	0
4/22/2024	6:15 PM	0	0	0	0	0	0	0	0	0	0	0	0	0
4/22/2024	6:30 PM	0	0	0	0	0	0	0	0	0	0	0	0	0
4/22/2024	6:45 PM	0	0	0	0	0	0	0	0	0	0	0	0	0
4/22/2024	7:00 PM	0	0	0	0	0	0	0	0	0	0	0	0	0
4/22/2024	7:15 PM	0	0	0	0	0	0	0	0	0	0	0	0	0
4/22/2024	7:30 PM	0	0	0	0	0	0	0	0	0	0	0	0	0
4/22/2024	7:45 PM	0	0	0	0	0	0	0	0	0	0	0	0	0
4/22/2024	8:00 PM	0	0	0	0	0	0	0	0	0	0	0	0	0
4/22/2024	8:15 PM	0	0	0	0	0	0	0	0	0	0	0	0	0
4/22/2024	8:30 PM	0	0	0	0	0	0	0	0	0	0	0	0	0
4/22/2024	8:45 PM	0	0	0	0	0	0	0	0	0	0	0	0	0
4/22/2024	9:00 PM	0	0	0	0	0	0	0	0	0	0	0	0	0
4/22/2024	9:15 PM	0	0	0	0	0	0	0	0	0	0	0	0	0
4/22/2024	9:30 PM	0	0	0	0	0	0	0	0	0	0	0	0	0
4/22/2024	9:45 PM	0	0	0	0	0	0	0	0	0	0	0	0	0
4/22/2024	10:00 PM	0	0	0	0	0	0	0	0	0	0	0	0	0
4/22/2024	10:15 PM	0	0	0	0	0	0	0	0	0	0	0	0	0
4/22/2024	10:30 PM	0	0	0	0	0	0	0	0	0	0	0	0	0
4/22/2024	10:45 PM	0	0	0	0	0	0	0	0	0	0	0	0	0
4/22/2024	11:00 PM	0	0	0	0	0	0	0	0	0	0	0	0	0
4/22/2024	11:15 PM	0	0	0	0	0	0	0	0	0	0	0	0	0
4/22/2024	11:30 PM	0	0	0	0	0	0	0	0	0	0	0	0	0
4/22/2024	11:45 PM	0	0	0	0	0	0	0	0	0	0	0	0	0

4/23/2024	12:00 AM	0	0	0	0	0	0	0	0	0	0	0	0	0
4/23/2024	12:15 AM	0	0	0	0	0	0	0	0	0	0	0	0	0
4/23/2024	12:30 AM	0	0	0	0	0	0	0	0	0	0	0	0	0
4/23/2024	12:45 AM	0	0	0	0	0	0	0	0	0	0	0	0	0
4/23/2024	1:00 AM	0	0	0	0	0	0	0	0	0	0	0	0	0
4/23/2024	1:15 AM	0	0	0	0	0	0	0	0	0	0	0	0	0
4/23/2024	1:30 AM	0	0	0	0	0	0	0	0	0	0	0	0	0
4/23/2024	1:45 AM	0	0	0	0	0	0	0	0	0	0	0	0	0
4/23/2024	2:00 AM	0	0	0	0	0	0	0	0	0	0	0	0	0
4/23/2024	2:15 AM	0	0	0	0	0	0	0	0	0	0	0	0	0
4/23/2024	2:30 AM	0	0	0	0	0	0	0	0	0	0	0	0	0
4/23/2024	2:45 AM	0	0	0	0	0	0	0	0	0	0	0	0	0
4/23/2024	3:00 AM	0	0	0	0	0	0	0	0	0	0	0	0	0
4/23/2024	3:15 AM	0	0	0	0	0	0	0	0	0	0	0	0	0
4/23/2024	3:30 AM	0	0	0	0	0	0	0	0	0	0	0	0	0
4/23/2024	3:45 AM	0	0	0	0	0	0	0	0	0	0	0	0	0
4/23/2024	4:00 AM	0	0	0	0	0	0	0	0	0	0	0	0	0
4/23/2024	4:15 AM	0	0	0	0	0	0	0	0	0	0	0	0	0
4/23/2024	4:30 AM	0	0	0	0	0	0	0	0	0	0	0	0	0
4/23/2024	4:45 AM	0	0	0	0	0	0	0	0	0	0	0	0	0
4/23/2024	5:00 AM	0	0	0	0	0	0	0	0	0	0	0	0	0
4/23/2024	5:15 AM	0	0	0	0	0	0	0	0	0	0	0	0	0
4/23/2024	5:30 AM	0	0	0	0	0	0	0	0	0	0	0	0	0
4/23/2024	5:45 AM	0	0	0	0	0	0	0	0	0	0	0	0	0
4/23/2024	6:00 AM	0	0	0	0	0	0	0	0	0	0	0	0	0
4/23/2024	6:15 AM	0	0	0	0	0	0	0	0	0	0	0	0	0
4/23/2024	6:30 AM	0	0	0	0	0	0	0	0	0	0	0	0	0
4/23/2024	6:45 AM	0	0	0	0	0	0	0	0	0	0	0	0	0
4/23/2024	7:00 AM	0	0	0	0	0	0	0	0	0	0	0	0	0
4/23/2024	7:15 AM	0	0	0	0	0	0	0	0	0	0	0	0	0
4/23/2024	7:30 AM	0	0	0	0	0	0	0	0	0	0	0	0	0
4/23/2024	7:45 AM	0	0	0	0	0	0	0	0	0	0	0	0	0
4/23/2024	8:00 AM	0	0	0	0	0	0	0	0	0	0	0	0	0
4/23/2024	8:15 AM	0	0	0	0	0	0	0	0	0	0	0	0	0
4/23/2024	8:30 AM	0	0	0	0	0	0	0	0	0	0	0	0	0
4/23/2024	8:45 AM	0	0	0	0	0	0	0	0	0	0	0	0	0
4/23/2024	9:00 AM	0	0	0	0	0	0	0	0	0	0	0	0	0
4/23/2024	9:15 AM	0	0	0	0	0	0	0	0	0	0	0	0	0
4/23/2024	9:30 AM	0	0	0	0	0	0	0	0	0	0	0	0	0
4/23/2024	9:45 AM	0	0	0	0	0	0	0	0	0	0	0	0	0
4/23/2024	10:00 AM	0	0	0	0	0	0	0	0	0	0	0	0	0
4/23/2024	10:15 AM	0	0	0	0	0	0	0	0	0	0	0	0	0
4/23/2024	10:30 AM	0	0	0	0	0	0	0	0	0	0	0	0	0
4/23/2024	10:45 AM	0	0	0	0	0	0	0	0	0	0	0	0	0
4/23/2024	11:00 AM	0	0	0	0	0	0	0	0	0	0	0	0	0
4/23/2024	11:15 AM	0	0	0	0	0	0	0	0	0	0	0	0	0
4/23/2024	11:30 AM	0	0	0	0	0	0	0	0	0	0	0	0	0
4/23/2024	11:45 AM	0	0	0	0	0	0	0	0	0	0	0	0	0
4/23/2024	12:00 PM	0	0	0	0	0	0	0	0	0	0	0	0	0
4/23/2024	12:15 PM	0	0	0	0	0	0	0	0	0	0	0	0	0
4/23/2024	12:30 PM	0	0	0	0	0	0	0	0	0	0	0	0	0
4/23/2024	12:45 PM	0	0	0	0	0	0	0	0	0	0	0	0	0
4/23/2024	1:00 PM	0	0	0	0	0	0	0	0	0	0	0	0	0
4/23/2024	1:15 PM	0	0	0	0	0	0	0	0	0	0	0	0	0
4/23/2024	1:30 PM	0	0	0	0	0	0	0	0	0	0	0	0	0
4/23/2024	1:45 PM	0	0	0	0	0	0	0	0	0	0	0	0	0
4/23/2024	2:00 PM	0	0	0	0	0	0	0	0	0	0	0	0	0
4/23/2024	2:15 PM	0	0	0	0	0	0	0	0	0	0	0	0	0
4/23/2024	2:30 PM	0	0	0	0	0	0	0	0	0	0	0	0	0
4/23/2024	2:45 PM	0	0	0	0	0	0	0	0	0	0	0	0	0
4/23/2024	3:00 PM	0	0	0	0	0	0	0	0	0	0	0	0	0
4/23/2024	3:15 PM	0	0	0	0	0	0	0	0	0	0	0	0	0
4/23/2024	3:30 PM	0	0	0	0	0	0	0	0	0	0	0	0	0
4/23/2024	3:45 PM	0	0	0	0	0	0	0	0	0	0	0	0	0
4/23/2024	4:00 PM	0	0	0	0	0	0	0	0	0	0	0	0	0
4/23/2024	4:15 PM	0	0	0	0	0	0	0	0	0	0	0	0	0
4/23/2024	4:30 PM	0	0	0	0	0	0	0	0	0	0	0	0	0
4/23/2024	4:45 PM	0	0	0	0	0	0	0	0	0	0	0	0	0
4/23/2024	5:00 PM	0	0	0	0	0	0	0	0	0	0	0	0	0
4/23/2024	5:15 PM	0	0	0	0	0	0	0	0	0	0	0	0	0
4/23/2024	5:30 PM	0	0	0	0	0	0	0	0	0	0	0	0	0
4/23/2024	5:45 PM	0	0	0	0	0	0	0	0	0	0	0	0	0
4/23/2024	6:00 PM	0	0	0	0	0	0	0	0	0	0	0	0	0
4/23/2024	6:15 PM	0	0	0	0	0	0	0	0	0	0	0	0	0
4/23/2024	6:30 PM	0	0	0	0	0	0	0	0	0	0	0	0	0
4/23/2024	6:45 PM	0	0	0	0	0	0	0	0	0	0	0	0	0
4/23/2024	7:00 PM	0	0	0	0	0	0	0	0	0	0	0	0	0
4/23/2024	7:15 PM	0	0	0	0	0	0	0	0	0	0	0	0	0
4/23/2024	7:30 PM	0	0	0	0	0	0	0	0	0	0	0	0	0
4/23/2024	7:45 PM	0	0	0	0	0	0	0	0	0	0	0	0	0
4/23/2024	8:00 PM	0	0	0	0	0	0	0	0	0	0	0	0	0
4/23/2024	8:15 PM	0	0	0	0	0	0	0	0	0	0	0	0	0
4/23/2024	8:30 PM	0	0	0	0	0	0	0	0	0	0	0	0	0
4/23/2024	8:45 PM	0	0	0	0	0	0	0	0	0	0	0	0	0
4/23/2024	9:00 PM	0	0	0	0	0	0	0	0	0	0	0	0	0
4/23/2024	9:15 PM	0	0	0	0	0	0	0	0	0	0	0	0	0
4/23/2024	9:30 PM	0	0	0	0	0	0	0	0	0	0	0	0	0
4/23/2024	9:45 PM	0	0	0	0	0	0	0	0	0	0	0	0	0
4/23/2024	10:00 PM	0	0	0	0	0	0	0	0	0	0	0	0	0
4/23/2024	10:15 PM	0	0	0	0	0	0	0	0	0	0	0	0	0
4/23/2024	10:30 PM	0	0	0	0	0	0	0	0	0	0	0	0	0
4/23/2024	10:45 PM	0	0	0	0	0	0	0	0	0	0	0	0	0
4/23/2024	11:00 PM	0	0	0	0	0	0	0	0	0	0	0	0	0
4/23/2024	11:15 PM	0	0	0	0	0	0	0	0	0	0	0	0	0
4/23/2024	11:30 PM	0	0	0	0	0	0	0	0	0	0	0	0	0
4/23/2024	11:45 PM	0	0	0	0	0	0	0	0	0	0	0	0	0

4/24/2024	12:00 AM	0	0	0	0	0	0	0	0	0	0	0	0	0
4/24/2024	12:15 AM	0	0	0	0	0	0	0	0	0	0	0	0	0
4/24/2024	12:30 AM	0	0	0	0	0	0	0	0	0	0	0	0	0
4/24/2024	12:45 AM	0	0	0	0	0	0	0	0	0	0	0	0	0
4/24/2024	1:00 AM	0	0	0	0	0	0	0	0	0	0	0	0	0
4/24/2024	1:15 AM	0	0	0	0	0	0	0	0	0	0	0	0	0
4/24/2024	1:30 AM	0	0	0	0	0	0	0	0	0	0	0	0	0
4/24/2024	1:45 AM	0	0	0	0	0	0	0	0	0	0	0	0	0
4/24/2024	2:00 AM	0	0	0	0	0	0	0	0	0	0	0	0	0
4/24/2024	2:15 AM	0	0	0	0	0	0	0	0	0	0	0	0	0
4/24/2024	2:30 AM	0	0	0	0	0	0	0	0	0	0	0	0	0
4/24/2024	2:45 AM	0	0	0	0	0	0	0	0	0	0	0	0	0
4/24/2024	3:00 AM	0	0	0	0	0	0	0	0	0	0	0	0	0
4/24/2024	3:15 AM	0	0	0	0	0	0	0	0	0	0	0	0	0
4/24/2024	3:30 AM	0	0	0	0	0	0	0	0	0	0	0	0	0
4/24/2024	3:45 AM	0	0	0	0	0	0	0	0	0	0	0	0	0
4/24/2024	4:00 AM	0	0	0	0	0	0	0	0	0	0	0	0	0
4/24/2024	4:15 AM	0	0	0	0	0	0	0	0	0	0	0	0	0
4/24/2024	4:30 AM	0	0	0	0	0	0	0	0	0	0	0	0	0
4/24/2024	4:45 AM	0	0	0	0	0	0	0	0	0	0	0	0	0
4/24/2024	5:00 AM	0	0	0	0	0	0	0	0	0	0	0	0	0
4/24/2024	5:15 AM	0	0	0	0	0	0	0	0	0	0	0	0	0
4/24/2024	5:30 AM	0	0	0	0	0	0	0	0	0	0	0	0	0
4/24/2024	5:45 AM	0	0	0	0	0	0	0	0	0	0	0	0	0
4/24/2024	6:00 AM	0	0	0	0	0	0	0	0	0	0	0	0	0
4/24/2024	6:15 AM	0	0	0	0	0	0	0	0	0	0	0	0	0
4/24/2024	6:30 AM	0	0	0	0	0	0	0	0	0	0	0	0	0
4/24/2024	6:45 AM	0	0	0	0	0	0	0	0	0	0	0	0	0
4/24/2024	7:00 AM	0	0	0	0	0	0	0	0	0	0	0	0	0
4/24/2024	7:15 AM	0	0	0	0	0	0	0	0	0	0	0	0	0
4/24/2024	7:30 AM	0	0	0	0	0	0	0	0	0	0	0	0	0
4/24/2024	7:45 AM	0	0	0	0	0	0	0	0	0	0	0	0	0
4/24/2024	8:00 AM	0	0	0	0	0	0	0	0	0	0	0	0	0
4/24/2024	8:15 AM	0	0	0	0	0	0	0	0	0	0	0	0	0
4/24/2024	8:30 AM	0	0	0	0	0	0	0	0	0	0	0	0	0
4/24/2024	8:45 AM	0	0	0	0	0	0	0	0	0	0	0	0	0
4/24/2024	9:00 AM	0	0	0	0	0	0	0	0	0	0	0	0	0
4/24/2024	9:15 AM	0	0	0	0	0	0	0	0	0	0	0	0	0
4/24/2024	9:30 AM	0	0	0	0	0	0	0	0	0	0	0	0	0
4/24/2024	9:45 AM	0	0	0	0	0	0	0	0	0	0	0	0	0
4/24/2024	10:00 AM	0	0	0	0	0	0	0	0	0	0	0	0	0
4/24/2024	10:15 AM	0	0	0	0	0	0	0	0	0	0	0	0	0
4/24/2024	10:30 AM	0	0	0	0	0	0	0	0	0	0	0	0	0
4/24/2024	10:45 AM	0	0	0	0	0	0	0	0	0	0	0	0	0
4/24/2024	11:00 AM	0	0	0	0	0	0	0	0	0	0	0	0	0
4/24/2024	11:15 AM	0	0	0	0	0	0	0	0	0	0	0	0	0
4/24/2024	11:30 AM	0	0	0	0	0	0	0	0	0	0	0	0	0
4/24/2024	11:45 AM	0	0	0	0	0	0	0	0	0	0	0	0	0
4/24/2024	12:00 PM	0	0	0	0	0	0	0	0	0	0	0	0	0
4/24/2024	12:15 PM	0	0	0	0	0	0	0	0	0	0	0	0	0
4/24/2024	12:30 PM	0	0	0	0	0	0	0	0	0	0	0	0	0
4/24/2024	12:45 PM	0	0	0	0	0	0	0	0	0	0	0	0	0
4/24/2024	1:00 PM	0	0	0	0	0	0	0	0	0	0	0	0	0
4/24/2024	1:15 PM	0	0	0	0	0	0	0	0	0	0	0	0	0
4/24/2024	1:30 PM	0	0	0	0	0	0	0	0	0	0	0	0	0
4/24/2024	1:45 PM	0	0	0	0	0	0	0	0	0	0	0	0	0
4/24/2024	2:00 PM	0	0	0	0	0	0	0	0	0	0	0	0	0
4/24/2024	2:15 PM	0	0	0	0	0	0	0	0	0	0	0	0	0
4/24/2024	2:30 PM	0	0	0	0	0	0	0	0	0	0	0	0	0
4/24/2024	2:45 PM	0	0	0	0	0	0	0	0	0	0	0	0	0
4/24/2024	3:00 PM	0	0	0	0	0	0	0	0	0	0	0	0	0
4/24/2024	3:15 PM	0	0	0	0	0	0	0	0	0	0	0	0	0
4/24/2024	3:30 PM	0	0	0	0	0	0	0	0	0	0	0	0	0
4/24/2024	3:45 PM	0	0	0	0	0	0	0	0	0	0	0	0	0
4/24/2024	4:00 PM	0	0	0	0	0	0	0	0	0	0	0	0	0
4/24/2024	4:15 PM	0	0	0	0	0	0	0	0	0	0	0	0	0
4/24/2024	4:30 PM	0	0	0	0	0	0	0	0	0	0	0	0	0
4/24/2024	4:45 PM	0	0	0	0	0	0	0	0	0	0	0	0	0
4/24/2024	5:00 PM	0	0	0	0	0	0	0	0	0	0	0	0	0
4/24/2024	5:15 PM	0	0	0	0	0	0	0	0	0	0	0	0	0
4/24/2024	5:30 PM	0	0	0	0	0	0	0	0	0	0	0	0	0
4/24/2024	5:45 PM	0	0	0	0	0	0	0	0	0	0	0	0	0
4/24/2024	6:00 PM	0	0	0	0	0	0	0	0	0	0	0	0	0
4/24/2024	6:15 PM	0	0	0	0	0	0	0	0	0	0	0	0	0
4/24/2024	6:30 PM	0	0	0	0	0	0	0	0	0	0	0	0	0
4/24/2024	6:45 PM	0	0	0	0	0	0	0	0	0	0	0	0	0
4/24/2024	7:00 PM	0	0	0	0	0	0	0	0	0	0	0	0	0
4/24/2024	7:15 PM	0	0	0	0	0	0	0	0	0	0	0	0	0
4/24/2024	7:30 PM	0	0	0	0	0	0	0	0	0	0	0	0	0
4/24/2024	7:45 PM	0	0	0	0	0	0	0	0	0	0	0	0	0
4/24/2024	8:00 PM	0	0	0	0	0	0	0	0	0	0	0	0	0
4/24/2024	8:15 PM	0	0	0	0	0	0	0	0	0	0	0	0	0
4/24/2024	8:30 PM	0	0	0	0	0	0	0	0	0	0	0	0	0
4/24/2024	8:45 PM	0	0	0	0	0	0	0	0	0	0	0	0	0
4/24/2024	9:00 PM	0	0	0	0	0	0	0	0	0	0	0	0	0
4/24/2024	9:15 PM	0	0	0	0	0	0	0	0	0	0	0	0	0
4/24/2024	9:30 PM	0	0	0	0	0	0	0	0	0	0	0	0	0
4/24/2024	9:45 PM	0	0	0	0	0	0	0	0	0	0	0	0	0
4/24/2024	10:00 PM	0	0	0	0	0	0	0	0	0	0	0	0	0
4/24/2024	10:15 PM	0	0	0	0	0	0	0	0	0	0	0	0	0
4/24/2024	10:30 PM	0	0	0	0	0	0	0	0	0	0	0	0	0
4/24/2024	10:45 PM	0	0	0	0	0	0	0	0	0	0	0	0	0
4/24/2024	11:00 PM	0	0	0	0	0	0	0	0	0	0	0	0	0
4/24/2024	11:15 PM	0	0	0	0	0	0	0	0	0	0	0	0	0
4/24/2024	11:30 PM	0	0	0	0	0	0	0	0	0	0	0	0	0
4/24/2024	11:45 PM	0	0	0	0	0	0	0	0	0	0	0	0	0

4/25/2024	12:00 AM	0	0	0	0	0	0	0	0	0	0	0	0	0
4/25/2024	12:15 AM	0	0	0	0	0	0	0	0	0	0	0	0	0
4/25/2024	12:30 AM	0	0	0	0	0	0	0	0	0	0	0	0	0
4/25/2024	12:45 AM	0	0	0	0	0	0	0	0	0	0	0	0	0
4/25/2024	1:00 AM	0	0	0	0	0	0	0	0	0	0	0	0	0
4/25/2024	1:15 AM	0	0	0	0	0	0	0	0	0	0	0	0	0
4/25/2024	1:30 AM	0	0	0	0	0	0	0	0	0	0	0	0	0
4/25/2024	1:45 AM	0	0	0	0	0	0	0	0	0	0	0	0	0
4/25/2024	2:00 AM	0	0	0	0	0	0	0	0	0	0	0	0	0
4/25/2024	2:15 AM	0	0	0	0	0	0	0	0	0	0	0	0	0
4/25/2024	2:30 AM	0	0	0	0	0	0	0	0	0	0	0	0	0
4/25/2024	2:45 AM	0	0	0	0	0	0	0	0	0	0	0	0	0
4/25/2024	3:00 AM	0	0	0	0	0	0	0	0	0	0	0	0	0
4/25/2024	3:15 AM	0	0	0	0	0	0	0	0	0	0	0	0	0
4/25/2024	3:30 AM	0	0	0	0	0	0	0	0	0	0	0	0	0
4/25/2024	3:45 AM	0	0	0	0	0	0	0	0	0	0	0	0	0
4/25/2024	4:00 AM	0	0	0	0	0	0	0	0	0	0	0	0	0
4/25/2024	4:15 AM	0	0	0	0	0	0	0	0	0	0	0	0	0
4/25/2024	4:30 AM	0	0	0	0	0	0	0	0	0	0	0	0	0
4/25/2024	4:45 AM	0	0	0	0	0	0	0	0	0	0	0	0	0
4/25/2024	5:00 AM	0	0	0	0	0	0	0	0	0	0	0	0	0
4/25/2024	5:15 AM	0	0	0	0	0	0	0	0	0	0	0	0	0
4/25/2024	5:30 AM	0	0	0	0	0	0	0	0	0	0	0	0	0
4/25/2024	5:45 AM	0	0	0	0	0	0	0	0	0	0	0	0	0
4/25/2024	6:00 AM	0	0	0	0	0	0	0	0	0	0	0	0	0
4/25/2024	6:15 AM	0	0	0	0	0	0	0	0	0	0	0	0	0
4/25/2024	6:30 AM	0	0	0	0	0	0	0	0	0	0	0	0	0
4/25/2024	6:45 AM	0	0	0	0	0	0	0	0	0	0	0	0	0
4/25/2024	7:00 AM	0	0	0	0	0	0	0	0	0	0	0	0	0
4/25/2024	7:15 AM	0	0	0	0	0	0	0	0	0	0	0	0	0
4/25/2024	7:30 AM	0	0	0	0	0	0	0	0	0	0	0	0	0
4/25/2024	7:45 AM	0	0	0	0	0	0	0	0	0	0	0	0	0
4/25/2024	8:00 AM	0	0	0	0	0	0	0	0	0	0	0	0	0
4/25/2024	8:15 AM	0	0	0	0	0	0	0	0	0	0	0	0	0
4/25/2024	8:30 AM	0	0	0	0	0	0	0	0	0	0	0	0	0
4/25/2024	8:45 AM	0	0	0	0	0	0	0	0	0	0	0	0	0
4/25/2024	9:00 AM	0	0	0	0	0	0	0	0	0	0	0	0	0
4/25/2024	9:15 AM	0	0	0	0	0	0	0	0	0	0	0	0	0
4/25/2024	9:30 AM	0	0	0	0	0	0	0	0	0	0	0	0	0
4/25/2024	9:45 AM	0	0	0	0	0	0	0	0	0	0	0	0	0
4/25/2024	10:00 AM	0	0	0	0	0	0	0	0	0	0	0	0	0
4/25/2024	10:15 AM	0	0	0	0	0	0	0	0	0	0	0	0	0
4/25/2024	10:30 AM	0	0	0	0	0	0	0	0	0	0	0	0	0
4/25/2024	10:45 AM	0	0	0	0	0	0	0	0	0	0	0	0	0
4/25/2024	11:00 AM	0	0	0	0	0	0	0	0	0	0	0	0	0
4/25/2024	11:15 AM	0	0	0	0	0	0	0	0	0	0	0	0	0
4/25/2024	11:30 AM	0	0	0	0	0	0	0	0	0	0	0	0	0
4/25/2024	11:45 AM	0	0	0	0	0	0	0	0	0	0	0	0	0
4/25/2024	12:00 PM	0	0	0	0	0	0	0	0	0	0	0	0	0
4/25/2024	12:15 PM	0	0	0	0	0	0	0	0	0	0	0	0	0
4/25/2024	12:30 PM	0	0	0	0	0	0	0	0	0	0	0	0	0
4/25/2024	12:45 PM	0	0	0	0	0	0	0	0	0	0	0	0	0
4/25/2024	1:00 PM	0	0	0	0	0	0	0	0	0	0	0	0	0
4/25/2024	1:15 PM	0	0	0	0	0	0	0	0	0	0	0	0	0
4/25/2024	1:30 PM	0	0	0	0	0	0	0	0	0	0	0	0	0
4/25/2024	1:45 PM	0	0	0	0	0	0	0	0	0	0	0	0	0
4/25/2024	2:00 PM	0	0	0	0	0	0	0	0	0	0	0	0	0
4/25/2024	2:15 PM	0	0	0	0	0	0	0	0	0	0	0	0	0
4/25/2024	2:30 PM	0	0	0	0	0	0	0	0	0	0	0	0	0
4/25/2024	2:45 PM	0	0	0	0	0	0	0	0	0	0	0	0	0
4/25/2024	3:00 PM	0	0	0	0	0	0	0	0	0	0	0	0	0
4/25/2024	3:15 PM	0	0	0	0	0	0	0	0	0	0	0	0	0
4/25/2024	3:30 PM	0	0	0	0	0	0	0	0	0	0	0	0	0
4/25/2024	3:45 PM	0	0	0	0	0	0	0	0	0	0	0	0	0
4/25/2024	4:00 PM	0	0	0	0	0	0	0	0	0	0	0	0	0
4/25/2024	4:15 PM	0	0	0	0	0	0	0	0	0	0	0	0	0
4/25/2024	4:30 PM	0	0	0	0	0	0	0	0	0	0	0	0	0
4/25/2024	4:45 PM	0	0	0	0	0	0	0	0	0	0	0	0	0
4/25/2024	5:00 PM	0	0	0	0	0	0	0	0	0	0	0	0	0
4/25/2024	5:15 PM	0	0	0	0	0	0	0	0	0	0	0	0	0
4/25/2024	5:30 PM	0	0	0	0	0	0	0	0	0	0	0	0	0
4/25/2024	5:45 PM	0	0	0	0	0	0	0	0	0	0	0	0	0
4/25/2024	6:00 PM	0	0	0	0	0	0	0	0	0	0	0	0	0
4/25/2024	6:15 PM	0	0	0	0	0	0	0	0	0	0	0	0	0
4/25/2024	6:30 PM	0	0	0	0	0	0	0	0	0	0	0	0	0
4/25/2024	6:45 PM	0	0	0	0	0	0	0	0	0	0	0	0	0
4/25/2024	7:00 PM	0	0	0	0	0	0	0	0	0	0	0	0	0
4/25/2024	7:15 PM	0	0	0	0	0	0	0	0	0	0	0	0	0
4/25/2024	7:30 PM	0	0	0	0	0	0	0	0	0	0	0	0	0
4/25/2024	7:45 PM	0	0	0	0	0	0	0	0	0	0	0	0	0
4/25/2024	8:00 PM	0	0	0	0	0	0	0	0	0	0	0	0	0
4/25/2024	8:15 PM	0	0	0	0	0	0	0	0	0	0	0	0	0
4/25/2024	8:30 PM	0	0	0	0	0	0	0	0	0	0	0	0	0
4/25/2024	8:45 PM	0	0	0	0	0	0	0	0	0	0	0	0	0
4/25/2024	9:00 PM	0	0	0	0	0	0	0	0	0	0	0	0	0
4/25/2024	9:15 PM	0	0	0	0	0	0	0	0	0	0	0	0	0
4/25/2024	9:30 PM	0	0	0	0	0	0	0	0	0	0	0	0	0
4/25/2024	9:45 PM	0	0	0	0	0	0	0	0	0	0	0	0	0
4/25/2024	10:00 PM	0	0	0	0	0	0	0	0	0	0	0	0	0
4/25/2024	10:15 PM	0	0	0	0	0	0	0	0	0	0	0	0	0
4/25/2024	10:30 PM	0	0	0	0	0	0	0	0	0	0	0	0	0
4/25/2024	10:45 PM	0	0	0	0	0	0	0	0	0	0	0	0	0
4/25/2024	11:00 PM	0	0	0	0	0	0	0	0	0	0	0	0	0
4/25/2024	11:15 PM	0	0	0	0	0	0	0	0	0	0	0	0	0
4/25/2024	11:30 PM	0	0	0	0	0	0	0	0	0	0	0	0	0
4/25/2024	11:45 PM	0	0	0	0	0	0	0	0	0	0	0	0	0

4/26/2024	12:00 AM	0	0	0	0	0	0	0	0	0	0	0	0	0
4/26/2024	12:15 AM	0	0	0	0	0	0	0	0	0	0	0	0	0
4/26/2024	12:30 AM	0	0	0	0	0	0	0	0	0	0	0	0	0
4/26/2024	12:45 AM	0	0	0	0	0	0	0	0	0	0	0	0	0
4/26/2024	1:00 AM	0	0	0	0	0	0	0	0	0	0	0	0	0
4/26/2024	1:15 AM	0	0	0	0	0	0	0	0	0	0	0	0	0
4/26/2024	1:30 AM	0	0	0	0	0	0	0	0	0	0	0	0	0
4/26/2024	1:45 AM	0	0	0	0	0	0	0	0	0	0	0	0	0
4/26/2024	2:00 AM	0	0	0	0	0	0	0	0	0	0	0	0	0
4/26/2024	2:15 AM	0	0	0	0	0	0	0	0	0	0	0	0	0
4/26/2024	2:30 AM	0	0	0	0	0	0	0	0	0	0	0	0	0
4/26/2024	2:45 AM	0	0	0	0	0	0	0	0	0	0	0	0	0
4/26/2024	3:00 AM	0	0	0	0	0	0	0	0	0	0	0	0	0
4/26/2024	3:15 AM	0	0	0	0	0	0	0	0	0	0	0	0	0
4/26/2024	3:30 AM	0	0	0	0	0	0	0	0	0	0	0	0	0
4/26/2024	3:45 AM	0	0	0	0	0	0	0	0	0	0	0	0	0
4/26/2024	4:00 AM	0	0	0	0	0	0	0	0	0	0	0	0	0
4/26/2024	4:15 AM	0	0	0	0	0	0	0	0	0	0	0	0	0
4/26/2024	4:30 AM	0	0	0	0	0	0	0	0	0	0	0	0	0
4/26/2024	4:45 AM	0	0	0	0	0	0	0	0	0	0	0	0	0
4/26/2024	5:00 AM	0	0	0	0	0	0	0	0	0	0	0	0	0
4/26/2024	5:15 AM	0	0	0	0	0	0	0	0	0	0	0	0	0
4/26/2024	5:30 AM	0	0	0	0	0	0	0	0	0	0	0	0	0
4/26/2024	5:45 AM	0	0	0	0	0	0	0	0	0	0	0	0	0
4/26/2024	6:00 AM	0	0	0	0	0	0	0	0	0	0	0	0	0
4/26/2024	6:15 AM	0	0	0	0	0	0	0	0	0	0	0	0	0
4/26/2024	6:30 AM	0	0	0	0	0	0	0	0	0	0	0	0	0
4/26/2024	6:45 AM	0	0	0	0	0	0	0	0	0	0	0	0	0
4/26/2024	7:00 AM	0	0	0	0	0	0	0	0	0	0	0	0	0
4/26/2024	7:15 AM	0	0	0	0	0	0	0	0	0	0	0	0	0
4/26/2024	7:30 AM	0	0	0	0	0	0	0	0	0	0	0	0	0
4/26/2024	7:45 AM	0	0	0	0	0	0	0	0	0	0	0	0	0
4/26/2024	8:00 AM	0	0	0	0	0	0	0	0	0	0	0	0	0
4/26/2024	8:15 AM	0	0	0	0	0	0	0	0	0	0	0	0	0
4/26/2024	8:30 AM	0	0	0	0	0	0	0	0	0	0	0	0	0
4/26/2024	8:45 AM	0	0	0	0	0	0	0	0	0	0	0	0	0
4/26/2024	9:00 AM	0	0	0	0	0	0	0	0	0	0	0	0	0
4/26/2024	9:15 AM	0	0	0	0	0	0	0	0	0	0	0	0	0
4/26/2024	9:30 AM	0	0	0	0	0	0	0	0	0	0	0	0	0
4/26/2024	9:45 AM	0	0	0	0	0	0	0	0	0	0	0	0	0
4/26/2024	10:00 AM	0	0	0	0	0	0	0	0	0	0	0	0	0
4/26/2024	10:15 AM	0	0	0	0	0	0	0	0	0	0	0	0	0
4/26/2024	10:30 AM	0	0	0	0	0	0	0	0	0	0	0	0	0
4/26/2024	10:45 AM	0	0	0	0	0	0	0	0	0	0	0	0	0
4/26/2024	11:00 AM	0	0	0	0	0	0	0	0	0	0	0	0	0
4/26/2024	11:15 AM	0	0	0	0	0	0	0	0	0	0	0	0	0
4/26/2024	11:30 AM	0	0	0	0	0	0	0	0	0	0	0	0	0
4/26/2024	11:45 AM	0	0	0	0	0	0	0	0	0	0	0	0	0
4/26/2024	12:00 PM	0	0	0	0	0	0	0	0	0	0	0	0	0
4/26/2024	12:15 PM	0	0	0	0	0	0	0	0	0	0	0	0	0
4/26/2024	12:30 PM	0	0	0	0	0	0	0	0	0	0	0	0	0
4/26/2024	12:45 PM	0	0	0	0	0	0	0	0	0	0	0	0	0
4/26/2024	1:00 PM	0	0	0	0	0	0	0	0	0	0	0	0	0
4/26/2024	1:15 PM	0	0	0	0	0	0	0	0	0	0	0	0	0
4/26/2024	1:30 PM	0	0	0	0	0	0	0	0	0	0	0	0	0
4/26/2024	1:45 PM	0	0	0	0	0	0	0	0	0	0	0	0	0
4/26/2024	2:00 PM	0	0	0	0	0	0	0	0	0	0	0	0	0
4/26/2024	2:15 PM	0	0	0	0	0	0	0	0	0	0	0	0	0
4/26/2024	2:30 PM	0	0	0	0	0	0	0	0	0	0	0	0	0
4/26/2024	2:45 PM	0	0	0	0	0	0	0	0	0	0	0	0	0
4/26/2024	3:00 PM	0	0	0	0	0	0	0	0	0	0	0	0	0
4/26/2024	3:15 PM	0	0	0	0	0	0	0	0	0	0	0	0	0
4/26/2024	3:30 PM	0	0	0	0	0	0	0	0	0	0	0	0	0
4/26/2024	3:45 PM	0	0	0	0	0	0	0	0	0	0	0	0	0
4/26/2024	4:00 PM	0	0	0	0	0	0	0	0	0	0	0	0	0
4/26/2024	4:15 PM	0	0	0	0	0	0	0	0	0	0	0	0	0
4/26/2024	4:30 PM	0	0	0	0	0	0	0	0	0	0	0	0	0
4/26/2024	4:45 PM	0	0	0	0	0	0	0	0	0	0	0	0	0
4/26/2024	5:00 PM	0	0	0	0	0	0	0	0	0	0	0	0	0
4/26/2024	5:15 PM	0	0	0	0	0	0	0	0	0	0	0	0	0
4/26/2024	5:30 PM	0	0	0	0	0	0	0	0	0	0	0	0	0
4/26/2024	5:45 PM	0	0	0	0	0	0	0	0	0	0	0	0	0
4/26/2024	6:00 PM	0	0	0	0	0	0	0	0	0	0	0	0	0
4/26/2024	6:15 PM	0	0	0	0	0	0	0	0	0	0	0	0	0
4/26/2024	6:30 PM	0	0	0	0	0	0	0	0	0	0	0	0	0
4/26/2024	6:45 PM	0	0	0	0	0	0	0	0	0	0	0	0	0
4/26/2024	7:00 PM	0	0	0	0	0	0	0	0	0	0	0	0	0
4/26/2024	7:15 PM	0	0	0	0	0	0	0	0	0	0	0	0	0
4/26/2024	7:30 PM	0	0	0	0	0	0	0	0	0	0	0	0	0
4/26/2024	7:45 PM	0	0	0	0	0	0	0	0	0	0	0	0	0
4/26/2024	8:00 PM	0	0	0	0	0	0	0	0	0	0	0	0	0
4/26/2024	8:15 PM	0	0	0	0	0	0	0	0	0	0	0	0	0
4/26/2024	8:30 PM	0	0	0	0	0	0	0	0	0	0	0	0	0
4/26/2024	8:45 PM	0	0	0	0	0	0	0	0	0	0	0	0	0
4/26/2024	9:00 PM	0	0	0	0	0	0	0	0	0	0	0	0	0
4/26/2024	9:15 PM	0	0	0	0	0	0	0	0	0	0	0	0	0
4/26/2024	9:30 PM	0	0	0	0	0	0	0	0	0	0	0	0	0
4/26/2024	9:45 PM	0	0	0	0	0	0	0	0	0	0	0	0	0
4/26/2024	10:00 PM	0	0	0	0	0	0	0	0	0	0	0	0	0
4/26/2024	10:15 PM	0	0	0	0	0	0	0	0	0	0	0	0	0
4/26/2024	10:30 PM	0	0	0	0	0	0	0	0	0	0	0	0	0
4/26/2024	10:45 PM	0	0	0	0	0	0	0	0	0	0	0	0	0
4/26/2024	11:00 PM	0	0	0	0	0	0	0	0	0	0	0	0	0
4/26/2024	11:15 PM	0	0	0	0	0	0	0	0	0	0	0	0	0
4/26/2024	11:30 PM	0	0	0	0	0	0	0	0	0	0	0	0	0
4/26/2024	11:45 PM	0	0	0	0	0	0	0	0	0	0	0	0	0

4/27/2024	12:00 AM	0	0	0	0	0	0	0	0	0	0	0	0	0
4/27/2024	12:15 AM	0	0	0	0	0	0	0	0	0	0	0	0	0
4/27/2024	12:30 AM	0	0	0	0	0	0	0	0	0	0	0	0	0
4/27/2024	12:45 AM	0	0	0	0	0	0	0	0	0	0	0	0	0
4/27/2024	1:00 AM	0	0	0	0	0	0	0	0	0	0	0	0	0
4/27/2024	1:15 AM	0	0	0	0	0	0	0	0	0	0	0	0	0
4/27/2024	1:30 AM	0	0	0	0	0	0	0	0	0	0	0	0	0
4/27/2024	1:45 AM	0	0	0	0	0	0	0	0	0	0	0	0	0
4/27/2024	2:00 AM	0	0	0	0	0	0	0	0	0	0	0	0	0
4/27/2024	2:15 AM	0	0	0	0	0	0	0	0	0	0	0	0	0
4/27/2024	2:30 AM	0	0	0	0	0	0	0	0	0	0	0	0	0
4/27/2024	2:45 AM	0	0	0	0	0	0	0	0	0	0	0	0	0
4/27/2024	3:00 AM	0	0	0	0	0	0	0	0	0	0	0	0	0
4/27/2024	3:15 AM	0	0	0	0	0	0	0	0	0	0	0	0	0
4/27/2024	3:30 AM	0	0	0	0	0	0	0	0	0	0	0	0	0
4/27/2024	3:45 AM	0	0	0	0	0	0	0	0	0	0	0	0	0
4/27/2024	4:00 AM	0	0	0	0	0	0	0	0	0	0	0	0	0
4/27/2024	4:15 AM	0	0	0	0	0	0	0	0	0	0	0	0	0
4/27/2024	4:30 AM	0	0	0	0	0	0	0	0	0	0	0	0	0
4/27/2024	4:45 AM	0	0	0	0	0	0	0	0	0	0	0	0	0
4/27/2024	5:00 AM	0	0	0	0	0	0	0	0	0	0	0	0	0
4/27/2024	5:15 AM	0	0	0	0	0	0	0	0	0	0	0	0	0
4/27/2024	5:30 AM	0	0	0	0	0	0	0	0	0	0	0	0	0
4/27/2024	5:45 AM	0	0	0	0	0	0	0	0	0	0	0	0	0
4/27/2024	6:00 AM	0	0	0	0	0	0	0	0	0	0	0	0	0
4/27/2024	6:15 AM	0	0	0	0	0	0	0	0	0	0	0	0	0
4/27/2024	6:30 AM	0	0	0	0	0	0	0	0	0	0	0	0	0
4/27/2024	6:45 AM	0	0	0	0	0	0	0	0	0	0	0	0	0
4/27/2024	7:00 AM	0	0	0	0	0	0	0	0	0	0	0	0	0
4/27/2024	7:15 AM	0	0	0	0	0	0	0	0	0	0	0	0	0
4/27/2024	7:30 AM	0	0	0	0	0	0	0	0	0	0	0	0	0
4/27/2024	7:45 AM	0	0	0	0	0	0	0	0	0	0	0	0	0
4/27/2024	8:00 AM	0	0	0	0	0	0	0	0	0	0	0	0	0
4/27/2024	8:15 AM	0	0	0	0	0	0	0	0	0	0	0	0	0
4/27/2024	8:30 AM	0	0	0	0	0	0	0	0	0	0	0	0	0
4/27/2024	8:45 AM	0	0	0	0	0	0	0	0	0	0	0	0	0
4/27/2024	9:00 AM	0	0	0	0	0	0	0	0	0	0	0	0	0
4/27/2024	9:15 AM	0	0	0	0	0	0	0	0	0	0	0	0	0
4/27/2024	9:30 AM	0	0	0	0	0	0	0	0	0	0	0	0	0
4/27/2024	9:45 AM	0	0	0	0	0	0	0	0	0	0	0	0	0
4/27/2024	10:00 AM	0	0	0	0	0	0	0	0	0	0	0	0	0
4/27/2024	10:15 AM	0	0	0	0	0	0	0	0	0	0	0	0	0
4/27/2024	10:30 AM	0	0	0	0	0	0	0	0	0	0	0	0	0
4/27/2024	10:45 AM	0	0	0	0	0	0	0	0	0	0	0	0	0
4/27/2024	11:00 AM	0	0	0	0	0	0	0	0	0	0	0	0	0
4/27/2024	11:15 AM	0	0	0	0	0	0	0	0	0	0	0	0	0
4/27/2024	11:30 AM	0	0	0	0	0	0	0	0	0	0	0	0	0
4/27/2024	11:45 AM	0	0	0	0	0	0	0	0	0	0	0	0	0
4/27/2024	12:00 PM	0	0	0	0	0	0	0	0	0	0	0	0	0
4/27/2024	12:15 PM	0	0	0	0	0	0	0	0	0	0	0	0	0
4/27/2024	12:30 PM	0	0	0	0	0	0	0	0	0	0	0	0	0
4/27/2024	12:45 PM	0	0	0	0	0	0	0	0	0	0	0	0	0
4/27/2024	1:00 PM	0	0	0	0	0	0	0	0	0	0	0	0	0
4/27/2024	1:15 PM	0	0	0	0	0	0	0	0	0	0	0	0	0
4/27/2024	1:30 PM	0	0	0	0	0	0	0	0	0	0	0	0	0
4/27/2024	1:45 PM	0	0	0	0	0	0	0	0	0	0	0	0	0
4/27/2024	2:00 PM	0	0	0	0	0	0	0	0	0	0	0	0	0
4/27/2024	2:15 PM	0	0	0	0	0	0	0	0	0	0	0	0	0
4/27/2024	2:30 PM	0	0	0	0	0	0	0	0	0	0	0	0	0
4/27/2024	2:45 PM	0	0	0	0	0	0	0	0	0	0	0	0	0
4/27/2024	3:00 PM	0	0	0	0	0	0	0	0	0	0	0	0	0
4/27/2024	3:15 PM	0	0	0	0	0	0	0	0	0	0	0	0	0
4/27/2024	3:30 PM	0	0	0	0	0	0	0	0	0	0	0	0	0
4/27/2024	3:45 PM	0	0	0	0	0	0	0	0	0	0	0	0	0
4/27/2024	4:00 PM	0	0	0	0	0	0	0	0	0	0	0	0	0
4/27/2024	4:15 PM	0	0	0	0	0	0	0	0	0	0	0	0	0
4/27/2024	4:30 PM	0	0	0	0	0	0	0	0	0	0	0	0	0
4/27/2024	4:45 PM	0	0	0	0	0	0	0	0	0	0	0	0	0
4/27/2024	5:00 PM	0	0	0	0	0	0	0	0	0	0	0	0	0
4/27/2024	5:15 PM	0	0	0	0	0	0	0	0	0	0	0	0	0
4/27/2024	5:30 PM	0	0	0	0	0	0	0	0	0	0	0	0	0
4/27/2024	5:45 PM	0	0	0	0	0	0	0	0	0	0	0	0	0
4/27/2024	6:00 PM	0	0	0	0	0	0	0	0	0	0	0	0	0
4/27/2024	6:15 PM	0	0	0	0	0	0	0	0	0	0	0	0	0
4/27/2024	6:30 PM	0	0	0	0	0	0	0	0	0	0	0	0	0
4/27/2024	6:45 PM	0	0	0	0	0	0	0	0	0	0	0	0	0
4/27/2024	7:00 PM	0	0	0	0	0	0	0	0	0	0	0	0	0
4/27/2024	7:15 PM	0	0	0	0	0	0	0	0	0	0	0	0	0
4/27/2024	7:30 PM	0	0	0	0	0	0	0	0	0	0	0	0	0
4/27/2024	7:45 PM	0	0	0	0	0	0	0	0	0	0	0	0	0
4/27/2024	8:00 PM	0	0	0	0	0	0	0	0	0	0	0	0	0
4/27/2024	8:15 PM	0	0	0	0	0	0	0	0	0	0	0	0	0
4/27/2024	8:30 PM	0	0	0	0	0	0	0	0	0	0	0	0	0
4/27/2024	8:45 PM	0	0	0	0	0	0	0	0	0	0	0	0	0
4/27/2024	9:00 PM	0	0	0	0	0	0	0	0	0	0	0	0	0
4/27/2024	9:15 PM	0	0	0	0	0	0	0	0	0	0	0	0	0
4/27/2024	9:30 PM	0	0	0	0	0	0	0	0	0	0	0	0	0
4/27/2024	9:45 PM	0	0	0	0	0	0	0	0	0	0	0	0	0
4/27/2024	10:00 PM	0	0	0	0	0	0	0	0	0	0	0	0	0
4/27/2024	10:15 PM	0	0	0	0	0	0	0	0	0	0	0	0	0
4/27/2024	10:30 PM	0	0	0	0	0	0	0	0	0	0	0	0	0
4/27/2024	10:45 PM	0	0	0	0	0	0	0	0	0	0	0	0	0
4/27/2024	11:00 PM	0	0	0	0	0	0	0	0	0	0	0	0	0
4/27/2024	11:15 PM	0	0	0	0	0	0	0	0	0	0	0	0	0
4/27/2024	11:30 PM	0	0	0	0	0	0	0	0	0	0	0	0	0
4/27/2024	11:45 PM	0	0	0	0	0	0	0	0	0	0	0	0	0

WB
File Name:
Start Date: 4/21/2024
Start Time: 0
Site Code: 74 Lane 1 WB
Station ID: 1
Location 1: I-20, west of US-378 Sunset Blvd S/Bound Off-Ramp
Location 2:

Date	Time	1	2	3	4	5	6	7	8	9	10	11	12	13
4/21/2024	12:00 AM	0	24	7	0	0	0	0	0	2	0	0	0	0
4/21/2024	12:15 AM	0	25	2	0	0	0	0	0	0	0	0	0	0
4/21/2024	12:30 AM	0	12	0	0	0	0	0	0	0	0	0	0	0
4/21/2024	12:45 AM	0	10	0	0	0	0	0	0	0	0	0	0	0
4/21/2024	1:00 AM	0	16	0	0	0	0	0	0	0	0	0	0	0
4/21/2024	1:15 AM	0	6	0	0	0	0	0	0	0	0	0	0	0
4/21/2024	1:30 AM	0	13	0	0	0	0	0	0	0	0	0	0	0
4/21/2024	1:45 AM	0	13	2	0	0	0	0	0	0	0	0	0	0
4/21/2024	2:00 AM	0	11	0	0	0	0	0	0	0	0	0	0	0
4/21/2024	2:15 AM	0	12	1	0	0	0	0	0	0	0	0	0	0
4/21/2024	2:30 AM	0	12	0	0	0	0	0	0	0	0	0	0	0
4/21/2024	2:45 AM	0	8	2	0	0	0	0	0	0	0	0	0	0
4/21/2024	3:00 AM	0	9	0	0	0	0	0	0	0	0	0	0	0
4/21/2024	3:15 AM	0	8	0	0	0	0	0	0	0	0	0	0	0
4/21/2024	3:30 AM	0	9	0	0	0	0	0	0	0	0	0	0	0
4/21/2024	3:45 AM	0	9	0	0	0	0	0	0	0	0	0	0	0
4/21/2024	4:00 AM	0	7	0	0	0	0	0	0	0	0	0	0	0
4/21/2024	4:15 AM	0	5	1	0	0	0	0	0	1	0	0	0	0
4/21/2024	4:30 AM	0	11	1	0	0	0	0	0	0	0	0	0	0
4/21/2024	4:45 AM	0	7	0	0	0	0	0	0	0	0	0	0	0
4/21/2024	5:00 AM	0	10	0	0	0	0	0	0	0	0	0	0	0
4/21/2024	5:15 AM	0	14	3	1	0	0	0	0	1	0	0	0	0
4/21/2024	5:30 AM	0	13	3	0	1	0	0	0	1	0	0	0	0
4/21/2024	5:45 AM	0	15	1	0	0	0	0	0	0	0	0	0	0
4/21/2024	6:00 AM	0	11	1	0	0	0	0	0	0	0	0	0	0
4/21/2024	6:15 AM	0	9	1	0	0	0	0	0	0	0	0	0	0
4/21/2024	6:30 AM	0	21	3	0	0	0	0	0	0	0	0	0	0
4/21/2024	6:45 AM	0	14	5	0	0	0	0	0	0	0	0	0	0
4/21/2024	7:00 AM	0	27	2	0	0	0	0	0	0	0	0	0	0
4/21/2024	7:15 AM	0	19	3	0	1	0	0	0	0	0	0	0	0
4/21/2024	7:30 AM	0	20	6	0	0	0	0	0	0	0	0	0	0
4/21/2024	7:45 AM	2	20	3	0	0	0	0	0	0	0	0	0	0
4/21/2024	8:00 AM	3	19	5	0	0	0	0	0	0	0	0	0	0
4/21/2024	8:15 AM	0	23	6	0	0	0	0	0	0	1	0	0	0
4/21/2024	8:30 AM	1	36	3	0	0	0	0	0	0	0	0	0	0
4/21/2024	8:45 AM	0	38	1	0	0	0	0	0	0	0	0	0	0
4/21/2024	9:00 AM	2	36	4	0	0	0	0	0	0	0	0	0	0
4/21/2024	9:15 AM	4	51	13	0	0	0	0	0	0	0	0	0	0
4/21/2024	9:30 AM	0	56	13	0	0	0	0	0	0	0	0	0	0
4/21/2024	9:45 AM	0	60	14	0	0	0	0	0	0	0	0	0	0
4/21/2024	10:00 AM	0	60	16	0	1	0	0	0	0	0	0	0	0
4/21/2024	10:15 AM	10	74	16	0	0	0	0	0	0	0	0	0	0
4/21/2024	10:30 AM	0	91	15	0	1	0	0	0	0	0	0	0	0
4/21/2024	10:45 AM	0	104	18	0	1	1	0	0	0	0	0	0	0
4/21/2024	11:00 AM	0	133	14	0	0	0	0	0	0	0	0	0	0
4/21/2024	11:15 AM	0	95	25	0	0	0	0	0	0	0	0	0	0
4/21/2024	11:30 AM	0	104	28	0	1	0	0	0	0	0	0	0	0
4/21/2024	11:45 AM	0	116	37	0	0	0	0	0	0	0	0	0	0
4/21/2024	12:00 PM	3	134	21	0	0	0	0	0	0	0	0	0	0
4/21/2024	12:15 PM	0	134	35	0	2	0	0	0	0	0	0	0	0
4/21/2024	12:30 PM	8	126	33	0	0	0	0	0	0	0	0	0	0
4/21/2024	12:45 PM	0	157	26	0	1	0	0	0	0	0	0	0	0
4/21/2024	1:00 PM	0	168	25	0	0	0	0	1	0	0	0	0	0
4/21/2024	1:15 PM	0	170	36	0	0	0	0	0	0	0	0	0	0
4/21/2024	1:30 PM	0	183	31	0	0	0	0	0	0	0	0	0	0
4/21/2024	1:45 PM	0	170	29	0	0	0	0	1	0	0	0	0	0
4/21/2024	2:00 PM	0	156	29	0	1	0	0	0	0	0	0	0	0
4/21/2024	2:15 PM	0	153	30	0	0	0	0	0	0	0	0	0	0
4/21/2024	2:30 PM	0	154	31	0	0	0	0	0	0	0	0	0	0
4/21/2024	2:45 PM	0	156	23	0	1	0	0	0	0	0	0	0	0
4/21/2024	3:00 PM	0	162	22	0	1	0	0	1	0	0	0	0	0
4/21/2024	3:15 PM	0	141	22	0	0	0	0	0	0	0	0	0	0
4/21/2024	3:30 PM	0	144	28	0	0	0	0	0	0	0	0	0	0
4/21/2024	3:45 PM	0	169	32	0	1	0	0	1	1	0	0	0	0
4/21/2024	4:00 PM	0	146	33	0	0	0	0	1	0	0	0	0	0
4/21/2024	4:15 PM	0	151	24	0	0	0	0	0	0	0	0	0	0
4/21/2024	4:30 PM	0	146	30	0	0	0	0	1	0	1	0	0	0
4/21/2024	4:45 PM	0	146	23	0	0	0	0	0	0	0	0	0	0
4/21/2024	5:00 PM	1	124	21	0	1	0	0	0	0	0	0	0	0
4/21/2024	5:15 PM	0	133	21	0	0	0	0	0	0	0	0	0	0
4/21/2024	5:30 PM	0	122	21	0	1	0	0	0	0	0	0	0	0
4/21/2024	5:45 PM	0	131	24	0	0	0	0	0	0	0	0	0	0
4/21/2024	6:00 PM	1	110	23	0	0	0	0	0	0	0	0	0	0
4/21/2024	6:15 PM	1	110	19	0	0	0	0	1	0	0	0	0	0
4/21/2024	6:30 PM	0	95	24	0	0	0	0	1	0	0	0	0	0
4/21/2024	6:45 PM	1	130	17	0	1	0	0	1	0	0	0	0	0
4/21/2024	7:00 PM	0	102	16	0	0	0	0	0	2	0	0	0	0
4/21/2024	7:15 PM	0	87	10	0	0	0	0	0	0	0	0	0	0
4/21/2024	7:30 PM	0	81	18	0	1	0	0	0	0	0	0	0	0
4/21/2024	7:45 PM	0	92	14	0	1	0	0	0	0	0	0	0	0
4/21/2024	8:00 PM	0	69	10	0	3	0	0	0	0	0	1	0	0
4/21/2024	8:15 PM	0	54	15	0	0	0	0	0	0	0	0	0	0
4/21/2024	8:30 PM	0	55	12	0	1	0	0	0	0	0	0	0	0
4/21/2024	8:45 PM	0	57	12	0	0	0	0	0	0	0	0	0	0
4/21/2024	9:00 PM	0	40	10	0	0	0	0	0	1	0	0	0	0
4/21/2024	9:15 PM	0	40	9	0	0	0	0	0	0	0	0	0	0
4/21/2024	9:30 PM	0	30	7	0	0	0	0	0	0	0	0	0	0
4/21/2024	9:45 PM	0	28	7	0	0	0	0	0	2	0	0	0	0
4/21/2024	10:00 PM	0	30	10	0	0	0	0	0	1	0	0	0	0
4/21/2024	10:15 PM	0	27	6	0	0	0	0	0	1	0	0	0	0
4/21/2024	10:30 PM	0	21	5	0	0	0	0	0	0	0	0	0	0
4/21/2024	10:45 PM	0	20	6	0	0	0	0	0	0	0	0	0	0
4/21/2024	11:00 PM	0	17	4	0	0	0	0	0	0	0	0	0	0
4/21/2024	11:15 PM	0	11	1	0	0	0	0	0	0	0	0	0	0
4/21/2024	11:30 PM	0	15	2	0	0	0	0	0	0	0	0	0	0
4/21/2024	11:45 PM	0	10	2	0	0	0	0	0	0	0	0	0	0

4/22/2024	12:00 AM	0	11	3	0	0	0	0	0	0	0	0	0	0
4/22/2024	12:15 AM	0	14	1	0	0	0	0	0	0	0	0	0	0
4/22/2024	12:30 AM	0	16	2	0	1	0	0	0	0	0	0	0	0
4/22/2024	12:45 AM	0	11	1	0	0	0	0	0	0	0	0	0	0
4/22/2024	1:00 AM	0	7	0	0	0	0	0	0	0	0	0	0	0
4/22/2024	1:15 AM	0	5	2	0	0	0	0	0	0	0	0	0	0
4/22/2024	1:30 AM	0	6	0	0	0	0	0	0	0	0	0	0	0
4/22/2024	1:45 AM	0	3	0	0	0	0	0	0	0	0	0	0	0
4/22/2024	2:00 AM	0	6	0	0	0	0	0	0	0	0	0	0	0
4/22/2024	2:15 AM	0	10	3	0	0	0	0	0	0	0	0	0	0
4/22/2024	2:30 AM	0	9	1	0	0	0	0	0	0	0	0	0	0
4/22/2024	2:45 AM	0	7	1	0	0	0	0	0	0	0	0	0	0
4/22/2024	3:00 AM	0	8	0	0	0	0	0	0	0	0	0	0	0
4/22/2024	3:15 AM	0	12	1	0	0	0	0	0	0	0	0	0	0
4/22/2024	3:30 AM	0	11	3	0	0	0	0	0	0	0	0	0	0
4/22/2024	3:45 AM	0	16	0	0	0	0	0	0	0	0	0	0	0
4/22/2024	4:00 AM	0	8	6	0	0	0	0	0	1	0	0	0	0
4/22/2024	4:15 AM	0	11	4	0	0	0	0	0	0	0	0	0	0
4/22/2024	4:30 AM	0	13	3	0	1	0	0	0	0	0	0	0	0
4/22/2024	4:45 AM	0	14	1	0	0	0	0	0	0	0	0	0	0
4/22/2024	5:00 AM	0	24	8	0	0	0	0	0	0	0	0	0	0
4/22/2024	5:15 AM	0	29	7	0	1	0	0	0	0	0	0	0	0
4/22/2024	5:30 AM	0	35	14	0	0	0	0	0	0	0	0	0	0
4/22/2024	5:45 AM	0	48	20	0	0	0	0	0	0	0	0	0	0
4/22/2024	6:00 AM	1	51	22	0	0	0	0	0	0	0	0	0	0
4/22/2024	6:15 AM	0	83	19	0	0	0	0	0	0	0	0	0	0
4/22/2024	6:30 AM	0	115	21	0	0	0	0	0	0	0	0	0	0
4/22/2024	6:45 AM	0	120	28	0	0	0	0	0	0	0	0	0	0
4/22/2024	7:00 AM	0	122	24	0	1	0	0	0	0	0	0	0	0
4/22/2024	7:15 AM	0	158	37	0	2	0	0	1	0	0	0	0	0
4/22/2024	7:30 AM	0	158	33	0	1	0	0	0	1	0	0	0	0
4/22/2024	7:45 AM	0	145	43	0	1	0	0	0	1	0	0	0	0
4/22/2024	8:00 AM	0	125	30	0	1	0	0	0	0	0	0	0	0
4/22/2024	8:15 AM	1	91	34	0	1	1	0	1	0	0	0	0	0
4/22/2024	8:30 AM	0	82	25	0	0	0	0	1	0	0	0	0	0
4/22/2024	8:45 AM	0	78	17	0	1	0	0	1	0	0	0	0	0
4/22/2024	9:00 AM	0	72	31	0	1	0	0	0	0	0	0	0	0
4/22/2024	9:15 AM	0	79	18	0	3	0	0	0	1	0	0	0	0
4/22/2024	9:30 AM	0	59	22	0	2	0	0	2	1	0	0	0	0
4/22/2024	9:45 AM	0	79	26	0	3	0	0	0	0	0	0	0	0
4/22/2024	10:00 AM	0	84	29	0	1	0	0	0	1	0	0	0	0
4/22/2024	10:15 AM	0	80	25	0	2	0	0	0	0	0	0	0	0
4/22/2024	10:30 AM	0	84	21	0	1	0	0	0	1	0	0	0	0
4/22/2024	10:45 AM	0	77	28	0	1	0	0	0	0	0	0	0	0
4/22/2024	11:00 AM	1	85	21	1	0	0	0	0	0	0	0	0	0
4/22/2024	11:15 AM	0	88	27	0	0	0	0	1	1	0	0	0	0
4/22/2024	11:30 AM	0	96	34	0	1	0	0	0	0	0	0	0	0
4/22/2024	11:45 AM	0	106	16	0	1	0	0	1	0	0	0	0	0
4/22/2024	12:00 PM	1	115	19	0	1	0	0	0	2	0	0	0	0
4/22/2024	12:15 PM	1	112	31	0	2	0	0	0	0	0	0	0	0
4/22/2024	12:30 PM	0	103	26	0	0	0	0	1	0	0	0	0	0
4/22/2024	12:45 PM	0	102	26	0	0	0	0	0	0	0	0	0	0
4/22/2024	1:00 PM	3	107	23	1	1	0	0	0	0	0	0	0	0
4/22/2024	1:15 PM	0	130	28	0	1	0	0	0	0	0	0	0	0
4/22/2024	1:30 PM	0	125	32	0	0	0	0	1	0	0	0	0	0
4/22/2024	1:45 PM	0	116	25	1	0	0	0	0	0	0	0	0	0
4/22/2024	2:00 PM	1	104	34	0	0	0	0	0	0	0	0	0	0
4/22/2024	2:15 PM	0	126	38	0	1	0	0	0	0	0	0	0	0
4/22/2024	2:30 PM	0	112	31	0	2	0	0	0	1	0	0	0	0
4/22/2024	2:45 PM	0	139	33	0	0	0	0	1	0	0	0	0	0
4/22/2024	3:00 PM	0	165	42	0	0	0	0	0	0	0	0	0	0
4/22/2024	3:15 PM	0	193	44	0	3	0	0	1	0	0	0	0	0
4/22/2024	3:30 PM	1	211	49	0	2	0	0	0	0	0	0	0	0
4/22/2024	3:45 PM	0	202	42	0	3	0	0	1	2	0	0	0	0
4/22/2024	4:00 PM	0	232	58	0	5	0	0	1	0	0	0	0	0
4/22/2024	4:15 PM	0	249	56	0	6	0	0	1	1	0	0	0	0
4/22/2024	4:30 PM	1	269	58	0	3	0	0	0	1	0	0	0	0
4/22/2024	4:45 PM	0	263	61	0	4	0	0	1	0	0	0	0	0
4/22/2024	5:00 PM	0	280	92	0	5	0	0	0	0	0	0	0	0
4/22/2024	5:15 PM	0	308	93	0	3	0	0	3	0	0	0	0	0
4/22/2024	5:30 PM	0	270	82	0	4	1	0	1	0	0	0	0	0
4/22/2024	5:45 PM	1	270	70	0	3	0	0	0	0	0	0	0	0
4/22/2024	6:00 PM	0	174	49	0	0	1	0	1	0	0	0	0	0
4/22/2024	6:15 PM	0	146	43	0	3	0	0	1	0	0	0	0	0
4/22/2024	6:30 PM	1	125	23	0	1	0	0	0	0	0	0	0	0
4/22/2024	6:45 PM	0	115	39	0	0	1	0	0	0	0	0	0	0
4/22/2024	7:00 PM	0	108	24	0	0	0	0	1	0	0	0	0	0
4/22/2024	7:15 PM	0	96	16	0	2	0	0	0	1	0	0	0	0
4/22/2024	7:30 PM	0	75	24	0	2	0	0	0	0	0	0	0	0
4/22/2024	7:45 PM	0	66	19	0	1	0	0	0	0	0	0	0	0
4/22/2024	8:00 PM	0	71	12	0	0	0	0	1	0	0	0	0	0
4/22/2024	8:15 PM	0	41	11	0	0	0	0	0	0	0	0	0	0
4/22/2024	8:30 PM	0	50	11	0	0	0	0	0	0	0	0	0	0
4/22/2024	8:45 PM	0	40	15	0	0	0	0	0	0	0	0	0	0
4/22/2024	9:00 PM	0	37	15	0	1	0	0	0	2	0	0	0	0
4/22/2024	9:15 PM	0	30	16	0	0	0	0	0	0	0	0	0	0
4/22/2024	9:30 PM	0	20	12	0	1	0	0	0	0	0	0	0	0
4/22/2024	9:45 PM	0	13	7	0	1	0	0	0	0	0	0	0	0
4/22/2024	10:00 PM	0	15	9	0	0	0	0	0	1	0	0	0	0
4/22/2024	10:15 PM	0	20	11	0	0	0	0	0	0	0	0	0	0
4/22/2024	10:30 PM	0	15	7	0	0	0	0	0	1	0	0	0	0
4/22/2024	10:45 PM	0	10	6	0	0	0	0	0	0	0	0	0	0
4/22/2024	11:00 PM	0	11	7	0	0	0	0	0	0	0	0	0	0
4/22/2024	11:15 PM	0	9	4	0	0	0	0	0	0	0	0	0	0
4/22/2024	11:30 PM	0	7	3	0	0	0	0	0	0	0	0	0	0
4/22/2024	11:45 PM	0	10	3	0	0	0	0	0	0	0	0	0	0

4/23/2024	12:00 AM	0	22	0	0	0	0	0	0	3	0	0	0	0
4/23/2024	12:15 AM	0	21	0	0	0	0	0	0	2	0	0	0	0
4/23/2024	12:30 AM	0	10	1	0	0	0	0	0	1	0	0	0	0
4/23/2024	12:45 AM	0	12	0	0	0	0	0	0	0	0	0	0	0
4/23/2024	1:00 AM	0	7	2	0	0	0	0	0	1	0	0	0	0
4/23/2024	1:15 AM	0	6	0	0	0	0	0	0	0	0	0	0	0
4/23/2024	1:30 AM	0	6	0	0	0	0	0	0	0	0	0	0	0
4/23/2024	1:45 AM	0	5	0	0	0	0	0	0	0	0	0	0	0
4/23/2024	2:00 AM	0	2	0	0	0	0	0	0	0	0	0	0	0
4/23/2024	2:15 AM	0	0	0	0	0	0	0	0	0	0	0	0	0
4/23/2024	2:30 AM	0	4	0	0	0	0	0	0	0	0	0	0	0
4/23/2024	2:45 AM	0	1	0	0	1	0	0	0	0	0	0	0	0
4/23/2024	3:00 AM	0	0	0	0	0	0	0	0	0	0	0	0	0
4/23/2024	3:15 AM	0	4	0	0	0	0	0	0	0	0	0	0	0
4/23/2024	3:30 AM	0	2	0	0	0	0	0	0	0	0	0	0	0
4/23/2024	3:45 AM	0	6	2	0	0	0	0	0	0	0	0	0	0
4/23/2024	4:00 AM	0	3	0	0	0	0	0	0	0	0	0	0	0
4/23/2024	4:15 AM	0	4	0	0	0	0	0	0	0	0	0	0	0
4/23/2024	4:30 AM	0	7	1	0	0	0	0	0	0	0	0	0	0
4/23/2024	4:45 AM	0	3	0	0	0	0	0	0	0	0	0	0	0
4/23/2024	5:00 AM	0	14	0	0	0	0	0	0	0	0	0	0	0
4/23/2024	5:15 AM	0	11	1	0	0	0	0	0	0	0	0	0	0
4/23/2024	5:30 AM	0	16	2	0	0	0	0	0	0	0	0	0	0
4/23/2024	5:45 AM	0	15	2	0	1	0	0	0	0	0	0	0	0
4/23/2024	6:00 AM	0	34	15	0	0	0	0	0	0	0	0	0	0
4/23/2024	6:15 AM	0	81	29	0	0	0	0	0	0	0	0	0	0
4/23/2024	6:30 AM	0	81	19	0	1	0	0	0	0	0	0	0	0
4/23/2024	6:45 AM	0	85	31	0	0	0	0	0	0	0	0	0	0
4/23/2024	7:00 AM	0	106	21	0	0	0	0	0	0	0	0	0	0
4/23/2024	7:15 AM	0	68	20	0	0	0	0	0	0	0	0	0	0
4/23/2024	7:30 AM	0	90	18	1	2	0	0	0	0	0	0	0	0
4/23/2024	7:45 AM	0	94	19	0	0	0	0	0	1	0	0	0	0
4/23/2024	8:00 AM	0	69	22	0	0	0	0	0	0	0	0	0	0
4/23/2024	8:15 AM	0	82	21	0	0	0	0	0	0	0	0	0	0
4/23/2024	8:30 AM	0	62	5	1	1	0	0	0	0	0	0	0	0
4/23/2024	8:45 AM	0	60	10	1	0	0	0	0	0	0	0	0	0
4/23/2024	9:00 AM	0	71	30	1	1	0	0	0	0	0	0	0	0
4/23/2024	9:15 AM	0	59	21	0	3	0	0	0	0	0	0	0	0
4/23/2024	9:30 AM	0	58	16	0	1	0	0	0	0	0	0	0	0
4/23/2024	9:45 AM	0	58	17	0	0	0	0	0	0	0	0	0	0
4/23/2024	10:00 AM	0	53	15	0	3	0	0	0	0	0	0	0	0
4/23/2024	10:15 AM	0	47	18	0	0	0	0	0	1	0	0	0	0
4/23/2024	10:30 AM	0	60	11	0	0	0	0	0	0	0	0	0	0
4/23/2024	10:45 AM	0	62	24	0	0	0	0	0	0	0	0	0	0
4/23/2024	11:00 AM	0	66	20	0	0	0	0	0	0	0	0	0	0
4/23/2024	11:15 AM	0	73	18	0	2	0	0	0	0	0	0	0	0
4/23/2024	11:30 AM	2	67	19	0	0	0	0	0	0	0	0	0	0
4/23/2024	11:45 AM	0	76	26	0	1	0	0	0	0	0	0	0	0
4/23/2024	12:00 PM	1	72	23	0	1	0	0	0	1	0	0	0	0
4/23/2024	12:15 PM	1	76	17	0	1	0	0	0	1	0	0	0	0
4/23/2024	12:30 PM	0	102	21	0	2	0	0	0	0	0	0	0	0
4/23/2024	12:45 PM	0	87	20	0	1	0	0	1	1	0	0	0	0
4/23/2024	1:00 PM	1	99	27	0	1	0	0	0	0	0	0	0	0
4/23/2024	1:15 PM	0	96	15	0	2	0	0	0	1	0	0	0	0
4/23/2024	1:30 PM	0	96	13	0	2	0	0	0	2	0	0	0	0
4/23/2024	1:45 PM	0	120	27	0	0	0	0	0	0	0	0	0	0
4/23/2024	2:00 PM	1	105	25	0	1	0	0	0	0	0	0	0	0
4/23/2024	2:15 PM	0	129	28	0	1	0	0	0	0	0	0	0	0
4/23/2024	2:30 PM	0	145	39	0	0	0	0	0	1	0	0	0	0
4/23/2024	2:45 PM	0	137	48	0	2	0	0	0	1	0	0	0	0
4/23/2024	3:00 PM	0	162	37	0	2	0	0	0	1	0	0	0	0
4/23/2024	3:15 PM	0	145	53	0	5	0	0	0	1	0	0	0	0
4/23/2024	3:30 PM	2	186	59	0	6	1	0	2	0	0	0	0	0
4/23/2024	3:45 PM	1	226	72	0	3	0	0	0	1	0	0	0	0
4/23/2024	4:00 PM	0	198	55	0	3	0	0	1	1	0	0	0	0
4/23/2024	4:15 PM	1	276	76	0	7	0	0	1	0	0	0	0	0
4/23/2024	4:30 PM	0	289	78	0	8	1	0	0	1	0	0	0	0
4/23/2024	4:45 PM	0	288	87	0	6	0	0	3	0	0	0	0	0
4/23/2024	5:00 PM	0	259	58	0	2	0	0	0	1	0	0	0	0
4/23/2024	5:15 PM	0	326	105	0	5	0	0	0	1	0	0	0	0
4/23/2024	5:30 PM	1	263	94	0	2	0	0	1	0	0	0	0	0
4/23/2024	5:45 PM	1	277	88	0	2	0	0	3	0	0	0	0	0
4/23/2024	6:00 PM	1	235	72	0	2	0	0	0	0	0	0	0	0
4/23/2024	6:15 PM	0	163	37	1	1	0	0	0	1	0	0	0	0
4/23/2024	6:30 PM	2	96	22	0	3	0	0	0	0	0	0	0	0
4/23/2024	6:45 PM	0	110	27	0	2	0	0	0	0	0	0	0	0
4/23/2024	7:00 PM	0	99	20	0	2	1	0	0	0	0	0	0	0
4/23/2024	7:15 PM	0	95	20	0	1	0	0	0	0	0	0	0	0
4/23/2024	7:30 PM	0	77	19	0	1	0	0	0	0	0	0	0	0
4/23/2024	7:45 PM	0	92	25	0	0	0	0	0	1	0	0	0	0
4/23/2024	8:00 PM	0	97	20	0	0	0	0	0	1	0	0	0	0
4/23/2024	8:15 PM	0	90	16	0	0	0	0	0	0	0	0	0	0
4/23/2024	8:30 PM	0	51	23	0	0	0	0	0	0	0	0	0	0
4/23/2024	8:45 PM	0	45	10	0	0	0	0	0	0	0	0	0	0
4/23/2024	9:00 PM	0	25	6	0	0	0	0	0	0	0	0	0	0
4/23/2024	9:15 PM	0	30	4	0	0	0	0	0	0	0	0	0	0
4/23/2024	9:30 PM	0	25	4	0	0	0	0	0	0	0	0	0	0
4/23/2024	9:45 PM	0	24	5	0	0	0	0	0	0	0	0	0	0
4/23/2024	10:00 PM	0	14	4	0	1	0	0	0	0	0	0	0	0
4/23/2024	10:15 PM	0	15	6	0	0	0	0	0	0	0	0	0	0
4/23/2024	10:30 PM	0	17	7	0	0	0	0	0	0	0	0	0	0
4/23/2024	10:45 PM	0	12	2	0	0	0	0	0	0	0	0	0	0
4/23/2024	11:00 PM	0	10	2	0	1	0	0	0	0	0	0	0	0
4/23/2024	11:15 PM	0	7	3	0	0	0	0	0	0	0	0	0	0
4/23/2024	11:30 PM	0	5	2	0	0	0	0	0	0	0	0	0	0
4/23/2024	11:45 PM	0	4	3	0	0	0	0	0	0	0	0	0	0

4/24/2024	12:00 AM	0	19	2	0	0	0	0	0	0	0	0	0
4/24/2024	12:15 AM	0	18	3	0	0	0	0	0	0	0	0	0
4/24/2024	12:30 AM	0	15	4	0	1	0	0	0	0	0	0	0
4/24/2024	12:45 AM	0	12	1	0	0	0	0	0	0	0	0	0
4/24/2024	1:00 AM	0	7	0	0	0	0	0	0	2	0	0	0	0
4/24/2024	1:15 AM	0	8	0	0	0	0	0	0	1	0	0	0	0
4/24/2024	1:30 AM	0	7	0	0	0	0	0	0	0	0	0	0	0
4/24/2024	1:45 AM	0	8	1	0	0	0	0	0	0	0	0	0	0
4/24/2024	2:00 AM	0	13	2	0	1	0	0	0	1	0	0	0	0
4/24/2024	2:15 AM	0	6	1	0	0	0	0	0	0	0	0	0	0
4/24/2024	2:30 AM	0	7	1	0	0	0	0	0	0	0	0	0	0
4/24/2024	2:45 AM	0	5	1	0	0	0	0	0	1	0	0	0	0
4/24/2024	3:00 AM	0	10	1	0	0	0	0	0	1	0	0	0	0
4/24/2024	3:15 AM	0	3	0	0	0	0	0	0	0	0	0	0	0
4/24/2024	3:30 AM	0	7	2	0	0	0	0	0	0	0	0	0	0
4/24/2024	3:45 AM	0	7	0	0	0	0	0	0	0	0	0	0	0
4/24/2024	4:00 AM	0	10	1	0	0	1	0	0	3	0	0	0	0
4/24/2024	4:15 AM	0	13	2	0	0	0	0	0	0	0	0	0	0
4/24/2024	4:30 AM	0	18	5	0	0	0	0	0	0	0	0	0	0
4/24/2024	4:45 AM	0	19	3	0	0	0	0	0	1	0	0	0	0
4/24/2024	5:00 AM	0	15	3	0	1	0	0	0	0	0	0	0	0
4/24/2024	5:15 AM	0	16	2	0	0	0	0	0	2	0	0	0	0
4/24/2024	5:30 AM	0	48	6	0	1	0	0	0	1	0	0	0	0
4/24/2024	5:45 AM	0	59	5	0	0	0	0	0	2	0	0	0	0
4/24/2024	6:00 AM	0	30	10	0	0	0	0	0	0	0	0	0	0
4/24/2024	6:15 AM	0	57	16	0	0	0	0	0	0	0	0	0	0
4/24/2024	6:30 AM	1	59	10	0	0	0	0	0	0	0	0	0	0
4/24/2024	6:45 AM	0	94	28	0	0	0	0	1	1	0	0	0	0
4/24/2024	7:00 AM	0	93	38	0	2	0	0	0	1	0	0	0	0
4/24/2024	7:15 AM	0	108	30	0	0	0	0	1	0	0	0	0	0
4/24/2024	7:30 AM	0	153	49	0	1	0	0	0	0	0	0	0	0
4/24/2024	7:45 AM	0	142	41	0	3	0	0	0	1	0	0	0	0
4/24/2024	8:00 AM	0	91	30	0	0	0	0	0	0	0	0	0	0
4/24/2024	8:15 AM	0	92	14	0	3	0	0	0	0	0	0	0	0
4/24/2024	8:30 AM	0	101	31	0	2	0	0	1	0	0	0	0	0
4/24/2024	8:45 AM	0	109	26	0	4	0	0	0	0	0	0	0	0
4/24/2024	9:00 AM	0	81	17	0	4	0	0	1	0	0	0	0	0
4/24/2024	9:15 AM	0	60	18	0	2	0	0	0	0	0	0	0	0
4/24/2024	9:30 AM	0	68	17	0	0	0	0	0	1	0	0	0	0
4/24/2024	9:45 AM	0	119	31	0	1	1	0	0	1	0	0	0	0
4/24/2024	10:00 AM	0	76	18	1	6	0	0	0	1	0	0	0	0
4/24/2024	10:15 AM	0	77	25	0	0	0	0	0	1	0	0	0	0
4/24/2024	10:30 AM	1	92	24	0	1	0	0	0	1	0	0	0	0
4/24/2024	10:45 AM	0	90	30	0	1	0	0	0	1	0	0	0	0
4/24/2024	11:00 AM	0	68	29	0	1	0	0	1	0	0	0	0	0
4/24/2024	11:15 AM	0	76	18	0	0	0	0	0	0	0	0	0	0
4/24/2024	11:30 AM	0	69	26	0	1	0	0	1	0	0	0	0	0
4/24/2024	11:45 AM	0	78	23	0	3	0	0	2	1	0	0	0	0
4/24/2024	12:00 PM	0	78	24	0	1	0	0	0	0	0	0	0	0
4/24/2024	12:15 PM	0	80	29	0	2	0	0	2	0	0	0	0	0
4/24/2024	12:30 PM	0	85	27	0	3	0	0	1	0	0	0	0	0
4/24/2024	12:45 PM	0	104	31	0	2	0	0	1	1	0	0	0	0
4/24/2024	1:00 PM	0	79	33	0	4	0	0	0	2	0	0	0	0
4/24/2024	1:15 PM	0	85	23	0	1	0	0	0	1	0	0	0	0
4/24/2024	1:30 PM	0	110	41	0	1	0	0	0	1	0	0	0	0
4/24/2024	1:45 PM	0	110	47	0	4	0	0	2	0	0	0	0	0
4/24/2024	2:00 PM	0	125	35	0	3	0	0	0	2	0	0	0	0
4/24/2024	2:15 PM	0	139	38	0	3	0	0	0	1	0	0	0	0
4/24/2024	2:30 PM	0	129	38	1	1	0	0	0	0	0	0	0	0
4/24/2024	2:45 PM	0	144	42	0	1	0	0	0	1	0	0	0	0
4/24/2024	3:00 PM	0	178	52	0	1	0	0	0	4	0	0	0	0
4/24/2024	3:15 PM	0	208	69	0	4	0	0	1	2	0	0	0	0
4/24/2024	3:30 PM	0	239	81	0	7	1	0	0	0	0	0	0	0
4/24/2024	3:45 PM	0	223	86	0	8	1	0	3	1	0	0	0	0
4/24/2024	4:00 PM	0	270	72	0	3	0	0	0	2	0	0	0	0
4/24/2024	4:15 PM	0	240	74	0	8	0	0	0	0	0	0	0	0
4/24/2024	4:30 PM	0	275	77	0	5	0	0	0	1	0	0	0	0
4/24/2024	4:45 PM	1	273	89	0	9	0	0	1	1	0	0	0	0
4/24/2024	5:00 PM	1	299	78	0	4	0	0	0	2	0	0	0	0
4/24/2024	5:15 PM	0	283	78	0	2	1	0	3	0	0	0	0	0
4/24/2024	5:30 PM	1	274	76	0	3	0	0	1	1	0	0	0	0
4/24/2024	5:45 PM	0	276	95	0	5	0	0	3	1	0	0	0	0
4/24/2024	6:00 PM	0	151	48	0	1	0	0	0	3	0	0	0	0
4/24/2024	6:15 PM	1	168	50	2	0	0	0	0	0	0	0	0	0
4/24/2024	6:30 PM	1	100	34	0	1	0	0	2	0	0	0	0	0
4/24/2024	6:45 PM	1	114	25	0	3	0	0	0	3	0	0	0	0
4/24/2024	7:00 PM	0	96	17	0	1	1	0	1	0	0	0	0	0
4/24/2024	7:15 PM	0	87	22	0	0	0	0	0	0	0	0	0	0
4/24/2024	7:30 PM	0	82	27	0	0	0	0	0	1	0	0	0	0
4/24/2024	7:45 PM	0	62	14	0	0	0	0	0	0	0	0	0	0
4/24/2024	8:00 PM	0	67	11	0	0	0	0	0	1	0	0	0	0
4/24/2024	8:15 PM	0	70	8	0	0	0	0	0	0	0	0	0	0
4/24/2024	8:30 PM	0	64	6	0	0	0	0	0	0	0	0	0	0
4/24/2024	8:45 PM	0	62	4	0	0	0	0	0	0	0	0	0	0
4/24/2024	9:00 PM	0	38	5	0	0	0	0	0	1	0	0	0	0
4/24/2024	9:15 PM	0	35	4	0	0	0	0	0	0	0	0	0	0
4/24/2024	9:30 PM	0	30	2	0	0	0	0	0	0	0	0	0	0
4/24/2024	9:45 PM	0	31	1	0	0	0	0	0	0	0	0	0	0
4/24/2024	10:00 PM	1	32	2	0	0	0	0	0	1	0	0	1	0
4/24/2024	10:15 PM	1	31	3	0	1	0	0	0	0	0	0	0	0
4/24/2024	10:30 PM	0	27	3	0	0	0	0	0	0	0	0	0	0
4/24/2024	10:45 PM	0	21	0	0	0	0	0	0	0	0	0	0	0
4/24/2024	11:00 PM	0	18	0	0	0	0	0	0	0	0	0	0	0
4/24/2024	11:15 PM	0	11	1	0	0	0	0	0	0	0	0	0	0
4/24/2024	11:30 PM	0	6	0	0	0	0	0	0	0	0	0	0	0
4/24/2024	11:45 PM	0	12	0	0	0	0	0	0	0	0	0	0	0

4/25/2024	12:00 AM	0	13	3	0	0	0	0	0	0	0	0	0
4/25/2024	12:15 AM	0	15	4	0	0	0	0	0	0	0	0	0
4/25/2024	12:30 AM	0	8	2	0	0	0	0	0	0	0	0	0
4/25/2024	12:45 AM	0	3	0	0	0	0	0	0	0	0	0	0
4/25/2024	1:00 AM	0	13	0	0	0	0	0	0	0	0	0	0
4/25/2024	1:15 AM	0	6	0	0	0	0	0	0	0	0	0	0
4/25/2024	1:30 AM	0	5	0	0	0	0	0	0	0	0	0	0
4/25/2024	1:45 AM	0	5	0	0	0	0	0	0	0	0	0	0
4/25/2024	2:00 AM	0	6	0	0	0	0	0	0	0	0	0	0
4/25/2024	2:15 AM	0	8	0	0	0	0	0	0	0	0	0	0
4/25/2024	2:30 AM	0	7	0	0	0	0	0	0	0	0	0	0
4/25/2024	2:45 AM	0	8	0	0	0	0	0	0	0	0	0	0
4/25/2024	3:00 AM	0	5	0	0	0	0	0	0	0	0	0	0
4/25/2024	3:15 AM	0	10	0	0	0	0	0	0	0	0	0	0
4/25/2024	3:30 AM	0	10	0	0	0	0	0	0	0	0	0	0
4/25/2024	3:45 AM	0	9	1	0	0	0	0	0	0	0	0	0
4/25/2024	4:00 AM	0	13	1	0	0	0	0	0	0	0	0	0
4/25/2024	4:15 AM	0	10	0	0	0	0	0	0	0	0	0	0
4/25/2024	4:30 AM	0	14	1	0	0	0	0	0	0	0	0	0
4/25/2024	4:45 AM	0	17	1	0	0	0	0	0	0	0	0	0
4/25/2024	5:00 AM	0	21	1	0	0	0	0	0	1	0	0	0
4/25/2024	5:15 AM	0	20	0	1	1	0	0	0	0	0	0	0
4/25/2024	5:30 AM	0	45	0	1	0	0	0	0	0	0	0	0
4/25/2024	5:45 AM	0	50	1	0	0	0	0	0	0	0	0	0
4/25/2024	6:00 AM	0	52	3	0	2	0	0	0	0	0	0	0
4/25/2024	6:15 AM	0	41	12	0	2	0	0	0	0	0	0	0
4/25/2024	6:30 AM	1	74	20	0	0	0	0	0	0	0	0	0
4/25/2024	6:45 AM	0	42	17	0	1	0	0	0	0	0	0	0
4/25/2024	7:00 AM	0	124	36	0	1	0	0	0	0	0	0	0
4/25/2024	7:15 AM	0	142	26	0	1	0	0	0	0	0	0	0
4/25/2024	7:30 AM	0	125	36	0	1	0	0	0	0	0	0	0
4/25/2024	7:45 AM	0	174	30	0	1	0	0	0	0	0	0	0
4/25/2024	8:00 AM	0	99	35	0	0	0	0	1	1	0	0	0
4/25/2024	8:15 AM	0	111	30	0	0	0	0	0	0	0	0	0
4/25/2024	8:30 AM	0	119	29	0	1	0	0	0	0	0	0	0
4/25/2024	8:45 AM	1	86	21	0	2	0	0	0	1	0	0	0
4/25/2024	9:00 AM	1	87	21	0	2	0	0	0	0	0	0	0
4/25/2024	9:15 AM	0	74	20	0	2	0	0	0	0	0	0	0
4/25/2024	9:30 AM	0	81	34	0	1	1	0	0	1	0	0	0
4/25/2024	9:45 AM	1	84	29	0	1	0	0	1	1	0	0	0
4/25/2024	10:00 AM	0	83	31	0	0	0	0	0	0	0	0	0
4/25/2024	10:15 AM	5	95	22	0	0	0	0	1	2	0	0	0
4/25/2024	10:30 AM	0	92	24	0	2	0	0	1	0	0	0	0
4/25/2024	10:45 AM	0	96	33	0	1	0	0	1	0	0	0	0
4/25/2024	11:00 AM	1	81	15	0	1	0	0	0	0	0	0	0
4/25/2024	11:15 AM	1	91	34	1	1	0	0	0	0	0	0	0
4/25/2024	11:30 AM	9	109	33	0	1	0	0	0	0	0	0	0
4/25/2024	11:45 AM	3	111	37	1	1	0	0	0	1	1	0	0
4/25/2024	12:00 PM	1	105	31	0	4	0	0	0	2	0	0	0
4/25/2024	12:15 PM	0	128	43	0	1	1	0	0	0	0	0	0
4/25/2024	12:30 PM	0	121	48	0	0	0	0	0	0	0	0	0
4/25/2024	12:45 PM	0	140	48	0	2	0	0	1	1	0	0	0
4/25/2024	1:00 PM	0	142	30	0	2	0	0	0	0	0	0	0
4/25/2024	1:15 PM	0	121	29	0	2	0	0	0	2	0	0	0
4/25/2024	1:30 PM	2	121	39	0	0	1	0	0	1	0	0	0
4/25/2024	1:45 PM	3	137	28	0	4	0	0	1	0	0	0	0
4/25/2024	2:00 PM	0	124	41	0	2	0	0	1	1	0	0	0
4/25/2024	2:15 PM	1	190	43	0	2	0	0	0	0	0	0	0
4/25/2024	2:30 PM	0	159	43	1	2	0	0	0	1	0	0	0
4/25/2024	2:45 PM	1	151	52	0	1	0	0	1	0	0	0	0
4/25/2024	3:00 PM	3	178	43	0	3	0	0	0	1	0	0	0
4/25/2024	3:15 PM	0	201	67	0	5	0	0	2	3	0	1	0
4/25/2024	3:30 PM	1	204	89	3	4	0	0	1	2	0	0	0
4/25/2024	3:45 PM	0	209	70	0	2	0	0	1	2	0	0	0
4/25/2024	4:00 PM	1	226	72	1	1	0	0	2	0	0	0	0
4/25/2024	4:15 PM	0	261	78	0	12	0	0	0	0	0	0	0
4/25/2024	4:30 PM	2	291	71	0	5	0	0	0	1	0	0	0
4/25/2024	4:45 PM	0	268	47	0	0	0	0	0	0	0	0	0
4/25/2024	5:00 PM	0	226	43	0	3	0	0	0	0	0	0	0
4/25/2024	5:15 PM	1	254	73	0	5	2	0	0	0	0	0	0
4/25/2024	5:30 PM	2	232	68	0	1	0	0	0	1	0	0	0
4/25/2024	5:45 PM	2	237	77	0	2	0	0	0	3	0	0	0
4/25/2024	6:00 PM	1	217	77	0	2	0	0	0	2	0	0	0
4/25/2024	6:15 PM	2	163	41	0	2	0	0	1	0	0	0	0
4/25/2024	6:30 PM	1	131	38	0	1	0	0	2	0	0	0	0
4/25/2024	6:45 PM	1	123	37	1	2	0	0	1	0	1	0	0
4/25/2024	7:00 PM	1	128	30	0	1	0	0	0	0	0	0	0
4/25/2024	7:15 PM	0	128	29	0	0	0	0	1	1	0	0	0
4/25/2024	7:30 PM	0	102	26	0	0	0	0	2	0	0	0	0
4/25/2024	7:45 PM	2	103	13	0	0	0	0	0	0	0	0	0
4/25/2024	8:00 PM	2	89	16	0	0	0	0	0	0	0	0	0
4/25/2024	8:15 PM	2	78	24	0	0	0	0	0	1	0	0	0
4/25/2024	8:30 PM	0	87	13	0	0	0	0	0	0	0	0	0
4/25/2024	8:45 PM	0	89	11	1	1	0	0	0	2	0	0	0
4/25/2024	9:00 PM	0	52	5	0	0	0	0	0	0	0	0	0
4/25/2024	9:15 PM	0	45	4	0	0	0	0	0	0	0	0	0
4/25/2024	9:30 PM	1	36	2	0	0	0	0	0	0	0	0	0
4/25/2024	9:45 PM	0	43	1	0	0	0	0	0	0	0	0	0
4/25/2024	10:00 PM	0	29	0	0	0	0	0	0	0	0	0	0
4/25/2024	10:15 PM	0	47	2	0	0	0	0	0	0	0	0	0
4/25/2024	10:30 PM	0	39	1	0	0	0	0	0	0	0	0	0
4/25/2024	10:45 PM	0	21	0	0	1	0	0	0	0	0	0	0
4/25/2024	11:00 PM	0	15	0	0	1	0	0	0	2	0	0	0
4/25/2024	11:15 PM	0	21	0	0	1	0	0	0	0	0	0	0
4/25/2024	11:30 PM	0	13	0	0	0	0	0	0	0	0	0	0
4/25/2024	11:45 PM	0	8	0	0	0	0	0	0	0	0	0	0

4/26/2024	12:00 AM	0	17	4	0	0	0	0	0	1	0	0	0	0
4/26/2024	12:15 AM	0	3	0	0	0	0	0	0	0	0	0	0	0
4/26/2024	12:30 AM	0	4	1	0	0	1	0	0	0	0	0	0	0
4/26/2024	12:45 AM	0	14	4	0	0	0	0	0	1	0	0	0	0
4/26/2024	1:00 AM	0	4	1	0	0	0	0	0	0	0	0	0	0
4/26/2024	1:15 AM	0	10	3	0	0	0	0	0	1	0	0	0	0
4/26/2024	1:30 AM	0	6	2	0	0	0	0	0	0	0	0	0	0
4/26/2024	1:45 AM	0	5	0	0	0	0	0	0	0	0	0	0	0
4/26/2024	2:00 AM	0	5	1	0	0	0	0	0	0	0	0	0	0
4/26/2024	2:15 AM	0	2	0	0	0	0	0	0	0	0	0	0	0
4/26/2024	2:30 AM	0	4	2	0	0	0	0	0	0	0	0	0	0
4/26/2024	2:45 AM	0	8	2	0	0	0	0	0	0	0	0	0	0
4/26/2024	3:00 AM	0	5	0	0	0	0	0	0	1	0	0	0	0
4/26/2024	3:15 AM	0	3	0	0	0	0	0	0	0	0	0	0	0
4/26/2024	3:30 AM	0	6	2	0	0	0	0	0	0	0	0	0	0
4/26/2024	3:45 AM	0	3	0	0	0	0	0	0	0	0	0	0	0
4/26/2024	4:00 AM	0	5	2	0	0	0	0	0	0	0	0	0	0
4/26/2024	4:15 AM	0	6	3	0	0	0	0	0	0	0	0	0	0
4/26/2024	4:30 AM	0	9	3	0	0	0	0	0	0	0	0	0	0
4/26/2024	4:45 AM	0	11	6	0	0	0	0	0	0	0	0	0	0
4/26/2024	5:00 AM	0	4	0	0	0	0	0	0	0	0	0	0	0
4/26/2024	5:15 AM	0	16	7	0	0	0	0	0	1	0	0	0	0
4/26/2024	5:30 AM	0	21	9	0	1	0	0	0	0	0	0	0	0
4/26/2024	5:45 AM	0	20	7	0	0	0	0	0	0	0	0	0	0
4/26/2024	6:00 AM	1	30	15	0	0	0	0	0	0	0	0	0	0
4/26/2024	6:15 AM	0	48	20	0	0	0	0	0	0	0	0	0	0
4/26/2024	6:30 AM	0	93	27	0	0	0	0	0	0	0	0	0	0
4/26/2024	6:45 AM	0	90	25	0	0	0	0	0	0	0	0	0	0
4/26/2024	7:00 AM	0	110	23	0	4	0	0	0	0	0	0	0	0
4/26/2024	7:15 AM	0	126	34	0	0	0	0	0	0	0	0	0	0
4/26/2024	7:30 AM	1	150	42	0	2	0	0	0	0	0	0	0	0
4/26/2024	7:45 AM	1	142	44	0	3	0	0	1	0	0	0	0	0
4/26/2024	8:00 AM	0	133	32	0	2	0	0	0	1	0	0	0	0
4/26/2024	8:15 AM	1	94	31	0	1	0	0	1	1	0	0	0	0
4/26/2024	8:30 AM	6	103	34	0	1	1	0	0	0	0	0	0	0
4/26/2024	8:45 AM	0	87	27	0	3	0	0	0	0	0	0	0	0
4/26/2024	9:00 AM	0	79	24	0	2	0	0	0	0	0	0	0	0
4/26/2024	9:15 AM	3	81	28	0	3	0	0	0	0	0	0	0	0
4/26/2024	9:30 AM	1	80	26	0	1	0	0	2	0	0	0	0	0
4/26/2024	9:45 AM	0	97	25	0	2	0	0	1	0	0	0	0	0
4/26/2024	10:00 AM	0	91	22	0	0	0	0	0	2	0	0	0	0
4/26/2024	10:15 AM	0	107	26	0	0	0	0	0	0	0	0	0	0
4/26/2024	10:30 AM	0	111	25	0	4	1	0	1	0	0	0	0	0
4/26/2024	10:45 AM	0	123	39	0	2	0	0	1	0	0	0	0	0
4/26/2024	11:00 AM	1	98	21	0	1	0	0	1	2	0	0	0	0
4/26/2024	11:15 AM	0	117	38	0	2	0	0	1	2	0	0	0	0
4/26/2024	11:30 AM	0	126	39	0	3	0	0	1	1	0	0	0	0
4/26/2024	11:45 AM	1	143	44	0	3	0	0	0	0	0	0	0	0
4/26/2024	12:00 PM	1	158	51	0	3	0	0	1	0	0	0	0	0
4/26/2024	12:15 PM	0	167	55	0	3	0	0	0	0	0	0	0	0
4/26/2024	12:30 PM	1	158	41	0	1	0	0	0	0	0	0	0	0
4/26/2024	12:45 PM	1	168	51	0	4	0	0	0	2	0	0	0	0
4/26/2024	1:00 PM	4	166	55	0	4	0	0	0	0	0	0	0	0
4/26/2024	1:15 PM	0	167	54	0	3	0	0	1	2	0	0	0	0
4/26/2024	1:30 PM	2	169	52	0	1	1	0	2	1	0	0	0	0
4/26/2024	1:45 PM	1	188	58	0	2	0	0	4	0	0	0	0	0
4/26/2024	2:00 PM	2	180	40	0	2	0	0	1	0	0	0	0	0
4/26/2024	2:15 PM	4	188	59	0	5	0	0	1	0	0	0	0	0
4/26/2024	2:30 PM	0	204	58	0	2	0	0	1	0	0	0	0	0
4/26/2024	2:45 PM	0	201	62	0	5	0	0	1	1	0	0	0	0
4/26/2024	3:00 PM	1	201	55	0	4	1	0	1	0	0	0	0	0
4/26/2024	3:15 PM	2	202	67	0	4	0	0	0	3	0	0	0	0
4/26/2024	3:30 PM	0	208	72	0	4	0	0	0	1	0	0	0	0
4/26/2024	3:45 PM	0	242	75	1	3	1	0	0	0	0	0	0	0
4/26/2024	4:00 PM	0	248	84	0	3	0	0	2	5	0	0	0	0
4/26/2024	4:15 PM	4	271	80	0	7	0	0	1	0	0	0	0	0
4/26/2024	4:30 PM	1	251	75	1	3	0	0	1	0	0	0	0	0
4/26/2024	4:45 PM	2	267	73	0	1	0	0	0	1	0	0	0	0
4/26/2024	5:00 PM	2	253	74	0	2	0	0	0	0	0	0	0	0
4/26/2024	5:15 PM	1	287	76	0	1	0	0	0	0	0	0	0	0
4/26/2024	5:30 PM	1	224	69	0	2	0	0	0	1	0	0	0	0
4/26/2024	5:45 PM	0	203	52	0	4	2	0	1	3	0	0	0	0
4/26/2024	6:00 PM	1	190	39	0	4	0	0	0	0	0	0	0	0
4/26/2024	6:15 PM	1	182	38	2	0	0	0	2	0	0	0	0	0
4/26/2024	6:30 PM	0	165	27	0	1	0	0	0	0	0	0	0	0
4/26/2024	6:45 PM	2	141	37	0	3	0	0	0	0	0	0	0	0
4/26/2024	7:00 PM	2	137	27	0	3	0	0	0	1	0	0	0	0
4/26/2024	7:15 PM	2	127	38	0	0	0	0	0	0	0	0	0	0
4/26/2024	7:30 PM	1	116	23	1	1	0	0	0	0	0	0	0	0
4/26/2024	7:45 PM	1	93	16	0	0	0	0	0	0	0	0	0	0
4/26/2024	8:00 PM	0	82	19	0	0	0	0	0	0	0	0	0	0
4/26/2024	8:15 PM	0	90	23	0	0	0	0	0	1	0	0	0	0
4/26/2024	8:30 PM	0	60	15	0	0	0	0	0	0	0	0	0	0
4/26/2024	8:45 PM	0	63	19	0	0	0	0	0	0	0	0	0	0
4/26/2024	9:00 PM	0	56	21	0	1	0	0	0	0	0	0	0	0
4/26/2024	9:15 PM	0	62	24	0	0	0	0	0	0	0	0	0	0
4/26/2024	9:30 PM	0	58	20	0	1	0	0	0	0	0	0	0	0
4/26/2024	9:45 PM	0	43	13	0	0	0	0	0	0	0	0	0	0
4/26/2024	10:00 PM	0	30	7	0	1	0	0	0	0	0	0	0	0
4/26/2024	10:15 PM	0	45	9	0	0	0	0	0	0	0	0	0	0
4/26/2024	10:30 PM	0	31	11	0	0	0	0	0	0	0	0	0	0
4/26/2024	10:45 PM	0	32	10	0	0	0	0	0	0	0	0	0	0
4/26/2024	11:00 PM	0	38	14	0	0	0	0	0	0	0	0	0	0
4/26/2024	11:15 PM	0	20	8	0	0	0	0	0	0	0	0	0	0
4/26/2024	11:30 PM	0	16	7	0	0	0	0	0	0	0	0	0	0
4/26/2024	11:45 PM	0	20	11	0	0	0	0	0	0	0	0	0	0

4/27/2024	12:00 AM	0	29	4	0	1	0	0	0	0	0	0	0
4/27/2024	12:15 AM	0	30	6	0	0	0	0	0	0	0	0	0
4/27/2024	12:30 AM	0	27	7	0	0	0	0	0	0	0	0	0
4/27/2024	12:45 AM	0	10	5	0	0	0	0	0	0	0	0	0
4/27/2024	1:00 AM	0	20	6	0	0	0	0	0	0	0	0	0
4/27/2024	1:15 AM	0	14	7	0	0	0	0	0	1	0	0	0
4/27/2024	1:30 AM	1	20	6	0	0	0	0	0	0	0	0	0
4/27/2024	1:45 AM	0	15	4	0	0	0	0	0	0	0	0	0
4/27/2024	2:00 AM	0	12	5	0	0	0	0	0	0	0	0	0
4/27/2024	2:15 AM	0	7	4	0	0	0	0	0	0	0	0	0
4/27/2024	2:30 AM	0	12	4	0	0	0	0	0	0	0	0	0
4/27/2024	2:45 AM	0	2	2	0	0	0	0	0	0	0	0	0
4/27/2024	3:00 AM	0	8	2	0	0	0	0	0	0	0	0	0
4/27/2024	3:15 AM	0	2	2	0	0	0	0	0	1	0	0	0
4/27/2024	3:30 AM	0	6	1	0	0	0	0	0	1	0	0	0
4/27/2024	3:45 AM	0	5	1	0	0	0	0	0	1	0	0	0
4/27/2024	4:00 AM	0	8	2	0	1	0	0	0	0	0	0	0
4/27/2024	4:15 AM	0	7	3	0	0	0	0	0	0	0	0	0
4/27/2024	4:30 AM	0	8	6	0	0	0	0	0	0	0	0	0
4/27/2024	4:45 AM	0	5	3	0	0	0	0	0	0	0	0	0
4/27/2024	5:00 AM	0	3	2	0	0	0	0	0	1	0	0	0
4/27/2024	5:15 AM	3	19	8	0	0	0	0	0	3	0	0	0
4/27/2024	5:30 AM	0	14	4	0	0	0	0	0	0	0	0	0
4/27/2024	5:45 AM	0	15	3	0	0	0	0	0	0	0	0	0
4/27/2024	6:00 AM	0	8	3	0	0	0	0	0	1	0	0	0
4/27/2024	6:15 AM	0	21	8	0	0	0	0	0	0	0	0	0
4/27/2024	6:30 AM	0	29	11	0	0	0	0	0	0	0	0	0
4/27/2024	6:45 AM	0	30	9	0	0	0	0	0	0	0	0	0
4/27/2024	7:00 AM	0	30	11	0	0	0	0	0	0	0	0	0
4/27/2024	7:15 AM	0	45	5	0	0	0	0	0	0	1	0	0
4/27/2024	7:30 AM	0	61	13	0	0	0	0	0	0	0	0	0
4/27/2024	7:45 AM	2	55	12	0	1	0	0	0	0	0	0	0
4/27/2024	8:00 AM	0	50	13	0	1	0	0	0	0	0	0	0
4/27/2024	8:15 AM	0	63	8	0	0	0	0	0	0	0	0	0
4/27/2024	8:30 AM	0	69	17	0	0	0	0	0	0	0	0	0
4/27/2024	8:45 AM	0	60	7	0	1	0	0	0	0	0	0	0
4/27/2024	9:00 AM	0	62	14	0	0	0	0	0	0	0	0	0
4/27/2024	9:15 AM	0	79	22	0	0	0	0	0	0	0	0	0
4/27/2024	9:30 AM	0	90	21	1	1	0	0	0	0	0	0	0
4/27/2024	9:45 AM	0	84	19	0	0	0	0	0	0	0	0	0
4/27/2024	10:00 AM	0	93	19	0	0	0	0	0	0	0	0	0
4/27/2024	10:15 AM	0	83	20	0	0	0	0	0	0	0	0	0
4/27/2024	10:30 AM	2	101	21	0	2	0	0	0	0	0	0	0
4/27/2024	10:45 AM	2	94	31	0	0	0	0	0	0	0	0	0
4/27/2024	11:00 AM	3	101	27	0	2	0	0	0	0	0	0	0
4/27/2024	11:15 AM	0	99	29	0	1	0	0	0	0	0	0	0
4/27/2024	11:30 AM	1	120	29	0	1	0	0	0	0	0	0	0
4/27/2024	11:45 AM	1	106	30	0	1	0	0	2	0	0	0	0
4/27/2024	12:00 PM	0	119	26	0	1	0	0	0	0	0	0	0
4/27/2024	12:15 PM	0	133	28	0	0	0	0	0	0	0	0	0
4/27/2024	12:30 PM	1	95	33	0	0	0	0	0	0	0	0	0
4/27/2024	12:45 PM	0	120	19	0	0	0	0	0	0	0	0	0
4/27/2024	1:00 PM	1	119	23	0	3	0	0	0	1	0	0	0
4/27/2024	1:15 PM	2	128	40	0	0	0	0	1	0	0	0	0
4/27/2024	1:30 PM	1	121	20	0	0	0	0	0	0	0	0	0
4/27/2024	1:45 PM	0	123	31	0	1	0	0	1	0	0	0	0
4/27/2024	2:00 PM	1	129	25	0	0	0	0	0	0	0	0	0
4/27/2024	2:15 PM	1	145	22	0	0	0	0	0	0	0	0	0
4/27/2024	2:30 PM	6	112	25	0	0	0	0	0	0	0	0	0
4/27/2024	2:45 PM	1	114	26	0	2	0	0	0	1	0	0	0
4/27/2024	3:00 PM	3	124	31	0	0	0	0	0	0	0	0	0
4/27/2024	3:15 PM	4	137	26	0	1	0	0	0	0	0	0	0
4/27/2024	3:30 PM	0	132	20	0	1	0	0	1	0	0	0	0
4/27/2024	3:45 PM	1	134	48	0	0	0	0	0	0	0	0	0
4/27/2024	4:00 PM	0	163	24	0	1	0	0	0	0	0	0	0
4/27/2024	4:15 PM	0	110	20	0	3	0	0	1	0	0	0	0
4/27/2024	4:30 PM	10	117	23	0	1	0	0	0	0	0	0	0
4/27/2024	4:45 PM	3	122	19	0	1	0	0	0	0	0	0	0
4/27/2024	5:00 PM	2	117	19	0	1	1	0	0	0	0	0	0
4/27/2024	5:15 PM	2	112	15	0	0	0	0	0	0	0	0	0
4/27/2024	5:30 PM	8	109	23	0	3	0	0	1	0	0	0	0
4/27/2024	5:45 PM	0	91	20	0	0	0	0	0	0	0	0	0
4/27/2024	6:00 PM	2	112	16	0	1	0	0	0	0	0	0	0
4/27/2024	6:15 PM	12	97	20	0	1	0	0	0	0	0	0	0
4/27/2024	6:30 PM	3	111	24	0	1	0	0	0	0	0	0	0
4/27/2024	6:45 PM	7	85	20	0	3	0	0	0	0	0	0	0
4/27/2024	7:00 PM	0	84	14	0	3	0	0	0	0	0	0	0
4/27/2024	7:15 PM	0	91	14	0	2	0	0	0	0	0	0	0
4/27/2024	7:30 PM	0	70	21	0	1	0	0	0	0	0	0	0
4/27/2024	7:45 PM	1	88	16	0	0	0	0	0	0	0	0	0
4/27/2024	8:00 PM	0	70	10	0	0	0	0	0	0	0	0	0
4/27/2024	8:15 PM	1	59	5	0	1	0	0	0	0	0	0	0
4/27/2024	8:30 PM	0	52	6	0	0	0	0	0	0	0	0	0
4/27/2024	8:45 PM	0	53	9	0	0	0	0	0	0	0	0	0
4/27/2024	9:00 PM	0	46	8	0	0	0	0	0	0	0	0	0
4/27/2024	9:15 PM	0	31	10	0	0	0	0	0	0	0	0	0
4/27/2024	9:30 PM	0	35	12	0	0	0	0	0	0	0	0	0
4/27/2024	9:45 PM	0	22	13	0	0	0	0	0	0	0	0	0
4/27/2024	10:00 PM	0	21	11	0	0	0	0	0	0	0	0	0
4/27/2024	10:15 PM	0	29	13	0	0	0	0	0	0	0	0	0
4/27/2024	10:30 PM	0	31	11	0	0	0	0	0	0	0	0	0
4/27/2024	10:45 PM	0	35	8	0	0	0	0	0	0	0	0	0
4/27/2024	11:00 PM	0	28	9	0	0	0	0	0	0	0	0	0
4/27/2024	11:15 PM	0	10	8	0	0	0	0	0	0	0	0	0
4/27/2024	11:30 PM	0	12	9	0	0	0	0	0	0	0	0	0
4/27/2024	11:45 PM	0	18	10	0	0	0	0	0	0	0	0	0

EB
File Name:
Start Date: 4/21/2024
Start Time: 0
Site Code: 74 Lane 1 WB
Station ID: 1
Location 1: I-20, west of US-378 Sunset Blvd S/Bound Off-Ramp
Location 2:

Date	Time	1	2	3	4	5	6	7	8	9	10	11	12	13
4/21/2024	12:00 AM	0	0	0	0	0	0	0	0	0	0	0	0	0
4/21/2024	12:15 AM	0	0	0	0	0	0	0	0	0	0	0	0	0
4/21/2024	12:30 AM	0	0	0	0	0	0	0	0	0	0	0	0	0
4/21/2024	12:45 AM	0	0	0	0	0	0	0	0	0	0	0	0	0
4/21/2024	1:00 AM	0	0	0	0	0	0	0	0	0	0	0	0	0
4/21/2024	1:15 AM	0	0	0	0	0	0	0	0	0	0	0	0	0
4/21/2024	1:30 AM	0	0	0	0	0	0	0	0	0	0	0	0	0
4/21/2024	1:45 AM	0	0	0	0	0	0	0	0	0	0	0	0	0
4/21/2024	2:00 AM	0	0	0	0	0	0	0	0	0	0	0	0	0
4/21/2024	2:15 AM	0	0	0	0	0	0	0	0	0	0	0	0	0
4/21/2024	2:30 AM	0	0	0	0	0	0	0	0	0	0	0	0	0
4/21/2024	2:45 AM	0	0	0	0	0	0	0	0	0	0	0	0	0
4/21/2024	3:00 AM	0	0	0	0	0	0	0	0	0	0	0	0	0
4/21/2024	3:15 AM	0	0	0	0	0	0	0	0	0	0	0	0	0
4/21/2024	3:30 AM	0	0	0	0	0	0	0	0	0	0	0	0	0
4/21/2024	3:45 AM	0	0	0	0	0	0	0	0	0	0	0	0	0
4/21/2024	4:00 AM	0	0	0	0	0	0	0	0	0	0	0	0	0
4/21/2024	4:15 AM	0	0	0	0	0	0	0	0	0	0	0	0	0
4/21/2024	4:30 AM	0	0	0	0	0	0	0	0	0	0	0	0	0
4/21/2024	4:45 AM	0	0	0	0	0	0	0	0	0	0	0	0	0
4/21/2024	5:00 AM	0	0	0	0	0	0	0	0	0	0	0	0	0
4/21/2024	5:15 AM	0	0	0	0	0	0	0	0	0	0	0	0	0
4/21/2024	5:30 AM	0	0	0	0	0	0	0	0	0	0	0	0	0
4/21/2024	5:45 AM	0	0	0	0	0	0	0	0	0	0	0	0	0
4/21/2024	6:00 AM	0	0	0	0	0	0	0	0	0	0	0	0	0
4/21/2024	6:15 AM	0	0	0	0	0	0	0	0	0	0	0	0	0
4/21/2024	6:30 AM	0	0	0	0	0	0	0	0	0	0	0	0	0
4/21/2024	6:45 AM	0	0	0	0	0	0	0	0	0	0	0	0	0
4/21/2024	7:00 AM	0	0	0	0	0	0	0	0	0	0	0	0	0
4/21/2024	7:15 AM	0	0	0	0	0	0	0	0	0	0	0	0	0
4/21/2024	7:30 AM	0	0	0	0	0	0	0	0	0	0	0	0	0
4/21/2024	7:45 AM	0	0	0	0	0	0	0	0	0	0	0	0	0
4/21/2024	8:00 AM	0	0	0	0	0	0	0	0	0	0	0	0	0
4/21/2024	8:15 AM	0	0	0	0	0	0	0	0	0	0	0	0	0
4/21/2024	8:30 AM	0	0	0	0	0	0	0	0	0	0	0	0	0
4/21/2024	8:45 AM	0	0	0	0	0	0	0	0	0	0	0	0	0
4/21/2024	9:00 AM	0	0	0	0	0	0	0	0	0	0	0	0	0
4/21/2024	9:15 AM	0	0	0	0	0	0	0	0	0	0	0	0	0
4/21/2024	9:30 AM	0	0	0	0	0	0	0	0	0	0	0	0	0
4/21/2024	9:45 AM	0	0	0	0	0	0	0	0	0	0	0	0	0
4/21/2024	10:00 AM	0	0	0	0	0	0	0	0	0	0	0	0	0
4/21/2024	10:15 AM	0	0	0	0	0	0	0	0	0	0	0	0	0
4/21/2024	10:30 AM	0	0	0	0	0	0	0	0	0	0	0	0	0
4/21/2024	10:45 AM	0	0	0	0	0	0	0	0	0	0	0	0	0
4/21/2024	11:00 AM	0	0	0	0	0	0	0	0	0	0	0	0	0
4/21/2024	11:15 AM	0	0	0	0	0	0	0	0	0	0	0	0	0
4/21/2024	11:30 AM	0	0	0	0	0	0	0	0	0	0	0	0	0
4/21/2024	11:45 AM	0	0	0	0	0	0	0	0	0	0	0	0	0
4/21/2024	12:00 PM	0	0	0	0	0	0	0	0	0	0	0	0	0
4/21/2024	12:15 PM	0	0	0	0	0	0	0	0	0	0	0	0	0
4/21/2024	12:30 PM	0	0	0	0	0	0	0	0	0	0	0	0	0
4/21/2024	12:45 PM	0	0	0	0	0	0	0	0	0	0	0	0	0
4/21/2024	1:00 PM	0	0	0	0	0	0	0	0	0	0	0	0	0
4/21/2024	1:15 PM	0	0	0	0	0	0	0	0	0	0	0	0	0
4/21/2024	1:30 PM	0	0	0	0	0	0	0	0	0	0	0	0	0
4/21/2024	1:45 PM	0	0	0	0	0	0	0	0	0	0	0	0	0
4/21/2024	2:00 PM	0	0	0	0	0	0	0	0	0	0	0	0	0
4/21/2024	2:15 PM	0	0	0	0	0	0	0	0	0	0	0	0	0
4/21/2024	2:30 PM	0	0	0	0	0	0	0	0	0	0	0	0	0
4/21/2024	2:45 PM	0	0	0	0	0	0	0	0	0	0	0	0	0
4/21/2024	3:00 PM	0	0	0	0	0	0	0	0	0	0	0	0	0
4/21/2024	3:15 PM	0	0	0	0	0	0	0	0	0	0	0	0	0
4/21/2024	3:30 PM	0	0	0	0	0	0	0	0	0	0	0	0	0
4/21/2024	3:45 PM	0	0	0	0	0	0	0	0	0	0	0	0	0
4/21/2024	4:00 PM	0	0	0	0	0	0	0	0	0	0	0	0	0
4/21/2024	4:15 PM	0	0	0	0	0	0	0	0	0	0	0	0	0
4/21/2024	4:30 PM	0	0	0	0	0	0	0	0	0	0	0	0	0
4/21/2024	4:45 PM	0	0	0	0	0	0	0	0	0	0	0	0	0
4/21/2024	5:00 PM	0	0	0	0	0	0	0	0	0	0	0	0	0
4/21/2024	5:15 PM	0	0	0	0	0	0	0	0	0	0	0	0	0
4/21/2024	5:30 PM	0	0	0	0	0	0	0	0	0	0	0	0	0
4/21/2024	5:45 PM	0	0	0	0	0	0	0	0	0	0	0	0	0
4/21/2024	6:00 PM	0	0	0	0	0	0	0	0	0	0	0	0	0
4/21/2024	6:15 PM	0	0	0	0	0	0	0	0	0	0	0	0	0
4/21/2024	6:30 PM	0	0	0	0	0	0	0	0	0	0	0	0	0
4/21/2024	6:45 PM	0	0	0	0	0	0	0	0	0	0	0	0	0
4/21/2024	7:00 PM	0	0	0	0	0	0	0	0	0	0	0	0	0
4/21/2024	7:15 PM	0	0	0	0	0	0	0	0	0	0	0	0	0
4/21/2024	7:30 PM	0	0	0	0	0	0	0	0	0	0	0	0	0
4/21/2024	7:45 PM	0	0	0	0	0	0	0	0	0	0	0	0	0
4/21/2024	8:00 PM	0	0	0	0	0	0	0	0	0	0	0	0	0
4/21/2024	8:15 PM	0	0	0	0	0	0	0	0	0	0	0	0	0
4/21/2024	8:30 PM	0	0	0	0	0	0	0	0	0	0	0	0	0
4/21/2024	8:45 PM	0	0	0	0	0	0	0	0	0	0	0	0	0
4/21/2024	9:00 PM	0	0	0	0	0	0	0	0	0	0	0	0	0
4/21/2024	9:15 PM	0	0	0	0	0	0	0	0	0	0	0	0	0
4/21/2024	9:30 PM	0	0	0	0	0	0	0	0	0	0	0	0	0
4/21/2024	9:45 PM	0	0	0	0	0	0	0	0	0	0	0	0	0
4/21/2024	10:00 PM	0	0	0	0	0	0	0	0	0	0	0	0	0
4/21/2024	10:15 PM	0	0	0	0	0	0	0	0	0	0	0	0	0
4/21/2024	10:30 PM	0	0	0	0	0	0	0	0	0	0	0	0	0
4/21/2024	10:45 PM	0	0	0	0	0	0	0	0	0	0	0	0	0
4/21/2024	11:00 PM	0	0	0	0	0	0	0	0	0	0	0	0	0
4/21/2024	11:15 PM	0	0	0	0	0	0	0	0	0	0	0	0	0
4/21/2024	11:30 PM	0	0	0	0	0	0	0	0	0	0	0	0	0
4/21/2024	11:45 PM	0	0	0	0	0	0	0	0	0	0	0	0	0

4/22/2024	12:00 AM	0	0	0	0	0	0	0	0	0	0	0	0	0
4/22/2024	12:15 AM	0	0	0	0	0	0	0	0	0	0	0	0	0
4/22/2024	12:30 AM	0	0	0	0	0	0	0	0	0	0	0	0	0
4/22/2024	12:45 AM	0	0	0	0	0	0	0	0	0	0	0	0	0
4/22/2024	1:00 AM	0	0	0	0	0	0	0	0	0	0	0	0	0
4/22/2024	1:15 AM	0	0	0	0	0	0	0	0	0	0	0	0	0
4/22/2024	1:30 AM	0	0	0	0	0	0	0	0	0	0	0	0	0
4/22/2024	1:45 AM	0	0	0	0	0	0	0	0	0	0	0	0	0
4/22/2024	2:00 AM	0	0	0	0	0	0	0	0	0	0	0	0	0
4/22/2024	2:15 AM	0	0	0	0	0	0	0	0	0	0	0	0	0
4/22/2024	2:30 AM	0	0	0	0	0	0	0	0	0	0	0	0	0
4/22/2024	2:45 AM	0	0	0	0	0	0	0	0	0	0	0	0	0
4/22/2024	3:00 AM	0	0	0	0	0	0	0	0	0	0	0	0	0
4/22/2024	3:15 AM	0	0	0	0	0	0	0	0	0	0	0	0	0
4/22/2024	3:30 AM	0	0	0	0	0	0	0	0	0	0	0	0	0
4/22/2024	3:45 AM	0	0	0	0	0	0	0	0	0	0	0	0	0
4/22/2024	4:00 AM	0	0	0	0	0	0	0	0	0	0	0	0	0
4/22/2024	4:15 AM	0	0	0	0	0	0	0	0	0	0	0	0	0
4/22/2024	4:30 AM	0	0	0	0	0	0	0	0	0	0	0	0	0
4/22/2024	4:45 AM	0	0	0	0	0	0	0	0	0	0	0	0	0
4/22/2024	5:00 AM	0	0	0	0	0	0	0	0	0	0	0	0	0
4/22/2024	5:15 AM	0	0	0	0	0	0	0	0	0	0	0	0	0
4/22/2024	5:30 AM	0	0	0	0	0	0	0	0	0	0	0	0	0
4/22/2024	5:45 AM	0	0	0	0	0	0	0	0	0	0	0	0	0
4/22/2024	6:00 AM	0	0	0	0	0	0	0	0	0	0	0	0	0
4/22/2024	6:15 AM	0	0	0	0	0	0	0	0	0	0	0	0	0
4/22/2024	6:30 AM	0	0	0	0	0	0	0	0	0	0	0	0	0
4/22/2024	6:45 AM	0	0	0	0	0	0	0	0	0	0	0	0	0
4/22/2024	7:00 AM	0	0	0	0	0	0	0	0	0	0	0	0	0
4/22/2024	7:15 AM	0	0	0	0	0	0	0	0	0	0	0	0	0
4/22/2024	7:30 AM	0	0	0	0	0	0	0	0	0	0	0	0	0
4/22/2024	7:45 AM	0	0	0	0	0	0	0	0	0	0	0	0	0
4/22/2024	8:00 AM	0	0	0	0	0	0	0	0	0	0	0	0	0
4/22/2024	8:15 AM	0	0	0	0	0	0	0	0	0	0	0	0	0
4/22/2024	8:30 AM	0	0	0	0	0	0	0	0	0	0	0	0	0
4/22/2024	8:45 AM	0	0	0	0	0	0	0	0	0	0	0	0	0
4/22/2024	9:00 AM	0	0	0	0	0	0	0	0	0	0	0	0	0
4/22/2024	9:15 AM	0	0	0	0	0	0	0	0	0	0	0	0	0
4/22/2024	9:30 AM	0	0	0	0	0	0	0	0	0	0	0	0	0
4/22/2024	9:45 AM	0	0	0	0	0	0	0	0	0	0	0	0	0
4/22/2024	10:00 AM	0	0	0	0	0	0	0	0	0	0	0	0	0
4/22/2024	10:15 AM	0	0	0	0	0	0	0	0	0	0	0	0	0
4/22/2024	10:30 AM	0	0	0	0	0	0	0	0	0	0	0	0	0
4/22/2024	10:45 AM	0	0	0	0	0	0	0	0	0	0	0	0	0
4/22/2024	11:00 AM	0	0	0	0	0	0	0	0	0	0	0	0	0
4/22/2024	11:15 AM	0	0	0	0	0	0	0	0	0	0	0	0	0
4/22/2024	11:30 AM	0	0	0	0	0	0	0	0	0	0	0	0	0
4/22/2024	11:45 AM	0	0	0	0	0	0	0	0	0	0	0	0	0
4/22/2024	12:00 PM	0	0	0	0	0	0	0	0	0	0	0	0	0
4/22/2024	12:15 PM	0	0	0	0	0	0	0	0	0	0	0	0	0
4/22/2024	12:30 PM	0	0	0	0	0	0	0	0	0	0	0	0	0
4/22/2024	12:45 PM	0	0	0	0	0	0	0	0	0	0	0	0	0
4/22/2024	1:00 PM	0	0	0	0	0	0	0	0	0	0	0	0	0
4/22/2024	1:15 PM	0	0	0	0	0	0	0	0	0	0	0	0	0
4/22/2024	1:30 PM	0	0	0	0	0	0	0	0	0	0	0	0	0
4/22/2024	1:45 PM	0	0	0	0	0	0	0	0	0	0	0	0	0
4/22/2024	2:00 PM	0	0	0	0	0	0	0	0	0	0	0	0	0
4/22/2024	2:15 PM	0	0	0	0	0	0	0	0	0	0	0	0	0
4/22/2024	2:30 PM	0	0	0	0	0	0	0	0	0	0	0	0	0
4/22/2024	2:45 PM	0	0	0	0	0	0	0	0	0	0	0	0	0
4/22/2024	3:00 PM	0	0	0	0	0	0	0	0	0	0	0	0	0
4/22/2024	3:15 PM	0	0	0	0	0	0	0	0	0	0	0	0	0
4/22/2024	3:30 PM	0	0	0	0	0	0	0	0	0	0	0	0	0
4/22/2024	3:45 PM	0	0	0	0	0	0	0	0	0	0	0	0	0
4/22/2024	4:00 PM	0	0	0	0	0	0	0	0	0	0	0	0	0
4/22/2024	4:15 PM	0	0	0	0	0	0	0	0	0	0	0	0	0
4/22/2024	4:30 PM	0	0	0	0	0	0	0	0	0	0	0	0	0
4/22/2024	4:45 PM	0	0	0	0	0	0	0	0	0	0	0	0	0
4/22/2024	5:00 PM	0	0	0	0	0	0	0	0	0	0	0	0	0
4/22/2024	5:15 PM	0	0	0	0	0	0	0	0	0	0	0	0	0
4/22/2024	5:30 PM	0	0	0	0	0	0	0	0	0	0	0	0	0
4/22/2024	5:45 PM	0	0	0	0	0	0	0	0	0	0	0	0	0
4/22/2024	6:00 PM	0	0	0	0	0	0	0	0	0	0	0	0	0
4/22/2024	6:15 PM	0	0	0	0	0	0	0	0	0	0	0	0	0
4/22/2024	6:30 PM	0	0	0	0	0	0	0	0	0	0	0	0	0
4/22/2024	6:45 PM	0	0	0	0	0	0	0	0	0	0	0	0	0
4/22/2024	7:00 PM	0	0	0	0	0	0	0	0	0	0	0	0	0
4/22/2024	7:15 PM	0	0	0	0	0	0	0	0	0	0	0	0	0
4/22/2024	7:30 PM	0	0	0	0	0	0	0	0	0	0	0	0	0
4/22/2024	7:45 PM	0	0	0	0	0	0	0	0	0	0	0	0	0
4/22/2024	8:00 PM	0	0	0	0	0	0	0	0	0	0	0	0	0
4/22/2024	8:15 PM	0	0	0	0	0	0	0	0	0	0	0	0	0
4/22/2024	8:30 PM	0	0	0	0	0	0	0	0	0	0	0	0	0
4/22/2024	8:45 PM	0	0	0	0	0	0	0	0	0	0	0	0	0
4/22/2024	9:00 PM	0	0	0	0	0	0	0	0	0	0	0	0	0
4/22/2024	9:15 PM	0	0	0	0	0	0	0	0	0	0	0	0	0
4/22/2024	9:30 PM	0	0	0	0	0	0	0	0	0	0	0	0	0
4/22/2024	9:45 PM	0	0	0	0	0	0	0	0	0	0	0	0	0
4/22/2024	10:00 PM	0	0	0	0	0	0	0	0	0	0	0	0	0
4/22/2024	10:15 PM	0	0	0	0	0	0	0	0	0	0	0	0	0
4/22/2024	10:30 PM	0	0	0	0	0	0	0	0	0	0	0	0	0
4/22/2024	10:45 PM	0	0	0	0	0	0	0	0	0	0	0	0	0
4/22/2024	11:00 PM	0	0	0	0	0	0	0	0	0	0	0	0	0
4/22/2024	11:15 PM	0	0	0	0	0	0	0	0	0	0	0	0	0
4/22/2024	11:30 PM	0	0	0	0	0	0	0	0	0	0	0	0	0
4/22/2024	11:45 PM	0	0	0	0	0	0	0	0	0	0	0	0	0

4/23/2024	12:00 AM	0	0	0	0	0	0	0	0	0	0	0	0	0
4/23/2024	12:15 AM	0	0	0	0	0	0	0	0	0	0	0	0	0
4/23/2024	12:30 AM	0	0	0	0	0	0	0	0	0	0	0	0	0
4/23/2024	12:45 AM	0	0	0	0	0	0	0	0	0	0	0	0	0
4/23/2024	1:00 AM	0	0	0	0	0	0	0	0	0	0	0	0	0
4/23/2024	1:15 AM	0	0	0	0	0	0	0	0	0	0	0	0	0
4/23/2024	1:30 AM	0	0	0	0	0	0	0	0	0	0	0	0	0
4/23/2024	1:45 AM	0	0	0	0	0	0	0	0	0	0	0	0	0
4/23/2024	2:00 AM	0	0	0	0	0	0	0	0	0	0	0	0	0
4/23/2024	2:15 AM	0	0	0	0	0	0	0	0	0	0	0	0	0
4/23/2024	2:30 AM	0	0	0	0	0	0	0	0	0	0	0	0	0
4/23/2024	2:45 AM	0	0	0	0	0	0	0	0	0	0	0	0	0
4/23/2024	3:00 AM	0	0	0	0	0	0	0	0	0	0	0	0	0
4/23/2024	3:15 AM	0	0	0	0	0	0	0	0	0	0	0	0	0
4/23/2024	3:30 AM	0	0	0	0	0	0	0	0	0	0	0	0	0
4/23/2024	3:45 AM	0	0	0	0	0	0	0	0	0	0	0	0	0
4/23/2024	4:00 AM	0	0	0	0	0	0	0	0	0	0	0	0	0
4/23/2024	4:15 AM	0	0	0	0	0	0	0	0	0	0	0	0	0
4/23/2024	4:30 AM	0	0	0	0	0	0	0	0	0	0	0	0	0
4/23/2024	4:45 AM	0	0	0	0	0	0	0	0	0	0	0	0	0
4/23/2024	5:00 AM	0	0	0	0	0	0	0	0	0	0	0	0	0
4/23/2024	5:15 AM	0	0	0	0	0	0	0	0	0	0	0	0	0
4/23/2024	5:30 AM	0	0	0	0	0	0	0	0	0	0	0	0	0
4/23/2024	5:45 AM	0	0	0	0	0	0	0	0	0	0	0	0	0
4/23/2024	6:00 AM	0	0	0	0	0	0	0	0	0	0	0	0	0
4/23/2024	6:15 AM	0	0	0	0	0	0	0	0	0	0	0	0	0
4/23/2024	6:30 AM	0	0	0	0	0	0	0	0	0	0	0	0	0
4/23/2024	6:45 AM	0	0	0	0	0	0	0	0	0	0	0	0	0
4/23/2024	7:00 AM	0	0	0	0	0	0	0	0	0	0	0	0	0
4/23/2024	7:15 AM	0	0	0	0	0	0	0	0	0	0	0	0	0
4/23/2024	7:30 AM	0	0	0	0	0	0	0	0	0	0	0	0	0
4/23/2024	7:45 AM	0	0	0	0	0	0	0	0	0	0	0	0	0
4/23/2024	8:00 AM	0	0	0	0	0	0	0	0	0	0	0	0	0
4/23/2024	8:15 AM	0	0	0	0	0	0	0	0	0	0	0	0	0
4/23/2024	8:30 AM	0	0	0	0	0	0	0	0	0	0	0	0	0
4/23/2024	8:45 AM	0	0	0	0	0	0	0	0	0	0	0	0	0
4/23/2024	9:00 AM	0	0	0	0	0	0	0	0	0	0	0	0	0
4/23/2024	9:15 AM	0	0	0	0	0	0	0	0	0	0	0	0	0
4/23/2024	9:30 AM	0	0	0	0	0	0	0	0	0	0	0	0	0
4/23/2024	9:45 AM	0	0	0	0	0	0	0	0	0	0	0	0	0
4/23/2024	10:00 AM	0	0	0	0	0	0	0	0	0	0	0	0	0
4/23/2024	10:15 AM	0	0	0	0	0	0	0	0	0	0	0	0	0
4/23/2024	10:30 AM	0	0	0	0	0	0	0	0	0	0	0	0	0
4/23/2024	10:45 AM	0	0	0	0	0	0	0	0	0	0	0	0	0
4/23/2024	11:00 AM	0	0	0	0	0	0	0	0	0	0	0	0	0
4/23/2024	11:15 AM	0	0	0	0	0	0	0	0	0	0	0	0	0
4/23/2024	11:30 AM	0	0	0	0	0	0	0	0	0	0	0	0	0
4/23/2024	11:45 AM	0	0	0	0	0	0	0	0	0	0	0	0	0
4/23/2024	12:00 PM	0	0	0	0	0	0	0	0	0	0	0	0	0
4/23/2024	12:15 PM	0	0	0	0	0	0	0	0	0	0	0	0	0
4/23/2024	12:30 PM	0	0	0	0	0	0	0	0	0	0	0	0	0
4/23/2024	12:45 PM	0	0	0	0	0	0	0	0	0	0	0	0	0
4/23/2024	1:00 PM	0	0	0	0	0	0	0	0	0	0	0	0	0
4/23/2024	1:15 PM	0	0	0	0	0	0	0	0	0	0	0	0	0
4/23/2024	1:30 PM	0	0	0	0	0	0	0	0	0	0	0	0	0
4/23/2024	1:45 PM	0	0	0	0	0	0	0	0	0	0	0	0	0
4/23/2024	2:00 PM	0	0	0	0	0	0	0	0	0	0	0	0	0
4/23/2024	2:15 PM	0	0	0	0	0	0	0	0	0	0	0	0	0
4/23/2024	2:30 PM	0	0	0	0	0	0	0	0	0	0	0	0	0
4/23/2024	2:45 PM	0	0	0	0	0	0	0	0	0	0	0	0	0
4/23/2024	3:00 PM	0	0	0	0	0	0	0	0	0	0	0	0	0
4/23/2024	3:15 PM	0	0	0	0	0	0	0	0	0	0	0	0	0
4/23/2024	3:30 PM	0	0	0	0	0	0	0	0	0	0	0	0	0
4/23/2024	3:45 PM	0	0	0	0	0	0	0	0	0	0	0	0	0
4/23/2024	4:00 PM	0	0	0	0	0	0	0	0	0	0	0	0	0
4/23/2024	4:15 PM	0	0	0	0	0	0	0	0	0	0	0	0	0
4/23/2024	4:30 PM	0	0	0	0	0	0	0	0	0	0	0	0	0
4/23/2024	4:45 PM	0	0	0	0	0	0	0	0	0	0	0	0	0
4/23/2024	5:00 PM	0	0	0	0	0	0	0	0	0	0	0	0	0
4/23/2024	5:15 PM	0	0	0	0	0	0	0	0	0	0	0	0	0
4/23/2024	5:30 PM	0	0	0	0	0	0	0	0	0	0	0	0	0
4/23/2024	5:45 PM	0	0	0	0	0	0	0	0	0	0	0	0	0
4/23/2024	6:00 PM	0	0	0	0	0	0	0	0	0	0	0	0	0
4/23/2024	6:15 PM	0	0	0	0	0	0	0	0	0	0	0	0	0
4/23/2024	6:30 PM	0	0	0	0	0	0	0	0	0	0	0	0	0
4/23/2024	6:45 PM	0	0	0	0	0	0	0	0	0	0	0	0	0
4/23/2024	7:00 PM	0	0	0	0	0	0	0	0	0	0	0	0	0
4/23/2024	7:15 PM	0	0	0	0	0	0	0	0	0	0	0	0	0
4/23/2024	7:30 PM	0	0	0	0	0	0	0	0	0	0	0	0	0
4/23/2024	7:45 PM	0	0	0	0	0	0	0	0	0	0	0	0	0
4/23/2024	8:00 PM	0	0	0	0	0	0	0	0	0	0	0	0	0
4/23/2024	8:15 PM	0	0	0	0	0	0	0	0	0	0	0	0	0
4/23/2024	8:30 PM	0	0	0	0	0	0	0	0	0	0	0	0	0
4/23/2024	8:45 PM	0	0	0	0	0	0	0	0	0	0	0	0	0
4/23/2024	9:00 PM	0	0	0	0	0	0	0	0	0	0	0	0	0
4/23/2024	9:15 PM	0	0	0	0	0	0	0	0	0	0	0	0	0
4/23/2024	9:30 PM	0	0	0	0	0	0	0	0	0	0	0	0	0
4/23/2024	9:45 PM	0	0	0	0	0	0	0	0	0	0	0	0	0
4/23/2024	10:00 PM	0	0	0	0	0	0	0	0	0	0	0	0	0
4/23/2024	10:15 PM	0	0	0	0	0	0	0	0	0	0	0	0	0
4/23/2024	10:30 PM	0	0	0	0	0	0	0	0	0	0	0	0	0
4/23/2024	10:45 PM	0	0	0	0	0	0	0	0	0	0	0	0	0
4/23/2024	11:00 PM	0	0	0	0	0	0	0	0	0	0	0	0	0
4/23/2024	11:15 PM	0	0	0	0	0	0	0	0	0	0	0	0	0
4/23/2024	11:30 PM	0	0	0	0	0	0	0	0	0	0	0	0	0
4/23/2024	11:45 PM	0	0	0	0	0	0	0	0	0	0	0	0	0

4/24/2024	12:00 AM	0	0	0	0	0	0	0	0	0	0	0	0	0
4/24/2024	12:15 AM	0	0	0	0	0	0	0	0	0	0	0	0	0
4/24/2024	12:30 AM	0	0	0	0	0	0	0	0	0	0	0	0	0
4/24/2024	12:45 AM	0	0	0	0	0	0	0	0	0	0	0	0	0
4/24/2024	1:00 AM	0	0	0	0	0	0	0	0	0	0	0	0	0
4/24/2024	1:15 AM	0	0	0	0	0	0	0	0	0	0	0	0	0
4/24/2024	1:30 AM	0	0	0	0	0	0	0	0	0	0	0	0	0
4/24/2024	1:45 AM	0	0	0	0	0	0	0	0	0	0	0	0	0
4/24/2024	2:00 AM	0	0	0	0	0	0	0	0	0	0	0	0	0
4/24/2024	2:15 AM	0	0	0	0	0	0	0	0	0	0	0	0	0
4/24/2024	2:30 AM	0	0	0	0	0	0	0	0	0	0	0	0	0
4/24/2024	2:45 AM	0	0	0	0	0	0	0	0	0	0	0	0	0
4/24/2024	3:00 AM	0	0	0	0	0	0	0	0	0	0	0	0	0
4/24/2024	3:15 AM	0	0	0	0	0	0	0	0	0	0	0	0	0
4/24/2024	3:30 AM	0	0	0	0	0	0	0	0	0	0	0	0	0
4/24/2024	3:45 AM	0	0	0	0	0	0	0	0	0	0	0	0	0
4/24/2024	4:00 AM	0	0	0	0	0	0	0	0	0	0	0	0	0
4/24/2024	4:15 AM	0	0	0	0	0	0	0	0	0	0	0	0	0
4/24/2024	4:30 AM	0	0	0	0	0	0	0	0	0	0	0	0	0
4/24/2024	4:45 AM	0	0	0	0	0	0	0	0	0	0	0	0	0
4/24/2024	5:00 AM	0	0	0	0	0	0	0	0	0	0	0	0	0
4/24/2024	5:15 AM	0	0	0	0	0	0	0	0	0	0	0	0	0
4/24/2024	5:30 AM	0	0	0	0	0	0	0	0	0	0	0	0	0
4/24/2024	5:45 AM	0	0	0	0	0	0	0	0	0	0	0	0	0
4/24/2024	6:00 AM	0	0	0	0	0	0	0	0	0	0	0	0	0
4/24/2024	6:15 AM	0	0	0	0	0	0	0	0	0	0	0	0	0
4/24/2024	6:30 AM	0	0	0	0	0	0	0	0	0	0	0	0	0
4/24/2024	6:45 AM	0	0	0	0	0	0	0	0	0	0	0	0	0
4/24/2024	7:00 AM	0	0	0	0	0	0	0	0	0	0	0	0	0
4/24/2024	7:15 AM	0	0	0	0	0	0	0	0	0	0	0	0	0
4/24/2024	7:30 AM	0	0	0	0	0	0	0	0	0	0	0	0	0
4/24/2024	7:45 AM	0	0	0	0	0	0	0	0	0	0	0	0	0
4/24/2024	8:00 AM	0	0	0	0	0	0	0	0	0	0	0	0	0
4/24/2024	8:15 AM	0	0	0	0	0	0	0	0	0	0	0	0	0
4/24/2024	8:30 AM	0	0	0	0	0	0	0	0	0	0	0	0	0
4/24/2024	8:45 AM	0	0	0	0	0	0	0	0	0	0	0	0	0
4/24/2024	9:00 AM	0	0	0	0	0	0	0	0	0	0	0	0	0
4/24/2024	9:15 AM	0	0	0	0	0	0	0	0	0	0	0	0	0
4/24/2024	9:30 AM	0	0	0	0	0	0	0	0	0	0	0	0	0
4/24/2024	9:45 AM	0	0	0	0	0	0	0	0	0	0	0	0	0
4/24/2024	10:00 AM	0	0	0	0	0	0	0	0	0	0	0	0	0
4/24/2024	10:15 AM	0	0	0	0	0	0	0	0	0	0	0	0	0
4/24/2024	10:30 AM	0	0	0	0	0	0	0	0	0	0	0	0	0
4/24/2024	10:45 AM	0	0	0	0	0	0	0	0	0	0	0	0	0
4/24/2024	11:00 AM	0	0	0	0	0	0	0	0	0	0	0	0	0
4/24/2024	11:15 AM	0	0	0	0	0	0	0	0	0	0	0	0	0
4/24/2024	11:30 AM	0	0	0	0	0	0	0	0	0	0	0	0	0
4/24/2024	11:45 AM	0	0	0	0	0	0	0	0	0	0	0	0	0
4/24/2024	12:00 PM	0	0	0	0	0	0	0	0	0	0	0	0	0
4/24/2024	12:15 PM	0	0	0	0	0	0	0	0	0	0	0	0	0
4/24/2024	12:30 PM	0	0	0	0	0	0	0	0	0	0	0	0	0
4/24/2024	12:45 PM	0	0	0	0	0	0	0	0	0	0	0	0	0
4/24/2024	1:00 PM	0	0	0	0	0	0	0	0	0	0	0	0	0
4/24/2024	1:15 PM	0	0	0	0	0	0	0	0	0	0	0	0	0
4/24/2024	1:30 PM	0	0	0	0	0	0	0	0	0	0	0	0	0
4/24/2024	1:45 PM	0	0	0	0	0	0	0	0	0	0	0	0	0
4/24/2024	2:00 PM	0	0	0	0	0	0	0	0	0	0	0	0	0
4/24/2024	2:15 PM	0	0	0	0	0	0	0	0	0	0	0	0	0
4/24/2024	2:30 PM	0	0	0	0	0	0	0	0	0	0	0	0	0
4/24/2024	2:45 PM	0	0	0	0	0	0	0	0	0	0	0	0	0
4/24/2024	3:00 PM	0	0	0	0	0	0	0	0	0	0	0	0	0
4/24/2024	3:15 PM	0	0	0	0	0	0	0	0	0	0	0	0	0
4/24/2024	3:30 PM	0	0	0	0	0	0	0	0	0	0	0	0	0
4/24/2024	3:45 PM	0	0	0	0	0	0	0	0	0	0	0	0	0
4/24/2024	4:00 PM	0	0	0	0	0	0	0	0	0	0	0	0	0
4/24/2024	4:15 PM	0	0	0	0	0	0	0	0	0	0	0	0	0
4/24/2024	4:30 PM	0	0	0	0	0	0	0	0	0	0	0	0	0
4/24/2024	4:45 PM	0	0	0	0	0	0	0	0	0	0	0	0	0
4/24/2024	5:00 PM	0	0	0	0	0	0	0	0	0	0	0	0	0
4/24/2024	5:15 PM	0	0	0	0	0	0	0	0	0	0	0	0	0
4/24/2024	5:30 PM	0	0	0	0	0	0	0	0	0	0	0	0	0
4/24/2024	5:45 PM	0	0	0	0	0	0	0	0	0	0	0	0	0
4/24/2024	6:00 PM	0	0	0	0	0	0	0	0	0	0	0	0	0
4/24/2024	6:15 PM	0	0	0	0	0	0	0	0	0	0	0	0	0
4/24/2024	6:30 PM	0	0	0	0	0	0	0	0	0	0	0	0	0
4/24/2024	6:45 PM	0	0	0	0	0	0	0	0	0	0	0	0	0
4/24/2024	7:00 PM	0	0	0	0	0	0	0	0	0	0	0	0	0
4/24/2024	7:15 PM	0	0	0	0	0	0	0	0	0	0	0	0	0
4/24/2024	7:30 PM	0	0	0	0	0	0	0	0	0	0	0	0	0
4/24/2024	7:45 PM	0	0	0	0	0	0	0	0	0	0	0	0	0
4/24/2024	8:00 PM	0	0	0	0	0	0	0	0	0	0	0	0	0
4/24/2024	8:15 PM	0	0	0	0	0	0	0	0	0	0	0	0	0
4/24/2024	8:30 PM	0	0	0	0	0	0	0	0	0	0	0	0	0
4/24/2024	8:45 PM	0	0	0	0	0	0	0	0	0	0	0	0	0
4/24/2024	9:00 PM	0	0	0	0	0	0	0	0	0	0	0	0	0
4/24/2024	9:15 PM	0	0	0	0	0	0	0	0	0	0	0	0	0
4/24/2024	9:30 PM	0	0	0	0	0	0	0	0	0	0	0	0	0
4/24/2024	9:45 PM	0	0	0	0	0	0	0	0	0	0	0	0	0
4/24/2024	10:00 PM	0	0	0	0	0	0	0	0	0	0	0	0	0
4/24/2024	10:15 PM	0	0	0	0	0	0	0	0	0	0	0	0	0
4/24/2024	10:30 PM	0	0	0	0	0	0	0	0	0	0	0	0	0
4/24/2024	10:45 PM	0	0	0	0	0	0	0	0	0	0	0	0	0
4/24/2024	11:00 PM	0	0	0	0	0	0	0	0	0	0	0	0	0
4/24/2024	11:15 PM	0	0	0	0	0	0	0	0	0	0	0	0	0
4/24/2024	11:30 PM	0	0	0	0	0	0	0	0	0	0	0	0	0
4/24/2024	11:45 PM	0	0	0	0	0	0	0	0	0	0	0	0	0

4/25/2024	12:00 AM	0	0	0	0	0	0	0	0	0	0	0	0	0
4/25/2024	12:15 AM	0	0	0	0	0	0	0	0	0	0	0	0	0
4/25/2024	12:30 AM	0	0	0	0	0	0	0	0	0	0	0	0	0
4/25/2024	12:45 AM	0	0	0	0	0	0	0	0	0	0	0	0	0
4/25/2024	1:00 AM	0	0	0	0	0	0	0	0	0	0	0	0	0
4/25/2024	1:15 AM	0	0	0	0	0	0	0	0	0	0	0	0	0
4/25/2024	1:30 AM	0	0	0	0	0	0	0	0	0	0	0	0	0
4/25/2024	1:45 AM	0	0	0	0	0	0	0	0	0	0	0	0	0
4/25/2024	2:00 AM	0	0	0	0	0	0	0	0	0	0	0	0	0
4/25/2024	2:15 AM	0	0	0	0	0	0	0	0	0	0	0	0	0
4/25/2024	2:30 AM	0	0	0	0	0	0	0	0	0	0	0	0	0
4/25/2024	2:45 AM	0	0	0	0	0	0	0	0	0	0	0	0	0
4/25/2024	3:00 AM	0	0	0	0	0	0	0	0	0	0	0	0	0
4/25/2024	3:15 AM	0	0	0	0	0	0	0	0	0	0	0	0	0
4/25/2024	3:30 AM	0	0	0	0	0	0	0	0	0	0	0	0	0
4/25/2024	3:45 AM	0	0	0	0	0	0	0	0	0	0	0	0	0
4/25/2024	4:00 AM	0	0	0	0	0	0	0	0	0	0	0	0	0
4/25/2024	4:15 AM	0	0	0	0	0	0	0	0	0	0	0	0	0
4/25/2024	4:30 AM	0	0	0	0	0	0	0	0	0	0	0	0	0
4/25/2024	4:45 AM	0	0	0	0	0	0	0	0	0	0	0	0	0
4/25/2024	5:00 AM	0	0	0	0	0	0	0	0	0	0	0	0	0
4/25/2024	5:15 AM	0	0	0	0	0	0	0	0	0	0	0	0	0
4/25/2024	5:30 AM	0	0	0	0	0	0	0	0	0	0	0	0	0
4/25/2024	5:45 AM	0	0	0	0	0	0	0	0	0	0	0	0	0
4/25/2024	6:00 AM	0	0	0	0	0	0	0	0	0	0	0	0	0
4/25/2024	6:15 AM	0	0	0	0	0	0	0	0	0	0	0	0	0
4/25/2024	6:30 AM	0	0	0	0	0	0	0	0	0	0	0	0	0
4/25/2024	6:45 AM	0	0	0	0	0	0	0	0	0	0	0	0	0
4/25/2024	7:00 AM	0	0	0	0	0	0	0	0	0	0	0	0	0
4/25/2024	7:15 AM	0	0	0	0	0	0	0	0	0	0	0	0	0
4/25/2024	7:30 AM	0	0	0	0	0	0	0	0	0	0	0	0	0
4/25/2024	7:45 AM	0	0	0	0	0	0	0	0	0	0	0	0	0
4/25/2024	8:00 AM	0	0	0	0	0	0	0	0	0	0	0	0	0
4/25/2024	8:15 AM	0	0	0	0	0	0	0	0	0	0	0	0	0
4/25/2024	8:30 AM	0	0	0	0	0	0	0	0	0	0	0	0	0
4/25/2024	8:45 AM	0	0	0	0	0	0	0	0	0	0	0	0	0
4/25/2024	9:00 AM	0	0	0	0	0	0	0	0	0	0	0	0	0
4/25/2024	9:15 AM	0	0	0	0	0	0	0	0	0	0	0	0	0
4/25/2024	9:30 AM	0	0	0	0	0	0	0	0	0	0	0	0	0
4/25/2024	9:45 AM	0	0	0	0	0	0	0	0	0	0	0	0	0
4/25/2024	10:00 AM	0	0	0	0	0	0	0	0	0	0	0	0	0
4/25/2024	10:15 AM	0	0	0	0	0	0	0	0	0	0	0	0	0
4/25/2024	10:30 AM	0	0	0	0	0	0	0	0	0	0	0	0	0
4/25/2024	10:45 AM	0	0	0	0	0	0	0	0	0	0	0	0	0
4/25/2024	11:00 AM	0	0	0	0	0	0	0	0	0	0	0	0	0
4/25/2024	11:15 AM	0	0	0	0	0	0	0	0	0	0	0	0	0
4/25/2024	11:30 AM	0	0	0	0	0	0	0	0	0	0	0	0	0
4/25/2024	11:45 AM	0	0	0	0	0	0	0	0	0	0	0	0	0
4/25/2024	12:00 PM	0	0	0	0	0	0	0	0	0	0	0	0	0
4/25/2024	12:15 PM	0	0	0	0	0	0	0	0	0	0	0	0	0
4/25/2024	12:30 PM	0	0	0	0	0	0	0	0	0	0	0	0	0
4/25/2024	12:45 PM	0	0	0	0	0	0	0	0	0	0	0	0	0
4/25/2024	1:00 PM	0	0	0	0	0	0	0	0	0	0	0	0	0
4/25/2024	1:15 PM	0	0	0	0	0	0	0	0	0	0	0	0	0
4/25/2024	1:30 PM	0	0	0	0	0	0	0	0	0	0	0	0	0
4/25/2024	1:45 PM	0	0	0	0	0	0	0	0	0	0	0	0	0
4/25/2024	2:00 PM	0	0	0	0	0	0	0	0	0	0	0	0	0
4/25/2024	2:15 PM	0	0	0	0	0	0	0	0	0	0	0	0	0
4/25/2024	2:30 PM	0	0	0	0	0	0	0	0	0	0	0	0	0
4/25/2024	2:45 PM	0	0	0	0	0	0	0	0	0	0	0	0	0
4/25/2024	3:00 PM	0	0	0	0	0	0	0	0	0	0	0	0	0
4/25/2024	3:15 PM	0	0	0	0	0	0	0	0	0	0	0	0	0
4/25/2024	3:30 PM	0	0	0	0	0	0	0	0	0	0	0	0	0
4/25/2024	3:45 PM	0	0	0	0	0	0	0	0	0	0	0	0	0
4/25/2024	4:00 PM	0	0	0	0	0	0	0	0	0	0	0	0	0
4/25/2024	4:15 PM	0	0	0	0	0	0	0	0	0	0	0	0	0
4/25/2024	4:30 PM	0	0	0	0	0	0	0	0	0	0	0	0	0
4/25/2024	4:45 PM	0	0	0	0	0	0	0	0	0	0	0	0	0
4/25/2024	5:00 PM	0	0	0	0	0	0	0	0	0	0	0	0	0
4/25/2024	5:15 PM	0	0	0	0	0	0	0	0	0	0	0	0	0
4/25/2024	5:30 PM	0	0	0	0	0	0	0	0	0	0	0	0	0
4/25/2024	5:45 PM	0	0	0	0	0	0	0	0	0	0	0	0	0
4/25/2024	6:00 PM	0	0	0	0	0	0	0	0	0	0	0	0	0
4/25/2024	6:15 PM	0	0	0	0	0	0	0	0	0	0	0	0	0
4/25/2024	6:30 PM	0	0	0	0	0	0	0	0	0	0	0	0	0
4/25/2024	6:45 PM	0	0	0	0	0	0	0	0	0	0	0	0	0
4/25/2024	7:00 PM	0	0	0	0	0	0	0	0	0	0	0	0	0
4/25/2024	7:15 PM	0	0	0	0	0	0	0	0	0	0	0	0	0
4/25/2024	7:30 PM	0	0	0	0	0	0	0	0	0	0	0	0	0
4/25/2024	7:45 PM	0	0	0	0	0	0	0	0	0	0	0	0	0
4/25/2024	8:00 PM	0	0	0	0	0	0	0	0	0	0	0	0	0
4/25/2024	8:15 PM	0	0	0	0	0	0	0	0	0	0	0	0	0
4/25/2024	8:30 PM	0	0	0	0	0	0	0	0	0	0	0	0	0
4/25/2024	8:45 PM	0	0	0	0	0	0	0	0	0	0	0	0	0
4/25/2024	9:00 PM	0	0	0	0	0	0	0	0	0	0	0	0	0
4/25/2024	9:15 PM	0	0	0	0	0	0	0	0	0	0	0	0	0
4/25/2024	9:30 PM	0	0	0	0	0	0	0	0	0	0	0	0	0
4/25/2024	9:45 PM	0	0	0	0	0	0	0	0	0	0	0	0	0
4/25/2024	10:00 PM	0	0	0	0	0	0	0	0	0	0	0	0	0
4/25/2024	10:15 PM	0	0	0	0	0	0	0	0	0	0	0	0	0
4/25/2024	10:30 PM	0	0	0	0	0	0	0	0	0	0	0	0	0
4/25/2024	10:45 PM	0	0	0	0	0	0	0	0	0	0	0	0	0
4/25/2024	11:00 PM	0	0	0	0	0	0	0	0	0	0	0	0	0
4/25/2024	11:15 PM	0	0	0	0	0	0	0	0	0	0	0	0	0
4/25/2024	11:30 PM	0	0	0	0	0	0	0	0	0	0	0	0	0
4/25/2024	11:45 PM	0	0	0	0	0	0	0	0	0	0	0	0	0

4/26/2024	12:00 AM	0	0	0	0	0	0	0	0	0	0	0	0	0
4/26/2024	12:15 AM	0	0	0	0	0	0	0	0	0	0	0	0	0
4/26/2024	12:30 AM	0	0	0	0	0	0	0	0	0	0	0	0	0
4/26/2024	12:45 AM	0	0	0	0	0	0	0	0	0	0	0	0	0
4/26/2024	1:00 AM	0	0	0	0	0	0	0	0	0	0	0	0	0
4/26/2024	1:15 AM	0	0	0	0	0	0	0	0	0	0	0	0	0
4/26/2024	1:30 AM	0	0	0	0	0	0	0	0	0	0	0	0	0
4/26/2024	1:45 AM	0	0	0	0	0	0	0	0	0	0	0	0	0
4/26/2024	2:00 AM	0	0	0	0	0	0	0	0	0	0	0	0	0
4/26/2024	2:15 AM	0	0	0	0	0	0	0	0	0	0	0	0	0
4/26/2024	2:30 AM	0	0	0	0	0	0	0	0	0	0	0	0	0
4/26/2024	2:45 AM	0	0	0	0	0	0	0	0	0	0	0	0	0
4/26/2024	3:00 AM	0	0	0	0	0	0	0	0	0	0	0	0	0
4/26/2024	3:15 AM	0	0	0	0	0	0	0	0	0	0	0	0	0
4/26/2024	3:30 AM	0	0	0	0	0	0	0	0	0	0	0	0	0
4/26/2024	3:45 AM	0	0	0	0	0	0	0	0	0	0	0	0	0
4/26/2024	4:00 AM	0	0	0	0	0	0	0	0	0	0	0	0	0
4/26/2024	4:15 AM	0	0	0	0	0	0	0	0	0	0	0	0	0
4/26/2024	4:30 AM	0	0	0	0	0	0	0	0	0	0	0	0	0
4/26/2024	4:45 AM	0	0	0	0	0	0	0	0	0	0	0	0	0
4/26/2024	5:00 AM	0	0	0	0	0	0	0	0	0	0	0	0	0
4/26/2024	5:15 AM	0	0	0	0	0	0	0	0	0	0	0	0	0
4/26/2024	5:30 AM	0	0	0	0	0	0	0	0	0	0	0	0	0
4/26/2024	5:45 AM	0	0	0	0	0	0	0	0	0	0	0	0	0
4/26/2024	6:00 AM	0	0	0	0	0	0	0	0	0	0	0	0	0
4/26/2024	6:15 AM	0	0	0	0	0	0	0	0	0	0	0	0	0
4/26/2024	6:30 AM	0	0	0	0	0	0	0	0	0	0	0	0	0
4/26/2024	6:45 AM	0	0	0	0	0	0	0	0	0	0	0	0	0
4/26/2024	7:00 AM	0	0	0	0	0	0	0	0	0	0	0	0	0
4/26/2024	7:15 AM	0	0	0	0	0	0	0	0	0	0	0	0	0
4/26/2024	7:30 AM	0	0	0	0	0	0	0	0	0	0	0	0	0
4/26/2024	7:45 AM	0	0	0	0	0	0	0	0	0	0	0	0	0
4/26/2024	8:00 AM	0	0	0	0	0	0	0	0	0	0	0	0	0
4/26/2024	8:15 AM	0	0	0	0	0	0	0	0	0	0	0	0	0
4/26/2024	8:30 AM	0	0	0	0	0	0	0	0	0	0	0	0	0
4/26/2024	8:45 AM	0	0	0	0	0	0	0	0	0	0	0	0	0
4/26/2024	9:00 AM	0	0	0	0	0	0	0	0	0	0	0	0	0
4/26/2024	9:15 AM	0	0	0	0	0	0	0	0	0	0	0	0	0
4/26/2024	9:30 AM	0	0	0	0	0	0	0	0	0	0	0	0	0
4/26/2024	9:45 AM	0	0	0	0	0	0	0	0	0	0	0	0	0
4/26/2024	10:00 AM	0	0	0	0	0	0	0	0	0	0	0	0	0
4/26/2024	10:15 AM	0	0	0	0	0	0	0	0	0	0	0	0	0
4/26/2024	10:30 AM	0	0	0	0	0	0	0	0	0	0	0	0	0
4/26/2024	10:45 AM	0	0	0	0	0	0	0	0	0	0	0	0	0
4/26/2024	11:00 AM	0	0	0	0	0	0	0	0	0	0	0	0	0
4/26/2024	11:15 AM	0	0	0	0	0	0	0	0	0	0	0	0	0
4/26/2024	11:30 AM	0	0	0	0	0	0	0	0	0	0	0	0	0
4/26/2024	11:45 AM	0	0	0	0	0	0	0	0	0	0	0	0	0
4/26/2024	12:00 PM	0	0	0	0	0	0	0	0	0	0	0	0	0
4/26/2024	12:15 PM	0	0	0	0	0	0	0	0	0	0	0	0	0
4/26/2024	12:30 PM	0	0	0	0	0	0	0	0	0	0	0	0	0
4/26/2024	12:45 PM	0	0	0	0	0	0	0	0	0	0	0	0	0
4/26/2024	1:00 PM	0	0	0	0	0	0	0	0	0	0	0	0	0
4/26/2024	1:15 PM	0	0	0	0	0	0	0	0	0	0	0	0	0
4/26/2024	1:30 PM	0	0	0	0	0	0	0	0	0	0	0	0	0
4/26/2024	1:45 PM	0	0	0	0	0	0	0	0	0	0	0	0	0
4/26/2024	2:00 PM	0	0	0	0	0	0	0	0	0	0	0	0	0
4/26/2024	2:15 PM	0	0	0	0	0	0	0	0	0	0	0	0	0
4/26/2024	2:30 PM	0	0	0	0	0	0	0	0	0	0	0	0	0
4/26/2024	2:45 PM	0	0	0	0	0	0	0	0	0	0	0	0	0
4/26/2024	3:00 PM	0	0	0	0	0	0	0	0	0	0	0	0	0
4/26/2024	3:15 PM	0	0	0	0	0	0	0	0	0	0	0	0	0
4/26/2024	3:30 PM	0	0	0	0	0	0	0	0	0	0	0	0	0
4/26/2024	3:45 PM	0	0	0	0	0	0	0	0	0	0	0	0	0
4/26/2024	4:00 PM	0	0	0	0	0	0	0	0	0	0	0	0	0
4/26/2024	4:15 PM	0	0	0	0	0	0	0	0	0	0	0	0	0
4/26/2024	4:30 PM	0	0	0	0	0	0	0	0	0	0	0	0	0
4/26/2024	4:45 PM	0	0	0	0	0	0	0	0	0	0	0	0	0
4/26/2024	5:00 PM	0	0	0	0	0	0	0	0	0	0	0	0	0
4/26/2024	5:15 PM	0	0	0	0	0	0	0	0	0	0	0	0	0
4/26/2024	5:30 PM	0	0	0	0	0	0	0	0	0	0	0	0	0
4/26/2024	5:45 PM	0	0	0	0	0	0	0	0	0	0	0	0	0
4/26/2024	6:00 PM	0	0	0	0	0	0	0	0	0	0	0	0	0
4/26/2024	6:15 PM	0	0	0	0	0	0	0	0	0	0	0	0	0
4/26/2024	6:30 PM	0	0	0	0	0	0	0	0	0	0	0	0	0
4/26/2024	6:45 PM	0	0	0	0	0	0	0	0	0	0	0	0	0
4/26/2024	7:00 PM	0	0	0	0	0	0	0	0	0	0	0	0	0
4/26/2024	7:15 PM	0	0	0	0	0	0	0	0	0	0	0	0	0
4/26/2024	7:30 PM	0	0	0	0	0	0	0	0	0	0	0	0	0
4/26/2024	7:45 PM	0	0	0	0	0	0	0	0	0	0	0	0	0
4/26/2024	8:00 PM	0	0	0	0	0	0	0	0	0	0	0	0	0
4/26/2024	8:15 PM	0	0	0	0	0	0	0	0	0	0	0	0	0
4/26/2024	8:30 PM	0	0	0	0	0	0	0	0	0	0	0	0	0
4/26/2024	8:45 PM	0	0	0	0	0	0	0	0	0	0	0	0	0
4/26/2024	9:00 PM	0	0	0	0	0	0	0	0	0	0	0	0	0
4/26/2024	9:15 PM	0	0	0	0	0	0	0	0	0	0	0	0	0
4/26/2024	9:30 PM	0	0	0	0	0	0	0	0	0	0	0	0	0
4/26/2024	9:45 PM	0	0	0	0	0	0	0	0	0	0	0	0	0
4/26/2024	10:00 PM	0	0	0	0	0	0	0	0	0	0	0	0	0
4/26/2024	10:15 PM	0	0	0	0	0	0	0	0	0	0	0	0	0
4/26/2024	10:30 PM	0	0	0	0	0	0	0	0	0	0	0	0	0
4/26/2024	10:45 PM	0	0	0	0	0	0	0	0	0	0	0	0	0
4/26/2024	11:00 PM	0	0	0	0	0	0	0	0	0	0	0	0	0
4/26/2024	11:15 PM	0	0	0	0	0	0	0	0	0	0	0	0	0
4/26/2024	11:30 PM	0	0	0	0	0	0	0	0	0	0	0	0	0
4/26/2024	11:45 PM	0	0	0	0	0	0	0	0	0	0	0	0	0

4/27/2024	12:00 AM	0	0	0	0	0	0	0	0	0	0	0	0	0
4/27/2024	12:15 AM	0	0	0	0	0	0	0	0	0	0	0	0	0
4/27/2024	12:30 AM	0	0	0	0	0	0	0	0	0	0	0	0	0
4/27/2024	12:45 AM	0	0	0	0	0	0	0	0	0	0	0	0	0
4/27/2024	1:00 AM	0	0	0	0	0	0	0	0	0	0	0	0	0
4/27/2024	1:15 AM	0	0	0	0	0	0	0	0	0	0	0	0	0
4/27/2024	1:30 AM	0	0	0	0	0	0	0	0	0	0	0	0	0
4/27/2024	1:45 AM	0	0	0	0	0	0	0	0	0	0	0	0	0
4/27/2024	2:00 AM	0	0	0	0	0	0	0	0	0	0	0	0	0
4/27/2024	2:15 AM	0	0	0	0	0	0	0	0	0	0	0	0	0
4/27/2024	2:30 AM	0	0	0	0	0	0	0	0	0	0	0	0	0
4/27/2024	2:45 AM	0	0	0	0	0	0	0	0	0	0	0	0	0
4/27/2024	3:00 AM	0	0	0	0	0	0	0	0	0	0	0	0	0
4/27/2024	3:15 AM	0	0	0	0	0	0	0	0	0	0	0	0	0
4/27/2024	3:30 AM	0	0	0	0	0	0	0	0	0	0	0	0	0
4/27/2024	3:45 AM	0	0	0	0	0	0	0	0	0	0	0	0	0
4/27/2024	4:00 AM	0	0	0	0	0	0	0	0	0	0	0	0	0
4/27/2024	4:15 AM	0	0	0	0	0	0	0	0	0	0	0	0	0
4/27/2024	4:30 AM	0	0	0	0	0	0	0	0	0	0	0	0	0
4/27/2024	4:45 AM	0	0	0	0	0	0	0	0	0	0	0	0	0
4/27/2024	5:00 AM	0	0	0	0	0	0	0	0	0	0	0	0	0
4/27/2024	5:15 AM	0	0	0	0	0	0	0	0	0	0	0	0	0
4/27/2024	5:30 AM	0	0	0	0	0	0	0	0	0	0	0	0	0
4/27/2024	5:45 AM	0	0	0	0	0	0	0	0	0	0	0	0	0
4/27/2024	6:00 AM	0	0	0	0	0	0	0	0	0	0	0	0	0
4/27/2024	6:15 AM	0	0	0	0	0	0	0	0	0	0	0	0	0
4/27/2024	6:30 AM	0	0	0	0	0	0	0	0	0	0	0	0	0
4/27/2024	6:45 AM	0	0	0	0	0	0	0	0	0	0	0	0	0
4/27/2024	7:00 AM	0	0	0	0	0	0	0	0	0	0	0	0	0
4/27/2024	7:15 AM	0	0	0	0	0	0	0	0	0	0	0	0	0
4/27/2024	7:30 AM	0	0	0	0	0	0	0	0	0	0	0	0	0
4/27/2024	7:45 AM	0	0	0	0	0	0	0	0	0	0	0	0	0
4/27/2024	8:00 AM	0	0	0	0	0	0	0	0	0	0	0	0	0
4/27/2024	8:15 AM	0	0	0	0	0	0	0	0	0	0	0	0	0
4/27/2024	8:30 AM	0	0	0	0	0	0	0	0	0	0	0	0	0
4/27/2024	8:45 AM	0	0	0	0	0	0	0	0	0	0	0	0	0
4/27/2024	9:00 AM	0	0	0	0	0	0	0	0	0	0	0	0	0
4/27/2024	9:15 AM	0	0	0	0	0	0	0	0	0	0	0	0	0
4/27/2024	9:30 AM	0	0	0	0	0	0	0	0	0	0	0	0	0
4/27/2024	9:45 AM	0	0	0	0	0	0	0	0	0	0	0	0	0
4/27/2024	10:00 AM	0	0	0	0	0	0	0	0	0	0	0	0	0
4/27/2024	10:15 AM	0	0	0	0	0	0	0	0	0	0	0	0	0
4/27/2024	10:30 AM	0	0	0	0	0	0	0	0	0	0	0	0	0
4/27/2024	10:45 AM	0	0	0	0	0	0	0	0	0	0	0	0	0
4/27/2024	11:00 AM	0	0	0	0	0	0	0	0	0	0	0	0	0
4/27/2024	11:15 AM	0	0	0	0	0	0	0	0	0	0	0	0	0
4/27/2024	11:30 AM	0	0	0	0	0	0	0	0	0	0	0	0	0
4/27/2024	11:45 AM	0	0	0	0	0	0	0	0	0	0	0	0	0
4/27/2024	12:00 PM	0	0	0	0	0	0	0	0	0	0	0	0	0
4/27/2024	12:15 PM	0	0	0	0	0	0	0	0	0	0	0	0	0
4/27/2024	12:30 PM	0	0	0	0	0	0	0	0	0	0	0	0	0
4/27/2024	12:45 PM	0	0	0	0	0	0	0	0	0	0	0	0	0
4/27/2024	1:00 PM	0	0	0	0	0	0	0	0	0	0	0	0	0
4/27/2024	1:15 PM	0	0	0	0	0	0	0	0	0	0	0	0	0
4/27/2024	1:30 PM	0	0	0	0	0	0	0	0	0	0	0	0	0
4/27/2024	1:45 PM	0	0	0	0	0	0	0	0	0	0	0	0	0
4/27/2024	2:00 PM	0	0	0	0	0	0	0	0	0	0	0	0	0
4/27/2024	2:15 PM	0	0	0	0	0	0	0	0	0	0	0	0	0
4/27/2024	2:30 PM	0	0	0	0	0	0	0	0	0	0	0	0	0
4/27/2024	2:45 PM	0	0	0	0	0	0	0	0	0	0	0	0	0
4/27/2024	3:00 PM	0	0	0	0	0	0	0	0	0	0	0	0	0
4/27/2024	3:15 PM	0	0	0	0	0	0	0	0	0	0	0	0	0
4/27/2024	3:30 PM	0	0	0	0	0	0	0	0	0	0	0	0	0
4/27/2024	3:45 PM	0	0	0	0	0	0	0	0	0	0	0	0	0
4/27/2024	4:00 PM	0	0	0	0	0	0	0	0	0	0	0	0	0
4/27/2024	4:15 PM	0	0	0	0	0	0	0	0	0	0	0	0	0
4/27/2024	4:30 PM	0	0	0	0	0	0	0	0	0	0	0	0	0
4/27/2024	4:45 PM	0	0	0	0	0	0	0	0	0	0	0	0	0
4/27/2024	5:00 PM	0	0	0	0	0	0	0	0	0	0	0	0	0
4/27/2024	5:15 PM	0	0	0	0	0	0	0	0	0	0	0	0	0
4/27/2024	5:30 PM	0	0	0	0	0	0	0	0	0	0	0	0	0
4/27/2024	5:45 PM	0	0	0	0	0	0	0	0	0	0	0	0	0
4/27/2024	6:00 PM	0	0	0	0	0	0	0	0	0	0	0	0	0
4/27/2024	6:15 PM	0	0	0	0	0	0	0	0	0	0	0	0	0
4/27/2024	6:30 PM	0	0	0	0	0	0	0	0	0	0	0	0	0
4/27/2024	6:45 PM	0	0	0	0	0	0	0	0	0	0	0	0	0
4/27/2024	7:00 PM	0	0	0	0	0	0	0	0	0	0	0	0	0
4/27/2024	7:15 PM	0	0	0	0	0	0	0	0	0	0	0	0	0
4/27/2024	7:30 PM	0	0	0	0	0	0	0	0	0	0	0	0	0
4/27/2024	7:45 PM	0	0	0	0	0	0	0	0	0	0	0	0	0
4/27/2024	8:00 PM	0	0	0	0	0	0	0	0	0	0	0	0	0
4/27/2024	8:15 PM	0	0	0	0	0	0	0	0	0	0	0	0	0
4/27/2024	8:30 PM	0	0	0	0	0	0	0	0	0	0	0	0	0
4/27/2024	8:45 PM	0	0	0	0	0	0	0	0	0	0	0	0	0
4/27/2024	9:00 PM	0	0	0	0	0	0	0	0	0	0	0	0	0
4/27/2024	9:15 PM	0	0	0	0	0	0	0	0	0	0	0	0	0
4/27/2024	9:30 PM	0	0	0	0	0	0	0	0	0	0	0	0	0
4/27/2024	9:45 PM	0	0	0	0	0	0	0	0	0	0	0	0	0
4/27/2024	10:00 PM	0	0	0	0	0	0	0	0	0	0	0	0	0
4/27/2024	10:15 PM	0	0	0	0	0	0	0	0	0	0	0	0	0
4/27/2024	10:30 PM	0	0	0	0	0	0	0	0	0	0	0	0	0
4/27/2024	10:45 PM	0	0	0	0	0	0	0	0	0	0	0	0	0
4/27/2024	11:00 PM	0	0	0	0	0	0	0	0	0	0	0	0	0
4/27/2024	11:15 PM	0	0	0	0	0	0	0	0	0	0	0	0	0
4/27/2024	11:30 PM	0	0	0	0	0	0	0	0	0	0	0	0	0
4/27/2024	11:45 PM	0	0	0	0	0	0	0	0	0	0	0	0	0

WB
File Name:
Start Date: 4/21/2024
Start Time: 0
Site Code: 74 Lane 1 WB
Station ID: 1
Location 1: I-20, west of US-378 Sunset Blvd S/Bound Off-Ramp
Location 2:

Date	Time	1	2	3	4	5	6	7	8	9	10	11	12	13
4/21/2024	12:00 AM	0	71	9	0	0	0	0	0	2	0	0	0	0
4/21/2024	12:15 AM	0	63	2	0	0	0	0	0	0	0	0	0	0
4/21/2024	12:30 AM	0	44	0	0	0	0	0	0	0	0	0	0	0
4/21/2024	12:45 AM	0	45	0	0	0	0	0	0	0	0	0	0	0
4/21/2024	1:00 AM	0	48	2	0	0	0	0	0	0	0	0	0	0
4/21/2024	1:15 AM	0	43	2	0	0	0	0	0	0	0	0	0	0
4/21/2024	1:30 AM	0	49	3	0	0	0	0	0	0	0	0	0	0
4/21/2024	1:45 AM	0	48	3	0	0	0	0	0	0	0	0	0	0
4/21/2024	2:00 AM	0	43	3	0	0	0	0	0	0	0	0	0	0
4/21/2024	2:15 AM	0	41	3	0	0	0	0	0	0	0	0	0	0
4/21/2024	2:30 AM	0	37	2	0	0	0	0	0	0	0	0	0	0
4/21/2024	2:45 AM	0	34	2	0	0	0	0	0	0	0	0	0	0
4/21/2024	3:00 AM	0	35	0	0	0	0	0	0	0	0	0	0	0
4/21/2024	3:15 AM	0	33	0	0	0	0	0	0	0	0	0	0	0
4/21/2024	3:30 AM	0	30	1	0	0	0	0	0	1	0	0	0	0
4/21/2024	3:45 AM	0	32	2	0	0	0	0	0	1	0	0	0	0
4/21/2024	4:00 AM	0	30	2	0	0	0	0	0	1	0	0	0	0
4/21/2024	4:15 AM	0	33	2	0	0	0	0	0	1	0	0	0	0
4/21/2024	4:30 AM	0	42	4	1	0	0	0	0	1	0	0	0	0
4/21/2024	4:45 AM	0	44	6	1	1	0	0	0	2	0	0	0	0
4/21/2024	5:00 AM	0	52	7	1	1	0	0	0	2	0	0	0	0
4/21/2024	5:15 AM	0	53	8	1	1	0	0	0	2	0	0	0	0
4/21/2024	5:30 AM	0	48	6	0	1	0	0	0	1	0	0	0	0
4/21/2024	5:45 AM	0	56	6	0	0	0	0	0	0	0	0	0	0
4/21/2024	6:00 AM	0	55	10	0	0	0	0	0	0	0	0	0	0
4/21/2024	6:15 AM	0	71	11	0	0	0	0	0	0	0	0	0	0
4/21/2024	6:30 AM	0	81	13	0	1	0	0	0	0	0	0	0	0
4/21/2024	6:45 AM	0	80	16	0	1	0	0	0	0	0	0	0	0
4/21/2024	7:00 AM	2	86	14	0	1	0	0	0	0	0	0	0	0
4/21/2024	7:15 AM	5	78	17	0	1	0	0	0	0	0	0	0	0
4/21/2024	7:30 AM	5	82	20	0	0	0	0	0	0	1	0	0	0
4/21/2024	7:45 AM	6	98	17	0	0	0	0	0	0	1	0	0	0
4/21/2024	8:00 AM	4	116	15	0	0	0	0	0	0	1	0	0	0
4/21/2024	8:15 AM	3	133	14	0	0	0	0	0	0	1	0	0	0
4/21/2024	8:30 AM	7	161	21	0	0	0	0	0	0	0	0	0	0
4/21/2024	8:45 AM	6	181	31	0	0	0	0	0	0	0	0	0	0
4/21/2024	9:00 AM	6	203	44	0	0	0	0	0	0	0	0	0	0
4/21/2024	9:15 AM	4	227	56	0	1	0	0	0	0	0	0	0	0
4/21/2024	9:30 AM	10	250	59	0	1	0	0	0	0	0	0	0	0
4/21/2024	9:45 AM	10	285	61	0	2	0	0	0	0	0	0	0	0
4/21/2024	10:00 AM	10	329	65	0	3	1	0	0	0	0	0	0	0
4/21/2024	10:15 AM	10	402	63	0	2	1	0	0	0	0	0	0	0
4/21/2024	10:30 AM	0	423	72	0	2	1	0	0	0	0	0	0	0
4/21/2024	10:45 AM	0	436	85	0	2	1	0	0	0	0	0	0	0
4/21/2024	11:00 AM	0	448	104	0	1	0	0	0	0	0	0	0	0
4/21/2024	11:15 AM	3	449	111	0	1	0	0	0	0	0	0	0	0
4/21/2024	11:30 AM	3	488	121	0	3	0	0	0	0	0	0	0	0
4/21/2024	11:45 AM	11	510	126	0	2	0	0	0	0	0	0	0	0
4/21/2024	12:00 PM	11	551	115	0	3	0	0	0	0	0	0	0	0
4/21/2024	12:15 PM	8	585	119	0	3	0	0	1	0	0	0	0	0
4/21/2024	12:30 PM	8	621	120	0	1	0	0	1	0	0	0	0	0
4/21/2024	12:45 PM	0	678	118	0	1	0	0	1	0	0	0	0	0
4/21/2024	1:00 PM	0	691	121	0	0	0	0	2	0	0	0	0	0
4/21/2024	1:15 PM	0	679	125	0	1	0	0	1	0	0	0	0	0
4/21/2024	1:30 PM	0	662	119	0	1	0	0	1	0	0	0	0	0
4/21/2024	1:45 PM	0	633	119	0	1	0	0	1	0	0	0	0	0
4/21/2024	2:00 PM	0	619	113	0	2	0	0	0	0	0	0	0	0
4/21/2024	2:15 PM	0	625	106	0	2	0	0	1	0	0	0	0	0
4/21/2024	2:30 PM	0	613	98	0	2	0	0	1	0	0	0	0	0
4/21/2024	2:45 PM	0	603	95	0	2	0	0	1	0	0	0	0	0
4/21/2024	3:00 PM	0	616	104	0	2	0	0	2	1	0	0	0	0
4/21/2024	3:15 PM	0	600	115	0	1	0	0	2	1	0	0	0	0
4/21/2024	3:30 PM	0	610	117	0	1	0	0	2	1	0	0	0	0
4/21/2024	3:45 PM	0	612	119	0	1	0	0	3	1	1	0	0	0
4/21/2024	4:00 PM	0	589	110	0	0	0	0	2	0	1	0	0	0
4/21/2024	4:15 PM	1	567	98	0	1	0	0	1	0	1	0	0	0
4/21/2024	4:30 PM	1	549	95	0	1	0	0	1	0	1	0	0	0
4/21/2024	4:45 PM	1	525	86	0	2	0	0	0	0	0	0	0	0
4/21/2024	5:00 PM	1	510	87	0	2	0	0	0	0	0	0	0	0
4/21/2024	5:15 PM	1	496	89	0	1	0	0	0	0	0	0	0	0
4/21/2024	5:30 PM	2	473	87	0	1	0	0	1	0	0	0	0	0
4/21/2024	5:45 PM	2	446	90	0	0	0	0	2	0	0	0	0	0
4/21/2024	6:00 PM	3	445	83	0	1	0	0	3	0	0	0	0	0
4/21/2024	6:15 PM	2	437	76	0	1	0	0	3	2	0	0	0	0
4/21/2024	6:30 PM	1	414	67	0	1	0	0	2	2	0	0	0	0
4/21/2024	6:45 PM	1	400	61	0	2	0	0	1	2	0	0	0	0
4/21/2024	7:00 PM	0	362	58	0	2	0	0	0	2	0	0	0	0
4/21/2024	7:15 PM	0	329	52	0	5	0	0	0	0	0	1	0	0
4/21/2024	7:30 PM	0	296	57	0	5	0	0	0	0	0	1	0	0
4/21/2024	7:45 PM	0	270	51	0	5	0	0	0	0	0	1	0	0
4/21/2024	8:00 PM	0	235	49	0	4	0	0	0	0	0	1	0	0
4/21/2024	8:15 PM	0	206	49	0	1	0	0	0	1	0	0	0	0
4/21/2024	8:30 PM	0	192	43	0	1	0	0	0	1	0	0	0	0
4/21/2024	8:45 PM	0	167	38	0	0	0	0	0	1	0	0	0	0
4/21/2024	9:00 PM	0	138	33	0	0	0	0	0	3	0	0	0	0
4/21/2024	9:15 PM	0	128	33	0	0	0	0	0	3	0	0	0	0
4/21/2024	9:30 PM	0	115	30	0	0	0	0	0	4	0	0	0	0
4/21/2024	9:45 PM	0	106	28	0	0	0	0	0	4	0	0	0	0
4/21/2024	10:00 PM	0	98	27	0	0	0	0	0	2	0	0	0	0
4/21/2024	10:15 PM	0	85	21	0	0	0	0	0	1	0	0	0	0
4/21/2024	10:30 PM	0	69	16	0	0	0	0	0	0	0	0	0	0
4/21/2024	10:45 PM	0	63	13	0	0	0	0	0	0	0	0	0	0
4/21/2024	11:00 PM	0	53	9	0	0	0	0	0	0	0	0	0	0
4/21/2024	11:15 PM	0	36	5	0	0	0	0	0	0	0	0	0	0
4/21/2024	11:30 PM	0	25	4	0	0	0	0	0	0	0	0	0	0
4/21/2024	11:45 PM	0	10	2	0	0	0	0	0	0	0	0	0	0

4/22/2024	12:00 AM	0	52	7	0	1	0	0	0	0	0	0	0
4/22/2024	12:15 AM	0	48	4	0	1	0	0	0	0	0	0	0
4/22/2024	12:30 AM	0	39	5	0	1	0	0	0	0	0	0	0
4/22/2024	12:45 AM	0	29	3	0	0	0	0	0	0	0	0	0
4/22/2024	1:00 AM	0	21	2	0	0	0	0	0	0	0	0	0
4/22/2024	1:15 AM	0	20	2	0	0	0	0	0	0	0	0	0
4/22/2024	1:30 AM	0	25	3	0	0	0	0	0	0	0	0	0
4/22/2024	1:45 AM	0	28	4	0	0	0	0	0	0	0	0	0
4/22/2024	2:00 AM	0	32	5	0	0	0	0	0	0	0	0	0
4/22/2024	2:15 AM	0	34	5	0	0	0	0	0	0	0	0	0
4/22/2024	2:30 AM	0	36	3	0	0	0	0	0	0	0	0	0
4/22/2024	2:45 AM	0	38	5	0	0	0	0	0	0	0	0	0
4/22/2024	3:00 AM	0	47	4	0	0	0	0	0	0	0	0	0
4/22/2024	3:15 AM	0	47	10	0	0	0	0	0	1	0	0	0
4/22/2024	3:30 AM	0	46	13	0	0	0	0	0	1	0	0	0
4/22/2024	3:45 AM	0	48	13	0	1	0	0	0	1	0	0	0
4/22/2024	4:00 AM	0	46	14	0	1	0	0	0	1	0	0	0
4/22/2024	4:15 AM	0	62	16	0	1	0	0	0	0	0	0	0
4/22/2024	4:30 AM	0	80	19	0	2	0	0	0	0	0	0	0
4/22/2024	4:45 AM	0	102	30	0	1	0	0	0	0	0	0	0
4/22/2024	5:00 AM	0	136	49	0	1	0	0	0	0	0	0	0
4/22/2024	5:15 AM	1	163	63	0	1	0	0	0	0	0	0	0
4/22/2024	5:30 AM	1	217	75	0	0	0	0	0	0	0	0	0
4/22/2024	5:45 AM	1	297	82	0	0	0	0	0	0	0	0	0
4/22/2024	6:00 AM	1	369	90	0	0	0	0	0	0	0	0	0
4/22/2024	6:15 AM	0	440	92	0	1	0	0	0	0	0	0	0
4/22/2024	6:30 AM	0	515	110	0	3	0	0	1	0	0	0	0
4/22/2024	6:45 AM	0	558	122	0	4	0	0	1	1	0	0	0
4/22/2024	7:00 AM	0	583	137	0	5	0	0	1	2	0	0	0
4/22/2024	7:15 AM	0	586	143	0	5	0	0	1	2	0	0	0
4/22/2024	7:30 AM	1	519	140	0	4	1	0	1	2	0	0	0
4/22/2024	7:45 AM	1	443	132	0	3	1	0	2	1	0	0	0
4/22/2024	8:00 AM	1	376	106	0	3	1	0	3	0	0	0	0
4/22/2024	8:15 AM	1	323	107	0	3	1	0	3	0	0	0	0
4/22/2024	8:30 AM	0	311	91	0	5	0	0	2	1	0	0	0
4/22/2024	8:45 AM	0	288	88	0	7	0	0	3	2	0	0	0
4/22/2024	9:00 AM	0	289	97	0	9	0	0	2	2	0	0	0
4/22/2024	9:15 AM	0	301	95	0	9	0	0	2	3	0	0	0
4/22/2024	9:30 AM	0	302	102	0	8	0	0	2	2	0	0	0
4/22/2024	9:45 AM	0	327	101	0	7	0	0	0	2	0	0	0
4/22/2024	10:00 AM	0	325	103	0	5	0	0	0	2	0	0	0
4/22/2024	10:15 AM	1	326	95	1	4	0	0	0	1	0	0	0
4/22/2024	10:30 AM	1	334	97	1	2	0	0	1	2	0	0	0
4/22/2024	10:45 AM	1	346	110	1	2	0	0	1	1	0	0	0
4/22/2024	11:00 AM	1	375	98	1	2	0	0	2	1	0	0	0
4/22/2024	11:15 AM	1	405	96	0	3	0	0	2	3	0	0	0
4/22/2024	11:30 AM	2	429	100	0	5	0	0	1	2	0	0	0
4/22/2024	11:45 AM	2	436	92	0	4	0	0	2	2	0	0	0
4/22/2024	12:00 PM	2	432	102	0	3	0	0	1	2	0	0	0
4/22/2024	12:15 PM	4	424	106	1	3	0	0	1	0	0	0	0
4/22/2024	12:30 PM	3	442	103	1	2	0	0	1	0	0	0	0
4/22/2024	12:45 PM	3	464	109	1	2	0	0	1	0	0	0	0
4/22/2024	1:00 PM	3	478	108	2	2	0	0	1	0	0	0	0
4/22/2024	1:15 PM	1	475	119	1	1	0	0	1	0	0	0	0
4/22/2024	1:30 PM	1	471	129	1	1	0	0	1	0	0	0	0
4/22/2024	1:45 PM	1	458	128	1	3	0	0	0	1	0	0	0
4/22/2024	2:00 PM	1	481	136	0	3	0	0	1	1	0	0	0
4/22/2024	2:15 PM	0	542	144	0	3	0	0	1	1	0	0	0
4/22/2024	2:30 PM	0	609	150	0	5	0	0	2	1	0	0	0
4/22/2024	2:45 PM	1	708	168	0	5	0	0	2	0	0	0	0
4/22/2024	3:00 PM	1	771	177	0	8	0	0	2	2	0	0	0
4/22/2024	3:15 PM	1	838	193	0	13	0	0	3	2	0	0	0
4/22/2024	3:30 PM	1	894	205	0	16	0	0	3	3	0	0	0
4/22/2024	3:45 PM	1	952	214	0	17	0	0	3	4	0	0	0
4/22/2024	4:00 PM	1	1013	233	0	18	0	0	3	2	0	0	0
4/22/2024	4:15 PM	1	1061	267	0	18	0	0	2	2	0	0	0
4/22/2024	4:30 PM	1	1120	304	0	15	0	0	4	1	0	0	0
4/22/2024	4:45 PM	0	1121	328	0	16	1	0	5	0	0	0	0
4/22/2024	5:00 PM	1	1128	337	0	15	1	0	4	0	0	0	0
4/22/2024	5:15 PM	1	1022	294	0	10	2	0	5	0	0	0	0
4/22/2024	5:30 PM	1	860	244	0	10	2	0	3	0	0	0	0
4/22/2024	5:45 PM	2	715	185	0	7	1	0	2	0	0	0	0
4/22/2024	6:00 PM	1	560	154	0	4	2	0	2	0	0	0	0
4/22/2024	6:15 PM	1	494	129	0	4	1	0	2	0	0	0	0
4/22/2024	6:30 PM	1	444	102	0	3	1	0	1	1	0	0	0
4/22/2024	6:45 PM	0	394	103	0	4	1	0	1	1	0	0	0
4/22/2024	7:00 PM	0	345	83	0	5	0	0	1	1	0	0	0
4/22/2024	7:15 PM	0	308	71	0	5	0	0	1	1	0	0	0
4/22/2024	7:30 PM	0	253	66	0	3	0	0	1	0	0	0	0
4/22/2024	7:45 PM	0	228	53	0	1	0	0	1	0	0	0	0
4/22/2024	8:00 PM	0	202	49	0	0	0	0	1	0	0	0	0
4/22/2024	8:15 PM	0	168	52	0	1	0	0	0	2	0	0	0
4/22/2024	8:30 PM	0	157	57	0	1	0	0	0	2	0	0	0
4/22/2024	8:45 PM	0	127	58	0	2	0	0	0	2	0	0	0
4/22/2024	9:00 PM	0	100	50	0	3	0	0	0	2	0	0	0
4/22/2024	9:15 PM	0	78	44	0	2	0	0	0	1	0	0	0
4/22/2024	9:30 PM	0	68	39	0	2	0	0	0	1	0	0	0
4/22/2024	9:45 PM	0	63	34	0	1	0	0	0	2	0	0	0
4/22/2024	10:00 PM	0	60	33	0	0	0	0	0	2	0	0	0
4/22/2024	10:15 PM	0	56	31	0	0	0	0	0	1	0	0	0
4/22/2024	10:30 PM	0	45	24	0	0	0	0	0	1	0	0	0
4/22/2024	10:45 PM	0	37	20	0	0	0	0	0	0	0	0	0
4/22/2024	11:00 PM	0	37	17	0	0	0	0	0	0	0	0	0
4/22/2024	11:15 PM	0	26	10	0	0	0	0	0	0	0	0	0
4/22/2024	11:30 PM	0	17	6	0	0	0	0	0	0	0	0	0
4/22/2024	11:45 PM	0	10	3	0	0	0	0	0	0	0	0	0

4/23/2024	12:00 AM	0	65	1	0	0	0	0	0	6	0	0	0	0
4/23/2024	12:15 AM	0	50	3	0	0	0	0	0	4	0	0	0	0
4/23/2024	12:30 AM	0	35	3	0	0	0	0	0	2	0	0	0	0
4/23/2024	12:45 AM	0	31	2	0	0	0	0	0	1	0	0	0	0
4/23/2024	1:00 AM	0	24	2	0	0	0	0	0	1	0	0	0	0
4/23/2024	1:15 AM	0	19	0	0	0	0	0	0	0	0	0	0	0
4/23/2024	1:30 AM	0	13	0	0	0	0	0	0	0	0	0	0	0
4/23/2024	1:45 AM	0	11	0	0	0	0	0	0	0	0	0	0	0
4/23/2024	2:00 AM	0	7	0	0	1	0	0	0	0	0	0	0	0
4/23/2024	2:15 AM	0	5	0	0	1	0	0	0	0	0	0	0	0
4/23/2024	2:30 AM	0	9	0	0	1	0	0	0	0	0	0	0	0
4/23/2024	2:45 AM	0	7	0	0	1	0	0	0	0	0	0	0	0
4/23/2024	3:00 AM	0	12	2	0	0	0	0	0	0	0	0	0	0
4/23/2024	3:15 AM	0	15	2	0	0	0	0	0	0	0	0	0	0
4/23/2024	3:30 AM	0	15	2	0	0	0	0	0	0	0	0	0	0
4/23/2024	3:45 AM	0	20	3	0	0	0	0	0	0	0	0	0	0
4/23/2024	4:00 AM	0	17	1	0	0	0	0	0	0	0	0	0	0
4/23/2024	4:15 AM	0	28	1	0	0	0	0	0	0	0	0	0	0
4/23/2024	4:30 AM	0	35	2	0	0	0	0	0	0	0	0	0	0
4/23/2024	4:45 AM	0	44	3	0	0	0	0	0	0	0	0	0	0
4/23/2024	5:00 AM	0	56	5	0	1	0	0	0	0	0	0	0	0
4/23/2024	5:15 AM	0	76	20	0	1	0	0	0	0	0	0	0	0
4/23/2024	5:30 AM	0	146	48	0	1	0	0	0	0	0	0	0	0
4/23/2024	5:45 AM	0	211	65	0	2	0	0	0	0	0	0	0	0
4/23/2024	6:00 AM	0	281	94	0	1	0	0	0	0	0	0	0	0
4/23/2024	6:15 AM	0	353	100	0	1	0	0	0	0	0	0	0	0
4/23/2024	6:30 AM	0	340	91	0	1	0	0	0	0	0	0	0	0
4/23/2024	6:45 AM	0	349	90	1	2	0	0	0	0	0	0	0	0
4/23/2024	7:00 AM	0	358	78	1	2	0	0	0	1	0	0	0	0
4/23/2024	7:15 AM	0	321	79	1	2	0	0	0	1	0	0	0	0
4/23/2024	7:30 AM	0	335	80	1	2	0	0	0	1	0	0	0	0
4/23/2024	7:45 AM	0	307	67	1	1	0	0	0	1	0	0	0	0
4/23/2024	8:00 AM	0	273	58	2	1	0	0	0	0	0	0	0	0
4/23/2024	8:15 AM	0	275	66	3	2	0	0	0	0	0	0	0	0
4/23/2024	8:30 AM	0	252	66	3	5	0	0	0	0	0	0	0	0
4/23/2024	8:45 AM	0	248	77	2	5	0	0	0	0	0	0	0	0
4/23/2024	9:00 AM	0	246	84	1	5	0	0	0	0	0	0	0	0
4/23/2024	9:15 AM	0	228	69	0	7	0	0	0	0	0	0	0	0
4/23/2024	9:30 AM	0	216	66	0	4	0	0	0	1	0	0	0	0
4/23/2024	9:45 AM	0	218	61	0	3	0	0	0	1	0	0	0	0
4/23/2024	10:00 AM	0	222	68	0	3	0	0	0	1	0	0	0	0
4/23/2024	10:15 AM	0	235	73	0	0	0	0	0	1	0	0	0	0
4/23/2024	10:30 AM	0	261	73	0	2	0	0	0	0	0	0	0	0
4/23/2024	10:45 AM	2	268	81	0	2	0	0	0	0	0	0	0	0
4/23/2024	11:00 AM	2	282	83	0	3	0	0	0	0	0	0	0	0
4/23/2024	11:15 AM	3	288	86	0	4	0	0	0	1	0	0	0	0
4/23/2024	11:30 AM	4	291	85	0	3	0	0	0	2	0	0	0	0
4/23/2024	11:45 AM	2	326	87	0	5	0	0	0	2	0	0	0	0
4/23/2024	12:00 PM	2	337	81	0	5	0	0	1	3	0	0	0	0
4/23/2024	12:15 PM	2	364	85	0	5	0	0	1	2	0	0	0	0
4/23/2024	12:30 PM	1	384	83	0	6	0	0	1	2	0	0	0	0
4/23/2024	12:45 PM	1	378	75	0	6	0	0	1	4	0	0	0	0
4/23/2024	1:00 PM	1	411	82	0	5	0	0	0	3	0	0	0	0
4/23/2024	1:15 PM	1	417	80	0	5	0	0	0	3	0	0	0	0
4/23/2024	1:30 PM	1	450	93	0	4	0	0	0	2	0	0	0	0
4/23/2024	1:45 PM	1	499	119	0	2	0	0	0	1	0	0	0	0
4/23/2024	2:00 PM	1	516	140	0	4	0	0	0	2	0	0	0	0
4/23/2024	2:15 PM	0	573	152	0	5	0	0	0	3	0	0	0	0
4/23/2024	2:30 PM	0	589	177	0	9	0	0	0	4	0	0	0	0
4/23/2024	2:45 PM	2	630	197	0	15	1	0	2	3	0	0	0	0
4/23/2024	3:00 PM	3	719	221	0	16	1	0	2	3	0	0	0	0
4/23/2024	3:15 PM	3	755	239	0	17	1	0	3	3	0	0	0	0
4/23/2024	3:30 PM	4	886	262	0	19	1	0	4	2	0	0	0	0
4/23/2024	3:45 PM	2	989	281	0	21	1	0	2	3	0	0	0	0
4/23/2024	4:00 PM	1	1051	296	0	24	1	0	5	2	0	0	0	0
4/23/2024	4:15 PM	1	1112	299	0	23	1	0	4	2	0	0	0	0
4/23/2024	4:30 PM	0	1162	328	0	21	1	0	3	3	0	0	0	0
4/23/2024	4:45 PM	1	1136	344	0	15	0	0	4	2	0	0	0	0
4/23/2024	5:00 PM	2	1125	345	0	11	0	0	4	2	0	0	0	0
4/23/2024	5:15 PM	3	1101	359	0	11	0	0	4	1	0	0	0	0
4/23/2024	5:30 PM	3	938	291	1	7	0	0	4	1	0	0	0	0
4/23/2024	5:45 PM	4	771	219	1	8	0	0	3	1	0	0	0	0
4/23/2024	6:00 PM	3	604	158	1	8	0	0	0	1	0	0	0	0
4/23/2024	6:15 PM	2	468	106	1	8	1	0	0	1	0	0	0	0
4/23/2024	6:30 PM	2	400	89	0	8	1	0	0	0	0	0	0	0
4/23/2024	6:45 PM	0	381	86	0	6	1	0	0	0	0	0	0	0
4/23/2024	7:00 PM	0	363	84	0	4	1	0	0	1	0	0	0	0
4/23/2024	7:15 PM	0	361	84	0	2	0	0	0	2	0	0	0	0
4/23/2024	7:30 PM	0	356	80	0	1	0	0	0	2	0	0	0	0
4/23/2024	7:45 PM	0	330	84	0	0	0	0	0	2	0	0	0	0
4/23/2024	8:00 PM	0	283	69	0	0	0	0	0	1	0	0	0	0
4/23/2024	8:15 PM	0	211	55	0	0	0	0	0	0	0	0	0	0
4/23/2024	8:30 PM	0	151	43	0	0	0	0	0	0	0	0	0	0
4/23/2024	8:45 PM	0	125	24	0	0	0	0	0	0	0	0	0	0
4/23/2024	9:00 PM	0	104	19	0	0	0	0	0	0	0	0	0	0
4/23/2024	9:15 PM	0	93	17	0	1	0	0	0	0	0	0	0	0
4/23/2024	9:30 PM	0	78	19	0	1	0	0	0	0	0	0	0	0
4/23/2024	9:45 PM	0	70	22	0	1	0	0	0	0	0	0	0	0
4/23/2024	10:00 PM	0	58	19	0	1	0	0	0	0	0	0	0	0
4/23/2024	10:15 PM	0	54	17	0	1	0	0	0	0	0	0	0	0
4/23/2024	10:30 PM	0	46	14	0	1	0	0	0	0	0	0	0	0
4/23/2024	10:45 PM	0	34	9	0	1	0	0	0	0	0	0	0	0
4/23/2024	11:00 PM	0	26	10	0	1	0	0	0	0	0	0	0	0
4/23/2024	11:15 PM	0	16	8	0	0	0	0	0	0	0	0	0	0
4/23/2024	11:30 PM	0	9	5	0	0	0	0	0	0	0	0	0	0
4/23/2024	11:45 PM	0	4	3	0	0	0	0	0	0	0	0	0	0

4/24/2024	12:00 AM	0	64	10	0	1	0	0	0	0	0	0	0	0
4/24/2024	12:15 AM	0	52	8	0	1	0	0	0	2	0	0	0	0
4/24/2024	12:30 AM	0	42	5	0	1	0	0	0	3	0	0	0	0
4/24/2024	12:45 AM	0	34	1	0	0	0	0	0	3	0	0	0	0
4/24/2024	1:00 AM	0	30	1	0	0	0	0	0	3	0	0	0	0
4/24/2024	1:15 AM	0	36	3	0	1	0	0	0	2	0	0	0	0
4/24/2024	1:30 AM	0	34	4	0	1	0	0	0	1	0	0	0	0
4/24/2024	1:45 AM	0	34	5	0	1	0	0	0	1	0	0	0	0
4/24/2024	2:00 AM	0	31	5	0	1	0	0	0	2	0	0	0	0
4/24/2024	2:15 AM	0	28	4	0	0	0	0	0	2	0	0	0	0
4/24/2024	2:30 AM	0	25	3	0	0	0	0	0	2	0	0	0	0
4/24/2024	2:45 AM	0	25	4	0	0	0	0	0	2	0	0	0	0
4/24/2024	3:00 AM	0	27	3	0	0	0	0	0	1	0	0	0	0
4/24/2024	3:15 AM	0	27	3	0	0	1	0	0	3	0	0	0	0
4/24/2024	3:30 AM	0	37	5	0	0	1	0	0	3	0	0	0	0
4/24/2024	3:45 AM	0	48	8	0	0	1	0	0	3	0	0	0	0
4/24/2024	4:00 AM	0	60	11	0	0	1	0	0	4	0	0	0	0
4/24/2024	4:15 AM	0	65	13	0	1	0	0	0	1	0	0	0	0
4/24/2024	4:30 AM	0	68	13	0	1	0	0	0	3	0	0	0	0
4/24/2024	4:45 AM	0	98	14	0	2	0	0	0	4	0	0	0	0
4/24/2024	5:00 AM	0	138	16	0	2	0	0	0	5	0	0	0	0
4/24/2024	5:15 AM	0	153	23	0	1	0	0	0	5	0	0	0	0
4/24/2024	5:30 AM	0	194	37	0	1	0	0	0	3	0	0	0	0
4/24/2024	5:45 AM	1	205	41	0	0	0	0	0	2	0	0	0	0
4/24/2024	6:00 AM	1	240	64	0	0	0	0	1	1	0	0	0	0
4/24/2024	6:15 AM	1	303	92	0	2	0	0	1	2	0	0	0	0
4/24/2024	6:30 AM	1	354	106	0	2	0	0	2	2	0	0	0	0
4/24/2024	6:45 AM	0	448	145	0	3	0	0	2	2	0	0	0	0
4/24/2024	7:00 AM	0	496	158	0	6	0	0	1	2	0	0	0	0
4/24/2024	7:15 AM	0	494	150	0	4	0	0	1	1	0	0	0	0
4/24/2024	7:30 AM	0	478	134	0	7	0	0	0	1	0	0	0	0
4/24/2024	7:45 AM	0	426	116	0	8	0	0	1	1	0	0	0	0
4/24/2024	8:00 AM	0	393	101	0	9	0	0	1	0	0	0	0	0
4/24/2024	8:15 AM	0	383	88	0	13	0	0	2	0	0	0	0	0
4/24/2024	8:30 AM	0	351	92	0	12	0	0	2	0	0	0	0	0
4/24/2024	8:45 AM	0	318	78	0	10	0	0	1	1	0	0	0	0
4/24/2024	9:00 AM	0	328	83	0	7	1	0	1	2	0	0	0	0
4/24/2024	9:15 AM	0	323	84	1	9	1	0	0	3	0	0	0	0
4/24/2024	9:30 AM	0	340	91	1	7	1	0	0	4	0	0	0	0
4/24/2024	9:45 AM	1	364	98	1	8	1	0	0	4	0	0	0	0
4/24/2024	10:00 AM	1	335	97	1	8	0	0	0	4	0	0	0	0
4/24/2024	10:15 AM	1	327	108	0	3	0	0	1	3	0	0	0	0
4/24/2024	10:30 AM	1	326	101	0	3	0	0	1	2	0	0	0	0
4/24/2024	10:45 AM	0	303	103	0	3	0	0	2	1	0	0	0	0
4/24/2024	11:00 AM	0	291	96	0	5	0	0	4	1	0	0	0	0
4/24/2024	11:15 AM	0	301	91	0	5	0	0	3	1	0	0	0	0
4/24/2024	11:30 AM	0	305	102	0	7	0	0	5	1	0	0	0	0
4/24/2024	11:45 AM	0	321	103	0	9	0	0	5	1	0	0	0	0
4/24/2024	12:00 PM	0	347	111	0	8	0	0	4	1	0	0	0	0
4/24/2024	12:15 PM	0	348	120	0	11	0	0	4	3	0	0	0	0
4/24/2024	12:30 PM	0	353	114	0	10	0	0	2	4	0	0	0	0
4/24/2024	12:45 PM	0	378	128	0	8	0	0	1	5	0	0	0	0
4/24/2024	1:00 PM	0	384	144	0	10	0	0	2	4	0	0	0	0
4/24/2024	1:15 PM	0	430	146	0	9	0	0	2	4	0	0	0	0
4/24/2024	1:30 PM	0	484	161	0	11	0	0	2	4	0	0	0	0
4/24/2024	1:45 PM	0	503	158	1	11	0	0	2	3	0	0	0	0
4/24/2024	2:00 PM	0	537	153	1	8	0	0	0	4	0	0	0	0
4/24/2024	2:15 PM	0	590	170	1	6	0	0	0	6	0	0	0	0
4/24/2024	2:30 PM	0	659	201	1	7	0	0	1	7	0	0	0	0
4/24/2024	2:45 PM	0	769	244	0	13	1	0	1	7	0	0	0	0
4/24/2024	3:00 PM	0	848	288	0	20	2	0	4	7	0	0	0	0
4/24/2024	3:15 PM	0	940	308	0	22	2	0	4	5	0	0	0	0
4/24/2024	3:30 PM	0	972	313	0	26	2	0	3	3	0	0	0	0
4/24/2024	3:45 PM	0	1008	309	0	24	1	0	3	4	0	0	0	0
4/24/2024	4:00 PM	1	1058	312	0	25	0	0	1	4	0	0	0	0
4/24/2024	4:15 PM	2	1087	318	0	26	0	0	1	4	0	0	0	0
4/24/2024	4:30 PM	2	1130	322	0	20	1	0	4	4	0	0	0	0
4/24/2024	4:45 PM	3	1129	321	0	18	1	0	5	4	0	0	0	0
4/24/2024	5:00 PM	2	1132	327	0	14	1	0	7	4	0	0	0	0
4/24/2024	5:15 PM	1	984	297	0	11	1	0	7	5	0	0	0	0
4/24/2024	5:30 PM	2	869	269	2	9	0	0	4	5	0	0	0	0
4/24/2024	5:45 PM	2	695	227	2	7	0	0	5	4	0	0	0	0
4/24/2024	6:00 PM	3	533	157	2	5	0	0	2	6	0	0	0	0
4/24/2024	6:15 PM	3	478	126	2	5	1	0	3	3	0	0	0	0
4/24/2024	6:30 PM	2	397	98	0	5	1	0	3	3	0	0	0	0
4/24/2024	6:45 PM	1	379	91	0	4	1	0	1	4	0	0	0	0
4/24/2024	7:00 PM	0	327	80	0	1	1	0	1	1	0	0	0	0
4/24/2024	7:15 PM	0	298	74	0	0	0	0	0	2	0	0	0	0
4/24/2024	7:30 PM	0	281	60	0	0	0	0	0	2	0	0	0	0
4/24/2024	7:45 PM	0	263	39	0	0	0	0	0	1	0	0	0	0
4/24/2024	8:00 PM	0	263	29	0	0	0	0	0	1	0	0	0	0
4/24/2024	8:15 PM	0	234	23	0	0	0	0	0	1	0	0	0	0
4/24/2024	8:30 PM	0	199	19	0	0	0	0	0	1	0	0	0	0
4/24/2024	8:45 PM	0	165	15	0	0	0	0	0	1	0	0	0	0
4/24/2024	9:00 PM	0	134	12	0	0	0	0	0	1	0	0	0	0
4/24/2024	9:15 PM	1	128	9	0	0	0	0	0	1	0	0	1	0
4/24/2024	9:30 PM	2	124	8	0	1	0	0	0	1	0	0	1	0
4/24/2024	9:45 PM	2	121	9	0	1	0	0	0	1	0	0	1	0
4/24/2024	10:00 PM	2	111	8	0	1	0	0	0	1	0	0	1	0
4/24/2024	10:15 PM	1	97	6	0	1	0	0	0	0	0	0	0	0
4/24/2024	10:30 PM	0	77	4	0	0	0	0	0	0	0	0	0	0
4/24/2024	10:45 PM	0	56	1	0	0	0	0	0	0	0	0	0	0
4/24/2024	11:00 PM	0	47	1	0	0	0	0	0	0	0	0	0	0
4/24/2024	11:15 PM	0	29	1	0	0	0	0	0	0	0	0	0	0
4/24/2024	11:30 PM	0	18	0	0	0	0	0	0	0	0	0	0	0
4/24/2024	11:45 PM	0	12	0	0	0	0	0	0	0	0	0	0	0

4/25/2024	12:00 AM	0	39	9	0	0	0	0	0	0	0	0	0
4/25/2024	12:15 AM	0	39	6	0	0	0	0	0	0	0	0	0
4/25/2024	12:30 AM	0	30	2	0	0	0	0	0	0	0	0	0
4/25/2024	12:45 AM	0	27	0	0	0	0	0	0	0	0	0	0
4/25/2024	1:00 AM	0	29	0	0	0	0	0	0	0	0	0	0
4/25/2024	1:15 AM	0	22	0	0	0	0	0	0	0	0	0	0
4/25/2024	1:30 AM	0	24	0	0	0	0	0	0	0	0	0	0
4/25/2024	1:45 AM	0	26	0	0	0	0	0	0	0	0	0	0
4/25/2024	2:00 AM	0	29	0	0	0	0	0	0	0	0	0	0
4/25/2024	2:15 AM	0	28	0	0	0	0	0	0	0	0	0	0
4/25/2024	2:30 AM	0	30	0	0	0	0	0	0	0	0	0	0
4/25/2024	2:45 AM	0	33	0	0	0	0	0	0	0	0	0	0
4/25/2024	3:00 AM	0	34	1	0	0	0	0	0	0	0	0	0
4/25/2024	3:15 AM	0	42	2	0	0	0	0	0	0	0	0	0
4/25/2024	3:30 AM	0	42	2	0	0	0	0	0	0	0	0	0
4/25/2024	3:45 AM	0	46	3	0	0	0	0	0	0	0	0	0
4/25/2024	4:00 AM	0	54	3	0	0	0	0	0	0	0	0	0
4/25/2024	4:15 AM	0	62	3	0	0	0	0	0	1	0	0	0
4/25/2024	4:30 AM	0	72	3	1	1	0	0	0	1	0	0	0
4/25/2024	4:45 AM	0	103	2	2	1	0	0	0	1	0	0	0
4/25/2024	5:00 AM	0	136	2	2	1	0	0	0	1	0	0	0
4/25/2024	5:15 AM	0	167	4	2	3	0	0	0	0	0	0	0
4/25/2024	5:30 AM	0	188	16	1	4	0	0	0	0	0	0	0
4/25/2024	5:45 AM	1	217	36	0	4	0	0	0	0	0	0	0
4/25/2024	6:00 AM	1	209	52	0	5	0	0	0	0	0	0	0
4/25/2024	6:15 AM	1	281	85	0	4	0	0	0	0	0	0	0
4/25/2024	6:30 AM	1	382	99	0	3	0	0	0	0	0	0	0
4/25/2024	6:45 AM	0	433	115	0	4	0	0	0	0	0	0	0
4/25/2024	7:00 AM	0	565	128	0	4	0	0	0	0	0	0	0
4/25/2024	7:15 AM	0	540	127	0	3	0	0	1	1	0	0	0
4/25/2024	7:30 AM	0	509	131	0	2	0	0	1	1	0	0	0
4/25/2024	7:45 AM	0	503	124	0	2	0	0	1	1	0	0	0
4/25/2024	8:00 AM	1	415	115	0	3	0	0	1	2	0	0	0
4/25/2024	8:15 AM	2	403	101	0	5	0	0	0	1	0	0	0
4/25/2024	8:30 AM	2	366	91	0	7	0	0	0	1	0	0	0
4/25/2024	8:45 AM	2	328	96	0	7	1	0	0	2	0	0	0
4/25/2024	9:00 AM	2	326	104	0	6	1	0	1	2	0	0	0
4/25/2024	9:15 AM	1	322	114	0	4	1	0	1	2	0	0	0
4/25/2024	9:30 AM	6	343	116	0	2	1	0	2	4	0	0	0
4/25/2024	9:45 AM	6	354	106	0	3	0	0	3	3	0	0	0
4/25/2024	10:00 AM	5	366	110	0	3	0	0	3	2	0	0	0
4/25/2024	10:15 AM	6	364	94	0	4	0	0	3	2	0	0	0
4/25/2024	10:30 AM	2	360	106	1	5	0	0	2	0	0	0	0
4/25/2024	10:45 AM	11	377	115	1	4	0	0	1	0	0	0	0
4/25/2024	11:00 AM	14	392	119	2	4	0	0	0	1	1	0	0
4/25/2024	11:15 AM	14	416	135	2	7	0	0	0	3	1	0	0
4/25/2024	11:30 AM	13	453	144	1	7	1	0	0	3	1	0	0
4/25/2024	11:45 AM	4	465	159	1	6	1	0	0	3	1	0	0
4/25/2024	12:00 PM	1	494	170	0	7	1	0	1	3	0	0	0
4/25/2024	12:15 PM	0	531	169	0	5	1	0	1	1	0	0	0
4/25/2024	12:30 PM	0	524	155	0	6	0	0	1	3	0	0	0
4/25/2024	12:45 PM	2	524	146	0	6	1	0	1	4	0	0	0
4/25/2024	1:00 PM	5	521	126	0	8	1	0	1	3	0	0	0
4/25/2024	1:15 PM	5	503	137	0	8	1	0	2	4	0	0	0
4/25/2024	1:30 PM	6	572	151	0	8	1	0	2	2	0	0	0
4/25/2024	1:45 PM	4	610	155	1	10	0	0	2	2	0	0	0
4/25/2024	2:00 PM	2	624	179	1	7	0	0	2	2	0	0	0
4/25/2024	2:15 PM	5	678	181	1	8	0	0	1	2	0	0	0
4/25/2024	2:30 PM	4	689	205	1	11	0	0	3	5	0	1	0
4/25/2024	2:45 PM	5	734	251	3	13	0	0	4	6	0	1	0
4/25/2024	3:00 PM	4	792	269	3	14	0	0	4	8	0	1	0
4/25/2024	3:15 PM	2	840	298	4	12	0	0	6	7	0	1	0
4/25/2024	3:30 PM	2	900	309	4	19	0	0	4	4	0	0	0
4/25/2024	3:45 PM	3	987	291	1	20	0	0	3	3	0	0	0
4/25/2024	4:00 PM	3	1046	268	1	18	0	0	2	1	0	0	0
4/25/2024	4:15 PM	2	1046	239	0	20	0	0	0	1	0	0	0
4/25/2024	4:30 PM	3	1039	234	0	13	2	0	0	1	0	0	0
4/25/2024	4:45 PM	3	980	231	0	9	2	0	0	1	0	0	0
4/25/2024	5:00 PM	5	949	261	0	11	2	0	0	4	0	0	0
4/25/2024	5:15 PM	6	940	295	0	10	2	0	0	6	0	0	0
4/25/2024	5:30 PM	7	849	263	0	7	0	0	1	6	0	0	0
4/25/2024	5:45 PM	6	748	233	0	7	0	0	3	5	0	0	0
4/25/2024	6:00 PM	5	634	193	1	7	0	0	4	2	1	0	0
4/25/2024	6:15 PM	5	545	146	1	6	0	0	4	0	1	0	0
4/25/2024	6:30 PM	3	510	134	1	4	0	0	4	1	1	0	0
4/25/2024	6:45 PM	2	481	122	1	3	0	0	4	1	1	0	0
4/25/2024	7:00 PM	3	461	98	0	1	0	0	3	1	0	0	0
4/25/2024	7:15 PM	4	422	84	0	0	0	0	3	1	0	0	0
4/25/2024	7:30 PM	6	372	79	0	0	0	0	2	1	0	0	0
4/25/2024	7:45 PM	6	357	66	0	0	0	0	0	1	0	0	0
4/25/2024	8:00 PM	4	343	64	1	1	0	0	0	3	0	0	0
4/25/2024	8:15 PM	2	306	53	1	1	0	0	0	3	0	0	0
4/25/2024	8:30 PM	0	273	33	1	1	0	0	0	2	0	0	0
4/25/2024	8:45 PM	1	222	22	1	1	0	0	0	2	0	0	0
4/25/2024	9:00 PM	1	176	12	0	0	0	0	0	0	0	0	0
4/25/2024	9:15 PM	1	153	7	0	0	0	0	0	0	0	0	0
4/25/2024	9:30 PM	1	155	5	0	0	0	0	0	0	0	0	0
4/25/2024	9:45 PM	0	158	4	0	0	0	0	0	0	0	0	0
4/25/2024	10:00 PM	0	136	3	0	1	0	0	0	0	0	0	0
4/25/2024	10:15 PM	0	122	3	0	2	0	0	0	2	0	0	0
4/25/2024	10:30 PM	0	96	1	0	3	0	0	0	2	0	0	0
4/25/2024	10:45 PM	0	70	0	0	3	0	0	0	2	0	0	0
4/25/2024	11:00 PM	0	57	0	0	2	0	0	0	2	0	0	0
4/25/2024	11:15 PM	0	42	0	0	1	0	0	0	0	0	0	0
4/25/2024	11:30 PM	0	21	0	0	0	0	0	0	0	0	0	0
4/25/2024	11:45 PM	0	8	0	0	0	0	0	0	0	0	0	0

4/26/2024	12:00 AM	0	38	9	0	0	1	0	0	2	0	0	0	0
4/26/2024	12:15 AM	0	25	6	0	0	1	0	0	1	0	0	0	0
4/26/2024	12:30 AM	0	32	9	0	0	1	0	0	2	0	0	0	0
4/26/2024	12:45 AM	0	34	10	0	0	0	0	0	2	0	0	0	0
4/26/2024	1:00 AM	0	25	6	0	0	0	0	0	1	0	0	0	0
4/26/2024	1:15 AM	0	26	6	0	0	0	0	0	1	0	0	0	0
4/26/2024	1:30 AM	0	18	3	0	0	0	0	0	0	0	0	0	0
4/26/2024	1:45 AM	0	16	3	0	0	0	0	0	0	0	0	0	0
4/26/2024	2:00 AM	0	19	5	0	0	0	0	0	0	0	0	0	0
4/26/2024	2:15 AM	0	19	4	0	0	0	0	0	1	0	0	0	0
4/26/2024	2:30 AM	0	20	4	0	0	0	0	0	1	0	0	0	0
4/26/2024	2:45 AM	0	22	4	0	0	0	0	0	1	0	0	0	0
4/26/2024	3:00 AM	0	17	2	0	0	0	0	0	1	0	0	0	0
4/26/2024	3:15 AM	0	17	4	0	0	0	0	0	0	0	0	0	0
4/26/2024	3:30 AM	0	20	7	0	0	0	0	0	0	0	0	0	0
4/26/2024	3:45 AM	0	23	8	0	0	0	0	0	0	0	0	0	0
4/26/2024	4:00 AM	0	31	14	0	0	0	0	0	0	0	0	0	0
4/26/2024	4:15 AM	0	30	12	0	0	0	0	0	0	0	0	0	0
4/26/2024	4:30 AM	0	40	16	0	0	0	0	0	1	0	0	0	0
4/26/2024	4:45 AM	0	52	22	0	1	0	0	0	1	0	0	0	0
4/26/2024	5:00 AM	0	61	23	0	1	0	0	0	1	0	0	0	0
4/26/2024	5:15 AM	1	87	38	0	1	0	0	0	1	0	0	0	0
4/26/2024	5:30 AM	1	119	51	0	1	0	0	0	0	0	0	0	0
4/26/2024	5:45 AM	1	191	69	0	0	0	0	0	0	0	0	0	0
4/26/2024	6:00 AM	1	261	87	0	0	0	0	0	0	0	0	0	0
4/26/2024	6:15 AM	0	341	95	0	4	0	0	0	0	0	0	0	0
4/26/2024	6:30 AM	0	419	109	0	4	0	0	0	0	0	0	0	0
4/26/2024	6:45 AM	1	476	124	0	6	0	0	0	0	0	0	0	0
4/26/2024	7:00 AM	2	528	143	0	9	0	0	1	0	0	0	0	0
4/26/2024	7:15 AM	2	551	152	0	7	0	0	1	1	0	0	0	0
4/26/2024	7:30 AM	3	519	149	0	8	0	0	2	2	0	0	0	0
4/26/2024	7:45 AM	8	472	141	0	7	1	0	2	2	0	0	0	0
4/26/2024	8:00 AM	7	417	124	0	7	1	0	1	2	0	0	0	0
4/26/2024	8:15 AM	7	363	116	0	7	1	0	1	1	0	0	0	0
4/26/2024	8:30 AM	9	350	113	0	9	1	0	0	0	0	0	0	0
4/26/2024	8:45 AM	4	327	105	0	9	0	0	2	0	0	0	0	0
4/26/2024	9:00 AM	4	337	103	0	8	0	0	3	0	0	0	0	0
4/26/2024	9:15 AM	4	349	101	0	6	0	0	3	2	0	0	0	0
4/26/2024	9:30 AM	1	375	99	0	3	0	0	3	2	0	0	0	0
4/26/2024	9:45 AM	0	406	98	0	6	1	0	2	2	0	0	0	0
4/26/2024	10:00 AM	0	432	112	0	6	1	0	2	2	0	0	0	0
4/26/2024	10:15 AM	1	439	111	0	7	1	0	3	2	0	0	0	0
4/26/2024	10:30 AM	1	449	123	0	9	1	0	4	4	0	0	0	0
4/26/2024	10:45 AM	1	464	137	0	8	0	0	4	5	0	0	0	0
4/26/2024	11:00 AM	2	484	142	0	9	0	0	3	5	0	0	0	0
4/26/2024	11:15 AM	2	544	172	0	11	0	0	3	3	0	0	0	0
4/26/2024	11:30 AM	2	594	189	0	12	0	0	2	1	0	0	0	0
4/26/2024	11:45 AM	3	626	191	0	10	0	0	1	0	0	0	0	0
4/26/2024	12:00 PM	3	651	198	0	11	0	0	1	2	0	0	0	0
4/26/2024	12:15 PM	6	659	202	0	12	0	0	0	2	0	0	0	0
4/26/2024	12:30 PM	6	659	201	0	12	0	0	1	4	0	0	0	0
4/26/2024	12:45 PM	7	670	212	0	12	1	0	3	5	0	0	0	0
4/26/2024	1:00 PM	7	690	219	0	10	1	0	7	3	0	0	0	0
4/26/2024	1:15 PM	5	704	204	0	8	1	0	8	3	0	0	0	0
4/26/2024	1:30 PM	9	725	209	0	10	1	0	8	1	0	0	0	0
4/26/2024	1:45 PM	7	760	215	0	11	0	0	7	0	0	0	0	0
4/26/2024	2:00 PM	6	773	219	0	14	0	0	4	1	0	0	0	0
4/26/2024	2:15 PM	5	794	234	0	16	1	0	4	1	0	0	0	0
4/26/2024	2:30 PM	3	808	242	0	15	1	0	3	4	0	0	0	0
4/26/2024	2:45 PM	3	812	256	0	17	1	0	2	5	0	0	0	0
4/26/2024	3:00 PM	3	853	269	1	15	2	0	1	4	0	0	0	0
4/26/2024	3:15 PM	2	900	298	1	14	1	0	2	9	0	0	0	0
4/26/2024	3:30 PM	4	969	311	1	17	1	0	3	6	0	0	0	0
4/26/2024	3:45 PM	5	1012	314	2	16	1	0	4	5	0	0	0	0
4/26/2024	4:00 PM	7	1037	312	1	14	0	0	4	6	0	0	0	0
4/26/2024	4:15 PM	9	1042	302	1	13	0	0	2	1	0	0	0	0
4/26/2024	4:30 PM	6	1058	298	1	7	0	0	1	1	0	0	0	0
4/26/2024	4:45 PM	6	1031	292	0	6	0	0	0	2	0	0	0	0
4/26/2024	5:00 PM	4	967	271	0	9	2	0	1	4	0	0	0	0
4/26/2024	5:15 PM	3	904	236	0	11	2	0	1	4	0	0	0	0
4/26/2024	5:30 PM	3	799	198	2	10	2	0	3	4	0	0	0	0
4/26/2024	5:45 PM	2	740	156	2	9	2	0	3	3	0	0	0	0
4/26/2024	6:00 PM	4	678	141	2	8	0	0	2	0	0	0	0	0
4/26/2024	6:15 PM	5	625	129	2	7	0	0	2	1	0	0	0	0
4/26/2024	6:30 PM	6	570	129	0	7	0	0	0	1	0	0	0	0
4/26/2024	6:45 PM	7	521	125	1	7	0	0	0	1	0	0	0	0
4/26/2024	7:00 PM	6	473	104	1	4	0	0	0	1	0	0	0	0
4/26/2024	7:15 PM	4	418	96	1	1	0	0	0	0	0	0	0	0
4/26/2024	7:30 PM	2	381	81	1	1	0	0	0	1	0	0	0	0
4/26/2024	7:45 PM	1	325	73	0	0	0	0	0	1	0	0	0	0
4/26/2024	8:00 PM	0	295	76	0	0	0	0	0	1	0	0	0	0
4/26/2024	8:15 PM	0	269	78	0	1	0	0	0	1	0	0	0	0
4/26/2024	8:30 PM	0	241	79	0	1	0	0	0	0	0	0	0	0
4/26/2024	8:45 PM	0	239	84	0	2	0	0	0	0	0	0	0	0
4/26/2024	9:00 PM	0	219	78	0	2	0	0	0	0	0	0	0	0
4/26/2024	9:15 PM	0	193	64	0	2	0	0	0	0	0	0	0	0
4/26/2024	9:30 PM	0	176	49	0	2	0	0	0	0	0	0	0	0
4/26/2024	9:45 PM	0	149	40	0	1	0	0	0	0	0	0	0	0
4/26/2024	10:00 PM	0	138	37	0	1	0	0	0	0	0	0	0	0
4/26/2024	10:15 PM	0	146	44	0	0	0	0	0	0	0	0	0	0
4/26/2024	10:30 PM	0	121	43	0	0	0	0	0	0	0	0	0	0
4/26/2024	10:45 PM	0	106	39	0	0	0	0	0	0	0	0	0	0
4/26/2024	11:00 PM	0	94	40	0	0	0	0	0	0	0	0	0	0
4/26/2024	11:15 PM	0	56	26	0	0	0	0	0	0	0	0	0	0
4/26/2024	11:30 PM	0	36	18	0	0	0	0	0	0	0	0	0	0
4/26/2024	11:45 PM	0	20	11	0	0	0	0	0	0	0	0	0	0

4/27/2024	12:00 AM	0	96	22	0	1	0	0	0	0	0	0	0	0
4/27/2024	12:15 AM	0	87	24	0	0	0	0	0	0	0	0	0	0
4/27/2024	12:30 AM	0	71	25	0	0	0	0	0	1	0	0	0	0
4/27/2024	12:45 AM	1	64	24	0	0	0	0	0	1	0	0	0	0
4/27/2024	1:00 AM	1	69	23	0	0	0	0	0	1	0	0	0	0
4/27/2024	1:15 AM	1	61	22	0	0	0	0	0	1	0	0	0	0
4/27/2024	1:30 AM	1	54	19	0	0	0	0	0	0	0	0	0	0
4/27/2024	1:45 AM	0	46	17	0	0	0	0	0	0	0	0	0	0
4/27/2024	2:00 AM	0	33	15	0	0	0	0	0	0	0	0	0	0
4/27/2024	2:15 AM	0	29	12	0	0	0	0	0	0	0	0	0	0
4/27/2024	2:30 AM	0	24	10	0	0	0	0	0	1	0	0	0	0
4/27/2024	2:45 AM	0	18	7	0	0	0	0	0	2	0	0	0	0
4/27/2024	3:00 AM	0	21	6	0	0	0	0	0	3	0	0	0	0
4/27/2024	3:15 AM	0	21	6	0	1	0	0	0	3	0	0	0	0
4/27/2024	3:30 AM	0	26	7	0	1	0	0	0	2	0	0	0	0
4/27/2024	3:45 AM	0	28	12	0	1	0	0	0	1	0	0	0	0
4/27/2024	4:00 AM	0	28	14	0	1	0	0	0	0	0	0	0	0
4/27/2024	4:15 AM	0	23	14	0	0	0	0	0	1	0	0	0	0
4/27/2024	4:30 AM	3	35	19	0	0	0	0	0	4	0	0	0	0
4/27/2024	4:45 AM	3	41	17	0	0	0	0	0	4	0	0	0	0
4/27/2024	5:00 AM	3	51	17	0	0	0	0	0	4	0	0	0	0
4/27/2024	5:15 AM	3	56	18	0	0	0	0	0	4	0	0	0	0
4/27/2024	5:30 AM	0	58	18	0	0	0	0	0	1	0	0	0	0
4/27/2024	5:45 AM	0	73	25	0	0	0	0	0	1	0	0	0	0
4/27/2024	6:00 AM	0	88	31	0	0	0	0	0	1	0	0	0	0
4/27/2024	6:15 AM	0	110	39	0	0	0	0	0	0	0	0	0	0
4/27/2024	6:30 AM	0	134	36	0	0	0	0	0	0	1	0	0	0
4/27/2024	6:45 AM	0	166	38	0	0	0	0	0	0	1	0	0	0
4/27/2024	7:00 AM	2	191	41	0	1	0	0	0	0	1	0	0	0
4/27/2024	7:15 AM	2	211	43	0	2	0	0	0	0	1	0	0	0
4/27/2024	7:30 AM	2	229	46	0	2	0	0	0	0	0	0	0	0
4/27/2024	7:45 AM	2	237	50	0	2	0	0	0	0	0	0	0	0
4/27/2024	8:00 AM	0	242	45	0	2	0	0	0	0	0	0	0	0
4/27/2024	8:15 AM	0	254	46	0	1	0	0	0	0	0	0	0	0
4/27/2024	8:30 AM	0	270	60	0	1	0	0	0	0	0	0	0	0
4/27/2024	8:45 AM	0	291	64	1	2	0	0	0	0	0	0	0	0
4/27/2024	9:00 AM	0	315	76	1	1	0	0	0	0	0	0	0	0
4/27/2024	9:15 AM	0	346	81	1	1	0	0	0	0	0	0	0	0
4/27/2024	9:30 AM	0	350	79	1	1	0	0	0	0	0	0	0	0
4/27/2024	9:45 AM	2	361	79	0	2	0	0	0	0	0	0	0	0
4/27/2024	10:00 AM	4	371	91	0	2	0	0	0	0	0	0	0	0
4/27/2024	10:15 AM	7	379	99	0	4	0	0	0	0	0	0	0	0
4/27/2024	10:30 AM	7	395	108	0	5	0	0	0	0	0	0	0	0
4/27/2024	10:45 AM	6	414	116	0	4	0	0	0	0	0	0	0	0
4/27/2024	11:00 AM	5	426	115	0	5	0	0	2	0	0	0	0	0
4/27/2024	11:15 AM	2	444	114	0	4	0	0	2	0	0	0	0	0
4/27/2024	11:30 AM	2	478	113	0	3	0	0	2	0	0	0	0	0
4/27/2024	11:45 AM	2	453	117	0	2	0	0	2	0	0	0	0	0
4/27/2024	12:00 PM	1	467	106	0	1	0	0	0	0	0	0	0	0
4/27/2024	12:15 PM	2	467	103	0	3	0	0	0	1	0	0	0	0
4/27/2024	12:30 PM	4	462	115	0	3	0	0	1	1	0	0	0	0
4/27/2024	12:45 PM	4	488	102	0	3	0	0	1	1	0	0	0	0
4/27/2024	1:00 PM	4	491	114	0	4	0	0	2	1	0	0	0	0
4/27/2024	1:15 PM	4	501	116	0	1	0	0	2	0	0	0	0	0
4/27/2024	1:30 PM	3	518	98	0	1	0	0	1	0	0	0	0	0
4/27/2024	1:45 PM	8	509	103	0	1	0	0	1	0	0	0	0	0
4/27/2024	2:00 PM	9	500	98	0	2	0	0	0	1	0	0	0	0
4/27/2024	2:15 PM	11	495	104	0	2	0	0	0	1	0	0	0	0
4/27/2024	2:30 PM	14	487	108	0	3	0	0	0	1	0	0	0	0
4/27/2024	2:45 PM	8	507	103	0	4	0	0	1	1	0	0	0	0
4/27/2024	3:00 PM	8	527	125	0	2	0	0	1	0	0	0	0	0
4/27/2024	3:15 PM	5	566	118	0	3	0	0	1	0	0	0	0	0
4/27/2024	3:30 PM	1	539	112	0	5	0	0	2	0	0	0	0	0
4/27/2024	3:45 PM	11	524	115	0	5	0	0	1	0	0	0	0	0
4/27/2024	4:00 PM	13	512	86	0	6	0	0	1	0	0	0	0	0
4/27/2024	4:15 PM	15	466	81	0	6	1	0	1	0	0	0	0	0
4/27/2024	4:30 PM	17	468	76	0	3	1	0	0	0	0	0	0	0
4/27/2024	4:45 PM	15	460	76	0	5	1	0	1	0	0	0	0	0
4/27/2024	5:00 PM	12	429	77	0	4	1	0	1	0	0	0	0	0
4/27/2024	5:15 PM	12	424	74	0	4	0	0	1	0	0	0	0	0
4/27/2024	5:30 PM	22	409	79	0	5	0	0	1	0	0	0	0	0
4/27/2024	5:45 PM	17	411	80	0	3	0	0	0	0	0	0	0	0
4/27/2024	6:00 PM	24	405	80	0	6	0	0	0	0	0	0	0	0
4/27/2024	6:15 PM	22	377	78	0	8	0	0	0	0	0	0	0	0
4/27/2024	6:30 PM	10	371	72	0	9	0	0	0	0	0	0	0	0
4/27/2024	6:45 PM	7	330	69	0	9	0	0	0	0	0	0	0	0
4/27/2024	7:00 PM	1	333	65	0	6	0	0	0	0	0	0	0	0
4/27/2024	7:15 PM	1	319	61	0	3	0	0	0	0	0	0	0	0
4/27/2024	7:30 PM	2	287	52	0	2	0	0	0	0	0	0	0	0
4/27/2024	7:45 PM	2	269	37	0	1	0	0	0	0	0	0	0	0
4/27/2024	8:00 PM	1	234	30	0	1	0	0	0	0	0	0	0	0
4/27/2024	8:15 PM	1	210	28	0	1	0	0	0	0	0	0	0	0
4/27/2024	8:30 PM	0	182	33	0	0	0	0	0	0	0	0	0	0
4/27/2024	8:45 PM	0	165	39	0	0	0	0	0	0	0	0	0	0
4/27/2024	9:00 PM	0	134	43	0	0	0	0	0	0	0	0	0	0
4/27/2024	9:15 PM	0	109	46	0	0	0	0	0	0	0	0	0	0
4/27/2024	9:30 PM	0	107	49	0	0	0	0	0	0	0	0	0	0
4/27/2024	9:45 PM	0	103	48	0	0	0	0	0	0	0	0	0	0
4/27/2024	10:00 PM	0	116	43	0	0	0	0	0	0	0	0	0	0
4/27/2024	10:15 PM	0	123	41	0	0	0	0	0	0	0	0	0	0
4/27/2024	10:30 PM	0	104	36	0	0	0	0	0	0	0	0	0	0
4/27/2024	10:45 PM	0	85	34	0	0	0	0	0	0	0	0	0	0
4/27/2024	11:00 PM	0	68	36	0	0	0	0	0	0	0	0	0	0
4/27/2024	11:15 PM	0	40	27	0	0	0	0	0	0	0	0	0	0
4/27/2024	11:30 PM	0	30	19	0	0	0	0	0	0	0	0	0	0
4/27/2024	11:45 PM	0	18	10	0	0	0	0	0	0	0	0	0	0

Bi-Directional Class Count || NB EB 15min

Columbia, SC

Marr Traffic DATA COLLECTION
www.marrtraffic.com

Site 74 Lane 2 EB
I-20,
west of US-378 Sunset Blvd S/Bound Off-Ramp

Date
Sunday, April 21, 2024

Lat/Long
34.008085°, -81.156669°

Weather
Cloudy
66°F

Click here for Detailed Weather

Click here for Map

0000 - 2400 (Sunday 24h Session) (04-21-2024)
NB EB 15min

	Eastbound (Movement 74 Lane 2 EB.1)													15min	60min
Time	1	2	3	4	5	6	7	8	9	10	11	12	13	Total	Total
0000 - 0015	0	55	10	0	0	0	0	0	3	0	0	0	0	**68**	
0015 - 0030	0	60	8	0	0	0	0	0	2	0	0	0	0	**70**	
0030 - 0045	0	40	5	0	0	0	0	0	4	0	0	0	0	**49**	
0045 - 0100	0	43	5	0	0	0	0	0	2	0	0	0	0	**50**	**237**
0100 - 0115	0	40	3	0	0	0	0	0	0	0	0	0	0	**43**	
0115 - 0130	0	42	4	0	1	0	0	0	2	0	0	0	0	**49**	
0130 - 0145	0	38	3	1	1	0	0	0	0	0	0	0	0	**43**	
0145 - 0200	0	37	5	1	0	0	0	0	0	0	0	0	0	**43**	**178**
0200 - 0215	0	25	2	0	2	0	0	0	3	0	0	0	0	**32**	
0215 - 0230	0	40	5	0	0	0	0	0	2	0	0	0	0	**47**	
0230 - 0245	0	23	2	0	1	0	0	0	3	0	0	0	0	**29**	
0245 - 0300	0	23	3	0	1	0	0	0	2	0	0	0	0	**29**	**137**
0300 - 0315	0	17	2	0	1	0	0	0	3	0	0	0	0	**23**	
0315 - 0330	0	23	3	0	0	0	0	0	1	0	0	0	0	**27**	
0330 - 0345	0	13	3	0	1	0	0	0	3	0	0	0	0	**20**	
0345 - 0400	0	21	2	0	0	0	0	0	2	0	0	0	0	**25**	**95**
0400 - 0415	0	29	3	0	3	0	0	0	5	0	0	0	0	**40**	
0415 - 0430	0	14	1	0	1	0	0	0	3	0	0	0	0	**19**	
0430 - 0445	0	26	2	1	1	0	0	1	1	0	0	0	0	**32**	
0445 - 0500	0	16	2	0	2	0	0	0	3	0	0	0	0	**23**	**114**
0500 - 0515	0	24	2	0	0	0	0	0	6	0	0	0	0	**32**	
0515 - 0530	0	20	3	0	1	0	0	0	2	0	0	0	0	**26**	
0530 - 0545	0	30	5	0	2	0	0	0	3	0	0	0	0	**40**	
0545 - 0600	0	29	4	0	2	0	0	0	2	0	0	0	0	**37**	**135**
0600 - 0615	0	30	6	0	0	0	0	0	4	0	0	0	0	**40**	
0615 - 0630	0	38	6	0	0	0	0	0	3	0	0	0	0	**47**	
0630 - 0645	0	44	11	0	0	0	0	0	3	0	0	0	0	**58**	
0645 - 0700	0	34	12	0	1	0	0	0	1	0	0	0	0	**48**	**193**
0700 - 0715	0	42	20	0	0	0	0	0	2	0	0	0	0	**64**	
0715 - 0730	1	45	10	0	1	0	0	0	1	0	0	0	0	**58**	
0730 - 0745	0	45	17	1	1	1	0	0	2	0	0	0	0	**67**	
0745 - 0800	0	55	14	0	0	0	0	0	5	0	0	0	0	**74**	**263**
0800 - 0815	1	58	11	0	0	0	0	0	2	0	0	0	0	**72**	
0815 - 0830	1	57	19	1	3	0	0	0	5	0	0	0	0	**86**	
0830 - 0845	0	73	16	0	0	0	0	0	5	0	0	0	0	**94**	
0845 - 0900	0	87	20	0	3	0	0	1	2	0	0	0	0	**113**	**365**
0900 - 0915	2	83	22	1	1	0	0	0	1	1	0	0	0	**111**	
0915 - 0930	0	98	21	0	2	0	0	0	2	0	0	0	0	**123**	
0930 - 0945	0	125	27	0	0	0	0	2	1	0	0	0	0	**155**	
0945 - 1000	0	107	27	0	1	0	0	0	5	0	0	0	0	**140**	**529**
1000 - 1015	0	114	25	0	2	1	0	0	8	0	1	0	0	**151**	
1015 - 1030	0	107	31	0	1	0	0	3	11	0	0	0	0	**153**	
1030 - 1045	0	128	30	0	1	0	0	0	6	0	0	0	0	**165**	
1045 - 1100	0	152	39	1	2	0	0	0	7	0	0	0	0	**201**	**670**
1100 - 1115	0	145	31	0	2	0	0	0	13	0	0	0	0	**191**	
1115 - 1130	0	127	33	0	1	0	0	1	7	0	0	0	0	**169**	
1130 - 1145	1	143	34	0	0	0	0	1	8	0	0	0	0	**187**	
1145 - 1200	0	175	40	0	1	0	0	2	4	0	1	0	0	**223**	**770**
1200 - 1215	0	184	26	0	2	0	0	0	13	0	0	0	0	**225**	
1215 - 1230	0	171	37	0	2	0	0	2	6	0	0	0	0	**218**	
1230 - 1245	0	169	38	0	2	1	0	2	4	0	0	0	0	**216**	
1245 - 1300	0	147	56	0	5	1	0	0	8	0	0	0	0	**217**	**876**
1300 - 1315	0	177	51	0	1	0	0	0	8	0	0	0	0	**237**	
1315 - 1330	0	195	43	0	0	0	0	0	5	0	0	0	0	**243**	
1330 - 1345	0	193	50	0	1	2	0	2	3	0	0	1	0	**252**	
1345 - 1400	1	179	41	1	1	0	0	0	9	0	0	0	0	**232**	**964**
1400 - 1415	0	193	46	0	0	1	0	0	6	0	0	0	0	**246**	
1415 - 1430	0	182	39	0	2	0	0	2	9	0	0	0	0	**234**	
1430 - 1445	0	164	32	0	3	0	0	0	7	0	0	0	0	**206**	
1445 - 1500	0	154	38	0	2	0	0	0	7	1	0	0	0	**202**	**888**
1500 - 1515	0	193	41	0	1	1	0	0	7	0	0	0	0	**243**	
1515 - 1530	0	155	46	0	3	0	0	0	9	0	0	0	0	**213**	
1530 - 1545	1	160	47	0	2	0	0	0	5	0	0	0	0	**215**	
1545 - 1600	0	190	38	0	1	1	0	1	8	1	0	0	0	**240**	**911**
1600 - 1615	0	187	32	0	0	0	0	1	3	0	0	0	0	**223**	
1615 - 1630	0	184	49	0	1	0	0	0	10	0	0	0	0	**244**	
1630 - 1645	0	166	43	1	1	0	0	1	4	0	0	0	0	**216**	
1645 - 1700	0	157	42	0	1	1	0	1	10	0	0	0	0	**212**	**895**
1700 - 1715	0	155	39	0	1	0	0	1	7	0	0	0	0	**203**	
1715 - 1730	0	146	27	0	0	1	0	3	4	0	0	0	0	**181**	
1730 - 1745	0	156	28	1	1	0	0	0	13	0	0	0	0	**199**	
1745 - 1800	0	142	44	0	2	0	0	2	10	0	0	0	0	**200**	**783**
1800 - 1815	0	142	40	0	0	0	0	1	6	0	0	0	0	**189**	
1815 - 1830	0	144	28	0	0	0	0	3	7	0	0	0	0	**182**	
1830 - 1845	1	143	36	0	0	0	0	2	7	0	0	0	0	**189**	
1845 - 1900	0	152	34	0	1	1	0	2	6	0	0	0	0	**196**	**756**
1900 - 1915	0	149	24	0	1	0	0	0	9	0	0	0	0	**183**	
1915 - 1930	0	115	32	0	0	0	0	0	13	0	2	0	0	**162**	
1930 - 1945	0	126	26	1	0	1	0	3	6	0	0	0	0	**163**	
1945 - 2000	0	111	15	0	1	1	0	0	7	0	0	0	0	**135**	**643**
2000 - 2015	0	105	26	0	0	0	0	0	5	0	0	0	0	**136**	
2015 - 2030	0	104	22	0	2	0	0	0	5	0	0	0	0	**133**	
2030 - 2045	0	101	15	0	0	0	0	0	6	0	0	0	0	**122**	
2045 - 2100	0	95	13	0	1	0	0	0	3	0	0	0	0	**112**	**503**
2100 - 2115	0	74	14	1	1	0	0	1	6	0	0	0	0	**97**	
2115 - 2130	0	91	15	0	2	0	0	0	6	0	1	0	0	**115**	
2130 - 2145	0	61	13	0	1	0	0	0	6	0	0	0	0	**81**	
2145 - 2200	0	50	11	0	0	0	0	0	8	0	1	0	0	**70**	**363**
2200 - 2215	0	61	13	0	0	0	0	0	10	0	1	0	0	**85**	
2215 - 2230	0	58	10	0	0	0	0	0	3	0	0	0	0	**71**	
2230 - 2245	0	44	8	1	0	0	0	0	11	0	1	0	0	**65**	
2245 - 2300	0	39	6	2	0	0	0	0	1	0	0	0	0	**48**	**269**
2300 - 2315	0	35	7	0	0	0	0	0	3	0	1	0	0	**46**	
2315 - 2330	0	25	2	1	1	0	0	0	3	0	1	0	0	**33**	
2330 - 2345	0	36	5	0	1	0	0	0	6	0	0	0	0	**48**	
2345 - 0000	0	28	2	0	0	0	0	0	2	0	0	0	0	**32**	**159**

Session Total	9	9028	1999	16	90	14	0	41	485	3	10	1	0	**11696**
Session Average	0.09	94.04	20.82	0.17	0.94	0.15	0.00	0.43	5.05	0.03	0.10	0.01	0.00	**121.83**
Session Percentage	0.08	77.19	17.09	0.14	0.77	0.12	0.00	0.35	4.15	0.03	0.09	0.01	0.00	

AM Peak Hour	0815 - 0915	0945 - 1045	0945 - 1045	0730 - 0830	0815 - 0915	0645 - 0745	-	0930 - 1030	0945 - 1045	0815 - 0915	0915 - 1015	-	-	**0945 - 1045**
AM Peak Volume	3	456	113	2	7	1	0	5	30	1	1	0	0	**609**

Noon Peak Hour	1045 - 1145	1315 - 1415	1245 - 1345	1000 - 1100	1200 - 1300	1245 - 1345	-	1145 - 1245	1015 - 1115	1400 - 1500	1000 - 1100	1245 - 1345	-	**1315 - 1415**
Noon Peak Volume	1	760	200	1	11	3	0	6	37	1	1	1	0	**973**

PM Peak Hour	1500 - 1600	1545 - 1645	1615 - 1715	1545 - 1645	1500 - 1600	1500 - 1600	-	1745 - 1845	1730 - 1830	1500 - 1600	1830 - 1930	-	-	**1545 - 1645**
PM Peak Volume	1	727	173	1	7	2	0	8	36	1	2	0	0	**923**

Site 74 Lane 2 EB
I-20,
west of US-378 Sunset Blvd S/Bound Off-Ramp

Date
Monday, April 22, 2024

Lat/Long
34.008085°, -81.156669°

Weather
Mostly Cloudy
57°F

Click here for Detailed Weather

0000 - 2400 (Weekday 24h Session) (04-22-2024)
NB EB 15min

	Eastbound (Movement 74 Lane 2 EB.1)													15min	60min
Time	1	2	3	4	5	6	7	8	9	10	11	12	13	Total	Total
0000 - 0015	0	17	3	0	2	0	0	0	6	0	0	0	0	**28**	
0015 - 0030	0	15	4	0	1	0	0	0	9	0	0	0	0	**29**	
0030 - 0045	0	17	1	0	0	0	0	0	7	0	0	0	0	**25**	
0045 - 0100	0	13	2	0	1	0	0	0	8	0	0	0	0	**24**	**106**
0100 - 0115	0	11	2	0	0	0	0	0	5	0	0	0	0	**18**	
0115 - 0130	0	11	4	0	0	0	0	0	5	0	0	0	0	**20**	
0130 - 0145	0	12	2	0	1	0	0	0	3	0	0	0	0	**18**	
0145 - 0200	0	12	1	0	1	0	0	0	5	0	0	0	0	**19**	**75**
0200 - 0215	0	8	0	0	0	0	0	0	9	0	0	0	0	**17**	
0215 - 0230	0	11	2	0	2	0	0	0	5	0	0	0	0	**20**	
0230 - 0245	0	10	0	0	1	0	0	0	3	0	0	0	0	**14**	
0245 - 0300	0	13	1	0	1	0	0	0	8	0	0	0	0	**23**	**74**
0300 - 0315	0	16	2	0	1	0	0	0	4	0	0	0	0	**23**	
0315 - 0330	0	17	0	0	1	0	0	0	10	0	0	0	0	**28**	
0330 - 0345	0	18	7	0	1	0	0	0	6	0	0	0	0	**32**	
0345 - 0400	0	17	0	0	1	0	0	0	9	0	0	0	0	**27**	**110**
0400 - 0415	0	18	0	0	0	0	0	0	7	0	0	0	0	**25**	
0415 - 0430	0	17	8	0	2	0	0	0	7	0	0	0	0	**34**	
0430 - 0445	0	21	8	0	0	0	0	0	8	0	0	0	0	**37**	
0445 - 0500	0	25	9	0	1	0	0	0	13	0	0	0	0	**48**	**144**
0500 - 0515	0	40	7	0	0	0	0	0	11	0	0	0	0	**58**	
0515 - 0530	0	47	18	0	3	0	0	0	13	0	0	0	0	**81**	
0530 - 0545	0	55	20	0	1	0	0	0	18	0	0	0	0	**94**	
0545 - 0600	0	81	28	0	3	0	0	0	11	0	0	0	0	**123**	**356**
0600 - 0615	0	77	20	0	1	0	0	0	15	0	0	0	0	**113**	
0615 - 0630	0	125	15	0	5	1	0	0	10	0	0	0	0	**156**	
0630 - 0645	0	123	50	0	3	1	0	1	10	0	0	0	0	**188**	
0645 - 0700	1	121	47	1	7	2	0	1	19	0	0	0	0	**199**	**656**
0700 - 0715	0	124	46	0	7	2	0	1	8	0	0	0	0	**188**	
0715 - 0730	0	133	60	0	6	5	0	2	17	0	0	0	0	**223**	
0730 - 0745	0	139	62	1	3	2	0	3	8	0	0	0	0	**218**	
0745 - 0800	0	143	48	0	5	2	0	1	13	0	0	0	0	**212**	**841**
0800 - 0815	0	123	50	0	2	2	0	1	18	0	0	0	0	**196**	
0815 - 0830	0	105	42	0	6	1	0	1	23	0	0	0	0	**178**	
0830 - 0845	0	117	50	1	10	1	2	2	16	1	0	0	0	**200**	
0845 - 0900	0	98	43	0	6	3	0	4	11	0	0	0	0	**165**	**739**
0900 - 0915	0	99	51	0	9	2	0	5	19	0	0	0	0	**185**	
0915 - 0930	0	93	58	1	5	3	0	2	25	0	0	1	0	**188**	
0930 - 0945	0	87	48	0	10	2	0	5	17	0	0	0	0	**169**	
0945 - 1000	0	85	41	0	6	4	0	1	19	0	0	0	0	**156**	**698**
1000 - 1015	0	91	52	0	5	2	0	4	19	0	0	0	0	**173**	
1015 - 1030	0	121	40	0	8	0	0	2	30	0	0	0	0	**201**	
1030 - 1045	0	106	47	0	5	4	0	1	34	0	0	0	0	**197**	
1045 - 1100	1	117	45	1	12	2	0	0	25	0	0	0	0	**203**	**774**
1100 - 1115	0	124	56	0	3	1	0	2	24	0	0	0	0	**210**	
1115 - 1130	0	98	41	0	4	0	0	1	24	0	0	0	0	**168**	
1130 - 1145	0	111	44	0	4	2	0	3	39	0	0	0	0	**203**	
1145 - 1200	0	111	35	0	6	2	0	0	22	0	0	0	0	**176**	**757**
1200 - 1215	1	125	49	0	2	2	0	4	25	0	0	0	0	**208**	
1215 - 1230	0	132	42	0	9	0	0	2	31	0	0	0	0	**216**	
1230 - 1245	0	119	39	0	5	2	0	2	22	0	0	0	0	**189**	
1245 - 1300	0	125	53	1	3	3	0	6	27	0	0	0	0	**218**	**831**
1300 - 1315	0	113	30	0	11	0	0	4	28	1	0	0	0	**187**	
1315 - 1330	0	141	44	1	3	2	0	3	27	0	0	0	0	**221**	
1330 - 1345	0	158	52	1	7	2	0	4	21	0	0	0	0	**245**	
1345 - 1400	0	139	41	1	5	2	0	4	35	0	0	0	0	**227**	**880**
1400 - 1415	0	133	49	0	3	4	0	1	21	0	0	0	0	**211**	
1415 - 1430	0	138	54	0	6	4	0	2	32	1	0	0	0	**237**	
1430 - 1445	0	139	61	0	8	2	0	5	32	0	0	0	0	**247**	
1445 - 1500	0	142	51	3	5	3	3	3	35	0	0	0	0	**245**	**940**
1500 - 1515	0	161	54	0	7	2	0	3	42	0	0	0	0	**269**	
1515 - 1530	0	171	40	0	5	2	0	3	35	0	0	0	0	**256**	
1530 - 1545	0	157	56	0	11	6	3	2	36	1	0	0	0	**272**	
1545 - 1600	1	188	58	1	2	1	0	2	31	1	0	0	0	**285**	**1082**
1600 - 1615	0	188	70	0	5	2	0	3	31	1	0	0	0	**300**	
1615 - 1630	0	205	54	0	4	1	0	1	30	1	0	0	0	**296**	
1630 - 1645	0	209	55	0	8	2	2	7	31	0	0	0	0	**314**	
1645 - 1700	0	197	62	0	11	2	0	1	32	0	0	0	0	**305**	**1215**
1700 - 1715	0	205	66	2	7	3	0	4	33	1	0	0	0	**321**	
1715 - 1730	0	206	57	0	7	3	0	3	29	0	0	0	0	**305**	
1730 - 1745	0	185	61	0	9	3	0	2	35	0	0	0	0	**295**	
1745 - 1800	0	168	59	0	4	2	0	5	31	1	0	0	0	**270**	**1191**
1800 - 1815	0	155	53	0	3	1	0	0	23	0	0	0	0	**235**	
1815 - 1830	0	165	45	0	4	3	0	3	26	0	0	0	0	**246**	
1830 - 1845	0	132	45	0	1	1	0	2	24	0	0	0	0	**205**	
1845 - 1900	0	111	39	0	1	2	0	1	23	0	0	0	0	**177**	**863**
1900 - 1915	0	104	35	0	1	1	0	3	23	0	0	0	0	**167**	
1915 - 1930	0	110	26	0	2	1	0	1	22	0	0	0	0	**162**	
1930 - 1945	0	104	30	0	3	2	0	2	26	0	1	0	0	**168**	
1945 - 2000	0	106	21	0	2	3	0	1	15	0	0	0	0	**148**	**645**
2000 - 2015	0	101	30	0	2	0	0	1	16	0	1	0	0	**151**	
2015 - 2030	0	90	13	0	1	2	0	3	12	0	1	0	0	**122**	
2030 - 2045	0	89	12	0	0	0	0	0	23	0	0	0	0	**124**	
2045 - 2100	0	87	13	0	2	0	0	0	20	0	0	0	0	**122**	**519**
2100 - 2115	0	89	11	0	1	0	0	0	18	0	0	0	0	**119**	
2115 - 2130	0	92	13	0	1	0	0	0	18	0	0	0	0	**124**	
2130 - 2145	0	70	14	0	3	0	0	0	13	0	0	0	0	**100**	
2145 - 2200	0	51	13	0	0	0	0	0	11	0	0	0	0	**75**	**418**
2200 - 2215	0	40	10	0	1	0	0	0	16	0	0	0	0	**67**	
2215 - 2230	0	39	12	0	0	0	0	0	12	0	0	0	0	**63**	
2230 - 2245	0	38	14	0	4	0	0	0	7	0	0	0	0	**63**	
2245 - 2300	0	30	12	0	0	0	0	0	14	0	0	0	0	**56**	**249**
2300 - 2315	0	31	13	0	0	0	0	0	14	0	0	0	0	**58**	
2315 - 2330	0	30	14	0	1	0	0	0	8	0	0	0	0	**53**	
2330 - 2345	0	21	7	0	2	0	0	0	5	0	0	0	0	**35**	
2345 - 0000	0	20	12	0	0	0	0	0	4	0	0	0	0	**36**	**182**

Session Total	4	8942	2984	15	344	117	10	136	1780	9	3	1	0	**14345**
Session Average	0.04	93.15	31.08	0.16	3.58	1.22	0.10	1.42	18.54	0.09	0.03	0.01	0.00	**149.43**
Session Percentage	0.03	62.34	20.80	0.10	2.40	0.82	0.07	0.95	12.41	0.06	0.02	0.01	0.00	

AM Peak Hour	0600 - 0700	0700 - 0800	0715 - 0815	0645 - 0745	0815 - 0915	0645 - 0745	0745 - 0845	0845 - 0945	0945 - 1045	0745 - 0845	-	0830 - 0930	-	**0715 - 0815**
AM Peak Volume	1	539	220	2	31	11	2	16	102	1	0	1	0	**849**

Noon Peak Hour	1000 - 1100	1445 - 1545	1415 - 1515	1245 - 1345	1000 - 1100	1400 - 1500	1445 - 1545	1245 - 1345	1445 - 1545	1215 - 1315	-	-	-	**1445 - 1545**
Noon Peak Volume	1	631	220	3	30	13	6	17	148	1	0	0	0	**1042**

PM Peak Hour	1500 - 1600	1630 - 1730	1645 - 1745	1615 - 1715	1645 - 1745	1500 - 1600	1500 - 1600	1630 - 1730	1500 - 1600	1530 - 1630	1930 - 2030	-	-	**1630 - 1730**
PM Peak Volume	1	817	246	2	34	11	3	15	144	4	3	0	0	**1245**

Site 74 Lane 2 EB
I-20,
west of US-378 Sunset Blvd S/Bound Off-Ramp

Date
Tuesday, April 23, 2024

Lat/Long
34.008085°, -81.156669°

Weather
Fair
58°F

Click here for Detailed Weather

0000 - 2400 (Weekday 24h Session) (04-23-2024)
NB EB 15min

	Eastbound (Movement 74 Lane 2 EB.1)													15min	60min
TIME	1	2	3	4	5	6	7	8	9	10	11	12	13	Total	Total
0000 - 0015	0	13	1	0	0	0	0	0	4	0	1	0	0	**19**	
0015 - 0030	0	22	0	0	0	0	0	0	5	0	0	0	0	**27**	
0030 - 0045	0	15	2	0	0	0	0	0	5	0	1	0	0	**23**	
0045 - 0100	0	23	1	0	0	1	0	0	7	0	0	0	0	**32**	**101**
0100 - 0115	0	25	1	0	3	0	0	0	7	0	1	0	0	**37**	
0115 - 0130	0	24	0	0	0	0	0	0	9	0	0	0	0	**33**	
0130 - 0145	0	15	0	0	0	0	0	0	11	0	0	0	0	**26**	
0145 - 0200	0	14	1	0	1	0	0	0	9	0	1	0	0	**26**	**122**
0200 - 0215	0	24	0	0	2	0	0	0	11	0	0	0	0	**37**	
0215 - 0230	0	19	0	0	0	0	0	0	10	0	0	0	0	**29**	
0230 - 0245	0	16	1	0	1	0	0	0	9	0	0	0	0	**27**	
0245 - 0300	0	25	1	0	0	0	0	0	9	0	0	0	0	**35**	**128**
0300 - 0315	0	10	0	0	1	0	0	0	4	0	0	0	0	**15**	
0315 - 0330	0	25	0	0	0	0	0	2	13	0	1	0	0	**41**	
0330 - 0345	0	21	1	0	1	0	0	1	11	0	0	0	0	**35**	
0345 - 0400	0	28	1	0	2	0	0	0	15	0	1	0	0	**47**	**138**
0400 - 0415	0	30	2	0	1	0	0	0	12	0	0	0	0	**45**	
0415 - 0430	0	22	5	0	0	0	0	0	8	0	0	0	0	**35**	
0430 - 0445	0	39	2	0	2	0	0	0	10	0	3	0	0	**56**	
0445 - 0500	0	37	0	0	0	0	0	0	14	0	1	0	0	**52**	**188**
0500 - 0515	0	46	3	0	0	0	0	0	9	0	0	0	0	**58**	
0515 - 0530	0	64	4	0	3	1	0	0	15	0	0	0	0	**87**	
0530 - 0545	0	95	9	0	0	0	0	0	18	0	0	0	0	**122**	
0545 - 0600	0	83	13	0	4	1	0	0	10	0	0	0	0	**111**	**378**
0600 - 0615	0	88	25	0	3	0	0	0	15	0	0	0	0	**131**	
0615 - 0630	0	99	45	0	3	0	0	2	24	0	0	0	0	**173**	
0630 - 0645	1	113	44	0	2	3	0	0	18	0	0	0	0	**181**	
0645 - 0700	0	109	51	0	4	2	0	1	14	0	1	0	0	**182**	**667**
0700 - 0715	0	119	64	0	0	0	0	1	13	0	0	0	0	**197**	
0715 - 0730	0	145	63	0	9	1	0	0	13	0	0	0	0	**231**	
0730 - 0745	1	150	37	1	3	1	1	1	9	0	0	0	0	**204**	
0745 - 0800	0	154	52	0	5	0	0	1	13	0	0	0	0	**225**	**857**
0800 - 0815	1	128	38	0	11	3	0	0	10	0	0	0	0	**191**	
0815 - 0830	0	86	45	0	6	2	0	1	12	0	0	0	0	**152**	
0830 - 0845	0	122	37	0	8	1	0	0	11	0	0	0	0	**179**	
0845 - 0900	0	135	48	0	7	1	0	0	19	0	1	0	0	**211**	**733**
0900 - 0915	0	105	52	2	7	2	0	0	29	0	0	0	0	**197**	
0915 - 0930	0	111	47	1	9	5	0	1	23	0	0	0	0	**197**	
0930 - 0945	0	116	46	1	4	1	0	1	23	0	0	0	0	**192**	
0945 - 1000	0	114	37	0	5	0	0	2	16	0	0	0	0	**174**	**760**
1000 - 1015	0	102	44	0	5	4	0	1	17	0	0	0	0	**173**	
1015 - 1030	0	107	41	1	13	3	0	1	14	0	0	0	0	**180**	
1030 - 1045	0	125	33	0	6	1	0	1	31	1	0	0	0	**198**	
1045 - 1100	0	101	54	0	8	3	0	0	32	0	0	0	0	**198**	**749**
1100 - 1115	0	101	43	0	6	2	0	0	32	0	0	0	0	**184**	
1115 - 1130	0	99	38	0	5	2	1	2	36	0	0	0	0	**183**	
1130 - 1145	2	123	42	0	5	2	0	2	30	0	0	0	0	**206**	
1145 - 1200	1	126	40	0	4	2	0	0	30	0	0	0	0	**203**	**776**
1200 - 1215	1	105	45	0	7	0	0	2	27	0	0	0	0	**187**	
1215 - 1230	0	124	44	0	3	3	0	2	39	0	0	0	0	**215**	
1230 - 1245	0	121	35	1	8	0	0	2	32	0	0	0	0	**199**	
1245 - 1300	0	130	44	1	3	4	0	1	35	0	0	0	0	**218**	**819**
1300 - 1315	0	119	44	0	5	1	0	2	38	1	0	0	0	**210**	
1315 - 1330	0	128	38	0	6	3	0	2	30	2	0	0	0	**209**	
1330 - 1345	0	148	43	0	8	2	0	1	28	0	0	0	0	**230**	
1345 - 1400	0	120	46	0	2	3	0	3	30	2	0	0	0	**206**	**855**
1400 - 1415	1	143	41	0	6	7	0	4	36	0	0	0	0	**238**	
1415 - 1430	0	152	50	5	5	0	0	1	33	1	0	0	0	**247**	
1430 - 1445	0	149	49	0	6	1	0	6	27	1	1	0	0	**240**	
1445 - 1500	1	146	62	0	7	2	2	5	29	0	1	0	0	**255**	**980**
1500 - 1515	1	146	65	0	5	3	1	6	37	0	0	0	0	**264**	
1515 - 1530	0	168	60	0	11	4	0	4	26	0	0	0	0	**273**	
1530 - 1545	0	162	64	0	5	4	0	9	42	0	0	0	0	**286**	
1545 - 1600	0	187	63	0	7	2	1	3	40	2	0	0	0	**305**	**1128**
1600 - 1615	0	189	83	1	8	3	2	6	28	0	1	0	0	**321**	
1615 - 1630	0	225	67	0	9	1	0	5	29	0	0	0	0	**336**	
1630 - 1645	0	201	55	0	11	4	0	3	34	0	0	0	0	**308**	
1645 - 1700	0	194	61	1	11	4	0	4	26	0	1	0	0	**302**	**1267**
1700 - 1715	0	205	61	0	5	2	0	3	12	1	0	0	0	**289**	
1715 - 1730	0	334	56	1	13	4	0	1	20	1	0	0	0	**430**	
1730 - 1745	1	184	56	0	12	1	0	6	32	0	0	0	0	**292**	
1745 - 1800	0	191	57	0	6	1	1	4	37	2	0	0	0	**299**	**1310**
1800 - 1815	1	161	58	0	8	2	0	3	27	0	0	0	0	**260**	
1815 - 1830	0	153	35	0	6	1	0	3	28	0	0	0	0	**226**	
1830 - 1845	0	132	38	0	3	2	0	0	15	0	0	0	0	**190**	
1845 - 1900	0	111	26	0	1	1	0	3	16	0	0	0	0	**158**	**834**
1900 - 1915	2	110	33	0	9	0	0	0	19	0	0	0	0	**173**	
1915 - 1930	1	99	27	0	3	0	0	0	18	0	2	0	0	**150**	
1930 - 1945	1	92	31	0	1	3	0	1	19	0	0	0	0	**148**	
1945 - 2000	1	84	39	0	1	0	0	0	12	0	0	0	0	**137**	**608**
2000 - 2015	0	90	39	0	3	5	0	0	16	0	0	0	0	**153**	
2015 - 2030	0	101	31	0	4	0	0	1	19	0	1	0	0	**157**	
2030 - 2045	0	98	23	0	1	1	0	0	13	0	0	0	0	**136**	
2045 - 2100	0	89	20	0	3	0	0	0	24	0	1	0	0	**137**	**583**
2100 - 2115	0	83	32	0	4	0	0	0	16	0	0	0	0	**135**	
2115 - 2130	1	98	30	0	0	0	0	0	14	0	0	0	0	**143**	
2130 - 2145	0	90	32	0	3	0	0	0	8	0	0	0	0	**133**	
2145 - 2200	0	72	10	0	1	0	0	0	9	0	2	0	0	**94**	**505**
2200 - 2215	0	65	11	0	2	0	0	0	10	0	1	0	0	**89**	
2215 - 2230	0	64	13	0	1	0	0	0	10	0	1	0	0	**89**	
2230 - 2245	0	58	15	0	0	0	0	0	14	0	1	0	0	**88**	
2245 - 2300	0	44	10	0	0	0	0	0	8	0	1	0	0	**63**	**329**
2300 - 2315	0	39	11	0	0	0	0	0	5	0	1	0	0	**56**	
2315 - 2330	0	38	16	0	0	0	0	0	8	0	1	0	0	**63**	
2330 - 2345	0	25	11	0	0	0	0	0	5	0	2	0	0	**43**	
2345 - 0000	0	24	9	0	2	0	0	0	3	0	0	0	0	**38**	**200**

Session Total	18	9504	3003	16	384	118	9	117	1802	14	30	0	0	**15015**
Session Average	0.19	99.00	31.28	0.17	4.00	1.23	0.09	1.22	18.77	0.15	0.31	0.00	0.00	**156.41**
Session Percentage	0.12	63.30	20.00	0.11	2.56	0.79	0.06	0.78	12.00	0.09	0.20	0.00	0.00	

AM Peak Hour	0715 - 0815	0715 - 0815	0630 - 0730	0845 - 0945	0800 - 0900	0915 - 1015	0645 - 0745	0915 - 1015	0845 - 0945	0945 - 1045	0600 - 0700	-	-	**0700 - 0800**
AM Peak Hour Volume	2	577	222	4	32	10	1	5	94	1	1	0	0	**857**

Noon Peak Hour	1115 - 1215	1445 - 1545	1445 - 1545	1330 - 1430	1015 - 1115	1315 - 1415	1415 - 1515	1445 - 1545	1215 - 1315	1300 - 1400	1400 - 1500	-	-	**1445 - 1545**
Noon Peak Hour Volume	4	622	251	5	33	15	3	24	144	5	2	0	0	**1078**

PM Peak Hour	1900 - 2000	1630 - 1730	1530 - 1630	1600 - 1700	1645 - 1745	1630 - 1730	1515 - 1615	1530 - 1630	1500 - 1600	1700 - 1800	1600 - 1700	-	-	**1630 - 1730**
PM Peak Hour Volume	5	934	277	2	41	14	3	23	145	4	2	0	0	**1329**

Site 74 Lane 2 EB
I-20,
west of US-378 Sunset Blvd S/Bound Off-Ramp

Date
Wednesday, April 24, 2024

Lat/Long
34.008085°, -81.156669°

Weather
Fair
66°F

Click here for Detailed Weather

0000 - 2400 (Weekday 24h Session) (04-24-2024)
NB EB 15min

	Eastbound (Movement 74 Lane 2 EB.1)													15min	60min
TIME	1	2	3	4	5	6	7	8	9	10	11	12	13	Total	Total
0000 - 0015	0	25	6	0	1	0	0	0	12	0	4	0	0	**48**	
0015 - 0030	0	24	6	0	0	0	0	0	7	0	0	0	0	**37**	
0030 - 0045	0	17	2	0	0	0	0	0	8	0	0	0	0	**27**	
0045 - 0100	0	14	2	0	1	0	0	0	5	0	0	0	0	**22**	**134**
0100 - 0115	0	18	1	0	3	0	0	0	4	0	0	0	0	**26**	
0115 - 0130	0	12	1	0	0	1	0	0	10	0	1	0	0	**25**	
0130 - 0145	0	14	2	0	1	1	0	0	2	0	0	0	0	**20**	
0145 - 0200	0	15	1	0	2	0	0	0	4	0	0	0	0	**22**	**93**
0200 - 0215	0	12	3	0	0	0	0	0	8	0	1	0	0	**24**	
0215 - 0230	0	15	2	0	1	1	0	0	4	0	0	0	0	**23**	
0230 - 0245	0	10	1	0	1	0	0	0	8	0	0	0	0	**20**	
0245 - 0300	0	9	3	0	0	0	0	0	9	0	2	0	0	**23**	**90**
0300 - 0315	0	13	2	0	0	0	0	0	10	0	0	0	0	**25**	
0315 - 0330	0	15	3	0	0	0	0	0	7	0	0	0	0	**25**	
0330 - 0345	0	16	4	0	1	1	0	0	7	0	0	0	0	**29**	
0345 - 0400	0	24	3	2	1	0	0	0	4	0	0	0	0	**34**	**113**
0400 - 0415	0	20	4	0	0	0	0	0	9	0	0	0	0	**33**	
0415 - 0430	0	15	1	0	1	0	0	0	5	0	0	0	0	**22**	
0430 - 0445	0	25	5	0	0	0	0	0	6	0	2	0	0	**38**	
0445 - 0500	0	20	3	0	3	0	0	0	8	0	0	0	0	**34**	**127**
0500 - 0515	0	36	4	0	4	0	0	0	10	0	1	0	0	**55**	
0515 - 0530	0	51	5	0	2	1	0	0	17	0	0	0	0	**76**	
0530 - 0545	0	69	8	0	1	0	0	0	7	0	0	0	0	**85**	
0545 - 0600	0	65	6	0	1	0	0	0	10	0	0	0	0	**82**	**298**
0600 - 0615	1	80	26	0	8	1	0	1	10	0	1	0	0	**128**	
0615 - 0630	0	97	44	0	2	0	0	3	11	0	0	0	0	**157**	
0630 - 0645	1	147	49	0	2	0	0	2	17	0	1	0	0	**219**	
0645 - 0700	0	104	56	0	6	1	0	3	18	0	0	0	0	**188**	**692**
0700 - 0715	0	118	44	0	5	3	0	2	29	0	1	0	0	**202**	
0715 - 0730	0	147	57	0	6	2	0	4	12	0	0	0	0	**228**	
0730 - 0745	0	135	59	0	9	2	0	2	19	0	1	0	0	**227**	
0745 - 0800	0	123	60	0	6	0	0	4	14	0	0	1	0	**208**	**865**
0800 - 0815	0	98	30	0	4	2	0	1	17	0	0	0	0	**152**	
0815 - 0830	0	112	51	0	10	3	2	1	14	0	0	0	0	**193**	
0830 - 0845	0	103	44	0	7	1	0	1	19	0	0	0	0	**175**	
0845 - 0900	0	108	42	0	7	2	0	2	23	1	0	0	0	**185**	**705**
0900 - 0915	1	89	42	1	3	2	2	1	29	0	0	0	0	**170**	
0915 - 0930	0	81	38	0	8	4	1	0	16	0	0	0	0	**148**	
0930 - 0945	0	94	52	1	5	0	0	3	19	1	1	0	0	**176**	
0945 - 1000	1	112	45	2	7	2	1	3	33	1	0	0	0	**207**	**701**
1000 - 1015	0	110	52	0	2	3	0	3	35	0	0	0	0	**205**	
1015 - 1030	1	111	44	0	7	1	0	2	28	0	0	0	0	**194**	
1030 - 1045	0	129	63	0	3	0	0	6	25	0	0	0	0	**226**	
1045 - 1100	0	114	30	1	5	4	0	1	34	1	0	0	0	**190**	**815**
1100 - 1115	0	94	53	1	9	1	0	1	27	0	0	0	0	**186**	
1115 - 1130	0	101	39	0	2	1	0	1	26	1	0	0	0	**171**	
1130 - 1145	2	115	42	0	5	0	0	5	25	0	0	0	0	**194**	
1145 - 1200	1	104	53	0	7	3	0	2	23	0	0	0	0	**193**	**744**
1200 - 1215	0	111	33	0	4	2	0	5	41	0	0	1	0	**197**	
1215 - 1230	1	135	49	0	8	0	2	6	46	1	0	0	0	**248**	
1230 - 1245	0	127	57	0	5	0	2	4	23	2	0	0	0	**220**	
1245 - 1300	0	117	41	0	6	5	0	1	38	2	0	0	0	**210**	**875**
1300 - 1315	0	124	39	0	5	3	0	2	45	0	0	0	0	**218**	
1315 - 1330	2	128	55	1	9	2	0	1	37	0	0	0	0	**235**	
1330 - 1345	1	142	44	0	7	1	0	3	38	0	0	0	0	**236**	
1345 - 1400	0	121	52	0	6	3	0	1	26	0	0	0	0	**209**	**898**
1400 - 1415	0	126	63	0	8	3	0	0	34	0	0	0	0	**234**	
1415 - 1430	0	166	51	0	2	1	0	2	42	0	0	0	0	**264**	
1430 - 1445	0	145	51	2	7	0	1	3	36	0	0	1	0	**246**	
1445 - 1500	1	153	55	3	7	1	0	3	28	0	0	0	0	**251**	**995**
1500 - 1515	1	154	62	0	6	3	0	1	44	1	0	0	0	**272**	
1515 - 1530	0	164	75	1	7	1	0	5	34	0	0	0	0	**287**	
1530 - 1545	0	172	62	0	20	3	1	4	38	0	0	0	0	**300**	
1545 - 1600	0	187	74	0	5	3	0	3	38	0	0	1	0	**311**	**1170**
1600 - 1615	1	183	80	2	7	5	1	3	45	0	0	0	0	**327**	
1615 - 1630	0	210	70	1	12	2	0	6	27	1	0	0	0	**329**	
1630 - 1645	0	196	65	2	10	2	0	5	45	0	0	0	0	**325**	
1645 - 1700	0	189	56	0	10	1	0	4	38	0	0	0	0	**298**	**1279**
1700 - 1715	0	186	75	0	11	2	0	2	34	0	0	0	0	**310**	
1715 - 1730	0	208	69	1	4	1	1	2	35	0	0	0	0	**321**	
1730 - 1745	0	175	53	0	8	0	0	1	31	0	0	0	0	**268**	
1745 - 1800	0	169	52	2	6	2	1	3	33	0	0	0	0	**268**	**1167**
1800 - 1815	0	153	44	0	5	0	0	2	33	0	0	0	0	**237**	
1815 - 1830	1	163	39	3	8	2	0	3	23	1	0	0	0	**243**	
1830 - 1845	0	130	40	0	3	1	0	0	25	0	0	0	0	**199**	
1845 - 1900	0	127	29	0	9	0	0	0	16	0	0	0	0	**181**	**860**
1900 - 1915	0	109	32	0	4	1	0	3	21	0	0	0	0	**170**	
1915 - 1930	0	115	36	0	1	0	0	1	16	0	0	0	0	**169**	
1930 - 1945	1	103	32	0	3	0	0	3	19	0	0	0	0	**161**	
1945 - 2000	0	94	26	0	3	0	0	2	14	0	1	0	0	**140**	**640**
2000 - 2015	0	93	23	0	1	1	0	1	17	0	1	0	0	**137**	
2015 - 2030	0	103	24	0	1	1	0	2	12	0	0	0	0	**143**	
2030 - 2045	0	98	20	0	2	0	0	0	16	0	0	0	0	**136**	
2045 - 2100	0	120	39	1	2	0	0	0	14	0	0	0	0	**176**	**592**
2100 - 2115	0	95	12	0	1	0	0	0	13	0	2	0	0	**123**	
2115 - 2130	0	88	8	0	1	0	0	0	12	0	0	0	0	**109**	
2130 - 2145	0	89	9	0	0	0	0	0	15	0	2	0	0	**115**	
2145 - 2200	0	75	6	0	1	0	0	1	18	0	1	0	0	**102**	**449**
2200 - 2215	0	65	3	0	0	0	0	0	11	0	1	0	0	**80**	
2215 - 2230	0	68	3	1	2	0	0	0	11	0	3	0	0	**88**	
2230 - 2245	0	69	4	0	0	0	0	0	6	0	1	0	0	**80**	
2245 - 2300	0	48	1	0	1	0	0	0	9	0	2	0	0	**61**	**309**
2300 - 2315	1	50	4	1	0	0	0	0	10	0	1	0	0	**67**	
2315 - 2330	0	47	3	0	2	0	0	0	15	0	0	0	0	**67**	
2330 - 2345	0	34	2	0	0	0	0	0	11	0	0	0	0	**47**	
2345 - 0000	0	37	2	0	0	0	0	0	4	0	1	0	0	**44**	**225**

Session Total	18	9141	3017	29	389	95	15	142	1941	13	32	4	0	**14836**
Session Average	0.19	95.22	31.43	0.30	4.05	0.99	0.16	1.48	20.22	0.14	0.33	0.04	0.00	**154.54**
Session Percentage	0.12	61.61	20.34	0.20	2.62	0.64	0.10	0.96	13.08	0.09	0.22	0.03	0.00	

AM Peak Hour	0545 - 0645	0700 - 0800	0700 - 0800	0900 - 1000	0730 - 0830	0830 - 0930	0815 - 0915	0945 - 1045	0945 - 1045	0845 - 0945	0545 - 0645	0700 - 0800	-	**0700 - 0800**
AM Peak Hour Volume	2	523	220	4	29	9	4	14	121	2	2	1	0	**865**

Noon Peak Hour	1130 - 1230	1445 - 1545	1445 - 1545	1430 - 1530	1445 - 1545	1245 - 1345	1145 - 1245	1130 - 1230	1245 - 1345	1200 - 1300	-	1115 - 1215	-	**1445 - 1545**
Noon Peak Hour Volume	4	643	254	6	40	11	4	18	158	5	0	1	0	**1110**

PM Peak Hour	1500 - 1600	1615 - 1715	1515 - 1615	1545 - 1645	1530 - 1630	1530 - 1630	1515 - 1615	1600 - 1700	1515 - 1615	1500 - 1600	1915 - 2015	1500 - 1600	-	**1545 - 1645**
PM Peak Hour Volume	1	781	291	5	44	13	2	18	155	1	2	1	0	**1292**

Site 74 Lane 2 EB
I-20,
west of US-378 Sunset Blvd S/Bound Off-Ramp

Date
Thursday, April 25, 2024

Lat/Long
34.008085°, -81.156669°

Weather
Fair
67°F

Click here for Detailed Weather

0000 - 2400 (Weekday 24h Session) (04-25-2024)
NB EB 15min

	Eastbound (Movement 74 Lane 2 EB.1)													15min	60min
TIME	1	2	3	4	5	6	7	8	9	10	11	12	13	Total	Total
0000 - 0015	0	29	8	0	0	1	0	2	8	0	0	0	0	**48**	
0015 - 0030	0	18	5	0	0	1	0	0	16	0	2	0	0	**42**	
0030 - 0045	0	15	3	0	2	0	0	0	12	0	1	0	0	**33**	
0045 - 0100	0	15	0	0	1	0	0	0	1	0	0	0	0	**17**	**140**
0100 - 0115	0	19	1	0	2	1	0	0	8	0	1	0	0	**32**	
0115 - 0130	0	13	1	0	0	1	0	0	3	0	0	0	0	**18**	
0130 - 0145	0	12	0	0	0	0	0	0	8	0	1	0	0	**21**	
0145 - 0200	0	13	0	0	0	0	0	0	5	0	0	0	0	**18**	**89**
0200 - 0215	0	17	1	0	1	0	0	0	7	0	1	0	0	**27**	
0215 - 0230	0	20	1	0	1	0	0	0	4	0	0	0	0	**26**	
0230 - 0245	0	10	0	0	0	0	0	0	5	0	0	0	0	**15**	
0245 - 0300	0	15	1	0	1	0	0	0	10	0	1	0	0	**28**	**96**
0300 - 0315	0	17	0	0	0	0	0	0	9	0	0	0	0	**26**	
0315 - 0330	0	13	0	0	1	0	0	0	5	0	1	0	0	**20**	
0330 - 0345	0	15	0	0	1	0	0	0	6	0	1	0	0	**23**	
0345 - 0400	0	32	0	0	1	0	0	0	5	0	0	0	0	**38**	**107**
0400 - 0415	0	20	3	0	2	0	0	0	3	0	0	0	0	**28**	
0415 - 0430	0	19	1	0	1	0	0	0	7	0	1	0	0	**29**	
0430 - 0445	0	32	0	0	0	0	0	0	8	0	0	0	0	**40**	
0445 - 0500	0	29	4	0	1	0	0	0	5	0	0	0	0	**39**	**136**
0500 - 0515	0	29	0	0	0	0	0	0	14	0	1	0	0	**44**	
0515 - 0530	0	51	0	0	0	0	0	0	7	0	0	0	0	**58**	
0530 - 0545	0	63	2	0	0	0	0	0	17	0	0	0	0	**82**	
0545 - 0600	0	87	3	0	0	0	0	0	16	0	1	0	0	**107**	**291**
0600 - 0615	0	119	4	0	1	0	0	0	19	0	2	0	0	**145**	
0615 - 0630	1	91	35	0	5	2	0	0	23	0	2	0	0	**159**	
0630 - 0645	0	111	42	0	4	2	0	0	16	0	0	0	0	**175**	
0645 - 0700	0	99	46	0	2	2	0	1	19	0	0	0	0	**169**	**648**
0700 - 0715	0	122	44	0	5	8	0	0	17	0	1	0	0	**197**	
0715 - 0730	0	139	49	1	6	3	1	1	25	0	0	0	0	**225**	
0730 - 0745	1	151	46	0	9	0	0	0	14	0	0	0	0	**221**	
0745 - 0800	0	163	60	0	9	1	0	0	15	0	0	0	0	**248**	**891**
0800 - 0815	0	116	64	1	4	3	0	0	22	0	0	0	0	**210**	
0815 - 0830	0	119	63	0	7	2	0	1	26	2	1	0	0	**221**	
0830 - 0845	0	101	56	0	14	2	0	2	27	0	0	0	0	**202**	
0845 - 0900	0	105	61	0	9	1	0	1	24	0	0	0	0	**201**	**834**
0900 - 0915	1	90	47	1	5	3	0	2	29	1	0	0	0	**179**	
0915 - 0930	1	97	54	0	4	2	0	1	22	1	0	0	0	**182**	
0930 - 0945	0	116	48	0	3	1	0	4	36	0	0	0	0	**208**	
0945 - 1000	0	123	39	0	9	2	0	2	18	0	0	0	0	**193**	**762**
1000 - 1015	0	114	54	0	0	5	1	2	25	0	0	0	0	**201**	
1015 - 1030	0	119	44	0	6	0	0	2	19	0	0	0	0	**190**	
1030 - 1045	0	120	43	0	10	1	0	1	33	0	0	0	0	**208**	
1045 - 1100	0	117	41	0	6	1	1	8	33	0	0	0	0	**207**	**806**
1100 - 1115	0	121	35	0	3	3	0	3	36	0	0	0	0	**201**	
1115 - 1130	0	123	36	0	7	4	0	3	31	0	0	0	0	**204**	
1130 - 1145	1	112	43	0	10	1	0	3	40	0	1	0	0	**211**	
1145 - 1200	1	107	63	0	3	3	0	0	31	0	0	0	0	**208**	**824**
1200 - 1215	0	100	43	0	8	3	0	1	35	1	0	0	0	**191**	
1215 - 1230	0	132	51	0	7	1	1	3	32	0	1	0	0	**228**	
1230 - 1245	0	116	50	0	8	3	1	2	39	0	0	0	0	**219**	
1245 - 1300	0	137	45	1	6	0	0	3	40	0	0	0	0	**232**	**870**
1300 - 1315	0	119	57	0	8	2	1	5	35	0	1	0	0	**228**	
1315 - 1330	0	151	55	2	9	4	1	0	28	1	0	0	0	**251**	
1330 - 1345	0	169	53	1	6	1	0	3	34	1	0	0	0	**268**	
1345 - 1400	1	164	66	0	2	0	0	4	41	0	0	0	0	**278**	**1025**
1400 - 1415	0	153	58	0	11	6	0	6	32	1	0	0	0	**267**	
1415 - 1430	1	149	64	0	5	1	0	1	50	1	0	0	0	**272**	
1430 - 1445	0	147	63	1	10	0	0	2	45	1	0	0	0	**269**	
1445 - 1500	1	154	58	0	10	1	0	3	31	0	0	1	0	**259**	**1067**
1500 - 1515	1	191	78	0	5	1	0	1	37	0	0	0	0	**314**	
1515 - 1530	0	198	59	0	10	1	0	2	33	1	1	0	0	**305**	
1530 - 1545	1	196	85	1	6	2	2	1	31	0	0	0	0	**325**	
1545 - 1600	0	168	81	0	9	0	0	5	32	0	0	0	0	**295**	**1239**
1600 - 1615	0	205	66	1	9	1	0	3	39	0	0	0	0	**324**	
1615 - 1630	0	239	85	0	12	3	0	0	21	0	0	0	0	**360**	
1630 - 1645	1	218	65	0	7	0	1	1	32	0	0	0	0	**325**	
1645 - 1700	1	244	94	0	8	1	0	5	33	0	0	0	0	**386**	**1395**
1700 - 1715	1	299	94	0	7	3	1	1	25	0	0	0	0	**431**	
1715 - 1730	0	230	86	0	4	0	0	1	26	0	0	0	0	**347**	
1730 - 1745	1	194	53	0	10	1	1	3	27	0	0	0	0	**290**	
1745 - 1800	1	186	55	2	4	3	0	1	32	1	0	0	0	**285**	**1353**
1800 - 1815	0	167	54	0	5	1	0	4	38	0	0	0	0	**269**	
1815 - 1830	1	182	54	0	6	1	0	0	19	0	0	0	0	**263**	
1830 - 1845	1	144	46	0	9	0	0	3	19	0	0	0	0	**222**	
1845 - 1900	0	141	55	2	5	0	0	2	14	1	0	0	0	**220**	**974**
1900 - 1915	0	130	41	0	3	0	0	1	12	0	0	0	0	**187**	
1915 - 1930	0	120	42	0	1	2	0	2	18	0	0	0	0	**185**	
1930 - 1945	2	117	36	0	6	0	0	6	17	0	1	0	0	**185**	
1945 - 2000	0	96	30	0	3	0	0	0	14	0	0	0	0	**143**	**700**
2000 - 2015	0	90	19	0	4	0	0	0	26	0	0	0	0	**139**	
2015 - 2030	0	108	15	1	2	2	0	0	11	0	2	0	0	**141**	
2030 - 2045	0	104	5	0	1	0	0	0	12	0	0	0	0	**122**	
2045 - 2100	0	82	4	0	1	0	0	0	11	0	0	0	0	**98**	**500**
2100 - 2115	0	106	5	0	2	0	0	0	9	0	0	0	0	**122**	
2115 - 2130	0	114	3	0	0	0	0	0	4	0	0	0	0	**121**	
2130 - 2145	0	104	2	0	0	0	0	0	9	0	0	0	0	**115**	
2145 - 2200	0	54	3	0	0	0	0	0	8	0	0	0	0	**65**	**423**
2200 - 2215	0	58	1	0	1	0	0	0	9	0	0	0	0	**69**	
2215 - 2230	0	76	1	0	1	0	0	0	7	0	0	0	0	**85**	
2230 - 2245	0	66	2	1	0	0	0	0	9	0	1	0	0	**79**	
2245 - 2300	0	58	1	0	2	0	0	0	3	0	1	0	0	**65**	**298**
2300 - 2315	0	57	7	0	0	0	0	0	10	0	0	0	0	**74**	
2315 - 2330	0	40	0	0	0	1	0	0	4	0	4	0	0	**49**	
2330 - 2345	0	51	1	0	0	0	0	0	2	0	0	0	0	**54**	
2345 - 0000	0	49	0	0	0	0	0	0	3	0	1	0	0	**53**	**230**

Session Total	20	9971	3142	16	389	101	12	114	1887	13	32	1	0	**15698**
Session Average	0.21	103.86	32.73	0.17	4.05	1.05	0.13	1.19	19.66	0.14	0.33	0.01	0.00	**163.52**
Session Percentage	0.13	63.52	20.02	0.10	2.48	0.64	0.08	0.73	12.02	0.08	0.20	0.01	0.00	

AM Peak Hour	0830 - 0930	0700 - 0800	0800 - 0900	0715 - 0815	0815 - 0915	0630 - 0730	0630 - 0730	0930 - 1030	0845 - 0945	0815 - 0915	0530 - 0630	-	-	**0715 - 0815**
AM Peak Hour Volume	2	575	244	2	35	15	1	10	111	3	5	0	0	**904**

Noon Peak Hour	1415 - 1515	1445 - 1545	1445 - 1545	1245 - 1345	1400 - 1500	1100 - 1200	1215 - 1315	1045 - 1145	1345 - 1445	1315 - 1415	1130 - 1230	1400 - 1500	-	**1445 - 1545**
Noon Peak Hour Volume	3	739	280	4	36	11	3	17	168	3	2	1	0	**1203**

PM Peak Hour	1615 - 1715	1615 - 1715	1630 - 1730	1515 - 1615	1545 - 1645	1615 - 1715	1500 - 1600	1515 - 1615	1515 - 1615	1500 - 1600	1930 - 2030	-	-	**1615 - 1715**
PM Peak Hour Volume	3	1000	339	2	37	7	2	11	135	1	3	0	0	**1502**

Site 74 Lane 2 EB
I-20,
west of US-378 Sunset Blvd S/Bound Off-Ramp

Date
Friday, April 26, 2024

Lat/Long
34.008085°, -81.156669°

Weather
Cloudy
69°F

Click here for Detailed Weather

0000 - 2400 (Weekday 24h Session) (04-26-2024)
NB EB 15min

	Eastbound (Movement 74 Lane 2 EB.1)													15min	60min
TIME	1	2	3	4	5	6	7	8	9	10	11	12	13	Total	Total
0000 - 0015	0	34	8	0	3	0	0	0	8	0	0	0	0	**53**	
0015 - 0030	0	25	4	0	1	0	0	0	4	0	2	0	0	**36**	
0030 - 0045	0	26	8	0	3	0	0	0	2	0	1	0	0	**40**	
0045 - 0100	0	18	5	0	1	0	0	0	10	0	0	0	0	**34**	**163**
0100 - 0115	0	19	6	0	5	0	0	0	7	0	2	0	0	**39**	
0115 - 0130	0	22	9	0	1	0	0	0	9	0	1	0	0	**42**	
0130 - 0145	0	24	8	0	1	0	0	0	7	0	1	0	0	**41**	
0145 - 0200	0	18	7	0	0	0	0	0	8	0	1	0	0	**34**	**156**
0200 - 0215	0	16	6	0	0	0	0	0	6	0	1	0	0	**29**	
0215 - 0230	0	13	3	0	2	0	0	0	9	0	0	0	0	**27**	
0230 - 0245	0	15	7	0	0	0	0	0	8	0	1	0	0	**31**	
0245 - 0300	0	16	5	0	3	0	0	0	5	0	2	0	0	**31**	**118**
0300 - 0315	0	17	6	0	2	0	0	0	13	0	2	0	0	**40**	
0315 - 0330	0	16	5	0	0	0	0	0	8	0	3	0	0	**32**	
0330 - 0345	0	20	7	0	1	0	0	0	11	0	2	0	0	**41**	
0345 - 0400	0	23	12	0	0	0	0	0	10	0	1	0	0	**46**	**159**
0400 - 0415	0	22	13	0	2	2	0	0	15	0	1	0	0	**55**	
0415 - 0430	0	21	11	0	1	0	0	0	12	0	1	0	0	**46**	
0430 - 0445	0	30	17	0	2	0	0	0	13	0	1	0	0	**63**	
0445 - 0500	0	28	14	0	3	0	0	0	15	0	1	0	0	**61**	**225**
0500 - 0515	0	30	13	0	1	1	0	0	9	0	0	0	0	**54**	
0515 - 0530	0	31	15	2	0	0	0	0	11	0	1	0	0	**60**	
0530 - 0545	0	55	30	0	3	0	0	0	12	0	2	0	0	**102**	
0545 - 0600	0	65	33	0	1	1	0	0	14	0	0	0	0	**114**	**330**
0600 - 0615	0	59	28	0	3	1	0	0	15	0	0	0	0	**106**	
0615 - 0630	0	92	37	0	2	1	0	0	15	0	1	0	0	**148**	
0630 - 0645	0	94	39	0	5	1	0	0	13	0	1	0	0	**153**	
0645 - 0700	0	95	44	0	2	1	0	0	16	1	1	0	0	**160**	**567**
0700 - 0715	1	115	49	0	9	1	0	0	9	0	0	0	0	**184**	
0715 - 0730	0	142	63	0	9	3	0	1	12	1	0	0	0	**231**	
0730 - 0745	1	140	54	0	9	4	1	0	15	0	0	0	0	**224**	
0745 - 0800	0	143	63	0	10	4	0	2	16	1	0	0	0	**239**	**878**
0800 - 0815	0	101	50	0	16	1	0	1	20	0	0	0	0	**189**	
0815 - 0830	0	104	48	1	6	0	0	3	19	0	1	0	0	**182**	
0830 - 0845	0	110	47	2	8	0	0	1	23	0	0	0	0	**191**	
0845 - 0900	0	104	37	0	8	3	0	3	19	0	0	0	0	**174**	**736**
0900 - 0915	0	103	48	1	6	4	0	1	12	0	0	0	0	**175**	
0915 - 0930	0	124	48	0	5	2	0	0	21	0	0	0	0	**200**	
0930 - 0945	0	110	50	0	7	0	0	1	18	2	0	0	0	**188**	
0945 - 1000	1	111	41	0	4	1	0	3	25	0	0	1	0	**187**	**750**
1000 - 1015	1	101	49	0	5	1	0	2	17	0	1	0	0	**177**	
1015 - 1030	1	116	39	0	5	2	0	2	19	1	0	0	0	**185**	
1030 - 1045	0	122	34	0	6	2	0	3	20	0	0	0	0	**187**	
1045 - 1100	1	117	40	1	8	2	1	5	26	0	0	0	0	**201**	**750**
1100 - 1115	0	136	51	0	5	2	2	2	29	1	0	0	0	**228**	
1115 - 1130	0	141	48	0	8	2	0	5	28	1	0	0	0	**233**	
1130 - 1145	1	137	53	1	9	2	0	1	28	0	0	0	0	**232**	
1145 - 1200	0	133	59	0	8	1	0	6	27	0	0	0	0	**234**	**927**
1200 - 1215	0	134	55	0	9	3	0	0	32	0	0	0	0	**233**	
1215 - 1230	1	139	56	1	6	3	0	2	37	0	0	0	0	**245**	
1230 - 1245	0	156	55	1	7	3	0	1	21	0	0	0	0	**244**	
1245 - 1300	4	148	46	0	8	2	0	3	27	0	0	0	0	**238**	**960**
1300 - 1315	1	164	63	3	8	0	0	3	18	0	0	0	0	**260**	
1315 - 1330	0	147	53	1	2	1	1	4	28	0	0	0	0	**237**	
1330 - 1345	1	161	40	0	12	0	0	3	34	0	0	0	0	**251**	
1345 - 1400	1	162	54	1	6	3	0	2	28	0	0	0	0	**257**	**1005**
1400 - 1415	1	172	57	1	7	1	0	1	33	0	0	0	0	**273**	
1415 - 1430	0	154	65	0	5	3	0	8	22	1	0	0	0	**258**	
1430 - 1445	0	158	50	0	12	2	0	2	36	0	0	0	0	**260**	
1445 - 1500	1	173	56	0	6	4	0	3	43	0	0	0	0	**286**	**1077**
1500 - 1515	0	185	67	0	6	4	0	2	36	0	0	0	0	**300**	
1515 - 1530	0	209	75	0	5	3	0	4	30	0	0	0	0	**326**	
1530 - 1545	0	177	58	1	9	0	0	4	31	0	1	0	0	**281**	
1545 - 1600	0	212	55	2	4	1	0	6	36	2	0	0	0	**318**	**1225**
1600 - 1615	0	210	61	1	11	2	0	9	25	0	0	0	0	**319**	
1615 - 1630	0	233	67	0	3	3	0	3	31	0	0	0	0	**340**	
1630 - 1645	0	201	64	0	10	1	0	4	29	0	0	0	0	**309**	
1645 - 1700	0	220	54	0	1	2	0	7	22	0	0	0	0	**306**	**1274**
1700 - 1715	0	217	63	0	9	2	0	0	25	1	1	0	0	**318**	
1715 - 1730	0	267	54	0	8	3	0	6	20	0	0	0	0	**358**	
1730 - 1745	0	209	57	0	2	0	0	2	25	0	0	0	0	**295**	
1745 - 1800	1	177	47	0	3	0	0	6	33	0	0	0	0	**267**	**1238**
1800 - 1815	1	171	48	1	4	1	0	1	30	0	0	0	0	**257**	
1815 - 1830	0	189	47	1	8	2	0	6	20	1	0	0	0	**274**	
1830 - 1845	0	147	50	0	3	0	0	1	15	1	0	0	0	**217**	
1845 - 1900	0	166	39	0	1	2	0	1	13	0	0	0	0	**222**	**970**
1900 - 1915	0	129	49	2	2	1	0	3	15	0	0	0	0	**201**	
1915 - 1930	1	138	19	0	3	1	0	4	16	1	0	0	0	**183**	
1930 - 1945	0	146	33	0	3	0	0	2	13	0	0	0	0	**197**	
1945 - 2000	0	134	35	1	1	0	0	3	12	0	0	0	0	**186**	**767**
2000 - 2015	1	124	25	1	3	0	0	0	19	0	0	0	0	**173**	
2015 - 2030	0	135	28	0	2	0	0	0	16	0	0	0	0	**181**	
2030 - 2045	0	118	22	0	1	0	0	0	14	0	2	0	0	**157**	
2045 - 2100	0	127	24	0	0	0	0	0	7	0	1	0	0	**159**	**670**
2100 - 2115	0	105	21	0	5	0	0	0	8	0	1	0	0	**140**	
2115 - 2130	0	117	27	0	2	0	0	0	21	0	2	0	0	**169**	
2130 - 2145	0	104	23	0	5	0	0	0	4	0	1	0	0	**137**	
2145 - 2200	0	85	18	1	0	0	0	0	6	0	3	0	0	**113**	**559**
2200 - 2215	0	107	23	0	2	0	0	0	11	0	0	0	0	**143**	
2215 - 2230	0	82	22	0	2	0	0	0	6	0	2	0	0	**114**	
2230 - 2245	0	101	23	0	1	0	0	0	11	0	2	0	0	**138**	
2245 - 2300	0	89	25	0	1	0	0	0	10	0	2	0	0	**127**	**522**
2300 - 2315	0	80	19	0	1	0	0	0	7	0	2	0	0	**109**	
2315 - 2330	0	64	15	0	0	0	0	0	3	0	1	0	0	**83**	
2330 - 2345	0	45	14	0	0	0	0	0	6	0	2	0	0	**67**	
2345 - 0000	0	46	16	0	2	0	0	0	7	0	1	0	0	**72**	**331**

Session Total	21	10488	3408	27	410	98	5	148	1680	15	56	1	0	**16357**
Session Average	0.22	109.25	35.50	0.28	4.27	1.02	0.05	1.54	17.50	0.16	0.58	0.01	0.00	**170.39**
Session Percentage	0.13	64.12	20.84	0.17	2.51	0.60	0.03	0.90	10.27	0.09	0.34	0.01	0.00	

AM Peak Hour	0930 - 1030	0700 - 0800	0715 - 0815	0815 - 0915	0715 - 0815	0700 - 0800	0645 - 0745	0945 - 1045	0800 - 0900	0930 - 1030	0500 - 0600	0900 - 1000	-	**0715 - 0815**
AM Peak Hour Volume	3	540	230	4	44	12	1	10	81	3	3	1	0	**883**

Noon Peak Hour	1215 - 1315	1445 - 1545	1445 - 1545	1215 - 1315	1115 - 1215	1415 - 1515	1015 - 1115	1030 - 1130	1430 - 1530	1015 - 1115	1000 - 1100	-	-	**1445 - 1545**
Noon Peak Hour Volume	6	744	256	5	34	13	3	15	145	2	1	0	0	**1193**

PM Peak Hour	1715 - 1815	1645 - 1745	1500 - 1600	1515 - 1615	1515 - 1615	1500 - 1600	-	1515 - 1615	1500 - 1600	1500 - 1600	1945 - 2045	-	-	**1630 - 1730**
PM Peak Hour Volume	2	913	255	4	29	8	0	23	133	2	2	0	0	**1291**

Site 74 Lane 2 EB
I-20,
west of US-378 Sunset Blvd S/Bound Off-Ramp

Date
Saturday, April 27, 2024

Lat/Long
34.008085°, -81.156669°

Weather
Mostly Cloudy
69°F

Click here for Detailed Weather

0000 - 2400 (Saturday 24h Session) (04-27-2024)
NB EB 15min

	Eastbound (Movement 74 Lane 2 EB.1)													15min	60min
TIME	1	2	3	4	5	6	7	8	9	10	11	12	13	Total	Total
0000 - 0015	0	50	6	0	1	0	0	0	8	0	0	0	0	**65**	
0015 - 0030	0	41	5	0	1	0	0	0	7	0	1	0	0	**55**	
0030 - 0045	0	29	6	0	1	0	0	0	7	0	0	0	0	**43**	
0045 - 0100	0	30	4	0	1	0	0	0	6	0	0	0	0	**41**	**204**
0100 - 0115	0	20	5	0	2	0	0	0	8	0	0	0	0	**35**	
0115 - 0130	0	21	6	0	1	0	0	0	5	0	0	0	0	**33**	
0130 - 0145	0	18	4	0	2	0	0	0	3	0	0	0	0	**27**	
0145 - 0200	0	11	3	0	1	0	0	0	3	0	0	0	0	**18**	**113**
0200 - 0215	0	10	2	0	0	0	0	0	1	0	0	0	0	**13**	
0215 - 0230	0	20	6	0	2	0	0	0	2	0	0	0	0	**30**	
0230 - 0245	0	15	3	0	0	0	0	0	3	0	0	0	0	**21**	
0245 - 0300	0	11	5	0	0	0	0	0	2	0	1	0	0	**19**	**83**
0300 - 0315	0	10	6	0	1	0	0	0	5	0	2	0	0	**24**	
0315 - 0330	0	21	9	0	0	0	0	0	2	0	1	0	0	**33**	
0330 - 0345	0	10	4	0	1	0	0	0	1	0	0	0	0	**16**	
0345 - 0400	0	8	2	0	1	0	0	0	3	0	0	0	0	**14**	**87**
0400 - 0415	0	10	5	0	1	0	0	0	6	0	0	0	0	**22**	
0415 - 0430	0	20	8	0	0	0	0	0	4	0	2	0	0	**34**	
0430 - 0445	0	18	3	0	0	0	0	0	3	0	0	0	0	**24**	
0445 - 0500	0	10	6	0	0	0	0	0	3	0	1	0	0	**20**	**100**
0500 - 0515	0	18	5	0	0	0	0	0	8	0	2	0	0	**33**	
0515 - 0530	0	26	6	0	1	0	0	0	3	0	0	0	0	**36**	
0530 - 0545	0	28	10	0	1	0	0	0	4	0	2	0	0	**45**	
0545 - 0600	0	30	19	0	4	0	0	0	2	0	0	0	0	**55**	**169**
0600 - 0615	0	37	26	0	1	0	0	0	8	0	1	0	0	**73**	
0615 - 0630	0	39	28	0	1	0	0	2	5	0	0	0	0	**75**	
0630 - 0645	0	62	19	0	1	0	0	0	2	0	0	0	0	**84**	
0645 - 0700	1	67	22	0	2	0	0	1	9	0	1	0	0	**103**	**335**
0700 - 0715	0	58	13	0	1	0	0	1	5	0	1	0	0	**79**	
0715 - 0730	0	90	30	0	0	1	0	0	3	0	0	0	0	**124**	
0730 - 0745	0	88	36	1	3	1	0	0	10	0	0	0	0	**139**	
0745 - 0800	0	101	27	0	1	2	0	1	4	0	0	0	0	**136**	**478**
0800 - 0815	0	97	26	0	1	1	0	0	9	0	0	0	0	**134**	
0815 - 0830	0	94	48	0	6	2	0	1	5	0	0	0	0	**156**	
0830 - 0845	0	106	33	0	2	0	0	2	16	0	0	0	0	**159**	
0845 - 0900	0	116	38	0	4	0	0	1	10	0	0	0	0	**169**	**618**
0900 - 0915	1	127	35	0	1	0	0	1	10	0	0	0	0	**175**	
0915 - 0930	0	121	37	0	2	0	0	2	11	0	0	0	0	**173**	
0930 - 0945	0	149	34	2	3	0	0	1	24	0	0	0	0	**213**	
0945 - 1000	0	147	39	1	2	2	0	0	11	0	0	0	0	**202**	**763**
1000 - 1015	0	129	34	0	2	0	0	0	18	0	0	0	0	**183**	
1015 - 1030	1	137	35	0	1	2	0	0	5	1	0	0	0	**182**	
1030 - 1045	1	144	35	1	2	1	0	0	14	0	0	0	0	**198**	
1045 - 1100	0	153	46	1	0	1	0	1	3	0	0	0	0	**205**	**768**
1100 - 1115	0	165	39	1	1	0	0	2	17	0	0	0	0	**225**	
1115 - 1130	0	153	48	0	1	0	0	1	11	0	0	0	0	**214**	
1130 - 1145	1	162	51	0	2	0	0	1	7	0	0	0	0	**224**	
1145 - 1200	0	137	50	1	2	0	0	1	11	0	0	0	0	**202**	**865**
1200 - 1215	0	151	41	1	3	3	0	0	14	0	0	0	0	**213**	
1215 - 1230	1	176	45	0	1	1	0	0	14	0	0	0	0	**238**	
1230 - 1245	0	177	47	0	2	1	0	3	11	0	0	0	0	**241**	
1245 - 1300	0	166	49	0	1	0	0	2	9	0	0	0	0	**227**	**919**
1300 - 1315	0	165	44	1	2	0	0	1	8	0	0	0	0	**221**	
1315 - 1330	0	184	51	0	1	1	0	0	12	0	0	0	0	**249**	
1330 - 1345	0	186	38	0	2	0	0	0	7	0	0	0	0	**233**	
1345 - 1400	0	162	50	0	3	0	0	0	12	0	0	0	0	**227**	**930**
1400 - 1415	1	169	59	0	1	1	0	3	14	0	0	0	0	**248**	
1415 - 1430	0	168	56	4	3	0	0	2	6	0	0	0	0	**239**	
1430 - 1445	0	151	43	0	3	0	0	2	13	0	0	0	0	**212**	
1445 - 1500	0	181	32	0	0	0	0	1	7	0	0	0	0	**221**	**920**
1500 - 1515	1	176	34	0	2	0	0	1	8	0	0	0	0	**222**	
1515 - 1530	0	178	36	0	5	0	0	1	8	0	0	0	0	**228**	
1530 - 1545	9	188	34	0	2	1	0	1	9	0	0	0	0	**244**	
1545 - 1600	0	184	31	1	2	1	1	1	8	1	0	0	0	**230**	**924**
1600 - 1615	1	170	38	0	4	0	0	1	9	0	0	0	0	**223**	
1615 - 1630	1	158	36	0	1	1	0	1	9	1	0	0	0	**208**	
1630 - 1645	1	178	41	0	0	1	0	0	5	0	0	0	0	**226**	
1645 - 1700	2	172	37	0	2	0	0	2	9	0	0	0	0	**224**	**881**
1700 - 1715	4	159	35	0	0	1	0	0	9	0	0	0	0	**208**	
1715 - 1730	1	147	33	1	3	1	0	0	6	0	0	0	0	**192**	
1730 - 1745	0	171	34	0	2	0	0	1	4	0	0	0	0	**212**	
1745 - 1800	0	135	42	1	0	0	0	0	6	0	0	0	0	**184**	**796**
1800 - 1815	0	170	38	0	1	0	0	1	3	0	0	0	0	**213**	
1815 - 1830	1	157	37	0	4	0	0	2	3	0	0	0	0	**204**	
1830 - 1845	1	162	36	1	1	0	0	1	7	0	0	0	0	**209**	
1845 - 1900	3	120	33	1	2	0	0	0	4	0	0	0	0	**163**	**789**
1900 - 1915	0	127	36	3	0	0	0	0	5	0	0	0	0	**171**	
1915 - 1930	1	113	34	0	4	1	0	1	5	0	0	0	0	**159**	
1930 - 1945	0	130	27	0	1	0	0	0	3	0	0	0	0	**161**	
1945 - 2000	0	131	35	1	0	1	0	0	7	0	0	0	0	**175**	**666**
2000 - 2015	0	129	30	0	0	0	0	0	9	0	0	0	0	**168**	
2015 - 2030	0	115	19	0	0	0	0	1	4	0	0	0	0	**139**	
2030 - 2045	0	125	15	0	0	1	0	0	3	0	0	0	0	**144**	
2045 - 2100	0	101	18	0	0	0	0	0	1	0	0	0	0	**120**	**571**
2100 - 2115	0	110	15	0	1	0	0	0	4	0	0	0	0	**130**	
2115 - 2130	0	111	17	0	0	0	0	0	7	0	0	0	0	**135**	
2130 - 2145	0	113	19	0	1	0	0	0	5	0	0	0	0	**138**	
2145 - 2200	0	120	17	0	0	1	0	0	1	0	0	0	0	**139**	**542**
2200 - 2215	0	125	20	0	0	0	0	0	3	0	0	0	0	**148**	
2215 - 2230	0	101	11	0	0	0	0	0	5	0	0	0	0	**117**	
2230 - 2245	0	89	10	0	0	0	0	0	6	0	0	0	0	**105**	
2245 - 2300	0	81	13	0	0	0	0	0	2	0	0	0	0	**96**	**466**
2300 - 2315	0	75	8	0	0	1	0	0	3	0	0	0	0	**87**	
2315 - 2330	0	59	7	0	0	0	0	0	3	0	0	0	0	**69**	
2330 - 2345	0	61	9	0	0	0	0	0	1	0	0	0	0	**71**	
2345 - 0000	0	55	9	0	0	0	0	0	3	0	0	0	0	**67**	**294**

Session Total	33	9896	2466	23	124	31	1	48	641	3	15	0	0	**13281**
Session Average	0.34	103.08	25.69	0.24	1.29	0.32	0.01	0.50	6.68	0.03	0.16	0.00	0.00	**138.34**
Session Percentage	0.25	74.51	18.57	0.17	0.93	0.23	0.01	0.36	4.83	0.02	0.11	0.00	0.00	

AM Peak Hour	0945 - 1045	0930 - 1030	0815 - 0915	0900 - 1000	0800 - 0900	0730 - 0830	-	0830 - 0930	0915 - 1015	0930 - 1030	0500 - 0600	-	-	**0930 - 1030**
AM Peak Hour Volume	2	562	154	3	13	6	0	6	64	1	4	0	0	**780**

Noon Peak Hour	1445 - 1545	1445 - 1545	1345 - 1445	1330 - 1430	1345 - 1445	1145 - 1245	-	1400 - 1500	1145 - 1245	1000 - 1100	-	-	-	**1315 - 1415**
Noon Peak Hour Volume	10	723	208	4	10	5	0	8	50	1	0	0	0	**957**

PM Peak Hour	1530 - 1630	1500 - 1600	1745 - 1845	1815 - 1915	1515 - 1615	1530 - 1630	1500 - 1600	1500 - 1600	1530 - 1630	1530 - 1630	-	-	-	**1515 - 1615**
PM Peak Hour Volume	11	726	153	5	13	3	1	4	35	2	0	0	0	**925**

Bi-Directional Class Count || NB EB Average 15min

Columbia, SC

Marr Traffic DATA COLLECTION
www.marrtraffic.com

Site 74 Lane 2 EB
I-20,
west of US-378 Sunset Blvd S/Bound Off-Ramp

Date
Sunday, April 21, 2024

Lat/Long
34.008085°, -81.156669°

Weather
Cloudy
66°F

0000 - 2400 (Weekday 24h Session) (All Dates)
NB EB Average 15min

	NB EB Average 15min													15min	60min
Time	1	2	3	4	5	6	7	8	9	10	11	12	13	Total	Total
0000 - 0015	0	32	6	0	1	0	0	0	7	0	1	0	0	**47**	
0015 - 0030	0	29	5	0	0	0	0	0	7	0	1	0	0	**42**	
0030 - 0045	0	23	4	0	1	0	0	0	6	0	0	0	0	**34**	
0045 - 0100	0	22	3	0	1	0	0	0	6	0	0	0	0	**31**	**155**
0100 - 0115	0	22	3	0	2	0	0	0	6	0	1	0	0	**33**	
0115 - 0130	0	21	4	0	0	0	0	0	6	0	0	0	0	**31**	
0130 - 0145	0	19	3	0	1	0	0	0	5	0	0	0	0	**28**	
0145 - 0200	0	17	3	0	1	0	0	0	5	0	0	0	0	**26**	**118**
0200 - 0215	0	16	2	0	1	0	0	0	6	0	0	0	0	**26**	
0215 - 0230	0	20	3	0	1	0	0	0	5	0	0	0	0	**29**	
0230 - 0245	0	14	2	0	1	0	0	0	6	0	0	0	0	**22**	
0245 - 0300	0	16	3	0	1	0	0	0	6	0	1	0	0	**27**	**104**
0300 - 0315	0	14	3	0	1	0	0	0	7	0	1	0	0	**25**	
0315 - 0330	0	19	3	0	0	0	0	0	7	0	1	0	0	**29**	
0330 - 0345	0	16	4	0	1	0	0	0	6	0	0	0	0	**28**	
0345 - 0400	0	22	3	0	1	0	0	0	7	0	0	0	0	**33**	**116**
0400 - 0415	0	21	4	0	1	0	0	0	8	0	0	0	0	**35**	
0415 - 0430	0	18	5	0	1	0	0	0	7	0	1	0	0	**31**	
0430 - 0445	0	27	5	0	1	0	0	0	7	0	1	0	0	**41**	
0445 - 0500	0	24	5	0	1	0	0	0	9	0	0	0	0	**40**	**148**
0500 - 0515	0	32	5	0	1	0	0	0	10	0	1	0	0	**48**	
0515 - 0530	0	41	7	0	1	0	0	0	10	0	0	0	0	**61**	
0530 - 0545	0	56	12	0	1	0	0	0	11	0	1	0	0	**81**	
0545 - 0600	0	63	15	0	2	0	0	0	9	0	0	0	0	**90**	**280**
0600 - 0615	0	70	19	0	2	0	0	0	12	0	1	0	0	**105**	
0615 - 0630	0	83	30	0	3	1	0	1	13	0	0	0	0	**131**	
0630 - 0645	0	99	36	0	2	1	0	0	11	0	0	0	0	**151**	
0645 - 0700	0	90	40	0	3	1	0	1	14	0	0	0	0	**150**	**537**
0700 - 0715	0	100	40	0	4	2	0	1	12	0	0	0	0	**159**	
0715 - 0730	0	120	47	0	5	2	0	1	12	0	0	0	0	**189**	
0730 - 0745	0	121	44	1	5	2	0	1	11	0	0	0	0	**186**	
0745 - 0800	0	126	46	0	5	1	0	1	11	0	0	0	0	**192**	**725**
0800 - 0815	0	103	38	0	5	2	0	0	14	0	0	0	0	**163**	
0815 - 0830	0	97	45	0	6	1	0	1	15	0	0	0	0	**167**	
0830 - 0845	0	105	40	0	7	1	0	1	17	0	0	0	0	**171**	
0845 - 0900	0	108	41	0	6	1	0	2	15	0	0	0	0	**174**	**676**
0900 - 0915	1	99	42	1	5	2	0	1	18	0	0	0	0	**170**	
0915 - 0930	0	104	43	0	5	2	0	1	17	0	0	0	0	**173**	
0930 - 0945	0	114	44	1	5	1	0	2	20	0	0	0	0	**186**	
0945 - 1000	0	114	38	0	5	2	0	2	18	0	0	0	0	**180**	**709**
1000 - 1015	0	109	44	0	3	2	0	2	20	0	0	0	0	**180**	
1015 - 1030	0	117	39	0	6	1	0	2	18	0	0	0	0	**184**	
1030 - 1045	0	125	41	0	5	1	0	2	23	0	0	0	0	**197**	
1045 - 1100	0	124	42	1	6	2	0	2	23	0	0	0	0	**201**	**762**
1100 - 1115	0	127	44	0	4	1	0	1	25	0	0	0	0	**204**	
1115 - 1130	0	120	40	0	4	1	0	2	23	0	0	0	0	**192**	
1130 - 1145	1	129	44	0	5	1	0	2	25	0	0	0	0	**208**	
1145 - 1200	0	128	49	0	4	2	0	2	21	0	0	0	0	**206**	**809**
1200 - 1215	0	130	42	0	5	2	0	2	27	0	0	0	0	**208**	
1215 - 1230	0	144	46	0	5	1	0	2	29	0	0	0	0	**230**	
1230 - 1245	0	141	46	0	5	1	0	2	22	0	0	0	0	**218**	
1245 - 1300	1	139	48	0	5	2	0	2	26	0	0	0	0	**223**	**879**
1300 - 1315	0	140	47	1	6	1	0	2	26	0	0	0	0	**223**	
1315 - 1330	0	153	48	1	4	2	0	1	24	0	0	0	0	**235**	
1330 - 1345	0	165	46	0	6	1	0	2	24	0	0	0	0	**245**	
1345 - 1400	0	150	50	0	4	2	0	2	26	0	0	0	0	**234**	**937**
1400 - 1415	0	156	53	0	5	3	0	2	25	0	0	0	0	**245**	
1415 - 1430	0	158	54	1	4	1	0	3	28	1	0	0	0	**250**	
1430 - 1445	0	150	50	0	7	1	0	3	28	0	0	0	0	**240**	
1445 - 1500	1	158	50	1	5	2	1	3	26	0	0	0	0	**246**	**981**
1500 - 1515	1	172	57	0	5	2	0	2	30	0	0	0	0	**269**	
1515 - 1530	0	178	56	0	7	2	0	3	25	0	0	0	0	**270**	
1530 - 1545	2	173	58	0	8	2	1	3	27	0	0	0	0	**275**	
1545 - 1600	0	188	57	1	4	1	0	3	28	1	0	0	0	**283**	**1097**
1600 - 1615	0	190	61	1	6	2	0	4	26	0	0	0	0	**291**	
1615 - 1630	0	208	61	0	6	2	0	2	22	0	0	0	0	**302**	
1630 - 1645	0	196	55	0	7	1	0	3	26	0	0	0	0	**289**	
1645 - 1700	0	196	58	0	6	2	0	3	24	0	0	0	0	**290**	**1172**
1700 - 1715	1	204	62	0	6	2	0	2	21	0	0	0	0	**297**	
1715 - 1730	0	220	55	0	6	2	0	2	20	0	0	0	0	**305**	
1730 - 1745	0	182	49	0	6	1	0	2	24	0	0	0	0	**264**	
1745 - 1800	0	167	51	1	4	1	0	3	26	1	0	0	0	**253**	**1120**
1800 - 1815	0	160	48	0	4	1	0	2	23	0	0	0	0	**237**	
1815 - 1830	0	165	41	1	5	1	0	3	18	0	0	0	0	**234**	
1830 - 1845	0	141	42	0	3	1	0	1	16	0	0	0	0	**204**	
1845 - 1900	0	133	36	0	3	1	0	1	13	0	0	0	0	**188**	**864**
1900 - 1915	0	123	36	1	3	0	0	1	15	0	0	0	0	**179**	
1915 - 1930	0	116	31	0	2	1	0	1	15	0	1	0	0	**167**	
1930 - 1945	1	117	31	0	2	1	0	2	15	0	0	0	0	**169**	
1945 - 2000	0	108	29	0	2	1	0	1	12	0	0	0	0	**152**	**667**
2000 - 2015	0	105	27	0	2	1	0	0	15	0	0	0	0	**151**	
2015 - 2030	0	108	22	0	2	1	0	1	11	0	1	0	0	**145**	
2030 - 2045	0	105	16	0	1	0	0	0	12	0	0	0	0	**134**	
2045 - 2100	0	100	19	0	1	0	0	0	11	0	0	0	0	**132**	**563**
2100 - 2115	0	95	16	0	2	0	0	0	11	0	0	0	0	**124**	
2115 - 2130	0	102	16	0	1	0	0	0	12	0	0	0	0	**131**	
2130 - 2145	0	90	16	0	2	0	0	0	9	0	0	0	0	**117**	
2145 - 2200	0	72	11	0	0	0	0	0	9	0	1	0	0	**94**	**466**
2200 - 2215	0	74	12	0	1	0	0	0	10	0	0	0	0	**97**	
2215 - 2230	0	70	10	0	1	0	0	0	8	0	1	0	0	**90**	
2230 - 2245	0	66	11	0	1	0	0	0	9	0	1	0	0	**88**	
2245 - 2300	0	56	10	0	1	0	0	0	7	0	1	0	0	**74**	**349**
2300 - 2315	0	52	10	0	0	0	0	0	7	0	1	0	0	**71**	
2315 - 2330	0	43	8	0	1	0	0	0	6	0	1	0	0	**60**	
2330 - 2345	0	39	7	0	0	0	0	0	5	0	1	0	0	**52**	
2345 - 0000	0	37	7	0	1	0	0	0	4	0	0	0	0	**49**	**232**

Session Total	18	9567	2860	20	304	82	7	107	1459	10	25	1	0	**14461**
Session Average	0.18	99.66	29.79	0.21	3.17	0.85	0.08	1.11	15.20	0.10	0.26	0.01	0.00	**150.64**
Session Percentage	0.12	66.16	19.78	0.14	2.10	0.57	0.05	0.74	10.09	0.07	0.18	0.01	0.00	

AM Peak Hour	0900 - 1000	0715 - 0815	0700 - 0800	0900 - 1000	0800 - 0900	0700 - 0800	0815 - 0915	0930 - 1030	0945 - 1045	0845 - 0945	0530 - 0630	0900 - 1000	-	**0945 - 1045**
AM Peak Volume	1	470	178	2	25	7	1	7	79	1	2	0	0	**741**

Noon Peak Hour	1445 - 1545	1445 - 1545	1445 - 1545	1400 - 1500	1445 - 1545	1315 - 1415	1445 - 1545	1445 - 1545	1415 - 1515	1230 - 1330	1130 - 1230	1400 - 1500	-	**1445 - 1545**
Noon Peak Volume	3	681	221	3	24	8	2	10	112	1	0	0	0	**1059**

PM Peak Hour	1500 - 1600	1630 - 1730	1530 - 1630	1815 - 1915	1600 - 1700	1500 - 1600	1515 - 1615	1515 - 1615	1500 - 1600	1530 - 1630	1915 - 2015	1500 - 1600	-	**1630 - 1730**
PM Peak Volume	2	815	238	2	25	7	2	12	110	2	1	0	0	**1181**

Bi-Directional Class Count || Volume Summary 15min

Columbia, SC

Marr Traffic DATA COLLECTION

www.marrtraffic.com

Site 74 Lane 2 EB

I-20,
west of US-378 Sunset Blvd S/Bound Off-Ramp

Date

Sunday, April 21, 2024

Lat/Long

34.008085°, -81.156669°

Weather

Cloudy
66°F

Click here for Detailed Weather

0000 - 2400 (Sunday 24h Session) (04-21-2024)

Volume Summary 15min

	Volume Summary 15min		15min	60min
TIME	EB	WB	Total	Total
0000 - 0015	68	0	**68**	
0015 - 0030	70	0	**70**	
0030 - 0045	49	0	**49**	
0045 - 0100	50	0	**50**	**237**
0100 - 0115	43	0	**43**	
0115 - 0130	49	0	**49**	
0130 - 0145	43	0	**43**	
0145 - 0200	43	0	**43**	**178**
0200 - 0215	32	0	**32**	
0215 - 0230	47	0	**47**	
0230 - 0245	29	0	**29**	
0245 - 0300	29	0	**29**	**137**
0300 - 0315	23	0	**23**	
0315 - 0330	27	0	**27**	
0330 - 0345	20	0	**20**	
0345 - 0400	25	0	**25**	**95**
0400 - 0415	40	0	**40**	
0415 - 0430	19	0	**19**	
0430 - 0445	32	0	**32**	
0445 - 0500	23	0	**23**	**114**
0500 - 0515	32	0	**32**	
0515 - 0530	26	0	**26**	
0530 - 0545	40	0	**40**	
0545 - 0600	37	0	**37**	**135**
0600 - 0615	40	0	**40**	
0615 - 0630	47	0	**47**	
0630 - 0645	58	0	**58**	
0645 - 0700	48	0	**48**	**193**
0700 - 0715	64	0	**64**	
0715 - 0730	58	0	**58**	
0730 - 0745	67	0	**67**	
0745 - 0800	74	0	**74**	**263**
0800 - 0815	72	0	**72**	
0815 - 0830	86	0	**86**	
0830 - 0845	94	0	**94**	
0845 - 0900	113	0	**113**	**365**
0900 - 0915	111	0	**111**	
0915 - 0930	123	0	**123**	
0930 - 0945	155	0	**155**	
0945 - 1000	140	0	**140**	**529**
1000 - 1015	151	0	**151**	
1015 - 1030	153	0	**153**	
1030 - 1045	165	0	**165**	
1045 - 1100	201	0	**201**	**670**
1100 - 1115	191	0	**191**	
1115 - 1130	169	0	**169**	
1130 - 1145	187	0	**187**	
1145 - 1200	223	0	**223**	**770**

	Volume Summary 15min		15min	60min
Time	EB	WB	Total	Total
1200 - 1215	225	0	**225**	
1215 - 1230	218	0	**218**	
1230 - 1245	216	0	**216**	
1245 - 1300	217	0	**217**	**876**
1300 - 1315	237	0	**237**	
1315 - 1330	243	0	**243**	
1330 - 1345	252	0	**252**	
1345 - 1400	232	0	**232**	**964**
1400 - 1415	246	0	**246**	
1415 - 1430	234	0	**234**	
1430 - 1445	206	0	**206**	
1445 - 1500	202	0	**202**	**888**
1500 - 1515	243	0	**243**	
1515 - 1530	213	0	**213**	
1530 - 1545	215	0	**215**	
1545 - 1600	240	0	**240**	**911**
1600 - 1615	223	0	**223**	
1615 - 1630	244	0	**244**	
1630 - 1645	216	0	**216**	
1645 - 1700	212	0	**212**	**895**
1700 - 1715	203	0	**203**	
1715 - 1730	181	0	**181**	
1730 - 1745	199	0	**199**	
1745 - 1800	200	0	**200**	**783**
1800 - 1815	189	0	**189**	
1815 - 1830	182	0	**182**	
1830 - 1845	189	0	**189**	
1845 - 1900	196	0	**196**	**756**
1900 - 1915	183	0	**183**	
1915 - 1930	162	0	**162**	
1930 - 1945	163	0	**163**	
1945 - 2000	135	0	**135**	**643**
2000 - 2015	136	0	**136**	
2015 - 2030	133	0	**133**	
2030 - 2045	122	0	**122**	
2045 - 2100	112	0	**112**	**503**
2100 - 2115	97	0	**97**	
2115 - 2130	115	0	**115**	
2130 - 2145	81	0	**81**	
2145 - 2200	70	0	**70**	**363**
2200 - 2215	85	0	**85**	
2215 - 2230	71	0	**71**	
2230 - 2245	65	0	**65**	
2245 - 2300	48	0	**48**	**269**
2300 - 2315	46	0	**46**	
2315 - 2330	33	0	**33**	
2330 - 2345	48	0	**48**	
2345 - 0000	32	0	**32**	**159**

Session Total	11696	0	**11696**
Session Average	121.83	0.00	**121.83**
Session Percentage	100.00	0.00	

Site 74 Lane 2 EB

I-20,
west of US-378 Sunset Blvd S/Bound Off-Ramp

Date

Monday, April 22, 2024

Lat/Long

34.008085°, -81.156669°

Weather

Mostly Cloudy
57°F

Click here for Detailed Weather

0000 - 2400 (Weekday 24h Session) (04-22-2024)

Volume Summary 15min

TIME	Volume Summary 15min EB	WB	15min Total	60min Total
0000 - 0015	28	0	**28**	
0015 - 0030	29	0	**29**	
0030 - 0045	25	0	**25**	
0045 - 0100	24	0	**24**	**106**
0100 - 0115	18	0	**18**	
0115 - 0130	20	0	**20**	
0130 - 0145	18	0	**18**	
0145 - 0200	19	0	**19**	**75**
0200 - 0215	17	0	**17**	
0215 - 0230	20	0	**20**	
0230 - 0245	14	0	**14**	
0245 - 0300	23	0	**23**	**74**
0300 - 0315	23	0	**23**	
0315 - 0330	28	0	**28**	
0330 - 0345	32	0	**32**	
0345 - 0400	27	0	**27**	**110**
0400 - 0415	25	0	**25**	
0415 - 0430	34	0	**34**	
0430 - 0445	37	0	**37**	
0445 - 0500	48	0	**48**	**144**
0500 - 0515	58	0	**58**	
0515 - 0530	81	0	**81**	
0530 - 0545	94	0	**94**	
0545 - 0600	123	0	**123**	**356**
0600 - 0615	113	0	**113**	
0615 - 0630	156	0	**156**	
0630 - 0645	188	0	**188**	
0645 - 0700	199	0	**199**	**656**
0700 - 0715	188	0	**188**	
0715 - 0730	223	0	**223**	
0730 - 0745	218	0	**218**	
0745 - 0800	212	0	**212**	**841**
0800 - 0815	196	0	**196**	
0815 - 0830	178	0	**178**	
0830 - 0845	200	0	**200**	
0845 - 0900	165	0	**165**	**739**
0900 - 0915	185	0	**185**	
0915 - 0930	188	0	**188**	
0930 - 0945	169	0	**169**	
0945 - 1000	156	0	**156**	**698**
1000 - 1015	173	0	**173**	
1015 - 1030	201	0	**201**	
1030 - 1045	197	0	**197**	
1045 - 1100	203	0	**203**	**774**
1100 - 1115	210	0	**210**	
1115 - 1130	168	0	**168**	
1130 - 1145	203	0	**203**	
1145 - 1200	176	0	**176**	**757**

Time	Volume Summary 15min EB	WB	15min Total	60min Total
1200 - 1215	208	0	**208**	
1215 - 1230	216	0	**216**	
1230 - 1245	189	0	**189**	
1245 - 1300	218	0	**218**	**831**
1300 - 1315	187	0	**187**	
1315 - 1330	221	0	**221**	
1330 - 1345	245	0	**245**	
1345 - 1400	227	0	**227**	**880**
1400 - 1415	211	0	**211**	
1415 - 1430	237	0	**237**	
1430 - 1445	247	0	**247**	
1445 - 1500	245	0	**245**	**940**
1500 - 1515	269	0	**269**	
1515 - 1530	256	0	**256**	
1530 - 1545	272	0	**272**	
1545 - 1600	285	0	**285**	**1082**
1600 - 1615	300	0	**300**	
1615 - 1630	296	0	**296**	
1630 - 1645	314	0	**314**	
1645 - 1700	305	0	**305**	**1215**
1700 - 1715	321	0	**321**	
1715 - 1730	305	0	**305**	
1730 - 1745	295	0	**295**	
1745 - 1800	270	0	**270**	**1191**
1800 - 1815	235	0	**235**	
1815 - 1830	246	0	**246**	
1830 - 1845	205	0	**205**	
1845 - 1900	177	0	**177**	**863**
1900 - 1915	167	0	**167**	
1915 - 1930	162	0	**162**	
1930 - 1945	168	0	**168**	
1945 - 2000	148	0	**148**	**645**
2000 - 2015	151	0	**151**	
2015 - 2030	122	0	**122**	
2030 - 2045	124	0	**124**	
2045 - 2100	122	0	**122**	**519**
2100 - 2115	119	0	**119**	
2115 - 2130	124	0	**124**	
2130 - 2145	100	0	**100**	
2145 - 2200	75	0	**75**	**418**
2200 - 2215	67	0	**67**	
2215 - 2230	63	0	**63**	
2230 - 2245	63	0	**63**	
2245 - 2300	56	0	**56**	**249**
2300 - 2315	58	0	**58**	
2315 - 2330	53	0	**53**	
2330 - 2345	35	0	**35**	
2345 - 0000	36	0	**36**	**182**

Session Total	14345	0	**14345**
Session Average	149.43	0.00	**149.43**
Session Percentage	100.00	0.00	

Site 74 Lane 2 EB

I-20,
west of US-378 Sunset Blvd S/Bound Off-Ramp

Date

Tuesday, April 23, 2024

Lat/Long

34.008085°, -81.156669°

Weather

Fair
58°F

Click here for Detailed Weather

0000 - 2400 (Weekday 24h Session) (04-23-2024)

Volume Summary 15min

TIME	Volume Summary 15min EB	Volume Summary 15min WB	15min Total	60min Total
0000 - 0015	19	0	**19**	
0015 - 0030	27	0	**27**	
0030 - 0045	23	0	**23**	
0045 - 0100	32	0	**32**	**101**
0100 - 0115	37	0	**37**	
0115 - 0130	33	0	**33**	
0130 - 0145	26	0	**26**	
0145 - 0200	26	0	**26**	**122**
0200 - 0215	37	0	**37**	
0215 - 0230	29	0	**29**	
0230 - 0245	27	0	**27**	
0245 - 0300	35	0	**35**	**128**
0300 - 0315	15	0	**15**	
0315 - 0330	41	0	**41**	
0330 - 0345	35	0	**35**	
0345 - 0400	47	0	**47**	**138**
0400 - 0415	45	0	**45**	
0415 - 0430	35	0	**35**	
0430 - 0445	56	0	**56**	
0445 - 0500	52	0	**52**	**188**
0500 - 0515	58	0	**58**	
0515 - 0530	87	0	**87**	
0530 - 0545	122	0	**122**	
0545 - 0600	111	0	**111**	**378**
0600 - 0615	131	0	**131**	
0615 - 0630	173	0	**173**	
0630 - 0645	181	0	**181**	
0645 - 0700	182	0	**182**	**667**
0700 - 0715	197	0	**197**	
0715 - 0730	231	0	**231**	
0730 - 0745	204	0	**204**	
0745 - 0800	225	0	**225**	**857**
0800 - 0815	191	0	**191**	
0815 - 0830	152	0	**152**	
0830 - 0845	179	0	**179**	
0845 - 0900	211	0	**211**	**733**
0900 - 0915	197	0	**197**	
0915 - 0930	197	0	**197**	
0930 - 0945	192	0	**192**	
0945 - 1000	174	0	**174**	**760**
1000 - 1015	173	0	**173**	
1015 - 1030	180	0	**180**	
1030 - 1045	198	0	**198**	
1045 - 1100	198	0	**198**	**749**
1100 - 1115	184	0	**184**	
1115 - 1130	183	0	**183**	
1130 - 1145	206	0	**206**	
1145 - 1200	203	0	**203**	**776**

Time	Volume Summary 15min EB	Volume Summary 15min WB	15min Total	60min Total
1200 - 1215	187	0	**187**	
1215 - 1230	215	0	**215**	
1230 - 1245	199	0	**199**	
1245 - 1300	218	0	**218**	**819**
1300 - 1315	210	0	**210**	
1315 - 1330	209	0	**209**	
1330 - 1345	230	0	**230**	
1345 - 1400	206	0	**206**	**855**
1400 - 1415	238	0	**238**	
1415 - 1430	247	0	**247**	
1430 - 1445	240	0	**240**	
1445 - 1500	255	0	**255**	**980**
1500 - 1515	264	0	**264**	
1515 - 1530	273	0	**273**	
1530 - 1545	286	0	**286**	
1545 - 1600	305	0	**305**	**1128**
1600 - 1615	321	0	**321**	
1615 - 1630	336	0	**336**	
1630 - 1645	308	0	**308**	
1645 - 1700	302	0	**302**	**1267**
1700 - 1715	289	0	**289**	
1715 - 1730	430	0	**430**	
1730 - 1745	292	0	**292**	
1745 - 1800	299	0	**299**	**1310**
1800 - 1815	260	0	**260**	
1815 - 1830	226	0	**226**	
1830 - 1845	190	0	**190**	
1845 - 1900	158	0	**158**	**834**
1900 - 1915	173	0	**173**	
1915 - 1930	150	0	**150**	
1930 - 1945	148	0	**148**	
1945 - 2000	137	0	**137**	**608**
2000 - 2015	153	0	**153**	
2015 - 2030	157	0	**157**	
2030 - 2045	136	0	**136**	
2045 - 2100	137	0	**137**	**583**
2100 - 2115	135	0	**135**	
2115 - 2130	143	0	**143**	
2130 - 2145	133	0	**133**	
2145 - 2200	94	0	**94**	**505**
2200 - 2215	89	0	**89**	
2215 - 2230	89	0	**89**	
2230 - 2245	88	0	**88**	
2245 - 2300	63	0	**63**	**329**
2300 - 2315	56	0	**56**	
2315 - 2330	63	0	**63**	
2330 - 2345	43	0	**43**	
2345 - 0000	38	0	**38**	**200**

Session Total	15015	0	**15015**
Session Average	156.41	0.00	**156.41**
Session Percentage	100.00	0.00	

Site 74 Lane 2 EB

I-20,
west of US-378 Sunset Blvd S/Bound Off-Ramp

Date

Wednesday, April 24, 2024

Lat/Long

34.008085°, -81.156669°

Weather

Fair
66°F

Click here for Detailed Weather

0000 - 2400 (Weekday 24h Session) (04-24-2024)

Volume Summary 15min

TIME	Volume Summary 15min EB	Volume Summary 15min WB	15min Total	60min Total
0000 - 0015	48	0	**48**	
0015 - 0030	37	0	**37**	
0030 - 0045	27	0	**27**	
0045 - 0100	22	0	**22**	**134**
0100 - 0115	26	0	**26**	
0115 - 0130	25	0	**25**	
0130 - 0145	20	0	**20**	
0145 - 0200	22	0	**22**	**93**
0200 - 0215	24	0	**24**	
0215 - 0230	23	0	**23**	
0230 - 0245	20	0	**20**	
0245 - 0300	23	0	**23**	**90**
0300 - 0315	25	0	**25**	
0315 - 0330	25	0	**25**	
0330 - 0345	29	0	**29**	
0345 - 0400	34	0	**34**	**113**
0400 - 0415	33	0	**33**	
0415 - 0430	22	0	**22**	
0430 - 0445	38	0	**38**	
0445 - 0500	34	0	**34**	**127**
0500 - 0515	55	0	**55**	
0515 - 0530	76	0	**76**	
0530 - 0545	85	0	**85**	
0545 - 0600	82	0	**82**	**298**
0600 - 0615	128	0	**128**	
0615 - 0630	157	0	**157**	
0630 - 0645	219	0	**219**	
0645 - 0700	188	0	**188**	**692**
0700 - 0715	202	0	**202**	
0715 - 0730	228	0	**228**	
0730 - 0745	227	0	**227**	
0745 - 0800	208	0	**208**	**865**
0800 - 0815	152	0	**152**	
0815 - 0830	193	0	**193**	
0830 - 0845	175	0	**175**	
0845 - 0900	185	0	**185**	**705**
0900 - 0915	170	0	**170**	
0915 - 0930	148	0	**148**	
0930 - 0945	176	0	**176**	
0945 - 1000	207	0	**207**	**701**
1000 - 1015	205	0	**205**	
1015 - 1030	194	0	**194**	
1030 - 1045	226	0	**226**	
1045 - 1100	190	0	**190**	**815**
1100 - 1115	186	0	**186**	
1115 - 1130	171	0	**171**	
1130 - 1145	194	0	**194**	
1145 - 1200	193	0	**193**	**744**

Time	Volume Summary 15min EB	Volume Summary 15min WB	15min Total	60min Total
1200 - 1215	197	0	**197**	
1215 - 1230	248	0	**248**	
1230 - 1245	220	0	**220**	
1245 - 1300	210	0	**210**	**875**
1300 - 1315	218	0	**218**	
1315 - 1330	235	0	**235**	
1330 - 1345	236	0	**236**	
1345 - 1400	209	0	**209**	**898**
1400 - 1415	234	0	**234**	
1415 - 1430	264	0	**264**	
1430 - 1445	246	0	**246**	
1445 - 1500	251	0	**251**	**995**
1500 - 1515	272	0	**272**	
1515 - 1530	287	0	**287**	
1530 - 1545	300	0	**300**	
1545 - 1600	311	0	**311**	**1170**
1600 - 1615	327	0	**327**	
1615 - 1630	329	0	**329**	
1630 - 1645	325	0	**325**	
1645 - 1700	298	0	**298**	**1279**
1700 - 1715	310	0	**310**	
1715 - 1730	321	0	**321**	
1730 - 1745	268	0	**268**	
1745 - 1800	268	0	**268**	**1167**
1800 - 1815	237	0	**237**	
1815 - 1830	243	0	**243**	
1830 - 1845	199	0	**199**	
1845 - 1900	181	0	**181**	**860**
1900 - 1915	170	0	**170**	
1915 - 1930	169	0	**169**	
1930 - 1945	161	0	**161**	
1945 - 2000	140	0	**140**	**640**
2000 - 2015	137	0	**137**	
2015 - 2030	143	0	**143**	
2030 - 2045	136	0	**136**	
2045 - 2100	176	0	**176**	**592**
2100 - 2115	123	0	**123**	
2115 - 2130	109	0	**109**	
2130 - 2145	115	0	**115**	
2145 - 2200	102	0	**102**	**449**
2200 - 2215	80	0	**80**	
2215 - 2230	88	0	**88**	
2230 - 2245	80	0	**80**	
2245 - 2300	61	0	**61**	**309**
2300 - 2315	67	0	**67**	
2315 - 2330	67	0	**67**	
2330 - 2345	47	0	**47**	
2345 - 0000	44	0	**44**	**225**

Session Total	14836	0	**14836**
Session Average	154.54	0.00	**154.54**
Session Percentage	100.00	0.00	

Site 74 Lane 2 EB

I-20,
west of US-378 Sunset Blvd S/Bound Off-Ramp

Date

Thursday, April 25, 2024

Lat/Long

34.008085°, -81.156669°

Weather

Fair
67°F

Click here for Detailed Weather

0000 - 2400 (Weekday 24h Session) (04-25-2024)

Volume Summary 15min

TIME	Volume Summary 15min EB	Volume Summary 15min WB	15min Total	60min Total
0000 - 0015	48	0	**48**	
0015 - 0030	42	0	**42**	
0030 - 0045	33	0	**33**	
0045 - 0100	17	0	**17**	**140**
0100 - 0115	32	0	**32**	
0115 - 0130	18	0	**18**	
0130 - 0145	21	0	**21**	
0145 - 0200	18	0	**18**	**89**
0200 - 0215	27	0	**27**	
0215 - 0230	26	0	**26**	
0230 - 0245	15	0	**15**	
0245 - 0300	28	0	**28**	**96**
0300 - 0315	26	0	**26**	
0315 - 0330	20	0	**20**	
0330 - 0345	23	0	**23**	
0345 - 0400	38	0	**38**	**107**
0400 - 0415	28	0	**28**	
0415 - 0430	29	0	**29**	
0430 - 0445	40	0	**40**	
0445 - 0500	39	0	**39**	**136**
0500 - 0515	44	0	**44**	
0515 - 0530	58	0	**58**	
0530 - 0545	82	0	**82**	
0545 - 0600	107	0	**107**	**291**
0600 - 0615	145	0	**145**	
0615 - 0630	159	0	**159**	
0630 - 0645	175	0	**175**	
0645 - 0700	169	0	**169**	**648**
0700 - 0715	197	0	**197**	
0715 - 0730	225	0	**225**	
0730 - 0745	221	0	**221**	
0745 - 0800	248	0	**248**	**891**
0800 - 0815	210	0	**210**	
0815 - 0830	221	0	**221**	
0830 - 0845	202	0	**202**	
0845 - 0900	201	0	**201**	**834**
0900 - 0915	179	0	**179**	
0915 - 0930	182	0	**182**	
0930 - 0945	208	0	**208**	
0945 - 1000	193	0	**193**	**762**
1000 - 1015	201	0	**201**	
1015 - 1030	190	0	**190**	
1030 - 1045	208	0	**208**	
1045 - 1100	207	0	**207**	**806**
1100 - 1115	201	0	**201**	
1115 - 1130	204	0	**204**	
1130 - 1145	211	0	**211**	
1145 - 1200	208	0	**208**	**824**

Time	Volume Summary 15min EB	Volume Summary 15min WB	15min Total	60min Total
1200 - 1215	191	0	**191**	
1215 - 1230	228	0	**228**	
1230 - 1245	219	0	**219**	
1245 - 1300	232	0	**232**	**870**
1300 - 1315	228	0	**228**	
1315 - 1330	251	0	**251**	
1330 - 1345	268	0	**268**	
1345 - 1400	278	0	**278**	**1025**
1400 - 1415	267	0	**267**	
1415 - 1430	272	0	**272**	
1430 - 1445	269	0	**269**	
1445 - 1500	259	0	**259**	**1067**
1500 - 1515	314	0	**314**	
1515 - 1530	305	0	**305**	
1530 - 1545	325	0	**325**	
1545 - 1600	295	0	**295**	**1239**
1600 - 1615	324	0	**324**	
1615 - 1630	360	0	**360**	
1630 - 1645	325	0	**325**	
1645 - 1700	386	0	**386**	**1395**
1700 - 1715	431	0	**431**	
1715 - 1730	347	0	**347**	
1730 - 1745	290	0	**290**	
1745 - 1800	285	0	**285**	**1353**
1800 - 1815	269	0	**269**	
1815 - 1830	263	0	**263**	
1830 - 1845	222	0	**222**	
1845 - 1900	220	0	**220**	**974**
1900 - 1915	187	0	**187**	
1915 - 1930	185	0	**185**	
1930 - 1945	185	0	**185**	
1945 - 2000	143	0	**143**	**700**
2000 - 2015	139	0	**139**	
2015 - 2030	141	0	**141**	
2030 - 2045	122	0	**122**	
2045 - 2100	98	0	**98**	**500**
2100 - 2115	122	0	**122**	
2115 - 2130	121	0	**121**	
2130 - 2145	115	0	**115**	
2145 - 2200	65	0	**65**	**423**
2200 - 2215	69	0	**69**	
2215 - 2230	85	0	**85**	
2230 - 2245	79	0	**79**	
2245 - 2300	65	0	**65**	**298**
2300 - 2315	74	0	**74**	
2315 - 2330	49	0	**49**	
2330 - 2345	54	0	**54**	
2345 - 0000	53	0	**53**	**230**

Session Total	15698	0	**15698**
Session Average	163.52	0.00	**163.52**
Session Percentage	100.00	0.00	

Site 74 Lane 2 EB

I-20,
west of US-378 Sunset Blvd S/Bound Off-Ramp

Date

Friday, April 26, 2024

Lat/Long

34.008085°, -81.156669°

Weather

Cloudy
69°F

Click here for Detailed Weather

0000 - 2400 (Weekday 24h Session) (04-26-2024)

Volume Summary 15min

TIME	Volume Summary 15min EB	Volume Summary 15min WB	15min Total	60min Total
0000 - 0015	53	0	**53**	
0015 - 0030	36	0	**36**	
0030 - 0045	40	0	**40**	
0045 - 0100	34	0	**34**	**163**
0100 - 0115	39	0	**39**	
0115 - 0130	42	0	**42**	
0130 - 0145	41	0	**41**	
0145 - 0200	34	0	**34**	**156**
0200 - 0215	29	0	**29**	
0215 - 0230	27	0	**27**	
0230 - 0245	31	0	**31**	
0245 - 0300	31	0	**31**	**118**
0300 - 0315	40	0	**40**	
0315 - 0330	32	0	**32**	
0330 - 0345	41	0	**41**	
0345 - 0400	46	0	**46**	**159**
0400 - 0415	55	0	**55**	
0415 - 0430	46	0	**46**	
0430 - 0445	63	0	**63**	
0445 - 0500	61	0	**61**	**225**
0500 - 0515	54	0	**54**	
0515 - 0530	60	0	**60**	
0530 - 0545	102	0	**102**	
0545 - 0600	114	0	**114**	**330**
0600 - 0615	106	0	**106**	
0615 - 0630	148	0	**148**	
0630 - 0645	153	0	**153**	
0645 - 0700	160	0	**160**	**567**
0700 - 0715	184	0	**184**	
0715 - 0730	231	0	**231**	
0730 - 0745	224	0	**224**	
0745 - 0800	239	0	**239**	**878**
0800 - 0815	189	0	**189**	
0815 - 0830	182	0	**182**	
0830 - 0845	191	0	**191**	
0845 - 0900	174	0	**174**	**736**
0900 - 0915	175	0	**175**	
0915 - 0930	200	0	**200**	
0930 - 0945	188	0	**188**	
0945 - 1000	187	0	**187**	**750**
1000 - 1015	177	0	**177**	
1015 - 1030	185	0	**185**	
1030 - 1045	187	0	**187**	
1045 - 1100	201	0	**201**	**750**
1100 - 1115	228	0	**228**	
1115 - 1130	233	0	**233**	
1130 - 1145	232	0	**232**	
1145 - 1200	234	0	**234**	**927**

Time	Volume Summary 15min EB	Volume Summary 15min WB	15min Total	60min Total
1200 - 1215	233	0	**233**	
1215 - 1230	245	0	**245**	
1230 - 1245	244	0	**244**	
1245 - 1300	238	0	**238**	**960**
1300 - 1315	260	0	**260**	
1315 - 1330	237	0	**237**	
1330 - 1345	251	0	**251**	
1345 - 1400	257	0	**257**	**1005**
1400 - 1415	273	0	**273**	
1415 - 1430	258	0	**258**	
1430 - 1445	260	0	**260**	
1445 - 1500	286	0	**286**	**1077**
1500 - 1515	300	0	**300**	
1515 - 1530	326	0	**326**	
1530 - 1545	281	0	**281**	
1545 - 1600	318	0	**318**	**1225**
1600 - 1615	319	0	**319**	
1615 - 1630	340	0	**340**	
1630 - 1645	309	0	**309**	
1645 - 1700	306	0	**306**	**1274**
1700 - 1715	318	0	**318**	
1715 - 1730	358	0	**358**	
1730 - 1745	295	0	**295**	
1745 - 1800	267	0	**267**	**1238**
1800 - 1815	257	0	**257**	
1815 - 1830	274	0	**274**	
1830 - 1845	217	0	**217**	
1845 - 1900	222	0	**222**	**970**
1900 - 1915	201	0	**201**	
1915 - 1930	183	0	**183**	
1930 - 1945	197	0	**197**	
1945 - 2000	186	0	**186**	**767**
2000 - 2015	173	0	**173**	
2015 - 2030	181	0	**181**	
2030 - 2045	157	0	**157**	
2045 - 2100	159	0	**159**	**670**
2100 - 2115	140	0	**140**	
2115 - 2130	169	0	**169**	
2130 - 2145	137	0	**137**	
2145 - 2200	113	0	**113**	**559**
2200 - 2215	143	0	**143**	
2215 - 2230	114	0	**114**	
2230 - 2245	138	0	**138**	
2245 - 2300	127	0	**127**	**522**
2300 - 2315	109	0	**109**	
2315 - 2330	83	0	**83**	
2330 - 2345	67	0	**67**	
2345 - 0000	72	0	**72**	**331**

Session Total	16357	0	**16357**
Session Average	170.39	0.00	**170.39**
Session Percentage	100.00	0.00	

Site 74 Lane 2 EB

I-20,
west of US-378 Sunset Blvd S/Bound Off-Ramp

Date

Saturday, April 27, 2024

Lat/Long

34.008085°, -81.156669°

Weather

Mostly Cloudy
69°F

Click here for Detailed Weather

0000 - 2400 (Saturday 24h Session) (04-27-2024)

Volume Summary 15min

TIME	Volume Summary 15min EB	WB	15min Total	60min Total
0000 - 0015	65	0	**65**	
0015 - 0030	55	0	**55**	
0030 - 0045	43	0	**43**	
0045 - 0100	41	0	**41**	**204**
0100 - 0115	35	0	**35**	
0115 - 0130	33	0	**33**	
0130 - 0145	27	0	**27**	
0145 - 0200	18	0	**18**	**113**
0200 - 0215	13	0	**13**	
0215 - 0230	30	0	**30**	
0230 - 0245	21	0	**21**	
0245 - 0300	19	0	**19**	**83**
0300 - 0315	24	0	**24**	
0315 - 0330	33	0	**33**	
0330 - 0345	16	0	**16**	
0345 - 0400	14	0	**14**	**87**
0400 - 0415	22	0	**22**	
0415 - 0430	34	0	**34**	
0430 - 0445	24	0	**24**	
0445 - 0500	20	0	**20**	**100**
0500 - 0515	33	0	**33**	
0515 - 0530	36	0	**36**	
0530 - 0545	45	0	**45**	
0545 - 0600	55	0	**55**	**169**
0600 - 0615	73	0	**73**	
0615 - 0630	75	0	**75**	
0630 - 0645	84	0	**84**	
0645 - 0700	103	0	**103**	**335**
0700 - 0715	79	0	**79**	
0715 - 0730	124	0	**124**	
0730 - 0745	139	0	**139**	
0745 - 0800	136	0	**136**	**478**
0800 - 0815	134	0	**134**	
0815 - 0830	156	0	**156**	
0830 - 0845	159	0	**159**	
0845 - 0900	169	0	**169**	**618**
0900 - 0915	175	0	**175**	
0915 - 0930	173	0	**173**	
0930 - 0945	213	0	**213**	
0945 - 1000	202	0	**202**	**763**
1000 - 1015	183	0	**183**	
1015 - 1030	182	0	**182**	
1030 - 1045	198	0	**198**	
1045 - 1100	205	0	**205**	**768**
1100 - 1115	225	0	**225**	
1115 - 1130	214	0	**214**	
1130 - 1145	224	0	**224**	
1145 - 1200	202	0	**202**	**865**

Time	Volume Summary 15min EB	WB	15min Total	60min Total
1200 - 1215	213	0	**213**	
1215 - 1230	238	0	**238**	
1230 - 1245	241	0	**241**	
1245 - 1300	227	0	**227**	**919**
1300 - 1315	221	0	**221**	
1315 - 1330	249	0	**249**	
1330 - 1345	233	0	**233**	
1345 - 1400	227	0	**227**	**930**
1400 - 1415	248	0	**248**	
1415 - 1430	239	0	**239**	
1430 - 1445	212	0	**212**	
1445 - 1500	221	0	**221**	**920**
1500 - 1515	222	0	**222**	
1515 - 1530	228	0	**228**	
1530 - 1545	244	0	**244**	
1545 - 1600	230	0	**230**	**924**
1600 - 1615	223	0	**223**	
1615 - 1630	208	0	**208**	
1630 - 1645	226	0	**226**	
1645 - 1700	224	0	**224**	**881**
1700 - 1715	208	0	**208**	
1715 - 1730	192	0	**192**	
1730 - 1745	212	0	**212**	
1745 - 1800	184	0	**184**	**796**
1800 - 1815	213	0	**213**	
1815 - 1830	204	0	**204**	
1830 - 1845	209	0	**209**	
1845 - 1900	163	0	**163**	**789**
1900 - 1915	171	0	**171**	
1915 - 1930	159	0	**159**	
1930 - 1945	161	0	**161**	
1945 - 2000	175	0	**175**	**666**
2000 - 2015	168	0	**168**	
2015 - 2030	139	0	**139**	
2030 - 2045	144	0	**144**	
2045 - 2100	120	0	**120**	**571**
2100 - 2115	130	0	**130**	
2115 - 2130	135	0	**135**	
2130 - 2145	138	0	**138**	
2145 - 2200	139	0	**139**	**542**
2200 - 2215	148	0	**148**	
2215 - 2230	117	0	**117**	
2230 - 2245	105	0	**105**	
2245 - 2300	96	0	**96**	**466**
2300 - 2315	87	0	**87**	
2315 - 2330	69	0	**69**	
2330 - 2345	71	0	**71**	
2345 - 0000	67	0	**67**	**294**

Session Total	13281	0	**13281**
Session Average	138.34	0.00	**138.34**
Session Percentage	100.00	0.00	

Bi-Directional Class Count || NB EB 60min

Columbia, SC

Marr Traffic DATA COLLECTION

www.marrtraffic.com

Site 74 Lane 2 EB
I-20,
west of US-378 Sunset Blvd S/Bound Off-Ramp

Date
Sunday, April 21, 2024

Lat/Long
34.008085°, -81.156669°

Weather
Cloudy
66°F

Click here for Detailed Weather

0000 - 2400 (Sunday 24h Session) (04-21-2024)
NB EB 60min

	Eastbound (Movement 74 Lane 2 EB.1)													
TIME	1	2	3	4	5	6	7	8	9	10	11	12	13	**Total**
0000 - 0100	0	198	28	0	0	0	0	0	11	0	0	0	0	**237**
0100 - 0200	0	157	15	2	2	0	0	0	2	0	0	0	0	**178**
0200 - 0300	0	111	12	0	4	0	0	0	10	0	0	0	0	**137**
0300 - 0400	0	74	10	0	2	0	0	0	9	0	0	0	0	**95**
0400 - 0500	0	85	8	1	7	0	0	1	12	0	0	0	0	**114**
0500 - 0600	0	103	14	0	5	0	0	0	13	0	0	0	0	**135**
0600 - 0700	0	146	35	0	1	0	0	0	11	0	0	0	0	**193**
0700 - 0800	1	187	61	1	2	1	0	0	10	0	0	0	0	**263**
0800 - 0900	2	275	66	1	6	0	0	1	14	0	0	0	0	**365**
0900 - 1000	2	413	97	1	4	0	0	2	9	1	0	0	0	**529**
1000 - 1100	0	501	125	1	6	1	0	3	32	0	1	0	0	**670**
1100 - 1200	1	590	138	0	4	0	0	4	32	0	1	0	0	**770**
1200 - 1300	0	671	157	0	11	2	0	4	31	0	0	0	0	**876**
1300 - 1400	1	744	185	1	3	2	0	2	25	0	0	1	0	**964**
1400 - 1500	0	693	155	0	7	1	0	2	29	1	0	0	0	**888**
1500 - 1600	1	698	172	0	7	2	0	1	29	1	0	0	0	**911**
1600 - 1700	0	694	166	1	3	1	0	3	27	0	0	0	0	**895**
1700 - 1800	0	599	138	1	4	1	0	6	34	0	0	0	0	**783**
1800 - 1900	1	581	138	0	1	1	0	8	26	0	0	0	0	**756**
1900 - 2000	0	501	97	1	2	2	0	3	35	0	2	0	0	**643**
2000 - 2100	0	405	76	0	3	0	0	0	19	0	0	0	0	**503**
2100 - 2200	0	276	53	1	4	0	0	1	26	0	2	0	0	**363**
2200 - 2300	0	202	37	3	0	0	0	0	25	0	2	0	0	**269**
2300 - 2400	0	124	16	1	2	0	0	0	14	0	2	0	0	**159**

Session Total	9	9028	1999	16	90	14	0	41	485	3	10	1	0	**11696**
Session Average	0.38	376.17	83.29	0.67	3.75	0.58	0.00	1.71	20.21	0.13	0.42	0.04	0.00	**487.33**
Session Percentage	0.08	77.19	17.09	0.14	0.77	0.12	0.00	0.35	4.15	0.03	0.09	0.01	0.00	

AM Peak Hour	0800 - 0900	0900 - 1000	0900 - 1000	0700 - 0800	0800 - 0900	0700 - 0800	-	0900 - 1000	0800 - 0900	0900 - 1000	-	-	-	**0900 - 1000**
AM Peak Volume	2	413	97	1	6	1	0	2	14	1	0	0	0	**529**

Noon Peak Hour	1100 - 1200	1300 - 1400	1300 - 1400	1000 - 1100	1200 - 1300	1200 - 1300	-	1100 - 1200	1000 - 1100	1400 - 1500	1000 - 1100	1300 - 1400	-	**1300 - 1400**
Noon Peak Volume	1	744	185	1	11	2	0	4	32	1	1	1	0	**964**

PM Peak Hour	1500 - 1600	1500 - 1600	1500 - 1600	1600 - 1700	1500 - 1600	1500 - 1600	-	1800 - 1900	1900 - 2000	1500 - 1600	1900 - 2000	-	-	**1500 - 1600**
PM Peak Volume	1	698	172	1	7	2	0	8	35	1	2	0	0	**911**

Site 74 Lane 2 EB

I-20,
west of US-378 Sunset Blvd S/Bound Off-Ramp

Date

Monday, April 22, 2024

Lat/Long

34.008085°, -81.156669°

Weather

Mostly Cloudy
57°F

Click here for Detailed Weather

0000 - 2400 (Weekday 24h Session) (04-22-2024)

NB EB 60min

	Eastbound (Movement 74 Lane 2 EB.1)													
TIME	1	2	3	4	5	6	7	8	9	10	11	12	13	**Total**
0000 - 0100	0	62	10	0	4	0	0	0	30	0	0	0	0	**106**
0100 - 0200	0	46	9	0	2	0	0	0	18	0	0	0	0	**75**
0200 - 0300	0	42	3	0	4	0	0	0	25	0	0	0	0	**74**
0300 - 0400	0	68	9	0	4	0	0	0	29	0	0	0	0	**110**
0400 - 0500	0	81	25	0	3	0	0	0	35	0	0	0	0	**144**
0500 - 0600	0	223	73	0	7	0	0	0	53	0	0	0	0	**356**
0600 - 0700	1	446	132	1	16	4	0	2	54	0	0	0	0	**656**
0700 - 0800	0	539	216	1	21	11	0	7	46	0	0	0	0	**841**
0800 - 0900	0	443	185	1	24	7	2	8	68	1	0	0	0	**739**
0900 - 1000	0	364	198	1	30	11	0	13	80	0	0	1	0	**698**
1000 - 1100	1	435	184	1	30	8	0	7	108	0	0	0	0	**774**
1100 - 1200	0	444	176	0	17	5	0	6	109	0	0	0	0	**757**
1200 - 1300	1	501	183	1	19	7	0	14	105	0	0	0	0	**831**
1300 - 1400	0	551	167	3	26	6	0	15	111	1	0	0	0	**880**
1400 - 1500	0	552	215	3	22	13	3	11	120	1	0	0	0	**940**
1500 - 1600	1	677	208	1	25	11	3	10	144	2	0	0	0	**1082**
1600 - 1700	0	799	241	0	28	7	2	12	124	2	0	0	0	**1215**
1700 - 1800	0	764	243	2	27	11	0	14	128	2	0	0	0	**1191**
1800 - 1900	0	563	182	0	9	7	0	6	96	0	0	0	0	**863**
1900 - 2000	0	424	112	0	8	7	0	7	86	0	1	0	0	**645**
2000 - 2100	0	367	68	0	5	2	0	4	71	0	2	0	0	**519**
2100 - 2200	0	302	51	0	5	0	0	0	60	0	0	0	0	**418**
2200 - 2300	0	147	48	0	5	0	0	0	49	0	0	0	0	**249**
2300 - 2400	0	102	46	0	3	0	0	0	31	0	0	0	0	**182**

Session Total	4	8942	2984	15	344	117	10	136	1780	9	3	1	0	**14345**
Session Average	0.17	372.58	124.33	0.63	14.33	4.88	0.42	5.67	74.17	0.38	0.13	0.04	0.00	**597.71**
Session Percentage	0.03	62.34	20.80	0.10	2.40	0.82	0.07	0.95	12.41	0.06	0.02	0.01	0.00	

AM Peak Hour	0600 - 0700	0700 - 0800	0700 - 0800	0600 - 0700	0900 - 1000	0700 - 0800	0800 - 0900	0900 - 1000	0900 - 1000	0800 - 0900	-	0900 - 1000	-	**0700 - 0800**
AM Peak Volume	1	539	216	1	30	11	2	13	80	1	0	1	0	**841**

Noon Peak Hour	1000 - 1100	1400 - 1500	1400 - 1500	1300 - 1400	1000 - 1100	1400 - 1500	1400 - 1500	1300 - 1400	1400 - 1500	1300 - 1400	-	-	-	**1400 - 1500**
Noon Peak Volume	1	552	215	3	30	13	3	15	120	1	0	0	0	**940**

PM Peak Hour	1500 - 1600	1600 - 1700	1700 - 1800	1700 - 1800	1600 - 1700	1500 - 1600	1500 - 1600	1700 - 1800	1500 - 1600	1500 - 1600	1900 - 2000	-	-	**1600 - 1700**
PM Peak Volume	1	799	243	2	28	11	3	14	144	2	1	0	0	**1215**

Site 74 Lane 2 EB

I-20,
west of US-378 Sunset Blvd S/Bound Off-Ramp

Date

Tuesday, April 23, 2024

Lat/Long

34.008085°, -81.156669°

Weather

Fair
58°F

Click here for Detailed Weather

0000 - 2400 (Weekday 24h Session) (04-23-2024)

NB EB 60min

	Eastbound (Movement 74 Lane 2 EB.1)													
TIME	1	2	3	4	5	6	7	8	9	10	11	12	13	**Total**
0000 - 0100	0	73	4	0	0	1	0	0	21	0	2	0	0	**101**
0100 - 0200	0	78	2	0	4	0	0	0	36	0	2	0	0	**122**
0200 - 0300	0	84	2	0	3	0	0	0	39	0	0	0	0	**128**
0300 - 0400	0	84	2	0	4	0	0	3	43	0	2	0	0	**138**
0400 - 0500	0	128	9	0	3	0	0	0	44	0	4	0	0	**188**
0500 - 0600	0	288	29	0	7	2	0	0	52	0	0	0	0	**378**
0600 - 0700	1	409	165	0	12	5	0	3	71	0	1	0	0	**667**
0700 - 0800	1	568	216	1	17	2	1	3	48	0	0	0	0	**857**
0800 - 0900	1	471	168	0	32	7	0	1	52	0	1	0	0	**733**
0900 - 1000	0	446	182	4	25	8	0	4	91	0	0	0	0	**760**
1000 - 1100	0	435	172	1	32	11	0	3	94	1	0	0	0	**749**
1100 - 1200	3	449	163	0	20	8	1	4	128	0	0	0	0	**776**
1200 - 1300	1	480	168	2	21	7	0	7	133	0	0	0	0	**819**
1300 - 1400	0	515	171	0	21	9	0	8	126	5	0	0	0	**855**
1400 - 1500	2	590	202	5	24	10	2	16	125	2	2	0	0	**980**
1500 - 1600	1	663	252	0	28	13	2	22	145	2	0	0	0	**1128**
1600 - 1700	0	809	266	2	39	12	2	18	117	0	2	0	0	**1267**
1700 - 1800	1	914	230	1	36	8	1	14	101	4	0	0	0	**1310**
1800 - 1900	1	557	157	0	18	6	0	9	86	0	0	0	0	**834**
1900 - 2000	5	385	130	0	14	3	0	1	68	0	2	0	0	**608**
2000 - 2100	0	378	113	0	11	6	0	1	72	0	2	0	0	**583**
2100 - 2200	1	343	104	0	8	0	0	0	47	0	2	0	0	**505**
2200 - 2300	0	231	49	0	3	0	0	0	42	0	4	0	0	**329**
2300 - 2400	0	126	47	0	2	0	0	0	21	0	4	0	0	**200**

Session Total	18	9504	3003	16	384	118	9	117	1802	14	30	0	0	**15015**
Session Average	0.75	396.00	125.13	0.67	16.00	4.92	0.38	4.88	75.08	0.58	1.25	0.00	0.00	**625.63**
Session Percentage	0.12	63.30	20.00	0.11	2.56	0.79	0.06	0.78	12.00	0.09	0.20	0.00	0.00	

AM Peak Hour	0600 - 0700	0700 - 0800	0700 - 0800	0900 - 1000	0800 - 0900	0900 - 1000	0700 - 0800	0900 - 1000	0900 - 1000	-	0600 - 0700	-	-	**0700 - 0800**
AM Peak Hour Volume	1	568	216	4	32	8	1	4	91	0	1	0	0	**857**

Noon Peak Hour	1100 - 1200	1400 - 1500	1400 - 1500	1400 - 1500	1000 - 1100	1000 - 1100	1400 - 1500	1400 - 1500	1200 - 1300	1300 - 1400	1400 - 1500	-	-	**1400 - 1500**
Noon Peak Hour Volume	3	590	202	5	32	11	2	16	133	5	2	0	0	**980**

PM Peak Hour	1900 - 2000	1700 - 1800	1600 - 1700	1600 - 1700	1600 - 1700	1500 - 1600	1500 - 1600	1500 - 1600	1500 - 1600	1700 - 1800	1600 - 1700	-	-	**1700 - 1800**
PM Peak Hour Volume	5	914	266	2	39	13	2	22	145	4	2	0	0	**1310**

Site 74 Lane 2 EB

I-20,
west of US-378 Sunset Blvd S/Bound Off-Ramp

Date

Wednesday, April 24, 2024

Lat/Long

34.008085°, -81.156669°

Weather

Fair
66°F

Click here for Detailed Weather

0000 - 2400 (Weekday 24h Session) (04-24-2024)

NB EB 60min

	Eastbound (Movement 74 Lane 2 EB.1)													
TIME	1	2	3	4	5	6	7	8	9	10	11	12	13	**Total**
0000 - 0100	0	80	16	0	2	0	0	0	32	0	4	0	0	**134**
0100 - 0200	0	59	5	0	6	2	0	0	20	0	1	0	0	**93**
0200 - 0300	0	46	9	0	2	1	0	0	29	0	3	0	0	**90**
0300 - 0400	0	68	12	2	2	1	0	0	28	0	0	0	0	**113**
0400 - 0500	0	80	13	0	4	0	0	0	28	0	2	0	0	**127**
0500 - 0600	0	221	23	0	8	1	0	0	44	0	1	0	0	**298**
0600 - 0700	2	428	175	0	18	2	0	9	56	0	2	0	0	**692**
0700 - 0800	0	523	220	0	26	7	0	12	74	0	2	1	0	**865**
0800 - 0900	0	421	167	0	28	8	2	5	73	1	0	0	0	**705**
0900 - 1000	2	376	177	4	23	8	4	7	97	2	1	0	0	**701**
1000 - 1100	1	464	189	1	17	8	0	12	122	1	0	0	0	**815**
1100 - 1200	3	414	187	1	23	5	0	9	101	1	0	0	0	**744**
1200 - 1300	1	490	180	0	23	7	4	16	148	5	0	1	0	**875**
1300 - 1400	3	515	190	1	27	9	0	7	146	0	0	0	0	**898**
1400 - 1500	1	590	220	5	24	5	1	8	140	0	0	1	0	**995**
1500 - 1600	1	677	273	1	38	10	1	13	154	1	0	1	0	**1170**
1600 - 1700	1	778	271	5	39	10	1	18	155	1	0	0	0	**1279**
1700 - 1800	0	738	249	3	29	5	2	8	133	0	0	0	0	**1167**
1800 - 1900	1	573	152	3	25	3	0	5	97	1	0	0	0	**860**
1900 - 2000	1	421	126	0	11	1	0	9	70	0	1	0	0	**640**
2000 - 2100	0	414	106	1	6	2	0	3	59	0	1	0	0	**592**
2100 - 2200	0	347	35	0	3	0	0	1	58	0	5	0	0	**449**
2200 - 2300	0	250	11	1	3	0	0	0	37	0	7	0	0	**309**
2300 - 2400	1	168	11	1	2	0	0	0	40	0	2	0	0	**225**

Session Total	18	9141	3017	29	389	95	15	142	1941	13	32	4	0	**14836**
Session Average	0.75	380.88	125.71	1.21	16.21	3.96	0.63	5.92	80.88	0.54	1.33	0.17	0.00	**618.17**
Session Percentage	0.12	61.61	20.34	0.20	2.62	0.64	0.10	0.96	13.08	0.09	0.22	0.03	0.00	

AM Peak Hour	0600 - 0700	0700 - 0800	0700 - 0800	0900 - 1000	0800 - 0900	0800 - 0900	0900 - 1000	0700 - 0800	0900 - 1000	0900 - 1000	0600 - 0700	0700 - 0800	-	**0700 - 0800**
AM Peak Hour Volume	2	523	220	4	28	8	4	12	97	2	2	1	0	**865**

Noon Peak Hour	1100 - 1200	1400 - 1500	1400 - 1500	1400 - 1500	1300 - 1400	1300 - 1400	1200 - 1300	1200 - 1300	1200 - 1300	1200 - 1300	-	1200 - 1300	-	**1400 - 1500**
Noon Peak Hour Volume	3	590	220	5	27	9	4	16	148	5	0	1	0	**995**

PM Peak Hour	1500 - 1600	1600 - 1700	1500 - 1600	1600 - 1700	1600 - 1700	1500 - 1600	1700 - 1800	1600 - 1700	1600 - 1700	1500 - 1600	1900 - 2000	1500 - 1600	-	**1600 - 1700**
PM Peak Hour Volume	1	778	273	5	39	10	2	18	155	1	1	1	0	**1279**

Site 74 Lane 2 EB
I-20,
west of US-378 Sunset Blvd S/Bound Off-Ramp

Date
Thursday, April 25, 2024

Lat/Long
34.008085°, -81.156669°

Weather
Fair
67°F

Click here for Detailed Weather

0000 - 2400 (Weekday 24h Session) (04-25-2024)
NB EB 60min

	Eastbound (Movement 74 Lane 2 EB.1)													
TIME	1	2	3	4	5	6	7	8	9	10	11	12	13	**Total**
0000 - 0100	0	77	16	0	3	2	0	2	37	0	3	0	0	**140**
0100 - 0200	0	57	2	0	2	2	0	0	24	0	2	0	0	**89**
0200 - 0300	0	62	3	0	3	0	0	0	26	0	2	0	0	**96**
0300 - 0400	0	77	0	0	3	0	0	0	25	0	2	0	0	**107**
0400 - 0500	0	100	8	0	4	0	0	0	23	0	1	0	0	**136**
0500 - 0600	0	230	5	0	0	0	0	0	54	0	2	0	0	**291**
0600 - 0700	1	420	127	0	12	6	0	1	77	0	4	0	0	**648**
0700 - 0800	1	575	199	1	29	12	1	1	71	0	1	0	0	**891**
0800 - 0900	0	441	244	1	34	8	0	4	99	2	1	0	0	**834**
0900 - 1000	2	426	188	1	21	8	0	9	105	2	0	0	0	**762**
1000 - 1100	0	470	182	0	22	7	2	13	110	0	0	0	0	**806**
1100 - 1200	2	463	177	0	23	11	0	9	138	0	1	0	0	**824**
1200 - 1300	0	485	189	1	29	7	2	9	146	1	1	0	0	**870**
1300 - 1400	1	603	231	3	25	7	2	12	138	2	1	0	0	**1025**
1400 - 1500	2	603	243	1	36	8	0	12	158	3	0	1	0	**1067**
1500 - 1600	2	753	303	1	30	4	2	9	133	1	1	0	0	**1239**
1600 - 1700	2	906	310	1	36	5	1	9	125	0	0	0	0	**1395**
1700 - 1800	3	909	288	2	25	7	2	6	110	1	0	0	0	**1353**
1800 - 1900	2	634	209	2	25	2	0	9	90	1	0	0	0	**974**
1900 - 2000	2	463	149	0	13	2	0	9	61	0	1	0	0	**700**
2000 - 2100	0	384	43	1	8	2	0	0	60	0	2	0	0	**500**
2100 - 2200	0	378	13	0	2	0	0	0	30	0	0	0	0	**423**
2200 - 2300	0	258	5	1	4	0	0	0	28	0	2	0	0	**298**
2300 - 2400	0	197	8	0	0	1	0	0	19	0	5	0	0	**230**

Session Total	20	9971	3142	16	389	101	12	114	1887	13	32	1	0	**15698**
Session Average	0.83	415.46	130.92	0.67	16.21	4.21	0.50	4.75	78.63	0.54	1.33	0.04	0.00	**654.08**
Session Percentage	0.13	63.52	20.02	0.10	2.48	0.64	0.08	0.73	12.02	0.08	0.20	0.01	0.00	

AM Peak Hour	0900 - 1000	0700 - 0800	0800 - 0900	0700 - 0800	0800 - 0900	0700 - 0800	0700 - 0800	0900 - 1000	0900 - 1000	0800 - 0900	0600 - 0700	-	-	**0700 - 0800**
AM Peak Hour Volume	2	575	244	1	34	12	1	9	105	2	4	0	0	**891**

Noon Peak Hour	1100 - 1200	1300 - 1400	1400 - 1500	1300 - 1400	1400 - 1500	1100 - 1200	1000 - 1100	1000 - 1100	1400 - 1500	1400 - 1500	1100 - 1200	1400 - 1500	-	**1400 - 1500**
Noon Peak Hour Volume	2	603	243	3	36	11	2	13	158	3	1	1	0	**1067**

PM Peak Hour	1700 - 1800	1700 - 1800	1600 - 1700	1700 - 1800	1600 - 1700	1700 - 1800	1500 - 1600	1500 - 1600	1500 - 1600	1500 - 1600	1500 - 1600	-	-	**1600 - 1700**
PM Peak Hour Volume	3	909	310	2	36	7	2	9	133	1	1	0	0	**1395**

Site 74 Lane 2 EB

I-20,
west of US-378 Sunset Blvd S/Bound Off-Ramp

Date

Friday, April 26, 2024

Lat/Long

34.008085°, -81.156669°

Weather

Cloudy
69°F

Click here for Detailed Weather

0000 - 2400 (Weekday 24h Session) (04-26-2024)

NB EB 60min

	Eastbound (Movement 74 Lane 2 EB.1)													
TIME	1	2	3	4	5	6	7	8	9	10	11	12	13	**Total**
0000 - 0100	0	103	25	0	8	0	0	0	24	0	3	0	0	**163**
0100 - 0200	0	83	30	0	7	0	0	0	31	0	5	0	0	**156**
0200 - 0300	0	60	21	0	5	0	0	0	28	0	4	0	0	**118**
0300 - 0400	0	76	30	0	3	0	0	0	42	0	8	0	0	**159**
0400 - 0500	0	101	55	0	8	2	0	0	55	0	4	0	0	**225**
0500 - 0600	0	181	91	2	5	2	0	0	46	0	3	0	0	**330**
0600 - 0700	0	340	148	0	12	4	0	0	59	1	3	0	0	**567**
0700 - 0800	2	540	229	0	37	12	1	3	52	2	0	0	0	**878**
0800 - 0900	0	419	182	3	38	4	0	8	81	0	1	0	0	**736**
0900 - 1000	1	448	187	1	22	7	0	5	76	2	0	1	0	**750**
1000 - 1100	3	456	162	1	24	7	1	12	82	1	1	0	0	**750**
1100 - 1200	1	547	211	1	30	7	2	14	112	2	0	0	0	**927**
1200 - 1300	5	577	212	2	30	11	0	6	117	0	0	0	0	**960**
1300 - 1400	3	634	210	5	28	4	1	12	108	0	0	0	0	**1005**
1400 - 1500	2	657	228	1	30	10	0	14	134	1	0	0	0	**1077**
1500 - 1600	0	783	255	3	24	8	0	16	133	2	1	0	0	**1225**
1600 - 1700	0	864	246	1	25	8	0	23	107	0	0	0	0	**1274**
1700 - 1800	1	870	221	0	22	5	0	14	103	1	1	0	0	**1238**
1800 - 1900	1	673	184	2	16	5	0	9	78	2	0	0	0	**970**
1900 - 2000	1	547	136	3	9	2	0	12	56	1	0	0	0	**767**
2000 - 2100	1	504	99	1	6	0	0	0	56	0	3	0	0	**670**
2100 - 2200	0	411	89	1	12	0	0	0	39	0	7	0	0	**559**
2200 - 2300	0	379	93	0	6	0	0	0	38	0	6	0	0	**522**
2300 - 2400	0	235	64	0	3	0	0	0	23	0	6	0	0	**331**

Session Total	21	10488	3408	27	410	98	5	148	1680	15	56	1	0	**16357**
Session Average	0.88	437.00	142.00	1.13	17.08	4.08	0.21	6.17	70.00	0.63	2.33	0.04	0.00	**681.54**
Session Percentage	0.13	64.12	20.84	0.17	2.51	0.60	0.03	0.90	10.27	0.09	0.34	0.01	0.00	

AM Peak Hour	0700 - 0800	0700 - 0800	0700 - 0800	0800 - 0900	0800 - 0900	0700 - 0800	0700 - 0800	0800 - 0900	0800 - 0900	0700 - 0800	0500 - 0600	0900 - 1000	-	**0700 - 0800**
AM Peak Hour Volume	2	540	229	3	38	12	1	8	81	2	3	1	0	**878**

Noon Peak Hour	1200 - 1300	1400 - 1500	1400 - 1500	1300 - 1400	1100 - 1200	1200 - 1300	1100 - 1200	1100 - 1200	1400 - 1500	1100 - 1200	1000 - 1100	-	-	**1400 - 1500**
Noon Peak Hour Volume	5	657	228	5	30	11	2	14	134	2	1	0	0	**1077**

PM Peak Hour	1700 - 1800	1700 - 1800	1500 - 1600	1500 - 1600	1600 - 1700	1500 - 1600	-	1600 - 1700	1500 - 1600	1500 - 1600	1500 - 1600	-	-	**1600 - 1700**
PM Peak Hour Volume	1	870	255	3	25	8	0	23	133	2	1	0	0	**1274**

Site 74 Lane 2 EB

I-20,
west of US-378 Sunset Blvd S/Bound Off-Ramp

Date

Saturday, April 27, 2024

Lat/Long

34.008085°, -81.156669°

Weather

Mostly Cloudy
69°F

Click here for Detailed Weather

0000 - 2400 (Saturday 24h Session) (04-27-2024)

NB EB 60min

	Eastbound (Movement 74 Lane 2 EB.1)													
TIME	1	2	3	4	5	6	7	8	9	10	11	12	13	**Total**
0000 - 0100	0	150	21	0	4	0	0	0	28	0	1	0	0	**204**
0100 - 0200	0	70	18	0	6	0	0	0	19	0	0	0	0	**113**
0200 - 0300	0	56	16	0	2	0	0	0	8	0	1	0	0	**83**
0300 - 0400	0	49	21	0	3	0	0	0	11	0	3	0	0	**87**
0400 - 0500	0	58	22	0	1	0	0	0	16	0	3	0	0	**100**
0500 - 0600	0	102	40	0	6	0	0	0	17	0	4	0	0	**169**
0600 - 0700	1	205	95	0	5	0	0	3	24	0	2	0	0	**335**
0700 - 0800	0	337	106	1	5	4	0	2	22	0	1	0	0	**478**
0800 - 0900	0	413	145	0	13	3	0	4	40	0	0	0	0	**618**
0900 - 1000	1	544	145	3	8	2	0	4	56	0	0	0	0	**763**
1000 - 1100	2	563	150	2	5	4	0	1	40	1	0	0	0	**768**
1100 - 1200	1	617	188	2	6	0	0	5	46	0	0	0	0	**865**
1200 - 1300	1	670	182	1	7	5	0	5	48	0	0	0	0	**919**
1300 - 1400	0	697	183	1	8	1	0	1	39	0	0	0	0	**930**
1400 - 1500	1	669	190	4	7	1	0	8	40	0	0	0	0	**920**
1500 - 1600	10	726	135	1	11	2	1	4	33	1	0	0	0	**924**
1600 - 1700	5	678	152	0	7	2	0	4	32	1	0	0	0	**881**
1700 - 1800	5	612	144	2	5	2	0	1	25	0	0	0	0	**796**
1800 - 1900	5	609	144	2	8	0	0	4	17	0	0	0	0	**789**
1900 - 2000	1	501	132	4	5	2	0	1	20	0	0	0	0	**666**
2000 - 2100	0	470	82	0	0	1	0	1	17	0	0	0	0	**571**
2100 - 2200	0	454	68	0	2	1	0	0	17	0	0	0	0	**542**
2200 - 2300	0	396	54	0	0	0	0	0	16	0	0	0	0	**466**
2300 - 2400	0	250	33	0	0	1	0	0	10	0	0	0	0	**294**

Session Total	33	9896	2466	23	124	31	1	48	641	3	15	0	0	**13281**
Session Average	1.38	412.33	102.75	0.96	5.17	1.29	0.04	2.00	26.71	0.13	0.63	0.00	0.00	**553.38**
Session Percentage	0.25	74.51	18.57	0.17	0.93	0.23	0.01	0.36	4.83	0.02	0.11	0.00	0.00	

AM Peak Hour	0600 - 0700	0900 - 1000	0800 - 0900	0900 - 1000	0800 - 0900	0700 - 0800	-	0800 - 0900	0900 - 1000	-	0500 - 0600	-	-	**0900 - 1000**
AM Peak Hour Volume	1	544	145	3	13	4	0	4	56	0	4	0	0	**763**

Noon Peak Hour	1000 - 1100	1300 - 1400	1400 - 1500	1400 - 1500	1300 - 1400	1200 - 1300	-	1400 - 1500	1200 - 1300	1000 - 1100	-	-	-	**1300 - 1400**
Noon Peak Hour Volume	2	697	190	4	8	5	0	8	48	1	0	0	0	**930**

PM Peak Hour	1500 - 1600	1500 - 1600	1600 - 1700	1900 - 2000	1500 - 1600	1500 - 1600	1500 - 1600	1500 - 1600	1500 - 1600	1500 - 1600	-	-	-	**1500 - 1600**
PM Peak Hour Volume	10	726	152	4	11	2	1	4	33	1	0	0	0	**924**

Bi-Directional Class Count || Volume Summary 60min

Columbia, SC

Marr Traffic DATA COLLECTION

www.marrtraffic.com

Site 74 Lane 2 EB

I-20,
west of US-378 Sunset Blvd S/Bound Off-Ramp

Date

Sunday, April 21, 2024

Lat/Long

34.008085°, -81.156669°

Weather

Cloudy
66°F

Click here for Detailed Weather

0000 - 2400 (Sunday 24h Session) (04-21-2024)

Volume Summary 60min

	Volume Summary 60min		
TIME	EB	WB	**Total**
0000 - 0100	237	0	**237**
0100 - 0200	178	0	**178**
0200 - 0300	137	0	**137**
0300 - 0400	95	0	**95**
0400 - 0500	114	0	**114**
0500 - 0600	135	0	**135**
0600 - 0700	193	0	**193**
0700 - 0800	263	0	**263**
0800 - 0900	365	0	**365**
0900 - 1000	529	0	**529**
1000 - 1100	670	0	**670**
1100 - 1200	770	0	**770**

	Volume Summary 60min		
Time	EB	WB	**Total**
1200 - 1300	876	0	**876**
1300 - 1400	964	0	**964**
1400 - 1500	888	0	**888**
1500 - 1600	911	0	**911**
1600 - 1700	895	0	**895**
1700 - 1800	783	0	**783**
1800 - 1900	756	0	**756**
1900 - 2000	643	0	**643**
2000 - 2100	503	0	**503**
2100 - 2200	363	0	**363**
2200 - 2300	269	0	**269**
2300 - 2400	159	0	**159**

Session Total	11696	0	**11696**
Session Average	487.33	0.00	**487.33**
Session Percentage	100.00	0.00	

Site 74 Lane 2 EB

I-20,
west of US-378 Sunset Blvd S/Bound Off-Ramp

Date

Monday, April 22, 2024

Lat/Long

34.008085°, -81.156669°

Weather

Mostly Cloudy
57°F

Click here for Detailed Weather

0000 - 2400 (Weekday 24h Session) (04-22-2024)

Volume Summary 60min

	Volume Summary 60min		
TIME	EB	WB	**Total**
0000 - 0100	106	0	**106**
0100 - 0200	75	0	**75**
0200 - 0300	74	0	**74**
0300 - 0400	110	0	**110**
0400 - 0500	144	0	**144**
0500 - 0600	356	0	**356**
0600 - 0700	656	0	**656**
0700 - 0800	841	0	**841**
0800 - 0900	739	0	**739**
0900 - 1000	698	0	**698**
1000 - 1100	774	0	**774**
1100 - 1200	757	0	**757**

	Volume Summary 60min		
Time	EB	WB	**Total**
1200 - 1300	831	0	**831**
1300 - 1400	880	0	**880**
1400 - 1500	940	0	**940**
1500 - 1600	1082	0	**1082**
1600 - 1700	1215	0	**1215**
1700 - 1800	1191	0	**1191**
1800 - 1900	863	0	**863**
1900 - 2000	645	0	**645**
2000 - 2100	519	0	**519**
2100 - 2200	418	0	**418**
2200 - 2300	249	0	**249**
2300 - 2400	182	0	**182**

Session Total	14345	0	**14345**
Session Average	597.71	0.00	**597.71**
Session Percentage	100.00	0.00	

Site 74 Lane 2 EB

I-20,
west of US-378 Sunset Blvd S/Bound Off-Ramp

Date

Tuesday, April 23, 2024

Lat/Long

34.008085°, -81.156669°

Weather

Fair
58°F

Click here for Detailed Weather

0000 - 2400 (Weekday 24h Session) (04-23-2024)

Volume Summary 60min

	Volume Summary 60min		
TIME	EB	WB	**Total**
0000 - 0100	101	0	**101**
0100 - 0200	122	0	**122**
0200 - 0300	128	0	**128**
0300 - 0400	138	0	**138**
0400 - 0500	188	0	**188**
0500 - 0600	378	0	**378**
0600 - 0700	667	0	**667**
0700 - 0800	857	0	**857**
0800 - 0900	733	0	**733**
0900 - 1000	760	0	**760**
1000 - 1100	749	0	**749**
1100 - 1200	776	0	**776**

Session Total	15015	0	**15015**
Session Average	625.63	0.00	**625.63**
Session Percentage	100.00	0.00	

	Volume Summary 60min		
Time	EB	WB	**Total**
1200 - 1300	819	0	**819**
1300 - 1400	855	0	**855**
1400 - 1500	980	0	**980**
1500 - 1600	1128	0	**1128**
1600 - 1700	1267	0	**1267**
1700 - 1800	1310	0	**1310**
1800 - 1900	834	0	**834**
1900 - 2000	608	0	**608**
2000 - 2100	583	0	**583**
2100 - 2200	505	0	**505**
2200 - 2300	329	0	**329**
2300 - 2400	200	0	**200**

Site 74 Lane 2 EB

I-20,
west of US-378 Sunset Blvd S/Bound Off-Ramp

Date

Wednesday, April 24, 2024

Lat/Long

34.008085°, -81.156669°

Weather

Fair
66°F

Click here for Detailed Weather

0000 - 2400 (Weekday 24h Session) (04-24-2024)

Volume Summary 60min

	Volume Summary 60min		
TIME	EB	WB	**Total**
0000 - 0100	134	0	**134**
0100 - 0200	93	0	**93**
0200 - 0300	90	0	**90**
0300 - 0400	113	0	**113**
0400 - 0500	127	0	**127**
0500 - 0600	298	0	**298**
0600 - 0700	692	0	**692**
0700 - 0800	865	0	**865**
0800 - 0900	705	0	**705**
0900 - 1000	701	0	**701**
1000 - 1100	815	0	**815**
1100 - 1200	744	0	**744**

Session Total	14836	0	**14836**
Session Average	618.17	0.00	**618.17**
Session Percentage	100.00	0.00	

	Volume Summary 60min		
Time	EB	WB	**Total**
1200 - 1300	875	0	**875**
1300 - 1400	898	0	**898**
1400 - 1500	995	0	**995**
1500 - 1600	1170	0	**1170**
1600 - 1700	1279	0	**1279**
1700 - 1800	1167	0	**1167**
1800 - 1900	860	0	**860**
1900 - 2000	640	0	**640**
2000 - 2100	592	0	**592**
2100 - 2200	449	0	**449**
2200 - 2300	309	0	**309**
2300 - 2400	225	0	**225**

Site 74 Lane 2 EB

I-20,
west of US-378 Sunset Blvd S/Bound Off-Ramp

Date

Thursday, April 25, 2024

Lat/Long

34.008085°, -81.156669°

Weather

Fair
67°F

Click here for Detailed Weather

0000 - 2400 (Weekday 24h Session) (04-25-2024)

Volume Summary 60min

	Volume Summary 60min		
TIME	EB	WB	**Total**
0000 - 0100	140	0	**140**
0100 - 0200	89	0	**89**
0200 - 0300	96	0	**96**
0300 - 0400	107	0	**107**
0400 - 0500	136	0	**136**
0500 - 0600	291	0	**291**
0600 - 0700	648	0	**648**
0700 - 0800	891	0	**891**
0800 - 0900	834	0	**834**
0900 - 1000	762	0	**762**
1000 - 1100	806	0	**806**
1100 - 1200	824	0	**824**

Session Total	15698	0	**15698**
Session Average	654.08	0.00	**654.08**
Session Percentage	100.00	0.00	

	Volume Summary 60min		
Time	EB	WB	**Total**
1200 - 1300	870	0	**870**
1300 - 1400	1025	0	**1025**
1400 - 1500	1067	0	**1067**
1500 - 1600	1239	0	**1239**
1600 - 1700	1395	0	**1395**
1700 - 1800	1353	0	**1353**
1800 - 1900	974	0	**974**
1900 - 2000	700	0	**700**
2000 - 2100	500	0	**500**
2100 - 2200	423	0	**423**
2200 - 2300	298	0	**298**
2300 - 2400	230	0	**230**

Site 74 Lane 2 EB

I-20,
west of US-378 Sunset Blvd S/Bound Off-Ramp

Date

Friday, April 26, 2024

Lat/Long

34.008085°, -81.156669°

Weather

Cloudy
69°F

Click here for Detailed Weather

0000 - 2400 (Weekday 24h Session) (04-26-2024)

Volume Summary 60min

	Volume Summary 60min		
TIME	EB	WB	**Total**
0000 - 0100	163	0	**163**
0100 - 0200	156	0	**156**
0200 - 0300	118	0	**118**
0300 - 0400	159	0	**159**
0400 - 0500	225	0	**225**
0500 - 0600	330	0	**330**
0600 - 0700	567	0	**567**
0700 - 0800	878	0	**878**
0800 - 0900	736	0	**736**
0900 - 1000	750	0	**750**
1000 - 1100	750	0	**750**
1100 - 1200	927	0	**927**

	Volume Summary 60min		
Time	EB	WB	**Total**
1200 - 1300	960	0	**960**
1300 - 1400	1005	0	**1005**
1400 - 1500	1077	0	**1077**
1500 - 1600	1225	0	**1225**
1600 - 1700	1274	0	**1274**
1700 - 1800	1238	0	**1238**
1800 - 1900	970	0	**970**
1900 - 2000	767	0	**767**
2000 - 2100	670	0	**670**
2100 - 2200	559	0	**559**
2200 - 2300	522	0	**522**
2300 - 2400	331	0	**331**

Session Total	16357	0	**16357**
Session Average	681.54	0.00	**681.54**
Session Percentage	100.00	0.00	

Site 74 Lane 2 EB

I-20,
west of US-378 Sunset Blvd S/Bound Off-Ramp

Date

Saturday, April 27, 2024

Lat/Long

34.008085°, -81.156669°

Weather

Mostly Cloudy
69°F

Click here for Detailed Weather

0000 - 2400 (Saturday 24h Session) (04-27-2024)

Volume Summary 60min

	Volume Summary 60min		
TIME	EB	WB	**Total**
0000 - 0100	204	0	**204**
0100 - 0200	113	0	**113**
0200 - 0300	83	0	**83**
0300 - 0400	87	0	**87**
0400 - 0500	100	0	**100**
0500 - 0600	169	0	**169**
0600 - 0700	335	0	**335**
0700 - 0800	478	0	**478**
0800 - 0900	618	0	**618**
0900 - 1000	763	0	**763**
1000 - 1100	768	0	**768**
1100 - 1200	865	0	**865**

	Volume Summary 60min		
Time	EB	WB	**Total**
1200 - 1300	919	0	**919**
1300 - 1400	930	0	**930**
1400 - 1500	920	0	**920**
1500 - 1600	924	0	**924**
1600 - 1700	881	0	**881**
1700 - 1800	796	0	**796**
1800 - 1900	789	0	**789**
1900 - 2000	666	0	**666**
2000 - 2100	571	0	**571**
2100 - 2200	542	0	**542**
2200 - 2300	466	0	**466**
2300 - 2400	294	0	**294**

Session Total	13281	0	**13281**
Session Average	553.38	0.00	**553.38**
Session Percentage	100.00	0.00	

Bi-Directional Class Count || Graphical Analysis NB EB

Columbia, SC

Marr Traffic DATA COLLECTION

www.marrtraffic.com

Site 74 Lane 2 EB

I-20,
west of US-378 Sunset Blvd S/Bound Off-Ramp

Lat/Long

34.008085°, -81.156669°

0000 - 2400 (Weekday 24h Session)

Graphical Analysis NB EB

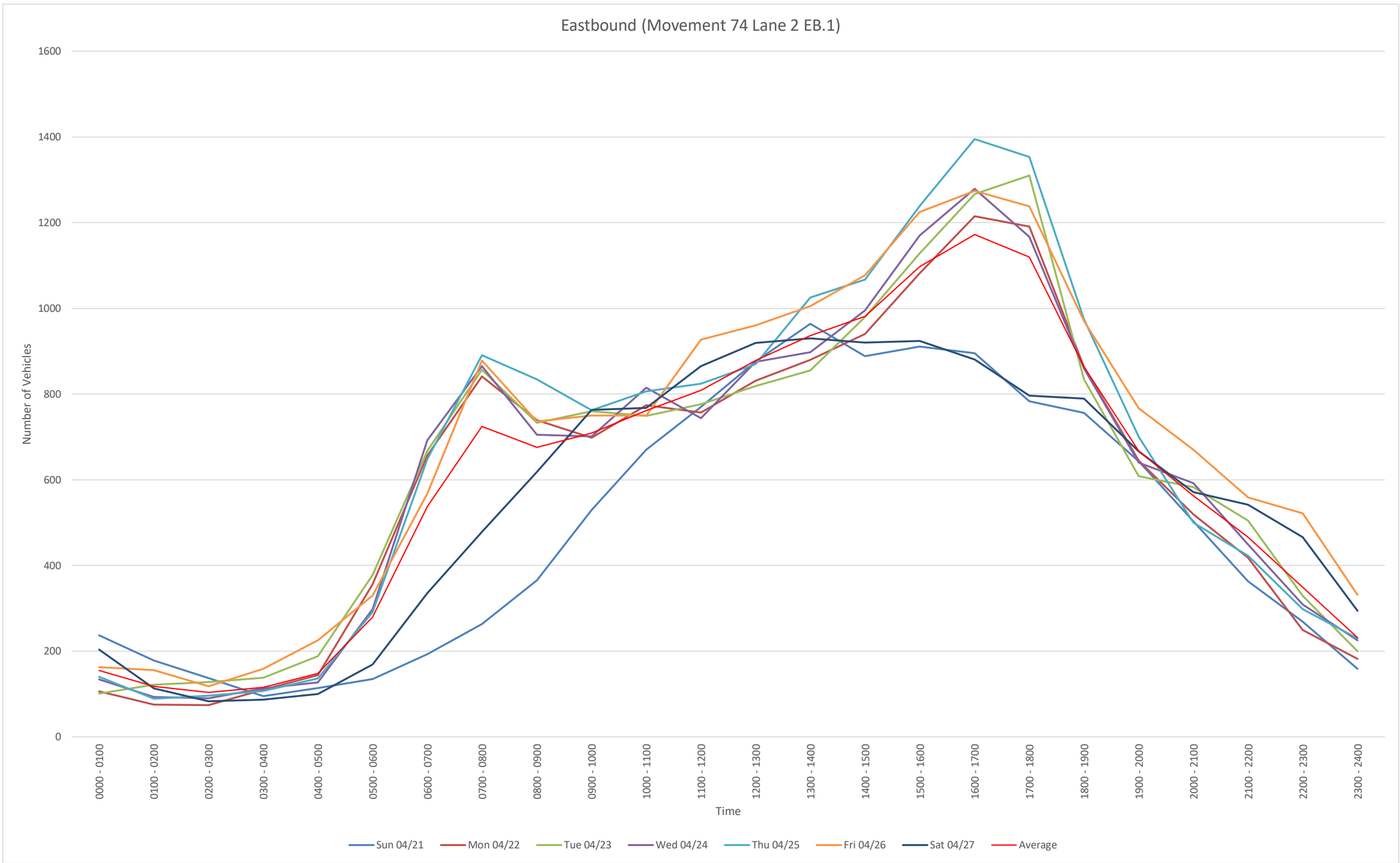

EB
File Name:
Start Date: 4/21/2024
Start Time: 0
Site Code: 74 Lane 2 EB
Station ID: 1
Location 1: I-20, west of US-378 Sunset Blvd S/Bound Off-Ramp
Location 2:

Date	Time	1	2	3	4	5	6	7	8	9	10	11	12	13
4/21/2024	12:00 AM	0	55	10	0	0	0	0	0	3	0	0	0	0
4/21/2024	12:15 AM	0	60	8	0	0	0	0	0	2	0	0	0	0
4/21/2024	12:30 AM	0	40	5	0	0	0	0	0	4	0	0	0	0
4/21/2024	12:45 AM	0	43	5	0	0	0	0	0	2	0	0	0	0
4/21/2024	1:00 AM	0	40	3	0	0	0	0	0	0	0	0	0	0
4/21/2024	1:15 AM	0	42	4	0	1	0	0	0	2	0	0	0	0
4/21/2024	1:30 AM	0	38	3	1	1	0	0	0	0	0	0	0	0
4/21/2024	1:45 AM	0	37	5	1	0	0	0	0	0	0	0	0	0
4/21/2024	2:00 AM	0	25	2	0	2	0	0	0	3	0	0	0	0
4/21/2024	2:15 AM	0	40	5	0	0	0	0	0	2	0	0	0	0
4/21/2024	2:30 AM	0	23	2	0	1	0	0	0	3	0	0	0	0
4/21/2024	2:45 AM	0	23	3	0	1	0	0	0	2	0	0	0	0
4/21/2024	3:00 AM	0	17	2	0	1	0	0	0	3	0	0	0	0
4/21/2024	3:15 AM	0	23	3	0	0	0	0	0	1	0	0	0	0
4/21/2024	3:30 AM	0	13	3	0	1	0	0	0	3	0	0	0	0
4/21/2024	3:45 AM	0	21	2	0	0	0	0	0	2	0	0	0	0
4/21/2024	4:00 AM	0	29	3	0	3	0	0	0	5	0	0	0	0
4/21/2024	4:15 AM	0	14	1	0	1	0	0	0	3	0	0	0	0
4/21/2024	4:30 AM	0	26	2	1	1	0	0	1	1	0	0	0	0
4/21/2024	4:45 AM	0	16	2	0	2	0	0	0	3	0	0	0	0
4/21/2024	5:00 AM	0	24	2	0	0	0	0	0	6	0	0	0	0
4/21/2024	5:15 AM	0	20	3	0	1	0	0	0	2	0	0	0	0
4/21/2024	5:30 AM	0	30	5	0	2	0	0	0	3	0	0	0	0
4/21/2024	5:45 AM	0	29	4	0	2	0	0	0	2	0	0	0	0
4/21/2024	6:00 AM	0	30	6	0	0	0	0	0	4	0	0	0	0
4/21/2024	6:15 AM	0	38	6	0	0	0	0	0	3	0	0	0	0
4/21/2024	6:30 AM	0	44	11	0	0	0	0	0	3	0	0	0	0
4/21/2024	6:45 AM	0	34	12	0	1	0	0	0	1	0	0	0	0
4/21/2024	7:00 AM	0	42	20	0	0	0	0	0	2	0	0	0	0
4/21/2024	7:15 AM	1	45	10	0	1	0	0	0	1	0	0	0	0
4/21/2024	7:30 AM	0	45	17	1	1	1	0	0	2	0	0	0	0
4/21/2024	7:45 AM	0	55	14	0	0	0	0	0	5	0	0	0	0
4/21/2024	8:00 AM	1	58	11	0	0	0	0	0	2	0	0	0	0
4/21/2024	8:15 AM	1	57	19	1	3	0	0	0	5	0	0	0	0
4/21/2024	8:30 AM	0	73	16	0	0	0	0	0	5	0	0	0	0
4/21/2024	8:45 AM	0	87	20	0	3	0	0	1	2	0	0	0	0
4/21/2024	9:00 AM	2	83	22	1	1	0	0	0	1	1	0	0	0
4/21/2024	9:15 AM	0	98	21	0	2	0	0	0	2	0	0	0	0
4/21/2024	9:30 AM	0	125	27	0	0	0	0	2	1	0	0	0	0
4/21/2024	9:45 AM	0	107	27	0	1	0	0	0	5	0	0	0	0
4/21/2024	10:00 AM	0	114	25	0	2	1	0	0	8	0	1	0	0
4/21/2024	10:15 AM	0	107	31	0	1	0	0	3	11	0	0	0	0
4/21/2024	10:30 AM	0	128	30	0	1	0	0	0	6	0	0	0	0
4/21/2024	10:45 AM	0	152	39	1	2	0	0	0	7	0	0	0	0
4/21/2024	11:00 AM	0	145	31	0	2	0	0	0	13	0	0	0	0
4/21/2024	11:15 AM	0	127	33	0	1	0	0	1	7	0	0	0	0
4/21/2024	11:30 AM	1	143	34	0	0	0	0	1	8	0	0	0	0
4/21/2024	11:45 AM	0	175	40	0	1	0	0	2	4	0	1	0	0
4/21/2024	12:00 PM	0	184	26	0	2	0	0	0	13	0	0	0	0
4/21/2024	12:15 PM	0	171	37	0	2	0	0	2	6	0	0	0	0
4/21/2024	12:30 PM	0	169	38	0	2	1	0	2	4	0	0	0	0
4/21/2024	12:45 PM	0	147	56	0	5	1	0	0	8	0	0	0	0
4/21/2024	1:00 PM	0	177	51	0	1	0	0	0	8	0	0	0	0
4/21/2024	1:15 PM	0	195	43	0	0	0	0	0	5	0	0	0	0
4/21/2024	1:30 PM	0	193	50	0	1	2	0	2	3	0	0	1	0
4/21/2024	1:45 PM	1	179	41	1	1	0	0	0	9	0	0	0	0
4/21/2024	2:00 PM	0	193	46	0	0	1	0	0	6	0	0	0	0
4/21/2024	2:15 PM	0	182	39	0	2	0	0	2	9	0	0	0	0
4/21/2024	2:30 PM	0	164	32	0	3	0	0	0	7	0	0	0	0
4/21/2024	2:45 PM	0	154	38	0	2	0	0	0	7	1	0	0	0
4/21/2024	3:00 PM	0	193	41	0	1	1	0	0	7	0	0	0	0
4/21/2024	3:15 PM	0	155	46	0	3	0	0	0	9	0	0	0	0
4/21/2024	3:30 PM	1	160	47	0	2	0	0	0	5	0	0	0	0
4/21/2024	3:45 PM	0	190	38	0	1	1	0	1	8	1	0	0	0
4/21/2024	4:00 PM	0	187	32	0	0	0	0	1	3	0	0	0	0
4/21/2024	4:15 PM	0	184	49	0	1	0	0	0	10	0	0	0	0
4/21/2024	4:30 PM	0	166	43	1	1	0	0	1	4	0	0	0	0
4/21/2024	4:45 PM	0	157	42	0	1	1	0	1	10	0	0	0	0
4/21/2024	5:00 PM	0	155	39	0	1	0	0	1	7	0	0	0	0
4/21/2024	5:15 PM	0	146	27	0	0	1	0	3	4	0	0	0	0
4/21/2024	5:30 PM	0	156	28	1	1	0	0	0	13	0	0	0	0
4/21/2024	5:45 PM	0	142	44	0	2	0	0	2	10	0	0	0	0
4/21/2024	6:00 PM	0	142	40	0	0	0	0	1	6	0	0	0	0
4/21/2024	6:15 PM	0	144	28	0	0	0	0	3	7	0	0	0	0
4/21/2024	6:30 PM	1	143	36	0	0	0	0	2	7	0	0	0	0
4/21/2024	6:45 PM	0	152	34	0	1	1	0	2	6	0	0	0	0
4/21/2024	7:00 PM	0	149	24	0	1	0	0	0	9	0	0	0	0
4/21/2024	7:15 PM	0	115	32	0	0	0	0	0	13	0	2	0	0
4/21/2024	7:30 PM	0	126	26	1	0	1	0	3	6	0	0	0	0
4/21/2024	7:45 PM	0	111	15	0	1	1	0	0	7	0	0	0	0
4/21/2024	8:00 PM	0	105	26	0	0	0	0	0	5	0	0	0	0
4/21/2024	8:15 PM	0	104	22	0	2	0	0	0	5	0	0	0	0
4/21/2024	8:30 PM	0	101	15	0	0	0	0	0	6	0	0	0	0
4/21/2024	8:45 PM	0	95	13	0	1	0	0	0	3	0	0	0	0
4/21/2024	9:00 PM	0	74	14	1	1	0	0	1	6	0	0	0	0
4/21/2024	9:15 PM	0	91	15	0	2	0	0	0	6	0	1	0	0
4/21/2024	9:30 PM	0	61	13	0	1	0	0	0	6	0	0	0	0
4/21/2024	9:45 PM	0	50	11	0	0	0	0	0	8	0	1	0	0
4/21/2024	10:00 PM	0	61	13	0	0	0	0	0	10	0	1	0	0
4/21/2024	10:15 PM	0	58	10	0	0	0	0	0	3	0	0	0	0
4/21/2024	10:30 PM	0	44	8	1	0	0	0	0	11	0	1	0	0
4/21/2024	10:45 PM	0	39	6	2	0	0	0	0	1	0	0	0	0
4/21/2024	11:00 PM	0	35	7	0	0	0	0	0	3	0	1	0	0
4/21/2024	11:15 PM	0	25	2	1	1	0	0	0	3	0	1	0	0
4/21/2024	11:30 PM	0	36	5	0	1	0	0	0	6	0	0	0	0
4/21/2024	11:45 PM	0	28	2	0	0	0	0	0	2	0	0	0	0

4/22/2024	12:00 AM	0	17	3	0	2	0	0	0	6	0	0	0	0
4/22/2024	12:15 AM	0	15	4	0	1	0	0	0	9	0	0	0	0
4/22/2024	12:30 AM	0	17	1	0	0	0	0	0	7	0	0	0	0
4/22/2024	12:45 AM	0	13	2	0	1	0	0	0	8	0	0	0	0
4/22/2024	1:00 AM	0	11	2	0	0	0	0	0	5	0	0	0	0
4/22/2024	1:15 AM	0	11	4	0	0	0	0	0	5	0	0	0	0
4/22/2024	1:30 AM	0	12	2	0	1	0	0	0	3	0	0	0	0
4/22/2024	1:45 AM	0	12	1	0	1	0	0	0	5	0	0	0	0
4/22/2024	2:00 AM	0	8	0	0	0	0	0	0	9	0	0	0	0
4/22/2024	2:15 AM	0	11	2	0	2	0	0	0	5	0	0	0	0
4/22/2024	2:30 AM	0	10	0	0	1	0	0	0	3	0	0	0	0
4/22/2024	2:45 AM	0	13	1	0	1	0	0	0	8	0	0	0	0
4/22/2024	3:00 AM	0	16	2	0	1	0	0	0	4	0	0	0	0
4/22/2024	3:15 AM	0	17	0	0	1	0	0	0	10	0	0	0	0
4/22/2024	3:30 AM	0	18	7	0	1	0	0	0	6	0	0	0	0
4/22/2024	3:45 AM	0	17	0	0	1	0	0	0	9	0	0	0	0
4/22/2024	4:00 AM	0	18	0	0	0	0	0	0	7	0	0	0	0
4/22/2024	4:15 AM	0	17	8	0	2	0	0	0	7	0	0	0	0
4/22/2024	4:30 AM	0	21	8	0	0	0	0	0	8	0	0	0	0
4/22/2024	4:45 AM	0	25	9	0	1	0	0	0	13	0	0	0	0
4/22/2024	5:00 AM	0	40	7	0	0	0	0	0	11	0	0	0	0
4/22/2024	5:15 AM	0	47	18	0	3	0	0	0	13	0	0	0	0
4/22/2024	5:30 AM	0	55	20	0	1	0	0	0	18	0	0	0	0
4/22/2024	5:45 AM	0	81	28	0	3	0	0	0	11	0	0	0	0
4/22/2024	6:00 AM	0	77	20	0	1	0	0	0	15	0	0	0	0
4/22/2024	6:15 AM	0	125	15	0	5	1	0	0	10	0	0	0	0
4/22/2024	6:30 AM	0	123	50	0	3	1	0	1	10	0	0	0	0
4/22/2024	6:45 AM	1	121	47	1	7	2	0	1	19	0	0	0	0
4/22/2024	7:00 AM	0	124	46	0	7	2	0	1	8	0	0	0	0
4/22/2024	7:15 AM	0	133	60	0	6	5	0	2	17	0	0	0	0
4/22/2024	7:30 AM	0	139	62	1	3	2	0	3	8	0	0	0	0
4/22/2024	7:45 AM	0	143	48	0	5	2	0	1	13	0	0	0	0
4/22/2024	8:00 AM	0	123	50	0	2	2	0	1	18	0	0	0	0
4/22/2024	8:15 AM	0	105	42	0	6	1	0	1	23	0	0	0	0
4/22/2024	8:30 AM	0	117	50	1	10	1	2	2	16	1	0	0	0
4/22/2024	8:45 AM	0	98	43	0	6	3	0	4	11	0	0	0	0
4/22/2024	9:00 AM	0	99	51	0	9	2	0	5	19	0	0	0	0
4/22/2024	9:15 AM	0	93	58	1	5	3	0	2	25	0	0	1	0
4/22/2024	9:30 AM	0	87	48	0	10	2	0	5	17	0	0	0	0
4/22/2024	9:45 AM	0	85	41	0	6	4	0	1	19	0	0	0	0
4/22/2024	10:00 AM	0	91	52	0	5	2	0	4	19	0	0	0	0
4/22/2024	10:15 AM	0	121	40	0	8	0	0	2	30	0	0	0	0
4/22/2024	10:30 AM	0	106	47	0	5	4	0	1	34	0	0	0	0
4/22/2024	10:45 AM	1	117	45	1	12	2	0	0	25	0	0	0	0
4/22/2024	11:00 AM	0	124	56	0	3	1	0	2	24	0	0	0	0
4/22/2024	11:15 AM	0	98	41	0	4	0	0	1	24	0	0	0	0
4/22/2024	11:30 AM	0	111	44	0	4	2	0	3	39	0	0	0	0
4/22/2024	11:45 AM	0	111	35	0	6	2	0	0	22	0	0	0	0
4/22/2024	12:00 PM	1	125	49	0	2	2	0	4	25	0	0	0	0
4/22/2024	12:15 PM	0	132	42	0	9	0	0	2	31	0	0	0	0
4/22/2024	12:30 PM	0	119	39	0	5	2	0	2	22	0	0	0	0
4/22/2024	12:45 PM	0	125	53	1	3	3	0	6	27	0	0	0	0
4/22/2024	1:00 PM	0	113	30	0	11	0	0	4	28	1	0	0	0
4/22/2024	1:15 PM	0	141	44	1	3	2	0	3	27	0	0	0	0
4/22/2024	1:30 PM	0	158	52	1	7	2	0	4	21	0	0	0	0
4/22/2024	1:45 PM	0	139	41	1	5	2	0	4	35	0	0	0	0
4/22/2024	2:00 PM	0	133	49	0	3	4	0	1	21	0	0	0	0
4/22/2024	2:15 PM	0	138	54	0	6	4	0	2	32	1	0	0	0
4/22/2024	2:30 PM	0	139	61	0	8	2	0	5	32	0	0	0	0
4/22/2024	2:45 PM	0	142	51	3	5	3	3	3	35	0	0	0	0
4/22/2024	3:00 PM	0	161	54	0	7	2	0	3	42	0	0	0	0
4/22/2024	3:15 PM	0	171	40	0	5	2	0	3	35	0	0	0	0
4/22/2024	3:30 PM	0	157	56	0	11	6	3	2	36	1	0	0	0
4/22/2024	3:45 PM	1	188	58	1	2	1	0	2	31	1	0	0	0
4/22/2024	4:00 PM	0	188	70	0	5	2	0	3	31	1	0	0	0
4/22/2024	4:15 PM	0	205	54	0	4	1	0	1	30	1	0	0	0
4/22/2024	4:30 PM	0	209	55	0	8	2	2	7	31	0	0	0	0
4/22/2024	4:45 PM	0	197	62	0	11	2	0	1	32	0	0	0	0
4/22/2024	5:00 PM	0	205	66	2	7	3	0	4	33	1	0	0	0
4/22/2024	5:15 PM	0	206	57	0	7	3	0	3	29	0	0	0	0
4/22/2024	5:30 PM	0	185	61	0	9	3	0	2	35	0	0	0	0
4/22/2024	5:45 PM	0	168	59	0	4	2	0	5	31	1	0	0	0
4/22/2024	6:00 PM	0	155	53	0	3	1	0	0	23	0	0	0	0
4/22/2024	6:15 PM	0	165	45	0	4	3	0	3	26	0	0	0	0
4/22/2024	6:30 PM	0	132	45	0	1	1	0	2	24	0	0	0	0
4/22/2024	6:45 PM	0	111	39	0	1	2	0	1	23	0	0	0	0
4/22/2024	7:00 PM	0	104	35	0	1	1	0	3	23	0	0	0	0
4/22/2024	7:15 PM	0	110	26	0	2	1	0	1	22	0	0	0	0
4/22/2024	7:30 PM	0	104	30	0	3	2	0	2	26	0	1	0	0
4/22/2024	7:45 PM	0	106	21	0	2	3	0	1	15	0	0	0	0
4/22/2024	8:00 PM	0	101	30	0	2	0	0	1	16	0	1	0	0
4/22/2024	8:15 PM	0	90	13	0	1	2	0	3	12	0	1	0	0
4/22/2024	8:30 PM	0	89	12	0	0	0	0	0	23	0	0	0	0
4/22/2024	8:45 PM	0	87	13	0	2	0	0	0	20	0	0	0	0
4/22/2024	9:00 PM	0	89	11	0	1	0	0	0	18	0	0	0	0
4/22/2024	9:15 PM	0	92	13	0	1	0	0	0	18	0	0	0	0
4/22/2024	9:30 PM	0	70	14	0	3	0	0	0	13	0	0	0	0
4/22/2024	9:45 PM	0	51	13	0	0	0	0	0	11	0	0	0	0
4/22/2024	10:00 PM	0	40	10	0	1	0	0	0	16	0	0	0	0
4/22/2024	10:15 PM	0	39	12	0	0	0	0	0	12	0	0	0	0
4/22/2024	10:30 PM	0	38	14	0	4	0	0	0	7	0	0	0	0
4/22/2024	10:45 PM	0	30	12	0	0	0	0	0	14	0	0	0	0
4/22/2024	11:00 PM	0	31	13	0	0	0	0	0	14	0	0	0	0
4/22/2024	11:15 PM	0	30	14	0	1	0	0	0	8	0	0	0	0
4/22/2024	11:30 PM	0	21	7	0	2	0	0	0	5	0	0	0	0
4/22/2024	11:45 PM	0	20	12	0	0	0	0	0	4	0	0	0	0

4/23/2024	12:00 AM	0	13	1	0	0	0	0	0	4	0	1	0	0
4/23/2024	12:15 AM	0	22	0	0	0	0	0	0	5	0	0	0	0
4/23/2024	12:30 AM	0	15	2	0	0	0	0	0	5	0	1	0	0
4/23/2024	12:45 AM	0	23	1	0	0	1	0	0	7	0	0	0	0
4/23/2024	1:00 AM	0	25	1	0	3	0	0	0	7	0	1	0	0
4/23/2024	1:15 AM	0	24	0	0	0	0	0	0	9	0	0	0	0
4/23/2024	1:30 AM	0	15	0	0	0	0	0	0	11	0	0	0	0
4/23/2024	1:45 AM	0	14	1	0	1	0	0	0	9	0	1	0	0
4/23/2024	2:00 AM	0	24	0	0	2	0	0	0	11	0	0	0	0
4/23/2024	2:15 AM	0	19	0	0	0	0	0	0	10	0	0	0	0
4/23/2024	2:30 AM	0	16	1	0	1	0	0	0	9	0	0	0	0
4/23/2024	2:45 AM	0	25	1	0	0	0	0	0	9	0	0	0	0
4/23/2024	3:00 AM	0	10	0	0	1	0	0	0	4	0	0	0	0
4/23/2024	3:15 AM	0	25	0	0	0	0	0	2	13	0	1	0	0
4/23/2024	3:30 AM	0	21	1	0	1	0	0	1	11	0	0	0	0
4/23/2024	3:45 AM	0	28	1	0	2	0	0	0	15	0	1	0	0
4/23/2024	4:00 AM	0	30	2	0	1	0	0	0	12	0	0	0	0
4/23/2024	4:15 AM	0	22	5	0	0	0	0	0	8	0	0	0	0
4/23/2024	4:30 AM	0	39	2	0	2	0	0	0	10	0	3	0	0
4/23/2024	4:45 AM	0	37	0	0	0	0	0	0	14	0	1	0	0
4/23/2024	5:00 AM	0	46	3	0	0	0	0	0	9	0	0	0	0
4/23/2024	5:15 AM	0	64	4	0	3	1	0	0	15	0	0	0	0
4/23/2024	5:30 AM	0	95	9	0	0	0	0	0	18	0	0	0	0
4/23/2024	5:45 AM	0	83	13	0	4	1	0	0	10	0	0	0	0
4/23/2024	6:00 AM	0	88	25	0	3	0	0	0	15	0	0	0	0
4/23/2024	6:15 AM	0	99	45	0	3	0	0	2	24	0	0	0	0
4/23/2024	6:30 AM	1	113	44	0	2	3	0	0	18	0	0	0	0
4/23/2024	6:45 AM	0	109	51	0	4	2	0	1	14	0	1	0	0
4/23/2024	7:00 AM	0	119	64	0	0	0	0	1	13	0	0	0	0
4/23/2024	7:15 AM	0	145	63	0	9	1	0	0	13	0	0	0	0
4/23/2024	7:30 AM	1	150	37	1	3	1	1	1	9	0	0	0	0
4/23/2024	7:45 AM	0	154	52	0	5	0	0	1	13	0	0	0	0
4/23/2024	8:00 AM	1	128	38	0	11	3	0	0	10	0	0	0	0
4/23/2024	8:15 AM	0	86	45	0	6	2	0	1	12	0	0	0	0
4/23/2024	8:30 AM	0	122	37	0	8	1	0	0	11	0	0	0	0
4/23/2024	8:45 AM	0	135	48	0	7	1	0	0	19	0	1	0	0
4/23/2024	9:00 AM	0	105	52	2	7	2	0	0	29	0	0	0	0
4/23/2024	9:15 AM	0	111	47	1	9	5	0	1	23	0	0	0	0
4/23/2024	9:30 AM	0	116	46	1	4	1	0	1	23	0	0	0	0
4/23/2024	9:45 AM	0	114	37	0	5	0	0	2	16	0	0	0	0
4/23/2024	10:00 AM	0	102	44	0	5	4	0	1	17	0	0	0	0
4/23/2024	10:15 AM	0	107	41	1	13	3	0	1	14	0	0	0	0
4/23/2024	10:30 AM	0	125	33	0	6	1	0	1	31	1	0	0	0
4/23/2024	10:45 AM	0	101	54	0	8	3	0	0	32	0	0	0	0
4/23/2024	11:00 AM	0	101	43	0	6	2	0	0	32	0	0	0	0
4/23/2024	11:15 AM	0	99	38	0	5	2	1	2	36	0	0	0	0
4/23/2024	11:30 AM	2	123	42	0	5	2	0	2	30	0	0	0	0
4/23/2024	11:45 AM	1	126	40	0	4	2	0	0	30	0	0	0	0
4/23/2024	12:00 PM	1	105	45	0	7	0	0	2	27	0	0	0	0
4/23/2024	12:15 PM	0	124	44	0	3	3	0	2	39	0	0	0	0
4/23/2024	12:30 PM	0	121	35	1	8	0	0	2	32	0	0	0	0
4/23/2024	12:45 PM	0	130	44	1	3	4	0	1	35	0	0	0	0
4/23/2024	1:00 PM	0	119	44	0	5	1	0	2	38	1	0	0	0
4/23/2024	1:15 PM	0	128	38	0	6	3	0	2	30	2	0	0	0
4/23/2024	1:30 PM	0	148	43	0	8	2	0	1	28	0	0	0	0
4/23/2024	1:45 PM	0	120	46	0	2	3	0	3	30	2	0	0	0
4/23/2024	2:00 PM	1	143	41	0	6	7	0	4	36	0	0	0	0
4/23/2024	2:15 PM	0	152	50	5	5	0	0	1	33	1	0	0	0
4/23/2024	2:30 PM	0	149	49	0	6	1	0	6	27	1	1	0	0
4/23/2024	2:45 PM	1	146	62	0	7	2	2	5	29	0	1	0	0
4/23/2024	3:00 PM	1	146	65	0	5	3	1	6	37	0	0	0	0
4/23/2024	3:15 PM	0	168	60	0	11	4	0	4	26	0	0	0	0
4/23/2024	3:30 PM	0	162	64	0	5	4	0	9	42	0	0	0	0
4/23/2024	3:45 PM	0	187	63	0	7	2	1	3	40	2	0	0	0
4/23/2024	4:00 PM	0	189	83	1	8	3	2	6	28	0	1	0	0
4/23/2024	4:15 PM	0	225	67	0	9	1	0	5	29	0	0	0	0
4/23/2024	4:30 PM	0	201	55	0	11	4	0	3	34	0	0	0	0
4/23/2024	4:45 PM	0	194	61	1	11	4	0	4	26	0	1	0	0
4/23/2024	5:00 PM	0	205	61	0	5	2	0	3	12	1	0	0	0
4/23/2024	5:15 PM	0	334	56	1	13	4	0	1	20	1	0	0	0
4/23/2024	5:30 PM	1	184	56	0	12	1	0	6	32	0	0	0	0
4/23/2024	5:45 PM	0	191	57	0	6	1	1	4	37	2	0	0	0
4/23/2024	6:00 PM	1	161	58	0	8	2	0	3	27	0	0	0	0
4/23/2024	6:15 PM	0	153	35	0	6	1	0	3	28	0	0	0	0
4/23/2024	6:30 PM	0	132	38	0	3	2	0	0	15	0	0	0	0
4/23/2024	6:45 PM	0	111	26	0	1	1	0	3	16	0	0	0	0
4/23/2024	7:00 PM	2	110	33	0	9	0	0	0	19	0	0	0	0
4/23/2024	7:15 PM	1	99	27	0	3	0	0	0	18	0	2	0	0
4/23/2024	7:30 PM	1	92	31	0	1	3	0	1	19	0	0	0	0
4/23/2024	7:45 PM	1	84	39	0	1	0	0	0	12	0	0	0	0
4/23/2024	8:00 PM	0	90	39	0	3	5	0	0	16	0	0	0	0
4/23/2024	8:15 PM	0	101	31	0	4	0	0	1	19	0	1	0	0
4/23/2024	8:30 PM	0	98	23	0	1	1	0	0	13	0	0	0	0
4/23/2024	8:45 PM	0	89	20	0	3	0	0	0	24	0	1	0	0
4/23/2024	9:00 PM	0	83	32	0	4	0	0	0	16	0	0	0	0
4/23/2024	9:15 PM	1	98	30	0	0	0	0	0	14	0	0	0	0
4/23/2024	9:30 PM	0	90	32	0	3	0	0	0	8	0	0	0	0
4/23/2024	9:45 PM	0	72	10	0	1	0	0	0	9	0	2	0	0
4/23/2024	10:00 PM	0	65	11	0	2	0	0	0	10	0	1	0	0
4/23/2024	10:15 PM	0	64	13	0	1	0	0	0	10	0	1	0	0
4/23/2024	10:30 PM	0	58	15	0	0	0	0	0	14	0	1	0	0
4/23/2024	10:45 PM	0	44	10	0	0	0	0	0	8	0	1	0	0
4/23/2024	11:00 PM	0	39	11	0	0	0	0	0	5	0	1	0	0
4/23/2024	11:15 PM	0	38	16	0	0	0	0	0	8	0	1	0	0
4/23/2024	11:30 PM	0	25	11	0	0	0	0	0	5	0	2	0	0
4/23/2024	11:45 PM	0	24	9	0	2	0	0	0	3	0	0	0	0

4/24/2024	12:00 AM	0	25	6	0	1	0	0	0	12	0	4	0	0
4/24/2024	12:15 AM	0	24	6	0	0	0	0	0	7	0	0	0	0
4/24/2024	12:30 AM	0	17	2	0	0	0	0	0	8	0	0	0	0
4/24/2024	12:45 AM	0	14	2	0	1	0	0	0	5	0	0	0	0
4/24/2024	1:00 AM	0	18	1	0	3	0	0	0	4	0	0	0	0
4/24/2024	1:15 AM	0	12	1	0	0	1	0	0	10	0	1	0	0
4/24/2024	1:30 AM	0	14	2	0	1	1	0	0	2	0	0	0	0
4/24/2024	1:45 AM	0	15	1	0	2	0	0	0	4	0	0	0	0
4/24/2024	2:00 AM	0	12	3	0	0	0	0	0	8	0	1	0	0
4/24/2024	2:15 AM	0	15	2	0	1	1	0	0	4	0	0	0	0
4/24/2024	2:30 AM	0	10	1	0	1	0	0	0	8	0	0	0	0
4/24/2024	2:45 AM	0	9	3	0	0	0	0	0	9	0	2	0	0
4/24/2024	3:00 AM	0	13	2	0	0	0	0	0	10	0	0	0	0
4/24/2024	3:15 AM	0	15	3	0	0	0	0	0	7	0	0	0	0
4/24/2024	3:30 AM	0	16	4	0	1	1	0	0	7	0	0	0	0
4/24/2024	3:45 AM	0	24	3	2	1	0	0	0	4	0	0	0	0
4/24/2024	4:00 AM	0	20	4	0	0	0	0	0	9	0	0	0	0
4/24/2024	4:15 AM	0	15	1	0	1	0	0	0	5	0	0	0	0
4/24/2024	4:30 AM	0	25	5	0	0	0	0	0	6	0	2	0	0
4/24/2024	4:45 AM	0	20	3	0	3	0	0	0	8	0	0	0	0
4/24/2024	5:00 AM	0	36	4	0	4	0	0	0	10	0	1	0	0
4/24/2024	5:15 AM	0	51	5	0	2	1	0	0	17	0	0	0	0
4/24/2024	5:30 AM	0	69	8	0	1	0	0	0	7	0	0	0	0
4/24/2024	5:45 AM	0	65	6	0	1	0	0	0	10	0	0	0	0
4/24/2024	6:00 AM	1	80	26	0	8	1	0	1	10	0	1	0	0
4/24/2024	6:15 AM	0	97	44	0	2	0	0	3	11	0	0	0	0
4/24/2024	6:30 AM	1	147	49	0	2	0	0	2	17	0	1	0	0
4/24/2024	6:45 AM	0	104	56	0	6	1	0	3	18	0	0	0	0
4/24/2024	7:00 AM	0	118	44	0	5	3	0	2	29	0	1	0	0
4/24/2024	7:15 AM	0	147	57	0	6	2	0	4	12	0	0	0	0
4/24/2024	7:30 AM	0	135	59	0	9	2	0	2	19	0	1	0	0
4/24/2024	7:45 AM	0	123	60	0	6	0	0	4	14	0	0	1	0
4/24/2024	8:00 AM	0	98	30	0	4	2	0	1	17	0	0	0	0
4/24/2024	8:15 AM	0	112	51	0	10	3	2	1	14	0	0	0	0
4/24/2024	8:30 AM	0	103	44	0	7	1	0	1	19	0	0	0	0
4/24/2024	8:45 AM	0	108	42	0	7	2	0	2	23	1	0	0	0
4/24/2024	9:00 AM	1	89	42	1	3	2	2	1	29	0	0	0	0
4/24/2024	9:15 AM	0	81	38	0	8	4	1	0	16	0	0	0	0
4/24/2024	9:30 AM	0	94	52	1	5	0	0	3	19	1	1	0	0
4/24/2024	9:45 AM	1	112	45	2	7	2	1	3	33	1	0	0	0
4/24/2024	10:00 AM	0	110	52	0	2	3	0	3	35	0	0	0	0
4/24/2024	10:15 AM	1	111	44	0	7	1	0	2	28	0	0	0	0
4/24/2024	10:30 AM	0	129	63	0	3	0	0	6	25	0	0	0	0
4/24/2024	10:45 AM	0	114	30	1	5	4	0	1	34	1	0	0	0
4/24/2024	11:00 AM	0	94	53	1	9	1	0	1	27	0	0	0	0
4/24/2024	11:15 AM	0	101	39	0	2	1	0	1	26	1	0	0	0
4/24/2024	11:30 AM	2	115	42	0	5	0	0	5	25	0	0	0	0
4/24/2024	11:45 AM	1	104	53	0	7	3	0	2	23	0	0	0	0
4/24/2024	12:00 PM	0	111	33	0	4	2	0	5	41	0	0	1	0
4/24/2024	12:15 PM	1	135	49	0	8	0	2	6	46	1	0	0	0
4/24/2024	12:30 PM	0	127	57	0	5	0	2	4	23	2	0	0	0
4/24/2024	12:45 PM	0	117	41	0	6	5	0	1	38	2	0	0	0
4/24/2024	1:00 PM	0	124	39	0	5	3	0	2	45	0	0	0	0
4/24/2024	1:15 PM	2	128	55	1	9	2	0	1	37	0	0	0	0
4/24/2024	1:30 PM	1	142	44	0	7	1	0	3	38	0	0	0	0
4/24/2024	1:45 PM	0	121	52	0	6	3	0	1	26	0	0	0	0
4/24/2024	2:00 PM	0	126	63	0	8	3	0	0	34	0	0	0	0
4/24/2024	2:15 PM	0	166	51	0	2	1	0	2	42	0	0	0	0
4/24/2024	2:30 PM	0	145	51	2	7	0	1	3	36	0	0	1	0
4/24/2024	2:45 PM	1	153	55	3	7	1	0	3	28	0	0	0	0
4/24/2024	3:00 PM	1	154	62	0	6	3	0	1	44	1	0	0	0
4/24/2024	3:15 PM	0	164	75	1	7	1	0	5	34	0	0	0	0
4/24/2024	3:30 PM	0	172	62	0	20	3	1	4	38	0	0	0	0
4/24/2024	3:45 PM	0	187	74	0	5	3	0	3	38	0	0	1	0
4/24/2024	4:00 PM	1	183	80	2	7	5	1	3	45	0	0	0	0
4/24/2024	4:15 PM	0	210	70	1	12	2	0	6	27	1	0	0	0
4/24/2024	4:30 PM	0	196	65	2	10	2	0	5	45	0	0	0	0
4/24/2024	4:45 PM	0	189	56	0	10	1	0	4	38	0	0	0	0
4/24/2024	5:00 PM	0	186	75	0	11	2	0	2	34	0	0	0	0
4/24/2024	5:15 PM	0	208	69	1	4	1	1	2	35	0	0	0	0
4/24/2024	5:30 PM	0	175	53	0	8	0	0	1	31	0	0	0	0
4/24/2024	5:45 PM	0	169	52	2	6	2	1	3	33	0	0	0	0
4/24/2024	6:00 PM	0	153	44	0	5	0	0	2	33	0	0	0	0
4/24/2024	6:15 PM	1	163	39	3	8	2	0	3	23	1	0	0	0
4/24/2024	6:30 PM	0	130	40	0	3	1	0	0	25	0	0	0	0
4/24/2024	6:45 PM	0	127	29	0	9	0	0	0	16	0	0	0	0
4/24/2024	7:00 PM	0	109	32	0	4	1	0	3	21	0	0	0	0
4/24/2024	7:15 PM	0	115	36	0	1	0	0	1	16	0	0	0	0
4/24/2024	7:30 PM	1	103	32	0	3	0	0	3	19	0	0	0	0
4/24/2024	7:45 PM	0	94	26	0	3	0	0	2	14	0	1	0	0
4/24/2024	8:00 PM	0	93	23	0	1	1	0	1	17	0	1	0	0
4/24/2024	8:15 PM	0	103	24	0	1	1	0	2	12	0	0	0	0
4/24/2024	8:30 PM	0	98	20	0	2	0	0	0	16	0	0	0	0
4/24/2024	8:45 PM	0	120	39	1	2	0	0	0	14	0	0	0	0
4/24/2024	9:00 PM	0	95	12	0	1	0	0	0	13	0	2	0	0
4/24/2024	9:15 PM	0	88	8	0	1	0	0	0	12	0	0	0	0
4/24/2024	9:30 PM	0	89	9	0	0	0	0	0	15	0	2	0	0
4/24/2024	9:45 PM	0	75	6	0	1	0	0	1	18	0	1	0	0
4/24/2024	10:00 PM	0	65	3	0	0	0	0	0	11	0	1	0	0
4/24/2024	10:15 PM	0	68	3	1	2	0	0	0	11	0	3	0	0
4/24/2024	10:30 PM	0	69	4	0	0	0	0	0	6	0	1	0	0
4/24/2024	10:45 PM	0	48	1	0	1	0	0	0	9	0	2	0	0
4/24/2024	11:00 PM	1	50	4	1	0	0	0	0	10	0	1	0	0
4/24/2024	11:15 PM	0	47	3	0	2	0	0	0	15	0	0	0	0
4/24/2024	11:30 PM	0	34	2	0	0	0	0	0	11	0	0	0	0
4/24/2024	11:45 PM	0	37	2	0	0	0	0	0	4	0	1	0	0

4/25/2024	12:00 AM	0	29	8	0	0	1	0	2	8	0	0	0	0
4/25/2024	12:15 AM	0	18	5	0	0	1	0	0	16	0	2	0	0
4/25/2024	12:30 AM	0	15	3	0	2	0	0	0	12	0	1	0	0
4/25/2024	12:45 AM	0	15	0	0	1	0	0	0	1	0	0	0	0
4/25/2024	1:00 AM	0	19	1	0	2	1	0	0	8	0	1	0	0
4/25/2024	1:15 AM	0	13	1	0	0	1	0	0	3	0	0	0	0
4/25/2024	1:30 AM	0	12	0	0	0	0	0	0	8	0	1	0	0
4/25/2024	1:45 AM	0	13	0	0	0	0	0	0	5	0	0	0	0
4/25/2024	2:00 AM	0	17	1	0	1	0	0	0	7	0	1	0	0
4/25/2024	2:15 AM	0	20	1	0	1	0	0	0	4	0	0	0	0
4/25/2024	2:30 AM	0	10	0	0	0	0	0	0	5	0	0	0	0
4/25/2024	2:45 AM	0	15	1	0	1	0	0	0	10	0	1	0	0
4/25/2024	3:00 AM	0	17	0	0	0	0	0	0	9	0	0	0	0
4/25/2024	3:15 AM	0	13	0	0	1	0	0	0	5	0	1	0	0
4/25/2024	3:30 AM	0	15	0	0	1	0	0	0	6	0	1	0	0
4/25/2024	3:45 AM	0	32	0	0	1	0	0	0	5	0	0	0	0
4/25/2024	4:00 AM	0	20	3	0	2	0	0	0	3	0	0	0	0
4/25/2024	4:15 AM	0	19	1	0	1	0	0	0	7	0	1	0	0
4/25/2024	4:30 AM	0	32	0	0	0	0	0	0	8	0	0	0	0
4/25/2024	4:45 AM	0	29	4	0	1	0	0	0	5	0	0	0	0
4/25/2024	5:00 AM	0	29	0	0	0	0	0	0	14	0	1	0	0
4/25/2024	5:15 AM	0	51	0	0	0	0	0	0	7	0	0	0	0
4/25/2024	5:30 AM	0	63	2	0	0	0	0	0	17	0	0	0	0
4/25/2024	5:45 AM	0	87	3	0	0	0	0	0	16	0	1	0	0
4/25/2024	6:00 AM	0	119	4	0	1	0	0	0	19	0	2	0	0
4/25/2024	6:15 AM	1	91	35	0	5	2	0	0	23	0	2	0	0
4/25/2024	6:30 AM	0	111	42	0	4	2	0	0	16	0	0	0	0
4/25/2024	6:45 AM	0	99	46	0	2	2	0	1	19	0	0	0	0
4/25/2024	7:00 AM	0	122	44	0	5	8	0	0	17	0	1	0	0
4/25/2024	7:15 AM	0	139	49	1	6	3	1	1	25	0	0	0	0
4/25/2024	7:30 AM	1	151	46	0	9	0	0	0	14	0	0	0	0
4/25/2024	7:45 AM	0	163	60	0	9	1	0	0	15	0	0	0	0
4/25/2024	8:00 AM	0	116	64	1	4	3	0	0	22	0	0	0	0
4/25/2024	8:15 AM	0	119	63	0	7	2	0	1	26	2	1	0	0
4/25/2024	8:30 AM	0	101	56	0	14	2	0	2	27	0	0	0	0
4/25/2024	8:45 AM	0	105	61	0	9	1	0	1	24	0	0	0	0
4/25/2024	9:00 AM	1	90	47	1	5	3	0	2	29	1	0	0	0
4/25/2024	9:15 AM	1	97	54	0	4	2	0	1	22	1	0	0	0
4/25/2024	9:30 AM	0	116	48	0	3	1	0	4	36	0	0	0	0
4/25/2024	9:45 AM	0	123	39	0	9	2	0	2	18	0	0	0	0
4/25/2024	10:00 AM	0	114	54	0	0	5	1	2	25	0	0	0	0
4/25/2024	10:15 AM	0	119	44	0	6	0	0	2	19	0	0	0	0
4/25/2024	10:30 AM	0	120	43	0	10	1	0	1	33	0	0	0	0
4/25/2024	10:45 AM	0	117	41	0	6	1	1	8	33	0	0	0	0
4/25/2024	11:00 AM	0	121	35	0	3	3	0	3	36	0	0	0	0
4/25/2024	11:15 AM	0	123	36	0	7	4	0	3	31	0	0	0	0
4/25/2024	11:30 AM	1	112	43	0	10	1	0	3	40	0	1	0	0
4/25/2024	11:45 AM	1	107	63	0	3	3	0	0	31	0	0	0	0
4/25/2024	12:00 PM	0	100	43	0	8	3	0	1	35	1	0	0	0
4/25/2024	12:15 PM	0	132	51	0	7	1	1	3	32	0	1	0	0
4/25/2024	12:30 PM	0	116	50	0	8	3	1	2	39	0	0	0	0
4/25/2024	12:45 PM	0	137	45	1	6	0	0	3	40	0	0	0	0
4/25/2024	1:00 PM	0	119	57	0	8	2	1	5	35	0	1	0	0
4/25/2024	1:15 PM	0	151	55	2	9	4	1	0	28	1	0	0	0
4/25/2024	1:30 PM	0	169	53	1	6	1	0	3	34	1	0	0	0
4/25/2024	1:45 PM	1	164	66	0	2	0	0	4	41	0	0	0	0
4/25/2024	2:00 PM	0	153	58	0	11	6	0	6	32	1	0	0	0
4/25/2024	2:15 PM	1	149	64	0	5	1	0	1	50	1	0	0	0
4/25/2024	2:30 PM	0	147	63	1	10	0	0	2	45	1	0	0	0
4/25/2024	2:45 PM	1	154	58	0	10	1	0	3	31	0	0	1	0
4/25/2024	3:00 PM	1	191	78	0	5	1	0	1	37	0	0	0	0
4/25/2024	3:15 PM	0	198	59	0	10	1	0	2	33	1	1	0	0
4/25/2024	3:30 PM	1	196	85	1	6	2	2	1	31	0	0	0	0
4/25/2024	3:45 PM	0	168	81	0	9	0	0	5	32	0	0	0	0
4/25/2024	4:00 PM	0	205	66	1	9	1	0	3	39	0	0	0	0
4/25/2024	4:15 PM	0	239	85	0	12	3	0	0	21	0	0	0	0
4/25/2024	4:30 PM	1	218	65	0	7	0	1	1	32	0	0	0	0
4/25/2024	4:45 PM	1	244	94	0	8	1	0	5	33	0	0	0	0
4/25/2024	5:00 PM	1	299	94	0	7	3	1	1	25	0	0	0	0
4/25/2024	5:15 PM	0	230	86	0	4	0	0	1	26	0	0	0	0
4/25/2024	5:30 PM	1	194	53	0	10	1	1	3	27	0	0	0	0
4/25/2024	5:45 PM	1	186	55	2	4	3	0	1	32	1	0	0	0
4/25/2024	6:00 PM	0	167	54	0	5	1	0	4	38	0	0	0	0
4/25/2024	6:15 PM	1	182	54	0	6	1	0	0	19	0	0	0	0
4/25/2024	6:30 PM	1	144	46	0	9	0	0	3	19	0	0	0	0
4/25/2024	6:45 PM	0	141	55	2	5	0	0	2	14	1	0	0	0
4/25/2024	7:00 PM	0	130	41	0	3	0	0	1	12	0	0	0	0
4/25/2024	7:15 PM	0	120	42	0	1	2	0	2	18	0	0	0	0
4/25/2024	7:30 PM	2	117	36	0	6	0	0	6	17	0	1	0	0
4/25/2024	7:45 PM	0	96	30	0	3	0	0	0	14	0	0	0	0
4/25/2024	8:00 PM	0	90	19	0	4	0	0	0	26	0	0	0	0
4/25/2024	8:15 PM	0	108	15	1	2	2	0	0	11	0	2	0	0
4/25/2024	8:30 PM	0	104	5	0	1	0	0	0	12	0	0	0	0
4/25/2024	8:45 PM	0	82	4	0	1	0	0	0	11	0	0	0	0
4/25/2024	9:00 PM	0	106	5	0	2	0	0	0	9	0	0	0	0
4/25/2024	9:15 PM	0	114	3	0	0	0	0	0	4	0	0	0	0
4/25/2024	9:30 PM	0	104	2	0	0	0	0	0	9	0	0	0	0
4/25/2024	9:45 PM	0	54	3	0	0	0	0	0	8	0	0	0	0
4/25/2024	10:00 PM	0	58	1	0	1	0	0	0	9	0	0	0	0
4/25/2024	10:15 PM	0	76	1	0	1	0	0	0	7	0	0	0	0
4/25/2024	10:30 PM	0	66	2	1	0	0	0	0	9	0	1	0	0
4/25/2024	10:45 PM	0	58	1	0	2	0	0	0	3	0	1	0	0
4/25/2024	11:00 PM	0	57	7	0	0	0	0	0	10	0	0	0	0
4/25/2024	11:15 PM	0	40	0	0	0	1	0	0	4	0	4	0	0
4/25/2024	11:30 PM	0	51	1	0	0	0	0	0	2	0	0	0	0
4/25/2024	11:45 PM	0	49	0	0	0	0	0	0	3	0	1	0	0

4/26/2024	12:00 AM	0	34	8	0	3	0	0	0	8	0	0	0	0
4/26/2024	12:15 AM	0	25	4	0	1	0	0	0	4	0	2	0	0
4/26/2024	12:30 AM	0	26	8	0	3	0	0	0	2	0	1	0	0
4/26/2024	12:45 AM	0	18	5	0	1	0	0	0	10	0	0	0	0
4/26/2024	1:00 AM	0	19	6	0	5	0	0	0	7	0	2	0	0
4/26/2024	1:15 AM	0	22	9	0	1	0	0	0	9	0	1	0	0
4/26/2024	1:30 AM	0	24	8	0	1	0	0	0	7	0	1	0	0
4/26/2024	1:45 AM	0	18	7	0	0	0	0	0	8	0	1	0	0
4/26/2024	2:00 AM	0	16	6	0	0	0	0	0	6	0	1	0	0
4/26/2024	2:15 AM	0	13	3	0	2	0	0	0	9	0	0	0	0
4/26/2024	2:30 AM	0	15	7	0	0	0	0	0	8	0	1	0	0
4/26/2024	2:45 AM	0	16	5	0	3	0	0	0	5	0	2	0	0
4/26/2024	3:00 AM	0	17	6	0	2	0	0	0	13	0	2	0	0
4/26/2024	3:15 AM	0	16	5	0	0	0	0	0	8	0	3	0	0
4/26/2024	3:30 AM	0	20	7	0	1	0	0	0	11	0	2	0	0
4/26/2024	3:45 AM	0	23	12	0	0	0	0	0	10	0	1	0	0
4/26/2024	4:00 AM	0	22	13	0	2	2	0	0	15	0	1	0	0
4/26/2024	4:15 AM	0	21	11	0	1	0	0	0	12	0	1	0	0
4/26/2024	4:30 AM	0	30	17	0	2	0	0	0	13	0	1	0	0
4/26/2024	4:45 AM	0	28	14	0	3	0	0	0	15	0	1	0	0
4/26/2024	5:00 AM	0	30	13	0	1	1	0	0	9	0	0	0	0
4/26/2024	5:15 AM	0	31	15	2	0	0	0	0	11	0	1	0	0
4/26/2024	5:30 AM	0	55	30	0	3	0	0	0	12	0	2	0	0
4/26/2024	5:45 AM	0	65	33	0	1	1	0	0	14	0	0	0	0
4/26/2024	6:00 AM	0	59	28	0	3	1	0	0	15	0	0	0	0
4/26/2024	6:15 AM	0	92	37	0	2	1	0	0	15	0	1	0	0
4/26/2024	6:30 AM	0	94	39	0	5	1	0	0	13	0	1	0	0
4/26/2024	6:45 AM	0	95	44	0	2	1	0	0	16	1	1	0	0
4/26/2024	7:00 AM	1	115	49	0	9	1	0	0	9	0	0	0	0
4/26/2024	7:15 AM	0	142	63	0	9	3	0	1	12	1	0	0	0
4/26/2024	7:30 AM	1	140	54	0	9	4	1	0	15	0	0	0	0
4/26/2024	7:45 AM	0	143	63	0	10	4	0	2	16	1	0	0	0
4/26/2024	8:00 AM	0	101	50	0	16	1	0	1	20	0	0	0	0
4/26/2024	8:15 AM	0	104	48	1	6	0	0	3	19	0	1	0	0
4/26/2024	8:30 AM	0	110	47	2	8	0	0	1	23	0	0	0	0
4/26/2024	8:45 AM	0	104	37	0	8	3	0	3	19	0	0	0	0
4/26/2024	9:00 AM	0	103	48	1	6	4	0	1	12	0	0	0	0
4/26/2024	9:15 AM	0	124	48	0	5	2	0	0	21	0	0	0	0
4/26/2024	9:30 AM	0	110	50	0	7	0	0	1	18	2	0	0	0
4/26/2024	9:45 AM	1	111	41	0	4	1	0	3	25	0	0	1	0
4/26/2024	10:00 AM	1	101	49	0	5	1	0	2	17	0	1	0	0
4/26/2024	10:15 AM	1	116	39	0	5	2	0	2	19	1	0	0	0
4/26/2024	10:30 AM	0	122	34	0	6	2	0	3	20	0	0	0	0
4/26/2024	10:45 AM	1	117	40	1	8	2	1	5	26	0	0	0	0
4/26/2024	11:00 AM	0	136	51	0	5	2	2	2	29	1	0	0	0
4/26/2024	11:15 AM	0	141	48	0	8	2	0	5	28	1	0	0	0
4/26/2024	11:30 AM	1	137	53	1	9	2	0	1	28	0	0	0	0
4/26/2024	11:45 AM	0	133	59	0	8	1	0	6	27	0	0	0	0
4/26/2024	12:00 PM	0	134	55	0	9	3	0	0	32	0	0	0	0
4/26/2024	12:15 PM	1	139	56	1	6	3	0	2	37	0	0	0	0
4/26/2024	12:30 PM	0	156	55	1	7	3	0	1	21	0	0	0	0
4/26/2024	12:45 PM	4	148	46	0	8	2	0	3	27	0	0	0	0
4/26/2024	1:00 PM	1	164	63	3	8	0	0	3	18	0	0	0	0
4/26/2024	1:15 PM	0	147	53	1	2	1	1	4	28	0	0	0	0
4/26/2024	1:30 PM	1	161	40	0	12	0	0	3	34	0	0	0	0
4/26/2024	1:45 PM	1	162	54	1	6	3	0	2	28	0	0	0	0
4/26/2024	2:00 PM	1	172	57	1	7	1	0	1	33	0	0	0	0
4/26/2024	2:15 PM	0	154	65	0	5	3	0	8	22	1	0	0	0
4/26/2024	2:30 PM	0	158	50	0	12	2	0	2	36	0	0	0	0
4/26/2024	2:45 PM	1	173	56	0	6	4	0	3	43	0	0	0	0
4/26/2024	3:00 PM	0	185	67	0	6	4	0	2	36	0	0	0	0
4/26/2024	3:15 PM	0	209	75	0	5	3	0	4	30	0	0	0	0
4/26/2024	3:30 PM	0	177	58	1	9	0	0	4	31	0	1	0	0
4/26/2024	3:45 PM	0	212	55	2	4	1	0	6	36	2	0	0	0
4/26/2024	4:00 PM	0	210	61	1	11	2	0	9	25	0	0	0	0
4/26/2024	4:15 PM	0	233	67	0	3	3	0	3	31	0	0	0	0
4/26/2024	4:30 PM	0	201	64	0	10	1	0	4	29	0	0	0	0
4/26/2024	4:45 PM	0	220	54	0	1	2	0	7	22	0	0	0	0
4/26/2024	5:00 PM	0	217	63	0	9	2	0	0	25	1	1	0	0
4/26/2024	5:15 PM	0	267	54	0	8	3	0	6	20	0	0	0	0
4/26/2024	5:30 PM	0	209	57	0	2	0	0	2	25	0	0	0	0
4/26/2024	5:45 PM	1	177	47	0	3	0	0	6	33	0	0	0	0
4/26/2024	6:00 PM	1	171	48	1	4	1	0	1	30	0	0	0	0
4/26/2024	6:15 PM	0	189	47	1	8	2	0	6	20	1	0	0	0
4/26/2024	6:30 PM	0	147	50	0	3	0	0	1	15	1	0	0	0
4/26/2024	6:45 PM	0	166	39	0	1	2	0	1	13	0	0	0	0
4/26/2024	7:00 PM	0	129	49	2	2	1	0	3	15	0	0	0	0
4/26/2024	7:15 PM	1	138	19	0	3	1	0	4	16	1	0	0	0
4/26/2024	7:30 PM	0	146	33	0	3	0	0	2	13	0	0	0	0
4/26/2024	7:45 PM	0	134	35	1	1	0	0	3	12	0	0	0	0
4/26/2024	8:00 PM	1	124	25	1	3	0	0	0	19	0	0	0	0
4/26/2024	8:15 PM	0	135	28	0	2	0	0	0	16	0	0	0	0
4/26/2024	8:30 PM	0	118	22	0	1	0	0	0	14	0	2	0	0
4/26/2024	8:45 PM	0	127	24	0	0	0	0	0	7	0	1	0	0
4/26/2024	9:00 PM	0	105	21	0	5	0	0	0	8	0	1	0	0
4/26/2024	9:15 PM	0	117	27	0	2	0	0	0	21	0	2	0	0
4/26/2024	9:30 PM	0	104	23	0	5	0	0	0	4	0	1	0	0
4/26/2024	9:45 PM	0	85	18	1	0	0	0	0	6	0	3	0	0
4/26/2024	10:00 PM	0	107	23	0	2	0	0	0	11	0	0	0	0
4/26/2024	10:15 PM	0	82	22	0	2	0	0	0	6	0	2	0	0
4/26/2024	10:30 PM	0	101	23	0	1	0	0	0	11	0	2	0	0
4/26/2024	10:45 PM	0	89	25	0	1	0	0	0	10	0	2	0	0
4/26/2024	11:00 PM	0	80	19	0	1	0	0	0	7	0	2	0	0
4/26/2024	11:15 PM	0	64	15	0	0	0	0	0	3	0	1	0	0
4/26/2024	11:30 PM	0	45	14	0	0	0	0	0	6	0	2	0	0
4/26/2024	11:45 PM	0	46	16	0	2	0	0	0	7	0	1	0	0

4/27/2024	12:00 AM	0	50	6	0	1	0	0	0	8	0	0	0	0
4/27/2024	12:15 AM	0	41	5	0	1	0	0	0	7	0	1	0	0
4/27/2024	12:30 AM	0	29	6	0	1	0	0	0	7	0	0	0	0
4/27/2024	12:45 AM	0	30	4	0	1	0	0	0	6	0	0	0	0
4/27/2024	1:00 AM	0	20	5	0	2	0	0	0	8	0	0	0	0
4/27/2024	1:15 AM	0	21	6	0	1	0	0	0	5	0	0	0	0
4/27/2024	1:30 AM	0	18	4	0	2	0	0	0	3	0	0	0	0
4/27/2024	1:45 AM	0	11	3	0	1	0	0	0	3	0	0	0	0
4/27/2024	2:00 AM	0	10	2	0	0	0	0	0	1	0	0	0	0
4/27/2024	2:15 AM	0	20	6	0	2	0	0	0	2	0	0	0	0
4/27/2024	2:30 AM	0	15	3	0	0	0	0	0	3	0	0	0	0
4/27/2024	2:45 AM	0	11	5	0	0	0	0	0	2	0	1	0	0
4/27/2024	3:00 AM	0	10	6	0	1	0	0	0	5	0	2	0	0
4/27/2024	3:15 AM	0	21	9	0	0	0	0	0	2	0	1	0	0
4/27/2024	3:30 AM	0	10	4	0	1	0	0	0	1	0	0	0	0
4/27/2024	3:45 AM	0	8	2	0	1	0	0	0	3	0	0	0	0
4/27/2024	4:00 AM	0	10	5	0	1	0	0	0	6	0	0	0	0
4/27/2024	4:15 AM	0	20	8	0	0	0	0	0	4	0	2	0	0
4/27/2024	4:30 AM	0	18	3	0	0	0	0	0	3	0	0	0	0
4/27/2024	4:45 AM	0	10	6	0	0	0	0	0	3	0	1	0	0
4/27/2024	5:00 AM	0	18	5	0	0	0	0	0	8	0	2	0	0
4/27/2024	5:15 AM	0	26	6	0	1	0	0	0	3	0	0	0	0
4/27/2024	5:30 AM	0	28	10	0	1	0	0	0	4	0	2	0	0
4/27/2024	5:45 AM	0	30	19	0	4	0	0	0	2	0	0	0	0
4/27/2024	6:00 AM	0	37	26	0	1	0	0	0	8	0	1	0	0
4/27/2024	6:15 AM	0	39	28	0	1	0	0	2	5	0	0	0	0
4/27/2024	6:30 AM	0	62	19	0	1	0	0	0	2	0	0	0	0
4/27/2024	6:45 AM	1	67	22	0	2	0	0	1	9	0	1	0	0
4/27/2024	7:00 AM	0	58	13	0	1	0	0	1	5	0	1	0	0
4/27/2024	7:15 AM	0	90	30	0	0	1	0	0	3	0	0	0	0
4/27/2024	7:30 AM	0	88	36	1	3	1	0	0	10	0	0	0	0
4/27/2024	7:45 AM	0	101	27	0	1	2	0	1	4	0	0	0	0
4/27/2024	8:00 AM	0	97	26	0	1	1	0	0	9	0	0	0	0
4/27/2024	8:15 AM	0	94	48	0	6	2	0	1	5	0	0	0	0
4/27/2024	8:30 AM	0	106	33	0	2	0	0	2	16	0	0	0	0
4/27/2024	8:45 AM	0	116	38	0	4	0	0	1	10	0	0	0	0
4/27/2024	9:00 AM	1	127	35	0	1	0	0	1	10	0	0	0	0
4/27/2024	9:15 AM	0	121	37	0	2	0	0	2	11	0	0	0	0
4/27/2024	9:30 AM	0	149	34	2	3	0	0	1	24	0	0	0	0
4/27/2024	9:45 AM	0	147	39	1	2	2	0	0	11	0	0	0	0
4/27/2024	10:00 AM	0	129	34	0	2	0	0	0	18	0	0	0	0
4/27/2024	10:15 AM	1	137	35	0	1	2	0	0	5	1	0	0	0
4/27/2024	10:30 AM	1	144	35	1	2	1	0	0	14	0	0	0	0
4/27/2024	10:45 AM	0	153	46	1	0	1	0	1	3	0	0	0	0
4/27/2024	11:00 AM	0	165	39	1	1	0	0	2	17	0	0	0	0
4/27/2024	11:15 AM	0	153	48	0	1	0	0	1	11	0	0	0	0
4/27/2024	11:30 AM	1	162	51	0	2	0	0	1	7	0	0	0	0
4/27/2024	11:45 AM	0	137	50	1	2	0	0	1	11	0	0	0	0
4/27/2024	12:00 PM	0	151	41	1	3	3	0	0	14	0	0	0	0
4/27/2024	12:15 PM	1	176	45	0	1	1	0	0	14	0	0	0	0
4/27/2024	12:30 PM	0	177	47	0	2	1	0	3	11	0	0	0	0
4/27/2024	12:45 PM	0	166	49	0	1	0	0	2	9	0	0	0	0
4/27/2024	1:00 PM	0	165	44	1	2	0	0	1	8	0	0	0	0
4/27/2024	1:15 PM	0	184	51	0	1	1	0	0	12	0	0	0	0
4/27/2024	1:30 PM	0	186	38	0	2	0	0	0	7	0	0	0	0
4/27/2024	1:45 PM	0	162	50	0	3	0	0	0	12	0	0	0	0
4/27/2024	2:00 PM	1	169	59	0	1	1	0	3	14	0	0	0	0
4/27/2024	2:15 PM	0	168	56	4	3	0	0	2	6	0	0	0	0
4/27/2024	2:30 PM	0	151	43	0	3	0	0	2	13	0	0	0	0
4/27/2024	2:45 PM	0	181	32	0	0	0	0	1	7	0	0	0	0
4/27/2024	3:00 PM	1	176	34	0	2	0	0	1	8	0	0	0	0
4/27/2024	3:15 PM	0	178	36	0	5	0	0	1	8	0	0	0	0
4/27/2024	3:30 PM	9	188	34	0	2	1	0	1	9	0	0	0	0
4/27/2024	3:45 PM	0	184	31	1	2	1	1	1	8	1	0	0	0
4/27/2024	4:00 PM	1	170	38	0	4	0	0	1	9	0	0	0	0
4/27/2024	4:15 PM	1	158	36	0	1	1	0	1	9	1	0	0	0
4/27/2024	4:30 PM	1	178	41	0	0	1	0	0	5	0	0	0	0
4/27/2024	4:45 PM	2	172	37	0	2	0	0	2	9	0	0	0	0
4/27/2024	5:00 PM	4	159	35	0	0	1	0	0	9	0	0	0	0
4/27/2024	5:15 PM	1	147	33	1	3	1	0	0	6	0	0	0	0
4/27/2024	5:30 PM	0	171	34	0	2	0	0	1	4	0	0	0	0
4/27/2024	5:45 PM	0	135	42	1	0	0	0	0	6	0	0	0	0
4/27/2024	6:00 PM	0	170	38	0	1	0	0	1	3	0	0	0	0
4/27/2024	6:15 PM	1	157	37	0	4	0	0	2	3	0	0	0	0
4/27/2024	6:30 PM	1	162	36	1	1	0	0	1	7	0	0	0	0
4/27/2024	6:45 PM	3	120	33	1	2	0	0	0	4	0	0	0	0
4/27/2024	7:00 PM	0	127	36	3	0	0	0	0	5	0	0	0	0
4/27/2024	7:15 PM	1	113	34	0	4	1	0	1	5	0	0	0	0
4/27/2024	7:30 PM	0	130	27	0	1	0	0	0	3	0	0	0	0
4/27/2024	7:45 PM	0	131	35	1	0	1	0	0	7	0	0	0	0
4/27/2024	8:00 PM	0	129	30	0	0	0	0	0	9	0	0	0	0
4/27/2024	8:15 PM	0	115	19	0	0	0	0	1	4	0	0	0	0
4/27/2024	8:30 PM	0	125	15	0	0	1	0	0	3	0	0	0	0
4/27/2024	8:45 PM	0	101	18	0	0	0	0	0	1	0	0	0	0
4/27/2024	9:00 PM	0	110	15	0	1	0	0	0	4	0	0	0	0
4/27/2024	9:15 PM	0	111	17	0	0	0	0	0	7	0	0	0	0
4/27/2024	9:30 PM	0	113	19	0	1	0	0	0	5	0	0	0	0
4/27/2024	9:45 PM	0	120	17	0	0	1	0	0	1	0	0	0	0
4/27/2024	10:00 PM	0	125	20	0	0	0	0	0	3	0	0	0	0
4/27/2024	10:15 PM	0	101	11	0	0	0	0	0	5	0	0	0	0
4/27/2024	10:30 PM	0	89	10	0	0	0	0	0	6	0	0	0	0
4/27/2024	10:45 PM	0	81	13	0	0	0	0	0	2	0	0	0	0
4/27/2024	11:00 PM	0	75	8	0	0	1	0	0	3	0	0	0	0
4/27/2024	11:15 PM	0	59	7	0	0	0	0	0	3	0	0	0	0
4/27/2024	11:30 PM	0	61	9	0	0	0	0	0	1	0	0	0	0
4/27/2024	11:45 PM	0	55	9	0	0	0	0	0	3	0	0	0	0

WB
File Name:
Start Date: 4/21/2024
Start Time: 0
Site Code: 74 Lane 2 EB
Station ID: 1
Location 1: I-20, west of US-378 Sunset Blvd S/Bound Off-Ramp
Location 2:

Date	Time	1	2	3	4	5	6	7	8	9	10	11	12	13
4/21/2024	12:00 AM	0	0	0	0	0	0	0	0	0	0	0	0	0
4/21/2024	12:15 AM	0	0	0	0	0	0	0	0	0	0	0	0	0
4/21/2024	12:30 AM	0	0	0	0	0	0	0	0	0	0	0	0	0
4/21/2024	12:45 AM	0	0	0	0	0	0	0	0	0	0	0	0	0
4/21/2024	1:00 AM	0	0	0	0	0	0	0	0	0	0	0	0	0
4/21/2024	1:15 AM	0	0	0	0	0	0	0	0	0	0	0	0	0
4/21/2024	1:30 AM	0	0	0	0	0	0	0	0	0	0	0	0	0
4/21/2024	1:45 AM	0	0	0	0	0	0	0	0	0	0	0	0	0
4/21/2024	2:00 AM	0	0	0	0	0	0	0	0	0	0	0	0	0
4/21/2024	2:15 AM	0	0	0	0	0	0	0	0	0	0	0	0	0
4/21/2024	2:30 AM	0	0	0	0	0	0	0	0	0	0	0	0	0
4/21/2024	2:45 AM	0	0	0	0	0	0	0	0	0	0	0	0	0
4/21/2024	3:00 AM	0	0	0	0	0	0	0	0	0	0	0	0	0
4/21/2024	3:15 AM	0	0	0	0	0	0	0	0	0	0	0	0	0
4/21/2024	3:30 AM	0	0	0	0	0	0	0	0	0	0	0	0	0
4/21/2024	3:45 AM	0	0	0	0	0	0	0	0	0	0	0	0	0
4/21/2024	4:00 AM	0	0	0	0	0	0	0	0	0	0	0	0	0
4/21/2024	4:15 AM	0	0	0	0	0	0	0	0	0	0	0	0	0
4/21/2024	4:30 AM	0	0	0	0	0	0	0	0	0	0	0	0	0
4/21/2024	4:45 AM	0	0	0	0	0	0	0	0	0	0	0	0	0
4/21/2024	5:00 AM	0	0	0	0	0	0	0	0	0	0	0	0	0
4/21/2024	5:15 AM	0	0	0	0	0	0	0	0	0	0	0	0	0
4/21/2024	5:30 AM	0	0	0	0	0	0	0	0	0	0	0	0	0
4/21/2024	5:45 AM	0	0	0	0	0	0	0	0	0	0	0	0	0
4/21/2024	6:00 AM	0	0	0	0	0	0	0	0	0	0	0	0	0
4/21/2024	6:15 AM	0	0	0	0	0	0	0	0	0	0	0	0	0
4/21/2024	6:30 AM	0	0	0	0	0	0	0	0	0	0	0	0	0
4/21/2024	6:45 AM	0	0	0	0	0	0	0	0	0	0	0	0	0
4/21/2024	7:00 AM	0	0	0	0	0	0	0	0	0	0	0	0	0
4/21/2024	7:15 AM	0	0	0	0	0	0	0	0	0	0	0	0	0
4/21/2024	7:30 AM	0	0	0	0	0	0	0	0	0	0	0	0	0
4/21/2024	7:45 AM	0	0	0	0	0	0	0	0	0	0	0	0	0
4/21/2024	8:00 AM	0	0	0	0	0	0	0	0	0	0	0	0	0
4/21/2024	8:15 AM	0	0	0	0	0	0	0	0	0	0	0	0	0
4/21/2024	8:30 AM	0	0	0	0	0	0	0	0	0	0	0	0	0
4/21/2024	8:45 AM	0	0	0	0	0	0	0	0	0	0	0	0	0
4/21/2024	9:00 AM	0	0	0	0	0	0	0	0	0	0	0	0	0
4/21/2024	9:15 AM	0	0	0	0	0	0	0	0	0	0	0	0	0
4/21/2024	9:30 AM	0	0	0	0	0	0	0	0	0	0	0	0	0
4/21/2024	9:45 AM	0	0	0	0	0	0	0	0	0	0	0	0	0
4/21/2024	10:00 AM	0	0	0	0	0	0	0	0	0	0	0	0	0
4/21/2024	10:15 AM	0	0	0	0	0	0	0	0	0	0	0	0	0
4/21/2024	10:30 AM	0	0	0	0	0	0	0	0	0	0	0	0	0
4/21/2024	10:45 AM	0	0	0	0	0	0	0	0	0	0	0	0	0
4/21/2024	11:00 AM	0	0	0	0	0	0	0	0	0	0	0	0	0
4/21/2024	11:15 AM	0	0	0	0	0	0	0	0	0	0	0	0	0
4/21/2024	11:30 AM	0	0	0	0	0	0	0	0	0	0	0	0	0
4/21/2024	11:45 AM	0	0	0	0	0	0	0	0	0	0	0	0	0
4/21/2024	12:00 PM	0	0	0	0	0	0	0	0	0	0	0	0	0
4/21/2024	12:15 PM	0	0	0	0	0	0	0	0	0	0	0	0	0
4/21/2024	12:30 PM	0	0	0	0	0	0	0	0	0	0	0	0	0
4/21/2024	12:45 PM	0	0	0	0	0	0	0	0	0	0	0	0	0
4/21/2024	1:00 PM	0	0	0	0	0	0	0	0	0	0	0	0	0
4/21/2024	1:15 PM	0	0	0	0	0	0	0	0	0	0	0	0	0
4/21/2024	1:30 PM	0	0	0	0	0	0	0	0	0	0	0	0	0
4/21/2024	1:45 PM	0	0	0	0	0	0	0	0	0	0	0	0	0
4/21/2024	2:00 PM	0	0	0	0	0	0	0	0	0	0	0	0	0
4/21/2024	2:15 PM	0	0	0	0	0	0	0	0	0	0	0	0	0
4/21/2024	2:30 PM	0	0	0	0	0	0	0	0	0	0	0	0	0
4/21/2024	2:45 PM	0	0	0	0	0	0	0	0	0	0	0	0	0
4/21/2024	3:00 PM	0	0	0	0	0	0	0	0	0	0	0	0	0
4/21/2024	3:15 PM	0	0	0	0	0	0	0	0	0	0	0	0	0
4/21/2024	3:30 PM	0	0	0	0	0	0	0	0	0	0	0	0	0
4/21/2024	3:45 PM	0	0	0	0	0	0	0	0	0	0	0	0	0
4/21/2024	4:00 PM	0	0	0	0	0	0	0	0	0	0	0	0	0
4/21/2024	4:15 PM	0	0	0	0	0	0	0	0	0	0	0	0	0
4/21/2024	4:30 PM	0	0	0	0	0	0	0	0	0	0	0	0	0
4/21/2024	4:45 PM	0	0	0	0	0	0	0	0	0	0	0	0	0
4/21/2024	5:00 PM	0	0	0	0	0	0	0	0	0	0	0	0	0
4/21/2024	5:15 PM	0	0	0	0	0	0	0	0	0	0	0	0	0
4/21/2024	5:30 PM	0	0	0	0	0	0	0	0	0	0	0	0	0
4/21/2024	5:45 PM	0	0	0	0	0	0	0	0	0	0	0	0	0
4/21/2024	6:00 PM	0	0	0	0	0	0	0	0	0	0	0	0	0
4/21/2024	6:15 PM	0	0	0	0	0	0	0	0	0	0	0	0	0
4/21/2024	6:30 PM	0	0	0	0	0	0	0	0	0	0	0	0	0
4/21/2024	6:45 PM	0	0	0	0	0	0	0	0	0	0	0	0	0
4/21/2024	7:00 PM	0	0	0	0	0	0	0	0	0	0	0	0	0
4/21/2024	7:15 PM	0	0	0	0	0	0	0	0	0	0	0	0	0
4/21/2024	7:30 PM	0	0	0	0	0	0	0	0	0	0	0	0	0
4/21/2024	7:45 PM	0	0	0	0	0	0	0	0	0	0	0	0	0
4/21/2024	8:00 PM	0	0	0	0	0	0	0	0	0	0	0	0	0
4/21/2024	8:15 PM	0	0	0	0	0	0	0	0	0	0	0	0	0
4/21/2024	8:30 PM	0	0	0	0	0	0	0	0	0	0	0	0	0
4/21/2024	8:45 PM	0	0	0	0	0	0	0	0	0	0	0	0	0
4/21/2024	9:00 PM	0	0	0	0	0	0	0	0	0	0	0	0	0
4/21/2024	9:15 PM	0	0	0	0	0	0	0	0	0	0	0	0	0
4/21/2024	9:30 PM	0	0	0	0	0	0	0	0	0	0	0	0	0
4/21/2024	9:45 PM	0	0	0	0	0	0	0	0	0	0	0	0	0
4/21/2024	10:00 PM	0	0	0	0	0	0	0	0	0	0	0	0	0
4/21/2024	10:15 PM	0	0	0	0	0	0	0	0	0	0	0	0	0
4/21/2024	10:30 PM	0	0	0	0	0	0	0	0	0	0	0	0	0
4/21/2024	10:45 PM	0	0	0	0	0	0	0	0	0	0	0	0	0
4/21/2024	11:00 PM	0	0	0	0	0	0	0	0	0	0	0	0	0
4/21/2024	11:15 PM	0	0	0	0	0	0	0	0	0	0	0	0	0
4/21/2024	11:30 PM	0	0	0	0	0	0	0	0	0	0	0	0	0
4/21/2024	11:45 PM	0	0	0	0	0	0	0	0	0	0	0	0	0

4/22/2024	12:00 AM	0	0	0	0	0	0	0	0	0	0	0	0	0
4/22/2024	12:15 AM	0	0	0	0	0	0	0	0	0	0	0	0	0
4/22/2024	12:30 AM	0	0	0	0	0	0	0	0	0	0	0	0	0
4/22/2024	12:45 AM	0	0	0	0	0	0	0	0	0	0	0	0	0
4/22/2024	1:00 AM	0	0	0	0	0	0	0	0	0	0	0	0	0
4/22/2024	1:15 AM	0	0	0	0	0	0	0	0	0	0	0	0	0
4/22/2024	1:30 AM	0	0	0	0	0	0	0	0	0	0	0	0	0
4/22/2024	1:45 AM	0	0	0	0	0	0	0	0	0	0	0	0	0
4/22/2024	2:00 AM	0	0	0	0	0	0	0	0	0	0	0	0	0
4/22/2024	2:15 AM	0	0	0	0	0	0	0	0	0	0	0	0	0
4/22/2024	2:30 AM	0	0	0	0	0	0	0	0	0	0	0	0	0
4/22/2024	2:45 AM	0	0	0	0	0	0	0	0	0	0	0	0	0
4/22/2024	3:00 AM	0	0	0	0	0	0	0	0	0	0	0	0	0
4/22/2024	3:15 AM	0	0	0	0	0	0	0	0	0	0	0	0	0
4/22/2024	3:30 AM	0	0	0	0	0	0	0	0	0	0	0	0	0
4/22/2024	3:45 AM	0	0	0	0	0	0	0	0	0	0	0	0	0
4/22/2024	4:00 AM	0	0	0	0	0	0	0	0	0	0	0	0	0
4/22/2024	4:15 AM	0	0	0	0	0	0	0	0	0	0	0	0	0
4/22/2024	4:30 AM	0	0	0	0	0	0	0	0	0	0	0	0	0
4/22/2024	4:45 AM	0	0	0	0	0	0	0	0	0	0	0	0	0
4/22/2024	5:00 AM	0	0	0	0	0	0	0	0	0	0	0	0	0
4/22/2024	5:15 AM	0	0	0	0	0	0	0	0	0	0	0	0	0
4/22/2024	5:30 AM	0	0	0	0	0	0	0	0	0	0	0	0	0
4/22/2024	5:45 AM	0	0	0	0	0	0	0	0	0	0	0	0	0
4/22/2024	6:00 AM	0	0	0	0	0	0	0	0	0	0	0	0	0
4/22/2024	6:15 AM	0	0	0	0	0	0	0	0	0	0	0	0	0
4/22/2024	6:30 AM	0	0	0	0	0	0	0	0	0	0	0	0	0
4/22/2024	6:45 AM	0	0	0	0	0	0	0	0	0	0	0	0	0
4/22/2024	7:00 AM	0	0	0	0	0	0	0	0	0	0	0	0	0
4/22/2024	7:15 AM	0	0	0	0	0	0	0	0	0	0	0	0	0
4/22/2024	7:30 AM	0	0	0	0	0	0	0	0	0	0	0	0	0
4/22/2024	7:45 AM	0	0	0	0	0	0	0	0	0	0	0	0	0
4/22/2024	8:00 AM	0	0	0	0	0	0	0	0	0	0	0	0	0
4/22/2024	8:15 AM	0	0	0	0	0	0	0	0	0	0	0	0	0
4/22/2024	8:30 AM	0	0	0	0	0	0	0	0	0	0	0	0	0
4/22/2024	8:45 AM	0	0	0	0	0	0	0	0	0	0	0	0	0
4/22/2024	9:00 AM	0	0	0	0	0	0	0	0	0	0	0	0	0
4/22/2024	9:15 AM	0	0	0	0	0	0	0	0	0	0	0	0	0
4/22/2024	9:30 AM	0	0	0	0	0	0	0	0	0	0	0	0	0
4/22/2024	9:45 AM	0	0	0	0	0	0	0	0	0	0	0	0	0
4/22/2024	10:00 AM	0	0	0	0	0	0	0	0	0	0	0	0	0
4/22/2024	10:15 AM	0	0	0	0	0	0	0	0	0	0	0	0	0
4/22/2024	10:30 AM	0	0	0	0	0	0	0	0	0	0	0	0	0
4/22/2024	10:45 AM	0	0	0	0	0	0	0	0	0	0	0	0	0
4/22/2024	11:00 AM	0	0	0	0	0	0	0	0	0	0	0	0	0
4/22/2024	11:15 AM	0	0	0	0	0	0	0	0	0	0	0	0	0
4/22/2024	11:30 AM	0	0	0	0	0	0	0	0	0	0	0	0	0
4/22/2024	11:45 AM	0	0	0	0	0	0	0	0	0	0	0	0	0
4/22/2024	12:00 PM	0	0	0	0	0	0	0	0	0	0	0	0	0
4/22/2024	12:15 PM	0	0	0	0	0	0	0	0	0	0	0	0	0
4/22/2024	12:30 PM	0	0	0	0	0	0	0	0	0	0	0	0	0
4/22/2024	12:45 PM	0	0	0	0	0	0	0	0	0	0	0	0	0
4/22/2024	1:00 PM	0	0	0	0	0	0	0	0	0	0	0	0	0
4/22/2024	1:15 PM	0	0	0	0	0	0	0	0	0	0	0	0	0
4/22/2024	1:30 PM	0	0	0	0	0	0	0	0	0	0	0	0	0
4/22/2024	1:45 PM	0	0	0	0	0	0	0	0	0	0	0	0	0
4/22/2024	2:00 PM	0	0	0	0	0	0	0	0	0	0	0	0	0
4/22/2024	2:15 PM	0	0	0	0	0	0	0	0	0	0	0	0	0
4/22/2024	2:30 PM	0	0	0	0	0	0	0	0	0	0	0	0	0
4/22/2024	2:45 PM	0	0	0	0	0	0	0	0	0	0	0	0	0
4/22/2024	3:00 PM	0	0	0	0	0	0	0	0	0	0	0	0	0
4/22/2024	3:15 PM	0	0	0	0	0	0	0	0	0	0	0	0	0
4/22/2024	3:30 PM	0	0	0	0	0	0	0	0	0	0	0	0	0
4/22/2024	3:45 PM	0	0	0	0	0	0	0	0	0	0	0	0	0
4/22/2024	4:00 PM	0	0	0	0	0	0	0	0	0	0	0	0	0
4/22/2024	4:15 PM	0	0	0	0	0	0	0	0	0	0	0	0	0
4/22/2024	4:30 PM	0	0	0	0	0	0	0	0	0	0	0	0	0
4/22/2024	4:45 PM	0	0	0	0	0	0	0	0	0	0	0	0	0
4/22/2024	5:00 PM	0	0	0	0	0	0	0	0	0	0	0	0	0
4/22/2024	5:15 PM	0	0	0	0	0	0	0	0	0	0	0	0	0
4/22/2024	5:30 PM	0	0	0	0	0	0	0	0	0	0	0	0	0
4/22/2024	5:45 PM	0	0	0	0	0	0	0	0	0	0	0	0	0
4/22/2024	6:00 PM	0	0	0	0	0	0	0	0	0	0	0	0	0
4/22/2024	6:15 PM	0	0	0	0	0	0	0	0	0	0	0	0	0
4/22/2024	6:30 PM	0	0	0	0	0	0	0	0	0	0	0	0	0
4/22/2024	6:45 PM	0	0	0	0	0	0	0	0	0	0	0	0	0
4/22/2024	7:00 PM	0	0	0	0	0	0	0	0	0	0	0	0	0
4/22/2024	7:15 PM	0	0	0	0	0	0	0	0	0	0	0	0	0
4/22/2024	7:30 PM	0	0	0	0	0	0	0	0	0	0	0	0	0
4/22/2024	7:45 PM	0	0	0	0	0	0	0	0	0	0	0	0	0
4/22/2024	8:00 PM	0	0	0	0	0	0	0	0	0	0	0	0	0
4/22/2024	8:15 PM	0	0	0	0	0	0	0	0	0	0	0	0	0
4/22/2024	8:30 PM	0	0	0	0	0	0	0	0	0	0	0	0	0
4/22/2024	8:45 PM	0	0	0	0	0	0	0	0	0	0	0	0	0
4/22/2024	9:00 PM	0	0	0	0	0	0	0	0	0	0	0	0	0
4/22/2024	9:15 PM	0	0	0	0	0	0	0	0	0	0	0	0	0
4/22/2024	9:30 PM	0	0	0	0	0	0	0	0	0	0	0	0	0
4/22/2024	9:45 PM	0	0	0	0	0	0	0	0	0	0	0	0	0
4/22/2024	10:00 PM	0	0	0	0	0	0	0	0	0	0	0	0	0
4/22/2024	10:15 PM	0	0	0	0	0	0	0	0	0	0	0	0	0
4/22/2024	10:30 PM	0	0	0	0	0	0	0	0	0	0	0	0	0
4/22/2024	10:45 PM	0	0	0	0	0	0	0	0	0	0	0	0	0
4/22/2024	11:00 PM	0	0	0	0	0	0	0	0	0	0	0	0	0
4/22/2024	11:15 PM	0	0	0	0	0	0	0	0	0	0	0	0	0
4/22/2024	11:30 PM	0	0	0	0	0	0	0	0	0	0	0	0	0
4/22/2024	11:45 PM	0	0	0	0	0	0	0	0	0	0	0	0	0

4/23/2024	12:00 AM	0	0	0	0	0	0	0	0	0	0	0	0	0
4/23/2024	12:15 AM	0	0	0	0	0	0	0	0	0	0	0	0	0
4/23/2024	12:30 AM	0	0	0	0	0	0	0	0	0	0	0	0	0
4/23/2024	12:45 AM	0	0	0	0	0	0	0	0	0	0	0	0	0
4/23/2024	1:00 AM	0	0	0	0	0	0	0	0	0	0	0	0	0
4/23/2024	1:15 AM	0	0	0	0	0	0	0	0	0	0	0	0	0
4/23/2024	1:30 AM	0	0	0	0	0	0	0	0	0	0	0	0	0
4/23/2024	1:45 AM	0	0	0	0	0	0	0	0	0	0	0	0	0
4/23/2024	2:00 AM	0	0	0	0	0	0	0	0	0	0	0	0	0
4/23/2024	2:15 AM	0	0	0	0	0	0	0	0	0	0	0	0	0
4/23/2024	2:30 AM	0	0	0	0	0	0	0	0	0	0	0	0	0
4/23/2024	2:45 AM	0	0	0	0	0	0	0	0	0	0	0	0	0
4/23/2024	3:00 AM	0	0	0	0	0	0	0	0	0	0	0	0	0
4/23/2024	3:15 AM	0	0	0	0	0	0	0	0	0	0	0	0	0
4/23/2024	3:30 AM	0	0	0	0	0	0	0	0	0	0	0	0	0
4/23/2024	3:45 AM	0	0	0	0	0	0	0	0	0	0	0	0	0
4/23/2024	4:00 AM	0	0	0	0	0	0	0	0	0	0	0	0	0
4/23/2024	4:15 AM	0	0	0	0	0	0	0	0	0	0	0	0	0
4/23/2024	4:30 AM	0	0	0	0	0	0	0	0	0	0	0	0	0
4/23/2024	4:45 AM	0	0	0	0	0	0	0	0	0	0	0	0	0
4/23/2024	5:00 AM	0	0	0	0	0	0	0	0	0	0	0	0	0
4/23/2024	5:15 AM	0	0	0	0	0	0	0	0	0	0	0	0	0
4/23/2024	5:30 AM	0	0	0	0	0	0	0	0	0	0	0	0	0
4/23/2024	5:45 AM	0	0	0	0	0	0	0	0	0	0	0	0	0
4/23/2024	6:00 AM	0	0	0	0	0	0	0	0	0	0	0	0	0
4/23/2024	6:15 AM	0	0	0	0	0	0	0	0	0	0	0	0	0
4/23/2024	6:30 AM	0	0	0	0	0	0	0	0	0	0	0	0	0
4/23/2024	6:45 AM	0	0	0	0	0	0	0	0	0	0	0	0	0
4/23/2024	7:00 AM	0	0	0	0	0	0	0	0	0	0	0	0	0
4/23/2024	7:15 AM	0	0	0	0	0	0	0	0	0	0	0	0	0
4/23/2024	7:30 AM	0	0	0	0	0	0	0	0	0	0	0	0	0
4/23/2024	7:45 AM	0	0	0	0	0	0	0	0	0	0	0	0	0
4/23/2024	8:00 AM	0	0	0	0	0	0	0	0	0	0	0	0	0
4/23/2024	8:15 AM	0	0	0	0	0	0	0	0	0	0	0	0	0
4/23/2024	8:30 AM	0	0	0	0	0	0	0	0	0	0	0	0	0
4/23/2024	8:45 AM	0	0	0	0	0	0	0	0	0	0	0	0	0
4/23/2024	9:00 AM	0	0	0	0	0	0	0	0	0	0	0	0	0
4/23/2024	9:15 AM	0	0	0	0	0	0	0	0	0	0	0	0	0
4/23/2024	9:30 AM	0	0	0	0	0	0	0	0	0	0	0	0	0
4/23/2024	9:45 AM	0	0	0	0	0	0	0	0	0	0	0	0	0
4/23/2024	10:00 AM	0	0	0	0	0	0	0	0	0	0	0	0	0
4/23/2024	10:15 AM	0	0	0	0	0	0	0	0	0	0	0	0	0
4/23/2024	10:30 AM	0	0	0	0	0	0	0	0	0	0	0	0	0
4/23/2024	10:45 AM	0	0	0	0	0	0	0	0	0	0	0	0	0
4/23/2024	11:00 AM	0	0	0	0	0	0	0	0	0	0	0	0	0
4/23/2024	11:15 AM	0	0	0	0	0	0	0	0	0	0	0	0	0
4/23/2024	11:30 AM	0	0	0	0	0	0	0	0	0	0	0	0	0
4/23/2024	11:45 AM	0	0	0	0	0	0	0	0	0	0	0	0	0
4/23/2024	12:00 PM	0	0	0	0	0	0	0	0	0	0	0	0	0
4/23/2024	12:15 PM	0	0	0	0	0	0	0	0	0	0	0	0	0
4/23/2024	12:30 PM	0	0	0	0	0	0	0	0	0	0	0	0	0
4/23/2024	12:45 PM	0	0	0	0	0	0	0	0	0	0	0	0	0
4/23/2024	1:00 PM	0	0	0	0	0	0	0	0	0	0	0	0	0
4/23/2024	1:15 PM	0	0	0	0	0	0	0	0	0	0	0	0	0
4/23/2024	1:30 PM	0	0	0	0	0	0	0	0	0	0	0	0	0
4/23/2024	1:45 PM	0	0	0	0	0	0	0	0	0	0	0	0	0
4/23/2024	2:00 PM	0	0	0	0	0	0	0	0	0	0	0	0	0
4/23/2024	2:15 PM	0	0	0	0	0	0	0	0	0	0	0	0	0
4/23/2024	2:30 PM	0	0	0	0	0	0	0	0	0	0	0	0	0
4/23/2024	2:45 PM	0	0	0	0	0	0	0	0	0	0	0	0	0
4/23/2024	3:00 PM	0	0	0	0	0	0	0	0	0	0	0	0	0
4/23/2024	3:15 PM	0	0	0	0	0	0	0	0	0	0	0	0	0
4/23/2024	3:30 PM	0	0	0	0	0	0	0	0	0	0	0	0	0
4/23/2024	3:45 PM	0	0	0	0	0	0	0	0	0	0	0	0	0
4/23/2024	4:00 PM	0	0	0	0	0	0	0	0	0	0	0	0	0
4/23/2024	4:15 PM	0	0	0	0	0	0	0	0	0	0	0	0	0
4/23/2024	4:30 PM	0	0	0	0	0	0	0	0	0	0	0	0	0
4/23/2024	4:45 PM	0	0	0	0	0	0	0	0	0	0	0	0	0
4/23/2024	5:00 PM	0	0	0	0	0	0	0	0	0	0	0	0	0
4/23/2024	5:15 PM	0	0	0	0	0	0	0	0	0	0	0	0	0
4/23/2024	5:30 PM	0	0	0	0	0	0	0	0	0	0	0	0	0
4/23/2024	5:45 PM	0	0	0	0	0	0	0	0	0	0	0	0	0
4/23/2024	6:00 PM	0	0	0	0	0	0	0	0	0	0	0	0	0
4/23/2024	6:15 PM	0	0	0	0	0	0	0	0	0	0	0	0	0
4/23/2024	6:30 PM	0	0	0	0	0	0	0	0	0	0	0	0	0
4/23/2024	6:45 PM	0	0	0	0	0	0	0	0	0	0	0	0	0
4/23/2024	7:00 PM	0	0	0	0	0	0	0	0	0	0	0	0	0
4/23/2024	7:15 PM	0	0	0	0	0	0	0	0	0	0	0	0	0
4/23/2024	7:30 PM	0	0	0	0	0	0	0	0	0	0	0	0	0
4/23/2024	7:45 PM	0	0	0	0	0	0	0	0	0	0	0	0	0
4/23/2024	8:00 PM	0	0	0	0	0	0	0	0	0	0	0	0	0
4/23/2024	8:15 PM	0	0	0	0	0	0	0	0	0	0	0	0	0
4/23/2024	8:30 PM	0	0	0	0	0	0	0	0	0	0	0	0	0
4/23/2024	8:45 PM	0	0	0	0	0	0	0	0	0	0	0	0	0
4/23/2024	9:00 PM	0	0	0	0	0	0	0	0	0	0	0	0	0
4/23/2024	9:15 PM	0	0	0	0	0	0	0	0	0	0	0	0	0
4/23/2024	9:30 PM	0	0	0	0	0	0	0	0	0	0	0	0	0
4/23/2024	9:45 PM	0	0	0	0	0	0	0	0	0	0	0	0	0
4/23/2024	10:00 PM	0	0	0	0	0	0	0	0	0	0	0	0	0
4/23/2024	10:15 PM	0	0	0	0	0	0	0	0	0	0	0	0	0
4/23/2024	10:30 PM	0	0	0	0	0	0	0	0	0	0	0	0	0
4/23/2024	10:45 PM	0	0	0	0	0	0	0	0	0	0	0	0	0
4/23/2024	11:00 PM	0	0	0	0	0	0	0	0	0	0	0	0	0
4/23/2024	11:15 PM	0	0	0	0	0	0	0	0	0	0	0	0	0
4/23/2024	11:30 PM	0	0	0	0	0	0	0	0	0	0	0	0	0
4/23/2024	11:45 PM	0	0	0	0	0	0	0	0	0	0	0	0	0

4/24/2024	12:00 AM	0	0	0	0	0	0	0	0	0	0	0	0	0
4/24/2024	12:15 AM	0	0	0	0	0	0	0	0	0	0	0	0	0
4/24/2024	12:30 AM	0	0	0	0	0	0	0	0	0	0	0	0	0
4/24/2024	12:45 AM	0	0	0	0	0	0	0	0	0	0	0	0	0
4/24/2024	1:00 AM	0	0	0	0	0	0	0	0	0	0	0	0	0
4/24/2024	1:15 AM	0	0	0	0	0	0	0	0	0	0	0	0	0
4/24/2024	1:30 AM	0	0	0	0	0	0	0	0	0	0	0	0	0
4/24/2024	1:45 AM	0	0	0	0	0	0	0	0	0	0	0	0	0
4/24/2024	2:00 AM	0	0	0	0	0	0	0	0	0	0	0	0	0
4/24/2024	2:15 AM	0	0	0	0	0	0	0	0	0	0	0	0	0
4/24/2024	2:30 AM	0	0	0	0	0	0	0	0	0	0	0	0	0
4/24/2024	2:45 AM	0	0	0	0	0	0	0	0	0	0	0	0	0
4/24/2024	3:00 AM	0	0	0	0	0	0	0	0	0	0	0	0	0
4/24/2024	3:15 AM	0	0	0	0	0	0	0	0	0	0	0	0	0
4/24/2024	3:30 AM	0	0	0	0	0	0	0	0	0	0	0	0	0
4/24/2024	3:45 AM	0	0	0	0	0	0	0	0	0	0	0	0	0
4/24/2024	4:00 AM	0	0	0	0	0	0	0	0	0	0	0	0	0
4/24/2024	4:15 AM	0	0	0	0	0	0	0	0	0	0	0	0	0
4/24/2024	4:30 AM	0	0	0	0	0	0	0	0	0	0	0	0	0
4/24/2024	4:45 AM	0	0	0	0	0	0	0	0	0	0	0	0	0
4/24/2024	5:00 AM	0	0	0	0	0	0	0	0	0	0	0	0	0
4/24/2024	5:15 AM	0	0	0	0	0	0	0	0	0	0	0	0	0
4/24/2024	5:30 AM	0	0	0	0	0	0	0	0	0	0	0	0	0
4/24/2024	5:45 AM	0	0	0	0	0	0	0	0	0	0	0	0	0
4/24/2024	6:00 AM	0	0	0	0	0	0	0	0	0	0	0	0	0
4/24/2024	6:15 AM	0	0	0	0	0	0	0	0	0	0	0	0	0
4/24/2024	6:30 AM	0	0	0	0	0	0	0	0	0	0	0	0	0
4/24/2024	6:45 AM	0	0	0	0	0	0	0	0	0	0	0	0	0
4/24/2024	7:00 AM	0	0	0	0	0	0	0	0	0	0	0	0	0
4/24/2024	7:15 AM	0	0	0	0	0	0	0	0	0	0	0	0	0
4/24/2024	7:30 AM	0	0	0	0	0	0	0	0	0	0	0	0	0
4/24/2024	7:45 AM	0	0	0	0	0	0	0	0	0	0	0	0	0
4/24/2024	8:00 AM	0	0	0	0	0	0	0	0	0	0	0	0	0
4/24/2024	8:15 AM	0	0	0	0	0	0	0	0	0	0	0	0	0
4/24/2024	8:30 AM	0	0	0	0	0	0	0	0	0	0	0	0	0
4/24/2024	8:45 AM	0	0	0	0	0	0	0	0	0	0	0	0	0
4/24/2024	9:00 AM	0	0	0	0	0	0	0	0	0	0	0	0	0
4/24/2024	9:15 AM	0	0	0	0	0	0	0	0	0	0	0	0	0
4/24/2024	9:30 AM	0	0	0	0	0	0	0	0	0	0	0	0	0
4/24/2024	9:45 AM	0	0	0	0	0	0	0	0	0	0	0	0	0
4/24/2024	10:00 AM	0	0	0	0	0	0	0	0	0	0	0	0	0
4/24/2024	10:15 AM	0	0	0	0	0	0	0	0	0	0	0	0	0
4/24/2024	10:30 AM	0	0	0	0	0	0	0	0	0	0	0	0	0
4/24/2024	10:45 AM	0	0	0	0	0	0	0	0	0	0	0	0	0
4/24/2024	11:00 AM	0	0	0	0	0	0	0	0	0	0	0	0	0
4/24/2024	11:15 AM	0	0	0	0	0	0	0	0	0	0	0	0	0
4/24/2024	11:30 AM	0	0	0	0	0	0	0	0	0	0	0	0	0
4/24/2024	11:45 AM	0	0	0	0	0	0	0	0	0	0	0	0	0
4/24/2024	12:00 PM	0	0	0	0	0	0	0	0	0	0	0	0	0
4/24/2024	12:15 PM	0	0	0	0	0	0	0	0	0	0	0	0	0
4/24/2024	12:30 PM	0	0	0	0	0	0	0	0	0	0	0	0	0
4/24/2024	12:45 PM	0	0	0	0	0	0	0	0	0	0	0	0	0
4/24/2024	1:00 PM	0	0	0	0	0	0	0	0	0	0	0	0	0
4/24/2024	1:15 PM	0	0	0	0	0	0	0	0	0	0	0	0	0
4/24/2024	1:30 PM	0	0	0	0	0	0	0	0	0	0	0	0	0
4/24/2024	1:45 PM	0	0	0	0	0	0	0	0	0	0	0	0	0
4/24/2024	2:00 PM	0	0	0	0	0	0	0	0	0	0	0	0	0
4/24/2024	2:15 PM	0	0	0	0	0	0	0	0	0	0	0	0	0
4/24/2024	2:30 PM	0	0	0	0	0	0	0	0	0	0	0	0	0
4/24/2024	2:45 PM	0	0	0	0	0	0	0	0	0	0	0	0	0
4/24/2024	3:00 PM	0	0	0	0	0	0	0	0	0	0	0	0	0
4/24/2024	3:15 PM	0	0	0	0	0	0	0	0	0	0	0	0	0
4/24/2024	3:30 PM	0	0	0	0	0	0	0	0	0	0	0	0	0
4/24/2024	3:45 PM	0	0	0	0	0	0	0	0	0	0	0	0	0
4/24/2024	4:00 PM	0	0	0	0	0	0	0	0	0	0	0	0	0
4/24/2024	4:15 PM	0	0	0	0	0	0	0	0	0	0	0	0	0
4/24/2024	4:30 PM	0	0	0	0	0	0	0	0	0	0	0	0	0
4/24/2024	4:45 PM	0	0	0	0	0	0	0	0	0	0	0	0	0
4/24/2024	5:00 PM	0	0	0	0	0	0	0	0	0	0	0	0	0
4/24/2024	5:15 PM	0	0	0	0	0	0	0	0	0	0	0	0	0
4/24/2024	5:30 PM	0	0	0	0	0	0	0	0	0	0	0	0	0
4/24/2024	5:45 PM	0	0	0	0	0	0	0	0	0	0	0	0	0
4/24/2024	6:00 PM	0	0	0	0	0	0	0	0	0	0	0	0	0
4/24/2024	6:15 PM	0	0	0	0	0	0	0	0	0	0	0	0	0
4/24/2024	6:30 PM	0	0	0	0	0	0	0	0	0	0	0	0	0
4/24/2024	6:45 PM	0	0	0	0	0	0	0	0	0	0	0	0	0
4/24/2024	7:00 PM	0	0	0	0	0	0	0	0	0	0	0	0	0
4/24/2024	7:15 PM	0	0	0	0	0	0	0	0	0	0	0	0	0
4/24/2024	7:30 PM	0	0	0	0	0	0	0	0	0	0	0	0	0
4/24/2024	7:45 PM	0	0	0	0	0	0	0	0	0	0	0	0	0
4/24/2024	8:00 PM	0	0	0	0	0	0	0	0	0	0	0	0	0
4/24/2024	8:15 PM	0	0	0	0	0	0	0	0	0	0	0	0	0
4/24/2024	8:30 PM	0	0	0	0	0	0	0	0	0	0	0	0	0
4/24/2024	8:45 PM	0	0	0	0	0	0	0	0	0	0	0	0	0
4/24/2024	9:00 PM	0	0	0	0	0	0	0	0	0	0	0	0	0
4/24/2024	9:15 PM	0	0	0	0	0	0	0	0	0	0	0	0	0
4/24/2024	9:30 PM	0	0	0	0	0	0	0	0	0	0	0	0	0
4/24/2024	9:45 PM	0	0	0	0	0	0	0	0	0	0	0	0	0
4/24/2024	10:00 PM	0	0	0	0	0	0	0	0	0	0	0	0	0
4/24/2024	10:15 PM	0	0	0	0	0	0	0	0	0	0	0	0	0
4/24/2024	10:30 PM	0	0	0	0	0	0	0	0	0	0	0	0	0
4/24/2024	10:45 PM	0	0	0	0	0	0	0	0	0	0	0	0	0
4/24/2024	11:00 PM	0	0	0	0	0	0	0	0	0	0	0	0	0
4/24/2024	11:15 PM	0	0	0	0	0	0	0	0	0	0	0	0	0
4/24/2024	11:30 PM	0	0	0	0	0	0	0	0	0	0	0	0	0
4/24/2024	11:45 PM	0	0	0	0	0	0	0	0	0	0	0	0	0

4/25/2024	12:00 AM	0	0	0	0	0	0	0	0	0	0	0	0	0
4/25/2024	12:15 AM	0	0	0	0	0	0	0	0	0	0	0	0	0
4/25/2024	12:30 AM	0	0	0	0	0	0	0	0	0	0	0	0	0
4/25/2024	12:45 AM	0	0	0	0	0	0	0	0	0	0	0	0	0
4/25/2024	1:00 AM	0	0	0	0	0	0	0	0	0	0	0	0	0
4/25/2024	1:15 AM	0	0	0	0	0	0	0	0	0	0	0	0	0
4/25/2024	1:30 AM	0	0	0	0	0	0	0	0	0	0	0	0	0
4/25/2024	1:45 AM	0	0	0	0	0	0	0	0	0	0	0	0	0
4/25/2024	2:00 AM	0	0	0	0	0	0	0	0	0	0	0	0	0
4/25/2024	2:15 AM	0	0	0	0	0	0	0	0	0	0	0	0	0
4/25/2024	2:30 AM	0	0	0	0	0	0	0	0	0	0	0	0	0
4/25/2024	2:45 AM	0	0	0	0	0	0	0	0	0	0	0	0	0
4/25/2024	3:00 AM	0	0	0	0	0	0	0	0	0	0	0	0	0
4/25/2024	3:15 AM	0	0	0	0	0	0	0	0	0	0	0	0	0
4/25/2024	3:30 AM	0	0	0	0	0	0	0	0	0	0	0	0	0
4/25/2024	3:45 AM	0	0	0	0	0	0	0	0	0	0	0	0	0
4/25/2024	4:00 AM	0	0	0	0	0	0	0	0	0	0	0	0	0
4/25/2024	4:15 AM	0	0	0	0	0	0	0	0	0	0	0	0	0
4/25/2024	4:30 AM	0	0	0	0	0	0	0	0	0	0	0	0	0
4/25/2024	4:45 AM	0	0	0	0	0	0	0	0	0	0	0	0	0
4/25/2024	5:00 AM	0	0	0	0	0	0	0	0	0	0	0	0	0
4/25/2024	5:15 AM	0	0	0	0	0	0	0	0	0	0	0	0	0
4/25/2024	5:30 AM	0	0	0	0	0	0	0	0	0	0	0	0	0
4/25/2024	5:45 AM	0	0	0	0	0	0	0	0	0	0	0	0	0
4/25/2024	6:00 AM	0	0	0	0	0	0	0	0	0	0	0	0	0
4/25/2024	6:15 AM	0	0	0	0	0	0	0	0	0	0	0	0	0
4/25/2024	6:30 AM	0	0	0	0	0	0	0	0	0	0	0	0	0
4/25/2024	6:45 AM	0	0	0	0	0	0	0	0	0	0	0	0	0
4/25/2024	7:00 AM	0	0	0	0	0	0	0	0	0	0	0	0	0
4/25/2024	7:15 AM	0	0	0	0	0	0	0	0	0	0	0	0	0
4/25/2024	7:30 AM	0	0	0	0	0	0	0	0	0	0	0	0	0
4/25/2024	7:45 AM	0	0	0	0	0	0	0	0	0	0	0	0	0
4/25/2024	8:00 AM	0	0	0	0	0	0	0	0	0	0	0	0	0
4/25/2024	8:15 AM	0	0	0	0	0	0	0	0	0	0	0	0	0
4/25/2024	8:30 AM	0	0	0	0	0	0	0	0	0	0	0	0	0
4/25/2024	8:45 AM	0	0	0	0	0	0	0	0	0	0	0	0	0
4/25/2024	9:00 AM	0	0	0	0	0	0	0	0	0	0	0	0	0
4/25/2024	9:15 AM	0	0	0	0	0	0	0	0	0	0	0	0	0
4/25/2024	9:30 AM	0	0	0	0	0	0	0	0	0	0	0	0	0
4/25/2024	9:45 AM	0	0	0	0	0	0	0	0	0	0	0	0	0
4/25/2024	10:00 AM	0	0	0	0	0	0	0	0	0	0	0	0	0
4/25/2024	10:15 AM	0	0	0	0	0	0	0	0	0	0	0	0	0
4/25/2024	10:30 AM	0	0	0	0	0	0	0	0	0	0	0	0	0
4/25/2024	10:45 AM	0	0	0	0	0	0	0	0	0	0	0	0	0
4/25/2024	11:00 AM	0	0	0	0	0	0	0	0	0	0	0	0	0
4/25/2024	11:15 AM	0	0	0	0	0	0	0	0	0	0	0	0	0
4/25/2024	11:30 AM	0	0	0	0	0	0	0	0	0	0	0	0	0
4/25/2024	11:45 AM	0	0	0	0	0	0	0	0	0	0	0	0	0
4/25/2024	12:00 PM	0	0	0	0	0	0	0	0	0	0	0	0	0
4/25/2024	12:15 PM	0	0	0	0	0	0	0	0	0	0	0	0	0
4/25/2024	12:30 PM	0	0	0	0	0	0	0	0	0	0	0	0	0
4/25/2024	12:45 PM	0	0	0	0	0	0	0	0	0	0	0	0	0
4/25/2024	1:00 PM	0	0	0	0	0	0	0	0	0	0	0	0	0
4/25/2024	1:15 PM	0	0	0	0	0	0	0	0	0	0	0	0	0
4/25/2024	1:30 PM	0	0	0	0	0	0	0	0	0	0	0	0	0
4/25/2024	1:45 PM	0	0	0	0	0	0	0	0	0	0	0	0	0
4/25/2024	2:00 PM	0	0	0	0	0	0	0	0	0	0	0	0	0
4/25/2024	2:15 PM	0	0	0	0	0	0	0	0	0	0	0	0	0
4/25/2024	2:30 PM	0	0	0	0	0	0	0	0	0	0	0	0	0
4/25/2024	2:45 PM	0	0	0	0	0	0	0	0	0	0	0	0	0
4/25/2024	3:00 PM	0	0	0	0	0	0	0	0	0	0	0	0	0
4/25/2024	3:15 PM	0	0	0	0	0	0	0	0	0	0	0	0	0
4/25/2024	3:30 PM	0	0	0	0	0	0	0	0	0	0	0	0	0
4/25/2024	3:45 PM	0	0	0	0	0	0	0	0	0	0	0	0	0
4/25/2024	4:00 PM	0	0	0	0	0	0	0	0	0	0	0	0	0
4/25/2024	4:15 PM	0	0	0	0	0	0	0	0	0	0	0	0	0
4/25/2024	4:30 PM	0	0	0	0	0	0	0	0	0	0	0	0	0
4/25/2024	4:45 PM	0	0	0	0	0	0	0	0	0	0	0	0	0
4/25/2024	5:00 PM	0	0	0	0	0	0	0	0	0	0	0	0	0
4/25/2024	5:15 PM	0	0	0	0	0	0	0	0	0	0	0	0	0
4/25/2024	5:30 PM	0	0	0	0	0	0	0	0	0	0	0	0	0
4/25/2024	5:45 PM	0	0	0	0	0	0	0	0	0	0	0	0	0
4/25/2024	6:00 PM	0	0	0	0	0	0	0	0	0	0	0	0	0
4/25/2024	6:15 PM	0	0	0	0	0	0	0	0	0	0	0	0	0
4/25/2024	6:30 PM	0	0	0	0	0	0	0	0	0	0	0	0	0
4/25/2024	6:45 PM	0	0	0	0	0	0	0	0	0	0	0	0	0
4/25/2024	7:00 PM	0	0	0	0	0	0	0	0	0	0	0	0	0
4/25/2024	7:15 PM	0	0	0	0	0	0	0	0	0	0	0	0	0
4/25/2024	7:30 PM	0	0	0	0	0	0	0	0	0	0	0	0	0
4/25/2024	7:45 PM	0	0	0	0	0	0	0	0	0	0	0	0	0
4/25/2024	8:00 PM	0	0	0	0	0	0	0	0	0	0	0	0	0
4/25/2024	8:15 PM	0	0	0	0	0	0	0	0	0	0	0	0	0
4/25/2024	8:30 PM	0	0	0	0	0	0	0	0	0	0	0	0	0
4/25/2024	8:45 PM	0	0	0	0	0	0	0	0	0	0	0	0	0
4/25/2024	9:00 PM	0	0	0	0	0	0	0	0	0	0	0	0	0
4/25/2024	9:15 PM	0	0	0	0	0	0	0	0	0	0	0	0	0
4/25/2024	9:30 PM	0	0	0	0	0	0	0	0	0	0	0	0	0
4/25/2024	9:45 PM	0	0	0	0	0	0	0	0	0	0	0	0	0
4/25/2024	10:00 PM	0	0	0	0	0	0	0	0	0	0	0	0	0
4/25/2024	10:15 PM	0	0	0	0	0	0	0	0	0	0	0	0	0
4/25/2024	10:30 PM	0	0	0	0	0	0	0	0	0	0	0	0	0
4/25/2024	10:45 PM	0	0	0	0	0	0	0	0	0	0	0	0	0
4/25/2024	11:00 PM	0	0	0	0	0	0	0	0	0	0	0	0	0
4/25/2024	11:15 PM	0	0	0	0	0	0	0	0	0	0	0	0	0
4/25/2024	11:30 PM	0	0	0	0	0	0	0	0	0	0	0	0	0
4/25/2024	11:45 PM	0	0	0	0	0	0	0	0	0	0	0	0	0

4/26/2024	12:00 AM	0	0	0	0	0	0	0	0	0	0	0	0	0
4/26/2024	12:15 AM	0	0	0	0	0	0	0	0	0	0	0	0	0
4/26/2024	12:30 AM	0	0	0	0	0	0	0	0	0	0	0	0	0
4/26/2024	12:45 AM	0	0	0	0	0	0	0	0	0	0	0	0	0
4/26/2024	1:00 AM	0	0	0	0	0	0	0	0	0	0	0	0	0
4/26/2024	1:15 AM	0	0	0	0	0	0	0	0	0	0	0	0	0
4/26/2024	1:30 AM	0	0	0	0	0	0	0	0	0	0	0	0	0
4/26/2024	1:45 AM	0	0	0	0	0	0	0	0	0	0	0	0	0
4/26/2024	2:00 AM	0	0	0	0	0	0	0	0	0	0	0	0	0
4/26/2024	2:15 AM	0	0	0	0	0	0	0	0	0	0	0	0	0
4/26/2024	2:30 AM	0	0	0	0	0	0	0	0	0	0	0	0	0
4/26/2024	2:45 AM	0	0	0	0	0	0	0	0	0	0	0	0	0
4/26/2024	3:00 AM	0	0	0	0	0	0	0	0	0	0	0	0	0
4/26/2024	3:15 AM	0	0	0	0	0	0	0	0	0	0	0	0	0
4/26/2024	3:30 AM	0	0	0	0	0	0	0	0	0	0	0	0	0
4/26/2024	3:45 AM	0	0	0	0	0	0	0	0	0	0	0	0	0
4/26/2024	4:00 AM	0	0	0	0	0	0	0	0	0	0	0	0	0
4/26/2024	4:15 AM	0	0	0	0	0	0	0	0	0	0	0	0	0
4/26/2024	4:30 AM	0	0	0	0	0	0	0	0	0	0	0	0	0
4/26/2024	4:45 AM	0	0	0	0	0	0	0	0	0	0	0	0	0
4/26/2024	5:00 AM	0	0	0	0	0	0	0	0	0	0	0	0	0
4/26/2024	5:15 AM	0	0	0	0	0	0	0	0	0	0	0	0	0
4/26/2024	5:30 AM	0	0	0	0	0	0	0	0	0	0	0	0	0
4/26/2024	5:45 AM	0	0	0	0	0	0	0	0	0	0	0	0	0
4/26/2024	6:00 AM	0	0	0	0	0	0	0	0	0	0	0	0	0
4/26/2024	6:15 AM	0	0	0	0	0	0	0	0	0	0	0	0	0
4/26/2024	6:30 AM	0	0	0	0	0	0	0	0	0	0	0	0	0
4/26/2024	6:45 AM	0	0	0	0	0	0	0	0	0	0	0	0	0
4/26/2024	7:00 AM	0	0	0	0	0	0	0	0	0	0	0	0	0
4/26/2024	7:15 AM	0	0	0	0	0	0	0	0	0	0	0	0	0
4/26/2024	7:30 AM	0	0	0	0	0	0	0	0	0	0	0	0	0
4/26/2024	7:45 AM	0	0	0	0	0	0	0	0	0	0	0	0	0
4/26/2024	8:00 AM	0	0	0	0	0	0	0	0	0	0	0	0	0
4/26/2024	8:15 AM	0	0	0	0	0	0	0	0	0	0	0	0	0
4/26/2024	8:30 AM	0	0	0	0	0	0	0	0	0	0	0	0	0
4/26/2024	8:45 AM	0	0	0	0	0	0	0	0	0	0	0	0	0
4/26/2024	9:00 AM	0	0	0	0	0	0	0	0	0	0	0	0	0
4/26/2024	9:15 AM	0	0	0	0	0	0	0	0	0	0	0	0	0
4/26/2024	9:30 AM	0	0	0	0	0	0	0	0	0	0	0	0	0
4/26/2024	9:45 AM	0	0	0	0	0	0	0	0	0	0	0	0	0
4/26/2024	10:00 AM	0	0	0	0	0	0	0	0	0	0	0	0	0
4/26/2024	10:15 AM	0	0	0	0	0	0	0	0	0	0	0	0	0
4/26/2024	10:30 AM	0	0	0	0	0	0	0	0	0	0	0	0	0
4/26/2024	10:45 AM	0	0	0	0	0	0	0	0	0	0	0	0	0
4/26/2024	11:00 AM	0	0	0	0	0	0	0	0	0	0	0	0	0
4/26/2024	11:15 AM	0	0	0	0	0	0	0	0	0	0	0	0	0
4/26/2024	11:30 AM	0	0	0	0	0	0	0	0	0	0	0	0	0
4/26/2024	11:45 AM	0	0	0	0	0	0	0	0	0	0	0	0	0
4/26/2024	12:00 PM	0	0	0	0	0	0	0	0	0	0	0	0	0
4/26/2024	12:15 PM	0	0	0	0	0	0	0	0	0	0	0	0	0
4/26/2024	12:30 PM	0	0	0	0	0	0	0	0	0	0	0	0	0
4/26/2024	12:45 PM	0	0	0	0	0	0	0	0	0	0	0	0	0
4/26/2024	1:00 PM	0	0	0	0	0	0	0	0	0	0	0	0	0
4/26/2024	1:15 PM	0	0	0	0	0	0	0	0	0	0	0	0	0
4/26/2024	1:30 PM	0	0	0	0	0	0	0	0	0	0	0	0	0
4/26/2024	1:45 PM	0	0	0	0	0	0	0	0	0	0	0	0	0
4/26/2024	2:00 PM	0	0	0	0	0	0	0	0	0	0	0	0	0
4/26/2024	2:15 PM	0	0	0	0	0	0	0	0	0	0	0	0	0
4/26/2024	2:30 PM	0	0	0	0	0	0	0	0	0	0	0	0	0
4/26/2024	2:45 PM	0	0	0	0	0	0	0	0	0	0	0	0	0
4/26/2024	3:00 PM	0	0	0	0	0	0	0	0	0	0	0	0	0
4/26/2024	3:15 PM	0	0	0	0	0	0	0	0	0	0	0	0	0
4/26/2024	3:30 PM	0	0	0	0	0	0	0	0	0	0	0	0	0
4/26/2024	3:45 PM	0	0	0	0	0	0	0	0	0	0	0	0	0
4/26/2024	4:00 PM	0	0	0	0	0	0	0	0	0	0	0	0	0
4/26/2024	4:15 PM	0	0	0	0	0	0	0	0	0	0	0	0	0
4/26/2024	4:30 PM	0	0	0	0	0	0	0	0	0	0	0	0	0
4/26/2024	4:45 PM	0	0	0	0	0	0	0	0	0	0	0	0	0
4/26/2024	5:00 PM	0	0	0	0	0	0	0	0	0	0	0	0	0
4/26/2024	5:15 PM	0	0	0	0	0	0	0	0	0	0	0	0	0
4/26/2024	5:30 PM	0	0	0	0	0	0	0	0	0	0	0	0	0
4/26/2024	5:45 PM	0	0	0	0	0	0	0	0	0	0	0	0	0
4/26/2024	6:00 PM	0	0	0	0	0	0	0	0	0	0	0	0	0
4/26/2024	6:15 PM	0	0	0	0	0	0	0	0	0	0	0	0	0
4/26/2024	6:30 PM	0	0	0	0	0	0	0	0	0	0	0	0	0
4/26/2024	6:45 PM	0	0	0	0	0	0	0	0	0	0	0	0	0
4/26/2024	7:00 PM	0	0	0	0	0	0	0	0	0	0	0	0	0
4/26/2024	7:15 PM	0	0	0	0	0	0	0	0	0	0	0	0	0
4/26/2024	7:30 PM	0	0	0	0	0	0	0	0	0	0	0	0	0
4/26/2024	7:45 PM	0	0	0	0	0	0	0	0	0	0	0	0	0
4/26/2024	8:00 PM	0	0	0	0	0	0	0	0	0	0	0	0	0
4/26/2024	8:15 PM	0	0	0	0	0	0	0	0	0	0	0	0	0
4/26/2024	8:30 PM	0	0	0	0	0	0	0	0	0	0	0	0	0
4/26/2024	8:45 PM	0	0	0	0	0	0	0	0	0	0	0	0	0
4/26/2024	9:00 PM	0	0	0	0	0	0	0	0	0	0	0	0	0
4/26/2024	9:15 PM	0	0	0	0	0	0	0	0	0	0	0	0	0
4/26/2024	9:30 PM	0	0	0	0	0	0	0	0	0	0	0	0	0
4/26/2024	9:45 PM	0	0	0	0	0	0	0	0	0	0	0	0	0
4/26/2024	10:00 PM	0	0	0	0	0	0	0	0	0	0	0	0	0
4/26/2024	10:15 PM	0	0	0	0	0	0	0	0	0	0	0	0	0
4/26/2024	10:30 PM	0	0	0	0	0	0	0	0	0	0	0	0	0
4/26/2024	10:45 PM	0	0	0	0	0	0	0	0	0	0	0	0	0
4/26/2024	11:00 PM	0	0	0	0	0	0	0	0	0	0	0	0	0
4/26/2024	11:15 PM	0	0	0	0	0	0	0	0	0	0	0	0	0
4/26/2024	11:30 PM	0	0	0	0	0	0	0	0	0	0	0	0	0
4/26/2024	11:45 PM	0	0	0	0	0	0	0	0	0	0	0	0	0

4/27/2024	12:00 AM	0	0	0	0	0	0	0	0	0	0	0	0	0
4/27/2024	12:15 AM	0	0	0	0	0	0	0	0	0	0	0	0	0
4/27/2024	12:30 AM	0	0	0	0	0	0	0	0	0	0	0	0	0
4/27/2024	12:45 AM	0	0	0	0	0	0	0	0	0	0	0	0	0
4/27/2024	1:00 AM	0	0	0	0	0	0	0	0	0	0	0	0	0
4/27/2024	1:15 AM	0	0	0	0	0	0	0	0	0	0	0	0	0
4/27/2024	1:30 AM	0	0	0	0	0	0	0	0	0	0	0	0	0
4/27/2024	1:45 AM	0	0	0	0	0	0	0	0	0	0	0	0	0
4/27/2024	2:00 AM	0	0	0	0	0	0	0	0	0	0	0	0	0
4/27/2024	2:15 AM	0	0	0	0	0	0	0	0	0	0	0	0	0
4/27/2024	2:30 AM	0	0	0	0	0	0	0	0	0	0	0	0	0
4/27/2024	2:45 AM	0	0	0	0	0	0	0	0	0	0	0	0	0
4/27/2024	3:00 AM	0	0	0	0	0	0	0	0	0	0	0	0	0
4/27/2024	3:15 AM	0	0	0	0	0	0	0	0	0	0	0	0	0
4/27/2024	3:30 AM	0	0	0	0	0	0	0	0	0	0	0	0	0
4/27/2024	3:45 AM	0	0	0	0	0	0	0	0	0	0	0	0	0
4/27/2024	4:00 AM	0	0	0	0	0	0	0	0	0	0	0	0	0
4/27/2024	4:15 AM	0	0	0	0	0	0	0	0	0	0	0	0	0
4/27/2024	4:30 AM	0	0	0	0	0	0	0	0	0	0	0	0	0
4/27/2024	4:45 AM	0	0	0	0	0	0	0	0	0	0	0	0	0
4/27/2024	5:00 AM	0	0	0	0	0	0	0	0	0	0	0	0	0
4/27/2024	5:15 AM	0	0	0	0	0	0	0	0	0	0	0	0	0
4/27/2024	5:30 AM	0	0	0	0	0	0	0	0	0	0	0	0	0
4/27/2024	5:45 AM	0	0	0	0	0	0	0	0	0	0	0	0	0
4/27/2024	6:00 AM	0	0	0	0	0	0	0	0	0	0	0	0	0
4/27/2024	6:15 AM	0	0	0	0	0	0	0	0	0	0	0	0	0
4/27/2024	6:30 AM	0	0	0	0	0	0	0	0	0	0	0	0	0
4/27/2024	6:45 AM	0	0	0	0	0	0	0	0	0	0	0	0	0
4/27/2024	7:00 AM	0	0	0	0	0	0	0	0	0	0	0	0	0
4/27/2024	7:15 AM	0	0	0	0	0	0	0	0	0	0	0	0	0
4/27/2024	7:30 AM	0	0	0	0	0	0	0	0	0	0	0	0	0
4/27/2024	7:45 AM	0	0	0	0	0	0	0	0	0	0	0	0	0
4/27/2024	8:00 AM	0	0	0	0	0	0	0	0	0	0	0	0	0
4/27/2024	8:15 AM	0	0	0	0	0	0	0	0	0	0	0	0	0
4/27/2024	8:30 AM	0	0	0	0	0	0	0	0	0	0	0	0	0
4/27/2024	8:45 AM	0	0	0	0	0	0	0	0	0	0	0	0	0
4/27/2024	9:00 AM	0	0	0	0	0	0	0	0	0	0	0	0	0
4/27/2024	9:15 AM	0	0	0	0	0	0	0	0	0	0	0	0	0
4/27/2024	9:30 AM	0	0	0	0	0	0	0	0	0	0	0	0	0
4/27/2024	9:45 AM	0	0	0	0	0	0	0	0	0	0	0	0	0
4/27/2024	10:00 AM	0	0	0	0	0	0	0	0	0	0	0	0	0
4/27/2024	10:15 AM	0	0	0	0	0	0	0	0	0	0	0	0	0
4/27/2024	10:30 AM	0	0	0	0	0	0	0	0	0	0	0	0	0
4/27/2024	10:45 AM	0	0	0	0	0	0	0	0	0	0	0	0	0
4/27/2024	11:00 AM	0	0	0	0	0	0	0	0	0	0	0	0	0
4/27/2024	11:15 AM	0	0	0	0	0	0	0	0	0	0	0	0	0
4/27/2024	11:30 AM	0	0	0	0	0	0	0	0	0	0	0	0	0
4/27/2024	11:45 AM	0	0	0	0	0	0	0	0	0	0	0	0	0
4/27/2024	12:00 PM	0	0	0	0	0	0	0	0	0	0	0	0	0
4/27/2024	12:15 PM	0	0	0	0	0	0	0	0	0	0	0	0	0
4/27/2024	12:30 PM	0	0	0	0	0	0	0	0	0	0	0	0	0
4/27/2024	12:45 PM	0	0	0	0	0	0	0	0	0	0	0	0	0
4/27/2024	1:00 PM	0	0	0	0	0	0	0	0	0	0	0	0	0
4/27/2024	1:15 PM	0	0	0	0	0	0	0	0	0	0	0	0	0
4/27/2024	1:30 PM	0	0	0	0	0	0	0	0	0	0	0	0	0
4/27/2024	1:45 PM	0	0	0	0	0	0	0	0	0	0	0	0	0
4/27/2024	2:00 PM	0	0	0	0	0	0	0	0	0	0	0	0	0
4/27/2024	2:15 PM	0	0	0	0	0	0	0	0	0	0	0	0	0
4/27/2024	2:30 PM	0	0	0	0	0	0	0	0	0	0	0	0	0
4/27/2024	2:45 PM	0	0	0	0	0	0	0	0	0	0	0	0	0
4/27/2024	3:00 PM	0	0	0	0	0	0	0	0	0	0	0	0	0
4/27/2024	3:15 PM	0	0	0	0	0	0	0	0	0	0	0	0	0
4/27/2024	3:30 PM	0	0	0	0	0	0	0	0	0	0	0	0	0
4/27/2024	3:45 PM	0	0	0	0	0	0	0	0	0	0	0	0	0
4/27/2024	4:00 PM	0	0	0	0	0	0	0	0	0	0	0	0	0
4/27/2024	4:15 PM	0	0	0	0	0	0	0	0	0	0	0	0	0
4/27/2024	4:30 PM	0	0	0	0	0	0	0	0	0	0	0	0	0
4/27/2024	4:45 PM	0	0	0	0	0	0	0	0	0	0	0	0	0
4/27/2024	5:00 PM	0	0	0	0	0	0	0	0	0	0	0	0	0
4/27/2024	5:15 PM	0	0	0	0	0	0	0	0	0	0	0	0	0
4/27/2024	5:30 PM	0	0	0	0	0	0	0	0	0	0	0	0	0
4/27/2024	5:45 PM	0	0	0	0	0	0	0	0	0	0	0	0	0
4/27/2024	6:00 PM	0	0	0	0	0	0	0	0	0	0	0	0	0
4/27/2024	6:15 PM	0	0	0	0	0	0	0	0	0	0	0	0	0
4/27/2024	6:30 PM	0	0	0	0	0	0	0	0	0	0	0	0	0
4/27/2024	6:45 PM	0	0	0	0	0	0	0	0	0	0	0	0	0
4/27/2024	7:00 PM	0	0	0	0	0	0	0	0	0	0	0	0	0
4/27/2024	7:15 PM	0	0	0	0	0	0	0	0	0	0	0	0	0
4/27/2024	7:30 PM	0	0	0	0	0	0	0	0	0	0	0	0	0
4/27/2024	7:45 PM	0	0	0	0	0	0	0	0	0	0	0	0	0
4/27/2024	8:00 PM	0	0	0	0	0	0	0	0	0	0	0	0	0
4/27/2024	8:15 PM	0	0	0	0	0	0	0	0	0	0	0	0	0
4/27/2024	8:30 PM	0	0	0	0	0	0	0	0	0	0	0	0	0
4/27/2024	8:45 PM	0	0	0	0	0	0	0	0	0	0	0	0	0
4/27/2024	9:00 PM	0	0	0	0	0	0	0	0	0	0	0	0	0
4/27/2024	9:15 PM	0	0	0	0	0	0	0	0	0	0	0	0	0
4/27/2024	9:30 PM	0	0	0	0	0	0	0	0	0	0	0	0	0
4/27/2024	9:45 PM	0	0	0	0	0	0	0	0	0	0	0	0	0
4/27/2024	10:00 PM	0	0	0	0	0	0	0	0	0	0	0	0	0
4/27/2024	10:15 PM	0	0	0	0	0	0	0	0	0	0	0	0	0
4/27/2024	10:30 PM	0	0	0	0	0	0	0	0	0	0	0	0	0
4/27/2024	10:45 PM	0	0	0	0	0	0	0	0	0	0	0	0	0
4/27/2024	11:00 PM	0	0	0	0	0	0	0	0	0	0	0	0	0
4/27/2024	11:15 PM	0	0	0	0	0	0	0	0	0	0	0	0	0
4/27/2024	11:30 PM	0	0	0	0	0	0	0	0	0	0	0	0	0
4/27/2024	11:45 PM	0	0	0	0	0	0	0	0	0	0	0	0	0

EB
File Name:
Start Date: 4/21/2024
Start Time: 0
Site Code: 74 Lane 2 EB
Station ID: 1
Location 1: I-20, west of US-378 Sunset Blvd S/Bound Off-Ramp
Location 2:

Date	Time	1	2	3	4	5	6	7	8	9	10	11	12	13
4/21/2024	12:00 AM	0	198	28	0	0	0	0	0	11	0	0	0	0
4/21/2024	12:15 AM	0	183	21	0	0	0	0	0	8	0	0	0	0
4/21/2024	12:30 AM	0	165	17	0	1	0	0	0	8	0	0	0	0
4/21/2024	12:45 AM	0	163	15	1	2	0	0	0	4	0	0	0	0
4/21/2024	1:00 AM	0	157	15	2	2	0	0	0	2	0	0	0	0
4/21/2024	1:15 AM	0	142	14	2	4	0	0	0	5	0	0	0	0
4/21/2024	1:30 AM	0	140	15	2	3	0	0	0	5	0	0	0	0
4/21/2024	1:45 AM	0	125	14	1	3	0	0	0	8	0	0	0	0
4/21/2024	2:00 AM	0	111	12	0	4	0	0	0	10	0	0	0	0
4/21/2024	2:15 AM	0	103	12	0	3	0	0	0	10	0	0	0	0
4/21/2024	2:30 AM	0	86	10	0	3	0	0	0	9	0	0	0	0
4/21/2024	2:45 AM	0	76	11	0	3	0	0	0	9	0	0	0	0
4/21/2024	3:00 AM	0	74	10	0	2	0	0	0	9	0	0	0	0
4/21/2024	3:15 AM	0	86	11	0	4	0	0	0	11	0	0	0	0
4/21/2024	3:30 AM	0	77	9	0	5	0	0	0	13	0	0	0	0
4/21/2024	3:45 AM	0	90	8	1	5	0	0	1	11	0	0	0	0
4/21/2024	4:00 AM	0	85	8	1	7	0	0	1	12	0	0	0	0
4/21/2024	4:15 AM	0	80	7	1	4	0	0	1	13	0	0	0	0
4/21/2024	4:30 AM	0	86	9	1	4	0	0	1	12	0	0	0	0
4/21/2024	4:45 AM	0	90	12	0	5	0	0	0	14	0	0	0	0
4/21/2024	5:00 AM	0	103	14	0	5	0	0	0	13	0	0	0	0
4/21/2024	5:15 AM	0	109	18	0	5	0	0	0	11	0	0	0	0
4/21/2024	5:30 AM	0	127	21	0	4	0	0	0	12	0	0	0	0
4/21/2024	5:45 AM	0	141	27	0	2	0	0	0	12	0	0	0	0
4/21/2024	6:00 AM	0	146	35	0	1	0	0	0	11	0	0	0	0
4/21/2024	6:15 AM	0	158	49	0	1	0	0	0	9	0	0	0	0
4/21/2024	6:30 AM	1	165	53	0	2	0	0	0	7	0	0	0	0
4/21/2024	6:45 AM	1	166	59	1	3	1	0	0	6	0	0	0	0
4/21/2024	7:00 AM	1	187	61	1	2	1	0	0	10	0	0	0	0
4/21/2024	7:15 AM	2	203	52	1	2	1	0	0	10	0	0	0	0
4/21/2024	7:30 AM	2	215	61	2	4	1	0	0	14	0	0	0	0
4/21/2024	7:45 AM	2	243	60	1	3	0	0	0	17	0	0	0	0
4/21/2024	8:00 AM	2	275	66	1	6	0	0	1	14	0	0	0	0
4/21/2024	8:15 AM	3	300	77	2	7	0	0	1	13	1	0	0	0
4/21/2024	8:30 AM	2	341	79	1	6	0	0	1	10	1	0	0	0
4/21/2024	8:45 AM	2	393	90	1	6	0	0	3	6	1	0	0	0
4/21/2024	9:00 AM	2	413	97	1	4	0	0	2	9	1	0	0	0
4/21/2024	9:15 AM	0	444	100	0	5	1	0	2	16	0	1	0	0
4/21/2024	9:30 AM	0	453	110	0	4	1	0	5	25	0	1	0	0
4/21/2024	9:45 AM	0	456	113	0	5	1	0	3	30	0	1	0	0
4/21/2024	10:00 AM	0	501	125	1	6	1	0	3	32	0	1	0	0
4/21/2024	10:15 AM	0	532	131	1	6	0	0	3	37	0	0	0	0
4/21/2024	10:30 AM	0	552	133	1	6	0	0	1	33	0	0	0	0
4/21/2024	10:45 AM	1	567	137	1	5	0	0	2	35	0	0	0	0
4/21/2024	11:00 AM	1	590	138	0	4	0	0	4	32	0	1	0	0
4/21/2024	11:15 AM	1	629	133	0	4	0	0	4	32	0	1	0	0
4/21/2024	11:30 AM	1	673	137	0	5	0	0	5	31	0	1	0	0
4/21/2024	11:45 AM	0	699	141	0	7	1	0	6	27	0	1	0	0
4/21/2024	12:00 PM	0	671	157	0	11	2	0	4	31	0	0	0	0
4/21/2024	12:15 PM	0	664	182	0	10	2	0	4	26	0	0	0	0
4/21/2024	12:30 PM	0	688	188	0	8	2	0	2	25	0	0	0	0
4/21/2024	12:45 PM	0	712	200	0	7	3	0	2	24	0	0	1	0
4/21/2024	1:00 PM	1	744	185	1	3	2	0	2	25	0	0	1	0
4/21/2024	1:15 PM	1	760	180	1	2	3	0	2	23	0	0	1	0
4/21/2024	1:30 PM	1	747	176	1	4	3	0	4	27	0	0	1	0
4/21/2024	1:45 PM	1	718	158	1	6	1	0	2	31	0	0	0	0
4/21/2024	2:00 PM	0	693	155	0	7	1	0	2	29	1	0	0	0
4/21/2024	2:15 PM	0	693	150	0	8	1	0	2	30	1	0	0	0
4/21/2024	2:30 PM	0	666	157	0	9	1	0	0	30	1	0	0	0
4/21/2024	2:45 PM	1	662	172	0	8	1	0	0	28	1	0	0	0
4/21/2024	3:00 PM	1	698	172	0	7	2	0	1	29	1	0	0	0
4/21/2024	3:15 PM	1	692	163	0	6	1	0	2	25	1	0	0	0
4/21/2024	3:30 PM	1	721	166	0	4	1	0	2	26	1	0	0	0
4/21/2024	3:45 PM	0	727	162	1	3	1	0	3	25	1	0	0	0
4/21/2024	4:00 PM	0	694	166	1	3	1	0	3	27	0	0	0	0
4/21/2024	4:15 PM	0	662	173	1	4	1	0	3	31	0	0	0	0
4/21/2024	4:30 PM	0	624	151	1	3	2	0	6	25	0	0	0	0
4/21/2024	4:45 PM	0	614	136	1	3	2	0	5	34	0	0	0	0
4/21/2024	5:00 PM	0	599	138	1	4	1	0	6	34	0	0	0	0
4/21/2024	5:15 PM	0	586	139	1	3	1	0	6	33	0	0	0	0
4/21/2024	5:30 PM	0	584	140	1	3	0	0	6	36	0	0	0	0
4/21/2024	5:45 PM	1	571	148	0	2	0	0	8	30	0	0	0	0
4/21/2024	6:00 PM	1	581	138	0	1	1	0	8	26	0	0	0	0
4/21/2024	6:15 PM	1	588	122	0	2	1	0	7	29	0	0	0	0
4/21/2024	6:30 PM	1	559	126	0	2	1	0	4	35	0	2	0	0
4/21/2024	6:45 PM	0	542	116	1	2	2	0	5	34	0	2	0	0
4/21/2024	7:00 PM	0	501	97	1	2	2	0	3	35	0	2	0	0
4/21/2024	7:15 PM	0	457	99	1	1	2	0	3	31	0	2	0	0
4/21/2024	7:30 PM	0	446	89	1	3	2	0	3	23	0	0	0	0
4/21/2024	7:45 PM	0	421	78	0	3	1	0	0	23	0	0	0	0
4/21/2024	8:00 PM	0	405	76	0	3	0	0	0	19	0	0	0	0
4/21/2024	8:15 PM	0	374	64	1	4	0	0	1	20	0	0	0	0
4/21/2024	8:30 PM	0	361	57	1	4	0	0	1	21	0	1	0	0
4/21/2024	8:45 PM	0	321	55	1	5	0	0	1	21	0	1	0	0
4/21/2024	9:00 PM	0	276	53	1	4	0	0	1	26	0	2	0	0
4/21/2024	9:15 PM	0	263	52	0	3	0	0	0	30	0	3	0	0
4/21/2024	9:30 PM	0	230	47	0	1	0	0	0	27	0	2	0	0
4/21/2024	9:45 PM	0	213	42	1	0	0	0	0	32	0	3	0	0
4/21/2024	10:00 PM	0	202	37	3	0	0	0	0	25	0	2	0	0
4/21/2024	10:15 PM	0	176	31	3	0	0	0	0	18	0	2	0	0
4/21/2024	10:30 PM	0	143	23	4	1	0	0	0	18	0	3	0	0
4/21/2024	10:45 PM	0	135	20	3	2	0	0	0	13	0	2	0	0
4/21/2024	11:00 PM	0	124	16	1	2	0	0	0	14	0	2	0	0
4/21/2024	11:15 PM	0	106	12	1	4	0	0	0	17	0	1	0	0
4/21/2024	11:30 PM	0	96	14	0	4	0	0	0	23	0	0	0	0
4/21/2024	11:45 PM	0	77	10	0	3	0	0	0	24	0	0	0	0

4/22/2024	12:00 AM	0	62	10	0	4	0	0	0	30	0	0	0	0
4/22/2024	12:15 AM	0	56	9	0	2	0	0	0	29	0	0	0	0
4/22/2024	12:30 AM	0	52	9	0	1	0	0	0	25	0	0	0	0
4/22/2024	12:45 AM	0	47	10	0	2	0	0	0	21	0	0	0	0
4/22/2024	1:00 AM	0	46	9	0	2	0	0	0	18	0	0	0	0
4/22/2024	1:15 AM	0	43	7	0	2	0	0	0	22	0	0	0	0
4/22/2024	1:30 AM	0	43	5	0	4	0	0	0	22	0	0	0	0
4/22/2024	1:45 AM	0	41	3	0	4	0	0	0	22	0	0	0	0
4/22/2024	2:00 AM	0	42	3	0	4	0	0	0	25	0	0	0	0
4/22/2024	2:15 AM	0	50	5	0	5	0	0	0	20	0	0	0	0
4/22/2024	2:30 AM	0	56	3	0	4	0	0	0	25	0	0	0	0
4/22/2024	2:45 AM	0	64	10	0	4	0	0	0	28	0	0	0	0
4/22/2024	3:00 AM	0	68	9	0	4	0	0	0	29	0	0	0	0
4/22/2024	3:15 AM	0	70	7	0	3	0	0	0	32	0	0	0	0
4/22/2024	3:30 AM	0	70	15	0	4	0	0	0	29	0	0	0	0
4/22/2024	3:45 AM	0	73	16	0	3	0	0	0	31	0	0	0	0
4/22/2024	4:00 AM	0	81	25	0	3	0	0	0	35	0	0	0	0
4/22/2024	4:15 AM	0	103	32	0	3	0	0	0	39	0	0	0	0
4/22/2024	4:30 AM	0	133	42	0	4	0	0	0	45	0	0	0	0
4/22/2024	4:45 AM	0	167	54	0	5	0	0	0	55	0	0	0	0
4/22/2024	5:00 AM	0	223	73	0	7	0	0	0	53	0	0	0	0
4/22/2024	5:15 AM	0	260	86	0	8	0	0	0	57	0	0	0	0
4/22/2024	5:30 AM	0	338	83	0	10	1	0	0	54	0	0	0	0
4/22/2024	5:45 AM	0	406	113	0	12	2	0	1	46	0	0	0	0
4/22/2024	6:00 AM	1	446	132	1	16	4	0	2	54	0	0	0	0
4/22/2024	6:15 AM	1	493	158	1	22	6	0	3	47	0	0	0	0
4/22/2024	6:30 AM	1	501	203	1	23	10	0	5	54	0	0	0	0
4/22/2024	6:45 AM	1	517	215	2	23	11	0	7	52	0	0	0	0
4/22/2024	7:00 AM	0	539	216	1	21	11	0	7	46	0	0	0	0
4/22/2024	7:15 AM	0	538	220	1	16	11	0	7	56	0	0	0	0
4/22/2024	7:30 AM	0	510	202	1	16	7	0	6	62	0	0	0	0
4/22/2024	7:45 AM	0	488	190	1	23	6	2	5	70	1	0	0	0
4/22/2024	8:00 AM	0	443	185	1	24	7	2	8	68	1	0	0	0
4/22/2024	8:15 AM	0	419	186	1	31	7	2	12	69	1	0	0	0
4/22/2024	8:30 AM	0	407	202	2	30	9	2	13	71	1	0	1	0
4/22/2024	8:45 AM	0	377	200	1	30	10	0	16	72	0	0	1	0
4/22/2024	9:00 AM	0	364	198	1	30	11	0	13	80	0	0	1	0
4/22/2024	9:15 AM	0	356	199	1	26	11	0	12	80	0	0	1	0
4/22/2024	9:30 AM	0	384	181	0	29	8	0	12	85	0	0	0	0
4/22/2024	9:45 AM	0	403	180	0	24	10	0	8	102	0	0	0	0
4/22/2024	10:00 AM	1	435	184	1	30	8	0	7	108	0	0	0	0
4/22/2024	10:15 AM	1	468	188	1	28	7	0	5	113	0	0	0	0
4/22/2024	10:30 AM	1	445	189	1	24	7	0	4	107	0	0	0	0
4/22/2024	10:45 AM	1	450	186	1	23	5	0	6	112	0	0	0	0
4/22/2024	11:00 AM	0	444	176	0	17	5	0	6	109	0	0	0	0
4/22/2024	11:15 AM	1	445	169	0	16	6	0	8	110	0	0	0	0
4/22/2024	11:30 AM	1	479	170	0	21	6	0	9	117	0	0	0	0
4/22/2024	11:45 AM	1	487	165	0	22	6	0	8	100	0	0	0	0
4/22/2024	12:00 PM	1	501	183	1	19	7	0	14	105	0	0	0	0
4/22/2024	12:15 PM	0	489	164	1	28	5	0	14	108	1	0	0	0
4/22/2024	12:30 PM	0	498	166	2	22	7	0	15	104	1	0	0	0
4/22/2024	12:45 PM	0	537	179	3	24	7	0	17	103	1	0	0	0
4/22/2024	1:00 PM	0	551	167	3	26	6	0	15	111	1	0	0	0
4/22/2024	1:15 PM	0	571	186	3	18	10	0	12	104	0	0	0	0
4/22/2024	1:30 PM	0	568	196	2	21	12	0	11	109	1	0	0	0
4/22/2024	1:45 PM	0	549	205	1	22	12	0	12	120	1	0	0	0
4/22/2024	2:00 PM	0	552	215	3	22	13	3	11	120	1	0	0	0
4/22/2024	2:15 PM	0	580	220	3	26	11	3	13	141	1	0	0	0
4/22/2024	2:30 PM	0	613	206	3	25	9	3	14	144	0	0	0	0
4/22/2024	2:45 PM	0	631	201	3	28	13	6	11	148	1	0	0	0
4/22/2024	3:00 PM	1	677	208	1	25	11	3	10	144	2	0	0	0
4/22/2024	3:15 PM	1	704	224	1	23	11	3	10	133	3	0	0	0
4/22/2024	3:30 PM	1	738	238	1	22	10	3	8	128	4	0	0	0
4/22/2024	3:45 PM	1	790	237	1	19	6	2	13	123	3	0	0	0
4/22/2024	4:00 PM	0	799	241	0	28	7	2	12	124	2	0	0	0
4/22/2024	4:15 PM	0	816	237	2	30	8	2	13	126	2	0	0	0
4/22/2024	4:30 PM	0	817	240	2	33	10	2	15	125	1	0	0	0
4/22/2024	4:45 PM	0	793	246	2	34	11	0	10	129	1	0	0	0
4/22/2024	5:00 PM	0	764	243	2	27	11	0	14	128	2	0	0	0
4/22/2024	5:15 PM	0	714	230	0	23	9	0	10	118	1	0	0	0
4/22/2024	5:30 PM	0	673	218	0	20	9	0	10	115	1	0	0	0
4/22/2024	5:45 PM	0	620	202	0	12	7	0	10	104	1	0	0	0
4/22/2024	6:00 PM	0	563	182	0	9	7	0	6	96	0	0	0	0
4/22/2024	6:15 PM	0	512	164	0	7	7	0	9	96	0	0	0	0
4/22/2024	6:30 PM	0	457	145	0	5	5	0	7	92	0	0	0	0
4/22/2024	6:45 PM	0	429	130	0	7	6	0	7	94	0	1	0	0
4/22/2024	7:00 PM	0	424	112	0	8	7	0	7	86	0	1	0	0
4/22/2024	7:15 PM	0	421	107	0	9	6	0	5	79	0	2	0	0
4/22/2024	7:30 PM	0	401	94	0	8	7	0	7	69	0	3	0	0
4/22/2024	7:45 PM	0	386	76	0	5	5	0	5	66	0	2	0	0
4/22/2024	8:00 PM	0	367	68	0	5	2	0	4	71	0	2	0	0
4/22/2024	8:15 PM	0	355	49	0	4	2	0	3	73	0	1	0	0
4/22/2024	8:30 PM	0	357	49	0	4	0	0	0	79	0	0	0	0
4/22/2024	8:45 PM	0	338	51	0	7	0	0	0	69	0	0	0	0
4/22/2024	9:00 PM	0	302	51	0	5	0	0	0	60	0	0	0	0
4/22/2024	9:15 PM	0	253	50	0	5	0	0	0	58	0	0	0	0
4/22/2024	9:30 PM	0	200	49	0	4	0	0	0	52	0	0	0	0
4/22/2024	9:45 PM	0	168	49	0	5	0	0	0	46	0	0	0	0
4/22/2024	10:00 PM	0	147	48	0	5	0	0	0	49	0	0	0	0
4/22/2024	10:15 PM	0	138	51	0	4	0	0	0	47	0	0	0	0
4/22/2024	10:30 PM	0	129	53	0	5	0	0	0	43	0	0	0	0
4/22/2024	10:45 PM	0	112	46	0	3	0	0	0	41	0	0	0	0
4/22/2024	11:00 PM	0	102	46	0	3	0	0	0	31	0	0	0	0
4/22/2024	11:15 PM	0	84	34	0	3	0	0	0	21	0	1	0	0
4/22/2024	11:30 PM	0	76	20	0	2	0	0	0	18	0	1	0	0
4/22/2024	11:45 PM	0	70	15	0	0	0	0	0	18	0	2	0	0

4/23/2024	12:00 AM	0	73	4	0	0	1	0	0	21	0	2	0	0
4/23/2024	12:15 AM	0	85	4	0	3	1	0	0	24	0	2	0	0
4/23/2024	12:30 AM	0	87	4	0	3	1	0	0	28	0	2	0	0
4/23/2024	12:45 AM	0	87	2	0	3	1	0	0	34	0	1	0	0
4/23/2024	1:00 AM	0	78	2	0	4	0	0	0	36	0	2	0	0
4/23/2024	1:15 AM	0	77	1	0	3	0	0	0	40	0	1	0	0
4/23/2024	1:30 AM	0	72	1	0	3	0	0	0	41	0	1	0	0
4/23/2024	1:45 AM	0	73	2	0	4	0	0	0	39	0	1	0	0
4/23/2024	2:00 AM	0	84	2	0	3	0	0	0	39	0	0	0	0
4/23/2024	2:15 AM	0	70	2	0	2	0	0	0	32	0	0	0	0
4/23/2024	2:30 AM	0	76	2	0	2	0	0	2	35	0	1	0	0
4/23/2024	2:45 AM	0	81	2	0	2	0	0	3	37	0	1	0	0
4/23/2024	3:00 AM	0	84	2	0	4	0	0	3	43	0	2	0	0
4/23/2024	3:15 AM	0	104	4	0	4	0	0	3	51	0	2	0	0
4/23/2024	3:30 AM	0	101	9	0	4	0	0	1	46	0	1	0	0
4/23/2024	3:45 AM	0	119	10	0	5	0	0	0	45	0	4	0	0
4/23/2024	4:00 AM	0	128	9	0	3	0	0	0	44	0	4	0	0
4/23/2024	4:15 AM	0	144	10	0	2	0	0	0	41	0	4	0	0
4/23/2024	4:30 AM	0	186	9	0	5	1	0	0	48	0	4	0	0
4/23/2024	4:45 AM	0	242	16	0	3	1	0	0	56	0	1	0	0
4/23/2024	5:00 AM	0	288	29	0	7	2	0	0	52	0	0	0	0
4/23/2024	5:15 AM	0	330	51	0	10	2	0	0	58	0	0	0	0
4/23/2024	5:30 AM	0	365	92	0	10	1	0	2	67	0	0	0	0
4/23/2024	5:45 AM	1	383	127	0	12	4	0	2	67	0	0	0	0
4/23/2024	6:00 AM	1	409	165	0	12	5	0	3	71	0	1	0	0
4/23/2024	6:15 AM	1	440	204	0	9	5	0	4	69	0	1	0	0
4/23/2024	6:30 AM	1	486	222	0	15	6	0	2	58	0	1	0	0
4/23/2024	6:45 AM	1	523	215	1	16	4	1	3	49	0	1	0	0
4/23/2024	7:00 AM	1	568	216	1	17	2	1	3	48	0	0	0	0
4/23/2024	7:15 AM	2	577	190	1	28	5	1	2	45	0	0	0	0
4/23/2024	7:30 AM	2	518	172	1	25	6	1	3	44	0	0	0	0
4/23/2024	7:45 AM	1	490	172	0	30	6	0	2	46	0	0	0	0
4/23/2024	8:00 AM	1	471	168	0	32	7	0	1	52	0	1	0	0
4/23/2024	8:15 AM	0	448	182	2	28	6	0	1	71	0	1	0	0
4/23/2024	8:30 AM	0	473	184	3	31	9	0	1	82	0	1	0	0
4/23/2024	8:45 AM	0	467	193	4	27	9	0	2	94	0	1	0	0
4/23/2024	9:00 AM	0	446	182	4	25	8	0	4	91	0	0	0	0
4/23/2024	9:15 AM	0	443	174	2	23	10	0	5	79	0	0	0	0
4/23/2024	9:30 AM	0	439	168	2	27	8	0	5	70	0	0	0	0
4/23/2024	9:45 AM	0	448	155	1	29	8	0	5	78	1	0	0	0
4/23/2024	10:00 AM	0	435	172	1	32	11	0	3	94	1	0	0	0
4/23/2024	10:15 AM	0	434	171	1	33	9	0	2	109	1	0	0	0
4/23/2024	10:30 AM	0	426	168	0	25	8	1	3	131	1	0	0	0
4/23/2024	10:45 AM	2	424	177	0	24	9	1	4	130	0	0	0	0
4/23/2024	11:00 AM	3	449	163	0	20	8	1	4	128	0	0	0	0
4/23/2024	11:15 AM	4	453	165	0	21	6	1	6	123	0	0	0	0
4/23/2024	11:30 AM	4	478	171	0	19	7	0	6	126	0	0	0	0
4/23/2024	11:45 AM	2	476	164	1	22	5	0	6	128	0	0	0	0
4/23/2024	12:00 PM	1	480	168	2	21	7	0	7	133	0	0	0	0
4/23/2024	12:15 PM	0	494	167	2	19	8	0	7	144	1	0	0	0
4/23/2024	12:30 PM	0	498	161	2	22	8	0	7	135	3	0	0	0
4/23/2024	12:45 PM	0	525	169	1	22	10	0	6	131	3	0	0	0
4/23/2024	1:00 PM	0	515	171	0	21	9	0	8	126	5	0	0	0
4/23/2024	1:15 PM	1	539	168	0	22	15	0	10	124	4	0	0	0
4/23/2024	1:30 PM	1	563	180	5	21	12	0	9	127	3	0	0	0
4/23/2024	1:45 PM	1	564	186	5	19	11	0	14	126	4	1	0	0
4/23/2024	2:00 PM	2	590	202	5	24	10	2	16	125	2	2	0	0
4/23/2024	2:15 PM	2	593	226	5	23	6	3	18	126	2	2	0	0
4/23/2024	2:30 PM	2	609	236	0	29	10	3	21	119	1	2	0	0
4/23/2024	2:45 PM	2	622	251	0	28	13	3	24	134	0	1	0	0
4/23/2024	3:00 PM	1	663	252	0	28	13	2	22	145	2	0	0	0
4/23/2024	3:15 PM	0	706	270	1	31	13	3	22	136	2	1	0	0
4/23/2024	3:30 PM	0	763	277	1	29	10	3	23	139	2	1	0	0
4/23/2024	3:45 PM	0	802	268	1	35	10	3	17	131	2	1	0	0
4/23/2024	4:00 PM	0	809	266	2	39	12	2	18	117	0	2	0	0
4/23/2024	4:15 PM	0	825	244	1	36	11	0	15	101	1	1	0	0
4/23/2024	4:30 PM	0	934	233	2	40	14	0	11	92	2	1	0	0
4/23/2024	4:45 PM	1	917	234	2	41	11	0	14	90	2	1	0	0
4/23/2024	5:00 PM	1	914	230	1	36	8	1	14	101	4	0	0	0
4/23/2024	5:15 PM	2	870	227	1	39	8	1	14	116	3	0	0	0
4/23/2024	5:30 PM	2	689	206	0	32	5	1	16	124	2	0	0	0
4/23/2024	5:45 PM	1	637	188	0	23	6	1	10	107	2	0	0	0
4/23/2024	6:00 PM	1	557	157	0	18	6	0	9	86	0	0	0	0
4/23/2024	6:15 PM	2	506	132	0	19	4	0	6	78	0	0	0	0
4/23/2024	6:30 PM	3	452	124	0	16	3	0	3	68	0	2	0	0
4/23/2024	6:45 PM	4	412	117	0	14	4	0	4	72	0	2	0	0
4/23/2024	7:00 PM	5	385	130	0	14	3	0	1	68	0	2	0	0
4/23/2024	7:15 PM	3	365	136	0	8	8	0	1	65	0	2	0	0
4/23/2024	7:30 PM	2	367	140	0	9	8	0	2	66	0	1	0	0
4/23/2024	7:45 PM	1	373	132	0	9	6	0	1	60	0	1	0	0
4/23/2024	8:00 PM	0	378	113	0	11	6	0	1	72	0	2	0	0
4/23/2024	8:15 PM	0	371	106	0	12	1	0	1	72	0	2	0	0
4/23/2024	8:30 PM	1	368	105	0	8	1	0	0	67	0	1	0	0
4/23/2024	8:45 PM	1	360	114	0	10	0	0	0	62	0	1	0	0
4/23/2024	9:00 PM	1	343	104	0	8	0	0	0	47	0	2	0	0
4/23/2024	9:15 PM	1	325	83	0	6	0	0	0	41	0	3	0	0
4/23/2024	9:30 PM	0	291	66	0	7	0	0	0	37	0	4	0	0
4/23/2024	9:45 PM	0	259	49	0	4	0	0	0	43	0	5	0	0
4/23/2024	10:00 PM	0	231	49	0	3	0	0	0	42	0	4	0	0
4/23/2024	10:15 PM	0	205	49	0	1	0	0	0	37	0	4	0	0
4/23/2024	10:30 PM	0	179	52	0	0	0	0	0	35	0	4	0	0
4/23/2024	10:45 PM	0	146	48	0	0	0	0	0	26	0	5	0	0
4/23/2024	11:00 PM	0	126	47	0	2	0	0	0	21	0	4	0	0
4/23/2024	11:15 PM	0	112	42	0	3	0	0	0	28	0	7	0	0
4/23/2024	11:30 PM	0	98	32	0	3	0	0	0	27	0	6	0	0
4/23/2024	11:45 PM	0	90	23	0	3	0	0	0	30	0	4	0	0

4/24/2024	12:00 AM	0	80	16	0	2	0	0	0	32	0	4	0	0
4/24/2024	12:15 AM	0	73	11	0	4	0	0	0	24	0	0	0	0
4/24/2024	12:30 AM	0	61	6	0	4	1	0	0	27	0	1	0	0
4/24/2024	12:45 AM	0	58	6	0	5	2	0	0	21	0	1	0	0
4/24/2024	1:00 AM	0	59	5	0	6	2	0	0	20	0	1	0	0
4/24/2024	1:15 AM	0	53	7	0	3	2	0	0	24	0	2	0	0
4/24/2024	1:30 AM	0	56	8	0	4	2	0	0	18	0	1	0	0
4/24/2024	1:45 AM	0	52	7	0	4	1	0	0	24	0	1	0	0
4/24/2024	2:00 AM	0	46	9	0	2	1	0	0	29	0	3	0	0
4/24/2024	2:15 AM	0	47	8	0	2	1	0	0	31	0	2	0	0
4/24/2024	2:30 AM	0	47	9	0	1	0	0	0	34	0	2	0	0
4/24/2024	2:45 AM	0	53	12	0	1	1	0	0	33	0	2	0	0
4/24/2024	3:00 AM	0	68	12	2	2	1	0	0	28	0	0	0	0
4/24/2024	3:15 AM	0	75	14	2	2	1	0	0	27	0	0	0	0
4/24/2024	3:30 AM	0	75	12	2	3	1	0	0	25	0	0	0	0
4/24/2024	3:45 AM	0	84	13	2	2	0	0	0	24	0	2	0	0
4/24/2024	4:00 AM	0	80	13	0	4	0	0	0	28	0	2	0	0
4/24/2024	4:15 AM	0	96	13	0	8	0	0	0	29	0	3	0	0
4/24/2024	4:30 AM	0	132	17	0	9	1	0	0	41	0	3	0	0
4/24/2024	4:45 AM	0	176	20	0	10	1	0	0	42	0	1	0	0
4/24/2024	5:00 AM	0	221	23	0	8	1	0	0	44	0	1	0	0
4/24/2024	5:15 AM	1	265	45	0	12	2	0	1	44	0	1	0	0
4/24/2024	5:30 AM	1	311	84	0	12	1	0	4	38	0	1	0	0
4/24/2024	5:45 AM	2	389	125	0	13	1	0	6	48	0	2	0	0
4/24/2024	6:00 AM	2	428	175	0	18	2	0	9	56	0	2	0	0
4/24/2024	6:15 AM	1	466	193	0	15	4	0	10	75	0	2	0	0
4/24/2024	6:30 AM	1	516	206	0	19	6	0	11	76	0	2	0	0
4/24/2024	6:45 AM	0	504	216	0	26	8	0	11	78	0	2	0	0
4/24/2024	7:00 AM	0	523	220	0	26	7	0	12	74	0	2	1	0
4/24/2024	7:15 AM	0	503	206	0	25	6	0	11	62	0	1	1	0
4/24/2024	7:30 AM	0	468	200	0	29	7	2	8	64	0	1	1	0
4/24/2024	7:45 AM	0	436	185	0	27	6	2	7	64	0	0	1	0
4/24/2024	8:00 AM	0	421	167	0	28	8	2	5	73	1	0	0	0
4/24/2024	8:15 AM	1	412	179	1	27	8	4	5	85	1	0	0	0
4/24/2024	8:30 AM	1	381	166	1	25	9	3	4	87	1	0	0	0
4/24/2024	8:45 AM	1	372	174	2	23	8	3	6	87	2	1	0	0
4/24/2024	9:00 AM	2	376	177	4	23	8	4	7	97	2	1	0	0
4/24/2024	9:15 AM	1	397	187	3	22	9	2	9	103	2	1	0	0
4/24/2024	9:30 AM	2	427	193	3	21	6	1	11	115	2	1	0	0
4/24/2024	9:45 AM	2	462	204	2	19	6	1	14	121	1	0	0	0
4/24/2024	10:00 AM	1	464	189	1	17	8	0	12	122	1	0	0	0
4/24/2024	10:15 AM	1	448	190	2	24	6	0	10	114	1	0	0	0
4/24/2024	10:30 AM	0	438	185	2	19	6	0	9	112	2	0	0	0
4/24/2024	10:45 AM	2	424	164	2	21	6	0	8	112	2	0	0	0
4/24/2024	11:00 AM	3	414	187	1	23	5	0	9	101	1	0	0	0
4/24/2024	11:15 AM	3	431	167	0	18	6	0	13	115	1	0	1	0
4/24/2024	11:30 AM	4	465	177	0	24	5	2	18	135	1	0	1	0
4/24/2024	11:45 AM	2	477	192	0	24	5	4	17	133	3	0	1	0
4/24/2024	12:00 PM	1	490	180	0	23	7	4	16	148	5	0	1	0
4/24/2024	12:15 PM	1	503	186	0	24	8	4	13	152	5	0	0	0
4/24/2024	12:30 PM	2	496	192	1	25	10	2	8	143	4	0	0	0
4/24/2024	12:45 PM	3	511	179	1	27	11	0	7	158	2	0	0	0
4/24/2024	1:00 PM	3	515	190	1	27	9	0	7	146	0	0	0	0
4/24/2024	1:15 PM	3	517	214	1	30	9	0	5	135	0	0	0	0
4/24/2024	1:30 PM	1	555	210	0	23	8	0	6	140	0	0	0	0
4/24/2024	1:45 PM	0	558	217	2	23	7	1	6	138	0	0	1	0
4/24/2024	2:00 PM	1	590	220	5	24	5	1	8	140	0	0	1	0
4/24/2024	2:15 PM	2	618	219	5	22	5	1	9	150	1	0	1	0
4/24/2024	2:30 PM	2	616	243	6	27	5	1	12	142	1	0	1	0
4/24/2024	2:45 PM	2	643	254	4	40	8	1	13	144	1	0	0	0
4/24/2024	3:00 PM	1	677	273	1	38	10	1	13	154	1	0	1	0
4/24/2024	3:15 PM	1	706	291	3	39	12	2	15	155	0	0	1	0
4/24/2024	3:30 PM	1	752	286	3	44	13	2	16	148	1	0	1	0
4/24/2024	3:45 PM	1	776	289	5	34	12	1	17	155	1	0	1	0
4/24/2024	4:00 PM	1	778	271	5	39	10	1	18	155	1	0	0	0
4/24/2024	4:15 PM	0	781	266	3	43	7	0	17	144	1	0	0	0
4/24/2024	4:30 PM	0	779	265	3	35	6	1	13	152	0	0	0	0
4/24/2024	4:45 PM	0	758	253	1	33	4	1	9	138	0	0	0	0
4/24/2024	5:00 PM	0	738	249	3	29	5	2	8	133	0	0	0	0
4/24/2024	5:15 PM	0	705	218	3	23	3	2	8	132	0	0	0	0
4/24/2024	5:30 PM	1	660	188	5	27	4	1	9	120	1	0	0	0
4/24/2024	5:45 PM	1	615	175	5	22	5	1	8	114	1	0	0	0
4/24/2024	6:00 PM	1	573	152	3	25	3	0	5	97	1	0	0	0
4/24/2024	6:15 PM	1	529	140	3	24	4	0	6	85	1	0	0	0
4/24/2024	6:30 PM	0	481	137	0	17	2	0	4	78	0	0	0	0
4/24/2024	6:45 PM	1	454	129	0	17	1	0	7	72	0	0	0	0
4/24/2024	7:00 PM	1	421	126	0	11	1	0	9	70	0	1	0	0
4/24/2024	7:15 PM	1	405	117	0	8	1	0	7	66	0	2	0	0
4/24/2024	7:30 PM	1	393	105	0	8	2	0	8	62	0	2	0	0
4/24/2024	7:45 PM	0	388	93	0	7	2	0	5	59	0	2	0	0
4/24/2024	8:00 PM	0	414	106	1	6	2	0	3	59	0	1	0	0
4/24/2024	8:15 PM	0	416	95	1	6	1	0	2	55	0	2	0	0
4/24/2024	8:30 PM	0	401	79	1	6	0	0	0	55	0	2	0	0
4/24/2024	8:45 PM	0	392	68	1	4	0	0	0	54	0	4	0	0
4/24/2024	9:00 PM	0	347	35	0	3	0	0	1	58	0	5	0	0
4/24/2024	9:15 PM	0	317	26	0	2	0	0	1	56	0	4	0	0
4/24/2024	9:30 PM	0	297	21	1	3	0	0	1	55	0	7	0	0
4/24/2024	9:45 PM	0	277	16	1	3	0	0	1	46	0	6	0	0
4/24/2024	10:00 PM	0	250	11	1	3	0	0	0	37	0	7	0	0
4/24/2024	10:15 PM	1	235	12	2	3	0	0	0	36	0	7	0	0
4/24/2024	10:30 PM	1	214	12	1	3	0	0	0	40	0	4	0	0
4/24/2024	10:45 PM	1	179	10	1	3	0	0	0	45	0	3	0	0
4/24/2024	11:00 PM	1	168	11	1	2	0	0	0	40	0	2	0	0
4/24/2024	11:15 PM	0	147	15	0	2	1	0	2	38	0	1	0	0
4/24/2024	11:30 PM	0	118	17	0	0	2	0	2	39	0	3	0	0
4/24/2024	11:45 PM	0	99	18	0	2	2	0	2	40	0	4	0	0

4/25/2024	12:00 AM	0	77	16	0	3	2	0	2	37	0	3	0	0
4/25/2024	12:15 AM	0	67	9	0	5	2	0	0	37	0	4	0	0
4/25/2024	12:30 AM	0	62	5	0	5	2	0	0	24	0	2	0	0
4/25/2024	12:45 AM	0	59	2	0	3	2	0	0	20	0	2	0	0
4/25/2024	1:00 AM	0	57	2	0	2	2	0	0	24	0	2	0	0
4/25/2024	1:15 AM	0	55	2	0	1	1	0	0	23	0	2	0	0
4/25/2024	1:30 AM	0	62	2	0	2	0	0	0	24	0	2	0	0
4/25/2024	1:45 AM	0	60	2	0	2	0	0	0	21	0	1	0	0
4/25/2024	2:00 AM	0	62	3	0	3	0	0	0	26	0	2	0	0
4/25/2024	2:15 AM	0	62	2	0	2	0	0	0	28	0	1	0	0
4/25/2024	2:30 AM	0	55	1	0	2	0	0	0	29	0	2	0	0
4/25/2024	2:45 AM	0	60	1	0	3	0	0	0	30	0	3	0	0
4/25/2024	3:00 AM	0	77	0	0	3	0	0	0	25	0	2	0	0
4/25/2024	3:15 AM	0	80	3	0	5	0	0	0	19	0	2	0	0
4/25/2024	3:30 AM	0	86	4	0	5	0	0	0	21	0	2	0	0
4/25/2024	3:45 AM	0	103	4	0	4	0	0	0	23	0	1	0	0
4/25/2024	4:00 AM	0	100	8	0	4	0	0	0	23	0	1	0	0
4/25/2024	4:15 AM	0	109	5	0	2	0	0	0	34	0	2	0	0
4/25/2024	4:30 AM	0	141	4	0	1	0	0	0	34	0	1	0	0
4/25/2024	4:45 AM	0	172	6	0	1	0	0	0	43	0	1	0	0
4/25/2024	5:00 AM	0	230	5	0	0	0	0	0	54	0	2	0	0
4/25/2024	5:15 AM	0	320	9	0	1	0	0	0	59	0	3	0	0
4/25/2024	5:30 AM	1	360	44	0	6	2	0	0	75	0	5	0	0
4/25/2024	5:45 AM	1	408	84	0	10	4	0	0	74	0	5	0	0
4/25/2024	6:00 AM	1	420	127	0	12	6	0	1	77	0	4	0	0
4/25/2024	6:15 AM	1	423	167	0	16	14	0	1	75	0	3	0	0
4/25/2024	6:30 AM	0	471	181	1	17	15	1	2	77	0	1	0	0
4/25/2024	6:45 AM	1	511	185	1	22	13	1	2	75	0	1	0	0
4/25/2024	7:00 AM	1	575	199	1	29	12	1	1	71	0	1	0	0
4/25/2024	7:15 AM	1	569	219	2	28	7	1	1	76	0	0	0	0
4/25/2024	7:30 AM	1	549	233	1	29	6	0	1	77	2	1	0	0
4/25/2024	7:45 AM	0	499	243	1	34	8	0	3	90	2	1	0	0
4/25/2024	8:00 AM	0	441	244	1	34	8	0	4	99	2	1	0	0
4/25/2024	8:15 AM	1	415	227	1	35	8	0	6	106	3	1	0	0
4/25/2024	8:30 AM	2	393	218	1	32	8	0	6	102	2	0	0	0
4/25/2024	8:45 AM	2	408	210	1	21	7	0	8	111	2	0	0	0
4/25/2024	9:00 AM	2	426	188	1	21	8	0	9	105	2	0	0	0
4/25/2024	9:15 AM	1	450	195	0	16	10	1	9	101	1	0	0	0
4/25/2024	9:30 AM	0	472	185	0	18	8	1	10	98	0	0	0	0
4/25/2024	9:45 AM	0	476	180	0	25	8	1	7	95	0	0	0	0
4/25/2024	10:00 AM	0	470	182	0	22	7	2	13	110	0	0	0	0
4/25/2024	10:15 AM	0	477	163	0	25	5	1	14	121	0	0	0	0
4/25/2024	10:30 AM	0	481	155	0	26	9	1	15	133	0	0	0	0
4/25/2024	10:45 AM	1	473	155	0	26	9	1	17	140	0	1	0	0
4/25/2024	11:00 AM	2	463	177	0	23	11	0	9	138	0	1	0	0
4/25/2024	11:15 AM	2	442	185	0	28	11	0	7	137	1	1	0	0
4/25/2024	11:30 AM	2	451	200	0	28	8	1	7	138	1	2	0	0
4/25/2024	11:45 AM	1	455	207	0	26	10	2	6	137	1	1	0	0
4/25/2024	12:00 PM	0	485	189	1	29	7	2	9	146	1	1	0	0
4/25/2024	12:15 PM	0	504	203	1	29	6	3	13	146	0	2	0	0
4/25/2024	12:30 PM	0	523	207	3	31	9	3	10	142	1	1	0	0
4/25/2024	12:45 PM	0	576	210	4	29	7	2	11	137	2	1	0	0
4/25/2024	1:00 PM	1	603	231	3	25	7	2	12	138	2	1	0	0
4/25/2024	1:15 PM	1	637	232	3	28	11	1	13	135	3	0	0	0
4/25/2024	1:30 PM	2	635	241	1	24	8	0	14	157	3	0	0	0
4/25/2024	1:45 PM	2	613	251	1	28	7	0	13	168	3	0	0	0
4/25/2024	2:00 PM	2	603	243	1	36	8	0	12	158	3	0	1	0
4/25/2024	2:15 PM	3	641	263	1	30	3	0	7	163	2	0	1	0
4/25/2024	2:30 PM	2	690	258	1	35	3	0	8	146	2	1	1	0
4/25/2024	2:45 PM	3	739	280	1	31	5	2	7	132	1	1	1	0
4/25/2024	3:00 PM	2	753	303	1	30	4	2	9	133	1	1	0	0
4/25/2024	3:15 PM	1	767	291	2	34	4	2	11	135	1	1	0	0
4/25/2024	3:30 PM	1	808	317	2	36	6	2	9	123	0	0	0	0
4/25/2024	3:45 PM	1	830	297	1	37	4	1	9	124	0	0	0	0
4/25/2024	4:00 PM	2	906	310	1	36	5	1	9	125	0	0	0	0
4/25/2024	4:15 PM	3	1000	338	0	34	7	2	7	111	0	0	0	0
4/25/2024	4:30 PM	3	991	339	0	26	4	2	8	116	0	0	0	0
4/25/2024	4:45 PM	3	967	327	0	29	5	2	10	111	0	0	0	0
4/25/2024	5:00 PM	3	909	288	2	25	7	2	6	110	1	0	0	0
4/25/2024	5:15 PM	2	777	248	2	23	5	1	9	123	1	0	0	0
4/25/2024	5:30 PM	3	729	216	2	25	6	1	8	116	1	0	0	0
4/25/2024	5:45 PM	3	679	209	2	24	5	0	8	108	1	0	0	0
4/25/2024	6:00 PM	2	634	209	2	25	2	0	9	90	1	0	0	0
4/25/2024	6:15 PM	2	597	196	2	23	1	0	6	64	1	0	0	0
4/25/2024	6:30 PM	1	535	184	2	18	2	0	8	63	1	0	0	0
4/25/2024	6:45 PM	2	508	174	2	15	2	0	11	61	1	1	0	0
4/25/2024	7:00 PM	2	463	149	0	13	2	0	9	61	0	1	0	0
4/25/2024	7:15 PM	2	423	127	0	14	2	0	8	75	0	1	0	0
4/25/2024	7:30 PM	2	411	100	1	15	2	0	6	68	0	3	0	0
4/25/2024	7:45 PM	0	398	69	1	10	2	0	0	63	0	2	0	0
4/25/2024	8:00 PM	0	384	43	1	8	2	0	0	60	0	2	0	0
4/25/2024	8:15 PM	0	400	29	1	6	2	0	0	43	0	2	0	0
4/25/2024	8:30 PM	0	406	17	0	4	0	0	0	36	0	0	0	0
4/25/2024	8:45 PM	0	406	14	0	3	0	0	0	33	0	0	0	0
4/25/2024	9:00 PM	0	378	13	0	2	0	0	0	30	0	0	0	0
4/25/2024	9:15 PM	0	330	9	0	1	0	0	0	30	0	0	0	0
4/25/2024	9:30 PM	0	292	7	0	2	0	0	0	33	0	0	0	0
4/25/2024	9:45 PM	0	254	7	1	2	0	0	0	33	0	1	0	0
4/25/2024	10:00 PM	0	258	5	1	4	0	0	0	28	0	2	0	0
4/25/2024	10:15 PM	0	257	11	1	3	0	0	0	29	0	2	0	0
4/25/2024	10:30 PM	0	221	10	1	2	1	0	0	26	0	6	0	0
4/25/2024	10:45 PM	0	206	9	0	2	1	0	0	19	0	5	0	0
4/25/2024	11:00 PM	0	197	8	0	0	1	0	0	19	0	5	0	0
4/25/2024	11:15 PM	0	140	1	0	0	1	0	0	9	0	5	0	0
4/25/2024	11:30 PM	0	100	1	0	0	0	0	0	5	0	1	0	0
4/25/2024	11:45 PM	0	49	0	0	0	0	0	0	3	0	1	0	0

4/26/2024	12:00 AM	0	103	25	0	8	0	0	0	24	0	3	0	0
4/26/2024	12:15 AM	0	88	23	0	10	0	0	0	23	0	5	0	0
4/26/2024	12:30 AM	0	85	28	0	10	0	0	0	28	0	4	0	0
4/26/2024	12:45 AM	0	83	28	0	8	0	0	0	33	0	4	0	0
4/26/2024	1:00 AM	0	83	30	0	7	0	0	0	31	0	5	0	0
4/26/2024	1:15 AM	0	80	30	0	2	0	0	0	30	0	4	0	0
4/26/2024	1:30 AM	0	71	24	0	3	0	0	0	30	0	3	0	0
4/26/2024	1:45 AM	0	62	23	0	2	0	0	0	31	0	3	0	0
4/26/2024	2:00 AM	0	60	21	0	5	0	0	0	28	0	4	0	0
4/26/2024	2:15 AM	0	61	21	0	7	0	0	0	35	0	5	0	0
4/26/2024	2:30 AM	0	64	23	0	5	0	0	0	34	0	8	0	0
4/26/2024	2:45 AM	0	69	23	0	6	0	0	0	37	0	9	0	0
4/26/2024	3:00 AM	0	76	30	0	3	0	0	0	42	0	8	0	0
4/26/2024	3:15 AM	0	81	37	0	3	2	0	0	44	0	7	0	0
4/26/2024	3:30 AM	0	86	43	0	4	2	0	0	48	0	5	0	0
4/26/2024	3:45 AM	0	96	53	0	5	2	0	0	50	0	4	0	0
4/26/2024	4:00 AM	0	101	55	0	8	2	0	0	55	0	4	0	0
4/26/2024	4:15 AM	0	109	55	0	7	1	0	0	49	0	3	0	0
4/26/2024	4:30 AM	0	119	59	2	6	1	0	0	48	0	3	0	0
4/26/2024	4:45 AM	0	144	72	2	7	1	0	0	47	0	4	0	0
4/26/2024	5:00 AM	0	181	91	2	5	2	0	0	46	0	3	0	0
4/26/2024	5:15 AM	0	210	106	2	7	2	0	0	52	0	3	0	0
4/26/2024	5:30 AM	0	271	128	0	9	3	0	0	56	0	3	0	0
4/26/2024	5:45 AM	0	310	137	0	11	4	0	0	57	0	2	0	0
4/26/2024	6:00 AM	0	340	148	0	12	4	0	0	59	1	3	0	0
4/26/2024	6:15 AM	1	396	169	0	18	4	0	0	53	1	3	0	0
4/26/2024	6:30 AM	1	446	195	0	25	6	0	1	50	2	2	0	0
4/26/2024	6:45 AM	2	492	210	0	29	9	1	1	52	2	1	0	0
4/26/2024	7:00 AM	2	540	229	0	37	12	1	3	52	2	0	0	0
4/26/2024	7:15 AM	1	526	230	0	44	12	1	4	63	2	0	0	0
4/26/2024	7:30 AM	1	488	215	1	41	9	1	6	70	1	1	0	0
4/26/2024	7:45 AM	0	458	208	3	40	5	0	7	78	1	1	0	0
4/26/2024	8:00 AM	0	419	182	3	38	4	0	8	81	0	1	0	0
4/26/2024	8:15 AM	0	421	180	4	28	7	0	8	73	0	1	0	0
4/26/2024	8:30 AM	0	441	180	3	27	9	0	5	75	0	0	0	0
4/26/2024	8:45 AM	0	441	183	1	26	9	0	5	70	2	0	0	0
4/26/2024	9:00 AM	1	448	187	1	22	7	0	5	76	2	0	1	0
4/26/2024	9:15 AM	2	446	188	0	21	4	0	6	81	2	1	1	0
4/26/2024	9:30 AM	3	438	179	0	21	4	0	8	79	3	1	1	0
4/26/2024	9:45 AM	3	450	163	0	20	6	0	10	81	1	1	1	0
4/26/2024	10:00 AM	3	456	162	1	24	7	1	12	82	1	1	0	0
4/26/2024	10:15 AM	2	491	164	1	24	8	3	12	94	2	0	0	0
4/26/2024	10:30 AM	1	516	173	1	27	8	3	15	103	2	0	0	0
4/26/2024	10:45 AM	2	531	192	2	30	8	3	13	111	2	0	0	0
4/26/2024	11:00 AM	1	547	211	1	30	7	2	14	112	2	0	0	0
4/26/2024	11:15 AM	1	545	215	1	34	8	0	12	115	1	0	0	0
4/26/2024	11:30 AM	2	543	223	2	32	9	0	9	124	0	0	0	0
4/26/2024	11:45 AM	1	562	225	2	30	10	0	9	117	0	0	0	0
4/26/2024	12:00 PM	5	577	212	2	30	11	0	6	117	0	0	0	0
4/26/2024	12:15 PM	6	607	220	5	29	8	0	9	103	0	0	0	0
4/26/2024	12:30 PM	5	615	217	5	25	6	1	11	94	0	0	0	0
4/26/2024	12:45 PM	6	620	202	4	30	3	1	13	107	0	0	0	0
4/26/2024	1:00 PM	3	634	210	5	28	4	1	12	108	0	0	0	0
4/26/2024	1:15 PM	3	642	204	3	27	5	1	10	123	0	0	0	0
4/26/2024	1:30 PM	3	649	216	2	30	7	0	14	117	1	0	0	0
4/26/2024	1:45 PM	2	646	226	2	30	9	0	13	119	1	0	0	0
4/26/2024	2:00 PM	2	657	228	1	30	10	0	14	134	1	0	0	0
4/26/2024	2:15 PM	1	670	238	0	29	13	0	15	137	1	0	0	0
4/26/2024	2:30 PM	1	725	248	0	29	13	0	11	145	0	0	0	0
4/26/2024	2:45 PM	1	744	256	1	26	11	0	13	140	0	1	0	0
4/26/2024	3:00 PM	0	783	255	3	24	8	0	16	133	2	1	0	0
4/26/2024	3:15 PM	0	808	249	4	29	6	0	23	122	2	1	0	0
4/26/2024	3:30 PM	0	832	241	4	27	6	0	22	123	2	1	0	0
4/26/2024	3:45 PM	0	856	247	3	28	7	0	22	121	2	0	0	0
4/26/2024	4:00 PM	0	864	246	1	25	8	0	23	107	0	0	0	0
4/26/2024	4:15 PM	0	871	248	0	23	8	0	14	107	1	1	0	0
4/26/2024	4:30 PM	0	905	235	0	28	8	0	17	96	1	1	0	0
4/26/2024	4:45 PM	0	913	228	0	20	7	0	15	92	1	1	0	0
4/26/2024	5:00 PM	1	870	221	0	22	5	0	14	103	1	1	0	0
4/26/2024	5:15 PM	2	824	206	1	17	4	0	15	108	0	0	0	0
4/26/2024	5:30 PM	2	746	199	2	17	3	0	15	108	1	0	0	0
4/26/2024	5:45 PM	2	684	192	2	18	3	0	14	98	2	0	0	0
4/26/2024	6:00 PM	1	673	184	2	16	5	0	9	78	2	0	0	0
4/26/2024	6:15 PM	0	631	185	3	14	5	0	11	63	2	0	0	0
4/26/2024	6:30 PM	1	580	157	2	9	4	0	9	59	2	0	0	0
4/26/2024	6:45 PM	1	579	140	2	9	4	0	10	57	1	0	0	0
4/26/2024	7:00 PM	1	547	136	3	9	2	0	12	56	1	0	0	0
4/26/2024	7:15 PM	2	542	112	2	10	1	0	9	60	1	0	0	0
4/26/2024	7:30 PM	1	539	121	2	9	0	0	5	60	0	0	0	0
4/26/2024	7:45 PM	1	511	110	2	7	0	0	3	61	0	2	0	0
4/26/2024	8:00 PM	1	504	99	1	6	0	0	0	56	0	3	0	0
4/26/2024	8:15 PM	0	485	95	0	8	0	0	0	45	0	4	0	0
4/26/2024	8:30 PM	0	467	94	0	8	0	0	0	50	0	6	0	0
4/26/2024	8:45 PM	0	453	95	0	12	0	0	0	40	0	5	0	0
4/26/2024	9:00 PM	0	411	89	1	12	0	0	0	39	0	7	0	0
4/26/2024	9:15 PM	0	413	91	1	9	0	0	0	42	0	6	0	0
4/26/2024	9:30 PM	0	378	86	1	9	0	0	0	27	0	6	0	0
4/26/2024	9:45 PM	0	375	86	1	5	0	0	0	34	0	7	0	0
4/26/2024	10:00 PM	0	379	93	0	6	0	0	0	38	0	6	0	0
4/26/2024	10:15 PM	0	352	89	0	5	0	0	0	34	0	8	0	0
4/26/2024	10:30 PM	0	334	82	0	3	0	0	0	31	0	7	0	0
4/26/2024	10:45 PM	0	278	73	0	2	0	0	0	26	0	7	0	0
4/26/2024	11:00 PM	0	235	64	0	3	0	0	0	23	0	6	0	0
4/26/2024	11:15 PM	0	155	45	0	2	0	0	0	16	0	4	0	0
4/26/2024	11:30 PM	0	91	30	0	2	0	0	0	13	0	3	0	0
4/26/2024	11:45 PM	0	46	16	0	2	0	0	0	7	0	1	0	0

4/27/2024	12:00 AM	0	150	21	0	4	0	0	0	28	0	1	0	0
4/27/2024	12:15 AM	0	120	20	0	5	0	0	0	28	0	1	0	0
4/27/2024	12:30 AM	0	100	21	0	5	0	0	0	26	0	0	0	0
4/27/2024	12:45 AM	0	89	19	0	6	0	0	0	22	0	0	0	0
4/27/2024	1:00 AM	0	70	18	0	6	0	0	0	19	0	0	0	0
4/27/2024	1:15 AM	0	60	15	0	4	0	0	0	12	0	0	0	0
4/27/2024	1:30 AM	0	59	15	0	5	0	0	0	9	0	0	0	0
4/27/2024	1:45 AM	0	56	14	0	3	0	0	0	9	0	0	0	0
4/27/2024	2:00 AM	0	56	16	0	2	0	0	0	8	0	1	0	0
4/27/2024	2:15 AM	0	56	20	0	3	0	0	0	12	0	3	0	0
4/27/2024	2:30 AM	0	57	23	0	1	0	0	0	12	0	4	0	0
4/27/2024	2:45 AM	0	52	24	0	2	0	0	0	10	0	4	0	0
4/27/2024	3:00 AM	0	49	21	0	3	0	0	0	11	0	3	0	0
4/27/2024	3:15 AM	0	49	20	0	3	0	0	0	12	0	1	0	0
4/27/2024	3:30 AM	0	48	19	0	3	0	0	0	14	0	2	0	0
4/27/2024	3:45 AM	0	56	18	0	2	0	0	0	16	0	2	0	0
4/27/2024	4:00 AM	0	58	22	0	1	0	0	0	16	0	3	0	0
4/27/2024	4:15 AM	0	66	22	0	0	0	0	0	18	0	5	0	0
4/27/2024	4:30 AM	0	72	20	0	1	0	0	0	17	0	3	0	0
4/27/2024	4:45 AM	0	82	27	0	2	0	0	0	18	0	5	0	0
4/27/2024	5:00 AM	0	102	40	0	6	0	0	0	17	0	4	0	0
4/27/2024	5:15 AM	0	121	61	0	7	0	0	0	17	0	3	0	0
4/27/2024	5:30 AM	0	134	83	0	7	0	0	2	19	0	3	0	0
4/27/2024	5:45 AM	0	168	92	0	7	0	0	2	17	0	1	0	0
4/27/2024	6:00 AM	1	205	95	0	5	0	0	3	24	0	2	0	0
4/27/2024	6:15 AM	1	226	82	0	5	0	0	4	21	0	2	0	0
4/27/2024	6:30 AM	1	277	84	0	4	1	0	2	19	0	2	0	0
4/27/2024	6:45 AM	1	303	101	1	6	2	0	2	27	0	2	0	0
4/27/2024	7:00 AM	0	337	106	1	5	4	0	2	22	0	1	0	0
4/27/2024	7:15 AM	0	376	119	1	5	5	0	1	26	0	0	0	0
4/27/2024	7:30 AM	0	380	137	1	11	6	0	2	28	0	0	0	0
4/27/2024	7:45 AM	0	398	134	0	10	5	0	4	34	0	0	0	0
4/27/2024	8:00 AM	0	413	145	0	13	3	0	4	40	0	0	0	0
4/27/2024	8:15 AM	1	443	154	0	13	2	0	5	41	0	0	0	0
4/27/2024	8:30 AM	1	470	143	0	9	0	0	6	47	0	0	0	0
4/27/2024	8:45 AM	1	513	144	2	10	0	0	5	55	0	0	0	0
4/27/2024	9:00 AM	1	544	145	3	8	2	0	4	56	0	0	0	0
4/27/2024	9:15 AM	0	546	144	3	9	2	0	3	64	0	0	0	0
4/27/2024	9:30 AM	1	562	142	3	8	4	0	1	58	1	0	0	0
4/27/2024	9:45 AM	2	557	143	2	7	5	0	0	48	1	0	0	0
4/27/2024	10:00 AM	2	563	150	2	5	4	0	1	40	1	0	0	0
4/27/2024	10:15 AM	2	599	155	3	4	4	0	3	39	1	0	0	0
4/27/2024	10:30 AM	1	615	168	3	4	2	0	4	45	0	0	0	0
4/27/2024	10:45 AM	1	633	184	2	4	1	0	5	38	0	0	0	0
4/27/2024	11:00 AM	1	617	188	2	6	0	0	5	46	0	0	0	0
4/27/2024	11:15 AM	1	603	190	2	8	3	0	3	43	0	0	0	0
4/27/2024	11:30 AM	2	626	187	2	8	4	0	2	46	0	0	0	0
4/27/2024	11:45 AM	1	641	183	2	8	5	0	4	50	0	0	0	0
4/27/2024	12:00 PM	1	670	182	1	7	5	0	5	48	0	0	0	0
4/27/2024	12:15 PM	1	684	185	1	6	2	0	6	42	0	0	0	0
4/27/2024	12:30 PM	0	692	191	1	6	2	0	6	40	0	0	0	0
4/27/2024	12:45 PM	0	701	182	1	6	1	0	3	36	0	0	0	0
4/27/2024	1:00 PM	0	697	183	1	8	1	0	1	39	0	0	0	0
4/27/2024	1:15 PM	1	701	198	0	7	2	0	3	45	0	0	0	0
4/27/2024	1:30 PM	1	685	203	4	9	1	0	5	39	0	0	0	0
4/27/2024	1:45 PM	1	650	208	4	10	1	0	7	45	0	0	0	0
4/27/2024	2:00 PM	1	669	190	4	7	1	0	8	40	0	0	0	0
4/27/2024	2:15 PM	1	676	165	4	8	0	0	6	34	0	0	0	0
4/27/2024	2:30 PM	1	686	145	0	10	0	0	5	36	0	0	0	0
4/27/2024	2:45 PM	10	723	136	0	9	1	0	4	32	0	0	0	0
4/27/2024	3:00 PM	10	726	135	1	11	2	1	4	33	1	0	0	0
4/27/2024	3:15 PM	10	720	139	1	13	2	1	4	34	1	0	0	0
4/27/2024	3:30 PM	11	700	139	1	9	3	1	4	35	2	0	0	0
4/27/2024	3:45 PM	3	690	146	1	7	3	1	3	31	2	0	0	0
4/27/2024	4:00 PM	5	678	152	0	7	2	0	4	32	1	0	0	0
4/27/2024	4:15 PM	8	667	149	0	3	3	0	3	32	1	0	0	0
4/27/2024	4:30 PM	8	656	146	1	5	3	0	2	29	0	0	0	0
4/27/2024	4:45 PM	7	649	139	1	7	2	0	3	28	0	0	0	0
4/27/2024	5:00 PM	5	612	144	2	5	2	0	1	25	0	0	0	0
4/27/2024	5:15 PM	1	623	147	2	6	1	0	2	19	0	0	0	0
4/27/2024	5:30 PM	1	633	151	1	7	0	0	4	16	0	0	0	0
4/27/2024	5:45 PM	2	624	153	2	6	0	0	4	19	0	0	0	0
4/27/2024	6:00 PM	5	609	144	2	8	0	0	4	17	0	0	0	0
4/27/2024	6:15 PM	5	566	142	5	7	0	0	3	19	0	0	0	0
4/27/2024	6:30 PM	5	522	139	5	7	1	0	2	21	0	0	0	0
4/27/2024	6:45 PM	4	490	130	4	7	1	0	1	17	0	0	0	0
4/27/2024	7:00 PM	1	501	132	4	5	2	0	1	20	0	0	0	0
4/27/2024	7:15 PM	1	503	126	1	5	2	0	1	24	0	0	0	0
4/27/2024	7:30 PM	0	505	111	1	1	1	0	1	23	0	0	0	0
4/27/2024	7:45 PM	0	500	99	1	0	2	0	1	23	0	0	0	0
4/27/2024	8:00 PM	0	470	82	0	0	1	0	1	17	0	0	0	0
4/27/2024	8:15 PM	0	451	67	0	1	1	0	1	12	0	0	0	0
4/27/2024	8:30 PM	0	447	65	0	1	1	0	0	15	0	0	0	0
4/27/2024	8:45 PM	0	435	69	0	2	0	0	0	17	0	0	0	0
4/27/2024	9:00 PM	0	454	68	0	2	1	0	0	17	0	0	0	0
4/27/2024	9:15 PM	0	469	73	0	1	1	0	0	16	0	0	0	0
4/27/2024	9:30 PM	0	459	67	0	1	1	0	0	14	0	0	0	0
4/27/2024	9:45 PM	0	435	58	0	0	1	0	0	15	0	0	0	0
4/27/2024	10:00 PM	0	396	54	0	0	0	0	0	16	0	0	0	0
4/27/2024	10:15 PM	0	346	42	0	0	1	0	0	16	0	0	0	0
4/27/2024	10:30 PM	0	304	38	0	0	1	0	0	14	0	0	0	0
4/27/2024	10:45 PM	0	276	37	0	0	1	0	0	9	0	0	0	0
4/27/2024	11:00 PM	0	250	33	0	0	1	0	0	10	0	0	0	0
4/27/2024	11:15 PM	0	175	25	0	0	0	0	0	7	0	0	0	0
4/27/2024	11:30 PM	0	116	18	0	0	0	0	0	4	0	0	0	0
4/27/2024	11:45 PM	0	55	9	0	0	0	0	0	3	0	0	0	0

WB
File Name:
Start Date: 4/21/2024
Start Time: 0
Site Code: 74 Lane 2 EB
Station ID: 1
Location 1: I-20, west of US-378 Sunset Blvd S/Bound Off-Ramp
Location 2:

Date	Time	1	2	3	4	5	6	7	8	9	10	11	12	13
4/21/2024	12:00 AM	0	0	0	0	0	0	0	0	0	0	0	0	0
4/21/2024	12:15 AM	0	0	0	0	0	0	0	0	0	0	0	0	0
4/21/2024	12:30 AM	0	0	0	0	0	0	0	0	0	0	0	0	0
4/21/2024	12:45 AM	0	0	0	0	0	0	0	0	0	0	0	0	0
4/21/2024	1:00 AM	0	0	0	0	0	0	0	0	0	0	0	0	0
4/21/2024	1:15 AM	0	0	0	0	0	0	0	0	0	0	0	0	0
4/21/2024	1:30 AM	0	0	0	0	0	0	0	0	0	0	0	0	0
4/21/2024	1:45 AM	0	0	0	0	0	0	0	0	0	0	0	0	0
4/21/2024	2:00 AM	0	0	0	0	0	0	0	0	0	0	0	0	0
4/21/2024	2:15 AM	0	0	0	0	0	0	0	0	0	0	0	0	0
4/21/2024	2:30 AM	0	0	0	0	0	0	0	0	0	0	0	0	0
4/21/2024	2:45 AM	0	0	0	0	0	0	0	0	0	0	0	0	0
4/21/2024	3:00 AM	0	0	0	0	0	0	0	0	0	0	0	0	0
4/21/2024	3:15 AM	0	0	0	0	0	0	0	0	0	0	0	0	0
4/21/2024	3:30 AM	0	0	0	0	0	0	0	0	0	0	0	0	0
4/21/2024	3:45 AM	0	0	0	0	0	0	0	0	0	0	0	0	0
4/21/2024	4:00 AM	0	0	0	0	0	0	0	0	0	0	0	0	0
4/21/2024	4:15 AM	0	0	0	0	0	0	0	0	0	0	0	0	0
4/21/2024	4:30 AM	0	0	0	0	0	0	0	0	0	0	0	0	0
4/21/2024	4:45 AM	0	0	0	0	0	0	0	0	0	0	0	0	0
4/21/2024	5:00 AM	0	0	0	0	0	0	0	0	0	0	0	0	0
4/21/2024	5:15 AM	0	0	0	0	0	0	0	0	0	0	0	0	0
4/21/2024	5:30 AM	0	0	0	0	0	0	0	0	0	0	0	0	0
4/21/2024	5:45 AM	0	0	0	0	0	0	0	0	0	0	0	0	0
4/21/2024	6:00 AM	0	0	0	0	0	0	0	0	0	0	0	0	0
4/21/2024	6:15 AM	0	0	0	0	0	0	0	0	0	0	0	0	0
4/21/2024	6:30 AM	0	0	0	0	0	0	0	0	0	0	0	0	0
4/21/2024	6:45 AM	0	0	0	0	0	0	0	0	0	0	0	0	0
4/21/2024	7:00 AM	0	0	0	0	0	0	0	0	0	0	0	0	0
4/21/2024	7:15 AM	0	0	0	0	0	0	0	0	0	0	0	0	0
4/21/2024	7:30 AM	0	0	0	0	0	0	0	0	0	0	0	0	0
4/21/2024	7:45 AM	0	0	0	0	0	0	0	0	0	0	0	0	0
4/21/2024	8:00 AM	0	0	0	0	0	0	0	0	0	0	0	0	0
4/21/2024	8:15 AM	0	0	0	0	0	0	0	0	0	0	0	0	0
4/21/2024	8:30 AM	0	0	0	0	0	0	0	0	0	0	0	0	0
4/21/2024	8:45 AM	0	0	0	0	0	0	0	0	0	0	0	0	0
4/21/2024	9:00 AM	0	0	0	0	0	0	0	0	0	0	0	0	0
4/21/2024	9:15 AM	0	0	0	0	0	0	0	0	0	0	0	0	0
4/21/2024	9:30 AM	0	0	0	0	0	0	0	0	0	0	0	0	0
4/21/2024	9:45 AM	0	0	0	0	0	0	0	0	0	0	0	0	0
4/21/2024	10:00 AM	0	0	0	0	0	0	0	0	0	0	0	0	0
4/21/2024	10:15 AM	0	0	0	0	0	0	0	0	0	0	0	0	0
4/21/2024	10:30 AM	0	0	0	0	0	0	0	0	0	0	0	0	0
4/21/2024	10:45 AM	0	0	0	0	0	0	0	0	0	0	0	0	0
4/21/2024	11:00 AM	0	0	0	0	0	0	0	0	0	0	0	0	0
4/21/2024	11:15 AM	0	0	0	0	0	0	0	0	0	0	0	0	0
4/21/2024	11:30 AM	0	0	0	0	0	0	0	0	0	0	0	0	0
4/21/2024	11:45 AM	0	0	0	0	0	0	0	0	0	0	0	0	0
4/21/2024	12:00 PM	0	0	0	0	0	0	0	0	0	0	0	0	0
4/21/2024	12:15 PM	0	0	0	0	0	0	0	0	0	0	0	0	0
4/21/2024	12:30 PM	0	0	0	0	0	0	0	0	0	0	0	0	0
4/21/2024	12:45 PM	0	0	0	0	0	0	0	0	0	0	0	0	0
4/21/2024	1:00 PM	0	0	0	0	0	0	0	0	0	0	0	0	0
4/21/2024	1:15 PM	0	0	0	0	0	0	0	0	0	0	0	0	0
4/21/2024	1:30 PM	0	0	0	0	0	0	0	0	0	0	0	0	0
4/21/2024	1:45 PM	0	0	0	0	0	0	0	0	0	0	0	0	0
4/21/2024	2:00 PM	0	0	0	0	0	0	0	0	0	0	0	0	0
4/21/2024	2:15 PM	0	0	0	0	0	0	0	0	0	0	0	0	0
4/21/2024	2:30 PM	0	0	0	0	0	0	0	0	0	0	0	0	0
4/21/2024	2:45 PM	0	0	0	0	0	0	0	0	0	0	0	0	0
4/21/2024	3:00 PM	0	0	0	0	0	0	0	0	0	0	0	0	0
4/21/2024	3:15 PM	0	0	0	0	0	0	0	0	0	0	0	0	0
4/21/2024	3:30 PM	0	0	0	0	0	0	0	0	0	0	0	0	0
4/21/2024	3:45 PM	0	0	0	0	0	0	0	0	0	0	0	0	0
4/21/2024	4:00 PM	0	0	0	0	0	0	0	0	0	0	0	0	0
4/21/2024	4:15 PM	0	0	0	0	0	0	0	0	0	0	0	0	0
4/21/2024	4:30 PM	0	0	0	0	0	0	0	0	0	0	0	0	0
4/21/2024	4:45 PM	0	0	0	0	0	0	0	0	0	0	0	0	0
4/21/2024	5:00 PM	0	0	0	0	0	0	0	0	0	0	0	0	0
4/21/2024	5:15 PM	0	0	0	0	0	0	0	0	0	0	0	0	0
4/21/2024	5:30 PM	0	0	0	0	0	0	0	0	0	0	0	0	0
4/21/2024	5:45 PM	0	0	0	0	0	0	0	0	0	0	0	0	0
4/21/2024	6:00 PM	0	0	0	0	0	0	0	0	0	0	0	0	0
4/21/2024	6:15 PM	0	0	0	0	0	0	0	0	0	0	0	0	0
4/21/2024	6:30 PM	0	0	0	0	0	0	0	0	0	0	0	0	0
4/21/2024	6:45 PM	0	0	0	0	0	0	0	0	0	0	0	0	0
4/21/2024	7:00 PM	0	0	0	0	0	0	0	0	0	0	0	0	0
4/21/2024	7:15 PM	0	0	0	0	0	0	0	0	0	0	0	0	0
4/21/2024	7:30 PM	0	0	0	0	0	0	0	0	0	0	0	0	0
4/21/2024	7:45 PM	0	0	0	0	0	0	0	0	0	0	0	0	0
4/21/2024	8:00 PM	0	0	0	0	0	0	0	0	0	0	0	0	0
4/21/2024	8:15 PM	0	0	0	0	0	0	0	0	0	0	0	0	0
4/21/2024	8:30 PM	0	0	0	0	0	0	0	0	0	0	0	0	0
4/21/2024	8:45 PM	0	0	0	0	0	0	0	0	0	0	0	0	0
4/21/2024	9:00 PM	0	0	0	0	0	0	0	0	0	0	0	0	0
4/21/2024	9:15 PM	0	0	0	0	0	0	0	0	0	0	0	0	0
4/21/2024	9:30 PM	0	0	0	0	0	0	0	0	0	0	0	0	0
4/21/2024	9:45 PM	0	0	0	0	0	0	0	0	0	0	0	0	0
4/21/2024	10:00 PM	0	0	0	0	0	0	0	0	0	0	0	0	0
4/21/2024	10:15 PM	0	0	0	0	0	0	0	0	0	0	0	0	0
4/21/2024	10:30 PM	0	0	0	0	0	0	0	0	0	0	0	0	0
4/21/2024	10:45 PM	0	0	0	0	0	0	0	0	0	0	0	0	0
4/21/2024	11:00 PM	0	0	0	0	0	0	0	0	0	0	0	0	0
4/21/2024	11:15 PM	0	0	0	0	0	0	0	0	0	0	0	0	0
4/21/2024	11:30 PM	0	0	0	0	0	0	0	0	0	0	0	0	0
4/21/2024	11:45 PM	0	0	0	0	0	0	0	0	0	0	0	0	0

4/22/2024	12:00 AM	0	0	0	0	0	0	0	0	0	0	0	0	0
4/22/2024	12:15 AM	0	0	0	0	0	0	0	0	0	0	0	0	0
4/22/2024	12:30 AM	0	0	0	0	0	0	0	0	0	0	0	0	0
4/22/2024	12:45 AM	0	0	0	0	0	0	0	0	0	0	0	0	0
4/22/2024	1:00 AM	0	0	0	0	0	0	0	0	0	0	0	0	0
4/22/2024	1:15 AM	0	0	0	0	0	0	0	0	0	0	0	0	0
4/22/2024	1:30 AM	0	0	0	0	0	0	0	0	0	0	0	0	0
4/22/2024	1:45 AM	0	0	0	0	0	0	0	0	0	0	0	0	0
4/22/2024	2:00 AM	0	0	0	0	0	0	0	0	0	0	0	0	0
4/22/2024	2:15 AM	0	0	0	0	0	0	0	0	0	0	0	0	0
4/22/2024	2:30 AM	0	0	0	0	0	0	0	0	0	0	0	0	0
4/22/2024	2:45 AM	0	0	0	0	0	0	0	0	0	0	0	0	0
4/22/2024	3:00 AM	0	0	0	0	0	0	0	0	0	0	0	0	0
4/22/2024	3:15 AM	0	0	0	0	0	0	0	0	0	0	0	0	0
4/22/2024	3:30 AM	0	0	0	0	0	0	0	0	0	0	0	0	0
4/22/2024	3:45 AM	0	0	0	0	0	0	0	0	0	0	0	0	0
4/22/2024	4:00 AM	0	0	0	0	0	0	0	0	0	0	0	0	0
4/22/2024	4:15 AM	0	0	0	0	0	0	0	0	0	0	0	0	0
4/22/2024	4:30 AM	0	0	0	0	0	0	0	0	0	0	0	0	0
4/22/2024	4:45 AM	0	0	0	0	0	0	0	0	0	0	0	0	0
4/22/2024	5:00 AM	0	0	0	0	0	0	0	0	0	0	0	0	0
4/22/2024	5:15 AM	0	0	0	0	0	0	0	0	0	0	0	0	0
4/22/2024	5:30 AM	0	0	0	0	0	0	0	0	0	0	0	0	0
4/22/2024	5:45 AM	0	0	0	0	0	0	0	0	0	0	0	0	0
4/22/2024	6:00 AM	0	0	0	0	0	0	0	0	0	0	0	0	0
4/22/2024	6:15 AM	0	0	0	0	0	0	0	0	0	0	0	0	0
4/22/2024	6:30 AM	0	0	0	0	0	0	0	0	0	0	0	0	0
4/22/2024	6:45 AM	0	0	0	0	0	0	0	0	0	0	0	0	0
4/22/2024	7:00 AM	0	0	0	0	0	0	0	0	0	0	0	0	0
4/22/2024	7:15 AM	0	0	0	0	0	0	0	0	0	0	0	0	0
4/22/2024	7:30 AM	0	0	0	0	0	0	0	0	0	0	0	0	0
4/22/2024	7:45 AM	0	0	0	0	0	0	0	0	0	0	0	0	0
4/22/2024	8:00 AM	0	0	0	0	0	0	0	0	0	0	0	0	0
4/22/2024	8:15 AM	0	0	0	0	0	0	0	0	0	0	0	0	0
4/22/2024	8:30 AM	0	0	0	0	0	0	0	0	0	0	0	0	0
4/22/2024	8:45 AM	0	0	0	0	0	0	0	0	0	0	0	0	0
4/22/2024	9:00 AM	0	0	0	0	0	0	0	0	0	0	0	0	0
4/22/2024	9:15 AM	0	0	0	0	0	0	0	0	0	0	0	0	0
4/22/2024	9:30 AM	0	0	0	0	0	0	0	0	0	0	0	0	0
4/22/2024	9:45 AM	0	0	0	0	0	0	0	0	0	0	0	0	0
4/22/2024	10:00 AM	0	0	0	0	0	0	0	0	0	0	0	0	0
4/22/2024	10:15 AM	0	0	0	0	0	0	0	0	0	0	0	0	0
4/22/2024	10:30 AM	0	0	0	0	0	0	0	0	0	0	0	0	0
4/22/2024	10:45 AM	0	0	0	0	0	0	0	0	0	0	0	0	0
4/22/2024	11:00 AM	0	0	0	0	0	0	0	0	0	0	0	0	0
4/22/2024	11:15 AM	0	0	0	0	0	0	0	0	0	0	0	0	0
4/22/2024	11:30 AM	0	0	0	0	0	0	0	0	0	0	0	0	0
4/22/2024	11:45 AM	0	0	0	0	0	0	0	0	0	0	0	0	0
4/22/2024	12:00 PM	0	0	0	0	0	0	0	0	0	0	0	0	0
4/22/2024	12:15 PM	0	0	0	0	0	0	0	0	0	0	0	0	0
4/22/2024	12:30 PM	0	0	0	0	0	0	0	0	0	0	0	0	0
4/22/2024	12:45 PM	0	0	0	0	0	0	0	0	0	0	0	0	0
4/22/2024	1:00 PM	0	0	0	0	0	0	0	0	0	0	0	0	0
4/22/2024	1:15 PM	0	0	0	0	0	0	0	0	0	0	0	0	0
4/22/2024	1:30 PM	0	0	0	0	0	0	0	0	0	0	0	0	0
4/22/2024	1:45 PM	0	0	0	0	0	0	0	0	0	0	0	0	0
4/22/2024	2:00 PM	0	0	0	0	0	0	0	0	0	0	0	0	0
4/22/2024	2:15 PM	0	0	0	0	0	0	0	0	0	0	0	0	0
4/22/2024	2:30 PM	0	0	0	0	0	0	0	0	0	0	0	0	0
4/22/2024	2:45 PM	0	0	0	0	0	0	0	0	0	0	0	0	0
4/22/2024	3:00 PM	0	0	0	0	0	0	0	0	0	0	0	0	0
4/22/2024	3:15 PM	0	0	0	0	0	0	0	0	0	0	0	0	0
4/22/2024	3:30 PM	0	0	0	0	0	0	0	0	0	0	0	0	0
4/22/2024	3:45 PM	0	0	0	0	0	0	0	0	0	0	0	0	0
4/22/2024	4:00 PM	0	0	0	0	0	0	0	0	0	0	0	0	0
4/22/2024	4:15 PM	0	0	0	0	0	0	0	0	0	0	0	0	0
4/22/2024	4:30 PM	0	0	0	0	0	0	0	0	0	0	0	0	0
4/22/2024	4:45 PM	0	0	0	0	0	0	0	0	0	0	0	0	0
4/22/2024	5:00 PM	0	0	0	0	0	0	0	0	0	0	0	0	0
4/22/2024	5:15 PM	0	0	0	0	0	0	0	0	0	0	0	0	0
4/22/2024	5:30 PM	0	0	0	0	0	0	0	0	0	0	0	0	0
4/22/2024	5:45 PM	0	0	0	0	0	0	0	0	0	0	0	0	0
4/22/2024	6:00 PM	0	0	0	0	0	0	0	0	0	0	0	0	0
4/22/2024	6:15 PM	0	0	0	0	0	0	0	0	0	0	0	0	0
4/22/2024	6:30 PM	0	0	0	0	0	0	0	0	0	0	0	0	0
4/22/2024	6:45 PM	0	0	0	0	0	0	0	0	0	0	0	0	0
4/22/2024	7:00 PM	0	0	0	0	0	0	0	0	0	0	0	0	0
4/22/2024	7:15 PM	0	0	0	0	0	0	0	0	0	0	0	0	0
4/22/2024	7:30 PM	0	0	0	0	0	0	0	0	0	0	0	0	0
4/22/2024	7:45 PM	0	0	0	0	0	0	0	0	0	0	0	0	0
4/22/2024	8:00 PM	0	0	0	0	0	0	0	0	0	0	0	0	0
4/22/2024	8:15 PM	0	0	0	0	0	0	0	0	0	0	0	0	0
4/22/2024	8:30 PM	0	0	0	0	0	0	0	0	0	0	0	0	0
4/22/2024	8:45 PM	0	0	0	0	0	0	0	0	0	0	0	0	0
4/22/2024	9:00 PM	0	0	0	0	0	0	0	0	0	0	0	0	0
4/22/2024	9:15 PM	0	0	0	0	0	0	0	0	0	0	0	0	0
4/22/2024	9:30 PM	0	0	0	0	0	0	0	0	0	0	0	0	0
4/22/2024	9:45 PM	0	0	0	0	0	0	0	0	0	0	0	0	0
4/22/2024	10:00 PM	0	0	0	0	0	0	0	0	0	0	0	0	0
4/22/2024	10:15 PM	0	0	0	0	0	0	0	0	0	0	0	0	0
4/22/2024	10:30 PM	0	0	0	0	0	0	0	0	0	0	0	0	0
4/22/2024	10:45 PM	0	0	0	0	0	0	0	0	0	0	0	0	0
4/22/2024	11:00 PM	0	0	0	0	0	0	0	0	0	0	0	0	0
4/22/2024	11:15 PM	0	0	0	0	0	0	0	0	0	0	0	0	0
4/22/2024	11:30 PM	0	0	0	0	0	0	0	0	0	0	0	0	0
4/22/2024	11:45 PM	0	0	0	0	0	0	0	0	0	0	0	0	0

4/23/2024	12:00 AM	0	0	0	0	0	0	0	0	0	0	0	0	0
4/23/2024	12:15 AM	0	0	0	0	0	0	0	0	0	0	0	0	0
4/23/2024	12:30 AM	0	0	0	0	0	0	0	0	0	0	0	0	0
4/23/2024	12:45 AM	0	0	0	0	0	0	0	0	0	0	0	0	0
4/23/2024	1:00 AM	0	0	0	0	0	0	0	0	0	0	0	0	0
4/23/2024	1:15 AM	0	0	0	0	0	0	0	0	0	0	0	0	0
4/23/2024	1:30 AM	0	0	0	0	0	0	0	0	0	0	0	0	0
4/23/2024	1:45 AM	0	0	0	0	0	0	0	0	0	0	0	0	0
4/23/2024	2:00 AM	0	0	0	0	0	0	0	0	0	0	0	0	0
4/23/2024	2:15 AM	0	0	0	0	0	0	0	0	0	0	0	0	0
4/23/2024	2:30 AM	0	0	0	0	0	0	0	0	0	0	0	0	0
4/23/2024	2:45 AM	0	0	0	0	0	0	0	0	0	0	0	0	0
4/23/2024	3:00 AM	0	0	0	0	0	0	0	0	0	0	0	0	0
4/23/2024	3:15 AM	0	0	0	0	0	0	0	0	0	0	0	0	0
4/23/2024	3:30 AM	0	0	0	0	0	0	0	0	0	0	0	0	0
4/23/2024	3:45 AM	0	0	0	0	0	0	0	0	0	0	0	0	0
4/23/2024	4:00 AM	0	0	0	0	0	0	0	0	0	0	0	0	0
4/23/2024	4:15 AM	0	0	0	0	0	0	0	0	0	0	0	0	0
4/23/2024	4:30 AM	0	0	0	0	0	0	0	0	0	0	0	0	0
4/23/2024	4:45 AM	0	0	0	0	0	0	0	0	0	0	0	0	0
4/23/2024	5:00 AM	0	0	0	0	0	0	0	0	0	0	0	0	0
4/23/2024	5:15 AM	0	0	0	0	0	0	0	0	0	0	0	0	0
4/23/2024	5:30 AM	0	0	0	0	0	0	0	0	0	0	0	0	0
4/23/2024	5:45 AM	0	0	0	0	0	0	0	0	0	0	0	0	0
4/23/2024	6:00 AM	0	0	0	0	0	0	0	0	0	0	0	0	0
4/23/2024	6:15 AM	0	0	0	0	0	0	0	0	0	0	0	0	0
4/23/2024	6:30 AM	0	0	0	0	0	0	0	0	0	0	0	0	0
4/23/2024	6:45 AM	0	0	0	0	0	0	0	0	0	0	0	0	0
4/23/2024	7:00 AM	0	0	0	0	0	0	0	0	0	0	0	0	0
4/23/2024	7:15 AM	0	0	0	0	0	0	0	0	0	0	0	0	0
4/23/2024	7:30 AM	0	0	0	0	0	0	0	0	0	0	0	0	0
4/23/2024	7:45 AM	0	0	0	0	0	0	0	0	0	0	0	0	0
4/23/2024	8:00 AM	0	0	0	0	0	0	0	0	0	0	0	0	0
4/23/2024	8:15 AM	0	0	0	0	0	0	0	0	0	0	0	0	0
4/23/2024	8:30 AM	0	0	0	0	0	0	0	0	0	0	0	0	0
4/23/2024	8:45 AM	0	0	0	0	0	0	0	0	0	0	0	0	0
4/23/2024	9:00 AM	0	0	0	0	0	0	0	0	0	0	0	0	0
4/23/2024	9:15 AM	0	0	0	0	0	0	0	0	0	0	0	0	0
4/23/2024	9:30 AM	0	0	0	0	0	0	0	0	0	0	0	0	0
4/23/2024	9:45 AM	0	0	0	0	0	0	0	0	0	0	0	0	0
4/23/2024	10:00 AM	0	0	0	0	0	0	0	0	0	0	0	0	0
4/23/2024	10:15 AM	0	0	0	0	0	0	0	0	0	0	0	0	0
4/23/2024	10:30 AM	0	0	0	0	0	0	0	0	0	0	0	0	0
4/23/2024	10:45 AM	0	0	0	0	0	0	0	0	0	0	0	0	0
4/23/2024	11:00 AM	0	0	0	0	0	0	0	0	0	0	0	0	0
4/23/2024	11:15 AM	0	0	0	0	0	0	0	0	0	0	0	0	0
4/23/2024	11:30 AM	0	0	0	0	0	0	0	0	0	0	0	0	0
4/23/2024	11:45 AM	0	0	0	0	0	0	0	0	0	0	0	0	0
4/23/2024	12:00 PM	0	0	0	0	0	0	0	0	0	0	0	0	0
4/23/2024	12:15 PM	0	0	0	0	0	0	0	0	0	0	0	0	0
4/23/2024	12:30 PM	0	0	0	0	0	0	0	0	0	0	0	0	0
4/23/2024	12:45 PM	0	0	0	0	0	0	0	0	0	0	0	0	0
4/23/2024	1:00 PM	0	0	0	0	0	0	0	0	0	0	0	0	0
4/23/2024	1:15 PM	0	0	0	0	0	0	0	0	0	0	0	0	0
4/23/2024	1:30 PM	0	0	0	0	0	0	0	0	0	0	0	0	0
4/23/2024	1:45 PM	0	0	0	0	0	0	0	0	0	0	0	0	0
4/23/2024	2:00 PM	0	0	0	0	0	0	0	0	0	0	0	0	0
4/23/2024	2:15 PM	0	0	0	0	0	0	0	0	0	0	0	0	0
4/23/2024	2:30 PM	0	0	0	0	0	0	0	0	0	0	0	0	0
4/23/2024	2:45 PM	0	0	0	0	0	0	0	0	0	0	0	0	0
4/23/2024	3:00 PM	0	0	0	0	0	0	0	0	0	0	0	0	0
4/23/2024	3:15 PM	0	0	0	0	0	0	0	0	0	0	0	0	0
4/23/2024	3:30 PM	0	0	0	0	0	0	0	0	0	0	0	0	0
4/23/2024	3:45 PM	0	0	0	0	0	0	0	0	0	0	0	0	0
4/23/2024	4:00 PM	0	0	0	0	0	0	0	0	0	0	0	0	0
4/23/2024	4:15 PM	0	0	0	0	0	0	0	0	0	0	0	0	0
4/23/2024	4:30 PM	0	0	0	0	0	0	0	0	0	0	0	0	0
4/23/2024	4:45 PM	0	0	0	0	0	0	0	0	0	0	0	0	0
4/23/2024	5:00 PM	0	0	0	0	0	0	0	0	0	0	0	0	0
4/23/2024	5:15 PM	0	0	0	0	0	0	0	0	0	0	0	0	0
4/23/2024	5:30 PM	0	0	0	0	0	0	0	0	0	0	0	0	0
4/23/2024	5:45 PM	0	0	0	0	0	0	0	0	0	0	0	0	0
4/23/2024	6:00 PM	0	0	0	0	0	0	0	0	0	0	0	0	0
4/23/2024	6:15 PM	0	0	0	0	0	0	0	0	0	0	0	0	0
4/23/2024	6:30 PM	0	0	0	0	0	0	0	0	0	0	0	0	0
4/23/2024	6:45 PM	0	0	0	0	0	0	0	0	0	0	0	0	0
4/23/2024	7:00 PM	0	0	0	0	0	0	0	0	0	0	0	0	0
4/23/2024	7:15 PM	0	0	0	0	0	0	0	0	0	0	0	0	0
4/23/2024	7:30 PM	0	0	0	0	0	0	0	0	0	0	0	0	0
4/23/2024	7:45 PM	0	0	0	0	0	0	0	0	0	0	0	0	0
4/23/2024	8:00 PM	0	0	0	0	0	0	0	0	0	0	0	0	0
4/23/2024	8:15 PM	0	0	0	0	0	0	0	0	0	0	0	0	0
4/23/2024	8:30 PM	0	0	0	0	0	0	0	0	0	0	0	0	0
4/23/2024	8:45 PM	0	0	0	0	0	0	0	0	0	0	0	0	0
4/23/2024	9:00 PM	0	0	0	0	0	0	0	0	0	0	0	0	0
4/23/2024	9:15 PM	0	0	0	0	0	0	0	0	0	0	0	0	0
4/23/2024	9:30 PM	0	0	0	0	0	0	0	0	0	0	0	0	0
4/23/2024	9:45 PM	0	0	0	0	0	0	0	0	0	0	0	0	0
4/23/2024	10:00 PM	0	0	0	0	0	0	0	0	0	0	0	0	0
4/23/2024	10:15 PM	0	0	0	0	0	0	0	0	0	0	0	0	0
4/23/2024	10:30 PM	0	0	0	0	0	0	0	0	0	0	0	0	0
4/23/2024	10:45 PM	0	0	0	0	0	0	0	0	0	0	0	0	0
4/23/2024	11:00 PM	0	0	0	0	0	0	0	0	0	0	0	0	0
4/23/2024	11:15 PM	0	0	0	0	0	0	0	0	0	0	0	0	0
4/23/2024	11:30 PM	0	0	0	0	0	0	0	0	0	0	0	0	0
4/23/2024	11:45 PM	0	0	0	0	0	0	0	0	0	0	0	0	0

4/24/2024	12:00 AM	0	0	0	0	0	0	0	0	0	0	0	0	0
4/24/2024	12:15 AM	0	0	0	0	0	0	0	0	0	0	0	0	0
4/24/2024	12:30 AM	0	0	0	0	0	0	0	0	0	0	0	0	0
4/24/2024	12:45 AM	0	0	0	0	0	0	0	0	0	0	0	0	0
4/24/2024	1:00 AM	0	0	0	0	0	0	0	0	0	0	0	0	0
4/24/2024	1:15 AM	0	0	0	0	0	0	0	0	0	0	0	0	0
4/24/2024	1:30 AM	0	0	0	0	0	0	0	0	0	0	0	0	0
4/24/2024	1:45 AM	0	0	0	0	0	0	0	0	0	0	0	0	0
4/24/2024	2:00 AM	0	0	0	0	0	0	0	0	0	0	0	0	0
4/24/2024	2:15 AM	0	0	0	0	0	0	0	0	0	0	0	0	0
4/24/2024	2:30 AM	0	0	0	0	0	0	0	0	0	0	0	0	0
4/24/2024	2:45 AM	0	0	0	0	0	0	0	0	0	0	0	0	0
4/24/2024	3:00 AM	0	0	0	0	0	0	0	0	0	0	0	0	0
4/24/2024	3:15 AM	0	0	0	0	0	0	0	0	0	0	0	0	0
4/24/2024	3:30 AM	0	0	0	0	0	0	0	0	0	0	0	0	0
4/24/2024	3:45 AM	0	0	0	0	0	0	0	0	0	0	0	0	0
4/24/2024	4:00 AM	0	0	0	0	0	0	0	0	0	0	0	0	0
4/24/2024	4:15 AM	0	0	0	0	0	0	0	0	0	0	0	0	0
4/24/2024	4:30 AM	0	0	0	0	0	0	0	0	0	0	0	0	0
4/24/2024	4:45 AM	0	0	0	0	0	0	0	0	0	0	0	0	0
4/24/2024	5:00 AM	0	0	0	0	0	0	0	0	0	0	0	0	0
4/24/2024	5:15 AM	0	0	0	0	0	0	0	0	0	0	0	0	0
4/24/2024	5:30 AM	0	0	0	0	0	0	0	0	0	0	0	0	0
4/24/2024	5:45 AM	0	0	0	0	0	0	0	0	0	0	0	0	0
4/24/2024	6:00 AM	0	0	0	0	0	0	0	0	0	0	0	0	0
4/24/2024	6:15 AM	0	0	0	0	0	0	0	0	0	0	0	0	0
4/24/2024	6:30 AM	0	0	0	0	0	0	0	0	0	0	0	0	0
4/24/2024	6:45 AM	0	0	0	0	0	0	0	0	0	0	0	0	0
4/24/2024	7:00 AM	0	0	0	0	0	0	0	0	0	0	0	0	0
4/24/2024	7:15 AM	0	0	0	0	0	0	0	0	0	0	0	0	0
4/24/2024	7:30 AM	0	0	0	0	0	0	0	0	0	0	0	0	0
4/24/2024	7:45 AM	0	0	0	0	0	0	0	0	0	0	0	0	0
4/24/2024	8:00 AM	0	0	0	0	0	0	0	0	0	0	0	0	0
4/24/2024	8:15 AM	0	0	0	0	0	0	0	0	0	0	0	0	0
4/24/2024	8:30 AM	0	0	0	0	0	0	0	0	0	0	0	0	0
4/24/2024	8:45 AM	0	0	0	0	0	0	0	0	0	0	0	0	0
4/24/2024	9:00 AM	0	0	0	0	0	0	0	0	0	0	0	0	0
4/24/2024	9:15 AM	0	0	0	0	0	0	0	0	0	0	0	0	0
4/24/2024	9:30 AM	0	0	0	0	0	0	0	0	0	0	0	0	0
4/24/2024	9:45 AM	0	0	0	0	0	0	0	0	0	0	0	0	0
4/24/2024	10:00 AM	0	0	0	0	0	0	0	0	0	0	0	0	0
4/24/2024	10:15 AM	0	0	0	0	0	0	0	0	0	0	0	0	0
4/24/2024	10:30 AM	0	0	0	0	0	0	0	0	0	0	0	0	0
4/24/2024	10:45 AM	0	0	0	0	0	0	0	0	0	0	0	0	0
4/24/2024	11:00 AM	0	0	0	0	0	0	0	0	0	0	0	0	0
4/24/2024	11:15 AM	0	0	0	0	0	0	0	0	0	0	0	0	0
4/24/2024	11:30 AM	0	0	0	0	0	0	0	0	0	0	0	0	0
4/24/2024	11:45 AM	0	0	0	0	0	0	0	0	0	0	0	0	0
4/24/2024	12:00 PM	0	0	0	0	0	0	0	0	0	0	0	0	0
4/24/2024	12:15 PM	0	0	0	0	0	0	0	0	0	0	0	0	0
4/24/2024	12:30 PM	0	0	0	0	0	0	0	0	0	0	0	0	0
4/24/2024	12:45 PM	0	0	0	0	0	0	0	0	0	0	0	0	0
4/24/2024	1:00 PM	0	0	0	0	0	0	0	0	0	0	0	0	0
4/24/2024	1:15 PM	0	0	0	0	0	0	0	0	0	0	0	0	0
4/24/2024	1:30 PM	0	0	0	0	0	0	0	0	0	0	0	0	0
4/24/2024	1:45 PM	0	0	0	0	0	0	0	0	0	0	0	0	0
4/24/2024	2:00 PM	0	0	0	0	0	0	0	0	0	0	0	0	0
4/24/2024	2:15 PM	0	0	0	0	0	0	0	0	0	0	0	0	0
4/24/2024	2:30 PM	0	0	0	0	0	0	0	0	0	0	0	0	0
4/24/2024	2:45 PM	0	0	0	0	0	0	0	0	0	0	0	0	0
4/24/2024	3:00 PM	0	0	0	0	0	0	0	0	0	0	0	0	0
4/24/2024	3:15 PM	0	0	0	0	0	0	0	0	0	0	0	0	0
4/24/2024	3:30 PM	0	0	0	0	0	0	0	0	0	0	0	0	0
4/24/2024	3:45 PM	0	0	0	0	0	0	0	0	0	0	0	0	0
4/24/2024	4:00 PM	0	0	0	0	0	0	0	0	0	0	0	0	0
4/24/2024	4:15 PM	0	0	0	0	0	0	0	0	0	0	0	0	0
4/24/2024	4:30 PM	0	0	0	0	0	0	0	0	0	0	0	0	0
4/24/2024	4:45 PM	0	0	0	0	0	0	0	0	0	0	0	0	0
4/24/2024	5:00 PM	0	0	0	0	0	0	0	0	0	0	0	0	0
4/24/2024	5:15 PM	0	0	0	0	0	0	0	0	0	0	0	0	0
4/24/2024	5:30 PM	0	0	0	0	0	0	0	0	0	0	0	0	0
4/24/2024	5:45 PM	0	0	0	0	0	0	0	0	0	0	0	0	0
4/24/2024	6:00 PM	0	0	0	0	0	0	0	0	0	0	0	0	0
4/24/2024	6:15 PM	0	0	0	0	0	0	0	0	0	0	0	0	0
4/24/2024	6:30 PM	0	0	0	0	0	0	0	0	0	0	0	0	0
4/24/2024	6:45 PM	0	0	0	0	0	0	0	0	0	0	0	0	0
4/24/2024	7:00 PM	0	0	0	0	0	0	0	0	0	0	0	0	0
4/24/2024	7:15 PM	0	0	0	0	0	0	0	0	0	0	0	0	0
4/24/2024	7:30 PM	0	0	0	0	0	0	0	0	0	0	0	0	0
4/24/2024	7:45 PM	0	0	0	0	0	0	0	0	0	0	0	0	0
4/24/2024	8:00 PM	0	0	0	0	0	0	0	0	0	0	0	0	0
4/24/2024	8:15 PM	0	0	0	0	0	0	0	0	0	0	0	0	0
4/24/2024	8:30 PM	0	0	0	0	0	0	0	0	0	0	0	0	0
4/24/2024	8:45 PM	0	0	0	0	0	0	0	0	0	0	0	0	0
4/24/2024	9:00 PM	0	0	0	0	0	0	0	0	0	0	0	0	0
4/24/2024	9:15 PM	0	0	0	0	0	0	0	0	0	0	0	0	0
4/24/2024	9:30 PM	0	0	0	0	0	0	0	0	0	0	0	0	0
4/24/2024	9:45 PM	0	0	0	0	0	0	0	0	0	0	0	0	0
4/24/2024	10:00 PM	0	0	0	0	0	0	0	0	0	0	0	0	0
4/24/2024	10:15 PM	0	0	0	0	0	0	0	0	0	0	0	0	0
4/24/2024	10:30 PM	0	0	0	0	0	0	0	0	0	0	0	0	0
4/24/2024	10:45 PM	0	0	0	0	0	0	0	0	0	0	0	0	0
4/24/2024	11:00 PM	0	0	0	0	0	0	0	0	0	0	0	0	0
4/24/2024	11:15 PM	0	0	0	0	0	0	0	0	0	0	0	0	0
4/24/2024	11:30 PM	0	0	0	0	0	0	0	0	0	0	0	0	0
4/24/2024	11:45 PM	0	0	0	0	0	0	0	0	0	0	0	0	0

4/25/2024	12:00 AM	0	0	0	0	0	0	0	0	0	0	0	0	0
4/25/2024	12:15 AM	0	0	0	0	0	0	0	0	0	0	0	0	0
4/25/2024	12:30 AM	0	0	0	0	0	0	0	0	0	0	0	0	0
4/25/2024	12:45 AM	0	0	0	0	0	0	0	0	0	0	0	0	0
4/25/2024	1:00 AM	0	0	0	0	0	0	0	0	0	0	0	0	0
4/25/2024	1:15 AM	0	0	0	0	0	0	0	0	0	0	0	0	0
4/25/2024	1:30 AM	0	0	0	0	0	0	0	0	0	0	0	0	0
4/25/2024	1:45 AM	0	0	0	0	0	0	0	0	0	0	0	0	0
4/25/2024	2:00 AM	0	0	0	0	0	0	0	0	0	0	0	0	0
4/25/2024	2:15 AM	0	0	0	0	0	0	0	0	0	0	0	0	0
4/25/2024	2:30 AM	0	0	0	0	0	0	0	0	0	0	0	0	0
4/25/2024	2:45 AM	0	0	0	0	0	0	0	0	0	0	0	0	0
4/25/2024	3:00 AM	0	0	0	0	0	0	0	0	0	0	0	0	0
4/25/2024	3:15 AM	0	0	0	0	0	0	0	0	0	0	0	0	0
4/25/2024	3:30 AM	0	0	0	0	0	0	0	0	0	0	0	0	0
4/25/2024	3:45 AM	0	0	0	0	0	0	0	0	0	0	0	0	0
4/25/2024	4:00 AM	0	0	0	0	0	0	0	0	0	0	0	0	0
4/25/2024	4:15 AM	0	0	0	0	0	0	0	0	0	0	0	0	0
4/25/2024	4:30 AM	0	0	0	0	0	0	0	0	0	0	0	0	0
4/25/2024	4:45 AM	0	0	0	0	0	0	0	0	0	0	0	0	0
4/25/2024	5:00 AM	0	0	0	0	0	0	0	0	0	0	0	0	0
4/25/2024	5:15 AM	0	0	0	0	0	0	0	0	0	0	0	0	0
4/25/2024	5:30 AM	0	0	0	0	0	0	0	0	0	0	0	0	0
4/25/2024	5:45 AM	0	0	0	0	0	0	0	0	0	0	0	0	0
4/25/2024	6:00 AM	0	0	0	0	0	0	0	0	0	0	0	0	0
4/25/2024	6:15 AM	0	0	0	0	0	0	0	0	0	0	0	0	0
4/25/2024	6:30 AM	0	0	0	0	0	0	0	0	0	0	0	0	0
4/25/2024	6:45 AM	0	0	0	0	0	0	0	0	0	0	0	0	0
4/25/2024	7:00 AM	0	0	0	0	0	0	0	0	0	0	0	0	0
4/25/2024	7:15 AM	0	0	0	0	0	0	0	0	0	0	0	0	0
4/25/2024	7:30 AM	0	0	0	0	0	0	0	0	0	0	0	0	0
4/25/2024	7:45 AM	0	0	0	0	0	0	0	0	0	0	0	0	0
4/25/2024	8:00 AM	0	0	0	0	0	0	0	0	0	0	0	0	0
4/25/2024	8:15 AM	0	0	0	0	0	0	0	0	0	0	0	0	0
4/25/2024	8:30 AM	0	0	0	0	0	0	0	0	0	0	0	0	0
4/25/2024	8:45 AM	0	0	0	0	0	0	0	0	0	0	0	0	0
4/25/2024	9:00 AM	0	0	0	0	0	0	0	0	0	0	0	0	0
4/25/2024	9:15 AM	0	0	0	0	0	0	0	0	0	0	0	0	0
4/25/2024	9:30 AM	0	0	0	0	0	0	0	0	0	0	0	0	0
4/25/2024	9:45 AM	0	0	0	0	0	0	0	0	0	0	0	0	0
4/25/2024	10:00 AM	0	0	0	0	0	0	0	0	0	0	0	0	0
4/25/2024	10:15 AM	0	0	0	0	0	0	0	0	0	0	0	0	0
4/25/2024	10:30 AM	0	0	0	0	0	0	0	0	0	0	0	0	0
4/25/2024	10:45 AM	0	0	0	0	0	0	0	0	0	0	0	0	0
4/25/2024	11:00 AM	0	0	0	0	0	0	0	0	0	0	0	0	0
4/25/2024	11:15 AM	0	0	0	0	0	0	0	0	0	0	0	0	0
4/25/2024	11:30 AM	0	0	0	0	0	0	0	0	0	0	0	0	0
4/25/2024	11:45 AM	0	0	0	0	0	0	0	0	0	0	0	0	0
4/25/2024	12:00 PM	0	0	0	0	0	0	0	0	0	0	0	0	0
4/25/2024	12:15 PM	0	0	0	0	0	0	0	0	0	0	0	0	0
4/25/2024	12:30 PM	0	0	0	0	0	0	0	0	0	0	0	0	0
4/25/2024	12:45 PM	0	0	0	0	0	0	0	0	0	0	0	0	0
4/25/2024	1:00 PM	0	0	0	0	0	0	0	0	0	0	0	0	0
4/25/2024	1:15 PM	0	0	0	0	0	0	0	0	0	0	0	0	0
4/25/2024	1:30 PM	0	0	0	0	0	0	0	0	0	0	0	0	0
4/25/2024	1:45 PM	0	0	0	0	0	0	0	0	0	0	0	0	0
4/25/2024	2:00 PM	0	0	0	0	0	0	0	0	0	0	0	0	0
4/25/2024	2:15 PM	0	0	0	0	0	0	0	0	0	0	0	0	0
4/25/2024	2:30 PM	0	0	0	0	0	0	0	0	0	0	0	0	0
4/25/2024	2:45 PM	0	0	0	0	0	0	0	0	0	0	0	0	0
4/25/2024	3:00 PM	0	0	0	0	0	0	0	0	0	0	0	0	0
4/25/2024	3:15 PM	0	0	0	0	0	0	0	0	0	0	0	0	0
4/25/2024	3:30 PM	0	0	0	0	0	0	0	0	0	0	0	0	0
4/25/2024	3:45 PM	0	0	0	0	0	0	0	0	0	0	0	0	0
4/25/2024	4:00 PM	0	0	0	0	0	0	0	0	0	0	0	0	0
4/25/2024	4:15 PM	0	0	0	0	0	0	0	0	0	0	0	0	0
4/25/2024	4:30 PM	0	0	0	0	0	0	0	0	0	0	0	0	0
4/25/2024	4:45 PM	0	0	0	0	0	0	0	0	0	0	0	0	0
4/25/2024	5:00 PM	0	0	0	0	0	0	0	0	0	0	0	0	0
4/25/2024	5:15 PM	0	0	0	0	0	0	0	0	0	0	0	0	0
4/25/2024	5:30 PM	0	0	0	0	0	0	0	0	0	0	0	0	0
4/25/2024	5:45 PM	0	0	0	0	0	0	0	0	0	0	0	0	0
4/25/2024	6:00 PM	0	0	0	0	0	0	0	0	0	0	0	0	0
4/25/2024	6:15 PM	0	0	0	0	0	0	0	0	0	0	0	0	0
4/25/2024	6:30 PM	0	0	0	0	0	0	0	0	0	0	0	0	0
4/25/2024	6:45 PM	0	0	0	0	0	0	0	0	0	0	0	0	0
4/25/2024	7:00 PM	0	0	0	0	0	0	0	0	0	0	0	0	0
4/25/2024	7:15 PM	0	0	0	0	0	0	0	0	0	0	0	0	0
4/25/2024	7:30 PM	0	0	0	0	0	0	0	0	0	0	0	0	0
4/25/2024	7:45 PM	0	0	0	0	0	0	0	0	0	0	0	0	0
4/25/2024	8:00 PM	0	0	0	0	0	0	0	0	0	0	0	0	0
4/25/2024	8:15 PM	0	0	0	0	0	0	0	0	0	0	0	0	0
4/25/2024	8:30 PM	0	0	0	0	0	0	0	0	0	0	0	0	0
4/25/2024	8:45 PM	0	0	0	0	0	0	0	0	0	0	0	0	0
4/25/2024	9:00 PM	0	0	0	0	0	0	0	0	0	0	0	0	0
4/25/2024	9:15 PM	0	0	0	0	0	0	0	0	0	0	0	0	0
4/25/2024	9:30 PM	0	0	0	0	0	0	0	0	0	0	0	0	0
4/25/2024	9:45 PM	0	0	0	0	0	0	0	0	0	0	0	0	0
4/25/2024	10:00 PM	0	0	0	0	0	0	0	0	0	0	0	0	0
4/25/2024	10:15 PM	0	0	0	0	0	0	0	0	0	0	0	0	0
4/25/2024	10:30 PM	0	0	0	0	0	0	0	0	0	0	0	0	0
4/25/2024	10:45 PM	0	0	0	0	0	0	0	0	0	0	0	0	0
4/25/2024	11:00 PM	0	0	0	0	0	0	0	0	0	0	0	0	0
4/25/2024	11:15 PM	0	0	0	0	0	0	0	0	0	0	0	0	0
4/25/2024	11:30 PM	0	0	0	0	0	0	0	0	0	0	0	0	0
4/25/2024	11:45 PM	0	0	0	0	0	0	0	0	0	0	0	0	0

4/26/2024	12:00 AM	0	0	0	0	0	0	0	0	0	0	0	0	0
4/26/2024	12:15 AM	0	0	0	0	0	0	0	0	0	0	0	0	0
4/26/2024	12:30 AM	0	0	0	0	0	0	0	0	0	0	0	0	0
4/26/2024	12:45 AM	0	0	0	0	0	0	0	0	0	0	0	0	0
4/26/2024	1:00 AM	0	0	0	0	0	0	0	0	0	0	0	0	0
4/26/2024	1:15 AM	0	0	0	0	0	0	0	0	0	0	0	0	0
4/26/2024	1:30 AM	0	0	0	0	0	0	0	0	0	0	0	0	0
4/26/2024	1:45 AM	0	0	0	0	0	0	0	0	0	0	0	0	0
4/26/2024	2:00 AM	0	0	0	0	0	0	0	0	0	0	0	0	0
4/26/2024	2:15 AM	0	0	0	0	0	0	0	0	0	0	0	0	0
4/26/2024	2:30 AM	0	0	0	0	0	0	0	0	0	0	0	0	0
4/26/2024	2:45 AM	0	0	0	0	0	0	0	0	0	0	0	0	0
4/26/2024	3:00 AM	0	0	0	0	0	0	0	0	0	0	0	0	0
4/26/2024	3:15 AM	0	0	0	0	0	0	0	0	0	0	0	0	0
4/26/2024	3:30 AM	0	0	0	0	0	0	0	0	0	0	0	0	0
4/26/2024	3:45 AM	0	0	0	0	0	0	0	0	0	0	0	0	0
4/26/2024	4:00 AM	0	0	0	0	0	0	0	0	0	0	0	0	0
4/26/2024	4:15 AM	0	0	0	0	0	0	0	0	0	0	0	0	0
4/26/2024	4:30 AM	0	0	0	0	0	0	0	0	0	0	0	0	0
4/26/2024	4:45 AM	0	0	0	0	0	0	0	0	0	0	0	0	0
4/26/2024	5:00 AM	0	0	0	0	0	0	0	0	0	0	0	0	0
4/26/2024	5:15 AM	0	0	0	0	0	0	0	0	0	0	0	0	0
4/26/2024	5:30 AM	0	0	0	0	0	0	0	0	0	0	0	0	0
4/26/2024	5:45 AM	0	0	0	0	0	0	0	0	0	0	0	0	0
4/26/2024	6:00 AM	0	0	0	0	0	0	0	0	0	0	0	0	0
4/26/2024	6:15 AM	0	0	0	0	0	0	0	0	0	0	0	0	0
4/26/2024	6:30 AM	0	0	0	0	0	0	0	0	0	0	0	0	0
4/26/2024	6:45 AM	0	0	0	0	0	0	0	0	0	0	0	0	0
4/26/2024	7:00 AM	0	0	0	0	0	0	0	0	0	0	0	0	0
4/26/2024	7:15 AM	0	0	0	0	0	0	0	0	0	0	0	0	0
4/26/2024	7:30 AM	0	0	0	0	0	0	0	0	0	0	0	0	0
4/26/2024	7:45 AM	0	0	0	0	0	0	0	0	0	0	0	0	0
4/26/2024	8:00 AM	0	0	0	0	0	0	0	0	0	0	0	0	0
4/26/2024	8:15 AM	0	0	0	0	0	0	0	0	0	0	0	0	0
4/26/2024	8:30 AM	0	0	0	0	0	0	0	0	0	0	0	0	0
4/26/2024	8:45 AM	0	0	0	0	0	0	0	0	0	0	0	0	0
4/26/2024	9:00 AM	0	0	0	0	0	0	0	0	0	0	0	0	0
4/26/2024	9:15 AM	0	0	0	0	0	0	0	0	0	0	0	0	0
4/26/2024	9:30 AM	0	0	0	0	0	0	0	0	0	0	0	0	0
4/26/2024	9:45 AM	0	0	0	0	0	0	0	0	0	0	0	0	0
4/26/2024	10:00 AM	0	0	0	0	0	0	0	0	0	0	0	0	0
4/26/2024	10:15 AM	0	0	0	0	0	0	0	0	0	0	0	0	0
4/26/2024	10:30 AM	0	0	0	0	0	0	0	0	0	0	0	0	0
4/26/2024	10:45 AM	0	0	0	0	0	0	0	0	0	0	0	0	0
4/26/2024	11:00 AM	0	0	0	0	0	0	0	0	0	0	0	0	0
4/26/2024	11:15 AM	0	0	0	0	0	0	0	0	0	0	0	0	0
4/26/2024	11:30 AM	0	0	0	0	0	0	0	0	0	0	0	0	0
4/26/2024	11:45 AM	0	0	0	0	0	0	0	0	0	0	0	0	0
4/26/2024	12:00 PM	0	0	0	0	0	0	0	0	0	0	0	0	0
4/26/2024	12:15 PM	0	0	0	0	0	0	0	0	0	0	0	0	0
4/26/2024	12:30 PM	0	0	0	0	0	0	0	0	0	0	0	0	0
4/26/2024	12:45 PM	0	0	0	0	0	0	0	0	0	0	0	0	0
4/26/2024	1:00 PM	0	0	0	0	0	0	0	0	0	0	0	0	0
4/26/2024	1:15 PM	0	0	0	0	0	0	0	0	0	0	0	0	0
4/26/2024	1:30 PM	0	0	0	0	0	0	0	0	0	0	0	0	0
4/26/2024	1:45 PM	0	0	0	0	0	0	0	0	0	0	0	0	0
4/26/2024	2:00 PM	0	0	0	0	0	0	0	0	0	0	0	0	0
4/26/2024	2:15 PM	0	0	0	0	0	0	0	0	0	0	0	0	0
4/26/2024	2:30 PM	0	0	0	0	0	0	0	0	0	0	0	0	0
4/26/2024	2:45 PM	0	0	0	0	0	0	0	0	0	0	0	0	0
4/26/2024	3:00 PM	0	0	0	0	0	0	0	0	0	0	0	0	0
4/26/2024	3:15 PM	0	0	0	0	0	0	0	0	0	0	0	0	0
4/26/2024	3:30 PM	0	0	0	0	0	0	0	0	0	0	0	0	0
4/26/2024	3:45 PM	0	0	0	0	0	0	0	0	0	0	0	0	0
4/26/2024	4:00 PM	0	0	0	0	0	0	0	0	0	0	0	0	0
4/26/2024	4:15 PM	0	0	0	0	0	0	0	0	0	0	0	0	0
4/26/2024	4:30 PM	0	0	0	0	0	0	0	0	0	0	0	0	0
4/26/2024	4:45 PM	0	0	0	0	0	0	0	0	0	0	0	0	0
4/26/2024	5:00 PM	0	0	0	0	0	0	0	0	0	0	0	0	0
4/26/2024	5:15 PM	0	0	0	0	0	0	0	0	0	0	0	0	0
4/26/2024	5:30 PM	0	0	0	0	0	0	0	0	0	0	0	0	0
4/26/2024	5:45 PM	0	0	0	0	0	0	0	0	0	0	0	0	0
4/26/2024	6:00 PM	0	0	0	0	0	0	0	0	0	0	0	0	0
4/26/2024	6:15 PM	0	0	0	0	0	0	0	0	0	0	0	0	0
4/26/2024	6:30 PM	0	0	0	0	0	0	0	0	0	0	0	0	0
4/26/2024	6:45 PM	0	0	0	0	0	0	0	0	0	0	0	0	0
4/26/2024	7:00 PM	0	0	0	0	0	0	0	0	0	0	0	0	0
4/26/2024	7:15 PM	0	0	0	0	0	0	0	0	0	0	0	0	0
4/26/2024	7:30 PM	0	0	0	0	0	0	0	0	0	0	0	0	0
4/26/2024	7:45 PM	0	0	0	0	0	0	0	0	0	0	0	0	0
4/26/2024	8:00 PM	0	0	0	0	0	0	0	0	0	0	0	0	0
4/26/2024	8:15 PM	0	0	0	0	0	0	0	0	0	0	0	0	0
4/26/2024	8:30 PM	0	0	0	0	0	0	0	0	0	0	0	0	0
4/26/2024	8:45 PM	0	0	0	0	0	0	0	0	0	0	0	0	0
4/26/2024	9:00 PM	0	0	0	0	0	0	0	0	0	0	0	0	0
4/26/2024	9:15 PM	0	0	0	0	0	0	0	0	0	0	0	0	0
4/26/2024	9:30 PM	0	0	0	0	0	0	0	0	0	0	0	0	0
4/26/2024	9:45 PM	0	0	0	0	0	0	0	0	0	0	0	0	0
4/26/2024	10:00 PM	0	0	0	0	0	0	0	0	0	0	0	0	0
4/26/2024	10:15 PM	0	0	0	0	0	0	0	0	0	0	0	0	0
4/26/2024	10:30 PM	0	0	0	0	0	0	0	0	0	0	0	0	0
4/26/2024	10:45 PM	0	0	0	0	0	0	0	0	0	0	0	0	0
4/26/2024	11:00 PM	0	0	0	0	0	0	0	0	0	0	0	0	0
4/26/2024	11:15 PM	0	0	0	0	0	0	0	0	0	0	0	0	0
4/26/2024	11:30 PM	0	0	0	0	0	0	0	0	0	0	0	0	0
4/26/2024	11:45 PM	0	0	0	0	0	0	0	0	0	0	0	0	0

4/27/2024	12:00 AM	0	0	0	0	0	0	0	0	0	0	0	0	0
4/27/2024	12:15 AM	0	0	0	0	0	0	0	0	0	0	0	0	0
4/27/2024	12:30 AM	0	0	0	0	0	0	0	0	0	0	0	0	0
4/27/2024	12:45 AM	0	0	0	0	0	0	0	0	0	0	0	0	0
4/27/2024	1:00 AM	0	0	0	0	0	0	0	0	0	0	0	0	0
4/27/2024	1:15 AM	0	0	0	0	0	0	0	0	0	0	0	0	0
4/27/2024	1:30 AM	0	0	0	0	0	0	0	0	0	0	0	0	0
4/27/2024	1:45 AM	0	0	0	0	0	0	0	0	0	0	0	0	0
4/27/2024	2:00 AM	0	0	0	0	0	0	0	0	0	0	0	0	0
4/27/2024	2:15 AM	0	0	0	0	0	0	0	0	0	0	0	0	0
4/27/2024	2:30 AM	0	0	0	0	0	0	0	0	0	0	0	0	0
4/27/2024	2:45 AM	0	0	0	0	0	0	0	0	0	0	0	0	0
4/27/2024	3:00 AM	0	0	0	0	0	0	0	0	0	0	0	0	0
4/27/2024	3:15 AM	0	0	0	0	0	0	0	0	0	0	0	0	0
4/27/2024	3:30 AM	0	0	0	0	0	0	0	0	0	0	0	0	0
4/27/2024	3:45 AM	0	0	0	0	0	0	0	0	0	0	0	0	0
4/27/2024	4:00 AM	0	0	0	0	0	0	0	0	0	0	0	0	0
4/27/2024	4:15 AM	0	0	0	0	0	0	0	0	0	0	0	0	0
4/27/2024	4:30 AM	0	0	0	0	0	0	0	0	0	0	0	0	0
4/27/2024	4:45 AM	0	0	0	0	0	0	0	0	0	0	0	0	0
4/27/2024	5:00 AM	0	0	0	0	0	0	0	0	0	0	0	0	0
4/27/2024	5:15 AM	0	0	0	0	0	0	0	0	0	0	0	0	0
4/27/2024	5:30 AM	0	0	0	0	0	0	0	0	0	0	0	0	0
4/27/2024	5:45 AM	0	0	0	0	0	0	0	0	0	0	0	0	0
4/27/2024	6:00 AM	0	0	0	0	0	0	0	0	0	0	0	0	0
4/27/2024	6:15 AM	0	0	0	0	0	0	0	0	0	0	0	0	0
4/27/2024	6:30 AM	0	0	0	0	0	0	0	0	0	0	0	0	0
4/27/2024	6:45 AM	0	0	0	0	0	0	0	0	0	0	0	0	0
4/27/2024	7:00 AM	0	0	0	0	0	0	0	0	0	0	0	0	0
4/27/2024	7:15 AM	0	0	0	0	0	0	0	0	0	0	0	0	0
4/27/2024	7:30 AM	0	0	0	0	0	0	0	0	0	0	0	0	0
4/27/2024	7:45 AM	0	0	0	0	0	0	0	0	0	0	0	0	0
4/27/2024	8:00 AM	0	0	0	0	0	0	0	0	0	0	0	0	0
4/27/2024	8:15 AM	0	0	0	0	0	0	0	0	0	0	0	0	0
4/27/2024	8:30 AM	0	0	0	0	0	0	0	0	0	0	0	0	0
4/27/2024	8:45 AM	0	0	0	0	0	0	0	0	0	0	0	0	0
4/27/2024	9:00 AM	0	0	0	0	0	0	0	0	0	0	0	0	0
4/27/2024	9:15 AM	0	0	0	0	0	0	0	0	0	0	0	0	0
4/27/2024	9:30 AM	0	0	0	0	0	0	0	0	0	0	0	0	0
4/27/2024	9:45 AM	0	0	0	0	0	0	0	0	0	0	0	0	0
4/27/2024	10:00 AM	0	0	0	0	0	0	0	0	0	0	0	0	0
4/27/2024	10:15 AM	0	0	0	0	0	0	0	0	0	0	0	0	0
4/27/2024	10:30 AM	0	0	0	0	0	0	0	0	0	0	0	0	0
4/27/2024	10:45 AM	0	0	0	0	0	0	0	0	0	0	0	0	0
4/27/2024	11:00 AM	0	0	0	0	0	0	0	0	0	0	0	0	0
4/27/2024	11:15 AM	0	0	0	0	0	0	0	0	0	0	0	0	0
4/27/2024	11:30 AM	0	0	0	0	0	0	0	0	0	0	0	0	0
4/27/2024	11:45 AM	0	0	0	0	0	0	0	0	0	0	0	0	0
4/27/2024	12:00 PM	0	0	0	0	0	0	0	0	0	0	0	0	0
4/27/2024	12:15 PM	0	0	0	0	0	0	0	0	0	0	0	0	0
4/27/2024	12:30 PM	0	0	0	0	0	0	0	0	0	0	0	0	0
4/27/2024	12:45 PM	0	0	0	0	0	0	0	0	0	0	0	0	0
4/27/2024	1:00 PM	0	0	0	0	0	0	0	0	0	0	0	0	0
4/27/2024	1:15 PM	0	0	0	0	0	0	0	0	0	0	0	0	0
4/27/2024	1:30 PM	0	0	0	0	0	0	0	0	0	0	0	0	0
4/27/2024	1:45 PM	0	0	0	0	0	0	0	0	0	0	0	0	0
4/27/2024	2:00 PM	0	0	0	0	0	0	0	0	0	0	0	0	0
4/27/2024	2:15 PM	0	0	0	0	0	0	0	0	0	0	0	0	0
4/27/2024	2:30 PM	0	0	0	0	0	0	0	0	0	0	0	0	0
4/27/2024	2:45 PM	0	0	0	0	0	0	0	0	0	0	0	0	0
4/27/2024	3:00 PM	0	0	0	0	0	0	0	0	0	0	0	0	0
4/27/2024	3:15 PM	0	0	0	0	0	0	0	0	0	0	0	0	0
4/27/2024	3:30 PM	0	0	0	0	0	0	0	0	0	0	0	0	0
4/27/2024	3:45 PM	0	0	0	0	0	0	0	0	0	0	0	0	0
4/27/2024	4:00 PM	0	0	0	0	0	0	0	0	0	0	0	0	0
4/27/2024	4:15 PM	0	0	0	0	0	0	0	0	0	0	0	0	0
4/27/2024	4:30 PM	0	0	0	0	0	0	0	0	0	0	0	0	0
4/27/2024	4:45 PM	0	0	0	0	0	0	0	0	0	0	0	0	0
4/27/2024	5:00 PM	0	0	0	0	0	0	0	0	0	0	0	0	0
4/27/2024	5:15 PM	0	0	0	0	0	0	0	0	0	0	0	0	0
4/27/2024	5:30 PM	0	0	0	0	0	0	0	0	0	0	0	0	0
4/27/2024	5:45 PM	0	0	0	0	0	0	0	0	0	0	0	0	0
4/27/2024	6:00 PM	0	0	0	0	0	0	0	0	0	0	0	0	0
4/27/2024	6:15 PM	0	0	0	0	0	0	0	0	0	0	0	0	0
4/27/2024	6:30 PM	0	0	0	0	0	0	0	0	0	0	0	0	0
4/27/2024	6:45 PM	0	0	0	0	0	0	0	0	0	0	0	0	0
4/27/2024	7:00 PM	0	0	0	0	0	0	0	0	0	0	0	0	0
4/27/2024	7:15 PM	0	0	0	0	0	0	0	0	0	0	0	0	0
4/27/2024	7:30 PM	0	0	0	0	0	0	0	0	0	0	0	0	0
4/27/2024	7:45 PM	0	0	0	0	0	0	0	0	0	0	0	0	0
4/27/2024	8:00 PM	0	0	0	0	0	0	0	0	0	0	0	0	0
4/27/2024	8:15 PM	0	0	0	0	0	0	0	0	0	0	0	0	0
4/27/2024	8:30 PM	0	0	0	0	0	0	0	0	0	0	0	0	0
4/27/2024	8:45 PM	0	0	0	0	0	0	0	0	0	0	0	0	0
4/27/2024	9:00 PM	0	0	0	0	0	0	0	0	0	0	0	0	0
4/27/2024	9:15 PM	0	0	0	0	0	0	0	0	0	0	0	0	0
4/27/2024	9:30 PM	0	0	0	0	0	0	0	0	0	0	0	0	0
4/27/2024	9:45 PM	0	0	0	0	0	0	0	0	0	0	0	0	0
4/27/2024	10:00 PM	0	0	0	0	0	0	0	0	0	0	0	0	0
4/27/2024	10:15 PM	0	0	0	0	0	0	0	0	0	0	0	0	0
4/27/2024	10:30 PM	0	0	0	0	0	0	0	0	0	0	0	0	0
4/27/2024	10:45 PM	0	0	0	0	0	0	0	0	0	0	0	0	0
4/27/2024	11:00 PM	0	0	0	0	0	0	0	0	0	0	0	0	0
4/27/2024	11:15 PM	0	0	0	0	0	0	0	0	0	0	0	0	0
4/27/2024	11:30 PM	0	0	0	0	0	0	0	0	0	0	0	0	0
4/27/2024	11:45 PM	0	0	0	0	0	0	0	0	0	0	0	0	0

Bi-Directional Class Count || SB WB 15min

Columbia, SC

Marr Traffic DATA COLLECTION
www.marrtraffic.com

Site 74 Lane 2 WB
I-20,
west of US-378 Sunset Blvd S/Bound Off-Ramp

Date
Sunday, April 21, 2024

Lat/Long
34.008085°, -81.156669°

Weather
Cloudy
66°F

Click here for Detailed Weather

Click here for Map

0000 - 2400 (Sunday 24h Session) (04-21-2024)
SB WB 15min

	Westbound (Movement 74 Lane 2 WB.1)													15min	60min
Time	1	2	3	4	5	6	7	8	9	10	11	12	13	Total	Total
0000 - 0015	0	55	10	0	0	0	0	0	3	0	0	0	0	**68**	
0015 - 0030	0	60	8	0	0	0	0	0	2	0	0	0	0	**70**	
0030 - 0045	0	40	5	0	0	0	0	0	4	0	0	0	0	**49**	
0045 - 0100	0	43	5	0	0	0	0	0	2	0	0	0	0	**50**	**237**
0100 - 0115	0	40	3	0	0	0	0	0	0	0	0	0	0	**43**	
0115 - 0130	0	42	4	0	1	0	0	0	2	0	0	0	0	**49**	
0130 - 0145	0	38	3	1	1	0	0	0	0	0	0	0	0	**43**	
0145 - 0200	0	37	5	1	0	0	0	0	0	0	0	0	0	**43**	**178**
0200 - 0215	0	25	2	0	2	0	0	0	3	0	0	0	0	**32**	
0215 - 0230	0	40	5	0	0	0	0	0	2	0	0	0	0	**47**	
0230 - 0245	0	23	2	0	1	0	0	0	3	0	0	0	0	**29**	
0245 - 0300	0	23	3	0	1	0	0	0	2	0	0	0	0	**29**	**137**
0300 - 0315	0	17	2	0	1	0	0	0	3	0	0	0	0	**23**	
0315 - 0330	0	23	3	0	0	0	0	0	1	0	0	0	0	**27**	
0330 - 0345	0	13	3	0	1	0	0	0	3	0	0	0	0	**20**	
0345 - 0400	0	21	2	0	0	0	0	0	2	0	0	0	0	**25**	**95**
0400 - 0415	0	29	3	0	3	0	0	0	5	0	0	0	0	**40**	
0415 - 0430	0	14	1	0	1	0	0	0	3	0	0	0	0	**19**	
0430 - 0445	0	26	2	1	1	0	0	1	1	0	0	0	0	**32**	
0445 - 0500	0	16	2	0	2	0	0	0	3	0	0	0	0	**23**	**114**
0500 - 0515	0	24	2	0	0	0	0	0	6	0	0	0	0	**32**	
0515 - 0530	0	20	3	0	1	0	0	0	2	0	0	0	0	**26**	
0530 - 0545	0	30	5	0	2	0	0	0	3	0	0	0	0	**40**	
0545 - 0600	0	29	4	0	2	0	0	0	2	0	0	0	0	**37**	**135**
0600 - 0615	0	30	6	0	0	0	0	0	4	0	0	0	0	**40**	
0615 - 0630	0	38	6	0	0	0	0	0	3	0	0	0	0	**47**	
0630 - 0645	0	44	11	0	0	0	0	0	3	0	0	0	0	**58**	
0645 - 0700	0	34	12	0	1	0	0	0	1	0	0	0	0	**48**	**193**
0700 - 0715	0	42	20	0	0	0	0	0	2	0	0	0	0	**64**	
0715 - 0730	1	45	10	0	1	0	0	0	1	0	0	0	0	**58**	
0730 - 0745	0	45	17	1	1	1	0	0	2	0	0	0	0	**67**	
0745 - 0800	0	55	14	0	0	0	0	0	5	0	0	0	0	**74**	**263**
0800 - 0815	1	58	11	0	0	0	0	0	2	0	0	0	0	**72**	
0815 - 0830	1	57	19	1	3	0	0	0	5	0	0	0	0	**86**	
0830 - 0845	0	73	16	0	0	0	0	0	5	0	0	0	0	**94**	
0845 - 0900	0	87	20	0	3	0	0	1	2	0	0	0	0	**113**	**365**
0900 - 0915	2	83	22	1	1	0	0	0	1	1	0	0	0	**111**	
0915 - 0930	0	98	21	0	2	0	0	0	2	0	0	0	0	**123**	
0930 - 0945	0	125	27	0	0	0	0	2	1	0	0	0	0	**155**	
0945 - 1000	0	107	27	0	1	0	0	0	5	0	0	0	0	**140**	**529**
1000 - 1015	0	114	25	0	2	1	0	0	8	0	1	0	0	**151**	
1015 - 1030	0	107	31	0	1	0	0	3	11	0	0	0	0	**153**	
1030 - 1045	0	128	30	0	1	0	0	0	6	0	0	0	0	**165**	
1045 - 1100	0	152	39	1	2	0	0	0	7	0	0	0	0	**201**	**670**
1100 - 1115	0	145	31	0	2	0	0	0	13	0	0	0	0	**191**	
1115 - 1130	0	127	33	0	1	0	0	1	7	0	0	0	0	**169**	
1130 - 1145	1	143	34	0	0	0	0	1	8	0	0	0	0	**187**	
1145 - 1200	0	175	40	0	1	0	0	2	4	0	1	0	0	**223**	**770**
1200 - 1215	0	184	26	0	2	0	0	0	13	0	0	0	0	**225**	
1215 - 1230	0	171	37	0	2	0	0	2	6	0	0	0	0	**218**	
1230 - 1245	0	169	38	0	2	1	0	2	4	0	0	0	0	**216**	
1245 - 1300	0	147	56	0	5	1	0	0	8	0	0	0	0	**217**	**876**
1300 - 1315	0	177	51	0	1	0	0	0	8	0	0	0	0	**237**	
1315 - 1330	0	195	43	0	0	0	0	0	5	0	0	0	0	**243**	
1330 - 1345	0	193	50	0	1	2	0	2	3	0	0	1	0	**252**	
1345 - 1400	1	179	41	1	1	0	0	0	9	0	0	0	0	**232**	**964**
1400 - 1415	0	193	46	0	0	1	0	0	6	0	0	0	0	**246**	
1415 - 1430	0	182	39	0	2	0	0	2	9	0	0	0	0	**234**	
1430 - 1445	0	164	32	0	3	0	0	0	7	0	0	0	0	**206**	
1445 - 1500	0	154	38	0	2	0	0	0	7	1	0	0	0	**202**	**888**
1500 - 1515	0	193	41	0	1	1	0	0	7	0	0	0	0	**243**	
1515 - 1530	0	155	46	0	3	0	0	0	9	0	0	0	0	**213**	
1530 - 1545	1	160	47	0	2	0	0	0	5	0	0	0	0	**215**	
1545 - 1600	0	190	38	0	1	1	0	1	8	1	0	0	0	**240**	**911**
1600 - 1615	0	187	32	0	0	0	0	1	3	0	0	0	0	**223**	
1615 - 1630	0	184	49	0	1	0	0	0	10	0	0	0	0	**244**	
1630 - 1645	0	166	43	1	1	0	0	1	4	0	0	0	0	**216**	
1645 - 1700	0	157	42	0	1	1	0	1	10	0	0	0	0	**212**	**895**
1700 - 1715	0	155	39	0	1	0	0	1	7	0	0	0	0	**203**	
1715 - 1730	0	146	27	0	0	1	0	3	4	0	0	0	0	**181**	
1730 - 1745	0	156	28	1	1	0	0	0	13	0	0	0	0	**199**	
1745 - 1800	0	142	44	0	2	0	0	2	10	0	0	0	0	**200**	**783**
1800 - 1815	0	142	40	0	0	0	0	1	6	0	0	0	0	**189**	
1815 - 1830	0	144	28	0	0	0	0	3	7	0	0	0	0	**182**	
1830 - 1845	1	143	36	0	0	0	0	2	7	0	0	0	0	**189**	
1845 - 1900	0	152	34	0	1	1	0	2	6	0	0	0	0	**196**	**756**
1900 - 1915	0	149	24	0	1	0	0	0	9	0	0	0	0	**183**	
1915 - 1930	0	115	32	0	0	0	0	0	13	0	2	0	0	**162**	
1930 - 1945	0	126	26	1	0	1	0	3	6	0	0	0	0	**163**	
1945 - 2000	0	111	15	0	1	1	0	0	7	0	0	0	0	**135**	**643**
2000 - 2015	0	105	26	0	0	0	0	0	5	0	0	0	0	**136**	
2015 - 2030	0	104	22	0	2	0	0	0	5	0	0	0	0	**133**	
2030 - 2045	0	101	15	0	0	0	0	0	6	0	0	0	0	**122**	
2045 - 2100	0	95	13	0	1	0	0	0	3	0	0	0	0	**112**	**503**
2100 - 2115	0	74	14	1	1	0	0	1	6	0	0	0	0	**97**	
2115 - 2130	0	91	15	0	2	0	0	0	6	0	1	0	0	**115**	
2130 - 2145	0	61	13	0	1	0	0	0	6	0	0	0	0	**81**	
2145 - 2200	0	50	11	0	0	0	0	0	8	0	1	0	0	**70**	**363**
2200 - 2215	0	61	13	0	0	0	0	0	10	0	1	0	0	**85**	
2215 - 2230	0	58	10	0	0	0	0	0	3	0	0	0	0	**71**	
2230 - 2245	0	44	8	1	0	0	0	0	11	0	1	0	0	**65**	
2245 - 2300	0	39	6	2	0	0	0	0	1	0	0	0	0	**48**	**269**
2300 - 2315	0	35	7	0	0	0	0	0	3	0	1	0	0	**46**	
2315 - 2330	0	25	2	1	1	0	0	0	3	0	1	0	0	**33**	
2330 - 2345	0	36	5	0	1	0	0	0	6	0	0	0	0	**48**	
2345 - 0000	0	28	2	0	0	0	0	0	2	0	0	0	0	**32**	**159**

Session Total	9	9028	1999	16	90	14	0	41	485	3	10	1	0	**11696**
Session Average	0.09	94.04	20.82	0.17	0.94	0.15	0.00	0.43	5.05	0.03	0.10	0.01	0.00	**121.83**
Session Percentage	0.08	77.19	17.09	0.14	0.77	0.12	0.00	0.35	4.15	0.03	0.09	0.01	0.00	

AM Peak Hour	0815 - 0915	0945 - 1045	0945 - 1045	0730 - 0830	0815 - 0915	0645 - 0745	-	0930 - 1030	0945 - 1045	0815 - 0915	0915 - 1015	-	-	**0945 - 1045**
AM Peak Volume	3	456	113	2	7	1	0	5	30	1	1	0	0	**609**

Noon Peak Hour	1045 - 1145	1315 - 1415	1245 - 1345	1000 - 1100	1200 - 1300	1245 - 1345	-	1145 - 1245	1015 - 1115	1400 - 1500	1000 - 1100	1245 - 1345	-	**1315 - 1415**
Noon Peak Volume	1	760	200	1	11	3	0	6	37	1	1	1	0	**973**

PM Peak Hour	1500 - 1600	1545 - 1645	1615 - 1715	1545 - 1645	1500 - 1600	1500 - 1600	-	1745 - 1845	1730 - 1830	1500 - 1600	1830 - 1930	-	-	**1545 - 1645**
PM Peak Volume	1	727	173	1	7	2	0	8	36	1	2	0	0	**923**

Site 74 Lane 2 WB
I-20,
west of US-378 Sunset Blvd S/Bound Off-Ramp

Date
Monday, April 22, 2024

Lat/Long
34.008085°, -81.156669°

Weather
Mostly Cloudy
57°F

Click here for Detailed Weather

0000 - 2400 (Weekday 24h Session) (04-22-2024)
SB WB 15min

	Westbound (Movement 74 Lane 2 WB.1)													15min	60min
Time	1	2	3	4	5	6	7	8	9	10	11	12	13	Total	Total
0000 - 0015	0	17	3	0	2	0	0	0	6	0	0	0	0	**28**	
0015 - 0030	0	15	4	0	1	0	0	0	9	0	0	0	0	**29**	
0030 - 0045	0	17	1	0	0	0	0	0	7	0	0	0	0	**25**	
0045 - 0100	0	13	2	0	1	0	0	0	8	0	0	0	0	**24**	**106**
0100 - 0115	0	11	2	0	0	0	0	0	5	0	0	0	0	**18**	
0115 - 0130	0	11	4	0	0	0	0	0	5	0	0	0	0	**20**	
0130 - 0145	0	12	2	0	1	0	0	0	3	0	0	0	0	**18**	
0145 - 0200	0	12	1	0	1	0	0	0	5	0	0	0	0	**19**	**75**
0200 - 0215	0	8	0	0	0	0	0	0	9	0	0	0	0	**17**	
0215 - 0230	0	11	2	0	2	0	0	0	5	0	0	0	0	**20**	
0230 - 0245	0	10	0	0	1	0	0	0	3	0	0	0	0	**14**	
0245 - 0300	0	13	1	0	1	0	0	0	8	0	0	0	0	**23**	**74**
0300 - 0315	0	16	2	0	1	0	0	0	4	0	0	0	0	**23**	
0315 - 0330	0	17	0	0	1	0	0	0	10	0	0	0	0	**28**	
0330 - 0345	0	18	7	0	1	0	0	0	6	0	0	0	0	**32**	
0345 - 0400	0	17	0	0	1	0	0	0	9	0	0	0	0	**27**	**110**
0400 - 0415	0	18	0	0	0	0	0	0	7	0	0	0	0	**25**	
0415 - 0430	0	17	8	0	2	0	0	0	7	0	0	0	0	**34**	
0430 - 0445	0	21	8	0	0	0	0	0	8	0	0	0	0	**37**	
0445 - 0500	0	25	9	0	1	0	0	0	13	0	0	0	0	**48**	**144**
0500 - 0515	0	40	7	0	0	0	0	0	11	0	0	0	0	**58**	
0515 - 0530	0	47	18	0	3	0	0	0	13	0	0	0	0	**81**	
0530 - 0545	0	55	20	0	1	0	0	0	18	0	0	0	0	**94**	
0545 - 0600	0	81	28	0	3	0	0	0	11	0	0	0	0	**123**	**356**
0600 - 0615	0	77	20	0	1	0	0	0	15	0	0	0	0	**113**	
0615 - 0630	0	125	15	0	5	1	0	0	10	0	0	0	0	**156**	
0630 - 0645	0	123	50	0	3	1	0	1	10	0	0	0	0	**188**	
0645 - 0700	1	121	47	1	7	2	0	1	19	0	0	0	0	**199**	**656**
0700 - 0715	0	124	46	0	7	2	0	1	8	0	0	0	0	**188**	
0715 - 0730	0	133	60	0	6	5	0	2	17	0	0	0	0	**223**	
0730 - 0745	0	139	62	1	3	2	0	3	8	0	0	0	0	**218**	
0745 - 0800	0	143	48	0	5	2	0	1	13	0	0	0	0	**212**	**841**
0800 - 0815	0	123	50	0	2	2	0	1	18	0	0	0	0	**196**	
0815 - 0830	0	105	42	0	6	1	0	1	23	0	0	0	0	**178**	
0830 - 0845	0	117	50	1	10	1	2	2	16	1	0	0	0	**200**	
0845 - 0900	0	98	43	0	6	3	0	4	11	0	0	0	0	**165**	**739**
0900 - 0915	0	99	51	0	9	2	0	5	19	0	0	0	0	**185**	
0915 - 0930	0	93	58	1	5	3	0	2	25	0	0	1	0	**188**	
0930 - 0945	0	87	48	0	10	2	0	5	17	0	0	0	0	**169**	
0945 - 1000	0	85	41	0	6	4	0	1	19	0	0	0	0	**156**	**698**
1000 - 1015	0	91	52	0	5	2	0	4	19	0	0	0	0	**173**	
1015 - 1030	0	121	40	0	8	0	0	2	30	0	0	0	0	**201**	
1030 - 1045	0	106	47	0	5	4	0	1	34	0	0	0	0	**197**	
1045 - 1100	1	117	45	1	12	2	0	0	25	0	0	0	0	**203**	**774**
1100 - 1115	0	124	56	0	3	1	0	2	24	0	0	0	0	**210**	
1115 - 1130	0	98	41	0	4	0	0	1	24	0	0	0	0	**168**	
1130 - 1145	0	111	44	0	4	2	0	3	39	0	0	0	0	**203**	
1145 - 1200	0	111	35	0	6	2	0	0	22	0	0	0	0	**176**	**757**
1200 - 1215	1	125	49	0	2	2	0	4	25	0	0	0	0	**208**	
1215 - 1230	0	132	42	0	9	0	0	2	31	0	0	0	0	**216**	
1230 - 1245	0	119	39	0	5	2	0	2	22	0	0	0	0	**189**	
1245 - 1300	0	125	53	1	3	3	0	6	27	0	0	0	0	**218**	**831**
1300 - 1315	0	113	30	0	11	0	0	4	28	1	0	0	0	**187**	
1315 - 1330	0	141	44	1	3	2	0	3	27	0	0	0	0	**221**	
1330 - 1345	0	158	52	1	7	2	0	4	21	0	0	0	0	**245**	
1345 - 1400	0	139	41	1	5	2	0	4	35	0	0	0	0	**227**	**880**
1400 - 1415	0	133	49	0	3	4	0	1	21	0	0	0	0	**211**	
1415 - 1430	0	138	54	0	6	4	0	2	32	1	0	0	0	**237**	
1430 - 1445	0	139	61	0	8	2	0	5	32	0	0	0	0	**247**	
1445 - 1500	0	142	51	3	5	3	3	3	35	0	0	0	0	**245**	**940**
1500 - 1515	0	161	54	0	7	2	0	3	42	0	0	0	0	**269**	
1515 - 1530	0	171	40	0	5	2	0	3	35	0	0	0	0	**256**	
1530 - 1545	0	157	56	0	11	6	3	2	36	1	0	0	0	**272**	
1545 - 1600	1	188	58	1	2	1	0	2	31	1	0	0	0	**285**	**1082**
1600 - 1615	0	188	70	0	5	2	0	3	31	1	0	0	0	**300**	
1615 - 1630	0	205	54	0	4	1	0	1	30	1	0	0	0	**296**	
1630 - 1645	0	209	55	0	8	2	2	7	31	0	0	0	0	**314**	
1645 - 1700	0	197	62	0	11	2	0	1	32	0	0	0	0	**305**	**1215**
1700 - 1715	0	205	66	2	7	3	0	4	33	1	0	0	0	**321**	
1715 - 1730	0	206	57	0	7	3	0	3	29	0	0	0	0	**305**	
1730 - 1745	0	185	61	0	9	3	0	2	35	0	0	0	0	**295**	
1745 - 1800	0	168	59	0	4	2	0	5	31	1	0	0	0	**270**	**1191**
1800 - 1815	0	155	53	0	3	1	0	0	23	0	0	0	0	**235**	
1815 - 1830	0	165	45	0	4	3	0	3	26	0	0	0	0	**246**	
1830 - 1845	0	132	45	0	1	1	0	2	24	0	0	0	0	**205**	
1845 - 1900	0	111	39	0	1	2	0	1	23	0	0	0	0	**177**	**863**
1900 - 1915	0	104	35	0	1	1	0	3	23	0	0	0	0	**167**	
1915 - 1930	0	110	26	0	2	1	0	1	22	0	0	0	0	**162**	
1930 - 1945	0	104	30	0	3	2	0	2	26	0	1	0	0	**168**	
1945 - 2000	0	106	21	0	2	3	0	1	15	0	0	0	0	**148**	**645**
2000 - 2015	0	101	30	0	2	0	0	1	16	0	1	0	0	**151**	
2015 - 2030	0	90	13	0	1	2	0	3	12	0	1	0	0	**122**	
2030 - 2045	0	89	12	0	0	0	0	0	23	0	0	0	0	**124**	
2045 - 2100	0	87	13	0	2	0	0	0	20	0	0	0	0	**122**	**519**
2100 - 2115	0	89	11	0	1	0	0	0	18	0	0	0	0	**119**	
2115 - 2130	0	92	13	0	1	0	0	0	18	0	0	0	0	**124**	
2130 - 2145	0	70	14	0	3	0	0	0	13	0	0	0	0	**100**	
2145 - 2200	0	51	13	0	0	0	0	0	11	0	0	0	0	**75**	**418**
2200 - 2215	0	40	10	0	1	0	0	0	16	0	0	0	0	**67**	
2215 - 2230	0	39	12	0	0	0	0	0	12	0	0	0	0	**63**	
2230 - 2245	0	38	14	0	4	0	0	0	7	0	0	0	0	**63**	
2245 - 2300	0	30	12	0	0	0	0	0	14	0	0	0	0	**56**	**249**
2300 - 2315	0	31	13	0	0	0	0	0	14	0	0	0	0	**58**	
2315 - 2330	0	30	14	0	1	0	0	0	8	0	0	0	0	**53**	
2330 - 2345	0	21	7	0	2	0	0	0	5	0	0	0	0	**35**	
2345 - 0000	0	20	12	0	0	0	0	0	4	0	0	0	0	**36**	**182**

Session Total	4	8942	2984	15	344	117	10	136	1780	9	3	1	0	**14345**
Session Average	0.04	93.15	31.08	0.16	3.58	1.22	0.10	1.42	18.54	0.09	0.03	0.01	0.00	**149.43**
Session Percentage	0.03	62.34	20.80	0.10	2.40	0.82	0.07	0.95	12.41	0.06	0.02	0.01	0.00	

AM Peak Hour	0600 - 0700	0700 - 0800	0715 - 0815	0645 - 0745	0815 - 0915	0645 - 0745	0745 - 0845	0845 - 0945	0945 - 1045	0745 - 0845	-	0830 - 0930	-	**0715 - 0815**
AM Peak Volume	1	539	220	2	31	11	2	16	102	1	0	1	0	**849**

Noon Peak Hour	1000 - 1100	1445 - 1545	1415 - 1515	1245 - 1345	1000 - 1100	1400 - 1500	1445 - 1545	1245 - 1345	1445 - 1545	1215 - 1315	-	-	-	**1445 - 1545**
Noon Peak Volume	1	631	220	3	30	13	6	17	148	1	0	0	0	**1042**

PM Peak Hour	1500 - 1600	1630 - 1730	1645 - 1745	1615 - 1715	1645 - 1745	1500 - 1600	1500 - 1600	1630 - 1730	1500 - 1600	1530 - 1630	1930 - 2030	-	-	**1630 - 1730**
PM Peak Volume	1	817	246	2	34	11	3	15	144	4	3	0	0	**1245**

Site 74 Lane 2 WB
I-20,
west of US-378 Sunset Blvd S/Bound Off-Ramp

Date
Tuesday, April 23, 2024

Lat/Long
34.008085°, -81.156669°

Weather
Fair
58°F

Click here for Detailed Weather

0000 - 2400 (Weekday 24h Session) (04-23-2024)
SB WB 15min

	Westbound (Movement 74 Lane 2 WB.1)													15min	60min
TIME	1	2	3	4	5	6	7	8	9	10	11	12	13	Total	Total
0000 - 0015	0	13	1	0	0	0	0	0	4	0	1	0	0	**19**	
0015 - 0030	0	22	0	0	0	0	0	0	5	0	0	0	0	**27**	
0030 - 0045	0	15	2	0	0	0	0	0	5	0	1	0	0	**23**	
0045 - 0100	0	23	1	0	0	1	0	0	7	0	0	0	0	**32**	**101**
0100 - 0115	0	25	1	0	3	0	0	0	7	0	1	0	0	**37**	
0115 - 0130	0	24	0	0	0	0	0	0	9	0	0	0	0	**33**	
0130 - 0145	0	15	0	0	0	0	0	0	11	0	0	0	0	**26**	
0145 - 0200	0	14	1	0	1	0	0	0	9	0	1	0	0	**26**	**122**
0200 - 0215	0	24	0	0	2	0	0	0	11	0	0	0	0	**37**	
0215 - 0230	0	19	0	0	0	0	0	0	10	0	0	0	0	**29**	
0230 - 0245	0	16	1	0	1	0	0	0	9	0	0	0	0	**27**	
0245 - 0300	0	25	1	0	0	0	0	0	9	0	0	0	0	**35**	**128**
0300 - 0315	0	10	0	0	1	0	0	0	4	0	0	0	0	**15**	
0315 - 0330	0	25	0	0	0	0	0	2	13	0	1	0	0	**41**	
0330 - 0345	0	21	1	0	1	0	0	1	11	0	0	0	0	**35**	
0345 - 0400	0	28	1	0	2	0	0	0	15	0	1	0	0	**47**	**138**
0400 - 0415	0	30	2	0	1	0	0	0	12	0	0	0	0	**45**	
0415 - 0430	0	22	5	0	0	0	0	0	8	0	0	0	0	**35**	
0430 - 0445	0	39	2	0	2	0	0	0	10	0	3	0	0	**56**	
0445 - 0500	0	37	0	0	0	0	0	0	14	0	1	0	0	**52**	**188**
0500 - 0515	0	46	3	0	0	0	0	0	9	0	0	0	0	**58**	
0515 - 0530	0	64	4	0	3	1	0	0	15	0	0	0	0	**87**	
0530 - 0545	0	95	9	0	0	0	0	0	18	0	0	0	0	**122**	
0545 - 0600	0	83	13	0	4	1	0	0	10	0	0	0	0	**111**	**378**
0600 - 0615	0	88	25	0	3	0	0	0	15	0	0	0	0	**131**	
0615 - 0630	0	99	45	0	3	0	0	2	24	0	0	0	0	**173**	
0630 - 0645	1	113	44	0	2	3	0	0	18	0	0	0	0	**181**	
0645 - 0700	0	109	51	0	4	2	0	1	14	0	1	0	0	**182**	**667**
0700 - 0715	0	119	64	0	0	0	0	1	13	0	0	0	0	**197**	
0715 - 0730	0	145	63	0	9	1	0	0	13	0	0	0	0	**231**	
0730 - 0745	1	150	37	1	3	1	1	1	9	0	0	0	0	**204**	
0745 - 0800	0	154	52	0	5	0	0	1	13	0	0	0	0	**225**	**857**
0800 - 0815	1	128	38	0	11	3	0	0	10	0	0	0	0	**191**	
0815 - 0830	0	86	45	0	6	2	0	1	12	0	0	0	0	**152**	
0830 - 0845	0	122	37	0	8	1	0	0	11	0	0	0	0	**179**	
0845 - 0900	0	135	48	0	7	1	0	0	19	0	1	0	0	**211**	**733**
0900 - 0915	0	105	52	2	7	2	0	0	29	0	0	0	0	**197**	
0915 - 0930	0	111	47	1	9	5	0	1	23	0	0	0	0	**197**	
0930 - 0945	0	116	46	1	4	1	0	1	23	0	0	0	0	**192**	
0945 - 1000	0	114	37	0	5	0	0	2	16	0	0	0	0	**174**	**760**
1000 - 1015	0	102	44	0	5	4	0	1	17	0	0	0	0	**173**	
1015 - 1030	0	107	41	1	13	3	0	1	14	0	0	0	0	**180**	
1030 - 1045	0	125	33	0	6	1	0	1	31	1	0	0	0	**198**	
1045 - 1100	0	101	54	0	8	3	0	0	32	0	0	0	0	**198**	**749**
1100 - 1115	0	101	43	0	6	2	0	0	32	0	0	0	0	**184**	
1115 - 1130	0	99	38	0	5	2	1	2	36	0	0	0	0	**183**	
1130 - 1145	2	123	42	0	5	2	0	2	30	0	0	0	0	**206**	
1145 - 1200	1	126	40	0	4	2	0	0	30	0	0	0	0	**203**	**776**
1200 - 1215	1	105	45	0	7	0	0	2	27	0	0	0	0	**187**	
1215 - 1230	0	124	44	0	3	3	0	2	39	0	0	0	0	**215**	
1230 - 1245	0	121	35	1	8	0	0	2	32	0	0	0	0	**199**	
1245 - 1300	0	130	44	1	3	4	0	1	35	0	0	0	0	**218**	**819**
1300 - 1315	0	119	44	0	5	1	0	2	38	1	0	0	0	**210**	
1315 - 1330	0	128	38	0	6	3	0	2	30	2	0	0	0	**209**	
1330 - 1345	0	148	43	0	8	2	0	1	28	0	0	0	0	**230**	
1345 - 1400	0	120	46	0	2	3	0	3	30	2	0	0	0	**206**	**855**
1400 - 1415	1	143	41	0	6	7	0	4	36	0	0	0	0	**238**	
1415 - 1430	0	152	50	5	5	0	0	1	33	1	0	0	0	**247**	
1430 - 1445	0	149	49	0	6	1	0	6	27	1	1	0	0	**240**	
1445 - 1500	1	146	62	0	7	2	2	5	29	0	1	0	0	**255**	**980**
1500 - 1515	1	146	65	0	5	3	1	6	37	0	0	0	0	**264**	
1515 - 1530	0	168	60	0	11	4	0	4	26	0	0	0	0	**273**	
1530 - 1545	0	162	64	0	5	4	0	9	42	0	0	0	0	**286**	
1545 - 1600	0	187	63	0	7	2	1	3	40	2	0	0	0	**305**	**1128**
1600 - 1615	0	189	83	1	8	3	2	6	28	0	1	0	0	**321**	
1615 - 1630	0	225	67	0	9	1	0	5	29	0	0	0	0	**336**	
1630 - 1645	0	201	55	0	11	4	0	3	34	0	0	0	0	**308**	
1645 - 1700	0	194	61	1	11	4	0	4	26	0	1	0	0	**302**	**1267**
1700 - 1715	0	205	61	0	5	2	0	3	12	1	0	0	0	**289**	
1715 - 1730	0	334	56	1	13	4	0	1	20	1	0	0	0	**430**	
1730 - 1745	1	184	56	0	12	1	0	6	32	0	0	0	0	**292**	
1745 - 1800	0	191	57	0	6	1	1	4	37	2	0	0	0	**299**	**1310**
1800 - 1815	1	161	58	0	8	2	0	3	27	0	0	0	0	**260**	
1815 - 1830	0	153	35	0	6	1	0	3	28	0	0	0	0	**226**	
1830 - 1845	0	132	38	0	3	2	0	0	15	0	0	0	0	**190**	
1845 - 1900	0	111	26	0	1	1	0	3	16	0	0	0	0	**158**	**834**
1900 - 1915	2	110	33	0	9	0	0	0	19	0	0	0	0	**173**	
1915 - 1930	1	99	27	0	3	0	0	0	18	0	2	0	0	**150**	
1930 - 1945	1	92	31	0	1	3	0	1	19	0	0	0	0	**148**	
1945 - 2000	1	84	39	0	1	0	0	0	12	0	0	0	0	**137**	**608**
2000 - 2015	0	90	39	0	3	5	0	0	16	0	0	0	0	**153**	
2015 - 2030	0	101	31	0	4	0	0	1	19	0	1	0	0	**157**	
2030 - 2045	0	98	23	0	1	1	0	0	13	0	0	0	0	**136**	
2045 - 2100	0	89	20	0	3	0	0	0	24	0	1	0	0	**137**	**583**
2100 - 2115	0	83	32	0	4	0	0	0	16	0	0	0	0	**135**	
2115 - 2130	1	98	30	0	0	0	0	0	14	0	0	0	0	**143**	
2130 - 2145	0	90	32	0	3	0	0	0	8	0	0	0	0	**133**	
2145 - 2200	0	72	10	0	1	0	0	0	9	0	2	0	0	**94**	**505**
2200 - 2215	0	65	11	0	2	0	0	0	10	0	1	0	0	**89**	
2215 - 2230	0	64	13	0	1	0	0	0	10	0	1	0	0	**89**	
2230 - 2245	0	58	15	0	0	0	0	0	14	0	1	0	0	**88**	
2245 - 2300	0	44	10	0	0	0	0	0	8	0	1	0	0	**63**	**329**
2300 - 2315	0	39	11	0	0	0	0	0	5	0	1	0	0	**56**	
2315 - 2330	0	38	16	0	0	0	0	0	8	0	1	0	0	**63**	
2330 - 2345	0	25	11	0	0	0	0	0	5	0	2	0	0	**43**	
2345 - 0000	0	24	9	0	2	0	0	0	3	0	0	0	0	**38**	**200**

Session Total	18	9504	3003	16	384	118	9	117	1802	14	30	0	0	**15015**
Session Average	0.19	99.00	31.28	0.17	4.00	1.23	0.09	1.22	18.77	0.15	0.31	0.00	0.00	**156.41**
Session Percentage	0.12	63.30	20.00	0.11	2.56	0.79	0.06	0.78	12.00	0.09	0.20	0.00	0.00	

AM Peak Hour	0715 - 0815	0715 - 0815	0630 - 0730	0845 - 0945	0800 - 0900	0915 - 1015	0645 - 0745	0915 - 1015	0845 - 0945	0945 - 1045	0600 - 0700	-	-	**0700 - 0800**
AM Peak Hour Volume	2	577	222	4	32	10	1	5	94	1	1	0	0	**857**

Noon Peak Hour	1115 - 1215	1445 - 1545	1445 - 1545	1330 - 1430	1015 - 1115	1315 - 1415	1415 - 1515	1445 - 1545	1215 - 1315	1300 - 1400	1400 - 1500	-	-	**1445 - 1545**
Noon Peak Hour Volume	4	622	251	5	33	15	3	24	144	5	2	0	0	**1078**

PM Peak Hour	1900 - 2000	1630 - 1730	1530 - 1630	1600 - 1700	1645 - 1745	1630 - 1730	1515 - 1615	1530 - 1630	1500 - 1600	1700 - 1800	1600 - 1700	-	-	**1630 - 1730**
PM Peak Hour Volume	5	934	277	2	41	14	3	23	145	4	2	0	0	**1329**

Site 74 Lane 2 WB
I-20,
west of US-378 Sunset Blvd S/Bound Off-Ramp

Date
Wednesday, April 24, 2024

Lat/Long
34.008085°, -81.156669°

Weather
Fair
66°F

Click here for Detailed Weather

0000 - 2400 (Weekday 24h Session) (04-24-2024)
SB WB 15min

	Westbound (Movement 74 Lane 2 WB.1)													15min	60min
TIME	1	2	3	4	5	6	7	8	9	10	11	12	13	Total	Total
0000 - 0015	0	25	6	0	1	0	0	0	12	0	4	0	0	**48**	
0015 - 0030	0	24	6	0	0	0	0	0	7	0	0	0	0	**37**	
0030 - 0045	0	17	2	0	0	0	0	0	8	0	0	0	0	**27**	
0045 - 0100	0	14	2	0	1	0	0	0	5	0	0	0	0	**22**	**134**
0100 - 0115	0	18	1	0	3	0	0	0	4	0	0	0	0	**26**	
0115 - 0130	0	12	1	0	0	1	0	0	10	0	1	0	0	**25**	
0130 - 0145	0	14	2	0	1	1	0	0	2	0	0	0	0	**20**	
0145 - 0200	0	15	1	0	2	0	0	0	4	0	0	0	0	**22**	**93**
0200 - 0215	0	12	3	0	0	0	0	0	8	0	1	0	0	**24**	
0215 - 0230	0	15	2	0	1	1	0	0	4	0	0	0	0	**23**	
0230 - 0245	0	10	1	0	1	0	0	0	8	0	0	0	0	**20**	
0245 - 0300	0	9	3	0	0	0	0	0	9	0	2	0	0	**23**	**90**
0300 - 0315	0	13	2	0	0	0	0	0	10	0	0	0	0	**25**	
0315 - 0330	0	15	3	0	0	0	0	0	7	0	0	0	0	**25**	
0330 - 0345	0	16	4	0	1	1	0	0	7	0	0	0	0	**29**	
0345 - 0400	0	24	3	2	1	0	0	0	4	0	0	0	0	**34**	**113**
0400 - 0415	0	20	4	0	0	0	0	0	9	0	0	0	0	**33**	
0415 - 0430	0	15	1	0	1	0	0	0	5	0	0	0	0	**22**	
0430 - 0445	0	25	5	0	0	0	0	0	6	0	2	0	0	**38**	
0445 - 0500	0	20	3	0	3	0	0	0	8	0	0	0	0	**34**	**127**
0500 - 0515	0	36	4	0	4	0	0	0	10	0	1	0	0	**55**	
0515 - 0530	0	51	5	0	2	1	0	0	17	0	0	0	0	**76**	
0530 - 0545	0	69	8	0	1	0	0	0	7	0	0	0	0	**85**	
0545 - 0600	0	65	6	0	1	0	0	0	10	0	0	0	0	**82**	**298**
0600 - 0615	1	80	26	0	8	1	0	1	10	0	1	0	0	**128**	
0615 - 0630	0	97	44	0	2	0	0	3	11	0	0	0	0	**157**	
0630 - 0645	1	147	49	0	2	0	0	2	17	0	1	0	0	**219**	
0645 - 0700	0	104	56	0	6	1	0	3	18	0	0	0	0	**188**	**692**
0700 - 0715	0	118	44	0	5	3	0	2	29	0	1	0	0	**202**	
0715 - 0730	0	147	57	0	6	2	0	4	12	0	0	0	0	**228**	
0730 - 0745	0	135	59	0	9	2	0	2	19	0	1	0	0	**227**	
0745 - 0800	0	123	60	0	6	0	0	4	14	0	0	1	0	**208**	**865**
0800 - 0815	0	98	30	0	4	2	0	1	17	0	0	0	0	**152**	
0815 - 0830	0	112	51	0	10	3	2	1	14	0	0	0	0	**193**	
0830 - 0845	0	103	44	0	7	1	0	1	19	0	0	0	0	**175**	
0845 - 0900	0	108	42	0	7	2	0	2	23	1	0	0	0	**185**	**705**
0900 - 0915	1	89	42	1	3	2	2	1	29	0	0	0	0	**170**	
0915 - 0930	0	81	38	0	8	4	1	0	16	0	0	0	0	**148**	
0930 - 0945	0	94	52	1	5	0	0	3	19	1	1	0	0	**176**	
0945 - 1000	1	112	45	2	7	2	1	3	33	1	0	0	0	**207**	**701**
1000 - 1015	0	110	52	0	2	3	0	3	35	0	0	0	0	**205**	
1015 - 1030	1	111	44	0	7	1	0	2	28	0	0	0	0	**194**	
1030 - 1045	0	129	63	0	3	0	0	6	25	0	0	0	0	**226**	
1045 - 1100	0	114	30	1	5	4	0	1	34	1	0	0	0	**190**	**815**
1100 - 1115	0	94	53	1	9	1	0	1	27	0	0	0	0	**186**	
1115 - 1130	0	101	39	0	2	1	0	1	26	1	0	0	0	**171**	
1130 - 1145	2	115	42	0	5	0	0	5	25	0	0	0	0	**194**	
1145 - 1200	1	104	53	0	7	3	0	2	23	0	0	0	0	**193**	**744**
1200 - 1215	0	111	33	0	4	2	0	5	41	0	0	1	0	**197**	
1215 - 1230	1	135	49	0	8	0	2	6	46	1	0	0	0	**248**	
1230 - 1245	0	127	57	0	5	0	2	4	23	2	0	0	0	**220**	
1245 - 1300	0	117	41	0	6	5	0	1	38	2	0	0	0	**210**	**875**
1300 - 1315	0	124	39	0	5	3	0	2	45	0	0	0	0	**218**	
1315 - 1330	2	128	55	1	9	2	0	1	37	0	0	0	0	**235**	
1330 - 1345	1	142	44	0	7	1	0	3	38	0	0	0	0	**236**	
1345 - 1400	0	121	52	0	6	3	0	1	26	0	0	0	0	**209**	**898**
1400 - 1415	0	126	63	0	8	3	0	0	34	0	0	0	0	**234**	
1415 - 1430	0	166	51	0	2	1	0	2	42	0	0	0	0	**264**	
1430 - 1445	0	145	51	2	7	0	1	3	36	0	0	1	0	**246**	
1445 - 1500	1	153	55	3	7	1	0	3	28	0	0	0	0	**251**	**995**
1500 - 1515	1	154	62	0	6	3	0	1	44	1	0	0	0	**272**	
1515 - 1530	0	164	75	1	7	1	0	5	34	0	0	0	0	**287**	
1530 - 1545	0	172	62	0	20	3	1	4	38	0	0	0	0	**300**	
1545 - 1600	0	187	74	0	5	3	0	3	38	0	0	1	0	**311**	**1170**
1600 - 1615	1	183	80	2	7	5	1	3	45	0	0	0	0	**327**	
1615 - 1630	0	210	70	1	12	2	0	6	27	1	0	0	0	**329**	
1630 - 1645	0	196	65	2	10	2	0	5	45	0	0	0	0	**325**	
1645 - 1700	0	189	56	0	10	1	0	4	38	0	0	0	0	**298**	**1279**
1700 - 1715	0	186	75	0	11	2	0	2	34	0	0	0	0	**310**	
1715 - 1730	0	208	69	1	4	1	1	2	35	0	0	0	0	**321**	
1730 - 1745	0	175	53	0	8	0	0	1	31	0	0	0	0	**268**	
1745 - 1800	0	169	52	2	6	2	1	3	33	0	0	0	0	**268**	**1167**
1800 - 1815	0	153	44	0	5	0	0	2	33	0	0	0	0	**237**	
1815 - 1830	1	163	39	3	8	2	0	3	23	1	0	0	0	**243**	
1830 - 1845	0	130	40	0	3	1	0	0	25	0	0	0	0	**199**	
1845 - 1900	0	127	29	0	9	0	0	0	16	0	0	0	0	**181**	**860**
1900 - 1915	0	109	32	0	4	1	0	3	21	0	0	0	0	**170**	
1915 - 1930	0	115	36	0	1	0	0	1	16	0	0	0	0	**169**	
1930 - 1945	1	103	32	0	3	0	0	3	19	0	0	0	0	**161**	
1945 - 2000	0	94	26	0	3	0	0	2	14	0	1	0	0	**140**	**640**
2000 - 2015	0	93	23	0	1	1	0	1	17	0	1	0	0	**137**	
2015 - 2030	0	103	24	0	1	1	0	2	12	0	0	0	0	**143**	
2030 - 2045	0	98	20	0	2	0	0	0	16	0	0	0	0	**136**	
2045 - 2100	0	120	39	1	2	0	0	0	14	0	0	0	0	**176**	**592**
2100 - 2115	0	95	12	0	1	0	0	0	13	0	2	0	0	**123**	
2115 - 2130	0	88	8	0	1	0	0	0	12	0	0	0	0	**109**	
2130 - 2145	0	89	9	0	0	0	0	0	15	0	2	0	0	**115**	
2145 - 2200	0	75	6	0	1	0	0	1	18	0	1	0	0	**102**	**449**
2200 - 2215	0	65	3	0	0	0	0	0	11	0	1	0	0	**80**	
2215 - 2230	0	68	3	1	2	0	0	0	11	0	3	0	0	**88**	
2230 - 2245	0	69	4	0	0	0	0	0	6	0	1	0	0	**80**	
2245 - 2300	0	48	1	0	1	0	0	0	9	0	2	0	0	**61**	**309**
2300 - 2315	1	50	4	1	0	0	0	0	10	0	1	0	0	**67**	
2315 - 2330	0	47	3	0	2	0	0	0	15	0	0	0	0	**67**	
2330 - 2345	0	34	2	0	0	0	0	0	11	0	0	0	0	**47**	
2345 - 0000	0	37	2	0	0	0	0	0	4	0	1	0	0	**44**	**225**

Session Total	18	9141	3017	29	389	95	15	142	1941	13	32	4	0	**14836**
Session Average	0.19	95.22	31.43	0.30	4.05	0.99	0.16	1.48	20.22	0.14	0.33	0.04	0.00	**154.54**
Session Percentage	0.12	61.61	20.34	0.20	2.62	0.64	0.10	0.96	13.08	0.09	0.22	0.03	0.00	

AM Peak Hour	0545 - 0645	0700 - 0800	0700 - 0800	0900 - 1000	0730 - 0830	0830 - 0930	0815 - 0915	0945 - 1045	0945 - 1045	0845 - 0945	0545 - 0645	0700 - 0800	-	**0700 - 0800**
AM Peak Hour Volume	2	523	220	4	29	9	4	14	121	2	2	1	0	**865**

Noon Peak Hour	1130 - 1230	1445 - 1545	1445 - 1545	1430 - 1530	1445 - 1545	1245 - 1345	1145 - 1245	1130 - 1230	1245 - 1345	1200 - 1300	-	1115 - 1215	-	**1445 - 1545**
Noon Peak Hour Volume	4	643	254	6	40	11	4	18	158	5	0	1	0	**1110**

PM Peak Hour	1500 - 1600	1615 - 1715	1515 - 1615	1545 - 1645	1530 - 1630	1530 - 1630	1515 - 1615	1600 - 1700	1515 - 1615	1500 - 1600	1915 - 2015	1500 - 1600	-	**1545 - 1645**
PM Peak Hour Volume	1	781	291	5	44	13	2	18	155	1	2	1	0	**1292**

Site 74 Lane 2 WB
I-20,
west of US-378 Sunset Blvd S/Bound Off-Ramp

Date
Thursday, April 25, 2024

Lat/Long
34.008085°, -81.156669°

Weather
Fair
67°F

Click here for Detailed Weather

0000 - 2400 (Weekday 24h Session) (04-25-2024)
SB WB 15min

	Westbound (Movement 74 Lane 2 WB.1)													15min	60min
TIME	1	2	3	4	5	6	7	8	9	10	11	12	13	Total	Total
0000 - 0015	0	29	8	0	0	1	0	2	8	0	0	0	0	**48**	
0015 - 0030	0	18	5	0	0	1	0	0	16	0	2	0	0	**42**	
0030 - 0045	0	15	3	0	2	0	0	0	12	0	1	0	0	**33**	
0045 - 0100	0	15	0	0	1	0	0	0	1	0	0	0	0	**17**	**140**
0100 - 0115	0	19	1	0	2	1	0	0	8	0	1	0	0	**32**	
0115 - 0130	0	13	1	0	0	1	0	0	3	0	0	0	0	**18**	
0130 - 0145	0	12	0	0	0	0	0	0	8	0	1	0	0	**21**	
0145 - 0200	0	13	0	0	0	0	0	0	5	0	0	0	0	**18**	**89**
0200 - 0215	0	17	1	0	1	0	0	0	7	0	1	0	0	**27**	
0215 - 0230	0	20	1	0	1	0	0	0	4	0	0	0	0	**26**	
0230 - 0245	0	10	0	0	0	0	0	0	5	0	0	0	0	**15**	
0245 - 0300	0	15	1	0	1	0	0	0	10	0	1	0	0	**28**	**96**
0300 - 0315	0	17	0	0	0	0	0	0	9	0	0	0	0	**26**	
0315 - 0330	0	13	0	0	1	0	0	0	5	0	1	0	0	**20**	
0330 - 0345	0	15	0	0	1	0	0	0	6	0	1	0	0	**23**	
0345 - 0400	0	32	0	0	1	0	0	0	5	0	0	0	0	**38**	**107**
0400 - 0415	0	20	3	0	2	0	0	0	3	0	0	0	0	**28**	
0415 - 0430	0	19	1	0	1	0	0	0	7	0	1	0	0	**29**	
0430 - 0445	0	32	0	0	0	0	0	0	8	0	0	0	0	**40**	
0445 - 0500	0	29	4	0	1	0	0	0	5	0	0	0	0	**39**	**136**
0500 - 0515	0	29	0	0	0	0	0	0	14	0	1	0	0	**44**	
0515 - 0530	0	51	0	0	0	0	0	0	7	0	0	0	0	**58**	
0530 - 0545	0	63	2	0	0	0	0	0	17	0	0	0	0	**82**	
0545 - 0600	0	87	3	0	0	0	0	0	16	0	1	0	0	**107**	**291**
0600 - 0615	0	119	4	0	1	0	0	0	19	0	2	0	0	**145**	
0615 - 0630	1	91	35	0	5	2	0	0	23	0	2	0	0	**159**	
0630 - 0645	0	111	42	0	4	2	0	0	16	0	0	0	0	**175**	
0645 - 0700	0	99	46	0	2	2	0	1	19	0	0	0	0	**169**	**648**
0700 - 0715	0	122	44	0	5	8	0	0	17	0	1	0	0	**197**	
0715 - 0730	0	139	49	1	6	3	1	1	25	0	0	0	0	**225**	
0730 - 0745	1	151	46	0	9	0	0	0	14	0	0	0	0	**221**	
0745 - 0800	0	163	60	0	9	1	0	0	15	0	0	0	0	**248**	**891**
0800 - 0815	0	116	64	1	4	3	0	0	22	0	0	0	0	**210**	
0815 - 0830	0	119	63	0	7	2	0	1	26	2	1	0	0	**221**	
0830 - 0845	0	101	56	0	14	2	0	2	27	0	0	0	0	**202**	
0845 - 0900	0	105	61	0	9	1	0	1	24	0	0	0	0	**201**	**834**
0900 - 0915	1	90	47	1	5	3	0	2	29	1	0	0	0	**179**	
0915 - 0930	1	97	54	0	4	2	0	1	22	1	0	0	0	**182**	
0930 - 0945	0	116	48	0	3	1	0	4	36	0	0	0	0	**208**	
0945 - 1000	0	123	39	0	9	2	0	2	18	0	0	0	0	**193**	**762**
1000 - 1015	0	114	54	0	0	5	1	2	25	0	0	0	0	**201**	
1015 - 1030	0	119	44	0	6	0	0	2	19	0	0	0	0	**190**	
1030 - 1045	0	120	43	0	10	1	0	1	33	0	0	0	0	**208**	
1045 - 1100	0	117	41	0	6	1	1	8	33	0	0	0	0	**207**	**806**
1100 - 1115	0	121	35	0	3	3	0	3	36	0	0	0	0	**201**	
1115 - 1130	0	123	36	0	7	4	0	3	31	0	0	0	0	**204**	
1130 - 1145	1	112	43	0	10	1	0	3	40	0	1	0	0	**211**	
1145 - 1200	1	107	63	0	3	3	0	0	31	0	0	0	0	**208**	**824**
1200 - 1215	0	100	43	0	8	3	0	1	35	1	0	0	0	**191**	
1215 - 1230	0	132	51	0	7	1	1	3	32	0	1	0	0	**228**	
1230 - 1245	0	116	50	0	8	3	1	2	39	0	0	0	0	**219**	
1245 - 1300	0	137	45	1	6	0	0	3	40	0	0	0	0	**232**	**870**
1300 - 1315	0	119	57	0	8	2	1	5	35	0	1	0	0	**228**	
1315 - 1330	0	151	55	2	9	4	1	0	28	1	0	0	0	**251**	
1330 - 1345	0	169	53	1	6	1	0	3	34	1	0	0	0	**268**	
1345 - 1400	1	164	66	0	2	0	0	4	41	0	0	0	0	**278**	**1025**
1400 - 1415	0	153	58	0	11	6	0	6	32	1	0	0	0	**267**	
1415 - 1430	1	149	64	0	5	1	0	1	50	1	0	0	0	**272**	
1430 - 1445	0	147	63	1	10	0	0	2	45	1	0	0	0	**269**	
1445 - 1500	1	154	58	0	10	1	0	3	31	0	0	1	0	**259**	**1067**
1500 - 1515	1	191	78	0	5	1	0	1	37	0	0	0	0	**314**	
1515 - 1530	0	198	59	0	10	1	0	2	33	1	1	0	0	**305**	
1530 - 1545	1	196	85	1	6	2	2	1	31	0	0	0	0	**325**	
1545 - 1600	0	168	81	0	9	0	0	5	32	0	0	0	0	**295**	**1239**
1600 - 1615	0	205	66	1	9	1	0	3	39	0	0	0	0	**324**	
1615 - 1630	0	239	85	0	12	3	0	0	21	0	0	0	0	**360**	
1630 - 1645	1	218	65	0	7	0	1	1	32	0	0	0	0	**325**	
1645 - 1700	1	244	94	0	8	1	0	5	33	0	0	0	0	**386**	**1395**
1700 - 1715	1	299	94	0	7	3	1	1	25	0	0	0	0	**431**	
1715 - 1730	0	230	86	0	4	0	0	1	26	0	0	0	0	**347**	
1730 - 1745	1	194	53	0	10	1	1	3	27	0	0	0	0	**290**	
1745 - 1800	1	186	55	2	4	3	0	1	32	1	0	0	0	**285**	**1353**
1800 - 1815	0	167	54	0	5	1	0	4	38	0	0	0	0	**269**	
1815 - 1830	1	182	54	0	6	1	0	0	19	0	0	0	0	**263**	
1830 - 1845	1	144	46	0	9	0	0	3	19	0	0	0	0	**222**	
1845 - 1900	0	141	55	2	5	0	0	2	14	1	0	0	0	**220**	**974**
1900 - 1915	0	130	41	0	3	0	0	1	12	0	0	0	0	**187**	
1915 - 1930	0	120	42	0	1	2	0	2	18	0	0	0	0	**185**	
1930 - 1945	2	117	36	0	6	0	0	6	17	0	1	0	0	**185**	
1945 - 2000	0	96	30	0	3	0	0	0	14	0	0	0	0	**143**	**700**
2000 - 2015	0	90	19	0	4	0	0	0	26	0	0	0	0	**139**	
2015 - 2030	0	108	15	1	2	2	0	0	11	0	2	0	0	**141**	
2030 - 2045	0	104	5	0	1	0	0	0	12	0	0	0	0	**122**	
2045 - 2100	0	82	4	0	1	0	0	0	11	0	0	0	0	**98**	**500**
2100 - 2115	0	106	5	0	2	0	0	0	9	0	0	0	0	**122**	
2115 - 2130	0	114	3	0	0	0	0	0	4	0	0	0	0	**121**	
2130 - 2145	0	104	2	0	0	0	0	0	9	0	0	0	0	**115**	
2145 - 2200	0	54	3	0	0	0	0	0	8	0	0	0	0	**65**	**423**
2200 - 2215	0	58	1	0	1	0	0	0	9	0	0	0	0	**69**	
2215 - 2230	0	76	1	0	1	0	0	0	7	0	0	0	0	**85**	
2230 - 2245	0	66	2	1	0	0	0	0	9	0	1	0	0	**79**	
2245 - 2300	0	58	1	0	2	0	0	0	3	0	1	0	0	**65**	**298**
2300 - 2315	0	57	7	0	0	0	0	0	10	0	0	0	0	**74**	
2315 - 2330	0	40	0	0	0	1	0	0	4	0	4	0	0	**49**	
2330 - 2345	0	51	1	0	0	0	0	0	2	0	0	0	0	**54**	
2345 - 0000	0	49	0	0	0	0	0	0	3	0	1	0	0	**53**	**230**

Session Total	20	9971	3142	16	389	101	12	114	1887	13	32	1	0	**15698**
Session Average	0.21	103.86	32.73	0.17	4.05	1.05	0.13	1.19	19.66	0.14	0.33	0.01	0.00	**163.52**
Session Percentage	0.13	63.52	20.02	0.10	2.48	0.64	0.08	0.73	12.02	0.08	0.20	0.01	0.00	

AM Peak Hour	0830 - 0930	0700 - 0800	0800 - 0900	0715 - 0815	0815 - 0915	0630 - 0730	0630 - 0730	0930 - 1030	0845 - 0945	0815 - 0915	0530 - 0630	-	-	**0715 - 0815**
AM Peak Hour Volume	2	575	244	2	35	15	1	10	111	3	5	0	0	**904**

Noon Peak Hour	1415 - 1515	1445 - 1545	1445 - 1545	1245 - 1345	1400 - 1500	1100 - 1200	1215 - 1315	1045 - 1145	1345 - 1445	1315 - 1415	1130 - 1230	1400 - 1500	-	**1445 - 1545**
Noon Peak Hour Volume	3	739	280	4	36	11	3	17	168	3	2	1	0	**1203**

PM Peak Hour	1615 - 1715	1615 - 1715	1630 - 1730	1515 - 1615	1545 - 1645	1615 - 1715	1500 - 1600	1515 - 1615	1515 - 1615	1500 - 1600	1930 - 2030	-	-	**1615 - 1715**
PM Peak Hour Volume	3	1000	339	2	37	7	2	11	135	1	3	0	0	**1502**

Site 74 Lane 2 WB
I-20,
west of US-378 Sunset Blvd S/Bound Off-Ramp

Date
Friday, April 26, 2024

Lat/Long
34.008085°, -81.156669°

Weather
Cloudy
69°F

Click here for Detailed Weather

0000 - 2400 (Weekday 24h Session) (04-26-2024)
SB WB 15min

	Westbound (Movement 74 Lane 2 WB.1)													15min	60min
TIME	1	2	3	4	5	6	7	8	9	10	11	12	13	Total	Total
0000 - 0015	0	34	8	0	3	0	0	0	8	0	0	0	0	**53**	
0015 - 0030	0	25	4	0	1	0	0	0	4	0	2	0	0	**36**	
0030 - 0045	0	26	8	0	3	0	0	0	2	0	1	0	0	**40**	
0045 - 0100	0	18	5	0	1	0	0	0	10	0	0	0	0	**34**	**163**
0100 - 0115	0	19	6	0	5	0	0	0	7	0	2	0	0	**39**	
0115 - 0130	0	22	9	0	1	0	0	0	9	0	1	0	0	**42**	
0130 - 0145	0	24	8	0	1	0	0	0	7	0	1	0	0	**41**	
0145 - 0200	0	18	7	0	0	0	0	0	8	0	1	0	0	**34**	**156**
0200 - 0215	0	16	6	0	0	0	0	0	6	0	1	0	0	**29**	
0215 - 0230	0	13	3	0	2	0	0	0	9	0	0	0	0	**27**	
0230 - 0245	0	15	7	0	0	0	0	0	8	0	1	0	0	**31**	
0245 - 0300	0	16	5	0	3	0	0	0	5	0	2	0	0	**31**	**118**
0300 - 0315	0	17	6	0	2	0	0	0	13	0	2	0	0	**40**	
0315 - 0330	0	16	5	0	0	0	0	0	8	0	3	0	0	**32**	
0330 - 0345	0	20	7	0	1	0	0	0	11	0	2	0	0	**41**	
0345 - 0400	0	23	12	0	0	0	0	0	10	0	1	0	0	**46**	**159**
0400 - 0415	0	22	13	0	2	2	0	0	15	0	1	0	0	**55**	
0415 - 0430	0	21	11	0	1	0	0	0	12	0	1	0	0	**46**	
0430 - 0445	0	30	17	0	2	0	0	0	13	0	1	0	0	**63**	
0445 - 0500	0	28	14	0	3	0	0	0	15	0	1	0	0	**61**	**225**
0500 - 0515	0	30	13	0	1	1	0	0	9	0	0	0	0	**54**	
0515 - 0530	0	31	15	2	0	0	0	0	11	0	1	0	0	**60**	
0530 - 0545	0	55	30	0	3	0	0	0	12	0	2	0	0	**102**	
0545 - 0600	0	65	33	0	1	1	0	0	14	0	0	0	0	**114**	**330**
0600 - 0615	0	59	28	0	3	1	0	0	15	0	0	0	0	**106**	
0615 - 0630	0	92	37	0	2	1	0	0	15	0	1	0	0	**148**	
0630 - 0645	0	94	39	0	5	1	0	0	13	0	1	0	0	**153**	
0645 - 0700	0	95	44	0	2	1	0	0	16	1	1	0	0	**160**	**567**
0700 - 0715	1	115	49	0	9	1	0	0	9	0	0	0	0	**184**	
0715 - 0730	0	142	63	0	9	3	0	1	12	1	0	0	0	**231**	
0730 - 0745	1	140	54	0	9	4	1	0	15	0	0	0	0	**224**	
0745 - 0800	0	143	63	0	10	4	0	2	16	1	0	0	0	**239**	**878**
0800 - 0815	0	101	50	0	16	1	0	1	20	0	0	0	0	**189**	
0815 - 0830	0	104	48	1	6	0	0	3	19	0	1	0	0	**182**	
0830 - 0845	0	110	47	2	8	0	0	1	23	0	0	0	0	**191**	
0845 - 0900	0	104	37	0	8	3	0	3	19	0	0	0	0	**174**	**736**
0900 - 0915	0	103	48	1	6	4	0	1	12	0	0	0	0	**175**	
0915 - 0930	0	124	48	0	5	2	0	0	21	0	0	0	0	**200**	
0930 - 0945	0	110	50	0	7	0	0	1	18	2	0	0	0	**188**	
0945 - 1000	1	111	41	0	4	1	0	3	25	0	0	1	0	**187**	**750**
1000 - 1015	1	101	49	0	5	1	0	2	17	0	1	0	0	**177**	
1015 - 1030	1	116	39	0	5	2	0	2	19	1	0	0	0	**185**	
1030 - 1045	0	122	34	0	6	2	0	3	20	0	0	0	0	**187**	
1045 - 1100	1	117	40	1	8	2	1	5	26	0	0	0	0	**201**	**750**
1100 - 1115	0	136	51	0	5	2	2	2	29	1	0	0	0	**228**	
1115 - 1130	0	141	48	0	8	2	0	5	28	1	0	0	0	**233**	
1130 - 1145	1	137	53	1	9	2	0	1	28	0	0	0	0	**232**	
1145 - 1200	0	133	59	0	8	1	0	6	27	0	0	0	0	**234**	**927**
1200 - 1215	0	134	55	0	9	3	0	0	32	0	0	0	0	**233**	
1215 - 1230	1	139	56	1	6	3	0	2	37	0	0	0	0	**245**	
1230 - 1245	0	156	55	1	7	3	0	1	21	0	0	0	0	**244**	
1245 - 1300	4	148	46	0	8	2	0	3	27	0	0	0	0	**238**	**960**
1300 - 1315	1	164	63	3	8	0	0	3	18	0	0	0	0	**260**	
1315 - 1330	0	147	53	1	2	1	1	4	28	0	0	0	0	**237**	
1330 - 1345	1	161	40	0	12	0	0	3	34	0	0	0	0	**251**	
1345 - 1400	1	162	54	1	6	3	0	2	28	0	0	0	0	**257**	**1005**
1400 - 1415	1	172	57	1	7	1	0	1	33	0	0	0	0	**273**	
1415 - 1430	0	154	65	0	5	3	0	8	22	1	0	0	0	**258**	
1430 - 1445	0	158	50	0	12	2	0	2	36	0	0	0	0	**260**	
1445 - 1500	1	173	56	0	6	4	0	3	43	0	0	0	0	**286**	**1077**
1500 - 1515	0	185	67	0	6	4	0	2	36	0	0	0	0	**300**	
1515 - 1530	0	209	75	0	5	3	0	4	30	0	0	0	0	**326**	
1530 - 1545	0	177	58	1	9	0	0	4	31	0	1	0	0	**281**	
1545 - 1600	0	212	55	2	4	1	0	6	36	2	0	0	0	**318**	**1225**
1600 - 1615	0	210	61	1	11	2	0	9	25	0	0	0	0	**319**	
1615 - 1630	0	233	67	0	3	3	0	3	31	0	0	0	0	**340**	
1630 - 1645	0	201	64	0	10	1	0	4	29	0	0	0	0	**309**	
1645 - 1700	0	220	54	0	1	2	0	7	22	0	0	0	0	**306**	**1274**
1700 - 1715	0	217	63	0	9	2	0	0	25	1	1	0	0	**318**	
1715 - 1730	0	267	54	0	8	3	0	6	20	0	0	0	0	**358**	
1730 - 1745	0	209	57	0	2	0	0	2	25	0	0	0	0	**295**	
1745 - 1800	1	177	47	0	3	0	0	6	33	0	0	0	0	**267**	**1238**
1800 - 1815	1	171	48	1	4	1	0	1	30	0	0	0	0	**257**	
1815 - 1830	0	189	47	1	8	2	0	6	20	1	0	0	0	**274**	
1830 - 1845	0	147	50	0	3	0	0	1	15	1	0	0	0	**217**	
1845 - 1900	0	166	39	0	1	2	0	1	13	0	0	0	0	**222**	**970**
1900 - 1915	0	129	49	2	2	1	0	3	15	0	0	0	0	**201**	
1915 - 1930	1	138	19	0	3	1	0	4	16	1	0	0	0	**183**	
1930 - 1945	0	146	33	0	3	0	0	2	13	0	0	0	0	**197**	
1945 - 2000	0	134	35	1	1	0	0	3	12	0	0	0	0	**186**	**767**
2000 - 2015	1	124	25	1	3	0	0	0	19	0	0	0	0	**173**	
2015 - 2030	0	135	28	0	2	0	0	0	16	0	0	0	0	**181**	
2030 - 2045	0	118	22	0	1	0	0	0	14	0	2	0	0	**157**	
2045 - 2100	0	127	24	0	0	0	0	0	7	0	1	0	0	**159**	**670**
2100 - 2115	0	105	21	0	5	0	0	0	8	0	1	0	0	**140**	
2115 - 2130	0	117	27	0	2	0	0	0	21	0	2	0	0	**169**	
2130 - 2145	0	104	23	0	5	0	0	0	4	0	1	0	0	**137**	
2145 - 2200	0	85	18	1	0	0	0	0	6	0	3	0	0	**113**	**559**
2200 - 2215	0	107	23	0	2	0	0	0	11	0	0	0	0	**143**	
2215 - 2230	0	82	22	0	2	0	0	0	6	0	2	0	0	**114**	
2230 - 2245	0	101	23	0	1	0	0	0	11	0	2	0	0	**138**	
2245 - 2300	0	89	25	0	1	0	0	0	10	0	2	0	0	**127**	**522**
2300 - 2315	0	80	19	0	1	0	0	0	7	0	2	0	0	**109**	
2315 - 2330	0	64	15	0	0	0	0	0	3	0	1	0	0	**83**	
2330 - 2345	0	45	14	0	0	0	0	0	6	0	2	0	0	**67**	
2345 - 0000	0	46	16	0	2	0	0	0	7	0	1	0	0	**72**	**331**

Session Total	21	10488	3408	27	410	98	5	148	1680	15	56	1	0	**16357**
Session Average	0.22	109.25	35.50	0.28	4.27	1.02	0.05	1.54	17.50	0.16	0.58	0.01	0.00	**170.39**
Session Percentage	0.13	64.12	20.84	0.17	2.51	0.60	0.03	0.90	10.27	0.09	0.34	0.01	0.00	

AM Peak Hour	0930 - 1030	0700 - 0800	0715 - 0815	0815 - 0915	0715 - 0815	0700 - 0800	0645 - 0745	0945 - 1045	0800 - 0900	0930 - 1030	0500 - 0600	0900 - 1000	-	**0715 - 0815**
AM Peak Hour Volume	3	540	230	4	44	12	1	10	81	3	3	1	0	**883**

Noon Peak Hour	1215 - 1315	1445 - 1545	1445 - 1545	1215 - 1315	1115 - 1215	1415 - 1515	1015 - 1115	1030 - 1130	1430 - 1530	1015 - 1115	1000 - 1100	-	-	**1445 - 1545**
Noon Peak Hour Volume	6	744	256	5	34	13	3	15	145	2	1	0	0	**1193**

PM Peak Hour	1715 - 1815	1645 - 1745	1500 - 1600	1515 - 1615	1515 - 1615	1500 - 1600	-	1515 - 1615	1500 - 1600	1500 - 1600	1945 - 2045	-	-	**1630 - 1730**
PM Peak Hour Volume	2	913	255	4	29	8	0	23	133	2	2	0	0	**1291**

Site 74 Lane 2 WB
I-20,
west of US-378 Sunset Blvd S/Bound Off-Ramp

Date
Saturday, April 27, 2024

Lat/Long
34.008085°, -81.156669°

Weather
Mostly Cloudy
69°F

Click here for Detailed Weather

0000 - 2400 (Saturday 24h Session) (04-27-2024)
SB WB 15min

	Westbound (Movement 74 Lane 2 WB.1)													15min	60min
TIME	1	2	3	4	5	6	7	8	9	10	11	12	13	Total	Total
0000 - 0015	0	50	6	0	1	0	0	0	8	0	0	0	0	**65**	
0015 - 0030	0	41	5	0	1	0	0	0	7	0	1	0	0	**55**	
0030 - 0045	0	29	6	0	1	0	0	0	7	0	0	0	0	**43**	
0045 - 0100	0	30	4	0	1	0	0	0	6	0	0	0	0	**41**	**204**
0100 - 0115	0	20	5	0	2	0	0	0	8	0	0	0	0	**35**	
0115 - 0130	0	21	6	0	1	0	0	0	5	0	0	0	0	**33**	
0130 - 0145	0	18	4	0	2	0	0	0	3	0	0	0	0	**27**	
0145 - 0200	0	11	3	0	1	0	0	0	3	0	0	0	0	**18**	**113**
0200 - 0215	0	10	2	0	0	0	0	0	1	0	0	0	0	**13**	
0215 - 0230	0	20	6	0	2	0	0	0	2	0	0	0	0	**30**	
0230 - 0245	0	15	3	0	0	0	0	0	3	0	0	0	0	**21**	
0245 - 0300	0	11	5	0	0	0	0	0	2	0	1	0	0	**19**	**83**
0300 - 0315	0	10	6	0	1	0	0	0	5	0	2	0	0	**24**	
0315 - 0330	0	21	9	0	0	0	0	0	2	0	1	0	0	**33**	
0330 - 0345	0	10	4	0	1	0	0	0	1	0	0	0	0	**16**	
0345 - 0400	0	8	2	0	1	0	0	0	3	0	0	0	0	**14**	**87**
0400 - 0415	0	10	5	0	1	0	0	0	6	0	0	0	0	**22**	
0415 - 0430	0	20	8	0	0	0	0	0	4	0	2	0	0	**34**	
0430 - 0445	0	18	3	0	0	0	0	0	3	0	0	0	0	**24**	
0445 - 0500	0	10	6	0	0	0	0	0	3	0	1	0	0	**20**	**100**
0500 - 0515	0	18	5	0	0	0	0	0	8	0	2	0	0	**33**	
0515 - 0530	0	26	6	0	1	0	0	0	3	0	0	0	0	**36**	
0530 - 0545	0	28	10	0	1	0	0	0	4	0	2	0	0	**45**	
0545 - 0600	0	30	19	0	4	0	0	0	2	0	0	0	0	**55**	**169**
0600 - 0615	0	37	26	0	1	0	0	0	8	0	1	0	0	**73**	
0615 - 0630	0	39	28	0	1	0	0	2	5	0	0	0	0	**75**	
0630 - 0645	0	62	19	0	1	0	0	0	2	0	0	0	0	**84**	
0645 - 0700	1	67	22	0	2	0	0	1	9	0	1	0	0	**103**	**335**
0700 - 0715	0	58	13	0	1	0	0	1	5	0	1	0	0	**79**	
0715 - 0730	0	90	30	0	0	1	0	0	3	0	0	0	0	**124**	
0730 - 0745	0	88	36	1	3	1	0	0	10	0	0	0	0	**139**	
0745 - 0800	0	101	27	0	1	2	0	1	4	0	0	0	0	**136**	**478**
0800 - 0815	0	97	26	0	1	1	0	0	9	0	0	0	0	**134**	
0815 - 0830	0	94	48	0	6	2	0	1	5	0	0	0	0	**156**	
0830 - 0845	0	106	33	0	2	0	0	2	16	0	0	0	0	**159**	
0845 - 0900	0	116	38	0	4	0	0	1	10	0	0	0	0	**169**	**618**
0900 - 0915	1	127	35	0	1	0	0	1	10	0	0	0	0	**175**	
0915 - 0930	0	121	37	0	2	0	0	2	11	0	0	0	0	**173**	
0930 - 0945	0	149	34	2	3	0	0	1	24	0	0	0	0	**213**	
0945 - 1000	0	147	39	1	2	2	0	0	11	0	0	0	0	**202**	**763**
1000 - 1015	0	129	34	0	2	0	0	0	18	0	0	0	0	**183**	
1015 - 1030	1	137	35	0	1	2	0	0	5	1	0	0	0	**182**	
1030 - 1045	1	144	35	1	2	1	0	0	14	0	0	0	0	**198**	
1045 - 1100	0	153	46	1	0	1	0	1	3	0	0	0	0	**205**	**768**
1100 - 1115	0	165	39	1	1	0	0	2	17	0	0	0	0	**225**	
1115 - 1130	0	153	48	0	1	0	0	1	11	0	0	0	0	**214**	
1130 - 1145	1	162	51	0	2	0	0	1	7	0	0	0	0	**224**	
1145 - 1200	0	137	50	1	2	0	0	1	11	0	0	0	0	**202**	**865**
1200 - 1215	0	151	41	1	3	3	0	0	14	0	0	0	0	**213**	
1215 - 1230	1	176	45	0	1	1	0	0	14	0	0	0	0	**238**	
1230 - 1245	0	177	47	0	2	1	0	3	11	0	0	0	0	**241**	
1245 - 1300	0	166	49	0	1	0	0	2	9	0	0	0	0	**227**	**919**
1300 - 1315	0	165	44	1	2	0	0	1	8	0	0	0	0	**221**	
1315 - 1330	0	184	51	0	1	1	0	0	12	0	0	0	0	**249**	
1330 - 1345	0	186	38	0	2	0	0	0	7	0	0	0	0	**233**	
1345 - 1400	0	162	50	0	3	0	0	0	12	0	0	0	0	**227**	**930**
1400 - 1415	1	169	59	0	1	1	0	3	14	0	0	0	0	**248**	
1415 - 1430	0	168	56	4	3	0	0	2	6	0	0	0	0	**239**	
1430 - 1445	0	151	43	0	3	0	0	2	13	0	0	0	0	**212**	
1445 - 1500	0	181	32	0	0	0	0	1	7	0	0	0	0	**221**	**920**
1500 - 1515	1	176	34	0	2	0	0	1	8	0	0	0	0	**222**	
1515 - 1530	0	178	36	0	5	0	0	1	8	0	0	0	0	**228**	
1530 - 1545	9	188	34	0	2	1	0	1	9	0	0	0	0	**244**	
1545 - 1600	0	184	31	1	2	1	1	1	8	1	0	0	0	**230**	**924**
1600 - 1615	1	170	38	0	4	0	0	1	9	0	0	0	0	**223**	
1615 - 1630	1	158	36	0	1	1	0	1	9	1	0	0	0	**208**	
1630 - 1645	1	178	41	0	0	1	0	0	5	0	0	0	0	**226**	
1645 - 1700	2	172	37	0	2	0	0	2	9	0	0	0	0	**224**	**881**
1700 - 1715	4	159	35	0	0	1	0	0	9	0	0	0	0	**208**	
1715 - 1730	1	147	33	1	3	1	0	0	6	0	0	0	0	**192**	
1730 - 1745	0	171	34	0	2	0	0	1	4	0	0	0	0	**212**	
1745 - 1800	0	135	42	1	0	0	0	0	6	0	0	0	0	**184**	**796**
1800 - 1815	0	170	38	0	1	0	0	1	3	0	0	0	0	**213**	
1815 - 1830	1	157	37	0	4	0	0	2	3	0	0	0	0	**204**	
1830 - 1845	1	162	36	1	1	0	0	1	7	0	0	0	0	**209**	
1845 - 1900	3	120	33	1	2	0	0	0	4	0	0	0	0	**163**	**789**
1900 - 1915	0	127	36	3	0	0	0	0	5	0	0	0	0	**171**	
1915 - 1930	1	113	34	0	4	1	0	1	5	0	0	0	0	**159**	
1930 - 1945	0	130	27	0	1	0	0	0	3	0	0	0	0	**161**	
1945 - 2000	0	131	35	1	0	1	0	0	7	0	0	0	0	**175**	**666**
2000 - 2015	0	129	30	0	0	0	0	0	9	0	0	0	0	**168**	
2015 - 2030	0	115	19	0	0	0	0	1	4	0	0	0	0	**139**	
2030 - 2045	0	125	15	0	0	1	0	0	3	0	0	0	0	**144**	
2045 - 2100	0	101	18	0	0	0	0	0	1	0	0	0	0	**120**	**571**
2100 - 2115	0	110	15	0	1	0	0	0	4	0	0	0	0	**130**	
2115 - 2130	0	111	17	0	0	0	0	0	7	0	0	0	0	**135**	
2130 - 2145	0	113	19	0	1	0	0	0	5	0	0	0	0	**138**	
2145 - 2200	0	120	17	0	0	1	0	0	1	0	0	0	0	**139**	**542**
2200 - 2215	0	125	20	0	0	0	0	0	3	0	0	0	0	**148**	
2215 - 2230	0	101	11	0	0	0	0	0	5	0	0	0	0	**117**	
2230 - 2245	0	89	10	0	0	0	0	0	6	0	0	0	0	**105**	
2245 - 2300	0	81	13	0	0	0	0	0	2	0	0	0	0	**96**	**466**
2300 - 2315	0	75	8	0	0	1	0	0	3	0	0	0	0	**87**	
2315 - 2330	0	59	7	0	0	0	0	0	3	0	0	0	0	**69**	
2330 - 2345	0	61	9	0	0	0	0	0	1	0	0	0	0	**71**	
2345 - 0000	0	55	9	0	0	0	0	0	3	0	0	0	0	**67**	**294**

Session Total	33	9896	2466	23	124	31	1	48	641	3	15	0	0	**13281**
Session Average	0.34	103.08	25.69	0.24	1.29	0.32	0.01	0.50	6.68	0.03	0.16	0.00	0.00	**138.34**
Session Percentage	0.25	74.51	18.57	0.17	0.93	0.23	0.01	0.36	4.83	0.02	0.11	0.00	0.00	

AM Peak Hour	0945 - 1045	0930 - 1030	0815 - 0915	0900 - 1000	0800 - 0900	0730 - 0830	-	0830 - 0930	0915 - 1015	0930 - 1030	0500 - 0600	-	-	**0930 - 1030**
AM Peak Hour Volume	2	562	154	3	13	6	0	6	64	1	4	0	0	**780**

Noon Peak Hour	1445 - 1545	1445 - 1545	1345 - 1445	1330 - 1430	1345 - 1445	1145 - 1245	-	1400 - 1500	1145 - 1245	1000 - 1100	-	-	-	**1315 - 1415**
Noon Peak Hour Volume	10	723	208	4	10	5	0	8	50	1	0	0	0	**957**

PM Peak Hour	1530 - 1630	1500 - 1600	1745 - 1845	1815 - 1915	1515 - 1615	1530 - 1630	1500 - 1600	1500 - 1600	1530 - 1630	1530 - 1630	-	-	-	**1515 - 1615**
PM Peak Hour Volume	11	726	153	5	13	3	1	4	35	2	0	0	0	**925**

Bi-Directional Class Count || SB WB Average 15min

Columbia, SC

Marr Traffic DATA COLLECTION
www.marrtraffic.com

Site 74 Lane 2 WB
I-20,
west of US-378 Sunset Blvd S/Bound Off-Ramp

Date
Sunday, April 21, 2024

Lat/Long
34.008085°, -81.156669°

Weather
Cloudy
66°F

0000 - 2400 (Weekday 24h Session) (All Dates)
SB WB Average 15min

	SB WB Average 15min													15min	60min
Time	1	2	3	4	5	6	7	8	9	10	11	12	13	Total	Total
0000 - 0015	0	32	6	0	1	0	0	0	7	0	1	0	0	**47**	
0015 - 0030	0	29	5	0	0	0	0	0	7	0	1	0	0	**42**	
0030 - 0045	0	23	4	0	1	0	0	0	6	0	0	0	0	**34**	
0045 - 0100	0	22	3	0	1	0	0	0	6	0	0	0	0	**31**	**155**
0100 - 0115	0	22	3	0	2	0	0	0	6	0	1	0	0	**33**	
0115 - 0130	0	21	4	0	0	0	0	0	6	0	0	0	0	**31**	
0130 - 0145	0	19	3	0	1	0	0	0	5	0	0	0	0	**28**	
0145 - 0200	0	17	3	0	1	0	0	0	5	0	0	0	0	**26**	**118**
0200 - 0215	0	16	2	0	1	0	0	0	6	0	0	0	0	**26**	
0215 - 0230	0	20	3	0	1	0	0	0	5	0	0	0	0	**29**	
0230 - 0245	0	14	2	0	1	0	0	0	6	0	0	0	0	**22**	
0245 - 0300	0	16	3	0	1	0	0	0	6	0	1	0	0	**27**	**104**
0300 - 0315	0	14	3	0	1	0	0	0	7	0	1	0	0	**25**	
0315 - 0330	0	19	3	0	0	0	0	0	7	0	1	0	0	**29**	
0330 - 0345	0	16	4	0	1	0	0	0	6	0	0	0	0	**28**	
0345 - 0400	0	22	3	0	1	0	0	0	7	0	0	0	0	**33**	**116**
0400 - 0415	0	21	4	0	1	0	0	0	8	0	0	0	0	**35**	
0415 - 0430	0	18	5	0	1	0	0	0	7	0	1	0	0	**31**	
0430 - 0445	0	27	5	0	1	0	0	0	7	0	1	0	0	**41**	
0445 - 0500	0	24	5	0	1	0	0	0	9	0	0	0	0	**40**	**148**
0500 - 0515	0	32	5	0	1	0	0	0	10	0	1	0	0	**48**	
0515 - 0530	0	41	7	0	1	0	0	0	10	0	0	0	0	**61**	
0530 - 0545	0	56	12	0	1	0	0	0	11	0	1	0	0	**81**	
0545 - 0600	0	63	15	0	2	0	0	0	9	0	0	0	0	**90**	**280**
0600 - 0615	0	70	19	0	2	0	0	0	12	0	1	0	0	**105**	
0615 - 0630	0	83	30	0	3	1	0	1	13	0	0	0	0	**131**	
0630 - 0645	0	99	36	0	2	1	0	0	11	0	0	0	0	**151**	
0645 - 0700	0	90	40	0	3	1	0	1	14	0	0	0	0	**150**	**537**
0700 - 0715	0	100	40	0	4	2	0	1	12	0	0	0	0	**159**	
0715 - 0730	0	120	47	0	5	2	0	1	12	0	0	0	0	**189**	
0730 - 0745	0	121	44	1	5	2	0	1	11	0	0	0	0	**186**	
0745 - 0800	0	126	46	0	5	1	0	1	11	0	0	0	0	**192**	**725**
0800 - 0815	0	103	38	0	5	2	0	0	14	0	0	0	0	**163**	
0815 - 0830	0	97	45	0	6	1	0	1	15	0	0	0	0	**167**	
0830 - 0845	0	105	40	0	7	1	0	1	17	0	0	0	0	**171**	
0845 - 0900	0	108	41	0	6	1	0	2	15	0	0	0	0	**174**	**676**
0900 - 0915	1	99	42	1	5	2	0	1	18	0	0	0	0	**170**	
0915 - 0930	0	104	43	0	5	2	0	1	17	0	0	0	0	**173**	
0930 - 0945	0	114	44	1	5	1	0	2	20	0	0	0	0	**186**	
0945 - 1000	0	114	38	0	5	2	0	2	18	0	0	0	0	**180**	**709**
1000 - 1015	0	109	44	0	3	2	0	2	20	0	0	0	0	**180**	
1015 - 1030	0	117	39	0	6	1	0	2	18	0	0	0	0	**184**	
1030 - 1045	0	125	41	0	5	1	0	2	23	0	0	0	0	**197**	
1045 - 1100	0	124	42	1	6	2	0	2	23	0	0	0	0	**201**	**762**
1100 - 1115	0	127	44	0	4	1	0	1	25	0	0	0	0	**204**	
1115 - 1130	0	120	40	0	4	1	0	2	23	0	0	0	0	**192**	
1130 - 1145	1	129	44	0	5	1	0	2	25	0	0	0	0	**208**	
1145 - 1200	0	128	49	0	4	2	0	2	21	0	0	0	0	**206**	**809**
1200 - 1215	0	130	42	0	5	2	0	2	27	0	0	0	0	**208**	
1215 - 1230	0	144	46	0	5	1	0	2	29	0	0	0	0	**230**	
1230 - 1245	0	141	46	0	5	1	0	2	22	0	0	0	0	**218**	
1245 - 1300	1	139	48	0	5	2	0	2	26	0	0	0	0	**223**	**879**
1300 - 1315	0	140	47	1	6	1	0	2	26	0	0	0	0	**223**	
1315 - 1330	0	153	48	1	4	2	0	1	24	0	0	0	0	**235**	
1330 - 1345	0	165	46	0	6	1	0	2	24	0	0	0	0	**245**	
1345 - 1400	0	150	50	0	4	2	0	2	26	0	0	0	0	**234**	**937**
1400 - 1415	0	156	53	0	5	3	0	2	25	0	0	0	0	**245**	
1415 - 1430	0	158	54	1	4	1	0	3	28	1	0	0	0	**250**	
1430 - 1445	0	150	50	0	7	1	0	3	28	0	0	0	0	**240**	
1445 - 1500	1	158	50	1	5	2	1	3	26	0	0	0	0	**246**	**981**
1500 - 1515	1	172	57	0	5	2	0	2	30	0	0	0	0	**269**	
1515 - 1530	0	178	56	0	7	2	0	3	25	0	0	0	0	**270**	
1530 - 1545	2	173	58	0	8	2	1	3	27	0	0	0	0	**275**	
1545 - 1600	0	188	57	1	4	1	0	3	28	1	0	0	0	**283**	**1097**
1600 - 1615	0	190	61	1	6	2	0	4	26	0	0	0	0	**291**	
1615 - 1630	0	208	61	0	6	2	0	2	22	0	0	0	0	**302**	
1630 - 1645	0	196	55	0	7	1	0	3	26	0	0	0	0	**289**	
1645 - 1700	0	196	58	0	6	2	0	3	24	0	0	0	0	**290**	**1172**
1700 - 1715	1	204	62	0	6	2	0	2	21	0	0	0	0	**297**	
1715 - 1730	0	220	55	0	6	2	0	2	20	0	0	0	0	**305**	
1730 - 1745	0	182	49	0	6	1	0	2	24	0	0	0	0	**264**	
1745 - 1800	0	167	51	1	4	1	0	3	26	1	0	0	0	**253**	**1120**
1800 - 1815	0	160	48	0	4	1	0	2	23	0	0	0	0	**237**	
1815 - 1830	0	165	41	1	5	1	0	3	18	0	0	0	0	**234**	
1830 - 1845	0	141	42	0	3	1	0	1	16	0	0	0	0	**204**	
1845 - 1900	0	133	36	0	3	1	0	1	13	0	0	0	0	**188**	**864**
1900 - 1915	0	123	36	1	3	0	0	1	15	0	0	0	0	**179**	
1915 - 1930	0	116	31	0	2	1	0	1	15	0	1	0	0	**167**	
1930 - 1945	1	117	31	0	2	1	0	2	15	0	0	0	0	**169**	
1945 - 2000	0	108	29	0	2	1	0	1	12	0	0	0	0	**152**	**667**
2000 - 2015	0	105	27	0	2	1	0	0	15	0	0	0	0	**151**	
2015 - 2030	0	108	22	0	2	1	0	1	11	0	1	0	0	**145**	
2030 - 2045	0	105	16	0	1	0	0	0	12	0	0	0	0	**134**	
2045 - 2100	0	100	19	0	1	0	0	0	11	0	0	0	0	**132**	**563**
2100 - 2115	0	95	16	0	2	0	0	0	11	0	0	0	0	**124**	
2115 - 2130	0	102	16	0	1	0	0	0	12	0	0	0	0	**131**	
2130 - 2145	0	90	16	0	2	0	0	0	9	0	0	0	0	**117**	
2145 - 2200	0	72	11	0	0	0	0	0	9	0	1	0	0	**94**	**466**
2200 - 2215	0	74	12	0	1	0	0	0	10	0	0	0	0	**97**	
2215 - 2230	0	70	10	0	1	0	0	0	8	0	1	0	0	**90**	
2230 - 2245	0	66	11	0	1	0	0	0	9	0	1	0	0	**88**	
2245 - 2300	0	56	10	0	1	0	0	0	7	0	1	0	0	**74**	**349**
2300 - 2315	0	52	10	0	0	0	0	0	7	0	1	0	0	**71**	
2315 - 2330	0	43	8	0	1	0	0	0	6	0	1	0	0	**60**	
2330 - 2345	0	39	7	0	0	0	0	0	5	0	1	0	0	**52**	
2345 - 0000	0	37	7	0	1	0	0	0	4	0	0	0	0	**49**	**232**

Session Total	18	9567	2860	20	304	82	7	107	1459	10	25	1	0	**14461**
Session Average	0.18	99.66	29.79	0.21	3.17	0.85	0.08	1.11	15.20	0.10	0.26	0.01	0.00	**150.64**
Session Percentage	0.12	66.16	19.78	0.14	2.10	0.57	0.05	0.74	10.09	0.07	0.18	0.01	0.00	

AM Peak Hour	0900 - 1000	0715 - 0815	0700 - 0800	0900 - 1000	0800 - 0900	0700 - 0800	0815 - 0915	0930 - 1030	0945 - 1045	0845 - 0945	0530 - 0630	0900 - 1000	-	**0945 - 1045**
AM Peak Volume	1	470	178	2	25	7	1	7	79	1	2	0	0	**741**

Noon Peak Hour	1445 - 1545	1445 - 1545	1445 - 1545	1400 - 1500	1445 - 1545	1315 - 1415	1445 - 1545	1445 - 1545	1415 - 1515	1230 - 1330	1130 - 1230	1400 - 1500	-	**1445 - 1545**
Noon Peak Volume	3	681	221	3	24	8	2	10	112	1	0	0	0	**1059**

PM Peak Hour	1500 - 1600	1630 - 1730	1530 - 1630	1815 - 1915	1600 - 1700	1500 - 1600	1515 - 1615	1515 - 1615	1500 - 1600	1530 - 1630	1915 - 2015	1500 - 1600	-	**1630 - 1730**
PM Peak Volume	2	815	238	2	25	7	2	12	110	2	1	0	0	**1181**

Bi-Directional Class Count || Volume Summary 15min

Columbia, SC

Marr Traffic DATA COLLECTION

www.marrtraffic.com

Site 74 Lane 2 WB

I-20,
west of US-378 Sunset Blvd S/Bound Off-Ramp

Date

Sunday, April 21, 2024

Lat/Long

34.008085°, -81.156669°

Weather

Cloudy
66°F

Click here for Detailed Weather

0000 - 2400 (Sunday 24h Session) (04-21-2024)

Volume Summary 15min

	Volume Summary 15min		15min	60min
TIME	EB	WB	Total	Total
0000 - 0015	0	68	**68**	
0015 - 0030	0	70	**70**	
0030 - 0045	0	49	**49**	
0045 - 0100	0	50	**50**	**237**
0100 - 0115	0	43	**43**	
0115 - 0130	0	49	**49**	
0130 - 0145	0	43	**43**	
0145 - 0200	0	43	**43**	**178**
0200 - 0215	0	32	**32**	
0215 - 0230	0	47	**47**	
0230 - 0245	0	29	**29**	
0245 - 0300	0	29	**29**	**137**
0300 - 0315	0	23	**23**	
0315 - 0330	0	27	**27**	
0330 - 0345	0	20	**20**	
0345 - 0400	0	25	**25**	**95**
0400 - 0415	0	40	**40**	
0415 - 0430	0	19	**19**	
0430 - 0445	0	32	**32**	
0445 - 0500	0	23	**23**	**114**
0500 - 0515	0	32	**32**	
0515 - 0530	0	26	**26**	
0530 - 0545	0	40	**40**	
0545 - 0600	0	37	**37**	**135**
0600 - 0615	0	40	**40**	
0615 - 0630	0	47	**47**	
0630 - 0645	0	58	**58**	
0645 - 0700	0	48	**48**	**193**
0700 - 0715	0	64	**64**	
0715 - 0730	0	58	**58**	
0730 - 0745	0	67	**67**	
0745 - 0800	0	74	**74**	**263**
0800 - 0815	0	72	**72**	
0815 - 0830	0	86	**86**	
0830 - 0845	0	94	**94**	
0845 - 0900	0	113	**113**	**365**
0900 - 0915	0	111	**111**	
0915 - 0930	0	123	**123**	
0930 - 0945	0	155	**155**	
0945 - 1000	0	140	**140**	**529**
1000 - 1015	0	151	**151**	
1015 - 1030	0	153	**153**	
1030 - 1045	0	165	**165**	
1045 - 1100	0	201	**201**	**670**
1100 - 1115	0	191	**191**	
1115 - 1130	0	169	**169**	
1130 - 1145	0	187	**187**	
1145 - 1200	0	223	**223**	**770**

	Volume Summary 15min		15min	60min
Time	EB	WB	Total	Total
1200 - 1215	0	225	**225**	
1215 - 1230	0	218	**218**	
1230 - 1245	0	216	**216**	
1245 - 1300	0	217	**217**	**876**
1300 - 1315	0	237	**237**	
1315 - 1330	0	243	**243**	
1330 - 1345	0	252	**252**	
1345 - 1400	0	232	**232**	**964**
1400 - 1415	0	246	**246**	
1415 - 1430	0	234	**234**	
1430 - 1445	0	206	**206**	
1445 - 1500	0	202	**202**	**888**
1500 - 1515	0	243	**243**	
1515 - 1530	0	213	**213**	
1530 - 1545	0	215	**215**	
1545 - 1600	0	240	**240**	**911**
1600 - 1615	0	223	**223**	
1615 - 1630	0	244	**244**	
1630 - 1645	0	216	**216**	
1645 - 1700	0	212	**212**	**895**
1700 - 1715	0	203	**203**	
1715 - 1730	0	181	**181**	
1730 - 1745	0	199	**199**	
1745 - 1800	0	200	**200**	**783**
1800 - 1815	0	189	**189**	
1815 - 1830	0	182	**182**	
1830 - 1845	0	189	**189**	
1845 - 1900	0	196	**196**	**756**
1900 - 1915	0	183	**183**	
1915 - 1930	0	162	**162**	
1930 - 1945	0	163	**163**	
1945 - 2000	0	135	**135**	**643**
2000 - 2015	0	136	**136**	
2015 - 2030	0	133	**133**	
2030 - 2045	0	122	**122**	
2045 - 2100	0	112	**112**	**503**
2100 - 2115	0	97	**97**	
2115 - 2130	0	115	**115**	
2130 - 2145	0	81	**81**	
2145 - 2200	0	70	**70**	**363**
2200 - 2215	0	85	**85**	
2215 - 2230	0	71	**71**	
2230 - 2245	0	65	**65**	
2245 - 2300	0	48	**48**	**269**
2300 - 2315	0	46	**46**	
2315 - 2330	0	33	**33**	
2330 - 2345	0	48	**48**	
2345 - 0000	0	32	**32**	**159**

Session Total	0	11696	**11696**
Session Average	0.00	121.83	**121.83**
Session Percentage	0.00	100.00	

Site 74 Lane 2 WB

I-20,
west of US-378 Sunset Blvd S/Bound Off-Ramp

Date

Monday, April 22, 2024

Lat/Long

34.008085°, -81.156669°

Weather

Mostly Cloudy
57°F

Click here for Detailed Weather

0000 - 2400 (Weekday 24h Session) (04-22-2024)

Volume Summary 15min

TIME	Volume Summary 15min EB	Volume Summary 15min WB	15min Total	60min Total
0000 - 0015	0	28	**28**	
0015 - 0030	0	29	**29**	
0030 - 0045	0	25	**25**	
0045 - 0100	0	24	**24**	**106**
0100 - 0115	0	18	**18**	
0115 - 0130	0	20	**20**	
0130 - 0145	0	18	**18**	
0145 - 0200	0	19	**19**	**75**
0200 - 0215	0	17	**17**	
0215 - 0230	0	20	**20**	
0230 - 0245	0	14	**14**	
0245 - 0300	0	23	**23**	**74**
0300 - 0315	0	23	**23**	
0315 - 0330	0	28	**28**	
0330 - 0345	0	32	**32**	
0345 - 0400	0	27	**27**	**110**
0400 - 0415	0	25	**25**	
0415 - 0430	0	34	**34**	
0430 - 0445	0	37	**37**	
0445 - 0500	0	48	**48**	**144**
0500 - 0515	0	58	**58**	
0515 - 0530	0	81	**81**	
0530 - 0545	0	94	**94**	
0545 - 0600	0	123	**123**	**356**
0600 - 0615	0	113	**113**	
0615 - 0630	0	156	**156**	
0630 - 0645	0	188	**188**	
0645 - 0700	0	199	**199**	**656**
0700 - 0715	0	188	**188**	
0715 - 0730	0	223	**223**	
0730 - 0745	0	218	**218**	
0745 - 0800	0	212	**212**	**841**
0800 - 0815	0	196	**196**	
0815 - 0830	0	178	**178**	
0830 - 0845	0	200	**200**	
0845 - 0900	0	165	**165**	**739**
0900 - 0915	0	185	**185**	
0915 - 0930	0	188	**188**	
0930 - 0945	0	169	**169**	
0945 - 1000	0	156	**156**	**698**
1000 - 1015	0	173	**173**	
1015 - 1030	0	201	**201**	
1030 - 1045	0	197	**197**	
1045 - 1100	0	203	**203**	**774**
1100 - 1115	0	210	**210**	
1115 - 1130	0	168	**168**	
1130 - 1145	0	203	**203**	
1145 - 1200	0	176	**176**	**757**

Time	Volume Summary 15min EB	Volume Summary 15min WB	15min Total	60min Total
1200 - 1215	0	208	**208**	
1215 - 1230	0	216	**216**	
1230 - 1245	0	189	**189**	
1245 - 1300	0	218	**218**	**831**
1300 - 1315	0	187	**187**	
1315 - 1330	0	221	**221**	
1330 - 1345	0	245	**245**	
1345 - 1400	0	227	**227**	**880**
1400 - 1415	0	211	**211**	
1415 - 1430	0	237	**237**	
1430 - 1445	0	247	**247**	
1445 - 1500	0	245	**245**	**940**
1500 - 1515	0	269	**269**	
1515 - 1530	0	256	**256**	
1530 - 1545	0	272	**272**	
1545 - 1600	0	285	**285**	**1082**
1600 - 1615	0	300	**300**	
1615 - 1630	0	296	**296**	
1630 - 1645	0	314	**314**	
1645 - 1700	0	305	**305**	**1215**
1700 - 1715	0	321	**321**	
1715 - 1730	0	305	**305**	
1730 - 1745	0	295	**295**	
1745 - 1800	0	270	**270**	**1191**
1800 - 1815	0	235	**235**	
1815 - 1830	0	246	**246**	
1830 - 1845	0	205	**205**	
1845 - 1900	0	177	**177**	**863**
1900 - 1915	0	167	**167**	
1915 - 1930	0	162	**162**	
1930 - 1945	0	168	**168**	
1945 - 2000	0	148	**148**	**645**
2000 - 2015	0	151	**151**	
2015 - 2030	0	122	**122**	
2030 - 2045	0	124	**124**	
2045 - 2100	0	122	**122**	**519**
2100 - 2115	0	119	**119**	
2115 - 2130	0	124	**124**	
2130 - 2145	0	100	**100**	
2145 - 2200	0	75	**75**	**418**
2200 - 2215	0	67	**67**	
2215 - 2230	0	63	**63**	
2230 - 2245	0	63	**63**	
2245 - 2300	0	56	**56**	**249**
2300 - 2315	0	58	**58**	
2315 - 2330	0	53	**53**	
2330 - 2345	0	35	**35**	
2345 - 0000	0	36	**36**	**182**

Session Total	0	14345	**14345**
Session Average	0.00	149.43	**149.43**
Session Percentage	0.00	100.00	

Site 74 Lane 2 WB

I-20,
west of US-378 Sunset Blvd S/Bound Off-Ramp

Date

Tuesday, April 23, 2024

Lat/Long

34.008085°, -81.156669°

Weather

Fair
58°F

Click here for Detailed Weather

0000 - 2400 (Weekday 24h Session) (04-23-2024)

Volume Summary 15min

TIME	Volume Summary 15min EB	Volume Summary 15min WB	15min Total	60min Total
0000 - 0015	0	19	**19**	
0015 - 0030	0	27	**27**	
0030 - 0045	0	23	**23**	
0045 - 0100	0	32	**32**	**101**
0100 - 0115	0	37	**37**	
0115 - 0130	0	33	**33**	
0130 - 0145	0	26	**26**	
0145 - 0200	0	26	**26**	**122**
0200 - 0215	0	37	**37**	
0215 - 0230	0	29	**29**	
0230 - 0245	0	27	**27**	
0245 - 0300	0	35	**35**	**128**
0300 - 0315	0	15	**15**	
0315 - 0330	0	41	**41**	
0330 - 0345	0	35	**35**	
0345 - 0400	0	47	**47**	**138**
0400 - 0415	0	45	**45**	
0415 - 0430	0	35	**35**	
0430 - 0445	0	56	**56**	
0445 - 0500	0	52	**52**	**188**
0500 - 0515	0	58	**58**	
0515 - 0530	0	87	**87**	
0530 - 0545	0	122	**122**	
0545 - 0600	0	111	**111**	**378**
0600 - 0615	0	131	**131**	
0615 - 0630	0	173	**173**	
0630 - 0645	0	181	**181**	
0645 - 0700	0	182	**182**	**667**
0700 - 0715	0	197	**197**	
0715 - 0730	0	231	**231**	
0730 - 0745	0	204	**204**	
0745 - 0800	0	225	**225**	**857**
0800 - 0815	0	191	**191**	
0815 - 0830	0	152	**152**	
0830 - 0845	0	179	**179**	
0845 - 0900	0	211	**211**	**733**
0900 - 0915	0	197	**197**	
0915 - 0930	0	197	**197**	
0930 - 0945	0	192	**192**	
0945 - 1000	0	174	**174**	**760**
1000 - 1015	0	173	**173**	
1015 - 1030	0	180	**180**	
1030 - 1045	0	198	**198**	
1045 - 1100	0	198	**198**	**749**
1100 - 1115	0	184	**184**	
1115 - 1130	0	183	**183**	
1130 - 1145	0	206	**206**	
1145 - 1200	0	203	**203**	**776**

Time	Volume Summary 15min EB	Volume Summary 15min WB	15min Total	60min Total
1200 - 1215	0	187	**187**	
1215 - 1230	0	215	**215**	
1230 - 1245	0	199	**199**	
1245 - 1300	0	218	**218**	**819**
1300 - 1315	0	210	**210**	
1315 - 1330	0	209	**209**	
1330 - 1345	0	230	**230**	
1345 - 1400	0	206	**206**	**855**
1400 - 1415	0	238	**238**	
1415 - 1430	0	247	**247**	
1430 - 1445	0	240	**240**	
1445 - 1500	0	255	**255**	**980**
1500 - 1515	0	264	**264**	
1515 - 1530	0	273	**273**	
1530 - 1545	0	286	**286**	
1545 - 1600	0	305	**305**	**1128**
1600 - 1615	0	321	**321**	
1615 - 1630	0	336	**336**	
1630 - 1645	0	308	**308**	
1645 - 1700	0	302	**302**	**1267**
1700 - 1715	0	289	**289**	
1715 - 1730	0	430	**430**	
1730 - 1745	0	292	**292**	
1745 - 1800	0	299	**299**	**1310**
1800 - 1815	0	260	**260**	
1815 - 1830	0	226	**226**	
1830 - 1845	0	190	**190**	
1845 - 1900	0	158	**158**	**834**
1900 - 1915	0	173	**173**	
1915 - 1930	0	150	**150**	
1930 - 1945	0	148	**148**	
1945 - 2000	0	137	**137**	**608**
2000 - 2015	0	153	**153**	
2015 - 2030	0	157	**157**	
2030 - 2045	0	136	**136**	
2045 - 2100	0	137	**137**	**583**
2100 - 2115	0	135	**135**	
2115 - 2130	0	143	**143**	
2130 - 2145	0	133	**133**	
2145 - 2200	0	94	**94**	**505**
2200 - 2215	0	89	**89**	
2215 - 2230	0	89	**89**	
2230 - 2245	0	88	**88**	
2245 - 2300	0	63	**63**	**329**
2300 - 2315	0	56	**56**	
2315 - 2330	0	63	**63**	
2330 - 2345	0	43	**43**	
2345 - 0000	0	38	**38**	**200**

Session Total	0	15015	**15015**
Session Average	0.00	156.41	**156.41**
Session Percentage	0.00	100.00	

Site 74 Lane 2 WB

I-20,
west of US-378 Sunset Blvd S/Bound Off-Ramp

Date

Wednesday, April 24, 2024

Lat/Long

34.008085°, -81.156669°

Weather

Fair
66°F

Click here for Detailed Weather

0000 - 2400 (Weekday 24h Session) (04-24-2024)

Volume Summary 15min

TIME	Volume Summary 15min EB	Volume Summary 15min WB	15min Total	60min Total
0000 - 0015	0	48	**48**	
0015 - 0030	0	37	**37**	
0030 - 0045	0	27	**27**	
0045 - 0100	0	22	**22**	**134**
0100 - 0115	0	26	**26**	
0115 - 0130	0	25	**25**	
0130 - 0145	0	20	**20**	
0145 - 0200	0	22	**22**	**93**
0200 - 0215	0	24	**24**	
0215 - 0230	0	23	**23**	
0230 - 0245	0	20	**20**	
0245 - 0300	0	23	**23**	**90**
0300 - 0315	0	25	**25**	
0315 - 0330	0	25	**25**	
0330 - 0345	0	29	**29**	
0345 - 0400	0	34	**34**	**113**
0400 - 0415	0	33	**33**	
0415 - 0430	0	22	**22**	
0430 - 0445	0	38	**38**	
0445 - 0500	0	34	**34**	**127**
0500 - 0515	0	55	**55**	
0515 - 0530	0	76	**76**	
0530 - 0545	0	85	**85**	
0545 - 0600	0	82	**82**	**298**
0600 - 0615	0	128	**128**	
0615 - 0630	0	157	**157**	
0630 - 0645	0	219	**219**	
0645 - 0700	0	188	**188**	**692**
0700 - 0715	0	202	**202**	
0715 - 0730	0	228	**228**	
0730 - 0745	0	227	**227**	
0745 - 0800	0	208	**208**	**865**
0800 - 0815	0	152	**152**	
0815 - 0830	0	193	**193**	
0830 - 0845	0	175	**175**	
0845 - 0900	0	185	**185**	**705**
0900 - 0915	0	170	**170**	
0915 - 0930	0	148	**148**	
0930 - 0945	0	176	**176**	
0945 - 1000	0	207	**207**	**701**
1000 - 1015	0	205	**205**	
1015 - 1030	0	194	**194**	
1030 - 1045	0	226	**226**	
1045 - 1100	0	190	**190**	**815**
1100 - 1115	0	186	**186**	
1115 - 1130	0	171	**171**	
1130 - 1145	0	194	**194**	
1145 - 1200	0	193	**193**	**744**
1200 - 1215	0	197	**197**	
1215 - 1230	0	248	**248**	
1230 - 1245	0	220	**220**	
1245 - 1300	0	210	**210**	**875**
1300 - 1315	0	218	**218**	
1315 - 1330	0	235	**235**	
1330 - 1345	0	236	**236**	
1345 - 1400	0	209	**209**	**898**
1400 - 1415	0	234	**234**	
1415 - 1430	0	264	**264**	
1430 - 1445	0	246	**246**	
1445 - 1500	0	251	**251**	**995**
1500 - 1515	0	272	**272**	
1515 - 1530	0	287	**287**	
1530 - 1545	0	300	**300**	
1545 - 1600	0	311	**311**	**1170**
1600 - 1615	0	327	**327**	
1615 - 1630	0	329	**329**	
1630 - 1645	0	325	**325**	
1645 - 1700	0	298	**298**	**1279**
1700 - 1715	0	310	**310**	
1715 - 1730	0	321	**321**	
1730 - 1745	0	268	**268**	
1745 - 1800	0	268	**268**	**1167**
1800 - 1815	0	237	**237**	
1815 - 1830	0	243	**243**	
1830 - 1845	0	199	**199**	
1845 - 1900	0	181	**181**	**860**
1900 - 1915	0	170	**170**	
1915 - 1930	0	169	**169**	
1930 - 1945	0	161	**161**	
1945 - 2000	0	140	**140**	**640**
2000 - 2015	0	137	**137**	
2015 - 2030	0	143	**143**	
2030 - 2045	0	136	**136**	
2045 - 2100	0	176	**176**	**592**
2100 - 2115	0	123	**123**	
2115 - 2130	0	109	**109**	
2130 - 2145	0	115	**115**	
2145 - 2200	0	102	**102**	**449**
2200 - 2215	0	80	**80**	
2215 - 2230	0	88	**88**	
2230 - 2245	0	80	**80**	
2245 - 2300	0	61	**61**	**309**
2300 - 2315	0	67	**67**	
2315 - 2330	0	67	**67**	
2330 - 2345	0	47	**47**	
2345 - 0000	0	44	**44**	**225**

Session Total	0	14836	**14836**
Session Average	0.00	154.54	**154.54**
Session Percentage	0.00	100.00	

Site 74 Lane 2 WB

I-20,
west of US-378 Sunset Blvd S/Bound Off-Ramp

Date

Thursday, April 25, 2024

Lat/Long

34.008085°, -81.156669°

Weather

Fair
67°F

Click here for Detailed Weather

0000 - 2400 (Weekday 24h Session) (04-25-2024)

Volume Summary 15min

TIME	Volume Summary 15min EB	Volume Summary 15min WB	15min Total	60min Total
0000 - 0015	0	48	**48**	
0015 - 0030	0	42	**42**	
0030 - 0045	0	33	**33**	
0045 - 0100	0	17	**17**	**140**
0100 - 0115	0	32	**32**	
0115 - 0130	0	18	**18**	
0130 - 0145	0	21	**21**	
0145 - 0200	0	18	**18**	**89**
0200 - 0215	0	27	**27**	
0215 - 0230	0	26	**26**	
0230 - 0245	0	15	**15**	
0245 - 0300	0	28	**28**	**96**
0300 - 0315	0	26	**26**	
0315 - 0330	0	20	**20**	
0330 - 0345	0	23	**23**	
0345 - 0400	0	38	**38**	**107**
0400 - 0415	0	28	**28**	
0415 - 0430	0	29	**29**	
0430 - 0445	0	40	**40**	
0445 - 0500	0	39	**39**	**136**
0500 - 0515	0	44	**44**	
0515 - 0530	0	58	**58**	
0530 - 0545	0	82	**82**	
0545 - 0600	0	107	**107**	**291**
0600 - 0615	0	145	**145**	
0615 - 0630	0	159	**159**	
0630 - 0645	0	175	**175**	
0645 - 0700	0	169	**169**	**648**
0700 - 0715	0	197	**197**	
0715 - 0730	0	225	**225**	
0730 - 0745	0	221	**221**	
0745 - 0800	0	248	**248**	**891**
0800 - 0815	0	210	**210**	
0815 - 0830	0	221	**221**	
0830 - 0845	0	202	**202**	
0845 - 0900	0	201	**201**	**834**
0900 - 0915	0	179	**179**	
0915 - 0930	0	182	**182**	
0930 - 0945	0	208	**208**	
0945 - 1000	0	193	**193**	**762**
1000 - 1015	0	201	**201**	
1015 - 1030	0	190	**190**	
1030 - 1045	0	208	**208**	
1045 - 1100	0	207	**207**	**806**
1100 - 1115	0	201	**201**	
1115 - 1130	0	204	**204**	
1130 - 1145	0	211	**211**	
1145 - 1200	0	208	**208**	**824**

Time	Volume Summary 15min EB	Volume Summary 15min WB	15min Total	60min Total
1200 - 1215	0	191	**191**	
1215 - 1230	0	228	**228**	
1230 - 1245	0	219	**219**	
1245 - 1300	0	232	**232**	**870**
1300 - 1315	0	228	**228**	
1315 - 1330	0	251	**251**	
1330 - 1345	0	268	**268**	
1345 - 1400	0	278	**278**	**1025**
1400 - 1415	0	267	**267**	
1415 - 1430	0	272	**272**	
1430 - 1445	0	269	**269**	
1445 - 1500	0	259	**259**	**1067**
1500 - 1515	0	314	**314**	
1515 - 1530	0	305	**305**	
1530 - 1545	0	325	**325**	
1545 - 1600	0	295	**295**	**1239**
1600 - 1615	0	324	**324**	
1615 - 1630	0	360	**360**	
1630 - 1645	0	325	**325**	
1645 - 1700	0	386	**386**	**1395**
1700 - 1715	0	431	**431**	
1715 - 1730	0	347	**347**	
1730 - 1745	0	290	**290**	
1745 - 1800	0	285	**285**	**1353**
1800 - 1815	0	269	**269**	
1815 - 1830	0	263	**263**	
1830 - 1845	0	222	**222**	
1845 - 1900	0	220	**220**	**974**
1900 - 1915	0	187	**187**	
1915 - 1930	0	185	**185**	
1930 - 1945	0	185	**185**	
1945 - 2000	0	143	**143**	**700**
2000 - 2015	0	139	**139**	
2015 - 2030	0	141	**141**	
2030 - 2045	0	122	**122**	
2045 - 2100	0	98	**98**	**500**
2100 - 2115	0	122	**122**	
2115 - 2130	0	121	**121**	
2130 - 2145	0	115	**115**	
2145 - 2200	0	65	**65**	**423**
2200 - 2215	0	69	**69**	
2215 - 2230	0	85	**85**	
2230 - 2245	0	79	**79**	
2245 - 2300	0	65	**65**	**298**
2300 - 2315	0	74	**74**	
2315 - 2330	0	49	**49**	
2330 - 2345	0	54	**54**	
2345 - 0000	0	53	**53**	**230**

Session Total	0	15698	**15698**
Session Average	0.00	163.52	**163.52**
Session Percentage	0.00	100.00	

Site 74 Lane 2 WB

I-20,
west of US-378 Sunset Blvd S/Bound Off-Ramp

Date

Friday, April 26, 2024

Lat/Long

34.008085°, -81.156669°

Weather

Cloudy
69°F

Click here for Detailed Weather

0000 - 2400 (Weekday 24h Session) (04-26-2024)

Volume Summary 15min

TIME	Volume Summary 15min EB	Volume Summary 15min WB	15min Total	60min Total
0000 - 0015	0	53	**53**	
0015 - 0030	0	36	**36**	
0030 - 0045	0	40	**40**	
0045 - 0100	0	34	**34**	**163**
0100 - 0115	0	39	**39**	
0115 - 0130	0	42	**42**	
0130 - 0145	0	41	**41**	
0145 - 0200	0	34	**34**	**156**
0200 - 0215	0	29	**29**	
0215 - 0230	0	27	**27**	
0230 - 0245	0	31	**31**	
0245 - 0300	0	31	**31**	**118**
0300 - 0315	0	40	**40**	
0315 - 0330	0	32	**32**	
0330 - 0345	0	41	**41**	
0345 - 0400	0	46	**46**	**159**
0400 - 0415	0	55	**55**	
0415 - 0430	0	46	**46**	
0430 - 0445	0	63	**63**	
0445 - 0500	0	61	**61**	**225**
0500 - 0515	0	54	**54**	
0515 - 0530	0	60	**60**	
0530 - 0545	0	102	**102**	
0545 - 0600	0	114	**114**	**330**
0600 - 0615	0	106	**106**	
0615 - 0630	0	148	**148**	
0630 - 0645	0	153	**153**	
0645 - 0700	0	160	**160**	**567**
0700 - 0715	0	184	**184**	
0715 - 0730	0	231	**231**	
0730 - 0745	0	224	**224**	
0745 - 0800	0	239	**239**	**878**
0800 - 0815	0	189	**189**	
0815 - 0830	0	182	**182**	
0830 - 0845	0	191	**191**	
0845 - 0900	0	174	**174**	**736**
0900 - 0915	0	175	**175**	
0915 - 0930	0	200	**200**	
0930 - 0945	0	188	**188**	
0945 - 1000	0	187	**187**	**750**
1000 - 1015	0	177	**177**	
1015 - 1030	0	185	**185**	
1030 - 1045	0	187	**187**	
1045 - 1100	0	201	**201**	**750**
1100 - 1115	0	228	**228**	
1115 - 1130	0	233	**233**	
1130 - 1145	0	232	**232**	
1145 - 1200	0	234	**234**	**927**

Time	Volume Summary 15min EB	Volume Summary 15min WB	15min Total	60min Total
1200 - 1215	0	233	**233**	
1215 - 1230	0	245	**245**	
1230 - 1245	0	244	**244**	
1245 - 1300	0	238	**238**	**960**
1300 - 1315	0	260	**260**	
1315 - 1330	0	237	**237**	
1330 - 1345	0	251	**251**	
1345 - 1400	0	257	**257**	**1005**
1400 - 1415	0	273	**273**	
1415 - 1430	0	258	**258**	
1430 - 1445	0	260	**260**	
1445 - 1500	0	286	**286**	**1077**
1500 - 1515	0	300	**300**	
1515 - 1530	0	326	**326**	
1530 - 1545	0	281	**281**	
1545 - 1600	0	318	**318**	**1225**
1600 - 1615	0	319	**319**	
1615 - 1630	0	340	**340**	
1630 - 1645	0	309	**309**	
1645 - 1700	0	306	**306**	**1274**
1700 - 1715	0	318	**318**	
1715 - 1730	0	358	**358**	
1730 - 1745	0	295	**295**	
1745 - 1800	0	267	**267**	**1238**
1800 - 1815	0	257	**257**	
1815 - 1830	0	274	**274**	
1830 - 1845	0	217	**217**	
1845 - 1900	0	222	**222**	**970**
1900 - 1915	0	201	**201**	
1915 - 1930	0	183	**183**	
1930 - 1945	0	197	**197**	
1945 - 2000	0	186	**186**	**767**
2000 - 2015	0	173	**173**	
2015 - 2030	0	181	**181**	
2030 - 2045	0	157	**157**	
2045 - 2100	0	159	**159**	**670**
2100 - 2115	0	140	**140**	
2115 - 2130	0	169	**169**	
2130 - 2145	0	137	**137**	
2145 - 2200	0	113	**113**	**559**
2200 - 2215	0	143	**143**	
2215 - 2230	0	114	**114**	
2230 - 2245	0	138	**138**	
2245 - 2300	0	127	**127**	**522**
2300 - 2315	0	109	**109**	
2315 - 2330	0	83	**83**	
2330 - 2345	0	67	**67**	
2345 - 0000	0	72	**72**	**331**

Session Total	0	16357	**16357**
Session Average	0.00	170.39	**170.39**
Session Percentage	0.00	100.00	

Site 74 Lane 2 WB

I-20,
west of US-378 Sunset Blvd S/Bound Off-Ramp

Date

Saturday, April 27, 2024

Lat/Long

34.008085°, -81.156669°

Weather

Mostly Cloudy
69°F

Click here for Detailed Weather

0000 - 2400 (Saturday 24h Session) (04-27-2024)

Volume Summary 15min

TIME	Volume Summary 15min EB	Volume Summary 15min WB	15min Total	60min Total
0000 - 0015	0	65	**65**	
0015 - 0030	0	55	**55**	
0030 - 0045	0	43	**43**	
0045 - 0100	0	41	**41**	**204**
0100 - 0115	0	35	**35**	
0115 - 0130	0	33	**33**	
0130 - 0145	0	27	**27**	
0145 - 0200	0	18	**18**	**113**
0200 - 0215	0	13	**13**	
0215 - 0230	0	30	**30**	
0230 - 0245	0	21	**21**	
0245 - 0300	0	19	**19**	**83**
0300 - 0315	0	24	**24**	
0315 - 0330	0	33	**33**	
0330 - 0345	0	16	**16**	
0345 - 0400	0	14	**14**	**87**
0400 - 0415	0	22	**22**	
0415 - 0430	0	34	**34**	
0430 - 0445	0	24	**24**	
0445 - 0500	0	20	**20**	**100**
0500 - 0515	0	33	**33**	
0515 - 0530	0	36	**36**	
0530 - 0545	0	45	**45**	
0545 - 0600	0	55	**55**	**169**
0600 - 0615	0	73	**73**	
0615 - 0630	0	75	**75**	
0630 - 0645	0	84	**84**	
0645 - 0700	0	103	**103**	**335**
0700 - 0715	0	79	**79**	
0715 - 0730	0	124	**124**	
0730 - 0745	0	139	**139**	
0745 - 0800	0	136	**136**	**478**
0800 - 0815	0	134	**134**	
0815 - 0830	0	156	**156**	
0830 - 0845	0	159	**159**	
0845 - 0900	0	169	**169**	**618**
0900 - 0915	0	175	**175**	
0915 - 0930	0	173	**173**	
0930 - 0945	0	213	**213**	
0945 - 1000	0	202	**202**	**763**
1000 - 1015	0	183	**183**	
1015 - 1030	0	182	**182**	
1030 - 1045	0	198	**198**	
1045 - 1100	0	205	**205**	**768**
1100 - 1115	0	225	**225**	
1115 - 1130	0	214	**214**	
1130 - 1145	0	224	**224**	
1145 - 1200	0	202	**202**	**865**

Time	Volume Summary 15min EB	Volume Summary 15min WB	15min Total	60min Total
1200 - 1215	0	213	**213**	
1215 - 1230	0	238	**238**	
1230 - 1245	0	241	**241**	
1245 - 1300	0	227	**227**	**919**
1300 - 1315	0	221	**221**	
1315 - 1330	0	249	**249**	
1330 - 1345	0	233	**233**	
1345 - 1400	0	227	**227**	**930**
1400 - 1415	0	248	**248**	
1415 - 1430	0	239	**239**	
1430 - 1445	0	212	**212**	
1445 - 1500	0	221	**221**	**920**
1500 - 1515	0	222	**222**	
1515 - 1530	0	228	**228**	
1530 - 1545	0	244	**244**	
1545 - 1600	0	230	**230**	**924**
1600 - 1615	0	223	**223**	
1615 - 1630	0	208	**208**	
1630 - 1645	0	226	**226**	
1645 - 1700	0	224	**224**	**881**
1700 - 1715	0	208	**208**	
1715 - 1730	0	192	**192**	
1730 - 1745	0	212	**212**	
1745 - 1800	0	184	**184**	**796**
1800 - 1815	0	213	**213**	
1815 - 1830	0	204	**204**	
1830 - 1845	0	209	**209**	
1845 - 1900	0	163	**163**	**789**
1900 - 1915	0	171	**171**	
1915 - 1930	0	159	**159**	
1930 - 1945	0	161	**161**	
1945 - 2000	0	175	**175**	**666**
2000 - 2015	0	168	**168**	
2015 - 2030	0	139	**139**	
2030 - 2045	0	144	**144**	
2045 - 2100	0	120	**120**	**571**
2100 - 2115	0	130	**130**	
2115 - 2130	0	135	**135**	
2130 - 2145	0	138	**138**	
2145 - 2200	0	139	**139**	**542**
2200 - 2215	0	148	**148**	
2215 - 2230	0	117	**117**	
2230 - 2245	0	105	**105**	
2245 - 2300	0	96	**96**	**466**
2300 - 2315	0	87	**87**	
2315 - 2330	0	69	**69**	
2330 - 2345	0	71	**71**	
2345 - 0000	0	67	**67**	**294**

Session Total	0	13281	**13281**
Session Average	0.00	138.34	**138.34**
Session Percentage	0.00	100.00	

Bi-Directional Class Count || SB WB 60min

Columbia, SC

Marr Traffic DATA COLLECTION

www.marrtraffic.com

Site 74 Lane 2 WB
I-20,
west of US-378 Sunset Blvd S/Bound Off-Ramp

Date
Sunday, April 21, 2024

Lat/Long
34.008085°, -81.156669°

Weather
Cloudy
66°F

Click here for Detailed Weather

0000 - 2400 (Sunday 24h Session) (04-21-2024)
SB WB 60min

	Westbound (Movement 74 Lane 2 WB.1)													
TIME	1	2	3	4	5	6	7	8	9	10	11	12	13	**Total**
0000 - 0100	0	198	28	0	0	0	0	0	11	0	0	0	0	**237**
0100 - 0200	0	157	15	2	2	0	0	0	2	0	0	0	0	**178**
0200 - 0300	0	111	12	0	4	0	0	0	10	0	0	0	0	**137**
0300 - 0400	0	74	10	0	2	0	0	0	9	0	0	0	0	**95**
0400 - 0500	0	85	8	1	7	0	0	1	12	0	0	0	0	**114**
0500 - 0600	0	103	14	0	5	0	0	0	13	0	0	0	0	**135**
0600 - 0700	0	146	35	0	1	0	0	0	11	0	0	0	0	**193**
0700 - 0800	1	187	61	1	2	1	0	0	10	0	0	0	0	**263**
0800 - 0900	2	275	66	1	6	0	0	1	14	0	0	0	0	**365**
0900 - 1000	2	413	97	1	4	0	0	2	9	1	0	0	0	**529**
1000 - 1100	0	501	125	1	6	1	0	3	32	0	1	0	0	**670**
1100 - 1200	1	590	138	0	4	0	0	4	32	0	1	0	0	**770**
1200 - 1300	0	671	157	0	11	2	0	4	31	0	0	0	0	**876**
1300 - 1400	1	744	185	1	3	2	0	2	25	0	0	1	0	**964**
1400 - 1500	0	693	155	0	7	1	0	2	29	1	0	0	0	**888**
1500 - 1600	1	698	172	0	7	2	0	1	29	1	0	0	0	**911**
1600 - 1700	0	694	166	1	3	1	0	3	27	0	0	0	0	**895**
1700 - 1800	0	599	138	1	4	1	0	6	34	0	0	0	0	**783**
1800 - 1900	1	581	138	0	1	1	0	8	26	0	0	0	0	**756**
1900 - 2000	0	501	97	1	2	2	0	3	35	0	2	0	0	**643**
2000 - 2100	0	405	76	0	3	0	0	0	19	0	0	0	0	**503**
2100 - 2200	0	276	53	1	4	0	0	1	26	0	2	0	0	**363**
2200 - 2300	0	202	37	3	0	0	0	0	25	0	2	0	0	**269**
2300 - 2400	0	124	16	1	2	0	0	0	14	0	2	0	0	**159**

Session Total	9	9028	1999	16	90	14	0	41	485	3	10	1	0	**11696**
Session Average	0.38	376.17	83.29	0.67	3.75	0.58	0.00	1.71	20.21	0.13	0.42	0.04	0.00	**487.33**
Session Percentage	0.08	77.19	17.09	0.14	0.77	0.12	0.00	0.35	4.15	0.03	0.09	0.01	0.00	

AM Peak Hour	0800 - 0900	0900 - 1000	0900 - 1000	0700 - 0800	0800 - 0900	0700 - 0800	-	0900 - 1000	0800 - 0900	0900 - 1000	-	-	-	**0900 - 1000**
AM Peak Volume	2	413	97	1	6	1	0	2	14	1	0	0	0	**529**

Noon Peak Hour	1100 - 1200	1300 - 1400	1300 - 1400	1000 - 1100	1200 - 1300	1200 - 1300	-	1100 - 1200	1000 - 1100	1400 - 1500	1000 - 1100	1300 - 1400	-	**1300 - 1400**
Noon Peak Volume	1	744	185	1	11	2	0	4	32	1	1	1	0	**964**

PM Peak Hour	1500 - 1600	1500 - 1600	1500 - 1600	1600 - 1700	1500 - 1600	1500 - 1600	-	1800 - 1900	1900 - 2000	1500 - 1600	1900 - 2000	-	-	**1500 - 1600**
PM Peak Volume	1	698	172	1	7	2	0	8	35	1	2	0	0	**911**

Site 74 Lane 2 WB

I-20,
west of US-378 Sunset Blvd S/Bound Off-Ramp

Date

Monday, April 22, 2024

Lat/Long

34.008085°, -81.156669°

Weather

Mostly Cloudy
57°F

Click here for Detailed Weather

0000 - 2400 (Weekday 24h Session) (04-22-2024)

SB WB 60min

	Westbound (Movement 74 Lane 2 WB.1)													
TIME	1	2	3	4	5	6	7	8	9	10	11	12	13	**Total**
0000 - 0100	0	62	10	0	4	0	0	0	30	0	0	0	0	**106**
0100 - 0200	0	46	9	0	2	0	0	0	18	0	0	0	0	**75**
0200 - 0300	0	42	3	0	4	0	0	0	25	0	0	0	0	**74**
0300 - 0400	0	68	9	0	4	0	0	0	29	0	0	0	0	**110**
0400 - 0500	0	81	25	0	3	0	0	0	35	0	0	0	0	**144**
0500 - 0600	0	223	73	0	7	0	0	0	53	0	0	0	0	**356**
0600 - 0700	1	446	132	1	16	4	0	2	54	0	0	0	0	**656**
0700 - 0800	0	539	216	1	21	11	0	7	46	0	0	0	0	**841**
0800 - 0900	0	443	185	1	24	7	2	8	68	1	0	0	0	**739**
0900 - 1000	0	364	198	1	30	11	0	13	80	0	0	1	0	**698**
1000 - 1100	1	435	184	1	30	8	0	7	108	0	0	0	0	**774**
1100 - 1200	0	444	176	0	17	5	0	6	109	0	0	0	0	**757**
1200 - 1300	1	501	183	1	19	7	0	14	105	0	0	0	0	**831**
1300 - 1400	0	551	167	3	26	6	0	15	111	1	0	0	0	**880**
1400 - 1500	0	552	215	3	22	13	3	11	120	1	0	0	0	**940**
1500 - 1600	1	677	208	1	25	11	3	10	144	2	0	0	0	**1082**
1600 - 1700	0	799	241	0	28	7	2	12	124	2	0	0	0	**1215**
1700 - 1800	0	764	243	2	27	11	0	14	128	2	0	0	0	**1191**
1800 - 1900	0	563	182	0	9	7	0	6	96	0	0	0	0	**863**
1900 - 2000	0	424	112	0	8	7	0	7	86	0	1	0	0	**645**
2000 - 2100	0	367	68	0	5	2	0	4	71	0	2	0	0	**519**
2100 - 2200	0	302	51	0	5	0	0	0	60	0	0	0	0	**418**
2200 - 2300	0	147	48	0	5	0	0	0	49	0	0	0	0	**249**
2300 - 2400	0	102	46	0	3	0	0	0	31	0	0	0	0	**182**

Session Total	4	8942	2984	15	344	117	10	136	1780	9	3	1	0	**14345**
Session Average	0.17	372.58	124.33	0.63	14.33	4.88	0.42	5.67	74.17	0.38	0.13	0.04	0.00	**597.71**
Session Percentage	0.03	62.34	20.80	0.10	2.40	0.82	0.07	0.95	12.41	0.06	0.02	0.01	0.00	

AM Peak Hour	0600 - 0700	0700 - 0800	0700 - 0800	0600 - 0700	0900 - 1000	0700 - 0800	0800 - 0900	0900 - 1000	0900 - 1000	0800 - 0900	-	0900 - 1000	-	**0700 - 0800**
AM Peak Volume	1	539	216	1	30	11	2	13	80	1	0	1	0	**841**

Noon Peak Hour	1000 - 1100	1400 - 1500	1400 - 1500	1300 - 1400	1000 - 1100	1400 - 1500	1400 - 1500	1300 - 1400	1400 - 1500	1300 - 1400	-	-	-	**1400 - 1500**
Noon Peak Volume	1	552	215	3	30	13	3	15	120	1	0	0	0	**940**

PM Peak Hour	1500 - 1600	1600 - 1700	1700 - 1800	1700 - 1800	1600 - 1700	1500 - 1600	1500 - 1600	1700 - 1800	1500 - 1600	1500 - 1600	1900 - 2000	-	-	**1600 - 1700**
PM Peak Volume	1	799	243	2	28	11	3	14	144	2	1	0	0	**1215**

Site 74 Lane 2 WB

I-20,
west of US-378 Sunset Blvd S/Bound Off-Ramp

Date

Tuesday, April 23, 2024

Lat/Long

34.008085°, -81.156669°

Weather

Fair
58°F

Click here for Detailed Weather

0000 - 2400 (Weekday 24h Session) (04-23-2024)

SB WB 60min

	Westbound (Movement 74 Lane 2 WB.1)													
TIME	1	2	3	4	5	6	7	8	9	10	11	12	13	**Total**
0000 - 0100	0	73	4	0	0	1	0	0	21	0	2	0	0	**101**
0100 - 0200	0	78	2	0	4	0	0	0	36	0	2	0	0	**122**
0200 - 0300	0	84	2	0	3	0	0	0	39	0	0	0	0	**128**
0300 - 0400	0	84	2	0	4	0	0	3	43	0	2	0	0	**138**
0400 - 0500	0	128	9	0	3	0	0	0	44	0	4	0	0	**188**
0500 - 0600	0	288	29	0	7	2	0	0	52	0	0	0	0	**378**
0600 - 0700	1	409	165	0	12	5	0	3	71	0	1	0	0	**667**
0700 - 0800	1	568	216	1	17	2	1	3	48	0	0	0	0	**857**
0800 - 0900	1	471	168	0	32	7	0	1	52	0	1	0	0	**733**
0900 - 1000	0	446	182	4	25	8	0	4	91	0	0	0	0	**760**
1000 - 1100	0	435	172	1	32	11	0	3	94	1	0	0	0	**749**
1100 - 1200	3	449	163	0	20	8	1	4	128	0	0	0	0	**776**
1200 - 1300	1	480	168	2	21	7	0	7	133	0	0	0	0	**819**
1300 - 1400	0	515	171	0	21	9	0	8	126	5	0	0	0	**855**
1400 - 1500	2	590	202	5	24	10	2	16	125	2	2	0	0	**980**
1500 - 1600	1	663	252	0	28	13	2	22	145	2	0	0	0	**1128**
1600 - 1700	0	809	266	2	39	12	2	18	117	0	2	0	0	**1267**
1700 - 1800	1	914	230	1	36	8	1	14	101	4	0	0	0	**1310**
1800 - 1900	1	557	157	0	18	6	0	9	86	0	0	0	0	**834**
1900 - 2000	5	385	130	0	14	3	0	1	68	0	2	0	0	**608**
2000 - 2100	0	378	113	0	11	6	0	1	72	0	2	0	0	**583**
2100 - 2200	1	343	104	0	8	0	0	0	47	0	2	0	0	**505**
2200 - 2300	0	231	49	0	3	0	0	0	42	0	4	0	0	**329**
2300 - 2400	0	126	47	0	2	0	0	0	21	0	4	0	0	**200**

Session Total	18	9504	3003	16	384	118	9	117	1802	14	30	0	0	**15015**
Session Average	0.75	396.00	125.13	0.67	16.00	4.92	0.38	4.88	75.08	0.58	1.25	0.00	0.00	**625.63**
Session Percentage	0.12	63.30	20.00	0.11	2.56	0.79	0.06	0.78	12.00	0.09	0.20	0.00	0.00	

AM Peak Hour	0600 - 0700	0700 - 0800	0700 - 0800	0900 - 1000	0800 - 0900	0900 - 1000	0700 - 0800	0900 - 1000	0900 - 1000	-	0600 - 0700	-	-	**0700 - 0800**
AM Peak Hour Volume	1	568	216	4	32	8	1	4	91	0	1	0	0	**857**

Noon Peak Hour	1100 - 1200	1400 - 1500	1400 - 1500	1400 - 1500	1000 - 1100	1000 - 1100	1400 - 1500	1400 - 1500	1200 - 1300	1300 - 1400	1400 - 1500	-	-	**1400 - 1500**
Noon Peak Hour Volume	3	590	202	5	32	11	2	16	133	5	2	0	0	**980**

PM Peak Hour	1900 - 2000	1700 - 1800	1600 - 1700	1600 - 1700	1600 - 1700	1500 - 1600	1500 - 1600	1500 - 1600	1500 - 1600	1700 - 1800	1600 - 1700	-	-	**1700 - 1800**
PM Peak Hour Volume	5	914	266	2	39	13	2	22	145	4	2	0	0	**1310**

Site 74 Lane 2 WB

I-20,
west of US-378 Sunset Blvd S/Bound Off-Ramp

Date

Wednesday, April 24, 2024

Lat/Long

34.008085°, -81.156669°

Weather

Fair
66°F

Click here for Detailed Weather

0000 - 2400 (Weekday 24h Session) (04-24-2024)

SB WB 60min

	Westbound (Movement 74 Lane 2 WB.1)													
TIME	1	2	3	4	5	6	7	8	9	10	11	12	13	**Total**
0000 - 0100	0	80	16	0	2	0	0	0	32	0	4	0	0	**134**
0100 - 0200	0	59	5	0	6	2	0	0	20	0	1	0	0	**93**
0200 - 0300	0	46	9	0	2	1	0	0	29	0	3	0	0	**90**
0300 - 0400	0	68	12	2	2	1	0	0	28	0	0	0	0	**113**
0400 - 0500	0	80	13	0	4	0	0	0	28	0	2	0	0	**127**
0500 - 0600	0	221	23	0	8	1	0	0	44	0	1	0	0	**298**
0600 - 0700	2	428	175	0	18	2	0	9	56	0	2	0	0	**692**
0700 - 0800	0	523	220	0	26	7	0	12	74	0	2	1	0	**865**
0800 - 0900	0	421	167	0	28	8	2	5	73	1	0	0	0	**705**
0900 - 1000	2	376	177	4	23	8	4	7	97	2	1	0	0	**701**
1000 - 1100	1	464	189	1	17	8	0	12	122	1	0	0	0	**815**
1100 - 1200	3	414	187	1	23	5	0	9	101	1	0	0	0	**744**
1200 - 1300	1	490	180	0	23	7	4	16	148	5	0	1	0	**875**
1300 - 1400	3	515	190	1	27	9	0	7	146	0	0	0	0	**898**
1400 - 1500	1	590	220	5	24	5	1	8	140	0	0	1	0	**995**
1500 - 1600	1	677	273	1	38	10	1	13	154	1	0	1	0	**1170**
1600 - 1700	1	778	271	5	39	10	1	18	155	1	0	0	0	**1279**
1700 - 1800	0	738	249	3	29	5	2	8	133	0	0	0	0	**1167**
1800 - 1900	1	573	152	3	25	3	0	5	97	1	0	0	0	**860**
1900 - 2000	1	421	126	0	11	1	0	9	70	0	1	0	0	**640**
2000 - 2100	0	414	106	1	6	2	0	3	59	0	1	0	0	**592**
2100 - 2200	0	347	35	0	3	0	0	1	58	0	5	0	0	**449**
2200 - 2300	0	250	11	1	3	0	0	0	37	0	7	0	0	**309**
2300 - 2400	1	168	11	1	2	0	0	0	40	0	2	0	0	**225**

Session Total	18	9141	3017	29	389	95	15	142	1941	13	32	4	0	**14836**
Session Average	0.75	380.88	125.71	1.21	16.21	3.96	0.63	5.92	80.88	0.54	1.33	0.17	0.00	**618.17**
Session Percentage	0.12	61.61	20.34	0.20	2.62	0.64	0.10	0.96	13.08	0.09	0.22	0.03	0.00	

AM Peak Hour	0600 - 0700	0700 - 0800	0700 - 0800	0900 - 1000	0800 - 0900	0800 - 0900	0900 - 1000	0700 - 0800	0900 - 1000	0900 - 1000	0600 - 0700	0700 - 0800	-	**0700 - 0800**
AM Peak Hour Volume	2	523	220	4	28	8	4	12	97	2	2	1	0	**865**

Noon Peak Hour	1100 - 1200	1400 - 1500	1400 - 1500	1400 - 1500	1300 - 1400	1300 - 1400	1200 - 1300	1200 - 1300	1200 - 1300	1200 - 1300	-	1200 - 1300	-	**1400 - 1500**
Noon Peak Hour Volume	3	590	220	5	27	9	4	16	148	5	0	1	0	**995**

PM Peak Hour	1500 - 1600	1600 - 1700	1500 - 1600	1600 - 1700	1600 - 1700	1500 - 1600	1700 - 1800	1600 - 1700	1600 - 1700	1500 - 1600	1900 - 2000	1500 - 1600	-	**1600 - 1700**
PM Peak Hour Volume	1	778	273	5	39	10	2	18	155	1	1	1	0	**1279**

Site 74 Lane 2 WB

I-20,
west of US-378 Sunset Blvd S/Bound Off-Ramp

Date

Thursday, April 25, 2024

Lat/Long

34.008085°, -81.156669°

Weather

Fair
67°F

Click here for Detailed Weather

0000 - 2400 (Weekday 24h Session) (04-25-2024)

SB WB 60min

	Westbound (Movement 74 Lane 2 WB.1)													
TIME	1	2	3	4	5	6	7	8	9	10	11	12	13	**Total**
0000 - 0100	0	77	16	0	3	2	0	2	37	0	3	0	0	**140**
0100 - 0200	0	57	2	0	2	2	0	0	24	0	2	0	0	**89**
0200 - 0300	0	62	3	0	3	0	0	0	26	0	2	0	0	**96**
0300 - 0400	0	77	0	0	3	0	0	0	25	0	2	0	0	**107**
0400 - 0500	0	100	8	0	4	0	0	0	23	0	1	0	0	**136**
0500 - 0600	0	230	5	0	0	0	0	0	54	0	2	0	0	**291**
0600 - 0700	1	420	127	0	12	6	0	1	77	0	4	0	0	**648**
0700 - 0800	1	575	199	1	29	12	1	1	71	0	1	0	0	**891**
0800 - 0900	0	441	244	1	34	8	0	4	99	2	1	0	0	**834**
0900 - 1000	2	426	188	1	21	8	0	9	105	2	0	0	0	**762**
1000 - 1100	0	470	182	0	22	7	2	13	110	0	0	0	0	**806**
1100 - 1200	2	463	177	0	23	11	0	9	138	0	1	0	0	**824**
1200 - 1300	0	485	189	1	29	7	2	9	146	1	1	0	0	**870**
1300 - 1400	1	603	231	3	25	7	2	12	138	2	1	0	0	**1025**
1400 - 1500	2	603	243	1	36	8	0	12	158	3	0	1	0	**1067**
1500 - 1600	2	753	303	1	30	4	2	9	133	1	1	0	0	**1239**
1600 - 1700	2	906	310	1	36	5	1	9	125	0	0	0	0	**1395**
1700 - 1800	3	909	288	2	25	7	2	6	110	1	0	0	0	**1353**
1800 - 1900	2	634	209	2	25	2	0	9	90	1	0	0	0	**974**
1900 - 2000	2	463	149	0	13	2	0	9	61	0	1	0	0	**700**
2000 - 2100	0	384	43	1	8	2	0	0	60	0	2	0	0	**500**
2100 - 2200	0	378	13	0	2	0	0	0	30	0	0	0	0	**423**
2200 - 2300	0	258	5	1	4	0	0	0	28	0	2	0	0	**298**
2300 - 2400	0	197	8	0	0	1	0	0	19	0	5	0	0	**230**

Session Total	20	9971	3142	16	389	101	12	114	1887	13	32	1	0	**15698**
Session Average	0.83	415.46	130.92	0.67	16.21	4.21	0.50	4.75	78.63	0.54	1.33	0.04	0.00	**654.08**
Session Percentage	0.13	63.52	20.02	0.10	2.48	0.64	0.08	0.73	12.02	0.08	0.20	0.01	0.00	

AM Peak Hour	0900 - 1000	0700 - 0800	0800 - 0900	0700 - 0800	0800 - 0900	0700 - 0800	0700 - 0800	0900 - 1000	0900 - 1000	0800 - 0900	0600 - 0700	-	-	**0700 - 0800**
AM Peak Hour Volume	2	575	244	1	34	12	1	9	105	2	4	0	0	**891**

Noon Peak Hour	1100 - 1200	1300 - 1400	1400 - 1500	1300 - 1400	1400 - 1500	1100 - 1200	1000 - 1100	1000 - 1100	1400 - 1500	1400 - 1500	1100 - 1200	1400 - 1500	-	**1400 - 1500**
Noon Peak Hour Volume	2	603	243	3	36	11	2	13	158	3	1	1	0	**1067**

PM Peak Hour	1700 - 1800	1700 - 1800	1600 - 1700	1700 - 1800	1600 - 1700	1700 - 1800	1500 - 1600	1500 - 1600	1500 - 1600	1500 - 1600	1500 - 1600	-	-	**1600 - 1700**
PM Peak Hour Volume	3	909	310	2	36	7	2	9	133	1	1	0	0	**1395**

Site 74 Lane 2 WB

I-20,
west of US-378 Sunset Blvd S/Bound Off-Ramp

Date

Friday, April 26, 2024

Lat/Long

34.008085°, -81.156669°

Weather

Cloudy
69°F

Click here for Detailed Weather

0000 - 2400 (Weekday 24h Session) (04-26-2024)

SB WB 60min

	Westbound (Movement 74 Lane 2 WB.1)													
TIME	1	2	3	4	5	6	7	8	9	10	11	12	13	**Total**
0000 - 0100	0	103	25	0	8	0	0	0	24	0	3	0	0	**163**
0100 - 0200	0	83	30	0	7	0	0	0	31	0	5	0	0	**156**
0200 - 0300	0	60	21	0	5	0	0	0	28	0	4	0	0	**118**
0300 - 0400	0	76	30	0	3	0	0	0	42	0	8	0	0	**159**
0400 - 0500	0	101	55	0	8	2	0	0	55	0	4	0	0	**225**
0500 - 0600	0	181	91	2	5	2	0	0	46	0	3	0	0	**330**
0600 - 0700	0	340	148	0	12	4	0	0	59	1	3	0	0	**567**
0700 - 0800	2	540	229	0	37	12	1	3	52	2	0	0	0	**878**
0800 - 0900	0	419	182	3	38	4	0	8	81	0	1	0	0	**736**
0900 - 1000	1	448	187	1	22	7	0	5	76	2	0	1	0	**750**
1000 - 1100	3	456	162	1	24	7	1	12	82	1	1	0	0	**750**
1100 - 1200	1	547	211	1	30	7	2	14	112	2	0	0	0	**927**
1200 - 1300	5	577	212	2	30	11	0	6	117	0	0	0	0	**960**
1300 - 1400	3	634	210	5	28	4	1	12	108	0	0	0	0	**1005**
1400 - 1500	2	657	228	1	30	10	0	14	134	1	0	0	0	**1077**
1500 - 1600	0	783	255	3	24	8	0	16	133	2	1	0	0	**1225**
1600 - 1700	0	864	246	1	25	8	0	23	107	0	0	0	0	**1274**
1700 - 1800	1	870	221	0	22	5	0	14	103	1	1	0	0	**1238**
1800 - 1900	1	673	184	2	16	5	0	9	78	2	0	0	0	**970**
1900 - 2000	1	547	136	3	9	2	0	12	56	1	0	0	0	**767**
2000 - 2100	1	504	99	1	6	0	0	0	56	0	3	0	0	**670**
2100 - 2200	0	411	89	1	12	0	0	0	39	0	7	0	0	**559**
2200 - 2300	0	379	93	0	6	0	0	0	38	0	6	0	0	**522**
2300 - 2400	0	235	64	0	3	0	0	0	23	0	6	0	0	**331**

Session Total	21	10488	3408	27	410	98	5	148	1680	15	56	1	0	**16357**
Session Average	0.88	437.00	142.00	1.13	17.08	4.08	0.21	6.17	70.00	0.63	2.33	0.04	0.00	**681.54**
Session Percentage	0.13	64.12	20.84	0.17	2.51	0.60	0.03	0.90	10.27	0.09	0.34	0.01	0.00	

AM Peak Hour	0700 - 0800	0700 - 0800	0700 - 0800	0800 - 0900	0800 - 0900	0700 - 0800	0700 - 0800	0800 - 0900	0800 - 0900	0700 - 0800	0500 - 0600	0900 - 1000	-	**0700 - 0800**
AM Peak Hour Volume	2	540	229	3	38	12	1	8	81	2	3	1	0	**878**

Noon Peak Hour	1200 - 1300	1400 - 1500	1400 - 1500	1300 - 1400	1100 - 1200	1200 - 1300	1100 - 1200	1100 - 1200	1400 - 1500	1100 - 1200	1000 - 1100	-	-	**1400 - 1500**
Noon Peak Hour Volume	5	657	228	5	30	11	2	14	134	2	1	0	0	**1077**

PM Peak Hour	1700 - 1800	1700 - 1800	1500 - 1600	1500 - 1600	1600 - 1700	1500 - 1600	-	1600 - 1700	1500 - 1600	1500 - 1600	1500 - 1600	-	-	**1600 - 1700**
PM Peak Hour Volume	1	870	255	3	25	8	0	23	133	2	1	0	0	**1274**

Site 74 Lane 2 WB

I-20,
west of US-378 Sunset Blvd S/Bound Off-Ramp

Date

Saturday, April 27, 2024

Lat/Long

34.008085°, -81.156669°

Weather

Mostly Cloudy
69°F

Click here for Detailed Weather

0000 - 2400 (Saturday 24h Session) (04-27-2024)

SB WB 60min

	Westbound (Movement 74 Lane 2 WB.1)													
TIME	1	2	3	4	5	6	7	8	9	10	11	12	13	**Total**
0000 - 0100	0	150	21	0	4	0	0	0	28	0	1	0	0	**204**
0100 - 0200	0	70	18	0	6	0	0	0	19	0	0	0	0	**113**
0200 - 0300	0	56	16	0	2	0	0	0	8	0	1	0	0	**83**
0300 - 0400	0	49	21	0	3	0	0	0	11	0	3	0	0	**87**
0400 - 0500	0	58	22	0	1	0	0	0	16	0	3	0	0	**100**
0500 - 0600	0	102	40	0	6	0	0	0	17	0	4	0	0	**169**
0600 - 0700	1	205	95	0	5	0	0	3	24	0	2	0	0	**335**
0700 - 0800	0	337	106	1	5	4	0	2	22	0	1	0	0	**478**
0800 - 0900	0	413	145	0	13	3	0	4	40	0	0	0	0	**618**
0900 - 1000	1	544	145	3	8	2	0	4	56	0	0	0	0	**763**
1000 - 1100	2	563	150	2	5	4	0	1	40	1	0	0	0	**768**
1100 - 1200	1	617	188	2	6	0	0	5	46	0	0	0	0	**865**
1200 - 1300	1	670	182	1	7	5	0	5	48	0	0	0	0	**919**
1300 - 1400	0	697	183	1	8	1	0	1	39	0	0	0	0	**930**
1400 - 1500	1	669	190	4	7	1	0	8	40	0	0	0	0	**920**
1500 - 1600	10	726	135	1	11	2	1	4	33	1	0	0	0	**924**
1600 - 1700	5	678	152	0	7	2	0	4	32	1	0	0	0	**881**
1700 - 1800	5	612	144	2	5	2	0	1	25	0	0	0	0	**796**
1800 - 1900	5	609	144	2	8	0	0	4	17	0	0	0	0	**789**
1900 - 2000	1	501	132	4	5	2	0	1	20	0	0	0	0	**666**
2000 - 2100	0	470	82	0	0	1	0	1	17	0	0	0	0	**571**
2100 - 2200	0	454	68	0	2	1	0	0	17	0	0	0	0	**542**
2200 - 2300	0	396	54	0	0	0	0	0	16	0	0	0	0	**466**
2300 - 2400	0	250	33	0	0	1	0	0	10	0	0	0	0	**294**

Session Total	33	9896	2466	23	124	31	1	48	641	3	15	0	0	**13281**
Session Average	1.38	412.33	102.75	0.96	5.17	1.29	0.04	2.00	26.71	0.13	0.63	0.00	0.00	**553.38**
Session Percentage	0.25	74.51	18.57	0.17	0.93	0.23	0.01	0.36	4.83	0.02	0.11	0.00	0.00	

AM Peak Hour	0600 - 0700	0900 - 1000	0800 - 0900	0900 - 1000	0800 - 0900	0700 - 0800	-	0800 - 0900	0900 - 1000	-	0500 - 0600	-	-	**0900 - 1000**
AM Peak Hour Volume	1	544	145	3	13	4	0	4	56	0	4	0	0	**763**

Noon Peak Hour	1000 - 1100	1300 - 1400	1400 - 1500	1400 - 1500	1300 - 1400	1200 - 1300	-	1400 - 1500	1200 - 1300	1000 - 1100	-	-	-	**1300 - 1400**
Noon Peak Hour Volume	2	697	190	4	8	5	0	8	48	1	0	0	0	**930**

PM Peak Hour	1500 - 1600	1500 - 1600	1600 - 1700	1900 - 2000	1500 - 1600	1500 - 1600	1500 - 1600	1500 - 1600	1500 - 1600	1500 - 1600	-	-	-	**1500 - 1600**
PM Peak Hour Volume	10	726	152	4	11	2	1	4	33	1	0	0	0	**924**

Bi-Directional Class Count || Volume Summary 60min

Columbia, SC

Marr Traffic DATA COLLECTION

www.marrtraffic.com

Site 74 Lane 2 WB

I-20,
west of US-378 Sunset Blvd S/Bound Off-Ramp

Date

Sunday, April 21, 2024

Lat/Long

34.008085°, -81.156669°

Weather

Cloudy
66°F

Click here for Detailed Weather

0000 - 2400 (Sunday 24h Session) (04-21-2024)

Volume Summary 60min

	Volume Summary 60min		
TIME	EB	WB	**Total**
0000 - 0100	0	237	**237**
0100 - 0200	0	178	**178**
0200 - 0300	0	137	**137**
0300 - 0400	0	95	**95**
0400 - 0500	0	114	**114**
0500 - 0600	0	135	**135**
0600 - 0700	0	193	**193**
0700 - 0800	0	263	**263**
0800 - 0900	0	365	**365**
0900 - 1000	0	529	**529**
1000 - 1100	0	670	**670**
1100 - 1200	0	770	**770**

	Volume Summary 60min		
Time	EB	WB	**Total**
1200 - 1300	0	876	**876**
1300 - 1400	0	964	**964**
1400 - 1500	0	888	**888**
1500 - 1600	0	911	**911**
1600 - 1700	0	895	**895**
1700 - 1800	0	783	**783**
1800 - 1900	0	756	**756**
1900 - 2000	0	643	**643**
2000 - 2100	0	503	**503**
2100 - 2200	0	363	**363**
2200 - 2300	0	269	**269**
2300 - 2400	0	159	**159**

Session Total	0	11696	**11696**
Session Average	0.00	487.33	**487.33**
Session Percentage	0.00	100.00	

Site 74 Lane 2 WB

I-20,
west of US-378 Sunset Blvd S/Bound Off-Ramp

Date

Monday, April 22, 2024

Lat/Long

34.008085°, -81.156669°

Weather

Mostly Cloudy
57°F

Click here for Detailed Weather

0000 - 2400 (Weekday 24h Session) (04-22-2024)

Volume Summary 60min

	Volume Summary 60min		
TIME	EB	WB	**Total**
0000 - 0100	0	106	**106**
0100 - 0200	0	75	**75**
0200 - 0300	0	74	**74**
0300 - 0400	0	110	**110**
0400 - 0500	0	144	**144**
0500 - 0600	0	356	**356**
0600 - 0700	0	656	**656**
0700 - 0800	0	841	**841**
0800 - 0900	0	739	**739**
0900 - 1000	0	698	**698**
1000 - 1100	0	774	**774**
1100 - 1200	0	757	**757**

Session Total	0	14345	**14345**
Session Average	0.00	597.71	**597.71**
Session Percentage	0.00	100.00	

	Volume Summary 60min		
Time	EB	WB	**Total**
1200 - 1300	0	831	**831**
1300 - 1400	0	880	**880**
1400 - 1500	0	940	**940**
1500 - 1600	0	1082	**1082**
1600 - 1700	0	1215	**1215**
1700 - 1800	0	1191	**1191**
1800 - 1900	0	863	**863**
1900 - 2000	0	645	**645**
2000 - 2100	0	519	**519**
2100 - 2200	0	418	**418**
2200 - 2300	0	249	**249**
2300 - 2400	0	182	**182**

Site 74 Lane 2 WB

I-20,
west of US-378 Sunset Blvd S/Bound Off-Ramp

Date

Tuesday, April 23, 2024

Lat/Long

34.008085°, -81.156669°

Weather

Fair
58°F

Click here for Detailed Weather

0000 - 2400 (Weekday 24h Session) (04-23-2024)

Volume Summary 60min

	Volume Summary 60min		
TIME	EB	WB	**Total**
0000 - 0100	0	101	**101**
0100 - 0200	0	122	**122**
0200 - 0300	0	128	**128**
0300 - 0400	0	138	**138**
0400 - 0500	0	188	**188**
0500 - 0600	0	378	**378**
0600 - 0700	0	667	**667**
0700 - 0800	0	857	**857**
0800 - 0900	0	733	**733**
0900 - 1000	0	760	**760**
1000 - 1100	0	749	**749**
1100 - 1200	0	776	**776**

Session Total	0	15015	**15015**
Session Average	0.00	625.63	**625.63**
Session Percentage	0.00	100.00	

	Volume Summary 60min		
Time	EB	WB	**Total**
1200 - 1300	0	819	**819**
1300 - 1400	0	855	**855**
1400 - 1500	0	980	**980**
1500 - 1600	0	1128	**1128**
1600 - 1700	0	1267	**1267**
1700 - 1800	0	1310	**1310**
1800 - 1900	0	834	**834**
1900 - 2000	0	608	**608**
2000 - 2100	0	583	**583**
2100 - 2200	0	505	**505**
2200 - 2300	0	329	**329**
2300 - 2400	0	200	**200**

Site 74 Lane 2 WB

I-20,
west of US-378 Sunset Blvd S/Bound Off-Ramp

Date

Wednesday, April 24, 2024

Lat/Long

34.008085°, -81.156669°

Weather

Fair
66°F

Click here for Detailed Weather

0000 - 2400 (Weekday 24h Session) (04-24-2024)

Volume Summary 60min

	Volume Summary 60min		
TIME	EB	WB	**Total**
0000 - 0100	0	134	**134**
0100 - 0200	0	93	**93**
0200 - 0300	0	90	**90**
0300 - 0400	0	113	**113**
0400 - 0500	0	127	**127**
0500 - 0600	0	298	**298**
0600 - 0700	0	692	**692**
0700 - 0800	0	865	**865**
0800 - 0900	0	705	**705**
0900 - 1000	0	701	**701**
1000 - 1100	0	815	**815**
1100 - 1200	0	744	**744**

	Volume Summary 60min		
Time	EB	WB	**Total**
1200 - 1300	0	875	**875**
1300 - 1400	0	898	**898**
1400 - 1500	0	995	**995**
1500 - 1600	0	1170	**1170**
1600 - 1700	0	1279	**1279**
1700 - 1800	0	1167	**1167**
1800 - 1900	0	860	**860**
1900 - 2000	0	640	**640**
2000 - 2100	0	592	**592**
2100 - 2200	0	449	**449**
2200 - 2300	0	309	**309**
2300 - 2400	0	225	**225**

Session Total	0	14836	**14836**
Session Average	0.00	618.17	**618.17**
Session Percentage	0.00	100.00	

Site 74 Lane 2 WB

I-20,
west of US-378 Sunset Blvd S/Bound Off-Ramp

Date

Thursday, April 25, 2024

Lat/Long

34.008085°, -81.156669°

Weather

Fair
67°F

Click here for Detailed Weather

0000 - 2400 (Weekday 24h Session) (04-25-2024)

Volume Summary 60min

	Volume Summary 60min		
TIME	EB	WB	**Total**
0000 - 0100	0	140	**140**
0100 - 0200	0	89	**89**
0200 - 0300	0	96	**96**
0300 - 0400	0	107	**107**
0400 - 0500	0	136	**136**
0500 - 0600	0	291	**291**
0600 - 0700	0	648	**648**
0700 - 0800	0	891	**891**
0800 - 0900	0	834	**834**
0900 - 1000	0	762	**762**
1000 - 1100	0	806	**806**
1100 - 1200	0	824	**824**

	Volume Summary 60min		
Time	EB	WB	**Total**
1200 - 1300	0	870	**870**
1300 - 1400	0	1025	**1025**
1400 - 1500	0	1067	**1067**
1500 - 1600	0	1239	**1239**
1600 - 1700	0	1395	**1395**
1700 - 1800	0	1353	**1353**
1800 - 1900	0	974	**974**
1900 - 2000	0	700	**700**
2000 - 2100	0	500	**500**
2100 - 2200	0	423	**423**
2200 - 2300	0	298	**298**
2300 - 2400	0	230	**230**

Session Total	0	15698	**15698**
Session Average	0.00	654.08	**654.08**
Session Percentage	0.00	100.00	

Site 74 Lane 2 WB

I-20,
west of US-378 Sunset Blvd S/Bound Off-Ramp

Date

Friday, April 26, 2024

Lat/Long

34.008085°, -81.156669°

Weather

Cloudy
69°F

Click here for Detailed Weather

0000 - 2400 (Weekday 24h Session) (04-26-2024)

Volume Summary 60min

	Volume Summary 60min		
TIME	EB	WB	**Total**
0000 - 0100	0	163	**163**
0100 - 0200	0	156	**156**
0200 - 0300	0	118	**118**
0300 - 0400	0	159	**159**
0400 - 0500	0	225	**225**
0500 - 0600	0	330	**330**
0600 - 0700	0	567	**567**
0700 - 0800	0	878	**878**
0800 - 0900	0	736	**736**
0900 - 1000	0	750	**750**
1000 - 1100	0	750	**750**
1100 - 1200	0	927	**927**
1200 - 1300	0	960	**960**
1300 - 1400	0	1005	**1005**
1400 - 1500	0	1077	**1077**
1500 - 1600	0	1225	**1225**
1600 - 1700	0	1274	**1274**
1700 - 1800	0	1238	**1238**
1800 - 1900	0	970	**970**
1900 - 2000	0	767	**767**
2000 - 2100	0	670	**670**
2100 - 2200	0	559	**559**
2200 - 2300	0	522	**522**
2300 - 2400	0	331	**331**
Session Total	0	16357	**16357**
Session Average	0.00	681.54	**681.54**
Session Percentage	0.00	100.00	

Site 74 Lane 2 WB

I-20,
west of US-378 Sunset Blvd S/Bound Off-Ramp

Date

Saturday, April 27, 2024

Lat/Long

34.008085°, -81.156669°

Weather

Mostly Cloudy
69°F

Click here for Detailed Weather

0000 - 2400 (Saturday 24h Session) (04-27-2024)

Volume Summary 60min

	Volume Summary 60min		
TIME	EB	WB	**Total**
0000 - 0100	0	204	**204**
0100 - 0200	0	113	**113**
0200 - 0300	0	83	**83**
0300 - 0400	0	87	**87**
0400 - 0500	0	100	**100**
0500 - 0600	0	169	**169**
0600 - 0700	0	335	**335**
0700 - 0800	0	478	**478**
0800 - 0900	0	618	**618**
0900 - 1000	0	763	**763**
1000 - 1100	0	768	**768**
1100 - 1200	0	865	**865**

	Volume Summary 60min		
Time	EB	WB	**Total**
1200 - 1300	0	919	**919**
1300 - 1400	0	930	**930**
1400 - 1500	0	920	**920**
1500 - 1600	0	924	**924**
1600 - 1700	0	881	**881**
1700 - 1800	0	796	**796**
1800 - 1900	0	789	**789**
1900 - 2000	0	666	**666**
2000 - 2100	0	571	**571**
2100 - 2200	0	542	**542**
2200 - 2300	0	466	**466**
2300 - 2400	0	294	**294**

Session Total	0	13281	**13281**
Session Average	0.00	553.38	**553.38**
Session Percentage	0.00	100.00	

Bi-Directional Class Count || Graphical Analysis SB WB

Columbia, SC

Marr Traffic DATA COLLECTION

www.marrtraffic.com

Site 74 Lane 2 WB

I-20,
west of US-378 Sunset Blvd S/Bound Off-Ramp

Lat/Long

34.008085°, -81.156669°

0000 - 2400 (Weekday 24h Session)

Graphical Analysis SB WB

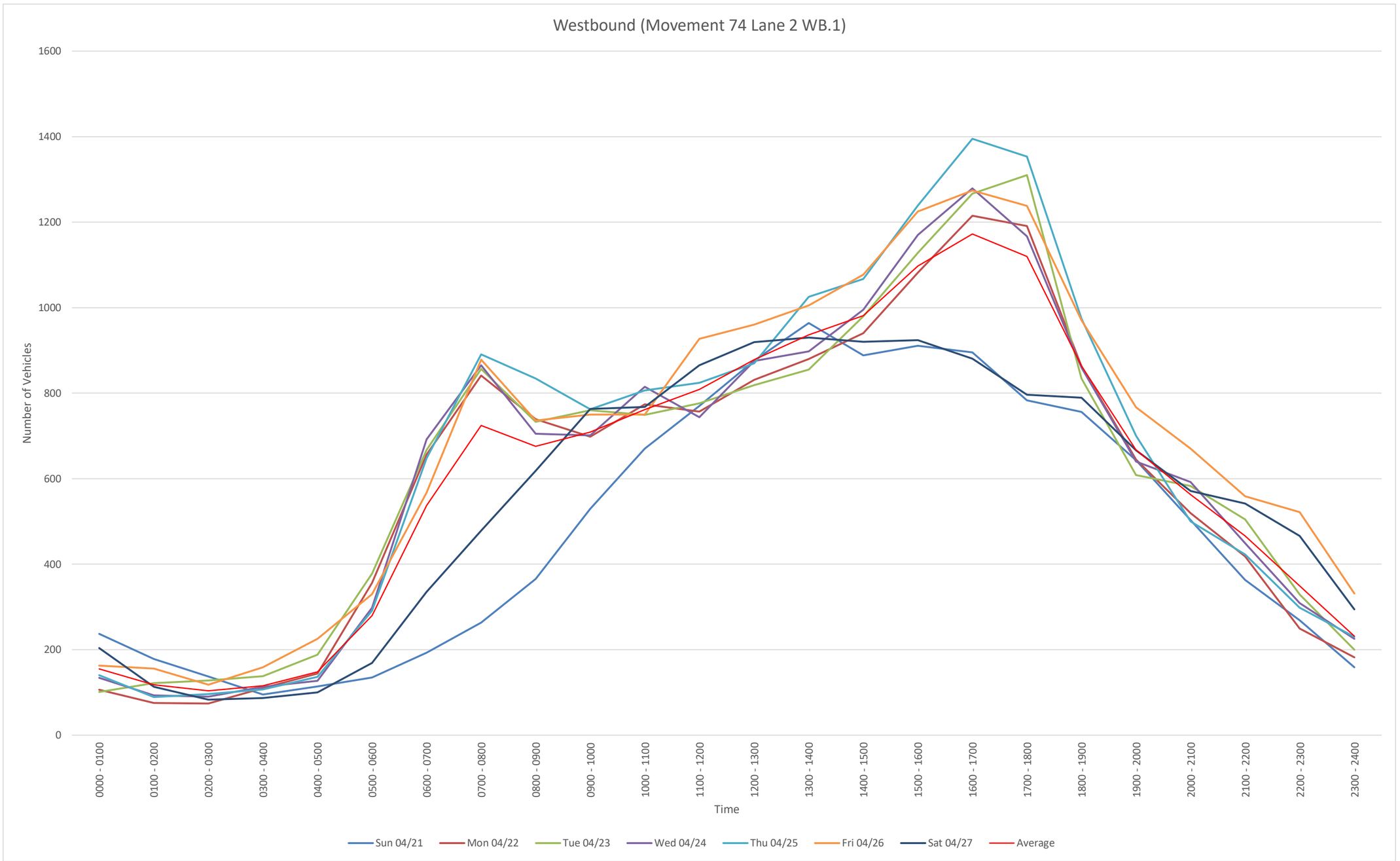

EB
File Name:
Start Date: 4/21/2024
Start Time: 0
Site Code: 74 Lane 2 WB
Station ID: 1
Location 1: I-20, west of US-378 Sunset Blvd S/Bound Off-Ramp
Location 2:

Date	Time	1	2	3	4	5	6	7	8	9	10	11	12	13
4/21/2024	12:00 AM	0	0	0	0	0	0	0	0	0	0	0	0	0
4/21/2024	12:15 AM	0	0	0	0	0	0	0	0	0	0	0	0	0
4/21/2024	12:30 AM	0	0	0	0	0	0	0	0	0	0	0	0	0
4/21/2024	12:45 AM	0	0	0	0	0	0	0	0	0	0	0	0	0
4/21/2024	1:00 AM	0	0	0	0	0	0	0	0	0	0	0	0	0
4/21/2024	1:15 AM	0	0	0	0	0	0	0	0	0	0	0	0	0
4/21/2024	1:30 AM	0	0	0	0	0	0	0	0	0	0	0	0	0
4/21/2024	1:45 AM	0	0	0	0	0	0	0	0	0	0	0	0	0
4/21/2024	2:00 AM	0	0	0	0	0	0	0	0	0	0	0	0	0
4/21/2024	2:15 AM	0	0	0	0	0	0	0	0	0	0	0	0	0
4/21/2024	2:30 AM	0	0	0	0	0	0	0	0	0	0	0	0	0
4/21/2024	2:45 AM	0	0	0	0	0	0	0	0	0	0	0	0	0
4/21/2024	3:00 AM	0	0	0	0	0	0	0	0	0	0	0	0	0
4/21/2024	3:15 AM	0	0	0	0	0	0	0	0	0	0	0	0	0
4/21/2024	3:30 AM	0	0	0	0	0	0	0	0	0	0	0	0	0
4/21/2024	3:45 AM	0	0	0	0	0	0	0	0	0	0	0	0	0
4/21/2024	4:00 AM	0	0	0	0	0	0	0	0	0	0	0	0	0
4/21/2024	4:15 AM	0	0	0	0	0	0	0	0	0	0	0	0	0
4/21/2024	4:30 AM	0	0	0	0	0	0	0	0	0	0	0	0	0
4/21/2024	4:45 AM	0	0	0	0	0	0	0	0	0	0	0	0	0
4/21/2024	5:00 AM	0	0	0	0	0	0	0	0	0	0	0	0	0
4/21/2024	5:15 AM	0	0	0	0	0	0	0	0	0	0	0	0	0
4/21/2024	5:30 AM	0	0	0	0	0	0	0	0	0	0	0	0	0
4/21/2024	5:45 AM	0	0	0	0	0	0	0	0	0	0	0	0	0
4/21/2024	6:00 AM	0	0	0	0	0	0	0	0	0	0	0	0	0
4/21/2024	6:15 AM	0	0	0	0	0	0	0	0	0	0	0	0	0
4/21/2024	6:30 AM	0	0	0	0	0	0	0	0	0	0	0	0	0
4/21/2024	6:45 AM	0	0	0	0	0	0	0	0	0	0	0	0	0
4/21/2024	7:00 AM	0	0	0	0	0	0	0	0	0	0	0	0	0
4/21/2024	7:15 AM	0	0	0	0	0	0	0	0	0	0	0	0	0
4/21/2024	7:30 AM	0	0	0	0	0	0	0	0	0	0	0	0	0
4/21/2024	7:45 AM	0	0	0	0	0	0	0	0	0	0	0	0	0
4/21/2024	8:00 AM	0	0	0	0	0	0	0	0	0	0	0	0	0
4/21/2024	8:15 AM	0	0	0	0	0	0	0	0	0	0	0	0	0
4/21/2024	8:30 AM	0	0	0	0	0	0	0	0	0	0	0	0	0
4/21/2024	8:45 AM	0	0	0	0	0	0	0	0	0	0	0	0	0
4/21/2024	9:00 AM	0	0	0	0	0	0	0	0	0	0	0	0	0
4/21/2024	9:15 AM	0	0	0	0	0	0	0	0	0	0	0	0	0
4/21/2024	9:30 AM	0	0	0	0	0	0	0	0	0	0	0	0	0
4/21/2024	9:45 AM	0	0	0	0	0	0	0	0	0	0	0	0	0
4/21/2024	10:00 AM	0	0	0	0	0	0	0	0	0	0	0	0	0
4/21/2024	10:15 AM	0	0	0	0	0	0	0	0	0	0	0	0	0
4/21/2024	10:30 AM	0	0	0	0	0	0	0	0	0	0	0	0	0
4/21/2024	10:45 AM	0	0	0	0	0	0	0	0	0	0	0	0	0
4/21/2024	11:00 AM	0	0	0	0	0	0	0	0	0	0	0	0	0
4/21/2024	11:15 AM	0	0	0	0	0	0	0	0	0	0	0	0	0
4/21/2024	11:30 AM	0	0	0	0	0	0	0	0	0	0	0	0	0
4/21/2024	11:45 AM	0	0	0	0	0	0	0	0	0	0	0	0	0
4/21/2024	12:00 PM	0	0	0	0	0	0	0	0	0	0	0	0	0
4/21/2024	12:15 PM	0	0	0	0	0	0	0	0	0	0	0	0	0
4/21/2024	12:30 PM	0	0	0	0	0	0	0	0	0	0	0	0	0
4/21/2024	12:45 PM	0	0	0	0	0	0	0	0	0	0	0	0	0
4/21/2024	1:00 PM	0	0	0	0	0	0	0	0	0	0	0	0	0
4/21/2024	1:15 PM	0	0	0	0	0	0	0	0	0	0	0	0	0
4/21/2024	1:30 PM	0	0	0	0	0	0	0	0	0	0	0	0	0
4/21/2024	1:45 PM	0	0	0	0	0	0	0	0	0	0	0	0	0
4/21/2024	2:00 PM	0	0	0	0	0	0	0	0	0	0	0	0	0
4/21/2024	2:15 PM	0	0	0	0	0	0	0	0	0	0	0	0	0
4/21/2024	2:30 PM	0	0	0	0	0	0	0	0	0	0	0	0	0
4/21/2024	2:45 PM	0	0	0	0	0	0	0	0	0	0	0	0	0
4/21/2024	3:00 PM	0	0	0	0	0	0	0	0	0	0	0	0	0
4/21/2024	3:15 PM	0	0	0	0	0	0	0	0	0	0	0	0	0
4/21/2024	3:30 PM	0	0	0	0	0	0	0	0	0	0	0	0	0
4/21/2024	3:45 PM	0	0	0	0	0	0	0	0	0	0	0	0	0
4/21/2024	4:00 PM	0	0	0	0	0	0	0	0	0	0	0	0	0
4/21/2024	4:15 PM	0	0	0	0	0	0	0	0	0	0	0	0	0
4/21/2024	4:30 PM	0	0	0	0	0	0	0	0	0	0	0	0	0
4/21/2024	4:45 PM	0	0	0	0	0	0	0	0	0	0	0	0	0
4/21/2024	5:00 PM	0	0	0	0	0	0	0	0	0	0	0	0	0
4/21/2024	5:15 PM	0	0	0	0	0	0	0	0	0	0	0	0	0
4/21/2024	5:30 PM	0	0	0	0	0	0	0	0	0	0	0	0	0
4/21/2024	5:45 PM	0	0	0	0	0	0	0	0	0	0	0	0	0
4/21/2024	6:00 PM	0	0	0	0	0	0	0	0	0	0	0	0	0
4/21/2024	6:15 PM	0	0	0	0	0	0	0	0	0	0	0	0	0
4/21/2024	6:30 PM	0	0	0	0	0	0	0	0	0	0	0	0	0
4/21/2024	6:45 PM	0	0	0	0	0	0	0	0	0	0	0	0	0
4/21/2024	7:00 PM	0	0	0	0	0	0	0	0	0	0	0	0	0
4/21/2024	7:15 PM	0	0	0	0	0	0	0	0	0	0	0	0	0
4/21/2024	7:30 PM	0	0	0	0	0	0	0	0	0	0	0	0	0
4/21/2024	7:45 PM	0	0	0	0	0	0	0	0	0	0	0	0	0
4/21/2024	8:00 PM	0	0	0	0	0	0	0	0	0	0	0	0	0
4/21/2024	8:15 PM	0	0	0	0	0	0	0	0	0	0	0	0	0
4/21/2024	8:30 PM	0	0	0	0	0	0	0	0	0	0	0	0	0
4/21/2024	8:45 PM	0	0	0	0	0	0	0	0	0	0	0	0	0
4/21/2024	9:00 PM	0	0	0	0	0	0	0	0	0	0	0	0	0
4/21/2024	9:15 PM	0	0	0	0	0	0	0	0	0	0	0	0	0
4/21/2024	9:30 PM	0	0	0	0	0	0	0	0	0	0	0	0	0
4/21/2024	9:45 PM	0	0	0	0	0	0	0	0	0	0	0	0	0
4/21/2024	10:00 PM	0	0	0	0	0	0	0	0	0	0	0	0	0
4/21/2024	10:15 PM	0	0	0	0	0	0	0	0	0	0	0	0	0
4/21/2024	10:30 PM	0	0	0	0	0	0	0	0	0	0	0	0	0
4/21/2024	10:45 PM	0	0	0	0	0	0	0	0	0	0	0	0	0
4/21/2024	11:00 PM	0	0	0	0	0	0	0	0	0	0	0	0	0
4/21/2024	11:15 PM	0	0	0	0	0	0	0	0	0	0	0	0	0
4/21/2024	11:30 PM	0	0	0	0	0	0	0	0	0	0	0	0	0
4/21/2024	11:45 PM	0	0	0	0	0	0	0	0	0	0	0	0	0

4/22/2024	12:00 AM	0	0	0	0	0	0	0	0	0	0	0	0	0
4/22/2024	12:15 AM	0	0	0	0	0	0	0	0	0	0	0	0	0
4/22/2024	12:30 AM	0	0	0	0	0	0	0	0	0	0	0	0	0
4/22/2024	12:45 AM	0	0	0	0	0	0	0	0	0	0	0	0	0
4/22/2024	1:00 AM	0	0	0	0	0	0	0	0	0	0	0	0	0
4/22/2024	1:15 AM	0	0	0	0	0	0	0	0	0	0	0	0	0
4/22/2024	1:30 AM	0	0	0	0	0	0	0	0	0	0	0	0	0
4/22/2024	1:45 AM	0	0	0	0	0	0	0	0	0	0	0	0	0
4/22/2024	2:00 AM	0	0	0	0	0	0	0	0	0	0	0	0	0
4/22/2024	2:15 AM	0	0	0	0	0	0	0	0	0	0	0	0	0
4/22/2024	2:30 AM	0	0	0	0	0	0	0	0	0	0	0	0	0
4/22/2024	2:45 AM	0	0	0	0	0	0	0	0	0	0	0	0	0
4/22/2024	3:00 AM	0	0	0	0	0	0	0	0	0	0	0	0	0
4/22/2024	3:15 AM	0	0	0	0	0	0	0	0	0	0	0	0	0
4/22/2024	3:30 AM	0	0	0	0	0	0	0	0	0	0	0	0	0
4/22/2024	3:45 AM	0	0	0	0	0	0	0	0	0	0	0	0	0
4/22/2024	4:00 AM	0	0	0	0	0	0	0	0	0	0	0	0	0
4/22/2024	4:15 AM	0	0	0	0	0	0	0	0	0	0	0	0	0
4/22/2024	4:30 AM	0	0	0	0	0	0	0	0	0	0	0	0	0
4/22/2024	4:45 AM	0	0	0	0	0	0	0	0	0	0	0	0	0
4/22/2024	5:00 AM	0	0	0	0	0	0	0	0	0	0	0	0	0
4/22/2024	5:15 AM	0	0	0	0	0	0	0	0	0	0	0	0	0
4/22/2024	5:30 AM	0	0	0	0	0	0	0	0	0	0	0	0	0
4/22/2024	5:45 AM	0	0	0	0	0	0	0	0	0	0	0	0	0
4/22/2024	6:00 AM	0	0	0	0	0	0	0	0	0	0	0	0	0
4/22/2024	6:15 AM	0	0	0	0	0	0	0	0	0	0	0	0	0
4/22/2024	6:30 AM	0	0	0	0	0	0	0	0	0	0	0	0	0
4/22/2024	6:45 AM	0	0	0	0	0	0	0	0	0	0	0	0	0
4/22/2024	7:00 AM	0	0	0	0	0	0	0	0	0	0	0	0	0
4/22/2024	7:15 AM	0	0	0	0	0	0	0	0	0	0	0	0	0
4/22/2024	7:30 AM	0	0	0	0	0	0	0	0	0	0	0	0	0
4/22/2024	7:45 AM	0	0	0	0	0	0	0	0	0	0	0	0	0
4/22/2024	8:00 AM	0	0	0	0	0	0	0	0	0	0	0	0	0
4/22/2024	8:15 AM	0	0	0	0	0	0	0	0	0	0	0	0	0
4/22/2024	8:30 AM	0	0	0	0	0	0	0	0	0	0	0	0	0
4/22/2024	8:45 AM	0	0	0	0	0	0	0	0	0	0	0	0	0
4/22/2024	9:00 AM	0	0	0	0	0	0	0	0	0	0	0	0	0
4/22/2024	9:15 AM	0	0	0	0	0	0	0	0	0	0	0	0	0
4/22/2024	9:30 AM	0	0	0	0	0	0	0	0	0	0	0	0	0
4/22/2024	9:45 AM	0	0	0	0	0	0	0	0	0	0	0	0	0
4/22/2024	10:00 AM	0	0	0	0	0	0	0	0	0	0	0	0	0
4/22/2024	10:15 AM	0	0	0	0	0	0	0	0	0	0	0	0	0
4/22/2024	10:30 AM	0	0	0	0	0	0	0	0	0	0	0	0	0
4/22/2024	10:45 AM	0	0	0	0	0	0	0	0	0	0	0	0	0
4/22/2024	11:00 AM	0	0	0	0	0	0	0	0	0	0	0	0	0
4/22/2024	11:15 AM	0	0	0	0	0	0	0	0	0	0	0	0	0
4/22/2024	11:30 AM	0	0	0	0	0	0	0	0	0	0	0	0	0
4/22/2024	11:45 AM	0	0	0	0	0	0	0	0	0	0	0	0	0
4/22/2024	12:00 PM	0	0	0	0	0	0	0	0	0	0	0	0	0
4/22/2024	12:15 PM	0	0	0	0	0	0	0	0	0	0	0	0	0
4/22/2024	12:30 PM	0	0	0	0	0	0	0	0	0	0	0	0	0
4/22/2024	12:45 PM	0	0	0	0	0	0	0	0	0	0	0	0	0
4/22/2024	1:00 PM	0	0	0	0	0	0	0	0	0	0	0	0	0
4/22/2024	1:15 PM	0	0	0	0	0	0	0	0	0	0	0	0	0
4/22/2024	1:30 PM	0	0	0	0	0	0	0	0	0	0	0	0	0
4/22/2024	1:45 PM	0	0	0	0	0	0	0	0	0	0	0	0	0
4/22/2024	2:00 PM	0	0	0	0	0	0	0	0	0	0	0	0	0
4/22/2024	2:15 PM	0	0	0	0	0	0	0	0	0	0	0	0	0
4/22/2024	2:30 PM	0	0	0	0	0	0	0	0	0	0	0	0	0
4/22/2024	2:45 PM	0	0	0	0	0	0	0	0	0	0	0	0	0
4/22/2024	3:00 PM	0	0	0	0	0	0	0	0	0	0	0	0	0
4/22/2024	3:15 PM	0	0	0	0	0	0	0	0	0	0	0	0	0
4/22/2024	3:30 PM	0	0	0	0	0	0	0	0	0	0	0	0	0
4/22/2024	3:45 PM	0	0	0	0	0	0	0	0	0	0	0	0	0
4/22/2024	4:00 PM	0	0	0	0	0	0	0	0	0	0	0	0	0
4/22/2024	4:15 PM	0	0	0	0	0	0	0	0	0	0	0	0	0
4/22/2024	4:30 PM	0	0	0	0	0	0	0	0	0	0	0	0	0
4/22/2024	4:45 PM	0	0	0	0	0	0	0	0	0	0	0	0	0
4/22/2024	5:00 PM	0	0	0	0	0	0	0	0	0	0	0	0	0
4/22/2024	5:15 PM	0	0	0	0	0	0	0	0	0	0	0	0	0
4/22/2024	5:30 PM	0	0	0	0	0	0	0	0	0	0	0	0	0
4/22/2024	5:45 PM	0	0	0	0	0	0	0	0	0	0	0	0	0
4/22/2024	6:00 PM	0	0	0	0	0	0	0	0	0	0	0	0	0
4/22/2024	6:15 PM	0	0	0	0	0	0	0	0	0	0	0	0	0
4/22/2024	6:30 PM	0	0	0	0	0	0	0	0	0	0	0	0	0
4/22/2024	6:45 PM	0	0	0	0	0	0	0	0	0	0	0	0	0
4/22/2024	7:00 PM	0	0	0	0	0	0	0	0	0	0	0	0	0
4/22/2024	7:15 PM	0	0	0	0	0	0	0	0	0	0	0	0	0
4/22/2024	7:30 PM	0	0	0	0	0	0	0	0	0	0	0	0	0
4/22/2024	7:45 PM	0	0	0	0	0	0	0	0	0	0	0	0	0
4/22/2024	8:00 PM	0	0	0	0	0	0	0	0	0	0	0	0	0
4/22/2024	8:15 PM	0	0	0	0	0	0	0	0	0	0	0	0	0
4/22/2024	8:30 PM	0	0	0	0	0	0	0	0	0	0	0	0	0
4/22/2024	8:45 PM	0	0	0	0	0	0	0	0	0	0	0	0	0
4/22/2024	9:00 PM	0	0	0	0	0	0	0	0	0	0	0	0	0
4/22/2024	9:15 PM	0	0	0	0	0	0	0	0	0	0	0	0	0
4/22/2024	9:30 PM	0	0	0	0	0	0	0	0	0	0	0	0	0
4/22/2024	9:45 PM	0	0	0	0	0	0	0	0	0	0	0	0	0
4/22/2024	10:00 PM	0	0	0	0	0	0	0	0	0	0	0	0	0
4/22/2024	10:15 PM	0	0	0	0	0	0	0	0	0	0	0	0	0
4/22/2024	10:30 PM	0	0	0	0	0	0	0	0	0	0	0	0	0
4/22/2024	10:45 PM	0	0	0	0	0	0	0	0	0	0	0	0	0
4/22/2024	11:00 PM	0	0	0	0	0	0	0	0	0	0	0	0	0
4/22/2024	11:15 PM	0	0	0	0	0	0	0	0	0	0	0	0	0
4/22/2024	11:30 PM	0	0	0	0	0	0	0	0	0	0	0	0	0
4/22/2024	11:45 PM	0	0	0	0	0	0	0	0	0	0	0	0	0

4/23/2024	12:00 AM	0	0	0	0	0	0	0	0	0	0	0	0	0
4/23/2024	12:15 AM	0	0	0	0	0	0	0	0	0	0	0	0	0
4/23/2024	12:30 AM	0	0	0	0	0	0	0	0	0	0	0	0	0
4/23/2024	12:45 AM	0	0	0	0	0	0	0	0	0	0	0	0	0
4/23/2024	1:00 AM	0	0	0	0	0	0	0	0	0	0	0	0	0
4/23/2024	1:15 AM	0	0	0	0	0	0	0	0	0	0	0	0	0
4/23/2024	1:30 AM	0	0	0	0	0	0	0	0	0	0	0	0	0
4/23/2024	1:45 AM	0	0	0	0	0	0	0	0	0	0	0	0	0
4/23/2024	2:00 AM	0	0	0	0	0	0	0	0	0	0	0	0	0
4/23/2024	2:15 AM	0	0	0	0	0	0	0	0	0	0	0	0	0
4/23/2024	2:30 AM	0	0	0	0	0	0	0	0	0	0	0	0	0
4/23/2024	2:45 AM	0	0	0	0	0	0	0	0	0	0	0	0	0
4/23/2024	3:00 AM	0	0	0	0	0	0	0	0	0	0	0	0	0
4/23/2024	3:15 AM	0	0	0	0	0	0	0	0	0	0	0	0	0
4/23/2024	3:30 AM	0	0	0	0	0	0	0	0	0	0	0	0	0
4/23/2024	3:45 AM	0	0	0	0	0	0	0	0	0	0	0	0	0
4/23/2024	4:00 AM	0	0	0	0	0	0	0	0	0	0	0	0	0
4/23/2024	4:15 AM	0	0	0	0	0	0	0	0	0	0	0	0	0
4/23/2024	4:30 AM	0	0	0	0	0	0	0	0	0	0	0	0	0
4/23/2024	4:45 AM	0	0	0	0	0	0	0	0	0	0	0	0	0
4/23/2024	5:00 AM	0	0	0	0	0	0	0	0	0	0	0	0	0
4/23/2024	5:15 AM	0	0	0	0	0	0	0	0	0	0	0	0	0
4/23/2024	5:30 AM	0	0	0	0	0	0	0	0	0	0	0	0	0
4/23/2024	5:45 AM	0	0	0	0	0	0	0	0	0	0	0	0	0
4/23/2024	6:00 AM	0	0	0	0	0	0	0	0	0	0	0	0	0
4/23/2024	6:15 AM	0	0	0	0	0	0	0	0	0	0	0	0	0
4/23/2024	6:30 AM	0	0	0	0	0	0	0	0	0	0	0	0	0
4/23/2024	6:45 AM	0	0	0	0	0	0	0	0	0	0	0	0	0
4/23/2024	7:00 AM	0	0	0	0	0	0	0	0	0	0	0	0	0
4/23/2024	7:15 AM	0	0	0	0	0	0	0	0	0	0	0	0	0
4/23/2024	7:30 AM	0	0	0	0	0	0	0	0	0	0	0	0	0
4/23/2024	7:45 AM	0	0	0	0	0	0	0	0	0	0	0	0	0
4/23/2024	8:00 AM	0	0	0	0	0	0	0	0	0	0	0	0	0
4/23/2024	8:15 AM	0	0	0	0	0	0	0	0	0	0	0	0	0
4/23/2024	8:30 AM	0	0	0	0	0	0	0	0	0	0	0	0	0
4/23/2024	8:45 AM	0	0	0	0	0	0	0	0	0	0	0	0	0
4/23/2024	9:00 AM	0	0	0	0	0	0	0	0	0	0	0	0	0
4/23/2024	9:15 AM	0	0	0	0	0	0	0	0	0	0	0	0	0
4/23/2024	9:30 AM	0	0	0	0	0	0	0	0	0	0	0	0	0
4/23/2024	9:45 AM	0	0	0	0	0	0	0	0	0	0	0	0	0
4/23/2024	10:00 AM	0	0	0	0	0	0	0	0	0	0	0	0	0
4/23/2024	10:15 AM	0	0	0	0	0	0	0	0	0	0	0	0	0
4/23/2024	10:30 AM	0	0	0	0	0	0	0	0	0	0	0	0	0
4/23/2024	10:45 AM	0	0	0	0	0	0	0	0	0	0	0	0	0
4/23/2024	11:00 AM	0	0	0	0	0	0	0	0	0	0	0	0	0
4/23/2024	11:15 AM	0	0	0	0	0	0	0	0	0	0	0	0	0
4/23/2024	11:30 AM	0	0	0	0	0	0	0	0	0	0	0	0	0
4/23/2024	11:45 AM	0	0	0	0	0	0	0	0	0	0	0	0	0
4/23/2024	12:00 PM	0	0	0	0	0	0	0	0	0	0	0	0	0
4/23/2024	12:15 PM	0	0	0	0	0	0	0	0	0	0	0	0	0
4/23/2024	12:30 PM	0	0	0	0	0	0	0	0	0	0	0	0	0
4/23/2024	12:45 PM	0	0	0	0	0	0	0	0	0	0	0	0	0
4/23/2024	1:00 PM	0	0	0	0	0	0	0	0	0	0	0	0	0
4/23/2024	1:15 PM	0	0	0	0	0	0	0	0	0	0	0	0	0
4/23/2024	1:30 PM	0	0	0	0	0	0	0	0	0	0	0	0	0
4/23/2024	1:45 PM	0	0	0	0	0	0	0	0	0	0	0	0	0
4/23/2024	2:00 PM	0	0	0	0	0	0	0	0	0	0	0	0	0
4/23/2024	2:15 PM	0	0	0	0	0	0	0	0	0	0	0	0	0
4/23/2024	2:30 PM	0	0	0	0	0	0	0	0	0	0	0	0	0
4/23/2024	2:45 PM	0	0	0	0	0	0	0	0	0	0	0	0	0
4/23/2024	3:00 PM	0	0	0	0	0	0	0	0	0	0	0	0	0
4/23/2024	3:15 PM	0	0	0	0	0	0	0	0	0	0	0	0	0
4/23/2024	3:30 PM	0	0	0	0	0	0	0	0	0	0	0	0	0
4/23/2024	3:45 PM	0	0	0	0	0	0	0	0	0	0	0	0	0
4/23/2024	4:00 PM	0	0	0	0	0	0	0	0	0	0	0	0	0
4/23/2024	4:15 PM	0	0	0	0	0	0	0	0	0	0	0	0	0
4/23/2024	4:30 PM	0	0	0	0	0	0	0	0	0	0	0	0	0
4/23/2024	4:45 PM	0	0	0	0	0	0	0	0	0	0	0	0	0
4/23/2024	5:00 PM	0	0	0	0	0	0	0	0	0	0	0	0	0
4/23/2024	5:15 PM	0	0	0	0	0	0	0	0	0	0	0	0	0
4/23/2024	5:30 PM	0	0	0	0	0	0	0	0	0	0	0	0	0
4/23/2024	5:45 PM	0	0	0	0	0	0	0	0	0	0	0	0	0
4/23/2024	6:00 PM	0	0	0	0	0	0	0	0	0	0	0	0	0
4/23/2024	6:15 PM	0	0	0	0	0	0	0	0	0	0	0	0	0
4/23/2024	6:30 PM	0	0	0	0	0	0	0	0	0	0	0	0	0
4/23/2024	6:45 PM	0	0	0	0	0	0	0	0	0	0	0	0	0
4/23/2024	7:00 PM	0	0	0	0	0	0	0	0	0	0	0	0	0
4/23/2024	7:15 PM	0	0	0	0	0	0	0	0	0	0	0	0	0
4/23/2024	7:30 PM	0	0	0	0	0	0	0	0	0	0	0	0	0
4/23/2024	7:45 PM	0	0	0	0	0	0	0	0	0	0	0	0	0
4/23/2024	8:00 PM	0	0	0	0	0	0	0	0	0	0	0	0	0
4/23/2024	8:15 PM	0	0	0	0	0	0	0	0	0	0	0	0	0
4/23/2024	8:30 PM	0	0	0	0	0	0	0	0	0	0	0	0	0
4/23/2024	8:45 PM	0	0	0	0	0	0	0	0	0	0	0	0	0
4/23/2024	9:00 PM	0	0	0	0	0	0	0	0	0	0	0	0	0
4/23/2024	9:15 PM	0	0	0	0	0	0	0	0	0	0	0	0	0
4/23/2024	9:30 PM	0	0	0	0	0	0	0	0	0	0	0	0	0
4/23/2024	9:45 PM	0	0	0	0	0	0	0	0	0	0	0	0	0
4/23/2024	10:00 PM	0	0	0	0	0	0	0	0	0	0	0	0	0
4/23/2024	10:15 PM	0	0	0	0	0	0	0	0	0	0	0	0	0
4/23/2024	10:30 PM	0	0	0	0	0	0	0	0	0	0	0	0	0
4/23/2024	10:45 PM	0	0	0	0	0	0	0	0	0	0	0	0	0
4/23/2024	11:00 PM	0	0	0	0	0	0	0	0	0	0	0	0	0
4/23/2024	11:15 PM	0	0	0	0	0	0	0	0	0	0	0	0	0
4/23/2024	11:30 PM	0	0	0	0	0	0	0	0	0	0	0	0	0
4/23/2024	11:45 PM	0	0	0	0	0	0	0	0	0	0	0	0	0

4/24/2024	12:00 AM	0	0	0	0	0	0	0	0	0	0	0	0	0
4/24/2024	12:15 AM	0	0	0	0	0	0	0	0	0	0	0	0	0
4/24/2024	12:30 AM	0	0	0	0	0	0	0	0	0	0	0	0	0
4/24/2024	12:45 AM	0	0	0	0	0	0	0	0	0	0	0	0	0
4/24/2024	1:00 AM	0	0	0	0	0	0	0	0	0	0	0	0	0
4/24/2024	1:15 AM	0	0	0	0	0	0	0	0	0	0	0	0	0
4/24/2024	1:30 AM	0	0	0	0	0	0	0	0	0	0	0	0	0
4/24/2024	1:45 AM	0	0	0	0	0	0	0	0	0	0	0	0	0
4/24/2024	2:00 AM	0	0	0	0	0	0	0	0	0	0	0	0	0
4/24/2024	2:15 AM	0	0	0	0	0	0	0	0	0	0	0	0	0
4/24/2024	2:30 AM	0	0	0	0	0	0	0	0	0	0	0	0	0
4/24/2024	2:45 AM	0	0	0	0	0	0	0	0	0	0	0	0	0
4/24/2024	3:00 AM	0	0	0	0	0	0	0	0	0	0	0	0	0
4/24/2024	3:15 AM	0	0	0	0	0	0	0	0	0	0	0	0	0
4/24/2024	3:30 AM	0	0	0	0	0	0	0	0	0	0	0	0	0
4/24/2024	3:45 AM	0	0	0	0	0	0	0	0	0	0	0	0	0
4/24/2024	4:00 AM	0	0	0	0	0	0	0	0	0	0	0	0	0
4/24/2024	4:15 AM	0	0	0	0	0	0	0	0	0	0	0	0	0
4/24/2024	4:30 AM	0	0	0	0	0	0	0	0	0	0	0	0	0
4/24/2024	4:45 AM	0	0	0	0	0	0	0	0	0	0	0	0	0
4/24/2024	5:00 AM	0	0	0	0	0	0	0	0	0	0	0	0	0
4/24/2024	5:15 AM	0	0	0	0	0	0	0	0	0	0	0	0	0
4/24/2024	5:30 AM	0	0	0	0	0	0	0	0	0	0	0	0	0
4/24/2024	5:45 AM	0	0	0	0	0	0	0	0	0	0	0	0	0
4/24/2024	6:00 AM	0	0	0	0	0	0	0	0	0	0	0	0	0
4/24/2024	6:15 AM	0	0	0	0	0	0	0	0	0	0	0	0	0
4/24/2024	6:30 AM	0	0	0	0	0	0	0	0	0	0	0	0	0
4/24/2024	6:45 AM	0	0	0	0	0	0	0	0	0	0	0	0	0
4/24/2024	7:00 AM	0	0	0	0	0	0	0	0	0	0	0	0	0
4/24/2024	7:15 AM	0	0	0	0	0	0	0	0	0	0	0	0	0
4/24/2024	7:30 AM	0	0	0	0	0	0	0	0	0	0	0	0	0
4/24/2024	7:45 AM	0	0	0	0	0	0	0	0	0	0	0	0	0
4/24/2024	8:00 AM	0	0	0	0	0	0	0	0	0	0	0	0	0
4/24/2024	8:15 AM	0	0	0	0	0	0	0	0	0	0	0	0	0
4/24/2024	8:30 AM	0	0	0	0	0	0	0	0	0	0	0	0	0
4/24/2024	8:45 AM	0	0	0	0	0	0	0	0	0	0	0	0	0
4/24/2024	9:00 AM	0	0	0	0	0	0	0	0	0	0	0	0	0
4/24/2024	9:15 AM	0	0	0	0	0	0	0	0	0	0	0	0	0
4/24/2024	9:30 AM	0	0	0	0	0	0	0	0	0	0	0	0	0
4/24/2024	9:45 AM	0	0	0	0	0	0	0	0	0	0	0	0	0
4/24/2024	10:00 AM	0	0	0	0	0	0	0	0	0	0	0	0	0
4/24/2024	10:15 AM	0	0	0	0	0	0	0	0	0	0	0	0	0
4/24/2024	10:30 AM	0	0	0	0	0	0	0	0	0	0	0	0	0
4/24/2024	10:45 AM	0	0	0	0	0	0	0	0	0	0	0	0	0
4/24/2024	11:00 AM	0	0	0	0	0	0	0	0	0	0	0	0	0
4/24/2024	11:15 AM	0	0	0	0	0	0	0	0	0	0	0	0	0
4/24/2024	11:30 AM	0	0	0	0	0	0	0	0	0	0	0	0	0
4/24/2024	11:45 AM	0	0	0	0	0	0	0	0	0	0	0	0	0
4/24/2024	12:00 PM	0	0	0	0	0	0	0	0	0	0	0	0	0
4/24/2024	12:15 PM	0	0	0	0	0	0	0	0	0	0	0	0	0
4/24/2024	12:30 PM	0	0	0	0	0	0	0	0	0	0	0	0	0
4/24/2024	12:45 PM	0	0	0	0	0	0	0	0	0	0	0	0	0
4/24/2024	1:00 PM	0	0	0	0	0	0	0	0	0	0	0	0	0
4/24/2024	1:15 PM	0	0	0	0	0	0	0	0	0	0	0	0	0
4/24/2024	1:30 PM	0	0	0	0	0	0	0	0	0	0	0	0	0
4/24/2024	1:45 PM	0	0	0	0	0	0	0	0	0	0	0	0	0
4/24/2024	2:00 PM	0	0	0	0	0	0	0	0	0	0	0	0	0
4/24/2024	2:15 PM	0	0	0	0	0	0	0	0	0	0	0	0	0
4/24/2024	2:30 PM	0	0	0	0	0	0	0	0	0	0	0	0	0
4/24/2024	2:45 PM	0	0	0	0	0	0	0	0	0	0	0	0	0
4/24/2024	3:00 PM	0	0	0	0	0	0	0	0	0	0	0	0	0
4/24/2024	3:15 PM	0	0	0	0	0	0	0	0	0	0	0	0	0
4/24/2024	3:30 PM	0	0	0	0	0	0	0	0	0	0	0	0	0
4/24/2024	3:45 PM	0	0	0	0	0	0	0	0	0	0	0	0	0
4/24/2024	4:00 PM	0	0	0	0	0	0	0	0	0	0	0	0	0
4/24/2024	4:15 PM	0	0	0	0	0	0	0	0	0	0	0	0	0
4/24/2024	4:30 PM	0	0	0	0	0	0	0	0	0	0	0	0	0
4/24/2024	4:45 PM	0	0	0	0	0	0	0	0	0	0	0	0	0
4/24/2024	5:00 PM	0	0	0	0	0	0	0	0	0	0	0	0	0
4/24/2024	5:15 PM	0	0	0	0	0	0	0	0	0	0	0	0	0
4/24/2024	5:30 PM	0	0	0	0	0	0	0	0	0	0	0	0	0
4/24/2024	5:45 PM	0	0	0	0	0	0	0	0	0	0	0	0	0
4/24/2024	6:00 PM	0	0	0	0	0	0	0	0	0	0	0	0	0
4/24/2024	6:15 PM	0	0	0	0	0	0	0	0	0	0	0	0	0
4/24/2024	6:30 PM	0	0	0	0	0	0	0	0	0	0	0	0	0
4/24/2024	6:45 PM	0	0	0	0	0	0	0	0	0	0	0	0	0
4/24/2024	7:00 PM	0	0	0	0	0	0	0	0	0	0	0	0	0
4/24/2024	7:15 PM	0	0	0	0	0	0	0	0	0	0	0	0	0
4/24/2024	7:30 PM	0	0	0	0	0	0	0	0	0	0	0	0	0
4/24/2024	7:45 PM	0	0	0	0	0	0	0	0	0	0	0	0	0
4/24/2024	8:00 PM	0	0	0	0	0	0	0	0	0	0	0	0	0
4/24/2024	8:15 PM	0	0	0	0	0	0	0	0	0	0	0	0	0
4/24/2024	8:30 PM	0	0	0	0	0	0	0	0	0	0	0	0	0
4/24/2024	8:45 PM	0	0	0	0	0	0	0	0	0	0	0	0	0
4/24/2024	9:00 PM	0	0	0	0	0	0	0	0	0	0	0	0	0
4/24/2024	9:15 PM	0	0	0	0	0	0	0	0	0	0	0	0	0
4/24/2024	9:30 PM	0	0	0	0	0	0	0	0	0	0	0	0	0
4/24/2024	9:45 PM	0	0	0	0	0	0	0	0	0	0	0	0	0
4/24/2024	10:00 PM	0	0	0	0	0	0	0	0	0	0	0	0	0
4/24/2024	10:15 PM	0	0	0	0	0	0	0	0	0	0	0	0	0
4/24/2024	10:30 PM	0	0	0	0	0	0	0	0	0	0	0	0	0
4/24/2024	10:45 PM	0	0	0	0	0	0	0	0	0	0	0	0	0
4/24/2024	11:00 PM	0	0	0	0	0	0	0	0	0	0	0	0	0
4/24/2024	11:15 PM	0	0	0	0	0	0	0	0	0	0	0	0	0
4/24/2024	11:30 PM	0	0	0	0	0	0	0	0	0	0	0	0	0
4/24/2024	11:45 PM	0	0	0	0	0	0	0	0	0	0	0	0	0

4/25/2024	12:00 AM	0	0	0	0	0	0	0	0	0	0	0	0	0
4/25/2024	12:15 AM	0	0	0	0	0	0	0	0	0	0	0	0	0
4/25/2024	12:30 AM	0	0	0	0	0	0	0	0	0	0	0	0	0
4/25/2024	12:45 AM	0	0	0	0	0	0	0	0	0	0	0	0	0
4/25/2024	1:00 AM	0	0	0	0	0	0	0	0	0	0	0	0	0
4/25/2024	1:15 AM	0	0	0	0	0	0	0	0	0	0	0	0	0
4/25/2024	1:30 AM	0	0	0	0	0	0	0	0	0	0	0	0	0
4/25/2024	1:45 AM	0	0	0	0	0	0	0	0	0	0	0	0	0
4/25/2024	2:00 AM	0	0	0	0	0	0	0	0	0	0	0	0	0
4/25/2024	2:15 AM	0	0	0	0	0	0	0	0	0	0	0	0	0
4/25/2024	2:30 AM	0	0	0	0	0	0	0	0	0	0	0	0	0
4/25/2024	2:45 AM	0	0	0	0	0	0	0	0	0	0	0	0	0
4/25/2024	3:00 AM	0	0	0	0	0	0	0	0	0	0	0	0	0
4/25/2024	3:15 AM	0	0	0	0	0	0	0	0	0	0	0	0	0
4/25/2024	3:30 AM	0	0	0	0	0	0	0	0	0	0	0	0	0
4/25/2024	3:45 AM	0	0	0	0	0	0	0	0	0	0	0	0	0
4/25/2024	4:00 AM	0	0	0	0	0	0	0	0	0	0	0	0	0
4/25/2024	4:15 AM	0	0	0	0	0	0	0	0	0	0	0	0	0
4/25/2024	4:30 AM	0	0	0	0	0	0	0	0	0	0	0	0	0
4/25/2024	4:45 AM	0	0	0	0	0	0	0	0	0	0	0	0	0
4/25/2024	5:00 AM	0	0	0	0	0	0	0	0	0	0	0	0	0
4/25/2024	5:15 AM	0	0	0	0	0	0	0	0	0	0	0	0	0
4/25/2024	5:30 AM	0	0	0	0	0	0	0	0	0	0	0	0	0
4/25/2024	5:45 AM	0	0	0	0	0	0	0	0	0	0	0	0	0
4/25/2024	6:00 AM	0	0	0	0	0	0	0	0	0	0	0	0	0
4/25/2024	6:15 AM	0	0	0	0	0	0	0	0	0	0	0	0	0
4/25/2024	6:30 AM	0	0	0	0	0	0	0	0	0	0	0	0	0
4/25/2024	6:45 AM	0	0	0	0	0	0	0	0	0	0	0	0	0
4/25/2024	7:00 AM	0	0	0	0	0	0	0	0	0	0	0	0	0
4/25/2024	7:15 AM	0	0	0	0	0	0	0	0	0	0	0	0	0
4/25/2024	7:30 AM	0	0	0	0	0	0	0	0	0	0	0	0	0
4/25/2024	7:45 AM	0	0	0	0	0	0	0	0	0	0	0	0	0
4/25/2024	8:00 AM	0	0	0	0	0	0	0	0	0	0	0	0	0
4/25/2024	8:15 AM	0	0	0	0	0	0	0	0	0	0	0	0	0
4/25/2024	8:30 AM	0	0	0	0	0	0	0	0	0	0	0	0	0
4/25/2024	8:45 AM	0	0	0	0	0	0	0	0	0	0	0	0	0
4/25/2024	9:00 AM	0	0	0	0	0	0	0	0	0	0	0	0	0
4/25/2024	9:15 AM	0	0	0	0	0	0	0	0	0	0	0	0	0
4/25/2024	9:30 AM	0	0	0	0	0	0	0	0	0	0	0	0	0
4/25/2024	9:45 AM	0	0	0	0	0	0	0	0	0	0	0	0	0
4/25/2024	10:00 AM	0	0	0	0	0	0	0	0	0	0	0	0	0
4/25/2024	10:15 AM	0	0	0	0	0	0	0	0	0	0	0	0	0
4/25/2024	10:30 AM	0	0	0	0	0	0	0	0	0	0	0	0	0
4/25/2024	10:45 AM	0	0	0	0	0	0	0	0	0	0	0	0	0
4/25/2024	11:00 AM	0	0	0	0	0	0	0	0	0	0	0	0	0
4/25/2024	11:15 AM	0	0	0	0	0	0	0	0	0	0	0	0	0
4/25/2024	11:30 AM	0	0	0	0	0	0	0	0	0	0	0	0	0
4/25/2024	11:45 AM	0	0	0	0	0	0	0	0	0	0	0	0	0
4/25/2024	12:00 PM	0	0	0	0	0	0	0	0	0	0	0	0	0
4/25/2024	12:15 PM	0	0	0	0	0	0	0	0	0	0	0	0	0
4/25/2024	12:30 PM	0	0	0	0	0	0	0	0	0	0	0	0	0
4/25/2024	12:45 PM	0	0	0	0	0	0	0	0	0	0	0	0	0
4/25/2024	1:00 PM	0	0	0	0	0	0	0	0	0	0	0	0	0
4/25/2024	1:15 PM	0	0	0	0	0	0	0	0	0	0	0	0	0
4/25/2024	1:30 PM	0	0	0	0	0	0	0	0	0	0	0	0	0
4/25/2024	1:45 PM	0	0	0	0	0	0	0	0	0	0	0	0	0
4/25/2024	2:00 PM	0	0	0	0	0	0	0	0	0	0	0	0	0
4/25/2024	2:15 PM	0	0	0	0	0	0	0	0	0	0	0	0	0
4/25/2024	2:30 PM	0	0	0	0	0	0	0	0	0	0	0	0	0
4/25/2024	2:45 PM	0	0	0	0	0	0	0	0	0	0	0	0	0
4/25/2024	3:00 PM	0	0	0	0	0	0	0	0	0	0	0	0	0
4/25/2024	3:15 PM	0	0	0	0	0	0	0	0	0	0	0	0	0
4/25/2024	3:30 PM	0	0	0	0	0	0	0	0	0	0	0	0	0
4/25/2024	3:45 PM	0	0	0	0	0	0	0	0	0	0	0	0	0
4/25/2024	4:00 PM	0	0	0	0	0	0	0	0	0	0	0	0	0
4/25/2024	4:15 PM	0	0	0	0	0	0	0	0	0	0	0	0	0
4/25/2024	4:30 PM	0	0	0	0	0	0	0	0	0	0	0	0	0
4/25/2024	4:45 PM	0	0	0	0	0	0	0	0	0	0	0	0	0
4/25/2024	5:00 PM	0	0	0	0	0	0	0	0	0	0	0	0	0
4/25/2024	5:15 PM	0	0	0	0	0	0	0	0	0	0	0	0	0
4/25/2024	5:30 PM	0	0	0	0	0	0	0	0	0	0	0	0	0
4/25/2024	5:45 PM	0	0	0	0	0	0	0	0	0	0	0	0	0
4/25/2024	6:00 PM	0	0	0	0	0	0	0	0	0	0	0	0	0
4/25/2024	6:15 PM	0	0	0	0	0	0	0	0	0	0	0	0	0
4/25/2024	6:30 PM	0	0	0	0	0	0	0	0	0	0	0	0	0
4/25/2024	6:45 PM	0	0	0	0	0	0	0	0	0	0	0	0	0
4/25/2024	7:00 PM	0	0	0	0	0	0	0	0	0	0	0	0	0
4/25/2024	7:15 PM	0	0	0	0	0	0	0	0	0	0	0	0	0
4/25/2024	7:30 PM	0	0	0	0	0	0	0	0	0	0	0	0	0
4/25/2024	7:45 PM	0	0	0	0	0	0	0	0	0	0	0	0	0
4/25/2024	8:00 PM	0	0	0	0	0	0	0	0	0	0	0	0	0
4/25/2024	8:15 PM	0	0	0	0	0	0	0	0	0	0	0	0	0
4/25/2024	8:30 PM	0	0	0	0	0	0	0	0	0	0	0	0	0
4/25/2024	8:45 PM	0	0	0	0	0	0	0	0	0	0	0	0	0
4/25/2024	9:00 PM	0	0	0	0	0	0	0	0	0	0	0	0	0
4/25/2024	9:15 PM	0	0	0	0	0	0	0	0	0	0	0	0	0
4/25/2024	9:30 PM	0	0	0	0	0	0	0	0	0	0	0	0	0
4/25/2024	9:45 PM	0	0	0	0	0	0	0	0	0	0	0	0	0
4/25/2024	10:00 PM	0	0	0	0	0	0	0	0	0	0	0	0	0
4/25/2024	10:15 PM	0	0	0	0	0	0	0	0	0	0	0	0	0
4/25/2024	10:30 PM	0	0	0	0	0	0	0	0	0	0	0	0	0
4/25/2024	10:45 PM	0	0	0	0	0	0	0	0	0	0	0	0	0
4/25/2024	11:00 PM	0	0	0	0	0	0	0	0	0	0	0	0	0
4/25/2024	11:15 PM	0	0	0	0	0	0	0	0	0	0	0	0	0
4/25/2024	11:30 PM	0	0	0	0	0	0	0	0	0	0	0	0	0
4/25/2024	11:45 PM	0	0	0	0	0	0	0	0	0	0	0	0	0

4/26/2024	12:00 AM	0	0	0	0	0	0	0	0	0	0	0	0	0
4/26/2024	12:15 AM	0	0	0	0	0	0	0	0	0	0	0	0	0
4/26/2024	12:30 AM	0	0	0	0	0	0	0	0	0	0	0	0	0
4/26/2024	12:45 AM	0	0	0	0	0	0	0	0	0	0	0	0	0
4/26/2024	1:00 AM	0	0	0	0	0	0	0	0	0	0	0	0	0
4/26/2024	1:15 AM	0	0	0	0	0	0	0	0	0	0	0	0	0
4/26/2024	1:30 AM	0	0	0	0	0	0	0	0	0	0	0	0	0
4/26/2024	1:45 AM	0	0	0	0	0	0	0	0	0	0	0	0	0
4/26/2024	2:00 AM	0	0	0	0	0	0	0	0	0	0	0	0	0
4/26/2024	2:15 AM	0	0	0	0	0	0	0	0	0	0	0	0	0
4/26/2024	2:30 AM	0	0	0	0	0	0	0	0	0	0	0	0	0
4/26/2024	2:45 AM	0	0	0	0	0	0	0	0	0	0	0	0	0
4/26/2024	3:00 AM	0	0	0	0	0	0	0	0	0	0	0	0	0
4/26/2024	3:15 AM	0	0	0	0	0	0	0	0	0	0	0	0	0
4/26/2024	3:30 AM	0	0	0	0	0	0	0	0	0	0	0	0	0
4/26/2024	3:45 AM	0	0	0	0	0	0	0	0	0	0	0	0	0
4/26/2024	4:00 AM	0	0	0	0	0	0	0	0	0	0	0	0	0
4/26/2024	4:15 AM	0	0	0	0	0	0	0	0	0	0	0	0	0
4/26/2024	4:30 AM	0	0	0	0	0	0	0	0	0	0	0	0	0
4/26/2024	4:45 AM	0	0	0	0	0	0	0	0	0	0	0	0	0
4/26/2024	5:00 AM	0	0	0	0	0	0	0	0	0	0	0	0	0
4/26/2024	5:15 AM	0	0	0	0	0	0	0	0	0	0	0	0	0
4/26/2024	5:30 AM	0	0	0	0	0	0	0	0	0	0	0	0	0
4/26/2024	5:45 AM	0	0	0	0	0	0	0	0	0	0	0	0	0
4/26/2024	6:00 AM	0	0	0	0	0	0	0	0	0	0	0	0	0
4/26/2024	6:15 AM	0	0	0	0	0	0	0	0	0	0	0	0	0
4/26/2024	6:30 AM	0	0	0	0	0	0	0	0	0	0	0	0	0
4/26/2024	6:45 AM	0	0	0	0	0	0	0	0	0	0	0	0	0
4/26/2024	7:00 AM	0	0	0	0	0	0	0	0	0	0	0	0	0
4/26/2024	7:15 AM	0	0	0	0	0	0	0	0	0	0	0	0	0
4/26/2024	7:30 AM	0	0	0	0	0	0	0	0	0	0	0	0	0
4/26/2024	7:45 AM	0	0	0	0	0	0	0	0	0	0	0	0	0
4/26/2024	8:00 AM	0	0	0	0	0	0	0	0	0	0	0	0	0
4/26/2024	8:15 AM	0	0	0	0	0	0	0	0	0	0	0	0	0
4/26/2024	8:30 AM	0	0	0	0	0	0	0	0	0	0	0	0	0
4/26/2024	8:45 AM	0	0	0	0	0	0	0	0	0	0	0	0	0
4/26/2024	9:00 AM	0	0	0	0	0	0	0	0	0	0	0	0	0
4/26/2024	9:15 AM	0	0	0	0	0	0	0	0	0	0	0	0	0
4/26/2024	9:30 AM	0	0	0	0	0	0	0	0	0	0	0	0	0
4/26/2024	9:45 AM	0	0	0	0	0	0	0	0	0	0	0	0	0
4/26/2024	10:00 AM	0	0	0	0	0	0	0	0	0	0	0	0	0
4/26/2024	10:15 AM	0	0	0	0	0	0	0	0	0	0	0	0	0
4/26/2024	10:30 AM	0	0	0	0	0	0	0	0	0	0	0	0	0
4/26/2024	10:45 AM	0	0	0	0	0	0	0	0	0	0	0	0	0
4/26/2024	11:00 AM	0	0	0	0	0	0	0	0	0	0	0	0	0
4/26/2024	11:15 AM	0	0	0	0	0	0	0	0	0	0	0	0	0
4/26/2024	11:30 AM	0	0	0	0	0	0	0	0	0	0	0	0	0
4/26/2024	11:45 AM	0	0	0	0	0	0	0	0	0	0	0	0	0
4/26/2024	12:00 PM	0	0	0	0	0	0	0	0	0	0	0	0	0
4/26/2024	12:15 PM	0	0	0	0	0	0	0	0	0	0	0	0	0
4/26/2024	12:30 PM	0	0	0	0	0	0	0	0	0	0	0	0	0
4/26/2024	12:45 PM	0	0	0	0	0	0	0	0	0	0	0	0	0
4/26/2024	1:00 PM	0	0	0	0	0	0	0	0	0	0	0	0	0
4/26/2024	1:15 PM	0	0	0	0	0	0	0	0	0	0	0	0	0
4/26/2024	1:30 PM	0	0	0	0	0	0	0	0	0	0	0	0	0
4/26/2024	1:45 PM	0	0	0	0	0	0	0	0	0	0	0	0	0
4/26/2024	2:00 PM	0	0	0	0	0	0	0	0	0	0	0	0	0
4/26/2024	2:15 PM	0	0	0	0	0	0	0	0	0	0	0	0	0
4/26/2024	2:30 PM	0	0	0	0	0	0	0	0	0	0	0	0	0
4/26/2024	2:45 PM	0	0	0	0	0	0	0	0	0	0	0	0	0
4/26/2024	3:00 PM	0	0	0	0	0	0	0	0	0	0	0	0	0
4/26/2024	3:15 PM	0	0	0	0	0	0	0	0	0	0	0	0	0
4/26/2024	3:30 PM	0	0	0	0	0	0	0	0	0	0	0	0	0
4/26/2024	3:45 PM	0	0	0	0	0	0	0	0	0	0	0	0	0
4/26/2024	4:00 PM	0	0	0	0	0	0	0	0	0	0	0	0	0
4/26/2024	4:15 PM	0	0	0	0	0	0	0	0	0	0	0	0	0
4/26/2024	4:30 PM	0	0	0	0	0	0	0	0	0	0	0	0	0
4/26/2024	4:45 PM	0	0	0	0	0	0	0	0	0	0	0	0	0
4/26/2024	5:00 PM	0	0	0	0	0	0	0	0	0	0	0	0	0
4/26/2024	5:15 PM	0	0	0	0	0	0	0	0	0	0	0	0	0
4/26/2024	5:30 PM	0	0	0	0	0	0	0	0	0	0	0	0	0
4/26/2024	5:45 PM	0	0	0	0	0	0	0	0	0	0	0	0	0
4/26/2024	6:00 PM	0	0	0	0	0	0	0	0	0	0	0	0	0
4/26/2024	6:15 PM	0	0	0	0	0	0	0	0	0	0	0	0	0
4/26/2024	6:30 PM	0	0	0	0	0	0	0	0	0	0	0	0	0
4/26/2024	6:45 PM	0	0	0	0	0	0	0	0	0	0	0	0	0
4/26/2024	7:00 PM	0	0	0	0	0	0	0	0	0	0	0	0	0
4/26/2024	7:15 PM	0	0	0	0	0	0	0	0	0	0	0	0	0
4/26/2024	7:30 PM	0	0	0	0	0	0	0	0	0	0	0	0	0
4/26/2024	7:45 PM	0	0	0	0	0	0	0	0	0	0	0	0	0
4/26/2024	8:00 PM	0	0	0	0	0	0	0	0	0	0	0	0	0
4/26/2024	8:15 PM	0	0	0	0	0	0	0	0	0	0	0	0	0
4/26/2024	8:30 PM	0	0	0	0	0	0	0	0	0	0	0	0	0
4/26/2024	8:45 PM	0	0	0	0	0	0	0	0	0	0	0	0	0
4/26/2024	9:00 PM	0	0	0	0	0	0	0	0	0	0	0	0	0
4/26/2024	9:15 PM	0	0	0	0	0	0	0	0	0	0	0	0	0
4/26/2024	9:30 PM	0	0	0	0	0	0	0	0	0	0	0	0	0
4/26/2024	9:45 PM	0	0	0	0	0	0	0	0	0	0	0	0	0
4/26/2024	10:00 PM	0	0	0	0	0	0	0	0	0	0	0	0	0
4/26/2024	10:15 PM	0	0	0	0	0	0	0	0	0	0	0	0	0
4/26/2024	10:30 PM	0	0	0	0	0	0	0	0	0	0	0	0	0
4/26/2024	10:45 PM	0	0	0	0	0	0	0	0	0	0	0	0	0
4/26/2024	11:00 PM	0	0	0	0	0	0	0	0	0	0	0	0	0
4/26/2024	11:15 PM	0	0	0	0	0	0	0	0	0	0	0	0	0
4/26/2024	11:30 PM	0	0	0	0	0	0	0	0	0	0	0	0	0
4/26/2024	11:45 PM	0	0	0	0	0	0	0	0	0	0	0	0	0

4/27/2024	12:00 AM	0	0	0	0	0	0	0	0	0	0	0	0	0
4/27/2024	12:15 AM	0	0	0	0	0	0	0	0	0	0	0	0	0
4/27/2024	12:30 AM	0	0	0	0	0	0	0	0	0	0	0	0	0
4/27/2024	12:45 AM	0	0	0	0	0	0	0	0	0	0	0	0	0
4/27/2024	1:00 AM	0	0	0	0	0	0	0	0	0	0	0	0	0
4/27/2024	1:15 AM	0	0	0	0	0	0	0	0	0	0	0	0	0
4/27/2024	1:30 AM	0	0	0	0	0	0	0	0	0	0	0	0	0
4/27/2024	1:45 AM	0	0	0	0	0	0	0	0	0	0	0	0	0
4/27/2024	2:00 AM	0	0	0	0	0	0	0	0	0	0	0	0	0
4/27/2024	2:15 AM	0	0	0	0	0	0	0	0	0	0	0	0	0
4/27/2024	2:30 AM	0	0	0	0	0	0	0	0	0	0	0	0	0
4/27/2024	2:45 AM	0	0	0	0	0	0	0	0	0	0	0	0	0
4/27/2024	3:00 AM	0	0	0	0	0	0	0	0	0	0	0	0	0
4/27/2024	3:15 AM	0	0	0	0	0	0	0	0	0	0	0	0	0
4/27/2024	3:30 AM	0	0	0	0	0	0	0	0	0	0	0	0	0
4/27/2024	3:45 AM	0	0	0	0	0	0	0	0	0	0	0	0	0
4/27/2024	4:00 AM	0	0	0	0	0	0	0	0	0	0	0	0	0
4/27/2024	4:15 AM	0	0	0	0	0	0	0	0	0	0	0	0	0
4/27/2024	4:30 AM	0	0	0	0	0	0	0	0	0	0	0	0	0
4/27/2024	4:45 AM	0	0	0	0	0	0	0	0	0	0	0	0	0
4/27/2024	5:00 AM	0	0	0	0	0	0	0	0	0	0	0	0	0
4/27/2024	5:15 AM	0	0	0	0	0	0	0	0	0	0	0	0	0
4/27/2024	5:30 AM	0	0	0	0	0	0	0	0	0	0	0	0	0
4/27/2024	5:45 AM	0	0	0	0	0	0	0	0	0	0	0	0	0
4/27/2024	6:00 AM	0	0	0	0	0	0	0	0	0	0	0	0	0
4/27/2024	6:15 AM	0	0	0	0	0	0	0	0	0	0	0	0	0
4/27/2024	6:30 AM	0	0	0	0	0	0	0	0	0	0	0	0	0
4/27/2024	6:45 AM	0	0	0	0	0	0	0	0	0	0	0	0	0
4/27/2024	7:00 AM	0	0	0	0	0	0	0	0	0	0	0	0	0
4/27/2024	7:15 AM	0	0	0	0	0	0	0	0	0	0	0	0	0
4/27/2024	7:30 AM	0	0	0	0	0	0	0	0	0	0	0	0	0
4/27/2024	7:45 AM	0	0	0	0	0	0	0	0	0	0	0	0	0
4/27/2024	8:00 AM	0	0	0	0	0	0	0	0	0	0	0	0	0
4/27/2024	8:15 AM	0	0	0	0	0	0	0	0	0	0	0	0	0
4/27/2024	8:30 AM	0	0	0	0	0	0	0	0	0	0	0	0	0
4/27/2024	8:45 AM	0	0	0	0	0	0	0	0	0	0	0	0	0
4/27/2024	9:00 AM	0	0	0	0	0	0	0	0	0	0	0	0	0
4/27/2024	9:15 AM	0	0	0	0	0	0	0	0	0	0	0	0	0
4/27/2024	9:30 AM	0	0	0	0	0	0	0	0	0	0	0	0	0
4/27/2024	9:45 AM	0	0	0	0	0	0	0	0	0	0	0	0	0
4/27/2024	10:00 AM	0	0	0	0	0	0	0	0	0	0	0	0	0
4/27/2024	10:15 AM	0	0	0	0	0	0	0	0	0	0	0	0	0
4/27/2024	10:30 AM	0	0	0	0	0	0	0	0	0	0	0	0	0
4/27/2024	10:45 AM	0	0	0	0	0	0	0	0	0	0	0	0	0
4/27/2024	11:00 AM	0	0	0	0	0	0	0	0	0	0	0	0	0
4/27/2024	11:15 AM	0	0	0	0	0	0	0	0	0	0	0	0	0
4/27/2024	11:30 AM	0	0	0	0	0	0	0	0	0	0	0	0	0
4/27/2024	11:45 AM	0	0	0	0	0	0	0	0	0	0	0	0	0
4/27/2024	12:00 PM	0	0	0	0	0	0	0	0	0	0	0	0	0
4/27/2024	12:15 PM	0	0	0	0	0	0	0	0	0	0	0	0	0
4/27/2024	12:30 PM	0	0	0	0	0	0	0	0	0	0	0	0	0
4/27/2024	12:45 PM	0	0	0	0	0	0	0	0	0	0	0	0	0
4/27/2024	1:00 PM	0	0	0	0	0	0	0	0	0	0	0	0	0
4/27/2024	1:15 PM	0	0	0	0	0	0	0	0	0	0	0	0	0
4/27/2024	1:30 PM	0	0	0	0	0	0	0	0	0	0	0	0	0
4/27/2024	1:45 PM	0	0	0	0	0	0	0	0	0	0	0	0	0
4/27/2024	2:00 PM	0	0	0	0	0	0	0	0	0	0	0	0	0
4/27/2024	2:15 PM	0	0	0	0	0	0	0	0	0	0	0	0	0
4/27/2024	2:30 PM	0	0	0	0	0	0	0	0	0	0	0	0	0
4/27/2024	2:45 PM	0	0	0	0	0	0	0	0	0	0	0	0	0
4/27/2024	3:00 PM	0	0	0	0	0	0	0	0	0	0	0	0	0
4/27/2024	3:15 PM	0	0	0	0	0	0	0	0	0	0	0	0	0
4/27/2024	3:30 PM	0	0	0	0	0	0	0	0	0	0	0	0	0
4/27/2024	3:45 PM	0	0	0	0	0	0	0	0	0	0	0	0	0
4/27/2024	4:00 PM	0	0	0	0	0	0	0	0	0	0	0	0	0
4/27/2024	4:15 PM	0	0	0	0	0	0	0	0	0	0	0	0	0
4/27/2024	4:30 PM	0	0	0	0	0	0	0	0	0	0	0	0	0
4/27/2024	4:45 PM	0	0	0	0	0	0	0	0	0	0	0	0	0
4/27/2024	5:00 PM	0	0	0	0	0	0	0	0	0	0	0	0	0
4/27/2024	5:15 PM	0	0	0	0	0	0	0	0	0	0	0	0	0
4/27/2024	5:30 PM	0	0	0	0	0	0	0	0	0	0	0	0	0
4/27/2024	5:45 PM	0	0	0	0	0	0	0	0	0	0	0	0	0
4/27/2024	6:00 PM	0	0	0	0	0	0	0	0	0	0	0	0	0
4/27/2024	6:15 PM	0	0	0	0	0	0	0	0	0	0	0	0	0
4/27/2024	6:30 PM	0	0	0	0	0	0	0	0	0	0	0	0	0
4/27/2024	6:45 PM	0	0	0	0	0	0	0	0	0	0	0	0	0
4/27/2024	7:00 PM	0	0	0	0	0	0	0	0	0	0	0	0	0
4/27/2024	7:15 PM	0	0	0	0	0	0	0	0	0	0	0	0	0
4/27/2024	7:30 PM	0	0	0	0	0	0	0	0	0	0	0	0	0
4/27/2024	7:45 PM	0	0	0	0	0	0	0	0	0	0	0	0	0
4/27/2024	8:00 PM	0	0	0	0	0	0	0	0	0	0	0	0	0
4/27/2024	8:15 PM	0	0	0	0	0	0	0	0	0	0	0	0	0
4/27/2024	8:30 PM	0	0	0	0	0	0	0	0	0	0	0	0	0
4/27/2024	8:45 PM	0	0	0	0	0	0	0	0	0	0	0	0	0
4/27/2024	9:00 PM	0	0	0	0	0	0	0	0	0	0	0	0	0
4/27/2024	9:15 PM	0	0	0	0	0	0	0	0	0	0	0	0	0
4/27/2024	9:30 PM	0	0	0	0	0	0	0	0	0	0	0	0	0
4/27/2024	9:45 PM	0	0	0	0	0	0	0	0	0	0	0	0	0
4/27/2024	10:00 PM	0	0	0	0	0	0	0	0	0	0	0	0	0
4/27/2024	10:15 PM	0	0	0	0	0	0	0	0	0	0	0	0	0
4/27/2024	10:30 PM	0	0	0	0	0	0	0	0	0	0	0	0	0
4/27/2024	10:45 PM	0	0	0	0	0	0	0	0	0	0	0	0	0
4/27/2024	11:00 PM	0	0	0	0	0	0	0	0	0	0	0	0	0
4/27/2024	11:15 PM	0	0	0	0	0	0	0	0	0	0	0	0	0
4/27/2024	11:30 PM	0	0	0	0	0	0	0	0	0	0	0	0	0
4/27/2024	11:45 PM	0	0	0	0	0	0	0	0	0	0	0	0	0

WB
File Name:
Start Date: 4/21/2024
Start Time: 0
Site Code: 74 Lane 2 WB
Station ID: 1
Location 1: I-20, west of US-378 Sunset Blvd S/Bound Off-Ramp
Location 2:

Date	Time	1	2	3	4	5	6	7	8	9	10	11	12	13
4/21/2024	12:00 AM	0	55	10	0	0	0	0	0	3	0	0	0	0
4/21/2024	12:15 AM	0	60	8	0	0	0	0	0	2	0	0	0	0
4/21/2024	12:30 AM	0	40	5	0	0	0	0	0	4	0	0	0	0
4/21/2024	12:45 AM	0	43	5	0	0	0	0	0	2	0	0	0	0
4/21/2024	1:00 AM	0	40	3	0	0	0	0	0	0	0	0	0	0
4/21/2024	1:15 AM	0	42	4	0	1	0	0	0	2	0	0	0	0
4/21/2024	1:30 AM	0	38	3	1	1	0	0	0	0	0	0	0	0
4/21/2024	1:45 AM	0	37	5	1	0	0	0	0	0	0	0	0	0
4/21/2024	2:00 AM	0	25	2	0	2	0	0	0	3	0	0	0	0
4/21/2024	2:15 AM	0	40	5	0	0	0	0	0	2	0	0	0	0
4/21/2024	2:30 AM	0	23	2	0	1	0	0	0	3	0	0	0	0
4/21/2024	2:45 AM	0	23	3	0	1	0	0	0	2	0	0	0	0
4/21/2024	3:00 AM	0	17	2	0	1	0	0	0	3	0	0	0	0
4/21/2024	3:15 AM	0	23	3	0	0	0	0	0	1	0	0	0	0
4/21/2024	3:30 AM	0	13	3	0	1	0	0	0	3	0	0	0	0
4/21/2024	3:45 AM	0	21	2	0	0	0	0	0	2	0	0	0	0
4/21/2024	4:00 AM	0	29	3	0	3	0	0	0	5	0	0	0	0
4/21/2024	4:15 AM	0	14	1	0	1	0	0	0	3	0	0	0	0
4/21/2024	4:30 AM	0	26	2	1	1	0	0	1	1	0	0	0	0
4/21/2024	4:45 AM	0	16	2	0	2	0	0	0	3	0	0	0	0
4/21/2024	5:00 AM	0	24	2	0	0	0	0	0	6	0	0	0	0
4/21/2024	5:15 AM	0	20	3	0	1	0	0	0	2	0	0	0	0
4/21/2024	5:30 AM	0	30	5	0	2	0	0	0	3	0	0	0	0
4/21/2024	5:45 AM	0	29	4	0	2	0	0	0	2	0	0	0	0
4/21/2024	6:00 AM	0	30	6	0	0	0	0	0	4	0	0	0	0
4/21/2024	6:15 AM	0	38	6	0	0	0	0	0	3	0	0	0	0
4/21/2024	6:30 AM	0	44	11	0	0	0	0	0	3	0	0	0	0
4/21/2024	6:45 AM	0	34	12	0	1	0	0	0	1	0	0	0	0
4/21/2024	7:00 AM	0	42	20	0	0	0	0	0	2	0	0	0	0
4/21/2024	7:15 AM	1	45	10	0	1	0	0	0	1	0	0	0	0
4/21/2024	7:30 AM	0	45	17	1	1	1	0	0	2	0	0	0	0
4/21/2024	7:45 AM	0	55	14	0	0	0	0	0	5	0	0	0	0
4/21/2024	8:00 AM	1	58	11	0	0	0	0	0	2	0	0	0	0
4/21/2024	8:15 AM	1	57	19	1	3	0	0	0	5	0	0	0	0
4/21/2024	8:30 AM	0	73	16	0	0	0	0	0	5	0	0	0	0
4/21/2024	8:45 AM	0	87	20	0	3	0	0	1	2	0	0	0	0
4/21/2024	9:00 AM	2	83	22	1	1	0	0	0	1	1	0	0	0
4/21/2024	9:15 AM	0	98	21	0	2	0	0	0	2	0	0	0	0
4/21/2024	9:30 AM	0	125	27	0	0	0	0	2	1	0	0	0	0
4/21/2024	9:45 AM	0	107	27	0	1	0	0	0	5	0	0	0	0
4/21/2024	10:00 AM	0	114	25	0	2	1	0	0	8	0	1	0	0
4/21/2024	10:15 AM	0	107	31	0	1	0	0	3	11	0	0	0	0
4/21/2024	10:30 AM	0	128	30	0	1	0	0	0	6	0	0	0	0
4/21/2024	10:45 AM	0	152	39	1	2	0	0	0	7	0	0	0	0
4/21/2024	11:00 AM	0	145	31	0	2	0	0	0	13	0	0	0	0
4/21/2024	11:15 AM	0	127	33	0	1	0	0	1	7	0	0	0	0
4/21/2024	11:30 AM	1	143	34	0	0	0	0	1	8	0	0	0	0
4/21/2024	11:45 AM	0	175	40	0	1	0	0	2	4	0	1	0	0
4/21/2024	12:00 PM	0	184	26	0	2	0	0	0	13	0	0	0	0
4/21/2024	12:15 PM	0	171	37	0	2	0	0	2	6	0	0	0	0
4/21/2024	12:30 PM	0	169	38	0	2	1	0	2	4	0	0	0	0
4/21/2024	12:45 PM	0	147	56	0	5	1	0	0	8	0	0	0	0
4/21/2024	1:00 PM	0	177	51	0	1	0	0	0	8	0	0	0	0
4/21/2024	1:15 PM	0	195	43	0	0	0	0	0	5	0	0	0	0
4/21/2024	1:30 PM	0	193	50	0	1	2	0	2	3	0	0	1	0
4/21/2024	1:45 PM	1	179	41	1	1	0	0	0	9	0	0	0	0
4/21/2024	2:00 PM	0	193	46	0	0	1	0	0	6	0	0	0	0
4/21/2024	2:15 PM	0	182	39	0	2	0	0	2	9	0	0	0	0
4/21/2024	2:30 PM	0	164	32	0	3	0	0	0	7	0	0	0	0
4/21/2024	2:45 PM	0	154	38	0	2	0	0	0	7	1	0	0	0
4/21/2024	3:00 PM	0	193	41	0	1	1	0	0	7	0	0	0	0
4/21/2024	3:15 PM	0	155	46	0	3	0	0	0	9	0	0	0	0
4/21/2024	3:30 PM	1	160	47	0	2	0	0	0	5	0	0	0	0
4/21/2024	3:45 PM	0	190	38	0	1	1	0	1	8	1	0	0	0
4/21/2024	4:00 PM	0	187	32	0	0	0	0	1	3	0	0	0	0
4/21/2024	4:15 PM	0	184	49	0	1	0	0	0	10	0	0	0	0
4/21/2024	4:30 PM	0	166	43	1	1	0	0	1	4	0	0	0	0
4/21/2024	4:45 PM	0	157	42	0	1	1	0	1	10	0	0	0	0
4/21/2024	5:00 PM	0	155	39	0	1	0	0	1	7	0	0	0	0
4/21/2024	5:15 PM	0	146	27	0	0	1	0	3	4	0	0	0	0
4/21/2024	5:30 PM	0	156	28	1	1	0	0	0	13	0	0	0	0
4/21/2024	5:45 PM	0	142	44	0	2	0	0	2	10	0	0	0	0
4/21/2024	6:00 PM	0	142	40	0	0	0	0	1	6	0	0	0	0
4/21/2024	6:15 PM	0	144	28	0	0	0	0	3	7	0	0	0	0
4/21/2024	6:30 PM	1	143	36	0	0	0	0	2	7	0	0	0	0
4/21/2024	6:45 PM	0	152	34	0	1	1	0	2	6	0	0	0	0
4/21/2024	7:00 PM	0	149	24	0	1	0	0	0	9	0	0	0	0
4/21/2024	7:15 PM	0	115	32	0	0	0	0	0	13	0	2	0	0
4/21/2024	7:30 PM	0	126	26	1	0	1	0	3	6	0	0	0	0
4/21/2024	7:45 PM	0	111	15	0	1	1	0	0	7	0	0	0	0
4/21/2024	8:00 PM	0	105	26	0	0	0	0	0	5	0	0	0	0
4/21/2024	8:15 PM	0	104	22	0	2	0	0	0	5	0	0	0	0
4/21/2024	8:30 PM	0	101	15	0	0	0	0	0	6	0	0	0	0
4/21/2024	8:45 PM	0	95	13	0	1	0	0	0	3	0	0	0	0
4/21/2024	9:00 PM	0	74	14	1	1	0	0	1	6	0	0	0	0
4/21/2024	9:15 PM	0	91	15	0	2	0	0	0	6	0	1	0	0
4/21/2024	9:30 PM	0	61	13	0	1	0	0	0	6	0	0	0	0
4/21/2024	9:45 PM	0	50	11	0	0	0	0	0	8	0	1	0	0
4/21/2024	10:00 PM	0	61	13	0	0	0	0	0	10	0	1	0	0
4/21/2024	10:15 PM	0	58	10	0	0	0	0	0	3	0	0	0	0
4/21/2024	10:30 PM	0	44	8	1	0	0	0	0	11	0	1	0	0
4/21/2024	10:45 PM	0	39	6	2	0	0	0	0	1	0	0	0	0
4/21/2024	11:00 PM	0	35	7	0	0	0	0	0	3	0	1	0	0
4/21/2024	11:15 PM	0	25	2	1	1	0	0	0	3	0	1	0	0
4/21/2024	11:30 PM	0	36	5	0	1	0	0	0	6	0	0	0	0
4/21/2024	11:45 PM	0	28	2	0	0	0	0	0	2	0	0	0	0

4/22/2024	12:00 AM	0	17	3	0	2	0	0	0	6	0	0	0	0
4/22/2024	12:15 AM	0	15	4	0	1	0	0	0	9	0	0	0	0
4/22/2024	12:30 AM	0	17	1	0	0	0	0	0	7	0	0	0	0
4/22/2024	12:45 AM	0	13	2	0	1	0	0	0	8	0	0	0	0
4/22/2024	1:00 AM	0	11	2	0	0	0	0	0	5	0	0	0	0
4/22/2024	1:15 AM	0	11	4	0	0	0	0	0	5	0	0	0	0
4/22/2024	1:30 AM	0	12	2	0	1	0	0	0	3	0	0	0	0
4/22/2024	1:45 AM	0	12	1	0	1	0	0	0	5	0	0	0	0
4/22/2024	2:00 AM	0	8	0	0	0	0	0	0	9	0	0	0	0
4/22/2024	2:15 AM	0	11	2	0	2	0	0	0	5	0	0	0	0
4/22/2024	2:30 AM	0	10	0	0	1	0	0	0	3	0	0	0	0
4/22/2024	2:45 AM	0	13	1	0	1	0	0	0	8	0	0	0	0
4/22/2024	3:00 AM	0	16	2	0	1	0	0	0	4	0	0	0	0
4/22/2024	3:15 AM	0	17	0	0	1	0	0	0	10	0	0	0	0
4/22/2024	3:30 AM	0	18	7	0	1	0	0	0	6	0	0	0	0
4/22/2024	3:45 AM	0	17	0	0	1	0	0	0	9	0	0	0	0
4/22/2024	4:00 AM	0	18	0	0	0	0	0	0	7	0	0	0	0
4/22/2024	4:15 AM	0	17	8	0	2	0	0	0	7	0	0	0	0
4/22/2024	4:30 AM	0	21	8	0	0	0	0	0	8	0	0	0	0
4/22/2024	4:45 AM	0	25	9	0	1	0	0	0	13	0	0	0	0
4/22/2024	5:00 AM	0	40	7	0	0	0	0	0	11	0	0	0	0
4/22/2024	5:15 AM	0	47	18	0	3	0	0	0	13	0	0	0	0
4/22/2024	5:30 AM	0	55	20	0	1	0	0	0	18	0	0	0	0
4/22/2024	5:45 AM	0	81	28	0	3	0	0	0	11	0	0	0	0
4/22/2024	6:00 AM	0	77	20	0	1	0	0	0	15	0	0	0	0
4/22/2024	6:15 AM	0	125	15	0	5	1	0	0	10	0	0	0	0
4/22/2024	6:30 AM	0	123	50	0	3	1	0	1	10	0	0	0	0
4/22/2024	6:45 AM	1	121	47	1	7	2	0	1	19	0	0	0	0
4/22/2024	7:00 AM	0	124	46	0	7	2	0	1	8	0	0	0	0
4/22/2024	7:15 AM	0	133	60	0	6	5	0	2	17	0	0	0	0
4/22/2024	7:30 AM	0	139	62	1	3	2	0	3	8	0	0	0	0
4/22/2024	7:45 AM	0	143	48	0	5	2	0	1	13	0	0	0	0
4/22/2024	8:00 AM	0	123	50	0	2	2	0	1	18	0	0	0	0
4/22/2024	8:15 AM	0	105	42	0	6	1	0	1	23	0	0	0	0
4/22/2024	8:30 AM	0	117	50	1	10	1	2	2	16	1	0	0	0
4/22/2024	8:45 AM	0	98	43	0	6	3	0	4	11	0	0	0	0
4/22/2024	9:00 AM	0	99	51	0	9	2	0	5	19	0	0	0	0
4/22/2024	9:15 AM	0	93	58	1	5	3	0	2	25	0	0	1	0
4/22/2024	9:30 AM	0	87	48	0	10	2	0	5	17	0	0	0	0
4/22/2024	9:45 AM	0	85	41	0	6	4	0	1	19	0	0	0	0
4/22/2024	10:00 AM	0	91	52	0	5	2	0	4	19	0	0	0	0
4/22/2024	10:15 AM	0	121	40	0	8	0	0	2	30	0	0	0	0
4/22/2024	10:30 AM	0	106	47	0	5	4	0	1	34	0	0	0	0
4/22/2024	10:45 AM	1	117	45	1	12	2	0	0	25	0	0	0	0
4/22/2024	11:00 AM	0	124	56	0	3	1	0	2	24	0	0	0	0
4/22/2024	11:15 AM	0	98	41	0	4	0	0	1	24	0	0	0	0
4/22/2024	11:30 AM	0	111	44	0	4	2	0	3	39	0	0	0	0
4/22/2024	11:45 AM	0	111	35	0	6	2	0	0	22	0	0	0	0
4/22/2024	12:00 PM	1	125	49	0	2	2	0	4	25	0	0	0	0
4/22/2024	12:15 PM	0	132	42	0	9	0	0	2	31	0	0	0	0
4/22/2024	12:30 PM	0	119	39	0	5	2	0	2	22	0	0	0	0
4/22/2024	12:45 PM	0	125	53	1	3	3	0	6	27	0	0	0	0
4/22/2024	1:00 PM	0	113	30	0	11	0	0	4	28	1	0	0	0
4/22/2024	1:15 PM	0	141	44	1	3	2	0	3	27	0	0	0	0
4/22/2024	1:30 PM	0	158	52	1	7	2	0	4	21	0	0	0	0
4/22/2024	1:45 PM	0	139	41	1	5	2	0	4	35	0	0	0	0
4/22/2024	2:00 PM	0	133	49	0	3	4	0	1	21	0	0	0	0
4/22/2024	2:15 PM	0	138	54	0	6	4	0	2	32	1	0	0	0
4/22/2024	2:30 PM	0	139	61	0	8	2	0	5	32	0	0	0	0
4/22/2024	2:45 PM	0	142	51	3	5	3	3	3	35	0	0	0	0
4/22/2024	3:00 PM	0	161	54	0	7	2	0	3	42	0	0	0	0
4/22/2024	3:15 PM	0	171	40	0	5	2	0	3	35	0	0	0	0
4/22/2024	3:30 PM	0	157	56	0	11	6	3	2	36	1	0	0	0
4/22/2024	3:45 PM	1	188	58	1	2	1	0	2	31	1	0	0	0
4/22/2024	4:00 PM	0	188	70	0	5	2	0	3	31	1	0	0	0
4/22/2024	4:15 PM	0	205	54	0	4	1	0	1	30	1	0	0	0
4/22/2024	4:30 PM	0	209	55	0	8	2	2	7	31	0	0	0	0
4/22/2024	4:45 PM	0	197	62	0	11	2	0	1	32	0	0	0	0
4/22/2024	5:00 PM	0	205	66	2	7	3	0	4	33	1	0	0	0
4/22/2024	5:15 PM	0	206	57	0	7	3	0	3	29	0	0	0	0
4/22/2024	5:30 PM	0	185	61	0	9	3	0	2	35	0	0	0	0
4/22/2024	5:45 PM	0	168	59	0	4	2	0	5	31	1	0	0	0
4/22/2024	6:00 PM	0	155	53	0	3	1	0	0	23	0	0	0	0
4/22/2024	6:15 PM	0	165	45	0	4	3	0	3	26	0	0	0	0
4/22/2024	6:30 PM	0	132	45	0	1	1	0	2	24	0	0	0	0
4/22/2024	6:45 PM	0	111	39	0	1	2	0	1	23	0	0	0	0
4/22/2024	7:00 PM	0	104	35	0	1	1	0	3	23	0	0	0	0
4/22/2024	7:15 PM	0	110	26	0	2	1	0	1	22	0	0	0	0
4/22/2024	7:30 PM	0	104	30	0	3	2	0	2	26	0	1	0	0
4/22/2024	7:45 PM	0	106	21	0	2	3	0	1	15	0	0	0	0
4/22/2024	8:00 PM	0	101	30	0	2	0	0	1	16	0	1	0	0
4/22/2024	8:15 PM	0	90	13	0	1	2	0	3	12	0	1	0	0
4/22/2024	8:30 PM	0	89	12	0	0	0	0	0	23	0	0	0	0
4/22/2024	8:45 PM	0	87	13	0	2	0	0	0	20	0	0	0	0
4/22/2024	9:00 PM	0	89	11	0	1	0	0	0	18	0	0	0	0
4/22/2024	9:15 PM	0	92	13	0	1	0	0	0	18	0	0	0	0
4/22/2024	9:30 PM	0	70	14	0	3	0	0	0	13	0	0	0	0
4/22/2024	9:45 PM	0	51	13	0	0	0	0	0	11	0	0	0	0
4/22/2024	10:00 PM	0	40	10	0	1	0	0	0	16	0	0	0	0
4/22/2024	10:15 PM	0	39	12	0	0	0	0	0	12	0	0	0	0
4/22/2024	10:30 PM	0	38	14	0	4	0	0	0	7	0	0	0	0
4/22/2024	10:45 PM	0	30	12	0	0	0	0	0	14	0	0	0	0
4/22/2024	11:00 PM	0	31	13	0	0	0	0	0	14	0	0	0	0
4/22/2024	11:15 PM	0	30	14	0	1	0	0	0	8	0	0	0	0
4/22/2024	11:30 PM	0	21	7	0	2	0	0	0	5	0	0	0	0
4/22/2024	11:45 PM	0	20	12	0	0	0	0	0	4	0	0	0	0

4/23/2024	12:00 AM	0	13	1	0	0	0	0	0	4	0	1	0	0
4/23/2024	12:15 AM	0	22	0	0	0	0	0	0	5	0	0	0	0
4/23/2024	12:30 AM	0	15	2	0	0	0	0	0	5	0	1	0	0
4/23/2024	12:45 AM	0	23	1	0	0	1	0	0	7	0	0	0	0
4/23/2024	1:00 AM	0	25	1	0	3	0	0	0	7	0	1	0	0
4/23/2024	1:15 AM	0	24	0	0	0	0	0	0	9	0	0	0	0
4/23/2024	1:30 AM	0	15	0	0	0	0	0	0	11	0	0	0	0
4/23/2024	1:45 AM	0	14	1	0	1	0	0	0	9	0	1	0	0
4/23/2024	2:00 AM	0	24	0	0	2	0	0	0	11	0	0	0	0
4/23/2024	2:15 AM	0	19	0	0	0	0	0	0	10	0	0	0	0
4/23/2024	2:30 AM	0	16	1	0	1	0	0	0	9	0	0	0	0
4/23/2024	2:45 AM	0	25	1	0	0	0	0	0	9	0	0	0	0
4/23/2024	3:00 AM	0	10	0	0	1	0	0	0	4	0	0	0	0
4/23/2024	3:15 AM	0	25	0	0	0	0	0	2	13	0	1	0	0
4/23/2024	3:30 AM	0	21	1	0	1	0	0	1	11	0	0	0	0
4/23/2024	3:45 AM	0	28	1	0	2	0	0	0	15	0	1	0	0
4/23/2024	4:00 AM	0	30	2	0	1	0	0	0	12	0	0	0	0
4/23/2024	4:15 AM	0	22	5	0	0	0	0	0	8	0	0	0	0
4/23/2024	4:30 AM	0	39	2	0	2	0	0	0	10	0	3	0	0
4/23/2024	4:45 AM	0	37	0	0	0	0	0	0	14	0	1	0	0
4/23/2024	5:00 AM	0	46	3	0	0	0	0	0	9	0	0	0	0
4/23/2024	5:15 AM	0	64	4	0	3	1	0	0	15	0	0	0	0
4/23/2024	5:30 AM	0	95	9	0	0	0	0	0	18	0	0	0	0
4/23/2024	5:45 AM	0	83	13	0	4	1	0	0	10	0	0	0	0
4/23/2024	6:00 AM	0	88	25	0	3	0	0	0	15	0	0	0	0
4/23/2024	6:15 AM	0	99	45	0	3	0	0	2	24	0	0	0	0
4/23/2024	6:30 AM	1	113	44	0	2	3	0	0	18	0	0	0	0
4/23/2024	6:45 AM	0	109	51	0	4	2	0	1	14	0	1	0	0
4/23/2024	7:00 AM	0	119	64	0	0	0	0	1	13	0	0	0	0
4/23/2024	7:15 AM	0	145	63	0	9	1	0	0	13	0	0	0	0
4/23/2024	7:30 AM	1	150	37	1	3	1	1	1	9	0	0	0	0
4/23/2024	7:45 AM	0	154	52	0	5	0	0	1	13	0	0	0	0
4/23/2024	8:00 AM	1	128	38	0	11	3	0	0	10	0	0	0	0
4/23/2024	8:15 AM	0	86	45	0	6	2	0	1	12	0	0	0	0
4/23/2024	8:30 AM	0	122	37	0	8	1	0	0	11	0	0	0	0
4/23/2024	8:45 AM	0	135	48	0	7	1	0	0	19	0	1	0	0
4/23/2024	9:00 AM	0	105	52	2	7	2	0	0	29	0	0	0	0
4/23/2024	9:15 AM	0	111	47	1	9	5	0	1	23	0	0	0	0
4/23/2024	9:30 AM	0	116	46	1	4	1	0	1	23	0	0	0	0
4/23/2024	9:45 AM	0	114	37	0	5	0	0	2	16	0	0	0	0
4/23/2024	10:00 AM	0	102	44	0	5	4	0	1	17	0	0	0	0
4/23/2024	10:15 AM	0	107	41	1	13	3	0	1	14	0	0	0	0
4/23/2024	10:30 AM	0	125	33	0	6	1	0	1	31	1	0	0	0
4/23/2024	10:45 AM	0	101	54	0	8	3	0	0	32	0	0	0	0
4/23/2024	11:00 AM	0	101	43	0	6	2	0	0	32	0	0	0	0
4/23/2024	11:15 AM	0	99	38	0	5	2	1	2	36	0	0	0	0
4/23/2024	11:30 AM	2	123	42	0	5	2	0	2	30	0	0	0	0
4/23/2024	11:45 AM	1	126	40	0	4	2	0	0	30	0	0	0	0
4/23/2024	12:00 PM	1	105	45	0	7	0	0	2	27	0	0	0	0
4/23/2024	12:15 PM	0	124	44	0	3	3	0	2	39	0	0	0	0
4/23/2024	12:30 PM	0	121	35	1	8	0	0	2	32	0	0	0	0
4/23/2024	12:45 PM	0	130	44	1	3	4	0	1	35	0	0	0	0
4/23/2024	1:00 PM	0	119	44	0	5	1	0	2	38	1	0	0	0
4/23/2024	1:15 PM	0	128	38	0	6	3	0	2	30	2	0	0	0
4/23/2024	1:30 PM	0	148	43	0	8	2	0	1	28	0	0	0	0
4/23/2024	1:45 PM	0	120	46	0	2	3	0	3	30	2	0	0	0
4/23/2024	2:00 PM	1	143	41	0	6	7	0	4	36	0	0	0	0
4/23/2024	2:15 PM	0	152	50	5	5	0	0	1	33	1	0	0	0
4/23/2024	2:30 PM	0	149	49	0	6	1	0	6	27	1	1	0	0
4/23/2024	2:45 PM	1	146	62	0	7	2	2	5	29	0	1	0	0
4/23/2024	3:00 PM	1	146	65	0	5	3	1	6	37	0	0	0	0
4/23/2024	3:15 PM	0	168	60	0	11	4	0	4	26	0	0	0	0
4/23/2024	3:30 PM	0	162	64	0	5	4	0	9	42	0	0	0	0
4/23/2024	3:45 PM	0	187	63	0	7	2	1	3	40	2	0	0	0
4/23/2024	4:00 PM	0	189	83	1	8	3	2	6	28	0	1	0	0
4/23/2024	4:15 PM	0	225	67	0	9	1	0	5	29	0	0	0	0
4/23/2024	4:30 PM	0	201	55	0	11	4	0	3	34	0	0	0	0
4/23/2024	4:45 PM	0	194	61	1	11	4	0	4	26	0	1	0	0
4/23/2024	5:00 PM	0	205	61	0	5	2	0	3	12	1	0	0	0
4/23/2024	5:15 PM	0	334	56	1	13	4	0	1	20	1	0	0	0
4/23/2024	5:30 PM	1	184	56	0	12	1	0	6	32	0	0	0	0
4/23/2024	5:45 PM	0	191	57	0	6	1	1	4	37	2	0	0	0
4/23/2024	6:00 PM	1	161	58	0	8	2	0	3	27	0	0	0	0
4/23/2024	6:15 PM	0	153	35	0	6	1	0	3	28	0	0	0	0
4/23/2024	6:30 PM	0	132	38	0	3	2	0	0	15	0	0	0	0
4/23/2024	6:45 PM	0	111	26	0	1	1	0	3	16	0	0	0	0
4/23/2024	7:00 PM	2	110	33	0	9	0	0	0	19	0	0	0	0
4/23/2024	7:15 PM	1	99	27	0	3	0	0	0	18	0	2	0	0
4/23/2024	7:30 PM	1	92	31	0	1	3	0	1	19	0	0	0	0
4/23/2024	7:45 PM	1	84	39	0	1	0	0	0	12	0	0	0	0
4/23/2024	8:00 PM	0	90	39	0	3	5	0	0	16	0	0	0	0
4/23/2024	8:15 PM	0	101	31	0	4	0	0	1	19	0	1	0	0
4/23/2024	8:30 PM	0	98	23	0	1	1	0	0	13	0	0	0	0
4/23/2024	8:45 PM	0	89	20	0	3	0	0	0	24	0	1	0	0
4/23/2024	9:00 PM	0	83	32	0	4	0	0	0	16	0	0	0	0
4/23/2024	9:15 PM	1	98	30	0	0	0	0	0	14	0	0	0	0
4/23/2024	9:30 PM	0	90	32	0	3	0	0	0	8	0	0	0	0
4/23/2024	9:45 PM	0	72	10	0	1	0	0	0	9	0	2	0	0
4/23/2024	10:00 PM	0	65	11	0	2	0	0	0	10	0	1	0	0
4/23/2024	10:15 PM	0	64	13	0	1	0	0	0	10	0	1	0	0
4/23/2024	10:30 PM	0	58	15	0	0	0	0	0	14	0	1	0	0
4/23/2024	10:45 PM	0	44	10	0	0	0	0	0	8	0	1	0	0
4/23/2024	11:00 PM	0	39	11	0	0	0	0	0	5	0	1	0	0
4/23/2024	11:15 PM	0	38	16	0	0	0	0	0	8	0	1	0	0
4/23/2024	11:30 PM	0	25	11	0	0	0	0	0	5	0	2	0	0
4/23/2024	11:45 PM	0	24	9	0	2	0	0	0	3	0	0	0	0

4/24/2024	12:00 AM	0	25	6	0	1	0	0	0	12	0	4	0	0
4/24/2024	12:15 AM	0	24	6	0	0	0	0	0	7	0	0	0	0
4/24/2024	12:30 AM	0	17	2	0	0	0	0	0	8	0	0	0	0
4/24/2024	12:45 AM	0	14	2	0	1	0	0	0	5	0	0	0	0
4/24/2024	1:00 AM	0	18	1	0	3	0	0	0	4	0	0	0	0
4/24/2024	1:15 AM	0	12	1	0	0	1	0	0	10	0	1	0	0
4/24/2024	1:30 AM	0	14	2	0	1	1	0	0	2	0	0	0	0
4/24/2024	1:45 AM	0	15	1	0	2	0	0	0	4	0	0	0	0
4/24/2024	2:00 AM	0	12	3	0	0	0	0	0	8	0	1	0	0
4/24/2024	2:15 AM	0	15	2	0	1	1	0	0	4	0	0	0	0
4/24/2024	2:30 AM	0	10	1	0	1	0	0	0	8	0	0	0	0
4/24/2024	2:45 AM	0	9	3	0	0	0	0	0	9	0	2	0	0
4/24/2024	3:00 AM	0	13	2	0	0	0	0	0	10	0	0	0	0
4/24/2024	3:15 AM	0	15	3	0	0	0	0	0	7	0	0	0	0
4/24/2024	3:30 AM	0	16	4	0	1	1	0	0	7	0	0	0	0
4/24/2024	3:45 AM	0	24	3	2	1	0	0	0	4	0	0	0	0
4/24/2024	4:00 AM	0	20	4	0	0	0	0	0	9	0	0	0	0
4/24/2024	4:15 AM	0	15	1	0	1	0	0	0	5	0	0	0	0
4/24/2024	4:30 AM	0	25	5	0	0	0	0	0	6	0	2	0	0
4/24/2024	4:45 AM	0	20	3	0	3	0	0	0	8	0	0	0	0
4/24/2024	5:00 AM	0	36	4	0	4	0	0	0	10	0	1	0	0
4/24/2024	5:15 AM	0	51	5	0	2	1	0	0	17	0	0	0	0
4/24/2024	5:30 AM	0	69	8	0	1	0	0	0	7	0	0	0	0
4/24/2024	5:45 AM	0	65	6	0	1	0	0	0	10	0	0	0	0
4/24/2024	6:00 AM	1	80	26	0	8	1	0	1	10	0	1	0	0
4/24/2024	6:15 AM	0	97	44	0	2	0	0	3	11	0	0	0	0
4/24/2024	6:30 AM	1	147	49	0	2	0	0	2	17	0	1	0	0
4/24/2024	6:45 AM	0	104	56	0	6	1	0	3	18	0	0	0	0
4/24/2024	7:00 AM	0	118	44	0	5	3	0	2	29	0	1	0	0
4/24/2024	7:15 AM	0	147	57	0	6	2	0	4	12	0	0	0	0
4/24/2024	7:30 AM	0	135	59	0	9	2	0	2	19	0	1	0	0
4/24/2024	7:45 AM	0	123	60	0	6	0	0	4	14	0	0	1	0
4/24/2024	8:00 AM	0	98	30	0	4	2	0	1	17	0	0	0	0
4/24/2024	8:15 AM	0	112	51	0	10	3	2	1	14	0	0	0	0
4/24/2024	8:30 AM	0	103	44	0	7	1	0	1	19	0	0	0	0
4/24/2024	8:45 AM	0	108	42	0	7	2	0	2	23	1	0	0	0
4/24/2024	9:00 AM	1	89	42	1	3	2	2	1	29	0	0	0	0
4/24/2024	9:15 AM	0	81	38	0	8	4	1	0	16	0	0	0	0
4/24/2024	9:30 AM	0	94	52	1	5	0	0	3	19	1	1	0	0
4/24/2024	9:45 AM	1	112	45	2	7	2	1	3	33	1	0	0	0
4/24/2024	10:00 AM	0	110	52	0	2	3	0	3	35	0	0	0	0
4/24/2024	10:15 AM	1	111	44	0	7	1	0	2	28	0	0	0	0
4/24/2024	10:30 AM	0	129	63	0	3	0	0	6	25	0	0	0	0
4/24/2024	10:45 AM	0	114	30	1	5	4	0	1	34	1	0	0	0
4/24/2024	11:00 AM	0	94	53	1	9	1	0	1	27	0	0	0	0
4/24/2024	11:15 AM	0	101	39	0	2	1	0	1	26	1	0	0	0
4/24/2024	11:30 AM	2	115	42	0	5	0	0	5	25	0	0	0	0
4/24/2024	11:45 AM	1	104	53	0	7	3	0	2	23	0	0	0	0
4/24/2024	12:00 PM	0	111	33	0	4	2	0	5	41	0	0	1	0
4/24/2024	12:15 PM	1	135	49	0	8	0	2	6	46	1	0	0	0
4/24/2024	12:30 PM	0	127	57	0	5	0	2	4	23	2	0	0	0
4/24/2024	12:45 PM	0	117	41	0	6	5	0	1	38	2	0	0	0
4/24/2024	1:00 PM	0	124	39	0	5	3	0	2	45	0	0	0	0
4/24/2024	1:15 PM	2	128	55	1	9	2	0	1	37	0	0	0	0
4/24/2024	1:30 PM	1	142	44	0	7	1	0	3	38	0	0	0	0
4/24/2024	1:45 PM	0	121	52	0	6	3	0	1	26	0	0	0	0
4/24/2024	2:00 PM	0	126	63	0	8	3	0	0	34	0	0	0	0
4/24/2024	2:15 PM	0	166	51	0	2	1	0	2	42	0	0	0	0
4/24/2024	2:30 PM	0	145	51	2	7	0	1	3	36	0	0	1	0
4/24/2024	2:45 PM	1	153	55	3	7	1	0	3	28	0	0	0	0
4/24/2024	3:00 PM	1	154	62	0	6	3	0	1	44	1	0	0	0
4/24/2024	3:15 PM	0	164	75	1	7	1	0	5	34	0	0	0	0
4/24/2024	3:30 PM	0	172	62	0	20	3	1	4	38	0	0	0	0
4/24/2024	3:45 PM	0	187	74	0	5	3	0	3	38	0	0	1	0
4/24/2024	4:00 PM	1	183	80	2	7	5	1	3	45	0	0	0	0
4/24/2024	4:15 PM	0	210	70	1	12	2	0	6	27	1	0	0	0
4/24/2024	4:30 PM	0	196	65	2	10	2	0	5	45	0	0	0	0
4/24/2024	4:45 PM	0	189	56	0	10	1	0	4	38	0	0	0	0
4/24/2024	5:00 PM	0	186	75	0	11	2	0	2	34	0	0	0	0
4/24/2024	5:15 PM	0	208	69	1	4	1	1	2	35	0	0	0	0
4/24/2024	5:30 PM	0	175	53	0	8	0	0	1	31	0	0	0	0
4/24/2024	5:45 PM	0	169	52	2	6	2	1	3	33	0	0	0	0
4/24/2024	6:00 PM	0	153	44	0	5	0	0	2	33	0	0	0	0
4/24/2024	6:15 PM	1	163	39	3	8	2	0	3	23	1	0	0	0
4/24/2024	6:30 PM	0	130	40	0	3	1	0	0	25	0	0	0	0
4/24/2024	6:45 PM	0	127	29	0	9	0	0	0	16	0	0	0	0
4/24/2024	7:00 PM	0	109	32	0	4	1	0	3	21	0	0	0	0
4/24/2024	7:15 PM	0	115	36	0	1	0	0	1	16	0	0	0	0
4/24/2024	7:30 PM	1	103	32	0	3	0	0	3	19	0	0	0	0
4/24/2024	7:45 PM	0	94	26	0	3	0	0	2	14	0	1	0	0
4/24/2024	8:00 PM	0	93	23	0	1	1	0	1	17	0	1	0	0
4/24/2024	8:15 PM	0	103	24	0	1	1	0	2	12	0	0	0	0
4/24/2024	8:30 PM	0	98	20	0	2	0	0	0	16	0	0	0	0
4/24/2024	8:45 PM	0	120	39	1	2	0	0	0	14	0	0	0	0
4/24/2024	9:00 PM	0	95	12	0	1	0	0	0	13	0	2	0	0
4/24/2024	9:15 PM	0	88	8	0	1	0	0	0	12	0	0	0	0
4/24/2024	9:30 PM	0	89	9	0	0	0	0	0	15	0	2	0	0
4/24/2024	9:45 PM	0	75	6	0	1	0	0	1	18	0	1	0	0
4/24/2024	10:00 PM	0	65	3	0	0	0	0	0	11	0	1	0	0
4/24/2024	10:15 PM	0	68	3	1	2	0	0	0	11	0	3	0	0
4/24/2024	10:30 PM	0	69	4	0	0	0	0	0	6	0	1	0	0
4/24/2024	10:45 PM	0	48	1	0	1	0	0	0	9	0	2	0	0
4/24/2024	11:00 PM	1	50	4	1	0	0	0	0	10	0	1	0	0
4/24/2024	11:15 PM	0	47	3	0	2	0	0	0	15	0	0	0	0
4/24/2024	11:30 PM	0	34	2	0	0	0	0	0	11	0	0	0	0
4/24/2024	11:45 PM	0	37	2	0	0	0	0	0	4	0	1	0	0

4/25/2024	12:00 AM	0	29	8	0	0	1	0	2	8	0	0	0	0
4/25/2024	12:15 AM	0	18	5	0	0	1	0	0	16	0	2	0	0
4/25/2024	12:30 AM	0	15	3	0	2	0	0	0	12	0	1	0	0
4/25/2024	12:45 AM	0	15	0	0	1	0	0	0	1	0	0	0	0
4/25/2024	1:00 AM	0	19	1	0	2	1	0	0	8	0	1	0	0
4/25/2024	1:15 AM	0	13	1	0	0	1	0	0	3	0	0	0	0
4/25/2024	1:30 AM	0	12	0	0	0	0	0	0	8	0	1	0	0
4/25/2024	1:45 AM	0	13	0	0	0	0	0	0	5	0	0	0	0
4/25/2024	2:00 AM	0	17	1	0	1	0	0	0	7	0	1	0	0
4/25/2024	2:15 AM	0	20	1	0	1	0	0	0	4	0	0	0	0
4/25/2024	2:30 AM	0	10	0	0	0	0	0	0	5	0	0	0	0
4/25/2024	2:45 AM	0	15	1	0	1	0	0	0	10	0	1	0	0
4/25/2024	3:00 AM	0	17	0	0	0	0	0	0	9	0	0	0	0
4/25/2024	3:15 AM	0	13	0	0	1	0	0	0	5	0	1	0	0
4/25/2024	3:30 AM	0	15	0	0	1	0	0	0	6	0	1	0	0
4/25/2024	3:45 AM	0	32	0	0	1	0	0	0	5	0	0	0	0
4/25/2024	4:00 AM	0	20	3	0	2	0	0	0	3	0	0	0	0
4/25/2024	4:15 AM	0	19	1	0	1	0	0	0	7	0	1	0	0
4/25/2024	4:30 AM	0	32	0	0	0	0	0	0	8	0	0	0	0
4/25/2024	4:45 AM	0	29	4	0	1	0	0	0	5	0	0	0	0
4/25/2024	5:00 AM	0	29	0	0	0	0	0	0	14	0	1	0	0
4/25/2024	5:15 AM	0	51	0	0	0	0	0	0	7	0	0	0	0
4/25/2024	5:30 AM	0	63	2	0	0	0	0	0	17	0	0	0	0
4/25/2024	5:45 AM	0	87	3	0	0	0	0	0	16	0	1	0	0
4/25/2024	6:00 AM	0	119	4	0	1	0	0	0	19	0	2	0	0
4/25/2024	6:15 AM	1	91	35	0	5	2	0	0	23	0	2	0	0
4/25/2024	6:30 AM	0	111	42	0	4	2	0	0	16	0	0	0	0
4/25/2024	6:45 AM	0	99	46	0	2	2	0	1	19	0	0	0	0
4/25/2024	7:00 AM	0	122	44	0	5	8	0	0	17	0	1	0	0
4/25/2024	7:15 AM	0	139	49	1	6	3	1	1	25	0	0	0	0
4/25/2024	7:30 AM	1	151	46	0	9	0	0	0	14	0	0	0	0
4/25/2024	7:45 AM	0	163	60	0	9	1	0	0	15	0	0	0	0
4/25/2024	8:00 AM	0	116	64	1	4	3	0	0	22	0	0	0	0
4/25/2024	8:15 AM	0	119	63	0	7	2	0	1	26	2	1	0	0
4/25/2024	8:30 AM	0	101	56	0	14	2	0	2	27	0	0	0	0
4/25/2024	8:45 AM	0	105	61	0	9	1	0	1	24	0	0	0	0
4/25/2024	9:00 AM	1	90	47	1	5	3	0	2	29	1	0	0	0
4/25/2024	9:15 AM	1	97	54	0	4	2	0	1	22	1	0	0	0
4/25/2024	9:30 AM	0	116	48	0	3	1	0	4	36	0	0	0	0
4/25/2024	9:45 AM	0	123	39	0	9	2	0	2	18	0	0	0	0
4/25/2024	10:00 AM	0	114	54	0	0	5	1	2	25	0	0	0	0
4/25/2024	10:15 AM	0	119	44	0	6	0	0	2	19	0	0	0	0
4/25/2024	10:30 AM	0	120	43	0	10	1	0	1	33	0	0	0	0
4/25/2024	10:45 AM	0	117	41	0	6	1	1	8	33	0	0	0	0
4/25/2024	11:00 AM	0	121	35	0	3	3	0	3	36	0	0	0	0
4/25/2024	11:15 AM	0	123	36	0	7	4	0	3	31	0	0	0	0
4/25/2024	11:30 AM	1	112	43	0	10	1	0	3	40	0	1	0	0
4/25/2024	11:45 AM	1	107	63	0	3	3	0	0	31	0	0	0	0
4/25/2024	12:00 PM	0	100	43	0	8	3	0	1	35	1	0	0	0
4/25/2024	12:15 PM	0	132	51	0	7	1	1	3	32	0	1	0	0
4/25/2024	12:30 PM	0	116	50	0	8	3	1	2	39	0	0	0	0
4/25/2024	12:45 PM	0	137	45	1	6	0	0	3	40	0	0	0	0
4/25/2024	1:00 PM	0	119	57	0	8	2	1	5	35	0	1	0	0
4/25/2024	1:15 PM	0	151	55	2	9	4	1	0	28	1	0	0	0
4/25/2024	1:30 PM	0	169	53	1	6	1	0	3	34	1	0	0	0
4/25/2024	1:45 PM	1	164	66	0	2	0	0	4	41	0	0	0	0
4/25/2024	2:00 PM	0	153	58	0	11	6	0	6	32	1	0	0	0
4/25/2024	2:15 PM	1	149	64	0	5	1	0	1	50	1	0	0	0
4/25/2024	2:30 PM	0	147	63	1	10	0	0	2	45	1	0	0	0
4/25/2024	2:45 PM	1	154	58	0	10	1	0	3	31	0	0	1	0
4/25/2024	3:00 PM	1	191	78	0	5	1	0	1	37	0	0	0	0
4/25/2024	3:15 PM	0	198	59	0	10	1	0	2	33	1	1	0	0
4/25/2024	3:30 PM	1	196	85	1	6	2	2	1	31	0	0	0	0
4/25/2024	3:45 PM	0	168	81	0	9	0	0	5	32	0	0	0	0
4/25/2024	4:00 PM	0	205	66	1	9	1	0	3	39	0	0	0	0
4/25/2024	4:15 PM	0	239	85	0	12	3	0	0	21	0	0	0	0
4/25/2024	4:30 PM	1	218	65	0	7	0	1	1	32	0	0	0	0
4/25/2024	4:45 PM	1	244	94	0	8	1	0	5	33	0	0	0	0
4/25/2024	5:00 PM	1	299	94	0	7	3	1	1	25	0	0	0	0
4/25/2024	5:15 PM	0	230	86	0	4	0	0	1	26	0	0	0	0
4/25/2024	5:30 PM	1	194	53	0	10	1	1	3	27	0	0	0	0
4/25/2024	5:45 PM	1	186	55	2	4	3	0	1	32	1	0	0	0
4/25/2024	6:00 PM	0	167	54	0	5	1	0	4	38	0	0	0	0
4/25/2024	6:15 PM	1	182	54	0	6	1	0	0	19	0	0	0	0
4/25/2024	6:30 PM	1	144	46	0	9	0	0	3	19	0	0	0	0
4/25/2024	6:45 PM	0	141	55	2	5	0	0	2	14	1	0	0	0
4/25/2024	7:00 PM	0	130	41	0	3	0	0	1	12	0	0	0	0
4/25/2024	7:15 PM	0	120	42	0	1	2	0	2	18	0	0	0	0
4/25/2024	7:30 PM	2	117	36	0	6	0	0	6	17	0	1	0	0
4/25/2024	7:45 PM	0	96	30	0	3	0	0	0	14	0	0	0	0
4/25/2024	8:00 PM	0	90	19	0	4	0	0	0	26	0	0	0	0
4/25/2024	8:15 PM	0	108	15	1	2	2	0	0	11	0	2	0	0
4/25/2024	8:30 PM	0	104	5	0	1	0	0	0	12	0	0	0	0
4/25/2024	8:45 PM	0	82	4	0	1	0	0	0	11	0	0	0	0
4/25/2024	9:00 PM	0	106	5	0	2	0	0	0	9	0	0	0	0
4/25/2024	9:15 PM	0	114	3	0	0	0	0	0	4	0	0	0	0
4/25/2024	9:30 PM	0	104	2	0	0	0	0	0	9	0	0	0	0
4/25/2024	9:45 PM	0	54	3	0	0	0	0	0	8	0	0	0	0
4/25/2024	10:00 PM	0	58	1	0	1	0	0	0	9	0	0	0	0
4/25/2024	10:15 PM	0	76	1	0	1	0	0	0	7	0	0	0	0
4/25/2024	10:30 PM	0	66	2	1	0	0	0	0	9	0	1	0	0
4/25/2024	10:45 PM	0	58	1	0	2	0	0	0	3	0	1	0	0
4/25/2024	11:00 PM	0	57	7	0	0	0	0	0	10	0	0	0	0
4/25/2024	11:15 PM	0	40	0	0	0	1	0	0	4	0	4	0	0
4/25/2024	11:30 PM	0	51	1	0	0	0	0	0	2	0	0	0	0
4/25/2024	11:45 PM	0	49	0	0	0	0	0	0	3	0	1	0	0

4/26/2024	12:00 AM	0	34	8	0	3	0	0	0	8	0	0	0	0
4/26/2024	12:15 AM	0	25	4	0	1	0	0	0	4	0	2	0	0
4/26/2024	12:30 AM	0	26	8	0	3	0	0	0	2	0	1	0	0
4/26/2024	12:45 AM	0	18	5	0	1	0	0	0	10	0	0	0	0
4/26/2024	1:00 AM	0	19	6	0	5	0	0	0	7	0	2	0	0
4/26/2024	1:15 AM	0	22	9	0	1	0	0	0	9	0	1	0	0
4/26/2024	1:30 AM	0	24	8	0	1	0	0	0	7	0	1	0	0
4/26/2024	1:45 AM	0	18	7	0	0	0	0	0	8	0	1	0	0
4/26/2024	2:00 AM	0	16	6	0	0	0	0	0	6	0	1	0	0
4/26/2024	2:15 AM	0	13	3	0	2	0	0	0	9	0	0	0	0
4/26/2024	2:30 AM	0	15	7	0	0	0	0	0	8	0	1	0	0
4/26/2024	2:45 AM	0	16	5	0	3	0	0	0	5	0	2	0	0
4/26/2024	3:00 AM	0	17	6	0	2	0	0	0	13	0	2	0	0
4/26/2024	3:15 AM	0	16	5	0	0	0	0	0	8	0	3	0	0
4/26/2024	3:30 AM	0	20	7	0	1	0	0	0	11	0	2	0	0
4/26/2024	3:45 AM	0	23	12	0	0	0	0	0	10	0	1	0	0
4/26/2024	4:00 AM	0	22	13	0	2	2	0	0	15	0	1	0	0
4/26/2024	4:15 AM	0	21	11	0	1	0	0	0	12	0	1	0	0
4/26/2024	4:30 AM	0	30	17	0	2	0	0	0	13	0	1	0	0
4/26/2024	4:45 AM	0	28	14	0	3	0	0	0	15	0	1	0	0
4/26/2024	5:00 AM	0	30	13	0	1	1	0	0	9	0	0	0	0
4/26/2024	5:15 AM	0	31	15	2	0	0	0	0	11	0	1	0	0
4/26/2024	5:30 AM	0	55	30	0	3	0	0	0	12	0	2	0	0
4/26/2024	5:45 AM	0	65	33	0	1	1	0	0	14	0	0	0	0
4/26/2024	6:00 AM	0	59	28	0	3	1	0	0	15	0	0	0	0
4/26/2024	6:15 AM	0	92	37	0	2	1	0	0	15	0	1	0	0
4/26/2024	6:30 AM	0	94	39	0	5	1	0	0	13	0	1	0	0
4/26/2024	6:45 AM	0	95	44	0	2	1	0	0	16	1	1	0	0
4/26/2024	7:00 AM	1	115	49	0	9	1	0	0	9	0	0	0	0
4/26/2024	7:15 AM	0	142	63	0	9	3	0	1	12	1	0	0	0
4/26/2024	7:30 AM	1	140	54	0	9	4	1	0	15	0	0	0	0
4/26/2024	7:45 AM	0	143	63	0	10	4	0	2	16	1	0	0	0
4/26/2024	8:00 AM	0	101	50	0	16	1	0	1	20	0	0	0	0
4/26/2024	8:15 AM	0	104	48	1	6	0	0	3	19	0	1	0	0
4/26/2024	8:30 AM	0	110	47	2	8	0	0	1	23	0	0	0	0
4/26/2024	8:45 AM	0	104	37	0	8	3	0	3	19	0	0	0	0
4/26/2024	9:00 AM	0	103	48	1	6	4	0	1	12	0	0	0	0
4/26/2024	9:15 AM	0	124	48	0	5	2	0	0	21	0	0	0	0
4/26/2024	9:30 AM	0	110	50	0	7	0	0	1	18	2	0	0	0
4/26/2024	9:45 AM	1	111	41	0	4	1	0	3	25	0	0	1	0
4/26/2024	10:00 AM	1	101	49	0	5	1	0	2	17	0	1	0	0
4/26/2024	10:15 AM	1	116	39	0	5	2	0	2	19	1	0	0	0
4/26/2024	10:30 AM	0	122	34	0	6	2	0	3	20	0	0	0	0
4/26/2024	10:45 AM	1	117	40	1	8	2	1	5	26	0	0	0	0
4/26/2024	11:00 AM	0	136	51	0	5	2	2	2	29	1	0	0	0
4/26/2024	11:15 AM	0	141	48	0	8	2	0	5	28	1	0	0	0
4/26/2024	11:30 AM	1	137	53	1	9	2	0	1	28	0	0	0	0
4/26/2024	11:45 AM	0	133	59	0	8	1	0	6	27	0	0	0	0
4/26/2024	12:00 PM	0	134	55	0	9	3	0	0	32	0	0	0	0
4/26/2024	12:15 PM	1	139	56	1	6	3	0	2	37	0	0	0	0
4/26/2024	12:30 PM	0	156	55	1	7	3	0	1	21	0	0	0	0
4/26/2024	12:45 PM	4	148	46	0	8	2	0	3	27	0	0	0	0
4/26/2024	1:00 PM	1	164	63	3	8	0	0	3	18	0	0	0	0
4/26/2024	1:15 PM	0	147	53	1	2	1	1	4	28	0	0	0	0
4/26/2024	1:30 PM	1	161	40	0	12	0	0	3	34	0	0	0	0
4/26/2024	1:45 PM	1	162	54	1	6	3	0	2	28	0	0	0	0
4/26/2024	2:00 PM	1	172	57	1	7	1	0	1	33	0	0	0	0
4/26/2024	2:15 PM	0	154	65	0	5	3	0	8	22	1	0	0	0
4/26/2024	2:30 PM	0	158	50	0	12	2	0	2	36	0	0	0	0
4/26/2024	2:45 PM	1	173	56	0	6	4	0	3	43	0	0	0	0
4/26/2024	3:00 PM	0	185	67	0	6	4	0	2	36	0	0	0	0
4/26/2024	3:15 PM	0	209	75	0	5	3	0	4	30	0	0	0	0
4/26/2024	3:30 PM	0	177	58	1	9	0	0	4	31	0	1	0	0
4/26/2024	3:45 PM	0	212	55	2	4	1	0	6	36	2	0	0	0
4/26/2024	4:00 PM	0	210	61	1	11	2	0	9	25	0	0	0	0
4/26/2024	4:15 PM	0	233	67	0	3	3	0	3	31	0	0	0	0
4/26/2024	4:30 PM	0	201	64	0	10	1	0	4	29	0	0	0	0
4/26/2024	4:45 PM	0	220	54	0	1	2	0	7	22	0	0	0	0
4/26/2024	5:00 PM	0	217	63	0	9	2	0	0	25	1	1	0	0
4/26/2024	5:15 PM	0	267	54	0	8	3	0	6	20	0	0	0	0
4/26/2024	5:30 PM	0	209	57	0	2	0	0	2	25	0	0	0	0
4/26/2024	5:45 PM	1	177	47	0	3	0	0	6	33	0	0	0	0
4/26/2024	6:00 PM	1	171	48	1	4	1	0	1	30	0	0	0	0
4/26/2024	6:15 PM	0	189	47	1	8	2	0	6	20	1	0	0	0
4/26/2024	6:30 PM	0	147	50	0	3	0	0	1	15	1	0	0	0
4/26/2024	6:45 PM	0	166	39	0	1	2	0	1	13	0	0	0	0
4/26/2024	7:00 PM	0	129	49	2	2	1	0	3	15	0	0	0	0
4/26/2024	7:15 PM	1	138	19	0	3	1	0	4	16	1	0	0	0
4/26/2024	7:30 PM	0	146	33	0	3	0	0	2	13	0	0	0	0
4/26/2024	7:45 PM	0	134	35	1	1	0	0	3	12	0	0	0	0
4/26/2024	8:00 PM	1	124	25	1	3	0	0	0	19	0	0	0	0
4/26/2024	8:15 PM	0	135	28	0	2	0	0	0	16	0	0	0	0
4/26/2024	8:30 PM	0	118	22	0	1	0	0	0	14	0	2	0	0
4/26/2024	8:45 PM	0	127	24	0	0	0	0	0	7	0	1	0	0
4/26/2024	9:00 PM	0	105	21	0	5	0	0	0	8	0	1	0	0
4/26/2024	9:15 PM	0	117	27	0	2	0	0	0	21	0	2	0	0
4/26/2024	9:30 PM	0	104	23	0	5	0	0	0	4	0	1	0	0
4/26/2024	9:45 PM	0	85	18	1	0	0	0	0	6	0	3	0	0
4/26/2024	10:00 PM	0	107	23	0	2	0	0	0	11	0	0	0	0
4/26/2024	10:15 PM	0	82	22	0	2	0	0	0	6	0	2	0	0
4/26/2024	10:30 PM	0	101	23	0	1	0	0	0	11	0	2	0	0
4/26/2024	10:45 PM	0	89	25	0	1	0	0	0	10	0	2	0	0
4/26/2024	11:00 PM	0	80	19	0	1	0	0	0	7	0	2	0	0
4/26/2024	11:15 PM	0	64	15	0	0	0	0	0	3	0	1	0	0
4/26/2024	11:30 PM	0	45	14	0	0	0	0	0	6	0	2	0	0
4/26/2024	11:45 PM	0	46	16	0	2	0	0	0	7	0	1	0	0

4/27/2024	12:00 AM	0	50	6	0	1	0	0	0	8	0	0	0	0
4/27/2024	12:15 AM	0	41	5	0	1	0	0	0	7	0	1	0	0
4/27/2024	12:30 AM	0	29	6	0	1	0	0	0	7	0	0	0	0
4/27/2024	12:45 AM	0	30	4	0	1	0	0	0	6	0	0	0	0
4/27/2024	1:00 AM	0	20	5	0	2	0	0	0	8	0	0	0	0
4/27/2024	1:15 AM	0	21	6	0	1	0	0	0	5	0	0	0	0
4/27/2024	1:30 AM	0	18	4	0	2	0	0	0	3	0	0	0	0
4/27/2024	1:45 AM	0	11	3	0	1	0	0	0	3	0	0	0	0
4/27/2024	2:00 AM	0	10	2	0	0	0	0	0	1	0	0	0	0
4/27/2024	2:15 AM	0	20	6	0	2	0	0	0	2	0	0	0	0
4/27/2024	2:30 AM	0	15	3	0	0	0	0	0	3	0	0	0	0
4/27/2024	2:45 AM	0	11	5	0	0	0	0	0	2	0	1	0	0
4/27/2024	3:00 AM	0	10	6	0	1	0	0	0	5	0	2	0	0
4/27/2024	3:15 AM	0	21	9	0	0	0	0	0	2	0	1	0	0
4/27/2024	3:30 AM	0	10	4	0	1	0	0	0	1	0	0	0	0
4/27/2024	3:45 AM	0	8	2	0	1	0	0	0	3	0	0	0	0
4/27/2024	4:00 AM	0	10	5	0	1	0	0	0	6	0	0	0	0
4/27/2024	4:15 AM	0	20	8	0	0	0	0	0	4	0	2	0	0
4/27/2024	4:30 AM	0	18	3	0	0	0	0	0	3	0	0	0	0
4/27/2024	4:45 AM	0	10	6	0	0	0	0	0	3	0	1	0	0
4/27/2024	5:00 AM	0	18	5	0	0	0	0	0	8	0	2	0	0
4/27/2024	5:15 AM	0	26	6	0	1	0	0	0	3	0	0	0	0
4/27/2024	5:30 AM	0	28	10	0	1	0	0	0	4	0	2	0	0
4/27/2024	5:45 AM	0	30	19	0	4	0	0	0	2	0	0	0	0
4/27/2024	6:00 AM	0	37	26	0	1	0	0	0	8	0	1	0	0
4/27/2024	6:15 AM	0	39	28	0	1	0	0	2	5	0	0	0	0
4/27/2024	6:30 AM	0	62	19	0	1	0	0	0	2	0	0	0	0
4/27/2024	6:45 AM	1	67	22	0	2	0	0	1	9	0	1	0	0
4/27/2024	7:00 AM	0	58	13	0	1	0	0	1	5	0	1	0	0
4/27/2024	7:15 AM	0	90	30	0	0	1	0	0	3	0	0	0	0
4/27/2024	7:30 AM	0	88	36	1	3	1	0	0	10	0	0	0	0
4/27/2024	7:45 AM	0	101	27	0	1	2	0	1	4	0	0	0	0
4/27/2024	8:00 AM	0	97	26	0	1	1	0	0	9	0	0	0	0
4/27/2024	8:15 AM	0	94	48	0	6	2	0	1	5	0	0	0	0
4/27/2024	8:30 AM	0	106	33	0	2	0	0	2	16	0	0	0	0
4/27/2024	8:45 AM	0	116	38	0	4	0	0	1	10	0	0	0	0
4/27/2024	9:00 AM	1	127	35	0	1	0	0	1	10	0	0	0	0
4/27/2024	9:15 AM	0	121	37	0	2	0	0	2	11	0	0	0	0
4/27/2024	9:30 AM	0	149	34	2	3	0	0	1	24	0	0	0	0
4/27/2024	9:45 AM	0	147	39	1	2	2	0	0	11	0	0	0	0
4/27/2024	10:00 AM	0	129	34	0	2	0	0	0	18	0	0	0	0
4/27/2024	10:15 AM	1	137	35	0	1	2	0	0	5	1	0	0	0
4/27/2024	10:30 AM	1	144	35	1	2	1	0	0	14	0	0	0	0
4/27/2024	10:45 AM	0	153	46	1	0	1	0	1	3	0	0	0	0
4/27/2024	11:00 AM	0	165	39	1	1	0	0	2	17	0	0	0	0
4/27/2024	11:15 AM	0	153	48	0	1	0	0	1	11	0	0	0	0
4/27/2024	11:30 AM	1	162	51	0	2	0	0	1	7	0	0	0	0
4/27/2024	11:45 AM	0	137	50	1	2	0	0	1	11	0	0	0	0
4/27/2024	12:00 PM	0	151	41	1	3	3	0	0	14	0	0	0	0
4/27/2024	12:15 PM	1	176	45	0	1	1	0	0	14	0	0	0	0
4/27/2024	12:30 PM	0	177	47	0	2	1	0	3	11	0	0	0	0
4/27/2024	12:45 PM	0	166	49	0	1	0	0	2	9	0	0	0	0
4/27/2024	1:00 PM	0	165	44	1	2	0	0	1	8	0	0	0	0
4/27/2024	1:15 PM	0	184	51	0	1	1	0	0	12	0	0	0	0
4/27/2024	1:30 PM	0	186	38	0	2	0	0	0	7	0	0	0	0
4/27/2024	1:45 PM	0	162	50	0	3	0	0	0	12	0	0	0	0
4/27/2024	2:00 PM	1	169	59	0	1	1	0	3	14	0	0	0	0
4/27/2024	2:15 PM	0	168	56	4	3	0	0	2	6	0	0	0	0
4/27/2024	2:30 PM	0	151	43	0	3	0	0	2	13	0	0	0	0
4/27/2024	2:45 PM	0	181	32	0	0	0	0	1	7	0	0	0	0
4/27/2024	3:00 PM	1	176	34	0	2	0	0	1	8	0	0	0	0
4/27/2024	3:15 PM	0	178	36	0	5	0	0	1	8	0	0	0	0
4/27/2024	3:30 PM	9	188	34	0	2	1	0	1	9	0	0	0	0
4/27/2024	3:45 PM	0	184	31	1	2	1	1	1	8	1	0	0	0
4/27/2024	4:00 PM	1	170	38	0	4	0	0	1	9	0	0	0	0
4/27/2024	4:15 PM	1	158	36	0	1	1	0	1	9	1	0	0	0
4/27/2024	4:30 PM	1	178	41	0	0	1	0	0	5	0	0	0	0
4/27/2024	4:45 PM	2	172	37	0	2	0	0	2	9	0	0	0	0
4/27/2024	5:00 PM	4	159	35	0	0	1	0	0	9	0	0	0	0
4/27/2024	5:15 PM	1	147	33	1	3	1	0	0	6	0	0	0	0
4/27/2024	5:30 PM	0	171	34	0	2	0	0	1	4	0	0	0	0
4/27/2024	5:45 PM	0	135	42	1	0	0	0	0	6	0	0	0	0
4/27/2024	6:00 PM	0	170	38	0	1	0	0	1	3	0	0	0	0
4/27/2024	6:15 PM	1	157	37	0	4	0	0	2	3	0	0	0	0
4/27/2024	6:30 PM	1	162	36	1	1	0	0	1	7	0	0	0	0
4/27/2024	6:45 PM	3	120	33	1	2	0	0	0	4	0	0	0	0
4/27/2024	7:00 PM	0	127	36	3	0	0	0	0	5	0	0	0	0
4/27/2024	7:15 PM	1	113	34	0	4	1	0	1	5	0	0	0	0
4/27/2024	7:30 PM	0	130	27	0	1	0	0	0	3	0	0	0	0
4/27/2024	7:45 PM	0	131	35	1	0	1	0	0	7	0	0	0	0
4/27/2024	8:00 PM	0	129	30	0	0	0	0	0	9	0	0	0	0
4/27/2024	8:15 PM	0	115	19	0	0	0	0	1	4	0	0	0	0
4/27/2024	8:30 PM	0	125	15	0	0	1	0	0	3	0	0	0	0
4/27/2024	8:45 PM	0	101	18	0	0	0	0	0	1	0	0	0	0
4/27/2024	9:00 PM	0	110	15	0	1	0	0	0	4	0	0	0	0
4/27/2024	9:15 PM	0	111	17	0	0	0	0	0	7	0	0	0	0
4/27/2024	9:30 PM	0	113	19	0	1	0	0	0	5	0	0	0	0
4/27/2024	9:45 PM	0	120	17	0	0	1	0	0	1	0	0	0	0
4/27/2024	10:00 PM	0	125	20	0	0	0	0	0	3	0	0	0	0
4/27/2024	10:15 PM	0	101	11	0	0	0	0	0	5	0	0	0	0
4/27/2024	10:30 PM	0	89	10	0	0	0	0	0	6	0	0	0	0
4/27/2024	10:45 PM	0	81	13	0	0	0	0	0	2	0	0	0	0
4/27/2024	11:00 PM	0	75	8	0	0	1	0	0	3	0	0	0	0
4/27/2024	11:15 PM	0	59	7	0	0	0	0	0	3	0	0	0	0
4/27/2024	11:30 PM	0	61	9	0	0	0	0	0	1	0	0	0	0
4/27/2024	11:45 PM	0	55	9	0	0	0	0	0	3	0	0	0	0

EB
File Name:
Start Date: 4/21/2024
Start Time: 0
Site Code: 74 Lane 2 WB
Station ID: 1
Location 1: I-20, west of US-378 Sunset Blvd S/Bound Off-Ramp
Location 2:

Date	Time	1	2	3	4	5	6	7	8	9	10	11	12	13
4/21/2024	12:00 AM	0	0	0	0	0	0	0	0	0	0	0	0	0
4/21/2024	12:15 AM	0	0	0	0	0	0	0	0	0	0	0	0	0
4/21/2024	12:30 AM	0	0	0	0	0	0	0	0	0	0	0	0	0
4/21/2024	12:45 AM	0	0	0	0	0	0	0	0	0	0	0	0	0
4/21/2024	1:00 AM	0	0	0	0	0	0	0	0	0	0	0	0	0
4/21/2024	1:15 AM	0	0	0	0	0	0	0	0	0	0	0	0	0
4/21/2024	1:30 AM	0	0	0	0	0	0	0	0	0	0	0	0	0
4/21/2024	1:45 AM	0	0	0	0	0	0	0	0	0	0	0	0	0
4/21/2024	2:00 AM	0	0	0	0	0	0	0	0	0	0	0	0	0
4/21/2024	2:15 AM	0	0	0	0	0	0	0	0	0	0	0	0	0
4/21/2024	2:30 AM	0	0	0	0	0	0	0	0	0	0	0	0	0
4/21/2024	2:45 AM	0	0	0	0	0	0	0	0	0	0	0	0	0
4/21/2024	3:00 AM	0	0	0	0	0	0	0	0	0	0	0	0	0
4/21/2024	3:15 AM	0	0	0	0	0	0	0	0	0	0	0	0	0
4/21/2024	3:30 AM	0	0	0	0	0	0	0	0	0	0	0	0	0
4/21/2024	3:45 AM	0	0	0	0	0	0	0	0	0	0	0	0	0
4/21/2024	4:00 AM	0	0	0	0	0	0	0	0	0	0	0	0	0
4/21/2024	4:15 AM	0	0	0	0	0	0	0	0	0	0	0	0	0
4/21/2024	4:30 AM	0	0	0	0	0	0	0	0	0	0	0	0	0
4/21/2024	4:45 AM	0	0	0	0	0	0	0	0	0	0	0	0	0
4/21/2024	5:00 AM	0	0	0	0	0	0	0	0	0	0	0	0	0
4/21/2024	5:15 AM	0	0	0	0	0	0	0	0	0	0	0	0	0
4/21/2024	5:30 AM	0	0	0	0	0	0	0	0	0	0	0	0	0
4/21/2024	5:45 AM	0	0	0	0	0	0	0	0	0	0	0	0	0
4/21/2024	6:00 AM	0	0	0	0	0	0	0	0	0	0	0	0	0
4/21/2024	6:15 AM	0	0	0	0	0	0	0	0	0	0	0	0	0
4/21/2024	6:30 AM	0	0	0	0	0	0	0	0	0	0	0	0	0
4/21/2024	6:45 AM	0	0	0	0	0	0	0	0	0	0	0	0	0
4/21/2024	7:00 AM	0	0	0	0	0	0	0	0	0	0	0	0	0
4/21/2024	7:15 AM	0	0	0	0	0	0	0	0	0	0	0	0	0
4/21/2024	7:30 AM	0	0	0	0	0	0	0	0	0	0	0	0	0
4/21/2024	7:45 AM	0	0	0	0	0	0	0	0	0	0	0	0	0
4/21/2024	8:00 AM	0	0	0	0	0	0	0	0	0	0	0	0	0
4/21/2024	8:15 AM	0	0	0	0	0	0	0	0	0	0	0	0	0
4/21/2024	8:30 AM	0	0	0	0	0	0	0	0	0	0	0	0	0
4/21/2024	8:45 AM	0	0	0	0	0	0	0	0	0	0	0	0	0
4/21/2024	9:00 AM	0	0	0	0	0	0	0	0	0	0	0	0	0
4/21/2024	9:15 AM	0	0	0	0	0	0	0	0	0	0	0	0	0
4/21/2024	9:30 AM	0	0	0	0	0	0	0	0	0	0	0	0	0
4/21/2024	9:45 AM	0	0	0	0	0	0	0	0	0	0	0	0	0
4/21/2024	10:00 AM	0	0	0	0	0	0	0	0	0	0	0	0	0
4/21/2024	10:15 AM	0	0	0	0	0	0	0	0	0	0	0	0	0
4/21/2024	10:30 AM	0	0	0	0	0	0	0	0	0	0	0	0	0
4/21/2024	10:45 AM	0	0	0	0	0	0	0	0	0	0	0	0	0
4/21/2024	11:00 AM	0	0	0	0	0	0	0	0	0	0	0	0	0
4/21/2024	11:15 AM	0	0	0	0	0	0	0	0	0	0	0	0	0
4/21/2024	11:30 AM	0	0	0	0	0	0	0	0	0	0	0	0	0
4/21/2024	11:45 AM	0	0	0	0	0	0	0	0	0	0	0	0	0
4/21/2024	12:00 PM	0	0	0	0	0	0	0	0	0	0	0	0	0
4/21/2024	12:15 PM	0	0	0	0	0	0	0	0	0	0	0	0	0
4/21/2024	12:30 PM	0	0	0	0	0	0	0	0	0	0	0	0	0
4/21/2024	12:45 PM	0	0	0	0	0	0	0	0	0	0	0	0	0
4/21/2024	1:00 PM	0	0	0	0	0	0	0	0	0	0	0	0	0
4/21/2024	1:15 PM	0	0	0	0	0	0	0	0	0	0	0	0	0
4/21/2024	1:30 PM	0	0	0	0	0	0	0	0	0	0	0	0	0
4/21/2024	1:45 PM	0	0	0	0	0	0	0	0	0	0	0	0	0
4/21/2024	2:00 PM	0	0	0	0	0	0	0	0	0	0	0	0	0
4/21/2024	2:15 PM	0	0	0	0	0	0	0	0	0	0	0	0	0
4/21/2024	2:30 PM	0	0	0	0	0	0	0	0	0	0	0	0	0
4/21/2024	2:45 PM	0	0	0	0	0	0	0	0	0	0	0	0	0
4/21/2024	3:00 PM	0	0	0	0	0	0	0	0	0	0	0	0	0
4/21/2024	3:15 PM	0	0	0	0	0	0	0	0	0	0	0	0	0
4/21/2024	3:30 PM	0	0	0	0	0	0	0	0	0	0	0	0	0
4/21/2024	3:45 PM	0	0	0	0	0	0	0	0	0	0	0	0	0
4/21/2024	4:00 PM	0	0	0	0	0	0	0	0	0	0	0	0	0
4/21/2024	4:15 PM	0	0	0	0	0	0	0	0	0	0	0	0	0
4/21/2024	4:30 PM	0	0	0	0	0	0	0	0	0	0	0	0	0
4/21/2024	4:45 PM	0	0	0	0	0	0	0	0	0	0	0	0	0
4/21/2024	5:00 PM	0	0	0	0	0	0	0	0	0	0	0	0	0
4/21/2024	5:15 PM	0	0	0	0	0	0	0	0	0	0	0	0	0
4/21/2024	5:30 PM	0	0	0	0	0	0	0	0	0	0	0	0	0
4/21/2024	5:45 PM	0	0	0	0	0	0	0	0	0	0	0	0	0
4/21/2024	6:00 PM	0	0	0	0	0	0	0	0	0	0	0	0	0
4/21/2024	6:15 PM	0	0	0	0	0	0	0	0	0	0	0	0	0
4/21/2024	6:30 PM	0	0	0	0	0	0	0	0	0	0	0	0	0
4/21/2024	6:45 PM	0	0	0	0	0	0	0	0	0	0	0	0	0
4/21/2024	7:00 PM	0	0	0	0	0	0	0	0	0	0	0	0	0
4/21/2024	7:15 PM	0	0	0	0	0	0	0	0	0	0	0	0	0
4/21/2024	7:30 PM	0	0	0	0	0	0	0	0	0	0	0	0	0
4/21/2024	7:45 PM	0	0	0	0	0	0	0	0	0	0	0	0	0
4/21/2024	8:00 PM	0	0	0	0	0	0	0	0	0	0	0	0	0
4/21/2024	8:15 PM	0	0	0	0	0	0	0	0	0	0	0	0	0
4/21/2024	8:30 PM	0	0	0	0	0	0	0	0	0	0	0	0	0
4/21/2024	8:45 PM	0	0	0	0	0	0	0	0	0	0	0	0	0
4/21/2024	9:00 PM	0	0	0	0	0	0	0	0	0	0	0	0	0
4/21/2024	9:15 PM	0	0	0	0	0	0	0	0	0	0	0	0	0
4/21/2024	9:30 PM	0	0	0	0	0	0	0	0	0	0	0	0	0
4/21/2024	9:45 PM	0	0	0	0	0	0	0	0	0	0	0	0	0
4/21/2024	10:00 PM	0	0	0	0	0	0	0	0	0	0	0	0	0
4/21/2024	10:15 PM	0	0	0	0	0	0	0	0	0	0	0	0	0
4/21/2024	10:30 PM	0	0	0	0	0	0	0	0	0	0	0	0	0
4/21/2024	10:45 PM	0	0	0	0	0	0	0	0	0	0	0	0	0
4/21/2024	11:00 PM	0	0	0	0	0	0	0	0	0	0	0	0	0
4/21/2024	11:15 PM	0	0	0	0	0	0	0	0	0	0	0	0	0
4/21/2024	11:30 PM	0	0	0	0	0	0	0	0	0	0	0	0	0
4/21/2024	11:45 PM	0	0	0	0	0	0	0	0	0	0	0	0	0

4/22/2024	12:00 AM	0	0	0	0	0	0	0	0	0	0	0	0	0
4/22/2024	12:15 AM	0	0	0	0	0	0	0	0	0	0	0	0	0
4/22/2024	12:30 AM	0	0	0	0	0	0	0	0	0	0	0	0	0
4/22/2024	12:45 AM	0	0	0	0	0	0	0	0	0	0	0	0	0
4/22/2024	1:00 AM	0	0	0	0	0	0	0	0	0	0	0	0	0
4/22/2024	1:15 AM	0	0	0	0	0	0	0	0	0	0	0	0	0
4/22/2024	1:30 AM	0	0	0	0	0	0	0	0	0	0	0	0	0
4/22/2024	1:45 AM	0	0	0	0	0	0	0	0	0	0	0	0	0
4/22/2024	2:00 AM	0	0	0	0	0	0	0	0	0	0	0	0	0
4/22/2024	2:15 AM	0	0	0	0	0	0	0	0	0	0	0	0	0
4/22/2024	2:30 AM	0	0	0	0	0	0	0	0	0	0	0	0	0
4/22/2024	2:45 AM	0	0	0	0	0	0	0	0	0	0	0	0	0
4/22/2024	3:00 AM	0	0	0	0	0	0	0	0	0	0	0	0	0
4/22/2024	3:15 AM	0	0	0	0	0	0	0	0	0	0	0	0	0
4/22/2024	3:30 AM	0	0	0	0	0	0	0	0	0	0	0	0	0
4/22/2024	3:45 AM	0	0	0	0	0	0	0	0	0	0	0	0	0
4/22/2024	4:00 AM	0	0	0	0	0	0	0	0	0	0	0	0	0
4/22/2024	4:15 AM	0	0	0	0	0	0	0	0	0	0	0	0	0
4/22/2024	4:30 AM	0	0	0	0	0	0	0	0	0	0	0	0	0
4/22/2024	4:45 AM	0	0	0	0	0	0	0	0	0	0	0	0	0
4/22/2024	5:00 AM	0	0	0	0	0	0	0	0	0	0	0	0	0
4/22/2024	5:15 AM	0	0	0	0	0	0	0	0	0	0	0	0	0
4/22/2024	5:30 AM	0	0	0	0	0	0	0	0	0	0	0	0	0
4/22/2024	5:45 AM	0	0	0	0	0	0	0	0	0	0	0	0	0
4/22/2024	6:00 AM	0	0	0	0	0	0	0	0	0	0	0	0	0
4/22/2024	6:15 AM	0	0	0	0	0	0	0	0	0	0	0	0	0
4/22/2024	6:30 AM	0	0	0	0	0	0	0	0	0	0	0	0	0
4/22/2024	6:45 AM	0	0	0	0	0	0	0	0	0	0	0	0	0
4/22/2024	7:00 AM	0	0	0	0	0	0	0	0	0	0	0	0	0
4/22/2024	7:15 AM	0	0	0	0	0	0	0	0	0	0	0	0	0
4/22/2024	7:30 AM	0	0	0	0	0	0	0	0	0	0	0	0	0
4/22/2024	7:45 AM	0	0	0	0	0	0	0	0	0	0	0	0	0
4/22/2024	8:00 AM	0	0	0	0	0	0	0	0	0	0	0	0	0
4/22/2024	8:15 AM	0	0	0	0	0	0	0	0	0	0	0	0	0
4/22/2024	8:30 AM	0	0	0	0	0	0	0	0	0	0	0	0	0
4/22/2024	8:45 AM	0	0	0	0	0	0	0	0	0	0	0	0	0
4/22/2024	9:00 AM	0	0	0	0	0	0	0	0	0	0	0	0	0
4/22/2024	9:15 AM	0	0	0	0	0	0	0	0	0	0	0	0	0
4/22/2024	9:30 AM	0	0	0	0	0	0	0	0	0	0	0	0	0
4/22/2024	9:45 AM	0	0	0	0	0	0	0	0	0	0	0	0	0
4/22/2024	10:00 AM	0	0	0	0	0	0	0	0	0	0	0	0	0
4/22/2024	10:15 AM	0	0	0	0	0	0	0	0	0	0	0	0	0
4/22/2024	10:30 AM	0	0	0	0	0	0	0	0	0	0	0	0	0
4/22/2024	10:45 AM	0	0	0	0	0	0	0	0	0	0	0	0	0
4/22/2024	11:00 AM	0	0	0	0	0	0	0	0	0	0	0	0	0
4/22/2024	11:15 AM	0	0	0	0	0	0	0	0	0	0	0	0	0
4/22/2024	11:30 AM	0	0	0	0	0	0	0	0	0	0	0	0	0
4/22/2024	11:45 AM	0	0	0	0	0	0	0	0	0	0	0	0	0
4/22/2024	12:00 PM	0	0	0	0	0	0	0	0	0	0	0	0	0
4/22/2024	12:15 PM	0	0	0	0	0	0	0	0	0	0	0	0	0
4/22/2024	12:30 PM	0	0	0	0	0	0	0	0	0	0	0	0	0
4/22/2024	12:45 PM	0	0	0	0	0	0	0	0	0	0	0	0	0
4/22/2024	1:00 PM	0	0	0	0	0	0	0	0	0	0	0	0	0
4/22/2024	1:15 PM	0	0	0	0	0	0	0	0	0	0	0	0	0
4/22/2024	1:30 PM	0	0	0	0	0	0	0	0	0	0	0	0	0
4/22/2024	1:45 PM	0	0	0	0	0	0	0	0	0	0	0	0	0
4/22/2024	2:00 PM	0	0	0	0	0	0	0	0	0	0	0	0	0
4/22/2024	2:15 PM	0	0	0	0	0	0	0	0	0	0	0	0	0
4/22/2024	2:30 PM	0	0	0	0	0	0	0	0	0	0	0	0	0
4/22/2024	2:45 PM	0	0	0	0	0	0	0	0	0	0	0	0	0
4/22/2024	3:00 PM	0	0	0	0	0	0	0	0	0	0	0	0	0
4/22/2024	3:15 PM	0	0	0	0	0	0	0	0	0	0	0	0	0
4/22/2024	3:30 PM	0	0	0	0	0	0	0	0	0	0	0	0	0
4/22/2024	3:45 PM	0	0	0	0	0	0	0	0	0	0	0	0	0
4/22/2024	4:00 PM	0	0	0	0	0	0	0	0	0	0	0	0	0
4/22/2024	4:15 PM	0	0	0	0	0	0	0	0	0	0	0	0	0
4/22/2024	4:30 PM	0	0	0	0	0	0	0	0	0	0	0	0	0
4/22/2024	4:45 PM	0	0	0	0	0	0	0	0	0	0	0	0	0
4/22/2024	5:00 PM	0	0	0	0	0	0	0	0	0	0	0	0	0
4/22/2024	5:15 PM	0	0	0	0	0	0	0	0	0	0	0	0	0
4/22/2024	5:30 PM	0	0	0	0	0	0	0	0	0	0	0	0	0
4/22/2024	5:45 PM	0	0	0	0	0	0	0	0	0	0	0	0	0
4/22/2024	6:00 PM	0	0	0	0	0	0	0	0	0	0	0	0	0
4/22/2024	6:15 PM	0	0	0	0	0	0	0	0	0	0	0	0	0
4/22/2024	6:30 PM	0	0	0	0	0	0	0	0	0	0	0	0	0
4/22/2024	6:45 PM	0	0	0	0	0	0	0	0	0	0	0	0	0
4/22/2024	7:00 PM	0	0	0	0	0	0	0	0	0	0	0	0	0
4/22/2024	7:15 PM	0	0	0	0	0	0	0	0	0	0	0	0	0
4/22/2024	7:30 PM	0	0	0	0	0	0	0	0	0	0	0	0	0
4/22/2024	7:45 PM	0	0	0	0	0	0	0	0	0	0	0	0	0
4/22/2024	8:00 PM	0	0	0	0	0	0	0	0	0	0	0	0	0
4/22/2024	8:15 PM	0	0	0	0	0	0	0	0	0	0	0	0	0
4/22/2024	8:30 PM	0	0	0	0	0	0	0	0	0	0	0	0	0
4/22/2024	8:45 PM	0	0	0	0	0	0	0	0	0	0	0	0	0
4/22/2024	9:00 PM	0	0	0	0	0	0	0	0	0	0	0	0	0
4/22/2024	9:15 PM	0	0	0	0	0	0	0	0	0	0	0	0	0
4/22/2024	9:30 PM	0	0	0	0	0	0	0	0	0	0	0	0	0
4/22/2024	9:45 PM	0	0	0	0	0	0	0	0	0	0	0	0	0
4/22/2024	10:00 PM	0	0	0	0	0	0	0	0	0	0	0	0	0
4/22/2024	10:15 PM	0	0	0	0	0	0	0	0	0	0	0	0	0
4/22/2024	10:30 PM	0	0	0	0	0	0	0	0	0	0	0	0	0
4/22/2024	10:45 PM	0	0	0	0	0	0	0	0	0	0	0	0	0
4/22/2024	11:00 PM	0	0	0	0	0	0	0	0	0	0	0	0	0
4/22/2024	11:15 PM	0	0	0	0	0	0	0	0	0	0	0	0	0
4/22/2024	11:30 PM	0	0	0	0	0	0	0	0	0	0	0	0	0
4/22/2024	11:45 PM	0	0	0	0	0	0	0	0	0	0	0	0	0

4/23/2024	12:00 AM	0	0	0	0	0	0	0	0	0	0	0	0	0
4/23/2024	12:15 AM	0	0	0	0	0	0	0	0	0	0	0	0	0
4/23/2024	12:30 AM	0	0	0	0	0	0	0	0	0	0	0	0	0
4/23/2024	12:45 AM	0	0	0	0	0	0	0	0	0	0	0	0	0
4/23/2024	1:00 AM	0	0	0	0	0	0	0	0	0	0	0	0	0
4/23/2024	1:15 AM	0	0	0	0	0	0	0	0	0	0	0	0	0
4/23/2024	1:30 AM	0	0	0	0	0	0	0	0	0	0	0	0	0
4/23/2024	1:45 AM	0	0	0	0	0	0	0	0	0	0	0	0	0
4/23/2024	2:00 AM	0	0	0	0	0	0	0	0	0	0	0	0	0
4/23/2024	2:15 AM	0	0	0	0	0	0	0	0	0	0	0	0	0
4/23/2024	2:30 AM	0	0	0	0	0	0	0	0	0	0	0	0	0
4/23/2024	2:45 AM	0	0	0	0	0	0	0	0	0	0	0	0	0
4/23/2024	3:00 AM	0	0	0	0	0	0	0	0	0	0	0	0	0
4/23/2024	3:15 AM	0	0	0	0	0	0	0	0	0	0	0	0	0
4/23/2024	3:30 AM	0	0	0	0	0	0	0	0	0	0	0	0	0
4/23/2024	3:45 AM	0	0	0	0	0	0	0	0	0	0	0	0	0
4/23/2024	4:00 AM	0	0	0	0	0	0	0	0	0	0	0	0	0
4/23/2024	4:15 AM	0	0	0	0	0	0	0	0	0	0	0	0	0
4/23/2024	4:30 AM	0	0	0	0	0	0	0	0	0	0	0	0	0
4/23/2024	4:45 AM	0	0	0	0	0	0	0	0	0	0	0	0	0
4/23/2024	5:00 AM	0	0	0	0	0	0	0	0	0	0	0	0	0
4/23/2024	5:15 AM	0	0	0	0	0	0	0	0	0	0	0	0	0
4/23/2024	5:30 AM	0	0	0	0	0	0	0	0	0	0	0	0	0
4/23/2024	5:45 AM	0	0	0	0	0	0	0	0	0	0	0	0	0
4/23/2024	6:00 AM	0	0	0	0	0	0	0	0	0	0	0	0	0
4/23/2024	6:15 AM	0	0	0	0	0	0	0	0	0	0	0	0	0
4/23/2024	6:30 AM	0	0	0	0	0	0	0	0	0	0	0	0	0
4/23/2024	6:45 AM	0	0	0	0	0	0	0	0	0	0	0	0	0
4/23/2024	7:00 AM	0	0	0	0	0	0	0	0	0	0	0	0	0
4/23/2024	7:15 AM	0	0	0	0	0	0	0	0	0	0	0	0	0
4/23/2024	7:30 AM	0	0	0	0	0	0	0	0	0	0	0	0	0
4/23/2024	7:45 AM	0	0	0	0	0	0	0	0	0	0	0	0	0
4/23/2024	8:00 AM	0	0	0	0	0	0	0	0	0	0	0	0	0
4/23/2024	8:15 AM	0	0	0	0	0	0	0	0	0	0	0	0	0
4/23/2024	8:30 AM	0	0	0	0	0	0	0	0	0	0	0	0	0
4/23/2024	8:45 AM	0	0	0	0	0	0	0	0	0	0	0	0	0
4/23/2024	9:00 AM	0	0	0	0	0	0	0	0	0	0	0	0	0
4/23/2024	9:15 AM	0	0	0	0	0	0	0	0	0	0	0	0	0
4/23/2024	9:30 AM	0	0	0	0	0	0	0	0	0	0	0	0	0
4/23/2024	9:45 AM	0	0	0	0	0	0	0	0	0	0	0	0	0
4/23/2024	10:00 AM	0	0	0	0	0	0	0	0	0	0	0	0	0
4/23/2024	10:15 AM	0	0	0	0	0	0	0	0	0	0	0	0	0
4/23/2024	10:30 AM	0	0	0	0	0	0	0	0	0	0	0	0	0
4/23/2024	10:45 AM	0	0	0	0	0	0	0	0	0	0	0	0	0
4/23/2024	11:00 AM	0	0	0	0	0	0	0	0	0	0	0	0	0
4/23/2024	11:15 AM	0	0	0	0	0	0	0	0	0	0	0	0	0
4/23/2024	11:30 AM	0	0	0	0	0	0	0	0	0	0	0	0	0
4/23/2024	11:45 AM	0	0	0	0	0	0	0	0	0	0	0	0	0
4/23/2024	12:00 PM	0	0	0	0	0	0	0	0	0	0	0	0	0
4/23/2024	12:15 PM	0	0	0	0	0	0	0	0	0	0	0	0	0
4/23/2024	12:30 PM	0	0	0	0	0	0	0	0	0	0	0	0	0
4/23/2024	12:45 PM	0	0	0	0	0	0	0	0	0	0	0	0	0
4/23/2024	1:00 PM	0	0	0	0	0	0	0	0	0	0	0	0	0
4/23/2024	1:15 PM	0	0	0	0	0	0	0	0	0	0	0	0	0
4/23/2024	1:30 PM	0	0	0	0	0	0	0	0	0	0	0	0	0
4/23/2024	1:45 PM	0	0	0	0	0	0	0	0	0	0	0	0	0
4/23/2024	2:00 PM	0	0	0	0	0	0	0	0	0	0	0	0	0
4/23/2024	2:15 PM	0	0	0	0	0	0	0	0	0	0	0	0	0
4/23/2024	2:30 PM	0	0	0	0	0	0	0	0	0	0	0	0	0
4/23/2024	2:45 PM	0	0	0	0	0	0	0	0	0	0	0	0	0
4/23/2024	3:00 PM	0	0	0	0	0	0	0	0	0	0	0	0	0
4/23/2024	3:15 PM	0	0	0	0	0	0	0	0	0	0	0	0	0
4/23/2024	3:30 PM	0	0	0	0	0	0	0	0	0	0	0	0	0
4/23/2024	3:45 PM	0	0	0	0	0	0	0	0	0	0	0	0	0
4/23/2024	4:00 PM	0	0	0	0	0	0	0	0	0	0	0	0	0
4/23/2024	4:15 PM	0	0	0	0	0	0	0	0	0	0	0	0	0
4/23/2024	4:30 PM	0	0	0	0	0	0	0	0	0	0	0	0	0
4/23/2024	4:45 PM	0	0	0	0	0	0	0	0	0	0	0	0	0
4/23/2024	5:00 PM	0	0	0	0	0	0	0	0	0	0	0	0	0
4/23/2024	5:15 PM	0	0	0	0	0	0	0	0	0	0	0	0	0
4/23/2024	5:30 PM	0	0	0	0	0	0	0	0	0	0	0	0	0
4/23/2024	5:45 PM	0	0	0	0	0	0	0	0	0	0	0	0	0
4/23/2024	6:00 PM	0	0	0	0	0	0	0	0	0	0	0	0	0
4/23/2024	6:15 PM	0	0	0	0	0	0	0	0	0	0	0	0	0
4/23/2024	6:30 PM	0	0	0	0	0	0	0	0	0	0	0	0	0
4/23/2024	6:45 PM	0	0	0	0	0	0	0	0	0	0	0	0	0
4/23/2024	7:00 PM	0	0	0	0	0	0	0	0	0	0	0	0	0
4/23/2024	7:15 PM	0	0	0	0	0	0	0	0	0	0	0	0	0
4/23/2024	7:30 PM	0	0	0	0	0	0	0	0	0	0	0	0	0
4/23/2024	7:45 PM	0	0	0	0	0	0	0	0	0	0	0	0	0
4/23/2024	8:00 PM	0	0	0	0	0	0	0	0	0	0	0	0	0
4/23/2024	8:15 PM	0	0	0	0	0	0	0	0	0	0	0	0	0
4/23/2024	8:30 PM	0	0	0	0	0	0	0	0	0	0	0	0	0
4/23/2024	8:45 PM	0	0	0	0	0	0	0	0	0	0	0	0	0
4/23/2024	9:00 PM	0	0	0	0	0	0	0	0	0	0	0	0	0
4/23/2024	9:15 PM	0	0	0	0	0	0	0	0	0	0	0	0	0
4/23/2024	9:30 PM	0	0	0	0	0	0	0	0	0	0	0	0	0
4/23/2024	9:45 PM	0	0	0	0	0	0	0	0	0	0	0	0	0
4/23/2024	10:00 PM	0	0	0	0	0	0	0	0	0	0	0	0	0
4/23/2024	10:15 PM	0	0	0	0	0	0	0	0	0	0	0	0	0
4/23/2024	10:30 PM	0	0	0	0	0	0	0	0	0	0	0	0	0
4/23/2024	10:45 PM	0	0	0	0	0	0	0	0	0	0	0	0	0
4/23/2024	11:00 PM	0	0	0	0	0	0	0	0	0	0	0	0	0
4/23/2024	11:15 PM	0	0	0	0	0	0	0	0	0	0	0	0	0
4/23/2024	11:30 PM	0	0	0	0	0	0	0	0	0	0	0	0	0
4/23/2024	11:45 PM	0	0	0	0	0	0	0	0	0	0	0	0	0

4/24/2024	12:00 AM	0	0	0	0	0	0	0	0	0	0	0	0	0
4/24/2024	12:15 AM	0	0	0	0	0	0	0	0	0	0	0	0	0
4/24/2024	12:30 AM	0	0	0	0	0	0	0	0	0	0	0	0	0
4/24/2024	12:45 AM	0	0	0	0	0	0	0	0	0	0	0	0	0
4/24/2024	1:00 AM	0	0	0	0	0	0	0	0	0	0	0	0	0
4/24/2024	1:15 AM	0	0	0	0	0	0	0	0	0	0	0	0	0
4/24/2024	1:30 AM	0	0	0	0	0	0	0	0	0	0	0	0	0
4/24/2024	1:45 AM	0	0	0	0	0	0	0	0	0	0	0	0	0
4/24/2024	2:00 AM	0	0	0	0	0	0	0	0	0	0	0	0	0
4/24/2024	2:15 AM	0	0	0	0	0	0	0	0	0	0	0	0	0
4/24/2024	2:30 AM	0	0	0	0	0	0	0	0	0	0	0	0	0
4/24/2024	2:45 AM	0	0	0	0	0	0	0	0	0	0	0	0	0
4/24/2024	3:00 AM	0	0	0	0	0	0	0	0	0	0	0	0	0
4/24/2024	3:15 AM	0	0	0	0	0	0	0	0	0	0	0	0	0
4/24/2024	3:30 AM	0	0	0	0	0	0	0	0	0	0	0	0	0
4/24/2024	3:45 AM	0	0	0	0	0	0	0	0	0	0	0	0	0
4/24/2024	4:00 AM	0	0	0	0	0	0	0	0	0	0	0	0	0
4/24/2024	4:15 AM	0	0	0	0	0	0	0	0	0	0	0	0	0
4/24/2024	4:30 AM	0	0	0	0	0	0	0	0	0	0	0	0	0
4/24/2024	4:45 AM	0	0	0	0	0	0	0	0	0	0	0	0	0
4/24/2024	5:00 AM	0	0	0	0	0	0	0	0	0	0	0	0	0
4/24/2024	5:15 AM	0	0	0	0	0	0	0	0	0	0	0	0	0
4/24/2024	5:30 AM	0	0	0	0	0	0	0	0	0	0	0	0	0
4/24/2024	5:45 AM	0	0	0	0	0	0	0	0	0	0	0	0	0
4/24/2024	6:00 AM	0	0	0	0	0	0	0	0	0	0	0	0	0
4/24/2024	6:15 AM	0	0	0	0	0	0	0	0	0	0	0	0	0
4/24/2024	6:30 AM	0	0	0	0	0	0	0	0	0	0	0	0	0
4/24/2024	6:45 AM	0	0	0	0	0	0	0	0	0	0	0	0	0
4/24/2024	7:00 AM	0	0	0	0	0	0	0	0	0	0	0	0	0
4/24/2024	7:15 AM	0	0	0	0	0	0	0	0	0	0	0	0	0
4/24/2024	7:30 AM	0	0	0	0	0	0	0	0	0	0	0	0	0
4/24/2024	7:45 AM	0	0	0	0	0	0	0	0	0	0	0	0	0
4/24/2024	8:00 AM	0	0	0	0	0	0	0	0	0	0	0	0	0
4/24/2024	8:15 AM	0	0	0	0	0	0	0	0	0	0	0	0	0
4/24/2024	8:30 AM	0	0	0	0	0	0	0	0	0	0	0	0	0
4/24/2024	8:45 AM	0	0	0	0	0	0	0	0	0	0	0	0	0
4/24/2024	9:00 AM	0	0	0	0	0	0	0	0	0	0	0	0	0
4/24/2024	9:15 AM	0	0	0	0	0	0	0	0	0	0	0	0	0
4/24/2024	9:30 AM	0	0	0	0	0	0	0	0	0	0	0	0	0
4/24/2024	9:45 AM	0	0	0	0	0	0	0	0	0	0	0	0	0
4/24/2024	10:00 AM	0	0	0	0	0	0	0	0	0	0	0	0	0
4/24/2024	10:15 AM	0	0	0	0	0	0	0	0	0	0	0	0	0
4/24/2024	10:30 AM	0	0	0	0	0	0	0	0	0	0	0	0	0
4/24/2024	10:45 AM	0	0	0	0	0	0	0	0	0	0	0	0	0
4/24/2024	11:00 AM	0	0	0	0	0	0	0	0	0	0	0	0	0
4/24/2024	11:15 AM	0	0	0	0	0	0	0	0	0	0	0	0	0
4/24/2024	11:30 AM	0	0	0	0	0	0	0	0	0	0	0	0	0
4/24/2024	11:45 AM	0	0	0	0	0	0	0	0	0	0	0	0	0
4/24/2024	12:00 PM	0	0	0	0	0	0	0	0	0	0	0	0	0
4/24/2024	12:15 PM	0	0	0	0	0	0	0	0	0	0	0	0	0
4/24/2024	12:30 PM	0	0	0	0	0	0	0	0	0	0	0	0	0
4/24/2024	12:45 PM	0	0	0	0	0	0	0	0	0	0	0	0	0
4/24/2024	1:00 PM	0	0	0	0	0	0	0	0	0	0	0	0	0
4/24/2024	1:15 PM	0	0	0	0	0	0	0	0	0	0	0	0	0
4/24/2024	1:30 PM	0	0	0	0	0	0	0	0	0	0	0	0	0
4/24/2024	1:45 PM	0	0	0	0	0	0	0	0	0	0	0	0	0
4/24/2024	2:00 PM	0	0	0	0	0	0	0	0	0	0	0	0	0
4/24/2024	2:15 PM	0	0	0	0	0	0	0	0	0	0	0	0	0
4/24/2024	2:30 PM	0	0	0	0	0	0	0	0	0	0	0	0	0
4/24/2024	2:45 PM	0	0	0	0	0	0	0	0	0	0	0	0	0
4/24/2024	3:00 PM	0	0	0	0	0	0	0	0	0	0	0	0	0
4/24/2024	3:15 PM	0	0	0	0	0	0	0	0	0	0	0	0	0
4/24/2024	3:30 PM	0	0	0	0	0	0	0	0	0	0	0	0	0
4/24/2024	3:45 PM	0	0	0	0	0	0	0	0	0	0	0	0	0
4/24/2024	4:00 PM	0	0	0	0	0	0	0	0	0	0	0	0	0
4/24/2024	4:15 PM	0	0	0	0	0	0	0	0	0	0	0	0	0
4/24/2024	4:30 PM	0	0	0	0	0	0	0	0	0	0	0	0	0
4/24/2024	4:45 PM	0	0	0	0	0	0	0	0	0	0	0	0	0
4/24/2024	5:00 PM	0	0	0	0	0	0	0	0	0	0	0	0	0
4/24/2024	5:15 PM	0	0	0	0	0	0	0	0	0	0	0	0	0
4/24/2024	5:30 PM	0	0	0	0	0	0	0	0	0	0	0	0	0
4/24/2024	5:45 PM	0	0	0	0	0	0	0	0	0	0	0	0	0
4/24/2024	6:00 PM	0	0	0	0	0	0	0	0	0	0	0	0	0
4/24/2024	6:15 PM	0	0	0	0	0	0	0	0	0	0	0	0	0
4/24/2024	6:30 PM	0	0	0	0	0	0	0	0	0	0	0	0	0
4/24/2024	6:45 PM	0	0	0	0	0	0	0	0	0	0	0	0	0
4/24/2024	7:00 PM	0	0	0	0	0	0	0	0	0	0	0	0	0
4/24/2024	7:15 PM	0	0	0	0	0	0	0	0	0	0	0	0	0
4/24/2024	7:30 PM	0	0	0	0	0	0	0	0	0	0	0	0	0
4/24/2024	7:45 PM	0	0	0	0	0	0	0	0	0	0	0	0	0
4/24/2024	8:00 PM	0	0	0	0	0	0	0	0	0	0	0	0	0
4/24/2024	8:15 PM	0	0	0	0	0	0	0	0	0	0	0	0	0
4/24/2024	8:30 PM	0	0	0	0	0	0	0	0	0	0	0	0	0
4/24/2024	8:45 PM	0	0	0	0	0	0	0	0	0	0	0	0	0
4/24/2024	9:00 PM	0	0	0	0	0	0	0	0	0	0	0	0	0
4/24/2024	9:15 PM	0	0	0	0	0	0	0	0	0	0	0	0	0
4/24/2024	9:30 PM	0	0	0	0	0	0	0	0	0	0	0	0	0
4/24/2024	9:45 PM	0	0	0	0	0	0	0	0	0	0	0	0	0
4/24/2024	10:00 PM	0	0	0	0	0	0	0	0	0	0	0	0	0
4/24/2024	10:15 PM	0	0	0	0	0	0	0	0	0	0	0	0	0
4/24/2024	10:30 PM	0	0	0	0	0	0	0	0	0	0	0	0	0
4/24/2024	10:45 PM	0	0	0	0	0	0	0	0	0	0	0	0	0
4/24/2024	11:00 PM	0	0	0	0	0	0	0	0	0	0	0	0	0
4/24/2024	11:15 PM	0	0	0	0	0	0	0	0	0	0	0	0	0
4/24/2024	11:30 PM	0	0	0	0	0	0	0	0	0	0	0	0	0
4/24/2024	11:45 PM	0	0	0	0	0	0	0	0	0	0	0	0	0

4/25/2024	12:00 AM	0	0	0	0	0	0	0	0	0	0	0	0	0
4/25/2024	12:15 AM	0	0	0	0	0	0	0	0	0	0	0	0	0
4/25/2024	12:30 AM	0	0	0	0	0	0	0	0	0	0	0	0	0
4/25/2024	12:45 AM	0	0	0	0	0	0	0	0	0	0	0	0	0
4/25/2024	1:00 AM	0	0	0	0	0	0	0	0	0	0	0	0	0
4/25/2024	1:15 AM	0	0	0	0	0	0	0	0	0	0	0	0	0
4/25/2024	1:30 AM	0	0	0	0	0	0	0	0	0	0	0	0	0
4/25/2024	1:45 AM	0	0	0	0	0	0	0	0	0	0	0	0	0
4/25/2024	2:00 AM	0	0	0	0	0	0	0	0	0	0	0	0	0
4/25/2024	2:15 AM	0	0	0	0	0	0	0	0	0	0	0	0	0
4/25/2024	2:30 AM	0	0	0	0	0	0	0	0	0	0	0	0	0
4/25/2024	2:45 AM	0	0	0	0	0	0	0	0	0	0	0	0	0
4/25/2024	3:00 AM	0	0	0	0	0	0	0	0	0	0	0	0	0
4/25/2024	3:15 AM	0	0	0	0	0	0	0	0	0	0	0	0	0
4/25/2024	3:30 AM	0	0	0	0	0	0	0	0	0	0	0	0	0
4/25/2024	3:45 AM	0	0	0	0	0	0	0	0	0	0	0	0	0
4/25/2024	4:00 AM	0	0	0	0	0	0	0	0	0	0	0	0	0
4/25/2024	4:15 AM	0	0	0	0	0	0	0	0	0	0	0	0	0
4/25/2024	4:30 AM	0	0	0	0	0	0	0	0	0	0	0	0	0
4/25/2024	4:45 AM	0	0	0	0	0	0	0	0	0	0	0	0	0
4/25/2024	5:00 AM	0	0	0	0	0	0	0	0	0	0	0	0	0
4/25/2024	5:15 AM	0	0	0	0	0	0	0	0	0	0	0	0	0
4/25/2024	5:30 AM	0	0	0	0	0	0	0	0	0	0	0	0	0
4/25/2024	5:45 AM	0	0	0	0	0	0	0	0	0	0	0	0	0
4/25/2024	6:00 AM	0	0	0	0	0	0	0	0	0	0	0	0	0
4/25/2024	6:15 AM	0	0	0	0	0	0	0	0	0	0	0	0	0
4/25/2024	6:30 AM	0	0	0	0	0	0	0	0	0	0	0	0	0
4/25/2024	6:45 AM	0	0	0	0	0	0	0	0	0	0	0	0	0
4/25/2024	7:00 AM	0	0	0	0	0	0	0	0	0	0	0	0	0
4/25/2024	7:15 AM	0	0	0	0	0	0	0	0	0	0	0	0	0
4/25/2024	7:30 AM	0	0	0	0	0	0	0	0	0	0	0	0	0
4/25/2024	7:45 AM	0	0	0	0	0	0	0	0	0	0	0	0	0
4/25/2024	8:00 AM	0	0	0	0	0	0	0	0	0	0	0	0	0
4/25/2024	8:15 AM	0	0	0	0	0	0	0	0	0	0	0	0	0
4/25/2024	8:30 AM	0	0	0	0	0	0	0	0	0	0	0	0	0
4/25/2024	8:45 AM	0	0	0	0	0	0	0	0	0	0	0	0	0
4/25/2024	9:00 AM	0	0	0	0	0	0	0	0	0	0	0	0	0
4/25/2024	9:15 AM	0	0	0	0	0	0	0	0	0	0	0	0	0
4/25/2024	9:30 AM	0	0	0	0	0	0	0	0	0	0	0	0	0
4/25/2024	9:45 AM	0	0	0	0	0	0	0	0	0	0	0	0	0
4/25/2024	10:00 AM	0	0	0	0	0	0	0	0	0	0	0	0	0
4/25/2024	10:15 AM	0	0	0	0	0	0	0	0	0	0	0	0	0
4/25/2024	10:30 AM	0	0	0	0	0	0	0	0	0	0	0	0	0
4/25/2024	10:45 AM	0	0	0	0	0	0	0	0	0	0	0	0	0
4/25/2024	11:00 AM	0	0	0	0	0	0	0	0	0	0	0	0	0
4/25/2024	11:15 AM	0	0	0	0	0	0	0	0	0	0	0	0	0
4/25/2024	11:30 AM	0	0	0	0	0	0	0	0	0	0	0	0	0
4/25/2024	11:45 AM	0	0	0	0	0	0	0	0	0	0	0	0	0
4/25/2024	12:00 PM	0	0	0	0	0	0	0	0	0	0	0	0	0
4/25/2024	12:15 PM	0	0	0	0	0	0	0	0	0	0	0	0	0
4/25/2024	12:30 PM	0	0	0	0	0	0	0	0	0	0	0	0	0
4/25/2024	12:45 PM	0	0	0	0	0	0	0	0	0	0	0	0	0
4/25/2024	1:00 PM	0	0	0	0	0	0	0	0	0	0	0	0	0
4/25/2024	1:15 PM	0	0	0	0	0	0	0	0	0	0	0	0	0
4/25/2024	1:30 PM	0	0	0	0	0	0	0	0	0	0	0	0	0
4/25/2024	1:45 PM	0	0	0	0	0	0	0	0	0	0	0	0	0
4/25/2024	2:00 PM	0	0	0	0	0	0	0	0	0	0	0	0	0
4/25/2024	2:15 PM	0	0	0	0	0	0	0	0	0	0	0	0	0
4/25/2024	2:30 PM	0	0	0	0	0	0	0	0	0	0	0	0	0
4/25/2024	2:45 PM	0	0	0	0	0	0	0	0	0	0	0	0	0
4/25/2024	3:00 PM	0	0	0	0	0	0	0	0	0	0	0	0	0
4/25/2024	3:15 PM	0	0	0	0	0	0	0	0	0	0	0	0	0
4/25/2024	3:30 PM	0	0	0	0	0	0	0	0	0	0	0	0	0
4/25/2024	3:45 PM	0	0	0	0	0	0	0	0	0	0	0	0	0
4/25/2024	4:00 PM	0	0	0	0	0	0	0	0	0	0	0	0	0
4/25/2024	4:15 PM	0	0	0	0	0	0	0	0	0	0	0	0	0
4/25/2024	4:30 PM	0	0	0	0	0	0	0	0	0	0	0	0	0
4/25/2024	4:45 PM	0	0	0	0	0	0	0	0	0	0	0	0	0
4/25/2024	5:00 PM	0	0	0	0	0	0	0	0	0	0	0	0	0
4/25/2024	5:15 PM	0	0	0	0	0	0	0	0	0	0	0	0	0
4/25/2024	5:30 PM	0	0	0	0	0	0	0	0	0	0	0	0	0
4/25/2024	5:45 PM	0	0	0	0	0	0	0	0	0	0	0	0	0
4/25/2024	6:00 PM	0	0	0	0	0	0	0	0	0	0	0	0	0
4/25/2024	6:15 PM	0	0	0	0	0	0	0	0	0	0	0	0	0
4/25/2024	6:30 PM	0	0	0	0	0	0	0	0	0	0	0	0	0
4/25/2024	6:45 PM	0	0	0	0	0	0	0	0	0	0	0	0	0
4/25/2024	7:00 PM	0	0	0	0	0	0	0	0	0	0	0	0	0
4/25/2024	7:15 PM	0	0	0	0	0	0	0	0	0	0	0	0	0
4/25/2024	7:30 PM	0	0	0	0	0	0	0	0	0	0	0	0	0
4/25/2024	7:45 PM	0	0	0	0	0	0	0	0	0	0	0	0	0
4/25/2024	8:00 PM	0	0	0	0	0	0	0	0	0	0	0	0	0
4/25/2024	8:15 PM	0	0	0	0	0	0	0	0	0	0	0	0	0
4/25/2024	8:30 PM	0	0	0	0	0	0	0	0	0	0	0	0	0
4/25/2024	8:45 PM	0	0	0	0	0	0	0	0	0	0	0	0	0
4/25/2024	9:00 PM	0	0	0	0	0	0	0	0	0	0	0	0	0
4/25/2024	9:15 PM	0	0	0	0	0	0	0	0	0	0	0	0	0
4/25/2024	9:30 PM	0	0	0	0	0	0	0	0	0	0	0	0	0
4/25/2024	9:45 PM	0	0	0	0	0	0	0	0	0	0	0	0	0
4/25/2024	10:00 PM	0	0	0	0	0	0	0	0	0	0	0	0	0
4/25/2024	10:15 PM	0	0	0	0	0	0	0	0	0	0	0	0	0
4/25/2024	10:30 PM	0	0	0	0	0	0	0	0	0	0	0	0	0
4/25/2024	10:45 PM	0	0	0	0	0	0	0	0	0	0	0	0	0
4/25/2024	11:00 PM	0	0	0	0	0	0	0	0	0	0	0	0	0
4/25/2024	11:15 PM	0	0	0	0	0	0	0	0	0	0	0	0	0
4/25/2024	11:30 PM	0	0	0	0	0	0	0	0	0	0	0	0	0
4/25/2024	11:45 PM	0	0	0	0	0	0	0	0	0	0	0	0	0

4/26/2024	12:00 AM	0	0	0	0	0	0	0	0	0	0	0	0	0
4/26/2024	12:15 AM	0	0	0	0	0	0	0	0	0	0	0	0	0
4/26/2024	12:30 AM	0	0	0	0	0	0	0	0	0	0	0	0	0
4/26/2024	12:45 AM	0	0	0	0	0	0	0	0	0	0	0	0	0
4/26/2024	1:00 AM	0	0	0	0	0	0	0	0	0	0	0	0	0
4/26/2024	1:15 AM	0	0	0	0	0	0	0	0	0	0	0	0	0
4/26/2024	1:30 AM	0	0	0	0	0	0	0	0	0	0	0	0	0
4/26/2024	1:45 AM	0	0	0	0	0	0	0	0	0	0	0	0	0
4/26/2024	2:00 AM	0	0	0	0	0	0	0	0	0	0	0	0	0
4/26/2024	2:15 AM	0	0	0	0	0	0	0	0	0	0	0	0	0
4/26/2024	2:30 AM	0	0	0	0	0	0	0	0	0	0	0	0	0
4/26/2024	2:45 AM	0	0	0	0	0	0	0	0	0	0	0	0	0
4/26/2024	3:00 AM	0	0	0	0	0	0	0	0	0	0	0	0	0
4/26/2024	3:15 AM	0	0	0	0	0	0	0	0	0	0	0	0	0
4/26/2024	3:30 AM	0	0	0	0	0	0	0	0	0	0	0	0	0
4/26/2024	3:45 AM	0	0	0	0	0	0	0	0	0	0	0	0	0
4/26/2024	4:00 AM	0	0	0	0	0	0	0	0	0	0	0	0	0
4/26/2024	4:15 AM	0	0	0	0	0	0	0	0	0	0	0	0	0
4/26/2024	4:30 AM	0	0	0	0	0	0	0	0	0	0	0	0	0
4/26/2024	4:45 AM	0	0	0	0	0	0	0	0	0	0	0	0	0
4/26/2024	5:00 AM	0	0	0	0	0	0	0	0	0	0	0	0	0
4/26/2024	5:15 AM	0	0	0	0	0	0	0	0	0	0	0	0	0
4/26/2024	5:30 AM	0	0	0	0	0	0	0	0	0	0	0	0	0
4/26/2024	5:45 AM	0	0	0	0	0	0	0	0	0	0	0	0	0
4/26/2024	6:00 AM	0	0	0	0	0	0	0	0	0	0	0	0	0
4/26/2024	6:15 AM	0	0	0	0	0	0	0	0	0	0	0	0	0
4/26/2024	6:30 AM	0	0	0	0	0	0	0	0	0	0	0	0	0
4/26/2024	6:45 AM	0	0	0	0	0	0	0	0	0	0	0	0	0
4/26/2024	7:00 AM	0	0	0	0	0	0	0	0	0	0	0	0	0
4/26/2024	7:15 AM	0	0	0	0	0	0	0	0	0	0	0	0	0
4/26/2024	7:30 AM	0	0	0	0	0	0	0	0	0	0	0	0	0
4/26/2024	7:45 AM	0	0	0	0	0	0	0	0	0	0	0	0	0
4/26/2024	8:00 AM	0	0	0	0	0	0	0	0	0	0	0	0	0
4/26/2024	8:15 AM	0	0	0	0	0	0	0	0	0	0	0	0	0
4/26/2024	8:30 AM	0	0	0	0	0	0	0	0	0	0	0	0	0
4/26/2024	8:45 AM	0	0	0	0	0	0	0	0	0	0	0	0	0
4/26/2024	9:00 AM	0	0	0	0	0	0	0	0	0	0	0	0	0
4/26/2024	9:15 AM	0	0	0	0	0	0	0	0	0	0	0	0	0
4/26/2024	9:30 AM	0	0	0	0	0	0	0	0	0	0	0	0	0
4/26/2024	9:45 AM	0	0	0	0	0	0	0	0	0	0	0	0	0
4/26/2024	10:00 AM	0	0	0	0	0	0	0	0	0	0	0	0	0
4/26/2024	10:15 AM	0	0	0	0	0	0	0	0	0	0	0	0	0
4/26/2024	10:30 AM	0	0	0	0	0	0	0	0	0	0	0	0	0
4/26/2024	10:45 AM	0	0	0	0	0	0	0	0	0	0	0	0	0
4/26/2024	11:00 AM	0	0	0	0	0	0	0	0	0	0	0	0	0
4/26/2024	11:15 AM	0	0	0	0	0	0	0	0	0	0	0	0	0
4/26/2024	11:30 AM	0	0	0	0	0	0	0	0	0	0	0	0	0
4/26/2024	11:45 AM	0	0	0	0	0	0	0	0	0	0	0	0	0
4/26/2024	12:00 PM	0	0	0	0	0	0	0	0	0	0	0	0	0
4/26/2024	12:15 PM	0	0	0	0	0	0	0	0	0	0	0	0	0
4/26/2024	12:30 PM	0	0	0	0	0	0	0	0	0	0	0	0	0
4/26/2024	12:45 PM	0	0	0	0	0	0	0	0	0	0	0	0	0
4/26/2024	1:00 PM	0	0	0	0	0	0	0	0	0	0	0	0	0
4/26/2024	1:15 PM	0	0	0	0	0	0	0	0	0	0	0	0	0
4/26/2024	1:30 PM	0	0	0	0	0	0	0	0	0	0	0	0	0
4/26/2024	1:45 PM	0	0	0	0	0	0	0	0	0	0	0	0	0
4/26/2024	2:00 PM	0	0	0	0	0	0	0	0	0	0	0	0	0
4/26/2024	2:15 PM	0	0	0	0	0	0	0	0	0	0	0	0	0
4/26/2024	2:30 PM	0	0	0	0	0	0	0	0	0	0	0	0	0
4/26/2024	2:45 PM	0	0	0	0	0	0	0	0	0	0	0	0	0
4/26/2024	3:00 PM	0	0	0	0	0	0	0	0	0	0	0	0	0
4/26/2024	3:15 PM	0	0	0	0	0	0	0	0	0	0	0	0	0
4/26/2024	3:30 PM	0	0	0	0	0	0	0	0	0	0	0	0	0
4/26/2024	3:45 PM	0	0	0	0	0	0	0	0	0	0	0	0	0
4/26/2024	4:00 PM	0	0	0	0	0	0	0	0	0	0	0	0	0
4/26/2024	4:15 PM	0	0	0	0	0	0	0	0	0	0	0	0	0
4/26/2024	4:30 PM	0	0	0	0	0	0	0	0	0	0	0	0	0
4/26/2024	4:45 PM	0	0	0	0	0	0	0	0	0	0	0	0	0
4/26/2024	5:00 PM	0	0	0	0	0	0	0	0	0	0	0	0	0
4/26/2024	5:15 PM	0	0	0	0	0	0	0	0	0	0	0	0	0
4/26/2024	5:30 PM	0	0	0	0	0	0	0	0	0	0	0	0	0
4/26/2024	5:45 PM	0	0	0	0	0	0	0	0	0	0	0	0	0
4/26/2024	6:00 PM	0	0	0	0	0	0	0	0	0	0	0	0	0
4/26/2024	6:15 PM	0	0	0	0	0	0	0	0	0	0	0	0	0
4/26/2024	6:30 PM	0	0	0	0	0	0	0	0	0	0	0	0	0
4/26/2024	6:45 PM	0	0	0	0	0	0	0	0	0	0	0	0	0
4/26/2024	7:00 PM	0	0	0	0	0	0	0	0	0	0	0	0	0
4/26/2024	7:15 PM	0	0	0	0	0	0	0	0	0	0	0	0	0
4/26/2024	7:30 PM	0	0	0	0	0	0	0	0	0	0	0	0	0
4/26/2024	7:45 PM	0	0	0	0	0	0	0	0	0	0	0	0	0
4/26/2024	8:00 PM	0	0	0	0	0	0	0	0	0	0	0	0	0
4/26/2024	8:15 PM	0	0	0	0	0	0	0	0	0	0	0	0	0
4/26/2024	8:30 PM	0	0	0	0	0	0	0	0	0	0	0	0	0
4/26/2024	8:45 PM	0	0	0	0	0	0	0	0	0	0	0	0	0
4/26/2024	9:00 PM	0	0	0	0	0	0	0	0	0	0	0	0	0
4/26/2024	9:15 PM	0	0	0	0	0	0	0	0	0	0	0	0	0
4/26/2024	9:30 PM	0	0	0	0	0	0	0	0	0	0	0	0	0
4/26/2024	9:45 PM	0	0	0	0	0	0	0	0	0	0	0	0	0
4/26/2024	10:00 PM	0	0	0	0	0	0	0	0	0	0	0	0	0
4/26/2024	10:15 PM	0	0	0	0	0	0	0	0	0	0	0	0	0
4/26/2024	10:30 PM	0	0	0	0	0	0	0	0	0	0	0	0	0
4/26/2024	10:45 PM	0	0	0	0	0	0	0	0	0	0	0	0	0
4/26/2024	11:00 PM	0	0	0	0	0	0	0	0	0	0	0	0	0
4/26/2024	11:15 PM	0	0	0	0	0	0	0	0	0	0	0	0	0
4/26/2024	11:30 PM	0	0	0	0	0	0	0	0	0	0	0	0	0
4/26/2024	11:45 PM	0	0	0	0	0	0	0	0	0	0	0	0	0

4/27/2024	12:00 AM	0	0	0	0	0	0	0	0	0	0	0	0	0
4/27/2024	12:15 AM	0	0	0	0	0	0	0	0	0	0	0	0	0
4/27/2024	12:30 AM	0	0	0	0	0	0	0	0	0	0	0	0	0
4/27/2024	12:45 AM	0	0	0	0	0	0	0	0	0	0	0	0	0
4/27/2024	1:00 AM	0	0	0	0	0	0	0	0	0	0	0	0	0
4/27/2024	1:15 AM	0	0	0	0	0	0	0	0	0	0	0	0	0
4/27/2024	1:30 AM	0	0	0	0	0	0	0	0	0	0	0	0	0
4/27/2024	1:45 AM	0	0	0	0	0	0	0	0	0	0	0	0	0
4/27/2024	2:00 AM	0	0	0	0	0	0	0	0	0	0	0	0	0
4/27/2024	2:15 AM	0	0	0	0	0	0	0	0	0	0	0	0	0
4/27/2024	2:30 AM	0	0	0	0	0	0	0	0	0	0	0	0	0
4/27/2024	2:45 AM	0	0	0	0	0	0	0	0	0	0	0	0	0
4/27/2024	3:00 AM	0	0	0	0	0	0	0	0	0	0	0	0	0
4/27/2024	3:15 AM	0	0	0	0	0	0	0	0	0	0	0	0	0
4/27/2024	3:30 AM	0	0	0	0	0	0	0	0	0	0	0	0	0
4/27/2024	3:45 AM	0	0	0	0	0	0	0	0	0	0	0	0	0
4/27/2024	4:00 AM	0	0	0	0	0	0	0	0	0	0	0	0	0
4/27/2024	4:15 AM	0	0	0	0	0	0	0	0	0	0	0	0	0
4/27/2024	4:30 AM	0	0	0	0	0	0	0	0	0	0	0	0	0
4/27/2024	4:45 AM	0	0	0	0	0	0	0	0	0	0	0	0	0
4/27/2024	5:00 AM	0	0	0	0	0	0	0	0	0	0	0	0	0
4/27/2024	5:15 AM	0	0	0	0	0	0	0	0	0	0	0	0	0
4/27/2024	5:30 AM	0	0	0	0	0	0	0	0	0	0	0	0	0
4/27/2024	5:45 AM	0	0	0	0	0	0	0	0	0	0	0	0	0
4/27/2024	6:00 AM	0	0	0	0	0	0	0	0	0	0	0	0	0
4/27/2024	6:15 AM	0	0	0	0	0	0	0	0	0	0	0	0	0
4/27/2024	6:30 AM	0	0	0	0	0	0	0	0	0	0	0	0	0
4/27/2024	6:45 AM	0	0	0	0	0	0	0	0	0	0	0	0	0
4/27/2024	7:00 AM	0	0	0	0	0	0	0	0	0	0	0	0	0
4/27/2024	7:15 AM	0	0	0	0	0	0	0	0	0	0	0	0	0
4/27/2024	7:30 AM	0	0	0	0	0	0	0	0	0	0	0	0	0
4/27/2024	7:45 AM	0	0	0	0	0	0	0	0	0	0	0	0	0
4/27/2024	8:00 AM	0	0	0	0	0	0	0	0	0	0	0	0	0
4/27/2024	8:15 AM	0	0	0	0	0	0	0	0	0	0	0	0	0
4/27/2024	8:30 AM	0	0	0	0	0	0	0	0	0	0	0	0	0
4/27/2024	8:45 AM	0	0	0	0	0	0	0	0	0	0	0	0	0
4/27/2024	9:00 AM	0	0	0	0	0	0	0	0	0	0	0	0	0
4/27/2024	9:15 AM	0	0	0	0	0	0	0	0	0	0	0	0	0
4/27/2024	9:30 AM	0	0	0	0	0	0	0	0	0	0	0	0	0
4/27/2024	9:45 AM	0	0	0	0	0	0	0	0	0	0	0	0	0
4/27/2024	10:00 AM	0	0	0	0	0	0	0	0	0	0	0	0	0
4/27/2024	10:15 AM	0	0	0	0	0	0	0	0	0	0	0	0	0
4/27/2024	10:30 AM	0	0	0	0	0	0	0	0	0	0	0	0	0
4/27/2024	10:45 AM	0	0	0	0	0	0	0	0	0	0	0	0	0
4/27/2024	11:00 AM	0	0	0	0	0	0	0	0	0	0	0	0	0
4/27/2024	11:15 AM	0	0	0	0	0	0	0	0	0	0	0	0	0
4/27/2024	11:30 AM	0	0	0	0	0	0	0	0	0	0	0	0	0
4/27/2024	11:45 AM	0	0	0	0	0	0	0	0	0	0	0	0	0
4/27/2024	12:00 PM	0	0	0	0	0	0	0	0	0	0	0	0	0
4/27/2024	12:15 PM	0	0	0	0	0	0	0	0	0	0	0	0	0
4/27/2024	12:30 PM	0	0	0	0	0	0	0	0	0	0	0	0	0
4/27/2024	12:45 PM	0	0	0	0	0	0	0	0	0	0	0	0	0
4/27/2024	1:00 PM	0	0	0	0	0	0	0	0	0	0	0	0	0
4/27/2024	1:15 PM	0	0	0	0	0	0	0	0	0	0	0	0	0
4/27/2024	1:30 PM	0	0	0	0	0	0	0	0	0	0	0	0	0
4/27/2024	1:45 PM	0	0	0	0	0	0	0	0	0	0	0	0	0
4/27/2024	2:00 PM	0	0	0	0	0	0	0	0	0	0	0	0	0
4/27/2024	2:15 PM	0	0	0	0	0	0	0	0	0	0	0	0	0
4/27/2024	2:30 PM	0	0	0	0	0	0	0	0	0	0	0	0	0
4/27/2024	2:45 PM	0	0	0	0	0	0	0	0	0	0	0	0	0
4/27/2024	3:00 PM	0	0	0	0	0	0	0	0	0	0	0	0	0
4/27/2024	3:15 PM	0	0	0	0	0	0	0	0	0	0	0	0	0
4/27/2024	3:30 PM	0	0	0	0	0	0	0	0	0	0	0	0	0
4/27/2024	3:45 PM	0	0	0	0	0	0	0	0	0	0	0	0	0
4/27/2024	4:00 PM	0	0	0	0	0	0	0	0	0	0	0	0	0
4/27/2024	4:15 PM	0	0	0	0	0	0	0	0	0	0	0	0	0
4/27/2024	4:30 PM	0	0	0	0	0	0	0	0	0	0	0	0	0
4/27/2024	4:45 PM	0	0	0	0	0	0	0	0	0	0	0	0	0
4/27/2024	5:00 PM	0	0	0	0	0	0	0	0	0	0	0	0	0
4/27/2024	5:15 PM	0	0	0	0	0	0	0	0	0	0	0	0	0
4/27/2024	5:30 PM	0	0	0	0	0	0	0	0	0	0	0	0	0
4/27/2024	5:45 PM	0	0	0	0	0	0	0	0	0	0	0	0	0
4/27/2024	6:00 PM	0	0	0	0	0	0	0	0	0	0	0	0	0
4/27/2024	6:15 PM	0	0	0	0	0	0	0	0	0	0	0	0	0
4/27/2024	6:30 PM	0	0	0	0	0	0	0	0	0	0	0	0	0
4/27/2024	6:45 PM	0	0	0	0	0	0	0	0	0	0	0	0	0
4/27/2024	7:00 PM	0	0	0	0	0	0	0	0	0	0	0	0	0
4/27/2024	7:15 PM	0	0	0	0	0	0	0	0	0	0	0	0	0
4/27/2024	7:30 PM	0	0	0	0	0	0	0	0	0	0	0	0	0
4/27/2024	7:45 PM	0	0	0	0	0	0	0	0	0	0	0	0	0
4/27/2024	8:00 PM	0	0	0	0	0	0	0	0	0	0	0	0	0
4/27/2024	8:15 PM	0	0	0	0	0	0	0	0	0	0	0	0	0
4/27/2024	8:30 PM	0	0	0	0	0	0	0	0	0	0	0	0	0
4/27/2024	8:45 PM	0	0	0	0	0	0	0	0	0	0	0	0	0
4/27/2024	9:00 PM	0	0	0	0	0	0	0	0	0	0	0	0	0
4/27/2024	9:15 PM	0	0	0	0	0	0	0	0	0	0	0	0	0
4/27/2024	9:30 PM	0	0	0	0	0	0	0	0	0	0	0	0	0
4/27/2024	9:45 PM	0	0	0	0	0	0	0	0	0	0	0	0	0
4/27/2024	10:00 PM	0	0	0	0	0	0	0	0	0	0	0	0	0
4/27/2024	10:15 PM	0	0	0	0	0	0	0	0	0	0	0	0	0
4/27/2024	10:30 PM	0	0	0	0	0	0	0	0	0	0	0	0	0
4/27/2024	10:45 PM	0	0	0	0	0	0	0	0	0	0	0	0	0
4/27/2024	11:00 PM	0	0	0	0	0	0	0	0	0	0	0	0	0
4/27/2024	11:15 PM	0	0	0	0	0	0	0	0	0	0	0	0	0
4/27/2024	11:30 PM	0	0	0	0	0	0	0	0	0	0	0	0	0
4/27/2024	11:45 PM	0	0	0	0	0	0	0	0	0	0	0	0	0

WB
File Name:
Start Date: 4/21/2024
Start Time: 0
Site Code: 74 Lane 2 WB
Station ID: 1
Location 1: I-20, west of US-378 Sunset Blvd S/Bound Off-Ramp
Location 2:

Date	Time	1	2	3	4	5	6	7	8	9	10	11	12	13
4/21/2024	12:00 AM	0	198	28	0	0	0	0	0	11	0	0	0	0
4/21/2024	12:15 AM	0	183	21	0	0	0	0	0	8	0	0	0	0
4/21/2024	12:30 AM	0	165	17	0	1	0	0	0	8	0	0	0	0
4/21/2024	12:45 AM	0	163	15	1	2	0	0	0	4	0	0	0	0
4/21/2024	1:00 AM	0	157	15	2	2	0	0	0	2	0	0	0	0
4/21/2024	1:15 AM	0	142	14	2	4	0	0	0	5	0	0	0	0
4/21/2024	1:30 AM	0	140	15	2	3	0	0	0	5	0	0	0	0
4/21/2024	1:45 AM	0	125	14	1	3	0	0	0	8	0	0	0	0
4/21/2024	2:00 AM	0	111	12	0	4	0	0	0	10	0	0	0	0
4/21/2024	2:15 AM	0	103	12	0	3	0	0	0	10	0	0	0	0
4/21/2024	2:30 AM	0	86	10	0	3	0	0	0	9	0	0	0	0
4/21/2024	2:45 AM	0	76	11	0	3	0	0	0	9	0	0	0	0
4/21/2024	3:00 AM	0	74	10	0	2	0	0	0	9	0	0	0	0
4/21/2024	3:15 AM	0	86	11	0	4	0	0	0	11	0	0	0	0
4/21/2024	3:30 AM	0	77	9	0	5	0	0	0	13	0	0	0	0
4/21/2024	3:45 AM	0	90	8	1	5	0	0	1	11	0	0	0	0
4/21/2024	4:00 AM	0	85	8	1	7	0	0	1	12	0	0	0	0
4/21/2024	4:15 AM	0	80	7	1	4	0	0	1	13	0	0	0	0
4/21/2024	4:30 AM	0	86	9	1	4	0	0	1	12	0	0	0	0
4/21/2024	4:45 AM	0	90	12	0	5	0	0	0	14	0	0	0	0
4/21/2024	5:00 AM	0	103	14	0	5	0	0	0	13	0	0	0	0
4/21/2024	5:15 AM	0	109	18	0	5	0	0	0	11	0	0	0	0
4/21/2024	5:30 AM	0	127	21	0	4	0	0	0	12	0	0	0	0
4/21/2024	5:45 AM	0	141	27	0	2	0	0	0	12	0	0	0	0
4/21/2024	6:00 AM	0	146	35	0	1	0	0	0	11	0	0	0	0
4/21/2024	6:15 AM	0	158	49	0	1	0	0	0	9	0	0	0	0
4/21/2024	6:30 AM	1	165	53	0	2	0	0	0	7	0	0	0	0
4/21/2024	6:45 AM	1	166	59	1	3	1	0	0	6	0	0	0	0
4/21/2024	7:00 AM	1	187	61	1	2	1	0	0	10	0	0	0	0
4/21/2024	7:15 AM	2	203	52	1	2	1	0	0	10	0	0	0	0
4/21/2024	7:30 AM	2	215	61	2	4	1	0	0	14	0	0	0	0
4/21/2024	7:45 AM	2	243	60	1	3	0	0	0	17	0	0	0	0
4/21/2024	8:00 AM	2	275	66	1	6	0	0	1	14	0	0	0	0
4/21/2024	8:15 AM	3	300	77	2	7	0	0	1	13	1	0	0	0
4/21/2024	8:30 AM	2	341	79	1	6	0	0	1	10	1	0	0	0
4/21/2024	8:45 AM	2	393	90	1	6	0	0	3	6	1	0	0	0
4/21/2024	9:00 AM	2	413	97	1	4	0	0	2	9	1	0	0	0
4/21/2024	9:15 AM	0	444	100	0	5	1	0	2	16	0	1	0	0
4/21/2024	9:30 AM	0	453	110	0	4	1	0	5	25	0	1	0	0
4/21/2024	9:45 AM	0	456	113	0	5	1	0	3	30	0	1	0	0
4/21/2024	10:00 AM	0	501	125	1	6	1	0	3	32	0	1	0	0
4/21/2024	10:15 AM	0	532	131	1	6	0	0	3	37	0	0	0	0
4/21/2024	10:30 AM	0	552	133	1	6	0	0	1	33	0	0	0	0
4/21/2024	10:45 AM	1	567	137	1	5	0	0	2	35	0	0	0	0
4/21/2024	11:00 AM	1	590	138	0	4	0	0	4	32	0	1	0	0
4/21/2024	11:15 AM	1	629	133	0	4	0	0	4	32	0	1	0	0
4/21/2024	11:30 AM	1	673	137	0	5	0	0	5	31	0	1	0	0
4/21/2024	11:45 AM	0	699	141	0	7	1	0	6	27	0	1	0	0
4/21/2024	12:00 PM	0	671	157	0	11	2	0	4	31	0	0	0	0
4/21/2024	12:15 PM	0	664	182	0	10	2	0	4	26	0	0	0	0
4/21/2024	12:30 PM	0	688	188	0	8	2	0	2	25	0	0	0	0
4/21/2024	12:45 PM	0	712	200	0	7	3	0	2	24	0	0	1	0
4/21/2024	1:00 PM	1	744	185	1	3	2	0	2	25	0	0	1	0
4/21/2024	1:15 PM	1	760	180	1	2	3	0	2	23	0	0	1	0
4/21/2024	1:30 PM	1	747	176	1	4	3	0	4	27	0	0	1	0
4/21/2024	1:45 PM	1	718	158	1	6	1	0	2	31	0	0	0	0
4/21/2024	2:00 PM	0	693	155	0	7	1	0	2	29	1	0	0	0
4/21/2024	2:15 PM	0	693	150	0	8	1	0	2	30	1	0	0	0
4/21/2024	2:30 PM	0	666	157	0	9	1	0	0	30	1	0	0	0
4/21/2024	2:45 PM	1	662	172	0	8	1	0	0	28	1	0	0	0
4/21/2024	3:00 PM	1	698	172	0	7	2	0	1	29	1	0	0	0
4/21/2024	3:15 PM	1	692	163	0	6	1	0	2	25	1	0	0	0
4/21/2024	3:30 PM	1	721	166	0	4	1	0	2	26	1	0	0	0
4/21/2024	3:45 PM	0	727	162	1	3	1	0	3	25	1	0	0	0
4/21/2024	4:00 PM	0	694	166	1	3	1	0	3	27	0	0	0	0
4/21/2024	4:15 PM	0	662	173	1	4	1	0	3	31	0	0	0	0
4/21/2024	4:30 PM	0	624	151	1	3	2	0	6	25	0	0	0	0
4/21/2024	4:45 PM	0	614	136	1	3	2	0	5	34	0	0	0	0
4/21/2024	5:00 PM	0	599	138	1	4	1	0	6	34	0	0	0	0
4/21/2024	5:15 PM	0	586	139	1	3	1	0	6	33	0	0	0	0
4/21/2024	5:30 PM	0	584	140	1	3	0	0	6	36	0	0	0	0
4/21/2024	5:45 PM	1	571	148	0	2	0	0	8	30	0	0	0	0
4/21/2024	6:00 PM	1	581	138	0	1	1	0	8	26	0	0	0	0
4/21/2024	6:15 PM	1	588	122	0	2	1	0	7	29	0	0	0	0
4/21/2024	6:30 PM	1	559	126	0	2	1	0	4	35	0	2	0	0
4/21/2024	6:45 PM	0	542	116	1	2	2	0	5	34	0	2	0	0
4/21/2024	7:00 PM	0	501	97	1	2	2	0	3	35	0	2	0	0
4/21/2024	7:15 PM	0	457	99	1	1	2	0	3	31	0	2	0	0
4/21/2024	7:30 PM	0	446	89	1	3	2	0	3	23	0	0	0	0
4/21/2024	7:45 PM	0	421	78	0	3	1	0	0	23	0	0	0	0
4/21/2024	8:00 PM	0	405	76	0	3	0	0	0	19	0	0	0	0
4/21/2024	8:15 PM	0	374	64	1	4	0	0	1	20	0	0	0	0
4/21/2024	8:30 PM	0	361	57	1	4	0	0	1	21	0	1	0	0
4/21/2024	8:45 PM	0	321	55	1	5	0	0	1	21	0	1	0	0
4/21/2024	9:00 PM	0	276	53	1	4	0	0	1	26	0	2	0	0
4/21/2024	9:15 PM	0	263	52	0	3	0	0	0	30	0	3	0	0
4/21/2024	9:30 PM	0	230	47	0	1	0	0	0	27	0	2	0	0
4/21/2024	9:45 PM	0	213	42	1	0	0	0	0	32	0	3	0	0
4/21/2024	10:00 PM	0	202	37	3	0	0	0	0	25	0	2	0	0
4/21/2024	10:15 PM	0	176	31	3	0	0	0	0	18	0	2	0	0
4/21/2024	10:30 PM	0	143	23	4	1	0	0	0	18	0	3	0	0
4/21/2024	10:45 PM	0	135	20	3	2	0	0	0	13	0	2	0	0
4/21/2024	11:00 PM	0	124	16	1	2	0	0	0	14	0	2	0	0
4/21/2024	11:15 PM	0	89	9	1	2	0	0	0	11	0	1	0	0
4/21/2024	11:30 PM	0	64	7	0	1	0	0	0	8	0	0	0	0
4/21/2024	11:45 PM	0	28	2	0	0	0	0	0	2	0	0	0	0

4/22/2024	12:00 AM	0	62	10	0	4	0	0	0	30	0	0	0	0
4/22/2024	12:15 AM	0	56	9	0	2	0	0	0	29	0	0	0	0
4/22/2024	12:30 AM	0	52	9	0	1	0	0	0	25	0	0	0	0
4/22/2024	12:45 AM	0	47	10	0	2	0	0	0	21	0	0	0	0
4/22/2024	1:00 AM	0	46	9	0	2	0	0	0	18	0	0	0	0
4/22/2024	1:15 AM	0	43	7	0	2	0	0	0	22	0	0	0	0
4/22/2024	1:30 AM	0	43	5	0	4	0	0	0	22	0	0	0	0
4/22/2024	1:45 AM	0	41	3	0	4	0	0	0	22	0	0	0	0
4/22/2024	2:00 AM	0	42	3	0	4	0	0	0	25	0	0	0	0
4/22/2024	2:15 AM	0	50	5	0	5	0	0	0	20	0	0	0	0
4/22/2024	2:30 AM	0	56	3	0	4	0	0	0	25	0	0	0	0
4/22/2024	2:45 AM	0	64	10	0	4	0	0	0	28	0	0	0	0
4/22/2024	3:00 AM	0	68	9	0	4	0	0	0	29	0	0	0	0
4/22/2024	3:15 AM	0	70	7	0	3	0	0	0	32	0	0	0	0
4/22/2024	3:30 AM	0	70	15	0	4	0	0	0	29	0	0	0	0
4/22/2024	3:45 AM	0	73	16	0	3	0	0	0	31	0	0	0	0
4/22/2024	4:00 AM	0	81	25	0	3	0	0	0	35	0	0	0	0
4/22/2024	4:15 AM	0	103	32	0	3	0	0	0	39	0	0	0	0
4/22/2024	4:30 AM	0	133	42	0	4	0	0	0	45	0	0	0	0
4/22/2024	4:45 AM	0	167	54	0	5	0	0	0	55	0	0	0	0
4/22/2024	5:00 AM	0	223	73	0	7	0	0	0	53	0	0	0	0
4/22/2024	5:15 AM	0	260	86	0	8	0	0	0	57	0	0	0	0
4/22/2024	5:30 AM	0	338	83	0	10	1	0	0	54	0	0	0	0
4/22/2024	5:45 AM	0	406	113	0	12	2	0	1	46	0	0	0	0
4/22/2024	6:00 AM	1	446	132	1	16	4	0	2	54	0	0	0	0
4/22/2024	6:15 AM	1	493	158	1	22	6	0	3	47	0	0	0	0
4/22/2024	6:30 AM	1	501	203	1	23	10	0	5	54	0	0	0	0
4/22/2024	6:45 AM	1	517	215	2	23	11	0	7	52	0	0	0	0
4/22/2024	7:00 AM	0	539	216	1	21	11	0	7	46	0	0	0	0
4/22/2024	7:15 AM	0	538	220	1	16	11	0	7	56	0	0	0	0
4/22/2024	7:30 AM	0	510	202	1	16	7	0	6	62	0	0	0	0
4/22/2024	7:45 AM	0	488	190	1	23	6	2	5	70	1	0	0	0
4/22/2024	8:00 AM	0	443	185	1	24	7	2	8	68	1	0	0	0
4/22/2024	8:15 AM	0	419	186	1	31	7	2	12	69	1	0	0	0
4/22/2024	8:30 AM	0	407	202	2	30	9	2	13	71	1	0	1	0
4/22/2024	8:45 AM	0	377	200	1	30	10	0	16	72	0	0	1	0
4/22/2024	9:00 AM	0	364	198	1	30	11	0	13	80	0	0	1	0
4/22/2024	9:15 AM	0	356	199	1	26	11	0	12	80	0	0	1	0
4/22/2024	9:30 AM	0	384	181	0	29	8	0	12	85	0	0	0	0
4/22/2024	9:45 AM	0	403	180	0	24	10	0	8	102	0	0	0	0
4/22/2024	10:00 AM	1	435	184	1	30	8	0	7	108	0	0	0	0
4/22/2024	10:15 AM	1	468	188	1	28	7	0	5	113	0	0	0	0
4/22/2024	10:30 AM	1	445	189	1	24	7	0	4	107	0	0	0	0
4/22/2024	10:45 AM	1	450	186	1	23	5	0	6	112	0	0	0	0
4/22/2024	11:00 AM	0	444	176	0	17	5	0	6	109	0	0	0	0
4/22/2024	11:15 AM	1	445	169	0	16	6	0	8	110	0	0	0	0
4/22/2024	11:30 AM	1	479	170	0	21	6	0	9	117	0	0	0	0
4/22/2024	11:45 AM	1	487	165	0	22	6	0	8	100	0	0	0	0
4/22/2024	12:00 PM	1	501	183	1	19	7	0	14	105	0	0	0	0
4/22/2024	12:15 PM	0	489	164	1	28	5	0	14	108	1	0	0	0
4/22/2024	12:30 PM	0	498	166	2	22	7	0	15	104	1	0	0	0
4/22/2024	12:45 PM	0	537	179	3	24	7	0	17	103	1	0	0	0
4/22/2024	1:00 PM	0	551	167	3	26	6	0	15	111	1	0	0	0
4/22/2024	1:15 PM	0	571	186	3	18	10	0	12	104	0	0	0	0
4/22/2024	1:30 PM	0	568	196	2	21	12	0	11	109	1	0	0	0
4/22/2024	1:45 PM	0	549	205	1	22	12	0	12	120	1	0	0	0
4/22/2024	2:00 PM	0	552	215	3	22	13	3	11	120	1	0	0	0
4/22/2024	2:15 PM	0	580	220	3	26	11	3	13	141	1	0	0	0
4/22/2024	2:30 PM	0	613	206	3	25	9	3	14	144	0	0	0	0
4/22/2024	2:45 PM	0	631	201	3	28	13	6	11	148	1	0	0	0
4/22/2024	3:00 PM	1	677	208	1	25	11	3	10	144	2	0	0	0
4/22/2024	3:15 PM	1	704	224	1	23	11	3	10	133	3	0	0	0
4/22/2024	3:30 PM	1	738	238	1	22	10	3	8	128	4	0	0	0
4/22/2024	3:45 PM	1	790	237	1	19	6	2	13	123	3	0	0	0
4/22/2024	4:00 PM	0	799	241	0	28	7	2	12	124	2	0	0	0
4/22/2024	4:15 PM	0	816	237	2	30	8	2	13	126	2	0	0	0
4/22/2024	4:30 PM	0	817	240	2	33	10	2	15	125	1	0	0	0
4/22/2024	4:45 PM	0	793	246	2	34	11	0	10	129	1	0	0	0
4/22/2024	5:00 PM	0	764	243	2	27	11	0	14	128	2	0	0	0
4/22/2024	5:15 PM	0	714	230	0	23	9	0	10	118	1	0	0	0
4/22/2024	5:30 PM	0	673	218	0	20	9	0	10	115	1	0	0	0
4/22/2024	5:45 PM	0	620	202	0	12	7	0	10	104	1	0	0	0
4/22/2024	6:00 PM	0	563	182	0	9	7	0	6	96	0	0	0	0
4/22/2024	6:15 PM	0	512	164	0	7	7	0	9	96	0	0	0	0
4/22/2024	6:30 PM	0	457	145	0	5	5	0	7	92	0	0	0	0
4/22/2024	6:45 PM	0	429	130	0	7	6	0	7	94	0	1	0	0
4/22/2024	7:00 PM	0	424	112	0	8	7	0	7	86	0	1	0	0
4/22/2024	7:15 PM	0	421	107	0	9	6	0	5	79	0	2	0	0
4/22/2024	7:30 PM	0	401	94	0	8	7	0	7	69	0	3	0	0
4/22/2024	7:45 PM	0	386	76	0	5	5	0	5	66	0	2	0	0
4/22/2024	8:00 PM	0	367	68	0	5	2	0	4	71	0	2	0	0
4/22/2024	8:15 PM	0	355	49	0	4	2	0	3	73	0	1	0	0
4/22/2024	8:30 PM	0	357	49	0	4	0	0	0	79	0	0	0	0
4/22/2024	8:45 PM	0	338	51	0	7	0	0	0	69	0	0	0	0
4/22/2024	9:00 PM	0	302	51	0	5	0	0	0	60	0	0	0	0
4/22/2024	9:15 PM	0	253	50	0	5	0	0	0	58	0	0	0	0
4/22/2024	9:30 PM	0	200	49	0	4	0	0	0	52	0	0	0	0
4/22/2024	9:45 PM	0	168	49	0	5	0	0	0	46	0	0	0	0
4/22/2024	10:00 PM	0	147	48	0	5	0	0	0	49	0	0	0	0
4/22/2024	10:15 PM	0	138	51	0	4	0	0	0	47	0	0	0	0
4/22/2024	10:30 PM	0	129	53	0	5	0	0	0	43	0	0	0	0
4/22/2024	10:45 PM	0	112	46	0	3	0	0	0	41	0	0	0	0
4/22/2024	11:00 PM	0	102	46	0	3	0	0	0	31	0	0	0	0
4/22/2024	11:15 PM	0	71	33	0	3	0	0	0	17	0	0	0	0
4/22/2024	11:30 PM	0	41	19	0	2	0	0	0	9	0	0	0	0
4/22/2024	11:45 PM	0	20	12	0	0	0	0	0	4	0	0	0	0

4/23/2024	12:00 AM	0	73	4	0	0	1	0	0	21	0	2	0	0
4/23/2024	12:15 AM	0	85	4	0	3	1	0	0	24	0	2	0	0
4/23/2024	12:30 AM	0	87	4	0	3	1	0	0	28	0	2	0	0
4/23/2024	12:45 AM	0	87	2	0	3	1	0	0	34	0	1	0	0
4/23/2024	1:00 AM	0	78	2	0	4	0	0	0	36	0	2	0	0
4/23/2024	1:15 AM	0	77	1	0	3	0	0	0	40	0	1	0	0
4/23/2024	1:30 AM	0	72	1	0	3	0	0	0	41	0	1	0	0
4/23/2024	1:45 AM	0	73	2	0	4	0	0	0	39	0	1	0	0
4/23/2024	2:00 AM	0	84	2	0	3	0	0	0	39	0	0	0	0
4/23/2024	2:15 AM	0	70	2	0	2	0	0	0	32	0	0	0	0
4/23/2024	2:30 AM	0	76	2	0	2	0	0	2	35	0	1	0	0
4/23/2024	2:45 AM	0	81	2	0	2	0	0	3	37	0	1	0	0
4/23/2024	3:00 AM	0	84	2	0	4	0	0	3	43	0	2	0	0
4/23/2024	3:15 AM	0	104	4	0	4	0	0	3	51	0	2	0	0
4/23/2024	3:30 AM	0	101	9	0	4	0	0	1	46	0	1	0	0
4/23/2024	3:45 AM	0	119	10	0	5	0	0	0	45	0	4	0	0
4/23/2024	4:00 AM	0	128	9	0	3	0	0	0	44	0	4	0	0
4/23/2024	4:15 AM	0	144	10	0	2	0	0	0	41	0	4	0	0
4/23/2024	4:30 AM	0	186	9	0	5	1	0	0	48	0	4	0	0
4/23/2024	4:45 AM	0	242	16	0	3	1	0	0	56	0	1	0	0
4/23/2024	5:00 AM	0	288	29	0	7	2	0	0	52	0	0	0	0
4/23/2024	5:15 AM	0	330	51	0	10	2	0	0	58	0	0	0	0
4/23/2024	5:30 AM	0	365	92	0	10	1	0	2	67	0	0	0	0
4/23/2024	5:45 AM	1	383	127	0	12	4	0	2	67	0	0	0	0
4/23/2024	6:00 AM	1	409	165	0	12	5	0	3	71	0	1	0	0
4/23/2024	6:15 AM	1	440	204	0	9	5	0	4	69	0	1	0	0
4/23/2024	6:30 AM	1	486	222	0	15	6	0	2	58	0	1	0	0
4/23/2024	6:45 AM	1	523	215	1	16	4	1	3	49	0	1	0	0
4/23/2024	7:00 AM	1	568	216	1	17	2	1	3	48	0	0	0	0
4/23/2024	7:15 AM	2	577	190	1	28	5	1	2	45	0	0	0	0
4/23/2024	7:30 AM	2	518	172	1	25	6	1	3	44	0	0	0	0
4/23/2024	7:45 AM	1	490	172	0	30	6	0	2	46	0	0	0	0
4/23/2024	8:00 AM	1	471	168	0	32	7	0	1	52	0	1	0	0
4/23/2024	8:15 AM	0	448	182	2	28	6	0	1	71	0	1	0	0
4/23/2024	8:30 AM	0	473	184	3	31	9	0	1	82	0	1	0	0
4/23/2024	8:45 AM	0	467	193	4	27	9	0	2	94	0	1	0	0
4/23/2024	9:00 AM	0	446	182	4	25	8	0	4	91	0	0	0	0
4/23/2024	9:15 AM	0	443	174	2	23	10	0	5	79	0	0	0	0
4/23/2024	9:30 AM	0	439	168	2	27	8	0	5	70	0	0	0	0
4/23/2024	9:45 AM	0	448	155	1	29	8	0	5	78	1	0	0	0
4/23/2024	10:00 AM	0	435	172	1	32	11	0	3	94	1	0	0	0
4/23/2024	10:15 AM	0	434	171	1	33	9	0	2	109	1	0	0	0
4/23/2024	10:30 AM	0	426	168	0	25	8	1	3	131	1	0	0	0
4/23/2024	10:45 AM	2	424	177	0	24	9	1	4	130	0	0	0	0
4/23/2024	11:00 AM	3	449	163	0	20	8	1	4	128	0	0	0	0
4/23/2024	11:15 AM	4	453	165	0	21	6	1	6	123	0	0	0	0
4/23/2024	11:30 AM	4	478	171	0	19	7	0	6	126	0	0	0	0
4/23/2024	11:45 AM	2	476	164	1	22	5	0	6	128	0	0	0	0
4/23/2024	12:00 PM	1	480	168	2	21	7	0	7	133	0	0	0	0
4/23/2024	12:15 PM	0	494	167	2	19	8	0	7	144	1	0	0	0
4/23/2024	12:30 PM	0	498	161	2	22	8	0	7	135	3	0	0	0
4/23/2024	12:45 PM	0	525	169	1	22	10	0	6	131	3	0	0	0
4/23/2024	1:00 PM	0	515	171	0	21	9	0	8	126	5	0	0	0
4/23/2024	1:15 PM	1	539	168	0	22	15	0	10	124	4	0	0	0
4/23/2024	1:30 PM	1	563	180	5	21	12	0	9	127	3	0	0	0
4/23/2024	1:45 PM	1	564	186	5	19	11	0	14	126	4	1	0	0
4/23/2024	2:00 PM	2	590	202	5	24	10	2	16	125	2	2	0	0
4/23/2024	2:15 PM	2	593	226	5	23	6	3	18	126	2	2	0	0
4/23/2024	2:30 PM	2	609	236	0	29	10	3	21	119	1	2	0	0
4/23/2024	2:45 PM	2	622	251	0	28	13	3	24	134	0	1	0	0
4/23/2024	3:00 PM	1	663	252	0	28	13	2	22	145	2	0	0	0
4/23/2024	3:15 PM	0	706	270	1	31	13	3	22	136	2	1	0	0
4/23/2024	3:30 PM	0	763	277	1	29	10	3	23	139	2	1	0	0
4/23/2024	3:45 PM	0	802	268	1	35	10	3	17	131	2	1	0	0
4/23/2024	4:00 PM	0	809	266	2	39	12	2	18	117	0	2	0	0
4/23/2024	4:15 PM	0	825	244	1	36	11	0	15	101	1	1	0	0
4/23/2024	4:30 PM	0	934	233	2	40	14	0	11	92	2	1	0	0
4/23/2024	4:45 PM	1	917	234	2	41	11	0	14	90	2	1	0	0
4/23/2024	5:00 PM	1	914	230	1	36	8	1	14	101	4	0	0	0
4/23/2024	5:15 PM	2	870	227	1	39	8	1	14	116	3	0	0	0
4/23/2024	5:30 PM	2	689	206	0	32	5	1	16	124	2	0	0	0
4/23/2024	5:45 PM	1	637	188	0	23	6	1	10	107	2	0	0	0
4/23/2024	6:00 PM	1	557	157	0	18	6	0	9	86	0	0	0	0
4/23/2024	6:15 PM	2	506	132	0	19	4	0	6	78	0	0	0	0
4/23/2024	6:30 PM	3	452	124	0	16	3	0	3	68	0	2	0	0
4/23/2024	6:45 PM	4	412	117	0	14	4	0	4	72	0	2	0	0
4/23/2024	7:00 PM	5	385	130	0	14	3	0	1	68	0	2	0	0
4/23/2024	7:15 PM	3	365	136	0	8	8	0	1	65	0	2	0	0
4/23/2024	7:30 PM	2	367	140	0	9	8	0	2	66	0	1	0	0
4/23/2024	7:45 PM	1	373	132	0	9	6	0	1	60	0	1	0	0
4/23/2024	8:00 PM	0	378	113	0	11	6	0	1	72	0	2	0	0
4/23/2024	8:15 PM	0	371	106	0	12	1	0	1	72	0	2	0	0
4/23/2024	8:30 PM	1	368	105	0	8	1	0	0	67	0	1	0	0
4/23/2024	8:45 PM	1	360	114	0	10	0	0	0	62	0	1	0	0
4/23/2024	9:00 PM	1	343	104	0	8	0	0	0	47	0	2	0	0
4/23/2024	9:15 PM	1	325	83	0	6	0	0	0	41	0	3	0	0
4/23/2024	9:30 PM	0	291	66	0	7	0	0	0	37	0	4	0	0
4/23/2024	9:45 PM	0	259	49	0	4	0	0	0	43	0	5	0	0
4/23/2024	10:00 PM	0	231	49	0	3	0	0	0	42	0	4	0	0
4/23/2024	10:15 PM	0	205	49	0	1	0	0	0	37	0	4	0	0
4/23/2024	10:30 PM	0	179	52	0	0	0	0	0	35	0	4	0	0
4/23/2024	10:45 PM	0	146	48	0	0	0	0	0	26	0	5	0	0
4/23/2024	11:00 PM	0	126	47	0	2	0	0	0	21	0	4	0	0
4/23/2024	11:15 PM	0	87	36	0	2	0	0	0	16	0	3	0	0
4/23/2024	11:30 PM	0	49	20	0	2	0	0	0	8	0	2	0	0
4/23/2024	11:45 PM	0	24	9	0	2	0	0	0	3	0	0	0	0

4/24/2024	12:00 AM	0	80	16	0	2	0	0	0	32	0	4	0	0
4/24/2024	12:15 AM	0	73	11	0	4	0	0	0	24	0	0	0	0
4/24/2024	12:30 AM	0	61	6	0	4	1	0	0	27	0	1	0	0
4/24/2024	12:45 AM	0	58	6	0	5	2	0	0	21	0	1	0	0
4/24/2024	1:00 AM	0	59	5	0	6	2	0	0	20	0	1	0	0
4/24/2024	1:15 AM	0	53	7	0	3	2	0	0	24	0	2	0	0
4/24/2024	1:30 AM	0	56	8	0	4	2	0	0	18	0	1	0	0
4/24/2024	1:45 AM	0	52	7	0	4	1	0	0	24	0	1	0	0
4/24/2024	2:00 AM	0	46	9	0	2	1	0	0	29	0	3	0	0
4/24/2024	2:15 AM	0	47	8	0	2	1	0	0	31	0	2	0	0
4/24/2024	2:30 AM	0	47	9	0	1	0	0	0	34	0	2	0	0
4/24/2024	2:45 AM	0	53	12	0	1	1	0	0	33	0	2	0	0
4/24/2024	3:00 AM	0	68	12	2	2	1	0	0	28	0	0	0	0
4/24/2024	3:15 AM	0	75	14	2	2	1	0	0	27	0	0	0	0
4/24/2024	3:30 AM	0	75	12	2	3	1	0	0	25	0	0	0	0
4/24/2024	3:45 AM	0	84	13	2	2	0	0	0	24	0	2	0	0
4/24/2024	4:00 AM	0	80	13	0	4	0	0	0	28	0	2	0	0
4/24/2024	4:15 AM	0	96	13	0	8	0	0	0	29	0	3	0	0
4/24/2024	4:30 AM	0	132	17	0	9	1	0	0	41	0	3	0	0
4/24/2024	4:45 AM	0	176	20	0	10	1	0	0	42	0	1	0	0
4/24/2024	5:00 AM	0	221	23	0	8	1	0	0	44	0	1	0	0
4/24/2024	5:15 AM	1	265	45	0	12	2	0	1	44	0	1	0	0
4/24/2024	5:30 AM	1	311	84	0	12	1	0	4	38	0	1	0	0
4/24/2024	5:45 AM	2	389	125	0	13	1	0	6	48	0	2	0	0
4/24/2024	6:00 AM	2	428	175	0	18	2	0	9	56	0	2	0	0
4/24/2024	6:15 AM	1	466	193	0	15	4	0	10	75	0	2	0	0
4/24/2024	6:30 AM	1	516	206	0	19	6	0	11	76	0	2	0	0
4/24/2024	6:45 AM	0	504	216	0	26	8	0	11	78	0	2	0	0
4/24/2024	7:00 AM	0	523	220	0	26	7	0	12	74	0	2	1	0
4/24/2024	7:15 AM	0	503	206	0	25	6	0	11	62	0	1	1	0
4/24/2024	7:30 AM	0	468	200	0	29	7	2	8	64	0	1	1	0
4/24/2024	7:45 AM	0	436	185	0	27	6	2	7	64	0	0	1	0
4/24/2024	8:00 AM	0	421	167	0	28	8	2	5	73	1	0	0	0
4/24/2024	8:15 AM	1	412	179	1	27	8	4	5	85	1	0	0	0
4/24/2024	8:30 AM	1	381	166	1	25	9	3	4	87	1	0	0	0
4/24/2024	8:45 AM	1	372	174	2	23	8	3	6	87	2	1	0	0
4/24/2024	9:00 AM	2	376	177	4	23	8	4	7	97	2	1	0	0
4/24/2024	9:15 AM	1	397	187	3	22	9	2	9	103	2	1	0	0
4/24/2024	9:30 AM	2	427	193	3	21	6	1	11	115	2	1	0	0
4/24/2024	9:45 AM	2	462	204	2	19	6	1	14	121	1	0	0	0
4/24/2024	10:00 AM	1	464	189	1	17	8	0	12	122	1	0	0	0
4/24/2024	10:15 AM	1	448	190	2	24	6	0	10	114	1	0	0	0
4/24/2024	10:30 AM	0	438	185	2	19	6	0	9	112	2	0	0	0
4/24/2024	10:45 AM	2	424	164	2	21	6	0	8	112	2	0	0	0
4/24/2024	11:00 AM	3	414	187	1	23	5	0	9	101	1	0	0	0
4/24/2024	11:15 AM	3	431	167	0	18	6	0	13	115	1	0	1	0
4/24/2024	11:30 AM	4	465	177	0	24	5	2	18	135	1	0	1	0
4/24/2024	11:45 AM	2	477	192	0	24	5	4	17	133	3	0	1	0
4/24/2024	12:00 PM	1	490	180	0	23	7	4	16	148	5	0	1	0
4/24/2024	12:15 PM	1	503	186	0	24	8	4	13	152	5	0	0	0
4/24/2024	12:30 PM	2	496	192	1	25	10	2	8	143	4	0	0	0
4/24/2024	12:45 PM	3	511	179	1	27	11	0	7	158	2	0	0	0
4/24/2024	1:00 PM	3	515	190	1	27	9	0	7	146	0	0	0	0
4/24/2024	1:15 PM	3	517	214	1	30	9	0	5	135	0	0	0	0
4/24/2024	1:30 PM	1	555	210	0	23	8	0	6	140	0	0	0	0
4/24/2024	1:45 PM	0	558	217	2	23	7	1	6	138	0	0	1	0
4/24/2024	2:00 PM	1	590	220	5	24	5	1	8	140	0	0	1	0
4/24/2024	2:15 PM	2	618	219	5	22	5	1	9	150	1	0	1	0
4/24/2024	2:30 PM	2	616	243	6	27	5	1	12	142	1	0	1	0
4/24/2024	2:45 PM	2	643	254	4	40	8	1	13	144	1	0	0	0
4/24/2024	3:00 PM	1	677	273	1	38	10	1	13	154	1	0	1	0
4/24/2024	3:15 PM	1	706	291	3	39	12	2	15	155	0	0	1	0
4/24/2024	3:30 PM	1	752	286	3	44	13	2	16	148	1	0	1	0
4/24/2024	3:45 PM	1	776	289	5	34	12	1	17	155	1	0	1	0
4/24/2024	4:00 PM	1	778	271	5	39	10	1	18	155	1	0	0	0
4/24/2024	4:15 PM	0	781	266	3	43	7	0	17	144	1	0	0	0
4/24/2024	4:30 PM	0	779	265	3	35	6	1	13	152	0	0	0	0
4/24/2024	4:45 PM	0	758	253	1	33	4	1	9	138	0	0	0	0
4/24/2024	5:00 PM	0	738	249	3	29	5	2	8	133	0	0	0	0
4/24/2024	5:15 PM	0	705	218	3	23	3	2	8	132	0	0	0	0
4/24/2024	5:30 PM	1	660	188	5	27	4	1	9	120	1	0	0	0
4/24/2024	5:45 PM	1	615	175	5	22	5	1	8	114	1	0	0	0
4/24/2024	6:00 PM	1	573	152	3	25	3	0	5	97	1	0	0	0
4/24/2024	6:15 PM	1	529	140	3	24	4	0	6	85	1	0	0	0
4/24/2024	6:30 PM	0	481	137	0	17	2	0	4	78	0	0	0	0
4/24/2024	6:45 PM	1	454	129	0	17	1	0	7	72	0	0	0	0
4/24/2024	7:00 PM	1	421	126	0	11	1	0	9	70	0	1	0	0
4/24/2024	7:15 PM	1	405	117	0	8	1	0	7	66	0	2	0	0
4/24/2024	7:30 PM	1	393	105	0	8	2	0	8	62	0	2	0	0
4/24/2024	7:45 PM	0	388	93	0	7	2	0	5	59	0	2	0	0
4/24/2024	8:00 PM	0	414	106	1	6	2	0	3	59	0	1	0	0
4/24/2024	8:15 PM	0	416	95	1	6	1	0	2	55	0	2	0	0
4/24/2024	8:30 PM	0	401	79	1	6	0	0	0	55	0	2	0	0
4/24/2024	8:45 PM	0	392	68	1	4	0	0	0	54	0	4	0	0
4/24/2024	9:00 PM	0	347	35	0	3	0	0	1	58	0	5	0	0
4/24/2024	9:15 PM	0	317	26	0	2	0	0	1	56	0	4	0	0
4/24/2024	9:30 PM	0	297	21	1	3	0	0	1	55	0	7	0	0
4/24/2024	9:45 PM	0	277	16	1	3	0	0	1	46	0	6	0	0
4/24/2024	10:00 PM	0	250	11	1	3	0	0	0	37	0	7	0	0
4/24/2024	10:15 PM	1	235	12	2	3	0	0	0	36	0	7	0	0
4/24/2024	10:30 PM	1	214	12	1	3	0	0	0	40	0	4	0	0
4/24/2024	10:45 PM	1	179	10	1	3	0	0	0	45	0	3	0	0
4/24/2024	11:00 PM	1	168	11	1	2	0	0	0	40	0	2	0	0
4/24/2024	11:15 PM	0	118	7	0	2	0	0	0	30	0	1	0	0
4/24/2024	11:30 PM	0	71	4	0	0	0	0	0	15	0	1	0	0
4/24/2024	11:45 PM	0	37	2	0	0	0	0	0	4	0	1	0	0

4/25/2024	12:00 AM	0	77	16	0	3	2	0	2	37	0	3	0	0
4/25/2024	12:15 AM	0	67	9	0	5	2	0	0	37	0	4	0	0
4/25/2024	12:30 AM	0	62	5	0	5	2	0	0	24	0	2	0	0
4/25/2024	12:45 AM	0	59	2	0	3	2	0	0	20	0	2	0	0
4/25/2024	1:00 AM	0	57	2	0	2	2	0	0	24	0	2	0	0
4/25/2024	1:15 AM	0	55	2	0	1	1	0	0	23	0	2	0	0
4/25/2024	1:30 AM	0	62	2	0	2	0	0	0	24	0	2	0	0
4/25/2024	1:45 AM	0	60	2	0	2	0	0	0	21	0	1	0	0
4/25/2024	2:00 AM	0	62	3	0	3	0	0	0	26	0	2	0	0
4/25/2024	2:15 AM	0	62	2	0	2	0	0	0	28	0	1	0	0
4/25/2024	2:30 AM	0	55	1	0	2	0	0	0	29	0	2	0	0
4/25/2024	2:45 AM	0	60	1	0	3	0	0	0	30	0	3	0	0
4/25/2024	3:00 AM	0	77	0	0	3	0	0	0	25	0	2	0	0
4/25/2024	3:15 AM	0	80	3	0	5	0	0	0	19	0	2	0	0
4/25/2024	3:30 AM	0	86	4	0	5	0	0	0	21	0	2	0	0
4/25/2024	3:45 AM	0	103	4	0	4	0	0	0	23	0	1	0	0
4/25/2024	4:00 AM	0	100	8	0	4	0	0	0	23	0	1	0	0
4/25/2024	4:15 AM	0	109	5	0	2	0	0	0	34	0	2	0	0
4/25/2024	4:30 AM	0	141	4	0	1	0	0	0	34	0	1	0	0
4/25/2024	4:45 AM	0	172	6	0	1	0	0	0	43	0	1	0	0
4/25/2024	5:00 AM	0	230	5	0	0	0	0	0	54	0	2	0	0
4/25/2024	5:15 AM	0	320	9	0	1	0	0	0	59	0	3	0	0
4/25/2024	5:30 AM	1	360	44	0	6	2	0	0	75	0	5	0	0
4/25/2024	5:45 AM	1	408	84	0	10	4	0	0	74	0	5	0	0
4/25/2024	6:00 AM	1	420	127	0	12	6	0	1	77	0	4	0	0
4/25/2024	6:15 AM	1	423	167	0	16	14	0	1	75	0	3	0	0
4/25/2024	6:30 AM	0	471	181	1	17	15	1	2	77	0	1	0	0
4/25/2024	6:45 AM	1	511	185	1	22	13	1	2	75	0	1	0	0
4/25/2024	7:00 AM	1	575	199	1	29	12	1	1	71	0	1	0	0
4/25/2024	7:15 AM	1	569	219	2	28	7	1	1	76	0	0	0	0
4/25/2024	7:30 AM	1	549	233	1	29	6	0	1	77	2	1	0	0
4/25/2024	7:45 AM	0	499	243	1	34	8	0	3	90	2	1	0	0
4/25/2024	8:00 AM	0	441	244	1	34	8	0	4	99	2	1	0	0
4/25/2024	8:15 AM	1	415	227	1	35	8	0	6	106	3	1	0	0
4/25/2024	8:30 AM	2	393	218	1	32	8	0	6	102	2	0	0	0
4/25/2024	8:45 AM	2	408	210	1	21	7	0	8	111	2	0	0	0
4/25/2024	9:00 AM	2	426	188	1	21	8	0	9	105	2	0	0	0
4/25/2024	9:15 AM	1	450	195	0	16	10	1	9	101	1	0	0	0
4/25/2024	9:30 AM	0	472	185	0	18	8	1	10	98	0	0	0	0
4/25/2024	9:45 AM	0	476	180	0	25	8	1	7	95	0	0	0	0
4/25/2024	10:00 AM	0	470	182	0	22	7	2	13	110	0	0	0	0
4/25/2024	10:15 AM	0	477	163	0	25	5	1	14	121	0	0	0	0
4/25/2024	10:30 AM	0	481	155	0	26	9	1	15	133	0	0	0	0
4/25/2024	10:45 AM	1	473	155	0	26	9	1	17	140	0	1	0	0
4/25/2024	11:00 AM	2	463	177	0	23	11	0	9	138	0	1	0	0
4/25/2024	11:15 AM	2	442	185	0	28	11	0	7	137	1	1	0	0
4/25/2024	11:30 AM	2	451	200	0	28	8	1	7	138	1	2	0	0
4/25/2024	11:45 AM	1	455	207	0	26	10	2	6	137	1	1	0	0
4/25/2024	12:00 PM	0	485	189	1	29	7	2	9	146	1	1	0	0
4/25/2024	12:15 PM	0	504	203	1	29	6	3	13	146	0	2	0	0
4/25/2024	12:30 PM	0	523	207	3	31	9	3	10	142	1	1	0	0
4/25/2024	12:45 PM	0	576	210	4	29	7	2	11	137	2	1	0	0
4/25/2024	1:00 PM	1	603	231	3	25	7	2	12	138	2	1	0	0
4/25/2024	1:15 PM	1	637	232	3	28	11	1	13	135	3	0	0	0
4/25/2024	1:30 PM	2	635	241	1	24	8	0	14	157	3	0	0	0
4/25/2024	1:45 PM	2	613	251	1	28	7	0	13	168	3	0	0	0
4/25/2024	2:00 PM	2	603	243	1	36	8	0	12	158	3	0	1	0
4/25/2024	2:15 PM	3	641	263	1	30	3	0	7	163	2	0	1	0
4/25/2024	2:30 PM	2	690	258	1	35	3	0	8	146	2	1	1	0
4/25/2024	2:45 PM	3	739	280	1	31	5	2	7	132	1	1	1	0
4/25/2024	3:00 PM	2	753	303	1	30	4	2	9	133	1	1	0	0
4/25/2024	3:15 PM	1	767	291	2	34	4	2	11	135	1	1	0	0
4/25/2024	3:30 PM	1	808	317	2	36	6	2	9	123	0	0	0	0
4/25/2024	3:45 PM	1	830	297	1	37	4	1	9	124	0	0	0	0
4/25/2024	4:00 PM	2	906	310	1	36	5	1	9	125	0	0	0	0
4/25/2024	4:15 PM	3	1000	338	0	34	7	2	7	111	0	0	0	0
4/25/2024	4:30 PM	3	991	339	0	26	4	2	8	116	0	0	0	0
4/25/2024	4:45 PM	3	967	327	0	29	5	2	10	111	0	0	0	0
4/25/2024	5:00 PM	3	909	288	2	25	7	2	6	110	1	0	0	0
4/25/2024	5:15 PM	2	777	248	2	23	5	1	9	123	1	0	0	0
4/25/2024	5:30 PM	3	729	216	2	25	6	1	8	116	1	0	0	0
4/25/2024	5:45 PM	3	679	209	2	24	5	0	8	108	1	0	0	0
4/25/2024	6:00 PM	2	634	209	2	25	2	0	9	90	1	0	0	0
4/25/2024	6:15 PM	2	597	196	2	23	1	0	6	64	1	0	0	0
4/25/2024	6:30 PM	1	535	184	2	18	2	0	8	63	1	0	0	0
4/25/2024	6:45 PM	2	508	174	2	15	2	0	11	61	1	1	0	0
4/25/2024	7:00 PM	2	463	149	0	13	2	0	9	61	0	1	0	0
4/25/2024	7:15 PM	2	423	127	0	14	2	0	8	75	0	1	0	0
4/25/2024	7:30 PM	2	411	100	1	15	2	0	6	68	0	3	0	0
4/25/2024	7:45 PM	0	398	69	1	10	2	0	0	63	0	2	0	0
4/25/2024	8:00 PM	0	384	43	1	8	2	0	0	60	0	2	0	0
4/25/2024	8:15 PM	0	400	29	1	6	2	0	0	43	0	2	0	0
4/25/2024	8:30 PM	0	406	17	0	4	0	0	0	36	0	0	0	0
4/25/2024	8:45 PM	0	406	14	0	3	0	0	0	33	0	0	0	0
4/25/2024	9:00 PM	0	378	13	0	2	0	0	0	30	0	0	0	0
4/25/2024	9:15 PM	0	330	9	0	1	0	0	0	30	0	0	0	0
4/25/2024	9:30 PM	0	292	7	0	2	0	0	0	33	0	0	0	0
4/25/2024	9:45 PM	0	254	7	1	2	0	0	0	33	0	1	0	0
4/25/2024	10:00 PM	0	258	5	1	4	0	0	0	28	0	2	0	0
4/25/2024	10:15 PM	0	257	11	1	3	0	0	0	29	0	2	0	0
4/25/2024	10:30 PM	0	221	10	1	2	1	0	0	26	0	6	0	0
4/25/2024	10:45 PM	0	206	9	0	2	1	0	0	19	0	5	0	0
4/25/2024	11:00 PM	0	197	8	0	0	1	0	0	19	0	5	0	0
4/25/2024	11:15 PM	0	140	1	0	0	1	0	0	9	0	5	0	0
4/25/2024	11:30 PM	0	100	1	0	0	0	0	0	5	0	1	0	0
4/25/2024	11:45 PM	0	49	0	0	0	0	0	0	3	0	1	0	0

4/26/2024	12:00 AM	0	103	25	0	8	0	0	0	24	0	3	0	0
4/26/2024	12:15 AM	0	88	23	0	10	0	0	0	23	0	5	0	0
4/26/2024	12:30 AM	0	85	28	0	10	0	0	0	28	0	4	0	0
4/26/2024	12:45 AM	0	83	28	0	8	0	0	0	33	0	4	0	0
4/26/2024	1:00 AM	0	83	30	0	7	0	0	0	31	0	5	0	0
4/26/2024	1:15 AM	0	80	30	0	2	0	0	0	30	0	4	0	0
4/26/2024	1:30 AM	0	71	24	0	3	0	0	0	30	0	3	0	0
4/26/2024	1:45 AM	0	62	23	0	2	0	0	0	31	0	3	0	0
4/26/2024	2:00 AM	0	60	21	0	5	0	0	0	28	0	4	0	0
4/26/2024	2:15 AM	0	61	21	0	7	0	0	0	35	0	5	0	0
4/26/2024	2:30 AM	0	64	23	0	5	0	0	0	34	0	8	0	0
4/26/2024	2:45 AM	0	69	23	0	6	0	0	0	37	0	9	0	0
4/26/2024	3:00 AM	0	76	30	0	3	0	0	0	42	0	8	0	0
4/26/2024	3:15 AM	0	81	37	0	3	2	0	0	44	0	7	0	0
4/26/2024	3:30 AM	0	86	43	0	4	2	0	0	48	0	5	0	0
4/26/2024	3:45 AM	0	96	53	0	5	2	0	0	50	0	4	0	0
4/26/2024	4:00 AM	0	101	55	0	8	2	0	0	55	0	4	0	0
4/26/2024	4:15 AM	0	109	55	0	7	1	0	0	49	0	3	0	0
4/26/2024	4:30 AM	0	119	59	2	6	1	0	0	48	0	3	0	0
4/26/2024	4:45 AM	0	144	72	2	7	1	0	0	47	0	4	0	0
4/26/2024	5:00 AM	0	181	91	2	5	2	0	0	46	0	3	0	0
4/26/2024	5:15 AM	0	210	106	2	7	2	0	0	52	0	3	0	0
4/26/2024	5:30 AM	0	271	128	0	9	3	0	0	56	0	3	0	0
4/26/2024	5:45 AM	0	310	137	0	11	4	0	0	57	0	2	0	0
4/26/2024	6:00 AM	0	340	148	0	12	4	0	0	59	1	3	0	0
4/26/2024	6:15 AM	1	396	169	0	18	4	0	0	53	1	3	0	0
4/26/2024	6:30 AM	1	446	195	0	25	6	0	1	50	2	2	0	0
4/26/2024	6:45 AM	2	492	210	0	29	9	1	1	52	2	1	0	0
4/26/2024	7:00 AM	2	540	229	0	37	12	1	3	52	2	0	0	0
4/26/2024	7:15 AM	1	526	230	0	44	12	1	4	63	2	0	0	0
4/26/2024	7:30 AM	1	488	215	1	41	9	1	6	70	1	1	0	0
4/26/2024	7:45 AM	0	458	208	3	40	5	0	7	78	1	1	0	0
4/26/2024	8:00 AM	0	419	182	3	38	4	0	8	81	0	1	0	0
4/26/2024	8:15 AM	0	421	180	4	28	7	0	8	73	0	1	0	0
4/26/2024	8:30 AM	0	441	180	3	27	9	0	5	75	0	0	0	0
4/26/2024	8:45 AM	0	441	183	1	26	9	0	5	70	2	0	0	0
4/26/2024	9:00 AM	1	448	187	1	22	7	0	5	76	2	0	1	0
4/26/2024	9:15 AM	2	446	188	0	21	4	0	6	81	2	1	1	0
4/26/2024	9:30 AM	3	438	179	0	21	4	0	8	79	3	1	1	0
4/26/2024	9:45 AM	3	450	163	0	20	6	0	10	81	1	1	1	0
4/26/2024	10:00 AM	3	456	162	1	24	7	1	12	82	1	1	0	0
4/26/2024	10:15 AM	2	491	164	1	24	8	3	12	94	2	0	0	0
4/26/2024	10:30 AM	1	516	173	1	27	8	3	15	103	2	0	0	0
4/26/2024	10:45 AM	2	531	192	2	30	8	3	13	111	2	0	0	0
4/26/2024	11:00 AM	1	547	211	1	30	7	2	14	112	2	0	0	0
4/26/2024	11:15 AM	1	545	215	1	34	8	0	12	115	1	0	0	0
4/26/2024	11:30 AM	2	543	223	2	32	9	0	9	124	0	0	0	0
4/26/2024	11:45 AM	1	562	225	2	30	10	0	9	117	0	0	0	0
4/26/2024	12:00 PM	5	577	212	2	30	11	0	6	117	0	0	0	0
4/26/2024	12:15 PM	6	607	220	5	29	8	0	9	103	0	0	0	0
4/26/2024	12:30 PM	5	615	217	5	25	6	1	11	94	0	0	0	0
4/26/2024	12:45 PM	6	620	202	4	30	3	1	13	107	0	0	0	0
4/26/2024	1:00 PM	3	634	210	5	28	4	1	12	108	0	0	0	0
4/26/2024	1:15 PM	3	642	204	3	27	5	1	10	123	0	0	0	0
4/26/2024	1:30 PM	3	649	216	2	30	7	0	14	117	1	0	0	0
4/26/2024	1:45 PM	2	646	226	2	30	9	0	13	119	1	0	0	0
4/26/2024	2:00 PM	2	657	228	1	30	10	0	14	134	1	0	0	0
4/26/2024	2:15 PM	1	670	238	0	29	13	0	15	137	1	0	0	0
4/26/2024	2:30 PM	1	725	248	0	29	13	0	11	145	0	0	0	0
4/26/2024	2:45 PM	1	744	256	1	26	11	0	13	140	0	1	0	0
4/26/2024	3:00 PM	0	783	255	3	24	8	0	16	133	2	1	0	0
4/26/2024	3:15 PM	0	808	249	4	29	6	0	23	122	2	1	0	0
4/26/2024	3:30 PM	0	832	241	4	27	6	0	22	123	2	1	0	0
4/26/2024	3:45 PM	0	856	247	3	28	7	0	22	121	2	0	0	0
4/26/2024	4:00 PM	0	864	246	1	25	8	0	23	107	0	0	0	0
4/26/2024	4:15 PM	0	871	248	0	23	8	0	14	107	1	1	0	0
4/26/2024	4:30 PM	0	905	235	0	28	8	0	17	96	1	1	0	0
4/26/2024	4:45 PM	0	913	228	0	20	7	0	15	92	1	1	0	0
4/26/2024	5:00 PM	1	870	221	0	22	5	0	14	103	1	1	0	0
4/26/2024	5:15 PM	2	824	206	1	17	4	0	15	108	0	0	0	0
4/26/2024	5:30 PM	2	746	199	2	17	3	0	15	108	1	0	0	0
4/26/2024	5:45 PM	2	684	192	2	18	3	0	14	98	2	0	0	0
4/26/2024	6:00 PM	1	673	184	2	16	5	0	9	78	2	0	0	0
4/26/2024	6:15 PM	0	631	185	3	14	5	0	11	63	2	0	0	0
4/26/2024	6:30 PM	1	580	157	2	9	4	0	9	59	2	0	0	0
4/26/2024	6:45 PM	1	579	140	2	9	4	0	10	57	1	0	0	0
4/26/2024	7:00 PM	1	547	136	3	9	2	0	12	56	1	0	0	0
4/26/2024	7:15 PM	2	542	112	2	10	1	0	9	60	1	0	0	0
4/26/2024	7:30 PM	1	539	121	2	9	0	0	5	60	0	0	0	0
4/26/2024	7:45 PM	1	511	110	2	7	0	0	3	61	0	2	0	0
4/26/2024	8:00 PM	1	504	99	1	6	0	0	0	56	0	3	0	0
4/26/2024	8:15 PM	0	485	95	0	8	0	0	0	45	0	4	0	0
4/26/2024	8:30 PM	0	467	94	0	8	0	0	0	50	0	6	0	0
4/26/2024	8:45 PM	0	453	95	0	12	0	0	0	40	0	5	0	0
4/26/2024	9:00 PM	0	411	89	1	12	0	0	0	39	0	7	0	0
4/26/2024	9:15 PM	0	413	91	1	9	0	0	0	42	0	6	0	0
4/26/2024	9:30 PM	0	378	86	1	9	0	0	0	27	0	6	0	0
4/26/2024	9:45 PM	0	375	86	1	5	0	0	0	34	0	7	0	0
4/26/2024	10:00 PM	0	379	93	0	6	0	0	0	38	0	6	0	0
4/26/2024	10:15 PM	0	352	89	0	5	0	0	0	34	0	8	0	0
4/26/2024	10:30 PM	0	334	82	0	3	0	0	0	31	0	7	0	0
4/26/2024	10:45 PM	0	278	73	0	2	0	0	0	26	0	7	0	0
4/26/2024	11:00 PM	0	235	64	0	3	0	0	0	23	0	6	0	0
4/26/2024	11:15 PM	0	155	45	0	2	0	0	0	16	0	4	0	0
4/26/2024	11:30 PM	0	91	30	0	2	0	0	0	13	0	3	0	0
4/26/2024	11:45 PM	0	46	16	0	2	0	0	0	7	0	1	0	0

4/27/2024	12:00 AM	0	150	21	0	4	0	0	0	28	0	1	0	0
4/27/2024	12:15 AM	0	120	20	0	5	0	0	0	28	0	1	0	0
4/27/2024	12:30 AM	0	100	21	0	5	0	0	0	26	0	0	0	0
4/27/2024	12:45 AM	0	89	19	0	6	0	0	0	22	0	0	0	0
4/27/2024	1:00 AM	0	70	18	0	6	0	0	0	19	0	0	0	0
4/27/2024	1:15 AM	0	60	15	0	4	0	0	0	12	0	0	0	0
4/27/2024	1:30 AM	0	59	15	0	5	0	0	0	9	0	0	0	0
4/27/2024	1:45 AM	0	56	14	0	3	0	0	0	9	0	0	0	0
4/27/2024	2:00 AM	0	56	16	0	2	0	0	0	8	0	1	0	0
4/27/2024	2:15 AM	0	56	20	0	3	0	0	0	12	0	3	0	0
4/27/2024	2:30 AM	0	57	23	0	1	0	0	0	12	0	4	0	0
4/27/2024	2:45 AM	0	52	24	0	2	0	0	0	10	0	4	0	0
4/27/2024	3:00 AM	0	49	21	0	3	0	0	0	11	0	3	0	0
4/27/2024	3:15 AM	0	49	20	0	3	0	0	0	12	0	1	0	0
4/27/2024	3:30 AM	0	48	19	0	3	0	0	0	14	0	2	0	0
4/27/2024	3:45 AM	0	56	18	0	2	0	0	0	16	0	2	0	0
4/27/2024	4:00 AM	0	58	22	0	1	0	0	0	16	0	3	0	0
4/27/2024	4:15 AM	0	66	22	0	0	0	0	0	18	0	5	0	0
4/27/2024	4:30 AM	0	72	20	0	1	0	0	0	17	0	3	0	0
4/27/2024	4:45 AM	0	82	27	0	2	0	0	0	18	0	5	0	0
4/27/2024	5:00 AM	0	102	40	0	6	0	0	0	17	0	4	0	0
4/27/2024	5:15 AM	0	121	61	0	7	0	0	0	17	0	3	0	0
4/27/2024	5:30 AM	0	134	83	0	7	0	0	2	19	0	3	0	0
4/27/2024	5:45 AM	0	168	92	0	7	0	0	2	17	0	1	0	0
4/27/2024	6:00 AM	1	205	95	0	5	0	0	3	24	0	2	0	0
4/27/2024	6:15 AM	1	226	82	0	5	0	0	4	21	0	2	0	0
4/27/2024	6:30 AM	1	277	84	0	4	1	0	2	19	0	2	0	0
4/27/2024	6:45 AM	1	303	101	1	6	2	0	2	27	0	2	0	0
4/27/2024	7:00 AM	0	337	106	1	5	4	0	2	22	0	1	0	0
4/27/2024	7:15 AM	0	376	119	1	5	5	0	1	26	0	0	0	0
4/27/2024	7:30 AM	0	380	137	1	11	6	0	2	28	0	0	0	0
4/27/2024	7:45 AM	0	398	134	0	10	5	0	4	34	0	0	0	0
4/27/2024	8:00 AM	0	413	145	0	13	3	0	4	40	0	0	0	0
4/27/2024	8:15 AM	1	443	154	0	13	2	0	5	41	0	0	0	0
4/27/2024	8:30 AM	1	470	143	0	9	0	0	6	47	0	0	0	0
4/27/2024	8:45 AM	1	513	144	2	10	0	0	5	55	0	0	0	0
4/27/2024	9:00 AM	1	544	145	3	8	2	0	4	56	0	0	0	0
4/27/2024	9:15 AM	0	546	144	3	9	2	0	3	64	0	0	0	0
4/27/2024	9:30 AM	1	562	142	3	8	4	0	1	58	1	0	0	0
4/27/2024	9:45 AM	2	557	143	2	7	5	0	0	48	1	0	0	0
4/27/2024	10:00 AM	2	563	150	2	5	4	0	1	40	1	0	0	0
4/27/2024	10:15 AM	2	599	155	3	4	4	0	3	39	1	0	0	0
4/27/2024	10:30 AM	1	615	168	3	4	2	0	4	45	0	0	0	0
4/27/2024	10:45 AM	1	633	184	2	4	1	0	5	38	0	0	0	0
4/27/2024	11:00 AM	1	617	188	2	6	0	0	5	46	0	0	0	0
4/27/2024	11:15 AM	1	603	190	2	8	3	0	3	43	0	0	0	0
4/27/2024	11:30 AM	2	626	187	2	8	4	0	2	46	0	0	0	0
4/27/2024	11:45 AM	1	641	183	2	8	5	0	4	50	0	0	0	0
4/27/2024	12:00 PM	1	670	182	1	7	5	0	5	48	0	0	0	0
4/27/2024	12:15 PM	1	684	185	1	6	2	0	6	42	0	0	0	0
4/27/2024	12:30 PM	0	692	191	1	6	2	0	6	40	0	0	0	0
4/27/2024	12:45 PM	0	701	182	1	6	1	0	3	36	0	0	0	0
4/27/2024	1:00 PM	0	697	183	1	8	1	0	1	39	0	0	0	0
4/27/2024	1:15 PM	1	701	198	0	7	2	0	3	45	0	0	0	0
4/27/2024	1:30 PM	1	685	203	4	9	1	0	5	39	0	0	0	0
4/27/2024	1:45 PM	1	650	208	4	10	1	0	7	45	0	0	0	0
4/27/2024	2:00 PM	1	669	190	4	7	1	0	8	40	0	0	0	0
4/27/2024	2:15 PM	1	676	165	4	8	0	0	6	34	0	0	0	0
4/27/2024	2:30 PM	1	686	145	0	10	0	0	5	36	0	0	0	0
4/27/2024	2:45 PM	10	723	136	0	9	1	0	4	32	0	0	0	0
4/27/2024	3:00 PM	10	726	135	1	11	2	1	4	33	1	0	0	0
4/27/2024	3:15 PM	10	720	139	1	13	2	1	4	34	1	0	0	0
4/27/2024	3:30 PM	11	700	139	1	9	3	1	4	35	2	0	0	0
4/27/2024	3:45 PM	3	690	146	1	7	3	1	3	31	2	0	0	0
4/27/2024	4:00 PM	5	678	152	0	7	2	0	4	32	1	0	0	0
4/27/2024	4:15 PM	8	667	149	0	3	3	0	3	32	1	0	0	0
4/27/2024	4:30 PM	8	656	146	1	5	3	0	2	29	0	0	0	0
4/27/2024	4:45 PM	7	649	139	1	7	2	0	3	28	0	0	0	0
4/27/2024	5:00 PM	5	612	144	2	5	2	0	1	25	0	0	0	0
4/27/2024	5:15 PM	1	623	147	2	6	1	0	2	19	0	0	0	0
4/27/2024	5:30 PM	1	633	151	1	7	0	0	4	16	0	0	0	0
4/27/2024	5:45 PM	2	624	153	2	6	0	0	4	19	0	0	0	0
4/27/2024	6:00 PM	5	609	144	2	8	0	0	4	17	0	0	0	0
4/27/2024	6:15 PM	5	566	142	5	7	0	0	3	19	0	0	0	0
4/27/2024	6:30 PM	5	522	139	5	7	1	0	2	21	0	0	0	0
4/27/2024	6:45 PM	4	490	130	4	7	1	0	1	17	0	0	0	0
4/27/2024	7:00 PM	1	501	132	4	5	2	0	1	20	0	0	0	0
4/27/2024	7:15 PM	1	503	126	1	5	2	0	1	24	0	0	0	0
4/27/2024	7:30 PM	0	505	111	1	1	1	0	1	23	0	0	0	0
4/27/2024	7:45 PM	0	500	99	1	0	2	0	1	23	0	0	0	0
4/27/2024	8:00 PM	0	470	82	0	0	1	0	1	17	0	0	0	0
4/27/2024	8:15 PM	0	451	67	0	1	1	0	1	12	0	0	0	0
4/27/2024	8:30 PM	0	447	65	0	1	1	0	0	15	0	0	0	0
4/27/2024	8:45 PM	0	435	69	0	2	0	0	0	17	0	0	0	0
4/27/2024	9:00 PM	0	454	68	0	2	1	0	0	17	0	0	0	0
4/27/2024	9:15 PM	0	469	73	0	1	1	0	0	16	0	0	0	0
4/27/2024	9:30 PM	0	459	67	0	1	1	0	0	14	0	0	0	0
4/27/2024	9:45 PM	0	435	58	0	0	1	0	0	15	0	0	0	0
4/27/2024	10:00 PM	0	396	54	0	0	0	0	0	16	0	0	0	0
4/27/2024	10:15 PM	0	346	42	0	0	1	0	0	16	0	0	0	0
4/27/2024	10:30 PM	0	304	38	0	0	1	0	0	14	0	0	0	0
4/27/2024	10:45 PM	0	276	37	0	0	1	0	0	9	0	0	0	0
4/27/2024	11:00 PM	0	250	33	0	0	1	0	0	10	0	0	0	0
4/27/2024	11:15 PM	0	175	25	0	0	0	0	0	7	0	0	0	0
4/27/2024	11:30 PM	0	116	18	0	0	0	0	0	4	0	0	0	0
4/27/2024	11:45 PM	0	55	9	0	0	0	0	0	3	0	0	0	0

Bi-Directional Class Count || NB EB 15min

Columbia, SC

Marr Traffic DATA COLLECTION
www.marrtraffic.com

Site 74 Lane 3 EB
I-20,
west of US-378 Sunset Blvd S/Bound Off-Ramp

Date
Sunday, April 21, 2024

Lat/Long
34.008085°, -81.156669°

Weather
Cloudy
66°F

Click here for Detailed Weather

Click here for Map

0000 - 2400 (Sunday 24h Session) (04-21-2024)
NB EB 15min

	Eastbound (Movement 74 Lane 3 EB.1)													15min	60min
Time	1	2	3	4	5	6	7	8	9	10	11	12	13	Total	Total
0000 - 0015	0	14	3	0	1	0	0	0	7	0	0	0	0	**25**	
0015 - 0030	0	25	2	0	0	0	0	0	6	0	0	0	0	**33**	
0030 - 0045	0	11	1	0	1	1	0	0	6	0	0	0	0	**20**	
0045 - 0100	0	22	4	0	1	0	0	0	6	0	0	0	0	**33**	**111**
0100 - 0115	0	10	3	0	0	0	0	0	2	0	0	0	0	**15**	
0115 - 0130	0	16	3	0	1	0	0	0	4	0	0	0	0	**24**	
0130 - 0145	0	17	2	0	0	0	0	0	4	0	0	0	0	**23**	
0145 - 0200	0	13	0	0	1	0	0	0	3	0	0	0	0	**17**	**79**
0200 - 0215	0	8	1	0	0	0	0	0	4	0	0	0	0	**13**	
0215 - 0230	0	10	2	0	0	0	0	0	5	0	0	0	0	**17**	
0230 - 0245	0	6	0	1	0	0	0	0	7	0	0	0	0	**14**	
0245 - 0300	0	4	0	0	0	0	0	0	6	0	0	0	0	**10**	**54**
0300 - 0315	0	8	1	0	1	1	0	0	1	0	0	0	0	**12**	
0315 - 0330	0	10	0	0	1	0	0	0	9	0	0	0	0	**20**	
0330 - 0345	0	5	0	0	0	0	0	0	3	0	1	0	0	**9**	
0345 - 0400	0	13	0	0	0	0	0	0	9	0	0	0	0	**22**	**63**
0400 - 0415	0	4	0	0	0	0	0	0	4	0	0	0	0	**8**	
0415 - 0430	0	7	1	0	0	0	0	0	4	0	0	0	0	**12**	
0430 - 0445	0	8	0	0	0	0	0	0	1	0	0	0	0	**9**	
0445 - 0500	0	7	2	0	0	0	0	0	1	0	0	0	0	**10**	**39**
0500 - 0515	0	4	0	0	0	0	0	0	3	0	0	0	0	**7**	
0515 - 0530	0	10	0	0	0	0	0	0	2	0	0	0	0	**12**	
0530 - 0545	0	3	0	0	0	0	0	0	1	0	0	0	0	**4**	
0545 - 0600	0	6	0	0	0	0	0	0	4	0	0	0	0	**10**	**33**
0600 - 0615	0	15	1	0	0	1	0	0	9	0	0	0	0	**26**	
0615 - 0630	0	24	3	0	1	0	0	0	2	0	0	0	0	**30**	
0630 - 0645	0	24	7	1	0	0	0	0	4	0	0	0	0	**36**	
0645 - 0700	0	28	10	0	0	0	0	0	9	0	0	0	0	**47**	**139**
0700 - 0715	0	28	13	0	1	0	0	0	11	0	0	0	0	**53**	
0715 - 0730	0	29	8	0	0	0	0	2	10	0	0	0	0	**49**	
0730 - 0745	0	33	12	0	0	0	0	0	6	0	0	0	0	**51**	
0745 - 0800	0	46	14	0	0	0	0	0	9	0	0	0	0	**69**	**222**
0800 - 0815	1	28	9	0	2	1	0	0	12	0	0	0	0	**53**	
0815 - 0830	1	42	10	0	0	0	0	1	7	0	0	0	0	**61**	
0830 - 0845	0	60	10	0	1	0	0	2	10	1	0	0	0	**84**	
0845 - 0900	0	55	14	0	2	0	0	0	5	0	0	0	0	**76**	**274**
0900 - 0915	0	74	15	0	1	2	0	2	14	0	0	0	0	**108**	
0915 - 0930	0	49	18	0	1	0	0	0	11	0	0	0	0	**79**	
0930 - 0945	0	64	10	0	0	1	0	0	10	0	0	0	0	**85**	
0945 - 1000	0	74	13	0	0	1	0	0	10	0	0	0	0	**98**	**370**
1000 - 1015	0	66	15	0	0	0	0	1	9	0	0	0	0	**91**	
1015 - 1030	1	58	18	1	1	0	0	1	11	0	1	0	0	**92**	
1030 - 1045	0	71	17	0	3	0	0	0	13	0	0	0	0	**104**	
1045 - 1100	0	76	21	0	1	1	0	1	9	0	0	0	0	**109**	**396**
1100 - 1115	1	76	23	0	1	1	0	1	14	0	0	0	0	**117**	
1115 - 1130	0	76	24	0	1	1	0	1	12	0	0	0	0	**115**	
1130 - 1145	0	69	17	0	2	0	0	2	10	0	0	0	0	**100**	
1145 - 1200	0	67	19	0	1	1	0	0	11	0	0	0	0	**99**	**431**
1200 - 1215	1	76	21	0	1	0	0	0	17	0	0	0	0	**116**	
1215 - 1230	0	85	24	1	3	0	0	5	10	2	0	0	0	**130**	
1230 - 1245	0	70	27	0	5	0	0	0	13	0	0	0	0	**115**	
1245 - 1300	0	83	23	4	1	0	0	2	11	0	0	0	0	**124**	**485**
1300 - 1315	1	79	22	0	1	1	0	0	9	1	0	0	0	**114**	
1315 - 1330	0	72	9	0	1	0	0	3	17	0	0	0	0	**102**	
1330 - 1345	0	80	16	1	0	0	0	0	19	0	0	0	0	**116**	
1345 - 1400	0	81	19	0	1	0	0	1	11	0	0	0	0	**113**	**445**
1400 - 1415	0	76	10	1	3	0	0	3	11	0	0	0	0	**104**	
1415 - 1430	0	84	23	0	2	0	0	3	8	0	0	0	0	**120**	
1430 - 1445	0	83	18	0	2	0	0	2	10	0	0	0	0	**115**	
1445 - 1500	0	71	20	1	0	0	0	0	18	0	0	0	0	**110**	**449**
1500 - 1515	0	78	21	0	1	0	0	0	12	0	0	0	0	**112**	
1515 - 1530	0	60	24	0	0	0	0	1	12	0	0	0	0	**97**	
1530 - 1545	0	81	22	0	0	0	0	2	8	0	0	0	0	**113**	
1545 - 1600	0	79	14	0	2	2	0	2	8	0	0	0	0	**107**	**429**
1600 - 1615	0	65	13	0	4	0	0	0	17	1	0	0	0	**100**	
1615 - 1630	0	71	22	0	5	2	0	1	12	1	1	0	0	**115**	
1630 - 1645	0	84	19	0	2	0	0	2	11	0	0	0	0	**118**	
1645 - 1700	0	81	22	0	3	0	0	0	11	0	0	0	0	**117**	**450**
1700 - 1715	0	86	13	0	2	0	0	2	12	0	0	0	0	**115**	
1715 - 1730	0	78	19	0	2	0	0	1	9	1	0	0	0	**110**	
1730 - 1745	0	78	16	0	0	1	0	1	20	0	0	0	0	**116**	
1745 - 1800	0	84	18	0	1	0	0	2	11	0	0	0	0	**116**	**457**
1800 - 1815	0	62	16	0	1	1	0	1	18	0	0	0	0	**99**	
1815 - 1830	0	48	12	0	1	0	0	1	7	0	0	0	0	**69**	
1830 - 1845	0	47	16	0	0	1	0	2	23	0	0	0	0	**89**	
1845 - 1900	1	57	7	1	2	1	0	2	10	0	1	0	0	**82**	**339**
1900 - 1915	0	32	5	0	0	0	0	0	14	0	0	0	0	**51**	
1915 - 1930	0	32	10	0	0	0	0	0	4	0	0	0	0	**46**	
1930 - 1945	0	31	7	0	1	0	0	2	5	0	0	0	0	**46**	
1945 - 2000	0	37	7	0	0	1	0	0	7	0	0	0	0	**52**	**195**
2000 - 2015	0	27	9	0	1	1	0	0	2	0	0	0	0	**40**	
2015 - 2030	0	27	8	0	2	0	0	0	5	0	0	0	0	**42**	
2030 - 2045	0	21	5	0	0	0	0	0	6	0	0	0	0	**32**	
2045 - 2100	0	27	1	0	1	0	0	0	3	0	0	0	0	**32**	**146**
2100 - 2115	0	22	2	0	0	0	0	0	2	0	0	0	0	**26**	
2115 - 2130	0	13	0	0	0	0	0	0	2	0	0	0	0	**15**	
2130 - 2145	0	21	1	0	1	0	0	0	4	0	0	0	0	**27**	
2145 - 2200	0	20	0	0	1	0	0	0	3	0	0	0	0	**24**	**92**
2200 - 2215	0	11	3	0	0	0	0	0	3	0	0	0	0	**17**	
2215 - 2230	0	12	2	0	1	0	0	0	4	0	0	0	0	**19**	
2230 - 2245	0	8	0	0	1	0	0	0	3	0	0	0	0	**12**	
2245 - 2300	0	12	0	0	0	0	0	0	6	0	0	0	0	**18**	**66**
2300 - 2315	0	9	4	0	0	0	0	0	4	0	2	0	0	**19**	
2315 - 2330	0	8	1	0	0	0	0	0	2	0	1	0	0	**12**	
2330 - 2345	0	8	2	0	0	0	0	0	5	0	0	0	0	**15**	
2345 - 0000	0	7	1	0	0	0	0	0	8	0	0	0	0	**16**	**62**

Session Total	7	3937	920	12	81	23	0	55	777	7	7	0	0	**5826**
Session Average	0.07	41.01	9.58	0.13	0.84	0.24	0.00	0.57	8.09	0.07	0.07	0.00	0.00	**60.69**
Session Percentage	0.12	67.58	15.79	0.21	1.39	0.39	0.00	0.94	13.34	0.12	0.12	0.00	0.00	

AM Peak Hour	0730 - 0830	0945 - 1045	0945 - 1045	0545 - 0645	0800 - 0900	0900 - 1000	-	0815 - 0915	0900 - 1000	0745 - 0845	0930 - 1030	-	-	**0945 - 1045**
AM Peak Volume	2	269	63	1	5	4	0	5	45	1	1	0	0	**385**

Noon Peak Hour	1015 - 1115	1345 - 1445	1215 - 1315	1200 - 1300	1145 - 1245	1030 - 1130	-	1345 - 1445	1315 - 1415	1215 - 1315	1000 - 1100	-	-	**1200 - 1300**
Noon Peak Volume	2	324	96	5	10	3	0	9	58	3	1	0	0	**485**

PM Peak Hour	1800 - 1900	1630 - 1730	1500 - 1600	1800 - 1900	1600 - 1700	1530 - 1630	-	1700 - 1800	1745 - 1845	1530 - 1630	1530 - 1630	-	-	**1615 - 1715**
PM Peak Volume	1	329	81	1	14	4	0	6	59	2	1	0	0	**465**

Site 74 Lane 3 EB
I-20,
west of US-378 Sunset Blvd S/Bound Off-Ramp

Date
Monday, April 22, 2024

Lat/Long
34.008085°, -81.156669°

Weather
Mostly Cloudy
57°F

Click here for Detailed Weather

0000 - 2400 (Weekday 24h Session) (04-22-2024)
NB EB 15min

	Eastbound (Movement 74 Lane 3 EB.1)													15min	60min
Time	1	2	3	4	5	6	7	8	9	10	11	12	13	Total	Total
0000 - 0015	0	8	0	0	0	0	0	0	1	0	1	0	0	**10**	
0015 - 0030	0	9	0	0	0	0	0	0	1	0	0	0	0	**10**	
0030 - 0045	0	7	0	0	0	0	0	0	3	0	1	0	0	**11**	
0045 - 0100	0	12	0	0	0	0	0	0	1	0	0	0	0	**13**	**44**
0100 - 0115	0	4	0	0	0	0	0	0	1	0	2	0	0	**7**	
0115 - 0130	0	5	0	0	0	0	0	0	2	0	0	0	0	**7**	
0130 - 0145	0	4	0	0	0	0	0	0	4	0	1	0	0	**9**	
0145 - 0200	0	7	0	0	0	0	0	0	2	0	2	0	0	**11**	**34**
0200 - 0215	0	5	0	0	1	0	0	0	4	0	0	0	0	**10**	
0215 - 0230	0	5	0	0	0	0	0	0	2	0	1	0	0	**8**	
0230 - 0245	0	4	0	0	0	0	0	0	3	0	2	0	0	**9**	
0245 - 0300	0	5	0	0	0	0	0	0	2	0	2	0	0	**9**	**36**
0300 - 0315	0	7	0	0	0	0	0	0	4	0	0	0	0	**11**	
0315 - 0330	0	9	0	0	1	0	0	0	7	0	3	0	0	**20**	
0330 - 0345	0	17	0	0	0	0	0	0	6	0	0	0	0	**23**	
0345 - 0400	0	9	0	0	0	0	0	0	5	0	1	0	0	**15**	**69**
0400 - 0415	0	18	0	0	0	0	0	0	2	0	0	0	0	**20**	
0415 - 0430	0	14	0	0	0	0	0	0	5	0	1	0	0	**20**	
0430 - 0445	0	15	0	0	0	0	0	0	7	0	0	0	0	**22**	
0445 - 0500	0	22	0	0	0	0	0	0	9	0	2	0	0	**33**	**95**
0500 - 0515	0	17	0	0	1	0	0	0	7	0	0	0	0	**25**	
0515 - 0530	0	33	0	0	0	0	0	0	8	0	0	0	0	**41**	
0530 - 0545	0	38	1	0	1	0	0	0	10	0	0	0	0	**50**	
0545 - 0600	0	24	0	0	0	0	0	0	9	0	0	0	0	**33**	**149**
0600 - 0615	0	55	3	0	0	0	0	0	12	0	0	0	0	**70**	
0615 - 0630	0	56	7	0	1	0	0	0	16	0	0	0	0	**80**	
0630 - 0645	0	59	11	0	3	1	0	0	23	0	0	0	0	**97**	
0645 - 0700	0	54	24	0	3	9	0	2	15	1	0	0	0	**108**	**355**
0700 - 0715	0	72	28	0	9	3	0	3	13	0	0	0	0	**128**	
0715 - 0730	0	84	34	0	4	4	0	0	10	0	0	0	0	**136**	
0730 - 0745	1	77	31	0	4	3	0	7	15	0	0	0	0	**138**	
0745 - 0800	0	94	30	0	8	0	0	0	9	0	0	0	0	**141**	**543**
0800 - 0815	0	94	41	0	6	2	0	1	19	0	0	0	0	**163**	
0815 - 0830	0	79	43	0	6	4	0	5	23	0	0	0	0	**160**	
0830 - 0845	0	77	38	0	4	7	0	2	27	0	0	0	0	**155**	
0845 - 0900	0	65	52	0	5	2	0	3	14	2	0	0	0	**143**	**621**
0900 - 0915	0	78	33	0	3	1	0	1	23	0	0	0	0	**139**	
0915 - 0930	0	63	35	0	9	2	0	1	14	0	0	0	0	**124**	
0930 - 0945	0	66	41	3	7	0	0	4	15	0	0	0	0	**136**	
0945 - 1000	0	59	25	1	5	1	1	1	24	1	0	0	0	**118**	**517**
1000 - 1015	0	61	17	0	3	5	0	3	28	0	0	0	0	**117**	
1015 - 1030	0	51	24	0	10	0	0	2	22	0	0	0	0	**109**	
1030 - 1045	0	45	28	1	9	3	0	7	33	0	0	0	0	**126**	
1045 - 1100	3	63	34	0	6	0	0	6	26	0	0	0	0	**138**	**490**
1100 - 1115	0	44	12	0	8	3	0	5	32	0	0	0	0	**104**	
1115 - 1130	0	46	22	0	7	1	1	1	35	0	0	0	0	**113**	
1130 - 1145	0	52	19	0	5	3	0	4	23	0	0	0	0	**106**	
1145 - 1200	0	44	25	0	7	0	0	1	24	1	0	0	0	**102**	**425**
1200 - 1215	0	59	25	0	4	2	0	5	17	0	0	0	0	**112**	
1215 - 1230	0	56	22	0	4	3	0	1	27	0	0	0	0	**113**	
1230 - 1245	0	52	23	0	7	0	0	5	31	0	0	0	0	**118**	
1245 - 1300	0	47	46	0	5	3	0	3	25	0	0	0	0	**129**	**472**
1300 - 1315	0	56	21	1	4	6	0	2	8	0	0	0	0	**98**	
1315 - 1330	0	55	29	0	5	4	0	2	18	1	0	0	0	**114**	
1330 - 1345	0	58	14	4	3	4	0	2	17	0	0	0	0	**102**	
1345 - 1400	0	73	26	0	6	3	0	0	15	0	0	0	0	**123**	**437**
1400 - 1415	0	39	32	0	7	2	0	2	26	0	1	0	0	**109**	
1415 - 1430	0	61	23	0	8	3	0	4	21	0	0	0	0	**120**	
1430 - 1445	0	60	24	0	4	0	0	0	17	0	0	0	0	**105**	
1445 - 1500	0	45	22	1	8	2	0	2	21	0	0	0	0	**101**	**435**
1500 - 1515	1	63	25	0	4	2	0	2	23	0	0	0	0	**120**	
1515 - 1530	0	60	31	0	6	1	0	2	24	1	0	0	0	**125**	
1530 - 1545	0	68	20	0	1	1	0	2	23	0	0	0	0	**115**	
1545 - 1600	0	48	21	0	4	2	0	1	37	0	0	0	0	**113**	**473**
1600 - 1615	0	57	15	0	8	1	0	1	36	0	0	0	0	**118**	
1615 - 1630	0	74	25	0	4	0	0	3	21	0	0	0	0	**127**	
1630 - 1645	0	65	16	0	4	3	0	3	33	0	0	0	0	**124**	
1645 - 1700	0	64	17	1	7	2	0	1	30	0	0	0	0	**122**	**491**
1700 - 1715	0	74	34	2	7	3	0	1	23	0	0	0	0	**144**	
1715 - 1730	0	85	12	0	2	3	0	2	24	0	0	0	0	**128**	
1730 - 1745	0	58	18	0	1	0	0	1	19	0	0	0	0	**97**	
1745 - 1800	0	61	16	0	2	0	0	1	28	0	0	0	0	**108**	**477**
1800 - 1815	0	46	12	0	4	0	0	2	10	0	0	0	0	**74**	
1815 - 1830	0	29	9	0	0	1	0	1	5	0	0	0	0	**45**	
1830 - 1845	0	26	14	0	0	1	0	0	12	0	0	0	0	**53**	
1845 - 1900	0	31	5	0	0	0	0	0	8	0	0	0	0	**44**	**216**
1900 - 1915	0	25	7	0	1	1	0	0	6	0	0	0	0	**40**	
1915 - 1930	0	34	7	0	1	2	0	0	11	0	0	0	0	**55**	
1930 - 1945	0	41	9	0	1	0	0	0	6	0	0	0	0	**57**	
1945 - 2000	0	30	3	0	2	0	0	1	7	0	0	0	0	**43**	**195**
2000 - 2015	0	18	9	0	3	0	0	0	14	0	0	0	0	**44**	
2015 - 2030	0	17	3	0	0	2	0	0	5	0	0	0	0	**27**	
2030 - 2045	0	9	2	0	0	0	0	0	4	0	0	0	0	**15**	
2045 - 2100	0	14	0	0	0	0	0	0	9	0	1	0	0	**24**	**110**
2100 - 2115	0	12	2	0	0	0	0	0	3	0	0	0	0	**17**	
2115 - 2130	0	11	1	0	0	0	0	0	4	0	0	0	0	**16**	
2130 - 2145	0	9	0	0	0	0	0	0	9	0	0	0	0	**18**	
2145 - 2200	0	8	0	0	0	0	0	0	3	0	0	0	0	**11**	**62**
2200 - 2215	0	13	0	0	0	0	0	0	8	0	0	0	0	**21**	
2215 - 2230	0	12	0	0	0	0	0	0	6	0	0	0	0	**18**	
2230 - 2245	0	14	2	0	1	0	0	0	3	0	0	0	0	**20**	
2245 - 2300	0	11	0	0	0	0	0	0	9	0	0	0	0	**20**	**79**
2300 - 2315	0	10	0	0	0	0	0	0	4	0	0	0	0	**14**	
2315 - 2330	0	3	0	0	0	0	0	0	2	0	0	0	0	**5**	
2330 - 2345	0	5	0	0	1	0	0	0	7	0	0	0	0	**13**	
2345 - 0000	0	7	0	0	0	0	0	0	4	0	0	0	0	**11**	**43**

Session Total	5	3709	1300	14	265	111	2	111	1323	7	21	0	0	**6868**
Session Average	0.05	38.64	13.54	0.15	2.76	1.16	0.02	1.16	13.78	0.07	0.22	0.00	0.00	**71.54**
Session Percentage	0.07	54.00	18.93	0.20	3.86	1.62	0.03	1.62	19.26	0.10	0.31	0.00	0.00	

AM Peak Hour	0645 - 0745	0715 - 0815	0800 - 0900	0900 - 1000	0945 - 1045	0645 - 0745	0900 - 1000	0730 - 0830	0945 - 1045	0800 - 0900	-	-	-	**0800 - 0900**
AM Peak Volume	1	349	174	4	27	19	1	13	107	2	0	0	0	**621**

Noon Peak Hour	1000 - 1100	1300 - 1400	1230 - 1330	1245 - 1345	1015 - 1115	1245 - 1345	1030 - 1130	1015 - 1115	1030 - 1130	1100 - 1200	1315 - 1415	-	-	**1000 - 1100**
Noon Peak Volume	3	242	119	5	33	17	1	20	126	1	1	0	0	**490**

PM Peak Hour	1500 - 1600	1630 - 1730	1500 - 1600	1615 - 1715	1600 - 1700	1630 - 1730	-	1545 - 1645	1545 - 1645	1500 - 1600	-	-	-	**1630 - 1730**
PM Peak Volume	1	288	97	3	23	11	0	8	127	1	0	0	0	**518**

Site 74 Lane 3 EB
I-20,
west of US-378 Sunset Blvd S/Bound Off-Ramp

Date
Tuesday, April 23, 2024

Lat/Long
34.008085°, -81.156669°

Weather
Fair
58°F

Click here for Detailed Weather

0000 - 2400 (Weekday 24h Session) (04-23-2024)
NB EB 15min

	Eastbound (Movement 74 Lane 3 EB.1)													15min	60min
TIME	1	2	3	4	5	6	7	8	9	10	11	12	13	Total	Total
0000 - 0015	0	8	3	0	1	0	0	0	2	0	0	0	0	**14**	
0015 - 0030	0	8	0	1	0	0	0	0	3	0	0	0	0	**12**	
0030 - 0045	0	10	4	0	0	0	0	0	2	0	1	0	0	**17**	
0045 - 0100	0	4	0	0	0	1	0	0	3	0	0	0	0	**8**	**51**
0100 - 0115	0	12	0	0	0	0	0	0	6	0	0	0	0	**18**	
0115 - 0130	0	11	2	0	1	0	0	1	6	0	1	0	0	**22**	
0130 - 0145	0	9	0	0	0	0	0	0	9	0	0	0	0	**18**	
0145 - 0200	0	11	0	0	0	0	0	0	11	2	0	0	0	**24**	**82**
0200 - 0215	0	3	0	0	0	0	0	0	10	0	1	0	0	**14**	
0215 - 0230	0	5	0	0	0	0	0	0	9	0	1	0	0	**15**	
0230 - 0245	0	5	0	0	0	1	0	0	8	2	1	0	0	**17**	
0245 - 0300	0	6	0	0	0	0	0	0	9	0	1	0	0	**16**	**62**
0300 - 0315	0	6	3	0	0	1	0	1	10	1	0	0	0	**22**	
0315 - 0330	0	10	1	0	0	1	0	0	10	0	4	0	0	**26**	
0330 - 0345	0	16	1	0	1	0	0	0	8	0	0	0	0	**26**	
0345 - 0400	0	15	0	0	2	0	0	0	11	1	0	0	0	**29**	**103**
0400 - 0415	0	14	0	0	2	1	0	0	13	0	2	0	0	**32**	
0415 - 0430	0	14	1	0	2	1	0	0	15	0	2	0	0	**35**	
0430 - 0445	0	13	1	0	1	0	0	0	18	0	1	0	0	**34**	
0445 - 0500	0	23	0	0	2	0	0	0	13	0	0	0	0	**38**	**139**
0500 - 0515	0	21	0	0	2	1	0	0	15	0	0	0	0	**39**	
0515 - 0530	0	42	0	0	1	3	0	0	9	0	0	0	0	**55**	
0530 - 0545	0	57	0	0	2	3	0	0	21	2	1	0	0	**86**	
0545 - 0600	0	48	3	0	0	3	0	0	12	0	1	0	0	**67**	**247**
0600 - 0615	0	35	9	0	5	2	0	1	11	0	0	0	0	**63**	
0615 - 0630	0	43	26	0	3	0	0	0	13	0	1	0	0	**86**	
0630 - 0645	0	61	25	1	3	5	0	1	22	0	0	0	0	**118**	
0645 - 0700	0	52	25	0	6	2	0	1	24	0	0	0	0	**110**	**377**
0700 - 0715	0	52	32	0	5	2	0	0	13	0	1	0	0	**105**	
0715 - 0730	0	71	27	0	12	2	0	0	14	0	0	0	0	**126**	
0730 - 0745	0	80	17	0	4	3	0	2	14	0	1	0	0	**121**	
0745 - 0800	0	113	28	0	5	0	0	4	6	0	0	0	0	**156**	**508**
0800 - 0815	0	88	39	0	4	3	0	3	12	0	1	0	0	**150**	
0815 - 0830	0	79	30	0	3	2	0	2	17	0	0	0	0	**133**	
0830 - 0845	0	65	22	0	15	3	2	8	17	0	1	0	0	**133**	
0845 - 0900	0	73	27	3	4	4	1	5	7	2	0	0	0	**126**	**542**
0900 - 0915	0	67	25	0	5	1	0	2	18	0	0	0	0	**118**	
0915 - 0930	0	69	36	2	9	2	0	5	21	1	0	0	0	**145**	
0930 - 0945	0	48	27	0	5	3	0	4	29	0	1	0	0	**117**	
0945 - 1000	0	64	32	0	5	2	0	3	22	2	0	0	0	**130**	**510**
1000 - 1015	0	47	23	2	6	1	0	1	29	1	0	0	0	**110**	
1015 - 1030	0	52	21	0	9	1	0	1	25	0	0	0	0	**109**	
1030 - 1045	0	49	21	2	3	4	0	0	28	0	0	0	0	**107**	
1045 - 1100	0	39	22	0	6	2	0	2	29	1	0	0	0	**101**	**427**
1100 - 1115	0	48	20	0	6	1	0	1	30	0	1	0	0	**107**	
1115 - 1130	0	44	37	2	4	4	0	1	24	1	0	0	0	**117**	
1130 - 1145	0	57	21	1	2	1	0	4	25	0	0	0	0	**111**	
1145 - 1200	0	38	26	0	4	3	0	2	28	0	0	0	0	**101**	**436**
1200 - 1215	0	53	19	1	6	3	0	2	31	2	0	0	0	**117**	
1215 - 1230	0	57	26	0	7	4	0	3	24	0	0	0	0	**121**	
1230 - 1245	0	51	21	0	10	1	0	2	24	1	0	0	0	**110**	
1245 - 1300	0	56	21	1	9	2	0	1	17	0	0	0	0	**107**	**455**
1300 - 1315	2	56	19	0	7	1	0	3	21	0	0	0	0	**109**	
1315 - 1330	0	55	21	0	8	5	0	3	29	0	0	0	0	**121**	
1330 - 1345	1	64	19	2	5	0	0	3	23	0	0	0	0	**117**	
1345 - 1400	0	61	24	0	2	3	0	2	19	1	0	0	0	**112**	**459**
1400 - 1415	0	52	27	0	6	8	1	3	25	0	0	0	0	**122**	
1415 - 1430	0	53	23	0	5	1	0	1	24	1	0	0	0	**108**	
1430 - 1445	0	63	12	1	5	1	0	3	22	0	0	0	0	**107**	
1445 - 1500	0	52	22	1	5	1	0	0	25	1	0	0	0	**107**	**444**
1500 - 1515	0	60	16	0	6	2	0	3	25	0	0	0	0	**112**	
1515 - 1530	0	51	17	0	7	1	0	2	30	0	0	0	0	**108**	
1530 - 1545	3	75	23	0	4	4	0	1	18	0	0	0	0	**128**	
1545 - 1600	0	40	30	0	3	5	0	2	31	0	0	0	0	**111**	**459**
1600 - 1615	0	41	24	0	2	2	0	2	31	0	0	0	0	**102**	
1615 - 1630	0	59	17	0	4	1	0	1	20	0	0	0	0	**102**	
1630 - 1645	0	80	16	1	6	1	0	2	24	0	0	0	0	**130**	
1645 - 1700	0	60	27	0	3	0	0	1	22	1	0	0	0	**114**	**448**
1700 - 1715	0	68	25	0	2	1	0	2	21	0	0	0	0	**119**	
1715 - 1730	0	80	21	0	2	1	0	2	29	0	1	0	0	**136**	
1730 - 1745	1	61	22	0	2	0	0	2	19	0	0	0	0	**107**	
1745 - 1800	0	58	21	0	2	1	0	0	24	0	0	0	0	**106**	**468**
1800 - 1815	0	52	27	1	1	1	0	0	29	0	0	0	0	**111**	
1815 - 1830	0	55	17	0	3	2	0	1	20	0	0	0	0	**98**	
1830 - 1845	0	50	14	0	2	1	0	2	24	0	0	0	0	**93**	
1845 - 1900	0	53	15	0	4	0	0	1	21	0	0	0	0	**94**	**396**
1900 - 1915	0	38	23	1	0	1	1	3	17	0	0	0	0	**84**	
1915 - 1930	1	44	16	0	3	0	0	0	22	0	0	0	0	**86**	
1930 - 1945	0	36	21	0	3	0	0	0	17	0	0	0	0	**77**	
1945 - 2000	0	48	17	0	2	0	0	0	25	1	0	0	0	**93**	**340**
2000 - 2015	0	35	9	1	2	0	0	0	19	0	0	0	0	**66**	
2015 - 2030	0	33	5	2	0	0	0	0	19	0	0	0	0	**59**	
2030 - 2045	0	26	2	1	5	0	0	1	12	0	0	0	0	**47**	
2045 - 2100	0	27	0	0	1	0	0	0	22	0	0	0	0	**50**	**222**
2100 - 2115	0	32	1	0	4	0	0	0	16	2	1	0	0	**56**	
2115 - 2130	0	30	0	1	2	0	0	0	15	0	0	0	0	**48**	
2130 - 2145	0	35	1	0	1	0	0	0	17	0	0	0	0	**54**	
2145 - 2200	0	25	2	0	1	0	0	0	14	1	1	0	0	**44**	**202**
2200 - 2215	0	29	0	0	1	0	0	0	21	1	0	0	0	**52**	
2215 - 2230	0	24	0	0	0	0	0	0	14	0	2	0	0	**40**	
2230 - 2245	0	21	1	0	3	0	0	0	15	0	0	0	0	**40**	
2245 - 2300	0	18	0	0	4	0	0	0	15	0	1	0	0	**38**	**170**
2300 - 2315	0	14	1	0	1	0	0	0	15	0	1	0	0	**32**	
2315 - 2330	0	12	2	0	2	0	0	0	14	0	1	0	0	**31**	
2330 - 2345	0	16	0	0	1	0	0	0	13	0	1	0	0	**31**	
2345 - 0000	0	10	1	0	0	0	0	0	15	0	0	0	0	**26**	**120**

Session Total	8	3974	1325	28	314	123	5	109	1720	28	33	0	0	**7667**
Session Average	0.08	41.40	13.80	0.29	3.27	1.28	0.05	1.14	17.92	0.29	0.34	0.00	0.00	**79.86**
Session Percentage	0.10	51.83	17.28	0.37	4.10	1.60	0.07	1.42	22.43	0.37	0.43	0.00	0.00	

AM Peak Hour	-	0730 - 0830	0900 - 1000	0830 - 0930	0830 - 0930	0800 - 0900	0800 - 0900	0830 - 0930	0930 - 1030	0915 - 1015	0530 - 0630	-	-	**0745 - 0845**
AM Peak Hour Volume	0	360	120	5	33	12	3	20	105	4	3	0	0	**572**

Noon Peak Hour	1245 - 1345	1445 - 1545	1100 - 1200	1000 - 1100	1230 - 1330	1315 - 1415	1315 - 1415	1130 - 1230	1015 - 1115	1115 - 1215	1015 - 1115	-	-	**1315 - 1415**
Noon Peak Hour Volume	3	238	104	4	34	16	1	11	112	3	1	0	0	**472**

PM Peak Hour	1500 - 1600	1630 - 1730	1645 - 1745	1945 - 2045	1500 - 1600	1500 - 1600	1815 - 1915	1500 - 1600	1515 - 1615	1600 - 1700	1630 - 1730	-	-	**1630 - 1730**
PM Peak Hour Volume	3	288	95	4	20	12	1	8	110	1	1	0	0	**499**

Site 74 Lane 3 EB
I-20,
west of US-378 Sunset Blvd S/Bound Off-Ramp

Date
Wednesday, April 24, 2024

Lat/Long
34.008085°, -81.156669°

Weather
Fair
66°F

Click here for Detailed Weather

0000 - 2400 (Weekday 24h Session) (04-24-2024)
NB EB 15min

	Eastbound (Movement 74 Lane 3 EB.1)													15min	60min
TIME	1	2	3	4	5	6	7	8	9	10	11	12	13	Total	Total
0000 - 0015	0	10	5	0	1	0	0	0	17	0	0	0	0	**33**	
0015 - 0030	0	15	5	1	0	0	0	0	17	0	0	0	0	**38**	
0030 - 0045	0	11	3	0	0	0	0	0	16	0	3	0	0	**33**	
0045 - 0100	0	18	6	0	0	0	0	0	19	0	1	0	0	**44**	**148**
0100 - 0115	0	11	0	0	0	0	0	0	8	0	0	0	0	**19**	
0115 - 0130	0	5	0	0	0	0	0	3	12	0	0	0	0	**20**	
0130 - 0145	0	5	0	0	0	0	0	0	6	0	0	0	0	**11**	
0145 - 0200	0	2	2	0	0	0	0	1	15	0	0	0	0	**20**	**70**
0200 - 0215	0	7	1	0	0	1	0	0	14	0	0	0	0	**23**	
0215 - 0230	0	6	2	0	0	0	0	0	13	0	0	0	0	**21**	
0230 - 0245	0	6	0	0	0	0	0	0	10	0	1	0	0	**17**	
0245 - 0300	0	8	0	0	0	0	0	0	16	0	2	0	0	**26**	**87**
0300 - 0315	1	9	1	0	0	0	0	0	13	0	0	0	0	**24**	
0315 - 0330	0	6	0	0	0	0	0	0	23	0	1	0	0	**30**	
0330 - 0345	0	11	2	0	0	0	0	0	11	0	0	0	0	**24**	
0345 - 0400	0	13	1	0	0	0	0	0	11	0	0	0	0	**25**	**103**
0400 - 0415	0	8	2	0	1	1	0	0	20	0	2	0	0	**34**	
0415 - 0430	0	11	2	0	2	2	0	2	13	0	0	0	0	**32**	
0430 - 0445	0	8	3	0	4	0	0	0	21	0	1	0	0	**37**	
0445 - 0500	0	21	5	0	3	0	0	1	19	0	2	0	0	**51**	**154**
0500 - 0515	0	29	5	0	1	0	0	0	14	0	1	0	0	**50**	
0515 - 0530	0	20	5	1	2	0	0	0	24	0	1	0	0	**53**	
0530 - 0545	0	24	4	0	4	0	0	0	20	0	1	0	0	**53**	
0545 - 0600	0	35	10	0	2	0	0	0	11	0	1	0	0	**59**	**215**
0600 - 0615	0	30	10	0	2	0	0	0	19	0	1	0	0	**62**	
0615 - 0630	0	40	14	0	5	3	0	1	22	0	0	0	0	**85**	
0630 - 0645	0	59	16	0	4	5	0	2	12	0	0	0	0	**98**	
0645 - 0700	0	54	34	1	7	2	1	1	18	0	0	0	0	**118**	**363**
0700 - 0715	0	72	38	0	13	4	0	1	11	2	0	0	0	**141**	
0715 - 0730	0	64	34	0	11	3	0	2	19	0	1	0	0	**134**	
0730 - 0745	0	76	27	0	6	2	0	3	21	2	0	0	0	**137**	
0745 - 0800	2	87	37	0	3	7	0	2	27	0	1	0	0	**166**	**578**
0800 - 0815	1	85	25	1	7	3	1	0	20	0	0	0	0	**143**	
0815 - 0830	0	85	42	0	5	0	1	4	15	0	0	0	0	**152**	
0830 - 0845	0	82	31	0	10	1	0	2	15	0	0	0	0	**141**	
0845 - 0900	0	67	48	6	5	1	0	4	17	0	0	0	0	**148**	**584**
0900 - 0915	0	64	38	0	3	4	0	1	27	0	0	0	0	**137**	
0915 - 0930	0	52	22	1	12	2	0	1	18	1	0	0	0	**109**	
0930 - 0945	0	58	34	0	3	2	2	2	21	0	0	0	0	**122**	
0945 - 1000	0	56	26	0	4	2	1	4	21	2	0	0	0	**116**	**484**
1000 - 1015	0	51	25	0	8	3	0	1	25	0	0	0	0	**113**	
1015 - 1030	1	47	24	0	3	5	0	1	18	2	0	0	0	**101**	
1030 - 1045	0	41	28	1	7	2	0	1	31	0	0	0	0	**111**	
1045 - 1100	0	55	25	0	4	3	0	1	23	0	0	0	0	**111**	**436**
1100 - 1115	0	48	20	0	9	0	1	1	22	1	0	0	0	**102**	
1115 - 1130	0	63	34	0	4	2	0	2	25	1	0	0	0	**131**	
1130 - 1145	0	46	20	0	8	4	0	2	31	0	0	0	0	**111**	
1145 - 1200	0	46	27	0	4	1	0	4	24	1	0	0	0	**107**	**451**
1200 - 1215	0	37	18	0	8	0	0	1	26	4	0	0	0	**94**	
1215 - 1230	0	52	22	0	9	2	0	1	24	2	0	0	0	**112**	
1230 - 1245	2	55	20	0	9	3	0	3	20	0	0	0	0	**112**	
1245 - 1300	0	51	23	3	5	7	0	3	24	2	0	0	0	**118**	**436**
1300 - 1315	0	51	19	0	4	2	0	5	22	0	0	0	0	**103**	
1315 - 1330	0	51	25	0	4	2	0	1	19	3	0	0	0	**105**	
1330 - 1345	0	60	15	0	6	4	0	1	25	1	0	0	0	**112**	
1345 - 1400	0	52	20	0	6	5	0	1	24	0	0	0	0	**108**	**428**
1400 - 1415	0	36	19	0	2	3	0	3	29	0	0	0	0	**92**	
1415 - 1430	0	57	25	0	6	2	0	2	26	3	0	0	0	**121**	
1430 - 1445	0	43	23	0	7	3	0	1	18	0	0	0	0	**95**	
1445 - 1500	1	56	18	0	3	4	1	1	24	0	0	0	0	**108**	**416**
1500 - 1515	0	54	25	0	2	5	0	0	17	2	0	0	0	**105**	
1515 - 1530	0	59	23	0	11	1	0	1	25	0	0	0	0	**120**	
1530 - 1545	0	47	22	1	5	2	3	1	22	0	0	0	0	**103**	
1545 - 1600	0	61	27	3	4	0	0	1	25	0	0	0	0	**121**	**449**
1600 - 1615	0	65	32	1	3	1	0	6	26	2	0	0	0	**136**	
1615 - 1630	1	64	18	1	4	3	0	4	28	0	0	1	0	**124**	
1630 - 1645	0	61	22	0	3	0	0	1	15	0	0	0	0	**102**	
1645 - 1700	0	67	33	0	2	0	0	0	15	1	0	0	0	**118**	**480**
1700 - 1715	1	86	20	0	6	1	0	2	19	2	0	0	0	**137**	
1715 - 1730	0	89	29	0	6	1	1	2	22	0	0	0	0	**150**	
1730 - 1745	2	61	23	0	3	0	0	1	17	0	0	0	0	**107**	
1745 - 1800	0	66	30	0	3	2	0	2	17	0	0	0	0	**120**	**514**
1800 - 1815	1	63	18	0	1	0	0	1	17	3	0	0	0	**104**	
1815 - 1830	0	64	14	0	6	0	0	2	21	0	0	0	0	**107**	
1830 - 1845	0	56	19	0	3	0	0	2	34	1	0	0	0	**115**	
1845 - 1900	0	44	12	0	1	1	0	0	30	1	0	0	0	**89**	**415**
1900 - 1915	0	35	14	0	1	1	0	0	24	2	0	0	0	**77**	
1915 - 1930	0	58	15	0	2	1	0	2	18	0	0	0	0	**96**	
1930 - 1945	0	31	16	0	3	2	0	1	20	0	0	0	0	**73**	
1945 - 2000	0	44	11	0	1	0	0	0	18	0	0	0	0	**74**	**320**
2000 - 2015	0	31	16	0	5	1	0	1	21	0	0	0	0	**75**	
2015 - 2030	0	39	14	1	1	0	0	2	13	0	0	0	0	**70**	
2030 - 2045	0	30	10	0	2	0	0	1	20	0	0	0	0	**63**	
2045 - 2100	0	27	8	0	2	0	0	2	17	0	0	0	0	**56**	**264**
2100 - 2115	0	29	9	0	2	0	0	2	14	0	0	0	0	**56**	
2115 - 2130	0	27	8	0	1	0	0	1	6	0	0	0	0	**43**	
2130 - 2145	0	28	7	0	2	0	0	2	19	0	0	0	0	**58**	
2145 - 2200	0	21	6	0	1	1	0	1	15	0	1	0	0	**46**	**203**
2200 - 2215	0	18	4	0	1	0	0	0	16	0	0	0	0	**39**	
2215 - 2230	0	15	4	0	1	0	0	0	17	0	0	0	0	**37**	
2230 - 2245	0	10	2	0	2	1	0	2	14	0	0	0	0	**31**	
2245 - 2300	0	9	5	1	0	0	0	1	13	0	3	0	0	**32**	**139**
2300 - 2315	0	11	2	0	0	0	0	2	9	0	3	0	0	**27**	
2315 - 2330	0	10	3	0	0	0	0	0	17	0	1	0	0	**31**	
2330 - 2345	0	19	1	0	1	0	0	0	5	0	0	0	0	**26**	
2345 - 0000	0	18	2	0	2	0	0	1	12	0	0	0	0	**35**	**119**

Session Total	13	3845	1514	23	329	126	12	120	1804	41	28	1	0	**7856**
Session Average	0.14	40.05	15.77	0.24	3.43	1.31	0.13	1.25	18.79	0.43	0.29	0.01	0.00	**81.83**
Session Percentage	0.17	48.94	19.27	0.29	4.19	1.60	0.15	1.53	22.96	0.52	0.36	0.01	0.00	

AM Peak Hour	0715 - 0815	0745 - 0845	0815 - 0915	0800 - 0900	0645 - 0745	0700 - 0800	0900 - 1000	0815 - 0915	0945 - 1045	0645 - 0745	0500 - 0600	-	-	**0745 - 0845**
AM Peak Hour Volume	3	339	159	7	37	16	3	11	95	4	4	0	0	**602**

Noon Peak Hour	1145 - 1245	1445 - 1545	1030 - 1130	1200 - 1300	1200 - 1300	1245 - 1345	1445 - 1545	1215 - 1315	1115 - 1215	1200 - 1300	-	-	-	**1030 - 1130**
Noon Peak Hour Volume	2	216	107	3	31	15	4	12	106	8	0	0	0	**455**

PM Peak Hour	1645 - 1745	1630 - 1730	1600 - 1700	1530 - 1630	1515 - 1615	1500 - 1600	1500 - 1600	1530 - 1630	1815 - 1915	1800 - 1900	-	1530 - 1630	-	**1700 - 1800**
PM Peak Hour Volume	3	303	105	6	23	8	3	12	109	5	0	1	0	**514**

Site 74 Lane 3 EB
I-20,
west of US-378 Sunset Blvd S/Bound Off-Ramp

Date
Thursday, April 25, 2024

Lat/Long
34.008085°, -81.156669°

Weather
Fair
67°F

Click here for Detailed Weather

0000 - 2400 (Weekday 24h Session) (04-25-2024)
NB EB 15min

	Eastbound (Movement 74 Lane 3 EB.1)													15min	60min
TIME	1	2	3	4	5	6	7	8	9	10	11	12	13	Total	Total
0000 - 0015	0	9	3	0	1	0	0	0	6	0	0	0	0	**19**	
0015 - 0030	0	5	1	0	3	0	0	0	11	0	2	0	0	**22**	
0030 - 0045	0	6	2	0	1	0	0	0	14	0	0	0	0	**23**	
0045 - 0100	0	5	2	0	0	0	0	0	14	0	3	0	0	**24**	**88**
0100 - 0115	0	5	1	0	0	0	0	1	8	0	2	0	0	**17**	
0115 - 0130	0	4	3	0	0	0	0	1	13	0	3	0	0	**24**	
0130 - 0145	0	5	1	0	0	0	0	0	6	0	2	0	0	**14**	
0145 - 0200	0	8	2	0	0	0	0	0	10	0	1	0	0	**21**	**76**
0200 - 0215	0	5	1	0	1	0	0	0	9	0	2	0	0	**18**	
0215 - 0230	0	3	1	0	0	0	0	0	10	0	2	0	0	**16**	
0230 - 0245	0	8	3	0	2	0	0	1	11	0	1	0	0	**26**	
0245 - 0300	0	6	2	0	0	0	0	0	7	0	2	0	0	**17**	**77**
0300 - 0315	0	10	2	0	0	0	0	0	13	0	1	0	0	**26**	
0315 - 0330	0	4	1	0	0	0	0	1	10	0	2	0	0	**18**	
0330 - 0345	0	10	3	0	2	0	0	0	18	0	0	0	0	**33**	
0345 - 0400	0	6	3	0	1	0	0	1	16	0	1	0	0	**28**	**105**
0400 - 0415	0	9	4	0	1	1	0	1	11	0	1	0	0	**28**	
0415 - 0430	0	12	6	0	0	0	0	2	10	0	1	0	0	**31**	
0430 - 0445	0	13	7	0	1	1	0	3	15	0	1	0	0	**41**	
0445 - 0500	0	13	7	0	1	0	0	1	17	0	3	0	0	**42**	**142**
0500 - 0515	0	12	6	0	2	3	0	0	16	0	0	0	0	**39**	
0515 - 0530	0	14	11	1	1	1	0	1	20	0	0	0	0	**49**	
0530 - 0545	0	25	15	0	2	0	0	0	14	0	1	0	0	**57**	
0545 - 0600	0	28	20	0	1	0	0	1	20	0	1	0	0	**71**	**216**
0600 - 0615	0	23	16	0	6	1	0	2	19	0	0	0	0	**67**	
0615 - 0630	0	38	25	0	1	5	0	3	24	0	0	0	0	**96**	
0630 - 0645	0	64	20	0	5	2	0	0	16	0	0	0	0	**107**	
0645 - 0700	0	57	29	0	4	1	1	1	21	0	1	0	0	**115**	**385**
0700 - 0715	0	55	30	0	8	5	1	3	20	1	1	0	0	**124**	
0715 - 0730	0	71	37	0	8	3	0	1	11	0	0	0	0	**131**	
0730 - 0745	0	75	28	0	4	2	0	0	16	1	0	0	0	**126**	
0745 - 0800	0	95	35	0	2	3	0	2	17	1	0	0	0	**155**	**536**
0800 - 0815	0	74	39	1	7	3	0	1	20	0	0	0	0	**145**	
0815 - 0830	0	86	49	0	6	1	0	5	14	0	0	0	0	**161**	
0830 - 0845	0	80	39	0	10	0	2	3	14	0	1	0	0	**149**	
0845 - 0900	0	52	41	0	7	3	1	3	23	1	0	1	0	**132**	**587**
0900 - 0915	0	66	32	0	6	2	0	4	22	0	0	0	0	**132**	
0915 - 0930	0	57	31	1	4	2	0	3	24	0	0	0	0	**122**	
0930 - 0945	0	42	26	1	9	1	0	4	37	0	0	0	0	**120**	
0945 - 1000	0	55	24	1	6	2	1	2	19	2	0	0	0	**112**	**486**
1000 - 1015	0	54	31	1	6	4	0	2	22	2	0	0	0	**122**	
1015 - 1030	1	55	23	4	5	4	1	1	21	1	0	0	0	**116**	
1030 - 1045	1	54	27	0	4	4	0	1	23	3	0	0	0	**117**	
1045 - 1100	0	54	29	0	4	4	0	4	35	0	0	0	0	**130**	**485**
1100 - 1115	0	49	15	0	6	3	1	3	30	0	1	0	0	**108**	
1115 - 1130	0	63	27	0	9	1	0	6	21	0	0	0	0	**127**	
1130 - 1145	0	52	18	1	7	3	0	2	30	1	0	0	0	**114**	
1145 - 1200	0	41	25	1	8	1	0	2	24	0	0	0	0	**102**	**451**
1200 - 1215	0	65	15	0	3	2	2	3	23	0	0	0	0	**113**	
1215 - 1230	0	50	30	0	9	2	1	3	22	0	0	0	0	**117**	
1230 - 1245	0	69	28	0	4	3	0	4	17	1	0	0	0	**126**	
1245 - 1300	0	51	23	1	8	3	0	6	25	2	0	0	0	**119**	**475**
1300 - 1315	0	57	35	0	9	3	0	4	13	0	0	0	0	**121**	
1315 - 1330	1	51	22	0	8	2	1	2	17	1	0	0	0	**105**	
1330 - 1345	0	53	21	0	9	4	0	3	24	3	0	0	0	**117**	
1345 - 1400	0	41	22	0	10	3	0	3	22	1	0	0	0	**102**	**445**
1400 - 1415	0	36	24	0	6	1	0	2	22	0	0	0	0	**91**	
1415 - 1430	1	53	25	0	8	3	1	3	23	0	0	0	0	**117**	
1430 - 1445	0	53	30	0	2	3	1	1	15	0	0	0	0	**105**	
1445 - 1500	0	45	24	0	5	3	1	2	23	0	0	0	0	**103**	**416**
1500 - 1515	0	55	24	0	3	1	0	3	15	0	0	0	0	**101**	
1515 - 1530	0	58	26	1	7	2	0	2	21	0	0	0	0	**117**	
1530 - 1545	0	56	25	1	8	1	0	3	31	0	0	0	0	**125**	
1545 - 1600	0	62	27	0	4	0	0	2	20	1	0	0	0	**116**	**459**
1600 - 1615	0	70	26	1	3	0	0	1	21	2	0	0	0	**124**	
1615 - 1630	0	51	21	0	2	1	0	1	30	2	0	0	0	**108**	
1630 - 1645	0	74	23	0	2	1	0	2	30	0	0	0	0	**132**	
1645 - 1700	0	67	31	0	6	1	0	2	20	0	0	0	0	**127**	**491**
1700 - 1715	0	81	26	0	7	1	0	3	18	0	0	0	0	**136**	
1715 - 1730	0	87	25	0	2	0	0	4	19	1	0	0	0	**138**	
1730 - 1745	1	70	26	0	2	1	0	0	19	1	0	0	0	**120**	
1745 - 1800	0	69	19	0	4	4	0	0	21	0	0	0	0	**117**	**511**
1800 - 1815	1	67	29	0	3	2	0	0	11	0	0	0	0	**113**	
1815 - 1830	0	74	22	1	1	2	0	2	8	0	0	0	0	**110**	
1830 - 1845	1	62	20	0	1	1	0	2	20	0	0	0	0	**107**	
1845 - 1900	0	47	10	0	3	1	0	1	21	0	0	0	0	**83**	**413**
1900 - 1915	0	33	20	0	1	0	0	1	24	0	0	0	0	**79**	
1915 - 1930	0	45	29	0	1	1	0	0	13	0	0	0	0	**89**	
1930 - 1945	0	38	22	1	1	0	0	1	21	0	0	0	0	**84**	
1945 - 2000	0	61	20	0	1	0	0	2	16	0	0	0	0	**100**	**352**
2000 - 2015	0	42	14	0	1	1	0	2	17	0	0	0	0	**77**	
2015 - 2030	0	33	15	0	2	2	0	2	21	0	0	0	0	**75**	
2030 - 2045	0	37	9	0	3	0	0	3	15	0	1	0	0	**68**	
2045 - 2100	0	31	8	0	0	0	0	0	20	0	0	0	0	**59**	**279**
2100 - 2115	0	38	9	1	3	1	0	2	11	0	0	0	0	**65**	
2115 - 2130	0	33	8	0	2	0	0	0	12	0	0	0	0	**55**	
2130 - 2145	0	18	8	0	0	0	0	0	16	0	3	0	0	**45**	
2145 - 2200	0	28	11	0	1	1	0	3	18	0	1	0	0	**63**	**228**
2200 - 2215	0	20	6	0	0	1	0	2	17	0	0	0	0	**46**	
2215 - 2230	0	23	4	0	4	1	0	0	13	0	1	0	0	**46**	
2230 - 2245	0	21	2	0	1	1	0	0	14	0	0	0	0	**39**	
2245 - 2300	0	19	4	0	1	1	0	1	5	0	1	0	0	**32**	**163**
2300 - 2315	0	20	6	0	0	0	0	1	12	0	2	0	0	**41**	
2315 - 2330	0	10	4	0	2	0	0	1	12	0	0	0	0	**29**	
2330 - 2345	0	11	6	0	1	1	0	0	5	0	0	0	0	**24**	
2345 - 0000	0	5	0	0	0	0	0	0	4	0	1	0	0	**10**	**104**

Session Total	7	3877	1687	19	326	128	15	157	1679	28	46	1	0	**7970**
Session Average	0.07	40.39	17.57	0.20	3.40	1.33	0.16	1.64	17.49	0.29	0.48	0.01	0.00	**83.02**
Session Percentage	0.09	48.64	21.17	0.24	4.09	1.61	0.19	1.97	21.07	0.35	0.58	0.01	0.00	

AM Peak Hour	0945 - 1045	0745 - 0845	0800 - 0900	0930 - 1030	0800 - 0900	0945 - 1045	0800 - 0900	0815 - 0915	0845 - 0945	0945 - 1045	0500 - 0600	0800 - 0900	-	**0745 - 0845**
AM Peak Hour Volume	2	335	168	7	30	14	3	15	106	8	2	1	0	**610**

Noon Peak Hour	1000 - 1100	1200 - 1300	1215 - 1315	1000 - 1100	1300 - 1400	1000 - 1100	1130 - 1230	1215 - 1315	1045 - 1145	1000 - 1100	1015 - 1115	-	-	**1000 - 1100**
Noon Peak Hour Volume	2	235	116	5	36	16	3	17	116	6	1	0	0	**485**

PM Peak Hour	1715 - 1815	1630 - 1730	1645 - 1745	1515 - 1615	1500 - 1600	1730 - 1830	-	1630 - 1730	1530 - 1630	1530 - 1630	1945 - 2045	-	-	**1630 - 1730**
PM Peak Hour Volume	2	309	108	3	22	9	0	11	102	5	1	0	0	**533**

Site 74 Lane 3 EB
I-20,
west of US-378 Sunset Blvd S/Bound Off-Ramp

Date
Friday, April 26, 2024

Lat/Long
34.008085°, -81.156669°

Weather
Cloudy
69°F

Click here for Detailed Weather

0000 - 2400 (Weekday 24h Session) (04-26-2024)
NB EB 15min

	Eastbound (Movement 74 Lane 3 EB.1)													15min	60min
TIME	1	2	3	4	5	6	7	8	9	10	11	12	13	Total	Total
0000 - 0015	0	0	0	0	0	0	0	0	9	0	1	0	0	**10**	
0015 - 0030	0	3	0	0	1	0	0	0	6	0	0	0	0	**10**	
0030 - 0045	0	5	0	0	0	0	0	0	4	0	1	0	0	**10**	
0045 - 0100	0	4	0	0	1	0	0	0	10	0	0	0	0	**15**	**45**
0100 - 0115	0	5	1	0	1	0	0	0	6	0	2	0	0	**15**	
0115 - 0130	0	11	1	0	0	2	0	0	6	0	2	0	0	**22**	
0130 - 0145	0	8	2	0	1	0	0	0	12	0	3	0	0	**26**	
0145 - 0200	0	4	0	0	0	0	0	0	7	0	1	0	0	**12**	**75**
0200 - 0215	0	9	1	2	0	1	0	0	14	0	0	0	0	**27**	
0215 - 0230	0	9	1	0	0	0	0	0	14	0	0	0	0	**24**	
0230 - 0245	0	3	0	0	2	1	0	0	12	0	2	0	0	**20**	
0245 - 0300	0	4	0	0	0	0	0	0	11	0	0	0	0	**15**	**86**
0300 - 0315	0	4	0	0	1	0	0	0	14	0	2	0	0	**21**	
0315 - 0330	0	11	1	0	1	2	0	0	12	0	0	0	0	**27**	
0330 - 0345	0	7	0	2	1	0	0	0	14	0	3	0	0	**27**	
0345 - 0400	0	8	2	0	0	0	0	0	18	0	1	0	0	**29**	**104**
0400 - 0415	0	15	3	0	1	1	0	0	6	0	3	0	0	**29**	
0415 - 0430	0	21	2	0	1	2	0	0	17	0	1	0	0	**44**	
0430 - 0445	1	10	4	0	2	0	0	0	15	0	0	0	0	**32**	
0445 - 0500	0	16	3	0	2	0	0	0	14	0	0	0	0	**35**	**140**
0500 - 0515	0	10	3	0	2	0	0	0	18	0	0	0	0	**33**	
0515 - 0530	0	29	5	0	2	0	0	0	18	0	1	0	0	**55**	
0530 - 0545	0	24	3	0	3	1	0	0	14	0	1	0	0	**46**	
0545 - 0600	0	25	12	1	1	0	0	1	13	0	0	0	0	**53**	**187**
0600 - 0615	0	33	14	0	1	0	0	0	14	0	0	0	0	**62**	
0615 - 0630	0	24	19	0	3	0	0	0	21	0	0	0	0	**67**	
0630 - 0645	0	47	26	3	3	2	1	3	20	2	0	0	0	**107**	
0645 - 0700	0	50	31	0	7	3	0	2	19	0	1	0	0	**113**	**349**
0700 - 0715	0	51	25	0	5	2	1	1	21	0	0	0	0	**106**	
0715 - 0730	0	66	48	0	8	0	0	3	14	0	1	0	0	**140**	
0730 - 0745	0	83	31	0	0	2	0	2	20	0	0	0	0	**138**	
0745 - 0800	0	102	31	1	3	3	1	3	9	0	1	0	0	**154**	**538**
0800 - 0815	0	82	46	0	6	2	0	2	12	0	0	0	0	**150**	
0815 - 0830	0	90	28	1	6	1	0	2	21	1	0	0	0	**150**	
0830 - 0845	0	105	31	6	2	2	0	1	13	1	0	0	0	**161**	
0845 - 0900	0	56	34	4	8	1	0	3	19	0	0	0	0	**125**	**586**
0900 - 0915	0	67	20	5	6	0	0	2	22	0	0	0	0	**122**	
0915 - 0930	0	78	32	0	7	1	1	5	21	0	0	0	0	**145**	
0930 - 0945	0	75	28	0	4	0	0	2	19	1	0	0	0	**129**	
0945 - 1000	0	51	41	0	3	2	0	1	20	0	0	0	0	**118**	**514**
1000 - 1015	0	63	20	0	8	2	0	5	28	1	0	0	0	**127**	
1015 - 1030	0	55	31	0	6	0	1	0	19	0	0	0	0	**112**	
1030 - 1045	0	75	23	0	3	3	1	1	25	1	0	0	0	**132**	
1045 - 1100	1	50	28	1	3	2	0	7	27	4	0	0	0	**123**	**494**
1100 - 1115	0	51	36	1	8	2	1	0	18	0	0	0	0	**117**	
1115 - 1130	0	58	21	0	4	2	0	4	23	2	0	0	0	**114**	
1130 - 1145	0	75	28	0	5	2	0	0	18	1	0	0	0	**129**	
1145 - 1200	0	63	34	0	8	1	0	3	24	0	0	0	0	**133**	**493**
1200 - 1215	0	50	26	0	6	0	0	4	21	2	0	0	0	**109**	
1215 - 1230	0	55	17	0	6	5	0	4	22	0	0	0	0	**109**	
1230 - 1245	0	53	30	0	6	0	0	1	24	0	0	0	0	**114**	
1245 - 1300	1	55	28	0	4	1	0	4	31	0	0	0	0	**124**	**456**
1300 - 1315	0	53	25	0	7	0	2	3	19	1	0	0	0	**110**	
1315 - 1330	0	61	25	0	5	3	0	2	19	0	0	0	0	**115**	
1330 - 1345	0	70	21	0	9	3	1	1	21	0	0	0	0	**126**	
1345 - 1400	0	55	25	0	4	3	0	6	8	1	0	0	0	**102**	**453**
1400 - 1415	0	60	24	0	6	2	1	3	17	0	0	0	0	**113**	
1415 - 1430	0	59	17	0	1	1	0	2	18	1	0	0	0	**99**	
1430 - 1445	0	49	19	0	1	0	0	3	22	0	0	0	0	**94**	
1445 - 1500	0	59	20	0	8	3	0	2	16	0	0	0	0	**108**	**414**
1500 - 1515	0	62	20	3	4	3	0	1	19	0	0	0	0	**112**	
1515 - 1530	1	66	27	0	5	1	0	2	21	1	0	0	0	**124**	
1530 - 1545	0	85	25	0	8	3	0	2	10	1	0	0	0	**134**	
1545 - 1600	1	87	31	3	3	1	0	3	19	1	1	0	0	**150**	**520**
1600 - 1615	1	92	18	0	0	4	0	3	15	0	0	0	0	**133**	
1615 - 1630	0	65	24	0	2	3	0	1	24	0	0	0	0	**119**	
1630 - 1645	0	75	20	0	3	2	0	2	8	0	0	0	0	**110**	
1645 - 1700	2	87	20	0	8	3	0	2	9	0	0	0	0	**131**	**493**
1700 - 1715	0	86	21	0	3	0	0	3	15	1	0	0	0	**129**	
1715 - 1730	0	80	22	1	4	2	0	1	21	0	0	0	0	**131**	
1730 - 1745	1	75	29	1	1	1	0	0	12	2	0	0	0	**122**	
1745 - 1800	1	88	23	0	3	2	0	2	10	0	0	0	0	**129**	**511**
1800 - 1815	0	87	22	2	4	1	0	3	15	0	0	0	0	**134**	
1815 - 1830	0	94	21	0	4	0	0	0	14	0	0	0	0	**133**	
1830 - 1845	1	69	26	0	5	2	0	0	15	1	0	0	0	**119**	
1845 - 1900	0	52	22	0	2	2	0	1	16	0	0	0	0	**95**	**481**
1900 - 1915	0	43	19	0	1	1	0	2	18	0	0	0	0	**84**	
1915 - 1930	0	69	17	0	1	3	0	1	13	0	0	0	0	**104**	
1930 - 1945	0	58	18	0	3	2	0	0	13	0	0	0	0	**94**	
1945 - 2000	2	56	25	1	1	1	0	1	13	0	0	0	0	**100**	**382**
2000 - 2015	0	49	17	0	1	0	0	0	16	0	0	0	0	**83**	
2015 - 2030	0	37	14	1	2	2	0	0	11	0	0	0	0	**67**	
2030 - 2045	0	47	10	0	2	0	0	0	15	0	0	0	0	**74**	
2045 - 2100	0	50	9	0	3	0	0	0	17	0	1	0	0	**80**	**304**
2100 - 2115	0	33	9	0	3	2	0	0	11	0	0	0	0	**58**	
2115 - 2130	0	40	8	0	3	0	0	0	11	0	0	0	0	**62**	
2130 - 2145	0	30	9	0	3	0	0	0	8	0	1	0	0	**51**	
2145 - 2200	0	51	10	0	1	0	0	0	5	0	2	0	0	**69**	**240**
2200 - 2215	0	23	8	0	0	0	0	0	11	0	0	0	0	**42**	
2215 - 2230	0	31	11	0	1	0	0	0	11	0	2	0	0	**56**	
2230 - 2245	0	28	5	0	1	0	0	0	9	0	0	0	0	**43**	
2245 - 2300	0	22	6	1	0	0	0	0	13	0	1	0	0	**43**	**184**
2300 - 2315	0	28	4	0	1	0	0	0	9	0	1	0	0	**43**	
2315 - 2330	0	25	2	0	0	0	0	1	11	0	0	0	0	**39**	
2330 - 2345	0	22	3	0	0	0	0	0	11	0	1	0	0	**37**	
2345 - 0000	0	24	0	0	3	0	0	0	7	0	0	0	0	**34**	**153**

Session Total	13	4490	1602	40	292	107	11	119	1465	26	37	0	0	**8202**
Session Average	0.14	46.77	16.69	0.42	3.04	1.11	0.11	1.24	15.26	0.27	0.39	0.00	0.00	**85.44**
Session Percentage	0.16	54.74	19.53	0.49	3.56	1.30	0.13	1.45	17.86	0.32	0.45	0.00	0.00	

AM Peak Hour	-	0745 - 0845	0715 - 0815	0815 - 0915	0845 - 0945	0730 - 0830	0615 - 0715	0915 - 1015	0945 - 1045	0545 - 0645	0500 - 0600	-	-	**0745 - 0845**
AM Peak Hour Volume	0	379	156	16	25	8	2	13	92	2	2	0	0	**615**

Noon Peak Hour	1000 - 1100	1445 - 1545	1100 - 1200	1415 - 1515	1145 - 1245	1315 - 1415	1015 - 1115	1345 - 1445	1000 - 1100	1030 - 1130	-	-	-	**1000 - 1100**
Noon Peak Hour Volume	1	272	119	3	26	11	3	14	99	7	0	0	0	**494**

PM Peak Hour	1515 - 1615	1730 - 1830	1500 - 1600	1500 - 1600	1500 - 1600	1600 - 1700	-	1515 - 1615	1500 - 1600	1500 - 1600	1500 - 1600	-	-	**1515 - 1615**
PM Peak Hour Volume	3	344	103	6	20	12	0	10	69	3	1	0	0	**541**

Site 74 Lane 3 EB
I-20,
west of US-378 Sunset Blvd S/Bound Off-Ramp

Date
Saturday, April 27, 2024

Lat/Long
34.008085°, -81.156669°

Weather
Mostly Cloudy
69°F

Click here for Detailed Weather

0000 - 2400 (Saturday 24h Session) (04-27-2024)
NB EB 15min

	Eastbound (Movement 74 Lane 3 EB.1)													15min	60min
TIME	1	2	3	4	5	6	7	8	9	10	11	12	13	Total	Total
0000 - 0015	0	18	1	0	0	0	0	0	8	0	0	0	0	**27**	
0015 - 0030	0	16	2	0	0	0	0	0	5	0	0	0	0	**23**	
0030 - 0045	0	14	2	0	1	0	0	0	6	0	0	0	0	**23**	
0045 - 0100	0	15	1	0	0	0	0	0	7	0	2	0	0	**25**	**98**
0100 - 0115	0	7	0	0	5	0	0	0	4	0	2	0	0	**18**	
0115 - 0130	0	8	1	0	1	1	0	0	10	0	1	0	0	**22**	
0130 - 0145	0	11	1	0	0	0	0	0	2	0	1	0	0	**15**	
0145 - 0200	0	4	0	0	1	1	0	0	5	0	0	0	0	**11**	**66**
0200 - 0215	0	8	1	0	0	0	0	0	4	0	1	0	0	**14**	
0215 - 0230	0	9	0	0	1	2	0	0	11	0	0	0	0	**23**	
0230 - 0245	0	7	0	0	0	0	0	0	5	0	0	0	0	**12**	
0245 - 0300	0	4	0	0	1	0	0	0	8	0	2	0	0	**15**	**64**
0300 - 0315	0	7	0	0	1	0	0	0	4	0	1	0	0	**13**	
0315 - 0330	0	5	0	0	0	1	0	0	7	0	1	0	0	**14**	
0330 - 0345	0	8	1	0	0	0	0	0	6	0	4	0	0	**19**	
0345 - 0400	0	6	0	0	0	3	0	0	6	0	0	0	0	**15**	**61**
0400 - 0415	0	8	0	0	0	0	0	0	3	0	0	0	0	**11**	
0415 - 0430	0	7	1	0	0	1	0	0	2	0	0	0	0	**11**	
0430 - 0445	0	12	3	0	0	0	0	0	4	0	0	0	0	**19**	
0445 - 0500	0	6	0	0	1	0	0	0	6	0	1	0	0	**14**	**55**
0500 - 0515	0	8	2	0	2	0	0	0	8	0	0	0	0	**20**	
0515 - 0530	0	9	2	0	0	1	0	0	6	0	0	0	0	**18**	
0530 - 0545	0	10	4	0	1	0	0	0	6	0	1	0	0	**22**	
0545 - 0600	0	6	5	0	0	0	0	0	15	0	1	0	0	**27**	**87**
0600 - 0615	0	15	10	0	1	0	0	0	3	0	1	0	0	**30**	
0615 - 0630	0	16	13	1	1	0	0	0	6	0	2	0	0	**39**	
0630 - 0645	0	29	10	0	2	1	0	0	12	1	0	0	0	**55**	
0645 - 0700	0	26	10	0	1	0	0	0	14	0	0	0	0	**51**	**175**
0700 - 0715	0	37	16	0	1	0	0	1	9	0	1	0	0	**65**	
0715 - 0730	0	46	22	0	5	0	1	2	9	0	0	0	0	**85**	
0730 - 0745	0	43	25	0	3	2	0	0	5	0	0	0	0	**78**	
0745 - 0800	2	47	21	0	0	1	0	0	12	0	1	1	0	**85**	**313**
0800 - 0815	0	58	26	0	1	0	0	1	13	0	0	0	0	**99**	
0815 - 0830	0	64	21	2	1	0	0	2	12	0	0	0	0	**102**	
0830 - 0845	0	61	13	0	2	1	0	0	16	0	0	0	0	**93**	
0845 - 0900	0	64	18	1	2	0	0	2	15	1	0	0	0	**103**	**397**
0900 - 0915	0	80	18	0	7	0	0	0	12	0	0	0	0	**117**	
0915 - 0930	0	80	21	0	4	2	0	0	9	0	0	0	0	**116**	
0930 - 0945	2	72	24	0	0	1	0	2	13	1	0	0	0	**115**	
0945 - 1000	0	73	24	0	0	0	0	1	13	1	0	0	0	**112**	**460**
1000 - 1015	0	80	18	0	2	0	0	0	10	1	0	0	0	**111**	
1015 - 1030	0	75	22	0	3	0	0	1	12	0	0	0	0	**113**	
1030 - 1045	0	81	22	0	3	0	0	1	10	0	0	0	0	**117**	
1045 - 1100	0	82	24	0	0	0	0	2	7	0	0	0	0	**115**	**456**
1100 - 1115	0	71	24	0	3	1	0	1	12	0	0	0	0	**112**	
1115 - 1130	0	90	12	0	2	0	0	0	17	0	0	0	0	**121**	
1130 - 1145	1	71	20	0	2	0	0	4	11	0	0	0	0	**109**	
1145 - 1200	0	91	21	0	2	0	0	2	16	0	0	0	0	**132**	**474**
1200 - 1215	0	78	23	0	2	1	0	0	11	1	0	0	0	**116**	
1215 - 1230	0	73	19	0	2	0	0	1	7	0	0	0	0	**102**	
1230 - 1245	1	90	21	0	3	0	0	1	19	0	0	0	0	**135**	
1245 - 1300	0	77	27	0	2	0	0	1	12	1	0	0	0	**120**	**473**
1300 - 1315	0	75	19	1	2	1	0	1	14	0	0	0	0	**113**	
1315 - 1330	2	64	22	0	0	0	0	2	13	0	0	0	0	**103**	
1330 - 1345	0	105	25	0	3	1	0	2	11	0	0	0	0	**147**	
1345 - 1400	0	63	21	0	0	1	0	0	12	0	0	0	0	**97**	**460**
1400 - 1415	0	79	21	0	1	0	0	0	9	0	0	0	0	**110**	
1415 - 1430	0	87	20	0	4	1	0	2	8	0	0	0	0	**122**	
1430 - 1445	1	90	28	1	1	0	0	1	8	0	0	0	0	**130**	
1445 - 1500	0	83	24	0	0	4	0	0	12	0	0	0	0	**123**	**485**
1500 - 1515	0	99	33	0	1	1	0	0	3	0	1	0	0	**138**	
1515 - 1530	1	80	18	0	1	0	0	1	12	2	0	0	0	**115**	
1530 - 1545	0	77	24	1	0	0	0	1	6	0	0	0	0	**109**	
1545 - 1600	0	84	19	0	0	0	0	0	9	0	0	0	0	**112**	**474**
1600 - 1615	0	78	21	1	2	1	0	0	4	0	0	0	0	**107**	
1615 - 1630	1	77	16	0	1	0	0	0	12	0	0	0	0	**107**	
1630 - 1645	0	79	19	0	3	1	0	3	12	0	0	0	0	**117**	
1645 - 1700	0	86	19	0	1	0	0	0	7	0	0	0	0	**113**	**444**
1700 - 1715	0	83	18	0	0	0	0	1	15	1	0	0	0	**118**	
1715 - 1730	1	72	17	0	2	0	0	0	13	0	0	0	0	**105**	
1730 - 1745	0	76	16	0	1	0	0	0	8	0	0	0	0	**101**	
1745 - 1800	0	67	19	0	1	1	0	1	8	0	0	0	0	**97**	**421**
1800 - 1815	0	64	26	0	0	0	0	1	7	0	0	0	0	**98**	
1815 - 1830	1	59	14	1	5	0	0	1	8	0	0	0	0	**89**	
1830 - 1845	0	73	10	0	1	0	0	0	13	1	0	0	0	**98**	
1845 - 1900	0	63	18	0	0	0	0	0	7	0	0	0	0	**88**	**373**
1900 - 1915	0	70	18	0	2	0	0	1	6	0	0	0	0	**97**	
1915 - 1930	0	58	21	0	3	0	0	2	9	0	0	0	0	**93**	
1930 - 1945	0	59	18	0	1	0	0	0	9	0	0	0	0	**87**	
1945 - 2000	0	66	15	0	2	0	0	1	4	0	0	0	0	**88**	**365**
2000 - 2015	0	53	18	0	1	0	0	1	5	0	0	0	0	**78**	
2015 - 2030	1	35	12	0	1	0	0	0	4	0	0	0	0	**53**	
2030 - 2045	0	41	8	0	4	0	0	0	8	0	0	0	0	**61**	
2045 - 2100	0	47	9	0	2	0	0	0	2	0	0	0	0	**60**	**252**
2100 - 2115	0	44	5	0	1	0	0	0	7	0	0	0	0	**57**	
2115 - 2130	0	48	4	0	0	0	0	0	3	0	0	0	0	**55**	
2130 - 2145	0	45	4	0	2	0	0	0	5	0	0	0	0	**56**	
2145 - 2200	0	36	3	0	1	0	0	0	9	0	0	0	0	**49**	**217**
2200 - 2215	0	36	2	0	0	0	0	0	5	0	0	0	0	**43**	
2215 - 2230	0	34	2	0	0	0	0	0	6	0	0	0	0	**42**	
2230 - 2245	0	39	3	0	1	0	0	0	3	0	0	0	0	**46**	
2245 - 2300	0	27	2	1	0	0	0	0	4	0	0	0	0	**34**	**165**
2300 - 2315	0	29	3	0	2	0	0	0	5	0	0	0	0	**39**	
2315 - 2330	0	34	4	0	0	0	0	0	9	0	0	0	0	**47**	
2330 - 2345	0	25	2	0	0	0	0	0	0	0	0	0	0	**27**	
2345 - 0000	0	24	1	0	1	0	0	0	7	0	0	0	0	**33**	**146**

Session Total	14	4696	1213	10	126	32	1	47	806	11	24	1	0	**6981**
Session Average	0.15	48.92	12.64	0.10	1.31	0.33	0.01	0.49	8.40	0.11	0.25	0.01	0.00	**72.72**
Session Percentage	0.20	67.27	17.38	0.14	1.80	0.46	0.01	0.67	11.55	0.16	0.34	0.01	0.00	

AM Peak Hour	0700 - 0800	0945 - 1045	0715 - 0815	0800 - 0900	0830 - 0930	0700 - 0800	0630 - 0730	0800 - 0900	0800 - 0900	0915 - 1015	0530 - 0630	0700 - 0800	-	**0900 - 1000**
AM Peak Hour Volume	2	309	94	3	15	3	1	5	56	3	5	1	0	**460**

Noon Peak Hour	1230 - 1330	1415 - 1515	1415 - 1515	1215 - 1315	1015 - 1115	1415 - 1515	-	1045 - 1145	1230 - 1330	1200 - 1300	1415 - 1515	-	-	**1415 - 1515**
Noon Peak Hour Volume	3	359	105	1	9	6	0	7	58	2	1	0	0	**513**

PM Peak Hour	1500 - 1600	1500 - 1600	1500 - 1600	1515 - 1615	1815 - 1915	1545 - 1645	-	1615 - 1715	1630 - 1730	1500 - 1600	1500 - 1600	-	-	**1500 - 1600**
PM Peak Hour Volume	1	340	94	2	8	2	0	4	47	2	1	0	0	**474**

Bi-Directional Class Count || NB EB Average 15min

Columbia, SC

Marr Traffic DATA COLLECTION
www.marrtraffic.com

Site 74 Lane 3 EB
I-20,
west of US-378 Sunset Blvd S/Bound Off-Ramp

Date
Sunday, April 21, 2024

Lat/Long
34.008085°, -81.156669°

Weather
Cloudy
66°F

0000 - 2400 (Weekday 24h Session) (All Dates)
NB EB Average 15min

	NB EB Average 15min													15min	60min
Time	1	2	3	4	5	6	7	8	9	10	11	12	13	Total	Total
0000 - 0015	0	10	2	0	1	0	0	0	7	0	0	0	0	**20**	
0015 - 0030	0	12	1	0	1	0	0	0	7	0	0	0	0	**21**	
0030 - 0045	0	9	2	0	0	0	0	0	7	0	1	0	0	**20**	
0045 - 0100	0	11	2	0	0	0	0	0	9	0	1	0	0	**23**	**84**
0100 - 0115	0	8	1	0	1	0	0	0	5	0	1	0	0	**16**	
0115 - 0130	0	9	1	0	0	0	0	1	8	0	1	0	0	**20**	
0130 - 0145	0	8	1	0	0	0	0	0	6	0	1	0	0	**17**	
0145 - 0200	0	7	1	0	0	0	0	0	8	0	1	0	0	**17**	**69**
0200 - 0215	0	6	1	0	0	0	0	0	8	0	1	0	0	**17**	
0215 - 0230	0	7	1	0	0	0	0	0	9	0	1	0	0	**18**	
0230 - 0245	0	6	0	0	1	0	0	0	8	0	1	0	0	**16**	
0245 - 0300	0	5	0	0	0	0	0	0	8	0	1	0	0	**15**	**67**
0300 - 0315	0	7	1	0	0	0	0	0	8	0	1	0	0	**18**	
0315 - 0330	0	8	0	0	0	1	0	0	11	0	2	0	0	**22**	
0330 - 0345	0	11	1	0	1	0	0	0	9	0	1	0	0	**23**	
0345 - 0400	0	10	1	0	0	0	0	0	11	0	0	0	0	**23**	**87**
0400 - 0415	0	11	1	0	1	1	0	0	8	0	1	0	0	**23**	
0415 - 0430	0	12	2	0	1	1	0	1	9	0	1	0	0	**26**	
0430 - 0445	0	11	3	0	1	0	0	0	12	0	0	0	0	**28**	
0445 - 0500	0	15	2	0	1	0	0	0	11	0	1	0	0	**32**	**109**
0500 - 0515	0	14	2	0	1	1	0	0	12	0	0	0	0	**30**	
0515 - 0530	0	22	3	0	1	1	0	0	12	0	0	0	0	**40**	
0530 - 0545	0	26	4	0	2	1	0	0	12	0	1	0	0	**45**	
0545 - 0600	0	25	7	0	1	0	0	0	12	0	1	0	0	**46**	**162**
0600 - 0615	0	29	9	0	2	1	0	0	12	0	0	0	0	**54**	
0615 - 0630	0	34	15	0	2	1	0	1	15	0	0	0	0	**69**	
0630 - 0645	0	49	16	1	3	2	0	1	16	0	0	0	0	**88**	
0645 - 0700	0	46	23	0	4	2	0	1	17	0	0	0	0	**95**	**306**
0700 - 0715	0	52	26	0	6	2	0	1	14	0	0	0	0	**103**	
0715 - 0730	0	62	30	0	7	2	0	1	12	0	0	0	0	**114**	
0730 - 0745	0	67	24	0	3	2	0	2	14	0	0	0	0	**113**	
0745 - 0800	1	83	28	0	3	2	0	2	13	0	0	0	0	**132**	**463**
0800 - 0815	0	73	32	0	5	2	0	1	15	0	0	0	0	**129**	
0815 - 0830	0	75	32	0	4	1	0	3	16	0	0	0	0	**131**	
0830 - 0845	0	76	26	1	6	2	1	3	16	0	0	0	0	**131**	
0845 - 0900	0	62	33	2	5	2	0	3	14	1	0	0	0	**122**	**513**
0900 - 0915	0	71	26	1	4	1	0	2	20	0	0	0	0	**125**	
0915 - 0930	0	64	28	1	7	2	0	2	17	0	0	0	0	**120**	
0930 - 0945	0	61	27	1	4	1	0	3	21	0	0	0	0	**118**	
0945 - 1000	0	62	26	0	3	1	0	2	18	1	0	0	0	**115**	**477**
1000 - 1015	0	60	21	0	5	2	0	2	22	1	0	0	0	**113**	
1015 - 1030	0	56	23	1	5	1	0	1	18	0	0	0	0	**107**	
1030 - 1045	0	59	24	1	5	2	0	2	23	1	0	0	0	**116**	
1045 - 1100	1	60	26	0	3	2	0	3	22	1	0	0	0	**118**	**455**
1100 - 1115	0	55	21	0	6	2	0	2	23	0	0	0	0	**110**	
1115 - 1130	0	63	25	0	4	2	0	2	22	1	0	0	0	**120**	
1130 - 1145	0	60	20	0	4	2	0	3	21	0	0	0	0	**111**	
1145 - 1200	0	56	25	0	5	1	0	2	22	0	0	0	0	**111**	**452**
1200 - 1215	0	60	21	0	4	1	0	2	21	1	0	0	0	**111**	
1215 - 1230	0	61	23	0	6	2	0	3	19	1	0	0	0	**115**	
1230 - 1245	0	63	24	0	6	1	0	2	21	0	0	0	0	**119**	
1245 - 1300	0	60	27	1	5	2	0	3	21	1	0	0	0	**120**	**465**
1300 - 1315	0	61	23	0	5	2	0	3	15	0	0	0	0	**110**	
1315 - 1330	0	58	22	0	4	2	0	2	19	1	0	0	0	**109**	
1330 - 1345	0	70	19	1	5	2	0	2	20	1	0	0	0	**120**	
1345 - 1400	0	61	22	0	4	3	0	2	16	0	0	0	0	**108**	**447**
1400 - 1415	0	54	22	0	4	2	0	2	20	0	0	0	0	**106**	
1415 - 1430	0	65	22	0	5	2	0	2	18	1	0	0	0	**115**	
1430 - 1445	0	63	22	0	3	1	0	2	16	0	0	0	0	**107**	
1445 - 1500	0	59	21	0	4	2	0	1	20	0	0	0	0	**109**	**437**
1500 - 1515	0	67	23	0	3	2	0	1	16	0	0	0	0	**114**	
1515 - 1530	0	62	24	0	5	1	0	2	21	1	0	0	0	**115**	
1530 - 1545	0	70	23	0	4	2	0	2	17	0	0	0	0	**118**	
1545 - 1600	0	66	24	1	3	1	0	2	21	0	0	0	0	**119**	**466**
1600 - 1615	0	67	21	0	3	1	0	2	21	1	0	0	0	**117**	
1615 - 1630	0	66	20	0	3	1	0	2	21	0	0	0	0	**115**	
1630 - 1645	0	74	19	0	3	1	0	2	19	0	0	0	0	**119**	
1645 - 1700	0	73	24	0	4	1	0	1	16	0	0	0	0	**120**	**471**
1700 - 1715	0	81	22	0	4	1	0	2	18	1	0	0	0	**128**	
1715 - 1730	0	82	21	0	3	1	0	2	20	0	0	0	0	**128**	
1730 - 1745	1	68	21	0	1	0	0	1	16	0	0	0	0	**110**	
1745 - 1800	0	70	21	0	2	1	0	1	17	0	0	0	0	**113**	**480**
1800 - 1815	0	63	21	0	2	1	0	1	15	0	0	0	0	**105**	
1815 - 1830	0	60	16	0	3	1	0	1	12	0	0	0	0	**93**	
1830 - 1845	0	55	17	0	2	1	0	1	20	0	0	0	0	**96**	
1845 - 1900	0	50	13	0	2	1	0	1	16	0	0	0	0	**82**	**376**
1900 - 1915	0	39	15	0	1	1	0	1	16	0	0	0	0	**73**	
1915 - 1930	0	49	16	0	2	1	0	1	13	0	0	0	0	**81**	
1930 - 1945	0	42	16	0	2	1	0	1	13	0	0	0	0	**74**	
1945 - 2000	0	49	14	0	1	0	0	1	13	0	0	0	0	**79**	**307**
2000 - 2015	0	36	13	0	2	0	0	1	13	0	0	0	0	**66**	
2015 - 2030	0	32	10	1	1	1	0	1	11	0	0	0	0	**56**	
2030 - 2045	0	30	7	0	2	0	0	1	11	0	0	0	0	**51**	
2045 - 2100	0	32	5	0	1	0	0	0	13	0	0	0	0	**52**	**225**
2100 - 2115	0	30	5	0	2	0	0	1	9	0	0	0	0	**48**	
2115 - 2130	0	29	4	0	1	0	0	0	8	0	0	0	0	**42**	
2130 - 2145	0	27	4	0	1	0	0	0	11	0	1	0	0	**44**	
2145 - 2200	0	27	5	0	1	0	0	1	10	0	1	0	0	**44**	**178**
2200 - 2215	0	21	3	0	0	0	0	0	12	0	0	0	0	**37**	
2215 - 2230	0	22	3	0	1	0	0	0	10	0	1	0	0	**37**	
2230 - 2245	0	20	2	0	1	0	0	0	9	0	0	0	0	**33**	
2245 - 2300	0	17	2	0	1	0	0	0	9	0	1	0	0	**31**	**138**
2300 - 2315	0	17	3	0	1	0	0	0	8	0	1	0	0	**31**	
2315 - 2330	0	15	2	0	1	0	0	0	10	0	0	0	0	**28**	
2330 - 2345	0	15	2	0	1	0	0	0	7	0	0	0	0	**25**	
2345 - 0000	0	14	1	0	1	0	0	0	8	0	0	0	0	**24**	**107**

Session Total	10	4075	1366	21	248	93	7	103	1368	21	28	0	0	**7339**
Session Average	0.10	42.45	14.23	0.22	2.58	0.97	0.07	1.07	14.25	0.22	0.29	0.00	0.00	**76.44**
Session Percentage	0.13	55.53	18.61	0.28	3.37	1.27	0.09	1.40	18.64	0.29	0.38	0.01	0.00	

AM Peak Hour	0730 - 0830	0745 - 0845	0800 - 0900	0830 - 0930	0830 - 0930	0630 - 0730	0800 - 0900	0815 - 0915	0945 - 1045	0945 - 1045	0530 - 0630	0700 - 0800	-	**0745 - 0845**
AM Peak Volume	1	307	124	4	22	9	1	10	82	3	2	0	0	**523**

Noon Peak Hour	1230 - 1330	1445 - 1545	1215 - 1315	1245 - 1345	1215 - 1315	1315 - 1415	1015 - 1115	1215 - 1315	1030 - 1130	1200 - 1300	1015 - 1115	-	-	**1200 - 1300**
Noon Peak Volume	1	258	97	3	22	9	1	10	91	3	0	0	0	**465**

PM Peak Hour	1645 - 1745	1630 - 1730	1500 - 1600	1500 - 1600	1515 - 1615	1500 - 1600	1500 - 1600	1545 - 1645	1545 - 1645	1515 - 1615	1500 - 1600	1530 - 1630	-	**1630 - 1730**
PM Peak Volume	1	309	94	2	15	6	0	7	83	2	0	0	0	**496**

Bi-Directional Class Count || Volume Summary 15min

Columbia, SC

Marr Traffic DATA COLLECTION

www.marrtraffic.com

Site 74 Lane 3 EB

I-20,
west of US-378 Sunset Blvd S/Bound Off-Ramp

Date

Sunday, April 21, 2024

Lat/Long

34.008085°, -81.156669°

Weather

Cloudy
66°F

Click here for Detailed Weather

0000 - 2400 (Sunday 24h Session) (04-21-2024)

Volume Summary 15min

TIME	Volume Summary 15min EB	WB	15min Total	60min Total
0000 - 0015	25	0	**25**	
0015 - 0030	33	0	**33**	
0030 - 0045	20	0	**20**	
0045 - 0100	33	0	**33**	**111**
0100 - 0115	15	0	**15**	
0115 - 0130	24	0	**24**	
0130 - 0145	23	0	**23**	
0145 - 0200	17	0	**17**	**79**
0200 - 0215	13	0	**13**	
0215 - 0230	17	0	**17**	
0230 - 0245	14	0	**14**	
0245 - 0300	10	0	**10**	**54**
0300 - 0315	12	0	**12**	
0315 - 0330	20	0	**20**	
0330 - 0345	9	0	**9**	
0345 - 0400	22	0	**22**	**63**
0400 - 0415	8	0	**8**	
0415 - 0430	12	0	**12**	
0430 - 0445	9	0	**9**	
0445 - 0500	10	0	**10**	**39**
0500 - 0515	7	0	**7**	
0515 - 0530	12	0	**12**	
0530 - 0545	4	0	**4**	
0545 - 0600	10	0	**10**	**33**
0600 - 0615	26	0	**26**	
0615 - 0630	30	0	**30**	
0630 - 0645	36	0	**36**	
0645 - 0700	47	0	**47**	**139**
0700 - 0715	53	0	**53**	
0715 - 0730	49	0	**49**	
0730 - 0745	51	0	**51**	
0745 - 0800	69	0	**69**	**222**
0800 - 0815	53	0	**53**	
0815 - 0830	61	0	**61**	
0830 - 0845	84	0	**84**	
0845 - 0900	76	0	**76**	**274**
0900 - 0915	108	0	**108**	
0915 - 0930	79	0	**79**	
0930 - 0945	85	0	**85**	
0945 - 1000	98	0	**98**	**370**
1000 - 1015	91	0	**91**	
1015 - 1030	92	0	**92**	
1030 - 1045	104	0	**104**	
1045 - 1100	109	0	**109**	**396**
1100 - 1115	117	0	**117**	
1115 - 1130	115	0	**115**	
1130 - 1145	100	0	**100**	
1145 - 1200	99	0	**99**	**431**

Time	Volume Summary 15min EB	WB	15min Total	60min Total
1200 - 1215	116	0	**116**	
1215 - 1230	130	0	**130**	
1230 - 1245	115	0	**115**	
1245 - 1300	124	0	**124**	**485**
1300 - 1315	114	0	**114**	
1315 - 1330	102	0	**102**	
1330 - 1345	116	0	**116**	
1345 - 1400	113	0	**113**	**445**
1400 - 1415	104	0	**104**	
1415 - 1430	120	0	**120**	
1430 - 1445	115	0	**115**	
1445 - 1500	110	0	**110**	**449**
1500 - 1515	112	0	**112**	
1515 - 1530	97	0	**97**	
1530 - 1545	113	0	**113**	
1545 - 1600	107	0	**107**	**429**
1600 - 1615	100	0	**100**	
1615 - 1630	115	0	**115**	
1630 - 1645	118	0	**118**	
1645 - 1700	117	0	**117**	**450**
1700 - 1715	115	0	**115**	
1715 - 1730	110	0	**110**	
1730 - 1745	116	0	**116**	
1745 - 1800	116	0	**116**	**457**
1800 - 1815	99	0	**99**	
1815 - 1830	69	0	**69**	
1830 - 1845	89	0	**89**	
1845 - 1900	82	0	**82**	**339**
1900 - 1915	51	0	**51**	
1915 - 1930	46	0	**46**	
1930 - 1945	46	0	**46**	
1945 - 2000	52	0	**52**	**195**
2000 - 2015	40	0	**40**	
2015 - 2030	42	0	**42**	
2030 - 2045	32	0	**32**	
2045 - 2100	32	0	**32**	**146**
2100 - 2115	26	0	**26**	
2115 - 2130	15	0	**15**	
2130 - 2145	27	0	**27**	
2145 - 2200	24	0	**24**	**92**
2200 - 2215	17	0	**17**	
2215 - 2230	19	0	**19**	
2230 - 2245	12	0	**12**	
2245 - 2300	18	0	**18**	**66**
2300 - 2315	19	0	**19**	
2315 - 2330	12	0	**12**	
2330 - 2345	15	0	**15**	
2345 - 0000	16	0	**16**	**62**

Session Total	5826	0	**5826**
Session Average	60.69	0.00	**60.69**
Session Percentage	100.00	0.00	

Site 74 Lane 3 EB

I-20,
west of US-378 Sunset Blvd S/Bound Off-Ramp

Date

Monday, April 22, 2024

Lat/Long

34.008085°, -81.156669°

Weather

Mostly Cloudy
57°F

Click here for Detailed Weather

0000 - 2400 (Weekday 24h Session) (04-22-2024)

Volume Summary 15min

TIME	Volume Summary 15min EB	WB	15min Total	60min Total
0000 - 0015	10	0	**10**	
0015 - 0030	10	0	**10**	
0030 - 0045	11	0	**11**	
0045 - 0100	13	0	**13**	**44**
0100 - 0115	7	0	**7**	
0115 - 0130	7	0	**7**	
0130 - 0145	9	0	**9**	
0145 - 0200	11	0	**11**	**34**
0200 - 0215	10	0	**10**	
0215 - 0230	8	0	**8**	
0230 - 0245	9	0	**9**	
0245 - 0300	9	0	**9**	**36**
0300 - 0315	11	0	**11**	
0315 - 0330	20	0	**20**	
0330 - 0345	23	0	**23**	
0345 - 0400	15	0	**15**	**69**
0400 - 0415	20	0	**20**	
0415 - 0430	20	0	**20**	
0430 - 0445	22	0	**22**	
0445 - 0500	33	0	**33**	**95**
0500 - 0515	25	0	**25**	
0515 - 0530	41	0	**41**	
0530 - 0545	50	0	**50**	
0545 - 0600	33	0	**33**	**149**
0600 - 0615	70	0	**70**	
0615 - 0630	80	0	**80**	
0630 - 0645	97	0	**97**	
0645 - 0700	108	0	**108**	**355**
0700 - 0715	128	0	**128**	
0715 - 0730	136	0	**136**	
0730 - 0745	138	0	**138**	
0745 - 0800	141	0	**141**	**543**
0800 - 0815	163	0	**163**	
0815 - 0830	160	0	**160**	
0830 - 0845	155	0	**155**	
0845 - 0900	143	0	**143**	**621**
0900 - 0915	139	0	**139**	
0915 - 0930	124	0	**124**	
0930 - 0945	136	0	**136**	
0945 - 1000	118	0	**118**	**517**
1000 - 1015	117	0	**117**	
1015 - 1030	109	0	**109**	
1030 - 1045	126	0	**126**	
1045 - 1100	138	0	**138**	**490**
1100 - 1115	104	0	**104**	
1115 - 1130	113	0	**113**	
1130 - 1145	106	0	**106**	
1145 - 1200	102	0	**102**	**425**

Time	Volume Summary 15min EB	WB	15min Total	60min Total
1200 - 1215	112	0	**112**	
1215 - 1230	113	0	**113**	
1230 - 1245	118	0	**118**	
1245 - 1300	129	0	**129**	**472**
1300 - 1315	98	0	**98**	
1315 - 1330	114	0	**114**	
1330 - 1345	102	0	**102**	
1345 - 1400	123	0	**123**	**437**
1400 - 1415	109	0	**109**	
1415 - 1430	120	0	**120**	
1430 - 1445	105	0	**105**	
1445 - 1500	101	0	**101**	**435**
1500 - 1515	120	0	**120**	
1515 - 1530	125	0	**125**	
1530 - 1545	115	0	**115**	
1545 - 1600	113	0	**113**	**473**
1600 - 1615	118	0	**118**	
1615 - 1630	127	0	**127**	
1630 - 1645	124	0	**124**	
1645 - 1700	122	0	**122**	**491**
1700 - 1715	144	0	**144**	
1715 - 1730	128	0	**128**	
1730 - 1745	97	0	**97**	
1745 - 1800	108	0	**108**	**477**
1800 - 1815	74	0	**74**	
1815 - 1830	45	0	**45**	
1830 - 1845	53	0	**53**	
1845 - 1900	44	0	**44**	**216**
1900 - 1915	40	0	**40**	
1915 - 1930	55	0	**55**	
1930 - 1945	57	0	**57**	
1945 - 2000	43	0	**43**	**195**
2000 - 2015	44	0	**44**	
2015 - 2030	27	0	**27**	
2030 - 2045	15	0	**15**	
2045 - 2100	24	0	**24**	**110**
2100 - 2115	17	0	**17**	
2115 - 2130	16	0	**16**	
2130 - 2145	18	0	**18**	
2145 - 2200	11	0	**11**	**62**
2200 - 2215	21	0	**21**	
2215 - 2230	18	0	**18**	
2230 - 2245	20	0	**20**	
2245 - 2300	20	0	**20**	**79**
2300 - 2315	14	0	**14**	
2315 - 2330	5	0	**5**	
2330 - 2345	13	0	**13**	
2345 - 0000	11	0	**11**	**43**

Session Total	6868	0	**6868**
Session Average	71.54	0.00	**71.54**
Session Percentage	100.00	0.00	

Site 74 Lane 3 EB

I-20,
west of US-378 Sunset Blvd S/Bound Off-Ramp

Date

Tuesday, April 23, 2024

Lat/Long

34.008085°, -81.156669°

Weather

Fair
58°F

Click here for Detailed Weather

0000 - 2400 (Weekday 24h Session) (04-23-2024)

Volume Summary 15min

TIME	Volume Summary 15min EB	Volume Summary 15min WB	15min Total	60min Total
0000 - 0015	14	0	**14**	
0015 - 0030	12	0	**12**	
0030 - 0045	17	0	**17**	
0045 - 0100	8	0	**8**	**51**
0100 - 0115	18	0	**18**	
0115 - 0130	22	0	**22**	
0130 - 0145	18	0	**18**	
0145 - 0200	24	0	**24**	**82**
0200 - 0215	14	0	**14**	
0215 - 0230	15	0	**15**	
0230 - 0245	17	0	**17**	
0245 - 0300	16	0	**16**	**62**
0300 - 0315	22	0	**22**	
0315 - 0330	26	0	**26**	
0330 - 0345	26	0	**26**	
0345 - 0400	29	0	**29**	**103**
0400 - 0415	32	0	**32**	
0415 - 0430	35	0	**35**	
0430 - 0445	34	0	**34**	
0445 - 0500	38	0	**38**	**139**
0500 - 0515	39	0	**39**	
0515 - 0530	55	0	**55**	
0530 - 0545	86	0	**86**	
0545 - 0600	67	0	**67**	**247**
0600 - 0615	63	0	**63**	
0615 - 0630	86	0	**86**	
0630 - 0645	118	0	**118**	
0645 - 0700	110	0	**110**	**377**
0700 - 0715	105	0	**105**	
0715 - 0730	126	0	**126**	
0730 - 0745	121	0	**121**	
0745 - 0800	156	0	**156**	**508**
0800 - 0815	150	0	**150**	
0815 - 0830	133	0	**133**	
0830 - 0845	133	0	**133**	
0845 - 0900	126	0	**126**	**542**
0900 - 0915	118	0	**118**	
0915 - 0930	145	0	**145**	
0930 - 0945	117	0	**117**	
0945 - 1000	130	0	**130**	**510**
1000 - 1015	110	0	**110**	
1015 - 1030	109	0	**109**	
1030 - 1045	107	0	**107**	
1045 - 1100	101	0	**101**	**427**
1100 - 1115	107	0	**107**	
1115 - 1130	117	0	**117**	
1130 - 1145	111	0	**111**	
1145 - 1200	101	0	**101**	**436**

Time	Volume Summary 15min EB	Volume Summary 15min WB	15min Total	60min Total
1200 - 1215	117	0	**117**	
1215 - 1230	121	0	**121**	
1230 - 1245	110	0	**110**	
1245 - 1300	107	0	**107**	**455**
1300 - 1315	109	0	**109**	
1315 - 1330	121	0	**121**	
1330 - 1345	117	0	**117**	
1345 - 1400	112	0	**112**	**459**
1400 - 1415	122	0	**122**	
1415 - 1430	108	0	**108**	
1430 - 1445	107	0	**107**	
1445 - 1500	107	0	**107**	**444**
1500 - 1515	112	0	**112**	
1515 - 1530	108	0	**108**	
1530 - 1545	128	0	**128**	
1545 - 1600	111	0	**111**	**459**
1600 - 1615	102	0	**102**	
1615 - 1630	102	0	**102**	
1630 - 1645	130	0	**130**	
1645 - 1700	114	0	**114**	**448**
1700 - 1715	119	0	**119**	
1715 - 1730	136	0	**136**	
1730 - 1745	107	0	**107**	
1745 - 1800	106	0	**106**	**468**
1800 - 1815	111	0	**111**	
1815 - 1830	98	0	**98**	
1830 - 1845	93	0	**93**	
1845 - 1900	94	0	**94**	**396**
1900 - 1915	84	0	**84**	
1915 - 1930	86	0	**86**	
1930 - 1945	77	0	**77**	
1945 - 2000	93	0	**93**	**340**
2000 - 2015	66	0	**66**	
2015 - 2030	59	0	**59**	
2030 - 2045	47	0	**47**	
2045 - 2100	50	0	**50**	**222**
2100 - 2115	56	0	**56**	
2115 - 2130	48	0	**48**	
2130 - 2145	54	0	**54**	
2145 - 2200	44	0	**44**	**202**
2200 - 2215	52	0	**52**	
2215 - 2230	40	0	**40**	
2230 - 2245	40	0	**40**	
2245 - 2300	38	0	**38**	**170**
2300 - 2315	32	0	**32**	
2315 - 2330	31	0	**31**	
2330 - 2345	31	0	**31**	
2345 - 0000	26	0	**26**	**120**

Session Total	7667	0	**7667**
Session Average	79.86	0.00	**79.86**
Session Percentage	100.00	0.00	

Site 74 Lane 3 EB

I-20,
west of US-378 Sunset Blvd S/Bound Off-Ramp

Date

Wednesday, April 24, 2024

Lat/Long

34.008085°, -81.156669°

Weather

Fair
66°F

Click here for Detailed Weather

0000 - 2400 (Weekday 24h Session) (04-24-2024)

Volume Summary 15min

TIME	Volume Summary 15min EB	WB	15min Total	60min Total
0000 - 0015	33	0	**33**	
0015 - 0030	38	0	**38**	
0030 - 0045	33	0	**33**	
0045 - 0100	44	0	**44**	**148**
0100 - 0115	19	0	**19**	
0115 - 0130	20	0	**20**	
0130 - 0145	11	0	**11**	
0145 - 0200	20	0	**20**	**70**
0200 - 0215	23	0	**23**	
0215 - 0230	21	0	**21**	
0230 - 0245	17	0	**17**	
0245 - 0300	26	0	**26**	**87**
0300 - 0315	24	0	**24**	
0315 - 0330	30	0	**30**	
0330 - 0345	24	0	**24**	
0345 - 0400	25	0	**25**	**103**
0400 - 0415	34	0	**34**	
0415 - 0430	32	0	**32**	
0430 - 0445	37	0	**37**	
0445 - 0500	51	0	**51**	**154**
0500 - 0515	50	0	**50**	
0515 - 0530	53	0	**53**	
0530 - 0545	53	0	**53**	
0545 - 0600	59	0	**59**	**215**
0600 - 0615	62	0	**62**	
0615 - 0630	85	0	**85**	
0630 - 0645	98	0	**98**	
0645 - 0700	118	0	**118**	**363**
0700 - 0715	141	0	**141**	
0715 - 0730	134	0	**134**	
0730 - 0745	137	0	**137**	
0745 - 0800	166	0	**166**	**578**
0800 - 0815	143	0	**143**	
0815 - 0830	152	0	**152**	
0830 - 0845	141	0	**141**	
0845 - 0900	148	0	**148**	**584**
0900 - 0915	137	0	**137**	
0915 - 0930	109	0	**109**	
0930 - 0945	122	0	**122**	
0945 - 1000	116	0	**116**	**484**
1000 - 1015	113	0	**113**	
1015 - 1030	101	0	**101**	
1030 - 1045	111	0	**111**	
1045 - 1100	111	0	**111**	**436**
1100 - 1115	102	0	**102**	
1115 - 1130	131	0	**131**	
1130 - 1145	111	0	**111**	
1145 - 1200	107	0	**107**	**451**

Time	Volume Summary 15min EB	WB	15min Total	60min Total
1200 - 1215	94	0	**94**	
1215 - 1230	112	0	**112**	
1230 - 1245	112	0	**112**	
1245 - 1300	118	0	**118**	**436**
1300 - 1315	103	0	**103**	
1315 - 1330	105	0	**105**	
1330 - 1345	112	0	**112**	
1345 - 1400	108	0	**108**	**428**
1400 - 1415	92	0	**92**	
1415 - 1430	121	0	**121**	
1430 - 1445	95	0	**95**	
1445 - 1500	108	0	**108**	**416**
1500 - 1515	105	0	**105**	
1515 - 1530	120	0	**120**	
1530 - 1545	103	0	**103**	
1545 - 1600	121	0	**121**	**449**
1600 - 1615	136	0	**136**	
1615 - 1630	124	0	**124**	
1630 - 1645	102	0	**102**	
1645 - 1700	118	0	**118**	**480**
1700 - 1715	137	0	**137**	
1715 - 1730	150	0	**150**	
1730 - 1745	107	0	**107**	
1745 - 1800	120	0	**120**	**514**
1800 - 1815	104	0	**104**	
1815 - 1830	107	0	**107**	
1830 - 1845	115	0	**115**	
1845 - 1900	89	0	**89**	**415**
1900 - 1915	77	0	**77**	
1915 - 1930	96	0	**96**	
1930 - 1945	73	0	**73**	
1945 - 2000	74	0	**74**	**320**
2000 - 2015	75	0	**75**	
2015 - 2030	70	0	**70**	
2030 - 2045	63	0	**63**	
2045 - 2100	56	0	**56**	**264**
2100 - 2115	56	0	**56**	
2115 - 2130	43	0	**43**	
2130 - 2145	58	0	**58**	
2145 - 2200	46	0	**46**	**203**
2200 - 2215	39	0	**39**	
2215 - 2230	37	0	**37**	
2230 - 2245	31	0	**31**	
2245 - 2300	32	0	**32**	**139**
2300 - 2315	27	0	**27**	
2315 - 2330	31	0	**31**	
2330 - 2345	26	0	**26**	
2345 - 0000	35	0	**35**	**119**

Session Total	7856	0	**7856**
Session Average	81.83	0.00	**81.83**
Session Percentage	100.00	0.00	

Site 74 Lane 3 EB

I-20,
west of US-378 Sunset Blvd S/Bound Off-Ramp

Date

Thursday, April 25, 2024

Lat/Long

34.008085°, -81.156669°

Weather

Fair
67°F

Click here for Detailed Weather

0000 - 2400 (Weekday 24h Session) (04-25-2024)

Volume Summary 15min

TIME	Volume Summary 15min EB	Volume Summary 15min WB	15min Total	60min Total
0000 - 0015	19	0	**19**	
0015 - 0030	22	0	**22**	
0030 - 0045	23	0	**23**	
0045 - 0100	24	0	**24**	**88**
0100 - 0115	17	0	**17**	
0115 - 0130	24	0	**24**	
0130 - 0145	14	0	**14**	
0145 - 0200	21	0	**21**	**76**
0200 - 0215	18	0	**18**	
0215 - 0230	16	0	**16**	
0230 - 0245	26	0	**26**	
0245 - 0300	17	0	**17**	**77**
0300 - 0315	26	0	**26**	
0315 - 0330	18	0	**18**	
0330 - 0345	33	0	**33**	
0345 - 0400	28	0	**28**	**105**
0400 - 0415	28	0	**28**	
0415 - 0430	31	0	**31**	
0430 - 0445	41	0	**41**	
0445 - 0500	42	0	**42**	**142**
0500 - 0515	39	0	**39**	
0515 - 0530	49	0	**49**	
0530 - 0545	57	0	**57**	
0545 - 0600	71	0	**71**	**216**
0600 - 0615	67	0	**67**	
0615 - 0630	96	0	**96**	
0630 - 0645	107	0	**107**	
0645 - 0700	115	0	**115**	**385**
0700 - 0715	124	0	**124**	
0715 - 0730	131	0	**131**	
0730 - 0745	126	0	**126**	
0745 - 0800	155	0	**155**	**536**
0800 - 0815	145	0	**145**	
0815 - 0830	161	0	**161**	
0830 - 0845	149	0	**149**	
0845 - 0900	132	0	**132**	**587**
0900 - 0915	132	0	**132**	
0915 - 0930	122	0	**122**	
0930 - 0945	120	0	**120**	
0945 - 1000	112	0	**112**	**486**
1000 - 1015	122	0	**122**	
1015 - 1030	116	0	**116**	
1030 - 1045	117	0	**117**	
1045 - 1100	130	0	**130**	**485**
1100 - 1115	108	0	**108**	
1115 - 1130	127	0	**127**	
1130 - 1145	114	0	**114**	
1145 - 1200	102	0	**102**	**451**

Time	Volume Summary 15min EB	Volume Summary 15min WB	15min Total	60min Total
1200 - 1215	113	0	**113**	
1215 - 1230	117	0	**117**	
1230 - 1245	126	0	**126**	
1245 - 1300	119	0	**119**	**475**
1300 - 1315	121	0	**121**	
1315 - 1330	105	0	**105**	
1330 - 1345	117	0	**117**	
1345 - 1400	102	0	**102**	**445**
1400 - 1415	91	0	**91**	
1415 - 1430	117	0	**117**	
1430 - 1445	105	0	**105**	
1445 - 1500	103	0	**103**	**416**
1500 - 1515	101	0	**101**	
1515 - 1530	117	0	**117**	
1530 - 1545	125	0	**125**	
1545 - 1600	116	0	**116**	**459**
1600 - 1615	124	0	**124**	
1615 - 1630	108	0	**108**	
1630 - 1645	132	0	**132**	
1645 - 1700	127	0	**127**	**491**
1700 - 1715	136	0	**136**	
1715 - 1730	138	0	**138**	
1730 - 1745	120	0	**120**	
1745 - 1800	117	0	**117**	**511**
1800 - 1815	113	0	**113**	
1815 - 1830	110	0	**110**	
1830 - 1845	107	0	**107**	
1845 - 1900	83	0	**83**	**413**
1900 - 1915	79	0	**79**	
1915 - 1930	89	0	**89**	
1930 - 1945	84	0	**84**	
1945 - 2000	100	0	**100**	**352**
2000 - 2015	77	0	**77**	
2015 - 2030	75	0	**75**	
2030 - 2045	68	0	**68**	
2045 - 2100	59	0	**59**	**279**
2100 - 2115	65	0	**65**	
2115 - 2130	55	0	**55**	
2130 - 2145	45	0	**45**	
2145 - 2200	63	0	**63**	**228**
2200 - 2215	46	0	**46**	
2215 - 2230	46	0	**46**	
2230 - 2245	39	0	**39**	
2245 - 2300	32	0	**32**	**163**
2300 - 2315	41	0	**41**	
2315 - 2330	29	0	**29**	
2330 - 2345	24	0	**24**	
2345 - 0000	10	0	**10**	**104**

Session Total	7970	0	**7970**
Session Average	83.02	0.00	**83.02**
Session Percentage	100.00	0.00	

Site 74 Lane 3 EB

I-20,
west of US-378 Sunset Blvd S/Bound Off-Ramp

Date

Friday, April 26, 2024

Lat/Long

34.008085°, -81.156669°

Weather

Cloudy
69°F

Click here for Detailed Weather

0000 - 2400 (Weekday 24h Session) (04-26-2024)

Volume Summary 15min

TIME	Volume Summary 15min EB	WB	15min Total	60min Total
0000 - 0015	10	0	**10**	
0015 - 0030	10	0	**10**	
0030 - 0045	10	0	**10**	
0045 - 0100	15	0	**15**	**45**
0100 - 0115	15	0	**15**	
0115 - 0130	22	0	**22**	
0130 - 0145	26	0	**26**	
0145 - 0200	12	0	**12**	**75**
0200 - 0215	27	0	**27**	
0215 - 0230	24	0	**24**	
0230 - 0245	20	0	**20**	
0245 - 0300	15	0	**15**	**86**
0300 - 0315	21	0	**21**	
0315 - 0330	27	0	**27**	
0330 - 0345	27	0	**27**	
0345 - 0400	29	0	**29**	**104**
0400 - 0415	29	0	**29**	
0415 - 0430	44	0	**44**	
0430 - 0445	32	0	**32**	
0445 - 0500	35	0	**35**	**140**
0500 - 0515	33	0	**33**	
0515 - 0530	55	0	**55**	
0530 - 0545	46	0	**46**	
0545 - 0600	53	0	**53**	**187**
0600 - 0615	62	0	**62**	
0615 - 0630	67	0	**67**	
0630 - 0645	107	0	**107**	
0645 - 0700	113	0	**113**	**349**
0700 - 0715	106	0	**106**	
0715 - 0730	140	0	**140**	
0730 - 0745	138	0	**138**	
0745 - 0800	154	0	**154**	**538**
0800 - 0815	150	0	**150**	
0815 - 0830	150	0	**150**	
0830 - 0845	161	0	**161**	
0845 - 0900	125	0	**125**	**586**
0900 - 0915	122	0	**122**	
0915 - 0930	145	0	**145**	
0930 - 0945	129	0	**129**	
0945 - 1000	118	0	**118**	**514**
1000 - 1015	127	0	**127**	
1015 - 1030	112	0	**112**	
1030 - 1045	132	0	**132**	
1045 - 1100	123	0	**123**	**494**
1100 - 1115	117	0	**117**	
1115 - 1130	114	0	**114**	
1130 - 1145	129	0	**129**	
1145 - 1200	133	0	**133**	**493**

Time	Volume Summary 15min EB	WB	15min Total	60min Total
1200 - 1215	109	0	**109**	
1215 - 1230	109	0	**109**	
1230 - 1245	114	0	**114**	
1245 - 1300	124	0	**124**	**456**
1300 - 1315	110	0	**110**	
1315 - 1330	115	0	**115**	
1330 - 1345	126	0	**126**	
1345 - 1400	102	0	**102**	**453**
1400 - 1415	113	0	**113**	
1415 - 1430	99	0	**99**	
1430 - 1445	94	0	**94**	
1445 - 1500	108	0	**108**	**414**
1500 - 1515	112	0	**112**	
1515 - 1530	124	0	**124**	
1530 - 1545	134	0	**134**	
1545 - 1600	150	0	**150**	**520**
1600 - 1615	133	0	**133**	
1615 - 1630	119	0	**119**	
1630 - 1645	110	0	**110**	
1645 - 1700	131	0	**131**	**493**
1700 - 1715	129	0	**129**	
1715 - 1730	131	0	**131**	
1730 - 1745	122	0	**122**	
1745 - 1800	129	0	**129**	**511**
1800 - 1815	134	0	**134**	
1815 - 1830	133	0	**133**	
1830 - 1845	119	0	**119**	
1845 - 1900	95	0	**95**	**481**
1900 - 1915	84	0	**84**	
1915 - 1930	104	0	**104**	
1930 - 1945	94	0	**94**	
1945 - 2000	100	0	**100**	**382**
2000 - 2015	83	0	**83**	
2015 - 2030	67	0	**67**	
2030 - 2045	74	0	**74**	
2045 - 2100	80	0	**80**	**304**
2100 - 2115	58	0	**58**	
2115 - 2130	62	0	**62**	
2130 - 2145	51	0	**51**	
2145 - 2200	69	0	**69**	**240**
2200 - 2215	42	0	**42**	
2215 - 2230	56	0	**56**	
2230 - 2245	43	0	**43**	
2245 - 2300	43	0	**43**	**184**
2300 - 2315	43	0	**43**	
2315 - 2330	39	0	**39**	
2330 - 2345	37	0	**37**	
2345 - 0000	34	0	**34**	**153**

Session Total	8202	0	**8202**
Session Average	85.44	0.00	**85.44**
Session Percentage	100.00	0.00	

Site 74 Lane 3 EB

I-20,
west of US-378 Sunset Blvd S/Bound Off-Ramp

Date

Saturday, April 27, 2024

Lat/Long

34.008085°, -81.156669°

Weather

Mostly Cloudy
69°F

Click here for Detailed Weather

0000 - 2400 (Saturday 24h Session) (04-27-2024)

Volume Summary 15min

TIME	Volume Summary 15min EB	WB	15min Total	60min Total
0000 - 0015	27	0	**27**	
0015 - 0030	23	0	**23**	
0030 - 0045	23	0	**23**	
0045 - 0100	25	0	**25**	**98**
0100 - 0115	18	0	**18**	
0115 - 0130	22	0	**22**	
0130 - 0145	15	0	**15**	
0145 - 0200	11	0	**11**	**66**
0200 - 0215	14	0	**14**	
0215 - 0230	23	0	**23**	
0230 - 0245	12	0	**12**	
0245 - 0300	15	0	**15**	**64**
0300 - 0315	13	0	**13**	
0315 - 0330	14	0	**14**	
0330 - 0345	19	0	**19**	
0345 - 0400	15	0	**15**	**61**
0400 - 0415	11	0	**11**	
0415 - 0430	11	0	**11**	
0430 - 0445	19	0	**19**	
0445 - 0500	14	0	**14**	**55**
0500 - 0515	20	0	**20**	
0515 - 0530	18	0	**18**	
0530 - 0545	22	0	**22**	
0545 - 0600	27	0	**27**	**87**
0600 - 0615	30	0	**30**	
0615 - 0630	39	0	**39**	
0630 - 0645	55	0	**55**	
0645 - 0700	51	0	**51**	**175**
0700 - 0715	65	0	**65**	
0715 - 0730	85	0	**85**	
0730 - 0745	78	0	**78**	
0745 - 0800	85	0	**85**	**313**
0800 - 0815	99	0	**99**	
0815 - 0830	102	0	**102**	
0830 - 0845	93	0	**93**	
0845 - 0900	103	0	**103**	**397**
0900 - 0915	117	0	**117**	
0915 - 0930	116	0	**116**	
0930 - 0945	115	0	**115**	
0945 - 1000	112	0	**112**	**460**
1000 - 1015	111	0	**111**	
1015 - 1030	113	0	**113**	
1030 - 1045	117	0	**117**	
1045 - 1100	115	0	**115**	**456**
1100 - 1115	112	0	**112**	
1115 - 1130	121	0	**121**	
1130 - 1145	109	0	**109**	
1145 - 1200	132	0	**132**	**474**

Time	Volume Summary 15min EB	WB	15min Total	60min Total
1200 - 1215	116	0	**116**	
1215 - 1230	102	0	**102**	
1230 - 1245	135	0	**135**	
1245 - 1300	120	0	**120**	**473**
1300 - 1315	113	0	**113**	
1315 - 1330	103	0	**103**	
1330 - 1345	147	0	**147**	
1345 - 1400	97	0	**97**	**460**
1400 - 1415	110	0	**110**	
1415 - 1430	122	0	**122**	
1430 - 1445	130	0	**130**	
1445 - 1500	123	0	**123**	**485**
1500 - 1515	138	0	**138**	
1515 - 1530	115	0	**115**	
1530 - 1545	109	0	**109**	
1545 - 1600	112	0	**112**	**474**
1600 - 1615	107	0	**107**	
1615 - 1630	107	0	**107**	
1630 - 1645	117	0	**117**	
1645 - 1700	113	0	**113**	**444**
1700 - 1715	118	0	**118**	
1715 - 1730	105	0	**105**	
1730 - 1745	101	0	**101**	
1745 - 1800	97	0	**97**	**421**
1800 - 1815	98	0	**98**	
1815 - 1830	89	0	**89**	
1830 - 1845	98	0	**98**	
1845 - 1900	88	0	**88**	**373**
1900 - 1915	97	0	**97**	
1915 - 1930	93	0	**93**	
1930 - 1945	87	0	**87**	
1945 - 2000	88	0	**88**	**365**
2000 - 2015	78	0	**78**	
2015 - 2030	53	0	**53**	
2030 - 2045	61	0	**61**	
2045 - 2100	60	0	**60**	**252**
2100 - 2115	57	0	**57**	
2115 - 2130	55	0	**55**	
2130 - 2145	56	0	**56**	
2145 - 2200	49	0	**49**	**217**
2200 - 2215	43	0	**43**	
2215 - 2230	42	0	**42**	
2230 - 2245	46	0	**46**	
2245 - 2300	34	0	**34**	**165**
2300 - 2315	39	0	**39**	
2315 - 2330	47	0	**47**	
2330 - 2345	27	0	**27**	
2345 - 0000	33	0	**33**	**146**

Session Total	6981	0	**6981**
Session Average	72.72	0.00	**72.72**
Session Percentage	100.00	0.00	

Bi-Directional Class Count || NB EB 60min

Columbia, SC

Marr Traffic DATA COLLECTION

www.marrtraffic.com

Site 74 Lane 3 EB
I-20,
west of US-378 Sunset Blvd S/Bound Off-Ramp

Date
Sunday, April 21, 2024

Lat/Long
34.008085°, -81.156669°

Weather
Cloudy
66°F

Click here for Detailed Weather

0000 - 2400 (Sunday 24h Session) (04-21-2024)
NB EB 60min

	Eastbound (Movement 74 Lane 3 EB.1)													
TIME	1	2	3	4	5	6	7	8	9	10	11	12	13	**Total**
0000 - 0100	0	72	10	0	3	1	0	0	25	0	0	0	0	**111**
0100 - 0200	0	56	8	0	2	0	0	0	13	0	0	0	0	**79**
0200 - 0300	0	28	3	1	0	0	0	0	22	0	0	0	0	**54**
0300 - 0400	0	36	1	0	2	1	0	0	22	0	1	0	0	**63**
0400 - 0500	0	26	3	0	0	0	0	0	10	0	0	0	0	**39**
0500 - 0600	0	23	0	0	0	0	0	0	10	0	0	0	0	**33**
0600 - 0700	0	91	21	1	1	1	0	0	24	0	0	0	0	**139**
0700 - 0800	0	136	47	0	1	0	0	2	36	0	0	0	0	**222**
0800 - 0900	2	185	43	0	5	1	0	3	34	1	0	0	0	**274**
0900 - 1000	0	261	56	0	2	4	0	2	45	0	0	0	0	**370**
1000 - 1100	1	271	71	1	5	1	0	3	42	0	1	0	0	**396**
1100 - 1200	1	288	83	0	5	3	0	4	47	0	0	0	0	**431**
1200 - 1300	1	314	95	5	10	0	0	7	51	2	0	0	0	**485**
1300 - 1400	1	312	66	1	3	1	0	4	56	1	0	0	0	**445**
1400 - 1500	0	314	71	2	7	0	0	8	47	0	0	0	0	**449**
1500 - 1600	0	298	81	0	3	2	0	5	40	0	0	0	0	**429**
1600 - 1700	0	301	76	0	14	2	0	3	51	2	1	0	0	**450**
1700 - 1800	0	326	66	0	5	1	0	6	52	1	0	0	0	**457**
1800 - 1900	1	214	51	1	4	3	0	6	58	0	1	0	0	**339**
1900 - 2000	0	132	29	0	1	1	0	2	30	0	0	0	0	**195**
2000 - 2100	0	102	23	0	4	1	0	0	16	0	0	0	0	**146**
2100 - 2200	0	76	3	0	2	0	0	0	11	0	0	0	0	**92**
2200 - 2300	0	43	5	0	2	0	0	0	16	0	0	0	0	**66**
2300 - 2400	0	32	8	0	0	0	0	0	19	0	3	0	0	**62**

Session Total	7	3937	920	12	81	23	0	55	777	7	7	0	0	**5826**
Session Average	0.29	164.04	38.33	0.50	3.38	0.96	0.00	2.29	32.38	0.29	0.29	0.00	0.00	**242.75**
Session Percentage	0.12	67.58	15.79	0.21	1.39	0.39	0.00	0.94	13.34	0.12	0.12	0.00	0.00	

AM Peak Hour	0800 - 0900	0900 - 1000	0900 - 1000	0600 - 0700	0800 - 0900	0900 - 1000	-	0800 - 0900	0900 - 1000	0800 - 0900	-	-	-	**0900 - 1000**
AM Peak Volume	2	261	56	1	5	4	0	3	45	1	0	0	0	**370**

Noon Peak Hour	1000 - 1100	1200 - 1300	1200 - 1300	1200 - 1300	1200 - 1300	1100 - 1200	-	1400 - 1500	1300 - 1400	1200 - 1300	1000 - 1100	-	-	**1200 - 1300**
Noon Peak Volume	1	314	95	5	10	3	0	8	56	2	1	0	0	**485**

PM Peak Hour	1800 - 1900	1700 - 1800	1500 - 1600	1800 - 1900	1600 - 1700	1800 - 1900	-	1700 - 1800	1800 - 1900	1600 - 1700	1600 - 1700	-	-	**1700 - 1800**
PM Peak Volume	1	326	81	1	14	3	0	6	58	2	1	0	0	**457**

Site 74 Lane 3 EB

I-20,
west of US-378 Sunset Blvd S/Bound Off-Ramp

Date

Monday, April 22, 2024

Lat/Long

34.008085°, -81.156669°

Weather

Mostly Cloudy
57°F

Click here for Detailed Weather

0000 - 2400 (Weekday 24h Session) (04-22-2024)

NB EB 60min

	Eastbound (Movement 74 Lane 3 EB.1)													
TIME	1	2	3	4	5	6	7	8	9	10	11	12	13	**Total**
0000 - 0100	0	36	0	0	0	0	0	0	6	0	2	0	0	**44**
0100 - 0200	0	20	0	0	0	0	0	0	9	0	5	0	0	**34**
0200 - 0300	0	19	0	0	1	0	0	0	11	0	5	0	0	**36**
0300 - 0400	0	42	0	0	1	0	0	0	22	0	4	0	0	**69**
0400 - 0500	0	69	0	0	0	0	0	0	23	0	3	0	0	**95**
0500 - 0600	0	112	1	0	2	0	0	0	34	0	0	0	0	**149**
0600 - 0700	0	224	45	0	7	10	0	2	66	1	0	0	0	**355**
0700 - 0800	1	327	123	0	25	10	0	10	47	0	0	0	0	**543**
0800 - 0900	0	315	174	0	21	15	0	11	83	2	0	0	0	**621**
0900 - 1000	0	266	134	4	24	4	1	7	76	1	0	0	0	**517**
1000 - 1100	3	220	103	1	28	8	0	18	109	0	0	0	0	**490**
1100 - 1200	0	186	78	0	27	7	1	11	114	1	0	0	0	**425**
1200 - 1300	0	214	116	0	20	8	0	14	100	0	0	0	0	**472**
1300 - 1400	0	242	90	5	18	17	0	6	58	1	0	0	0	**437**
1400 - 1500	0	205	101	1	27	7	0	8	85	0	1	0	0	**435**
1500 - 1600	1	239	97	0	15	6	0	7	107	1	0	0	0	**473**
1600 - 1700	0	260	73	1	23	6	0	8	120	0	0	0	0	**491**
1700 - 1800	0	278	80	2	12	6	0	5	94	0	0	0	0	**477**
1800 - 1900	0	132	40	0	4	2	0	3	35	0	0	0	0	**216**
1900 - 2000	0	130	26	0	5	3	0	1	30	0	0	0	0	**195**
2000 - 2100	0	58	14	0	3	2	0	0	32	0	1	0	0	**110**
2100 - 2200	0	40	3	0	0	0	0	0	19	0	0	0	0	**62**
2200 - 2300	0	50	2	0	1	0	0	0	26	0	0	0	0	**79**
2300 - 2400	0	25	0	0	1	0	0	0	17	0	0	0	0	**43**

Session Total	5	3709	1300	14	265	111	2	111	1323	7	21	0	0	**6868**
Session Average	0.21	154.54	54.17	0.58	11.04	4.63	0.08	4.63	55.13	0.29	0.88	0.00	0.00	**286.17**
Session Percentage	0.07	54.00	18.93	0.20	3.86	1.62	0.03	1.62	19.26	0.10	0.31	0.00	0.00	

AM Peak Hour	0700 - 0800	0700 - 0800	0800 - 0900	0900 - 1000	0700 - 0800	0800 - 0900	0900 - 1000	0800 - 0900	0800 - 0900	0800 - 0900	-	-	-	**0800 - 0900**
AM Peak Volume	1	327	174	4	25	15	1	11	83	2	0	0	0	**621**

Noon Peak Hour	1000 - 1100	1300 - 1400	1200 - 1300	1300 - 1400	1000 - 1100	1300 - 1400	1100 - 1200	1000 - 1100	1100 - 1200	1100 - 1200	1400 - 1500	-	-	**1000 - 1100**
Noon Peak Volume	3	242	116	5	28	17	1	18	114	1	1	0	0	**490**

PM Peak Hour	1500 - 1600	1700 - 1800	1500 - 1600	1700 - 1800	1600 - 1700	1500 - 1600	-	1600 - 1700	1600 - 1700	1500 - 1600	-	-	-	**1600 - 1700**
PM Peak Volume	1	278	97	2	23	6	0	8	120	1	0	0	0	**491**

Site 74 Lane 3 EB

I-20,
west of US-378 Sunset Blvd S/Bound Off-Ramp

Date

Tuesday, April 23, 2024

Lat/Long

34.008085°, -81.156669°

Weather

Fair
58°F

Click here for Detailed Weather

0000 - 2400 (Weekday 24h Session) (04-23-2024)

NB EB 60min

	Eastbound (Movement 74 Lane 3 EB.1)													
TIME	1	2	3	4	5	6	7	8	9	10	11	12	13	**Total**
0000 - 0100	0	30	7	1	1	1	0	0	10	0	1	0	0	**51**
0100 - 0200	0	43	2	0	1	0	0	1	32	2	1	0	0	**82**
0200 - 0300	0	19	0	0	0	1	0	0	36	2	4	0	0	**62**
0300 - 0400	0	47	5	0	3	2	0	1	39	2	4	0	0	**103**
0400 - 0500	0	64	2	0	7	2	0	0	59	0	5	0	0	**139**
0500 - 0600	0	168	3	0	5	10	0	0	57	2	2	0	0	**247**
0600 - 0700	0	191	85	1	17	9	0	3	70	0	1	0	0	**377**
0700 - 0800	0	316	104	0	26	7	0	6	47	0	2	0	0	**508**
0800 - 0900	0	305	118	3	26	12	3	18	53	2	2	0	0	**542**
0900 - 1000	0	248	120	2	24	8	0	14	90	3	1	0	0	**510**
1000 - 1100	0	187	87	4	24	8	0	4	111	2	0	0	0	**427**
1100 - 1200	0	187	104	3	16	9	0	8	107	1	1	0	0	**436**
1200 - 1300	0	217	87	2	32	10	0	8	96	3	0	0	0	**455**
1300 - 1400	3	236	83	2	22	9	0	11	92	1	0	0	0	**459**
1400 - 1500	0	220	84	2	21	11	1	7	96	2	0	0	0	**444**
1500 - 1600	3	226	86	0	20	12	0	8	104	0	0	0	0	**459**
1600 - 1700	0	240	84	1	15	4	0	6	97	1	0	0	0	**448**
1700 - 1800	1	267	89	0	8	3	0	6	93	0	1	0	0	**468**
1800 - 1900	0	210	73	1	10	4	0	4	94	0	0	0	0	**396**
1900 - 2000	1	166	77	1	8	1	1	3	81	1	0	0	0	**340**
2000 - 2100	0	121	16	4	8	0	0	1	72	0	0	0	0	**222**
2100 - 2200	0	122	4	1	8	0	0	0	62	3	2	0	0	**202**
2200 - 2300	0	92	1	0	8	0	0	0	65	1	3	0	0	**170**
2300 - 2400	0	52	4	0	4	0	0	0	57	0	3	0	0	**120**

Session Total	8	3974	1325	28	314	123	5	109	1720	28	33	0	0	**7667**
Session Average	0.33	165.58	55.21	1.17	13.08	5.13	0.21	4.54	71.67	1.17	1.38	0.00	0.00	**319.46**
Session Percentage	0.10	51.83	17.28	0.37	4.10	1.60	0.07	1.42	22.43	0.37	0.43	0.00	0.00	

AM Peak Hour	-	0700 - 0800	0900 - 1000	0800 - 0900	0700 - 0800	0800 - 0900	0800 - 0900	0800 - 0900	0900 - 1000	0900 - 1000	0500 - 0600	-	-	**0800 - 0900**
AM Peak Hour Volume	0	316	120	3	26	12	3	18	90	3	2	0	0	**542**

Noon Peak Hour	1300 - 1400	1300 - 1400	1100 - 1200	1000 - 1100	1200 - 1300	1400 - 1500	1400 - 1500	1300 - 1400	1000 - 1100	1200 - 1300	1100 - 1200	-	-	**1300 - 1400**
Noon Peak Hour Volume	3	236	104	4	32	11	1	11	111	3	1	0	0	**459**

PM Peak Hour	1500 - 1600	1700 - 1800	1700 - 1800	1600 - 1700	1500 - 1600	1500 - 1600	1900 - 2000	1500 - 1600	1500 - 1600	1600 - 1700	1700 - 1800	-	-	**1700 - 1800**
PM Peak Hour Volume	3	267	89	1	20	12	1	8	104	1	1	0	0	**468**

Site 74 Lane 3 EB

I-20,
west of US-378 Sunset Blvd S/Bound Off-Ramp

Date

Wednesday, April 24, 2024

Lat/Long

34.008085°, -81.156669°

Weather

Fair
66°F

Click here for Detailed Weather

0000 - 2400 (Weekday 24h Session) (04-24-2024)

NB EB 60min

	Eastbound (Movement 74 Lane 3 EB.1)													
TIME	1	2	3	4	5	6	7	8	9	10	11	12	13	**Total**
0000 - 0100	0	54	19	1	1	0	0	0	69	0	4	0	0	**148**
0100 - 0200	0	23	2	0	0	0	0	4	41	0	0	0	0	**70**
0200 - 0300	0	27	3	0	0	1	0	0	53	0	3	0	0	**87**
0300 - 0400	1	39	4	0	0	0	0	0	58	0	1	0	0	**103**
0400 - 0500	0	48	12	0	10	3	0	3	73	0	5	0	0	**154**
0500 - 0600	0	108	24	1	9	0	0	0	69	0	4	0	0	**215**
0600 - 0700	0	183	74	1	18	10	1	4	71	0	1	0	0	**363**
0700 - 0800	2	299	136	0	33	16	0	8	78	4	2	0	0	**578**
0800 - 0900	1	319	146	7	27	5	2	10	67	0	0	0	0	**584**
0900 - 1000	0	230	120	1	22	10	3	8	87	3	0	0	0	**484**
1000 - 1100	1	194	102	1	22	13	0	4	97	2	0	0	0	**436**
1100 - 1200	0	203	101	0	25	7	1	9	102	3	0	0	0	**451**
1200 - 1300	2	195	83	3	31	12	0	8	94	8	0	0	0	**436**
1300 - 1400	0	214	79	0	20	13	0	8	90	4	0	0	0	**428**
1400 - 1500	1	192	85	0	18	12	1	7	97	3	0	0	0	**416**
1500 - 1600	0	221	97	4	22	8	3	3	89	2	0	0	0	**449**
1600 - 1700	1	257	105	2	12	4	0	11	84	3	0	1	0	**480**
1700 - 1800	3	302	102	0	18	4	1	7	75	2	0	0	0	**514**
1800 - 1900	1	227	63	0	11	1	0	5	102	5	0	0	0	**415**
1900 - 2000	0	168	56	0	7	4	0	3	80	2	0	0	0	**320**
2000 - 2100	0	127	48	1	10	1	0	6	71	0	0	0	0	**264**
2100 - 2200	0	105	30	0	6	1	0	6	54	0	1	0	0	**203**
2200 - 2300	0	52	15	1	4	1	0	3	60	0	3	0	0	**139**
2300 - 2400	0	58	8	0	3	0	0	3	43	0	4	0	0	**119**

Session Total	13	3845	1514	23	329	126	12	120	1804	41	28	1	0	**7856**
Session Average	0.54	160.21	63.08	0.96	13.71	5.25	0.50	5.00	75.17	1.71	1.17	0.04	0.00	**327.33**
Session Percentage	0.17	48.94	19.27	0.29	4.19	1.60	0.15	1.53	22.96	0.52	0.36	0.01	0.00	

AM Peak Hour	0700 - 0800	0800 - 0900	0800 - 0900	0800 - 0900	0700 - 0800	0700 - 0800	0900 - 1000	0800 - 0900	0900 - 1000	0700 - 0800	0500 - 0600	-	-	**0800 - 0900**
AM Peak Hour Volume	2	319	146	7	33	16	3	10	87	4	4	0	0	**584**

Noon Peak Hour	1200 - 1300	1300 - 1400	1000 - 1100	1200 - 1300	1200 - 1300	1000 - 1100	1100 - 1200	1100 - 1200	1100 - 1200	1200 - 1300	-	-	-	**1100 - 1200**
Noon Peak Hour Volume	2	214	102	3	31	13	1	9	102	8	0	0	0	**451**

PM Peak Hour	1700 - 1800	1700 - 1800	1600 - 1700	1500 - 1600	1500 - 1600	1500 - 1600	1500 - 1600	1600 - 1700	1800 - 1900	1800 - 1900	-	1600 - 1700	-	**1700 - 1800**
PM Peak Hour Volume	3	302	105	4	22	8	3	11	102	5	0	1	0	**514**

Site 74 Lane 3 EB

I-20,
west of US-378 Sunset Blvd S/Bound Off-Ramp

Date

Thursday, April 25, 2024

Lat/Long

34.008085°, -81.156669°

Weather

Fair
67°F

Click here for Detailed Weather

0000 - 2400 (Weekday 24h Session) (04-25-2024)

NB EB 60min

	Eastbound (Movement 74 Lane 3 EB.1)													
TIME	1	2	3	4	5	6	7	8	9	10	11	12	13	**Total**
0000 - 0100	0	25	8	0	5	0	0	0	45	0	5	0	0	**88**
0100 - 0200	0	22	7	0	0	0	0	2	37	0	8	0	0	**76**
0200 - 0300	0	22	7	0	3	0	0	1	37	0	7	0	0	**77**
0300 - 0400	0	30	9	0	3	0	0	2	57	0	4	0	0	**105**
0400 - 0500	0	47	24	0	3	2	0	7	53	0	6	0	0	**142**
0500 - 0600	0	79	52	1	6	4	0	2	70	0	2	0	0	**216**
0600 - 0700	0	182	90	0	16	9	1	6	80	0	1	0	0	**385**
0700 - 0800	0	296	130	0	22	13	1	6	64	3	1	0	0	**536**
0800 - 0900	0	292	168	1	30	7	3	12	71	1	1	1	0	**587**
0900 - 1000	0	220	113	3	25	7	1	13	102	2	0	0	0	**486**
1000 - 1100	2	217	110	5	19	16	1	8	101	6	0	0	0	**485**
1100 - 1200	0	205	85	2	30	8	1	13	105	1	1	0	0	**451**
1200 - 1300	0	235	96	1	24	10	3	16	87	3	0	0	0	**475**
1300 - 1400	1	202	100	0	36	12	1	12	76	5	0	0	0	**445**
1400 - 1500	1	187	103	0	21	10	3	8	83	0	0	0	0	**416**
1500 - 1600	0	231	102	2	22	4	0	10	87	1	0	0	0	**459**
1600 - 1700	0	262	101	1	13	3	0	6	101	4	0	0	0	**491**
1700 - 1800	1	307	96	0	15	6	0	7	77	2	0	0	0	**511**
1800 - 1900	2	250	81	1	8	6	0	5	60	0	0	0	0	**413**
1900 - 2000	0	177	91	1	4	1	0	4	74	0	0	0	0	**352**
2000 - 2100	0	143	46	0	6	3	0	7	73	0	1	0	0	**279**
2100 - 2200	0	117	36	1	6	2	0	5	57	0	4	0	0	**228**
2200 - 2300	0	83	16	0	6	4	0	3	49	0	2	0	0	**163**
2300 - 2400	0	46	16	0	3	1	0	2	33	0	3	0	0	**104**

Session Total	7	3877	1687	19	326	128	15	157	1679	28	46	1	0	**7970**
Session Average	0.29	161.54	70.29	0.79	13.58	5.33	0.63	6.54	69.96	1.17	1.92	0.04	0.00	**332.08**
Session Percentage	0.09	48.64	21.17	0.24	4.09	1.61	0.19	1.97	21.07	0.35	0.58	0.01	0.00	

AM Peak Hour	-	0700 - 0800	0800 - 0900	0900 - 1000	0800 - 0900	0700 - 0800	0800 - 0900	0900 - 1000	0900 - 1000	0700 - 0800	0500 - 0600	0800 - 0900	-	**0800 - 0900**
AM Peak Hour Volume	0	296	168	3	30	13	3	13	102	3	2	1	0	**587**

Noon Peak Hour	1000 - 1100	1200 - 1300	1000 - 1100	1000 - 1100	1300 - 1400	1000 - 1100	1200 - 1300	1200 - 1300	1100 - 1200	1000 - 1100	1100 - 1200	-	-	**1000 - 1100**
Noon Peak Hour Volume	2	235	110	5	36	16	3	16	105	6	1	0	0	**485**

PM Peak Hour	1800 - 1900	1700 - 1800	1500 - 1600	1500 - 1600	1500 - 1600	1700 - 1800	-	1500 - 1600	1600 - 1700	1600 - 1700	-	-	-	**1700 - 1800**
PM Peak Hour Volume	2	307	102	2	22	6	0	10	101	4	0	0	0	**511**

Site 74 Lane 3 EB

I-20,
west of US-378 Sunset Blvd S/Bound Off-Ramp

Date

Friday, April 26, 2024

Lat/Long

34.008085°, -81.156669°

Weather

Cloudy
69°F

Click here for Detailed Weather

0000 - 2400 (Weekday 24h Session) (04-26-2024)

NB EB 60min

	Eastbound (Movement 74 Lane 3 EB.1)													
TIME	1	2	3	4	5	6	7	8	9	10	11	12	13	**Total**
0000 - 0100	0	12	0	0	2	0	0	0	29	0	2	0	0	**45**
0100 - 0200	0	28	4	0	2	2	0	0	31	0	8	0	0	**75**
0200 - 0300	0	25	2	2	2	2	0	0	51	0	2	0	0	**86**
0300 - 0400	0	30	3	2	3	2	0	0	58	0	6	0	0	**104**
0400 - 0500	1	62	12	0	6	3	0	0	52	0	4	0	0	**140**
0500 - 0600	0	88	23	1	8	1	0	1	63	0	2	0	0	**187**
0600 - 0700	0	154	90	3	14	5	1	5	74	2	1	0	0	**349**
0700 - 0800	0	302	135	1	16	7	2	9	64	0	2	0	0	**538**
0800 - 0900	0	333	139	11	22	6	0	8	65	2	0	0	0	**586**
0900 - 1000	0	271	121	5	20	3	1	10	82	1	0	0	0	**514**
1000 - 1100	1	243	102	1	20	7	2	13	99	6	0	0	0	**494**
1100 - 1200	0	247	119	1	25	7	1	7	83	3	0	0	0	**493**
1200 - 1300	1	213	101	0	22	6	0	13	98	2	0	0	0	**456**
1300 - 1400	0	239	96	0	25	9	3	12	67	2	0	0	0	**453**
1400 - 1500	0	227	80	0	16	6	1	10	73	1	0	0	0	**414**
1500 - 1600	2	300	103	6	20	8	0	8	69	3	1	0	0	**520**
1600 - 1700	3	319	82	0	13	12	0	8	56	0	0	0	0	**493**
1700 - 1800	2	329	95	2	11	5	0	6	58	3	0	0	0	**511**
1800 - 1900	1	302	91	2	15	5	0	4	60	1	0	0	0	**481**
1900 - 2000	2	226	79	1	6	7	0	4	57	0	0	0	0	**382**
2000 - 2100	0	183	50	1	8	2	0	0	59	0	1	0	0	**304**
2100 - 2200	0	154	36	0	10	2	0	0	35	0	3	0	0	**240**
2200 - 2300	0	104	30	1	2	0	0	0	44	0	3	0	0	**184**
2300 - 2400	0	99	9	0	4	0	0	1	38	0	2	0	0	**153**

Session Total	13	4490	1602	40	292	107	11	119	1465	26	37	0	0	**8202**
Session Average	0.54	187.08	66.75	1.67	12.17	4.46	0.46	4.96	61.04	1.08	1.54	0.00	0.00	**341.75**
Session Percentage	0.16	54.74	19.53	0.49	3.56	1.30	0.13	1.45	17.86	0.32	0.45	0.00	0.00	

AM Peak Hour	-	0800 - 0900	0800 - 0900	0800 - 0900	0800 - 0900	0700 - 0800	0700 - 0800	0900 - 1000	0900 - 1000	0600 - 0700	0500 - 0600	-	-	**0800 - 0900**
AM Peak Hour Volume	0	333	139	11	22	7	2	10	82	2	2	0	0	**586**

Noon Peak Hour	1000 - 1100	1100 - 1200	1100 - 1200	1000 - 1100	1100 - 1200	1300 - 1400	1300 - 1400	1000 - 1100	1000 - 1100	1000 - 1100	-	-	-	**1000 - 1100**
Noon Peak Hour Volume	1	247	119	1	25	9	3	13	99	6	0	0	0	**494**

PM Peak Hour	1600 - 1700	1700 - 1800	1500 - 1600	1500 - 1600	1500 - 1600	1600 - 1700	-	1500 - 1600	1500 - 1600	1500 - 1600	1500 - 1600	-	-	**1500 - 1600**
PM Peak Hour Volume	3	329	103	6	20	12	0	8	69	3	1	0	0	**520**

Site 74 Lane 3 EB

I-20,
west of US-378 Sunset Blvd S/Bound Off-Ramp

Date

Saturday, April 27, 2024

Lat/Long

34.008085°, -81.156669°

Weather

Mostly Cloudy
69°F

Click here for Detailed Weather

0000 - 2400 (Saturday 24h Session) (04-27-2024)

NB EB 60min

	Eastbound (Movement 74 Lane 3 EB.1)													
TIME	1	2	3	4	5	6	7	8	9	10	11	12	13	**Total**
0000 - 0100	0	63	6	0	1	0	0	0	26	0	2	0	0	**98**
0100 - 0200	0	30	2	0	7	2	0	0	21	0	4	0	0	**66**
0200 - 0300	0	28	1	0	2	2	0	0	28	0	3	0	0	**64**
0300 - 0400	0	26	1	0	1	4	0	0	23	0	6	0	0	**61**
0400 - 0500	0	33	4	0	1	1	0	0	15	0	1	0	0	**55**
0500 - 0600	0	33	13	0	3	1	0	0	35	0	2	0	0	**87**
0600 - 0700	0	86	43	1	5	1	0	0	35	1	3	0	0	**175**
0700 - 0800	2	173	84	0	9	3	1	3	35	0	2	1	0	**313**
0800 - 0900	0	247	78	3	6	1	0	5	56	1	0	0	0	**397**
0900 - 1000	2	305	87	0	11	3	0	3	47	2	0	0	0	**460**
1000 - 1100	0	318	86	0	8	0	0	4	39	1	0	0	0	**456**
1100 - 1200	1	323	77	0	9	1	0	7	56	0	0	0	0	**474**
1200 - 1300	1	318	90	0	9	1	0	3	49	2	0	0	0	**473**
1300 - 1400	2	307	87	1	5	3	0	5	50	0	0	0	0	**460**
1400 - 1500	1	339	93	1	6	5	0	3	37	0	0	0	0	**485**
1500 - 1600	1	340	94	1	2	1	0	2	30	2	1	0	0	**474**
1600 - 1700	1	320	75	1	7	2	0	3	35	0	0	0	0	**444**
1700 - 1800	1	298	70	0	4	1	0	2	44	1	0	0	0	**421**
1800 - 1900	1	259	68	1	6	0	0	2	35	1	0	0	0	**373**
1900 - 2000	0	253	72	0	8	0	0	4	28	0	0	0	0	**365**
2000 - 2100	1	176	47	0	8	0	0	1	19	0	0	0	0	**252**
2100 - 2200	0	173	16	0	4	0	0	0	24	0	0	0	0	**217**
2200 - 2300	0	136	9	1	1	0	0	0	18	0	0	0	0	**165**
2300 - 2400	0	112	10	0	3	0	0	0	21	0	0	0	0	**146**

Session Total	14	4696	1213	10	126	32	1	47	806	11	24	1	0	**6981**
Session Average	0.58	195.67	50.54	0.42	5.25	1.33	0.04	1.96	33.58	0.46	1.00	0.04	0.00	**290.88**
Session Percentage	0.20	67.27	17.38	0.14	1.80	0.46	0.01	0.67	11.55	0.16	0.34	0.01	0.00	

AM Peak Hour	0700 - 0800	0900 - 1000	0900 - 1000	0800 - 0900	0900 - 1000	0700 - 0800	0700 - 0800	0800 - 0900	0800 - 0900	0900 - 1000	0600 - 0700	0700 - 0800	-	**0900 - 1000**
AM Peak Hour Volume	2	305	87	3	11	3	1	5	56	2	3	1	0	**460**

Noon Peak Hour	1300 - 1400	1400 - 1500	1400 - 1500	1300 - 1400	1100 - 1200	1400 - 1500	-	1100 - 1200	1100 - 1200	1200 - 1300	-	-	-	**1400 - 1500**
Noon Peak Hour Volume	2	339	93	1	9	5	0	7	56	2	0	0	0	**485**

PM Peak Hour	1500 - 1600	1500 - 1600	1500 - 1600	1500 - 1600	1900 - 2000	1600 - 1700	-	1900 - 2000	1700 - 1800	1500 - 1600	1500 - 1600	-	-	**1500 - 1600**
PM Peak Hour Volume	1	340	94	1	8	2	0	4	44	2	1	0	0	**474**

Bi-Directional Class Count || Volume Summary 60min

Columbia, SC

Marr Traffic DATA COLLECTION

www.marrtraffic.com

Site 74 Lane 3 EB

I-20,
west of US-378 Sunset Blvd S/Bound Off-Ramp

Date

Sunday, April 21, 2024

Lat/Long

34.008085°, -81.156669°

Weather

Cloudy
66°F

Click here for Detailed Weather

0000 - 2400 (Sunday 24h Session) (04-21-2024)

Volume Summary 60min

	Volume Summary 60min		
TIME	EB	WB	**Total**
0000 - 0100	111	0	**111**
0100 - 0200	79	0	**79**
0200 - 0300	54	0	**54**
0300 - 0400	63	0	**63**
0400 - 0500	39	0	**39**
0500 - 0600	33	0	**33**
0600 - 0700	139	0	**139**
0700 - 0800	222	0	**222**
0800 - 0900	274	0	**274**
0900 - 1000	370	0	**370**
1000 - 1100	396	0	**396**
1100 - 1200	431	0	**431**

	Volume Summary 60min		
Time	EB	WB	**Total**
1200 - 1300	485	0	**485**
1300 - 1400	445	0	**445**
1400 - 1500	449	0	**449**
1500 - 1600	429	0	**429**
1600 - 1700	450	0	**450**
1700 - 1800	457	0	**457**
1800 - 1900	339	0	**339**
1900 - 2000	195	0	**195**
2000 - 2100	146	0	**146**
2100 - 2200	92	0	**92**
2200 - 2300	66	0	**66**
2300 - 2400	62	0	**62**

Session Total	5826	0	**5826**
Session Average	242.75	0.00	**242.75**
Session Percentage	100.00	0.00	

Site 74 Lane 3 EB

I-20,
west of US-378 Sunset Blvd S/Bound Off-Ramp

Date

Monday, April 22, 2024

Lat/Long

34.008085°, -81.156669°

Weather

Mostly Cloudy
57°F

Click here for Detailed Weather

0000 - 2400 (Weekday 24h Session) (04-22-2024)

Volume Summary 60min

	Volume Summary 60min		
TIME	EB	WB	**Total**
0000 - 0100	44	0	**44**
0100 - 0200	34	0	**34**
0200 - 0300	36	0	**36**
0300 - 0400	69	0	**69**
0400 - 0500	95	0	**95**
0500 - 0600	149	0	**149**
0600 - 0700	355	0	**355**
0700 - 0800	543	0	**543**
0800 - 0900	621	0	**621**
0900 - 1000	517	0	**517**
1000 - 1100	490	0	**490**
1100 - 1200	425	0	**425**

Session Total	6868	0	**6868**
Session Average	286.17	0.00	**286.17**
Session Percentage	100.00	0.00	

	Volume Summary 60min		
Time	EB	WB	**Total**
1200 - 1300	472	0	**472**
1300 - 1400	437	0	**437**
1400 - 1500	435	0	**435**
1500 - 1600	473	0	**473**
1600 - 1700	491	0	**491**
1700 - 1800	477	0	**477**
1800 - 1900	216	0	**216**
1900 - 2000	195	0	**195**
2000 - 2100	110	0	**110**
2100 - 2200	62	0	**62**
2200 - 2300	79	0	**79**
2300 - 2400	43	0	**43**

Site 74 Lane 3 EB

I-20,
west of US-378 Sunset Blvd S/Bound Off-Ramp

Date

Tuesday, April 23, 2024

Lat/Long

34.008085°, -81.156669°

Weather

Fair
58°F

Click here for Detailed Weather

0000 - 2400 (Weekday 24h Session) (04-23-2024)

Volume Summary 60min

	Volume Summary 60min		
TIME	EB	WB	**Total**
0000 - 0100	51	0	**51**
0100 - 0200	82	0	**82**
0200 - 0300	62	0	**62**
0300 - 0400	103	0	**103**
0400 - 0500	139	0	**139**
0500 - 0600	247	0	**247**
0600 - 0700	377	0	**377**
0700 - 0800	508	0	**508**
0800 - 0900	542	0	**542**
0900 - 1000	510	0	**510**
1000 - 1100	427	0	**427**
1100 - 1200	436	0	**436**

	Volume Summary 60min		
Time	EB	WB	**Total**
1200 - 1300	455	0	**455**
1300 - 1400	459	0	**459**
1400 - 1500	444	0	**444**
1500 - 1600	459	0	**459**
1600 - 1700	448	0	**448**
1700 - 1800	468	0	**468**
1800 - 1900	396	0	**396**
1900 - 2000	340	0	**340**
2000 - 2100	222	0	**222**
2100 - 2200	202	0	**202**
2200 - 2300	170	0	**170**
2300 - 2400	120	0	**120**

Session Total	7667	0	**7667**
Session Average	319.46	0.00	**319.46**
Session Percentage	100.00	0.00	

Site 74 Lane 3 EB

I-20,
west of US-378 Sunset Blvd S/Bound Off-Ramp

Date

Wednesday, April 24, 2024

Lat/Long

34.008085°, -81.156669°

Weather

Fair
66°F

Click here for Detailed Weather

0000 - 2400 (Weekday 24h Session) (04-24-2024)

Volume Summary 60min

	Volume Summary 60min		
TIME	EB	WB	**Total**
0000 - 0100	148	0	**148**
0100 - 0200	70	0	**70**
0200 - 0300	87	0	**87**
0300 - 0400	103	0	**103**
0400 - 0500	154	0	**154**
0500 - 0600	215	0	**215**
0600 - 0700	363	0	**363**
0700 - 0800	578	0	**578**
0800 - 0900	584	0	**584**
0900 - 1000	484	0	**484**
1000 - 1100	436	0	**436**
1100 - 1200	451	0	**451**

	Volume Summary 60min		
Time	EB	WB	**Total**
1200 - 1300	436	0	**436**
1300 - 1400	428	0	**428**
1400 - 1500	416	0	**416**
1500 - 1600	449	0	**449**
1600 - 1700	480	0	**480**
1700 - 1800	514	0	**514**
1800 - 1900	415	0	**415**
1900 - 2000	320	0	**320**
2000 - 2100	264	0	**264**
2100 - 2200	203	0	**203**
2200 - 2300	139	0	**139**
2300 - 2400	119	0	**119**

Session Total	7856	0	**7856**
Session Average	327.33	0.00	**327.33**
Session Percentage	100.00	0.00	

Site 74 Lane 3 EB

I-20,
west of US-378 Sunset Blvd S/Bound Off-Ramp

Date

Thursday, April 25, 2024

Lat/Long

34.008085°, -81.156669°

Weather

Fair
67°F

Click here for Detailed Weather

0000 - 2400 (Weekday 24h Session) (04-25-2024)

Volume Summary 60min

	Volume Summary 60min		
TIME	EB	WB	**Total**
0000 - 0100	88	0	**88**
0100 - 0200	76	0	**76**
0200 - 0300	77	0	**77**
0300 - 0400	105	0	**105**
0400 - 0500	142	0	**142**
0500 - 0600	216	0	**216**
0600 - 0700	385	0	**385**
0700 - 0800	536	0	**536**
0800 - 0900	587	0	**587**
0900 - 1000	486	0	**486**
1000 - 1100	485	0	**485**
1100 - 1200	451	0	**451**

Session Total	7970	0	**7970**
Session Average	332.08	0.00	**332.08**
Session Percentage	100.00	0.00	

	Volume Summary 60min		
Time	EB	WB	**Total**
1200 - 1300	475	0	**475**
1300 - 1400	445	0	**445**
1400 - 1500	416	0	**416**
1500 - 1600	459	0	**459**
1600 - 1700	491	0	**491**
1700 - 1800	511	0	**511**
1800 - 1900	413	0	**413**
1900 - 2000	352	0	**352**
2000 - 2100	279	0	**279**
2100 - 2200	228	0	**228**
2200 - 2300	163	0	**163**
2300 - 2400	104	0	**104**

Site 74 Lane 3 EB

I-20,
west of US-378 Sunset Blvd S/Bound Off-Ramp

Date

Friday, April 26, 2024

Lat/Long

34.008085°, -81.156669°

Weather

Cloudy
69°F

Click here for Detailed Weather

0000 - 2400 (Weekday 24h Session) (04-26-2024)

Volume Summary 60min

	Volume Summary 60min		
TIME	EB	WB	**Total**
0000 - 0100	45	0	**45**
0100 - 0200	75	0	**75**
0200 - 0300	86	0	**86**
0300 - 0400	104	0	**104**
0400 - 0500	140	0	**140**
0500 - 0600	187	0	**187**
0600 - 0700	349	0	**349**
0700 - 0800	538	0	**538**
0800 - 0900	586	0	**586**
0900 - 1000	514	0	**514**
1000 - 1100	494	0	**494**
1100 - 1200	493	0	**493**

	Volume Summary 60min		
Time	EB	WB	**Total**
1200 - 1300	456	0	**456**
1300 - 1400	453	0	**453**
1400 - 1500	414	0	**414**
1500 - 1600	520	0	**520**
1600 - 1700	493	0	**493**
1700 - 1800	511	0	**511**
1800 - 1900	481	0	**481**
1900 - 2000	382	0	**382**
2000 - 2100	304	0	**304**
2100 - 2200	240	0	**240**
2200 - 2300	184	0	**184**
2300 - 2400	153	0	**153**

Session Total	8202	0	**8202**
Session Average	341.75	0.00	**341.75**
Session Percentage	100.00	0.00	

Site 74 Lane 3 EB

I-20,
west of US-378 Sunset Blvd S/Bound Off-Ramp

Date

Saturday, April 27, 2024

Lat/Long

34.008085°, -81.156669°

Weather

Mostly Cloudy
69°F

Click here for Detailed Weather

0000 - 2400 (Saturday 24h Session) (04-27-2024)

Volume Summary 60min

	Volume Summary 60min		
TIME	EB	WB	**Total**
0000 - 0100	98	0	**98**
0100 - 0200	66	0	**66**
0200 - 0300	64	0	**64**
0300 - 0400	61	0	**61**
0400 - 0500	55	0	**55**
0500 - 0600	87	0	**87**
0600 - 0700	175	0	**175**
0700 - 0800	313	0	**313**
0800 - 0900	397	0	**397**
0900 - 1000	460	0	**460**
1000 - 1100	456	0	**456**
1100 - 1200	474	0	**474**

	Volume Summary 60min		
Time	EB	WB	**Total**
1200 - 1300	473	0	**473**
1300 - 1400	460	0	**460**
1400 - 1500	485	0	**485**
1500 - 1600	474	0	**474**
1600 - 1700	444	0	**444**
1700 - 1800	421	0	**421**
1800 - 1900	373	0	**373**
1900 - 2000	365	0	**365**
2000 - 2100	252	0	**252**
2100 - 2200	217	0	**217**
2200 - 2300	165	0	**165**
2300 - 2400	146	0	**146**

Session Total	6981	0	**6981**
Session Average	290.88	0.00	**290.88**
Session Percentage	100.00	0.00	

Bi-Directional Class Count || Graphical Analysis NB EB

Columbia, SC

Marr Traffic DATA COLLECTION

www.marrtraffic.com

Site 74 Lane 3 EB

I-20,
west of US-378 Sunset Blvd S/Bound Off-Ramp

Lat/Long

34.008085°, -81.156669°

0000 - 2400 (Weekday 24h Session)

Graphical Analysis NB EB

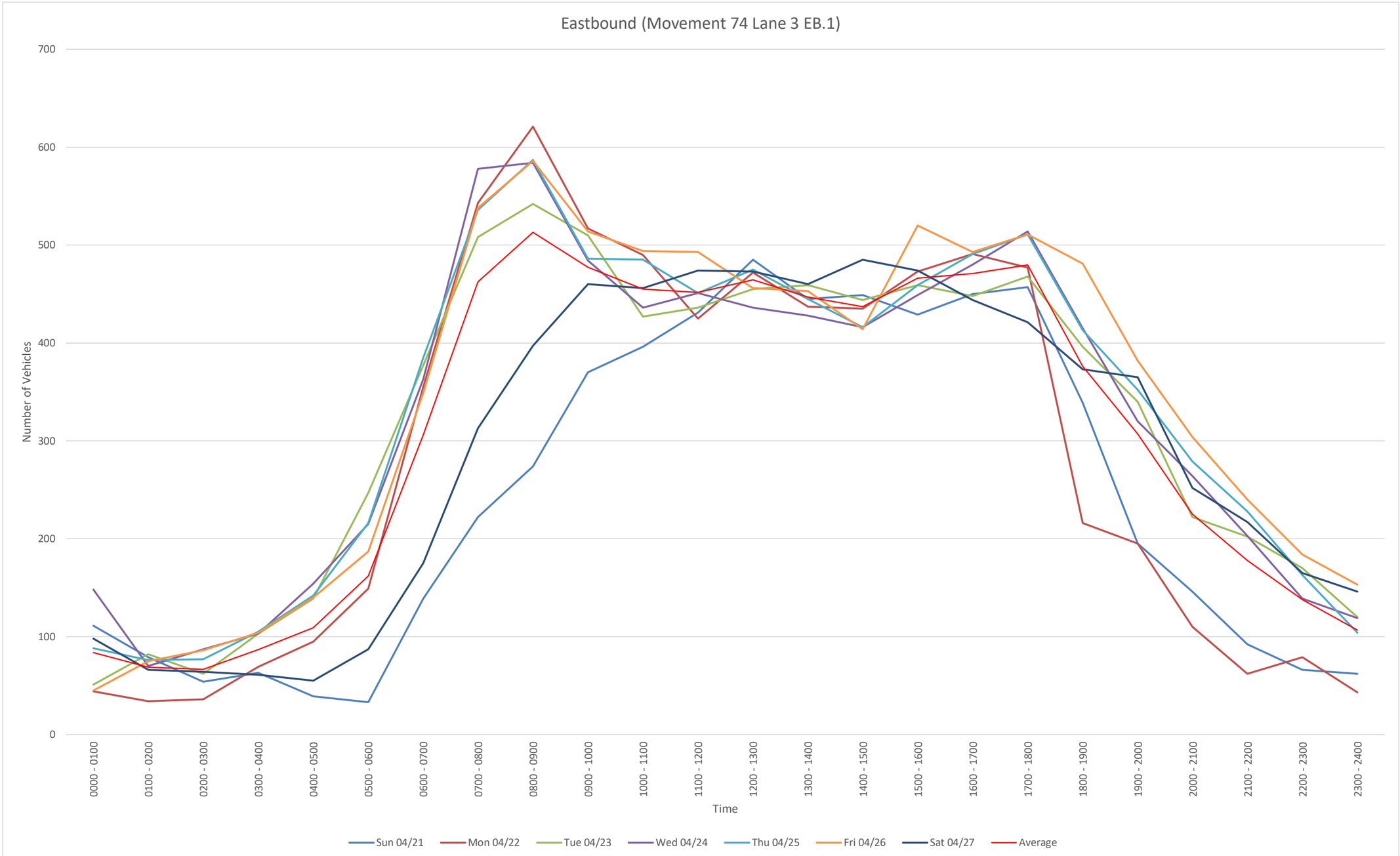

EB
File Name:
Start Date: 4/21/2024
Start Time: 0
Site Code: 74 Lane 3 EB
Station ID: 1
Location 1: I-20, west of US-378 Sunset Blvd S/Bound Off-Ramp
Location 2:

Date	Time	1	2	3	4	5	6	7	8	9	10	11	12	13
4/21/2024	12:00 AM	0	14	3	0	1	0	0	0	7	0	0	0	0
4/21/2024	12:15 AM	0	25	2	0	0	0	0	0	6	0	0	0	0
4/21/2024	12:30 AM	0	11	1	0	1	1	0	0	6	0	0	0	0
4/21/2024	12:45 AM	0	22	4	0	1	0	0	0	6	0	0	0	0
4/21/2024	1:00 AM	0	10	3	0	0	0	0	0	2	0	0	0	0
4/21/2024	1:15 AM	0	16	3	0	1	0	0	0	4	0	0	0	0
4/21/2024	1:30 AM	0	17	2	0	0	0	0	0	4	0	0	0	0
4/21/2024	1:45 AM	0	13	0	0	1	0	0	0	3	0	0	0	0
4/21/2024	2:00 AM	0	8	1	0	0	0	0	0	4	0	0	0	0
4/21/2024	2:15 AM	0	10	2	0	0	0	0	0	5	0	0	0	0
4/21/2024	2:30 AM	0	6	0	1	0	0	0	0	7	0	0	0	0
4/21/2024	2:45 AM	0	4	0	0	0	0	0	0	6	0	0	0	0
4/21/2024	3:00 AM	0	8	1	0	1	1	0	0	1	0	0	0	0
4/21/2024	3:15 AM	0	10	0	0	1	0	0	0	9	0	0	0	0
4/21/2024	3:30 AM	0	5	0	0	0	0	0	0	3	0	1	0	0
4/21/2024	3:45 AM	0	13	0	0	0	0	0	0	9	0	0	0	0
4/21/2024	4:00 AM	0	4	0	0	0	0	0	0	4	0	0	0	0
4/21/2024	4:15 AM	0	7	1	0	0	0	0	0	4	0	0	0	0
4/21/2024	4:30 AM	0	8	0	0	0	0	0	0	1	0	0	0	0
4/21/2024	4:45 AM	0	7	2	0	0	0	0	0	1	0	0	0	0
4/21/2024	5:00 AM	0	4	0	0	0	0	0	0	3	0	0	0	0
4/21/2024	5:15 AM	0	10	0	0	0	0	0	0	2	0	0	0	0
4/21/2024	5:30 AM	0	3	0	0	0	0	0	0	1	0	0	0	0
4/21/2024	5:45 AM	0	6	0	0	0	0	0	0	4	0	0	0	0
4/21/2024	6:00 AM	0	15	1	0	0	1	0	0	9	0	0	0	0
4/21/2024	6:15 AM	0	24	3	0	1	0	0	0	2	0	0	0	0
4/21/2024	6:30 AM	0	24	7	1	0	0	0	0	4	0	0	0	0
4/21/2024	6:45 AM	0	28	10	0	0	0	0	0	9	0	0	0	0
4/21/2024	7:00 AM	0	28	13	0	1	0	0	0	11	0	0	0	0
4/21/2024	7:15 AM	0	29	8	0	0	0	0	2	10	0	0	0	0
4/21/2024	7:30 AM	0	33	12	0	0	0	0	0	6	0	0	0	0
4/21/2024	7:45 AM	0	46	14	0	0	0	0	0	9	0	0	0	0
4/21/2024	8:00 AM	1	28	9	0	2	1	0	0	12	0	0	0	0
4/21/2024	8:15 AM	1	42	10	0	0	0	0	1	7	0	0	0	0
4/21/2024	8:30 AM	0	60	10	0	1	0	0	2	10	1	0	0	0
4/21/2024	8:45 AM	0	55	14	0	2	0	0	0	5	0	0	0	0
4/21/2024	9:00 AM	0	74	15	0	1	2	0	2	14	0	0	0	0
4/21/2024	9:15 AM	0	49	18	0	1	0	0	0	11	0	0	0	0
4/21/2024	9:30 AM	0	64	10	0	0	1	0	0	10	0	0	0	0
4/21/2024	9:45 AM	0	74	13	0	0	1	0	0	10	0	0	0	0
4/21/2024	10:00 AM	0	66	15	0	0	0	0	1	9	0	0	0	0
4/21/2024	10:15 AM	1	58	18	1	1	0	0	1	11	0	1	0	0
4/21/2024	10:30 AM	0	71	17	0	3	0	0	0	13	0	0	0	0
4/21/2024	10:45 AM	0	76	21	0	1	1	0	1	9	0	0	0	0
4/21/2024	11:00 AM	1	76	23	0	1	1	0	1	14	0	0	0	0
4/21/2024	11:15 AM	0	76	24	0	1	1	0	1	12	0	0	0	0
4/21/2024	11:30 AM	0	69	17	0	2	0	0	2	10	0	0	0	0
4/21/2024	11:45 AM	0	67	19	0	1	1	0	0	11	0	0	0	0
4/21/2024	12:00 PM	1	76	21	0	1	0	0	0	17	0	0	0	0
4/21/2024	12:15 PM	0	85	24	1	3	0	0	5	10	2	0	0	0
4/21/2024	12:30 PM	0	70	27	0	5	0	0	0	13	0	0	0	0
4/21/2024	12:45 PM	0	83	23	4	1	0	0	2	11	0	0	0	0
4/21/2024	1:00 PM	1	79	22	0	1	1	0	0	9	1	0	0	0
4/21/2024	1:15 PM	0	72	9	0	1	0	0	3	17	0	0	0	0
4/21/2024	1:30 PM	0	80	16	1	0	0	0	0	19	0	0	0	0
4/21/2024	1:45 PM	0	81	19	0	1	0	0	1	11	0	0	0	0
4/21/2024	2:00 PM	0	76	10	1	3	0	0	3	11	0	0	0	0
4/21/2024	2:15 PM	0	84	23	0	2	0	0	3	8	0	0	0	0
4/21/2024	2:30 PM	0	83	18	0	2	0	0	2	10	0	0	0	0
4/21/2024	2:45 PM	0	71	20	1	0	0	0	0	18	0	0	0	0
4/21/2024	3:00 PM	0	78	21	0	1	0	0	0	12	0	0	0	0
4/21/2024	3:15 PM	0	60	24	0	0	0	0	1	12	0	0	0	0
4/21/2024	3:30 PM	0	81	22	0	0	0	0	2	8	0	0	0	0
4/21/2024	3:45 PM	0	79	14	0	2	2	0	2	8	0	0	0	0
4/21/2024	4:00 PM	0	65	13	0	4	0	0	0	17	1	0	0	0
4/21/2024	4:15 PM	0	71	22	0	5	2	0	1	12	1	1	0	0
4/21/2024	4:30 PM	0	84	19	0	2	0	0	2	11	0	0	0	0
4/21/2024	4:45 PM	0	81	22	0	3	0	0	0	11	0	0	0	0
4/21/2024	5:00 PM	0	86	13	0	2	0	0	2	12	0	0	0	0
4/21/2024	5:15 PM	0	78	19	0	2	0	0	1	9	1	0	0	0
4/21/2024	5:30 PM	0	78	16	0	0	1	0	1	20	0	0	0	0
4/21/2024	5:45 PM	0	84	18	0	1	0	0	2	11	0	0	0	0
4/21/2024	6:00 PM	0	62	16	0	1	1	0	1	18	0	0	0	0
4/21/2024	6:15 PM	0	48	12	0	1	0	0	1	7	0	0	0	0
4/21/2024	6:30 PM	0	47	16	0	0	1	0	2	23	0	0	0	0
4/21/2024	6:45 PM	1	57	7	1	2	1	0	2	10	0	1	0	0
4/21/2024	7:00 PM	0	32	5	0	0	0	0	0	14	0	0	0	0
4/21/2024	7:15 PM	0	32	10	0	0	0	0	0	4	0	0	0	0
4/21/2024	7:30 PM	0	31	7	0	1	0	0	2	5	0	0	0	0
4/21/2024	7:45 PM	0	37	7	0	0	1	0	0	7	0	0	0	0
4/21/2024	8:00 PM	0	27	9	0	1	1	0	0	2	0	0	0	0
4/21/2024	8:15 PM	0	27	8	0	2	0	0	0	5	0	0	0	0
4/21/2024	8:30 PM	0	21	5	0	0	0	0	0	6	0	0	0	0
4/21/2024	8:45 PM	0	27	1	0	1	0	0	0	3	0	0	0	0
4/21/2024	9:00 PM	0	22	2	0	0	0	0	0	2	0	0	0	0
4/21/2024	9:15 PM	0	13	0	0	0	0	0	0	2	0	0	0	0
4/21/2024	9:30 PM	0	21	1	0	1	0	0	0	4	0	0	0	0
4/21/2024	9:45 PM	0	20	0	0	1	0	0	0	3	0	0	0	0
4/21/2024	10:00 PM	0	11	3	0	0	0	0	0	3	0	0	0	0
4/21/2024	10:15 PM	0	12	2	0	1	0	0	0	4	0	0	0	0
4/21/2024	10:30 PM	0	8	0	0	1	0	0	0	3	0	0	0	0
4/21/2024	10:45 PM	0	12	0	0	0	0	0	0	6	0	0	0	0
4/21/2024	11:00 PM	0	9	4	0	0	0	0	0	4	0	2	0	0
4/21/2024	11:15 PM	0	8	1	0	0	0	0	0	2	0	1	0	0
4/21/2024	11:30 PM	0	8	2	0	0	0	0	0	5	0	0	0	0
4/21/2024	11:45 PM	0	7	1	0	0	0	0	0	8	0	0	0	0

4/22/2024	12:00 AM	0	8	0	0	0	0	0	0	1	0	1	0	0
4/22/2024	12:15 AM	0	9	0	0	0	0	0	0	1	0	0	0	0
4/22/2024	12:30 AM	0	7	0	0	0	0	0	0	3	0	1	0	0
4/22/2024	12:45 AM	0	12	0	0	0	0	0	0	1	0	0	0	0
4/22/2024	1:00 AM	0	4	0	0	0	0	0	0	1	0	2	0	0
4/22/2024	1:15 AM	0	5	0	0	0	0	0	0	2	0	0	0	0
4/22/2024	1:30 AM	0	4	0	0	0	0	0	0	4	0	1	0	0
4/22/2024	1:45 AM	0	7	0	0	0	0	0	0	2	0	2	0	0
4/22/2024	2:00 AM	0	5	0	0	1	0	0	0	4	0	0	0	0
4/22/2024	2:15 AM	0	5	0	0	0	0	0	0	2	0	1	0	0
4/22/2024	2:30 AM	0	4	0	0	0	0	0	0	3	0	2	0	0
4/22/2024	2:45 AM	0	5	0	0	0	0	0	0	2	0	2	0	0
4/22/2024	3:00 AM	0	7	0	0	0	0	0	0	4	0	0	0	0
4/22/2024	3:15 AM	0	9	0	0	1	0	0	0	7	0	3	0	0
4/22/2024	3:30 AM	0	17	0	0	0	0	0	0	6	0	0	0	0
4/22/2024	3:45 AM	0	9	0	0	0	0	0	0	5	0	1	0	0
4/22/2024	4:00 AM	0	18	0	0	0	0	0	0	2	0	0	0	0
4/22/2024	4:15 AM	0	14	0	0	0	0	0	0	5	0	1	0	0
4/22/2024	4:30 AM	0	15	0	0	0	0	0	0	7	0	0	0	0
4/22/2024	4:45 AM	0	22	0	0	0	0	0	0	9	0	2	0	0
4/22/2024	5:00 AM	0	17	0	0	1	0	0	0	7	0	0	0	0
4/22/2024	5:15 AM	0	33	0	0	0	0	0	0	8	0	0	0	0
4/22/2024	5:30 AM	0	38	1	0	1	0	0	0	10	0	0	0	0
4/22/2024	5:45 AM	0	24	0	0	0	0	0	0	9	0	0	0	0
4/22/2024	6:00 AM	0	55	3	0	0	0	0	0	12	0	0	0	0
4/22/2024	6:15 AM	0	56	7	0	1	0	0	0	16	0	0	0	0
4/22/2024	6:30 AM	0	59	11	0	3	1	0	0	23	0	0	0	0
4/22/2024	6:45 AM	0	54	24	0	3	9	0	2	15	1	0	0	0
4/22/2024	7:00 AM	0	72	28	0	9	3	0	3	13	0	0	0	0
4/22/2024	7:15 AM	0	84	34	0	4	4	0	0	10	0	0	0	0
4/22/2024	7:30 AM	1	77	31	0	4	3	0	7	15	0	0	0	0
4/22/2024	7:45 AM	0	94	30	0	8	0	0	0	9	0	0	0	0
4/22/2024	8:00 AM	0	94	41	0	6	2	0	1	19	0	0	0	0
4/22/2024	8:15 AM	0	79	43	0	6	4	0	5	23	0	0	0	0
4/22/2024	8:30 AM	0	77	38	0	4	7	0	2	27	0	0	0	0
4/22/2024	8:45 AM	0	65	52	0	5	2	0	3	14	2	0	0	0
4/22/2024	9:00 AM	0	78	33	0	3	1	0	1	23	0	0	0	0
4/22/2024	9:15 AM	0	63	35	0	9	2	0	1	14	0	0	0	0
4/22/2024	9:30 AM	0	66	41	3	7	0	0	4	15	0	0	0	0
4/22/2024	9:45 AM	0	59	25	1	5	1	1	1	24	1	0	0	0
4/22/2024	10:00 AM	0	61	17	0	3	5	0	3	28	0	0	0	0
4/22/2024	10:15 AM	0	51	24	0	10	0	0	2	22	0	0	0	0
4/22/2024	10:30 AM	0	45	28	1	9	3	0	7	33	0	0	0	0
4/22/2024	10:45 AM	3	63	34	0	6	0	0	6	26	0	0	0	0
4/22/2024	11:00 AM	0	44	12	0	8	3	0	5	32	0	0	0	0
4/22/2024	11:15 AM	0	46	22	0	7	1	1	1	35	0	0	0	0
4/22/2024	11:30 AM	0	52	19	0	5	3	0	4	23	0	0	0	0
4/22/2024	11:45 AM	0	44	25	0	7	0	0	1	24	1	0	0	0
4/22/2024	12:00 PM	0	59	25	0	4	2	0	5	17	0	0	0	0
4/22/2024	12:15 PM	0	56	22	0	4	3	0	1	27	0	0	0	0
4/22/2024	12:30 PM	0	52	23	0	7	0	0	5	31	0	0	0	0
4/22/2024	12:45 PM	0	47	46	0	5	3	0	3	25	0	0	0	0
4/22/2024	1:00 PM	0	56	21	1	4	6	0	2	8	0	0	0	0
4/22/2024	1:15 PM	0	55	29	0	5	4	0	2	18	1	0	0	0
4/22/2024	1:30 PM	0	58	14	4	3	4	0	2	17	0	0	0	0
4/22/2024	1:45 PM	0	73	26	0	6	3	0	0	15	0	0	0	0
4/22/2024	2:00 PM	0	39	32	0	7	2	0	2	26	0	1	0	0
4/22/2024	2:15 PM	0	61	23	0	8	3	0	4	21	0	0	0	0
4/22/2024	2:30 PM	0	60	24	0	4	0	0	0	17	0	0	0	0
4/22/2024	2:45 PM	0	45	22	1	8	2	0	2	21	0	0	0	0
4/22/2024	3:00 PM	1	63	25	0	4	2	0	2	23	0	0	0	0
4/22/2024	3:15 PM	0	60	31	0	6	1	0	2	24	1	0	0	0
4/22/2024	3:30 PM	0	68	20	0	1	1	0	2	23	0	0	0	0
4/22/2024	3:45 PM	0	48	21	0	4	2	0	1	37	0	0	0	0
4/22/2024	4:00 PM	0	57	15	0	8	1	0	1	36	0	0	0	0
4/22/2024	4:15 PM	0	74	25	0	4	0	0	3	21	0	0	0	0
4/22/2024	4:30 PM	0	65	16	0	4	3	0	3	33	0	0	0	0
4/22/2024	4:45 PM	0	64	17	1	7	2	0	1	30	0	0	0	0
4/22/2024	5:00 PM	0	74	34	2	7	3	0	1	23	0	0	0	0
4/22/2024	5:15 PM	0	85	12	0	2	3	0	2	24	0	0	0	0
4/22/2024	5:30 PM	0	58	18	0	1	0	0	1	19	0	0	0	0
4/22/2024	5:45 PM	0	61	16	0	2	0	0	1	28	0	0	0	0
4/22/2024	6:00 PM	0	46	12	0	4	0	0	2	10	0	0	0	0
4/22/2024	6:15 PM	0	29	9	0	0	1	0	1	5	0	0	0	0
4/22/2024	6:30 PM	0	26	14	0	0	1	0	0	12	0	0	0	0
4/22/2024	6:45 PM	0	31	5	0	0	0	0	0	8	0	0	0	0
4/22/2024	7:00 PM	0	25	7	0	1	1	0	0	6	0	0	0	0
4/22/2024	7:15 PM	0	34	7	0	1	2	0	0	11	0	0	0	0
4/22/2024	7:30 PM	0	41	9	0	1	0	0	0	6	0	0	0	0
4/22/2024	7:45 PM	0	30	3	0	2	0	0	1	7	0	0	0	0
4/22/2024	8:00 PM	0	18	9	0	3	0	0	0	14	0	0	0	0
4/22/2024	8:15 PM	0	17	3	0	0	2	0	0	5	0	0	0	0
4/22/2024	8:30 PM	0	9	2	0	0	0	0	0	4	0	0	0	0
4/22/2024	8:45 PM	0	14	0	0	0	0	0	0	9	0	1	0	0
4/22/2024	9:00 PM	0	12	2	0	0	0	0	0	3	0	0	0	0
4/22/2024	9:15 PM	0	11	1	0	0	0	0	0	4	0	0	0	0
4/22/2024	9:30 PM	0	9	0	0	0	0	0	0	9	0	0	0	0
4/22/2024	9:45 PM	0	8	0	0	0	0	0	0	3	0	0	0	0
4/22/2024	10:00 PM	0	13	0	0	0	0	0	0	8	0	0	0	0
4/22/2024	10:15 PM	0	12	0	0	0	0	0	0	6	0	0	0	0
4/22/2024	10:30 PM	0	14	2	0	1	0	0	0	3	0	0	0	0
4/22/2024	10:45 PM	0	11	0	0	0	0	0	0	9	0	0	0	0
4/22/2024	11:00 PM	0	10	0	0	0	0	0	0	4	0	0	0	0
4/22/2024	11:15 PM	0	3	0	0	0	0	0	0	2	0	0	0	0
4/22/2024	11:30 PM	0	5	0	0	1	0	0	0	7	0	0	0	0
4/22/2024	11:45 PM	0	7	0	0	0	0	0	0	4	0	0	0	0

4/23/2024	12:00 AM	0	8	3	0	1	0	0	0	2	0	0	0	0
4/23/2024	12:15 AM	0	8	0	1	0	0	0	0	3	0	0	0	0
4/23/2024	12:30 AM	0	10	4	0	0	0	0	0	2	0	1	0	0
4/23/2024	12:45 AM	0	4	0	0	0	1	0	0	3	0	0	0	0
4/23/2024	1:00 AM	0	12	0	0	0	0	0	0	6	0	0	0	0
4/23/2024	1:15 AM	0	11	2	0	1	0	0	1	6	0	1	0	0
4/23/2024	1:30 AM	0	9	0	0	0	0	0	0	9	0	0	0	0
4/23/2024	1:45 AM	0	11	0	0	0	0	0	0	11	2	0	0	0
4/23/2024	2:00 AM	0	3	0	0	0	0	0	0	10	0	1	0	0
4/23/2024	2:15 AM	0	5	0	0	0	0	0	0	9	0	1	0	0
4/23/2024	2:30 AM	0	5	0	0	0	1	0	0	8	2	1	0	0
4/23/2024	2:45 AM	0	6	0	0	0	0	0	0	9	0	1	0	0
4/23/2024	3:00 AM	0	6	3	0	0	1	0	1	10	1	0	0	0
4/23/2024	3:15 AM	0	10	1	0	0	1	0	0	10	0	4	0	0
4/23/2024	3:30 AM	0	16	1	0	1	0	0	0	8	0	0	0	0
4/23/2024	3:45 AM	0	15	0	0	2	0	0	0	11	1	0	0	0
4/23/2024	4:00 AM	0	14	0	0	2	1	0	0	13	0	2	0	0
4/23/2024	4:15 AM	0	14	1	0	2	1	0	0	15	0	2	0	0
4/23/2024	4:30 AM	0	13	1	0	1	0	0	0	18	0	1	0	0
4/23/2024	4:45 AM	0	23	0	0	2	0	0	0	13	0	0	0	0
4/23/2024	5:00 AM	0	21	0	0	2	1	0	0	15	0	0	0	0
4/23/2024	5:15 AM	0	42	0	0	1	3	0	0	9	0	0	0	0
4/23/2024	5:30 AM	0	57	0	0	2	3	0	0	21	2	1	0	0
4/23/2024	5:45 AM	0	48	3	0	0	3	0	0	12	0	1	0	0
4/23/2024	6:00 AM	0	35	9	0	5	2	0	1	11	0	0	0	0
4/23/2024	6:15 AM	0	43	26	0	3	0	0	0	13	0	1	0	0
4/23/2024	6:30 AM	0	61	25	1	3	5	0	1	22	0	0	0	0
4/23/2024	6:45 AM	0	52	25	0	6	2	0	1	24	0	0	0	0
4/23/2024	7:00 AM	0	52	32	0	5	2	0	0	13	0	1	0	0
4/23/2024	7:15 AM	0	71	27	0	12	2	0	0	14	0	0	0	0
4/23/2024	7:30 AM	0	80	17	0	4	3	0	2	14	0	1	0	0
4/23/2024	7:45 AM	0	113	28	0	5	0	0	4	6	0	0	0	0
4/23/2024	8:00 AM	0	88	39	0	4	3	0	3	12	0	1	0	0
4/23/2024	8:15 AM	0	79	30	0	3	2	0	2	17	0	0	0	0
4/23/2024	8:30 AM	0	65	22	0	15	3	2	8	17	0	1	0	0
4/23/2024	8:45 AM	0	73	27	3	4	4	1	5	7	2	0	0	0
4/23/2024	9:00 AM	0	67	25	0	5	1	0	2	18	0	0	0	0
4/23/2024	9:15 AM	0	69	36	2	9	2	0	5	21	1	0	0	0
4/23/2024	9:30 AM	0	48	27	0	5	3	0	4	29	0	1	0	0
4/23/2024	9:45 AM	0	64	32	0	5	2	0	3	22	2	0	0	0
4/23/2024	10:00 AM	0	47	23	2	6	1	0	1	29	1	0	0	0
4/23/2024	10:15 AM	0	52	21	0	9	1	0	1	25	0	0	0	0
4/23/2024	10:30 AM	0	49	21	2	3	4	0	0	28	0	0	0	0
4/23/2024	10:45 AM	0	39	22	0	6	2	0	2	29	1	0	0	0
4/23/2024	11:00 AM	0	48	20	0	6	1	0	1	30	0	1	0	0
4/23/2024	11:15 AM	0	44	37	2	4	4	0	1	24	1	0	0	0
4/23/2024	11:30 AM	0	57	21	1	2	1	0	4	25	0	0	0	0
4/23/2024	11:45 AM	0	38	26	0	4	3	0	2	28	0	0	0	0
4/23/2024	12:00 PM	0	53	19	1	6	3	0	2	31	2	0	0	0
4/23/2024	12:15 PM	0	57	26	0	7	4	0	3	24	0	0	0	0
4/23/2024	12:30 PM	0	51	21	0	10	1	0	2	24	1	0	0	0
4/23/2024	12:45 PM	0	56	21	1	9	2	0	1	17	0	0	0	0
4/23/2024	1:00 PM	2	56	19	0	7	1	0	3	21	0	0	0	0
4/23/2024	1:15 PM	0	55	21	0	8	5	0	3	29	0	0	0	0
4/23/2024	1:30 PM	1	64	19	2	5	0	0	3	23	0	0	0	0
4/23/2024	1:45 PM	0	61	24	0	2	3	0	2	19	1	0	0	0
4/23/2024	2:00 PM	0	52	27	0	6	8	1	3	25	0	0	0	0
4/23/2024	2:15 PM	0	53	23	0	5	1	0	1	24	1	0	0	0
4/23/2024	2:30 PM	0	63	12	1	5	1	0	3	22	0	0	0	0
4/23/2024	2:45 PM	0	52	22	1	5	1	0	0	25	1	0	0	0
4/23/2024	3:00 PM	0	60	16	0	6	2	0	3	25	0	0	0	0
4/23/2024	3:15 PM	0	51	17	0	7	1	0	2	30	0	0	0	0
4/23/2024	3:30 PM	3	75	23	0	4	4	0	1	18	0	0	0	0
4/23/2024	3:45 PM	0	40	30	0	3	5	0	2	31	0	0	0	0
4/23/2024	4:00 PM	0	41	24	0	2	2	0	2	31	0	0	0	0
4/23/2024	4:15 PM	0	59	17	0	4	1	0	1	20	0	0	0	0
4/23/2024	4:30 PM	0	80	16	1	6	1	0	2	24	0	0	0	0
4/23/2024	4:45 PM	0	60	27	0	3	0	0	1	22	1	0	0	0
4/23/2024	5:00 PM	0	68	25	0	2	1	0	2	21	0	0	0	0
4/23/2024	5:15 PM	0	80	21	0	2	1	0	2	29	0	1	0	0
4/23/2024	5:30 PM	1	61	22	0	2	0	0	2	19	0	0	0	0
4/23/2024	5:45 PM	0	58	21	0	2	1	0	0	24	0	0	0	0
4/23/2024	6:00 PM	0	52	27	1	1	1	0	0	29	0	0	0	0
4/23/2024	6:15 PM	0	55	17	0	3	2	0	1	20	0	0	0	0
4/23/2024	6:30 PM	0	50	14	0	2	1	0	2	24	0	0	0	0
4/23/2024	6:45 PM	0	53	15	0	4	0	0	1	21	0	0	0	0
4/23/2024	7:00 PM	0	38	23	1	0	1	1	3	17	0	0	0	0
4/23/2024	7:15 PM	1	44	16	0	3	0	0	0	22	0	0	0	0
4/23/2024	7:30 PM	0	36	21	0	3	0	0	0	17	0	0	0	0
4/23/2024	7:45 PM	0	48	17	0	2	0	0	0	25	1	0	0	0
4/23/2024	8:00 PM	0	35	9	1	2	0	0	0	19	0	0	0	0
4/23/2024	8:15 PM	0	33	5	2	0	0	0	0	19	0	0	0	0
4/23/2024	8:30 PM	0	26	2	1	5	0	0	1	12	0	0	0	0
4/23/2024	8:45 PM	0	27	0	0	1	0	0	0	22	0	0	0	0
4/23/2024	9:00 PM	0	32	1	0	4	0	0	0	16	2	1	0	0
4/23/2024	9:15 PM	0	30	0	1	2	0	0	0	15	0	0	0	0
4/23/2024	9:30 PM	0	35	1	0	1	0	0	0	17	0	0	0	0
4/23/2024	9:45 PM	0	25	2	0	1	0	0	0	14	1	1	0	0
4/23/2024	10:00 PM	0	29	0	0	1	0	0	0	21	1	0	0	0
4/23/2024	10:15 PM	0	24	0	0	0	0	0	0	14	0	2	0	0
4/23/2024	10:30 PM	0	21	1	0	3	0	0	0	15	0	0	0	0
4/23/2024	10:45 PM	0	18	0	0	4	0	0	0	15	0	1	0	0
4/23/2024	11:00 PM	0	14	1	0	1	0	0	0	15	0	1	0	0
4/23/2024	11:15 PM	0	12	2	0	2	0	0	0	14	0	1	0	0
4/23/2024	11:30 PM	0	16	0	0	1	0	0	0	13	0	1	0	0
4/23/2024	11:45 PM	0	10	1	0	0	0	0	0	15	0	0	0	0

4/24/2024	12:00 AM	0	10	5	0	1	0	0	0	17	0	0	0	0
4/24/2024	12:15 AM	0	15	5	1	0	0	0	0	17	0	0	0	0
4/24/2024	12:30 AM	0	11	3	0	0	0	0	0	16	0	3	0	0
4/24/2024	12:45 AM	0	18	6	0	0	0	0	0	19	0	1	0	0
4/24/2024	1:00 AM	0	11	0	0	0	0	0	0	8	0	0	0	0
4/24/2024	1:15 AM	0	5	0	0	0	0	0	3	12	0	0	0	0
4/24/2024	1:30 AM	0	5	0	0	0	0	0	0	6	0	0	0	0
4/24/2024	1:45 AM	0	2	2	0	0	0	0	1	15	0	0	0	0
4/24/2024	2:00 AM	0	7	1	0	0	1	0	0	14	0	0	0	0
4/24/2024	2:15 AM	0	6	2	0	0	0	0	0	13	0	0	0	0
4/24/2024	2:30 AM	0	6	0	0	0	0	0	0	10	0	1	0	0
4/24/2024	2:45 AM	0	8	0	0	0	0	0	0	16	0	2	0	0
4/24/2024	3:00 AM	1	9	1	0	0	0	0	0	13	0	0	0	0
4/24/2024	3:15 AM	0	6	0	0	0	0	0	0	23	0	1	0	0
4/24/2024	3:30 AM	0	11	2	0	0	0	0	0	11	0	0	0	0
4/24/2024	3:45 AM	0	13	1	0	0	0	0	0	11	0	0	0	0
4/24/2024	4:00 AM	0	8	2	0	1	1	0	0	20	0	2	0	0
4/24/2024	4:15 AM	0	11	2	0	2	2	0	2	13	0	0	0	0
4/24/2024	4:30 AM	0	8	3	0	4	0	0	0	21	0	1	0	0
4/24/2024	4:45 AM	0	21	5	0	3	0	0	1	19	0	2	0	0
4/24/2024	5:00 AM	0	29	5	0	1	0	0	0	14	0	1	0	0
4/24/2024	5:15 AM	0	20	5	1	2	0	0	0	24	0	1	0	0
4/24/2024	5:30 AM	0	24	4	0	4	0	0	0	20	0	1	0	0
4/24/2024	5:45 AM	0	35	10	0	2	0	0	0	11	0	1	0	0
4/24/2024	6:00 AM	0	30	10	0	2	0	0	0	19	0	1	0	0
4/24/2024	6:15 AM	0	40	14	0	5	3	0	1	22	0	0	0	0
4/24/2024	6:30 AM	0	59	16	0	4	5	0	2	12	0	0	0	0
4/24/2024	6:45 AM	0	54	34	1	7	2	1	1	18	0	0	0	0
4/24/2024	7:00 AM	0	72	38	0	13	4	0	1	11	2	0	0	0
4/24/2024	7:15 AM	0	64	34	0	11	3	0	2	19	0	1	0	0
4/24/2024	7:30 AM	0	76	27	0	6	2	0	3	21	2	0	0	0
4/24/2024	7:45 AM	2	87	37	0	3	7	0	2	27	0	1	0	0
4/24/2024	8:00 AM	1	85	25	1	7	3	1	0	20	0	0	0	0
4/24/2024	8:15 AM	0	85	42	0	5	0	1	4	15	0	0	0	0
4/24/2024	8:30 AM	0	82	31	0	10	1	0	2	15	0	0	0	0
4/24/2024	8:45 AM	0	67	48	6	5	1	0	4	17	0	0	0	0
4/24/2024	9:00 AM	0	64	38	0	3	4	0	1	27	0	0	0	0
4/24/2024	9:15 AM	0	52	22	1	12	2	0	1	18	1	0	0	0
4/24/2024	9:30 AM	0	58	34	0	3	2	2	2	21	0	0	0	0
4/24/2024	9:45 AM	0	56	26	0	4	2	1	4	21	2	0	0	0
4/24/2024	10:00 AM	0	51	25	0	8	3	0	1	25	0	0	0	0
4/24/2024	10:15 AM	1	47	24	0	3	5	0	1	18	2	0	0	0
4/24/2024	10:30 AM	0	41	28	1	7	2	0	1	31	0	0	0	0
4/24/2024	10:45 AM	0	55	25	0	4	3	0	1	23	0	0	0	0
4/24/2024	11:00 AM	0	48	20	0	9	0	1	1	22	1	0	0	0
4/24/2024	11:15 AM	0	63	34	0	4	2	0	2	25	1	0	0	0
4/24/2024	11:30 AM	0	46	20	0	8	4	0	2	31	0	0	0	0
4/24/2024	11:45 AM	0	46	27	0	4	1	0	4	24	1	0	0	0
4/24/2024	12:00 PM	0	37	18	0	8	0	0	1	26	4	0	0	0
4/24/2024	12:15 PM	0	52	22	0	9	2	0	1	24	2	0	0	0
4/24/2024	12:30 PM	2	55	20	0	9	3	0	3	20	0	0	0	0
4/24/2024	12:45 PM	0	51	23	3	5	7	0	3	24	2	0	0	0
4/24/2024	1:00 PM	0	51	19	0	4	2	0	5	22	0	0	0	0
4/24/2024	1:15 PM	0	51	25	0	4	2	0	1	19	3	0	0	0
4/24/2024	1:30 PM	0	60	15	0	6	4	0	1	25	1	0	0	0
4/24/2024	1:45 PM	0	52	20	0	6	5	0	1	24	0	0	0	0
4/24/2024	2:00 PM	0	36	19	0	2	3	0	3	29	0	0	0	0
4/24/2024	2:15 PM	0	57	25	0	6	2	0	2	26	3	0	0	0
4/24/2024	2:30 PM	0	43	23	0	7	3	0	1	18	0	0	0	0
4/24/2024	2:45 PM	1	56	18	0	3	4	1	1	24	0	0	0	0
4/24/2024	3:00 PM	0	54	25	0	2	5	0	0	17	2	0	0	0
4/24/2024	3:15 PM	0	59	23	0	11	1	0	1	25	0	0	0	0
4/24/2024	3:30 PM	0	47	22	1	5	2	3	1	22	0	0	0	0
4/24/2024	3:45 PM	0	61	27	3	4	0	0	1	25	0	0	0	0
4/24/2024	4:00 PM	0	65	32	1	3	1	0	6	26	2	0	0	0
4/24/2024	4:15 PM	1	64	18	1	4	3	0	4	28	0	0	1	0
4/24/2024	4:30 PM	0	61	22	0	3	0	0	1	15	0	0	0	0
4/24/2024	4:45 PM	0	67	33	0	2	0	0	0	15	1	0	0	0
4/24/2024	5:00 PM	1	86	20	0	6	1	0	2	19	2	0	0	0
4/24/2024	5:15 PM	0	89	29	0	6	1	1	2	22	0	0	0	0
4/24/2024	5:30 PM	2	61	23	0	3	0	0	1	17	0	0	0	0
4/24/2024	5:45 PM	0	66	30	0	3	2	0	2	17	0	0	0	0
4/24/2024	6:00 PM	1	63	18	0	1	0	0	1	17	3	0	0	0
4/24/2024	6:15 PM	0	64	14	0	6	0	0	2	21	0	0	0	0
4/24/2024	6:30 PM	0	56	19	0	3	0	0	2	34	1	0	0	0
4/24/2024	6:45 PM	0	44	12	0	1	1	0	0	30	1	0	0	0
4/24/2024	7:00 PM	0	35	14	0	1	1	0	0	24	2	0	0	0
4/24/2024	7:15 PM	0	58	15	0	2	1	0	2	18	0	0	0	0
4/24/2024	7:30 PM	0	31	16	0	3	2	0	1	20	0	0	0	0
4/24/2024	7:45 PM	0	44	11	0	1	0	0	0	18	0	0	0	0
4/24/2024	8:00 PM	0	31	16	0	5	1	0	1	21	0	0	0	0
4/24/2024	8:15 PM	0	39	14	1	1	0	0	2	13	0	0	0	0
4/24/2024	8:30 PM	0	30	10	0	2	0	0	1	20	0	0	0	0
4/24/2024	8:45 PM	0	27	8	0	2	0	0	2	17	0	0	0	0
4/24/2024	9:00 PM	0	29	9	0	2	0	0	2	14	0	0	0	0
4/24/2024	9:15 PM	0	27	8	0	1	0	0	1	6	0	0	0	0
4/24/2024	9:30 PM	0	28	7	0	2	0	0	2	19	0	0	0	0
4/24/2024	9:45 PM	0	21	6	0	1	1	0	1	15	0	1	0	0
4/24/2024	10:00 PM	0	18	4	0	1	0	0	0	16	0	0	0	0
4/24/2024	10:15 PM	0	15	4	0	1	0	0	0	17	0	0	0	0
4/24/2024	10:30 PM	0	10	2	0	2	1	0	2	14	0	0	0	0
4/24/2024	10:45 PM	0	9	5	1	0	0	0	1	13	0	3	0	0
4/24/2024	11:00 PM	0	11	2	0	0	0	0	2	9	0	3	0	0
4/24/2024	11:15 PM	0	10	3	0	0	0	0	0	17	0	1	0	0
4/24/2024	11:30 PM	0	19	1	0	1	0	0	0	5	0	0	0	0
4/24/2024	11:45 PM	0	18	2	0	2	0	0	1	12	0	0	0	0

4/25/2024	12:00 AM	0	9	3	0	1	0	0	0	6	0	0	0	0
4/25/2024	12:15 AM	0	5	1	0	3	0	0	0	11	0	2	0	0
4/25/2024	12:30 AM	0	6	2	0	1	0	0	0	14	0	0	0	0
4/25/2024	12:45 AM	0	5	2	0	0	0	0	0	14	0	3	0	0
4/25/2024	1:00 AM	0	5	1	0	0	0	0	1	8	0	2	0	0
4/25/2024	1:15 AM	0	4	3	0	0	0	0	1	13	0	3	0	0
4/25/2024	1:30 AM	0	5	1	0	0	0	0	0	6	0	2	0	0
4/25/2024	1:45 AM	0	8	2	0	0	0	0	0	10	0	1	0	0
4/25/2024	2:00 AM	0	5	1	0	1	0	0	0	9	0	2	0	0
4/25/2024	2:15 AM	0	3	1	0	0	0	0	0	10	0	2	0	0
4/25/2024	2:30 AM	0	8	3	0	2	0	0	1	11	0	1	0	0
4/25/2024	2:45 AM	0	6	2	0	0	0	0	0	7	0	2	0	0
4/25/2024	3:00 AM	0	10	2	0	0	0	0	0	13	0	1	0	0
4/25/2024	3:15 AM	0	4	1	0	0	0	0	1	10	0	2	0	0
4/25/2024	3:30 AM	0	10	3	0	2	0	0	0	18	0	0	0	0
4/25/2024	3:45 AM	0	6	3	0	1	0	0	1	16	0	1	0	0
4/25/2024	4:00 AM	0	9	4	0	1	1	0	1	11	0	1	0	0
4/25/2024	4:15 AM	0	12	6	0	0	0	0	2	10	0	1	0	0
4/25/2024	4:30 AM	0	13	7	0	1	1	0	3	15	0	1	0	0
4/25/2024	4:45 AM	0	13	7	0	1	0	0	1	17	0	3	0	0
4/25/2024	5:00 AM	0	12	6	0	2	3	0	0	16	0	0	0	0
4/25/2024	5:15 AM	0	14	11	1	1	1	0	1	20	0	0	0	0
4/25/2024	5:30 AM	0	25	15	0	2	0	0	0	14	0	1	0	0
4/25/2024	5:45 AM	0	28	20	0	1	0	0	1	20	0	1	0	0
4/25/2024	6:00 AM	0	23	16	0	6	1	0	2	19	0	0	0	0
4/25/2024	6:15 AM	0	38	25	0	1	5	0	3	24	0	0	0	0
4/25/2024	6:30 AM	0	64	20	0	5	2	0	0	16	0	0	0	0
4/25/2024	6:45 AM	0	57	29	0	4	1	1	1	21	0	1	0	0
4/25/2024	7:00 AM	0	55	30	0	8	5	1	3	20	1	1	0	0
4/25/2024	7:15 AM	0	71	37	0	8	3	0	1	11	0	0	0	0
4/25/2024	7:30 AM	0	75	28	0	4	2	0	0	16	1	0	0	0
4/25/2024	7:45 AM	0	95	35	0	2	3	0	2	17	1	0	0	0
4/25/2024	8:00 AM	0	74	39	1	7	3	0	1	20	0	0	0	0
4/25/2024	8:15 AM	0	86	49	0	6	1	0	5	14	0	0	0	0
4/25/2024	8:30 AM	0	80	39	0	10	0	2	3	14	0	1	0	0
4/25/2024	8:45 AM	0	52	41	0	7	3	1	3	23	1	0	1	0
4/25/2024	9:00 AM	0	66	32	0	6	2	0	4	22	0	0	0	0
4/25/2024	9:15 AM	0	57	31	1	4	2	0	3	24	0	0	0	0
4/25/2024	9:30 AM	0	42	26	1	9	1	0	4	37	0	0	0	0
4/25/2024	9:45 AM	0	55	24	1	6	2	1	2	19	2	0	0	0
4/25/2024	10:00 AM	0	54	31	1	6	4	0	2	22	2	0	0	0
4/25/2024	10:15 AM	1	55	23	4	5	4	1	1	21	1	0	0	0
4/25/2024	10:30 AM	1	54	27	0	4	4	0	1	23	3	0	0	0
4/25/2024	10:45 AM	0	54	29	0	4	4	0	4	35	0	0	0	0
4/25/2024	11:00 AM	0	49	15	0	6	3	1	3	30	0	1	0	0
4/25/2024	11:15 AM	0	63	27	0	9	1	0	6	21	0	0	0	0
4/25/2024	11:30 AM	0	52	18	1	7	3	0	2	30	1	0	0	0
4/25/2024	11:45 AM	0	41	25	1	8	1	0	2	24	0	0	0	0
4/25/2024	12:00 PM	0	65	15	0	3	2	2	3	23	0	0	0	0
4/25/2024	12:15 PM	0	50	30	0	9	2	1	3	22	0	0	0	0
4/25/2024	12:30 PM	0	69	28	0	4	3	0	4	17	1	0	0	0
4/25/2024	12:45 PM	0	51	23	1	8	3	0	6	25	2	0	0	0
4/25/2024	1:00 PM	0	57	35	0	9	3	0	4	13	0	0	0	0
4/25/2024	1:15 PM	1	51	22	0	8	2	1	2	17	1	0	0	0
4/25/2024	1:30 PM	0	53	21	0	9	4	0	3	24	3	0	0	0
4/25/2024	1:45 PM	0	41	22	0	10	3	0	3	22	1	0	0	0
4/25/2024	2:00 PM	0	36	24	0	6	1	0	2	22	0	0	0	0
4/25/2024	2:15 PM	1	53	25	0	8	3	1	3	23	0	0	0	0
4/25/2024	2:30 PM	0	53	30	0	2	3	1	1	15	0	0	0	0
4/25/2024	2:45 PM	0	45	24	0	5	3	1	2	23	0	0	0	0
4/25/2024	3:00 PM	0	55	24	0	3	1	0	3	15	0	0	0	0
4/25/2024	3:15 PM	0	58	26	1	7	2	0	2	21	0	0	0	0
4/25/2024	3:30 PM	0	56	25	1	8	1	0	3	31	0	0	0	0
4/25/2024	3:45 PM	0	62	27	0	4	0	0	2	20	1	0	0	0
4/25/2024	4:00 PM	0	70	26	1	3	0	0	1	21	2	0	0	0
4/25/2024	4:15 PM	0	51	21	0	2	1	0	1	30	2	0	0	0
4/25/2024	4:30 PM	0	74	23	0	2	1	0	2	30	0	0	0	0
4/25/2024	4:45 PM	0	67	31	0	6	1	0	2	20	0	0	0	0
4/25/2024	5:00 PM	0	81	26	0	7	1	0	3	18	0	0	0	0
4/25/2024	5:15 PM	0	87	25	0	2	0	0	4	19	1	0	0	0
4/25/2024	5:30 PM	1	70	26	0	2	1	0	0	19	1	0	0	0
4/25/2024	5:45 PM	0	69	19	0	4	4	0	0	21	0	0	0	0
4/25/2024	6:00 PM	1	67	29	0	3	2	0	0	11	0	0	0	0
4/25/2024	6:15 PM	0	74	22	1	1	2	0	2	8	0	0	0	0
4/25/2024	6:30 PM	1	62	20	0	1	1	0	2	20	0	0	0	0
4/25/2024	6:45 PM	0	47	10	0	3	1	0	1	21	0	0	0	0
4/25/2024	7:00 PM	0	33	20	0	1	0	0	1	24	0	0	0	0
4/25/2024	7:15 PM	0	45	29	0	1	1	0	0	13	0	0	0	0
4/25/2024	7:30 PM	0	38	22	1	1	0	0	1	21	0	0	0	0
4/25/2024	7:45 PM	0	61	20	0	1	0	0	2	16	0	0	0	0
4/25/2024	8:00 PM	0	42	14	0	1	1	0	2	17	0	0	0	0
4/25/2024	8:15 PM	0	33	15	0	2	2	0	2	21	0	0	0	0
4/25/2024	8:30 PM	0	37	9	0	3	0	0	3	15	0	1	0	0
4/25/2024	8:45 PM	0	31	8	0	0	0	0	0	20	0	0	0	0
4/25/2024	9:00 PM	0	38	9	1	3	1	0	2	11	0	0	0	0
4/25/2024	9:15 PM	0	33	8	0	2	0	0	0	12	0	0	0	0
4/25/2024	9:30 PM	0	18	8	0	0	0	0	0	16	0	3	0	0
4/25/2024	9:45 PM	0	28	11	0	1	1	0	3	18	0	1	0	0
4/25/2024	10:00 PM	0	20	6	0	0	1	0	2	17	0	0	0	0
4/25/2024	10:15 PM	0	23	4	0	4	1	0	0	13	0	1	0	0
4/25/2024	10:30 PM	0	21	2	0	1	1	0	0	14	0	0	0	0
4/25/2024	10:45 PM	0	19	4	0	1	1	0	1	5	0	1	0	0
4/25/2024	11:00 PM	0	20	6	0	0	0	0	1	12	0	2	0	0
4/25/2024	11:15 PM	0	10	4	0	2	0	0	1	12	0	0	0	0
4/25/2024	11:30 PM	0	11	6	0	1	1	0	0	5	0	0	0	0
4/25/2024	11:45 PM	0	5	0	0	0	0	0	0	4	0	1	0	0

4/26/2024	12:00 AM	0	0	0	0	0	0	0	0	9	0	1	0	0
4/26/2024	12:15 AM	0	3	0	0	1	0	0	0	6	0	0	0	0
4/26/2024	12:30 AM	0	5	0	0	0	0	0	0	4	0	1	0	0
4/26/2024	12:45 AM	0	4	0	0	1	0	0	0	10	0	0	0	0
4/26/2024	1:00 AM	0	5	1	0	1	0	0	0	6	0	2	0	0
4/26/2024	1:15 AM	0	11	1	0	0	2	0	0	6	0	2	0	0
4/26/2024	1:30 AM	0	8	2	0	1	0	0	0	12	0	3	0	0
4/26/2024	1:45 AM	0	4	0	0	0	0	0	0	7	0	1	0	0
4/26/2024	2:00 AM	0	9	1	2	0	1	0	0	14	0	0	0	0
4/26/2024	2:15 AM	0	9	1	0	0	0	0	0	14	0	0	0	0
4/26/2024	2:30 AM	0	3	0	0	2	1	0	0	12	0	2	0	0
4/26/2024	2:45 AM	0	4	0	0	0	0	0	0	11	0	0	0	0
4/26/2024	3:00 AM	0	4	0	0	1	0	0	0	14	0	2	0	0
4/26/2024	3:15 AM	0	11	1	0	1	2	0	0	12	0	0	0	0
4/26/2024	3:30 AM	0	7	0	2	1	0	0	0	14	0	3	0	0
4/26/2024	3:45 AM	0	8	2	0	0	0	0	0	18	0	1	0	0
4/26/2024	4:00 AM	0	15	3	0	1	1	0	0	6	0	3	0	0
4/26/2024	4:15 AM	0	21	2	0	1	2	0	0	17	0	1	0	0
4/26/2024	4:30 AM	1	10	4	0	2	0	0	0	15	0	0	0	0
4/26/2024	4:45 AM	0	16	3	0	2	0	0	0	14	0	0	0	0
4/26/2024	5:00 AM	0	10	3	0	2	0	0	0	18	0	0	0	0
4/26/2024	5:15 AM	0	29	5	0	2	0	0	0	18	0	1	0	0
4/26/2024	5:30 AM	0	24	3	0	3	1	0	0	14	0	1	0	0
4/26/2024	5:45 AM	0	25	12	1	1	0	0	1	13	0	0	0	0
4/26/2024	6:00 AM	0	33	14	0	1	0	0	0	14	0	0	0	0
4/26/2024	6:15 AM	0	24	19	0	3	0	0	0	21	0	0	0	0
4/26/2024	6:30 AM	0	47	26	3	3	2	1	3	20	2	0	0	0
4/26/2024	6:45 AM	0	50	31	0	7	3	0	2	19	0	1	0	0
4/26/2024	7:00 AM	0	51	25	0	5	2	1	1	21	0	0	0	0
4/26/2024	7:15 AM	0	66	48	0	8	0	0	3	14	0	1	0	0
4/26/2024	7:30 AM	0	83	31	0	0	2	0	2	20	0	0	0	0
4/26/2024	7:45 AM	0	102	31	1	3	3	1	3	9	0	1	0	0
4/26/2024	8:00 AM	0	82	46	0	6	2	0	2	12	0	0	0	0
4/26/2024	8:15 AM	0	90	28	1	6	1	0	2	21	1	0	0	0
4/26/2024	8:30 AM	0	105	31	6	2	2	0	1	13	1	0	0	0
4/26/2024	8:45 AM	0	56	34	4	8	1	0	3	19	0	0	0	0
4/26/2024	9:00 AM	0	67	20	5	6	0	0	2	22	0	0	0	0
4/26/2024	9:15 AM	0	78	32	0	7	1	1	5	21	0	0	0	0
4/26/2024	9:30 AM	0	75	28	0	4	0	0	2	19	1	0	0	0
4/26/2024	9:45 AM	0	51	41	0	3	2	0	1	20	0	0	0	0
4/26/2024	10:00 AM	0	63	20	0	8	2	0	5	28	1	0	0	0
4/26/2024	10:15 AM	0	55	31	0	6	0	1	0	19	0	0	0	0
4/26/2024	10:30 AM	0	75	23	0	3	3	1	1	25	1	0	0	0
4/26/2024	10:45 AM	1	50	28	1	3	2	0	7	27	4	0	0	0
4/26/2024	11:00 AM	0	51	36	1	8	2	1	0	18	0	0	0	0
4/26/2024	11:15 AM	0	58	21	0	4	2	0	4	23	2	0	0	0
4/26/2024	11:30 AM	0	75	28	0	5	2	0	0	18	1	0	0	0
4/26/2024	11:45 AM	0	63	34	0	8	1	0	3	24	0	0	0	0
4/26/2024	12:00 PM	0	50	26	0	6	0	0	4	21	2	0	0	0
4/26/2024	12:15 PM	0	55	17	0	6	5	0	4	22	0	0	0	0
4/26/2024	12:30 PM	0	53	30	0	6	0	0	1	24	0	0	0	0
4/26/2024	12:45 PM	1	55	28	0	4	1	0	4	31	0	0	0	0
4/26/2024	1:00 PM	0	53	25	0	7	0	2	3	19	1	0	0	0
4/26/2024	1:15 PM	0	61	25	0	5	3	0	2	19	0	0	0	0
4/26/2024	1:30 PM	0	70	21	0	9	3	1	1	21	0	0	0	0
4/26/2024	1:45 PM	0	55	25	0	4	3	0	6	8	1	0	0	0
4/26/2024	2:00 PM	0	60	24	0	6	2	1	3	17	0	0	0	0
4/26/2024	2:15 PM	0	59	17	0	1	1	0	2	18	1	0	0	0
4/26/2024	2:30 PM	0	49	19	0	1	0	0	3	22	0	0	0	0
4/26/2024	2:45 PM	0	59	20	0	8	3	0	2	16	0	0	0	0
4/26/2024	3:00 PM	0	62	20	3	4	3	0	1	19	0	0	0	0
4/26/2024	3:15 PM	1	66	27	0	5	1	0	2	21	1	0	0	0
4/26/2024	3:30 PM	0	85	25	0	8	3	0	2	10	1	0	0	0
4/26/2024	3:45 PM	1	87	31	3	3	1	0	3	19	1	1	0	0
4/26/2024	4:00 PM	1	92	18	0	0	4	0	3	15	0	0	0	0
4/26/2024	4:15 PM	0	65	24	0	2	3	0	1	24	0	0	0	0
4/26/2024	4:30 PM	0	75	20	0	3	2	0	2	8	0	0	0	0
4/26/2024	4:45 PM	2	87	20	0	8	3	0	2	9	0	0	0	0
4/26/2024	5:00 PM	0	86	21	0	3	0	0	3	15	1	0	0	0
4/26/2024	5:15 PM	0	80	22	1	4	2	0	1	21	0	0	0	0
4/26/2024	5:30 PM	1	75	29	1	1	1	0	0	12	2	0	0	0
4/26/2024	5:45 PM	1	88	23	0	3	2	0	2	10	0	0	0	0
4/26/2024	6:00 PM	0	87	22	2	4	1	0	3	15	0	0	0	0
4/26/2024	6:15 PM	0	94	21	0	4	0	0	0	14	0	0	0	0
4/26/2024	6:30 PM	1	69	26	0	5	2	0	0	15	1	0	0	0
4/26/2024	6:45 PM	0	52	22	0	2	2	0	1	16	0	0	0	0
4/26/2024	7:00 PM	0	43	19	0	1	1	0	2	18	0	0	0	0
4/26/2024	7:15 PM	0	69	17	0	1	3	0	1	13	0	0	0	0
4/26/2024	7:30 PM	0	58	18	0	3	2	0	0	13	0	0	0	0
4/26/2024	7:45 PM	2	56	25	1	1	1	0	1	13	0	0	0	0
4/26/2024	8:00 PM	0	49	17	0	1	0	0	0	16	0	0	0	0
4/26/2024	8:15 PM	0	37	14	1	2	2	0	0	11	0	0	0	0
4/26/2024	8:30 PM	0	47	10	0	2	0	0	0	15	0	0	0	0
4/26/2024	8:45 PM	0	50	9	0	3	0	0	0	17	0	1	0	0
4/26/2024	9:00 PM	0	33	9	0	3	2	0	0	11	0	0	0	0
4/26/2024	9:15 PM	0	40	8	0	3	0	0	0	11	0	0	0	0
4/26/2024	9:30 PM	0	30	9	0	3	0	0	0	8	0	1	0	0
4/26/2024	9:45 PM	0	51	10	0	1	0	0	0	5	0	2	0	0
4/26/2024	10:00 PM	0	23	8	0	0	0	0	0	11	0	0	0	0
4/26/2024	10:15 PM	0	31	11	0	1	0	0	0	11	0	2	0	0
4/26/2024	10:30 PM	0	28	5	0	1	0	0	0	9	0	0	0	0
4/26/2024	10:45 PM	0	22	6	1	0	0	0	0	13	0	1	0	0
4/26/2024	11:00 PM	0	28	4	0	1	0	0	0	9	0	1	0	0
4/26/2024	11:15 PM	0	25	2	0	0	0	0	1	11	0	0	0	0
4/26/2024	11:30 PM	0	22	3	0	0	0	0	0	11	0	1	0	0
4/26/2024	11:45 PM	0	24	0	0	3	0	0	0	7	0	0	0	0

4/27/2024	12:00 AM	0	18	1	0	0	0	0	0	8	0	0	0	0
4/27/2024	12:15 AM	0	16	2	0	0	0	0	0	5	0	0	0	0
4/27/2024	12:30 AM	0	14	2	0	1	0	0	0	6	0	0	0	0
4/27/2024	12:45 AM	0	15	1	0	0	0	0	0	7	0	2	0	0
4/27/2024	1:00 AM	0	7	0	0	5	0	0	0	4	0	2	0	0
4/27/2024	1:15 AM	0	8	1	0	1	1	0	0	10	0	1	0	0
4/27/2024	1:30 AM	0	11	1	0	0	0	0	0	2	0	1	0	0
4/27/2024	1:45 AM	0	4	0	0	1	1	0	0	5	0	0	0	0
4/27/2024	2:00 AM	0	8	1	0	0	0	0	0	4	0	1	0	0
4/27/2024	2:15 AM	0	9	0	0	1	2	0	0	11	0	0	0	0
4/27/2024	2:30 AM	0	7	0	0	0	0	0	0	5	0	0	0	0
4/27/2024	2:45 AM	0	4	0	0	1	0	0	0	8	0	2	0	0
4/27/2024	3:00 AM	0	7	0	0	1	0	0	0	4	0	1	0	0
4/27/2024	3:15 AM	0	5	0	0	0	1	0	0	7	0	1	0	0
4/27/2024	3:30 AM	0	8	1	0	0	0	0	0	6	0	4	0	0
4/27/2024	3:45 AM	0	6	0	0	0	3	0	0	6	0	0	0	0
4/27/2024	4:00 AM	0	8	0	0	0	0	0	0	3	0	0	0	0
4/27/2024	4:15 AM	0	7	1	0	0	1	0	0	2	0	0	0	0
4/27/2024	4:30 AM	0	12	3	0	0	0	0	0	4	0	0	0	0
4/27/2024	4:45 AM	0	6	0	0	1	0	0	0	6	0	1	0	0
4/27/2024	5:00 AM	0	8	2	0	2	0	0	0	8	0	0	0	0
4/27/2024	5:15 AM	0	9	2	0	0	1	0	0	6	0	0	0	0
4/27/2024	5:30 AM	0	10	4	0	1	0	0	0	6	0	1	0	0
4/27/2024	5:45 AM	0	6	5	0	0	0	0	0	15	0	1	0	0
4/27/2024	6:00 AM	0	15	10	0	1	0	0	0	3	0	1	0	0
4/27/2024	6:15 AM	0	16	13	1	1	0	0	0	6	0	2	0	0
4/27/2024	6:30 AM	0	29	10	0	2	1	0	0	12	1	0	0	0
4/27/2024	6:45 AM	0	26	10	0	1	0	0	0	14	0	0	0	0
4/27/2024	7:00 AM	0	37	16	0	1	0	0	1	9	0	1	0	0
4/27/2024	7:15 AM	0	46	22	0	5	0	1	2	9	0	0	0	0
4/27/2024	7:30 AM	0	43	25	0	3	2	0	0	5	0	0	0	0
4/27/2024	7:45 AM	2	47	21	0	0	1	0	0	12	0	1	1	0
4/27/2024	8:00 AM	0	58	26	0	1	0	0	1	13	0	0	0	0
4/27/2024	8:15 AM	0	64	21	2	1	0	0	2	12	0	0	0	0
4/27/2024	8:30 AM	0	61	13	0	2	1	0	0	16	0	0	0	0
4/27/2024	8:45 AM	0	64	18	1	2	0	0	2	15	1	0	0	0
4/27/2024	9:00 AM	0	80	18	0	7	0	0	0	12	0	0	0	0
4/27/2024	9:15 AM	0	80	21	0	4	2	0	0	9	0	0	0	0
4/27/2024	9:30 AM	2	72	24	0	0	1	0	2	13	1	0	0	0
4/27/2024	9:45 AM	0	73	24	0	0	0	0	1	13	1	0	0	0
4/27/2024	10:00 AM	0	80	18	0	2	0	0	0	10	1	0	0	0
4/27/2024	10:15 AM	0	75	22	0	3	0	0	1	12	0	0	0	0
4/27/2024	10:30 AM	0	81	22	0	3	0	0	1	10	0	0	0	0
4/27/2024	10:45 AM	0	82	24	0	0	0	0	2	7	0	0	0	0
4/27/2024	11:00 AM	0	71	24	0	3	1	0	1	12	0	0	0	0
4/27/2024	11:15 AM	0	90	12	0	2	0	0	0	17	0	0	0	0
4/27/2024	11:30 AM	1	71	20	0	2	0	0	4	11	0	0	0	0
4/27/2024	11:45 AM	0	91	21	0	2	0	0	2	16	0	0	0	0
4/27/2024	12:00 PM	0	78	23	0	2	1	0	0	11	1	0	0	0
4/27/2024	12:15 PM	0	73	19	0	2	0	0	1	7	0	0	0	0
4/27/2024	12:30 PM	1	90	21	0	3	0	0	1	19	0	0	0	0
4/27/2024	12:45 PM	0	77	27	0	2	0	0	1	12	1	0	0	0
4/27/2024	1:00 PM	0	75	19	1	2	1	0	1	14	0	0	0	0
4/27/2024	1:15 PM	2	64	22	0	0	0	0	2	13	0	0	0	0
4/27/2024	1:30 PM	0	105	25	0	3	1	0	2	11	0	0	0	0
4/27/2024	1:45 PM	0	63	21	0	0	1	0	0	12	0	0	0	0
4/27/2024	2:00 PM	0	79	21	0	1	0	0	0	9	0	0	0	0
4/27/2024	2:15 PM	0	87	20	0	4	1	0	2	8	0	0	0	0
4/27/2024	2:30 PM	1	90	28	1	1	0	0	1	8	0	0	0	0
4/27/2024	2:45 PM	0	83	24	0	0	4	0	0	12	0	0	0	0
4/27/2024	3:00 PM	0	99	33	0	1	1	0	0	3	0	1	0	0
4/27/2024	3:15 PM	1	80	18	0	1	0	0	1	12	2	0	0	0
4/27/2024	3:30 PM	0	77	24	1	0	0	0	1	6	0	0	0	0
4/27/2024	3:45 PM	0	84	19	0	0	0	0	0	9	0	0	0	0
4/27/2024	4:00 PM	0	78	21	1	2	1	0	0	4	0	0	0	0
4/27/2024	4:15 PM	1	77	16	0	1	0	0	0	12	0	0	0	0
4/27/2024	4:30 PM	0	79	19	0	3	1	0	3	12	0	0	0	0
4/27/2024	4:45 PM	0	86	19	0	1	0	0	0	7	0	0	0	0
4/27/2024	5:00 PM	0	83	18	0	0	0	0	1	15	1	0	0	0
4/27/2024	5:15 PM	1	72	17	0	2	0	0	0	13	0	0	0	0
4/27/2024	5:30 PM	0	76	16	0	1	0	0	0	8	0	0	0	0
4/27/2024	5:45 PM	0	67	19	0	1	1	0	1	8	0	0	0	0
4/27/2024	6:00 PM	0	64	26	0	0	0	0	1	7	0	0	0	0
4/27/2024	6:15 PM	1	59	14	1	5	0	0	1	8	0	0	0	0
4/27/2024	6:30 PM	0	73	10	0	1	0	0	0	13	1	0	0	0
4/27/2024	6:45 PM	0	63	18	0	0	0	0	0	7	0	0	0	0
4/27/2024	7:00 PM	0	70	18	0	2	0	0	1	6	0	0	0	0
4/27/2024	7:15 PM	0	58	21	0	3	0	0	2	9	0	0	0	0
4/27/2024	7:30 PM	0	59	18	0	1	0	0	0	9	0	0	0	0
4/27/2024	7:45 PM	0	66	15	0	2	0	0	1	4	0	0	0	0
4/27/2024	8:00 PM	0	53	18	0	1	0	0	1	5	0	0	0	0
4/27/2024	8:15 PM	1	35	12	0	1	0	0	0	4	0	0	0	0
4/27/2024	8:30 PM	0	41	8	0	4	0	0	0	8	0	0	0	0
4/27/2024	8:45 PM	0	47	9	0	2	0	0	0	2	0	0	0	0
4/27/2024	9:00 PM	0	44	5	0	1	0	0	0	7	0	0	0	0
4/27/2024	9:15 PM	0	48	4	0	0	0	0	0	3	0	0	0	0
4/27/2024	9:30 PM	0	45	4	0	2	0	0	0	5	0	0	0	0
4/27/2024	9:45 PM	0	36	3	0	1	0	0	0	9	0	0	0	0
4/27/2024	10:00 PM	0	36	2	0	0	0	0	0	5	0	0	0	0
4/27/2024	10:15 PM	0	34	2	0	0	0	0	0	6	0	0	0	0
4/27/2024	10:30 PM	0	39	3	0	1	0	0	0	3	0	0	0	0
4/27/2024	10:45 PM	0	27	2	1	0	0	0	0	4	0	0	0	0
4/27/2024	11:00 PM	0	29	3	0	2	0	0	0	5	0	0	0	0
4/27/2024	11:15 PM	0	34	4	0	0	0	0	0	9	0	0	0	0
4/27/2024	11:30 PM	0	25	2	0	0	0	0	0	0	0	0	0	0
4/27/2024	11:45 PM	0	24	1	0	1	0	0	0	7	0	0	0	0

WB
File Name:
Start Date: 4/21/2024
Start Time: 0
Site Code: 74 Lane 3 EB
Station ID: 1
Location 1: I-20, west of US-378 Sunset Blvd S/Bound Off-Ramp
Location 2:

Date	Time	1	2	3	4	5	6	7	8	9	10	11	12	13
4/21/2024	12:00 AM	0	0	0	0	0	0	0	0	0	0	0	0	0
4/21/2024	12:15 AM	0	0	0	0	0	0	0	0	0	0	0	0	0
4/21/2024	12:30 AM	0	0	0	0	0	0	0	0	0	0	0	0	0
4/21/2024	12:45 AM	0	0	0	0	0	0	0	0	0	0	0	0	0
4/21/2024	1:00 AM	0	0	0	0	0	0	0	0	0	0	0	0	0
4/21/2024	1:15 AM	0	0	0	0	0	0	0	0	0	0	0	0	0
4/21/2024	1:30 AM	0	0	0	0	0	0	0	0	0	0	0	0	0
4/21/2024	1:45 AM	0	0	0	0	0	0	0	0	0	0	0	0	0
4/21/2024	2:00 AM	0	0	0	0	0	0	0	0	0	0	0	0	0
4/21/2024	2:15 AM	0	0	0	0	0	0	0	0	0	0	0	0	0
4/21/2024	2:30 AM	0	0	0	0	0	0	0	0	0	0	0	0	0
4/21/2024	2:45 AM	0	0	0	0	0	0	0	0	0	0	0	0	0
4/21/2024	3:00 AM	0	0	0	0	0	0	0	0	0	0	0	0	0
4/21/2024	3:15 AM	0	0	0	0	0	0	0	0	0	0	0	0	0
4/21/2024	3:30 AM	0	0	0	0	0	0	0	0	0	0	0	0	0
4/21/2024	3:45 AM	0	0	0	0	0	0	0	0	0	0	0	0	0
4/21/2024	4:00 AM	0	0	0	0	0	0	0	0	0	0	0	0	0
4/21/2024	4:15 AM	0	0	0	0	0	0	0	0	0	0	0	0	0
4/21/2024	4:30 AM	0	0	0	0	0	0	0	0	0	0	0	0	0
4/21/2024	4:45 AM	0	0	0	0	0	0	0	0	0	0	0	0	0
4/21/2024	5:00 AM	0	0	0	0	0	0	0	0	0	0	0	0	0
4/21/2024	5:15 AM	0	0	0	0	0	0	0	0	0	0	0	0	0
4/21/2024	5:30 AM	0	0	0	0	0	0	0	0	0	0	0	0	0
4/21/2024	5:45 AM	0	0	0	0	0	0	0	0	0	0	0	0	0
4/21/2024	6:00 AM	0	0	0	0	0	0	0	0	0	0	0	0	0
4/21/2024	6:15 AM	0	0	0	0	0	0	0	0	0	0	0	0	0
4/21/2024	6:30 AM	0	0	0	0	0	0	0	0	0	0	0	0	0
4/21/2024	6:45 AM	0	0	0	0	0	0	0	0	0	0	0	0	0
4/21/2024	7:00 AM	0	0	0	0	0	0	0	0	0	0	0	0	0
4/21/2024	7:15 AM	0	0	0	0	0	0	0	0	0	0	0	0	0
4/21/2024	7:30 AM	0	0	0	0	0	0	0	0	0	0	0	0	0
4/21/2024	7:45 AM	0	0	0	0	0	0	0	0	0	0	0	0	0
4/21/2024	8:00 AM	0	0	0	0	0	0	0	0	0	0	0	0	0
4/21/2024	8:15 AM	0	0	0	0	0	0	0	0	0	0	0	0	0
4/21/2024	8:30 AM	0	0	0	0	0	0	0	0	0	0	0	0	0
4/21/2024	8:45 AM	0	0	0	0	0	0	0	0	0	0	0	0	0
4/21/2024	9:00 AM	0	0	0	0	0	0	0	0	0	0	0	0	0
4/21/2024	9:15 AM	0	0	0	0	0	0	0	0	0	0	0	0	0
4/21/2024	9:30 AM	0	0	0	0	0	0	0	0	0	0	0	0	0
4/21/2024	9:45 AM	0	0	0	0	0	0	0	0	0	0	0	0	0
4/21/2024	10:00 AM	0	0	0	0	0	0	0	0	0	0	0	0	0
4/21/2024	10:15 AM	0	0	0	0	0	0	0	0	0	0	0	0	0
4/21/2024	10:30 AM	0	0	0	0	0	0	0	0	0	0	0	0	0
4/21/2024	10:45 AM	0	0	0	0	0	0	0	0	0	0	0	0	0
4/21/2024	11:00 AM	0	0	0	0	0	0	0	0	0	0	0	0	0
4/21/2024	11:15 AM	0	0	0	0	0	0	0	0	0	0	0	0	0
4/21/2024	11:30 AM	0	0	0	0	0	0	0	0	0	0	0	0	0
4/21/2024	11:45 AM	0	0	0	0	0	0	0	0	0	0	0	0	0
4/21/2024	12:00 PM	0	0	0	0	0	0	0	0	0	0	0	0	0
4/21/2024	12:15 PM	0	0	0	0	0	0	0	0	0	0	0	0	0
4/21/2024	12:30 PM	0	0	0	0	0	0	0	0	0	0	0	0	0
4/21/2024	12:45 PM	0	0	0	0	0	0	0	0	0	0	0	0	0
4/21/2024	1:00 PM	0	0	0	0	0	0	0	0	0	0	0	0	0
4/21/2024	1:15 PM	0	0	0	0	0	0	0	0	0	0	0	0	0
4/21/2024	1:30 PM	0	0	0	0	0	0	0	0	0	0	0	0	0
4/21/2024	1:45 PM	0	0	0	0	0	0	0	0	0	0	0	0	0
4/21/2024	2:00 PM	0	0	0	0	0	0	0	0	0	0	0	0	0
4/21/2024	2:15 PM	0	0	0	0	0	0	0	0	0	0	0	0	0
4/21/2024	2:30 PM	0	0	0	0	0	0	0	0	0	0	0	0	0
4/21/2024	2:45 PM	0	0	0	0	0	0	0	0	0	0	0	0	0
4/21/2024	3:00 PM	0	0	0	0	0	0	0	0	0	0	0	0	0
4/21/2024	3:15 PM	0	0	0	0	0	0	0	0	0	0	0	0	0
4/21/2024	3:30 PM	0	0	0	0	0	0	0	0	0	0	0	0	0
4/21/2024	3:45 PM	0	0	0	0	0	0	0	0	0	0	0	0	0
4/21/2024	4:00 PM	0	0	0	0	0	0	0	0	0	0	0	0	0
4/21/2024	4:15 PM	0	0	0	0	0	0	0	0	0	0	0	0	0
4/21/2024	4:30 PM	0	0	0	0	0	0	0	0	0	0	0	0	0
4/21/2024	4:45 PM	0	0	0	0	0	0	0	0	0	0	0	0	0
4/21/2024	5:00 PM	0	0	0	0	0	0	0	0	0	0	0	0	0
4/21/2024	5:15 PM	0	0	0	0	0	0	0	0	0	0	0	0	0
4/21/2024	5:30 PM	0	0	0	0	0	0	0	0	0	0	0	0	0
4/21/2024	5:45 PM	0	0	0	0	0	0	0	0	0	0	0	0	0
4/21/2024	6:00 PM	0	0	0	0	0	0	0	0	0	0	0	0	0
4/21/2024	6:15 PM	0	0	0	0	0	0	0	0	0	0	0	0	0
4/21/2024	6:30 PM	0	0	0	0	0	0	0	0	0	0	0	0	0
4/21/2024	6:45 PM	0	0	0	0	0	0	0	0	0	0	0	0	0
4/21/2024	7:00 PM	0	0	0	0	0	0	0	0	0	0	0	0	0
4/21/2024	7:15 PM	0	0	0	0	0	0	0	0	0	0	0	0	0
4/21/2024	7:30 PM	0	0	0	0	0	0	0	0	0	0	0	0	0
4/21/2024	7:45 PM	0	0	0	0	0	0	0	0	0	0	0	0	0
4/21/2024	8:00 PM	0	0	0	0	0	0	0	0	0	0	0	0	0
4/21/2024	8:15 PM	0	0	0	0	0	0	0	0	0	0	0	0	0
4/21/2024	8:30 PM	0	0	0	0	0	0	0	0	0	0	0	0	0
4/21/2024	8:45 PM	0	0	0	0	0	0	0	0	0	0	0	0	0
4/21/2024	9:00 PM	0	0	0	0	0	0	0	0	0	0	0	0	0
4/21/2024	9:15 PM	0	0	0	0	0	0	0	0	0	0	0	0	0
4/21/2024	9:30 PM	0	0	0	0	0	0	0	0	0	0	0	0	0
4/21/2024	9:45 PM	0	0	0	0	0	0	0	0	0	0	0	0	0
4/21/2024	10:00 PM	0	0	0	0	0	0	0	0	0	0	0	0	0
4/21/2024	10:15 PM	0	0	0	0	0	0	0	0	0	0	0	0	0
4/21/2024	10:30 PM	0	0	0	0	0	0	0	0	0	0	0	0	0
4/21/2024	10:45 PM	0	0	0	0	0	0	0	0	0	0	0	0	0
4/21/2024	11:00 PM	0	0	0	0	0	0	0	0	0	0	0	0	0
4/21/2024	11:15 PM	0	0	0	0	0	0	0	0	0	0	0	0	0
4/21/2024	11:30 PM	0	0	0	0	0	0	0	0	0	0	0	0	0
4/21/2024	11:45 PM	0	0	0	0	0	0	0	0	0	0	0	0	0

4/22/2024	12:00 AM	0	0	0	0	0	0	0	0	0	0	0	0	0
4/22/2024	12:15 AM	0	0	0	0	0	0	0	0	0	0	0	0	0
4/22/2024	12:30 AM	0	0	0	0	0	0	0	0	0	0	0	0	0
4/22/2024	12:45 AM	0	0	0	0	0	0	0	0	0	0	0	0	0
4/22/2024	1:00 AM	0	0	0	0	0	0	0	0	0	0	0	0	0
4/22/2024	1:15 AM	0	0	0	0	0	0	0	0	0	0	0	0	0
4/22/2024	1:30 AM	0	0	0	0	0	0	0	0	0	0	0	0	0
4/22/2024	1:45 AM	0	0	0	0	0	0	0	0	0	0	0	0	0
4/22/2024	2:00 AM	0	0	0	0	0	0	0	0	0	0	0	0	0
4/22/2024	2:15 AM	0	0	0	0	0	0	0	0	0	0	0	0	0
4/22/2024	2:30 AM	0	0	0	0	0	0	0	0	0	0	0	0	0
4/22/2024	2:45 AM	0	0	0	0	0	0	0	0	0	0	0	0	0
4/22/2024	3:00 AM	0	0	0	0	0	0	0	0	0	0	0	0	0
4/22/2024	3:15 AM	0	0	0	0	0	0	0	0	0	0	0	0	0
4/22/2024	3:30 AM	0	0	0	0	0	0	0	0	0	0	0	0	0
4/22/2024	3:45 AM	0	0	0	0	0	0	0	0	0	0	0	0	0
4/22/2024	4:00 AM	0	0	0	0	0	0	0	0	0	0	0	0	0
4/22/2024	4:15 AM	0	0	0	0	0	0	0	0	0	0	0	0	0
4/22/2024	4:30 AM	0	0	0	0	0	0	0	0	0	0	0	0	0
4/22/2024	4:45 AM	0	0	0	0	0	0	0	0	0	0	0	0	0
4/22/2024	5:00 AM	0	0	0	0	0	0	0	0	0	0	0	0	0
4/22/2024	5:15 AM	0	0	0	0	0	0	0	0	0	0	0	0	0
4/22/2024	5:30 AM	0	0	0	0	0	0	0	0	0	0	0	0	0
4/22/2024	5:45 AM	0	0	0	0	0	0	0	0	0	0	0	0	0
4/22/2024	6:00 AM	0	0	0	0	0	0	0	0	0	0	0	0	0
4/22/2024	6:15 AM	0	0	0	0	0	0	0	0	0	0	0	0	0
4/22/2024	6:30 AM	0	0	0	0	0	0	0	0	0	0	0	0	0
4/22/2024	6:45 AM	0	0	0	0	0	0	0	0	0	0	0	0	0
4/22/2024	7:00 AM	0	0	0	0	0	0	0	0	0	0	0	0	0
4/22/2024	7:15 AM	0	0	0	0	0	0	0	0	0	0	0	0	0
4/22/2024	7:30 AM	0	0	0	0	0	0	0	0	0	0	0	0	0
4/22/2024	7:45 AM	0	0	0	0	0	0	0	0	0	0	0	0	0
4/22/2024	8:00 AM	0	0	0	0	0	0	0	0	0	0	0	0	0
4/22/2024	8:15 AM	0	0	0	0	0	0	0	0	0	0	0	0	0
4/22/2024	8:30 AM	0	0	0	0	0	0	0	0	0	0	0	0	0
4/22/2024	8:45 AM	0	0	0	0	0	0	0	0	0	0	0	0	0
4/22/2024	9:00 AM	0	0	0	0	0	0	0	0	0	0	0	0	0
4/22/2024	9:15 AM	0	0	0	0	0	0	0	0	0	0	0	0	0
4/22/2024	9:30 AM	0	0	0	0	0	0	0	0	0	0	0	0	0
4/22/2024	9:45 AM	0	0	0	0	0	0	0	0	0	0	0	0	0
4/22/2024	10:00 AM	0	0	0	0	0	0	0	0	0	0	0	0	0
4/22/2024	10:15 AM	0	0	0	0	0	0	0	0	0	0	0	0	0
4/22/2024	10:30 AM	0	0	0	0	0	0	0	0	0	0	0	0	0
4/22/2024	10:45 AM	0	0	0	0	0	0	0	0	0	0	0	0	0
4/22/2024	11:00 AM	0	0	0	0	0	0	0	0	0	0	0	0	0
4/22/2024	11:15 AM	0	0	0	0	0	0	0	0	0	0	0	0	0
4/22/2024	11:30 AM	0	0	0	0	0	0	0	0	0	0	0	0	0
4/22/2024	11:45 AM	0	0	0	0	0	0	0	0	0	0	0	0	0
4/22/2024	12:00 PM	0	0	0	0	0	0	0	0	0	0	0	0	0
4/22/2024	12:15 PM	0	0	0	0	0	0	0	0	0	0	0	0	0
4/22/2024	12:30 PM	0	0	0	0	0	0	0	0	0	0	0	0	0
4/22/2024	12:45 PM	0	0	0	0	0	0	0	0	0	0	0	0	0
4/22/2024	1:00 PM	0	0	0	0	0	0	0	0	0	0	0	0	0
4/22/2024	1:15 PM	0	0	0	0	0	0	0	0	0	0	0	0	0
4/22/2024	1:30 PM	0	0	0	0	0	0	0	0	0	0	0	0	0
4/22/2024	1:45 PM	0	0	0	0	0	0	0	0	0	0	0	0	0
4/22/2024	2:00 PM	0	0	0	0	0	0	0	0	0	0	0	0	0
4/22/2024	2:15 PM	0	0	0	0	0	0	0	0	0	0	0	0	0
4/22/2024	2:30 PM	0	0	0	0	0	0	0	0	0	0	0	0	0
4/22/2024	2:45 PM	0	0	0	0	0	0	0	0	0	0	0	0	0
4/22/2024	3:00 PM	0	0	0	0	0	0	0	0	0	0	0	0	0
4/22/2024	3:15 PM	0	0	0	0	0	0	0	0	0	0	0	0	0
4/22/2024	3:30 PM	0	0	0	0	0	0	0	0	0	0	0	0	0
4/22/2024	3:45 PM	0	0	0	0	0	0	0	0	0	0	0	0	0
4/22/2024	4:00 PM	0	0	0	0	0	0	0	0	0	0	0	0	0
4/22/2024	4:15 PM	0	0	0	0	0	0	0	0	0	0	0	0	0
4/22/2024	4:30 PM	0	0	0	0	0	0	0	0	0	0	0	0	0
4/22/2024	4:45 PM	0	0	0	0	0	0	0	0	0	0	0	0	0
4/22/2024	5:00 PM	0	0	0	0	0	0	0	0	0	0	0	0	0
4/22/2024	5:15 PM	0	0	0	0	0	0	0	0	0	0	0	0	0
4/22/2024	5:30 PM	0	0	0	0	0	0	0	0	0	0	0	0	0
4/22/2024	5:45 PM	0	0	0	0	0	0	0	0	0	0	0	0	0
4/22/2024	6:00 PM	0	0	0	0	0	0	0	0	0	0	0	0	0
4/22/2024	6:15 PM	0	0	0	0	0	0	0	0	0	0	0	0	0
4/22/2024	6:30 PM	0	0	0	0	0	0	0	0	0	0	0	0	0
4/22/2024	6:45 PM	0	0	0	0	0	0	0	0	0	0	0	0	0
4/22/2024	7:00 PM	0	0	0	0	0	0	0	0	0	0	0	0	0
4/22/2024	7:15 PM	0	0	0	0	0	0	0	0	0	0	0	0	0
4/22/2024	7:30 PM	0	0	0	0	0	0	0	0	0	0	0	0	0
4/22/2024	7:45 PM	0	0	0	0	0	0	0	0	0	0	0	0	0
4/22/2024	8:00 PM	0	0	0	0	0	0	0	0	0	0	0	0	0
4/22/2024	8:15 PM	0	0	0	0	0	0	0	0	0	0	0	0	0
4/22/2024	8:30 PM	0	0	0	0	0	0	0	0	0	0	0	0	0
4/22/2024	8:45 PM	0	0	0	0	0	0	0	0	0	0	0	0	0
4/22/2024	9:00 PM	0	0	0	0	0	0	0	0	0	0	0	0	0
4/22/2024	9:15 PM	0	0	0	0	0	0	0	0	0	0	0	0	0
4/22/2024	9:30 PM	0	0	0	0	0	0	0	0	0	0	0	0	0
4/22/2024	9:45 PM	0	0	0	0	0	0	0	0	0	0	0	0	0
4/22/2024	10:00 PM	0	0	0	0	0	0	0	0	0	0	0	0	0
4/22/2024	10:15 PM	0	0	0	0	0	0	0	0	0	0	0	0	0
4/22/2024	10:30 PM	0	0	0	0	0	0	0	0	0	0	0	0	0
4/22/2024	10:45 PM	0	0	0	0	0	0	0	0	0	0	0	0	0
4/22/2024	11:00 PM	0	0	0	0	0	0	0	0	0	0	0	0	0
4/22/2024	11:15 PM	0	0	0	0	0	0	0	0	0	0	0	0	0
4/22/2024	11:30 PM	0	0	0	0	0	0	0	0	0	0	0	0	0
4/22/2024	11:45 PM	0	0	0	0	0	0	0	0	0	0	0	0	0

4/23/2024	12:00 AM	0	0	0	0	0	0	0	0	0	0	0	0	0
4/23/2024	12:15 AM	0	0	0	0	0	0	0	0	0	0	0	0	0
4/23/2024	12:30 AM	0	0	0	0	0	0	0	0	0	0	0	0	0
4/23/2024	12:45 AM	0	0	0	0	0	0	0	0	0	0	0	0	0
4/23/2024	1:00 AM	0	0	0	0	0	0	0	0	0	0	0	0	0
4/23/2024	1:15 AM	0	0	0	0	0	0	0	0	0	0	0	0	0
4/23/2024	1:30 AM	0	0	0	0	0	0	0	0	0	0	0	0	0
4/23/2024	1:45 AM	0	0	0	0	0	0	0	0	0	0	0	0	0
4/23/2024	2:00 AM	0	0	0	0	0	0	0	0	0	0	0	0	0
4/23/2024	2:15 AM	0	0	0	0	0	0	0	0	0	0	0	0	0
4/23/2024	2:30 AM	0	0	0	0	0	0	0	0	0	0	0	0	0
4/23/2024	2:45 AM	0	0	0	0	0	0	0	0	0	0	0	0	0
4/23/2024	3:00 AM	0	0	0	0	0	0	0	0	0	0	0	0	0
4/23/2024	3:15 AM	0	0	0	0	0	0	0	0	0	0	0	0	0
4/23/2024	3:30 AM	0	0	0	0	0	0	0	0	0	0	0	0	0
4/23/2024	3:45 AM	0	0	0	0	0	0	0	0	0	0	0	0	0
4/23/2024	4:00 AM	0	0	0	0	0	0	0	0	0	0	0	0	0
4/23/2024	4:15 AM	0	0	0	0	0	0	0	0	0	0	0	0	0
4/23/2024	4:30 AM	0	0	0	0	0	0	0	0	0	0	0	0	0
4/23/2024	4:45 AM	0	0	0	0	0	0	0	0	0	0	0	0	0
4/23/2024	5:00 AM	0	0	0	0	0	0	0	0	0	0	0	0	0
4/23/2024	5:15 AM	0	0	0	0	0	0	0	0	0	0	0	0	0
4/23/2024	5:30 AM	0	0	0	0	0	0	0	0	0	0	0	0	0
4/23/2024	5:45 AM	0	0	0	0	0	0	0	0	0	0	0	0	0
4/23/2024	6:00 AM	0	0	0	0	0	0	0	0	0	0	0	0	0
4/23/2024	6:15 AM	0	0	0	0	0	0	0	0	0	0	0	0	0
4/23/2024	6:30 AM	0	0	0	0	0	0	0	0	0	0	0	0	0
4/23/2024	6:45 AM	0	0	0	0	0	0	0	0	0	0	0	0	0
4/23/2024	7:00 AM	0	0	0	0	0	0	0	0	0	0	0	0	0
4/23/2024	7:15 AM	0	0	0	0	0	0	0	0	0	0	0	0	0
4/23/2024	7:30 AM	0	0	0	0	0	0	0	0	0	0	0	0	0
4/23/2024	7:45 AM	0	0	0	0	0	0	0	0	0	0	0	0	0
4/23/2024	8:00 AM	0	0	0	0	0	0	0	0	0	0	0	0	0
4/23/2024	8:15 AM	0	0	0	0	0	0	0	0	0	0	0	0	0
4/23/2024	8:30 AM	0	0	0	0	0	0	0	0	0	0	0	0	0
4/23/2024	8:45 AM	0	0	0	0	0	0	0	0	0	0	0	0	0
4/23/2024	9:00 AM	0	0	0	0	0	0	0	0	0	0	0	0	0
4/23/2024	9:15 AM	0	0	0	0	0	0	0	0	0	0	0	0	0
4/23/2024	9:30 AM	0	0	0	0	0	0	0	0	0	0	0	0	0
4/23/2024	9:45 AM	0	0	0	0	0	0	0	0	0	0	0	0	0
4/23/2024	10:00 AM	0	0	0	0	0	0	0	0	0	0	0	0	0
4/23/2024	10:15 AM	0	0	0	0	0	0	0	0	0	0	0	0	0
4/23/2024	10:30 AM	0	0	0	0	0	0	0	0	0	0	0	0	0
4/23/2024	10:45 AM	0	0	0	0	0	0	0	0	0	0	0	0	0
4/23/2024	11:00 AM	0	0	0	0	0	0	0	0	0	0	0	0	0
4/23/2024	11:15 AM	0	0	0	0	0	0	0	0	0	0	0	0	0
4/23/2024	11:30 AM	0	0	0	0	0	0	0	0	0	0	0	0	0
4/23/2024	11:45 AM	0	0	0	0	0	0	0	0	0	0	0	0	0
4/23/2024	12:00 PM	0	0	0	0	0	0	0	0	0	0	0	0	0
4/23/2024	12:15 PM	0	0	0	0	0	0	0	0	0	0	0	0	0
4/23/2024	12:30 PM	0	0	0	0	0	0	0	0	0	0	0	0	0
4/23/2024	12:45 PM	0	0	0	0	0	0	0	0	0	0	0	0	0
4/23/2024	1:00 PM	0	0	0	0	0	0	0	0	0	0	0	0	0
4/23/2024	1:15 PM	0	0	0	0	0	0	0	0	0	0	0	0	0
4/23/2024	1:30 PM	0	0	0	0	0	0	0	0	0	0	0	0	0
4/23/2024	1:45 PM	0	0	0	0	0	0	0	0	0	0	0	0	0
4/23/2024	2:00 PM	0	0	0	0	0	0	0	0	0	0	0	0	0
4/23/2024	2:15 PM	0	0	0	0	0	0	0	0	0	0	0	0	0
4/23/2024	2:30 PM	0	0	0	0	0	0	0	0	0	0	0	0	0
4/23/2024	2:45 PM	0	0	0	0	0	0	0	0	0	0	0	0	0
4/23/2024	3:00 PM	0	0	0	0	0	0	0	0	0	0	0	0	0
4/23/2024	3:15 PM	0	0	0	0	0	0	0	0	0	0	0	0	0
4/23/2024	3:30 PM	0	0	0	0	0	0	0	0	0	0	0	0	0
4/23/2024	3:45 PM	0	0	0	0	0	0	0	0	0	0	0	0	0
4/23/2024	4:00 PM	0	0	0	0	0	0	0	0	0	0	0	0	0
4/23/2024	4:15 PM	0	0	0	0	0	0	0	0	0	0	0	0	0
4/23/2024	4:30 PM	0	0	0	0	0	0	0	0	0	0	0	0	0
4/23/2024	4:45 PM	0	0	0	0	0	0	0	0	0	0	0	0	0
4/23/2024	5:00 PM	0	0	0	0	0	0	0	0	0	0	0	0	0
4/23/2024	5:15 PM	0	0	0	0	0	0	0	0	0	0	0	0	0
4/23/2024	5:30 PM	0	0	0	0	0	0	0	0	0	0	0	0	0
4/23/2024	5:45 PM	0	0	0	0	0	0	0	0	0	0	0	0	0
4/23/2024	6:00 PM	0	0	0	0	0	0	0	0	0	0	0	0	0
4/23/2024	6:15 PM	0	0	0	0	0	0	0	0	0	0	0	0	0
4/23/2024	6:30 PM	0	0	0	0	0	0	0	0	0	0	0	0	0
4/23/2024	6:45 PM	0	0	0	0	0	0	0	0	0	0	0	0	0
4/23/2024	7:00 PM	0	0	0	0	0	0	0	0	0	0	0	0	0
4/23/2024	7:15 PM	0	0	0	0	0	0	0	0	0	0	0	0	0
4/23/2024	7:30 PM	0	0	0	0	0	0	0	0	0	0	0	0	0
4/23/2024	7:45 PM	0	0	0	0	0	0	0	0	0	0	0	0	0
4/23/2024	8:00 PM	0	0	0	0	0	0	0	0	0	0	0	0	0
4/23/2024	8:15 PM	0	0	0	0	0	0	0	0	0	0	0	0	0
4/23/2024	8:30 PM	0	0	0	0	0	0	0	0	0	0	0	0	0
4/23/2024	8:45 PM	0	0	0	0	0	0	0	0	0	0	0	0	0
4/23/2024	9:00 PM	0	0	0	0	0	0	0	0	0	0	0	0	0
4/23/2024	9:15 PM	0	0	0	0	0	0	0	0	0	0	0	0	0
4/23/2024	9:30 PM	0	0	0	0	0	0	0	0	0	0	0	0	0
4/23/2024	9:45 PM	0	0	0	0	0	0	0	0	0	0	0	0	0
4/23/2024	10:00 PM	0	0	0	0	0	0	0	0	0	0	0	0	0
4/23/2024	10:15 PM	0	0	0	0	0	0	0	0	0	0	0	0	0
4/23/2024	10:30 PM	0	0	0	0	0	0	0	0	0	0	0	0	0
4/23/2024	10:45 PM	0	0	0	0	0	0	0	0	0	0	0	0	0
4/23/2024	11:00 PM	0	0	0	0	0	0	0	0	0	0	0	0	0
4/23/2024	11:15 PM	0	0	0	0	0	0	0	0	0	0	0	0	0
4/23/2024	11:30 PM	0	0	0	0	0	0	0	0	0	0	0	0	0
4/23/2024	11:45 PM	0	0	0	0	0	0	0	0	0	0	0	0	0

4/24/2024	12:00 AM	0	0	0	0	0	0	0	0	0	0	0	0	0
4/24/2024	12:15 AM	0	0	0	0	0	0	0	0	0	0	0	0	0
4/24/2024	12:30 AM	0	0	0	0	0	0	0	0	0	0	0	0	0
4/24/2024	12:45 AM	0	0	0	0	0	0	0	0	0	0	0	0	0
4/24/2024	1:00 AM	0	0	0	0	0	0	0	0	0	0	0	0	0
4/24/2024	1:15 AM	0	0	0	0	0	0	0	0	0	0	0	0	0
4/24/2024	1:30 AM	0	0	0	0	0	0	0	0	0	0	0	0	0
4/24/2024	1:45 AM	0	0	0	0	0	0	0	0	0	0	0	0	0
4/24/2024	2:00 AM	0	0	0	0	0	0	0	0	0	0	0	0	0
4/24/2024	2:15 AM	0	0	0	0	0	0	0	0	0	0	0	0	0
4/24/2024	2:30 AM	0	0	0	0	0	0	0	0	0	0	0	0	0
4/24/2024	2:45 AM	0	0	0	0	0	0	0	0	0	0	0	0	0
4/24/2024	3:00 AM	0	0	0	0	0	0	0	0	0	0	0	0	0
4/24/2024	3:15 AM	0	0	0	0	0	0	0	0	0	0	0	0	0
4/24/2024	3:30 AM	0	0	0	0	0	0	0	0	0	0	0	0	0
4/24/2024	3:45 AM	0	0	0	0	0	0	0	0	0	0	0	0	0
4/24/2024	4:00 AM	0	0	0	0	0	0	0	0	0	0	0	0	0
4/24/2024	4:15 AM	0	0	0	0	0	0	0	0	0	0	0	0	0
4/24/2024	4:30 AM	0	0	0	0	0	0	0	0	0	0	0	0	0
4/24/2024	4:45 AM	0	0	0	0	0	0	0	0	0	0	0	0	0
4/24/2024	5:00 AM	0	0	0	0	0	0	0	0	0	0	0	0	0
4/24/2024	5:15 AM	0	0	0	0	0	0	0	0	0	0	0	0	0
4/24/2024	5:30 AM	0	0	0	0	0	0	0	0	0	0	0	0	0
4/24/2024	5:45 AM	0	0	0	0	0	0	0	0	0	0	0	0	0
4/24/2024	6:00 AM	0	0	0	0	0	0	0	0	0	0	0	0	0
4/24/2024	6:15 AM	0	0	0	0	0	0	0	0	0	0	0	0	0
4/24/2024	6:30 AM	0	0	0	0	0	0	0	0	0	0	0	0	0
4/24/2024	6:45 AM	0	0	0	0	0	0	0	0	0	0	0	0	0
4/24/2024	7:00 AM	0	0	0	0	0	0	0	0	0	0	0	0	0
4/24/2024	7:15 AM	0	0	0	0	0	0	0	0	0	0	0	0	0
4/24/2024	7:30 AM	0	0	0	0	0	0	0	0	0	0	0	0	0
4/24/2024	7:45 AM	0	0	0	0	0	0	0	0	0	0	0	0	0
4/24/2024	8:00 AM	0	0	0	0	0	0	0	0	0	0	0	0	0
4/24/2024	8:15 AM	0	0	0	0	0	0	0	0	0	0	0	0	0
4/24/2024	8:30 AM	0	0	0	0	0	0	0	0	0	0	0	0	0
4/24/2024	8:45 AM	0	0	0	0	0	0	0	0	0	0	0	0	0
4/24/2024	9:00 AM	0	0	0	0	0	0	0	0	0	0	0	0	0
4/24/2024	9:15 AM	0	0	0	0	0	0	0	0	0	0	0	0	0
4/24/2024	9:30 AM	0	0	0	0	0	0	0	0	0	0	0	0	0
4/24/2024	9:45 AM	0	0	0	0	0	0	0	0	0	0	0	0	0
4/24/2024	10:00 AM	0	0	0	0	0	0	0	0	0	0	0	0	0
4/24/2024	10:15 AM	0	0	0	0	0	0	0	0	0	0	0	0	0
4/24/2024	10:30 AM	0	0	0	0	0	0	0	0	0	0	0	0	0
4/24/2024	10:45 AM	0	0	0	0	0	0	0	0	0	0	0	0	0
4/24/2024	11:00 AM	0	0	0	0	0	0	0	0	0	0	0	0	0
4/24/2024	11:15 AM	0	0	0	0	0	0	0	0	0	0	0	0	0
4/24/2024	11:30 AM	0	0	0	0	0	0	0	0	0	0	0	0	0
4/24/2024	11:45 AM	0	0	0	0	0	0	0	0	0	0	0	0	0
4/24/2024	12:00 PM	0	0	0	0	0	0	0	0	0	0	0	0	0
4/24/2024	12:15 PM	0	0	0	0	0	0	0	0	0	0	0	0	0
4/24/2024	12:30 PM	0	0	0	0	0	0	0	0	0	0	0	0	0
4/24/2024	12:45 PM	0	0	0	0	0	0	0	0	0	0	0	0	0
4/24/2024	1:00 PM	0	0	0	0	0	0	0	0	0	0	0	0	0
4/24/2024	1:15 PM	0	0	0	0	0	0	0	0	0	0	0	0	0
4/24/2024	1:30 PM	0	0	0	0	0	0	0	0	0	0	0	0	0
4/24/2024	1:45 PM	0	0	0	0	0	0	0	0	0	0	0	0	0
4/24/2024	2:00 PM	0	0	0	0	0	0	0	0	0	0	0	0	0
4/24/2024	2:15 PM	0	0	0	0	0	0	0	0	0	0	0	0	0
4/24/2024	2:30 PM	0	0	0	0	0	0	0	0	0	0	0	0	0
4/24/2024	2:45 PM	0	0	0	0	0	0	0	0	0	0	0	0	0
4/24/2024	3:00 PM	0	0	0	0	0	0	0	0	0	0	0	0	0
4/24/2024	3:15 PM	0	0	0	0	0	0	0	0	0	0	0	0	0
4/24/2024	3:30 PM	0	0	0	0	0	0	0	0	0	0	0	0	0
4/24/2024	3:45 PM	0	0	0	0	0	0	0	0	0	0	0	0	0
4/24/2024	4:00 PM	0	0	0	0	0	0	0	0	0	0	0	0	0
4/24/2024	4:15 PM	0	0	0	0	0	0	0	0	0	0	0	0	0
4/24/2024	4:30 PM	0	0	0	0	0	0	0	0	0	0	0	0	0
4/24/2024	4:45 PM	0	0	0	0	0	0	0	0	0	0	0	0	0
4/24/2024	5:00 PM	0	0	0	0	0	0	0	0	0	0	0	0	0
4/24/2024	5:15 PM	0	0	0	0	0	0	0	0	0	0	0	0	0
4/24/2024	5:30 PM	0	0	0	0	0	0	0	0	0	0	0	0	0
4/24/2024	5:45 PM	0	0	0	0	0	0	0	0	0	0	0	0	0
4/24/2024	6:00 PM	0	0	0	0	0	0	0	0	0	0	0	0	0
4/24/2024	6:15 PM	0	0	0	0	0	0	0	0	0	0	0	0	0
4/24/2024	6:30 PM	0	0	0	0	0	0	0	0	0	0	0	0	0
4/24/2024	6:45 PM	0	0	0	0	0	0	0	0	0	0	0	0	0
4/24/2024	7:00 PM	0	0	0	0	0	0	0	0	0	0	0	0	0
4/24/2024	7:15 PM	0	0	0	0	0	0	0	0	0	0	0	0	0
4/24/2024	7:30 PM	0	0	0	0	0	0	0	0	0	0	0	0	0
4/24/2024	7:45 PM	0	0	0	0	0	0	0	0	0	0	0	0	0
4/24/2024	8:00 PM	0	0	0	0	0	0	0	0	0	0	0	0	0
4/24/2024	8:15 PM	0	0	0	0	0	0	0	0	0	0	0	0	0
4/24/2024	8:30 PM	0	0	0	0	0	0	0	0	0	0	0	0	0
4/24/2024	8:45 PM	0	0	0	0	0	0	0	0	0	0	0	0	0
4/24/2024	9:00 PM	0	0	0	0	0	0	0	0	0	0	0	0	0
4/24/2024	9:15 PM	0	0	0	0	0	0	0	0	0	0	0	0	0
4/24/2024	9:30 PM	0	0	0	0	0	0	0	0	0	0	0	0	0
4/24/2024	9:45 PM	0	0	0	0	0	0	0	0	0	0	0	0	0
4/24/2024	10:00 PM	0	0	0	0	0	0	0	0	0	0	0	0	0
4/24/2024	10:15 PM	0	0	0	0	0	0	0	0	0	0	0	0	0
4/24/2024	10:30 PM	0	0	0	0	0	0	0	0	0	0	0	0	0
4/24/2024	10:45 PM	0	0	0	0	0	0	0	0	0	0	0	0	0
4/24/2024	11:00 PM	0	0	0	0	0	0	0	0	0	0	0	0	0
4/24/2024	11:15 PM	0	0	0	0	0	0	0	0	0	0	0	0	0
4/24/2024	11:30 PM	0	0	0	0	0	0	0	0	0	0	0	0	0
4/24/2024	11:45 PM	0	0	0	0	0	0	0	0	0	0	0	0	0

4/25/2024	12:00 AM	0	0	0	0	0	0	0	0	0	0	0	0	0
4/25/2024	12:15 AM	0	0	0	0	0	0	0	0	0	0	0	0	0
4/25/2024	12:30 AM	0	0	0	0	0	0	0	0	0	0	0	0	0
4/25/2024	12:45 AM	0	0	0	0	0	0	0	0	0	0	0	0	0
4/25/2024	1:00 AM	0	0	0	0	0	0	0	0	0	0	0	0	0
4/25/2024	1:15 AM	0	0	0	0	0	0	0	0	0	0	0	0	0
4/25/2024	1:30 AM	0	0	0	0	0	0	0	0	0	0	0	0	0
4/25/2024	1:45 AM	0	0	0	0	0	0	0	0	0	0	0	0	0
4/25/2024	2:00 AM	0	0	0	0	0	0	0	0	0	0	0	0	0
4/25/2024	2:15 AM	0	0	0	0	0	0	0	0	0	0	0	0	0
4/25/2024	2:30 AM	0	0	0	0	0	0	0	0	0	0	0	0	0
4/25/2024	2:45 AM	0	0	0	0	0	0	0	0	0	0	0	0	0
4/25/2024	3:00 AM	0	0	0	0	0	0	0	0	0	0	0	0	0
4/25/2024	3:15 AM	0	0	0	0	0	0	0	0	0	0	0	0	0
4/25/2024	3:30 AM	0	0	0	0	0	0	0	0	0	0	0	0	0
4/25/2024	3:45 AM	0	0	0	0	0	0	0	0	0	0	0	0	0
4/25/2024	4:00 AM	0	0	0	0	0	0	0	0	0	0	0	0	0
4/25/2024	4:15 AM	0	0	0	0	0	0	0	0	0	0	0	0	0
4/25/2024	4:30 AM	0	0	0	0	0	0	0	0	0	0	0	0	0
4/25/2024	4:45 AM	0	0	0	0	0	0	0	0	0	0	0	0	0
4/25/2024	5:00 AM	0	0	0	0	0	0	0	0	0	0	0	0	0
4/25/2024	5:15 AM	0	0	0	0	0	0	0	0	0	0	0	0	0
4/25/2024	5:30 AM	0	0	0	0	0	0	0	0	0	0	0	0	0
4/25/2024	5:45 AM	0	0	0	0	0	0	0	0	0	0	0	0	0
4/25/2024	6:00 AM	0	0	0	0	0	0	0	0	0	0	0	0	0
4/25/2024	6:15 AM	0	0	0	0	0	0	0	0	0	0	0	0	0
4/25/2024	6:30 AM	0	0	0	0	0	0	0	0	0	0	0	0	0
4/25/2024	6:45 AM	0	0	0	0	0	0	0	0	0	0	0	0	0
4/25/2024	7:00 AM	0	0	0	0	0	0	0	0	0	0	0	0	0
4/25/2024	7:15 AM	0	0	0	0	0	0	0	0	0	0	0	0	0
4/25/2024	7:30 AM	0	0	0	0	0	0	0	0	0	0	0	0	0
4/25/2024	7:45 AM	0	0	0	0	0	0	0	0	0	0	0	0	0
4/25/2024	8:00 AM	0	0	0	0	0	0	0	0	0	0	0	0	0
4/25/2024	8:15 AM	0	0	0	0	0	0	0	0	0	0	0	0	0
4/25/2024	8:30 AM	0	0	0	0	0	0	0	0	0	0	0	0	0
4/25/2024	8:45 AM	0	0	0	0	0	0	0	0	0	0	0	0	0
4/25/2024	9:00 AM	0	0	0	0	0	0	0	0	0	0	0	0	0
4/25/2024	9:15 AM	0	0	0	0	0	0	0	0	0	0	0	0	0
4/25/2024	9:30 AM	0	0	0	0	0	0	0	0	0	0	0	0	0
4/25/2024	9:45 AM	0	0	0	0	0	0	0	0	0	0	0	0	0
4/25/2024	10:00 AM	0	0	0	0	0	0	0	0	0	0	0	0	0
4/25/2024	10:15 AM	0	0	0	0	0	0	0	0	0	0	0	0	0
4/25/2024	10:30 AM	0	0	0	0	0	0	0	0	0	0	0	0	0
4/25/2024	10:45 AM	0	0	0	0	0	0	0	0	0	0	0	0	0
4/25/2024	11:00 AM	0	0	0	0	0	0	0	0	0	0	0	0	0
4/25/2024	11:15 AM	0	0	0	0	0	0	0	0	0	0	0	0	0
4/25/2024	11:30 AM	0	0	0	0	0	0	0	0	0	0	0	0	0
4/25/2024	11:45 AM	0	0	0	0	0	0	0	0	0	0	0	0	0
4/25/2024	12:00 PM	0	0	0	0	0	0	0	0	0	0	0	0	0
4/25/2024	12:15 PM	0	0	0	0	0	0	0	0	0	0	0	0	0
4/25/2024	12:30 PM	0	0	0	0	0	0	0	0	0	0	0	0	0
4/25/2024	12:45 PM	0	0	0	0	0	0	0	0	0	0	0	0	0
4/25/2024	1:00 PM	0	0	0	0	0	0	0	0	0	0	0	0	0
4/25/2024	1:15 PM	0	0	0	0	0	0	0	0	0	0	0	0	0
4/25/2024	1:30 PM	0	0	0	0	0	0	0	0	0	0	0	0	0
4/25/2024	1:45 PM	0	0	0	0	0	0	0	0	0	0	0	0	0
4/25/2024	2:00 PM	0	0	0	0	0	0	0	0	0	0	0	0	0
4/25/2024	2:15 PM	0	0	0	0	0	0	0	0	0	0	0	0	0
4/25/2024	2:30 PM	0	0	0	0	0	0	0	0	0	0	0	0	0
4/25/2024	2:45 PM	0	0	0	0	0	0	0	0	0	0	0	0	0
4/25/2024	3:00 PM	0	0	0	0	0	0	0	0	0	0	0	0	0
4/25/2024	3:15 PM	0	0	0	0	0	0	0	0	0	0	0	0	0
4/25/2024	3:30 PM	0	0	0	0	0	0	0	0	0	0	0	0	0
4/25/2024	3:45 PM	0	0	0	0	0	0	0	0	0	0	0	0	0
4/25/2024	4:00 PM	0	0	0	0	0	0	0	0	0	0	0	0	0
4/25/2024	4:15 PM	0	0	0	0	0	0	0	0	0	0	0	0	0
4/25/2024	4:30 PM	0	0	0	0	0	0	0	0	0	0	0	0	0
4/25/2024	4:45 PM	0	0	0	0	0	0	0	0	0	0	0	0	0
4/25/2024	5:00 PM	0	0	0	0	0	0	0	0	0	0	0	0	0
4/25/2024	5:15 PM	0	0	0	0	0	0	0	0	0	0	0	0	0
4/25/2024	5:30 PM	0	0	0	0	0	0	0	0	0	0	0	0	0
4/25/2024	5:45 PM	0	0	0	0	0	0	0	0	0	0	0	0	0
4/25/2024	6:00 PM	0	0	0	0	0	0	0	0	0	0	0	0	0
4/25/2024	6:15 PM	0	0	0	0	0	0	0	0	0	0	0	0	0
4/25/2024	6:30 PM	0	0	0	0	0	0	0	0	0	0	0	0	0
4/25/2024	6:45 PM	0	0	0	0	0	0	0	0	0	0	0	0	0
4/25/2024	7:00 PM	0	0	0	0	0	0	0	0	0	0	0	0	0
4/25/2024	7:15 PM	0	0	0	0	0	0	0	0	0	0	0	0	0
4/25/2024	7:30 PM	0	0	0	0	0	0	0	0	0	0	0	0	0
4/25/2024	7:45 PM	0	0	0	0	0	0	0	0	0	0	0	0	0
4/25/2024	8:00 PM	0	0	0	0	0	0	0	0	0	0	0	0	0
4/25/2024	8:15 PM	0	0	0	0	0	0	0	0	0	0	0	0	0
4/25/2024	8:30 PM	0	0	0	0	0	0	0	0	0	0	0	0	0
4/25/2024	8:45 PM	0	0	0	0	0	0	0	0	0	0	0	0	0
4/25/2024	9:00 PM	0	0	0	0	0	0	0	0	0	0	0	0	0
4/25/2024	9:15 PM	0	0	0	0	0	0	0	0	0	0	0	0	0
4/25/2024	9:30 PM	0	0	0	0	0	0	0	0	0	0	0	0	0
4/25/2024	9:45 PM	0	0	0	0	0	0	0	0	0	0	0	0	0
4/25/2024	10:00 PM	0	0	0	0	0	0	0	0	0	0	0	0	0
4/25/2024	10:15 PM	0	0	0	0	0	0	0	0	0	0	0	0	0
4/25/2024	10:30 PM	0	0	0	0	0	0	0	0	0	0	0	0	0
4/25/2024	10:45 PM	0	0	0	0	0	0	0	0	0	0	0	0	0
4/25/2024	11:00 PM	0	0	0	0	0	0	0	0	0	0	0	0	0
4/25/2024	11:15 PM	0	0	0	0	0	0	0	0	0	0	0	0	0
4/25/2024	11:30 PM	0	0	0	0	0	0	0	0	0	0	0	0	0
4/25/2024	11:45 PM	0	0	0	0	0	0	0	0	0	0	0	0	0

4/26/2024	12:00 AM	0	0	0	0	0	0	0	0	0	0	0	0	0
4/26/2024	12:15 AM	0	0	0	0	0	0	0	0	0	0	0	0	0
4/26/2024	12:30 AM	0	0	0	0	0	0	0	0	0	0	0	0	0
4/26/2024	12:45 AM	0	0	0	0	0	0	0	0	0	0	0	0	0
4/26/2024	1:00 AM	0	0	0	0	0	0	0	0	0	0	0	0	0
4/26/2024	1:15 AM	0	0	0	0	0	0	0	0	0	0	0	0	0
4/26/2024	1:30 AM	0	0	0	0	0	0	0	0	0	0	0	0	0
4/26/2024	1:45 AM	0	0	0	0	0	0	0	0	0	0	0	0	0
4/26/2024	2:00 AM	0	0	0	0	0	0	0	0	0	0	0	0	0
4/26/2024	2:15 AM	0	0	0	0	0	0	0	0	0	0	0	0	0
4/26/2024	2:30 AM	0	0	0	0	0	0	0	0	0	0	0	0	0
4/26/2024	2:45 AM	0	0	0	0	0	0	0	0	0	0	0	0	0
4/26/2024	3:00 AM	0	0	0	0	0	0	0	0	0	0	0	0	0
4/26/2024	3:15 AM	0	0	0	0	0	0	0	0	0	0	0	0	0
4/26/2024	3:30 AM	0	0	0	0	0	0	0	0	0	0	0	0	0
4/26/2024	3:45 AM	0	0	0	0	0	0	0	0	0	0	0	0	0
4/26/2024	4:00 AM	0	0	0	0	0	0	0	0	0	0	0	0	0
4/26/2024	4:15 AM	0	0	0	0	0	0	0	0	0	0	0	0	0
4/26/2024	4:30 AM	0	0	0	0	0	0	0	0	0	0	0	0	0
4/26/2024	4:45 AM	0	0	0	0	0	0	0	0	0	0	0	0	0
4/26/2024	5:00 AM	0	0	0	0	0	0	0	0	0	0	0	0	0
4/26/2024	5:15 AM	0	0	0	0	0	0	0	0	0	0	0	0	0
4/26/2024	5:30 AM	0	0	0	0	0	0	0	0	0	0	0	0	0
4/26/2024	5:45 AM	0	0	0	0	0	0	0	0	0	0	0	0	0
4/26/2024	6:00 AM	0	0	0	0	0	0	0	0	0	0	0	0	0
4/26/2024	6:15 AM	0	0	0	0	0	0	0	0	0	0	0	0	0
4/26/2024	6:30 AM	0	0	0	0	0	0	0	0	0	0	0	0	0
4/26/2024	6:45 AM	0	0	0	0	0	0	0	0	0	0	0	0	0
4/26/2024	7:00 AM	0	0	0	0	0	0	0	0	0	0	0	0	0
4/26/2024	7:15 AM	0	0	0	0	0	0	0	0	0	0	0	0	0
4/26/2024	7:30 AM	0	0	0	0	0	0	0	0	0	0	0	0	0
4/26/2024	7:45 AM	0	0	0	0	0	0	0	0	0	0	0	0	0
4/26/2024	8:00 AM	0	0	0	0	0	0	0	0	0	0	0	0	0
4/26/2024	8:15 AM	0	0	0	0	0	0	0	0	0	0	0	0	0
4/26/2024	8:30 AM	0	0	0	0	0	0	0	0	0	0	0	0	0
4/26/2024	8:45 AM	0	0	0	0	0	0	0	0	0	0	0	0	0
4/26/2024	9:00 AM	0	0	0	0	0	0	0	0	0	0	0	0	0
4/26/2024	9:15 AM	0	0	0	0	0	0	0	0	0	0	0	0	0
4/26/2024	9:30 AM	0	0	0	0	0	0	0	0	0	0	0	0	0
4/26/2024	9:45 AM	0	0	0	0	0	0	0	0	0	0	0	0	0
4/26/2024	10:00 AM	0	0	0	0	0	0	0	0	0	0	0	0	0
4/26/2024	10:15 AM	0	0	0	0	0	0	0	0	0	0	0	0	0
4/26/2024	10:30 AM	0	0	0	0	0	0	0	0	0	0	0	0	0
4/26/2024	10:45 AM	0	0	0	0	0	0	0	0	0	0	0	0	0
4/26/2024	11:00 AM	0	0	0	0	0	0	0	0	0	0	0	0	0
4/26/2024	11:15 AM	0	0	0	0	0	0	0	0	0	0	0	0	0
4/26/2024	11:30 AM	0	0	0	0	0	0	0	0	0	0	0	0	0
4/26/2024	11:45 AM	0	0	0	0	0	0	0	0	0	0	0	0	0
4/26/2024	12:00 PM	0	0	0	0	0	0	0	0	0	0	0	0	0
4/26/2024	12:15 PM	0	0	0	0	0	0	0	0	0	0	0	0	0
4/26/2024	12:30 PM	0	0	0	0	0	0	0	0	0	0	0	0	0
4/26/2024	12:45 PM	0	0	0	0	0	0	0	0	0	0	0	0	0
4/26/2024	1:00 PM	0	0	0	0	0	0	0	0	0	0	0	0	0
4/26/2024	1:15 PM	0	0	0	0	0	0	0	0	0	0	0	0	0
4/26/2024	1:30 PM	0	0	0	0	0	0	0	0	0	0	0	0	0
4/26/2024	1:45 PM	0	0	0	0	0	0	0	0	0	0	0	0	0
4/26/2024	2:00 PM	0	0	0	0	0	0	0	0	0	0	0	0	0
4/26/2024	2:15 PM	0	0	0	0	0	0	0	0	0	0	0	0	0
4/26/2024	2:30 PM	0	0	0	0	0	0	0	0	0	0	0	0	0
4/26/2024	2:45 PM	0	0	0	0	0	0	0	0	0	0	0	0	0
4/26/2024	3:00 PM	0	0	0	0	0	0	0	0	0	0	0	0	0
4/26/2024	3:15 PM	0	0	0	0	0	0	0	0	0	0	0	0	0
4/26/2024	3:30 PM	0	0	0	0	0	0	0	0	0	0	0	0	0
4/26/2024	3:45 PM	0	0	0	0	0	0	0	0	0	0	0	0	0
4/26/2024	4:00 PM	0	0	0	0	0	0	0	0	0	0	0	0	0
4/26/2024	4:15 PM	0	0	0	0	0	0	0	0	0	0	0	0	0
4/26/2024	4:30 PM	0	0	0	0	0	0	0	0	0	0	0	0	0
4/26/2024	4:45 PM	0	0	0	0	0	0	0	0	0	0	0	0	0
4/26/2024	5:00 PM	0	0	0	0	0	0	0	0	0	0	0	0	0
4/26/2024	5:15 PM	0	0	0	0	0	0	0	0	0	0	0	0	0
4/26/2024	5:30 PM	0	0	0	0	0	0	0	0	0	0	0	0	0
4/26/2024	5:45 PM	0	0	0	0	0	0	0	0	0	0	0	0	0
4/26/2024	6:00 PM	0	0	0	0	0	0	0	0	0	0	0	0	0
4/26/2024	6:15 PM	0	0	0	0	0	0	0	0	0	0	0	0	0
4/26/2024	6:30 PM	0	0	0	0	0	0	0	0	0	0	0	0	0
4/26/2024	6:45 PM	0	0	0	0	0	0	0	0	0	0	0	0	0
4/26/2024	7:00 PM	0	0	0	0	0	0	0	0	0	0	0	0	0
4/26/2024	7:15 PM	0	0	0	0	0	0	0	0	0	0	0	0	0
4/26/2024	7:30 PM	0	0	0	0	0	0	0	0	0	0	0	0	0
4/26/2024	7:45 PM	0	0	0	0	0	0	0	0	0	0	0	0	0
4/26/2024	8:00 PM	0	0	0	0	0	0	0	0	0	0	0	0	0
4/26/2024	8:15 PM	0	0	0	0	0	0	0	0	0	0	0	0	0
4/26/2024	8:30 PM	0	0	0	0	0	0	0	0	0	0	0	0	0
4/26/2024	8:45 PM	0	0	0	0	0	0	0	0	0	0	0	0	0
4/26/2024	9:00 PM	0	0	0	0	0	0	0	0	0	0	0	0	0
4/26/2024	9:15 PM	0	0	0	0	0	0	0	0	0	0	0	0	0
4/26/2024	9:30 PM	0	0	0	0	0	0	0	0	0	0	0	0	0
4/26/2024	9:45 PM	0	0	0	0	0	0	0	0	0	0	0	0	0
4/26/2024	10:00 PM	0	0	0	0	0	0	0	0	0	0	0	0	0
4/26/2024	10:15 PM	0	0	0	0	0	0	0	0	0	0	0	0	0
4/26/2024	10:30 PM	0	0	0	0	0	0	0	0	0	0	0	0	0
4/26/2024	10:45 PM	0	0	0	0	0	0	0	0	0	0	0	0	0
4/26/2024	11:00 PM	0	0	0	0	0	0	0	0	0	0	0	0	0
4/26/2024	11:15 PM	0	0	0	0	0	0	0	0	0	0	0	0	0
4/26/2024	11:30 PM	0	0	0	0	0	0	0	0	0	0	0	0	0
4/26/2024	11:45 PM	0	0	0	0	0	0	0	0	0	0	0	0	0

4/27/2024	12:00 AM	0	0	0	0	0	0	0	0	0	0	0	0	0
4/27/2024	12:15 AM	0	0	0	0	0	0	0	0	0	0	0	0	0
4/27/2024	12:30 AM	0	0	0	0	0	0	0	0	0	0	0	0	0
4/27/2024	12:45 AM	0	0	0	0	0	0	0	0	0	0	0	0	0
4/27/2024	1:00 AM	0	0	0	0	0	0	0	0	0	0	0	0	0
4/27/2024	1:15 AM	0	0	0	0	0	0	0	0	0	0	0	0	0
4/27/2024	1:30 AM	0	0	0	0	0	0	0	0	0	0	0	0	0
4/27/2024	1:45 AM	0	0	0	0	0	0	0	0	0	0	0	0	0
4/27/2024	2:00 AM	0	0	0	0	0	0	0	0	0	0	0	0	0
4/27/2024	2:15 AM	0	0	0	0	0	0	0	0	0	0	0	0	0
4/27/2024	2:30 AM	0	0	0	0	0	0	0	0	0	0	0	0	0
4/27/2024	2:45 AM	0	0	0	0	0	0	0	0	0	0	0	0	0
4/27/2024	3:00 AM	0	0	0	0	0	0	0	0	0	0	0	0	0
4/27/2024	3:15 AM	0	0	0	0	0	0	0	0	0	0	0	0	0
4/27/2024	3:30 AM	0	0	0	0	0	0	0	0	0	0	0	0	0
4/27/2024	3:45 AM	0	0	0	0	0	0	0	0	0	0	0	0	0
4/27/2024	4:00 AM	0	0	0	0	0	0	0	0	0	0	0	0	0
4/27/2024	4:15 AM	0	0	0	0	0	0	0	0	0	0	0	0	0
4/27/2024	4:30 AM	0	0	0	0	0	0	0	0	0	0	0	0	0
4/27/2024	4:45 AM	0	0	0	0	0	0	0	0	0	0	0	0	0
4/27/2024	5:00 AM	0	0	0	0	0	0	0	0	0	0	0	0	0
4/27/2024	5:15 AM	0	0	0	0	0	0	0	0	0	0	0	0	0
4/27/2024	5:30 AM	0	0	0	0	0	0	0	0	0	0	0	0	0
4/27/2024	5:45 AM	0	0	0	0	0	0	0	0	0	0	0	0	0
4/27/2024	6:00 AM	0	0	0	0	0	0	0	0	0	0	0	0	0
4/27/2024	6:15 AM	0	0	0	0	0	0	0	0	0	0	0	0	0
4/27/2024	6:30 AM	0	0	0	0	0	0	0	0	0	0	0	0	0
4/27/2024	6:45 AM	0	0	0	0	0	0	0	0	0	0	0	0	0
4/27/2024	7:00 AM	0	0	0	0	0	0	0	0	0	0	0	0	0
4/27/2024	7:15 AM	0	0	0	0	0	0	0	0	0	0	0	0	0
4/27/2024	7:30 AM	0	0	0	0	0	0	0	0	0	0	0	0	0
4/27/2024	7:45 AM	0	0	0	0	0	0	0	0	0	0	0	0	0
4/27/2024	8:00 AM	0	0	0	0	0	0	0	0	0	0	0	0	0
4/27/2024	8:15 AM	0	0	0	0	0	0	0	0	0	0	0	0	0
4/27/2024	8:30 AM	0	0	0	0	0	0	0	0	0	0	0	0	0
4/27/2024	8:45 AM	0	0	0	0	0	0	0	0	0	0	0	0	0
4/27/2024	9:00 AM	0	0	0	0	0	0	0	0	0	0	0	0	0
4/27/2024	9:15 AM	0	0	0	0	0	0	0	0	0	0	0	0	0
4/27/2024	9:30 AM	0	0	0	0	0	0	0	0	0	0	0	0	0
4/27/2024	9:45 AM	0	0	0	0	0	0	0	0	0	0	0	0	0
4/27/2024	10:00 AM	0	0	0	0	0	0	0	0	0	0	0	0	0
4/27/2024	10:15 AM	0	0	0	0	0	0	0	0	0	0	0	0	0
4/27/2024	10:30 AM	0	0	0	0	0	0	0	0	0	0	0	0	0
4/27/2024	10:45 AM	0	0	0	0	0	0	0	0	0	0	0	0	0
4/27/2024	11:00 AM	0	0	0	0	0	0	0	0	0	0	0	0	0
4/27/2024	11:15 AM	0	0	0	0	0	0	0	0	0	0	0	0	0
4/27/2024	11:30 AM	0	0	0	0	0	0	0	0	0	0	0	0	0
4/27/2024	11:45 AM	0	0	0	0	0	0	0	0	0	0	0	0	0
4/27/2024	12:00 PM	0	0	0	0	0	0	0	0	0	0	0	0	0
4/27/2024	12:15 PM	0	0	0	0	0	0	0	0	0	0	0	0	0
4/27/2024	12:30 PM	0	0	0	0	0	0	0	0	0	0	0	0	0
4/27/2024	12:45 PM	0	0	0	0	0	0	0	0	0	0	0	0	0
4/27/2024	1:00 PM	0	0	0	0	0	0	0	0	0	0	0	0	0
4/27/2024	1:15 PM	0	0	0	0	0	0	0	0	0	0	0	0	0
4/27/2024	1:30 PM	0	0	0	0	0	0	0	0	0	0	0	0	0
4/27/2024	1:45 PM	0	0	0	0	0	0	0	0	0	0	0	0	0
4/27/2024	2:00 PM	0	0	0	0	0	0	0	0	0	0	0	0	0
4/27/2024	2:15 PM	0	0	0	0	0	0	0	0	0	0	0	0	0
4/27/2024	2:30 PM	0	0	0	0	0	0	0	0	0	0	0	0	0
4/27/2024	2:45 PM	0	0	0	0	0	0	0	0	0	0	0	0	0
4/27/2024	3:00 PM	0	0	0	0	0	0	0	0	0	0	0	0	0
4/27/2024	3:15 PM	0	0	0	0	0	0	0	0	0	0	0	0	0
4/27/2024	3:30 PM	0	0	0	0	0	0	0	0	0	0	0	0	0
4/27/2024	3:45 PM	0	0	0	0	0	0	0	0	0	0	0	0	0
4/27/2024	4:00 PM	0	0	0	0	0	0	0	0	0	0	0	0	0
4/27/2024	4:15 PM	0	0	0	0	0	0	0	0	0	0	0	0	0
4/27/2024	4:30 PM	0	0	0	0	0	0	0	0	0	0	0	0	0
4/27/2024	4:45 PM	0	0	0	0	0	0	0	0	0	0	0	0	0
4/27/2024	5:00 PM	0	0	0	0	0	0	0	0	0	0	0	0	0
4/27/2024	5:15 PM	0	0	0	0	0	0	0	0	0	0	0	0	0
4/27/2024	5:30 PM	0	0	0	0	0	0	0	0	0	0	0	0	0
4/27/2024	5:45 PM	0	0	0	0	0	0	0	0	0	0	0	0	0
4/27/2024	6:00 PM	0	0	0	0	0	0	0	0	0	0	0	0	0
4/27/2024	6:15 PM	0	0	0	0	0	0	0	0	0	0	0	0	0
4/27/2024	6:30 PM	0	0	0	0	0	0	0	0	0	0	0	0	0
4/27/2024	6:45 PM	0	0	0	0	0	0	0	0	0	0	0	0	0
4/27/2024	7:00 PM	0	0	0	0	0	0	0	0	0	0	0	0	0
4/27/2024	7:15 PM	0	0	0	0	0	0	0	0	0	0	0	0	0
4/27/2024	7:30 PM	0	0	0	0	0	0	0	0	0	0	0	0	0
4/27/2024	7:45 PM	0	0	0	0	0	0	0	0	0	0	0	0	0
4/27/2024	8:00 PM	0	0	0	0	0	0	0	0	0	0	0	0	0
4/27/2024	8:15 PM	0	0	0	0	0	0	0	0	0	0	0	0	0
4/27/2024	8:30 PM	0	0	0	0	0	0	0	0	0	0	0	0	0
4/27/2024	8:45 PM	0	0	0	0	0	0	0	0	0	0	0	0	0
4/27/2024	9:00 PM	0	0	0	0	0	0	0	0	0	0	0	0	0
4/27/2024	9:15 PM	0	0	0	0	0	0	0	0	0	0	0	0	0
4/27/2024	9:30 PM	0	0	0	0	0	0	0	0	0	0	0	0	0
4/27/2024	9:45 PM	0	0	0	0	0	0	0	0	0	0	0	0	0
4/27/2024	10:00 PM	0	0	0	0	0	0	0	0	0	0	0	0	0
4/27/2024	10:15 PM	0	0	0	0	0	0	0	0	0	0	0	0	0
4/27/2024	10:30 PM	0	0	0	0	0	0	0	0	0	0	0	0	0
4/27/2024	10:45 PM	0	0	0	0	0	0	0	0	0	0	0	0	0
4/27/2024	11:00 PM	0	0	0	0	0	0	0	0	0	0	0	0	0
4/27/2024	11:15 PM	0	0	0	0	0	0	0	0	0	0	0	0	0
4/27/2024	11:30 PM	0	0	0	0	0	0	0	0	0	0	0	0	0
4/27/2024	11:45 PM	0	0	0	0	0	0	0	0	0	0	0	0	0

EB
File Name:
Start Date: 4/21/2024
Start Time: 0
Site Code: 74 Lane 3 EB
Station ID: 1
Location 1: I-20, west of US-378 Sunset Blvd S/Bound Off-Ramp
Location 2:

Date	Time	1	2	3	4	5	6	7	8	9	10	11	12	13
4/21/2024	12:00 AM	0	72	10	0	3	1	0	0	25	0	0	0	0
4/21/2024	12:15 AM	0	68	10	0	2	1	0	0	20	0	0	0	0
4/21/2024	12:30 AM	0	59	11	0	3	1	0	0	18	0	0	0	0
4/21/2024	12:45 AM	0	65	12	0	2	0	0	0	16	0	0	0	0
4/21/2024	1:00 AM	0	56	8	0	2	0	0	0	13	0	0	0	0
4/21/2024	1:15 AM	0	54	6	0	2	0	0	0	15	0	0	0	0
4/21/2024	1:30 AM	0	48	5	0	1	0	0	0	16	0	0	0	0
4/21/2024	1:45 AM	0	37	3	1	1	0	0	0	19	0	0	0	0
4/21/2024	2:00 AM	0	28	3	1	0	0	0	0	22	0	0	0	0
4/21/2024	2:15 AM	0	28	3	1	1	1	0	0	19	0	0	0	0
4/21/2024	2:30 AM	0	28	1	1	2	1	0	0	23	0	0	0	0
4/21/2024	2:45 AM	0	27	1	0	2	1	0	0	19	0	1	0	0
4/21/2024	3:00 AM	0	36	1	0	2	1	0	0	22	0	1	0	0
4/21/2024	3:15 AM	0	32	0	0	1	0	0	0	25	0	1	0	0
4/21/2024	3:30 AM	0	29	1	0	0	0	0	0	20	0	1	0	0
4/21/2024	3:45 AM	0	32	1	0	0	0	0	0	18	0	0	0	0
4/21/2024	4:00 AM	0	26	3	0	0	0	0	0	10	0	0	0	0
4/21/2024	4:15 AM	0	26	3	0	0	0	0	0	9	0	0	0	0
4/21/2024	4:30 AM	0	29	2	0	0	0	0	0	7	0	0	0	0
4/21/2024	4:45 AM	0	24	2	0	0	0	0	0	7	0	0	0	0
4/21/2024	5:00 AM	0	23	0	0	0	0	0	0	10	0	0	0	0
4/21/2024	5:15 AM	0	34	1	0	0	1	0	0	16	0	0	0	0
4/21/2024	5:30 AM	0	48	4	0	1	1	0	0	16	0	0	0	0
4/21/2024	5:45 AM	0	69	11	1	1	1	0	0	19	0	0	0	0
4/21/2024	6:00 AM	0	91	21	1	1	1	0	0	24	0	0	0	0
4/21/2024	6:15 AM	0	104	33	1	2	0	0	0	26	0	0	0	0
4/21/2024	6:30 AM	0	109	38	1	1	0	0	2	34	0	0	0	0
4/21/2024	6:45 AM	0	118	43	0	1	0	0	2	36	0	0	0	0
4/21/2024	7:00 AM	0	136	47	0	1	0	0	2	36	0	0	0	0
4/21/2024	7:15 AM	1	136	43	0	2	1	0	2	37	0	0	0	0
4/21/2024	7:30 AM	2	149	45	0	2	1	0	1	34	0	0	0	0
4/21/2024	7:45 AM	2	176	43	0	3	1	0	3	38	1	0	0	0
4/21/2024	8:00 AM	2	185	43	0	5	1	0	3	34	1	0	0	0
4/21/2024	8:15 AM	1	231	49	0	4	2	0	5	36	1	0	0	0
4/21/2024	8:30 AM	0	238	57	0	5	2	0	4	40	1	0	0	0
4/21/2024	8:45 AM	0	242	57	0	4	3	0	2	40	0	0	0	0
4/21/2024	9:00 AM	0	261	56	0	2	4	0	2	45	0	0	0	0
4/21/2024	9:15 AM	0	253	56	0	1	2	0	1	40	0	0	0	0
4/21/2024	9:30 AM	1	262	56	1	1	2	0	2	40	0	1	0	0
4/21/2024	9:45 AM	1	269	63	1	4	1	0	2	43	0	1	0	0
4/21/2024	10:00 AM	1	271	71	1	5	1	0	3	42	0	1	0	0
4/21/2024	10:15 AM	2	281	79	1	6	2	0	3	47	0	1	0	0
4/21/2024	10:30 AM	1	299	85	0	6	3	0	3	48	0	0	0	0
4/21/2024	10:45 AM	1	297	85	0	5	3	0	5	45	0	0	0	0
4/21/2024	11:00 AM	1	288	83	0	5	3	0	4	47	0	0	0	0
4/21/2024	11:15 AM	1	288	81	0	5	2	0	3	50	0	0	0	0
4/21/2024	11:30 AM	1	297	81	1	7	1	0	7	48	2	0	0	0
4/21/2024	11:45 AM	1	298	91	1	10	1	0	5	51	2	0	0	0
4/21/2024	12:00 PM	1	314	95	5	10	0	0	7	51	2	0	0	0
4/21/2024	12:15 PM	1	317	96	5	10	1	0	7	43	3	0	0	0
4/21/2024	12:30 PM	1	304	81	4	8	1	0	5	50	1	0	0	0
4/21/2024	12:45 PM	1	314	70	5	3	1	0	5	56	1	0	0	0
4/21/2024	1:00 PM	1	312	66	1	3	1	0	4	56	1	0	0	0
4/21/2024	1:15 PM	0	309	54	2	5	0	0	7	58	0	0	0	0
4/21/2024	1:30 PM	0	321	68	2	6	0	0	7	49	0	0	0	0
4/21/2024	1:45 PM	0	324	70	1	8	0	0	9	40	0	0	0	0
4/21/2024	2:00 PM	0	314	71	2	7	0	0	8	47	0	0	0	0
4/21/2024	2:15 PM	0	316	82	1	5	0	0	5	48	0	0	0	0
4/21/2024	2:30 PM	0	292	83	1	3	0	0	3	52	0	0	0	0
4/21/2024	2:45 PM	0	290	87	1	1	0	0	3	50	0	0	0	0
4/21/2024	3:00 PM	0	298	81	0	3	2	0	5	40	0	0	0	0
4/21/2024	3:15 PM	0	285	73	0	6	2	0	5	45	1	0	0	0
4/21/2024	3:30 PM	0	296	71	0	11	4	0	5	45	2	1	0	0
4/21/2024	3:45 PM	0	299	68	0	13	4	0	5	48	2	1	0	0
4/21/2024	4:00 PM	0	301	76	0	14	2	0	3	51	2	1	0	0
4/21/2024	4:15 PM	0	322	76	0	12	2	0	5	46	1	1	0	0
4/21/2024	4:30 PM	0	329	73	0	9	0	0	5	43	1	0	0	0
4/21/2024	4:45 PM	0	323	70	0	7	1	0	4	52	1	0	0	0
4/21/2024	5:00 PM	0	326	66	0	5	1	0	6	52	1	0	0	0
4/21/2024	5:15 PM	0	302	69	0	4	2	0	5	58	1	0	0	0
4/21/2024	5:30 PM	0	272	62	0	3	2	0	5	56	0	0	0	0
4/21/2024	5:45 PM	0	241	62	0	3	2	0	6	59	0	0	0	0
4/21/2024	6:00 PM	1	214	51	1	4	3	0	6	58	0	1	0	0
4/21/2024	6:15 PM	1	184	40	1	3	2	0	5	54	0	1	0	0
4/21/2024	6:30 PM	1	168	38	1	2	2	0	4	51	0	1	0	0
4/21/2024	6:45 PM	1	152	29	1	3	1	0	4	33	0	1	0	0
4/21/2024	7:00 PM	0	132	29	0	1	1	0	2	30	0	0	0	0
4/21/2024	7:15 PM	0	127	33	0	2	2	0	2	18	0	0	0	0
4/21/2024	7:30 PM	0	122	31	0	4	2	0	2	19	0	0	0	0
4/21/2024	7:45 PM	0	112	29	0	3	2	0	0	20	0	0	0	0
4/21/2024	8:00 PM	0	102	23	0	4	1	0	0	16	0	0	0	0
4/21/2024	8:15 PM	0	97	16	0	3	0	0	0	16	0	0	0	0
4/21/2024	8:30 PM	0	83	8	0	1	0	0	0	13	0	0	0	0
4/21/2024	8:45 PM	0	83	4	0	2	0	0	0	11	0	0	0	0
4/21/2024	9:00 PM	0	76	3	0	2	0	0	0	11	0	0	0	0
4/21/2024	9:15 PM	0	65	4	0	2	0	0	0	12	0	0	0	0
4/21/2024	9:30 PM	0	64	6	0	3	0	0	0	14	0	0	0	0
4/21/2024	9:45 PM	0	51	5	0	3	0	0	0	13	0	0	0	0
4/21/2024	10:00 PM	0	43	5	0	2	0	0	0	16	0	0	0	0
4/21/2024	10:15 PM	0	41	6	0	2	0	0	0	17	0	2	0	0
4/21/2024	10:30 PM	0	37	5	0	1	0	0	0	15	0	3	0	0
4/21/2024	10:45 PM	0	37	7	0	0	0	0	0	17	0	3	0	0
4/21/2024	11:00 PM	0	32	8	0	0	0	0	0	19	0	3	0	0
4/21/2024	11:15 PM	0	31	4	0	0	0	0	0	16	0	2	0	0
4/21/2024	11:30 PM	0	32	3	0	0	0	0	0	15	0	1	0	0
4/21/2024	11:45 PM	0	31	1	0	0	0	0	0	13	0	2	0	0

4/22/2024	12:00 AM	0	36	0	0	0	0	0	0	6	0	2	0	0
4/22/2024	12:15 AM	0	32	0	0	0	0	0	0	6	0	3	0	0
4/22/2024	12:30 AM	0	28	0	0	0	0	0	0	7	0	3	0	0
4/22/2024	12:45 AM	0	25	0	0	0	0	0	0	8	0	3	0	0
4/22/2024	1:00 AM	0	20	0	0	0	0	0	0	9	0	5	0	0
4/22/2024	1:15 AM	0	21	0	0	1	0	0	0	12	0	3	0	0
4/22/2024	1:30 AM	0	21	0	0	1	0	0	0	12	0	4	0	0
4/22/2024	1:45 AM	0	21	0	0	1	0	0	0	11	0	5	0	0
4/22/2024	2:00 AM	0	19	0	0	1	0	0	0	11	0	5	0	0
4/22/2024	2:15 AM	0	21	0	0	0	0	0	0	11	0	5	0	0
4/22/2024	2:30 AM	0	25	0	0	1	0	0	0	16	0	7	0	0
4/22/2024	2:45 AM	0	38	0	0	1	0	0	0	19	0	5	0	0
4/22/2024	3:00 AM	0	42	0	0	1	0	0	0	22	0	4	0	0
4/22/2024	3:15 AM	0	53	0	0	1	0	0	0	20	0	4	0	0
4/22/2024	3:30 AM	0	58	0	0	0	0	0	0	18	0	2	0	0
4/22/2024	3:45 AM	0	56	0	0	0	0	0	0	19	0	2	0	0
4/22/2024	4:00 AM	0	69	0	0	0	0	0	0	23	0	3	0	0
4/22/2024	4:15 AM	0	68	0	0	1	0	0	0	28	0	3	0	0
4/22/2024	4:30 AM	0	87	0	0	1	0	0	0	31	0	2	0	0
4/22/2024	4:45 AM	0	110	1	0	2	0	0	0	34	0	2	0	0
4/22/2024	5:00 AM	0	112	1	0	2	0	0	0	34	0	0	0	0
4/22/2024	5:15 AM	0	150	4	0	1	0	0	0	39	0	0	0	0
4/22/2024	5:30 AM	0	173	11	0	2	0	0	0	47	0	0	0	0
4/22/2024	5:45 AM	0	194	21	0	4	1	0	0	60	0	0	0	0
4/22/2024	6:00 AM	0	224	45	0	7	10	0	2	66	1	0	0	0
4/22/2024	6:15 AM	0	241	70	0	16	13	0	5	67	1	0	0	0
4/22/2024	6:30 AM	0	269	97	0	19	17	0	5	61	1	0	0	0
4/22/2024	6:45 AM	1	287	117	0	20	19	0	12	53	1	0	0	0
4/22/2024	7:00 AM	1	327	123	0	25	10	0	10	47	0	0	0	0
4/22/2024	7:15 AM	1	349	136	0	22	9	0	8	53	0	0	0	0
4/22/2024	7:30 AM	1	344	145	0	24	9	0	13	66	0	0	0	0
4/22/2024	7:45 AM	0	344	152	0	24	13	0	8	78	0	0	0	0
4/22/2024	8:00 AM	0	315	174	0	21	15	0	11	83	2	0	0	0
4/22/2024	8:15 AM	0	299	166	0	18	14	0	11	87	2	0	0	0
4/22/2024	8:30 AM	0	283	158	0	21	12	0	7	78	2	0	0	0
4/22/2024	8:45 AM	0	272	161	3	24	5	0	9	66	2	0	0	0
4/22/2024	9:00 AM	0	266	134	4	24	4	1	7	76	1	0	0	0
4/22/2024	9:15 AM	0	249	118	4	24	8	1	9	81	1	0	0	0
4/22/2024	9:30 AM	0	237	107	4	25	6	1	10	89	1	0	0	0
4/22/2024	9:45 AM	0	216	94	2	27	9	1	13	107	1	0	0	0
4/22/2024	10:00 AM	3	220	103	1	28	8	0	18	109	0	0	0	0
4/22/2024	10:15 AM	3	203	98	1	33	6	0	20	113	0	0	0	0
4/22/2024	10:30 AM	3	198	96	1	30	7	1	19	126	0	0	0	0
4/22/2024	10:45 AM	3	205	87	0	26	7	1	16	116	0	0	0	0
4/22/2024	11:00 AM	0	186	78	0	27	7	1	11	114	1	0	0	0
4/22/2024	11:15 AM	0	201	91	0	23	6	1	11	99	1	0	0	0
4/22/2024	11:30 AM	0	211	91	0	20	8	0	11	91	1	0	0	0
4/22/2024	11:45 AM	0	211	95	0	22	5	0	12	99	1	0	0	0
4/22/2024	12:00 PM	0	214	116	0	20	8	0	14	100	0	0	0	0
4/22/2024	12:15 PM	0	211	112	1	20	12	0	11	91	0	0	0	0
4/22/2024	12:30 PM	0	210	119	1	21	13	0	12	82	1	0	0	0
4/22/2024	12:45 PM	0	216	110	5	17	17	0	9	68	1	0	0	0
4/22/2024	1:00 PM	0	242	90	5	18	17	0	6	58	1	0	0	0
4/22/2024	1:15 PM	0	225	101	4	21	13	0	6	76	1	1	0	0
4/22/2024	1:30 PM	0	231	95	4	24	12	0	8	79	0	1	0	0
4/22/2024	1:45 PM	0	233	105	0	25	8	0	6	79	0	1	0	0
4/22/2024	2:00 PM	0	205	101	1	27	7	0	8	85	0	1	0	0
4/22/2024	2:15 PM	1	229	94	1	24	7	0	8	82	0	0	0	0
4/22/2024	2:30 PM	1	228	102	1	22	5	0	6	85	1	0	0	0
4/22/2024	2:45 PM	1	236	98	1	19	6	0	8	91	1	0	0	0
4/22/2024	3:00 PM	1	239	97	0	15	6	0	7	107	1	0	0	0
4/22/2024	3:15 PM	0	233	87	0	19	5	0	6	120	1	0	0	0
4/22/2024	3:30 PM	0	247	81	0	17	4	0	7	117	0	0	0	0
4/22/2024	3:45 PM	0	244	77	0	20	6	0	8	127	0	0	0	0
4/22/2024	4:00 PM	0	260	73	1	23	6	0	8	120	0	0	0	0
4/22/2024	4:15 PM	0	277	92	3	22	8	0	8	107	0	0	0	0
4/22/2024	4:30 PM	0	288	79	3	20	11	0	7	110	0	0	0	0
4/22/2024	4:45 PM	0	281	81	3	17	8	0	5	96	0	0	0	0
4/22/2024	5:00 PM	0	278	80	2	12	6	0	5	94	0	0	0	0
4/22/2024	5:15 PM	0	250	58	0	9	3	0	6	81	0	0	0	0
4/22/2024	5:30 PM	0	194	55	0	7	1	0	5	62	0	0	0	0
4/22/2024	5:45 PM	0	162	51	0	6	2	0	4	55	0	0	0	0
4/22/2024	6:00 PM	0	132	40	0	4	2	0	3	35	0	0	0	0
4/22/2024	6:15 PM	0	111	35	0	1	3	0	1	31	0	0	0	0
4/22/2024	6:30 PM	0	116	33	0	2	4	0	0	37	0	0	0	0
4/22/2024	6:45 PM	0	131	28	0	3	3	0	0	31	0	0	0	0
4/22/2024	7:00 PM	0	130	26	0	5	3	0	1	30	0	0	0	0
4/22/2024	7:15 PM	0	123	28	0	7	2	0	1	38	0	0	0	0
4/22/2024	7:30 PM	0	106	24	0	6	2	0	1	32	0	0	0	0
4/22/2024	7:45 PM	0	74	17	0	5	2	0	1	30	0	0	0	0
4/22/2024	8:00 PM	0	58	14	0	3	2	0	0	32	0	1	0	0
4/22/2024	8:15 PM	0	52	7	0	0	2	0	0	21	0	1	0	0
4/22/2024	8:30 PM	0	46	5	0	0	0	0	0	20	0	1	0	0
4/22/2024	8:45 PM	0	46	3	0	0	0	0	0	25	0	1	0	0
4/22/2024	9:00 PM	0	40	3	0	0	0	0	0	19	0	0	0	0
4/22/2024	9:15 PM	0	41	1	0	0	0	0	0	24	0	0	0	0
4/22/2024	9:30 PM	0	42	0	0	0	0	0	0	26	0	0	0	0
4/22/2024	9:45 PM	0	47	2	0	1	0	0	0	20	0	0	0	0
4/22/2024	10:00 PM	0	50	2	0	1	0	0	0	26	0	0	0	0
4/22/2024	10:15 PM	0	47	2	0	1	0	0	0	22	0	0	0	0
4/22/2024	10:30 PM	0	38	2	0	1	0	0	0	18	0	0	0	0
4/22/2024	10:45 PM	0	29	0	0	1	0	0	0	22	0	0	0	0
4/22/2024	11:00 PM	0	25	0	0	1	0	0	0	17	0	0	0	0
4/22/2024	11:15 PM	0	23	3	0	2	0	0	0	15	0	0	0	0
4/22/2024	11:30 PM	0	28	3	1	2	0	0	0	16	0	0	0	0
4/22/2024	11:45 PM	0	33	7	1	1	0	0	0	11	0	1	0	0

4/23/2024	12:00 AM	0	30	7	1	1	1	0	0	10	0	1	0	0
4/23/2024	12:15 AM	0	34	4	1	0	1	0	0	14	0	1	0	0
4/23/2024	12:30 AM	0	37	6	0	1	1	0	1	17	0	2	0	0
4/23/2024	12:45 AM	0	36	2	0	1	1	0	1	24	0	1	0	0
4/23/2024	1:00 AM	0	43	2	0	1	0	0	1	32	2	1	0	0
4/23/2024	1:15 AM	0	34	2	0	1	0	0	1	36	2	2	0	0
4/23/2024	1:30 AM	0	28	0	0	0	0	0	0	39	2	2	0	0
4/23/2024	1:45 AM	0	24	0	0	0	1	0	0	38	4	3	0	0
4/23/2024	2:00 AM	0	19	0	0	0	1	0	0	36	2	4	0	0
4/23/2024	2:15 AM	0	22	3	0	0	2	0	1	36	3	3	0	0
4/23/2024	2:30 AM	0	27	4	0	0	3	0	1	37	3	6	0	0
4/23/2024	2:45 AM	0	38	5	0	1	2	0	1	37	1	5	0	0
4/23/2024	3:00 AM	0	47	5	0	3	2	0	1	39	2	4	0	0
4/23/2024	3:15 AM	0	55	2	0	5	2	0	0	42	1	6	0	0
4/23/2024	3:30 AM	0	59	2	0	7	2	0	0	47	1	4	0	0
4/23/2024	3:45 AM	0	56	2	0	7	2	0	0	57	1	5	0	0
4/23/2024	4:00 AM	0	64	2	0	7	2	0	0	59	0	5	0	0
4/23/2024	4:15 AM	0	71	2	0	7	2	0	0	61	0	3	0	0
4/23/2024	4:30 AM	0	99	1	0	6	4	0	0	55	0	1	0	0
4/23/2024	4:45 AM	0	143	0	0	7	7	0	0	58	2	1	0	0
4/23/2024	5:00 AM	0	168	3	0	5	10	0	0	57	2	2	0	0
4/23/2024	5:15 AM	0	182	12	0	8	11	0	1	53	2	2	0	0
4/23/2024	5:30 AM	0	183	38	0	10	8	0	1	57	2	3	0	0
4/23/2024	5:45 AM	0	187	63	1	11	10	0	2	58	0	2	0	0
4/23/2024	6:00 AM	0	191	85	1	17	9	0	3	70	0	1	0	0
4/23/2024	6:15 AM	0	208	108	1	17	9	0	2	72	0	2	0	0
4/23/2024	6:30 AM	0	236	109	1	26	11	0	2	73	0	1	0	0
4/23/2024	6:45 AM	0	255	101	0	27	9	0	3	65	0	2	0	0
4/23/2024	7:00 AM	0	316	104	0	26	7	0	6	47	0	2	0	0
4/23/2024	7:15 AM	0	352	111	0	25	8	0	9	46	0	2	0	0
4/23/2024	7:30 AM	0	360	114	0	16	8	0	11	49	0	2	0	0
4/23/2024	7:45 AM	0	345	119	0	27	8	2	17	52	0	2	0	0
4/23/2024	8:00 AM	0	305	118	3	26	12	3	18	53	2	2	0	0
4/23/2024	8:15 AM	0	284	104	3	27	10	3	17	59	2	1	0	0
4/23/2024	8:30 AM	0	274	110	5	33	10	3	20	63	3	1	0	0
4/23/2024	8:45 AM	0	257	115	5	23	10	1	16	75	3	1	0	0
4/23/2024	9:00 AM	0	248	120	2	24	8	0	14	90	3	1	0	0
4/23/2024	9:15 AM	0	228	118	4	25	8	0	13	101	4	1	0	0
4/23/2024	9:30 AM	0	211	103	2	25	7	0	9	105	3	1	0	0
4/23/2024	9:45 AM	0	212	97	4	23	8	0	5	104	3	0	0	0
4/23/2024	10:00 AM	0	187	87	4	24	8	0	4	111	2	0	0	0
4/23/2024	10:15 AM	0	188	84	2	24	8	0	4	112	1	1	0	0
4/23/2024	10:30 AM	0	180	100	4	19	11	0	4	111	2	1	0	0
4/23/2024	10:45 AM	0	188	100	3	18	8	0	8	108	2	1	0	0
4/23/2024	11:00 AM	0	187	104	3	16	9	0	8	107	1	1	0	0
4/23/2024	11:15 AM	0	192	103	4	16	11	0	9	108	3	0	0	0
4/23/2024	11:30 AM	0	205	92	2	19	11	0	11	108	2	0	0	0
4/23/2024	11:45 AM	0	199	92	1	27	11	0	9	107	3	0	0	0
4/23/2024	12:00 PM	0	217	87	2	32	10	0	8	96	3	0	0	0
4/23/2024	12:15 PM	2	220	87	1	33	8	0	9	86	1	0	0	0
4/23/2024	12:30 PM	2	218	82	1	34	9	0	9	91	1	0	0	0
4/23/2024	12:45 PM	3	231	80	3	29	8	0	10	90	0	0	0	0
4/23/2024	1:00 PM	3	236	83	2	22	9	0	11	92	1	0	0	0
4/23/2024	1:15 PM	1	232	91	2	21	16	1	11	96	1	0	0	0
4/23/2024	1:30 PM	1	230	93	2	18	12	1	9	91	2	0	0	0
4/23/2024	1:45 PM	0	229	86	1	18	13	1	9	90	2	0	0	0
4/23/2024	2:00 PM	0	220	84	2	21	11	1	7	96	2	0	0	0
4/23/2024	2:15 PM	0	228	73	2	21	5	0	7	96	2	0	0	0
4/23/2024	2:30 PM	0	226	67	2	23	5	0	8	102	1	0	0	0
4/23/2024	2:45 PM	3	238	78	1	22	8	0	6	98	1	0	0	0
4/23/2024	3:00 PM	3	226	86	0	20	12	0	8	104	0	0	0	0
4/23/2024	3:15 PM	3	207	94	0	16	12	0	7	110	0	0	0	0
4/23/2024	3:30 PM	3	215	94	0	13	12	0	6	100	0	0	0	0
4/23/2024	3:45 PM	0	220	87	1	15	9	0	7	106	0	0	0	0
4/23/2024	4:00 PM	0	240	84	1	15	4	0	6	97	1	0	0	0
4/23/2024	4:15 PM	0	267	85	1	15	3	0	6	87	1	0	0	0
4/23/2024	4:30 PM	0	288	89	1	13	3	0	7	96	1	1	0	0
4/23/2024	4:45 PM	1	269	95	0	9	2	0	7	91	1	1	0	0
4/23/2024	5:00 PM	1	267	89	0	8	3	0	6	93	0	1	0	0
4/23/2024	5:15 PM	1	251	91	1	7	3	0	4	101	0	1	0	0
4/23/2024	5:30 PM	1	226	87	1	8	4	0	3	92	0	0	0	0
4/23/2024	5:45 PM	0	215	79	1	8	5	0	3	97	0	0	0	0
4/23/2024	6:00 PM	0	210	73	1	10	4	0	4	94	0	0	0	0
4/23/2024	6:15 PM	0	196	69	1	9	4	1	7	82	0	0	0	0
4/23/2024	6:30 PM	1	185	68	1	9	2	1	6	84	0	0	0	0
4/23/2024	6:45 PM	1	171	75	1	10	1	1	4	77	0	0	0	0
4/23/2024	7:00 PM	1	166	77	1	8	1	1	3	81	1	0	0	0
4/23/2024	7:15 PM	1	163	63	1	10	0	0	0	83	1	0	0	0
4/23/2024	7:30 PM	0	152	52	3	7	0	0	0	80	1	0	0	0
4/23/2024	7:45 PM	0	142	33	4	9	0	0	1	75	1	0	0	0
4/23/2024	8:00 PM	0	121	16	4	8	0	0	1	72	0	0	0	0
4/23/2024	8:15 PM	0	118	8	3	10	0	0	1	69	2	1	0	0
4/23/2024	8:30 PM	0	115	3	2	12	0	0	1	65	2	1	0	0
4/23/2024	8:45 PM	0	124	2	1	8	0	0	0	70	2	1	0	0
4/23/2024	9:00 PM	0	122	4	1	8	0	0	0	62	3	2	0	0
4/23/2024	9:15 PM	0	119	3	1	5	0	0	0	67	2	1	0	0
4/23/2024	9:30 PM	0	113	3	0	3	0	0	0	66	2	3	0	0
4/23/2024	9:45 PM	0	99	3	0	5	0	0	0	64	2	3	0	0
4/23/2024	10:00 PM	0	92	1	0	8	0	0	0	65	1	3	0	0
4/23/2024	10:15 PM	0	77	2	0	8	0	0	0	59	0	4	0	0
4/23/2024	10:30 PM	0	65	4	0	10	0	0	0	59	0	3	0	0
4/23/2024	10:45 PM	0	60	3	0	8	0	0	0	57	0	4	0	0
4/23/2024	11:00 PM	0	52	4	0	4	0	0	0	57	0	3	0	0
4/23/2024	11:15 PM	0	48	8	0	4	0	0	0	59	0	2	0	0
4/23/2024	11:30 PM	0	51	11	1	2	0	0	0	62	0	1	0	0
4/23/2024	11:45 PM	0	46	14	1	1	0	0	0	65	0	3	0	0

4/24/2024	12:00 AM	0	54	19	1	1	0	0	0	69	0	4	0	0
4/24/2024	12:15 AM	0	55	14	1	0	0	0	0	60	0	4	0	0
4/24/2024	12:30 AM	0	45	9	0	0	0	0	3	55	0	4	0	0
4/24/2024	12:45 AM	0	39	6	0	0	0	0	3	45	0	1	0	0
4/24/2024	1:00 AM	0	23	2	0	0	0	0	4	41	0	0	0	0
4/24/2024	1:15 AM	0	19	3	0	0	1	0	4	47	0	0	0	0
4/24/2024	1:30 AM	0	20	5	0	0	1	0	1	48	0	0	0	0
4/24/2024	1:45 AM	0	21	5	0	0	1	0	1	52	0	1	0	0
4/24/2024	2:00 AM	0	27	3	0	0	1	0	0	53	0	3	0	0
4/24/2024	2:15 AM	1	29	3	0	0	0	0	0	52	0	3	0	0
4/24/2024	2:30 AM	1	29	1	0	0	0	0	0	62	0	4	0	0
4/24/2024	2:45 AM	1	34	3	0	0	0	0	0	63	0	3	0	0
4/24/2024	3:00 AM	1	39	4	0	0	0	0	0	58	0	1	0	0
4/24/2024	3:15 AM	0	38	5	0	1	1	0	0	65	0	3	0	0
4/24/2024	3:30 AM	0	43	7	0	3	3	0	2	55	0	2	0	0
4/24/2024	3:45 AM	0	40	8	0	7	3	0	2	65	0	3	0	0
4/24/2024	4:00 AM	0	48	12	0	10	3	0	3	73	0	5	0	0
4/24/2024	4:15 AM	0	69	15	0	10	2	0	3	67	0	4	0	0
4/24/2024	4:30 AM	0	78	18	1	10	0	0	1	78	0	5	0	0
4/24/2024	4:45 AM	0	94	19	1	10	0	0	1	77	0	5	0	0
4/24/2024	5:00 AM	0	108	24	1	9	0	0	0	69	0	4	0	0
4/24/2024	5:15 AM	0	109	29	1	10	0	0	0	74	0	4	0	0
4/24/2024	5:30 AM	0	129	38	0	13	3	0	1	72	0	3	0	0
4/24/2024	5:45 AM	0	164	50	0	13	8	0	3	64	0	2	0	0
4/24/2024	6:00 AM	0	183	74	1	18	10	1	4	71	0	1	0	0
4/24/2024	6:15 AM	0	225	102	1	29	14	1	5	63	2	0	0	0
4/24/2024	6:30 AM	0	249	122	1	35	14	1	6	60	2	1	0	0
4/24/2024	6:45 AM	0	266	133	1	37	11	1	7	69	4	1	0	0
4/24/2024	7:00 AM	2	299	136	0	33	16	0	8	78	4	2	0	0
4/24/2024	7:15 AM	3	312	123	1	27	15	1	7	87	2	2	0	0
4/24/2024	7:30 AM	3	333	131	1	21	12	2	9	83	2	1	0	0
4/24/2024	7:45 AM	3	339	135	1	25	11	2	8	77	0	1	0	0
4/24/2024	8:00 AM	1	319	146	7	27	5	2	10	67	0	0	0	0
4/24/2024	8:15 AM	0	298	159	6	23	6	1	11	74	0	0	0	0
4/24/2024	8:30 AM	0	265	139	7	30	8	0	8	77	1	0	0	0
4/24/2024	8:45 AM	0	241	142	7	23	9	2	8	83	1	0	0	0
4/24/2024	9:00 AM	0	230	120	1	22	10	3	8	87	3	0	0	0
4/24/2024	9:15 AM	0	217	107	1	27	9	3	8	85	3	0	0	0
4/24/2024	9:30 AM	1	212	109	0	18	12	3	8	85	4	0	0	0
4/24/2024	9:45 AM	1	195	103	1	22	12	1	7	95	4	0	0	0
4/24/2024	10:00 AM	1	194	102	1	22	13	0	4	97	2	0	0	0
4/24/2024	10:15 AM	1	191	97	1	23	10	1	4	94	3	0	0	0
4/24/2024	10:30 AM	0	207	107	1	24	7	1	5	101	2	0	0	0
4/24/2024	10:45 AM	0	212	99	0	25	9	1	6	101	2	0	0	0
4/24/2024	11:00 AM	0	203	101	0	25	7	1	9	102	3	0	0	0
4/24/2024	11:15 AM	0	192	99	0	24	7	0	9	106	6	0	0	0
4/24/2024	11:30 AM	0	181	87	0	29	7	0	8	105	7	0	0	0
4/24/2024	11:45 AM	2	190	87	0	30	6	0	9	94	7	0	0	0
4/24/2024	12:00 PM	2	195	83	3	31	12	0	8	94	8	0	0	0
4/24/2024	12:15 PM	2	209	84	3	27	14	0	12	90	4	0	0	0
4/24/2024	12:30 PM	2	208	87	3	22	14	0	12	85	5	0	0	0
4/24/2024	12:45 PM	0	213	82	3	19	15	0	10	90	6	0	0	0
4/24/2024	1:00 PM	0	214	79	0	20	13	0	8	90	4	0	0	0
4/24/2024	1:15 PM	0	199	79	0	18	14	0	6	97	4	0	0	0
4/24/2024	1:30 PM	0	205	79	0	20	14	0	7	104	4	0	0	0
4/24/2024	1:45 PM	0	188	87	0	21	13	0	7	97	3	0	0	0
4/24/2024	2:00 PM	1	192	85	0	18	12	1	7	97	3	0	0	0
4/24/2024	2:15 PM	1	210	91	0	18	14	1	4	85	5	0	0	0
4/24/2024	2:30 PM	1	212	89	0	23	13	1	3	84	2	0	0	0
4/24/2024	2:45 PM	1	216	88	1	21	12	4	3	88	2	0	0	0
4/24/2024	3:00 PM	0	221	97	4	22	8	3	3	89	2	0	0	0
4/24/2024	3:15 PM	0	232	104	5	23	4	3	9	98	2	0	0	0
4/24/2024	3:30 PM	1	237	99	6	16	6	3	12	101	2	0	1	0
4/24/2024	3:45 PM	1	251	99	5	14	4	0	12	94	2	0	1	0
4/24/2024	4:00 PM	1	257	105	2	12	4	0	11	84	3	0	1	0
4/24/2024	4:15 PM	2	278	93	1	15	4	0	7	77	3	0	1	0
4/24/2024	4:30 PM	1	303	104	0	17	2	1	5	71	3	0	0	0
4/24/2024	4:45 PM	3	303	105	0	17	2	1	5	73	3	0	0	0
4/24/2024	5:00 PM	3	302	102	0	18	4	1	7	75	2	0	0	0
4/24/2024	5:15 PM	3	279	100	0	13	3	1	6	73	3	0	0	0
4/24/2024	5:30 PM	3	254	85	0	13	2	0	6	72	3	0	0	0
4/24/2024	5:45 PM	1	249	81	0	13	2	0	7	89	4	0	0	0
4/24/2024	6:00 PM	1	227	63	0	11	1	0	5	102	5	0	0	0
4/24/2024	6:15 PM	0	199	59	0	11	2	0	4	109	4	0	0	0
4/24/2024	6:30 PM	0	193	60	0	7	3	0	4	106	4	0	0	0
4/24/2024	6:45 PM	0	168	57	0	7	5	0	3	92	3	0	0	0
4/24/2024	7:00 PM	0	168	56	0	7	4	0	3	80	2	0	0	0
4/24/2024	7:15 PM	0	164	58	0	11	4	0	4	77	0	0	0	0
4/24/2024	7:30 PM	0	145	57	1	10	3	0	4	72	0	0	0	0
4/24/2024	7:45 PM	0	144	51	1	9	1	0	4	72	0	0	0	0
4/24/2024	8:00 PM	0	127	48	1	10	1	0	6	71	0	0	0	0
4/24/2024	8:15 PM	0	125	41	1	7	0	0	7	64	0	0	0	0
4/24/2024	8:30 PM	0	113	35	0	7	0	0	6	57	0	0	0	0
4/24/2024	8:45 PM	0	111	32	0	7	0	0	7	56	0	0	0	0
4/24/2024	9:00 PM	0	105	30	0	6	1	0	6	54	0	1	0	0
4/24/2024	9:15 PM	0	94	25	0	5	1	0	4	56	0	1	0	0
4/24/2024	9:30 PM	0	82	21	0	5	1	0	3	67	0	1	0	0
4/24/2024	9:45 PM	0	64	16	0	5	2	0	3	62	0	1	0	0
4/24/2024	10:00 PM	0	52	15	1	4	1	0	3	60	0	3	0	0
4/24/2024	10:15 PM	0	45	13	1	3	1	0	5	53	0	6	0	0
4/24/2024	10:30 PM	0	40	12	1	2	1	0	5	53	0	7	0	0
4/24/2024	10:45 PM	0	49	11	1	1	0	0	3	44	0	7	0	0
4/24/2024	11:00 PM	0	58	8	0	3	0	0	3	43	0	4	0	0
4/24/2024	11:15 PM	0	56	9	0	4	0	0	1	40	0	1	0	0
4/24/2024	11:30 PM	0	51	7	0	7	0	0	1	34	0	2	0	0
4/24/2024	11:45 PM	0	38	8	0	7	0	0	1	43	0	2	0	0

4/25/2024	12:00 AM	0	25	8	0	5	0	0	0	45	0	5	0	0
4/25/2024	12:15 AM	0	21	6	0	4	0	0	1	47	0	7	0	0
4/25/2024	12:30 AM	0	20	8	0	1	0	0	2	49	0	8	0	0
4/25/2024	12:45 AM	0	19	7	0	0	0	0	2	41	0	10	0	0
4/25/2024	1:00 AM	0	22	7	0	0	0	0	2	37	0	8	0	0
4/25/2024	1:15 AM	0	22	7	0	1	0	0	1	38	0	8	0	0
4/25/2024	1:30 AM	0	21	5	0	1	0	0	0	35	0	7	0	0
4/25/2024	1:45 AM	0	24	7	0	3	0	0	1	40	0	6	0	0
4/25/2024	2:00 AM	0	22	7	0	3	0	0	1	37	0	7	0	0
4/25/2024	2:15 AM	0	27	8	0	2	0	0	1	41	0	6	0	0
4/25/2024	2:30 AM	0	28	8	0	2	0	0	2	41	0	6	0	0
4/25/2024	2:45 AM	0	30	8	0	2	0	0	1	48	0	5	0	0
4/25/2024	3:00 AM	0	30	9	0	3	0	0	2	57	0	4	0	0
4/25/2024	3:15 AM	0	29	11	0	4	1	0	3	55	0	4	0	0
4/25/2024	3:30 AM	0	37	16	0	4	1	0	4	55	0	3	0	0
4/25/2024	3:45 AM	0	40	20	0	3	2	0	7	52	0	4	0	0
4/25/2024	4:00 AM	0	47	24	0	3	2	0	7	53	0	6	0	0
4/25/2024	4:15 AM	0	50	26	0	4	4	0	6	58	0	5	0	0
4/25/2024	4:30 AM	0	52	31	1	5	5	0	5	68	0	4	0	0
4/25/2024	4:45 AM	0	64	39	1	6	4	0	2	67	0	4	0	0
4/25/2024	5:00 AM	0	79	52	1	6	4	0	2	70	0	2	0	0
4/25/2024	5:15 AM	0	90	62	1	10	2	0	4	73	0	2	0	0
4/25/2024	5:30 AM	0	114	76	0	10	6	0	6	77	0	2	0	0
4/25/2024	5:45 AM	0	153	81	0	13	8	0	6	79	0	1	0	0
4/25/2024	6:00 AM	0	182	90	0	16	9	1	6	80	0	1	0	0
4/25/2024	6:15 AM	0	214	104	0	18	13	2	7	81	1	2	0	0
4/25/2024	6:30 AM	0	247	116	0	25	11	2	5	68	1	2	0	0
4/25/2024	6:45 AM	0	258	124	0	24	11	2	5	68	2	2	0	0
4/25/2024	7:00 AM	0	296	130	0	22	13	1	6	64	3	1	0	0
4/25/2024	7:15 AM	0	315	139	1	21	11	0	4	64	2	0	0	0
4/25/2024	7:30 AM	0	330	151	1	19	9	0	8	67	2	0	0	0
4/25/2024	7:45 AM	0	335	162	1	25	7	2	11	65	1	1	0	0
4/25/2024	8:00 AM	0	292	168	1	30	7	3	12	71	1	1	1	0
4/25/2024	8:15 AM	0	284	161	0	29	6	3	15	73	1	1	1	0
4/25/2024	8:30 AM	0	255	143	1	27	7	3	13	83	1	1	1	0
4/25/2024	8:45 AM	0	217	130	2	26	8	1	14	106	1	0	1	0
4/25/2024	9:00 AM	0	220	113	3	25	7	1	13	102	2	0	0	0
4/25/2024	9:15 AM	0	208	112	4	25	9	1	11	102	4	0	0	0
4/25/2024	9:30 AM	1	206	104	7	26	11	2	9	99	5	0	0	0
4/25/2024	9:45 AM	2	218	105	6	21	14	2	6	85	8	0	0	0
4/25/2024	10:00 AM	2	217	110	5	19	16	1	8	101	6	0	0	0
4/25/2024	10:15 AM	2	212	94	4	19	15	2	9	109	4	1	0	0
4/25/2024	10:30 AM	1	220	98	0	23	12	1	14	109	3	1	0	0
4/25/2024	10:45 AM	0	218	89	1	26	11	1	15	116	1	1	0	0
4/25/2024	11:00 AM	0	205	85	2	30	8	1	13	105	1	1	0	0
4/25/2024	11:15 AM	0	221	85	2	27	7	2	13	98	1	0	0	0
4/25/2024	11:30 AM	0	208	88	2	27	8	3	10	99	1	0	0	0
4/25/2024	11:45 AM	0	225	98	1	24	8	3	12	86	1	0	0	0
4/25/2024	12:00 PM	0	235	96	1	24	10	3	16	87	3	0	0	0
4/25/2024	12:15 PM	0	227	116	1	30	11	1	17	77	3	0	0	0
4/25/2024	12:30 PM	1	228	108	1	29	11	1	16	72	4	0	0	0
4/25/2024	12:45 PM	1	212	101	1	34	12	1	15	79	6	0	0	0
4/25/2024	1:00 PM	1	202	100	0	36	12	1	12	76	5	0	0	0
4/25/2024	1:15 PM	1	181	89	0	33	10	1	10	85	5	0	0	0
4/25/2024	1:30 PM	1	183	92	0	33	11	1	11	91	4	0	0	0
4/25/2024	1:45 PM	1	183	101	0	26	10	2	9	82	1	0	0	0
4/25/2024	2:00 PM	1	187	103	0	21	10	3	8	83	0	0	0	0
4/25/2024	2:15 PM	1	206	103	0	18	10	3	9	76	0	0	0	0
4/25/2024	2:30 PM	0	211	104	1	17	9	2	8	74	0	0	0	0
4/25/2024	2:45 PM	0	214	99	2	23	7	1	10	90	0	0	0	0
4/25/2024	3:00 PM	0	231	102	2	22	4	0	10	87	1	0	0	0
4/25/2024	3:15 PM	0	246	104	3	22	3	0	8	93	3	0	0	0
4/25/2024	3:30 PM	0	239	99	2	17	2	0	7	102	5	0	0	0
4/25/2024	3:45 PM	0	257	97	1	11	2	0	6	101	5	0	0	0
4/25/2024	4:00 PM	0	262	101	1	13	3	0	6	101	4	0	0	0
4/25/2024	4:15 PM	0	273	101	0	17	4	0	8	98	2	0	0	0
4/25/2024	4:30 PM	0	309	105	0	17	3	0	11	87	1	0	0	0
4/25/2024	4:45 PM	1	305	108	0	17	3	0	9	76	2	0	0	0
4/25/2024	5:00 PM	1	307	96	0	15	6	0	7	77	2	0	0	0
4/25/2024	5:15 PM	2	293	99	0	11	7	0	4	70	2	0	0	0
4/25/2024	5:30 PM	2	280	96	1	10	9	0	2	59	1	0	0	0
4/25/2024	5:45 PM	2	272	90	1	9	9	0	4	60	0	0	0	0
4/25/2024	6:00 PM	2	250	81	1	8	6	0	5	60	0	0	0	0
4/25/2024	6:15 PM	1	216	72	1	6	4	0	6	73	0	0	0	0
4/25/2024	6:30 PM	1	187	79	0	6	3	0	4	78	0	0	0	0
4/25/2024	6:45 PM	0	163	81	1	6	2	0	3	79	0	0	0	0
4/25/2024	7:00 PM	0	177	91	1	4	1	0	4	74	0	0	0	0
4/25/2024	7:15 PM	0	186	85	1	4	2	0	5	67	0	0	0	0
4/25/2024	7:30 PM	0	174	71	1	5	3	0	7	75	0	0	0	0
4/25/2024	7:45 PM	0	173	58	0	7	3	0	9	69	0	1	0	0
4/25/2024	8:00 PM	0	143	46	0	6	3	0	7	73	0	1	0	0
4/25/2024	8:15 PM	0	139	41	1	8	3	0	7	67	0	1	0	0
4/25/2024	8:30 PM	0	139	34	1	8	1	0	5	58	0	1	0	0
4/25/2024	8:45 PM	0	120	33	1	5	1	0	2	59	0	3	0	0
4/25/2024	9:00 PM	0	117	36	1	6	2	0	5	57	0	4	0	0
4/25/2024	9:15 PM	0	99	33	0	3	2	0	5	63	0	4	0	0
4/25/2024	9:30 PM	0	89	29	0	5	3	0	5	64	0	5	0	0
4/25/2024	9:45 PM	0	92	23	0	6	4	0	5	62	0	2	0	0
4/25/2024	10:00 PM	0	83	16	0	6	4	0	3	49	0	2	0	0
4/25/2024	10:15 PM	0	83	16	0	6	3	0	2	44	0	4	0	0
4/25/2024	10:30 PM	0	70	16	0	4	2	0	3	43	0	3	0	0
4/25/2024	10:45 PM	0	60	20	0	4	2	0	3	34	0	3	0	0
4/25/2024	11:00 PM	0	46	16	0	3	1	0	2	33	0	3	0	0
4/25/2024	11:15 PM	0	26	10	0	3	1	0	1	21	0	1	0	0
4/25/2024	11:30 PM	0	16	6	0	1	1	0	0	9	0	1	0	0
4/25/2024	11:45 PM	0	5	0	0	0	0	0	0	4	0	1	0	0

4/26/2024	12:00 AM	0	12	0	0	2	0	0	0	29	0	2	0	0
4/26/2024	12:15 AM	0	17	1	0	3	0	0	0	26	0	3	0	0
4/26/2024	12:30 AM	0	25	2	0	2	2	0	0	26	0	5	0	0
4/26/2024	12:45 AM	0	28	4	0	3	2	0	0	34	0	7	0	0
4/26/2024	1:00 AM	0	28	4	0	2	2	0	0	31	0	8	0	0
4/26/2024	1:15 AM	0	32	4	2	1	3	0	0	39	0	6	0	0
4/26/2024	1:30 AM	0	30	4	2	1	1	0	0	47	0	4	0	0
4/26/2024	1:45 AM	0	25	2	2	2	2	0	0	47	0	3	0	0
4/26/2024	2:00 AM	0	25	2	2	2	2	0	0	51	0	2	0	0
4/26/2024	2:15 AM	0	20	1	0	3	1	0	0	51	0	4	0	0
4/26/2024	2:30 AM	0	22	1	0	4	3	0	0	49	0	4	0	0
4/26/2024	2:45 AM	0	26	1	2	3	2	0	0	51	0	5	0	0
4/26/2024	3:00 AM	0	30	3	2	3	2	0	0	58	0	6	0	0
4/26/2024	3:15 AM	0	41	6	2	3	3	0	0	50	0	7	0	0
4/26/2024	3:30 AM	0	51	7	2	3	3	0	0	55	0	8	0	0
4/26/2024	3:45 AM	1	54	11	0	4	3	0	0	56	0	5	0	0
4/26/2024	4:00 AM	1	62	12	0	6	3	0	0	52	0	4	0	0
4/26/2024	4:15 AM	1	57	12	0	7	2	0	0	64	0	1	0	0
4/26/2024	4:30 AM	1	65	15	0	8	0	0	0	65	0	1	0	0
4/26/2024	4:45 AM	0	79	14	0	9	1	0	0	64	0	2	0	0
4/26/2024	5:00 AM	0	88	23	1	8	1	0	1	63	0	2	0	0
4/26/2024	5:15 AM	0	111	34	1	7	1	0	1	59	0	2	0	0
4/26/2024	5:30 AM	0	106	48	1	8	1	0	1	62	0	1	0	0
4/26/2024	5:45 AM	0	129	71	4	8	2	1	4	68	2	0	0	0
4/26/2024	6:00 AM	0	154	90	3	14	5	1	5	74	2	1	0	0
4/26/2024	6:15 AM	0	172	101	3	18	7	2	6	81	2	1	0	0
4/26/2024	6:30 AM	0	214	130	3	23	7	2	9	74	2	2	0	0
4/26/2024	6:45 AM	0	250	135	0	20	7	1	8	74	0	2	0	0
4/26/2024	7:00 AM	0	302	135	1	16	7	2	9	64	0	2	0	0
4/26/2024	7:15 AM	0	333	156	1	17	7	1	10	55	0	2	0	0
4/26/2024	7:30 AM	0	357	136	2	15	8	1	9	62	1	1	0	0
4/26/2024	7:45 AM	0	379	136	8	17	8	1	8	55	2	1	0	0
4/26/2024	8:00 AM	0	333	139	11	22	6	0	8	65	2	0	0	0
4/26/2024	8:15 AM	0	318	113	16	22	4	0	8	75	2	0	0	0
4/26/2024	8:30 AM	0	306	117	15	23	4	1	11	75	1	0	0	0
4/26/2024	8:45 AM	0	276	114	9	25	2	1	12	81	1	0	0	0
4/26/2024	9:00 AM	0	271	121	5	20	3	1	10	82	1	0	0	0
4/26/2024	9:15 AM	0	267	121	0	22	5	1	13	88	2	0	0	0
4/26/2024	9:30 AM	0	244	120	0	21	4	1	8	86	2	0	0	0
4/26/2024	9:45 AM	0	244	115	0	20	7	2	7	92	2	0	0	0
4/26/2024	10:00 AM	1	243	102	1	20	7	2	13	99	6	0	0	0
4/26/2024	10:15 AM	1	231	118	2	20	7	3	8	89	5	0	0	0
4/26/2024	10:30 AM	1	234	108	2	18	9	2	12	93	7	0	0	0
4/26/2024	10:45 AM	1	234	113	2	20	8	1	11	86	7	0	0	0
4/26/2024	11:00 AM	0	247	119	1	25	7	1	7	83	3	0	0	0
4/26/2024	11:15 AM	0	246	109	0	23	5	0	11	86	5	0	0	0
4/26/2024	11:30 AM	0	243	105	0	25	8	0	11	85	3	0	0	0
4/26/2024	11:45 AM	0	221	107	0	26	6	0	12	91	2	0	0	0
4/26/2024	12:00 PM	1	213	101	0	22	6	0	13	98	2	0	0	0
4/26/2024	12:15 PM	1	216	100	0	23	6	2	12	96	1	0	0	0
4/26/2024	12:30 PM	1	222	108	0	22	4	2	10	93	1	0	0	0
4/26/2024	12:45 PM	1	239	99	0	25	7	3	10	90	1	0	0	0
4/26/2024	1:00 PM	0	239	96	0	25	9	3	12	67	2	0	0	0
4/26/2024	1:15 PM	0	246	95	0	24	11	2	12	65	1	0	0	0
4/26/2024	1:30 PM	0	244	87	0	20	9	2	12	64	2	0	0	0
4/26/2024	1:45 PM	0	223	85	0	12	6	1	14	65	2	0	0	0
4/26/2024	2:00 PM	0	227	80	0	16	6	1	10	73	1	0	0	0
4/26/2024	2:15 PM	0	229	76	3	14	7	0	8	75	1	0	0	0
4/26/2024	2:30 PM	1	236	86	3	18	7	0	8	78	1	0	0	0
4/26/2024	2:45 PM	1	272	92	3	25	10	0	7	66	2	0	0	0
4/26/2024	3:00 PM	2	300	103	6	20	8	0	8	69	3	1	0	0
4/26/2024	3:15 PM	3	330	101	3	16	9	0	10	65	3	1	0	0
4/26/2024	3:30 PM	2	329	98	3	13	11	0	9	68	2	1	0	0
4/26/2024	3:45 PM	2	319	93	3	8	10	0	9	66	1	1	0	0
4/26/2024	4:00 PM	3	319	82	0	13	12	0	8	56	0	0	0	0
4/26/2024	4:15 PM	2	313	85	0	16	8	0	8	56	1	0	0	0
4/26/2024	4:30 PM	2	328	83	1	18	7	0	8	53	1	0	0	0
4/26/2024	4:45 PM	3	328	92	2	16	6	0	6	57	3	0	0	0
4/26/2024	5:00 PM	2	329	95	2	11	5	0	6	58	3	0	0	0
4/26/2024	5:15 PM	2	330	96	4	12	6	0	6	58	2	0	0	0
4/26/2024	5:30 PM	2	344	95	3	12	4	0	5	51	2	0	0	0
4/26/2024	5:45 PM	2	338	92	2	16	5	0	5	54	1	0	0	0
4/26/2024	6:00 PM	1	302	91	2	15	5	0	4	60	1	0	0	0
4/26/2024	6:15 PM	1	258	88	0	12	5	0	3	63	1	0	0	0
4/26/2024	6:30 PM	1	233	84	0	9	8	0	4	62	1	0	0	0
4/26/2024	6:45 PM	0	222	76	0	7	8	0	4	60	0	0	0	0
4/26/2024	7:00 PM	2	226	79	1	6	7	0	4	57	0	0	0	0
4/26/2024	7:15 PM	2	232	77	1	6	6	0	2	55	0	0	0	0
4/26/2024	7:30 PM	2	200	74	2	7	5	0	1	53	0	0	0	0
4/26/2024	7:45 PM	2	189	66	2	6	3	0	1	55	0	0	0	0
4/26/2024	8:00 PM	0	183	50	1	8	2	0	0	59	0	1	0	0
4/26/2024	8:15 PM	0	167	42	1	10	4	0	0	54	0	1	0	0
4/26/2024	8:30 PM	0	170	36	0	11	2	0	0	54	0	1	0	0
4/26/2024	8:45 PM	0	153	35	0	12	2	0	0	47	0	2	0	0
4/26/2024	9:00 PM	0	154	36	0	10	2	0	0	35	0	3	0	0
4/26/2024	9:15 PM	0	144	35	0	7	0	0	0	35	0	3	0	0
4/26/2024	9:30 PM	0	135	38	0	5	0	0	0	35	0	5	0	0
4/26/2024	9:45 PM	0	133	34	0	3	0	0	0	36	0	4	0	0
4/26/2024	10:00 PM	0	104	30	1	2	0	0	0	44	0	3	0	0
4/26/2024	10:15 PM	0	109	26	1	3	0	0	0	42	0	4	0	0
4/26/2024	10:30 PM	0	103	17	1	2	0	0	1	42	0	2	0	0
4/26/2024	10:45 PM	0	97	15	1	1	0	0	1	44	0	3	0	0
4/26/2024	11:00 PM	0	99	9	0	4	0	0	1	38	0	2	0	0
4/26/2024	11:15 PM	0	71	5	0	3	0	0	1	29	0	1	0	0
4/26/2024	11:30 PM	0	46	3	0	3	0	0	0	18	0	1	0	0
4/26/2024	11:45 PM	0	24	0	0	3	0	0	0	7	0	0	0	0

4/27/2024	12:00 AM	0	63	6	0	1	0	0	0	26	0	2	0	0
4/27/2024	12:15 AM	0	52	5	0	6	0	0	0	22	0	4	0	0
4/27/2024	12:30 AM	0	44	4	0	7	1	0	0	27	0	5	0	0
4/27/2024	12:45 AM	0	41	3	0	6	1	0	0	23	0	6	0	0
4/27/2024	1:00 AM	0	30	2	0	7	2	0	0	21	0	4	0	0
4/27/2024	1:15 AM	0	31	3	0	2	2	0	0	21	0	3	0	0
4/27/2024	1:30 AM	0	32	2	0	2	3	0	0	22	0	2	0	0
4/27/2024	1:45 AM	0	28	1	0	2	3	0	0	25	0	1	0	0
4/27/2024	2:00 AM	0	28	1	0	2	2	0	0	28	0	3	0	0
4/27/2024	2:15 AM	0	27	0	0	3	2	0	0	28	0	3	0	0
4/27/2024	2:30 AM	0	23	0	0	2	1	0	0	24	0	4	0	0
4/27/2024	2:45 AM	0	24	1	0	2	1	0	0	25	0	8	0	0
4/27/2024	3:00 AM	0	26	1	0	1	4	0	0	23	0	6	0	0
4/27/2024	3:15 AM	0	27	1	0	0	4	0	0	22	0	5	0	0
4/27/2024	3:30 AM	0	29	2	0	0	4	0	0	17	0	4	0	0
4/27/2024	3:45 AM	0	33	4	0	0	4	0	0	15	0	0	0	0
4/27/2024	4:00 AM	0	33	4	0	1	1	0	0	15	0	1	0	0
4/27/2024	4:15 AM	0	33	6	0	3	1	0	0	20	0	1	0	0
4/27/2024	4:30 AM	0	35	7	0	3	1	0	0	24	0	1	0	0
4/27/2024	4:45 AM	0	33	8	0	4	1	0	0	26	0	2	0	0
4/27/2024	5:00 AM	0	33	13	0	3	1	0	0	35	0	2	0	0
4/27/2024	5:15 AM	0	40	21	0	2	1	0	0	30	0	3	0	0
4/27/2024	5:30 AM	0	47	32	1	3	0	0	0	30	0	5	0	0
4/27/2024	5:45 AM	0	66	38	1	4	1	0	0	36	1	4	0	0
4/27/2024	6:00 AM	0	86	43	1	5	1	0	0	35	1	3	0	0
4/27/2024	6:15 AM	0	108	49	1	5	1	0	1	41	1	3	0	0
4/27/2024	6:30 AM	0	138	58	0	9	1	1	3	44	1	1	0	0
4/27/2024	6:45 AM	0	152	73	0	10	2	1	3	37	0	1	0	0
4/27/2024	7:00 AM	2	173	84	0	9	3	1	3	35	0	2	1	0
4/27/2024	7:15 AM	2	194	94	0	9	3	1	3	39	0	1	1	0
4/27/2024	7:30 AM	2	212	93	2	5	3	0	3	42	0	1	1	0
4/27/2024	7:45 AM	2	230	81	2	4	2	0	3	53	0	1	1	0
4/27/2024	8:00 AM	0	247	78	3	6	1	0	5	56	1	0	0	0
4/27/2024	8:15 AM	0	269	70	3	12	1	0	4	55	1	0	0	0
4/27/2024	8:30 AM	0	285	70	1	15	3	0	2	52	1	0	0	0
4/27/2024	8:45 AM	2	296	81	1	13	3	0	4	49	2	0	0	0
4/27/2024	9:00 AM	2	305	87	0	11	3	0	3	47	2	0	0	0
4/27/2024	9:15 AM	2	305	87	0	6	3	0	3	45	3	0	0	0
4/27/2024	9:30 AM	2	300	88	0	5	1	0	4	48	3	0	0	0
4/27/2024	9:45 AM	0	309	86	0	8	0	0	3	45	2	0	0	0
4/27/2024	10:00 AM	0	318	86	0	8	0	0	4	39	1	0	0	0
4/27/2024	10:15 AM	0	309	92	0	9	1	0	5	41	0	0	0	0
4/27/2024	10:30 AM	0	324	82	0	8	1	0	4	46	0	0	0	0
4/27/2024	10:45 AM	1	314	80	0	7	1	0	7	47	0	0	0	0
4/27/2024	11:00 AM	1	323	77	0	9	1	0	7	56	0	0	0	0
4/27/2024	11:15 AM	1	330	76	0	8	1	0	6	55	1	0	0	0
4/27/2024	11:30 AM	1	313	83	0	8	1	0	7	45	1	0	0	0
4/27/2024	11:45 AM	1	332	84	0	9	1	0	4	53	1	0	0	0
4/27/2024	12:00 PM	1	318	90	0	9	1	0	3	49	2	0	0	0
4/27/2024	12:15 PM	1	315	86	1	9	1	0	4	52	1	0	0	0
4/27/2024	12:30 PM	3	306	89	1	7	1	0	5	58	1	0	0	0
4/27/2024	12:45 PM	2	321	93	1	7	2	0	6	50	1	0	0	0
4/27/2024	1:00 PM	2	307	87	1	5	3	0	5	50	0	0	0	0
4/27/2024	1:15 PM	2	311	89	0	4	2	0	4	45	0	0	0	0
4/27/2024	1:30 PM	0	334	87	0	8	3	0	4	40	0	0	0	0
4/27/2024	1:45 PM	1	319	90	1	6	2	0	3	37	0	0	0	0
4/27/2024	2:00 PM	1	339	93	1	6	5	0	3	37	0	0	0	0
4/27/2024	2:15 PM	1	359	105	1	6	6	0	3	31	0	1	0	0
4/27/2024	2:30 PM	2	352	103	1	3	5	0	2	35	2	1	0	0
4/27/2024	2:45 PM	1	339	99	1	2	5	0	2	33	2	1	0	0
4/27/2024	3:00 PM	1	340	94	1	2	1	0	2	30	2	1	0	0
4/27/2024	3:15 PM	1	319	82	2	3	1	0	2	31	2	0	0	0
4/27/2024	3:30 PM	1	316	80	2	3	1	0	1	31	0	0	0	0
4/27/2024	3:45 PM	1	318	75	1	6	2	0	3	37	0	0	0	0
4/27/2024	4:00 PM	1	320	75	1	7	2	0	3	35	0	0	0	0
4/27/2024	4:15 PM	1	325	72	0	5	1	0	4	46	1	0	0	0
4/27/2024	4:30 PM	1	320	73	0	6	1	0	4	47	1	0	0	0
4/27/2024	4:45 PM	1	317	70	0	4	0	0	1	43	1	0	0	0
4/27/2024	5:00 PM	1	298	70	0	4	1	0	2	44	1	0	0	0
4/27/2024	5:15 PM	1	279	78	0	4	1	0	2	36	0	0	0	0
4/27/2024	5:30 PM	1	266	75	1	7	1	0	3	31	0	0	0	0
4/27/2024	5:45 PM	1	263	69	1	7	1	0	3	36	1	0	0	0
4/27/2024	6:00 PM	1	259	68	1	6	0	0	2	35	1	0	0	0
4/27/2024	6:15 PM	1	265	60	1	8	0	0	2	34	1	0	0	0
4/27/2024	6:30 PM	0	264	67	0	6	0	0	3	35	1	0	0	0
4/27/2024	6:45 PM	0	250	75	0	6	0	0	3	31	0	0	0	0
4/27/2024	7:00 PM	0	253	72	0	8	0	0	4	28	0	0	0	0
4/27/2024	7:15 PM	0	236	72	0	7	0	0	4	27	0	0	0	0
4/27/2024	7:30 PM	1	213	63	0	5	0	0	2	22	0	0	0	0
4/27/2024	7:45 PM	1	195	53	0	8	0	0	2	21	0	0	0	0
4/27/2024	8:00 PM	1	176	47	0	8	0	0	1	19	0	0	0	0
4/27/2024	8:15 PM	1	167	34	0	8	0	0	0	21	0	0	0	0
4/27/2024	8:30 PM	0	180	26	0	7	0	0	0	20	0	0	0	0
4/27/2024	8:45 PM	0	184	22	0	5	0	0	0	17	0	0	0	0
4/27/2024	9:00 PM	0	173	16	0	4	0	0	0	24	0	0	0	0
4/27/2024	9:15 PM	0	165	13	0	3	0	0	0	22	0	0	0	0
4/27/2024	9:30 PM	0	151	11	0	3	0	0	0	25	0	0	0	0
4/27/2024	9:45 PM	0	145	10	0	2	0	0	0	23	0	0	0	0
4/27/2024	10:00 PM	0	136	9	1	1	0	0	0	18	0	0	0	0
4/27/2024	10:15 PM	0	129	10	1	3	0	0	0	18	0	0	0	0
4/27/2024	10:30 PM	0	129	12	1	3	0	0	0	21	0	0	0	0
4/27/2024	10:45 PM	0	115	11	1	2	0	0	0	18	0	0	0	0
4/27/2024	11:00 PM	0	112	10	0	3	0	0	0	21	0	0	0	0
4/27/2024	11:15 PM	0	83	7	0	1	0	0	0	16	0	0	0	0
4/27/2024	11:30 PM	0	49	3	0	1	0	0	0	7	0	0	0	0
4/27/2024	11:45 PM	0	24	1	0	1	0	0	0	7	0	0	0	0

WB
File Name:
Start Date: 4/21/2024
Start Time: 0
Site Code: 74 Lane 3 EB
Station ID: 1
Location 1: I-20, west of US-378 Sunset Blvd S/Bound Off-Ramp
Location 2:

Date	Time	1	2	3	4	5	6	7	8	9	10	11	12	13
4/21/2024	12:00 AM	0	0	0	0	0	0	0	0	0	0	0	0	0
4/21/2024	12:15 AM	0	0	0	0	0	0	0	0	0	0	0	0	0
4/21/2024	12:30 AM	0	0	0	0	0	0	0	0	0	0	0	0	0
4/21/2024	12:45 AM	0	0	0	0	0	0	0	0	0	0	0	0	0
4/21/2024	1:00 AM	0	0	0	0	0	0	0	0	0	0	0	0	0
4/21/2024	1:15 AM	0	0	0	0	0	0	0	0	0	0	0	0	0
4/21/2024	1:30 AM	0	0	0	0	0	0	0	0	0	0	0	0	0
4/21/2024	1:45 AM	0	0	0	0	0	0	0	0	0	0	0	0	0
4/21/2024	2:00 AM	0	0	0	0	0	0	0	0	0	0	0	0	0
4/21/2024	2:15 AM	0	0	0	0	0	0	0	0	0	0	0	0	0
4/21/2024	2:30 AM	0	0	0	0	0	0	0	0	0	0	0	0	0
4/21/2024	2:45 AM	0	0	0	0	0	0	0	0	0	0	0	0	0
4/21/2024	3:00 AM	0	0	0	0	0	0	0	0	0	0	0	0	0
4/21/2024	3:15 AM	0	0	0	0	0	0	0	0	0	0	0	0	0
4/21/2024	3:30 AM	0	0	0	0	0	0	0	0	0	0	0	0	0
4/21/2024	3:45 AM	0	0	0	0	0	0	0	0	0	0	0	0	0
4/21/2024	4:00 AM	0	0	0	0	0	0	0	0	0	0	0	0	0
4/21/2024	4:15 AM	0	0	0	0	0	0	0	0	0	0	0	0	0
4/21/2024	4:30 AM	0	0	0	0	0	0	0	0	0	0	0	0	0
4/21/2024	4:45 AM	0	0	0	0	0	0	0	0	0	0	0	0	0
4/21/2024	5:00 AM	0	0	0	0	0	0	0	0	0	0	0	0	0
4/21/2024	5:15 AM	0	0	0	0	0	0	0	0	0	0	0	0	0
4/21/2024	5:30 AM	0	0	0	0	0	0	0	0	0	0	0	0	0
4/21/2024	5:45 AM	0	0	0	0	0	0	0	0	0	0	0	0	0
4/21/2024	6:00 AM	0	0	0	0	0	0	0	0	0	0	0	0	0
4/21/2024	6:15 AM	0	0	0	0	0	0	0	0	0	0	0	0	0
4/21/2024	6:30 AM	0	0	0	0	0	0	0	0	0	0	0	0	0
4/21/2024	6:45 AM	0	0	0	0	0	0	0	0	0	0	0	0	0
4/21/2024	7:00 AM	0	0	0	0	0	0	0	0	0	0	0	0	0
4/21/2024	7:15 AM	0	0	0	0	0	0	0	0	0	0	0	0	0
4/21/2024	7:30 AM	0	0	0	0	0	0	0	0	0	0	0	0	0
4/21/2024	7:45 AM	0	0	0	0	0	0	0	0	0	0	0	0	0
4/21/2024	8:00 AM	0	0	0	0	0	0	0	0	0	0	0	0	0
4/21/2024	8:15 AM	0	0	0	0	0	0	0	0	0	0	0	0	0
4/21/2024	8:30 AM	0	0	0	0	0	0	0	0	0	0	0	0	0
4/21/2024	8:45 AM	0	0	0	0	0	0	0	0	0	0	0	0	0
4/21/2024	9:00 AM	0	0	0	0	0	0	0	0	0	0	0	0	0
4/21/2024	9:15 AM	0	0	0	0	0	0	0	0	0	0	0	0	0
4/21/2024	9:30 AM	0	0	0	0	0	0	0	0	0	0	0	0	0
4/21/2024	9:45 AM	0	0	0	0	0	0	0	0	0	0	0	0	0
4/21/2024	10:00 AM	0	0	0	0	0	0	0	0	0	0	0	0	0
4/21/2024	10:15 AM	0	0	0	0	0	0	0	0	0	0	0	0	0
4/21/2024	10:30 AM	0	0	0	0	0	0	0	0	0	0	0	0	0
4/21/2024	10:45 AM	0	0	0	0	0	0	0	0	0	0	0	0	0
4/21/2024	11:00 AM	0	0	0	0	0	0	0	0	0	0	0	0	0
4/21/2024	11:15 AM	0	0	0	0	0	0	0	0	0	0	0	0	0
4/21/2024	11:30 AM	0	0	0	0	0	0	0	0	0	0	0	0	0
4/21/2024	11:45 AM	0	0	0	0	0	0	0	0	0	0	0	0	0
4/21/2024	12:00 PM	0	0	0	0	0	0	0	0	0	0	0	0	0
4/21/2024	12:15 PM	0	0	0	0	0	0	0	0	0	0	0	0	0
4/21/2024	12:30 PM	0	0	0	0	0	0	0	0	0	0	0	0	0
4/21/2024	12:45 PM	0	0	0	0	0	0	0	0	0	0	0	0	0
4/21/2024	1:00 PM	0	0	0	0	0	0	0	0	0	0	0	0	0
4/21/2024	1:15 PM	0	0	0	0	0	0	0	0	0	0	0	0	0
4/21/2024	1:30 PM	0	0	0	0	0	0	0	0	0	0	0	0	0
4/21/2024	1:45 PM	0	0	0	0	0	0	0	0	0	0	0	0	0
4/21/2024	2:00 PM	0	0	0	0	0	0	0	0	0	0	0	0	0
4/21/2024	2:15 PM	0	0	0	0	0	0	0	0	0	0	0	0	0
4/21/2024	2:30 PM	0	0	0	0	0	0	0	0	0	0	0	0	0
4/21/2024	2:45 PM	0	0	0	0	0	0	0	0	0	0	0	0	0
4/21/2024	3:00 PM	0	0	0	0	0	0	0	0	0	0	0	0	0
4/21/2024	3:15 PM	0	0	0	0	0	0	0	0	0	0	0	0	0
4/21/2024	3:30 PM	0	0	0	0	0	0	0	0	0	0	0	0	0
4/21/2024	3:45 PM	0	0	0	0	0	0	0	0	0	0	0	0	0
4/21/2024	4:00 PM	0	0	0	0	0	0	0	0	0	0	0	0	0
4/21/2024	4:15 PM	0	0	0	0	0	0	0	0	0	0	0	0	0
4/21/2024	4:30 PM	0	0	0	0	0	0	0	0	0	0	0	0	0
4/21/2024	4:45 PM	0	0	0	0	0	0	0	0	0	0	0	0	0
4/21/2024	5:00 PM	0	0	0	0	0	0	0	0	0	0	0	0	0
4/21/2024	5:15 PM	0	0	0	0	0	0	0	0	0	0	0	0	0
4/21/2024	5:30 PM	0	0	0	0	0	0	0	0	0	0	0	0	0
4/21/2024	5:45 PM	0	0	0	0	0	0	0	0	0	0	0	0	0
4/21/2024	6:00 PM	0	0	0	0	0	0	0	0	0	0	0	0	0
4/21/2024	6:15 PM	0	0	0	0	0	0	0	0	0	0	0	0	0
4/21/2024	6:30 PM	0	0	0	0	0	0	0	0	0	0	0	0	0
4/21/2024	6:45 PM	0	0	0	0	0	0	0	0	0	0	0	0	0
4/21/2024	7:00 PM	0	0	0	0	0	0	0	0	0	0	0	0	0
4/21/2024	7:15 PM	0	0	0	0	0	0	0	0	0	0	0	0	0
4/21/2024	7:30 PM	0	0	0	0	0	0	0	0	0	0	0	0	0
4/21/2024	7:45 PM	0	0	0	0	0	0	0	0	0	0	0	0	0
4/21/2024	8:00 PM	0	0	0	0	0	0	0	0	0	0	0	0	0
4/21/2024	8:15 PM	0	0	0	0	0	0	0	0	0	0	0	0	0
4/21/2024	8:30 PM	0	0	0	0	0	0	0	0	0	0	0	0	0
4/21/2024	8:45 PM	0	0	0	0	0	0	0	0	0	0	0	0	0
4/21/2024	9:00 PM	0	0	0	0	0	0	0	0	0	0	0	0	0
4/21/2024	9:15 PM	0	0	0	0	0	0	0	0	0	0	0	0	0
4/21/2024	9:30 PM	0	0	0	0	0	0	0	0	0	0	0	0	0
4/21/2024	9:45 PM	0	0	0	0	0	0	0	0	0	0	0	0	0
4/21/2024	10:00 PM	0	0	0	0	0	0	0	0	0	0	0	0	0
4/21/2024	10:15 PM	0	0	0	0	0	0	0	0	0	0	0	0	0
4/21/2024	10:30 PM	0	0	0	0	0	0	0	0	0	0	0	0	0
4/21/2024	10:45 PM	0	0	0	0	0	0	0	0	0	0	0	0	0
4/21/2024	11:00 PM	0	0	0	0	0	0	0	0	0	0	0	0	0
4/21/2024	11:15 PM	0	0	0	0	0	0	0	0	0	0	0	0	0
4/21/2024	11:30 PM	0	0	0	0	0	0	0	0	0	0	0	0	0
4/21/2024	11:45 PM	0	0	0	0	0	0	0	0	0	0	0	0	0

4/22/2024	12:00 AM	0	0	0	0	0	0	0	0	0	0	0	0	0
4/22/2024	12:15 AM	0	0	0	0	0	0	0	0	0	0	0	0	0
4/22/2024	12:30 AM	0	0	0	0	0	0	0	0	0	0	0	0	0
4/22/2024	12:45 AM	0	0	0	0	0	0	0	0	0	0	0	0	0
4/22/2024	1:00 AM	0	0	0	0	0	0	0	0	0	0	0	0	0
4/22/2024	1:15 AM	0	0	0	0	0	0	0	0	0	0	0	0	0
4/22/2024	1:30 AM	0	0	0	0	0	0	0	0	0	0	0	0	0
4/22/2024	1:45 AM	0	0	0	0	0	0	0	0	0	0	0	0	0
4/22/2024	2:00 AM	0	0	0	0	0	0	0	0	0	0	0	0	0
4/22/2024	2:15 AM	0	0	0	0	0	0	0	0	0	0	0	0	0
4/22/2024	2:30 AM	0	0	0	0	0	0	0	0	0	0	0	0	0
4/22/2024	2:45 AM	0	0	0	0	0	0	0	0	0	0	0	0	0
4/22/2024	3:00 AM	0	0	0	0	0	0	0	0	0	0	0	0	0
4/22/2024	3:15 AM	0	0	0	0	0	0	0	0	0	0	0	0	0
4/22/2024	3:30 AM	0	0	0	0	0	0	0	0	0	0	0	0	0
4/22/2024	3:45 AM	0	0	0	0	0	0	0	0	0	0	0	0	0
4/22/2024	4:00 AM	0	0	0	0	0	0	0	0	0	0	0	0	0
4/22/2024	4:15 AM	0	0	0	0	0	0	0	0	0	0	0	0	0
4/22/2024	4:30 AM	0	0	0	0	0	0	0	0	0	0	0	0	0
4/22/2024	4:45 AM	0	0	0	0	0	0	0	0	0	0	0	0	0
4/22/2024	5:00 AM	0	0	0	0	0	0	0	0	0	0	0	0	0
4/22/2024	5:15 AM	0	0	0	0	0	0	0	0	0	0	0	0	0
4/22/2024	5:30 AM	0	0	0	0	0	0	0	0	0	0	0	0	0
4/22/2024	5:45 AM	0	0	0	0	0	0	0	0	0	0	0	0	0
4/22/2024	6:00 AM	0	0	0	0	0	0	0	0	0	0	0	0	0
4/22/2024	6:15 AM	0	0	0	0	0	0	0	0	0	0	0	0	0
4/22/2024	6:30 AM	0	0	0	0	0	0	0	0	0	0	0	0	0
4/22/2024	6:45 AM	0	0	0	0	0	0	0	0	0	0	0	0	0
4/22/2024	7:00 AM	0	0	0	0	0	0	0	0	0	0	0	0	0
4/22/2024	7:15 AM	0	0	0	0	0	0	0	0	0	0	0	0	0
4/22/2024	7:30 AM	0	0	0	0	0	0	0	0	0	0	0	0	0
4/22/2024	7:45 AM	0	0	0	0	0	0	0	0	0	0	0	0	0
4/22/2024	8:00 AM	0	0	0	0	0	0	0	0	0	0	0	0	0
4/22/2024	8:15 AM	0	0	0	0	0	0	0	0	0	0	0	0	0
4/22/2024	8:30 AM	0	0	0	0	0	0	0	0	0	0	0	0	0
4/22/2024	8:45 AM	0	0	0	0	0	0	0	0	0	0	0	0	0
4/22/2024	9:00 AM	0	0	0	0	0	0	0	0	0	0	0	0	0
4/22/2024	9:15 AM	0	0	0	0	0	0	0	0	0	0	0	0	0
4/22/2024	9:30 AM	0	0	0	0	0	0	0	0	0	0	0	0	0
4/22/2024	9:45 AM	0	0	0	0	0	0	0	0	0	0	0	0	0
4/22/2024	10:00 AM	0	0	0	0	0	0	0	0	0	0	0	0	0
4/22/2024	10:15 AM	0	0	0	0	0	0	0	0	0	0	0	0	0
4/22/2024	10:30 AM	0	0	0	0	0	0	0	0	0	0	0	0	0
4/22/2024	10:45 AM	0	0	0	0	0	0	0	0	0	0	0	0	0
4/22/2024	11:00 AM	0	0	0	0	0	0	0	0	0	0	0	0	0
4/22/2024	11:15 AM	0	0	0	0	0	0	0	0	0	0	0	0	0
4/22/2024	11:30 AM	0	0	0	0	0	0	0	0	0	0	0	0	0
4/22/2024	11:45 AM	0	0	0	0	0	0	0	0	0	0	0	0	0
4/22/2024	12:00 PM	0	0	0	0	0	0	0	0	0	0	0	0	0
4/22/2024	12:15 PM	0	0	0	0	0	0	0	0	0	0	0	0	0
4/22/2024	12:30 PM	0	0	0	0	0	0	0	0	0	0	0	0	0
4/22/2024	12:45 PM	0	0	0	0	0	0	0	0	0	0	0	0	0
4/22/2024	1:00 PM	0	0	0	0	0	0	0	0	0	0	0	0	0
4/22/2024	1:15 PM	0	0	0	0	0	0	0	0	0	0	0	0	0
4/22/2024	1:30 PM	0	0	0	0	0	0	0	0	0	0	0	0	0
4/22/2024	1:45 PM	0	0	0	0	0	0	0	0	0	0	0	0	0
4/22/2024	2:00 PM	0	0	0	0	0	0	0	0	0	0	0	0	0
4/22/2024	2:15 PM	0	0	0	0	0	0	0	0	0	0	0	0	0
4/22/2024	2:30 PM	0	0	0	0	0	0	0	0	0	0	0	0	0
4/22/2024	2:45 PM	0	0	0	0	0	0	0	0	0	0	0	0	0
4/22/2024	3:00 PM	0	0	0	0	0	0	0	0	0	0	0	0	0
4/22/2024	3:15 PM	0	0	0	0	0	0	0	0	0	0	0	0	0
4/22/2024	3:30 PM	0	0	0	0	0	0	0	0	0	0	0	0	0
4/22/2024	3:45 PM	0	0	0	0	0	0	0	0	0	0	0	0	0
4/22/2024	4:00 PM	0	0	0	0	0	0	0	0	0	0	0	0	0
4/22/2024	4:15 PM	0	0	0	0	0	0	0	0	0	0	0	0	0
4/22/2024	4:30 PM	0	0	0	0	0	0	0	0	0	0	0	0	0
4/22/2024	4:45 PM	0	0	0	0	0	0	0	0	0	0	0	0	0
4/22/2024	5:00 PM	0	0	0	0	0	0	0	0	0	0	0	0	0
4/22/2024	5:15 PM	0	0	0	0	0	0	0	0	0	0	0	0	0
4/22/2024	5:30 PM	0	0	0	0	0	0	0	0	0	0	0	0	0
4/22/2024	5:45 PM	0	0	0	0	0	0	0	0	0	0	0	0	0
4/22/2024	6:00 PM	0	0	0	0	0	0	0	0	0	0	0	0	0
4/22/2024	6:15 PM	0	0	0	0	0	0	0	0	0	0	0	0	0
4/22/2024	6:30 PM	0	0	0	0	0	0	0	0	0	0	0	0	0
4/22/2024	6:45 PM	0	0	0	0	0	0	0	0	0	0	0	0	0
4/22/2024	7:00 PM	0	0	0	0	0	0	0	0	0	0	0	0	0
4/22/2024	7:15 PM	0	0	0	0	0	0	0	0	0	0	0	0	0
4/22/2024	7:30 PM	0	0	0	0	0	0	0	0	0	0	0	0	0
4/22/2024	7:45 PM	0	0	0	0	0	0	0	0	0	0	0	0	0
4/22/2024	8:00 PM	0	0	0	0	0	0	0	0	0	0	0	0	0
4/22/2024	8:15 PM	0	0	0	0	0	0	0	0	0	0	0	0	0
4/22/2024	8:30 PM	0	0	0	0	0	0	0	0	0	0	0	0	0
4/22/2024	8:45 PM	0	0	0	0	0	0	0	0	0	0	0	0	0
4/22/2024	9:00 PM	0	0	0	0	0	0	0	0	0	0	0	0	0
4/22/2024	9:15 PM	0	0	0	0	0	0	0	0	0	0	0	0	0
4/22/2024	9:30 PM	0	0	0	0	0	0	0	0	0	0	0	0	0
4/22/2024	9:45 PM	0	0	0	0	0	0	0	0	0	0	0	0	0
4/22/2024	10:00 PM	0	0	0	0	0	0	0	0	0	0	0	0	0
4/22/2024	10:15 PM	0	0	0	0	0	0	0	0	0	0	0	0	0
4/22/2024	10:30 PM	0	0	0	0	0	0	0	0	0	0	0	0	0
4/22/2024	10:45 PM	0	0	0	0	0	0	0	0	0	0	0	0	0
4/22/2024	11:00 PM	0	0	0	0	0	0	0	0	0	0	0	0	0
4/22/2024	11:15 PM	0	0	0	0	0	0	0	0	0	0	0	0	0
4/22/2024	11:30 PM	0	0	0	0	0	0	0	0	0	0	0	0	0
4/22/2024	11:45 PM	0	0	0	0	0	0	0	0	0	0	0	0	0

4/23/2024	12:00 AM	0	0	0	0	0	0	0	0	0	0	0	0	0
4/23/2024	12:15 AM	0	0	0	0	0	0	0	0	0	0	0	0	0
4/23/2024	12:30 AM	0	0	0	0	0	0	0	0	0	0	0	0	0
4/23/2024	12:45 AM	0	0	0	0	0	0	0	0	0	0	0	0	0
4/23/2024	1:00 AM	0	0	0	0	0	0	0	0	0	0	0	0	0
4/23/2024	1:15 AM	0	0	0	0	0	0	0	0	0	0	0	0	0
4/23/2024	1:30 AM	0	0	0	0	0	0	0	0	0	0	0	0	0
4/23/2024	1:45 AM	0	0	0	0	0	0	0	0	0	0	0	0	0
4/23/2024	2:00 AM	0	0	0	0	0	0	0	0	0	0	0	0	0
4/23/2024	2:15 AM	0	0	0	0	0	0	0	0	0	0	0	0	0
4/23/2024	2:30 AM	0	0	0	0	0	0	0	0	0	0	0	0	0
4/23/2024	2:45 AM	0	0	0	0	0	0	0	0	0	0	0	0	0
4/23/2024	3:00 AM	0	0	0	0	0	0	0	0	0	0	0	0	0
4/23/2024	3:15 AM	0	0	0	0	0	0	0	0	0	0	0	0	0
4/23/2024	3:30 AM	0	0	0	0	0	0	0	0	0	0	0	0	0
4/23/2024	3:45 AM	0	0	0	0	0	0	0	0	0	0	0	0	0
4/23/2024	4:00 AM	0	0	0	0	0	0	0	0	0	0	0	0	0
4/23/2024	4:15 AM	0	0	0	0	0	0	0	0	0	0	0	0	0
4/23/2024	4:30 AM	0	0	0	0	0	0	0	0	0	0	0	0	0
4/23/2024	4:45 AM	0	0	0	0	0	0	0	0	0	0	0	0	0
4/23/2024	5:00 AM	0	0	0	0	0	0	0	0	0	0	0	0	0
4/23/2024	5:15 AM	0	0	0	0	0	0	0	0	0	0	0	0	0
4/23/2024	5:30 AM	0	0	0	0	0	0	0	0	0	0	0	0	0
4/23/2024	5:45 AM	0	0	0	0	0	0	0	0	0	0	0	0	0
4/23/2024	6:00 AM	0	0	0	0	0	0	0	0	0	0	0	0	0
4/23/2024	6:15 AM	0	0	0	0	0	0	0	0	0	0	0	0	0
4/23/2024	6:30 AM	0	0	0	0	0	0	0	0	0	0	0	0	0
4/23/2024	6:45 AM	0	0	0	0	0	0	0	0	0	0	0	0	0
4/23/2024	7:00 AM	0	0	0	0	0	0	0	0	0	0	0	0	0
4/23/2024	7:15 AM	0	0	0	0	0	0	0	0	0	0	0	0	0
4/23/2024	7:30 AM	0	0	0	0	0	0	0	0	0	0	0	0	0
4/23/2024	7:45 AM	0	0	0	0	0	0	0	0	0	0	0	0	0
4/23/2024	8:00 AM	0	0	0	0	0	0	0	0	0	0	0	0	0
4/23/2024	8:15 AM	0	0	0	0	0	0	0	0	0	0	0	0	0
4/23/2024	8:30 AM	0	0	0	0	0	0	0	0	0	0	0	0	0
4/23/2024	8:45 AM	0	0	0	0	0	0	0	0	0	0	0	0	0
4/23/2024	9:00 AM	0	0	0	0	0	0	0	0	0	0	0	0	0
4/23/2024	9:15 AM	0	0	0	0	0	0	0	0	0	0	0	0	0
4/23/2024	9:30 AM	0	0	0	0	0	0	0	0	0	0	0	0	0
4/23/2024	9:45 AM	0	0	0	0	0	0	0	0	0	0	0	0	0
4/23/2024	10:00 AM	0	0	0	0	0	0	0	0	0	0	0	0	0
4/23/2024	10:15 AM	0	0	0	0	0	0	0	0	0	0	0	0	0
4/23/2024	10:30 AM	0	0	0	0	0	0	0	0	0	0	0	0	0
4/23/2024	10:45 AM	0	0	0	0	0	0	0	0	0	0	0	0	0
4/23/2024	11:00 AM	0	0	0	0	0	0	0	0	0	0	0	0	0
4/23/2024	11:15 AM	0	0	0	0	0	0	0	0	0	0	0	0	0
4/23/2024	11:30 AM	0	0	0	0	0	0	0	0	0	0	0	0	0
4/23/2024	11:45 AM	0	0	0	0	0	0	0	0	0	0	0	0	0
4/23/2024	12:00 PM	0	0	0	0	0	0	0	0	0	0	0	0	0
4/23/2024	12:15 PM	0	0	0	0	0	0	0	0	0	0	0	0	0
4/23/2024	12:30 PM	0	0	0	0	0	0	0	0	0	0	0	0	0
4/23/2024	12:45 PM	0	0	0	0	0	0	0	0	0	0	0	0	0
4/23/2024	1:00 PM	0	0	0	0	0	0	0	0	0	0	0	0	0
4/23/2024	1:15 PM	0	0	0	0	0	0	0	0	0	0	0	0	0
4/23/2024	1:30 PM	0	0	0	0	0	0	0	0	0	0	0	0	0
4/23/2024	1:45 PM	0	0	0	0	0	0	0	0	0	0	0	0	0
4/23/2024	2:00 PM	0	0	0	0	0	0	0	0	0	0	0	0	0
4/23/2024	2:15 PM	0	0	0	0	0	0	0	0	0	0	0	0	0
4/23/2024	2:30 PM	0	0	0	0	0	0	0	0	0	0	0	0	0
4/23/2024	2:45 PM	0	0	0	0	0	0	0	0	0	0	0	0	0
4/23/2024	3:00 PM	0	0	0	0	0	0	0	0	0	0	0	0	0
4/23/2024	3:15 PM	0	0	0	0	0	0	0	0	0	0	0	0	0
4/23/2024	3:30 PM	0	0	0	0	0	0	0	0	0	0	0	0	0
4/23/2024	3:45 PM	0	0	0	0	0	0	0	0	0	0	0	0	0
4/23/2024	4:00 PM	0	0	0	0	0	0	0	0	0	0	0	0	0
4/23/2024	4:15 PM	0	0	0	0	0	0	0	0	0	0	0	0	0
4/23/2024	4:30 PM	0	0	0	0	0	0	0	0	0	0	0	0	0
4/23/2024	4:45 PM	0	0	0	0	0	0	0	0	0	0	0	0	0
4/23/2024	5:00 PM	0	0	0	0	0	0	0	0	0	0	0	0	0
4/23/2024	5:15 PM	0	0	0	0	0	0	0	0	0	0	0	0	0
4/23/2024	5:30 PM	0	0	0	0	0	0	0	0	0	0	0	0	0
4/23/2024	5:45 PM	0	0	0	0	0	0	0	0	0	0	0	0	0
4/23/2024	6:00 PM	0	0	0	0	0	0	0	0	0	0	0	0	0
4/23/2024	6:15 PM	0	0	0	0	0	0	0	0	0	0	0	0	0
4/23/2024	6:30 PM	0	0	0	0	0	0	0	0	0	0	0	0	0
4/23/2024	6:45 PM	0	0	0	0	0	0	0	0	0	0	0	0	0
4/23/2024	7:00 PM	0	0	0	0	0	0	0	0	0	0	0	0	0
4/23/2024	7:15 PM	0	0	0	0	0	0	0	0	0	0	0	0	0
4/23/2024	7:30 PM	0	0	0	0	0	0	0	0	0	0	0	0	0
4/23/2024	7:45 PM	0	0	0	0	0	0	0	0	0	0	0	0	0
4/23/2024	8:00 PM	0	0	0	0	0	0	0	0	0	0	0	0	0
4/23/2024	8:15 PM	0	0	0	0	0	0	0	0	0	0	0	0	0
4/23/2024	8:30 PM	0	0	0	0	0	0	0	0	0	0	0	0	0
4/23/2024	8:45 PM	0	0	0	0	0	0	0	0	0	0	0	0	0
4/23/2024	9:00 PM	0	0	0	0	0	0	0	0	0	0	0	0	0
4/23/2024	9:15 PM	0	0	0	0	0	0	0	0	0	0	0	0	0
4/23/2024	9:30 PM	0	0	0	0	0	0	0	0	0	0	0	0	0
4/23/2024	9:45 PM	0	0	0	0	0	0	0	0	0	0	0	0	0
4/23/2024	10:00 PM	0	0	0	0	0	0	0	0	0	0	0	0	0
4/23/2024	10:15 PM	0	0	0	0	0	0	0	0	0	0	0	0	0
4/23/2024	10:30 PM	0	0	0	0	0	0	0	0	0	0	0	0	0
4/23/2024	10:45 PM	0	0	0	0	0	0	0	0	0	0	0	0	0
4/23/2024	11:00 PM	0	0	0	0	0	0	0	0	0	0	0	0	0
4/23/2024	11:15 PM	0	0	0	0	0	0	0	0	0	0	0	0	0
4/23/2024	11:30 PM	0	0	0	0	0	0	0	0	0	0	0	0	0
4/23/2024	11:45 PM	0	0	0	0	0	0	0	0	0	0	0	0	0

4/24/2024	12:00 AM	0	0	0	0	0	0	0	0	0	0	0	0	0
4/24/2024	12:15 AM	0	0	0	0	0	0	0	0	0	0	0	0	0
4/24/2024	12:30 AM	0	0	0	0	0	0	0	0	0	0	0	0	0
4/24/2024	12:45 AM	0	0	0	0	0	0	0	0	0	0	0	0	0
4/24/2024	1:00 AM	0	0	0	0	0	0	0	0	0	0	0	0	0
4/24/2024	1:15 AM	0	0	0	0	0	0	0	0	0	0	0	0	0
4/24/2024	1:30 AM	0	0	0	0	0	0	0	0	0	0	0	0	0
4/24/2024	1:45 AM	0	0	0	0	0	0	0	0	0	0	0	0	0
4/24/2024	2:00 AM	0	0	0	0	0	0	0	0	0	0	0	0	0
4/24/2024	2:15 AM	0	0	0	0	0	0	0	0	0	0	0	0	0
4/24/2024	2:30 AM	0	0	0	0	0	0	0	0	0	0	0	0	0
4/24/2024	2:45 AM	0	0	0	0	0	0	0	0	0	0	0	0	0
4/24/2024	3:00 AM	0	0	0	0	0	0	0	0	0	0	0	0	0
4/24/2024	3:15 AM	0	0	0	0	0	0	0	0	0	0	0	0	0
4/24/2024	3:30 AM	0	0	0	0	0	0	0	0	0	0	0	0	0
4/24/2024	3:45 AM	0	0	0	0	0	0	0	0	0	0	0	0	0
4/24/2024	4:00 AM	0	0	0	0	0	0	0	0	0	0	0	0	0
4/24/2024	4:15 AM	0	0	0	0	0	0	0	0	0	0	0	0	0
4/24/2024	4:30 AM	0	0	0	0	0	0	0	0	0	0	0	0	0
4/24/2024	4:45 AM	0	0	0	0	0	0	0	0	0	0	0	0	0
4/24/2024	5:00 AM	0	0	0	0	0	0	0	0	0	0	0	0	0
4/24/2024	5:15 AM	0	0	0	0	0	0	0	0	0	0	0	0	0
4/24/2024	5:30 AM	0	0	0	0	0	0	0	0	0	0	0	0	0
4/24/2024	5:45 AM	0	0	0	0	0	0	0	0	0	0	0	0	0
4/24/2024	6:00 AM	0	0	0	0	0	0	0	0	0	0	0	0	0
4/24/2024	6:15 AM	0	0	0	0	0	0	0	0	0	0	0	0	0
4/24/2024	6:30 AM	0	0	0	0	0	0	0	0	0	0	0	0	0
4/24/2024	6:45 AM	0	0	0	0	0	0	0	0	0	0	0	0	0
4/24/2024	7:00 AM	0	0	0	0	0	0	0	0	0	0	0	0	0
4/24/2024	7:15 AM	0	0	0	0	0	0	0	0	0	0	0	0	0
4/24/2024	7:30 AM	0	0	0	0	0	0	0	0	0	0	0	0	0
4/24/2024	7:45 AM	0	0	0	0	0	0	0	0	0	0	0	0	0
4/24/2024	8:00 AM	0	0	0	0	0	0	0	0	0	0	0	0	0
4/24/2024	8:15 AM	0	0	0	0	0	0	0	0	0	0	0	0	0
4/24/2024	8:30 AM	0	0	0	0	0	0	0	0	0	0	0	0	0
4/24/2024	8:45 AM	0	0	0	0	0	0	0	0	0	0	0	0	0
4/24/2024	9:00 AM	0	0	0	0	0	0	0	0	0	0	0	0	0
4/24/2024	9:15 AM	0	0	0	0	0	0	0	0	0	0	0	0	0
4/24/2024	9:30 AM	0	0	0	0	0	0	0	0	0	0	0	0	0
4/24/2024	9:45 AM	0	0	0	0	0	0	0	0	0	0	0	0	0
4/24/2024	10:00 AM	0	0	0	0	0	0	0	0	0	0	0	0	0
4/24/2024	10:15 AM	0	0	0	0	0	0	0	0	0	0	0	0	0
4/24/2024	10:30 AM	0	0	0	0	0	0	0	0	0	0	0	0	0
4/24/2024	10:45 AM	0	0	0	0	0	0	0	0	0	0	0	0	0
4/24/2024	11:00 AM	0	0	0	0	0	0	0	0	0	0	0	0	0
4/24/2024	11:15 AM	0	0	0	0	0	0	0	0	0	0	0	0	0
4/24/2024	11:30 AM	0	0	0	0	0	0	0	0	0	0	0	0	0
4/24/2024	11:45 AM	0	0	0	0	0	0	0	0	0	0	0	0	0
4/24/2024	12:00 PM	0	0	0	0	0	0	0	0	0	0	0	0	0
4/24/2024	12:15 PM	0	0	0	0	0	0	0	0	0	0	0	0	0
4/24/2024	12:30 PM	0	0	0	0	0	0	0	0	0	0	0	0	0
4/24/2024	12:45 PM	0	0	0	0	0	0	0	0	0	0	0	0	0
4/24/2024	1:00 PM	0	0	0	0	0	0	0	0	0	0	0	0	0
4/24/2024	1:15 PM	0	0	0	0	0	0	0	0	0	0	0	0	0
4/24/2024	1:30 PM	0	0	0	0	0	0	0	0	0	0	0	0	0
4/24/2024	1:45 PM	0	0	0	0	0	0	0	0	0	0	0	0	0
4/24/2024	2:00 PM	0	0	0	0	0	0	0	0	0	0	0	0	0
4/24/2024	2:15 PM	0	0	0	0	0	0	0	0	0	0	0	0	0
4/24/2024	2:30 PM	0	0	0	0	0	0	0	0	0	0	0	0	0
4/24/2024	2:45 PM	0	0	0	0	0	0	0	0	0	0	0	0	0
4/24/2024	3:00 PM	0	0	0	0	0	0	0	0	0	0	0	0	0
4/24/2024	3:15 PM	0	0	0	0	0	0	0	0	0	0	0	0	0
4/24/2024	3:30 PM	0	0	0	0	0	0	0	0	0	0	0	0	0
4/24/2024	3:45 PM	0	0	0	0	0	0	0	0	0	0	0	0	0
4/24/2024	4:00 PM	0	0	0	0	0	0	0	0	0	0	0	0	0
4/24/2024	4:15 PM	0	0	0	0	0	0	0	0	0	0	0	0	0
4/24/2024	4:30 PM	0	0	0	0	0	0	0	0	0	0	0	0	0
4/24/2024	4:45 PM	0	0	0	0	0	0	0	0	0	0	0	0	0
4/24/2024	5:00 PM	0	0	0	0	0	0	0	0	0	0	0	0	0
4/24/2024	5:15 PM	0	0	0	0	0	0	0	0	0	0	0	0	0
4/24/2024	5:30 PM	0	0	0	0	0	0	0	0	0	0	0	0	0
4/24/2024	5:45 PM	0	0	0	0	0	0	0	0	0	0	0	0	0
4/24/2024	6:00 PM	0	0	0	0	0	0	0	0	0	0	0	0	0
4/24/2024	6:15 PM	0	0	0	0	0	0	0	0	0	0	0	0	0
4/24/2024	6:30 PM	0	0	0	0	0	0	0	0	0	0	0	0	0
4/24/2024	6:45 PM	0	0	0	0	0	0	0	0	0	0	0	0	0
4/24/2024	7:00 PM	0	0	0	0	0	0	0	0	0	0	0	0	0
4/24/2024	7:15 PM	0	0	0	0	0	0	0	0	0	0	0	0	0
4/24/2024	7:30 PM	0	0	0	0	0	0	0	0	0	0	0	0	0
4/24/2024	7:45 PM	0	0	0	0	0	0	0	0	0	0	0	0	0
4/24/2024	8:00 PM	0	0	0	0	0	0	0	0	0	0	0	0	0
4/24/2024	8:15 PM	0	0	0	0	0	0	0	0	0	0	0	0	0
4/24/2024	8:30 PM	0	0	0	0	0	0	0	0	0	0	0	0	0
4/24/2024	8:45 PM	0	0	0	0	0	0	0	0	0	0	0	0	0
4/24/2024	9:00 PM	0	0	0	0	0	0	0	0	0	0	0	0	0
4/24/2024	9:15 PM	0	0	0	0	0	0	0	0	0	0	0	0	0
4/24/2024	9:30 PM	0	0	0	0	0	0	0	0	0	0	0	0	0
4/24/2024	9:45 PM	0	0	0	0	0	0	0	0	0	0	0	0	0
4/24/2024	10:00 PM	0	0	0	0	0	0	0	0	0	0	0	0	0
4/24/2024	10:15 PM	0	0	0	0	0	0	0	0	0	0	0	0	0
4/24/2024	10:30 PM	0	0	0	0	0	0	0	0	0	0	0	0	0
4/24/2024	10:45 PM	0	0	0	0	0	0	0	0	0	0	0	0	0
4/24/2024	11:00 PM	0	0	0	0	0	0	0	0	0	0	0	0	0
4/24/2024	11:15 PM	0	0	0	0	0	0	0	0	0	0	0	0	0
4/24/2024	11:30 PM	0	0	0	0	0	0	0	0	0	0	0	0	0
4/24/2024	11:45 PM	0	0	0	0	0	0	0	0	0	0	0	0	0

4/25/2024	12:00 AM	0	0	0	0	0	0	0	0	0	0	0	0	0
4/25/2024	12:15 AM	0	0	0	0	0	0	0	0	0	0	0	0	0
4/25/2024	12:30 AM	0	0	0	0	0	0	0	0	0	0	0	0	0
4/25/2024	12:45 AM	0	0	0	0	0	0	0	0	0	0	0	0	0
4/25/2024	1:00 AM	0	0	0	0	0	0	0	0	0	0	0	0	0
4/25/2024	1:15 AM	0	0	0	0	0	0	0	0	0	0	0	0	0
4/25/2024	1:30 AM	0	0	0	0	0	0	0	0	0	0	0	0	0
4/25/2024	1:45 AM	0	0	0	0	0	0	0	0	0	0	0	0	0
4/25/2024	2:00 AM	0	0	0	0	0	0	0	0	0	0	0	0	0
4/25/2024	2:15 AM	0	0	0	0	0	0	0	0	0	0	0	0	0
4/25/2024	2:30 AM	0	0	0	0	0	0	0	0	0	0	0	0	0
4/25/2024	2:45 AM	0	0	0	0	0	0	0	0	0	0	0	0	0
4/25/2024	3:00 AM	0	0	0	0	0	0	0	0	0	0	0	0	0
4/25/2024	3:15 AM	0	0	0	0	0	0	0	0	0	0	0	0	0
4/25/2024	3:30 AM	0	0	0	0	0	0	0	0	0	0	0	0	0
4/25/2024	3:45 AM	0	0	0	0	0	0	0	0	0	0	0	0	0
4/25/2024	4:00 AM	0	0	0	0	0	0	0	0	0	0	0	0	0
4/25/2024	4:15 AM	0	0	0	0	0	0	0	0	0	0	0	0	0
4/25/2024	4:30 AM	0	0	0	0	0	0	0	0	0	0	0	0	0
4/25/2024	4:45 AM	0	0	0	0	0	0	0	0	0	0	0	0	0
4/25/2024	5:00 AM	0	0	0	0	0	0	0	0	0	0	0	0	0
4/25/2024	5:15 AM	0	0	0	0	0	0	0	0	0	0	0	0	0
4/25/2024	5:30 AM	0	0	0	0	0	0	0	0	0	0	0	0	0
4/25/2024	5:45 AM	0	0	0	0	0	0	0	0	0	0	0	0	0
4/25/2024	6:00 AM	0	0	0	0	0	0	0	0	0	0	0	0	0
4/25/2024	6:15 AM	0	0	0	0	0	0	0	0	0	0	0	0	0
4/25/2024	6:30 AM	0	0	0	0	0	0	0	0	0	0	0	0	0
4/25/2024	6:45 AM	0	0	0	0	0	0	0	0	0	0	0	0	0
4/25/2024	7:00 AM	0	0	0	0	0	0	0	0	0	0	0	0	0
4/25/2024	7:15 AM	0	0	0	0	0	0	0	0	0	0	0	0	0
4/25/2024	7:30 AM	0	0	0	0	0	0	0	0	0	0	0	0	0
4/25/2024	7:45 AM	0	0	0	0	0	0	0	0	0	0	0	0	0
4/25/2024	8:00 AM	0	0	0	0	0	0	0	0	0	0	0	0	0
4/25/2024	8:15 AM	0	0	0	0	0	0	0	0	0	0	0	0	0
4/25/2024	8:30 AM	0	0	0	0	0	0	0	0	0	0	0	0	0
4/25/2024	8:45 AM	0	0	0	0	0	0	0	0	0	0	0	0	0
4/25/2024	9:00 AM	0	0	0	0	0	0	0	0	0	0	0	0	0
4/25/2024	9:15 AM	0	0	0	0	0	0	0	0	0	0	0	0	0
4/25/2024	9:30 AM	0	0	0	0	0	0	0	0	0	0	0	0	0
4/25/2024	9:45 AM	0	0	0	0	0	0	0	0	0	0	0	0	0
4/25/2024	10:00 AM	0	0	0	0	0	0	0	0	0	0	0	0	0
4/25/2024	10:15 AM	0	0	0	0	0	0	0	0	0	0	0	0	0
4/25/2024	10:30 AM	0	0	0	0	0	0	0	0	0	0	0	0	0
4/25/2024	10:45 AM	0	0	0	0	0	0	0	0	0	0	0	0	0
4/25/2024	11:00 AM	0	0	0	0	0	0	0	0	0	0	0	0	0
4/25/2024	11:15 AM	0	0	0	0	0	0	0	0	0	0	0	0	0
4/25/2024	11:30 AM	0	0	0	0	0	0	0	0	0	0	0	0	0
4/25/2024	11:45 AM	0	0	0	0	0	0	0	0	0	0	0	0	0
4/25/2024	12:00 PM	0	0	0	0	0	0	0	0	0	0	0	0	0
4/25/2024	12:15 PM	0	0	0	0	0	0	0	0	0	0	0	0	0
4/25/2024	12:30 PM	0	0	0	0	0	0	0	0	0	0	0	0	0
4/25/2024	12:45 PM	0	0	0	0	0	0	0	0	0	0	0	0	0
4/25/2024	1:00 PM	0	0	0	0	0	0	0	0	0	0	0	0	0
4/25/2024	1:15 PM	0	0	0	0	0	0	0	0	0	0	0	0	0
4/25/2024	1:30 PM	0	0	0	0	0	0	0	0	0	0	0	0	0
4/25/2024	1:45 PM	0	0	0	0	0	0	0	0	0	0	0	0	0
4/25/2024	2:00 PM	0	0	0	0	0	0	0	0	0	0	0	0	0
4/25/2024	2:15 PM	0	0	0	0	0	0	0	0	0	0	0	0	0
4/25/2024	2:30 PM	0	0	0	0	0	0	0	0	0	0	0	0	0
4/25/2024	2:45 PM	0	0	0	0	0	0	0	0	0	0	0	0	0
4/25/2024	3:00 PM	0	0	0	0	0	0	0	0	0	0	0	0	0
4/25/2024	3:15 PM	0	0	0	0	0	0	0	0	0	0	0	0	0
4/25/2024	3:30 PM	0	0	0	0	0	0	0	0	0	0	0	0	0
4/25/2024	3:45 PM	0	0	0	0	0	0	0	0	0	0	0	0	0
4/25/2024	4:00 PM	0	0	0	0	0	0	0	0	0	0	0	0	0
4/25/2024	4:15 PM	0	0	0	0	0	0	0	0	0	0	0	0	0
4/25/2024	4:30 PM	0	0	0	0	0	0	0	0	0	0	0	0	0
4/25/2024	4:45 PM	0	0	0	0	0	0	0	0	0	0	0	0	0
4/25/2024	5:00 PM	0	0	0	0	0	0	0	0	0	0	0	0	0
4/25/2024	5:15 PM	0	0	0	0	0	0	0	0	0	0	0	0	0
4/25/2024	5:30 PM	0	0	0	0	0	0	0	0	0	0	0	0	0
4/25/2024	5:45 PM	0	0	0	0	0	0	0	0	0	0	0	0	0
4/25/2024	6:00 PM	0	0	0	0	0	0	0	0	0	0	0	0	0
4/25/2024	6:15 PM	0	0	0	0	0	0	0	0	0	0	0	0	0
4/25/2024	6:30 PM	0	0	0	0	0	0	0	0	0	0	0	0	0
4/25/2024	6:45 PM	0	0	0	0	0	0	0	0	0	0	0	0	0
4/25/2024	7:00 PM	0	0	0	0	0	0	0	0	0	0	0	0	0
4/25/2024	7:15 PM	0	0	0	0	0	0	0	0	0	0	0	0	0
4/25/2024	7:30 PM	0	0	0	0	0	0	0	0	0	0	0	0	0
4/25/2024	7:45 PM	0	0	0	0	0	0	0	0	0	0	0	0	0
4/25/2024	8:00 PM	0	0	0	0	0	0	0	0	0	0	0	0	0
4/25/2024	8:15 PM	0	0	0	0	0	0	0	0	0	0	0	0	0
4/25/2024	8:30 PM	0	0	0	0	0	0	0	0	0	0	0	0	0
4/25/2024	8:45 PM	0	0	0	0	0	0	0	0	0	0	0	0	0
4/25/2024	9:00 PM	0	0	0	0	0	0	0	0	0	0	0	0	0
4/25/2024	9:15 PM	0	0	0	0	0	0	0	0	0	0	0	0	0
4/25/2024	9:30 PM	0	0	0	0	0	0	0	0	0	0	0	0	0
4/25/2024	9:45 PM	0	0	0	0	0	0	0	0	0	0	0	0	0
4/25/2024	10:00 PM	0	0	0	0	0	0	0	0	0	0	0	0	0
4/25/2024	10:15 PM	0	0	0	0	0	0	0	0	0	0	0	0	0
4/25/2024	10:30 PM	0	0	0	0	0	0	0	0	0	0	0	0	0
4/25/2024	10:45 PM	0	0	0	0	0	0	0	0	0	0	0	0	0
4/25/2024	11:00 PM	0	0	0	0	0	0	0	0	0	0	0	0	0
4/25/2024	11:15 PM	0	0	0	0	0	0	0	0	0	0	0	0	0
4/25/2024	11:30 PM	0	0	0	0	0	0	0	0	0	0	0	0	0
4/25/2024	11:45 PM	0	0	0	0	0	0	0	0	0	0	0	0	0

4/26/2024	12:00 AM	0	0	0	0	0	0	0	0	0	0	0	0	0
4/26/2024	12:15 AM	0	0	0	0	0	0	0	0	0	0	0	0	0
4/26/2024	12:30 AM	0	0	0	0	0	0	0	0	0	0	0	0	0
4/26/2024	12:45 AM	0	0	0	0	0	0	0	0	0	0	0	0	0
4/26/2024	1:00 AM	0	0	0	0	0	0	0	0	0	0	0	0	0
4/26/2024	1:15 AM	0	0	0	0	0	0	0	0	0	0	0	0	0
4/26/2024	1:30 AM	0	0	0	0	0	0	0	0	0	0	0	0	0
4/26/2024	1:45 AM	0	0	0	0	0	0	0	0	0	0	0	0	0
4/26/2024	2:00 AM	0	0	0	0	0	0	0	0	0	0	0	0	0
4/26/2024	2:15 AM	0	0	0	0	0	0	0	0	0	0	0	0	0
4/26/2024	2:30 AM	0	0	0	0	0	0	0	0	0	0	0	0	0
4/26/2024	2:45 AM	0	0	0	0	0	0	0	0	0	0	0	0	0
4/26/2024	3:00 AM	0	0	0	0	0	0	0	0	0	0	0	0	0
4/26/2024	3:15 AM	0	0	0	0	0	0	0	0	0	0	0	0	0
4/26/2024	3:30 AM	0	0	0	0	0	0	0	0	0	0	0	0	0
4/26/2024	3:45 AM	0	0	0	0	0	0	0	0	0	0	0	0	0
4/26/2024	4:00 AM	0	0	0	0	0	0	0	0	0	0	0	0	0
4/26/2024	4:15 AM	0	0	0	0	0	0	0	0	0	0	0	0	0
4/26/2024	4:30 AM	0	0	0	0	0	0	0	0	0	0	0	0	0
4/26/2024	4:45 AM	0	0	0	0	0	0	0	0	0	0	0	0	0
4/26/2024	5:00 AM	0	0	0	0	0	0	0	0	0	0	0	0	0
4/26/2024	5:15 AM	0	0	0	0	0	0	0	0	0	0	0	0	0
4/26/2024	5:30 AM	0	0	0	0	0	0	0	0	0	0	0	0	0
4/26/2024	5:45 AM	0	0	0	0	0	0	0	0	0	0	0	0	0
4/26/2024	6:00 AM	0	0	0	0	0	0	0	0	0	0	0	0	0
4/26/2024	6:15 AM	0	0	0	0	0	0	0	0	0	0	0	0	0
4/26/2024	6:30 AM	0	0	0	0	0	0	0	0	0	0	0	0	0
4/26/2024	6:45 AM	0	0	0	0	0	0	0	0	0	0	0	0	0
4/26/2024	7:00 AM	0	0	0	0	0	0	0	0	0	0	0	0	0
4/26/2024	7:15 AM	0	0	0	0	0	0	0	0	0	0	0	0	0
4/26/2024	7:30 AM	0	0	0	0	0	0	0	0	0	0	0	0	0
4/26/2024	7:45 AM	0	0	0	0	0	0	0	0	0	0	0	0	0
4/26/2024	8:00 AM	0	0	0	0	0	0	0	0	0	0	0	0	0
4/26/2024	8:15 AM	0	0	0	0	0	0	0	0	0	0	0	0	0
4/26/2024	8:30 AM	0	0	0	0	0	0	0	0	0	0	0	0	0
4/26/2024	8:45 AM	0	0	0	0	0	0	0	0	0	0	0	0	0
4/26/2024	9:00 AM	0	0	0	0	0	0	0	0	0	0	0	0	0
4/26/2024	9:15 AM	0	0	0	0	0	0	0	0	0	0	0	0	0
4/26/2024	9:30 AM	0	0	0	0	0	0	0	0	0	0	0	0	0
4/26/2024	9:45 AM	0	0	0	0	0	0	0	0	0	0	0	0	0
4/26/2024	10:00 AM	0	0	0	0	0	0	0	0	0	0	0	0	0
4/26/2024	10:15 AM	0	0	0	0	0	0	0	0	0	0	0	0	0
4/26/2024	10:30 AM	0	0	0	0	0	0	0	0	0	0	0	0	0
4/26/2024	10:45 AM	0	0	0	0	0	0	0	0	0	0	0	0	0
4/26/2024	11:00 AM	0	0	0	0	0	0	0	0	0	0	0	0	0
4/26/2024	11:15 AM	0	0	0	0	0	0	0	0	0	0	0	0	0
4/26/2024	11:30 AM	0	0	0	0	0	0	0	0	0	0	0	0	0
4/26/2024	11:45 AM	0	0	0	0	0	0	0	0	0	0	0	0	0
4/26/2024	12:00 PM	0	0	0	0	0	0	0	0	0	0	0	0	0
4/26/2024	12:15 PM	0	0	0	0	0	0	0	0	0	0	0	0	0
4/26/2024	12:30 PM	0	0	0	0	0	0	0	0	0	0	0	0	0
4/26/2024	12:45 PM	0	0	0	0	0	0	0	0	0	0	0	0	0
4/26/2024	1:00 PM	0	0	0	0	0	0	0	0	0	0	0	0	0
4/26/2024	1:15 PM	0	0	0	0	0	0	0	0	0	0	0	0	0
4/26/2024	1:30 PM	0	0	0	0	0	0	0	0	0	0	0	0	0
4/26/2024	1:45 PM	0	0	0	0	0	0	0	0	0	0	0	0	0
4/26/2024	2:00 PM	0	0	0	0	0	0	0	0	0	0	0	0	0
4/26/2024	2:15 PM	0	0	0	0	0	0	0	0	0	0	0	0	0
4/26/2024	2:30 PM	0	0	0	0	0	0	0	0	0	0	0	0	0
4/26/2024	2:45 PM	0	0	0	0	0	0	0	0	0	0	0	0	0
4/26/2024	3:00 PM	0	0	0	0	0	0	0	0	0	0	0	0	0
4/26/2024	3:15 PM	0	0	0	0	0	0	0	0	0	0	0	0	0
4/26/2024	3:30 PM	0	0	0	0	0	0	0	0	0	0	0	0	0
4/26/2024	3:45 PM	0	0	0	0	0	0	0	0	0	0	0	0	0
4/26/2024	4:00 PM	0	0	0	0	0	0	0	0	0	0	0	0	0
4/26/2024	4:15 PM	0	0	0	0	0	0	0	0	0	0	0	0	0
4/26/2024	4:30 PM	0	0	0	0	0	0	0	0	0	0	0	0	0
4/26/2024	4:45 PM	0	0	0	0	0	0	0	0	0	0	0	0	0
4/26/2024	5:00 PM	0	0	0	0	0	0	0	0	0	0	0	0	0
4/26/2024	5:15 PM	0	0	0	0	0	0	0	0	0	0	0	0	0
4/26/2024	5:30 PM	0	0	0	0	0	0	0	0	0	0	0	0	0
4/26/2024	5:45 PM	0	0	0	0	0	0	0	0	0	0	0	0	0
4/26/2024	6:00 PM	0	0	0	0	0	0	0	0	0	0	0	0	0
4/26/2024	6:15 PM	0	0	0	0	0	0	0	0	0	0	0	0	0
4/26/2024	6:30 PM	0	0	0	0	0	0	0	0	0	0	0	0	0
4/26/2024	6:45 PM	0	0	0	0	0	0	0	0	0	0	0	0	0
4/26/2024	7:00 PM	0	0	0	0	0	0	0	0	0	0	0	0	0
4/26/2024	7:15 PM	0	0	0	0	0	0	0	0	0	0	0	0	0
4/26/2024	7:30 PM	0	0	0	0	0	0	0	0	0	0	0	0	0
4/26/2024	7:45 PM	0	0	0	0	0	0	0	0	0	0	0	0	0
4/26/2024	8:00 PM	0	0	0	0	0	0	0	0	0	0	0	0	0
4/26/2024	8:15 PM	0	0	0	0	0	0	0	0	0	0	0	0	0
4/26/2024	8:30 PM	0	0	0	0	0	0	0	0	0	0	0	0	0
4/26/2024	8:45 PM	0	0	0	0	0	0	0	0	0	0	0	0	0
4/26/2024	9:00 PM	0	0	0	0	0	0	0	0	0	0	0	0	0
4/26/2024	9:15 PM	0	0	0	0	0	0	0	0	0	0	0	0	0
4/26/2024	9:30 PM	0	0	0	0	0	0	0	0	0	0	0	0	0
4/26/2024	9:45 PM	0	0	0	0	0	0	0	0	0	0	0	0	0
4/26/2024	10:00 PM	0	0	0	0	0	0	0	0	0	0	0	0	0
4/26/2024	10:15 PM	0	0	0	0	0	0	0	0	0	0	0	0	0
4/26/2024	10:30 PM	0	0	0	0	0	0	0	0	0	0	0	0	0
4/26/2024	10:45 PM	0	0	0	0	0	0	0	0	0	0	0	0	0
4/26/2024	11:00 PM	0	0	0	0	0	0	0	0	0	0	0	0	0
4/26/2024	11:15 PM	0	0	0	0	0	0	0	0	0	0	0	0	0
4/26/2024	11:30 PM	0	0	0	0	0	0	0	0	0	0	0	0	0
4/26/2024	11:45 PM	0	0	0	0	0	0	0	0	0	0	0	0	0

4/27/2024	12:00 AM	0	0	0	0	0	0	0	0	0	0	0	0	0
4/27/2024	12:15 AM	0	0	0	0	0	0	0	0	0	0	0	0	0
4/27/2024	12:30 AM	0	0	0	0	0	0	0	0	0	0	0	0	0
4/27/2024	12:45 AM	0	0	0	0	0	0	0	0	0	0	0	0	0
4/27/2024	1:00 AM	0	0	0	0	0	0	0	0	0	0	0	0	0
4/27/2024	1:15 AM	0	0	0	0	0	0	0	0	0	0	0	0	0
4/27/2024	1:30 AM	0	0	0	0	0	0	0	0	0	0	0	0	0
4/27/2024	1:45 AM	0	0	0	0	0	0	0	0	0	0	0	0	0
4/27/2024	2:00 AM	0	0	0	0	0	0	0	0	0	0	0	0	0
4/27/2024	2:15 AM	0	0	0	0	0	0	0	0	0	0	0	0	0
4/27/2024	2:30 AM	0	0	0	0	0	0	0	0	0	0	0	0	0
4/27/2024	2:45 AM	0	0	0	0	0	0	0	0	0	0	0	0	0
4/27/2024	3:00 AM	0	0	0	0	0	0	0	0	0	0	0	0	0
4/27/2024	3:15 AM	0	0	0	0	0	0	0	0	0	0	0	0	0
4/27/2024	3:30 AM	0	0	0	0	0	0	0	0	0	0	0	0	0
4/27/2024	3:45 AM	0	0	0	0	0	0	0	0	0	0	0	0	0
4/27/2024	4:00 AM	0	0	0	0	0	0	0	0	0	0	0	0	0
4/27/2024	4:15 AM	0	0	0	0	0	0	0	0	0	0	0	0	0
4/27/2024	4:30 AM	0	0	0	0	0	0	0	0	0	0	0	0	0
4/27/2024	4:45 AM	0	0	0	0	0	0	0	0	0	0	0	0	0
4/27/2024	5:00 AM	0	0	0	0	0	0	0	0	0	0	0	0	0
4/27/2024	5:15 AM	0	0	0	0	0	0	0	0	0	0	0	0	0
4/27/2024	5:30 AM	0	0	0	0	0	0	0	0	0	0	0	0	0
4/27/2024	5:45 AM	0	0	0	0	0	0	0	0	0	0	0	0	0
4/27/2024	6:00 AM	0	0	0	0	0	0	0	0	0	0	0	0	0
4/27/2024	6:15 AM	0	0	0	0	0	0	0	0	0	0	0	0	0
4/27/2024	6:30 AM	0	0	0	0	0	0	0	0	0	0	0	0	0
4/27/2024	6:45 AM	0	0	0	0	0	0	0	0	0	0	0	0	0
4/27/2024	7:00 AM	0	0	0	0	0	0	0	0	0	0	0	0	0
4/27/2024	7:15 AM	0	0	0	0	0	0	0	0	0	0	0	0	0
4/27/2024	7:30 AM	0	0	0	0	0	0	0	0	0	0	0	0	0
4/27/2024	7:45 AM	0	0	0	0	0	0	0	0	0	0	0	0	0
4/27/2024	8:00 AM	0	0	0	0	0	0	0	0	0	0	0	0	0
4/27/2024	8:15 AM	0	0	0	0	0	0	0	0	0	0	0	0	0
4/27/2024	8:30 AM	0	0	0	0	0	0	0	0	0	0	0	0	0
4/27/2024	8:45 AM	0	0	0	0	0	0	0	0	0	0	0	0	0
4/27/2024	9:00 AM	0	0	0	0	0	0	0	0	0	0	0	0	0
4/27/2024	9:15 AM	0	0	0	0	0	0	0	0	0	0	0	0	0
4/27/2024	9:30 AM	0	0	0	0	0	0	0	0	0	0	0	0	0
4/27/2024	9:45 AM	0	0	0	0	0	0	0	0	0	0	0	0	0
4/27/2024	10:00 AM	0	0	0	0	0	0	0	0	0	0	0	0	0
4/27/2024	10:15 AM	0	0	0	0	0	0	0	0	0	0	0	0	0
4/27/2024	10:30 AM	0	0	0	0	0	0	0	0	0	0	0	0	0
4/27/2024	10:45 AM	0	0	0	0	0	0	0	0	0	0	0	0	0
4/27/2024	11:00 AM	0	0	0	0	0	0	0	0	0	0	0	0	0
4/27/2024	11:15 AM	0	0	0	0	0	0	0	0	0	0	0	0	0
4/27/2024	11:30 AM	0	0	0	0	0	0	0	0	0	0	0	0	0
4/27/2024	11:45 AM	0	0	0	0	0	0	0	0	0	0	0	0	0
4/27/2024	12:00 PM	0	0	0	0	0	0	0	0	0	0	0	0	0
4/27/2024	12:15 PM	0	0	0	0	0	0	0	0	0	0	0	0	0
4/27/2024	12:30 PM	0	0	0	0	0	0	0	0	0	0	0	0	0
4/27/2024	12:45 PM	0	0	0	0	0	0	0	0	0	0	0	0	0
4/27/2024	1:00 PM	0	0	0	0	0	0	0	0	0	0	0	0	0
4/27/2024	1:15 PM	0	0	0	0	0	0	0	0	0	0	0	0	0
4/27/2024	1:30 PM	0	0	0	0	0	0	0	0	0	0	0	0	0
4/27/2024	1:45 PM	0	0	0	0	0	0	0	0	0	0	0	0	0
4/27/2024	2:00 PM	0	0	0	0	0	0	0	0	0	0	0	0	0
4/27/2024	2:15 PM	0	0	0	0	0	0	0	0	0	0	0	0	0
4/27/2024	2:30 PM	0	0	0	0	0	0	0	0	0	0	0	0	0
4/27/2024	2:45 PM	0	0	0	0	0	0	0	0	0	0	0	0	0
4/27/2024	3:00 PM	0	0	0	0	0	0	0	0	0	0	0	0	0
4/27/2024	3:15 PM	0	0	0	0	0	0	0	0	0	0	0	0	0
4/27/2024	3:30 PM	0	0	0	0	0	0	0	0	0	0	0	0	0
4/27/2024	3:45 PM	0	0	0	0	0	0	0	0	0	0	0	0	0
4/27/2024	4:00 PM	0	0	0	0	0	0	0	0	0	0	0	0	0
4/27/2024	4:15 PM	0	0	0	0	0	0	0	0	0	0	0	0	0
4/27/2024	4:30 PM	0	0	0	0	0	0	0	0	0	0	0	0	0
4/27/2024	4:45 PM	0	0	0	0	0	0	0	0	0	0	0	0	0
4/27/2024	5:00 PM	0	0	0	0	0	0	0	0	0	0	0	0	0
4/27/2024	5:15 PM	0	0	0	0	0	0	0	0	0	0	0	0	0
4/27/2024	5:30 PM	0	0	0	0	0	0	0	0	0	0	0	0	0
4/27/2024	5:45 PM	0	0	0	0	0	0	0	0	0	0	0	0	0
4/27/2024	6:00 PM	0	0	0	0	0	0	0	0	0	0	0	0	0
4/27/2024	6:15 PM	0	0	0	0	0	0	0	0	0	0	0	0	0
4/27/2024	6:30 PM	0	0	0	0	0	0	0	0	0	0	0	0	0
4/27/2024	6:45 PM	0	0	0	0	0	0	0	0	0	0	0	0	0
4/27/2024	7:00 PM	0	0	0	0	0	0	0	0	0	0	0	0	0
4/27/2024	7:15 PM	0	0	0	0	0	0	0	0	0	0	0	0	0
4/27/2024	7:30 PM	0	0	0	0	0	0	0	0	0	0	0	0	0
4/27/2024	7:45 PM	0	0	0	0	0	0	0	0	0	0	0	0	0
4/27/2024	8:00 PM	0	0	0	0	0	0	0	0	0	0	0	0	0
4/27/2024	8:15 PM	0	0	0	0	0	0	0	0	0	0	0	0	0
4/27/2024	8:30 PM	0	0	0	0	0	0	0	0	0	0	0	0	0
4/27/2024	8:45 PM	0	0	0	0	0	0	0	0	0	0	0	0	0
4/27/2024	9:00 PM	0	0	0	0	0	0	0	0	0	0	0	0	0
4/27/2024	9:15 PM	0	0	0	0	0	0	0	0	0	0	0	0	0
4/27/2024	9:30 PM	0	0	0	0	0	0	0	0	0	0	0	0	0
4/27/2024	9:45 PM	0	0	0	0	0	0	0	0	0	0	0	0	0
4/27/2024	10:00 PM	0	0	0	0	0	0	0	0	0	0	0	0	0
4/27/2024	10:15 PM	0	0	0	0	0	0	0	0	0	0	0	0	0
4/27/2024	10:30 PM	0	0	0	0	0	0	0	0	0	0	0	0	0
4/27/2024	10:45 PM	0	0	0	0	0	0	0	0	0	0	0	0	0
4/27/2024	11:00 PM	0	0	0	0	0	0	0	0	0	0	0	0	0
4/27/2024	11:15 PM	0	0	0	0	0	0	0	0	0	0	0	0	0
4/27/2024	11:30 PM	0	0	0	0	0	0	0	0	0	0	0	0	0
4/27/2024	11:45 PM	0	0	0	0	0	0	0	0	0	0	0	0	0

Bi-Directional Class Count || SB WB 15min

Columbia, SC

Marr Traffic DATA COLLECTION
www.marrtraffic.com

Site 74 Lane 3 WB
I-20,
west of US-378 Sunset Blvd S/Bound Off-Ramp

Date
Sunday, April 21, 2024

Lat/Long
34.008085°, -81.156669°

Weather
Cloudy
66°F

Click here for Detailed Weather

Click here for Map

0000 - 2400 (Sunday 24h Session) (04-21-2024)
SB WB 15min

	Westbound (Movement 74 Lane 3 WB.1)													15min	60min
Time	1	2	3	4	5	6	7	8	9	10	11	12	13	Total	Total
0000 - 0015	0	31	1	0	0	0	0	0	0	0	0	0	0	**32**	
0015 - 0030	1	30	3	0	0	0	0	0	4	0	0	0	0	**38**	
0030 - 0045	0	22	3	0	0	0	0	0	5	0	0	0	0	**30**	
0045 - 0100	0	19	2	0	1	0	0	0	2	0	0	0	0	**24**	**124**
0100 - 0115	0	23	3	0	2	0	0	0	4	0	0	0	0	**32**	
0115 - 0130	0	14	1	0	1	0	0	0	5	0	1	0	0	**22**	
0130 - 0145	0	20	3	0	1	0	0	0	3	0	0	0	0	**27**	
0145 - 0200	0	20	0	0	2	0	0	0	4	0	0	0	0	**26**	**107**
0200 - 0215	0	14	2	0	1	0	0	0	2	0	0	0	0	**19**	
0215 - 0230	0	13	2	0	1	0	0	0	4	0	0	0	0	**20**	
0230 - 0245	0	13	2	0	0	0	0	0	2	0	0	0	0	**17**	
0245 - 0300	0	4	0	0	1	0	0	0	5	0	0	0	0	**10**	**66**
0300 - 0315	0	12	1	0	0	0	0	0	1	0	0	0	0	**14**	
0315 - 0330	0	8	0	0	0	0	0	0	2	0	0	0	0	**10**	
0330 - 0345	0	9	0	0	0	0	0	0	1	0	0	0	0	**10**	
0345 - 0400	0	6	1	0	1	0	0	0	3	0	0	0	0	**11**	**45**
0400 - 0415	0	8	0	0	0	0	0	0	4	0	0	0	0	**12**	
0415 - 0430	0	6	0	0	1	0	0	0	3	0	0	0	0	**10**	
0430 - 0445	0	10	2	0	0	1	0	0	1	0	0	0	0	**14**	
0445 - 0500	0	4	1	0	1	0	0	0	3	0	1	0	0	**10**	**46**
0500 - 0515	0	5	0	0	0	0	0	0	3	0	0	0	0	**8**	
0515 - 0530	0	2	0	0	0	0	0	0	1	0	0	0	0	**3**	
0530 - 0545	0	9	0	0	0	0	0	0	7	0	0	0	0	**16**	
0545 - 0600	0	11	0	0	1	0	0	0	6	0	0	0	0	**18**	**45**
0600 - 0615	0	13	3	0	0	0	0	0	4	0	0	0	0	**20**	
0615 - 0630	0	18	6	0	0	0	0	0	1	0	0	0	0	**25**	
0630 - 0645	0	25	4	0	0	0	0	0	6	0	0	0	0	**35**	
0645 - 0700	0	31	8	0	0	0	0	0	2	0	0	0	0	**41**	**121**
0700 - 0715	0	37	11	0	0	0	0	0	6	0	0	0	0	**54**	
0715 - 0730	1	51	3	0	0	0	0	0	7	0	0	0	0	**62**	
0730 - 0745	0	39	13	0	0	0	0	0	8	0	0	0	0	**60**	
0745 - 0800	0	50	7	0	1	0	0	0	6	0	0	0	0	**64**	**240**
0800 - 0815	0	30	7	0	0	0	0	1	7	0	1	0	0	**46**	
0815 - 0830	0	39	16	0	1	0	0	1	8	0	0	0	0	**65**	
0830 - 0845	0	45	14	0	0	1	0	0	5	0	0	0	0	**65**	
0845 - 0900	0	56	9	1	0	0	1	0	12	0	0	0	0	**79**	**255**
0900 - 0915	0	64	16	0	3	0	0	1	6	0	1	1	0	**92**	
0915 - 0930	0	65	17	0	1	2	0	0	8	0	0	0	0	**93**	
0930 - 0945	0	68	12	0	2	0	1	1	11	0	0	0	0	**95**	
0945 - 1000	0	85	14	0	1	0	0	1	6	0	0	0	0	**107**	**387**
1000 - 1015	0	72	14	0	1	1	0	0	9	0	0	0	0	**97**	
1015 - 1030	0	69	19	0	2	0	0	0	11	0	0	0	0	**101**	
1030 - 1045	1	73	20	0	1	0	0	1	9	0	0	0	0	**105**	
1045 - 1100	1	74	20	0	0	0	0	2	5	0	0	0	0	**102**	**405**
1100 - 1115	0	87	21	0	0	0	0	0	10	0	0	0	0	**118**	
1115 - 1130	0	72	24	0	1	1	0	0	15	0	0	0	0	**113**	
1130 - 1145	0	84	22	0	3	0	0	2	7	0	0	0	0	**118**	
1145 - 1200	0	82	35	0	4	0	0	1	15	0	0	0	0	**137**	**486**
1200 - 1215	0	108	34	0	2	0	0	1	7	0	0	0	0	**152**	
1215 - 1230	0	106	28	0	0	0	0	1	13	0	0	0	0	**148**	
1230 - 1245	0	98	25	0	0	0	0	1	9	0	0	0	0	**133**	
1245 - 1300	0	120	19	0	2	0	0	0	10	0	0	0	0	**151**	**584**
1300 - 1315	1	101	26	0	1	0	0	1	12	0	0	0	0	**142**	
1315 - 1330	0	94	25	0	3	1	0	2	9	0	0	0	0	**134**	
1330 - 1345	0	114	27	0	0	0	0	1	5	0	0	0	0	**147**	
1345 - 1400	0	107	19	0	1	1	0	0	10	0	0	0	0	**138**	**561**
1400 - 1415	0	112	28	0	3	0	0	1	6	0	0	0	0	**150**	
1415 - 1430	0	96	30	0	2	0	0	2	5	0	0	0	0	**135**	
1430 - 1445	1	106	26	0	1	0	0	1	10	0	0	0	0	**145**	
1445 - 1500	0	112	29	0	1	0	0	1	10	0	0	0	0	**153**	**583**
1500 - 1515	0	103	14	0	2	0	0	1	4	0	0	0	0	**124**	
1515 - 1530	0	86	17	0	0	0	0	0	9	0	0	0	0	**112**	
1530 - 1545	0	112	21	0	1	0	0	2	8	0	0	0	0	**144**	
1545 - 1600	0	107	23	0	5	0	0	1	10	0	0	0	0	**146**	**526**
1600 - 1615	0	96	27	1	3	0	0	1	9	0	0	0	0	**137**	
1615 - 1630	0	108	14	1	2	0	0	1	9	0	0	0	0	**135**	
1630 - 1645	0	97	19	0	2	0	0	2	5	0	0	0	0	**125**	
1645 - 1700	0	93	26	0	1	0	0	0	11	0	1	0	0	**132**	**529**
1700 - 1715	0	79	23	0	1	0	0	0	8	0	0	0	0	**111**	
1715 - 1730	0	105	17	0	0	1	0	1	9	0	0	0	0	**133**	
1730 - 1745	0	101	25	0	1	1	0	0	5	0	0	0	0	**133**	
1745 - 1800	0	95	17	0	2	0	0	0	16	0	0	0	0	**130**	**507**
1800 - 1815	0	66	20	0	1	0	0	0	10	0	0	0	0	**97**	
1815 - 1830	0	91	27	0	1	0	0	1	9	1	1	0	0	**131**	
1830 - 1845	0	80	16	1	2	0	0	0	10	0	1	0	0	**110**	
1845 - 1900	0	68	13	0	1	0	0	0	14	0	1	0	0	**97**	**435**
1900 - 1915	0	106	26	0	6	0	0	0	6	0	0	0	0	**144**	
1915 - 1930	0	73	20	0	0	0	0	0	12	0	0	0	0	**105**	
1930 - 1945	0	90	15	0	1	0	0	0	7	0	1	0	0	**114**	
1945 - 2000	0	77	17	0	1	0	0	0	9	0	1	0	0	**105**	**468**
2000 - 2015	0	62	19	0	1	0	0	0	9	0	0	0	0	**91**	
2015 - 2030	0	65	10	0	2	0	0	0	10	0	0	0	0	**87**	
2030 - 2045	0	54	11	0	0	1	0	0	8	0	0	0	0	**74**	
2045 - 2100	0	41	7	0	1	1	0	0	9	0	0	0	0	**59**	**311**
2100 - 2115	0	40	8	0	2	0	0	0	10	0	0	0	0	**60**	
2115 - 2130	0	37	7	0	0	0	0	0	8	0	0	0	0	**52**	
2130 - 2145	0	25	6	0	0	0	0	0	9	0	1	0	0	**41**	
2145 - 2200	0	32	7	0	0	0	0	0	9	0	2	0	0	**50**	**203**
2200 - 2215	0	26	5	1	0	1	0	0	13	0	2	0	0	**48**	
2215 - 2230	0	22	4	1	1	0	0	0	11	0	1	0	0	**40**	
2230 - 2245	0	23	6	0	1	0	0	0	5	0	0	0	0	**35**	
2245 - 2300	0	19	5	0	0	2	0	0	9	0	3	0	0	**38**	**161**
2300 - 2315	0	17	3	0	0	0	0	0	1	0	0	0	0	**21**	
2315 - 2330	0	19	4	0	1	0	0	0	5	0	3	0	0	**32**	
2330 - 2345	0	17	3	0	2	0	0	0	6	0	2	0	0	**30**	
2345 - 0000	0	12	2	0	1	0	0	0	9	0	0	0	0	**24**	**107**

Session Total	6	5260	1182	6	96	15	2	33	676	1	24	1	0	**7302**
Session Average	0.06	54.79	12.31	0.06	1.00	0.16	0.02	0.34	7.04	0.01	0.25	0.01	0.00	**76.06**
Session Percentage	0.08	72.04	16.19	0.08	1.31	0.21	0.03	0.45	9.26	0.01	0.33	0.01	0.00	

AM Peak Hour	0630 - 0730	0945 - 1045	0945 - 1045	0800 - 0900	0900 - 1000	0830 - 0930	0845 - 0945	0900 - 1000	0845 - 0945	-	0715 - 0815	0815 - 0915	-	**0945 - 1045**
AM Peak Volume	1	299	67	1	7	3	2	3	37	0	1	1	0	**410**

Noon Peak Hour	1000 - 1100	1200 - 1300	1145 - 1245	-	1115 - 1215	1300 - 1400	-	1130 - 1230	1100 - 1200	-	-	-	-	**1200 - 1300**
Noon Peak Volume	2	432	122	0	10	2	0	5	47	0	0	0	0	**584**

PM Peak Hour	-	1530 - 1630	1645 - 1745	1530 - 1630	1545 - 1645	1645 - 1745	-	1530 - 1630	1745 - 1845	1730 - 1830	1800 - 1900	-	-	**1530 - 1630**
PM Peak Volume	0	423	91	2	12	2	0	5	45	1	3	0	0	**562**

Site 74 Lane 3 WB
I-20,
west of US-378 Sunset Blvd S/Bound Off-Ramp

Date
Monday, April 22, 2024

Lat/Long
34.008085°, -81.156669°

Weather
Mostly Cloudy
57°F

Click here for Detailed Weather

0000 - 2400 (Weekday 24h Session) (04-22-2024)
SB WB 15min

	Westbound (Movement 74 Lane 3 WB.1)													15min	60min
Time	1	2	3	4	5	6	7	8	9	10	11	12	13	Total	Total
0000 - 0015	0	15	3	0	0	0	0	0	7	0	0	0	0	**25**	
0015 - 0030	0	9	2	0	0	0	0	0	7	0	0	0	0	**18**	
0030 - 0045	0	8	1	0	0	0	0	0	4	0	0	0	0	**13**	
0045 - 0100	0	9	1	0	0	0	0	0	6	0	0	0	0	**16**	**72**
0100 - 0115	0	8	0	0	0	0	0	0	2	0	0	0	0	**10**	
0115 - 0130	0	8	1	0	0	0	0	0	6	0	0	0	0	**15**	
0130 - 0145	0	10	3	0	1	0	0	0	6	0	0	0	0	**20**	
0145 - 0200	0	7	0	0	0	0	0	0	4	0	0	0	0	**11**	**56**
0200 - 0215	0	8	1	0	0	0	0	0	8	0	0	0	0	**17**	
0215 - 0230	0	6	0	0	0	0	0	0	8	0	0	0	0	**14**	
0230 - 0245	0	4	1	0	0	0	0	0	4	0	0	0	0	**9**	
0245 - 0300	0	5	0	0	0	0	0	0	8	0	0	0	0	**13**	**53**
0300 - 0315	0	4	0	0	0	0	0	0	8	0	0	0	0	**12**	
0315 - 0330	0	6	0	0	2	0	0	0	13	0	0	0	0	**21**	
0330 - 0345	0	11	4	0	1	0	0	0	6	0	0	0	0	**22**	
0345 - 0400	0	9	2	0	1	0	0	0	10	0	0	0	0	**22**	**77**
0400 - 0415	0	6	1	0	2	0	0	0	4	0	0	0	0	**13**	
0415 - 0430	0	12	3	0	1	0	0	0	8	0	0	0	0	**24**	
0430 - 0445	0	15	3	0	1	0	0	0	9	0	0	0	0	**28**	
0445 - 0500	0	9	3	0	2	0	0	0	14	0	0	0	0	**28**	**93**
0500 - 0515	0	11	3	0	2	0	0	0	11	0	0	0	0	**27**	
0515 - 0530	0	25	8	0	2	0	0	0	13	0	0	0	0	**48**	
0530 - 0545	0	22	8	0	0	0	0	0	13	0	0	0	0	**43**	
0545 - 0600	0	28	10	0	3	0	0	0	14	0	0	0	0	**55**	**173**
0600 - 0615	0	40	13	0	3	0	0	0	14	0	0	0	0	**70**	
0615 - 0630	0	62	13	0	3	0	0	0	13	0	0	0	0	**91**	
0630 - 0645	0	57	23	1	1	0	0	2	6	0	0	0	0	**90**	
0645 - 0700	0	56	25	0	3	2	0	5	14	0	0	0	0	**105**	**356**
0700 - 0715	0	57	27	0	5	5	0	1	17	0	0	0	0	**112**	
0715 - 0730	0	62	30	0	10	5	0	3	22	2	1	0	0	**135**	
0730 - 0745	0	78	21	0	13	1	0	2	13	0	0	0	0	**128**	
0745 - 0800	0	81	28	1	7	1	0	1	17	0	1	0	0	**137**	**512**
0800 - 0815	0	63	37	0	1	2	0	1	18	0	0	0	0	**122**	
0815 - 0830	0	64	26	1	4	6	0	2	13	0	0	0	0	**116**	
0830 - 0845	0	51	32	0	7	2	0	2	24	0	0	0	0	**118**	
0845 - 0900	0	58	28	3	7	3	0	2	16	0	0	0	0	**117**	**473**
0900 - 0915	0	52	25	0	11	4	0	2	18	1	0	0	0	**113**	
0915 - 0930	0	55	37	0	7	2	0	3	27	0	0	0	0	**131**	
0930 - 0945	0	71	29	0	4	4	0	4	21	1	0	0	0	**134**	
0945 - 1000	0	58	29	0	6	2	0	6	27	0	0	0	0	**128**	**506**
1000 - 1015	0	53	27	0	9	1	0	6	26	0	0	0	0	**122**	
1015 - 1030	0	81	32	4	11	5	0	2	17	1	0	0	0	**153**	
1030 - 1045	0	71	30	0	3	1	0	1	27	0	0	0	0	**133**	
1045 - 1100	0	57	28	0	9	3	0	5	32	1	0	0	0	**135**	**543**
1100 - 1115	0	71	25	1	7	3	0	3	26	0	0	0	0	**136**	
1115 - 1130	0	66	36	0	7	2	0	4	33	0	0	0	0	**148**	
1130 - 1145	0	70	31	1	9	1	0	2	21	0	0	0	0	**135**	
1145 - 1200	0	77	29	0	7	0	0	4	26	0	1	0	0	**144**	**563**
1200 - 1215	0	99	32	1	4	3	0	4	37	0	0	0	0	**180**	
1215 - 1230	0	73	36	0	6	0	0	2	23	0	0	0	0	**140**	
1230 - 1245	0	79	30	0	2	3	0	4	31	0	0	0	0	**149**	
1245 - 1300	0	87	28	0	4	3	0	6	22	1	0	0	0	**151**	**620**
1300 - 1315	0	57	25	0	5	1	0	3	21	0	0	0	0	**112**	
1315 - 1330	0	76	33	1	5	2	0	3	21	1	0	0	0	**142**	
1330 - 1345	0	88	23	0	4	2	0	2	30	0	0	0	0	**149**	
1345 - 1400	0	97	28	0	7	2	0	0	25	0	0	0	0	**159**	**562**
1400 - 1415	0	94	40	1	7	4	0	3	15	0	0	0	0	**164**	
1415 - 1430	0	79	19	4	8	3	0	2	20	0	0	0	0	**135**	
1430 - 1445	0	91	32	0	2	1	0	6	40	1	0	0	0	**173**	
1445 - 1500	0	91	29	0	3	1	0	3	22	1	0	0	0	**150**	**622**
1500 - 1515	0	95	43	0	4	1	1	2	21	0	0	0	0	**167**	
1515 - 1530	0	118	31	0	6	1	1	2	19	0	0	0	0	**178**	
1530 - 1545	0	132	32	0	4	3	5	2	21	0	0	0	0	**199**	
1545 - 1600	0	112	37	0	2	1	0	3	22	1	0	0	0	**178**	**722**
1600 - 1615	0	117	41	1	10	0	0	4	17	1	0	0	0	**191**	
1615 - 1630	0	123	43	0	9	1	0	2	23	0	0	0	0	**201**	
1630 - 1645	0	104	39	0	7	1	0	2	14	1	1	0	0	**169**	
1645 - 1700	0	117	38	1	6	1	0	0	26	0	0	0	0	**189**	**750**
1700 - 1715	0	136	30	0	1	3	0	1	20	0	0	0	0	**191**	
1715 - 1730	0	135	25	0	1	0	1	2	21	1	0	0	0	**186**	
1730 - 1745	0	147	31	0	2	1	0	0	14	1	0	0	0	**196**	
1745 - 1800	0	103	33	0	2	0	0	2	27	1	0	0	0	**168**	**741**
1800 - 1815	0	89	21	0	4	1	0	2	27	0	0	0	0	**144**	
1815 - 1830	0	79	20	0	5	0	0	3	21	0	3	0	0	**131**	
1830 - 1845	1	86	24	0	3	1	0	0	17	1	0	0	0	**133**	
1845 - 1900	0	76	19	0	5	3	0	1	19	0	2	0	0	**125**	**533**
1900 - 1915	0	72	21	0	4	1	0	2	19	0	1	0	0	**120**	
1915 - 1930	0	57	18	0	1	0	0	2	20	0	0	0	0	**98**	
1930 - 1945	0	71	13	1	3	2	0	1	28	0	0	0	0	**119**	
1945 - 2000	0	67	12	0	3	1	0	1	25	1	1	0	0	**111**	**448**
2000 - 2015	0	53	17	0	4	0	0	1	17	0	1	0	0	**93**	
2015 - 2030	0	60	12	0	1	0	0	0	16	0	0	0	0	**89**	
2030 - 2045	0	50	14	0	1	1	0	0	14	0	0	0	0	**80**	
2045 - 2100	0	39	11	0	2	0	0	0	14	0	0	0	0	**66**	**328**
2100 - 2115	0	46	15	0	1	0	0	0	11	0	0	0	0	**73**	
2115 - 2130	0	29	11	0	0	0	0	0	13	0	0	0	0	**53**	
2130 - 2145	0	35	11	0	3	0	0	0	15	0	0	0	0	**64**	
2145 - 2200	0	36	10	0	2	0	0	0	11	0	0	0	0	**59**	**249**
2200 - 2215	0	30	9	0	2	0	0	0	10	0	0	0	0	**51**	
2215 - 2230	0	20	8	0	0	0	0	0	19	0	0	0	0	**47**	
2230 - 2245	0	24	10	0	2	0	0	0	17	0	0	0	0	**53**	
2245 - 2300	0	19	9	0	1	0	0	0	14	0	0	0	0	**43**	**194**
2300 - 2315	0	20	7	0	1	0	0	0	22	0	0	0	0	**50**	
2315 - 2330	0	21	8	0	1	0	0	0	17	0	0	0	0	**47**	
2330 - 2345	0	17	3	0	4	0	0	0	17	0	0	0	0	**41**	
2345 - 0000	0	10	4	0	1	0	0	0	13	0	0	0	0	**28**	**166**

Session Total	1	5322	1804	22	337	103	8	136	1649	18	12	0	0	**9412**
Session Average	0.01	55.44	18.79	0.23	3.51	1.07	0.08	1.42	17.18	0.19	0.13	0.00	0.00	**98.04**
Session Percentage	0.01	56.54	19.17	0.23	3.58	1.09	0.08	1.44	17.52	0.19	0.13	0.00	0.00	

AM Peak Hour	-	0730 - 0830	0745 - 0845	0800 - 0900	0700 - 0800	0815 - 0915	-	0915 - 1015	0915 - 1015	0630 - 0730	0700 - 0800	-	-	**0930 - 1030**
AM Peak Volume	0	286	123	4	35	15	0	19	101	2	2	0	0	**537**

Noon Peak Hour	-	1445 - 1545	1430 - 1530	1015 - 1115	1000 - 1100	1015 - 1115	1445 - 1545	1200 - 1300	1030 - 1130	1000 - 1100	1100 - 1200	-	-	**1445 - 1545**
Noon Peak Volume	0	436	135	5	32	12	7	16	118	2	1	0	0	**694**

PM Peak Hour	1745 - 1845	1645 - 1745	1600 - 1700	1600 - 1700	1600 - 1700	1500 - 1600	1500 - 1600	1515 - 1615	1745 - 1845	1545 - 1645	1815 - 1915	-	-	**1530 - 1630**
PM Peak Volume	1	535	161	2	32	6	7	11	92	3	6	0	0	**769**

Site 74 Lane 3 WB

I-20,
west of US-378 Sunset Blvd S/Bound Off-Ramp

Date

Tuesday, April 23, 2024

Lat/Long

34.008085°, -81.156669°

Weather

Fair
58°F

Click here for Detailed Weather

0000 - 2400 (Weekday 24h Session) (04-23-2024)

SB WB 15min

	Westbound (Movement 74 Lane 3 WB.1)													15min	60min
TIME	1	2	3	4	5	6	7	8	9	10	11	12	13	Total	Total
0000 - 0015	0	14	0	0	0	0	0	0	17	0	2	0	0	**33**	
0015 - 0030	0	9	5	0	1	0	0	1	14	0	1	0	0	**31**	
0030 - 0045	0	9	1	0	1	0	0	0	6	0	2	0	0	**19**	
0045 - 0100	0	11	1	0	2	0	0	0	9	0	0	0	0	**23**	**106**
0100 - 0115	0	8	0	0	1	1	0	0	3	0	1	0	0	**14**	
0115 - 0130	0	5	0	0	1	1	0	0	6	0	0	0	0	**13**	
0130 - 0145	0	4	0	0	0	0	0	0	4	0	0	0	0	**8**	
0145 - 0200	0	3	0	0	0	0	0	0	4	0	1	0	0	**8**	**43**
0200 - 0215	0	3	0	0	0	0	0	0	6	0	0	0	0	**9**	
0215 - 0230	0	2	2	0	0	0	0	0	8	0	1	0	0	**13**	
0230 - 0245	0	5	1	0	1	0	0	0	9	0	3	0	0	**19**	
0245 - 0300	0	2	0	0	0	0	0	1	11	0	2	0	0	**16**	**57**
0300 - 0315	0	6	0	0	1	0	0	0	7	0	3	0	0	**17**	
0315 - 0330	0	5	1	0	2	0	0	0	7	0	2	0	0	**17**	
0330 - 0345	0	8	0	0	1	0	0	0	11	0	1	0	0	**21**	
0345 - 0400	0	10	0	0	0	0	0	0	16	0	1	0	0	**27**	**82**
0400 - 0415	0	12	1	0	0	0	0	0	14	0	2	0	0	**29**	
0415 - 0430	0	7	1	0	0	1	0	2	15	0	2	0	0	**28**	
0430 - 0445	0	11	1	0	2	1	0	0	12	0	0	0	0	**27**	
0445 - 0500	0	9	1	0	0	0	0	0	12	0	4	0	0	**26**	**110**
0500 - 0515	0	13	0	0	1	0	0	0	13	0	2	0	0	**29**	
0515 - 0530	0	27	2	0	2	1	0	0	22	0	0	0	0	**54**	
0530 - 0545	0	26	4	0	0	0	0	0	19	0	1	0	0	**50**	
0545 - 0600	0	42	6	0	0	0	0	0	12	0	1	0	0	**61**	**194**
0600 - 0615	0	24	5	0	0	3	0	1	20	0	0	0	0	**53**	
0615 - 0630	0	49	18	0	4	3	1	0	21	0	0	0	0	**96**	
0630 - 0645	0	63	22	0	2	1	0	0	19	0	0	0	0	**107**	
0645 - 0700	0	71	16	0	7	2	0	0	15	0	1	0	0	**112**	**368**
0700 - 0715	0	66	18	0	6	1	0	1	20	0	1	0	0	**113**	
0715 - 0730	0	62	24	0	2	2	0	0	13	0	0	0	0	**103**	
0730 - 0745	0	73	16	0	3	6	0	0	18	0	0	0	0	**116**	
0745 - 0800	0	71	20	2	10	0	0	0	19	0	0	0	0	**122**	**454**
0800 - 0815	0	52	31	2	5	1	0	0	13	0	0	0	0	**104**	
0815 - 0830	0	67	29	6	0	0	0	3	14	0	0	0	0	**119**	
0830 - 0845	0	48	23	1	4	0	0	2	21	0	0	0	0	**99**	
0845 - 0900	0	56	30	2	6	0	0	4	20	0	0	0	0	**118**	**440**
0900 - 0915	0	58	33	1	9	3	0	2	32	0	0	0	0	**138**	
0915 - 0930	0	64	29	0	7	0	0	1	25	0	0	0	0	**126**	
0930 - 0945	0	66	31	0	6	0	0	0	23	0	1	0	0	**127**	
0945 - 1000	0	69	20	0	6	1	0	0	34	0	0	0	0	**130**	**521**
1000 - 1015	0	53	19	0	6	0	0	1	33	0	0	0	0	**112**	
1015 - 1030	0	55	21	0	10	3	0	2	27	0	0	0	0	**118**	
1030 - 1045	0	69	21	1	6	1	0	2	28	0	0	0	0	**128**	
1045 - 1100	0	56	22	0	5	4	0	2	28	0	0	0	0	**117**	**475**
1100 - 1115	1	67	18	0	6	2	0	3	26	0	0	0	0	**123**	
1115 - 1130	0	65	24	2	4	0	0	1	25	0	0	0	0	**121**	
1130 - 1145	0	68	40	0	6	3	0	3	24	0	0	0	0	**144**	
1145 - 1200	0	65	27	0	5	5	0	2	30	0	0	0	0	**134**	**522**
1200 - 1215	0	74	32	0	8	3	0	3	21	0	0	0	0	**141**	
1215 - 1230	0	76	38	0	6	2	0	2	15	0	0	0	0	**139**	
1230 - 1245	0	82	25	0	2	2	0	5	33	0	0	0	0	**149**	
1245 - 1300	0	65	32	2	4	0	0	3	26	0	0	0	0	**132**	**561**
1300 - 1315	1	69	25	0	2	1	0	5	35	1	0	0	0	**139**	
1315 - 1330	0	76	31	5	3	1	0	1	23	0	0	0	0	**140**	
1330 - 1345	1	77	43	3	4	2	2	2	17	0	0	0	0	**151**	
1345 - 1400	1	68	28	0	4	5	0	3	37	0	0	0	0	**146**	**576**
1400 - 1415	1	81	26	2	7	3	0	2	29	0	0	0	0	**151**	
1415 - 1430	1	91	26	2	5	0	1	2	29	0	0	0	0	**157**	
1430 - 1445	0	96	32	1	7	1	0	1	25	0	0	0	0	**163**	
1445 - 1500	0	90	31	0	4	0	0	2	30	0	0	1	0	**158**	**629**
1500 - 1515	0	109	31	0	6	2	1	5	29	0	0	0	0	**183**	
1515 - 1530	0	106	39	0	6	3	0	2	27	0	0	0	0	**183**	
1530 - 1545	0	118	37	1	3	1	1	1	28	0	0	0	0	**190**	
1545 - 1600	1	128	30	0	7	0	0	3	24	0	0	0	0	**193**	**749**
1600 - 1615	0	112	49	1	4	0	0	5	25	0	0	0	0	**196**	
1615 - 1630	0	138	35	0	5	3	0	5	16	3	0	0	0	**205**	
1630 - 1645	1	145	26	0	6	1	1	1	12	1	0	0	0	**194**	
1645 - 1700	0	160	39	2	7	1	0	3	15	0	0	0	0	**227**	**822**
1700 - 1715	0	151	41	0	7	1	0	0	12	0	0	0	0	**212**	
1715 - 1730	0	168	28	0	4	1	0	3	19	0	0	0	0	**223**	
1730 - 1745	0	126	40	0	5	0	0	1	23	0	0	0	0	**195**	
1745 - 1800	3	115	47	0	3	2	0	7	19	2	0	0	0	**198**	**828**
1800 - 1815	0	104	29	0	4	0	0	2	21	0	0	0	0	**160**	
1815 - 1830	1	87	26	0	7	1	0	2	20	0	4	0	0	**148**	
1830 - 1845	0	89	15	0	1	1	0	4	19	0	1	0	0	**130**	
1845 - 1900	0	62	28	0	3	2	0	1	21	1	0	0	0	**118**	**556**
1900 - 1915	0	62	21	0	4	0	1	5	15	0	1	0	0	**109**	
1915 - 1930	0	66	14	0	1	0	0	1	17	0	3	0	0	**102**	
1930 - 1945	0	60	10	0	2	0	0	2	24	0	0	0	0	**98**	
1945 - 2000	1	52	15	0	1	1	0	1	22	0	0	0	0	**93**	**402**
2000 - 2015	0	65	17	0	0	0	0	0	18	0	1	0	0	**101**	
2015 - 2030	0	70	14	1	1	0	0	0	20	0	0	0	0	**106**	
2030 - 2045	0	38	5	0	2	0	0	0	19	0	0	0	0	**64**	
2045 - 2100	0	47	6	0	0	1	0	0	18	0	2	0	0	**74**	**345**
2100 - 2115	0	41	7	0	2	0	0	0	16	0	0	0	0	**66**	
2115 - 2130	0	25	4	0	2	0	0	0	21	0	2	0	0	**54**	
2130 - 2145	0	29	4	0	0	0	0	0	9	0	2	0	0	**44**	
2145 - 2200	0	21	3	0	2	0	0	0	24	0	1	0	0	**51**	**215**
2200 - 2215	1	22	5	0	2	0	0	0	18	0	3	0	0	**51**	
2215 - 2230	0	11	3	0	3	0	0	0	16	0	4	0	0	**37**	
2230 - 2245	0	25	4	0	0	0	0	0	20	0	3	0	0	**52**	
2245 - 2300	0	14	2	0	0	1	0	0	16	0	2	0	0	**35**	**175**
2300 - 2315	0	12	3	0	0	0	0	0	21	0	2	0	0	**38**	
2315 - 2330	0	14	2	0	1	2	0	0	16	0	2	0	0	**37**	
2330 - 2345	0	13	4	0	1	0	0	0	12	0	1	0	0	**31**	
2345 - 0000	0	11	3	0	0	0	0	0	15	0	2	0	0	**31**	**137**

Session Total	14	5269	1639	37	299	90	8	119	1812	8	71	1	0	**9367**
Session Average	0.15	54.89	17.07	0.39	3.11	0.94	0.08	1.24	18.88	0.08	0.74	0.01	0.00	**97.57**
Session Percentage	0.15	56.25	17.50	0.40	3.19	0.96	0.09	1.27	19.34	0.09	0.76	0.01	0.00	

AM Peak Hour	-	0645 - 0745	0845 - 0945	0745 - 0845	0845 - 0945	0645 - 0745	0530 - 0630	0815 - 0915	0945 - 1045	-	0500 - 0600	-	-	**0900 - 1000**
AM Peak Hour Volume	0	272	123	11	28	11	1	11	122	0	4	0	0	**521**

Noon Peak Hour	1330 - 1430	1445 - 1545	1445 - 1545	1245 - 1345	1000 - 1100	1130 - 1230	1330 - 1430	1215 - 1315	1345 - 1445	1215 - 1315	-	1400 - 1500	-	**1445 - 1545**
Noon Peak Hour Volume	4	423	138	10	27	13	3	15	120	1	0	1	0	**714**

PM Peak Hour	1730 - 1830	1630 - 1730	1700 - 1800	1600 - 1700	1615 - 1715	1500 - 1600	1500 - 1600	1745 - 1845	1500 - 1600	1545 - 1645	1815 - 1915	-	-	**1645 - 1745**
PM Peak Hour Volume	4	624	156	3	25	6	2	15	108	4	6	0	0	**857**

Site 74 Lane 3 WB
I-20,
west of US-378 Sunset Blvd S/Bound Off-Ramp

Date
Wednesday, April 24, 2024

Lat/Long
34.008085°, -81.156669°

Weather
Fair
66°F

Click here for Detailed Weather

0000 - 2400 (Weekday 24h Session) (04-24-2024)
SB WB 15min

	Westbound (Movement 74 Lane 3 WB.1)													15min	60min
TIME	1	2	3	4	5	6	7	8	9	10	11	12	13	Total	Total
0000 - 0015	0	7	6	0	1	0	0	0	16	0	3	0	0	**33**	
0015 - 0030	0	10	2	0	1	0	0	0	10	0	0	0	0	**23**	
0030 - 0045	0	11	1	0	0	1	0	0	13	0	3	0	0	**29**	
0045 - 0100	0	7	1	0	1	0	0	0	15	0	3	0	0	**27**	**112**
0100 - 0115	0	7	1	0	0	0	0	0	8	0	2	0	0	**18**	
0115 - 0130	0	5	0	0	1	1	0	0	10	0	0	0	0	**17**	
0130 - 0145	0	9	1	0	1	0	0	0	13	0	2	0	0	**26**	
0145 - 0200	0	8	2	0	0	1	0	0	7	0	1	0	0	**19**	**80**
0200 - 0215	0	6	1	0	0	0	0	0	10	0	1	0	0	**18**	
0215 - 0230	0	7	1	0	0	0	0	0	15	0	1	0	0	**24**	
0230 - 0245	0	4	0	0	1	0	0	0	8	0	2	0	0	**15**	
0245 - 0300	0	3	0	0	0	2	0	0	9	0	1	0	0	**15**	**72**
0300 - 0315	0	6	0	0	0	0	0	0	14	0	0	0	0	**20**	
0315 - 0330	0	2	2	0	0	0	0	0	8	0	3	0	0	**15**	
0330 - 0345	0	8	3	0	1	0	0	0	8	0	2	0	0	**22**	
0345 - 0400	0	11	2	0	0	0	0	0	8	0	0	0	0	**21**	**78**
0400 - 0415	0	6	4	0	0	0	0	0	14	0	0	0	0	**24**	
0415 - 0430	0	11	1	0	4	0	0	0	18	0	2	0	0	**36**	
0430 - 0445	0	15	3	0	3	0	0	0	20	0	0	0	0	**41**	
0445 - 0500	0	13	2	0	3	0	0	0	19	0	3	0	0	**40**	**141**
0500 - 0515	0	11	4	0	0	0	0	0	15	0	0	0	0	**30**	
0515 - 0530	0	23	6	0	0	0	0	0	14	0	4	0	0	**47**	
0530 - 0545	0	28	4	0	0	0	0	0	26	0	0	0	0	**58**	
0545 - 0600	0	23	5	0	4	0	0	0	21	0	1	0	0	**54**	**189**
0600 - 0615	0	47	9	0	4	1	0	0	29	0	2	0	0	**92**	
0615 - 0630	0	56	16	0	1	1	0	2	12	0	1	0	0	**89**	
0630 - 0645	0	82	25	0	7	3	0	2	18	0	0	0	0	**137**	
0645 - 0700	1	58	23	0	5	3	0	1	22	1	1	0	0	**115**	**433**
0700 - 0715	0	78	26	0	5	3	0	2	19	1	0	0	0	**134**	
0715 - 0730	1	69	21	0	5	1	0	5	14	0	0	0	0	**116**	
0730 - 0745	0	65	25	1	7	3	0	1	15	0	0	0	0	**117**	
0745 - 0800	0	83	30	0	7	2	1	2	15	1	1	0	0	**142**	**509**
0800 - 0815	0	66	30	1	3	1	0	1	11	0	0	0	0	**113**	
0815 - 0830	0	43	26	1	9	0	1	4	23	0	0	0	0	**107**	
0830 - 0845	0	56	31	0	7	2	0	2	22	1	2	0	0	**123**	
0845 - 0900	0	60	35	1	8	0	1	2	27	0	0	0	0	**134**	**477**
0900 - 0915	0	49	30	0	11	2	1	2	19	0	0	0	0	**114**	
0915 - 0930	0	68	26	1	8	1	0	1	19	0	1	0	0	**125**	
0930 - 0945	0	62	31	0	8	2	0	2	17	0	0	0	0	**122**	
0945 - 1000	0	48	25	1	3	2	0	6	31	0	0	0	0	**116**	**477**
1000 - 1015	0	70	25	0	8	4	0	4	28	0	1	0	0	**140**	
1015 - 1030	0	58	26	0	3	5	0	4	20	0	1	0	0	**117**	
1030 - 1045	0	80	28	1	4	1	0	0	21	0	1	0	0	**136**	
1045 - 1100	0	64	26	0	4	1	0	2	25	0	0	0	0	**122**	**515**
1100 - 1115	1	59	25	1	6	0	0	4	19	0	1	0	0	**116**	
1115 - 1130	0	56	29	0	2	3	0	2	36	0	0	0	0	**128**	
1130 - 1145	0	73	24	0	6	1	1	1	26	0	0	0	0	**132**	
1145 - 1200	1	59	32	0	3	3	0	2	27	0	0	1	0	**128**	**504**
1200 - 1215	0	78	25	3	1	3	0	2	26	0	1	0	0	**139**	
1215 - 1230	0	89	41	2	9	2	1	3	20	0	1	0	0	**168**	
1230 - 1245	0	75	31	1	9	3	1	3	25	0	0	0	0	**148**	
1245 - 1300	0	73	39	1	6	3	1	3	31	0	1	0	0	**158**	**613**
1300 - 1315	0	72	27	0	4	1	0	0	30	0	4	0	0	**138**	
1315 - 1330	0	69	32	0	6	3	0	3	26	0	2	0	0	**141**	
1330 - 1345	1	86	35	0	4	2	1	3	19	0	2	0	0	**153**	
1345 - 1400	0	82	32	5	4	0	0	5	24	0	0	0	0	**152**	**584**
1400 - 1415	0	94	30	0	6	1	1	1	33	0	2	0	0	**168**	
1415 - 1430	0	93	35	0	4	2	0	3	26	0	0	0	0	**163**	
1430 - 1445	1	99	37	1	6	5	1	3	22	0	1	0	0	**176**	
1445 - 1500	0	85	33	0	6	0	2	2	28	0	0	1	0	**157**	**664**
1500 - 1515	0	110	37	0	7	0	1	3	24	0	1	0	0	**183**	
1515 - 1530	0	112	38	0	4	2	0	4	32	0	1	0	0	**193**	
1530 - 1545	0	135	35	0	5	2	2	1	18	0	0	0	0	**198**	
1545 - 1600	0	119	37	0	8	2	1	3	29	0	0	0	0	**199**	**773**
1600 - 1615	0	129	52	0	7	0	2	2	21	0	3	0	0	**216**	
1615 - 1630	0	134	31	0	7	0	0	3	19	0	1	0	0	**195**	
1630 - 1645	0	135	35	1	9	1	0	1	13	0	0	0	0	**195**	
1645 - 1700	0	138	46	2	5	1	0	1	21	0	0	0	0	**214**	**820**
1700 - 1715	0	139	27	0	5	0	0	2	19	0	2	0	0	**194**	
1715 - 1730	1	152	36	0	2	0	0	0	13	0	0	0	0	**204**	
1730 - 1745	2	118	32	0	5	0	0	3	10	0	0	0	0	**170**	
1745 - 1800	0	130	35	0	6	1	1	4	18	0	0	0	0	**195**	**763**
1800 - 1815	0	81	23	0	5	1	0	1	31	0	0	0	0	**142**	
1815 - 1830	2	94	22	0	8	1	1	2	28	0	2	1	0	**161**	
1830 - 1845	0	79	18	0	2	1	0	1	21	0	1	0	0	**123**	
1845 - 1900	1	86	21	0	2	1	0	4	10	0	1	0	0	**126**	**552**
1900 - 1915	0	80	17	0	4	0	0	4	11	0	0	0	0	**116**	
1915 - 1930	0	61	18	0	5	2	0	2	24	0	1	1	0	**114**	
1930 - 1945	0	68	12	0	1	2	0	2	18	1	1	0	0	**105**	
1945 - 2000	0	60	16	0	1	0	0	1	17	0	0	1	0	**96**	**431**
2000 - 2015	0	69	13	0	0	3	0	0	23	0	0	0	0	**108**	
2015 - 2030	0	72	11	0	1	3	0	1	13	0	2	0	0	**103**	
2030 - 2045	0	60	9	0	2	0	0	1	14	0	1	0	0	**87**	
2045 - 2100	0	70	12	0	1	0	0	0	15	0	2	0	0	**100**	**398**
2100 - 2115	0	54	9	0	0	1	0	0	18	0	1	0	0	**83**	
2115 - 2130	0	37	4	0	0	1	0	0	21	0	2	0	0	**65**	
2130 - 2145	0	40	7	0	0	0	0	0	18	0	0	0	0	**65**	
2145 - 2200	0	44	8	0	0	0	0	0	18	0	1	1	0	**72**	**285**
2200 - 2215	0	46	5	0	1	0	0	0	11	0	2	0	0	**65**	
2215 - 2230	0	35	1	0	2	0	0	0	17	0	2	0	0	**57**	
2230 - 2245	0	45	2	0	3	0	0	0	13	0	2	0	0	**65**	
2245 - 2300	0	23	1	0	0	0	0	0	16	0	2	0	0	**42**	**229**
2300 - 2315	0	33	1	0	3	0	0	0	21	0	2	0	0	**60**	
2315 - 2330	0	34	1	0	0	0	0	0	10	0	6	0	0	**51**	
2330 - 2345	0	24	2	0	2	0	0	0	8	0	3	0	0	**39**	
2345 - 0000	0	22	1	0	1	0	0	0	12	0	0	0	0	**36**	**186**

Session Total	12	5613	1748	24	334	100	21	131	1789	5	102	6	0	**9885**
Session Average	0.13	58.47	18.21	0.25	3.48	1.04	0.22	1.36	18.64	0.05	1.06	0.06	0.00	**102.97**
Session Percentage	0.12	56.78	17.68	0.24	3.38	1.01	0.21	1.33	18.10	0.05	1.03	0.06	0.00	

AM Peak Hour	0630 - 0730	0700 - 0800	0800 - 0900	0730 - 0830	0815 - 0915	0930 - 1030	0815 - 0915	0930 - 1030	0945 - 1045	0615 - 0715	0515 - 0615	-	-	**0700 - 0800**
AM Peak Hour Volume	2	295	122	3	35	13	3	16	100	2	7	0	0	**509**

Noon Peak Hour	1100 - 1200	1445 - 1545	1430 - 1530	1200 - 1300	1215 - 1315	1000 - 1100	1445 - 1545	1315 - 1415	1115 - 1215	-	1245 - 1345	1100 - 1200	-	**1445 - 1545**
Noon Peak Hour Volume	2	442	145	7	28	11	5	12	115	0	9	1	0	**731**

PM Peak Hour	1730 - 1830	1630 - 1730	1600 - 1700	1600 - 1700	1545 - 1645	1930 - 2030	1515 - 1615	1845 - 1945	1500 - 1600	1845 - 1945	1515 - 1615	1900 - 2000	-	**1600 - 1700**
PM Peak Hour Volume	4	564	164	3	31	8	5	12	103	1	4	2	0	**820**

Site 74 Lane 3 WB

I-20,
west of US-378 Sunset Blvd S/Bound Off-Ramp

Date

Thursday, April 25, 2024

Lat/Long

34.008085°, -81.156669°

Weather

Fair
67°F

Click here for Detailed Weather

0000 - 2400 (Weekday 24h Session) (04-25-2024)

SB WB 15min

	Westbound (Movement 74 Lane 3 WB.1)													15min	60min
TIME	1	2	3	4	5	6	7	8	9	10	11	12	13	Total	Total
0000 - 0015	0	10	4	0	1	0	0	1	15	0	0	0	0	**31**	
0015 - 0030	0	14	4	0	0	0	0	0	12	0	2	0	0	**32**	
0030 - 0045	0	18	5	0	0	0	0	0	15	0	1	0	0	**39**	
0045 - 0100	0	8	0	0	0	1	0	0	14	0	1	0	0	**24**	**126**
0100 - 0115	0	3	0	0	0	2	0	0	9	0	2	0	0	**16**	
0115 - 0130	0	6	1	0	0	0	0	0	6	0	0	0	0	**13**	
0130 - 0145	0	8	0	0	0	0	0	0	4	0	0	0	0	**12**	
0145 - 0200	0	5	1	0	0	1	0	0	11	0	1	0	0	**19**	**60**
0200 - 0215	0	7	1	0	1	0	0	0	11	0	1	0	0	**21**	
0215 - 0230	0	1	1	0	0	0	0	0	9	0	3	0	0	**14**	
0230 - 0245	0	5	0	0	0	0	0	0	9	0	0	0	0	**14**	
0245 - 0300	0	3	0	0	3	2	0	0	11	0	1	0	0	**20**	**69**
0300 - 0315	0	6	0	0	1	1	0	0	7	0	1	0	0	**16**	
0315 - 0330	0	13	0	0	0	0	0	0	13	0	1	0	0	**27**	
0330 - 0345	0	13	0	0	2	0	0	0	5	0	2	0	0	**22**	
0345 - 0400	0	11	2	0	1	0	0	0	14	0	1	0	0	**29**	**94**
0400 - 0415	0	12	1	0	0	1	0	0	12	0	0	0	0	**26**	
0415 - 0430	0	11	0	0	4	0	0	0	15	0	1	0	0	**31**	
0430 - 0445	0	24	3	0	1	0	0	0	20	0	1	0	0	**49**	
0445 - 0500	0	21	3	0	2	0	0	0	21	0	1	0	0	**48**	**154**
0500 - 0515	0	22	0	0	3	1	0	0	17	0	1	0	0	**44**	
0515 - 0530	0	31	2	0	3	0	0	0	20	0	0	0	0	**56**	
0530 - 0545	0	35	0	0	0	0	0	0	27	0	0	0	0	**62**	
0545 - 0600	0	36	2	0	4	0	0	0	31	0	1	0	0	**74**	**236**
0600 - 0615	0	38	4	0	2	0	0	0	22	0	0	0	0	**66**	
0615 - 0630	0	61	18	1	3	0	0	0	29	0	0	0	0	**112**	
0630 - 0645	0	62	17	0	4	2	0	1	23	0	0	0	0	**109**	
0645 - 0700	0	51	28	0	7	0	0	1	29	0	0	0	0	**116**	**403**
0700 - 0715	0	68	19	0	4	2	0	3	19	1	0	0	0	**116**	
0715 - 0730	1	70	26	1	8	1	1	3	23	0	0	0	0	**134**	
0730 - 0745	0	71	19	0	8	0	1	2	21	0	0	0	0	**122**	
0745 - 0800	1	83	38	1	0	2	0	1	18	0	0	0	0	**144**	**516**
0800 - 0815	0	49	30	0	5	1	1	2	14	1	0	0	0	**103**	
0815 - 0830	0	65	37	1	5	2	0	2	16	0	0	0	0	**128**	
0830 - 0845	0	50	41	0	7	3	1	1	20	0	0	0	0	**123**	
0845 - 0900	0	49	33	0	4	2	0	3	16	0	0	0	0	**107**	**461**
0900 - 0915	0	51	31	0	4	1	0	2	25	2	0	0	0	**116**	
0915 - 0930	0	47	35	0	5	1	1	1	16	1	0	0	0	**107**	
0930 - 0945	0	52	30	0	7	2	0	1	37	0	0	0	0	**129**	
0945 - 1000	0	56	27	0	8	6	1	1	33	1	0	0	0	**133**	**485**
1000 - 1015	0	54	38	0	9	3	1	3	28	1	0	0	0	**137**	
1015 - 1030	0	85	32	0	3	2	1	4	17	1	0	0	0	**145**	
1030 - 1045	0	75	27	0	4	1	0	5	22	0	0	0	0	**134**	
1045 - 1100	1	64	35	0	5	0	0	1	33	0	0	0	0	**139**	**555**
1100 - 1115	0	56	30	0	8	1	1	5	24	0	0	0	0	**125**	
1115 - 1130	0	85	27	2	4	3	0	1	22	0	0	0	0	**144**	
1130 - 1145	0	68	35	0	8	2	1	3	24	0	0	0	0	**141**	
1145 - 1200	0	69	44	0	5	4	2	4	24	0	0	0	0	**152**	**562**
1200 - 1215	0	77	29	0	4	2	0	3	22	0	0	0	0	**137**	
1215 - 1230	0	80	43	0	6	0	0	1	18	0	0	0	0	**148**	
1230 - 1245	1	79	43	0	6	1	0	1	17	0	0	0	0	**148**	
1245 - 1300	0	74	34	5	2	0	1	2	26	1	0	0	0	**145**	**578**
1300 - 1315	0	72	39	0	5	2	0	1	25	1	0	0	0	**145**	
1315 - 1330	1	92	32	0	8	1	1	2	20	0	0	0	0	**157**	
1330 - 1345	0	104	28	0	6	1	2	3	25	3	0	0	0	**172**	
1345 - 1400	0	86	27	0	0	3	0	4	21	1	1	0	0	**143**	**617**
1400 - 1415	0	81	30	0	6	0	0	5	28	0	0	0	0	**150**	
1415 - 1430	0	93	39	2	5	2	0	4	22	2	0	0	0	**169**	
1430 - 1445	0	88	41	3	5	3	3	6	28	0	0	0	0	**177**	
1445 - 1500	0	93	35	0	10	1	0	8	19	0	0	0	0	**166**	**662**
1500 - 1515	0	123	44	1	2	1	0	3	19	1	0	1	0	**195**	
1515 - 1530	0	113	46	1	7	1	2	3	20	0	2	0	0	**195**	
1530 - 1545	0	117	42	0	8	2	0	2	20	1	0	0	0	**192**	
1545 - 1600	1	127	45	0	8	2	0	6	15	0	0	0	0	**204**	**786**
1600 - 1615	0	97	49	0	2	2	2	8	18	2	0	0	0	**180**	
1615 - 1630	0	147	46	0	8	1	0	0	13	1	0	0	0	**216**	
1630 - 1645	0	133	35	0	8	0	0	0	11	1	0	0	0	**188**	
1645 - 1700	0	162	27	1	5	3	0	4	9	0	0	0	0	**211**	**795**
1700 - 1715	0	150	50	0	5	1	0	2	17	0	0	0	0	**225**	
1715 - 1730	0	162	46	0	1	0	0	1	26	0	0	0	0	**236**	
1730 - 1745	0	119	37	0	5	2	0	0	16	0	0	0	0	**179**	
1745 - 1800	1	115	34	0	3	2	0	3	17	0	0	0	0	**175**	**815**
1800 - 1815	0	117	36	0	3	4	0	1	16	0	0	0	0	**177**	
1815 - 1830	2	92	30	0	0	0	0	3	18	0	0	0	0	**145**	
1830 - 1845	0	80	25	0	3	0	0	0	16	0	2	0	0	**126**	
1845 - 1900	0	93	23	0	4	2	0	0	14	0	2	0	0	**138**	**586**
1900 - 1915	0	69	26	0	7	1	0	1	21	0	1	0	0	**126**	
1915 - 1930	1	66	10	2	4	1	0	0	15	0	1	0	0	**100**	
1930 - 1945	0	89	19	0	4	0	0	1	15	0	0	0	0	**128**	
1945 - 2000	0	66	11	0	1	2	0	3	21	0	0	0	0	**104**	**458**
2000 - 2015	1	75	18	0	4	0	0	0	13	0	0	0	0	**111**	
2015 - 2030	0	68	10	0	1	2	0	0	18	0	1	0	0	**100**	
2030 - 2045	0	59	2	1	2	1	0	0	21	0	5	0	0	**91**	
2045 - 2100	0	83	2	0	2	0	0	0	16	0	0	0	0	**103**	**405**
2100 - 2115	0	77	4	0	3	0	0	0	22	0	3	0	0	**109**	
2115 - 2130	0	70	3	0	1	0	0	0	26	0	4	0	0	**104**	
2130 - 2145	0	73	1	0	2	0	0	0	25	0	2	0	0	**103**	
2145 - 2200	0	80	1	0	5	0	0	0	26	0	1	0	0	**113**	**429**
2200 - 2215	0	65	2	0	0	0	0	0	21	0	0	0	0	**88**	
2215 - 2230	0	48	1	1	0	0	0	0	19	0	3	0	0	**72**	
2230 - 2245	0	60	2	0	0	0	0	0	20	0	5	0	0	**87**	
2245 - 2300	0	38	1	0	3	0	0	0	20	0	2	0	0	**64**	**311**
2300 - 2315	0	25	0	0	1	0	0	0	12	0	0	0	0	**38**	
2315 - 2330	0	27	1	0	3	0	0	0	9	0	3	0	0	**43**	
2330 - 2345	0	33	0	0	1	0	0	0	18	0	0	0	0	**52**	
2345 - 0000	0	27	0	0	1	0	0	0	14	0	1	0	0	**43**	**176**

Session Total	11	5966	1880	23	333	96	23	132	1791	22	61	1	0	**10339**
Session Average	0.11	62.15	19.58	0.24	3.47	1.00	0.24	1.38	18.66	0.23	0.64	0.01	0.00	**107.70**
Session Percentage	0.11	57.70	18.18	0.22	3.22	0.93	0.22	1.28	17.32	0.21	0.59	0.01	0.00	

AM Peak Hour	0700 - 0800	0700 - 0800	0745 - 0845	0700 - 0800	0915 - 1015	0930 - 1030	0715 - 0815	0945 - 1045	0930 - 1030	0900 - 1000	0500 - 0600	-	-	**0945 - 1045**
AM Peak Hour Volume	2	292	146	2	29	13	3	13	115	4	2	0	0	**549**

Noon Peak Hour	1230 - 1330	1445 - 1545	1445 - 1545	1415 - 1515	1445 - 1545	1115 - 1215	1430 - 1530	1400 - 1500	1045 - 1145	1330 - 1430	1430 - 1530	1415 - 1515	-	**1445 - 1545**
Noon Peak Hour Volume	2	446	167	6	27	11	5	23	103	6	2	1	0	**748**

PM Peak Hour	1730 - 1830	1630 - 1730	1515 - 1615	1500 - 1600	1530 - 1630	1715 - 1815	1515 - 1615	1515 - 1615	1700 - 1800	1530 - 1630	1830 - 1930	1500 - 1600	-	**1630 - 1730**
PM Peak Hour Volume	3	607	182	2	26	8	4	19	76	4	6	1	0	**860**

Site 74 Lane 3 WB
I-20,
west of US-378 Sunset Blvd S/Bound Off-Ramp

Date
Friday, April 26, 2024

Lat/Long
34.008085°, -81.156669°

Weather
Cloudy
69°F

Click here for Detailed Weather

0000 - 2400 (Weekday 24h Session) (04-26-2024)
SB WB 15min

	Westbound (Movement 74 Lane 3 WB.1)													15min	60min
TIME	1	2	3	4	5	6	7	8	9	10	11	12	13	Total	Total
0000 - 0015	0	13	2	0	2	1	0	0	9	0	1	0	0	**28**	
0015 - 0030	0	7	3	0	0	0	0	0	2	0	1	0	0	**13**	
0030 - 0045	0	8	2	0	1	0	0	0	7	0	0	0	0	**18**	
0045 - 0100	0	7	4	0	0	0	0	0	6	0	1	0	0	**18**	**77**
0100 - 0115	0	5	1	0	2	0	0	0	3	0	2	0	0	**13**	
0115 - 0130	0	4	0	0	2	0	0	0	9	0	1	0	0	**16**	
0130 - 0145	0	8	4	0	1	0	0	0	6	0	0	0	0	**19**	
0145 - 0200	0	4	0	0	0	0	0	0	9	0	0	0	0	**13**	**61**
0200 - 0215	0	6	2	0	0	0	0	0	6	0	0	0	0	**14**	
0215 - 0230	0	8	1	0	1	0	0	0	9	0	1	0	0	**20**	
0230 - 0245	0	6	1	0	1	0	0	0	10	0	0	0	0	**18**	
0245 - 0300	0	5	1	0	0	0	0	0	7	0	1	0	0	**14**	**66**
0300 - 0315	0	6	0	0	4	2	0	0	7	0	2	0	0	**21**	
0315 - 0330	0	5	2	0	2	2	0	0	11	0	1	0	0	**23**	
0330 - 0345	0	6	1	0	2	0	0	0	5	0	0	0	0	**14**	
0345 - 0400	0	8	4	0	2	0	0	0	10	0	1	0	0	**25**	**83**
0400 - 0415	0	10	3	0	2	0	0	0	5	0	1	0	0	**21**	
0415 - 0430	0	8	2	0	3	0	0	0	8	0	0	0	0	**21**	
0430 - 0445	0	7	3	0	2	0	0	0	8	0	0	0	0	**20**	
0445 - 0500	0	12	6	0	1	1	0	0	19	0	0	0	0	**39**	**101**
0500 - 0515	0	14	6	0	4	0	0	0	16	0	1	0	0	**41**	
0515 - 0530	0	19	10	0	0	0	0	0	18	0	3	0	0	**50**	
0530 - 0545	0	21	12	0	4	1	0	0	13	0	2	0	0	**53**	
0545 - 0600	1	25	13	0	7	3	0	0	12	0	0	0	0	**61**	**205**
0600 - 0615	0	20	10	0	4	3	0	0	19	0	0	0	0	**56**	
0615 - 0630	0	42	23	0	3	0	0	0	17	0	1	0	0	**86**	
0630 - 0645	1	74	26	0	4	1	0	0	13	0	0	0	0	**119**	
0645 - 0700	0	59	19	0	1	5	0	0	22	0	0	0	0	**106**	**367**
0700 - 0715	1	74	21	1	8	5	0	4	18	0	0	0	0	**132**	
0715 - 0730	0	77	24	1	5	0	0	1	15	0	0	0	0	**123**	
0730 - 0745	0	74	33	2	8	1	0	1	20	0	0	0	0	**139**	
0745 - 0800	0	70	26	0	7	1	0	3	13	1	0	0	0	**121**	**515**
0800 - 0815	0	63	30	0	4	1	1	3	16	1	0	0	0	**119**	
0815 - 0830	0	56	18	0	11	1	0	2	16	0	0	0	0	**104**	
0830 - 0845	0	55	29	1	12	5	1	3	18	0	0	0	0	**124**	
0845 - 0900	0	59	28	3	7	2	2	3	17	1	1	0	0	**123**	**470**
0900 - 0915	0	66	30	0	7	2	0	2	22	0	1	0	0	**130**	
0915 - 0930	0	71	37	0	5	6	0	3	20	0	0	0	0	**142**	
0930 - 0945	0	63	29	0	5	2	1	6	18	0	1	0	0	**125**	
0945 - 1000	0	73	27	0	10	0	2	2	14	1	0	0	0	**129**	**526**
1000 - 1015	0	67	47	2	9	2	0	5	22	0	0	0	0	**154**	
1015 - 1030	0	71	29	0	3	2	0	2	25	0	0	0	0	**132**	
1030 - 1045	0	77	28	0	7	3	1	1	27	0	0	0	0	**144**	
1045 - 1100	0	67	39	3	7	3	1	4	22	0	0	0	0	**146**	**576**
1100 - 1115	0	78	26	0	11	2	0	3	30	0	0	0	0	**150**	
1115 - 1130	0	95	40	2	6	3	0	0	25	1	0	0	0	**172**	
1130 - 1145	0	94	26	0	4	2	1	3	33	0	0	0	0	**163**	
1145 - 1200	0	88	38	1	9	0	0	4	26	0	0	0	0	**166**	**651**
1200 - 1215	0	97	33	2	4	2	1	2	28	1	0	0	0	**170**	
1215 - 1230	0	95	59	5	4	0	0	4	15	1	0	0	0	**183**	
1230 - 1245	1	110	32	5	5	0	0	2	19	0	0	0	0	**174**	
1245 - 1300	1	94	36	0	4	0	0	2	31	1	0	0	0	**169**	**696**
1300 - 1315	0	114	30	2	2	0	0	3	20	2	0	0	0	**173**	
1315 - 1330	0	95	36	0	3	2	0	3	29	0	0	0	0	**168**	
1330 - 1345	0	92	37	3	1	1	1	1	24	0	0	0	0	**160**	
1345 - 1400	3	105	33	1	11	2	0	0	20	1	0	0	0	**176**	**677**
1400 - 1415	0	88	31	1	5	6	0	3	24	1	0	0	0	**159**	
1415 - 1430	0	118	44	1	2	0	0	1	16	0	0	0	0	**182**	
1430 - 1445	0	107	35	0	7	2	0	1	21	0	1	0	0	**174**	
1445 - 1500	1	112	49	0	7	5	0	4	23	0	0	0	0	**201**	**716**
1500 - 1515	1	135	39	0	2	0	0	3	16	0	0	0	0	**196**	
1515 - 1530	1	132	37	0	3	0	1	2	17	1	0	0	0	**194**	
1530 - 1545	0	136	41	0	3	0	0	3	17	0	0	0	0	**200**	
1545 - 1600	0	110	38	0	6	3	0	1	23	0	0	0	0	**181**	**771**
1600 - 1615	0	122	38	1	4	2	0	1	27	1	0	0	0	**196**	
1615 - 1630	0	144	34	0	6	0	0	2	19	0	0	0	0	**205**	
1630 - 1645	0	122	33	0	9	1	0	3	11	0	0	0	0	**179**	
1645 - 1700	1	118	43	1	6	1	0	2	20	0	0	0	0	**192**	**772**
1700 - 1715	0	129	31	0	2	3	0	2	19	0	0	0	0	**186**	
1715 - 1730	1	121	35	0	5	0	0	3	15	0	0	0	0	**180**	
1730 - 1745	0	130	27	0	3	0	0	1	17	0	0	0	0	**178**	
1745 - 1800	1	97	31	0	7	1	0	2	14	0	0	0	0	**153**	**697**
1800 - 1815	0	91	27	1	3	0	0	3	16	0	0	0	0	**141**	
1815 - 1830	0	92	24	0	2	1	0	1	24	0	0	0	0	**144**	
1830 - 1845	0	95	24	0	2	2	0	1	15	0	1	0	0	**140**	
1845 - 1900	0	96	26	0	1	0	0	1	17	0	0	0	0	**141**	**566**
1900 - 1915	2	85	23	0	4	0	0	3	14	0	0	0	0	**131**	
1915 - 1930	0	87	19	1	6	0	0	3	18	0	0	0	0	**134**	
1930 - 1945	0	83	22	0	5	0	0	1	15	0	0	0	0	**126**	
1945 - 2000	0	86	20	1	2	0	0	0	9	0	2	0	0	**120**	**511**
2000 - 2015	0	61	16	1	2	0	0	1	16	0	0	0	0	**97**	
2015 - 2030	0	67	22	3	1	3	0	0	15	0	0	0	0	**111**	
2030 - 2045	0	56	18	0	0	0	0	0	12	0	1	0	0	**87**	
2045 - 2100	0	54	20	0	2	0	0	0	17	0	2	0	0	**95**	**390**
2100 - 2115	0	58	23	0	0	0	0	0	14	0	1	0	0	**96**	
2115 - 2130	0	53	16	0	1	0	0	0	17	0	3	0	0	**90**	
2130 - 2145	0	55	18	0	2	0	0	0	13	0	1	0	0	**89**	
2145 - 2200	0	52	22	0	2	0	0	0	8	0	0	0	0	**84**	**359**
2200 - 2215	0	61	20	0	1	0	0	0	6	0	1	0	0	**89**	
2215 - 2230	0	44	19	0	3	0	0	0	16	0	1	0	0	**83**	
2230 - 2245	0	53	20	0	1	0	0	0	9	0	0	0	0	**83**	
2245 - 2300	0	51	22	0	1	0	0	0	13	0	5	0	0	**92**	**347**
2300 - 2315	0	41	22	0	2	0	0	0	7	0	2	0	0	**74**	
2315 - 2330	0	42	15	0	3	0	0	0	4	0	0	0	0	**64**	
2330 - 2345	0	32	8	0	0	0	0	0	9	0	1	0	0	**50**	
2345 - 0000	0	27	9	0	0	0	0	0	6	0	1	0	0	**43**	**231**

Session Total	16	6100	2123	45	357	99	13	120	1498	14	46	0	0	**10431**
Session Average	0.17	63.54	22.11	0.47	3.72	1.03	0.14	1.25	15.60	0.15	0.48	0.00	0.00	**108.66**
Session Percentage	0.15	58.48	20.35	0.43	3.42	0.95	0.12	1.15	14.36	0.13	0.44	0.00	0.00	

AM Peak Hour	0545 - 0645	0700 - 0800	0915 - 1015	0645 - 0745	0815 - 0915	0830 - 0930	0800 - 0900	0915 - 1015	0945 - 1045	0715 - 0815	0500 - 0600	-	-	**0945 - 1045**
AM Peak Hour Volume	2	295	140	4	37	15	4	16	88	2	6	0	0	**559**

Noon Peak Hour	1300 - 1400	1445 - 1545	1415 - 1515	1145 - 1245	1030 - 1130	1400 - 1500	1000 - 1100	1130 - 1230	1100 - 1200	1215 - 1315	1345 - 1445	-	-	**1445 - 1545**
Noon Peak Hour Volume	3	515	167	13	31	13	2	13	114	4	1	0	0	**791**

PM Peak Hour	1500 - 1600	1500 - 1600	1500 - 1600	1930 - 2030	1545 - 1645	1545 - 1645	1500 - 1600	1630 - 1730	1530 - 1630	1515 - 1615	1945 - 2045	-	-	**1530 - 1630**
PM Peak Hour Volume	2	513	155	5	25	6	1	10	86	2	3	0	0	**782**

Site 74 Lane 3 WB

I-20,
west of US-378 Sunset Blvd S/Bound Off-Ramp

Date

Saturday, April 27, 2024

Lat/Long

34.008085°, -81.156669°

Weather

Mostly Cloudy
69°F

Click here for Detailed Weather

0000 - 2400 (Saturday 24h Session) (04-27-2024)

SB WB 15min

	Westbound (Movement 74 Lane 3 WB.1)													15min	60min
TIME	1	2	3	4	5	6	7	8	9	10	11	12	13	Total	Total
0000 - 0015	0	10	2	0	1	0	0	0	3	0	0	0	0	**16**	
0015 - 0030	0	11	4	0	1	0	0	0	0	0	1	0	0	**17**	
0030 - 0045	0	18	5	0	2	0	0	0	4	0	1	0	0	**30**	
0045 - 0100	0	16	3	0	2	0	0	0	5	0	2	0	0	**28**	**91**
0100 - 0115	0	10	4	0	0	0	0	0	5	0	1	0	0	**20**	
0115 - 0130	0	8	2	0	0	0	0	0	3	0	2	0	0	**15**	
0130 - 0145	0	10	3	1	0	0	0	0	5	0	1	0	0	**20**	
0145 - 0200	0	9	2	0	0	0	0	0	7	0	0	0	0	**18**	**73**
0200 - 0215	0	10	4	0	2	0	0	0	3	0	0	0	0	**19**	
0215 - 0230	0	8	2	0	0	0	0	0	7	0	1	0	0	**18**	
0230 - 0245	0	11	3	0	0	0	0	0	9	0	2	0	0	**25**	
0245 - 0300	0	12	4	0	0	0	0	0	12	0	0	0	0	**28**	**90**
0300 - 0315	0	11	6	0	0	0	0	0	5	0	1	0	0	**23**	
0315 - 0330	0	10	5	0	0	0	0	0	12	0	1	0	0	**28**	
0330 - 0345	0	5	2	1	0	0	0	0	9	0	1	0	0	**18**	
0345 - 0400	0	8	3	0	0	0	0	0	15	0	1	0	0	**27**	**96**
0400 - 0415	0	6	3	0	0	2	0	0	11	0	0	0	0	**22**	
0415 - 0430	0	5	3	0	0	0	0	0	9	0	1	0	0	**18**	
0430 - 0445	0	6	2	0	0	0	0	0	8	0	0	0	0	**16**	
0445 - 0500	0	10	5	0	0	0	0	0	13	0	1	0	0	**29**	**85**
0500 - 0515	0	19	10	0	1	0	0	0	10	0	0	0	0	**40**	
0515 - 0530	0	10	2	0	2	0	0	0	9	0	4	0	0	**27**	
0530 - 0545	0	16	7	0	0	0	0	0	10	0	0	0	0	**33**	
0545 - 0600	0	23	10	0	2	0	0	0	9	0	0	0	0	**44**	**144**
0600 - 0615	0	30	15	0	2	0	0	0	9	0	0	0	0	**56**	
0615 - 0630	0	34	10	0	0	0	0	0	4	0	1	0	0	**49**	
0630 - 0645	0	36	11	0	1	0	0	0	13	0	0	0	0	**61**	
0645 - 0700	0	43	19	0	0	1	0	1	8	0	0	0	0	**72**	**238**
0700 - 0715	0	42	14	0	0	1	0	0	13	0	0	0	0	**70**	
0715 - 0730	0	49	17	0	2	2	0	1	12	0	0	0	0	**83**	
0730 - 0745	1	39	12	1	2	1	0	2	15	0	1	0	0	**74**	
0745 - 0800	0	45	28	0	5	1	0	0	12	1	0	0	0	**92**	**319**
0800 - 0815	1	55	11	0	4	3	0	0	14	1	0	0	0	**89**	
0815 - 0830	0	46	22	0	3	3	0	1	12	0	0	0	0	**87**	
0830 - 0845	2	64	29	0	0	1	0	0	8	1	0	0	0	**105**	
0845 - 0900	0	37	13	0	5	2	0	1	19	0	1	0	0	**78**	**359**
0900 - 0915	2	40	18	0	2	2	0	2	9	0	1	0	0	**76**	
0915 - 0930	0	59	15	0	1	2	0	0	22	0	0	0	0	**99**	
0930 - 0945	0	72	28	0	3	0	0	2	12	0	1	0	0	**118**	
0945 - 1000	3	73	20	0	2	1	0	2	11	0	0	0	0	**112**	**405**
1000 - 1015	0	74	23	0	3	1	0	3	17	0	0	0	0	**121**	
1015 - 1030	0	69	23	0	3	0	0	1	10	0	0	0	0	**106**	
1030 - 1045	0	85	19	0	3	1	0	0	16	0	0	0	0	**124**	
1045 - 1100	0	83	25	0	4	2	0	0	9	0	0	0	0	**123**	**474**
1100 - 1115	1	82	27	1	2	1	0	3	13	0	0	0	0	**130**	
1115 - 1130	0	90	25	0	4	0	0	0	7	0	0	0	0	**126**	
1130 - 1145	0	87	23	0	4	0	0	2	9	2	0	0	0	**127**	
1145 - 1200	0	81	30	0	1	0	0	0	18	0	0	0	0	**130**	**513**
1200 - 1215	1	92	39	0	3	0	0	2	7	0	0	0	0	**144**	
1215 - 1230	0	103	34	0	2	0	0	3	14	0	0	0	0	**156**	
1230 - 1245	1	90	29	0	2	0	0	1	17	0	0	0	0	**140**	
1245 - 1300	0	91	31	0	4	0	0	1	15	0	0	0	0	**142**	**582**
1300 - 1315	0	82	31	0	5	0	0	1	18	0	0	0	0	**137**	
1315 - 1330	0	101	33	0	1	1	0	2	12	0	0	0	0	**150**	
1330 - 1345	0	116	34	0	2	0	0	0	11	0	0	0	0	**163**	
1345 - 1400	0	125	27	0	4	0	0	1	12	0	0	0	0	**169**	**619**
1400 - 1415	2	104	25	0	2	0	0	1	10	0	0	0	0	**144**	
1415 - 1430	1	117	28	0	1	1	0	2	11	0	0	0	0	**161**	
1430 - 1445	1	101	29	0	3	0	0	1	13	0	0	0	0	**148**	
1445 - 1500	0	108	30	0	1	0	0	1	9	0	0	0	0	**149**	**602**
1500 - 1515	0	101	30	0	3	0	0	0	7	1	0	0	0	**142**	
1515 - 1530	0	113	31	0	2	0	0	2	10	0	0	0	0	**158**	
1530 - 1545	3	100	20	0	0	0	0	2	9	0	0	0	0	**134**	
1545 - 1600	0	118	26	0	1	0	0	0	18	1	1	0	0	**165**	**599**
1600 - 1615	1	113	27	1	2	1	0	1	5	0	0	0	0	**151**	
1615 - 1630	0	108	24	0	2	1	0	2	11	0	0	0	0	**148**	
1630 - 1645	0	103	24	0	1	0	0	0	8	0	0	0	0	**136**	
1645 - 1700	0	102	23	0	1	0	0	0	7	0	0	0	0	**133**	**568**
1700 - 1715	0	95	19	0	5	0	0	0	8	0	0	0	0	**127**	
1715 - 1730	0	102	20	0	0	0	0	2	10	0	0	0	0	**134**	
1730 - 1745	0	79	20	1	2	0	0	1	11	0	0	0	0	**114**	
1745 - 1800	0	85	17	1	3	0	0	0	8	0	0	0	0	**114**	**489**
1800 - 1815	0	80	23	0	1	1	0	1	6	0	0	0	0	**112**	
1815 - 1830	0	93	22	0	3	0	0	0	9	0	0	0	0	**127**	
1830 - 1845	0	93	19	0	1	0	0	1	7	0	0	0	0	**121**	
1845 - 1900	0	99	20	0	0	0	0	0	8	1	0	0	0	**128**	**488**
1900 - 1915	1	91	22	0	0	0	0	1	4	0	0	0	0	**119**	
1915 - 1930	0	88	13	0	3	0	0	1	7	0	0	0	0	**112**	
1930 - 1945	0	91	21	0	0	0	0	1	7	0	0	0	0	**120**	
1945 - 2000	0	69	18	0	0	1	0	0	7	0	0	0	0	**95**	**446**
2000 - 2015	0	70	17	0	0	0	0	0	9	0	0	0	0	**96**	
2015 - 2030	0	80	15	0	1	0	0	0	7	0	0	0	0	**103**	
2030 - 2045	0	70	11	0	0	0	0	0	8	0	0	0	0	**89**	
2045 - 2100	0	99	17	0	1	0	0	0	5	0	0	0	0	**122**	**410**
2100 - 2115	0	80	10	0	0	0	0	0	4	0	0	0	0	**94**	
2115 - 2130	0	73	9	0	0	0	0	0	3	0	0	0	0	**85**	
2130 - 2145	0	85	12	0	1	0	0	0	11	0	0	0	0	**109**	
2145 - 2200	0	89	18	0	0	0	0	0	3	0	0	0	0	**110**	**398**
2200 - 2215	0	59	10	0	1	0	0	0	4	0	0	0	0	**74**	
2215 - 2230	0	50	12	0	1	0	0	0	3	0	0	0	0	**66**	
2230 - 2245	0	51	10	0	0	0	0	0	6	0	0	0	0	**67**	
2245 - 2300	0	40	8	0	1	0	0	0	5	0	1	0	0	**55**	**262**
2300 - 2315	0	39	7	0	0	0	0	0	1	0	0	0	0	**47**	
2315 - 2330	0	40	10	0	0	0	0	0	8	0	0	0	0	**58**	
2330 - 2345	0	25	6	0	0	0	0	0	6	0	0	0	0	**37**	
2345 - 0000	0	27	7	0	0	0	0	0	4	0	0	0	0	**38**	**180**

Session Total	21	5807	1561	7	135	33	0	52	878	8	28	0	0	**8530**
Session Average	0.22	60.49	16.26	0.07	1.41	0.34	0.00	0.54	9.15	0.08	0.29	0.00	0.00	**88.85**
Session Percentage	0.25	68.08	18.30	0.08	1.58	0.39	0.00	0.61	10.29	0.09	0.33	0.00	0.00	

AM Peak Hour	0900 - 1000	0945 - 1045	0930 - 1030	0645 - 0745	0730 - 0830	0800 - 0900	-	0930 - 1030	0845 - 0945	0745 - 0845	0500 - 0600	-	-	**0945 - 1045**
AM Peak Hour Volume	5	301	94	1	14	9	0	8	62	3	4	0	0	**463**

Noon Peak Hour	1345 - 1445	1330 - 1430	1200 - 1300	1015 - 1115	1045 - 1145	1000 - 1100	-	1130 - 1230	1215 - 1315	1045 - 1145	-	-	-	**1330 - 1430**
Noon Peak Hour Volume	4	462	133	1	14	4	0	7	64	2	0	0	0	**637**

PM Peak Hour	1515 - 1615	1515 - 1615	1500 - 1600	1700 - 1800	1700 - 1800	1530 - 1630	-	1515 - 1615	1500 - 1600	1500 - 1600	1500 - 1600	-	-	**1515 - 1615**
PM Peak Hour Volume	4	444	107	2	10	2	0	5	44	2	1	0	0	**608**

Bi-Directional Class Count || SB WB Average 15min

Columbia, SC

Marr Traffic DATA COLLECTION
www.marrtraffic.com

Site 74 Lane 3 WB
I-20,
west of US-378 Sunset Blvd S/Bound Off-Ramp

Date
Sunday, April 21, 2024

Lat/Long
34.008085°, -81.156669°

Weather
Cloudy
66°F

0000 - 2400 (Weekday 24h Session) (All Dates)
SB WB Average 15min

	SB WB Average 15min													15min	60min
Time	1	2	3	4	5	6	7	8	9	10	11	12	13	Total	Total
0000 - 0015	0	14	3	0	1	0	0	0	10	0	1	0	0	**28**	
0015 - 0030	0	13	3	0	0	0	0	0	7	0	1	0	0	**25**	
0030 - 0045	0	13	3	0	1	0	0	0	8	0	1	0	0	**25**	
0045 - 0100	0	11	2	0	1	0	0	0	8	0	1	0	0	**23**	**101**
0100 - 0115	0	9	1	0	1	0	0	0	5	0	1	0	0	**18**	
0115 - 0130	0	7	1	0	1	0	0	0	6	0	1	0	0	**16**	
0130 - 0145	0	10	2	0	1	0	0	0	6	0	0	0	0	**19**	
0145 - 0200	0	8	1	0	0	0	0	0	7	0	0	0	0	**16**	**69**
0200 - 0215	0	8	2	0	1	0	0	0	7	0	0	0	0	**17**	
0215 - 0230	0	6	1	0	0	0	0	0	9	0	1	0	0	**18**	
0230 - 0245	0	7	1	0	0	0	0	0	7	0	1	0	0	**17**	
0245 - 0300	0	5	1	0	1	1	0	0	9	0	1	0	0	**17**	**68**
0300 - 0315	0	7	1	0	1	0	0	0	7	0	1	0	0	**18**	
0315 - 0330	0	7	1	0	1	0	0	0	9	0	1	0	0	**20**	
0330 - 0345	0	9	1	0	1	0	0	0	6	0	1	0	0	**18**	
0345 - 0400	0	9	2	0	1	0	0	0	11	0	1	0	0	**23**	**79**
0400 - 0415	0	9	2	0	1	0	0	0	9	0	0	0	0	**21**	
0415 - 0430	0	9	1	0	2	0	0	0	11	0	1	0	0	**24**	
0430 - 0445	0	13	2	0	1	0	0	0	11	0	0	0	0	**28**	
0445 - 0500	0	11	3	0	1	0	0	0	14	0	1	0	0	**31**	**104**
0500 - 0515	0	14	3	0	2	0	0	0	12	0	1	0	0	**31**	
0515 - 0530	0	20	4	0	1	0	0	0	14	0	2	0	0	**41**	
0530 - 0545	0	22	5	0	1	0	0	0	16	0	0	0	0	**45**	
0545 - 0600	0	27	7	0	3	0	0	0	15	0	0	0	0	**52**	**169**
0600 - 0615	0	30	8	0	2	1	0	0	17	0	0	0	0	**59**	
0615 - 0630	0	46	15	0	2	1	0	0	14	0	0	0	0	**78**	
0630 - 0645	0	57	18	0	3	1	0	1	14	0	0	0	0	**94**	
0645 - 0700	0	53	20	0	3	2	0	1	16	0	0	0	0	**95**	**327**
0700 - 0715	0	60	19	0	4	2	0	2	16	0	0	0	0	**104**	
0715 - 0730	0	63	21	0	5	2	0	2	15	0	0	0	0	**108**	
0730 - 0745	0	63	20	1	6	2	0	1	16	0	0	0	0	**108**	
0745 - 0800	0	69	25	1	5	1	0	1	14	0	0	0	0	**117**	**438**
0800 - 0815	0	54	25	0	3	1	0	1	13	0	0	0	0	**99**	
0815 - 0830	0	54	25	1	5	2	0	2	15	0	0	0	0	**104**	
0830 - 0845	0	53	28	0	5	2	0	1	17	0	0	0	0	**108**	
0845 - 0900	0	54	25	1	5	1	1	2	18	0	0	0	0	**108**	**419**
0900 - 0915	0	54	26	0	7	2	0	2	19	0	0	0	0	**111**	
0915 - 0930	0	61	28	0	5	2	0	1	20	0	0	0	0	**118**	
0930 - 0945	0	65	27	0	5	1	0	2	20	0	0	0	0	**121**	
0945 - 1000	0	66	23	0	5	2	0	3	22	0	0	0	0	**122**	**472**
1000 - 1015	0	63	28	0	6	2	0	3	23	0	0	0	0	**126**	
1015 - 1030	0	70	26	1	5	2	0	2	18	0	0	0	0	**125**	
1030 - 1045	0	76	25	0	4	1	0	1	21	0	0	0	0	**129**	
1045 - 1100	0	66	28	0	5	2	0	2	22	0	0	0	0	**126**	**506**
1100 - 1115	0	71	25	0	6	1	0	3	21	0	0	0	0	**128**	
1115 - 1130	0	76	29	1	4	2	0	1	23	0	0	0	0	**136**	
1130 - 1145	0	78	29	0	6	1	0	2	21	0	0	0	0	**137**	
1145 - 1200	0	74	34	0	5	2	0	2	24	0	0	0	0	**142**	**543**
1200 - 1215	0	89	32	1	4	2	0	2	21	0	0	0	0	**152**	
1215 - 1230	0	89	40	1	5	1	0	2	17	0	0	0	0	**155**	
1230 - 1245	0	88	31	1	4	1	0	2	22	0	0	0	0	**149**	
1245 - 1300	0	86	31	1	4	1	0	2	23	0	0	0	0	**150**	**605**
1300 - 1315	0	81	29	0	3	1	0	2	23	1	1	0	0	**141**	
1315 - 1330	0	86	32	1	4	2	0	2	20	0	0	0	0	**147**	
1330 - 1345	0	97	32	1	3	1	1	2	19	0	0	0	0	**156**	
1345 - 1400	1	96	28	1	4	2	0	2	21	0	0	0	0	**155**	**599**
1400 - 1415	0	93	30	1	5	2	0	2	21	0	0	0	0	**155**	
1415 - 1430	0	98	32	1	4	1	0	2	18	0	0	0	0	**157**	
1430 - 1445	0	98	33	1	4	2	1	3	23	0	0	0	0	**165**	
1445 - 1500	0	99	34	0	5	1	0	3	20	0	0	0	0	**162**	**640**
1500 - 1515	0	111	34	0	4	1	0	2	17	0	0	0	0	**170**	
1515 - 1530	0	111	34	0	4	1	1	2	19	0	0	0	0	**173**	
1530 - 1545	0	121	33	0	3	1	1	2	17	0	0	0	0	**180**	
1545 - 1600	0	117	34	0	5	1	0	2	20	0	0	0	0	**181**	**704**
1600 - 1615	0	112	40	1	5	1	1	3	17	1	0	0	0	**181**	
1615 - 1630	0	129	32	0	6	1	0	2	16	1	0	0	0	**186**	
1630 - 1645	0	120	30	0	6	1	0	1	11	0	0	0	0	**169**	
1645 - 1700	0	127	35	1	4	1	0	1	16	0	0	0	0	**185**	**722**
1700 - 1715	0	126	32	0	4	1	0	1	15	0	0	0	0	**178**	
1715 - 1730	0	135	30	0	2	0	0	2	16	0	0	0	0	**185**	
1730 - 1745	0	117	30	0	3	1	0	1	14	0	0	0	0	**166**	
1745 - 1800	1	106	31	0	4	1	0	3	17	0	0	0	0	**162**	**691**
1800 - 1815	0	90	26	0	3	1	0	1	18	0	0	0	0	**139**	
1815 - 1830	1	90	24	0	4	0	0	2	18	0	1	0	0	**141**	
1830 - 1845	0	86	20	0	2	1	0	1	15	0	1	0	0	**126**	
1845 - 1900	0	83	21	0	2	1	0	1	15	0	1	0	0	**125**	**531**
1900 - 1915	0	81	22	0	4	0	0	2	13	0	0	0	0	**124**	
1915 - 1930	0	71	16	0	3	0	0	1	16	0	1	0	0	**109**	
1930 - 1945	0	79	16	0	2	1	0	1	16	0	0	0	0	**116**	
1945 - 2000	0	68	16	0	1	1	0	1	16	0	1	0	0	**103**	**452**
2000 - 2015	0	65	17	0	2	0	0	0	15	0	0	0	0	**100**	
2015 - 2030	0	69	13	1	1	1	0	0	14	0	0	0	0	**100**	
2030 - 2045	0	55	10	0	1	0	0	0	14	0	1	0	0	**82**	
2045 - 2100	0	62	11	0	1	0	0	0	13	0	1	0	0	**88**	**370**
2100 - 2115	0	57	11	0	1	0	0	0	14	0	1	0	0	**83**	
2115 - 2130	0	46	8	0	1	0	0	0	16	0	2	0	0	**72**	
2130 - 2145	0	49	8	0	1	0	0	0	14	0	1	0	0	**74**	
2145 - 2200	0	51	10	0	2	0	0	0	14	0	1	0	0	**77**	**305**
2200 - 2215	0	44	8	0	1	0	0	0	12	0	1	0	0	**67**	
2215 - 2230	0	33	7	0	1	0	0	0	14	0	2	0	0	**57**	
2230 - 2245	0	40	8	0	1	0	0	0	13	0	1	0	0	**63**	
2245 - 2300	0	29	7	0	1	0	0	0	13	0	2	0	0	**53**	**240**
2300 - 2315	0	27	6	0	1	0	0	0	12	0	1	0	0	**47**	
2315 - 2330	0	28	6	0	1	0	0	0	10	0	2	0	0	**47**	
2330 - 2345	0	23	4	0	1	0	0	0	11	0	1	0	0	**40**	
2345 - 0000	0	19	4	0	1	0	0	0	10	0	1	0	0	**35**	**169**

Session Total	12	5620	1705	23	270	77	11	103	1442	11	49	1	0	**9324**
Session Average	0.12	58.54	17.76	0.24	2.81	0.80	0.11	1.08	15.02	0.11	0.51	0.01	0.00	**97.12**
Session Percentage	0.12	60.27	18.29	0.25	2.90	0.82	0.11	1.11	15.46	0.12	0.53	0.01	0.00	

AM Peak Hour	0630 - 0730	0945 - 1045	0830 - 0930	0800 - 0900	0830 - 0930	0645 - 0745	0800 - 0900	0930 - 1030	0945 - 1045	0715 - 0815	0500 - 0600	0815 - 0915	-	**0945 - 1045**
AM Peak Volume	1	275	108	3	22	8	1	10	85	1	3	0	0	**502**

Noon Peak Hour	1345 - 1445	1445 - 1545	1145 - 1245	1200 - 1300	1100 - 1200	1000 - 1100	1445 - 1545	1415 - 1515	1100 - 1200	1245 - 1345	1245 - 1345	1415 - 1515	-	**1445 - 1545**
Noon Peak Volume	2	442	136	4	20	7	2	10	89	2	1	0	0	**685**

PM Peak Hour	1730 - 1830	1630 - 1730	1515 - 1615	1600 - 1700	1545 - 1645	1515 - 1615	1515 - 1615	1515 - 1615	1515 - 1615	1545 - 1645	1815 - 1915	1900 - 2000	-	**1530 - 1630**
PM Peak Volume	2	508	141	2	21	4	2	10	74	2	4	0	0	**728**

Bi-Directional Class Count || Volume Summary 15min

Columbia, SC

Marr Traffic DATA COLLECTION

www.marrtraffic.com

Site 74 Lane 3 WB

I-20,
west of US-378 Sunset Blvd S/Bound Off-Ramp

Date

Sunday, April 21, 2024

Lat/Long

34.008085°, -81.156669°

Weather

Cloudy
66°F

Click here for Detailed Weather

0000 - 2400 (Sunday 24h Session) (04-21-2024)

Volume Summary 15min

TIME	Volume Summary 15min EB	Volume Summary 15min WB	15min Total	60min Total
0000 - 0015	0	32	**32**	
0015 - 0030	0	38	**38**	
0030 - 0045	0	30	**30**	
0045 - 0100	0	24	**24**	**124**
0100 - 0115	0	32	**32**	
0115 - 0130	0	22	**22**	
0130 - 0145	0	27	**27**	
0145 - 0200	0	26	**26**	**107**
0200 - 0215	0	19	**19**	
0215 - 0230	0	20	**20**	
0230 - 0245	0	17	**17**	
0245 - 0300	0	10	**10**	**66**
0300 - 0315	0	14	**14**	
0315 - 0330	0	10	**10**	
0330 - 0345	0	10	**10**	
0345 - 0400	0	11	**11**	**45**
0400 - 0415	0	12	**12**	
0415 - 0430	0	10	**10**	
0430 - 0445	0	14	**14**	
0445 - 0500	0	10	**10**	**46**
0500 - 0515	0	8	**8**	
0515 - 0530	0	3	**3**	
0530 - 0545	0	16	**16**	
0545 - 0600	0	18	**18**	**45**
0600 - 0615	0	20	**20**	
0615 - 0630	0	25	**25**	
0630 - 0645	0	35	**35**	
0645 - 0700	0	41	**41**	**121**
0700 - 0715	0	54	**54**	
0715 - 0730	0	62	**62**	
0730 - 0745	0	60	**60**	
0745 - 0800	0	64	**64**	**240**
0800 - 0815	0	46	**46**	
0815 - 0830	0	65	**65**	
0830 - 0845	0	65	**65**	
0845 - 0900	0	79	**79**	**255**
0900 - 0915	0	92	**92**	
0915 - 0930	0	93	**93**	
0930 - 0945	0	95	**95**	
0945 - 1000	0	107	**107**	**387**
1000 - 1015	0	97	**97**	
1015 - 1030	0	101	**101**	
1030 - 1045	0	105	**105**	
1045 - 1100	0	102	**102**	**405**
1100 - 1115	0	118	**118**	
1115 - 1130	0	113	**113**	
1130 - 1145	0	118	**118**	
1145 - 1200	0	137	**137**	**486**

Time	Volume Summary 15min EB	Volume Summary 15min WB	15min Total	60min Total
1200 - 1215	0	152	**152**	
1215 - 1230	0	148	**148**	
1230 - 1245	0	133	**133**	
1245 - 1300	0	151	**151**	**584**
1300 - 1315	0	142	**142**	
1315 - 1330	0	134	**134**	
1330 - 1345	0	147	**147**	
1345 - 1400	0	138	**138**	**561**
1400 - 1415	0	150	**150**	
1415 - 1430	0	135	**135**	
1430 - 1445	0	145	**145**	
1445 - 1500	0	153	**153**	**583**
1500 - 1515	0	124	**124**	
1515 - 1530	0	112	**112**	
1530 - 1545	0	144	**144**	
1545 - 1600	0	146	**146**	**526**
1600 - 1615	0	137	**137**	
1615 - 1630	0	135	**135**	
1630 - 1645	0	125	**125**	
1645 - 1700	0	132	**132**	**529**
1700 - 1715	0	111	**111**	
1715 - 1730	0	133	**133**	
1730 - 1745	0	133	**133**	
1745 - 1800	0	130	**130**	**507**
1800 - 1815	0	97	**97**	
1815 - 1830	0	131	**131**	
1830 - 1845	0	110	**110**	
1845 - 1900	0	97	**97**	**435**
1900 - 1915	0	144	**144**	
1915 - 1930	0	105	**105**	
1930 - 1945	0	114	**114**	
1945 - 2000	0	105	**105**	**468**
2000 - 2015	0	91	**91**	
2015 - 2030	0	87	**87**	
2030 - 2045	0	74	**74**	
2045 - 2100	0	59	**59**	**311**
2100 - 2115	0	60	**60**	
2115 - 2130	0	52	**52**	
2130 - 2145	0	41	**41**	
2145 - 2200	0	50	**50**	**203**
2200 - 2215	0	48	**48**	
2215 - 2230	0	40	**40**	
2230 - 2245	0	35	**35**	
2245 - 2300	0	38	**38**	**161**
2300 - 2315	0	21	**21**	
2315 - 2330	0	32	**32**	
2330 - 2345	0	30	**30**	
2345 - 0000	0	24	**24**	**107**

Session Total	0	7302	**7302**
Session Average	0.00	76.06	**76.06**
Session Percentage	0.00	100.00	

Site 74 Lane 3 WB

I-20,
west of US-378 Sunset Blvd S/Bound Off-Ramp

Date

Monday, April 22, 2024

Lat/Long

34.008085°, -81.156669°

Weather

Mostly Cloudy
57°F

Click here for Detailed Weather

0000 - 2400 (Weekday 24h Session) (04-22-2024)

Volume Summary 15min

TIME	Volume Summary 15min EB	Volume Summary 15min WB	15min Total	60min Total
0000 - 0015	0	25	**25**	
0015 - 0030	0	18	**18**	
0030 - 0045	0	13	**13**	
0045 - 0100	0	16	**16**	**72**
0100 - 0115	0	10	**10**	
0115 - 0130	0	15	**15**	
0130 - 0145	0	20	**20**	
0145 - 0200	0	11	**11**	**56**
0200 - 0215	0	17	**17**	
0215 - 0230	0	14	**14**	
0230 - 0245	0	9	**9**	
0245 - 0300	0	13	**13**	**53**
0300 - 0315	0	12	**12**	
0315 - 0330	0	21	**21**	
0330 - 0345	0	22	**22**	
0345 - 0400	0	22	**22**	**77**
0400 - 0415	0	13	**13**	
0415 - 0430	0	24	**24**	
0430 - 0445	0	28	**28**	
0445 - 0500	0	28	**28**	**93**
0500 - 0515	0	27	**27**	
0515 - 0530	0	48	**48**	
0530 - 0545	0	43	**43**	
0545 - 0600	0	55	**55**	**173**
0600 - 0615	0	70	**70**	
0615 - 0630	0	91	**91**	
0630 - 0645	0	90	**90**	
0645 - 0700	0	105	**105**	**356**
0700 - 0715	0	112	**112**	
0715 - 0730	0	135	**135**	
0730 - 0745	0	128	**128**	
0745 - 0800	0	137	**137**	**512**
0800 - 0815	0	122	**122**	
0815 - 0830	0	116	**116**	
0830 - 0845	0	118	**118**	
0845 - 0900	0	117	**117**	**473**
0900 - 0915	0	113	**113**	
0915 - 0930	0	131	**131**	
0930 - 0945	0	134	**134**	
0945 - 1000	0	128	**128**	**506**
1000 - 1015	0	122	**122**	
1015 - 1030	0	153	**153**	
1030 - 1045	0	133	**133**	
1045 - 1100	0	135	**135**	**543**
1100 - 1115	0	136	**136**	
1115 - 1130	0	148	**148**	
1130 - 1145	0	135	**135**	
1145 - 1200	0	144	**144**	**563**

Time	Volume Summary 15min EB	Volume Summary 15min WB	15min Total	60min Total
1200 - 1215	0	180	**180**	
1215 - 1230	0	140	**140**	
1230 - 1245	0	149	**149**	
1245 - 1300	0	151	**151**	**620**
1300 - 1315	0	112	**112**	
1315 - 1330	0	142	**142**	
1330 - 1345	0	149	**149**	
1345 - 1400	0	159	**159**	**562**
1400 - 1415	0	164	**164**	
1415 - 1430	0	135	**135**	
1430 - 1445	0	173	**173**	
1445 - 1500	0	150	**150**	**622**
1500 - 1515	0	167	**167**	
1515 - 1530	0	178	**178**	
1530 - 1545	0	199	**199**	
1545 - 1600	0	178	**178**	**722**
1600 - 1615	0	191	**191**	
1615 - 1630	0	201	**201**	
1630 - 1645	0	169	**169**	
1645 - 1700	0	189	**189**	**750**
1700 - 1715	0	191	**191**	
1715 - 1730	0	186	**186**	
1730 - 1745	0	196	**196**	
1745 - 1800	0	168	**168**	**741**
1800 - 1815	0	144	**144**	
1815 - 1830	0	131	**131**	
1830 - 1845	0	133	**133**	
1845 - 1900	0	125	**125**	**533**
1900 - 1915	0	120	**120**	
1915 - 1930	0	98	**98**	
1930 - 1945	0	119	**119**	
1945 - 2000	0	111	**111**	**448**
2000 - 2015	0	93	**93**	
2015 - 2030	0	89	**89**	
2030 - 2045	0	80	**80**	
2045 - 2100	0	66	**66**	**328**
2100 - 2115	0	73	**73**	
2115 - 2130	0	53	**53**	
2130 - 2145	0	64	**64**	
2145 - 2200	0	59	**59**	**249**
2200 - 2215	0	51	**51**	
2215 - 2230	0	47	**47**	
2230 - 2245	0	53	**53**	
2245 - 2300	0	43	**43**	**194**
2300 - 2315	0	50	**50**	
2315 - 2330	0	47	**47**	
2330 - 2345	0	41	**41**	
2345 - 0000	0	28	**28**	**166**

Session Total	0	9412	**9412**
Session Average	0.00	98.04	**98.04**
Session Percentage	0.00	100.00	

Site 74 Lane 3 WB

I-20,
west of US-378 Sunset Blvd S/Bound Off-Ramp

Date

Tuesday, April 23, 2024

Lat/Long

34.008085°, -81.156669°

Weather

Fair
58°F

Click here for Detailed Weather

0000 - 2400 (Weekday 24h Session) (04-23-2024)

Volume Summary 15min

TIME	Volume Summary 15min EB	Volume Summary 15min WB	15min Total	60min Total
0000 - 0015	0	33	**33**	
0015 - 0030	0	31	**31**	
0030 - 0045	0	19	**19**	
0045 - 0100	0	23	**23**	**106**
0100 - 0115	0	14	**14**	
0115 - 0130	0	13	**13**	
0130 - 0145	0	8	**8**	
0145 - 0200	0	8	**8**	**43**
0200 - 0215	0	9	**9**	
0215 - 0230	0	13	**13**	
0230 - 0245	0	19	**19**	
0245 - 0300	0	16	**16**	**57**
0300 - 0315	0	17	**17**	
0315 - 0330	0	17	**17**	
0330 - 0345	0	21	**21**	
0345 - 0400	0	27	**27**	**82**
0400 - 0415	0	29	**29**	
0415 - 0430	0	28	**28**	
0430 - 0445	0	27	**27**	
0445 - 0500	0	26	**26**	**110**
0500 - 0515	0	29	**29**	
0515 - 0530	0	54	**54**	
0530 - 0545	0	50	**50**	
0545 - 0600	0	61	**61**	**194**
0600 - 0615	0	53	**53**	
0615 - 0630	0	96	**96**	
0630 - 0645	0	107	**107**	
0645 - 0700	0	112	**112**	**368**
0700 - 0715	0	113	**113**	
0715 - 0730	0	103	**103**	
0730 - 0745	0	116	**116**	
0745 - 0800	0	122	**122**	**454**
0800 - 0815	0	104	**104**	
0815 - 0830	0	119	**119**	
0830 - 0845	0	99	**99**	
0845 - 0900	0	118	**118**	**440**
0900 - 0915	0	138	**138**	
0915 - 0930	0	126	**126**	
0930 - 0945	0	127	**127**	
0945 - 1000	0	130	**130**	**521**
1000 - 1015	0	112	**112**	
1015 - 1030	0	118	**118**	
1030 - 1045	0	128	**128**	
1045 - 1100	0	117	**117**	**475**
1100 - 1115	0	123	**123**	
1115 - 1130	0	121	**121**	
1130 - 1145	0	144	**144**	
1145 - 1200	0	134	**134**	**522**

Time	Volume Summary 15min EB	Volume Summary 15min WB	15min Total	60min Total
1200 - 1215	0	141	**141**	
1215 - 1230	0	139	**139**	
1230 - 1245	0	149	**149**	
1245 - 1300	0	132	**132**	**561**
1300 - 1315	0	139	**139**	
1315 - 1330	0	140	**140**	
1330 - 1345	0	151	**151**	
1345 - 1400	0	146	**146**	**576**
1400 - 1415	0	151	**151**	
1415 - 1430	0	157	**157**	
1430 - 1445	0	163	**163**	
1445 - 1500	0	158	**158**	**629**
1500 - 1515	0	183	**183**	
1515 - 1530	0	183	**183**	
1530 - 1545	0	190	**190**	
1545 - 1600	0	193	**193**	**749**
1600 - 1615	0	196	**196**	
1615 - 1630	0	205	**205**	
1630 - 1645	0	194	**194**	
1645 - 1700	0	227	**227**	**822**
1700 - 1715	0	212	**212**	
1715 - 1730	0	223	**223**	
1730 - 1745	0	195	**195**	
1745 - 1800	0	198	**198**	**828**
1800 - 1815	0	160	**160**	
1815 - 1830	0	148	**148**	
1830 - 1845	0	130	**130**	
1845 - 1900	0	118	**118**	**556**
1900 - 1915	0	109	**109**	
1915 - 1930	0	102	**102**	
1930 - 1945	0	98	**98**	
1945 - 2000	0	93	**93**	**402**
2000 - 2015	0	101	**101**	
2015 - 2030	0	106	**106**	
2030 - 2045	0	64	**64**	
2045 - 2100	0	74	**74**	**345**
2100 - 2115	0	66	**66**	
2115 - 2130	0	54	**54**	
2130 - 2145	0	44	**44**	
2145 - 2200	0	51	**51**	**215**
2200 - 2215	0	51	**51**	
2215 - 2230	0	37	**37**	
2230 - 2245	0	52	**52**	
2245 - 2300	0	35	**35**	**175**
2300 - 2315	0	38	**38**	
2315 - 2330	0	37	**37**	
2330 - 2345	0	31	**31**	
2345 - 0000	0	31	**31**	**137**

Session Total	0	9367	**9367**
Session Average	0.00	97.57	**97.57**
Session Percentage	0.00	100.00	

Site 74 Lane 3 WB

I-20,
west of US-378 Sunset Blvd S/Bound Off-Ramp

Date

Wednesday, April 24, 2024

Lat/Long

34.008085°, -81.156669°

Weather

Fair
66°F

Click here for Detailed Weather

0000 - 2400 (Weekday 24h Session) (04-24-2024)

Volume Summary 15min

TIME	Volume Summary 15min EB	Volume Summary 15min WB	15min Total	60min Total
0000 - 0015	0	33	**33**	
0015 - 0030	0	23	**23**	
0030 - 0045	0	29	**29**	
0045 - 0100	0	27	**27**	**112**
0100 - 0115	0	18	**18**	
0115 - 0130	0	17	**17**	
0130 - 0145	0	26	**26**	
0145 - 0200	0	19	**19**	**80**
0200 - 0215	0	18	**18**	
0215 - 0230	0	24	**24**	
0230 - 0245	0	15	**15**	
0245 - 0300	0	15	**15**	**72**
0300 - 0315	0	20	**20**	
0315 - 0330	0	15	**15**	
0330 - 0345	0	22	**22**	
0345 - 0400	0	21	**21**	**78**
0400 - 0415	0	24	**24**	
0415 - 0430	0	36	**36**	
0430 - 0445	0	41	**41**	
0445 - 0500	0	40	**40**	**141**
0500 - 0515	0	30	**30**	
0515 - 0530	0	47	**47**	
0530 - 0545	0	58	**58**	
0545 - 0600	0	54	**54**	**189**
0600 - 0615	0	92	**92**	
0615 - 0630	0	89	**89**	
0630 - 0645	0	137	**137**	
0645 - 0700	0	115	**115**	**433**
0700 - 0715	0	134	**134**	
0715 - 0730	0	116	**116**	
0730 - 0745	0	117	**117**	
0745 - 0800	0	142	**142**	**509**
0800 - 0815	0	113	**113**	
0815 - 0830	0	107	**107**	
0830 - 0845	0	123	**123**	
0845 - 0900	0	134	**134**	**477**
0900 - 0915	0	114	**114**	
0915 - 0930	0	125	**125**	
0930 - 0945	0	122	**122**	
0945 - 1000	0	116	**116**	**477**
1000 - 1015	0	140	**140**	
1015 - 1030	0	117	**117**	
1030 - 1045	0	136	**136**	
1045 - 1100	0	122	**122**	**515**
1100 - 1115	0	116	**116**	
1115 - 1130	0	128	**128**	
1130 - 1145	0	132	**132**	
1145 - 1200	0	128	**128**	**504**

Time	Volume Summary 15min EB	Volume Summary 15min WB	15min Total	60min Total
1200 - 1215	0	139	**139**	
1215 - 1230	0	168	**168**	
1230 - 1245	0	148	**148**	
1245 - 1300	0	158	**158**	**613**
1300 - 1315	0	138	**138**	
1315 - 1330	0	141	**141**	
1330 - 1345	0	153	**153**	
1345 - 1400	0	152	**152**	**584**
1400 - 1415	0	168	**168**	
1415 - 1430	0	163	**163**	
1430 - 1445	0	176	**176**	
1445 - 1500	0	157	**157**	**664**
1500 - 1515	0	183	**183**	
1515 - 1530	0	193	**193**	
1530 - 1545	0	198	**198**	
1545 - 1600	0	199	**199**	**773**
1600 - 1615	0	216	**216**	
1615 - 1630	0	195	**195**	
1630 - 1645	0	195	**195**	
1645 - 1700	0	214	**214**	**820**
1700 - 1715	0	194	**194**	
1715 - 1730	0	204	**204**	
1730 - 1745	0	170	**170**	
1745 - 1800	0	195	**195**	**763**
1800 - 1815	0	142	**142**	
1815 - 1830	0	161	**161**	
1830 - 1845	0	123	**123**	
1845 - 1900	0	126	**126**	**552**
1900 - 1915	0	116	**116**	
1915 - 1930	0	114	**114**	
1930 - 1945	0	105	**105**	
1945 - 2000	0	96	**96**	**431**
2000 - 2015	0	108	**108**	
2015 - 2030	0	103	**103**	
2030 - 2045	0	87	**87**	
2045 - 2100	0	100	**100**	**398**
2100 - 2115	0	83	**83**	
2115 - 2130	0	65	**65**	
2130 - 2145	0	65	**65**	
2145 - 2200	0	72	**72**	**285**
2200 - 2215	0	65	**65**	
2215 - 2230	0	57	**57**	
2230 - 2245	0	65	**65**	
2245 - 2300	0	42	**42**	**229**
2300 - 2315	0	60	**60**	
2315 - 2330	0	51	**51**	
2330 - 2345	0	39	**39**	
2345 - 0000	0	36	**36**	**186**

Session Total	0	9885	**9885**
Session Average	0.00	102.97	**102.97**
Session Percentage	0.00	100.00	

Site 74 Lane 3 WB

I-20,
west of US-378 Sunset Blvd S/Bound Off-Ramp

Date

Thursday, April 25, 2024

Lat/Long

34.008085°, -81.156669°

Weather

Fair
67°F

Click here for Detailed Weather

0000 - 2400 (Weekday 24h Session) (04-25-2024)

Volume Summary 15min

TIME	Volume Summary 15min EB	Volume Summary 15min WB	15min Total	60min Total
0000 - 0015	0	31	**31**	
0015 - 0030	0	32	**32**	
0030 - 0045	0	39	**39**	
0045 - 0100	0	24	**24**	**126**
0100 - 0115	0	16	**16**	
0115 - 0130	0	13	**13**	
0130 - 0145	0	12	**12**	
0145 - 0200	0	19	**19**	**60**
0200 - 0215	0	21	**21**	
0215 - 0230	0	14	**14**	
0230 - 0245	0	14	**14**	
0245 - 0300	0	20	**20**	**69**
0300 - 0315	0	16	**16**	
0315 - 0330	0	27	**27**	
0330 - 0345	0	22	**22**	
0345 - 0400	0	29	**29**	**94**
0400 - 0415	0	26	**26**	
0415 - 0430	0	31	**31**	
0430 - 0445	0	49	**49**	
0445 - 0500	0	48	**48**	**154**
0500 - 0515	0	44	**44**	
0515 - 0530	0	56	**56**	
0530 - 0545	0	62	**62**	
0545 - 0600	0	74	**74**	**236**
0600 - 0615	0	66	**66**	
0615 - 0630	0	112	**112**	
0630 - 0645	0	109	**109**	
0645 - 0700	0	116	**116**	**403**
0700 - 0715	0	116	**116**	
0715 - 0730	0	134	**134**	
0730 - 0745	0	122	**122**	
0745 - 0800	0	144	**144**	**516**
0800 - 0815	0	103	**103**	
0815 - 0830	0	128	**128**	
0830 - 0845	0	123	**123**	
0845 - 0900	0	107	**107**	**461**
0900 - 0915	0	116	**116**	
0915 - 0930	0	107	**107**	
0930 - 0945	0	129	**129**	
0945 - 1000	0	133	**133**	**485**
1000 - 1015	0	137	**137**	
1015 - 1030	0	145	**145**	
1030 - 1045	0	134	**134**	
1045 - 1100	0	139	**139**	**555**
1100 - 1115	0	125	**125**	
1115 - 1130	0	144	**144**	
1130 - 1145	0	141	**141**	
1145 - 1200	0	152	**152**	**562**

Time	Volume Summary 15min EB	Volume Summary 15min WB	15min Total	60min Total
1200 - 1215	0	137	**137**	
1215 - 1230	0	148	**148**	
1230 - 1245	0	148	**148**	
1245 - 1300	0	145	**145**	**578**
1300 - 1315	0	145	**145**	
1315 - 1330	0	157	**157**	
1330 - 1345	0	172	**172**	
1345 - 1400	0	143	**143**	**617**
1400 - 1415	0	150	**150**	
1415 - 1430	0	169	**169**	
1430 - 1445	0	177	**177**	
1445 - 1500	0	166	**166**	**662**
1500 - 1515	0	195	**195**	
1515 - 1530	0	195	**195**	
1530 - 1545	0	192	**192**	
1545 - 1600	0	204	**204**	**786**
1600 - 1615	0	180	**180**	
1615 - 1630	0	216	**216**	
1630 - 1645	0	188	**188**	
1645 - 1700	0	211	**211**	**795**
1700 - 1715	0	225	**225**	
1715 - 1730	0	236	**236**	
1730 - 1745	0	179	**179**	
1745 - 1800	0	175	**175**	**815**
1800 - 1815	0	177	**177**	
1815 - 1830	0	145	**145**	
1830 - 1845	0	126	**126**	
1845 - 1900	0	138	**138**	**586**
1900 - 1915	0	126	**126**	
1915 - 1930	0	100	**100**	
1930 - 1945	0	128	**128**	
1945 - 2000	0	104	**104**	**458**
2000 - 2015	0	111	**111**	
2015 - 2030	0	100	**100**	
2030 - 2045	0	91	**91**	
2045 - 2100	0	103	**103**	**405**
2100 - 2115	0	109	**109**	
2115 - 2130	0	104	**104**	
2130 - 2145	0	103	**103**	
2145 - 2200	0	113	**113**	**429**
2200 - 2215	0	88	**88**	
2215 - 2230	0	72	**72**	
2230 - 2245	0	87	**87**	
2245 - 2300	0	64	**64**	**311**
2300 - 2315	0	38	**38**	
2315 - 2330	0	43	**43**	
2330 - 2345	0	52	**52**	
2345 - 0000	0	43	**43**	**176**

Session Total	0	10339	**10339**
Session Average	0.00	107.70	**107.70**
Session Percentage	0.00	100.00	

Site 74 Lane 3 WB

I-20,
west of US-378 Sunset Blvd S/Bound Off-Ramp

Date

Friday, April 26, 2024

Lat/Long

34.008085°, -81.156669°

Weather

Cloudy
69°F

Click here for Detailed Weather

0000 - 2400 (Weekday 24h Session) (04-26-2024)

Volume Summary 15min

TIME	Volume Summary 15min		15min Total	60min Total
	EB	WB		
0000 - 0015	0	28	**28**	
0015 - 0030	0	13	**13**	
0030 - 0045	0	18	**18**	
0045 - 0100	0	18	**18**	**77**
0100 - 0115	0	13	**13**	
0115 - 0130	0	16	**16**	
0130 - 0145	0	19	**19**	
0145 - 0200	0	13	**13**	**61**
0200 - 0215	0	14	**14**	
0215 - 0230	0	20	**20**	
0230 - 0245	0	18	**18**	
0245 - 0300	0	14	**14**	**66**
0300 - 0315	0	21	**21**	
0315 - 0330	0	23	**23**	
0330 - 0345	0	14	**14**	
0345 - 0400	0	25	**25**	**83**
0400 - 0415	0	21	**21**	
0415 - 0430	0	21	**21**	
0430 - 0445	0	20	**20**	
0445 - 0500	0	39	**39**	**101**
0500 - 0515	0	41	**41**	
0515 - 0530	0	50	**50**	
0530 - 0545	0	53	**53**	
0545 - 0600	0	61	**61**	**205**
0600 - 0615	0	56	**56**	
0615 - 0630	0	86	**86**	
0630 - 0645	0	119	**119**	
0645 - 0700	0	106	**106**	**367**
0700 - 0715	0	132	**132**	
0715 - 0730	0	123	**123**	
0730 - 0745	0	139	**139**	
0745 - 0800	0	121	**121**	**515**
0800 - 0815	0	119	**119**	
0815 - 0830	0	104	**104**	
0830 - 0845	0	124	**124**	
0845 - 0900	0	123	**123**	**470**
0900 - 0915	0	130	**130**	
0915 - 0930	0	142	**142**	
0930 - 0945	0	125	**125**	
0945 - 1000	0	129	**129**	**526**
1000 - 1015	0	154	**154**	
1015 - 1030	0	132	**132**	
1030 - 1045	0	144	**144**	
1045 - 1100	0	146	**146**	**576**
1100 - 1115	0	150	**150**	
1115 - 1130	0	172	**172**	
1130 - 1145	0	163	**163**	
1145 - 1200	0	166	**166**	**651**

Time	Volume Summary 15min		15min Total	60min Total
	EB	WB		
1200 - 1215	0	170	**170**	
1215 - 1230	0	183	**183**	
1230 - 1245	0	174	**174**	
1245 - 1300	0	169	**169**	**696**
1300 - 1315	0	173	**173**	
1315 - 1330	0	168	**168**	
1330 - 1345	0	160	**160**	
1345 - 1400	0	176	**176**	**677**
1400 - 1415	0	159	**159**	
1415 - 1430	0	182	**182**	
1430 - 1445	0	174	**174**	
1445 - 1500	0	201	**201**	**716**
1500 - 1515	0	196	**196**	
1515 - 1530	0	194	**194**	
1530 - 1545	0	200	**200**	
1545 - 1600	0	181	**181**	**771**
1600 - 1615	0	196	**196**	
1615 - 1630	0	205	**205**	
1630 - 1645	0	179	**179**	
1645 - 1700	0	192	**192**	**772**
1700 - 1715	0	186	**186**	
1715 - 1730	0	180	**180**	
1730 - 1745	0	178	**178**	
1745 - 1800	0	153	**153**	**697**
1800 - 1815	0	141	**141**	
1815 - 1830	0	144	**144**	
1830 - 1845	0	140	**140**	
1845 - 1900	0	141	**141**	**566**
1900 - 1915	0	131	**131**	
1915 - 1930	0	134	**134**	
1930 - 1945	0	126	**126**	
1945 - 2000	0	120	**120**	**511**
2000 - 2015	0	97	**97**	
2015 - 2030	0	111	**111**	
2030 - 2045	0	87	**87**	
2045 - 2100	0	95	**95**	**390**
2100 - 2115	0	96	**96**	
2115 - 2130	0	90	**90**	
2130 - 2145	0	89	**89**	
2145 - 2200	0	84	**84**	**359**
2200 - 2215	0	89	**89**	
2215 - 2230	0	83	**83**	
2230 - 2245	0	83	**83**	
2245 - 2300	0	92	**92**	**347**
2300 - 2315	0	74	**74**	
2315 - 2330	0	64	**64**	
2330 - 2345	0	50	**50**	
2345 - 0000	0	43	**43**	**231**

Session Total	0	10431	**10431**
Session Average	0.00	108.66	**108.66**
Session Percentage	0.00	100.00	

Site 74 Lane 3 WB

I-20,
west of US-378 Sunset Blvd S/Bound Off-Ramp

Date

Saturday, April 27, 2024

Lat/Long

34.008085°, -81.156669°

Weather

Mostly Cloudy
69°F

Click here for Detailed Weather

0000 - 2400 (Saturday 24h Session) (04-27-2024)

Volume Summary 15min

	Volume Summary 15min		15min	60min
TIME	EB	WB	**Total**	**Total**
0000 - 0015	0	16	**16**	
0015 - 0030	0	17	**17**	
0030 - 0045	0	30	**30**	
0045 - 0100	0	28	**28**	**91**
0100 - 0115	0	20	**20**	
0115 - 0130	0	15	**15**	
0130 - 0145	0	20	**20**	
0145 - 0200	0	18	**18**	**73**
0200 - 0215	0	19	**19**	
0215 - 0230	0	18	**18**	
0230 - 0245	0	25	**25**	
0245 - 0300	0	28	**28**	**90**
0300 - 0315	0	23	**23**	
0315 - 0330	0	28	**28**	
0330 - 0345	0	18	**18**	
0345 - 0400	0	27	**27**	**96**
0400 - 0415	0	22	**22**	
0415 - 0430	0	18	**18**	
0430 - 0445	0	16	**16**	
0445 - 0500	0	29	**29**	**85**
0500 - 0515	0	40	**40**	
0515 - 0530	0	27	**27**	
0530 - 0545	0	33	**33**	
0545 - 0600	0	44	**44**	**144**
0600 - 0615	0	56	**56**	
0615 - 0630	0	49	**49**	
0630 - 0645	0	61	**61**	
0645 - 0700	0	72	**72**	**238**
0700 - 0715	0	70	**70**	
0715 - 0730	0	83	**83**	
0730 - 0745	0	74	**74**	
0745 - 0800	0	92	**92**	**319**
0800 - 0815	0	89	**89**	
0815 - 0830	0	87	**87**	
0830 - 0845	0	105	**105**	
0845 - 0900	0	78	**78**	**359**
0900 - 0915	0	76	**76**	
0915 - 0930	0	99	**99**	
0930 - 0945	0	118	**118**	
0945 - 1000	0	112	**112**	**405**
1000 - 1015	0	121	**121**	
1015 - 1030	0	106	**106**	
1030 - 1045	0	124	**124**	
1045 - 1100	0	123	**123**	**474**
1100 - 1115	0	130	**130**	
1115 - 1130	0	126	**126**	
1130 - 1145	0	127	**127**	
1145 - 1200	0	130	**130**	**513**

	Volume Summary 15min		15min	60min
Time	EB	WB	**Total**	**Total**
1200 - 1215	0	144	**144**	
1215 - 1230	0	156	**156**	
1230 - 1245	0	140	**140**	
1245 - 1300	0	142	**142**	**582**
1300 - 1315	0	137	**137**	
1315 - 1330	0	150	**150**	
1330 - 1345	0	163	**163**	
1345 - 1400	0	169	**169**	**619**
1400 - 1415	0	144	**144**	
1415 - 1430	0	161	**161**	
1430 - 1445	0	148	**148**	
1445 - 1500	0	149	**149**	**602**
1500 - 1515	0	142	**142**	
1515 - 1530	0	158	**158**	
1530 - 1545	0	134	**134**	
1545 - 1600	0	165	**165**	**599**
1600 - 1615	0	151	**151**	
1615 - 1630	0	148	**148**	
1630 - 1645	0	136	**136**	
1645 - 1700	0	133	**133**	**568**
1700 - 1715	0	127	**127**	
1715 - 1730	0	134	**134**	
1730 - 1745	0	114	**114**	
1745 - 1800	0	114	**114**	**489**
1800 - 1815	0	112	**112**	
1815 - 1830	0	127	**127**	
1830 - 1845	0	121	**121**	
1845 - 1900	0	128	**128**	**488**
1900 - 1915	0	119	**119**	
1915 - 1930	0	112	**112**	
1930 - 1945	0	120	**120**	
1945 - 2000	0	95	**95**	**446**
2000 - 2015	0	96	**96**	
2015 - 2030	0	103	**103**	
2030 - 2045	0	89	**89**	
2045 - 2100	0	122	**122**	**410**
2100 - 2115	0	94	**94**	
2115 - 2130	0	85	**85**	
2130 - 2145	0	109	**109**	
2145 - 2200	0	110	**110**	**398**
2200 - 2215	0	74	**74**	
2215 - 2230	0	66	**66**	
2230 - 2245	0	67	**67**	
2245 - 2300	0	55	**55**	**262**
2300 - 2315	0	47	**47**	
2315 - 2330	0	58	**58**	
2330 - 2345	0	37	**37**	
2345 - 0000	0	38	**38**	**180**

Session Total	0	8530	**8530**
Session Average	0.00	88.85	**88.85**
Session Percentage	0.00	100.00	

Bi-Directional Class Count || SB WB 60min

Columbia, SC

Marr Traffic DATA COLLECTION

www.marrtraffic.com

Site 74 Lane 3 WB
I-20,
west of US-378 Sunset Blvd S/Bound Off-Ramp

Date
Sunday, April 21, 2024

Lat/Long
34.008085°, -81.156669°

Weather
Cloudy
66°F

Click here for Detailed Weather

0000 - 2400 (Sunday 24h Session) (04-21-2024)
SB WB 60min

	Westbound (Movement 74 Lane 3 WB.1)													
TIME	1	2	3	4	5	6	7	8	9	10	11	12	13	**Total**
0000 - 0100	1	102	9	0	1	0	0	0	11	0	0	0	0	**124**
0100 - 0200	0	77	7	0	6	0	0	0	16	0	1	0	0	**107**
0200 - 0300	0	44	6	0	3	0	0	0	13	0	0	0	0	**66**
0300 - 0400	0	35	2	0	1	0	0	0	7	0	0	0	0	**45**
0400 - 0500	0	28	3	0	2	1	0	0	11	0	1	0	0	**46**
0500 - 0600	0	27	0	0	1	0	0	0	17	0	0	0	0	**45**
0600 - 0700	0	87	21	0	0	0	0	0	13	0	0	0	0	**121**
0700 - 0800	1	177	34	0	1	0	0	0	27	0	0	0	0	**240**
0800 - 0900	0	170	46	1	1	1	1	2	32	0	1	0	0	**255**
0900 - 1000	0	282	59	0	7	2	1	3	31	0	1	1	0	**387**
1000 - 1100	2	288	73	0	4	1	0	3	34	0	0	0	0	**405**
1100 - 1200	0	325	102	0	8	1	0	3	47	0	0	0	0	**486**
1200 - 1300	0	432	106	0	4	0	0	3	39	0	0	0	0	**584**
1300 - 1400	1	416	97	0	5	2	0	4	36	0	0	0	0	**561**
1400 - 1500	1	426	113	0	7	0	0	5	31	0	0	0	0	**583**
1500 - 1600	0	408	75	0	8	0	0	4	31	0	0	0	0	**526**
1600 - 1700	0	394	86	2	8	0	0	4	34	0	1	0	0	**529**
1700 - 1800	0	380	82	0	4	2	0	1	38	0	0	0	0	**507**
1800 - 1900	0	305	76	1	5	0	0	1	43	1	3	0	0	**435**
1900 - 2000	0	346	78	0	8	0	0	0	34	0	2	0	0	**468**
2000 - 2100	0	222	47	0	4	2	0	0	36	0	0	0	0	**311**
2100 - 2200	0	134	28	0	2	0	0	0	36	0	3	0	0	**203**
2200 - 2300	0	90	20	2	2	3	0	0	38	0	6	0	0	**161**
2300 - 2400	0	65	12	0	4	0	0	0	21	0	5	0	0	**107**

Session Total	6	5260	1182	6	96	15	2	33	676	1	24	1	0	**7302**
Session Average	0.25	219.17	49.25	0.25	4.00	0.63	0.08	1.38	28.17	0.04	1.00	0.04	0.00	**304.25**
Session Percentage	0.08	72.04	16.19	0.08	1.31	0.21	0.03	0.45	9.26	0.01	0.33	0.01	0.00	

AM Peak Hour	0700 - 0800	0900 - 1000	0900 - 1000	0800 - 0900	0900 - 1000	0900 - 1000	0800 - 0900	0900 - 1000	0800 - 0900	-	0800 - 0900	0900 - 1000	-	**0900 - 1000**
AM Peak Volume	1	282	59	1	7	2	1	3	32	0	1	1	0	**387**

Noon Peak Hour	1000 - 1100	1200 - 1300	1400 - 1500	-	1100 - 1200	1300 - 1400	-	1400 - 1500	1100 - 1200	-	-	-	-	**1200 - 1300**
Noon Peak Volume	2	432	113	0	8	2	0	5	47	0	0	0	0	**584**

PM Peak Hour	-	1500 - 1600	1600 - 1700	1600 - 1700	1500 - 1600	1700 - 1800	-	1500 - 1600	1800 - 1900	1800 - 1900	1800 - 1900	-	-	**1600 - 1700**
PM Peak Volume	0	408	86	2	8	2	0	4	43	1	3	0	0	**529**

Site 74 Lane 3 WB

I-20,
west of US-378 Sunset Blvd S/Bound Off-Ramp

Date

Monday, April 22, 2024

Lat/Long

34.008085°, -81.156669°

Weather

Mostly Cloudy
57°F

Click here for Detailed Weather

0000 - 2400 (Weekday 24h Session) (04-22-2024)

SB WB 60min

	Westbound (Movement 74 Lane 3 WB.1)													
TIME	1	2	3	4	5	6	7	8	9	10	11	12	13	**Total**
0000 - 0100	0	41	7	0	0	0	0	0	24	0	0	0	0	**72**
0100 - 0200	0	33	4	0	1	0	0	0	18	0	0	0	0	**56**
0200 - 0300	0	23	2	0	0	0	0	0	28	0	0	0	0	**53**
0300 - 0400	0	30	6	0	4	0	0	0	37	0	0	0	0	**77**
0400 - 0500	0	42	10	0	6	0	0	0	35	0	0	0	0	**93**
0500 - 0600	0	86	29	0	7	0	0	0	51	0	0	0	0	**173**
0600 - 0700	0	215	74	1	10	2	0	7	47	0	0	0	0	**356**
0700 - 0800	0	278	106	1	35	12	0	7	69	2	2	0	0	**512**
0800 - 0900	0	236	123	4	19	13	0	7	71	0	0	0	0	**473**
0900 - 1000	0	236	120	0	28	12	0	15	93	2	0	0	0	**506**
1000 - 1100	0	262	117	4	32	10	0	14	102	2	0	0	0	**543**
1100 - 1200	0	284	121	2	30	6	0	13	106	0	1	0	0	**563**
1200 - 1300	0	338	126	1	16	9	0	16	113	1	0	0	0	**620**
1300 - 1400	0	318	109	1	21	7	0	8	97	1	0	0	0	**562**
1400 - 1500	0	355	120	5	20	9	0	14	97	2	0	0	0	**622**
1500 - 1600	0	457	143	0	16	6	7	9	83	1	0	0	0	**722**
1600 - 1700	0	461	161	2	32	3	0	8	80	2	1	0	0	**750**
1700 - 1800	0	521	119	0	6	4	1	5	82	3	0	0	0	**741**
1800 - 1900	1	330	84	0	17	5	0	6	84	1	5	0	0	**533**
1900 - 2000	0	267	64	1	11	4	0	6	92	1	2	0	0	**448**
2000 - 2100	0	202	54	0	8	1	0	1	61	0	1	0	0	**328**
2100 - 2200	0	146	47	0	6	0	0	0	50	0	0	0	0	**249**
2200 - 2300	0	93	36	0	5	0	0	0	60	0	0	0	0	**194**
2300 - 2400	0	68	22	0	7	0	0	0	69	0	0	0	0	**166**

Session Total	1	5322	1804	22	337	103	8	136	1649	18	12	0	0	**9412**
Session Average	0.04	221.75	75.17	0.92	14.04	4.29	0.33	5.67	68.71	0.75	0.50	0.00	0.00	**392.17**
Session Percentage	0.01	56.54	19.17	0.23	3.58	1.09	0.08	1.44	17.52	0.19	0.13	0.00	0.00	

AM Peak Hour	-	0700 - 0800	0800 - 0900	0800 - 0900	0700 - 0800	0800 - 0900	-	0900 - 1000	0900 - 1000	0700 - 0800	0700 - 0800	-	-	**0700 - 0800**
AM Peak Volume	0	278	123	4	35	13	0	15	93	2	2	0	0	**512**

Noon Peak Hour	-	1400 - 1500	1200 - 1300	1400 - 1500	1000 - 1100	1000 - 1100	-	1200 - 1300	1200 - 1300	1000 - 1100	1100 - 1200	-	-	**1400 - 1500**
Noon Peak Volume	0	355	126	5	32	10	0	16	113	2	1	0	0	**622**

PM Peak Hour	1800 - 1900	1700 - 1800	1600 - 1700	1600 - 1700	1600 - 1700	1500 - 1600	1500 - 1600	1500 - 1600	1900 - 2000	1700 - 1800	1800 - 1900	-	-	**1600 - 1700**
PM Peak Volume	1	521	161	2	32	6	7	9	92	3	5	0	0	**750**

Site 74 Lane 3 WB

I-20,
west of US-378 Sunset Blvd S/Bound Off-Ramp

Date

Tuesday, April 23, 2024

Lat/Long

34.008085°, -81.156669°

Weather

Fair
58°F

Click here for Detailed Weather

0000 - 2400 (Weekday 24h Session) (04-23-2024)

SB WB 60min

	Westbound (Movement 74 Lane 3 WB.1)													
TIME	1	2	3	4	5	6	7	8	9	10	11	12	13	**Total**
0000 - 0100	0	43	7	0	4	0	0	1	46	0	5	0	0	**106**
0100 - 0200	0	20	0	0	2	2	0	0	17	0	2	0	0	**43**
0200 - 0300	0	12	3	0	1	0	0	1	34	0	6	0	0	**57**
0300 - 0400	0	29	1	0	4	0	0	0	41	0	7	0	0	**82**
0400 - 0500	0	39	4	0	2	2	0	2	53	0	8	0	0	**110**
0500 - 0600	0	108	12	0	3	1	0	0	66	0	4	0	0	**194**
0600 - 0700	0	207	61	0	13	9	1	1	75	0	1	0	0	**368**
0700 - 0800	0	272	78	2	21	9	0	1	70	0	1	0	0	**454**
0800 - 0900	0	223	113	11	15	1	0	9	68	0	0	0	0	**440**
0900 - 1000	0	257	113	1	28	4	0	3	114	0	1	0	0	**521**
1000 - 1100	0	233	83	1	27	8	0	7	116	0	0	0	0	**475**
1100 - 1200	1	265	109	2	21	10	0	9	105	0	0	0	0	**522**
1200 - 1300	0	297	127	2	20	7	0	13	95	0	0	0	0	**561**
1300 - 1400	3	290	127	8	13	9	2	11	112	1	0	0	0	**576**
1400 - 1500	2	358	115	5	23	4	1	7	113	0	0	1	0	**629**
1500 - 1600	1	461	137	1	22	6	2	11	108	0	0	0	0	**749**
1600 - 1700	1	555	149	3	22	5	1	14	68	4	0	0	0	**822**
1700 - 1800	3	560	156	0	19	4	0	11	73	2	0	0	0	**828**
1800 - 1900	1	342	98	0	15	4	0	9	81	1	5	0	0	**556**
1900 - 2000	1	240	60	0	8	1	1	9	78	0	4	0	0	**402**
2000 - 2100	0	220	42	1	3	1	0	0	75	0	3	0	0	**345**
2100 - 2200	0	116	18	0	6	0	0	0	70	0	5	0	0	**215**
2200 - 2300	1	72	14	0	5	1	0	0	70	0	12	0	0	**175**
2300 - 2400	0	50	12	0	2	2	0	0	64	0	7	0	0	**137**

Session Total	14	5269	1639	37	299	90	8	119	1812	8	71	1	0	**9367**
Session Average	0.58	219.54	68.29	1.54	12.46	3.75	0.33	4.96	75.50	0.33	2.96	0.04	0.00	**390.29**
Session Percentage	0.15	56.25	17.50	0.40	3.19	0.96	0.09	1.27	19.34	0.09	0.76	0.01	0.00	

AM Peak Hour	-	0700 - 0800	0800 - 0900	0800 - 0900	0900 - 1000	0600 - 0700	0600 - 0700	0800 - 0900	0900 - 1000	-	0500 - 0600	-	-	**0900 - 1000**
AM Peak Hour Volume	0	272	113	11	28	9	1	9	114	0	4	0	0	**521**

Noon Peak Hour	1300 - 1400	1400 - 1500	1200 - 1300	1300 - 1400	1000 - 1100	1100 - 1200	1300 - 1400	1200 - 1300	1000 - 1100	1300 - 1400	-	1400 - 1500	-	**1400 - 1500**
Noon Peak Hour Volume	3	358	127	8	27	10	2	13	116	1	0	1	0	**629**

PM Peak Hour	1700 - 1800	1700 - 1800	1700 - 1800	1600 - 1700	1500 - 1600	1500 - 1600	1500 - 1600	1600 - 1700	1500 - 1600	1600 - 1700	1800 - 1900	-	-	**1700 - 1800**
PM Peak Hour Volume	3	560	156	3	22	6	2	14	108	4	5	0	0	**828**

Site 74 Lane 3 WB

I-20,
west of US-378 Sunset Blvd S/Bound Off-Ramp

Date

Wednesday, April 24, 2024

Lat/Long

34.008085°, -81.156669°

Weather

Fair
66°F

Click here for Detailed Weather

0000 - 2400 (Weekday 24h Session) (04-24-2024)

SB WB 60min

	Westbound (Movement 74 Lane 3 WB.1)													
TIME	1	2	3	4	5	6	7	8	9	10	11	12	13	**Total**
0000 - 0100	0	35	10	0	3	1	0	0	54	0	9	0	0	**112**
0100 - 0200	0	29	4	0	2	2	0	0	38	0	5	0	0	**80**
0200 - 0300	0	20	2	0	1	2	0	0	42	0	5	0	0	**72**
0300 - 0400	0	27	7	0	1	0	0	0	38	0	5	0	0	**78**
0400 - 0500	0	45	10	0	10	0	0	0	71	0	5	0	0	**141**
0500 - 0600	0	85	19	0	4	0	0	0	76	0	5	0	0	**189**
0600 - 0700	1	243	73	0	17	8	0	5	81	1	4	0	0	**433**
0700 - 0800	1	295	102	1	24	9	1	10	63	2	1	0	0	**509**
0800 - 0900	0	225	122	3	27	3	2	9	83	1	2	0	0	**477**
0900 - 1000	0	227	112	2	30	7	1	11	86	0	1	0	0	**477**
1000 - 1100	0	272	105	1	19	11	0	10	94	0	3	0	0	**515**
1100 - 1200	2	247	110	1	17	7	1	9	108	0	1	1	0	**504**
1200 - 1300	0	315	136	7	25	11	3	11	102	0	3	0	0	**613**
1300 - 1400	1	309	126	5	18	6	1	11	99	0	8	0	0	**584**
1400 - 1500	1	371	135	1	22	8	4	9	109	0	3	1	0	**664**
1500 - 1600	0	476	147	0	24	6	4	11	103	0	2	0	0	**773**
1600 - 1700	0	536	164	3	28	2	2	7	74	0	4	0	0	**820**
1700 - 1800	3	539	130	0	18	1	1	9	60	0	2	0	0	**763**
1800 - 1900	3	340	84	0	17	4	1	8	90	0	4	1	0	**552**
1900 - 2000	0	269	63	0	11	4	0	9	70	1	2	2	0	**431**
2000 - 2100	0	271	45	0	4	6	0	2	65	0	5	0	0	**398**
2100 - 2200	0	175	28	0	0	2	0	0	75	0	4	1	0	**285**
2200 - 2300	0	149	9	0	6	0	0	0	57	0	8	0	0	**229**
2300 - 2400	0	113	5	0	6	0	0	0	51	0	11	0	0	**186**

Session Total	12	5613	1748	24	334	100	21	131	1789	5	102	6	0	**9885**
Session Average	0.50	233.88	72.83	1.00	13.92	4.17	0.88	5.46	74.54	0.21	4.25	0.25	0.00	**411.88**
Session Percentage	0.12	56.78	17.68	0.24	3.38	1.01	0.21	1.33	18.10	0.05	1.03	0.06	0.00	

AM Peak Hour	0600 - 0700	0700 - 0800	0800 - 0900	0800 - 0900	0900 - 1000	0700 - 0800	0800 - 0900	0900 - 1000	0900 - 1000	0700 - 0800	0500 - 0600	-	-	**0700 - 0800**
AM Peak Hour Volume	1	295	122	3	30	9	2	11	86	2	5	0	0	**509**

Noon Peak Hour	1100 - 1200	1400 - 1500	1200 - 1300	1200 - 1300	1200 - 1300	1000 - 1100	1400 - 1500	1200 - 1300	1400 - 1500	-	1300 - 1400	1100 - 1200	-	**1400 - 1500**
Noon Peak Hour Volume	2	371	136	7	25	11	4	11	109	0	8	1	0	**664**

PM Peak Hour	1700 - 1800	1700 - 1800	1600 - 1700	1600 - 1700	1600 - 1700	1500 - 1600	1500 - 1600	1500 - 1600	1500 - 1600	1900 - 2000	1600 - 1700	1900 - 2000	-	**1600 - 1700**
PM Peak Hour Volume	3	539	164	3	28	6	4	11	103	1	4	2	0	**820**

Site 74 Lane 3 WB

I-20,
west of US-378 Sunset Blvd S/Bound Off-Ramp

Date

Thursday, April 25, 2024

Lat/Long

34.008085°, -81.156669°

Weather

Fair
67°F

Click here for Detailed Weather

0000 - 2400 (Weekday 24h Session) (04-25-2024)

SB WB 60min

	Westbound (Movement 74 Lane 3 WB.1)													
TIME	1	2	3	4	5	6	7	8	9	10	11	12	13	**Total**
0000 - 0100	0	50	13	0	1	1	0	1	56	0	4	0	0	**126**
0100 - 0200	0	22	2	0	0	3	0	0	30	0	3	0	0	**60**
0200 - 0300	0	16	2	0	4	2	0	0	40	0	5	0	0	**69**
0300 - 0400	0	43	2	0	4	1	0	0	39	0	5	0	0	**94**
0400 - 0500	0	68	7	0	7	1	0	0	68	0	3	0	0	**154**
0500 - 0600	0	124	4	0	10	1	0	0	95	0	2	0	0	**236**
0600 - 0700	0	212	67	1	16	2	0	2	103	0	0	0	0	**403**
0700 - 0800	2	292	102	2	20	5	2	9	81	1	0	0	0	**516**
0800 - 0900	0	213	141	1	21	8	2	8	66	1	0	0	0	**461**
0900 - 1000	0	206	123	0	24	10	2	5	111	4	0	0	0	**485**
1000 - 1100	1	278	132	0	21	6	2	13	100	2	0	0	0	**555**
1100 - 1200	0	278	136	2	25	10	4	13	94	0	0	0	0	**562**
1200 - 1300	1	310	149	5	18	3	1	7	83	1	0	0	0	**578**
1300 - 1400	1	354	126	0	19	7	3	10	91	5	1	0	0	**617**
1400 - 1500	0	355	145	5	26	6	3	23	97	2	0	0	0	**662**
1500 - 1600	1	480	177	2	25	6	2	14	74	2	2	1	0	**786**
1600 - 1700	0	539	157	1	23	6	2	12	51	4	0	0	0	**795**
1700 - 1800	1	546	167	0	14	5	0	6	76	0	0	0	0	**815**
1800 - 1900	2	382	114	0	10	6	0	4	64	0	4	0	0	**586**
1900 - 2000	1	290	66	2	16	4	0	5	72	0	2	0	0	**458**
2000 - 2100	1	285	32	1	9	3	0	0	68	0	6	0	0	**405**
2100 - 2200	0	300	9	0	11	0	0	0	99	0	10	0	0	**429**
2200 - 2300	0	211	6	1	3	0	0	0	80	0	10	0	0	**311**
2300 - 2400	0	112	1	0	6	0	0	0	53	0	4	0	0	**176**

Session Total	11	5966	1880	23	333	96	23	132	1791	22	61	1	0	**10339**
Session Average	0.46	248.58	78.33	0.96	13.88	4.00	0.96	5.50	74.63	0.92	2.54	0.04	0.00	**430.79**
Session Percentage	0.11	57.70	18.18	0.22	3.22	0.93	0.22	1.28	17.32	0.21	0.59	0.01	0.00	

AM Peak Hour	0700 - 0800	0700 - 0800	0800 - 0900	0700 - 0800	0900 - 1000	0900 - 1000	0700 - 0800	0700 - 0800	0900 - 1000	0900 - 1000	0500 - 0600	-	-	**0700 - 0800**
AM Peak Hour Volume	2	292	141	2	24	10	2	9	111	4	2	0	0	**516**

Noon Peak Hour	1000 - 1100	1400 - 1500	1200 - 1300	1200 - 1300	1400 - 1500	1100 - 1200	1100 - 1200	1400 - 1500	1000 - 1100	1300 - 1400	1300 - 1400	-	-	**1400 - 1500**
Noon Peak Hour Volume	1	355	149	5	26	10	4	23	100	5	1	0	0	**662**

PM Peak Hour	1800 - 1900	1700 - 1800	1500 - 1600	1500 - 1600	1500 - 1600	1500 - 1600	1500 - 1600	1500 - 1600	1700 - 1800	1600 - 1700	1800 - 1900	1500 - 1600	-	**1700 - 1800**
PM Peak Hour Volume	2	546	177	2	25	6	2	14	76	4	4	1	0	**815**

Site 74 Lane 3 WB

I-20,
west of US-378 Sunset Blvd S/Bound Off-Ramp

Date

Friday, April 26, 2024

Lat/Long

34.008085°, -81.156669°

Weather

Cloudy
69°F

Click here for Detailed Weather

0000 - 2400 (Weekday 24h Session) (04-26-2024)

SB WB 60min

	Westbound (Movement 74 Lane 3 WB.1)													
TIME	1	2	3	4	5	6	7	8	9	10	11	12	13	**Total**
0000 - 0100	0	35	11	0	3	1	0	0	24	0	3	0	0	**77**
0100 - 0200	0	21	5	0	5	0	0	0	27	0	3	0	0	**61**
0200 - 0300	0	25	5	0	2	0	0	0	32	0	2	0	0	**66**
0300 - 0400	0	25	7	0	10	4	0	0	33	0	4	0	0	**83**
0400 - 0500	0	37	14	0	8	1	0	0	40	0	1	0	0	**101**
0500 - 0600	1	79	41	0	15	4	0	0	59	0	6	0	0	**205**
0600 - 0700	1	195	78	0	12	9	0	0	71	0	1	0	0	**367**
0700 - 0800	1	295	104	4	28	7	0	9	66	1	0	0	0	**515**
0800 - 0900	0	233	105	4	34	9	4	11	67	2	1	0	0	**470**
0900 - 1000	0	273	123	0	27	10	3	13	74	1	2	0	0	**526**
1000 - 1100	0	282	143	5	26	10	2	12	96	0	0	0	0	**576**
1100 - 1200	0	355	130	3	30	7	1	10	114	1	0	0	0	**651**
1200 - 1300	2	396	160	12	17	2	1	10	93	3	0	0	0	**696**
1300 - 1400	3	406	136	6	17	5	1	7	93	3	0	0	0	**677**
1400 - 1500	1	425	159	2	21	13	0	9	84	1	1	0	0	**716**
1500 - 1600	2	513	155	0	14	3	1	9	73	1	0	0	0	**771**
1600 - 1700	1	506	148	2	25	4	0	8	77	1	0	0	0	**772**
1700 - 1800	2	477	124	0	17	4	0	8	65	0	0	0	0	**697**
1800 - 1900	0	374	101	1	8	3	0	6	72	0	1	0	0	**566**
1900 - 2000	2	341	84	2	17	0	0	7	56	0	2	0	0	**511**
2000 - 2100	0	238	76	4	5	3	0	1	60	0	3	0	0	**390**
2100 - 2200	0	218	79	0	5	0	0	0	52	0	5	0	0	**359**
2200 - 2300	0	209	81	0	6	0	0	0	44	0	7	0	0	**347**
2300 - 2400	0	142	54	0	5	0	0	0	26	0	4	0	0	**231**

Session Total	16	6100	2123	45	357	99	13	120	1498	14	46	0	0	**10431**
Session Average	0.67	254.17	88.46	1.88	14.88	4.13	0.54	5.00	62.42	0.58	1.92	0.00	0.00	**434.63**
Session Percentage	0.15	58.48	20.35	0.43	3.42	0.95	0.12	1.15	14.36	0.13	0.44	0.00	0.00	

AM Peak Hour	0500 - 0600	0700 - 0800	0900 - 1000	0700 - 0800	0800 - 0900	0900 - 1000	0800 - 0900	0900 - 1000	0900 - 1000	0800 - 0900	0500 - 0600	-	-	**0900 - 1000**
AM Peak Hour Volume	1	295	123	4	34	10	4	13	74	2	6	0	0	**526**

Noon Peak Hour	1300 - 1400	1400 - 1500	1200 - 1300	1200 - 1300	1100 - 1200	1400 - 1500	1000 - 1100	1000 - 1100	1100 - 1200	1200 - 1300	1400 - 1500	-	-	**1400 - 1500**
Noon Peak Hour Volume	3	425	160	12	30	13	2	12	114	3	1	0	0	**716**

PM Peak Hour	1500 - 1600	1500 - 1600	1500 - 1600	1600 - 1700	1600 - 1700	1600 - 1700	1500 - 1600	1500 - 1600	1600 - 1700	1500 - 1600	1900 - 2000	-	-	**1600 - 1700**
PM Peak Hour Volume	2	513	155	2	25	4	1	9	77	1	2	0	0	**772**

Site 74 Lane 3 WB

I-20,
west of US-378 Sunset Blvd S/Bound Off-Ramp

Date

Saturday, April 27, 2024

Lat/Long

34.008085°, -81.156669°

Weather

Mostly Cloudy
69°F

Click here for Detailed Weather

0000 - 2400 (Saturday 24h Session) (04-27-2024)

SB WB 60min

	Westbound (Movement 74 Lane 3 WB.1)													
TIME	1	2	3	4	5	6	7	8	9	10	11	12	13	**Total**
0000 - 0100	0	55	14	0	6	0	0	0	12	0	4	0	0	**91**
0100 - 0200	0	37	11	1	0	0	0	0	20	0	4	0	0	**73**
0200 - 0300	0	41	13	0	2	0	0	0	31	0	3	0	0	**90**
0300 - 0400	0	34	16	1	0	0	0	0	41	0	4	0	0	**96**
0400 - 0500	0	27	13	0	0	2	0	0	41	0	2	0	0	**85**
0500 - 0600	0	68	29	0	5	0	0	0	38	0	4	0	0	**144**
0600 - 0700	0	143	55	0	3	1	0	1	34	0	1	0	0	**238**
0700 - 0800	1	175	71	1	9	5	0	3	52	1	1	0	0	**319**
0800 - 0900	3	202	75	0	12	9	0	2	53	2	1	0	0	**359**
0900 - 1000	5	244	81	0	8	5	0	6	54	0	2	0	0	**405**
1000 - 1100	0	311	90	0	13	4	0	4	52	0	0	0	0	**474**
1100 - 1200	1	340	105	1	11	1	0	5	47	2	0	0	0	**513**
1200 - 1300	2	376	133	0	11	0	0	7	53	0	0	0	0	**582**
1300 - 1400	0	424	125	0	12	1	0	4	53	0	0	0	0	**619**
1400 - 1500	4	430	112	0	7	1	0	5	43	0	0	0	0	**602**
1500 - 1600	3	432	107	0	6	0	0	4	44	2	1	0	0	**599**
1600 - 1700	1	426	98	1	6	2	0	3	31	0	0	0	0	**568**
1700 - 1800	0	361	76	2	10	0	0	3	37	0	0	0	0	**489**
1800 - 1900	0	365	84	0	5	1	0	2	30	1	0	0	0	**488**
1900 - 2000	1	339	74	0	3	1	0	3	25	0	0	0	0	**446**
2000 - 2100	0	319	60	0	2	0	0	0	29	0	0	0	0	**410**
2100 - 2200	0	327	49	0	1	0	0	0	21	0	0	0	0	**398**
2200 - 2300	0	200	40	0	3	0	0	0	18	0	1	0	0	**262**
2300 - 2400	0	131	30	0	0	0	0	0	19	0	0	0	0	**180**

Session Total	21	5807	1561	7	135	33	0	52	878	8	28	0	0	**8530**
Session Average	0.88	241.96	65.04	0.29	5.63	1.38	0.00	2.17	36.58	0.33	1.17	0.00	0.00	**355.42**
Session Percentage	0.25	68.08	18.30	0.08	1.58	0.39	0.00	0.61	10.29	0.09	0.33	0.00	0.00	

AM Peak Hour	0900 - 1000	0900 - 1000	0900 - 1000	0700 - 0800	0800 - 0900	0800 - 0900	-	0900 - 1000	0900 - 1000	0800 - 0900	0500 - 0600	-	-	**0900 - 1000**
AM Peak Hour Volume	5	244	81	1	12	9	0	6	54	2	4	0	0	**405**

Noon Peak Hour	1400 - 1500	1400 - 1500	1200 - 1300	1100 - 1200	1000 - 1100	1000 - 1100	-	1200 - 1300	1200 - 1300	1100 - 1200	-	-	-	**1300 - 1400**
Noon Peak Hour Volume	4	430	133	1	13	4	0	7	53	2	0	0	0	**619**

PM Peak Hour	1500 - 1600	1500 - 1600	1500 - 1600	1700 - 1800	1700 - 1800	1600 - 1700	-	1500 - 1600	1500 - 1600	1500 - 1600	1500 - 1600	-	-	**1500 - 1600**
PM Peak Hour Volume	3	432	107	2	10	2	0	4	44	2	1	0	0	**599**

Bi-Directional Class Count || Volume Summary 60min

Columbia, SC

Marr Traffic DATA COLLECTION

www.marrtraffic.com

Site 74 Lane 3 WB

I-20,
west of US-378 Sunset Blvd S/Bound Off-Ramp

Date

Sunday, April 21, 2024

Lat/Long

34.008085°, -81.156669°

Weather

Cloudy
66°F

Click here for Detailed Weather

0000 - 2400 (Sunday 24h Session) (04-21-2024)

Volume Summary 60min

	Volume Summary 60min		
TIME	EB	WB	**Total**
0000 - 0100	0	124	**124**
0100 - 0200	0	107	**107**
0200 - 0300	0	66	**66**
0300 - 0400	0	45	**45**
0400 - 0500	0	46	**46**
0500 - 0600	0	45	**45**
0600 - 0700	0	121	**121**
0700 - 0800	0	240	**240**
0800 - 0900	0	255	**255**
0900 - 1000	0	387	**387**
1000 - 1100	0	405	**405**
1100 - 1200	0	486	**486**

	Volume Summary 60min		
Time	EB	WB	**Total**
1200 - 1300	0	584	**584**
1300 - 1400	0	561	**561**
1400 - 1500	0	583	**583**
1500 - 1600	0	526	**526**
1600 - 1700	0	529	**529**
1700 - 1800	0	507	**507**
1800 - 1900	0	435	**435**
1900 - 2000	0	468	**468**
2000 - 2100	0	311	**311**
2100 - 2200	0	203	**203**
2200 - 2300	0	161	**161**
2300 - 2400	0	107	**107**

Session Total	0	7302	**7302**
Session Average	0.00	304.25	**304.25**
Session Percentage	0.00	100.00	

Site 74 Lane 3 WB

I-20,
west of US-378 Sunset Blvd S/Bound Off-Ramp

Date

Monday, April 22, 2024

Lat/Long

34.008085°, -81.156669°

Weather

Mostly Cloudy
57°F

Click here for Detailed Weather

0000 - 2400 (Weekday 24h Session) (04-22-2024)

Volume Summary 60min

	Volume Summary 60min		
TIME	EB	WB	**Total**
0000 - 0100	0	72	**72**
0100 - 0200	0	56	**56**
0200 - 0300	0	53	**53**
0300 - 0400	0	77	**77**
0400 - 0500	0	93	**93**
0500 - 0600	0	173	**173**
0600 - 0700	0	356	**356**
0700 - 0800	0	512	**512**
0800 - 0900	0	473	**473**
0900 - 1000	0	506	**506**
1000 - 1100	0	543	**543**
1100 - 1200	0	563	**563**

	Volume Summary 60min		
Time	EB	WB	**Total**
1200 - 1300	0	620	**620**
1300 - 1400	0	562	**562**
1400 - 1500	0	622	**622**
1500 - 1600	0	722	**722**
1600 - 1700	0	750	**750**
1700 - 1800	0	741	**741**
1800 - 1900	0	533	**533**
1900 - 2000	0	448	**448**
2000 - 2100	0	328	**328**
2100 - 2200	0	249	**249**
2200 - 2300	0	194	**194**
2300 - 2400	0	166	**166**

Session Total	0	9412	**9412**
Session Average	0.00	392.17	**392.17**
Session Percentage	0.00	100.00	

Site 74 Lane 3 WB

I-20,
west of US-378 Sunset Blvd S/Bound Off-Ramp

Date

Tuesday, April 23, 2024

Lat/Long

34.008085°, -81.156669°

Weather

Fair
58°F

Click here for Detailed Weather

0000 - 2400 (Weekday 24h Session) (04-23-2024)

Volume Summary 60min

	Volume Summary 60min		
TIME	EB	WB	**Total**
0000 - 0100	0	106	**106**
0100 - 0200	0	43	**43**
0200 - 0300	0	57	**57**
0300 - 0400	0	82	**82**
0400 - 0500	0	110	**110**
0500 - 0600	0	194	**194**
0600 - 0700	0	368	**368**
0700 - 0800	0	454	**454**
0800 - 0900	0	440	**440**
0900 - 1000	0	521	**521**
1000 - 1100	0	475	**475**
1100 - 1200	0	522	**522**

Session Total	0	9367	**9367**
Session Average	0.00	390.29	**390.29**
Session Percentage	0.00	100.00	

	Volume Summary 60min		
Time	EB	WB	**Total**
1200 - 1300	0	561	**561**
1300 - 1400	0	576	**576**
1400 - 1500	0	629	**629**
1500 - 1600	0	749	**749**
1600 - 1700	0	822	**822**
1700 - 1800	0	828	**828**
1800 - 1900	0	556	**556**
1900 - 2000	0	402	**402**
2000 - 2100	0	345	**345**
2100 - 2200	0	215	**215**
2200 - 2300	0	175	**175**
2300 - 2400	0	137	**137**

Site 74 Lane 3 WB

I-20,
west of US-378 Sunset Blvd S/Bound Off-Ramp

Date

Wednesday, April 24, 2024

Lat/Long

34.008085°, -81.156669°

Weather

Fair
66°F

Click here for Detailed Weather

0000 - 2400 (Weekday 24h Session) (04-24-2024)

Volume Summary 60min

	Volume Summary 60min		
TIME	EB	WB	**Total**
0000 - 0100	0	112	**112**
0100 - 0200	0	80	**80**
0200 - 0300	0	72	**72**
0300 - 0400	0	78	**78**
0400 - 0500	0	141	**141**
0500 - 0600	0	189	**189**
0600 - 0700	0	433	**433**
0700 - 0800	0	509	**509**
0800 - 0900	0	477	**477**
0900 - 1000	0	477	**477**
1000 - 1100	0	515	**515**
1100 - 1200	0	504	**504**

	Volume Summary 60min		
Time	EB	WB	**Total**
1200 - 1300	0	613	**613**
1300 - 1400	0	584	**584**
1400 - 1500	0	664	**664**
1500 - 1600	0	773	**773**
1600 - 1700	0	820	**820**
1700 - 1800	0	763	**763**
1800 - 1900	0	552	**552**
1900 - 2000	0	431	**431**
2000 - 2100	0	398	**398**
2100 - 2200	0	285	**285**
2200 - 2300	0	229	**229**
2300 - 2400	0	186	**186**

Session Total	0	9885	**9885**
Session Average	0.00	411.88	**411.88**
Session Percentage	0.00	100.00	

Site 74 Lane 3 WB

I-20,
west of US-378 Sunset Blvd S/Bound Off-Ramp

Date

Thursday, April 25, 2024

Lat/Long

34.008085°, -81.156669°

Weather

Fair
67°F

Click here for Detailed Weather

0000 - 2400 (Weekday 24h Session) (04-25-2024)

Volume Summary 60min

	Volume Summary 60min		
TIME	EB	WB	**Total**
0000 - 0100	0	126	**126**
0100 - 0200	0	60	**60**
0200 - 0300	0	69	**69**
0300 - 0400	0	94	**94**
0400 - 0500	0	154	**154**
0500 - 0600	0	236	**236**
0600 - 0700	0	403	**403**
0700 - 0800	0	516	**516**
0800 - 0900	0	461	**461**
0900 - 1000	0	485	**485**
1000 - 1100	0	555	**555**
1100 - 1200	0	562	**562**

	Volume Summary 60min		
Time	EB	WB	**Total**
1200 - 1300	0	578	**578**
1300 - 1400	0	617	**617**
1400 - 1500	0	662	**662**
1500 - 1600	0	786	**786**
1600 - 1700	0	795	**795**
1700 - 1800	0	815	**815**
1800 - 1900	0	586	**586**
1900 - 2000	0	458	**458**
2000 - 2100	0	405	**405**
2100 - 2200	0	429	**429**
2200 - 2300	0	311	**311**
2300 - 2400	0	176	**176**

Session Total	0	10339	**10339**
Session Average	0.00	430.79	**430.79**
Session Percentage	0.00	100.00	

Site 74 Lane 3 WB

I-20,
west of US-378 Sunset Blvd S/Bound Off-Ramp

Date

Friday, April 26, 2024

Lat/Long

34.008085°, -81.156669°

Weather

Cloudy
69°F

Click here for Detailed Weather

0000 - 2400 (Weekday 24h Session) (04-26-2024)

Volume Summary 60min

	Volume Summary 60min		
TIME	EB	WB	**Total**
0000 - 0100	0	77	**77**
0100 - 0200	0	61	**61**
0200 - 0300	0	66	**66**
0300 - 0400	0	83	**83**
0400 - 0500	0	101	**101**
0500 - 0600	0	205	**205**
0600 - 0700	0	367	**367**
0700 - 0800	0	515	**515**
0800 - 0900	0	470	**470**
0900 - 1000	0	526	**526**
1000 - 1100	0	576	**576**
1100 - 1200	0	651	**651**

	Volume Summary 60min		
Time	EB	WB	**Total**
1200 - 1300	0	696	**696**
1300 - 1400	0	677	**677**
1400 - 1500	0	716	**716**
1500 - 1600	0	771	**771**
1600 - 1700	0	772	**772**
1700 - 1800	0	697	**697**
1800 - 1900	0	566	**566**
1900 - 2000	0	511	**511**
2000 - 2100	0	390	**390**
2100 - 2200	0	359	**359**
2200 - 2300	0	347	**347**
2300 - 2400	0	231	**231**

Session Total	0	10431	**10431**
Session Average	0.00	434.63	**434.63**
Session Percentage	0.00	100.00	

Site 74 Lane 3 WB

I-20,
west of US-378 Sunset Blvd S/Bound Off-Ramp

Date

Saturday, April 27, 2024

Lat/Long

34.008085°, -81.156669°

Weather

Mostly Cloudy
69°F

Click here for Detailed Weather

0000 - 2400 (Saturday 24h Session) (04-27-2024)

Volume Summary 60min

	Volume Summary 60min		
TIME	EB	WB	**Total**
0000 - 0100	0	91	**91**
0100 - 0200	0	73	**73**
0200 - 0300	0	90	**90**
0300 - 0400	0	96	**96**
0400 - 0500	0	85	**85**
0500 - 0600	0	144	**144**
0600 - 0700	0	238	**238**
0700 - 0800	0	319	**319**
0800 - 0900	0	359	**359**
0900 - 1000	0	405	**405**
1000 - 1100	0	474	**474**
1100 - 1200	0	513	**513**

	Volume Summary 60min		
Time	EB	WB	**Total**
1200 - 1300	0	582	**582**
1300 - 1400	0	619	**619**
1400 - 1500	0	602	**602**
1500 - 1600	0	599	**599**
1600 - 1700	0	568	**568**
1700 - 1800	0	489	**489**
1800 - 1900	0	488	**488**
1900 - 2000	0	446	**446**
2000 - 2100	0	410	**410**
2100 - 2200	0	398	**398**
2200 - 2300	0	262	**262**
2300 - 2400	0	180	**180**

Session Total	0	8530	**8530**
Session Average	0.00	355.42	**355.42**
Session Percentage	0.00	100.00	

Bi-Directional Class Count || Graphical Analysis SB WB

Columbia, SC

Marr Traffic DATA COLLECTION

www.marrtraffic.com

Site 74 Lane 3 WB

I-20,
west of US-378 Sunset Blvd S/Bound Off-Ramp

Lat/Long

34.008085°, -81.156669°

0000 - 2400 (Weekday 24h Session)

Graphical Analysis SB WB

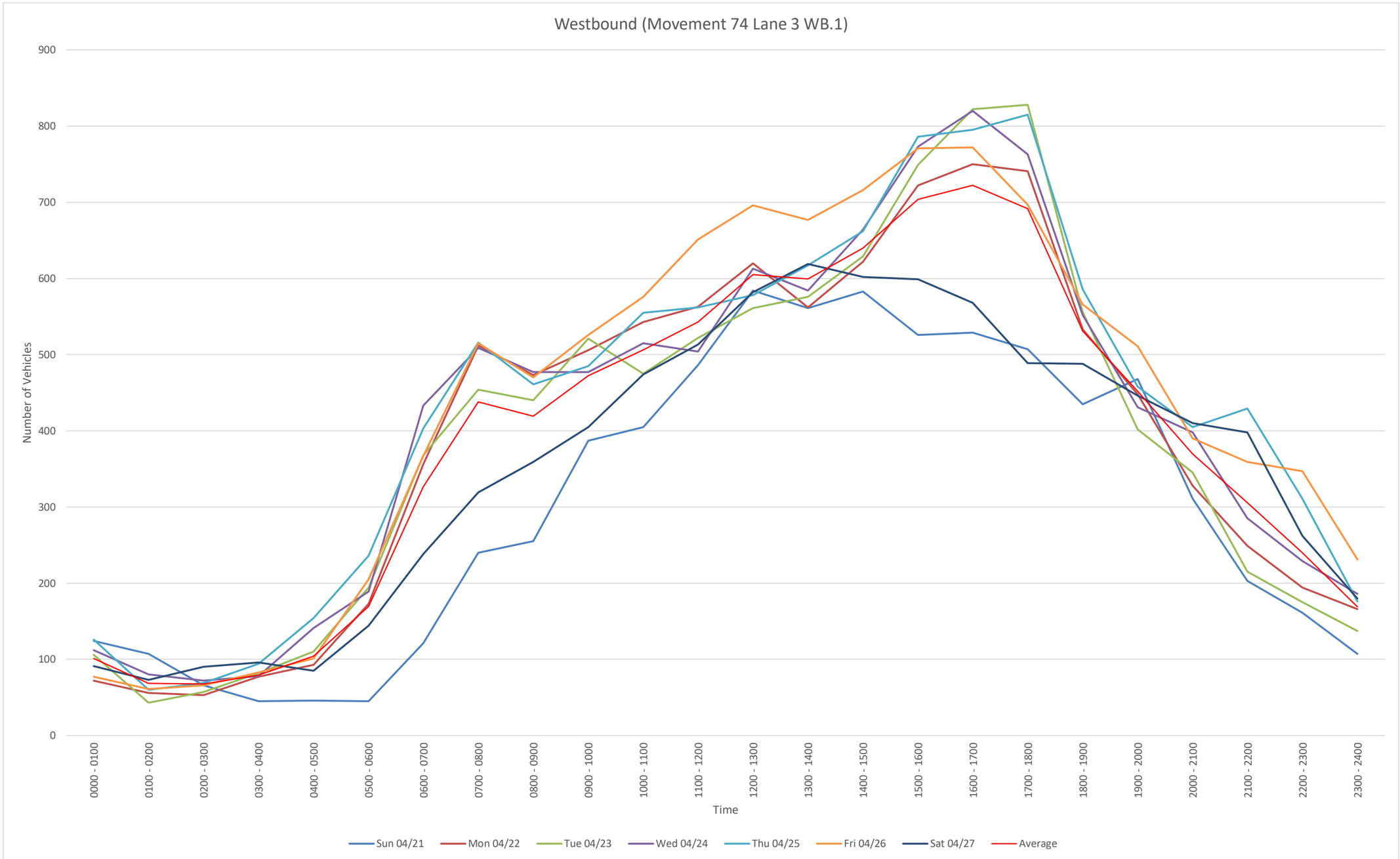

EB
File Name:
Start Date: 4/21/2024
Start Time: 0
Site Code: 74 Lane 3 WB
Station ID: 1
Location 1: I-20, west of US-378 Sunset Blvd S/Bound Off-Ramp
Location 2:

Date	Time	1	2	3	4	5	6	7	8	9	10	11	12	13
4/21/2024	12:00 AM	0	0	0	0	0	0	0	0	0	0	0	0	0
4/21/2024	12:15 AM	0	0	0	0	0	0	0	0	0	0	0	0	0
4/21/2024	12:30 AM	0	0	0	0	0	0	0	0	0	0	0	0	0
4/21/2024	12:45 AM	0	0	0	0	0	0	0	0	0	0	0	0	0
4/21/2024	1:00 AM	0	0	0	0	0	0	0	0	0	0	0	0	0
4/21/2024	1:15 AM	0	0	0	0	0	0	0	0	0	0	0	0	0
4/21/2024	1:30 AM	0	0	0	0	0	0	0	0	0	0	0	0	0
4/21/2024	1:45 AM	0	0	0	0	0	0	0	0	0	0	0	0	0
4/21/2024	2:00 AM	0	0	0	0	0	0	0	0	0	0	0	0	0
4/21/2024	2:15 AM	0	0	0	0	0	0	0	0	0	0	0	0	0
4/21/2024	2:30 AM	0	0	0	0	0	0	0	0	0	0	0	0	0
4/21/2024	2:45 AM	0	0	0	0	0	0	0	0	0	0	0	0	0
4/21/2024	3:00 AM	0	0	0	0	0	0	0	0	0	0	0	0	0
4/21/2024	3:15 AM	0	0	0	0	0	0	0	0	0	0	0	0	0
4/21/2024	3:30 AM	0	0	0	0	0	0	0	0	0	0	0	0	0
4/21/2024	3:45 AM	0	0	0	0	0	0	0	0	0	0	0	0	0
4/21/2024	4:00 AM	0	0	0	0	0	0	0	0	0	0	0	0	0
4/21/2024	4:15 AM	0	0	0	0	0	0	0	0	0	0	0	0	0
4/21/2024	4:30 AM	0	0	0	0	0	0	0	0	0	0	0	0	0
4/21/2024	4:45 AM	0	0	0	0	0	0	0	0	0	0	0	0	0
4/21/2024	5:00 AM	0	0	0	0	0	0	0	0	0	0	0	0	0
4/21/2024	5:15 AM	0	0	0	0	0	0	0	0	0	0	0	0	0
4/21/2024	5:30 AM	0	0	0	0	0	0	0	0	0	0	0	0	0
4/21/2024	5:45 AM	0	0	0	0	0	0	0	0	0	0	0	0	0
4/21/2024	6:00 AM	0	0	0	0	0	0	0	0	0	0	0	0	0
4/21/2024	6:15 AM	0	0	0	0	0	0	0	0	0	0	0	0	0
4/21/2024	6:30 AM	0	0	0	0	0	0	0	0	0	0	0	0	0
4/21/2024	6:45 AM	0	0	0	0	0	0	0	0	0	0	0	0	0
4/21/2024	7:00 AM	0	0	0	0	0	0	0	0	0	0	0	0	0
4/21/2024	7:15 AM	0	0	0	0	0	0	0	0	0	0	0	0	0
4/21/2024	7:30 AM	0	0	0	0	0	0	0	0	0	0	0	0	0
4/21/2024	7:45 AM	0	0	0	0	0	0	0	0	0	0	0	0	0
4/21/2024	8:00 AM	0	0	0	0	0	0	0	0	0	0	0	0	0
4/21/2024	8:15 AM	0	0	0	0	0	0	0	0	0	0	0	0	0
4/21/2024	8:30 AM	0	0	0	0	0	0	0	0	0	0	0	0	0
4/21/2024	8:45 AM	0	0	0	0	0	0	0	0	0	0	0	0	0
4/21/2024	9:00 AM	0	0	0	0	0	0	0	0	0	0	0	0	0
4/21/2024	9:15 AM	0	0	0	0	0	0	0	0	0	0	0	0	0
4/21/2024	9:30 AM	0	0	0	0	0	0	0	0	0	0	0	0	0
4/21/2024	9:45 AM	0	0	0	0	0	0	0	0	0	0	0	0	0
4/21/2024	10:00 AM	0	0	0	0	0	0	0	0	0	0	0	0	0
4/21/2024	10:15 AM	0	0	0	0	0	0	0	0	0	0	0	0	0
4/21/2024	10:30 AM	0	0	0	0	0	0	0	0	0	0	0	0	0
4/21/2024	10:45 AM	0	0	0	0	0	0	0	0	0	0	0	0	0
4/21/2024	11:00 AM	0	0	0	0	0	0	0	0	0	0	0	0	0
4/21/2024	11:15 AM	0	0	0	0	0	0	0	0	0	0	0	0	0
4/21/2024	11:30 AM	0	0	0	0	0	0	0	0	0	0	0	0	0
4/21/2024	11:45 AM	0	0	0	0	0	0	0	0	0	0	0	0	0
4/21/2024	12:00 PM	0	0	0	0	0	0	0	0	0	0	0	0	0
4/21/2024	12:15 PM	0	0	0	0	0	0	0	0	0	0	0	0	0
4/21/2024	12:30 PM	0	0	0	0	0	0	0	0	0	0	0	0	0
4/21/2024	12:45 PM	0	0	0	0	0	0	0	0	0	0	0	0	0
4/21/2024	1:00 PM	0	0	0	0	0	0	0	0	0	0	0	0	0
4/21/2024	1:15 PM	0	0	0	0	0	0	0	0	0	0	0	0	0
4/21/2024	1:30 PM	0	0	0	0	0	0	0	0	0	0	0	0	0
4/21/2024	1:45 PM	0	0	0	0	0	0	0	0	0	0	0	0	0
4/21/2024	2:00 PM	0	0	0	0	0	0	0	0	0	0	0	0	0
4/21/2024	2:15 PM	0	0	0	0	0	0	0	0	0	0	0	0	0
4/21/2024	2:30 PM	0	0	0	0	0	0	0	0	0	0	0	0	0
4/21/2024	2:45 PM	0	0	0	0	0	0	0	0	0	0	0	0	0
4/21/2024	3:00 PM	0	0	0	0	0	0	0	0	0	0	0	0	0
4/21/2024	3:15 PM	0	0	0	0	0	0	0	0	0	0	0	0	0
4/21/2024	3:30 PM	0	0	0	0	0	0	0	0	0	0	0	0	0
4/21/2024	3:45 PM	0	0	0	0	0	0	0	0	0	0	0	0	0
4/21/2024	4:00 PM	0	0	0	0	0	0	0	0	0	0	0	0	0
4/21/2024	4:15 PM	0	0	0	0	0	0	0	0	0	0	0	0	0
4/21/2024	4:30 PM	0	0	0	0	0	0	0	0	0	0	0	0	0
4/21/2024	4:45 PM	0	0	0	0	0	0	0	0	0	0	0	0	0
4/21/2024	5:00 PM	0	0	0	0	0	0	0	0	0	0	0	0	0
4/21/2024	5:15 PM	0	0	0	0	0	0	0	0	0	0	0	0	0
4/21/2024	5:30 PM	0	0	0	0	0	0	0	0	0	0	0	0	0
4/21/2024	5:45 PM	0	0	0	0	0	0	0	0	0	0	0	0	0
4/21/2024	6:00 PM	0	0	0	0	0	0	0	0	0	0	0	0	0
4/21/2024	6:15 PM	0	0	0	0	0	0	0	0	0	0	0	0	0
4/21/2024	6:30 PM	0	0	0	0	0	0	0	0	0	0	0	0	0
4/21/2024	6:45 PM	0	0	0	0	0	0	0	0	0	0	0	0	0
4/21/2024	7:00 PM	0	0	0	0	0	0	0	0	0	0	0	0	0
4/21/2024	7:15 PM	0	0	0	0	0	0	0	0	0	0	0	0	0
4/21/2024	7:30 PM	0	0	0	0	0	0	0	0	0	0	0	0	0
4/21/2024	7:45 PM	0	0	0	0	0	0	0	0	0	0	0	0	0
4/21/2024	8:00 PM	0	0	0	0	0	0	0	0	0	0	0	0	0
4/21/2024	8:15 PM	0	0	0	0	0	0	0	0	0	0	0	0	0
4/21/2024	8:30 PM	0	0	0	0	0	0	0	0	0	0	0	0	0
4/21/2024	8:45 PM	0	0	0	0	0	0	0	0	0	0	0	0	0
4/21/2024	9:00 PM	0	0	0	0	0	0	0	0	0	0	0	0	0
4/21/2024	9:15 PM	0	0	0	0	0	0	0	0	0	0	0	0	0
4/21/2024	9:30 PM	0	0	0	0	0	0	0	0	0	0	0	0	0
4/21/2024	9:45 PM	0	0	0	0	0	0	0	0	0	0	0	0	0
4/21/2024	10:00 PM	0	0	0	0	0	0	0	0	0	0	0	0	0
4/21/2024	10:15 PM	0	0	0	0	0	0	0	0	0	0	0	0	0
4/21/2024	10:30 PM	0	0	0	0	0	0	0	0	0	0	0	0	0
4/21/2024	10:45 PM	0	0	0	0	0	0	0	0	0	0	0	0	0
4/21/2024	11:00 PM	0	0	0	0	0	0	0	0	0	0	0	0	0
4/21/2024	11:15 PM	0	0	0	0	0	0	0	0	0	0	0	0	0
4/21/2024	11:30 PM	0	0	0	0	0	0	0	0	0	0	0	0	0
4/21/2024	11:45 PM	0	0	0	0	0	0	0	0	0	0	0	0	0

4/22/2024	12:00 AM	0	0	0	0	0	0	0	0	0	0	0	0	0
4/22/2024	12:15 AM	0	0	0	0	0	0	0	0	0	0	0	0	0
4/22/2024	12:30 AM	0	0	0	0	0	0	0	0	0	0	0	0	0
4/22/2024	12:45 AM	0	0	0	0	0	0	0	0	0	0	0	0	0
4/22/2024	1:00 AM	0	0	0	0	0	0	0	0	0	0	0	0	0
4/22/2024	1:15 AM	0	0	0	0	0	0	0	0	0	0	0	0	0
4/22/2024	1:30 AM	0	0	0	0	0	0	0	0	0	0	0	0	0
4/22/2024	1:45 AM	0	0	0	0	0	0	0	0	0	0	0	0	0
4/22/2024	2:00 AM	0	0	0	0	0	0	0	0	0	0	0	0	0
4/22/2024	2:15 AM	0	0	0	0	0	0	0	0	0	0	0	0	0
4/22/2024	2:30 AM	0	0	0	0	0	0	0	0	0	0	0	0	0
4/22/2024	2:45 AM	0	0	0	0	0	0	0	0	0	0	0	0	0
4/22/2024	3:00 AM	0	0	0	0	0	0	0	0	0	0	0	0	0
4/22/2024	3:15 AM	0	0	0	0	0	0	0	0	0	0	0	0	0
4/22/2024	3:30 AM	0	0	0	0	0	0	0	0	0	0	0	0	0
4/22/2024	3:45 AM	0	0	0	0	0	0	0	0	0	0	0	0	0
4/22/2024	4:00 AM	0	0	0	0	0	0	0	0	0	0	0	0	0
4/22/2024	4:15 AM	0	0	0	0	0	0	0	0	0	0	0	0	0
4/22/2024	4:30 AM	0	0	0	0	0	0	0	0	0	0	0	0	0
4/22/2024	4:45 AM	0	0	0	0	0	0	0	0	0	0	0	0	0
4/22/2024	5:00 AM	0	0	0	0	0	0	0	0	0	0	0	0	0
4/22/2024	5:15 AM	0	0	0	0	0	0	0	0	0	0	0	0	0
4/22/2024	5:30 AM	0	0	0	0	0	0	0	0	0	0	0	0	0
4/22/2024	5:45 AM	0	0	0	0	0	0	0	0	0	0	0	0	0
4/22/2024	6:00 AM	0	0	0	0	0	0	0	0	0	0	0	0	0
4/22/2024	6:15 AM	0	0	0	0	0	0	0	0	0	0	0	0	0
4/22/2024	6:30 AM	0	0	0	0	0	0	0	0	0	0	0	0	0
4/22/2024	6:45 AM	0	0	0	0	0	0	0	0	0	0	0	0	0
4/22/2024	7:00 AM	0	0	0	0	0	0	0	0	0	0	0	0	0
4/22/2024	7:15 AM	0	0	0	0	0	0	0	0	0	0	0	0	0
4/22/2024	7:30 AM	0	0	0	0	0	0	0	0	0	0	0	0	0
4/22/2024	7:45 AM	0	0	0	0	0	0	0	0	0	0	0	0	0
4/22/2024	8:00 AM	0	0	0	0	0	0	0	0	0	0	0	0	0
4/22/2024	8:15 AM	0	0	0	0	0	0	0	0	0	0	0	0	0
4/22/2024	8:30 AM	0	0	0	0	0	0	0	0	0	0	0	0	0
4/22/2024	8:45 AM	0	0	0	0	0	0	0	0	0	0	0	0	0
4/22/2024	9:00 AM	0	0	0	0	0	0	0	0	0	0	0	0	0
4/22/2024	9:15 AM	0	0	0	0	0	0	0	0	0	0	0	0	0
4/22/2024	9:30 AM	0	0	0	0	0	0	0	0	0	0	0	0	0
4/22/2024	9:45 AM	0	0	0	0	0	0	0	0	0	0	0	0	0
4/22/2024	10:00 AM	0	0	0	0	0	0	0	0	0	0	0	0	0
4/22/2024	10:15 AM	0	0	0	0	0	0	0	0	0	0	0	0	0
4/22/2024	10:30 AM	0	0	0	0	0	0	0	0	0	0	0	0	0
4/22/2024	10:45 AM	0	0	0	0	0	0	0	0	0	0	0	0	0
4/22/2024	11:00 AM	0	0	0	0	0	0	0	0	0	0	0	0	0
4/22/2024	11:15 AM	0	0	0	0	0	0	0	0	0	0	0	0	0
4/22/2024	11:30 AM	0	0	0	0	0	0	0	0	0	0	0	0	0
4/22/2024	11:45 AM	0	0	0	0	0	0	0	0	0	0	0	0	0
4/22/2024	12:00 PM	0	0	0	0	0	0	0	0	0	0	0	0	0
4/22/2024	12:15 PM	0	0	0	0	0	0	0	0	0	0	0	0	0
4/22/2024	12:30 PM	0	0	0	0	0	0	0	0	0	0	0	0	0
4/22/2024	12:45 PM	0	0	0	0	0	0	0	0	0	0	0	0	0
4/22/2024	1:00 PM	0	0	0	0	0	0	0	0	0	0	0	0	0
4/22/2024	1:15 PM	0	0	0	0	0	0	0	0	0	0	0	0	0
4/22/2024	1:30 PM	0	0	0	0	0	0	0	0	0	0	0	0	0
4/22/2024	1:45 PM	0	0	0	0	0	0	0	0	0	0	0	0	0
4/22/2024	2:00 PM	0	0	0	0	0	0	0	0	0	0	0	0	0
4/22/2024	2:15 PM	0	0	0	0	0	0	0	0	0	0	0	0	0
4/22/2024	2:30 PM	0	0	0	0	0	0	0	0	0	0	0	0	0
4/22/2024	2:45 PM	0	0	0	0	0	0	0	0	0	0	0	0	0
4/22/2024	3:00 PM	0	0	0	0	0	0	0	0	0	0	0	0	0
4/22/2024	3:15 PM	0	0	0	0	0	0	0	0	0	0	0	0	0
4/22/2024	3:30 PM	0	0	0	0	0	0	0	0	0	0	0	0	0
4/22/2024	3:45 PM	0	0	0	0	0	0	0	0	0	0	0	0	0
4/22/2024	4:00 PM	0	0	0	0	0	0	0	0	0	0	0	0	0
4/22/2024	4:15 PM	0	0	0	0	0	0	0	0	0	0	0	0	0
4/22/2024	4:30 PM	0	0	0	0	0	0	0	0	0	0	0	0	0
4/22/2024	4:45 PM	0	0	0	0	0	0	0	0	0	0	0	0	0
4/22/2024	5:00 PM	0	0	0	0	0	0	0	0	0	0	0	0	0
4/22/2024	5:15 PM	0	0	0	0	0	0	0	0	0	0	0	0	0
4/22/2024	5:30 PM	0	0	0	0	0	0	0	0	0	0	0	0	0
4/22/2024	5:45 PM	0	0	0	0	0	0	0	0	0	0	0	0	0
4/22/2024	6:00 PM	0	0	0	0	0	0	0	0	0	0	0	0	0
4/22/2024	6:15 PM	0	0	0	0	0	0	0	0	0	0	0	0	0
4/22/2024	6:30 PM	0	0	0	0	0	0	0	0	0	0	0	0	0
4/22/2024	6:45 PM	0	0	0	0	0	0	0	0	0	0	0	0	0
4/22/2024	7:00 PM	0	0	0	0	0	0	0	0	0	0	0	0	0
4/22/2024	7:15 PM	0	0	0	0	0	0	0	0	0	0	0	0	0
4/22/2024	7:30 PM	0	0	0	0	0	0	0	0	0	0	0	0	0
4/22/2024	7:45 PM	0	0	0	0	0	0	0	0	0	0	0	0	0
4/22/2024	8:00 PM	0	0	0	0	0	0	0	0	0	0	0	0	0
4/22/2024	8:15 PM	0	0	0	0	0	0	0	0	0	0	0	0	0
4/22/2024	8:30 PM	0	0	0	0	0	0	0	0	0	0	0	0	0
4/22/2024	8:45 PM	0	0	0	0	0	0	0	0	0	0	0	0	0
4/22/2024	9:00 PM	0	0	0	0	0	0	0	0	0	0	0	0	0
4/22/2024	9:15 PM	0	0	0	0	0	0	0	0	0	0	0	0	0
4/22/2024	9:30 PM	0	0	0	0	0	0	0	0	0	0	0	0	0
4/22/2024	9:45 PM	0	0	0	0	0	0	0	0	0	0	0	0	0
4/22/2024	10:00 PM	0	0	0	0	0	0	0	0	0	0	0	0	0
4/22/2024	10:15 PM	0	0	0	0	0	0	0	0	0	0	0	0	0
4/22/2024	10:30 PM	0	0	0	0	0	0	0	0	0	0	0	0	0
4/22/2024	10:45 PM	0	0	0	0	0	0	0	0	0	0	0	0	0
4/22/2024	11:00 PM	0	0	0	0	0	0	0	0	0	0	0	0	0
4/22/2024	11:15 PM	0	0	0	0	0	0	0	0	0	0	0	0	0
4/22/2024	11:30 PM	0	0	0	0	0	0	0	0	0	0	0	0	0
4/22/2024	11:45 PM	0	0	0	0	0	0	0	0	0	0	0	0	0

4/23/2024	12:00 AM	0	0	0	0	0	0	0	0	0	0	0	0	0
4/23/2024	12:15 AM	0	0	0	0	0	0	0	0	0	0	0	0	0
4/23/2024	12:30 AM	0	0	0	0	0	0	0	0	0	0	0	0	0
4/23/2024	12:45 AM	0	0	0	0	0	0	0	0	0	0	0	0	0
4/23/2024	1:00 AM	0	0	0	0	0	0	0	0	0	0	0	0	0
4/23/2024	1:15 AM	0	0	0	0	0	0	0	0	0	0	0	0	0
4/23/2024	1:30 AM	0	0	0	0	0	0	0	0	0	0	0	0	0
4/23/2024	1:45 AM	0	0	0	0	0	0	0	0	0	0	0	0	0
4/23/2024	2:00 AM	0	0	0	0	0	0	0	0	0	0	0	0	0
4/23/2024	2:15 AM	0	0	0	0	0	0	0	0	0	0	0	0	0
4/23/2024	2:30 AM	0	0	0	0	0	0	0	0	0	0	0	0	0
4/23/2024	2:45 AM	0	0	0	0	0	0	0	0	0	0	0	0	0
4/23/2024	3:00 AM	0	0	0	0	0	0	0	0	0	0	0	0	0
4/23/2024	3:15 AM	0	0	0	0	0	0	0	0	0	0	0	0	0
4/23/2024	3:30 AM	0	0	0	0	0	0	0	0	0	0	0	0	0
4/23/2024	3:45 AM	0	0	0	0	0	0	0	0	0	0	0	0	0
4/23/2024	4:00 AM	0	0	0	0	0	0	0	0	0	0	0	0	0
4/23/2024	4:15 AM	0	0	0	0	0	0	0	0	0	0	0	0	0
4/23/2024	4:30 AM	0	0	0	0	0	0	0	0	0	0	0	0	0
4/23/2024	4:45 AM	0	0	0	0	0	0	0	0	0	0	0	0	0
4/23/2024	5:00 AM	0	0	0	0	0	0	0	0	0	0	0	0	0
4/23/2024	5:15 AM	0	0	0	0	0	0	0	0	0	0	0	0	0
4/23/2024	5:30 AM	0	0	0	0	0	0	0	0	0	0	0	0	0
4/23/2024	5:45 AM	0	0	0	0	0	0	0	0	0	0	0	0	0
4/23/2024	6:00 AM	0	0	0	0	0	0	0	0	0	0	0	0	0
4/23/2024	6:15 AM	0	0	0	0	0	0	0	0	0	0	0	0	0
4/23/2024	6:30 AM	0	0	0	0	0	0	0	0	0	0	0	0	0
4/23/2024	6:45 AM	0	0	0	0	0	0	0	0	0	0	0	0	0
4/23/2024	7:00 AM	0	0	0	0	0	0	0	0	0	0	0	0	0
4/23/2024	7:15 AM	0	0	0	0	0	0	0	0	0	0	0	0	0
4/23/2024	7:30 AM	0	0	0	0	0	0	0	0	0	0	0	0	0
4/23/2024	7:45 AM	0	0	0	0	0	0	0	0	0	0	0	0	0
4/23/2024	8:00 AM	0	0	0	0	0	0	0	0	0	0	0	0	0
4/23/2024	8:15 AM	0	0	0	0	0	0	0	0	0	0	0	0	0
4/23/2024	8:30 AM	0	0	0	0	0	0	0	0	0	0	0	0	0
4/23/2024	8:45 AM	0	0	0	0	0	0	0	0	0	0	0	0	0
4/23/2024	9:00 AM	0	0	0	0	0	0	0	0	0	0	0	0	0
4/23/2024	9:15 AM	0	0	0	0	0	0	0	0	0	0	0	0	0
4/23/2024	9:30 AM	0	0	0	0	0	0	0	0	0	0	0	0	0
4/23/2024	9:45 AM	0	0	0	0	0	0	0	0	0	0	0	0	0
4/23/2024	10:00 AM	0	0	0	0	0	0	0	0	0	0	0	0	0
4/23/2024	10:15 AM	0	0	0	0	0	0	0	0	0	0	0	0	0
4/23/2024	10:30 AM	0	0	0	0	0	0	0	0	0	0	0	0	0
4/23/2024	10:45 AM	0	0	0	0	0	0	0	0	0	0	0	0	0
4/23/2024	11:00 AM	0	0	0	0	0	0	0	0	0	0	0	0	0
4/23/2024	11:15 AM	0	0	0	0	0	0	0	0	0	0	0	0	0
4/23/2024	11:30 AM	0	0	0	0	0	0	0	0	0	0	0	0	0
4/23/2024	11:45 AM	0	0	0	0	0	0	0	0	0	0	0	0	0
4/23/2024	12:00 PM	0	0	0	0	0	0	0	0	0	0	0	0	0
4/23/2024	12:15 PM	0	0	0	0	0	0	0	0	0	0	0	0	0
4/23/2024	12:30 PM	0	0	0	0	0	0	0	0	0	0	0	0	0
4/23/2024	12:45 PM	0	0	0	0	0	0	0	0	0	0	0	0	0
4/23/2024	1:00 PM	0	0	0	0	0	0	0	0	0	0	0	0	0
4/23/2024	1:15 PM	0	0	0	0	0	0	0	0	0	0	0	0	0
4/23/2024	1:30 PM	0	0	0	0	0	0	0	0	0	0	0	0	0
4/23/2024	1:45 PM	0	0	0	0	0	0	0	0	0	0	0	0	0
4/23/2024	2:00 PM	0	0	0	0	0	0	0	0	0	0	0	0	0
4/23/2024	2:15 PM	0	0	0	0	0	0	0	0	0	0	0	0	0
4/23/2024	2:30 PM	0	0	0	0	0	0	0	0	0	0	0	0	0
4/23/2024	2:45 PM	0	0	0	0	0	0	0	0	0	0	0	0	0
4/23/2024	3:00 PM	0	0	0	0	0	0	0	0	0	0	0	0	0
4/23/2024	3:15 PM	0	0	0	0	0	0	0	0	0	0	0	0	0
4/23/2024	3:30 PM	0	0	0	0	0	0	0	0	0	0	0	0	0
4/23/2024	3:45 PM	0	0	0	0	0	0	0	0	0	0	0	0	0
4/23/2024	4:00 PM	0	0	0	0	0	0	0	0	0	0	0	0	0
4/23/2024	4:15 PM	0	0	0	0	0	0	0	0	0	0	0	0	0
4/23/2024	4:30 PM	0	0	0	0	0	0	0	0	0	0	0	0	0
4/23/2024	4:45 PM	0	0	0	0	0	0	0	0	0	0	0	0	0
4/23/2024	5:00 PM	0	0	0	0	0	0	0	0	0	0	0	0	0
4/23/2024	5:15 PM	0	0	0	0	0	0	0	0	0	0	0	0	0
4/23/2024	5:30 PM	0	0	0	0	0	0	0	0	0	0	0	0	0
4/23/2024	5:45 PM	0	0	0	0	0	0	0	0	0	0	0	0	0
4/23/2024	6:00 PM	0	0	0	0	0	0	0	0	0	0	0	0	0
4/23/2024	6:15 PM	0	0	0	0	0	0	0	0	0	0	0	0	0
4/23/2024	6:30 PM	0	0	0	0	0	0	0	0	0	0	0	0	0
4/23/2024	6:45 PM	0	0	0	0	0	0	0	0	0	0	0	0	0
4/23/2024	7:00 PM	0	0	0	0	0	0	0	0	0	0	0	0	0
4/23/2024	7:15 PM	0	0	0	0	0	0	0	0	0	0	0	0	0
4/23/2024	7:30 PM	0	0	0	0	0	0	0	0	0	0	0	0	0
4/23/2024	7:45 PM	0	0	0	0	0	0	0	0	0	0	0	0	0
4/23/2024	8:00 PM	0	0	0	0	0	0	0	0	0	0	0	0	0
4/23/2024	8:15 PM	0	0	0	0	0	0	0	0	0	0	0	0	0
4/23/2024	8:30 PM	0	0	0	0	0	0	0	0	0	0	0	0	0
4/23/2024	8:45 PM	0	0	0	0	0	0	0	0	0	0	0	0	0
4/23/2024	9:00 PM	0	0	0	0	0	0	0	0	0	0	0	0	0
4/23/2024	9:15 PM	0	0	0	0	0	0	0	0	0	0	0	0	0
4/23/2024	9:30 PM	0	0	0	0	0	0	0	0	0	0	0	0	0
4/23/2024	9:45 PM	0	0	0	0	0	0	0	0	0	0	0	0	0
4/23/2024	10:00 PM	0	0	0	0	0	0	0	0	0	0	0	0	0
4/23/2024	10:15 PM	0	0	0	0	0	0	0	0	0	0	0	0	0
4/23/2024	10:30 PM	0	0	0	0	0	0	0	0	0	0	0	0	0
4/23/2024	10:45 PM	0	0	0	0	0	0	0	0	0	0	0	0	0
4/23/2024	11:00 PM	0	0	0	0	0	0	0	0	0	0	0	0	0
4/23/2024	11:15 PM	0	0	0	0	0	0	0	0	0	0	0	0	0
4/23/2024	11:30 PM	0	0	0	0	0	0	0	0	0	0	0	0	0
4/23/2024	11:45 PM	0	0	0	0	0	0	0	0	0	0	0	0	0

4/24/2024	12:00 AM	0	0	0	0	0	0	0	0	0	0	0	0	0
4/24/2024	12:15 AM	0	0	0	0	0	0	0	0	0	0	0	0	0
4/24/2024	12:30 AM	0	0	0	0	0	0	0	0	0	0	0	0	0
4/24/2024	12:45 AM	0	0	0	0	0	0	0	0	0	0	0	0	0
4/24/2024	1:00 AM	0	0	0	0	0	0	0	0	0	0	0	0	0
4/24/2024	1:15 AM	0	0	0	0	0	0	0	0	0	0	0	0	0
4/24/2024	1:30 AM	0	0	0	0	0	0	0	0	0	0	0	0	0
4/24/2024	1:45 AM	0	0	0	0	0	0	0	0	0	0	0	0	0
4/24/2024	2:00 AM	0	0	0	0	0	0	0	0	0	0	0	0	0
4/24/2024	2:15 AM	0	0	0	0	0	0	0	0	0	0	0	0	0
4/24/2024	2:30 AM	0	0	0	0	0	0	0	0	0	0	0	0	0
4/24/2024	2:45 AM	0	0	0	0	0	0	0	0	0	0	0	0	0
4/24/2024	3:00 AM	0	0	0	0	0	0	0	0	0	0	0	0	0
4/24/2024	3:15 AM	0	0	0	0	0	0	0	0	0	0	0	0	0
4/24/2024	3:30 AM	0	0	0	0	0	0	0	0	0	0	0	0	0
4/24/2024	3:45 AM	0	0	0	0	0	0	0	0	0	0	0	0	0
4/24/2024	4:00 AM	0	0	0	0	0	0	0	0	0	0	0	0	0
4/24/2024	4:15 AM	0	0	0	0	0	0	0	0	0	0	0	0	0
4/24/2024	4:30 AM	0	0	0	0	0	0	0	0	0	0	0	0	0
4/24/2024	4:45 AM	0	0	0	0	0	0	0	0	0	0	0	0	0
4/24/2024	5:00 AM	0	0	0	0	0	0	0	0	0	0	0	0	0
4/24/2024	5:15 AM	0	0	0	0	0	0	0	0	0	0	0	0	0
4/24/2024	5:30 AM	0	0	0	0	0	0	0	0	0	0	0	0	0
4/24/2024	5:45 AM	0	0	0	0	0	0	0	0	0	0	0	0	0
4/24/2024	6:00 AM	0	0	0	0	0	0	0	0	0	0	0	0	0
4/24/2024	6:15 AM	0	0	0	0	0	0	0	0	0	0	0	0	0
4/24/2024	6:30 AM	0	0	0	0	0	0	0	0	0	0	0	0	0
4/24/2024	6:45 AM	0	0	0	0	0	0	0	0	0	0	0	0	0
4/24/2024	7:00 AM	0	0	0	0	0	0	0	0	0	0	0	0	0
4/24/2024	7:15 AM	0	0	0	0	0	0	0	0	0	0	0	0	0
4/24/2024	7:30 AM	0	0	0	0	0	0	0	0	0	0	0	0	0
4/24/2024	7:45 AM	0	0	0	0	0	0	0	0	0	0	0	0	0
4/24/2024	8:00 AM	0	0	0	0	0	0	0	0	0	0	0	0	0
4/24/2024	8:15 AM	0	0	0	0	0	0	0	0	0	0	0	0	0
4/24/2024	8:30 AM	0	0	0	0	0	0	0	0	0	0	0	0	0
4/24/2024	8:45 AM	0	0	0	0	0	0	0	0	0	0	0	0	0
4/24/2024	9:00 AM	0	0	0	0	0	0	0	0	0	0	0	0	0
4/24/2024	9:15 AM	0	0	0	0	0	0	0	0	0	0	0	0	0
4/24/2024	9:30 AM	0	0	0	0	0	0	0	0	0	0	0	0	0
4/24/2024	9:45 AM	0	0	0	0	0	0	0	0	0	0	0	0	0
4/24/2024	10:00 AM	0	0	0	0	0	0	0	0	0	0	0	0	0
4/24/2024	10:15 AM	0	0	0	0	0	0	0	0	0	0	0	0	0
4/24/2024	10:30 AM	0	0	0	0	0	0	0	0	0	0	0	0	0
4/24/2024	10:45 AM	0	0	0	0	0	0	0	0	0	0	0	0	0
4/24/2024	11:00 AM	0	0	0	0	0	0	0	0	0	0	0	0	0
4/24/2024	11:15 AM	0	0	0	0	0	0	0	0	0	0	0	0	0
4/24/2024	11:30 AM	0	0	0	0	0	0	0	0	0	0	0	0	0
4/24/2024	11:45 AM	0	0	0	0	0	0	0	0	0	0	0	0	0
4/24/2024	12:00 PM	0	0	0	0	0	0	0	0	0	0	0	0	0
4/24/2024	12:15 PM	0	0	0	0	0	0	0	0	0	0	0	0	0
4/24/2024	12:30 PM	0	0	0	0	0	0	0	0	0	0	0	0	0
4/24/2024	12:45 PM	0	0	0	0	0	0	0	0	0	0	0	0	0
4/24/2024	1:00 PM	0	0	0	0	0	0	0	0	0	0	0	0	0
4/24/2024	1:15 PM	0	0	0	0	0	0	0	0	0	0	0	0	0
4/24/2024	1:30 PM	0	0	0	0	0	0	0	0	0	0	0	0	0
4/24/2024	1:45 PM	0	0	0	0	0	0	0	0	0	0	0	0	0
4/24/2024	2:00 PM	0	0	0	0	0	0	0	0	0	0	0	0	0
4/24/2024	2:15 PM	0	0	0	0	0	0	0	0	0	0	0	0	0
4/24/2024	2:30 PM	0	0	0	0	0	0	0	0	0	0	0	0	0
4/24/2024	2:45 PM	0	0	0	0	0	0	0	0	0	0	0	0	0
4/24/2024	3:00 PM	0	0	0	0	0	0	0	0	0	0	0	0	0
4/24/2024	3:15 PM	0	0	0	0	0	0	0	0	0	0	0	0	0
4/24/2024	3:30 PM	0	0	0	0	0	0	0	0	0	0	0	0	0
4/24/2024	3:45 PM	0	0	0	0	0	0	0	0	0	0	0	0	0
4/24/2024	4:00 PM	0	0	0	0	0	0	0	0	0	0	0	0	0
4/24/2024	4:15 PM	0	0	0	0	0	0	0	0	0	0	0	0	0
4/24/2024	4:30 PM	0	0	0	0	0	0	0	0	0	0	0	0	0
4/24/2024	4:45 PM	0	0	0	0	0	0	0	0	0	0	0	0	0
4/24/2024	5:00 PM	0	0	0	0	0	0	0	0	0	0	0	0	0
4/24/2024	5:15 PM	0	0	0	0	0	0	0	0	0	0	0	0	0
4/24/2024	5:30 PM	0	0	0	0	0	0	0	0	0	0	0	0	0
4/24/2024	5:45 PM	0	0	0	0	0	0	0	0	0	0	0	0	0
4/24/2024	6:00 PM	0	0	0	0	0	0	0	0	0	0	0	0	0
4/24/2024	6:15 PM	0	0	0	0	0	0	0	0	0	0	0	0	0
4/24/2024	6:30 PM	0	0	0	0	0	0	0	0	0	0	0	0	0
4/24/2024	6:45 PM	0	0	0	0	0	0	0	0	0	0	0	0	0
4/24/2024	7:00 PM	0	0	0	0	0	0	0	0	0	0	0	0	0
4/24/2024	7:15 PM	0	0	0	0	0	0	0	0	0	0	0	0	0
4/24/2024	7:30 PM	0	0	0	0	0	0	0	0	0	0	0	0	0
4/24/2024	7:45 PM	0	0	0	0	0	0	0	0	0	0	0	0	0
4/24/2024	8:00 PM	0	0	0	0	0	0	0	0	0	0	0	0	0
4/24/2024	8:15 PM	0	0	0	0	0	0	0	0	0	0	0	0	0
4/24/2024	8:30 PM	0	0	0	0	0	0	0	0	0	0	0	0	0
4/24/2024	8:45 PM	0	0	0	0	0	0	0	0	0	0	0	0	0
4/24/2024	9:00 PM	0	0	0	0	0	0	0	0	0	0	0	0	0
4/24/2024	9:15 PM	0	0	0	0	0	0	0	0	0	0	0	0	0
4/24/2024	9:30 PM	0	0	0	0	0	0	0	0	0	0	0	0	0
4/24/2024	9:45 PM	0	0	0	0	0	0	0	0	0	0	0	0	0
4/24/2024	10:00 PM	0	0	0	0	0	0	0	0	0	0	0	0	0
4/24/2024	10:15 PM	0	0	0	0	0	0	0	0	0	0	0	0	0
4/24/2024	10:30 PM	0	0	0	0	0	0	0	0	0	0	0	0	0
4/24/2024	10:45 PM	0	0	0	0	0	0	0	0	0	0	0	0	0
4/24/2024	11:00 PM	0	0	0	0	0	0	0	0	0	0	0	0	0
4/24/2024	11:15 PM	0	0	0	0	0	0	0	0	0	0	0	0	0
4/24/2024	11:30 PM	0	0	0	0	0	0	0	0	0	0	0	0	0
4/24/2024	11:45 PM	0	0	0	0	0	0	0	0	0	0	0	0	0

4/25/2024	12:00 AM	0	0	0	0	0	0	0	0	0	0	0	0	0
4/25/2024	12:15 AM	0	0	0	0	0	0	0	0	0	0	0	0	0
4/25/2024	12:30 AM	0	0	0	0	0	0	0	0	0	0	0	0	0
4/25/2024	12:45 AM	0	0	0	0	0	0	0	0	0	0	0	0	0
4/25/2024	1:00 AM	0	0	0	0	0	0	0	0	0	0	0	0	0
4/25/2024	1:15 AM	0	0	0	0	0	0	0	0	0	0	0	0	0
4/25/2024	1:30 AM	0	0	0	0	0	0	0	0	0	0	0	0	0
4/25/2024	1:45 AM	0	0	0	0	0	0	0	0	0	0	0	0	0
4/25/2024	2:00 AM	0	0	0	0	0	0	0	0	0	0	0	0	0
4/25/2024	2:15 AM	0	0	0	0	0	0	0	0	0	0	0	0	0
4/25/2024	2:30 AM	0	0	0	0	0	0	0	0	0	0	0	0	0
4/25/2024	2:45 AM	0	0	0	0	0	0	0	0	0	0	0	0	0
4/25/2024	3:00 AM	0	0	0	0	0	0	0	0	0	0	0	0	0
4/25/2024	3:15 AM	0	0	0	0	0	0	0	0	0	0	0	0	0
4/25/2024	3:30 AM	0	0	0	0	0	0	0	0	0	0	0	0	0
4/25/2024	3:45 AM	0	0	0	0	0	0	0	0	0	0	0	0	0
4/25/2024	4:00 AM	0	0	0	0	0	0	0	0	0	0	0	0	0
4/25/2024	4:15 AM	0	0	0	0	0	0	0	0	0	0	0	0	0
4/25/2024	4:30 AM	0	0	0	0	0	0	0	0	0	0	0	0	0
4/25/2024	4:45 AM	0	0	0	0	0	0	0	0	0	0	0	0	0
4/25/2024	5:00 AM	0	0	0	0	0	0	0	0	0	0	0	0	0
4/25/2024	5:15 AM	0	0	0	0	0	0	0	0	0	0	0	0	0
4/25/2024	5:30 AM	0	0	0	0	0	0	0	0	0	0	0	0	0
4/25/2024	5:45 AM	0	0	0	0	0	0	0	0	0	0	0	0	0
4/25/2024	6:00 AM	0	0	0	0	0	0	0	0	0	0	0	0	0
4/25/2024	6:15 AM	0	0	0	0	0	0	0	0	0	0	0	0	0
4/25/2024	6:30 AM	0	0	0	0	0	0	0	0	0	0	0	0	0
4/25/2024	6:45 AM	0	0	0	0	0	0	0	0	0	0	0	0	0
4/25/2024	7:00 AM	0	0	0	0	0	0	0	0	0	0	0	0	0
4/25/2024	7:15 AM	0	0	0	0	0	0	0	0	0	0	0	0	0
4/25/2024	7:30 AM	0	0	0	0	0	0	0	0	0	0	0	0	0
4/25/2024	7:45 AM	0	0	0	0	0	0	0	0	0	0	0	0	0
4/25/2024	8:00 AM	0	0	0	0	0	0	0	0	0	0	0	0	0
4/25/2024	8:15 AM	0	0	0	0	0	0	0	0	0	0	0	0	0
4/25/2024	8:30 AM	0	0	0	0	0	0	0	0	0	0	0	0	0
4/25/2024	8:45 AM	0	0	0	0	0	0	0	0	0	0	0	0	0
4/25/2024	9:00 AM	0	0	0	0	0	0	0	0	0	0	0	0	0
4/25/2024	9:15 AM	0	0	0	0	0	0	0	0	0	0	0	0	0
4/25/2024	9:30 AM	0	0	0	0	0	0	0	0	0	0	0	0	0
4/25/2024	9:45 AM	0	0	0	0	0	0	0	0	0	0	0	0	0
4/25/2024	10:00 AM	0	0	0	0	0	0	0	0	0	0	0	0	0
4/25/2024	10:15 AM	0	0	0	0	0	0	0	0	0	0	0	0	0
4/25/2024	10:30 AM	0	0	0	0	0	0	0	0	0	0	0	0	0
4/25/2024	10:45 AM	0	0	0	0	0	0	0	0	0	0	0	0	0
4/25/2024	11:00 AM	0	0	0	0	0	0	0	0	0	0	0	0	0
4/25/2024	11:15 AM	0	0	0	0	0	0	0	0	0	0	0	0	0
4/25/2024	11:30 AM	0	0	0	0	0	0	0	0	0	0	0	0	0
4/25/2024	11:45 AM	0	0	0	0	0	0	0	0	0	0	0	0	0
4/25/2024	12:00 PM	0	0	0	0	0	0	0	0	0	0	0	0	0
4/25/2024	12:15 PM	0	0	0	0	0	0	0	0	0	0	0	0	0
4/25/2024	12:30 PM	0	0	0	0	0	0	0	0	0	0	0	0	0
4/25/2024	12:45 PM	0	0	0	0	0	0	0	0	0	0	0	0	0
4/25/2024	1:00 PM	0	0	0	0	0	0	0	0	0	0	0	0	0
4/25/2024	1:15 PM	0	0	0	0	0	0	0	0	0	0	0	0	0
4/25/2024	1:30 PM	0	0	0	0	0	0	0	0	0	0	0	0	0
4/25/2024	1:45 PM	0	0	0	0	0	0	0	0	0	0	0	0	0
4/25/2024	2:00 PM	0	0	0	0	0	0	0	0	0	0	0	0	0
4/25/2024	2:15 PM	0	0	0	0	0	0	0	0	0	0	0	0	0
4/25/2024	2:30 PM	0	0	0	0	0	0	0	0	0	0	0	0	0
4/25/2024	2:45 PM	0	0	0	0	0	0	0	0	0	0	0	0	0
4/25/2024	3:00 PM	0	0	0	0	0	0	0	0	0	0	0	0	0
4/25/2024	3:15 PM	0	0	0	0	0	0	0	0	0	0	0	0	0
4/25/2024	3:30 PM	0	0	0	0	0	0	0	0	0	0	0	0	0
4/25/2024	3:45 PM	0	0	0	0	0	0	0	0	0	0	0	0	0
4/25/2024	4:00 PM	0	0	0	0	0	0	0	0	0	0	0	0	0
4/25/2024	4:15 PM	0	0	0	0	0	0	0	0	0	0	0	0	0
4/25/2024	4:30 PM	0	0	0	0	0	0	0	0	0	0	0	0	0
4/25/2024	4:45 PM	0	0	0	0	0	0	0	0	0	0	0	0	0
4/25/2024	5:00 PM	0	0	0	0	0	0	0	0	0	0	0	0	0
4/25/2024	5:15 PM	0	0	0	0	0	0	0	0	0	0	0	0	0
4/25/2024	5:30 PM	0	0	0	0	0	0	0	0	0	0	0	0	0
4/25/2024	5:45 PM	0	0	0	0	0	0	0	0	0	0	0	0	0
4/25/2024	6:00 PM	0	0	0	0	0	0	0	0	0	0	0	0	0
4/25/2024	6:15 PM	0	0	0	0	0	0	0	0	0	0	0	0	0
4/25/2024	6:30 PM	0	0	0	0	0	0	0	0	0	0	0	0	0
4/25/2024	6:45 PM	0	0	0	0	0	0	0	0	0	0	0	0	0
4/25/2024	7:00 PM	0	0	0	0	0	0	0	0	0	0	0	0	0
4/25/2024	7:15 PM	0	0	0	0	0	0	0	0	0	0	0	0	0
4/25/2024	7:30 PM	0	0	0	0	0	0	0	0	0	0	0	0	0
4/25/2024	7:45 PM	0	0	0	0	0	0	0	0	0	0	0	0	0
4/25/2024	8:00 PM	0	0	0	0	0	0	0	0	0	0	0	0	0
4/25/2024	8:15 PM	0	0	0	0	0	0	0	0	0	0	0	0	0
4/25/2024	8:30 PM	0	0	0	0	0	0	0	0	0	0	0	0	0
4/25/2024	8:45 PM	0	0	0	0	0	0	0	0	0	0	0	0	0
4/25/2024	9:00 PM	0	0	0	0	0	0	0	0	0	0	0	0	0
4/25/2024	9:15 PM	0	0	0	0	0	0	0	0	0	0	0	0	0
4/25/2024	9:30 PM	0	0	0	0	0	0	0	0	0	0	0	0	0
4/25/2024	9:45 PM	0	0	0	0	0	0	0	0	0	0	0	0	0
4/25/2024	10:00 PM	0	0	0	0	0	0	0	0	0	0	0	0	0
4/25/2024	10:15 PM	0	0	0	0	0	0	0	0	0	0	0	0	0
4/25/2024	10:30 PM	0	0	0	0	0	0	0	0	0	0	0	0	0
4/25/2024	10:45 PM	0	0	0	0	0	0	0	0	0	0	0	0	0
4/25/2024	11:00 PM	0	0	0	0	0	0	0	0	0	0	0	0	0
4/25/2024	11:15 PM	0	0	0	0	0	0	0	0	0	0	0	0	0
4/25/2024	11:30 PM	0	0	0	0	0	0	0	0	0	0	0	0	0
4/25/2024	11:45 PM	0	0	0	0	0	0	0	0	0	0	0	0	0

4/26/2024	12:00 AM	0	0	0	0	0	0	0	0	0	0	0	0	0
4/26/2024	12:15 AM	0	0	0	0	0	0	0	0	0	0	0	0	0
4/26/2024	12:30 AM	0	0	0	0	0	0	0	0	0	0	0	0	0
4/26/2024	12:45 AM	0	0	0	0	0	0	0	0	0	0	0	0	0
4/26/2024	1:00 AM	0	0	0	0	0	0	0	0	0	0	0	0	0
4/26/2024	1:15 AM	0	0	0	0	0	0	0	0	0	0	0	0	0
4/26/2024	1:30 AM	0	0	0	0	0	0	0	0	0	0	0	0	0
4/26/2024	1:45 AM	0	0	0	0	0	0	0	0	0	0	0	0	0
4/26/2024	2:00 AM	0	0	0	0	0	0	0	0	0	0	0	0	0
4/26/2024	2:15 AM	0	0	0	0	0	0	0	0	0	0	0	0	0
4/26/2024	2:30 AM	0	0	0	0	0	0	0	0	0	0	0	0	0
4/26/2024	2:45 AM	0	0	0	0	0	0	0	0	0	0	0	0	0
4/26/2024	3:00 AM	0	0	0	0	0	0	0	0	0	0	0	0	0
4/26/2024	3:15 AM	0	0	0	0	0	0	0	0	0	0	0	0	0
4/26/2024	3:30 AM	0	0	0	0	0	0	0	0	0	0	0	0	0
4/26/2024	3:45 AM	0	0	0	0	0	0	0	0	0	0	0	0	0
4/26/2024	4:00 AM	0	0	0	0	0	0	0	0	0	0	0	0	0
4/26/2024	4:15 AM	0	0	0	0	0	0	0	0	0	0	0	0	0
4/26/2024	4:30 AM	0	0	0	0	0	0	0	0	0	0	0	0	0
4/26/2024	4:45 AM	0	0	0	0	0	0	0	0	0	0	0	0	0
4/26/2024	5:00 AM	0	0	0	0	0	0	0	0	0	0	0	0	0
4/26/2024	5:15 AM	0	0	0	0	0	0	0	0	0	0	0	0	0
4/26/2024	5:30 AM	0	0	0	0	0	0	0	0	0	0	0	0	0
4/26/2024	5:45 AM	0	0	0	0	0	0	0	0	0	0	0	0	0
4/26/2024	6:00 AM	0	0	0	0	0	0	0	0	0	0	0	0	0
4/26/2024	6:15 AM	0	0	0	0	0	0	0	0	0	0	0	0	0
4/26/2024	6:30 AM	0	0	0	0	0	0	0	0	0	0	0	0	0
4/26/2024	6:45 AM	0	0	0	0	0	0	0	0	0	0	0	0	0
4/26/2024	7:00 AM	0	0	0	0	0	0	0	0	0	0	0	0	0
4/26/2024	7:15 AM	0	0	0	0	0	0	0	0	0	0	0	0	0
4/26/2024	7:30 AM	0	0	0	0	0	0	0	0	0	0	0	0	0
4/26/2024	7:45 AM	0	0	0	0	0	0	0	0	0	0	0	0	0
4/26/2024	8:00 AM	0	0	0	0	0	0	0	0	0	0	0	0	0
4/26/2024	8:15 AM	0	0	0	0	0	0	0	0	0	0	0	0	0
4/26/2024	8:30 AM	0	0	0	0	0	0	0	0	0	0	0	0	0
4/26/2024	8:45 AM	0	0	0	0	0	0	0	0	0	0	0	0	0
4/26/2024	9:00 AM	0	0	0	0	0	0	0	0	0	0	0	0	0
4/26/2024	9:15 AM	0	0	0	0	0	0	0	0	0	0	0	0	0
4/26/2024	9:30 AM	0	0	0	0	0	0	0	0	0	0	0	0	0
4/26/2024	9:45 AM	0	0	0	0	0	0	0	0	0	0	0	0	0
4/26/2024	10:00 AM	0	0	0	0	0	0	0	0	0	0	0	0	0
4/26/2024	10:15 AM	0	0	0	0	0	0	0	0	0	0	0	0	0
4/26/2024	10:30 AM	0	0	0	0	0	0	0	0	0	0	0	0	0
4/26/2024	10:45 AM	0	0	0	0	0	0	0	0	0	0	0	0	0
4/26/2024	11:00 AM	0	0	0	0	0	0	0	0	0	0	0	0	0
4/26/2024	11:15 AM	0	0	0	0	0	0	0	0	0	0	0	0	0
4/26/2024	11:30 AM	0	0	0	0	0	0	0	0	0	0	0	0	0
4/26/2024	11:45 AM	0	0	0	0	0	0	0	0	0	0	0	0	0
4/26/2024	12:00 PM	0	0	0	0	0	0	0	0	0	0	0	0	0
4/26/2024	12:15 PM	0	0	0	0	0	0	0	0	0	0	0	0	0
4/26/2024	12:30 PM	0	0	0	0	0	0	0	0	0	0	0	0	0
4/26/2024	12:45 PM	0	0	0	0	0	0	0	0	0	0	0	0	0
4/26/2024	1:00 PM	0	0	0	0	0	0	0	0	0	0	0	0	0
4/26/2024	1:15 PM	0	0	0	0	0	0	0	0	0	0	0	0	0
4/26/2024	1:30 PM	0	0	0	0	0	0	0	0	0	0	0	0	0
4/26/2024	1:45 PM	0	0	0	0	0	0	0	0	0	0	0	0	0
4/26/2024	2:00 PM	0	0	0	0	0	0	0	0	0	0	0	0	0
4/26/2024	2:15 PM	0	0	0	0	0	0	0	0	0	0	0	0	0
4/26/2024	2:30 PM	0	0	0	0	0	0	0	0	0	0	0	0	0
4/26/2024	2:45 PM	0	0	0	0	0	0	0	0	0	0	0	0	0
4/26/2024	3:00 PM	0	0	0	0	0	0	0	0	0	0	0	0	0
4/26/2024	3:15 PM	0	0	0	0	0	0	0	0	0	0	0	0	0
4/26/2024	3:30 PM	0	0	0	0	0	0	0	0	0	0	0	0	0
4/26/2024	3:45 PM	0	0	0	0	0	0	0	0	0	0	0	0	0
4/26/2024	4:00 PM	0	0	0	0	0	0	0	0	0	0	0	0	0
4/26/2024	4:15 PM	0	0	0	0	0	0	0	0	0	0	0	0	0
4/26/2024	4:30 PM	0	0	0	0	0	0	0	0	0	0	0	0	0
4/26/2024	4:45 PM	0	0	0	0	0	0	0	0	0	0	0	0	0
4/26/2024	5:00 PM	0	0	0	0	0	0	0	0	0	0	0	0	0
4/26/2024	5:15 PM	0	0	0	0	0	0	0	0	0	0	0	0	0
4/26/2024	5:30 PM	0	0	0	0	0	0	0	0	0	0	0	0	0
4/26/2024	5:45 PM	0	0	0	0	0	0	0	0	0	0	0	0	0
4/26/2024	6:00 PM	0	0	0	0	0	0	0	0	0	0	0	0	0
4/26/2024	6:15 PM	0	0	0	0	0	0	0	0	0	0	0	0	0
4/26/2024	6:30 PM	0	0	0	0	0	0	0	0	0	0	0	0	0
4/26/2024	6:45 PM	0	0	0	0	0	0	0	0	0	0	0	0	0
4/26/2024	7:00 PM	0	0	0	0	0	0	0	0	0	0	0	0	0
4/26/2024	7:15 PM	0	0	0	0	0	0	0	0	0	0	0	0	0
4/26/2024	7:30 PM	0	0	0	0	0	0	0	0	0	0	0	0	0
4/26/2024	7:45 PM	0	0	0	0	0	0	0	0	0	0	0	0	0
4/26/2024	8:00 PM	0	0	0	0	0	0	0	0	0	0	0	0	0
4/26/2024	8:15 PM	0	0	0	0	0	0	0	0	0	0	0	0	0
4/26/2024	8:30 PM	0	0	0	0	0	0	0	0	0	0	0	0	0
4/26/2024	8:45 PM	0	0	0	0	0	0	0	0	0	0	0	0	0
4/26/2024	9:00 PM	0	0	0	0	0	0	0	0	0	0	0	0	0
4/26/2024	9:15 PM	0	0	0	0	0	0	0	0	0	0	0	0	0
4/26/2024	9:30 PM	0	0	0	0	0	0	0	0	0	0	0	0	0
4/26/2024	9:45 PM	0	0	0	0	0	0	0	0	0	0	0	0	0
4/26/2024	10:00 PM	0	0	0	0	0	0	0	0	0	0	0	0	0
4/26/2024	10:15 PM	0	0	0	0	0	0	0	0	0	0	0	0	0
4/26/2024	10:30 PM	0	0	0	0	0	0	0	0	0	0	0	0	0
4/26/2024	10:45 PM	0	0	0	0	0	0	0	0	0	0	0	0	0
4/26/2024	11:00 PM	0	0	0	0	0	0	0	0	0	0	0	0	0
4/26/2024	11:15 PM	0	0	0	0	0	0	0	0	0	0	0	0	0
4/26/2024	11:30 PM	0	0	0	0	0	0	0	0	0	0	0	0	0
4/26/2024	11:45 PM	0	0	0	0	0	0	0	0	0	0	0	0	0

4/27/2024	12:00 AM	0	0	0	0	0	0	0	0	0	0	0	0	0
4/27/2024	12:15 AM	0	0	0	0	0	0	0	0	0	0	0	0	0
4/27/2024	12:30 AM	0	0	0	0	0	0	0	0	0	0	0	0	0
4/27/2024	12:45 AM	0	0	0	0	0	0	0	0	0	0	0	0	0
4/27/2024	1:00 AM	0	0	0	0	0	0	0	0	0	0	0	0	0
4/27/2024	1:15 AM	0	0	0	0	0	0	0	0	0	0	0	0	0
4/27/2024	1:30 AM	0	0	0	0	0	0	0	0	0	0	0	0	0
4/27/2024	1:45 AM	0	0	0	0	0	0	0	0	0	0	0	0	0
4/27/2024	2:00 AM	0	0	0	0	0	0	0	0	0	0	0	0	0
4/27/2024	2:15 AM	0	0	0	0	0	0	0	0	0	0	0	0	0
4/27/2024	2:30 AM	0	0	0	0	0	0	0	0	0	0	0	0	0
4/27/2024	2:45 AM	0	0	0	0	0	0	0	0	0	0	0	0	0
4/27/2024	3:00 AM	0	0	0	0	0	0	0	0	0	0	0	0	0
4/27/2024	3:15 AM	0	0	0	0	0	0	0	0	0	0	0	0	0
4/27/2024	3:30 AM	0	0	0	0	0	0	0	0	0	0	0	0	0
4/27/2024	3:45 AM	0	0	0	0	0	0	0	0	0	0	0	0	0
4/27/2024	4:00 AM	0	0	0	0	0	0	0	0	0	0	0	0	0
4/27/2024	4:15 AM	0	0	0	0	0	0	0	0	0	0	0	0	0
4/27/2024	4:30 AM	0	0	0	0	0	0	0	0	0	0	0	0	0
4/27/2024	4:45 AM	0	0	0	0	0	0	0	0	0	0	0	0	0
4/27/2024	5:00 AM	0	0	0	0	0	0	0	0	0	0	0	0	0
4/27/2024	5:15 AM	0	0	0	0	0	0	0	0	0	0	0	0	0
4/27/2024	5:30 AM	0	0	0	0	0	0	0	0	0	0	0	0	0
4/27/2024	5:45 AM	0	0	0	0	0	0	0	0	0	0	0	0	0
4/27/2024	6:00 AM	0	0	0	0	0	0	0	0	0	0	0	0	0
4/27/2024	6:15 AM	0	0	0	0	0	0	0	0	0	0	0	0	0
4/27/2024	6:30 AM	0	0	0	0	0	0	0	0	0	0	0	0	0
4/27/2024	6:45 AM	0	0	0	0	0	0	0	0	0	0	0	0	0
4/27/2024	7:00 AM	0	0	0	0	0	0	0	0	0	0	0	0	0
4/27/2024	7:15 AM	0	0	0	0	0	0	0	0	0	0	0	0	0
4/27/2024	7:30 AM	0	0	0	0	0	0	0	0	0	0	0	0	0
4/27/2024	7:45 AM	0	0	0	0	0	0	0	0	0	0	0	0	0
4/27/2024	8:00 AM	0	0	0	0	0	0	0	0	0	0	0	0	0
4/27/2024	8:15 AM	0	0	0	0	0	0	0	0	0	0	0	0	0
4/27/2024	8:30 AM	0	0	0	0	0	0	0	0	0	0	0	0	0
4/27/2024	8:45 AM	0	0	0	0	0	0	0	0	0	0	0	0	0
4/27/2024	9:00 AM	0	0	0	0	0	0	0	0	0	0	0	0	0
4/27/2024	9:15 AM	0	0	0	0	0	0	0	0	0	0	0	0	0
4/27/2024	9:30 AM	0	0	0	0	0	0	0	0	0	0	0	0	0
4/27/2024	9:45 AM	0	0	0	0	0	0	0	0	0	0	0	0	0
4/27/2024	10:00 AM	0	0	0	0	0	0	0	0	0	0	0	0	0
4/27/2024	10:15 AM	0	0	0	0	0	0	0	0	0	0	0	0	0
4/27/2024	10:30 AM	0	0	0	0	0	0	0	0	0	0	0	0	0
4/27/2024	10:45 AM	0	0	0	0	0	0	0	0	0	0	0	0	0
4/27/2024	11:00 AM	0	0	0	0	0	0	0	0	0	0	0	0	0
4/27/2024	11:15 AM	0	0	0	0	0	0	0	0	0	0	0	0	0
4/27/2024	11:30 AM	0	0	0	0	0	0	0	0	0	0	0	0	0
4/27/2024	11:45 AM	0	0	0	0	0	0	0	0	0	0	0	0	0
4/27/2024	12:00 PM	0	0	0	0	0	0	0	0	0	0	0	0	0
4/27/2024	12:15 PM	0	0	0	0	0	0	0	0	0	0	0	0	0
4/27/2024	12:30 PM	0	0	0	0	0	0	0	0	0	0	0	0	0
4/27/2024	12:45 PM	0	0	0	0	0	0	0	0	0	0	0	0	0
4/27/2024	1:00 PM	0	0	0	0	0	0	0	0	0	0	0	0	0
4/27/2024	1:15 PM	0	0	0	0	0	0	0	0	0	0	0	0	0
4/27/2024	1:30 PM	0	0	0	0	0	0	0	0	0	0	0	0	0
4/27/2024	1:45 PM	0	0	0	0	0	0	0	0	0	0	0	0	0
4/27/2024	2:00 PM	0	0	0	0	0	0	0	0	0	0	0	0	0
4/27/2024	2:15 PM	0	0	0	0	0	0	0	0	0	0	0	0	0
4/27/2024	2:30 PM	0	0	0	0	0	0	0	0	0	0	0	0	0
4/27/2024	2:45 PM	0	0	0	0	0	0	0	0	0	0	0	0	0
4/27/2024	3:00 PM	0	0	0	0	0	0	0	0	0	0	0	0	0
4/27/2024	3:15 PM	0	0	0	0	0	0	0	0	0	0	0	0	0
4/27/2024	3:30 PM	0	0	0	0	0	0	0	0	0	0	0	0	0
4/27/2024	3:45 PM	0	0	0	0	0	0	0	0	0	0	0	0	0
4/27/2024	4:00 PM	0	0	0	0	0	0	0	0	0	0	0	0	0
4/27/2024	4:15 PM	0	0	0	0	0	0	0	0	0	0	0	0	0
4/27/2024	4:30 PM	0	0	0	0	0	0	0	0	0	0	0	0	0
4/27/2024	4:45 PM	0	0	0	0	0	0	0	0	0	0	0	0	0
4/27/2024	5:00 PM	0	0	0	0	0	0	0	0	0	0	0	0	0
4/27/2024	5:15 PM	0	0	0	0	0	0	0	0	0	0	0	0	0
4/27/2024	5:30 PM	0	0	0	0	0	0	0	0	0	0	0	0	0
4/27/2024	5:45 PM	0	0	0	0	0	0	0	0	0	0	0	0	0
4/27/2024	6:00 PM	0	0	0	0	0	0	0	0	0	0	0	0	0
4/27/2024	6:15 PM	0	0	0	0	0	0	0	0	0	0	0	0	0
4/27/2024	6:30 PM	0	0	0	0	0	0	0	0	0	0	0	0	0
4/27/2024	6:45 PM	0	0	0	0	0	0	0	0	0	0	0	0	0
4/27/2024	7:00 PM	0	0	0	0	0	0	0	0	0	0	0	0	0
4/27/2024	7:15 PM	0	0	0	0	0	0	0	0	0	0	0	0	0
4/27/2024	7:30 PM	0	0	0	0	0	0	0	0	0	0	0	0	0
4/27/2024	7:45 PM	0	0	0	0	0	0	0	0	0	0	0	0	0
4/27/2024	8:00 PM	0	0	0	0	0	0	0	0	0	0	0	0	0
4/27/2024	8:15 PM	0	0	0	0	0	0	0	0	0	0	0	0	0
4/27/2024	8:30 PM	0	0	0	0	0	0	0	0	0	0	0	0	0
4/27/2024	8:45 PM	0	0	0	0	0	0	0	0	0	0	0	0	0
4/27/2024	9:00 PM	0	0	0	0	0	0	0	0	0	0	0	0	0
4/27/2024	9:15 PM	0	0	0	0	0	0	0	0	0	0	0	0	0
4/27/2024	9:30 PM	0	0	0	0	0	0	0	0	0	0	0	0	0
4/27/2024	9:45 PM	0	0	0	0	0	0	0	0	0	0	0	0	0
4/27/2024	10:00 PM	0	0	0	0	0	0	0	0	0	0	0	0	0
4/27/2024	10:15 PM	0	0	0	0	0	0	0	0	0	0	0	0	0
4/27/2024	10:30 PM	0	0	0	0	0	0	0	0	0	0	0	0	0
4/27/2024	10:45 PM	0	0	0	0	0	0	0	0	0	0	0	0	0
4/27/2024	11:00 PM	0	0	0	0	0	0	0	0	0	0	0	0	0
4/27/2024	11:15 PM	0	0	0	0	0	0	0	0	0	0	0	0	0
4/27/2024	11:30 PM	0	0	0	0	0	0	0	0	0	0	0	0	0
4/27/2024	11:45 PM	0	0	0	0	0	0	0	0	0	0	0	0	0

WB
File Name:
Start Date: 4/21/2024
Start Time: 0
Site Code: 74 Lane 3 WB
Station ID: 1
Location 1: I-20, west of US-378 Sunset Blvd S/Bound Off-Ramp
Location 2:

Date	Time	1	2	3	4	5	6	7	8	9	10	11	12	13
4/21/2024	12:00 AM	0	31	1	0	0	0	0	0	0	0	0	0	0
4/21/2024	12:15 AM	1	30	3	0	0	0	0	0	4	0	0	0	0
4/21/2024	12:30 AM	0	22	3	0	0	0	0	0	5	0	0	0	0
4/21/2024	12:45 AM	0	19	2	0	1	0	0	0	2	0	0	0	0
4/21/2024	1:00 AM	0	23	3	0	2	0	0	0	4	0	0	0	0
4/21/2024	1:15 AM	0	14	1	0	1	0	0	0	5	0	1	0	0
4/21/2024	1:30 AM	0	20	3	0	1	0	0	0	3	0	0	0	0
4/21/2024	1:45 AM	0	20	0	0	2	0	0	0	4	0	0	0	0
4/21/2024	2:00 AM	0	14	2	0	1	0	0	0	2	0	0	0	0
4/21/2024	2:15 AM	0	13	2	0	1	0	0	0	4	0	0	0	0
4/21/2024	2:30 AM	0	13	2	0	0	0	0	0	2	0	0	0	0
4/21/2024	2:45 AM	0	4	0	0	1	0	0	0	5	0	0	0	0
4/21/2024	3:00 AM	0	12	1	0	0	0	0	0	1	0	0	0	0
4/21/2024	3:15 AM	0	8	0	0	0	0	0	0	2	0	0	0	0
4/21/2024	3:30 AM	0	9	0	0	0	0	0	0	1	0	0	0	0
4/21/2024	3:45 AM	0	6	1	0	1	0	0	0	3	0	0	0	0
4/21/2024	4:00 AM	0	8	0	0	0	0	0	0	4	0	0	0	0
4/21/2024	4:15 AM	0	6	0	0	1	0	0	0	3	0	0	0	0
4/21/2024	4:30 AM	0	10	2	0	0	1	0	0	1	0	0	0	0
4/21/2024	4:45 AM	0	4	1	0	1	0	0	0	3	0	1	0	0
4/21/2024	5:00 AM	0	5	0	0	0	0	0	0	3	0	0	0	0
4/21/2024	5:15 AM	0	2	0	0	0	0	0	0	1	0	0	0	0
4/21/2024	5:30 AM	0	9	0	0	0	0	0	0	7	0	0	0	0
4/21/2024	5:45 AM	0	11	0	0	1	0	0	0	6	0	0	0	0
4/21/2024	6:00 AM	0	13	3	0	0	0	0	0	4	0	0	0	0
4/21/2024	6:15 AM	0	18	6	0	0	0	0	0	1	0	0	0	0
4/21/2024	6:30 AM	0	25	4	0	0	0	0	0	6	0	0	0	0
4/21/2024	6:45 AM	0	31	8	0	0	0	0	0	2	0	0	0	0
4/21/2024	7:00 AM	0	37	11	0	0	0	0	0	6	0	0	0	0
4/21/2024	7:15 AM	1	51	3	0	0	0	0	0	7	0	0	0	0
4/21/2024	7:30 AM	0	39	13	0	0	0	0	0	8	0	0	0	0
4/21/2024	7:45 AM	0	50	7	0	1	0	0	0	6	0	0	0	0
4/21/2024	8:00 AM	0	30	7	0	0	0	0	1	7	0	1	0	0
4/21/2024	8:15 AM	0	39	16	0	1	0	0	1	8	0	0	0	0
4/21/2024	8:30 AM	0	45	14	0	0	1	0	0	5	0	0	0	0
4/21/2024	8:45 AM	0	56	9	1	0	0	1	0	12	0	0	0	0
4/21/2024	9:00 AM	0	64	16	0	3	0	0	1	6	0	1	1	0
4/21/2024	9:15 AM	0	65	17	0	1	2	0	0	8	0	0	0	0
4/21/2024	9:30 AM	0	68	12	0	2	0	1	1	11	0	0	0	0
4/21/2024	9:45 AM	0	85	14	0	1	0	0	1	6	0	0	0	0
4/21/2024	10:00 AM	0	72	14	0	1	1	0	0	9	0	0	0	0
4/21/2024	10:15 AM	0	69	19	0	2	0	0	0	11	0	0	0	0
4/21/2024	10:30 AM	1	73	20	0	1	0	0	1	9	0	0	0	0
4/21/2024	10:45 AM	1	74	20	0	0	0	0	2	5	0	0	0	0
4/21/2024	11:00 AM	0	87	21	0	0	0	0	0	10	0	0	0	0
4/21/2024	11:15 AM	0	72	24	0	1	1	0	0	15	0	0	0	0
4/21/2024	11:30 AM	0	84	22	0	3	0	0	2	7	0	0	0	0
4/21/2024	11:45 AM	0	82	35	0	4	0	0	1	15	0	0	0	0
4/21/2024	12:00 PM	0	108	34	0	2	0	0	1	7	0	0	0	0
4/21/2024	12:15 PM	0	106	28	0	0	0	0	1	13	0	0	0	0
4/21/2024	12:30 PM	0	98	25	0	0	0	0	1	9	0	0	0	0
4/21/2024	12:45 PM	0	120	19	0	2	0	0	0	10	0	0	0	0
4/21/2024	1:00 PM	1	101	26	0	1	0	0	1	12	0	0	0	0
4/21/2024	1:15 PM	0	94	25	0	3	1	0	2	9	0	0	0	0
4/21/2024	1:30 PM	0	114	27	0	0	0	0	1	5	0	0	0	0
4/21/2024	1:45 PM	0	107	19	0	1	1	0	0	10	0	0	0	0
4/21/2024	2:00 PM	0	112	28	0	3	0	0	1	6	0	0	0	0
4/21/2024	2:15 PM	0	96	30	0	2	0	0	2	5	0	0	0	0
4/21/2024	2:30 PM	1	106	26	0	1	0	0	1	10	0	0	0	0
4/21/2024	2:45 PM	0	112	29	0	1	0	0	1	10	0	0	0	0
4/21/2024	3:00 PM	0	103	14	0	2	0	0	1	4	0	0	0	0
4/21/2024	3:15 PM	0	86	17	0	0	0	0	0	9	0	0	0	0
4/21/2024	3:30 PM	0	112	21	0	1	0	0	2	8	0	0	0	0
4/21/2024	3:45 PM	0	107	23	0	5	0	0	1	10	0	0	0	0
4/21/2024	4:00 PM	0	96	27	1	3	0	0	1	9	0	0	0	0
4/21/2024	4:15 PM	0	108	14	1	2	0	0	1	9	0	0	0	0
4/21/2024	4:30 PM	0	97	19	0	2	0	0	2	5	0	0	0	0
4/21/2024	4:45 PM	0	93	26	0	1	0	0	0	11	0	1	0	0
4/21/2024	5:00 PM	0	79	23	0	1	0	0	0	8	0	0	0	0
4/21/2024	5:15 PM	0	105	17	0	0	1	0	1	9	0	0	0	0
4/21/2024	5:30 PM	0	101	25	0	1	1	0	0	5	0	0	0	0
4/21/2024	5:45 PM	0	95	17	0	2	0	0	0	16	0	0	0	0
4/21/2024	6:00 PM	0	66	20	0	1	0	0	0	10	0	0	0	0
4/21/2024	6:15 PM	0	91	27	0	1	0	0	1	9	1	1	0	0
4/21/2024	6:30 PM	0	80	16	1	2	0	0	0	10	0	1	0	0
4/21/2024	6:45 PM	0	68	13	0	1	0	0	0	14	0	1	0	0
4/21/2024	7:00 PM	0	106	26	0	6	0	0	0	6	0	0	0	0
4/21/2024	7:15 PM	0	73	20	0	0	0	0	0	12	0	0	0	0
4/21/2024	7:30 PM	0	90	15	0	1	0	0	0	7	0	1	0	0
4/21/2024	7:45 PM	0	77	17	0	1	0	0	0	9	0	1	0	0
4/21/2024	8:00 PM	0	62	19	0	1	0	0	0	9	0	0	0	0
4/21/2024	8:15 PM	0	65	10	0	2	0	0	0	10	0	0	0	0
4/21/2024	8:30 PM	0	54	11	0	0	1	0	0	8	0	0	0	0
4/21/2024	8:45 PM	0	41	7	0	1	1	0	0	9	0	0	0	0
4/21/2024	9:00 PM	0	40	8	0	2	0	0	0	10	0	0	0	0
4/21/2024	9:15 PM	0	37	7	0	0	0	0	0	8	0	0	0	0
4/21/2024	9:30 PM	0	25	6	0	0	0	0	0	9	0	1	0	0
4/21/2024	9:45 PM	0	32	7	0	0	0	0	0	9	0	2	0	0
4/21/2024	10:00 PM	0	26	5	1	0	1	0	0	13	0	2	0	0
4/21/2024	10:15 PM	0	22	4	1	1	0	0	0	11	0	1	0	0
4/21/2024	10:30 PM	0	23	6	0	1	0	0	0	5	0	0	0	0
4/21/2024	10:45 PM	0	19	5	0	0	2	0	0	9	0	3	0	0
4/21/2024	11:00 PM	0	17	3	0	0	0	0	0	1	0	0	0	0
4/21/2024	11:15 PM	0	19	4	0	1	0	0	0	5	0	3	0	0
4/21/2024	11:30 PM	0	17	3	0	2	0	0	0	6	0	2	0	0
4/21/2024	11:45 PM	0	12	2	0	1	0	0	0	9	0	0	0	0

4/22/2024	12:00 AM	0	15	3	0	0	0	0	0	7	0	0	0	0
4/22/2024	12:15 AM	0	9	2	0	0	0	0	0	7	0	0	0	0
4/22/2024	12:30 AM	0	8	1	0	0	0	0	0	4	0	0	0	0
4/22/2024	12:45 AM	0	9	1	0	0	0	0	0	6	0	0	0	0
4/22/2024	1:00 AM	0	8	0	0	0	0	0	0	2	0	0	0	0
4/22/2024	1:15 AM	0	8	1	0	0	0	0	0	6	0	0	0	0
4/22/2024	1:30 AM	0	10	3	0	1	0	0	0	6	0	0	0	0
4/22/2024	1:45 AM	0	7	0	0	0	0	0	0	4	0	0	0	0
4/22/2024	2:00 AM	0	8	1	0	0	0	0	0	8	0	0	0	0
4/22/2024	2:15 AM	0	6	0	0	0	0	0	0	8	0	0	0	0
4/22/2024	2:30 AM	0	4	1	0	0	0	0	0	4	0	0	0	0
4/22/2024	2:45 AM	0	5	0	0	0	0	0	0	8	0	0	0	0
4/22/2024	3:00 AM	0	4	0	0	0	0	0	0	8	0	0	0	0
4/22/2024	3:15 AM	0	6	0	0	2	0	0	0	13	0	0	0	0
4/22/2024	3:30 AM	0	11	4	0	1	0	0	0	6	0	0	0	0
4/22/2024	3:45 AM	0	9	2	0	1	0	0	0	10	0	0	0	0
4/22/2024	4:00 AM	0	6	1	0	2	0	0	0	4	0	0	0	0
4/22/2024	4:15 AM	0	12	3	0	1	0	0	0	8	0	0	0	0
4/22/2024	4:30 AM	0	15	3	0	1	0	0	0	9	0	0	0	0
4/22/2024	4:45 AM	0	9	3	0	2	0	0	0	14	0	0	0	0
4/22/2024	5:00 AM	0	11	3	0	2	0	0	0	11	0	0	0	0
4/22/2024	5:15 AM	0	25	8	0	2	0	0	0	13	0	0	0	0
4/22/2024	5:30 AM	0	22	8	0	0	0	0	0	13	0	0	0	0
4/22/2024	5:45 AM	0	28	10	0	3	0	0	0	14	0	0	0	0
4/22/2024	6:00 AM	0	40	13	0	3	0	0	0	14	0	0	0	0
4/22/2024	6:15 AM	0	62	13	0	3	0	0	0	13	0	0	0	0
4/22/2024	6:30 AM	0	57	23	1	1	0	0	2	6	0	0	0	0
4/22/2024	6:45 AM	0	56	25	0	3	2	0	5	14	0	0	0	0
4/22/2024	7:00 AM	0	57	27	0	5	5	0	1	17	0	0	0	0
4/22/2024	7:15 AM	0	62	30	0	10	5	0	3	22	2	1	0	0
4/22/2024	7:30 AM	0	78	21	0	13	1	0	2	13	0	0	0	0
4/22/2024	7:45 AM	0	81	28	1	7	1	0	1	17	0	1	0	0
4/22/2024	8:00 AM	0	63	37	0	1	2	0	1	18	0	0	0	0
4/22/2024	8:15 AM	0	64	26	1	4	6	0	2	13	0	0	0	0
4/22/2024	8:30 AM	0	51	32	0	7	2	0	2	24	0	0	0	0
4/22/2024	8:45 AM	0	58	28	3	7	3	0	2	16	0	0	0	0
4/22/2024	9:00 AM	0	52	25	0	11	4	0	2	18	1	0	0	0
4/22/2024	9:15 AM	0	55	37	0	7	2	0	3	27	0	0	0	0
4/22/2024	9:30 AM	0	71	29	0	4	4	0	4	21	1	0	0	0
4/22/2024	9:45 AM	0	58	29	0	6	2	0	6	27	0	0	0	0
4/22/2024	10:00 AM	0	53	27	0	9	1	0	6	26	0	0	0	0
4/22/2024	10:15 AM	0	81	32	4	11	5	0	2	17	1	0	0	0
4/22/2024	10:30 AM	0	71	30	0	3	1	0	1	27	0	0	0	0
4/22/2024	10:45 AM	0	57	28	0	9	3	0	5	32	1	0	0	0
4/22/2024	11:00 AM	0	71	25	1	7	3	0	3	26	0	0	0	0
4/22/2024	11:15 AM	0	66	36	0	7	2	0	4	33	0	0	0	0
4/22/2024	11:30 AM	0	70	31	1	9	1	0	2	21	0	0	0	0
4/22/2024	11:45 AM	0	77	29	0	7	0	0	4	26	0	1	0	0
4/22/2024	12:00 PM	0	99	32	1	4	3	0	4	37	0	0	0	0
4/22/2024	12:15 PM	0	73	36	0	6	0	0	2	23	0	0	0	0
4/22/2024	12:30 PM	0	79	30	0	2	3	0	4	31	0	0	0	0
4/22/2024	12:45 PM	0	87	28	0	4	3	0	6	22	1	0	0	0
4/22/2024	1:00 PM	0	57	25	0	5	1	0	3	21	0	0	0	0
4/22/2024	1:15 PM	0	76	33	1	5	2	0	3	21	1	0	0	0
4/22/2024	1:30 PM	0	88	23	0	4	2	0	2	30	0	0	0	0
4/22/2024	1:45 PM	0	97	28	0	7	2	0	0	25	0	0	0	0
4/22/2024	2:00 PM	0	94	40	1	7	4	0	3	15	0	0	0	0
4/22/2024	2:15 PM	0	79	19	4	8	3	0	2	20	0	0	0	0
4/22/2024	2:30 PM	0	91	32	0	2	1	0	6	40	1	0	0	0
4/22/2024	2:45 PM	0	91	29	0	3	1	0	3	22	1	0	0	0
4/22/2024	3:00 PM	0	95	43	0	4	1	1	2	21	0	0	0	0
4/22/2024	3:15 PM	0	118	31	0	6	1	1	2	19	0	0	0	0
4/22/2024	3:30 PM	0	132	32	0	4	3	5	2	21	0	0	0	0
4/22/2024	3:45 PM	0	112	37	0	2	1	0	3	22	1	0	0	0
4/22/2024	4:00 PM	0	117	41	1	10	0	0	4	17	1	0	0	0
4/22/2024	4:15 PM	0	123	43	0	9	1	0	2	23	0	0	0	0
4/22/2024	4:30 PM	0	104	39	0	7	1	0	2	14	1	1	0	0
4/22/2024	4:45 PM	0	117	38	1	6	1	0	0	26	0	0	0	0
4/22/2024	5:00 PM	0	136	30	0	1	3	0	1	20	0	0	0	0
4/22/2024	5:15 PM	0	135	25	0	1	0	1	2	21	1	0	0	0
4/22/2024	5:30 PM	0	147	31	0	2	1	0	0	14	1	0	0	0
4/22/2024	5:45 PM	0	103	33	0	2	0	0	2	27	1	0	0	0
4/22/2024	6:00 PM	0	89	21	0	4	1	0	2	27	0	0	0	0
4/22/2024	6:15 PM	0	79	20	0	5	0	0	3	21	0	3	0	0
4/22/2024	6:30 PM	1	86	24	0	3	1	0	0	17	1	0	0	0
4/22/2024	6:45 PM	0	76	19	0	5	3	0	1	19	0	2	0	0
4/22/2024	7:00 PM	0	72	21	0	4	1	0	2	19	0	1	0	0
4/22/2024	7:15 PM	0	57	18	0	1	0	0	2	20	0	0	0	0
4/22/2024	7:30 PM	0	71	13	1	3	2	0	1	28	0	0	0	0
4/22/2024	7:45 PM	0	67	12	0	3	1	0	1	25	1	1	0	0
4/22/2024	8:00 PM	0	53	17	0	4	0	0	1	17	0	1	0	0
4/22/2024	8:15 PM	0	60	12	0	1	0	0	0	16	0	0	0	0
4/22/2024	8:30 PM	0	50	14	0	1	1	0	0	14	0	0	0	0
4/22/2024	8:45 PM	0	39	11	0	2	0	0	0	14	0	0	0	0
4/22/2024	9:00 PM	0	46	15	0	1	0	0	0	11	0	0	0	0
4/22/2024	9:15 PM	0	29	11	0	0	0	0	0	13	0	0	0	0
4/22/2024	9:30 PM	0	35	11	0	3	0	0	0	15	0	0	0	0
4/22/2024	9:45 PM	0	36	10	0	2	0	0	0	11	0	0	0	0
4/22/2024	10:00 PM	0	30	9	0	2	0	0	0	10	0	0	0	0
4/22/2024	10:15 PM	0	20	8	0	0	0	0	0	19	0	0	0	0
4/22/2024	10:30 PM	0	24	10	0	2	0	0	0	17	0	0	0	0
4/22/2024	10:45 PM	0	19	9	0	1	0	0	0	14	0	0	0	0
4/22/2024	11:00 PM	0	20	7	0	1	0	0	0	22	0	0	0	0
4/22/2024	11:15 PM	0	21	8	0	1	0	0	0	17	0	0	0	0
4/22/2024	11:30 PM	0	17	3	0	4	0	0	0	17	0	0	0	0
4/22/2024	11:45 PM	0	10	4	0	1	0	0	0	13	0	0	0	0

4/23/2024	12:00 AM	0	14	0	0	0	0	0	0	17	0	2	0	0
4/23/2024	12:15 AM	0	9	5	0	1	0	0	1	14	0	1	0	0
4/23/2024	12:30 AM	0	9	1	0	1	0	0	0	6	0	2	0	0
4/23/2024	12:45 AM	0	11	1	0	2	0	0	0	9	0	0	0	0
4/23/2024	1:00 AM	0	8	0	0	1	1	0	0	3	0	1	0	0
4/23/2024	1:15 AM	0	5	0	0	1	1	0	0	6	0	0	0	0
4/23/2024	1:30 AM	0	4	0	0	0	0	0	0	4	0	0	0	0
4/23/2024	1:45 AM	0	3	0	0	0	0	0	0	4	0	1	0	0
4/23/2024	2:00 AM	0	3	0	0	0	0	0	0	6	0	0	0	0
4/23/2024	2:15 AM	0	2	2	0	0	0	0	0	8	0	1	0	0
4/23/2024	2:30 AM	0	5	1	0	1	0	0	0	9	0	3	0	0
4/23/2024	2:45 AM	0	2	0	0	0	0	0	1	11	0	2	0	0
4/23/2024	3:00 AM	0	6	0	0	1	0	0	0	7	0	3	0	0
4/23/2024	3:15 AM	0	5	1	0	2	0	0	0	7	0	2	0	0
4/23/2024	3:30 AM	0	8	0	0	1	0	0	0	11	0	1	0	0
4/23/2024	3:45 AM	0	10	0	0	0	0	0	0	16	0	1	0	0
4/23/2024	4:00 AM	0	12	1	0	0	0	0	0	14	0	2	0	0
4/23/2024	4:15 AM	0	7	1	0	0	1	0	2	15	0	2	0	0
4/23/2024	4:30 AM	0	11	1	0	2	1	0	0	12	0	0	0	0
4/23/2024	4:45 AM	0	9	1	0	0	0	0	0	12	0	4	0	0
4/23/2024	5:00 AM	0	13	0	0	1	0	0	0	13	0	2	0	0
4/23/2024	5:15 AM	0	27	2	0	2	1	0	0	22	0	0	0	0
4/23/2024	5:30 AM	0	26	4	0	0	0	0	0	19	0	1	0	0
4/23/2024	5:45 AM	0	42	6	0	0	0	0	0	12	0	1	0	0
4/23/2024	6:00 AM	0	24	5	0	0	3	0	1	20	0	0	0	0
4/23/2024	6:15 AM	0	49	18	0	4	3	1	0	21	0	0	0	0
4/23/2024	6:30 AM	0	63	22	0	2	1	0	0	19	0	0	0	0
4/23/2024	6:45 AM	0	71	16	0	7	2	0	0	15	0	1	0	0
4/23/2024	7:00 AM	0	66	18	0	6	1	0	1	20	0	1	0	0
4/23/2024	7:15 AM	0	62	24	0	2	2	0	0	13	0	0	0	0
4/23/2024	7:30 AM	0	73	16	0	3	6	0	0	18	0	0	0	0
4/23/2024	7:45 AM	0	71	20	2	10	0	0	0	19	0	0	0	0
4/23/2024	8:00 AM	0	52	31	2	5	1	0	0	13	0	0	0	0
4/23/2024	8:15 AM	0	67	29	6	0	0	0	3	14	0	0	0	0
4/23/2024	8:30 AM	0	48	23	1	4	0	0	2	21	0	0	0	0
4/23/2024	8:45 AM	0	56	30	2	6	0	0	4	20	0	0	0	0
4/23/2024	9:00 AM	0	58	33	1	9	3	0	2	32	0	0	0	0
4/23/2024	9:15 AM	0	64	29	0	7	0	0	1	25	0	0	0	0
4/23/2024	9:30 AM	0	66	31	0	6	0	0	0	23	0	1	0	0
4/23/2024	9:45 AM	0	69	20	0	6	1	0	0	34	0	0	0	0
4/23/2024	10:00 AM	0	53	19	0	6	0	0	1	33	0	0	0	0
4/23/2024	10:15 AM	0	55	21	0	10	3	0	2	27	0	0	0	0
4/23/2024	10:30 AM	0	69	21	1	6	1	0	2	28	0	0	0	0
4/23/2024	10:45 AM	0	56	22	0	5	4	0	2	28	0	0	0	0
4/23/2024	11:00 AM	1	67	18	0	6	2	0	3	26	0	0	0	0
4/23/2024	11:15 AM	0	65	24	2	4	0	0	1	25	0	0	0	0
4/23/2024	11:30 AM	0	68	40	0	6	3	0	3	24	0	0	0	0
4/23/2024	11:45 AM	0	65	27	0	5	5	0	2	30	0	0	0	0
4/23/2024	12:00 PM	0	74	32	0	8	3	0	3	21	0	0	0	0
4/23/2024	12:15 PM	0	76	38	0	6	2	0	2	15	0	0	0	0
4/23/2024	12:30 PM	0	82	25	0	2	2	0	5	33	0	0	0	0
4/23/2024	12:45 PM	0	65	32	2	4	0	0	3	26	0	0	0	0
4/23/2024	1:00 PM	1	69	25	0	2	1	0	5	35	1	0	0	0
4/23/2024	1:15 PM	0	76	31	5	3	1	0	1	23	0	0	0	0
4/23/2024	1:30 PM	1	77	43	3	4	2	2	2	17	0	0	0	0
4/23/2024	1:45 PM	1	68	28	0	4	5	0	3	37	0	0	0	0
4/23/2024	2:00 PM	1	81	26	2	7	3	0	2	29	0	0	0	0
4/23/2024	2:15 PM	1	91	26	2	5	0	1	2	29	0	0	0	0
4/23/2024	2:30 PM	0	96	32	1	7	1	0	1	25	0	0	0	0
4/23/2024	2:45 PM	0	90	31	0	4	0	0	2	30	0	0	1	0
4/23/2024	3:00 PM	0	109	31	0	6	2	1	5	29	0	0	0	0
4/23/2024	3:15 PM	0	106	39	0	6	3	0	2	27	0	0	0	0
4/23/2024	3:30 PM	0	118	37	1	3	1	1	1	28	0	0	0	0
4/23/2024	3:45 PM	1	128	30	0	7	0	0	3	24	0	0	0	0
4/23/2024	4:00 PM	0	112	49	1	4	0	0	5	25	0	0	0	0
4/23/2024	4:15 PM	0	138	35	0	5	3	0	5	16	3	0	0	0
4/23/2024	4:30 PM	1	145	26	0	6	1	1	1	12	1	0	0	0
4/23/2024	4:45 PM	0	160	39	2	7	1	0	3	15	0	0	0	0
4/23/2024	5:00 PM	0	151	41	0	7	1	0	0	12	0	0	0	0
4/23/2024	5:15 PM	0	168	28	0	4	1	0	3	19	0	0	0	0
4/23/2024	5:30 PM	0	126	40	0	5	0	0	1	23	0	0	0	0
4/23/2024	5:45 PM	3	115	47	0	3	2	0	7	19	2	0	0	0
4/23/2024	6:00 PM	0	104	29	0	4	0	0	2	21	0	0	0	0
4/23/2024	6:15 PM	1	87	26	0	7	1	0	2	20	0	4	0	0
4/23/2024	6:30 PM	0	89	15	0	1	1	0	4	19	0	1	0	0
4/23/2024	6:45 PM	0	62	28	0	3	2	0	1	21	1	0	0	0
4/23/2024	7:00 PM	0	62	21	0	4	0	1	5	15	0	1	0	0
4/23/2024	7:15 PM	0	66	14	0	1	0	0	1	17	0	3	0	0
4/23/2024	7:30 PM	0	60	10	0	2	0	0	2	24	0	0	0	0
4/23/2024	7:45 PM	1	52	15	0	1	1	0	1	22	0	0	0	0
4/23/2024	8:00 PM	0	65	17	0	0	0	0	0	18	0	1	0	0
4/23/2024	8:15 PM	0	70	14	1	1	0	0	0	20	0	0	0	0
4/23/2024	8:30 PM	0	38	5	0	2	0	0	0	19	0	0	0	0
4/23/2024	8:45 PM	0	47	6	0	0	1	0	0	18	0	2	0	0
4/23/2024	9:00 PM	0	41	7	0	2	0	0	0	16	0	0	0	0
4/23/2024	9:15 PM	0	25	4	0	2	0	0	0	21	0	2	0	0
4/23/2024	9:30 PM	0	29	4	0	0	0	0	0	9	0	2	0	0
4/23/2024	9:45 PM	0	21	3	0	2	0	0	0	24	0	1	0	0
4/23/2024	10:00 PM	1	22	5	0	2	0	0	0	18	0	3	0	0
4/23/2024	10:15 PM	0	11	3	0	3	0	0	0	16	0	4	0	0
4/23/2024	10:30 PM	0	25	4	0	0	0	0	0	20	0	3	0	0
4/23/2024	10:45 PM	0	14	2	0	0	1	0	0	16	0	2	0	0
4/23/2024	11:00 PM	0	12	3	0	0	0	0	0	21	0	2	0	0
4/23/2024	11:15 PM	0	14	2	0	1	2	0	0	16	0	2	0	0
4/23/2024	11:30 PM	0	13	4	0	1	0	0	0	12	0	1	0	0
4/23/2024	11:45 PM	0	11	3	0	0	0	0	0	15	0	2	0	0

4/24/2024	12:00 AM	0	7	6	0	1	0	0	0	16	0	3	0	0
4/24/2024	12:15 AM	0	10	2	0	1	0	0	0	10	0	0	0	0
4/24/2024	12:30 AM	0	11	1	0	0	1	0	0	13	0	3	0	0
4/24/2024	12:45 AM	0	7	1	0	1	0	0	0	15	0	3	0	0
4/24/2024	1:00 AM	0	7	1	0	0	0	0	0	8	0	2	0	0
4/24/2024	1:15 AM	0	5	0	0	1	1	0	0	10	0	0	0	0
4/24/2024	1:30 AM	0	9	1	0	1	0	0	0	13	0	2	0	0
4/24/2024	1:45 AM	0	8	2	0	0	1	0	0	7	0	1	0	0
4/24/2024	2:00 AM	0	6	1	0	0	0	0	0	10	0	1	0	0
4/24/2024	2:15 AM	0	7	1	0	0	0	0	0	15	0	1	0	0
4/24/2024	2:30 AM	0	4	0	0	1	0	0	0	8	0	2	0	0
4/24/2024	2:45 AM	0	3	0	0	0	2	0	0	9	0	1	0	0
4/24/2024	3:00 AM	0	6	0	0	0	0	0	0	14	0	0	0	0
4/24/2024	3:15 AM	0	2	2	0	0	0	0	0	8	0	3	0	0
4/24/2024	3:30 AM	0	8	3	0	1	0	0	0	8	0	2	0	0
4/24/2024	3:45 AM	0	11	2	0	0	0	0	0	8	0	0	0	0
4/24/2024	4:00 AM	0	6	4	0	0	0	0	0	14	0	0	0	0
4/24/2024	4:15 AM	0	11	1	0	4	0	0	0	18	0	2	0	0
4/24/2024	4:30 AM	0	15	3	0	3	0	0	0	20	0	0	0	0
4/24/2024	4:45 AM	0	13	2	0	3	0	0	0	19	0	3	0	0
4/24/2024	5:00 AM	0	11	4	0	0	0	0	0	15	0	0	0	0
4/24/2024	5:15 AM	0	23	6	0	0	0	0	0	14	0	4	0	0
4/24/2024	5:30 AM	0	28	4	0	0	0	0	0	26	0	0	0	0
4/24/2024	5:45 AM	0	23	5	0	4	0	0	0	21	0	1	0	0
4/24/2024	6:00 AM	0	47	9	0	4	1	0	0	29	0	2	0	0
4/24/2024	6:15 AM	0	56	16	0	1	1	0	2	12	0	1	0	0
4/24/2024	6:30 AM	0	82	25	0	7	3	0	2	18	0	0	0	0
4/24/2024	6:45 AM	1	58	23	0	5	3	0	1	22	1	1	0	0
4/24/2024	7:00 AM	0	78	26	0	5	3	0	2	19	1	0	0	0
4/24/2024	7:15 AM	1	69	21	0	5	1	0	5	14	0	0	0	0
4/24/2024	7:30 AM	0	65	25	1	7	3	0	1	15	0	0	0	0
4/24/2024	7:45 AM	0	83	30	0	7	2	1	2	15	1	1	0	0
4/24/2024	8:00 AM	0	66	30	1	3	1	0	1	11	0	0	0	0
4/24/2024	8:15 AM	0	43	26	1	9	0	1	4	23	0	0	0	0
4/24/2024	8:30 AM	0	56	31	0	7	2	0	2	22	1	2	0	0
4/24/2024	8:45 AM	0	60	35	1	8	0	1	2	27	0	0	0	0
4/24/2024	9:00 AM	0	49	30	0	11	2	1	2	19	0	0	0	0
4/24/2024	9:15 AM	0	68	26	1	8	1	0	1	19	0	1	0	0
4/24/2024	9:30 AM	0	62	31	0	8	2	0	2	17	0	0	0	0
4/24/2024	9:45 AM	0	48	25	1	3	2	0	6	31	0	0	0	0
4/24/2024	10:00 AM	0	70	25	0	8	4	0	4	28	0	1	0	0
4/24/2024	10:15 AM	0	58	26	0	3	5	0	4	20	0	1	0	0
4/24/2024	10:30 AM	0	80	28	1	4	1	0	0	21	0	1	0	0
4/24/2024	10:45 AM	0	64	26	0	4	1	0	2	25	0	0	0	0
4/24/2024	11:00 AM	1	59	25	1	6	0	0	4	19	0	1	0	0
4/24/2024	11:15 AM	0	56	29	0	2	3	0	2	36	0	0	0	0
4/24/2024	11:30 AM	0	73	24	0	6	1	1	1	26	0	0	0	0
4/24/2024	11:45 AM	1	59	32	0	3	3	0	2	27	0	0	1	0
4/24/2024	12:00 PM	0	78	25	3	1	3	0	2	26	0	1	0	0
4/24/2024	12:15 PM	0	89	41	2	9	2	1	3	20	0	1	0	0
4/24/2024	12:30 PM	0	75	31	1	9	3	1	3	25	0	0	0	0
4/24/2024	12:45 PM	0	73	39	1	6	3	1	3	31	0	1	0	0
4/24/2024	1:00 PM	0	72	27	0	4	1	0	0	30	0	4	0	0
4/24/2024	1:15 PM	0	69	32	0	6	3	0	3	26	0	2	0	0
4/24/2024	1:30 PM	1	86	35	0	4	2	1	3	19	0	2	0	0
4/24/2024	1:45 PM	0	82	32	5	4	0	0	5	24	0	0	0	0
4/24/2024	2:00 PM	0	94	30	0	6	1	1	1	33	0	2	0	0
4/24/2024	2:15 PM	0	93	35	0	4	2	0	3	26	0	0	0	0
4/24/2024	2:30 PM	1	99	37	1	6	5	1	3	22	0	1	0	0
4/24/2024	2:45 PM	0	85	33	0	6	0	2	2	28	0	0	1	0
4/24/2024	3:00 PM	0	110	37	0	7	0	1	3	24	0	1	0	0
4/24/2024	3:15 PM	0	112	38	0	4	2	0	4	32	0	1	0	0
4/24/2024	3:30 PM	0	135	35	0	5	2	2	1	18	0	0	0	0
4/24/2024	3:45 PM	0	119	37	0	8	2	1	3	29	0	0	0	0
4/24/2024	4:00 PM	0	129	52	0	7	0	2	2	21	0	3	0	0
4/24/2024	4:15 PM	0	134	31	0	7	0	0	3	19	0	1	0	0
4/24/2024	4:30 PM	0	135	35	1	9	1	0	1	13	0	0	0	0
4/24/2024	4:45 PM	0	138	46	2	5	1	0	1	21	0	0	0	0
4/24/2024	5:00 PM	0	139	27	0	5	0	0	2	19	0	2	0	0
4/24/2024	5:15 PM	1	152	36	0	2	0	0	0	13	0	0	0	0
4/24/2024	5:30 PM	2	118	32	0	5	0	0	3	10	0	0	0	0
4/24/2024	5:45 PM	0	130	35	0	6	1	1	4	18	0	0	0	0
4/24/2024	6:00 PM	0	81	23	0	5	1	0	1	31	0	0	0	0
4/24/2024	6:15 PM	2	94	22	0	8	1	1	2	28	0	2	1	0
4/24/2024	6:30 PM	0	79	18	0	2	1	0	1	21	0	1	0	0
4/24/2024	6:45 PM	1	86	21	0	2	1	0	4	10	0	1	0	0
4/24/2024	7:00 PM	0	80	17	0	4	0	0	4	11	0	0	0	0
4/24/2024	7:15 PM	0	61	18	0	5	2	0	2	24	0	1	1	0
4/24/2024	7:30 PM	0	68	12	0	1	2	0	2	18	1	1	0	0
4/24/2024	7:45 PM	0	60	16	0	1	0	0	1	17	0	0	1	0
4/24/2024	8:00 PM	0	69	13	0	0	3	0	0	23	0	0	0	0
4/24/2024	8:15 PM	0	72	11	0	1	3	0	1	13	0	2	0	0
4/24/2024	8:30 PM	0	60	9	0	2	0	0	1	14	0	1	0	0
4/24/2024	8:45 PM	0	70	12	0	1	0	0	0	15	0	2	0	0
4/24/2024	9:00 PM	0	54	9	0	0	1	0	0	18	0	1	0	0
4/24/2024	9:15 PM	0	37	4	0	0	1	0	0	21	0	2	0	0
4/24/2024	9:30 PM	0	40	7	0	0	0	0	0	18	0	0	0	0
4/24/2024	9:45 PM	0	44	8	0	0	0	0	0	18	0	1	1	0
4/24/2024	10:00 PM	0	46	5	0	1	0	0	0	11	0	2	0	0
4/24/2024	10:15 PM	0	35	1	0	2	0	0	0	17	0	2	0	0
4/24/2024	10:30 PM	0	45	2	0	3	0	0	0	13	0	2	0	0
4/24/2024	10:45 PM	0	23	1	0	0	0	0	0	16	0	2	0	0
4/24/2024	11:00 PM	0	33	1	0	3	0	0	0	21	0	2	0	0
4/24/2024	11:15 PM	0	34	1	0	0	0	0	0	10	0	6	0	0
4/24/2024	11:30 PM	0	24	2	0	2	0	0	0	8	0	3	0	0
4/24/2024	11:45 PM	0	22	1	0	1	0	0	0	12	0	0	0	0

4/25/2024	12:00 AM	0	10	4	0	1	0	0	1	15	0	0	0	0
4/25/2024	12:15 AM	0	14	4	0	0	0	0	0	12	0	2	0	0
4/25/2024	12:30 AM	0	18	5	0	0	0	0	0	15	0	1	0	0
4/25/2024	12:45 AM	0	8	0	0	0	1	0	0	14	0	1	0	0
4/25/2024	1:00 AM	0	3	0	0	0	2	0	0	9	0	2	0	0
4/25/2024	1:15 AM	0	6	1	0	0	0	0	0	6	0	0	0	0
4/25/2024	1:30 AM	0	8	0	0	0	0	0	0	4	0	0	0	0
4/25/2024	1:45 AM	0	5	1	0	0	1	0	0	11	0	1	0	0
4/25/2024	2:00 AM	0	7	1	0	1	0	0	0	11	0	1	0	0
4/25/2024	2:15 AM	0	1	1	0	0	0	0	0	9	0	3	0	0
4/25/2024	2:30 AM	0	5	0	0	0	0	0	0	9	0	0	0	0
4/25/2024	2:45 AM	0	3	0	0	3	2	0	0	11	0	1	0	0
4/25/2024	3:00 AM	0	6	0	0	1	1	0	0	7	0	1	0	0
4/25/2024	3:15 AM	0	13	0	0	0	0	0	0	13	0	1	0	0
4/25/2024	3:30 AM	0	13	0	0	2	0	0	0	5	0	2	0	0
4/25/2024	3:45 AM	0	11	2	0	1	0	0	0	14	0	1	0	0
4/25/2024	4:00 AM	0	12	1	0	0	1	0	0	12	0	0	0	0
4/25/2024	4:15 AM	0	11	0	0	4	0	0	0	15	0	1	0	0
4/25/2024	4:30 AM	0	24	3	0	1	0	0	0	20	0	1	0	0
4/25/2024	4:45 AM	0	21	3	0	2	0	0	0	21	0	1	0	0
4/25/2024	5:00 AM	0	22	0	0	3	1	0	0	17	0	1	0	0
4/25/2024	5:15 AM	0	31	2	0	3	0	0	0	20	0	0	0	0
4/25/2024	5:30 AM	0	35	0	0	0	0	0	0	27	0	0	0	0
4/25/2024	5:45 AM	0	36	2	0	4	0	0	0	31	0	1	0	0
4/25/2024	6:00 AM	0	38	4	0	2	0	0	0	22	0	0	0	0
4/25/2024	6:15 AM	0	61	18	1	3	0	0	0	29	0	0	0	0
4/25/2024	6:30 AM	0	62	17	0	4	2	0	1	23	0	0	0	0
4/25/2024	6:45 AM	0	51	28	0	7	0	0	1	29	0	0	0	0
4/25/2024	7:00 AM	0	68	19	0	4	2	0	3	19	1	0	0	0
4/25/2024	7:15 AM	1	70	26	1	8	1	1	3	23	0	0	0	0
4/25/2024	7:30 AM	0	71	19	0	8	0	1	2	21	0	0	0	0
4/25/2024	7:45 AM	1	83	38	1	0	2	0	1	18	0	0	0	0
4/25/2024	8:00 AM	0	49	30	0	5	1	1	2	14	1	0	0	0
4/25/2024	8:15 AM	0	65	37	1	5	2	0	2	16	0	0	0	0
4/25/2024	8:30 AM	0	50	41	0	7	3	1	1	20	0	0	0	0
4/25/2024	8:45 AM	0	49	33	0	4	2	0	3	16	0	0	0	0
4/25/2024	9:00 AM	0	51	31	0	4	1	0	2	25	2	0	0	0
4/25/2024	9:15 AM	0	47	35	0	5	1	1	1	16	1	0	0	0
4/25/2024	9:30 AM	0	52	30	0	7	2	0	1	37	0	0	0	0
4/25/2024	9:45 AM	0	56	27	0	8	6	1	1	33	1	0	0	0
4/25/2024	10:00 AM	0	54	38	0	9	3	1	3	28	1	0	0	0
4/25/2024	10:15 AM	0	85	32	0	3	2	1	4	17	1	0	0	0
4/25/2024	10:30 AM	0	75	27	0	4	1	0	5	22	0	0	0	0
4/25/2024	10:45 AM	1	64	35	0	5	0	0	1	33	0	0	0	0
4/25/2024	11:00 AM	0	56	30	0	8	1	1	5	24	0	0	0	0
4/25/2024	11:15 AM	0	85	27	2	4	3	0	1	22	0	0	0	0
4/25/2024	11:30 AM	0	68	35	0	8	2	1	3	24	0	0	0	0
4/25/2024	11:45 AM	0	69	44	0	5	4	2	4	24	0	0	0	0
4/25/2024	12:00 PM	0	77	29	0	4	2	0	3	22	0	0	0	0
4/25/2024	12:15 PM	0	80	43	0	6	0	0	1	18	0	0	0	0
4/25/2024	12:30 PM	1	79	43	0	6	1	0	1	17	0	0	0	0
4/25/2024	12:45 PM	0	74	34	5	2	0	1	2	26	1	0	0	0
4/25/2024	1:00 PM	0	72	39	0	5	2	0	1	25	1	0	0	0
4/25/2024	1:15 PM	1	92	32	0	8	1	1	2	20	0	0	0	0
4/25/2024	1:30 PM	0	104	28	0	6	1	2	3	25	3	0	0	0
4/25/2024	1:45 PM	0	86	27	0	0	3	0	4	21	1	1	0	0
4/25/2024	2:00 PM	0	81	30	0	6	0	0	5	28	0	0	0	0
4/25/2024	2:15 PM	0	93	39	2	5	2	0	4	22	2	0	0	0
4/25/2024	2:30 PM	0	88	41	3	5	3	3	6	28	0	0	0	0
4/25/2024	2:45 PM	0	93	35	0	10	1	0	8	19	0	0	0	0
4/25/2024	3:00 PM	0	123	44	1	2	1	0	3	19	1	0	1	0
4/25/2024	3:15 PM	0	113	46	1	7	1	2	3	20	0	2	0	0
4/25/2024	3:30 PM	0	117	42	0	8	2	0	2	20	1	0	0	0
4/25/2024	3:45 PM	1	127	45	0	8	2	0	6	15	0	0	0	0
4/25/2024	4:00 PM	0	97	49	0	2	2	2	8	18	2	0	0	0
4/25/2024	4:15 PM	0	147	46	0	8	1	0	0	13	1	0	0	0
4/25/2024	4:30 PM	0	133	35	0	8	0	0	0	11	1	0	0	0
4/25/2024	4:45 PM	0	162	27	1	5	3	0	4	9	0	0	0	0
4/25/2024	5:00 PM	0	150	50	0	5	1	0	2	17	0	0	0	0
4/25/2024	5:15 PM	0	162	46	0	1	0	0	1	26	0	0	0	0
4/25/2024	5:30 PM	0	119	37	0	5	2	0	0	16	0	0	0	0
4/25/2024	5:45 PM	1	115	34	0	3	2	0	3	17	0	0	0	0
4/25/2024	6:00 PM	0	117	36	0	3	4	0	1	16	0	0	0	0
4/25/2024	6:15 PM	2	92	30	0	0	0	0	3	18	0	0	0	0
4/25/2024	6:30 PM	0	80	25	0	3	0	0	0	16	0	2	0	0
4/25/2024	6:45 PM	0	93	23	0	4	2	0	0	14	0	2	0	0
4/25/2024	7:00 PM	0	69	26	0	7	1	0	1	21	0	1	0	0
4/25/2024	7:15 PM	1	66	10	2	4	1	0	0	15	0	1	0	0
4/25/2024	7:30 PM	0	89	19	0	4	0	0	1	15	0	0	0	0
4/25/2024	7:45 PM	0	66	11	0	1	2	0	3	21	0	0	0	0
4/25/2024	8:00 PM	1	75	18	0	4	0	0	0	13	0	0	0	0
4/25/2024	8:15 PM	0	68	10	0	1	2	0	0	18	0	1	0	0
4/25/2024	8:30 PM	0	59	2	1	2	1	0	0	21	0	5	0	0
4/25/2024	8:45 PM	0	83	2	0	2	0	0	0	16	0	0	0	0
4/25/2024	9:00 PM	0	77	4	0	3	0	0	0	22	0	3	0	0
4/25/2024	9:15 PM	0	70	3	0	1	0	0	0	26	0	4	0	0
4/25/2024	9:30 PM	0	73	1	0	2	0	0	0	25	0	2	0	0
4/25/2024	9:45 PM	0	80	1	0	5	0	0	0	26	0	1	0	0
4/25/2024	10:00 PM	0	65	2	0	0	0	0	0	21	0	0	0	0
4/25/2024	10:15 PM	0	48	1	1	0	0	0	0	19	0	3	0	0
4/25/2024	10:30 PM	0	60	2	0	0	0	0	0	20	0	5	0	0
4/25/2024	10:45 PM	0	38	1	0	3	0	0	0	20	0	2	0	0
4/25/2024	11:00 PM	0	25	0	0	1	0	0	0	12	0	0	0	0
4/25/2024	11:15 PM	0	27	1	0	3	0	0	0	9	0	3	0	0
4/25/2024	11:30 PM	0	33	0	0	1	0	0	0	18	0	0	0	0
4/25/2024	11:45 PM	0	27	0	0	1	0	0	0	14	0	1	0	0

4/26/2024	12:00 AM	0	13	2	0	2	1	0	0	9	0	1	0	0
4/26/2024	12:15 AM	0	7	3	0	0	0	0	0	2	0	1	0	0
4/26/2024	12:30 AM	0	8	2	0	1	0	0	0	7	0	0	0	0
4/26/2024	12:45 AM	0	7	4	0	0	0	0	0	6	0	1	0	0
4/26/2024	1:00 AM	0	5	1	0	2	0	0	0	3	0	2	0	0
4/26/2024	1:15 AM	0	4	0	0	2	0	0	0	9	0	1	0	0
4/26/2024	1:30 AM	0	8	4	0	1	0	0	0	6	0	0	0	0
4/26/2024	1:45 AM	0	4	0	0	0	0	0	0	9	0	0	0	0
4/26/2024	2:00 AM	0	6	2	0	0	0	0	0	6	0	0	0	0
4/26/2024	2:15 AM	0	8	1	0	1	0	0	0	9	0	1	0	0
4/26/2024	2:30 AM	0	6	1	0	1	0	0	0	10	0	0	0	0
4/26/2024	2:45 AM	0	5	1	0	0	0	0	0	7	0	1	0	0
4/26/2024	3:00 AM	0	6	0	0	4	2	0	0	7	0	2	0	0
4/26/2024	3:15 AM	0	5	2	0	2	2	0	0	11	0	1	0	0
4/26/2024	3:30 AM	0	6	1	0	2	0	0	0	5	0	0	0	0
4/26/2024	3:45 AM	0	8	4	0	2	0	0	0	10	0	1	0	0
4/26/2024	4:00 AM	0	10	3	0	2	0	0	0	5	0	1	0	0
4/26/2024	4:15 AM	0	8	2	0	3	0	0	0	8	0	0	0	0
4/26/2024	4:30 AM	0	7	3	0	2	0	0	0	8	0	0	0	0
4/26/2024	4:45 AM	0	12	6	0	1	1	0	0	19	0	0	0	0
4/26/2024	5:00 AM	0	14	6	0	4	0	0	0	16	0	1	0	0
4/26/2024	5:15 AM	0	19	10	0	0	0	0	0	18	0	3	0	0
4/26/2024	5:30 AM	0	21	12	0	4	1	0	0	13	0	2	0	0
4/26/2024	5:45 AM	1	25	13	0	7	3	0	0	12	0	0	0	0
4/26/2024	6:00 AM	0	20	10	0	4	3	0	0	19	0	0	0	0
4/26/2024	6:15 AM	0	42	23	0	3	0	0	0	17	0	1	0	0
4/26/2024	6:30 AM	1	74	26	0	4	1	0	0	13	0	0	0	0
4/26/2024	6:45 AM	0	59	19	0	1	5	0	0	22	0	0	0	0
4/26/2024	7:00 AM	1	74	21	1	8	5	0	4	18	0	0	0	0
4/26/2024	7:15 AM	0	77	24	1	5	0	0	1	15	0	0	0	0
4/26/2024	7:30 AM	0	74	33	2	8	1	0	1	20	0	0	0	0
4/26/2024	7:45 AM	0	70	26	0	7	1	0	3	13	1	0	0	0
4/26/2024	8:00 AM	0	63	30	0	4	1	1	3	16	1	0	0	0
4/26/2024	8:15 AM	0	56	18	0	11	1	0	2	16	0	0	0	0
4/26/2024	8:30 AM	0	55	29	1	12	5	1	3	18	0	0	0	0
4/26/2024	8:45 AM	0	59	28	3	7	2	2	3	17	1	1	0	0
4/26/2024	9:00 AM	0	66	30	0	7	2	0	2	22	0	1	0	0
4/26/2024	9:15 AM	0	71	37	0	5	6	0	3	20	0	0	0	0
4/26/2024	9:30 AM	0	63	29	0	5	2	1	6	18	0	1	0	0
4/26/2024	9:45 AM	0	73	27	0	10	0	2	2	14	1	0	0	0
4/26/2024	10:00 AM	0	67	47	2	9	2	0	5	22	0	0	0	0
4/26/2024	10:15 AM	0	71	29	0	3	2	0	2	25	0	0	0	0
4/26/2024	10:30 AM	0	77	28	0	7	3	1	1	27	0	0	0	0
4/26/2024	10:45 AM	0	67	39	3	7	3	1	4	22	0	0	0	0
4/26/2024	11:00 AM	0	78	26	0	11	2	0	3	30	0	0	0	0
4/26/2024	11:15 AM	0	95	40	2	6	3	0	0	25	1	0	0	0
4/26/2024	11:30 AM	0	94	26	0	4	2	1	3	33	0	0	0	0
4/26/2024	11:45 AM	0	88	38	1	9	0	0	4	26	0	0	0	0
4/26/2024	12:00 PM	0	97	33	2	4	2	1	2	28	1	0	0	0
4/26/2024	12:15 PM	0	95	59	5	4	0	0	4	15	1	0	0	0
4/26/2024	12:30 PM	1	110	32	5	5	0	0	2	19	0	0	0	0
4/26/2024	12:45 PM	1	94	36	0	4	0	0	2	31	1	0	0	0
4/26/2024	1:00 PM	0	114	30	2	2	0	0	3	20	2	0	0	0
4/26/2024	1:15 PM	0	95	36	0	3	2	0	3	29	0	0	0	0
4/26/2024	1:30 PM	0	92	37	3	1	1	1	1	24	0	0	0	0
4/26/2024	1:45 PM	3	105	33	1	11	2	0	0	20	1	0	0	0
4/26/2024	2:00 PM	0	88	31	1	5	6	0	3	24	1	0	0	0
4/26/2024	2:15 PM	0	118	44	1	2	0	0	1	16	0	0	0	0
4/26/2024	2:30 PM	0	107	35	0	7	2	0	1	21	0	1	0	0
4/26/2024	2:45 PM	1	112	49	0	7	5	0	4	23	0	0	0	0
4/26/2024	3:00 PM	1	135	39	0	2	0	0	3	16	0	0	0	0
4/26/2024	3:15 PM	1	132	37	0	3	0	1	2	17	1	0	0	0
4/26/2024	3:30 PM	0	136	41	0	3	0	0	3	17	0	0	0	0
4/26/2024	3:45 PM	0	110	38	0	6	3	0	1	23	0	0	0	0
4/26/2024	4:00 PM	0	122	38	1	4	2	0	1	27	1	0	0	0
4/26/2024	4:15 PM	0	144	34	0	6	0	0	2	19	0	0	0	0
4/26/2024	4:30 PM	0	122	33	0	9	1	0	3	11	0	0	0	0
4/26/2024	4:45 PM	1	118	43	1	6	1	0	2	20	0	0	0	0
4/26/2024	5:00 PM	0	129	31	0	2	3	0	2	19	0	0	0	0
4/26/2024	5:15 PM	1	121	35	0	5	0	0	3	15	0	0	0	0
4/26/2024	5:30 PM	0	130	27	0	3	0	0	1	17	0	0	0	0
4/26/2024	5:45 PM	1	97	31	0	7	1	0	2	14	0	0	0	0
4/26/2024	6:00 PM	0	91	27	1	3	0	0	3	16	0	0	0	0
4/26/2024	6:15 PM	0	92	24	0	2	1	0	1	24	0	0	0	0
4/26/2024	6:30 PM	0	95	24	0	2	2	0	1	15	0	1	0	0
4/26/2024	6:45 PM	0	96	26	0	1	0	0	1	17	0	0	0	0
4/26/2024	7:00 PM	2	85	23	0	4	0	0	3	14	0	0	0	0
4/26/2024	7:15 PM	0	87	19	1	6	0	0	3	18	0	0	0	0
4/26/2024	7:30 PM	0	83	22	0	5	0	0	1	15	0	0	0	0
4/26/2024	7:45 PM	0	86	20	1	2	0	0	0	9	0	2	0	0
4/26/2024	8:00 PM	0	61	16	1	2	0	0	1	16	0	0	0	0
4/26/2024	8:15 PM	0	67	22	3	1	3	0	0	15	0	0	0	0
4/26/2024	8:30 PM	0	56	18	0	0	0	0	0	12	0	1	0	0
4/26/2024	8:45 PM	0	54	20	0	2	0	0	0	17	0	2	0	0
4/26/2024	9:00 PM	0	58	23	0	0	0	0	0	14	0	1	0	0
4/26/2024	9:15 PM	0	53	16	0	1	0	0	0	17	0	3	0	0
4/26/2024	9:30 PM	0	55	18	0	2	0	0	0	13	0	1	0	0
4/26/2024	9:45 PM	0	52	22	0	2	0	0	0	8	0	0	0	0
4/26/2024	10:00 PM	0	61	20	0	1	0	0	0	6	0	1	0	0
4/26/2024	10:15 PM	0	44	19	0	3	0	0	0	16	0	1	0	0
4/26/2024	10:30 PM	0	53	20	0	1	0	0	0	9	0	0	0	0
4/26/2024	10:45 PM	0	51	22	0	1	0	0	0	13	0	5	0	0
4/26/2024	11:00 PM	0	41	22	0	2	0	0	0	7	0	2	0	0
4/26/2024	11:15 PM	0	42	15	0	3	0	0	0	4	0	0	0	0
4/26/2024	11:30 PM	0	32	8	0	0	0	0	0	9	0	1	0	0
4/26/2024	11:45 PM	0	27	9	0	0	0	0	0	6	0	1	0	0

4/27/2024	12:00 AM	0	10	2	0	1	0	0	0	3	0	0	0	0
4/27/2024	12:15 AM	0	11	4	0	1	0	0	0	0	0	1	0	0
4/27/2024	12:30 AM	0	18	5	0	2	0	0	0	4	0	1	0	0
4/27/2024	12:45 AM	0	16	3	0	2	0	0	0	5	0	2	0	0
4/27/2024	1:00 AM	0	10	4	0	0	0	0	0	5	0	1	0	0
4/27/2024	1:15 AM	0	8	2	0	0	0	0	0	3	0	2	0	0
4/27/2024	1:30 AM	0	10	3	1	0	0	0	0	5	0	1	0	0
4/27/2024	1:45 AM	0	9	2	0	0	0	0	0	7	0	0	0	0
4/27/2024	2:00 AM	0	10	4	0	2	0	0	0	3	0	0	0	0
4/27/2024	2:15 AM	0	8	2	0	0	0	0	0	7	0	1	0	0
4/27/2024	2:30 AM	0	11	3	0	0	0	0	0	9	0	2	0	0
4/27/2024	2:45 AM	0	12	4	0	0	0	0	0	12	0	0	0	0
4/27/2024	3:00 AM	0	11	6	0	0	0	0	0	5	0	1	0	0
4/27/2024	3:15 AM	0	10	5	0	0	0	0	0	12	0	1	0	0
4/27/2024	3:30 AM	0	5	2	1	0	0	0	0	9	0	1	0	0
4/27/2024	3:45 AM	0	8	3	0	0	0	0	0	15	0	1	0	0
4/27/2024	4:00 AM	0	6	3	0	0	2	0	0	11	0	0	0	0
4/27/2024	4:15 AM	0	5	3	0	0	0	0	0	9	0	1	0	0
4/27/2024	4:30 AM	0	6	2	0	0	0	0	0	8	0	0	0	0
4/27/2024	4:45 AM	0	10	5	0	0	0	0	0	13	0	1	0	0
4/27/2024	5:00 AM	0	19	10	0	1	0	0	0	10	0	0	0	0
4/27/2024	5:15 AM	0	10	2	0	2	0	0	0	9	0	4	0	0
4/27/2024	5:30 AM	0	16	7	0	0	0	0	0	10	0	0	0	0
4/27/2024	5:45 AM	0	23	10	0	2	0	0	0	9	0	0	0	0
4/27/2024	6:00 AM	0	30	15	0	2	0	0	0	9	0	0	0	0
4/27/2024	6:15 AM	0	34	10	0	0	0	0	0	4	0	1	0	0
4/27/2024	6:30 AM	0	36	11	0	1	0	0	0	13	0	0	0	0
4/27/2024	6:45 AM	0	43	19	0	0	1	0	1	8	0	0	0	0
4/27/2024	7:00 AM	0	42	14	0	0	1	0	0	13	0	0	0	0
4/27/2024	7:15 AM	0	49	17	0	2	2	0	1	12	0	0	0	0
4/27/2024	7:30 AM	1	39	12	1	2	1	0	2	15	0	1	0	0
4/27/2024	7:45 AM	0	45	28	0	5	1	0	0	12	1	0	0	0
4/27/2024	8:00 AM	1	55	11	0	4	3	0	0	14	1	0	0	0
4/27/2024	8:15 AM	0	46	22	0	3	3	0	1	12	0	0	0	0
4/27/2024	8:30 AM	2	64	29	0	0	1	0	0	8	1	0	0	0
4/27/2024	8:45 AM	0	37	13	0	5	2	0	1	19	0	1	0	0
4/27/2024	9:00 AM	2	40	18	0	2	2	0	2	9	0	1	0	0
4/27/2024	9:15 AM	0	59	15	0	1	2	0	0	22	0	0	0	0
4/27/2024	9:30 AM	0	72	28	0	3	0	0	2	12	0	1	0	0
4/27/2024	9:45 AM	3	73	20	0	2	1	0	2	11	0	0	0	0
4/27/2024	10:00 AM	0	74	23	0	3	1	0	3	17	0	0	0	0
4/27/2024	10:15 AM	0	69	23	0	3	0	0	1	10	0	0	0	0
4/27/2024	10:30 AM	0	85	19	0	3	1	0	0	16	0	0	0	0
4/27/2024	10:45 AM	0	83	25	0	4	2	0	0	9	0	0	0	0
4/27/2024	11:00 AM	1	82	27	1	2	1	0	3	13	0	0	0	0
4/27/2024	11:15 AM	0	90	25	0	4	0	0	0	7	0	0	0	0
4/27/2024	11:30 AM	0	87	23	0	4	0	0	2	9	2	0	0	0
4/27/2024	11:45 AM	0	81	30	0	1	0	0	0	18	0	0	0	0
4/27/2024	12:00 PM	1	92	39	0	3	0	0	2	7	0	0	0	0
4/27/2024	12:15 PM	0	103	34	0	2	0	0	3	14	0	0	0	0
4/27/2024	12:30 PM	1	90	29	0	2	0	0	1	17	0	0	0	0
4/27/2024	12:45 PM	0	91	31	0	4	0	0	1	15	0	0	0	0
4/27/2024	1:00 PM	0	82	31	0	5	0	0	1	18	0	0	0	0
4/27/2024	1:15 PM	0	101	33	0	1	1	0	2	12	0	0	0	0
4/27/2024	1:30 PM	0	116	34	0	2	0	0	0	11	0	0	0	0
4/27/2024	1:45 PM	0	125	27	0	4	0	0	1	12	0	0	0	0
4/27/2024	2:00 PM	2	104	25	0	2	0	0	1	10	0	0	0	0
4/27/2024	2:15 PM	1	117	28	0	1	1	0	2	11	0	0	0	0
4/27/2024	2:30 PM	1	101	29	0	3	0	0	1	13	0	0	0	0
4/27/2024	2:45 PM	0	108	30	0	1	0	0	1	9	0	0	0	0
4/27/2024	3:00 PM	0	101	30	0	3	0	0	0	7	1	0	0	0
4/27/2024	3:15 PM	0	113	31	0	2	0	0	2	10	0	0	0	0
4/27/2024	3:30 PM	3	100	20	0	0	0	0	2	9	0	0	0	0
4/27/2024	3:45 PM	0	118	26	0	1	0	0	0	18	1	1	0	0
4/27/2024	4:00 PM	1	113	27	1	2	1	0	1	5	0	0	0	0
4/27/2024	4:15 PM	0	108	24	0	2	1	0	2	11	0	0	0	0
4/27/2024	4:30 PM	0	103	24	0	1	0	0	0	8	0	0	0	0
4/27/2024	4:45 PM	0	102	23	0	1	0	0	0	7	0	0	0	0
4/27/2024	5:00 PM	0	95	19	0	5	0	0	0	8	0	0	0	0
4/27/2024	5:15 PM	0	102	20	0	0	0	0	2	10	0	0	0	0
4/27/2024	5:30 PM	0	79	20	1	2	0	0	1	11	0	0	0	0
4/27/2024	5:45 PM	0	85	17	1	3	0	0	0	8	0	0	0	0
4/27/2024	6:00 PM	0	80	23	0	1	1	0	1	6	0	0	0	0
4/27/2024	6:15 PM	0	93	22	0	3	0	0	0	9	0	0	0	0
4/27/2024	6:30 PM	0	93	19	0	1	0	0	1	7	0	0	0	0
4/27/2024	6:45 PM	0	99	20	0	0	0	0	0	8	1	0	0	0
4/27/2024	7:00 PM	1	91	22	0	0	0	0	1	4	0	0	0	0
4/27/2024	7:15 PM	0	88	13	0	3	0	0	1	7	0	0	0	0
4/27/2024	7:30 PM	0	91	21	0	0	0	0	1	7	0	0	0	0
4/27/2024	7:45 PM	0	69	18	0	0	1	0	0	7	0	0	0	0
4/27/2024	8:00 PM	0	70	17	0	0	0	0	0	9	0	0	0	0
4/27/2024	8:15 PM	0	80	15	0	1	0	0	0	7	0	0	0	0
4/27/2024	8:30 PM	0	70	11	0	0	0	0	0	8	0	0	0	0
4/27/2024	8:45 PM	0	99	17	0	1	0	0	0	5	0	0	0	0
4/27/2024	9:00 PM	0	80	10	0	0	0	0	0	4	0	0	0	0
4/27/2024	9:15 PM	0	73	9	0	0	0	0	0	3	0	0	0	0
4/27/2024	9:30 PM	0	85	12	0	1	0	0	0	11	0	0	0	0
4/27/2024	9:45 PM	0	89	18	0	0	0	0	0	3	0	0	0	0
4/27/2024	10:00 PM	0	59	10	0	1	0	0	0	4	0	0	0	0
4/27/2024	10:15 PM	0	50	12	0	1	0	0	0	3	0	0	0	0
4/27/2024	10:30 PM	0	51	10	0	0	0	0	0	6	0	0	0	0
4/27/2024	10:45 PM	0	40	8	0	1	0	0	0	5	0	1	0	0
4/27/2024	11:00 PM	0	39	7	0	0	0	0	0	1	0	0	0	0
4/27/2024	11:15 PM	0	40	10	0	0	0	0	0	8	0	0	0	0
4/27/2024	11:30 PM	0	25	6	0	0	0	0	0	6	0	0	0	0
4/27/2024	11:45 PM	0	27	7	0	0	0	0	0	4	0	0	0	0

EB
File Name:
Start Date: 4/21/2024
Start Time: 0
Site Code: 74 Lane 3 WB
Station ID: 1
Location 1: I-20, west of US-378 Sunset Blvd S/Bound Off-Ramp
Location 2:

Date	Time	1	2	3	4	5	6	7	8	9	10	11	12	13
4/21/2024	12:00 AM	0	0	0	0	0	0	0	0	0	0	0	0	0
4/21/2024	12:15 AM	0	0	0	0	0	0	0	0	0	0	0	0	0
4/21/2024	12:30 AM	0	0	0	0	0	0	0	0	0	0	0	0	0
4/21/2024	12:45 AM	0	0	0	0	0	0	0	0	0	0	0	0	0
4/21/2024	1:00 AM	0	0	0	0	0	0	0	0	0	0	0	0	0
4/21/2024	1:15 AM	0	0	0	0	0	0	0	0	0	0	0	0	0
4/21/2024	1:30 AM	0	0	0	0	0	0	0	0	0	0	0	0	0
4/21/2024	1:45 AM	0	0	0	0	0	0	0	0	0	0	0	0	0
4/21/2024	2:00 AM	0	0	0	0	0	0	0	0	0	0	0	0	0
4/21/2024	2:15 AM	0	0	0	0	0	0	0	0	0	0	0	0	0
4/21/2024	2:30 AM	0	0	0	0	0	0	0	0	0	0	0	0	0
4/21/2024	2:45 AM	0	0	0	0	0	0	0	0	0	0	0	0	0
4/21/2024	3:00 AM	0	0	0	0	0	0	0	0	0	0	0	0	0
4/21/2024	3:15 AM	0	0	0	0	0	0	0	0	0	0	0	0	0
4/21/2024	3:30 AM	0	0	0	0	0	0	0	0	0	0	0	0	0
4/21/2024	3:45 AM	0	0	0	0	0	0	0	0	0	0	0	0	0
4/21/2024	4:00 AM	0	0	0	0	0	0	0	0	0	0	0	0	0
4/21/2024	4:15 AM	0	0	0	0	0	0	0	0	0	0	0	0	0
4/21/2024	4:30 AM	0	0	0	0	0	0	0	0	0	0	0	0	0
4/21/2024	4:45 AM	0	0	0	0	0	0	0	0	0	0	0	0	0
4/21/2024	5:00 AM	0	0	0	0	0	0	0	0	0	0	0	0	0
4/21/2024	5:15 AM	0	0	0	0	0	0	0	0	0	0	0	0	0
4/21/2024	5:30 AM	0	0	0	0	0	0	0	0	0	0	0	0	0
4/21/2024	5:45 AM	0	0	0	0	0	0	0	0	0	0	0	0	0
4/21/2024	6:00 AM	0	0	0	0	0	0	0	0	0	0	0	0	0
4/21/2024	6:15 AM	0	0	0	0	0	0	0	0	0	0	0	0	0
4/21/2024	6:30 AM	0	0	0	0	0	0	0	0	0	0	0	0	0
4/21/2024	6:45 AM	0	0	0	0	0	0	0	0	0	0	0	0	0
4/21/2024	7:00 AM	0	0	0	0	0	0	0	0	0	0	0	0	0
4/21/2024	7:15 AM	0	0	0	0	0	0	0	0	0	0	0	0	0
4/21/2024	7:30 AM	0	0	0	0	0	0	0	0	0	0	0	0	0
4/21/2024	7:45 AM	0	0	0	0	0	0	0	0	0	0	0	0	0
4/21/2024	8:00 AM	0	0	0	0	0	0	0	0	0	0	0	0	0
4/21/2024	8:15 AM	0	0	0	0	0	0	0	0	0	0	0	0	0
4/21/2024	8:30 AM	0	0	0	0	0	0	0	0	0	0	0	0	0
4/21/2024	8:45 AM	0	0	0	0	0	0	0	0	0	0	0	0	0
4/21/2024	9:00 AM	0	0	0	0	0	0	0	0	0	0	0	0	0
4/21/2024	9:15 AM	0	0	0	0	0	0	0	0	0	0	0	0	0
4/21/2024	9:30 AM	0	0	0	0	0	0	0	0	0	0	0	0	0
4/21/2024	9:45 AM	0	0	0	0	0	0	0	0	0	0	0	0	0
4/21/2024	10:00 AM	0	0	0	0	0	0	0	0	0	0	0	0	0
4/21/2024	10:15 AM	0	0	0	0	0	0	0	0	0	0	0	0	0
4/21/2024	10:30 AM	0	0	0	0	0	0	0	0	0	0	0	0	0
4/21/2024	10:45 AM	0	0	0	0	0	0	0	0	0	0	0	0	0
4/21/2024	11:00 AM	0	0	0	0	0	0	0	0	0	0	0	0	0
4/21/2024	11:15 AM	0	0	0	0	0	0	0	0	0	0	0	0	0
4/21/2024	11:30 AM	0	0	0	0	0	0	0	0	0	0	0	0	0
4/21/2024	11:45 AM	0	0	0	0	0	0	0	0	0	0	0	0	0
4/21/2024	12:00 PM	0	0	0	0	0	0	0	0	0	0	0	0	0
4/21/2024	12:15 PM	0	0	0	0	0	0	0	0	0	0	0	0	0
4/21/2024	12:30 PM	0	0	0	0	0	0	0	0	0	0	0	0	0
4/21/2024	12:45 PM	0	0	0	0	0	0	0	0	0	0	0	0	0
4/21/2024	1:00 PM	0	0	0	0	0	0	0	0	0	0	0	0	0
4/21/2024	1:15 PM	0	0	0	0	0	0	0	0	0	0	0	0	0
4/21/2024	1:30 PM	0	0	0	0	0	0	0	0	0	0	0	0	0
4/21/2024	1:45 PM	0	0	0	0	0	0	0	0	0	0	0	0	0
4/21/2024	2:00 PM	0	0	0	0	0	0	0	0	0	0	0	0	0
4/21/2024	2:15 PM	0	0	0	0	0	0	0	0	0	0	0	0	0
4/21/2024	2:30 PM	0	0	0	0	0	0	0	0	0	0	0	0	0
4/21/2024	2:45 PM	0	0	0	0	0	0	0	0	0	0	0	0	0
4/21/2024	3:00 PM	0	0	0	0	0	0	0	0	0	0	0	0	0
4/21/2024	3:15 PM	0	0	0	0	0	0	0	0	0	0	0	0	0
4/21/2024	3:30 PM	0	0	0	0	0	0	0	0	0	0	0	0	0
4/21/2024	3:45 PM	0	0	0	0	0	0	0	0	0	0	0	0	0
4/21/2024	4:00 PM	0	0	0	0	0	0	0	0	0	0	0	0	0
4/21/2024	4:15 PM	0	0	0	0	0	0	0	0	0	0	0	0	0
4/21/2024	4:30 PM	0	0	0	0	0	0	0	0	0	0	0	0	0
4/21/2024	4:45 PM	0	0	0	0	0	0	0	0	0	0	0	0	0
4/21/2024	5:00 PM	0	0	0	0	0	0	0	0	0	0	0	0	0
4/21/2024	5:15 PM	0	0	0	0	0	0	0	0	0	0	0	0	0
4/21/2024	5:30 PM	0	0	0	0	0	0	0	0	0	0	0	0	0
4/21/2024	5:45 PM	0	0	0	0	0	0	0	0	0	0	0	0	0
4/21/2024	6:00 PM	0	0	0	0	0	0	0	0	0	0	0	0	0
4/21/2024	6:15 PM	0	0	0	0	0	0	0	0	0	0	0	0	0
4/21/2024	6:30 PM	0	0	0	0	0	0	0	0	0	0	0	0	0
4/21/2024	6:45 PM	0	0	0	0	0	0	0	0	0	0	0	0	0
4/21/2024	7:00 PM	0	0	0	0	0	0	0	0	0	0	0	0	0
4/21/2024	7:15 PM	0	0	0	0	0	0	0	0	0	0	0	0	0
4/21/2024	7:30 PM	0	0	0	0	0	0	0	0	0	0	0	0	0
4/21/2024	7:45 PM	0	0	0	0	0	0	0	0	0	0	0	0	0
4/21/2024	8:00 PM	0	0	0	0	0	0	0	0	0	0	0	0	0
4/21/2024	8:15 PM	0	0	0	0	0	0	0	0	0	0	0	0	0
4/21/2024	8:30 PM	0	0	0	0	0	0	0	0	0	0	0	0	0
4/21/2024	8:45 PM	0	0	0	0	0	0	0	0	0	0	0	0	0
4/21/2024	9:00 PM	0	0	0	0	0	0	0	0	0	0	0	0	0
4/21/2024	9:15 PM	0	0	0	0	0	0	0	0	0	0	0	0	0
4/21/2024	9:30 PM	0	0	0	0	0	0	0	0	0	0	0	0	0
4/21/2024	9:45 PM	0	0	0	0	0	0	0	0	0	0	0	0	0
4/21/2024	10:00 PM	0	0	0	0	0	0	0	0	0	0	0	0	0
4/21/2024	10:15 PM	0	0	0	0	0	0	0	0	0	0	0	0	0
4/21/2024	10:30 PM	0	0	0	0	0	0	0	0	0	0	0	0	0
4/21/2024	10:45 PM	0	0	0	0	0	0	0	0	0	0	0	0	0
4/21/2024	11:00 PM	0	0	0	0	0	0	0	0	0	0	0	0	0
4/21/2024	11:15 PM	0	0	0	0	0	0	0	0	0	0	0	0	0
4/21/2024	11:30 PM	0	0	0	0	0	0	0	0	0	0	0	0	0
4/21/2024	11:45 PM	0	0	0	0	0	0	0	0	0	0	0	0	0

4/22/2024	12:00 AM	0	0	0	0	0	0	0	0	0	0	0	0	0
4/22/2024	12:15 AM	0	0	0	0	0	0	0	0	0	0	0	0	0
4/22/2024	12:30 AM	0	0	0	0	0	0	0	0	0	0	0	0	0
4/22/2024	12:45 AM	0	0	0	0	0	0	0	0	0	0	0	0	0
4/22/2024	1:00 AM	0	0	0	0	0	0	0	0	0	0	0	0	0
4/22/2024	1:15 AM	0	0	0	0	0	0	0	0	0	0	0	0	0
4/22/2024	1:30 AM	0	0	0	0	0	0	0	0	0	0	0	0	0
4/22/2024	1:45 AM	0	0	0	0	0	0	0	0	0	0	0	0	0
4/22/2024	2:00 AM	0	0	0	0	0	0	0	0	0	0	0	0	0
4/22/2024	2:15 AM	0	0	0	0	0	0	0	0	0	0	0	0	0
4/22/2024	2:30 AM	0	0	0	0	0	0	0	0	0	0	0	0	0
4/22/2024	2:45 AM	0	0	0	0	0	0	0	0	0	0	0	0	0
4/22/2024	3:00 AM	0	0	0	0	0	0	0	0	0	0	0	0	0
4/22/2024	3:15 AM	0	0	0	0	0	0	0	0	0	0	0	0	0
4/22/2024	3:30 AM	0	0	0	0	0	0	0	0	0	0	0	0	0
4/22/2024	3:45 AM	0	0	0	0	0	0	0	0	0	0	0	0	0
4/22/2024	4:00 AM	0	0	0	0	0	0	0	0	0	0	0	0	0
4/22/2024	4:15 AM	0	0	0	0	0	0	0	0	0	0	0	0	0
4/22/2024	4:30 AM	0	0	0	0	0	0	0	0	0	0	0	0	0
4/22/2024	4:45 AM	0	0	0	0	0	0	0	0	0	0	0	0	0
4/22/2024	5:00 AM	0	0	0	0	0	0	0	0	0	0	0	0	0
4/22/2024	5:15 AM	0	0	0	0	0	0	0	0	0	0	0	0	0
4/22/2024	5:30 AM	0	0	0	0	0	0	0	0	0	0	0	0	0
4/22/2024	5:45 AM	0	0	0	0	0	0	0	0	0	0	0	0	0
4/22/2024	6:00 AM	0	0	0	0	0	0	0	0	0	0	0	0	0
4/22/2024	6:15 AM	0	0	0	0	0	0	0	0	0	0	0	0	0
4/22/2024	6:30 AM	0	0	0	0	0	0	0	0	0	0	0	0	0
4/22/2024	6:45 AM	0	0	0	0	0	0	0	0	0	0	0	0	0
4/22/2024	7:00 AM	0	0	0	0	0	0	0	0	0	0	0	0	0
4/22/2024	7:15 AM	0	0	0	0	0	0	0	0	0	0	0	0	0
4/22/2024	7:30 AM	0	0	0	0	0	0	0	0	0	0	0	0	0
4/22/2024	7:45 AM	0	0	0	0	0	0	0	0	0	0	0	0	0
4/22/2024	8:00 AM	0	0	0	0	0	0	0	0	0	0	0	0	0
4/22/2024	8:15 AM	0	0	0	0	0	0	0	0	0	0	0	0	0
4/22/2024	8:30 AM	0	0	0	0	0	0	0	0	0	0	0	0	0
4/22/2024	8:45 AM	0	0	0	0	0	0	0	0	0	0	0	0	0
4/22/2024	9:00 AM	0	0	0	0	0	0	0	0	0	0	0	0	0
4/22/2024	9:15 AM	0	0	0	0	0	0	0	0	0	0	0	0	0
4/22/2024	9:30 AM	0	0	0	0	0	0	0	0	0	0	0	0	0
4/22/2024	9:45 AM	0	0	0	0	0	0	0	0	0	0	0	0	0
4/22/2024	10:00 AM	0	0	0	0	0	0	0	0	0	0	0	0	0
4/22/2024	10:15 AM	0	0	0	0	0	0	0	0	0	0	0	0	0
4/22/2024	10:30 AM	0	0	0	0	0	0	0	0	0	0	0	0	0
4/22/2024	10:45 AM	0	0	0	0	0	0	0	0	0	0	0	0	0
4/22/2024	11:00 AM	0	0	0	0	0	0	0	0	0	0	0	0	0
4/22/2024	11:15 AM	0	0	0	0	0	0	0	0	0	0	0	0	0
4/22/2024	11:30 AM	0	0	0	0	0	0	0	0	0	0	0	0	0
4/22/2024	11:45 AM	0	0	0	0	0	0	0	0	0	0	0	0	0
4/22/2024	12:00 PM	0	0	0	0	0	0	0	0	0	0	0	0	0
4/22/2024	12:15 PM	0	0	0	0	0	0	0	0	0	0	0	0	0
4/22/2024	12:30 PM	0	0	0	0	0	0	0	0	0	0	0	0	0
4/22/2024	12:45 PM	0	0	0	0	0	0	0	0	0	0	0	0	0
4/22/2024	1:00 PM	0	0	0	0	0	0	0	0	0	0	0	0	0
4/22/2024	1:15 PM	0	0	0	0	0	0	0	0	0	0	0	0	0
4/22/2024	1:30 PM	0	0	0	0	0	0	0	0	0	0	0	0	0
4/22/2024	1:45 PM	0	0	0	0	0	0	0	0	0	0	0	0	0
4/22/2024	2:00 PM	0	0	0	0	0	0	0	0	0	0	0	0	0
4/22/2024	2:15 PM	0	0	0	0	0	0	0	0	0	0	0	0	0
4/22/2024	2:30 PM	0	0	0	0	0	0	0	0	0	0	0	0	0
4/22/2024	2:45 PM	0	0	0	0	0	0	0	0	0	0	0	0	0
4/22/2024	3:00 PM	0	0	0	0	0	0	0	0	0	0	0	0	0
4/22/2024	3:15 PM	0	0	0	0	0	0	0	0	0	0	0	0	0
4/22/2024	3:30 PM	0	0	0	0	0	0	0	0	0	0	0	0	0
4/22/2024	3:45 PM	0	0	0	0	0	0	0	0	0	0	0	0	0
4/22/2024	4:00 PM	0	0	0	0	0	0	0	0	0	0	0	0	0
4/22/2024	4:15 PM	0	0	0	0	0	0	0	0	0	0	0	0	0
4/22/2024	4:30 PM	0	0	0	0	0	0	0	0	0	0	0	0	0
4/22/2024	4:45 PM	0	0	0	0	0	0	0	0	0	0	0	0	0
4/22/2024	5:00 PM	0	0	0	0	0	0	0	0	0	0	0	0	0
4/22/2024	5:15 PM	0	0	0	0	0	0	0	0	0	0	0	0	0
4/22/2024	5:30 PM	0	0	0	0	0	0	0	0	0	0	0	0	0
4/22/2024	5:45 PM	0	0	0	0	0	0	0	0	0	0	0	0	0
4/22/2024	6:00 PM	0	0	0	0	0	0	0	0	0	0	0	0	0
4/22/2024	6:15 PM	0	0	0	0	0	0	0	0	0	0	0	0	0
4/22/2024	6:30 PM	0	0	0	0	0	0	0	0	0	0	0	0	0
4/22/2024	6:45 PM	0	0	0	0	0	0	0	0	0	0	0	0	0
4/22/2024	7:00 PM	0	0	0	0	0	0	0	0	0	0	0	0	0
4/22/2024	7:15 PM	0	0	0	0	0	0	0	0	0	0	0	0	0
4/22/2024	7:30 PM	0	0	0	0	0	0	0	0	0	0	0	0	0
4/22/2024	7:45 PM	0	0	0	0	0	0	0	0	0	0	0	0	0
4/22/2024	8:00 PM	0	0	0	0	0	0	0	0	0	0	0	0	0
4/22/2024	8:15 PM	0	0	0	0	0	0	0	0	0	0	0	0	0
4/22/2024	8:30 PM	0	0	0	0	0	0	0	0	0	0	0	0	0
4/22/2024	8:45 PM	0	0	0	0	0	0	0	0	0	0	0	0	0
4/22/2024	9:00 PM	0	0	0	0	0	0	0	0	0	0	0	0	0
4/22/2024	9:15 PM	0	0	0	0	0	0	0	0	0	0	0	0	0
4/22/2024	9:30 PM	0	0	0	0	0	0	0	0	0	0	0	0	0
4/22/2024	9:45 PM	0	0	0	0	0	0	0	0	0	0	0	0	0
4/22/2024	10:00 PM	0	0	0	0	0	0	0	0	0	0	0	0	0
4/22/2024	10:15 PM	0	0	0	0	0	0	0	0	0	0	0	0	0
4/22/2024	10:30 PM	0	0	0	0	0	0	0	0	0	0	0	0	0
4/22/2024	10:45 PM	0	0	0	0	0	0	0	0	0	0	0	0	0
4/22/2024	11:00 PM	0	0	0	0	0	0	0	0	0	0	0	0	0
4/22/2024	11:15 PM	0	0	0	0	0	0	0	0	0	0	0	0	0
4/22/2024	11:30 PM	0	0	0	0	0	0	0	0	0	0	0	0	0
4/22/2024	11:45 PM	0	0	0	0	0	0	0	0	0	0	0	0	0

4/23/2024	12:00 AM	0	0	0	0	0	0	0	0	0	0	0	0	0
4/23/2024	12:15 AM	0	0	0	0	0	0	0	0	0	0	0	0	0
4/23/2024	12:30 AM	0	0	0	0	0	0	0	0	0	0	0	0	0
4/23/2024	12:45 AM	0	0	0	0	0	0	0	0	0	0	0	0	0
4/23/2024	1:00 AM	0	0	0	0	0	0	0	0	0	0	0	0	0
4/23/2024	1:15 AM	0	0	0	0	0	0	0	0	0	0	0	0	0
4/23/2024	1:30 AM	0	0	0	0	0	0	0	0	0	0	0	0	0
4/23/2024	1:45 AM	0	0	0	0	0	0	0	0	0	0	0	0	0
4/23/2024	2:00 AM	0	0	0	0	0	0	0	0	0	0	0	0	0
4/23/2024	2:15 AM	0	0	0	0	0	0	0	0	0	0	0	0	0
4/23/2024	2:30 AM	0	0	0	0	0	0	0	0	0	0	0	0	0
4/23/2024	2:45 AM	0	0	0	0	0	0	0	0	0	0	0	0	0
4/23/2024	3:00 AM	0	0	0	0	0	0	0	0	0	0	0	0	0
4/23/2024	3:15 AM	0	0	0	0	0	0	0	0	0	0	0	0	0
4/23/2024	3:30 AM	0	0	0	0	0	0	0	0	0	0	0	0	0
4/23/2024	3:45 AM	0	0	0	0	0	0	0	0	0	0	0	0	0
4/23/2024	4:00 AM	0	0	0	0	0	0	0	0	0	0	0	0	0
4/23/2024	4:15 AM	0	0	0	0	0	0	0	0	0	0	0	0	0
4/23/2024	4:30 AM	0	0	0	0	0	0	0	0	0	0	0	0	0
4/23/2024	4:45 AM	0	0	0	0	0	0	0	0	0	0	0	0	0
4/23/2024	5:00 AM	0	0	0	0	0	0	0	0	0	0	0	0	0
4/23/2024	5:15 AM	0	0	0	0	0	0	0	0	0	0	0	0	0
4/23/2024	5:30 AM	0	0	0	0	0	0	0	0	0	0	0	0	0
4/23/2024	5:45 AM	0	0	0	0	0	0	0	0	0	0	0	0	0
4/23/2024	6:00 AM	0	0	0	0	0	0	0	0	0	0	0	0	0
4/23/2024	6:15 AM	0	0	0	0	0	0	0	0	0	0	0	0	0
4/23/2024	6:30 AM	0	0	0	0	0	0	0	0	0	0	0	0	0
4/23/2024	6:45 AM	0	0	0	0	0	0	0	0	0	0	0	0	0
4/23/2024	7:00 AM	0	0	0	0	0	0	0	0	0	0	0	0	0
4/23/2024	7:15 AM	0	0	0	0	0	0	0	0	0	0	0	0	0
4/23/2024	7:30 AM	0	0	0	0	0	0	0	0	0	0	0	0	0
4/23/2024	7:45 AM	0	0	0	0	0	0	0	0	0	0	0	0	0
4/23/2024	8:00 AM	0	0	0	0	0	0	0	0	0	0	0	0	0
4/23/2024	8:15 AM	0	0	0	0	0	0	0	0	0	0	0	0	0
4/23/2024	8:30 AM	0	0	0	0	0	0	0	0	0	0	0	0	0
4/23/2024	8:45 AM	0	0	0	0	0	0	0	0	0	0	0	0	0
4/23/2024	9:00 AM	0	0	0	0	0	0	0	0	0	0	0	0	0
4/23/2024	9:15 AM	0	0	0	0	0	0	0	0	0	0	0	0	0
4/23/2024	9:30 AM	0	0	0	0	0	0	0	0	0	0	0	0	0
4/23/2024	9:45 AM	0	0	0	0	0	0	0	0	0	0	0	0	0
4/23/2024	10:00 AM	0	0	0	0	0	0	0	0	0	0	0	0	0
4/23/2024	10:15 AM	0	0	0	0	0	0	0	0	0	0	0	0	0
4/23/2024	10:30 AM	0	0	0	0	0	0	0	0	0	0	0	0	0
4/23/2024	10:45 AM	0	0	0	0	0	0	0	0	0	0	0	0	0
4/23/2024	11:00 AM	0	0	0	0	0	0	0	0	0	0	0	0	0
4/23/2024	11:15 AM	0	0	0	0	0	0	0	0	0	0	0	0	0
4/23/2024	11:30 AM	0	0	0	0	0	0	0	0	0	0	0	0	0
4/23/2024	11:45 AM	0	0	0	0	0	0	0	0	0	0	0	0	0
4/23/2024	12:00 PM	0	0	0	0	0	0	0	0	0	0	0	0	0
4/23/2024	12:15 PM	0	0	0	0	0	0	0	0	0	0	0	0	0
4/23/2024	12:30 PM	0	0	0	0	0	0	0	0	0	0	0	0	0
4/23/2024	12:45 PM	0	0	0	0	0	0	0	0	0	0	0	0	0
4/23/2024	1:00 PM	0	0	0	0	0	0	0	0	0	0	0	0	0
4/23/2024	1:15 PM	0	0	0	0	0	0	0	0	0	0	0	0	0
4/23/2024	1:30 PM	0	0	0	0	0	0	0	0	0	0	0	0	0
4/23/2024	1:45 PM	0	0	0	0	0	0	0	0	0	0	0	0	0
4/23/2024	2:00 PM	0	0	0	0	0	0	0	0	0	0	0	0	0
4/23/2024	2:15 PM	0	0	0	0	0	0	0	0	0	0	0	0	0
4/23/2024	2:30 PM	0	0	0	0	0	0	0	0	0	0	0	0	0
4/23/2024	2:45 PM	0	0	0	0	0	0	0	0	0	0	0	0	0
4/23/2024	3:00 PM	0	0	0	0	0	0	0	0	0	0	0	0	0
4/23/2024	3:15 PM	0	0	0	0	0	0	0	0	0	0	0	0	0
4/23/2024	3:30 PM	0	0	0	0	0	0	0	0	0	0	0	0	0
4/23/2024	3:45 PM	0	0	0	0	0	0	0	0	0	0	0	0	0
4/23/2024	4:00 PM	0	0	0	0	0	0	0	0	0	0	0	0	0
4/23/2024	4:15 PM	0	0	0	0	0	0	0	0	0	0	0	0	0
4/23/2024	4:30 PM	0	0	0	0	0	0	0	0	0	0	0	0	0
4/23/2024	4:45 PM	0	0	0	0	0	0	0	0	0	0	0	0	0
4/23/2024	5:00 PM	0	0	0	0	0	0	0	0	0	0	0	0	0
4/23/2024	5:15 PM	0	0	0	0	0	0	0	0	0	0	0	0	0
4/23/2024	5:30 PM	0	0	0	0	0	0	0	0	0	0	0	0	0
4/23/2024	5:45 PM	0	0	0	0	0	0	0	0	0	0	0	0	0
4/23/2024	6:00 PM	0	0	0	0	0	0	0	0	0	0	0	0	0
4/23/2024	6:15 PM	0	0	0	0	0	0	0	0	0	0	0	0	0
4/23/2024	6:30 PM	0	0	0	0	0	0	0	0	0	0	0	0	0
4/23/2024	6:45 PM	0	0	0	0	0	0	0	0	0	0	0	0	0
4/23/2024	7:00 PM	0	0	0	0	0	0	0	0	0	0	0	0	0
4/23/2024	7:15 PM	0	0	0	0	0	0	0	0	0	0	0	0	0
4/23/2024	7:30 PM	0	0	0	0	0	0	0	0	0	0	0	0	0
4/23/2024	7:45 PM	0	0	0	0	0	0	0	0	0	0	0	0	0
4/23/2024	8:00 PM	0	0	0	0	0	0	0	0	0	0	0	0	0
4/23/2024	8:15 PM	0	0	0	0	0	0	0	0	0	0	0	0	0
4/23/2024	8:30 PM	0	0	0	0	0	0	0	0	0	0	0	0	0
4/23/2024	8:45 PM	0	0	0	0	0	0	0	0	0	0	0	0	0
4/23/2024	9:00 PM	0	0	0	0	0	0	0	0	0	0	0	0	0
4/23/2024	9:15 PM	0	0	0	0	0	0	0	0	0	0	0	0	0
4/23/2024	9:30 PM	0	0	0	0	0	0	0	0	0	0	0	0	0
4/23/2024	9:45 PM	0	0	0	0	0	0	0	0	0	0	0	0	0
4/23/2024	10:00 PM	0	0	0	0	0	0	0	0	0	0	0	0	0
4/23/2024	10:15 PM	0	0	0	0	0	0	0	0	0	0	0	0	0
4/23/2024	10:30 PM	0	0	0	0	0	0	0	0	0	0	0	0	0
4/23/2024	10:45 PM	0	0	0	0	0	0	0	0	0	0	0	0	0
4/23/2024	11:00 PM	0	0	0	0	0	0	0	0	0	0	0	0	0
4/23/2024	11:15 PM	0	0	0	0	0	0	0	0	0	0	0	0	0
4/23/2024	11:30 PM	0	0	0	0	0	0	0	0	0	0	0	0	0
4/23/2024	11:45 PM	0	0	0	0	0	0	0	0	0	0	0	0	0

4/24/2024	12:00 AM	0	0	0	0	0	0	0	0	0	0	0	0	0
4/24/2024	12:15 AM	0	0	0	0	0	0	0	0	0	0	0	0	0
4/24/2024	12:30 AM	0	0	0	0	0	0	0	0	0	0	0	0	0
4/24/2024	12:45 AM	0	0	0	0	0	0	0	0	0	0	0	0	0
4/24/2024	1:00 AM	0	0	0	0	0	0	0	0	0	0	0	0	0
4/24/2024	1:15 AM	0	0	0	0	0	0	0	0	0	0	0	0	0
4/24/2024	1:30 AM	0	0	0	0	0	0	0	0	0	0	0	0	0
4/24/2024	1:45 AM	0	0	0	0	0	0	0	0	0	0	0	0	0
4/24/2024	2:00 AM	0	0	0	0	0	0	0	0	0	0	0	0	0
4/24/2024	2:15 AM	0	0	0	0	0	0	0	0	0	0	0	0	0
4/24/2024	2:30 AM	0	0	0	0	0	0	0	0	0	0	0	0	0
4/24/2024	2:45 AM	0	0	0	0	0	0	0	0	0	0	0	0	0
4/24/2024	3:00 AM	0	0	0	0	0	0	0	0	0	0	0	0	0
4/24/2024	3:15 AM	0	0	0	0	0	0	0	0	0	0	0	0	0
4/24/2024	3:30 AM	0	0	0	0	0	0	0	0	0	0	0	0	0
4/24/2024	3:45 AM	0	0	0	0	0	0	0	0	0	0	0	0	0
4/24/2024	4:00 AM	0	0	0	0	0	0	0	0	0	0	0	0	0
4/24/2024	4:15 AM	0	0	0	0	0	0	0	0	0	0	0	0	0
4/24/2024	4:30 AM	0	0	0	0	0	0	0	0	0	0	0	0	0
4/24/2024	4:45 AM	0	0	0	0	0	0	0	0	0	0	0	0	0
4/24/2024	5:00 AM	0	0	0	0	0	0	0	0	0	0	0	0	0
4/24/2024	5:15 AM	0	0	0	0	0	0	0	0	0	0	0	0	0
4/24/2024	5:30 AM	0	0	0	0	0	0	0	0	0	0	0	0	0
4/24/2024	5:45 AM	0	0	0	0	0	0	0	0	0	0	0	0	0
4/24/2024	6:00 AM	0	0	0	0	0	0	0	0	0	0	0	0	0
4/24/2024	6:15 AM	0	0	0	0	0	0	0	0	0	0	0	0	0
4/24/2024	6:30 AM	0	0	0	0	0	0	0	0	0	0	0	0	0
4/24/2024	6:45 AM	0	0	0	0	0	0	0	0	0	0	0	0	0
4/24/2024	7:00 AM	0	0	0	0	0	0	0	0	0	0	0	0	0
4/24/2024	7:15 AM	0	0	0	0	0	0	0	0	0	0	0	0	0
4/24/2024	7:30 AM	0	0	0	0	0	0	0	0	0	0	0	0	0
4/24/2024	7:45 AM	0	0	0	0	0	0	0	0	0	0	0	0	0
4/24/2024	8:00 AM	0	0	0	0	0	0	0	0	0	0	0	0	0
4/24/2024	8:15 AM	0	0	0	0	0	0	0	0	0	0	0	0	0
4/24/2024	8:30 AM	0	0	0	0	0	0	0	0	0	0	0	0	0
4/24/2024	8:45 AM	0	0	0	0	0	0	0	0	0	0	0	0	0
4/24/2024	9:00 AM	0	0	0	0	0	0	0	0	0	0	0	0	0
4/24/2024	9:15 AM	0	0	0	0	0	0	0	0	0	0	0	0	0
4/24/2024	9:30 AM	0	0	0	0	0	0	0	0	0	0	0	0	0
4/24/2024	9:45 AM	0	0	0	0	0	0	0	0	0	0	0	0	0
4/24/2024	10:00 AM	0	0	0	0	0	0	0	0	0	0	0	0	0
4/24/2024	10:15 AM	0	0	0	0	0	0	0	0	0	0	0	0	0
4/24/2024	10:30 AM	0	0	0	0	0	0	0	0	0	0	0	0	0
4/24/2024	10:45 AM	0	0	0	0	0	0	0	0	0	0	0	0	0
4/24/2024	11:00 AM	0	0	0	0	0	0	0	0	0	0	0	0	0
4/24/2024	11:15 AM	0	0	0	0	0	0	0	0	0	0	0	0	0
4/24/2024	11:30 AM	0	0	0	0	0	0	0	0	0	0	0	0	0
4/24/2024	11:45 AM	0	0	0	0	0	0	0	0	0	0	0	0	0
4/24/2024	12:00 PM	0	0	0	0	0	0	0	0	0	0	0	0	0
4/24/2024	12:15 PM	0	0	0	0	0	0	0	0	0	0	0	0	0
4/24/2024	12:30 PM	0	0	0	0	0	0	0	0	0	0	0	0	0
4/24/2024	12:45 PM	0	0	0	0	0	0	0	0	0	0	0	0	0
4/24/2024	1:00 PM	0	0	0	0	0	0	0	0	0	0	0	0	0
4/24/2024	1:15 PM	0	0	0	0	0	0	0	0	0	0	0	0	0
4/24/2024	1:30 PM	0	0	0	0	0	0	0	0	0	0	0	0	0
4/24/2024	1:45 PM	0	0	0	0	0	0	0	0	0	0	0	0	0
4/24/2024	2:00 PM	0	0	0	0	0	0	0	0	0	0	0	0	0
4/24/2024	2:15 PM	0	0	0	0	0	0	0	0	0	0	0	0	0
4/24/2024	2:30 PM	0	0	0	0	0	0	0	0	0	0	0	0	0
4/24/2024	2:45 PM	0	0	0	0	0	0	0	0	0	0	0	0	0
4/24/2024	3:00 PM	0	0	0	0	0	0	0	0	0	0	0	0	0
4/24/2024	3:15 PM	0	0	0	0	0	0	0	0	0	0	0	0	0
4/24/2024	3:30 PM	0	0	0	0	0	0	0	0	0	0	0	0	0
4/24/2024	3:45 PM	0	0	0	0	0	0	0	0	0	0	0	0	0
4/24/2024	4:00 PM	0	0	0	0	0	0	0	0	0	0	0	0	0
4/24/2024	4:15 PM	0	0	0	0	0	0	0	0	0	0	0	0	0
4/24/2024	4:30 PM	0	0	0	0	0	0	0	0	0	0	0	0	0
4/24/2024	4:45 PM	0	0	0	0	0	0	0	0	0	0	0	0	0
4/24/2024	5:00 PM	0	0	0	0	0	0	0	0	0	0	0	0	0
4/24/2024	5:15 PM	0	0	0	0	0	0	0	0	0	0	0	0	0
4/24/2024	5:30 PM	0	0	0	0	0	0	0	0	0	0	0	0	0
4/24/2024	5:45 PM	0	0	0	0	0	0	0	0	0	0	0	0	0
4/24/2024	6:00 PM	0	0	0	0	0	0	0	0	0	0	0	0	0
4/24/2024	6:15 PM	0	0	0	0	0	0	0	0	0	0	0	0	0
4/24/2024	6:30 PM	0	0	0	0	0	0	0	0	0	0	0	0	0
4/24/2024	6:45 PM	0	0	0	0	0	0	0	0	0	0	0	0	0
4/24/2024	7:00 PM	0	0	0	0	0	0	0	0	0	0	0	0	0
4/24/2024	7:15 PM	0	0	0	0	0	0	0	0	0	0	0	0	0
4/24/2024	7:30 PM	0	0	0	0	0	0	0	0	0	0	0	0	0
4/24/2024	7:45 PM	0	0	0	0	0	0	0	0	0	0	0	0	0
4/24/2024	8:00 PM	0	0	0	0	0	0	0	0	0	0	0	0	0
4/24/2024	8:15 PM	0	0	0	0	0	0	0	0	0	0	0	0	0
4/24/2024	8:30 PM	0	0	0	0	0	0	0	0	0	0	0	0	0
4/24/2024	8:45 PM	0	0	0	0	0	0	0	0	0	0	0	0	0
4/24/2024	9:00 PM	0	0	0	0	0	0	0	0	0	0	0	0	0
4/24/2024	9:15 PM	0	0	0	0	0	0	0	0	0	0	0	0	0
4/24/2024	9:30 PM	0	0	0	0	0	0	0	0	0	0	0	0	0
4/24/2024	9:45 PM	0	0	0	0	0	0	0	0	0	0	0	0	0
4/24/2024	10:00 PM	0	0	0	0	0	0	0	0	0	0	0	0	0
4/24/2024	10:15 PM	0	0	0	0	0	0	0	0	0	0	0	0	0
4/24/2024	10:30 PM	0	0	0	0	0	0	0	0	0	0	0	0	0
4/24/2024	10:45 PM	0	0	0	0	0	0	0	0	0	0	0	0	0
4/24/2024	11:00 PM	0	0	0	0	0	0	0	0	0	0	0	0	0
4/24/2024	11:15 PM	0	0	0	0	0	0	0	0	0	0	0	0	0
4/24/2024	11:30 PM	0	0	0	0	0	0	0	0	0	0	0	0	0
4/24/2024	11:45 PM	0	0	0	0	0	0	0	0	0	0	0	0	0

4/25/2024	12:00 AM	0	0	0	0	0	0	0	0	0	0	0	0	0
4/25/2024	12:15 AM	0	0	0	0	0	0	0	0	0	0	0	0	0
4/25/2024	12:30 AM	0	0	0	0	0	0	0	0	0	0	0	0	0
4/25/2024	12:45 AM	0	0	0	0	0	0	0	0	0	0	0	0	0
4/25/2024	1:00 AM	0	0	0	0	0	0	0	0	0	0	0	0	0
4/25/2024	1:15 AM	0	0	0	0	0	0	0	0	0	0	0	0	0
4/25/2024	1:30 AM	0	0	0	0	0	0	0	0	0	0	0	0	0
4/25/2024	1:45 AM	0	0	0	0	0	0	0	0	0	0	0	0	0
4/25/2024	2:00 AM	0	0	0	0	0	0	0	0	0	0	0	0	0
4/25/2024	2:15 AM	0	0	0	0	0	0	0	0	0	0	0	0	0
4/25/2024	2:30 AM	0	0	0	0	0	0	0	0	0	0	0	0	0
4/25/2024	2:45 AM	0	0	0	0	0	0	0	0	0	0	0	0	0
4/25/2024	3:00 AM	0	0	0	0	0	0	0	0	0	0	0	0	0
4/25/2024	3:15 AM	0	0	0	0	0	0	0	0	0	0	0	0	0
4/25/2024	3:30 AM	0	0	0	0	0	0	0	0	0	0	0	0	0
4/25/2024	3:45 AM	0	0	0	0	0	0	0	0	0	0	0	0	0
4/25/2024	4:00 AM	0	0	0	0	0	0	0	0	0	0	0	0	0
4/25/2024	4:15 AM	0	0	0	0	0	0	0	0	0	0	0	0	0
4/25/2024	4:30 AM	0	0	0	0	0	0	0	0	0	0	0	0	0
4/25/2024	4:45 AM	0	0	0	0	0	0	0	0	0	0	0	0	0
4/25/2024	5:00 AM	0	0	0	0	0	0	0	0	0	0	0	0	0
4/25/2024	5:15 AM	0	0	0	0	0	0	0	0	0	0	0	0	0
4/25/2024	5:30 AM	0	0	0	0	0	0	0	0	0	0	0	0	0
4/25/2024	5:45 AM	0	0	0	0	0	0	0	0	0	0	0	0	0
4/25/2024	6:00 AM	0	0	0	0	0	0	0	0	0	0	0	0	0
4/25/2024	6:15 AM	0	0	0	0	0	0	0	0	0	0	0	0	0
4/25/2024	6:30 AM	0	0	0	0	0	0	0	0	0	0	0	0	0
4/25/2024	6:45 AM	0	0	0	0	0	0	0	0	0	0	0	0	0
4/25/2024	7:00 AM	0	0	0	0	0	0	0	0	0	0	0	0	0
4/25/2024	7:15 AM	0	0	0	0	0	0	0	0	0	0	0	0	0
4/25/2024	7:30 AM	0	0	0	0	0	0	0	0	0	0	0	0	0
4/25/2024	7:45 AM	0	0	0	0	0	0	0	0	0	0	0	0	0
4/25/2024	8:00 AM	0	0	0	0	0	0	0	0	0	0	0	0	0
4/25/2024	8:15 AM	0	0	0	0	0	0	0	0	0	0	0	0	0
4/25/2024	8:30 AM	0	0	0	0	0	0	0	0	0	0	0	0	0
4/25/2024	8:45 AM	0	0	0	0	0	0	0	0	0	0	0	0	0
4/25/2024	9:00 AM	0	0	0	0	0	0	0	0	0	0	0	0	0
4/25/2024	9:15 AM	0	0	0	0	0	0	0	0	0	0	0	0	0
4/25/2024	9:30 AM	0	0	0	0	0	0	0	0	0	0	0	0	0
4/25/2024	9:45 AM	0	0	0	0	0	0	0	0	0	0	0	0	0
4/25/2024	10:00 AM	0	0	0	0	0	0	0	0	0	0	0	0	0
4/25/2024	10:15 AM	0	0	0	0	0	0	0	0	0	0	0	0	0
4/25/2024	10:30 AM	0	0	0	0	0	0	0	0	0	0	0	0	0
4/25/2024	10:45 AM	0	0	0	0	0	0	0	0	0	0	0	0	0
4/25/2024	11:00 AM	0	0	0	0	0	0	0	0	0	0	0	0	0
4/25/2024	11:15 AM	0	0	0	0	0	0	0	0	0	0	0	0	0
4/25/2024	11:30 AM	0	0	0	0	0	0	0	0	0	0	0	0	0
4/25/2024	11:45 AM	0	0	0	0	0	0	0	0	0	0	0	0	0
4/25/2024	12:00 PM	0	0	0	0	0	0	0	0	0	0	0	0	0
4/25/2024	12:15 PM	0	0	0	0	0	0	0	0	0	0	0	0	0
4/25/2024	12:30 PM	0	0	0	0	0	0	0	0	0	0	0	0	0
4/25/2024	12:45 PM	0	0	0	0	0	0	0	0	0	0	0	0	0
4/25/2024	1:00 PM	0	0	0	0	0	0	0	0	0	0	0	0	0
4/25/2024	1:15 PM	0	0	0	0	0	0	0	0	0	0	0	0	0
4/25/2024	1:30 PM	0	0	0	0	0	0	0	0	0	0	0	0	0
4/25/2024	1:45 PM	0	0	0	0	0	0	0	0	0	0	0	0	0
4/25/2024	2:00 PM	0	0	0	0	0	0	0	0	0	0	0	0	0
4/25/2024	2:15 PM	0	0	0	0	0	0	0	0	0	0	0	0	0
4/25/2024	2:30 PM	0	0	0	0	0	0	0	0	0	0	0	0	0
4/25/2024	2:45 PM	0	0	0	0	0	0	0	0	0	0	0	0	0
4/25/2024	3:00 PM	0	0	0	0	0	0	0	0	0	0	0	0	0
4/25/2024	3:15 PM	0	0	0	0	0	0	0	0	0	0	0	0	0
4/25/2024	3:30 PM	0	0	0	0	0	0	0	0	0	0	0	0	0
4/25/2024	3:45 PM	0	0	0	0	0	0	0	0	0	0	0	0	0
4/25/2024	4:00 PM	0	0	0	0	0	0	0	0	0	0	0	0	0
4/25/2024	4:15 PM	0	0	0	0	0	0	0	0	0	0	0	0	0
4/25/2024	4:30 PM	0	0	0	0	0	0	0	0	0	0	0	0	0
4/25/2024	4:45 PM	0	0	0	0	0	0	0	0	0	0	0	0	0
4/25/2024	5:00 PM	0	0	0	0	0	0	0	0	0	0	0	0	0
4/25/2024	5:15 PM	0	0	0	0	0	0	0	0	0	0	0	0	0
4/25/2024	5:30 PM	0	0	0	0	0	0	0	0	0	0	0	0	0
4/25/2024	5:45 PM	0	0	0	0	0	0	0	0	0	0	0	0	0
4/25/2024	6:00 PM	0	0	0	0	0	0	0	0	0	0	0	0	0
4/25/2024	6:15 PM	0	0	0	0	0	0	0	0	0	0	0	0	0
4/25/2024	6:30 PM	0	0	0	0	0	0	0	0	0	0	0	0	0
4/25/2024	6:45 PM	0	0	0	0	0	0	0	0	0	0	0	0	0
4/25/2024	7:00 PM	0	0	0	0	0	0	0	0	0	0	0	0	0
4/25/2024	7:15 PM	0	0	0	0	0	0	0	0	0	0	0	0	0
4/25/2024	7:30 PM	0	0	0	0	0	0	0	0	0	0	0	0	0
4/25/2024	7:45 PM	0	0	0	0	0	0	0	0	0	0	0	0	0
4/25/2024	8:00 PM	0	0	0	0	0	0	0	0	0	0	0	0	0
4/25/2024	8:15 PM	0	0	0	0	0	0	0	0	0	0	0	0	0
4/25/2024	8:30 PM	0	0	0	0	0	0	0	0	0	0	0	0	0
4/25/2024	8:45 PM	0	0	0	0	0	0	0	0	0	0	0	0	0
4/25/2024	9:00 PM	0	0	0	0	0	0	0	0	0	0	0	0	0
4/25/2024	9:15 PM	0	0	0	0	0	0	0	0	0	0	0	0	0
4/25/2024	9:30 PM	0	0	0	0	0	0	0	0	0	0	0	0	0
4/25/2024	9:45 PM	0	0	0	0	0	0	0	0	0	0	0	0	0
4/25/2024	10:00 PM	0	0	0	0	0	0	0	0	0	0	0	0	0
4/25/2024	10:15 PM	0	0	0	0	0	0	0	0	0	0	0	0	0
4/25/2024	10:30 PM	0	0	0	0	0	0	0	0	0	0	0	0	0
4/25/2024	10:45 PM	0	0	0	0	0	0	0	0	0	0	0	0	0
4/25/2024	11:00 PM	0	0	0	0	0	0	0	0	0	0	0	0	0
4/25/2024	11:15 PM	0	0	0	0	0	0	0	0	0	0	0	0	0
4/25/2024	11:30 PM	0	0	0	0	0	0	0	0	0	0	0	0	0
4/25/2024	11:45 PM	0	0	0	0	0	0	0	0	0	0	0	0	0

4/26/2024	12:00 AM	0	0	0	0	0	0	0	0	0	0	0	0	0
4/26/2024	12:15 AM	0	0	0	0	0	0	0	0	0	0	0	0	0
4/26/2024	12:30 AM	0	0	0	0	0	0	0	0	0	0	0	0	0
4/26/2024	12:45 AM	0	0	0	0	0	0	0	0	0	0	0	0	0
4/26/2024	1:00 AM	0	0	0	0	0	0	0	0	0	0	0	0	0
4/26/2024	1:15 AM	0	0	0	0	0	0	0	0	0	0	0	0	0
4/26/2024	1:30 AM	0	0	0	0	0	0	0	0	0	0	0	0	0
4/26/2024	1:45 AM	0	0	0	0	0	0	0	0	0	0	0	0	0
4/26/2024	2:00 AM	0	0	0	0	0	0	0	0	0	0	0	0	0
4/26/2024	2:15 AM	0	0	0	0	0	0	0	0	0	0	0	0	0
4/26/2024	2:30 AM	0	0	0	0	0	0	0	0	0	0	0	0	0
4/26/2024	2:45 AM	0	0	0	0	0	0	0	0	0	0	0	0	0
4/26/2024	3:00 AM	0	0	0	0	0	0	0	0	0	0	0	0	0
4/26/2024	3:15 AM	0	0	0	0	0	0	0	0	0	0	0	0	0
4/26/2024	3:30 AM	0	0	0	0	0	0	0	0	0	0	0	0	0
4/26/2024	3:45 AM	0	0	0	0	0	0	0	0	0	0	0	0	0
4/26/2024	4:00 AM	0	0	0	0	0	0	0	0	0	0	0	0	0
4/26/2024	4:15 AM	0	0	0	0	0	0	0	0	0	0	0	0	0
4/26/2024	4:30 AM	0	0	0	0	0	0	0	0	0	0	0	0	0
4/26/2024	4:45 AM	0	0	0	0	0	0	0	0	0	0	0	0	0
4/26/2024	5:00 AM	0	0	0	0	0	0	0	0	0	0	0	0	0
4/26/2024	5:15 AM	0	0	0	0	0	0	0	0	0	0	0	0	0
4/26/2024	5:30 AM	0	0	0	0	0	0	0	0	0	0	0	0	0
4/26/2024	5:45 AM	0	0	0	0	0	0	0	0	0	0	0	0	0
4/26/2024	6:00 AM	0	0	0	0	0	0	0	0	0	0	0	0	0
4/26/2024	6:15 AM	0	0	0	0	0	0	0	0	0	0	0	0	0
4/26/2024	6:30 AM	0	0	0	0	0	0	0	0	0	0	0	0	0
4/26/2024	6:45 AM	0	0	0	0	0	0	0	0	0	0	0	0	0
4/26/2024	7:00 AM	0	0	0	0	0	0	0	0	0	0	0	0	0
4/26/2024	7:15 AM	0	0	0	0	0	0	0	0	0	0	0	0	0
4/26/2024	7:30 AM	0	0	0	0	0	0	0	0	0	0	0	0	0
4/26/2024	7:45 AM	0	0	0	0	0	0	0	0	0	0	0	0	0
4/26/2024	8:00 AM	0	0	0	0	0	0	0	0	0	0	0	0	0
4/26/2024	8:15 AM	0	0	0	0	0	0	0	0	0	0	0	0	0
4/26/2024	8:30 AM	0	0	0	0	0	0	0	0	0	0	0	0	0
4/26/2024	8:45 AM	0	0	0	0	0	0	0	0	0	0	0	0	0
4/26/2024	9:00 AM	0	0	0	0	0	0	0	0	0	0	0	0	0
4/26/2024	9:15 AM	0	0	0	0	0	0	0	0	0	0	0	0	0
4/26/2024	9:30 AM	0	0	0	0	0	0	0	0	0	0	0	0	0
4/26/2024	9:45 AM	0	0	0	0	0	0	0	0	0	0	0	0	0
4/26/2024	10:00 AM	0	0	0	0	0	0	0	0	0	0	0	0	0
4/26/2024	10:15 AM	0	0	0	0	0	0	0	0	0	0	0	0	0
4/26/2024	10:30 AM	0	0	0	0	0	0	0	0	0	0	0	0	0
4/26/2024	10:45 AM	0	0	0	0	0	0	0	0	0	0	0	0	0
4/26/2024	11:00 AM	0	0	0	0	0	0	0	0	0	0	0	0	0
4/26/2024	11:15 AM	0	0	0	0	0	0	0	0	0	0	0	0	0
4/26/2024	11:30 AM	0	0	0	0	0	0	0	0	0	0	0	0	0
4/26/2024	11:45 AM	0	0	0	0	0	0	0	0	0	0	0	0	0
4/26/2024	12:00 PM	0	0	0	0	0	0	0	0	0	0	0	0	0
4/26/2024	12:15 PM	0	0	0	0	0	0	0	0	0	0	0	0	0
4/26/2024	12:30 PM	0	0	0	0	0	0	0	0	0	0	0	0	0
4/26/2024	12:45 PM	0	0	0	0	0	0	0	0	0	0	0	0	0
4/26/2024	1:00 PM	0	0	0	0	0	0	0	0	0	0	0	0	0
4/26/2024	1:15 PM	0	0	0	0	0	0	0	0	0	0	0	0	0
4/26/2024	1:30 PM	0	0	0	0	0	0	0	0	0	0	0	0	0
4/26/2024	1:45 PM	0	0	0	0	0	0	0	0	0	0	0	0	0
4/26/2024	2:00 PM	0	0	0	0	0	0	0	0	0	0	0	0	0
4/26/2024	2:15 PM	0	0	0	0	0	0	0	0	0	0	0	0	0
4/26/2024	2:30 PM	0	0	0	0	0	0	0	0	0	0	0	0	0
4/26/2024	2:45 PM	0	0	0	0	0	0	0	0	0	0	0	0	0
4/26/2024	3:00 PM	0	0	0	0	0	0	0	0	0	0	0	0	0
4/26/2024	3:15 PM	0	0	0	0	0	0	0	0	0	0	0	0	0
4/26/2024	3:30 PM	0	0	0	0	0	0	0	0	0	0	0	0	0
4/26/2024	3:45 PM	0	0	0	0	0	0	0	0	0	0	0	0	0
4/26/2024	4:00 PM	0	0	0	0	0	0	0	0	0	0	0	0	0
4/26/2024	4:15 PM	0	0	0	0	0	0	0	0	0	0	0	0	0
4/26/2024	4:30 PM	0	0	0	0	0	0	0	0	0	0	0	0	0
4/26/2024	4:45 PM	0	0	0	0	0	0	0	0	0	0	0	0	0
4/26/2024	5:00 PM	0	0	0	0	0	0	0	0	0	0	0	0	0
4/26/2024	5:15 PM	0	0	0	0	0	0	0	0	0	0	0	0	0
4/26/2024	5:30 PM	0	0	0	0	0	0	0	0	0	0	0	0	0
4/26/2024	5:45 PM	0	0	0	0	0	0	0	0	0	0	0	0	0
4/26/2024	6:00 PM	0	0	0	0	0	0	0	0	0	0	0	0	0
4/26/2024	6:15 PM	0	0	0	0	0	0	0	0	0	0	0	0	0
4/26/2024	6:30 PM	0	0	0	0	0	0	0	0	0	0	0	0	0
4/26/2024	6:45 PM	0	0	0	0	0	0	0	0	0	0	0	0	0
4/26/2024	7:00 PM	0	0	0	0	0	0	0	0	0	0	0	0	0
4/26/2024	7:15 PM	0	0	0	0	0	0	0	0	0	0	0	0	0
4/26/2024	7:30 PM	0	0	0	0	0	0	0	0	0	0	0	0	0
4/26/2024	7:45 PM	0	0	0	0	0	0	0	0	0	0	0	0	0
4/26/2024	8:00 PM	0	0	0	0	0	0	0	0	0	0	0	0	0
4/26/2024	8:15 PM	0	0	0	0	0	0	0	0	0	0	0	0	0
4/26/2024	8:30 PM	0	0	0	0	0	0	0	0	0	0	0	0	0
4/26/2024	8:45 PM	0	0	0	0	0	0	0	0	0	0	0	0	0
4/26/2024	9:00 PM	0	0	0	0	0	0	0	0	0	0	0	0	0
4/26/2024	9:15 PM	0	0	0	0	0	0	0	0	0	0	0	0	0
4/26/2024	9:30 PM	0	0	0	0	0	0	0	0	0	0	0	0	0
4/26/2024	9:45 PM	0	0	0	0	0	0	0	0	0	0	0	0	0
4/26/2024	10:00 PM	0	0	0	0	0	0	0	0	0	0	0	0	0
4/26/2024	10:15 PM	0	0	0	0	0	0	0	0	0	0	0	0	0
4/26/2024	10:30 PM	0	0	0	0	0	0	0	0	0	0	0	0	0
4/26/2024	10:45 PM	0	0	0	0	0	0	0	0	0	0	0	0	0
4/26/2024	11:00 PM	0	0	0	0	0	0	0	0	0	0	0	0	0
4/26/2024	11:15 PM	0	0	0	0	0	0	0	0	0	0	0	0	0
4/26/2024	11:30 PM	0	0	0	0	0	0	0	0	0	0	0	0	0
4/26/2024	11:45 PM	0	0	0	0	0	0	0	0	0	0	0	0	0

4/27/2024	12:00 AM	0	0	0	0	0	0	0	0	0	0	0	0	0
4/27/2024	12:15 AM	0	0	0	0	0	0	0	0	0	0	0	0	0
4/27/2024	12:30 AM	0	0	0	0	0	0	0	0	0	0	0	0	0
4/27/2024	12:45 AM	0	0	0	0	0	0	0	0	0	0	0	0	0
4/27/2024	1:00 AM	0	0	0	0	0	0	0	0	0	0	0	0	0
4/27/2024	1:15 AM	0	0	0	0	0	0	0	0	0	0	0	0	0
4/27/2024	1:30 AM	0	0	0	0	0	0	0	0	0	0	0	0	0
4/27/2024	1:45 AM	0	0	0	0	0	0	0	0	0	0	0	0	0
4/27/2024	2:00 AM	0	0	0	0	0	0	0	0	0	0	0	0	0
4/27/2024	2:15 AM	0	0	0	0	0	0	0	0	0	0	0	0	0
4/27/2024	2:30 AM	0	0	0	0	0	0	0	0	0	0	0	0	0
4/27/2024	2:45 AM	0	0	0	0	0	0	0	0	0	0	0	0	0
4/27/2024	3:00 AM	0	0	0	0	0	0	0	0	0	0	0	0	0
4/27/2024	3:15 AM	0	0	0	0	0	0	0	0	0	0	0	0	0
4/27/2024	3:30 AM	0	0	0	0	0	0	0	0	0	0	0	0	0
4/27/2024	3:45 AM	0	0	0	0	0	0	0	0	0	0	0	0	0
4/27/2024	4:00 AM	0	0	0	0	0	0	0	0	0	0	0	0	0
4/27/2024	4:15 AM	0	0	0	0	0	0	0	0	0	0	0	0	0
4/27/2024	4:30 AM	0	0	0	0	0	0	0	0	0	0	0	0	0
4/27/2024	4:45 AM	0	0	0	0	0	0	0	0	0	0	0	0	0
4/27/2024	5:00 AM	0	0	0	0	0	0	0	0	0	0	0	0	0
4/27/2024	5:15 AM	0	0	0	0	0	0	0	0	0	0	0	0	0
4/27/2024	5:30 AM	0	0	0	0	0	0	0	0	0	0	0	0	0
4/27/2024	5:45 AM	0	0	0	0	0	0	0	0	0	0	0	0	0
4/27/2024	6:00 AM	0	0	0	0	0	0	0	0	0	0	0	0	0
4/27/2024	6:15 AM	0	0	0	0	0	0	0	0	0	0	0	0	0
4/27/2024	6:30 AM	0	0	0	0	0	0	0	0	0	0	0	0	0
4/27/2024	6:45 AM	0	0	0	0	0	0	0	0	0	0	0	0	0
4/27/2024	7:00 AM	0	0	0	0	0	0	0	0	0	0	0	0	0
4/27/2024	7:15 AM	0	0	0	0	0	0	0	0	0	0	0	0	0
4/27/2024	7:30 AM	0	0	0	0	0	0	0	0	0	0	0	0	0
4/27/2024	7:45 AM	0	0	0	0	0	0	0	0	0	0	0	0	0
4/27/2024	8:00 AM	0	0	0	0	0	0	0	0	0	0	0	0	0
4/27/2024	8:15 AM	0	0	0	0	0	0	0	0	0	0	0	0	0
4/27/2024	8:30 AM	0	0	0	0	0	0	0	0	0	0	0	0	0
4/27/2024	8:45 AM	0	0	0	0	0	0	0	0	0	0	0	0	0
4/27/2024	9:00 AM	0	0	0	0	0	0	0	0	0	0	0	0	0
4/27/2024	9:15 AM	0	0	0	0	0	0	0	0	0	0	0	0	0
4/27/2024	9:30 AM	0	0	0	0	0	0	0	0	0	0	0	0	0
4/27/2024	9:45 AM	0	0	0	0	0	0	0	0	0	0	0	0	0
4/27/2024	10:00 AM	0	0	0	0	0	0	0	0	0	0	0	0	0
4/27/2024	10:15 AM	0	0	0	0	0	0	0	0	0	0	0	0	0
4/27/2024	10:30 AM	0	0	0	0	0	0	0	0	0	0	0	0	0
4/27/2024	10:45 AM	0	0	0	0	0	0	0	0	0	0	0	0	0
4/27/2024	11:00 AM	0	0	0	0	0	0	0	0	0	0	0	0	0
4/27/2024	11:15 AM	0	0	0	0	0	0	0	0	0	0	0	0	0
4/27/2024	11:30 AM	0	0	0	0	0	0	0	0	0	0	0	0	0
4/27/2024	11:45 AM	0	0	0	0	0	0	0	0	0	0	0	0	0
4/27/2024	12:00 PM	0	0	0	0	0	0	0	0	0	0	0	0	0
4/27/2024	12:15 PM	0	0	0	0	0	0	0	0	0	0	0	0	0
4/27/2024	12:30 PM	0	0	0	0	0	0	0	0	0	0	0	0	0
4/27/2024	12:45 PM	0	0	0	0	0	0	0	0	0	0	0	0	0
4/27/2024	1:00 PM	0	0	0	0	0	0	0	0	0	0	0	0	0
4/27/2024	1:15 PM	0	0	0	0	0	0	0	0	0	0	0	0	0
4/27/2024	1:30 PM	0	0	0	0	0	0	0	0	0	0	0	0	0
4/27/2024	1:45 PM	0	0	0	0	0	0	0	0	0	0	0	0	0
4/27/2024	2:00 PM	0	0	0	0	0	0	0	0	0	0	0	0	0
4/27/2024	2:15 PM	0	0	0	0	0	0	0	0	0	0	0	0	0
4/27/2024	2:30 PM	0	0	0	0	0	0	0	0	0	0	0	0	0
4/27/2024	2:45 PM	0	0	0	0	0	0	0	0	0	0	0	0	0
4/27/2024	3:00 PM	0	0	0	0	0	0	0	0	0	0	0	0	0
4/27/2024	3:15 PM	0	0	0	0	0	0	0	0	0	0	0	0	0
4/27/2024	3:30 PM	0	0	0	0	0	0	0	0	0	0	0	0	0
4/27/2024	3:45 PM	0	0	0	0	0	0	0	0	0	0	0	0	0
4/27/2024	4:00 PM	0	0	0	0	0	0	0	0	0	0	0	0	0
4/27/2024	4:15 PM	0	0	0	0	0	0	0	0	0	0	0	0	0
4/27/2024	4:30 PM	0	0	0	0	0	0	0	0	0	0	0	0	0
4/27/2024	4:45 PM	0	0	0	0	0	0	0	0	0	0	0	0	0
4/27/2024	5:00 PM	0	0	0	0	0	0	0	0	0	0	0	0	0
4/27/2024	5:15 PM	0	0	0	0	0	0	0	0	0	0	0	0	0
4/27/2024	5:30 PM	0	0	0	0	0	0	0	0	0	0	0	0	0
4/27/2024	5:45 PM	0	0	0	0	0	0	0	0	0	0	0	0	0
4/27/2024	6:00 PM	0	0	0	0	0	0	0	0	0	0	0	0	0
4/27/2024	6:15 PM	0	0	0	0	0	0	0	0	0	0	0	0	0
4/27/2024	6:30 PM	0	0	0	0	0	0	0	0	0	0	0	0	0
4/27/2024	6:45 PM	0	0	0	0	0	0	0	0	0	0	0	0	0
4/27/2024	7:00 PM	0	0	0	0	0	0	0	0	0	0	0	0	0
4/27/2024	7:15 PM	0	0	0	0	0	0	0	0	0	0	0	0	0
4/27/2024	7:30 PM	0	0	0	0	0	0	0	0	0	0	0	0	0
4/27/2024	7:45 PM	0	0	0	0	0	0	0	0	0	0	0	0	0
4/27/2024	8:00 PM	0	0	0	0	0	0	0	0	0	0	0	0	0
4/27/2024	8:15 PM	0	0	0	0	0	0	0	0	0	0	0	0	0
4/27/2024	8:30 PM	0	0	0	0	0	0	0	0	0	0	0	0	0
4/27/2024	8:45 PM	0	0	0	0	0	0	0	0	0	0	0	0	0
4/27/2024	9:00 PM	0	0	0	0	0	0	0	0	0	0	0	0	0
4/27/2024	9:15 PM	0	0	0	0	0	0	0	0	0	0	0	0	0
4/27/2024	9:30 PM	0	0	0	0	0	0	0	0	0	0	0	0	0
4/27/2024	9:45 PM	0	0	0	0	0	0	0	0	0	0	0	0	0
4/27/2024	10:00 PM	0	0	0	0	0	0	0	0	0	0	0	0	0
4/27/2024	10:15 PM	0	0	0	0	0	0	0	0	0	0	0	0	0
4/27/2024	10:30 PM	0	0	0	0	0	0	0	0	0	0	0	0	0
4/27/2024	10:45 PM	0	0	0	0	0	0	0	0	0	0	0	0	0
4/27/2024	11:00 PM	0	0	0	0	0	0	0	0	0	0	0	0	0
4/27/2024	11:15 PM	0	0	0	0	0	0	0	0	0	0	0	0	0
4/27/2024	11:30 PM	0	0	0	0	0	0	0	0	0	0	0	0	0
4/27/2024	11:45 PM	0	0	0	0	0	0	0	0	0	0	0	0	0

WB
File Name:
Start Date: 4/21/2024
Start Time: 0
Site Code: 74 Lane 3 WB
Station ID: 1
Location 1: I-20, west of US-378 Sunset Blvd S/Bound Off-Ramp
Location 2:

Date	Time	1	2	3	4	5	6	7	8	9	10	11	12	13
4/21/2024	12:00 AM	1	102	9	0	1	0	0	0	11	0	0	0	0
4/21/2024	12:15 AM	1	94	11	0	3	0	0	0	15	0	0	0	0
4/21/2024	12:30 AM	0	78	9	0	4	0	0	0	16	0	1	0	0
4/21/2024	12:45 AM	0	76	9	0	5	0	0	0	14	0	1	0	0
4/21/2024	1:00 AM	0	77	7	0	6	0	0	0	16	0	1	0	0
4/21/2024	1:15 AM	0	68	6	0	5	0	0	0	14	0	1	0	0
4/21/2024	1:30 AM	0	67	7	0	5	0	0	0	13	0	0	0	0
4/21/2024	1:45 AM	0	60	6	0	4	0	0	0	12	0	0	0	0
4/21/2024	2:00 AM	0	44	6	0	3	0	0	0	13	0	0	0	0
4/21/2024	2:15 AM	0	42	5	0	2	0	0	0	12	0	0	0	0
4/21/2024	2:30 AM	0	37	3	0	1	0	0	0	10	0	0	0	0
4/21/2024	2:45 AM	0	33	1	0	1	0	0	0	9	0	0	0	0
4/21/2024	3:00 AM	0	35	2	0	1	0	0	0	7	0	0	0	0
4/21/2024	3:15 AM	0	31	1	0	1	0	0	0	10	0	0	0	0
4/21/2024	3:30 AM	0	29	1	0	2	0	0	0	11	0	0	0	0
4/21/2024	3:45 AM	0	30	3	0	2	1	0	0	11	0	0	0	0
4/21/2024	4:00 AM	0	28	3	0	2	1	0	0	11	0	1	0	0
4/21/2024	4:15 AM	0	25	3	0	2	1	0	0	10	0	1	0	0
4/21/2024	4:30 AM	0	21	3	0	1	1	0	0	8	0	1	0	0
4/21/2024	4:45 AM	0	20	1	0	1	0	0	0	14	0	1	0	0
4/21/2024	5:00 AM	0	27	0	0	1	0	0	0	17	0	0	0	0
4/21/2024	5:15 AM	0	35	3	0	1	0	0	0	18	0	0	0	0
4/21/2024	5:30 AM	0	51	9	0	1	0	0	0	18	0	0	0	0
4/21/2024	5:45 AM	0	67	13	0	1	0	0	0	17	0	0	0	0
4/21/2024	6:00 AM	0	87	21	0	0	0	0	0	13	0	0	0	0
4/21/2024	6:15 AM	0	111	29	0	0	0	0	0	15	0	0	0	0
4/21/2024	6:30 AM	1	144	26	0	0	0	0	0	21	0	0	0	0
4/21/2024	6:45 AM	1	158	35	0	0	0	0	0	23	0	0	0	0
4/21/2024	7:00 AM	1	177	34	0	1	0	0	0	27	0	0	0	0
4/21/2024	7:15 AM	1	170	30	0	1	0	0	1	28	0	1	0	0
4/21/2024	7:30 AM	0	158	43	0	2	0	0	2	29	0	1	0	0
4/21/2024	7:45 AM	0	164	44	0	2	1	0	2	26	0	1	0	0
4/21/2024	8:00 AM	0	170	46	1	1	1	1	2	32	0	1	0	0
4/21/2024	8:15 AM	0	204	55	1	4	1	1	2	31	0	1	1	0
4/21/2024	8:30 AM	0	230	56	1	4	3	1	1	31	0	1	1	0
4/21/2024	8:45 AM	0	253	54	1	6	2	2	2	37	0	1	1	0
4/21/2024	9:00 AM	0	282	59	0	7	2	1	3	31	0	1	1	0
4/21/2024	9:15 AM	0	290	57	0	5	3	1	2	34	0	0	0	0
4/21/2024	9:30 AM	0	294	59	0	6	1	1	2	37	0	0	0	0
4/21/2024	9:45 AM	1	299	67	0	5	1	0	2	35	0	0	0	0
4/21/2024	10:00 AM	2	288	73	0	4	1	0	3	34	0	0	0	0
4/21/2024	10:15 AM	2	303	80	0	3	0	0	3	35	0	0	0	0
4/21/2024	10:30 AM	2	306	85	0	2	1	0	3	39	0	0	0	0
4/21/2024	10:45 AM	1	317	87	0	4	1	0	4	37	0	0	0	0
4/21/2024	11:00 AM	0	325	102	0	8	1	0	3	47	0	0	0	0
4/21/2024	11:15 AM	0	346	115	0	10	1	0	4	44	0	0	0	0
4/21/2024	11:30 AM	0	380	119	0	9	0	0	5	42	0	0	0	0
4/21/2024	11:45 AM	0	394	122	0	6	0	0	4	44	0	0	0	0
4/21/2024	12:00 PM	0	432	106	0	4	0	0	3	39	0	0	0	0
4/21/2024	12:15 PM	1	425	98	0	3	0	0	3	44	0	0	0	0
4/21/2024	12:30 PM	1	413	95	0	6	1	0	4	40	0	0	0	0
4/21/2024	12:45 PM	1	429	97	0	6	1	0	4	36	0	0	0	0
4/21/2024	1:00 PM	1	416	97	0	5	2	0	4	36	0	0	0	0
4/21/2024	1:15 PM	0	427	99	0	7	2	0	4	30	0	0	0	0
4/21/2024	1:30 PM	0	429	104	0	6	1	0	4	26	0	0	0	0
4/21/2024	1:45 PM	1	421	103	0	7	1	0	4	31	0	0	0	0
4/21/2024	2:00 PM	1	426	113	0	7	0	0	5	31	0	0	0	0
4/21/2024	2:15 PM	1	417	99	0	6	0	0	5	29	0	0	0	0
4/21/2024	2:30 PM	1	407	86	0	4	0	0	3	33	0	0	0	0
4/21/2024	2:45 PM	0	413	81	0	4	0	0	4	31	0	0	0	0
4/21/2024	3:00 PM	0	408	75	0	8	0	0	4	31	0	0	0	0
4/21/2024	3:15 PM	0	401	88	1	9	0	0	4	36	0	0	0	0
4/21/2024	3:30 PM	0	423	85	2	11	0	0	5	36	0	0	0	0
4/21/2024	3:45 PM	0	408	83	2	12	0	0	5	33	0	0	0	0
4/21/2024	4:00 PM	0	394	86	2	8	0	0	4	34	0	1	0	0
4/21/2024	4:15 PM	0	377	82	1	6	0	0	3	33	0	1	0	0
4/21/2024	4:30 PM	0	374	85	0	4	1	0	3	33	0	1	0	0
4/21/2024	4:45 PM	0	378	91	0	3	2	0	1	33	0	1	0	0
4/21/2024	5:00 PM	0	380	82	0	4	2	0	1	38	0	0	0	0
4/21/2024	5:15 PM	0	367	79	0	4	2	0	1	40	0	0	0	0
4/21/2024	5:30 PM	0	353	89	0	5	1	0	1	40	1	1	0	0
4/21/2024	5:45 PM	0	332	80	1	6	0	0	1	45	1	2	0	0
4/21/2024	6:00 PM	0	305	76	1	5	0	0	1	43	1	3	0	0
4/21/2024	6:15 PM	0	345	82	1	10	0	0	1	39	1	3	0	0
4/21/2024	6:30 PM	0	327	75	1	9	0	0	0	42	0	2	0	0
4/21/2024	6:45 PM	0	337	74	0	8	0	0	0	39	0	2	0	0
4/21/2024	7:00 PM	0	346	78	0	8	0	0	0	34	0	2	0	0
4/21/2024	7:15 PM	0	302	71	0	3	0	0	0	37	0	2	0	0
4/21/2024	7:30 PM	0	294	61	0	5	0	0	0	35	0	2	0	0
4/21/2024	7:45 PM	0	258	57	0	4	1	0	0	36	0	1	0	0
4/21/2024	8:00 PM	0	222	47	0	4	2	0	0	36	0	0	0	0
4/21/2024	8:15 PM	0	200	36	0	5	2	0	0	37	0	0	0	0
4/21/2024	8:30 PM	0	172	33	0	3	2	0	0	35	0	0	0	0
4/21/2024	8:45 PM	0	143	28	0	3	1	0	0	36	0	1	0	0
4/21/2024	9:00 PM	0	134	28	0	2	0	0	0	36	0	3	0	0
4/21/2024	9:15 PM	0	120	25	1	0	1	0	0	39	0	5	0	0
4/21/2024	9:30 PM	0	105	22	2	1	1	0	0	42	0	6	0	0
4/21/2024	9:45 PM	0	103	22	2	2	1	0	0	38	0	5	0	0
4/21/2024	10:00 PM	0	90	20	2	2	3	0	0	38	0	6	0	0
4/21/2024	10:15 PM	0	81	18	1	2	2	0	0	26	0	4	0	0
4/21/2024	10:30 PM	0	78	18	0	2	2	0	0	20	0	6	0	0
4/21/2024	10:45 PM	0	72	15	0	3	2	0	0	21	0	8	0	0
4/21/2024	11:00 PM	0	65	12	0	4	0	0	0	21	0	5	0	0
4/21/2024	11:15 PM	0	48	9	0	4	0	0	0	20	0	5	0	0
4/21/2024	11:30 PM	0	29	5	0	3	0	0	0	15	0	2	0	0
4/21/2024	11:45 PM	0	12	2	0	1	0	0	0	9	0	0	0	0

4/22/2024	12:00 AM	0	41	7	0	0	0	0	0	24	0	0	0	0
4/22/2024	12:15 AM	0	34	4	0	0	0	0	0	19	0	0	0	0
4/22/2024	12:30 AM	0	33	3	0	0	0	0	0	18	0	0	0	0
4/22/2024	12:45 AM	0	35	5	0	1	0	0	0	20	0	0	0	0
4/22/2024	1:00 AM	0	33	4	0	1	0	0	0	18	0	0	0	0
4/22/2024	1:15 AM	0	33	5	0	1	0	0	0	24	0	0	0	0
4/22/2024	1:30 AM	0	31	4	0	1	0	0	0	26	0	0	0	0
4/22/2024	1:45 AM	0	25	2	0	0	0	0	0	24	0	0	0	0
4/22/2024	2:00 AM	0	23	2	0	0	0	0	0	28	0	0	0	0
4/22/2024	2:15 AM	0	19	1	0	0	0	0	0	28	0	0	0	0
4/22/2024	2:30 AM	0	19	1	0	2	0	0	0	33	0	0	0	0
4/22/2024	2:45 AM	0	26	4	0	3	0	0	0	35	0	0	0	0
4/22/2024	3:00 AM	0	30	6	0	4	0	0	0	37	0	0	0	0
4/22/2024	3:15 AM	0	32	7	0	6	0	0	0	33	0	0	0	0
4/22/2024	3:30 AM	0	38	10	0	5	0	0	0	28	0	0	0	0
4/22/2024	3:45 AM	0	42	9	0	5	0	0	0	31	0	0	0	0
4/22/2024	4:00 AM	0	42	10	0	6	0	0	0	35	0	0	0	0
4/22/2024	4:15 AM	0	47	12	0	6	0	0	0	42	0	0	0	0
4/22/2024	4:30 AM	0	60	17	0	7	0	0	0	47	0	0	0	0
4/22/2024	4:45 AM	0	67	22	0	6	0	0	0	51	0	0	0	0
4/22/2024	5:00 AM	0	86	29	0	7	0	0	0	51	0	0	0	0
4/22/2024	5:15 AM	0	115	39	0	8	0	0	0	54	0	0	0	0
4/22/2024	5:30 AM	0	152	44	0	9	0	0	0	54	0	0	0	0
4/22/2024	5:45 AM	0	187	59	1	10	0	0	2	47	0	0	0	0
4/22/2024	6:00 AM	0	215	74	1	10	2	0	7	47	0	0	0	0
4/22/2024	6:15 AM	0	232	88	1	12	7	0	8	50	0	0	0	0
4/22/2024	6:30 AM	0	232	105	1	19	12	0	11	59	2	1	0	0
4/22/2024	6:45 AM	0	253	103	0	31	13	0	11	66	2	1	0	0
4/22/2024	7:00 AM	0	278	106	1	35	12	0	7	69	2	2	0	0
4/22/2024	7:15 AM	0	284	116	1	31	9	0	7	70	2	2	0	0
4/22/2024	7:30 AM	0	286	112	2	25	10	0	6	61	0	1	0	0
4/22/2024	7:45 AM	0	259	123	2	19	11	0	6	72	0	1	0	0
4/22/2024	8:00 AM	0	236	123	4	19	13	0	7	71	0	0	0	0
4/22/2024	8:15 AM	0	225	111	4	29	15	0	8	71	1	0	0	0
4/22/2024	8:30 AM	0	216	122	3	32	11	0	9	85	1	0	0	0
4/22/2024	8:45 AM	0	236	119	3	29	13	0	11	82	2	0	0	0
4/22/2024	9:00 AM	0	236	120	0	28	12	0	15	93	2	0	0	0
4/22/2024	9:15 AM	0	237	122	0	26	9	0	19	101	1	0	0	0
4/22/2024	9:30 AM	0	263	117	4	30	12	0	18	91	2	0	0	0
4/22/2024	9:45 AM	0	263	118	4	29	9	0	15	97	1	0	0	0
4/22/2024	10:00 AM	0	262	117	4	32	10	0	14	102	2	0	0	0
4/22/2024	10:15 AM	0	280	115	5	30	12	0	11	102	2	0	0	0
4/22/2024	10:30 AM	0	265	119	1	26	9	0	13	118	1	0	0	0
4/22/2024	10:45 AM	0	264	120	2	32	9	0	14	112	1	0	0	0
4/22/2024	11:00 AM	0	284	121	2	30	6	0	13	106	0	1	0	0
4/22/2024	11:15 AM	0	312	128	2	27	6	0	14	117	0	1	0	0
4/22/2024	11:30 AM	0	319	128	2	26	4	0	12	107	0	1	0	0
4/22/2024	11:45 AM	0	328	127	1	19	6	0	14	117	0	1	0	0
4/22/2024	12:00 PM	0	338	126	1	16	9	0	16	113	1	0	0	0
4/22/2024	12:15 PM	0	296	119	0	17	7	0	15	97	1	0	0	0
4/22/2024	12:30 PM	0	299	116	1	16	9	0	16	95	2	0	0	0
4/22/2024	12:45 PM	0	308	109	1	18	8	0	14	94	2	0	0	0
4/22/2024	1:00 PM	0	318	109	1	21	7	0	8	97	1	0	0	0
4/22/2024	1:15 PM	0	355	124	2	23	10	0	8	91	1	0	0	0
4/22/2024	1:30 PM	0	358	110	5	26	11	0	7	90	0	0	0	0
4/22/2024	1:45 PM	0	361	119	5	24	10	0	11	100	1	0	0	0
4/22/2024	2:00 PM	0	355	120	5	20	9	0	14	97	2	0	0	0
4/22/2024	2:15 PM	0	356	123	4	17	6	1	13	103	2	0	0	0
4/22/2024	2:30 PM	0	395	135	0	15	4	2	13	102	2	0	0	0
4/22/2024	2:45 PM	0	436	135	0	17	6	7	9	83	1	0	0	0
4/22/2024	3:00 PM	0	457	143	0	16	6	7	9	83	1	0	0	0
4/22/2024	3:15 PM	0	479	141	1	22	5	6	11	79	2	0	0	0
4/22/2024	3:30 PM	0	484	153	1	25	5	5	11	83	2	0	0	0
4/22/2024	3:45 PM	0	456	160	1	28	3	0	11	76	3	1	0	0
4/22/2024	4:00 PM	0	461	161	2	32	3	0	8	80	2	1	0	0
4/22/2024	4:15 PM	0	480	150	1	23	6	0	5	83	1	1	0	0
4/22/2024	4:30 PM	0	492	132	1	15	5	1	5	81	2	1	0	0
4/22/2024	4:45 PM	0	535	124	1	10	5	1	3	81	2	0	0	0
4/22/2024	5:00 PM	0	521	119	0	6	4	1	5	82	3	0	0	0
4/22/2024	5:15 PM	0	474	110	0	9	2	1	6	89	3	0	0	0
4/22/2024	5:30 PM	0	418	105	0	13	2	0	7	89	2	3	0	0
4/22/2024	5:45 PM	1	357	98	0	14	2	0	7	92	2	3	0	0
4/22/2024	6:00 PM	1	330	84	0	17	5	0	6	84	1	5	0	0
4/22/2024	6:15 PM	1	313	84	0	17	5	0	6	76	1	6	0	0
4/22/2024	6:30 PM	1	291	82	0	13	5	0	5	75	1	3	0	0
4/22/2024	6:45 PM	0	276	71	1	13	6	0	6	86	0	3	0	0
4/22/2024	7:00 PM	0	267	64	1	11	4	0	6	92	1	2	0	0
4/22/2024	7:15 PM	0	248	60	1	11	3	0	5	90	1	2	0	0
4/22/2024	7:30 PM	0	251	54	1	11	3	0	3	86	1	2	0	0
4/22/2024	7:45 PM	0	230	55	0	9	2	0	2	72	1	2	0	0
4/22/2024	8:00 PM	0	202	54	0	8	1	0	1	61	0	1	0	0
4/22/2024	8:15 PM	0	195	52	0	5	1	0	0	55	0	0	0	0
4/22/2024	8:30 PM	0	164	51	0	4	1	0	0	52	0	0	0	0
4/22/2024	8:45 PM	0	149	48	0	6	0	0	0	53	0	0	0	0
4/22/2024	9:00 PM	0	146	47	0	6	0	0	0	50	0	0	0	0
4/22/2024	9:15 PM	0	130	41	0	7	0	0	0	49	0	0	0	0
4/22/2024	9:30 PM	0	121	38	0	7	0	0	0	55	0	0	0	0
4/22/2024	9:45 PM	0	110	37	0	6	0	0	0	57	0	0	0	0
4/22/2024	10:00 PM	0	93	36	0	5	0	0	0	60	0	0	0	0
4/22/2024	10:15 PM	0	83	34	0	4	0	0	0	72	0	0	0	0
4/22/2024	10:30 PM	0	84	34	0	5	0	0	0	70	0	0	0	0
4/22/2024	10:45 PM	0	77	27	0	7	0	0	0	70	0	0	0	0
4/22/2024	11:00 PM	0	68	22	0	7	0	0	0	69	0	0	0	0
4/22/2024	11:15 PM	0	48	15	0	6	0	0	0	47	0	0	0	0
4/22/2024	11:30 PM	0	27	7	0	5	0	0	0	30	0	0	0	0
4/22/2024	11:45 PM	0	10	4	0	1	0	0	0	13	0	0	0	0

4/23/2024	12:00 AM	0	43	7	0	4	0	0	1	46	0	5	0	0
4/23/2024	12:15 AM	0	37	7	0	5	1	0	1	32	0	4	0	0
4/23/2024	12:30 AM	0	33	2	0	5	2	0	0	24	0	3	0	0
4/23/2024	12:45 AM	0	28	1	0	4	2	0	0	22	0	1	0	0
4/23/2024	1:00 AM	0	20	0	0	2	2	0	0	17	0	2	0	0
4/23/2024	1:15 AM	0	15	0	0	1	1	0	0	20	0	1	0	0
4/23/2024	1:30 AM	0	12	2	0	0	0	0	0	22	0	2	0	0
4/23/2024	1:45 AM	0	13	3	0	1	0	0	0	27	0	5	0	0
4/23/2024	2:00 AM	0	12	3	0	1	0	0	1	34	0	6	0	0
4/23/2024	2:15 AM	0	15	3	0	2	0	0	1	35	0	9	0	0
4/23/2024	2:30 AM	0	18	2	0	4	0	0	1	34	0	10	0	0
4/23/2024	2:45 AM	0	21	1	0	4	0	0	1	36	0	8	0	0
4/23/2024	3:00 AM	0	29	1	0	4	0	0	0	41	0	7	0	0
4/23/2024	3:15 AM	0	35	2	0	3	0	0	0	48	0	6	0	0
4/23/2024	3:30 AM	0	37	2	0	1	1	0	2	56	0	6	0	0
4/23/2024	3:45 AM	0	40	3	0	2	2	0	2	57	0	5	0	0
4/23/2024	4:00 AM	0	39	4	0	2	2	0	2	53	0	8	0	0
4/23/2024	4:15 AM	0	40	3	0	3	2	0	2	52	0	8	0	0
4/23/2024	4:30 AM	0	60	4	0	5	2	0	0	59	0	6	0	0
4/23/2024	4:45 AM	0	75	7	0	3	1	0	0	66	0	7	0	0
4/23/2024	5:00 AM	0	108	12	0	3	1	0	0	66	0	4	0	0
4/23/2024	5:15 AM	0	119	17	0	2	4	0	1	73	0	2	0	0
4/23/2024	5:30 AM	0	141	33	0	4	6	1	1	72	0	2	0	0
4/23/2024	5:45 AM	0	178	51	0	6	7	1	1	72	0	1	0	0
4/23/2024	6:00 AM	0	207	61	0	13	9	1	1	75	0	1	0	0
4/23/2024	6:15 AM	0	249	74	0	19	7	1	1	75	0	2	0	0
4/23/2024	6:30 AM	0	262	80	0	17	6	0	1	67	0	2	0	0
4/23/2024	6:45 AM	0	272	74	0	18	11	0	1	66	0	2	0	0
4/23/2024	7:00 AM	0	272	78	2	21	9	0	1	70	0	1	0	0
4/23/2024	7:15 AM	0	258	91	4	20	9	0	0	63	0	0	0	0
4/23/2024	7:30 AM	0	263	96	10	18	7	0	3	64	0	0	0	0
4/23/2024	7:45 AM	0	238	103	11	19	1	0	5	67	0	0	0	0
4/23/2024	8:00 AM	0	223	113	11	15	1	0	9	68	0	0	0	0
4/23/2024	8:15 AM	0	229	115	10	19	3	0	11	87	0	0	0	0
4/23/2024	8:30 AM	0	226	115	4	26	3	0	9	98	0	0	0	0
4/23/2024	8:45 AM	0	244	123	3	28	3	0	7	100	0	1	0	0
4/23/2024	9:00 AM	0	257	113	1	28	4	0	3	114	0	1	0	0
4/23/2024	9:15 AM	0	252	99	0	25	1	0	2	115	0	1	0	0
4/23/2024	9:30 AM	0	243	91	0	28	4	0	3	117	0	1	0	0
4/23/2024	9:45 AM	0	246	81	1	28	5	0	5	122	0	0	0	0
4/23/2024	10:00 AM	0	233	83	1	27	8	0	7	116	0	0	0	0
4/23/2024	10:15 AM	1	247	82	1	27	10	0	9	109	0	0	0	0
4/23/2024	10:30 AM	1	257	85	3	21	7	0	8	107	0	0	0	0
4/23/2024	10:45 AM	1	256	104	2	21	9	0	9	103	0	0	0	0
4/23/2024	11:00 AM	1	265	109	2	21	10	0	9	105	0	0	0	0
4/23/2024	11:15 AM	0	272	123	2	23	11	0	9	100	0	0	0	0
4/23/2024	11:30 AM	0	283	137	0	25	13	0	10	90	0	0	0	0
4/23/2024	11:45 AM	0	297	122	0	21	12	0	12	99	0	0	0	0
4/23/2024	12:00 PM	0	297	127	2	20	7	0	13	95	0	0	0	0
4/23/2024	12:15 PM	1	292	120	2	14	5	0	15	109	1	0	0	0
4/23/2024	12:30 PM	1	292	113	7	11	4	0	14	117	1	0	0	0
4/23/2024	12:45 PM	2	287	131	10	13	4	2	11	101	1	0	0	0
4/23/2024	1:00 PM	3	290	127	8	13	9	2	11	112	1	0	0	0
4/23/2024	1:15 PM	3	302	128	10	18	11	2	8	106	0	0	0	0
4/23/2024	1:30 PM	4	317	123	7	20	10	3	9	112	0	0	0	0
4/23/2024	1:45 PM	3	336	112	5	23	9	1	8	120	0	0	0	0
4/23/2024	2:00 PM	2	358	115	5	23	4	1	7	113	0	0	1	0
4/23/2024	2:15 PM	1	386	120	3	22	3	2	10	113	0	0	1	0
4/23/2024	2:30 PM	0	401	133	1	23	6	1	10	111	0	0	1	0
4/23/2024	2:45 PM	0	423	138	1	19	6	2	10	114	0	0	1	0
4/23/2024	3:00 PM	1	461	137	1	22	6	2	11	108	0	0	0	0
4/23/2024	3:15 PM	1	464	155	2	20	4	1	11	104	0	0	0	0
4/23/2024	3:30 PM	1	496	151	2	19	4	1	14	93	3	0	0	0
4/23/2024	3:45 PM	2	523	140	1	22	4	1	14	77	4	0	0	0
4/23/2024	4:00 PM	1	555	149	3	22	5	1	14	68	4	0	0	0
4/23/2024	4:15 PM	1	594	141	2	25	6	1	9	55	4	0	0	0
4/23/2024	4:30 PM	1	624	134	2	24	4	1	7	58	1	0	0	0
4/23/2024	4:45 PM	0	605	148	2	23	3	0	7	69	0	0	0	0
4/23/2024	5:00 PM	3	560	156	0	19	4	0	11	73	2	0	0	0
4/23/2024	5:15 PM	3	513	144	0	16	3	0	13	82	2	0	0	0
4/23/2024	5:30 PM	4	432	142	0	19	3	0	12	83	2	4	0	0
4/23/2024	5:45 PM	4	395	117	0	15	4	0	15	79	2	5	0	0
4/23/2024	6:00 PM	1	342	98	0	15	4	0	9	81	1	5	0	0
4/23/2024	6:15 PM	1	300	90	0	15	4	1	12	75	1	6	0	0
4/23/2024	6:30 PM	0	279	78	0	9	3	1	11	72	1	5	0	0
4/23/2024	6:45 PM	0	250	73	0	10	2	1	9	77	1	4	0	0
4/23/2024	7:00 PM	1	240	60	0	8	1	1	9	78	0	4	0	0
4/23/2024	7:15 PM	1	243	56	0	4	1	0	4	81	0	4	0	0
4/23/2024	7:30 PM	1	247	56	1	4	1	0	3	84	0	1	0	0
4/23/2024	7:45 PM	1	225	51	1	4	1	0	1	79	0	1	0	0
4/23/2024	8:00 PM	0	220	42	1	3	1	0	0	75	0	3	0	0
4/23/2024	8:15 PM	0	196	32	1	5	1	0	0	73	0	2	0	0
4/23/2024	8:30 PM	0	151	22	0	6	1	0	0	74	0	4	0	0
4/23/2024	8:45 PM	0	142	21	0	4	1	0	0	64	0	6	0	0
4/23/2024	9:00 PM	0	116	18	0	6	0	0	0	70	0	5	0	0
4/23/2024	9:15 PM	1	97	16	0	6	0	0	0	72	0	8	0	0
4/23/2024	9:30 PM	1	83	15	0	7	0	0	0	67	0	10	0	0
4/23/2024	9:45 PM	1	79	15	0	7	0	0	0	78	0	11	0	0
4/23/2024	10:00 PM	1	72	14	0	5	1	0	0	70	0	12	0	0
4/23/2024	10:15 PM	0	62	12	0	3	1	0	0	73	0	11	0	0
4/23/2024	10:30 PM	0	65	11	0	1	3	0	0	73	0	9	0	0
4/23/2024	10:45 PM	0	53	11	0	2	3	0	0	65	0	7	0	0
4/23/2024	11:00 PM	0	50	12	0	2	2	0	0	64	0	7	0	0
4/23/2024	11:15 PM	0	38	9	0	2	2	0	0	43	0	5	0	0
4/23/2024	11:30 PM	0	24	7	0	1	0	0	0	27	0	3	0	0
4/23/2024	11:45 PM	0	11	3	0	0	0	0	0	15	0	2	0	0

4/24/2024	12:00 AM	0	35	10	0	3	1	0	0	54	0	9	0	0
4/24/2024	12:15 AM	0	35	5	0	2	1	0	0	46	0	8	0	0
4/24/2024	12:30 AM	0	30	3	0	2	2	0	0	46	0	8	0	0
4/24/2024	12:45 AM	0	28	3	0	3	1	0	0	46	0	7	0	0
4/24/2024	1:00 AM	0	29	4	0	2	2	0	0	38	0	5	0	0
4/24/2024	1:15 AM	0	28	4	0	2	2	0	0	40	0	4	0	0
4/24/2024	1:30 AM	0	30	5	0	1	1	0	0	45	0	5	0	0
4/24/2024	1:45 AM	0	25	4	0	1	1	0	0	40	0	5	0	0
4/24/2024	2:00 AM	0	20	2	0	1	2	0	0	42	0	5	0	0
4/24/2024	2:15 AM	0	20	1	0	1	2	0	0	46	0	4	0	0
4/24/2024	2:30 AM	0	15	2	0	1	2	0	0	39	0	6	0	0
4/24/2024	2:45 AM	0	19	5	0	1	2	0	0	39	0	6	0	0
4/24/2024	3:00 AM	0	27	7	0	1	0	0	0	38	0	5	0	0
4/24/2024	3:15 AM	0	27	11	0	1	0	0	0	38	0	5	0	0
4/24/2024	3:30 AM	0	36	10	0	5	0	0	0	48	0	4	0	0
4/24/2024	3:45 AM	0	43	10	0	7	0	0	0	60	0	2	0	0
4/24/2024	4:00 AM	0	45	10	0	10	0	0	0	71	0	5	0	0
4/24/2024	4:15 AM	0	50	10	0	10	0	0	0	72	0	5	0	0
4/24/2024	4:30 AM	0	62	15	0	6	0	0	0	68	0	7	0	0
4/24/2024	4:45 AM	0	75	16	0	3	0	0	0	74	0	7	0	0
4/24/2024	5:00 AM	0	85	19	0	4	0	0	0	76	0	5	0	0
4/24/2024	5:15 AM	0	121	24	0	8	1	0	0	90	0	7	0	0
4/24/2024	5:30 AM	0	154	34	0	9	2	0	2	88	0	4	0	0
4/24/2024	5:45 AM	0	208	55	0	16	5	0	4	80	0	4	0	0
4/24/2024	6:00 AM	1	243	73	0	17	8	0	5	81	1	4	0	0
4/24/2024	6:15 AM	1	274	90	0	18	10	0	7	71	2	2	0	0
4/24/2024	6:30 AM	2	287	95	0	22	10	0	10	73	2	1	0	0
4/24/2024	6:45 AM	2	270	95	1	22	10	0	9	70	2	1	0	0
4/24/2024	7:00 AM	1	295	102	1	24	9	1	10	63	2	1	0	0
4/24/2024	7:15 AM	1	283	106	2	22	7	1	9	55	1	1	0	0
4/24/2024	7:30 AM	0	257	111	3	26	6	2	8	64	1	1	0	0
4/24/2024	7:45 AM	0	248	117	2	26	5	2	9	71	2	3	0	0
4/24/2024	8:00 AM	0	225	122	3	27	3	2	9	83	1	2	0	0
4/24/2024	8:15 AM	0	208	122	2	35	4	3	10	91	1	2	0	0
4/24/2024	8:30 AM	0	233	122	2	34	5	2	7	87	1	3	0	0
4/24/2024	8:45 AM	0	239	122	2	35	5	2	7	82	0	1	0	0
4/24/2024	9:00 AM	0	227	112	2	30	7	1	11	86	0	1	0	0
4/24/2024	9:15 AM	0	248	107	2	27	9	0	13	95	0	2	0	0
4/24/2024	9:30 AM	0	238	107	1	22	13	0	16	96	0	2	0	0
4/24/2024	9:45 AM	0	256	104	2	18	12	0	14	100	0	3	0	0
4/24/2024	10:00 AM	0	272	105	1	19	11	0	10	94	0	3	0	0
4/24/2024	10:15 AM	1	261	105	2	17	7	0	10	85	0	3	0	0
4/24/2024	10:30 AM	1	259	108	2	16	5	0	8	101	0	2	0	0
4/24/2024	10:45 AM	1	252	104	1	18	5	1	9	106	0	1	0	0
4/24/2024	11:00 AM	2	247	110	1	17	7	1	9	108	0	1	1	0
4/24/2024	11:15 AM	1	266	110	3	12	10	1	7	115	0	1	1	0
4/24/2024	11:30 AM	1	299	122	5	19	9	2	8	99	0	2	1	0
4/24/2024	11:45 AM	1	301	129	6	22	11	2	10	98	0	2	1	0
4/24/2024	12:00 PM	0	315	136	7	25	11	3	11	102	0	3	0	0
4/24/2024	12:15 PM	0	309	138	4	28	9	3	9	106	0	6	0	0
4/24/2024	12:30 PM	0	289	129	2	25	10	2	9	112	0	7	0	0
4/24/2024	12:45 PM	1	300	133	1	20	9	2	9	106	0	9	0	0
4/24/2024	1:00 PM	1	309	126	5	18	6	1	11	99	0	8	0	0
4/24/2024	1:15 PM	1	331	129	5	20	6	2	12	102	0	6	0	0
4/24/2024	1:30 PM	1	355	132	5	18	5	2	12	102	0	4	0	0
4/24/2024	1:45 PM	1	368	134	6	20	8	2	12	105	0	3	0	0
4/24/2024	2:00 PM	1	371	135	1	22	8	4	9	109	0	3	1	0
4/24/2024	2:15 PM	1	387	142	1	23	7	4	11	100	0	2	1	0
4/24/2024	2:30 PM	1	406	145	1	23	7	4	12	106	0	3	1	0
4/24/2024	2:45 PM	0	442	143	0	22	4	5	10	102	0	2	1	0
4/24/2024	3:00 PM	0	476	147	0	24	6	4	11	103	0	2	0	0
4/24/2024	3:15 PM	0	495	162	0	24	6	5	10	100	0	4	0	0
4/24/2024	3:30 PM	0	517	155	0	27	4	5	9	87	0	4	0	0
4/24/2024	3:45 PM	0	517	155	1	31	3	3	9	82	0	4	0	0
4/24/2024	4:00 PM	0	536	164	3	28	2	2	7	74	0	4	0	0
4/24/2024	4:15 PM	0	546	139	3	26	2	0	7	72	0	3	0	0
4/24/2024	4:30 PM	1	564	144	3	21	2	0	4	66	0	2	0	0
4/24/2024	4:45 PM	3	547	141	2	17	1	0	6	63	0	2	0	0
4/24/2024	5:00 PM	3	539	130	0	18	1	1	9	60	0	2	0	0
4/24/2024	5:15 PM	3	481	126	0	18	2	1	8	72	0	0	0	0
4/24/2024	5:30 PM	4	423	112	0	24	3	2	10	87	0	2	1	0
4/24/2024	5:45 PM	2	384	98	0	21	4	2	8	98	0	3	1	0
4/24/2024	6:00 PM	3	340	84	0	17	4	1	8	90	0	4	1	0
4/24/2024	6:15 PM	3	339	78	0	16	3	1	11	70	0	4	1	0
4/24/2024	6:30 PM	1	306	74	0	13	4	0	11	66	0	3	1	0
4/24/2024	6:45 PM	1	295	68	0	12	5	0	12	63	1	3	1	0
4/24/2024	7:00 PM	0	269	63	0	11	4	0	9	70	1	2	2	0
4/24/2024	7:15 PM	0	258	59	0	7	7	0	5	82	1	2	2	0
4/24/2024	7:30 PM	0	269	52	0	3	8	0	4	71	1	3	1	0
4/24/2024	7:45 PM	0	261	49	0	4	6	0	3	67	0	3	1	0
4/24/2024	8:00 PM	0	271	45	0	4	6	0	2	65	0	5	0	0
4/24/2024	8:15 PM	0	256	41	0	4	4	0	2	60	0	6	0	0
4/24/2024	8:30 PM	0	221	34	0	3	2	0	1	68	0	6	0	0
4/24/2024	8:45 PM	0	201	32	0	1	2	0	0	72	0	5	0	0
4/24/2024	9:00 PM	0	175	28	0	0	2	0	0	75	0	4	1	0
4/24/2024	9:15 PM	0	167	24	0	1	1	0	0	68	0	5	1	0
4/24/2024	9:30 PM	0	165	21	0	3	0	0	0	64	0	5	1	0
4/24/2024	9:45 PM	0	170	16	0	6	0	0	0	59	0	7	1	0
4/24/2024	10:00 PM	0	149	9	0	6	0	0	0	57	0	8	0	0
4/24/2024	10:15 PM	0	136	5	0	8	0	0	0	67	0	8	0	0
4/24/2024	10:30 PM	0	135	5	0	6	0	0	0	60	0	12	0	0
4/24/2024	10:45 PM	0	114	5	0	5	0	0	0	55	0	13	0	0
4/24/2024	11:00 PM	0	113	5	0	6	0	0	0	51	0	11	0	0
4/24/2024	11:15 PM	0	80	4	0	3	0	0	0	30	0	9	0	0
4/24/2024	11:30 PM	0	46	3	0	3	0	0	0	20	0	3	0	0
4/24/2024	11:45 PM	0	22	1	0	1	0	0	0	12	0	0	0	0

4/25/2024	12:00 AM	0	50	13	0	1	1	0	1	56	0	4	0	0
4/25/2024	12:15 AM	0	43	9	0	0	3	0	0	50	0	6	0	0
4/25/2024	12:30 AM	0	35	6	0	0	3	0	0	44	0	4	0	0
4/25/2024	12:45 AM	0	25	1	0	0	3	0	0	33	0	3	0	0
4/25/2024	1:00 AM	0	22	2	0	0	3	0	0	30	0	3	0	0
4/25/2024	1:15 AM	0	26	3	0	1	1	0	0	32	0	2	0	0
4/25/2024	1:30 AM	0	21	3	0	1	1	0	0	35	0	5	0	0
4/25/2024	1:45 AM	0	18	3	0	1	1	0	0	40	0	5	0	0
4/25/2024	2:00 AM	0	16	2	0	4	2	0	0	40	0	5	0	0
4/25/2024	2:15 AM	0	15	1	0	4	3	0	0	36	0	5	0	0
4/25/2024	2:30 AM	0	27	0	0	4	3	0	0	40	0	3	0	0
4/25/2024	2:45 AM	0	35	0	0	6	3	0	0	36	0	5	0	0
4/25/2024	3:00 AM	0	43	2	0	4	1	0	0	39	0	5	0	0
4/25/2024	3:15 AM	0	49	3	0	3	1	0	0	44	0	4	0	0
4/25/2024	3:30 AM	0	47	3	0	7	1	0	0	46	0	4	0	0
4/25/2024	3:45 AM	0	58	6	0	6	1	0	0	61	0	3	0	0
4/25/2024	4:00 AM	0	68	7	0	7	1	0	0	68	0	3	0	0
4/25/2024	4:15 AM	0	78	6	0	10	1	0	0	73	0	4	0	0
4/25/2024	4:30 AM	0	98	8	0	9	1	0	0	78	0	3	0	0
4/25/2024	4:45 AM	0	109	5	0	8	1	0	0	85	0	2	0	0
4/25/2024	5:00 AM	0	124	4	0	10	1	0	0	95	0	2	0	0
4/25/2024	5:15 AM	0	140	8	0	9	0	0	0	100	0	1	0	0
4/25/2024	5:30 AM	0	170	24	1	9	0	0	0	109	0	1	0	0
4/25/2024	5:45 AM	0	197	41	1	13	2	0	1	105	0	1	0	0
4/25/2024	6:00 AM	0	212	67	1	16	2	0	2	103	0	0	0	0
4/25/2024	6:15 AM	0	242	82	1	18	4	0	5	100	1	0	0	0
4/25/2024	6:30 AM	1	251	90	1	23	5	1	8	94	1	0	0	0
4/25/2024	6:45 AM	1	260	92	1	27	3	2	9	92	1	0	0	0
4/25/2024	7:00 AM	2	292	102	2	20	5	2	9	81	1	0	0	0
4/25/2024	7:15 AM	2	273	113	2	21	4	3	8	76	1	0	0	0
4/25/2024	7:30 AM	1	268	124	2	18	5	2	7	69	1	0	0	0
4/25/2024	7:45 AM	1	247	146	2	17	8	2	6	68	1	0	0	0
4/25/2024	8:00 AM	0	213	141	1	21	8	2	8	66	1	0	0	0
4/25/2024	8:15 AM	0	215	142	1	20	8	1	8	77	2	0	0	0
4/25/2024	8:30 AM	0	197	140	0	20	7	2	7	77	3	0	0	0
4/25/2024	8:45 AM	0	199	129	0	20	6	1	7	94	3	0	0	0
4/25/2024	9:00 AM	0	206	123	0	24	10	2	5	111	4	0	0	0
4/25/2024	9:15 AM	0	209	130	0	29	12	3	6	114	3	0	0	0
4/25/2024	9:30 AM	0	247	127	0	27	13	3	9	115	3	0	0	0
4/25/2024	9:45 AM	0	270	124	0	24	12	3	13	100	3	0	0	0
4/25/2024	10:00 AM	1	278	132	0	21	6	2	13	100	2	0	0	0
4/25/2024	10:15 AM	1	280	124	0	20	4	2	15	96	1	0	0	0
4/25/2024	10:30 AM	1	280	119	2	21	5	1	12	101	0	0	0	0
4/25/2024	10:45 AM	1	273	127	2	25	6	2	10	103	0	0	0	0
4/25/2024	11:00 AM	0	278	136	2	25	10	4	13	94	0	0	0	0
4/25/2024	11:15 AM	0	299	135	2	21	11	3	11	92	0	0	0	0
4/25/2024	11:30 AM	0	294	151	0	23	8	3	11	88	0	0	0	0
4/25/2024	11:45 AM	1	305	159	0	21	7	2	9	81	0	0	0	0
4/25/2024	12:00 PM	1	310	149	5	18	3	1	7	83	1	0	0	0
4/25/2024	12:15 PM	1	305	159	5	19	3	1	5	86	2	0	0	0
4/25/2024	12:30 PM	2	317	148	5	21	4	2	6	88	2	0	0	0
4/25/2024	12:45 PM	1	342	133	5	21	4	4	8	96	5	0	0	0
4/25/2024	1:00 PM	1	354	126	0	19	7	3	10	91	5	1	0	0
4/25/2024	1:15 PM	1	363	117	0	20	5	3	14	94	4	1	0	0
4/25/2024	1:30 PM	0	364	124	2	17	6	2	16	96	6	1	0	0
4/25/2024	1:45 PM	0	348	137	5	16	8	3	19	99	3	1	0	0
4/25/2024	2:00 PM	0	355	145	5	26	6	3	23	97	2	0	0	0
4/25/2024	2:15 PM	0	397	159	6	22	7	3	21	88	3	0	1	0
4/25/2024	2:30 PM	0	417	166	5	24	6	5	20	86	1	2	1	0
4/25/2024	2:45 PM	0	446	167	2	27	5	2	16	78	2	2	1	0
4/25/2024	3:00 PM	1	480	177	2	25	6	2	14	74	2	2	1	0
4/25/2024	3:15 PM	1	454	182	1	25	7	4	19	73	3	2	0	0
4/25/2024	3:30 PM	1	488	182	0	26	7	2	16	66	4	0	0	0
4/25/2024	3:45 PM	1	504	175	0	26	5	2	14	57	4	0	0	0
4/25/2024	4:00 PM	0	539	157	1	23	6	2	12	51	4	0	0	0
4/25/2024	4:15 PM	0	592	158	1	26	5	0	6	50	2	0	0	0
4/25/2024	4:30 PM	0	607	158	1	19	4	0	7	63	1	0	0	0
4/25/2024	4:45 PM	0	593	160	1	16	6	0	7	68	0	0	0	0
4/25/2024	5:00 PM	1	546	167	0	14	5	0	6	76	0	0	0	0
4/25/2024	5:15 PM	1	513	153	0	12	8	0	5	75	0	0	0	0
4/25/2024	5:30 PM	3	443	137	0	11	8	0	7	67	0	0	0	0
4/25/2024	5:45 PM	3	404	125	0	9	6	0	7	67	0	2	0	0
4/25/2024	6:00 PM	2	382	114	0	10	6	0	4	64	0	4	0	0
4/25/2024	6:15 PM	2	334	104	0	14	3	0	4	69	0	5	0	0
4/25/2024	6:30 PM	1	308	84	2	18	4	0	1	66	0	6	0	0
4/25/2024	6:45 PM	1	317	78	2	19	4	0	2	65	0	4	0	0
4/25/2024	7:00 PM	1	290	66	2	16	4	0	5	72	0	2	0	0
4/25/2024	7:15 PM	2	296	58	2	13	3	0	4	64	0	1	0	0
4/25/2024	7:30 PM	1	298	58	0	10	4	0	4	67	0	1	0	0
4/25/2024	7:45 PM	1	268	41	1	8	5	0	3	73	0	6	0	0
4/25/2024	8:00 PM	1	285	32	1	9	3	0	0	68	0	6	0	0
4/25/2024	8:15 PM	0	287	18	1	8	3	0	0	77	0	9	0	0
4/25/2024	8:30 PM	0	289	11	1	8	1	0	0	85	0	12	0	0
4/25/2024	8:45 PM	0	303	10	0	8	0	0	0	89	0	9	0	0
4/25/2024	9:00 PM	0	300	9	0	11	0	0	0	99	0	10	0	0
4/25/2024	9:15 PM	0	288	7	0	8	0	0	0	98	0	7	0	0
4/25/2024	9:30 PM	0	266	5	1	7	0	0	0	91	0	6	0	0
4/25/2024	9:45 PM	0	253	6	1	5	0	0	0	86	0	9	0	0
4/25/2024	10:00 PM	0	211	6	1	3	0	0	0	80	0	10	0	0
4/25/2024	10:15 PM	0	171	4	1	4	0	0	0	71	0	10	0	0
4/25/2024	10:30 PM	0	150	4	0	7	0	0	0	61	0	10	0	0
4/25/2024	10:45 PM	0	123	2	0	8	0	0	0	59	0	5	0	0
4/25/2024	11:00 PM	0	112	1	0	6	0	0	0	53	0	4	0	0
4/25/2024	11:15 PM	0	87	1	0	5	0	0	0	41	0	4	0	0
4/25/2024	11:30 PM	0	60	0	0	2	0	0	0	32	0	1	0	0
4/25/2024	11:45 PM	0	27	0	0	1	0	0	0	14	0	1	0	0

4/26/2024	12:00 AM	0	35	11	0	3	1	0	0	24	0	3	0	0
4/26/2024	12:15 AM	0	27	10	0	3	0	0	0	18	0	4	0	0
4/26/2024	12:30 AM	0	24	7	0	5	0	0	0	25	0	4	0	0
4/26/2024	12:45 AM	0	24	9	0	5	0	0	0	24	0	4	0	0
4/26/2024	1:00 AM	0	21	5	0	5	0	0	0	27	0	3	0	0
4/26/2024	1:15 AM	0	22	6	0	3	0	0	0	30	0	1	0	0
4/26/2024	1:30 AM	0	26	7	0	2	0	0	0	30	0	1	0	0
4/26/2024	1:45 AM	0	24	4	0	2	0	0	0	34	0	1	0	0
4/26/2024	2:00 AM	0	25	5	0	2	0	0	0	32	0	2	0	0
4/26/2024	2:15 AM	0	25	3	0	6	2	0	0	33	0	4	0	0
4/26/2024	2:30 AM	0	22	4	0	7	4	0	0	35	0	4	0	0
4/26/2024	2:45 AM	0	22	4	0	8	4	0	0	30	0	4	0	0
4/26/2024	3:00 AM	0	25	7	0	10	4	0	0	33	0	4	0	0
4/26/2024	3:15 AM	0	29	10	0	8	2	0	0	31	0	3	0	0
4/26/2024	3:30 AM	0	32	10	0	9	0	0	0	28	0	2	0	0
4/26/2024	3:45 AM	0	33	12	0	9	0	0	0	31	0	2	0	0
4/26/2024	4:00 AM	0	37	14	0	8	1	0	0	40	0	1	0	0
4/26/2024	4:15 AM	0	41	17	0	10	1	0	0	51	0	1	0	0
4/26/2024	4:30 AM	0	52	25	0	7	1	0	0	61	0	4	0	0
4/26/2024	4:45 AM	0	66	34	0	9	2	0	0	66	0	6	0	0
4/26/2024	5:00 AM	1	79	41	0	15	4	0	0	59	0	6	0	0
4/26/2024	5:15 AM	1	85	45	0	15	7	0	0	62	0	5	0	0
4/26/2024	5:30 AM	1	108	58	0	18	7	0	0	61	0	3	0	0
4/26/2024	5:45 AM	2	161	72	0	18	7	0	0	61	0	1	0	0
4/26/2024	6:00 AM	1	195	78	0	12	9	0	0	71	0	1	0	0
4/26/2024	6:15 AM	2	249	89	1	16	11	0	4	70	0	1	0	0
4/26/2024	6:30 AM	2	284	90	2	18	11	0	5	68	0	0	0	0
4/26/2024	6:45 AM	1	284	97	4	22	11	0	6	75	0	0	0	0
4/26/2024	7:00 AM	1	295	104	4	28	7	0	9	66	1	0	0	0
4/26/2024	7:15 AM	0	284	113	3	24	3	1	8	64	2	0	0	0
4/26/2024	7:30 AM	0	263	107	2	30	4	1	9	65	2	0	0	0
4/26/2024	7:45 AM	0	244	103	1	34	8	2	11	63	2	0	0	0
4/26/2024	8:00 AM	0	233	105	4	34	9	4	11	67	2	1	0	0
4/26/2024	8:15 AM	0	236	105	4	37	10	3	10	73	1	2	0	0
4/26/2024	8:30 AM	0	251	124	4	31	15	3	11	77	1	2	0	0
4/26/2024	8:45 AM	0	259	124	3	24	12	3	14	77	1	3	0	0
4/26/2024	9:00 AM	0	273	123	0	27	10	3	13	74	1	2	0	0
4/26/2024	9:15 AM	0	274	140	2	29	10	3	16	74	1	1	0	0
4/26/2024	9:30 AM	0	274	132	2	27	6	3	15	79	1	1	0	0
4/26/2024	9:45 AM	0	288	131	2	29	7	3	10	88	1	0	0	0
4/26/2024	10:00 AM	0	282	143	5	26	10	2	12	96	0	0	0	0
4/26/2024	10:15 AM	0	293	122	3	28	10	2	10	104	0	0	0	0
4/26/2024	10:30 AM	0	317	133	5	31	11	2	8	104	1	0	0	0
4/26/2024	10:45 AM	0	334	131	5	28	10	2	10	110	1	0	0	0
4/26/2024	11:00 AM	0	355	130	3	30	7	1	10	114	1	0	0	0
4/26/2024	11:15 AM	0	374	137	5	23	7	2	9	112	2	0	0	0
4/26/2024	11:30 AM	0	374	156	8	21	4	2	13	102	2	0	0	0
4/26/2024	11:45 AM	1	390	162	13	22	2	1	12	88	2	0	0	0
4/26/2024	12:00 PM	2	396	160	12	17	2	1	10	93	3	0	0	0
4/26/2024	12:15 PM	2	413	157	12	15	0	0	11	85	4	0	0	0
4/26/2024	12:30 PM	2	413	134	7	14	2	0	10	99	3	0	0	0
4/26/2024	12:45 PM	1	395	139	5	10	3	1	9	104	3	0	0	0
4/26/2024	1:00 PM	3	406	136	6	17	5	1	7	93	3	0	0	0
4/26/2024	1:15 PM	3	380	137	5	20	11	1	7	97	2	0	0	0
4/26/2024	1:30 PM	3	403	145	6	19	9	1	5	84	2	0	0	0
4/26/2024	1:45 PM	3	418	143	3	25	10	0	5	81	2	1	0	0
4/26/2024	2:00 PM	1	425	159	2	21	13	0	9	84	1	1	0	0
4/26/2024	2:15 PM	2	472	167	1	18	7	0	9	76	0	1	0	0
4/26/2024	2:30 PM	3	486	160	0	19	7	1	10	77	1	1	0	0
4/26/2024	2:45 PM	3	515	166	0	15	5	1	12	73	1	0	0	0
4/26/2024	3:00 PM	2	513	155	0	14	3	1	9	73	1	0	0	0
4/26/2024	3:15 PM	1	500	154	1	16	5	1	7	84	2	0	0	0
4/26/2024	3:30 PM	0	512	151	1	19	5	0	7	86	1	0	0	0
4/26/2024	3:45 PM	0	498	143	1	25	6	0	7	80	1	0	0	0
4/26/2024	4:00 PM	1	506	148	2	25	4	0	8	77	1	0	0	0
4/26/2024	4:15 PM	1	513	141	1	23	5	0	9	69	0	0	0	0
4/26/2024	4:30 PM	2	490	142	1	22	5	0	10	65	0	0	0	0
4/26/2024	4:45 PM	2	498	136	1	16	4	0	8	71	0	0	0	0
4/26/2024	5:00 PM	2	477	124	0	17	4	0	8	65	0	0	0	0
4/26/2024	5:15 PM	2	439	120	1	18	1	0	9	62	0	0	0	0
4/26/2024	5:30 PM	1	410	109	1	15	2	0	7	71	0	0	0	0
4/26/2024	5:45 PM	1	375	106	1	14	4	0	7	69	0	1	0	0
4/26/2024	6:00 PM	0	374	101	1	8	3	0	6	72	0	1	0	0
4/26/2024	6:15 PM	2	368	97	0	9	3	0	6	70	0	1	0	0
4/26/2024	6:30 PM	2	363	92	1	13	2	0	8	64	0	1	0	0
4/26/2024	6:45 PM	2	351	90	1	16	0	0	8	64	0	0	0	0
4/26/2024	7:00 PM	2	341	84	2	17	0	0	7	56	0	2	0	0
4/26/2024	7:15 PM	0	317	77	3	15	0	0	5	58	0	2	0	0
4/26/2024	7:30 PM	0	297	80	5	10	3	0	2	55	0	2	0	0
4/26/2024	7:45 PM	0	270	76	5	5	3	0	1	52	0	3	0	0
4/26/2024	8:00 PM	0	238	76	4	5	3	0	1	60	0	3	0	0
4/26/2024	8:15 PM	0	235	83	3	3	3	0	0	58	0	4	0	0
4/26/2024	8:30 PM	0	221	77	0	3	0	0	0	60	0	7	0	0
4/26/2024	8:45 PM	0	220	77	0	5	0	0	0	61	0	7	0	0
4/26/2024	9:00 PM	0	218	79	0	5	0	0	0	52	0	5	0	0
4/26/2024	9:15 PM	0	221	76	0	6	0	0	0	44	0	5	0	0
4/26/2024	9:30 PM	0	212	79	0	8	0	0	0	43	0	3	0	0
4/26/2024	9:45 PM	0	210	81	0	7	0	0	0	39	0	2	0	0
4/26/2024	10:00 PM	0	209	81	0	6	0	0	0	44	0	7	0	0
4/26/2024	10:15 PM	0	189	83	0	7	0	0	0	45	0	8	0	0
4/26/2024	10:30 PM	0	187	79	0	7	0	0	0	33	0	7	0	0
4/26/2024	10:45 PM	0	166	67	0	6	0	0	0	33	0	8	0	0
4/26/2024	11:00 PM	0	142	54	0	5	0	0	0	26	0	4	0	0
4/26/2024	11:15 PM	0	101	32	0	3	0	0	0	19	0	2	0	0
4/26/2024	11:30 PM	0	59	17	0	0	0	0	0	15	0	2	0	0
4/26/2024	11:45 PM	0	27	9	0	0	0	0	0	6	0	1	0	0

4/27/2024	12:00 AM	0	55	14	0	6	0	0	0	12	0	4	0	0
4/27/2024	12:15 AM	0	55	16	0	5	0	0	0	14	0	5	0	0
4/27/2024	12:30 AM	0	52	14	0	4	0	0	0	17	0	6	0	0
4/27/2024	12:45 AM	0	44	12	1	2	0	0	0	18	0	6	0	0
4/27/2024	1:00 AM	0	37	11	1	0	0	0	0	20	0	4	0	0
4/27/2024	1:15 AM	0	37	11	1	2	0	0	0	18	0	3	0	0
4/27/2024	1:30 AM	0	37	11	1	2	0	0	0	22	0	2	0	0
4/27/2024	1:45 AM	0	38	11	0	2	0	0	0	26	0	3	0	0
4/27/2024	2:00 AM	0	41	13	0	2	0	0	0	31	0	3	0	0
4/27/2024	2:15 AM	0	42	15	0	0	0	0	0	33	0	4	0	0
4/27/2024	2:30 AM	0	44	18	0	0	0	0	0	38	0	4	0	0
4/27/2024	2:45 AM	0	38	17	1	0	0	0	0	38	0	3	0	0
4/27/2024	3:00 AM	0	34	16	1	0	0	0	0	41	0	4	0	0
4/27/2024	3:15 AM	0	29	13	1	0	2	0	0	47	0	3	0	0
4/27/2024	3:30 AM	0	24	11	1	0	2	0	0	44	0	3	0	0
4/27/2024	3:45 AM	0	25	11	0	0	2	0	0	43	0	2	0	0
4/27/2024	4:00 AM	0	27	13	0	0	2	0	0	41	0	2	0	0
4/27/2024	4:15 AM	0	40	20	0	1	0	0	0	40	0	2	0	0
4/27/2024	4:30 AM	0	45	19	0	3	0	0	0	40	0	5	0	0
4/27/2024	4:45 AM	0	55	24	0	3	0	0	0	42	0	5	0	0
4/27/2024	5:00 AM	0	68	29	0	5	0	0	0	38	0	4	0	0
4/27/2024	5:15 AM	0	79	34	0	6	0	0	0	37	0	4	0	0
4/27/2024	5:30 AM	0	103	42	0	4	0	0	0	32	0	1	0	0
4/27/2024	5:45 AM	0	123	46	0	5	0	0	0	35	0	1	0	0
4/27/2024	6:00 AM	0	143	55	0	3	1	0	1	34	0	1	0	0
4/27/2024	6:15 AM	0	155	54	0	1	2	0	1	38	0	1	0	0
4/27/2024	6:30 AM	0	170	61	0	3	4	0	2	46	0	0	0	0
4/27/2024	6:45 AM	1	173	62	1	4	5	0	4	48	0	1	0	0
4/27/2024	7:00 AM	1	175	71	1	9	5	0	3	52	1	1	0	0
4/27/2024	7:15 AM	2	188	68	1	13	7	0	3	53	2	1	0	0
4/27/2024	7:30 AM	2	185	73	1	14	8	0	3	53	2	1	0	0
4/27/2024	7:45 AM	3	210	90	0	12	8	0	1	46	3	0	0	0
4/27/2024	8:00 AM	3	202	75	0	12	9	0	2	53	2	1	0	0
4/27/2024	8:15 AM	4	187	82	0	10	8	0	4	48	1	2	0	0
4/27/2024	8:30 AM	4	200	75	0	8	7	0	3	58	1	2	0	0
4/27/2024	8:45 AM	2	208	74	0	11	6	0	5	62	0	3	0	0
4/27/2024	9:00 AM	5	244	81	0	8	5	0	6	54	0	2	0	0
4/27/2024	9:15 AM	3	278	86	0	9	4	0	7	62	0	1	0	0
4/27/2024	9:30 AM	3	288	94	0	11	2	0	8	50	0	1	0	0
4/27/2024	9:45 AM	3	301	85	0	11	3	0	6	54	0	0	0	0
4/27/2024	10:00 AM	0	311	90	0	13	4	0	4	52	0	0	0	0
4/27/2024	10:15 AM	1	319	94	1	12	4	0	4	48	0	0	0	0
4/27/2024	10:30 AM	1	340	96	1	13	4	0	3	45	0	0	0	0
4/27/2024	10:45 AM	1	342	100	1	14	3	0	5	38	2	0	0	0
4/27/2024	11:00 AM	1	340	105	1	11	1	0	5	47	2	0	0	0
4/27/2024	11:15 AM	1	350	117	0	12	0	0	4	41	2	0	0	0
4/27/2024	11:30 AM	1	363	126	0	10	0	0	7	48	2	0	0	0
4/27/2024	11:45 AM	2	366	132	0	8	0	0	6	56	0	0	0	0
4/27/2024	12:00 PM	2	376	133	0	11	0	0	7	53	0	0	0	0
4/27/2024	12:15 PM	1	366	125	0	13	0	0	6	64	0	0	0	0
4/27/2024	12:30 PM	1	364	124	0	12	1	0	5	62	0	0	0	0
4/27/2024	12:45 PM	0	390	129	0	12	1	0	4	56	0	0	0	0
4/27/2024	1:00 PM	0	424	125	0	12	1	0	4	53	0	0	0	0
4/27/2024	1:15 PM	2	446	119	0	9	1	0	4	45	0	0	0	0
4/27/2024	1:30 PM	3	462	114	0	9	1	0	4	44	0	0	0	0
4/27/2024	1:45 PM	4	447	109	0	10	1	0	5	46	0	0	0	0
4/27/2024	2:00 PM	4	430	112	0	7	1	0	5	43	0	0	0	0
4/27/2024	2:15 PM	2	427	117	0	8	1	0	4	40	1	0	0	0
4/27/2024	2:30 PM	1	423	120	0	9	0	0	4	39	1	0	0	0
4/27/2024	2:45 PM	3	422	111	0	6	0	0	5	35	1	0	0	0
4/27/2024	3:00 PM	3	432	107	0	6	0	0	4	44	2	1	0	0
4/27/2024	3:15 PM	4	444	104	1	5	1	0	5	42	1	1	0	0
4/27/2024	3:30 PM	4	439	97	1	5	2	0	5	43	1	1	0	0
4/27/2024	3:45 PM	1	442	101	1	6	2	0	3	42	1	1	0	0
4/27/2024	4:00 PM	1	426	98	1	6	2	0	3	31	0	0	0	0
4/27/2024	4:15 PM	0	408	90	0	9	1	0	2	34	0	0	0	0
4/27/2024	4:30 PM	0	402	86	0	7	0	0	2	33	0	0	0	0
4/27/2024	4:45 PM	0	378	82	1	8	0	0	3	36	0	0	0	0
4/27/2024	5:00 PM	0	361	76	2	10	0	0	3	37	0	0	0	0
4/27/2024	5:15 PM	0	346	80	2	6	1	0	4	35	0	0	0	0
4/27/2024	5:30 PM	0	337	82	2	9	1	0	2	34	0	0	0	0
4/27/2024	5:45 PM	0	351	81	1	8	1	0	2	30	0	0	0	0
4/27/2024	6:00 PM	0	365	84	0	5	1	0	2	30	1	0	0	0
4/27/2024	6:15 PM	1	376	83	0	4	0	0	2	28	1	0	0	0
4/27/2024	6:30 PM	1	371	74	0	4	0	0	3	26	1	0	0	0
4/27/2024	6:45 PM	1	369	76	0	3	0	0	3	26	1	0	0	0
4/27/2024	7:00 PM	1	339	74	0	3	1	0	3	25	0	0	0	0
4/27/2024	7:15 PM	0	318	69	0	3	1	0	2	30	0	0	0	0
4/27/2024	7:30 PM	0	310	71	0	1	1	0	1	30	0	0	0	0
4/27/2024	7:45 PM	0	289	61	0	1	1	0	0	31	0	0	0	0
4/27/2024	8:00 PM	0	319	60	0	2	0	0	0	29	0	0	0	0
4/27/2024	8:15 PM	0	329	53	0	2	0	0	0	24	0	0	0	0
4/27/2024	8:30 PM	0	322	47	0	1	0	0	0	20	0	0	0	0
4/27/2024	8:45 PM	0	337	48	0	2	0	0	0	23	0	0	0	0
4/27/2024	9:00 PM	0	327	49	0	1	0	0	0	21	0	0	0	0
4/27/2024	9:15 PM	0	306	49	0	2	0	0	0	21	0	0	0	0
4/27/2024	9:30 PM	0	283	52	0	3	0	0	0	21	0	0	0	0
4/27/2024	9:45 PM	0	249	50	0	2	0	0	0	16	0	0	0	0
4/27/2024	10:00 PM	0	200	40	0	3	0	0	0	18	0	1	0	0
4/27/2024	10:15 PM	0	180	37	0	2	0	0	0	15	0	1	0	0
4/27/2024	10:30 PM	0	170	35	0	1	0	0	0	20	0	1	0	0
4/27/2024	10:45 PM	0	144	31	0	1	0	0	0	20	0	1	0	0
4/27/2024	11:00 PM	0	131	30	0	0	0	0	0	19	0	0	0	0
4/27/2024	11:15 PM	0	92	23	0	0	0	0	0	18	0	0	0	0
4/27/2024	11:30 PM	0	52	13	0	0	0	0	0	10	0	0	0	0
4/27/2024	11:45 PM	0	27	7	0	0	0	0	0	4	0	0	0	0

Bi-Directional Class Count || NB EB 15min

Columbia, SC

Marr Traffic DATA COLLECTION
www.marrtraffic.com

Site 74 Lane 4 EB
I-20,
west of US-378 Sunset Blvd S/Bound Off-Ramp

Date
Sunday, April 21, 2024

Lat/Long
34.008085°, -81.156669°

Click here for Map

Weather
Cloudy
66°F

Click here for Detailed Weather

0000 - 2400 (Sunday 24h Session) (04-21-2024)
NB EB 15min

	Eastbound (Movement 74 Lane 4 EB.1)													15min	60min
Time	1	2	3	4	5	6	7	8	9	10	11	12	13	Total	Total
0000 - 0015	0	13	0	0	0	0	0	0	0	0	0	0	0	**13**	
0015 - 0030	0	10	0	0	0	0	0	0	1	0	0	0	0	**11**	
0030 - 0045	0	9	0	0	0	0	0	0	0	0	0	0	0	**9**	
0045 - 0100	0	8	0	0	0	0	0	0	0	0	0	0	0	**8**	**41**
0100 - 0115	0	13	2	0	0	0	0	0	0	0	0	0	0	**15**	
0115 - 0130	0	8	0	0	1	0	0	0	0	0	0	0	0	**9**	
0130 - 0145	0	10	0	0	0	0	0	0	0	0	0	0	0	**10**	
0145 - 0200	0	11	0	0	0	0	0	0	0	0	0	0	0	**11**	**45**
0200 - 0215	0	6	0	0	0	0	0	0	0	0	0	0	0	**6**	
0215 - 0230	0	5	0	0	0	0	0	0	0	0	0	0	0	**5**	
0230 - 0245	0	4	0	0	0	0	0	0	0	0	0	0	0	**4**	
0245 - 0300	0	1	0	0	0	0	0	0	0	0	0	0	0	**1**	**16**
0300 - 0315	0	3	0	0	0	0	0	0	0	0	0	0	0	**3**	
0315 - 0330	0	4	0	0	0	1	0	0	0	0	0	0	0	**5**	
0330 - 0345	0	3	0	0	0	0	0	0	0	0	0	0	0	**3**	
0345 - 0400	0	3	0	0	0	0	0	0	1	0	0	0	0	**4**	**15**
0400 - 0415	0	3	0	0	0	0	0	0	0	0	0	0	0	**3**	
0415 - 0430	0	1	0	0	0	0	0	0	1	0	0	0	0	**2**	
0430 - 0445	0	0	1	0	0	0	0	0	0	0	0	0	0	**1**	
0445 - 0500	0	3	0	0	0	0	0	0	0	0	0	0	0	**3**	**9**
0500 - 0515	0	5	0	0	0	0	0	0	0	0	0	0	0	**5**	
0515 - 0530	0	5	0	0	0	0	0	0	0	0	0	0	0	**5**	
0530 - 0545	0	2	0	0	1	0	0	0	2	0	0	0	0	**5**	
0545 - 0600	0	12	1	0	0	0	0	0	0	0	0	0	0	**13**	**28**
0600 - 0615	0	12	0	0	0	0	0	0	1	0	0	0	0	**13**	
0615 - 0630	0	30	4	0	0	0	0	0	1	0	0	0	0	**35**	
0630 - 0645	0	29	4	0	0	1	0	0	0	0	0	0	0	**34**	
0645 - 0700	0	30	3	0	0	0	0	0	1	0	0	0	0	**34**	**116**
0700 - 0715	0	17	4	0	0	0	0	0	2	0	0	0	0	**23**	
0715 - 0730	0	17	4	0	0	0	0	0	1	0	0	0	0	**22**	
0730 - 0745	0	20	1	0	0	0	0	0	1	0	0	0	0	**22**	
0745 - 0800	0	24	3	0	1	0	0	0	0	0	0	0	0	**28**	**95**
0800 - 0815	0	19	2	0	2	0	0	0	0	0	0	0	0	**23**	
0815 - 0830	0	26	4	0	0	0	0	0	0	0	0	0	0	**30**	
0830 - 0845	0	34	6	0	0	0	0	0	1	0	0	0	0	**41**	
0845 - 0900	0	55	11	0	2	0	0	0	0	0	0	0	0	**68**	**162**
0900 - 0915	0	50	13	0	1	0	0	0	0	0	0	0	0	**64**	
0915 - 0930	0	51	12	0	0	0	0	0	0	0	0	0	0	**63**	
0930 - 0945	0	55	6	0	0	0	0	0	0	0	0	0	0	**61**	
0945 - 1000	0	37	4	1	0	1	0	0	0	0	0	0	0	**43**	**231**
1000 - 1015	0	53	12	0	0	0	0	0	1	0	0	0	0	**66**	
1015 - 1030	0	65	12	0	0	0	0	0	1	0	0	0	0	**78**	
1030 - 1045	0	66	15	0	0	0	0	0	2	0	0	0	0	**83**	
1045 - 1100	0	53	15	0	0	0	0	0	0	0	0	0	0	**68**	**295**
1100 - 1115	0	36	2	0	0	1	0	0	1	0	0	0	0	**40**	
1115 - 1130	0	37	7	0	1	0	0	0	2	0	0	0	0	**47**	
1130 - 1145	0	64	8	0	0	0	0	0	0	0	0	0	0	**72**	
1145 - 1200	0	61	11	1	0	1	0	0	1	0	0	0	0	**75**	**234**
1200 - 1215	0	57	9	0	0	1	0	2	1	0	0	0	0	**70**	
1215 - 1230	0	63	16	0	1	1	0	0	0	0	0	0	0	**81**	
1230 - 1245	0	67	13	0	1	0	0	0	3	0	0	0	0	**84**	
1245 - 1300	0	65	13	0	3	0	0	0	1	0	0	0	0	**82**	**317**
1300 - 1315	0	75	11	0	2	0	0	0	1	0	0	0	0	**89**	
1315 - 1330	0	70	12	0	0	0	0	0	1	0	0	0	0	**83**	
1330 - 1345	0	75	18	0	0	0	0	1	0	0	0	0	0	**94**	
1345 - 1400	0	85	15	0	0	0	0	0	3	0	0	0	0	**103**	**369**
1400 - 1415	0	76	21	1	1	0	0	0	1	0	0	0	0	**100**	
1415 - 1430	0	70	5	0	1	0	0	0	1	0	0	0	0	**77**	
1430 - 1445	0	78	15	0	1	0	0	0	3	0	0	0	0	**97**	
1445 - 1500	0	79	10	0	0	0	0	0	0	0	0	0	0	**89**	**363**
1500 - 1515	0	46	11	0	0	0	0	1	1	0	0	0	0	**59**	
1515 - 1530	0	50	18	0	1	1	0	0	2	0	0	0	0	**72**	
1530 - 1545	0	53	4	0	1	0	0	0	1	0	0	0	0	**59**	
1545 - 1600	0	63	10	0	1	0	0	0	0	0	0	0	0	**74**	**264**
1600 - 1615	0	64	14	0	1	0	0	1	1	0	0	0	0	**81**	
1615 - 1630	0	43	13	0	1	0	0	1	0	0	0	0	0	**58**	
1630 - 1645	0	60	14	0	1	0	0	0	1	0	0	0	0	**76**	
1645 - 1700	0	56	15	0	0	0	0	0	3	0	0	0	0	**74**	**289**
1700 - 1715	0	52	12	0	2	0	0	0	1	0	0	0	0	**67**	
1715 - 1730	0	51	9	0	0	0	0	0	2	0	0	0	0	**62**	
1730 - 1745	0	52	13	0	2	0	0	0	2	0	0	0	0	**69**	
1745 - 1800	0	66	11	0	0	0	0	0	4	0	0	0	0	**81**	**279**
1800 - 1815	0	44	10	0	1	1	0	0	1	0	0	0	0	**57**	
1815 - 1830	0	66	5	0	0	0	0	0	1	0	0	0	0	**72**	
1830 - 1845	0	61	4	0	0	0	0	0	2	0	0	0	0	**67**	
1845 - 1900	0	53	7	0	1	0	0	0	1	0	0	0	0	**62**	**258**
1900 - 1915	0	39	7	0	0	0	0	0	0	0	0	0	0	**46**	
1915 - 1930	0	36	8	0	0	0	0	0	2	0	0	0	0	**46**	
1930 - 1945	0	39	4	0	0	0	0	0	1	0	0	0	0	**44**	
1945 - 2000	0	41	8	0	1	0	0	0	0	0	0	0	0	**50**	**186**
2000 - 2015	0	21	4	0	1	0	0	0	0	0	0	0	0	**26**	
2015 - 2030	0	27	1	0	0	0	0	0	2	0	0	0	0	**30**	
2030 - 2045	0	26	0	0	0	0	0	0	2	0	0	0	0	**28**	
2045 - 2100	0	20	0	0	0	0	0	0	0	0	0	0	0	**20**	**104**
2100 - 2115	0	22	1	0	0	0	0	0	1	0	0	0	0	**24**	
2115 - 2130	0	38	0	0	0	1	0	0	0	0	0	0	0	**39**	
2130 - 2145	0	18	0	0	0	0	0	0	0	0	0	0	0	**18**	
2145 - 2200	0	14	0	0	0	0	0	0	1	2	0	0	0	**17**	**98**
2200 - 2215	0	20	0	0	1	0	0	0	2	0	0	0	0	**23**	
2215 - 2230	0	16	0	0	0	0	0	0	2	0	0	0	0	**18**	
2230 - 2245	0	15	0	0	0	0	0	0	2	0	0	0	0	**17**	
2245 - 2300	0	15	1	0	0	0	0	0	0	0	0	0	0	**16**	**74**
2300 - 2315	0	11	0	0	0	0	0	0	0	2	0	0	0	**13**	
2315 - 2330	0	9	1	0	0	0	0	0	2	0	0	0	0	**12**	
2330 - 2345	0	7	0	0	0	0	0	0	0	0	0	0	0	**7**	
2345 - 0000	0	5	0	0	0	0	0	0	3	0	0	0	0	**8**	**40**

Session Total	0	3262	530	3	34	10	0	6	79	4	0	0	0	3928
Session Average	0.00	33.98	5.52	0.03	0.35	0.10	0.00	0.06	0.82	0.04	0.00	0.00	0.00	**40.92**
Session Percentage	0.00	83.04	13.49	0.08	0.87	0.25	0.00	0.15	2.01	0.10	0.00	0.00	0.00	

AM Peak Hour	-	0945 - 1045	0945 - 1045	0900 - 1000	0800 - 0900	0545 - 0645	-	-	0645 - 0745	-	-	-	-	**0945 - 1045**
AM Peak Volume	0	221	43	1	4	1	0	0	5	0	0	0	0	**270**

Noon Peak Hour	-	1345 - 1445	1315 - 1415	1100 - 1200	1215 - 1315	1130 - 1230	-	1115 - 1215	1345 - 1445	-	-	-	-	**1315 - 1415**
Noon Peak Volume	0	309	66	1	7	3	0	2	8	0	0	0	0	**380**

PM Peak Hour	-	1745 - 1845	1600 - 1700	-	1515 - 1615	1500 - 1600	-	1530 - 1630	1700 - 1800	-	-	-	-	**1545 - 1645**
PM Peak Volume	0	237	56	0	4	1	0	2	9	0	0	0	0	**289**

Site 74 Lane 4 EB
I-20,
west of US-378 Sunset Blvd S/Bound Off-Ramp

Date
Monday, April 22, 2024

Lat/Long
34.008085°, -81.156669°

Weather
Mostly Cloudy
57°F

Click here for Detailed Weather

0000 - 2400 (Weekday 24h Session) (04-22-2024)
NB EB 15min

	Eastbound (Movement 74 Lane 4 EB.1)													15min	60min
Time	1	2	3	4	5	6	7	8	9	10	11	12	13	Total	Total
0000 - 0015	0	3	0	0	0	0	0	0	1	0	0	0	0	**4**	
0015 - 0030	0	5	0	0	0	0	0	0	1	0	0	0	0	**6**	
0030 - 0045	0	7	0	0	0	0	0	0	0	0	1	0	0	**8**	
0045 - 0100	0	6	0	0	0	0	0	0	0	0	0	0	0	**6**	**24**
0100 - 0115	0	3	0	0	0	0	0	0	0	0	0	0	0	**3**	
0115 - 0130	0	7	0	0	0	0	0	0	0	0	0	0	0	**7**	
0130 - 0145	0	4	0	0	0	0	0	0	1	0	0	0	0	**5**	
0145 - 0200	0	8	0	0	0	0	0	0	0	0	0	0	0	**8**	**23**
0200 - 0215	0	2	0	0	0	0	0	0	0	0	0	0	0	**2**	
0215 - 0230	0	6	0	0	0	0	0	0	1	0	0	0	0	**7**	
0230 - 0245	0	7	0	0	0	0	0	0	0	0	0	0	0	**7**	
0245 - 0300	0	4	0	0	0	0	0	0	0	0	0	0	0	**4**	**20**
0300 - 0315	0	4	0	0	0	0	0	0	1	0	0	0	0	**5**	
0315 - 0330	0	5	0	0	0	0	0	0	0	0	0	0	0	**5**	
0330 - 0345	0	2	0	0	0	0	0	0	0	0	0	0	0	**2**	
0345 - 0400	0	6	0	0	0	0	0	0	1	0	0	0	0	**7**	**19**
0400 - 0415	0	6	0	0	0	0	0	0	1	0	0	0	0	**7**	
0415 - 0430	0	12	0	0	0	0	0	0	1	0	0	0	0	**13**	
0430 - 0445	0	11	1	0	0	0	0	0	0	0	0	0	0	**12**	
0445 - 0500	0	19	0	0	0	0	0	0	2	0	1	0	0	**22**	**54**
0500 - 0515	0	15	1	0	0	0	0	0	0	0	0	0	0	**16**	
0515 - 0530	0	17	2	0	0	0	0	0	1	0	0	0	0	**20**	
0530 - 0545	0	35	4	0	0	0	0	0	2	0	0	0	0	**41**	
0545 - 0600	0	50	3	0	0	0	0	0	1	0	0	0	0	**54**	**131**
0600 - 0615	0	51	15	0	0	0	0	0	0	0	0	0	0	**66**	
0615 - 0630	0	55	18	0	0	0	0	0	2	0	1	0	0	**76**	
0630 - 0645	0	110	35	0	0	0	0	0	4	0	2	0	0	**151**	
0645 - 0700	0	148	46	0	2	1	0	0	3	0	1	0	0	**201**	**494**
0700 - 0715	0	165	46	0	0	0	0	0	6	0	0	0	0	**217**	
0715 - 0730	0	204	67	0	2	0	0	2	5	0	0	0	0	**280**	
0730 - 0745	0	236	74	0	2	0	0	0	6	0	0	0	0	**318**	
0745 - 0800	0	213	57	0	2	0	0	0	3	0	0	0	0	**275**	**1090**
0800 - 0815	0	164	33	0	3	1	0	0	3	0	0	0	0	**204**	
0815 - 0830	0	161	29	1	0	0	0	0	2	0	0	0	0	**193**	
0830 - 0845	0	143	28	1	3	0	0	1	3	0	0	0	0	**179**	
0845 - 0900	0	136	30	1	0	0	0	0	0	0	0	0	0	**167**	**743**
0900 - 0915	0	88	24	0	5	0	0	1	1	0	0	0	0	**119**	
0915 - 0930	0	84	28	0	8	0	0	0	3	0	0	0	0	**123**	
0930 - 0945	0	108	25	1	3	1	0	0	8	0	0	0	0	**146**	
0945 - 1000	0	99	22	0	2	0	0	0	3	0	0	0	0	**126**	**514**
1000 - 1015	0	72	14	0	5	0	0	1	5	0	0	0	0	**97**	
1015 - 1030	0	68	23	1	4	1	0	0	1	0	0	0	0	**98**	
1030 - 1045	0	73	17	0	3	0	0	0	4	0	0	0	0	**97**	
1045 - 1100	0	84	21	0	3	0	0	0	2	0	0	0	0	**110**	**402**
1100 - 1115	0	65	12	1	7	1	0	0	3	0	0	0	0	**89**	
1115 - 1130	0	77	11	3	5	0	0	0	2	0	0	0	0	**98**	
1130 - 1145	0	73	22	0	0	0	0	1	1	0	0	0	0	**97**	
1145 - 1200	0	56	15	0	0	1	0	0	4	0	0	0	0	**76**	**360**
1200 - 1215	0	63	12	0	1	1	0	0	2	0	0	0	0	**79**	
1215 - 1230	0	57	14	1	2	0	0	0	2	0	0	0	0	**76**	
1230 - 1245	0	66	16	0	0	1	0	1	0	0	0	0	0	**84**	
1245 - 1300	0	92	10	0	2	1	0	0	4	0	0	0	0	**109**	**348**
1300 - 1315	0	76	15	1	4	0	0	0	3	0	0	0	0	**99**	
1315 - 1330	0	74	20	0	1	0	0	1	4	0	0	0	0	**100**	
1330 - 1345	0	84	13	1	3	0	0	0	1	0	0	0	0	**102**	
1345 - 1400	0	73	10	1	3	0	0	0	1	0	0	0	0	**88**	**389**
1400 - 1415	0	88	17	0	2	0	0	1	4	0	0	0	0	**112**	
1415 - 1430	0	85	22	0	1	0	0	0	3	0	0	0	0	**111**	
1430 - 1445	0	87	26	0	2	1	0	0	3	0	0	0	0	**119**	
1445 - 1500	0	98	14	3	6	0	0	1	1	0	0	0	0	**123**	**465**
1500 - 1515	0	93	12	0	2	2	0	1	2	0	0	0	0	**112**	
1515 - 1530	0	79	12	1	2	2	0	1	1	0	0	0	0	**98**	
1530 - 1545	0	77	14	1	3	1	0	1	3	0	0	0	0	**100**	
1545 - 1600	0	99	16	0	2	1	0	0	3	0	0	0	0	**121**	**431**
1600 - 1615	0	93	10	0	0	0	0	1	8	0	0	0	0	**112**	
1615 - 1630	0	80	13	0	2	0	0	0	3	0	0	0	0	**98**	
1630 - 1645	0	69	18	0	2	0	0	0	5	0	0	0	0	**94**	
1645 - 1700	0	87	22	0	4	1	0	0	1	0	0	0	0	**115**	**419**
1700 - 1715	0	68	17	0	0	1	0	0	3	0	0	0	0	**89**	
1715 - 1730	0	104	29	0	1	2	0	0	5	0	0	0	0	**141**	
1730 - 1745	0	122	26	1	2	0	0	0	6	0	0	0	0	**157**	
1745 - 1800	0	79	22	0	1	0	0	0	4	0	0	0	0	**106**	**493**
1800 - 1815	2	64	12	1	0	0	0	0	3	0	0	0	0	**82**	
1815 - 1830	0	94	14	0	0	0	0	0	4	0	0	0	0	**112**	
1830 - 1845	0	63	8	0	0	0	0	0	2	0	0	0	0	**73**	
1845 - 1900	0	56	3	0	0	0	0	0	3	0	0	0	0	**62**	**329**
1900 - 1915	0	48	6	0	1	0	0	0	0	0	0	0	0	**55**	
1915 - 1930	0	51	14	0	0	0	0	0	2	0	0	0	0	**67**	
1930 - 1945	0	34	7	0	1	0	0	0	4	0	0	0	0	**46**	
1945 - 2000	0	47	11	0	1	1	0	0	3	0	0	0	0	**63**	**231**
2000 - 2015	0	40	7	0	3	0	0	0	0	0	1	0	0	**51**	
2015 - 2030	0	29	3	0	2	0	0	0	1	0	0	0	0	**35**	
2030 - 2045	0	32	3	0	2	0	0	0	0	0	2	0	0	**39**	
2045 - 2100	0	28	4	0	1	0	0	0	2	0	0	0	0	**35**	**160**
2100 - 2115	0	25	3	0	0	0	0	0	1	0	1	0	0	**30**	
2115 - 2130	0	29	4	0	1	0	0	0	2	0	0	0	0	**36**	
2130 - 2145	0	18	1	0	2	0	0	0	2	0	2	0	0	**25**	
2145 - 2200	0	15	5	0	1	0	0	0	3	0	0	0	0	**24**	**115**
2200 - 2215	0	17	2	0	0	0	0	0	1	0	0	0	0	**20**	
2215 - 2230	0	18	1	0	2	0	0	0	2	0	0	0	0	**23**	
2230 - 2245	0	15	3	0	0	0	0	0	1	0	1	0	0	**20**	
2245 - 2300	0	13	2	0	0	0	0	0	0	0	0	0	0	**15**	**78**
2300 - 2315	0	10	1	0	1	0	0	0	1	0	2	0	0	**15**	
2315 - 2330	0	12	2	0	0	0	0	0	2	0	0	0	0	**16**	
2330 - 2345	0	3	0	0	0	0	0	0	1	0	1	0	0	**5**	
2345 - 0000	0	2	0	0	0	0	0	0	1	0	1	0	0	**4**	**40**

Session Total	2	5733	1239	20	125	21	0	14	201	0	17	0	0	**7372**
Session Average	0.02	59.72	12.91	0.21	1.30	0.22	0.00	0.15	2.09	0.00	0.18	0.00	0.00	**76.79**
Session Percentage	0.03	77.77	16.81	0.27	1.70	0.28	0.00	0.19	2.73	0.00	0.23	0.00	0.00	

AM Peak Hour	-	0700 - 0800	0700 - 0800	0800 - 0900	0900 - 1000	0930 - 1030	-	0630 - 0730	0645 - 0745	-	0600 - 0700	-	-	**0700 - 0800**
AM Peak Volume	0	818	244	3	18	2	0	2	20	0	4	0	0	**1090**

Noon Peak Hour	-	1415 - 1515	1400 - 1500	1445 - 1545	1030 - 1130	1430 - 1530	-	1445 - 1545	1000 - 1100	-	-	-	-	**1400 - 1500**
Noon Peak Volume	0	363	79	5	18	5	0	4	12	0	0	0	0	**465**

PM Peak Hour	1715 - 1815	1645 - 1745	1645 - 1745	1500 - 1600	1500 - 1600	1500 - 1600	-	1500 - 1600	1545 - 1645	-	1945 - 2045	-	-	**1645 - 1745**
PM Peak Volume	2	381	94	2	9	6	0	3	19	0	3	0	0	**502**

Site 74 Lane 4 EB
I-20,
west of US-378 Sunset Blvd S/Bound Off-Ramp

Date
Tuesday, April 23, 2024

Lat/Long
34.008085°, -81.156669°

Weather
Fair
58°F

Click here for Detailed Weather

0000 - 2400 (Weekday 24h Session) (04-23-2024)
NB EB 15min

	Eastbound (Movement 74 Lane 4 EB.1)													15min	60min
TIME	1	2	3	4	5	6	7	8	9	10	11	12	13	Total	Total
0000 - 0015	0	7	0	0	0	0	0	0	1	0	2	0	0	**10**	
0015 - 0030	0	3	0	0	0	0	0	0	2	0	3	0	0	**8**	
0030 - 0045	0	6	1	0	0	0	0	0	2	0	0	0	0	**9**	
0045 - 0100	0	3	0	0	0	0	0	0	2	0	0	0	0	**5**	**32**
0100 - 0115	0	4	0	0	0	0	0	0	1	0	1	0	0	**6**	
0115 - 0130	0	2	0	0	0	0	0	0	1	0	1	0	0	**4**	
0130 - 0145	0	3	0	0	0	0	0	0	3	0	0	0	0	**6**	
0145 - 0200	0	2	0	0	0	0	0	0	2	0	1	0	0	**5**	**21**
0200 - 0215	0	2	0	0	0	0	0	0	0	0	0	0	0	**2**	
0215 - 0230	0	3	0	0	0	0	0	0	2	0	1	0	0	**6**	
0230 - 0245	0	3	0	0	0	0	0	0	3	0	2	0	0	**8**	
0245 - 0300	0	4	0	0	0	0	0	0	3	0	1	0	0	**8**	**24**
0300 - 0315	0	1	0	0	0	0	0	0	0	0	1	0	0	**2**	
0315 - 0330	0	1	0	0	1	0	0	0	2	0	0	0	0	**4**	
0330 - 0345	0	6	1	0	1	0	0	0	1	0	1	0	0	**10**	
0345 - 0400	0	4	0	0	0	0	0	0	3	0	2	0	0	**9**	**25**
0400 - 0415	0	4	0	0	0	0	0	0	2	0	0	0	0	**6**	
0415 - 0430	0	8	1	0	1	0	0	0	1	0	0	0	0	**11**	
0430 - 0445	0	7	0	0	0	0	0	0	2	0	0	0	0	**9**	
0445 - 0500	0	19	0	0	0	0	0	0	6	0	0	0	0	**25**	**51**
0500 - 0515	0	5	0	0	0	0	0	0	2	0	2	0	0	**9**	
0515 - 0530	0	17	0	0	0	0	0	0	2	0	0	0	0	**19**	
0530 - 0545	0	31	8	0	0	0	0	0	4	0	2	0	0	**45**	
0545 - 0600	0	34	7	0	0	0	0	0	5	0	2	0	0	**48**	**121**
0600 - 0615	0	61	13	0	0	0	0	0	2	0	0	0	0	**76**	
0615 - 0630	0	80	12	0	0	0	0	0	4	0	1	0	0	**97**	
0630 - 0645	0	147	20	0	1	4	0	0	1	0	0	0	0	**173**	
0645 - 0700	0	170	35	0	1	0	0	2	3	0	0	0	0	**211**	**557**
0700 - 0715	0	166	35	0	0	0	1	0	8	0	0	1	0	**211**	
0715 - 0730	0	231	35	0	0	0	0	0	4	0	0	0	0	**270**	
0730 - 0745	0	241	48	2	3	0	0	0	4	0	0	0	0	**298**	
0745 - 0800	0	205	39	0	3	0	0	1	2	0	0	0	0	**250**	**1029**
0800 - 0815	0	182	23	0	2	0	0	1	6	0	0	0	0	**214**	
0815 - 0830	0	210	32	1	2	1	0	0	5	0	0	0	0	**251**	
0830 - 0845	0	190	25	3	3	1	0	0	2	0	0	0	0	**224**	
0845 - 0900	1	145	22	0	5	1	0	0	4	0	0	0	0	**178**	**867**
0900 - 0915	0	88	19	0	1	1	0	0	1	0	0	0	0	**110**	
0915 - 0930	0	84	13	0	2	0	0	1	4	0	0	0	0	**104**	
0930 - 0945	0	99	14	0	3	1	0	2	1	0	0	0	0	**120**	
0945 - 1000	0	86	14	0	3	1	0	2	2	0	0	0	0	**108**	**442**
1000 - 1015	0	78	17	0	2	1	0	0	3	0	0	0	0	**101**	
1015 - 1030	0	80	18	0	3	0	0	0	1	0	0	0	0	**102**	
1030 - 1045	0	84	18	0	2	1	0	0	4	0	0	0	0	**109**	
1045 - 1100	0	80	14	1	3	0	0	0	2	0	0	0	0	**100**	**412**
1100 - 1115	0	73	10	1	1	0	0	1	4	0	0	0	0	**90**	
1115 - 1130	0	70	11	1	1	0	0	2	3	0	0	0	0	**88**	
1130 - 1145	0	67	14	1	1	1	0	0	5	0	0	0	0	**89**	
1145 - 1200	0	63	18	1	3	0	0	1	1	0	0	0	0	**87**	**354**
1200 - 1215	0	73	12	1	1	0	0	1	3	0	0	0	0	**91**	
1215 - 1230	0	80	12	0	3	0	0	1	5	0	0	0	0	**101**	
1230 - 1245	0	79	13	0	2	0	0	1	1	0	0	0	0	**96**	
1245 - 1300	0	75	17	0	1	0	0	0	2	0	0	0	0	**95**	**383**
1300 - 1315	1	64	14	0	1	0	0	0	2	0	0	0	0	**82**	
1315 - 1330	0	79	14	0	3	1	0	0	1	0	0	0	0	**98**	
1330 - 1345	1	65	11	2	8	1	0	0	4	0	0	0	0	**92**	
1345 - 1400	0	69	10	1	1	0	0	0	7	0	0	0	0	**88**	**360**
1400 - 1415	0	79	10	0	1	0	0	0	2	0	0	0	0	**92**	
1415 - 1430	0	82	9	1	1	0	0	1	3	0	0	0	0	**97**	
1430 - 1445	0	91	16	1	2	0	0	0	0	0	0	0	0	**110**	
1445 - 1500	1	84	14	3	3	0	0	0	4	0	0	0	0	**109**	**408**
1500 - 1515	0	74	24	0	3	0	0	0	1	0	0	0	0	**102**	
1515 - 1530	0	61	28	0	1	0	0	1	2	0	0	0	0	**93**	
1530 - 1545	0	85	20	1	4	0	0	0	0	0	0	0	0	**110**	
1545 - 1600	0	82	19	0	1	1	0	0	2	0	0	0	0	**105**	**410**
1600 - 1615	0	77	18	0	1	0	0	1	6	0	0	0	0	**103**	
1615 - 1630	0	74	14	0	1	0	0	4	2	0	0	0	0	**95**	
1630 - 1645	0	71	19	1	0	0	0	2	2	0	0	0	0	**95**	
1645 - 1700	0	76	21	1	3	0	0	3	4	0	0	0	0	**108**	**401**
1700 - 1715	0	89	21	1	1	1	0	0	3	0	0	0	0	**116**	
1715 - 1730	0	106	29	0	2	0	0	3	3	0	0	0	0	**143**	
1730 - 1745	0	82	29	0	1	0	0	2	5	0	0	0	0	**119**	
1745 - 1800	0	79	38	0	0	0	0	2	5	0	0	0	0	**124**	**502**
1800 - 1815	0	88	20	0	0	0	0	1	3	0	0	0	0	**112**	
1815 - 1830	1	83	17	0	1	0	0	0	3	0	0	0	0	**105**	
1830 - 1845	0	80	9	0	4	0	0	0	2	0	0	0	0	**95**	
1845 - 1900	0	54	18	0	0	0	0	0	2	0	0	0	0	**74**	**386**
1900 - 1915	0	49	12	0	1	2	0	0	3	0	0	0	0	**67**	
1915 - 1930	0	43	10	0	1	0	0	0	2	0	0	0	0	**56**	
1930 - 1945	0	35	12	0	0	0	0	0	3	0	0	0	0	**50**	
1945 - 2000	0	34	23	0	1	0	0	0	2	0	0	0	0	**60**	**233**
2000 - 2015	0	25	11	0	0	0	0	0	2	0	0	0	0	**38**	
2015 - 2030	0	33	6	0	1	0	0	0	4	0	0	0	0	**44**	
2030 - 2045	0	32	2	0	0	2	0	0	4	0	1	0	0	**41**	
2045 - 2100	0	26	0	0	0	0	0	0	2	0	0	0	0	**28**	**151**
2100 - 2115	0	36	3	0	6	2	0	0	2	0	0	0	0	**49**	
2115 - 2130	0	38	0	0	2	1	0	0	2	0	1	0	0	**44**	
2130 - 2145	0	26	1	1	1	0	0	0	2	0	0	0	0	**31**	
2145 - 2200	0	13	0	0	1	0	0	0	6	0	1	0	0	**21**	**145**
2200 - 2215	0	12	0	0	1	0	0	0	3	0	0	0	0	**16**	
2215 - 2230	0	13	1	0	0	0	0	0	0	0	0	0	0	**14**	
2230 - 2245	0	14	0	0	0	1	0	0	2	0	0	0	0	**17**	
2245 - 2300	0	18	1	0	0	0	0	0	3	0	0	0	0	**22**	**69**
2300 - 2315	0	6	1	0	0	0	0	0	4	0	0	0	0	**11**	
2315 - 2330	0	6	0	0	0	0	0	0	5	0	0	0	0	**11**	
2330 - 2345	0	5	0	0	1	0	0	0	3	0	0	0	0	**9**	
2345 - 0000	0	4	1	0	0	0	0	0	0	0	0	0	0	**5**	**36**

Session Total	5	5808	1117	25	114	25	1	36	261	0	26	1	0	**7419**
Session Average	0.05	60.50	11.64	0.26	1.19	0.26	0.01	0.38	2.72	0.00	0.27	0.01	0.00	**77.28**
Session Percentage	0.07	78.29	15.06	0.34	1.54	0.34	0.01	0.49	3.52	0.00	0.35	0.01	0.00	

AM Peak Hour	0800 - 0900	0715 - 0815	0700 - 0800	0745 - 0845	0800 - 0900	0545 - 0645	0615 - 0715	0900 - 1000	0645 - 0745	-	0500 - 0600	0615 - 0715	-	**0715 - 0815**
AM Peak Hour Volume	1	859	157	4	12	4	1	5	19	0	6	1	0	**1032**

Noon Peak Hour	1245 - 1345	1400 - 1500	1445 - 1545	1400 - 1500	1245 - 1345	1000 - 1100	-	1100 - 1200	1330 - 1430	-	-	-	-	**1415 - 1515**
Noon Peak Hour Volume	2	336	86	5	13	2	0	4	16	0	0	0	0	**418**

PM Peak Hour	1730 - 1830	1700 - 1800	1700 - 1800	1615 - 1715	1500 - 1600	1815 - 1915	-	1600 - 1700	1700 - 1800	-	1945 - 2045	-	-	**1700 - 1800**
PM Peak Hour Volume	1	356	117	3	9	2	0	10	16	0	1	0	0	**502**

Site 74 Lane 4 EB
I-20,
west of US-378 Sunset Blvd S/Bound Off-Ramp

Date
Wednesday, April 24, 2024

Lat/Long
34.008085°, -81.156669°

Weather
Fair
66°F

Click here for Detailed Weather

0000 - 2400 (Weekday 24h Session) (04-24-2024)
NB EB 15min

	Eastbound (Movement 74 Lane 4 EB.1)													15min	60min
TIME	1	2	3	4	5	6	7	8	9	10	11	12	13	Total	Total
0000 - 0015	0	4	0	0	0	0	0	0	0	0	0	0	0	**4**	
0015 - 0030	0	5	0	0	1	0	0	0	1	0	1	0	0	**8**	
0030 - 0045	0	2	0	0	0	0	0	0	1	0	3	0	0	**6**	
0045 - 0100	0	2	1	0	0	0	0	0	2	0	1	0	0	**6**	**24**
0100 - 0115	0	1	0	0	0	0	0	0	3	0	0	0	0	**4**	
0115 - 0130	0	2	0	0	0	0	0	0	2	0	0	0	0	**4**	
0130 - 0145	0	3	0	0	0	0	0	0	2	0	1	0	0	**6**	
0145 - 0200	0	4	0	0	1	0	0	0	1	0	0	0	0	**6**	**20**
0200 - 0215	0	3	0	0	0	0	0	0	0	0	1	0	0	**4**	
0215 - 0230	0	2	0	0	0	0	0	0	1	0	5	0	0	**8**	
0230 - 0245	0	2	0	0	1	0	0	0	1	0	1	0	0	**5**	
0245 - 0300	0	2	0	0	0	0	0	0	0	0	1	0	0	**3**	**20**
0300 - 0315	0	2	1	0	0	0	0	0	0	0	1	0	0	**4**	
0315 - 0330	0	3	2	0	2	0	0	0	3	0	0	0	0	**10**	
0330 - 0345	0	3	2	0	0	0	0	0	0	0	1	0	0	**6**	
0345 - 0400	0	3	1	0	1	0	0	0	1	0	0	0	0	**6**	**26**
0400 - 0415	0	2	0	0	1	1	0	0	5	0	0	0	0	**9**	
0415 - 0430	0	5	1	0	0	0	0	0	3	0	1	0	0	**10**	
0430 - 0445	0	4	1	0	1	1	0	0	1	0	0	0	0	**8**	
0445 - 0500	0	12	4	0	0	0	0	0	1	0	1	0	0	**18**	**45**
0500 - 0515	0	9	1	0	0	0	0	0	1	0	1	0	0	**12**	
0515 - 0530	0	9	2	0	1	0	0	0	3	0	2	0	0	**17**	
0530 - 0545	0	37	6	0	2	1	0	0	3	0	0	0	0	**49**	
0545 - 0600	0	40	7	0	2	0	0	0	5	0	0	0	0	**54**	**132**
0600 - 0615	1	63	8	0	0	1	0	0	2	0	0	0	0	**75**	
0615 - 0630	0	86	21	0	1	0	0	0	3	0	1	0	0	**112**	
0630 - 0645	1	137	22	0	1	0	0	1	1	0	0	0	0	**163**	
0645 - 0700	0	151	54	1	2	0	0	2	4	0	0	0	0	**214**	**564**
0700 - 0715	0	141	39	0	1	0	0	0	5	0	0	0	0	**186**	
0715 - 0730	0	229	51	0	2	0	0	0	5	0	0	0	0	**287**	
0730 - 0745	0	233	56	2	0	0	0	0	4	0	0	0	0	**295**	
0745 - 0800	1	206	47	0	3	0	0	2	2	0	0	0	0	**261**	**1029**
0800 - 0815	0	166	34	0	2	0	0	0	3	0	0	0	0	**205**	
0815 - 0830	0	168	44	0	4	1	0	1	11	0	0	1	0	**230**	
0830 - 0845	0	146	37	3	4	0	0	4	2	0	0	0	0	**196**	
0845 - 0900	1	108	33	0	5	0	0	0	4	0	0	0	0	**151**	**782**
0900 - 0915	0	96	21	0	3	0	0	0	4	0	0	0	0	**124**	
0915 - 0930	0	83	27	0	2	0	0	0	0	1	0	0	0	**113**	
0930 - 0945	0	53	14	0	3	1	0	0	6	0	0	0	0	**77**	
0945 - 1000	0	95	26	0	5	1	0	0	7	0	0	0	0	**134**	**448**
1000 - 1015	0	64	23	0	4	1	0	4	6	0	0	0	0	**102**	
1015 - 1030	0	69	22	0	5	1	0	2	4	0	0	0	0	**103**	
1030 - 1045	0	70	25	0	3	0	0	0	4	0	0	0	0	**102**	
1045 - 1100	0	65	25	0	3	1	0	0	2	1	0	0	0	**97**	**404**
1100 - 1115	0	63	22	3	2	1	0	2	1	0	0	0	0	**94**	
1115 - 1130	0	55	18	1	3	0	0	1	5	0	0	0	0	**83**	
1130 - 1145	0	59	23	1	3	1	0	0	2	0	0	0	0	**89**	
1145 - 1200	0	68	19	1	4	1	0	1	5	0	0	0	0	**99**	**365**
1200 - 1215	0	78	18	1	5	0	0	2	3	0	0	0	0	**107**	
1215 - 1230	0	69	20	0	2	1	0	0	4	0	0	0	0	**96**	
1230 - 1245	0	80	16	0	1	1	0	1	1	0	0	0	0	**100**	
1245 - 1300	0	78	31	0	1	0	0	0	2	0	0	0	0	**112**	**415**
1300 - 1315	0	72	19	1	2	0	0	1	4	0	0	0	0	**99**	
1315 - 1330	0	74	23	0	1	1	0	1	2	0	0	0	0	**102**	
1330 - 1345	0	80	30	2	1	1	0	0	3	0	0	0	0	**117**	
1345 - 1400	0	77	26	1	3	1	0	1	4	0	0	0	0	**113**	**431**
1400 - 1415	0	74	26	0	0	0	0	0	3	0	0	0	0	**103**	
1415 - 1430	0	73	19	0	0	0	0	0	1	0	0	0	0	**93**	
1430 - 1445	0	76	25	1	2	1	0	2	5	0	0	0	0	**112**	
1445 - 1500	0	95	26	2	3	1	0	0	3	0	0	0	0	**130**	**438**
1500 - 1515	0	96	30	0	7	1	0	0	5	0	0	0	0	**139**	
1515 - 1530	0	83	23	0	6	0	0	1	4	0	0	0	0	**117**	
1530 - 1545	0	80	19	1	3	0	0	1	2	0	0	0	0	**106**	
1545 - 1600	0	78	21	0	2	0	0	0	4	0	0	0	0	**105**	**467**
1600 - 1615	0	75	10	0	3	0	0	0	2	0	0	0	0	**90**	
1615 - 1630	0	83	6	0	3	0	1	0	4	0	0	0	0	**97**	
1630 - 1645	0	82	9	2	2	1	0	3	5	0	0	0	0	**104**	
1645 - 1700	0	85	27	0	4	0	0	4	2	0	0	0	0	**122**	**413**
1700 - 1715	0	78	18	0	3	1	0	0	3	0	0	0	0	**103**	
1715 - 1730	0	69	14	0	0	0	0	0	2	0	0	0	0	**85**	
1730 - 1745	1	110	21	0	2	0	0	3	7	0	0	0	0	**144**	
1745 - 1800	0	91	31	1	1	0	0	1	6	0	0	0	0	**131**	**463**
1800 - 1815	1	87	18	0	1	0	0	1	7	0	0	0	0	**115**	
1815 - 1830	0	84	14	0	1	0	0	1	4	1	0	0	0	**105**	
1830 - 1845	0	65	12	0	0	1	0	1	3	0	0	0	0	**82**	
1845 - 1900	0	57	9	0	1	0	0	0	4	0	0	0	0	**71**	**373**
1900 - 1915	0	49	10	1	1	0	0	0	2	0	0	0	0	**63**	
1915 - 1930	0	41	10	0	1	0	0	0	6	0	0	0	0	**58**	
1930 - 1945	0	49	9	0	2	0	0	0	1	0	0	0	0	**61**	
1945 - 2000	0	31	8	1	1	0	0	0	1	0	0	0	0	**42**	**224**
2000 - 2015	0	29	10	0	1	0	0	0	2	0	0	0	0	**42**	
2015 - 2030	0	31	1	0	0	0	0	0	1	0	0	0	0	**33**	
2030 - 2045	0	37	1	0	1	0	0	0	0	0	0	0	0	**39**	
2045 - 2100	0	28	1	0	2	0	0	0	1	0	0	0	0	**32**	**146**
2100 - 2115	0	26	3	0	0	0	0	0	0	0	0	0	0	**29**	
2115 - 2130	0	17	1	0	0	0	0	0	4	0	4	0	0	**26**	
2130 - 2145	0	17	3	0	1	0	0	0	0	0	0	0	0	**21**	
2145 - 2200	0	24	2	0	0	0	0	0	2	0	2	0	0	**30**	**106**
2200 - 2215	0	20	1	0	0	1	0	0	3	0	1	0	0	**26**	
2215 - 2230	0	13	1	0	0	0	0	0	3	0	2	0	0	**19**	
2230 - 2245	0	17	0	0	0	0	0	0	3	0	0	0	0	**20**	
2245 - 2300	0	22	0	0	1	0	0	0	1	0	0	0	0	**24**	**89**
2300 - 2315	0	11	0	0	0	0	0	0	0	0	0	0	0	**11**	
2315 - 2330	0	5	0	0	0	0	0	0	2	0	0	0	0	**7**	
2330 - 2345	0	3	0	0	0	0	0	1	2	0	1	0	0	**7**	
2345 - 0000	0	5	0	0	0	1	0	0	2	0	0	0	0	**8**	**33**

Session Total	6	5539	1362	26	149	26	1	45	267	3	32	1	0	**7457**
Session Average	0.06	57.70	14.19	0.27	1.55	0.27	0.01	0.47	2.78	0.03	0.33	0.01	0.00	**77.68**
Session Percentage	0.08	74.28	18.26	0.35	2.00	0.35	0.01	0.60	3.58	0.04	0.43	0.01	0.00	

AM Peak Hour	0545 - 0645	0715 - 0815	0645 - 0745	0645 - 0745	0930 - 1030	0930 - 1030	-	0745 - 0845	0930 - 1030	0830 - 0930	0500 - 0600	0730 - 0830	-	**0715 - 0815**
AM Peak Hour Volume	2	834	200	3	17	4	0	7	23	1	3	1	0	**1048**

Noon Peak Hour	-	1445 - 1545	1315 - 1415	1100 - 1200	1445 - 1545	1000 - 1100	-	1000 - 1100	1430 - 1530	1000 - 1100	-	-	-	**1430 - 1530**
Noon Peak Hour Volume	0	354	105	6	19	3	0	6	17	1	0	0	0	**498**

PM Peak Hour	1715 - 1815	1730 - 1830	1500 - 1600	1545 - 1645	1500 - 1600	1615 - 1715	1530 - 1630	1600 - 1700	1730 - 1830	1730 - 1830	-	-	-	**1730 - 1830**
PM Peak Hour Volume	2	372	93	2	18	2	1	7	24	1	0	0	0	**495**

Site 74 Lane 4 EB
I-20,
west of US-378 Sunset Blvd S/Bound Off-Ramp

Date
Thursday, April 25, 2024

Lat/Long
34.008085°, -81.156669°

Weather
Fair
67°F

Click here for Detailed Weather

0000 - 2400 (Weekday 24h Session) (04-25-2024)
NB EB 15min

	Eastbound (Movement 74 Lane 4 EB.1)													15min	60min
TIME	1	2	3	4	5	6	7	8	9	10	11	12	13	Total	Total
0000 - 0015	0	4	2	0	6	0	0	0	1	0	2	0	0	**15**	
0015 - 0030	0	4	1	0	0	0	0	0	4	0	1	0	0	**10**	
0030 - 0045	0	7	2	0	0	0	0	0	1	0	2	0	0	**12**	
0045 - 0100	0	1	1	0	0	0	0	0	0	0	0	0	0	**2**	**39**
0100 - 0115	0	2	1	0	0	0	0	0	1	0	1	0	0	**5**	
0115 - 0130	0	0	1	0	0	0	0	0	1	0	0	0	0	**2**	
0130 - 0145	0	3	1	0	0	0	0	0	1	0	2	0	0	**7**	
0145 - 0200	0	1	2	0	0	0	0	0	1	0	0	0	0	**4**	**18**
0200 - 0215	0	1	0	0	0	0	0	0	2	0	1	0	0	**4**	
0215 - 0230	0	2	0	0	0	0	0	0	1	0	0	0	0	**3**	
0230 - 0245	0	2	0	0	0	0	0	0	2	0	1	0	0	**5**	
0245 - 0300	0	3	0	0	0	0	0	0	2	0	3	0	0	**8**	**20**
0300 - 0315	0	5	0	0	0	0	0	0	1	0	1	0	0	**7**	
0315 - 0330	0	3	0	0	0	0	0	0	1	0	0	0	0	**4**	
0330 - 0345	0	7	2	0	0	0	0	0	2	0	1	0	0	**12**	
0345 - 0400	0	3	2	0	1	0	0	0	3	0	1	0	0	**10**	**33**
0400 - 0415	0	1	0	0	0	0	0	0	4	0	1	0	0	**6**	
0415 - 0430	0	6	1	0	0	0	0	0	0	0	0	0	0	**7**	
0430 - 0445	0	7	2	0	1	0	0	0	1	0	0	0	0	**11**	
0445 - 0500	0	14	3	0	0	0	0	0	5	0	2	0	0	**24**	**48**
0500 - 0515	0	6	3	0	1	0	0	0	2	0	0	0	0	**12**	
0515 - 0530	0	17	7	0	1	0	0	0	4	0	1	0	0	**30**	
0530 - 0545	0	27	10	0	2	0	0	0	0	0	0	0	0	**39**	
0545 - 0600	0	42	20	0	0	0	0	0	1	0	0	0	0	**63**	**144**
0600 - 0615	0	51	16	0	0	1	0	0	1	0	1	0	0	**70**	
0615 - 0630	0	74	23	0	3	0	0	2	1	0	1	0	0	**104**	
0630 - 0645	1	142	13	0	0	0	0	0	1	0	1	0	0	**158**	
0645 - 0700	1	153	43	0	0	0	0	1	5	0	0	0	0	**203**	**535**
0700 - 0715	1	165	48	2	3	0	0	0	5	0	0	0	0	**224**	
0715 - 0730	0	229	62	0	6	0	0	3	2	0	0	0	0	**302**	
0730 - 0745	0	222	43	0	2	2	0	0	5	0	0	0	0	**274**	
0745 - 0800	0	206	61	0	1	0	0	2	3	0	0	0	0	**273**	**1073**
0800 - 0815	0	160	43	0	1	0	0	1	5	0	1	0	0	**211**	
0815 - 0830	0	158	35	0	0	0	0	4	5	0	0	0	0	**202**	
0830 - 0845	0	137	25	1	0	0	0	0	0	0	0	0	0	**163**	
0845 - 0900	0	124	29	1	1	0	0	2	6	0	0	0	0	**163**	**739**
0900 - 0915	0	95	19	0	2	0	0	1	5	0	0	0	0	**122**	
0915 - 0930	0	111	29	0	5	2	0	2	3	0	0	0	0	**152**	
0930 - 0945	0	77	12	0	3	0	0	0	3	0	0	0	0	**95**	
0945 - 1000	0	95	16	0	1	0	0	1	3	0	0	0	0	**116**	**485**
1000 - 1015	0	61	13	0	1	2	0	1	0	0	0	0	0	**78**	
1015 - 1030	0	64	28	0	4	0	0	0	2	0	0	0	0	**98**	
1030 - 1045	0	72	20	0	3	0	0	1	1	0	0	0	0	**97**	
1045 - 1100	0	59	15	0	1	1	0	1	3	0	0	0	0	**80**	**353**
1100 - 1115	0	65	19	1	0	1	0	1	3	0	0	0	0	**90**	
1115 - 1130	0	70	23	2	4	0	0	0	7	0	0	0	0	**106**	
1130 - 1145	0	59	23	1	3	1	0	1	3	0	0	0	0	**91**	
1145 - 1200	0	62	21	1	2	0	0	0	7	0	0	0	0	**93**	**380**
1200 - 1215	0	70	17	0	2	0	0	0	4	0	0	0	0	**93**	
1215 - 1230	0	94	16	1	2	0	0	0	4	0	0	0	0	**117**	
1230 - 1245	0	80	27	0	0	0	0	0	2	0	0	0	0	**109**	
1245 - 1300	1	74	26	0	12	0	0	0	3	0	0	0	0	**116**	**435**
1300 - 1315	0	86	24	2	0	1	0	0	5	0	0	0	0	**118**	
1315 - 1330	0	89	19	0	3	0	0	0	7	0	0	0	0	**118**	
1330 - 1345	0	82	22	2	2	2	0	0	6	0	0	0	0	**116**	
1345 - 1400	0	102	28	1	1	0	0	0	1	0	0	0	0	**133**	**485**
1400 - 1415	0	69	27	0	0	0	0	2	5	0	0	0	0	**103**	
1415 - 1430	0	80	22	0	6	0	0	1	4	0	0	0	0	**113**	
1430 - 1445	0	93	23	1	1	1	0	0	3	0	0	0	0	**122**	
1445 - 1500	0	68	21	3	0	1	0	1	2	0	0	0	0	**96**	**434**
1500 - 1515	0	79	26	0	1	0	0	0	4	0	0	0	0	**110**	
1515 - 1530	0	83	27	2	3	0	0	1	5	0	0	0	0	**121**	
1530 - 1545	0	77	21	0	3	1	0	0	4	1	0	0	0	**107**	
1545 - 1600	2	97	21	0	6	0	0	3	3	0	0	0	0	**132**	**470**
1600 - 1615	0	67	24	0	1	0	0	2	1	0	0	0	0	**95**	
1615 - 1630	1	72	26	0	3	0	0	1	9	0	0	0	0	**112**	
1630 - 1645	0	83	17	1	4	0	0	0	2	0	0	0	0	**107**	
1645 - 1700	0	84	21	0	4	0	0	1	3	0	0	0	0	**113**	**427**
1700 - 1715	0	76	28	0	1	0	0	0	3	0	0	0	0	**108**	
1715 - 1730	0	93	28	1	0	0	0	0	5	0	0	0	0	**127**	
1730 - 1745	0	82	23	1	2	0	0	0	2	0	0	0	0	**110**	
1745 - 1800	0	71	21	0	2	0	0	0	5	0	0	0	0	**99**	**444**
1800 - 1815	0	89	17	0	0	0	0	0	4	0	0	0	0	**110**	
1815 - 1830	0	94	24	0	1	1	0	1	4	0	0	0	0	**125**	
1830 - 1845	1	64	17	0	2	1	0	2	3	0	0	0	0	**90**	
1845 - 1900	0	57	16	0	1	0	0	0	5	0	0	0	0	**79**	**404**
1900 - 1915	0	32	10	0	3	0	0	0	2	0	0	0	0	**47**	
1915 - 1930	0	47	11	0	2	0	0	1	5	0	0	0	0	**66**	
1930 - 1945	0	51	14	0	0	0	0	1	0	0	0	0	0	**66**	
1945 - 2000	0	44	12	0	1	0	0	0	0	0	0	0	0	**57**	**236**
2000 - 2015	0	30	8	0	1	0	0	0	3	0	1	0	0	**43**	
2015 - 2030	0	47	12	1	1	0	0	0	2	0	0	0	0	**63**	
2030 - 2045	0	20	8	0	1	0	0	0	0	0	0	0	0	**29**	
2045 - 2100	0	31	14	0	2	0	0	0	0	0	0	0	0	**47**	**182**
2100 - 2115	0	16	6	0	0	0	0	0	2	0	0	0	0	**24**	
2115 - 2130	0	22	6	0	1	0	0	0	0	0	1	0	0	**30**	
2130 - 2145	0	22	10	0	0	1	0	0	5	0	0	0	0	**38**	
2145 - 2200	0	23	4	0	0	1	0	0	1	0	3	0	0	**32**	**124**
2200 - 2215	0	11	3	0	0	0	0	0	1	0	2	0	0	**17**	
2215 - 2230	0	9	2	1	1	0	0	0	2	0	0	0	0	**15**	
2230 - 2245	0	14	7	0	1	0	0	0	2	0	0	0	0	**24**	
2245 - 2300	0	17	5	0	2	0	0	0	3	0	0	0	0	**27**	**83**
2300 - 2315	0	10	3	0	1	0	0	0	4	0	1	0	0	**19**	
2315 - 2330	0	6	2	0	0	0	0	0	0	0	2	0	0	**10**	
2330 - 2345	0	5	2	0	1	0	0	0	1	0	0	0	0	**9**	
2345 - 0000	0	6	2	0	0	0	0	0	1	0	1	0	0	**10**	**48**

Session Total	8	5597	1510	26	139	20	0	41	262	1	35	0	0	**7639**
Session Average	0.08	58.30	15.73	0.27	1.45	0.21	0.00	0.43	2.73	0.01	0.36	0.00	0.00	**79.57**
Session Percentage	0.10	73.27	19.77	0.34	1.82	0.26	0.00	0.54	3.43	0.01	0.46	0.00	0.00	

AM Peak Hour	0615 - 0715	0700 - 0800	0700 - 0800	0615 - 0715	0700 - 0800	0915 - 1015	-	0730 - 0830	0730 - 0830	-	0545 - 0645	-	-	**0700 - 0800**
AM Peak Hour Volume	3	822	214	2	12	4	0	7	18	0	3	0	0	**1073**

Noon Peak Hour	1200 - 1300	1300 - 1400	1345 - 1445	1430 - 1530	1245 - 1345	1000 - 1100	-	1400 - 1500	1115 - 1215	1445 - 1545	-	-	-	**1300 - 1400**
Noon Peak Hour Volume	1	359	100	6	17	3	0	4	21	1	0	0	0	**485**

PM Peak Hour	1530 - 1630	1500 - 1600	1645 - 1745	1500 - 1600	1545 - 1645	1745 - 1845	-	1515 - 1615	1530 - 1630	1500 - 1600	1915 - 2015	-	-	**1500 - 1600**
PM Peak Hour Volume	3	336	100	2	14	2	0	6	17	1	1	0	0	**470**

Site 74 Lane 4 EB
I-20,
west of US-378 Sunset Blvd S/Bound Off-Ramp

Date
Friday, April 26, 2024

Lat/Long
34.008085°, -81.156669°

Weather
Cloudy
69°F

Click here for Detailed Weather

0000 - 2400 (Weekday 24h Session) (04-26-2024)
NB EB 15min

	Eastbound (Movement 74 Lane 4 EB.1)													15min	60min
TIME	1	2	3	4	5	6	7	8	9	10	11	12	13	Total	Total
0000 - 0015	0	6	0	0	0	0	0	0	2	0	3	0	0	**11**	
0015 - 0030	0	6	1	0	0	0	0	0	0	0	3	0	0	**10**	
0030 - 0045	0	6	0	0	1	0	0	0	1	0	1	0	0	**9**	
0045 - 0100	0	3	0	0	0	0	0	0	3	0	1	0	0	**7**	**37**
0100 - 0115	0	3	0	0	0	0	0	0	3	0	1	0	0	**7**	
0115 - 0130	0	1	0	0	0	0	0	0	2	0	1	0	0	**4**	
0130 - 0145	0	3	0	0	0	0	0	0	0	0	1	0	0	**4**	
0145 - 0200	0	1	1	0	0	0	0	0	0	0	1	0	0	**3**	**18**
0200 - 0215	0	1	1	0	0	0	0	0	0	0	0	0	0	**2**	
0215 - 0230	0	4	0	0	0	0	0	0	2	0	0	0	0	**6**	
0230 - 0245	0	4	0	0	2	0	0	0	3	0	1	0	0	**10**	
0245 - 0300	0	4	2	0	0	0	0	0	0	0	1	0	0	**7**	**25**
0300 - 0315	0	4	0	0	1	0	0	0	1	0	0	0	0	**6**	
0315 - 0330	0	2	0	0	0	0	0	0	0	0	0	0	0	**2**	
0330 - 0345	0	3	1	0	0	0	0	0	1	0	2	0	0	**7**	
0345 - 0400	0	5	0	0	1	0	0	0	2	0	1	0	0	**9**	**24**
0400 - 0415	0	3	0	0	0	0	0	0	3	0	1	0	0	**7**	
0415 - 0430	0	4	2	0	0	0	0	0	2	0	0	0	0	**8**	
0430 - 0445	0	7	1	0	0	1	0	0	0	0	0	0	0	**9**	
0445 - 0500	0	13	2	0	1	0	0	0	0	0	0	0	0	**16**	**40**
0500 - 0515	0	4	0	0	0	0	0	0	4	0	1	0	0	**9**	
0515 - 0530	0	10	3	0	3	2	0	0	0	0	0	0	0	**18**	
0530 - 0545	0	29	5	0	1	0	0	0	3	0	1	0	0	**39**	
0545 - 0600	0	34	7	0	1	1	0	0	3	0	0	0	0	**46**	**112**
0600 - 0615	0	55	14	0	0	0	0	0	3	0	0	0	0	**72**	
0615 - 0630	0	69	18	0	2	2	0	1	3	0	1	0	0	**96**	
0630 - 0645	1	120	28	0	1	0	0	0	3	0	1	0	0	**154**	
0645 - 0700	0	139	51	0	1	0	0	1	3	0	0	0	0	**195**	**517**
0700 - 0715	0	156	40	1	0	0	0	1	3	0	0	0	0	**201**	
0715 - 0730	0	183	48	0	0	0	0	0	1	0	0	0	0	**232**	
0730 - 0745	0	213	44	3	1	0	0	1	4	0	0	0	0	**266**	
0745 - 0800	0	181	53	0	2	1	0	0	3	0	0	0	0	**240**	**939**
0800 - 0815	1	154	48	0	1	0	0	0	4	0	0	0	0	**208**	
0815 - 0830	0	128	52	2	5	0	0	0	3	0	0	0	0	**190**	
0830 - 0845	0	113	44	3	3	0	0	0	4	0	0	0	0	**167**	
0845 - 0900	1	123	38	0	3	0	0	0	2	0	0	0	0	**167**	**732**
0900 - 0915	0	82	25	0	5	1	0	1	3	1	0	0	0	**118**	
0915 - 0930	0	76	17	0	4	0	0	1	4	0	0	0	0	**102**	
0930 - 0945	1	80	20	0	5	0	0	1	3	0	0	0	0	**110**	
0945 - 1000	0	84	29	0	5	1	0	0	1	0	0	0	0	**120**	**450**
1000 - 1015	1	72	14	0	4	1	0	1	3	0	0	0	0	**96**	
1015 - 1030	0	76	22	0	2	0	0	0	2	0	0	0	0	**102**	
1030 - 1045	0	71	13	0	3	0	0	0	2	0	0	0	0	**89**	
1045 - 1100	0	77	23	0	3	1	0	0	3	0	0	0	0	**107**	**394**
1100 - 1115	0	56	21	0	5	0	0	0	5	0	0	0	0	**87**	
1115 - 1130	0	64	24	3	1	0	0	1	2	1	0	0	0	**96**	
1130 - 1145	1	60	19	1	2	1	0	0	4	1	0	0	0	**89**	
1145 - 1200	0	58	30	1	0	4	0	0	2	0	0	0	0	**95**	**367**
1200 - 1215	0	85	15	0	4	0	0	1	3	0	0	0	0	**108**	
1215 - 1230	0	87	23	0	2	0	0	2	3	0	0	0	0	**117**	
1230 - 1245	0	50	24	0	3	0	0	0	0	0	0	0	0	**77**	
1245 - 1300	0	73	16	0	0	0	0	3	2	0	0	0	0	**94**	**396**
1300 - 1315	0	59	18	3	2	4	0	0	1	0	0	0	0	**87**	
1315 - 1330	0	63	18	0	2	0	0	0	4	0	0	0	0	**87**	
1330 - 1345	0	62	27	2	3	4	0	0	3	0	0	0	0	**101**	
1345 - 1400	0	74	19	1	4	0	0	0	1	0	0	0	0	**99**	**374**
1400 - 1415	0	71	27	0	1	0	0	0	4	0	0	0	0	**103**	
1415 - 1430	0	76	26	0	5	0	0	3	4	0	0	0	0	**114**	
1430 - 1445	0	79	25	2	3	0	0	0	3	0	0	0	0	**112**	
1445 - 1500	0	97	24	2	2	1	0	0	2	0	0	0	0	**128**	**457**
1500 - 1515	0	80	16	0	1	1	0	0	1	0	0	0	0	**99**	
1515 - 1530	0	73	21	0	1	0	0	1	1	0	0	0	0	**97**	
1530 - 1545	0	97	20	1	6	0	1	1	4	0	0	0	0	**130**	
1545 - 1600	0	90	31	0	2	0	0	3	2	0	0	0	0	**128**	**454**
1600 - 1615	0	87	22	0	3	0	0	1	1	0	0	0	0	**114**	
1615 - 1630	0	83	20	0	3	0	0	1	3	0	0	0	0	**110**	
1630 - 1645	2	80	29	1	4	0	0	1	8	0	0	0	0	**125**	
1645 - 1700	1	102	18	0	2	1	0	1	2	0	0	0	0	**127**	**476**
1700 - 1715	0	88	25	0	4	1	0	0	2	0	0	0	0	**120**	
1715 - 1730	1	110	28	0	1	0	0	1	1	0	0	0	0	**142**	
1730 - 1745	0	91	27	1	4	0	0	1	2	0	0	0	0	**126**	
1745 - 1800	0	88	32	0	2	0	0	0	1	0	0	0	0	**123**	**511**
1800 - 1815	0	82	21	0	2	0	0	2	2	0	0	0	0	**109**	
1815 - 1830	0	93	34	1	2	0	0	0	4	0	0	0	0	**134**	
1830 - 1845	0	72	14	0	0	0	0	0	1	0	0	0	0	**87**	
1845 - 1900	0	67	17	0	2	0	0	0	4	0	0	0	0	**90**	**420**
1900 - 1915	0	61	8	1	2	0	0	1	2	0	0	0	0	**75**	
1915 - 1930	0	43	9	0	1	0	0	0	2	0	0	0	0	**55**	
1930 - 1945	0	61	17	0	0	0	0	1	4	0	0	0	0	**83**	
1945 - 2000	0	45	9	0	0	0	0	0	0	0	1	0	0	**55**	**268**
2000 - 2015	1	40	13	0	0	0	0	1	1	0	0	0	0	**56**	
2015 - 2030	0	48	7	0	0	0	0	0	3	0	0	0	0	**58**	
2030 - 2045	0	42	6	0	0	0	0	0	1	0	0	0	0	**49**	
2045 - 2100	0	45	4	0	1	0	0	0	1	0	0	0	0	**51**	**214**
2100 - 2115	0	32	5	0	0	0	0	0	2	0	0	0	0	**39**	
2115 - 2130	0	25	4	0	1	1	0	0	1	0	0	0	0	**32**	
2130 - 2145	0	18	3	0	0	0	0	0	0	0	0	0	0	**21**	
2145 - 2200	0	21	4	0	0	0	0	0	0	0	2	0	0	**27**	**119**
2200 - 2215	0	25	4	0	0	0	0	0	0	0	0	0	0	**29**	
2215 - 2230	0	19	3	0	0	0	0	0	1	0	0	0	0	**23**	
2230 - 2245	2	18	4	0	0	0	0	0	2	0	0	0	0	**26**	
2245 - 2300	0	21	8	0	0	0	0	0	0	0	0	0	0	**29**	**107**
2300 - 2315	0	10	2	0	1	0	0	0	0	0	1	0	0	**14**	
2315 - 2330	0	11	1	0	0	0	0	0	0	0	1	0	0	**13**	
2330 - 2345	0	12	0	0	0	0	0	0	1	0	0	0	0	**13**	
2345 - 0000	0	5	0	0	0	0	0	0	1	0	2	0	0	**8**	**48**

Session Total	13	5511	1509	29	145	29	1	34	196	3	29	0	0	**7499**
Session Average	0.14	57.41	15.72	0.30	1.51	0.30	0.01	0.35	2.04	0.03	0.30	0.00	0.00	**78.11**
Session Percentage	0.17	73.49	20.12	0.39	1.93	0.39	0.01	0.45	2.61	0.04	0.39	0.00	0.00	

AM Peak Hour	0800 - 0900	0700 - 0800	0730 - 0830	0730 - 0830	0900 - 1000	0500 - 0600	-	0615 - 0715	0730 - 0830	0815 - 0915	0500 - 0600	-	-	**0715 - 0815**
AM Peak Hour Volume	2	733	197	5	19	3	0	3	14	1	2	0	0	**946**

Noon Peak Hour	1000 - 1100	1445 - 1545	1400 - 1500	1300 - 1400	1015 - 1115	1245 - 1345	1445 - 1545	1200 - 1300	1045 - 1145	1045 - 1145	-	-	-	**1400 - 1500**
Noon Peak Hour Volume	1	347	102	6	13	8	1	6	14	2	0	0	0	**457**

PM Peak Hour	1630 - 1730	1645 - 1745	1730 - 1830	1730 - 1830	1530 - 1630	1615 - 1715	1500 - 1600	1515 - 1615	1615 - 1715	-	1900 - 2000	-	-	**1645 - 1745**
PM Peak Hour Volume	4	391	114	2	14	2	1	6	15	0	1	0	0	**515**

Site 74 Lane 4 EB
I-20,
west of US-378 Sunset Blvd S/Bound Off-Ramp

Date
Saturday, April 27, 2024

Lat/Long
34.008085°, -81.156669°

Weather
Mostly Cloudy
69°F

Click here for Detailed Weather

0000 - 2400 (Saturday 24h Session) (04-27-2024)
NB EB 15min

	Eastbound (Movement 74 Lane 4 EB.1)													15min	60min
TIME	1	2	3	4	5	6	7	8	9	10	11	12	13	Total	Total
0000 - 0015	0	8	0	0	0	0	0	0	0	0	0	0	0	**8**	
0015 - 0030	0	9	2	0	1	0	0	0	2	0	4	0	0	**18**	
0030 - 0045	0	7	0	0	0	0	0	1	0	0	0	0	0	**8**	
0045 - 0100	0	4	1	0	0	0	0	0	2	0	0	0	0	**7**	**41**
0100 - 0115	0	5	0	0	1	0	0	0	1	0	0	0	0	**7**	
0115 - 0130	0	7	0	0	1	0	0	0	0	0	1	0	0	**9**	
0130 - 0145	0	5	0	0	0	0	0	0	0	0	1	0	0	**6**	
0145 - 0200	0	6	0	0	1	3	0	1	0	0	1	0	0	**12**	**34**
0200 - 0215	0	3	0	0	1	0	0	0	1	0	1	0	0	**6**	
0215 - 0230	0	5	0	0	1	0	0	0	1	0	0	0	0	**7**	
0230 - 0245	0	8	0	0	0	0	0	0	0	0	1	0	0	**9**	
0245 - 0300	0	2	1	0	0	0	0	0	0	0	1	0	0	**4**	**26**
0300 - 0315	0	2	0	0	0	0	0	0	0	0	0	0	0	**2**	
0315 - 0330	0	3	1	0	0	0	0	0	1	0	0	0	0	**5**	
0330 - 0345	0	2	1	0	0	0	0	0	0	0	2	0	0	**5**	
0345 - 0400	0	3	0	0	0	0	0	0	1	0	1	0	0	**5**	**17**
0400 - 0415	0	3	0	0	0	0	0	0	1	0	0	0	0	**4**	
0415 - 0430	0	2	1	0	0	0	0	0	0	0	0	0	0	**3**	
0430 - 0445	0	4	0	0	0	0	0	0	0	0	0	0	0	**4**	
0445 - 0500	0	5	0	0	0	0	0	0	2	0	0	0	0	**7**	**18**
0500 - 0515	0	3	1	0	0	0	0	0	0	0	2	0	0	**6**	
0515 - 0530	0	5	2	0	0	0	0	0	0	0	1	0	0	**8**	
0530 - 0545	0	7	2	0	0	0	0	0	2	0	1	0	0	**12**	
0545 - 0600	0	17	5	0	0	0	0	0	0	0	0	0	0	**22**	**48**
0600 - 0615	0	11	3	0	1	0	0	0	2	0	0	0	0	**17**	
0615 - 0630	0	35	7	0	0	2	0	0	0	0	0	0	0	**44**	
0630 - 0645	0	38	10	0	0	0	0	0	2	0	0	0	0	**50**	
0645 - 0700	0	35	12	0	0	0	0	0	0	0	0	0	0	**47**	**158**
0700 - 0715	0	20	10	0	1	0	0	0	1	0	0	0	0	**32**	
0715 - 0730	0	31	14	0	1	0	0	0	3	0	0	0	0	**49**	
0730 - 0745	1	32	22	0	3	0	0	0	2	0	0	0	0	**60**	
0745 - 0800	0	52	15	1	1	0	0	1	0	0	0	0	0	**70**	**211**
0800 - 0815	0	44	21	0	0	0	0	1	3	0	0	0	0	**69**	
0815 - 0830	0	48	15	0	2	0	0	0	1	0	0	0	0	**66**	
0830 - 0845	0	66	23	0	1	0	0	0	0	0	0	0	0	**90**	
0845 - 0900	0	75	19	0	0	0	0	0	0	0	0	0	0	**94**	**319**
0900 - 0915	1	64	15	1	1	0	0	0	1	0	0	0	0	**83**	
0915 - 0930	1	65	16	0	3	0	0	0	2	0	0	0	0	**87**	
0930 - 0945	2	69	18	0	0	0	0	0	0	0	0	0	0	**89**	
0945 - 1000	0	80	20	0	1	0	0	1	5	0	0	0	0	**107**	**366**
1000 - 1015	0	69	21	0	2	0	0	0	3	0	0	0	0	**95**	
1015 - 1030	0	76	24	0	3	0	0	0	1	0	0	0	0	**104**	
1030 - 1045	0	79	14	0	2	0	0	0	1	0	0	0	0	**96**	
1045 - 1100	0	69	21	0	3	0	0	0	1	0	0	0	0	**94**	**389**
1100 - 1115	0	79	24	0	3	1	0	0	1	0	0	0	0	**108**	
1115 - 1130	0	92	21	0	1	0	0	0	1	0	0	0	0	**115**	
1130 - 1145	0	93	16	0	2	0	0	0	0	0	0	0	0	**111**	
1145 - 1200	0	72	35	1	2	0	0	0	2	0	0	0	0	**112**	**446**
1200 - 1215	0	78	16	0	2	0	0	1	1	0	0	0	0	**98**	
1215 - 1230	0	83	21	0	1	0	0	1	1	0	0	0	0	**107**	
1230 - 1245	0	90	21	0	2	0	0	1	1	0	0	0	0	**115**	
1245 - 1300	0	83	32	0	1	0	0	0	2	0	0	0	0	**118**	**438**
1300 - 1315	0	72	18	0	2	0	0	0	4	0	0	0	0	**96**	
1315 - 1330	0	86	23	0	1	0	0	1	3	0	0	0	0	**114**	
1330 - 1345	0	64	26	0	2	0	0	0	0	0	0	0	0	**92**	
1345 - 1400	0	82	20	0	1	0	0	0	0	0	0	0	0	**103**	**405**
1400 - 1415	0	78	21	0	1	0	0	0	0	0	0	0	0	**100**	
1415 - 1430	2	88	16	0	3	0	0	0	0	0	0	0	0	**109**	
1430 - 1445	0	67	17	0	2	0	0	0	1	0	0	0	0	**87**	
1445 - 1500	0	104	16	0	2	0	0	0	0	0	0	0	0	**122**	**418**
1500 - 1515	0	72	15	0	0	0	0	0	1	0	0	0	0	**88**	
1515 - 1530	0	66	14	0	4	0	0	0	1	0	0	0	0	**85**	
1530 - 1545	0	67	12	0	1	0	0	0	1	0	0	0	0	**81**	
1545 - 1600	0	66	13	0	0	0	0	0	0	0	0	0	0	**79**	**333**
1600 - 1615	0	59	10	0	0	0	0	0	1	0	0	0	0	**70**	
1615 - 1630	1	63	11	0	1	0	0	0	1	0	0	0	0	**77**	
1630 - 1645	0	50	14	0	3	0	0	0	0	0	0	0	0	**67**	
1645 - 1700	0	73	21	0	3	0	0	0	3	0	0	0	0	**100**	**314**
1700 - 1715	0	52	11	0	1	0	0	0	1	0	0	0	0	**65**	
1715 - 1730	0	50	8	0	0	0	0	0	2	0	0	0	0	**60**	
1730 - 1745	0	40	9	0	0	0	0	0	2	0	0	0	0	**51**	
1745 - 1800	0	45	14	0	0	0	0	0	3	0	1	0	0	**63**	**239**
1800 - 1815	0	58	11	0	0	0	0	0	0	0	0	0	0	**69**	
1815 - 1830	0	78	14	0	1	0	0	0	1	0	0	0	0	**94**	
1830 - 1845	0	51	7	0	1	0	0	0	4	0	0	0	0	**63**	
1845 - 1900	0	69	11	0	2	0	0	0	2	0	0	0	0	**84**	**310**
1900 - 1915	0	43	9	0	0	0	0	0	2	0	0	0	0	**54**	
1915 - 1930	1	38	10	0	2	0	0	0	0	0	0	0	0	**51**	
1930 - 1945	0	28	11	0	0	0	0	0	1	0	0	0	0	**40**	
1945 - 2000	0	43	10	0	0	0	0	0	0	0	0	0	0	**53**	**198**
2000 - 2015	0	33	16	0	0	0	0	0	0	0	0	0	0	**49**	
2015 - 2030	0	34	8	0	0	0	0	0	1	0	0	0	0	**43**	
2030 - 2045	0	23	5	0	1	0	0	0	0	0	0	0	0	**29**	
2045 - 2100	0	30	6	0	0	0	0	0	0	0	0	0	0	**36**	**157**
2100 - 2115	0	24	4	0	0	1	0	0	0	0	0	0	0	**29**	
2115 - 2130	0	16	3	0	1	0	0	0	0	0	0	0	0	**20**	
2130 - 2145	0	21	4	0	1	0	0	0	0	0	0	0	0	**26**	
2145 - 2200	0	17	2	0	0	0	0	0	0	0	0	0	0	**19**	**94**
2200 - 2215	0	18	1	0	0	0	0	0	0	0	0	0	0	**19**	
2215 - 2230	0	17	3	0	0	0	0	0	1	0	0	0	0	**21**	
2230 - 2245	0	19	2	0	1	0	0	0	0	0	0	0	0	**22**	
2245 - 2300	0	22	4	0	2	0	0	0	0	0	0	0	0	**28**	**90**
2300 - 2315	0	19	2	0	0	0	0	0	0	0	0	0	0	**21**	
2315 - 2330	0	10	4	0	0	0	0	0	0	0	0	0	0	**14**	
2330 - 2345	0	11	3	0	0	0	0	0	0	0	0	0	0	**14**	
2345 - 0000	0	10	3	0	0	0	0	0	1	0	0	0	0	**14**	**63**

Session Total	9	3929	985	3	84	7	0	9	88	0	18	0	0	**5132**
Session Average	0.09	40.93	10.26	0.03	0.88	0.07	0.00	0.09	0.92	0.00	0.19	0.00	0.00	**53.46**
Session Percentage	0.18	76.56	19.19	0.06	1.64	0.14	0.00	0.18	1.71	0.00	0.35	0.00	0.00	

AM Peak Hour	0845 - 0945	0945 - 1045	0930 - 1030	0700 - 0800	0945 - 1045	0530 - 0630	-	0715 - 0815	0915 - 1015	-	0500 - 0600	-	-	**0945 - 1045**
AM Peak Hour Volume	4	304	83	1	8	2	0	2	10	0	4	0	0	**402**

Noon Peak Hour	1330 - 1430	1400 - 1500	1245 - 1345	1100 - 1200	1015 - 1115	1015 - 1115	-	1145 - 1245	1230 - 1330	-	-	-	-	**1100 - 1200**
Noon Peak Hour Volume	2	337	99	1	11	1	0	3	10	0	0	0	0	**446**

PM Peak Hour	1530 - 1630	1500 - 1600	1615 - 1715	-	1615 - 1715	-	-	-	1815 - 1915	-	1700 - 1800	-	-	**1500 - 1600**
PM Peak Hour Volume	1	271	57	0	8	0	0	0	9	0	1	0	0	**333**

Bi-Directional Class Count || NB EB Average 15min

Columbia, SC

Marr Traffic DATA COLLECTION
www.marrtraffic.com

Site 74 Lane 4 EB
I-20,
west of US-378 Sunset Blvd S/Bound Off-Ramp

Date
Sunday, April 21, 2024

Lat/Long
34.008085°, -81.156669°

Weather
Cloudy
66°F

0000 - 2400 (Weekday 24h Session) (All Dates)
NB EB Average 15min

	NB EB Average 15min													15min	60min
Time	1	2	3	4	5	6	7	8	9	10	11	12	13	Total	Total
0000 - 0015	0	6	0	0	1	0	0	0	1	0	1	0	0	**9**	
0015 - 0030	0	6	1	0	0	0	0	0	2	0	2	0	0	**10**	
0030 - 0045	0	6	0	0	0	0	0	0	1	0	1	0	0	**9**	
0045 - 0100	0	4	0	0	0	0	0	0	1	0	0	0	0	**6**	**34**
0100 - 0115	0	4	0	0	0	0	0	0	1	0	0	0	0	**7**	
0115 - 0130	0	4	0	0	0	0	0	0	1	0	0	0	0	**6**	
0130 - 0145	0	4	0	0	0	0	0	0	1	0	1	0	0	**6**	
0145 - 0200	0	5	0	0	0	0	0	0	1	0	0	0	0	**7**	**26**
0200 - 0215	0	3	0	0	0	0	0	0	0	0	0	0	0	**4**	
0215 - 0230	0	4	0	0	0	0	0	0	1	0	1	0	0	**6**	
0230 - 0245	0	4	0	0	0	0	0	0	1	0	1	0	0	**7**	
0245 - 0300	0	3	0	0	0	0	0	0	1	0	1	0	0	**5**	**22**
0300 - 0315	0	3	0	0	0	0	0	0	0	0	0	0	0	**4**	
0315 - 0330	0	3	0	0	0	0	0	0	1	0	0	0	0	**5**	
0330 - 0345	0	4	1	0	0	0	0	0	1	0	1	0	0	**6**	
0345 - 0400	0	4	0	0	0	0	0	0	2	0	1	0	0	**7**	**23**
0400 - 0415	0	3	0	0	0	0	0	0	2	0	0	0	0	**6**	
0415 - 0430	0	5	1	0	0	0	0	0	1	0	0	0	0	**8**	
0430 - 0445	0	6	1	0	0	0	0	0	1	0	0	0	0	**8**	
0445 - 0500	0	12	1	0	0	0	0	0	2	0	1	0	0	**16**	**38**
0500 - 0515	0	7	1	0	0	0	0	0	1	0	1	0	0	**10**	
0515 - 0530	0	11	2	0	1	0	0	0	1	0	1	0	0	**17**	
0530 - 0545	0	24	5	0	1	0	0	0	2	0	1	0	0	**33**	
0545 - 0600	0	33	7	0	0	0	0	0	2	0	0	0	0	**43**	**102**
0600 - 0615	0	43	10	0	0	0	0	0	2	0	0	0	0	**56**	
0615 - 0630	0	61	15	0	1	1	0	0	2	0	1	0	0	**81**	
0630 - 0645	0	103	19	0	0	1	0	0	2	0	1	0	0	**126**	
0645 - 0700	0	118	35	0	1	0	0	1	3	0	0	0	0	**158**	**420**
0700 - 0715	0	119	32	0	1	0	0	0	4	0	0	0	0	**156**	
0715 - 0730	0	161	40	0	2	0	0	1	3	0	0	0	0	**206**	
0730 - 0745	0	171	41	1	2	0	0	0	4	0	0	0	0	**219**	
0745 - 0800	0	155	39	0	2	0	0	1	2	0	0	0	0	**200**	**781**
0800 - 0815	0	127	29	0	2	0	0	0	3	0	0	0	0	**162**	
0815 - 0830	0	128	30	1	2	0	0	1	4	0	0	0	0	**166**	
0830 - 0845	0	118	27	2	2	0	0	1	2	0	0	0	0	**151**	
0845 - 0900	0	109	26	0	2	0	0	0	2	0	0	0	0	**141**	**621**
0900 - 0915	0	80	19	0	3	0	0	0	2	0	0	0	0	**106**	
0915 - 0930	0	79	20	0	3	0	0	1	2	0	0	0	0	**106**	
0930 - 0945	0	77	16	0	2	0	0	0	3	0	0	0	0	**100**	
0945 - 1000	0	82	19	0	2	1	0	1	3	0	0	0	0	**108**	**419**
1000 - 1015	0	67	16	0	3	1	0	1	3	0	0	0	0	**91**	
1015 - 1030	0	71	21	0	3	0	0	0	2	0	0	0	0	**98**	
1030 - 1045	0	74	17	0	2	0	0	0	3	0	0	0	0	**96**	
1045 - 1100	0	70	19	0	2	0	0	0	2	0	0	0	0	**94**	**378**
1100 - 1115	0	62	16	1	3	1	0	1	3	0	0	0	0	**85**	
1115 - 1130	0	66	16	1	2	0	0	1	3	0	0	0	0	**90**	
1130 - 1145	0	68	18	1	2	1	0	0	2	0	0	0	0	**91**	
1145 - 1200	0	63	21	1	2	1	0	0	3	0	0	0	0	**91**	**358**
1200 - 1215	0	72	14	0	2	0	0	1	2	0	0	0	0	**92**	
1215 - 1230	0	76	17	0	2	0	0	1	3	0	0	0	0	**99**	
1230 - 1245	0	73	19	0	1	0	0	1	1	0	0	0	0	**95**	
1245 - 1300	0	77	21	0	3	0	0	0	2	0	0	0	0	**104**	**390**
1300 - 1315	0	72	17	1	2	1	0	0	3	0	0	0	0	**96**	
1315 - 1330	0	76	18	0	2	0	0	0	3	0	0	0	0	**100**	
1330 - 1345	0	73	21	1	3	1	0	0	2	0	0	0	0	**102**	
1345 - 1400	0	80	18	1	2	0	0	0	2	0	0	0	0	**104**	**402**
1400 - 1415	0	76	21	0	1	0	0	0	3	0	0	0	0	**102**	
1415 - 1430	0	79	17	0	2	0	0	1	2	0	0	0	0	**102**	
1430 - 1445	0	82	21	1	2	0	0	0	3	0	0	0	0	**108**	
1445 - 1500	0	89	18	2	2	0	0	0	2	0	0	0	0	**114**	**426**
1500 - 1515	0	77	19	0	2	1	0	0	2	0	0	0	0	**101**	
1515 - 1530	0	71	20	0	3	0	0	1	2	0	0	0	0	**98**	
1530 - 1545	0	77	16	1	3	0	0	0	2	0	0	0	0	**99**	
1545 - 1600	0	82	19	0	2	0	0	1	2	0	0	0	0	**106**	**404**
1600 - 1615	0	75	15	0	1	0	0	1	3	0	0	0	0	**95**	
1615 - 1630	0	71	15	0	2	0	0	1	3	0	0	0	0	**92**	
1630 - 1645	0	71	17	1	2	0	0	1	3	0	0	0	0	**95**	
1645 - 1700	0	80	21	0	3	0	0	1	3	0	0	0	0	**108**	**391**
1700 - 1715	0	72	19	0	2	1	0	0	2	0	0	0	0	**95**	
1715 - 1730	0	83	21	0	1	0	0	1	3	0	0	0	0	**109**	
1730 - 1745	0	83	21	0	2	0	0	1	4	0	0	0	0	**111**	
1745 - 1800	0	74	24	0	1	0	0	0	4	0	0	0	0	**104**	**419**
1800 - 1815	0	73	16	0	1	0	0	1	3	0	0	0	0	**93**	
1815 - 1830	0	85	17	0	1	0	0	0	3	0	0	0	0	**107**	
1830 - 1845	0	65	10	0	1	0	0	0	2	0	0	0	0	**80**	
1845 - 1900	0	59	12	0	1	0	0	0	3	0	0	0	0	**75**	**354**
1900 - 1915	0	46	9	0	1	0	0	0	2	0	0	0	0	**58**	
1915 - 1930	0	43	10	0	1	0	0	0	3	0	0	0	0	**57**	
1930 - 1945	0	42	11	0	0	0	0	0	2	0	0	0	0	**56**	
1945 - 2000	0	41	12	0	1	0	0	0	1	0	0	0	0	**54**	**225**
2000 - 2015	0	31	10	0	1	0	0	0	1	0	0	0	0	**44**	
2015 - 2030	0	36	5	0	1	0	0	0	2	0	0	0	0	**44**	
2030 - 2045	0	30	4	0	1	0	0	0	1	0	0	0	0	**36**	
2045 - 2100	0	30	4	0	1	0	0	0	1	0	0	0	0	**36**	**159**
2100 - 2115	0	26	4	0	1	0	0	0	1	0	0	0	0	**32**	
2115 - 2130	0	26	3	0	1	0	0	0	1	0	1	0	0	**32**	
2130 - 2145	0	20	3	0	1	0	0	0	1	0	0	0	0	**26**	
2145 - 2200	0	18	2	0	0	0	0	0	2	0	1	0	0	**24**	**114**
2200 - 2215	0	18	2	0	0	0	0	0	1	0	0	0	0	**21**	
2215 - 2230	0	15	2	0	0	0	0	0	2	0	0	0	0	**19**	
2230 - 2245	0	16	2	0	0	0	0	0	2	0	0	0	0	**21**	
2245 - 2300	0	18	3	0	1	0	0	0	1	0	0	0	0	**23**	**84**
2300 - 2315	0	11	1	0	0	0	0	0	1	0	1	0	0	**15**	
2315 - 2330	0	8	1	0	0	0	0	0	2	0	0	0	0	**12**	
2330 - 2345	0	7	1	0	0	0	0	0	1	0	0	0	0	**9**	
2345 - 0000	0	5	1	0	0	0	0	0	1	0	1	0	0	**8**	**44**

Session Total	6	5054	1179	19	113	20	0	26	193	2	22	0	0	**6635**
Session Average	0.06	52.65	12.28	0.20	1.18	0.21	0.00	0.28	2.01	0.02	0.23	0.00	0.00	**69.12**
Session Percentage	0.09	76.17	17.77	0.28	1.70	0.30	0.01	0.40	2.92	0.02	0.34	0.00	0.00	

AM Peak Hour	0845 - 0945	0715 - 0815	0700 - 0800	0815 - 0915	0900 - 1000	0915 - 1015	0615 - 0715	0745 - 0845	0645 - 0745	0830 - 0930	0500 - 0600	0615 - 0715	-	**0715 - 0815**
AM Peak Volume	1	614	152	3	11	2	0	3	14	0	2	0	0	**787**

Noon Peak Hour	1245 - 1345	1415 - 1515	1315 - 1415	1100 - 1200	1000 - 1100	1100 - 1200	1445 - 1545	1200 - 1300	1100 - 1200	1045 - 1145	-	-	-	**1400 - 1500**
Noon Peak Volume	0	327	79	4	10	2	0	3	11	0	0	0	0	**426**

PM Peak Hour	1545 - 1645	1645 - 1745	1700 - 1800	1630 - 1730	1500 - 1600	1500 - 1600	1530 - 1630	1600 - 1700	1730 - 1830	1500 - 1600	1945 - 2045	-	-	**1645 - 1745**
PM Peak Volume	1	318	85	1	10	2	0	4	14	0	1	0	0	**423**

Bi-Directional Class Count || Volume Summary 15min

Columbia, SC

Marr Traffic DATA COLLECTION

www.marrtraffic.com

Site 74 Lane 4 EB

I-20,
west of US-378 Sunset Blvd S/Bound Off-Ramp

Date

Sunday, April 21, 2024

Lat/Long

34.008085°, -81.156669°

Weather

Cloudy
66°F

Click here for Detailed Weather

0000 - 2400 (Sunday 24h Session) (04-21-2024)

Volume Summary 15min

TIME	Volume Summary 15min EB	WB	15min Total	60min Total
0000 - 0015	13	0	**13**	
0015 - 0030	11	0	**11**	
0030 - 0045	9	0	**9**	
0045 - 0100	8	0	**8**	**41**
0100 - 0115	15	0	**15**	
0115 - 0130	9	0	**9**	
0130 - 0145	10	0	**10**	
0145 - 0200	11	0	**11**	**45**
0200 - 0215	6	0	**6**	
0215 - 0230	5	0	**5**	
0230 - 0245	4	0	**4**	
0245 - 0300	1	0	**1**	**16**
0300 - 0315	3	0	**3**	
0315 - 0330	5	0	**5**	
0330 - 0345	3	0	**3**	
0345 - 0400	4	0	**4**	**15**
0400 - 0415	3	0	**3**	
0415 - 0430	2	0	**2**	
0430 - 0445	1	0	**1**	
0445 - 0500	3	0	**3**	**9**
0500 - 0515	5	0	**5**	
0515 - 0530	5	0	**5**	
0530 - 0545	5	0	**5**	
0545 - 0600	13	0	**13**	**28**
0600 - 0615	13	0	**13**	
0615 - 0630	35	0	**35**	
0630 - 0645	34	0	**34**	
0645 - 0700	34	0	**34**	**116**
0700 - 0715	23	0	**23**	
0715 - 0730	22	0	**22**	
0730 - 0745	22	0	**22**	
0745 - 0800	28	0	**28**	**95**
0800 - 0815	23	0	**23**	
0815 - 0830	30	0	**30**	
0830 - 0845	41	0	**41**	
0845 - 0900	68	0	**68**	**162**
0900 - 0915	64	0	**64**	
0915 - 0930	63	0	**63**	
0930 - 0945	61	0	**61**	
0945 - 1000	43	0	**43**	**231**
1000 - 1015	66	0	**66**	
1015 - 1030	78	0	**78**	
1030 - 1045	83	0	**83**	
1045 - 1100	68	0	**68**	**295**
1100 - 1115	40	0	**40**	
1115 - 1130	47	0	**47**	
1130 - 1145	72	0	**72**	
1145 - 1200	75	0	**75**	**234**

Time	Volume Summary 15min EB	WB	15min Total	60min Total
1200 - 1215	70	0	**70**	
1215 - 1230	81	0	**81**	
1230 - 1245	84	0	**84**	
1245 - 1300	82	0	**82**	**317**
1300 - 1315	89	0	**89**	
1315 - 1330	83	0	**83**	
1330 - 1345	94	0	**94**	
1345 - 1400	103	0	**103**	**369**
1400 - 1415	100	0	**100**	
1415 - 1430	77	0	**77**	
1430 - 1445	97	0	**97**	
1445 - 1500	89	0	**89**	**363**
1500 - 1515	59	0	**59**	
1515 - 1530	72	0	**72**	
1530 - 1545	59	0	**59**	
1545 - 1600	74	0	**74**	**264**
1600 - 1615	81	0	**81**	
1615 - 1630	58	0	**58**	
1630 - 1645	76	0	**76**	
1645 - 1700	74	0	**74**	**289**
1700 - 1715	67	0	**67**	
1715 - 1730	62	0	**62**	
1730 - 1745	69	0	**69**	
1745 - 1800	81	0	**81**	**279**
1800 - 1815	57	0	**57**	
1815 - 1830	72	0	**72**	
1830 - 1845	67	0	**67**	
1845 - 1900	62	0	**62**	**258**
1900 - 1915	46	0	**46**	
1915 - 1930	46	0	**46**	
1930 - 1945	44	0	**44**	
1945 - 2000	50	0	**50**	**186**
2000 - 2015	26	0	**26**	
2015 - 2030	30	0	**30**	
2030 - 2045	28	0	**28**	
2045 - 2100	20	0	**20**	**104**
2100 - 2115	24	0	**24**	
2115 - 2130	39	0	**39**	
2130 - 2145	18	0	**18**	
2145 - 2200	17	0	**17**	**98**
2200 - 2215	23	0	**23**	
2215 - 2230	18	0	**18**	
2230 - 2245	17	0	**17**	
2245 - 2300	16	0	**16**	**74**
2300 - 2315	13	0	**13**	
2315 - 2330	12	0	**12**	
2330 - 2345	7	0	**7**	
2345 - 0000	8	0	**8**	**40**

Session Total	3928	0	**3928**
Session Average	40.92	0.00	**40.92**
Session Percentage	100.00	0.00	

Site 74 Lane 4 EB

I-20,
west of US-378 Sunset Blvd S/Bound Off-Ramp

Date

Monday, April 22, 2024

Lat/Long

34.008085°, -81.156669°

Weather

Mostly Cloudy
57°F

Click here for Detailed Weather

0000 - 2400 (Weekday 24h Session) (04-22-2024)

Volume Summary 15min

TIME	Volume Summary 15min EB	WB	15min Total	60min Total
0000 - 0015	4	0	**4**	
0015 - 0030	6	0	**6**	
0030 - 0045	8	0	**8**	
0045 - 0100	6	0	**6**	**24**
0100 - 0115	3	0	**3**	
0115 - 0130	7	0	**7**	
0130 - 0145	5	0	**5**	
0145 - 0200	8	0	**8**	**23**
0200 - 0215	2	0	**2**	
0215 - 0230	7	0	**7**	
0230 - 0245	7	0	**7**	
0245 - 0300	4	0	**4**	**20**
0300 - 0315	5	0	**5**	
0315 - 0330	5	0	**5**	
0330 - 0345	2	0	**2**	
0345 - 0400	7	0	**7**	**19**
0400 - 0415	7	0	**7**	
0415 - 0430	13	0	**13**	
0430 - 0445	12	0	**12**	
0445 - 0500	22	0	**22**	**54**
0500 - 0515	16	0	**16**	
0515 - 0530	20	0	**20**	
0530 - 0545	41	0	**41**	
0545 - 0600	54	0	**54**	**131**
0600 - 0615	66	0	**66**	
0615 - 0630	76	0	**76**	
0630 - 0645	151	0	**151**	
0645 - 0700	201	0	**201**	**494**
0700 - 0715	217	0	**217**	
0715 - 0730	280	0	**280**	
0730 - 0745	318	0	**318**	
0745 - 0800	275	0	**275**	**1090**
0800 - 0815	204	0	**204**	
0815 - 0830	193	0	**193**	
0830 - 0845	179	0	**179**	
0845 - 0900	167	0	**167**	**743**
0900 - 0915	119	0	**119**	
0915 - 0930	123	0	**123**	
0930 - 0945	146	0	**146**	
0945 - 1000	126	0	**126**	**514**
1000 - 1015	97	0	**97**	
1015 - 1030	98	0	**98**	
1030 - 1045	97	0	**97**	
1045 - 1100	110	0	**110**	**402**
1100 - 1115	89	0	**89**	
1115 - 1130	98	0	**98**	
1130 - 1145	97	0	**97**	
1145 - 1200	76	0	**76**	**360**

Time	Volume Summary 15min EB	WB	15min Total	60min Total
1200 - 1215	79	0	**79**	
1215 - 1230	76	0	**76**	
1230 - 1245	84	0	**84**	
1245 - 1300	109	0	**109**	**348**
1300 - 1315	99	0	**99**	
1315 - 1330	100	0	**100**	
1330 - 1345	102	0	**102**	
1345 - 1400	88	0	**88**	**389**
1400 - 1415	112	0	**112**	
1415 - 1430	111	0	**111**	
1430 - 1445	119	0	**119**	
1445 - 1500	123	0	**123**	**465**
1500 - 1515	112	0	**112**	
1515 - 1530	98	0	**98**	
1530 - 1545	100	0	**100**	
1545 - 1600	121	0	**121**	**431**
1600 - 1615	112	0	**112**	
1615 - 1630	98	0	**98**	
1630 - 1645	94	0	**94**	
1645 - 1700	115	0	**115**	**419**
1700 - 1715	89	0	**89**	
1715 - 1730	141	0	**141**	
1730 - 1745	157	0	**157**	
1745 - 1800	106	0	**106**	**493**
1800 - 1815	82	0	**82**	
1815 - 1830	112	0	**112**	
1830 - 1845	73	0	**73**	
1845 - 1900	62	0	**62**	**329**
1900 - 1915	55	0	**55**	
1915 - 1930	67	0	**67**	
1930 - 1945	46	0	**46**	
1945 - 2000	63	0	**63**	**231**
2000 - 2015	51	0	**51**	
2015 - 2030	35	0	**35**	
2030 - 2045	39	0	**39**	
2045 - 2100	35	0	**35**	**160**
2100 - 2115	30	0	**30**	
2115 - 2130	36	0	**36**	
2130 - 2145	25	0	**25**	
2145 - 2200	24	0	**24**	**115**
2200 - 2215	20	0	**20**	
2215 - 2230	23	0	**23**	
2230 - 2245	20	0	**20**	
2245 - 2300	15	0	**15**	**78**
2300 - 2315	15	0	**15**	
2315 - 2330	16	0	**16**	
2330 - 2345	5	0	**5**	
2345 - 0000	4	0	**4**	**40**

Session Total	7372	0	**7372**
Session Average	76.79	0.00	**76.79**
Session Percentage	100.00	0.00	

Site 74 Lane 4 EB

I-20,
west of US-378 Sunset Blvd S/Bound Off-Ramp

Date

Tuesday, April 23, 2024

Lat/Long

34.008085°, -81.156669°

Weather

Fair
58°F

Click here for Detailed Weather

0000 - 2400 (Weekday 24h Session) (04-23-2024)

Volume Summary 15min

TIME	Volume Summary 15min EB	Volume Summary 15min WB	15min Total	60min Total
0000 - 0015	10	0	**10**	
0015 - 0030	8	0	**8**	
0030 - 0045	9	0	**9**	
0045 - 0100	5	0	**5**	**32**
0100 - 0115	6	0	**6**	
0115 - 0130	4	0	**4**	
0130 - 0145	6	0	**6**	
0145 - 0200	5	0	**5**	**21**
0200 - 0215	2	0	**2**	
0215 - 0230	6	0	**6**	
0230 - 0245	8	0	**8**	
0245 - 0300	8	0	**8**	**24**
0300 - 0315	2	0	**2**	
0315 - 0330	4	0	**4**	
0330 - 0345	10	0	**10**	
0345 - 0400	9	0	**9**	**25**
0400 - 0415	6	0	**6**	
0415 - 0430	11	0	**11**	
0430 - 0445	9	0	**9**	
0445 - 0500	25	0	**25**	**51**
0500 - 0515	9	0	**9**	
0515 - 0530	19	0	**19**	
0530 - 0545	45	0	**45**	
0545 - 0600	48	0	**48**	**121**
0600 - 0615	76	0	**76**	
0615 - 0630	97	0	**97**	
0630 - 0645	173	0	**173**	
0645 - 0700	211	0	**211**	**557**
0700 - 0715	211	0	**211**	
0715 - 0730	270	0	**270**	
0730 - 0745	298	0	**298**	
0745 - 0800	250	0	**250**	**1029**
0800 - 0815	214	0	**214**	
0815 - 0830	251	0	**251**	
0830 - 0845	224	0	**224**	
0845 - 0900	178	0	**178**	**867**
0900 - 0915	110	0	**110**	
0915 - 0930	104	0	**104**	
0930 - 0945	120	0	**120**	
0945 - 1000	108	0	**108**	**442**
1000 - 1015	101	0	**101**	
1015 - 1030	102	0	**102**	
1030 - 1045	109	0	**109**	
1045 - 1100	100	0	**100**	**412**
1100 - 1115	90	0	**90**	
1115 - 1130	88	0	**88**	
1130 - 1145	89	0	**89**	
1145 - 1200	87	0	**87**	**354**

Time	Volume Summary 15min EB	Volume Summary 15min WB	15min Total	60min Total
1200 - 1215	91	0	**91**	
1215 - 1230	101	0	**101**	
1230 - 1245	96	0	**96**	
1245 - 1300	95	0	**95**	**383**
1300 - 1315	82	0	**82**	
1315 - 1330	98	0	**98**	
1330 - 1345	92	0	**92**	
1345 - 1400	88	0	**88**	**360**
1400 - 1415	92	0	**92**	
1415 - 1430	97	0	**97**	
1430 - 1445	110	0	**110**	
1445 - 1500	109	0	**109**	**408**
1500 - 1515	102	0	**102**	
1515 - 1530	93	0	**93**	
1530 - 1545	110	0	**110**	
1545 - 1600	105	0	**105**	**410**
1600 - 1615	103	0	**103**	
1615 - 1630	95	0	**95**	
1630 - 1645	95	0	**95**	
1645 - 1700	108	0	**108**	**401**
1700 - 1715	116	0	**116**	
1715 - 1730	143	0	**143**	
1730 - 1745	119	0	**119**	
1745 - 1800	124	0	**124**	**502**
1800 - 1815	112	0	**112**	
1815 - 1830	105	0	**105**	
1830 - 1845	95	0	**95**	
1845 - 1900	74	0	**74**	**386**
1900 - 1915	67	0	**67**	
1915 - 1930	56	0	**56**	
1930 - 1945	50	0	**50**	
1945 - 2000	60	0	**60**	**233**
2000 - 2015	38	0	**38**	
2015 - 2030	44	0	**44**	
2030 - 2045	41	0	**41**	
2045 - 2100	28	0	**28**	**151**
2100 - 2115	49	0	**49**	
2115 - 2130	44	0	**44**	
2130 - 2145	31	0	**31**	
2145 - 2200	21	0	**21**	**145**
2200 - 2215	16	0	**16**	
2215 - 2230	14	0	**14**	
2230 - 2245	17	0	**17**	
2245 - 2300	22	0	**22**	**69**
2300 - 2315	11	0	**11**	
2315 - 2330	11	0	**11**	
2330 - 2345	9	0	**9**	
2345 - 0000	5	0	**5**	**36**

Session Total	7419	0	**7419**
Session Average	77.28	0.00	**77.28**
Session Percentage	100.00	0.00	

Site 74 Lane 4 EB

I-20,
west of US-378 Sunset Blvd S/Bound Off-Ramp

Date

Wednesday, April 24, 2024

Lat/Long

34.008085°, -81.156669°

Weather

Fair
66°F

Click here for Detailed Weather

0000 - 2400 (Weekday 24h Session) (04-24-2024)

Volume Summary 15min

TIME	Volume Summary 15min EB	Volume Summary 15min WB	15min Total	60min Total
0000 - 0015	4	0	**4**	
0015 - 0030	8	0	**8**	
0030 - 0045	6	0	**6**	
0045 - 0100	6	0	**6**	**24**
0100 - 0115	4	0	**4**	
0115 - 0130	4	0	**4**	
0130 - 0145	6	0	**6**	
0145 - 0200	6	0	**6**	**20**
0200 - 0215	4	0	**4**	
0215 - 0230	8	0	**8**	
0230 - 0245	5	0	**5**	
0245 - 0300	3	0	**3**	**20**
0300 - 0315	4	0	**4**	
0315 - 0330	10	0	**10**	
0330 - 0345	6	0	**6**	
0345 - 0400	6	0	**6**	**26**
0400 - 0415	9	0	**9**	
0415 - 0430	10	0	**10**	
0430 - 0445	8	0	**8**	
0445 - 0500	18	0	**18**	**45**
0500 - 0515	12	0	**12**	
0515 - 0530	17	0	**17**	
0530 - 0545	49	0	**49**	
0545 - 0600	54	0	**54**	**132**
0600 - 0615	75	0	**75**	
0615 - 0630	112	0	**112**	
0630 - 0645	163	0	**163**	
0645 - 0700	214	0	**214**	**564**
0700 - 0715	186	0	**186**	
0715 - 0730	287	0	**287**	
0730 - 0745	295	0	**295**	
0745 - 0800	261	0	**261**	**1029**
0800 - 0815	205	0	**205**	
0815 - 0830	230	0	**230**	
0830 - 0845	196	0	**196**	
0845 - 0900	151	0	**151**	**782**
0900 - 0915	124	0	**124**	
0915 - 0930	113	0	**113**	
0930 - 0945	77	0	**77**	
0945 - 1000	134	0	**134**	**448**
1000 - 1015	102	0	**102**	
1015 - 1030	103	0	**103**	
1030 - 1045	102	0	**102**	
1045 - 1100	97	0	**97**	**404**
1100 - 1115	94	0	**94**	
1115 - 1130	83	0	**83**	
1130 - 1145	89	0	**89**	
1145 - 1200	99	0	**99**	**365**

Time	Volume Summary 15min EB	Volume Summary 15min WB	15min Total	60min Total
1200 - 1215	107	0	**107**	
1215 - 1230	96	0	**96**	
1230 - 1245	100	0	**100**	
1245 - 1300	112	0	**112**	**415**
1300 - 1315	99	0	**99**	
1315 - 1330	102	0	**102**	
1330 - 1345	117	0	**117**	
1345 - 1400	113	0	**113**	**431**
1400 - 1415	103	0	**103**	
1415 - 1430	93	0	**93**	
1430 - 1445	112	0	**112**	
1445 - 1500	130	0	**130**	**438**
1500 - 1515	139	0	**139**	
1515 - 1530	117	0	**117**	
1530 - 1545	106	0	**106**	
1545 - 1600	105	0	**105**	**467**
1600 - 1615	90	0	**90**	
1615 - 1630	97	0	**97**	
1630 - 1645	104	0	**104**	
1645 - 1700	122	0	**122**	**413**
1700 - 1715	103	0	**103**	
1715 - 1730	85	0	**85**	
1730 - 1745	144	0	**144**	
1745 - 1800	131	0	**131**	**463**
1800 - 1815	115	0	**115**	
1815 - 1830	105	0	**105**	
1830 - 1845	82	0	**82**	
1845 - 1900	71	0	**71**	**373**
1900 - 1915	63	0	**63**	
1915 - 1930	58	0	**58**	
1930 - 1945	61	0	**61**	
1945 - 2000	42	0	**42**	**224**
2000 - 2015	42	0	**42**	
2015 - 2030	33	0	**33**	
2030 - 2045	39	0	**39**	
2045 - 2100	32	0	**32**	**146**
2100 - 2115	29	0	**29**	
2115 - 2130	26	0	**26**	
2130 - 2145	21	0	**21**	
2145 - 2200	30	0	**30**	**106**
2200 - 2215	26	0	**26**	
2215 - 2230	19	0	**19**	
2230 - 2245	20	0	**20**	
2245 - 2300	24	0	**24**	**89**
2300 - 2315	11	0	**11**	
2315 - 2330	7	0	**7**	
2330 - 2345	7	0	**7**	
2345 - 0000	8	0	**8**	**33**

Session Total	7457	0	**7457**
Session Average	77.68	0.00	**77.68**
Session Percentage	100.00	0.00	

Site 74 Lane 4 EB

I-20,
west of US-378 Sunset Blvd S/Bound Off-Ramp

Date

Thursday, April 25, 2024

Lat/Long

34.008085°, -81.156669°

Weather

Fair
67°F

Click here for Detailed Weather

0000 - 2400 (Weekday 24h Session) (04-25-2024)

Volume Summary 15min

TIME	Volume Summary 15min EB	Volume Summary 15min WB	15min Total	60min Total
0000 - 0015	15	0	**15**	
0015 - 0030	10	0	**10**	
0030 - 0045	12	0	**12**	
0045 - 0100	2	0	**2**	**39**
0100 - 0115	5	0	**5**	
0115 - 0130	2	0	**2**	
0130 - 0145	7	0	**7**	
0145 - 0200	4	0	**4**	**18**
0200 - 0215	4	0	**4**	
0215 - 0230	3	0	**3**	
0230 - 0245	5	0	**5**	
0245 - 0300	8	0	**8**	**20**
0300 - 0315	7	0	**7**	
0315 - 0330	4	0	**4**	
0330 - 0345	12	0	**12**	
0345 - 0400	10	0	**10**	**33**
0400 - 0415	6	0	**6**	
0415 - 0430	7	0	**7**	
0430 - 0445	11	0	**11**	
0445 - 0500	24	0	**24**	**48**
0500 - 0515	12	0	**12**	
0515 - 0530	30	0	**30**	
0530 - 0545	39	0	**39**	
0545 - 0600	63	0	**63**	**144**
0600 - 0615	70	0	**70**	
0615 - 0630	104	0	**104**	
0630 - 0645	158	0	**158**	
0645 - 0700	203	0	**203**	**535**
0700 - 0715	224	0	**224**	
0715 - 0730	302	0	**302**	
0730 - 0745	274	0	**274**	
0745 - 0800	273	0	**273**	**1073**
0800 - 0815	211	0	**211**	
0815 - 0830	202	0	**202**	
0830 - 0845	163	0	**163**	
0845 - 0900	163	0	**163**	**739**
0900 - 0915	122	0	**122**	
0915 - 0930	152	0	**152**	
0930 - 0945	95	0	**95**	
0945 - 1000	116	0	**116**	**485**
1000 - 1015	78	0	**78**	
1015 - 1030	98	0	**98**	
1030 - 1045	97	0	**97**	
1045 - 1100	80	0	**80**	**353**
1100 - 1115	90	0	**90**	
1115 - 1130	106	0	**106**	
1130 - 1145	91	0	**91**	
1145 - 1200	93	0	**93**	**380**

Time	Volume Summary 15min EB	Volume Summary 15min WB	15min Total	60min Total
1200 - 1215	93	0	**93**	
1215 - 1230	117	0	**117**	
1230 - 1245	109	0	**109**	
1245 - 1300	116	0	**116**	**435**
1300 - 1315	118	0	**118**	
1315 - 1330	118	0	**118**	
1330 - 1345	116	0	**116**	
1345 - 1400	133	0	**133**	**485**
1400 - 1415	103	0	**103**	
1415 - 1430	113	0	**113**	
1430 - 1445	122	0	**122**	
1445 - 1500	96	0	**96**	**434**
1500 - 1515	110	0	**110**	
1515 - 1530	121	0	**121**	
1530 - 1545	107	0	**107**	
1545 - 1600	132	0	**132**	**470**
1600 - 1615	95	0	**95**	
1615 - 1630	112	0	**112**	
1630 - 1645	107	0	**107**	
1645 - 1700	113	0	**113**	**427**
1700 - 1715	108	0	**108**	
1715 - 1730	127	0	**127**	
1730 - 1745	110	0	**110**	
1745 - 1800	99	0	**99**	**444**
1800 - 1815	110	0	**110**	
1815 - 1830	125	0	**125**	
1830 - 1845	90	0	**90**	
1845 - 1900	79	0	**79**	**404**
1900 - 1915	47	0	**47**	
1915 - 1930	66	0	**66**	
1930 - 1945	66	0	**66**	
1945 - 2000	57	0	**57**	**236**
2000 - 2015	43	0	**43**	
2015 - 2030	63	0	**63**	
2030 - 2045	29	0	**29**	
2045 - 2100	47	0	**47**	**182**
2100 - 2115	24	0	**24**	
2115 - 2130	30	0	**30**	
2130 - 2145	38	0	**38**	
2145 - 2200	32	0	**32**	**124**
2200 - 2215	17	0	**17**	
2215 - 2230	15	0	**15**	
2230 - 2245	24	0	**24**	
2245 - 2300	27	0	**27**	**83**
2300 - 2315	19	0	**19**	
2315 - 2330	10	0	**10**	
2330 - 2345	9	0	**9**	
2345 - 0000	10	0	**10**	**48**

Session Total	7639	0	**7639**
Session Average	79.57	0.00	**79.57**
Session Percentage	100.00	0.00	

Site 74 Lane 4 EB

I-20,
west of US-378 Sunset Blvd S/Bound Off-Ramp

Date

Friday, April 26, 2024

Lat/Long

34.008085°, -81.156669°

Weather

Cloudy
69°F

Click here for Detailed Weather

0000 - 2400 (Weekday 24h Session) (04-26-2024)

Volume Summary 15min

TIME	Volume Summary 15min EB	Volume Summary 15min WB	15min Total	60min Total
0000 - 0015	11	0	**11**	
0015 - 0030	10	0	**10**	
0030 - 0045	9	0	**9**	
0045 - 0100	7	0	**7**	**37**
0100 - 0115	7	0	**7**	
0115 - 0130	4	0	**4**	
0130 - 0145	4	0	**4**	
0145 - 0200	3	0	**3**	**18**
0200 - 0215	2	0	**2**	
0215 - 0230	6	0	**6**	
0230 - 0245	10	0	**10**	
0245 - 0300	7	0	**7**	**25**
0300 - 0315	6	0	**6**	
0315 - 0330	2	0	**2**	
0330 - 0345	7	0	**7**	
0345 - 0400	9	0	**9**	**24**
0400 - 0415	7	0	**7**	
0415 - 0430	8	0	**8**	
0430 - 0445	9	0	**9**	
0445 - 0500	16	0	**16**	**40**
0500 - 0515	9	0	**9**	
0515 - 0530	18	0	**18**	
0530 - 0545	39	0	**39**	
0545 - 0600	46	0	**46**	**112**
0600 - 0615	72	0	**72**	
0615 - 0630	96	0	**96**	
0630 - 0645	154	0	**154**	
0645 - 0700	195	0	**195**	**517**
0700 - 0715	201	0	**201**	
0715 - 0730	232	0	**232**	
0730 - 0745	266	0	**266**	
0745 - 0800	240	0	**240**	**939**
0800 - 0815	208	0	**208**	
0815 - 0830	190	0	**190**	
0830 - 0845	167	0	**167**	
0845 - 0900	167	0	**167**	**732**
0900 - 0915	118	0	**118**	
0915 - 0930	102	0	**102**	
0930 - 0945	110	0	**110**	
0945 - 1000	120	0	**120**	**450**
1000 - 1015	96	0	**96**	
1015 - 1030	102	0	**102**	
1030 - 1045	89	0	**89**	
1045 - 1100	107	0	**107**	**394**
1100 - 1115	87	0	**87**	
1115 - 1130	96	0	**96**	
1130 - 1145	89	0	**89**	
1145 - 1200	95	0	**95**	**367**

Time	Volume Summary 15min EB	Volume Summary 15min WB	15min Total	60min Total
1200 - 1215	108	0	**108**	
1215 - 1230	117	0	**117**	
1230 - 1245	77	0	**77**	
1245 - 1300	94	0	**94**	**396**
1300 - 1315	87	0	**87**	
1315 - 1330	87	0	**87**	
1330 - 1345	101	0	**101**	
1345 - 1400	99	0	**99**	**374**
1400 - 1415	103	0	**103**	
1415 - 1430	114	0	**114**	
1430 - 1445	112	0	**112**	
1445 - 1500	128	0	**128**	**457**
1500 - 1515	99	0	**99**	
1515 - 1530	97	0	**97**	
1530 - 1545	130	0	**130**	
1545 - 1600	128	0	**128**	**454**
1600 - 1615	114	0	**114**	
1615 - 1630	110	0	**110**	
1630 - 1645	125	0	**125**	
1645 - 1700	127	0	**127**	**476**
1700 - 1715	120	0	**120**	
1715 - 1730	142	0	**142**	
1730 - 1745	126	0	**126**	
1745 - 1800	123	0	**123**	**511**
1800 - 1815	109	0	**109**	
1815 - 1830	134	0	**134**	
1830 - 1845	87	0	**87**	
1845 - 1900	90	0	**90**	**420**
1900 - 1915	75	0	**75**	
1915 - 1930	55	0	**55**	
1930 - 1945	83	0	**83**	
1945 - 2000	55	0	**55**	**268**
2000 - 2015	56	0	**56**	
2015 - 2030	58	0	**58**	
2030 - 2045	49	0	**49**	
2045 - 2100	51	0	**51**	**214**
2100 - 2115	39	0	**39**	
2115 - 2130	32	0	**32**	
2130 - 2145	21	0	**21**	
2145 - 2200	27	0	**27**	**119**
2200 - 2215	29	0	**29**	
2215 - 2230	23	0	**23**	
2230 - 2245	26	0	**26**	
2245 - 2300	29	0	**29**	**107**
2300 - 2315	14	0	**14**	
2315 - 2330	13	0	**13**	
2330 - 2345	13	0	**13**	
2345 - 0000	8	0	**8**	**48**

Session Total	7499	0	**7499**
Session Average	78.11	0.00	**78.11**
Session Percentage	100.00	0.00	

Site 74 Lane 4 EB

I-20,
west of US-378 Sunset Blvd S/Bound Off-Ramp

Date

Saturday, April 27, 2024

Lat/Long

34.008085°, -81.156669°

Weather

Mostly Cloudy
69°F

Click here for Detailed Weather

0000 - 2400 (Saturday 24h Session) (04-27-2024)

Volume Summary 15min

TIME	Volume Summary 15min EB	WB	15min Total	60min Total
0000 - 0015	8	0	**8**	
0015 - 0030	18	0	**18**	
0030 - 0045	8	0	**8**	
0045 - 0100	7	0	**7**	**41**
0100 - 0115	7	0	**7**	
0115 - 0130	9	0	**9**	
0130 - 0145	6	0	**6**	
0145 - 0200	12	0	**12**	**34**
0200 - 0215	6	0	**6**	
0215 - 0230	7	0	**7**	
0230 - 0245	9	0	**9**	
0245 - 0300	4	0	**4**	**26**
0300 - 0315	2	0	**2**	
0315 - 0330	5	0	**5**	
0330 - 0345	5	0	**5**	
0345 - 0400	5	0	**5**	**17**
0400 - 0415	4	0	**4**	
0415 - 0430	3	0	**3**	
0430 - 0445	4	0	**4**	
0445 - 0500	7	0	**7**	**18**
0500 - 0515	6	0	**6**	
0515 - 0530	8	0	**8**	
0530 - 0545	12	0	**12**	
0545 - 0600	22	0	**22**	**48**
0600 - 0615	17	0	**17**	
0615 - 0630	44	0	**44**	
0630 - 0645	50	0	**50**	
0645 - 0700	47	0	**47**	**158**
0700 - 0715	32	0	**32**	
0715 - 0730	49	0	**49**	
0730 - 0745	60	0	**60**	
0745 - 0800	70	0	**70**	**211**
0800 - 0815	69	0	**69**	
0815 - 0830	66	0	**66**	
0830 - 0845	90	0	**90**	
0845 - 0900	94	0	**94**	**319**
0900 - 0915	83	0	**83**	
0915 - 0930	87	0	**87**	
0930 - 0945	89	0	**89**	
0945 - 1000	107	0	**107**	**366**
1000 - 1015	95	0	**95**	
1015 - 1030	104	0	**104**	
1030 - 1045	96	0	**96**	
1045 - 1100	94	0	**94**	**389**
1100 - 1115	108	0	**108**	
1115 - 1130	115	0	**115**	
1130 - 1145	111	0	**111**	
1145 - 1200	112	0	**112**	**446**

Time	Volume Summary 15min EB	WB	15min Total	60min Total
1200 - 1215	98	0	**98**	
1215 - 1230	107	0	**107**	
1230 - 1245	115	0	**115**	
1245 - 1300	118	0	**118**	**438**
1300 - 1315	96	0	**96**	
1315 - 1330	114	0	**114**	
1330 - 1345	92	0	**92**	
1345 - 1400	103	0	**103**	**405**
1400 - 1415	100	0	**100**	
1415 - 1430	109	0	**109**	
1430 - 1445	87	0	**87**	
1445 - 1500	122	0	**122**	**418**
1500 - 1515	88	0	**88**	
1515 - 1530	85	0	**85**	
1530 - 1545	81	0	**81**	
1545 - 1600	79	0	**79**	**333**
1600 - 1615	70	0	**70**	
1615 - 1630	77	0	**77**	
1630 - 1645	67	0	**67**	
1645 - 1700	100	0	**100**	**314**
1700 - 1715	65	0	**65**	
1715 - 1730	60	0	**60**	
1730 - 1745	51	0	**51**	
1745 - 1800	63	0	**63**	**239**
1800 - 1815	69	0	**69**	
1815 - 1830	94	0	**94**	
1830 - 1845	63	0	**63**	
1845 - 1900	84	0	**84**	**310**
1900 - 1915	54	0	**54**	
1915 - 1930	51	0	**51**	
1930 - 1945	40	0	**40**	
1945 - 2000	53	0	**53**	**198**
2000 - 2015	49	0	**49**	
2015 - 2030	43	0	**43**	
2030 - 2045	29	0	**29**	
2045 - 2100	36	0	**36**	**157**
2100 - 2115	29	0	**29**	
2115 - 2130	20	0	**20**	
2130 - 2145	26	0	**26**	
2145 - 2200	19	0	**19**	**94**
2200 - 2215	19	0	**19**	
2215 - 2230	21	0	**21**	
2230 - 2245	22	0	**22**	
2245 - 2300	28	0	**28**	**90**
2300 - 2315	21	0	**21**	
2315 - 2330	14	0	**14**	
2330 - 2345	14	0	**14**	
2345 - 0000	14	0	**14**	**63**

Session Total	5132	0	**5132**
Session Average	53.46	0.00	**53.46**
Session Percentage	100.00	0.00	

Bi-Directional Class Count || NB EB 60min

Columbia, SC

Marr Traffic DATA COLLECTION

www.marrtraffic.com

Site 74 Lane 4 EB
I-20,
west of US-378 Sunset Blvd S/Bound Off-Ramp

Date
Sunday, April 21, 2024

Lat/Long
34.008085°, -81.156669°

Weather
Cloudy
66°F

Click here for Detailed Weather

0000 - 2400 (Sunday 24h Session) (04-21-2024)
NB EB 60min

	Eastbound (Movement 74 Lane 4 EB.1)													
TIME	1	2	3	4	5	6	7	8	9	10	11	12	13	**Total**
0000 - 0100	0	40	0	0	0	0	0	0	1	0	0	0	0	**41**
0100 - 0200	0	42	2	0	1	0	0	0	0	0	0	0	0	**45**
0200 - 0300	0	16	0	0	0	0	0	0	0	0	0	0	0	**16**
0300 - 0400	0	13	0	0	0	1	0	0	1	0	0	0	0	**15**
0400 - 0500	0	7	1	0	0	0	0	0	1	0	0	0	0	**9**
0500 - 0600	0	24	1	0	1	0	0	0	2	0	0	0	0	**28**
0600 - 0700	0	101	11	0	0	1	0	0	3	0	0	0	0	**116**
0700 - 0800	0	78	12	0	1	0	0	0	4	0	0	0	0	**95**
0800 - 0900	0	134	23	0	4	0	0	0	1	0	0	0	0	**162**
0900 - 1000	0	193	35	1	1	1	0	0	0	0	0	0	0	**231**
1000 - 1100	0	237	54	0	0	0	0	0	4	0	0	0	0	**295**
1100 - 1200	0	198	28	1	1	2	0	0	4	0	0	0	0	**234**
1200 - 1300	0	252	51	0	5	2	0	2	5	0	0	0	0	**317**
1300 - 1400	0	305	56	0	2	0	0	1	5	0	0	0	0	**369**
1400 - 1500	0	303	51	1	3	0	0	0	5	0	0	0	0	**363**
1500 - 1600	0	212	43	0	3	1	0	1	4	0	0	0	0	**264**
1600 - 1700	0	223	56	0	3	0	0	2	5	0	0	0	0	**289**
1700 - 1800	0	221	45	0	4	0	0	0	9	0	0	0	0	**279**
1800 - 1900	0	224	26	0	2	1	0	0	5	0	0	0	0	**258**
1900 - 2000	0	155	27	0	1	0	0	0	3	0	0	0	0	**186**
2000 - 2100	0	94	5	0	1	0	0	0	4	0	0	0	0	**104**
2100 - 2200	0	92	1	0	0	1	0	0	2	2	0	0	0	**98**
2200 - 2300	0	66	1	0	1	0	0	0	6	0	0	0	0	**74**
2300 - 2400	0	32	1	0	0	0	0	0	5	2	0	0	0	**40**

Session Total	0	3262	530	3	34	10	0	6	79	4	0	0	0	**3928**
Session Average	0.00	135.92	22.08	0.13	1.42	0.42	0.00	0.25	3.29	0.17	0.00	0.00	0.00	**163.67**
Session Percentage	0.00	83.04	13.49	0.08	0.87	0.25	0.00	0.15	2.01	0.10	0.00	0.00	0.00	

AM Peak Hour	-	0900 - 1000	0900 - 1000	0900 - 1000	0800 - 0900	0600 - 0700	-	-	0700 - 0800	-	-	-	-	**0900 - 1000**
AM Peak Volume	0	193	35	1	4	1	0	0	4	0	0	0	0	**231**

Noon Peak Hour	-	1300 - 1400	1300 - 1400	1100 - 1200	1200 - 1300	1100 - 1200	-	1200 - 1300	1200 - 1300	-	-	-	-	**1300 - 1400**
Noon Peak Volume	0	305	56	1	5	2	0	2	5	0	0	0	0	**369**

PM Peak Hour	-	1800 - 1900	1600 - 1700	-	1700 - 1800	1500 - 1600	-	1600 - 1700	1700 - 1800	-	-	-	-	**1600 - 1700**
PM Peak Volume	0	224	56	0	4	1	0	2	9	0	0	0	0	**289**

Site 74 Lane 4 EB

I-20,
west of US-378 Sunset Blvd S/Bound Off-Ramp

Date

Monday, April 22, 2024

Lat/Long

34.008085°, -81.156669°

Weather

Mostly Cloudy
57°F

Click here for Detailed Weather

0000 - 2400 (Weekday 24h Session) (04-22-2024)

NB EB 60min

	Eastbound (Movement 74 Lane 4 EB.1)													
TIME	1	2	3	4	5	6	7	8	9	10	11	12	13	**Total**
0000 - 0100	0	21	0	0	0	0	0	0	2	0	1	0	0	**24**
0100 - 0200	0	22	0	0	0	0	0	0	1	0	0	0	0	**23**
0200 - 0300	0	19	0	0	0	0	0	0	1	0	0	0	0	**20**
0300 - 0400	0	17	0	0	0	0	0	0	2	0	0	0	0	**19**
0400 - 0500	0	48	1	0	0	0	0	0	4	0	1	0	0	**54**
0500 - 0600	0	117	10	0	0	0	0	0	4	0	0	0	0	**131**
0600 - 0700	0	364	114	0	2	1	0	0	9	0	4	0	0	**494**
0700 - 0800	0	818	244	0	6	0	0	2	20	0	0	0	0	**1090**
0800 - 0900	0	604	120	3	6	1	0	1	8	0	0	0	0	**743**
0900 - 1000	0	379	99	1	18	1	0	1	15	0	0	0	0	**514**
1000 - 1100	0	297	75	1	15	1	0	1	12	0	0	0	0	**402**
1100 - 1200	0	271	60	4	12	2	0	1	10	0	0	0	0	**360**
1200 - 1300	0	278	52	1	5	3	0	1	8	0	0	0	0	**348**
1300 - 1400	0	307	58	3	11	0	0	1	9	0	0	0	0	**389**
1400 - 1500	0	358	79	3	11	1	0	2	11	0	0	0	0	**465**
1500 - 1600	0	348	54	2	9	6	0	3	9	0	0	0	0	**431**
1600 - 1700	0	329	63	0	8	1	0	1	17	0	0	0	0	**419**
1700 - 1800	0	373	94	1	4	3	0	0	18	0	0	0	0	**493**
1800 - 1900	2	277	37	1	0	0	0	0	12	0	0	0	0	**329**
1900 - 2000	0	180	38	0	3	1	0	0	9	0	0	0	0	**231**
2000 - 2100	0	129	17	0	8	0	0	0	3	0	3	0	0	**160**
2100 - 2200	0	87	13	0	4	0	0	0	8	0	3	0	0	**115**
2200 - 2300	0	63	8	0	2	0	0	0	4	0	1	0	0	**78**
2300 - 2400	0	27	3	0	1	0	0	0	5	0	4	0	0	**40**

Session Total	2	5733	1239	20	125	21	0	14	201	0	17	0	0	**7372**
Session Average	0.08	238.88	51.63	0.83	5.21	0.88	0.00	0.58	8.38	0.00	0.71	0.00	0.00	**307.17**
Session Percentage	0.03	77.77	16.81	0.27	1.70	0.28	0.00	0.19	2.73	0.00	0.23	0.00	0.00	

AM Peak Hour	-	0700 - 0800	0700 - 0800	0800 - 0900	0900 - 1000	0600 - 0700	-	0700 - 0800	0700 - 0800	-	0600 - 0700	-	-	**0700 - 0800**
AM Peak Volume	0	818	244	3	18	1	0	2	20	0	4	0	0	**1090**

Noon Peak Hour	-	1400 - 1500	1400 - 1500	1100 - 1200	1000 - 1100	1200 - 1300	-	1400 - 1500	1000 - 1100	-	-	-	-	**1400 - 1500**
Noon Peak Volume	0	358	79	4	15	3	0	2	12	0	0	0	0	**465**

PM Peak Hour	1800 - 1900	1700 - 1800	1700 - 1800	1500 - 1600	1500 - 1600	1500 - 1600	-	1500 - 1600	1700 - 1800	-	-	-	-	**1700 - 1800**
PM Peak Volume	2	373	94	2	9	6	0	3	18	0	0	0	0	**493**

Site 74 Lane 4 EB

I-20,
west of US-378 Sunset Blvd S/Bound Off-Ramp

Date

Tuesday, April 23, 2024

Lat/Long

34.008085°, -81.156669°

Weather

Fair
58°F

Click here for Detailed Weather

0000 - 2400 (Weekday 24h Session) (04-23-2024)

NB EB 60min

	Eastbound (Movement 74 Lane 4 EB.1)													
TIME	1	2	3	4	5	6	7	8	9	10	11	12	13	**Total**
0000 - 0100	0	19	1	0	0	0	0	0	7	0	5	0	0	**32**
0100 - 0200	0	11	0	0	0	0	0	0	7	0	3	0	0	**21**
0200 - 0300	0	12	0	0	0	0	0	0	8	0	4	0	0	**24**
0300 - 0400	0	12	1	0	2	0	0	0	6	0	4	0	0	**25**
0400 - 0500	0	38	1	0	1	0	0	0	11	0	0	0	0	**51**
0500 - 0600	0	87	15	0	0	0	0	0	13	0	6	0	0	**121**
0600 - 0700	0	458	80	0	2	4	0	2	10	0	1	0	0	**557**
0700 - 0800	0	843	157	2	6	0	1	1	18	0	0	1	0	**1029**
0800 - 0900	1	727	102	4	12	3	0	1	17	0	0	0	0	**867**
0900 - 1000	0	357	60	0	9	3	0	5	8	0	0	0	0	**442**
1000 - 1100	0	322	67	1	10	2	0	0	10	0	0	0	0	**412**
1100 - 1200	0	273	53	4	6	1	0	4	13	0	0	0	0	**354**
1200 - 1300	0	307	54	1	7	0	0	3	11	0	0	0	0	**383**
1300 - 1400	2	277	49	3	13	2	0	0	14	0	0	0	0	**360**
1400 - 1500	1	336	49	5	7	0	0	1	9	0	0	0	0	**408**
1500 - 1600	0	302	91	1	9	1	0	1	5	0	0	0	0	**410**
1600 - 1700	0	298	72	2	5	0	0	10	14	0	0	0	0	**401**
1700 - 1800	0	356	117	1	4	1	0	7	16	0	0	0	0	**502**
1800 - 1900	1	305	64	0	5	0	0	1	10	0	0	0	0	**386**
1900 - 2000	0	161	57	0	3	2	0	0	10	0	0	0	0	**233**
2000 - 2100	0	116	19	0	1	2	0	0	12	0	1	0	0	**151**
2100 - 2200	0	113	4	1	10	3	0	0	12	0	2	0	0	**145**
2200 - 2300	0	57	2	0	1	1	0	0	8	0	0	0	0	**69**
2300 - 2400	0	21	2	0	1	0	0	0	12	0	0	0	0	**36**

Session Total	5	5808	1117	25	114	25	1	36	261	0	26	1	0	**7419**
Session Average	0.21	242.00	46.54	1.04	4.75	1.04	0.04	1.50	10.88	0.00	1.08	0.04	0.00	**309.13**
Session Percentage	0.07	78.29	15.06	0.34	1.54	0.34	0.01	0.49	3.52	0.00	0.35	0.01	0.00	

AM Peak Hour	0800 - 0900	0700 - 0800	0700 - 0800	0800 - 0900	0800 - 0900	0600 - 0700	0700 - 0800	0900 - 1000	0700 - 0800	-	0500 - 0600	0700 - 0800	-	**0700 - 0800**
AM Peak Hour Volume	1	843	157	4	12	4	1	5	18	0	6	1	0	**1029**

Noon Peak Hour	1300 - 1400	1400 - 1500	1000 - 1100	1400 - 1500	1300 - 1400	1000 - 1100	-	1100 - 1200	1300 - 1400	-	-	-	-	**1000 - 1100**
Noon Peak Hour Volume	2	336	67	5	13	2	0	4	14	0	0	0	0	**412**

PM Peak Hour	1800 - 1900	1700 - 1800	1700 - 1800	1600 - 1700	1500 - 1600	1900 - 2000	-	1600 - 1700	1700 - 1800	-	-	-	-	**1700 - 1800**
PM Peak Hour Volume	1	356	117	2	9	2	0	10	16	0	0	0	0	**502**

Site 74 Lane 4 EB

I-20,
west of US-378 Sunset Blvd S/Bound Off-Ramp

Date

Wednesday, April 24, 2024

Lat/Long

34.008085°, -81.156669°

Weather

Fair
66°F

Click here for Detailed Weather

0000 - 2400 (Weekday 24h Session) (04-24-2024)

NB EB 60min

	Eastbound (Movement 74 Lane 4 EB.1)													
TIME	1	2	3	4	5	6	7	8	9	10	11	12	13	**Total**
0000 - 0100	0	13	1	0	1	0	0	0	4	0	5	0	0	**24**
0100 - 0200	0	10	0	0	1	0	0	0	8	0	1	0	0	**20**
0200 - 0300	0	9	0	0	1	0	0	0	2	0	8	0	0	**20**
0300 - 0400	0	11	6	0	3	0	0	0	4	0	2	0	0	**26**
0400 - 0500	0	23	6	0	2	2	0	0	10	0	2	0	0	**45**
0500 - 0600	0	95	16	0	5	1	0	0	12	0	3	0	0	**132**
0600 - 0700	2	437	105	1	4	1	0	3	10	0	1	0	0	**564**
0700 - 0800	1	809	193	2	6	0	0	2	16	0	0	0	0	**1029**
0800 - 0900	1	588	148	3	15	1	0	5	20	0	0	1	0	**782**
0900 - 1000	0	327	88	0	13	2	0	0	17	1	0	0	0	**448**
1000 - 1100	0	268	95	0	15	3	0	6	16	1	0	0	0	**404**
1100 - 1200	0	245	82	6	12	3	0	4	13	0	0	0	0	**365**
1200 - 1300	0	305	85	1	9	2	0	3	10	0	0	0	0	**415**
1300 - 1400	0	303	98	4	7	3	0	3	13	0	0	0	0	**431**
1400 - 1500	0	318	96	3	5	2	0	2	12	0	0	0	0	**438**
1500 - 1600	0	337	93	1	18	1	0	2	15	0	0	0	0	**467**
1600 - 1700	0	325	52	2	12	1	1	7	13	0	0	0	0	**413**
1700 - 1800	1	348	84	1	6	1	0	4	18	0	0	0	0	**463**
1800 - 1900	1	293	53	0	3	1	0	3	18	1	0	0	0	**373**
1900 - 2000	0	170	37	2	5	0	0	0	10	0	0	0	0	**224**
2000 - 2100	0	125	13	0	4	0	0	0	4	0	0	0	0	**146**
2100 - 2200	0	84	9	0	1	0	0	0	6	0	6	0	0	**106**
2200 - 2300	0	72	2	0	1	1	0	0	10	0	3	0	0	**89**
2300 - 2400	0	24	0	0	0	1	0	1	6	0	1	0	0	**33**

Session Total	6	5539	1362	26	149	26	1	45	267	3	32	1	0	**7457**
Session Average	0.25	230.79	56.75	1.08	6.21	1.08	0.04	1.88	11.13	0.13	1.33	0.04	0.00	**310.71**
Session Percentage	0.08	74.28	18.26	0.35	2.00	0.35	0.01	0.60	3.58	0.04	0.43	0.01	0.00	

AM Peak Hour	0600 - 0700	0700 - 0800	0700 - 0800	0800 - 0900	0800 - 0900	0900 - 1000	-	0800 - 0900	0800 - 0900	0900 - 1000	0500 - 0600	0800 - 0900	-	**0700 - 0800**
AM Peak Hour Volume	2	809	193	3	15	2	0	5	20	1	3	1	0	**1029**

Noon Peak Hour	-	1400 - 1500	1300 - 1400	1100 - 1200	1000 - 1100	1000 - 1100	-	1000 - 1100	1000 - 1100	1000 - 1100	-	-	-	**1400 - 1500**
Noon Peak Hour Volume	0	318	98	6	15	3	0	6	16	1	0	0	0	**438**

PM Peak Hour	1700 - 1800	1700 - 1800	1500 - 1600	1600 - 1700	1500 - 1600	1500 - 1600	1600 - 1700	1600 - 1700	1700 - 1800	1800 - 1900	-	-	-	**1500 - 1600**
PM Peak Hour Volume	1	348	93	2	18	1	1	7	18	1	0	0	0	**467**

Site 74 Lane 4 EB

I-20,
west of US-378 Sunset Blvd S/Bound Off-Ramp

Date

Thursday, April 25, 2024

Lat/Long

34.008085°, -81.156669°

Weather

Fair
67°F

Click here for Detailed Weather

0000 - 2400 (Weekday 24h Session) (04-25-2024)

NB EB 60min

	Eastbound (Movement 74 Lane 4 EB.1)													
TIME	1	2	3	4	5	6	7	8	9	10	11	12	13	**Total**
0000 - 0100	0	16	6	0	6	0	0	0	6	0	5	0	0	**39**
0100 - 0200	0	6	5	0	0	0	0	0	4	0	3	0	0	**18**
0200 - 0300	0	8	0	0	0	0	0	0	7	0	5	0	0	**20**
0300 - 0400	0	18	4	0	1	0	0	0	7	0	3	0	0	**33**
0400 - 0500	0	28	6	0	1	0	0	0	10	0	3	0	0	**48**
0500 - 0600	0	92	40	0	4	0	0	0	7	0	1	0	0	**144**
0600 - 0700	2	420	95	0	3	1	0	3	8	0	3	0	0	**535**
0700 - 0800	1	822	214	2	12	2	0	5	15	0	0	0	0	**1073**
0800 - 0900	0	579	132	2	2	0	0	7	16	0	1	0	0	**739**
0900 - 1000	0	378	76	0	11	2	0	4	14	0	0	0	0	**485**
1000 - 1100	0	256	76	0	9	3	0	3	6	0	0	0	0	**353**
1100 - 1200	0	256	86	5	9	2	0	2	20	0	0	0	0	**380**
1200 - 1300	1	318	86	1	16	0	0	0	13	0	0	0	0	**435**
1300 - 1400	0	359	93	5	6	3	0	0	19	0	0	0	0	**485**
1400 - 1500	0	310	93	4	7	2	0	4	14	0	0	0	0	**434**
1500 - 1600	2	336	95	2	13	1	0	4	16	1	0	0	0	**470**
1600 - 1700	1	306	88	1	12	0	0	4	15	0	0	0	0	**427**
1700 - 1800	0	322	100	2	5	0	0	0	15	0	0	0	0	**444**
1800 - 1900	1	304	74	0	4	2	0	3	16	0	0	0	0	**404**
1900 - 2000	0	174	47	0	6	0	0	2	7	0	0	0	0	**236**
2000 - 2100	0	128	42	1	5	0	0	0	5	0	1	0	0	**182**
2100 - 2200	0	83	26	0	1	2	0	0	8	0	4	0	0	**124**
2200 - 2300	0	51	17	1	4	0	0	0	8	0	2	0	0	**83**
2300 - 2400	0	27	9	0	2	0	0	0	6	0	4	0	0	**48**

Session Total	8	5597	1510	26	139	20	0	41	262	1	35	0	0	**7639**
Session Average	0.33	233.21	62.92	1.08	5.79	0.83	0.00	1.71	10.92	0.04	1.46	0.00	0.00	**318.29**
Session Percentage	0.10	73.27	19.77	0.34	1.82	0.26	0.00	0.54	3.43	0.01	0.46	0.00	0.00	

AM Peak Hour	0600 - 0700	0700 - 0800	0700 - 0800	0700 - 0800	0700 - 0800	0700 - 0800	-	0800 - 0900	0800 - 0900	-	0600 - 0700	-	-	**0700 - 0800**
AM Peak Hour Volume	2	822	214	2	12	2	0	7	16	0	3	0	0	**1073**

Noon Peak Hour	1200 - 1300	1300 - 1400	1300 - 1400	1100 - 1200	1200 - 1300	1000 - 1100	-	1400 - 1500	1100 - 1200	-	-	-	-	**1300 - 1400**
Noon Peak Hour Volume	1	359	93	5	16	3	0	4	20	0	0	0	0	**485**

PM Peak Hour	1500 - 1600	1500 - 1600	1700 - 1800	1500 - 1600	1500 - 1600	1800 - 1900	-	1500 - 1600	1500 - 1600	1500 - 1600	-	-	-	**1500 - 1600**
PM Peak Hour Volume	2	336	100	2	13	2	0	4	16	1	0	0	0	**470**

Site 74 Lane 4 EB

I-20,
west of US-378 Sunset Blvd S/Bound Off-Ramp

Date

Friday, April 26, 2024

Lat/Long

34.008085°, -81.156669°

Weather

Cloudy
69°F

Click here for Detailed Weather

0000 - 2400 (Weekday 24h Session) (04-26-2024)

NB EB 60min

	Eastbound (Movement 74 Lane 4 EB.1)													
TIME	1	2	3	4	5	6	7	8	9	10	11	12	13	**Total**
0000 - 0100	0	21	1	0	1	0	0	0	6	0	8	0	0	**37**
0100 - 0200	0	8	1	0	0	0	0	0	5	0	4	0	0	**18**
0200 - 0300	0	13	3	0	2	0	0	0	5	0	2	0	0	**25**
0300 - 0400	0	14	1	0	2	0	0	0	4	0	3	0	0	**24**
0400 - 0500	0	27	5	0	1	1	0	0	5	0	1	0	0	**40**
0500 - 0600	0	77	15	0	5	3	0	0	10	0	2	0	0	**112**
0600 - 0700	1	383	111	0	4	2	0	2	12	0	2	0	0	**517**
0700 - 0800	0	733	185	4	3	1	0	2	11	0	0	0	0	**939**
0800 - 0900	2	518	182	5	12	0	0	0	13	0	0	0	0	**732**
0900 - 1000	1	322	91	0	19	2	0	3	11	1	0	0	0	**450**
1000 - 1100	1	296	72	0	12	2	0	1	10	0	0	0	0	**394**
1100 - 1200	1	238	94	5	8	5	0	1	13	2	0	0	0	**367**
1200 - 1300	0	295	78	0	9	0	0	6	8	0	0	0	0	**396**
1300 - 1400	0	258	82	6	11	8	0	0	9	0	0	0	0	**374**
1400 - 1500	0	323	102	4	11	1	0	3	13	0	0	0	0	**457**
1500 - 1600	0	340	88	1	10	1	1	5	8	0	0	0	0	**454**
1600 - 1700	3	352	89	1	12	1	0	4	14	0	0	0	0	**476**
1700 - 1800	1	377	112	1	11	1	0	2	6	0	0	0	0	**511**
1800 - 1900	0	314	86	1	6	0	0	2	11	0	0	0	0	**420**
1900 - 2000	0	210	43	1	3	0	0	2	8	0	1	0	0	**268**
2000 - 2100	1	175	30	0	1	0	0	1	6	0	0	0	0	**214**
2100 - 2200	0	96	16	0	1	1	0	0	3	0	2	0	0	**119**
2200 - 2300	2	83	19	0	0	0	0	0	3	0	0	0	0	**107**
2300 - 2400	0	38	3	0	1	0	0	0	2	0	4	0	0	**48**

Session Total	13	5511	1509	29	145	29	1	34	196	3	29	0	0	**7499**
Session Average	0.54	229.63	62.88	1.21	6.04	1.21	0.04	1.42	8.17	0.13	1.21	0.00	0.00	**312.46**
Session Percentage	0.17	73.49	20.12	0.39	1.93	0.39	0.01	0.45	2.61	0.04	0.39	0.00	0.00	

AM Peak Hour	0800 - 0900	0700 - 0800	0700 - 0800	0800 - 0900	0900 - 1000	0500 - 0600	-	0900 - 1000	0800 - 0900	0900 - 1000	0500 - 0600	-	-	**0700 - 0800**
AM Peak Hour Volume	2	733	185	5	19	3	0	3	13	1	2	0	0	**939**

Noon Peak Hour	1000 - 1100	1400 - 1500	1400 - 1500	1300 - 1400	1000 - 1100	1300 - 1400	-	1200 - 1300	1100 - 1200	1100 - 1200	-	-	-	**1400 - 1500**
Noon Peak Hour Volume	1	323	102	6	12	8	0	6	13	2	0	0	0	**457**

PM Peak Hour	1600 - 1700	1700 - 1800	1700 - 1800	1500 - 1600	1600 - 1700	1500 - 1600	1500 - 1600	1500 - 1600	1600 - 1700	-	1900 - 2000	-	-	**1700 - 1800**
PM Peak Hour Volume	3	377	112	1	12	1	1	5	14	0	1	0	0	**511**

Site 74 Lane 4 EB

I-20,
west of US-378 Sunset Blvd S/Bound Off-Ramp

Date

Saturday, April 27, 2024

Lat/Long

34.008085°, -81.156669°

Weather

Mostly Cloudy
69°F

Click here for Detailed Weather

0000 - 2400 (Saturday 24h Session) (04-27-2024)

NB EB 60min

	Eastbound (Movement 74 Lane 4 EB.1)													
TIME	1	2	3	4	5	6	7	8	9	10	11	12	13	**Total**
0000 - 0100	0	28	3	0	1	0	0	1	4	0	4	0	0	**41**
0100 - 0200	0	23	0	0	3	3	0	1	1	0	3	0	0	**34**
0200 - 0300	0	18	1	0	2	0	0	0	2	0	3	0	0	**26**
0300 - 0400	0	10	2	0	0	0	0	0	2	0	3	0	0	**17**
0400 - 0500	0	14	1	0	0	0	0	0	3	0	0	0	0	**18**
0500 - 0600	0	32	10	0	0	0	0	0	2	0	4	0	0	**48**
0600 - 0700	0	119	32	0	1	2	0	0	4	0	0	0	0	**158**
0700 - 0800	1	135	61	1	6	0	0	1	6	0	0	0	0	**211**
0800 - 0900	0	233	78	0	3	0	0	1	4	0	0	0	0	**319**
0900 - 1000	4	278	69	1	5	0	0	1	8	0	0	0	0	**366**
1000 - 1100	0	293	80	0	10	0	0	0	6	0	0	0	0	**389**
1100 - 1200	0	336	96	1	8	1	0	0	4	0	0	0	0	**446**
1200 - 1300	0	334	90	0	6	0	0	3	5	0	0	0	0	**438**
1300 - 1400	0	304	87	0	6	0	0	1	7	0	0	0	0	**405**
1400 - 1500	2	337	70	0	8	0	0	0	1	0	0	0	0	**418**
1500 - 1600	0	271	54	0	5	0	0	0	3	0	0	0	0	**333**
1600 - 1700	1	245	56	0	7	0	0	0	5	0	0	0	0	**314**
1700 - 1800	0	187	42	0	1	0	0	0	8	0	1	0	0	**239**
1800 - 1900	0	256	43	0	4	0	0	0	7	0	0	0	0	**310**
1900 - 2000	1	152	40	0	2	0	0	0	3	0	0	0	0	**198**
2000 - 2100	0	120	35	0	1	0	0	0	1	0	0	0	0	**157**
2100 - 2200	0	78	13	0	2	1	0	0	0	0	0	0	0	**94**
2200 - 2300	0	76	10	0	3	0	0	0	1	0	0	0	0	**90**
2300 - 2400	0	50	12	0	0	0	0	0	1	0	0	0	0	**63**

Session Total	9	3929	985	3	84	7	0	9	88	0	18	0	0	**5132**
Session Average	0.38	163.71	41.04	0.13	3.50	0.29	0.00	0.38	3.67	0.00	0.75	0.00	0.00	**213.83**
Session Percentage	0.18	76.56	19.19	0.06	1.64	0.14	0.00	0.18	1.71	0.00	0.35	0.00	0.00	

AM Peak Hour	0900 - 1000	0900 - 1000	0800 - 0900	0700 - 0800	0700 - 0800	0600 - 0700	-	0700 - 0800	0900 - 1000	-	0500 - 0600	-	-	**0900 - 1000**
AM Peak Hour Volume	4	278	78	1	6	2	0	1	8	0	4	0	0	**366**

Noon Peak Hour	1400 - 1500	1400 - 1500	1100 - 1200	1100 - 1200	1000 - 1100	1100 - 1200	-	1200 - 1300	1300 - 1400	-	-	-	-	**1100 - 1200**
Noon Peak Hour Volume	2	337	96	1	10	1	0	3	7	0	0	0	0	**446**

PM Peak Hour	1600 - 1700	1500 - 1600	1600 - 1700	-	1600 - 1700	-	-	-	1700 - 1800	-	1700 - 1800	-	-	**1500 - 1600**
PM Peak Hour Volume	1	271	56	0	7	0	0	0	8	0	1	0	0	**333**

Bi-Directional Class Count || Volume Summary 60min

Columbia, SC

Marr Traffic DATA COLLECTION

www.marrtraffic.com

Site 74 Lane 4 EB

I-20,
west of US-378 Sunset Blvd S/Bound Off-Ramp

Date

Sunday, April 21, 2024

Lat/Long

34.008085°, -81.156669°

Weather

Cloudy
66°F

Click here for Detailed Weather

0000 - 2400 (Sunday 24h Session) (04-21-2024)

Volume Summary 60min

	Volume Summary 60min		
TIME	EB	WB	**Total**
0000 - 0100	41	0	**41**
0100 - 0200	45	0	**45**
0200 - 0300	16	0	**16**
0300 - 0400	15	0	**15**
0400 - 0500	9	0	**9**
0500 - 0600	28	0	**28**
0600 - 0700	116	0	**116**
0700 - 0800	95	0	**95**
0800 - 0900	162	0	**162**
0900 - 1000	231	0	**231**
1000 - 1100	295	0	**295**
1100 - 1200	234	0	**234**

	Volume Summary 60min		
Time	EB	WB	**Total**
1200 - 1300	317	0	**317**
1300 - 1400	369	0	**369**
1400 - 1500	363	0	**363**
1500 - 1600	264	0	**264**
1600 - 1700	289	0	**289**
1700 - 1800	279	0	**279**
1800 - 1900	258	0	**258**
1900 - 2000	186	0	**186**
2000 - 2100	104	0	**104**
2100 - 2200	98	0	**98**
2200 - 2300	74	0	**74**
2300 - 2400	40	0	**40**

Session Total	3928	0	**3928**
Session Average	163.67	0.00	**163.67**
Session Percentage	100.00	0.00	

Site 74 Lane 4 EB

I-20,
west of US-378 Sunset Blvd S/Bound Off-Ramp

Date

Monday, April 22, 2024

Lat/Long

34.008085°, -81.156669°

Weather

Mostly Cloudy
57°F

Click here for Detailed Weather

0000 - 2400 (Weekday 24h Session) (04-22-2024)

Volume Summary 60min

	Volume Summary 60min		
TIME	EB	WB	**Total**
0000 - 0100	24	0	**24**
0100 - 0200	23	0	**23**
0200 - 0300	20	0	**20**
0300 - 0400	19	0	**19**
0400 - 0500	54	0	**54**
0500 - 0600	131	0	**131**
0600 - 0700	494	0	**494**
0700 - 0800	1090	0	**1090**
0800 - 0900	743	0	**743**
0900 - 1000	514	0	**514**
1000 - 1100	402	0	**402**
1100 - 1200	360	0	**360**

Session Total	7372	0	**7372**
Session Average	307.17	0.00	**307.17**
Session Percentage	100.00	0.00	

	Volume Summary 60min		
Time	EB	WB	**Total**
1200 - 1300	348	0	**348**
1300 - 1400	389	0	**389**
1400 - 1500	465	0	**465**
1500 - 1600	431	0	**431**
1600 - 1700	419	0	**419**
1700 - 1800	493	0	**493**
1800 - 1900	329	0	**329**
1900 - 2000	231	0	**231**
2000 - 2100	160	0	**160**
2100 - 2200	115	0	**115**
2200 - 2300	78	0	**78**
2300 - 2400	40	0	**40**

Site 74 Lane 4 EB

I-20,
west of US-378 Sunset Blvd S/Bound Off-Ramp

Date

Tuesday, April 23, 2024

Lat/Long

34.008085°, -81.156669°

Weather

Fair
58°F

Click here for Detailed Weather

0000 - 2400 (Weekday 24h Session) (04-23-2024)

Volume Summary 60min

	Volume Summary 60min		
TIME	EB	WB	**Total**
0000 - 0100	32	0	**32**
0100 - 0200	21	0	**21**
0200 - 0300	24	0	**24**
0300 - 0400	25	0	**25**
0400 - 0500	51	0	**51**
0500 - 0600	121	0	**121**
0600 - 0700	557	0	**557**
0700 - 0800	1029	0	**1029**
0800 - 0900	867	0	**867**
0900 - 1000	442	0	**442**
1000 - 1100	412	0	**412**
1100 - 1200	354	0	**354**

	Volume Summary 60min		
Time	EB	WB	**Total**
1200 - 1300	383	0	**383**
1300 - 1400	360	0	**360**
1400 - 1500	408	0	**408**
1500 - 1600	410	0	**410**
1600 - 1700	401	0	**401**
1700 - 1800	502	0	**502**
1800 - 1900	386	0	**386**
1900 - 2000	233	0	**233**
2000 - 2100	151	0	**151**
2100 - 2200	145	0	**145**
2200 - 2300	69	0	**69**
2300 - 2400	36	0	**36**

Session Total	7419	0	**7419**
Session Average	309.13	0.00	**309.13**
Session Percentage	100.00	0.00	

Site 74 Lane 4 EB

I-20,
west of US-378 Sunset Blvd S/Bound Off-Ramp

Date

Wednesday, April 24, 2024

Lat/Long

34.008085°, -81.156669°

Weather

Fair
66°F

Click here for Detailed Weather

0000 - 2400 (Weekday 24h Session) (04-24-2024)

Volume Summary 60min

	Volume Summary 60min		
TIME	EB	WB	**Total**
0000 - 0100	24	0	**24**
0100 - 0200	20	0	**20**
0200 - 0300	20	0	**20**
0300 - 0400	26	0	**26**
0400 - 0500	45	0	**45**
0500 - 0600	132	0	**132**
0600 - 0700	564	0	**564**
0700 - 0800	1029	0	**1029**
0800 - 0900	782	0	**782**
0900 - 1000	448	0	**448**
1000 - 1100	404	0	**404**
1100 - 1200	365	0	**365**

Session Total	7457	0	**7457**
Session Average	310.71	0.00	**310.71**
Session Percentage	100.00	0.00	

	Volume Summary 60min		
Time	EB	WB	**Total**
1200 - 1300	415	0	**415**
1300 - 1400	431	0	**431**
1400 - 1500	438	0	**438**
1500 - 1600	467	0	**467**
1600 - 1700	413	0	**413**
1700 - 1800	463	0	**463**
1800 - 1900	373	0	**373**
1900 - 2000	224	0	**224**
2000 - 2100	146	0	**146**
2100 - 2200	106	0	**106**
2200 - 2300	89	0	**89**
2300 - 2400	33	0	**33**

Site 74 Lane 4 EB

I-20,
west of US-378 Sunset Blvd S/Bound Off-Ramp

Date

Thursday, April 25, 2024

Lat/Long

34.008085°, -81.156669°

Weather

Fair
67°F

Click here for Detailed Weather

0000 - 2400 (Weekday 24h Session) (04-25-2024)

Volume Summary 60min

	Volume Summary 60min		
TIME	EB	WB	**Total**
0000 - 0100	39	0	**39**
0100 - 0200	18	0	**18**
0200 - 0300	20	0	**20**
0300 - 0400	33	0	**33**
0400 - 0500	48	0	**48**
0500 - 0600	144	0	**144**
0600 - 0700	535	0	**535**
0700 - 0800	1073	0	**1073**
0800 - 0900	739	0	**739**
0900 - 1000	485	0	**485**
1000 - 1100	353	0	**353**
1100 - 1200	380	0	**380**

Session Total	7639	0	**7639**
Session Average	318.29	0.00	**318.29**
Session Percentage	100.00	0.00	

	Volume Summary 60min		
Time	EB	WB	**Total**
1200 - 1300	435	0	**435**
1300 - 1400	485	0	**485**
1400 - 1500	434	0	**434**
1500 - 1600	470	0	**470**
1600 - 1700	427	0	**427**
1700 - 1800	444	0	**444**
1800 - 1900	404	0	**404**
1900 - 2000	236	0	**236**
2000 - 2100	182	0	**182**
2100 - 2200	124	0	**124**
2200 - 2300	83	0	**83**
2300 - 2400	48	0	**48**

Site 74 Lane 4 EB

I-20,
west of US-378 Sunset Blvd S/Bound Off-Ramp

Date

Friday, April 26, 2024

Lat/Long

34.008085°, -81.156669°

Weather

Cloudy
69°F

Click here for Detailed Weather

0000 - 2400 (Weekday 24h Session) (04-26-2024)

Volume Summary 60min

	Volume Summary 60min		
TIME	EB	WB	**Total**
0000 - 0100	37	0	**37**
0100 - 0200	18	0	**18**
0200 - 0300	25	0	**25**
0300 - 0400	24	0	**24**
0400 - 0500	40	0	**40**
0500 - 0600	112	0	**112**
0600 - 0700	517	0	**517**
0700 - 0800	939	0	**939**
0800 - 0900	732	0	**732**
0900 - 1000	450	0	**450**
1000 - 1100	394	0	**394**
1100 - 1200	367	0	**367**

	Volume Summary 60min		
Time	EB	WB	**Total**
1200 - 1300	396	0	**396**
1300 - 1400	374	0	**374**
1400 - 1500	457	0	**457**
1500 - 1600	454	0	**454**
1600 - 1700	476	0	**476**
1700 - 1800	511	0	**511**
1800 - 1900	420	0	**420**
1900 - 2000	268	0	**268**
2000 - 2100	214	0	**214**
2100 - 2200	119	0	**119**
2200 - 2300	107	0	**107**
2300 - 2400	48	0	**48**

Session Total	7499	0	**7499**
Session Average	312.46	0.00	**312.46**
Session Percentage	100.00	0.00	

Site 74 Lane 4 EB

I-20,
west of US-378 Sunset Blvd S/Bound Off-Ramp

Date

Saturday, April 27, 2024

Lat/Long

34.008085°, -81.156669°

Weather

Mostly Cloudy
69°F

Click here for Detailed Weather

0000 - 2400 (Saturday 24h Session) (04-27-2024)

Volume Summary 60min

	Volume Summary 60min		
TIME	EB	WB	**Total**
0000 - 0100	41	0	**41**
0100 - 0200	34	0	**34**
0200 - 0300	26	0	**26**
0300 - 0400	17	0	**17**
0400 - 0500	18	0	**18**
0500 - 0600	48	0	**48**
0600 - 0700	158	0	**158**
0700 - 0800	211	0	**211**
0800 - 0900	319	0	**319**
0900 - 1000	366	0	**366**
1000 - 1100	389	0	**389**
1100 - 1200	446	0	**446**

	Volume Summary 60min		
Time	EB	WB	**Total**
1200 - 1300	438	0	**438**
1300 - 1400	405	0	**405**
1400 - 1500	418	0	**418**
1500 - 1600	333	0	**333**
1600 - 1700	314	0	**314**
1700 - 1800	239	0	**239**
1800 - 1900	310	0	**310**
1900 - 2000	198	0	**198**
2000 - 2100	157	0	**157**
2100 - 2200	94	0	**94**
2200 - 2300	90	0	**90**
2300 - 2400	63	0	**63**

Session Total	5132	0	**5132**
Session Average	213.83	0.00	**213.83**
Session Percentage	100.00	0.00	

Bi-Directional Class Count || Graphical Analysis NB EB

Columbia, SC

Marr Traffic DATA COLLECTION

www.marrtraffic.com

Site 74 Lane 4 EB

I-20,
west of US-378 Sunset Blvd S/Bound Off-Ramp

Lat/Long

34.008085°, -81.156669°

0000 - 2400 (Weekday 24h Session)

Graphical Analysis NB EB

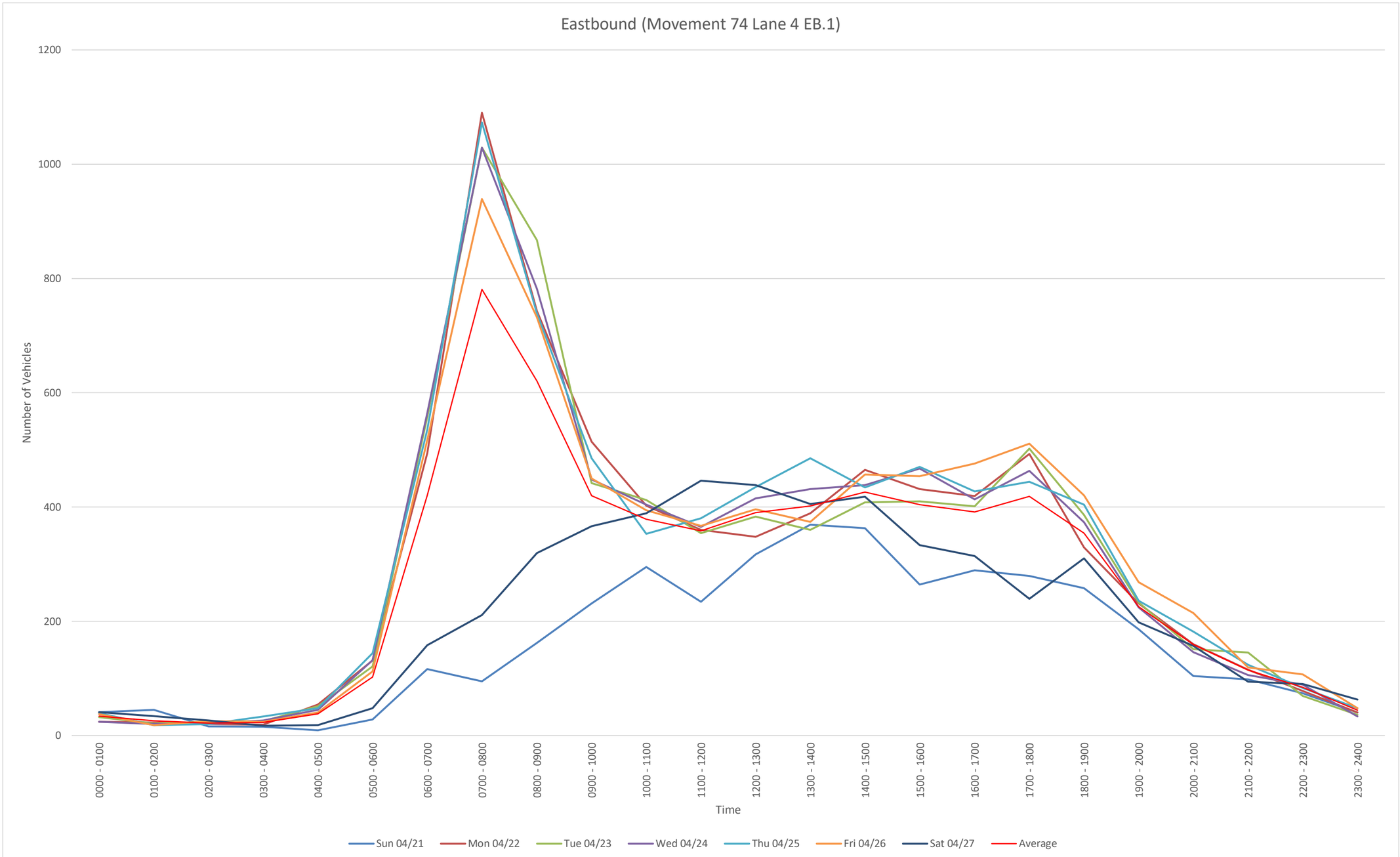

EB
File Name:
Start Date: 4/21/2024
Start Time: 0
Site Code: 74 Lane 4 EB
Station ID: 1
Location 1: I-20, west of US-378 Sunset Blvd S/Bound Off-Ramp
Location 2:

Date	Time	1	2	3	4	5	6	7	8	9	10	11	12	13
4/21/2024	12:00 AM	0	13	0	0	0	0	0	0	0	0	0	0	0
4/21/2024	12:15 AM	0	10	0	0	0	0	0	0	1	0	0	0	0
4/21/2024	12:30 AM	0	9	0	0	0	0	0	0	0	0	0	0	0
4/21/2024	12:45 AM	0	8	0	0	0	0	0	0	0	0	0	0	0
4/21/2024	1:00 AM	0	13	2	0	0	0	0	0	0	0	0	0	0
4/21/2024	1:15 AM	0	8	0	0	1	0	0	0	0	0	0	0	0
4/21/2024	1:30 AM	0	10	0	0	0	0	0	0	0	0	0	0	0
4/21/2024	1:45 AM	0	11	0	0	0	0	0	0	0	0	0	0	0
4/21/2024	2:00 AM	0	6	0	0	0	0	0	0	0	0	0	0	0
4/21/2024	2:15 AM	0	5	0	0	0	0	0	0	0	0	0	0	0
4/21/2024	2:30 AM	0	4	0	0	0	0	0	0	0	0	0	0	0
4/21/2024	2:45 AM	0	1	0	0	0	0	0	0	0	0	0	0	0
4/21/2024	3:00 AM	0	3	0	0	0	0	0	0	0	0	0	0	0
4/21/2024	3:15 AM	0	4	0	0	0	1	0	0	0	0	0	0	0
4/21/2024	3:30 AM	0	3	0	0	0	0	0	0	0	0	0	0	0
4/21/2024	3:45 AM	0	3	0	0	0	0	0	0	1	0	0	0	0
4/21/2024	4:00 AM	0	3	0	0	0	0	0	0	0	0	0	0	0
4/21/2024	4:15 AM	0	1	0	0	0	0	0	0	1	0	0	0	0
4/21/2024	4:30 AM	0	0	1	0	0	0	0	0	0	0	0	0	0
4/21/2024	4:45 AM	0	3	0	0	0	0	0	0	0	0	0	0	0
4/21/2024	5:00 AM	0	5	0	0	0	0	0	0	0	0	0	0	0
4/21/2024	5:15 AM	0	5	0	0	0	0	0	0	0	0	0	0	0
4/21/2024	5:30 AM	0	2	0	0	1	0	0	0	2	0	0	0	0
4/21/2024	5:45 AM	0	12	1	0	0	0	0	0	0	0	0	0	0
4/21/2024	6:00 AM	0	12	0	0	0	0	0	0	1	0	0	0	0
4/21/2024	6:15 AM	0	30	4	0	0	0	0	0	1	0	0	0	0
4/21/2024	6:30 AM	0	29	4	0	0	1	0	0	0	0	0	0	0
4/21/2024	6:45 AM	0	30	3	0	0	0	0	0	1	0	0	0	0
4/21/2024	7:00 AM	0	17	4	0	0	0	0	0	2	0	0	0	0
4/21/2024	7:15 AM	0	17	4	0	0	0	0	0	1	0	0	0	0
4/21/2024	7:30 AM	0	20	1	0	0	0	0	0	1	0	0	0	0
4/21/2024	7:45 AM	0	24	3	0	1	0	0	0	0	0	0	0	0
4/21/2024	8:00 AM	0	19	2	0	2	0	0	0	0	0	0	0	0
4/21/2024	8:15 AM	0	26	4	0	0	0	0	0	0	0	0	0	0
4/21/2024	8:30 AM	0	34	6	0	0	0	0	0	1	0	0	0	0
4/21/2024	8:45 AM	0	55	11	0	2	0	0	0	0	0	0	0	0
4/21/2024	9:00 AM	0	50	13	0	1	0	0	0	0	0	0	0	0
4/21/2024	9:15 AM	0	51	12	0	0	0	0	0	0	0	0	0	0
4/21/2024	9:30 AM	0	55	6	0	0	0	0	0	0	0	0	0	0
4/21/2024	9:45 AM	0	37	4	1	0	1	0	0	0	0	0	0	0
4/21/2024	10:00 AM	0	53	12	0	0	0	0	0	1	0	0	0	0
4/21/2024	10:15 AM	0	65	12	0	0	0	0	0	1	0	0	0	0
4/21/2024	10:30 AM	0	66	15	0	0	0	0	0	2	0	0	0	0
4/21/2024	10:45 AM	0	53	15	0	0	0	0	0	0	0	0	0	0
4/21/2024	11:00 AM	0	36	2	0	0	1	0	0	1	0	0	0	0
4/21/2024	11:15 AM	0	37	7	0	1	0	0	0	2	0	0	0	0
4/21/2024	11:30 AM	0	64	8	0	0	0	0	0	0	0	0	0	0
4/21/2024	11:45 AM	0	61	11	1	0	1	0	0	1	0	0	0	0
4/21/2024	12:00 PM	0	57	9	0	0	1	0	2	1	0	0	0	0
4/21/2024	12:15 PM	0	63	16	0	1	1	0	0	0	0	0	0	0
4/21/2024	12:30 PM	0	67	13	0	1	0	0	0	3	0	0	0	0
4/21/2024	12:45 PM	0	65	13	0	3	0	0	0	1	0	0	0	0
4/21/2024	1:00 PM	0	75	11	0	2	0	0	0	1	0	0	0	0
4/21/2024	1:15 PM	0	70	12	0	0	0	0	0	1	0	0	0	0
4/21/2024	1:30 PM	0	75	18	0	0	0	0	1	0	0	0	0	0
4/21/2024	1:45 PM	0	85	15	0	0	0	0	0	3	0	0	0	0
4/21/2024	2:00 PM	0	76	21	1	1	0	0	0	1	0	0	0	0
4/21/2024	2:15 PM	0	70	5	0	1	0	0	0	1	0	0	0	0
4/21/2024	2:30 PM	0	78	15	0	1	0	0	0	3	0	0	0	0
4/21/2024	2:45 PM	0	79	10	0	0	0	0	0	0	0	0	0	0
4/21/2024	3:00 PM	0	46	11	0	0	0	0	1	1	0	0	0	0
4/21/2024	3:15 PM	0	50	18	0	1	1	0	0	2	0	0	0	0
4/21/2024	3:30 PM	0	53	4	0	1	0	0	0	1	0	0	0	0
4/21/2024	3:45 PM	0	63	10	0	1	0	0	0	0	0	0	0	0
4/21/2024	4:00 PM	0	64	14	0	1	0	0	1	1	0	0	0	0
4/21/2024	4:15 PM	0	43	13	0	1	0	0	1	0	0	0	0	0
4/21/2024	4:30 PM	0	60	14	0	1	0	0	0	1	0	0	0	0
4/21/2024	4:45 PM	0	56	15	0	0	0	0	0	3	0	0	0	0
4/21/2024	5:00 PM	0	52	12	0	2	0	0	0	1	0	0	0	0
4/21/2024	5:15 PM	0	51	9	0	0	0	0	0	2	0	0	0	0
4/21/2024	5:30 PM	0	52	13	0	2	0	0	0	2	0	0	0	0
4/21/2024	5:45 PM	0	66	11	0	0	0	0	0	4	0	0	0	0
4/21/2024	6:00 PM	0	44	10	0	1	1	0	0	1	0	0	0	0
4/21/2024	6:15 PM	0	66	5	0	0	0	0	0	1	0	0	0	0
4/21/2024	6:30 PM	0	61	4	0	0	0	0	0	2	0	0	0	0
4/21/2024	6:45 PM	0	53	7	0	1	0	0	0	1	0	0	0	0
4/21/2024	7:00 PM	0	39	7	0	0	0	0	0	0	0	0	0	0
4/21/2024	7:15 PM	0	36	8	0	0	0	0	0	2	0	0	0	0
4/21/2024	7:30 PM	0	39	4	0	0	0	0	0	1	0	0	0	0
4/21/2024	7:45 PM	0	41	8	0	1	0	0	0	0	0	0	0	0
4/21/2024	8:00 PM	0	21	4	0	1	0	0	0	0	0	0	0	0
4/21/2024	8:15 PM	0	27	1	0	0	0	0	0	2	0	0	0	0
4/21/2024	8:30 PM	0	26	0	0	0	0	0	0	2	0	0	0	0
4/21/2024	8:45 PM	0	20	0	0	0	0	0	0	0	0	0	0	0
4/21/2024	9:00 PM	0	22	1	0	0	0	0	0	1	0	0	0	0
4/21/2024	9:15 PM	0	38	0	0	0	1	0	0	0	0	0	0	0
4/21/2024	9:30 PM	0	18	0	0	0	0	0	0	0	0	0	0	0
4/21/2024	9:45 PM	0	14	0	0	0	0	0	0	1	2	0	0	0
4/21/2024	10:00 PM	0	20	0	0	1	0	0	0	2	0	0	0	0
4/21/2024	10:15 PM	0	16	0	0	0	0	0	0	2	0	0	0	0
4/21/2024	10:30 PM	0	15	0	0	0	0	0	0	2	0	0	0	0
4/21/2024	10:45 PM	0	15	1	0	0	0	0	0	0	0	0	0	0
4/21/2024	11:00 PM	0	11	0	0	0	0	0	0	0	2	0	0	0
4/21/2024	11:15 PM	0	9	1	0	0	0	0	0	2	0	0	0	0
4/21/2024	11:30 PM	0	7	0	0	0	0	0	0	0	0	0	0	0
4/21/2024	11:45 PM	0	5	0	0	0	0	0	0	3	0	0	0	0

4/22/2024	12:00 AM	0	3	0	0	0	0	0	0	1	0	0	0	0
4/22/2024	12:15 AM	0	5	0	0	0	0	0	0	1	0	0	0	0
4/22/2024	12:30 AM	0	7	0	0	0	0	0	0	0	0	1	0	0
4/22/2024	12:45 AM	0	6	0	0	0	0	0	0	0	0	0	0	0
4/22/2024	1:00 AM	0	3	0	0	0	0	0	0	0	0	0	0	0
4/22/2024	1:15 AM	0	7	0	0	0	0	0	0	0	0	0	0	0
4/22/2024	1:30 AM	0	4	0	0	0	0	0	0	1	0	0	0	0
4/22/2024	1:45 AM	0	8	0	0	0	0	0	0	0	0	0	0	0
4/22/2024	2:00 AM	0	2	0	0	0	0	0	0	0	0	0	0	0
4/22/2024	2:15 AM	0	6	0	0	0	0	0	0	1	0	0	0	0
4/22/2024	2:30 AM	0	7	0	0	0	0	0	0	0	0	0	0	0
4/22/2024	2:45 AM	0	4	0	0	0	0	0	0	0	0	0	0	0
4/22/2024	3:00 AM	0	4	0	0	0	0	0	0	1	0	0	0	0
4/22/2024	3:15 AM	0	5	0	0	0	0	0	0	0	0	0	0	0
4/22/2024	3:30 AM	0	2	0	0	0	0	0	0	0	0	0	0	0
4/22/2024	3:45 AM	0	6	0	0	0	0	0	0	1	0	0	0	0
4/22/2024	4:00 AM	0	6	0	0	0	0	0	0	1	0	0	0	0
4/22/2024	4:15 AM	0	12	0	0	0	0	0	0	1	0	0	0	0
4/22/2024	4:30 AM	0	11	1	0	0	0	0	0	0	0	0	0	0
4/22/2024	4:45 AM	0	19	0	0	0	0	0	0	2	0	1	0	0
4/22/2024	5:00 AM	0	15	1	0	0	0	0	0	0	0	0	0	0
4/22/2024	5:15 AM	0	17	2	0	0	0	0	0	1	0	0	0	0
4/22/2024	5:30 AM	0	35	4	0	0	0	0	0	2	0	0	0	0
4/22/2024	5:45 AM	0	50	3	0	0	0	0	0	1	0	0	0	0
4/22/2024	6:00 AM	0	51	15	0	0	0	0	0	0	0	0	0	0
4/22/2024	6:15 AM	0	55	18	0	0	0	0	0	2	0	1	0	0
4/22/2024	6:30 AM	0	110	35	0	0	0	0	0	4	0	2	0	0
4/22/2024	6:45 AM	0	148	46	0	2	1	0	0	3	0	1	0	0
4/22/2024	7:00 AM	0	165	46	0	0	0	0	0	6	0	0	0	0
4/22/2024	7:15 AM	0	204	67	0	2	0	0	2	5	0	0	0	0
4/22/2024	7:30 AM	0	236	74	0	2	0	0	0	6	0	0	0	0
4/22/2024	7:45 AM	0	213	57	0	2	0	0	0	3	0	0	0	0
4/22/2024	8:00 AM	0	164	33	0	3	1	0	0	3	0	0	0	0
4/22/2024	8:15 AM	0	161	29	1	0	0	0	0	2	0	0	0	0
4/22/2024	8:30 AM	0	143	28	1	3	0	0	1	3	0	0	0	0
4/22/2024	8:45 AM	0	136	30	1	0	0	0	0	0	0	0	0	0
4/22/2024	9:00 AM	0	88	24	0	5	0	0	1	1	0	0	0	0
4/22/2024	9:15 AM	0	84	28	0	8	0	0	0	3	0	0	0	0
4/22/2024	9:30 AM	0	108	25	1	3	1	0	0	8	0	0	0	0
4/22/2024	9:45 AM	0	99	22	0	2	0	0	0	3	0	0	0	0
4/22/2024	10:00 AM	0	72	14	0	5	0	0	1	5	0	0	0	0
4/22/2024	10:15 AM	0	68	23	1	4	1	0	0	1	0	0	0	0
4/22/2024	10:30 AM	0	73	17	0	3	0	0	0	4	0	0	0	0
4/22/2024	10:45 AM	0	84	21	0	3	0	0	0	2	0	0	0	0
4/22/2024	11:00 AM	0	65	12	1	7	1	0	0	3	0	0	0	0
4/22/2024	11:15 AM	0	77	11	3	5	0	0	0	2	0	0	0	0
4/22/2024	11:30 AM	0	73	22	0	0	0	0	1	1	0	0	0	0
4/22/2024	11:45 AM	0	56	15	0	0	1	0	0	4	0	0	0	0
4/22/2024	12:00 PM	0	63	12	0	1	1	0	0	2	0	0	0	0
4/22/2024	12:15 PM	0	57	14	1	2	0	0	0	2	0	0	0	0
4/22/2024	12:30 PM	0	66	16	0	0	1	0	1	0	0	0	0	0
4/22/2024	12:45 PM	0	92	10	0	2	1	0	0	4	0	0	0	0
4/22/2024	1:00 PM	0	76	15	1	4	0	0	0	3	0	0	0	0
4/22/2024	1:15 PM	0	74	20	0	1	0	0	1	4	0	0	0	0
4/22/2024	1:30 PM	0	84	13	1	3	0	0	0	1	0	0	0	0
4/22/2024	1:45 PM	0	73	10	1	3	0	0	0	1	0	0	0	0
4/22/2024	2:00 PM	0	88	17	0	2	0	0	1	4	0	0	0	0
4/22/2024	2:15 PM	0	85	22	0	1	0	0	0	3	0	0	0	0
4/22/2024	2:30 PM	0	87	26	0	2	1	0	0	3	0	0	0	0
4/22/2024	2:45 PM	0	98	14	3	6	0	0	1	1	0	0	0	0
4/22/2024	3:00 PM	0	93	12	0	2	2	0	1	2	0	0	0	0
4/22/2024	3:15 PM	0	79	12	1	2	2	0	1	1	0	0	0	0
4/22/2024	3:30 PM	0	77	14	1	3	1	0	1	3	0	0	0	0
4/22/2024	3:45 PM	0	99	16	0	2	1	0	0	3	0	0	0	0
4/22/2024	4:00 PM	0	93	10	0	0	0	0	1	8	0	0	0	0
4/22/2024	4:15 PM	0	80	13	0	2	0	0	0	3	0	0	0	0
4/22/2024	4:30 PM	0	69	18	0	2	0	0	0	5	0	0	0	0
4/22/2024	4:45 PM	0	87	22	0	4	1	0	0	1	0	0	0	0
4/22/2024	5:00 PM	0	68	17	0	0	1	0	0	3	0	0	0	0
4/22/2024	5:15 PM	0	104	29	0	1	2	0	0	5	0	0	0	0
4/22/2024	5:30 PM	0	122	26	1	2	0	0	0	6	0	0	0	0
4/22/2024	5:45 PM	0	79	22	0	1	0	0	0	4	0	0	0	0
4/22/2024	6:00 PM	2	64	12	1	0	0	0	0	3	0	0	0	0
4/22/2024	6:15 PM	0	94	14	0	0	0	0	0	4	0	0	0	0
4/22/2024	6:30 PM	0	63	8	0	0	0	0	0	2	0	0	0	0
4/22/2024	6:45 PM	0	56	3	0	0	0	0	0	3	0	0	0	0
4/22/2024	7:00 PM	0	48	6	0	1	0	0	0	0	0	0	0	0
4/22/2024	7:15 PM	0	51	14	0	0	0	0	0	2	0	0	0	0
4/22/2024	7:30 PM	0	34	7	0	1	0	0	0	4	0	0	0	0
4/22/2024	7:45 PM	0	47	11	0	1	1	0	0	3	0	0	0	0
4/22/2024	8:00 PM	0	40	7	0	3	0	0	0	0	0	1	0	0
4/22/2024	8:15 PM	0	29	3	0	2	0	0	0	1	0	0	0	0
4/22/2024	8:30 PM	0	32	3	0	2	0	0	0	0	0	2	0	0
4/22/2024	8:45 PM	0	28	4	0	1	0	0	0	2	0	0	0	0
4/22/2024	9:00 PM	0	25	3	0	0	0	0	0	1	0	1	0	0
4/22/2024	9:15 PM	0	29	4	0	1	0	0	0	2	0	0	0	0
4/22/2024	9:30 PM	0	18	1	0	2	0	0	0	2	0	2	0	0
4/22/2024	9:45 PM	0	15	5	0	1	0	0	0	3	0	0	0	0
4/22/2024	10:00 PM	0	17	2	0	0	0	0	0	1	0	0	0	0
4/22/2024	10:15 PM	0	18	1	0	2	0	0	0	2	0	0	0	0
4/22/2024	10:30 PM	0	15	3	0	0	0	0	0	1	0	1	0	0
4/22/2024	10:45 PM	0	13	2	0	0	0	0	0	0	0	0	0	0
4/22/2024	11:00 PM	0	10	1	0	1	0	0	0	1	0	2	0	0
4/22/2024	11:15 PM	0	12	2	0	0	0	0	0	2	0	0	0	0
4/22/2024	11:30 PM	0	3	0	0	0	0	0	0	1	0	1	0	0
4/22/2024	11:45 PM	0	2	0	0	0	0	0	0	1	0	1	0	0

4/23/2024	12:00 AM	0	7	0	0	0	0	0	0	1	0	2	0	0
4/23/2024	12:15 AM	0	3	0	0	0	0	0	0	2	0	3	0	0
4/23/2024	12:30 AM	0	6	1	0	0	0	0	0	2	0	0	0	0
4/23/2024	12:45 AM	0	3	0	0	0	0	0	0	2	0	0	0	0
4/23/2024	1:00 AM	0	4	0	0	0	0	0	0	1	0	1	0	0
4/23/2024	1:15 AM	0	2	0	0	0	0	0	0	1	0	1	0	0
4/23/2024	1:30 AM	0	3	0	0	0	0	0	0	3	0	0	0	0
4/23/2024	1:45 AM	0	2	0	0	0	0	0	0	2	0	1	0	0
4/23/2024	2:00 AM	0	2	0	0	0	0	0	0	0	0	0	0	0
4/23/2024	2:15 AM	0	3	0	0	0	0	0	0	2	0	1	0	0
4/23/2024	2:30 AM	0	3	0	0	0	0	0	0	3	0	2	0	0
4/23/2024	2:45 AM	0	4	0	0	0	0	0	0	3	0	1	0	0
4/23/2024	3:00 AM	0	1	0	0	0	0	0	0	0	0	1	0	0
4/23/2024	3:15 AM	0	1	0	0	1	0	0	0	2	0	0	0	0
4/23/2024	3:30 AM	0	6	1	0	1	0	0	0	1	0	1	0	0
4/23/2024	3:45 AM	0	4	0	0	0	0	0	0	3	0	2	0	0
4/23/2024	4:00 AM	0	4	0	0	0	0	0	0	2	0	0	0	0
4/23/2024	4:15 AM	0	8	1	0	1	0	0	0	1	0	0	0	0
4/23/2024	4:30 AM	0	7	0	0	0	0	0	0	2	0	0	0	0
4/23/2024	4:45 AM	0	19	0	0	0	0	0	0	6	0	0	0	0
4/23/2024	5:00 AM	0	5	0	0	0	0	0	0	2	0	2	0	0
4/23/2024	5:15 AM	0	17	0	0	0	0	0	0	2	0	0	0	0
4/23/2024	5:30 AM	0	31	8	0	0	0	0	0	4	0	2	0	0
4/23/2024	5:45 AM	0	34	7	0	0	0	0	0	5	0	2	0	0
4/23/2024	6:00 AM	0	61	13	0	0	0	0	0	2	0	0	0	0
4/23/2024	6:15 AM	0	80	12	0	0	0	0	0	4	0	1	0	0
4/23/2024	6:30 AM	0	147	20	0	1	4	0	0	1	0	0	0	0
4/23/2024	6:45 AM	0	170	35	0	1	0	0	2	3	0	0	0	0
4/23/2024	7:00 AM	0	166	35	0	0	0	1	0	8	0	0	1	0
4/23/2024	7:15 AM	0	231	35	0	0	0	0	0	4	0	0	0	0
4/23/2024	7:30 AM	0	241	48	2	3	0	0	0	4	0	0	0	0
4/23/2024	7:45 AM	0	205	39	0	3	0	0	1	2	0	0	0	0
4/23/2024	8:00 AM	0	182	23	0	2	0	0	1	6	0	0	0	0
4/23/2024	8:15 AM	0	210	32	1	2	1	0	0	5	0	0	0	0
4/23/2024	8:30 AM	0	190	25	3	3	1	0	0	2	0	0	0	0
4/23/2024	8:45 AM	1	145	22	0	5	1	0	0	4	0	0	0	0
4/23/2024	9:00 AM	0	88	19	0	1	1	0	0	1	0	0	0	0
4/23/2024	9:15 AM	0	84	13	0	2	0	0	1	4	0	0	0	0
4/23/2024	9:30 AM	0	99	14	0	3	1	0	2	1	0	0	0	0
4/23/2024	9:45 AM	0	86	14	0	3	1	0	2	2	0	0	0	0
4/23/2024	10:00 AM	0	78	17	0	2	1	0	0	3	0	0	0	0
4/23/2024	10:15 AM	0	80	18	0	3	0	0	0	1	0	0	0	0
4/23/2024	10:30 AM	0	84	18	0	2	1	0	0	4	0	0	0	0
4/23/2024	10:45 AM	0	80	14	1	3	0	0	0	2	0	0	0	0
4/23/2024	11:00 AM	0	73	10	1	1	0	0	1	4	0	0	0	0
4/23/2024	11:15 AM	0	70	11	1	1	0	0	2	3	0	0	0	0
4/23/2024	11:30 AM	0	67	14	1	1	1	0	0	5	0	0	0	0
4/23/2024	11:45 AM	0	63	18	1	3	0	0	1	1	0	0	0	0
4/23/2024	12:00 PM	0	73	12	1	1	0	0	1	3	0	0	0	0
4/23/2024	12:15 PM	0	80	12	0	3	0	0	1	5	0	0	0	0
4/23/2024	12:30 PM	0	79	13	0	2	0	0	1	1	0	0	0	0
4/23/2024	12:45 PM	0	75	17	0	1	0	0	0	2	0	0	0	0
4/23/2024	1:00 PM	1	64	14	0	1	0	0	0	2	0	0	0	0
4/23/2024	1:15 PM	0	79	14	0	3	1	0	0	1	0	0	0	0
4/23/2024	1:30 PM	1	65	11	2	8	1	0	0	4	0	0	0	0
4/23/2024	1:45 PM	0	69	10	1	1	0	0	0	7	0	0	0	0
4/23/2024	2:00 PM	0	79	10	0	1	0	0	0	2	0	0	0	0
4/23/2024	2:15 PM	0	82	9	1	1	0	0	1	3	0	0	0	0
4/23/2024	2:30 PM	0	91	16	1	2	0	0	0	0	0	0	0	0
4/23/2024	2:45 PM	1	84	14	3	3	0	0	0	4	0	0	0	0
4/23/2024	3:00 PM	0	74	24	0	3	0	0	0	1	0	0	0	0
4/23/2024	3:15 PM	0	61	28	0	1	0	0	1	2	0	0	0	0
4/23/2024	3:30 PM	0	85	20	1	4	0	0	0	0	0	0	0	0
4/23/2024	3:45 PM	0	82	19	0	1	1	0	0	2	0	0	0	0
4/23/2024	4:00 PM	0	77	18	0	1	0	0	1	6	0	0	0	0
4/23/2024	4:15 PM	0	74	14	0	1	0	0	4	2	0	0	0	0
4/23/2024	4:30 PM	0	71	19	1	0	0	0	2	2	0	0	0	0
4/23/2024	4:45 PM	0	76	21	1	3	0	0	3	4	0	0	0	0
4/23/2024	5:00 PM	0	89	21	1	1	1	0	0	3	0	0	0	0
4/23/2024	5:15 PM	0	106	29	0	2	0	0	3	3	0	0	0	0
4/23/2024	5:30 PM	0	82	29	0	1	0	0	2	5	0	0	0	0
4/23/2024	5:45 PM	0	79	38	0	0	0	0	2	5	0	0	0	0
4/23/2024	6:00 PM	0	88	20	0	0	0	0	1	3	0	0	0	0
4/23/2024	6:15 PM	1	83	17	0	1	0	0	0	3	0	0	0	0
4/23/2024	6:30 PM	0	80	9	0	4	0	0	0	2	0	0	0	0
4/23/2024	6:45 PM	0	54	18	0	0	0	0	0	2	0	0	0	0
4/23/2024	7:00 PM	0	49	12	0	1	2	0	0	3	0	0	0	0
4/23/2024	7:15 PM	0	43	10	0	1	0	0	0	2	0	0	0	0
4/23/2024	7:30 PM	0	35	12	0	0	0	0	0	3	0	0	0	0
4/23/2024	7:45 PM	0	34	23	0	1	0	0	0	2	0	0	0	0
4/23/2024	8:00 PM	0	25	11	0	0	0	0	0	2	0	0	0	0
4/23/2024	8:15 PM	0	33	6	0	1	0	0	0	4	0	0	0	0
4/23/2024	8:30 PM	0	32	2	0	0	2	0	0	4	0	1	0	0
4/23/2024	8:45 PM	0	26	0	0	0	0	0	0	2	0	0	0	0
4/23/2024	9:00 PM	0	36	3	0	6	2	0	0	2	0	0	0	0
4/23/2024	9:15 PM	0	38	0	0	2	1	0	0	2	0	1	0	0
4/23/2024	9:30 PM	0	26	1	1	1	0	0	0	2	0	0	0	0
4/23/2024	9:45 PM	0	13	0	0	1	0	0	0	6	0	1	0	0
4/23/2024	10:00 PM	0	12	0	0	1	0	0	0	3	0	0	0	0
4/23/2024	10:15 PM	0	13	1	0	0	0	0	0	0	0	0	0	0
4/23/2024	10:30 PM	0	14	0	0	0	1	0	0	2	0	0	0	0
4/23/2024	10:45 PM	0	18	1	0	0	0	0	0	3	0	0	0	0
4/23/2024	11:00 PM	0	6	1	0	0	0	0	0	4	0	0	0	0
4/23/2024	11:15 PM	0	6	0	0	0	0	0	0	5	0	0	0	0
4/23/2024	11:30 PM	0	5	0	0	1	0	0	0	3	0	0	0	0
4/23/2024	11:45 PM	0	4	1	0	0	0	0	0	0	0	0	0	0

4/24/2024	12:00 AM	0	4	0	0	0	0	0	0	0	0	0	0	0
4/24/2024	12:15 AM	0	5	0	0	1	0	0	0	1	0	1	0	0
4/24/2024	12:30 AM	0	2	0	0	0	0	0	0	1	0	3	0	0
4/24/2024	12:45 AM	0	2	1	0	0	0	0	0	2	0	1	0	0
4/24/2024	1:00 AM	0	1	0	0	0	0	0	0	3	0	0	0	0
4/24/2024	1:15 AM	0	2	0	0	0	0	0	0	2	0	0	0	0
4/24/2024	1:30 AM	0	3	0	0	0	0	0	0	2	0	1	0	0
4/24/2024	1:45 AM	0	4	0	0	1	0	0	0	1	0	0	0	0
4/24/2024	2:00 AM	0	3	0	0	0	0	0	0	0	0	1	0	0
4/24/2024	2:15 AM	0	2	0	0	0	0	0	0	1	0	5	0	0
4/24/2024	2:30 AM	0	2	0	0	1	0	0	0	1	0	1	0	0
4/24/2024	2:45 AM	0	2	0	0	0	0	0	0	0	0	1	0	0
4/24/2024	3:00 AM	0	2	1	0	0	0	0	0	0	0	1	0	0
4/24/2024	3:15 AM	0	3	2	0	2	0	0	0	3	0	0	0	0
4/24/2024	3:30 AM	0	3	2	0	0	0	0	0	0	0	1	0	0
4/24/2024	3:45 AM	0	3	1	0	1	0	0	0	1	0	0	0	0
4/24/2024	4:00 AM	0	2	0	0	1	1	0	0	5	0	0	0	0
4/24/2024	4:15 AM	0	5	1	0	0	0	0	0	3	0	1	0	0
4/24/2024	4:30 AM	0	4	1	0	1	1	0	0	1	0	0	0	0
4/24/2024	4:45 AM	0	12	4	0	0	0	0	0	1	0	1	0	0
4/24/2024	5:00 AM	0	9	1	0	0	0	0	0	1	0	1	0	0
4/24/2024	5:15 AM	0	9	2	0	1	0	0	0	3	0	2	0	0
4/24/2024	5:30 AM	0	37	6	0	2	1	0	0	3	0	0	0	0
4/24/2024	5:45 AM	0	40	7	0	2	0	0	0	5	0	0	0	0
4/24/2024	6:00 AM	1	63	8	0	0	1	0	0	2	0	0	0	0
4/24/2024	6:15 AM	0	86	21	0	1	0	0	0	3	0	1	0	0
4/24/2024	6:30 AM	1	137	22	0	1	0	0	1	1	0	0	0	0
4/24/2024	6:45 AM	0	151	54	1	2	0	0	2	4	0	0	0	0
4/24/2024	7:00 AM	0	141	39	0	1	0	0	0	5	0	0	0	0
4/24/2024	7:15 AM	0	229	51	0	2	0	0	0	5	0	0	0	0
4/24/2024	7:30 AM	0	233	56	2	0	0	0	0	4	0	0	0	0
4/24/2024	7:45 AM	1	206	47	0	3	0	0	2	2	0	0	0	0
4/24/2024	8:00 AM	0	166	34	0	2	0	0	0	3	0	0	0	0
4/24/2024	8:15 AM	0	168	44	0	4	1	0	1	11	0	0	1	0
4/24/2024	8:30 AM	0	146	37	3	4	0	0	4	2	0	0	0	0
4/24/2024	8:45 AM	1	108	33	0	5	0	0	0	4	0	0	0	0
4/24/2024	9:00 AM	0	96	21	0	3	0	0	0	4	0	0	0	0
4/24/2024	9:15 AM	0	83	27	0	2	0	0	0	0	1	0	0	0
4/24/2024	9:30 AM	0	53	14	0	3	1	0	0	6	0	0	0	0
4/24/2024	9:45 AM	0	95	26	0	5	1	0	0	7	0	0	0	0
4/24/2024	10:00 AM	0	64	23	0	4	1	0	4	6	0	0	0	0
4/24/2024	10:15 AM	0	69	22	0	5	1	0	2	4	0	0	0	0
4/24/2024	10:30 AM	0	70	25	0	3	0	0	0	4	0	0	0	0
4/24/2024	10:45 AM	0	65	25	0	3	1	0	0	2	1	0	0	0
4/24/2024	11:00 AM	0	63	22	3	2	1	0	2	1	0	0	0	0
4/24/2024	11:15 AM	0	55	18	1	3	0	0	1	5	0	0	0	0
4/24/2024	11:30 AM	0	59	23	1	3	1	0	0	2	0	0	0	0
4/24/2024	11:45 AM	0	68	19	1	4	1	0	1	5	0	0	0	0
4/24/2024	12:00 PM	0	78	18	1	5	0	0	2	3	0	0	0	0
4/24/2024	12:15 PM	0	69	20	0	2	1	0	0	4	0	0	0	0
4/24/2024	12:30 PM	0	80	16	0	1	1	0	1	1	0	0	0	0
4/24/2024	12:45 PM	0	78	31	0	1	0	0	0	2	0	0	0	0
4/24/2024	1:00 PM	0	72	19	1	2	0	0	1	4	0	0	0	0
4/24/2024	1:15 PM	0	74	23	0	1	1	0	1	2	0	0	0	0
4/24/2024	1:30 PM	0	80	30	2	1	1	0	0	3	0	0	0	0
4/24/2024	1:45 PM	0	77	26	1	3	1	0	1	4	0	0	0	0
4/24/2024	2:00 PM	0	74	26	0	0	0	0	0	3	0	0	0	0
4/24/2024	2:15 PM	0	73	19	0	0	0	0	0	1	0	0	0	0
4/24/2024	2:30 PM	0	76	25	1	2	1	0	2	5	0	0	0	0
4/24/2024	2:45 PM	0	95	26	2	3	1	0	0	3	0	0	0	0
4/24/2024	3:00 PM	0	96	30	0	7	1	0	0	5	0	0	0	0
4/24/2024	3:15 PM	0	83	23	0	6	0	0	1	4	0	0	0	0
4/24/2024	3:30 PM	0	80	19	1	3	0	0	1	2	0	0	0	0
4/24/2024	3:45 PM	0	78	21	0	2	0	0	0	4	0	0	0	0
4/24/2024	4:00 PM	0	75	10	0	3	0	0	0	2	0	0	0	0
4/24/2024	4:15 PM	0	83	6	0	3	0	1	0	4	0	0	0	0
4/24/2024	4:30 PM	0	82	9	2	2	1	0	3	5	0	0	0	0
4/24/2024	4:45 PM	0	85	27	0	4	0	0	4	2	0	0	0	0
4/24/2024	5:00 PM	0	78	18	0	3	1	0	0	3	0	0	0	0
4/24/2024	5:15 PM	0	69	14	0	0	0	0	0	2	0	0	0	0
4/24/2024	5:30 PM	1	110	21	0	2	0	0	3	7	0	0	0	0
4/24/2024	5:45 PM	0	91	31	1	1	0	0	1	6	0	0	0	0
4/24/2024	6:00 PM	1	87	18	0	1	0	0	1	7	0	0	0	0
4/24/2024	6:15 PM	0	84	14	0	1	0	0	1	4	1	0	0	0
4/24/2024	6:30 PM	0	65	12	0	0	1	0	1	3	0	0	0	0
4/24/2024	6:45 PM	0	57	9	0	1	0	0	0	4	0	0	0	0
4/24/2024	7:00 PM	0	49	10	1	1	0	0	0	2	0	0	0	0
4/24/2024	7:15 PM	0	41	10	0	1	0	0	0	6	0	0	0	0
4/24/2024	7:30 PM	0	49	9	0	2	0	0	0	1	0	0	0	0
4/24/2024	7:45 PM	0	31	8	1	1	0	0	0	1	0	0	0	0
4/24/2024	8:00 PM	0	29	10	0	1	0	0	0	2	0	0	0	0
4/24/2024	8:15 PM	0	31	1	0	0	0	0	0	1	0	0	0	0
4/24/2024	8:30 PM	0	37	1	0	1	0	0	0	0	0	0	0	0
4/24/2024	8:45 PM	0	28	1	0	2	0	0	0	1	0	0	0	0
4/24/2024	9:00 PM	0	26	3	0	0	0	0	0	0	0	0	0	0
4/24/2024	9:15 PM	0	17	1	0	0	0	0	0	4	0	4	0	0
4/24/2024	9:30 PM	0	17	3	0	1	0	0	0	0	0	0	0	0
4/24/2024	9:45 PM	0	24	2	0	0	0	0	0	2	0	2	0	0
4/24/2024	10:00 PM	0	20	1	0	0	1	0	0	3	0	1	0	0
4/24/2024	10:15 PM	0	13	1	0	0	0	0	0	3	0	2	0	0
4/24/2024	10:30 PM	0	17	0	0	0	0	0	0	3	0	0	0	0
4/24/2024	10:45 PM	0	22	0	0	1	0	0	0	1	0	0	0	0
4/24/2024	11:00 PM	0	11	0	0	0	0	0	0	0	0	0	0	0
4/24/2024	11:15 PM	0	5	0	0	0	0	0	0	2	0	0	0	0
4/24/2024	11:30 PM	0	3	0	0	0	0	0	1	2	0	1	0	0
4/24/2024	11:45 PM	0	5	0	0	0	1	0	0	2	0	0	0	0

4/25/2024	12:00 AM	0	4	2	0	6	0	0	0	1	0	2	0	0
4/25/2024	12:15 AM	0	4	1	0	0	0	0	0	4	0	1	0	0
4/25/2024	12:30 AM	0	7	2	0	0	0	0	0	1	0	2	0	0
4/25/2024	12:45 AM	0	1	1	0	0	0	0	0	0	0	0	0	0
4/25/2024	1:00 AM	0	2	1	0	0	0	0	0	1	0	1	0	0
4/25/2024	1:15 AM	0	0	1	0	0	0	0	0	1	0	0	0	0
4/25/2024	1:30 AM	0	3	1	0	0	0	0	0	1	0	2	0	0
4/25/2024	1:45 AM	0	1	2	0	0	0	0	0	1	0	0	0	0
4/25/2024	2:00 AM	0	1	0	0	0	0	0	0	2	0	1	0	0
4/25/2024	2:15 AM	0	2	0	0	0	0	0	0	1	0	0	0	0
4/25/2024	2:30 AM	0	2	0	0	0	0	0	0	2	0	1	0	0
4/25/2024	2:45 AM	0	3	0	0	0	0	0	0	2	0	3	0	0
4/25/2024	3:00 AM	0	5	0	0	0	0	0	0	1	0	1	0	0
4/25/2024	3:15 AM	0	3	0	0	0	0	0	0	1	0	0	0	0
4/25/2024	3:30 AM	0	7	2	0	0	0	0	0	2	0	1	0	0
4/25/2024	3:45 AM	0	3	2	0	1	0	0	0	3	0	1	0	0
4/25/2024	4:00 AM	0	1	0	0	0	0	0	0	4	0	1	0	0
4/25/2024	4:15 AM	0	6	1	0	0	0	0	0	0	0	0	0	0
4/25/2024	4:30 AM	0	7	2	0	1	0	0	0	1	0	0	0	0
4/25/2024	4:45 AM	0	14	3	0	0	0	0	0	5	0	2	0	0
4/25/2024	5:00 AM	0	6	3	0	1	0	0	0	2	0	0	0	0
4/25/2024	5:15 AM	0	17	7	0	1	0	0	0	4	0	1	0	0
4/25/2024	5:30 AM	0	27	10	0	2	0	0	0	0	0	0	0	0
4/25/2024	5:45 AM	0	42	20	0	0	0	0	0	1	0	0	0	0
4/25/2024	6:00 AM	0	51	16	0	0	1	0	0	1	0	1	0	0
4/25/2024	6:15 AM	0	74	23	0	3	0	0	2	1	0	1	0	0
4/25/2024	6:30 AM	1	142	13	0	0	0	0	0	1	0	1	0	0
4/25/2024	6:45 AM	1	153	43	0	0	0	0	1	5	0	0	0	0
4/25/2024	7:00 AM	1	165	48	2	3	0	0	0	5	0	0	0	0
4/25/2024	7:15 AM	0	229	62	0	6	0	0	3	2	0	0	0	0
4/25/2024	7:30 AM	0	222	43	0	2	2	0	0	5	0	0	0	0
4/25/2024	7:45 AM	0	206	61	0	1	0	0	2	3	0	0	0	0
4/25/2024	8:00 AM	0	160	43	0	1	0	0	1	5	0	1	0	0
4/25/2024	8:15 AM	0	158	35	0	0	0	0	4	5	0	0	0	0
4/25/2024	8:30 AM	0	137	25	1	0	0	0	0	0	0	0	0	0
4/25/2024	8:45 AM	0	124	29	1	1	0	0	2	6	0	0	0	0
4/25/2024	9:00 AM	0	95	19	0	2	0	0	1	5	0	0	0	0
4/25/2024	9:15 AM	0	111	29	0	5	2	0	2	3	0	0	0	0
4/25/2024	9:30 AM	0	77	12	0	3	0	0	0	3	0	0	0	0
4/25/2024	9:45 AM	0	95	16	0	1	0	0	1	3	0	0	0	0
4/25/2024	10:00 AM	0	61	13	0	1	2	0	1	0	0	0	0	0
4/25/2024	10:15 AM	0	64	28	0	4	0	0	0	2	0	0	0	0
4/25/2024	10:30 AM	0	72	20	0	3	0	0	1	1	0	0	0	0
4/25/2024	10:45 AM	0	59	15	0	1	1	0	1	3	0	0	0	0
4/25/2024	11:00 AM	0	65	19	1	0	1	0	1	3	0	0	0	0
4/25/2024	11:15 AM	0	70	23	2	4	0	0	0	7	0	0	0	0
4/25/2024	11:30 AM	0	59	23	1	3	1	0	1	3	0	0	0	0
4/25/2024	11:45 AM	0	62	21	1	2	0	0	0	7	0	0	0	0
4/25/2024	12:00 PM	0	70	17	0	2	0	0	0	4	0	0	0	0
4/25/2024	12:15 PM	0	94	16	1	2	0	0	0	4	0	0	0	0
4/25/2024	12:30 PM	0	80	27	0	0	0	0	0	2	0	0	0	0
4/25/2024	12:45 PM	1	74	26	0	12	0	0	0	3	0	0	0	0
4/25/2024	1:00 PM	0	86	24	2	0	1	0	0	5	0	0	0	0
4/25/2024	1:15 PM	0	89	19	0	3	0	0	0	7	0	0	0	0
4/25/2024	1:30 PM	0	82	22	2	2	2	0	0	6	0	0	0	0
4/25/2024	1:45 PM	0	102	28	1	1	0	0	0	1	0	0	0	0
4/25/2024	2:00 PM	0	69	27	0	0	0	0	2	5	0	0	0	0
4/25/2024	2:15 PM	0	80	22	0	6	0	0	1	4	0	0	0	0
4/25/2024	2:30 PM	0	93	23	1	1	1	0	0	3	0	0	0	0
4/25/2024	2:45 PM	0	68	21	3	0	1	0	1	2	0	0	0	0
4/25/2024	3:00 PM	0	79	26	0	1	0	0	0	4	0	0	0	0
4/25/2024	3:15 PM	0	83	27	2	3	0	0	1	5	0	0	0	0
4/25/2024	3:30 PM	0	77	21	0	3	1	0	0	4	1	0	0	0
4/25/2024	3:45 PM	2	97	21	0	6	0	0	3	3	0	0	0	0
4/25/2024	4:00 PM	0	67	24	0	1	0	0	2	1	0	0	0	0
4/25/2024	4:15 PM	1	72	26	0	3	0	0	1	9	0	0	0	0
4/25/2024	4:30 PM	0	83	17	1	4	0	0	0	2	0	0	0	0
4/25/2024	4:45 PM	0	84	21	0	4	0	0	1	3	0	0	0	0
4/25/2024	5:00 PM	0	76	28	0	1	0	0	0	3	0	0	0	0
4/25/2024	5:15 PM	0	93	28	1	0	0	0	0	5	0	0	0	0
4/25/2024	5:30 PM	0	82	23	1	2	0	0	0	2	0	0	0	0
4/25/2024	5:45 PM	0	71	21	0	2	0	0	0	5	0	0	0	0
4/25/2024	6:00 PM	0	89	17	0	0	0	0	0	4	0	0	0	0
4/25/2024	6:15 PM	0	94	24	0	1	1	0	1	4	0	0	0	0
4/25/2024	6:30 PM	1	64	17	0	2	1	0	2	3	0	0	0	0
4/25/2024	6:45 PM	0	57	16	0	1	0	0	0	5	0	0	0	0
4/25/2024	7:00 PM	0	32	10	0	3	0	0	0	2	0	0	0	0
4/25/2024	7:15 PM	0	47	11	0	2	0	0	1	5	0	0	0	0
4/25/2024	7:30 PM	0	51	14	0	0	0	0	1	0	0	0	0	0
4/25/2024	7:45 PM	0	44	12	0	1	0	0	0	0	0	0	0	0
4/25/2024	8:00 PM	0	30	8	0	1	0	0	0	3	0	1	0	0
4/25/2024	8:15 PM	0	47	12	1	1	0	0	0	2	0	0	0	0
4/25/2024	8:30 PM	0	20	8	0	1	0	0	0	0	0	0	0	0
4/25/2024	8:45 PM	0	31	14	0	2	0	0	0	0	0	0	0	0
4/25/2024	9:00 PM	0	16	6	0	0	0	0	0	2	0	0	0	0
4/25/2024	9:15 PM	0	22	6	0	1	0	0	0	0	0	1	0	0
4/25/2024	9:30 PM	0	22	10	0	0	1	0	0	5	0	0	0	0
4/25/2024	9:45 PM	0	23	4	0	0	1	0	0	1	0	3	0	0
4/25/2024	10:00 PM	0	11	3	0	0	0	0	0	1	0	2	0	0
4/25/2024	10:15 PM	0	9	2	1	1	0	0	0	2	0	0	0	0
4/25/2024	10:30 PM	0	14	7	0	1	0	0	0	2	0	0	0	0
4/25/2024	10:45 PM	0	17	5	0	2	0	0	0	3	0	0	0	0
4/25/2024	11:00 PM	0	10	3	0	1	0	0	0	4	0	1	0	0
4/25/2024	11:15 PM	0	6	2	0	0	0	0	0	0	0	2	0	0
4/25/2024	11:30 PM	0	5	2	0	1	0	0	0	1	0	0	0	0
4/25/2024	11:45 PM	0	6	2	0	0	0	0	0	1	0	1	0	0

4/26/2024	12:00 AM	0	6	0	0	0	0	0	0	2	0	3	0	0
4/26/2024	12:15 AM	0	6	1	0	0	0	0	0	0	0	3	0	0
4/26/2024	12:30 AM	0	6	0	0	1	0	0	0	1	0	1	0	0
4/26/2024	12:45 AM	0	3	0	0	0	0	0	0	3	0	1	0	0
4/26/2024	1:00 AM	0	3	0	0	0	0	0	0	3	0	1	0	0
4/26/2024	1:15 AM	0	1	0	0	0	0	0	0	2	0	1	0	0
4/26/2024	1:30 AM	0	3	0	0	0	0	0	0	0	0	1	0	0
4/26/2024	1:45 AM	0	1	1	0	0	0	0	0	0	0	1	0	0
4/26/2024	2:00 AM	0	1	1	0	0	0	0	0	0	0	0	0	0
4/26/2024	2:15 AM	0	4	0	0	0	0	0	0	2	0	0	0	0
4/26/2024	2:30 AM	0	4	0	0	2	0	0	0	3	0	1	0	0
4/26/2024	2:45 AM	0	4	2	0	0	0	0	0	0	0	1	0	0
4/26/2024	3:00 AM	0	4	0	0	1	0	0	0	1	0	0	0	0
4/26/2024	3:15 AM	0	2	0	0	0	0	0	0	0	0	0	0	0
4/26/2024	3:30 AM	0	3	1	0	0	0	0	0	1	0	2	0	0
4/26/2024	3:45 AM	0	5	0	0	1	0	0	0	2	0	1	0	0
4/26/2024	4:00 AM	0	3	0	0	0	0	0	0	3	0	1	0	0
4/26/2024	4:15 AM	0	4	2	0	0	0	0	0	2	0	0	0	0
4/26/2024	4:30 AM	0	7	1	0	0	1	0	0	0	0	0	0	0
4/26/2024	4:45 AM	0	13	2	0	1	0	0	0	0	0	0	0	0
4/26/2024	5:00 AM	0	4	0	0	0	0	0	0	4	0	1	0	0
4/26/2024	5:15 AM	0	10	3	0	3	2	0	0	0	0	0	0	0
4/26/2024	5:30 AM	0	29	5	0	1	0	0	0	3	0	1	0	0
4/26/2024	5:45 AM	0	34	7	0	1	1	0	0	3	0	0	0	0
4/26/2024	6:00 AM	0	55	14	0	0	0	0	0	3	0	0	0	0
4/26/2024	6:15 AM	0	69	18	0	2	2	0	1	3	0	1	0	0
4/26/2024	6:30 AM	1	120	28	0	1	0	0	0	3	0	1	0	0
4/26/2024	6:45 AM	0	139	51	0	1	0	0	1	3	0	0	0	0
4/26/2024	7:00 AM	0	156	40	1	0	0	0	1	3	0	0	0	0
4/26/2024	7:15 AM	0	183	48	0	0	0	0	0	1	0	0	0	0
4/26/2024	7:30 AM	0	213	44	3	1	0	0	1	4	0	0	0	0
4/26/2024	7:45 AM	0	181	53	0	2	1	0	0	3	0	0	0	0
4/26/2024	8:00 AM	1	154	48	0	1	0	0	0	4	0	0	0	0
4/26/2024	8:15 AM	0	128	52	2	5	0	0	0	3	0	0	0	0
4/26/2024	8:30 AM	0	113	44	3	3	0	0	0	4	0	0	0	0
4/26/2024	8:45 AM	1	123	38	0	3	0	0	0	2	0	0	0	0
4/26/2024	9:00 AM	0	82	25	0	5	1	0	1	3	1	0	0	0
4/26/2024	9:15 AM	0	76	17	0	4	0	0	1	4	0	0	0	0
4/26/2024	9:30 AM	1	80	20	0	5	0	0	1	3	0	0	0	0
4/26/2024	9:45 AM	0	84	29	0	5	1	0	0	1	0	0	0	0
4/26/2024	10:00 AM	1	72	14	0	4	1	0	1	3	0	0	0	0
4/26/2024	10:15 AM	0	76	22	0	2	0	0	0	2	0	0	0	0
4/26/2024	10:30 AM	0	71	13	0	3	0	0	0	2	0	0	0	0
4/26/2024	10:45 AM	0	77	23	0	3	1	0	0	3	0	0	0	0
4/26/2024	11:00 AM	0	56	21	0	5	0	0	0	5	0	0	0	0
4/26/2024	11:15 AM	0	64	24	3	1	0	0	1	2	1	0	0	0
4/26/2024	11:30 AM	1	60	19	1	2	1	0	0	4	1	0	0	0
4/26/2024	11:45 AM	0	58	30	1	0	4	0	0	2	0	0	0	0
4/26/2024	12:00 PM	0	85	15	0	4	0	0	1	3	0	0	0	0
4/26/2024	12:15 PM	0	87	23	0	2	0	0	2	3	0	0	0	0
4/26/2024	12:30 PM	0	50	24	0	3	0	0	0	0	0	0	0	0
4/26/2024	12:45 PM	0	73	16	0	0	0	0	3	2	0	0	0	0
4/26/2024	1:00 PM	0	59	18	3	2	4	0	0	1	0	0	0	0
4/26/2024	1:15 PM	0	63	18	0	2	0	0	0	4	0	0	0	0
4/26/2024	1:30 PM	0	62	27	2	3	4	0	0	3	0	0	0	0
4/26/2024	1:45 PM	0	74	19	1	4	0	0	0	1	0	0	0	0
4/26/2024	2:00 PM	0	71	27	0	1	0	0	0	4	0	0	0	0
4/26/2024	2:15 PM	0	76	26	0	5	0	0	3	4	0	0	0	0
4/26/2024	2:30 PM	0	79	25	2	3	0	0	0	3	0	0	0	0
4/26/2024	2:45 PM	0	97	24	2	2	1	0	0	2	0	0	0	0
4/26/2024	3:00 PM	0	80	16	0	1	1	0	0	1	0	0	0	0
4/26/2024	3:15 PM	0	73	21	0	1	0	0	1	1	0	0	0	0
4/26/2024	3:30 PM	0	97	20	1	6	0	1	1	4	0	0	0	0
4/26/2024	3:45 PM	0	90	31	0	2	0	0	3	2	0	0	0	0
4/26/2024	4:00 PM	0	87	22	0	3	0	0	1	1	0	0	0	0
4/26/2024	4:15 PM	0	83	20	0	3	0	0	1	3	0	0	0	0
4/26/2024	4:30 PM	2	80	29	1	4	0	0	1	8	0	0	0	0
4/26/2024	4:45 PM	1	102	18	0	2	1	0	1	2	0	0	0	0
4/26/2024	5:00 PM	0	88	25	0	4	1	0	0	2	0	0	0	0
4/26/2024	5:15 PM	1	110	28	0	1	0	0	1	1	0	0	0	0
4/26/2024	5:30 PM	0	91	27	1	4	0	0	1	2	0	0	0	0
4/26/2024	5:45 PM	0	88	32	0	2	0	0	0	1	0	0	0	0
4/26/2024	6:00 PM	0	82	21	0	2	0	0	2	2	0	0	0	0
4/26/2024	6:15 PM	0	93	34	1	2	0	0	0	4	0	0	0	0
4/26/2024	6:30 PM	0	72	14	0	0	0	0	0	1	0	0	0	0
4/26/2024	6:45 PM	0	67	17	0	2	0	0	0	4	0	0	0	0
4/26/2024	7:00 PM	0	61	8	1	2	0	0	1	2	0	0	0	0
4/26/2024	7:15 PM	0	43	9	0	1	0	0	0	2	0	0	0	0
4/26/2024	7:30 PM	0	61	17	0	0	0	0	1	4	0	0	0	0
4/26/2024	7:45 PM	0	45	9	0	0	0	0	0	0	0	1	0	0
4/26/2024	8:00 PM	1	40	13	0	0	0	0	1	1	0	0	0	0
4/26/2024	8:15 PM	0	48	7	0	0	0	0	0	3	0	0	0	0
4/26/2024	8:30 PM	0	42	6	0	0	0	0	0	1	0	0	0	0
4/26/2024	8:45 PM	0	45	4	0	1	0	0	0	1	0	0	0	0
4/26/2024	9:00 PM	0	32	5	0	0	0	0	0	2	0	0	0	0
4/26/2024	9:15 PM	0	25	4	0	1	1	0	0	1	0	0	0	0
4/26/2024	9:30 PM	0	18	3	0	0	0	0	0	0	0	0	0	0
4/26/2024	9:45 PM	0	21	4	0	0	0	0	0	0	0	2	0	0
4/26/2024	10:00 PM	0	25	4	0	0	0	0	0	0	0	0	0	0
4/26/2024	10:15 PM	0	19	3	0	0	0	0	0	1	0	0	0	0
4/26/2024	10:30 PM	2	18	4	0	0	0	0	0	2	0	0	0	0
4/26/2024	10:45 PM	0	21	8	0	0	0	0	0	0	0	0	0	0
4/26/2024	11:00 PM	0	10	2	0	1	0	0	0	0	0	1	0	0
4/26/2024	11:15 PM	0	11	1	0	0	0	0	0	0	0	1	0	0
4/26/2024	11:30 PM	0	12	0	0	0	0	0	0	1	0	0	0	0
4/26/2024	11:45 PM	0	5	0	0	0	0	0	0	1	0	2	0	0

4/27/2024	12:00 AM	0	8	0	0	0	0	0	0	0	0	0	0	0
4/27/2024	12:15 AM	0	9	2	0	1	0	0	0	2	0	4	0	0
4/27/2024	12:30 AM	0	7	0	0	0	0	0	1	0	0	0	0	0
4/27/2024	12:45 AM	0	4	1	0	0	0	0	0	2	0	0	0	0
4/27/2024	1:00 AM	0	5	0	0	1	0	0	0	1	0	0	0	0
4/27/2024	1:15 AM	0	7	0	0	1	0	0	0	0	0	1	0	0
4/27/2024	1:30 AM	0	5	0	0	0	0	0	0	0	0	1	0	0
4/27/2024	1:45 AM	0	6	0	0	1	3	0	1	0	0	1	0	0
4/27/2024	2:00 AM	0	3	0	0	1	0	0	0	1	0	1	0	0
4/27/2024	2:15 AM	0	5	0	0	1	0	0	0	1	0	0	0	0
4/27/2024	2:30 AM	0	8	0	0	0	0	0	0	0	0	1	0	0
4/27/2024	2:45 AM	0	2	1	0	0	0	0	0	0	0	1	0	0
4/27/2024	3:00 AM	0	2	0	0	0	0	0	0	0	0	0	0	0
4/27/2024	3:15 AM	0	3	1	0	0	0	0	0	1	0	0	0	0
4/27/2024	3:30 AM	0	2	1	0	0	0	0	0	0	0	2	0	0
4/27/2024	3:45 AM	0	3	0	0	0	0	0	0	1	0	1	0	0
4/27/2024	4:00 AM	0	3	0	0	0	0	0	0	1	0	0	0	0
4/27/2024	4:15 AM	0	2	1	0	0	0	0	0	0	0	0	0	0
4/27/2024	4:30 AM	0	4	0	0	0	0	0	0	0	0	0	0	0
4/27/2024	4:45 AM	0	5	0	0	0	0	0	0	2	0	0	0	0
4/27/2024	5:00 AM	0	3	1	0	0	0	0	0	0	0	2	0	0
4/27/2024	5:15 AM	0	5	2	0	0	0	0	0	0	0	1	0	0
4/27/2024	5:30 AM	0	7	2	0	0	0	0	0	2	0	1	0	0
4/27/2024	5:45 AM	0	17	5	0	0	0	0	0	0	0	0	0	0
4/27/2024	6:00 AM	0	11	3	0	1	0	0	0	2	0	0	0	0
4/27/2024	6:15 AM	0	35	7	0	0	2	0	0	0	0	0	0	0
4/27/2024	6:30 AM	0	38	10	0	0	0	0	0	2	0	0	0	0
4/27/2024	6:45 AM	0	35	12	0	0	0	0	0	0	0	0	0	0
4/27/2024	7:00 AM	0	20	10	0	1	0	0	0	1	0	0	0	0
4/27/2024	7:15 AM	0	31	14	0	1	0	0	0	3	0	0	0	0
4/27/2024	7:30 AM	1	32	22	0	3	0	0	0	2	0	0	0	0
4/27/2024	7:45 AM	0	52	15	1	1	0	0	1	0	0	0	0	0
4/27/2024	8:00 AM	0	44	21	0	0	0	0	1	3	0	0	0	0
4/27/2024	8:15 AM	0	48	15	0	2	0	0	0	1	0	0	0	0
4/27/2024	8:30 AM	0	66	23	0	1	0	0	0	0	0	0	0	0
4/27/2024	8:45 AM	0	75	19	0	0	0	0	0	0	0	0	0	0
4/27/2024	9:00 AM	1	64	15	1	1	0	0	0	1	0	0	0	0
4/27/2024	9:15 AM	1	65	16	0	3	0	0	0	2	0	0	0	0
4/27/2024	9:30 AM	2	69	18	0	0	0	0	0	0	0	0	0	0
4/27/2024	9:45 AM	0	80	20	0	1	0	0	1	5	0	0	0	0
4/27/2024	10:00 AM	0	69	21	0	2	0	0	0	3	0	0	0	0
4/27/2024	10:15 AM	0	76	24	0	3	0	0	0	1	0	0	0	0
4/27/2024	10:30 AM	0	79	14	0	2	0	0	0	1	0	0	0	0
4/27/2024	10:45 AM	0	69	21	0	3	0	0	0	1	0	0	0	0
4/27/2024	11:00 AM	0	79	24	0	3	1	0	0	1	0	0	0	0
4/27/2024	11:15 AM	0	92	21	0	1	0	0	0	1	0	0	0	0
4/27/2024	11:30 AM	0	93	16	0	2	0	0	0	0	0	0	0	0
4/27/2024	11:45 AM	0	72	35	1	2	0	0	0	2	0	0	0	0
4/27/2024	12:00 PM	0	78	16	0	2	0	0	1	1	0	0	0	0
4/27/2024	12:15 PM	0	83	21	0	1	0	0	1	1	0	0	0	0
4/27/2024	12:30 PM	0	90	21	0	2	0	0	1	1	0	0	0	0
4/27/2024	12:45 PM	0	83	32	0	1	0	0	0	2	0	0	0	0
4/27/2024	1:00 PM	0	72	18	0	2	0	0	0	4	0	0	0	0
4/27/2024	1:15 PM	0	86	23	0	1	0	0	1	3	0	0	0	0
4/27/2024	1:30 PM	0	64	26	0	2	0	0	0	0	0	0	0	0
4/27/2024	1:45 PM	0	82	20	0	1	0	0	0	0	0	0	0	0
4/27/2024	2:00 PM	0	78	21	0	1	0	0	0	0	0	0	0	0
4/27/2024	2:15 PM	2	88	16	0	3	0	0	0	0	0	0	0	0
4/27/2024	2:30 PM	0	67	17	0	2	0	0	0	1	0	0	0	0
4/27/2024	2:45 PM	0	104	16	0	2	0	0	0	0	0	0	0	0
4/27/2024	3:00 PM	0	72	15	0	0	0	0	0	1	0	0	0	0
4/27/2024	3:15 PM	0	66	14	0	4	0	0	0	1	0	0	0	0
4/27/2024	3:30 PM	0	67	12	0	1	0	0	0	1	0	0	0	0
4/27/2024	3:45 PM	0	66	13	0	0	0	0	0	0	0	0	0	0
4/27/2024	4:00 PM	0	59	10	0	0	0	0	0	1	0	0	0	0
4/27/2024	4:15 PM	1	63	11	0	1	0	0	0	1	0	0	0	0
4/27/2024	4:30 PM	0	50	14	0	3	0	0	0	0	0	0	0	0
4/27/2024	4:45 PM	0	73	21	0	3	0	0	0	3	0	0	0	0
4/27/2024	5:00 PM	0	52	11	0	1	0	0	0	1	0	0	0	0
4/27/2024	5:15 PM	0	50	8	0	0	0	0	0	2	0	0	0	0
4/27/2024	5:30 PM	0	40	9	0	0	0	0	0	2	0	0	0	0
4/27/2024	5:45 PM	0	45	14	0	0	0	0	0	3	0	1	0	0
4/27/2024	6:00 PM	0	58	11	0	0	0	0	0	0	0	0	0	0
4/27/2024	6:15 PM	0	78	14	0	1	0	0	0	1	0	0	0	0
4/27/2024	6:30 PM	0	51	7	0	1	0	0	0	4	0	0	0	0
4/27/2024	6:45 PM	0	69	11	0	2	0	0	0	2	0	0	0	0
4/27/2024	7:00 PM	0	43	9	0	0	0	0	0	2	0	0	0	0
4/27/2024	7:15 PM	1	38	10	0	2	0	0	0	0	0	0	0	0
4/27/2024	7:30 PM	0	28	11	0	0	0	0	0	1	0	0	0	0
4/27/2024	7:45 PM	0	43	10	0	0	0	0	0	0	0	0	0	0
4/27/2024	8:00 PM	0	33	16	0	0	0	0	0	0	0	0	0	0
4/27/2024	8:15 PM	0	34	8	0	0	0	0	0	1	0	0	0	0
4/27/2024	8:30 PM	0	23	5	0	1	0	0	0	0	0	0	0	0
4/27/2024	8:45 PM	0	30	6	0	0	0	0	0	0	0	0	0	0
4/27/2024	9:00 PM	0	24	4	0	0	1	0	0	0	0	0	0	0
4/27/2024	9:15 PM	0	16	3	0	1	0	0	0	0	0	0	0	0
4/27/2024	9:30 PM	0	21	4	0	1	0	0	0	0	0	0	0	0
4/27/2024	9:45 PM	0	17	2	0	0	0	0	0	0	0	0	0	0
4/27/2024	10:00 PM	0	18	1	0	0	0	0	0	0	0	0	0	0
4/27/2024	10:15 PM	0	17	3	0	0	0	0	0	1	0	0	0	0
4/27/2024	10:30 PM	0	19	2	0	1	0	0	0	0	0	0	0	0
4/27/2024	10:45 PM	0	22	4	0	2	0	0	0	0	0	0	0	0
4/27/2024	11:00 PM	0	19	2	0	0	0	0	0	0	0	0	0	0
4/27/2024	11:15 PM	0	10	4	0	0	0	0	0	0	0	0	0	0
4/27/2024	11:30 PM	0	11	3	0	0	0	0	0	0	0	0	0	0
4/27/2024	11:45 PM	0	10	3	0	0	0	0	0	1	0	0	0	0

WB
File Name:
Start Date: 4/21/2024
Start Time: 0
Site Code: 74 Lane 4 EB
Station ID: 1
Location 1: I-20, west of US-378 Sunset Blvd S/Bound Off-Ramp
Location 2:

Date	Time	1	2	3	4	5	6	7	8	9	10	11	12	13
4/21/2024	12:00 AM	0	0	0	0	0	0	0	0	0	0	0	0	0
4/21/2024	12:15 AM	0	0	0	0	0	0	0	0	0	0	0	0	0
4/21/2024	12:30 AM	0	0	0	0	0	0	0	0	0	0	0	0	0
4/21/2024	12:45 AM	0	0	0	0	0	0	0	0	0	0	0	0	0
4/21/2024	1:00 AM	0	0	0	0	0	0	0	0	0	0	0	0	0
4/21/2024	1:15 AM	0	0	0	0	0	0	0	0	0	0	0	0	0
4/21/2024	1:30 AM	0	0	0	0	0	0	0	0	0	0	0	0	0
4/21/2024	1:45 AM	0	0	0	0	0	0	0	0	0	0	0	0	0
4/21/2024	2:00 AM	0	0	0	0	0	0	0	0	0	0	0	0	0
4/21/2024	2:15 AM	0	0	0	0	0	0	0	0	0	0	0	0	0
4/21/2024	2:30 AM	0	0	0	0	0	0	0	0	0	0	0	0	0
4/21/2024	2:45 AM	0	0	0	0	0	0	0	0	0	0	0	0	0
4/21/2024	3:00 AM	0	0	0	0	0	0	0	0	0	0	0	0	0
4/21/2024	3:15 AM	0	0	0	0	0	0	0	0	0	0	0	0	0
4/21/2024	3:30 AM	0	0	0	0	0	0	0	0	0	0	0	0	0
4/21/2024	3:45 AM	0	0	0	0	0	0	0	0	0	0	0	0	0
4/21/2024	4:00 AM	0	0	0	0	0	0	0	0	0	0	0	0	0
4/21/2024	4:15 AM	0	0	0	0	0	0	0	0	0	0	0	0	0
4/21/2024	4:30 AM	0	0	0	0	0	0	0	0	0	0	0	0	0
4/21/2024	4:45 AM	0	0	0	0	0	0	0	0	0	0	0	0	0
4/21/2024	5:00 AM	0	0	0	0	0	0	0	0	0	0	0	0	0
4/21/2024	5:15 AM	0	0	0	0	0	0	0	0	0	0	0	0	0
4/21/2024	5:30 AM	0	0	0	0	0	0	0	0	0	0	0	0	0
4/21/2024	5:45 AM	0	0	0	0	0	0	0	0	0	0	0	0	0
4/21/2024	6:00 AM	0	0	0	0	0	0	0	0	0	0	0	0	0
4/21/2024	6:15 AM	0	0	0	0	0	0	0	0	0	0	0	0	0
4/21/2024	6:30 AM	0	0	0	0	0	0	0	0	0	0	0	0	0
4/21/2024	6:45 AM	0	0	0	0	0	0	0	0	0	0	0	0	0
4/21/2024	7:00 AM	0	0	0	0	0	0	0	0	0	0	0	0	0
4/21/2024	7:15 AM	0	0	0	0	0	0	0	0	0	0	0	0	0
4/21/2024	7:30 AM	0	0	0	0	0	0	0	0	0	0	0	0	0
4/21/2024	7:45 AM	0	0	0	0	0	0	0	0	0	0	0	0	0
4/21/2024	8:00 AM	0	0	0	0	0	0	0	0	0	0	0	0	0
4/21/2024	8:15 AM	0	0	0	0	0	0	0	0	0	0	0	0	0
4/21/2024	8:30 AM	0	0	0	0	0	0	0	0	0	0	0	0	0
4/21/2024	8:45 AM	0	0	0	0	0	0	0	0	0	0	0	0	0
4/21/2024	9:00 AM	0	0	0	0	0	0	0	0	0	0	0	0	0
4/21/2024	9:15 AM	0	0	0	0	0	0	0	0	0	0	0	0	0
4/21/2024	9:30 AM	0	0	0	0	0	0	0	0	0	0	0	0	0
4/21/2024	9:45 AM	0	0	0	0	0	0	0	0	0	0	0	0	0
4/21/2024	10:00 AM	0	0	0	0	0	0	0	0	0	0	0	0	0
4/21/2024	10:15 AM	0	0	0	0	0	0	0	0	0	0	0	0	0
4/21/2024	10:30 AM	0	0	0	0	0	0	0	0	0	0	0	0	0
4/21/2024	10:45 AM	0	0	0	0	0	0	0	0	0	0	0	0	0
4/21/2024	11:00 AM	0	0	0	0	0	0	0	0	0	0	0	0	0
4/21/2024	11:15 AM	0	0	0	0	0	0	0	0	0	0	0	0	0
4/21/2024	11:30 AM	0	0	0	0	0	0	0	0	0	0	0	0	0
4/21/2024	11:45 AM	0	0	0	0	0	0	0	0	0	0	0	0	0
4/21/2024	12:00 PM	0	0	0	0	0	0	0	0	0	0	0	0	0
4/21/2024	12:15 PM	0	0	0	0	0	0	0	0	0	0	0	0	0
4/21/2024	12:30 PM	0	0	0	0	0	0	0	0	0	0	0	0	0
4/21/2024	12:45 PM	0	0	0	0	0	0	0	0	0	0	0	0	0
4/21/2024	1:00 PM	0	0	0	0	0	0	0	0	0	0	0	0	0
4/21/2024	1:15 PM	0	0	0	0	0	0	0	0	0	0	0	0	0
4/21/2024	1:30 PM	0	0	0	0	0	0	0	0	0	0	0	0	0
4/21/2024	1:45 PM	0	0	0	0	0	0	0	0	0	0	0	0	0
4/21/2024	2:00 PM	0	0	0	0	0	0	0	0	0	0	0	0	0
4/21/2024	2:15 PM	0	0	0	0	0	0	0	0	0	0	0	0	0
4/21/2024	2:30 PM	0	0	0	0	0	0	0	0	0	0	0	0	0
4/21/2024	2:45 PM	0	0	0	0	0	0	0	0	0	0	0	0	0
4/21/2024	3:00 PM	0	0	0	0	0	0	0	0	0	0	0	0	0
4/21/2024	3:15 PM	0	0	0	0	0	0	0	0	0	0	0	0	0
4/21/2024	3:30 PM	0	0	0	0	0	0	0	0	0	0	0	0	0
4/21/2024	3:45 PM	0	0	0	0	0	0	0	0	0	0	0	0	0
4/21/2024	4:00 PM	0	0	0	0	0	0	0	0	0	0	0	0	0
4/21/2024	4:15 PM	0	0	0	0	0	0	0	0	0	0	0	0	0
4/21/2024	4:30 PM	0	0	0	0	0	0	0	0	0	0	0	0	0
4/21/2024	4:45 PM	0	0	0	0	0	0	0	0	0	0	0	0	0
4/21/2024	5:00 PM	0	0	0	0	0	0	0	0	0	0	0	0	0
4/21/2024	5:15 PM	0	0	0	0	0	0	0	0	0	0	0	0	0
4/21/2024	5:30 PM	0	0	0	0	0	0	0	0	0	0	0	0	0
4/21/2024	5:45 PM	0	0	0	0	0	0	0	0	0	0	0	0	0
4/21/2024	6:00 PM	0	0	0	0	0	0	0	0	0	0	0	0	0
4/21/2024	6:15 PM	0	0	0	0	0	0	0	0	0	0	0	0	0
4/21/2024	6:30 PM	0	0	0	0	0	0	0	0	0	0	0	0	0
4/21/2024	6:45 PM	0	0	0	0	0	0	0	0	0	0	0	0	0
4/21/2024	7:00 PM	0	0	0	0	0	0	0	0	0	0	0	0	0
4/21/2024	7:15 PM	0	0	0	0	0	0	0	0	0	0	0	0	0
4/21/2024	7:30 PM	0	0	0	0	0	0	0	0	0	0	0	0	0
4/21/2024	7:45 PM	0	0	0	0	0	0	0	0	0	0	0	0	0
4/21/2024	8:00 PM	0	0	0	0	0	0	0	0	0	0	0	0	0
4/21/2024	8:15 PM	0	0	0	0	0	0	0	0	0	0	0	0	0
4/21/2024	8:30 PM	0	0	0	0	0	0	0	0	0	0	0	0	0
4/21/2024	8:45 PM	0	0	0	0	0	0	0	0	0	0	0	0	0
4/21/2024	9:00 PM	0	0	0	0	0	0	0	0	0	0	0	0	0
4/21/2024	9:15 PM	0	0	0	0	0	0	0	0	0	0	0	0	0
4/21/2024	9:30 PM	0	0	0	0	0	0	0	0	0	0	0	0	0
4/21/2024	9:45 PM	0	0	0	0	0	0	0	0	0	0	0	0	0
4/21/2024	10:00 PM	0	0	0	0	0	0	0	0	0	0	0	0	0
4/21/2024	10:15 PM	0	0	0	0	0	0	0	0	0	0	0	0	0
4/21/2024	10:30 PM	0	0	0	0	0	0	0	0	0	0	0	0	0
4/21/2024	10:45 PM	0	0	0	0	0	0	0	0	0	0	0	0	0
4/21/2024	11:00 PM	0	0	0	0	0	0	0	0	0	0	0	0	0
4/21/2024	11:15 PM	0	0	0	0	0	0	0	0	0	0	0	0	0
4/21/2024	11:30 PM	0	0	0	0	0	0	0	0	0	0	0	0	0
4/21/2024	11:45 PM	0	0	0	0	0	0	0	0	0	0	0	0	0

4/22/2024	12:00 AM	0	0	0	0	0	0	0	0	0	0	0	0	0
4/22/2024	12:15 AM	0	0	0	0	0	0	0	0	0	0	0	0	0
4/22/2024	12:30 AM	0	0	0	0	0	0	0	0	0	0	0	0	0
4/22/2024	12:45 AM	0	0	0	0	0	0	0	0	0	0	0	0	0
4/22/2024	1:00 AM	0	0	0	0	0	0	0	0	0	0	0	0	0
4/22/2024	1:15 AM	0	0	0	0	0	0	0	0	0	0	0	0	0
4/22/2024	1:30 AM	0	0	0	0	0	0	0	0	0	0	0	0	0
4/22/2024	1:45 AM	0	0	0	0	0	0	0	0	0	0	0	0	0
4/22/2024	2:00 AM	0	0	0	0	0	0	0	0	0	0	0	0	0
4/22/2024	2:15 AM	0	0	0	0	0	0	0	0	0	0	0	0	0
4/22/2024	2:30 AM	0	0	0	0	0	0	0	0	0	0	0	0	0
4/22/2024	2:45 AM	0	0	0	0	0	0	0	0	0	0	0	0	0
4/22/2024	3:00 AM	0	0	0	0	0	0	0	0	0	0	0	0	0
4/22/2024	3:15 AM	0	0	0	0	0	0	0	0	0	0	0	0	0
4/22/2024	3:30 AM	0	0	0	0	0	0	0	0	0	0	0	0	0
4/22/2024	3:45 AM	0	0	0	0	0	0	0	0	0	0	0	0	0
4/22/2024	4:00 AM	0	0	0	0	0	0	0	0	0	0	0	0	0
4/22/2024	4:15 AM	0	0	0	0	0	0	0	0	0	0	0	0	0
4/22/2024	4:30 AM	0	0	0	0	0	0	0	0	0	0	0	0	0
4/22/2024	4:45 AM	0	0	0	0	0	0	0	0	0	0	0	0	0
4/22/2024	5:00 AM	0	0	0	0	0	0	0	0	0	0	0	0	0
4/22/2024	5:15 AM	0	0	0	0	0	0	0	0	0	0	0	0	0
4/22/2024	5:30 AM	0	0	0	0	0	0	0	0	0	0	0	0	0
4/22/2024	5:45 AM	0	0	0	0	0	0	0	0	0	0	0	0	0
4/22/2024	6:00 AM	0	0	0	0	0	0	0	0	0	0	0	0	0
4/22/2024	6:15 AM	0	0	0	0	0	0	0	0	0	0	0	0	0
4/22/2024	6:30 AM	0	0	0	0	0	0	0	0	0	0	0	0	0
4/22/2024	6:45 AM	0	0	0	0	0	0	0	0	0	0	0	0	0
4/22/2024	7:00 AM	0	0	0	0	0	0	0	0	0	0	0	0	0
4/22/2024	7:15 AM	0	0	0	0	0	0	0	0	0	0	0	0	0
4/22/2024	7:30 AM	0	0	0	0	0	0	0	0	0	0	0	0	0
4/22/2024	7:45 AM	0	0	0	0	0	0	0	0	0	0	0	0	0
4/22/2024	8:00 AM	0	0	0	0	0	0	0	0	0	0	0	0	0
4/22/2024	8:15 AM	0	0	0	0	0	0	0	0	0	0	0	0	0
4/22/2024	8:30 AM	0	0	0	0	0	0	0	0	0	0	0	0	0
4/22/2024	8:45 AM	0	0	0	0	0	0	0	0	0	0	0	0	0
4/22/2024	9:00 AM	0	0	0	0	0	0	0	0	0	0	0	0	0
4/22/2024	9:15 AM	0	0	0	0	0	0	0	0	0	0	0	0	0
4/22/2024	9:30 AM	0	0	0	0	0	0	0	0	0	0	0	0	0
4/22/2024	9:45 AM	0	0	0	0	0	0	0	0	0	0	0	0	0
4/22/2024	10:00 AM	0	0	0	0	0	0	0	0	0	0	0	0	0
4/22/2024	10:15 AM	0	0	0	0	0	0	0	0	0	0	0	0	0
4/22/2024	10:30 AM	0	0	0	0	0	0	0	0	0	0	0	0	0
4/22/2024	10:45 AM	0	0	0	0	0	0	0	0	0	0	0	0	0
4/22/2024	11:00 AM	0	0	0	0	0	0	0	0	0	0	0	0	0
4/22/2024	11:15 AM	0	0	0	0	0	0	0	0	0	0	0	0	0
4/22/2024	11:30 AM	0	0	0	0	0	0	0	0	0	0	0	0	0
4/22/2024	11:45 AM	0	0	0	0	0	0	0	0	0	0	0	0	0
4/22/2024	12:00 PM	0	0	0	0	0	0	0	0	0	0	0	0	0
4/22/2024	12:15 PM	0	0	0	0	0	0	0	0	0	0	0	0	0
4/22/2024	12:30 PM	0	0	0	0	0	0	0	0	0	0	0	0	0
4/22/2024	12:45 PM	0	0	0	0	0	0	0	0	0	0	0	0	0
4/22/2024	1:00 PM	0	0	0	0	0	0	0	0	0	0	0	0	0
4/22/2024	1:15 PM	0	0	0	0	0	0	0	0	0	0	0	0	0
4/22/2024	1:30 PM	0	0	0	0	0	0	0	0	0	0	0	0	0
4/22/2024	1:45 PM	0	0	0	0	0	0	0	0	0	0	0	0	0
4/22/2024	2:00 PM	0	0	0	0	0	0	0	0	0	0	0	0	0
4/22/2024	2:15 PM	0	0	0	0	0	0	0	0	0	0	0	0	0
4/22/2024	2:30 PM	0	0	0	0	0	0	0	0	0	0	0	0	0
4/22/2024	2:45 PM	0	0	0	0	0	0	0	0	0	0	0	0	0
4/22/2024	3:00 PM	0	0	0	0	0	0	0	0	0	0	0	0	0
4/22/2024	3:15 PM	0	0	0	0	0	0	0	0	0	0	0	0	0
4/22/2024	3:30 PM	0	0	0	0	0	0	0	0	0	0	0	0	0
4/22/2024	3:45 PM	0	0	0	0	0	0	0	0	0	0	0	0	0
4/22/2024	4:00 PM	0	0	0	0	0	0	0	0	0	0	0	0	0
4/22/2024	4:15 PM	0	0	0	0	0	0	0	0	0	0	0	0	0
4/22/2024	4:30 PM	0	0	0	0	0	0	0	0	0	0	0	0	0
4/22/2024	4:45 PM	0	0	0	0	0	0	0	0	0	0	0	0	0
4/22/2024	5:00 PM	0	0	0	0	0	0	0	0	0	0	0	0	0
4/22/2024	5:15 PM	0	0	0	0	0	0	0	0	0	0	0	0	0
4/22/2024	5:30 PM	0	0	0	0	0	0	0	0	0	0	0	0	0
4/22/2024	5:45 PM	0	0	0	0	0	0	0	0	0	0	0	0	0
4/22/2024	6:00 PM	0	0	0	0	0	0	0	0	0	0	0	0	0
4/22/2024	6:15 PM	0	0	0	0	0	0	0	0	0	0	0	0	0
4/22/2024	6:30 PM	0	0	0	0	0	0	0	0	0	0	0	0	0
4/22/2024	6:45 PM	0	0	0	0	0	0	0	0	0	0	0	0	0
4/22/2024	7:00 PM	0	0	0	0	0	0	0	0	0	0	0	0	0
4/22/2024	7:15 PM	0	0	0	0	0	0	0	0	0	0	0	0	0
4/22/2024	7:30 PM	0	0	0	0	0	0	0	0	0	0	0	0	0
4/22/2024	7:45 PM	0	0	0	0	0	0	0	0	0	0	0	0	0
4/22/2024	8:00 PM	0	0	0	0	0	0	0	0	0	0	0	0	0
4/22/2024	8:15 PM	0	0	0	0	0	0	0	0	0	0	0	0	0
4/22/2024	8:30 PM	0	0	0	0	0	0	0	0	0	0	0	0	0
4/22/2024	8:45 PM	0	0	0	0	0	0	0	0	0	0	0	0	0
4/22/2024	9:00 PM	0	0	0	0	0	0	0	0	0	0	0	0	0
4/22/2024	9:15 PM	0	0	0	0	0	0	0	0	0	0	0	0	0
4/22/2024	9:30 PM	0	0	0	0	0	0	0	0	0	0	0	0	0
4/22/2024	9:45 PM	0	0	0	0	0	0	0	0	0	0	0	0	0
4/22/2024	10:00 PM	0	0	0	0	0	0	0	0	0	0	0	0	0
4/22/2024	10:15 PM	0	0	0	0	0	0	0	0	0	0	0	0	0
4/22/2024	10:30 PM	0	0	0	0	0	0	0	0	0	0	0	0	0
4/22/2024	10:45 PM	0	0	0	0	0	0	0	0	0	0	0	0	0
4/22/2024	11:00 PM	0	0	0	0	0	0	0	0	0	0	0	0	0
4/22/2024	11:15 PM	0	0	0	0	0	0	0	0	0	0	0	0	0
4/22/2024	11:30 PM	0	0	0	0	0	0	0	0	0	0	0	0	0
4/22/2024	11:45 PM	0	0	0	0	0	0	0	0	0	0	0	0	0

4/23/2024	12:00 AM	0	0	0	0	0	0	0	0	0	0	0	0	0
4/23/2024	12:15 AM	0	0	0	0	0	0	0	0	0	0	0	0	0
4/23/2024	12:30 AM	0	0	0	0	0	0	0	0	0	0	0	0	0
4/23/2024	12:45 AM	0	0	0	0	0	0	0	0	0	0	0	0	0
4/23/2024	1:00 AM	0	0	0	0	0	0	0	0	0	0	0	0	0
4/23/2024	1:15 AM	0	0	0	0	0	0	0	0	0	0	0	0	0
4/23/2024	1:30 AM	0	0	0	0	0	0	0	0	0	0	0	0	0
4/23/2024	1:45 AM	0	0	0	0	0	0	0	0	0	0	0	0	0
4/23/2024	2:00 AM	0	0	0	0	0	0	0	0	0	0	0	0	0
4/23/2024	2:15 AM	0	0	0	0	0	0	0	0	0	0	0	0	0
4/23/2024	2:30 AM	0	0	0	0	0	0	0	0	0	0	0	0	0
4/23/2024	2:45 AM	0	0	0	0	0	0	0	0	0	0	0	0	0
4/23/2024	3:00 AM	0	0	0	0	0	0	0	0	0	0	0	0	0
4/23/2024	3:15 AM	0	0	0	0	0	0	0	0	0	0	0	0	0
4/23/2024	3:30 AM	0	0	0	0	0	0	0	0	0	0	0	0	0
4/23/2024	3:45 AM	0	0	0	0	0	0	0	0	0	0	0	0	0
4/23/2024	4:00 AM	0	0	0	0	0	0	0	0	0	0	0	0	0
4/23/2024	4:15 AM	0	0	0	0	0	0	0	0	0	0	0	0	0
4/23/2024	4:30 AM	0	0	0	0	0	0	0	0	0	0	0	0	0
4/23/2024	4:45 AM	0	0	0	0	0	0	0	0	0	0	0	0	0
4/23/2024	5:00 AM	0	0	0	0	0	0	0	0	0	0	0	0	0
4/23/2024	5:15 AM	0	0	0	0	0	0	0	0	0	0	0	0	0
4/23/2024	5:30 AM	0	0	0	0	0	0	0	0	0	0	0	0	0
4/23/2024	5:45 AM	0	0	0	0	0	0	0	0	0	0	0	0	0
4/23/2024	6:00 AM	0	0	0	0	0	0	0	0	0	0	0	0	0
4/23/2024	6:15 AM	0	0	0	0	0	0	0	0	0	0	0	0	0
4/23/2024	6:30 AM	0	0	0	0	0	0	0	0	0	0	0	0	0
4/23/2024	6:45 AM	0	0	0	0	0	0	0	0	0	0	0	0	0
4/23/2024	7:00 AM	0	0	0	0	0	0	0	0	0	0	0	0	0
4/23/2024	7:15 AM	0	0	0	0	0	0	0	0	0	0	0	0	0
4/23/2024	7:30 AM	0	0	0	0	0	0	0	0	0	0	0	0	0
4/23/2024	7:45 AM	0	0	0	0	0	0	0	0	0	0	0	0	0
4/23/2024	8:00 AM	0	0	0	0	0	0	0	0	0	0	0	0	0
4/23/2024	8:15 AM	0	0	0	0	0	0	0	0	0	0	0	0	0
4/23/2024	8:30 AM	0	0	0	0	0	0	0	0	0	0	0	0	0
4/23/2024	8:45 AM	0	0	0	0	0	0	0	0	0	0	0	0	0
4/23/2024	9:00 AM	0	0	0	0	0	0	0	0	0	0	0	0	0
4/23/2024	9:15 AM	0	0	0	0	0	0	0	0	0	0	0	0	0
4/23/2024	9:30 AM	0	0	0	0	0	0	0	0	0	0	0	0	0
4/23/2024	9:45 AM	0	0	0	0	0	0	0	0	0	0	0	0	0
4/23/2024	10:00 AM	0	0	0	0	0	0	0	0	0	0	0	0	0
4/23/2024	10:15 AM	0	0	0	0	0	0	0	0	0	0	0	0	0
4/23/2024	10:30 AM	0	0	0	0	0	0	0	0	0	0	0	0	0
4/23/2024	10:45 AM	0	0	0	0	0	0	0	0	0	0	0	0	0
4/23/2024	11:00 AM	0	0	0	0	0	0	0	0	0	0	0	0	0
4/23/2024	11:15 AM	0	0	0	0	0	0	0	0	0	0	0	0	0
4/23/2024	11:30 AM	0	0	0	0	0	0	0	0	0	0	0	0	0
4/23/2024	11:45 AM	0	0	0	0	0	0	0	0	0	0	0	0	0
4/23/2024	12:00 PM	0	0	0	0	0	0	0	0	0	0	0	0	0
4/23/2024	12:15 PM	0	0	0	0	0	0	0	0	0	0	0	0	0
4/23/2024	12:30 PM	0	0	0	0	0	0	0	0	0	0	0	0	0
4/23/2024	12:45 PM	0	0	0	0	0	0	0	0	0	0	0	0	0
4/23/2024	1:00 PM	0	0	0	0	0	0	0	0	0	0	0	0	0
4/23/2024	1:15 PM	0	0	0	0	0	0	0	0	0	0	0	0	0
4/23/2024	1:30 PM	0	0	0	0	0	0	0	0	0	0	0	0	0
4/23/2024	1:45 PM	0	0	0	0	0	0	0	0	0	0	0	0	0
4/23/2024	2:00 PM	0	0	0	0	0	0	0	0	0	0	0	0	0
4/23/2024	2:15 PM	0	0	0	0	0	0	0	0	0	0	0	0	0
4/23/2024	2:30 PM	0	0	0	0	0	0	0	0	0	0	0	0	0
4/23/2024	2:45 PM	0	0	0	0	0	0	0	0	0	0	0	0	0
4/23/2024	3:00 PM	0	0	0	0	0	0	0	0	0	0	0	0	0
4/23/2024	3:15 PM	0	0	0	0	0	0	0	0	0	0	0	0	0
4/23/2024	3:30 PM	0	0	0	0	0	0	0	0	0	0	0	0	0
4/23/2024	3:45 PM	0	0	0	0	0	0	0	0	0	0	0	0	0
4/23/2024	4:00 PM	0	0	0	0	0	0	0	0	0	0	0	0	0
4/23/2024	4:15 PM	0	0	0	0	0	0	0	0	0	0	0	0	0
4/23/2024	4:30 PM	0	0	0	0	0	0	0	0	0	0	0	0	0
4/23/2024	4:45 PM	0	0	0	0	0	0	0	0	0	0	0	0	0
4/23/2024	5:00 PM	0	0	0	0	0	0	0	0	0	0	0	0	0
4/23/2024	5:15 PM	0	0	0	0	0	0	0	0	0	0	0	0	0
4/23/2024	5:30 PM	0	0	0	0	0	0	0	0	0	0	0	0	0
4/23/2024	5:45 PM	0	0	0	0	0	0	0	0	0	0	0	0	0
4/23/2024	6:00 PM	0	0	0	0	0	0	0	0	0	0	0	0	0
4/23/2024	6:15 PM	0	0	0	0	0	0	0	0	0	0	0	0	0
4/23/2024	6:30 PM	0	0	0	0	0	0	0	0	0	0	0	0	0
4/23/2024	6:45 PM	0	0	0	0	0	0	0	0	0	0	0	0	0
4/23/2024	7:00 PM	0	0	0	0	0	0	0	0	0	0	0	0	0
4/23/2024	7:15 PM	0	0	0	0	0	0	0	0	0	0	0	0	0
4/23/2024	7:30 PM	0	0	0	0	0	0	0	0	0	0	0	0	0
4/23/2024	7:45 PM	0	0	0	0	0	0	0	0	0	0	0	0	0
4/23/2024	8:00 PM	0	0	0	0	0	0	0	0	0	0	0	0	0
4/23/2024	8:15 PM	0	0	0	0	0	0	0	0	0	0	0	0	0
4/23/2024	8:30 PM	0	0	0	0	0	0	0	0	0	0	0	0	0
4/23/2024	8:45 PM	0	0	0	0	0	0	0	0	0	0	0	0	0
4/23/2024	9:00 PM	0	0	0	0	0	0	0	0	0	0	0	0	0
4/23/2024	9:15 PM	0	0	0	0	0	0	0	0	0	0	0	0	0
4/23/2024	9:30 PM	0	0	0	0	0	0	0	0	0	0	0	0	0
4/23/2024	9:45 PM	0	0	0	0	0	0	0	0	0	0	0	0	0
4/23/2024	10:00 PM	0	0	0	0	0	0	0	0	0	0	0	0	0
4/23/2024	10:15 PM	0	0	0	0	0	0	0	0	0	0	0	0	0
4/23/2024	10:30 PM	0	0	0	0	0	0	0	0	0	0	0	0	0
4/23/2024	10:45 PM	0	0	0	0	0	0	0	0	0	0	0	0	0
4/23/2024	11:00 PM	0	0	0	0	0	0	0	0	0	0	0	0	0
4/23/2024	11:15 PM	0	0	0	0	0	0	0	0	0	0	0	0	0
4/23/2024	11:30 PM	0	0	0	0	0	0	0	0	0	0	0	0	0
4/23/2024	11:45 PM	0	0	0	0	0	0	0	0	0	0	0	0	0

4/24/2024	12:00 AM	0	0	0	0	0	0	0	0	0	0	0	0	0
4/24/2024	12:15 AM	0	0	0	0	0	0	0	0	0	0	0	0	0
4/24/2024	12:30 AM	0	0	0	0	0	0	0	0	0	0	0	0	0
4/24/2024	12:45 AM	0	0	0	0	0	0	0	0	0	0	0	0	0
4/24/2024	1:00 AM	0	0	0	0	0	0	0	0	0	0	0	0	0
4/24/2024	1:15 AM	0	0	0	0	0	0	0	0	0	0	0	0	0
4/24/2024	1:30 AM	0	0	0	0	0	0	0	0	0	0	0	0	0
4/24/2024	1:45 AM	0	0	0	0	0	0	0	0	0	0	0	0	0
4/24/2024	2:00 AM	0	0	0	0	0	0	0	0	0	0	0	0	0
4/24/2024	2:15 AM	0	0	0	0	0	0	0	0	0	0	0	0	0
4/24/2024	2:30 AM	0	0	0	0	0	0	0	0	0	0	0	0	0
4/24/2024	2:45 AM	0	0	0	0	0	0	0	0	0	0	0	0	0
4/24/2024	3:00 AM	0	0	0	0	0	0	0	0	0	0	0	0	0
4/24/2024	3:15 AM	0	0	0	0	0	0	0	0	0	0	0	0	0
4/24/2024	3:30 AM	0	0	0	0	0	0	0	0	0	0	0	0	0
4/24/2024	3:45 AM	0	0	0	0	0	0	0	0	0	0	0	0	0
4/24/2024	4:00 AM	0	0	0	0	0	0	0	0	0	0	0	0	0
4/24/2024	4:15 AM	0	0	0	0	0	0	0	0	0	0	0	0	0
4/24/2024	4:30 AM	0	0	0	0	0	0	0	0	0	0	0	0	0
4/24/2024	4:45 AM	0	0	0	0	0	0	0	0	0	0	0	0	0
4/24/2024	5:00 AM	0	0	0	0	0	0	0	0	0	0	0	0	0
4/24/2024	5:15 AM	0	0	0	0	0	0	0	0	0	0	0	0	0
4/24/2024	5:30 AM	0	0	0	0	0	0	0	0	0	0	0	0	0
4/24/2024	5:45 AM	0	0	0	0	0	0	0	0	0	0	0	0	0
4/24/2024	6:00 AM	0	0	0	0	0	0	0	0	0	0	0	0	0
4/24/2024	6:15 AM	0	0	0	0	0	0	0	0	0	0	0	0	0
4/24/2024	6:30 AM	0	0	0	0	0	0	0	0	0	0	0	0	0
4/24/2024	6:45 AM	0	0	0	0	0	0	0	0	0	0	0	0	0
4/24/2024	7:00 AM	0	0	0	0	0	0	0	0	0	0	0	0	0
4/24/2024	7:15 AM	0	0	0	0	0	0	0	0	0	0	0	0	0
4/24/2024	7:30 AM	0	0	0	0	0	0	0	0	0	0	0	0	0
4/24/2024	7:45 AM	0	0	0	0	0	0	0	0	0	0	0	0	0
4/24/2024	8:00 AM	0	0	0	0	0	0	0	0	0	0	0	0	0
4/24/2024	8:15 AM	0	0	0	0	0	0	0	0	0	0	0	0	0
4/24/2024	8:30 AM	0	0	0	0	0	0	0	0	0	0	0	0	0
4/24/2024	8:45 AM	0	0	0	0	0	0	0	0	0	0	0	0	0
4/24/2024	9:00 AM	0	0	0	0	0	0	0	0	0	0	0	0	0
4/24/2024	9:15 AM	0	0	0	0	0	0	0	0	0	0	0	0	0
4/24/2024	9:30 AM	0	0	0	0	0	0	0	0	0	0	0	0	0
4/24/2024	9:45 AM	0	0	0	0	0	0	0	0	0	0	0	0	0
4/24/2024	10:00 AM	0	0	0	0	0	0	0	0	0	0	0	0	0
4/24/2024	10:15 AM	0	0	0	0	0	0	0	0	0	0	0	0	0
4/24/2024	10:30 AM	0	0	0	0	0	0	0	0	0	0	0	0	0
4/24/2024	10:45 AM	0	0	0	0	0	0	0	0	0	0	0	0	0
4/24/2024	11:00 AM	0	0	0	0	0	0	0	0	0	0	0	0	0
4/24/2024	11:15 AM	0	0	0	0	0	0	0	0	0	0	0	0	0
4/24/2024	11:30 AM	0	0	0	0	0	0	0	0	0	0	0	0	0
4/24/2024	11:45 AM	0	0	0	0	0	0	0	0	0	0	0	0	0
4/24/2024	12:00 PM	0	0	0	0	0	0	0	0	0	0	0	0	0
4/24/2024	12:15 PM	0	0	0	0	0	0	0	0	0	0	0	0	0
4/24/2024	12:30 PM	0	0	0	0	0	0	0	0	0	0	0	0	0
4/24/2024	12:45 PM	0	0	0	0	0	0	0	0	0	0	0	0	0
4/24/2024	1:00 PM	0	0	0	0	0	0	0	0	0	0	0	0	0
4/24/2024	1:15 PM	0	0	0	0	0	0	0	0	0	0	0	0	0
4/24/2024	1:30 PM	0	0	0	0	0	0	0	0	0	0	0	0	0
4/24/2024	1:45 PM	0	0	0	0	0	0	0	0	0	0	0	0	0
4/24/2024	2:00 PM	0	0	0	0	0	0	0	0	0	0	0	0	0
4/24/2024	2:15 PM	0	0	0	0	0	0	0	0	0	0	0	0	0
4/24/2024	2:30 PM	0	0	0	0	0	0	0	0	0	0	0	0	0
4/24/2024	2:45 PM	0	0	0	0	0	0	0	0	0	0	0	0	0
4/24/2024	3:00 PM	0	0	0	0	0	0	0	0	0	0	0	0	0
4/24/2024	3:15 PM	0	0	0	0	0	0	0	0	0	0	0	0	0
4/24/2024	3:30 PM	0	0	0	0	0	0	0	0	0	0	0	0	0
4/24/2024	3:45 PM	0	0	0	0	0	0	0	0	0	0	0	0	0
4/24/2024	4:00 PM	0	0	0	0	0	0	0	0	0	0	0	0	0
4/24/2024	4:15 PM	0	0	0	0	0	0	0	0	0	0	0	0	0
4/24/2024	4:30 PM	0	0	0	0	0	0	0	0	0	0	0	0	0
4/24/2024	4:45 PM	0	0	0	0	0	0	0	0	0	0	0	0	0
4/24/2024	5:00 PM	0	0	0	0	0	0	0	0	0	0	0	0	0
4/24/2024	5:15 PM	0	0	0	0	0	0	0	0	0	0	0	0	0
4/24/2024	5:30 PM	0	0	0	0	0	0	0	0	0	0	0	0	0
4/24/2024	5:45 PM	0	0	0	0	0	0	0	0	0	0	0	0	0
4/24/2024	6:00 PM	0	0	0	0	0	0	0	0	0	0	0	0	0
4/24/2024	6:15 PM	0	0	0	0	0	0	0	0	0	0	0	0	0
4/24/2024	6:30 PM	0	0	0	0	0	0	0	0	0	0	0	0	0
4/24/2024	6:45 PM	0	0	0	0	0	0	0	0	0	0	0	0	0
4/24/2024	7:00 PM	0	0	0	0	0	0	0	0	0	0	0	0	0
4/24/2024	7:15 PM	0	0	0	0	0	0	0	0	0	0	0	0	0
4/24/2024	7:30 PM	0	0	0	0	0	0	0	0	0	0	0	0	0
4/24/2024	7:45 PM	0	0	0	0	0	0	0	0	0	0	0	0	0
4/24/2024	8:00 PM	0	0	0	0	0	0	0	0	0	0	0	0	0
4/24/2024	8:15 PM	0	0	0	0	0	0	0	0	0	0	0	0	0
4/24/2024	8:30 PM	0	0	0	0	0	0	0	0	0	0	0	0	0
4/24/2024	8:45 PM	0	0	0	0	0	0	0	0	0	0	0	0	0
4/24/2024	9:00 PM	0	0	0	0	0	0	0	0	0	0	0	0	0
4/24/2024	9:15 PM	0	0	0	0	0	0	0	0	0	0	0	0	0
4/24/2024	9:30 PM	0	0	0	0	0	0	0	0	0	0	0	0	0
4/24/2024	9:45 PM	0	0	0	0	0	0	0	0	0	0	0	0	0
4/24/2024	10:00 PM	0	0	0	0	0	0	0	0	0	0	0	0	0
4/24/2024	10:15 PM	0	0	0	0	0	0	0	0	0	0	0	0	0
4/24/2024	10:30 PM	0	0	0	0	0	0	0	0	0	0	0	0	0
4/24/2024	10:45 PM	0	0	0	0	0	0	0	0	0	0	0	0	0
4/24/2024	11:00 PM	0	0	0	0	0	0	0	0	0	0	0	0	0
4/24/2024	11:15 PM	0	0	0	0	0	0	0	0	0	0	0	0	0
4/24/2024	11:30 PM	0	0	0	0	0	0	0	0	0	0	0	0	0
4/24/2024	11:45 PM	0	0	0	0	0	0	0	0	0	0	0	0	0

4/25/2024	12:00 AM	0	0	0	0	0	0	0	0	0	0	0	0	0
4/25/2024	12:15 AM	0	0	0	0	0	0	0	0	0	0	0	0	0
4/25/2024	12:30 AM	0	0	0	0	0	0	0	0	0	0	0	0	0
4/25/2024	12:45 AM	0	0	0	0	0	0	0	0	0	0	0	0	0
4/25/2024	1:00 AM	0	0	0	0	0	0	0	0	0	0	0	0	0
4/25/2024	1:15 AM	0	0	0	0	0	0	0	0	0	0	0	0	0
4/25/2024	1:30 AM	0	0	0	0	0	0	0	0	0	0	0	0	0
4/25/2024	1:45 AM	0	0	0	0	0	0	0	0	0	0	0	0	0
4/25/2024	2:00 AM	0	0	0	0	0	0	0	0	0	0	0	0	0
4/25/2024	2:15 AM	0	0	0	0	0	0	0	0	0	0	0	0	0
4/25/2024	2:30 AM	0	0	0	0	0	0	0	0	0	0	0	0	0
4/25/2024	2:45 AM	0	0	0	0	0	0	0	0	0	0	0	0	0
4/25/2024	3:00 AM	0	0	0	0	0	0	0	0	0	0	0	0	0
4/25/2024	3:15 AM	0	0	0	0	0	0	0	0	0	0	0	0	0
4/25/2024	3:30 AM	0	0	0	0	0	0	0	0	0	0	0	0	0
4/25/2024	3:45 AM	0	0	0	0	0	0	0	0	0	0	0	0	0
4/25/2024	4:00 AM	0	0	0	0	0	0	0	0	0	0	0	0	0
4/25/2024	4:15 AM	0	0	0	0	0	0	0	0	0	0	0	0	0
4/25/2024	4:30 AM	0	0	0	0	0	0	0	0	0	0	0	0	0
4/25/2024	4:45 AM	0	0	0	0	0	0	0	0	0	0	0	0	0
4/25/2024	5:00 AM	0	0	0	0	0	0	0	0	0	0	0	0	0
4/25/2024	5:15 AM	0	0	0	0	0	0	0	0	0	0	0	0	0
4/25/2024	5:30 AM	0	0	0	0	0	0	0	0	0	0	0	0	0
4/25/2024	5:45 AM	0	0	0	0	0	0	0	0	0	0	0	0	0
4/25/2024	6:00 AM	0	0	0	0	0	0	0	0	0	0	0	0	0
4/25/2024	6:15 AM	0	0	0	0	0	0	0	0	0	0	0	0	0
4/25/2024	6:30 AM	0	0	0	0	0	0	0	0	0	0	0	0	0
4/25/2024	6:45 AM	0	0	0	0	0	0	0	0	0	0	0	0	0
4/25/2024	7:00 AM	0	0	0	0	0	0	0	0	0	0	0	0	0
4/25/2024	7:15 AM	0	0	0	0	0	0	0	0	0	0	0	0	0
4/25/2024	7:30 AM	0	0	0	0	0	0	0	0	0	0	0	0	0
4/25/2024	7:45 AM	0	0	0	0	0	0	0	0	0	0	0	0	0
4/25/2024	8:00 AM	0	0	0	0	0	0	0	0	0	0	0	0	0
4/25/2024	8:15 AM	0	0	0	0	0	0	0	0	0	0	0	0	0
4/25/2024	8:30 AM	0	0	0	0	0	0	0	0	0	0	0	0	0
4/25/2024	8:45 AM	0	0	0	0	0	0	0	0	0	0	0	0	0
4/25/2024	9:00 AM	0	0	0	0	0	0	0	0	0	0	0	0	0
4/25/2024	9:15 AM	0	0	0	0	0	0	0	0	0	0	0	0	0
4/25/2024	9:30 AM	0	0	0	0	0	0	0	0	0	0	0	0	0
4/25/2024	9:45 AM	0	0	0	0	0	0	0	0	0	0	0	0	0
4/25/2024	10:00 AM	0	0	0	0	0	0	0	0	0	0	0	0	0
4/25/2024	10:15 AM	0	0	0	0	0	0	0	0	0	0	0	0	0
4/25/2024	10:30 AM	0	0	0	0	0	0	0	0	0	0	0	0	0
4/25/2024	10:45 AM	0	0	0	0	0	0	0	0	0	0	0	0	0
4/25/2024	11:00 AM	0	0	0	0	0	0	0	0	0	0	0	0	0
4/25/2024	11:15 AM	0	0	0	0	0	0	0	0	0	0	0	0	0
4/25/2024	11:30 AM	0	0	0	0	0	0	0	0	0	0	0	0	0
4/25/2024	11:45 AM	0	0	0	0	0	0	0	0	0	0	0	0	0
4/25/2024	12:00 PM	0	0	0	0	0	0	0	0	0	0	0	0	0
4/25/2024	12:15 PM	0	0	0	0	0	0	0	0	0	0	0	0	0
4/25/2024	12:30 PM	0	0	0	0	0	0	0	0	0	0	0	0	0
4/25/2024	12:45 PM	0	0	0	0	0	0	0	0	0	0	0	0	0
4/25/2024	1:00 PM	0	0	0	0	0	0	0	0	0	0	0	0	0
4/25/2024	1:15 PM	0	0	0	0	0	0	0	0	0	0	0	0	0
4/25/2024	1:30 PM	0	0	0	0	0	0	0	0	0	0	0	0	0
4/25/2024	1:45 PM	0	0	0	0	0	0	0	0	0	0	0	0	0
4/25/2024	2:00 PM	0	0	0	0	0	0	0	0	0	0	0	0	0
4/25/2024	2:15 PM	0	0	0	0	0	0	0	0	0	0	0	0	0
4/25/2024	2:30 PM	0	0	0	0	0	0	0	0	0	0	0	0	0
4/25/2024	2:45 PM	0	0	0	0	0	0	0	0	0	0	0	0	0
4/25/2024	3:00 PM	0	0	0	0	0	0	0	0	0	0	0	0	0
4/25/2024	3:15 PM	0	0	0	0	0	0	0	0	0	0	0	0	0
4/25/2024	3:30 PM	0	0	0	0	0	0	0	0	0	0	0	0	0
4/25/2024	3:45 PM	0	0	0	0	0	0	0	0	0	0	0	0	0
4/25/2024	4:00 PM	0	0	0	0	0	0	0	0	0	0	0	0	0
4/25/2024	4:15 PM	0	0	0	0	0	0	0	0	0	0	0	0	0
4/25/2024	4:30 PM	0	0	0	0	0	0	0	0	0	0	0	0	0
4/25/2024	4:45 PM	0	0	0	0	0	0	0	0	0	0	0	0	0
4/25/2024	5:00 PM	0	0	0	0	0	0	0	0	0	0	0	0	0
4/25/2024	5:15 PM	0	0	0	0	0	0	0	0	0	0	0	0	0
4/25/2024	5:30 PM	0	0	0	0	0	0	0	0	0	0	0	0	0
4/25/2024	5:45 PM	0	0	0	0	0	0	0	0	0	0	0	0	0
4/25/2024	6:00 PM	0	0	0	0	0	0	0	0	0	0	0	0	0
4/25/2024	6:15 PM	0	0	0	0	0	0	0	0	0	0	0	0	0
4/25/2024	6:30 PM	0	0	0	0	0	0	0	0	0	0	0	0	0
4/25/2024	6:45 PM	0	0	0	0	0	0	0	0	0	0	0	0	0
4/25/2024	7:00 PM	0	0	0	0	0	0	0	0	0	0	0	0	0
4/25/2024	7:15 PM	0	0	0	0	0	0	0	0	0	0	0	0	0
4/25/2024	7:30 PM	0	0	0	0	0	0	0	0	0	0	0	0	0
4/25/2024	7:45 PM	0	0	0	0	0	0	0	0	0	0	0	0	0
4/25/2024	8:00 PM	0	0	0	0	0	0	0	0	0	0	0	0	0
4/25/2024	8:15 PM	0	0	0	0	0	0	0	0	0	0	0	0	0
4/25/2024	8:30 PM	0	0	0	0	0	0	0	0	0	0	0	0	0
4/25/2024	8:45 PM	0	0	0	0	0	0	0	0	0	0	0	0	0
4/25/2024	9:00 PM	0	0	0	0	0	0	0	0	0	0	0	0	0
4/25/2024	9:15 PM	0	0	0	0	0	0	0	0	0	0	0	0	0
4/25/2024	9:30 PM	0	0	0	0	0	0	0	0	0	0	0	0	0
4/25/2024	9:45 PM	0	0	0	0	0	0	0	0	0	0	0	0	0
4/25/2024	10:00 PM	0	0	0	0	0	0	0	0	0	0	0	0	0
4/25/2024	10:15 PM	0	0	0	0	0	0	0	0	0	0	0	0	0
4/25/2024	10:30 PM	0	0	0	0	0	0	0	0	0	0	0	0	0
4/25/2024	10:45 PM	0	0	0	0	0	0	0	0	0	0	0	0	0
4/25/2024	11:00 PM	0	0	0	0	0	0	0	0	0	0	0	0	0
4/25/2024	11:15 PM	0	0	0	0	0	0	0	0	0	0	0	0	0
4/25/2024	11:30 PM	0	0	0	0	0	0	0	0	0	0	0	0	0
4/25/2024	11:45 PM	0	0	0	0	0	0	0	0	0	0	0	0	0

4/26/2024	12:00 AM	0	0	0	0	0	0	0	0	0	0	0	0	0
4/26/2024	12:15 AM	0	0	0	0	0	0	0	0	0	0	0	0	0
4/26/2024	12:30 AM	0	0	0	0	0	0	0	0	0	0	0	0	0
4/26/2024	12:45 AM	0	0	0	0	0	0	0	0	0	0	0	0	0
4/26/2024	1:00 AM	0	0	0	0	0	0	0	0	0	0	0	0	0
4/26/2024	1:15 AM	0	0	0	0	0	0	0	0	0	0	0	0	0
4/26/2024	1:30 AM	0	0	0	0	0	0	0	0	0	0	0	0	0
4/26/2024	1:45 AM	0	0	0	0	0	0	0	0	0	0	0	0	0
4/26/2024	2:00 AM	0	0	0	0	0	0	0	0	0	0	0	0	0
4/26/2024	2:15 AM	0	0	0	0	0	0	0	0	0	0	0	0	0
4/26/2024	2:30 AM	0	0	0	0	0	0	0	0	0	0	0	0	0
4/26/2024	2:45 AM	0	0	0	0	0	0	0	0	0	0	0	0	0
4/26/2024	3:00 AM	0	0	0	0	0	0	0	0	0	0	0	0	0
4/26/2024	3:15 AM	0	0	0	0	0	0	0	0	0	0	0	0	0
4/26/2024	3:30 AM	0	0	0	0	0	0	0	0	0	0	0	0	0
4/26/2024	3:45 AM	0	0	0	0	0	0	0	0	0	0	0	0	0
4/26/2024	4:00 AM	0	0	0	0	0	0	0	0	0	0	0	0	0
4/26/2024	4:15 AM	0	0	0	0	0	0	0	0	0	0	0	0	0
4/26/2024	4:30 AM	0	0	0	0	0	0	0	0	0	0	0	0	0
4/26/2024	4:45 AM	0	0	0	0	0	0	0	0	0	0	0	0	0
4/26/2024	5:00 AM	0	0	0	0	0	0	0	0	0	0	0	0	0
4/26/2024	5:15 AM	0	0	0	0	0	0	0	0	0	0	0	0	0
4/26/2024	5:30 AM	0	0	0	0	0	0	0	0	0	0	0	0	0
4/26/2024	5:45 AM	0	0	0	0	0	0	0	0	0	0	0	0	0
4/26/2024	6:00 AM	0	0	0	0	0	0	0	0	0	0	0	0	0
4/26/2024	6:15 AM	0	0	0	0	0	0	0	0	0	0	0	0	0
4/26/2024	6:30 AM	0	0	0	0	0	0	0	0	0	0	0	0	0
4/26/2024	6:45 AM	0	0	0	0	0	0	0	0	0	0	0	0	0
4/26/2024	7:00 AM	0	0	0	0	0	0	0	0	0	0	0	0	0
4/26/2024	7:15 AM	0	0	0	0	0	0	0	0	0	0	0	0	0
4/26/2024	7:30 AM	0	0	0	0	0	0	0	0	0	0	0	0	0
4/26/2024	7:45 AM	0	0	0	0	0	0	0	0	0	0	0	0	0
4/26/2024	8:00 AM	0	0	0	0	0	0	0	0	0	0	0	0	0
4/26/2024	8:15 AM	0	0	0	0	0	0	0	0	0	0	0	0	0
4/26/2024	8:30 AM	0	0	0	0	0	0	0	0	0	0	0	0	0
4/26/2024	8:45 AM	0	0	0	0	0	0	0	0	0	0	0	0	0
4/26/2024	9:00 AM	0	0	0	0	0	0	0	0	0	0	0	0	0
4/26/2024	9:15 AM	0	0	0	0	0	0	0	0	0	0	0	0	0
4/26/2024	9:30 AM	0	0	0	0	0	0	0	0	0	0	0	0	0
4/26/2024	9:45 AM	0	0	0	0	0	0	0	0	0	0	0	0	0
4/26/2024	10:00 AM	0	0	0	0	0	0	0	0	0	0	0	0	0
4/26/2024	10:15 AM	0	0	0	0	0	0	0	0	0	0	0	0	0
4/26/2024	10:30 AM	0	0	0	0	0	0	0	0	0	0	0	0	0
4/26/2024	10:45 AM	0	0	0	0	0	0	0	0	0	0	0	0	0
4/26/2024	11:00 AM	0	0	0	0	0	0	0	0	0	0	0	0	0
4/26/2024	11:15 AM	0	0	0	0	0	0	0	0	0	0	0	0	0
4/26/2024	11:30 AM	0	0	0	0	0	0	0	0	0	0	0	0	0
4/26/2024	11:45 AM	0	0	0	0	0	0	0	0	0	0	0	0	0
4/26/2024	12:00 PM	0	0	0	0	0	0	0	0	0	0	0	0	0
4/26/2024	12:15 PM	0	0	0	0	0	0	0	0	0	0	0	0	0
4/26/2024	12:30 PM	0	0	0	0	0	0	0	0	0	0	0	0	0
4/26/2024	12:45 PM	0	0	0	0	0	0	0	0	0	0	0	0	0
4/26/2024	1:00 PM	0	0	0	0	0	0	0	0	0	0	0	0	0
4/26/2024	1:15 PM	0	0	0	0	0	0	0	0	0	0	0	0	0
4/26/2024	1:30 PM	0	0	0	0	0	0	0	0	0	0	0	0	0
4/26/2024	1:45 PM	0	0	0	0	0	0	0	0	0	0	0	0	0
4/26/2024	2:00 PM	0	0	0	0	0	0	0	0	0	0	0	0	0
4/26/2024	2:15 PM	0	0	0	0	0	0	0	0	0	0	0	0	0
4/26/2024	2:30 PM	0	0	0	0	0	0	0	0	0	0	0	0	0
4/26/2024	2:45 PM	0	0	0	0	0	0	0	0	0	0	0	0	0
4/26/2024	3:00 PM	0	0	0	0	0	0	0	0	0	0	0	0	0
4/26/2024	3:15 PM	0	0	0	0	0	0	0	0	0	0	0	0	0
4/26/2024	3:30 PM	0	0	0	0	0	0	0	0	0	0	0	0	0
4/26/2024	3:45 PM	0	0	0	0	0	0	0	0	0	0	0	0	0
4/26/2024	4:00 PM	0	0	0	0	0	0	0	0	0	0	0	0	0
4/26/2024	4:15 PM	0	0	0	0	0	0	0	0	0	0	0	0	0
4/26/2024	4:30 PM	0	0	0	0	0	0	0	0	0	0	0	0	0
4/26/2024	4:45 PM	0	0	0	0	0	0	0	0	0	0	0	0	0
4/26/2024	5:00 PM	0	0	0	0	0	0	0	0	0	0	0	0	0
4/26/2024	5:15 PM	0	0	0	0	0	0	0	0	0	0	0	0	0
4/26/2024	5:30 PM	0	0	0	0	0	0	0	0	0	0	0	0	0
4/26/2024	5:45 PM	0	0	0	0	0	0	0	0	0	0	0	0	0
4/26/2024	6:00 PM	0	0	0	0	0	0	0	0	0	0	0	0	0
4/26/2024	6:15 PM	0	0	0	0	0	0	0	0	0	0	0	0	0
4/26/2024	6:30 PM	0	0	0	0	0	0	0	0	0	0	0	0	0
4/26/2024	6:45 PM	0	0	0	0	0	0	0	0	0	0	0	0	0
4/26/2024	7:00 PM	0	0	0	0	0	0	0	0	0	0	0	0	0
4/26/2024	7:15 PM	0	0	0	0	0	0	0	0	0	0	0	0	0
4/26/2024	7:30 PM	0	0	0	0	0	0	0	0	0	0	0	0	0
4/26/2024	7:45 PM	0	0	0	0	0	0	0	0	0	0	0	0	0
4/26/2024	8:00 PM	0	0	0	0	0	0	0	0	0	0	0	0	0
4/26/2024	8:15 PM	0	0	0	0	0	0	0	0	0	0	0	0	0
4/26/2024	8:30 PM	0	0	0	0	0	0	0	0	0	0	0	0	0
4/26/2024	8:45 PM	0	0	0	0	0	0	0	0	0	0	0	0	0
4/26/2024	9:00 PM	0	0	0	0	0	0	0	0	0	0	0	0	0
4/26/2024	9:15 PM	0	0	0	0	0	0	0	0	0	0	0	0	0
4/26/2024	9:30 PM	0	0	0	0	0	0	0	0	0	0	0	0	0
4/26/2024	9:45 PM	0	0	0	0	0	0	0	0	0	0	0	0	0
4/26/2024	10:00 PM	0	0	0	0	0	0	0	0	0	0	0	0	0
4/26/2024	10:15 PM	0	0	0	0	0	0	0	0	0	0	0	0	0
4/26/2024	10:30 PM	0	0	0	0	0	0	0	0	0	0	0	0	0
4/26/2024	10:45 PM	0	0	0	0	0	0	0	0	0	0	0	0	0
4/26/2024	11:00 PM	0	0	0	0	0	0	0	0	0	0	0	0	0
4/26/2024	11:15 PM	0	0	0	0	0	0	0	0	0	0	0	0	0
4/26/2024	11:30 PM	0	0	0	0	0	0	0	0	0	0	0	0	0
4/26/2024	11:45 PM	0	0	0	0	0	0	0	0	0	0	0	0	0

4/27/2024	12:00 AM	0	0	0	0	0	0	0	0	0	0	0	0	0
4/27/2024	12:15 AM	0	0	0	0	0	0	0	0	0	0	0	0	0
4/27/2024	12:30 AM	0	0	0	0	0	0	0	0	0	0	0	0	0
4/27/2024	12:45 AM	0	0	0	0	0	0	0	0	0	0	0	0	0
4/27/2024	1:00 AM	0	0	0	0	0	0	0	0	0	0	0	0	0
4/27/2024	1:15 AM	0	0	0	0	0	0	0	0	0	0	0	0	0
4/27/2024	1:30 AM	0	0	0	0	0	0	0	0	0	0	0	0	0
4/27/2024	1:45 AM	0	0	0	0	0	0	0	0	0	0	0	0	0
4/27/2024	2:00 AM	0	0	0	0	0	0	0	0	0	0	0	0	0
4/27/2024	2:15 AM	0	0	0	0	0	0	0	0	0	0	0	0	0
4/27/2024	2:30 AM	0	0	0	0	0	0	0	0	0	0	0	0	0
4/27/2024	2:45 AM	0	0	0	0	0	0	0	0	0	0	0	0	0
4/27/2024	3:00 AM	0	0	0	0	0	0	0	0	0	0	0	0	0
4/27/2024	3:15 AM	0	0	0	0	0	0	0	0	0	0	0	0	0
4/27/2024	3:30 AM	0	0	0	0	0	0	0	0	0	0	0	0	0
4/27/2024	3:45 AM	0	0	0	0	0	0	0	0	0	0	0	0	0
4/27/2024	4:00 AM	0	0	0	0	0	0	0	0	0	0	0	0	0
4/27/2024	4:15 AM	0	0	0	0	0	0	0	0	0	0	0	0	0
4/27/2024	4:30 AM	0	0	0	0	0	0	0	0	0	0	0	0	0
4/27/2024	4:45 AM	0	0	0	0	0	0	0	0	0	0	0	0	0
4/27/2024	5:00 AM	0	0	0	0	0	0	0	0	0	0	0	0	0
4/27/2024	5:15 AM	0	0	0	0	0	0	0	0	0	0	0	0	0
4/27/2024	5:30 AM	0	0	0	0	0	0	0	0	0	0	0	0	0
4/27/2024	5:45 AM	0	0	0	0	0	0	0	0	0	0	0	0	0
4/27/2024	6:00 AM	0	0	0	0	0	0	0	0	0	0	0	0	0
4/27/2024	6:15 AM	0	0	0	0	0	0	0	0	0	0	0	0	0
4/27/2024	6:30 AM	0	0	0	0	0	0	0	0	0	0	0	0	0
4/27/2024	6:45 AM	0	0	0	0	0	0	0	0	0	0	0	0	0
4/27/2024	7:00 AM	0	0	0	0	0	0	0	0	0	0	0	0	0
4/27/2024	7:15 AM	0	0	0	0	0	0	0	0	0	0	0	0	0
4/27/2024	7:30 AM	0	0	0	0	0	0	0	0	0	0	0	0	0
4/27/2024	7:45 AM	0	0	0	0	0	0	0	0	0	0	0	0	0
4/27/2024	8:00 AM	0	0	0	0	0	0	0	0	0	0	0	0	0
4/27/2024	8:15 AM	0	0	0	0	0	0	0	0	0	0	0	0	0
4/27/2024	8:30 AM	0	0	0	0	0	0	0	0	0	0	0	0	0
4/27/2024	8:45 AM	0	0	0	0	0	0	0	0	0	0	0	0	0
4/27/2024	9:00 AM	0	0	0	0	0	0	0	0	0	0	0	0	0
4/27/2024	9:15 AM	0	0	0	0	0	0	0	0	0	0	0	0	0
4/27/2024	9:30 AM	0	0	0	0	0	0	0	0	0	0	0	0	0
4/27/2024	9:45 AM	0	0	0	0	0	0	0	0	0	0	0	0	0
4/27/2024	10:00 AM	0	0	0	0	0	0	0	0	0	0	0	0	0
4/27/2024	10:15 AM	0	0	0	0	0	0	0	0	0	0	0	0	0
4/27/2024	10:30 AM	0	0	0	0	0	0	0	0	0	0	0	0	0
4/27/2024	10:45 AM	0	0	0	0	0	0	0	0	0	0	0	0	0
4/27/2024	11:00 AM	0	0	0	0	0	0	0	0	0	0	0	0	0
4/27/2024	11:15 AM	0	0	0	0	0	0	0	0	0	0	0	0	0
4/27/2024	11:30 AM	0	0	0	0	0	0	0	0	0	0	0	0	0
4/27/2024	11:45 AM	0	0	0	0	0	0	0	0	0	0	0	0	0
4/27/2024	12:00 PM	0	0	0	0	0	0	0	0	0	0	0	0	0
4/27/2024	12:15 PM	0	0	0	0	0	0	0	0	0	0	0	0	0
4/27/2024	12:30 PM	0	0	0	0	0	0	0	0	0	0	0	0	0
4/27/2024	12:45 PM	0	0	0	0	0	0	0	0	0	0	0	0	0
4/27/2024	1:00 PM	0	0	0	0	0	0	0	0	0	0	0	0	0
4/27/2024	1:15 PM	0	0	0	0	0	0	0	0	0	0	0	0	0
4/27/2024	1:30 PM	0	0	0	0	0	0	0	0	0	0	0	0	0
4/27/2024	1:45 PM	0	0	0	0	0	0	0	0	0	0	0	0	0
4/27/2024	2:00 PM	0	0	0	0	0	0	0	0	0	0	0	0	0
4/27/2024	2:15 PM	0	0	0	0	0	0	0	0	0	0	0	0	0
4/27/2024	2:30 PM	0	0	0	0	0	0	0	0	0	0	0	0	0
4/27/2024	2:45 PM	0	0	0	0	0	0	0	0	0	0	0	0	0
4/27/2024	3:00 PM	0	0	0	0	0	0	0	0	0	0	0	0	0
4/27/2024	3:15 PM	0	0	0	0	0	0	0	0	0	0	0	0	0
4/27/2024	3:30 PM	0	0	0	0	0	0	0	0	0	0	0	0	0
4/27/2024	3:45 PM	0	0	0	0	0	0	0	0	0	0	0	0	0
4/27/2024	4:00 PM	0	0	0	0	0	0	0	0	0	0	0	0	0
4/27/2024	4:15 PM	0	0	0	0	0	0	0	0	0	0	0	0	0
4/27/2024	4:30 PM	0	0	0	0	0	0	0	0	0	0	0	0	0
4/27/2024	4:45 PM	0	0	0	0	0	0	0	0	0	0	0	0	0
4/27/2024	5:00 PM	0	0	0	0	0	0	0	0	0	0	0	0	0
4/27/2024	5:15 PM	0	0	0	0	0	0	0	0	0	0	0	0	0
4/27/2024	5:30 PM	0	0	0	0	0	0	0	0	0	0	0	0	0
4/27/2024	5:45 PM	0	0	0	0	0	0	0	0	0	0	0	0	0
4/27/2024	6:00 PM	0	0	0	0	0	0	0	0	0	0	0	0	0
4/27/2024	6:15 PM	0	0	0	0	0	0	0	0	0	0	0	0	0
4/27/2024	6:30 PM	0	0	0	0	0	0	0	0	0	0	0	0	0
4/27/2024	6:45 PM	0	0	0	0	0	0	0	0	0	0	0	0	0
4/27/2024	7:00 PM	0	0	0	0	0	0	0	0	0	0	0	0	0
4/27/2024	7:15 PM	0	0	0	0	0	0	0	0	0	0	0	0	0
4/27/2024	7:30 PM	0	0	0	0	0	0	0	0	0	0	0	0	0
4/27/2024	7:45 PM	0	0	0	0	0	0	0	0	0	0	0	0	0
4/27/2024	8:00 PM	0	0	0	0	0	0	0	0	0	0	0	0	0
4/27/2024	8:15 PM	0	0	0	0	0	0	0	0	0	0	0	0	0
4/27/2024	8:30 PM	0	0	0	0	0	0	0	0	0	0	0	0	0
4/27/2024	8:45 PM	0	0	0	0	0	0	0	0	0	0	0	0	0
4/27/2024	9:00 PM	0	0	0	0	0	0	0	0	0	0	0	0	0
4/27/2024	9:15 PM	0	0	0	0	0	0	0	0	0	0	0	0	0
4/27/2024	9:30 PM	0	0	0	0	0	0	0	0	0	0	0	0	0
4/27/2024	9:45 PM	0	0	0	0	0	0	0	0	0	0	0	0	0
4/27/2024	10:00 PM	0	0	0	0	0	0	0	0	0	0	0	0	0
4/27/2024	10:15 PM	0	0	0	0	0	0	0	0	0	0	0	0	0
4/27/2024	10:30 PM	0	0	0	0	0	0	0	0	0	0	0	0	0
4/27/2024	10:45 PM	0	0	0	0	0	0	0	0	0	0	0	0	0
4/27/2024	11:00 PM	0	0	0	0	0	0	0	0	0	0	0	0	0
4/27/2024	11:15 PM	0	0	0	0	0	0	0	0	0	0	0	0	0
4/27/2024	11:30 PM	0	0	0	0	0	0	0	0	0	0	0	0	0
4/27/2024	11:45 PM	0	0	0	0	0	0	0	0	0	0	0	0	0

EB
File Name:
Start Date: 4/21/2024
Start Time: 0
Site Code: 74 Lane 4 EB
Station ID: 1
Location 1: I-20, west of US-378 Sunset Blvd S/Bound Off-Ramp
Location 2:

Date	Time	1	2	3	4	5	6	7	8	9	10	11	12	13
4/21/2024	12:00 AM	0	40	0	0	0	0	0	0	1	0	0	0	0
4/21/2024	12:15 AM	0	40	2	0	0	0	0	0	1	0	0	0	0
4/21/2024	12:30 AM	0	38	2	0	1	0	0	0	0	0	0	0	0
4/21/2024	12:45 AM	0	39	2	0	1	0	0	0	0	0	0	0	0
4/21/2024	1:00 AM	0	42	2	0	1	0	0	0	0	0	0	0	0
4/21/2024	1:15 AM	0	35	0	0	1	0	0	0	0	0	0	0	0
4/21/2024	1:30 AM	0	32	0	0	0	0	0	0	0	0	0	0	0
4/21/2024	1:45 AM	0	26	0	0	0	0	0	0	0	0	0	0	0
4/21/2024	2:00 AM	0	16	0	0	0	0	0	0	0	0	0	0	0
4/21/2024	2:15 AM	0	13	0	0	0	0	0	0	0	0	0	0	0
4/21/2024	2:30 AM	0	12	0	0	0	1	0	0	0	0	0	0	0
4/21/2024	2:45 AM	0	11	0	0	0	1	0	0	0	0	0	0	0
4/21/2024	3:00 AM	0	13	0	0	0	1	0	0	1	0	0	0	0
4/21/2024	3:15 AM	0	13	0	0	0	1	0	0	1	0	0	0	0
4/21/2024	3:30 AM	0	10	0	0	0	0	0	0	2	0	0	0	0
4/21/2024	3:45 AM	0	7	1	0	0	0	0	0	2	0	0	0	0
4/21/2024	4:00 AM	0	7	1	0	0	0	0	0	1	0	0	0	0
4/21/2024	4:15 AM	0	9	1	0	0	0	0	0	1	0	0	0	0
4/21/2024	4:30 AM	0	13	1	0	0	0	0	0	0	0	0	0	0
4/21/2024	4:45 AM	0	15	0	0	1	0	0	0	2	0	0	0	0
4/21/2024	5:00 AM	0	24	1	0	1	0	0	0	2	0	0	0	0
4/21/2024	5:15 AM	0	31	1	0	1	0	0	0	3	0	0	0	0
4/21/2024	5:30 AM	0	56	5	0	1	0	0	0	4	0	0	0	0
4/21/2024	5:45 AM	0	83	9	0	0	1	0	0	2	0	0	0	0
4/21/2024	6:00 AM	0	101	11	0	0	1	0	0	3	0	0	0	0
4/21/2024	6:15 AM	0	106	15	0	0	1	0	0	4	0	0	0	0
4/21/2024	6:30 AM	0	93	15	0	0	1	0	0	4	0	0	0	0
4/21/2024	6:45 AM	0	84	12	0	0	0	0	0	5	0	0	0	0
4/21/2024	7:00 AM	0	78	12	0	1	0	0	0	4	0	0	0	0
4/21/2024	7:15 AM	0	80	10	0	3	0	0	0	2	0	0	0	0
4/21/2024	7:30 AM	0	89	10	0	3	0	0	0	1	0	0	0	0
4/21/2024	7:45 AM	0	103	15	0	3	0	0	0	1	0	0	0	0
4/21/2024	8:00 AM	0	134	23	0	4	0	0	0	1	0	0	0	0
4/21/2024	8:15 AM	0	165	34	0	3	0	0	0	1	0	0	0	0
4/21/2024	8:30 AM	0	190	42	0	3	0	0	0	1	0	0	0	0
4/21/2024	8:45 AM	0	211	42	0	3	0	0	0	0	0	0	0	0
4/21/2024	9:00 AM	0	193	35	1	1	1	0	0	0	0	0	0	0
4/21/2024	9:15 AM	0	196	34	1	0	1	0	0	1	0	0	0	0
4/21/2024	9:30 AM	0	210	34	1	0	1	0	0	2	0	0	0	0
4/21/2024	9:45 AM	0	221	43	1	0	1	0	0	4	0	0	0	0
4/21/2024	10:00 AM	0	237	54	0	0	0	0	0	4	0	0	0	0
4/21/2024	10:15 AM	0	220	44	0	0	1	0	0	4	0	0	0	0
4/21/2024	10:30 AM	0	192	39	0	1	1	0	0	5	0	0	0	0
4/21/2024	10:45 AM	0	190	32	0	1	1	0	0	3	0	0	0	0
4/21/2024	11:00 AM	0	198	28	1	1	2	0	0	4	0	0	0	0
4/21/2024	11:15 AM	0	219	35	1	1	2	0	2	4	0	0	0	0
4/21/2024	11:30 AM	0	245	44	1	1	3	0	2	2	0	0	0	0
4/21/2024	11:45 AM	0	248	49	1	2	3	0	2	5	0	0	0	0
4/21/2024	12:00 PM	0	252	51	0	5	2	0	2	5	0	0	0	0
4/21/2024	12:15 PM	0	270	53	0	7	1	0	0	5	0	0	0	0
4/21/2024	12:30 PM	0	277	49	0	6	0	0	0	6	0	0	0	0
4/21/2024	12:45 PM	0	285	54	0	5	0	0	1	3	0	0	0	0
4/21/2024	1:00 PM	0	305	56	0	2	0	0	1	5	0	0	0	0
4/21/2024	1:15 PM	0	306	66	1	1	0	0	1	5	0	0	0	0
4/21/2024	1:30 PM	0	306	59	1	2	0	0	1	5	0	0	0	0
4/21/2024	1:45 PM	0	309	56	1	3	0	0	0	8	0	0	0	0
4/21/2024	2:00 PM	0	303	51	1	3	0	0	0	5	0	0	0	0
4/21/2024	2:15 PM	0	273	41	0	2	0	0	1	5	0	0	0	0
4/21/2024	2:30 PM	0	253	54	0	2	1	0	1	6	0	0	0	0
4/21/2024	2:45 PM	0	228	43	0	2	1	0	1	4	0	0	0	0
4/21/2024	3:00 PM	0	212	43	0	3	1	0	1	4	0	0	0	0
4/21/2024	3:15 PM	0	230	46	0	4	1	0	1	4	0	0	0	0
4/21/2024	3:30 PM	0	223	41	0	4	0	0	2	2	0	0	0	0
4/21/2024	3:45 PM	0	230	51	0	4	0	0	2	2	0	0	0	0
4/21/2024	4:00 PM	0	223	56	0	3	0	0	2	5	0	0	0	0
4/21/2024	4:15 PM	0	211	54	0	4	0	0	1	5	0	0	0	0
4/21/2024	4:30 PM	0	219	50	0	3	0	0	0	7	0	0	0	0
4/21/2024	4:45 PM	0	211	49	0	4	0	0	0	8	0	0	0	0
4/21/2024	5:00 PM	0	221	45	0	4	0	0	0	9	0	0	0	0
4/21/2024	5:15 PM	0	213	43	0	3	1	0	0	9	0	0	0	0
4/21/2024	5:30 PM	0	228	39	0	3	1	0	0	8	0	0	0	0
4/21/2024	5:45 PM	0	237	30	0	1	1	0	0	8	0	0	0	0
4/21/2024	6:00 PM	0	224	26	0	2	1	0	0	5	0	0	0	0
4/21/2024	6:15 PM	0	219	23	0	1	0	0	0	4	0	0	0	0
4/21/2024	6:30 PM	0	189	26	0	1	0	0	0	5	0	0	0	0
4/21/2024	6:45 PM	0	167	26	0	1	0	0	0	4	0	0	0	0
4/21/2024	7:00 PM	0	155	27	0	1	0	0	0	3	0	0	0	0
4/21/2024	7:15 PM	0	137	24	0	2	0	0	0	3	0	0	0	0
4/21/2024	7:30 PM	0	128	17	0	2	0	0	0	3	0	0	0	0
4/21/2024	7:45 PM	0	115	13	0	2	0	0	0	4	0	0	0	0
4/21/2024	8:00 PM	0	94	5	0	1	0	0	0	4	0	0	0	0
4/21/2024	8:15 PM	0	95	2	0	0	0	0	0	5	0	0	0	0
4/21/2024	8:30 PM	0	106	1	0	0	1	0	0	3	0	0	0	0
4/21/2024	8:45 PM	0	98	1	0	0	1	0	0	1	0	0	0	0
4/21/2024	9:00 PM	0	92	1	0	0	1	0	0	2	2	0	0	0
4/21/2024	9:15 PM	0	90	0	0	1	1	0	0	3	2	0	0	0
4/21/2024	9:30 PM	0	68	0	0	1	0	0	0	5	2	0	0	0
4/21/2024	9:45 PM	0	65	0	0	1	0	0	0	7	2	0	0	0
4/21/2024	10:00 PM	0	66	1	0	1	0	0	0	6	0	0	0	0
4/21/2024	10:15 PM	0	57	1	0	0	0	0	0	4	2	0	0	0
4/21/2024	10:30 PM	0	50	2	0	0	0	0	0	4	2	0	0	0
4/21/2024	10:45 PM	0	42	2	0	0	0	0	0	2	2	0	0	0
4/21/2024	11:00 PM	0	32	1	0	0	0	0	0	5	2	0	0	0
4/21/2024	11:15 PM	0	24	1	0	0	0	0	0	6	0	0	0	0
4/21/2024	11:30 PM	0	20	0	0	0	0	0	0	5	0	0	0	0
4/21/2024	11:45 PM	0	20	0	0	0	0	0	0	5	0	1	0	0

4/22/2024	12:00 AM	0	21	0	0	0	0	0	0	2	0	1	0	0
4/22/2024	12:15 AM	0	21	0	0	0	0	0	0	1	0	1	0	0
4/22/2024	12:30 AM	0	23	0	0	0	0	0	0	0	0	1	0	0
4/22/2024	12:45 AM	0	20	0	0	0	0	0	0	1	0	0	0	0
4/22/2024	1:00 AM	0	22	0	0	0	0	0	0	1	0	0	0	0
4/22/2024	1:15 AM	0	21	0	0	0	0	0	0	1	0	0	0	0
4/22/2024	1:30 AM	0	20	0	0	0	0	0	0	2	0	0	0	0
4/22/2024	1:45 AM	0	23	0	0	0	0	0	0	1	0	0	0	0
4/22/2024	2:00 AM	0	19	0	0	0	0	0	0	1	0	0	0	0
4/22/2024	2:15 AM	0	21	0	0	0	0	0	0	2	0	0	0	0
4/22/2024	2:30 AM	0	20	0	0	0	0	0	0	1	0	0	0	0
4/22/2024	2:45 AM	0	15	0	0	0	0	0	0	1	0	0	0	0
4/22/2024	3:00 AM	0	17	0	0	0	0	0	0	2	0	0	0	0
4/22/2024	3:15 AM	0	19	0	0	0	0	0	0	2	0	0	0	0
4/22/2024	3:30 AM	0	26	0	0	0	0	0	0	3	0	0	0	0
4/22/2024	3:45 AM	0	35	1	0	0	0	0	0	3	0	0	0	0
4/22/2024	4:00 AM	0	48	1	0	0	0	0	0	4	0	1	0	0
4/22/2024	4:15 AM	0	57	2	0	0	0	0	0	3	0	1	0	0
4/22/2024	4:30 AM	0	62	4	0	0	0	0	0	3	0	1	0	0
4/22/2024	4:45 AM	0	86	7	0	0	0	0	0	5	0	1	0	0
4/22/2024	5:00 AM	0	117	10	0	0	0	0	0	4	0	0	0	0
4/22/2024	5:15 AM	0	153	24	0	0	0	0	0	4	0	0	0	0
4/22/2024	5:30 AM	0	191	40	0	0	0	0	0	5	0	1	0	0
4/22/2024	5:45 AM	0	266	71	0	0	0	0	0	7	0	3	0	0
4/22/2024	6:00 AM	0	364	114	0	2	1	0	0	9	0	4	0	0
4/22/2024	6:15 AM	0	478	145	0	2	1	0	0	15	0	4	0	0
4/22/2024	6:30 AM	0	627	194	0	4	1	0	2	18	0	3	0	0
4/22/2024	6:45 AM	0	753	233	0	6	1	0	2	20	0	1	0	0
4/22/2024	7:00 AM	0	818	244	0	6	0	0	2	20	0	0	0	0
4/22/2024	7:15 AM	0	817	231	0	9	1	0	2	17	0	0	0	0
4/22/2024	7:30 AM	0	774	193	1	7	1	0	0	14	0	0	0	0
4/22/2024	7:45 AM	0	681	147	2	8	1	0	1	11	0	0	0	0
4/22/2024	8:00 AM	0	604	120	3	6	1	0	1	8	0	0	0	0
4/22/2024	8:15 AM	0	528	111	3	8	0	0	2	6	0	0	0	0
4/22/2024	8:30 AM	0	451	110	2	16	0	0	2	7	0	0	0	0
4/22/2024	8:45 AM	0	416	107	2	16	1	0	1	12	0	0	0	0
4/22/2024	9:00 AM	0	379	99	1	18	1	0	1	15	0	0	0	0
4/22/2024	9:15 AM	0	363	89	1	18	1	0	1	19	0	0	0	0
4/22/2024	9:30 AM	0	347	84	2	14	2	0	1	17	0	0	0	0
4/22/2024	9:45 AM	0	312	76	1	14	1	0	1	13	0	0	0	0
4/22/2024	10:00 AM	0	297	75	1	15	1	0	1	12	0	0	0	0
4/22/2024	10:15 AM	0	290	73	2	17	2	0	0	10	0	0	0	0
4/22/2024	10:30 AM	0	299	61	4	18	1	0	0	11	0	0	0	0
4/22/2024	10:45 AM	0	299	66	4	15	1	0	1	8	0	0	0	0
4/22/2024	11:00 AM	0	271	60	4	12	2	0	1	10	0	0	0	0
4/22/2024	11:15 AM	0	269	60	3	6	2	0	1	9	0	0	0	0
4/22/2024	11:30 AM	0	249	63	1	3	2	0	1	9	0	0	0	0
4/22/2024	11:45 AM	0	242	57	1	3	3	0	1	8	0	0	0	0
4/22/2024	12:00 PM	0	278	52	1	5	3	0	1	8	0	0	0	0
4/22/2024	12:15 PM	0	291	55	2	8	2	0	1	9	0	0	0	0
4/22/2024	12:30 PM	0	308	61	1	7	2	0	2	11	0	0	0	0
4/22/2024	12:45 PM	0	326	58	2	10	1	0	1	12	0	0	0	0
4/22/2024	1:00 PM	0	307	58	3	11	0	0	1	9	0	0	0	0
4/22/2024	1:15 PM	0	319	60	2	9	0	0	2	10	0	0	0	0
4/22/2024	1:30 PM	0	330	62	2	9	0	0	1	9	0	0	0	0
4/22/2024	1:45 PM	0	333	75	1	8	1	0	1	11	0	0	0	0
4/22/2024	2:00 PM	0	358	79	3	11	1	0	2	11	0	0	0	0
4/22/2024	2:15 PM	0	363	74	3	11	3	0	2	9	0	0	0	0
4/22/2024	2:30 PM	0	357	64	4	12	5	0	3	7	0	0	0	0
4/22/2024	2:45 PM	0	347	52	5	13	5	0	4	7	0	0	0	0
4/22/2024	3:00 PM	0	348	54	2	9	6	0	3	9	0	0	0	0
4/22/2024	3:15 PM	0	348	52	2	7	4	0	3	15	0	0	0	0
4/22/2024	3:30 PM	0	349	53	1	7	2	0	2	17	0	0	0	0
4/22/2024	3:45 PM	0	341	57	0	6	1	0	1	19	0	0	0	0
4/22/2024	4:00 PM	0	329	63	0	8	1	0	1	17	0	0	0	0
4/22/2024	4:15 PM	0	304	70	0	8	2	0	0	12	0	0	0	0
4/22/2024	4:30 PM	0	328	86	0	7	4	0	0	14	0	0	0	0
4/22/2024	4:45 PM	0	381	94	1	7	4	0	0	15	0	0	0	0
4/22/2024	5:00 PM	0	373	94	1	4	3	0	0	18	0	0	0	0
4/22/2024	5:15 PM	2	369	89	2	4	2	0	0	18	0	0	0	0
4/22/2024	5:30 PM	2	359	74	2	3	0	0	0	17	0	0	0	0
4/22/2024	5:45 PM	2	300	56	1	1	0	0	0	13	0	0	0	0
4/22/2024	6:00 PM	2	277	37	1	0	0	0	0	12	0	0	0	0
4/22/2024	6:15 PM	0	261	31	0	1	0	0	0	9	0	0	0	0
4/22/2024	6:30 PM	0	218	31	0	1	0	0	0	7	0	0	0	0
4/22/2024	6:45 PM	0	189	30	0	2	0	0	0	9	0	0	0	0
4/22/2024	7:00 PM	0	180	38	0	3	1	0	0	9	0	0	0	0
4/22/2024	7:15 PM	0	172	39	0	5	1	0	0	9	0	1	0	0
4/22/2024	7:30 PM	0	150	28	0	7	1	0	0	8	0	1	0	0
4/22/2024	7:45 PM	0	148	24	0	8	1	0	0	4	0	3	0	0
4/22/2024	8:00 PM	0	129	17	0	8	0	0	0	3	0	3	0	0
4/22/2024	8:15 PM	0	114	13	0	5	0	0	0	4	0	3	0	0
4/22/2024	8:30 PM	0	114	14	0	4	0	0	0	5	0	3	0	0
4/22/2024	8:45 PM	0	100	12	0	4	0	0	0	7	0	3	0	0
4/22/2024	9:00 PM	0	87	13	0	4	0	0	0	8	0	3	0	0
4/22/2024	9:15 PM	0	79	12	0	4	0	0	0	8	0	2	0	0
4/22/2024	9:30 PM	0	68	9	0	5	0	0	0	8	0	2	0	0
4/22/2024	9:45 PM	0	65	11	0	3	0	0	0	7	0	1	0	0
4/22/2024	10:00 PM	0	63	8	0	2	0	0	0	4	0	1	0	0
4/22/2024	10:15 PM	0	56	7	0	3	0	0	0	4	0	3	0	0
4/22/2024	10:30 PM	0	50	8	0	1	0	0	0	4	0	3	0	0
4/22/2024	10:45 PM	0	38	5	0	1	0	0	0	4	0	3	0	0
4/22/2024	11:00 PM	0	27	3	0	1	0	0	0	5	0	4	0	0
4/22/2024	11:15 PM	0	24	2	0	0	0	0	0	5	0	4	0	0
4/22/2024	11:30 PM	0	15	0	0	0	0	0	0	5	0	7	0	0
4/22/2024	11:45 PM	0	18	1	0	0	0	0	0	6	0	6	0	0

4/23/2024	12:00 AM	0	19	1	0	0	0	0	0	7	0	5	0	0
4/23/2024	12:15 AM	0	16	1	0	0	0	0	0	7	0	4	0	0
4/23/2024	12:30 AM	0	15	1	0	0	0	0	0	6	0	2	0	0
4/23/2024	12:45 AM	0	12	0	0	0	0	0	0	7	0	2	0	0
4/23/2024	1:00 AM	0	11	0	0	0	0	0	0	7	0	3	0	0
4/23/2024	1:15 AM	0	9	0	0	0	0	0	0	6	0	2	0	0
4/23/2024	1:30 AM	0	10	0	0	0	0	0	0	7	0	2	0	0
4/23/2024	1:45 AM	0	10	0	0	0	0	0	0	7	0	4	0	0
4/23/2024	2:00 AM	0	12	0	0	0	0	0	0	8	0	4	0	0
4/23/2024	2:15 AM	0	11	0	0	0	0	0	0	8	0	5	0	0
4/23/2024	2:30 AM	0	9	0	0	1	0	0	0	8	0	4	0	0
4/23/2024	2:45 AM	0	12	1	0	2	0	0	0	6	0	3	0	0
4/23/2024	3:00 AM	0	12	1	0	2	0	0	0	6	0	4	0	0
4/23/2024	3:15 AM	0	15	1	0	2	0	0	0	8	0	3	0	0
4/23/2024	3:30 AM	0	22	2	0	2	0	0	0	7	0	3	0	0
4/23/2024	3:45 AM	0	23	1	0	1	0	0	0	8	0	2	0	0
4/23/2024	4:00 AM	0	38	1	0	1	0	0	0	11	0	0	0	0
4/23/2024	4:15 AM	0	39	1	0	1	0	0	0	11	0	2	0	0
4/23/2024	4:30 AM	0	48	0	0	0	0	0	0	12	0	2	0	0
4/23/2024	4:45 AM	0	72	8	0	0	0	0	0	14	0	4	0	0
4/23/2024	5:00 AM	0	87	15	0	0	0	0	0	13	0	6	0	0
4/23/2024	5:15 AM	0	143	28	0	0	0	0	0	13	0	4	0	0
4/23/2024	5:30 AM	0	206	40	0	0	0	0	0	15	0	5	0	0
4/23/2024	5:45 AM	0	322	52	0	1	4	0	0	12	0	3	0	0
4/23/2024	6:00 AM	0	458	80	0	2	4	0	2	10	0	1	0	0
4/23/2024	6:15 AM	0	563	102	0	2	4	1	2	16	0	1	1	0
4/23/2024	6:30 AM	0	714	125	0	2	4	1	2	16	0	0	1	0
4/23/2024	6:45 AM	0	808	153	2	4	0	1	2	19	0	0	1	0
4/23/2024	7:00 AM	0	843	157	2	6	0	1	1	18	0	0	1	0
4/23/2024	7:15 AM	0	859	145	2	8	0	0	2	16	0	0	0	0
4/23/2024	7:30 AM	0	838	142	3	10	1	0	2	17	0	0	0	0
4/23/2024	7:45 AM	0	787	119	4	10	2	0	2	15	0	0	0	0
4/23/2024	8:00 AM	1	727	102	4	12	3	0	1	17	0	0	0	0
4/23/2024	8:15 AM	1	633	98	4	11	4	0	0	12	0	0	0	0
4/23/2024	8:30 AM	1	507	79	3	11	3	0	1	11	0	0	0	0
4/23/2024	8:45 AM	1	416	68	0	11	3	0	3	10	0	0	0	0
4/23/2024	9:00 AM	0	357	60	0	9	3	0	5	8	0	0	0	0
4/23/2024	9:15 AM	0	347	58	0	10	3	0	5	10	0	0	0	0
4/23/2024	9:30 AM	0	343	63	0	11	3	0	4	7	0	0	0	0
4/23/2024	9:45 AM	0	328	67	0	10	3	0	2	10	0	0	0	0
4/23/2024	10:00 AM	0	322	67	1	10	2	0	0	10	0	0	0	0
4/23/2024	10:15 AM	0	317	60	2	9	1	0	1	11	0	0	0	0
4/23/2024	10:30 AM	0	307	53	3	7	1	0	3	13	0	0	0	0
4/23/2024	10:45 AM	0	290	49	4	6	1	0	3	14	0	0	0	0
4/23/2024	11:00 AM	0	273	53	4	6	1	0	4	13	0	0	0	0
4/23/2024	11:15 AM	0	273	55	4	6	1	0	4	12	0	0	0	0
4/23/2024	11:30 AM	0	283	56	3	8	1	0	3	14	0	0	0	0
4/23/2024	11:45 AM	0	295	55	2	9	0	0	4	10	0	0	0	0
4/23/2024	12:00 PM	0	307	54	1	7	0	0	3	11	0	0	0	0
4/23/2024	12:15 PM	1	298	56	0	7	0	0	2	10	0	0	0	0
4/23/2024	12:30 PM	1	297	58	0	7	1	0	1	6	0	0	0	0
4/23/2024	12:45 PM	2	283	56	2	13	2	0	0	9	0	0	0	0
4/23/2024	1:00 PM	2	277	49	3	13	2	0	0	14	0	0	0	0
4/23/2024	1:15 PM	1	292	45	3	13	2	0	0	14	0	0	0	0
4/23/2024	1:30 PM	1	295	40	4	11	1	0	1	16	0	0	0	0
4/23/2024	1:45 PM	0	321	45	3	5	0	0	1	12	0	0	0	0
4/23/2024	2:00 PM	1	336	49	5	7	0	0	1	9	0	0	0	0
4/23/2024	2:15 PM	1	331	63	5	9	0	0	1	8	0	0	0	0
4/23/2024	2:30 PM	1	310	82	4	9	0	0	1	7	0	0	0	0
4/23/2024	2:45 PM	1	304	86	4	11	0	0	1	7	0	0	0	0
4/23/2024	3:00 PM	0	302	91	1	9	1	0	1	5	0	0	0	0
4/23/2024	3:15 PM	0	305	85	1	7	1	0	2	10	0	0	0	0
4/23/2024	3:30 PM	0	318	71	1	7	1	0	5	10	0	0	0	0
4/23/2024	3:45 PM	0	304	70	1	3	1	0	7	12	0	0	0	0
4/23/2024	4:00 PM	0	298	72	2	5	0	0	10	14	0	0	0	0
4/23/2024	4:15 PM	0	310	75	3	5	1	0	9	11	0	0	0	0
4/23/2024	4:30 PM	0	342	90	3	6	1	0	8	12	0	0	0	0
4/23/2024	4:45 PM	0	353	100	2	7	1	0	8	15	0	0	0	0
4/23/2024	5:00 PM	0	356	117	1	4	1	0	7	16	0	0	0	0
4/23/2024	5:15 PM	0	355	116	0	3	0	0	8	16	0	0	0	0
4/23/2024	5:30 PM	1	332	104	0	2	0	0	5	16	0	0	0	0
4/23/2024	5:45 PM	1	330	84	0	5	0	0	3	13	0	0	0	0
4/23/2024	6:00 PM	1	305	64	0	5	0	0	1	10	0	0	0	0
4/23/2024	6:15 PM	1	266	56	0	6	2	0	0	10	0	0	0	0
4/23/2024	6:30 PM	0	226	49	0	6	2	0	0	9	0	0	0	0
4/23/2024	6:45 PM	0	181	52	0	2	2	0	0	10	0	0	0	0
4/23/2024	7:00 PM	0	161	57	0	3	2	0	0	10	0	0	0	0
4/23/2024	7:15 PM	0	137	56	0	2	0	0	0	9	0	0	0	0
4/23/2024	7:30 PM	0	127	52	0	2	0	0	0	11	0	0	0	0
4/23/2024	7:45 PM	0	124	42	0	2	2	0	0	12	0	1	0	0
4/23/2024	8:00 PM	0	116	19	0	1	2	0	0	12	0	1	0	0
4/23/2024	8:15 PM	0	127	11	0	7	4	0	0	12	0	1	0	0
4/23/2024	8:30 PM	0	132	5	0	8	5	0	0	10	0	2	0	0
4/23/2024	8:45 PM	0	126	4	1	9	3	0	0	8	0	1	0	0
4/23/2024	9:00 PM	0	113	4	1	10	3	0	0	12	0	2	0	0
4/23/2024	9:15 PM	0	89	1	1	5	1	0	0	13	0	2	0	0
4/23/2024	9:30 PM	0	64	2	1	3	0	0	0	11	0	1	0	0
4/23/2024	9:45 PM	0	52	1	0	2	1	0	0	11	0	1	0	0
4/23/2024	10:00 PM	0	57	2	0	1	1	0	0	8	0	0	0	0
4/23/2024	10:15 PM	0	51	3	0	0	1	0	0	9	0	0	0	0
4/23/2024	10:30 PM	0	44	2	0	0	1	0	0	14	0	0	0	0
4/23/2024	10:45 PM	0	35	2	0	1	0	0	0	15	0	0	0	0
4/23/2024	11:00 PM	0	21	2	0	1	0	0	0	12	0	0	0	0
4/23/2024	11:15 PM	0	19	1	0	1	0	0	0	8	0	0	0	0
4/23/2024	11:30 PM	0	18	1	0	2	0	0	0	4	0	1	0	0
4/23/2024	11:45 PM	0	15	1	0	1	0	0	0	2	0	4	0	0

4/24/2024	12:00 AM	0	13	1	0	1	0	0	0	4	0	5	0	0
4/24/2024	12:15 AM	0	10	1	0	1	0	0	0	7	0	5	0	0
4/24/2024	12:30 AM	0	7	1	0	0	0	0	0	8	0	4	0	0
4/24/2024	12:45 AM	0	8	1	0	0	0	0	0	9	0	2	0	0
4/24/2024	1:00 AM	0	10	0	0	1	0	0	0	8	0	1	0	0
4/24/2024	1:15 AM	0	12	0	0	1	0	0	0	5	0	2	0	0
4/24/2024	1:30 AM	0	12	0	0	1	0	0	0	4	0	7	0	0
4/24/2024	1:45 AM	0	11	0	0	2	0	0	0	3	0	7	0	0
4/24/2024	2:00 AM	0	9	0	0	1	0	0	0	2	0	8	0	0
4/24/2024	2:15 AM	0	8	1	0	1	0	0	0	2	0	8	0	0
4/24/2024	2:30 AM	0	9	3	0	3	0	0	0	4	0	3	0	0
4/24/2024	2:45 AM	0	10	5	0	2	0	0	0	3	0	3	0	0
4/24/2024	3:00 AM	0	11	6	0	3	0	0	0	4	0	2	0	0
4/24/2024	3:15 AM	0	11	5	0	4	1	0	0	9	0	1	0	0
4/24/2024	3:30 AM	0	13	4	0	2	1	0	0	9	0	2	0	0
4/24/2024	3:45 AM	0	14	3	0	3	2	0	0	10	0	1	0	0
4/24/2024	4:00 AM	0	23	6	0	2	2	0	0	10	0	2	0	0
4/24/2024	4:15 AM	0	30	7	0	1	1	0	0	6	0	3	0	0
4/24/2024	4:30 AM	0	34	8	0	2	1	0	0	6	0	4	0	0
4/24/2024	4:45 AM	0	67	13	0	3	1	0	0	8	0	4	0	0
4/24/2024	5:00 AM	0	95	16	0	5	1	0	0	12	0	3	0	0
4/24/2024	5:15 AM	1	149	23	0	5	2	0	0	13	0	2	0	0
4/24/2024	5:30 AM	1	226	42	0	5	2	0	0	13	0	1	0	0
4/24/2024	5:45 AM	2	326	58	0	4	1	0	1	11	0	1	0	0
4/24/2024	6:00 AM	2	437	105	1	4	1	0	3	10	0	1	0	0
4/24/2024	6:15 AM	1	515	136	1	5	0	0	3	13	0	1	0	0
4/24/2024	6:30 AM	1	658	166	1	6	0	0	3	15	0	0	0	0
4/24/2024	6:45 AM	0	754	200	3	5	0	0	2	18	0	0	0	0
4/24/2024	7:00 AM	1	809	193	2	6	0	0	2	16	0	0	0	0
4/24/2024	7:15 AM	1	834	188	2	7	0	0	2	14	0	0	0	0
4/24/2024	7:30 AM	1	773	181	2	9	1	0	3	20	0	0	1	0
4/24/2024	7:45 AM	1	686	162	3	13	1	0	7	18	0	0	1	0
4/24/2024	8:00 AM	1	588	148	3	15	1	0	5	20	0	0	1	0
4/24/2024	8:15 AM	1	518	135	3	16	1	0	5	21	0	0	1	0
4/24/2024	8:30 AM	1	433	118	3	14	0	0	4	10	1	0	0	0
4/24/2024	8:45 AM	1	340	95	0	13	1	0	0	14	1	0	0	0
4/24/2024	9:00 AM	0	327	88	0	13	2	0	0	17	1	0	0	0
4/24/2024	9:15 AM	0	295	90	0	14	3	0	4	19	1	0	0	0
4/24/2024	9:30 AM	0	281	85	0	17	4	0	6	23	0	0	0	0
4/24/2024	9:45 AM	0	298	96	0	17	3	0	6	21	0	0	0	0
4/24/2024	10:00 AM	0	268	95	0	15	3	0	6	16	1	0	0	0
4/24/2024	10:15 AM	0	267	94	3	13	3	0	4	11	1	0	0	0
4/24/2024	10:30 AM	0	253	90	4	11	2	0	3	12	1	0	0	0
4/24/2024	10:45 AM	0	242	88	5	11	3	0	3	10	1	0	0	0
4/24/2024	11:00 AM	0	245	82	6	12	3	0	4	13	0	0	0	0
4/24/2024	11:15 AM	0	260	78	4	15	2	0	4	15	0	0	0	0
4/24/2024	11:30 AM	0	274	80	3	14	3	0	3	14	0	0	0	0
4/24/2024	11:45 AM	0	295	73	2	12	3	0	4	13	0	0	0	0
4/24/2024	12:00 PM	0	305	85	1	9	2	0	3	10	0	0	0	0
4/24/2024	12:15 PM	0	299	86	1	6	2	0	2	11	0	0	0	0
4/24/2024	12:30 PM	0	304	89	1	5	2	0	3	9	0	0	0	0
4/24/2024	12:45 PM	0	304	103	3	5	2	0	2	11	0	0	0	0
4/24/2024	1:00 PM	0	303	98	4	7	3	0	3	13	0	0	0	0
4/24/2024	1:15 PM	0	305	105	3	5	3	0	2	12	0	0	0	0
4/24/2024	1:30 PM	0	304	101	3	4	2	0	1	11	0	0	0	0
4/24/2024	1:45 PM	0	300	96	2	5	2	0	3	13	0	0	0	0
4/24/2024	2:00 PM	0	318	96	3	5	2	0	2	12	0	0	0	0
4/24/2024	2:15 PM	0	340	100	3	12	3	0	2	14	0	0	0	0
4/24/2024	2:30 PM	0	350	104	3	18	3	0	3	17	0	0	0	0
4/24/2024	2:45 PM	0	354	98	3	19	2	0	2	14	0	0	0	0
4/24/2024	3:00 PM	0	337	93	1	18	1	0	2	15	0	0	0	0
4/24/2024	3:15 PM	0	316	73	1	14	0	0	2	12	0	0	0	0
4/24/2024	3:30 PM	0	316	56	1	11	0	1	1	12	0	0	0	0
4/24/2024	3:45 PM	0	318	46	2	10	1	1	3	15	0	0	0	0
4/24/2024	4:00 PM	0	325	52	2	12	1	1	7	13	0	0	0	0
4/24/2024	4:15 PM	0	328	60	2	12	2	1	7	14	0	0	0	0
4/24/2024	4:30 PM	0	314	68	2	9	2	0	7	12	0	0	0	0
4/24/2024	4:45 PM	1	342	80	0	9	1	0	7	14	0	0	0	0
4/24/2024	5:00 PM	1	348	84	1	6	1	0	4	18	0	0	0	0
4/24/2024	5:15 PM	2	357	84	1	4	0	0	5	22	0	0	0	0
4/24/2024	5:30 PM	2	372	84	1	5	0	0	6	24	1	0	0	0
4/24/2024	5:45 PM	1	327	75	1	3	1	0	4	20	1	0	0	0
4/24/2024	6:00 PM	1	293	53	0	3	1	0	3	18	1	0	0	0
4/24/2024	6:15 PM	0	255	45	1	3	1	0	2	13	1	0	0	0
4/24/2024	6:30 PM	0	212	41	1	3	1	0	1	15	0	0	0	0
4/24/2024	6:45 PM	0	196	38	1	5	0	0	0	13	0	0	0	0
4/24/2024	7:00 PM	0	170	37	2	5	0	0	0	10	0	0	0	0
4/24/2024	7:15 PM	0	150	37	1	5	0	0	0	10	0	0	0	0
4/24/2024	7:30 PM	0	140	28	1	4	0	0	0	5	0	0	0	0
4/24/2024	7:45 PM	0	128	20	1	3	0	0	0	4	0	0	0	0
4/24/2024	8:00 PM	0	125	13	0	4	0	0	0	4	0	0	0	0
4/24/2024	8:15 PM	0	122	6	0	3	0	0	0	2	0	0	0	0
4/24/2024	8:30 PM	0	108	6	0	3	0	0	0	5	0	4	0	0
4/24/2024	8:45 PM	0	88	8	0	3	0	0	0	5	0	4	0	0
4/24/2024	9:00 PM	0	84	9	0	1	0	0	0	6	0	6	0	0
4/24/2024	9:15 PM	0	78	7	0	1	1	0	0	9	0	7	0	0
4/24/2024	9:30 PM	0	74	7	0	1	1	0	0	8	0	5	0	0
4/24/2024	9:45 PM	0	74	4	0	0	1	0	0	11	0	5	0	0
4/24/2024	10:00 PM	0	72	2	0	1	1	0	0	10	0	3	0	0
4/24/2024	10:15 PM	0	63	1	0	1	0	0	0	7	0	2	0	0
4/24/2024	10:30 PM	0	55	0	0	1	0	0	0	6	0	0	0	0
4/24/2024	10:45 PM	0	41	0	0	1	0	0	1	5	0	1	0	0
4/24/2024	11:00 PM	0	24	0	0	0	1	0	1	6	0	1	0	0
4/24/2024	11:15 PM	0	17	2	0	6	1	0	1	7	0	3	0	0
4/24/2024	11:30 PM	0	16	3	0	6	1	0	1	9	0	4	0	0
4/24/2024	11:45 PM	0	20	5	0	6	1	0	0	8	0	5	0	0

4/25/2024	12:00 AM	0	16	6	0	6	0	0	0	6	0	5	0	0
4/25/2024	12:15 AM	0	14	5	0	0	0	0	0	6	0	4	0	0
4/25/2024	12:30 AM	0	10	5	0	0	0	0	0	3	0	3	0	0
4/25/2024	12:45 AM	0	6	4	0	0	0	0	0	3	0	3	0	0
4/25/2024	1:00 AM	0	6	5	0	0	0	0	0	4	0	3	0	0
4/25/2024	1:15 AM	0	5	4	0	0	0	0	0	5	0	3	0	0
4/25/2024	1:30 AM	0	7	3	0	0	0	0	0	5	0	3	0	0
4/25/2024	1:45 AM	0	6	2	0	0	0	0	0	6	0	2	0	0
4/25/2024	2:00 AM	0	8	0	0	0	0	0	0	7	0	5	0	0
4/25/2024	2:15 AM	0	12	0	0	0	0	0	0	6	0	5	0	0
4/25/2024	2:30 AM	0	13	0	0	0	0	0	0	6	0	5	0	0
4/25/2024	2:45 AM	0	18	2	0	0	0	0	0	6	0	5	0	0
4/25/2024	3:00 AM	0	18	4	0	1	0	0	0	7	0	3	0	0
4/25/2024	3:15 AM	0	14	4	0	1	0	0	0	10	0	3	0	0
4/25/2024	3:30 AM	0	17	5	0	1	0	0	0	9	0	3	0	0
4/25/2024	3:45 AM	0	17	5	0	2	0	0	0	8	0	2	0	0
4/25/2024	4:00 AM	0	28	6	0	1	0	0	0	10	0	3	0	0
4/25/2024	4:15 AM	0	33	9	0	2	0	0	0	8	0	2	0	0
4/25/2024	4:30 AM	0	44	15	0	3	0	0	0	12	0	3	0	0
4/25/2024	4:45 AM	0	64	23	0	4	0	0	0	11	0	3	0	0
4/25/2024	5:00 AM	0	92	40	0	4	0	0	0	7	0	1	0	0
4/25/2024	5:15 AM	0	137	53	0	3	1	0	0	6	0	2	0	0
4/25/2024	5:30 AM	0	194	69	0	5	1	0	2	3	0	2	0	0
4/25/2024	5:45 AM	1	309	72	0	3	1	0	2	4	0	3	0	0
4/25/2024	6:00 AM	2	420	95	0	3	1	0	3	8	0	3	0	0
4/25/2024	6:15 AM	3	534	127	2	6	0	0	3	12	0	2	0	0
4/25/2024	6:30 AM	3	689	166	2	9	0	0	4	13	0	1	0	0
4/25/2024	6:45 AM	2	769	196	2	11	2	0	4	17	0	0	0	0
4/25/2024	7:00 AM	1	822	214	2	12	2	0	5	15	0	0	0	0
4/25/2024	7:15 AM	0	817	209	0	10	2	0	6	15	0	1	0	0
4/25/2024	7:30 AM	0	746	182	0	4	2	0	7	18	0	1	0	0
4/25/2024	7:45 AM	0	661	164	1	2	0	0	7	13	0	1	0	0
4/25/2024	8:00 AM	0	579	132	2	2	0	0	7	16	0	1	0	0
4/25/2024	8:15 AM	0	514	108	2	3	0	0	7	16	0	0	0	0
4/25/2024	8:30 AM	0	467	102	2	8	2	0	5	14	0	0	0	0
4/25/2024	8:45 AM	0	407	89	1	11	2	0	5	17	0	0	0	0
4/25/2024	9:00 AM	0	378	76	0	11	2	0	4	14	0	0	0	0
4/25/2024	9:15 AM	0	344	70	0	10	4	0	4	9	0	0	0	0
4/25/2024	9:30 AM	0	297	69	0	9	2	0	2	8	0	0	0	0
4/25/2024	9:45 AM	0	292	77	0	9	2	0	3	6	0	0	0	0
4/25/2024	10:00 AM	0	256	76	0	9	3	0	3	6	0	0	0	0
4/25/2024	10:15 AM	0	260	82	1	8	2	0	3	9	0	0	0	0
4/25/2024	10:30 AM	0	266	77	3	8	2	0	3	14	0	0	0	0
4/25/2024	10:45 AM	0	253	80	4	8	3	0	3	16	0	0	0	0
4/25/2024	11:00 AM	0	256	86	5	9	2	0	2	20	0	0	0	0
4/25/2024	11:15 AM	0	261	84	4	11	1	0	1	21	0	0	0	0
4/25/2024	11:30 AM	0	285	77	3	9	1	0	1	18	0	0	0	0
4/25/2024	11:45 AM	0	306	81	2	6	0	0	0	17	0	0	0	0
4/25/2024	12:00 PM	1	318	86	1	16	0	0	0	13	0	0	0	0
4/25/2024	12:15 PM	1	334	93	3	14	1	0	0	14	0	0	0	0
4/25/2024	12:30 PM	1	329	96	2	15	1	0	0	17	0	0	0	0
4/25/2024	12:45 PM	1	331	91	4	17	3	0	0	21	0	0	0	0
4/25/2024	1:00 PM	0	359	93	5	6	3	0	0	19	0	0	0	0
4/25/2024	1:15 PM	0	342	96	3	6	2	0	2	19	0	0	0	0
4/25/2024	1:30 PM	0	333	99	3	9	2	0	3	16	0	0	0	0
4/25/2024	1:45 PM	0	344	100	2	8	1	0	3	13	0	0	0	0
4/25/2024	2:00 PM	0	310	93	4	7	2	0	4	14	0	0	0	0
4/25/2024	2:15 PM	0	320	92	4	8	2	0	2	13	0	0	0	0
4/25/2024	2:30 PM	0	323	97	6	5	2	0	2	14	0	0	0	0
4/25/2024	2:45 PM	0	307	95	5	7	2	0	2	15	1	0	0	0
4/25/2024	3:00 PM	2	336	95	2	13	1	0	4	16	1	0	0	0
4/25/2024	3:15 PM	2	324	93	2	13	1	0	6	13	1	0	0	0
4/25/2024	3:30 PM	3	313	92	0	13	1	0	6	17	1	0	0	0
4/25/2024	3:45 PM	3	319	88	1	14	0	0	6	15	0	0	0	0
4/25/2024	4:00 PM	1	306	88	1	12	0	0	4	15	0	0	0	0
4/25/2024	4:15 PM	1	315	92	1	12	0	0	2	17	0	0	0	0
4/25/2024	4:30 PM	0	336	94	2	9	0	0	1	13	0	0	0	0
4/25/2024	4:45 PM	0	335	100	2	7	0	0	1	13	0	0	0	0
4/25/2024	5:00 PM	0	322	100	2	5	0	0	0	15	0	0	0	0
4/25/2024	5:15 PM	0	335	89	2	4	0	0	0	16	0	0	0	0
4/25/2024	5:30 PM	0	336	85	1	5	1	0	1	15	0	0	0	0
4/25/2024	5:45 PM	1	318	79	0	5	2	0	3	16	0	0	0	0
4/25/2024	6:00 PM	1	304	74	0	4	2	0	3	16	0	0	0	0
4/25/2024	6:15 PM	1	247	67	0	7	2	0	3	14	0	0	0	0
4/25/2024	6:30 PM	1	200	54	0	8	1	0	3	15	0	0	0	0
4/25/2024	6:45 PM	0	187	51	0	6	0	0	2	12	0	0	0	0
4/25/2024	7:00 PM	0	174	47	0	6	0	0	2	7	0	0	0	0
4/25/2024	7:15 PM	0	172	45	0	4	0	0	2	8	0	1	0	0
4/25/2024	7:30 PM	0	172	46	1	3	0	0	1	5	0	1	0	0
4/25/2024	7:45 PM	0	141	40	1	4	0	0	0	5	0	1	0	0
4/25/2024	8:00 PM	0	128	42	1	5	0	0	0	5	0	1	0	0
4/25/2024	8:15 PM	0	114	40	1	4	0	0	0	4	0	0	0	0
4/25/2024	8:30 PM	0	89	34	0	4	0	0	0	2	0	1	0	0
4/25/2024	8:45 PM	0	91	36	0	3	1	0	0	7	0	1	0	0
4/25/2024	9:00 PM	0	83	26	0	1	2	0	0	8	0	4	0	0
4/25/2024	9:15 PM	0	78	23	0	1	2	0	0	7	0	6	0	0
4/25/2024	9:30 PM	0	65	19	1	1	2	0	0	9	0	5	0	0
4/25/2024	9:45 PM	0	57	16	1	2	1	0	0	6	0	5	0	0
4/25/2024	10:00 PM	0	51	17	1	4	0	0	0	8	0	2	0	0
4/25/2024	10:15 PM	0	50	17	1	5	0	0	0	11	0	1	0	0
4/25/2024	10:30 PM	0	47	17	0	4	0	0	0	9	0	3	0	0
4/25/2024	10:45 PM	0	38	12	0	4	0	0	0	8	0	3	0	0
4/25/2024	11:00 PM	0	27	9	0	2	0	0	0	6	0	4	0	0
4/25/2024	11:15 PM	0	17	6	0	1	0	0	0	2	0	3	0	0
4/25/2024	11:30 PM	0	11	4	0	1	0	0	0	2	0	1	0	0
4/25/2024	11:45 PM	0	6	2	0	0	0	0	0	1	0	1	0	0

4/26/2024	12:00 AM	0	21	1	0	1	0	0	0	6	0	8	0	0
4/26/2024	12:15 AM	0	18	1	0	1	0	0	0	7	0	6	0	0
4/26/2024	12:30 AM	0	13	0	0	1	0	0	0	9	0	4	0	0
4/26/2024	12:45 AM	0	10	0	0	0	0	0	0	8	0	4	0	0
4/26/2024	1:00 AM	0	8	1	0	0	0	0	0	5	0	4	0	0
4/26/2024	1:15 AM	0	6	2	0	0	0	0	0	2	0	3	0	0
4/26/2024	1:30 AM	0	9	2	0	0	0	0	0	2	0	2	0	0
4/26/2024	1:45 AM	0	10	2	0	2	0	0	0	5	0	2	0	0
4/26/2024	2:00 AM	0	13	3	0	2	0	0	0	5	0	2	0	0
4/26/2024	2:15 AM	0	16	2	0	3	0	0	0	6	0	2	0	0
4/26/2024	2:30 AM	0	14	2	0	3	0	0	0	4	0	2	0	0
4/26/2024	2:45 AM	0	13	3	0	1	0	0	0	2	0	3	0	0
4/26/2024	3:00 AM	0	14	1	0	2	0	0	0	4	0	3	0	0
4/26/2024	3:15 AM	0	13	1	0	1	0	0	0	6	0	4	0	0
4/26/2024	3:30 AM	0	15	3	0	1	0	0	0	8	0	4	0	0
4/26/2024	3:45 AM	0	19	3	0	1	1	0	0	7	0	2	0	0
4/26/2024	4:00 AM	0	27	5	0	1	1	0	0	5	0	1	0	0
4/26/2024	4:15 AM	0	28	5	0	1	1	0	0	6	0	1	0	0
4/26/2024	4:30 AM	0	34	6	0	4	3	0	0	4	0	1	0	0
4/26/2024	4:45 AM	0	56	10	0	5	2	0	0	7	0	2	0	0
4/26/2024	5:00 AM	0	77	15	0	5	3	0	0	10	0	2	0	0
4/26/2024	5:15 AM	0	128	29	0	5	3	0	0	9	0	1	0	0
4/26/2024	5:30 AM	0	187	44	0	4	3	0	1	12	0	2	0	0
4/26/2024	5:45 AM	1	278	67	0	4	3	0	1	12	0	2	0	0
4/26/2024	6:00 AM	1	383	111	0	4	2	0	2	12	0	2	0	0
4/26/2024	6:15 AM	1	484	137	1	4	2	0	3	12	0	2	0	0
4/26/2024	6:30 AM	1	598	167	1	2	0	0	2	10	0	1	0	0
4/26/2024	6:45 AM	0	691	183	4	2	0	0	3	11	0	0	0	0
4/26/2024	7:00 AM	0	733	185	4	3	1	0	2	11	0	0	0	0
4/26/2024	7:15 AM	1	731	193	3	4	1	0	1	12	0	0	0	0
4/26/2024	7:30 AM	1	676	197	5	9	1	0	1	14	0	0	0	0
4/26/2024	7:45 AM	1	576	197	5	11	1	0	0	14	0	0	0	0
4/26/2024	8:00 AM	2	518	182	5	12	0	0	0	13	0	0	0	0
4/26/2024	8:15 AM	1	446	159	5	16	1	0	1	12	1	0	0	0
4/26/2024	8:30 AM	1	394	124	3	15	1	0	2	13	1	0	0	0
4/26/2024	8:45 AM	2	361	100	0	17	1	0	3	12	1	0	0	0
4/26/2024	9:00 AM	1	322	91	0	19	2	0	3	11	1	0	0	0
4/26/2024	9:15 AM	2	312	80	0	18	2	0	3	11	0	0	0	0
4/26/2024	9:30 AM	2	312	85	0	16	2	0	2	9	0	0	0	0
4/26/2024	9:45 AM	1	303	78	0	14	2	0	1	8	0	0	0	0
4/26/2024	10:00 AM	1	296	72	0	12	2	0	1	10	0	0	0	0
4/26/2024	10:15 AM	0	280	79	0	13	1	0	0	12	0	0	0	0
4/26/2024	10:30 AM	0	268	81	3	12	1	0	1	12	1	0	0	0
4/26/2024	10:45 AM	1	257	87	4	11	2	0	1	14	2	0	0	0
4/26/2024	11:00 AM	1	238	94	5	8	5	0	1	13	2	0	0	0
4/26/2024	11:15 AM	1	267	88	5	7	5	0	2	11	2	0	0	0
4/26/2024	11:30 AM	1	290	87	2	8	5	0	3	12	1	0	0	0
4/26/2024	11:45 AM	0	280	92	1	9	4	0	3	8	0	0	0	0
4/26/2024	12:00 PM	0	295	78	0	9	0	0	6	8	0	0	0	0
4/26/2024	12:15 PM	0	269	81	3	7	4	0	5	6	0	0	0	0
4/26/2024	12:30 PM	0	245	76	3	7	4	0	3	7	0	0	0	0
4/26/2024	12:45 PM	0	257	79	5	7	8	0	3	10	0	0	0	0
4/26/2024	1:00 PM	0	258	82	6	11	8	0	0	9	0	0	0	0
4/26/2024	1:15 PM	0	270	91	3	10	4	0	0	12	0	0	0	0
4/26/2024	1:30 PM	0	283	99	3	13	4	0	3	12	0	0	0	0
4/26/2024	1:45 PM	0	300	97	3	13	0	0	3	12	0	0	0	0
4/26/2024	2:00 PM	0	323	102	4	11	1	0	3	13	0	0	0	0
4/26/2024	2:15 PM	0	332	91	4	11	2	0	3	10	0	0	0	0
4/26/2024	2:30 PM	0	329	86	4	7	2	0	1	7	0	0	0	0
4/26/2024	2:45 PM	0	347	81	3	10	2	1	2	8	0	0	0	0
4/26/2024	3:00 PM	0	340	88	1	10	1	1	5	8	0	0	0	0
4/26/2024	3:15 PM	0	347	94	1	12	0	1	6	8	0	0	0	0
4/26/2024	3:30 PM	0	357	93	1	14	0	1	6	10	0	0	0	0
4/26/2024	3:45 PM	2	340	102	1	12	0	0	6	14	0	0	0	0
4/26/2024	4:00 PM	3	352	89	1	12	1	0	4	14	0	0	0	0
4/26/2024	4:15 PM	3	353	92	1	13	2	0	3	15	0	0	0	0
4/26/2024	4:30 PM	4	380	100	1	11	2	0	3	13	0	0	0	0
4/26/2024	4:45 PM	2	391	98	1	11	2	0	3	7	0	0	0	0
4/26/2024	5:00 PM	1	377	112	1	11	1	0	2	6	0	0	0	0
4/26/2024	5:15 PM	1	371	108	1	9	0	0	4	6	0	0	0	0
4/26/2024	5:30 PM	0	354	114	2	10	0	0	3	9	0	0	0	0
4/26/2024	5:45 PM	0	335	101	1	6	0	0	2	8	0	0	0	0
4/26/2024	6:00 PM	0	314	86	1	6	0	0	2	11	0	0	0	0
4/26/2024	6:15 PM	0	293	73	2	6	0	0	1	11	0	0	0	0
4/26/2024	6:30 PM	0	243	48	1	5	0	0	1	9	0	0	0	0
4/26/2024	6:45 PM	0	232	51	1	5	0	0	2	12	0	0	0	0
4/26/2024	7:00 PM	0	210	43	1	3	0	0	2	8	0	1	0	0
4/26/2024	7:15 PM	1	189	48	0	1	0	0	2	7	0	1	0	0
4/26/2024	7:30 PM	1	194	46	0	0	0	0	2	8	0	1	0	0
4/26/2024	7:45 PM	1	175	35	0	0	0	0	1	5	0	1	0	0
4/26/2024	8:00 PM	1	175	30	0	1	0	0	1	6	0	0	0	0
4/26/2024	8:15 PM	0	167	22	0	1	0	0	0	7	0	0	0	0
4/26/2024	8:30 PM	0	144	19	0	2	1	0	0	5	0	0	0	0
4/26/2024	8:45 PM	0	120	16	0	2	1	0	0	4	0	0	0	0
4/26/2024	9:00 PM	0	96	16	0	1	1	0	0	3	0	2	0	0
4/26/2024	9:15 PM	0	89	15	0	1	1	0	0	1	0	2	0	0
4/26/2024	9:30 PM	0	83	14	0	0	0	0	0	1	0	2	0	0
4/26/2024	9:45 PM	2	83	15	0	0	0	0	0	3	0	2	0	0
4/26/2024	10:00 PM	2	83	19	0	0	0	0	0	3	0	0	0	0
4/26/2024	10:15 PM	2	68	17	0	1	0	0	0	3	0	1	0	0
4/26/2024	10:30 PM	2	60	15	0	1	0	0	0	2	0	2	0	0
4/26/2024	10:45 PM	0	54	11	0	1	0	0	0	1	0	2	0	0
4/26/2024	11:00 PM	0	38	3	0	1	0	0	0	2	0	4	0	0
4/26/2024	11:15 PM	0	28	1	0	0	0	0	0	2	0	3	0	0
4/26/2024	11:30 PM	0	17	0	0	0	0	0	0	2	0	2	0	0
4/26/2024	11:45 PM	0	5	0	0	0	0	0	0	1	0	2	0	0

4/27/2024	12:00 AM	0	28	3	0	1	0	0	1	4	0	4	0	0
4/27/2024	12:15 AM	0	25	3	0	2	0	0	1	5	0	4	0	0
4/27/2024	12:30 AM	0	23	1	0	2	0	0	1	3	0	1	0	0
4/27/2024	12:45 AM	0	21	1	0	2	0	0	0	3	0	2	0	0
4/27/2024	1:00 AM	0	23	0	0	3	3	0	1	1	0	3	0	0
4/27/2024	1:15 AM	0	21	0	0	3	3	0	1	1	0	4	0	0
4/27/2024	1:30 AM	0	19	0	0	3	3	0	1	2	0	3	0	0
4/27/2024	1:45 AM	0	22	0	0	3	3	0	1	2	0	3	0	0
4/27/2024	2:00 AM	0	18	1	0	2	0	0	0	2	0	3	0	0
4/27/2024	2:15 AM	0	17	1	0	1	0	0	0	1	0	2	0	0
4/27/2024	2:30 AM	0	15	2	0	0	0	0	0	1	0	2	0	0
4/27/2024	2:45 AM	0	9	3	0	0	0	0	0	1	0	3	0	0
4/27/2024	3:00 AM	0	10	2	0	0	0	0	0	2	0	3	0	0
4/27/2024	3:15 AM	0	11	2	0	0	0	0	0	3	0	3	0	0
4/27/2024	3:30 AM	0	10	2	0	0	0	0	0	2	0	3	0	0
4/27/2024	3:45 AM	0	12	1	0	0	0	0	0	2	0	1	0	0
4/27/2024	4:00 AM	0	14	1	0	0	0	0	0	3	0	0	0	0
4/27/2024	4:15 AM	0	14	2	0	0	0	0	0	2	0	2	0	0
4/27/2024	4:30 AM	0	17	3	0	0	0	0	0	2	0	3	0	0
4/27/2024	4:45 AM	0	20	5	0	0	0	0	0	4	0	4	0	0
4/27/2024	5:00 AM	0	32	10	0	0	0	0	0	2	0	4	0	0
4/27/2024	5:15 AM	0	40	12	0	1	0	0	0	4	0	2	0	0
4/27/2024	5:30 AM	0	70	17	0	1	2	0	0	4	0	1	0	0
4/27/2024	5:45 AM	0	101	25	0	1	2	0	0	4	0	0	0	0
4/27/2024	6:00 AM	0	119	32	0	1	2	0	0	4	0	0	0	0
4/27/2024	6:15 AM	0	128	39	0	1	2	0	0	3	0	0	0	0
4/27/2024	6:30 AM	0	124	46	0	2	0	0	0	6	0	0	0	0
4/27/2024	6:45 AM	1	118	58	0	5	0	0	0	6	0	0	0	0
4/27/2024	7:00 AM	1	135	61	1	6	0	0	1	6	0	0	0	0
4/27/2024	7:15 AM	1	159	72	1	5	0	0	2	8	0	0	0	0
4/27/2024	7:30 AM	1	176	73	1	6	0	0	2	6	0	0	0	0
4/27/2024	7:45 AM	0	210	74	1	4	0	0	2	4	0	0	0	0
4/27/2024	8:00 AM	0	233	78	0	3	0	0	1	4	0	0	0	0
4/27/2024	8:15 AM	1	253	72	1	4	0	0	0	2	0	0	0	0
4/27/2024	8:30 AM	2	270	73	1	5	0	0	0	3	0	0	0	0
4/27/2024	8:45 AM	4	273	68	1	4	0	0	0	3	0	0	0	0
4/27/2024	9:00 AM	4	278	69	1	5	0	0	1	8	0	0	0	0
4/27/2024	9:15 AM	3	283	75	0	6	0	0	1	10	0	0	0	0
4/27/2024	9:30 AM	2	294	83	0	6	0	0	1	9	0	0	0	0
4/27/2024	9:45 AM	0	304	79	0	8	0	0	1	10	0	0	0	0
4/27/2024	10:00 AM	0	293	80	0	10	0	0	0	6	0	0	0	0
4/27/2024	10:15 AM	0	303	83	0	11	1	0	0	4	0	0	0	0
4/27/2024	10:30 AM	0	319	80	0	9	1	0	0	4	0	0	0	0
4/27/2024	10:45 AM	0	333	82	0	9	1	0	0	3	0	0	0	0
4/27/2024	11:00 AM	0	336	96	1	8	1	0	0	4	0	0	0	0
4/27/2024	11:15 AM	0	335	88	1	7	0	0	1	4	0	0	0	0
4/27/2024	11:30 AM	0	326	88	1	7	0	0	2	4	0	0	0	0
4/27/2024	11:45 AM	0	323	93	1	7	0	0	3	5	0	0	0	0
4/27/2024	12:00 PM	0	334	90	0	6	0	0	3	5	0	0	0	0
4/27/2024	12:15 PM	0	328	92	0	6	0	0	2	8	0	0	0	0
4/27/2024	12:30 PM	0	331	94	0	6	0	0	2	10	0	0	0	0
4/27/2024	12:45 PM	0	305	99	0	6	0	0	1	9	0	0	0	0
4/27/2024	1:00 PM	0	304	87	0	6	0	0	1	7	0	0	0	0
4/27/2024	1:15 PM	0	310	90	0	5	0	0	1	3	0	0	0	0
4/27/2024	1:30 PM	2	312	83	0	7	0	0	0	0	0	0	0	0
4/27/2024	1:45 PM	2	315	74	0	7	0	0	0	1	0	0	0	0
4/27/2024	2:00 PM	2	337	70	0	8	0	0	0	1	0	0	0	0
4/27/2024	2:15 PM	2	331	64	0	7	0	0	0	2	0	0	0	0
4/27/2024	2:30 PM	0	309	62	0	8	0	0	0	3	0	0	0	0
4/27/2024	2:45 PM	0	309	57	0	7	0	0	0	3	0	0	0	0
4/27/2024	3:00 PM	0	271	54	0	5	0	0	0	3	0	0	0	0
4/27/2024	3:15 PM	0	258	49	0	5	0	0	0	3	0	0	0	0
4/27/2024	3:30 PM	1	255	46	0	2	0	0	0	3	0	0	0	0
4/27/2024	3:45 PM	1	238	48	0	4	0	0	0	2	0	0	0	0
4/27/2024	4:00 PM	1	245	56	0	7	0	0	0	5	0	0	0	0
4/27/2024	4:15 PM	1	238	57	0	8	0	0	0	5	0	0	0	0
4/27/2024	4:30 PM	0	225	54	0	7	0	0	0	6	0	0	0	0
4/27/2024	4:45 PM	0	215	49	0	4	0	0	0	8	0	0	0	0
4/27/2024	5:00 PM	0	187	42	0	1	0	0	0	8	0	1	0	0
4/27/2024	5:15 PM	0	193	42	0	0	0	0	0	7	0	1	0	0
4/27/2024	5:30 PM	0	221	48	0	1	0	0	0	6	0	1	0	0
4/27/2024	5:45 PM	0	232	46	0	2	0	0	0	8	0	1	0	0
4/27/2024	6:00 PM	0	256	43	0	4	0	0	0	7	0	0	0	0
4/27/2024	6:15 PM	0	241	41	0	4	0	0	0	9	0	0	0	0
4/27/2024	6:30 PM	1	201	37	0	5	0	0	0	8	0	0	0	0
4/27/2024	6:45 PM	1	178	41	0	4	0	0	0	5	0	0	0	0
4/27/2024	7:00 PM	1	152	40	0	2	0	0	0	3	0	0	0	0
4/27/2024	7:15 PM	1	142	47	0	2	0	0	0	1	0	0	0	0
4/27/2024	7:30 PM	0	138	45	0	0	0	0	0	2	0	0	0	0
4/27/2024	7:45 PM	0	133	39	0	1	0	0	0	1	0	0	0	0
4/27/2024	8:00 PM	0	120	35	0	1	0	0	0	1	0	0	0	0
4/27/2024	8:15 PM	0	111	23	0	1	1	0	0	1	0	0	0	0
4/27/2024	8:30 PM	0	93	18	0	2	1	0	0	0	0	0	0	0
4/27/2024	8:45 PM	0	91	17	0	2	1	0	0	0	0	0	0	0
4/27/2024	9:00 PM	0	78	13	0	2	1	0	0	0	0	0	0	0
4/27/2024	9:15 PM	0	72	10	0	2	0	0	0	0	0	0	0	0
4/27/2024	9:30 PM	0	73	10	0	1	0	0	0	1	0	0	0	0
4/27/2024	9:45 PM	0	71	8	0	1	0	0	0	1	0	0	0	0
4/27/2024	10:00 PM	0	76	10	0	3	0	0	0	1	0	0	0	0
4/27/2024	10:15 PM	0	77	11	0	3	0	0	0	1	0	0	0	0
4/27/2024	10:30 PM	0	70	12	0	3	0	0	0	0	0	0	0	0
4/27/2024	10:45 PM	0	62	13	0	2	0	0	0	0	0	0	0	0
4/27/2024	11:00 PM	0	50	12	0	0	0	0	0	1	0	0	0	0
4/27/2024	11:15 PM	0	31	10	0	0	0	0	0	1	0	0	0	0
4/27/2024	11:30 PM	0	21	6	0	0	0	0	0	1	0	0	0	0
4/27/2024	11:45 PM	0	10	3	0	0	0	0	0	1	0	0	0	0

WB
File Name:
Start Date: 4/21/2024
Start Time: 0
Site Code: 74 Lane 4 EB
Station ID: 1
Location 1: I-20, west of US-378 Sunset Blvd S/Bound Off-Ramp
Location 2:

Date	Time	1	2	3	4	5	6	7	8	9	10	11	12	13
4/21/2024	12:00 AM	0	0	0	0	0	0	0	0	0	0	0	0	0
4/21/2024	12:15 AM	0	0	0	0	0	0	0	0	0	0	0	0	0
4/21/2024	12:30 AM	0	0	0	0	0	0	0	0	0	0	0	0	0
4/21/2024	12:45 AM	0	0	0	0	0	0	0	0	0	0	0	0	0
4/21/2024	1:00 AM	0	0	0	0	0	0	0	0	0	0	0	0	0
4/21/2024	1:15 AM	0	0	0	0	0	0	0	0	0	0	0	0	0
4/21/2024	1:30 AM	0	0	0	0	0	0	0	0	0	0	0	0	0
4/21/2024	1:45 AM	0	0	0	0	0	0	0	0	0	0	0	0	0
4/21/2024	2:00 AM	0	0	0	0	0	0	0	0	0	0	0	0	0
4/21/2024	2:15 AM	0	0	0	0	0	0	0	0	0	0	0	0	0
4/21/2024	2:30 AM	0	0	0	0	0	0	0	0	0	0	0	0	0
4/21/2024	2:45 AM	0	0	0	0	0	0	0	0	0	0	0	0	0
4/21/2024	3:00 AM	0	0	0	0	0	0	0	0	0	0	0	0	0
4/21/2024	3:15 AM	0	0	0	0	0	0	0	0	0	0	0	0	0
4/21/2024	3:30 AM	0	0	0	0	0	0	0	0	0	0	0	0	0
4/21/2024	3:45 AM	0	0	0	0	0	0	0	0	0	0	0	0	0
4/21/2024	4:00 AM	0	0	0	0	0	0	0	0	0	0	0	0	0
4/21/2024	4:15 AM	0	0	0	0	0	0	0	0	0	0	0	0	0
4/21/2024	4:30 AM	0	0	0	0	0	0	0	0	0	0	0	0	0
4/21/2024	4:45 AM	0	0	0	0	0	0	0	0	0	0	0	0	0
4/21/2024	5:00 AM	0	0	0	0	0	0	0	0	0	0	0	0	0
4/21/2024	5:15 AM	0	0	0	0	0	0	0	0	0	0	0	0	0
4/21/2024	5:30 AM	0	0	0	0	0	0	0	0	0	0	0	0	0
4/21/2024	5:45 AM	0	0	0	0	0	0	0	0	0	0	0	0	0
4/21/2024	6:00 AM	0	0	0	0	0	0	0	0	0	0	0	0	0
4/21/2024	6:15 AM	0	0	0	0	0	0	0	0	0	0	0	0	0
4/21/2024	6:30 AM	0	0	0	0	0	0	0	0	0	0	0	0	0
4/21/2024	6:45 AM	0	0	0	0	0	0	0	0	0	0	0	0	0
4/21/2024	7:00 AM	0	0	0	0	0	0	0	0	0	0	0	0	0
4/21/2024	7:15 AM	0	0	0	0	0	0	0	0	0	0	0	0	0
4/21/2024	7:30 AM	0	0	0	0	0	0	0	0	0	0	0	0	0
4/21/2024	7:45 AM	0	0	0	0	0	0	0	0	0	0	0	0	0
4/21/2024	8:00 AM	0	0	0	0	0	0	0	0	0	0	0	0	0
4/21/2024	8:15 AM	0	0	0	0	0	0	0	0	0	0	0	0	0
4/21/2024	8:30 AM	0	0	0	0	0	0	0	0	0	0	0	0	0
4/21/2024	8:45 AM	0	0	0	0	0	0	0	0	0	0	0	0	0
4/21/2024	9:00 AM	0	0	0	0	0	0	0	0	0	0	0	0	0
4/21/2024	9:15 AM	0	0	0	0	0	0	0	0	0	0	0	0	0
4/21/2024	9:30 AM	0	0	0	0	0	0	0	0	0	0	0	0	0
4/21/2024	9:45 AM	0	0	0	0	0	0	0	0	0	0	0	0	0
4/21/2024	10:00 AM	0	0	0	0	0	0	0	0	0	0	0	0	0
4/21/2024	10:15 AM	0	0	0	0	0	0	0	0	0	0	0	0	0
4/21/2024	10:30 AM	0	0	0	0	0	0	0	0	0	0	0	0	0
4/21/2024	10:45 AM	0	0	0	0	0	0	0	0	0	0	0	0	0
4/21/2024	11:00 AM	0	0	0	0	0	0	0	0	0	0	0	0	0
4/21/2024	11:15 AM	0	0	0	0	0	0	0	0	0	0	0	0	0
4/21/2024	11:30 AM	0	0	0	0	0	0	0	0	0	0	0	0	0
4/21/2024	11:45 AM	0	0	0	0	0	0	0	0	0	0	0	0	0
4/21/2024	12:00 PM	0	0	0	0	0	0	0	0	0	0	0	0	0
4/21/2024	12:15 PM	0	0	0	0	0	0	0	0	0	0	0	0	0
4/21/2024	12:30 PM	0	0	0	0	0	0	0	0	0	0	0	0	0
4/21/2024	12:45 PM	0	0	0	0	0	0	0	0	0	0	0	0	0
4/21/2024	1:00 PM	0	0	0	0	0	0	0	0	0	0	0	0	0
4/21/2024	1:15 PM	0	0	0	0	0	0	0	0	0	0	0	0	0
4/21/2024	1:30 PM	0	0	0	0	0	0	0	0	0	0	0	0	0
4/21/2024	1:45 PM	0	0	0	0	0	0	0	0	0	0	0	0	0
4/21/2024	2:00 PM	0	0	0	0	0	0	0	0	0	0	0	0	0
4/21/2024	2:15 PM	0	0	0	0	0	0	0	0	0	0	0	0	0
4/21/2024	2:30 PM	0	0	0	0	0	0	0	0	0	0	0	0	0
4/21/2024	2:45 PM	0	0	0	0	0	0	0	0	0	0	0	0	0
4/21/2024	3:00 PM	0	0	0	0	0	0	0	0	0	0	0	0	0
4/21/2024	3:15 PM	0	0	0	0	0	0	0	0	0	0	0	0	0
4/21/2024	3:30 PM	0	0	0	0	0	0	0	0	0	0	0	0	0
4/21/2024	3:45 PM	0	0	0	0	0	0	0	0	0	0	0	0	0
4/21/2024	4:00 PM	0	0	0	0	0	0	0	0	0	0	0	0	0
4/21/2024	4:15 PM	0	0	0	0	0	0	0	0	0	0	0	0	0
4/21/2024	4:30 PM	0	0	0	0	0	0	0	0	0	0	0	0	0
4/21/2024	4:45 PM	0	0	0	0	0	0	0	0	0	0	0	0	0
4/21/2024	5:00 PM	0	0	0	0	0	0	0	0	0	0	0	0	0
4/21/2024	5:15 PM	0	0	0	0	0	0	0	0	0	0	0	0	0
4/21/2024	5:30 PM	0	0	0	0	0	0	0	0	0	0	0	0	0
4/21/2024	5:45 PM	0	0	0	0	0	0	0	0	0	0	0	0	0
4/21/2024	6:00 PM	0	0	0	0	0	0	0	0	0	0	0	0	0
4/21/2024	6:15 PM	0	0	0	0	0	0	0	0	0	0	0	0	0
4/21/2024	6:30 PM	0	0	0	0	0	0	0	0	0	0	0	0	0
4/21/2024	6:45 PM	0	0	0	0	0	0	0	0	0	0	0	0	0
4/21/2024	7:00 PM	0	0	0	0	0	0	0	0	0	0	0	0	0
4/21/2024	7:15 PM	0	0	0	0	0	0	0	0	0	0	0	0	0
4/21/2024	7:30 PM	0	0	0	0	0	0	0	0	0	0	0	0	0
4/21/2024	7:45 PM	0	0	0	0	0	0	0	0	0	0	0	0	0
4/21/2024	8:00 PM	0	0	0	0	0	0	0	0	0	0	0	0	0
4/21/2024	8:15 PM	0	0	0	0	0	0	0	0	0	0	0	0	0
4/21/2024	8:30 PM	0	0	0	0	0	0	0	0	0	0	0	0	0
4/21/2024	8:45 PM	0	0	0	0	0	0	0	0	0	0	0	0	0
4/21/2024	9:00 PM	0	0	0	0	0	0	0	0	0	0	0	0	0
4/21/2024	9:15 PM	0	0	0	0	0	0	0	0	0	0	0	0	0
4/21/2024	9:30 PM	0	0	0	0	0	0	0	0	0	0	0	0	0
4/21/2024	9:45 PM	0	0	0	0	0	0	0	0	0	0	0	0	0
4/21/2024	10:00 PM	0	0	0	0	0	0	0	0	0	0	0	0	0
4/21/2024	10:15 PM	0	0	0	0	0	0	0	0	0	0	0	0	0
4/21/2024	10:30 PM	0	0	0	0	0	0	0	0	0	0	0	0	0
4/21/2024	10:45 PM	0	0	0	0	0	0	0	0	0	0	0	0	0
4/21/2024	11:00 PM	0	0	0	0	0	0	0	0	0	0	0	0	0
4/21/2024	11:15 PM	0	0	0	0	0	0	0	0	0	0	0	0	0
4/21/2024	11:30 PM	0	0	0	0	0	0	0	0	0	0	0	0	0
4/21/2024	11:45 PM	0	0	0	0	0	0	0	0	0	0	0	0	0

4/22/2024	12:00 AM	0	0	0	0	0	0	0	0	0	0	0	0	0
4/22/2024	12:15 AM	0	0	0	0	0	0	0	0	0	0	0	0	0
4/22/2024	12:30 AM	0	0	0	0	0	0	0	0	0	0	0	0	0
4/22/2024	12:45 AM	0	0	0	0	0	0	0	0	0	0	0	0	0
4/22/2024	1:00 AM	0	0	0	0	0	0	0	0	0	0	0	0	0
4/22/2024	1:15 AM	0	0	0	0	0	0	0	0	0	0	0	0	0
4/22/2024	1:30 AM	0	0	0	0	0	0	0	0	0	0	0	0	0
4/22/2024	1:45 AM	0	0	0	0	0	0	0	0	0	0	0	0	0
4/22/2024	2:00 AM	0	0	0	0	0	0	0	0	0	0	0	0	0
4/22/2024	2:15 AM	0	0	0	0	0	0	0	0	0	0	0	0	0
4/22/2024	2:30 AM	0	0	0	0	0	0	0	0	0	0	0	0	0
4/22/2024	2:45 AM	0	0	0	0	0	0	0	0	0	0	0	0	0
4/22/2024	3:00 AM	0	0	0	0	0	0	0	0	0	0	0	0	0
4/22/2024	3:15 AM	0	0	0	0	0	0	0	0	0	0	0	0	0
4/22/2024	3:30 AM	0	0	0	0	0	0	0	0	0	0	0	0	0
4/22/2024	3:45 AM	0	0	0	0	0	0	0	0	0	0	0	0	0
4/22/2024	4:00 AM	0	0	0	0	0	0	0	0	0	0	0	0	0
4/22/2024	4:15 AM	0	0	0	0	0	0	0	0	0	0	0	0	0
4/22/2024	4:30 AM	0	0	0	0	0	0	0	0	0	0	0	0	0
4/22/2024	4:45 AM	0	0	0	0	0	0	0	0	0	0	0	0	0
4/22/2024	5:00 AM	0	0	0	0	0	0	0	0	0	0	0	0	0
4/22/2024	5:15 AM	0	0	0	0	0	0	0	0	0	0	0	0	0
4/22/2024	5:30 AM	0	0	0	0	0	0	0	0	0	0	0	0	0
4/22/2024	5:45 AM	0	0	0	0	0	0	0	0	0	0	0	0	0
4/22/2024	6:00 AM	0	0	0	0	0	0	0	0	0	0	0	0	0
4/22/2024	6:15 AM	0	0	0	0	0	0	0	0	0	0	0	0	0
4/22/2024	6:30 AM	0	0	0	0	0	0	0	0	0	0	0	0	0
4/22/2024	6:45 AM	0	0	0	0	0	0	0	0	0	0	0	0	0
4/22/2024	7:00 AM	0	0	0	0	0	0	0	0	0	0	0	0	0
4/22/2024	7:15 AM	0	0	0	0	0	0	0	0	0	0	0	0	0
4/22/2024	7:30 AM	0	0	0	0	0	0	0	0	0	0	0	0	0
4/22/2024	7:45 AM	0	0	0	0	0	0	0	0	0	0	0	0	0
4/22/2024	8:00 AM	0	0	0	0	0	0	0	0	0	0	0	0	0
4/22/2024	8:15 AM	0	0	0	0	0	0	0	0	0	0	0	0	0
4/22/2024	8:30 AM	0	0	0	0	0	0	0	0	0	0	0	0	0
4/22/2024	8:45 AM	0	0	0	0	0	0	0	0	0	0	0	0	0
4/22/2024	9:00 AM	0	0	0	0	0	0	0	0	0	0	0	0	0
4/22/2024	9:15 AM	0	0	0	0	0	0	0	0	0	0	0	0	0
4/22/2024	9:30 AM	0	0	0	0	0	0	0	0	0	0	0	0	0
4/22/2024	9:45 AM	0	0	0	0	0	0	0	0	0	0	0	0	0
4/22/2024	10:00 AM	0	0	0	0	0	0	0	0	0	0	0	0	0
4/22/2024	10:15 AM	0	0	0	0	0	0	0	0	0	0	0	0	0
4/22/2024	10:30 AM	0	0	0	0	0	0	0	0	0	0	0	0	0
4/22/2024	10:45 AM	0	0	0	0	0	0	0	0	0	0	0	0	0
4/22/2024	11:00 AM	0	0	0	0	0	0	0	0	0	0	0	0	0
4/22/2024	11:15 AM	0	0	0	0	0	0	0	0	0	0	0	0	0
4/22/2024	11:30 AM	0	0	0	0	0	0	0	0	0	0	0	0	0
4/22/2024	11:45 AM	0	0	0	0	0	0	0	0	0	0	0	0	0
4/22/2024	12:00 PM	0	0	0	0	0	0	0	0	0	0	0	0	0
4/22/2024	12:15 PM	0	0	0	0	0	0	0	0	0	0	0	0	0
4/22/2024	12:30 PM	0	0	0	0	0	0	0	0	0	0	0	0	0
4/22/2024	12:45 PM	0	0	0	0	0	0	0	0	0	0	0	0	0
4/22/2024	1:00 PM	0	0	0	0	0	0	0	0	0	0	0	0	0
4/22/2024	1:15 PM	0	0	0	0	0	0	0	0	0	0	0	0	0
4/22/2024	1:30 PM	0	0	0	0	0	0	0	0	0	0	0	0	0
4/22/2024	1:45 PM	0	0	0	0	0	0	0	0	0	0	0	0	0
4/22/2024	2:00 PM	0	0	0	0	0	0	0	0	0	0	0	0	0
4/22/2024	2:15 PM	0	0	0	0	0	0	0	0	0	0	0	0	0
4/22/2024	2:30 PM	0	0	0	0	0	0	0	0	0	0	0	0	0
4/22/2024	2:45 PM	0	0	0	0	0	0	0	0	0	0	0	0	0
4/22/2024	3:00 PM	0	0	0	0	0	0	0	0	0	0	0	0	0
4/22/2024	3:15 PM	0	0	0	0	0	0	0	0	0	0	0	0	0
4/22/2024	3:30 PM	0	0	0	0	0	0	0	0	0	0	0	0	0
4/22/2024	3:45 PM	0	0	0	0	0	0	0	0	0	0	0	0	0
4/22/2024	4:00 PM	0	0	0	0	0	0	0	0	0	0	0	0	0
4/22/2024	4:15 PM	0	0	0	0	0	0	0	0	0	0	0	0	0
4/22/2024	4:30 PM	0	0	0	0	0	0	0	0	0	0	0	0	0
4/22/2024	4:45 PM	0	0	0	0	0	0	0	0	0	0	0	0	0
4/22/2024	5:00 PM	0	0	0	0	0	0	0	0	0	0	0	0	0
4/22/2024	5:15 PM	0	0	0	0	0	0	0	0	0	0	0	0	0
4/22/2024	5:30 PM	0	0	0	0	0	0	0	0	0	0	0	0	0
4/22/2024	5:45 PM	0	0	0	0	0	0	0	0	0	0	0	0	0
4/22/2024	6:00 PM	0	0	0	0	0	0	0	0	0	0	0	0	0
4/22/2024	6:15 PM	0	0	0	0	0	0	0	0	0	0	0	0	0
4/22/2024	6:30 PM	0	0	0	0	0	0	0	0	0	0	0	0	0
4/22/2024	6:45 PM	0	0	0	0	0	0	0	0	0	0	0	0	0
4/22/2024	7:00 PM	0	0	0	0	0	0	0	0	0	0	0	0	0
4/22/2024	7:15 PM	0	0	0	0	0	0	0	0	0	0	0	0	0
4/22/2024	7:30 PM	0	0	0	0	0	0	0	0	0	0	0	0	0
4/22/2024	7:45 PM	0	0	0	0	0	0	0	0	0	0	0	0	0
4/22/2024	8:00 PM	0	0	0	0	0	0	0	0	0	0	0	0	0
4/22/2024	8:15 PM	0	0	0	0	0	0	0	0	0	0	0	0	0
4/22/2024	8:30 PM	0	0	0	0	0	0	0	0	0	0	0	0	0
4/22/2024	8:45 PM	0	0	0	0	0	0	0	0	0	0	0	0	0
4/22/2024	9:00 PM	0	0	0	0	0	0	0	0	0	0	0	0	0
4/22/2024	9:15 PM	0	0	0	0	0	0	0	0	0	0	0	0	0
4/22/2024	9:30 PM	0	0	0	0	0	0	0	0	0	0	0	0	0
4/22/2024	9:45 PM	0	0	0	0	0	0	0	0	0	0	0	0	0
4/22/2024	10:00 PM	0	0	0	0	0	0	0	0	0	0	0	0	0
4/22/2024	10:15 PM	0	0	0	0	0	0	0	0	0	0	0	0	0
4/22/2024	10:30 PM	0	0	0	0	0	0	0	0	0	0	0	0	0
4/22/2024	10:45 PM	0	0	0	0	0	0	0	0	0	0	0	0	0
4/22/2024	11:00 PM	0	0	0	0	0	0	0	0	0	0	0	0	0
4/22/2024	11:15 PM	0	0	0	0	0	0	0	0	0	0	0	0	0
4/22/2024	11:30 PM	0	0	0	0	0	0	0	0	0	0	0	0	0
4/22/2024	11:45 PM	0	0	0	0	0	0	0	0	0	0	0	0	0

4/23/2024	12:00 AM	0	0	0	0	0	0	0	0	0	0	0	0	0
4/23/2024	12:15 AM	0	0	0	0	0	0	0	0	0	0	0	0	0
4/23/2024	12:30 AM	0	0	0	0	0	0	0	0	0	0	0	0	0
4/23/2024	12:45 AM	0	0	0	0	0	0	0	0	0	0	0	0	0
4/23/2024	1:00 AM	0	0	0	0	0	0	0	0	0	0	0	0	0
4/23/2024	1:15 AM	0	0	0	0	0	0	0	0	0	0	0	0	0
4/23/2024	1:30 AM	0	0	0	0	0	0	0	0	0	0	0	0	0
4/23/2024	1:45 AM	0	0	0	0	0	0	0	0	0	0	0	0	0
4/23/2024	2:00 AM	0	0	0	0	0	0	0	0	0	0	0	0	0
4/23/2024	2:15 AM	0	0	0	0	0	0	0	0	0	0	0	0	0
4/23/2024	2:30 AM	0	0	0	0	0	0	0	0	0	0	0	0	0
4/23/2024	2:45 AM	0	0	0	0	0	0	0	0	0	0	0	0	0
4/23/2024	3:00 AM	0	0	0	0	0	0	0	0	0	0	0	0	0
4/23/2024	3:15 AM	0	0	0	0	0	0	0	0	0	0	0	0	0
4/23/2024	3:30 AM	0	0	0	0	0	0	0	0	0	0	0	0	0
4/23/2024	3:45 AM	0	0	0	0	0	0	0	0	0	0	0	0	0
4/23/2024	4:00 AM	0	0	0	0	0	0	0	0	0	0	0	0	0
4/23/2024	4:15 AM	0	0	0	0	0	0	0	0	0	0	0	0	0
4/23/2024	4:30 AM	0	0	0	0	0	0	0	0	0	0	0	0	0
4/23/2024	4:45 AM	0	0	0	0	0	0	0	0	0	0	0	0	0
4/23/2024	5:00 AM	0	0	0	0	0	0	0	0	0	0	0	0	0
4/23/2024	5:15 AM	0	0	0	0	0	0	0	0	0	0	0	0	0
4/23/2024	5:30 AM	0	0	0	0	0	0	0	0	0	0	0	0	0
4/23/2024	5:45 AM	0	0	0	0	0	0	0	0	0	0	0	0	0
4/23/2024	6:00 AM	0	0	0	0	0	0	0	0	0	0	0	0	0
4/23/2024	6:15 AM	0	0	0	0	0	0	0	0	0	0	0	0	0
4/23/2024	6:30 AM	0	0	0	0	0	0	0	0	0	0	0	0	0
4/23/2024	6:45 AM	0	0	0	0	0	0	0	0	0	0	0	0	0
4/23/2024	7:00 AM	0	0	0	0	0	0	0	0	0	0	0	0	0
4/23/2024	7:15 AM	0	0	0	0	0	0	0	0	0	0	0	0	0
4/23/2024	7:30 AM	0	0	0	0	0	0	0	0	0	0	0	0	0
4/23/2024	7:45 AM	0	0	0	0	0	0	0	0	0	0	0	0	0
4/23/2024	8:00 AM	0	0	0	0	0	0	0	0	0	0	0	0	0
4/23/2024	8:15 AM	0	0	0	0	0	0	0	0	0	0	0	0	0
4/23/2024	8:30 AM	0	0	0	0	0	0	0	0	0	0	0	0	0
4/23/2024	8:45 AM	0	0	0	0	0	0	0	0	0	0	0	0	0
4/23/2024	9:00 AM	0	0	0	0	0	0	0	0	0	0	0	0	0
4/23/2024	9:15 AM	0	0	0	0	0	0	0	0	0	0	0	0	0
4/23/2024	9:30 AM	0	0	0	0	0	0	0	0	0	0	0	0	0
4/23/2024	9:45 AM	0	0	0	0	0	0	0	0	0	0	0	0	0
4/23/2024	10:00 AM	0	0	0	0	0	0	0	0	0	0	0	0	0
4/23/2024	10:15 AM	0	0	0	0	0	0	0	0	0	0	0	0	0
4/23/2024	10:30 AM	0	0	0	0	0	0	0	0	0	0	0	0	0
4/23/2024	10:45 AM	0	0	0	0	0	0	0	0	0	0	0	0	0
4/23/2024	11:00 AM	0	0	0	0	0	0	0	0	0	0	0	0	0
4/23/2024	11:15 AM	0	0	0	0	0	0	0	0	0	0	0	0	0
4/23/2024	11:30 AM	0	0	0	0	0	0	0	0	0	0	0	0	0
4/23/2024	11:45 AM	0	0	0	0	0	0	0	0	0	0	0	0	0
4/23/2024	12:00 PM	0	0	0	0	0	0	0	0	0	0	0	0	0
4/23/2024	12:15 PM	0	0	0	0	0	0	0	0	0	0	0	0	0
4/23/2024	12:30 PM	0	0	0	0	0	0	0	0	0	0	0	0	0
4/23/2024	12:45 PM	0	0	0	0	0	0	0	0	0	0	0	0	0
4/23/2024	1:00 PM	0	0	0	0	0	0	0	0	0	0	0	0	0
4/23/2024	1:15 PM	0	0	0	0	0	0	0	0	0	0	0	0	0
4/23/2024	1:30 PM	0	0	0	0	0	0	0	0	0	0	0	0	0
4/23/2024	1:45 PM	0	0	0	0	0	0	0	0	0	0	0	0	0
4/23/2024	2:00 PM	0	0	0	0	0	0	0	0	0	0	0	0	0
4/23/2024	2:15 PM	0	0	0	0	0	0	0	0	0	0	0	0	0
4/23/2024	2:30 PM	0	0	0	0	0	0	0	0	0	0	0	0	0
4/23/2024	2:45 PM	0	0	0	0	0	0	0	0	0	0	0	0	0
4/23/2024	3:00 PM	0	0	0	0	0	0	0	0	0	0	0	0	0
4/23/2024	3:15 PM	0	0	0	0	0	0	0	0	0	0	0	0	0
4/23/2024	3:30 PM	0	0	0	0	0	0	0	0	0	0	0	0	0
4/23/2024	3:45 PM	0	0	0	0	0	0	0	0	0	0	0	0	0
4/23/2024	4:00 PM	0	0	0	0	0	0	0	0	0	0	0	0	0
4/23/2024	4:15 PM	0	0	0	0	0	0	0	0	0	0	0	0	0
4/23/2024	4:30 PM	0	0	0	0	0	0	0	0	0	0	0	0	0
4/23/2024	4:45 PM	0	0	0	0	0	0	0	0	0	0	0	0	0
4/23/2024	5:00 PM	0	0	0	0	0	0	0	0	0	0	0	0	0
4/23/2024	5:15 PM	0	0	0	0	0	0	0	0	0	0	0	0	0
4/23/2024	5:30 PM	0	0	0	0	0	0	0	0	0	0	0	0	0
4/23/2024	5:45 PM	0	0	0	0	0	0	0	0	0	0	0	0	0
4/23/2024	6:00 PM	0	0	0	0	0	0	0	0	0	0	0	0	0
4/23/2024	6:15 PM	0	0	0	0	0	0	0	0	0	0	0	0	0
4/23/2024	6:30 PM	0	0	0	0	0	0	0	0	0	0	0	0	0
4/23/2024	6:45 PM	0	0	0	0	0	0	0	0	0	0	0	0	0
4/23/2024	7:00 PM	0	0	0	0	0	0	0	0	0	0	0	0	0
4/23/2024	7:15 PM	0	0	0	0	0	0	0	0	0	0	0	0	0
4/23/2024	7:30 PM	0	0	0	0	0	0	0	0	0	0	0	0	0
4/23/2024	7:45 PM	0	0	0	0	0	0	0	0	0	0	0	0	0
4/23/2024	8:00 PM	0	0	0	0	0	0	0	0	0	0	0	0	0
4/23/2024	8:15 PM	0	0	0	0	0	0	0	0	0	0	0	0	0
4/23/2024	8:30 PM	0	0	0	0	0	0	0	0	0	0	0	0	0
4/23/2024	8:45 PM	0	0	0	0	0	0	0	0	0	0	0	0	0
4/23/2024	9:00 PM	0	0	0	0	0	0	0	0	0	0	0	0	0
4/23/2024	9:15 PM	0	0	0	0	0	0	0	0	0	0	0	0	0
4/23/2024	9:30 PM	0	0	0	0	0	0	0	0	0	0	0	0	0
4/23/2024	9:45 PM	0	0	0	0	0	0	0	0	0	0	0	0	0
4/23/2024	10:00 PM	0	0	0	0	0	0	0	0	0	0	0	0	0
4/23/2024	10:15 PM	0	0	0	0	0	0	0	0	0	0	0	0	0
4/23/2024	10:30 PM	0	0	0	0	0	0	0	0	0	0	0	0	0
4/23/2024	10:45 PM	0	0	0	0	0	0	0	0	0	0	0	0	0
4/23/2024	11:00 PM	0	0	0	0	0	0	0	0	0	0	0	0	0
4/23/2024	11:15 PM	0	0	0	0	0	0	0	0	0	0	0	0	0
4/23/2024	11:30 PM	0	0	0	0	0	0	0	0	0	0	0	0	0
4/23/2024	11:45 PM	0	0	0	0	0	0	0	0	0	0	0	0	0

4/24/2024	12:00 AM	0	0	0	0	0	0	0	0	0	0	0	0	0
4/24/2024	12:15 AM	0	0	0	0	0	0	0	0	0	0	0	0	0
4/24/2024	12:30 AM	0	0	0	0	0	0	0	0	0	0	0	0	0
4/24/2024	12:45 AM	0	0	0	0	0	0	0	0	0	0	0	0	0
4/24/2024	1:00 AM	0	0	0	0	0	0	0	0	0	0	0	0	0
4/24/2024	1:15 AM	0	0	0	0	0	0	0	0	0	0	0	0	0
4/24/2024	1:30 AM	0	0	0	0	0	0	0	0	0	0	0	0	0
4/24/2024	1:45 AM	0	0	0	0	0	0	0	0	0	0	0	0	0
4/24/2024	2:00 AM	0	0	0	0	0	0	0	0	0	0	0	0	0
4/24/2024	2:15 AM	0	0	0	0	0	0	0	0	0	0	0	0	0
4/24/2024	2:30 AM	0	0	0	0	0	0	0	0	0	0	0	0	0
4/24/2024	2:45 AM	0	0	0	0	0	0	0	0	0	0	0	0	0
4/24/2024	3:00 AM	0	0	0	0	0	0	0	0	0	0	0	0	0
4/24/2024	3:15 AM	0	0	0	0	0	0	0	0	0	0	0	0	0
4/24/2024	3:30 AM	0	0	0	0	0	0	0	0	0	0	0	0	0
4/24/2024	3:45 AM	0	0	0	0	0	0	0	0	0	0	0	0	0
4/24/2024	4:00 AM	0	0	0	0	0	0	0	0	0	0	0	0	0
4/24/2024	4:15 AM	0	0	0	0	0	0	0	0	0	0	0	0	0
4/24/2024	4:30 AM	0	0	0	0	0	0	0	0	0	0	0	0	0
4/24/2024	4:45 AM	0	0	0	0	0	0	0	0	0	0	0	0	0
4/24/2024	5:00 AM	0	0	0	0	0	0	0	0	0	0	0	0	0
4/24/2024	5:15 AM	0	0	0	0	0	0	0	0	0	0	0	0	0
4/24/2024	5:30 AM	0	0	0	0	0	0	0	0	0	0	0	0	0
4/24/2024	5:45 AM	0	0	0	0	0	0	0	0	0	0	0	0	0
4/24/2024	6:00 AM	0	0	0	0	0	0	0	0	0	0	0	0	0
4/24/2024	6:15 AM	0	0	0	0	0	0	0	0	0	0	0	0	0
4/24/2024	6:30 AM	0	0	0	0	0	0	0	0	0	0	0	0	0
4/24/2024	6:45 AM	0	0	0	0	0	0	0	0	0	0	0	0	0
4/24/2024	7:00 AM	0	0	0	0	0	0	0	0	0	0	0	0	0
4/24/2024	7:15 AM	0	0	0	0	0	0	0	0	0	0	0	0	0
4/24/2024	7:30 AM	0	0	0	0	0	0	0	0	0	0	0	0	0
4/24/2024	7:45 AM	0	0	0	0	0	0	0	0	0	0	0	0	0
4/24/2024	8:00 AM	0	0	0	0	0	0	0	0	0	0	0	0	0
4/24/2024	8:15 AM	0	0	0	0	0	0	0	0	0	0	0	0	0
4/24/2024	8:30 AM	0	0	0	0	0	0	0	0	0	0	0	0	0
4/24/2024	8:45 AM	0	0	0	0	0	0	0	0	0	0	0	0	0
4/24/2024	9:00 AM	0	0	0	0	0	0	0	0	0	0	0	0	0
4/24/2024	9:15 AM	0	0	0	0	0	0	0	0	0	0	0	0	0
4/24/2024	9:30 AM	0	0	0	0	0	0	0	0	0	0	0	0	0
4/24/2024	9:45 AM	0	0	0	0	0	0	0	0	0	0	0	0	0
4/24/2024	10:00 AM	0	0	0	0	0	0	0	0	0	0	0	0	0
4/24/2024	10:15 AM	0	0	0	0	0	0	0	0	0	0	0	0	0
4/24/2024	10:30 AM	0	0	0	0	0	0	0	0	0	0	0	0	0
4/24/2024	10:45 AM	0	0	0	0	0	0	0	0	0	0	0	0	0
4/24/2024	11:00 AM	0	0	0	0	0	0	0	0	0	0	0	0	0
4/24/2024	11:15 AM	0	0	0	0	0	0	0	0	0	0	0	0	0
4/24/2024	11:30 AM	0	0	0	0	0	0	0	0	0	0	0	0	0
4/24/2024	11:45 AM	0	0	0	0	0	0	0	0	0	0	0	0	0
4/24/2024	12:00 PM	0	0	0	0	0	0	0	0	0	0	0	0	0
4/24/2024	12:15 PM	0	0	0	0	0	0	0	0	0	0	0	0	0
4/24/2024	12:30 PM	0	0	0	0	0	0	0	0	0	0	0	0	0
4/24/2024	12:45 PM	0	0	0	0	0	0	0	0	0	0	0	0	0
4/24/2024	1:00 PM	0	0	0	0	0	0	0	0	0	0	0	0	0
4/24/2024	1:15 PM	0	0	0	0	0	0	0	0	0	0	0	0	0
4/24/2024	1:30 PM	0	0	0	0	0	0	0	0	0	0	0	0	0
4/24/2024	1:45 PM	0	0	0	0	0	0	0	0	0	0	0	0	0
4/24/2024	2:00 PM	0	0	0	0	0	0	0	0	0	0	0	0	0
4/24/2024	2:15 PM	0	0	0	0	0	0	0	0	0	0	0	0	0
4/24/2024	2:30 PM	0	0	0	0	0	0	0	0	0	0	0	0	0
4/24/2024	2:45 PM	0	0	0	0	0	0	0	0	0	0	0	0	0
4/24/2024	3:00 PM	0	0	0	0	0	0	0	0	0	0	0	0	0
4/24/2024	3:15 PM	0	0	0	0	0	0	0	0	0	0	0	0	0
4/24/2024	3:30 PM	0	0	0	0	0	0	0	0	0	0	0	0	0
4/24/2024	3:45 PM	0	0	0	0	0	0	0	0	0	0	0	0	0
4/24/2024	4:00 PM	0	0	0	0	0	0	0	0	0	0	0	0	0
4/24/2024	4:15 PM	0	0	0	0	0	0	0	0	0	0	0	0	0
4/24/2024	4:30 PM	0	0	0	0	0	0	0	0	0	0	0	0	0
4/24/2024	4:45 PM	0	0	0	0	0	0	0	0	0	0	0	0	0
4/24/2024	5:00 PM	0	0	0	0	0	0	0	0	0	0	0	0	0
4/24/2024	5:15 PM	0	0	0	0	0	0	0	0	0	0	0	0	0
4/24/2024	5:30 PM	0	0	0	0	0	0	0	0	0	0	0	0	0
4/24/2024	5:45 PM	0	0	0	0	0	0	0	0	0	0	0	0	0
4/24/2024	6:00 PM	0	0	0	0	0	0	0	0	0	0	0	0	0
4/24/2024	6:15 PM	0	0	0	0	0	0	0	0	0	0	0	0	0
4/24/2024	6:30 PM	0	0	0	0	0	0	0	0	0	0	0	0	0
4/24/2024	6:45 PM	0	0	0	0	0	0	0	0	0	0	0	0	0
4/24/2024	7:00 PM	0	0	0	0	0	0	0	0	0	0	0	0	0
4/24/2024	7:15 PM	0	0	0	0	0	0	0	0	0	0	0	0	0
4/24/2024	7:30 PM	0	0	0	0	0	0	0	0	0	0	0	0	0
4/24/2024	7:45 PM	0	0	0	0	0	0	0	0	0	0	0	0	0
4/24/2024	8:00 PM	0	0	0	0	0	0	0	0	0	0	0	0	0
4/24/2024	8:15 PM	0	0	0	0	0	0	0	0	0	0	0	0	0
4/24/2024	8:30 PM	0	0	0	0	0	0	0	0	0	0	0	0	0
4/24/2024	8:45 PM	0	0	0	0	0	0	0	0	0	0	0	0	0
4/24/2024	9:00 PM	0	0	0	0	0	0	0	0	0	0	0	0	0
4/24/2024	9:15 PM	0	0	0	0	0	0	0	0	0	0	0	0	0
4/24/2024	9:30 PM	0	0	0	0	0	0	0	0	0	0	0	0	0
4/24/2024	9:45 PM	0	0	0	0	0	0	0	0	0	0	0	0	0
4/24/2024	10:00 PM	0	0	0	0	0	0	0	0	0	0	0	0	0
4/24/2024	10:15 PM	0	0	0	0	0	0	0	0	0	0	0	0	0
4/24/2024	10:30 PM	0	0	0	0	0	0	0	0	0	0	0	0	0
4/24/2024	10:45 PM	0	0	0	0	0	0	0	0	0	0	0	0	0
4/24/2024	11:00 PM	0	0	0	0	0	0	0	0	0	0	0	0	0
4/24/2024	11:15 PM	0	0	0	0	0	0	0	0	0	0	0	0	0
4/24/2024	11:30 PM	0	0	0	0	0	0	0	0	0	0	0	0	0
4/24/2024	11:45 PM	0	0	0	0	0	0	0	0	0	0	0	0	0

4/25/2024	12:00 AM	0	0	0	0	0	0	0	0	0	0	0	0	0
4/25/2024	12:15 AM	0	0	0	0	0	0	0	0	0	0	0	0	0
4/25/2024	12:30 AM	0	0	0	0	0	0	0	0	0	0	0	0	0
4/25/2024	12:45 AM	0	0	0	0	0	0	0	0	0	0	0	0	0
4/25/2024	1:00 AM	0	0	0	0	0	0	0	0	0	0	0	0	0
4/25/2024	1:15 AM	0	0	0	0	0	0	0	0	0	0	0	0	0
4/25/2024	1:30 AM	0	0	0	0	0	0	0	0	0	0	0	0	0
4/25/2024	1:45 AM	0	0	0	0	0	0	0	0	0	0	0	0	0
4/25/2024	2:00 AM	0	0	0	0	0	0	0	0	0	0	0	0	0
4/25/2024	2:15 AM	0	0	0	0	0	0	0	0	0	0	0	0	0
4/25/2024	2:30 AM	0	0	0	0	0	0	0	0	0	0	0	0	0
4/25/2024	2:45 AM	0	0	0	0	0	0	0	0	0	0	0	0	0
4/25/2024	3:00 AM	0	0	0	0	0	0	0	0	0	0	0	0	0
4/25/2024	3:15 AM	0	0	0	0	0	0	0	0	0	0	0	0	0
4/25/2024	3:30 AM	0	0	0	0	0	0	0	0	0	0	0	0	0
4/25/2024	3:45 AM	0	0	0	0	0	0	0	0	0	0	0	0	0
4/25/2024	4:00 AM	0	0	0	0	0	0	0	0	0	0	0	0	0
4/25/2024	4:15 AM	0	0	0	0	0	0	0	0	0	0	0	0	0
4/25/2024	4:30 AM	0	0	0	0	0	0	0	0	0	0	0	0	0
4/25/2024	4:45 AM	0	0	0	0	0	0	0	0	0	0	0	0	0
4/25/2024	5:00 AM	0	0	0	0	0	0	0	0	0	0	0	0	0
4/25/2024	5:15 AM	0	0	0	0	0	0	0	0	0	0	0	0	0
4/25/2024	5:30 AM	0	0	0	0	0	0	0	0	0	0	0	0	0
4/25/2024	5:45 AM	0	0	0	0	0	0	0	0	0	0	0	0	0
4/25/2024	6:00 AM	0	0	0	0	0	0	0	0	0	0	0	0	0
4/25/2024	6:15 AM	0	0	0	0	0	0	0	0	0	0	0	0	0
4/25/2024	6:30 AM	0	0	0	0	0	0	0	0	0	0	0	0	0
4/25/2024	6:45 AM	0	0	0	0	0	0	0	0	0	0	0	0	0
4/25/2024	7:00 AM	0	0	0	0	0	0	0	0	0	0	0	0	0
4/25/2024	7:15 AM	0	0	0	0	0	0	0	0	0	0	0	0	0
4/25/2024	7:30 AM	0	0	0	0	0	0	0	0	0	0	0	0	0
4/25/2024	7:45 AM	0	0	0	0	0	0	0	0	0	0	0	0	0
4/25/2024	8:00 AM	0	0	0	0	0	0	0	0	0	0	0	0	0
4/25/2024	8:15 AM	0	0	0	0	0	0	0	0	0	0	0	0	0
4/25/2024	8:30 AM	0	0	0	0	0	0	0	0	0	0	0	0	0
4/25/2024	8:45 AM	0	0	0	0	0	0	0	0	0	0	0	0	0
4/25/2024	9:00 AM	0	0	0	0	0	0	0	0	0	0	0	0	0
4/25/2024	9:15 AM	0	0	0	0	0	0	0	0	0	0	0	0	0
4/25/2024	9:30 AM	0	0	0	0	0	0	0	0	0	0	0	0	0
4/25/2024	9:45 AM	0	0	0	0	0	0	0	0	0	0	0	0	0
4/25/2024	10:00 AM	0	0	0	0	0	0	0	0	0	0	0	0	0
4/25/2024	10:15 AM	0	0	0	0	0	0	0	0	0	0	0	0	0
4/25/2024	10:30 AM	0	0	0	0	0	0	0	0	0	0	0	0	0
4/25/2024	10:45 AM	0	0	0	0	0	0	0	0	0	0	0	0	0
4/25/2024	11:00 AM	0	0	0	0	0	0	0	0	0	0	0	0	0
4/25/2024	11:15 AM	0	0	0	0	0	0	0	0	0	0	0	0	0
4/25/2024	11:30 AM	0	0	0	0	0	0	0	0	0	0	0	0	0
4/25/2024	11:45 AM	0	0	0	0	0	0	0	0	0	0	0	0	0
4/25/2024	12:00 PM	0	0	0	0	0	0	0	0	0	0	0	0	0
4/25/2024	12:15 PM	0	0	0	0	0	0	0	0	0	0	0	0	0
4/25/2024	12:30 PM	0	0	0	0	0	0	0	0	0	0	0	0	0
4/25/2024	12:45 PM	0	0	0	0	0	0	0	0	0	0	0	0	0
4/25/2024	1:00 PM	0	0	0	0	0	0	0	0	0	0	0	0	0
4/25/2024	1:15 PM	0	0	0	0	0	0	0	0	0	0	0	0	0
4/25/2024	1:30 PM	0	0	0	0	0	0	0	0	0	0	0	0	0
4/25/2024	1:45 PM	0	0	0	0	0	0	0	0	0	0	0	0	0
4/25/2024	2:00 PM	0	0	0	0	0	0	0	0	0	0	0	0	0
4/25/2024	2:15 PM	0	0	0	0	0	0	0	0	0	0	0	0	0
4/25/2024	2:30 PM	0	0	0	0	0	0	0	0	0	0	0	0	0
4/25/2024	2:45 PM	0	0	0	0	0	0	0	0	0	0	0	0	0
4/25/2024	3:00 PM	0	0	0	0	0	0	0	0	0	0	0	0	0
4/25/2024	3:15 PM	0	0	0	0	0	0	0	0	0	0	0	0	0
4/25/2024	3:30 PM	0	0	0	0	0	0	0	0	0	0	0	0	0
4/25/2024	3:45 PM	0	0	0	0	0	0	0	0	0	0	0	0	0
4/25/2024	4:00 PM	0	0	0	0	0	0	0	0	0	0	0	0	0
4/25/2024	4:15 PM	0	0	0	0	0	0	0	0	0	0	0	0	0
4/25/2024	4:30 PM	0	0	0	0	0	0	0	0	0	0	0	0	0
4/25/2024	4:45 PM	0	0	0	0	0	0	0	0	0	0	0	0	0
4/25/2024	5:00 PM	0	0	0	0	0	0	0	0	0	0	0	0	0
4/25/2024	5:15 PM	0	0	0	0	0	0	0	0	0	0	0	0	0
4/25/2024	5:30 PM	0	0	0	0	0	0	0	0	0	0	0	0	0
4/25/2024	5:45 PM	0	0	0	0	0	0	0	0	0	0	0	0	0
4/25/2024	6:00 PM	0	0	0	0	0	0	0	0	0	0	0	0	0
4/25/2024	6:15 PM	0	0	0	0	0	0	0	0	0	0	0	0	0
4/25/2024	6:30 PM	0	0	0	0	0	0	0	0	0	0	0	0	0
4/25/2024	6:45 PM	0	0	0	0	0	0	0	0	0	0	0	0	0
4/25/2024	7:00 PM	0	0	0	0	0	0	0	0	0	0	0	0	0
4/25/2024	7:15 PM	0	0	0	0	0	0	0	0	0	0	0	0	0
4/25/2024	7:30 PM	0	0	0	0	0	0	0	0	0	0	0	0	0
4/25/2024	7:45 PM	0	0	0	0	0	0	0	0	0	0	0	0	0
4/25/2024	8:00 PM	0	0	0	0	0	0	0	0	0	0	0	0	0
4/25/2024	8:15 PM	0	0	0	0	0	0	0	0	0	0	0	0	0
4/25/2024	8:30 PM	0	0	0	0	0	0	0	0	0	0	0	0	0
4/25/2024	8:45 PM	0	0	0	0	0	0	0	0	0	0	0	0	0
4/25/2024	9:00 PM	0	0	0	0	0	0	0	0	0	0	0	0	0
4/25/2024	9:15 PM	0	0	0	0	0	0	0	0	0	0	0	0	0
4/25/2024	9:30 PM	0	0	0	0	0	0	0	0	0	0	0	0	0
4/25/2024	9:45 PM	0	0	0	0	0	0	0	0	0	0	0	0	0
4/25/2024	10:00 PM	0	0	0	0	0	0	0	0	0	0	0	0	0
4/25/2024	10:15 PM	0	0	0	0	0	0	0	0	0	0	0	0	0
4/25/2024	10:30 PM	0	0	0	0	0	0	0	0	0	0	0	0	0
4/25/2024	10:45 PM	0	0	0	0	0	0	0	0	0	0	0	0	0
4/25/2024	11:00 PM	0	0	0	0	0	0	0	0	0	0	0	0	0
4/25/2024	11:15 PM	0	0	0	0	0	0	0	0	0	0	0	0	0
4/25/2024	11:30 PM	0	0	0	0	0	0	0	0	0	0	0	0	0
4/25/2024	11:45 PM	0	0	0	0	0	0	0	0	0	0	0	0	0

4/26/2024	12:00 AM	0	0	0	0	0	0	0	0	0	0	0	0	0
4/26/2024	12:15 AM	0	0	0	0	0	0	0	0	0	0	0	0	0
4/26/2024	12:30 AM	0	0	0	0	0	0	0	0	0	0	0	0	0
4/26/2024	12:45 AM	0	0	0	0	0	0	0	0	0	0	0	0	0
4/26/2024	1:00 AM	0	0	0	0	0	0	0	0	0	0	0	0	0
4/26/2024	1:15 AM	0	0	0	0	0	0	0	0	0	0	0	0	0
4/26/2024	1:30 AM	0	0	0	0	0	0	0	0	0	0	0	0	0
4/26/2024	1:45 AM	0	0	0	0	0	0	0	0	0	0	0	0	0
4/26/2024	2:00 AM	0	0	0	0	0	0	0	0	0	0	0	0	0
4/26/2024	2:15 AM	0	0	0	0	0	0	0	0	0	0	0	0	0
4/26/2024	2:30 AM	0	0	0	0	0	0	0	0	0	0	0	0	0
4/26/2024	2:45 AM	0	0	0	0	0	0	0	0	0	0	0	0	0
4/26/2024	3:00 AM	0	0	0	0	0	0	0	0	0	0	0	0	0
4/26/2024	3:15 AM	0	0	0	0	0	0	0	0	0	0	0	0	0
4/26/2024	3:30 AM	0	0	0	0	0	0	0	0	0	0	0	0	0
4/26/2024	3:45 AM	0	0	0	0	0	0	0	0	0	0	0	0	0
4/26/2024	4:00 AM	0	0	0	0	0	0	0	0	0	0	0	0	0
4/26/2024	4:15 AM	0	0	0	0	0	0	0	0	0	0	0	0	0
4/26/2024	4:30 AM	0	0	0	0	0	0	0	0	0	0	0	0	0
4/26/2024	4:45 AM	0	0	0	0	0	0	0	0	0	0	0	0	0
4/26/2024	5:00 AM	0	0	0	0	0	0	0	0	0	0	0	0	0
4/26/2024	5:15 AM	0	0	0	0	0	0	0	0	0	0	0	0	0
4/26/2024	5:30 AM	0	0	0	0	0	0	0	0	0	0	0	0	0
4/26/2024	5:45 AM	0	0	0	0	0	0	0	0	0	0	0	0	0
4/26/2024	6:00 AM	0	0	0	0	0	0	0	0	0	0	0	0	0
4/26/2024	6:15 AM	0	0	0	0	0	0	0	0	0	0	0	0	0
4/26/2024	6:30 AM	0	0	0	0	0	0	0	0	0	0	0	0	0
4/26/2024	6:45 AM	0	0	0	0	0	0	0	0	0	0	0	0	0
4/26/2024	7:00 AM	0	0	0	0	0	0	0	0	0	0	0	0	0
4/26/2024	7:15 AM	0	0	0	0	0	0	0	0	0	0	0	0	0
4/26/2024	7:30 AM	0	0	0	0	0	0	0	0	0	0	0	0	0
4/26/2024	7:45 AM	0	0	0	0	0	0	0	0	0	0	0	0	0
4/26/2024	8:00 AM	0	0	0	0	0	0	0	0	0	0	0	0	0
4/26/2024	8:15 AM	0	0	0	0	0	0	0	0	0	0	0	0	0
4/26/2024	8:30 AM	0	0	0	0	0	0	0	0	0	0	0	0	0
4/26/2024	8:45 AM	0	0	0	0	0	0	0	0	0	0	0	0	0
4/26/2024	9:00 AM	0	0	0	0	0	0	0	0	0	0	0	0	0
4/26/2024	9:15 AM	0	0	0	0	0	0	0	0	0	0	0	0	0
4/26/2024	9:30 AM	0	0	0	0	0	0	0	0	0	0	0	0	0
4/26/2024	9:45 AM	0	0	0	0	0	0	0	0	0	0	0	0	0
4/26/2024	10:00 AM	0	0	0	0	0	0	0	0	0	0	0	0	0
4/26/2024	10:15 AM	0	0	0	0	0	0	0	0	0	0	0	0	0
4/26/2024	10:30 AM	0	0	0	0	0	0	0	0	0	0	0	0	0
4/26/2024	10:45 AM	0	0	0	0	0	0	0	0	0	0	0	0	0
4/26/2024	11:00 AM	0	0	0	0	0	0	0	0	0	0	0	0	0
4/26/2024	11:15 AM	0	0	0	0	0	0	0	0	0	0	0	0	0
4/26/2024	11:30 AM	0	0	0	0	0	0	0	0	0	0	0	0	0
4/26/2024	11:45 AM	0	0	0	0	0	0	0	0	0	0	0	0	0
4/26/2024	12:00 PM	0	0	0	0	0	0	0	0	0	0	0	0	0
4/26/2024	12:15 PM	0	0	0	0	0	0	0	0	0	0	0	0	0
4/26/2024	12:30 PM	0	0	0	0	0	0	0	0	0	0	0	0	0
4/26/2024	12:45 PM	0	0	0	0	0	0	0	0	0	0	0	0	0
4/26/2024	1:00 PM	0	0	0	0	0	0	0	0	0	0	0	0	0
4/26/2024	1:15 PM	0	0	0	0	0	0	0	0	0	0	0	0	0
4/26/2024	1:30 PM	0	0	0	0	0	0	0	0	0	0	0	0	0
4/26/2024	1:45 PM	0	0	0	0	0	0	0	0	0	0	0	0	0
4/26/2024	2:00 PM	0	0	0	0	0	0	0	0	0	0	0	0	0
4/26/2024	2:15 PM	0	0	0	0	0	0	0	0	0	0	0	0	0
4/26/2024	2:30 PM	0	0	0	0	0	0	0	0	0	0	0	0	0
4/26/2024	2:45 PM	0	0	0	0	0	0	0	0	0	0	0	0	0
4/26/2024	3:00 PM	0	0	0	0	0	0	0	0	0	0	0	0	0
4/26/2024	3:15 PM	0	0	0	0	0	0	0	0	0	0	0	0	0
4/26/2024	3:30 PM	0	0	0	0	0	0	0	0	0	0	0	0	0
4/26/2024	3:45 PM	0	0	0	0	0	0	0	0	0	0	0	0	0
4/26/2024	4:00 PM	0	0	0	0	0	0	0	0	0	0	0	0	0
4/26/2024	4:15 PM	0	0	0	0	0	0	0	0	0	0	0	0	0
4/26/2024	4:30 PM	0	0	0	0	0	0	0	0	0	0	0	0	0
4/26/2024	4:45 PM	0	0	0	0	0	0	0	0	0	0	0	0	0
4/26/2024	5:00 PM	0	0	0	0	0	0	0	0	0	0	0	0	0
4/26/2024	5:15 PM	0	0	0	0	0	0	0	0	0	0	0	0	0
4/26/2024	5:30 PM	0	0	0	0	0	0	0	0	0	0	0	0	0
4/26/2024	5:45 PM	0	0	0	0	0	0	0	0	0	0	0	0	0
4/26/2024	6:00 PM	0	0	0	0	0	0	0	0	0	0	0	0	0
4/26/2024	6:15 PM	0	0	0	0	0	0	0	0	0	0	0	0	0
4/26/2024	6:30 PM	0	0	0	0	0	0	0	0	0	0	0	0	0
4/26/2024	6:45 PM	0	0	0	0	0	0	0	0	0	0	0	0	0
4/26/2024	7:00 PM	0	0	0	0	0	0	0	0	0	0	0	0	0
4/26/2024	7:15 PM	0	0	0	0	0	0	0	0	0	0	0	0	0
4/26/2024	7:30 PM	0	0	0	0	0	0	0	0	0	0	0	0	0
4/26/2024	7:45 PM	0	0	0	0	0	0	0	0	0	0	0	0	0
4/26/2024	8:00 PM	0	0	0	0	0	0	0	0	0	0	0	0	0
4/26/2024	8:15 PM	0	0	0	0	0	0	0	0	0	0	0	0	0
4/26/2024	8:30 PM	0	0	0	0	0	0	0	0	0	0	0	0	0
4/26/2024	8:45 PM	0	0	0	0	0	0	0	0	0	0	0	0	0
4/26/2024	9:00 PM	0	0	0	0	0	0	0	0	0	0	0	0	0
4/26/2024	9:15 PM	0	0	0	0	0	0	0	0	0	0	0	0	0
4/26/2024	9:30 PM	0	0	0	0	0	0	0	0	0	0	0	0	0
4/26/2024	9:45 PM	0	0	0	0	0	0	0	0	0	0	0	0	0
4/26/2024	10:00 PM	0	0	0	0	0	0	0	0	0	0	0	0	0
4/26/2024	10:15 PM	0	0	0	0	0	0	0	0	0	0	0	0	0
4/26/2024	10:30 PM	0	0	0	0	0	0	0	0	0	0	0	0	0
4/26/2024	10:45 PM	0	0	0	0	0	0	0	0	0	0	0	0	0
4/26/2024	11:00 PM	0	0	0	0	0	0	0	0	0	0	0	0	0
4/26/2024	11:15 PM	0	0	0	0	0	0	0	0	0	0	0	0	0
4/26/2024	11:30 PM	0	0	0	0	0	0	0	0	0	0	0	0	0
4/26/2024	11:45 PM	0	0	0	0	0	0	0	0	0	0	0	0	0

4/27/2024	12:00 AM	0	0	0	0	0	0	0	0	0	0	0	0	0
4/27/2024	12:15 AM	0	0	0	0	0	0	0	0	0	0	0	0	0
4/27/2024	12:30 AM	0	0	0	0	0	0	0	0	0	0	0	0	0
4/27/2024	12:45 AM	0	0	0	0	0	0	0	0	0	0	0	0	0
4/27/2024	1:00 AM	0	0	0	0	0	0	0	0	0	0	0	0	0
4/27/2024	1:15 AM	0	0	0	0	0	0	0	0	0	0	0	0	0
4/27/2024	1:30 AM	0	0	0	0	0	0	0	0	0	0	0	0	0
4/27/2024	1:45 AM	0	0	0	0	0	0	0	0	0	0	0	0	0
4/27/2024	2:00 AM	0	0	0	0	0	0	0	0	0	0	0	0	0
4/27/2024	2:15 AM	0	0	0	0	0	0	0	0	0	0	0	0	0
4/27/2024	2:30 AM	0	0	0	0	0	0	0	0	0	0	0	0	0
4/27/2024	2:45 AM	0	0	0	0	0	0	0	0	0	0	0	0	0
4/27/2024	3:00 AM	0	0	0	0	0	0	0	0	0	0	0	0	0
4/27/2024	3:15 AM	0	0	0	0	0	0	0	0	0	0	0	0	0
4/27/2024	3:30 AM	0	0	0	0	0	0	0	0	0	0	0	0	0
4/27/2024	3:45 AM	0	0	0	0	0	0	0	0	0	0	0	0	0
4/27/2024	4:00 AM	0	0	0	0	0	0	0	0	0	0	0	0	0
4/27/2024	4:15 AM	0	0	0	0	0	0	0	0	0	0	0	0	0
4/27/2024	4:30 AM	0	0	0	0	0	0	0	0	0	0	0	0	0
4/27/2024	4:45 AM	0	0	0	0	0	0	0	0	0	0	0	0	0
4/27/2024	5:00 AM	0	0	0	0	0	0	0	0	0	0	0	0	0
4/27/2024	5:15 AM	0	0	0	0	0	0	0	0	0	0	0	0	0
4/27/2024	5:30 AM	0	0	0	0	0	0	0	0	0	0	0	0	0
4/27/2024	5:45 AM	0	0	0	0	0	0	0	0	0	0	0	0	0
4/27/2024	6:00 AM	0	0	0	0	0	0	0	0	0	0	0	0	0
4/27/2024	6:15 AM	0	0	0	0	0	0	0	0	0	0	0	0	0
4/27/2024	6:30 AM	0	0	0	0	0	0	0	0	0	0	0	0	0
4/27/2024	6:45 AM	0	0	0	0	0	0	0	0	0	0	0	0	0
4/27/2024	7:00 AM	0	0	0	0	0	0	0	0	0	0	0	0	0
4/27/2024	7:15 AM	0	0	0	0	0	0	0	0	0	0	0	0	0
4/27/2024	7:30 AM	0	0	0	0	0	0	0	0	0	0	0	0	0
4/27/2024	7:45 AM	0	0	0	0	0	0	0	0	0	0	0	0	0
4/27/2024	8:00 AM	0	0	0	0	0	0	0	0	0	0	0	0	0
4/27/2024	8:15 AM	0	0	0	0	0	0	0	0	0	0	0	0	0
4/27/2024	8:30 AM	0	0	0	0	0	0	0	0	0	0	0	0	0
4/27/2024	8:45 AM	0	0	0	0	0	0	0	0	0	0	0	0	0
4/27/2024	9:00 AM	0	0	0	0	0	0	0	0	0	0	0	0	0
4/27/2024	9:15 AM	0	0	0	0	0	0	0	0	0	0	0	0	0
4/27/2024	9:30 AM	0	0	0	0	0	0	0	0	0	0	0	0	0
4/27/2024	9:45 AM	0	0	0	0	0	0	0	0	0	0	0	0	0
4/27/2024	10:00 AM	0	0	0	0	0	0	0	0	0	0	0	0	0
4/27/2024	10:15 AM	0	0	0	0	0	0	0	0	0	0	0	0	0
4/27/2024	10:30 AM	0	0	0	0	0	0	0	0	0	0	0	0	0
4/27/2024	10:45 AM	0	0	0	0	0	0	0	0	0	0	0	0	0
4/27/2024	11:00 AM	0	0	0	0	0	0	0	0	0	0	0	0	0
4/27/2024	11:15 AM	0	0	0	0	0	0	0	0	0	0	0	0	0
4/27/2024	11:30 AM	0	0	0	0	0	0	0	0	0	0	0	0	0
4/27/2024	11:45 AM	0	0	0	0	0	0	0	0	0	0	0	0	0
4/27/2024	12:00 PM	0	0	0	0	0	0	0	0	0	0	0	0	0
4/27/2024	12:15 PM	0	0	0	0	0	0	0	0	0	0	0	0	0
4/27/2024	12:30 PM	0	0	0	0	0	0	0	0	0	0	0	0	0
4/27/2024	12:45 PM	0	0	0	0	0	0	0	0	0	0	0	0	0
4/27/2024	1:00 PM	0	0	0	0	0	0	0	0	0	0	0	0	0
4/27/2024	1:15 PM	0	0	0	0	0	0	0	0	0	0	0	0	0
4/27/2024	1:30 PM	0	0	0	0	0	0	0	0	0	0	0	0	0
4/27/2024	1:45 PM	0	0	0	0	0	0	0	0	0	0	0	0	0
4/27/2024	2:00 PM	0	0	0	0	0	0	0	0	0	0	0	0	0
4/27/2024	2:15 PM	0	0	0	0	0	0	0	0	0	0	0	0	0
4/27/2024	2:30 PM	0	0	0	0	0	0	0	0	0	0	0	0	0
4/27/2024	2:45 PM	0	0	0	0	0	0	0	0	0	0	0	0	0
4/27/2024	3:00 PM	0	0	0	0	0	0	0	0	0	0	0	0	0
4/27/2024	3:15 PM	0	0	0	0	0	0	0	0	0	0	0	0	0
4/27/2024	3:30 PM	0	0	0	0	0	0	0	0	0	0	0	0	0
4/27/2024	3:45 PM	0	0	0	0	0	0	0	0	0	0	0	0	0
4/27/2024	4:00 PM	0	0	0	0	0	0	0	0	0	0	0	0	0
4/27/2024	4:15 PM	0	0	0	0	0	0	0	0	0	0	0	0	0
4/27/2024	4:30 PM	0	0	0	0	0	0	0	0	0	0	0	0	0
4/27/2024	4:45 PM	0	0	0	0	0	0	0	0	0	0	0	0	0
4/27/2024	5:00 PM	0	0	0	0	0	0	0	0	0	0	0	0	0
4/27/2024	5:15 PM	0	0	0	0	0	0	0	0	0	0	0	0	0
4/27/2024	5:30 PM	0	0	0	0	0	0	0	0	0	0	0	0	0
4/27/2024	5:45 PM	0	0	0	0	0	0	0	0	0	0	0	0	0
4/27/2024	6:00 PM	0	0	0	0	0	0	0	0	0	0	0	0	0
4/27/2024	6:15 PM	0	0	0	0	0	0	0	0	0	0	0	0	0
4/27/2024	6:30 PM	0	0	0	0	0	0	0	0	0	0	0	0	0
4/27/2024	6:45 PM	0	0	0	0	0	0	0	0	0	0	0	0	0
4/27/2024	7:00 PM	0	0	0	0	0	0	0	0	0	0	0	0	0
4/27/2024	7:15 PM	0	0	0	0	0	0	0	0	0	0	0	0	0
4/27/2024	7:30 PM	0	0	0	0	0	0	0	0	0	0	0	0	0
4/27/2024	7:45 PM	0	0	0	0	0	0	0	0	0	0	0	0	0
4/27/2024	8:00 PM	0	0	0	0	0	0	0	0	0	0	0	0	0
4/27/2024	8:15 PM	0	0	0	0	0	0	0	0	0	0	0	0	0
4/27/2024	8:30 PM	0	0	0	0	0	0	0	0	0	0	0	0	0
4/27/2024	8:45 PM	0	0	0	0	0	0	0	0	0	0	0	0	0
4/27/2024	9:00 PM	0	0	0	0	0	0	0	0	0	0	0	0	0
4/27/2024	9:15 PM	0	0	0	0	0	0	0	0	0	0	0	0	0
4/27/2024	9:30 PM	0	0	0	0	0	0	0	0	0	0	0	0	0
4/27/2024	9:45 PM	0	0	0	0	0	0	0	0	0	0	0	0	0
4/27/2024	10:00 PM	0	0	0	0	0	0	0	0	0	0	0	0	0
4/27/2024	10:15 PM	0	0	0	0	0	0	0	0	0	0	0	0	0
4/27/2024	10:30 PM	0	0	0	0	0	0	0	0	0	0	0	0	0
4/27/2024	10:45 PM	0	0	0	0	0	0	0	0	0	0	0	0	0
4/27/2024	11:00 PM	0	0	0	0	0	0	0	0	0	0	0	0	0
4/27/2024	11:15 PM	0	0	0	0	0	0	0	0	0	0	0	0	0
4/27/2024	11:30 PM	0	0	0	0	0	0	0	0	0	0	0	0	0
4/27/2024	11:45 PM	0	0	0	0	0	0	0	0	0	0	0	0	0

Bi-Directional Class Count || SB WB 15min

Columbia, SC

Marr Traffic DATA COLLECTION
www.marrtraffic.com

Site 74 Lane 4 WB
I-20,
west of US-378 Sunset Blvd S/Bound Off-Ramp

Date
Sunday, April 21, 2024

Lat/Long
34.008085°, -81.156669°

Weather
Cloudy
66°F

Click here for Detailed Weather

Click here for Map

0000 - 2400 (Sunday 24h Session) (04-21-2024)
SB WB 15min

	Westbound (Movement 74 Lane 4 WB.1)													15min	60min
Time	1	2	3	4	5	6	7	8	9	10	11	12	13	Total	Total
0000 - 0015	0	1	0	0	0	0	0	0	0	0	0	0	0	**1**	
0015 - 0030	0	4	0	0	0	0	0	0	0	0	0	0	0	**4**	
0030 - 0045	0	4	0	0	0	0	0	0	0	0	0	0	0	**4**	
0045 - 0100	0	1	0	0	0	0	0	0	0	0	0	0	0	**1**	**10**
0100 - 0115	0	3	1	0	0	0	0	0	0	0	0	0	0	**4**	
0115 - 0130	0	5	1	0	0	0	0	0	0	0	0	0	0	**6**	
0130 - 0145	0	3	0	0	0	0	0	0	0	0	0	0	0	**3**	
0145 - 0200	0	3	0	0	0	0	0	0	0	0	0	0	0	**3**	**16**
0200 - 0215	0	1	0	0	0	0	0	0	0	0	0	0	0	**1**	
0215 - 0230	0	2	0	0	0	0	0	0	0	0	0	0	0	**2**	
0230 - 0245	0	1	0	0	0	0	0	0	0	0	0	0	0	**1**	
0245 - 0300	0	0	0	0	0	0	0	0	0	0	0	0	0	**0**	**4**
0300 - 0315	0	1	0	0	0	0	0	0	0	0	0	0	0	**1**	
0315 - 0330	0	0	0	0	0	0	0	0	0	0	0	0	0	**0**	
0330 - 0345	0	0	0	0	0	0	0	0	0	0	0	0	0	**0**	
0345 - 0400	0	0	0	0	0	0	0	0	0	0	0	0	0	**0**	**1**
0400 - 0415	0	0	0	0	0	0	0	0	0	0	0	0	0	**0**	
0415 - 0430	0	0	0	0	0	0	0	0	0	0	0	0	0	**0**	
0430 - 0445	0	0	0	0	0	0	0	0	0	0	0	0	0	**0**	
0445 - 0500	0	0	0	0	0	0	0	0	0	0	0	0	0	**0**	**0**
0500 - 0515	0	0	0	0	0	0	0	0	0	0	0	0	0	**0**	
0515 - 0530	0	1	0	0	0	0	0	0	0	0	0	0	0	**1**	
0530 - 0545	0	1	0	0	0	0	0	0	0	0	0	0	0	**1**	
0545 - 0600	0	0	0	0	0	0	0	0	0	0	0	0	0	**0**	**2**
0600 - 0615	0	0	1	0	0	0	0	0	0	0	0	0	0	**1**	
0615 - 0630	0	3	0	0	0	0	0	0	0	0	0	0	0	**3**	
0630 - 0645	0	2	0	0	0	0	0	0	0	0	0	0	0	**2**	
0645 - 0700	0	1	1	0	0	0	0	0	0	0	0	0	0	**2**	**8**
0700 - 0715	0	3	1	0	0	0	0	1	0	0	0	0	0	**5**	
0715 - 0730	0	5	0	0	0	0	0	0	0	0	0	0	0	**5**	
0730 - 0745	0	6	0	0	0	0	0	0	0	0	0	0	0	**6**	
0745 - 0800	0	2	1	0	0	0	0	0	0	0	0	0	0	**3**	**19**
0800 - 0815	0	3	0	0	0	0	0	0	0	0	0	0	0	**3**	
0815 - 0830	0	2	2	0	0	0	0	0	0	0	0	0	0	**4**	
0830 - 0845	0	7	1	0	0	0	0	0	0	0	0	0	0	**8**	
0845 - 0900	0	7	1	0	0	0	0	0	0	0	0	0	0	**8**	**23**
0900 - 0915	0	7	0	0	0	0	0	0	0	0	0	0	0	**7**	
0915 - 0930	0	10	2	0	0	0	0	0	0	0	0	0	0	**12**	
0930 - 0945	0	7	3	0	0	0	0	0	0	0	0	0	0	**10**	
0945 - 1000	0	10	2	0	0	0	0	0	0	0	0	0	0	**12**	**41**
1000 - 1015	0	12	2	0	0	0	0	0	0	0	0	0	0	**14**	
1015 - 1030	0	10	1	0	0	0	0	0	0	0	0	0	0	**11**	
1030 - 1045	0	14	2	0	0	0	1	0	1	0	0	0	0	**18**	
1045 - 1100	0	21	3	0	0	0	0	0	0	0	0	0	0	**24**	**67**
1100 - 1115	0	12	5	0	0	0	0	0	0	0	0	0	0	**17**	
1115 - 1130	0	12	2	0	0	0	0	0	0	0	0	0	0	**14**	
1130 - 1145	0	20	4	0	0	0	0	0	0	0	0	0	0	**24**	
1145 - 1200	1	20	5	0	0	0	0	0	0	0	0	0	0	**26**	**81**
1200 - 1215	0	16	5	0	0	0	0	0	0	0	0	0	0	**21**	
1215 - 1230	0	14	5	0	0	0	0	0	0	0	0	0	0	**19**	
1230 - 1245	0	22	3	0	0	0	0	0	0	0	0	0	0	**25**	
1245 - 1300	0	20	3	0	0	0	0	0	0	0	0	0	0	**23**	**88**
1300 - 1315	0	19	4	0	0	0	0	0	0	0	0	0	0	**23**	
1315 - 1330	0	15	3	0	0	0	0	0	0	0	0	0	0	**18**	
1330 - 1345	0	34	9	0	0	0	0	0	0	0	0	0	0	**43**	
1345 - 1400	0	22	6	0	0	0	0	0	0	0	0	0	0	**28**	**112**
1400 - 1415	0	43	6	0	0	0	0	0	0	0	0	0	0	**49**	
1415 - 1430	0	27	4	0	0	0	0	0	0	0	0	0	0	**31**	
1430 - 1445	0	17	5	0	0	0	0	0	0	0	0	0	0	**22**	
1445 - 1500	0	18	5	0	0	0	0	0	0	0	0	0	0	**23**	**125**
1500 - 1515	0	25	9	0	0	0	0	0	0	0	0	0	0	**34**	
1515 - 1530	0	22	6	0	0	0	0	0	0	0	0	0	0	**28**	
1530 - 1545	0	23	6	0	0	0	0	0	0	0	0	0	0	**29**	
1545 - 1600	0	20	3	0	0	0	0	0	0	0	0	0	0	**23**	**114**
1600 - 1615	0	15	3	0	0	0	0	0	0	0	0	0	0	**18**	
1615 - 1630	0	24	5	0	0	0	0	0	0	0	0	0	0	**29**	
1630 - 1645	0	19	3	0	1	0	0	0	0	0	0	0	0	**23**	
1645 - 1700	0	13	0	0	0	0	0	0	0	0	0	0	0	**13**	**83**
1700 - 1715	0	13	4	0	0	0	0	0	0	0	0	0	0	**17**	
1715 - 1730	0	8	9	0	1	0	0	0	0	0	0	0	0	**18**	
1730 - 1745	0	10	6	0	0	0	0	0	0	0	0	0	0	**16**	
1745 - 1800	0	15	4	0	0	0	0	0	0	0	0	0	0	**19**	**70**
1800 - 1815	0	20	4	0	0	0	0	0	0	0	0	0	0	**24**	
1815 - 1830	0	10	4	0	0	0	0	0	0	0	0	0	0	**14**	
1830 - 1845	0	15	3	0	0	0	0	0	0	0	0	0	0	**18**	
1845 - 1900	0	17	3	0	0	0	0	0	0	0	0	0	0	**20**	**76**
1900 - 1915	0	6	3	0	0	0	0	0	0	0	0	0	0	**9**	
1915 - 1930	0	11	4	0	0	0	0	0	0	0	0	0	0	**15**	
1930 - 1945	0	12	3	0	1	0	0	0	0	0	0	0	0	**16**	
1945 - 2000	0	10	1	0	0	0	0	0	0	0	0	0	0	**11**	**51**
2000 - 2015	0	12	4	0	0	0	0	0	0	0	0	0	0	**16**	
2015 - 2030	0	12	1	0	0	0	0	0	0	0	0	0	0	**13**	
2030 - 2045	0	8	2	0	0	0	0	0	0	0	0	0	0	**10**	
2045 - 2100	0	2	2	0	0	0	0	0	0	0	0	0	0	**4**	**43**
2100 - 2115	0	10	1	0	1	0	0	0	0	0	0	0	0	**12**	
2115 - 2130	0	13	3	0	0	0	0	0	0	0	0	0	0	**16**	
2130 - 2145	0	3	0	0	0	0	0	0	0	0	0	0	0	**3**	
2145 - 2200	0	7	0	0	0	0	0	0	0	0	0	0	0	**7**	**38**
2200 - 2215	0	5	0	0	0	0	0	0	0	0	0	0	0	**5**	
2215 - 2230	0	3	1	0	0	0	0	0	0	0	0	0	0	**4**	
2230 - 2245	0	1	0	0	0	0	0	0	0	0	0	0	0	**1**	
2245 - 2300	0	2	0	0	0	0	0	0	0	0	0	0	0	**2**	**12**
2300 - 2315	0	0	0	0	0	0	0	0	0	0	0	0	0	**0**	
2315 - 2330	0	1	0	0	0	0	0	0	0	0	0	0	0	**1**	
2330 - 2345	0	2	0	0	0	0	0	0	0	0	0	0	0	**2**	
2345 - 0000	0	1	0	0	1	0	0	0	0	0	0	0	0	**2**	**5**

Session Total	1	884	196	0	5	0	1	1	1	0	0	0	0	**1089**
Session Average	0.01	9.21	2.04	0.00	0.05	0.00	0.01	0.01	0.01	0.00	0.00	0.00	0.00	**11.34**
Session Percentage	0.09	81.18	18.00	0.00	0.46	0.00	0.09	0.09	0.09	0.00	0.00	0.00	0.00	

AM Peak Hour	-	0945 - 1045	0915 - 1015	-	-	-	0945 - 1045	0615 - 0715	0945 - 1045	-	-	-	-	**0945 - 1045**
AM Peak Volume	0	46	9	0	0	0	1	1	1	0	0	0	0	**55**

Noon Peak Hour	1100 - 1200	1330 - 1430	1445 - 1545	-	-	-	1000 - 1100	-	1000 - 1100	-	-	-	-	**1330 - 1430**
Noon Peak Volume	1	126	26	0	0	0	1	0	1	0	0	0	0	**151**

PM Peak Hour	-	1500 - 1600	1500 - 1600	-	1630 - 1730	-	-	-	-	-	-	-	-	**1500 - 1600**
PM Peak Volume	0	90	24	0	2	0	0	0	0	0	0	0	0	**114**

Site 74 Lane 4 WB
I-20,
west of US-378 Sunset Blvd S/Bound Off-Ramp

Date
Monday, April 22, 2024

Lat/Long
34.008085°, -81.156669°

Weather
Mostly Cloudy
57°F

Click here for Detailed Weather

0000 - 2400 (Weekday 24h Session) (04-22-2024)
SB WB 15min

	Westbound (Movement 74 Lane 4 WB.1)													15min	60min
Time	1	2	3	4	5	6	7	8	9	10	11	12	13	Total	Total
0000 - 0015	0	3	0	0	0	0	0	0	0	0	0	0	0	**3**	
0015 - 0030	0	0	0	0	0	0	0	0	0	0	0	0	0	**0**	
0030 - 0045	0	1	0	0	0	0	0	0	0	0	0	0	0	**1**	
0045 - 0100	0	0	0	0	0	0	0	0	0	0	0	0	0	**0**	**4**
0100 - 0115	0	1	0	0	0	0	0	0	0	0	0	0	0	**1**	
0115 - 0130	0	0	0	0	0	0	0	0	0	0	0	0	0	**0**	
0130 - 0145	0	0	0	0	0	0	0	0	0	0	0	0	0	**0**	
0145 - 0200	0	1	0	0	0	0	0	0	0	0	0	0	0	**1**	**2**
0200 - 0215	0	0	0	0	0	0	0	0	0	0	0	0	0	**0**	
0215 - 0230	0	0	0	0	0	0	0	0	0	0	0	0	0	**0**	
0230 - 0245	0	0	0	0	0	0	0	0	0	0	0	0	0	**0**	
0245 - 0300	0	0	0	0	0	0	0	0	0	0	0	0	0	**0**	**0**
0300 - 0315	0	1	0	0	0	0	0	0	0	0	0	0	0	**1**	
0315 - 0330	0	0	0	0	0	0	0	0	0	0	0	0	0	**0**	
0330 - 0345	0	0	0	0	0	0	0	0	0	0	0	0	0	**0**	
0345 - 0400	0	0	0	0	0	0	0	0	0	0	0	0	0	**0**	**1**
0400 - 0415	0	0	0	0	0	0	0	0	0	0	0	0	0	**0**	
0415 - 0430	0	0	0	0	0	0	0	0	0	0	0	0	0	**0**	
0430 - 0445	0	0	0	0	0	0	0	0	0	0	0	0	0	**0**	
0445 - 0500	0	0	0	0	0	0	0	0	0	0	0	0	0	**0**	**0**
0500 - 0515	0	2	0	0	0	0	0	0	0	0	0	0	0	**2**	
0515 - 0530	0	4	0	0	0	0	0	0	0	0	0	0	0	**4**	
0530 - 0545	0	5	0	0	0	0	0	0	0	0	0	0	0	**5**	
0545 - 0600	0	10	0	0	1	0	0	0	0	0	0	0	0	**11**	**22**
0600 - 0615	0	12	0	0	0	0	0	0	1	0	0	0	0	**13**	
0615 - 0630	0	13	3	0	0	0	0	0	0	0	0	0	0	**16**	
0630 - 0645	0	12	3	0	1	0	0	1	0	0	0	0	0	**17**	
0645 - 0700	0	13	3	0	0	1	0	0	0	0	0	0	0	**17**	**63**
0700 - 0715	0	25	7	0	2	0	0	0	1	0	0	0	0	**35**	
0715 - 0730	0	25	8	1	1	0	0	0	0	0	0	0	0	**35**	
0730 - 0745	0	30	7	0	1	0	0	0	0	0	0	0	0	**38**	
0745 - 0800	0	32	5	2	0	0	0	0	0	0	0	0	0	**39**	**147**
0800 - 0815	0	27	7	1	0	0	0	0	0	0	0	0	0	**35**	
0815 - 0830	0	16	5	1	0	0	0	0	0	0	0	0	0	**22**	
0830 - 0845	0	17	7	0	1	0	0	0	0	0	0	0	0	**25**	
0845 - 0900	0	29	4	1	1	0	0	0	0	0	0	0	0	**35**	**117**
0900 - 0915	0	21	12	1	1	0	0	1	0	0	0	0	0	**36**	
0915 - 0930	0	14	8	0	0	1	0	0	0	0	0	0	0	**23**	
0930 - 0945	0	24	6	0	1	0	0	0	0	0	0	0	0	**31**	
0945 - 1000	0	21	10	0	1	0	0	0	0	0	0	0	0	**32**	**122**
1000 - 1015	0	37	12	0	0	1	0	0	0	0	0	0	0	**50**	
1015 - 1030	0	18	6	0	1	0	0	0	0	0	0	0	0	**25**	
1030 - 1045	0	25	4	0	0	0	0	1	0	0	0	0	0	**30**	
1045 - 1100	0	17	8	0	0	0	0	1	0	0	0	0	0	**26**	**131**
1100 - 1115	0	17	5	0	0	0	0	0	0	0	0	0	0	**22**	
1115 - 1130	0	25	4	0	2	0	0	0	2	0	0	0	0	**33**	
1130 - 1145	0	21	7	1	2	0	0	0	0	0	0	0	0	**31**	
1145 - 1200	0	31	5	3	0	0	0	0	0	0	0	0	0	**39**	**125**
1200 - 1215	0	36	8	0	2	0	0	1	0	0	0	0	0	**47**	
1215 - 1230	0	40	9	1	2	0	0	0	0	0	0	0	0	**52**	
1230 - 1245	0	20	11	2	1	0	0	0	0	0	0	0	0	**34**	
1245 - 1300	0	38	7	0	1	1	0	0	0	1	0	0	0	**48**	**181**
1300 - 1315	0	33	6	0	0	0	0	1	0	0	0	0	0	**40**	
1315 - 1330	0	34	13	0	0	0	0	1	0	0	0	0	0	**48**	
1330 - 1345	0	23	6	0	0	0	0	1	0	0	0	0	0	**30**	
1345 - 1400	0	27	12	0	0	0	0	0	0	0	1	0	0	**40**	**158**
1400 - 1415	0	24	9	2	0	0	0	0	0	0	0	0	0	**35**	
1415 - 1430	0	39	11	0	0	0	0	0	0	0	0	0	0	**50**	
1430 - 1445	0	22	12	0	1	0	0	0	0	0	0	0	0	**35**	
1445 - 1500	0	39	17	0	0	0	0	0	1	0	0	0	0	**57**	**177**
1500 - 1515	0	44	9	0	1	0	0	0	0	0	0	0	0	**54**	
1515 - 1530	0	49	12	0	2	0	1	0	0	0	0	0	0	**64**	
1530 - 1545	0	51	7	2	0	0	0	2	0	0	0	0	0	**62**	
1545 - 1600	0	50	12	1	0	0	0	1	0	0	0	0	0	**64**	**244**
1600 - 1615	0	61	11	0	2	0	0	0	0	0	0	0	0	**74**	
1615 - 1630	0	54	17	1	0	0	0	0	0	0	0	0	0	**72**	
1630 - 1645	0	43	12	1	0	0	0	0	0	0	0	0	0	**56**	
1645 - 1700	0	53	9	0	0	0	0	0	0	0	0	0	0	**62**	**264**
1700 - 1715	0	64	12	1	1	0	0	0	0	0	0	0	0	**78**	
1715 - 1730	0	58	14	0	1	0	0	0	0	0	0	0	0	**73**	
1730 - 1745	0	33	7	0	1	0	0	0	0	0	0	0	0	**41**	
1745 - 1800	0	26	7	0	1	0	0	0	0	0	0	0	0	**34**	**226**
1800 - 1815	0	40	8	0	2	0	0	0	0	0	0	0	0	**50**	
1815 - 1830	0	29	6	0	1	0	0	0	0	0	0	0	0	**36**	
1830 - 1845	0	28	6	0	0	0	0	0	1	0	0	0	0	**35**	
1845 - 1900	0	15	7	0	0	0	0	1	0	0	0	0	0	**23**	**144**
1900 - 1915	0	20	5	0	1	0	0	0	0	0	0	0	0	**26**	
1915 - 1930	0	27	9	0	0	0	0	0	0	0	0	0	0	**36**	
1930 - 1945	0	11	0	0	0	0	0	0	0	0	0	0	0	**11**	
1945 - 2000	0	17	1	0	0	0	0	0	0	0	0	0	0	**18**	**91**
2000 - 2015	0	31	2	0	0	0	0	0	0	0	0	0	0	**33**	
2015 - 2030	0	25	2	0	0	0	0	0	0	0	0	0	0	**27**	
2030 - 2045	0	14	2	0	0	0	0	0	1	0	0	0	0	**17**	
2045 - 2100	0	15	3	0	0	0	0	0	0	0	0	0	0	**18**	**95**
2100 - 2115	0	10	2	0	0	0	0	0	0	0	0	0	0	**12**	
2115 - 2130	0	10	6	0	0	0	0	0	0	0	0	0	0	**16**	
2130 - 2145	0	8	1	0	0	0	0	0	1	0	0	0	0	**10**	
2145 - 2200	0	10	3	0	0	0	0	0	2	0	0	0	0	**15**	**53**
2200 - 2215	0	6	0	0	0	0	0	0	0	0	0	0	0	**6**	
2215 - 2230	0	4	0	0	0	0	0	0	0	0	0	0	0	**4**	
2230 - 2245	0	3	0	0	0	0	0	0	0	0	0	0	0	**3**	
2245 - 2300	0	6	0	0	0	0	0	0	0	0	0	0	0	**6**	**19**
2300 - 2315	0	6	0	0	0	0	0	0	0	0	0	0	0	**6**	
2315 - 2330	0	3	0	0	0	0	0	0	0	0	0	0	0	**3**	
2330 - 2345	0	0	0	0	0	0	0	0	0	0	0	0	0	**0**	
2345 - 0000	0	0	0	0	0	0	0	0	0	0	0	0	0	**0**	**9**

Session Total	0	1849	459	22	36	4	1	12	10	1	1	0	0	**2395**
Session Average	0.00	19.26	4.78	0.23	0.38	0.04	0.01	0.13	0.10	0.01	0.01	0.00	0.00	**24.95**
Session Percentage	0.00	77.20	19.16	0.92	1.50	0.17	0.04	0.50	0.42	0.04	0.04	0.00	0.00	

AM Peak Hour	-	0715 - 0815	0900 - 1000	0715 - 0815	0630 - 0730	0915 - 1015	-	0545 - 0645	0515 - 0615	-	-	-	-	**0700 - 0800**
AM Peak Volume	0	114	36	4	4	2	0	1	1	0	0	0	0	**147**

Noon Peak Hour	-	1445 - 1545	1430 - 1530	1145 - 1245	1115 - 1215	1000 - 1100	1430 - 1530	1245 - 1345	1030 - 1130	1200 - 1300	1300 - 1400	-	-	**1445 - 1545**
Noon Peak Volume	0	183	50	6	6	1	1	3	2	1	1	0	0	**237**

PM Peak Hour	-	1630 - 1730	1545 - 1645	1530 - 1630	1715 - 1815	-	1500 - 1600	1500 - 1600	1745 - 1845	-	-	-	-	**1530 - 1630**
PM Peak Volume	0	218	52	4	5	0	1	3	1	0	0	0	0	**272**

Site 74 Lane 4 WB
I-20,
west of US-378 Sunset Blvd S/Bound Off-Ramp

Date
Tuesday, April 23, 2024

Lat/Long
34.008085°, -81.156669°

Weather
Fair
58°F

Click here for Detailed Weather

0000 - 2400 (Weekday 24h Session) (04-23-2024)
SB WB 15min

	Westbound (Movement 74 Lane 4 WB.1)													15min	60min
TIME	1	2	3	4	5	6	7	8	9	10	11	12	13	Total	Total
0000 - 0015	0	1	0	0	0	0	0	0	0	0	0	0	0	**1**	
0015 - 0030	0	0	0	0	0	0	0	0	0	0	0	0	0	**0**	
0030 - 0045	0	1	0	0	0	0	0	0	0	0	0	0	0	**1**	
0045 - 0100	0	0	0	0	0	0	0	0	0	0	0	0	0	**0**	**2**
0100 - 0115	0	1	0	0	0	0	0	0	0	0	0	0	0	**1**	
0115 - 0130	0	0	0	0	0	0	0	0	0	0	0	0	0	**0**	
0130 - 0145	0	0	0	0	0	0	0	0	0	0	0	0	0	**0**	
0145 - 0200	0	0	0	0	0	0	0	0	0	0	0	0	0	**0**	**1**
0200 - 0215	0	0	0	0	0	0	0	0	0	0	0	0	0	**0**	
0215 - 0230	0	1	0	0	0	0	0	0	0	0	0	0	0	**1**	
0230 - 0245	0	0	0	0	0	0	0	0	0	0	0	0	0	**0**	
0245 - 0300	0	0	0	0	0	0	0	0	0	0	0	0	0	**0**	**1**
0300 - 0315	0	0	0	0	0	0	0	0	0	0	0	0	0	**0**	
0315 - 0330	0	0	0	0	0	0	0	0	0	0	0	0	0	**0**	
0330 - 0345	0	0	0	0	1	0	0	0	0	0	0	0	0	**1**	
0345 - 0400	0	0	0	0	0	0	0	0	0	0	0	0	0	**0**	**1**
0400 - 0415	0	0	0	0	0	0	0	0	0	0	0	0	0	**0**	
0415 - 0430	0	0	0	0	0	0	0	0	0	0	0	0	0	**0**	
0430 - 0445	0	0	0	0	0	0	0	0	0	0	0	0	0	**0**	
0445 - 0500	0	0	0	0	0	0	0	0	0	0	0	0	0	**0**	**0**
0500 - 0515	0	0	0	0	0	0	0	0	0	0	0	0	0	**0**	
0515 - 0530	0	0	0	0	0	0	0	0	0	0	0	0	0	**0**	
0530 - 0545	0	1	0	0	0	0	0	0	0	0	0	0	0	**1**	
0545 - 0600	0	3	0	0	0	0	0	0	0	0	0	0	0	**3**	**4**
0600 - 0615	0	4	0	0	0	0	0	0	0	0	0	0	0	**4**	
0615 - 0630	0	10	4	0	0	0	0	0	1	0	0	0	0	**15**	
0630 - 0645	0	13	6	0	0	0	0	0	0	0	0	0	0	**19**	
0645 - 0700	0	11	5	0	0	0	0	0	0	0	0	0	0	**16**	**54**
0700 - 0715	0	19	5	0	0	0	0	0	1	0	0	0	0	**25**	
0715 - 0730	0	22	5	0	0	0	0	0	0	0	0	0	0	**27**	
0730 - 0745	0	19	5	0	0	0	0	1	0	0	0	0	0	**25**	
0745 - 0800	0	30	10	2	0	0	0	0	0	0	0	0	0	**42**	**119**
0800 - 0815	0	27	17	1	1	0	0	0	0	0	0	0	0	**46**	
0815 - 0830	0	19	2	1	1	0	0	1	0	0	0	0	0	**24**	
0830 - 0845	0	19	8	0	0	0	0	0	0	0	0	0	0	**27**	
0845 - 0900	0	29	7	3	1	0	0	0	0	0	0	0	0	**40**	**137**
0900 - 0915	0	17	10	0	0	0	0	0	0	0	0	0	0	**27**	
0915 - 0930	0	16	9	0	0	0	0	0	0	0	0	0	0	**25**	
0930 - 0945	0	20	8	0	2	0	0	0	1	0	0	0	0	**31**	
0945 - 1000	0	23	8	0	2	0	0	0	0	0	0	0	0	**33**	**116**
1000 - 1015	0	26	7	0	0	0	0	0	0	0	0	0	0	**33**	
1015 - 1030	0	20	4	0	0	0	0	0	0	0	0	0	0	**24**	
1030 - 1045	0	20	7	0	1	0	0	0	0	0	0	0	0	**28**	
1045 - 1100	0	22	8	0	2	0	0	1	0	0	0	0	0	**33**	**118**
1100 - 1115	0	21	7	0	1	0	0	0	0	0	0	0	0	**29**	
1115 - 1130	0	27	9	1	2	0	0	0	1	0	0	0	0	**40**	
1130 - 1145	0	19	8	0	0	1	0	0	0	0	0	0	0	**28**	
1145 - 1200	0	31	9	3	1	0	0	0	0	0	0	0	0	**44**	**141**
1200 - 1215	0	25	7	0	2	1	0	0	0	0	0	0	0	**35**	
1215 - 1230	0	20	11	2	2	0	0	0	1	0	0	0	0	**36**	
1230 - 1245	0	19	12	1	1	0	0	0	0	0	0	0	0	**33**	
1245 - 1300	0	26	8	0	0	0	0	1	0	0	0	0	0	**35**	**139**
1300 - 1315	0	24	11	0	1	0	0	0	0	0	0	0	0	**36**	
1315 - 1330	0	28	12	0	1	0	0	1	0	0	0	0	0	**42**	
1330 - 1345	0	30	8	0	0	0	0	0	1	0	0	0	0	**39**	
1345 - 1400	0	17	4	0	0	0	0	0	0	0	0	0	0	**21**	**138**
1400 - 1415	0	21	9	1	0	0	0	0	0	0	0	0	0	**31**	
1415 - 1430	0	33	9	1	0	0	0	0	0	0	0	0	0	**43**	
1430 - 1445	0	33	8	1	0	0	0	0	1	0	0	0	0	**43**	
1445 - 1500	0	46	6	1	0	0	0	0	0	0	0	0	0	**53**	**170**
1500 - 1515	0	45	13	0	0	0	0	0	0	0	0	0	0	**58**	
1515 - 1530	0	49	14	0	2	0	0	0	0	0	0	0	0	**65**	
1530 - 1545	0	46	8	1	2	0	0	0	0	0	0	0	0	**57**	
1545 - 1600	0	61	7	1	1	0	0	0	0	0	0	0	0	**70**	**250**
1600 - 1615	0	44	13	0	1	0	0	1	0	0	0	0	0	**59**	
1615 - 1630	0	53	10	0	0	0	0	0	0	0	0	0	0	**63**	
1630 - 1645	2	36	15	0	1	0	0	0	0	0	0	0	0	**54**	
1645 - 1700	0	43	8	1	0	0	0	0	0	0	0	0	0	**52**	**228**
1700 - 1715	0	46	14	0	0	0	0	0	0	0	0	0	0	**60**	
1715 - 1730	0	29	4	0	1	0	0	0	0	0	0	0	0	**34**	
1730 - 1745	0	31	12	0	0	0	0	0	0	0	0	0	0	**43**	
1745 - 1800	0	30	12	0	0	0	0	0	0	0	0	0	0	**42**	**179**
1800 - 1815	0	30	3	0	1	0	0	0	0	0	0	0	0	**34**	
1815 - 1830	0	33	12	0	0	0	0	1	0	0	0	0	0	**46**	
1830 - 1845	0	24	7	0	0	0	0	0	0	0	0	0	0	**31**	
1845 - 1900	0	22	5	0	0	0	0	0	0	0	0	0	0	**27**	**138**
1900 - 1915	0	19	9	0	1	0	0	0	0	0	0	0	0	**29**	
1915 - 1930	0	14	5	0	0	0	0	0	1	0	0	0	0	**20**	
1930 - 1945	0	27	7	0	0	0	0	0	0	0	0	0	0	**34**	
1945 - 2000	0	28	6	0	0	0	0	0	0	0	0	0	0	**34**	**117**
2000 - 2015	0	23	5	0	0	0	0	0	0	0	0	0	0	**28**	
2015 - 2030	0	13	3	0	0	0	0	0	0	0	0	0	0	**16**	
2030 - 2045	0	11	2	0	0	0	0	0	0	0	0	0	0	**13**	
2045 - 2100	0	10	3	0	0	0	0	0	0	0	0	0	0	**13**	**70**
2100 - 2115	0	11	2	0	0	0	0	0	0	0	0	0	0	**13**	
2115 - 2130	0	10	5	0	0	0	0	0	0	0	0	0	0	**15**	
2130 - 2145	0	5	2	0	0	0	0	0	0	0	0	0	0	**7**	
2145 - 2200	0	3	1	1	0	0	0	0	0	0	0	0	0	**5**	**40**
2200 - 2215	0	5	2	0	0	0	0	0	0	0	0	0	0	**7**	
2215 - 2230	0	3	0	0	0	0	0	0	0	0	0	0	0	**3**	
2230 - 2245	0	4	0	0	0	0	0	0	0	0	0	0	0	**4**	
2245 - 2300	0	0	0	0	0	0	0	0	0	0	0	0	0	**0**	**14**
2300 - 2315	0	0	0	0	0	0	0	0	0	0	0	0	0	**0**	
2315 - 2330	0	2	0	0	0	0	0	0	0	0	0	0	0	**2**	
2330 - 2345	0	0	0	0	0	0	0	0	0	0	0	0	0	**0**	
2345 - 0000	0	1	0	0	0	0	0	0	0	0	0	0	0	**1**	**3**

Session Total	2	1625	482	22	32	2	0	7	8	0	0	0	0	**2180**
Session Average	0.02	16.93	5.02	0.23	0.33	0.02	0.00	0.07	0.08	0.00	0.00	0.00	0.00	**22.71**
Session Percentage	0.09	74.54	22.11	1.01	1.47	0.09	0.00	0.32	0.37	0.00	0.00	0.00	0.00	

AM Peak Hour	-	0715 - 0815	0715 - 0815	0800 - 0900	0900 - 1000	-	-	0730 - 0830	0615 - 0715	-	-	-	-	**0715 - 0815**
AM Peak Hour Volume	0	98	37	5	4	0	0	2	2	0	0	0	0	**140**

Noon Peak Hour	-	1445 - 1545	1230 - 1330	1145 - 1245	1030 - 1130	1115 - 1215	-	1230 - 1330	1030 - 1130	-	-	-	-	**1445 - 1545**
Noon Peak Hour Volume	0	186	43	6	6	2	0	2	1	0	0	0	0	**233**

PM Peak Hour	1545 - 1645	1530 - 1630	1615 - 1715	1500 - 1600	1515 - 1615	-	-	1515 - 1615	1830 - 1930	-	-	-	-	**1515 - 1615**
PM Peak Hour Volume	2	204	47	2	6	0	0	1	1	0	0	0	0	**251**

Site 74 Lane 4 WB
I-20,
west of US-378 Sunset Blvd S/Bound Off-Ramp

Date
Wednesday, April 24, 2024

Lat/Long
34.008085°, -81.156669°

Weather
Fair
66°F

Click here for Detailed Weather

0000 - 2400 (Weekday 24h Session) (04-24-2024)
SB WB 15min

	Westbound (Movement 74 Lane 4 WB.1)													15min	60min
TIME	1	2	3	4	5	6	7	8	9	10	11	12	13	Total	Total
0000 - 0015	0	0	0	0	0	0	0	0	0	0	0	0	0	**0**	
0015 - 0030	0	0	1	0	0	0	0	0	0	0	0	0	0	**1**	
0030 - 0045	0	0	0	0	0	0	0	0	1	0	0	0	0	**1**	
0045 - 0100	0	1	1	0	0	0	0	0	0	0	0	0	0	**2**	**4**
0100 - 0115	0	2	0	0	0	0	0	0	0	0	0	0	0	**2**	
0115 - 0130	0	0	0	0	0	0	0	0	0	0	0	0	0	**0**	
0130 - 0145	0	1	0	0	0	0	0	0	0	0	0	0	0	**1**	
0145 - 0200	0	1	0	0	0	0	0	0	0	0	0	0	0	**1**	**4**
0200 - 0215	0	0	0	0	0	0	0	0	0	0	0	0	0	**0**	
0215 - 0230	0	0	0	0	0	0	0	0	0	0	0	0	0	**0**	
0230 - 0245	0	0	0	0	0	0	0	0	0	0	0	0	0	**0**	
0245 - 0300	0	1	0	0	0	0	0	0	0	0	0	0	0	**1**	**1**
0300 - 0315	0	1	0	0	0	0	0	0	0	0	0	0	0	**1**	
0315 - 0330	0	0	0	0	1	0	0	0	0	0	0	0	0	**1**	
0330 - 0345	0	0	0	0	0	0	0	0	0	0	0	0	0	**0**	
0345 - 0400	0	1	0	0	0	0	0	0	0	0	0	0	0	**1**	**3**
0400 - 0415	0	0	0	0	0	0	0	0	0	0	0	0	0	**0**	
0415 - 0430	0	1	0	0	0	0	0	0	0	0	0	0	0	**1**	
0430 - 0445	0	0	0	0	0	0	0	0	0	0	0	0	0	**0**	
0445 - 0500	0	1	0	0	0	0	0	0	0	0	0	0	0	**1**	**2**
0500 - 0515	0	2	0	0	0	0	0	0	0	0	0	0	0	**2**	
0515 - 0530	0	5	0	0	0	0	0	0	0	0	0	0	0	**5**	
0530 - 0545	0	5	0	0	0	0	0	0	1	0	0	0	0	**6**	
0545 - 0600	0	3	1	0	0	0	0	0	1	0	0	0	0	**5**	**18**
0600 - 0615	0	5	1	0	0	0	0	0	0	0	0	0	0	**6**	
0615 - 0630	0	15	7	0	0	0	0	0	0	0	0	0	0	**22**	
0630 - 0645	0	12	4	0	0	0	0	0	0	0	0	0	0	**16**	
0645 - 0700	0	16	3	0	0	0	0	0	0	0	0	0	0	**19**	**63**
0700 - 0715	0	19	5	0	1	0	0	0	0	0	0	0	0	**25**	
0715 - 0730	0	25	8	1	0	0	0	0	0	0	0	0	0	**34**	
0730 - 0745	0	25	6	0	1	0	0	0	0	0	0	0	0	**32**	
0745 - 0800	0	26	9	2	0	0	0	0	0	0	0	0	0	**37**	**128**
0800 - 0815	0	44	8	2	0	0	0	0	0	0	0	0	0	**54**	
0815 - 0830	0	26	10	2	1	0	0	0	0	0	0	0	0	**39**	
0830 - 0845	0	20	4	1	2	0	0	0	0	0	0	0	0	**27**	
0845 - 0900	0	21	4	2	2	0	0	0	0	0	0	0	0	**29**	**149**
0900 - 0915	0	23	9	0	0	0	0	1	0	0	0	0	0	**33**	
0915 - 0930	0	17	8	0	3	1	0	1	0	0	0	0	0	**30**	
0930 - 0945	0	22	4	0	0	0	0	0	0	0	0	0	0	**26**	
0945 - 1000	0	23	9	0	1	0	0	0	1	0	0	0	0	**34**	**123**
1000 - 1015	0	23	4	0	1	1	0	2	0	0	0	0	0	**31**	
1015 - 1030	0	16	4	0	0	0	0	0	0	0	0	0	0	**20**	
1030 - 1045	0	17	3	0	2	0	0	0	0	0	0	0	0	**22**	
1045 - 1100	0	23	6	0	4	0	0	0	0	0	0	0	0	**33**	**106**
1100 - 1115	0	29	6	0	1	0	0	0	0	0	0	0	0	**36**	
1115 - 1130	0	20	14	1	1	0	0	0	0	0	0	0	0	**36**	
1130 - 1145	0	23	5	1	0	0	0	0	0	0	0	0	0	**29**	
1145 - 1200	0	20	5	0	0	0	0	1	0	0	0	0	0	**26**	**127**
1200 - 1215	0	19	6	0	2	0	0	0	1	0	0	0	0	**28**	
1215 - 1230	0	11	3	2	1	0	0	0	0	0	0	0	0	**17**	
1230 - 1245	0	23	6	0	1	0	0	0	0	0	0	0	0	**30**	
1245 - 1300	0	32	8	1	1	0	1	0	1	0	0	0	0	**44**	**119**
1300 - 1315	0	23	7	0	1	0	0	0	0	0	0	0	0	**31**	
1315 - 1330	1	25	13	0	1	0	0	0	0	0	0	0	0	**40**	
1330 - 1345	0	29	11	1	1	0	0	1	0	0	0	0	0	**43**	
1345 - 1400	0	25	7	0	1	0	0	0	0	0	0	0	0	**33**	**147**
1400 - 1415	0	22	8	3	0	0	1	0	0	0	0	0	0	**34**	
1415 - 1430	0	30	8	0	0	0	0	0	1	0	0	0	0	**39**	
1430 - 1445	0	27	7	0	2	0	0	0	0	0	0	0	0	**36**	
1445 - 1500	0	44	9	0	2	1	0	0	0	0	0	0	0	**56**	**165**
1500 - 1515	0	49	8	0	2	0	0	0	0	0	0	0	0	**59**	
1515 - 1530	0	50	12	0	0	0	0	0	0	0	0	0	0	**62**	
1530 - 1545	0	41	15	1	2	0	0	1	0	1	0	0	0	**61**	
1545 - 1600	0	43	21	2	3	0	0	0	0	0	0	0	0	**69**	**251**
1600 - 1615	0	74	14	1	0	0	0	0	0	0	0	0	0	**89**	
1615 - 1630	0	55	20	0	0	0	0	0	0	0	0	0	0	**75**	
1630 - 1645	0	52	12	0	0	0	0	1	0	0	0	0	0	**65**	
1645 - 1700	0	48	15	2	0	0	0	1	0	0	0	0	0	**66**	**295**
1700 - 1715	0	68	19	0	0	0	0	0	0	0	0	0	0	**87**	
1715 - 1730	0	51	13	0	0	0	0	1	0	0	0	0	0	**65**	
1730 - 1745	2	29	9	0	0	0	0	0	1	0	0	0	0	**41**	
1745 - 1800	0	32	15	0	0	0	0	0	0	1	0	0	0	**48**	**241**
1800 - 1815	0	40	14	0	0	0	0	0	0	0	0	0	0	**54**	
1815 - 1830	0	31	7	0	1	0	0	0	0	0	0	0	0	**39**	
1830 - 1845	0	31	10	0	1	0	0	0	0	0	0	0	0	**42**	
1845 - 1900	0	25	5	0	0	0	0	0	0	0	0	0	0	**30**	**165**
1900 - 1915	0	31	2	0	1	0	0	0	0	0	0	0	0	**34**	
1915 - 1930	0	28	11	0	1	0	0	0	0	0	0	0	0	**40**	
1930 - 1945	0	24	8	0	0	0	0	0	0	0	0	0	0	**32**	
1945 - 2000	0	23	4	0	0	0	0	0	0	0	0	0	0	**27**	**133**
2000 - 2015	0	18	2	0	0	0	0	0	0	0	0	0	0	**20**	
2015 - 2030	0	21	1	0	0	0	0	0	0	0	0	0	0	**22**	
2030 - 2045	0	16	2	0	0	0	0	0	0	0	0	0	0	**18**	
2045 - 2100	0	23	3	0	0	0	0	0	1	0	0	0	0	**27**	**87**
2100 - 2115	0	15	5	0	0	0	0	0	0	0	0	0	0	**20**	
2115 - 2130	0	12	2	0	0	0	0	0	0	0	0	0	0	**14**	
2130 - 2145	0	11	1	0	0	0	0	0	0	0	0	0	0	**12**	
2145 - 2200	0	10	3	0	0	0	0	0	0	0	0	0	0	**13**	**59**
2200 - 2215	0	7	0	0	1	0	0	0	0	0	0	0	0	**8**	
2215 - 2230	0	5	0	0	0	0	0	0	0	0	0	0	0	**5**	
2230 - 2245	0	3	0	0	0	0	0	0	0	0	0	0	0	**3**	
2245 - 2300	0	2	0	0	0	0	0	0	0	0	0	0	0	**2**	**18**
2300 - 2315	0	1	0	0	0	0	0	0	1	0	0	0	0	**2**	
2315 - 2330	0	1	0	0	0	0	0	0	0	0	0	0	0	**1**	
2330 - 2345	0	4	0	0	0	0	0	0	0	0	0	0	0	**4**	
2345 - 0000	0	3	0	0	0	0	0	0	0	0	0	0	0	**3**	**10**

Session Total	3	1822	495	25	46	3	2	10	10	2	0	0	0	**2418**
Session Average	0.03	18.98	5.16	0.26	0.48	0.03	0.02	0.10	0.10	0.02	0.00	0.00	0.00	**25.19**
Session Percentage	0.12	75.35	20.47	1.03	1.90	0.12	0.08	0.41	0.41	0.08	0.00	0.00	0.00	

AM Peak Hour	-	0730 - 0830	0730 - 0830	0745 - 0845	0830 - 0930	0915 - 1015	-	0915 - 1015	0500 - 0600	-	-	-	-	**0730 - 0830**
AM Peak Hour Volume	0	121	33	7	7	2	0	3	2	0	0	0	0	**162**

Noon Peak Hour	1230 - 1330	1445 - 1545	1445 - 1545	1315 - 1415	1030 - 1130	1000 - 1100	1200 - 1300	1000 - 1100	1200 - 1300	1445 - 1545	-	-	-	**1445 - 1545**
Noon Peak Hour Volume	1	184	44	4	8	1	1	2	2	1	0	0	0	**238**

PM Peak Hour	1645 - 1745	1600 - 1700	1530 - 1630	1515 - 1615	1500 - 1600	-	-	1630 - 1730	1645 - 1745	1500 - 1600	-	-	-	**1545 - 1645**
PM Peak Hour Volume	2	229	70	4	7	0	0	3	1	1	0	0	0	**298**

Site 74 Lane 4 WB
I-20,
west of US-378 Sunset Blvd S/Bound Off-Ramp

Date
Thursday, April 25, 2024

Lat/Long
34.008085°, -81.156669°

Weather
Fair
67°F

Click here for Detailed Weather

0000 - 2400 (Weekday 24h Session) (04-25-2024)
SB WB 15min

	Westbound (Movement 74 Lane 4 WB.1)													15min	60min
TIME	1	2	3	4	5	6	7	8	9	10	11	12	13	Total	Total
0000 - 0015	0	0	0	0	0	0	0	0	0	0	0	0	0	**0**	
0015 - 0030	0	0	0	0	0	0	0	0	0	0	0	0	0	**0**	
0030 - 0045	0	1	0	0	0	0	0	0	0	0	0	0	0	**1**	
0045 - 0100	0	0	0	0	0	0	0	0	0	0	0	0	0	**0**	**1**
0100 - 0115	0	3	0	0	0	0	0	0	0	0	0	0	0	**3**	
0115 - 0130	0	0	0	0	0	0	0	0	0	0	0	0	0	**0**	
0130 - 0145	0	0	0	0	0	0	0	0	0	0	0	0	0	**0**	
0145 - 0200	0	0	0	0	0	0	0	0	0	0	0	0	0	**0**	**3**
0200 - 0215	0	0	0	0	0	0	0	0	0	0	0	0	0	**0**	
0215 - 0230	0	0	0	0	0	0	0	0	0	0	0	0	0	**0**	
0230 - 0245	0	1	0	0	0	0	0	0	0	0	0	0	0	**1**	
0245 - 0300	0	2	0	0	0	0	0	0	0	0	0	0	0	**2**	**3**
0300 - 0315	0	0	0	0	0	0	0	0	0	0	0	0	0	**0**	
0315 - 0330	0	1	0	0	0	0	0	0	0	0	0	0	0	**1**	
0330 - 0345	0	0	0	0	0	0	0	0	0	0	0	0	0	**0**	
0345 - 0400	0	2	1	0	0	0	0	0	0	0	0	0	0	**3**	**4**
0400 - 0415	0	0	0	0	0	0	0	0	0	0	0	0	0	**0**	
0415 - 0430	0	1	0	0	0	0	0	0	0	0	0	0	0	**1**	
0430 - 0445	0	2	2	0	0	0	0	0	0	0	0	0	0	**4**	
0445 - 0500	0	3	0	0	0	0	0	0	0	0	0	0	0	**3**	**8**
0500 - 0515	0	0	0	0	0	0	0	0	0	0	0	0	0	**0**	
0515 - 0530	0	4	0	0	0	0	0	0	0	0	0	0	0	**4**	
0530 - 0545	0	8	0	0	0	0	0	0	0	0	0	0	0	**8**	
0545 - 0600	0	8	0	0	0	0	0	0	0	0	0	0	0	**8**	**20**
0600 - 0615	0	12	1	0	0	0	0	0	0	0	0	0	0	**13**	
0615 - 0630	0	6	4	0	1	0	0	0	0	0	0	0	0	**11**	
0630 - 0645	0	16	5	0	0	0	0	0	0	0	0	0	0	**21**	
0645 - 0700	0	18	4	0	0	0	0	2	0	0	0	0	0	**24**	**69**
0700 - 0715	0	21	10	0	0	0	0	0	0	0	0	0	0	**31**	
0715 - 0730	0	27	6	1	0	0	0	0	1	0	0	0	0	**35**	
0730 - 0745	0	25	5	0	0	0	0	0	0	0	0	0	0	**30**	
0745 - 0800	0	24	5	2	0	0	0	2	0	0	0	0	0	**33**	**129**
0800 - 0815	0	34	9	2	0	0	0	0	0	0	0	0	0	**45**	
0815 - 0830	0	22	11	1	0	0	0	0	0	0	0	0	0	**34**	
0830 - 0845	0	21	8	1	0	0	0	0	0	0	0	0	0	**30**	
0845 - 0900	0	16	7	1	1	0	0	0	0	0	0	0	0	**25**	**134**
0900 - 0915	0	22	8	1	0	0	0	0	0	0	0	0	0	**31**	
0915 - 0930	0	20	7	0	1	0	0	0	0	0	0	0	0	**28**	
0930 - 0945	0	20	4	0	1	0	0	0	0	0	0	0	0	**25**	
0945 - 1000	0	19	8	0	0	0	0	0	0	0	0	0	0	**27**	**111**
1000 - 1015	0	17	9	0	0	0	0	0	0	0	0	0	0	**26**	
1015 - 1030	0	19	6	0	1	0	0	2	0	0	0	0	0	**28**	
1030 - 1045	0	33	7	0	1	0	0	1	0	0	0	0	0	**42**	
1045 - 1100	0	20	10	0	1	0	0	0	0	0	0	0	0	**31**	**127**
1100 - 1115	0	25	6	0	1	0	0	0	1	0	0	0	0	**33**	
1115 - 1130	0	24	10	0	0	0	0	0	0	0	0	0	0	**34**	
1130 - 1145	0	15	11	1	0	0	0	0	0	0	0	0	0	**27**	
1145 - 1200	1	19	6	1	0	0	0	0	0	0	0	0	0	**27**	**121**
1200 - 1215	0	32	11	0	1	0	0	1	0	0	0	0	0	**45**	
1215 - 1230	0	26	7	1	3	0	0	1	0	0	0	0	0	**38**	
1230 - 1245	0	35	6	0	0	0	0	0	0	0	0	0	0	**41**	
1245 - 1300	0	41	12	0	1	0	1	0	0	0	0	0	0	**55**	**179**
1300 - 1315	0	31	10	1	0	0	0	2	0	0	0	0	0	**44**	
1315 - 1330	0	35	12	0	1	0	0	1	0	0	0	0	0	**49**	
1330 - 1345	0	33	13	0	0	0	0	0	0	0	0	0	0	**46**	
1345 - 1400	1	41	11	0	2	0	0	0	1	0	0	0	0	**56**	**195**
1400 - 1415	0	30	13	3	1	1	0	1	1	0	0	0	0	**50**	
1415 - 1430	0	42	12	0	0	0	0	0	0	0	0	0	0	**54**	
1430 - 1445	0	31	11	0	0	0	0	0	1	0	0	0	0	**43**	
1445 - 1500	0	53	8	0	0	0	0	0	0	0	0	0	0	**61**	**208**
1500 - 1515	0	40	13	0	0	1	0	0	0	0	0	0	0	**54**	
1515 - 1530	0	50	12	0	1	0	0	0	0	0	0	0	0	**63**	
1530 - 1545	1	49	10	1	2	0	0	0	0	0	0	0	0	**63**	
1545 - 1600	0	51	10	1	2	0	1	1	0	0	0	0	0	**66**	**246**
1600 - 1615	0	52	13	0	0	1	0	0	0	0	0	0	0	**66**	
1615 - 1630	1	48	12	1	1	0	0	0	0	0	0	0	0	**63**	
1630 - 1645	0	41	12	1	0	0	0	0	0	0	0	0	0	**54**	
1645 - 1700	0	44	10	2	2	0	0	0	0	0	0	0	0	**58**	**241**
1700 - 1715	0	71	12	0	0	0	0	1	0	0	0	0	0	**84**	
1715 - 1730	0	46	7	0	1	0	0	0	0	0	0	0	0	**54**	
1730 - 1745	0	48	9	0	0	0	0	0	0	0	0	0	0	**57**	
1745 - 1800	0	46	4	0	0	0	0	0	0	0	0	0	0	**50**	**245**
1800 - 1815	0	31	12	0	0	0	0	0	0	0	0	0	0	**43**	
1815 - 1830	1	28	6	0	0	0	0	0	0	0	0	0	0	**35**	
1830 - 1845	0	28	10	0	0	0	0	0	0	0	0	0	0	**38**	
1845 - 1900	0	16	8	0	1	0	0	1	0	0	0	0	0	**26**	**142**
1900 - 1915	0	35	6	0	0	0	0	0	0	0	0	0	0	**41**	
1915 - 1930	0	29	8	0	1	0	0	0	0	0	0	0	0	**38**	
1930 - 1945	0	25	5	0	0	0	0	0	0	0	0	0	0	**30**	
1945 - 2000	0	25	8	0	1	0	0	0	1	0	0	0	0	**35**	**144**
2000 - 2015	0	29	2	0	0	0	0	0	0	0	0	0	0	**31**	
2015 - 2030	0	23	3	0	0	0	0	0	0	0	0	0	0	**26**	
2030 - 2045	0	21	0	0	0	0	0	0	0	0	0	0	0	**21**	
2045 - 2100	0	18	1	0	0	0	0	0	0	0	0	0	0	**19**	**97**
2100 - 2115	0	28	1	0	1	0	0	0	0	0	0	0	0	**30**	
2115 - 2130	0	19	0	0	0	0	0	0	0	0	0	0	0	**19**	
2130 - 2145	0	15	0	0	0	0	0	0	0	0	0	0	0	**15**	
2145 - 2200	0	15	1	0	0	0	0	0	0	0	0	0	0	**16**	**80**
2200 - 2215	0	10	2	0	0	0	0	0	0	0	0	0	0	**12**	
2215 - 2230	0	10	1	0	0	0	0	0	0	0	0	0	0	**11**	
2230 - 2245	0	8	0	0	0	0	0	0	0	0	0	0	0	**8**	
2245 - 2300	0	7	0	0	0	0	0	0	0	0	0	0	0	**7**	**38**
2300 - 2315	0	10	0	0	0	0	0	0	1	0	0	0	0	**11**	
2315 - 2330	0	0	0	0	0	0	0	0	0	0	0	0	0	**0**	
2330 - 2345	0	3	0	0	0	0	0	0	0	0	0	0	0	**3**	
2345 - 0000	0	1	0	0	0	0	0	0	0	0	0	0	0	**1**	**15**

Session Total	5	1981	494	22	30	3	2	16	7	0	0	0	0	**2560**
Session Average	0.05	20.64	5.15	0.23	0.31	0.03	0.02	0.17	0.07	0.00	0.00	0.00	0.00	**26.67**
Session Percentage	0.20	77.38	19.30	0.86	1.17	0.12	0.08	0.63	0.27	0.00	0.00	0.00	0.00	

AM Peak Hour	-	0715 - 0815	0800 - 0900	0745 - 0845	0845 - 0945	-	-	0945 - 1045	0630 - 0730	-	-	-	-	**0715 - 0815**
AM Peak Hour Volume	0	110	35	6	3	0	0	3	1	0	0	0	0	**143**

Noon Peak Hour	1100 - 1200	1445 - 1545	1315 - 1415	1130 - 1230	1200 - 1300	1315 - 1415	1200 - 1300	1000 - 1100	1345 - 1445	-	-	-	-	**1445 - 1545**
Noon Peak Hour Volume	1	192	49	3	5	1	1	3	3	0	0	0	0	**241**

PM Peak Hour	1530 - 1630	1700 - 1800	1545 - 1645	1600 - 1700	1500 - 1600	1500 - 1600	1500 - 1600	1500 - 1600	1900 - 2000	-	-	-	-	**1615 - 1715**
PM Peak Hour Volume	2	211	47	4	5	1	1	1	1	0	0	0	0	**259**

Site 74 Lane 4 WB
I-20,
west of US-378 Sunset Blvd S/Bound Off-Ramp

Date
Friday, April 26, 2024

Lat/Long
34.008085°, -81.156669°

Weather
Cloudy
69°F

Click here for Detailed Weather

0000 - 2400 (Weekday 24h Session) (04-26-2024)
SB WB 15min

	Westbound (Movement 74 Lane 4 WB.1)													15min	60min
TIME	1	2	3	4	5	6	7	8	9	10	11	12	13	Total	Total
0000 - 0015	0	0	0	0	0	0	0	0	0	0	0	0	0	**0**	
0015 - 0030	0	0	0	0	0	0	0	0	0	0	0	0	0	**0**	
0030 - 0045	0	0	0	0	0	0	0	0	0	0	0	0	0	**0**	
0045 - 0100	0	0	0	0	0	0	0	0	0	0	0	0	0	**0**	**0**
0100 - 0115	0	0	0	0	1	0	0	0	0	0	0	0	0	**1**	
0115 - 0130	0	0	0	0	0	0	0	0	0	0	0	0	0	**0**	
0130 - 0145	0	0	0	0	0	0	0	0	0	0	0	0	0	**0**	
0145 - 0200	0	0	0	0	0	0	0	0	0	0	0	0	0	**0**	**1**
0200 - 0215	0	0	0	0	0	0	0	0	0	0	0	0	0	**0**	
0215 - 0230	0	0	0	0	0	0	0	0	0	0	0	0	0	**0**	
0230 - 0245	0	3	0	0	0	0	0	0	0	0	0	0	0	**3**	
0245 - 0300	0	0	0	0	0	0	0	0	0	0	0	0	0	**0**	**3**
0300 - 0315	0	0	0	0	0	0	0	0	0	0	0	0	0	**0**	
0315 - 0330	0	1	0	0	0	0	0	0	0	0	0	0	0	**1**	
0330 - 0345	0	0	0	0	0	0	0	0	0	0	0	0	0	**0**	
0345 - 0400	0	0	0	0	0	0	0	0	0	0	0	0	0	**0**	**1**
0400 - 0415	0	0	0	0	0	0	0	0	0	0	0	0	0	**0**	
0415 - 0430	0	0	0	0	1	0	0	0	0	0	0	0	0	**1**	
0430 - 0445	0	0	0	0	0	0	0	0	0	0	0	0	0	**0**	
0445 - 0500	0	0	0	0	0	0	0	0	0	0	0	0	0	**0**	**1**
0500 - 0515	0	1	0	0	0	0	0	0	0	0	0	0	0	**1**	
0515 - 0530	0	0	0	0	0	0	0	0	0	0	0	0	0	**0**	
0530 - 0545	0	2	0	0	0	0	0	0	0	0	0	0	0	**2**	
0545 - 0600	0	4	0	0	0	0	0	0	0	0	0	0	0	**4**	**7**
0600 - 0615	0	5	1	0	0	0	0	0	0	0	0	0	0	**6**	
0615 - 0630	0	6	3	0	0	0	0	0	0	0	0	0	0	**9**	
0630 - 0645	0	8	1	0	0	0	0	0	0	0	0	0	0	**9**	
0645 - 0700	0	14	8	0	0	0	0	0	0	0	0	0	0	**22**	**46**
0700 - 0715	0	14	5	0	1	0	0	0	0	0	0	0	0	**20**	
0715 - 0730	0	29	4	1	0	0	0	1	0	0	0	0	0	**35**	
0730 - 0745	0	15	9	1	0	0	0	0	0	0	0	0	0	**25**	
0745 - 0800	0	40	8	1	0	0	0	0	0	0	0	0	0	**49**	**129**
0800 - 0815	0	31	8	3	0	0	0	0	0	0	0	0	0	**42**	
0815 - 0830	0	21	8	2	2	1	0	0	0	0	0	0	0	**34**	
0830 - 0845	0	32	6	2	1	0	0	0	1	0	0	0	0	**42**	
0845 - 0900	0	25	14	2	0	0	0	0	0	0	0	0	0	**41**	**159**
0900 - 0915	0	26	11	0	0	0	0	0	1	0	0	0	0	**38**	
0915 - 0930	0	15	5	0	0	0	0	0	1	0	0	0	0	**21**	
0930 - 0945	0	15	7	0	0	0	0	0	0	0	0	0	0	**22**	
0945 - 1000	0	23	9	0	1	0	0	0	0	0	0	0	0	**33**	**114**
1000 - 1015	0	28	8	0	0	0	0	0	1	0	0	0	0	**37**	
1015 - 1030	0	18	10	0	0	0	0	0	0	0	0	0	0	**28**	
1030 - 1045	0	16	6	0	0	0	0	0	0	0	0	0	0	**22**	
1045 - 1100	0	18	8	0	1	0	0	0	0	0	0	0	0	**27**	**114**
1100 - 1115	0	23	6	0	2	0	0	0	0	0	0	0	0	**31**	
1115 - 1130	0	28	5	1	0	0	0	0	0	0	0	0	0	**34**	
1130 - 1145	0	23	6	2	1	1	0	0	0	0	0	0	0	**33**	
1145 - 1200	0	28	11	1	0	0	0	0	0	0	0	0	0	**40**	**138**
1200 - 1215	0	31	8	0	0	0	0	0	0	0	0	0	0	**39**	
1215 - 1230	0	27	9	1	1	0	0	0	0	0	0	0	0	**38**	
1230 - 1245	0	27	2	0	0	0	0	2	0	0	0	0	0	**31**	
1245 - 1300	0	26	10	0	0	0	0	1	0	0	0	0	0	**37**	**145**
1300 - 1315	0	26	11	0	1	1	0	0	0	0	0	0	0	**39**	
1315 - 1330	0	32	4	0	0	0	0	0	0	0	0	0	0	**36**	
1330 - 1345	0	30	8	1	1	0	0	1	0	0	0	0	0	**41**	
1345 - 1400	0	32	13	1	0	0	0	0	0	0	0	0	0	**46**	**162**
1400 - 1415	0	45	13	2	0	1	0	0	0	0	0	0	0	**61**	
1415 - 1430	0	26	9	0	1	0	0	0	0	0	0	0	0	**36**	
1430 - 1445	0	38	16	0	0	1	0	0	0	0	0	0	0	**55**	
1445 - 1500	0	36	14	0	3	0	0	0	0	0	0	0	0	**53**	**205**
1500 - 1515	0	49	13	0	1	1	0	0	0	0	0	0	0	**64**	
1515 - 1530	0	56	11	0	1	0	0	0	0	0	0	0	0	**68**	
1530 - 1545	1	56	12	0	0	0	0	0	0	0	0	0	0	**69**	
1545 - 1600	0	46	16	2	2	0	0	0	0	0	0	0	0	**66**	**267**
1600 - 1615	1	58	17	0	1	0	0	0	0	0	0	0	0	**77**	
1615 - 1630	0	36	6	1	2	0	0	0	0	0	0	0	0	**45**	
1630 - 1645	0	40	12	0	3	0	0	0	0	0	0	0	0	**55**	
1645 - 1700	0	43	14	1	0	0	0	0	0	0	0	0	0	**58**	**235**
1700 - 1715	0	46	16	1	0	0	0	0	0	0	0	0	0	**63**	
1715 - 1730	0	47	12	0	0	0	0	0	0	0	0	0	0	**59**	
1730 - 1745	0	35	15	0	1	0	0	0	0	0	0	0	0	**51**	
1745 - 1800	0	34	5	0	1	0	0	0	0	0	0	0	0	**40**	**213**
1800 - 1815	0	43	11	0	0	0	0	2	0	0	0	0	0	**56**	
1815 - 1830	0	30	6	0	0	0	0	0	0	0	0	0	0	**36**	
1830 - 1845	0	29	12	0	0	0	0	0	0	0	0	0	0	**41**	
1845 - 1900	0	35	7	0	0	0	0	0	0	0	0	0	0	**42**	**175**
1900 - 1915	0	27	4	0	0	0	0	0	0	0	0	0	0	**31**	
1915 - 1930	0	26	7	0	0	0	0	0	0	0	0	0	0	**33**	
1930 - 1945	0	26	9	0	0	0	0	0	0	0	0	0	0	**35**	
1945 - 2000	0	20	8	0	0	0	0	0	0	0	0	0	0	**28**	**127**
2000 - 2015	1	23	10	0	0	0	0	0	1	0	0	0	0	**35**	
2015 - 2030	0	18	8	0	0	0	0	0	0	0	0	0	0	**26**	
2030 - 2045	1	14	6	0	0	0	0	0	0	0	0	0	0	**21**	
2045 - 2100	0	15	6	0	0	0	0	0	0	0	0	0	0	**21**	**103**
2100 - 2115	0	8	2	0	0	0	0	0	0	0	0	0	0	**10**	
2115 - 2130	0	10	4	0	0	0	0	0	0	0	0	0	0	**14**	
2130 - 2145	0	11	3	0	0	0	0	0	1	0	0	0	0	**15**	
2145 - 2200	0	15	7	0	0	0	0	0	0	0	0	0	0	**22**	**61**
2200 - 2215	0	6	2	0	0	0	0	0	0	0	0	0	0	**8**	
2215 - 2230	0	10	3	0	1	0	0	0	0	0	0	0	0	**14**	
2230 - 2245	0	4	0	0	0	0	0	0	0	0	0	0	0	**4**	
2245 - 2300	0	3	0	0	0	0	0	0	0	0	0	0	0	**3**	**29**
2300 - 2315	0	5	1	0	0	0	0	0	0	0	0	0	0	**6**	
2315 - 2330	0	4	0	0	0	0	0	0	0	0	0	0	0	**4**	
2330 - 2345	0	5	0	0	0	0	0	0	0	0	0	0	0	**5**	
2345 - 0000	0	5	1	0	0	0	0	0	0	0	0	0	0	**6**	**21**

Session Total	4	1826	550	26	31	6	0	7	6	0	0	0	0	**2456**
Session Average	0.04	19.02	5.73	0.27	0.32	0.06	0.00	0.07	0.06	0.00	0.00	0.00	0.00	**25.58**
Session Percentage	0.16	74.35	22.39	1.06	1.26	0.24	0.00	0.29	0.24	0.00	0.00	0.00	0.00	

AM Peak Hour	-	0745 - 0845	0815 - 0915	0800 - 0900	0745 - 0845	0730 - 0830	-	0630 - 0730	0830 - 0930	-	-	-	-	**0745 - 0845**
AM Peak Hour Volume	0	124	39	9	3	1	0	1	3	0	0	0	0	**167**

Noon Peak Hour	1445 - 1545	1445 - 1545	1430 - 1530	1100 - 1200	1415 - 1515	1345 - 1445	-	1200 - 1300	1000 - 1100	-	-	-	-	**1445 - 1545**
Noon Peak Hour Volume	1	197	54	4	5	2	0	3	1	0	0	0	0	**254**

PM Peak Hour	1515 - 1615	1515 - 1615	1645 - 1745	1530 - 1630	1545 - 1645	1500 - 1600	-	1715 - 1815	1915 - 2015	-	-	-	-	**1515 - 1615**
PM Peak Hour Volume	2	216	57	3	8	1	0	2	1	0	0	0	0	**280**

Site 74 Lane 4 WB
I-20,
west of US-378 Sunset Blvd S/Bound Off-Ramp

Date
Saturday, April 27, 2024

Lat/Long
34.008085°, -81.156669°

Weather
Mostly Cloudy
69°F

Click here for Detailed Weather

0000 - 2400 (Saturday 24h Session) (04-27-2024)
SB WB 15min

	Westbound (Movement 74 Lane 4 WB.1)													15min	60min
TIME	1	2	3	4	5	6	7	8	9	10	11	12	13	Total	Total
0000 - 0015	0	1	0	0	0	0	0	0	0	0	0	0	0	**1**	
0015 - 0030	0	2	1	0	0	0	0	0	0	0	0	0	0	**3**	
0030 - 0045	1	1	1	0	0	0	0	0	0	0	0	0	0	**3**	
0045 - 0100	0	1	1	0	0	0	0	0	0	0	0	0	0	**2**	**9**
0100 - 0115	0	1	0	0	0	0	0	0	0	0	0	0	0	**1**	
0115 - 0130	0	2	1	0	0	0	0	0	0	0	0	0	0	**3**	
0130 - 0145	0	1	0	0	0	0	0	0	0	0	0	0	0	**1**	
0145 - 0200	0	1	1	0	0	0	0	0	0	0	0	0	0	**2**	**7**
0200 - 0215	0	0	0	0	0	0	0	0	0	0	0	0	0	**0**	
0215 - 0230	0	0	0	0	0	0	0	0	0	0	0	0	0	**0**	
0230 - 0245	0	0	0	0	0	0	0	0	0	0	0	0	0	**0**	
0245 - 0300	0	0	0	0	0	0	0	0	0	0	0	0	0	**0**	**0**
0300 - 0315	0	0	0	0	0	0	0	0	0	0	0	0	0	**0**	
0315 - 0330	0	0	0	0	0	0	0	0	0	0	0	0	0	**0**	
0330 - 0345	0	1	0	0	0	0	0	0	0	0	0	0	0	**1**	
0345 - 0400	0	0	0	0	0	0	0	0	0	0	0	0	0	**0**	**1**
0400 - 0415	0	0	0	0	0	0	0	0	0	0	0	0	0	**0**	
0415 - 0430	0	1	0	0	0	0	0	0	0	0	0	0	0	**1**	
0430 - 0445	0	1	0	0	0	0	0	0	0	0	0	0	0	**1**	
0445 - 0500	0	1	0	0	0	0	0	0	0	0	0	0	0	**1**	**3**
0500 - 0515	0	1	0	0	0	0	0	0	0	0	0	0	0	**1**	
0515 - 0530	0	1	1	0	0	0	0	0	0	0	0	0	0	**2**	
0530 - 0545	0	4	2	0	1	0	0	0	0	0	0	0	0	**7**	
0545 - 0600	0	1	1	0	0	0	0	0	0	0	0	0	0	**2**	**12**
0600 - 0615	0	4	2	0	0	0	0	0	0	0	0	0	0	**6**	
0615 - 0630	0	1	2	0	0	0	0	0	0	0	0	0	0	**3**	
0630 - 0645	0	5	5	0	0	0	0	0	0	0	0	0	0	**10**	
0645 - 0700	0	7	2	0	0	0	0	0	0	0	0	0	0	**9**	**28**
0700 - 0715	0	4	7	0	0	0	0	0	0	0	0	0	0	**11**	
0715 - 0730	0	7	2	0	0	0	0	0	0	0	0	0	0	**9**	
0730 - 0745	0	7	4	0	0	0	0	0	1	0	0	0	0	**12**	
0745 - 0800	0	16	4	0	0	0	0	0	0	0	0	0	0	**20**	**52**
0800 - 0815	0	14	6	0	1	0	0	0	0	0	0	0	0	**21**	
0815 - 0830	0	16	3	0	0	0	0	0	0	0	0	0	0	**19**	
0830 - 0845	0	14	9	0	0	0	0	0	0	0	0	0	0	**23**	
0845 - 0900	0	13	7	0	0	0	0	0	0	0	0	0	0	**20**	**83**
0900 - 0915	0	28	2	0	0	0	0	0	1	0	0	0	0	**31**	
0915 - 0930	0	16	8	0	0	0	0	0	0	0	0	0	0	**24**	
0930 - 0945	0	20	3	0	0	0	0	0	0	0	0	0	0	**23**	
0945 - 1000	0	17	6	0	1	0	0	0	1	0	0	0	0	**25**	**103**
1000 - 1015	0	35	7	0	0	0	0	0	0	0	0	0	0	**42**	
1015 - 1030	0	29	5	0	0	0	0	0	0	0	0	0	0	**34**	
1030 - 1045	0	17	4	0	0	0	0	0	0	0	0	0	0	**21**	
1045 - 1100	0	25	9	0	2	0	0	0	0	0	0	0	0	**36**	**133**
1100 - 1115	1	31	7	0	0	0	0	0	0	0	0	0	0	**39**	
1115 - 1130	0	30	13	0	0	0	0	0	1	0	0	0	0	**44**	
1130 - 1145	0	33	12	0	0	1	0	0	0	0	0	0	0	**46**	
1145 - 1200	0	33	5	0	0	0	0	0	0	0	0	0	0	**38**	**167**
1200 - 1215	0	35	9	0	0	0	0	0	0	0	0	0	0	**44**	
1215 - 1230	0	23	9	0	0	0	0	0	0	0	0	0	0	**32**	
1230 - 1245	0	32	9	0	1	0	0	1	0	0	0	0	0	**43**	
1245 - 1300	0	31	5	0	1	0	0	0	0	0	0	0	0	**37**	**156**
1300 - 1315	0	44	8	0	1	0	0	0	0	0	0	0	0	**53**	
1315 - 1330	0	29	7	0	0	0	0	0	0	0	0	0	0	**36**	
1330 - 1345	0	26	7	0	0	0	0	0	0	0	0	0	0	**33**	
1345 - 1400	0	42	9	0	0	0	0	0	0	0	0	0	0	**51**	**173**
1400 - 1415	0	28	8	0	0	0	0	0	0	0	0	0	0	**36**	
1415 - 1430	0	37	5	0	0	0	0	0	0	0	0	0	0	**42**	
1430 - 1445	0	26	6	0	0	0	0	0	0	0	0	0	0	**32**	
1445 - 1500	0	33	5	0	1	0	0	0	0	0	0	0	0	**39**	**149**
1500 - 1515	0	30	5	0	0	0	0	0	0	0	0	0	0	**35**	
1515 - 1530	0	24	4	0	0	0	0	0	0	0	0	0	0	**28**	
1530 - 1545	3	20	5	0	0	0	0	0	0	0	0	0	0	**28**	
1545 - 1600	0	31	2	0	0	0	0	0	0	0	0	0	0	**33**	**124**
1600 - 1615	0	27	7	0	0	0	0	0	0	0	0	0	0	**34**	
1615 - 1630	0	22	6	0	0	0	0	0	0	0	0	0	0	**28**	
1630 - 1645	0	38	3	0	0	0	0	0	0	0	0	0	0	**41**	
1645 - 1700	0	27	3	0	1	0	0	0	0	0	0	0	0	**31**	**134**
1700 - 1715	0	24	2	0	1	0	0	0	0	0	0	0	0	**27**	
1715 - 1730	0	14	5	0	1	0	0	1	0	0	0	0	0	**21**	
1730 - 1745	0	26	6	0	0	0	0	0	0	0	0	0	0	**32**	
1745 - 1800	0	30	2	0	0	0	0	0	0	0	0	0	0	**32**	**112**
1800 - 1815	0	23	5	0	0	0	0	0	0	0	0	0	0	**28**	
1815 - 1830	0	20	4	0	0	0	0	0	0	0	0	0	0	**24**	
1830 - 1845	0	24	7	0	1	0	0	0	0	0	0	0	0	**32**	
1845 - 1900	0	24	8	0	0	0	0	0	0	0	0	0	0	**32**	**116**
1900 - 1915	0	21	5	0	1	0	0	0	0	0	0	0	0	**27**	
1915 - 1930	0	20	6	0	0	0	0	0	0	0	0	0	0	**26**	
1930 - 1945	0	21	3	0	0	0	0	0	0	0	0	0	0	**24**	
1945 - 2000	0	23	6	0	1	0	0	0	0	0	0	0	0	**30**	**107**
2000 - 2015	0	22	3	0	0	0	0	0	0	0	0	0	0	**25**	
2015 - 2030	0	26	5	0	0	0	0	0	0	0	0	0	0	**31**	
2030 - 2045	0	8	4	0	0	0	0	1	0	0	0	0	0	**13**	
2045 - 2100	0	7	3	0	0	0	0	0	0	0	0	0	0	**10**	**79**
2100 - 2115	0	5	2	0	0	0	0	0	0	0	0	0	0	**7**	
2115 - 2130	0	7	4	0	0	0	0	0	0	0	0	0	0	**11**	
2130 - 2145	0	8	3	0	0	0	0	0	0	0	0	0	0	**11**	
2145 - 2200	0	10	3	0	0	0	0	0	0	0	0	0	0	**13**	**42**
2200 - 2215	0	6	2	0	0	0	0	0	0	0	0	0	0	**8**	
2215 - 2230	0	7	2	0	0	0	0	0	0	0	0	0	0	**9**	
2230 - 2245	0	3	1	0	0	0	0	0	0	0	0	0	0	**4**	
2245 - 2300	0	3	2	0	0	0	0	0	0	0	0	0	0	**5**	**26**
2300 - 2315	0	1	1	0	0	0	0	0	0	0	0	0	0	**2**	
2315 - 2330	0	1	1	0	0	0	0	0	0	0	0	0	0	**2**	
2330 - 2345	0	2	1	0	0	0	0	0	0	0	0	0	0	**3**	
2345 - 0000	0	1	0	0	0	0	0	0	0	0	0	0	0	**1**	**8**

Session Total	5	1435	361	0	15	1	0	3	4	0	0	0	0	**1824**
Session Average	0.05	14.95	3.76	0.00	0.16	0.01	0.00	0.03	0.04	0.00	0.00	0.00	0.00	**19.00**
Session Percentage	0.27	78.67	19.79	0.00	0.82	0.05	0.00	0.16	0.22	0.00	0.00	0.00	0.00	

AM Peak Hour	-	0930 - 1030	0830 - 0930	-	0500 - 0600	-	-	-	0900 - 1000	-	-	-	-	**0930 - 1030**
AM Peak Hour Volume	0	101	26	0	1	0	0	0	2	0	0	0	0	**124**

Noon Peak Hour	1445 - 1545	1300 - 1400	1045 - 1145	-	1215 - 1315	1045 - 1145	-	1145 - 1245	1030 - 1130	-	-	-	-	**1300 - 1400**
Noon Peak Hour Volume	3	141	41	0	3	1	0	1	1	0	0	0	0	**173**

PM Peak Hour	1500 - 1600	1545 - 1645	1830 - 1930	-	1630 - 1730	-	-	1630 - 1730	-	-	-	-	-	**1545 - 1645**
PM Peak Hour Volume	3	118	26	0	3	0	0	1	0	0	0	0	0	**136**

Bi-Directional Class Count || SB WB Average 15min

Columbia, SC

Marr Traffic DATA COLLECTION
www.marrtraffic.com

Site 74 Lane 4 WB
I-20,
west of US-378 Sunset Blvd S/Bound Off-Ramp

Date
Sunday, April 21, 2024

Lat/Long
34.008085°, -81.156669°

Weather
Cloudy
66°F

0000 - 2400 (Weekday 24h Session) (All Dates)
SB WB Average 15min

	SB WB Average 15min													15min	60min
Time	1	2	3	4	5	6	7	8	9	10	11	12	13	Total	Total
0000 - 0015	0	1	0	0	0	0	0	0	0	0	0	0	0	**1**	
0015 - 0030	0	1	0	0	0	0	0	0	0	0	0	0	0	**1**	
0030 - 0045	0	1	0	0	0	0	0	0	0	0	0	0	0	**2**	
0045 - 0100	0	0	0	0	0	0	0	0	0	0	0	0	0	**1**	**4**
0100 - 0115	0	2	0	0	0	0	0	0	0	0	0	0	0	**2**	
0115 - 0130	0	1	0	0	0	0	0	0	0	0	0	0	0	**1**	
0130 - 0145	0	1	0	0	0	0	0	0	0	0	0	0	0	**1**	
0145 - 0200	0	1	0	0	0	0	0	0	0	0	0	0	0	**1**	**5**
0200 - 0215	0	0	0	0	0	0	0	0	0	0	0	0	0	**0**	
0215 - 0230	0	0	0	0	0	0	0	0	0	0	0	0	0	**0**	
0230 - 0245	0	1	0	0	0	0	0	0	0	0	0	0	0	**1**	
0245 - 0300	0	0	0	0	0	0	0	0	0	0	0	0	0	**0**	**2**
0300 - 0315	0	0	0	0	0	0	0	0	0	0	0	0	0	**0**	
0315 - 0330	0	0	0	0	0	0	0	0	0	0	0	0	0	**0**	
0330 - 0345	0	0	0	0	0	0	0	0	0	0	0	0	0	**0**	
0345 - 0400	0	0	0	0	0	0	0	0	0	0	0	0	0	**1**	**2**
0400 - 0415	0	0	0	0	0	0	0	0	0	0	0	0	0	**0**	
0415 - 0430	0	0	0	0	0	0	0	0	0	0	0	0	0	**1**	
0430 - 0445	0	0	0	0	0	0	0	0	0	0	0	0	0	**1**	
0445 - 0500	0	1	0	0	0	0	0	0	0	0	0	0	0	**1**	**2**
0500 - 0515	0	1	0	0	0	0	0	0	0	0	0	0	0	**1**	
0515 - 0530	0	2	0	0	0	0	0	0	0	0	0	0	0	**2**	
0530 - 0545	0	4	0	0	0	0	0	0	0	0	0	0	0	**4**	
0545 - 0600	0	4	0	0	0	0	0	0	0	0	0	0	0	**5**	**12**
0600 - 0615	0	6	1	0	0	0	0	0	0	0	0	0	0	**7**	
0615 - 0630	0	8	3	0	0	0	0	0	0	0	0	0	0	**11**	
0630 - 0645	0	10	3	0	0	0	0	0	0	0	0	0	0	**13**	
0645 - 0700	0	11	4	0	0	0	0	0	0	0	0	0	0	**16**	**47**
0700 - 0715	0	15	6	0	1	0	0	0	0	0	0	0	0	**22**	
0715 - 0730	0	20	5	1	0	0	0	0	0	0	0	0	0	**26**	
0730 - 0745	0	18	5	0	0	0	0	0	0	0	0	0	0	**24**	
0745 - 0800	0	24	6	1	0	0	0	0	0	0	0	0	0	**32**	**103**
0800 - 0815	0	26	8	1	0	0	0	0	0	0	0	0	0	**35**	
0815 - 0830	0	17	6	1	1	0	0	0	0	0	0	0	0	**25**	
0830 - 0845	0	19	6	1	1	0	0	0	0	0	0	0	0	**26**	
0845 - 0900	0	20	6	1	1	0	0	0	0	0	0	0	0	**28**	**115**
0900 - 0915	0	21	7	0	0	0	0	0	0	0	0	0	0	**29**	
0915 - 0930	0	15	7	0	1	0	0	0	0	0	0	0	0	**23**	
0930 - 0945	0	18	5	0	1	0	0	0	0	0	0	0	0	**24**	
0945 - 1000	0	19	7	0	1	0	0	0	0	0	0	0	0	**28**	**104**
1000 - 1015	0	25	7	0	0	0	0	0	0	0	0	0	0	**33**	
1015 - 1030	0	19	5	0	0	0	0	0	0	0	0	0	0	**24**	
1030 - 1045	0	20	5	0	1	0	0	0	0	0	0	0	0	**26**	
1045 - 1100	0	21	7	0	1	0	0	0	0	0	0	0	0	**30**	**114**
1100 - 1115	0	23	6	0	1	0	0	0	0	0	0	0	0	**30**	
1115 - 1130	0	24	8	0	1	0	0	0	1	0	0	0	0	**34**	
1130 - 1145	0	22	8	1	0	0	0	0	0	0	0	0	0	**31**	
1145 - 1200	0	26	7	1	0	0	0	0	0	0	0	0	0	**34**	**129**
1200 - 1215	0	28	8	0	1	0	0	0	0	0	0	0	0	**37**	
1215 - 1230	0	23	8	1	1	0	0	0	0	0	0	0	0	**33**	
1230 - 1245	0	25	7	0	1	0	0	0	0	0	0	0	0	**34**	
1245 - 1300	0	31	8	0	1	0	0	0	0	0	0	0	0	**40**	**144**
1300 - 1315	0	29	8	0	1	0	0	0	0	0	0	0	0	**38**	
1315 - 1330	0	28	9	0	0	0	0	0	0	0	0	0	0	**38**	
1330 - 1345	0	29	9	0	0	0	0	0	0	0	0	0	0	**39**	
1345 - 1400	0	29	9	0	0	0	0	0	0	0	0	0	0	**39**	**155**
1400 - 1415	0	30	9	2	0	0	0	0	0	0	0	0	0	**42**	
1415 - 1430	0	33	8	0	0	0	0	0	0	0	0	0	0	**42**	
1430 - 1445	0	28	9	0	0	0	0	0	0	0	0	0	0	**38**	
1445 - 1500	0	38	9	0	1	0	0	0	0	0	0	0	0	**49**	**171**
1500 - 1515	0	40	10	0	1	0	0	0	0	0	0	0	0	**51**	
1515 - 1530	0	43	10	0	1	0	0	0	0	0	0	0	0	**54**	
1530 - 1545	1	41	9	1	1	0	0	0	0	0	0	0	0	**53**	
1545 - 1600	0	43	10	1	1	0	0	0	0	0	0	0	0	**56**	**214**
1600 - 1615	0	47	11	0	1	0	0	0	0	0	0	0	0	**60**	
1615 - 1630	0	42	11	0	0	0	0	0	0	0	0	0	0	**54**	
1630 - 1645	0	38	10	0	1	0	0	0	0	0	0	0	0	**50**	
1645 - 1700	0	39	8	1	0	0	0	0	0	0	0	0	0	**49**	**211**
1700 - 1715	0	47	11	0	0	0	0	0	0	0	0	0	0	**59**	
1715 - 1730	0	36	9	0	1	0	0	0	0	0	0	0	0	**46**	
1730 - 1745	0	30	9	0	0	0	0	0	0	0	0	0	0	**40**	
1745 - 1800	0	30	7	0	0	0	0	0	0	0	0	0	0	**38**	**184**
1800 - 1815	0	32	8	0	0	0	0	0	0	0	0	0	0	**41**	
1815 - 1830	0	26	6	0	0	0	0	0	0	0	0	0	0	**33**	
1830 - 1845	0	26	8	0	0	0	0	0	0	0	0	0	0	**34**	
1845 - 1900	0	22	6	0	0	0	0	0	0	0	0	0	0	**29**	**137**
1900 - 1915	0	23	5	0	1	0	0	0	0	0	0	0	0	**28**	
1915 - 1930	0	22	7	0	0	0	0	0	0	0	0	0	0	**30**	
1930 - 1945	0	21	5	0	0	0	0	0	0	0	0	0	0	**26**	
1945 - 2000	0	21	5	0	0	0	0	0	0	0	0	0	0	**26**	**110**
2000 - 2015	0	23	4	0	0	0	0	0	0	0	0	0	0	**27**	
2015 - 2030	0	20	3	0	0	0	0	0	0	0	0	0	0	**23**	
2030 - 2045	0	13	3	0	0	0	0	0	0	0	0	0	0	**16**	
2045 - 2100	0	13	3	0	0	0	0	0	0	0	0	0	0	**16**	**82**
2100 - 2115	0	12	2	0	0	0	0	0	0	0	0	0	0	**15**	
2115 - 2130	0	12	3	0	0	0	0	0	0	0	0	0	0	**15**	
2130 - 2145	0	9	1	0	0	0	0	0	0	0	0	0	0	**10**	
2145 - 2200	0	10	3	0	0	0	0	0	0	0	0	0	0	**13**	**53**
2200 - 2215	0	6	1	0	0	0	0	0	0	0	0	0	0	**8**	
2215 - 2230	0	6	1	0	0	0	0	0	0	0	0	0	0	**7**	
2230 - 2245	0	4	0	0	0	0	0	0	0	0	0	0	0	**4**	
2245 - 2300	0	3	0	0	0	0	0	0	0	0	0	0	0	**4**	**22**
2300 - 2315	0	3	0	0	0	0	0	0	0	0	0	0	0	**4**	
2315 - 2330	0	2	0	0	0	0	0	0	0	0	0	0	0	**2**	
2330 - 2345	0	2	0	0	0	0	0	0	0	0	0	0	0	**2**	
2345 - 0000	0	2	0	0	0	0	0	0	0	0	0	0	0	**2**	**10**

Session Total	3	1632	434	17	28	3	1	8	7	0	0	0	0	**2132**
Session Average	0.03	17.00	4.52	0.17	0.29	0.03	0.01	0.08	0.07	0.00	0.00	0.00	0.00	**22.21**
Session Percentage	0.13	76.54	20.35	0.78	1.31	0.13	0.04	0.38	0.31	0.02	0.01	0.00	0.00	

AM Peak Hour	-	0715 - 0815	0830 - 0930	0745 - 0845	0800 - 0900	0915 - 1015	0945 - 1045	0945 - 1045	0900 - 1000	-	-	-	-	**0745 - 0845**
AM Peak Volume	0	88	27	4	2	1	0	1	1	0	0	0	0	**118**

Noon Peak Hour	1445 - 1545	1445 - 1545	1430 - 1530	1130 - 1230	1030 - 1130	1115 - 1215	1200 - 1300	1230 - 1330	1030 - 1130	1200 - 1300	1300 - 1400	-	-	**1445 - 1545**
Noon Peak Volume	1	162	39	3	3	1	0	2	1	0	0	0	0	**207**

PM Peak Hour	1530 - 1630	1515 - 1615	1545 - 1645	1530 - 1630	1500 - 1600	1500 - 1600	1500 - 1600	1515 - 1615	1915 - 2015	1500 - 1600	-	-	-	**1515 - 1615**
PM Peak Volume	1	174	42	2	3	0	0	1	0	0	0	0	0	**222**

Bi-Directional Class Count || Volume Summary 15min

Columbia, SC

Marr Traffic DATA COLLECTION
www.marrtraffic.com

Site 74 Lane 4 WB
I-20,
west of US-378 Sunset Blvd S/Bound Off-Ramp

Date
Sunday, April 21, 2024

Lat/Long
34.008085°, -81.156669°

Weather
Cloudy
66°F

Click here for Detailed Weather

0000 - 2400 (Sunday 24h Session) (04-21-2024)
Volume Summary 15min

TIME	Volume Summary 15min EB	WB	15min Total	60min Total
0000 - 0015	0	1	**1**	
0015 - 0030	0	4	**4**	
0030 - 0045	0	4	**4**	
0045 - 0100	0	1	**1**	**10**
0100 - 0115	0	4	**4**	
0115 - 0130	0	6	**6**	
0130 - 0145	0	3	**3**	
0145 - 0200	0	3	**3**	**16**
0200 - 0215	0	1	**1**	
0215 - 0230	0	2	**2**	
0230 - 0245	0	1	**1**	
0245 - 0300	0	0	**0**	**4**
0300 - 0315	0	1	**1**	
0315 - 0330	0	0	**0**	
0330 - 0345	0	0	**0**	
0345 - 0400	0	0	**0**	**1**
0400 - 0415	0	0	**0**	
0415 - 0430	0	0	**0**	
0430 - 0445	0	0	**0**	
0445 - 0500	0	0	**0**	**0**
0500 - 0515	0	0	**0**	
0515 - 0530	0	1	**1**	
0530 - 0545	0	1	**1**	
0545 - 0600	0	0	**0**	**2**
0600 - 0615	0	1	**1**	
0615 - 0630	0	3	**3**	
0630 - 0645	0	2	**2**	
0645 - 0700	0	2	**2**	**8**
0700 - 0715	0	5	**5**	
0715 - 0730	0	5	**5**	
0730 - 0745	0	6	**6**	
0745 - 0800	0	3	**3**	**19**
0800 - 0815	0	3	**3**	
0815 - 0830	0	4	**4**	
0830 - 0845	0	8	**8**	
0845 - 0900	0	8	**8**	**23**
0900 - 0915	0	7	**7**	
0915 - 0930	0	12	**12**	
0930 - 0945	0	10	**10**	
0945 - 1000	0	12	**12**	**41**
1000 - 1015	0	14	**14**	
1015 - 1030	0	11	**11**	
1030 - 1045	0	18	**18**	
1045 - 1100	0	24	**24**	**67**
1100 - 1115	0	17	**17**	
1115 - 1130	0	14	**14**	
1130 - 1145	0	24	**24**	
1145 - 1200	0	26	**26**	**81**

Time	Volume Summary 15min EB	WB	15min Total	60min Total
1200 - 1215	0	21	**21**	
1215 - 1230	0	19	**19**	
1230 - 1245	0	25	**25**	
1245 - 1300	0	23	**23**	**88**
1300 - 1315	0	23	**23**	
1315 - 1330	0	18	**18**	
1330 - 1345	0	43	**43**	
1345 - 1400	0	28	**28**	**112**
1400 - 1415	0	49	**49**	
1415 - 1430	0	31	**31**	
1430 - 1445	0	22	**22**	
1445 - 1500	0	23	**23**	**125**
1500 - 1515	0	34	**34**	
1515 - 1530	0	28	**28**	
1530 - 1545	0	29	**29**	
1545 - 1600	0	23	**23**	**114**
1600 - 1615	0	18	**18**	
1615 - 1630	0	29	**29**	
1630 - 1645	0	23	**23**	
1645 - 1700	0	13	**13**	**83**
1700 - 1715	0	17	**17**	
1715 - 1730	0	18	**18**	
1730 - 1745	0	16	**16**	
1745 - 1800	0	19	**19**	**70**
1800 - 1815	0	24	**24**	
1815 - 1830	0	14	**14**	
1830 - 1845	0	18	**18**	
1845 - 1900	0	20	**20**	**76**
1900 - 1915	0	9	**9**	
1915 - 1930	0	15	**15**	
1930 - 1945	0	16	**16**	
1945 - 2000	0	11	**11**	**51**
2000 - 2015	0	16	**16**	
2015 - 2030	0	13	**13**	
2030 - 2045	0	10	**10**	
2045 - 2100	0	4	**4**	**43**
2100 - 2115	0	12	**12**	
2115 - 2130	0	16	**16**	
2130 - 2145	0	3	**3**	
2145 - 2200	0	7	**7**	**38**
2200 - 2215	0	5	**5**	
2215 - 2230	0	4	**4**	
2230 - 2245	0	1	**1**	
2245 - 2300	0	2	**2**	**12**
2300 - 2315	0	0	**0**	
2315 - 2330	0	1	**1**	
2330 - 2345	0	2	**2**	
2345 - 0000	0	2	**2**	**5**

Session Total	0	1089	**1089**
Session Average	0.00	11.34	**11.34**
Session Percentage	0.00	100.00	

Site 74 Lane 4 WB

I-20,
west of US-378 Sunset Blvd S/Bound Off-Ramp

Date

Monday, April 22, 2024

Lat/Long

34.008085°, -81.156669°

Weather

Mostly Cloudy
57°F

Click here for Detailed Weather

0000 - 2400 (Weekday 24h Session) (04-22-2024)

Volume Summary 15min

TIME	Volume Summary 15min EB	WB	15min Total	60min Total
0000 - 0015	0	3	**3**	
0015 - 0030	0	0	**0**	
0030 - 0045	0	1	**1**	
0045 - 0100	0	0	**0**	**4**
0100 - 0115	0	1	**1**	
0115 - 0130	0	0	**0**	
0130 - 0145	0	0	**0**	
0145 - 0200	0	1	**1**	**2**
0200 - 0215	0	0	**0**	
0215 - 0230	0	0	**0**	
0230 - 0245	0	0	**0**	
0245 - 0300	0	0	**0**	**0**
0300 - 0315	0	1	**1**	
0315 - 0330	0	0	**0**	
0330 - 0345	0	0	**0**	
0345 - 0400	0	0	**0**	**1**
0400 - 0415	0	0	**0**	
0415 - 0430	0	0	**0**	
0430 - 0445	0	0	**0**	
0445 - 0500	0	0	**0**	**0**
0500 - 0515	0	2	**2**	
0515 - 0530	0	4	**4**	
0530 - 0545	0	5	**5**	
0545 - 0600	0	11	**11**	**22**
0600 - 0615	0	13	**13**	
0615 - 0630	0	16	**16**	
0630 - 0645	0	17	**17**	
0645 - 0700	0	17	**17**	**63**
0700 - 0715	0	35	**35**	
0715 - 0730	0	35	**35**	
0730 - 0745	0	38	**38**	
0745 - 0800	0	39	**39**	**147**
0800 - 0815	0	35	**35**	
0815 - 0830	0	22	**22**	
0830 - 0845	0	25	**25**	
0845 - 0900	0	35	**35**	**117**
0900 - 0915	0	36	**36**	
0915 - 0930	0	23	**23**	
0930 - 0945	0	31	**31**	
0945 - 1000	0	32	**32**	**122**
1000 - 1015	0	50	**50**	
1015 - 1030	0	25	**25**	
1030 - 1045	0	30	**30**	
1045 - 1100	0	26	**26**	**131**
1100 - 1115	0	22	**22**	
1115 - 1130	0	33	**33**	
1130 - 1145	0	31	**31**	
1145 - 1200	0	39	**39**	**125**

Time	Volume Summary 15min EB	WB	15min Total	60min Total
1200 - 1215	0	47	**47**	
1215 - 1230	0	52	**52**	
1230 - 1245	0	34	**34**	
1245 - 1300	0	48	**48**	**181**
1300 - 1315	0	40	**40**	
1315 - 1330	0	48	**48**	
1330 - 1345	0	30	**30**	
1345 - 1400	0	40	**40**	**158**
1400 - 1415	0	35	**35**	
1415 - 1430	0	50	**50**	
1430 - 1445	0	35	**35**	
1445 - 1500	0	57	**57**	**177**
1500 - 1515	0	54	**54**	
1515 - 1530	0	64	**64**	
1530 - 1545	0	62	**62**	
1545 - 1600	0	64	**64**	**244**
1600 - 1615	0	74	**74**	
1615 - 1630	0	72	**72**	
1630 - 1645	0	56	**56**	
1645 - 1700	0	62	**62**	**264**
1700 - 1715	0	78	**78**	
1715 - 1730	0	73	**73**	
1730 - 1745	0	41	**41**	
1745 - 1800	0	34	**34**	**226**
1800 - 1815	0	50	**50**	
1815 - 1830	0	36	**36**	
1830 - 1845	0	35	**35**	
1845 - 1900	0	23	**23**	**144**
1900 - 1915	0	26	**26**	
1915 - 1930	0	36	**36**	
1930 - 1945	0	11	**11**	
1945 - 2000	0	18	**18**	**91**
2000 - 2015	0	33	**33**	
2015 - 2030	0	27	**27**	
2030 - 2045	0	17	**17**	
2045 - 2100	0	18	**18**	**95**
2100 - 2115	0	12	**12**	
2115 - 2130	0	16	**16**	
2130 - 2145	0	10	**10**	
2145 - 2200	0	15	**15**	**53**
2200 - 2215	0	6	**6**	
2215 - 2230	0	4	**4**	
2230 - 2245	0	3	**3**	
2245 - 2300	0	6	**6**	**19**
2300 - 2315	0	6	**6**	
2315 - 2330	0	3	**3**	
2330 - 2345	0	0	**0**	
2345 - 0000	0	0	**0**	**9**

Session Total	0	2395	**2395**
Session Average	0.00	24.95	**24.95**
Session Percentage	0.00	100.00	

Site 74 Lane 4 WB

I-20,
west of US-378 Sunset Blvd S/Bound Off-Ramp

Date

Tuesday, April 23, 2024

Lat/Long

34.008085°, -81.156669°

Weather

Fair
58°F

Click here for Detailed Weather

0000 - 2400 (Weekday 24h Session) (04-23-2024)

Volume Summary 15min

TIME	Volume Summary 15min EB	Volume Summary 15min WB	15min Total	60min Total
0000 - 0015	0	1	**1**	
0015 - 0030	0	0	**0**	
0030 - 0045	0	1	**1**	
0045 - 0100	0	0	**0**	**2**
0100 - 0115	0	1	**1**	
0115 - 0130	0	0	**0**	
0130 - 0145	0	0	**0**	
0145 - 0200	0	0	**0**	**1**
0200 - 0215	0	0	**0**	
0215 - 0230	0	1	**1**	
0230 - 0245	0	0	**0**	
0245 - 0300	0	0	**0**	**1**
0300 - 0315	0	0	**0**	
0315 - 0330	0	0	**0**	
0330 - 0345	0	1	**1**	
0345 - 0400	0	0	**0**	**1**
0400 - 0415	0	0	**0**	
0415 - 0430	0	0	**0**	
0430 - 0445	0	0	**0**	
0445 - 0500	0	0	**0**	**0**
0500 - 0515	0	0	**0**	
0515 - 0530	0	0	**0**	
0530 - 0545	0	1	**1**	
0545 - 0600	0	3	**3**	**4**
0600 - 0615	0	4	**4**	
0615 - 0630	0	15	**15**	
0630 - 0645	0	19	**19**	
0645 - 0700	0	16	**16**	**54**
0700 - 0715	0	25	**25**	
0715 - 0730	0	27	**27**	
0730 - 0745	0	25	**25**	
0745 - 0800	0	42	**42**	**119**
0800 - 0815	0	46	**46**	
0815 - 0830	0	24	**24**	
0830 - 0845	0	27	**27**	
0845 - 0900	0	40	**40**	**137**
0900 - 0915	0	27	**27**	
0915 - 0930	0	25	**25**	
0930 - 0945	0	31	**31**	
0945 - 1000	0	33	**33**	**116**
1000 - 1015	0	33	**33**	
1015 - 1030	0	24	**24**	
1030 - 1045	0	28	**28**	
1045 - 1100	0	33	**33**	**118**
1100 - 1115	0	29	**29**	
1115 - 1130	0	40	**40**	
1130 - 1145	0	28	**28**	
1145 - 1200	0	44	**44**	**141**

Time	Volume Summary 15min EB	Volume Summary 15min WB	15min Total	60min Total
1200 - 1215	0	35	**35**	
1215 - 1230	0	36	**36**	
1230 - 1245	0	33	**33**	
1245 - 1300	0	35	**35**	**139**
1300 - 1315	0	36	**36**	
1315 - 1330	0	42	**42**	
1330 - 1345	0	39	**39**	
1345 - 1400	0	21	**21**	**138**
1400 - 1415	0	31	**31**	
1415 - 1430	0	43	**43**	
1430 - 1445	0	43	**43**	
1445 - 1500	0	53	**53**	**170**
1500 - 1515	0	58	**58**	
1515 - 1530	0	65	**65**	
1530 - 1545	0	57	**57**	
1545 - 1600	0	70	**70**	**250**
1600 - 1615	0	59	**59**	
1615 - 1630	0	63	**63**	
1630 - 1645	0	54	**54**	
1645 - 1700	0	52	**52**	**228**
1700 - 1715	0	60	**60**	
1715 - 1730	0	34	**34**	
1730 - 1745	0	43	**43**	
1745 - 1800	0	42	**42**	**179**
1800 - 1815	0	34	**34**	
1815 - 1830	0	46	**46**	
1830 - 1845	0	31	**31**	
1845 - 1900	0	27	**27**	**138**
1900 - 1915	0	29	**29**	
1915 - 1930	0	20	**20**	
1930 - 1945	0	34	**34**	
1945 - 2000	0	34	**34**	**117**
2000 - 2015	0	28	**28**	
2015 - 2030	0	16	**16**	
2030 - 2045	0	13	**13**	
2045 - 2100	0	13	**13**	**70**
2100 - 2115	0	13	**13**	
2115 - 2130	0	15	**15**	
2130 - 2145	0	7	**7**	
2145 - 2200	0	5	**5**	**40**
2200 - 2215	0	7	**7**	
2215 - 2230	0	3	**3**	
2230 - 2245	0	4	**4**	
2245 - 2300	0	0	**0**	**14**
2300 - 2315	0	0	**0**	
2315 - 2330	0	2	**2**	
2330 - 2345	0	0	**0**	
2345 - 0000	0	1	**1**	**3**

Session Total	0	2180	**2180**
Session Average	0.00	22.71	**22.71**
Session Percentage	0.00	100.00	

Site 74 Lane 4 WB

I-20,
west of US-378 Sunset Blvd S/Bound Off-Ramp

Date

Wednesday, April 24, 2024

Lat/Long

34.008085°, -81.156669°

Weather

Fair
66°F

Click here for Detailed Weather

0000 - 2400 (Weekday 24h Session) (04-24-2024)

Volume Summary 15min

TIME	Volume Summary 15min EB	WB	15min Total	60min Total
0000 - 0015	0	0	**0**	
0015 - 0030	0	1	**1**	
0030 - 0045	0	1	**1**	
0045 - 0100	0	2	**2**	**4**
0100 - 0115	0	2	**2**	
0115 - 0130	0	0	**0**	
0130 - 0145	0	1	**1**	
0145 - 0200	0	1	**1**	**4**
0200 - 0215	0	0	**0**	
0215 - 0230	0	0	**0**	
0230 - 0245	0	0	**0**	
0245 - 0300	0	1	**1**	**1**
0300 - 0315	0	1	**1**	
0315 - 0330	0	1	**1**	
0330 - 0345	0	0	**0**	
0345 - 0400	0	1	**1**	**3**
0400 - 0415	0	0	**0**	
0415 - 0430	0	1	**1**	
0430 - 0445	0	0	**0**	
0445 - 0500	0	1	**1**	**2**
0500 - 0515	0	2	**2**	
0515 - 0530	0	5	**5**	
0530 - 0545	0	6	**6**	
0545 - 0600	0	5	**5**	**18**
0600 - 0615	0	6	**6**	
0615 - 0630	0	22	**22**	
0630 - 0645	0	16	**16**	
0645 - 0700	0	19	**19**	**63**
0700 - 0715	0	25	**25**	
0715 - 0730	0	34	**34**	
0730 - 0745	0	32	**32**	
0745 - 0800	0	37	**37**	**128**
0800 - 0815	0	54	**54**	
0815 - 0830	0	39	**39**	
0830 - 0845	0	27	**27**	
0845 - 0900	0	29	**29**	**149**
0900 - 0915	0	33	**33**	
0915 - 0930	0	30	**30**	
0930 - 0945	0	26	**26**	
0945 - 1000	0	34	**34**	**123**
1000 - 1015	0	31	**31**	
1015 - 1030	0	20	**20**	
1030 - 1045	0	22	**22**	
1045 - 1100	0	33	**33**	**106**
1100 - 1115	0	36	**36**	
1115 - 1130	0	36	**36**	
1130 - 1145	0	29	**29**	
1145 - 1200	0	26	**26**	**127**

Time	Volume Summary 15min EB	WB	15min Total	60min Total
1200 - 1215	0	28	**28**	
1215 - 1230	0	17	**17**	
1230 - 1245	0	30	**30**	
1245 - 1300	0	44	**44**	**119**
1300 - 1315	0	31	**31**	
1315 - 1330	0	40	**40**	
1330 - 1345	0	43	**43**	
1345 - 1400	0	33	**33**	**147**
1400 - 1415	0	34	**34**	
1415 - 1430	0	39	**39**	
1430 - 1445	0	36	**36**	
1445 - 1500	0	56	**56**	**165**
1500 - 1515	0	59	**59**	
1515 - 1530	0	62	**62**	
1530 - 1545	0	61	**61**	
1545 - 1600	0	69	**69**	**251**
1600 - 1615	0	89	**89**	
1615 - 1630	0	75	**75**	
1630 - 1645	0	65	**65**	
1645 - 1700	0	66	**66**	**295**
1700 - 1715	0	87	**87**	
1715 - 1730	0	65	**65**	
1730 - 1745	0	41	**41**	
1745 - 1800	0	48	**48**	**241**
1800 - 1815	0	54	**54**	
1815 - 1830	0	39	**39**	
1830 - 1845	0	42	**42**	
1845 - 1900	0	30	**30**	**165**
1900 - 1915	0	34	**34**	
1915 - 1930	0	40	**40**	
1930 - 1945	0	32	**32**	
1945 - 2000	0	27	**27**	**133**
2000 - 2015	0	20	**20**	
2015 - 2030	0	22	**22**	
2030 - 2045	0	18	**18**	
2045 - 2100	0	27	**27**	**87**
2100 - 2115	0	20	**20**	
2115 - 2130	0	14	**14**	
2130 - 2145	0	12	**12**	
2145 - 2200	0	13	**13**	**59**
2200 - 2215	0	8	**8**	
2215 - 2230	0	5	**5**	
2230 - 2245	0	3	**3**	
2245 - 2300	0	2	**2**	**18**
2300 - 2315	0	2	**2**	
2315 - 2330	0	1	**1**	
2330 - 2345	0	4	**4**	
2345 - 0000	0	3	**3**	**10**

Session Total	0	2418	**2418**
Session Average	0.00	25.19	**25.19**
Session Percentage	0.00	100.00	

Site 74 Lane 4 WB

I-20,
west of US-378 Sunset Blvd S/Bound Off-Ramp

Date

Thursday, April 25, 2024

Lat/Long

34.008085°, -81.156669°

Weather

Fair
67°F

Click here for Detailed Weather

0000 - 2400 (Weekday 24h Session) (04-25-2024)

Volume Summary 15min

TIME	Volume Summary 15min EB	Volume Summary 15min WB	15min Total	60min Total
0000 - 0015	0	0	**0**	
0015 - 0030	0	0	**0**	
0030 - 0045	0	1	**1**	
0045 - 0100	0	0	**0**	**1**
0100 - 0115	0	3	**3**	
0115 - 0130	0	0	**0**	
0130 - 0145	0	0	**0**	
0145 - 0200	0	0	**0**	**3**
0200 - 0215	0	0	**0**	
0215 - 0230	0	0	**0**	
0230 - 0245	0	1	**1**	
0245 - 0300	0	2	**2**	**3**
0300 - 0315	0	0	**0**	
0315 - 0330	0	1	**1**	
0330 - 0345	0	0	**0**	
0345 - 0400	0	3	**3**	**4**
0400 - 0415	0	0	**0**	
0415 - 0430	0	1	**1**	
0430 - 0445	0	4	**4**	
0445 - 0500	0	3	**3**	**8**
0500 - 0515	0	0	**0**	
0515 - 0530	0	4	**4**	
0530 - 0545	0	8	**8**	
0545 - 0600	0	8	**8**	**20**
0600 - 0615	0	13	**13**	
0615 - 0630	0	11	**11**	
0630 - 0645	0	21	**21**	
0645 - 0700	0	24	**24**	**69**
0700 - 0715	0	31	**31**	
0715 - 0730	0	35	**35**	
0730 - 0745	0	30	**30**	
0745 - 0800	0	33	**33**	**129**
0800 - 0815	0	45	**45**	
0815 - 0830	0	34	**34**	
0830 - 0845	0	30	**30**	
0845 - 0900	0	25	**25**	**134**
0900 - 0915	0	31	**31**	
0915 - 0930	0	28	**28**	
0930 - 0945	0	25	**25**	
0945 - 1000	0	27	**27**	**111**
1000 - 1015	0	26	**26**	
1015 - 1030	0	28	**28**	
1030 - 1045	0	42	**42**	
1045 - 1100	0	31	**31**	**127**
1100 - 1115	0	33	**33**	
1115 - 1130	0	34	**34**	
1130 - 1145	0	27	**27**	
1145 - 1200	0	27	**27**	**121**

Time	Volume Summary 15min EB	Volume Summary 15min WB	15min Total	60min Total
1200 - 1215	0	45	**45**	
1215 - 1230	0	38	**38**	
1230 - 1245	0	41	**41**	
1245 - 1300	0	55	**55**	**179**
1300 - 1315	0	44	**44**	
1315 - 1330	0	49	**49**	
1330 - 1345	0	46	**46**	
1345 - 1400	0	56	**56**	**195**
1400 - 1415	0	50	**50**	
1415 - 1430	0	54	**54**	
1430 - 1445	0	43	**43**	
1445 - 1500	0	61	**61**	**208**
1500 - 1515	0	54	**54**	
1515 - 1530	0	63	**63**	
1530 - 1545	0	63	**63**	
1545 - 1600	0	66	**66**	**246**
1600 - 1615	0	66	**66**	
1615 - 1630	0	63	**63**	
1630 - 1645	0	54	**54**	
1645 - 1700	0	58	**58**	**241**
1700 - 1715	0	84	**84**	
1715 - 1730	0	54	**54**	
1730 - 1745	0	57	**57**	
1745 - 1800	0	50	**50**	**245**
1800 - 1815	0	43	**43**	
1815 - 1830	0	35	**35**	
1830 - 1845	0	38	**38**	
1845 - 1900	0	26	**26**	**142**
1900 - 1915	0	41	**41**	
1915 - 1930	0	38	**38**	
1930 - 1945	0	30	**30**	
1945 - 2000	0	35	**35**	**144**
2000 - 2015	0	31	**31**	
2015 - 2030	0	26	**26**	
2030 - 2045	0	21	**21**	
2045 - 2100	0	19	**19**	**97**
2100 - 2115	0	30	**30**	
2115 - 2130	0	19	**19**	
2130 - 2145	0	15	**15**	
2145 - 2200	0	16	**16**	**80**
2200 - 2215	0	12	**12**	
2215 - 2230	0	11	**11**	
2230 - 2245	0	8	**8**	
2245 - 2300	0	7	**7**	**38**
2300 - 2315	0	11	**11**	
2315 - 2330	0	0	**0**	
2330 - 2345	0	3	**3**	
2345 - 0000	0	1	**1**	**15**

Session Total	0	2560	**2560**
Session Average	0.00	26.67	**26.67**
Session Percentage	0.00	100.00	

Site 74 Lane 4 WB

I-20,
west of US-378 Sunset Blvd S/Bound Off-Ramp

Date

Friday, April 26, 2024

Lat/Long

34.008085°, -81.156669°

Weather

Cloudy
69°F

Click here for Detailed Weather

0000 - 2400 (Weekday 24h Session) (04-26-2024)

Volume Summary 15min

TIME	Volume Summary 15min EB	WB	15min Total	60min Total
0000 - 0015	0	0	**0**	
0015 - 0030	0	0	**0**	
0030 - 0045	0	0	**0**	
0045 - 0100	0	0	**0**	**0**
0100 - 0115	0	1	**1**	
0115 - 0130	0	0	**0**	
0130 - 0145	0	0	**0**	
0145 - 0200	0	0	**0**	**1**
0200 - 0215	0	0	**0**	
0215 - 0230	0	0	**0**	
0230 - 0245	0	3	**3**	
0245 - 0300	0	0	**0**	**3**
0300 - 0315	0	0	**0**	
0315 - 0330	0	1	**1**	
0330 - 0345	0	0	**0**	
0345 - 0400	0	0	**0**	**1**
0400 - 0415	0	0	**0**	
0415 - 0430	0	1	**1**	
0430 - 0445	0	0	**0**	
0445 - 0500	0	0	**0**	**1**
0500 - 0515	0	1	**1**	
0515 - 0530	0	0	**0**	
0530 - 0545	0	2	**2**	
0545 - 0600	0	4	**4**	**7**
0600 - 0615	0	6	**6**	
0615 - 0630	0	9	**9**	
0630 - 0645	0	9	**9**	
0645 - 0700	0	22	**22**	**46**
0700 - 0715	0	20	**20**	
0715 - 0730	0	35	**35**	
0730 - 0745	0	25	**25**	
0745 - 0800	0	49	**49**	**129**
0800 - 0815	0	42	**42**	
0815 - 0830	0	34	**34**	
0830 - 0845	0	42	**42**	
0845 - 0900	0	41	**41**	**159**
0900 - 0915	0	38	**38**	
0915 - 0930	0	21	**21**	
0930 - 0945	0	22	**22**	
0945 - 1000	0	33	**33**	**114**
1000 - 1015	0	37	**37**	
1015 - 1030	0	28	**28**	
1030 - 1045	0	22	**22**	
1045 - 1100	0	27	**27**	**114**
1100 - 1115	0	31	**31**	
1115 - 1130	0	34	**34**	
1130 - 1145	0	33	**33**	
1145 - 1200	0	40	**40**	**138**

Time	Volume Summary 15min EB	WB	15min Total	60min Total
1200 - 1215	0	39	**39**	
1215 - 1230	0	38	**38**	
1230 - 1245	0	31	**31**	
1245 - 1300	0	37	**37**	**145**
1300 - 1315	0	39	**39**	
1315 - 1330	0	36	**36**	
1330 - 1345	0	41	**41**	
1345 - 1400	0	46	**46**	**162**
1400 - 1415	0	61	**61**	
1415 - 1430	0	36	**36**	
1430 - 1445	0	55	**55**	
1445 - 1500	0	53	**53**	**205**
1500 - 1515	0	64	**64**	
1515 - 1530	0	68	**68**	
1530 - 1545	0	69	**69**	
1545 - 1600	0	66	**66**	**267**
1600 - 1615	0	77	**77**	
1615 - 1630	0	45	**45**	
1630 - 1645	0	55	**55**	
1645 - 1700	0	58	**58**	**235**
1700 - 1715	0	63	**63**	
1715 - 1730	0	59	**59**	
1730 - 1745	0	51	**51**	
1745 - 1800	0	40	**40**	**213**
1800 - 1815	0	56	**56**	
1815 - 1830	0	36	**36**	
1830 - 1845	0	41	**41**	
1845 - 1900	0	42	**42**	**175**
1900 - 1915	0	31	**31**	
1915 - 1930	0	33	**33**	
1930 - 1945	0	35	**35**	
1945 - 2000	0	28	**28**	**127**
2000 - 2015	0	35	**35**	
2015 - 2030	0	26	**26**	
2030 - 2045	0	21	**21**	
2045 - 2100	0	21	**21**	**103**
2100 - 2115	0	10	**10**	
2115 - 2130	0	14	**14**	
2130 - 2145	0	15	**15**	
2145 - 2200	0	22	**22**	**61**
2200 - 2215	0	8	**8**	
2215 - 2230	0	14	**14**	
2230 - 2245	0	4	**4**	
2245 - 2300	0	3	**3**	**29**
2300 - 2315	0	6	**6**	
2315 - 2330	0	4	**4**	
2330 - 2345	0	5	**5**	
2345 - 0000	0	6	**6**	**21**

Session Total	0	2456	**2456**
Session Average	0.00	25.58	**25.58**
Session Percentage	0.00	100.00	

Site 74 Lane 4 WB

I-20,
west of US-378 Sunset Blvd S/Bound Off-Ramp

Date

Saturday, April 27, 2024

Lat/Long

34.008085°, -81.156669°

Weather

Mostly Cloudy
69°F

Click here for Detailed Weather

0000 - 2400 (Saturday 24h Session) (04-27-2024)

Volume Summary 15min

TIME	Volume Summary 15min EB	WB	15min Total	60min Total
0000 - 0015	0	1	**1**	
0015 - 0030	0	3	**3**	
0030 - 0045	0	3	**3**	
0045 - 0100	0	2	**2**	**9**
0100 - 0115	0	1	**1**	
0115 - 0130	0	3	**3**	
0130 - 0145	0	1	**1**	
0145 - 0200	0	2	**2**	**7**
0200 - 0215	0	0	**0**	
0215 - 0230	0	0	**0**	
0230 - 0245	0	0	**0**	
0245 - 0300	0	0	**0**	**0**
0300 - 0315	0	0	**0**	
0315 - 0330	0	0	**0**	
0330 - 0345	0	1	**1**	
0345 - 0400	0	0	**0**	**1**
0400 - 0415	0	0	**0**	
0415 - 0430	0	1	**1**	
0430 - 0445	0	1	**1**	
0445 - 0500	0	1	**1**	**3**
0500 - 0515	0	1	**1**	
0515 - 0530	0	2	**2**	
0530 - 0545	0	7	**7**	
0545 - 0600	0	2	**2**	**12**
0600 - 0615	0	6	**6**	
0615 - 0630	0	3	**3**	
0630 - 0645	0	10	**10**	
0645 - 0700	0	9	**9**	**28**
0700 - 0715	0	11	**11**	
0715 - 0730	0	9	**9**	
0730 - 0745	0	12	**12**	
0745 - 0800	0	20	**20**	**52**
0800 - 0815	0	21	**21**	
0815 - 0830	0	19	**19**	
0830 - 0845	0	23	**23**	
0845 - 0900	0	20	**20**	**83**
0900 - 0915	0	31	**31**	
0915 - 0930	0	24	**24**	
0930 - 0945	0	23	**23**	
0945 - 1000	0	25	**25**	**103**
1000 - 1015	0	42	**42**	
1015 - 1030	0	34	**34**	
1030 - 1045	0	21	**21**	
1045 - 1100	0	36	**36**	**133**
1100 - 1115	0	39	**39**	
1115 - 1130	0	44	**44**	
1130 - 1145	0	46	**46**	
1145 - 1200	0	38	**38**	**167**

Time	Volume Summary 15min EB	WB	15min Total	60min Total
1200 - 1215	0	44	**44**	
1215 - 1230	0	32	**32**	
1230 - 1245	0	43	**43**	
1245 - 1300	0	37	**37**	**156**
1300 - 1315	0	53	**53**	
1315 - 1330	0	36	**36**	
1330 - 1345	0	33	**33**	
1345 - 1400	0	51	**51**	**173**
1400 - 1415	0	36	**36**	
1415 - 1430	0	42	**42**	
1430 - 1445	0	32	**32**	
1445 - 1500	0	39	**39**	**149**
1500 - 1515	0	35	**35**	
1515 - 1530	0	28	**28**	
1530 - 1545	0	28	**28**	
1545 - 1600	0	33	**33**	**124**
1600 - 1615	0	34	**34**	
1615 - 1630	0	28	**28**	
1630 - 1645	0	41	**41**	
1645 - 1700	0	31	**31**	**134**
1700 - 1715	0	27	**27**	
1715 - 1730	0	21	**21**	
1730 - 1745	0	32	**32**	
1745 - 1800	0	32	**32**	**112**
1800 - 1815	0	28	**28**	
1815 - 1830	0	24	**24**	
1830 - 1845	0	32	**32**	
1845 - 1900	0	32	**32**	**116**
1900 - 1915	0	27	**27**	
1915 - 1930	0	26	**26**	
1930 - 1945	0	24	**24**	
1945 - 2000	0	30	**30**	**107**
2000 - 2015	0	25	**25**	
2015 - 2030	0	31	**31**	
2030 - 2045	0	13	**13**	
2045 - 2100	0	10	**10**	**79**
2100 - 2115	0	7	**7**	
2115 - 2130	0	11	**11**	
2130 - 2145	0	11	**11**	
2145 - 2200	0	13	**13**	**42**
2200 - 2215	0	8	**8**	
2215 - 2230	0	9	**9**	
2230 - 2245	0	4	**4**	
2245 - 2300	0	5	**5**	**26**
2300 - 2315	0	2	**2**	
2315 - 2330	0	2	**2**	
2330 - 2345	0	3	**3**	
2345 - 0000	0	1	**1**	**8**

Session Total	0	1824	**1824**
Session Average	0.00	19.00	**19.00**
Session Percentage	0.00	100.00	

Bi-Directional Class Count || SB WB 60min

Columbia, SC

Marr Traffic DATA COLLECTION

www.marrtraffic.com

Site 74 Lane 4 WB
I-20,
west of US-378 Sunset Blvd S/Bound Off-Ramp

Date
Sunday, April 21, 2024

Lat/Long
34.008085°, -81.156669°

Weather
Cloudy
66°F

Click here for Detailed Weather

0000 - 2400 (Sunday 24h Session) (04-21-2024)
SB WB 60min

	Westbound (Movement 74 Lane 4 WB.1)													
TIME	1	2	3	4	5	6	7	8	9	10	11	12	13	**Total**
0000 - 0100	0	10	0	0	0	0	0	0	0	0	0	0	0	**10**
0100 - 0200	0	14	2	0	0	0	0	0	0	0	0	0	0	**16**
0200 - 0300	0	4	0	0	0	0	0	0	0	0	0	0	0	**4**
0300 - 0400	0	1	0	0	0	0	0	0	0	0	0	0	0	**1**
0400 - 0500	0	0	0	0	0	0	0	0	0	0	0	0	0	**0**
0500 - 0600	0	2	0	0	0	0	0	0	0	0	0	0	0	**2**
0600 - 0700	0	6	2	0	0	0	0	0	0	0	0	0	0	**8**
0700 - 0800	0	16	2	0	0	0	0	1	0	0	0	0	0	**19**
0800 - 0900	0	19	4	0	0	0	0	0	0	0	0	0	0	**23**
0900 - 1000	0	34	7	0	0	0	0	0	0	0	0	0	0	**41**
1000 - 1100	0	57	8	0	0	0	1	0	1	0	0	0	0	**67**
1100 - 1200	1	64	16	0	0	0	0	0	0	0	0	0	0	**81**
1200 - 1300	0	72	16	0	0	0	0	0	0	0	0	0	0	**88**
1300 - 1400	0	90	22	0	0	0	0	0	0	0	0	0	0	**112**
1400 - 1500	0	105	20	0	0	0	0	0	0	0	0	0	0	**125**
1500 - 1600	0	90	24	0	0	0	0	0	0	0	0	0	0	**114**
1600 - 1700	0	71	11	0	1	0	0	0	0	0	0	0	0	**83**
1700 - 1800	0	46	23	0	1	0	0	0	0	0	0	0	0	**70**
1800 - 1900	0	62	14	0	0	0	0	0	0	0	0	0	0	**76**
1900 - 2000	0	39	11	0	1	0	0	0	0	0	0	0	0	**51**
2000 - 2100	0	34	9	0	0	0	0	0	0	0	0	0	0	**43**
2100 - 2200	0	33	4	0	1	0	0	0	0	0	0	0	0	**38**
2200 - 2300	0	11	1	0	0	0	0	0	0	0	0	0	0	**12**
2300 - 2400	0	4	0	0	1	0	0	0	0	0	0	0	0	**5**

Session Total	1	884	196	0	5	0	1	1	1	0	0	0	0	**1089**
Session Average	0.04	36.83	8.17	0.00	0.21	0.00	0.04	0.04	0.04	0.00	0.00	0.00	0.00	**45.38**
Session Percentage	0.09	81.18	18.00	0.00	0.46	0.00	0.09	0.09	0.09	0.00	0.00	0.00	0.00	

AM Peak Hour	-	0900 - 1000	0900 - 1000	-	-	-	-	0700 - 0800	-	-	-	-	-	**0900 - 1000**
AM Peak Volume	0	34	7	0	0	0	0	1	0	0	0	0	0	**41**

Noon Peak Hour	1100 - 1200	1400 - 1500	1300 - 1400	-	-	-	1000 - 1100	-	1000 - 1100	-	-	-	-	**1400 - 1500**
Noon Peak Volume	1	105	22	0	0	0	1	0	1	0	0	0	0	**125**

PM Peak Hour	-	1500 - 1600	1500 - 1600	-	1600 - 1700	-	-	-	-	-	-	-	-	**1500 - 1600**
PM Peak Volume	0	90	24	0	1	0	0	0	0	0	0	0	0	**114**

Site 74 Lane 4 WB

I-20,
west of US-378 Sunset Blvd S/Bound Off-Ramp

Date

Monday, April 22, 2024

Lat/Long

34.008085°, -81.156669°

Weather

Mostly Cloudy
57°F

Click here for Detailed Weather

0000 - 2400 (Weekday 24h Session) (04-22-2024)

SB WB 60min

	Westbound (Movement 74 Lane 4 WB.1)													
TIME	1	2	3	4	5	6	7	8	9	10	11	12	13	**Total**
0000 - 0100	0	4	0	0	0	0	0	0	0	0	0	0	0	**4**
0100 - 0200	0	2	0	0	0	0	0	0	0	0	0	0	0	**2**
0200 - 0300	0	0	0	0	0	0	0	0	0	0	0	0	0	**0**
0300 - 0400	0	1	0	0	0	0	0	0	0	0	0	0	0	**1**
0400 - 0500	0	0	0	0	0	0	0	0	0	0	0	0	0	**0**
0500 - 0600	0	21	0	0	1	0	0	0	0	0	0	0	0	**22**
0600 - 0700	0	50	9	0	1	1	0	1	1	0	0	0	0	**63**
0700 - 0800	0	112	27	3	4	0	0	0	1	0	0	0	0	**147**
0800 - 0900	0	89	23	3	2	0	0	0	0	0	0	0	0	**117**
0900 - 1000	0	80	36	1	3	1	0	1	0	0	0	0	0	**122**
1000 - 1100	0	97	30	0	1	1	0	2	0	0	0	0	0	**131**
1100 - 1200	0	94	21	4	4	0	0	0	2	0	0	0	0	**125**
1200 - 1300	0	134	35	3	6	1	0	1	0	1	0	0	0	**181**
1300 - 1400	0	117	37	0	0	0	0	3	0	0	1	0	0	**158**
1400 - 1500	0	124	49	2	1	0	0	0	1	0	0	0	0	**177**
1500 - 1600	0	194	40	3	3	0	1	3	0	0	0	0	0	**244**
1600 - 1700	0	211	49	2	2	0	0	0	0	0	0	0	0	**264**
1700 - 1800	0	181	40	1	4	0	0	0	0	0	0	0	0	**226**
1800 - 1900	0	112	27	0	3	0	0	1	1	0	0	0	0	**144**
1900 - 2000	0	75	15	0	1	0	0	0	0	0	0	0	0	**91**
2000 - 2100	0	85	9	0	0	0	0	0	1	0	0	0	0	**95**
2100 - 2200	0	38	12	0	0	0	0	0	3	0	0	0	0	**53**
2200 - 2300	0	19	0	0	0	0	0	0	0	0	0	0	0	**19**
2300 - 2400	0	9	0	0	0	0	0	0	0	0	0	0	0	**9**

Session Total	0	1849	459	22	36	4	1	12	10	1	1	0	0	**2395**
Session Average	0.00	77.04	19.13	0.92	1.50	0.17	0.04	0.50	0.42	0.04	0.04	0.00	0.00	**99.79**
Session Percentage	0.00	77.20	19.16	0.92	1.50	0.17	0.04	0.50	0.42	0.04	0.04	0.00	0.00	

AM Peak Hour	-	0700 - 0800	0900 - 1000	0700 - 0800	0700 - 0800	0600 - 0700	-	0600 - 0700	0600 - 0700	-	-	-	-	**0700 - 0800**
AM Peak Volume	0	112	36	3	4	1	0	1	1	0	0	0	0	**147**

Noon Peak Hour	-	1200 - 1300	1400 - 1500	1100 - 1200	1200 - 1300	1000 - 1100	-	1300 - 1400	1100 - 1200	1200 - 1300	1300 - 1400	-	-	**1200 - 1300**
Noon Peak Volume	0	134	49	4	6	1	0	3	2	1	1	0	0	**181**

PM Peak Hour	-	1600 - 1700	1600 - 1700	1500 - 1600	1700 - 1800	-	1500 - 1600	1500 - 1600	1800 - 1900	-	-	-	-	**1600 - 1700**
PM Peak Volume	0	211	49	3	4	0	1	3	1	0	0	0	0	**264**

Site 74 Lane 4 WB

I-20,
west of US-378 Sunset Blvd S/Bound Off-Ramp

Date

Tuesday, April 23, 2024

Lat/Long

34.008085°, -81.156669°

Weather

Fair
58°F

Click here for Detailed Weather

0000 - 2400 (Weekday 24h Session) (04-23-2024)

SB WB 60min

	Westbound (Movement 74 Lane 4 WB.1)													
TIME	1	2	3	4	5	6	7	8	9	10	11	12	13	**Total**
0000 - 0100	0	2	0	0	0	0	0	0	0	0	0	0	0	**2**
0100 - 0200	0	1	0	0	0	0	0	0	0	0	0	0	0	**1**
0200 - 0300	0	1	0	0	0	0	0	0	0	0	0	0	0	**1**
0300 - 0400	0	0	0	0	1	0	0	0	0	0	0	0	0	**1**
0400 - 0500	0	0	0	0	0	0	0	0	0	0	0	0	0	**0**
0500 - 0600	0	4	0	0	0	0	0	0	0	0	0	0	0	**4**
0600 - 0700	0	38	15	0	0	0	0	0	1	0	0	0	0	**54**
0700 - 0800	0	90	25	2	0	0	0	1	1	0	0	0	0	**119**
0800 - 0900	0	94	34	5	3	0	0	1	0	0	0	0	0	**137**
0900 - 1000	0	76	35	0	4	0	0	0	1	0	0	0	0	**116**
1000 - 1100	0	88	26	0	3	0	0	1	0	0	0	0	0	**118**
1100 - 1200	0	98	33	4	4	1	0	0	1	0	0	0	0	**141**
1200 - 1300	0	90	38	3	5	1	0	1	1	0	0	0	0	**139**
1300 - 1400	0	99	35	0	2	0	0	1	1	0	0	0	0	**138**
1400 - 1500	0	133	32	4	0	0	0	0	1	0	0	0	0	**170**
1500 - 1600	0	201	42	2	5	0	0	0	0	0	0	0	0	**250**
1600 - 1700	2	176	46	1	2	0	0	1	0	0	0	0	0	**228**
1700 - 1800	0	136	42	0	1	0	0	0	0	0	0	0	0	**179**
1800 - 1900	0	109	27	0	1	0	0	1	0	0	0	0	0	**138**
1900 - 2000	0	88	27	0	1	0	0	0	1	0	0	0	0	**117**
2000 - 2100	0	57	13	0	0	0	0	0	0	0	0	0	0	**70**
2100 - 2200	0	29	10	1	0	0	0	0	0	0	0	0	0	**40**
2200 - 2300	0	12	2	0	0	0	0	0	0	0	0	0	0	**14**
2300 - 2400	0	3	0	0	0	0	0	0	0	0	0	0	0	**3**
Session Total	2	1625	482	22	32	2	0	7	8	0	0	0	0	**2180**
Session Average	0.08	67.71	20.08	0.92	1.33	0.08	0.00	0.29	0.33	0.00	0.00	0.00	0.00	**90.83**
Session Percentage	0.09	74.54	22.11	1.01	1.47	0.09	0.00	0.32	0.37	0.00	0.00	0.00	0.00	
AM Peak Hour	-	0800 - 0900	0900 - 1000	0800 - 0900	0900 - 1000	-	-	0700 - 0800	0600 - 0700	-	-	-	-	**0800 - 0900**
AM Peak Hour Volume	0	94	35	5	4	0	0	1	1	0	0	0	0	**137**
Noon Peak Hour	-	1400 - 1500	1200 - 1300	1100 - 1200	1200 - 1300	1100 - 1200	-	1000 - 1100	1100 - 1200	-	-	-	-	**1400 - 1500**
Noon Peak Hour Volume	0	133	38	4	5	1	0	1	1	0	0	0	0	**170**
PM Peak Hour	1600 - 1700	1500 - 1600	1600 - 1700	1500 - 1600	1500 - 1600	-	-	1600 - 1700	1900 - 2000	-	-	-	-	**1500 - 1600**
PM Peak Hour Volume	2	201	46	2	5	0	0	1	1	0	0	0	0	**250**

Site 74 Lane 4 WB

I-20,
west of US-378 Sunset Blvd S/Bound Off-Ramp

Date

Wednesday, April 24, 2024

Lat/Long

34.008085°, -81.156669°

Weather

Fair
66°F

Click here for Detailed Weather

0000 - 2400 (Weekday 24h Session) (04-24-2024)

SB WB 60min

	Westbound (Movement 74 Lane 4 WB.1)													
TIME	1	2	3	4	5	6	7	8	9	10	11	12	13	**Total**
0000 - 0100	0	1	2	0	0	0	0	0	1	0	0	0	0	**4**
0100 - 0200	0	4	0	0	0	0	0	0	0	0	0	0	0	**4**
0200 - 0300	0	1	0	0	0	0	0	0	0	0	0	0	0	**1**
0300 - 0400	0	2	0	0	1	0	0	0	0	0	0	0	0	**3**
0400 - 0500	0	2	0	0	0	0	0	0	0	0	0	0	0	**2**
0500 - 0600	0	15	1	0	0	0	0	0	2	0	0	0	0	**18**
0600 - 0700	0	48	15	0	0	0	0	0	0	0	0	0	0	**63**
0700 - 0800	0	95	28	3	2	0	0	0	0	0	0	0	0	**128**
0800 - 0900	0	111	26	7	5	0	0	0	0	0	0	0	0	**149**
0900 - 1000	0	85	30	0	4	1	0	2	1	0	0	0	0	**123**
1000 - 1100	0	79	17	0	7	1	0	2	0	0	0	0	0	**106**
1100 - 1200	0	92	30	2	2	0	0	1	0	0	0	0	0	**127**
1200 - 1300	0	85	23	3	5	0	1	0	2	0	0	0	0	**119**
1300 - 1400	1	102	38	1	4	0	0	1	0	0	0	0	0	**147**
1400 - 1500	0	123	32	3	4	1	1	0	1	0	0	0	0	**165**
1500 - 1600	0	183	56	3	7	0	0	1	0	1	0	0	0	**251**
1600 - 1700	0	229	61	3	0	0	0	2	0	0	0	0	0	**295**
1700 - 1800	2	180	56	0	0	0	0	1	1	1	0	0	0	**241**
1800 - 1900	0	127	36	0	2	0	0	0	0	0	0	0	0	**165**
1900 - 2000	0	106	25	0	2	0	0	0	0	0	0	0	0	**133**
2000 - 2100	0	78	8	0	0	0	0	0	1	0	0	0	0	**87**
2100 - 2200	0	48	11	0	0	0	0	0	0	0	0	0	0	**59**
2200 - 2300	0	17	0	0	1	0	0	0	0	0	0	0	0	**18**
2300 - 2400	0	9	0	0	0	0	0	0	1	0	0	0	0	**10**

Session Total	3	1822	495	25	46	3	2	10	10	2	0	0	0	**2418**
Session Average	0.13	75.92	20.63	1.04	1.92	0.13	0.08	0.42	0.42	0.08	0.00	0.00	0.00	**100.75**
Session Percentage	0.12	75.35	20.47	1.03	1.90	0.12	0.08	0.41	0.41	0.08	0.00	0.00	0.00	

AM Peak Hour	-	0800 - 0900	0900 - 1000	0800 - 0900	0800 - 0900	0900 - 1000	-	0900 - 1000	0500 - 0600	-	-	-	-	**0800 - 0900**
AM Peak Hour Volume	0	111	30	7	5	1	0	2	2	0	0	0	0	**149**

Noon Peak Hour	1300 - 1400	1400 - 1500	1300 - 1400	1200 - 1300	1000 - 1100	1000 - 1100	1200 - 1300	1000 - 1100	1200 - 1300	-	-	-	-	**1400 - 1500**
Noon Peak Hour Volume	1	123	38	3	7	1	1	2	2	0	0	0	0	**165**

PM Peak Hour	1700 - 1800	1600 - 1700	1600 - 1700	1500 - 1600	1500 - 1600	-	-	1600 - 1700	1700 - 1800	1500 - 1600	-	-	-	**1600 - 1700**
PM Peak Hour Volume	2	229	61	3	7	0	0	2	1	1	0	0	0	**295**

Site 74 Lane 4 WB

I-20,
west of US-378 Sunset Blvd S/Bound Off-Ramp

Date

Thursday, April 25, 2024

Lat/Long

34.008085°, -81.156669°

Weather

Fair
67°F

Click here for Detailed Weather

0000 - 2400 (Weekday 24h Session) (04-25-2024)

SB WB 60min

	Westbound (Movement 74 Lane 4 WB.1)													
TIME	1	2	3	4	5	6	7	8	9	10	11	12	13	**Total**
0000 - 0100	0	1	0	0	0	0	0	0	0	0	0	0	0	**1**
0100 - 0200	0	3	0	0	0	0	0	0	0	0	0	0	0	**3**
0200 - 0300	0	3	0	0	0	0	0	0	0	0	0	0	0	**3**
0300 - 0400	0	3	1	0	0	0	0	0	0	0	0	0	0	**4**
0400 - 0500	0	6	2	0	0	0	0	0	0	0	0	0	0	**8**
0500 - 0600	0	20	0	0	0	0	0	0	0	0	0	0	0	**20**
0600 - 0700	0	52	14	0	1	0	0	2	0	0	0	0	0	**69**
0700 - 0800	0	97	26	3	0	0	0	2	1	0	0	0	0	**129**
0800 - 0900	0	93	35	5	1	0	0	0	0	0	0	0	0	**134**
0900 - 1000	0	81	27	1	2	0	0	0	0	0	0	0	0	**111**
1000 - 1100	0	89	32	0	3	0	0	3	0	0	0	0	0	**127**
1100 - 1200	1	83	33	2	1	0	0	0	1	0	0	0	0	**121**
1200 - 1300	0	134	36	1	5	0	1	2	0	0	0	0	0	**179**
1300 - 1400	1	140	46	1	3	0	0	3	1	0	0	0	0	**195**
1400 - 1500	0	156	44	3	1	1	0	1	2	0	0	0	0	**208**
1500 - 1600	1	190	45	2	5	1	1	1	0	0	0	0	0	**246**
1600 - 1700	1	185	47	4	3	1	0	0	0	0	0	0	0	**241**
1700 - 1800	0	211	32	0	1	0	0	1	0	0	0	0	0	**245**
1800 - 1900	1	103	36	0	1	0	0	1	0	0	0	0	0	**142**
1900 - 2000	0	114	27	0	2	0	0	0	1	0	0	0	0	**144**
2000 - 2100	0	91	6	0	0	0	0	0	0	0	0	0	0	**97**
2100 - 2200	0	77	2	0	1	0	0	0	0	0	0	0	0	**80**
2200 - 2300	0	35	3	0	0	0	0	0	0	0	0	0	0	**38**
2300 - 2400	0	14	0	0	0	0	0	0	1	0	0	0	0	**15**

Session Total	5	1981	494	22	30	3	2	16	7	0	0	0	0	**2560**
Session Average	0.21	82.54	20.58	0.92	1.25	0.13	0.08	0.67	0.29	0.00	0.00	0.00	0.00	**106.67**
Session Percentage	0.20	77.38	19.30	0.86	1.17	0.12	0.08	0.63	0.27	0.00	0.00	0.00	0.00	

AM Peak Hour	-	0700 - 0800	0800 - 0900	0800 - 0900	0900 - 1000	-	-	0600 - 0700	0700 - 0800	-	-	-	-	**0800 - 0900**
AM Peak Hour Volume	0	97	35	5	2	0	0	2	1	0	0	0	0	**134**

Noon Peak Hour	1100 - 1200	1400 - 1500	1300 - 1400	1400 - 1500	1200 - 1300	1400 - 1500	1200 - 1300	1000 - 1100	1400 - 1500	-	-	-	-	**1400 - 1500**
Noon Peak Hour Volume	1	156	46	3	5	1	1	3	2	0	0	0	0	**208**

PM Peak Hour	1500 - 1600	1700 - 1800	1600 - 1700	1600 - 1700	1500 - 1600	1500 - 1600	1500 - 1600	1500 - 1600	1900 - 2000	-	-	-	-	**1500 - 1600**
PM Peak Hour Volume	1	211	47	4	5	1	1	1	1	0	0	0	0	**246**

Site 74 Lane 4 WB

I-20,
west of US-378 Sunset Blvd S/Bound Off-Ramp

Date

Friday, April 26, 2024

Lat/Long

34.008085°, -81.156669°

Weather

Cloudy
69°F

Click here for Detailed Weather

0000 - 2400 (Weekday 24h Session) (04-26-2024)

SB WB 60min

	Westbound (Movement 74 Lane 4 WB.1)													
TIME	1	2	3	4	5	6	7	8	9	10	11	12	13	**Total**
0000 - 0100	0	0	0	0	0	0	0	0	0	0	0	0	0	**0**
0100 - 0200	0	0	0	0	1	0	0	0	0	0	0	0	0	**1**
0200 - 0300	0	3	0	0	0	0	0	0	0	0	0	0	0	**3**
0300 - 0400	0	1	0	0	0	0	0	0	0	0	0	0	0	**1**
0400 - 0500	0	0	0	0	1	0	0	0	0	0	0	0	0	**1**
0500 - 0600	0	7	0	0	0	0	0	0	0	0	0	0	0	**7**
0600 - 0700	0	33	13	0	0	0	0	0	0	0	0	0	0	**46**
0700 - 0800	0	98	26	3	1	0	0	1	0	0	0	0	0	**129**
0800 - 0900	0	109	36	9	3	1	0	0	1	0	0	0	0	**159**
0900 - 1000	0	79	32	0	1	0	0	0	2	0	0	0	0	**114**
1000 - 1100	0	80	32	0	1	0	0	0	1	0	0	0	0	**114**
1100 - 1200	0	102	28	4	3	1	0	0	0	0	0	0	0	**138**
1200 - 1300	0	111	29	1	1	0	0	3	0	0	0	0	0	**145**
1300 - 1400	0	120	36	2	2	1	0	1	0	0	0	0	0	**162**
1400 - 1500	0	145	52	2	4	2	0	0	0	0	0	0	0	**205**
1500 - 1600	1	207	52	2	4	1	0	0	0	0	0	0	0	**267**
1600 - 1700	1	177	49	2	6	0	0	0	0	0	0	0	0	**235**
1700 - 1800	0	162	48	1	2	0	0	0	0	0	0	0	0	**213**
1800 - 1900	0	137	36	0	0	0	0	2	0	0	0	0	0	**175**
1900 - 2000	0	99	28	0	0	0	0	0	0	0	0	0	0	**127**
2000 - 2100	2	70	30	0	0	0	0	0	1	0	0	0	0	**103**
2100 - 2200	0	44	16	0	0	0	0	0	1	0	0	0	0	**61**
2200 - 2300	0	23	5	0	1	0	0	0	0	0	0	0	0	**29**
2300 - 2400	0	19	2	0	0	0	0	0	0	0	0	0	0	**21**

Session Total	4	1826	550	26	31	6	0	7	6	0	0	0	0	**2456**
Session Average	0.17	76.08	22.92	1.08	1.29	0.25	0.00	0.29	0.25	0.00	0.00	0.00	0.00	**102.33**
Session Percentage	0.16	74.35	22.39	1.06	1.26	0.24	0.00	0.29	0.24	0.00	0.00	0.00	0.00	

AM Peak Hour	-	0800 - 0900	0800 - 0900	0800 - 0900	0800 - 0900	0800 - 0900	-	0700 - 0800	0900 - 1000	-	-	-	-	**0800 - 0900**
AM Peak Hour Volume	0	109	36	9	3	1	0	1	2	0	0	0	0	**159**

Noon Peak Hour	-	1400 - 1500	1400 - 1500	1100 - 1200	1400 - 1500	1400 - 1500	-	1200 - 1300	1000 - 1100	-	-	-	-	**1400 - 1500**
Noon Peak Hour Volume	0	145	52	4	4	2	0	3	1	0	0	0	0	**205**

PM Peak Hour	1500 - 1600	1500 - 1600	1500 - 1600	1500 - 1600	1600 - 1700	1500 - 1600	-	1800 - 1900	-	-	-	-	-	**1500 - 1600**
PM Peak Hour Volume	1	207	52	2	6	1	0	2	0	0	0	0	0	**267**

Site 74 Lane 4 WB

I-20,
west of US-378 Sunset Blvd S/Bound Off-Ramp

Date

Saturday, April 27, 2024

Lat/Long

34.008085°, -81.156669°

Weather

Mostly Cloudy
69°F

Click here for Detailed Weather

0000 - 2400 (Saturday 24h Session) (04-27-2024)

SB WB 60min

	Westbound (Movement 74 Lane 4 WB.1)													
TIME	1	2	3	4	5	6	7	8	9	10	11	12	13	**Total**
0000 - 0100	1	5	3	0	0	0	0	0	0	0	0	0	0	**9**
0100 - 0200	0	5	2	0	0	0	0	0	0	0	0	0	0	**7**
0200 - 0300	0	0	0	0	0	0	0	0	0	0	0	0	0	**0**
0300 - 0400	0	1	0	0	0	0	0	0	0	0	0	0	0	**1**
0400 - 0500	0	3	0	0	0	0	0	0	0	0	0	0	0	**3**
0500 - 0600	0	7	4	0	1	0	0	0	0	0	0	0	0	**12**
0600 - 0700	0	17	11	0	0	0	0	0	0	0	0	0	0	**28**
0700 - 0800	0	34	17	0	0	0	0	0	1	0	0	0	0	**52**
0800 - 0900	0	57	25	0	1	0	0	0	0	0	0	0	0	**83**
0900 - 1000	0	81	19	0	1	0	0	0	2	0	0	0	0	**103**
1000 - 1100	0	106	25	0	2	0	0	0	0	0	0	0	0	**133**
1100 - 1200	1	127	37	0	0	1	0	0	1	0	0	0	0	**167**
1200 - 1300	0	121	32	0	2	0	0	1	0	0	0	0	0	**156**
1300 - 1400	0	141	31	0	1	0	0	0	0	0	0	0	0	**173**
1400 - 1500	0	124	24	0	1	0	0	0	0	0	0	0	0	**149**
1500 - 1600	3	105	16	0	0	0	0	0	0	0	0	0	0	**124**
1600 - 1700	0	114	19	0	1	0	0	0	0	0	0	0	0	**134**
1700 - 1800	0	94	15	0	2	0	0	1	0	0	0	0	0	**112**
1800 - 1900	0	91	24	0	1	0	0	0	0	0	0	0	0	**116**
1900 - 2000	0	85	20	0	2	0	0	0	0	0	0	0	0	**107**
2000 - 2100	0	63	15	0	0	0	0	1	0	0	0	0	0	**79**
2100 - 2200	0	30	12	0	0	0	0	0	0	0	0	0	0	**42**
2200 - 2300	0	19	7	0	0	0	0	0	0	0	0	0	0	**26**
2300 - 2400	0	5	3	0	0	0	0	0	0	0	0	0	0	**8**
Session Total	5	1435	361	0	15	1	0	3	4	0	0	0	0	**1824**
Session Average	0.21	59.79	15.04	0.00	0.63	0.04	0.00	0.13	0.17	0.00	0.00	0.00	0.00	**76.00**
Session Percentage	0.27	78.67	19.79	0.00	0.82	0.05	0.00	0.16	0.22	0.00	0.00	0.00	0.00	
AM Peak Hour	-	0900 - 1000	0800 - 0900	-	0500 - 0600	-	-	-	0900 - 1000	-	-	-	-	**0900 - 1000**
AM Peak Hour Volume	0	81	25	0	1	0	0	0	2	0	0	0	0	**103**
Noon Peak Hour	1100 - 1200	1300 - 1400	1100 - 1200	-	1000 - 1100	1100 - 1200	-	1200 - 1300	1100 - 1200	-	-	-	-	**1300 - 1400**
Noon Peak Hour Volume	1	141	37	0	2	1	0	1	1	0	0	0	0	**173**
PM Peak Hour	1500 - 1600	1600 - 1700	1800 - 1900	-	1700 - 1800	-	-	1700 - 1800	-	-	-	-	-	**1600 - 1700**
PM Peak Hour Volume	3	114	24	0	2	0	0	1	0	0	0	0	0	**134**

Bi-Directional Class Count || Volume Summary 60min

Columbia, SC

Marr Traffic DATA COLLECTION

www.marrtraffic.com

Site 74 Lane 4 WB

I-20,
west of US-378 Sunset Blvd S/Bound Off-Ramp

Date

Sunday, April 21, 2024

Lat/Long

34.008085°, -81.156669°

Weather

Cloudy
66°F

Click here for Detailed Weather

0000 - 2400 (Sunday 24h Session) (04-21-2024)

Volume Summary 60min

	Volume Summary 60min		
TIME	EB	WB	**Total**
0000 - 0100	0	10	**10**
0100 - 0200	0	16	**16**
0200 - 0300	0	4	**4**
0300 - 0400	0	1	**1**
0400 - 0500	0	0	**0**
0500 - 0600	0	2	**2**
0600 - 0700	0	8	**8**
0700 - 0800	0	19	**19**
0800 - 0900	0	23	**23**
0900 - 1000	0	41	**41**
1000 - 1100	0	67	**67**
1100 - 1200	0	81	**81**

	Volume Summary 60min		
Time	EB	WB	**Total**
1200 - 1300	0	88	**88**
1300 - 1400	0	112	**112**
1400 - 1500	0	125	**125**
1500 - 1600	0	114	**114**
1600 - 1700	0	83	**83**
1700 - 1800	0	70	**70**
1800 - 1900	0	76	**76**
1900 - 2000	0	51	**51**
2000 - 2100	0	43	**43**
2100 - 2200	0	38	**38**
2200 - 2300	0	12	**12**
2300 - 2400	0	5	**5**

Session Total	0	1089	**1089**
Session Average	0.00	45.38	**45.38**
Session Percentage	0.00	100.00	

Site 74 Lane 4 WB

I-20,
west of US-378 Sunset Blvd S/Bound Off-Ramp

Date

Monday, April 22, 2024

Lat/Long

34.008085°, -81.156669°

Weather

Mostly Cloudy
57°F

Click here for Detailed Weather

0000 - 2400 (Weekday 24h Session) (04-22-2024)

Volume Summary 60min

	Volume Summary 60min		
TIME	EB	WB	**Total**
0000 - 0100	0	4	**4**
0100 - 0200	0	2	**2**
0200 - 0300	0	0	**0**
0300 - 0400	0	1	**1**
0400 - 0500	0	0	**0**
0500 - 0600	0	22	**22**
0600 - 0700	0	63	**63**
0700 - 0800	0	147	**147**
0800 - 0900	0	117	**117**
0900 - 1000	0	122	**122**
1000 - 1100	0	131	**131**
1100 - 1200	0	125	**125**

Session Total	0	2395	**2395**
Session Average	0.00	99.79	**99.79**
Session Percentage	0.00	100.00	

	Volume Summary 60min		
Time	EB	WB	**Total**
1200 - 1300	0	181	**181**
1300 - 1400	0	158	**158**
1400 - 1500	0	177	**177**
1500 - 1600	0	244	**244**
1600 - 1700	0	264	**264**
1700 - 1800	0	226	**226**
1800 - 1900	0	144	**144**
1900 - 2000	0	91	**91**
2000 - 2100	0	95	**95**
2100 - 2200	0	53	**53**
2200 - 2300	0	19	**19**
2300 - 2400	0	9	**9**

Site 74 Lane 4 WB

I-20,
west of US-378 Sunset Blvd S/Bound Off-Ramp

Date

Tuesday, April 23, 2024

Lat/Long

34.008085°, -81.156669°

Weather

Fair
58°F

Click here for Detailed Weather

0000 - 2400 (Weekday 24h Session) (04-23-2024)

Volume Summary 60min

	Volume Summary 60min		
TIME	EB	WB	**Total**
0000 - 0100	0	2	**2**
0100 - 0200	0	1	**1**
0200 - 0300	0	1	**1**
0300 - 0400	0	1	**1**
0400 - 0500	0	0	**0**
0500 - 0600	0	4	**4**
0600 - 0700	0	54	**54**
0700 - 0800	0	119	**119**
0800 - 0900	0	137	**137**
0900 - 1000	0	116	**116**
1000 - 1100	0	118	**118**
1100 - 1200	0	141	**141**

Session Total	0	2180	**2180**
Session Average	0.00	90.83	**90.83**
Session Percentage	0.00	100.00	

	Volume Summary 60min		
Time	EB	WB	**Total**
1200 - 1300	0	139	**139**
1300 - 1400	0	138	**138**
1400 - 1500	0	170	**170**
1500 - 1600	0	250	**250**
1600 - 1700	0	228	**228**
1700 - 1800	0	179	**179**
1800 - 1900	0	138	**138**
1900 - 2000	0	117	**117**
2000 - 2100	0	70	**70**
2100 - 2200	0	40	**40**
2200 - 2300	0	14	**14**
2300 - 2400	0	3	**3**

Site 74 Lane 4 WB

I-20,
west of US-378 Sunset Blvd S/Bound Off-Ramp

Date

Wednesday, April 24, 2024

Lat/Long

34.008085°, -81.156669°

Weather

Fair
66°F

Click here for Detailed Weather

0000 - 2400 (Weekday 24h Session) (04-24-2024)

Volume Summary 60min

	Volume Summary 60min		
TIME	EB	WB	**Total**
0000 - 0100	0	4	**4**
0100 - 0200	0	4	**4**
0200 - 0300	0	1	**1**
0300 - 0400	0	3	**3**
0400 - 0500	0	2	**2**
0500 - 0600	0	18	**18**
0600 - 0700	0	63	**63**
0700 - 0800	0	128	**128**
0800 - 0900	0	149	**149**
0900 - 1000	0	123	**123**
1000 - 1100	0	106	**106**
1100 - 1200	0	127	**127**

	Volume Summary 60min		
Time	EB	WB	**Total**
1200 - 1300	0	119	**119**
1300 - 1400	0	147	**147**
1400 - 1500	0	165	**165**
1500 - 1600	0	251	**251**
1600 - 1700	0	295	**295**
1700 - 1800	0	241	**241**
1800 - 1900	0	165	**165**
1900 - 2000	0	133	**133**
2000 - 2100	0	87	**87**
2100 - 2200	0	59	**59**
2200 - 2300	0	18	**18**
2300 - 2400	0	10	**10**

Session Total	0	2418	**2418**
Session Average	0.00	100.75	**100.75**
Session Percentage	0.00	100.00	

Site 74 Lane 4 WB

I-20,
west of US-378 Sunset Blvd S/Bound Off-Ramp

Date

Thursday, April 25, 2024

Lat/Long

34.008085°, -81.156669°

Weather

Fair
67°F

Click here for Detailed Weather

0000 - 2400 (Weekday 24h Session) (04-25-2024)

Volume Summary 60min

	Volume Summary 60min		
TIME	EB	WB	**Total**
0000 - 0100	0	1	**1**
0100 - 0200	0	3	**3**
0200 - 0300	0	3	**3**
0300 - 0400	0	4	**4**
0400 - 0500	0	8	**8**
0500 - 0600	0	20	**20**
0600 - 0700	0	69	**69**
0700 - 0800	0	129	**129**
0800 - 0900	0	134	**134**
0900 - 1000	0	111	**111**
1000 - 1100	0	127	**127**
1100 - 1200	0	121	**121**

Session Total	0	2560	**2560**
Session Average	0.00	106.67	**106.67**
Session Percentage	0.00	100.00	

	Volume Summary 60min		
Time	EB	WB	**Total**
1200 - 1300	0	179	**179**
1300 - 1400	0	195	**195**
1400 - 1500	0	208	**208**
1500 - 1600	0	246	**246**
1600 - 1700	0	241	**241**
1700 - 1800	0	245	**245**
1800 - 1900	0	142	**142**
1900 - 2000	0	144	**144**
2000 - 2100	0	97	**97**
2100 - 2200	0	80	**80**
2200 - 2300	0	38	**38**
2300 - 2400	0	15	**15**

Site 74 Lane 4 WB

I-20,
west of US-378 Sunset Blvd S/Bound Off-Ramp

Date

Friday, April 26, 2024

Lat/Long

34.008085°, -81.156669°

Weather

Cloudy
69°F

Click here for Detailed Weather

0000 - 2400 (Weekday 24h Session) (04-26-2024)

Volume Summary 60min

	Volume Summary 60min		
TIME	EB	WB	**Total**
0000 - 0100	0	0	**0**
0100 - 0200	0	1	**1**
0200 - 0300	0	3	**3**
0300 - 0400	0	1	**1**
0400 - 0500	0	1	**1**
0500 - 0600	0	7	**7**
0600 - 0700	0	46	**46**
0700 - 0800	0	129	**129**
0800 - 0900	0	159	**159**
0900 - 1000	0	114	**114**
1000 - 1100	0	114	**114**
1100 - 1200	0	138	**138**

	Volume Summary 60min		
Time	EB	WB	**Total**
1200 - 1300	0	145	**145**
1300 - 1400	0	162	**162**
1400 - 1500	0	205	**205**
1500 - 1600	0	267	**267**
1600 - 1700	0	235	**235**
1700 - 1800	0	213	**213**
1800 - 1900	0	175	**175**
1900 - 2000	0	127	**127**
2000 - 2100	0	103	**103**
2100 - 2200	0	61	**61**
2200 - 2300	0	29	**29**
2300 - 2400	0	21	**21**

Session Total	0	2456	**2456**
Session Average	0.00	102.33	**102.33**
Session Percentage	0.00	100.00	

Site 74 Lane 4 WB

I-20,
west of US-378 Sunset Blvd S/Bound Off-Ramp

Date

Saturday, April 27, 2024

Lat/Long

34.008085°, -81.156669°

Weather

Mostly Cloudy
69°F

Click here for Detailed Weather

0000 - 2400 (Saturday 24h Session) (04-27-2024)

Volume Summary 60min

	Volume Summary 60min		
TIME	EB	WB	**Total**
0000 - 0100	0	9	**9**
0100 - 0200	0	7	**7**
0200 - 0300	0	0	**0**
0300 - 0400	0	1	**1**
0400 - 0500	0	3	**3**
0500 - 0600	0	12	**12**
0600 - 0700	0	28	**28**
0700 - 0800	0	52	**52**
0800 - 0900	0	83	**83**
0900 - 1000	0	103	**103**
1000 - 1100	0	133	**133**
1100 - 1200	0	167	**167**

	Volume Summary 60min		
Time	EB	WB	**Total**
1200 - 1300	0	156	**156**
1300 - 1400	0	173	**173**
1400 - 1500	0	149	**149**
1500 - 1600	0	124	**124**
1600 - 1700	0	134	**134**
1700 - 1800	0	112	**112**
1800 - 1900	0	116	**116**
1900 - 2000	0	107	**107**
2000 - 2100	0	79	**79**
2100 - 2200	0	42	**42**
2200 - 2300	0	26	**26**
2300 - 2400	0	8	**8**

Session Total	0	1824	**1824**
Session Average	0.00	76.00	**76.00**
Session Percentage	0.00	100.00	

Bi-Directional Class Count || Graphical Analysis SB WB

Columbia, SC

Marr Traffic DATA COLLECTION

www.marrtraffic.com

Site 74 Lane 4 WB

I-20,
west of US-378 Sunset Blvd S/Bound Off-Ramp

Lat/Long

34.008085°, -81.156669°

0000 - 2400 (Weekday 24h Session)

Graphical Analysis SB WB

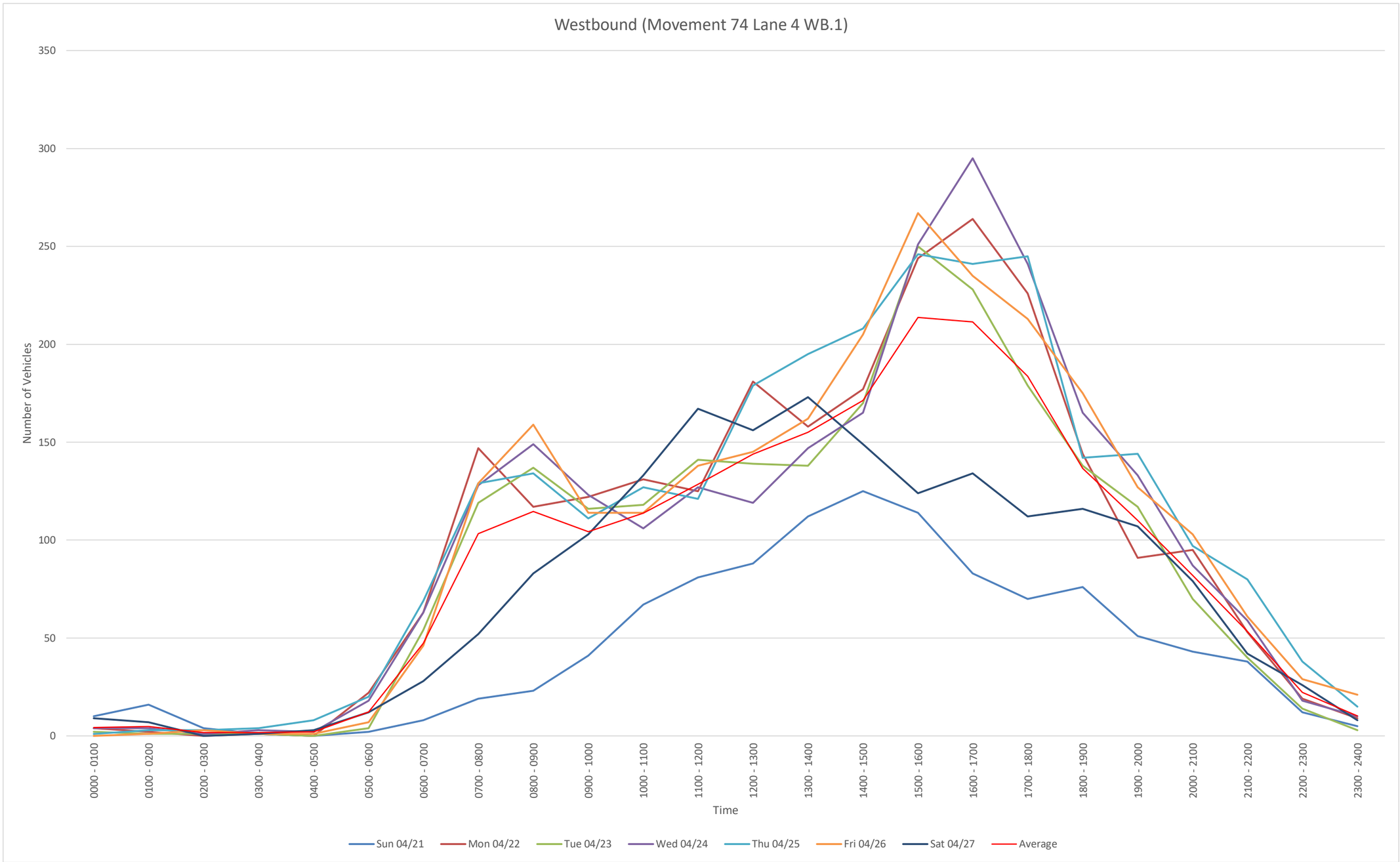

EB
File Name:
Start Date: 4/21/2024
Start Time: 0
Site Code: 74 Lane 4 WB
Station ID: 1
Location 1: I-20, west of US-378 Sunset Blvd S/Bound Off-Ramp
Location 2:

Date	Time	1	2	3	4	5	6	7	8	9	10	11	12	13
4/21/2024	12:00 AM	0	0	0	0	0	0	0	0	0	0	0	0	0
4/21/2024	12:15 AM	0	0	0	0	0	0	0	0	0	0	0	0	0
4/21/2024	12:30 AM	0	0	0	0	0	0	0	0	0	0	0	0	0
4/21/2024	12:45 AM	0	0	0	0	0	0	0	0	0	0	0	0	0
4/21/2024	1:00 AM	0	0	0	0	0	0	0	0	0	0	0	0	0
4/21/2024	1:15 AM	0	0	0	0	0	0	0	0	0	0	0	0	0
4/21/2024	1:30 AM	0	0	0	0	0	0	0	0	0	0	0	0	0
4/21/2024	1:45 AM	0	0	0	0	0	0	0	0	0	0	0	0	0
4/21/2024	2:00 AM	0	0	0	0	0	0	0	0	0	0	0	0	0
4/21/2024	2:15 AM	0	0	0	0	0	0	0	0	0	0	0	0	0
4/21/2024	2:30 AM	0	0	0	0	0	0	0	0	0	0	0	0	0
4/21/2024	2:45 AM	0	0	0	0	0	0	0	0	0	0	0	0	0
4/21/2024	3:00 AM	0	0	0	0	0	0	0	0	0	0	0	0	0
4/21/2024	3:15 AM	0	0	0	0	0	0	0	0	0	0	0	0	0
4/21/2024	3:30 AM	0	0	0	0	0	0	0	0	0	0	0	0	0
4/21/2024	3:45 AM	0	0	0	0	0	0	0	0	0	0	0	0	0
4/21/2024	4:00 AM	0	0	0	0	0	0	0	0	0	0	0	0	0
4/21/2024	4:15 AM	0	0	0	0	0	0	0	0	0	0	0	0	0
4/21/2024	4:30 AM	0	0	0	0	0	0	0	0	0	0	0	0	0
4/21/2024	4:45 AM	0	0	0	0	0	0	0	0	0	0	0	0	0
4/21/2024	5:00 AM	0	0	0	0	0	0	0	0	0	0	0	0	0
4/21/2024	5:15 AM	0	0	0	0	0	0	0	0	0	0	0	0	0
4/21/2024	5:30 AM	0	0	0	0	0	0	0	0	0	0	0	0	0
4/21/2024	5:45 AM	0	0	0	0	0	0	0	0	0	0	0	0	0
4/21/2024	6:00 AM	0	0	0	0	0	0	0	0	0	0	0	0	0
4/21/2024	6:15 AM	0	0	0	0	0	0	0	0	0	0	0	0	0
4/21/2024	6:30 AM	0	0	0	0	0	0	0	0	0	0	0	0	0
4/21/2024	6:45 AM	0	0	0	0	0	0	0	0	0	0	0	0	0
4/21/2024	7:00 AM	0	0	0	0	0	0	0	0	0	0	0	0	0
4/21/2024	7:15 AM	0	0	0	0	0	0	0	0	0	0	0	0	0
4/21/2024	7:30 AM	0	0	0	0	0	0	0	0	0	0	0	0	0
4/21/2024	7:45 AM	0	0	0	0	0	0	0	0	0	0	0	0	0
4/21/2024	8:00 AM	0	0	0	0	0	0	0	0	0	0	0	0	0
4/21/2024	8:15 AM	0	0	0	0	0	0	0	0	0	0	0	0	0
4/21/2024	8:30 AM	0	0	0	0	0	0	0	0	0	0	0	0	0
4/21/2024	8:45 AM	0	0	0	0	0	0	0	0	0	0	0	0	0
4/21/2024	9:00 AM	0	0	0	0	0	0	0	0	0	0	0	0	0
4/21/2024	9:15 AM	0	0	0	0	0	0	0	0	0	0	0	0	0
4/21/2024	9:30 AM	0	0	0	0	0	0	0	0	0	0	0	0	0
4/21/2024	9:45 AM	0	0	0	0	0	0	0	0	0	0	0	0	0
4/21/2024	10:00 AM	0	0	0	0	0	0	0	0	0	0	0	0	0
4/21/2024	10:15 AM	0	0	0	0	0	0	0	0	0	0	0	0	0
4/21/2024	10:30 AM	0	0	0	0	0	0	0	0	0	0	0	0	0
4/21/2024	10:45 AM	0	0	0	0	0	0	0	0	0	0	0	0	0
4/21/2024	11:00 AM	0	0	0	0	0	0	0	0	0	0	0	0	0
4/21/2024	11:15 AM	0	0	0	0	0	0	0	0	0	0	0	0	0
4/21/2024	11:30 AM	0	0	0	0	0	0	0	0	0	0	0	0	0
4/21/2024	11:45 AM	0	0	0	0	0	0	0	0	0	0	0	0	0
4/21/2024	12:00 PM	0	0	0	0	0	0	0	0	0	0	0	0	0
4/21/2024	12:15 PM	0	0	0	0	0	0	0	0	0	0	0	0	0
4/21/2024	12:30 PM	0	0	0	0	0	0	0	0	0	0	0	0	0
4/21/2024	12:45 PM	0	0	0	0	0	0	0	0	0	0	0	0	0
4/21/2024	1:00 PM	0	0	0	0	0	0	0	0	0	0	0	0	0
4/21/2024	1:15 PM	0	0	0	0	0	0	0	0	0	0	0	0	0
4/21/2024	1:30 PM	0	0	0	0	0	0	0	0	0	0	0	0	0
4/21/2024	1:45 PM	0	0	0	0	0	0	0	0	0	0	0	0	0
4/21/2024	2:00 PM	0	0	0	0	0	0	0	0	0	0	0	0	0
4/21/2024	2:15 PM	0	0	0	0	0	0	0	0	0	0	0	0	0
4/21/2024	2:30 PM	0	0	0	0	0	0	0	0	0	0	0	0	0
4/21/2024	2:45 PM	0	0	0	0	0	0	0	0	0	0	0	0	0
4/21/2024	3:00 PM	0	0	0	0	0	0	0	0	0	0	0	0	0
4/21/2024	3:15 PM	0	0	0	0	0	0	0	0	0	0	0	0	0
4/21/2024	3:30 PM	0	0	0	0	0	0	0	0	0	0	0	0	0
4/21/2024	3:45 PM	0	0	0	0	0	0	0	0	0	0	0	0	0
4/21/2024	4:00 PM	0	0	0	0	0	0	0	0	0	0	0	0	0
4/21/2024	4:15 PM	0	0	0	0	0	0	0	0	0	0	0	0	0
4/21/2024	4:30 PM	0	0	0	0	0	0	0	0	0	0	0	0	0
4/21/2024	4:45 PM	0	0	0	0	0	0	0	0	0	0	0	0	0
4/21/2024	5:00 PM	0	0	0	0	0	0	0	0	0	0	0	0	0
4/21/2024	5:15 PM	0	0	0	0	0	0	0	0	0	0	0	0	0
4/21/2024	5:30 PM	0	0	0	0	0	0	0	0	0	0	0	0	0
4/21/2024	5:45 PM	0	0	0	0	0	0	0	0	0	0	0	0	0
4/21/2024	6:00 PM	0	0	0	0	0	0	0	0	0	0	0	0	0
4/21/2024	6:15 PM	0	0	0	0	0	0	0	0	0	0	0	0	0
4/21/2024	6:30 PM	0	0	0	0	0	0	0	0	0	0	0	0	0
4/21/2024	6:45 PM	0	0	0	0	0	0	0	0	0	0	0	0	0
4/21/2024	7:00 PM	0	0	0	0	0	0	0	0	0	0	0	0	0
4/21/2024	7:15 PM	0	0	0	0	0	0	0	0	0	0	0	0	0
4/21/2024	7:30 PM	0	0	0	0	0	0	0	0	0	0	0	0	0
4/21/2024	7:45 PM	0	0	0	0	0	0	0	0	0	0	0	0	0
4/21/2024	8:00 PM	0	0	0	0	0	0	0	0	0	0	0	0	0
4/21/2024	8:15 PM	0	0	0	0	0	0	0	0	0	0	0	0	0
4/21/2024	8:30 PM	0	0	0	0	0	0	0	0	0	0	0	0	0
4/21/2024	8:45 PM	0	0	0	0	0	0	0	0	0	0	0	0	0
4/21/2024	9:00 PM	0	0	0	0	0	0	0	0	0	0	0	0	0
4/21/2024	9:15 PM	0	0	0	0	0	0	0	0	0	0	0	0	0
4/21/2024	9:30 PM	0	0	0	0	0	0	0	0	0	0	0	0	0
4/21/2024	9:45 PM	0	0	0	0	0	0	0	0	0	0	0	0	0
4/21/2024	10:00 PM	0	0	0	0	0	0	0	0	0	0	0	0	0
4/21/2024	10:15 PM	0	0	0	0	0	0	0	0	0	0	0	0	0
4/21/2024	10:30 PM	0	0	0	0	0	0	0	0	0	0	0	0	0
4/21/2024	10:45 PM	0	0	0	0	0	0	0	0	0	0	0	0	0
4/21/2024	11:00 PM	0	0	0	0	0	0	0	0	0	0	0	0	0
4/21/2024	11:15 PM	0	0	0	0	0	0	0	0	0	0	0	0	0
4/21/2024	11:30 PM	0	0	0	0	0	0	0	0	0	0	0	0	0
4/21/2024	11:45 PM	0	0	0	0	0	0	0	0	0	0	0	0	0

4/22/2024	12:00 AM	0	0	0	0	0	0	0	0	0	0	0	0	0
4/22/2024	12:15 AM	0	0	0	0	0	0	0	0	0	0	0	0	0
4/22/2024	12:30 AM	0	0	0	0	0	0	0	0	0	0	0	0	0
4/22/2024	12:45 AM	0	0	0	0	0	0	0	0	0	0	0	0	0
4/22/2024	1:00 AM	0	0	0	0	0	0	0	0	0	0	0	0	0
4/22/2024	1:15 AM	0	0	0	0	0	0	0	0	0	0	0	0	0
4/22/2024	1:30 AM	0	0	0	0	0	0	0	0	0	0	0	0	0
4/22/2024	1:45 AM	0	0	0	0	0	0	0	0	0	0	0	0	0
4/22/2024	2:00 AM	0	0	0	0	0	0	0	0	0	0	0	0	0
4/22/2024	2:15 AM	0	0	0	0	0	0	0	0	0	0	0	0	0
4/22/2024	2:30 AM	0	0	0	0	0	0	0	0	0	0	0	0	0
4/22/2024	2:45 AM	0	0	0	0	0	0	0	0	0	0	0	0	0
4/22/2024	3:00 AM	0	0	0	0	0	0	0	0	0	0	0	0	0
4/22/2024	3:15 AM	0	0	0	0	0	0	0	0	0	0	0	0	0
4/22/2024	3:30 AM	0	0	0	0	0	0	0	0	0	0	0	0	0
4/22/2024	3:45 AM	0	0	0	0	0	0	0	0	0	0	0	0	0
4/22/2024	4:00 AM	0	0	0	0	0	0	0	0	0	0	0	0	0
4/22/2024	4:15 AM	0	0	0	0	0	0	0	0	0	0	0	0	0
4/22/2024	4:30 AM	0	0	0	0	0	0	0	0	0	0	0	0	0
4/22/2024	4:45 AM	0	0	0	0	0	0	0	0	0	0	0	0	0
4/22/2024	5:00 AM	0	0	0	0	0	0	0	0	0	0	0	0	0
4/22/2024	5:15 AM	0	0	0	0	0	0	0	0	0	0	0	0	0
4/22/2024	5:30 AM	0	0	0	0	0	0	0	0	0	0	0	0	0
4/22/2024	5:45 AM	0	0	0	0	0	0	0	0	0	0	0	0	0
4/22/2024	6:00 AM	0	0	0	0	0	0	0	0	0	0	0	0	0
4/22/2024	6:15 AM	0	0	0	0	0	0	0	0	0	0	0	0	0
4/22/2024	6:30 AM	0	0	0	0	0	0	0	0	0	0	0	0	0
4/22/2024	6:45 AM	0	0	0	0	0	0	0	0	0	0	0	0	0
4/22/2024	7:00 AM	0	0	0	0	0	0	0	0	0	0	0	0	0
4/22/2024	7:15 AM	0	0	0	0	0	0	0	0	0	0	0	0	0
4/22/2024	7:30 AM	0	0	0	0	0	0	0	0	0	0	0	0	0
4/22/2024	7:45 AM	0	0	0	0	0	0	0	0	0	0	0	0	0
4/22/2024	8:00 AM	0	0	0	0	0	0	0	0	0	0	0	0	0
4/22/2024	8:15 AM	0	0	0	0	0	0	0	0	0	0	0	0	0
4/22/2024	8:30 AM	0	0	0	0	0	0	0	0	0	0	0	0	0
4/22/2024	8:45 AM	0	0	0	0	0	0	0	0	0	0	0	0	0
4/22/2024	9:00 AM	0	0	0	0	0	0	0	0	0	0	0	0	0
4/22/2024	9:15 AM	0	0	0	0	0	0	0	0	0	0	0	0	0
4/22/2024	9:30 AM	0	0	0	0	0	0	0	0	0	0	0	0	0
4/22/2024	9:45 AM	0	0	0	0	0	0	0	0	0	0	0	0	0
4/22/2024	10:00 AM	0	0	0	0	0	0	0	0	0	0	0	0	0
4/22/2024	10:15 AM	0	0	0	0	0	0	0	0	0	0	0	0	0
4/22/2024	10:30 AM	0	0	0	0	0	0	0	0	0	0	0	0	0
4/22/2024	10:45 AM	0	0	0	0	0	0	0	0	0	0	0	0	0
4/22/2024	11:00 AM	0	0	0	0	0	0	0	0	0	0	0	0	0
4/22/2024	11:15 AM	0	0	0	0	0	0	0	0	0	0	0	0	0
4/22/2024	11:30 AM	0	0	0	0	0	0	0	0	0	0	0	0	0
4/22/2024	11:45 AM	0	0	0	0	0	0	0	0	0	0	0	0	0
4/22/2024	12:00 PM	0	0	0	0	0	0	0	0	0	0	0	0	0
4/22/2024	12:15 PM	0	0	0	0	0	0	0	0	0	0	0	0	0
4/22/2024	12:30 PM	0	0	0	0	0	0	0	0	0	0	0	0	0
4/22/2024	12:45 PM	0	0	0	0	0	0	0	0	0	0	0	0	0
4/22/2024	1:00 PM	0	0	0	0	0	0	0	0	0	0	0	0	0
4/22/2024	1:15 PM	0	0	0	0	0	0	0	0	0	0	0	0	0
4/22/2024	1:30 PM	0	0	0	0	0	0	0	0	0	0	0	0	0
4/22/2024	1:45 PM	0	0	0	0	0	0	0	0	0	0	0	0	0
4/22/2024	2:00 PM	0	0	0	0	0	0	0	0	0	0	0	0	0
4/22/2024	2:15 PM	0	0	0	0	0	0	0	0	0	0	0	0	0
4/22/2024	2:30 PM	0	0	0	0	0	0	0	0	0	0	0	0	0
4/22/2024	2:45 PM	0	0	0	0	0	0	0	0	0	0	0	0	0
4/22/2024	3:00 PM	0	0	0	0	0	0	0	0	0	0	0	0	0
4/22/2024	3:15 PM	0	0	0	0	0	0	0	0	0	0	0	0	0
4/22/2024	3:30 PM	0	0	0	0	0	0	0	0	0	0	0	0	0
4/22/2024	3:45 PM	0	0	0	0	0	0	0	0	0	0	0	0	0
4/22/2024	4:00 PM	0	0	0	0	0	0	0	0	0	0	0	0	0
4/22/2024	4:15 PM	0	0	0	0	0	0	0	0	0	0	0	0	0
4/22/2024	4:30 PM	0	0	0	0	0	0	0	0	0	0	0	0	0
4/22/2024	4:45 PM	0	0	0	0	0	0	0	0	0	0	0	0	0
4/22/2024	5:00 PM	0	0	0	0	0	0	0	0	0	0	0	0	0
4/22/2024	5:15 PM	0	0	0	0	0	0	0	0	0	0	0	0	0
4/22/2024	5:30 PM	0	0	0	0	0	0	0	0	0	0	0	0	0
4/22/2024	5:45 PM	0	0	0	0	0	0	0	0	0	0	0	0	0
4/22/2024	6:00 PM	0	0	0	0	0	0	0	0	0	0	0	0	0
4/22/2024	6:15 PM	0	0	0	0	0	0	0	0	0	0	0	0	0
4/22/2024	6:30 PM	0	0	0	0	0	0	0	0	0	0	0	0	0
4/22/2024	6:45 PM	0	0	0	0	0	0	0	0	0	0	0	0	0
4/22/2024	7:00 PM	0	0	0	0	0	0	0	0	0	0	0	0	0
4/22/2024	7:15 PM	0	0	0	0	0	0	0	0	0	0	0	0	0
4/22/2024	7:30 PM	0	0	0	0	0	0	0	0	0	0	0	0	0
4/22/2024	7:45 PM	0	0	0	0	0	0	0	0	0	0	0	0	0
4/22/2024	8:00 PM	0	0	0	0	0	0	0	0	0	0	0	0	0
4/22/2024	8:15 PM	0	0	0	0	0	0	0	0	0	0	0	0	0
4/22/2024	8:30 PM	0	0	0	0	0	0	0	0	0	0	0	0	0
4/22/2024	8:45 PM	0	0	0	0	0	0	0	0	0	0	0	0	0
4/22/2024	9:00 PM	0	0	0	0	0	0	0	0	0	0	0	0	0
4/22/2024	9:15 PM	0	0	0	0	0	0	0	0	0	0	0	0	0
4/22/2024	9:30 PM	0	0	0	0	0	0	0	0	0	0	0	0	0
4/22/2024	9:45 PM	0	0	0	0	0	0	0	0	0	0	0	0	0
4/22/2024	10:00 PM	0	0	0	0	0	0	0	0	0	0	0	0	0
4/22/2024	10:15 PM	0	0	0	0	0	0	0	0	0	0	0	0	0
4/22/2024	10:30 PM	0	0	0	0	0	0	0	0	0	0	0	0	0
4/22/2024	10:45 PM	0	0	0	0	0	0	0	0	0	0	0	0	0
4/22/2024	11:00 PM	0	0	0	0	0	0	0	0	0	0	0	0	0
4/22/2024	11:15 PM	0	0	0	0	0	0	0	0	0	0	0	0	0
4/22/2024	11:30 PM	0	0	0	0	0	0	0	0	0	0	0	0	0
4/22/2024	11:45 PM	0	0	0	0	0	0	0	0	0	0	0	0	0

4/23/2024	12:00 AM	0	0	0	0	0	0	0	0	0	0	0	0	0
4/23/2024	12:15 AM	0	0	0	0	0	0	0	0	0	0	0	0	0
4/23/2024	12:30 AM	0	0	0	0	0	0	0	0	0	0	0	0	0
4/23/2024	12:45 AM	0	0	0	0	0	0	0	0	0	0	0	0	0
4/23/2024	1:00 AM	0	0	0	0	0	0	0	0	0	0	0	0	0
4/23/2024	1:15 AM	0	0	0	0	0	0	0	0	0	0	0	0	0
4/23/2024	1:30 AM	0	0	0	0	0	0	0	0	0	0	0	0	0
4/23/2024	1:45 AM	0	0	0	0	0	0	0	0	0	0	0	0	0
4/23/2024	2:00 AM	0	0	0	0	0	0	0	0	0	0	0	0	0
4/23/2024	2:15 AM	0	0	0	0	0	0	0	0	0	0	0	0	0
4/23/2024	2:30 AM	0	0	0	0	0	0	0	0	0	0	0	0	0
4/23/2024	2:45 AM	0	0	0	0	0	0	0	0	0	0	0	0	0
4/23/2024	3:00 AM	0	0	0	0	0	0	0	0	0	0	0	0	0
4/23/2024	3:15 AM	0	0	0	0	0	0	0	0	0	0	0	0	0
4/23/2024	3:30 AM	0	0	0	0	0	0	0	0	0	0	0	0	0
4/23/2024	3:45 AM	0	0	0	0	0	0	0	0	0	0	0	0	0
4/23/2024	4:00 AM	0	0	0	0	0	0	0	0	0	0	0	0	0
4/23/2024	4:15 AM	0	0	0	0	0	0	0	0	0	0	0	0	0
4/23/2024	4:30 AM	0	0	0	0	0	0	0	0	0	0	0	0	0
4/23/2024	4:45 AM	0	0	0	0	0	0	0	0	0	0	0	0	0
4/23/2024	5:00 AM	0	0	0	0	0	0	0	0	0	0	0	0	0
4/23/2024	5:15 AM	0	0	0	0	0	0	0	0	0	0	0	0	0
4/23/2024	5:30 AM	0	0	0	0	0	0	0	0	0	0	0	0	0
4/23/2024	5:45 AM	0	0	0	0	0	0	0	0	0	0	0	0	0
4/23/2024	6:00 AM	0	0	0	0	0	0	0	0	0	0	0	0	0
4/23/2024	6:15 AM	0	0	0	0	0	0	0	0	0	0	0	0	0
4/23/2024	6:30 AM	0	0	0	0	0	0	0	0	0	0	0	0	0
4/23/2024	6:45 AM	0	0	0	0	0	0	0	0	0	0	0	0	0
4/23/2024	7:00 AM	0	0	0	0	0	0	0	0	0	0	0	0	0
4/23/2024	7:15 AM	0	0	0	0	0	0	0	0	0	0	0	0	0
4/23/2024	7:30 AM	0	0	0	0	0	0	0	0	0	0	0	0	0
4/23/2024	7:45 AM	0	0	0	0	0	0	0	0	0	0	0	0	0
4/23/2024	8:00 AM	0	0	0	0	0	0	0	0	0	0	0	0	0
4/23/2024	8:15 AM	0	0	0	0	0	0	0	0	0	0	0	0	0
4/23/2024	8:30 AM	0	0	0	0	0	0	0	0	0	0	0	0	0
4/23/2024	8:45 AM	0	0	0	0	0	0	0	0	0	0	0	0	0
4/23/2024	9:00 AM	0	0	0	0	0	0	0	0	0	0	0	0	0
4/23/2024	9:15 AM	0	0	0	0	0	0	0	0	0	0	0	0	0
4/23/2024	9:30 AM	0	0	0	0	0	0	0	0	0	0	0	0	0
4/23/2024	9:45 AM	0	0	0	0	0	0	0	0	0	0	0	0	0
4/23/2024	10:00 AM	0	0	0	0	0	0	0	0	0	0	0	0	0
4/23/2024	10:15 AM	0	0	0	0	0	0	0	0	0	0	0	0	0
4/23/2024	10:30 AM	0	0	0	0	0	0	0	0	0	0	0	0	0
4/23/2024	10:45 AM	0	0	0	0	0	0	0	0	0	0	0	0	0
4/23/2024	11:00 AM	0	0	0	0	0	0	0	0	0	0	0	0	0
4/23/2024	11:15 AM	0	0	0	0	0	0	0	0	0	0	0	0	0
4/23/2024	11:30 AM	0	0	0	0	0	0	0	0	0	0	0	0	0
4/23/2024	11:45 AM	0	0	0	0	0	0	0	0	0	0	0	0	0
4/23/2024	12:00 PM	0	0	0	0	0	0	0	0	0	0	0	0	0
4/23/2024	12:15 PM	0	0	0	0	0	0	0	0	0	0	0	0	0
4/23/2024	12:30 PM	0	0	0	0	0	0	0	0	0	0	0	0	0
4/23/2024	12:45 PM	0	0	0	0	0	0	0	0	0	0	0	0	0
4/23/2024	1:00 PM	0	0	0	0	0	0	0	0	0	0	0	0	0
4/23/2024	1:15 PM	0	0	0	0	0	0	0	0	0	0	0	0	0
4/23/2024	1:30 PM	0	0	0	0	0	0	0	0	0	0	0	0	0
4/23/2024	1:45 PM	0	0	0	0	0	0	0	0	0	0	0	0	0
4/23/2024	2:00 PM	0	0	0	0	0	0	0	0	0	0	0	0	0
4/23/2024	2:15 PM	0	0	0	0	0	0	0	0	0	0	0	0	0
4/23/2024	2:30 PM	0	0	0	0	0	0	0	0	0	0	0	0	0
4/23/2024	2:45 PM	0	0	0	0	0	0	0	0	0	0	0	0	0
4/23/2024	3:00 PM	0	0	0	0	0	0	0	0	0	0	0	0	0
4/23/2024	3:15 PM	0	0	0	0	0	0	0	0	0	0	0	0	0
4/23/2024	3:30 PM	0	0	0	0	0	0	0	0	0	0	0	0	0
4/23/2024	3:45 PM	0	0	0	0	0	0	0	0	0	0	0	0	0
4/23/2024	4:00 PM	0	0	0	0	0	0	0	0	0	0	0	0	0
4/23/2024	4:15 PM	0	0	0	0	0	0	0	0	0	0	0	0	0
4/23/2024	4:30 PM	0	0	0	0	0	0	0	0	0	0	0	0	0
4/23/2024	4:45 PM	0	0	0	0	0	0	0	0	0	0	0	0	0
4/23/2024	5:00 PM	0	0	0	0	0	0	0	0	0	0	0	0	0
4/23/2024	5:15 PM	0	0	0	0	0	0	0	0	0	0	0	0	0
4/23/2024	5:30 PM	0	0	0	0	0	0	0	0	0	0	0	0	0
4/23/2024	5:45 PM	0	0	0	0	0	0	0	0	0	0	0	0	0
4/23/2024	6:00 PM	0	0	0	0	0	0	0	0	0	0	0	0	0
4/23/2024	6:15 PM	0	0	0	0	0	0	0	0	0	0	0	0	0
4/23/2024	6:30 PM	0	0	0	0	0	0	0	0	0	0	0	0	0
4/23/2024	6:45 PM	0	0	0	0	0	0	0	0	0	0	0	0	0
4/23/2024	7:00 PM	0	0	0	0	0	0	0	0	0	0	0	0	0
4/23/2024	7:15 PM	0	0	0	0	0	0	0	0	0	0	0	0	0
4/23/2024	7:30 PM	0	0	0	0	0	0	0	0	0	0	0	0	0
4/23/2024	7:45 PM	0	0	0	0	0	0	0	0	0	0	0	0	0
4/23/2024	8:00 PM	0	0	0	0	0	0	0	0	0	0	0	0	0
4/23/2024	8:15 PM	0	0	0	0	0	0	0	0	0	0	0	0	0
4/23/2024	8:30 PM	0	0	0	0	0	0	0	0	0	0	0	0	0
4/23/2024	8:45 PM	0	0	0	0	0	0	0	0	0	0	0	0	0
4/23/2024	9:00 PM	0	0	0	0	0	0	0	0	0	0	0	0	0
4/23/2024	9:15 PM	0	0	0	0	0	0	0	0	0	0	0	0	0
4/23/2024	9:30 PM	0	0	0	0	0	0	0	0	0	0	0	0	0
4/23/2024	9:45 PM	0	0	0	0	0	0	0	0	0	0	0	0	0
4/23/2024	10:00 PM	0	0	0	0	0	0	0	0	0	0	0	0	0
4/23/2024	10:15 PM	0	0	0	0	0	0	0	0	0	0	0	0	0
4/23/2024	10:30 PM	0	0	0	0	0	0	0	0	0	0	0	0	0
4/23/2024	10:45 PM	0	0	0	0	0	0	0	0	0	0	0	0	0
4/23/2024	11:00 PM	0	0	0	0	0	0	0	0	0	0	0	0	0
4/23/2024	11:15 PM	0	0	0	0	0	0	0	0	0	0	0	0	0
4/23/2024	11:30 PM	0	0	0	0	0	0	0	0	0	0	0	0	0
4/23/2024	11:45 PM	0	0	0	0	0	0	0	0	0	0	0	0	0

4/24/2024	12:00 AM	0	0	0	0	0	0	0	0	0	0	0	0	0
4/24/2024	12:15 AM	0	0	0	0	0	0	0	0	0	0	0	0	0
4/24/2024	12:30 AM	0	0	0	0	0	0	0	0	0	0	0	0	0
4/24/2024	12:45 AM	0	0	0	0	0	0	0	0	0	0	0	0	0
4/24/2024	1:00 AM	0	0	0	0	0	0	0	0	0	0	0	0	0
4/24/2024	1:15 AM	0	0	0	0	0	0	0	0	0	0	0	0	0
4/24/2024	1:30 AM	0	0	0	0	0	0	0	0	0	0	0	0	0
4/24/2024	1:45 AM	0	0	0	0	0	0	0	0	0	0	0	0	0
4/24/2024	2:00 AM	0	0	0	0	0	0	0	0	0	0	0	0	0
4/24/2024	2:15 AM	0	0	0	0	0	0	0	0	0	0	0	0	0
4/24/2024	2:30 AM	0	0	0	0	0	0	0	0	0	0	0	0	0
4/24/2024	2:45 AM	0	0	0	0	0	0	0	0	0	0	0	0	0
4/24/2024	3:00 AM	0	0	0	0	0	0	0	0	0	0	0	0	0
4/24/2024	3:15 AM	0	0	0	0	0	0	0	0	0	0	0	0	0
4/24/2024	3:30 AM	0	0	0	0	0	0	0	0	0	0	0	0	0
4/24/2024	3:45 AM	0	0	0	0	0	0	0	0	0	0	0	0	0
4/24/2024	4:00 AM	0	0	0	0	0	0	0	0	0	0	0	0	0
4/24/2024	4:15 AM	0	0	0	0	0	0	0	0	0	0	0	0	0
4/24/2024	4:30 AM	0	0	0	0	0	0	0	0	0	0	0	0	0
4/24/2024	4:45 AM	0	0	0	0	0	0	0	0	0	0	0	0	0
4/24/2024	5:00 AM	0	0	0	0	0	0	0	0	0	0	0	0	0
4/24/2024	5:15 AM	0	0	0	0	0	0	0	0	0	0	0	0	0
4/24/2024	5:30 AM	0	0	0	0	0	0	0	0	0	0	0	0	0
4/24/2024	5:45 AM	0	0	0	0	0	0	0	0	0	0	0	0	0
4/24/2024	6:00 AM	0	0	0	0	0	0	0	0	0	0	0	0	0
4/24/2024	6:15 AM	0	0	0	0	0	0	0	0	0	0	0	0	0
4/24/2024	6:30 AM	0	0	0	0	0	0	0	0	0	0	0	0	0
4/24/2024	6:45 AM	0	0	0	0	0	0	0	0	0	0	0	0	0
4/24/2024	7:00 AM	0	0	0	0	0	0	0	0	0	0	0	0	0
4/24/2024	7:15 AM	0	0	0	0	0	0	0	0	0	0	0	0	0
4/24/2024	7:30 AM	0	0	0	0	0	0	0	0	0	0	0	0	0
4/24/2024	7:45 AM	0	0	0	0	0	0	0	0	0	0	0	0	0
4/24/2024	8:00 AM	0	0	0	0	0	0	0	0	0	0	0	0	0
4/24/2024	8:15 AM	0	0	0	0	0	0	0	0	0	0	0	0	0
4/24/2024	8:30 AM	0	0	0	0	0	0	0	0	0	0	0	0	0
4/24/2024	8:45 AM	0	0	0	0	0	0	0	0	0	0	0	0	0
4/24/2024	9:00 AM	0	0	0	0	0	0	0	0	0	0	0	0	0
4/24/2024	9:15 AM	0	0	0	0	0	0	0	0	0	0	0	0	0
4/24/2024	9:30 AM	0	0	0	0	0	0	0	0	0	0	0	0	0
4/24/2024	9:45 AM	0	0	0	0	0	0	0	0	0	0	0	0	0
4/24/2024	10:00 AM	0	0	0	0	0	0	0	0	0	0	0	0	0
4/24/2024	10:15 AM	0	0	0	0	0	0	0	0	0	0	0	0	0
4/24/2024	10:30 AM	0	0	0	0	0	0	0	0	0	0	0	0	0
4/24/2024	10:45 AM	0	0	0	0	0	0	0	0	0	0	0	0	0
4/24/2024	11:00 AM	0	0	0	0	0	0	0	0	0	0	0	0	0
4/24/2024	11:15 AM	0	0	0	0	0	0	0	0	0	0	0	0	0
4/24/2024	11:30 AM	0	0	0	0	0	0	0	0	0	0	0	0	0
4/24/2024	11:45 AM	0	0	0	0	0	0	0	0	0	0	0	0	0
4/24/2024	12:00 PM	0	0	0	0	0	0	0	0	0	0	0	0	0
4/24/2024	12:15 PM	0	0	0	0	0	0	0	0	0	0	0	0	0
4/24/2024	12:30 PM	0	0	0	0	0	0	0	0	0	0	0	0	0
4/24/2024	12:45 PM	0	0	0	0	0	0	0	0	0	0	0	0	0
4/24/2024	1:00 PM	0	0	0	0	0	0	0	0	0	0	0	0	0
4/24/2024	1:15 PM	0	0	0	0	0	0	0	0	0	0	0	0	0
4/24/2024	1:30 PM	0	0	0	0	0	0	0	0	0	0	0	0	0
4/24/2024	1:45 PM	0	0	0	0	0	0	0	0	0	0	0	0	0
4/24/2024	2:00 PM	0	0	0	0	0	0	0	0	0	0	0	0	0
4/24/2024	2:15 PM	0	0	0	0	0	0	0	0	0	0	0	0	0
4/24/2024	2:30 PM	0	0	0	0	0	0	0	0	0	0	0	0	0
4/24/2024	2:45 PM	0	0	0	0	0	0	0	0	0	0	0	0	0
4/24/2024	3:00 PM	0	0	0	0	0	0	0	0	0	0	0	0	0
4/24/2024	3:15 PM	0	0	0	0	0	0	0	0	0	0	0	0	0
4/24/2024	3:30 PM	0	0	0	0	0	0	0	0	0	0	0	0	0
4/24/2024	3:45 PM	0	0	0	0	0	0	0	0	0	0	0	0	0
4/24/2024	4:00 PM	0	0	0	0	0	0	0	0	0	0	0	0	0
4/24/2024	4:15 PM	0	0	0	0	0	0	0	0	0	0	0	0	0
4/24/2024	4:30 PM	0	0	0	0	0	0	0	0	0	0	0	0	0
4/24/2024	4:45 PM	0	0	0	0	0	0	0	0	0	0	0	0	0
4/24/2024	5:00 PM	0	0	0	0	0	0	0	0	0	0	0	0	0
4/24/2024	5:15 PM	0	0	0	0	0	0	0	0	0	0	0	0	0
4/24/2024	5:30 PM	0	0	0	0	0	0	0	0	0	0	0	0	0
4/24/2024	5:45 PM	0	0	0	0	0	0	0	0	0	0	0	0	0
4/24/2024	6:00 PM	0	0	0	0	0	0	0	0	0	0	0	0	0
4/24/2024	6:15 PM	0	0	0	0	0	0	0	0	0	0	0	0	0
4/24/2024	6:30 PM	0	0	0	0	0	0	0	0	0	0	0	0	0
4/24/2024	6:45 PM	0	0	0	0	0	0	0	0	0	0	0	0	0
4/24/2024	7:00 PM	0	0	0	0	0	0	0	0	0	0	0	0	0
4/24/2024	7:15 PM	0	0	0	0	0	0	0	0	0	0	0	0	0
4/24/2024	7:30 PM	0	0	0	0	0	0	0	0	0	0	0	0	0
4/24/2024	7:45 PM	0	0	0	0	0	0	0	0	0	0	0	0	0
4/24/2024	8:00 PM	0	0	0	0	0	0	0	0	0	0	0	0	0
4/24/2024	8:15 PM	0	0	0	0	0	0	0	0	0	0	0	0	0
4/24/2024	8:30 PM	0	0	0	0	0	0	0	0	0	0	0	0	0
4/24/2024	8:45 PM	0	0	0	0	0	0	0	0	0	0	0	0	0
4/24/2024	9:00 PM	0	0	0	0	0	0	0	0	0	0	0	0	0
4/24/2024	9:15 PM	0	0	0	0	0	0	0	0	0	0	0	0	0
4/24/2024	9:30 PM	0	0	0	0	0	0	0	0	0	0	0	0	0
4/24/2024	9:45 PM	0	0	0	0	0	0	0	0	0	0	0	0	0
4/24/2024	10:00 PM	0	0	0	0	0	0	0	0	0	0	0	0	0
4/24/2024	10:15 PM	0	0	0	0	0	0	0	0	0	0	0	0	0
4/24/2024	10:30 PM	0	0	0	0	0	0	0	0	0	0	0	0	0
4/24/2024	10:45 PM	0	0	0	0	0	0	0	0	0	0	0	0	0
4/24/2024	11:00 PM	0	0	0	0	0	0	0	0	0	0	0	0	0
4/24/2024	11:15 PM	0	0	0	0	0	0	0	0	0	0	0	0	0
4/24/2024	11:30 PM	0	0	0	0	0	0	0	0	0	0	0	0	0
4/24/2024	11:45 PM	0	0	0	0	0	0	0	0	0	0	0	0	0

4/25/2024	12:00 AM	0	0	0	0	0	0	0	0	0	0	0	0	0
4/25/2024	12:15 AM	0	0	0	0	0	0	0	0	0	0	0	0	0
4/25/2024	12:30 AM	0	0	0	0	0	0	0	0	0	0	0	0	0
4/25/2024	12:45 AM	0	0	0	0	0	0	0	0	0	0	0	0	0
4/25/2024	1:00 AM	0	0	0	0	0	0	0	0	0	0	0	0	0
4/25/2024	1:15 AM	0	0	0	0	0	0	0	0	0	0	0	0	0
4/25/2024	1:30 AM	0	0	0	0	0	0	0	0	0	0	0	0	0
4/25/2024	1:45 AM	0	0	0	0	0	0	0	0	0	0	0	0	0
4/25/2024	2:00 AM	0	0	0	0	0	0	0	0	0	0	0	0	0
4/25/2024	2:15 AM	0	0	0	0	0	0	0	0	0	0	0	0	0
4/25/2024	2:30 AM	0	0	0	0	0	0	0	0	0	0	0	0	0
4/25/2024	2:45 AM	0	0	0	0	0	0	0	0	0	0	0	0	0
4/25/2024	3:00 AM	0	0	0	0	0	0	0	0	0	0	0	0	0
4/25/2024	3:15 AM	0	0	0	0	0	0	0	0	0	0	0	0	0
4/25/2024	3:30 AM	0	0	0	0	0	0	0	0	0	0	0	0	0
4/25/2024	3:45 AM	0	0	0	0	0	0	0	0	0	0	0	0	0
4/25/2024	4:00 AM	0	0	0	0	0	0	0	0	0	0	0	0	0
4/25/2024	4:15 AM	0	0	0	0	0	0	0	0	0	0	0	0	0
4/25/2024	4:30 AM	0	0	0	0	0	0	0	0	0	0	0	0	0
4/25/2024	4:45 AM	0	0	0	0	0	0	0	0	0	0	0	0	0
4/25/2024	5:00 AM	0	0	0	0	0	0	0	0	0	0	0	0	0
4/25/2024	5:15 AM	0	0	0	0	0	0	0	0	0	0	0	0	0
4/25/2024	5:30 AM	0	0	0	0	0	0	0	0	0	0	0	0	0
4/25/2024	5:45 AM	0	0	0	0	0	0	0	0	0	0	0	0	0
4/25/2024	6:00 AM	0	0	0	0	0	0	0	0	0	0	0	0	0
4/25/2024	6:15 AM	0	0	0	0	0	0	0	0	0	0	0	0	0
4/25/2024	6:30 AM	0	0	0	0	0	0	0	0	0	0	0	0	0
4/25/2024	6:45 AM	0	0	0	0	0	0	0	0	0	0	0	0	0
4/25/2024	7:00 AM	0	0	0	0	0	0	0	0	0	0	0	0	0
4/25/2024	7:15 AM	0	0	0	0	0	0	0	0	0	0	0	0	0
4/25/2024	7:30 AM	0	0	0	0	0	0	0	0	0	0	0	0	0
4/25/2024	7:45 AM	0	0	0	0	0	0	0	0	0	0	0	0	0
4/25/2024	8:00 AM	0	0	0	0	0	0	0	0	0	0	0	0	0
4/25/2024	8:15 AM	0	0	0	0	0	0	0	0	0	0	0	0	0
4/25/2024	8:30 AM	0	0	0	0	0	0	0	0	0	0	0	0	0
4/25/2024	8:45 AM	0	0	0	0	0	0	0	0	0	0	0	0	0
4/25/2024	9:00 AM	0	0	0	0	0	0	0	0	0	0	0	0	0
4/25/2024	9:15 AM	0	0	0	0	0	0	0	0	0	0	0	0	0
4/25/2024	9:30 AM	0	0	0	0	0	0	0	0	0	0	0	0	0
4/25/2024	9:45 AM	0	0	0	0	0	0	0	0	0	0	0	0	0
4/25/2024	10:00 AM	0	0	0	0	0	0	0	0	0	0	0	0	0
4/25/2024	10:15 AM	0	0	0	0	0	0	0	0	0	0	0	0	0
4/25/2024	10:30 AM	0	0	0	0	0	0	0	0	0	0	0	0	0
4/25/2024	10:45 AM	0	0	0	0	0	0	0	0	0	0	0	0	0
4/25/2024	11:00 AM	0	0	0	0	0	0	0	0	0	0	0	0	0
4/25/2024	11:15 AM	0	0	0	0	0	0	0	0	0	0	0	0	0
4/25/2024	11:30 AM	0	0	0	0	0	0	0	0	0	0	0	0	0
4/25/2024	11:45 AM	0	0	0	0	0	0	0	0	0	0	0	0	0
4/25/2024	12:00 PM	0	0	0	0	0	0	0	0	0	0	0	0	0
4/25/2024	12:15 PM	0	0	0	0	0	0	0	0	0	0	0	0	0
4/25/2024	12:30 PM	0	0	0	0	0	0	0	0	0	0	0	0	0
4/25/2024	12:45 PM	0	0	0	0	0	0	0	0	0	0	0	0	0
4/25/2024	1:00 PM	0	0	0	0	0	0	0	0	0	0	0	0	0
4/25/2024	1:15 PM	0	0	0	0	0	0	0	0	0	0	0	0	0
4/25/2024	1:30 PM	0	0	0	0	0	0	0	0	0	0	0	0	0
4/25/2024	1:45 PM	0	0	0	0	0	0	0	0	0	0	0	0	0
4/25/2024	2:00 PM	0	0	0	0	0	0	0	0	0	0	0	0	0
4/25/2024	2:15 PM	0	0	0	0	0	0	0	0	0	0	0	0	0
4/25/2024	2:30 PM	0	0	0	0	0	0	0	0	0	0	0	0	0
4/25/2024	2:45 PM	0	0	0	0	0	0	0	0	0	0	0	0	0
4/25/2024	3:00 PM	0	0	0	0	0	0	0	0	0	0	0	0	0
4/25/2024	3:15 PM	0	0	0	0	0	0	0	0	0	0	0	0	0
4/25/2024	3:30 PM	0	0	0	0	0	0	0	0	0	0	0	0	0
4/25/2024	3:45 PM	0	0	0	0	0	0	0	0	0	0	0	0	0
4/25/2024	4:00 PM	0	0	0	0	0	0	0	0	0	0	0	0	0
4/25/2024	4:15 PM	0	0	0	0	0	0	0	0	0	0	0	0	0
4/25/2024	4:30 PM	0	0	0	0	0	0	0	0	0	0	0	0	0
4/25/2024	4:45 PM	0	0	0	0	0	0	0	0	0	0	0	0	0
4/25/2024	5:00 PM	0	0	0	0	0	0	0	0	0	0	0	0	0
4/25/2024	5:15 PM	0	0	0	0	0	0	0	0	0	0	0	0	0
4/25/2024	5:30 PM	0	0	0	0	0	0	0	0	0	0	0	0	0
4/25/2024	5:45 PM	0	0	0	0	0	0	0	0	0	0	0	0	0
4/25/2024	6:00 PM	0	0	0	0	0	0	0	0	0	0	0	0	0
4/25/2024	6:15 PM	0	0	0	0	0	0	0	0	0	0	0	0	0
4/25/2024	6:30 PM	0	0	0	0	0	0	0	0	0	0	0	0	0
4/25/2024	6:45 PM	0	0	0	0	0	0	0	0	0	0	0	0	0
4/25/2024	7:00 PM	0	0	0	0	0	0	0	0	0	0	0	0	0
4/25/2024	7:15 PM	0	0	0	0	0	0	0	0	0	0	0	0	0
4/25/2024	7:30 PM	0	0	0	0	0	0	0	0	0	0	0	0	0
4/25/2024	7:45 PM	0	0	0	0	0	0	0	0	0	0	0	0	0
4/25/2024	8:00 PM	0	0	0	0	0	0	0	0	0	0	0	0	0
4/25/2024	8:15 PM	0	0	0	0	0	0	0	0	0	0	0	0	0
4/25/2024	8:30 PM	0	0	0	0	0	0	0	0	0	0	0	0	0
4/25/2024	8:45 PM	0	0	0	0	0	0	0	0	0	0	0	0	0
4/25/2024	9:00 PM	0	0	0	0	0	0	0	0	0	0	0	0	0
4/25/2024	9:15 PM	0	0	0	0	0	0	0	0	0	0	0	0	0
4/25/2024	9:30 PM	0	0	0	0	0	0	0	0	0	0	0	0	0
4/25/2024	9:45 PM	0	0	0	0	0	0	0	0	0	0	0	0	0
4/25/2024	10:00 PM	0	0	0	0	0	0	0	0	0	0	0	0	0
4/25/2024	10:15 PM	0	0	0	0	0	0	0	0	0	0	0	0	0
4/25/2024	10:30 PM	0	0	0	0	0	0	0	0	0	0	0	0	0
4/25/2024	10:45 PM	0	0	0	0	0	0	0	0	0	0	0	0	0
4/25/2024	11:00 PM	0	0	0	0	0	0	0	0	0	0	0	0	0
4/25/2024	11:15 PM	0	0	0	0	0	0	0	0	0	0	0	0	0
4/25/2024	11:30 PM	0	0	0	0	0	0	0	0	0	0	0	0	0
4/25/2024	11:45 PM	0	0	0	0	0	0	0	0	0	0	0	0	0

4/26/2024	12:00 AM	0	0	0	0	0	0	0	0	0	0	0	0	0
4/26/2024	12:15 AM	0	0	0	0	0	0	0	0	0	0	0	0	0
4/26/2024	12:30 AM	0	0	0	0	0	0	0	0	0	0	0	0	0
4/26/2024	12:45 AM	0	0	0	0	0	0	0	0	0	0	0	0	0
4/26/2024	1:00 AM	0	0	0	0	0	0	0	0	0	0	0	0	0
4/26/2024	1:15 AM	0	0	0	0	0	0	0	0	0	0	0	0	0
4/26/2024	1:30 AM	0	0	0	0	0	0	0	0	0	0	0	0	0
4/26/2024	1:45 AM	0	0	0	0	0	0	0	0	0	0	0	0	0
4/26/2024	2:00 AM	0	0	0	0	0	0	0	0	0	0	0	0	0
4/26/2024	2:15 AM	0	0	0	0	0	0	0	0	0	0	0	0	0
4/26/2024	2:30 AM	0	0	0	0	0	0	0	0	0	0	0	0	0
4/26/2024	2:45 AM	0	0	0	0	0	0	0	0	0	0	0	0	0
4/26/2024	3:00 AM	0	0	0	0	0	0	0	0	0	0	0	0	0
4/26/2024	3:15 AM	0	0	0	0	0	0	0	0	0	0	0	0	0
4/26/2024	3:30 AM	0	0	0	0	0	0	0	0	0	0	0	0	0
4/26/2024	3:45 AM	0	0	0	0	0	0	0	0	0	0	0	0	0
4/26/2024	4:00 AM	0	0	0	0	0	0	0	0	0	0	0	0	0
4/26/2024	4:15 AM	0	0	0	0	0	0	0	0	0	0	0	0	0
4/26/2024	4:30 AM	0	0	0	0	0	0	0	0	0	0	0	0	0
4/26/2024	4:45 AM	0	0	0	0	0	0	0	0	0	0	0	0	0
4/26/2024	5:00 AM	0	0	0	0	0	0	0	0	0	0	0	0	0
4/26/2024	5:15 AM	0	0	0	0	0	0	0	0	0	0	0	0	0
4/26/2024	5:30 AM	0	0	0	0	0	0	0	0	0	0	0	0	0
4/26/2024	5:45 AM	0	0	0	0	0	0	0	0	0	0	0	0	0
4/26/2024	6:00 AM	0	0	0	0	0	0	0	0	0	0	0	0	0
4/26/2024	6:15 AM	0	0	0	0	0	0	0	0	0	0	0	0	0
4/26/2024	6:30 AM	0	0	0	0	0	0	0	0	0	0	0	0	0
4/26/2024	6:45 AM	0	0	0	0	0	0	0	0	0	0	0	0	0
4/26/2024	7:00 AM	0	0	0	0	0	0	0	0	0	0	0	0	0
4/26/2024	7:15 AM	0	0	0	0	0	0	0	0	0	0	0	0	0
4/26/2024	7:30 AM	0	0	0	0	0	0	0	0	0	0	0	0	0
4/26/2024	7:45 AM	0	0	0	0	0	0	0	0	0	0	0	0	0
4/26/2024	8:00 AM	0	0	0	0	0	0	0	0	0	0	0	0	0
4/26/2024	8:15 AM	0	0	0	0	0	0	0	0	0	0	0	0	0
4/26/2024	8:30 AM	0	0	0	0	0	0	0	0	0	0	0	0	0
4/26/2024	8:45 AM	0	0	0	0	0	0	0	0	0	0	0	0	0
4/26/2024	9:00 AM	0	0	0	0	0	0	0	0	0	0	0	0	0
4/26/2024	9:15 AM	0	0	0	0	0	0	0	0	0	0	0	0	0
4/26/2024	9:30 AM	0	0	0	0	0	0	0	0	0	0	0	0	0
4/26/2024	9:45 AM	0	0	0	0	0	0	0	0	0	0	0	0	0
4/26/2024	10:00 AM	0	0	0	0	0	0	0	0	0	0	0	0	0
4/26/2024	10:15 AM	0	0	0	0	0	0	0	0	0	0	0	0	0
4/26/2024	10:30 AM	0	0	0	0	0	0	0	0	0	0	0	0	0
4/26/2024	10:45 AM	0	0	0	0	0	0	0	0	0	0	0	0	0
4/26/2024	11:00 AM	0	0	0	0	0	0	0	0	0	0	0	0	0
4/26/2024	11:15 AM	0	0	0	0	0	0	0	0	0	0	0	0	0
4/26/2024	11:30 AM	0	0	0	0	0	0	0	0	0	0	0	0	0
4/26/2024	11:45 AM	0	0	0	0	0	0	0	0	0	0	0	0	0
4/26/2024	12:00 PM	0	0	0	0	0	0	0	0	0	0	0	0	0
4/26/2024	12:15 PM	0	0	0	0	0	0	0	0	0	0	0	0	0
4/26/2024	12:30 PM	0	0	0	0	0	0	0	0	0	0	0	0	0
4/26/2024	12:45 PM	0	0	0	0	0	0	0	0	0	0	0	0	0
4/26/2024	1:00 PM	0	0	0	0	0	0	0	0	0	0	0	0	0
4/26/2024	1:15 PM	0	0	0	0	0	0	0	0	0	0	0	0	0
4/26/2024	1:30 PM	0	0	0	0	0	0	0	0	0	0	0	0	0
4/26/2024	1:45 PM	0	0	0	0	0	0	0	0	0	0	0	0	0
4/26/2024	2:00 PM	0	0	0	0	0	0	0	0	0	0	0	0	0
4/26/2024	2:15 PM	0	0	0	0	0	0	0	0	0	0	0	0	0
4/26/2024	2:30 PM	0	0	0	0	0	0	0	0	0	0	0	0	0
4/26/2024	2:45 PM	0	0	0	0	0	0	0	0	0	0	0	0	0
4/26/2024	3:00 PM	0	0	0	0	0	0	0	0	0	0	0	0	0
4/26/2024	3:15 PM	0	0	0	0	0	0	0	0	0	0	0	0	0
4/26/2024	3:30 PM	0	0	0	0	0	0	0	0	0	0	0	0	0
4/26/2024	3:45 PM	0	0	0	0	0	0	0	0	0	0	0	0	0
4/26/2024	4:00 PM	0	0	0	0	0	0	0	0	0	0	0	0	0
4/26/2024	4:15 PM	0	0	0	0	0	0	0	0	0	0	0	0	0
4/26/2024	4:30 PM	0	0	0	0	0	0	0	0	0	0	0	0	0
4/26/2024	4:45 PM	0	0	0	0	0	0	0	0	0	0	0	0	0
4/26/2024	5:00 PM	0	0	0	0	0	0	0	0	0	0	0	0	0
4/26/2024	5:15 PM	0	0	0	0	0	0	0	0	0	0	0	0	0
4/26/2024	5:30 PM	0	0	0	0	0	0	0	0	0	0	0	0	0
4/26/2024	5:45 PM	0	0	0	0	0	0	0	0	0	0	0	0	0
4/26/2024	6:00 PM	0	0	0	0	0	0	0	0	0	0	0	0	0
4/26/2024	6:15 PM	0	0	0	0	0	0	0	0	0	0	0	0	0
4/26/2024	6:30 PM	0	0	0	0	0	0	0	0	0	0	0	0	0
4/26/2024	6:45 PM	0	0	0	0	0	0	0	0	0	0	0	0	0
4/26/2024	7:00 PM	0	0	0	0	0	0	0	0	0	0	0	0	0
4/26/2024	7:15 PM	0	0	0	0	0	0	0	0	0	0	0	0	0
4/26/2024	7:30 PM	0	0	0	0	0	0	0	0	0	0	0	0	0
4/26/2024	7:45 PM	0	0	0	0	0	0	0	0	0	0	0	0	0
4/26/2024	8:00 PM	0	0	0	0	0	0	0	0	0	0	0	0	0
4/26/2024	8:15 PM	0	0	0	0	0	0	0	0	0	0	0	0	0
4/26/2024	8:30 PM	0	0	0	0	0	0	0	0	0	0	0	0	0
4/26/2024	8:45 PM	0	0	0	0	0	0	0	0	0	0	0	0	0
4/26/2024	9:00 PM	0	0	0	0	0	0	0	0	0	0	0	0	0
4/26/2024	9:15 PM	0	0	0	0	0	0	0	0	0	0	0	0	0
4/26/2024	9:30 PM	0	0	0	0	0	0	0	0	0	0	0	0	0
4/26/2024	9:45 PM	0	0	0	0	0	0	0	0	0	0	0	0	0
4/26/2024	10:00 PM	0	0	0	0	0	0	0	0	0	0	0	0	0
4/26/2024	10:15 PM	0	0	0	0	0	0	0	0	0	0	0	0	0
4/26/2024	10:30 PM	0	0	0	0	0	0	0	0	0	0	0	0	0
4/26/2024	10:45 PM	0	0	0	0	0	0	0	0	0	0	0	0	0
4/26/2024	11:00 PM	0	0	0	0	0	0	0	0	0	0	0	0	0
4/26/2024	11:15 PM	0	0	0	0	0	0	0	0	0	0	0	0	0
4/26/2024	11:30 PM	0	0	0	0	0	0	0	0	0	0	0	0	0
4/26/2024	11:45 PM	0	0	0	0	0	0	0	0	0	0	0	0	0

4/27/2024	12:00 AM	0	0	0	0	0	0	0	0	0	0	0	0	0
4/27/2024	12:15 AM	0	0	0	0	0	0	0	0	0	0	0	0	0
4/27/2024	12:30 AM	0	0	0	0	0	0	0	0	0	0	0	0	0
4/27/2024	12:45 AM	0	0	0	0	0	0	0	0	0	0	0	0	0
4/27/2024	1:00 AM	0	0	0	0	0	0	0	0	0	0	0	0	0
4/27/2024	1:15 AM	0	0	0	0	0	0	0	0	0	0	0	0	0
4/27/2024	1:30 AM	0	0	0	0	0	0	0	0	0	0	0	0	0
4/27/2024	1:45 AM	0	0	0	0	0	0	0	0	0	0	0	0	0
4/27/2024	2:00 AM	0	0	0	0	0	0	0	0	0	0	0	0	0
4/27/2024	2:15 AM	0	0	0	0	0	0	0	0	0	0	0	0	0
4/27/2024	2:30 AM	0	0	0	0	0	0	0	0	0	0	0	0	0
4/27/2024	2:45 AM	0	0	0	0	0	0	0	0	0	0	0	0	0
4/27/2024	3:00 AM	0	0	0	0	0	0	0	0	0	0	0	0	0
4/27/2024	3:15 AM	0	0	0	0	0	0	0	0	0	0	0	0	0
4/27/2024	3:30 AM	0	0	0	0	0	0	0	0	0	0	0	0	0
4/27/2024	3:45 AM	0	0	0	0	0	0	0	0	0	0	0	0	0
4/27/2024	4:00 AM	0	0	0	0	0	0	0	0	0	0	0	0	0
4/27/2024	4:15 AM	0	0	0	0	0	0	0	0	0	0	0	0	0
4/27/2024	4:30 AM	0	0	0	0	0	0	0	0	0	0	0	0	0
4/27/2024	4:45 AM	0	0	0	0	0	0	0	0	0	0	0	0	0
4/27/2024	5:00 AM	0	0	0	0	0	0	0	0	0	0	0	0	0
4/27/2024	5:15 AM	0	0	0	0	0	0	0	0	0	0	0	0	0
4/27/2024	5:30 AM	0	0	0	0	0	0	0	0	0	0	0	0	0
4/27/2024	5:45 AM	0	0	0	0	0	0	0	0	0	0	0	0	0
4/27/2024	6:00 AM	0	0	0	0	0	0	0	0	0	0	0	0	0
4/27/2024	6:15 AM	0	0	0	0	0	0	0	0	0	0	0	0	0
4/27/2024	6:30 AM	0	0	0	0	0	0	0	0	0	0	0	0	0
4/27/2024	6:45 AM	0	0	0	0	0	0	0	0	0	0	0	0	0
4/27/2024	7:00 AM	0	0	0	0	0	0	0	0	0	0	0	0	0
4/27/2024	7:15 AM	0	0	0	0	0	0	0	0	0	0	0	0	0
4/27/2024	7:30 AM	0	0	0	0	0	0	0	0	0	0	0	0	0
4/27/2024	7:45 AM	0	0	0	0	0	0	0	0	0	0	0	0	0
4/27/2024	8:00 AM	0	0	0	0	0	0	0	0	0	0	0	0	0
4/27/2024	8:15 AM	0	0	0	0	0	0	0	0	0	0	0	0	0
4/27/2024	8:30 AM	0	0	0	0	0	0	0	0	0	0	0	0	0
4/27/2024	8:45 AM	0	0	0	0	0	0	0	0	0	0	0	0	0
4/27/2024	9:00 AM	0	0	0	0	0	0	0	0	0	0	0	0	0
4/27/2024	9:15 AM	0	0	0	0	0	0	0	0	0	0	0	0	0
4/27/2024	9:30 AM	0	0	0	0	0	0	0	0	0	0	0	0	0
4/27/2024	9:45 AM	0	0	0	0	0	0	0	0	0	0	0	0	0
4/27/2024	10:00 AM	0	0	0	0	0	0	0	0	0	0	0	0	0
4/27/2024	10:15 AM	0	0	0	0	0	0	0	0	0	0	0	0	0
4/27/2024	10:30 AM	0	0	0	0	0	0	0	0	0	0	0	0	0
4/27/2024	10:45 AM	0	0	0	0	0	0	0	0	0	0	0	0	0
4/27/2024	11:00 AM	0	0	0	0	0	0	0	0	0	0	0	0	0
4/27/2024	11:15 AM	0	0	0	0	0	0	0	0	0	0	0	0	0
4/27/2024	11:30 AM	0	0	0	0	0	0	0	0	0	0	0	0	0
4/27/2024	11:45 AM	0	0	0	0	0	0	0	0	0	0	0	0	0
4/27/2024	12:00 PM	0	0	0	0	0	0	0	0	0	0	0	0	0
4/27/2024	12:15 PM	0	0	0	0	0	0	0	0	0	0	0	0	0
4/27/2024	12:30 PM	0	0	0	0	0	0	0	0	0	0	0	0	0
4/27/2024	12:45 PM	0	0	0	0	0	0	0	0	0	0	0	0	0
4/27/2024	1:00 PM	0	0	0	0	0	0	0	0	0	0	0	0	0
4/27/2024	1:15 PM	0	0	0	0	0	0	0	0	0	0	0	0	0
4/27/2024	1:30 PM	0	0	0	0	0	0	0	0	0	0	0	0	0
4/27/2024	1:45 PM	0	0	0	0	0	0	0	0	0	0	0	0	0
4/27/2024	2:00 PM	0	0	0	0	0	0	0	0	0	0	0	0	0
4/27/2024	2:15 PM	0	0	0	0	0	0	0	0	0	0	0	0	0
4/27/2024	2:30 PM	0	0	0	0	0	0	0	0	0	0	0	0	0
4/27/2024	2:45 PM	0	0	0	0	0	0	0	0	0	0	0	0	0
4/27/2024	3:00 PM	0	0	0	0	0	0	0	0	0	0	0	0	0
4/27/2024	3:15 PM	0	0	0	0	0	0	0	0	0	0	0	0	0
4/27/2024	3:30 PM	0	0	0	0	0	0	0	0	0	0	0	0	0
4/27/2024	3:45 PM	0	0	0	0	0	0	0	0	0	0	0	0	0
4/27/2024	4:00 PM	0	0	0	0	0	0	0	0	0	0	0	0	0
4/27/2024	4:15 PM	0	0	0	0	0	0	0	0	0	0	0	0	0
4/27/2024	4:30 PM	0	0	0	0	0	0	0	0	0	0	0	0	0
4/27/2024	4:45 PM	0	0	0	0	0	0	0	0	0	0	0	0	0
4/27/2024	5:00 PM	0	0	0	0	0	0	0	0	0	0	0	0	0
4/27/2024	5:15 PM	0	0	0	0	0	0	0	0	0	0	0	0	0
4/27/2024	5:30 PM	0	0	0	0	0	0	0	0	0	0	0	0	0
4/27/2024	5:45 PM	0	0	0	0	0	0	0	0	0	0	0	0	0
4/27/2024	6:00 PM	0	0	0	0	0	0	0	0	0	0	0	0	0
4/27/2024	6:15 PM	0	0	0	0	0	0	0	0	0	0	0	0	0
4/27/2024	6:30 PM	0	0	0	0	0	0	0	0	0	0	0	0	0
4/27/2024	6:45 PM	0	0	0	0	0	0	0	0	0	0	0	0	0
4/27/2024	7:00 PM	0	0	0	0	0	0	0	0	0	0	0	0	0
4/27/2024	7:15 PM	0	0	0	0	0	0	0	0	0	0	0	0	0
4/27/2024	7:30 PM	0	0	0	0	0	0	0	0	0	0	0	0	0
4/27/2024	7:45 PM	0	0	0	0	0	0	0	0	0	0	0	0	0
4/27/2024	8:00 PM	0	0	0	0	0	0	0	0	0	0	0	0	0
4/27/2024	8:15 PM	0	0	0	0	0	0	0	0	0	0	0	0	0
4/27/2024	8:30 PM	0	0	0	0	0	0	0	0	0	0	0	0	0
4/27/2024	8:45 PM	0	0	0	0	0	0	0	0	0	0	0	0	0
4/27/2024	9:00 PM	0	0	0	0	0	0	0	0	0	0	0	0	0
4/27/2024	9:15 PM	0	0	0	0	0	0	0	0	0	0	0	0	0
4/27/2024	9:30 PM	0	0	0	0	0	0	0	0	0	0	0	0	0
4/27/2024	9:45 PM	0	0	0	0	0	0	0	0	0	0	0	0	0
4/27/2024	10:00 PM	0	0	0	0	0	0	0	0	0	0	0	0	0
4/27/2024	10:15 PM	0	0	0	0	0	0	0	0	0	0	0	0	0
4/27/2024	10:30 PM	0	0	0	0	0	0	0	0	0	0	0	0	0
4/27/2024	10:45 PM	0	0	0	0	0	0	0	0	0	0	0	0	0
4/27/2024	11:00 PM	0	0	0	0	0	0	0	0	0	0	0	0	0
4/27/2024	11:15 PM	0	0	0	0	0	0	0	0	0	0	0	0	0
4/27/2024	11:30 PM	0	0	0	0	0	0	0	0	0	0	0	0	0
4/27/2024	11:45 PM	0	0	0	0	0	0	0	0	0	0	0	0	0

WB
File Name:
Start Date: 4/21/2024
Start Time: 0
Site Code: 74 Lane 4 WB
Station ID: 1
Location 1: I-20, west of US-378 Sunset Blvd S/Bound Off-Ramp
Location 2:

Date	Time	1	2	3	4	5	6	7	8	9	10	11	12	13
4/21/2024	12:00 AM	0	1	0	0	0	0	0	0	0	0	0	0	0
4/21/2024	12:15 AM	0	4	0	0	0	0	0	0	0	0	0	0	0
4/21/2024	12:30 AM	0	4	0	0	0	0	0	0	0	0	0	0	0
4/21/2024	12:45 AM	0	1	0	0	0	0	0	0	0	0	0	0	0
4/21/2024	1:00 AM	0	3	1	0	0	0	0	0	0	0	0	0	0
4/21/2024	1:15 AM	0	5	1	0	0	0	0	0	0	0	0	0	0
4/21/2024	1:30 AM	0	3	0	0	0	0	0	0	0	0	0	0	0
4/21/2024	1:45 AM	0	3	0	0	0	0	0	0	0	0	0	0	0
4/21/2024	2:00 AM	0	1	0	0	0	0	0	0	0	0	0	0	0
4/21/2024	2:15 AM	0	2	0	0	0	0	0	0	0	0	0	0	0
4/21/2024	2:30 AM	0	1	0	0	0	0	0	0	0	0	0	0	0
4/21/2024	2:45 AM	0	0	0	0	0	0	0	0	0	0	0	0	0
4/21/2024	3:00 AM	0	1	0	0	0	0	0	0	0	0	0	0	0
4/21/2024	3:15 AM	0	0	0	0	0	0	0	0	0	0	0	0	0
4/21/2024	3:30 AM	0	0	0	0	0	0	0	0	0	0	0	0	0
4/21/2024	3:45 AM	0	0	0	0	0	0	0	0	0	0	0	0	0
4/21/2024	4:00 AM	0	0	0	0	0	0	0	0	0	0	0	0	0
4/21/2024	4:15 AM	0	0	0	0	0	0	0	0	0	0	0	0	0
4/21/2024	4:30 AM	0	0	0	0	0	0	0	0	0	0	0	0	0
4/21/2024	4:45 AM	0	0	0	0	0	0	0	0	0	0	0	0	0
4/21/2024	5:00 AM	0	0	0	0	0	0	0	0	0	0	0	0	0
4/21/2024	5:15 AM	0	1	0	0	0	0	0	0	0	0	0	0	0
4/21/2024	5:30 AM	0	1	0	0	0	0	0	0	0	0	0	0	0
4/21/2024	5:45 AM	0	0	0	0	0	0	0	0	0	0	0	0	0
4/21/2024	6:00 AM	0	0	1	0	0	0	0	0	0	0	0	0	0
4/21/2024	6:15 AM	0	3	0	0	0	0	0	0	0	0	0	0	0
4/21/2024	6:30 AM	0	2	0	0	0	0	0	0	0	0	0	0	0
4/21/2024	6:45 AM	0	1	1	0	0	0	0	0	0	0	0	0	0
4/21/2024	7:00 AM	0	3	1	0	0	0	0	1	0	0	0	0	0
4/21/2024	7:15 AM	0	5	0	0	0	0	0	0	0	0	0	0	0
4/21/2024	7:30 AM	0	6	0	0	0	0	0	0	0	0	0	0	0
4/21/2024	7:45 AM	0	2	1	0	0	0	0	0	0	0	0	0	0
4/21/2024	8:00 AM	0	3	0	0	0	0	0	0	0	0	0	0	0
4/21/2024	8:15 AM	0	2	2	0	0	0	0	0	0	0	0	0	0
4/21/2024	8:30 AM	0	7	1	0	0	0	0	0	0	0	0	0	0
4/21/2024	8:45 AM	0	7	1	0	0	0	0	0	0	0	0	0	0
4/21/2024	9:00 AM	0	7	0	0	0	0	0	0	0	0	0	0	0
4/21/2024	9:15 AM	0	10	2	0	0	0	0	0	0	0	0	0	0
4/21/2024	9:30 AM	0	7	3	0	0	0	0	0	0	0	0	0	0
4/21/2024	9:45 AM	0	10	2	0	0	0	0	0	0	0	0	0	0
4/21/2024	10:00 AM	0	12	2	0	0	0	0	0	0	0	0	0	0
4/21/2024	10:15 AM	0	10	1	0	0	0	0	0	0	0	0	0	0
4/21/2024	10:30 AM	0	14	2	0	0	0	1	0	1	0	0	0	0
4/21/2024	10:45 AM	0	21	3	0	0	0	0	0	0	0	0	0	0
4/21/2024	11:00 AM	0	12	5	0	0	0	0	0	0	0	0	0	0
4/21/2024	11:15 AM	0	12	2	0	0	0	0	0	0	0	0	0	0
4/21/2024	11:30 AM	0	20	4	0	0	0	0	0	0	0	0	0	0
4/21/2024	11:45 AM	1	20	5	0	0	0	0	0	0	0	0	0	0
4/21/2024	12:00 PM	0	16	5	0	0	0	0	0	0	0	0	0	0
4/21/2024	12:15 PM	0	14	5	0	0	0	0	0	0	0	0	0	0
4/21/2024	12:30 PM	0	22	3	0	0	0	0	0	0	0	0	0	0
4/21/2024	12:45 PM	0	20	3	0	0	0	0	0	0	0	0	0	0
4/21/2024	1:00 PM	0	19	4	0	0	0	0	0	0	0	0	0	0
4/21/2024	1:15 PM	0	15	3	0	0	0	0	0	0	0	0	0	0
4/21/2024	1:30 PM	0	34	9	0	0	0	0	0	0	0	0	0	0
4/21/2024	1:45 PM	0	22	6	0	0	0	0	0	0	0	0	0	0
4/21/2024	2:00 PM	0	43	6	0	0	0	0	0	0	0	0	0	0
4/21/2024	2:15 PM	0	27	4	0	0	0	0	0	0	0	0	0	0
4/21/2024	2:30 PM	0	17	5	0	0	0	0	0	0	0	0	0	0
4/21/2024	2:45 PM	0	18	5	0	0	0	0	0	0	0	0	0	0
4/21/2024	3:00 PM	0	25	9	0	0	0	0	0	0	0	0	0	0
4/21/2024	3:15 PM	0	22	6	0	0	0	0	0	0	0	0	0	0
4/21/2024	3:30 PM	0	23	6	0	0	0	0	0	0	0	0	0	0
4/21/2024	3:45 PM	0	20	3	0	0	0	0	0	0	0	0	0	0
4/21/2024	4:00 PM	0	15	3	0	0	0	0	0	0	0	0	0	0
4/21/2024	4:15 PM	0	24	5	0	0	0	0	0	0	0	0	0	0
4/21/2024	4:30 PM	0	19	3	0	1	0	0	0	0	0	0	0	0
4/21/2024	4:45 PM	0	13	0	0	0	0	0	0	0	0	0	0	0
4/21/2024	5:00 PM	0	13	4	0	0	0	0	0	0	0	0	0	0
4/21/2024	5:15 PM	0	8	9	0	1	0	0	0	0	0	0	0	0
4/21/2024	5:30 PM	0	10	6	0	0	0	0	0	0	0	0	0	0
4/21/2024	5:45 PM	0	15	4	0	0	0	0	0	0	0	0	0	0
4/21/2024	6:00 PM	0	20	4	0	0	0	0	0	0	0	0	0	0
4/21/2024	6:15 PM	0	10	4	0	0	0	0	0	0	0	0	0	0
4/21/2024	6:30 PM	0	15	3	0	0	0	0	0	0	0	0	0	0
4/21/2024	6:45 PM	0	17	3	0	0	0	0	0	0	0	0	0	0
4/21/2024	7:00 PM	0	6	3	0	0	0	0	0	0	0	0	0	0
4/21/2024	7:15 PM	0	11	4	0	0	0	0	0	0	0	0	0	0
4/21/2024	7:30 PM	0	12	3	0	1	0	0	0	0	0	0	0	0
4/21/2024	7:45 PM	0	10	1	0	0	0	0	0	0	0	0	0	0
4/21/2024	8:00 PM	0	12	4	0	0	0	0	0	0	0	0	0	0
4/21/2024	8:15 PM	0	12	1	0	0	0	0	0	0	0	0	0	0
4/21/2024	8:30 PM	0	8	2	0	0	0	0	0	0	0	0	0	0
4/21/2024	8:45 PM	0	2	2	0	0	0	0	0	0	0	0	0	0
4/21/2024	9:00 PM	0	10	1	0	1	0	0	0	0	0	0	0	0
4/21/2024	9:15 PM	0	13	3	0	0	0	0	0	0	0	0	0	0
4/21/2024	9:30 PM	0	3	0	0	0	0	0	0	0	0	0	0	0
4/21/2024	9:45 PM	0	7	0	0	0	0	0	0	0	0	0	0	0
4/21/2024	10:00 PM	0	5	0	0	0	0	0	0	0	0	0	0	0
4/21/2024	10:15 PM	0	3	1	0	0	0	0	0	0	0	0	0	0
4/21/2024	10:30 PM	0	1	0	0	0	0	0	0	0	0	0	0	0
4/21/2024	10:45 PM	0	2	0	0	0	0	0	0	0	0	0	0	0
4/21/2024	11:00 PM	0	0	0	0	0	0	0	0	0	0	0	0	0
4/21/2024	11:15 PM	0	1	0	0	0	0	0	0	0	0	0	0	0
4/21/2024	11:30 PM	0	2	0	0	0	0	0	0	0	0	0	0	0
4/21/2024	11:45 PM	0	1	0	0	1	0	0	0	0	0	0	0	0

4/22/2024	12:00 AM	0	3	0	0	0	0	0	0	0	0	0	0	0
4/22/2024	12:15 AM	0	0	0	0	0	0	0	0	0	0	0	0	0
4/22/2024	12:30 AM	0	1	0	0	0	0	0	0	0	0	0	0	0
4/22/2024	12:45 AM	0	0	0	0	0	0	0	0	0	0	0	0	0
4/22/2024	1:00 AM	0	1	0	0	0	0	0	0	0	0	0	0	0
4/22/2024	1:15 AM	0	0	0	0	0	0	0	0	0	0	0	0	0
4/22/2024	1:30 AM	0	0	0	0	0	0	0	0	0	0	0	0	0
4/22/2024	1:45 AM	0	1	0	0	0	0	0	0	0	0	0	0	0
4/22/2024	2:00 AM	0	0	0	0	0	0	0	0	0	0	0	0	0
4/22/2024	2:15 AM	0	0	0	0	0	0	0	0	0	0	0	0	0
4/22/2024	2:30 AM	0	0	0	0	0	0	0	0	0	0	0	0	0
4/22/2024	2:45 AM	0	0	0	0	0	0	0	0	0	0	0	0	0
4/22/2024	3:00 AM	0	1	0	0	0	0	0	0	0	0	0	0	0
4/22/2024	3:15 AM	0	0	0	0	0	0	0	0	0	0	0	0	0
4/22/2024	3:30 AM	0	0	0	0	0	0	0	0	0	0	0	0	0
4/22/2024	3:45 AM	0	0	0	0	0	0	0	0	0	0	0	0	0
4/22/2024	4:00 AM	0	0	0	0	0	0	0	0	0	0	0	0	0
4/22/2024	4:15 AM	0	0	0	0	0	0	0	0	0	0	0	0	0
4/22/2024	4:30 AM	0	0	0	0	0	0	0	0	0	0	0	0	0
4/22/2024	4:45 AM	0	0	0	0	0	0	0	0	0	0	0	0	0
4/22/2024	5:00 AM	0	2	0	0	0	0	0	0	0	0	0	0	0
4/22/2024	5:15 AM	0	4	0	0	0	0	0	0	0	0	0	0	0
4/22/2024	5:30 AM	0	5	0	0	0	0	0	0	0	0	0	0	0
4/22/2024	5:45 AM	0	10	0	0	1	0	0	0	0	0	0	0	0
4/22/2024	6:00 AM	0	12	0	0	0	0	0	0	1	0	0	0	0
4/22/2024	6:15 AM	0	13	3	0	0	0	0	0	0	0	0	0	0
4/22/2024	6:30 AM	0	12	3	0	1	0	0	1	0	0	0	0	0
4/22/2024	6:45 AM	0	13	3	0	0	1	0	0	0	0	0	0	0
4/22/2024	7:00 AM	0	25	7	0	2	0	0	0	1	0	0	0	0
4/22/2024	7:15 AM	0	25	8	1	1	0	0	0	0	0	0	0	0
4/22/2024	7:30 AM	0	30	7	0	1	0	0	0	0	0	0	0	0
4/22/2024	7:45 AM	0	32	5	2	0	0	0	0	0	0	0	0	0
4/22/2024	8:00 AM	0	27	7	1	0	0	0	0	0	0	0	0	0
4/22/2024	8:15 AM	0	16	5	1	0	0	0	0	0	0	0	0	0
4/22/2024	8:30 AM	0	17	7	0	1	0	0	0	0	0	0	0	0
4/22/2024	8:45 AM	0	29	4	1	1	0	0	0	0	0	0	0	0
4/22/2024	9:00 AM	0	21	12	1	1	0	0	1	0	0	0	0	0
4/22/2024	9:15 AM	0	14	8	0	0	1	0	0	0	0	0	0	0
4/22/2024	9:30 AM	0	24	6	0	1	0	0	0	0	0	0	0	0
4/22/2024	9:45 AM	0	21	10	0	1	0	0	0	0	0	0	0	0
4/22/2024	10:00 AM	0	37	12	0	0	1	0	0	0	0	0	0	0
4/22/2024	10:15 AM	0	18	6	0	1	0	0	0	0	0	0	0	0
4/22/2024	10:30 AM	0	25	4	0	0	0	0	1	0	0	0	0	0
4/22/2024	10:45 AM	0	17	8	0	0	0	0	1	0	0	0	0	0
4/22/2024	11:00 AM	0	17	5	0	0	0	0	0	0	0	0	0	0
4/22/2024	11:15 AM	0	25	4	0	2	0	0	0	2	0	0	0	0
4/22/2024	11:30 AM	0	21	7	1	2	0	0	0	0	0	0	0	0
4/22/2024	11:45 AM	0	31	5	3	0	0	0	0	0	0	0	0	0
4/22/2024	12:00 PM	0	36	8	0	2	0	0	1	0	0	0	0	0
4/22/2024	12:15 PM	0	40	9	1	2	0	0	0	0	0	0	0	0
4/22/2024	12:30 PM	0	20	11	2	1	0	0	0	0	0	0	0	0
4/22/2024	12:45 PM	0	38	7	0	1	1	0	0	0	1	0	0	0
4/22/2024	1:00 PM	0	33	6	0	0	0	0	1	0	0	0	0	0
4/22/2024	1:15 PM	0	34	13	0	0	0	0	1	0	0	0	0	0
4/22/2024	1:30 PM	0	23	6	0	0	0	0	1	0	0	0	0	0
4/22/2024	1:45 PM	0	27	12	0	0	0	0	0	0	0	1	0	0
4/22/2024	2:00 PM	0	24	9	2	0	0	0	0	0	0	0	0	0
4/22/2024	2:15 PM	0	39	11	0	0	0	0	0	0	0	0	0	0
4/22/2024	2:30 PM	0	22	12	0	1	0	0	0	0	0	0	0	0
4/22/2024	2:45 PM	0	39	17	0	0	0	0	0	1	0	0	0	0
4/22/2024	3:00 PM	0	44	9	0	1	0	0	0	0	0	0	0	0
4/22/2024	3:15 PM	0	49	12	0	2	0	1	0	0	0	0	0	0
4/22/2024	3:30 PM	0	51	7	2	0	0	0	2	0	0	0	0	0
4/22/2024	3:45 PM	0	50	12	1	0	0	0	1	0	0	0	0	0
4/22/2024	4:00 PM	0	61	11	0	2	0	0	0	0	0	0	0	0
4/22/2024	4:15 PM	0	54	17	1	0	0	0	0	0	0	0	0	0
4/22/2024	4:30 PM	0	43	12	1	0	0	0	0	0	0	0	0	0
4/22/2024	4:45 PM	0	53	9	0	0	0	0	0	0	0	0	0	0
4/22/2024	5:00 PM	0	64	12	1	1	0	0	0	0	0	0	0	0
4/22/2024	5:15 PM	0	58	14	0	1	0	0	0	0	0	0	0	0
4/22/2024	5:30 PM	0	33	7	0	1	0	0	0	0	0	0	0	0
4/22/2024	5:45 PM	0	26	7	0	1	0	0	0	0	0	0	0	0
4/22/2024	6:00 PM	0	40	8	0	2	0	0	0	0	0	0	0	0
4/22/2024	6:15 PM	0	29	6	0	1	0	0	0	0	0	0	0	0
4/22/2024	6:30 PM	0	28	6	0	0	0	0	0	1	0	0	0	0
4/22/2024	6:45 PM	0	15	7	0	0	0	0	1	0	0	0	0	0
4/22/2024	7:00 PM	0	20	5	0	1	0	0	0	0	0	0	0	0
4/22/2024	7:15 PM	0	27	9	0	0	0	0	0	0	0	0	0	0
4/22/2024	7:30 PM	0	11	0	0	0	0	0	0	0	0	0	0	0
4/22/2024	7:45 PM	0	17	1	0	0	0	0	0	0	0	0	0	0
4/22/2024	8:00 PM	0	31	2	0	0	0	0	0	0	0	0	0	0
4/22/2024	8:15 PM	0	25	2	0	0	0	0	0	0	0	0	0	0
4/22/2024	8:30 PM	0	14	2	0	0	0	0	0	1	0	0	0	0
4/22/2024	8:45 PM	0	15	3	0	0	0	0	0	0	0	0	0	0
4/22/2024	9:00 PM	0	10	2	0	0	0	0	0	0	0	0	0	0
4/22/2024	9:15 PM	0	10	6	0	0	0	0	0	0	0	0	0	0
4/22/2024	9:30 PM	0	8	1	0	0	0	0	0	1	0	0	0	0
4/22/2024	9:45 PM	0	10	3	0	0	0	0	0	2	0	0	0	0
4/22/2024	10:00 PM	0	6	0	0	0	0	0	0	0	0	0	0	0
4/22/2024	10:15 PM	0	4	0	0	0	0	0	0	0	0	0	0	0
4/22/2024	10:30 PM	0	3	0	0	0	0	0	0	0	0	0	0	0
4/22/2024	10:45 PM	0	6	0	0	0	0	0	0	0	0	0	0	0
4/22/2024	11:00 PM	0	6	0	0	0	0	0	0	0	0	0	0	0
4/22/2024	11:15 PM	0	3	0	0	0	0	0	0	0	0	0	0	0
4/22/2024	11:30 PM	0	0	0	0	0	0	0	0	0	0	0	0	0
4/22/2024	11:45 PM	0	0	0	0	0	0	0	0	0	0	0	0	0

4/23/2024	12:00 AM	0	1	0	0	0	0	0	0	0	0	0	0
4/23/2024	12:15 AM	0	0	0	0	0	0	0	0	0	0	0	0
4/23/2024	12:30 AM	0	1	0	0	0	0	0	0	0	0	0	0
4/23/2024	12:45 AM	0	0	0	0	0	0	0	0	0	0	0	0
4/23/2024	1:00 AM	0	1	0	0	0	0	0	0	0	0	0	0
4/23/2024	1:15 AM	0	0	0	0	0	0	0	0	0	0	0	0
4/23/2024	1:30 AM	0	0	0	0	0	0	0	0	0	0	0	0
4/23/2024	1:45 AM	0	0	0	0	0	0	0	0	0	0	0	0
4/23/2024	2:00 AM	0	0	0	0	0	0	0	0	0	0	0	0
4/23/2024	2:15 AM	0	1	0	0	0	0	0	0	0	0	0	0
4/23/2024	2:30 AM	0	0	0	0	0	0	0	0	0	0	0	0
4/23/2024	2:45 AM	0	0	0	0	0	0	0	0	0	0	0	0
4/23/2024	3:00 AM	0	0	0	0	0	0	0	0	0	0	0	0
4/23/2024	3:15 AM	0	0	0	0	0	0	0	0	0	0	0	0
4/23/2024	3:30 AM	0	0	0	0	1	0	0	0	0	0	0	0
4/23/2024	3:45 AM	0	0	0	0	0	0	0	0	0	0	0	0
4/23/2024	4:00 AM	0	0	0	0	0	0	0	0	0	0	0	0
4/23/2024	4:15 AM	0	0	0	0	0	0	0	0	0	0	0	0
4/23/2024	4:30 AM	0	0	0	0	0	0	0	0	0	0	0	0
4/23/2024	4:45 AM	0	0	0	0	0	0	0	0	0	0	0	0
4/23/2024	5:00 AM	0	0	0	0	0	0	0	0	0	0	0	0
4/23/2024	5:15 AM	0	0	0	0	0	0	0	0	0	0	0	0
4/23/2024	5:30 AM	0	1	0	0	0	0	0	0	0	0	0	0
4/23/2024	5:45 AM	0	3	0	0	0	0	0	0	0	0	0	0
4/23/2024	6:00 AM	0	4	0	0	0	0	0	0	0	0	0	0
4/23/2024	6:15 AM	0	10	4	0	0	0	0	0	1	0	0	0
4/23/2024	6:30 AM	0	13	6	0	0	0	0	0	0	0	0	0
4/23/2024	6:45 AM	0	11	5	0	0	0	0	0	0	0	0	0
4/23/2024	7:00 AM	0	19	5	0	0	0	0	0	1	0	0	0
4/23/2024	7:15 AM	0	22	5	0	0	0	0	0	0	0	0	0
4/23/2024	7:30 AM	0	19	5	0	0	0	0	1	0	0	0	0
4/23/2024	7:45 AM	0	30	10	2	0	0	0	0	0	0	0	0
4/23/2024	8:00 AM	0	27	17	1	1	0	0	0	0	0	0	0
4/23/2024	8:15 AM	0	19	2	1	1	0	0	1	0	0	0	0
4/23/2024	8:30 AM	0	19	8	0	0	0	0	0	0	0	0	0
4/23/2024	8:45 AM	0	29	7	3	1	0	0	0	0	0	0	0
4/23/2024	9:00 AM	0	17	10	0	0	0	0	0	0	0	0	0
4/23/2024	9:15 AM	0	16	9	0	0	0	0	0	0	0	0	0
4/23/2024	9:30 AM	0	20	8	0	2	0	0	0	1	0	0	0
4/23/2024	9:45 AM	0	23	8	0	2	0	0	0	0	0	0	0
4/23/2024	10:00 AM	0	26	7	0	0	0	0	0	0	0	0	0
4/23/2024	10:15 AM	0	20	4	0	0	0	0	0	0	0	0	0
4/23/2024	10:30 AM	0	20	7	0	1	0	0	0	0	0	0	0
4/23/2024	10:45 AM	0	22	8	0	2	0	0	1	0	0	0	0
4/23/2024	11:00 AM	0	21	7	0	1	0	0	0	0	0	0	0
4/23/2024	11:15 AM	0	27	9	1	2	0	0	0	1	0	0	0
4/23/2024	11:30 AM	0	19	8	0	0	1	0	0	0	0	0	0
4/23/2024	11:45 AM	0	31	9	3	1	0	0	0	0	0	0	0
4/23/2024	12:00 PM	0	25	7	0	2	1	0	0	0	0	0	0
4/23/2024	12:15 PM	0	20	11	2	2	0	0	0	1	0	0	0
4/23/2024	12:30 PM	0	19	12	1	1	0	0	0	0	0	0	0
4/23/2024	12:45 PM	0	26	8	0	0	0	0	1	0	0	0	0
4/23/2024	1:00 PM	0	24	11	0	1	0	0	0	0	0	0	0
4/23/2024	1:15 PM	0	28	12	0	1	0	0	1	0	0	0	0
4/23/2024	1:30 PM	0	30	8	0	0	0	0	0	1	0	0	0
4/23/2024	1:45 PM	0	17	4	0	0	0	0	0	0	0	0	0
4/23/2024	2:00 PM	0	21	9	1	0	0	0	0	0	0	0	0
4/23/2024	2:15 PM	0	33	9	1	0	0	0	0	0	0	0	0
4/23/2024	2:30 PM	0	33	8	1	0	0	0	0	1	0	0	0
4/23/2024	2:45 PM	0	46	6	1	0	0	0	0	0	0	0	0
4/23/2024	3:00 PM	0	45	13	0	0	0	0	0	0	0	0	0
4/23/2024	3:15 PM	0	49	14	0	2	0	0	0	0	0	0	0
4/23/2024	3:30 PM	0	46	8	1	2	0	0	0	0	0	0	0
4/23/2024	3:45 PM	0	61	7	1	1	0	0	0	0	0	0	0
4/23/2024	4:00 PM	0	44	13	0	1	0	0	1	0	0	0	0
4/23/2024	4:15 PM	0	53	10	0	0	0	0	0	0	0	0	0
4/23/2024	4:30 PM	2	36	15	0	1	0	0	0	0	0	0	0
4/23/2024	4:45 PM	0	43	8	1	0	0	0	0	0	0	0	0
4/23/2024	5:00 PM	0	46	14	0	0	0	0	0	0	0	0	0
4/23/2024	5:15 PM	0	29	4	0	1	0	0	0	0	0	0	0
4/23/2024	5:30 PM	0	31	12	0	0	0	0	0	0	0	0	0
4/23/2024	5:45 PM	0	30	12	0	0	0	0	0	0	0	0	0
4/23/2024	6:00 PM	0	30	3	0	1	0	0	0	0	0	0	0
4/23/2024	6:15 PM	0	33	12	0	0	0	0	1	0	0	0	0
4/23/2024	6:30 PM	0	24	7	0	0	0	0	0	0	0	0	0
4/23/2024	6:45 PM	0	22	5	0	0	0	0	0	0	0	0	0
4/23/2024	7:00 PM	0	19	9	0	1	0	0	0	0	0	0	0
4/23/2024	7:15 PM	0	14	5	0	0	0	0	0	1	0	0	0
4/23/2024	7:30 PM	0	27	7	0	0	0	0	0	0	0	0	0
4/23/2024	7:45 PM	0	28	6	0	0	0	0	0	0	0	0	0
4/23/2024	8:00 PM	0	23	5	0	0	0	0	0	0	0	0	0
4/23/2024	8:15 PM	0	13	3	0	0	0	0	0	0	0	0	0
4/23/2024	8:30 PM	0	11	2	0	0	0	0	0	0	0	0	0
4/23/2024	8:45 PM	0	10	3	0	0	0	0	0	0	0	0	0
4/23/2024	9:00 PM	0	11	2	0	0	0	0	0	0	0	0	0
4/23/2024	9:15 PM	0	10	5	0	0	0	0	0	0	0	0	0
4/23/2024	9:30 PM	0	5	2	0	0	0	0	0	0	0	0	0
4/23/2024	9:45 PM	0	3	1	1	0	0	0	0	0	0	0	0
4/23/2024	10:00 PM	0	5	2	0	0	0	0	0	0	0	0	0
4/23/2024	10:15 PM	0	3	0	0	0	0	0	0	0	0	0	0
4/23/2024	10:30 PM	0	4	0	0	0	0	0	0	0	0	0	0
4/23/2024	10:45 PM	0	0	0	0	0	0	0	0	0	0	0	0
4/23/2024	11:00 PM	0	0	0	0	0	0	0	0	0	0	0	0
4/23/2024	11:15 PM	0	2	0	0	0	0	0	0	0	0	0	0
4/23/2024	11:30 PM	0	0	0	0	0	0	0	0	0	0	0	0
4/23/2024	11:45 PM	0	1	0	0	0	0	0	0	0	0	0	0

4/24/2024	12:00 AM	0	0	0	0	0	0	0	0	0	0	0	0	0
4/24/2024	12:15 AM	0	0	1	0	0	0	0	0	0	0	0	0	0
4/24/2024	12:30 AM	0	0	0	0	0	0	0	0	1	0	0	0	0
4/24/2024	12:45 AM	0	1	1	0	0	0	0	0	0	0	0	0	0
4/24/2024	1:00 AM	0	2	0	0	0	0	0	0	0	0	0	0	0
4/24/2024	1:15 AM	0	0	0	0	0	0	0	0	0	0	0	0	0
4/24/2024	1:30 AM	0	1	0	0	0	0	0	0	0	0	0	0	0
4/24/2024	1:45 AM	0	1	0	0	0	0	0	0	0	0	0	0	0
4/24/2024	2:00 AM	0	0	0	0	0	0	0	0	0	0	0	0	0
4/24/2024	2:15 AM	0	0	0	0	0	0	0	0	0	0	0	0	0
4/24/2024	2:30 AM	0	0	0	0	0	0	0	0	0	0	0	0	0
4/24/2024	2:45 AM	0	1	0	0	0	0	0	0	0	0	0	0	0
4/24/2024	3:00 AM	0	1	0	0	0	0	0	0	0	0	0	0	0
4/24/2024	3:15 AM	0	0	0	0	1	0	0	0	0	0	0	0	0
4/24/2024	3:30 AM	0	0	0	0	0	0	0	0	0	0	0	0	0
4/24/2024	3:45 AM	0	1	0	0	0	0	0	0	0	0	0	0	0
4/24/2024	4:00 AM	0	0	0	0	0	0	0	0	0	0	0	0	0
4/24/2024	4:15 AM	0	1	0	0	0	0	0	0	0	0	0	0	0
4/24/2024	4:30 AM	0	0	0	0	0	0	0	0	0	0	0	0	0
4/24/2024	4:45 AM	0	1	0	0	0	0	0	0	0	0	0	0	0
4/24/2024	5:00 AM	0	2	0	0	0	0	0	0	0	0	0	0	0
4/24/2024	5:15 AM	0	5	0	0	0	0	0	0	0	0	0	0	0
4/24/2024	5:30 AM	0	5	0	0	0	0	0	0	1	0	0	0	0
4/24/2024	5:45 AM	0	3	1	0	0	0	0	0	1	0	0	0	0
4/24/2024	6:00 AM	0	5	1	0	0	0	0	0	0	0	0	0	0
4/24/2024	6:15 AM	0	15	7	0	0	0	0	0	0	0	0	0	0
4/24/2024	6:30 AM	0	12	4	0	0	0	0	0	0	0	0	0	0
4/24/2024	6:45 AM	0	16	3	0	0	0	0	0	0	0	0	0	0
4/24/2024	7:00 AM	0	19	5	0	1	0	0	0	0	0	0	0	0
4/24/2024	7:15 AM	0	25	8	1	0	0	0	0	0	0	0	0	0
4/24/2024	7:30 AM	0	25	6	0	1	0	0	0	0	0	0	0	0
4/24/2024	7:45 AM	0	26	9	2	0	0	0	0	0	0	0	0	0
4/24/2024	8:00 AM	0	44	8	2	0	0	0	0	0	0	0	0	0
4/24/2024	8:15 AM	0	26	10	2	1	0	0	0	0	0	0	0	0
4/24/2024	8:30 AM	0	20	4	1	2	0	0	0	0	0	0	0	0
4/24/2024	8:45 AM	0	21	4	2	2	0	0	0	0	0	0	0	0
4/24/2024	9:00 AM	0	23	9	0	0	0	0	1	0	0	0	0	0
4/24/2024	9:15 AM	0	17	8	0	3	1	0	1	0	0	0	0	0
4/24/2024	9:30 AM	0	22	4	0	0	0	0	0	0	0	0	0	0
4/24/2024	9:45 AM	0	23	9	0	1	0	0	0	1	0	0	0	0
4/24/2024	10:00 AM	0	23	4	0	1	1	0	2	0	0	0	0	0
4/24/2024	10:15 AM	0	16	4	0	0	0	0	0	0	0	0	0	0
4/24/2024	10:30 AM	0	17	3	0	2	0	0	0	0	0	0	0	0
4/24/2024	10:45 AM	0	23	6	0	4	0	0	0	0	0	0	0	0
4/24/2024	11:00 AM	0	29	6	0	1	0	0	0	0	0	0	0	0
4/24/2024	11:15 AM	0	20	14	1	1	0	0	0	0	0	0	0	0
4/24/2024	11:30 AM	0	23	5	1	0	0	0	0	0	0	0	0	0
4/24/2024	11:45 AM	0	20	5	0	0	0	0	1	0	0	0	0	0
4/24/2024	12:00 PM	0	19	6	0	2	0	0	0	1	0	0	0	0
4/24/2024	12:15 PM	0	11	3	2	1	0	0	0	0	0	0	0	0
4/24/2024	12:30 PM	0	23	6	0	1	0	0	0	0	0	0	0	0
4/24/2024	12:45 PM	0	32	8	1	1	0	1	0	1	0	0	0	0
4/24/2024	1:00 PM	0	23	7	0	1	0	0	0	0	0	0	0	0
4/24/2024	1:15 PM	1	25	13	0	1	0	0	0	0	0	0	0	0
4/24/2024	1:30 PM	0	29	11	1	1	0	0	1	0	0	0	0	0
4/24/2024	1:45 PM	0	25	7	0	1	0	0	0	0	0	0	0	0
4/24/2024	2:00 PM	0	22	8	3	0	0	1	0	0	0	0	0	0
4/24/2024	2:15 PM	0	30	8	0	0	0	0	0	1	0	0	0	0
4/24/2024	2:30 PM	0	27	7	0	2	0	0	0	0	0	0	0	0
4/24/2024	2:45 PM	0	44	9	0	2	1	0	0	0	0	0	0	0
4/24/2024	3:00 PM	0	49	8	0	2	0	0	0	0	0	0	0	0
4/24/2024	3:15 PM	0	50	12	0	0	0	0	0	0	0	0	0	0
4/24/2024	3:30 PM	0	41	15	1	2	0	0	1	0	1	0	0	0
4/24/2024	3:45 PM	0	43	21	2	3	0	0	0	0	0	0	0	0
4/24/2024	4:00 PM	0	74	14	1	0	0	0	0	0	0	0	0	0
4/24/2024	4:15 PM	0	55	20	0	0	0	0	0	0	0	0	0	0
4/24/2024	4:30 PM	0	52	12	0	0	0	0	1	0	0	0	0	0
4/24/2024	4:45 PM	0	48	15	2	0	0	0	1	0	0	0	0	0
4/24/2024	5:00 PM	0	68	19	0	0	0	0	0	0	0	0	0	0
4/24/2024	5:15 PM	0	51	13	0	0	0	0	1	0	0	0	0	0
4/24/2024	5:30 PM	2	29	9	0	0	0	0	0	1	0	0	0	0
4/24/2024	5:45 PM	0	32	15	0	0	0	0	0	0	1	0	0	0
4/24/2024	6:00 PM	0	40	14	0	0	0	0	0	0	0	0	0	0
4/24/2024	6:15 PM	0	31	7	0	1	0	0	0	0	0	0	0	0
4/24/2024	6:30 PM	0	31	10	0	1	0	0	0	0	0	0	0	0
4/24/2024	6:45 PM	0	25	5	0	0	0	0	0	0	0	0	0	0
4/24/2024	7:00 PM	0	31	2	0	1	0	0	0	0	0	0	0	0
4/24/2024	7:15 PM	0	28	11	0	1	0	0	0	0	0	0	0	0
4/24/2024	7:30 PM	0	24	8	0	0	0	0	0	0	0	0	0	0
4/24/2024	7:45 PM	0	23	4	0	0	0	0	0	0	0	0	0	0
4/24/2024	8:00 PM	0	18	2	0	0	0	0	0	0	0	0	0	0
4/24/2024	8:15 PM	0	21	1	0	0	0	0	0	0	0	0	0	0
4/24/2024	8:30 PM	0	16	2	0	0	0	0	0	0	0	0	0	0
4/24/2024	8:45 PM	0	23	3	0	0	0	0	0	1	0	0	0	0
4/24/2024	9:00 PM	0	15	5	0	0	0	0	0	0	0	0	0	0
4/24/2024	9:15 PM	0	12	2	0	0	0	0	0	0	0	0	0	0
4/24/2024	9:30 PM	0	11	1	0	0	0	0	0	0	0	0	0	0
4/24/2024	9:45 PM	0	10	3	0	0	0	0	0	0	0	0	0	0
4/24/2024	10:00 PM	0	7	0	0	1	0	0	0	0	0	0	0	0
4/24/2024	10:15 PM	0	5	0	0	0	0	0	0	0	0	0	0	0
4/24/2024	10:30 PM	0	3	0	0	0	0	0	0	0	0	0	0	0
4/24/2024	10:45 PM	0	2	0	0	0	0	0	0	0	0	0	0	0
4/24/2024	11:00 PM	0	1	0	0	0	0	0	0	1	0	0	0	0
4/24/2024	11:15 PM	0	1	0	0	0	0	0	0	0	0	0	0	0
4/24/2024	11:30 PM	0	4	0	0	0	0	0	0	0	0	0	0	0
4/24/2024	11:45 PM	0	3	0	0	0	0	0	0	0	0	0	0	0

4/25/2024	12:00 AM	0	0	0	0	0	0	0	0	0	0	0	0	0
4/25/2024	12:15 AM	0	0	0	0	0	0	0	0	0	0	0	0	0
4/25/2024	12:30 AM	0	1	0	0	0	0	0	0	0	0	0	0	0
4/25/2024	12:45 AM	0	0	0	0	0	0	0	0	0	0	0	0	0
4/25/2024	1:00 AM	0	3	0	0	0	0	0	0	0	0	0	0	0
4/25/2024	1:15 AM	0	0	0	0	0	0	0	0	0	0	0	0	0
4/25/2024	1:30 AM	0	0	0	0	0	0	0	0	0	0	0	0	0
4/25/2024	1:45 AM	0	0	0	0	0	0	0	0	0	0	0	0	0
4/25/2024	2:00 AM	0	0	0	0	0	0	0	0	0	0	0	0	0
4/25/2024	2:15 AM	0	0	0	0	0	0	0	0	0	0	0	0	0
4/25/2024	2:30 AM	0	1	0	0	0	0	0	0	0	0	0	0	0
4/25/2024	2:45 AM	0	2	0	0	0	0	0	0	0	0	0	0	0
4/25/2024	3:00 AM	0	0	0	0	0	0	0	0	0	0	0	0	0
4/25/2024	3:15 AM	0	1	0	0	0	0	0	0	0	0	0	0	0
4/25/2024	3:30 AM	0	0	0	0	0	0	0	0	0	0	0	0	0
4/25/2024	3:45 AM	0	2	1	0	0	0	0	0	0	0	0	0	0
4/25/2024	4:00 AM	0	0	0	0	0	0	0	0	0	0	0	0	0
4/25/2024	4:15 AM	0	1	0	0	0	0	0	0	0	0	0	0	0
4/25/2024	4:30 AM	0	2	2	0	0	0	0	0	0	0	0	0	0
4/25/2024	4:45 AM	0	3	0	0	0	0	0	0	0	0	0	0	0
4/25/2024	5:00 AM	0	0	0	0	0	0	0	0	0	0	0	0	0
4/25/2024	5:15 AM	0	4	0	0	0	0	0	0	0	0	0	0	0
4/25/2024	5:30 AM	0	8	0	0	0	0	0	0	0	0	0	0	0
4/25/2024	5:45 AM	0	8	0	0	0	0	0	0	0	0	0	0	0
4/25/2024	6:00 AM	0	12	1	0	0	0	0	0	0	0	0	0	0
4/25/2024	6:15 AM	0	6	4	0	1	0	0	0	0	0	0	0	0
4/25/2024	6:30 AM	0	16	5	0	0	0	0	0	0	0	0	0	0
4/25/2024	6:45 AM	0	18	4	0	0	0	0	2	0	0	0	0	0
4/25/2024	7:00 AM	0	21	10	0	0	0	0	0	0	0	0	0	0
4/25/2024	7:15 AM	0	27	6	1	0	0	0	0	1	0	0	0	0
4/25/2024	7:30 AM	0	25	5	0	0	0	0	0	0	0	0	0	0
4/25/2024	7:45 AM	0	24	5	2	0	0	0	2	0	0	0	0	0
4/25/2024	8:00 AM	0	34	9	2	0	0	0	0	0	0	0	0	0
4/25/2024	8:15 AM	0	22	11	1	0	0	0	0	0	0	0	0	0
4/25/2024	8:30 AM	0	21	8	1	0	0	0	0	0	0	0	0	0
4/25/2024	8:45 AM	0	16	7	1	1	0	0	0	0	0	0	0	0
4/25/2024	9:00 AM	0	22	8	1	0	0	0	0	0	0	0	0	0
4/25/2024	9:15 AM	0	20	7	0	1	0	0	0	0	0	0	0	0
4/25/2024	9:30 AM	0	20	4	0	1	0	0	0	0	0	0	0	0
4/25/2024	9:45 AM	0	19	8	0	0	0	0	0	0	0	0	0	0
4/25/2024	10:00 AM	0	17	9	0	0	0	0	0	0	0	0	0	0
4/25/2024	10:15 AM	0	19	6	0	1	0	0	2	0	0	0	0	0
4/25/2024	10:30 AM	0	33	7	0	1	0	0	1	0	0	0	0	0
4/25/2024	10:45 AM	0	20	10	0	1	0	0	0	0	0	0	0	0
4/25/2024	11:00 AM	0	25	6	0	1	0	0	0	1	0	0	0	0
4/25/2024	11:15 AM	0	24	10	0	0	0	0	0	0	0	0	0	0
4/25/2024	11:30 AM	0	15	11	1	0	0	0	0	0	0	0	0	0
4/25/2024	11:45 AM	1	19	6	1	0	0	0	0	0	0	0	0	0
4/25/2024	12:00 PM	0	32	11	0	1	0	0	1	0	0	0	0	0
4/25/2024	12:15 PM	0	26	7	1	3	0	0	1	0	0	0	0	0
4/25/2024	12:30 PM	0	35	6	0	0	0	0	0	0	0	0	0	0
4/25/2024	12:45 PM	0	41	12	0	1	0	1	0	0	0	0	0	0
4/25/2024	1:00 PM	0	31	10	1	0	0	0	2	0	0	0	0	0
4/25/2024	1:15 PM	0	35	12	0	1	0	0	1	0	0	0	0	0
4/25/2024	1:30 PM	0	33	13	0	0	0	0	0	0	0	0	0	0
4/25/2024	1:45 PM	1	41	11	0	2	0	0	0	1	0	0	0	0
4/25/2024	2:00 PM	0	30	13	3	1	1	0	1	1	0	0	0	0
4/25/2024	2:15 PM	0	42	12	0	0	0	0	0	0	0	0	0	0
4/25/2024	2:30 PM	0	31	11	0	0	0	0	0	1	0	0	0	0
4/25/2024	2:45 PM	0	53	8	0	0	0	0	0	0	0	0	0	0
4/25/2024	3:00 PM	0	40	13	0	0	1	0	0	0	0	0	0	0
4/25/2024	3:15 PM	0	50	12	0	1	0	0	0	0	0	0	0	0
4/25/2024	3:30 PM	1	49	10	1	2	0	0	0	0	0	0	0	0
4/25/2024	3:45 PM	0	51	10	1	2	0	1	1	0	0	0	0	0
4/25/2024	4:00 PM	0	52	13	0	0	1	0	0	0	0	0	0	0
4/25/2024	4:15 PM	1	48	12	1	1	0	0	0	0	0	0	0	0
4/25/2024	4:30 PM	0	41	12	1	0	0	0	0	0	0	0	0	0
4/25/2024	4:45 PM	0	44	10	2	2	0	0	0	0	0	0	0	0
4/25/2024	5:00 PM	0	71	12	0	0	0	0	1	0	0	0	0	0
4/25/2024	5:15 PM	0	46	7	0	1	0	0	0	0	0	0	0	0
4/25/2024	5:30 PM	0	48	9	0	0	0	0	0	0	0	0	0	0
4/25/2024	5:45 PM	0	46	4	0	0	0	0	0	0	0	0	0	0
4/25/2024	6:00 PM	0	31	12	0	0	0	0	0	0	0	0	0	0
4/25/2024	6:15 PM	1	28	6	0	0	0	0	0	0	0	0	0	0
4/25/2024	6:30 PM	0	28	10	0	0	0	0	0	0	0	0	0	0
4/25/2024	6:45 PM	0	16	8	0	1	0	0	1	0	0	0	0	0
4/25/2024	7:00 PM	0	35	6	0	0	0	0	0	0	0	0	0	0
4/25/2024	7:15 PM	0	29	8	0	1	0	0	0	0	0	0	0	0
4/25/2024	7:30 PM	0	25	5	0	0	0	0	0	0	0	0	0	0
4/25/2024	7:45 PM	0	25	8	0	1	0	0	0	1	0	0	0	0
4/25/2024	8:00 PM	0	29	2	0	0	0	0	0	0	0	0	0	0
4/25/2024	8:15 PM	0	23	3	0	0	0	0	0	0	0	0	0	0
4/25/2024	8:30 PM	0	21	0	0	0	0	0	0	0	0	0	0	0
4/25/2024	8:45 PM	0	18	1	0	0	0	0	0	0	0	0	0	0
4/25/2024	9:00 PM	0	28	1	0	1	0	0	0	0	0	0	0	0
4/25/2024	9:15 PM	0	19	0	0	0	0	0	0	0	0	0	0	0
4/25/2024	9:30 PM	0	15	0	0	0	0	0	0	0	0	0	0	0
4/25/2024	9:45 PM	0	15	1	0	0	0	0	0	0	0	0	0	0
4/25/2024	10:00 PM	0	10	2	0	0	0	0	0	0	0	0	0	0
4/25/2024	10:15 PM	0	10	1	0	0	0	0	0	0	0	0	0	0
4/25/2024	10:30 PM	0	8	0	0	0	0	0	0	0	0	0	0	0
4/25/2024	10:45 PM	0	7	0	0	0	0	0	0	0	0	0	0	0
4/25/2024	11:00 PM	0	10	0	0	0	0	0	0	1	0	0	0	0
4/25/2024	11:15 PM	0	0	0	0	0	0	0	0	0	0	0	0	0
4/25/2024	11:30 PM	0	3	0	0	0	0	0	0	0	0	0	0	0
4/25/2024	11:45 PM	0	1	0	0	0	0	0	0	0	0	0	0	0

4/26/2024	12:00 AM	0	0	0	0	0	0	0	0	0	0	0	0	0
4/26/2024	12:15 AM	0	0	0	0	0	0	0	0	0	0	0	0	0
4/26/2024	12:30 AM	0	0	0	0	0	0	0	0	0	0	0	0	0
4/26/2024	12:45 AM	0	0	0	0	0	0	0	0	0	0	0	0	0
4/26/2024	1:00 AM	0	0	0	0	1	0	0	0	0	0	0	0	0
4/26/2024	1:15 AM	0	0	0	0	0	0	0	0	0	0	0	0	0
4/26/2024	1:30 AM	0	0	0	0	0	0	0	0	0	0	0	0	0
4/26/2024	1:45 AM	0	0	0	0	0	0	0	0	0	0	0	0	0
4/26/2024	2:00 AM	0	0	0	0	0	0	0	0	0	0	0	0	0
4/26/2024	2:15 AM	0	0	0	0	0	0	0	0	0	0	0	0	0
4/26/2024	2:30 AM	0	3	0	0	0	0	0	0	0	0	0	0	0
4/26/2024	2:45 AM	0	0	0	0	0	0	0	0	0	0	0	0	0
4/26/2024	3:00 AM	0	0	0	0	0	0	0	0	0	0	0	0	0
4/26/2024	3:15 AM	0	1	0	0	0	0	0	0	0	0	0	0	0
4/26/2024	3:30 AM	0	0	0	0	0	0	0	0	0	0	0	0	0
4/26/2024	3:45 AM	0	0	0	0	0	0	0	0	0	0	0	0	0
4/26/2024	4:00 AM	0	0	0	0	0	0	0	0	0	0	0	0	0
4/26/2024	4:15 AM	0	0	0	0	1	0	0	0	0	0	0	0	0
4/26/2024	4:30 AM	0	0	0	0	0	0	0	0	0	0	0	0	0
4/26/2024	4:45 AM	0	0	0	0	0	0	0	0	0	0	0	0	0
4/26/2024	5:00 AM	0	1	0	0	0	0	0	0	0	0	0	0	0
4/26/2024	5:15 AM	0	0	0	0	0	0	0	0	0	0	0	0	0
4/26/2024	5:30 AM	0	2	0	0	0	0	0	0	0	0	0	0	0
4/26/2024	5:45 AM	0	4	0	0	0	0	0	0	0	0	0	0	0
4/26/2024	6:00 AM	0	5	1	0	0	0	0	0	0	0	0	0	0
4/26/2024	6:15 AM	0	6	3	0	0	0	0	0	0	0	0	0	0
4/26/2024	6:30 AM	0	8	1	0	0	0	0	0	0	0	0	0	0
4/26/2024	6:45 AM	0	14	8	0	0	0	0	0	0	0	0	0	0
4/26/2024	7:00 AM	0	14	5	0	1	0	0	0	0	0	0	0	0
4/26/2024	7:15 AM	0	29	4	1	0	0	0	1	0	0	0	0	0
4/26/2024	7:30 AM	0	15	9	1	0	0	0	0	0	0	0	0	0
4/26/2024	7:45 AM	0	40	8	1	0	0	0	0	0	0	0	0	0
4/26/2024	8:00 AM	0	31	8	3	0	0	0	0	0	0	0	0	0
4/26/2024	8:15 AM	0	21	8	2	2	1	0	0	0	0	0	0	0
4/26/2024	8:30 AM	0	32	6	2	1	0	0	0	1	0	0	0	0
4/26/2024	8:45 AM	0	25	14	2	0	0	0	0	0	0	0	0	0
4/26/2024	9:00 AM	0	26	11	0	0	0	0	0	1	0	0	0	0
4/26/2024	9:15 AM	0	15	5	0	0	0	0	0	1	0	0	0	0
4/26/2024	9:30 AM	0	15	7	0	0	0	0	0	0	0	0	0	0
4/26/2024	9:45 AM	0	23	9	0	1	0	0	0	0	0	0	0	0
4/26/2024	10:00 AM	0	28	8	0	0	0	0	0	1	0	0	0	0
4/26/2024	10:15 AM	0	18	10	0	0	0	0	0	0	0	0	0	0
4/26/2024	10:30 AM	0	16	6	0	0	0	0	0	0	0	0	0	0
4/26/2024	10:45 AM	0	18	8	0	1	0	0	0	0	0	0	0	0
4/26/2024	11:00 AM	0	23	6	0	2	0	0	0	0	0	0	0	0
4/26/2024	11:15 AM	0	28	5	1	0	0	0	0	0	0	0	0	0
4/26/2024	11:30 AM	0	23	6	2	1	1	0	0	0	0	0	0	0
4/26/2024	11:45 AM	0	28	11	1	0	0	0	0	0	0	0	0	0
4/26/2024	12:00 PM	0	31	8	0	0	0	0	0	0	0	0	0	0
4/26/2024	12:15 PM	0	27	9	1	1	0	0	0	0	0	0	0	0
4/26/2024	12:30 PM	0	27	2	0	0	0	0	2	0	0	0	0	0
4/26/2024	12:45 PM	0	26	10	0	0	0	0	1	0	0	0	0	0
4/26/2024	1:00 PM	0	26	11	0	1	1	0	0	0	0	0	0	0
4/26/2024	1:15 PM	0	32	4	0	0	0	0	0	0	0	0	0	0
4/26/2024	1:30 PM	0	30	8	1	1	0	0	1	0	0	0	0	0
4/26/2024	1:45 PM	0	32	13	1	0	0	0	0	0	0	0	0	0
4/26/2024	2:00 PM	0	45	13	2	0	1	0	0	0	0	0	0	0
4/26/2024	2:15 PM	0	26	9	0	1	0	0	0	0	0	0	0	0
4/26/2024	2:30 PM	0	38	16	0	0	1	0	0	0	0	0	0	0
4/26/2024	2:45 PM	0	36	14	0	3	0	0	0	0	0	0	0	0
4/26/2024	3:00 PM	0	49	13	0	1	1	0	0	0	0	0	0	0
4/26/2024	3:15 PM	0	56	11	0	1	0	0	0	0	0	0	0	0
4/26/2024	3:30 PM	1	56	12	0	0	0	0	0	0	0	0	0	0
4/26/2024	3:45 PM	0	46	16	2	2	0	0	0	0	0	0	0	0
4/26/2024	4:00 PM	1	58	17	0	1	0	0	0	0	0	0	0	0
4/26/2024	4:15 PM	0	36	6	1	2	0	0	0	0	0	0	0	0
4/26/2024	4:30 PM	0	40	12	0	3	0	0	0	0	0	0	0	0
4/26/2024	4:45 PM	0	43	14	1	0	0	0	0	0	0	0	0	0
4/26/2024	5:00 PM	0	46	16	1	0	0	0	0	0	0	0	0	0
4/26/2024	5:15 PM	0	47	12	0	0	0	0	0	0	0	0	0	0
4/26/2024	5:30 PM	0	35	15	0	1	0	0	0	0	0	0	0	0
4/26/2024	5:45 PM	0	34	5	0	1	0	0	0	0	0	0	0	0
4/26/2024	6:00 PM	0	43	11	0	0	0	0	2	0	0	0	0	0
4/26/2024	6:15 PM	0	30	6	0	0	0	0	0	0	0	0	0	0
4/26/2024	6:30 PM	0	29	12	0	0	0	0	0	0	0	0	0	0
4/26/2024	6:45 PM	0	35	7	0	0	0	0	0	0	0	0	0	0
4/26/2024	7:00 PM	0	27	4	0	0	0	0	0	0	0	0	0	0
4/26/2024	7:15 PM	0	26	7	0	0	0	0	0	0	0	0	0	0
4/26/2024	7:30 PM	0	26	9	0	0	0	0	0	0	0	0	0	0
4/26/2024	7:45 PM	0	20	8	0	0	0	0	0	0	0	0	0	0
4/26/2024	8:00 PM	1	23	10	0	0	0	0	0	1	0	0	0	0
4/26/2024	8:15 PM	0	18	8	0	0	0	0	0	0	0	0	0	0
4/26/2024	8:30 PM	1	14	6	0	0	0	0	0	0	0	0	0	0
4/26/2024	8:45 PM	0	15	6	0	0	0	0	0	0	0	0	0	0
4/26/2024	9:00 PM	0	8	2	0	0	0	0	0	0	0	0	0	0
4/26/2024	9:15 PM	0	10	4	0	0	0	0	0	0	0	0	0	0
4/26/2024	9:30 PM	0	11	3	0	0	0	0	0	1	0	0	0	0
4/26/2024	9:45 PM	0	15	7	0	0	0	0	0	0	0	0	0	0
4/26/2024	10:00 PM	0	6	2	0	0	0	0	0	0	0	0	0	0
4/26/2024	10:15 PM	0	10	3	0	1	0	0	0	0	0	0	0	0
4/26/2024	10:30 PM	0	4	0	0	0	0	0	0	0	0	0	0	0
4/26/2024	10:45 PM	0	3	0	0	0	0	0	0	0	0	0	0	0
4/26/2024	11:00 PM	0	5	1	0	0	0	0	0	0	0	0	0	0
4/26/2024	11:15 PM	0	4	0	0	0	0	0	0	0	0	0	0	0
4/26/2024	11:30 PM	0	5	0	0	0	0	0	0	0	0	0	0	0
4/26/2024	11:45 PM	0	5	1	0	0	0	0	0	0	0	0	0	0

4/27/2024	12:00 AM	0	1	0	0	0	0	0	0	0	0	0	0
4/27/2024	12:15 AM	0	2	1	0	0	0	0	0	0	0	0	0
4/27/2024	12:30 AM	1	1	1	0	0	0	0	0	0	0	0	0
4/27/2024	12:45 AM	0	1	1	0	0	0	0	0	0	0	0	0
4/27/2024	1:00 AM	0	1	0	0	0	0	0	0	0	0	0	0
4/27/2024	1:15 AM	0	2	1	0	0	0	0	0	0	0	0	0
4/27/2024	1:30 AM	0	1	0	0	0	0	0	0	0	0	0	0
4/27/2024	1:45 AM	0	1	1	0	0	0	0	0	0	0	0	0
4/27/2024	2:00 AM	0	0	0	0	0	0	0	0	0	0	0	0
4/27/2024	2:15 AM	0	0	0	0	0	0	0	0	0	0	0	0
4/27/2024	2:30 AM	0	0	0	0	0	0	0	0	0	0	0	0
4/27/2024	2:45 AM	0	0	0	0	0	0	0	0	0	0	0	0
4/27/2024	3:00 AM	0	0	0	0	0	0	0	0	0	0	0	0
4/27/2024	3:15 AM	0	0	0	0	0	0	0	0	0	0	0	0
4/27/2024	3:30 AM	0	1	0	0	0	0	0	0	0	0	0	0
4/27/2024	3:45 AM	0	0	0	0	0	0	0	0	0	0	0	0
4/27/2024	4:00 AM	0	0	0	0	0	0	0	0	0	0	0	0
4/27/2024	4:15 AM	0	1	0	0	0	0	0	0	0	0	0	0
4/27/2024	4:30 AM	0	1	0	0	0	0	0	0	0	0	0	0
4/27/2024	4:45 AM	0	1	0	0	0	0	0	0	0	0	0	0
4/27/2024	5:00 AM	0	1	0	0	0	0	0	0	0	0	0	0
4/27/2024	5:15 AM	0	1	1	0	0	0	0	0	0	0	0	0
4/27/2024	5:30 AM	0	4	2	0	1	0	0	0	0	0	0	0
4/27/2024	5:45 AM	0	1	1	0	0	0	0	0	0	0	0	0
4/27/2024	6:00 AM	0	4	2	0	0	0	0	0	0	0	0	0
4/27/2024	6:15 AM	0	1	2	0	0	0	0	0	0	0	0	0
4/27/2024	6:30 AM	0	5	5	0	0	0	0	0	0	0	0	0
4/27/2024	6:45 AM	0	7	2	0	0	0	0	0	0	0	0	0
4/27/2024	7:00 AM	0	4	7	0	0	0	0	0	0	0	0	0
4/27/2024	7:15 AM	0	7	2	0	0	0	0	0	0	0	0	0
4/27/2024	7:30 AM	0	7	4	0	0	0	0	0	1	0	0	0
4/27/2024	7:45 AM	0	16	4	0	0	0	0	0	0	0	0	0
4/27/2024	8:00 AM	0	14	6	0	1	0	0	0	0	0	0	0
4/27/2024	8:15 AM	0	16	3	0	0	0	0	0	0	0	0	0
4/27/2024	8:30 AM	0	14	9	0	0	0	0	0	0	0	0	0
4/27/2024	8:45 AM	0	13	7	0	0	0	0	0	0	0	0	0
4/27/2024	9:00 AM	0	28	2	0	0	0	0	0	1	0	0	0
4/27/2024	9:15 AM	0	16	8	0	0	0	0	0	0	0	0	0
4/27/2024	9:30 AM	0	20	3	0	0	0	0	0	0	0	0	0
4/27/2024	9:45 AM	0	17	6	0	1	0	0	0	1	0	0	0
4/27/2024	10:00 AM	0	35	7	0	0	0	0	0	0	0	0	0
4/27/2024	10:15 AM	0	29	5	0	0	0	0	0	0	0	0	0
4/27/2024	10:30 AM	0	17	4	0	0	0	0	0	0	0	0	0
4/27/2024	10:45 AM	0	25	9	0	2	0	0	0	0	0	0	0
4/27/2024	11:00 AM	1	31	7	0	0	0	0	0	0	0	0	0
4/27/2024	11:15 AM	0	30	13	0	0	0	0	0	1	0	0	0
4/27/2024	11:30 AM	0	33	12	0	0	1	0	0	0	0	0	0
4/27/2024	11:45 AM	0	33	5	0	0	0	0	0	0	0	0	0
4/27/2024	12:00 PM	0	35	9	0	0	0	0	0	0	0	0	0
4/27/2024	12:15 PM	0	23	9	0	0	0	0	0	0	0	0	0
4/27/2024	12:30 PM	0	32	9	0	1	0	0	1	0	0	0	0
4/27/2024	12:45 PM	0	31	5	0	1	0	0	0	0	0	0	0
4/27/2024	1:00 PM	0	44	8	0	1	0	0	0	0	0	0	0
4/27/2024	1:15 PM	0	29	7	0	0	0	0	0	0	0	0	0
4/27/2024	1:30 PM	0	26	7	0	0	0	0	0	0	0	0	0
4/27/2024	1:45 PM	0	42	9	0	0	0	0	0	0	0	0	0
4/27/2024	2:00 PM	0	28	8	0	0	0	0	0	0	0	0	0
4/27/2024	2:15 PM	0	37	5	0	0	0	0	0	0	0	0	0
4/27/2024	2:30 PM	0	26	6	0	0	0	0	0	0	0	0	0
4/27/2024	2:45 PM	0	33	5	0	1	0	0	0	0	0	0	0
4/27/2024	3:00 PM	0	30	5	0	0	0	0	0	0	0	0	0
4/27/2024	3:15 PM	0	24	4	0	0	0	0	0	0	0	0	0
4/27/2024	3:30 PM	3	20	5	0	0	0	0	0	0	0	0	0
4/27/2024	3:45 PM	0	31	2	0	0	0	0	0	0	0	0	0
4/27/2024	4:00 PM	0	27	7	0	0	0	0	0	0	0	0	0
4/27/2024	4:15 PM	0	22	6	0	0	0	0	0	0	0	0	0
4/27/2024	4:30 PM	0	38	3	0	0	0	0	0	0	0	0	0
4/27/2024	4:45 PM	0	27	3	0	1	0	0	0	0	0	0	0
4/27/2024	5:00 PM	0	24	2	0	1	0	0	0	0	0	0	0
4/27/2024	5:15 PM	0	14	5	0	1	0	0	1	0	0	0	0
4/27/2024	5:30 PM	0	26	6	0	0	0	0	0	0	0	0	0
4/27/2024	5:45 PM	0	30	2	0	0	0	0	0	0	0	0	0
4/27/2024	6:00 PM	0	23	5	0	0	0	0	0	0	0	0	0
4/27/2024	6:15 PM	0	20	4	0	0	0	0	0	0	0	0	0
4/27/2024	6:30 PM	0	24	7	0	1	0	0	0	0	0	0	0
4/27/2024	6:45 PM	0	24	8	0	0	0	0	0	0	0	0	0
4/27/2024	7:00 PM	0	21	5	0	1	0	0	0	0	0	0	0
4/27/2024	7:15 PM	0	20	6	0	0	0	0	0	0	0	0	0
4/27/2024	7:30 PM	0	21	3	0	0	0	0	0	0	0	0	0
4/27/2024	7:45 PM	0	23	6	0	1	0	0	0	0	0	0	0
4/27/2024	8:00 PM	0	22	3	0	0	0	0	0	0	0	0	0
4/27/2024	8:15 PM	0	26	5	0	0	0	0	0	0	0	0	0
4/27/2024	8:30 PM	0	8	4	0	0	0	0	1	0	0	0	0
4/27/2024	8:45 PM	0	7	3	0	0	0	0	0	0	0	0	0
4/27/2024	9:00 PM	0	5	2	0	0	0	0	0	0	0	0	0
4/27/2024	9:15 PM	0	7	4	0	0	0	0	0	0	0	0	0
4/27/2024	9:30 PM	0	8	3	0	0	0	0	0	0	0	0	0
4/27/2024	9:45 PM	0	10	3	0	0	0	0	0	0	0	0	0
4/27/2024	10:00 PM	0	6	2	0	0	0	0	0	0	0	0	0
4/27/2024	10:15 PM	0	7	2	0	0	0	0	0	0	0	0	0
4/27/2024	10:30 PM	0	3	1	0	0	0	0	0	0	0	0	0
4/27/2024	10:45 PM	0	3	2	0	0	0	0	0	0	0	0	0
4/27/2024	11:00 PM	0	1	1	0	0	0	0	0	0	0	0	0
4/27/2024	11:15 PM	0	1	1	0	0	0	0	0	0	0	0	0
4/27/2024	11:30 PM	0	2	1	0	0	0	0	0	0	0	0	0
4/27/2024	11:45 PM	0	1	0	0	0	0	0	0	0	0	0	0

EB
File Name:
Start Date: 4/21/2024
Start Time: 0
Site Code: 74 Lane 4 WB
Station ID: 1
Location 1: I-20, west of US-378 Sunset Blvd S/Bound Off-Ramp
Location 2:

Date	Time	1	2	3	4	5	6	7	8	9	10	11	12	13
4/21/2024	12:00 AM	0	0	0	0	0	0	0	0	0	0	0	0	0
4/21/2024	12:15 AM	0	0	0	0	0	0	0	0	0	0	0	0	0
4/21/2024	12:30 AM	0	0	0	0	0	0	0	0	0	0	0	0	0
4/21/2024	12:45 AM	0	0	0	0	0	0	0	0	0	0	0	0	0
4/21/2024	1:00 AM	0	0	0	0	0	0	0	0	0	0	0	0	0
4/21/2024	1:15 AM	0	0	0	0	0	0	0	0	0	0	0	0	0
4/21/2024	1:30 AM	0	0	0	0	0	0	0	0	0	0	0	0	0
4/21/2024	1:45 AM	0	0	0	0	0	0	0	0	0	0	0	0	0
4/21/2024	2:00 AM	0	0	0	0	0	0	0	0	0	0	0	0	0
4/21/2024	2:15 AM	0	0	0	0	0	0	0	0	0	0	0	0	0
4/21/2024	2:30 AM	0	0	0	0	0	0	0	0	0	0	0	0	0
4/21/2024	2:45 AM	0	0	0	0	0	0	0	0	0	0	0	0	0
4/21/2024	3:00 AM	0	0	0	0	0	0	0	0	0	0	0	0	0
4/21/2024	3:15 AM	0	0	0	0	0	0	0	0	0	0	0	0	0
4/21/2024	3:30 AM	0	0	0	0	0	0	0	0	0	0	0	0	0
4/21/2024	3:45 AM	0	0	0	0	0	0	0	0	0	0	0	0	0
4/21/2024	4:00 AM	0	0	0	0	0	0	0	0	0	0	0	0	0
4/21/2024	4:15 AM	0	0	0	0	0	0	0	0	0	0	0	0	0
4/21/2024	4:30 AM	0	0	0	0	0	0	0	0	0	0	0	0	0
4/21/2024	4:45 AM	0	0	0	0	0	0	0	0	0	0	0	0	0
4/21/2024	5:00 AM	0	0	0	0	0	0	0	0	0	0	0	0	0
4/21/2024	5:15 AM	0	0	0	0	0	0	0	0	0	0	0	0	0
4/21/2024	5:30 AM	0	0	0	0	0	0	0	0	0	0	0	0	0
4/21/2024	5:45 AM	0	0	0	0	0	0	0	0	0	0	0	0	0
4/21/2024	6:00 AM	0	0	0	0	0	0	0	0	0	0	0	0	0
4/21/2024	6:15 AM	0	0	0	0	0	0	0	0	0	0	0	0	0
4/21/2024	6:30 AM	0	0	0	0	0	0	0	0	0	0	0	0	0
4/21/2024	6:45 AM	0	0	0	0	0	0	0	0	0	0	0	0	0
4/21/2024	7:00 AM	0	0	0	0	0	0	0	0	0	0	0	0	0
4/21/2024	7:15 AM	0	0	0	0	0	0	0	0	0	0	0	0	0
4/21/2024	7:30 AM	0	0	0	0	0	0	0	0	0	0	0	0	0
4/21/2024	7:45 AM	0	0	0	0	0	0	0	0	0	0	0	0	0
4/21/2024	8:00 AM	0	0	0	0	0	0	0	0	0	0	0	0	0
4/21/2024	8:15 AM	0	0	0	0	0	0	0	0	0	0	0	0	0
4/21/2024	8:30 AM	0	0	0	0	0	0	0	0	0	0	0	0	0
4/21/2024	8:45 AM	0	0	0	0	0	0	0	0	0	0	0	0	0
4/21/2024	9:00 AM	0	0	0	0	0	0	0	0	0	0	0	0	0
4/21/2024	9:15 AM	0	0	0	0	0	0	0	0	0	0	0	0	0
4/21/2024	9:30 AM	0	0	0	0	0	0	0	0	0	0	0	0	0
4/21/2024	9:45 AM	0	0	0	0	0	0	0	0	0	0	0	0	0
4/21/2024	10:00 AM	0	0	0	0	0	0	0	0	0	0	0	0	0
4/21/2024	10:15 AM	0	0	0	0	0	0	0	0	0	0	0	0	0
4/21/2024	10:30 AM	0	0	0	0	0	0	0	0	0	0	0	0	0
4/21/2024	10:45 AM	0	0	0	0	0	0	0	0	0	0	0	0	0
4/21/2024	11:00 AM	0	0	0	0	0	0	0	0	0	0	0	0	0
4/21/2024	11:15 AM	0	0	0	0	0	0	0	0	0	0	0	0	0
4/21/2024	11:30 AM	0	0	0	0	0	0	0	0	0	0	0	0	0
4/21/2024	11:45 AM	0	0	0	0	0	0	0	0	0	0	0	0	0
4/21/2024	12:00 PM	0	0	0	0	0	0	0	0	0	0	0	0	0
4/21/2024	12:15 PM	0	0	0	0	0	0	0	0	0	0	0	0	0
4/21/2024	12:30 PM	0	0	0	0	0	0	0	0	0	0	0	0	0
4/21/2024	12:45 PM	0	0	0	0	0	0	0	0	0	0	0	0	0
4/21/2024	1:00 PM	0	0	0	0	0	0	0	0	0	0	0	0	0
4/21/2024	1:15 PM	0	0	0	0	0	0	0	0	0	0	0	0	0
4/21/2024	1:30 PM	0	0	0	0	0	0	0	0	0	0	0	0	0
4/21/2024	1:45 PM	0	0	0	0	0	0	0	0	0	0	0	0	0
4/21/2024	2:00 PM	0	0	0	0	0	0	0	0	0	0	0	0	0
4/21/2024	2:15 PM	0	0	0	0	0	0	0	0	0	0	0	0	0
4/21/2024	2:30 PM	0	0	0	0	0	0	0	0	0	0	0	0	0
4/21/2024	2:45 PM	0	0	0	0	0	0	0	0	0	0	0	0	0
4/21/2024	3:00 PM	0	0	0	0	0	0	0	0	0	0	0	0	0
4/21/2024	3:15 PM	0	0	0	0	0	0	0	0	0	0	0	0	0
4/21/2024	3:30 PM	0	0	0	0	0	0	0	0	0	0	0	0	0
4/21/2024	3:45 PM	0	0	0	0	0	0	0	0	0	0	0	0	0
4/21/2024	4:00 PM	0	0	0	0	0	0	0	0	0	0	0	0	0
4/21/2024	4:15 PM	0	0	0	0	0	0	0	0	0	0	0	0	0
4/21/2024	4:30 PM	0	0	0	0	0	0	0	0	0	0	0	0	0
4/21/2024	4:45 PM	0	0	0	0	0	0	0	0	0	0	0	0	0
4/21/2024	5:00 PM	0	0	0	0	0	0	0	0	0	0	0	0	0
4/21/2024	5:15 PM	0	0	0	0	0	0	0	0	0	0	0	0	0
4/21/2024	5:30 PM	0	0	0	0	0	0	0	0	0	0	0	0	0
4/21/2024	5:45 PM	0	0	0	0	0	0	0	0	0	0	0	0	0
4/21/2024	6:00 PM	0	0	0	0	0	0	0	0	0	0	0	0	0
4/21/2024	6:15 PM	0	0	0	0	0	0	0	0	0	0	0	0	0
4/21/2024	6:30 PM	0	0	0	0	0	0	0	0	0	0	0	0	0
4/21/2024	6:45 PM	0	0	0	0	0	0	0	0	0	0	0	0	0
4/21/2024	7:00 PM	0	0	0	0	0	0	0	0	0	0	0	0	0
4/21/2024	7:15 PM	0	0	0	0	0	0	0	0	0	0	0	0	0
4/21/2024	7:30 PM	0	0	0	0	0	0	0	0	0	0	0	0	0
4/21/2024	7:45 PM	0	0	0	0	0	0	0	0	0	0	0	0	0
4/21/2024	8:00 PM	0	0	0	0	0	0	0	0	0	0	0	0	0
4/21/2024	8:15 PM	0	0	0	0	0	0	0	0	0	0	0	0	0
4/21/2024	8:30 PM	0	0	0	0	0	0	0	0	0	0	0	0	0
4/21/2024	8:45 PM	0	0	0	0	0	0	0	0	0	0	0	0	0
4/21/2024	9:00 PM	0	0	0	0	0	0	0	0	0	0	0	0	0
4/21/2024	9:15 PM	0	0	0	0	0	0	0	0	0	0	0	0	0
4/21/2024	9:30 PM	0	0	0	0	0	0	0	0	0	0	0	0	0
4/21/2024	9:45 PM	0	0	0	0	0	0	0	0	0	0	0	0	0
4/21/2024	10:00 PM	0	0	0	0	0	0	0	0	0	0	0	0	0
4/21/2024	10:15 PM	0	0	0	0	0	0	0	0	0	0	0	0	0
4/21/2024	10:30 PM	0	0	0	0	0	0	0	0	0	0	0	0	0
4/21/2024	10:45 PM	0	0	0	0	0	0	0	0	0	0	0	0	0
4/21/2024	11:00 PM	0	0	0	0	0	0	0	0	0	0	0	0	0
4/21/2024	11:15 PM	0	0	0	0	0	0	0	0	0	0	0	0	0
4/21/2024	11:30 PM	0	0	0	0	0	0	0	0	0	0	0	0	0
4/21/2024	11:45 PM	0	0	0	0	0	0	0	0	0	0	0	0	0

4/22/2024	12:00 AM	0	0	0	0	0	0	0	0	0	0	0	0	0
4/22/2024	12:15 AM	0	0	0	0	0	0	0	0	0	0	0	0	0
4/22/2024	12:30 AM	0	0	0	0	0	0	0	0	0	0	0	0	0
4/22/2024	12:45 AM	0	0	0	0	0	0	0	0	0	0	0	0	0
4/22/2024	1:00 AM	0	0	0	0	0	0	0	0	0	0	0	0	0
4/22/2024	1:15 AM	0	0	0	0	0	0	0	0	0	0	0	0	0
4/22/2024	1:30 AM	0	0	0	0	0	0	0	0	0	0	0	0	0
4/22/2024	1:45 AM	0	0	0	0	0	0	0	0	0	0	0	0	0
4/22/2024	2:00 AM	0	0	0	0	0	0	0	0	0	0	0	0	0
4/22/2024	2:15 AM	0	0	0	0	0	0	0	0	0	0	0	0	0
4/22/2024	2:30 AM	0	0	0	0	0	0	0	0	0	0	0	0	0
4/22/2024	2:45 AM	0	0	0	0	0	0	0	0	0	0	0	0	0
4/22/2024	3:00 AM	0	0	0	0	0	0	0	0	0	0	0	0	0
4/22/2024	3:15 AM	0	0	0	0	0	0	0	0	0	0	0	0	0
4/22/2024	3:30 AM	0	0	0	0	0	0	0	0	0	0	0	0	0
4/22/2024	3:45 AM	0	0	0	0	0	0	0	0	0	0	0	0	0
4/22/2024	4:00 AM	0	0	0	0	0	0	0	0	0	0	0	0	0
4/22/2024	4:15 AM	0	0	0	0	0	0	0	0	0	0	0	0	0
4/22/2024	4:30 AM	0	0	0	0	0	0	0	0	0	0	0	0	0
4/22/2024	4:45 AM	0	0	0	0	0	0	0	0	0	0	0	0	0
4/22/2024	5:00 AM	0	0	0	0	0	0	0	0	0	0	0	0	0
4/22/2024	5:15 AM	0	0	0	0	0	0	0	0	0	0	0	0	0
4/22/2024	5:30 AM	0	0	0	0	0	0	0	0	0	0	0	0	0
4/22/2024	5:45 AM	0	0	0	0	0	0	0	0	0	0	0	0	0
4/22/2024	6:00 AM	0	0	0	0	0	0	0	0	0	0	0	0	0
4/22/2024	6:15 AM	0	0	0	0	0	0	0	0	0	0	0	0	0
4/22/2024	6:30 AM	0	0	0	0	0	0	0	0	0	0	0	0	0
4/22/2024	6:45 AM	0	0	0	0	0	0	0	0	0	0	0	0	0
4/22/2024	7:00 AM	0	0	0	0	0	0	0	0	0	0	0	0	0
4/22/2024	7:15 AM	0	0	0	0	0	0	0	0	0	0	0	0	0
4/22/2024	7:30 AM	0	0	0	0	0	0	0	0	0	0	0	0	0
4/22/2024	7:45 AM	0	0	0	0	0	0	0	0	0	0	0	0	0
4/22/2024	8:00 AM	0	0	0	0	0	0	0	0	0	0	0	0	0
4/22/2024	8:15 AM	0	0	0	0	0	0	0	0	0	0	0	0	0
4/22/2024	8:30 AM	0	0	0	0	0	0	0	0	0	0	0	0	0
4/22/2024	8:45 AM	0	0	0	0	0	0	0	0	0	0	0	0	0
4/22/2024	9:00 AM	0	0	0	0	0	0	0	0	0	0	0	0	0
4/22/2024	9:15 AM	0	0	0	0	0	0	0	0	0	0	0	0	0
4/22/2024	9:30 AM	0	0	0	0	0	0	0	0	0	0	0	0	0
4/22/2024	9:45 AM	0	0	0	0	0	0	0	0	0	0	0	0	0
4/22/2024	10:00 AM	0	0	0	0	0	0	0	0	0	0	0	0	0
4/22/2024	10:15 AM	0	0	0	0	0	0	0	0	0	0	0	0	0
4/22/2024	10:30 AM	0	0	0	0	0	0	0	0	0	0	0	0	0
4/22/2024	10:45 AM	0	0	0	0	0	0	0	0	0	0	0	0	0
4/22/2024	11:00 AM	0	0	0	0	0	0	0	0	0	0	0	0	0
4/22/2024	11:15 AM	0	0	0	0	0	0	0	0	0	0	0	0	0
4/22/2024	11:30 AM	0	0	0	0	0	0	0	0	0	0	0	0	0
4/22/2024	11:45 AM	0	0	0	0	0	0	0	0	0	0	0	0	0
4/22/2024	12:00 PM	0	0	0	0	0	0	0	0	0	0	0	0	0
4/22/2024	12:15 PM	0	0	0	0	0	0	0	0	0	0	0	0	0
4/22/2024	12:30 PM	0	0	0	0	0	0	0	0	0	0	0	0	0
4/22/2024	12:45 PM	0	0	0	0	0	0	0	0	0	0	0	0	0
4/22/2024	1:00 PM	0	0	0	0	0	0	0	0	0	0	0	0	0
4/22/2024	1:15 PM	0	0	0	0	0	0	0	0	0	0	0	0	0
4/22/2024	1:30 PM	0	0	0	0	0	0	0	0	0	0	0	0	0
4/22/2024	1:45 PM	0	0	0	0	0	0	0	0	0	0	0	0	0
4/22/2024	2:00 PM	0	0	0	0	0	0	0	0	0	0	0	0	0
4/22/2024	2:15 PM	0	0	0	0	0	0	0	0	0	0	0	0	0
4/22/2024	2:30 PM	0	0	0	0	0	0	0	0	0	0	0	0	0
4/22/2024	2:45 PM	0	0	0	0	0	0	0	0	0	0	0	0	0
4/22/2024	3:00 PM	0	0	0	0	0	0	0	0	0	0	0	0	0
4/22/2024	3:15 PM	0	0	0	0	0	0	0	0	0	0	0	0	0
4/22/2024	3:30 PM	0	0	0	0	0	0	0	0	0	0	0	0	0
4/22/2024	3:45 PM	0	0	0	0	0	0	0	0	0	0	0	0	0
4/22/2024	4:00 PM	0	0	0	0	0	0	0	0	0	0	0	0	0
4/22/2024	4:15 PM	0	0	0	0	0	0	0	0	0	0	0	0	0
4/22/2024	4:30 PM	0	0	0	0	0	0	0	0	0	0	0	0	0
4/22/2024	4:45 PM	0	0	0	0	0	0	0	0	0	0	0	0	0
4/22/2024	5:00 PM	0	0	0	0	0	0	0	0	0	0	0	0	0
4/22/2024	5:15 PM	0	0	0	0	0	0	0	0	0	0	0	0	0
4/22/2024	5:30 PM	0	0	0	0	0	0	0	0	0	0	0	0	0
4/22/2024	5:45 PM	0	0	0	0	0	0	0	0	0	0	0	0	0
4/22/2024	6:00 PM	0	0	0	0	0	0	0	0	0	0	0	0	0
4/22/2024	6:15 PM	0	0	0	0	0	0	0	0	0	0	0	0	0
4/22/2024	6:30 PM	0	0	0	0	0	0	0	0	0	0	0	0	0
4/22/2024	6:45 PM	0	0	0	0	0	0	0	0	0	0	0	0	0
4/22/2024	7:00 PM	0	0	0	0	0	0	0	0	0	0	0	0	0
4/22/2024	7:15 PM	0	0	0	0	0	0	0	0	0	0	0	0	0
4/22/2024	7:30 PM	0	0	0	0	0	0	0	0	0	0	0	0	0
4/22/2024	7:45 PM	0	0	0	0	0	0	0	0	0	0	0	0	0
4/22/2024	8:00 PM	0	0	0	0	0	0	0	0	0	0	0	0	0
4/22/2024	8:15 PM	0	0	0	0	0	0	0	0	0	0	0	0	0
4/22/2024	8:30 PM	0	0	0	0	0	0	0	0	0	0	0	0	0
4/22/2024	8:45 PM	0	0	0	0	0	0	0	0	0	0	0	0	0
4/22/2024	9:00 PM	0	0	0	0	0	0	0	0	0	0	0	0	0
4/22/2024	9:15 PM	0	0	0	0	0	0	0	0	0	0	0	0	0
4/22/2024	9:30 PM	0	0	0	0	0	0	0	0	0	0	0	0	0
4/22/2024	9:45 PM	0	0	0	0	0	0	0	0	0	0	0	0	0
4/22/2024	10:00 PM	0	0	0	0	0	0	0	0	0	0	0	0	0
4/22/2024	10:15 PM	0	0	0	0	0	0	0	0	0	0	0	0	0
4/22/2024	10:30 PM	0	0	0	0	0	0	0	0	0	0	0	0	0
4/22/2024	10:45 PM	0	0	0	0	0	0	0	0	0	0	0	0	0
4/22/2024	11:00 PM	0	0	0	0	0	0	0	0	0	0	0	0	0
4/22/2024	11:15 PM	0	0	0	0	0	0	0	0	0	0	0	0	0
4/22/2024	11:30 PM	0	0	0	0	0	0	0	0	0	0	0	0	0
4/22/2024	11:45 PM	0	0	0	0	0	0	0	0	0	0	0	0	0

4/23/2024	12:00 AM	0	0	0	0	0	0	0	0	0	0	0	0	0
4/23/2024	12:15 AM	0	0	0	0	0	0	0	0	0	0	0	0	0
4/23/2024	12:30 AM	0	0	0	0	0	0	0	0	0	0	0	0	0
4/23/2024	12:45 AM	0	0	0	0	0	0	0	0	0	0	0	0	0
4/23/2024	1:00 AM	0	0	0	0	0	0	0	0	0	0	0	0	0
4/23/2024	1:15 AM	0	0	0	0	0	0	0	0	0	0	0	0	0
4/23/2024	1:30 AM	0	0	0	0	0	0	0	0	0	0	0	0	0
4/23/2024	1:45 AM	0	0	0	0	0	0	0	0	0	0	0	0	0
4/23/2024	2:00 AM	0	0	0	0	0	0	0	0	0	0	0	0	0
4/23/2024	2:15 AM	0	0	0	0	0	0	0	0	0	0	0	0	0
4/23/2024	2:30 AM	0	0	0	0	0	0	0	0	0	0	0	0	0
4/23/2024	2:45 AM	0	0	0	0	0	0	0	0	0	0	0	0	0
4/23/2024	3:00 AM	0	0	0	0	0	0	0	0	0	0	0	0	0
4/23/2024	3:15 AM	0	0	0	0	0	0	0	0	0	0	0	0	0
4/23/2024	3:30 AM	0	0	0	0	0	0	0	0	0	0	0	0	0
4/23/2024	3:45 AM	0	0	0	0	0	0	0	0	0	0	0	0	0
4/23/2024	4:00 AM	0	0	0	0	0	0	0	0	0	0	0	0	0
4/23/2024	4:15 AM	0	0	0	0	0	0	0	0	0	0	0	0	0
4/23/2024	4:30 AM	0	0	0	0	0	0	0	0	0	0	0	0	0
4/23/2024	4:45 AM	0	0	0	0	0	0	0	0	0	0	0	0	0
4/23/2024	5:00 AM	0	0	0	0	0	0	0	0	0	0	0	0	0
4/23/2024	5:15 AM	0	0	0	0	0	0	0	0	0	0	0	0	0
4/23/2024	5:30 AM	0	0	0	0	0	0	0	0	0	0	0	0	0
4/23/2024	5:45 AM	0	0	0	0	0	0	0	0	0	0	0	0	0
4/23/2024	6:00 AM	0	0	0	0	0	0	0	0	0	0	0	0	0
4/23/2024	6:15 AM	0	0	0	0	0	0	0	0	0	0	0	0	0
4/23/2024	6:30 AM	0	0	0	0	0	0	0	0	0	0	0	0	0
4/23/2024	6:45 AM	0	0	0	0	0	0	0	0	0	0	0	0	0
4/23/2024	7:00 AM	0	0	0	0	0	0	0	0	0	0	0	0	0
4/23/2024	7:15 AM	0	0	0	0	0	0	0	0	0	0	0	0	0
4/23/2024	7:30 AM	0	0	0	0	0	0	0	0	0	0	0	0	0
4/23/2024	7:45 AM	0	0	0	0	0	0	0	0	0	0	0	0	0
4/23/2024	8:00 AM	0	0	0	0	0	0	0	0	0	0	0	0	0
4/23/2024	8:15 AM	0	0	0	0	0	0	0	0	0	0	0	0	0
4/23/2024	8:30 AM	0	0	0	0	0	0	0	0	0	0	0	0	0
4/23/2024	8:45 AM	0	0	0	0	0	0	0	0	0	0	0	0	0
4/23/2024	9:00 AM	0	0	0	0	0	0	0	0	0	0	0	0	0
4/23/2024	9:15 AM	0	0	0	0	0	0	0	0	0	0	0	0	0
4/23/2024	9:30 AM	0	0	0	0	0	0	0	0	0	0	0	0	0
4/23/2024	9:45 AM	0	0	0	0	0	0	0	0	0	0	0	0	0
4/23/2024	10:00 AM	0	0	0	0	0	0	0	0	0	0	0	0	0
4/23/2024	10:15 AM	0	0	0	0	0	0	0	0	0	0	0	0	0
4/23/2024	10:30 AM	0	0	0	0	0	0	0	0	0	0	0	0	0
4/23/2024	10:45 AM	0	0	0	0	0	0	0	0	0	0	0	0	0
4/23/2024	11:00 AM	0	0	0	0	0	0	0	0	0	0	0	0	0
4/23/2024	11:15 AM	0	0	0	0	0	0	0	0	0	0	0	0	0
4/23/2024	11:30 AM	0	0	0	0	0	0	0	0	0	0	0	0	0
4/23/2024	11:45 AM	0	0	0	0	0	0	0	0	0	0	0	0	0
4/23/2024	12:00 PM	0	0	0	0	0	0	0	0	0	0	0	0	0
4/23/2024	12:15 PM	0	0	0	0	0	0	0	0	0	0	0	0	0
4/23/2024	12:30 PM	0	0	0	0	0	0	0	0	0	0	0	0	0
4/23/2024	12:45 PM	0	0	0	0	0	0	0	0	0	0	0	0	0
4/23/2024	1:00 PM	0	0	0	0	0	0	0	0	0	0	0	0	0
4/23/2024	1:15 PM	0	0	0	0	0	0	0	0	0	0	0	0	0
4/23/2024	1:30 PM	0	0	0	0	0	0	0	0	0	0	0	0	0
4/23/2024	1:45 PM	0	0	0	0	0	0	0	0	0	0	0	0	0
4/23/2024	2:00 PM	0	0	0	0	0	0	0	0	0	0	0	0	0
4/23/2024	2:15 PM	0	0	0	0	0	0	0	0	0	0	0	0	0
4/23/2024	2:30 PM	0	0	0	0	0	0	0	0	0	0	0	0	0
4/23/2024	2:45 PM	0	0	0	0	0	0	0	0	0	0	0	0	0
4/23/2024	3:00 PM	0	0	0	0	0	0	0	0	0	0	0	0	0
4/23/2024	3:15 PM	0	0	0	0	0	0	0	0	0	0	0	0	0
4/23/2024	3:30 PM	0	0	0	0	0	0	0	0	0	0	0	0	0
4/23/2024	3:45 PM	0	0	0	0	0	0	0	0	0	0	0	0	0
4/23/2024	4:00 PM	0	0	0	0	0	0	0	0	0	0	0	0	0
4/23/2024	4:15 PM	0	0	0	0	0	0	0	0	0	0	0	0	0
4/23/2024	4:30 PM	0	0	0	0	0	0	0	0	0	0	0	0	0
4/23/2024	4:45 PM	0	0	0	0	0	0	0	0	0	0	0	0	0
4/23/2024	5:00 PM	0	0	0	0	0	0	0	0	0	0	0	0	0
4/23/2024	5:15 PM	0	0	0	0	0	0	0	0	0	0	0	0	0
4/23/2024	5:30 PM	0	0	0	0	0	0	0	0	0	0	0	0	0
4/23/2024	5:45 PM	0	0	0	0	0	0	0	0	0	0	0	0	0
4/23/2024	6:00 PM	0	0	0	0	0	0	0	0	0	0	0	0	0
4/23/2024	6:15 PM	0	0	0	0	0	0	0	0	0	0	0	0	0
4/23/2024	6:30 PM	0	0	0	0	0	0	0	0	0	0	0	0	0
4/23/2024	6:45 PM	0	0	0	0	0	0	0	0	0	0	0	0	0
4/23/2024	7:00 PM	0	0	0	0	0	0	0	0	0	0	0	0	0
4/23/2024	7:15 PM	0	0	0	0	0	0	0	0	0	0	0	0	0
4/23/2024	7:30 PM	0	0	0	0	0	0	0	0	0	0	0	0	0
4/23/2024	7:45 PM	0	0	0	0	0	0	0	0	0	0	0	0	0
4/23/2024	8:00 PM	0	0	0	0	0	0	0	0	0	0	0	0	0
4/23/2024	8:15 PM	0	0	0	0	0	0	0	0	0	0	0	0	0
4/23/2024	8:30 PM	0	0	0	0	0	0	0	0	0	0	0	0	0
4/23/2024	8:45 PM	0	0	0	0	0	0	0	0	0	0	0	0	0
4/23/2024	9:00 PM	0	0	0	0	0	0	0	0	0	0	0	0	0
4/23/2024	9:15 PM	0	0	0	0	0	0	0	0	0	0	0	0	0
4/23/2024	9:30 PM	0	0	0	0	0	0	0	0	0	0	0	0	0
4/23/2024	9:45 PM	0	0	0	0	0	0	0	0	0	0	0	0	0
4/23/2024	10:00 PM	0	0	0	0	0	0	0	0	0	0	0	0	0
4/23/2024	10:15 PM	0	0	0	0	0	0	0	0	0	0	0	0	0
4/23/2024	10:30 PM	0	0	0	0	0	0	0	0	0	0	0	0	0
4/23/2024	10:45 PM	0	0	0	0	0	0	0	0	0	0	0	0	0
4/23/2024	11:00 PM	0	0	0	0	0	0	0	0	0	0	0	0	0
4/23/2024	11:15 PM	0	0	0	0	0	0	0	0	0	0	0	0	0
4/23/2024	11:30 PM	0	0	0	0	0	0	0	0	0	0	0	0	0
4/23/2024	11:45 PM	0	0	0	0	0	0	0	0	0	0	0	0	0

4/24/2024	12:00 AM	0	0	0	0	0	0	0	0	0	0	0	0	0
4/24/2024	12:15 AM	0	0	0	0	0	0	0	0	0	0	0	0	0
4/24/2024	12:30 AM	0	0	0	0	0	0	0	0	0	0	0	0	0
4/24/2024	12:45 AM	0	0	0	0	0	0	0	0	0	0	0	0	0
4/24/2024	1:00 AM	0	0	0	0	0	0	0	0	0	0	0	0	0
4/24/2024	1:15 AM	0	0	0	0	0	0	0	0	0	0	0	0	0
4/24/2024	1:30 AM	0	0	0	0	0	0	0	0	0	0	0	0	0
4/24/2024	1:45 AM	0	0	0	0	0	0	0	0	0	0	0	0	0
4/24/2024	2:00 AM	0	0	0	0	0	0	0	0	0	0	0	0	0
4/24/2024	2:15 AM	0	0	0	0	0	0	0	0	0	0	0	0	0
4/24/2024	2:30 AM	0	0	0	0	0	0	0	0	0	0	0	0	0
4/24/2024	2:45 AM	0	0	0	0	0	0	0	0	0	0	0	0	0
4/24/2024	3:00 AM	0	0	0	0	0	0	0	0	0	0	0	0	0
4/24/2024	3:15 AM	0	0	0	0	0	0	0	0	0	0	0	0	0
4/24/2024	3:30 AM	0	0	0	0	0	0	0	0	0	0	0	0	0
4/24/2024	3:45 AM	0	0	0	0	0	0	0	0	0	0	0	0	0
4/24/2024	4:00 AM	0	0	0	0	0	0	0	0	0	0	0	0	0
4/24/2024	4:15 AM	0	0	0	0	0	0	0	0	0	0	0	0	0
4/24/2024	4:30 AM	0	0	0	0	0	0	0	0	0	0	0	0	0
4/24/2024	4:45 AM	0	0	0	0	0	0	0	0	0	0	0	0	0
4/24/2024	5:00 AM	0	0	0	0	0	0	0	0	0	0	0	0	0
4/24/2024	5:15 AM	0	0	0	0	0	0	0	0	0	0	0	0	0
4/24/2024	5:30 AM	0	0	0	0	0	0	0	0	0	0	0	0	0
4/24/2024	5:45 AM	0	0	0	0	0	0	0	0	0	0	0	0	0
4/24/2024	6:00 AM	0	0	0	0	0	0	0	0	0	0	0	0	0
4/24/2024	6:15 AM	0	0	0	0	0	0	0	0	0	0	0	0	0
4/24/2024	6:30 AM	0	0	0	0	0	0	0	0	0	0	0	0	0
4/24/2024	6:45 AM	0	0	0	0	0	0	0	0	0	0	0	0	0
4/24/2024	7:00 AM	0	0	0	0	0	0	0	0	0	0	0	0	0
4/24/2024	7:15 AM	0	0	0	0	0	0	0	0	0	0	0	0	0
4/24/2024	7:30 AM	0	0	0	0	0	0	0	0	0	0	0	0	0
4/24/2024	7:45 AM	0	0	0	0	0	0	0	0	0	0	0	0	0
4/24/2024	8:00 AM	0	0	0	0	0	0	0	0	0	0	0	0	0
4/24/2024	8:15 AM	0	0	0	0	0	0	0	0	0	0	0	0	0
4/24/2024	8:30 AM	0	0	0	0	0	0	0	0	0	0	0	0	0
4/24/2024	8:45 AM	0	0	0	0	0	0	0	0	0	0	0	0	0
4/24/2024	9:00 AM	0	0	0	0	0	0	0	0	0	0	0	0	0
4/24/2024	9:15 AM	0	0	0	0	0	0	0	0	0	0	0	0	0
4/24/2024	9:30 AM	0	0	0	0	0	0	0	0	0	0	0	0	0
4/24/2024	9:45 AM	0	0	0	0	0	0	0	0	0	0	0	0	0
4/24/2024	10:00 AM	0	0	0	0	0	0	0	0	0	0	0	0	0
4/24/2024	10:15 AM	0	0	0	0	0	0	0	0	0	0	0	0	0
4/24/2024	10:30 AM	0	0	0	0	0	0	0	0	0	0	0	0	0
4/24/2024	10:45 AM	0	0	0	0	0	0	0	0	0	0	0	0	0
4/24/2024	11:00 AM	0	0	0	0	0	0	0	0	0	0	0	0	0
4/24/2024	11:15 AM	0	0	0	0	0	0	0	0	0	0	0	0	0
4/24/2024	11:30 AM	0	0	0	0	0	0	0	0	0	0	0	0	0
4/24/2024	11:45 AM	0	0	0	0	0	0	0	0	0	0	0	0	0
4/24/2024	12:00 PM	0	0	0	0	0	0	0	0	0	0	0	0	0
4/24/2024	12:15 PM	0	0	0	0	0	0	0	0	0	0	0	0	0
4/24/2024	12:30 PM	0	0	0	0	0	0	0	0	0	0	0	0	0
4/24/2024	12:45 PM	0	0	0	0	0	0	0	0	0	0	0	0	0
4/24/2024	1:00 PM	0	0	0	0	0	0	0	0	0	0	0	0	0
4/24/2024	1:15 PM	0	0	0	0	0	0	0	0	0	0	0	0	0
4/24/2024	1:30 PM	0	0	0	0	0	0	0	0	0	0	0	0	0
4/24/2024	1:45 PM	0	0	0	0	0	0	0	0	0	0	0	0	0
4/24/2024	2:00 PM	0	0	0	0	0	0	0	0	0	0	0	0	0
4/24/2024	2:15 PM	0	0	0	0	0	0	0	0	0	0	0	0	0
4/24/2024	2:30 PM	0	0	0	0	0	0	0	0	0	0	0	0	0
4/24/2024	2:45 PM	0	0	0	0	0	0	0	0	0	0	0	0	0
4/24/2024	3:00 PM	0	0	0	0	0	0	0	0	0	0	0	0	0
4/24/2024	3:15 PM	0	0	0	0	0	0	0	0	0	0	0	0	0
4/24/2024	3:30 PM	0	0	0	0	0	0	0	0	0	0	0	0	0
4/24/2024	3:45 PM	0	0	0	0	0	0	0	0	0	0	0	0	0
4/24/2024	4:00 PM	0	0	0	0	0	0	0	0	0	0	0	0	0
4/24/2024	4:15 PM	0	0	0	0	0	0	0	0	0	0	0	0	0
4/24/2024	4:30 PM	0	0	0	0	0	0	0	0	0	0	0	0	0
4/24/2024	4:45 PM	0	0	0	0	0	0	0	0	0	0	0	0	0
4/24/2024	5:00 PM	0	0	0	0	0	0	0	0	0	0	0	0	0
4/24/2024	5:15 PM	0	0	0	0	0	0	0	0	0	0	0	0	0
4/24/2024	5:30 PM	0	0	0	0	0	0	0	0	0	0	0	0	0
4/24/2024	5:45 PM	0	0	0	0	0	0	0	0	0	0	0	0	0
4/24/2024	6:00 PM	0	0	0	0	0	0	0	0	0	0	0	0	0
4/24/2024	6:15 PM	0	0	0	0	0	0	0	0	0	0	0	0	0
4/24/2024	6:30 PM	0	0	0	0	0	0	0	0	0	0	0	0	0
4/24/2024	6:45 PM	0	0	0	0	0	0	0	0	0	0	0	0	0
4/24/2024	7:00 PM	0	0	0	0	0	0	0	0	0	0	0	0	0
4/24/2024	7:15 PM	0	0	0	0	0	0	0	0	0	0	0	0	0
4/24/2024	7:30 PM	0	0	0	0	0	0	0	0	0	0	0	0	0
4/24/2024	7:45 PM	0	0	0	0	0	0	0	0	0	0	0	0	0
4/24/2024	8:00 PM	0	0	0	0	0	0	0	0	0	0	0	0	0
4/24/2024	8:15 PM	0	0	0	0	0	0	0	0	0	0	0	0	0
4/24/2024	8:30 PM	0	0	0	0	0	0	0	0	0	0	0	0	0
4/24/2024	8:45 PM	0	0	0	0	0	0	0	0	0	0	0	0	0
4/24/2024	9:00 PM	0	0	0	0	0	0	0	0	0	0	0	0	0
4/24/2024	9:15 PM	0	0	0	0	0	0	0	0	0	0	0	0	0
4/24/2024	9:30 PM	0	0	0	0	0	0	0	0	0	0	0	0	0
4/24/2024	9:45 PM	0	0	0	0	0	0	0	0	0	0	0	0	0
4/24/2024	10:00 PM	0	0	0	0	0	0	0	0	0	0	0	0	0
4/24/2024	10:15 PM	0	0	0	0	0	0	0	0	0	0	0	0	0
4/24/2024	10:30 PM	0	0	0	0	0	0	0	0	0	0	0	0	0
4/24/2024	10:45 PM	0	0	0	0	0	0	0	0	0	0	0	0	0
4/24/2024	11:00 PM	0	0	0	0	0	0	0	0	0	0	0	0	0
4/24/2024	11:15 PM	0	0	0	0	0	0	0	0	0	0	0	0	0
4/24/2024	11:30 PM	0	0	0	0	0	0	0	0	0	0	0	0	0
4/24/2024	11:45 PM	0	0	0	0	0	0	0	0	0	0	0	0	0

4/25/2024	12:00 AM	0	0	0	0	0	0	0	0	0	0	0	0	0
4/25/2024	12:15 AM	0	0	0	0	0	0	0	0	0	0	0	0	0
4/25/2024	12:30 AM	0	0	0	0	0	0	0	0	0	0	0	0	0
4/25/2024	12:45 AM	0	0	0	0	0	0	0	0	0	0	0	0	0
4/25/2024	1:00 AM	0	0	0	0	0	0	0	0	0	0	0	0	0
4/25/2024	1:15 AM	0	0	0	0	0	0	0	0	0	0	0	0	0
4/25/2024	1:30 AM	0	0	0	0	0	0	0	0	0	0	0	0	0
4/25/2024	1:45 AM	0	0	0	0	0	0	0	0	0	0	0	0	0
4/25/2024	2:00 AM	0	0	0	0	0	0	0	0	0	0	0	0	0
4/25/2024	2:15 AM	0	0	0	0	0	0	0	0	0	0	0	0	0
4/25/2024	2:30 AM	0	0	0	0	0	0	0	0	0	0	0	0	0
4/25/2024	2:45 AM	0	0	0	0	0	0	0	0	0	0	0	0	0
4/25/2024	3:00 AM	0	0	0	0	0	0	0	0	0	0	0	0	0
4/25/2024	3:15 AM	0	0	0	0	0	0	0	0	0	0	0	0	0
4/25/2024	3:30 AM	0	0	0	0	0	0	0	0	0	0	0	0	0
4/25/2024	3:45 AM	0	0	0	0	0	0	0	0	0	0	0	0	0
4/25/2024	4:00 AM	0	0	0	0	0	0	0	0	0	0	0	0	0
4/25/2024	4:15 AM	0	0	0	0	0	0	0	0	0	0	0	0	0
4/25/2024	4:30 AM	0	0	0	0	0	0	0	0	0	0	0	0	0
4/25/2024	4:45 AM	0	0	0	0	0	0	0	0	0	0	0	0	0
4/25/2024	5:00 AM	0	0	0	0	0	0	0	0	0	0	0	0	0
4/25/2024	5:15 AM	0	0	0	0	0	0	0	0	0	0	0	0	0
4/25/2024	5:30 AM	0	0	0	0	0	0	0	0	0	0	0	0	0
4/25/2024	5:45 AM	0	0	0	0	0	0	0	0	0	0	0	0	0
4/25/2024	6:00 AM	0	0	0	0	0	0	0	0	0	0	0	0	0
4/25/2024	6:15 AM	0	0	0	0	0	0	0	0	0	0	0	0	0
4/25/2024	6:30 AM	0	0	0	0	0	0	0	0	0	0	0	0	0
4/25/2024	6:45 AM	0	0	0	0	0	0	0	0	0	0	0	0	0
4/25/2024	7:00 AM	0	0	0	0	0	0	0	0	0	0	0	0	0
4/25/2024	7:15 AM	0	0	0	0	0	0	0	0	0	0	0	0	0
4/25/2024	7:30 AM	0	0	0	0	0	0	0	0	0	0	0	0	0
4/25/2024	7:45 AM	0	0	0	0	0	0	0	0	0	0	0	0	0
4/25/2024	8:00 AM	0	0	0	0	0	0	0	0	0	0	0	0	0
4/25/2024	8:15 AM	0	0	0	0	0	0	0	0	0	0	0	0	0
4/25/2024	8:30 AM	0	0	0	0	0	0	0	0	0	0	0	0	0
4/25/2024	8:45 AM	0	0	0	0	0	0	0	0	0	0	0	0	0
4/25/2024	9:00 AM	0	0	0	0	0	0	0	0	0	0	0	0	0
4/25/2024	9:15 AM	0	0	0	0	0	0	0	0	0	0	0	0	0
4/25/2024	9:30 AM	0	0	0	0	0	0	0	0	0	0	0	0	0
4/25/2024	9:45 AM	0	0	0	0	0	0	0	0	0	0	0	0	0
4/25/2024	10:00 AM	0	0	0	0	0	0	0	0	0	0	0	0	0
4/25/2024	10:15 AM	0	0	0	0	0	0	0	0	0	0	0	0	0
4/25/2024	10:30 AM	0	0	0	0	0	0	0	0	0	0	0	0	0
4/25/2024	10:45 AM	0	0	0	0	0	0	0	0	0	0	0	0	0
4/25/2024	11:00 AM	0	0	0	0	0	0	0	0	0	0	0	0	0
4/25/2024	11:15 AM	0	0	0	0	0	0	0	0	0	0	0	0	0
4/25/2024	11:30 AM	0	0	0	0	0	0	0	0	0	0	0	0	0
4/25/2024	11:45 AM	0	0	0	0	0	0	0	0	0	0	0	0	0
4/25/2024	12:00 PM	0	0	0	0	0	0	0	0	0	0	0	0	0
4/25/2024	12:15 PM	0	0	0	0	0	0	0	0	0	0	0	0	0
4/25/2024	12:30 PM	0	0	0	0	0	0	0	0	0	0	0	0	0
4/25/2024	12:45 PM	0	0	0	0	0	0	0	0	0	0	0	0	0
4/25/2024	1:00 PM	0	0	0	0	0	0	0	0	0	0	0	0	0
4/25/2024	1:15 PM	0	0	0	0	0	0	0	0	0	0	0	0	0
4/25/2024	1:30 PM	0	0	0	0	0	0	0	0	0	0	0	0	0
4/25/2024	1:45 PM	0	0	0	0	0	0	0	0	0	0	0	0	0
4/25/2024	2:00 PM	0	0	0	0	0	0	0	0	0	0	0	0	0
4/25/2024	2:15 PM	0	0	0	0	0	0	0	0	0	0	0	0	0
4/25/2024	2:30 PM	0	0	0	0	0	0	0	0	0	0	0	0	0
4/25/2024	2:45 PM	0	0	0	0	0	0	0	0	0	0	0	0	0
4/25/2024	3:00 PM	0	0	0	0	0	0	0	0	0	0	0	0	0
4/25/2024	3:15 PM	0	0	0	0	0	0	0	0	0	0	0	0	0
4/25/2024	3:30 PM	0	0	0	0	0	0	0	0	0	0	0	0	0
4/25/2024	3:45 PM	0	0	0	0	0	0	0	0	0	0	0	0	0
4/25/2024	4:00 PM	0	0	0	0	0	0	0	0	0	0	0	0	0
4/25/2024	4:15 PM	0	0	0	0	0	0	0	0	0	0	0	0	0
4/25/2024	4:30 PM	0	0	0	0	0	0	0	0	0	0	0	0	0
4/25/2024	4:45 PM	0	0	0	0	0	0	0	0	0	0	0	0	0
4/25/2024	5:00 PM	0	0	0	0	0	0	0	0	0	0	0	0	0
4/25/2024	5:15 PM	0	0	0	0	0	0	0	0	0	0	0	0	0
4/25/2024	5:30 PM	0	0	0	0	0	0	0	0	0	0	0	0	0
4/25/2024	5:45 PM	0	0	0	0	0	0	0	0	0	0	0	0	0
4/25/2024	6:00 PM	0	0	0	0	0	0	0	0	0	0	0	0	0
4/25/2024	6:15 PM	0	0	0	0	0	0	0	0	0	0	0	0	0
4/25/2024	6:30 PM	0	0	0	0	0	0	0	0	0	0	0	0	0
4/25/2024	6:45 PM	0	0	0	0	0	0	0	0	0	0	0	0	0
4/25/2024	7:00 PM	0	0	0	0	0	0	0	0	0	0	0	0	0
4/25/2024	7:15 PM	0	0	0	0	0	0	0	0	0	0	0	0	0
4/25/2024	7:30 PM	0	0	0	0	0	0	0	0	0	0	0	0	0
4/25/2024	7:45 PM	0	0	0	0	0	0	0	0	0	0	0	0	0
4/25/2024	8:00 PM	0	0	0	0	0	0	0	0	0	0	0	0	0
4/25/2024	8:15 PM	0	0	0	0	0	0	0	0	0	0	0	0	0
4/25/2024	8:30 PM	0	0	0	0	0	0	0	0	0	0	0	0	0
4/25/2024	8:45 PM	0	0	0	0	0	0	0	0	0	0	0	0	0
4/25/2024	9:00 PM	0	0	0	0	0	0	0	0	0	0	0	0	0
4/25/2024	9:15 PM	0	0	0	0	0	0	0	0	0	0	0	0	0
4/25/2024	9:30 PM	0	0	0	0	0	0	0	0	0	0	0	0	0
4/25/2024	9:45 PM	0	0	0	0	0	0	0	0	0	0	0	0	0
4/25/2024	10:00 PM	0	0	0	0	0	0	0	0	0	0	0	0	0
4/25/2024	10:15 PM	0	0	0	0	0	0	0	0	0	0	0	0	0
4/25/2024	10:30 PM	0	0	0	0	0	0	0	0	0	0	0	0	0
4/25/2024	10:45 PM	0	0	0	0	0	0	0	0	0	0	0	0	0
4/25/2024	11:00 PM	0	0	0	0	0	0	0	0	0	0	0	0	0
4/25/2024	11:15 PM	0	0	0	0	0	0	0	0	0	0	0	0	0
4/25/2024	11:30 PM	0	0	0	0	0	0	0	0	0	0	0	0	0
4/25/2024	11:45 PM	0	0	0	0	0	0	0	0	0	0	0	0	0

4/26/2024	12:00 AM	0	0	0	0	0	0	0	0	0	0	0	0	0
4/26/2024	12:15 AM	0	0	0	0	0	0	0	0	0	0	0	0	0
4/26/2024	12:30 AM	0	0	0	0	0	0	0	0	0	0	0	0	0
4/26/2024	12:45 AM	0	0	0	0	0	0	0	0	0	0	0	0	0
4/26/2024	1:00 AM	0	0	0	0	0	0	0	0	0	0	0	0	0
4/26/2024	1:15 AM	0	0	0	0	0	0	0	0	0	0	0	0	0
4/26/2024	1:30 AM	0	0	0	0	0	0	0	0	0	0	0	0	0
4/26/2024	1:45 AM	0	0	0	0	0	0	0	0	0	0	0	0	0
4/26/2024	2:00 AM	0	0	0	0	0	0	0	0	0	0	0	0	0
4/26/2024	2:15 AM	0	0	0	0	0	0	0	0	0	0	0	0	0
4/26/2024	2:30 AM	0	0	0	0	0	0	0	0	0	0	0	0	0
4/26/2024	2:45 AM	0	0	0	0	0	0	0	0	0	0	0	0	0
4/26/2024	3:00 AM	0	0	0	0	0	0	0	0	0	0	0	0	0
4/26/2024	3:15 AM	0	0	0	0	0	0	0	0	0	0	0	0	0
4/26/2024	3:30 AM	0	0	0	0	0	0	0	0	0	0	0	0	0
4/26/2024	3:45 AM	0	0	0	0	0	0	0	0	0	0	0	0	0
4/26/2024	4:00 AM	0	0	0	0	0	0	0	0	0	0	0	0	0
4/26/2024	4:15 AM	0	0	0	0	0	0	0	0	0	0	0	0	0
4/26/2024	4:30 AM	0	0	0	0	0	0	0	0	0	0	0	0	0
4/26/2024	4:45 AM	0	0	0	0	0	0	0	0	0	0	0	0	0
4/26/2024	5:00 AM	0	0	0	0	0	0	0	0	0	0	0	0	0
4/26/2024	5:15 AM	0	0	0	0	0	0	0	0	0	0	0	0	0
4/26/2024	5:30 AM	0	0	0	0	0	0	0	0	0	0	0	0	0
4/26/2024	5:45 AM	0	0	0	0	0	0	0	0	0	0	0	0	0
4/26/2024	6:00 AM	0	0	0	0	0	0	0	0	0	0	0	0	0
4/26/2024	6:15 AM	0	0	0	0	0	0	0	0	0	0	0	0	0
4/26/2024	6:30 AM	0	0	0	0	0	0	0	0	0	0	0	0	0
4/26/2024	6:45 AM	0	0	0	0	0	0	0	0	0	0	0	0	0
4/26/2024	7:00 AM	0	0	0	0	0	0	0	0	0	0	0	0	0
4/26/2024	7:15 AM	0	0	0	0	0	0	0	0	0	0	0	0	0
4/26/2024	7:30 AM	0	0	0	0	0	0	0	0	0	0	0	0	0
4/26/2024	7:45 AM	0	0	0	0	0	0	0	0	0	0	0	0	0
4/26/2024	8:00 AM	0	0	0	0	0	0	0	0	0	0	0	0	0
4/26/2024	8:15 AM	0	0	0	0	0	0	0	0	0	0	0	0	0
4/26/2024	8:30 AM	0	0	0	0	0	0	0	0	0	0	0	0	0
4/26/2024	8:45 AM	0	0	0	0	0	0	0	0	0	0	0	0	0
4/26/2024	9:00 AM	0	0	0	0	0	0	0	0	0	0	0	0	0
4/26/2024	9:15 AM	0	0	0	0	0	0	0	0	0	0	0	0	0
4/26/2024	9:30 AM	0	0	0	0	0	0	0	0	0	0	0	0	0
4/26/2024	9:45 AM	0	0	0	0	0	0	0	0	0	0	0	0	0
4/26/2024	10:00 AM	0	0	0	0	0	0	0	0	0	0	0	0	0
4/26/2024	10:15 AM	0	0	0	0	0	0	0	0	0	0	0	0	0
4/26/2024	10:30 AM	0	0	0	0	0	0	0	0	0	0	0	0	0
4/26/2024	10:45 AM	0	0	0	0	0	0	0	0	0	0	0	0	0
4/26/2024	11:00 AM	0	0	0	0	0	0	0	0	0	0	0	0	0
4/26/2024	11:15 AM	0	0	0	0	0	0	0	0	0	0	0	0	0
4/26/2024	11:30 AM	0	0	0	0	0	0	0	0	0	0	0	0	0
4/26/2024	11:45 AM	0	0	0	0	0	0	0	0	0	0	0	0	0
4/26/2024	12:00 PM	0	0	0	0	0	0	0	0	0	0	0	0	0
4/26/2024	12:15 PM	0	0	0	0	0	0	0	0	0	0	0	0	0
4/26/2024	12:30 PM	0	0	0	0	0	0	0	0	0	0	0	0	0
4/26/2024	12:45 PM	0	0	0	0	0	0	0	0	0	0	0	0	0
4/26/2024	1:00 PM	0	0	0	0	0	0	0	0	0	0	0	0	0
4/26/2024	1:15 PM	0	0	0	0	0	0	0	0	0	0	0	0	0
4/26/2024	1:30 PM	0	0	0	0	0	0	0	0	0	0	0	0	0
4/26/2024	1:45 PM	0	0	0	0	0	0	0	0	0	0	0	0	0
4/26/2024	2:00 PM	0	0	0	0	0	0	0	0	0	0	0	0	0
4/26/2024	2:15 PM	0	0	0	0	0	0	0	0	0	0	0	0	0
4/26/2024	2:30 PM	0	0	0	0	0	0	0	0	0	0	0	0	0
4/26/2024	2:45 PM	0	0	0	0	0	0	0	0	0	0	0	0	0
4/26/2024	3:00 PM	0	0	0	0	0	0	0	0	0	0	0	0	0
4/26/2024	3:15 PM	0	0	0	0	0	0	0	0	0	0	0	0	0
4/26/2024	3:30 PM	0	0	0	0	0	0	0	0	0	0	0	0	0
4/26/2024	3:45 PM	0	0	0	0	0	0	0	0	0	0	0	0	0
4/26/2024	4:00 PM	0	0	0	0	0	0	0	0	0	0	0	0	0
4/26/2024	4:15 PM	0	0	0	0	0	0	0	0	0	0	0	0	0
4/26/2024	4:30 PM	0	0	0	0	0	0	0	0	0	0	0	0	0
4/26/2024	4:45 PM	0	0	0	0	0	0	0	0	0	0	0	0	0
4/26/2024	5:00 PM	0	0	0	0	0	0	0	0	0	0	0	0	0
4/26/2024	5:15 PM	0	0	0	0	0	0	0	0	0	0	0	0	0
4/26/2024	5:30 PM	0	0	0	0	0	0	0	0	0	0	0	0	0
4/26/2024	5:45 PM	0	0	0	0	0	0	0	0	0	0	0	0	0
4/26/2024	6:00 PM	0	0	0	0	0	0	0	0	0	0	0	0	0
4/26/2024	6:15 PM	0	0	0	0	0	0	0	0	0	0	0	0	0
4/26/2024	6:30 PM	0	0	0	0	0	0	0	0	0	0	0	0	0
4/26/2024	6:45 PM	0	0	0	0	0	0	0	0	0	0	0	0	0
4/26/2024	7:00 PM	0	0	0	0	0	0	0	0	0	0	0	0	0
4/26/2024	7:15 PM	0	0	0	0	0	0	0	0	0	0	0	0	0
4/26/2024	7:30 PM	0	0	0	0	0	0	0	0	0	0	0	0	0
4/26/2024	7:45 PM	0	0	0	0	0	0	0	0	0	0	0	0	0
4/26/2024	8:00 PM	0	0	0	0	0	0	0	0	0	0	0	0	0
4/26/2024	8:15 PM	0	0	0	0	0	0	0	0	0	0	0	0	0
4/26/2024	8:30 PM	0	0	0	0	0	0	0	0	0	0	0	0	0
4/26/2024	8:45 PM	0	0	0	0	0	0	0	0	0	0	0	0	0
4/26/2024	9:00 PM	0	0	0	0	0	0	0	0	0	0	0	0	0
4/26/2024	9:15 PM	0	0	0	0	0	0	0	0	0	0	0	0	0
4/26/2024	9:30 PM	0	0	0	0	0	0	0	0	0	0	0	0	0
4/26/2024	9:45 PM	0	0	0	0	0	0	0	0	0	0	0	0	0
4/26/2024	10:00 PM	0	0	0	0	0	0	0	0	0	0	0	0	0
4/26/2024	10:15 PM	0	0	0	0	0	0	0	0	0	0	0	0	0
4/26/2024	10:30 PM	0	0	0	0	0	0	0	0	0	0	0	0	0
4/26/2024	10:45 PM	0	0	0	0	0	0	0	0	0	0	0	0	0
4/26/2024	11:00 PM	0	0	0	0	0	0	0	0	0	0	0	0	0
4/26/2024	11:15 PM	0	0	0	0	0	0	0	0	0	0	0	0	0
4/26/2024	11:30 PM	0	0	0	0	0	0	0	0	0	0	0	0	0
4/26/2024	11:45 PM	0	0	0	0	0	0	0	0	0	0	0	0	0

4/27/2024	12:00 AM	0	0	0	0	0	0	0	0	0	0	0	0	0
4/27/2024	12:15 AM	0	0	0	0	0	0	0	0	0	0	0	0	0
4/27/2024	12:30 AM	0	0	0	0	0	0	0	0	0	0	0	0	0
4/27/2024	12:45 AM	0	0	0	0	0	0	0	0	0	0	0	0	0
4/27/2024	1:00 AM	0	0	0	0	0	0	0	0	0	0	0	0	0
4/27/2024	1:15 AM	0	0	0	0	0	0	0	0	0	0	0	0	0
4/27/2024	1:30 AM	0	0	0	0	0	0	0	0	0	0	0	0	0
4/27/2024	1:45 AM	0	0	0	0	0	0	0	0	0	0	0	0	0
4/27/2024	2:00 AM	0	0	0	0	0	0	0	0	0	0	0	0	0
4/27/2024	2:15 AM	0	0	0	0	0	0	0	0	0	0	0	0	0
4/27/2024	2:30 AM	0	0	0	0	0	0	0	0	0	0	0	0	0
4/27/2024	2:45 AM	0	0	0	0	0	0	0	0	0	0	0	0	0
4/27/2024	3:00 AM	0	0	0	0	0	0	0	0	0	0	0	0	0
4/27/2024	3:15 AM	0	0	0	0	0	0	0	0	0	0	0	0	0
4/27/2024	3:30 AM	0	0	0	0	0	0	0	0	0	0	0	0	0
4/27/2024	3:45 AM	0	0	0	0	0	0	0	0	0	0	0	0	0
4/27/2024	4:00 AM	0	0	0	0	0	0	0	0	0	0	0	0	0
4/27/2024	4:15 AM	0	0	0	0	0	0	0	0	0	0	0	0	0
4/27/2024	4:30 AM	0	0	0	0	0	0	0	0	0	0	0	0	0
4/27/2024	4:45 AM	0	0	0	0	0	0	0	0	0	0	0	0	0
4/27/2024	5:00 AM	0	0	0	0	0	0	0	0	0	0	0	0	0
4/27/2024	5:15 AM	0	0	0	0	0	0	0	0	0	0	0	0	0
4/27/2024	5:30 AM	0	0	0	0	0	0	0	0	0	0	0	0	0
4/27/2024	5:45 AM	0	0	0	0	0	0	0	0	0	0	0	0	0
4/27/2024	6:00 AM	0	0	0	0	0	0	0	0	0	0	0	0	0
4/27/2024	6:15 AM	0	0	0	0	0	0	0	0	0	0	0	0	0
4/27/2024	6:30 AM	0	0	0	0	0	0	0	0	0	0	0	0	0
4/27/2024	6:45 AM	0	0	0	0	0	0	0	0	0	0	0	0	0
4/27/2024	7:00 AM	0	0	0	0	0	0	0	0	0	0	0	0	0
4/27/2024	7:15 AM	0	0	0	0	0	0	0	0	0	0	0	0	0
4/27/2024	7:30 AM	0	0	0	0	0	0	0	0	0	0	0	0	0
4/27/2024	7:45 AM	0	0	0	0	0	0	0	0	0	0	0	0	0
4/27/2024	8:00 AM	0	0	0	0	0	0	0	0	0	0	0	0	0
4/27/2024	8:15 AM	0	0	0	0	0	0	0	0	0	0	0	0	0
4/27/2024	8:30 AM	0	0	0	0	0	0	0	0	0	0	0	0	0
4/27/2024	8:45 AM	0	0	0	0	0	0	0	0	0	0	0	0	0
4/27/2024	9:00 AM	0	0	0	0	0	0	0	0	0	0	0	0	0
4/27/2024	9:15 AM	0	0	0	0	0	0	0	0	0	0	0	0	0
4/27/2024	9:30 AM	0	0	0	0	0	0	0	0	0	0	0	0	0
4/27/2024	9:45 AM	0	0	0	0	0	0	0	0	0	0	0	0	0
4/27/2024	10:00 AM	0	0	0	0	0	0	0	0	0	0	0	0	0
4/27/2024	10:15 AM	0	0	0	0	0	0	0	0	0	0	0	0	0
4/27/2024	10:30 AM	0	0	0	0	0	0	0	0	0	0	0	0	0
4/27/2024	10:45 AM	0	0	0	0	0	0	0	0	0	0	0	0	0
4/27/2024	11:00 AM	0	0	0	0	0	0	0	0	0	0	0	0	0
4/27/2024	11:15 AM	0	0	0	0	0	0	0	0	0	0	0	0	0
4/27/2024	11:30 AM	0	0	0	0	0	0	0	0	0	0	0	0	0
4/27/2024	11:45 AM	0	0	0	0	0	0	0	0	0	0	0	0	0
4/27/2024	12:00 PM	0	0	0	0	0	0	0	0	0	0	0	0	0
4/27/2024	12:15 PM	0	0	0	0	0	0	0	0	0	0	0	0	0
4/27/2024	12:30 PM	0	0	0	0	0	0	0	0	0	0	0	0	0
4/27/2024	12:45 PM	0	0	0	0	0	0	0	0	0	0	0	0	0
4/27/2024	1:00 PM	0	0	0	0	0	0	0	0	0	0	0	0	0
4/27/2024	1:15 PM	0	0	0	0	0	0	0	0	0	0	0	0	0
4/27/2024	1:30 PM	0	0	0	0	0	0	0	0	0	0	0	0	0
4/27/2024	1:45 PM	0	0	0	0	0	0	0	0	0	0	0	0	0
4/27/2024	2:00 PM	0	0	0	0	0	0	0	0	0	0	0	0	0
4/27/2024	2:15 PM	0	0	0	0	0	0	0	0	0	0	0	0	0
4/27/2024	2:30 PM	0	0	0	0	0	0	0	0	0	0	0	0	0
4/27/2024	2:45 PM	0	0	0	0	0	0	0	0	0	0	0	0	0
4/27/2024	3:00 PM	0	0	0	0	0	0	0	0	0	0	0	0	0
4/27/2024	3:15 PM	0	0	0	0	0	0	0	0	0	0	0	0	0
4/27/2024	3:30 PM	0	0	0	0	0	0	0	0	0	0	0	0	0
4/27/2024	3:45 PM	0	0	0	0	0	0	0	0	0	0	0	0	0
4/27/2024	4:00 PM	0	0	0	0	0	0	0	0	0	0	0	0	0
4/27/2024	4:15 PM	0	0	0	0	0	0	0	0	0	0	0	0	0
4/27/2024	4:30 PM	0	0	0	0	0	0	0	0	0	0	0	0	0
4/27/2024	4:45 PM	0	0	0	0	0	0	0	0	0	0	0	0	0
4/27/2024	5:00 PM	0	0	0	0	0	0	0	0	0	0	0	0	0
4/27/2024	5:15 PM	0	0	0	0	0	0	0	0	0	0	0	0	0
4/27/2024	5:30 PM	0	0	0	0	0	0	0	0	0	0	0	0	0
4/27/2024	5:45 PM	0	0	0	0	0	0	0	0	0	0	0	0	0
4/27/2024	6:00 PM	0	0	0	0	0	0	0	0	0	0	0	0	0
4/27/2024	6:15 PM	0	0	0	0	0	0	0	0	0	0	0	0	0
4/27/2024	6:30 PM	0	0	0	0	0	0	0	0	0	0	0	0	0
4/27/2024	6:45 PM	0	0	0	0	0	0	0	0	0	0	0	0	0
4/27/2024	7:00 PM	0	0	0	0	0	0	0	0	0	0	0	0	0
4/27/2024	7:15 PM	0	0	0	0	0	0	0	0	0	0	0	0	0
4/27/2024	7:30 PM	0	0	0	0	0	0	0	0	0	0	0	0	0
4/27/2024	7:45 PM	0	0	0	0	0	0	0	0	0	0	0	0	0
4/27/2024	8:00 PM	0	0	0	0	0	0	0	0	0	0	0	0	0
4/27/2024	8:15 PM	0	0	0	0	0	0	0	0	0	0	0	0	0
4/27/2024	8:30 PM	0	0	0	0	0	0	0	0	0	0	0	0	0
4/27/2024	8:45 PM	0	0	0	0	0	0	0	0	0	0	0	0	0
4/27/2024	9:00 PM	0	0	0	0	0	0	0	0	0	0	0	0	0
4/27/2024	9:15 PM	0	0	0	0	0	0	0	0	0	0	0	0	0
4/27/2024	9:30 PM	0	0	0	0	0	0	0	0	0	0	0	0	0
4/27/2024	9:45 PM	0	0	0	0	0	0	0	0	0	0	0	0	0
4/27/2024	10:00 PM	0	0	0	0	0	0	0	0	0	0	0	0	0
4/27/2024	10:15 PM	0	0	0	0	0	0	0	0	0	0	0	0	0
4/27/2024	10:30 PM	0	0	0	0	0	0	0	0	0	0	0	0	0
4/27/2024	10:45 PM	0	0	0	0	0	0	0	0	0	0	0	0	0
4/27/2024	11:00 PM	0	0	0	0	0	0	0	0	0	0	0	0	0
4/27/2024	11:15 PM	0	0	0	0	0	0	0	0	0	0	0	0	0
4/27/2024	11:30 PM	0	0	0	0	0	0	0	0	0	0	0	0	0
4/27/2024	11:45 PM	0	0	0	0	0	0	0	0	0	0	0	0	0

WB
File Name:
Start Date: 4/21/2024
Start Time: 0
Site Code: 74 Lane 4 WB
Station ID: 1
Location 1: I-20, west of US-378 Sunset Blvd S/Bound Off-Ramp
Location 2:

Date	Time	1	2	3	4	5	6	7	8	9	10	11	12	13
4/21/2024	12:00 AM	0	10	0	0	0	0	0	0	0	0	0	0	0
4/21/2024	12:15 AM	0	12	1	0	0	0	0	0	0	0	0	0	0
4/21/2024	12:30 AM	0	13	2	0	0	0	0	0	0	0	0	0	0
4/21/2024	12:45 AM	0	12	2	0	0	0	0	0	0	0	0	0	0
4/21/2024	1:00 AM	0	14	2	0	0	0	0	0	0	0	0	0	0
4/21/2024	1:15 AM	0	12	1	0	0	0	0	0	0	0	0	0	0
4/21/2024	1:30 AM	0	9	0	0	0	0	0	0	0	0	0	0	0
4/21/2024	1:45 AM	0	7	0	0	0	0	0	0	0	0	0	0	0
4/21/2024	2:00 AM	0	4	0	0	0	0	0	0	0	0	0	0	0
4/21/2024	2:15 AM	0	4	0	0	0	0	0	0	0	0	0	0	0
4/21/2024	2:30 AM	0	2	0	0	0	0	0	0	0	0	0	0	0
4/21/2024	2:45 AM	0	1	0	0	0	0	0	0	0	0	0	0	0
4/21/2024	3:00 AM	0	1	0	0	0	0	0	0	0	0	0	0	0
4/21/2024	3:15 AM	0	0	0	0	0	0	0	0	0	0	0	0	0
4/21/2024	3:30 AM	0	0	0	0	0	0	0	0	0	0	0	0	0
4/21/2024	3:45 AM	0	0	0	0	0	0	0	0	0	0	0	0	0
4/21/2024	4:00 AM	0	0	0	0	0	0	0	0	0	0	0	0	0
4/21/2024	4:15 AM	0	0	0	0	0	0	0	0	0	0	0	0	0
4/21/2024	4:30 AM	0	1	0	0	0	0	0	0	0	0	0	0	0
4/21/2024	4:45 AM	0	2	0	0	0	0	0	0	0	0	0	0	0
4/21/2024	5:00 AM	0	2	0	0	0	0	0	0	0	0	0	0	0
4/21/2024	5:15 AM	0	2	1	0	0	0	0	0	0	0	0	0	0
4/21/2024	5:30 AM	0	4	1	0	0	0	0	0	0	0	0	0	0
4/21/2024	5:45 AM	0	5	1	0	0	0	0	0	0	0	0	0	0
4/21/2024	6:00 AM	0	6	2	0	0	0	0	0	0	0	0	0	0
4/21/2024	6:15 AM	0	9	2	0	0	0	0	1	0	0	0	0	0
4/21/2024	6:30 AM	0	11	2	0	0	0	0	1	0	0	0	0	0
4/21/2024	6:45 AM	0	15	2	0	0	0	0	1	0	0	0	0	0
4/21/2024	7:00 AM	0	16	2	0	0	0	0	1	0	0	0	0	0
4/21/2024	7:15 AM	0	16	1	0	0	0	0	0	0	0	0	0	0
4/21/2024	7:30 AM	0	13	3	0	0	0	0	0	0	0	0	0	0
4/21/2024	7:45 AM	0	14	4	0	0	0	0	0	0	0	0	0	0
4/21/2024	8:00 AM	0	19	4	0	0	0	0	0	0	0	0	0	0
4/21/2024	8:15 AM	0	23	4	0	0	0	0	0	0	0	0	0	0
4/21/2024	8:30 AM	0	31	4	0	0	0	0	0	0	0	0	0	0
4/21/2024	8:45 AM	0	31	6	0	0	0	0	0	0	0	0	0	0
4/21/2024	9:00 AM	0	34	7	0	0	0	0	0	0	0	0	0	0
4/21/2024	9:15 AM	0	39	9	0	0	0	0	0	0	0	0	0	0
4/21/2024	9:30 AM	0	39	8	0	0	0	0	0	0	0	0	0	0
4/21/2024	9:45 AM	0	46	7	0	0	0	1	0	1	0	0	0	0
4/21/2024	10:00 AM	0	57	8	0	0	0	1	0	1	0	0	0	0
4/21/2024	10:15 AM	0	57	11	0	0	0	1	0	1	0	0	0	0
4/21/2024	10:30 AM	0	59	12	0	0	0	1	0	1	0	0	0	0
4/21/2024	10:45 AM	0	65	14	0	0	0	0	0	0	0	0	0	0
4/21/2024	11:00 AM	1	64	16	0	0	0	0	0	0	0	0	0	0
4/21/2024	11:15 AM	1	68	16	0	0	0	0	0	0	0	0	0	0
4/21/2024	11:30 AM	1	70	19	0	0	0	0	0	0	0	0	0	0
4/21/2024	11:45 AM	1	72	18	0	0	0	0	0	0	0	0	0	0
4/21/2024	12:00 PM	0	72	16	0	0	0	0	0	0	0	0	0	0
4/21/2024	12:15 PM	0	75	15	0	0	0	0	0	0	0	0	0	0
4/21/2024	12:30 PM	0	76	13	0	0	0	0	0	0	0	0	0	0
4/21/2024	12:45 PM	0	88	19	0	0	0	0	0	0	0	0	0	0
4/21/2024	1:00 PM	0	90	22	0	0	0	0	0	0	0	0	0	0
4/21/2024	1:15 PM	0	114	24	0	0	0	0	0	0	0	0	0	0
4/21/2024	1:30 PM	0	126	25	0	0	0	0	0	0	0	0	0	0
4/21/2024	1:45 PM	0	109	21	0	0	0	0	0	0	0	0	0	0
4/21/2024	2:00 PM	0	105	20	0	0	0	0	0	0	0	0	0	0
4/21/2024	2:15 PM	0	87	23	0	0	0	0	0	0	0	0	0	0
4/21/2024	2:30 PM	0	82	25	0	0	0	0	0	0	0	0	0	0
4/21/2024	2:45 PM	0	88	26	0	0	0	0	0	0	0	0	0	0
4/21/2024	3:00 PM	0	90	24	0	0	0	0	0	0	0	0	0	0
4/21/2024	3:15 PM	0	80	18	0	0	0	0	0	0	0	0	0	0
4/21/2024	3:30 PM	0	82	17	0	0	0	0	0	0	0	0	0	0
4/21/2024	3:45 PM	0	78	14	0	1	0	0	0	0	0	0	0	0
4/21/2024	4:00 PM	0	71	11	0	1	0	0	0	0	0	0	0	0
4/21/2024	4:15 PM	0	69	12	0	1	0	0	0	0	0	0	0	0
4/21/2024	4:30 PM	0	53	16	0	2	0	0	0	0	0	0	0	0
4/21/2024	4:45 PM	0	44	19	0	1	0	0	0	0	0	0	0	0
4/21/2024	5:00 PM	0	46	23	0	1	0	0	0	0	0	0	0	0
4/21/2024	5:15 PM	0	53	23	0	1	0	0	0	0	0	0	0	0
4/21/2024	5:30 PM	0	55	18	0	0	0	0	0	0	0	0	0	0
4/21/2024	5:45 PM	0	60	15	0	0	0	0	0	0	0	0	0	0
4/21/2024	6:00 PM	0	62	14	0	0	0	0	0	0	0	0	0	0
4/21/2024	6:15 PM	0	48	13	0	0	0	0	0	0	0	0	0	0
4/21/2024	6:30 PM	0	49	13	0	0	0	0	0	0	0	0	0	0
4/21/2024	6:45 PM	0	46	13	0	1	0	0	0	0	0	0	0	0
4/21/2024	7:00 PM	0	39	11	0	1	0	0	0	0	0	0	0	0
4/21/2024	7:15 PM	0	45	12	0	1	0	0	0	0	0	0	0	0
4/21/2024	7:30 PM	0	46	9	0	1	0	0	0	0	0	0	0	0
4/21/2024	7:45 PM	0	42	8	0	0	0	0	0	0	0	0	0	0
4/21/2024	8:00 PM	0	34	9	0	0	0	0	0	0	0	0	0	0
4/21/2024	8:15 PM	0	32	6	0	1	0	0	0	0	0	0	0	0
4/21/2024	8:30 PM	0	33	8	0	1	0	0	0	0	0	0	0	0
4/21/2024	8:45 PM	0	28	6	0	1	0	0	0	0	0	0	0	0
4/21/2024	9:00 PM	0	33	4	0	1	0	0	0	0	0	0	0	0
4/21/2024	9:15 PM	0	28	3	0	0	0	0	0	0	0	0	0	0
4/21/2024	9:30 PM	0	18	1	0	0	0	0	0	0	0	0	0	0
4/21/2024	9:45 PM	0	16	1	0	0	0	0	0	0	0	0	0	0
4/21/2024	10:00 PM	0	11	1	0	0	0	0	0	0	0	0	0	0
4/21/2024	10:15 PM	0	6	1	0	0	0	0	0	0	0	0	0	0
4/21/2024	10:30 PM	0	4	0	0	0	0	0	0	0	0	0	0	0
4/21/2024	10:45 PM	0	5	0	0	0	0	0	0	0	0	0	0	0
4/21/2024	11:00 PM	0	4	0	0	1	0	0	0	0	0	0	0	0
4/21/2024	11:15 PM	0	4	0	0	1	0	0	0	0	0	0	0	0
4/21/2024	11:30 PM	0	3	0	0	1	0	0	0	0	0	0	0	0
4/21/2024	11:45 PM	0	1	0	0	1	0	0	0	0	0	0	0	0

4/22/2024	12:00 AM	0	4	0	0	0	0	0	0	0	0	0	0
4/22/2024	12:15 AM	0	2	0	0	0	0	0	0	0	0	0	0
4/22/2024	12:30 AM	0	2	0	0	0	0	0	0	0	0	0	0
4/22/2024	12:45 AM	0	1	0	0	0	0	0	0	0	0	0	0
4/22/2024	1:00 AM	0	2	0	0	0	0	0	0	0	0	0	0
4/22/2024	1:15 AM	0	1	0	0	0	0	0	0	0	0	0	0
4/22/2024	1:30 AM	0	1	0	0	0	0	0	0	0	0	0	0
4/22/2024	1:45 AM	0	1	0	0	0	0	0	0	0	0	0	0
4/22/2024	2:00 AM	0	0	0	0	0	0	0	0	0	0	0	0
4/22/2024	2:15 AM	0	1	0	0	0	0	0	0	0	0	0	0
4/22/2024	2:30 AM	0	1	0	0	0	0	0	0	0	0	0	0
4/22/2024	2:45 AM	0	1	0	0	0	0	0	0	0	0	0	0
4/22/2024	3:00 AM	0	1	0	0	0	0	0	0	0	0	0	0
4/22/2024	3:15 AM	0	0	0	0	0	0	0	0	0	0	0	0
4/22/2024	3:30 AM	0	0	0	0	0	0	0	0	0	0	0	0
4/22/2024	3:45 AM	0	0	0	0	0	0	0	0	0	0	0	0
4/22/2024	4:00 AM	0	0	0	0	0	0	0	0	0	0	0	0
4/22/2024	4:15 AM	0	2	0	0	0	0	0	0	0	0	0	0
4/22/2024	4:30 AM	0	6	0	0	0	0	0	0	0	0	0	0
4/22/2024	4:45 AM	0	11	0	0	0	0	0	0	0	0	0	0
4/22/2024	5:00 AM	0	21	0	0	1	0	0	0	0	0	0	0
4/22/2024	5:15 AM	0	31	0	0	1	0	0	0	1	0	0	0
4/22/2024	5:30 AM	0	40	3	0	1	0	0	0	1	0	0	0
4/22/2024	5:45 AM	0	47	6	0	2	0	0	1	1	0	0	0
4/22/2024	6:00 AM	0	50	9	0	1	1	0	1	1	0	0	0
4/22/2024	6:15 AM	0	63	16	0	3	1	0	1	1	0	0	0
4/22/2024	6:30 AM	0	75	21	1	4	1	0	1	1	0	0	0
4/22/2024	6:45 AM	0	93	25	1	4	1	0	0	1	0	0	0
4/22/2024	7:00 AM	0	112	27	3	4	0	0	0	1	0	0	0
4/22/2024	7:15 AM	0	114	27	4	2	0	0	0	0	0	0	0
4/22/2024	7:30 AM	0	105	24	4	1	0	0	0	0	0	0	0
4/22/2024	7:45 AM	0	92	24	4	1	0	0	0	0	0	0	0
4/22/2024	8:00 AM	0	89	23	3	2	0	0	0	0	0	0	0
4/22/2024	8:15 AM	0	83	28	3	3	0	0	1	0	0	0	0
4/22/2024	8:30 AM	0	81	31	2	3	1	0	1	0	0	0	0
4/22/2024	8:45 AM	0	88	30	2	3	1	0	1	0	0	0	0
4/22/2024	9:00 AM	0	80	36	1	3	1	0	1	0	0	0	0
4/22/2024	9:15 AM	0	96	36	0	2	2	0	0	0	0	0	0
4/22/2024	9:30 AM	0	100	34	0	3	1	0	0	0	0	0	0
4/22/2024	9:45 AM	0	101	32	0	2	1	0	1	0	0	0	0
4/22/2024	10:00 AM	0	97	30	0	1	1	0	2	0	0	0	0
4/22/2024	10:15 AM	0	77	23	0	1	0	0	2	0	0	0	0
4/22/2024	10:30 AM	0	84	21	0	2	0	0	2	2	0	0	0
4/22/2024	10:45 AM	0	80	24	1	4	0	0	1	2	0	0	0
4/22/2024	11:00 AM	0	94	21	4	4	0	0	0	2	0	0	0
4/22/2024	11:15 AM	0	113	24	4	6	0	0	1	2	0	0	0
4/22/2024	11:30 AM	0	128	29	5	6	0	0	1	0	0	0	0
4/22/2024	11:45 AM	0	127	33	6	5	0	0	1	0	0	0	0
4/22/2024	12:00 PM	0	134	35	3	6	1	0	1	0	1	0	0
4/22/2024	12:15 PM	0	131	33	3	4	1	0	1	0	1	0	0
4/22/2024	12:30 PM	0	125	37	2	2	1	0	2	0	1	0	0
4/22/2024	12:45 PM	0	128	32	0	1	1	0	3	0	1	0	0
4/22/2024	1:00 PM	0	117	37	0	0	0	0	3	0	0	1	0	0
4/22/2024	1:15 PM	0	108	40	2	0	0	0	2	0	0	1	0	0
4/22/2024	1:30 PM	0	113	38	2	0	0	0	1	0	0	1	0	0
4/22/2024	1:45 PM	0	112	44	2	1	0	0	0	0	0	1	0	0
4/22/2024	2:00 PM	0	124	49	2	1	0	0	0	1	0	0	0	0
4/22/2024	2:15 PM	0	144	49	0	2	0	0	0	1	0	0	0	0
4/22/2024	2:30 PM	0	154	50	0	4	0	1	0	1	0	0	0	0
4/22/2024	2:45 PM	0	183	45	2	3	0	1	2	1	0	0	0	0
4/22/2024	3:00 PM	0	194	40	3	3	0	1	3	0	0	0	0	0
4/22/2024	3:15 PM	0	211	42	3	4	0	1	3	0	0	0	0	0
4/22/2024	3:30 PM	0	216	47	4	2	0	0	3	0	0	0	0	0
4/22/2024	3:45 PM	0	208	52	3	2	0	0	1	0	0	0	0	0
4/22/2024	4:00 PM	0	211	49	2	2	0	0	0	0	0	0	0	0
4/22/2024	4:15 PM	0	214	50	3	1	0	0	0	0	0	0	0	0
4/22/2024	4:30 PM	0	218	47	2	2	0	0	0	0	0	0	0	0
4/22/2024	4:45 PM	0	208	42	1	3	0	0	0	0	0	0	0	0
4/22/2024	5:00 PM	0	181	40	1	4	0	0	0	0	0	0	0	0
4/22/2024	5:15 PM	0	157	36	0	5	0	0	0	0	0	0	0	0
4/22/2024	5:30 PM	0	128	28	0	5	0	0	0	0	0	0	0	0
4/22/2024	5:45 PM	0	123	27	0	4	0	0	0	1	0	0	0	0
4/22/2024	6:00 PM	0	112	27	0	3	0	0	1	1	0	0	0	0
4/22/2024	6:15 PM	0	92	24	0	2	0	0	1	1	0	0	0	0
4/22/2024	6:30 PM	0	90	27	0	1	0	0	1	1	0	0	0	0
4/22/2024	6:45 PM	0	73	21	0	1	0	0	1	0	0	0	0	0
4/22/2024	7:00 PM	0	75	15	0	1	0	0	0	0	0	0	0	0
4/22/2024	7:15 PM	0	86	12	0	0	0	0	0	0	0	0	0	0
4/22/2024	7:30 PM	0	84	5	0	0	0	0	0	0	0	0	0	0
4/22/2024	7:45 PM	0	87	7	0	0	0	0	0	1	0	0	0	0
4/22/2024	8:00 PM	0	85	9	0	0	0	0	0	1	0	0	0	0
4/22/2024	8:15 PM	0	64	9	0	0	0	0	0	1	0	0	0	0
4/22/2024	8:30 PM	0	49	13	0	0	0	0	0	1	0	0	0	0
4/22/2024	8:45 PM	0	43	12	0	0	0	0	0	1	0	0	0	0
4/22/2024	9:00 PM	0	38	12	0	0	0	0	0	3	0	0	0	0
4/22/2024	9:15 PM	0	34	10	0	0	0	0	0	3	0	0	0	0
4/22/2024	9:30 PM	0	28	4	0	0	0	0	0	3	0	0	0	0
4/22/2024	9:45 PM	0	23	3	0	0	0	0	0	2	0	0	0	0
4/22/2024	10:00 PM	0	19	0	0	0	0	0	0	0	0	0	0	0
4/22/2024	10:15 PM	0	19	0	0	0	0	0	0	0	0	0	0	0
4/22/2024	10:30 PM	0	18	0	0	0	0	0	0	0	0	0	0	0
4/22/2024	10:45 PM	0	15	0	0	0	0	0	0	0	0	0	0	0
4/22/2024	11:00 PM	0	9	0	0	0	0	0	0	0	0	0	0	0
4/22/2024	11:15 PM	0	3	0	0	0	0	0	0	0	0	0	0	0
4/22/2024	11:30 PM	0	0	0	0	0	0	0	0	0	0	0	0	0
4/22/2024	11:45 PM	0	0	0	0	0	0	0	0	0	0	0	0	0

4/23/2024	12:00 AM	0	2	0	0	0	0	0	0	0	0	0	0
4/23/2024	12:15 AM	0	2	0	0	0	0	0	0	0	0	0	0
4/23/2024	12:30 AM	0	2	0	0	0	0	0	0	0	0	0	0
4/23/2024	12:45 AM	0	1	0	0	0	0	0	0	0	0	0	0
4/23/2024	1:00 AM	0	1	0	0	0	0	0	0	0	0	0	0
4/23/2024	1:15 AM	0	0	0	0	0	0	0	0	0	0	0	0
4/23/2024	1:30 AM	0	1	0	0	0	0	0	0	0	0	0	0
4/23/2024	1:45 AM	0	1	0	0	0	0	0	0	0	0	0	0
4/23/2024	2:00 AM	0	1	0	0	0	0	0	0	0	0	0	0
4/23/2024	2:15 AM	0	1	0	0	0	0	0	0	0	0	0	0
4/23/2024	2:30 AM	0	0	0	0	0	0	0	0	0	0	0	0
4/23/2024	2:45 AM	0	0	0	0	1	0	0	0	0	0	0	0
4/23/2024	3:00 AM	0	0	0	0	1	0	0	0	0	0	0	0
4/23/2024	3:15 AM	0	0	0	0	1	0	0	0	0	0	0	0
4/23/2024	3:30 AM	0	0	0	0	1	0	0	0	0	0	0	0
4/23/2024	3:45 AM	0	0	0	0	0	0	0	0	0	0	0	0
4/23/2024	4:00 AM	0	0	0	0	0	0	0	0	0	0	0	0
4/23/2024	4:15 AM	0	0	0	0	0	0	0	0	0	0	0	0
4/23/2024	4:30 AM	0	0	0	0	0	0	0	0	0	0	0	0
4/23/2024	4:45 AM	0	1	0	0	0	0	0	0	0	0	0	0
4/23/2024	5:00 AM	0	4	0	0	0	0	0	0	0	0	0	0
4/23/2024	5:15 AM	0	8	0	0	0	0	0	0	0	0	0	0
4/23/2024	5:30 AM	0	18	4	0	0	0	0	0	1	0	0	0	0
4/23/2024	5:45 AM	0	30	10	0	0	0	0	0	1	0	0	0	0
4/23/2024	6:00 AM	0	38	15	0	0	0	0	0	1	0	0	0	0
4/23/2024	6:15 AM	0	53	20	0	0	0	0	0	2	0	0	0	0
4/23/2024	6:30 AM	0	65	21	0	0	0	0	0	1	0	0	0	0
4/23/2024	6:45 AM	0	71	20	0	0	0	0	1	1	0	0	0	0
4/23/2024	7:00 AM	0	90	25	2	0	0	0	1	1	0	0	0	0
4/23/2024	7:15 AM	0	98	37	3	1	0	0	1	0	0	0	0	0
4/23/2024	7:30 AM	0	95	34	4	2	0	0	2	0	0	0	0	0
4/23/2024	7:45 AM	0	95	37	4	2	0	0	1	0	0	0	0	0
4/23/2024	8:00 AM	0	94	34	5	3	0	0	1	0	0	0	0	0
4/23/2024	8:15 AM	0	84	27	4	2	0	0	1	0	0	0	0	0
4/23/2024	8:30 AM	0	81	34	3	1	0	0	0	0	0	0	0	0
4/23/2024	8:45 AM	0	82	34	3	3	0	0	0	1	0	0	0	0
4/23/2024	9:00 AM	0	76	35	0	4	0	0	0	1	0	0	0	0
4/23/2024	9:15 AM	0	85	32	0	4	0	0	0	1	0	0	0	0
4/23/2024	9:30 AM	0	89	27	0	4	0	0	0	1	0	0	0	0
4/23/2024	9:45 AM	0	89	26	0	3	0	0	0	0	0	0	0	0
4/23/2024	10:00 AM	0	88	26	0	3	0	0	1	0	0	0	0	0
4/23/2024	10:15 AM	0	83	26	0	4	0	0	1	0	0	0	0	0
4/23/2024	10:30 AM	0	90	31	1	6	0	0	1	1	0	0	0	0
4/23/2024	10:45 AM	0	89	32	1	5	1	0	1	1	0	0	0	0
4/23/2024	11:00 AM	0	98	33	4	4	1	0	0	1	0	0	0	0
4/23/2024	11:15 AM	0	102	33	4	5	2	0	0	1	0	0	0	0
4/23/2024	11:30 AM	0	95	35	5	5	2	0	0	1	0	0	0	0
4/23/2024	11:45 AM	0	95	39	6	6	1	0	0	1	0	0	0	0
4/23/2024	12:00 PM	0	90	38	3	5	1	0	1	1	0	0	0	0
4/23/2024	12:15 PM	0	89	42	3	4	0	0	1	1	0	0	0	0
4/23/2024	12:30 PM	0	97	43	1	3	0	0	2	0	0	0	0	0
4/23/2024	12:45 PM	0	108	39	0	2	0	0	2	1	0	0	0	0
4/23/2024	1:00 PM	0	99	35	0	2	0	0	1	1	0	0	0	0
4/23/2024	1:15 PM	0	96	33	1	1	0	0	1	1	0	0	0	0
4/23/2024	1:30 PM	0	101	30	2	0	0	0	0	1	0	0	0	0
4/23/2024	1:45 PM	0	104	30	3	0	0	0	0	1	0	0	0	0
4/23/2024	2:00 PM	0	133	32	4	0	0	0	0	1	0	0	0	0
4/23/2024	2:15 PM	0	157	36	3	0	0	0	0	1	0	0	0	0
4/23/2024	2:30 PM	0	173	41	2	2	0	0	0	1	0	0	0	0
4/23/2024	2:45 PM	0	186	41	2	4	0	0	0	0	0	0	0	0
4/23/2024	3:00 PM	0	201	42	2	5	0	0	0	0	0	0	0	0
4/23/2024	3:15 PM	0	200	42	2	6	0	0	1	0	0	0	0	0
4/23/2024	3:30 PM	0	204	38	2	4	0	0	1	0	0	0	0	0
4/23/2024	3:45 PM	2	194	45	1	3	0	0	1	0	0	0	0	0
4/23/2024	4:00 PM	2	176	46	1	2	0	0	1	0	0	0	0	0
4/23/2024	4:15 PM	2	178	47	1	1	0	0	0	0	0	0	0	0
4/23/2024	4:30 PM	2	154	41	1	2	0	0	0	0	0	0	0	0
4/23/2024	4:45 PM	0	149	38	1	1	0	0	0	0	0	0	0	0
4/23/2024	5:00 PM	0	136	42	0	1	0	0	0	0	0	0	0	0
4/23/2024	5:15 PM	0	120	31	0	2	0	0	0	0	0	0	0	0
4/23/2024	5:30 PM	0	124	39	0	1	0	0	1	0	0	0	0	0
4/23/2024	5:45 PM	0	117	34	0	1	0	0	1	0	0	0	0	0
4/23/2024	6:00 PM	0	109	27	0	1	0	0	1	0	0	0	0	0
4/23/2024	6:15 PM	0	98	33	0	1	0	0	1	0	0	0	0	0
4/23/2024	6:30 PM	0	79	26	0	1	0	0	0	1	0	0	0	0
4/23/2024	6:45 PM	0	82	26	0	1	0	0	0	1	0	0	0	0
4/23/2024	7:00 PM	0	88	27	0	1	0	0	0	1	0	0	0	0
4/23/2024	7:15 PM	0	92	23	0	0	0	0	0	1	0	0	0	0
4/23/2024	7:30 PM	0	91	21	0	0	0	0	0	0	0	0	0	0
4/23/2024	7:45 PM	0	75	16	0	0	0	0	0	0	0	0	0	0
4/23/2024	8:00 PM	0	57	13	0	0	0	0	0	0	0	0	0	0
4/23/2024	8:15 PM	0	45	10	0	0	0	0	0	0	0	0	0	0
4/23/2024	8:30 PM	0	42	12	0	0	0	0	0	0	0	0	0	0
4/23/2024	8:45 PM	0	36	12	0	0	0	0	0	0	0	0	0	0
4/23/2024	9:00 PM	0	29	10	1	0	0	0	0	0	0	0	0	0
4/23/2024	9:15 PM	0	23	10	1	0	0	0	0	0	0	0	0	0
4/23/2024	9:30 PM	0	16	5	1	0	0	0	0	0	0	0	0	0
4/23/2024	9:45 PM	0	15	3	1	0	0	0	0	0	0	0	0	0
4/23/2024	10:00 PM	0	12	2	0	0	0	0	0	0	0	0	0	0
4/23/2024	10:15 PM	0	7	0	0	0	0	0	0	0	0	0	0	0
4/23/2024	10:30 PM	0	6	0	0	0	0	0	0	0	0	0	0	0
4/23/2024	10:45 PM	0	2	0	0	0	0	0	0	0	0	0	0	0
4/23/2024	11:00 PM	0	3	0	0	0	0	0	0	0	0	0	0	0
4/23/2024	11:15 PM	0	3	0	0	0	0	0	0	0	0	0	0	0
4/23/2024	11:30 PM	0	1	0	0	0	0	0	0	0	0	0	0	0
4/23/2024	11:45 PM	0	1	0	0	0	0	0	0	0	0	0	0	0

4/24/2024	12:00 AM	0	1	2	0	0	0	0	0	1	0	0	0	0
4/24/2024	12:15 AM	0	3	2	0	0	0	0	0	1	0	0	0	0
4/24/2024	12:30 AM	0	3	1	0	0	0	0	0	1	0	0	0	0
4/24/2024	12:45 AM	0	4	1	0	0	0	0	0	0	0	0	0	0
4/24/2024	1:00 AM	0	4	0	0	0	0	0	0	0	0	0	0	0
4/24/2024	1:15 AM	0	2	0	0	0	0	0	0	0	0	0	0	0
4/24/2024	1:30 AM	0	2	0	0	0	0	0	0	0	0	0	0	0
4/24/2024	1:45 AM	0	1	0	0	0	0	0	0	0	0	0	0	0
4/24/2024	2:00 AM	0	1	0	0	0	0	0	0	0	0	0	0	0
4/24/2024	2:15 AM	0	2	0	0	0	0	0	0	0	0	0	0	0
4/24/2024	2:30 AM	0	2	0	0	1	0	0	0	0	0	0	0	0
4/24/2024	2:45 AM	0	2	0	0	1	0	0	0	0	0	0	0	0
4/24/2024	3:00 AM	0	2	0	0	1	0	0	0	0	0	0	0	0
4/24/2024	3:15 AM	0	1	0	0	1	0	0	0	0	0	0	0	0
4/24/2024	3:30 AM	0	2	0	0	0	0	0	0	0	0	0	0	0
4/24/2024	3:45 AM	0	2	0	0	0	0	0	0	0	0	0	0	0
4/24/2024	4:00 AM	0	2	0	0	0	0	0	0	0	0	0	0	0
4/24/2024	4:15 AM	0	4	0	0	0	0	0	0	0	0	0	0	0
4/24/2024	4:30 AM	0	8	0	0	0	0	0	0	0	0	0	0	0
4/24/2024	4:45 AM	0	13	0	0	0	0	0	0	1	0	0	0	0
4/24/2024	5:00 AM	0	15	1	0	0	0	0	0	2	0	0	0	0
4/24/2024	5:15 AM	0	18	2	0	0	0	0	0	2	0	0	0	0
4/24/2024	5:30 AM	0	28	9	0	0	0	0	0	2	0	0	0	0
4/24/2024	5:45 AM	0	35	13	0	0	0	0	0	1	0	0	0	0
4/24/2024	6:00 AM	0	48	15	0	0	0	0	0	0	0	0	0	0
4/24/2024	6:15 AM	0	62	19	0	1	0	0	0	0	0	0	0	0
4/24/2024	6:30 AM	0	72	20	1	1	0	0	0	0	0	0	0	0
4/24/2024	6:45 AM	0	85	22	1	2	0	0	0	0	0	0	0	0
4/24/2024	7:00 AM	0	95	28	3	2	0	0	0	0	0	0	0	0
4/24/2024	7:15 AM	0	120	31	5	1	0	0	0	0	0	0	0	0
4/24/2024	7:30 AM	0	121	33	6	2	0	0	0	0	0	0	0	0
4/24/2024	7:45 AM	0	116	31	7	3	0	0	0	0	0	0	0	0
4/24/2024	8:00 AM	0	111	26	7	5	0	0	0	0	0	0	0	0
4/24/2024	8:15 AM	0	90	27	5	5	0	0	1	0	0	0	0	0
4/24/2024	8:30 AM	0	81	25	3	7	1	0	2	0	0	0	0	0
4/24/2024	8:45 AM	0	83	25	2	5	1	0	2	0	0	0	0	0
4/24/2024	9:00 AM	0	85	30	0	4	1	0	2	1	0	0	0	0
4/24/2024	9:15 AM	0	85	25	0	5	2	0	3	1	0	0	0	0
4/24/2024	9:30 AM	0	84	21	0	2	1	0	2	1	0	0	0	0
4/24/2024	9:45 AM	0	79	20	0	4	1	0	2	1	0	0	0	0
4/24/2024	10:00 AM	0	79	17	0	7	1	0	2	0	0	0	0	0
4/24/2024	10:15 AM	0	85	19	0	7	0	0	0	0	0	0	0	0
4/24/2024	10:30 AM	0	89	29	1	8	0	0	0	0	0	0	0	0
4/24/2024	10:45 AM	0	95	31	2	6	0	0	0	0	0	0	0	0
4/24/2024	11:00 AM	0	92	30	2	2	0	0	1	0	0	0	0	0
4/24/2024	11:15 AM	0	82	30	2	3	0	0	1	1	0	0	0	0
4/24/2024	11:30 AM	0	73	19	3	3	0	0	1	1	0	0	0	0
4/24/2024	11:45 AM	0	73	20	2	4	0	0	1	1	0	0	0	0
4/24/2024	12:00 PM	0	85	23	3	5	0	1	0	2	0	0	0	0
4/24/2024	12:15 PM	0	89	24	3	4	0	1	0	1	0	0	0	0
4/24/2024	12:30 PM	1	103	34	1	4	0	1	0	1	0	0	0	0
4/24/2024	12:45 PM	1	109	39	2	4	0	1	1	1	0	0	0	0
4/24/2024	1:00 PM	1	102	38	1	4	0	0	1	0	0	0	0	0
4/24/2024	1:15 PM	1	101	39	4	3	0	1	1	0	0	0	0	0
4/24/2024	1:30 PM	0	106	34	4	2	0	1	1	1	0	0	0	0
4/24/2024	1:45 PM	0	104	30	3	3	0	1	0	1	0	0	0	0
4/24/2024	2:00 PM	0	123	32	3	4	1	1	0	1	0	0	0	0
4/24/2024	2:15 PM	0	150	32	0	6	1	0	0	1	0	0	0	0
4/24/2024	2:30 PM	0	170	36	0	6	1	0	0	0	0	0	0	0
4/24/2024	2:45 PM	0	184	44	1	6	1	0	1	0	1	0	0	0
4/24/2024	3:00 PM	0	183	56	3	7	0	0	1	0	1	0	0	0
4/24/2024	3:15 PM	0	208	62	4	5	0	0	1	0	1	0	0	0
4/24/2024	3:30 PM	0	213	70	4	5	0	0	1	0	1	0	0	0
4/24/2024	3:45 PM	0	224	67	3	3	0	0	1	0	0	0	0	0
4/24/2024	4:00 PM	0	229	61	3	0	0	0	2	0	0	0	0	0
4/24/2024	4:15 PM	0	223	66	2	0	0	0	2	0	0	0	0	0
4/24/2024	4:30 PM	0	219	59	2	0	0	0	3	0	0	0	0	0
4/24/2024	4:45 PM	2	196	56	2	0	0	0	2	1	0	0	0	0
4/24/2024	5:00 PM	2	180	56	0	0	0	0	1	1	1	0	0	0
4/24/2024	5:15 PM	2	152	51	0	0	0	0	1	1	1	0	0	0
4/24/2024	5:30 PM	2	132	45	0	1	0	0	0	1	1	0	0	0
4/24/2024	5:45 PM	0	134	46	0	2	0	0	0	0	1	0	0	0
4/24/2024	6:00 PM	0	127	36	0	2	0	0	0	0	0	0	0	0
4/24/2024	6:15 PM	0	118	24	0	3	0	0	0	0	0	0	0	0
4/24/2024	6:30 PM	0	115	28	0	3	0	0	0	0	0	0	0	0
4/24/2024	6:45 PM	0	108	26	0	2	0	0	0	0	0	0	0	0
4/24/2024	7:00 PM	0	106	25	0	2	0	0	0	0	0	0	0	0
4/24/2024	7:15 PM	0	93	25	0	1	0	0	0	0	0	0	0	0
4/24/2024	7:30 PM	0	86	15	0	0	0	0	0	0	0	0	0	0
4/24/2024	7:45 PM	0	78	9	0	0	0	0	0	0	0	0	0	0
4/24/2024	8:00 PM	0	78	8	0	0	0	0	0	1	0	0	0	0
4/24/2024	8:15 PM	0	75	11	0	0	0	0	0	1	0	0	0	0
4/24/2024	8:30 PM	0	66	12	0	0	0	0	0	1	0	0	0	0
4/24/2024	8:45 PM	0	61	11	0	0	0	0	0	1	0	0	0	0
4/24/2024	9:00 PM	0	48	11	0	0	0	0	0	0	0	0	0	0
4/24/2024	9:15 PM	0	40	6	0	1	0	0	0	0	0	0	0	0
4/24/2024	9:30 PM	0	33	4	0	1	0	0	0	0	0	0	0	0
4/24/2024	9:45 PM	0	25	3	0	1	0	0	0	0	0	0	0	0
4/24/2024	10:00 PM	0	17	0	0	1	0	0	0	0	0	0	0	0
4/24/2024	10:15 PM	0	11	0	0	0	0	0	0	1	0	0	0	0
4/24/2024	10:30 PM	0	7	0	0	0	0	0	0	1	0	0	0	0
4/24/2024	10:45 PM	0	8	0	0	0	0	0	0	1	0	0	0	0
4/24/2024	11:00 PM	0	9	0	0	0	0	0	0	1	0	0	0	0
4/24/2024	11:15 PM	0	8	0	0	0	0	0	0	0	0	0	0	0
4/24/2024	11:30 PM	0	7	0	0	0	0	0	0	0	0	0	0	0
4/24/2024	11:45 PM	0	3	0	0	0	0	0	0	0	0	0	0	0

4/25/2024	12:00 AM	0	1	0	0	0	0	0	0	0	0	0	0
4/25/2024	12:15 AM	0	4	0	0	0	0	0	0	0	0	0	0
4/25/2024	12:30 AM	0	4	0	0	0	0	0	0	0	0	0	0
4/25/2024	12:45 AM	0	3	0	0	0	0	0	0	0	0	0	0
4/25/2024	1:00 AM	0	3	0	0	0	0	0	0	0	0	0	0
4/25/2024	1:15 AM	0	0	0	0	0	0	0	0	0	0	0	0
4/25/2024	1:30 AM	0	0	0	0	0	0	0	0	0	0	0	0
4/25/2024	1:45 AM	0	1	0	0	0	0	0	0	0	0	0	0
4/25/2024	2:00 AM	0	3	0	0	0	0	0	0	0	0	0	0
4/25/2024	2:15 AM	0	3	0	0	0	0	0	0	0	0	0	0
4/25/2024	2:30 AM	0	4	0	0	0	0	0	0	0	0	0	0
4/25/2024	2:45 AM	0	3	0	0	0	0	0	0	0	0	0	0
4/25/2024	3:00 AM	0	3	1	0	0	0	0	0	0	0	0	0
4/25/2024	3:15 AM	0	3	1	0	0	0	0	0	0	0	0	0
4/25/2024	3:30 AM	0	3	1	0	0	0	0	0	0	0	0	0
4/25/2024	3:45 AM	0	5	3	0	0	0	0	0	0	0	0	0
4/25/2024	4:00 AM	0	6	2	0	0	0	0	0	0	0	0	0
4/25/2024	4:15 AM	0	6	2	0	0	0	0	0	0	0	0	0
4/25/2024	4:30 AM	0	9	2	0	0	0	0	0	0	0	0	0
4/25/2024	4:45 AM	0	15	0	0	0	0	0	0	0	0	0	0
4/25/2024	5:00 AM	0	20	0	0	0	0	0	0	0	0	0	0
4/25/2024	5:15 AM	0	32	1	0	0	0	0	0	0	0	0	0
4/25/2024	5:30 AM	0	34	5	0	1	0	0	0	0	0	0	0
4/25/2024	5:45 AM	0	42	10	0	1	0	0	0	0	0	0	0
4/25/2024	6:00 AM	0	52	14	0	1	0	0	2	0	0	0	0
4/25/2024	6:15 AM	0	61	23	0	1	0	0	2	0	0	0	0
4/25/2024	6:30 AM	0	82	25	1	0	0	0	2	1	0	0	0
4/25/2024	6:45 AM	0	91	25	1	0	0	0	2	1	0	0	0
4/25/2024	7:00 AM	0	97	26	3	0	0	0	2	1	0	0	0
4/25/2024	7:15 AM	0	110	25	5	0	0	0	2	1	0	0	0
4/25/2024	7:30 AM	0	105	30	5	0	0	0	2	0	0	0	0
4/25/2024	7:45 AM	0	101	33	6	0	0	0	2	0	0	0	0
4/25/2024	8:00 AM	0	93	35	5	1	0	0	0	0	0	0	0
4/25/2024	8:15 AM	0	81	34	4	1	0	0	0	0	0	0	0
4/25/2024	8:30 AM	0	79	30	3	2	0	0	0	0	0	0	0
4/25/2024	8:45 AM	0	78	26	2	3	0	0	0	0	0	0	0
4/25/2024	9:00 AM	0	81	27	1	2	0	0	0	0	0	0	0
4/25/2024	9:15 AM	0	76	28	0	2	0	0	0	0	0	0	0
4/25/2024	9:30 AM	0	75	27	0	2	0	0	2	0	0	0	0
4/25/2024	9:45 AM	0	88	30	0	2	0	0	3	0	0	0	0
4/25/2024	10:00 AM	0	89	32	0	3	0	0	3	0	0	0	0
4/25/2024	10:15 AM	0	97	29	0	4	0	0	3	1	0	0	0
4/25/2024	10:30 AM	0	102	33	0	3	0	0	1	1	0	0	0
4/25/2024	10:45 AM	0	84	37	1	2	0	0	0	1	0	0	0
4/25/2024	11:00 AM	1	83	33	2	1	0	0	0	1	0	0	0
4/25/2024	11:15 AM	1	90	38	2	1	0	0	1	0	0	0	0
4/25/2024	11:30 AM	1	92	35	3	4	0	0	2	0	0	0	0
4/25/2024	11:45 AM	1	112	30	2	4	0	0	2	0	0	0	0
4/25/2024	12:00 PM	0	134	36	1	5	0	1	2	0	0	0	0
4/25/2024	12:15 PM	0	133	35	2	4	0	1	3	0	0	0	0
4/25/2024	12:30 PM	0	142	40	1	2	0	1	3	0	0	0	0
4/25/2024	12:45 PM	0	140	47	1	2	0	1	3	0	0	0	0
4/25/2024	1:00 PM	1	140	46	1	3	0	0	3	1	0	0	0
4/25/2024	1:15 PM	1	139	49	3	4	1	0	2	2	0	0	0
4/25/2024	1:30 PM	1	146	49	3	3	1	0	1	2	0	0	0
4/25/2024	1:45 PM	1	144	47	3	3	1	0	1	3	0	0	0
4/25/2024	2:00 PM	0	156	44	3	1	1	0	1	2	0	0	0
4/25/2024	2:15 PM	0	166	44	0	0	1	0	0	1	0	0	0
4/25/2024	2:30 PM	0	174	44	0	1	1	0	0	1	0	0	0
4/25/2024	2:45 PM	1	192	43	1	3	1	0	0	0	0	0	0
4/25/2024	3:00 PM	1	190	45	2	5	1	1	1	0	0	0	0
4/25/2024	3:15 PM	1	202	45	2	5	1	1	1	0	0	0	0
4/25/2024	3:30 PM	2	200	45	3	5	1	1	1	0	0	0	0
4/25/2024	3:45 PM	1	192	47	3	3	1	1	1	0	0	0	0
4/25/2024	4:00 PM	1	185	47	4	3	1	0	0	0	0	0	0
4/25/2024	4:15 PM	1	204	46	4	3	0	0	1	0	0	0	0
4/25/2024	4:30 PM	0	202	41	3	3	0	0	1	0	0	0	0
4/25/2024	4:45 PM	0	209	38	2	3	0	0	1	0	0	0	0
4/25/2024	5:00 PM	0	211	32	0	1	0	0	1	0	0	0	0
4/25/2024	5:15 PM	0	171	32	0	1	0	0	0	0	0	0	0
4/25/2024	5:30 PM	1	153	31	0	0	0	0	0	0	0	0	0
4/25/2024	5:45 PM	1	133	32	0	0	0	0	0	0	0	0	0
4/25/2024	6:00 PM	1	103	36	0	1	0	0	1	0	0	0	0
4/25/2024	6:15 PM	1	107	30	0	1	0	0	1	0	0	0	0
4/25/2024	6:30 PM	0	108	32	0	2	0	0	1	0	0	0	0
4/25/2024	6:45 PM	0	105	27	0	2	0	0	1	0	0	0	0
4/25/2024	7:00 PM	0	114	27	0	2	0	0	0	1	0	0	0
4/25/2024	7:15 PM	0	108	23	0	2	0	0	0	1	0	0	0
4/25/2024	7:30 PM	0	102	18	0	1	0	0	0	1	0	0	0
4/25/2024	7:45 PM	0	98	13	0	1	0	0	0	1	0	0	0
4/25/2024	8:00 PM	0	91	6	0	0	0	0	0	0	0	0	0
4/25/2024	8:15 PM	0	90	5	0	1	0	0	0	0	0	0	0
4/25/2024	8:30 PM	0	86	2	0	1	0	0	0	0	0	0	0
4/25/2024	8:45 PM	0	80	2	0	1	0	0	0	0	0	0	0
4/25/2024	9:00 PM	0	77	2	0	1	0	0	0	0	0	0	0
4/25/2024	9:15 PM	0	59	3	0	0	0	0	0	0	0	0	0
4/25/2024	9:30 PM	0	50	4	0	0	0	0	0	0	0	0	0
4/25/2024	9:45 PM	0	43	4	0	0	0	0	0	0	0	0	0
4/25/2024	10:00 PM	0	35	3	0	0	0	0	0	0	0	0	0
4/25/2024	10:15 PM	0	35	1	0	0	0	0	0	1	0	0	0
4/25/2024	10:30 PM	0	25	0	0	0	0	0	0	1	0	0	0
4/25/2024	10:45 PM	0	20	0	0	0	0	0	0	1	0	0	0
4/25/2024	11:00 PM	0	14	0	0	0	0	0	0	1	0	0	0
4/25/2024	11:15 PM	0	4	0	0	0	0	0	0	0	0	0	0
4/25/2024	11:30 PM	0	4	0	0	0	0	0	0	0	0	0	0
4/25/2024	11:45 PM	0	1	0	0	0	0	0	0	0	0	0	0

4/26/2024	12:00 AM	0	0	0	0	0	0	0	0	0	0	0	0	0
4/26/2024	12:15 AM	0	0	0	0	1	0	0	0	0	0	0	0	0
4/26/2024	12:30 AM	0	0	0	0	1	0	0	0	0	0	0	0	0
4/26/2024	12:45 AM	0	0	0	0	1	0	0	0	0	0	0	0	0
4/26/2024	1:00 AM	0	0	0	0	1	0	0	0	0	0	0	0	0
4/26/2024	1:15 AM	0	0	0	0	0	0	0	0	0	0	0	0	0
4/26/2024	1:30 AM	0	0	0	0	0	0	0	0	0	0	0	0	0
4/26/2024	1:45 AM	0	3	0	0	0	0	0	0	0	0	0	0	0
4/26/2024	2:00 AM	0	3	0	0	0	0	0	0	0	0	0	0	0
4/26/2024	2:15 AM	0	3	0	0	0	0	0	0	0	0	0	0	0
4/26/2024	2:30 AM	0	4	0	0	0	0	0	0	0	0	0	0	0
4/26/2024	2:45 AM	0	1	0	0	0	0	0	0	0	0	0	0	0
4/26/2024	3:00 AM	0	1	0	0	0	0	0	0	0	0	0	0	0
4/26/2024	3:15 AM	0	1	0	0	0	0	0	0	0	0	0	0	0
4/26/2024	3:30 AM	0	0	0	0	1	0	0	0	0	0	0	0	0
4/26/2024	3:45 AM	0	0	0	0	1	0	0	0	0	0	0	0	0
4/26/2024	4:00 AM	0	0	0	0	1	0	0	0	0	0	0	0	0
4/26/2024	4:15 AM	0	1	0	0	1	0	0	0	0	0	0	0	0
4/26/2024	4:30 AM	0	1	0	0	0	0	0	0	0	0	0	0	0
4/26/2024	4:45 AM	0	3	0	0	0	0	0	0	0	0	0	0	0
4/26/2024	5:00 AM	0	7	0	0	0	0	0	0	0	0	0	0	0
4/26/2024	5:15 AM	0	11	1	0	0	0	0	0	0	0	0	0	0
4/26/2024	5:30 AM	0	17	4	0	0	0	0	0	0	0	0	0	0
4/26/2024	5:45 AM	0	23	5	0	0	0	0	0	0	0	0	0	0
4/26/2024	6:00 AM	0	33	13	0	0	0	0	0	0	0	0	0	0
4/26/2024	6:15 AM	0	42	17	0	1	0	0	0	0	0	0	0	0
4/26/2024	6:30 AM	0	65	18	1	1	0	0	1	0	0	0	0	0
4/26/2024	6:45 AM	0	72	26	2	1	0	0	1	0	0	0	0	0
4/26/2024	7:00 AM	0	98	26	3	1	0	0	1	0	0	0	0	0
4/26/2024	7:15 AM	0	115	29	6	0	0	0	1	0	0	0	0	0
4/26/2024	7:30 AM	0	107	33	7	2	1	0	0	0	0	0	0	0
4/26/2024	7:45 AM	0	124	30	8	3	1	0	0	1	0	0	0	0
4/26/2024	8:00 AM	0	109	36	9	3	1	0	0	1	0	0	0	0
4/26/2024	8:15 AM	0	104	39	6	3	1	0	0	2	0	0	0	0
4/26/2024	8:30 AM	0	98	36	4	1	0	0	0	3	0	0	0	0
4/26/2024	8:45 AM	0	81	37	2	0	0	0	0	2	0	0	0	0
4/26/2024	9:00 AM	0	79	32	0	1	0	0	0	2	0	0	0	0
4/26/2024	9:15 AM	0	81	29	0	1	0	0	0	2	0	0	0	0
4/26/2024	9:30 AM	0	84	34	0	1	0	0	0	1	0	0	0	0
4/26/2024	9:45 AM	0	85	33	0	1	0	0	0	1	0	0	0	0
4/26/2024	10:00 AM	0	80	32	0	1	0	0	0	1	0	0	0	0
4/26/2024	10:15 AM	0	75	30	0	3	0	0	0	0	0	0	0	0
4/26/2024	10:30 AM	0	85	25	1	3	0	0	0	0	0	0	0	0
4/26/2024	10:45 AM	0	92	25	3	4	1	0	0	0	0	0	0	0
4/26/2024	11:00 AM	0	102	28	4	3	1	0	0	0	0	0	0	0
4/26/2024	11:15 AM	0	110	30	4	1	1	0	0	0	0	0	0	0
4/26/2024	11:30 AM	0	109	34	4	2	1	0	0	0	0	0	0	0
4/26/2024	11:45 AM	0	113	30	2	1	0	0	2	0	0	0	0	0
4/26/2024	12:00 PM	0	111	29	1	1	0	0	3	0	0	0	0	0
4/26/2024	12:15 PM	0	106	32	1	2	1	0	3	0	0	0	0	0
4/26/2024	12:30 PM	0	111	27	0	1	1	0	3	0	0	0	0	0
4/26/2024	12:45 PM	0	114	33	1	2	1	0	2	0	0	0	0	0
4/26/2024	1:00 PM	0	120	36	2	2	1	0	1	0	0	0	0	0
4/26/2024	1:15 PM	0	139	38	4	1	1	0	1	0	0	0	0	0
4/26/2024	1:30 PM	0	133	43	4	2	1	0	1	0	0	0	0	0
4/26/2024	1:45 PM	0	141	51	3	1	2	0	0	0	0	0	0	0
4/26/2024	2:00 PM	0	145	52	2	4	2	0	0	0	0	0	0	0
4/26/2024	2:15 PM	0	149	52	0	5	2	0	0	0	0	0	0	0
4/26/2024	2:30 PM	0	179	54	0	5	2	0	0	0	0	0	0	0
4/26/2024	2:45 PM	1	197	50	0	5	1	0	0	0	0	0	0	0
4/26/2024	3:00 PM	1	207	52	2	4	1	0	0	0	0	0	0	0
4/26/2024	3:15 PM	2	216	56	2	4	0	0	0	0	0	0	0	0
4/26/2024	3:30 PM	2	196	51	3	5	0	0	0	0	0	0	0	0
4/26/2024	3:45 PM	1	180	51	3	8	0	0	0	0	0	0	0	0
4/26/2024	4:00 PM	1	177	49	2	6	0	0	0	0	0	0	0	0
4/26/2024	4:15 PM	0	165	48	3	5	0	0	0	0	0	0	0	0
4/26/2024	4:30 PM	0	176	54	2	3	0	0	0	0	0	0	0	0
4/26/2024	4:45 PM	0	171	57	2	1	0	0	0	0	0	0	0	0
4/26/2024	5:00 PM	0	162	48	1	2	0	0	0	0	0	0	0	0
4/26/2024	5:15 PM	0	159	43	0	2	0	0	2	0	0	0	0	0
4/26/2024	5:30 PM	0	142	37	0	2	0	0	2	0	0	0	0	0
4/26/2024	5:45 PM	0	136	34	0	1	0	0	2	0	0	0	0	0
4/26/2024	6:00 PM	0	137	36	0	0	0	0	2	0	0	0	0	0
4/26/2024	6:15 PM	0	121	29	0	0	0	0	0	0	0	0	0	0
4/26/2024	6:30 PM	0	117	30	0	0	0	0	0	0	0	0	0	0
4/26/2024	6:45 PM	0	114	27	0	0	0	0	0	0	0	0	0	0
4/26/2024	7:00 PM	0	99	28	0	0	0	0	0	0	0	0	0	0
4/26/2024	7:15 PM	1	95	34	0	0	0	0	0	1	0	0	0	0
4/26/2024	7:30 PM	1	87	35	0	0	0	0	0	1	0	0	0	0
4/26/2024	7:45 PM	2	75	32	0	0	0	0	0	1	0	0	0	0
4/26/2024	8:00 PM	2	70	30	0	0	0	0	0	1	0	0	0	0
4/26/2024	8:15 PM	1	55	22	0	0	0	0	0	0	0	0	0	0
4/26/2024	8:30 PM	1	47	18	0	0	0	0	0	0	0	0	0	0
4/26/2024	8:45 PM	0	44	15	0	0	0	0	0	1	0	0	0	0
4/26/2024	9:00 PM	0	44	16	0	0	0	0	0	1	0	0	0	0
4/26/2024	9:15 PM	0	42	16	0	0	0	0	0	1	0	0	0	0
4/26/2024	9:30 PM	0	42	15	0	1	0	0	0	1	0	0	0	0
4/26/2024	9:45 PM	0	35	12	0	1	0	0	0	0	0	0	0	0
4/26/2024	10:00 PM	0	23	5	0	1	0	0	0	0	0	0	0	0
4/26/2024	10:15 PM	0	22	4	0	1	0	0	0	0	0	0	0	0
4/26/2024	10:30 PM	0	16	1	0	0	0	0	0	0	0	0	0	0
4/26/2024	10:45 PM	0	17	1	0	0	0	0	0	0	0	0	0	0
4/26/2024	11:00 PM	0	19	2	0	0	0	0	0	0	0	0	0	0
4/26/2024	11:15 PM	0	14	1	0	0	0	0	0	0	0	0	0	0
4/26/2024	11:30 PM	0	10	1	0	0	0	0	0	0	0	0	0	0
4/26/2024	11:45 PM	0	5	1	0	0	0	0	0	0	0	0	0	0

4/27/2024	12:00 AM	1	5	3	0	0	0	0	0	0	0	0	0	0
4/27/2024	12:15 AM	1	5	3	0	0	0	0	0	0	0	0	0	0
4/27/2024	12:30 AM	1	5	3	0	0	0	0	0	0	0	0	0	0
4/27/2024	12:45 AM	0	5	2	0	0	0	0	0	0	0	0	0	0
4/27/2024	1:00 AM	0	5	2	0	0	0	0	0	0	0	0	0	0
4/27/2024	1:15 AM	0	4	2	0	0	0	0	0	0	0	0	0	0
4/27/2024	1:30 AM	0	2	1	0	0	0	0	0	0	0	0	0	0
4/27/2024	1:45 AM	0	1	1	0	0	0	0	0	0	0	0	0	0
4/27/2024	2:00 AM	0	0	0	0	0	0	0	0	0	0	0	0	0
4/27/2024	2:15 AM	0	0	0	0	0	0	0	0	0	0	0	0	0
4/27/2024	2:30 AM	0	0	0	0	0	0	0	0	0	0	0	0	0
4/27/2024	2:45 AM	0	1	0	0	0	0	0	0	0	0	0	0	0
4/27/2024	3:00 AM	0	1	0	0	0	0	0	0	0	0	0	0	0
4/27/2024	3:15 AM	0	1	0	0	0	0	0	0	0	0	0	0	0
4/27/2024	3:30 AM	0	2	0	0	0	0	0	0	0	0	0	0	0
4/27/2024	3:45 AM	0	2	0	0	0	0	0	0	0	0	0	0	0
4/27/2024	4:00 AM	0	3	0	0	0	0	0	0	0	0	0	0	0
4/27/2024	4:15 AM	0	4	0	0	0	0	0	0	0	0	0	0	0
4/27/2024	4:30 AM	0	4	1	0	0	0	0	0	0	0	0	0	0
4/27/2024	4:45 AM	0	7	3	0	1	0	0	0	0	0	0	0	0
4/27/2024	5:00 AM	0	7	4	0	1	0	0	0	0	0	0	0	0
4/27/2024	5:15 AM	0	10	6	0	1	0	0	0	0	0	0	0	0
4/27/2024	5:30 AM	0	10	7	0	1	0	0	0	0	0	0	0	0
4/27/2024	5:45 AM	0	11	10	0	0	0	0	0	0	0	0	0	0
4/27/2024	6:00 AM	0	17	11	0	0	0	0	0	0	0	0	0	0
4/27/2024	6:15 AM	0	17	16	0	0	0	0	0	0	0	0	0	0
4/27/2024	6:30 AM	0	23	16	0	0	0	0	0	0	0	0	0	0
4/27/2024	6:45 AM	0	25	15	0	0	0	0	0	1	0	0	0	0
4/27/2024	7:00 AM	0	34	17	0	0	0	0	0	1	0	0	0	0
4/27/2024	7:15 AM	0	44	16	0	1	0	0	0	1	0	0	0	0
4/27/2024	7:30 AM	0	53	17	0	1	0	0	0	1	0	0	0	0
4/27/2024	7:45 AM	0	60	22	0	1	0	0	0	0	0	0	0	0
4/27/2024	8:00 AM	0	57	25	0	1	0	0	0	0	0	0	0	0
4/27/2024	8:15 AM	0	71	21	0	0	0	0	0	1	0	0	0	0
4/27/2024	8:30 AM	0	71	26	0	0	0	0	0	1	0	0	0	0
4/27/2024	8:45 AM	0	77	20	0	0	0	0	0	1	0	0	0	0
4/27/2024	9:00 AM	0	81	19	0	1	0	0	0	2	0	0	0	0
4/27/2024	9:15 AM	0	88	24	0	1	0	0	0	1	0	0	0	0
4/27/2024	9:30 AM	0	101	21	0	1	0	0	0	1	0	0	0	0
4/27/2024	9:45 AM	0	98	22	0	1	0	0	0	1	0	0	0	0
4/27/2024	10:00 AM	0	106	25	0	2	0	0	0	0	0	0	0	0
4/27/2024	10:15 AM	1	102	25	0	2	0	0	0	0	0	0	0	0
4/27/2024	10:30 AM	1	103	33	0	2	0	0	0	1	0	0	0	0
4/27/2024	10:45 AM	1	119	41	0	2	1	0	0	1	0	0	0	0
4/27/2024	11:00 AM	1	127	37	0	0	1	0	0	1	0	0	0	0
4/27/2024	11:15 AM	0	131	39	0	0	1	0	0	1	0	0	0	0
4/27/2024	11:30 AM	0	124	35	0	0	1	0	0	0	0	0	0	0
4/27/2024	11:45 AM	0	123	32	0	1	0	0	1	0	0	0	0	0
4/27/2024	12:00 PM	0	121	32	0	2	0	0	1	0	0	0	0	0
4/27/2024	12:15 PM	0	130	31	0	3	0	0	1	0	0	0	0	0
4/27/2024	12:30 PM	0	136	29	0	3	0	0	1	0	0	0	0	0
4/27/2024	12:45 PM	0	130	27	0	2	0	0	0	0	0	0	0	0
4/27/2024	1:00 PM	0	141	31	0	1	0	0	0	0	0	0	0	0
4/27/2024	1:15 PM	0	125	31	0	0	0	0	0	0	0	0	0	0
4/27/2024	1:30 PM	0	133	29	0	0	0	0	0	0	0	0	0	0
4/27/2024	1:45 PM	0	133	28	0	0	0	0	0	0	0	0	0	0
4/27/2024	2:00 PM	0	124	24	0	1	0	0	0	0	0	0	0	0
4/27/2024	2:15 PM	0	126	21	0	1	0	0	0	0	0	0	0	0
4/27/2024	2:30 PM	0	113	20	0	1	0	0	0	0	0	0	0	0
4/27/2024	2:45 PM	3	107	19	0	1	0	0	0	0	0	0	0	0
4/27/2024	3:00 PM	3	105	16	0	0	0	0	0	0	0	0	0	0
4/27/2024	3:15 PM	3	102	18	0	0	0	0	0	0	0	0	0	0
4/27/2024	3:30 PM	3	100	20	0	0	0	0	0	0	0	0	0	0
4/27/2024	3:45 PM	0	118	18	0	0	0	0	0	0	0	0	0	0
4/27/2024	4:00 PM	0	114	19	0	1	0	0	0	0	0	0	0	0
4/27/2024	4:15 PM	0	111	14	0	2	0	0	0	0	0	0	0	0
4/27/2024	4:30 PM	0	103	13	0	3	0	0	1	0	0	0	0	0
4/27/2024	4:45 PM	0	91	16	0	3	0	0	1	0	0	0	0	0
4/27/2024	5:00 PM	0	94	15	0	2	0	0	1	0	0	0	0	0
4/27/2024	5:15 PM	0	93	18	0	1	0	0	1	0	0	0	0	0
4/27/2024	5:30 PM	0	99	17	0	0	0	0	0	0	0	0	0	0
4/27/2024	5:45 PM	0	97	18	0	1	0	0	0	0	0	0	0	0
4/27/2024	6:00 PM	0	91	24	0	1	0	0	0	0	0	0	0	0
4/27/2024	6:15 PM	0	89	24	0	2	0	0	0	0	0	0	0	0
4/27/2024	6:30 PM	0	89	26	0	2	0	0	0	0	0	0	0	0
4/27/2024	6:45 PM	0	86	22	0	1	0	0	0	0	0	0	0	0
4/27/2024	7:00 PM	0	85	20	0	2	0	0	0	0	0	0	0	0
4/27/2024	7:15 PM	0	86	18	0	1	0	0	0	0	0	0	0	0
4/27/2024	7:30 PM	0	92	17	0	1	0	0	0	0	0	0	0	0
4/27/2024	7:45 PM	0	79	18	0	1	0	0	1	0	0	0	0	0
4/27/2024	8:00 PM	0	63	15	0	0	0	0	1	0	0	0	0	0
4/27/2024	8:15 PM	0	46	14	0	0	0	0	1	0	0	0	0	0
4/27/2024	8:30 PM	0	27	13	0	0	0	0	1	0	0	0	0	0
4/27/2024	8:45 PM	0	27	12	0	0	0	0	0	0	0	0	0	0
4/27/2024	9:00 PM	0	30	12	0	0	0	0	0	0	0	0	0	0
4/27/2024	9:15 PM	0	31	12	0	0	0	0	0	0	0	0	0	0
4/27/2024	9:30 PM	0	31	10	0	0	0	0	0	0	0	0	0	0
4/27/2024	9:45 PM	0	26	8	0	0	0	0	0	0	0	0	0	0
4/27/2024	10:00 PM	0	19	7	0	0	0	0	0	0	0	0	0	0
4/27/2024	10:15 PM	0	14	6	0	0	0	0	0	0	0	0	0	0
4/27/2024	10:30 PM	0	8	5	0	0	0	0	0	0	0	0	0	0
4/27/2024	10:45 PM	0	7	5	0	0	0	0	0	0	0	0	0	0
4/27/2024	11:00 PM	0	5	3	0	0	0	0	0	0	0	0	0	0
4/27/2024	11:15 PM	0	4	2	0	0	0	0	0	0	0	0	0	0
4/27/2024	11:30 PM	0	3	1	0	0	0	0	0	0	0	0	0	0
4/27/2024	11:45 PM	0	1	0	0	0	0	0	0	0	0	0	0	0

Bi-Directional Class Count || NB EB 15min

Columbia, SC

Marr Traffic DATA COLLECTION
www.marrtraffic.com

Site 75 Lane 1 NB
I-20,
north of Bush River Rd

Date
Sunday, April 21, 2024

Lat/Long
34.034393°, -81.117736°

Weather
Cloudy
66°F

Click here for Detailed Weather

Click here for Map

0000 - 2400 (Sunday 24h Session) (04-21-2024)
NB EB 15min

	Northbound (Movement 75 Lane 1 NB.1)													15min	60min
Time	1	2	3	4	5	6	7	8	9	10	11	12	13	Total	Total
0000 - 0015	0	17	2	0	0	0	0	0	0	0	0	0	0	**19**	
0015 - 0030	0	9	1	0	0	0	0	0	0	0	0	0	0	**10**	
0030 - 0045	0	9	3	0	0	0	0	0	0	0	0	0	0	**12**	
0045 - 0100	0	6	1	0	0	0	0	1	0	0	0	0	0	**8**	**49**
0100 - 0115	0	3	2	0	0	0	0	0	0	0	0	0	0	**5**	
0115 - 0130	0	9	0	0	0	0	0	0	0	0	0	0	0	**9**	
0130 - 0145	0	6	0	0	0	0	0	0	0	0	0	0	0	**6**	
0145 - 0200	0	11	2	0	0	0	0	0	0	0	0	0	0	**13**	**33**
0200 - 0215	0	2	0	0	0	0	0	0	0	0	0	0	0	**2**	
0215 - 0230	0	1	0	0	0	0	0	0	0	0	0	0	0	**1**	
0230 - 0245	0	2	0	0	0	0	0	0	0	0	0	0	0	**2**	
0245 - 0300	0	0	0	0	0	0	0	0	0	0	0	0	0	**0**	**5**
0300 - 0315	0	4	1	0	0	0	0	0	0	0	0	0	0	**5**	
0315 - 0330	0	3	0	0	0	0	0	0	0	0	0	0	0	**3**	
0330 - 0345	0	1	0	0	0	0	0	0	0	0	0	0	0	**1**	
0345 - 0400	0	4	0	0	0	0	0	0	0	0	0	0	0	**4**	**13**
0400 - 0415	0	2	0	0	0	0	0	0	0	0	0	0	0	**2**	
0415 - 0430	0	4	0	0	0	0	0	0	0	0	0	0	0	**4**	
0430 - 0445	0	4	0	0	0	0	0	0	0	0	0	0	0	**4**	
0445 - 0500	0	3	0	0	0	0	0	0	0	0	0	0	0	**3**	**13**
0500 - 0515	0	3	0	0	0	0	0	0	0	0	0	0	0	**3**	
0515 - 0530	0	6	0	0	0	0	0	0	0	0	0	0	0	**6**	
0530 - 0545	0	9	0	0	0	0	0	0	0	0	0	0	0	**9**	
0545 - 0600	0	4	1	0	0	0	0	0	0	0	0	0	0	**5**	**23**
0600 - 0615	0	10	0	0	0	0	0	0	0	0	0	0	0	**10**	
0615 - 0630	0	9	4	0	0	0	0	0	0	0	0	0	0	**13**	
0630 - 0645	0	11	3	0	0	0	0	0	0	0	0	0	0	**14**	
0645 - 0700	0	15	3	0	1	0	0	0	0	0	0	0	0	**19**	**56**
0700 - 0715	0	14	3	0	2	0	0	0	0	0	0	0	0	**19**	
0715 - 0730	1	27	4	0	1	0	0	0	0	0	0	0	0	**33**	
0730 - 0745	0	26	5	0	0	0	0	0	0	0	0	0	0	**31**	
0745 - 0800	0	39	11	0	0	0	0	0	0	0	0	0	0	**50**	**133**
0800 - 0815	0	23	9	0	0	0	0	0	0	0	0	0	0	**32**	
0815 - 0830	0	36	6	0	0	0	0	0	0	0	0	0	0	**42**	
0830 - 0845	0	41	6	0	0	0	0	0	0	0	0	0	0	**47**	
0845 - 0900	0	51	6	0	0	0	0	0	0	0	0	0	0	**57**	**178**
0900 - 0915	3	47	7	0	0	0	0	0	0	0	0	0	0	**57**	
0915 - 0930	0	43	9	0	2	0	0	0	0	0	0	0	0	**54**	
0930 - 0945	0	41	10	0	0	0	0	0	0	0	0	0	0	**51**	
0945 - 1000	0	47	9	0	0	0	0	0	0	0	0	0	0	**56**	**218**
1000 - 1015	20	67	10	0	0	0	0	0	0	0	0	0	0	**97**	
1015 - 1030	0	71	7	1	0	0	0	0	0	0	0	0	0	**79**	
1030 - 1045	1	79	18	0	1	0	0	0	0	0	0	0	0	**99**	
1045 - 1100	14	79	18	0	1	0	0	0	0	0	0	0	0	**112**	**387**
1100 - 1115	14	64	14	0	0	0	0	0	0	0	0	0	0	**92**	
1115 - 1130	0	76	8	0	1	0	0	0	0	0	0	0	0	**85**	
1130 - 1145	0	99	25	0	0	1	0	0	0	0	0	0	0	**125**	
1145 - 1200	0	90	20	0	1	0	0	1	0	1	0	0	0	**113**	**415**
1200 - 1215	0	93	9	0	0	0	0	2	0	0	0	0	0	**104**	
1215 - 1230	0	92	26	0	1	0	0	1	1	0	0	0	0	**121**	
1230 - 1245	0	114	26	0	0	0	0	0	0	0	0	0	0	**140**	
1245 - 1300	0	97	21	0	1	0	0	1	0	0	0	0	0	**120**	**485**
1300 - 1315	0	86	25	0	1	0	0	0	0	0	0	0	0	**112**	
1315 - 1330	0	92	22	0	0	0	0	0	0	0	0	0	0	**114**	
1330 - 1345	0	123	18	0	1	0	0	1	0	0	0	0	0	**143**	
1345 - 1400	0	101	22	0	0	0	0	0	0	0	0	0	0	**123**	**492**
1400 - 1415	0	121	17	1	2	0	0	0	0	0	0	0	0	**141**	
1415 - 1430	0	110	27	0	0	0	0	0	0	0	0	0	0	**137**	
1430 - 1445	0	118	35	0	1	0	0	0	0	0	0	0	0	**154**	
1445 - 1500	1	104	33	0	0	0	0	1	1	0	0	0	0	**140**	**572**
1500 - 1515	0	86	25	0	1	1	0	0	0	0	0	0	0	**113**	
1515 - 1530	0	98	22	0	0	0	0	1	0	0	0	0	0	**121**	
1530 - 1545	1	115	28	0	2	1	0	0	0	0	0	0	0	**147**	
1545 - 1600	0	95	20	0	1	0	0	1	0	0	0	0	0	**117**	**498**
1600 - 1615	4	126	29	0	2	0	0	1	0	0	0	0	0	**162**	
1615 - 1630	0	126	32	0	1	0	0	0	0	0	0	0	0	**159**	
1630 - 1645	1	140	30	0	3	0	0	1	0	0	0	0	0	**175**	
1645 - 1700	0	138	33	0	1	0	0	0	0	0	0	0	0	**172**	**668**
1700 - 1715	0	118	24	0	0	0	0	2	0	0	0	0	0	**144**	
1715 - 1730	0	96	15	0	0	0	0	0	0	0	0	0	0	**111**	
1730 - 1745	0	117	15	0	0	0	0	1	0	0	0	0	0	**133**	
1745 - 1800	0	103	16	0	0	0	0	0	0	0	0	0	0	**119**	**507**
1800 - 1815	0	106	20	0	0	0	0	0	0	0	0	0	0	**126**	
1815 - 1830	0	86	20	0	0	0	0	2	1	0	0	0	0	**109**	
1830 - 1845	0	76	16	0	0	0	0	0	1	0	0	0	0	**93**	
1845 - 1900	0	72	7	0	0	0	0	0	1	0	0	0	0	**80**	**408**
1900 - 1915	0	88	15	0	0	0	0	0	0	0	0	0	0	**103**	
1915 - 1930	0	98	16	0	0	0	0	0	0	0	0	0	0	**114**	
1930 - 1945	0	103	20	0	1	0	0	0	0	0	0	0	0	**124**	
1945 - 2000	2	82	24	0	1	0	0	0	1	0	0	0	0	**110**	**451**
2000 - 2015	0	84	15	0	0	0	0	1	2	0	0	0	0	**102**	
2015 - 2030	0	56	14	0	0	0	0	0	0	0	0	0	0	**70**	
2030 - 2045	1	74	9	0	0	0	0	0	0	0	0	0	0	**84**	
2045 - 2100	0	59	3	0	0	0	0	0	2	0	0	0	0	**64**	**320**
2100 - 2115	0	60	10	0	0	0	0	0	0	0	0	0	0	**70**	
2115 - 2130	0	46	7	0	0	0	0	0	0	0	0	0	0	**53**	
2130 - 2145	0	41	5	0	0	0	0	0	1	0	0	0	0	**47**	
2145 - 2200	0	27	4	0	1	0	0	0	0	0	0	0	0	**32**	**202**
2200 - 2215	0	39	8	0	0	0	0	1	0	0	0	0	0	**48**	
2215 - 2230	0	24	3	0	0	0	0	0	0	0	0	0	0	**27**	
2230 - 2245	0	26	1	0	0	0	0	0	0	0	0	0	0	**27**	
2245 - 2300	0	26	2	0	0	0	0	0	0	0	0	0	0	**28**	**130**
2300 - 2315	0	25	3	0	0	0	0	0	0	0	0	0	0	**28**	
2315 - 2330	0	17	0	0	0	0	0	0	0	0	0	0	0	**17**	
2330 - 2345	0	10	1	0	0	0	0	0	0	0	0	0	0	**11**	
2345 - 0000	0	13	1	0	0	0	0	0	0	0	0	0	0	**14**	**70**

Session Total	63	5174	1022	2	31	3	0	19	11	1	0	0	0	**6326**
Session Average	0.66	53.90	10.65	0.02	0.32	0.03	0.00	0.20	0.11	0.01	0.00	0.00	0.00	**65.90**
Session Percentage	1.00	81.79	16.16	0.03	0.49	0.05	0.00	0.30	0.17	0.02	0.00	0.00	0.00	

AM Peak Hour	0945 - 1045	0945 - 1045	0945 - 1045	0930 - 1030	0630 - 0730	-	-	-	-	-	-	-	-	**0945 - 1045**
AM Peak Volume	21	264	44	1	4	0	0	0	0	0	0	0	0	**331**

Noon Peak Hour	1000 - 1100	1330 - 1430	1415 - 1515	1000 - 1100	1030 - 1130	1445 - 1545	-	1130 - 1230	1130 - 1230	1100 - 1200	-	-	-	**1400 - 1500**
Noon Peak Volume	35	455	120	1	3	2	0	4	1	1	0	0	0	**572**

PM Peak Hour	1515 - 1615	1600 - 1700	1600 - 1700	-	1545 - 1645	1500 - 1600	-	1515 - 1615	1800 - 1900	-	-	-	-	**1600 - 1700**
PM Peak Volume	5	530	124	0	7	2	0	3	3	0	0	0	0	**668**

Site 75 Lane 1 NB
I-20,
north of Bush River Rd

Date
Monday, April 22, 2024

Lat/Long
34.034393°, -81.117736°

Weather
Mostly Cloudy
57°F

Click here for Detailed Weather

0000 - 2400 (Weekday 24h Session) (04-22-2024)
NB EB 15min

	Northbound (Movement 75 Lane 1 NB.1)													15min	60min
Time	1	2	3	4	5	6	7	8	9	10	11	12	13	Total	Total
0000 - 0015	0	11	2	0	0	0	0	0	0	0	0	0	0	**13**	
0015 - 0030	0	10	1	0	0	0	0	0	0	0	0	0	0	**11**	
0030 - 0045	0	12	1	0	0	0	0	0	0	0	0	0	0	**13**	
0045 - 0100	0	9	1	0	0	0	0	0	0	0	0	0	0	**10**	**47**
0100 - 0115	0	8	2	0	0	0	0	0	0	0	0	0	0	**10**	
0115 - 0130	0	7	1	0	0	0	0	0	0	0	0	0	0	**8**	
0130 - 0145	0	5	0	0	0	0	0	0	0	0	0	0	0	**5**	
0145 - 0200	0	4	1	0	1	0	0	0	0	0	0	0	0	**6**	**29**
0200 - 0215	0	7	0	0	0	0	0	0	1	0	0	0	0	**8**	
0215 - 0230	0	4	0	0	0	0	0	0	0	0	0	0	0	**4**	
0230 - 0245	0	5	0	0	0	0	0	0	0	0	0	0	0	**5**	
0245 - 0300	0	8	0	0	0	0	0	0	0	0	0	0	0	**8**	**25**
0300 - 0315	0	9	1	0	0	0	0	0	0	0	0	0	0	**10**	
0315 - 0330	0	10	0	0	0	0	0	0	0	0	0	0	0	**10**	
0330 - 0345	0	12	1	0	0	0	0	0	0	0	0	0	0	**13**	
0345 - 0400	0	11	1	0	1	0	0	0	0	0	0	0	0	**13**	**46**
0400 - 0415	0	7	6	0	0	1	0	0	0	0	0	0	0	**14**	
0415 - 0430	0	9	2	0	0	0	0	0	0	0	0	0	0	**11**	
0430 - 0445	0	15	2	0	0	0	0	0	0	0	0	0	0	**17**	
0445 - 0500	0	19	5	0	0	0	0	0	0	0	0	0	0	**24**	**66**
0500 - 0515	0	16	1	0	0	0	0	0	0	0	0	0	0	**17**	
0515 - 0530	0	35	5	0	1	0	0	0	0	0	0	0	0	**41**	
0530 - 0545	0	43	5	0	0	0	0	0	0	0	0	0	0	**48**	
0545 - 0600	0	38	6	0	0	1	0	0	0	0	0	0	0	**45**	**151**
0600 - 0615	0	56	8	0	0	0	0	1	0	0	0	0	0	**65**	
0615 - 0630	0	67	30	0	2	0	0	0	0	0	0	0	0	**99**	
0630 - 0645	0	138	48	0	0	0	0	0	0	0	0	0	0	**186**	
0645 - 0700	0	125	34	0	2	0	0	0	0	0	0	0	0	**161**	**511**
0700 - 0715	0	185	53	0	0	0	0	0	0	0	0	0	0	**238**	
0715 - 0730	0	234	73	0	1	0	0	1	1	0	0	0	0	**310**	
0730 - 0745	1	269	67	0	3	0	0	0	0	0	0	0	0	**340**	
0745 - 0800	2	224	61	0	4	0	0	0	0	0	0	0	0	**291**	**1179**
0800 - 0815	0	221	72	0	3	0	0	0	4	0	0	0	0	**300**	
0815 - 0830	0	209	52	0	4	0	0	1	1	0	0	0	0	**267**	
0830 - 0845	1	145	62	0	1	0	0	1	0	0	0	0	0	**210**	
0845 - 0900	0	135	50	0	1	0	0	1	0	0	0	0	0	**187**	**964**
0900 - 0915	0	122	37	1	1	0	0	0	1	0	0	0	0	**162**	
0915 - 0930	0	76	42	0	1	0	0	0	0	0	0	0	0	**119**	
0930 - 0945	0	83	30	0	2	0	0	1	0	0	0	0	0	**116**	
0945 - 1000	0	84	36	0	2	0	0	0	3	0	0	0	0	**125**	**522**
1000 - 1015	0	83	24	0	0	0	0	1	0	0	0	0	0	**108**	
1015 - 1030	1	61	19	0	1	0	0	0	0	0	0	0	0	**82**	
1030 - 1045	0	92	23	0	2	0	0	1	0	0	0	0	0	**118**	
1045 - 1100	0	57	27	0	1	0	0	0	0	1	0	0	0	**86**	**394**
1100 - 1115	1	76	23	0	0	1	0	0	3	0	0	0	0	**104**	
1115 - 1130	1	57	25	0	1	0	0	2	0	0	0	0	0	**86**	
1130 - 1145	2	65	16	0	3	0	0	0	0	0	0	0	0	**86**	
1145 - 1200	0	64	31	0	1	0	0	1	0	0	0	0	0	**97**	**373**
1200 - 1215	0	77	31	0	0	0	0	1	0	0	0	0	0	**109**	
1215 - 1230	0	69	27	0	0	0	0	1	1	0	0	0	0	**98**	
1230 - 1245	0	59	27	0	1	0	0	0	0	0	0	0	0	**87**	
1245 - 1300	0	65	26	0	0	0	0	0	0	0	0	0	0	**91**	**385**
1300 - 1315	0	70	19	0	0	0	0	0	0	0	0	0	0	**89**	
1315 - 1330	0	91	25	0	3	0	0	1	0	0	0	0	0	**120**	
1330 - 1345	1	88	27	0	1	0	0	0	0	0	0	0	0	**117**	
1345 - 1400	0	78	33	0	5	0	0	0	0	0	0	0	0	**116**	**442**
1400 - 1415	1	85	30	0	2	0	0	2	4	0	0	0	0	**124**	
1415 - 1430	2	95	35	0	4	0	0	1	4	0	0	0	0	**141**	
1430 - 1445	0	99	29	1	1	0	0	1	0	0	0	0	0	**131**	
1445 - 1500	0	118	33	0	4	0	0	0	1	0	0	0	0	**156**	**552**
1500 - 1515	0	93	37	1	4	0	0	1	0	0	0	0	0	**136**	
1515 - 1530	1	104	31	0	5	0	0	1	0	1	0	0	0	**143**	
1530 - 1545	0	152	35	0	1	0	0	1	0	0	0	0	0	**189**	
1545 - 1600	0	135	42	0	4	1	0	0	3	0	0	0	0	**185**	**653**
1600 - 1615	1	154	40	0	2	0	0	0	0	0	0	0	0	**197**	
1615 - 1630	0	170	39	2	3	0	0	0	0	0	0	0	0	**214**	
1630 - 1645	0	186	43	0	3	0	0	0	2	0	0	0	0	**234**	
1645 - 1700	0	173	50	0	1	0	0	0	1	0	0	0	0	**225**	**870**
1700 - 1715	0	192	64	0	4	1	0	1	1	0	0	0	0	**263**	
1715 - 1730	0	173	49	0	1	2	0	0	1	0	0	0	0	**226**	
1730 - 1745	0	178	57	0	3	0	0	0	1	0	0	0	0	**239**	
1745 - 1800	0	170	53	0	2	0	0	0	0	0	0	0	0	**225**	**953**
1800 - 1815	0	119	20	0	0	0	0	0	0	0	0	0	0	**139**	
1815 - 1830	0	102	24	0	0	0	0	0	0	0	0	0	0	**126**	
1830 - 1845	0	83	16	0	0	0	0	0	3	0	0	0	0	**102**	
1845 - 1900	0	53	10	0	1	0	0	0	2	0	0	0	0	**66**	**433**
1900 - 1915	0	83	12	0	0	0	0	0	2	0	0	0	0	**97**	
1915 - 1930	0	92	15	0	0	0	0	0	1	0	0	0	0	**108**	
1930 - 1945	0	69	17	0	0	0	0	2	0	0	0	0	0	**88**	
1945 - 2000	0	77	25	0	2	0	0	0	1	0	0	0	0	**105**	**398**
2000 - 2015	0	52	12	0	0	0	0	0	1	0	0	0	0	**65**	
2015 - 2030	0	44	8	0	2	0	0	1	0	0	0	0	0	**55**	
2030 - 2045	0	53	5	0	1	0	0	0	2	0	0	0	0	**61**	
2045 - 2100	0	51	8	0	0	0	0	1	2	0	0	0	0	**62**	**243**
2100 - 2115	0	40	5	0	0	0	0	0	1	0	0	0	0	**46**	
2115 - 2130	0	39	4	0	1	0	0	0	1	0	0	0	0	**45**	
2130 - 2145	0	40	3	0	0	0	0	0	1	0	0	0	0	**44**	
2145 - 2200	0	30	3	0	0	0	0	0	1	0	0	0	0	**34**	**169**
2200 - 2215	0	31	1	0	0	0	0	0	1	0	0	0	0	**33**	
2215 - 2230	0	32	2	0	0	0	0	0	0	0	0	0	0	**34**	
2230 - 2245	0	23	1	0	0	0	0	0	0	0	0	0	0	**24**	
2245 - 2300	0	20	3	0	0	0	0	0	0	0	0	0	0	**23**	**114**
2300 - 2315	0	24	4	0	0	0	0	0	1	0	0	0	0	**29**	
2315 - 2330	0	19	2	0	0	0	0	0	0	0	0	0	0	**21**	
2330 - 2345	0	8	2	0	0	0	0	0	0	0	0	0	0	**10**	
2345 - 0000	0	5	1	0	0	0	0	0	0	0	0	0	0	**6**	**66**

Session Total	15	7305	2072	5	100	7	0	26	53	2	0	0	0	**9585**
Session Average	0.16	76.09	21.58	0.05	1.04	0.07	0.00	0.27	0.55	0.02	0.00	0.00	0.00	**99.84**
Session Percentage	0.16	76.21	21.62	0.05	1.04	0.07	0.00	0.27	0.55	0.02	0.00	0.00	0.00	

AM Peak Hour	0700 - 0800	0715 - 0815	0715 - 0815	0815 - 0915	0730 - 0830	0500 - 0600	-	0800 - 0900	0715 - 0815	-	-	-	-	**0715 - 0815**
AM Peak Volume	3	948	273	1	14	1	0	3	5	0	0	0	0	**1241**

Noon Peak Hour	1045 - 1145	1445 - 1545	1445 - 1545	1415 - 1515	1430 - 1530	1015 - 1115	-	1115 - 1215	1400 - 1500	1000 - 1100	-	-	-	**1445 - 1545**
Noon Peak Volume	4	467	136	2	14	1	0	4	9	1	0	0	0	**624**

PM Peak Hour	1515 - 1615	1630 - 1730	1700 - 1800	1530 - 1630	1500 - 1600	1630 - 1730	-	1500 - 1600	1830 - 1930	1500 - 1600	-	-	-	**1645 - 1745**
PM Peak Volume	2	724	223	2	14	3	0	3	8	1	0	0	0	**953**

Site 75 Lane 1 NB
I-20,
north of Bush River Rd

Date
Tuesday, April 23, 2024

Weather
Fair
58°F

Lat/Long
34.034393°, -81.117736°

Click here for Detailed Weather

0000 - 2400 (Weekday 24h Session) (04-23-2024)
NB EB 15min

	Northbound (Movement 75 Lane 1 NB.1)													15min	60min
TIME	1	2	3	4	5	6	7	8	9	10	11	12	13	Total	Total
0000 - 0015	0	11	1	0	0	0	0	0	0	0	0	0	0	**12**	
0015 - 0030	0	3	1	0	0	0	0	0	0	0	0	0	0	**4**	
0030 - 0045	0	10	1	0	0	0	0	0	0	0	0	0	0	**11**	
0045 - 0100	0	4	0	2	0	0	0	0	0	0	0	0	0	**6**	**33**
0100 - 0115	0	5	0	0	0	0	0	0	0	0	0	0	0	**5**	
0115 - 0130	0	11	0	0	0	0	0	0	0	0	0	0	0	**11**	
0130 - 0145	0	3	0	0	0	0	0	0	0	0	0	0	0	**3**	
0145 - 0200	0	1	0	0	0	0	0	0	0	0	0	0	0	**1**	**20**
0200 - 0215	0	2	0	0	0	0	0	0	0	0	0	0	0	**2**	
0215 - 0230	0	2	0	0	0	0	0	0	0	0	0	0	0	**2**	
0230 - 0245	0	2	0	0	0	0	0	0	0	0	0	0	0	**2**	
0245 - 0300	0	0	0	0	0	0	0	0	0	0	0	0	0	**0**	**6**
0300 - 0315	0	1	0	0	0	0	0	0	0	0	0	0	0	**1**	
0315 - 0330	0	3	0	0	0	0	0	0	0	0	0	0	0	**3**	
0330 - 0345	0	3	0	0	0	0	0	0	0	0	0	0	0	**3**	
0345 - 0400	0	4	0	0	0	0	0	0	0	0	0	0	0	**4**	**11**
0400 - 0415	0	7	0	0	0	0	0	0	0	0	0	0	0	**7**	
0415 - 0430	0	10	0	0	0	0	0	0	0	0	0	0	0	**10**	
0430 - 0445	0	15	0	0	0	0	0	0	0	0	0	0	0	**15**	
0445 - 0500	0	16	2	0	0	0	0	0	0	0	0	0	0	**18**	**50**
0500 - 0515	0	12	3	0	0	0	0	0	0	0	0	0	0	**15**	
0515 - 0530	0	30	7	0	1	0	0	0	0	0	0	0	0	**38**	
0530 - 0545	0	44	9	0	0	0	0	0	0	0	0	0	0	**53**	
0545 - 0600	0	36	5	0	0	0	0	0	0	0	0	0	0	**41**	**147**
0600 - 0615	0	66	6	0	0	0	0	0	0	0	0	0	0	**72**	
0615 - 0630	0	85	22	0	1	0	0	0	0	0	0	0	0	**108**	
0630 - 0645	0	142	40	0	1	0	0	1	0	0	0	0	0	**184**	
0645 - 0700	0	150	55	0	3	0	0	2	0	0	0	0	0	**210**	**574**
0700 - 0715	0	170	54	0	1	0	0	0	0	0	0	0	0	**225**	
0715 - 0730	2	227	56	0	4	0	0	1	0	0	0	0	0	**290**	
0730 - 0745	0	156	34	0	4	0	0	0	0	0	0	0	0	**194**	
0745 - 0800	0	216	70	0	3	0	0	1	1	0	0	0	0	**291**	**1000**
0800 - 0815	0	242	68	0	0	0	0	1	0	0	0	0	0	**311**	
0815 - 0830	2	177	54	0	6	0	0	2	1	0	0	0	0	**242**	
0830 - 0845	0	205	76	0	3	0	0	3	1	0	0	0	0	**288**	
0845 - 0900	0	158	54	0	0	0	0	0	0	0	0	0	0	**212**	**1053**
0900 - 0915	0	73	32	0	1	1	0	0	2	0	0	0	0	**109**	
0915 - 0930	1	87	29	0	1	0	0	0	0	0	0	0	0	**118**	
0930 - 0945	0	89	38	0	2	0	0	0	3	0	0	0	0	**132**	
0945 - 1000	0	78	34	0	2	0	0	0	1	1	0	0	0	**116**	**475**
1000 - 1015	2	68	25	0	2	1	0	0	0	0	0	0	0	**98**	
1015 - 1030	2	70	29	0	1	1	0	0	0	0	0	0	0	**103**	
1030 - 1045	0	62	28	0	3	0	0	2	0	0	0	0	0	**95**	
1045 - 1100	0	80	26	0	1	0	0	1	0	0	0	0	0	**108**	**404**
1100 - 1115	1	64	18	0	3	0	0	0	0	0	0	0	0	**86**	
1115 - 1130	1	64	19	0	2	0	0	0	0	0	0	0	0	**86**	
1130 - 1145	1	57	32	0	0	0	0	0	2	0	0	0	0	**92**	
1145 - 1200	0	76	14	0	3	0	0	0	0	0	0	0	0	**93**	**357**
1200 - 1215	0	79	22	1	3	0	0	1	0	0	0	0	0	**106**	
1215 - 1230	0	77	29	0	3	0	0	0	0	0	0	0	0	**109**	
1230 - 1245	0	74	20	0	2	0	0	0	1	0	0	0	0	**97**	
1245 - 1300	1	82	34	0	2	0	0	0	0	0	0	0	0	**119**	**431**
1300 - 1315	0	73	22	0	1	0	0	0	0	0	0	0	0	**96**	
1315 - 1330	0	95	23	1	9	0	0	0	1	0	0	0	0	**129**	
1330 - 1345	0	75	26	0	1	0	0	0	2	0	0	0	0	**104**	
1345 - 1400	0	74	25	0	0	0	0	0	1	0	0	0	0	**100**	**429**
1400 - 1415	0	86	25	0	5	0	0	0	0	0	0	0	0	**116**	
1415 - 1430	0	91	38	0	1	0	0	0	0	0	0	0	0	**130**	
1430 - 1445	0	111	38	0	3	0	0	2	1	0	0	0	0	**155**	
1445 - 1500	0	101	34	1	1	0	0	0	2	0	0	0	0	**139**	**540**
1500 - 1515	0	93	37	0	2	2	0	0	1	0	0	0	0	**135**	
1515 - 1530	0	109	31	0	1	0	0	0	0	0	0	0	0	**141**	
1530 - 1545	1	116	33	0	6	0	0	2	2	0	0	0	0	**160**	
1545 - 1600	0	134	38	0	0	0	0	0	2	0	0	0	0	**174**	**610**
1600 - 1615	1	146	47	0	3	0	0	0	0	0	0	0	0	**197**	
1615 - 1630	0	169	55	0	3	1	0	2	3	0	0	0	0	**233**	
1630 - 1645	0	189	52	0	2	1	0	0	1	0	0	0	0	**245**	
1645 - 1700	0	165	44	1	3	0	0	0	0	1	0	0	0	**214**	**889**
1700 - 1715	0	195	55	0	1	0	0	0	2	0	0	0	0	**253**	
1715 - 1730	1	214	45	2	0	0	0	0	1	0	0	0	0	**263**	
1730 - 1745	0	160	65	0	2	0	0	0	0	0	0	0	0	**227**	
1745 - 1800	0	114	29	0	0	0	0	0	0	0	0	0	0	**143**	**886**
1800 - 1815	0	87	25	0	1	0	0	0	0	0	0	0	0	**113**	
1815 - 1830	0	81	25	0	1	0	0	1	1	0	0	0	0	**109**	
1830 - 1845	0	83	23	0	0	0	0	1	0	0	0	0	0	**107**	
1845 - 1900	0	63	23	0	0	0	0	0	0	0	0	0	0	**86**	**415**
1900 - 1915	0	55	9	0	2	0	0	1	0	0	0	0	0	**67**	
1915 - 1930	0	61	21	0	1	0	0	0	1	0	0	0	0	**84**	
1930 - 1945	0	62	13	0	0	0	0	0	2	0	0	0	0	**77**	
1945 - 2000	0	60	18	0	0	0	0	0	0	0	0	0	0	**78**	**306**
2000 - 2015	0	52	10	0	0	0	0	0	0	0	0	0	0	**62**	
2015 - 2030	0	54	5	0	1	0	0	0	0	0	0	0	0	**60**	
2030 - 2045	0	36	1	0	0	0	0	0	0	0	0	0	0	**37**	
2045 - 2100	0	35	4	0	0	0	0	0	0	0	0	0	0	**39**	**198**
2100 - 2115	0	42	4	1	0	0	0	0	2	0	0	0	0	**49**	
2115 - 2130	0	43	7	0	0	0	0	0	0	0	0	0	0	**50**	
2130 - 2145	0	20	4	0	0	0	0	0	0	0	0	0	0	**24**	
2145 - 2200	0	19	5	0	0	0	0	0	0	0	0	0	0	**24**	**147**
2200 - 2215	0	5	3	0	1	0	0	0	1	0	0	0	0	**10**	
2215 - 2230	0	4	0	0	0	0	0	0	0	0	0	0	0	**4**	
2230 - 2245	0	4	1	0	0	0	0	0	0	0	0	0	0	**5**	
2245 - 2300	0	5	0	0	0	0	0	0	1	0	0	0	0	**6**	**25**
2300 - 2315	0	4	0	0	0	0	0	0	0	0	0	0	0	**4**	
2315 - 2330	0	2	0	0	0	0	0	0	0	0	0	0	0	**2**	
2330 - 2345	0	2	0	0	0	0	0	0	0	0	0	0	0	**2**	
2345 - 0000	0	2	0	0	0	0	0	0	0	0	0	0	0	**2**	**10**

Session Total	16	6800	2010	9	109	7	0	24	39	2	0	0	0	**9016**
Session Average	0.17	70.83	20.94	0.09	1.14	0.07	0.00	0.25	0.41	0.02	0.00	0.00	0.00	**93.92**
Session Percentage	0.18	75.42	22.29	0.10	1.21	0.08	0.00	0.27	0.43	0.02	0.00	0.00	0.00	

AM Peak Hour	0930 - 1030	0715 - 0815	0745 - 0845	-	0730 - 0830	0930 - 1030	-	0745 - 0845	0900 - 1000	0900 - 1000	-	-	-	**0745 - 0845**
AM Peak Hour Volume	4	841	268	0	13	2	0	7	6	1	0	0	0	**1132**

Noon Peak Hour	1000 - 1100	1445 - 1545	1415 - 1515	1115 - 1215	1315 - 1415	1000 - 1100	-	1000 - 1100	1445 - 1545	-	-	-	-	**1445 - 1545**
Noon Peak Hour Volume	4	419	147	1	15	2	0	3	5	0	0	0	0	**575**

PM Peak Hour	1515 - 1615	1630 - 1730	1645 - 1745	1630 - 1730	1530 - 1630	1500 - 1600	-	1530 - 1630	1530 - 1630	1600 - 1700	-	-	-	**1630 - 1730**
PM Peak Hour Volume	2	763	209	3	12	2	0	4	7	1	0	0	0	**975**

Site 75 Lane 1 NB
I-20,
north of Bush River Rd

Date
Wednesday, April 24, 2024

Lat/Long
34.034393°, -81.117736°

Weather
Fair
66°F

Click here for Detailed Weather

0000 - 2400 (Weekday 24h Session) (04-24-2024)
NB EB 15min

	Northbound (Movement 75 Lane 1 NB.1)													15min	60min
TIME	1	2	3	4	5	6	7	8	9	10	11	12	13	Total	Total
0000 - 0015	0	3	0	0	0	0	0	0	0	0	0	0	0	**3**	
0015 - 0030	0	1	1	0	0	0	0	0	0	0	0	0	0	**2**	
0030 - 0045	0	1	0	0	0	0	0	0	0	0	0	0	0	**1**	
0045 - 0100	0	3	0	0	0	0	0	0	0	0	0	0	0	**3**	**9**
0100 - 0115	0	1	1	0	1	0	0	0	0	0	0	0	0	**3**	
0115 - 0130	0	0	0	0	0	0	0	0	0	0	0	0	0	**0**	
0130 - 0145	0	0	0	0	0	0	0	0	0	0	0	0	0	**0**	
0145 - 0200	0	2	0	0	0	0	0	0	0	0	0	0	0	**2**	**5**
0200 - 0215	0	3	0	0	0	0	0	0	0	0	0	0	0	**3**	
0215 - 0230	0	3	1	0	0	0	0	1	0	0	0	0	0	**5**	
0230 - 0245	0	0	0	0	0	0	0	0	0	0	0	0	0	**0**	
0245 - 0300	0	3	0	0	0	0	0	0	0	0	0	0	0	**3**	**11**
0300 - 0315	0	0	0	0	0	0	0	0	0	0	0	0	0	**0**	
0315 - 0330	0	4	1	0	0	0	0	0	0	0	0	0	0	**5**	
0330 - 0345	2	3	0	0	0	0	0	0	0	0	0	0	0	**5**	
0345 - 0400	0	5	0	0	0	0	0	0	0	0	0	0	0	**5**	**15**
0400 - 0415	0	5	0	0	0	0	0	0	0	0	0	0	0	**5**	
0415 - 0430	0	2	1	0	0	0	0	0	2	0	0	0	0	**5**	
0430 - 0445	0	5	2	0	0	0	0	0	0	0	0	0	0	**7**	
0445 - 0500	0	12	5	0	0	0	0	0	0	0	0	0	0	**17**	**34**
0500 - 0515	0	11	1	0	0	0	0	0	0	0	0	0	0	**12**	
0515 - 0530	0	37	3	0	0	0	0	0	0	0	0	0	0	**40**	
0530 - 0545	0	48	4	0	0	0	0	0	0	0	0	0	0	**52**	
0545 - 0600	1	43	3	0	0	0	0	0	0	0	0	0	0	**47**	**151**
0600 - 0615	1	50	15	0	0	0	0	0	0	0	0	0	0	**66**	
0615 - 0630	0	80	24	0	1	0	0	0	1	0	0	0	0	**106**	
0630 - 0645	0	127	60	0	2	0	0	0	0	0	0	0	0	**189**	
0645 - 0700	0	143	47	0	5	0	0	1	0	0	0	0	0	**196**	**557**
0700 - 0715	3	163	73	0	4	0	0	0	1	0	0	0	0	**244**	
0715 - 0730	1	239	72	0	3	0	0	1	1	0	0	0	0	**317**	
0730 - 0745	0	238	86	0	4	0	0	1	1	0	0	0	0	**330**	
0745 - 0800	1	294	81	0	4	0	0	2	1	0	0	0	0	**383**	**1274**
0800 - 0815	1	215	87	0	3	0	0	1	1	0	0	0	0	**308**	
0815 - 0830	0	242	66	0	3	0	0	1	2	0	0	0	0	**314**	
0830 - 0845	0	169	49	0	1	0	0	1	1	0	0	0	0	**221**	
0845 - 0900	4	114	48	0	2	0	0	1	1	0	0	0	0	**170**	**1013**
0900 - 0915	0	99	44	0	2	0	0	0	2	0	0	0	0	**147**	
0915 - 0930	0	86	28	0	1	0	0	0	1	0	0	0	0	**116**	
0930 - 0945	0	83	32	0	1	0	0	0	0	0	0	0	0	**116**	
0945 - 1000	0	83	23	0	0	0	0	0	0	0	0	0	0	**106**	**485**
1000 - 1015	0	85	22	0	1	0	0	0	0	0	0	0	0	**108**	
1015 - 1030	0	63	28	0	3	0	0	1	0	0	0	0	0	**95**	
1030 - 1045	0	68	27	0	0	1	0	0	0	0	0	0	0	**96**	
1045 - 1100	0	80	25	0	0	0	0	0	0	0	0	0	0	**105**	**404**
1100 - 1115	0	69	28	0	3	0	0	2	0	0	0	0	0	**102**	
1115 - 1130	0	78	19	0	3	0	0	0	1	0	0	0	0	**101**	
1130 - 1145	1	66	28	0	4	0	0	1	1	0	0	0	0	**101**	
1145 - 1200	0	74	25	0	3	0	0	0	1	0	0	0	0	**103**	**407**
1200 - 1215	1	71	27	0	0	0	0	1	1	0	0	0	0	**101**	
1215 - 1230	0	57	20	0	2	0	0	1	0	1	0	0	0	**81**	
1230 - 1245	0	104	25	0	3	0	0	2	2	0	0	0	0	**136**	
1245 - 1300	0	80	40	0	4	0	0	0	1	0	0	0	0	**125**	**443**
1300 - 1315	0	79	31	0	2	0	0	0	1	0	0	0	0	**113**	
1315 - 1330	0	74	32	0	2	0	0	0	0	0	0	0	0	**108**	
1330 - 1345	0	96	35	0	3	0	0	1	0	0	0	0	0	**135**	
1345 - 1400	0	94	35	0	3	1	0	0	0	0	0	0	0	**133**	**489**
1400 - 1415	0	88	21	0	3	0	0	1	0	0	0	0	0	**113**	
1415 - 1430	1	80	22	0	2	0	0	1	0	0	0	0	0	**106**	
1430 - 1445	0	98	26	0	1	0	0	0	0	0	0	0	0	**125**	
1445 - 1500	1	115	34	0	4	0	0	0	1	0	0	0	0	**155**	**499**
1500 - 1515	3	109	37	0	6	0	0	0	0	0	0	0	0	**155**	
1515 - 1530	0	108	41	0	1	0	0	0	1	0	0	0	0	**151**	
1530 - 1545	0	121	36	0	2	0	0	0	0	0	0	0	0	**159**	
1545 - 1600	0	148	45	1	2	0	0	0	0	0	0	0	0	**196**	**661**
1600 - 1615	0	162	40	0	4	0	0	0	1	0	0	0	0	**207**	
1615 - 1630	1	142	41	0	2	0	0	0	0	0	0	0	0	**186**	
1630 - 1645	0	154	52	0	3	0	0	0	0	0	0	0	0	**209**	
1645 - 1700	0	169	39	0	2	0	0	2	1	0	0	0	0	**213**	**815**
1700 - 1715	1	213	46	0	1	0	0	1	6	0	0	0	0	**268**	
1715 - 1730	0	224	46	0	3	0	0	0	1	0	0	0	0	**274**	
1730 - 1745	0	141	42	0	0	1	0	1	1	0	0	0	0	**186**	
1745 - 1800	0	127	33	0	3	0	0	2	1	0	0	0	0	**166**	**894**
1800 - 1815	0	118	30	0	1	0	0	0	4	0	0	0	0	**153**	
1815 - 1830	0	101	25	0	2	0	0	0	1	0	0	0	0	**129**	
1830 - 1845	1	102	32	0	1	0	0	2	1	0	0	0	0	**139**	
1845 - 1900	1	94	26	0	1	0	0	0	1	0	0	0	0	**123**	**544**
1900 - 1915	2	53	12	0	2	0	0	1	0	1	0	0	0	**71**	
1915 - 1930	0	69	16	0	0	0	0	1	0	0	0	0	0	**86**	
1930 - 1945	0	45	12	0	1	0	0	0	1	0	0	0	0	**59**	
1945 - 2000	0	56	15	0	0	1	0	1	0	0	0	0	0	**73**	**289**
2000 - 2015	0	40	14	0	0	0	0	0	1	0	0	0	0	**55**	
2015 - 2030	0	50	8	1	0	0	0	0	0	0	0	0	0	**59**	
2030 - 2045	0	39	8	0	0	0	0	0	0	0	0	0	0	**47**	
2045 - 2100	1	40	2	0	0	0	0	0	0	0	1	0	0	**44**	**205**
2100 - 2115	0	43	4	0	1	0	0	0	0	0	0	0	0	**48**	
2115 - 2130	0	46	7	0	1	0	0	0	1	0	0	0	0	**55**	
2130 - 2145	0	27	2	0	0	0	0	0	0	0	0	0	0	**29**	
2145 - 2200	1	13	2	0	0	0	0	0	3	0	0	0	0	**19**	**151**
2200 - 2215	0	20	7	0	0	0	0	0	0	0	0	0	0	**27**	
2215 - 2230	0	11	3	0	0	0	0	0	0	0	0	0	0	**14**	
2230 - 2245	0	9	0	0	0	0	0	0	0	0	0	0	0	**9**	
2245 - 2300	0	20	4	0	1	0	0	0	0	0	0	0	0	**25**	**75**
2300 - 2315	0	8	0	0	1	0	0	0	1	0	0	0	0	**10**	
2315 - 2330	0	8	2	0	0	0	0	0	0	0	0	0	0	**10**	
2330 - 2345	0	7	1	0	0	0	0	0	0	0	0	0	0	**8**	
2345 - 0000	0	7	2	0	0	0	0	0	0	0	0	0	0	**9**	**37**

Session Total	29	7083	2140	2	124	4	0	32	50	2	1	0	0	**9467**
Session Average	0.30	73.78	22.29	0.02	1.29	0.04	0.00	0.33	0.52	0.02	0.01	0.00	0.00	**98.61**
Session Percentage	0.31	74.82	22.60	0.02	1.31	0.04	0.00	0.34	0.53	0.02	0.01	0.00	0.00	

AM Peak Hour	0700 - 0800	0730 - 0830	0715 - 0815	-	0645 - 0745	0945 - 1045	-	0715 - 0815	0815 - 0915	-	-	-	-	**0715 - 0815**
AM Peak Hour Volume	5	989	326	0	16	1	0	5	6	0	0	0	0	**1338**

Noon Peak Hour	1415 - 1515	1445 - 1545	1445 - 1545	-	1100 - 1200	1000 - 1100	-	1145 - 1245	1115 - 1215	1130 - 1230	-	-	-	**1445 - 1545**
Noon Peak Hour Volume	5	453	148	0	13	1	0	4	4	1	0	0	0	**620**

PM Peak Hour	1815 - 1915	1630 - 1730	1630 - 1730	1500 - 1600	1500 - 1600	1645 - 1745	-	1645 - 1745	1645 - 1745	1815 - 1915	-	-	-	**1630 - 1730**
PM Peak Hour Volume	4	760	183	1	11	1	0	4	9	1	0	0	0	**964**

Site 75 Lane 1 NB
I-20,
north of Bush River Rd

Date
Thursday, April 25, 2024

Lat/Long
34.034393°, -81.117736°

Weather
Fair
67°F

Click here for Detailed Weather

0000 - 2400 (Weekday 24h Session) (04-25-2024)
NB EB 15min

	Northbound (Movement 75 Lane 1 NB.1)													15min	60min
TIME	1	2	3	4	5	6	7	8	9	10	11	12	13	Total	Total
0000 - 0015	0	5	0	0	0	0	0	0	0	0	0	0	0	**5**	
0015 - 0030	0	6	0	0	0	0	0	0	0	0	0	0	0	**6**	
0030 - 0045	0	0	0	0	0	0	0	0	0	0	0	0	0	**0**	
0045 - 0100	0	2	0	0	0	0	0	0	0	0	0	0	0	**2**	**13**
0100 - 0115	0	2	0	0	0	0	0	0	0	0	0	0	0	**2**	
0115 - 0130	0	2	0	1	0	0	0	0	0	0	0	0	0	**3**	
0130 - 0145	0	2	1	0	0	0	0	0	0	0	0	0	0	**3**	
0145 - 0200	0	3	0	0	0	0	0	0	0	0	0	0	0	**3**	**11**
0200 - 0215	0	2	0	0	0	0	0	0	0	0	0	0	0	**2**	
0215 - 0230	0	1	0	0	0	0	0	0	0	0	0	0	0	**1**	
0230 - 0245	0	2	0	0	0	0	0	0	0	0	0	0	0	**2**	
0245 - 0300	0	3	0	0	0	0	0	0	0	0	0	0	0	**3**	**8**
0300 - 0315	0	5	0	0	0	0	0	0	0	0	0	0	0	**5**	
0315 - 0330	0	3	0	0	0	0	0	0	1	0	0	0	0	**4**	
0330 - 0345	0	5	0	0	0	0	0	0	1	0	0	0	0	**6**	
0345 - 0400	0	5	3	0	0	0	0	0	0	0	0	0	0	**8**	**23**
0400 - 0415	0	6	2	0	0	0	0	0	0	0	0	0	0	**8**	
0415 - 0430	0	7	1	0	0	0	0	0	0	0	0	0	0	**8**	
0430 - 0445	0	9	2	0	0	0	0	0	0	0	0	0	0	**11**	
0445 - 0500	0	10	3	0	0	0	0	0	0	0	0	0	0	**13**	**40**
0500 - 0515	0	15	5	0	1	0	0	0	0	0	0	0	0	**21**	
0515 - 0530	0	24	5	0	1	0	0	0	0	0	0	0	0	**30**	
0530 - 0545	0	43	6	0	0	0	0	0	1	0	0	0	0	**50**	
0545 - 0600	0	43	5	0	0	0	0	0	1	0	0	0	0	**49**	**150**
0600 - 0615	0	60	17	0	0	0	0	0	0	0	0	0	0	**77**	
0615 - 0630	0	79	28	0	1	0	0	0	1	0	0	0	0	**109**	
0630 - 0645	0	133	49	0	1	0	0	0	1	0	0	0	0	**184**	
0645 - 0700	1	170	55	0	3	0	0	0	0	0	0	0	0	**229**	**599**
0700 - 0715	1	177	59	0	2	0	0	0	1	0	0	0	0	**240**	
0715 - 0730	2	242	71	0	3	0	0	0	0	0	0	0	0	**318**	
0730 - 0745	0	250	82	0	7	0	0	1	0	0	0	0	0	**340**	
0745 - 0800	1	247	74	0	2	0	0	0	2	0	0	0	0	**326**	**1224**
0800 - 0815	1	237	75	0	8	0	0	1	0	0	0	0	0	**322**	
0815 - 0830	2	198	73	0	2	0	0	0	1	0	0	0	0	**276**	
0830 - 0845	1	183	64	1	4	0	0	3	1	0	0	0	0	**257**	
0845 - 0900	0	144	45	0	1	0	0	0	1	0	0	0	0	**191**	**1046**
0900 - 0915	0	110	49	0	4	0	0	2	1	0	0	0	0	**166**	
0915 - 0930	0	97	37	0	1	0	0	3	1	0	0	0	0	**139**	
0930 - 0945	0	99	36	0	0	0	0	1	0	0	0	0	0	**136**	
0945 - 1000	0	88	37	0	2	0	0	0	2	1	0	0	0	**130**	**571**
1000 - 1015	0	78	40	0	1	0	0	1	0	0	0	0	0	**120**	
1015 - 1030	0	85	32	0	1	0	0	0	1	0	0	0	0	**119**	
1030 - 1045	0	70	24	0	3	1	0	3	1	0	0	0	0	**102**	
1045 - 1100	0	78	37	0	1	0	0	0	0	0	0	0	0	**116**	**457**
1100 - 1115	0	64	22	0	3	0	0	0	1	0	0	0	0	**90**	
1115 - 1130	0	124	40	0	5	1	0	0	5	0	0	0	0	**175**	
1130 - 1145	0	94	33	0	2	0	0	0	1	0	0	0	0	**130**	
1145 - 1200	0	73	22	0	3	0	0	0	1	0	0	0	0	**99**	**494**
1200 - 1215	3	80	28	0	2	0	0	0	1	0	0	0	0	**114**	
1215 - 1230	0	87	29	0	4	0	0	1	0	1	0	0	0	**122**	
1230 - 1245	2	70	35	0	1	0	0	1	0	0	0	0	0	**109**	
1245 - 1300	0	85	27	0	1	0	0	1	0	0	0	0	0	**114**	**459**
1300 - 1315	0	92	36	0	1	1	0	0	0	0	0	0	0	**130**	
1315 - 1330	1	93	28	0	3	0	0	1	3	0	0	0	0	**129**	
1330 - 1345	0	102	31	0	1	0	0	2	1	0	0	0	0	**137**	
1345 - 1400	1	94	47	0	3	0	0	1	1	0	0	0	0	**147**	**543**
1400 - 1415	0	99	26	0	4	0	0	1	0	0	0	0	0	**130**	
1415 - 1430	2	104	34	0	7	0	0	0	1	0	0	0	0	**148**	
1430 - 1445	2	105	33	0	3	0	0	1	0	0	0	0	0	**144**	
1445 - 1500	0	93	28	0	1	0	0	0	1	0	0	0	0	**123**	**545**
1500 - 1515	0	118	39	0	5	0	0	1	0	0	0	0	0	**163**	
1515 - 1530	2	140	40	0	3	0	0	0	1	0	0	0	0	**186**	
1530 - 1545	1	133	43	0	0	0	0	0	1	0	0	0	0	**178**	
1545 - 1600	0	155	52	1	2	0	0	0	0	0	0	0	0	**210**	**737**
1600 - 1615	1	154	39	1	2	0	0	0	2	0	0	0	0	**199**	
1615 - 1630	0	178	51	0	4	0	0	1	1	0	0	0	0	**235**	
1630 - 1645	2	175	53	0	7	0	0	1	1	0	0	0	0	**239**	
1645 - 1700	0	193	54	0	2	0	0	0	0	0	0	0	0	**249**	**922**
1700 - 1715	2	211	55	0	3	0	0	1	2	0	0	0	0	**274**	
1715 - 1730	0	238	58	0	6	0	0	0	5	0	0	0	0	**307**	
1730 - 1745	2	196	45	1	1	0	0	0	0	0	0	0	0	**245**	
1745 - 1800	1	127	47	0	2	0	0	1	1	0	0	0	0	**179**	**1005**
1800 - 1815	0	102	39	0	1	0	0	0	0	0	0	0	0	**142**	
1815 - 1830	0	90	29	0	1	0	0	2	0	0	0	0	0	**122**	
1830 - 1845	2	98	30	0	1	0	0	0	0	0	0	0	0	**131**	
1845 - 1900	0	83	32	0	3	0	0	0	4	0	0	0	0	**122**	**517**
1900 - 1915	0	72	19	0	2	0	0	0	0	0	0	0	0	**93**	
1915 - 1930	0	91	26	0	1	0	0	1	1	0	0	0	0	**120**	
1930 - 1945	2	63	21	0	1	0	0	0	0	0	0	0	0	**87**	
1945 - 2000	0	75	26	0	1	0	0	0	0	0	0	0	0	**102**	**402**
2000 - 2015	1	57	10	0	0	0	0	0	0	0	0	0	0	**68**	
2015 - 2030	0	67	8	0	0	0	0	0	0	0	0	0	0	**75**	
2030 - 2045	0	43	7	0	1	0	0	0	2	0	0	0	0	**53**	
2045 - 2100	0	45	5	0	1	0	0	0	0	0	0	0	0	**51**	**247**
2100 - 2115	0	39	6	0	0	0	0	0	2	0	0	0	0	**47**	
2115 - 2130	0	33	11	0	0	0	0	0	1	0	0	0	0	**45**	
2130 - 2145	0	34	5	0	0	0	0	0	0	0	0	0	0	**39**	
2145 - 2200	0	29	3	0	0	0	0	0	2	0	0	0	0	**34**	**165**
2200 - 2215	0	33	3	0	1	0	0	0	1	0	0	0	0	**38**	
2215 - 2230	1	15	1	0	0	0	0	0	0	0	0	0	0	**17**	
2230 - 2245	0	19	2	0	1	0	0	0	0	0	0	0	0	**22**	
2245 - 2300	0	14	1	0	0	0	0	0	0	0	0	0	0	**15**	**92**
2300 - 2315	0	12	2	0	0	0	0	0	0	0	0	0	0	**14**	
2315 - 2330	0	17	1	0	2	0	0	0	1	0	0	0	0	**21**	
2330 - 2345	0	8	4	0	0	0	0	0	0	0	0	0	0	**12**	
2345 - 0000	0	9	3	0	0	0	0	0	0	0	0	0	0	**12**	**59**

Session Total	37	7655	2386	5	147	3	0	32	62	2	0	0	0	**10329**
Session Average	0.39	79.74	24.85	0.05	1.53	0.03	0.00	0.33	0.65	0.02	0.00	0.00	0.00	**107.59**
Session Percentage	0.36	74.11	23.10	0.05	1.42	0.03	0.00	0.31	0.60	0.02	0.00	0.00	0.00	

AM Peak Hour	0745 - 0845	0715 - 0815	0730 - 0830	0745 - 0845	0715 - 0815	0945 - 1045	-	0830 - 0930	0745 - 0845	0900 - 1000	-	-	-	**0715 - 0815**
AM Peak Hour Volume	5	976	304	1	20	1	0	8	4	1	0	0	0	**1306**

Noon Peak Hour	1145 - 1245	1445 - 1545	1445 - 1545	-	1345 - 1445	1030 - 1130	-	1315 - 1415	1100 - 1200	1130 - 1230	-	-	-	**1445 - 1545**
Noon Peak Hour Volume	5	484	150	0	17	2	0	5	8	1	0	0	0	**650**

PM Peak Hour	1700 - 1800	1645 - 1745	1630 - 1730	1515 - 1615	1630 - 1730	-	-	1615 - 1715	1630 - 1730	-	-	-	-	**1645 - 1745**
PM Peak Hour Volume	5	838	220	2	18	0	0	3	8	0	0	0	0	**1075**

Site 75 Lane 1 NB
I-20,
north of Bush River Rd

Date
Friday, April 26, 2024

Lat/Long
34.034393°, -81.117736°

Weather
Cloudy
69°F

Click here for Detailed Weather

0000 - 2400 (Weekday 24h Session) (04-26-2024)
NB EB 15min

	Northbound (Movement 75 Lane 1 NB.1)													15min	60min
TIME	1	2	3	4	5	6	7	8	9	10	11	12	13	Total	Total
0000 - 0015	0	3	0	0	0	0	0	0	0	0	0	0	0	**3**	
0015 - 0030	0	4	0	0	0	0	0	0	0	0	0	0	0	**4**	
0030 - 0045	0	8	1	0	0	0	0	0	0	0	0	0	0	**9**	
0045 - 0100	0	1	0	0	0	0	0	0	0	0	0	0	0	**1**	**17**
0100 - 0115	0	2	0	0	0	0	0	0	0	0	0	0	0	**2**	
0115 - 0130	0	7	0	0	0	0	0	0	0	0	0	0	0	**7**	
0130 - 0145	0	5	1	0	0	0	0	0	0	0	0	0	0	**6**	
0145 - 0200	0	3	0	0	0	0	0	0	0	0	0	0	0	**3**	**18**
0200 - 0215	0	1	0	0	0	0	0	0	0	0	0	0	0	**1**	
0215 - 0230	0	5	0	0	0	0	0	0	0	0	0	0	0	**5**	
0230 - 0245	0	6	0	0	0	0	0	0	0	0	1	0	0	**7**	
0245 - 0300	0	2	0	0	0	0	0	0	0	0	0	0	0	**2**	**15**
0300 - 0315	0	4	0	0	0	0	0	0	0	0	0	0	0	**4**	
0315 - 0330	0	4	0	0	0	0	0	0	0	0	0	0	0	**4**	
0330 - 0345	0	7	1	0	0	0	0	0	0	0	0	0	0	**8**	
0345 - 0400	0	2	0	0	0	0	0	0	0	0	0	0	0	**2**	**18**
0400 - 0415	0	5	0	0	0	0	0	0	0	0	0	0	0	**5**	
0415 - 0430	0	6	2	0	0	0	0	0	0	0	0	0	0	**8**	
0430 - 0445	0	9	2	0	0	0	0	0	0	0	0	0	0	**11**	
0445 - 0500	0	15	2	0	0	0	0	0	0	0	0	0	0	**17**	**41**
0500 - 0515	0	16	3	0	0	0	0	0	0	0	0	0	0	**19**	
0515 - 0530	0	29	4	0	0	0	0	0	0	0	0	0	0	**33**	
0530 - 0545	0	31	8	0	0	0	0	0	0	0	0	0	0	**39**	
0545 - 0600	0	39	12	0	0	0	0	0	0	0	0	0	0	**51**	**142**
0600 - 0615	0	41	12	1	0	0	0	0	0	0	0	0	0	**54**	
0615 - 0630	0	77	15	0	1	0	0	0	1	0	0	0	0	**94**	
0630 - 0645	1	122	30	0	0	0	0	0	0	0	0	0	0	**153**	
0645 - 0700	0	124	38	0	1	1	0	0	0	0	0	0	0	**164**	**465**
0700 - 0715	4	148	56	1	0	0	0	1	0	0	0	0	0	**210**	
0715 - 0730	3	209	56	0	3	0	0	0	1	0	0	0	0	**272**	
0730 - 0745	0	220	65	0	1	0	0	0	0	0	0	0	0	**286**	
0745 - 0800	0	229	64	0	4	0	0	0	0	0	0	0	0	**297**	**1065**
0800 - 0815	1	185	62	0	2	0	0	3	0	0	0	0	0	**253**	
0815 - 0830	0	160	42	2	2	0	0	2	0	0	0	0	0	**208**	
0830 - 0845	1	152	52	0	3	0	0	0	3	0	0	0	0	**211**	
0845 - 0900	0	127	49	2	3	1	0	0	0	0	0	0	0	**182**	**854**
0900 - 0915	0	110	33	0	2	0	0	0	0	0	0	0	0	**145**	
0915 - 0930	0	105	39	0	2	0	0	1	1	0	0	0	0	**148**	
0930 - 0945	0	124	26	0	2	0	0	0	3	1	0	0	0	**156**	
0945 - 1000	1	95	27	1	1	0	0	1	0	0	0	0	0	**126**	**575**
1000 - 1015	2	89	35	0	2	1	0	0	0	0	0	0	0	**129**	
1015 - 1030	0	106	36	0	0	0	0	0	1	0	0	0	0	**143**	
1030 - 1045	0	89	32	0	4	0	0	1	1	0	0	0	0	**127**	
1045 - 1100	0	83	33	0	0	0	0	0	0	0	0	0	0	**116**	**515**
1100 - 1115	6	119	20	0	1	0	0	0	0	0	0	0	0	**146**	
1115 - 1130	0	115	22	0	2	0	0	0	1	1	0	0	0	**141**	
1130 - 1145	0	98	37	0	1	0	0	0	1	0	0	0	0	**137**	
1145 - 1200	2	136	34	0	5	0	0	1	2	0	0	0	0	**180**	**604**
1200 - 1215	0	115	32	0	1	0	0	1	3	0	0	0	0	**152**	
1215 - 1230	0	105	25	0	1	0	0	0	1	0	0	0	0	**132**	
1230 - 1245	10	117	38	0	3	0	0	0	1	0	0	0	0	**169**	
1245 - 1300	1	129	44	0	3	0	0	0	1	0	0	0	0	**178**	**631**
1300 - 1315	0	122	39	0	3	0	0	1	1	0	0	0	0	**166**	
1315 - 1330	6	160	35	0	3	0	0	0	1	0	0	0	0	**205**	
1330 - 1345	0	146	40	0	1	0	0	0	2	0	0	0	0	**189**	
1345 - 1400	4	149	39	0	2	0	0	0	2	0	0	0	0	**196**	**756**
1400 - 1415	0	137	40	0	3	0	0	0	3	0	0	0	0	**183**	
1415 - 1430	0	138	41	0	3	0	0	0	2	0	0	0	0	**184**	
1430 - 1445	2	128	39	0	4	0	0	0	0	0	0	0	0	**173**	
1445 - 1500	2	139	31	0	1	0	0	0	0	0	0	0	0	**173**	**713**
1500 - 1515	0	142	36	0	3	1	0	1	0	0	0	0	0	**183**	
1515 - 1530	18	184	42	0	2	1	0	0	1	0	0	0	0	**248**	
1530 - 1545	9	224	71	1	4	0	0	0	1	0	0	0	0	**310**	
1545 - 1600	2	216	55	0	4	0	0	2	2	0	0	0	0	**281**	**1022**
1600 - 1615	0	225	52	0	4	1	0	2	1	0	0	0	0	**285**	
1615 - 1630	0	201	47	0	1	0	0	0	1	0	0	0	0	**250**	
1630 - 1645	4	222	55	0	3	0	0	0	0	0	0	0	0	**284**	
1645 - 1700	1	223	49	0	3	0	0	0	0	0	0	0	0	**276**	**1095**
1700 - 1715	6	221	51	0	0	1	0	1	0	0	0	0	0	**280**	
1715 - 1730	2	224	40	1	2	0	0	0	0	0	0	0	0	**269**	
1730 - 1745	4	139	38	0	0	0	0	1	0	0	0	0	0	**182**	
1745 - 1800	2	155	35	0	0	0	0	0	0	0	0	0	0	**192**	**923**
1800 - 1815	7	143	44	0	3	0	0	1	0	0	0	0	0	**198**	
1815 - 1830	0	144	25	0	2	0	0	1	0	0	0	0	0	**172**	
1830 - 1845	1	140	22	0	0	0	0	0	1	0	0	0	0	**164**	
1845 - 1900	1	112	15	0	0	1	0	1	0	0	0	0	0	**130**	**664**
1900 - 1915	5	86	22	0	1	0	0	2	0	0	0	0	0	**116**	
1915 - 1930	7	97	17	0	0	0	1	1	0	0	0	0	0	**123**	
1930 - 1945	1	81	18	0	1	0	0	0	0	0	0	0	0	**101**	
1945 - 2000	1	101	15	0	1	0	0	0	0	0	0	0	0	**118**	**458**
2000 - 2015	3	66	19	0	0	0	0	0	0	0	0	0	0	**88**	
2015 - 2030	0	62	11	0	0	0	0	0	0	0	0	0	0	**73**	
2030 - 2045	2	75	12	0	0	0	0	0	0	0	0	0	0	**89**	
2045 - 2100	0	67	10	0	1	0	0	0	0	0	1	0	0	**79**	**329**
2100 - 2115	0	47	9	0	1	0	0	0	0	0	1	0	0	**58**	
2115 - 2130	0	49	10	0	0	0	0	0	0	0	0	0	0	**59**	
2130 - 2145	0	25	7	0	0	0	0	0	0	0	0	0	0	**32**	
2145 - 2200	0	39	8	0	0	0	0	0	0	0	0	0	0	**47**	**196**
2200 - 2215	0	27	7	0	0	0	0	0	0	0	0	0	0	**34**	
2215 - 2230	1	26	9	0	0	0	0	0	0	0	0	0	0	**36**	
2230 - 2245	8	21	6	0	0	0	0	0	0	0	0	0	0	**35**	
2245 - 2300	0	21	5	0	0	0	0	0	0	0	0	0	0	**26**	**131**
2300 - 2315	0	18	6	0	1	0	0	0	0	0	0	0	0	**25**	
2315 - 2330	2	15	5	0	0	0	0	0	0	0	0	0	0	**22**	
2330 - 2345	0	19	5	0	0	0	0	0	0	0	0	0	0	**24**	
2345 - 0000	0	11	4	0	0	0	0	0	0	0	0	0	0	**15**	**86**

Session Total	133	8730	2276	9	107	8	1	25	39	2	3	0	0	**11333**
Session Average	1.39	90.94	23.71	0.09	1.11	0.08	0.01	0.26	0.41	0.02	0.03	0.00	0.00	**118.05**
Session Percentage	1.17	77.03	20.08	0.08	0.94	0.07	0.01	0.22	0.34	0.02	0.03	0.00	0.00	

AM Peak Hour	0630 - 0730	0715 - 0815	0715 - 0815	0800 - 0900	0745 - 0845	0600 - 0700	-	0730 - 0830	0830 - 0930	0845 - 0945	-	-	-	**0715 - 0815**
AM Peak Hour Volume	8	843	247	4	11	1	0	5	4	1	0	0	0	**1108**

Noon Peak Hour	1445 - 1545	1445 - 1545	1445 - 1545	1445 - 1545	1230 - 1330	1430 - 1530	-	1115 - 1215	1330 - 1430	1030 - 1130	-	-	-	**1445 - 1545**
Noon Peak Hour Volume	29	689	180	1	12	2	0	2	9	1	0	0	0	**914**

PM Peak Hour	1500 - 1600	1630 - 1730	1530 - 1630	1500 - 1600	1515 - 1615	1500 - 1600	1830 - 1930	1515 - 1615	1515 - 1615	-	-	-	-	**1530 - 1630**
PM Peak Hour Volume	29	890	225	1	14	2	1	4	5	0	0	0	0	**1126**

Site 75 Lane 1 NB
I-20,
north of Bush River Rd

Date
Saturday, April 27, 2024

Lat/Long
34.034393°, -81.117736°

Weather
Mostly Cloudy
69°F

Click here for Detailed Weather

0000 - 2400 (Saturday 24h Session) (04-27-2024)
NB EB 15min

	Northbound (Movement 75 Lane 1 NB.1)													15min	60min
TIME	1	2	3	4	5	6	7	8	9	10	11	12	13	Total	Total
0000 - 0015	1	16	1	0	0	0	0	0	1	0	0	0	0	**19**	
0015 - 0030	0	8	2	0	0	0	0	0	0	0	0	0	0	**10**	
0030 - 0045	0	7	0	0	0	0	0	0	0	0	0	0	0	**7**	
0045 - 0100	0	8	0	0	0	0	0	0	0	0	0	0	0	**8**	**44**
0100 - 0115	0	6	0	0	0	0	0	0	0	0	0	0	0	**6**	
0115 - 0130	0	5	0	0	0	0	0	0	0	0	0	0	0	**5**	
0130 - 0145	0	3	0	0	0	0	0	0	0	0	0	0	0	**3**	
0145 - 0200	0	4	1	0	0	0	0	0	0	0	0	0	0	**5**	**19**
0200 - 0215	0	7	0	0	0	0	0	0	0	0	0	0	0	**7**	
0215 - 0230	0	2	1	0	0	0	0	0	0	0	0	0	0	**3**	
0230 - 0245	0	2	0	0	0	0	0	0	0	0	0	0	0	**2**	
0245 - 0300	8	4	0	0	0	0	0	0	0	0	0	0	0	**12**	**24**
0300 - 0315	0	2	0	0	0	0	0	0	0	0	0	0	0	**2**	
0315 - 0330	0	3	0	0	0	0	0	0	0	0	0	0	0	**3**	
0330 - 0345	0	3	0	0	0	0	0	0	0	0	0	0	0	**3**	
0345 - 0400	0	6	0	0	0	0	0	0	0	0	0	0	0	**6**	**14**
0400 - 0415	0	3	0	0	0	0	0	0	0	0	0	0	0	**3**	
0415 - 0430	1	6	0	0	0	0	0	0	0	0	0	0	0	**7**	
0430 - 0445	0	3	0	0	0	0	0	0	0	0	0	0	0	**3**	
0445 - 0500	0	7	1	0	0	0	0	0	0	0	0	0	0	**8**	**21**
0500 - 0515	0	8	0	0	0	0	0	0	0	0	0	0	0	**8**	
0515 - 0530	2	3	0	0	0	0	0	0	0	0	0	0	0	**5**	
0530 - 0545	0	6	2	0	1	0	0	0	0	0	0	0	0	**9**	
0545 - 0600	0	13	2	0	0	0	0	0	0	0	0	0	0	**15**	**37**
0600 - 0615	1	11	5	0	0	0	0	0	0	0	0	0	0	**17**	
0615 - 0630	0	25	5	0	0	0	0	0	1	0	0	0	0	**31**	
0630 - 0645	0	30	6	0	1	0	0	0	1	0	0	0	0	**38**	
0645 - 0700	0	40	12	0	0	0	0	0	0	0	0	0	0	**52**	**138**
0700 - 0715	0	29	9	0	0	0	0	1	1	0	0	0	0	**40**	
0715 - 0730	1	56	17	0	1	0	0	0	0	0	0	0	0	**75**	
0730 - 0745	1	54	22	0	0	0	0	0	0	0	0	0	0	**77**	
0745 - 0800	1	77	18	0	0	0	0	0	0	0	0	0	0	**96**	**288**
0800 - 0815	1	60	12	0	1	1	0	0	1	0	0	0	0	**76**	
0815 - 0830	1	79	21	0	0	0	0	0	0	0	0	0	0	**101**	
0830 - 0845	0	71	21	0	2	0	0	0	1	0	0	0	0	**95**	
0845 - 0900	1	73	15	0	0	0	0	0	0	0	0	0	0	**89**	**361**
0900 - 0915	1	59	18	0	0	0	0	0	0	0	0	0	0	**78**	
0915 - 0930	0	82	30	0	0	0	0	0	0	0	0	0	0	**112**	
0930 - 0945	0	95	16	0	0	0	0	1	0	0	0	0	0	**112**	
0945 - 1000	0	102	24	0	1	0	0	0	0	0	0	0	0	**127**	**429**
1000 - 1015	0	75	19	0	1	0	0	0	0	0	0	0	0	**95**	
1015 - 1030	3	108	21	0	0	0	0	0	1	0	0	0	0	**133**	
1030 - 1045	12	117	20	0	1	0	0	0	0	0	0	0	0	**150**	
1045 - 1100	9	94	25	0	1	0	0	0	0	0	0	0	0	**129**	**507**
1100 - 1115	0	94	22	0	2	0	0	0	0	0	0	0	0	**118**	
1115 - 1130	15	106	24	0	2	0	0	0	0	0	0	0	0	**147**	
1130 - 1145	6	102	21	0	0	0	0	1	0	0	0	0	0	**130**	
1145 - 1200	1	116	27	0	0	0	0	0	2	0	0	0	0	**146**	**541**
1200 - 1215	1	104	25	0	2	0	0	1	0	0	0	0	0	**133**	
1215 - 1230	4	125	22	0	0	1	0	0	1	0	0	0	0	**153**	
1230 - 1245	2	120	37	0	3	0	0	0	1	0	0	0	0	**163**	
1245 - 1300	2	124	24	0	0	0	0	0	0	0	0	0	0	**150**	**599**
1300 - 1315	5	121	33	1	1	0	0	0	0	0	0	0	0	**161**	
1315 - 1330	19	119	25	0	0	0	0	0	1	0	0	0	0	**164**	
1330 - 1345	5	121	27	0	0	0	0	0	0	0	0	0	0	**153**	
1345 - 1400	3	111	27	0	1	0	0	0	1	0	0	0	0	**143**	**621**
1400 - 1415	5	116	24	0	1	0	0	1	1	0	0	0	0	**148**	
1415 - 1430	0	115	29	0	2	0	0	0	1	0	0	0	0	**147**	
1430 - 1445	1	84	22	0	1	0	0	0	0	0	0	0	0	**108**	
1445 - 1500	1	104	24	0	2	0	0	0	0	0	0	0	0	**131**	**534**
1500 - 1515	1	122	26	0	1	0	0	1	0	0	0	0	0	**151**	
1515 - 1530	4	103	20	0	0	0	0	0	0	0	0	0	0	**127**	
1530 - 1545	8	110	31	0	0	0	0	2	0	0	0	0	0	**151**	
1545 - 1600	3	111	19	0	0	0	0	0	0	0	0	0	0	**133**	**562**
1600 - 1615	6	94	14	0	2	0	0	0	0	0	0	0	0	**116**	
1615 - 1630	4	109	27	0	0	0	0	0	0	0	0	0	0	**140**	
1630 - 1645	1	93	30	0	1	1	0	0	1	0	0	0	0	**127**	
1645 - 1700	0	104	9	0	0	0	0	0	1	0	0	0	0	**114**	**497**
1700 - 1715	0	99	9	0	1	0	0	0	0	0	0	0	0	**109**	
1715 - 1730	2	100	24	0	1	0	0	0	0	0	0	0	0	**127**	
1730 - 1745	1	88	12	0	2	0	0	1	1	0	0	0	0	**105**	
1745 - 1800	0	70	23	0	0	0	0	0	0	0	0	0	0	**93**	**434**
1800 - 1815	0	68	12	1	0	0	0	0	0	0	0	0	0	**81**	
1815 - 1830	0	88	10	0	1	0	0	0	0	0	0	0	0	**99**	
1830 - 1845	0	84	24	0	1	0	0	0	0	0	0	0	0	**109**	
1845 - 1900	0	72	11	0	0	0	0	1	0	0	0	0	0	**84**	**373**
1900 - 1915	0	76	14	0	1	0	0	1	1	0	0	0	0	**93**	
1915 - 1930	1	70	16	0	0	0	0	0	0	0	0	0	0	**87**	
1930 - 1945	0	71	10	0	0	0	0	0	0	0	0	0	0	**81**	
1945 - 2000	2	73	16	0	0	0	0	0	0	0	0	0	0	**91**	**352**
2000 - 2015	2	67	12	0	0	0	0	0	1	0	0	0	0	**82**	
2015 - 2030	0	56	11	0	0	0	0	0	0	0	0	0	0	**67**	
2030 - 2045	0	51	10	0	0	0	0	0	0	0	0	0	0	**61**	
2045 - 2100	0	42	7	0	1	0	0	0	0	0	0	0	0	**50**	**260**
2100 - 2115	0	47	7	0	0	0	0	0	0	0	0	0	0	**54**	
2115 - 2130	0	44	5	0	0	0	0	0	0	0	0	0	0	**49**	
2130 - 2145	0	30	4	0	0	0	0	0	0	0	0	0	0	**34**	
2145 - 2200	0	15	5	0	1	0	0	0	0	0	0	0	0	**21**	**158**
2200 - 2215	0	24	4	0	0	0	0	0	0	0	0	0	0	**28**	
2215 - 2230	0	18	1	0	0	0	0	0	0	0	0	0	0	**19**	
2230 - 2245	0	20	2	0	0	0	0	0	0	0	0	0	0	**22**	
2245 - 2300	0	17	2	0	0	0	0	0	0	0	0	0	0	**19**	**88**
2300 - 2315	0	17	1	0	0	0	0	0	0	0	0	0	0	**18**	
2315 - 2330	0	16	2	0	0	0	0	0	0	0	0	0	0	**18**	
2330 - 2345	0	19	1	0	0	0	0	0	0	0	0	0	0	**20**	
2345 - 0000	0	15	0	0	0	0	0	0	0	0	0	0	0	**15**	**71**

Session Total	149	5557	1190	2	40	3	0	11	20	0	0	0	0	**6972**
Session Average	1.55	57.89	12.40	0.02	0.42	0.03	0.00	0.11	0.21	0.00	0.00	0.00	0.00	**72.63**
Session Percentage	2.14	79.70	17.07	0.03	0.57	0.04	0.00	0.16	0.29	0.00	0.00	0.00	0.00	

AM Peak Hour	0945 - 1045	0945 - 1045	0915 - 1015	-	0745 - 0845	0715 - 0815	-	0615 - 0715	0615 - 0715	-	-	-	-	**0945 - 1045**
AM Peak Hour Volume	15	402	89	0	3	1	0	1	3	0	0	0	0	**505**

Noon Peak Hour	1030 - 1130	1215 - 1315	1230 - 1330	1215 - 1315	1030 - 1130	1130 - 1230	-	1445 - 1545	1145 - 1245	-	-	-	-	**1230 - 1330**
Noon Peak Hour Volume	36	490	119	1	6	1	0	3	4	0	0	0	0	**638**

PM Peak Hour	1515 - 1615	1500 - 1600	1500 - 1600	1715 - 1815	1645 - 1745	1545 - 1645	-	1500 - 1600	1600 - 1700	-	-	-	-	**1500 - 1600**
PM Peak Hour Volume	21	446	96	1	4	1	0	3	2	0	0	0	0	**562**

Bi-Directional Class Count || NB EB Average 15min

Columbia, SC

Marr Traffic DATA COLLECTION
www.marrtraffic.com

Site 75 Lane 1 NB
I-20,
north of Bush River Rd

Date
Sunday, April 21, 2024

Lat/Long
34.034393°, -81.117736°

Weather
Cloudy
66°F

0000 - 2400 (Weekday 24h Session) (All Dates)
NB EB Average 15min

	NB EB Average 15min													15min	60min
Time	1	2	3	4	5	6	7	8	9	10	11	12	13	Total	Total
0000 - 0015	0	9	1	0	0	0	0	0	0	0	0	0	0	**11**	
0015 - 0030	0	6	1	0	0	0	0	0	0	0	0	0	0	**7**	
0030 - 0045	0	7	1	0	0	0	0	0	0	0	0	0	0	**8**	
0045 - 0100	0	5	0	0	0	0	0	0	0	0	0	0	0	**5**	**30**
0100 - 0115	0	4	1	0	0	0	0	0	0	0	0	0	0	**5**	
0115 - 0130	0	6	0	0	0	0	0	0	0	0	0	0	0	**6**	
0130 - 0145	0	3	0	0	0	0	0	0	0	0	0	0	0	**4**	
0145 - 0200	0	4	1	0	0	0	0	0	0	0	0	0	0	**5**	**19**
0200 - 0215	0	3	0	0	0	0	0	0	0	0	0	0	0	**4**	
0215 - 0230	0	3	0	0	0	0	0	0	0	0	0	0	0	**3**	
0230 - 0245	0	3	0	0	0	0	0	0	0	0	0	0	0	**3**	
0245 - 0300	1	3	0	0	0	0	0	0	0	0	0	0	0	**4**	**13**
0300 - 0315	0	4	0	0	0	0	0	0	0	0	0	0	0	**4**	
0315 - 0330	0	4	0	0	0	0	0	0	0	0	0	0	0	**5**	
0330 - 0345	0	5	0	0	0	0	0	0	0	0	0	0	0	**6**	
0345 - 0400	0	5	1	0	0	0	0	0	0	0	0	0	0	**6**	**20**
0400 - 0415	0	5	1	0	0	0	0	0	0	0	0	0	0	**6**	
0415 - 0430	0	6	1	0	0	0	0	0	0	0	0	0	0	**8**	
0430 - 0445	0	9	1	0	0	0	0	0	0	0	0	0	0	**10**	
0445 - 0500	0	12	3	0	0	0	0	0	0	0	0	0	0	**14**	**38**
0500 - 0515	0	12	2	0	0	0	0	0	0	0	0	0	0	**14**	
0515 - 0530	0	23	3	0	0	0	0	0	0	0	0	0	0	**28**	
0530 - 0545	0	32	5	0	0	0	0	0	0	0	0	0	0	**37**	
0545 - 0600	0	31	5	0	0	0	0	0	0	0	0	0	0	**36**	**114**
0600 - 0615	0	42	9	0	0	0	0	0	0	0	0	0	0	**52**	
0615 - 0630	0	60	18	0	1	0	0	0	1	0	0	0	0	**80**	
0630 - 0645	0	100	34	0	1	0	0	0	0	0	0	0	0	**135**	
0645 - 0700	0	110	35	0	2	0	0	0	0	0	0	0	0	**147**	**414**
0700 - 0715	1	127	44	0	1	0	0	0	0	0	0	0	0	**174**	
0715 - 0730	1	176	50	0	2	0	0	0	0	0	0	0	0	**231**	
0730 - 0745	0	173	52	0	3	0	0	0	0	0	0	0	0	**228**	
0745 - 0800	1	189	54	0	2	0	0	0	1	0	0	0	0	**248**	**880**
0800 - 0815	1	169	55	0	2	0	0	1	1	0	0	0	0	**229**	
0815 - 0830	1	157	45	0	2	0	0	1	1	0	0	0	0	**207**	
0830 - 0845	0	138	47	0	2	0	0	1	1	0	0	0	0	**190**	
0845 - 0900	1	115	38	0	1	0	0	0	0	0	0	0	0	**155**	**781**
0900 - 0915	1	89	31	0	1	0	0	0	1	0	0	0	0	**123**	
0915 - 0930	0	82	31	0	1	0	0	1	0	0	0	0	0	**115**	
0930 - 0945	0	88	27	0	1	0	0	0	1	0	0	0	0	**117**	
0945 - 1000	0	82	27	0	1	0	0	0	1	0	0	0	0	**112**	**468**
1000 - 1015	3	78	25	0	1	0	0	0	0	0	0	0	0	**108**	
1015 - 1030	1	81	25	0	1	0	0	0	0	0	0	0	0	**108**	
1030 - 1045	2	82	25	0	2	0	0	1	0	0	0	0	0	**112**	
1045 - 1100	3	79	27	0	1	0	0	0	0	0	0	0	0	**110**	**438**
1100 - 1115	3	79	21	0	2	0	0	0	1	0	0	0	0	**105**	
1115 - 1130	2	89	22	0	2	0	0	0	1	0	0	0	0	**117**	
1130 - 1145	1	83	27	0	1	0	0	0	1	0	0	0	0	**114**	
1145 - 1200	0	90	25	0	2	0	0	0	1	0	0	0	0	**119**	**456**
1200 - 1215	1	88	25	0	1	0	0	1	1	0	0	0	0	**117**	
1215 - 1230	1	87	25	0	2	0	0	1	1	0	0	0	0	**117**	
1230 - 1245	2	94	30	0	2	0	0	0	1	0	0	0	0	**129**	
1245 - 1300	1	95	31	0	2	0	0	0	0	0	0	0	0	**128**	**490**
1300 - 1315	1	92	29	0	1	0	0	0	0	0	0	0	0	**124**	
1315 - 1330	4	103	27	0	3	0	0	0	1	0	0	0	0	**138**	
1330 - 1345	1	107	29	0	1	0	0	1	1	0	0	0	0	**140**	
1345 - 1400	1	100	33	0	2	0	0	0	1	0	0	0	0	**137**	**539**
1400 - 1415	1	105	26	0	3	0	0	1	1	0	0	0	0	**136**	
1415 - 1430	1	105	32	0	3	0	0	0	1	0	0	0	0	**142**	
1430 - 1445	1	106	32	0	2	0	0	1	0	0	0	0	0	**141**	
1445 - 1500	1	111	31	0	2	0	0	0	1	0	0	0	0	**145**	**565**
1500 - 1515	1	109	34	0	3	1	0	1	0	0	0	0	0	**148**	
1515 - 1530	4	121	32	0	2	0	0	0	0	0	0	0	0	**160**	
1530 - 1545	3	139	40	0	2	0	0	1	1	0	0	0	0	**185**	
1545 - 1600	1	142	39	0	2	0	0	0	1	0	0	0	0	**185**	**678**
1600 - 1615	2	152	37	0	3	0	0	0	1	0	0	0	0	**195**	
1615 - 1630	1	156	42	0	2	0	0	0	1	0	0	0	0	**202**	
1630 - 1645	1	166	45	0	3	0	0	0	1	0	0	0	0	**216**	
1645 - 1700	0	166	40	0	2	0	0	0	0	0	0	0	0	**209**	**822**
1700 - 1715	1	178	43	0	1	0	0	1	2	0	0	0	0	**227**	
1715 - 1730	1	181	40	0	2	0	0	0	1	0	0	0	0	**225**	
1730 - 1745	1	146	39	0	1	0	0	1	0	0	0	0	0	**188**	
1745 - 1800	0	124	34	0	1	0	0	0	0	0	0	0	0	**160**	**800**
1800 - 1815	1	106	27	0	1	0	0	0	1	0	0	0	0	**136**	
1815 - 1830	0	99	23	0	1	0	0	1	0	0	0	0	0	**124**	
1830 - 1845	1	95	23	0	0	0	0	0	1	0	0	0	0	**121**	
1845 - 1900	0	78	18	0	1	0	0	0	1	0	0	0	0	**99**	**479**
1900 - 1915	1	73	15	0	1	0	0	1	0	0	0	0	0	**91**	
1915 - 1930	1	83	18	0	0	0	0	0	0	0	0	0	0	**103**	
1930 - 1945	0	71	16	0	1	0	0	0	0	0	0	0	0	**88**	
1945 - 2000	1	75	20	0	1	0	0	0	0	0	0	0	0	**97**	**379**
2000 - 2015	1	60	13	0	0	0	0	0	1	0	0	0	0	**75**	
2015 - 2030	0	56	9	0	0	0	0	0	0	0	0	0	0	**66**	
2030 - 2045	0	53	7	0	0	0	0	0	1	0	0	0	0	**62**	
2045 - 2100	0	48	6	0	0	0	0	0	1	0	0	0	0	**56**	**257**
2100 - 2115	0	45	6	0	0	0	0	0	1	0	0	0	0	**53**	
2115 - 2130	0	43	7	0	0	0	0	0	0	0	0	0	0	**51**	
2130 - 2145	0	31	4	0	0	0	0	0	0	0	0	0	0	**36**	
2145 - 2200	0	25	4	0	0	0	0	0	1	0	0	0	0	**30**	**170**
2200 - 2215	0	26	5	0	0	0	0	0	0	0	0	0	0	**31**	
2215 - 2230	0	19	3	0	0	0	0	0	0	0	0	0	0	**22**	
2230 - 2245	1	17	2	0	0	0	0	0	0	0	0	0	0	**21**	
2245 - 2300	0	18	2	0	0	0	0	0	0	0	0	0	0	**20**	**94**
2300 - 2315	0	15	2	0	0	0	0	0	0	0	0	0	0	**18**	
2315 - 2330	0	13	2	0	0	0	0	0	0	0	0	0	0	**16**	
2330 - 2345	0	10	2	0	0	0	0	0	0	0	0	0	0	**12**	
2345 - 0000	0	9	2	0	0	0	0	0	0	0	0	0	0	**10**	**57**

Session Total	63	6901	1871	5	94	5	0	24	39	2	1	0	0	**9004**
Session Average	0.66	71.88	19.49	0.05	0.98	0.05	0.00	0.25	0.41	0.02	0.01	0.00	0.00	**93.79**
Session Percentage	0.70	76.64	20.78	0.05	1.04	0.06	0.00	0.27	0.43	0.02	0.01	0.00	0.00	

AM Peak Hour	0945 - 1045	0715 - 0815	0715 - 0815	0815 - 0915	0730 - 0830	0945 - 1045	-	0745 - 0845	0745 - 0845	0900 - 1000	-	-	-	**0715 - 0815**
AM Peak Volume	6	708	211	1	10	1	0	3	3	0	0	0	0	**936**

Noon Peak Hour	1030 - 1130	1445 - 1545	1445 - 1545	1400 - 1500	1415 - 1515	1445 - 1545	-	1145 - 1245	1330 - 1430	1130 - 1230	-	-	-	**1445 - 1545**
Noon Peak Volume	11	479	137	0	10	1	0	2	4	0	0	0	0	**638**

PM Peak Hour	1515 - 1615	1630 - 1730	1615 - 1715	1530 - 1630	1545 - 1645	1500 - 1600	1830 - 1930	1815 - 1915	1630 - 1730	1500 - 1600	-	-	-	**1630 - 1730**
PM Peak Volume	9	692	170	1	10	1	0	2	4	0	0	0	0	**878**

Bi-Directional Class Count || Volume Summary 15min

Columbia, SC

Marr Traffic DATA COLLECTION

www.marrtraffic.com

Site 75 Lane 1 NB

I-20,
north of Bush River Rd

Date

Sunday, April 21, 2024

Lat/Long

34.034393°, -81.117736°

Weather

Cloudy
66°F

Click here for Detailed Weather

0000 - 2400 (Sunday 24h Session) (04-21-2024)

Volume Summary 15min

TIME	Volume Summary 15min NB	SB	15min Total	60min Total
0000 - 0015	19	0	**19**	
0015 - 0030	10	0	**10**	
0030 - 0045	12	0	**12**	
0045 - 0100	8	0	**8**	**49**
0100 - 0115	5	0	**5**	
0115 - 0130	9	0	**9**	
0130 - 0145	6	0	**6**	
0145 - 0200	13	0	**13**	**33**
0200 - 0215	2	0	**2**	
0215 - 0230	1	0	**1**	
0230 - 0245	2	0	**2**	
0245 - 0300	0	0	**0**	**5**
0300 - 0315	5	0	**5**	
0315 - 0330	3	0	**3**	
0330 - 0345	1	0	**1**	
0345 - 0400	4	0	**4**	**13**
0400 - 0415	2	0	**2**	
0415 - 0430	4	0	**4**	
0430 - 0445	4	0	**4**	
0445 - 0500	3	0	**3**	**13**
0500 - 0515	3	0	**3**	
0515 - 0530	6	0	**6**	
0530 - 0545	9	0	**9**	
0545 - 0600	5	0	**5**	**23**
0600 - 0615	10	0	**10**	
0615 - 0630	13	0	**13**	
0630 - 0645	14	0	**14**	
0645 - 0700	19	0	**19**	**56**
0700 - 0715	19	0	**19**	
0715 - 0730	33	0	**33**	
0730 - 0745	31	0	**31**	
0745 - 0800	50	0	**50**	**133**
0800 - 0815	32	0	**32**	
0815 - 0830	42	0	**42**	
0830 - 0845	47	0	**47**	
0845 - 0900	57	0	**57**	**178**
0900 - 0915	57	0	**57**	
0915 - 0930	54	0	**54**	
0930 - 0945	51	0	**51**	
0945 - 1000	56	0	**56**	**218**
1000 - 1015	97	0	**97**	
1015 - 1030	79	0	**79**	
1030 - 1045	99	0	**99**	
1045 - 1100	112	0	**112**	**387**
1100 - 1115	92	0	**92**	
1115 - 1130	85	0	**85**	
1130 - 1145	125	0	**125**	
1145 - 1200	113	0	**113**	**415**

Time	Volume Summary 15min NB	SB	15min Total	60min Total
1200 - 1215	104	0	**104**	
1215 - 1230	121	0	**121**	
1230 - 1245	140	0	**140**	
1245 - 1300	120	0	**120**	**485**
1300 - 1315	112	0	**112**	
1315 - 1330	114	0	**114**	
1330 - 1345	143	0	**143**	
1345 - 1400	123	0	**123**	**492**
1400 - 1415	141	0	**141**	
1415 - 1430	137	0	**137**	
1430 - 1445	154	0	**154**	
1445 - 1500	140	0	**140**	**572**
1500 - 1515	113	0	**113**	
1515 - 1530	121	0	**121**	
1530 - 1545	147	0	**147**	
1545 - 1600	117	0	**117**	**498**
1600 - 1615	162	0	**162**	
1615 - 1630	159	0	**159**	
1630 - 1645	175	0	**175**	
1645 - 1700	172	0	**172**	**668**
1700 - 1715	144	0	**144**	
1715 - 1730	111	0	**111**	
1730 - 1745	133	0	**133**	
1745 - 1800	119	0	**119**	**507**
1800 - 1815	126	0	**126**	
1815 - 1830	109	0	**109**	
1830 - 1845	93	0	**93**	
1845 - 1900	80	0	**80**	**408**
1900 - 1915	103	0	**103**	
1915 - 1930	114	0	**114**	
1930 - 1945	124	0	**124**	
1945 - 2000	110	0	**110**	**451**
2000 - 2015	102	0	**102**	
2015 - 2030	70	0	**70**	
2030 - 2045	84	0	**84**	
2045 - 2100	64	0	**64**	**320**
2100 - 2115	70	0	**70**	
2115 - 2130	53	0	**53**	
2130 - 2145	47	0	**47**	
2145 - 2200	32	0	**32**	**202**
2200 - 2215	48	0	**48**	
2215 - 2230	27	0	**27**	
2230 - 2245	27	0	**27**	
2245 - 2300	28	0	**28**	**130**
2300 - 2315	28	0	**28**	
2315 - 2330	17	0	**17**	
2330 - 2345	11	0	**11**	
2345 - 0000	14	0	**14**	**70**

Session Total	6326	0	**6326**
Session Average	65.90	0.00	**65.90**
Session Percentage	100.00	0.00	

Site 75 Lane 1 NB

I-20,
north of Bush River Rd

Date

Monday, April 22, 2024

Lat/Long

34.034393°, -81.117736°

Weather

Mostly Cloudy
57°F

Click here for Detailed Weather

0000 - 2400 (Weekday 24h Session) (04-22-2024)

Volume Summary 15min

TIME	Volume Summary 15min NB	SB	15min Total	60min Total
0000 - 0015	13	0	**13**	
0015 - 0030	11	0	**11**	
0030 - 0045	13	0	**13**	
0045 - 0100	10	0	**10**	**47**
0100 - 0115	10	0	**10**	
0115 - 0130	8	0	**8**	
0130 - 0145	5	0	**5**	
0145 - 0200	6	0	**6**	**29**
0200 - 0215	8	0	**8**	
0215 - 0230	4	0	**4**	
0230 - 0245	5	0	**5**	
0245 - 0300	8	0	**8**	**25**
0300 - 0315	10	0	**10**	
0315 - 0330	10	0	**10**	
0330 - 0345	13	0	**13**	
0345 - 0400	13	0	**13**	**46**
0400 - 0415	14	0	**14**	
0415 - 0430	11	0	**11**	
0430 - 0445	17	0	**17**	
0445 - 0500	24	0	**24**	**66**
0500 - 0515	17	0	**17**	
0515 - 0530	41	0	**41**	
0530 - 0545	48	0	**48**	
0545 - 0600	45	0	**45**	**151**
0600 - 0615	65	0	**65**	
0615 - 0630	99	0	**99**	
0630 - 0645	186	0	**186**	
0645 - 0700	161	0	**161**	**511**
0700 - 0715	238	0	**238**	
0715 - 0730	310	0	**310**	
0730 - 0745	340	0	**340**	
0745 - 0800	291	0	**291**	**1179**
0800 - 0815	300	0	**300**	
0815 - 0830	267	0	**267**	
0830 - 0845	210	0	**210**	
0845 - 0900	187	0	**187**	**964**
0900 - 0915	162	0	**162**	
0915 - 0930	119	0	**119**	
0930 - 0945	116	0	**116**	
0945 - 1000	125	0	**125**	**522**
1000 - 1015	108	0	**108**	
1015 - 1030	82	0	**82**	
1030 - 1045	118	0	**118**	
1045 - 1100	86	0	**86**	**394**
1100 - 1115	104	0	**104**	
1115 - 1130	86	0	**86**	
1130 - 1145	86	0	**86**	
1145 - 1200	97	0	**97**	**373**

Time	Volume Summary 15min NB	SB	15min Total	60min Total
1200 - 1215	109	0	**109**	
1215 - 1230	98	0	**98**	
1230 - 1245	87	0	**87**	
1245 - 1300	91	0	**91**	**385**
1300 - 1315	89	0	**89**	
1315 - 1330	120	0	**120**	
1330 - 1345	117	0	**117**	
1345 - 1400	116	0	**116**	**442**
1400 - 1415	124	0	**124**	
1415 - 1430	141	0	**141**	
1430 - 1445	131	0	**131**	
1445 - 1500	156	0	**156**	**552**
1500 - 1515	136	0	**136**	
1515 - 1530	143	0	**143**	
1530 - 1545	189	0	**189**	
1545 - 1600	185	0	**185**	**653**
1600 - 1615	197	0	**197**	
1615 - 1630	214	0	**214**	
1630 - 1645	234	0	**234**	
1645 - 1700	225	0	**225**	**870**
1700 - 1715	263	0	**263**	
1715 - 1730	226	0	**226**	
1730 - 1745	239	0	**239**	
1745 - 1800	225	0	**225**	**953**
1800 - 1815	139	0	**139**	
1815 - 1830	126	0	**126**	
1830 - 1845	102	0	**102**	
1845 - 1900	66	0	**66**	**433**
1900 - 1915	97	0	**97**	
1915 - 1930	108	0	**108**	
1930 - 1945	88	0	**88**	
1945 - 2000	105	0	**105**	**398**
2000 - 2015	65	0	**65**	
2015 - 2030	55	0	**55**	
2030 - 2045	61	0	**61**	
2045 - 2100	62	0	**62**	**243**
2100 - 2115	46	0	**46**	
2115 - 2130	45	0	**45**	
2130 - 2145	44	0	**44**	
2145 - 2200	34	0	**34**	**169**
2200 - 2215	33	0	**33**	
2215 - 2230	34	0	**34**	
2230 - 2245	24	0	**24**	
2245 - 2300	23	0	**23**	**114**
2300 - 2315	29	0	**29**	
2315 - 2330	21	0	**21**	
2330 - 2345	10	0	**10**	
2345 - 0000	6	0	**6**	**66**

Session Total	9585	0	**9585**
Session Average	99.84	0.00	**99.84**
Session Percentage	100.00	0.00	

Site 75 Lane 1 NB

I-20,
north of Bush River Rd

Date

Tuesday, April 23, 2024

Lat/Long

34.034393°, -81.117736°

Weather

Fair
58°F

Click here for Detailed Weather

0000 - 2400 (Weekday 24h Session) (04-23-2024)

Volume Summary 15min

TIME	Volume Summary 15min NB	Volume Summary 15min SB	15min Total	60min Total
0000 - 0015	12	0	**12**	
0015 - 0030	4	0	**4**	
0030 - 0045	11	0	**11**	
0045 - 0100	6	0	**6**	**33**
0100 - 0115	5	0	**5**	
0115 - 0130	11	0	**11**	
0130 - 0145	3	0	**3**	
0145 - 0200	1	0	**1**	**20**
0200 - 0215	2	0	**2**	
0215 - 0230	2	0	**2**	
0230 - 0245	2	0	**2**	
0245 - 0300	0	0	**0**	**6**
0300 - 0315	1	0	**1**	
0315 - 0330	3	0	**3**	
0330 - 0345	3	0	**3**	
0345 - 0400	4	0	**4**	**11**
0400 - 0415	7	0	**7**	
0415 - 0430	10	0	**10**	
0430 - 0445	15	0	**15**	
0445 - 0500	18	0	**18**	**50**
0500 - 0515	15	0	**15**	
0515 - 0530	38	0	**38**	
0530 - 0545	53	0	**53**	
0545 - 0600	41	0	**41**	**147**
0600 - 0615	72	0	**72**	
0615 - 0630	108	0	**108**	
0630 - 0645	184	0	**184**	
0645 - 0700	210	0	**210**	**574**
0700 - 0715	225	0	**225**	
0715 - 0730	290	0	**290**	
0730 - 0745	194	0	**194**	
0745 - 0800	291	0	**291**	**1000**
0800 - 0815	311	0	**311**	
0815 - 0830	242	0	**242**	
0830 - 0845	288	0	**288**	
0845 - 0900	212	0	**212**	**1053**
0900 - 0915	109	0	**109**	
0915 - 0930	118	0	**118**	
0930 - 0945	132	0	**132**	
0945 - 1000	116	0	**116**	**475**
1000 - 1015	98	0	**98**	
1015 - 1030	103	0	**103**	
1030 - 1045	95	0	**95**	
1045 - 1100	108	0	**108**	**404**
1100 - 1115	86	0	**86**	
1115 - 1130	86	0	**86**	
1130 - 1145	92	0	**92**	
1145 - 1200	93	0	**93**	**357**

Time	Volume Summary 15min NB	Volume Summary 15min SB	15min Total	60min Total
1200 - 1215	106	0	**106**	
1215 - 1230	109	0	**109**	
1230 - 1245	97	0	**97**	
1245 - 1300	119	0	**119**	**431**
1300 - 1315	96	0	**96**	
1315 - 1330	129	0	**129**	
1330 - 1345	104	0	**104**	
1345 - 1400	100	0	**100**	**429**
1400 - 1415	116	0	**116**	
1415 - 1430	130	0	**130**	
1430 - 1445	155	0	**155**	
1445 - 1500	139	0	**139**	**540**
1500 - 1515	135	0	**135**	
1515 - 1530	141	0	**141**	
1530 - 1545	160	0	**160**	
1545 - 1600	174	0	**174**	**610**
1600 - 1615	197	0	**197**	
1615 - 1630	233	0	**233**	
1630 - 1645	245	0	**245**	
1645 - 1700	214	0	**214**	**889**
1700 - 1715	253	0	**253**	
1715 - 1730	263	0	**263**	
1730 - 1745	227	0	**227**	
1745 - 1800	143	0	**143**	**886**
1800 - 1815	113	0	**113**	
1815 - 1830	109	0	**109**	
1830 - 1845	107	0	**107**	
1845 - 1900	86	0	**86**	**415**
1900 - 1915	67	0	**67**	
1915 - 1930	84	0	**84**	
1930 - 1945	77	0	**77**	
1945 - 2000	78	0	**78**	**306**
2000 - 2015	62	0	**62**	
2015 - 2030	60	0	**60**	
2030 - 2045	37	0	**37**	
2045 - 2100	39	0	**39**	**198**
2100 - 2115	49	0	**49**	
2115 - 2130	50	0	**50**	
2130 - 2145	24	0	**24**	
2145 - 2200	24	0	**24**	**147**
2200 - 2215	10	0	**10**	
2215 - 2230	4	0	**4**	
2230 - 2245	5	0	**5**	
2245 - 2300	6	0	**6**	**25**
2300 - 2315	4	0	**4**	
2315 - 2330	2	0	**2**	
2330 - 2345	2	0	**2**	
2345 - 0000	2	0	**2**	**10**

Session Total	9016	0	**9016**
Session Average	93.92	0.00	**93.92**
Session Percentage	100.00	0.00	

Site 75 Lane 1 NB

I-20,
north of Bush River Rd

Date

Wednesday, April 24, 2024

Lat/Long

34.034393°, -81.117736°

Weather

Fair
66°F

Click here for Detailed Weather

0000 - 2400 (Weekday 24h Session) (04-24-2024)

Volume Summary 15min

TIME	Volume Summary 15min NB	Volume Summary 15min SB	15min Total	60min Total
0000 - 0015	3	0	**3**	
0015 - 0030	2	0	**2**	
0030 - 0045	1	0	**1**	
0045 - 0100	3	0	**3**	**9**
0100 - 0115	3	0	**3**	
0115 - 0130	0	0	**0**	
0130 - 0145	0	0	**0**	
0145 - 0200	2	0	**2**	**5**
0200 - 0215	3	0	**3**	
0215 - 0230	5	0	**5**	
0230 - 0245	0	0	**0**	
0245 - 0300	3	0	**3**	**11**
0300 - 0315	0	0	**0**	
0315 - 0330	5	0	**5**	
0330 - 0345	5	0	**5**	
0345 - 0400	5	0	**5**	**15**
0400 - 0415	5	0	**5**	
0415 - 0430	5	0	**5**	
0430 - 0445	7	0	**7**	
0445 - 0500	17	0	**17**	**34**
0500 - 0515	12	0	**12**	
0515 - 0530	40	0	**40**	
0530 - 0545	52	0	**52**	
0545 - 0600	47	0	**47**	**151**
0600 - 0615	66	0	**66**	
0615 - 0630	106	0	**106**	
0630 - 0645	189	0	**189**	
0645 - 0700	196	0	**196**	**557**
0700 - 0715	244	0	**244**	
0715 - 0730	317	0	**317**	
0730 - 0745	330	0	**330**	
0745 - 0800	383	0	**383**	**1274**
0800 - 0815	308	0	**308**	
0815 - 0830	314	0	**314**	
0830 - 0845	221	0	**221**	
0845 - 0900	170	0	**170**	**1013**
0900 - 0915	147	0	**147**	
0915 - 0930	116	0	**116**	
0930 - 0945	116	0	**116**	
0945 - 1000	106	0	**106**	**485**
1000 - 1015	108	0	**108**	
1015 - 1030	95	0	**95**	
1030 - 1045	96	0	**96**	
1045 - 1100	105	0	**105**	**404**
1100 - 1115	102	0	**102**	
1115 - 1130	101	0	**101**	
1130 - 1145	101	0	**101**	
1145 - 1200	103	0	**103**	**407**

Time	Volume Summary 15min NB	Volume Summary 15min SB	15min Total	60min Total
1200 - 1215	101	0	**101**	
1215 - 1230	81	0	**81**	
1230 - 1245	136	0	**136**	
1245 - 1300	125	0	**125**	**443**
1300 - 1315	113	0	**113**	
1315 - 1330	108	0	**108**	
1330 - 1345	135	0	**135**	
1345 - 1400	133	0	**133**	**489**
1400 - 1415	113	0	**113**	
1415 - 1430	106	0	**106**	
1430 - 1445	125	0	**125**	
1445 - 1500	155	0	**155**	**499**
1500 - 1515	155	0	**155**	
1515 - 1530	151	0	**151**	
1530 - 1545	159	0	**159**	
1545 - 1600	196	0	**196**	**661**
1600 - 1615	207	0	**207**	
1615 - 1630	186	0	**186**	
1630 - 1645	209	0	**209**	
1645 - 1700	213	0	**213**	**815**
1700 - 1715	268	0	**268**	
1715 - 1730	274	0	**274**	
1730 - 1745	186	0	**186**	
1745 - 1800	166	0	**166**	**894**
1800 - 1815	153	0	**153**	
1815 - 1830	129	0	**129**	
1830 - 1845	139	0	**139**	
1845 - 1900	123	0	**123**	**544**
1900 - 1915	71	0	**71**	
1915 - 1930	86	0	**86**	
1930 - 1945	59	0	**59**	
1945 - 2000	73	0	**73**	**289**
2000 - 2015	55	0	**55**	
2015 - 2030	59	0	**59**	
2030 - 2045	47	0	**47**	
2045 - 2100	44	0	**44**	**205**
2100 - 2115	48	0	**48**	
2115 - 2130	55	0	**55**	
2130 - 2145	29	0	**29**	
2145 - 2200	19	0	**19**	**151**
2200 - 2215	27	0	**27**	
2215 - 2230	14	0	**14**	
2230 - 2245	9	0	**9**	
2245 - 2300	25	0	**25**	**75**
2300 - 2315	10	0	**10**	
2315 - 2330	10	0	**10**	
2330 - 2345	8	0	**8**	
2345 - 0000	9	0	**9**	**37**

Session Total	9467	0	**9467**
Session Average	98.61	0.00	**98.61**
Session Percentage	100.00	0.00	

Site 75 Lane 1 NB

I-20,
north of Bush River Rd

Date

Thursday, April 25, 2024

Lat/Long

34.034393°, -81.117736°

Weather

Fair
67°F

Click here for Detailed Weather

0000 - 2400 (Weekday 24h Session) (04-25-2024)

Volume Summary 15min

TIME	Volume Summary 15min NB	Volume Summary 15min SB	15min Total	60min Total
0000 - 0015	5	0	**5**	
0015 - 0030	6	0	**6**	
0030 - 0045	0	0	**0**	
0045 - 0100	2	0	**2**	**13**
0100 - 0115	2	0	**2**	
0115 - 0130	3	0	**3**	
0130 - 0145	3	0	**3**	
0145 - 0200	3	0	**3**	**11**
0200 - 0215	2	0	**2**	
0215 - 0230	1	0	**1**	
0230 - 0245	2	0	**2**	
0245 - 0300	3	0	**3**	**8**
0300 - 0315	5	0	**5**	
0315 - 0330	4	0	**4**	
0330 - 0345	6	0	**6**	
0345 - 0400	8	0	**8**	**23**
0400 - 0415	8	0	**8**	
0415 - 0430	8	0	**8**	
0430 - 0445	11	0	**11**	
0445 - 0500	13	0	**13**	**40**
0500 - 0515	21	0	**21**	
0515 - 0530	30	0	**30**	
0530 - 0545	50	0	**50**	
0545 - 0600	49	0	**49**	**150**
0600 - 0615	77	0	**77**	
0615 - 0630	109	0	**109**	
0630 - 0645	184	0	**184**	
0645 - 0700	229	0	**229**	**599**
0700 - 0715	240	0	**240**	
0715 - 0730	318	0	**318**	
0730 - 0745	340	0	**340**	
0745 - 0800	326	0	**326**	**1224**
0800 - 0815	322	0	**322**	
0815 - 0830	276	0	**276**	
0830 - 0845	257	0	**257**	
0845 - 0900	191	0	**191**	**1046**
0900 - 0915	166	0	**166**	
0915 - 0930	139	0	**139**	
0930 - 0945	136	0	**136**	
0945 - 1000	130	0	**130**	**571**
1000 - 1015	120	0	**120**	
1015 - 1030	119	0	**119**	
1030 - 1045	102	0	**102**	
1045 - 1100	116	0	**116**	**457**
1100 - 1115	90	0	**90**	
1115 - 1130	175	0	**175**	
1130 - 1145	130	0	**130**	
1145 - 1200	99	0	**99**	**494**

Time	Volume Summary 15min NB	Volume Summary 15min SB	15min Total	60min Total
1200 - 1215	114	0	**114**	
1215 - 1230	122	0	**122**	
1230 - 1245	109	0	**109**	
1245 - 1300	114	0	**114**	**459**
1300 - 1315	130	0	**130**	
1315 - 1330	129	0	**129**	
1330 - 1345	137	0	**137**	
1345 - 1400	147	0	**147**	**543**
1400 - 1415	130	0	**130**	
1415 - 1430	148	0	**148**	
1430 - 1445	144	0	**144**	
1445 - 1500	123	0	**123**	**545**
1500 - 1515	163	0	**163**	
1515 - 1530	186	0	**186**	
1530 - 1545	178	0	**178**	
1545 - 1600	210	0	**210**	**737**
1600 - 1615	199	0	**199**	
1615 - 1630	235	0	**235**	
1630 - 1645	239	0	**239**	
1645 - 1700	249	0	**249**	**922**
1700 - 1715	274	0	**274**	
1715 - 1730	307	0	**307**	
1730 - 1745	245	0	**245**	
1745 - 1800	179	0	**179**	**1005**
1800 - 1815	142	0	**142**	
1815 - 1830	122	0	**122**	
1830 - 1845	131	0	**131**	
1845 - 1900	122	0	**122**	**517**
1900 - 1915	93	0	**93**	
1915 - 1930	120	0	**120**	
1930 - 1945	87	0	**87**	
1945 - 2000	102	0	**102**	**402**
2000 - 2015	68	0	**68**	
2015 - 2030	75	0	**75**	
2030 - 2045	53	0	**53**	
2045 - 2100	51	0	**51**	**247**
2100 - 2115	47	0	**47**	
2115 - 2130	45	0	**45**	
2130 - 2145	39	0	**39**	
2145 - 2200	34	0	**34**	**165**
2200 - 2215	38	0	**38**	
2215 - 2230	17	0	**17**	
2230 - 2245	22	0	**22**	
2245 - 2300	15	0	**15**	**92**
2300 - 2315	14	0	**14**	
2315 - 2330	21	0	**21**	
2330 - 2345	12	0	**12**	
2345 - 0000	12	0	**12**	**59**

Session Total	10329	0	**10329**
Session Average	107.59	0.00	**107.59**
Session Percentage	100.00	0.00	

Site 75 Lane 1 NB

I-20,
north of Bush River Rd

Date

Friday, April 26, 2024

Lat/Long

34.034393°, -81.117736°

Weather

Cloudy
69°F

Click here for Detailed Weather

0000 - 2400 (Weekday 24h Session) (04-26-2024)

Volume Summary 15min

TIME	Volume Summary 15min NB	Volume Summary 15min SB	15min Total	60min Total
0000 - 0015	3	0	**3**	
0015 - 0030	4	0	**4**	
0030 - 0045	9	0	**9**	
0045 - 0100	1	0	**1**	**17**
0100 - 0115	2	0	**2**	
0115 - 0130	7	0	**7**	
0130 - 0145	6	0	**6**	
0145 - 0200	3	0	**3**	**18**
0200 - 0215	1	0	**1**	
0215 - 0230	5	0	**5**	
0230 - 0245	7	0	**7**	
0245 - 0300	2	0	**2**	**15**
0300 - 0315	4	0	**4**	
0315 - 0330	4	0	**4**	
0330 - 0345	8	0	**8**	
0345 - 0400	2	0	**2**	**18**
0400 - 0415	5	0	**5**	
0415 - 0430	8	0	**8**	
0430 - 0445	11	0	**11**	
0445 - 0500	17	0	**17**	**41**
0500 - 0515	19	0	**19**	
0515 - 0530	33	0	**33**	
0530 - 0545	39	0	**39**	
0545 - 0600	51	0	**51**	**142**
0600 - 0615	54	0	**54**	
0615 - 0630	94	0	**94**	
0630 - 0645	153	0	**153**	
0645 - 0700	164	0	**164**	**465**
0700 - 0715	210	0	**210**	
0715 - 0730	272	0	**272**	
0730 - 0745	286	0	**286**	
0745 - 0800	297	0	**297**	**1065**
0800 - 0815	253	0	**253**	
0815 - 0830	208	0	**208**	
0830 - 0845	211	0	**211**	
0845 - 0900	182	0	**182**	**854**
0900 - 0915	145	0	**145**	
0915 - 0930	148	0	**148**	
0930 - 0945	156	0	**156**	
0945 - 1000	126	0	**126**	**575**
1000 - 1015	129	0	**129**	
1015 - 1030	143	0	**143**	
1030 - 1045	127	0	**127**	
1045 - 1100	116	0	**116**	**515**
1100 - 1115	146	0	**146**	
1115 - 1130	141	0	**141**	
1130 - 1145	137	0	**137**	
1145 - 1200	180	0	**180**	**604**

Time	Volume Summary 15min NB	Volume Summary 15min SB	15min Total	60min Total
1200 - 1215	152	0	**152**	
1215 - 1230	132	0	**132**	
1230 - 1245	169	0	**169**	
1245 - 1300	178	0	**178**	**631**
1300 - 1315	166	0	**166**	
1315 - 1330	205	0	**205**	
1330 - 1345	189	0	**189**	
1345 - 1400	196	0	**196**	**756**
1400 - 1415	183	0	**183**	
1415 - 1430	184	0	**184**	
1430 - 1445	173	0	**173**	
1445 - 1500	173	0	**173**	**713**
1500 - 1515	183	0	**183**	
1515 - 1530	248	0	**248**	
1530 - 1545	310	0	**310**	
1545 - 1600	281	0	**281**	**1022**
1600 - 1615	285	0	**285**	
1615 - 1630	250	0	**250**	
1630 - 1645	284	0	**284**	
1645 - 1700	276	0	**276**	**1095**
1700 - 1715	280	0	**280**	
1715 - 1730	269	0	**269**	
1730 - 1745	182	0	**182**	
1745 - 1800	192	0	**192**	**923**
1800 - 1815	198	0	**198**	
1815 - 1830	172	0	**172**	
1830 - 1845	164	0	**164**	
1845 - 1900	130	0	**130**	**664**
1900 - 1915	116	0	**116**	
1915 - 1930	123	0	**123**	
1930 - 1945	101	0	**101**	
1945 - 2000	118	0	**118**	**458**
2000 - 2015	88	0	**88**	
2015 - 2030	73	0	**73**	
2030 - 2045	89	0	**89**	
2045 - 2100	79	0	**79**	**329**
2100 - 2115	58	0	**58**	
2115 - 2130	59	0	**59**	
2130 - 2145	32	0	**32**	
2145 - 2200	47	0	**47**	**196**
2200 - 2215	34	0	**34**	
2215 - 2230	36	0	**36**	
2230 - 2245	35	0	**35**	
2245 - 2300	26	0	**26**	**131**
2300 - 2315	25	0	**25**	
2315 - 2330	22	0	**22**	
2330 - 2345	24	0	**24**	
2345 - 0000	15	0	**15**	**86**

Session Total	11333	0	**11333**
Session Average	118.05	0.00	**118.05**
Session Percentage	100.00	0.00	

Site 75 Lane 1 NB

I-20,
north of Bush River Rd

Date

Saturday, April 27, 2024

Lat/Long

34.034393°, -81.117736°

Weather

Mostly Cloudy
69°F

Click here for Detailed Weather

0000 - 2400 (Saturday 24h Session) (04-27-2024)

Volume Summary 15min

TIME	Volume Summary 15min NB	SB	15min Total	60min Total
0000 - 0015	19	0	**19**	
0015 - 0030	10	0	**10**	
0030 - 0045	7	0	**7**	
0045 - 0100	8	0	**8**	**44**
0100 - 0115	6	0	**6**	
0115 - 0130	5	0	**5**	
0130 - 0145	3	0	**3**	
0145 - 0200	5	0	**5**	**19**
0200 - 0215	7	0	**7**	
0215 - 0230	3	0	**3**	
0230 - 0245	2	0	**2**	
0245 - 0300	12	0	**12**	**24**
0300 - 0315	2	0	**2**	
0315 - 0330	3	0	**3**	
0330 - 0345	3	0	**3**	
0345 - 0400	6	0	**6**	**14**
0400 - 0415	3	0	**3**	
0415 - 0430	7	0	**7**	
0430 - 0445	3	0	**3**	
0445 - 0500	8	0	**8**	**21**
0500 - 0515	8	0	**8**	
0515 - 0530	5	0	**5**	
0530 - 0545	9	0	**9**	
0545 - 0600	15	0	**15**	**37**
0600 - 0615	17	0	**17**	
0615 - 0630	31	0	**31**	
0630 - 0645	38	0	**38**	
0645 - 0700	52	0	**52**	**138**
0700 - 0715	40	0	**40**	
0715 - 0730	75	0	**75**	
0730 - 0745	77	0	**77**	
0745 - 0800	96	0	**96**	**288**
0800 - 0815	76	0	**76**	
0815 - 0830	101	0	**101**	
0830 - 0845	95	0	**95**	
0845 - 0900	89	0	**89**	**361**
0900 - 0915	78	0	**78**	
0915 - 0930	112	0	**112**	
0930 - 0945	112	0	**112**	
0945 - 1000	127	0	**127**	**429**
1000 - 1015	95	0	**95**	
1015 - 1030	133	0	**133**	
1030 - 1045	150	0	**150**	
1045 - 1100	129	0	**129**	**507**
1100 - 1115	118	0	**118**	
1115 - 1130	147	0	**147**	
1130 - 1145	130	0	**130**	
1145 - 1200	146	0	**146**	**541**

Time	Volume Summary 15min NB	SB	15min Total	60min Total
1200 - 1215	133	0	**133**	
1215 - 1230	153	0	**153**	
1230 - 1245	163	0	**163**	
1245 - 1300	150	0	**150**	**599**
1300 - 1315	161	0	**161**	
1315 - 1330	164	0	**164**	
1330 - 1345	153	0	**153**	
1345 - 1400	143	0	**143**	**621**
1400 - 1415	148	0	**148**	
1415 - 1430	147	0	**147**	
1430 - 1445	108	0	**108**	
1445 - 1500	131	0	**131**	**534**
1500 - 1515	151	0	**151**	
1515 - 1530	127	0	**127**	
1530 - 1545	151	0	**151**	
1545 - 1600	133	0	**133**	**562**
1600 - 1615	116	0	**116**	
1615 - 1630	140	0	**140**	
1630 - 1645	127	0	**127**	
1645 - 1700	114	0	**114**	**497**
1700 - 1715	109	0	**109**	
1715 - 1730	127	0	**127**	
1730 - 1745	105	0	**105**	
1745 - 1800	93	0	**93**	**434**
1800 - 1815	81	0	**81**	
1815 - 1830	99	0	**99**	
1830 - 1845	109	0	**109**	
1845 - 1900	84	0	**84**	**373**
1900 - 1915	93	0	**93**	
1915 - 1930	87	0	**87**	
1930 - 1945	81	0	**81**	
1945 - 2000	91	0	**91**	**352**
2000 - 2015	82	0	**82**	
2015 - 2030	67	0	**67**	
2030 - 2045	61	0	**61**	
2045 - 2100	50	0	**50**	**260**
2100 - 2115	54	0	**54**	
2115 - 2130	49	0	**49**	
2130 - 2145	34	0	**34**	
2145 - 2200	21	0	**21**	**158**
2200 - 2215	28	0	**28**	
2215 - 2230	19	0	**19**	
2230 - 2245	22	0	**22**	
2245 - 2300	19	0	**19**	**88**
2300 - 2315	18	0	**18**	
2315 - 2330	18	0	**18**	
2330 - 2345	20	0	**20**	
2345 - 0000	15	0	**15**	**71**

Session Total	6972	0	**6972**
Session Average	72.63	0.00	**72.63**
Session Percentage	100.00	0.00	

Bi-Directional Class Count || NB EB 60min

Columbia, SC

Marr Traffic DATA COLLECTION

www.marrtraffic.com

Site 75 Lane 1 NB
I-20,
north of Bush River Rd

Date
Sunday, April 21, 2024

Lat/Long
34.034393°, -81.117736°

Weather
Cloudy
66°F

Click here for Detailed Weather

0000 - 2400 (Sunday 24h Session) (04-21-2024)
NB EB 60min

	Northbound (Movement 75 Lane 1 NB.1)													
TIME	1	2	3	4	5	6	7	8	9	10	11	12	13	**Total**
0000 - 0100	0	41	7	0	0	0	0	1	0	0	0	0	0	**49**
0100 - 0200	0	29	4	0	0	0	0	0	0	0	0	0	0	**33**
0200 - 0300	0	5	0	0	0	0	0	0	0	0	0	0	0	**5**
0300 - 0400	0	12	1	0	0	0	0	0	0	0	0	0	0	**13**
0400 - 0500	0	13	0	0	0	0	0	0	0	0	0	0	0	**13**
0500 - 0600	0	22	1	0	0	0	0	0	0	0	0	0	0	**23**
0600 - 0700	0	45	10	0	1	0	0	0	0	0	0	0	0	**56**
0700 - 0800	1	106	23	0	3	0	0	0	0	0	0	0	0	**133**
0800 - 0900	0	151	27	0	0	0	0	0	0	0	0	0	0	**178**
0900 - 1000	3	178	35	0	2	0	0	0	0	0	0	0	0	**218**
1000 - 1100	35	296	53	1	2	0	0	0	0	0	0	0	0	**387**
1100 - 1200	14	329	67	0	2	1	0	1	0	1	0	0	0	**415**
1200 - 1300	0	396	82	0	2	0	0	4	1	0	0	0	0	**485**
1300 - 1400	0	402	87	0	2	0	0	1	0	0	0	0	0	**492**
1400 - 1500	1	453	112	1	3	0	0	1	1	0	0	0	0	**572**
1500 - 1600	1	394	95	0	4	2	0	2	0	0	0	0	0	**498**
1600 - 1700	5	530	124	0	7	0	0	2	0	0	0	0	0	**668**
1700 - 1800	0	434	70	0	0	0	0	3	0	0	0	0	0	**507**
1800 - 1900	0	340	63	0	0	0	0	2	3	0	0	0	0	**408**
1900 - 2000	2	371	75	0	2	0	0	0	1	0	0	0	0	**451**
2000 - 2100	1	273	41	0	0	0	0	1	4	0	0	0	0	**320**
2100 - 2200	0	174	26	0	1	0	0	0	1	0	0	0	0	**202**
2200 - 2300	0	115	14	0	0	0	0	1	0	0	0	0	0	**130**
2300 - 2400	0	65	5	0	0	0	0	0	0	0	0	0	0	**70**
Session Total	63	5174	1022	2	31	3	0	19	11	1	0	0	0	**6326**
Session Average	2.63	215.58	42.58	0.08	1.29	0.13	0.00	0.79	0.46	0.04	0.00	0.00	0.00	**263.58**
Session Percentage	1.00	81.79	16.16	0.03	0.49	0.05	0.00	0.30	0.17	0.02	0.00	0.00	0.00	
AM Peak Hour	0900 - 1000	0900 - 1000	0900 - 1000	-	0700 - 0800	-	-	-	-	-	-	-	-	**0900 - 1000**
AM Peak Volume	3	178	35	0	3	0	0	0	0	0	0	0	0	**218**
Noon Peak Hour	1000 - 1100	1400 - 1500	1400 - 1500	1000 - 1100	1400 - 1500	1100 - 1200	-	1200 - 1300	1200 - 1300	1100 - 1200	-	-	-	**1400 - 1500**
Noon Peak Volume	35	453	112	1	3	1	0	4	1	1	0	0	0	**572**
PM Peak Hour	1600 - 1700	1600 - 1700	1600 - 1700	-	1600 - 1700	1500 - 1600	-	1700 - 1800	1800 - 1900	-	-	-	-	**1600 - 1700**
PM Peak Volume	5	530	124	0	7	2	0	3	3	0	0	0	0	**668**

Site 75 Lane 1 NB

I-20,
north of Bush River Rd

Date

Monday, April 22, 2024

Lat/Long

34.034393°, -81.117736°

Weather

Mostly Cloudy
57°F

Click here for Detailed Weather

0000 - 2400 (Weekday 24h Session) (04-22-2024)

NB EB 60min

	Northbound (Movement 75 Lane 1 NB.1)													
TIME	1	2	3	4	5	6	7	8	9	10	11	12	13	**Total**
0000 - 0100	0	42	5	0	0	0	0	0	0	0	0	0	0	**47**
0100 - 0200	0	24	4	0	1	0	0	0	0	0	0	0	0	**29**
0200 - 0300	0	24	0	0	0	0	0	0	1	0	0	0	0	**25**
0300 - 0400	0	42	3	0	1	0	0	0	0	0	0	0	0	**46**
0400 - 0500	0	50	15	0	0	1	0	0	0	0	0	0	0	**66**
0500 - 0600	0	132	17	0	1	1	0	0	0	0	0	0	0	**151**
0600 - 0700	0	386	120	0	4	0	0	1	0	0	0	0	0	**511**
0700 - 0800	3	912	254	0	8	0	0	1	1	0	0	0	0	**1179**
0800 - 0900	1	710	236	0	9	0	0	3	5	0	0	0	0	**964**
0900 - 1000	0	365	145	1	6	0	0	1	4	0	0	0	0	**522**
1000 - 1100	1	293	93	0	4	0	0	2	0	1	0	0	0	**394**
1100 - 1200	4	262	95	0	5	1	0	3	3	0	0	0	0	**373**
1200 - 1300	0	270	111	0	1	0	0	2	1	0	0	0	0	**385**
1300 - 1400	1	327	104	0	9	0	0	1	0	0	0	0	0	**442**
1400 - 1500	3	397	127	1	11	0	0	4	9	0	0	0	0	**552**
1500 - 1600	1	484	145	1	14	1	0	3	3	1	0	0	0	**653**
1600 - 1700	1	683	172	2	9	0	0	0	3	0	0	0	0	**870**
1700 - 1800	0	713	223	0	10	3	0	1	3	0	0	0	0	**953**
1800 - 1900	0	357	70	0	1	0	0	0	5	0	0	0	0	**433**
1900 - 2000	0	321	69	0	2	0	0	2	4	0	0	0	0	**398**
2000 - 2100	0	200	33	0	3	0	0	2	5	0	0	0	0	**243**
2100 - 2200	0	149	15	0	1	0	0	0	4	0	0	0	0	**169**
2200 - 2300	0	106	7	0	0	0	0	0	1	0	0	0	0	**114**
2300 - 2400	0	56	9	0	0	0	0	0	1	0	0	0	0	**66**

Session Total	15	7305	2072	5	100	7	0	26	53	2	0	0	0	**9585**
Session Average	0.63	304.38	86.33	0.21	4.17	0.29	0.00	1.08	2.21	0.08	0.00	0.00	0.00	**399.38**
Session Percentage	0.16	76.21	21.62	0.05	1.04	0.07	0.00	0.27	0.55	0.02	0.00	0.00	0.00	

AM Peak Hour	0700 - 0800	0700 - 0800	0700 - 0800	0900 - 1000	0800 - 0900	0500 - 0600	-	0800 - 0900	0800 - 0900	-	-	-	-	**0700 - 0800**
AM Peak Volume	3	912	254	1	9	1	0	3	5	0	0	0	0	**1179**

Noon Peak Hour	1100 - 1200	1400 - 1500	1400 - 1500	1400 - 1500	1400 - 1500	1100 - 1200	-	1400 - 1500	1400 - 1500	1000 - 1100	-	-	-	**1400 - 1500**
Noon Peak Volume	4	397	127	1	11	1	0	4	9	1	0	0	0	**552**

PM Peak Hour	1500 - 1600	1700 - 1800	1700 - 1800	1600 - 1700	1500 - 1600	1700 - 1800	-	1500 - 1600	1800 - 1900	1500 - 1600	-	-	-	**1700 - 1800**
PM Peak Volume	1	713	223	2	14	3	0	3	5	1	0	0	0	**953**

Site 75 Lane 1 NB
I-20,
north of Bush River Rd

Date
Tuesday, April 23, 2024

Lat/Long
34.034393°, -81.117736°

Weather
Fair
58°F

Click here for Detailed Weather

0000 - 2400 (Weekday 24h Session) (04-23-2024)
NB EB 60min

	Northbound (Movement 75 Lane 1 NB.1)													
TIME	1	2	3	4	5	6	7	8	9	10	11	12	13	**Total**
0000 - 0100	0	28	3	2	0	0	0	0	0	0	0	0	0	**33**
0100 - 0200	0	20	0	0	0	0	0	0	0	0	0	0	0	**20**
0200 - 0300	0	6	0	0	0	0	0	0	0	0	0	0	0	**6**
0300 - 0400	0	11	0	0	0	0	0	0	0	0	0	0	0	**11**
0400 - 0500	0	48	2	0	0	0	0	0	0	0	0	0	0	**50**
0500 - 0600	0	122	24	0	1	0	0	0	0	0	0	0	0	**147**
0600 - 0700	0	443	123	0	5	0	0	3	0	0	0	0	0	**574**
0700 - 0800	2	769	214	0	12	0	0	2	1	0	0	0	0	**1000**
0800 - 0900	2	782	252	0	9	0	0	6	2	0	0	0	0	**1053**
0900 - 1000	1	327	133	0	6	1	0	0	6	1	0	0	0	**475**
1000 - 1100	4	280	108	0	7	2	0	3	0	0	0	0	0	**404**
1100 - 1200	3	261	83	0	8	0	0	0	2	0	0	0	0	**357**
1200 - 1300	1	312	105	1	10	0	0	1	1	0	0	0	0	**431**
1300 - 1400	0	317	96	1	11	0	0	0	4	0	0	0	0	**429**
1400 - 1500	0	389	135	1	10	0	0	2	3	0	0	0	0	**540**
1500 - 1600	1	452	139	0	9	2	0	2	5	0	0	0	0	**610**
1600 - 1700	1	669	198	1	11	2	0	2	4	1	0	0	0	**889**
1700 - 1800	1	683	194	2	3	0	0	0	3	0	0	0	0	**886**
1800 - 1900	0	314	96	0	2	0	0	2	1	0	0	0	0	**415**
1900 - 2000	0	238	61	0	3	0	0	1	3	0	0	0	0	**306**
2000 - 2100	0	177	20	0	1	0	0	0	0	0	0	0	0	**198**
2100 - 2200	0	124	20	1	0	0	0	0	2	0	0	0	0	**147**
2200 - 2300	0	18	4	0	1	0	0	0	2	0	0	0	0	**25**
2300 - 2400	0	10	0	0	0	0	0	0	0	0	0	0	0	**10**

Session Total	16	6800	2010	9	109	7	0	24	39	2	0	0	0	**9016**
Session Average	0.67	283.33	83.75	0.38	4.54	0.29	0.00	1.00	1.63	0.08	0.00	0.00	0.00	**375.67**
Session Percentage	0.18	75.42	22.29	0.10	1.21	0.08	0.00	0.27	0.43	0.02	0.00	0.00	0.00	

AM Peak Hour	0700 - 0800	0800 - 0900	0800 - 0900	-	0700 - 0800	0900 - 1000	-	0800 - 0900	0900 - 1000	0900 - 1000	-	-	-	**0800 - 0900**
AM Peak Hour Volume	2	782	252	0	12	1	0	6	6	1	0	0	0	**1053**

Noon Peak Hour	1000 - 1100	1400 - 1500	1400 - 1500	1200 - 1300	1300 - 1400	1000 - 1100	-	1000 - 1100	1300 - 1400	-	-	-	-	**1400 - 1500**
Noon Peak Hour Volume	4	389	135	1	11	2	0	3	4	0	0	0	0	**540**

PM Peak Hour	1500 - 1600	1700 - 1800	1600 - 1700	1700 - 1800	1600 - 1700	1500 - 1600	-	1500 - 1600	1500 - 1600	1600 - 1700	-	-	-	**1600 - 1700**
PM Peak Hour Volume	1	683	198	2	11	2	0	2	5	1	0	0	0	**889**

Site 75 Lane 1 NB

I-20,
north of Bush River Rd

Date

Wednesday, April 24, 2024

Weather

Fair
66°F

Lat/Long

34.034393°, -81.117736°

Click here for Detailed Weather

0000 - 2400 (Weekday 24h Session) (04-24-2024)

NB EB 60min

	Northbound (Movement 75 Lane 1 NB.1)													
TIME	1	2	3	4	5	6	7	8	9	10	11	12	13	**Total**
0000 - 0100	0	8	1	0	0	0	0	0	0	0	0	0	0	**9**
0100 - 0200	0	3	1	0	1	0	0	0	0	0	0	0	0	**5**
0200 - 0300	0	9	1	0	0	0	0	1	0	0	0	0	0	**11**
0300 - 0400	2	12	1	0	0	0	0	0	0	0	0	0	0	**15**
0400 - 0500	0	24	8	0	0	0	0	0	2	0	0	0	0	**34**
0500 - 0600	1	139	11	0	0	0	0	0	0	0	0	0	0	**151**
0600 - 0700	1	400	146	0	8	0	0	1	1	0	0	0	0	**557**
0700 - 0800	5	934	312	0	15	0	0	4	4	0	0	0	0	**1274**
0800 - 0900	5	740	250	0	9	0	0	4	5	0	0	0	0	**1013**
0900 - 1000	0	351	127	0	4	0	0	0	3	0	0	0	0	**485**
1000 - 1100	0	296	102	0	4	1	0	1	0	0	0	0	0	**404**
1100 - 1200	1	287	100	0	13	0	0	3	3	0	0	0	0	**407**
1200 - 1300	1	312	112	0	9	0	0	4	4	1	0	0	0	**443**
1300 - 1400	0	343	133	0	10	1	0	1	1	0	0	0	0	**489**
1400 - 1500	2	381	103	0	10	0	0	2	1	0	0	0	0	**499**
1500 - 1600	3	486	159	1	11	0	0	0	1	0	0	0	0	**661**
1600 - 1700	1	627	172	0	11	0	0	2	2	0	0	0	0	**815**
1700 - 1800	1	705	167	0	7	1	0	4	9	0	0	0	0	**894**
1800 - 1900	2	415	113	0	5	0	0	2	7	0	0	0	0	**544**
1900 - 2000	2	223	55	0	3	1	0	3	1	1	0	0	0	**289**
2000 - 2100	1	169	32	1	0	0	0	0	1	0	1	0	0	**205**
2100 - 2200	1	129	15	0	2	0	0	0	4	0	0	0	0	**151**
2200 - 2300	0	60	14	0	1	0	0	0	0	0	0	0	0	**75**
2300 - 2400	0	30	5	0	1	0	0	0	1	0	0	0	0	**37**
Session Total	29	7083	2140	2	124	4	0	32	50	2	1	0	0	**9467**
Session Average	1.21	295.13	89.17	0.08	5.17	0.17	0.00	1.33	2.08	0.08	0.04	0.00	0.00	**394.46**
Session Percentage	0.31	74.82	22.60	0.02	1.31	0.04	0.00	0.34	0.53	0.02	0.01	0.00	0.00	
AM Peak Hour	0700 - 0800	0700 - 0800	0700 - 0800	-	0700 - 0800	-	-	0700 - 0800	0800 - 0900	-	-	-	-	**0700 - 0800**
AM Peak Hour Volume	5	934	312	0	15	0	0	4	5	0	0	0	0	**1274**
Noon Peak Hour	1400 - 1500	1400 - 1500	1300 - 1400	-	1100 - 1200	1000 - 1100	-	1200 - 1300	1200 - 1300	1200 - 1300	-	-	-	**1400 - 1500**
Noon Peak Hour Volume	2	381	133	0	13	1	0	4	4	1	0	0	0	**499**
PM Peak Hour	1500 - 1600	1700 - 1800	1600 - 1700	1500 - 1600	1500 - 1600	1700 - 1800	-	1700 - 1800	1700 - 1800	1900 - 2000	-	-	-	**1700 - 1800**
PM Peak Hour Volume	3	705	172	1	11	1	0	4	9	1	0	0	0	**894**

Site 75 Lane 1 NB

I-20,
north of Bush River Rd

Date

Thursday, April 25, 2024

Lat/Long

34.034393°, -81.117736°

Weather

Fair
67°F

Click here for Detailed Weather

0000 - 2400 (Weekday 24h Session) (04-25-2024)

NB EB 60min

	Northbound (Movement 75 Lane 1 NB.1)													
TIME	1	2	3	4	5	6	7	8	9	10	11	12	13	**Total**
0000 - 0100	0	13	0	0	0	0	0	0	0	0	0	0	0	**13**
0100 - 0200	0	9	1	1	0	0	0	0	0	0	0	0	0	**11**
0200 - 0300	0	8	0	0	0	0	0	0	0	0	0	0	0	**8**
0300 - 0400	0	18	3	0	0	0	0	0	2	0	0	0	0	**23**
0400 - 0500	0	32	8	0	0	0	0	0	0	0	0	0	0	**40**
0500 - 0600	0	125	21	0	2	0	0	0	2	0	0	0	0	**150**
0600 - 0700	1	442	149	0	5	0	0	0	2	0	0	0	0	**599**
0700 - 0800	4	916	286	0	14	0	0	1	3	0	0	0	0	**1224**
0800 - 0900	4	762	257	1	15	0	0	4	3	0	0	0	0	**1046**
0900 - 1000	0	394	159	0	7	0	0	6	4	1	0	0	0	**571**
1000 - 1100	0	311	133	0	6	1	0	4	2	0	0	0	0	**457**
1100 - 1200	0	355	117	0	13	1	0	0	8	0	0	0	0	**494**
1200 - 1300	5	322	119	0	8	0	0	3	1	1	0	0	0	**459**
1300 - 1400	2	381	142	0	8	1	0	4	5	0	0	0	0	**543**
1400 - 1500	4	401	121	0	15	0	0	2	2	0	0	0	0	**545**
1500 - 1600	3	546	174	1	10	0	0	1	2	0	0	0	0	**737**
1600 - 1700	3	700	197	1	15	0	0	2	4	0	0	0	0	**922**
1700 - 1800	5	772	205	1	12	0	0	2	8	0	0	0	0	**1005**
1800 - 1900	2	373	130	0	6	0	0	2	4	0	0	0	0	**517**
1900 - 2000	2	301	92	0	5	0	0	1	1	0	0	0	0	**402**
2000 - 2100	1	212	30	0	2	0	0	0	2	0	0	0	0	**247**
2100 - 2200	0	135	25	0	0	0	0	0	5	0	0	0	0	**165**
2200 - 2300	1	81	7	0	2	0	0	0	1	0	0	0	0	**92**
2300 - 2400	0	46	10	0	2	0	0	0	1	0	0	0	0	**59**

Session Total	37	7655	2386	5	147	3	0	32	62	2	0	0	0	**10329**
Session Average	1.54	318.96	99.42	0.21	6.13	0.13	0.00	1.33	2.58	0.08	0.00	0.00	0.00	**430.38**
Session Percentage	0.36	74.11	23.10	0.05	1.42	0.03	0.00	0.31	0.60	0.02	0.00	0.00	0.00	

AM Peak Hour	0700 - 0800	0700 - 0800	0700 - 0800	0800 - 0900	0800 - 0900	-	-	0900 - 1000	0900 - 1000	0900 - 1000	-	-	-	**0700 - 0800**
AM Peak Hour Volume	4	916	286	1	15	0	0	6	4	1	0	0	0	**1224**

Noon Peak Hour	1200 - 1300	1400 - 1500	1300 - 1400	-	1400 - 1500	1000 - 1100	-	1000 - 1100	1100 - 1200	1200 - 1300	-	-	-	**1400 - 1500**
Noon Peak Hour Volume	5	401	142	0	15	1	0	4	8	1	0	0	0	**545**

PM Peak Hour	1700 - 1800	1700 - 1800	1700 - 1800	1500 - 1600	1600 - 1700	-	-	1600 - 1700	1700 - 1800	-	-	-	-	**1700 - 1800**
PM Peak Hour Volume	5	772	205	1	15	0	0	2	8	0	0	0	0	**1005**

Site 75 Lane 1 NB

I-20,
north of Bush River Rd

Date

Friday, April 26, 2024

Lat/Long

34.034393°, -81.117736°

Weather

Cloudy
69°F

Click here for Detailed Weather

0000 - 2400 (Weekday 24h Session) (04-26-2024)

NB EB 60min

	Northbound (Movement 75 Lane 1 NB.1)													
TIME	1	2	3	4	5	6	7	8	9	10	11	12	13	**Total**
0000 - 0100	0	16	1	0	0	0	0	0	0	0	0	0	0	**17**
0100 - 0200	0	17	1	0	0	0	0	0	0	0	0	0	0	**18**
0200 - 0300	0	14	0	0	0	0	0	0	0	0	1	0	0	**15**
0300 - 0400	0	17	1	0	0	0	0	0	0	0	0	0	0	**18**
0400 - 0500	0	35	6	0	0	0	0	0	0	0	0	0	0	**41**
0500 - 0600	0	115	27	0	0	0	0	0	0	0	0	0	0	**142**
0600 - 0700	1	364	95	1	2	1	0	0	1	0	0	0	0	**465**
0700 - 0800	7	806	241	1	8	0	0	1	1	0	0	0	0	**1065**
0800 - 0900	2	624	205	4	10	1	0	5	3	0	0	0	0	**854**
0900 - 1000	1	434	125	1	7	0	0	2	4	1	0	0	0	**575**
1000 - 1100	2	367	136	0	6	1	0	1	2	0	0	0	0	**515**
1100 - 1200	8	468	113	0	9	0	0	1	4	1	0	0	0	**604**
1200 - 1300	11	466	139	0	8	0	0	1	6	0	0	0	0	**631**
1300 - 1400	10	577	153	0	9	0	0	1	6	0	0	0	0	**756**
1400 - 1500	4	542	151	0	11	0	0	0	5	0	0	0	0	**713**
1500 - 1600	29	766	204	1	13	2	0	3	4	0	0	0	0	**1022**
1600 - 1700	5	871	203	0	11	1	0	2	2	0	0	0	0	**1095**
1700 - 1800	14	739	164	1	2	1	0	2	0	0	0	0	0	**923**
1800 - 1900	9	539	106	0	5	1	0	3	1	0	0	0	0	**664**
1900 - 2000	14	365	72	0	3	0	1	3	0	0	0	0	0	**458**
2000 - 2100	5	270	52	0	1	0	0	0	0	0	1	0	0	**329**
2100 - 2200	0	160	34	0	1	0	0	0	0	0	1	0	0	**196**
2200 - 2300	9	95	27	0	0	0	0	0	0	0	0	0	0	**131**
2300 - 2400	2	63	20	0	1	0	0	0	0	0	0	0	0	**86**

Session Total	133	8730	2276	9	107	8	1	25	39	2	3	0	0	**11333**
Session Average	5.54	363.75	94.83	0.38	4.46	0.33	0.04	1.04	1.63	0.08	0.13	0.00	0.00	**472.21**
Session Percentage	1.17	77.03	20.08	0.08	0.94	0.07	0.01	0.22	0.34	0.02	0.03	0.00	0.00	

AM Peak Hour	0700 - 0800	0700 - 0800	0700 - 0800	0800 - 0900	0800 - 0900	0600 - 0700	-	0800 - 0900	0900 - 1000	0900 - 1000	-	-	-	**0700 - 0800**
AM Peak Hour Volume	7	806	241	4	10	1	0	5	4	1	0	0	0	**1065**

Noon Peak Hour	1200 - 1300	1300 - 1400	1300 - 1400	-	1400 - 1500	1000 - 1100	-	1000 - 1100	1200 - 1300	1100 - 1200	-	-	-	**1300 - 1400**
Noon Peak Hour Volume	11	577	153	0	11	1	0	1	6	1	0	0	0	**756**

PM Peak Hour	1500 - 1600	1600 - 1700	1500 - 1600	1500 - 1600	1500 - 1600	1500 - 1600	1900 - 2000	1500 - 1600	1500 - 1600	-	-	-	-	**1600 - 1700**
PM Peak Hour Volume	29	871	204	1	13	2	1	3	4	0	0	0	0	**1095**

Site 75 Lane 1 NB

I-20,
north of Bush River Rd

Date

Saturday, April 27, 2024

Lat/Long

34.034393°, -81.117736°

Weather

Mostly Cloudy
69°F

Click here for Detailed Weather

0000 - 2400 (Saturday 24h Session) (04-27-2024)

NB EB 60min

	Northbound (Movement 75 Lane 1 NB.1)													
TIME	1	2	3	4	5	6	7	8	9	10	11	12	13	**Total**
0000 - 0100	1	39	3	0	0	0	0	0	1	0	0	0	0	**44**
0100 - 0200	0	18	1	0	0	0	0	0	0	0	0	0	0	**19**
0200 - 0300	8	15	1	0	0	0	0	0	0	0	0	0	0	**24**
0300 - 0400	0	14	0	0	0	0	0	0	0	0	0	0	0	**14**
0400 - 0500	1	19	1	0	0	0	0	0	0	0	0	0	0	**21**
0500 - 0600	2	30	4	0	1	0	0	0	0	0	0	0	0	**37**
0600 - 0700	1	106	28	0	1	0	0	0	2	0	0	0	0	**138**
0700 - 0800	3	216	66	0	1	0	0	1	1	0	0	0	0	**288**
0800 - 0900	3	283	69	0	3	1	0	0	2	0	0	0	0	**361**
0900 - 1000	1	338	88	0	1	0	0	1	0	0	0	0	0	**429**
1000 - 1100	24	394	85	0	3	0	0	0	1	0	0	0	0	**507**
1100 - 1200	22	418	94	0	4	0	0	1	2	0	0	0	0	**541**
1200 - 1300	9	473	108	0	5	1	0	1	2	0	0	0	0	**599**
1300 - 1400	32	472	112	1	2	0	0	0	2	0	0	0	0	**621**
1400 - 1500	7	419	99	0	6	0	0	1	2	0	0	0	0	**534**
1500 - 1600	16	446	96	0	1	0	0	3	0	0	0	0	0	**562**
1600 - 1700	11	400	80	0	3	1	0	0	2	0	0	0	0	**497**
1700 - 1800	3	357	68	0	4	0	0	1	1	0	0	0	0	**434**
1800 - 1900	0	312	57	1	2	0	0	1	0	0	0	0	0	**373**
1900 - 2000	3	290	56	0	1	0	0	1	1	0	0	0	0	**352**
2000 - 2100	2	216	40	0	1	0	0	0	1	0	0	0	0	**260**
2100 - 2200	0	136	21	0	1	0	0	0	0	0	0	0	0	**158**
2200 - 2300	0	79	9	0	0	0	0	0	0	0	0	0	0	**88**
2300 - 2400	0	67	4	0	0	0	0	0	0	0	0	0	0	**71**

Session Total	149	5557	1190	2	40	3	0	11	20	0	0	0	0	**6972**
Session Average	6.21	231.54	49.58	0.08	1.67	0.13	0.00	0.46	0.83	0.00	0.00	0.00	0.00	**290.50**
Session Percentage	2.14	79.70	17.07	0.03	0.57	0.04	0.00	0.16	0.29	0.00	0.00	0.00	0.00	

AM Peak Hour	0700 - 0800	0900 - 1000	0900 - 1000	-	0800 - 0900	0800 - 0900	-	0700 - 0800	0600 - 0700	-	-	-	-	**0900 - 1000**
AM Peak Hour Volume	3	338	88	0	3	1	0	1	2	0	0	0	0	**429**

Noon Peak Hour	1300 - 1400	1200 - 1300	1300 - 1400	1300 - 1400	1400 - 1500	1200 - 1300	-	1100 - 1200	1100 - 1200	-	-	-	-	**1300 - 1400**
Noon Peak Hour Volume	32	473	112	1	6	1	0	1	2	0	0	0	0	**621**

PM Peak Hour	1500 - 1600	1500 - 1600	1500 - 1600	1800 - 1900	1700 - 1800	1600 - 1700	-	1500 - 1600	1600 - 1700	-	-	-	-	**1500 - 1600**
PM Peak Hour Volume	16	446	96	1	4	1	0	3	2	0	0	0	0	**562**

Bi-Directional Class Count || Volume Summary 60min

Columbia, SC

Marr Traffic DATA COLLECTION

www.marrtraffic.com

Site 75 Lane 1 NB

I-20,
north of Bush River Rd

Date

Sunday, April 21, 2024

Lat/Long

34.034393°, -81.117736°

Weather

Cloudy
66°F

Click here for Detailed Weather

0000 - 2400 (Sunday 24h Session) (04-21-2024)

Volume Summary 60min

	Volume Summary 60min		
TIME	NB	SB	**Total**
0000 - 0100	49	0	**49**
0100 - 0200	33	0	**33**
0200 - 0300	5	0	**5**
0300 - 0400	13	0	**13**
0400 - 0500	13	0	**13**
0500 - 0600	23	0	**23**
0600 - 0700	56	0	**56**
0700 - 0800	133	0	**133**
0800 - 0900	178	0	**178**
0900 - 1000	218	0	**218**
1000 - 1100	387	0	**387**
1100 - 1200	415	0	**415**

	Volume Summary 60min		
Time	NB	SB	**Total**
1200 - 1300	485	0	**485**
1300 - 1400	492	0	**492**
1400 - 1500	572	0	**572**
1500 - 1600	498	0	**498**
1600 - 1700	668	0	**668**
1700 - 1800	507	0	**507**
1800 - 1900	408	0	**408**
1900 - 2000	451	0	**451**
2000 - 2100	320	0	**320**
2100 - 2200	202	0	**202**
2200 - 2300	130	0	**130**
2300 - 2400	70	0	**70**

Session Total	6326	0	**6326**
Session Average	263.58	0.00	**263.58**
Session Percentage	100.00	0.00	

Site 75 Lane 1 NB

I-20,
north of Bush River Rd

Date

Monday, April 22, 2024

Lat/Long

34.034393°, -81.117736°

Weather

Mostly Cloudy
57°F

Click here for Detailed Weather

0000 - 2400 (Weekday 24h Session) (04-22-2024)

Volume Summary 60min

	Volume Summary 60min		
TIME	NB	SB	**Total**
0000 - 0100	47	0	**47**
0100 - 0200	29	0	**29**
0200 - 0300	25	0	**25**
0300 - 0400	46	0	**46**
0400 - 0500	66	0	**66**
0500 - 0600	151	0	**151**
0600 - 0700	511	0	**511**
0700 - 0800	1179	0	**1179**
0800 - 0900	964	0	**964**
0900 - 1000	522	0	**522**
1000 - 1100	394	0	**394**
1100 - 1200	373	0	**373**

Session Total	9585	0	**9585**
Session Average	399.38	0.00	**399.38**
Session Percentage	100.00	0.00	

	Volume Summary 60min		
Time	NB	SB	**Total**
1200 - 1300	385	0	**385**
1300 - 1400	442	0	**442**
1400 - 1500	552	0	**552**
1500 - 1600	653	0	**653**
1600 - 1700	870	0	**870**
1700 - 1800	953	0	**953**
1800 - 1900	433	0	**433**
1900 - 2000	398	0	**398**
2000 - 2100	243	0	**243**
2100 - 2200	169	0	**169**
2200 - 2300	114	0	**114**
2300 - 2400	66	0	**66**

Site 75 Lane 1 NB

I-20,
north of Bush River Rd

Date

Tuesday, April 23, 2024

Lat/Long

34.034393°, -81.117736°

Weather

Fair
58°F

Click here for Detailed Weather

0000 - 2400 (Weekday 24h Session) (04-23-2024)

Volume Summary 60min

	Volume Summary 60min		
TIME	NB	SB	**Total**
0000 - 0100	33	0	**33**
0100 - 0200	20	0	**20**
0200 - 0300	6	0	**6**
0300 - 0400	11	0	**11**
0400 - 0500	50	0	**50**
0500 - 0600	147	0	**147**
0600 - 0700	574	0	**574**
0700 - 0800	1000	0	**1000**
0800 - 0900	1053	0	**1053**
0900 - 1000	475	0	**475**
1000 - 1100	404	0	**404**
1100 - 1200	357	0	**357**

Session Total	9016	0	**9016**
Session Average	375.67	0.00	**375.67**
Session Percentage	100.00	0.00	

	Volume Summary 60min		
Time	NB	SB	**Total**
1200 - 1300	431	0	**431**
1300 - 1400	429	0	**429**
1400 - 1500	540	0	**540**
1500 - 1600	610	0	**610**
1600 - 1700	889	0	**889**
1700 - 1800	886	0	**886**
1800 - 1900	415	0	**415**
1900 - 2000	306	0	**306**
2000 - 2100	198	0	**198**
2100 - 2200	147	0	**147**
2200 - 2300	25	0	**25**
2300 - 2400	10	0	**10**

Site 75 Lane 1 NB

I-20,
north of Bush River Rd

Date

Wednesday, April 24, 2024

Lat/Long

34.034393°, -81.117736°

Weather

Fair
66°F

Click here for Detailed Weather

0000 - 2400 (Weekday 24h Session) (04-24-2024)

Volume Summary 60min

	Volume Summary 60min		
TIME	NB	SB	**Total**
0000 - 0100	9	0	**9**
0100 - 0200	5	0	**5**
0200 - 0300	11	0	**11**
0300 - 0400	15	0	**15**
0400 - 0500	34	0	**34**
0500 - 0600	151	0	**151**
0600 - 0700	557	0	**557**
0700 - 0800	1274	0	**1274**
0800 - 0900	1013	0	**1013**
0900 - 1000	485	0	**485**
1000 - 1100	404	0	**404**
1100 - 1200	407	0	**407**

Session Total	9467	0	**9467**
Session Average	394.46	0.00	**394.46**
Session Percentage	100.00	0.00	

	Volume Summary 60min		
Time	NB	SB	**Total**
1200 - 1300	443	0	**443**
1300 - 1400	489	0	**489**
1400 - 1500	499	0	**499**
1500 - 1600	661	0	**661**
1600 - 1700	815	0	**815**
1700 - 1800	894	0	**894**
1800 - 1900	544	0	**544**
1900 - 2000	289	0	**289**
2000 - 2100	205	0	**205**
2100 - 2200	151	0	**151**
2200 - 2300	75	0	**75**
2300 - 2400	37	0	**37**

Site 75 Lane 1 NB

I-20,
north of Bush River Rd

Date

Thursday, April 25, 2024

Lat/Long

34.034393°, -81.117736°

Weather

Fair
67°F

Click here for Detailed Weather

0000 - 2400 (Weekday 24h Session) (04-25-2024)

Volume Summary 60min

	Volume Summary 60min		
TIME	NB	SB	**Total**
0000 - 0100	13	0	**13**
0100 - 0200	11	0	**11**
0200 - 0300	8	0	**8**
0300 - 0400	23	0	**23**
0400 - 0500	40	0	**40**
0500 - 0600	150	0	**150**
0600 - 0700	599	0	**599**
0700 - 0800	1224	0	**1224**
0800 - 0900	1046	0	**1046**
0900 - 1000	571	0	**571**
1000 - 1100	457	0	**457**
1100 - 1200	494	0	**494**

Session Total	10329	0	**10329**
Session Average	430.38	0.00	**430.38**
Session Percentage	100.00	0.00	

	Volume Summary 60min		
Time	NB	SB	**Total**
1200 - 1300	459	0	**459**
1300 - 1400	543	0	**543**
1400 - 1500	545	0	**545**
1500 - 1600	737	0	**737**
1600 - 1700	922	0	**922**
1700 - 1800	1005	0	**1005**
1800 - 1900	517	0	**517**
1900 - 2000	402	0	**402**
2000 - 2100	247	0	**247**
2100 - 2200	165	0	**165**
2200 - 2300	92	0	**92**
2300 - 2400	59	0	**59**

Site 75 Lane 1 NB

I-20,
north of Bush River Rd

Date

Friday, April 26, 2024

Lat/Long

34.034393°, -81.117736°

Weather

Cloudy
69°F

Click here for Detailed Weather

0000 - 2400 (Weekday 24h Session) (04-26-2024)

Volume Summary 60min

	Volume Summary 60min		
TIME	NB	SB	**Total**
0000 - 0100	17	0	**17**
0100 - 0200	18	0	**18**
0200 - 0300	15	0	**15**
0300 - 0400	18	0	**18**
0400 - 0500	41	0	**41**
0500 - 0600	142	0	**142**
0600 - 0700	465	0	**465**
0700 - 0800	1065	0	**1065**
0800 - 0900	854	0	**854**
0900 - 1000	575	0	**575**
1000 - 1100	515	0	**515**
1100 - 1200	604	0	**604**
Session Total	11333	0	**11333**
Session Average	472.21	0.00	**472.21**
Session Percentage	100.00	0.00	

	Volume Summary 60min		
Time	NB	SB	**Total**
1200 - 1300	631	0	**631**
1300 - 1400	756	0	**756**
1400 - 1500	713	0	**713**
1500 - 1600	1022	0	**1022**
1600 - 1700	1095	0	**1095**
1700 - 1800	923	0	**923**
1800 - 1900	664	0	**664**
1900 - 2000	458	0	**458**
2000 - 2100	329	0	**329**
2100 - 2200	196	0	**196**
2200 - 2300	131	0	**131**
2300 - 2400	86	0	**86**

Site 75 Lane 1 NB

I-20,
north of Bush River Rd

Date

Saturday, April 27, 2024

Lat/Long

34.034393°, -81.117736°

Weather

Mostly Cloudy
69°F

Click here for Detailed Weather

0000 - 2400 (Saturday 24h Session) (04-27-2024)

Volume Summary 60min

	Volume Summary 60min		
TIME	NB	SB	**Total**
0000 - 0100	44	0	**44**
0100 - 0200	19	0	**19**
0200 - 0300	24	0	**24**
0300 - 0400	14	0	**14**
0400 - 0500	21	0	**21**
0500 - 0600	37	0	**37**
0600 - 0700	138	0	**138**
0700 - 0800	288	0	**288**
0800 - 0900	361	0	**361**
0900 - 1000	429	0	**429**
1000 - 1100	507	0	**507**
1100 - 1200	541	0	**541**

	Volume Summary 60min		
Time	NB	SB	**Total**
1200 - 1300	599	0	**599**
1300 - 1400	621	0	**621**
1400 - 1500	534	0	**534**
1500 - 1600	562	0	**562**
1600 - 1700	497	0	**497**
1700 - 1800	434	0	**434**
1800 - 1900	373	0	**373**
1900 - 2000	352	0	**352**
2000 - 2100	260	0	**260**
2100 - 2200	158	0	**158**
2200 - 2300	88	0	**88**
2300 - 2400	71	0	**71**

Session Total	6972	0	**6972**
Session Average	290.50	0.00	**290.50**
Session Percentage	100.00	0.00	

Bi-Directional Class Count || Graphical Analysis NB EB

Columbia, SC

Marr Traffic DATA COLLECTION

www.marrtraffic.com

Site 75 Lane 1 NB

I-20,
north of Bush River Rd

Lat/Long

34.034393°, -81.117736°

0000 - 2400 (Weekday 24h Session)

Graphical Analysis NB EB

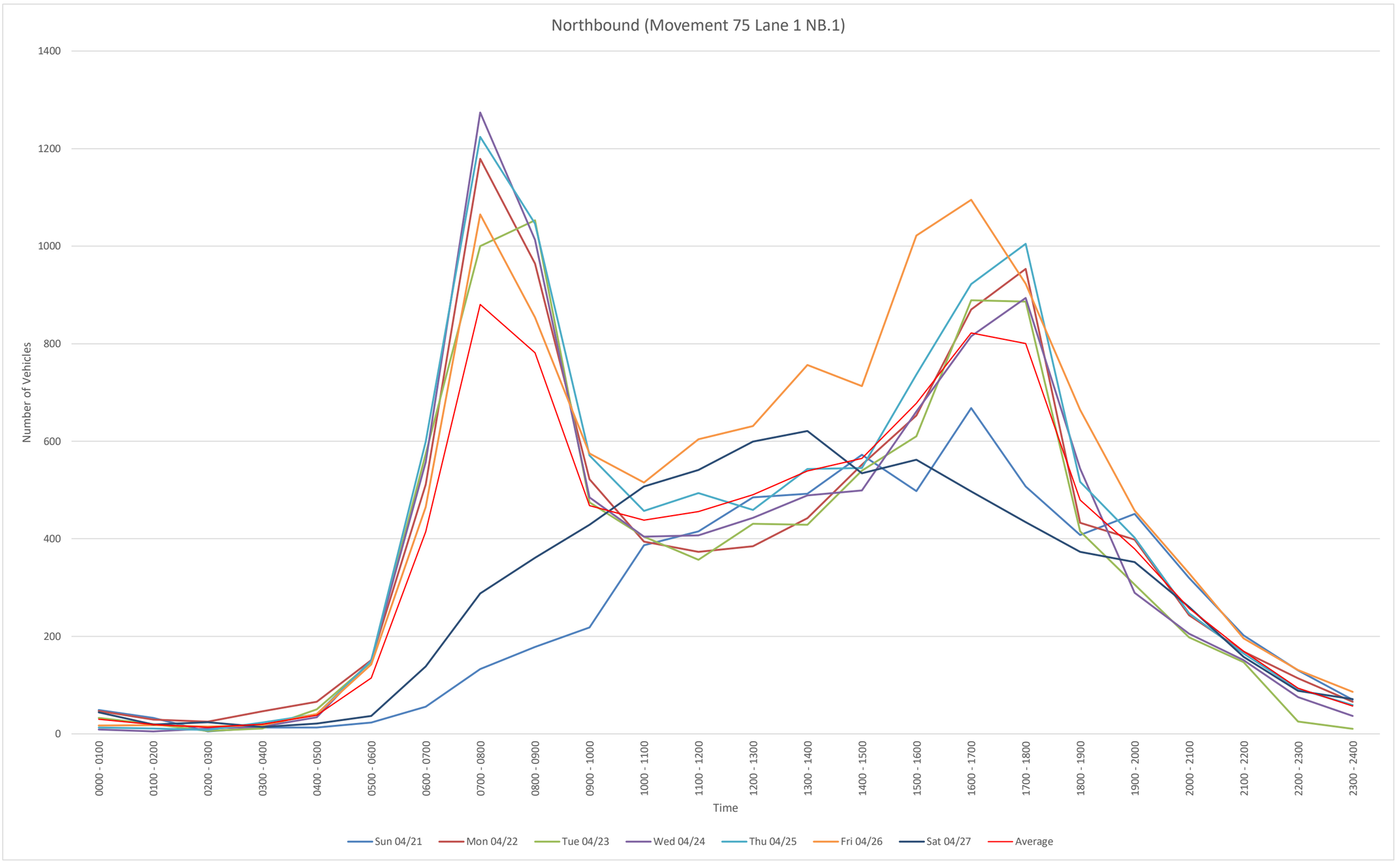

NB
File Name:
Start Date: 4/21/2024
Start Time: 0
Site Code: 75 Lane 1 NB
Station ID: 1
Location 1: I-20, north of Bush River Rd
Location 2:

Date	Time	1	2	3	4	5	6	7	8	9	10	11	12	13
4/21/2024	12:00 AM	0	17	2	0	0	0	0	0	0	0	0	0	0
4/21/2024	12:15 AM	0	9	1	0	0	0	0	0	0	0	0	0	0
4/21/2024	12:30 AM	0	9	3	0	0	0	0	0	0	0	0	0	0
4/21/2024	12:45 AM	0	6	1	0	0	0	0	1	0	0	0	0	0
4/21/2024	1:00 AM	0	3	2	0	0	0	0	0	0	0	0	0	0
4/21/2024	1:15 AM	0	9	0	0	0	0	0	0	0	0	0	0	0
4/21/2024	1:30 AM	0	6	0	0	0	0	0	0	0	0	0	0	0
4/21/2024	1:45 AM	0	11	2	0	0	0	0	0	0	0	0	0	0
4/21/2024	2:00 AM	0	2	0	0	0	0	0	0	0	0	0	0	0
4/21/2024	2:15 AM	0	1	0	0	0	0	0	0	0	0	0	0	0
4/21/2024	2:30 AM	0	2	0	0	0	0	0	0	0	0	0	0	0
4/21/2024	2:45 AM	0	0	0	0	0	0	0	0	0	0	0	0	0
4/21/2024	3:00 AM	0	4	1	0	0	0	0	0	0	0	0	0	0
4/21/2024	3:15 AM	0	3	0	0	0	0	0	0	0	0	0	0	0
4/21/2024	3:30 AM	0	1	0	0	0	0	0	0	0	0	0	0	0
4/21/2024	3:45 AM	0	4	0	0	0	0	0	0	0	0	0	0	0
4/21/2024	4:00 AM	0	2	0	0	0	0	0	0	0	0	0	0	0
4/21/2024	4:15 AM	0	4	0	0	0	0	0	0	0	0	0	0	0
4/21/2024	4:30 AM	0	4	0	0	0	0	0	0	0	0	0	0	0
4/21/2024	4:45 AM	0	3	0	0	0	0	0	0	0	0	0	0	0
4/21/2024	5:00 AM	0	3	0	0	0	0	0	0	0	0	0	0	0
4/21/2024	5:15 AM	0	6	0	0	0	0	0	0	0	0	0	0	0
4/21/2024	5:30 AM	0	9	0	0	0	0	0	0	0	0	0	0	0
4/21/2024	5:45 AM	0	4	1	0	0	0	0	0	0	0	0	0	0
4/21/2024	6:00 AM	0	10	0	0	0	0	0	0	0	0	0	0	0
4/21/2024	6:15 AM	0	9	4	0	0	0	0	0	0	0	0	0	0
4/21/2024	6:30 AM	0	11	3	0	0	0	0	0	0	0	0	0	0
4/21/2024	6:45 AM	0	15	3	0	1	0	0	0	0	0	0	0	0
4/21/2024	7:00 AM	0	14	3	0	2	0	0	0	0	0	0	0	0
4/21/2024	7:15 AM	1	27	4	0	1	0	0	0	0	0	0	0	0
4/21/2024	7:30 AM	0	26	5	0	0	0	0	0	0	0	0	0	0
4/21/2024	7:45 AM	0	39	11	0	0	0	0	0	0	0	0	0	0
4/21/2024	8:00 AM	0	23	9	0	0	0	0	0	0	0	0	0	0
4/21/2024	8:15 AM	0	36	6	0	0	0	0	0	0	0	0	0	0
4/21/2024	8:30 AM	0	41	6	0	0	0	0	0	0	0	0	0	0
4/21/2024	8:45 AM	0	51	6	0	0	0	0	0	0	0	0	0	0
4/21/2024	9:00 AM	3	47	7	0	0	0	0	0	0	0	0	0	0
4/21/2024	9:15 AM	0	43	9	0	2	0	0	0	0	0	0	0	0
4/21/2024	9:30 AM	0	41	10	0	0	0	0	0	0	0	0	0	0
4/21/2024	9:45 AM	0	47	9	0	0	0	0	0	0	0	0	0	0
4/21/2024	10:00 AM	20	67	10	0	0	0	0	0	0	0	0	0	0
4/21/2024	10:15 AM	0	71	7	1	0	0	0	0	0	0	0	0	0
4/21/2024	10:30 AM	1	79	18	0	1	0	0	0	0	0	0	0	0
4/21/2024	10:45 AM	14	79	18	0	1	0	0	0	0	0	0	0	0
4/21/2024	11:00 AM	14	64	14	0	0	0	0	0	0	0	0	0	0
4/21/2024	11:15 AM	0	76	8	0	1	0	0	0	0	0	0	0	0
4/21/2024	11:30 AM	0	99	25	0	0	1	0	0	0	0	0	0	0
4/21/2024	11:45 AM	0	90	20	0	1	0	0	1	0	1	0	0	0
4/21/2024	12:00 PM	0	93	9	0	0	0	0	2	0	0	0	0	0
4/21/2024	12:15 PM	0	92	26	0	1	0	0	1	1	0	0	0	0
4/21/2024	12:30 PM	0	114	26	0	0	0	0	0	0	0	0	0	0
4/21/2024	12:45 PM	0	97	21	0	1	0	0	1	0	0	0	0	0
4/21/2024	1:00 PM	0	86	25	0	1	0	0	0	0	0	0	0	0
4/21/2024	1:15 PM	0	92	22	0	0	0	0	0	0	0	0	0	0
4/21/2024	1:30 PM	0	123	18	0	1	0	0	1	0	0	0	0	0
4/21/2024	1:45 PM	0	101	22	0	0	0	0	0	0	0	0	0	0
4/21/2024	2:00 PM	0	121	17	1	2	0	0	0	0	0	0	0	0
4/21/2024	2:15 PM	0	110	27	0	0	0	0	0	0	0	0	0	0
4/21/2024	2:30 PM	0	118	35	0	1	0	0	0	0	0	0	0	0
4/21/2024	2:45 PM	1	104	33	0	0	0	0	1	1	0	0	0	0
4/21/2024	3:00 PM	0	86	25	0	1	1	0	0	0	0	0	0	0
4/21/2024	3:15 PM	0	98	22	0	0	0	0	1	0	0	0	0	0
4/21/2024	3:30 PM	1	115	28	0	2	1	0	0	0	0	0	0	0
4/21/2024	3:45 PM	0	95	20	0	1	0	0	1	0	0	0	0	0
4/21/2024	4:00 PM	4	126	29	0	2	0	0	1	0	0	0	0	0
4/21/2024	4:15 PM	0	126	32	0	1	0	0	0	0	0	0	0	0
4/21/2024	4:30 PM	1	140	30	0	3	0	0	1	0	0	0	0	0
4/21/2024	4:45 PM	0	138	33	0	1	0	0	0	0	0	0	0	0
4/21/2024	5:00 PM	0	118	24	0	0	0	0	2	0	0	0	0	0
4/21/2024	5:15 PM	0	96	15	0	0	0	0	0	0	0	0	0	0
4/21/2024	5:30 PM	0	117	15	0	0	0	0	1	0	0	0	0	0
4/21/2024	5:45 PM	0	103	16	0	0	0	0	0	0	0	0	0	0
4/21/2024	6:00 PM	0	106	20	0	0	0	0	0	0	0	0	0	0
4/21/2024	6:15 PM	0	86	20	0	0	0	0	2	1	0	0	0	0
4/21/2024	6:30 PM	0	76	16	0	0	0	0	0	1	0	0	0	0
4/21/2024	6:45 PM	0	72	7	0	0	0	0	0	1	0	0	0	0
4/21/2024	7:00 PM	0	88	15	0	0	0	0	0	0	0	0	0	0
4/21/2024	7:15 PM	0	98	16	0	0	0	0	0	0	0	0	0	0
4/21/2024	7:30 PM	0	103	20	0	1	0	0	0	0	0	0	0	0
4/21/2024	7:45 PM	2	82	24	0	1	0	0	0	1	0	0	0	0
4/21/2024	8:00 PM	0	84	15	0	0	0	0	1	2	0	0	0	0
4/21/2024	8:15 PM	0	56	14	0	0	0	0	0	0	0	0	0	0
4/21/2024	8:30 PM	1	74	9	0	0	0	0	0	0	0	0	0	0
4/21/2024	8:45 PM	0	59	3	0	0	0	0	0	2	0	0	0	0
4/21/2024	9:00 PM	0	60	10	0	0	0	0	0	0	0	0	0	0
4/21/2024	9:15 PM	0	46	7	0	0	0	0	0	0	0	0	0	0
4/21/2024	9:30 PM	0	41	5	0	0	0	0	0	1	0	0	0	0
4/21/2024	9:45 PM	0	27	4	0	1	0	0	0	0	0	0	0	0
4/21/2024	10:00 PM	0	39	8	0	0	0	0	1	0	0	0	0	0
4/21/2024	10:15 PM	0	24	3	0	0	0	0	0	0	0	0	0	0
4/21/2024	10:30 PM	0	26	1	0	0	0	0	0	0	0	0	0	0
4/21/2024	10:45 PM	0	26	2	0	0	0	0	0	0	0	0	0	0
4/21/2024	11:00 PM	0	25	3	0	0	0	0	0	0	0	0	0	0
4/21/2024	11:15 PM	0	17	0	0	0	0	0	0	0	0	0	0	0
4/21/2024	11:30 PM	0	10	1	0	0	0	0	0	0	0	0	0	0
4/21/2024	11:45 PM	0	13	1	0	0	0	0	0	0	0	0	0	0

4/22/2024	12:00 AM	0	11	2	0	0	0	0	0	0	0	0	0
4/22/2024	12:15 AM	0	10	1	0	0	0	0	0	0	0	0	0
4/22/2024	12:30 AM	0	12	1	0	0	0	0	0	0	0	0	0
4/22/2024	12:45 AM	0	9	1	0	0	0	0	0	0	0	0	0
4/22/2024	1:00 AM	0	8	2	0	0	0	0	0	0	0	0	0
4/22/2024	1:15 AM	0	7	1	0	0	0	0	0	0	0	0	0
4/22/2024	1:30 AM	0	5	0	0	0	0	0	0	0	0	0	0
4/22/2024	1:45 AM	0	4	1	0	1	0	0	0	0	0	0	0
4/22/2024	2:00 AM	0	7	0	0	0	0	0	0	1	0	0	0
4/22/2024	2:15 AM	0	4	0	0	0	0	0	0	0	0	0	0
4/22/2024	2:30 AM	0	5	0	0	0	0	0	0	0	0	0	0
4/22/2024	2:45 AM	0	8	0	0	0	0	0	0	0	0	0	0
4/22/2024	3:00 AM	0	9	1	0	0	0	0	0	0	0	0	0
4/22/2024	3:15 AM	0	10	0	0	0	0	0	0	0	0	0	0
4/22/2024	3:30 AM	0	12	1	0	0	0	0	0	0	0	0	0
4/22/2024	3:45 AM	0	11	1	0	1	0	0	0	0	0	0	0
4/22/2024	4:00 AM	0	7	6	0	0	1	0	0	0	0	0	0
4/22/2024	4:15 AM	0	9	2	0	0	0	0	0	0	0	0	0
4/22/2024	4:30 AM	0	15	2	0	0	0	0	0	0	0	0	0
4/22/2024	4:45 AM	0	19	5	0	0	0	0	0	0	0	0	0
4/22/2024	5:00 AM	0	16	1	0	0	0	0	0	0	0	0	0
4/22/2024	5:15 AM	0	35	5	0	1	0	0	0	0	0	0	0
4/22/2024	5:30 AM	0	43	5	0	0	0	0	0	0	0	0	0
4/22/2024	5:45 AM	0	38	6	0	0	1	0	0	0	0	0	0
4/22/2024	6:00 AM	0	56	8	0	0	0	0	1	0	0	0	0
4/22/2024	6:15 AM	0	67	30	0	2	0	0	0	0	0	0	0
4/22/2024	6:30 AM	0	138	48	0	0	0	0	0	0	0	0	0
4/22/2024	6:45 AM	0	125	34	0	2	0	0	0	0	0	0	0
4/22/2024	7:00 AM	0	185	53	0	0	0	0	0	0	0	0	0
4/22/2024	7:15 AM	0	234	73	0	1	0	0	1	1	0	0	0
4/22/2024	7:30 AM	1	269	67	0	3	0	0	0	0	0	0	0
4/22/2024	7:45 AM	2	224	61	0	4	0	0	0	0	0	0	0
4/22/2024	8:00 AM	0	221	72	0	3	0	0	0	4	0	0	0
4/22/2024	8:15 AM	0	209	52	0	4	0	0	1	1	0	0	0
4/22/2024	8:30 AM	1	145	62	0	1	0	0	1	0	0	0	0
4/22/2024	8:45 AM	0	135	50	0	1	0	0	1	0	0	0	0
4/22/2024	9:00 AM	0	122	37	1	1	0	0	0	1	0	0	0
4/22/2024	9:15 AM	0	76	42	0	1	0	0	0	0	0	0	0
4/22/2024	9:30 AM	0	83	30	0	2	0	0	1	0	0	0	0
4/22/2024	9:45 AM	0	84	36	0	2	0	0	0	3	0	0	0
4/22/2024	10:00 AM	0	83	24	0	0	0	0	1	0	0	0	0
4/22/2024	10:15 AM	1	61	19	0	1	0	0	0	0	0	0	0
4/22/2024	10:30 AM	0	92	23	0	2	0	0	1	0	0	0	0
4/22/2024	10:45 AM	0	57	27	0	1	0	0	0	0	1	0	0
4/22/2024	11:00 AM	1	76	23	0	0	1	0	0	3	0	0	0
4/22/2024	11:15 AM	1	57	25	0	1	0	0	2	0	0	0	0
4/22/2024	11:30 AM	2	65	16	0	3	0	0	0	0	0	0	0
4/22/2024	11:45 AM	0	64	31	0	1	0	0	1	0	0	0	0
4/22/2024	12:00 PM	0	77	31	0	0	0	0	1	0	0	0	0
4/22/2024	12:15 PM	0	69	27	0	0	0	0	1	1	0	0	0
4/22/2024	12:30 PM	0	59	27	0	1	0	0	0	0	0	0	0
4/22/2024	12:45 PM	0	65	26	0	0	0	0	0	0	0	0	0
4/22/2024	1:00 PM	0	70	19	0	0	0	0	0	0	0	0	0
4/22/2024	1:15 PM	0	91	25	0	3	0	0	1	0	0	0	0
4/22/2024	1:30 PM	1	88	27	0	1	0	0	0	0	0	0	0
4/22/2024	1:45 PM	0	78	33	0	5	0	0	0	0	0	0	0
4/22/2024	2:00 PM	1	85	30	0	2	0	0	2	4	0	0	0
4/22/2024	2:15 PM	2	95	35	0	4	0	0	1	4	0	0	0
4/22/2024	2:30 PM	0	99	29	1	1	0	0	1	0	0	0	0
4/22/2024	2:45 PM	0	118	33	0	4	0	0	0	1	0	0	0
4/22/2024	3:00 PM	0	93	37	1	4	0	0	1	0	0	0	0
4/22/2024	3:15 PM	1	104	31	0	5	0	0	1	0	1	0	0
4/22/2024	3:30 PM	0	152	35	0	1	0	0	1	0	0	0	0
4/22/2024	3:45 PM	0	135	42	0	4	1	0	0	3	0	0	0
4/22/2024	4:00 PM	1	154	40	0	2	0	0	0	0	0	0	0
4/22/2024	4:15 PM	0	170	39	2	3	0	0	0	0	0	0	0
4/22/2024	4:30 PM	0	186	43	0	3	0	0	0	2	0	0	0
4/22/2024	4:45 PM	0	173	50	0	1	0	0	0	1	0	0	0
4/22/2024	5:00 PM	0	192	64	0	4	1	0	1	1	0	0	0
4/22/2024	5:15 PM	0	173	49	0	1	2	0	0	1	0	0	0
4/22/2024	5:30 PM	0	178	57	0	3	0	0	0	1	0	0	0
4/22/2024	5:45 PM	0	170	53	0	2	0	0	0	0	0	0	0
4/22/2024	6:00 PM	0	119	20	0	0	0	0	0	0	0	0	0
4/22/2024	6:15 PM	0	102	24	0	0	0	0	0	0	0	0	0
4/22/2024	6:30 PM	0	83	16	0	0	0	0	0	3	0	0	0
4/22/2024	6:45 PM	0	53	10	0	1	0	0	0	2	0	0	0
4/22/2024	7:00 PM	0	83	12	0	0	0	0	0	2	0	0	0
4/22/2024	7:15 PM	0	92	15	0	0	0	0	0	1	0	0	0
4/22/2024	7:30 PM	0	69	17	0	0	0	0	2	0	0	0	0
4/22/2024	7:45 PM	0	77	25	0	2	0	0	0	1	0	0	0
4/22/2024	8:00 PM	0	52	12	0	0	0	0	0	1	0	0	0
4/22/2024	8:15 PM	0	44	8	0	2	0	0	1	0	0	0	0
4/22/2024	8:30 PM	0	53	5	0	1	0	0	0	2	0	0	0
4/22/2024	8:45 PM	0	51	8	0	0	0	0	1	2	0	0	0
4/22/2024	9:00 PM	0	40	5	0	0	0	0	0	1	0	0	0
4/22/2024	9:15 PM	0	39	4	0	1	0	0	0	1	0	0	0
4/22/2024	9:30 PM	0	40	3	0	0	0	0	0	1	0	0	0
4/22/2024	9:45 PM	0	30	3	0	0	0	0	0	1	0	0	0
4/22/2024	10:00 PM	0	31	1	0	0	0	0	0	1	0	0	0
4/22/2024	10:15 PM	0	32	2	0	0	0	0	0	0	0	0	0
4/22/2024	10:30 PM	0	23	1	0	0	0	0	0	0	0	0	0
4/22/2024	10:45 PM	0	20	3	0	0	0	0	0	0	0	0	0
4/22/2024	11:00 PM	0	24	4	0	0	0	0	0	1	0	0	0
4/22/2024	11:15 PM	0	19	2	0	0	0	0	0	0	0	0	0
4/22/2024	11:30 PM	0	8	2	0	0	0	0	0	0	0	0	0
4/22/2024	11:45 PM	0	5	1	0	0	0	0	0	0	0	0	0

4/23/2024	12:00 AM	0	11	1	0	0	0	0	0	0	0	0	0
4/23/2024	12:15 AM	0	3	1	0	0	0	0	0	0	0	0	0
4/23/2024	12:30 AM	0	10	1	0	0	0	0	0	0	0	0	0
4/23/2024	12:45 AM	0	4	0	2	0	0	0	0	0	0	0	0
4/23/2024	1:00 AM	0	5	0	0	0	0	0	0	0	0	0	0
4/23/2024	1:15 AM	0	11	0	0	0	0	0	0	0	0	0	0
4/23/2024	1:30 AM	0	3	0	0	0	0	0	0	0	0	0	0
4/23/2024	1:45 AM	0	1	0	0	0	0	0	0	0	0	0	0
4/23/2024	2:00 AM	0	2	0	0	0	0	0	0	0	0	0	0
4/23/2024	2:15 AM	0	2	0	0	0	0	0	0	0	0	0	0
4/23/2024	2:30 AM	0	2	0	0	0	0	0	0	0	0	0	0
4/23/2024	2:45 AM	0	0	0	0	0	0	0	0	0	0	0	0
4/23/2024	3:00 AM	0	1	0	0	0	0	0	0	0	0	0	0
4/23/2024	3:15 AM	0	3	0	0	0	0	0	0	0	0	0	0
4/23/2024	3:30 AM	0	3	0	0	0	0	0	0	0	0	0	0
4/23/2024	3:45 AM	0	4	0	0	0	0	0	0	0	0	0	0
4/23/2024	4:00 AM	0	7	0	0	0	0	0	0	0	0	0	0
4/23/2024	4:15 AM	0	10	0	0	0	0	0	0	0	0	0	0
4/23/2024	4:30 AM	0	15	0	0	0	0	0	0	0	0	0	0
4/23/2024	4:45 AM	0	16	2	0	0	0	0	0	0	0	0	0
4/23/2024	5:00 AM	0	12	3	0	0	0	0	0	0	0	0	0
4/23/2024	5:15 AM	0	30	7	0	1	0	0	0	0	0	0	0
4/23/2024	5:30 AM	0	44	9	0	0	0	0	0	0	0	0	0
4/23/2024	5:45 AM	0	36	5	0	0	0	0	0	0	0	0	0
4/23/2024	6:00 AM	0	66	6	0	0	0	0	0	0	0	0	0
4/23/2024	6:15 AM	0	85	22	0	1	0	0	0	0	0	0	0
4/23/2024	6:30 AM	0	142	40	0	1	0	0	1	0	0	0	0
4/23/2024	6:45 AM	0	150	55	0	3	0	0	2	0	0	0	0
4/23/2024	7:00 AM	0	170	54	0	1	0	0	0	0	0	0	0
4/23/2024	7:15 AM	2	227	56	0	4	0	0	1	0	0	0	0
4/23/2024	7:30 AM	0	156	34	0	4	0	0	0	0	0	0	0
4/23/2024	7:45 AM	0	216	70	0	3	0	0	1	1	0	0	0
4/23/2024	8:00 AM	0	242	68	0	0	0	0	1	0	0	0	0
4/23/2024	8:15 AM	2	177	54	0	6	0	0	2	1	0	0	0
4/23/2024	8:30 AM	0	205	76	0	3	0	0	3	1	0	0	0
4/23/2024	8:45 AM	0	158	54	0	0	0	0	0	0	0	0	0
4/23/2024	9:00 AM	0	73	32	0	1	1	0	0	2	0	0	0
4/23/2024	9:15 AM	1	87	29	0	1	0	0	0	0	0	0	0
4/23/2024	9:30 AM	0	89	38	0	2	0	0	0	3	0	0	0
4/23/2024	9:45 AM	0	78	34	0	2	0	0	0	1	1	0	0
4/23/2024	10:00 AM	2	68	25	0	2	1	0	0	0	0	0	0
4/23/2024	10:15 AM	2	70	29	0	1	1	0	0	0	0	0	0
4/23/2024	10:30 AM	0	62	28	0	3	0	0	2	0	0	0	0
4/23/2024	10:45 AM	0	80	26	0	1	0	0	1	0	0	0	0
4/23/2024	11:00 AM	1	64	18	0	3	0	0	0	0	0	0	0
4/23/2024	11:15 AM	1	64	19	0	2	0	0	0	0	0	0	0
4/23/2024	11:30 AM	1	57	32	0	0	0	0	0	2	0	0	0
4/23/2024	11:45 AM	0	76	14	0	3	0	0	0	0	0	0	0
4/23/2024	12:00 PM	0	79	22	1	3	0	0	1	0	0	0	0
4/23/2024	12:15 PM	0	77	29	0	3	0	0	0	0	0	0	0
4/23/2024	12:30 PM	0	74	20	0	2	0	0	0	1	0	0	0
4/23/2024	12:45 PM	1	82	34	0	2	0	0	0	0	0	0	0
4/23/2024	1:00 PM	0	73	22	0	1	0	0	0	0	0	0	0
4/23/2024	1:15 PM	0	95	23	1	9	0	0	0	1	0	0	0
4/23/2024	1:30 PM	0	75	26	0	1	0	0	0	2	0	0	0
4/23/2024	1:45 PM	0	74	25	0	0	0	0	0	1	0	0	0
4/23/2024	2:00 PM	0	86	25	0	5	0	0	0	0	0	0	0
4/23/2024	2:15 PM	0	91	38	0	1	0	0	0	0	0	0	0
4/23/2024	2:30 PM	0	111	38	0	3	0	0	2	1	0	0	0
4/23/2024	2:45 PM	0	101	34	1	1	0	0	0	2	0	0	0
4/23/2024	3:00 PM	0	93	37	0	2	2	0	0	1	0	0	0
4/23/2024	3:15 PM	0	109	31	0	1	0	0	0	0	0	0	0
4/23/2024	3:30 PM	1	116	33	0	6	0	0	2	2	0	0	0
4/23/2024	3:45 PM	0	134	38	0	0	0	0	0	2	0	0	0
4/23/2024	4:00 PM	1	146	47	0	3	0	0	0	0	0	0	0
4/23/2024	4:15 PM	0	169	55	0	3	1	0	2	3	0	0	0
4/23/2024	4:30 PM	0	189	52	0	2	1	0	0	1	0	0	0
4/23/2024	4:45 PM	0	165	44	1	3	0	0	0	0	1	0	0
4/23/2024	5:00 PM	0	195	55	0	1	0	0	0	2	0	0	0
4/23/2024	5:15 PM	1	214	45	2	0	0	0	0	1	0	0	0
4/23/2024	5:30 PM	0	160	65	0	2	0	0	0	0	0	0	0
4/23/2024	5:45 PM	0	114	29	0	0	0	0	0	0	0	0	0
4/23/2024	6:00 PM	0	87	25	0	1	0	0	0	0	0	0	0
4/23/2024	6:15 PM	0	81	25	0	1	0	0	1	1	0	0	0
4/23/2024	6:30 PM	0	83	23	0	0	0	0	1	0	0	0	0
4/23/2024	6:45 PM	0	63	23	0	0	0	0	0	0	0	0	0
4/23/2024	7:00 PM	0	55	9	0	2	0	0	1	0	0	0	0
4/23/2024	7:15 PM	0	61	21	0	1	0	0	0	1	0	0	0
4/23/2024	7:30 PM	0	62	13	0	0	0	0	0	2	0	0	0
4/23/2024	7:45 PM	0	60	18	0	0	0	0	0	0	0	0	0
4/23/2024	8:00 PM	0	52	10	0	0	0	0	0	0	0	0	0
4/23/2024	8:15 PM	0	54	5	0	1	0	0	0	0	0	0	0
4/23/2024	8:30 PM	0	36	1	0	0	0	0	0	0	0	0	0
4/23/2024	8:45 PM	0	35	4	0	0	0	0	0	0	0	0	0
4/23/2024	9:00 PM	0	42	4	1	0	0	0	0	2	0	0	0
4/23/2024	9:15 PM	0	43	7	0	0	0	0	0	0	0	0	0
4/23/2024	9:30 PM	0	20	4	0	0	0	0	0	0	0	0	0
4/23/2024	9:45 PM	0	19	5	0	0	0	0	0	0	0	0	0
4/23/2024	10:00 PM	0	5	3	0	1	0	0	0	1	0	0	0
4/23/2024	10:15 PM	0	4	0	0	0	0	0	0	0	0	0	0
4/23/2024	10:30 PM	0	4	1	0	0	0	0	0	0	0	0	0
4/23/2024	10:45 PM	0	5	0	0	0	0	0	0	1	0	0	0
4/23/2024	11:00 PM	0	4	0	0	0	0	0	0	0	0	0	0
4/23/2024	11:15 PM	0	2	0	0	0	0	0	0	0	0	0	0
4/23/2024	11:30 PM	0	2	0	0	0	0	0	0	0	0	0	0
4/23/2024	11:45 PM	0	2	0	0	0	0	0	0	0	0	0	0

4/24/2024	12:00 AM	0	3	0	0	0	0	0	0	0	0	0	0
4/24/2024	12:15 AM	0	1	1	0	0	0	0	0	0	0	0	0
4/24/2024	12:30 AM	0	1	0	0	0	0	0	0	0	0	0	0
4/24/2024	12:45 AM	0	3	0	0	0	0	0	0	0	0	0	0
4/24/2024	1:00 AM	0	1	1	0	1	0	0	0	0	0	0	0
4/24/2024	1:15 AM	0	0	0	0	0	0	0	0	0	0	0	0
4/24/2024	1:30 AM	0	0	0	0	0	0	0	0	0	0	0	0
4/24/2024	1:45 AM	0	2	0	0	0	0	0	0	0	0	0	0
4/24/2024	2:00 AM	0	3	0	0	0	0	0	0	0	0	0	0
4/24/2024	2:15 AM	0	3	1	0	0	0	0	1	0	0	0	0
4/24/2024	2:30 AM	0	0	0	0	0	0	0	0	0	0	0	0
4/24/2024	2:45 AM	0	3	0	0	0	0	0	0	0	0	0	0
4/24/2024	3:00 AM	0	0	0	0	0	0	0	0	0	0	0	0
4/24/2024	3:15 AM	0	4	1	0	0	0	0	0	0	0	0	0
4/24/2024	3:30 AM	2	3	0	0	0	0	0	0	0	0	0	0
4/24/2024	3:45 AM	0	5	0	0	0	0	0	0	0	0	0	0
4/24/2024	4:00 AM	0	5	0	0	0	0	0	0	0	0	0	0
4/24/2024	4:15 AM	0	2	1	0	0	0	0	0	2	0	0	0
4/24/2024	4:30 AM	0	5	2	0	0	0	0	0	0	0	0	0
4/24/2024	4:45 AM	0	12	5	0	0	0	0	0	0	0	0	0
4/24/2024	5:00 AM	0	11	1	0	0	0	0	0	0	0	0	0
4/24/2024	5:15 AM	0	37	3	0	0	0	0	0	0	0	0	0
4/24/2024	5:30 AM	0	48	4	0	0	0	0	0	0	0	0	0
4/24/2024	5:45 AM	1	43	3	0	0	0	0	0	0	0	0	0
4/24/2024	6:00 AM	1	50	15	0	0	0	0	0	0	0	0	0
4/24/2024	6:15 AM	0	80	24	0	1	0	0	0	1	0	0	0
4/24/2024	6:30 AM	0	127	60	0	2	0	0	0	0	0	0	0
4/24/2024	6:45 AM	0	143	47	0	5	0	0	1	0	0	0	0
4/24/2024	7:00 AM	3	163	73	0	4	0	0	0	1	0	0	0
4/24/2024	7:15 AM	1	239	72	0	3	0	0	1	1	0	0	0
4/24/2024	7:30 AM	0	238	86	0	4	0	0	1	1	0	0	0
4/24/2024	7:45 AM	1	294	81	0	4	0	0	2	1	0	0	0
4/24/2024	8:00 AM	1	215	87	0	3	0	0	1	1	0	0	0
4/24/2024	8:15 AM	0	242	66	0	3	0	0	1	2	0	0	0
4/24/2024	8:30 AM	0	169	49	0	1	0	0	1	1	0	0	0
4/24/2024	8:45 AM	4	114	48	0	2	0	0	1	1	0	0	0
4/24/2024	9:00 AM	0	99	44	0	2	0	0	0	2	0	0	0
4/24/2024	9:15 AM	0	86	28	0	1	0	0	0	1	0	0	0
4/24/2024	9:30 AM	0	83	32	0	1	0	0	0	0	0	0	0
4/24/2024	9:45 AM	0	83	23	0	0	0	0	0	0	0	0	0
4/24/2024	10:00 AM	0	85	22	0	1	0	0	0	0	0	0	0
4/24/2024	10:15 AM	0	63	28	0	3	0	0	1	0	0	0	0
4/24/2024	10:30 AM	0	68	27	0	0	1	0	0	0	0	0	0
4/24/2024	10:45 AM	0	80	25	0	0	0	0	0	0	0	0	0
4/24/2024	11:00 AM	0	69	28	0	3	0	0	2	0	0	0	0
4/24/2024	11:15 AM	0	78	19	0	3	0	0	0	1	0	0	0
4/24/2024	11:30 AM	1	66	28	0	4	0	0	1	1	0	0	0
4/24/2024	11:45 AM	0	74	25	0	3	0	0	0	1	0	0	0
4/24/2024	12:00 PM	1	71	27	0	0	0	0	1	1	0	0	0
4/24/2024	12:15 PM	0	57	20	0	2	0	0	1	0	1	0	0
4/24/2024	12:30 PM	0	104	25	0	3	0	0	2	2	0	0	0
4/24/2024	12:45 PM	0	80	40	0	4	0	0	0	1	0	0	0
4/24/2024	1:00 PM	0	79	31	0	2	0	0	0	1	0	0	0
4/24/2024	1:15 PM	0	74	32	0	2	0	0	0	0	0	0	0
4/24/2024	1:30 PM	0	96	35	0	3	0	0	1	0	0	0	0
4/24/2024	1:45 PM	0	94	35	0	3	1	0	0	0	0	0	0
4/24/2024	2:00 PM	0	88	21	0	3	0	0	1	0	0	0	0
4/24/2024	2:15 PM	1	80	22	0	2	0	0	1	0	0	0	0
4/24/2024	2:30 PM	0	98	26	0	1	0	0	0	0	0	0	0
4/24/2024	2:45 PM	1	115	34	0	4	0	0	0	1	0	0	0
4/24/2024	3:00 PM	3	109	37	0	6	0	0	0	0	0	0	0
4/24/2024	3:15 PM	0	108	41	0	1	0	0	0	1	0	0	0
4/24/2024	3:30 PM	0	121	36	0	2	0	0	0	0	0	0	0
4/24/2024	3:45 PM	0	148	45	1	2	0	0	0	0	0	0	0
4/24/2024	4:00 PM	0	162	40	0	4	0	0	0	1	0	0	0
4/24/2024	4:15 PM	1	142	41	0	2	0	0	0	0	0	0	0
4/24/2024	4:30 PM	0	154	52	0	3	0	0	0	0	0	0	0
4/24/2024	4:45 PM	0	169	39	0	2	0	0	2	1	0	0	0
4/24/2024	5:00 PM	1	213	46	0	1	0	0	1	6	0	0	0
4/24/2024	5:15 PM	0	224	46	0	3	0	0	0	1	0	0	0
4/24/2024	5:30 PM	0	141	42	0	0	1	0	1	1	0	0	0
4/24/2024	5:45 PM	0	127	33	0	3	0	0	2	1	0	0	0
4/24/2024	6:00 PM	0	118	30	0	1	0	0	0	4	0	0	0
4/24/2024	6:15 PM	0	101	25	0	2	0	0	0	1	0	0	0
4/24/2024	6:30 PM	1	102	32	0	1	0	0	2	1	0	0	0
4/24/2024	6:45 PM	1	94	26	0	1	0	0	0	1	0	0	0
4/24/2024	7:00 PM	2	53	12	0	2	0	0	1	0	1	0	0
4/24/2024	7:15 PM	0	69	16	0	0	0	0	1	0	0	0	0
4/24/2024	7:30 PM	0	45	12	0	1	0	0	0	1	0	0	0
4/24/2024	7:45 PM	0	56	15	0	0	1	0	1	0	0	0	0
4/24/2024	8:00 PM	0	40	14	0	0	0	0	0	1	0	0	0
4/24/2024	8:15 PM	0	50	8	1	0	0	0	0	0	0	0	0
4/24/2024	8:30 PM	0	39	8	0	0	0	0	0	0	0	0	0
4/24/2024	8:45 PM	1	40	2	0	0	0	0	0	0	1	0	0
4/24/2024	9:00 PM	0	43	4	0	1	0	0	0	0	0	0	0
4/24/2024	9:15 PM	0	46	7	0	1	0	0	0	1	0	0	0
4/24/2024	9:30 PM	0	27	2	0	0	0	0	0	0	0	0	0
4/24/2024	9:45 PM	1	13	2	0	0	0	0	0	3	0	0	0
4/24/2024	10:00 PM	0	20	7	0	0	0	0	0	0	0	0	0
4/24/2024	10:15 PM	0	11	3	0	0	0	0	0	0	0	0	0
4/24/2024	10:30 PM	0	9	0	0	0	0	0	0	0	0	0	0
4/24/2024	10:45 PM	0	20	4	0	1	0	0	0	0	0	0	0
4/24/2024	11:00 PM	0	8	0	0	1	0	0	0	1	0	0	0
4/24/2024	11:15 PM	0	8	2	0	0	0	0	0	0	0	0	0
4/24/2024	11:30 PM	0	7	1	0	0	0	0	0	0	0	0	0
4/24/2024	11:45 PM	0	7	2	0	0	0	0	0	0	0	0	0

4/25/2024	12:00 AM	0	5	0	0	0	0	0	0	0	0	0	0
4/25/2024	12:15 AM	0	6	0	0	0	0	0	0	0	0	0	0
4/25/2024	12:30 AM	0	0	0	0	0	0	0	0	0	0	0	0
4/25/2024	12:45 AM	0	2	0	0	0	0	0	0	0	0	0	0
4/25/2024	1:00 AM	0	2	0	0	0	0	0	0	0	0	0	0
4/25/2024	1:15 AM	0	2	0	1	0	0	0	0	0	0	0	0
4/25/2024	1:30 AM	0	2	1	0	0	0	0	0	0	0	0	0
4/25/2024	1:45 AM	0	3	0	0	0	0	0	0	0	0	0	0
4/25/2024	2:00 AM	0	2	0	0	0	0	0	0	0	0	0	0
4/25/2024	2:15 AM	0	1	0	0	0	0	0	0	0	0	0	0
4/25/2024	2:30 AM	0	2	0	0	0	0	0	0	0	0	0	0
4/25/2024	2:45 AM	0	3	0	0	0	0	0	0	0	0	0	0
4/25/2024	3:00 AM	0	5	0	0	0	0	0	0	0	0	0	0
4/25/2024	3:15 AM	0	3	0	0	0	0	0	0	1	0	0	0
4/25/2024	3:30 AM	0	5	0	0	0	0	0	0	1	0	0	0
4/25/2024	3:45 AM	0	5	3	0	0	0	0	0	0	0	0	0
4/25/2024	4:00 AM	0	6	2	0	0	0	0	0	0	0	0	0
4/25/2024	4:15 AM	0	7	1	0	0	0	0	0	0	0	0	0
4/25/2024	4:30 AM	0	9	2	0	0	0	0	0	0	0	0	0
4/25/2024	4:45 AM	0	10	3	0	0	0	0	0	0	0	0	0
4/25/2024	5:00 AM	0	15	5	0	1	0	0	0	0	0	0	0
4/25/2024	5:15 AM	0	24	5	0	1	0	0	0	0	0	0	0
4/25/2024	5:30 AM	0	43	6	0	0	0	0	0	1	0	0	0
4/25/2024	5:45 AM	0	43	5	0	0	0	0	0	1	0	0	0
4/25/2024	6:00 AM	0	60	17	0	0	0	0	0	0	0	0	0
4/25/2024	6:15 AM	0	79	28	0	1	0	0	0	1	0	0	0
4/25/2024	6:30 AM	0	133	49	0	1	0	0	0	1	0	0	0
4/25/2024	6:45 AM	1	170	55	0	3	0	0	0	0	0	0	0
4/25/2024	7:00 AM	1	177	59	0	2	0	0	0	1	0	0	0
4/25/2024	7:15 AM	2	242	71	0	3	0	0	0	0	0	0	0
4/25/2024	7:30 AM	0	250	82	0	7	0	0	1	0	0	0	0
4/25/2024	7:45 AM	1	247	74	0	2	0	0	0	2	0	0	0
4/25/2024	8:00 AM	1	237	75	0	8	0	0	1	0	0	0	0
4/25/2024	8:15 AM	2	198	73	0	2	0	0	0	1	0	0	0
4/25/2024	8:30 AM	1	183	64	1	4	0	0	3	1	0	0	0
4/25/2024	8:45 AM	0	144	45	0	1	0	0	0	1	0	0	0
4/25/2024	9:00 AM	0	110	49	0	4	0	0	2	1	0	0	0
4/25/2024	9:15 AM	0	97	37	0	1	0	0	3	1	0	0	0
4/25/2024	9:30 AM	0	99	36	0	0	0	0	1	0	0	0	0
4/25/2024	9:45 AM	0	88	37	0	2	0	0	0	2	1	0	0
4/25/2024	10:00 AM	0	78	40	0	1	0	0	1	0	0	0	0
4/25/2024	10:15 AM	0	85	32	0	1	0	0	0	1	0	0	0
4/25/2024	10:30 AM	0	70	24	0	3	1	0	3	1	0	0	0
4/25/2024	10:45 AM	0	78	37	0	1	0	0	0	0	0	0	0
4/25/2024	11:00 AM	0	64	22	0	3	0	0	0	1	0	0	0
4/25/2024	11:15 AM	0	124	40	0	5	1	0	0	5	0	0	0
4/25/2024	11:30 AM	0	94	33	0	2	0	0	0	1	0	0	0
4/25/2024	11:45 AM	0	73	22	0	3	0	0	0	1	0	0	0
4/25/2024	12:00 PM	3	80	28	0	2	0	0	0	1	0	0	0
4/25/2024	12:15 PM	0	87	29	0	4	0	0	1	0	1	0	0
4/25/2024	12:30 PM	2	70	35	0	1	0	0	1	0	0	0	0
4/25/2024	12:45 PM	0	85	27	0	1	0	0	1	0	0	0	0
4/25/2024	1:00 PM	0	92	36	0	1	1	0	0	0	0	0	0
4/25/2024	1:15 PM	1	93	28	0	3	0	0	1	3	0	0	0
4/25/2024	1:30 PM	0	102	31	0	1	0	0	2	1	0	0	0
4/25/2024	1:45 PM	1	94	47	0	3	0	0	1	1	0	0	0
4/25/2024	2:00 PM	0	99	26	0	4	0	0	1	0	0	0	0
4/25/2024	2:15 PM	2	104	34	0	7	0	0	0	1	0	0	0
4/25/2024	2:30 PM	2	105	33	0	3	0	0	1	0	0	0	0
4/25/2024	2:45 PM	0	93	28	0	1	0	0	0	1	0	0	0
4/25/2024	3:00 PM	0	118	39	0	5	0	0	1	0	0	0	0
4/25/2024	3:15 PM	2	140	40	0	3	0	0	0	1	0	0	0
4/25/2024	3:30 PM	1	133	43	0	0	0	0	0	1	0	0	0
4/25/2024	3:45 PM	0	155	52	1	2	0	0	0	0	0	0	0
4/25/2024	4:00 PM	1	154	39	1	2	0	0	0	2	0	0	0
4/25/2024	4:15 PM	0	178	51	0	4	0	0	1	1	0	0	0
4/25/2024	4:30 PM	2	175	53	0	7	0	0	1	1	0	0	0
4/25/2024	4:45 PM	0	193	54	0	2	0	0	0	0	0	0	0
4/25/2024	5:00 PM	2	211	55	0	3	0	0	1	2	0	0	0
4/25/2024	5:15 PM	0	238	58	0	6	0	0	0	5	0	0	0
4/25/2024	5:30 PM	2	196	45	1	1	0	0	0	0	0	0	0
4/25/2024	5:45 PM	1	127	47	0	2	0	0	1	1	0	0	0
4/25/2024	6:00 PM	0	102	39	0	1	0	0	0	0	0	0	0
4/25/2024	6:15 PM	0	90	29	0	1	0	0	2	0	0	0	0
4/25/2024	6:30 PM	2	98	30	0	1	0	0	0	0	0	0	0
4/25/2024	6:45 PM	0	83	32	0	3	0	0	0	4	0	0	0
4/25/2024	7:00 PM	0	72	19	0	2	0	0	0	0	0	0	0
4/25/2024	7:15 PM	0	91	26	0	1	0	0	1	1	0	0	0
4/25/2024	7:30 PM	2	63	21	0	1	0	0	0	0	0	0	0
4/25/2024	7:45 PM	0	75	26	0	1	0	0	0	0	0	0	0
4/25/2024	8:00 PM	1	57	10	0	0	0	0	0	0	0	0	0
4/25/2024	8:15 PM	0	67	8	0	0	0	0	0	0	0	0	0
4/25/2024	8:30 PM	0	43	7	0	1	0	0	0	2	0	0	0
4/25/2024	8:45 PM	0	45	5	0	1	0	0	0	0	0	0	0
4/25/2024	9:00 PM	0	39	6	0	0	0	0	0	2	0	0	0
4/25/2024	9:15 PM	0	33	11	0	0	0	0	0	1	0	0	0
4/25/2024	9:30 PM	0	34	5	0	0	0	0	0	0	0	0	0
4/25/2024	9:45 PM	0	29	3	0	0	0	0	0	2	0	0	0
4/25/2024	10:00 PM	0	33	3	0	1	0	0	0	1	0	0	0
4/25/2024	10:15 PM	1	15	1	0	0	0	0	0	0	0	0	0
4/25/2024	10:30 PM	0	19	2	0	1	0	0	0	0	0	0	0
4/25/2024	10:45 PM	0	14	1	0	0	0	0	0	0	0	0	0
4/25/2024	11:00 PM	0	12	2	0	0	0	0	0	0	0	0	0
4/25/2024	11:15 PM	0	17	1	0	2	0	0	0	1	0	0	0
4/25/2024	11:30 PM	0	8	4	0	0	0	0	0	0	0	0	0
4/25/2024	11:45 PM	0	9	3	0	0	0	0	0	0	0	0	0

4/26/2024	12:00 AM	0	3	0	0	0	0	0	0	0	0	0	0
4/26/2024	12:15 AM	0	4	0	0	0	0	0	0	0	0	0	0
4/26/2024	12:30 AM	0	8	1	0	0	0	0	0	0	0	0	0
4/26/2024	12:45 AM	0	1	0	0	0	0	0	0	0	0	0	0
4/26/2024	1:00 AM	0	2	0	0	0	0	0	0	0	0	0	0
4/26/2024	1:15 AM	0	7	0	0	0	0	0	0	0	0	0	0
4/26/2024	1:30 AM	0	5	1	0	0	0	0	0	0	0	0	0
4/26/2024	1:45 AM	0	3	0	0	0	0	0	0	0	0	0	0
4/26/2024	2:00 AM	0	1	0	0	0	0	0	0	0	0	0	0
4/26/2024	2:15 AM	0	5	0	0	0	0	0	0	0	0	0	0
4/26/2024	2:30 AM	0	6	0	0	0	0	0	0	0	1	0	0
4/26/2024	2:45 AM	0	2	0	0	0	0	0	0	0	0	0	0
4/26/2024	3:00 AM	0	4	0	0	0	0	0	0	0	0	0	0
4/26/2024	3:15 AM	0	4	0	0	0	0	0	0	0	0	0	0
4/26/2024	3:30 AM	0	7	1	0	0	0	0	0	0	0	0	0
4/26/2024	3:45 AM	0	2	0	0	0	0	0	0	0	0	0	0
4/26/2024	4:00 AM	0	5	0	0	0	0	0	0	0	0	0	0
4/26/2024	4:15 AM	0	6	2	0	0	0	0	0	0	0	0	0
4/26/2024	4:30 AM	0	9	2	0	0	0	0	0	0	0	0	0
4/26/2024	4:45 AM	0	15	2	0	0	0	0	0	0	0	0	0
4/26/2024	5:00 AM	0	16	3	0	0	0	0	0	0	0	0	0
4/26/2024	5:15 AM	0	29	4	0	0	0	0	0	0	0	0	0
4/26/2024	5:30 AM	0	31	8	0	0	0	0	0	0	0	0	0
4/26/2024	5:45 AM	0	39	12	0	0	0	0	0	0	0	0	0
4/26/2024	6:00 AM	0	41	12	1	0	0	0	0	0	0	0	0
4/26/2024	6:15 AM	0	77	15	0	1	0	0	0	1	0	0	0
4/26/2024	6:30 AM	1	122	30	0	0	0	0	0	0	0	0	0
4/26/2024	6:45 AM	0	124	38	0	1	1	0	0	0	0	0	0
4/26/2024	7:00 AM	4	148	56	1	0	0	0	1	0	0	0	0
4/26/2024	7:15 AM	3	209	56	0	3	0	0	0	1	0	0	0
4/26/2024	7:30 AM	0	220	65	0	1	0	0	0	0	0	0	0
4/26/2024	7:45 AM	0	229	64	0	4	0	0	0	0	0	0	0
4/26/2024	8:00 AM	1	185	62	0	2	0	0	3	0	0	0	0
4/26/2024	8:15 AM	0	160	42	2	2	0	0	2	0	0	0	0
4/26/2024	8:30 AM	1	152	52	0	3	0	0	0	3	0	0	0
4/26/2024	8:45 AM	0	127	49	2	3	1	0	0	0	0	0	0
4/26/2024	9:00 AM	0	110	33	0	2	0	0	0	0	0	0	0
4/26/2024	9:15 AM	0	105	39	0	2	0	0	1	1	0	0	0
4/26/2024	9:30 AM	0	124	26	0	2	0	0	0	3	1	0	0
4/26/2024	9:45 AM	1	95	27	1	1	0	0	1	0	0	0	0
4/26/2024	10:00 AM	2	89	35	0	2	1	0	0	0	0	0	0
4/26/2024	10:15 AM	0	106	36	0	0	0	0	0	1	0	0	0
4/26/2024	10:30 AM	0	89	32	0	4	0	0	1	1	0	0	0
4/26/2024	10:45 AM	0	83	33	0	0	0	0	0	0	0	0	0
4/26/2024	11:00 AM	6	119	20	0	1	0	0	0	0	0	0	0
4/26/2024	11:15 AM	0	115	22	0	2	0	0	0	1	1	0	0
4/26/2024	11:30 AM	0	98	37	0	1	0	0	0	1	0	0	0
4/26/2024	11:45 AM	2	136	34	0	5	0	0	1	2	0	0	0
4/26/2024	12:00 PM	0	115	32	0	1	0	0	1	3	0	0	0
4/26/2024	12:15 PM	0	105	25	0	1	0	0	0	1	0	0	0
4/26/2024	12:30 PM	10	117	38	0	3	0	0	0	1	0	0	0
4/26/2024	12:45 PM	1	129	44	0	3	0	0	0	1	0	0	0
4/26/2024	1:00 PM	0	122	39	0	3	0	0	1	1	0	0	0
4/26/2024	1:15 PM	6	160	35	0	3	0	0	0	1	0	0	0
4/26/2024	1:30 PM	0	146	40	0	1	0	0	0	2	0	0	0
4/26/2024	1:45 PM	4	149	39	0	2	0	0	0	2	0	0	0
4/26/2024	2:00 PM	0	137	40	0	3	0	0	0	3	0	0	0
4/26/2024	2:15 PM	0	138	41	0	3	0	0	0	2	0	0	0
4/26/2024	2:30 PM	2	128	39	0	4	0	0	0	0	0	0	0
4/26/2024	2:45 PM	2	139	31	0	1	0	0	0	0	0	0	0
4/26/2024	3:00 PM	0	142	36	0	3	1	0	1	0	0	0	0
4/26/2024	3:15 PM	18	184	42	0	2	1	0	0	1	0	0	0
4/26/2024	3:30 PM	9	224	71	1	4	0	0	0	1	0	0	0
4/26/2024	3:45 PM	2	216	55	0	4	0	0	2	2	0	0	0
4/26/2024	4:00 PM	0	225	52	0	4	1	0	2	1	0	0	0
4/26/2024	4:15 PM	0	201	47	0	1	0	0	0	1	0	0	0
4/26/2024	4:30 PM	4	222	55	0	3	0	0	0	0	0	0	0
4/26/2024	4:45 PM	1	223	49	0	3	0	0	0	0	0	0	0
4/26/2024	5:00 PM	6	221	51	0	0	1	0	1	0	0	0	0
4/26/2024	5:15 PM	2	224	40	1	2	0	0	0	0	0	0	0
4/26/2024	5:30 PM	4	139	38	0	0	0	0	1	0	0	0	0
4/26/2024	5:45 PM	2	155	35	0	0	0	0	0	0	0	0	0
4/26/2024	6:00 PM	7	143	44	0	3	0	0	1	0	0	0	0
4/26/2024	6:15 PM	0	144	25	0	2	0	0	1	0	0	0	0
4/26/2024	6:30 PM	1	140	22	0	0	0	0	0	1	0	0	0
4/26/2024	6:45 PM	1	112	15	0	0	1	0	1	0	0	0	0
4/26/2024	7:00 PM	5	86	22	0	1	0	0	2	0	0	0	0
4/26/2024	7:15 PM	7	97	17	0	0	0	1	1	0	0	0	0
4/26/2024	7:30 PM	1	81	18	0	1	0	0	0	0	0	0	0
4/26/2024	7:45 PM	1	101	15	0	1	0	0	0	0	0	0	0
4/26/2024	8:00 PM	3	66	19	0	0	0	0	0	0	0	0	0
4/26/2024	8:15 PM	0	62	11	0	0	0	0	0	0	0	0	0
4/26/2024	8:30 PM	2	75	12	0	0	0	0	0	0	0	0	0
4/26/2024	8:45 PM	0	67	10	0	1	0	0	0	0	1	0	0
4/26/2024	9:00 PM	0	47	9	0	1	0	0	0	0	1	0	0
4/26/2024	9:15 PM	0	49	10	0	0	0	0	0	0	0	0	0
4/26/2024	9:30 PM	0	25	7	0	0	0	0	0	0	0	0	0
4/26/2024	9:45 PM	0	39	8	0	0	0	0	0	0	0	0	0
4/26/2024	10:00 PM	0	27	7	0	0	0	0	0	0	0	0	0
4/26/2024	10:15 PM	1	26	9	0	0	0	0	0	0	0	0	0
4/26/2024	10:30 PM	8	21	6	0	0	0	0	0	0	0	0	0
4/26/2024	10:45 PM	0	21	5	0	0	0	0	0	0	0	0	0
4/26/2024	11:00 PM	0	18	6	0	1	0	0	0	0	0	0	0
4/26/2024	11:15 PM	2	15	5	0	0	0	0	0	0	0	0	0
4/26/2024	11:30 PM	0	19	5	0	0	0	0	0	0	0	0	0
4/26/2024	11:45 PM	0	11	4	0	0	0	0	0	0	0	0	0

4/27/2024	12:00 AM	1	16	1	0	0	0	0	0	1	0	0	0	0
4/27/2024	12:15 AM	0	8	2	0	0	0	0	0	0	0	0	0	0
4/27/2024	12:30 AM	0	7	0	0	0	0	0	0	0	0	0	0	0
4/27/2024	12:45 AM	0	8	0	0	0	0	0	0	0	0	0	0	0
4/27/2024	1:00 AM	0	6	0	0	0	0	0	0	0	0	0	0	0
4/27/2024	1:15 AM	0	5	0	0	0	0	0	0	0	0	0	0	0
4/27/2024	1:30 AM	0	3	0	0	0	0	0	0	0	0	0	0	0
4/27/2024	1:45 AM	0	4	1	0	0	0	0	0	0	0	0	0	0
4/27/2024	2:00 AM	0	7	0	0	0	0	0	0	0	0	0	0	0
4/27/2024	2:15 AM	0	2	1	0	0	0	0	0	0	0	0	0	0
4/27/2024	2:30 AM	0	2	0	0	0	0	0	0	0	0	0	0	0
4/27/2024	2:45 AM	8	4	0	0	0	0	0	0	0	0	0	0	0
4/27/2024	3:00 AM	0	2	0	0	0	0	0	0	0	0	0	0	0
4/27/2024	3:15 AM	0	3	0	0	0	0	0	0	0	0	0	0	0
4/27/2024	3:30 AM	0	3	0	0	0	0	0	0	0	0	0	0	0
4/27/2024	3:45 AM	0	6	0	0	0	0	0	0	0	0	0	0	0
4/27/2024	4:00 AM	0	3	0	0	0	0	0	0	0	0	0	0	0
4/27/2024	4:15 AM	1	6	0	0	0	0	0	0	0	0	0	0	0
4/27/2024	4:30 AM	0	3	0	0	0	0	0	0	0	0	0	0	0
4/27/2024	4:45 AM	0	7	1	0	0	0	0	0	0	0	0	0	0
4/27/2024	5:00 AM	0	8	0	0	0	0	0	0	0	0	0	0	0
4/27/2024	5:15 AM	2	3	0	0	0	0	0	0	0	0	0	0	0
4/27/2024	5:30 AM	0	6	2	0	1	0	0	0	0	0	0	0	0
4/27/2024	5:45 AM	0	13	2	0	0	0	0	0	0	0	0	0	0
4/27/2024	6:00 AM	1	11	5	0	0	0	0	0	0	0	0	0	0
4/27/2024	6:15 AM	0	25	5	0	0	0	0	0	1	0	0	0	0
4/27/2024	6:30 AM	0	30	6	0	1	0	0	0	1	0	0	0	0
4/27/2024	6:45 AM	0	40	12	0	0	0	0	0	0	0	0	0	0
4/27/2024	7:00 AM	0	29	9	0	0	0	0	1	1	0	0	0	0
4/27/2024	7:15 AM	1	56	17	0	1	0	0	0	0	0	0	0	0
4/27/2024	7:30 AM	1	54	22	0	0	0	0	0	0	0	0	0	0
4/27/2024	7:45 AM	1	77	18	0	0	0	0	0	0	0	0	0	0
4/27/2024	8:00 AM	1	60	12	0	1	1	0	0	1	0	0	0	0
4/27/2024	8:15 AM	1	79	21	0	0	0	0	0	0	0	0	0	0
4/27/2024	8:30 AM	0	71	21	0	2	0	0	0	1	0	0	0	0
4/27/2024	8:45 AM	1	73	15	0	0	0	0	0	0	0	0	0	0
4/27/2024	9:00 AM	1	59	18	0	0	0	0	0	0	0	0	0	0
4/27/2024	9:15 AM	0	82	30	0	0	0	0	0	0	0	0	0	0
4/27/2024	9:30 AM	0	95	16	0	0	0	0	1	0	0	0	0	0
4/27/2024	9:45 AM	0	102	24	0	1	0	0	0	0	0	0	0	0
4/27/2024	10:00 AM	0	75	19	0	1	0	0	0	0	0	0	0	0
4/27/2024	10:15 AM	3	108	21	0	0	0	0	0	1	0	0	0	0
4/27/2024	10:30 AM	12	117	20	0	1	0	0	0	0	0	0	0	0
4/27/2024	10:45 AM	9	94	25	0	1	0	0	0	0	0	0	0	0
4/27/2024	11:00 AM	0	94	22	0	2	0	0	0	0	0	0	0	0
4/27/2024	11:15 AM	15	106	24	0	2	0	0	0	0	0	0	0	0
4/27/2024	11:30 AM	6	102	21	0	0	0	0	1	0	0	0	0	0
4/27/2024	11:45 AM	1	116	27	0	0	0	0	0	2	0	0	0	0
4/27/2024	12:00 PM	1	104	25	0	2	0	0	1	0	0	0	0	0
4/27/2024	12:15 PM	4	125	22	0	0	1	0	0	1	0	0	0	0
4/27/2024	12:30 PM	2	120	37	0	3	0	0	0	1	0	0	0	0
4/27/2024	12:45 PM	2	124	24	0	0	0	0	0	0	0	0	0	0
4/27/2024	1:00 PM	5	121	33	1	1	0	0	0	0	0	0	0	0
4/27/2024	1:15 PM	19	119	25	0	0	0	0	0	1	0	0	0	0
4/27/2024	1:30 PM	5	121	27	0	0	0	0	0	0	0	0	0	0
4/27/2024	1:45 PM	3	111	27	0	1	0	0	0	1	0	0	0	0
4/27/2024	2:00 PM	5	116	24	0	1	0	0	1	1	0	0	0	0
4/27/2024	2:15 PM	0	115	29	0	2	0	0	0	1	0	0	0	0
4/27/2024	2:30 PM	1	84	22	0	1	0	0	0	0	0	0	0	0
4/27/2024	2:45 PM	1	104	24	0	2	0	0	0	0	0	0	0	0
4/27/2024	3:00 PM	1	122	26	0	1	0	0	1	0	0	0	0	0
4/27/2024	3:15 PM	4	103	20	0	0	0	0	0	0	0	0	0	0
4/27/2024	3:30 PM	8	110	31	0	0	0	0	2	0	0	0	0	0
4/27/2024	3:45 PM	3	111	19	0	0	0	0	0	0	0	0	0	0
4/27/2024	4:00 PM	6	94	14	0	2	0	0	0	0	0	0	0	0
4/27/2024	4:15 PM	4	109	27	0	0	0	0	0	0	0	0	0	0
4/27/2024	4:30 PM	1	93	30	0	1	1	0	0	1	0	0	0	0
4/27/2024	4:45 PM	0	104	9	0	0	0	0	0	1	0	0	0	0
4/27/2024	5:00 PM	0	99	9	0	1	0	0	0	0	0	0	0	0
4/27/2024	5:15 PM	2	100	24	0	1	0	0	0	0	0	0	0	0
4/27/2024	5:30 PM	1	88	12	0	2	0	0	1	1	0	0	0	0
4/27/2024	5:45 PM	0	70	23	0	0	0	0	0	0	0	0	0	0
4/27/2024	6:00 PM	0	68	12	1	0	0	0	0	0	0	0	0	0
4/27/2024	6:15 PM	0	88	10	0	1	0	0	0	0	0	0	0	0
4/27/2024	6:30 PM	0	84	24	0	1	0	0	0	0	0	0	0	0
4/27/2024	6:45 PM	0	72	11	0	0	0	0	1	0	0	0	0	0
4/27/2024	7:00 PM	0	76	14	0	1	0	0	1	1	0	0	0	0
4/27/2024	7:15 PM	1	70	16	0	0	0	0	0	0	0	0	0	0
4/27/2024	7:30 PM	0	71	10	0	0	0	0	0	0	0	0	0	0
4/27/2024	7:45 PM	2	73	16	0	0	0	0	0	0	0	0	0	0
4/27/2024	8:00 PM	2	67	12	0	0	0	0	0	1	0	0	0	0
4/27/2024	8:15 PM	0	56	11	0	0	0	0	0	0	0	0	0	0
4/27/2024	8:30 PM	0	51	10	0	0	0	0	0	0	0	0	0	0
4/27/2024	8:45 PM	0	42	7	0	1	0	0	0	0	0	0	0	0
4/27/2024	9:00 PM	0	47	7	0	0	0	0	0	0	0	0	0	0
4/27/2024	9:15 PM	0	44	5	0	0	0	0	0	0	0	0	0	0
4/27/2024	9:30 PM	0	30	4	0	0	0	0	0	0	0	0	0	0
4/27/2024	9:45 PM	0	15	5	0	1	0	0	0	0	0	0	0	0
4/27/2024	10:00 PM	0	24	4	0	0	0	0	0	0	0	0	0	0
4/27/2024	10:15 PM	0	18	1	0	0	0	0	0	0	0	0	0	0
4/27/2024	10:30 PM	0	20	2	0	0	0	0	0	0	0	0	0	0
4/27/2024	10:45 PM	0	17	2	0	0	0	0	0	0	0	0	0	0
4/27/2024	11:00 PM	0	17	1	0	0	0	0	0	0	0	0	0	0
4/27/2024	11:15 PM	0	16	2	0	0	0	0	0	0	0	0	0	0
4/27/2024	11:30 PM	0	19	1	0	0	0	0	0	0	0	0	0	0
4/27/2024	11:45 PM	0	15	0	0	0	0	0	0	0	0	0	0	0

SB
File Name:
Start Date: 4/21/2024
Start Time: 0
Site Code: 75 Lane 1 NB
Station ID: 1
Location 1: I-20, north of Bush River Rd
Location 2:

Date	Time	1	2	3	4	5	6	7	8	9	10	11	12	13
4/21/2024	12:00 AM	0	0	0	0	0	0	0	0	0	0	0	0	0
4/21/2024	12:15 AM	0	0	0	0	0	0	0	0	0	0	0	0	0
4/21/2024	12:30 AM	0	0	0	0	0	0	0	0	0	0	0	0	0
4/21/2024	12:45 AM	0	0	0	0	0	0	0	0	0	0	0	0	0
4/21/2024	1:00 AM	0	0	0	0	0	0	0	0	0	0	0	0	0
4/21/2024	1:15 AM	0	0	0	0	0	0	0	0	0	0	0	0	0
4/21/2024	1:30 AM	0	0	0	0	0	0	0	0	0	0	0	0	0
4/21/2024	1:45 AM	0	0	0	0	0	0	0	0	0	0	0	0	0
4/21/2024	2:00 AM	0	0	0	0	0	0	0	0	0	0	0	0	0
4/21/2024	2:15 AM	0	0	0	0	0	0	0	0	0	0	0	0	0
4/21/2024	2:30 AM	0	0	0	0	0	0	0	0	0	0	0	0	0
4/21/2024	2:45 AM	0	0	0	0	0	0	0	0	0	0	0	0	0
4/21/2024	3:00 AM	0	0	0	0	0	0	0	0	0	0	0	0	0
4/21/2024	3:15 AM	0	0	0	0	0	0	0	0	0	0	0	0	0
4/21/2024	3:30 AM	0	0	0	0	0	0	0	0	0	0	0	0	0
4/21/2024	3:45 AM	0	0	0	0	0	0	0	0	0	0	0	0	0
4/21/2024	4:00 AM	0	0	0	0	0	0	0	0	0	0	0	0	0
4/21/2024	4:15 AM	0	0	0	0	0	0	0	0	0	0	0	0	0
4/21/2024	4:30 AM	0	0	0	0	0	0	0	0	0	0	0	0	0
4/21/2024	4:45 AM	0	0	0	0	0	0	0	0	0	0	0	0	0
4/21/2024	5:00 AM	0	0	0	0	0	0	0	0	0	0	0	0	0
4/21/2024	5:15 AM	0	0	0	0	0	0	0	0	0	0	0	0	0
4/21/2024	5:30 AM	0	0	0	0	0	0	0	0	0	0	0	0	0
4/21/2024	5:45 AM	0	0	0	0	0	0	0	0	0	0	0	0	0
4/21/2024	6:00 AM	0	0	0	0	0	0	0	0	0	0	0	0	0
4/21/2024	6:15 AM	0	0	0	0	0	0	0	0	0	0	0	0	0
4/21/2024	6:30 AM	0	0	0	0	0	0	0	0	0	0	0	0	0
4/21/2024	6:45 AM	0	0	0	0	0	0	0	0	0	0	0	0	0
4/21/2024	7:00 AM	0	0	0	0	0	0	0	0	0	0	0	0	0
4/21/2024	7:15 AM	0	0	0	0	0	0	0	0	0	0	0	0	0
4/21/2024	7:30 AM	0	0	0	0	0	0	0	0	0	0	0	0	0
4/21/2024	7:45 AM	0	0	0	0	0	0	0	0	0	0	0	0	0
4/21/2024	8:00 AM	0	0	0	0	0	0	0	0	0	0	0	0	0
4/21/2024	8:15 AM	0	0	0	0	0	0	0	0	0	0	0	0	0
4/21/2024	8:30 AM	0	0	0	0	0	0	0	0	0	0	0	0	0
4/21/2024	8:45 AM	0	0	0	0	0	0	0	0	0	0	0	0	0
4/21/2024	9:00 AM	0	0	0	0	0	0	0	0	0	0	0	0	0
4/21/2024	9:15 AM	0	0	0	0	0	0	0	0	0	0	0	0	0
4/21/2024	9:30 AM	0	0	0	0	0	0	0	0	0	0	0	0	0
4/21/2024	9:45 AM	0	0	0	0	0	0	0	0	0	0	0	0	0
4/21/2024	10:00 AM	0	0	0	0	0	0	0	0	0	0	0	0	0
4/21/2024	10:15 AM	0	0	0	0	0	0	0	0	0	0	0	0	0
4/21/2024	10:30 AM	0	0	0	0	0	0	0	0	0	0	0	0	0
4/21/2024	10:45 AM	0	0	0	0	0	0	0	0	0	0	0	0	0
4/21/2024	11:00 AM	0	0	0	0	0	0	0	0	0	0	0	0	0
4/21/2024	11:15 AM	0	0	0	0	0	0	0	0	0	0	0	0	0
4/21/2024	11:30 AM	0	0	0	0	0	0	0	0	0	0	0	0	0
4/21/2024	11:45 AM	0	0	0	0	0	0	0	0	0	0	0	0	0
4/21/2024	12:00 PM	0	0	0	0	0	0	0	0	0	0	0	0	0
4/21/2024	12:15 PM	0	0	0	0	0	0	0	0	0	0	0	0	0
4/21/2024	12:30 PM	0	0	0	0	0	0	0	0	0	0	0	0	0
4/21/2024	12:45 PM	0	0	0	0	0	0	0	0	0	0	0	0	0
4/21/2024	1:00 PM	0	0	0	0	0	0	0	0	0	0	0	0	0
4/21/2024	1:15 PM	0	0	0	0	0	0	0	0	0	0	0	0	0
4/21/2024	1:30 PM	0	0	0	0	0	0	0	0	0	0	0	0	0
4/21/2024	1:45 PM	0	0	0	0	0	0	0	0	0	0	0	0	0
4/21/2024	2:00 PM	0	0	0	0	0	0	0	0	0	0	0	0	0
4/21/2024	2:15 PM	0	0	0	0	0	0	0	0	0	0	0	0	0
4/21/2024	2:30 PM	0	0	0	0	0	0	0	0	0	0	0	0	0
4/21/2024	2:45 PM	0	0	0	0	0	0	0	0	0	0	0	0	0
4/21/2024	3:00 PM	0	0	0	0	0	0	0	0	0	0	0	0	0
4/21/2024	3:15 PM	0	0	0	0	0	0	0	0	0	0	0	0	0
4/21/2024	3:30 PM	0	0	0	0	0	0	0	0	0	0	0	0	0
4/21/2024	3:45 PM	0	0	0	0	0	0	0	0	0	0	0	0	0
4/21/2024	4:00 PM	0	0	0	0	0	0	0	0	0	0	0	0	0
4/21/2024	4:15 PM	0	0	0	0	0	0	0	0	0	0	0	0	0
4/21/2024	4:30 PM	0	0	0	0	0	0	0	0	0	0	0	0	0
4/21/2024	4:45 PM	0	0	0	0	0	0	0	0	0	0	0	0	0
4/21/2024	5:00 PM	0	0	0	0	0	0	0	0	0	0	0	0	0
4/21/2024	5:15 PM	0	0	0	0	0	0	0	0	0	0	0	0	0
4/21/2024	5:30 PM	0	0	0	0	0	0	0	0	0	0	0	0	0
4/21/2024	5:45 PM	0	0	0	0	0	0	0	0	0	0	0	0	0
4/21/2024	6:00 PM	0	0	0	0	0	0	0	0	0	0	0	0	0
4/21/2024	6:15 PM	0	0	0	0	0	0	0	0	0	0	0	0	0
4/21/2024	6:30 PM	0	0	0	0	0	0	0	0	0	0	0	0	0
4/21/2024	6:45 PM	0	0	0	0	0	0	0	0	0	0	0	0	0
4/21/2024	7:00 PM	0	0	0	0	0	0	0	0	0	0	0	0	0
4/21/2024	7:15 PM	0	0	0	0	0	0	0	0	0	0	0	0	0
4/21/2024	7:30 PM	0	0	0	0	0	0	0	0	0	0	0	0	0
4/21/2024	7:45 PM	0	0	0	0	0	0	0	0	0	0	0	0	0
4/21/2024	8:00 PM	0	0	0	0	0	0	0	0	0	0	0	0	0
4/21/2024	8:15 PM	0	0	0	0	0	0	0	0	0	0	0	0	0
4/21/2024	8:30 PM	0	0	0	0	0	0	0	0	0	0	0	0	0
4/21/2024	8:45 PM	0	0	0	0	0	0	0	0	0	0	0	0	0
4/21/2024	9:00 PM	0	0	0	0	0	0	0	0	0	0	0	0	0
4/21/2024	9:15 PM	0	0	0	0	0	0	0	0	0	0	0	0	0
4/21/2024	9:30 PM	0	0	0	0	0	0	0	0	0	0	0	0	0
4/21/2024	9:45 PM	0	0	0	0	0	0	0	0	0	0	0	0	0
4/21/2024	10:00 PM	0	0	0	0	0	0	0	0	0	0	0	0	0
4/21/2024	10:15 PM	0	0	0	0	0	0	0	0	0	0	0	0	0
4/21/2024	10:30 PM	0	0	0	0	0	0	0	0	0	0	0	0	0
4/21/2024	10:45 PM	0	0	0	0	0	0	0	0	0	0	0	0	0
4/21/2024	11:00 PM	0	0	0	0	0	0	0	0	0	0	0	0	0
4/21/2024	11:15 PM	0	0	0	0	0	0	0	0	0	0	0	0	0
4/21/2024	11:30 PM	0	0	0	0	0	0	0	0	0	0	0	0	0
4/21/2024	11:45 PM	0	0	0	0	0	0	0	0	0	0	0	0	0

4/22/2024	12:00 AM	0	0	0	0	0	0	0	0	0	0	0	0	0
4/22/2024	12:15 AM	0	0	0	0	0	0	0	0	0	0	0	0	0
4/22/2024	12:30 AM	0	0	0	0	0	0	0	0	0	0	0	0	0
4/22/2024	12:45 AM	0	0	0	0	0	0	0	0	0	0	0	0	0
4/22/2024	1:00 AM	0	0	0	0	0	0	0	0	0	0	0	0	0
4/22/2024	1:15 AM	0	0	0	0	0	0	0	0	0	0	0	0	0
4/22/2024	1:30 AM	0	0	0	0	0	0	0	0	0	0	0	0	0
4/22/2024	1:45 AM	0	0	0	0	0	0	0	0	0	0	0	0	0
4/22/2024	2:00 AM	0	0	0	0	0	0	0	0	0	0	0	0	0
4/22/2024	2:15 AM	0	0	0	0	0	0	0	0	0	0	0	0	0
4/22/2024	2:30 AM	0	0	0	0	0	0	0	0	0	0	0	0	0
4/22/2024	2:45 AM	0	0	0	0	0	0	0	0	0	0	0	0	0
4/22/2024	3:00 AM	0	0	0	0	0	0	0	0	0	0	0	0	0
4/22/2024	3:15 AM	0	0	0	0	0	0	0	0	0	0	0	0	0
4/22/2024	3:30 AM	0	0	0	0	0	0	0	0	0	0	0	0	0
4/22/2024	3:45 AM	0	0	0	0	0	0	0	0	0	0	0	0	0
4/22/2024	4:00 AM	0	0	0	0	0	0	0	0	0	0	0	0	0
4/22/2024	4:15 AM	0	0	0	0	0	0	0	0	0	0	0	0	0
4/22/2024	4:30 AM	0	0	0	0	0	0	0	0	0	0	0	0	0
4/22/2024	4:45 AM	0	0	0	0	0	0	0	0	0	0	0	0	0
4/22/2024	5:00 AM	0	0	0	0	0	0	0	0	0	0	0	0	0
4/22/2024	5:15 AM	0	0	0	0	0	0	0	0	0	0	0	0	0
4/22/2024	5:30 AM	0	0	0	0	0	0	0	0	0	0	0	0	0
4/22/2024	5:45 AM	0	0	0	0	0	0	0	0	0	0	0	0	0
4/22/2024	6:00 AM	0	0	0	0	0	0	0	0	0	0	0	0	0
4/22/2024	6:15 AM	0	0	0	0	0	0	0	0	0	0	0	0	0
4/22/2024	6:30 AM	0	0	0	0	0	0	0	0	0	0	0	0	0
4/22/2024	6:45 AM	0	0	0	0	0	0	0	0	0	0	0	0	0
4/22/2024	7:00 AM	0	0	0	0	0	0	0	0	0	0	0	0	0
4/22/2024	7:15 AM	0	0	0	0	0	0	0	0	0	0	0	0	0
4/22/2024	7:30 AM	0	0	0	0	0	0	0	0	0	0	0	0	0
4/22/2024	7:45 AM	0	0	0	0	0	0	0	0	0	0	0	0	0
4/22/2024	8:00 AM	0	0	0	0	0	0	0	0	0	0	0	0	0
4/22/2024	8:15 AM	0	0	0	0	0	0	0	0	0	0	0	0	0
4/22/2024	8:30 AM	0	0	0	0	0	0	0	0	0	0	0	0	0
4/22/2024	8:45 AM	0	0	0	0	0	0	0	0	0	0	0	0	0
4/22/2024	9:00 AM	0	0	0	0	0	0	0	0	0	0	0	0	0
4/22/2024	9:15 AM	0	0	0	0	0	0	0	0	0	0	0	0	0
4/22/2024	9:30 AM	0	0	0	0	0	0	0	0	0	0	0	0	0
4/22/2024	9:45 AM	0	0	0	0	0	0	0	0	0	0	0	0	0
4/22/2024	10:00 AM	0	0	0	0	0	0	0	0	0	0	0	0	0
4/22/2024	10:15 AM	0	0	0	0	0	0	0	0	0	0	0	0	0
4/22/2024	10:30 AM	0	0	0	0	0	0	0	0	0	0	0	0	0
4/22/2024	10:45 AM	0	0	0	0	0	0	0	0	0	0	0	0	0
4/22/2024	11:00 AM	0	0	0	0	0	0	0	0	0	0	0	0	0
4/22/2024	11:15 AM	0	0	0	0	0	0	0	0	0	0	0	0	0
4/22/2024	11:30 AM	0	0	0	0	0	0	0	0	0	0	0	0	0
4/22/2024	11:45 AM	0	0	0	0	0	0	0	0	0	0	0	0	0
4/22/2024	12:00 PM	0	0	0	0	0	0	0	0	0	0	0	0	0
4/22/2024	12:15 PM	0	0	0	0	0	0	0	0	0	0	0	0	0
4/22/2024	12:30 PM	0	0	0	0	0	0	0	0	0	0	0	0	0
4/22/2024	12:45 PM	0	0	0	0	0	0	0	0	0	0	0	0	0
4/22/2024	1:00 PM	0	0	0	0	0	0	0	0	0	0	0	0	0
4/22/2024	1:15 PM	0	0	0	0	0	0	0	0	0	0	0	0	0
4/22/2024	1:30 PM	0	0	0	0	0	0	0	0	0	0	0	0	0
4/22/2024	1:45 PM	0	0	0	0	0	0	0	0	0	0	0	0	0
4/22/2024	2:00 PM	0	0	0	0	0	0	0	0	0	0	0	0	0
4/22/2024	2:15 PM	0	0	0	0	0	0	0	0	0	0	0	0	0
4/22/2024	2:30 PM	0	0	0	0	0	0	0	0	0	0	0	0	0
4/22/2024	2:45 PM	0	0	0	0	0	0	0	0	0	0	0	0	0
4/22/2024	3:00 PM	0	0	0	0	0	0	0	0	0	0	0	0	0
4/22/2024	3:15 PM	0	0	0	0	0	0	0	0	0	0	0	0	0
4/22/2024	3:30 PM	0	0	0	0	0	0	0	0	0	0	0	0	0
4/22/2024	3:45 PM	0	0	0	0	0	0	0	0	0	0	0	0	0
4/22/2024	4:00 PM	0	0	0	0	0	0	0	0	0	0	0	0	0
4/22/2024	4:15 PM	0	0	0	0	0	0	0	0	0	0	0	0	0
4/22/2024	4:30 PM	0	0	0	0	0	0	0	0	0	0	0	0	0
4/22/2024	4:45 PM	0	0	0	0	0	0	0	0	0	0	0	0	0
4/22/2024	5:00 PM	0	0	0	0	0	0	0	0	0	0	0	0	0
4/22/2024	5:15 PM	0	0	0	0	0	0	0	0	0	0	0	0	0
4/22/2024	5:30 PM	0	0	0	0	0	0	0	0	0	0	0	0	0
4/22/2024	5:45 PM	0	0	0	0	0	0	0	0	0	0	0	0	0
4/22/2024	6:00 PM	0	0	0	0	0	0	0	0	0	0	0	0	0
4/22/2024	6:15 PM	0	0	0	0	0	0	0	0	0	0	0	0	0
4/22/2024	6:30 PM	0	0	0	0	0	0	0	0	0	0	0	0	0
4/22/2024	6:45 PM	0	0	0	0	0	0	0	0	0	0	0	0	0
4/22/2024	7:00 PM	0	0	0	0	0	0	0	0	0	0	0	0	0
4/22/2024	7:15 PM	0	0	0	0	0	0	0	0	0	0	0	0	0
4/22/2024	7:30 PM	0	0	0	0	0	0	0	0	0	0	0	0	0
4/22/2024	7:45 PM	0	0	0	0	0	0	0	0	0	0	0	0	0
4/22/2024	8:00 PM	0	0	0	0	0	0	0	0	0	0	0	0	0
4/22/2024	8:15 PM	0	0	0	0	0	0	0	0	0	0	0	0	0
4/22/2024	8:30 PM	0	0	0	0	0	0	0	0	0	0	0	0	0
4/22/2024	8:45 PM	0	0	0	0	0	0	0	0	0	0	0	0	0
4/22/2024	9:00 PM	0	0	0	0	0	0	0	0	0	0	0	0	0
4/22/2024	9:15 PM	0	0	0	0	0	0	0	0	0	0	0	0	0
4/22/2024	9:30 PM	0	0	0	0	0	0	0	0	0	0	0	0	0
4/22/2024	9:45 PM	0	0	0	0	0	0	0	0	0	0	0	0	0
4/22/2024	10:00 PM	0	0	0	0	0	0	0	0	0	0	0	0	0
4/22/2024	10:15 PM	0	0	0	0	0	0	0	0	0	0	0	0	0
4/22/2024	10:30 PM	0	0	0	0	0	0	0	0	0	0	0	0	0
4/22/2024	10:45 PM	0	0	0	0	0	0	0	0	0	0	0	0	0
4/22/2024	11:00 PM	0	0	0	0	0	0	0	0	0	0	0	0	0
4/22/2024	11:15 PM	0	0	0	0	0	0	0	0	0	0	0	0	0
4/22/2024	11:30 PM	0	0	0	0	0	0	0	0	0	0	0	0	0
4/22/2024	11:45 PM	0	0	0	0	0	0	0	0	0	0	0	0	0

4/23/2024	12:00 AM	0	0	0	0	0	0	0	0	0	0	0	0	0
4/23/2024	12:15 AM	0	0	0	0	0	0	0	0	0	0	0	0	0
4/23/2024	12:30 AM	0	0	0	0	0	0	0	0	0	0	0	0	0
4/23/2024	12:45 AM	0	0	0	0	0	0	0	0	0	0	0	0	0
4/23/2024	1:00 AM	0	0	0	0	0	0	0	0	0	0	0	0	0
4/23/2024	1:15 AM	0	0	0	0	0	0	0	0	0	0	0	0	0
4/23/2024	1:30 AM	0	0	0	0	0	0	0	0	0	0	0	0	0
4/23/2024	1:45 AM	0	0	0	0	0	0	0	0	0	0	0	0	0
4/23/2024	2:00 AM	0	0	0	0	0	0	0	0	0	0	0	0	0
4/23/2024	2:15 AM	0	0	0	0	0	0	0	0	0	0	0	0	0
4/23/2024	2:30 AM	0	0	0	0	0	0	0	0	0	0	0	0	0
4/23/2024	2:45 AM	0	0	0	0	0	0	0	0	0	0	0	0	0
4/23/2024	3:00 AM	0	0	0	0	0	0	0	0	0	0	0	0	0
4/23/2024	3:15 AM	0	0	0	0	0	0	0	0	0	0	0	0	0
4/23/2024	3:30 AM	0	0	0	0	0	0	0	0	0	0	0	0	0
4/23/2024	3:45 AM	0	0	0	0	0	0	0	0	0	0	0	0	0
4/23/2024	4:00 AM	0	0	0	0	0	0	0	0	0	0	0	0	0
4/23/2024	4:15 AM	0	0	0	0	0	0	0	0	0	0	0	0	0
4/23/2024	4:30 AM	0	0	0	0	0	0	0	0	0	0	0	0	0
4/23/2024	4:45 AM	0	0	0	0	0	0	0	0	0	0	0	0	0
4/23/2024	5:00 AM	0	0	0	0	0	0	0	0	0	0	0	0	0
4/23/2024	5:15 AM	0	0	0	0	0	0	0	0	0	0	0	0	0
4/23/2024	5:30 AM	0	0	0	0	0	0	0	0	0	0	0	0	0
4/23/2024	5:45 AM	0	0	0	0	0	0	0	0	0	0	0	0	0
4/23/2024	6:00 AM	0	0	0	0	0	0	0	0	0	0	0	0	0
4/23/2024	6:15 AM	0	0	0	0	0	0	0	0	0	0	0	0	0
4/23/2024	6:30 AM	0	0	0	0	0	0	0	0	0	0	0	0	0
4/23/2024	6:45 AM	0	0	0	0	0	0	0	0	0	0	0	0	0
4/23/2024	7:00 AM	0	0	0	0	0	0	0	0	0	0	0	0	0
4/23/2024	7:15 AM	0	0	0	0	0	0	0	0	0	0	0	0	0
4/23/2024	7:30 AM	0	0	0	0	0	0	0	0	0	0	0	0	0
4/23/2024	7:45 AM	0	0	0	0	0	0	0	0	0	0	0	0	0
4/23/2024	8:00 AM	0	0	0	0	0	0	0	0	0	0	0	0	0
4/23/2024	8:15 AM	0	0	0	0	0	0	0	0	0	0	0	0	0
4/23/2024	8:30 AM	0	0	0	0	0	0	0	0	0	0	0	0	0
4/23/2024	8:45 AM	0	0	0	0	0	0	0	0	0	0	0	0	0
4/23/2024	9:00 AM	0	0	0	0	0	0	0	0	0	0	0	0	0
4/23/2024	9:15 AM	0	0	0	0	0	0	0	0	0	0	0	0	0
4/23/2024	9:30 AM	0	0	0	0	0	0	0	0	0	0	0	0	0
4/23/2024	9:45 AM	0	0	0	0	0	0	0	0	0	0	0	0	0
4/23/2024	10:00 AM	0	0	0	0	0	0	0	0	0	0	0	0	0
4/23/2024	10:15 AM	0	0	0	0	0	0	0	0	0	0	0	0	0
4/23/2024	10:30 AM	0	0	0	0	0	0	0	0	0	0	0	0	0
4/23/2024	10:45 AM	0	0	0	0	0	0	0	0	0	0	0	0	0
4/23/2024	11:00 AM	0	0	0	0	0	0	0	0	0	0	0	0	0
4/23/2024	11:15 AM	0	0	0	0	0	0	0	0	0	0	0	0	0
4/23/2024	11:30 AM	0	0	0	0	0	0	0	0	0	0	0	0	0
4/23/2024	11:45 AM	0	0	0	0	0	0	0	0	0	0	0	0	0
4/23/2024	12:00 PM	0	0	0	0	0	0	0	0	0	0	0	0	0
4/23/2024	12:15 PM	0	0	0	0	0	0	0	0	0	0	0	0	0
4/23/2024	12:30 PM	0	0	0	0	0	0	0	0	0	0	0	0	0
4/23/2024	12:45 PM	0	0	0	0	0	0	0	0	0	0	0	0	0
4/23/2024	1:00 PM	0	0	0	0	0	0	0	0	0	0	0	0	0
4/23/2024	1:15 PM	0	0	0	0	0	0	0	0	0	0	0	0	0
4/23/2024	1:30 PM	0	0	0	0	0	0	0	0	0	0	0	0	0
4/23/2024	1:45 PM	0	0	0	0	0	0	0	0	0	0	0	0	0
4/23/2024	2:00 PM	0	0	0	0	0	0	0	0	0	0	0	0	0
4/23/2024	2:15 PM	0	0	0	0	0	0	0	0	0	0	0	0	0
4/23/2024	2:30 PM	0	0	0	0	0	0	0	0	0	0	0	0	0
4/23/2024	2:45 PM	0	0	0	0	0	0	0	0	0	0	0	0	0
4/23/2024	3:00 PM	0	0	0	0	0	0	0	0	0	0	0	0	0
4/23/2024	3:15 PM	0	0	0	0	0	0	0	0	0	0	0	0	0
4/23/2024	3:30 PM	0	0	0	0	0	0	0	0	0	0	0	0	0
4/23/2024	3:45 PM	0	0	0	0	0	0	0	0	0	0	0	0	0
4/23/2024	4:00 PM	0	0	0	0	0	0	0	0	0	0	0	0	0
4/23/2024	4:15 PM	0	0	0	0	0	0	0	0	0	0	0	0	0
4/23/2024	4:30 PM	0	0	0	0	0	0	0	0	0	0	0	0	0
4/23/2024	4:45 PM	0	0	0	0	0	0	0	0	0	0	0	0	0
4/23/2024	5:00 PM	0	0	0	0	0	0	0	0	0	0	0	0	0
4/23/2024	5:15 PM	0	0	0	0	0	0	0	0	0	0	0	0	0
4/23/2024	5:30 PM	0	0	0	0	0	0	0	0	0	0	0	0	0
4/23/2024	5:45 PM	0	0	0	0	0	0	0	0	0	0	0	0	0
4/23/2024	6:00 PM	0	0	0	0	0	0	0	0	0	0	0	0	0
4/23/2024	6:15 PM	0	0	0	0	0	0	0	0	0	0	0	0	0
4/23/2024	6:30 PM	0	0	0	0	0	0	0	0	0	0	0	0	0
4/23/2024	6:45 PM	0	0	0	0	0	0	0	0	0	0	0	0	0
4/23/2024	7:00 PM	0	0	0	0	0	0	0	0	0	0	0	0	0
4/23/2024	7:15 PM	0	0	0	0	0	0	0	0	0	0	0	0	0
4/23/2024	7:30 PM	0	0	0	0	0	0	0	0	0	0	0	0	0
4/23/2024	7:45 PM	0	0	0	0	0	0	0	0	0	0	0	0	0
4/23/2024	8:00 PM	0	0	0	0	0	0	0	0	0	0	0	0	0
4/23/2024	8:15 PM	0	0	0	0	0	0	0	0	0	0	0	0	0
4/23/2024	8:30 PM	0	0	0	0	0	0	0	0	0	0	0	0	0
4/23/2024	8:45 PM	0	0	0	0	0	0	0	0	0	0	0	0	0
4/23/2024	9:00 PM	0	0	0	0	0	0	0	0	0	0	0	0	0
4/23/2024	9:15 PM	0	0	0	0	0	0	0	0	0	0	0	0	0
4/23/2024	9:30 PM	0	0	0	0	0	0	0	0	0	0	0	0	0
4/23/2024	9:45 PM	0	0	0	0	0	0	0	0	0	0	0	0	0
4/23/2024	10:00 PM	0	0	0	0	0	0	0	0	0	0	0	0	0
4/23/2024	10:15 PM	0	0	0	0	0	0	0	0	0	0	0	0	0
4/23/2024	10:30 PM	0	0	0	0	0	0	0	0	0	0	0	0	0
4/23/2024	10:45 PM	0	0	0	0	0	0	0	0	0	0	0	0	0
4/23/2024	11:00 PM	0	0	0	0	0	0	0	0	0	0	0	0	0
4/23/2024	11:15 PM	0	0	0	0	0	0	0	0	0	0	0	0	0
4/23/2024	11:30 PM	0	0	0	0	0	0	0	0	0	0	0	0	0
4/23/2024	11:45 PM	0	0	0	0	0	0	0	0	0	0	0	0	0

4/24/2024	12:00 AM	0	0	0	0	0	0	0	0	0	0	0	0	0
4/24/2024	12:15 AM	0	0	0	0	0	0	0	0	0	0	0	0	0
4/24/2024	12:30 AM	0	0	0	0	0	0	0	0	0	0	0	0	0
4/24/2024	12:45 AM	0	0	0	0	0	0	0	0	0	0	0	0	0
4/24/2024	1:00 AM	0	0	0	0	0	0	0	0	0	0	0	0	0
4/24/2024	1:15 AM	0	0	0	0	0	0	0	0	0	0	0	0	0
4/24/2024	1:30 AM	0	0	0	0	0	0	0	0	0	0	0	0	0
4/24/2024	1:45 AM	0	0	0	0	0	0	0	0	0	0	0	0	0
4/24/2024	2:00 AM	0	0	0	0	0	0	0	0	0	0	0	0	0
4/24/2024	2:15 AM	0	0	0	0	0	0	0	0	0	0	0	0	0
4/24/2024	2:30 AM	0	0	0	0	0	0	0	0	0	0	0	0	0
4/24/2024	2:45 AM	0	0	0	0	0	0	0	0	0	0	0	0	0
4/24/2024	3:00 AM	0	0	0	0	0	0	0	0	0	0	0	0	0
4/24/2024	3:15 AM	0	0	0	0	0	0	0	0	0	0	0	0	0
4/24/2024	3:30 AM	0	0	0	0	0	0	0	0	0	0	0	0	0
4/24/2024	3:45 AM	0	0	0	0	0	0	0	0	0	0	0	0	0
4/24/2024	4:00 AM	0	0	0	0	0	0	0	0	0	0	0	0	0
4/24/2024	4:15 AM	0	0	0	0	0	0	0	0	0	0	0	0	0
4/24/2024	4:30 AM	0	0	0	0	0	0	0	0	0	0	0	0	0
4/24/2024	4:45 AM	0	0	0	0	0	0	0	0	0	0	0	0	0
4/24/2024	5:00 AM	0	0	0	0	0	0	0	0	0	0	0	0	0
4/24/2024	5:15 AM	0	0	0	0	0	0	0	0	0	0	0	0	0
4/24/2024	5:30 AM	0	0	0	0	0	0	0	0	0	0	0	0	0
4/24/2024	5:45 AM	0	0	0	0	0	0	0	0	0	0	0	0	0
4/24/2024	6:00 AM	0	0	0	0	0	0	0	0	0	0	0	0	0
4/24/2024	6:15 AM	0	0	0	0	0	0	0	0	0	0	0	0	0
4/24/2024	6:30 AM	0	0	0	0	0	0	0	0	0	0	0	0	0
4/24/2024	6:45 AM	0	0	0	0	0	0	0	0	0	0	0	0	0
4/24/2024	7:00 AM	0	0	0	0	0	0	0	0	0	0	0	0	0
4/24/2024	7:15 AM	0	0	0	0	0	0	0	0	0	0	0	0	0
4/24/2024	7:30 AM	0	0	0	0	0	0	0	0	0	0	0	0	0
4/24/2024	7:45 AM	0	0	0	0	0	0	0	0	0	0	0	0	0
4/24/2024	8:00 AM	0	0	0	0	0	0	0	0	0	0	0	0	0
4/24/2024	8:15 AM	0	0	0	0	0	0	0	0	0	0	0	0	0
4/24/2024	8:30 AM	0	0	0	0	0	0	0	0	0	0	0	0	0
4/24/2024	8:45 AM	0	0	0	0	0	0	0	0	0	0	0	0	0
4/24/2024	9:00 AM	0	0	0	0	0	0	0	0	0	0	0	0	0
4/24/2024	9:15 AM	0	0	0	0	0	0	0	0	0	0	0	0	0
4/24/2024	9:30 AM	0	0	0	0	0	0	0	0	0	0	0	0	0
4/24/2024	9:45 AM	0	0	0	0	0	0	0	0	0	0	0	0	0
4/24/2024	10:00 AM	0	0	0	0	0	0	0	0	0	0	0	0	0
4/24/2024	10:15 AM	0	0	0	0	0	0	0	0	0	0	0	0	0
4/24/2024	10:30 AM	0	0	0	0	0	0	0	0	0	0	0	0	0
4/24/2024	10:45 AM	0	0	0	0	0	0	0	0	0	0	0	0	0
4/24/2024	11:00 AM	0	0	0	0	0	0	0	0	0	0	0	0	0
4/24/2024	11:15 AM	0	0	0	0	0	0	0	0	0	0	0	0	0
4/24/2024	11:30 AM	0	0	0	0	0	0	0	0	0	0	0	0	0
4/24/2024	11:45 AM	0	0	0	0	0	0	0	0	0	0	0	0	0
4/24/2024	12:00 PM	0	0	0	0	0	0	0	0	0	0	0	0	0
4/24/2024	12:15 PM	0	0	0	0	0	0	0	0	0	0	0	0	0
4/24/2024	12:30 PM	0	0	0	0	0	0	0	0	0	0	0	0	0
4/24/2024	12:45 PM	0	0	0	0	0	0	0	0	0	0	0	0	0
4/24/2024	1:00 PM	0	0	0	0	0	0	0	0	0	0	0	0	0
4/24/2024	1:15 PM	0	0	0	0	0	0	0	0	0	0	0	0	0
4/24/2024	1:30 PM	0	0	0	0	0	0	0	0	0	0	0	0	0
4/24/2024	1:45 PM	0	0	0	0	0	0	0	0	0	0	0	0	0
4/24/2024	2:00 PM	0	0	0	0	0	0	0	0	0	0	0	0	0
4/24/2024	2:15 PM	0	0	0	0	0	0	0	0	0	0	0	0	0
4/24/2024	2:30 PM	0	0	0	0	0	0	0	0	0	0	0	0	0
4/24/2024	2:45 PM	0	0	0	0	0	0	0	0	0	0	0	0	0
4/24/2024	3:00 PM	0	0	0	0	0	0	0	0	0	0	0	0	0
4/24/2024	3:15 PM	0	0	0	0	0	0	0	0	0	0	0	0	0
4/24/2024	3:30 PM	0	0	0	0	0	0	0	0	0	0	0	0	0
4/24/2024	3:45 PM	0	0	0	0	0	0	0	0	0	0	0	0	0
4/24/2024	4:00 PM	0	0	0	0	0	0	0	0	0	0	0	0	0
4/24/2024	4:15 PM	0	0	0	0	0	0	0	0	0	0	0	0	0
4/24/2024	4:30 PM	0	0	0	0	0	0	0	0	0	0	0	0	0
4/24/2024	4:45 PM	0	0	0	0	0	0	0	0	0	0	0	0	0
4/24/2024	5:00 PM	0	0	0	0	0	0	0	0	0	0	0	0	0
4/24/2024	5:15 PM	0	0	0	0	0	0	0	0	0	0	0	0	0
4/24/2024	5:30 PM	0	0	0	0	0	0	0	0	0	0	0	0	0
4/24/2024	5:45 PM	0	0	0	0	0	0	0	0	0	0	0	0	0
4/24/2024	6:00 PM	0	0	0	0	0	0	0	0	0	0	0	0	0
4/24/2024	6:15 PM	0	0	0	0	0	0	0	0	0	0	0	0	0
4/24/2024	6:30 PM	0	0	0	0	0	0	0	0	0	0	0	0	0
4/24/2024	6:45 PM	0	0	0	0	0	0	0	0	0	0	0	0	0
4/24/2024	7:00 PM	0	0	0	0	0	0	0	0	0	0	0	0	0
4/24/2024	7:15 PM	0	0	0	0	0	0	0	0	0	0	0	0	0
4/24/2024	7:30 PM	0	0	0	0	0	0	0	0	0	0	0	0	0
4/24/2024	7:45 PM	0	0	0	0	0	0	0	0	0	0	0	0	0
4/24/2024	8:00 PM	0	0	0	0	0	0	0	0	0	0	0	0	0
4/24/2024	8:15 PM	0	0	0	0	0	0	0	0	0	0	0	0	0
4/24/2024	8:30 PM	0	0	0	0	0	0	0	0	0	0	0	0	0
4/24/2024	8:45 PM	0	0	0	0	0	0	0	0	0	0	0	0	0
4/24/2024	9:00 PM	0	0	0	0	0	0	0	0	0	0	0	0	0
4/24/2024	9:15 PM	0	0	0	0	0	0	0	0	0	0	0	0	0
4/24/2024	9:30 PM	0	0	0	0	0	0	0	0	0	0	0	0	0
4/24/2024	9:45 PM	0	0	0	0	0	0	0	0	0	0	0	0	0
4/24/2024	10:00 PM	0	0	0	0	0	0	0	0	0	0	0	0	0
4/24/2024	10:15 PM	0	0	0	0	0	0	0	0	0	0	0	0	0
4/24/2024	10:30 PM	0	0	0	0	0	0	0	0	0	0	0	0	0
4/24/2024	10:45 PM	0	0	0	0	0	0	0	0	0	0	0	0	0
4/24/2024	11:00 PM	0	0	0	0	0	0	0	0	0	0	0	0	0
4/24/2024	11:15 PM	0	0	0	0	0	0	0	0	0	0	0	0	0
4/24/2024	11:30 PM	0	0	0	0	0	0	0	0	0	0	0	0	0
4/24/2024	11:45 PM	0	0	0	0	0	0	0	0	0	0	0	0	0

4/25/2024	12:00 AM	0	0	0	0	0	0	0	0	0	0	0	0	0
4/25/2024	12:15 AM	0	0	0	0	0	0	0	0	0	0	0	0	0
4/25/2024	12:30 AM	0	0	0	0	0	0	0	0	0	0	0	0	0
4/25/2024	12:45 AM	0	0	0	0	0	0	0	0	0	0	0	0	0
4/25/2024	1:00 AM	0	0	0	0	0	0	0	0	0	0	0	0	0
4/25/2024	1:15 AM	0	0	0	0	0	0	0	0	0	0	0	0	0
4/25/2024	1:30 AM	0	0	0	0	0	0	0	0	0	0	0	0	0
4/25/2024	1:45 AM	0	0	0	0	0	0	0	0	0	0	0	0	0
4/25/2024	2:00 AM	0	0	0	0	0	0	0	0	0	0	0	0	0
4/25/2024	2:15 AM	0	0	0	0	0	0	0	0	0	0	0	0	0
4/25/2024	2:30 AM	0	0	0	0	0	0	0	0	0	0	0	0	0
4/25/2024	2:45 AM	0	0	0	0	0	0	0	0	0	0	0	0	0
4/25/2024	3:00 AM	0	0	0	0	0	0	0	0	0	0	0	0	0
4/25/2024	3:15 AM	0	0	0	0	0	0	0	0	0	0	0	0	0
4/25/2024	3:30 AM	0	0	0	0	0	0	0	0	0	0	0	0	0
4/25/2024	3:45 AM	0	0	0	0	0	0	0	0	0	0	0	0	0
4/25/2024	4:00 AM	0	0	0	0	0	0	0	0	0	0	0	0	0
4/25/2024	4:15 AM	0	0	0	0	0	0	0	0	0	0	0	0	0
4/25/2024	4:30 AM	0	0	0	0	0	0	0	0	0	0	0	0	0
4/25/2024	4:45 AM	0	0	0	0	0	0	0	0	0	0	0	0	0
4/25/2024	5:00 AM	0	0	0	0	0	0	0	0	0	0	0	0	0
4/25/2024	5:15 AM	0	0	0	0	0	0	0	0	0	0	0	0	0
4/25/2024	5:30 AM	0	0	0	0	0	0	0	0	0	0	0	0	0
4/25/2024	5:45 AM	0	0	0	0	0	0	0	0	0	0	0	0	0
4/25/2024	6:00 AM	0	0	0	0	0	0	0	0	0	0	0	0	0
4/25/2024	6:15 AM	0	0	0	0	0	0	0	0	0	0	0	0	0
4/25/2024	6:30 AM	0	0	0	0	0	0	0	0	0	0	0	0	0
4/25/2024	6:45 AM	0	0	0	0	0	0	0	0	0	0	0	0	0
4/25/2024	7:00 AM	0	0	0	0	0	0	0	0	0	0	0	0	0
4/25/2024	7:15 AM	0	0	0	0	0	0	0	0	0	0	0	0	0
4/25/2024	7:30 AM	0	0	0	0	0	0	0	0	0	0	0	0	0
4/25/2024	7:45 AM	0	0	0	0	0	0	0	0	0	0	0	0	0
4/25/2024	8:00 AM	0	0	0	0	0	0	0	0	0	0	0	0	0
4/25/2024	8:15 AM	0	0	0	0	0	0	0	0	0	0	0	0	0
4/25/2024	8:30 AM	0	0	0	0	0	0	0	0	0	0	0	0	0
4/25/2024	8:45 AM	0	0	0	0	0	0	0	0	0	0	0	0	0
4/25/2024	9:00 AM	0	0	0	0	0	0	0	0	0	0	0	0	0
4/25/2024	9:15 AM	0	0	0	0	0	0	0	0	0	0	0	0	0
4/25/2024	9:30 AM	0	0	0	0	0	0	0	0	0	0	0	0	0
4/25/2024	9:45 AM	0	0	0	0	0	0	0	0	0	0	0	0	0
4/25/2024	10:00 AM	0	0	0	0	0	0	0	0	0	0	0	0	0
4/25/2024	10:15 AM	0	0	0	0	0	0	0	0	0	0	0	0	0
4/25/2024	10:30 AM	0	0	0	0	0	0	0	0	0	0	0	0	0
4/25/2024	10:45 AM	0	0	0	0	0	0	0	0	0	0	0	0	0
4/25/2024	11:00 AM	0	0	0	0	0	0	0	0	0	0	0	0	0
4/25/2024	11:15 AM	0	0	0	0	0	0	0	0	0	0	0	0	0
4/25/2024	11:30 AM	0	0	0	0	0	0	0	0	0	0	0	0	0
4/25/2024	11:45 AM	0	0	0	0	0	0	0	0	0	0	0	0	0
4/25/2024	12:00 PM	0	0	0	0	0	0	0	0	0	0	0	0	0
4/25/2024	12:15 PM	0	0	0	0	0	0	0	0	0	0	0	0	0
4/25/2024	12:30 PM	0	0	0	0	0	0	0	0	0	0	0	0	0
4/25/2024	12:45 PM	0	0	0	0	0	0	0	0	0	0	0	0	0
4/25/2024	1:00 PM	0	0	0	0	0	0	0	0	0	0	0	0	0
4/25/2024	1:15 PM	0	0	0	0	0	0	0	0	0	0	0	0	0
4/25/2024	1:30 PM	0	0	0	0	0	0	0	0	0	0	0	0	0
4/25/2024	1:45 PM	0	0	0	0	0	0	0	0	0	0	0	0	0
4/25/2024	2:00 PM	0	0	0	0	0	0	0	0	0	0	0	0	0
4/25/2024	2:15 PM	0	0	0	0	0	0	0	0	0	0	0	0	0
4/25/2024	2:30 PM	0	0	0	0	0	0	0	0	0	0	0	0	0
4/25/2024	2:45 PM	0	0	0	0	0	0	0	0	0	0	0	0	0
4/25/2024	3:00 PM	0	0	0	0	0	0	0	0	0	0	0	0	0
4/25/2024	3:15 PM	0	0	0	0	0	0	0	0	0	0	0	0	0
4/25/2024	3:30 PM	0	0	0	0	0	0	0	0	0	0	0	0	0
4/25/2024	3:45 PM	0	0	0	0	0	0	0	0	0	0	0	0	0
4/25/2024	4:00 PM	0	0	0	0	0	0	0	0	0	0	0	0	0
4/25/2024	4:15 PM	0	0	0	0	0	0	0	0	0	0	0	0	0
4/25/2024	4:30 PM	0	0	0	0	0	0	0	0	0	0	0	0	0
4/25/2024	4:45 PM	0	0	0	0	0	0	0	0	0	0	0	0	0
4/25/2024	5:00 PM	0	0	0	0	0	0	0	0	0	0	0	0	0
4/25/2024	5:15 PM	0	0	0	0	0	0	0	0	0	0	0	0	0
4/25/2024	5:30 PM	0	0	0	0	0	0	0	0	0	0	0	0	0
4/25/2024	5:45 PM	0	0	0	0	0	0	0	0	0	0	0	0	0
4/25/2024	6:00 PM	0	0	0	0	0	0	0	0	0	0	0	0	0
4/25/2024	6:15 PM	0	0	0	0	0	0	0	0	0	0	0	0	0
4/25/2024	6:30 PM	0	0	0	0	0	0	0	0	0	0	0	0	0
4/25/2024	6:45 PM	0	0	0	0	0	0	0	0	0	0	0	0	0
4/25/2024	7:00 PM	0	0	0	0	0	0	0	0	0	0	0	0	0
4/25/2024	7:15 PM	0	0	0	0	0	0	0	0	0	0	0	0	0
4/25/2024	7:30 PM	0	0	0	0	0	0	0	0	0	0	0	0	0
4/25/2024	7:45 PM	0	0	0	0	0	0	0	0	0	0	0	0	0
4/25/2024	8:00 PM	0	0	0	0	0	0	0	0	0	0	0	0	0
4/25/2024	8:15 PM	0	0	0	0	0	0	0	0	0	0	0	0	0
4/25/2024	8:30 PM	0	0	0	0	0	0	0	0	0	0	0	0	0
4/25/2024	8:45 PM	0	0	0	0	0	0	0	0	0	0	0	0	0
4/25/2024	9:00 PM	0	0	0	0	0	0	0	0	0	0	0	0	0
4/25/2024	9:15 PM	0	0	0	0	0	0	0	0	0	0	0	0	0
4/25/2024	9:30 PM	0	0	0	0	0	0	0	0	0	0	0	0	0
4/25/2024	9:45 PM	0	0	0	0	0	0	0	0	0	0	0	0	0
4/25/2024	10:00 PM	0	0	0	0	0	0	0	0	0	0	0	0	0
4/25/2024	10:15 PM	0	0	0	0	0	0	0	0	0	0	0	0	0
4/25/2024	10:30 PM	0	0	0	0	0	0	0	0	0	0	0	0	0
4/25/2024	10:45 PM	0	0	0	0	0	0	0	0	0	0	0	0	0
4/25/2024	11:00 PM	0	0	0	0	0	0	0	0	0	0	0	0	0
4/25/2024	11:15 PM	0	0	0	0	0	0	0	0	0	0	0	0	0
4/25/2024	11:30 PM	0	0	0	0	0	0	0	0	0	0	0	0	0
4/25/2024	11:45 PM	0	0	0	0	0	0	0	0	0	0	0	0	0

4/26/2024	12:00 AM	0	0	0	0	0	0	0	0	0	0	0	0	0
4/26/2024	12:15 AM	0	0	0	0	0	0	0	0	0	0	0	0	0
4/26/2024	12:30 AM	0	0	0	0	0	0	0	0	0	0	0	0	0
4/26/2024	12:45 AM	0	0	0	0	0	0	0	0	0	0	0	0	0
4/26/2024	1:00 AM	0	0	0	0	0	0	0	0	0	0	0	0	0
4/26/2024	1:15 AM	0	0	0	0	0	0	0	0	0	0	0	0	0
4/26/2024	1:30 AM	0	0	0	0	0	0	0	0	0	0	0	0	0
4/26/2024	1:45 AM	0	0	0	0	0	0	0	0	0	0	0	0	0
4/26/2024	2:00 AM	0	0	0	0	0	0	0	0	0	0	0	0	0
4/26/2024	2:15 AM	0	0	0	0	0	0	0	0	0	0	0	0	0
4/26/2024	2:30 AM	0	0	0	0	0	0	0	0	0	0	0	0	0
4/26/2024	2:45 AM	0	0	0	0	0	0	0	0	0	0	0	0	0
4/26/2024	3:00 AM	0	0	0	0	0	0	0	0	0	0	0	0	0
4/26/2024	3:15 AM	0	0	0	0	0	0	0	0	0	0	0	0	0
4/26/2024	3:30 AM	0	0	0	0	0	0	0	0	0	0	0	0	0
4/26/2024	3:45 AM	0	0	0	0	0	0	0	0	0	0	0	0	0
4/26/2024	4:00 AM	0	0	0	0	0	0	0	0	0	0	0	0	0
4/26/2024	4:15 AM	0	0	0	0	0	0	0	0	0	0	0	0	0
4/26/2024	4:30 AM	0	0	0	0	0	0	0	0	0	0	0	0	0
4/26/2024	4:45 AM	0	0	0	0	0	0	0	0	0	0	0	0	0
4/26/2024	5:00 AM	0	0	0	0	0	0	0	0	0	0	0	0	0
4/26/2024	5:15 AM	0	0	0	0	0	0	0	0	0	0	0	0	0
4/26/2024	5:30 AM	0	0	0	0	0	0	0	0	0	0	0	0	0
4/26/2024	5:45 AM	0	0	0	0	0	0	0	0	0	0	0	0	0
4/26/2024	6:00 AM	0	0	0	0	0	0	0	0	0	0	0	0	0
4/26/2024	6:15 AM	0	0	0	0	0	0	0	0	0	0	0	0	0
4/26/2024	6:30 AM	0	0	0	0	0	0	0	0	0	0	0	0	0
4/26/2024	6:45 AM	0	0	0	0	0	0	0	0	0	0	0	0	0
4/26/2024	7:00 AM	0	0	0	0	0	0	0	0	0	0	0	0	0
4/26/2024	7:15 AM	0	0	0	0	0	0	0	0	0	0	0	0	0
4/26/2024	7:30 AM	0	0	0	0	0	0	0	0	0	0	0	0	0
4/26/2024	7:45 AM	0	0	0	0	0	0	0	0	0	0	0	0	0
4/26/2024	8:00 AM	0	0	0	0	0	0	0	0	0	0	0	0	0
4/26/2024	8:15 AM	0	0	0	0	0	0	0	0	0	0	0	0	0
4/26/2024	8:30 AM	0	0	0	0	0	0	0	0	0	0	0	0	0
4/26/2024	8:45 AM	0	0	0	0	0	0	0	0	0	0	0	0	0
4/26/2024	9:00 AM	0	0	0	0	0	0	0	0	0	0	0	0	0
4/26/2024	9:15 AM	0	0	0	0	0	0	0	0	0	0	0	0	0
4/26/2024	9:30 AM	0	0	0	0	0	0	0	0	0	0	0	0	0
4/26/2024	9:45 AM	0	0	0	0	0	0	0	0	0	0	0	0	0
4/26/2024	10:00 AM	0	0	0	0	0	0	0	0	0	0	0	0	0
4/26/2024	10:15 AM	0	0	0	0	0	0	0	0	0	0	0	0	0
4/26/2024	10:30 AM	0	0	0	0	0	0	0	0	0	0	0	0	0
4/26/2024	10:45 AM	0	0	0	0	0	0	0	0	0	0	0	0	0
4/26/2024	11:00 AM	0	0	0	0	0	0	0	0	0	0	0	0	0
4/26/2024	11:15 AM	0	0	0	0	0	0	0	0	0	0	0	0	0
4/26/2024	11:30 AM	0	0	0	0	0	0	0	0	0	0	0	0	0
4/26/2024	11:45 AM	0	0	0	0	0	0	0	0	0	0	0	0	0
4/26/2024	12:00 PM	0	0	0	0	0	0	0	0	0	0	0	0	0
4/26/2024	12:15 PM	0	0	0	0	0	0	0	0	0	0	0	0	0
4/26/2024	12:30 PM	0	0	0	0	0	0	0	0	0	0	0	0	0
4/26/2024	12:45 PM	0	0	0	0	0	0	0	0	0	0	0	0	0
4/26/2024	1:00 PM	0	0	0	0	0	0	0	0	0	0	0	0	0
4/26/2024	1:15 PM	0	0	0	0	0	0	0	0	0	0	0	0	0
4/26/2024	1:30 PM	0	0	0	0	0	0	0	0	0	0	0	0	0
4/26/2024	1:45 PM	0	0	0	0	0	0	0	0	0	0	0	0	0
4/26/2024	2:00 PM	0	0	0	0	0	0	0	0	0	0	0	0	0
4/26/2024	2:15 PM	0	0	0	0	0	0	0	0	0	0	0	0	0
4/26/2024	2:30 PM	0	0	0	0	0	0	0	0	0	0	0	0	0
4/26/2024	2:45 PM	0	0	0	0	0	0	0	0	0	0	0	0	0
4/26/2024	3:00 PM	0	0	0	0	0	0	0	0	0	0	0	0	0
4/26/2024	3:15 PM	0	0	0	0	0	0	0	0	0	0	0	0	0
4/26/2024	3:30 PM	0	0	0	0	0	0	0	0	0	0	0	0	0
4/26/2024	3:45 PM	0	0	0	0	0	0	0	0	0	0	0	0	0
4/26/2024	4:00 PM	0	0	0	0	0	0	0	0	0	0	0	0	0
4/26/2024	4:15 PM	0	0	0	0	0	0	0	0	0	0	0	0	0
4/26/2024	4:30 PM	0	0	0	0	0	0	0	0	0	0	0	0	0
4/26/2024	4:45 PM	0	0	0	0	0	0	0	0	0	0	0	0	0
4/26/2024	5:00 PM	0	0	0	0	0	0	0	0	0	0	0	0	0
4/26/2024	5:15 PM	0	0	0	0	0	0	0	0	0	0	0	0	0
4/26/2024	5:30 PM	0	0	0	0	0	0	0	0	0	0	0	0	0
4/26/2024	5:45 PM	0	0	0	0	0	0	0	0	0	0	0	0	0
4/26/2024	6:00 PM	0	0	0	0	0	0	0	0	0	0	0	0	0
4/26/2024	6:15 PM	0	0	0	0	0	0	0	0	0	0	0	0	0
4/26/2024	6:30 PM	0	0	0	0	0	0	0	0	0	0	0	0	0
4/26/2024	6:45 PM	0	0	0	0	0	0	0	0	0	0	0	0	0
4/26/2024	7:00 PM	0	0	0	0	0	0	0	0	0	0	0	0	0
4/26/2024	7:15 PM	0	0	0	0	0	0	0	0	0	0	0	0	0
4/26/2024	7:30 PM	0	0	0	0	0	0	0	0	0	0	0	0	0
4/26/2024	7:45 PM	0	0	0	0	0	0	0	0	0	0	0	0	0
4/26/2024	8:00 PM	0	0	0	0	0	0	0	0	0	0	0	0	0
4/26/2024	8:15 PM	0	0	0	0	0	0	0	0	0	0	0	0	0
4/26/2024	8:30 PM	0	0	0	0	0	0	0	0	0	0	0	0	0
4/26/2024	8:45 PM	0	0	0	0	0	0	0	0	0	0	0	0	0
4/26/2024	9:00 PM	0	0	0	0	0	0	0	0	0	0	0	0	0
4/26/2024	9:15 PM	0	0	0	0	0	0	0	0	0	0	0	0	0
4/26/2024	9:30 PM	0	0	0	0	0	0	0	0	0	0	0	0	0
4/26/2024	9:45 PM	0	0	0	0	0	0	0	0	0	0	0	0	0
4/26/2024	10:00 PM	0	0	0	0	0	0	0	0	0	0	0	0	0
4/26/2024	10:15 PM	0	0	0	0	0	0	0	0	0	0	0	0	0
4/26/2024	10:30 PM	0	0	0	0	0	0	0	0	0	0	0	0	0
4/26/2024	10:45 PM	0	0	0	0	0	0	0	0	0	0	0	0	0
4/26/2024	11:00 PM	0	0	0	0	0	0	0	0	0	0	0	0	0
4/26/2024	11:15 PM	0	0	0	0	0	0	0	0	0	0	0	0	0
4/26/2024	11:30 PM	0	0	0	0	0	0	0	0	0	0	0	0	0
4/26/2024	11:45 PM	0	0	0	0	0	0	0	0	0	0	0	0	0

4/27/2024	12:00 AM	0	0	0	0	0	0	0	0	0	0	0	0	0
4/27/2024	12:15 AM	0	0	0	0	0	0	0	0	0	0	0	0	0
4/27/2024	12:30 AM	0	0	0	0	0	0	0	0	0	0	0	0	0
4/27/2024	12:45 AM	0	0	0	0	0	0	0	0	0	0	0	0	0
4/27/2024	1:00 AM	0	0	0	0	0	0	0	0	0	0	0	0	0
4/27/2024	1:15 AM	0	0	0	0	0	0	0	0	0	0	0	0	0
4/27/2024	1:30 AM	0	0	0	0	0	0	0	0	0	0	0	0	0
4/27/2024	1:45 AM	0	0	0	0	0	0	0	0	0	0	0	0	0
4/27/2024	2:00 AM	0	0	0	0	0	0	0	0	0	0	0	0	0
4/27/2024	2:15 AM	0	0	0	0	0	0	0	0	0	0	0	0	0
4/27/2024	2:30 AM	0	0	0	0	0	0	0	0	0	0	0	0	0
4/27/2024	2:45 AM	0	0	0	0	0	0	0	0	0	0	0	0	0
4/27/2024	3:00 AM	0	0	0	0	0	0	0	0	0	0	0	0	0
4/27/2024	3:15 AM	0	0	0	0	0	0	0	0	0	0	0	0	0
4/27/2024	3:30 AM	0	0	0	0	0	0	0	0	0	0	0	0	0
4/27/2024	3:45 AM	0	0	0	0	0	0	0	0	0	0	0	0	0
4/27/2024	4:00 AM	0	0	0	0	0	0	0	0	0	0	0	0	0
4/27/2024	4:15 AM	0	0	0	0	0	0	0	0	0	0	0	0	0
4/27/2024	4:30 AM	0	0	0	0	0	0	0	0	0	0	0	0	0
4/27/2024	4:45 AM	0	0	0	0	0	0	0	0	0	0	0	0	0
4/27/2024	5:00 AM	0	0	0	0	0	0	0	0	0	0	0	0	0
4/27/2024	5:15 AM	0	0	0	0	0	0	0	0	0	0	0	0	0
4/27/2024	5:30 AM	0	0	0	0	0	0	0	0	0	0	0	0	0
4/27/2024	5:45 AM	0	0	0	0	0	0	0	0	0	0	0	0	0
4/27/2024	6:00 AM	0	0	0	0	0	0	0	0	0	0	0	0	0
4/27/2024	6:15 AM	0	0	0	0	0	0	0	0	0	0	0	0	0
4/27/2024	6:30 AM	0	0	0	0	0	0	0	0	0	0	0	0	0
4/27/2024	6:45 AM	0	0	0	0	0	0	0	0	0	0	0	0	0
4/27/2024	7:00 AM	0	0	0	0	0	0	0	0	0	0	0	0	0
4/27/2024	7:15 AM	0	0	0	0	0	0	0	0	0	0	0	0	0
4/27/2024	7:30 AM	0	0	0	0	0	0	0	0	0	0	0	0	0
4/27/2024	7:45 AM	0	0	0	0	0	0	0	0	0	0	0	0	0
4/27/2024	8:00 AM	0	0	0	0	0	0	0	0	0	0	0	0	0
4/27/2024	8:15 AM	0	0	0	0	0	0	0	0	0	0	0	0	0
4/27/2024	8:30 AM	0	0	0	0	0	0	0	0	0	0	0	0	0
4/27/2024	8:45 AM	0	0	0	0	0	0	0	0	0	0	0	0	0
4/27/2024	9:00 AM	0	0	0	0	0	0	0	0	0	0	0	0	0
4/27/2024	9:15 AM	0	0	0	0	0	0	0	0	0	0	0	0	0
4/27/2024	9:30 AM	0	0	0	0	0	0	0	0	0	0	0	0	0
4/27/2024	9:45 AM	0	0	0	0	0	0	0	0	0	0	0	0	0
4/27/2024	10:00 AM	0	0	0	0	0	0	0	0	0	0	0	0	0
4/27/2024	10:15 AM	0	0	0	0	0	0	0	0	0	0	0	0	0
4/27/2024	10:30 AM	0	0	0	0	0	0	0	0	0	0	0	0	0
4/27/2024	10:45 AM	0	0	0	0	0	0	0	0	0	0	0	0	0
4/27/2024	11:00 AM	0	0	0	0	0	0	0	0	0	0	0	0	0
4/27/2024	11:15 AM	0	0	0	0	0	0	0	0	0	0	0	0	0
4/27/2024	11:30 AM	0	0	0	0	0	0	0	0	0	0	0	0	0
4/27/2024	11:45 AM	0	0	0	0	0	0	0	0	0	0	0	0	0
4/27/2024	12:00 PM	0	0	0	0	0	0	0	0	0	0	0	0	0
4/27/2024	12:15 PM	0	0	0	0	0	0	0	0	0	0	0	0	0
4/27/2024	12:30 PM	0	0	0	0	0	0	0	0	0	0	0	0	0
4/27/2024	12:45 PM	0	0	0	0	0	0	0	0	0	0	0	0	0
4/27/2024	1:00 PM	0	0	0	0	0	0	0	0	0	0	0	0	0
4/27/2024	1:15 PM	0	0	0	0	0	0	0	0	0	0	0	0	0
4/27/2024	1:30 PM	0	0	0	0	0	0	0	0	0	0	0	0	0
4/27/2024	1:45 PM	0	0	0	0	0	0	0	0	0	0	0	0	0
4/27/2024	2:00 PM	0	0	0	0	0	0	0	0	0	0	0	0	0
4/27/2024	2:15 PM	0	0	0	0	0	0	0	0	0	0	0	0	0
4/27/2024	2:30 PM	0	0	0	0	0	0	0	0	0	0	0	0	0
4/27/2024	2:45 PM	0	0	0	0	0	0	0	0	0	0	0	0	0
4/27/2024	3:00 PM	0	0	0	0	0	0	0	0	0	0	0	0	0
4/27/2024	3:15 PM	0	0	0	0	0	0	0	0	0	0	0	0	0
4/27/2024	3:30 PM	0	0	0	0	0	0	0	0	0	0	0	0	0
4/27/2024	3:45 PM	0	0	0	0	0	0	0	0	0	0	0	0	0
4/27/2024	4:00 PM	0	0	0	0	0	0	0	0	0	0	0	0	0
4/27/2024	4:15 PM	0	0	0	0	0	0	0	0	0	0	0	0	0
4/27/2024	4:30 PM	0	0	0	0	0	0	0	0	0	0	0	0	0
4/27/2024	4:45 PM	0	0	0	0	0	0	0	0	0	0	0	0	0
4/27/2024	5:00 PM	0	0	0	0	0	0	0	0	0	0	0	0	0
4/27/2024	5:15 PM	0	0	0	0	0	0	0	0	0	0	0	0	0
4/27/2024	5:30 PM	0	0	0	0	0	0	0	0	0	0	0	0	0
4/27/2024	5:45 PM	0	0	0	0	0	0	0	0	0	0	0	0	0
4/27/2024	6:00 PM	0	0	0	0	0	0	0	0	0	0	0	0	0
4/27/2024	6:15 PM	0	0	0	0	0	0	0	0	0	0	0	0	0
4/27/2024	6:30 PM	0	0	0	0	0	0	0	0	0	0	0	0	0
4/27/2024	6:45 PM	0	0	0	0	0	0	0	0	0	0	0	0	0
4/27/2024	7:00 PM	0	0	0	0	0	0	0	0	0	0	0	0	0
4/27/2024	7:15 PM	0	0	0	0	0	0	0	0	0	0	0	0	0
4/27/2024	7:30 PM	0	0	0	0	0	0	0	0	0	0	0	0	0
4/27/2024	7:45 PM	0	0	0	0	0	0	0	0	0	0	0	0	0
4/27/2024	8:00 PM	0	0	0	0	0	0	0	0	0	0	0	0	0
4/27/2024	8:15 PM	0	0	0	0	0	0	0	0	0	0	0	0	0
4/27/2024	8:30 PM	0	0	0	0	0	0	0	0	0	0	0	0	0
4/27/2024	8:45 PM	0	0	0	0	0	0	0	0	0	0	0	0	0
4/27/2024	9:00 PM	0	0	0	0	0	0	0	0	0	0	0	0	0
4/27/2024	9:15 PM	0	0	0	0	0	0	0	0	0	0	0	0	0
4/27/2024	9:30 PM	0	0	0	0	0	0	0	0	0	0	0	0	0
4/27/2024	9:45 PM	0	0	0	0	0	0	0	0	0	0	0	0	0
4/27/2024	10:00 PM	0	0	0	0	0	0	0	0	0	0	0	0	0
4/27/2024	10:15 PM	0	0	0	0	0	0	0	0	0	0	0	0	0
4/27/2024	10:30 PM	0	0	0	0	0	0	0	0	0	0	0	0	0
4/27/2024	10:45 PM	0	0	0	0	0	0	0	0	0	0	0	0	0
4/27/2024	11:00 PM	0	0	0	0	0	0	0	0	0	0	0	0	0
4/27/2024	11:15 PM	0	0	0	0	0	0	0	0	0	0	0	0	0
4/27/2024	11:30 PM	0	0	0	0	0	0	0	0	0	0	0	0	0
4/27/2024	11:45 PM	0	0	0	0	0	0	0	0	0	0	0	0	0

NB
File Name:
Start Date: 4/21/2024
Start Time: 0
Site Code: 75 Lane 1 NB
Station ID: 1
Location 1: I-20, north of Bush River Rd
Location 2:

Date	Time	1	2	3	4	5	6	7	8	9	10	11	12	13
4/21/2024	12:00 AM	0	41	7	0	0	0	0	1	0	0	0	0	0
4/21/2024	12:15 AM	0	27	7	0	0	0	0	1	0	0	0	0	0
4/21/2024	12:30 AM	0	27	6	0	0	0	0	1	0	0	0	0	0
4/21/2024	12:45 AM	0	24	3	0	0	0	0	1	0	0	0	0	0
4/21/2024	1:00 AM	0	29	4	0	0	0	0	0	0	0	0	0	0
4/21/2024	1:15 AM	0	28	2	0	0	0	0	0	0	0	0	0	0
4/21/2024	1:30 AM	0	20	2	0	0	0	0	0	0	0	0	0	0
4/21/2024	1:45 AM	0	16	2	0	0	0	0	0	0	0	0	0	0
4/21/2024	2:00 AM	0	5	0	0	0	0	0	0	0	0	0	0	0
4/21/2024	2:15 AM	0	7	1	0	0	0	0	0	0	0	0	0	0
4/21/2024	2:30 AM	0	9	1	0	0	0	0	0	0	0	0	0	0
4/21/2024	2:45 AM	0	8	1	0	0	0	0	0	0	0	0	0	0
4/21/2024	3:00 AM	0	12	1	0	0	0	0	0	0	0	0	0	0
4/21/2024	3:15 AM	0	10	0	0	0	0	0	0	0	0	0	0	0
4/21/2024	3:30 AM	0	11	0	0	0	0	0	0	0	0	0	0	0
4/21/2024	3:45 AM	0	14	0	0	0	0	0	0	0	0	0	0	0
4/21/2024	4:00 AM	0	13	0	0	0	0	0	0	0	0	0	0	0
4/21/2024	4:15 AM	0	14	0	0	0	0	0	0	0	0	0	0	0
4/21/2024	4:30 AM	0	16	0	0	0	0	0	0	0	0	0	0	0
4/21/2024	4:45 AM	0	21	0	0	0	0	0	0	0	0	0	0	0
4/21/2024	5:00 AM	0	22	1	0	0	0	0	0	0	0	0	0	0
4/21/2024	5:15 AM	0	29	1	0	0	0	0	0	0	0	0	0	0
4/21/2024	5:30 AM	0	32	5	0	0	0	0	0	0	0	0	0	0
4/21/2024	5:45 AM	0	34	8	0	0	0	0	0	0	0	0	0	0
4/21/2024	6:00 AM	0	45	10	0	1	0	0	0	0	0	0	0	0
4/21/2024	6:15 AM	0	49	13	0	3	0	0	0	0	0	0	0	0
4/21/2024	6:30 AM	1	67	13	0	4	0	0	0	0	0	0	0	0
4/21/2024	6:45 AM	1	82	15	0	4	0	0	0	0	0	0	0	0
4/21/2024	7:00 AM	1	106	23	0	3	0	0	0	0	0	0	0	0
4/21/2024	7:15 AM	1	115	29	0	1	0	0	0	0	0	0	0	0
4/21/2024	7:30 AM	0	124	31	0	0	0	0	0	0	0	0	0	0
4/21/2024	7:45 AM	0	139	32	0	0	0	0	0	0	0	0	0	0
4/21/2024	8:00 AM	0	151	27	0	0	0	0	0	0	0	0	0	0
4/21/2024	8:15 AM	3	175	25	0	0	0	0	0	0	0	0	0	0
4/21/2024	8:30 AM	3	182	28	0	2	0	0	0	0	0	0	0	0
4/21/2024	8:45 AM	3	182	32	0	2	0	0	0	0	0	0	0	0
4/21/2024	9:00 AM	3	178	35	0	2	0	0	0	0	0	0	0	0
4/21/2024	9:15 AM	20	198	38	0	2	0	0	0	0	0	0	0	0
4/21/2024	9:30 AM	20	226	36	1	0	0	0	0	0	0	0	0	0
4/21/2024	9:45 AM	21	264	44	1	1	0	0	0	0	0	0	0	0
4/21/2024	10:00 AM	35	296	53	1	2	0	0	0	0	0	0	0	0
4/21/2024	10:15 AM	29	293	57	1	2	0	0	0	0	0	0	0	0
4/21/2024	10:30 AM	29	298	58	0	3	0	0	0	0	0	0	0	0
4/21/2024	10:45 AM	28	318	65	0	2	1	0	0	0	0	0	0	0
4/21/2024	11:00 AM	14	329	67	0	2	1	0	1	0	1	0	0	0
4/21/2024	11:15 AM	0	358	62	0	2	1	0	3	0	1	0	0	0
4/21/2024	11:30 AM	0	374	80	0	2	1	0	4	1	1	0	0	0
4/21/2024	11:45 AM	0	389	81	0	2	0	0	4	1	1	0	0	0
4/21/2024	12:00 PM	0	396	82	0	2	0	0	4	1	0	0	0	0
4/21/2024	12:15 PM	0	389	98	0	3	0	0	2	1	0	0	0	0
4/21/2024	12:30 PM	0	389	94	0	2	0	0	1	0	0	0	0	0
4/21/2024	12:45 PM	0	398	86	0	3	0	0	2	0	0	0	0	0
4/21/2024	1:00 PM	0	402	87	0	2	0	0	1	0	0	0	0	0
4/21/2024	1:15 PM	0	437	79	1	3	0	0	1	0	0	0	0	0
4/21/2024	1:30 PM	0	455	84	1	3	0	0	1	0	0	0	0	0
4/21/2024	1:45 PM	0	450	101	1	3	0	0	0	0	0	0	0	0
4/21/2024	2:00 PM	1	453	112	1	3	0	0	1	1	0	0	0	0
4/21/2024	2:15 PM	1	418	120	0	2	1	0	1	1	0	0	0	0
4/21/2024	2:30 PM	1	406	115	0	2	1	0	2	1	0	0	0	0
4/21/2024	2:45 PM	2	403	108	0	3	2	0	2	1	0	0	0	0
4/21/2024	3:00 PM	1	394	95	0	4	2	0	2	0	0	0	0	0
4/21/2024	3:15 PM	5	434	99	0	5	1	0	3	0	0	0	0	0
4/21/2024	3:30 PM	5	462	109	0	6	1	0	2	0	0	0	0	0
4/21/2024	3:45 PM	5	487	111	0	7	0	0	3	0	0	0	0	0
4/21/2024	4:00 PM	5	530	124	0	7	0	0	2	0	0	0	0	0
4/21/2024	4:15 PM	1	522	119	0	5	0	0	3	0	0	0	0	0
4/21/2024	4:30 PM	1	492	102	0	4	0	0	3	0	0	0	0	0
4/21/2024	4:45 PM	0	469	87	0	1	0	0	3	0	0	0	0	0
4/21/2024	5:00 PM	0	434	70	0	0	0	0	3	0	0	0	0	0
4/21/2024	5:15 PM	0	422	66	0	0	0	0	1	0	0	0	0	0
4/21/2024	5:30 PM	0	412	71	0	0	0	0	3	1	0	0	0	0
4/21/2024	5:45 PM	0	371	72	0	0	0	0	2	2	0	0	0	0
4/21/2024	6:00 PM	0	340	63	0	0	0	0	2	3	0	0	0	0
4/21/2024	6:15 PM	0	322	58	0	0	0	0	2	3	0	0	0	0
4/21/2024	6:30 PM	0	334	54	0	0	0	0	0	2	0	0	0	0
4/21/2024	6:45 PM	0	361	58	0	1	0	0	0	1	0	0	0	0
4/21/2024	7:00 PM	2	371	75	0	2	0	0	0	1	0	0	0	0
4/21/2024	7:15 PM	2	367	75	0	2	0	0	1	3	0	0	0	0
4/21/2024	7:30 PM	2	325	73	0	2	0	0	1	3	0	0	0	0
4/21/2024	7:45 PM	3	296	62	0	1	0	0	1	3	0	0	0	0
4/21/2024	8:00 PM	1	273	41	0	0	0	0	1	4	0	0	0	0
4/21/2024	8:15 PM	1	249	36	0	0	0	0	0	2	0	0	0	0
4/21/2024	8:30 PM	1	239	29	0	0	0	0	0	2	0	0	0	0
4/21/2024	8:45 PM	0	206	25	0	0	0	0	0	3	0	0	0	0
4/21/2024	9:00 PM	0	174	26	0	1	0	0	0	1	0	0	0	0
4/21/2024	9:15 PM	0	153	24	0	1	0	0	1	1	0	0	0	0
4/21/2024	9:30 PM	0	131	20	0	1	0	0	1	1	0	0	0	0
4/21/2024	9:45 PM	0	116	16	0	1	0	0	1	0	0	0	0	0
4/21/2024	10:00 PM	0	115	14	0	0	0	0	1	0	0	0	0	0
4/21/2024	10:15 PM	0	101	9	0	0	0	0	0	0	0	0	0	0
4/21/2024	10:30 PM	0	94	6	0	0	0	0	0	0	0	0	0	0
4/21/2024	10:45 PM	0	78	6	0	0	0	0	0	0	0	0	0	0
4/21/2024	11:00 PM	0	65	5	0	0	0	0	0	0	0	0	0	0
4/21/2024	11:15 PM	0	51	4	0	0	0	0	0	0	0	0	0	0
4/21/2024	11:30 PM	0	44	5	0	0	0	0	0	0	0	0	0	0
4/21/2024	11:45 PM	0	46	5	0	0	0	0	0	0	0	0	0	0

4/22/2024	12:00 AM	0	42	5	0	0	0	0	0	0	0	0	0
4/22/2024	12:15 AM	0	39	5	0	0	0	0	0	0	0	0	0
4/22/2024	12:30 AM	0	36	5	0	0	0	0	0	0	0	0	0
4/22/2024	12:45 AM	0	29	4	0	0	0	0	0	0	0	0	0
4/22/2024	1:00 AM	0	24	4	0	1	0	0	0	0	0	0	0
4/22/2024	1:15 AM	0	23	2	0	1	0	0	0	1	0	0	0
4/22/2024	1:30 AM	0	20	1	0	1	0	0	0	1	0	0	0
4/22/2024	1:45 AM	0	20	1	0	1	0	0	0	1	0	0	0
4/22/2024	2:00 AM	0	24	0	0	0	0	0	0	1	0	0	0
4/22/2024	2:15 AM	0	26	1	0	0	0	0	0	0	0	0	0
4/22/2024	2:30 AM	0	32	1	0	0	0	0	0	0	0	0	0
4/22/2024	2:45 AM	0	39	2	0	0	0	0	0	0	0	0	0
4/22/2024	3:00 AM	0	42	3	0	1	0	0	0	0	0	0	0
4/22/2024	3:15 AM	0	40	8	0	1	1	0	0	0	0	0	0
4/22/2024	3:30 AM	0	39	10	0	1	1	0	0	0	0	0	0
4/22/2024	3:45 AM	0	42	11	0	1	1	0	0	0	0	0	0
4/22/2024	4:00 AM	0	50	15	0	0	1	0	0	0	0	0	0
4/22/2024	4:15 AM	0	59	10	0	0	0	0	0	0	0	0	0
4/22/2024	4:30 AM	0	85	13	0	1	0	0	0	0	0	0	0
4/22/2024	4:45 AM	0	113	16	0	1	0	0	0	0	0	0	0
4/22/2024	5:00 AM	0	132	17	0	1	1	0	0	0	0	0	0
4/22/2024	5:15 AM	0	172	24	0	1	1	0	1	0	0	0	0
4/22/2024	5:30 AM	0	204	49	0	2	1	0	1	0	0	0	0
4/22/2024	5:45 AM	0	299	92	0	2	1	0	1	0	0	0	0
4/22/2024	6:00 AM	0	386	120	0	4	0	0	1	0	0	0	0
4/22/2024	6:15 AM	0	515	165	0	4	0	0	0	0	0	0	0
4/22/2024	6:30 AM	0	682	208	0	3	0	0	1	1	0	0	0
4/22/2024	6:45 AM	1	813	227	0	6	0	0	1	1	0	0	0
4/22/2024	7:00 AM	3	912	254	0	8	0	0	1	1	0	0	0
4/22/2024	7:15 AM	3	948	273	0	11	0	0	1	5	0	0	0
4/22/2024	7:30 AM	3	923	252	0	14	0	0	1	5	0	0	0
4/22/2024	7:45 AM	3	799	247	0	12	0	0	2	5	0	0	0
4/22/2024	8:00 AM	1	710	236	0	9	0	0	3	5	0	0	0
4/22/2024	8:15 AM	1	611	201	1	7	0	0	3	2	0	0	0
4/22/2024	8:30 AM	1	478	191	1	4	0	0	2	1	0	0	0
4/22/2024	8:45 AM	0	416	159	1	5	0	0	2	1	0	0	0
4/22/2024	9:00 AM	0	365	145	1	6	0	0	1	4	0	0	0
4/22/2024	9:15 AM	0	326	132	0	5	0	0	2	3	0	0	0
4/22/2024	9:30 AM	1	311	109	0	5	0	0	2	3	0	0	0
4/22/2024	9:45 AM	1	320	102	0	5	0	0	2	3	0	0	0
4/22/2024	10:00 AM	1	293	93	0	4	0	0	2	0	1	0	0
4/22/2024	10:15 AM	2	286	92	0	4	1	0	1	3	1	0	0
4/22/2024	10:30 AM	2	282	98	0	4	1	0	3	3	1	0	0
4/22/2024	10:45 AM	4	255	91	0	5	1	0	2	3	1	0	0
4/22/2024	11:00 AM	4	262	95	0	5	1	0	3	3	0	0	0
4/22/2024	11:15 AM	3	263	103	0	5	0	0	4	0	0	0	0
4/22/2024	11:30 AM	2	275	105	0	4	0	0	3	1	0	0	0
4/22/2024	11:45 AM	0	269	116	0	2	0	0	3	1	0	0	0
4/22/2024	12:00 PM	0	270	111	0	1	0	0	2	1	0	0	0
4/22/2024	12:15 PM	0	263	99	0	1	0	0	1	1	0	0	0
4/22/2024	12:30 PM	0	285	97	0	4	0	0	1	0	0	0	0
4/22/2024	12:45 PM	1	314	97	0	4	0	0	1	0	0	0	0
4/22/2024	1:00 PM	1	327	104	0	9	0	0	1	0	0	0	0
4/22/2024	1:15 PM	2	342	115	0	11	0	0	3	4	0	0	0
4/22/2024	1:30 PM	4	346	125	0	12	0	0	3	8	0	0	0
4/22/2024	1:45 PM	3	357	127	1	12	0	0	4	8	0	0	0
4/22/2024	2:00 PM	3	397	127	1	11	0	0	4	9	0	0	0
4/22/2024	2:15 PM	2	405	134	2	13	0	0	3	5	0	0	0
4/22/2024	2:30 PM	1	414	130	2	14	0	0	3	1	1	0	0
4/22/2024	2:45 PM	1	467	136	1	14	0	0	3	1	1	0	0
4/22/2024	3:00 PM	1	484	145	1	14	1	0	3	3	1	0	0
4/22/2024	3:15 PM	2	545	148	0	12	1	0	2	3	1	0	0
4/22/2024	3:30 PM	1	611	156	2	10	1	0	1	3	0	0	0
4/22/2024	3:45 PM	1	645	164	2	12	1	0	0	5	0	0	0
4/22/2024	4:00 PM	1	683	172	2	9	0	0	0	3	0	0	0
4/22/2024	4:15 PM	0	721	196	2	11	1	0	1	4	0	0	0
4/22/2024	4:30 PM	0	724	206	0	9	3	0	1	5	0	0	0
4/22/2024	4:45 PM	0	716	220	0	9	3	0	1	4	0	0	0
4/22/2024	5:00 PM	0	713	223	0	10	3	0	1	3	0	0	0
4/22/2024	5:15 PM	0	640	179	0	6	2	0	0	2	0	0	0
4/22/2024	5:30 PM	0	569	154	0	5	0	0	0	1	0	0	0
4/22/2024	5:45 PM	0	474	113	0	2	0	0	0	3	0	0	0
4/22/2024	6:00 PM	0	357	70	0	1	0	0	0	5	0	0	0
4/22/2024	6:15 PM	0	321	62	0	1	0	0	0	7	0	0	0
4/22/2024	6:30 PM	0	311	53	0	1	0	0	0	8	0	0	0
4/22/2024	6:45 PM	0	297	54	0	1	0	0	2	5	0	0	0
4/22/2024	7:00 PM	0	321	69	0	2	0	0	2	4	0	0	0
4/22/2024	7:15 PM	0	290	69	0	2	0	0	2	3	0	0	0
4/22/2024	7:30 PM	0	242	62	0	4	0	0	3	2	0	0	0
4/22/2024	7:45 PM	0	226	50	0	5	0	0	1	4	0	0	0
4/22/2024	8:00 PM	0	200	33	0	3	0	0	2	5	0	0	0
4/22/2024	8:15 PM	0	188	26	0	3	0	0	2	5	0	0	0
4/22/2024	8:30 PM	0	183	22	0	2	0	0	1	6	0	0	0
4/22/2024	8:45 PM	0	170	20	0	1	0	0	1	5	0	0	0
4/22/2024	9:00 PM	0	149	15	0	1	0	0	0	4	0	0	0
4/22/2024	9:15 PM	0	140	11	0	1	0	0	0	4	0	0	0
4/22/2024	9:30 PM	0	133	9	0	0	0	0	0	3	0	0	0
4/22/2024	9:45 PM	0	116	7	0	0	0	0	0	2	0	0	0
4/22/2024	10:00 PM	0	106	7	0	0	0	0	0	1	0	0	0
4/22/2024	10:15 PM	0	99	10	0	0	0	0	0	1	0	0	0
4/22/2024	10:30 PM	0	86	10	0	0	0	0	0	1	0	0	0
4/22/2024	10:45 PM	0	71	11	0	0	0	0	0	1	0	0	0
4/22/2024	11:00 PM	0	56	9	0	0	0	0	0	1	0	0	0
4/22/2024	11:15 PM	0	43	6	0	0	0	0	0	0	0	0	0
4/22/2024	11:30 PM	0	27	5	0	0	0	0	0	0	0	0	0
4/22/2024	11:45 PM	0	29	4	0	0	0	0	0	0	0	0	0

4/23/2024	12:00 AM	0	28	3	2	0	0	0	0	0	0	0	0
4/23/2024	12:15 AM	0	22	2	2	0	0	0	0	0	0	0	0
4/23/2024	12:30 AM	0	30	1	2	0	0	0	0	0	0	0	0
4/23/2024	12:45 AM	0	23	0	2	0	0	0	0	0	0	0	0
4/23/2024	1:00 AM	0	20	0	0	0	0	0	0	0	0	0	0
4/23/2024	1:15 AM	0	17	0	0	0	0	0	0	0	0	0	0
4/23/2024	1:30 AM	0	8	0	0	0	0	0	0	0	0	0	0
4/23/2024	1:45 AM	0	7	0	0	0	0	0	0	0	0	0	0
4/23/2024	2:00 AM	0	6	0	0	0	0	0	0	0	0	0	0
4/23/2024	2:15 AM	0	5	0	0	0	0	0	0	0	0	0	0
4/23/2024	2:30 AM	0	6	0	0	0	0	0	0	0	0	0	0
4/23/2024	2:45 AM	0	7	0	0	0	0	0	0	0	0	0	0
4/23/2024	3:00 AM	0	11	0	0	0	0	0	0	0	0	0	0
4/23/2024	3:15 AM	0	17	0	0	0	0	0	0	0	0	0	0
4/23/2024	3:30 AM	0	24	0	0	0	0	0	0	0	0	0	0
4/23/2024	3:45 AM	0	36	0	0	0	0	0	0	0	0	0	0
4/23/2024	4:00 AM	0	48	2	0	0	0	0	0	0	0	0	0
4/23/2024	4:15 AM	0	53	5	0	0	0	0	0	0	0	0	0
4/23/2024	4:30 AM	0	73	12	0	1	0	0	0	0	0	0	0
4/23/2024	4:45 AM	0	102	21	0	1	0	0	0	0	0	0	0
4/23/2024	5:00 AM	0	122	24	0	1	0	0	0	0	0	0	0
4/23/2024	5:15 AM	0	176	27	0	1	0	0	0	0	0	0	0
4/23/2024	5:30 AM	0	231	42	0	1	0	0	0	0	0	0	0
4/23/2024	5:45 AM	0	329	73	0	2	0	0	1	0	0	0	0
4/23/2024	6:00 AM	0	443	123	0	5	0	0	3	0	0	0	0
4/23/2024	6:15 AM	0	547	171	0	6	0	0	3	0	0	0	0
4/23/2024	6:30 AM	2	689	205	0	9	0	0	4	0	0	0	0
4/23/2024	6:45 AM	2	703	199	0	12	0	0	3	0	0	0	0
4/23/2024	7:00 AM	2	769	214	0	12	0	0	2	1	0	0	0
4/23/2024	7:15 AM	2	841	228	0	11	0	0	3	1	0	0	0
4/23/2024	7:30 AM	2	791	226	0	13	0	0	4	2	0	0	0
4/23/2024	7:45 AM	2	840	268	0	12	0	0	7	3	0	0	0
4/23/2024	8:00 AM	2	782	252	0	9	0	0	6	2	0	0	0
4/23/2024	8:15 AM	2	613	216	0	10	1	0	5	4	0	0	0
4/23/2024	8:30 AM	1	523	191	0	5	1	0	3	3	0	0	0
4/23/2024	8:45 AM	1	407	153	0	4	1	0	0	5	0	0	0
4/23/2024	9:00 AM	1	327	133	0	6	1	0	0	6	1	0	0
4/23/2024	9:15 AM	3	322	126	0	7	1	0	0	4	1	0	0
4/23/2024	9:30 AM	4	305	126	0	7	2	0	0	4	1	0	0
4/23/2024	9:45 AM	4	278	116	0	8	2	0	2	1	1	0	0
4/23/2024	10:00 AM	4	280	108	0	7	2	0	3	0	0	0	0
4/23/2024	10:15 AM	3	276	101	0	8	1	0	3	0	0	0	0
4/23/2024	10:30 AM	2	270	91	0	9	0	0	3	0	0	0	0
4/23/2024	10:45 AM	3	265	95	0	6	0	0	1	2	0	0	0
4/23/2024	11:00 AM	3	261	83	0	8	0	0	0	2	0	0	0
4/23/2024	11:15 AM	2	276	87	1	8	0	0	1	2	0	0	0
4/23/2024	11:30 AM	1	289	97	1	9	0	0	1	2	0	0	0
4/23/2024	11:45 AM	0	306	85	1	11	0	0	1	1	0	0	0
4/23/2024	12:00 PM	1	312	105	1	10	0	0	1	1	0	0	0
4/23/2024	12:15 PM	1	306	105	0	8	0	0	0	1	0	0	0
4/23/2024	12:30 PM	1	324	99	1	14	0	0	0	2	0	0	0
4/23/2024	12:45 PM	1	325	105	1	13	0	0	0	3	0	0	0
4/23/2024	1:00 PM	0	317	96	1	11	0	0	0	4	0	0	0
4/23/2024	1:15 PM	0	330	99	1	15	0	0	0	4	0	0	0
4/23/2024	1:30 PM	0	326	114	0	7	0	0	0	3	0	0	0
4/23/2024	1:45 PM	0	362	126	0	9	0	0	2	2	0	0	0
4/23/2024	2:00 PM	0	389	135	1	10	0	0	2	3	0	0	0
4/23/2024	2:15 PM	0	396	147	1	7	2	0	2	4	0	0	0
4/23/2024	2:30 PM	0	414	140	1	7	2	0	2	4	0	0	0
4/23/2024	2:45 PM	1	419	135	1	10	2	0	2	5	0	0	0
4/23/2024	3:00 PM	1	452	139	0	9	2	0	2	5	0	0	0
4/23/2024	3:15 PM	2	505	149	0	10	0	0	2	4	0	0	0
4/23/2024	3:30 PM	2	565	173	0	12	1	0	4	7	0	0	0
4/23/2024	3:45 PM	1	638	192	0	8	2	0	2	6	0	0	0
4/23/2024	4:00 PM	1	669	198	1	11	2	0	2	4	1	0	0
4/23/2024	4:15 PM	0	718	206	1	9	2	0	2	6	1	0	0
4/23/2024	4:30 PM	1	763	196	3	6	1	0	0	4	1	0	0
4/23/2024	4:45 PM	1	734	209	3	6	0	0	0	3	1	0	0
4/23/2024	5:00 PM	1	683	194	2	3	0	0	0	3	0	0	0
4/23/2024	5:15 PM	1	575	164	2	3	0	0	0	1	0	0	0
4/23/2024	5:30 PM	0	442	144	0	4	0	0	1	1	0	0	0
4/23/2024	5:45 PM	0	365	102	0	2	0	0	2	1	0	0	0
4/23/2024	6:00 PM	0	314	96	0	2	0	0	2	1	0	0	0
4/23/2024	6:15 PM	0	282	80	0	3	0	0	3	1	0	0	0
4/23/2024	6:30 PM	0	262	76	0	3	0	0	2	1	0	0	0
4/23/2024	6:45 PM	0	241	66	0	3	0	0	1	3	0	0	0
4/23/2024	7:00 PM	0	238	61	0	3	0	0	1	3	0	0	0
4/23/2024	7:15 PM	0	235	62	0	1	0	0	0	3	0	0	0
4/23/2024	7:30 PM	0	228	46	0	1	0	0	0	2	0	0	0
4/23/2024	7:45 PM	0	202	34	0	1	0	0	0	0	0	0	0
4/23/2024	8:00 PM	0	177	20	0	1	0	0	0	0	0	0	0
4/23/2024	8:15 PM	0	167	14	1	1	0	0	0	2	0	0	0
4/23/2024	8:30 PM	0	156	16	1	0	0	0	0	2	0	0	0
4/23/2024	8:45 PM	0	140	19	1	0	0	0	0	2	0	0	0
4/23/2024	9:00 PM	0	124	20	1	0	0	0	0	2	0	0	0
4/23/2024	9:15 PM	0	87	19	0	1	0	0	0	1	0	0	0
4/23/2024	9:30 PM	0	48	12	0	1	0	0	0	1	0	0	0
4/23/2024	9:45 PM	0	32	9	0	1	0	0	0	1	0	0	0
4/23/2024	10:00 PM	0	18	4	0	1	0	0	0	2	0	0	0
4/23/2024	10:15 PM	0	17	1	0	0	0	0	0	1	0	0	0
4/23/2024	10:30 PM	0	15	1	0	0	0	0	0	1	0	0	0
4/23/2024	10:45 PM	0	13	0	0	0	0	0	0	1	0	0	0
4/23/2024	11:00 PM	0	10	0	0	0	0	0	0	0	0	0	0
4/23/2024	11:15 PM	0	9	0	0	0	0	0	0	0	0	0	0
4/23/2024	11:30 PM	0	8	1	0	0	0	0	0	0	0	0	0
4/23/2024	11:45 PM	0	7	1	0	0	0	0	0	0	0	0	0

4/24/2024	12:00 AM	0	8	1	0	0	0	0	0	0	0	0	0	0
4/24/2024	12:15 AM	0	6	2	0	1	0	0	0	0	0	0	0	0
4/24/2024	12:30 AM	0	5	1	0	1	0	0	0	0	0	0	0	0
4/24/2024	12:45 AM	0	4	1	0	1	0	0	0	0	0	0	0	0
4/24/2024	1:00 AM	0	3	1	0	1	0	0	0	0	0	0	0	0
4/24/2024	1:15 AM	0	5	0	0	0	0	0	0	0	0	0	0	0
4/24/2024	1:30 AM	0	8	1	0	0	0	0	1	0	0	0	0	0
4/24/2024	1:45 AM	0	8	1	0	0	0	0	1	0	0	0	0	0
4/24/2024	2:00 AM	0	9	1	0	0	0	0	1	0	0	0	0	0
4/24/2024	2:15 AM	0	6	1	0	0	0	0	1	0	0	0	0	0
4/24/2024	2:30 AM	0	7	1	0	0	0	0	0	0	0	0	0	0
4/24/2024	2:45 AM	2	10	1	0	0	0	0	0	0	0	0	0	0
4/24/2024	3:00 AM	2	12	1	0	0	0	0	0	0	0	0	0	0
4/24/2024	3:15 AM	2	17	1	0	0	0	0	0	0	0	0	0	0
4/24/2024	3:30 AM	2	15	1	0	0	0	0	0	2	0	0	0	0
4/24/2024	3:45 AM	0	17	3	0	0	0	0	0	2	0	0	0	0
4/24/2024	4:00 AM	0	24	8	0	0	0	0	0	2	0	0	0	0
4/24/2024	4:15 AM	0	30	9	0	0	0	0	0	2	0	0	0	0
4/24/2024	4:30 AM	0	65	11	0	0	0	0	0	0	0	0	0	0
4/24/2024	4:45 AM	0	108	13	0	0	0	0	0	0	0	0	0	0
4/24/2024	5:00 AM	1	139	11	0	0	0	0	0	0	0	0	0	0
4/24/2024	5:15 AM	2	178	25	0	0	0	0	0	0	0	0	0	0
4/24/2024	5:30 AM	2	221	46	0	1	0	0	0	1	0	0	0	0
4/24/2024	5:45 AM	2	300	102	0	3	0	0	0	1	0	0	0	0
4/24/2024	6:00 AM	1	400	146	0	8	0	0	1	1	0	0	0	0
4/24/2024	6:15 AM	3	513	204	0	12	0	0	1	2	0	0	0	0
4/24/2024	6:30 AM	4	672	252	0	14	0	0	2	2	0	0	0	0
4/24/2024	6:45 AM	4	783	278	0	16	0	0	3	3	0	0	0	0
4/24/2024	7:00 AM	5	934	312	0	15	0	0	4	4	0	0	0	0
4/24/2024	7:15 AM	3	986	326	0	14	0	0	5	4	0	0	0	0
4/24/2024	7:30 AM	2	989	320	0	14	0	0	5	5	0	0	0	0
4/24/2024	7:45 AM	2	920	283	0	11	0	0	5	5	0	0	0	0
4/24/2024	8:00 AM	5	740	250	0	9	0	0	4	5	0	0	0	0
4/24/2024	8:15 AM	4	624	207	0	8	0	0	3	6	0	0	0	0
4/24/2024	8:30 AM	4	468	169	0	6	0	0	2	5	0	0	0	0
4/24/2024	8:45 AM	4	382	152	0	6	0	0	1	4	0	0	0	0
4/24/2024	9:00 AM	0	351	127	0	4	0	0	0	3	0	0	0	0
4/24/2024	9:15 AM	0	337	105	0	3	0	0	0	1	0	0	0	0
4/24/2024	9:30 AM	0	314	105	0	5	0	0	1	0	0	0	0	0
4/24/2024	9:45 AM	0	299	100	0	4	1	0	1	0	0	0	0	0
4/24/2024	10:00 AM	0	296	102	0	4	1	0	1	0	0	0	0	0
4/24/2024	10:15 AM	0	280	108	0	6	1	0	3	0	0	0	0	0
4/24/2024	10:30 AM	0	295	99	0	6	1	0	2	1	0	0	0	0
4/24/2024	10:45 AM	1	293	100	0	10	0	0	3	2	0	0	0	0
4/24/2024	11:00 AM	1	287	100	0	13	0	0	3	3	0	0	0	0
4/24/2024	11:15 AM	2	289	99	0	10	0	0	2	4	0	0	0	0
4/24/2024	11:30 AM	2	268	100	0	9	0	0	3	3	1	0	0	0
4/24/2024	11:45 AM	1	306	97	0	8	0	0	4	4	1	0	0	0
4/24/2024	12:00 PM	1	312	112	0	9	0	0	4	4	1	0	0	0
4/24/2024	12:15 PM	0	320	116	0	11	0	0	3	4	1	0	0	0
4/24/2024	12:30 PM	0	337	128	0	11	0	0	2	4	0	0	0	0
4/24/2024	12:45 PM	0	329	138	0	11	0	0	1	2	0	0	0	0
4/24/2024	1:00 PM	0	343	133	0	10	1	0	1	1	0	0	0	0
4/24/2024	1:15 PM	0	352	123	0	11	1	0	2	0	0	0	0	0
4/24/2024	1:30 PM	1	358	113	0	11	1	0	3	0	0	0	0	0
4/24/2024	1:45 PM	1	360	104	0	9	1	0	2	0	0	0	0	0
4/24/2024	2:00 PM	2	381	103	0	10	0	0	2	1	0	0	0	0
4/24/2024	2:15 PM	5	402	119	0	13	0	0	1	1	0	0	0	0
4/24/2024	2:30 PM	4	430	138	0	12	0	0	0	2	0	0	0	0
4/24/2024	2:45 PM	4	453	148	0	13	0	0	0	2	0	0	0	0
4/24/2024	3:00 PM	3	486	159	1	11	0	0	0	1	0	0	0	0
4/24/2024	3:15 PM	0	539	162	1	9	0	0	0	2	0	0	0	0
4/24/2024	3:30 PM	1	573	162	1	10	0	0	0	1	0	0	0	0
4/24/2024	3:45 PM	1	606	178	1	11	0	0	0	1	0	0	0	0
4/24/2024	4:00 PM	1	627	172	0	11	0	0	2	2	0	0	0	0
4/24/2024	4:15 PM	2	678	178	0	8	0	0	3	7	0	0	0	0
4/24/2024	4:30 PM	1	760	183	0	9	0	0	3	8	0	0	0	0
4/24/2024	4:45 PM	1	747	173	0	6	1	0	4	9	0	0	0	0
4/24/2024	5:00 PM	1	705	167	0	7	1	0	4	9	0	0	0	0
4/24/2024	5:15 PM	0	610	151	0	7	1	0	3	7	0	0	0	0
4/24/2024	5:30 PM	0	487	130	0	6	1	0	3	7	0	0	0	0
4/24/2024	5:45 PM	1	448	120	0	7	0	0	4	7	0	0	0	0
4/24/2024	6:00 PM	2	415	113	0	5	0	0	2	7	0	0	0	0
4/24/2024	6:15 PM	4	350	95	0	6	0	0	3	3	1	0	0	0
4/24/2024	6:30 PM	4	318	86	0	4	0	0	4	2	1	0	0	0
4/24/2024	6:45 PM	3	261	66	0	4	0	0	2	2	1	0	0	0
4/24/2024	7:00 PM	2	223	55	0	3	1	0	3	1	1	0	0	0
4/24/2024	7:15 PM	0	210	57	0	1	1	0	2	2	0	0	0	0
4/24/2024	7:30 PM	0	191	49	1	1	1	0	1	2	0	0	0	0
4/24/2024	7:45 PM	0	185	45	1	0	1	0	1	1	0	0	0	0
4/24/2024	8:00 PM	1	169	32	1	0	0	0	0	1	0	1	0	0
4/24/2024	8:15 PM	1	172	22	1	1	0	0	0	0	0	1	0	0
4/24/2024	8:30 PM	1	168	21	0	2	0	0	0	1	0	1	0	0
4/24/2024	8:45 PM	1	156	15	0	2	0	0	0	1	0	1	0	0
4/24/2024	9:00 PM	1	129	15	0	2	0	0	0	4	0	0	0	0
4/24/2024	9:15 PM	1	106	18	0	1	0	0	0	4	0	0	0	0
4/24/2024	9:30 PM	1	71	14	0	0	0	0	0	3	0	0	0	0
4/24/2024	9:45 PM	1	53	12	0	0	0	0	0	3	0	0	0	0
4/24/2024	10:00 PM	0	60	14	0	1	0	0	0	0	0	0	0	0
4/24/2024	10:15 PM	0	48	7	0	2	0	0	0	1	0	0	0	0
4/24/2024	10:30 PM	0	45	6	0	2	0	0	0	1	0	0	0	0
4/24/2024	10:45 PM	0	43	7	0	2	0	0	0	1	0	0	0	0
4/24/2024	11:00 PM	0	30	5	0	1	0	0	0	1	0	0	0	0
4/24/2024	11:15 PM	0	27	5	0	0	0	0	0	0	0	0	0	0
4/24/2024	11:30 PM	0	25	3	0	0	0	0	0	0	0	0	0	0
4/24/2024	11:45 PM	0	18	2	0	0	0	0	0	0	0	0	0	0

4/25/2024	12:00 AM	0	13	0	0	0	0	0	0	0	0	0	0
4/25/2024	12:15 AM	0	10	0	0	0	0	0	0	0	0	0	0
4/25/2024	12:30 AM	0	6	0	1	0	0	0	0	0	0	0	0
4/25/2024	12:45 AM	0	8	1	1	0	0	0	0	0	0	0	0
4/25/2024	1:00 AM	0	9	1	1	0	0	0	0	0	0	0	0
4/25/2024	1:15 AM	0	9	1	1	0	0	0	0	0	0	0	0
4/25/2024	1:30 AM	0	8	1	0	0	0	0	0	0	0	0	0
4/25/2024	1:45 AM	0	8	0	0	0	0	0	0	0	0	0	0
4/25/2024	2:00 AM	0	8	0	0	0	0	0	0	0	0	0	0
4/25/2024	2:15 AM	0	11	0	0	0	0	0	0	0	0	0	0
4/25/2024	2:30 AM	0	13	0	0	0	0	0	0	1	0	0	0
4/25/2024	2:45 AM	0	16	0	0	0	0	0	0	2	0	0	0
4/25/2024	3:00 AM	0	18	3	0	0	0	0	0	2	0	0	0
4/25/2024	3:15 AM	0	19	5	0	0	0	0	0	2	0	0	0
4/25/2024	3:30 AM	0	23	6	0	0	0	0	0	1	0	0	0
4/25/2024	3:45 AM	0	27	8	0	0	0	0	0	0	0	0	0
4/25/2024	4:00 AM	0	32	8	0	0	0	0	0	0	0	0	0
4/25/2024	4:15 AM	0	41	11	0	1	0	0	0	0	0	0	0
4/25/2024	4:30 AM	0	58	15	0	2	0	0	0	0	0	0	0
4/25/2024	4:45 AM	0	92	19	0	2	0	0	0	1	0	0	0
4/25/2024	5:00 AM	0	125	21	0	2	0	0	0	2	0	0	0
4/25/2024	5:15 AM	0	170	33	0	1	0	0	0	2	0	0	0
4/25/2024	5:30 AM	0	225	56	0	1	0	0	0	3	0	0	0
4/25/2024	5:45 AM	0	315	99	0	2	0	0	0	3	0	0	0
4/25/2024	6:00 AM	1	442	149	0	5	0	0	0	2	0	0	0
4/25/2024	6:15 AM	2	559	191	0	7	0	0	0	3	0	0	0
4/25/2024	6:30 AM	4	722	234	0	9	0	0	0	2	0	0	0
4/25/2024	6:45 AM	4	839	267	0	15	0	0	1	1	0	0	0
4/25/2024	7:00 AM	4	916	286	0	14	0	0	1	3	0	0	0
4/25/2024	7:15 AM	4	976	302	0	20	0	0	2	2	0	0	0
4/25/2024	7:30 AM	4	932	304	0	19	0	0	2	3	0	0	0
4/25/2024	7:45 AM	5	865	286	1	16	0	0	4	4	0	0	0
4/25/2024	8:00 AM	4	762	257	1	15	0	0	4	3	0	0	0
4/25/2024	8:15 AM	3	635	231	1	11	0	0	5	4	0	0	0
4/25/2024	8:30 AM	1	534	195	1	10	0	0	8	4	0	0	0
4/25/2024	8:45 AM	0	450	167	0	6	0	0	6	3	0	0	0
4/25/2024	9:00 AM	0	394	159	0	7	0	0	6	4	1	0	0
4/25/2024	9:15 AM	0	362	150	0	4	0	0	5	3	1	0	0
4/25/2024	9:30 AM	0	350	145	0	4	0	0	2	3	1	0	0
4/25/2024	9:45 AM	0	321	133	0	7	1	0	4	4	1	0	0
4/25/2024	10:00 AM	0	311	133	0	6	1	0	4	2	0	0	0
4/25/2024	10:15 AM	0	297	115	0	8	1	0	3	3	0	0	0
4/25/2024	10:30 AM	0	336	123	0	12	2	0	3	7	0	0	0
4/25/2024	10:45 AM	0	360	132	0	11	1	0	0	7	0	0	0
4/25/2024	11:00 AM	0	355	117	0	13	1	0	0	8	0	0	0
4/25/2024	11:15 AM	3	371	123	0	12	1	0	0	8	0	0	0
4/25/2024	11:30 AM	3	334	112	0	11	0	0	1	3	1	0	0
4/25/2024	11:45 AM	5	310	114	0	10	0	0	2	2	1	0	0
4/25/2024	12:00 PM	5	322	119	0	8	0	0	3	1	1	0	0
4/25/2024	12:15 PM	2	334	127	0	7	1	0	3	0	1	0	0
4/25/2024	12:30 PM	3	340	126	0	6	1	0	3	3	0	0	0
4/25/2024	12:45 PM	1	372	122	0	6	1	0	4	4	0	0	0
4/25/2024	1:00 PM	2	381	142	0	8	1	0	4	5	0	0	0
4/25/2024	1:15 PM	2	388	132	0	11	0	0	5	5	0	0	0
4/25/2024	1:30 PM	3	399	138	0	15	0	0	4	3	0	0	0
4/25/2024	1:45 PM	5	402	140	0	17	0	0	3	2	0	0	0
4/25/2024	2:00 PM	4	401	121	0	15	0	0	2	2	0	0	0
4/25/2024	2:15 PM	4	420	134	0	16	0	0	2	2	0	0	0
4/25/2024	2:30 PM	4	456	140	0	12	0	0	2	2	0	0	0
4/25/2024	2:45 PM	3	484	150	0	9	0	0	1	3	0	0	0
4/25/2024	3:00 PM	3	546	174	1	10	0	0	1	2	0	0	0
4/25/2024	3:15 PM	4	582	174	2	7	0	0	0	4	0	0	0
4/25/2024	3:30 PM	2	620	185	2	8	0	0	1	4	0	0	0
4/25/2024	3:45 PM	3	662	195	2	15	0	0	2	4	0	0	0
4/25/2024	4:00 PM	3	700	197	1	15	0	0	2	4	0	0	0
4/25/2024	4:15 PM	4	757	213	0	16	0	0	3	4	0	0	0
4/25/2024	4:30 PM	4	817	220	0	18	0	0	2	8	0	0	0
4/25/2024	4:45 PM	4	838	212	1	12	0	0	1	7	0	0	0
4/25/2024	5:00 PM	5	772	205	1	12	0	0	2	8	0	0	0
4/25/2024	5:15 PM	3	663	189	1	10	0	0	1	6	0	0	0
4/25/2024	5:30 PM	3	515	160	1	5	0	0	3	1	0	0	0
4/25/2024	5:45 PM	3	417	145	0	5	0	0	3	1	0	0	0
4/25/2024	6:00 PM	2	373	130	0	6	0	0	2	4	0	0	0
4/25/2024	6:15 PM	2	343	110	0	7	0	0	2	4	0	0	0
4/25/2024	6:30 PM	2	344	107	0	7	0	0	1	5	0	0	0
4/25/2024	6:45 PM	2	309	98	0	7	0	0	1	5	0	0	0
4/25/2024	7:00 PM	2	301	92	0	5	0	0	1	1	0	0	0
4/25/2024	7:15 PM	3	286	83	0	3	0	0	1	1	0	0	0
4/25/2024	7:30 PM	3	262	65	0	2	0	0	0	0	0	0	0
4/25/2024	7:45 PM	1	242	51	0	2	0	0	0	2	0	0	0
4/25/2024	8:00 PM	1	212	30	0	2	0	0	0	2	0	0	0
4/25/2024	8:15 PM	0	194	26	0	2	0	0	0	4	0	0	0
4/25/2024	8:30 PM	0	160	29	0	2	0	0	0	5	0	0	0
4/25/2024	8:45 PM	0	151	27	0	1	0	0	0	3	0	0	0
4/25/2024	9:00 PM	0	135	25	0	0	0	0	0	5	0	0	0
4/25/2024	9:15 PM	0	129	22	0	1	0	0	0	4	0	0	0
4/25/2024	9:30 PM	1	111	12	0	1	0	0	0	3	0	0	0
4/25/2024	9:45 PM	1	96	9	0	2	0	0	0	3	0	0	0
4/25/2024	10:00 PM	1	81	7	0	2	0	0	0	1	0	0	0
4/25/2024	10:15 PM	1	60	6	0	1	0	0	0	0	0	0	0
4/25/2024	10:30 PM	0	62	6	0	3	0	0	0	1	0	0	0
4/25/2024	10:45 PM	0	51	8	0	2	0	0	0	1	0	0	0
4/25/2024	11:00 PM	0	46	10	0	2	0	0	0	1	0	0	0
4/25/2024	11:15 PM	0	34	8	0	2	0	0	0	1	0	0	0
4/25/2024	11:30 PM	0	17	7	0	0	0	0	0	0	0	0	0
4/25/2024	11:45 PM	0	9	3	0	0	0	0	0	0	0	0	0

4/26/2024	12:00 AM	0	16	1	0	0	0	0	0	0	0	0	0
4/26/2024	12:15 AM	0	15	1	0	0	0	0	0	0	0	0	0
4/26/2024	12:30 AM	0	18	1	0	0	0	0	0	0	0	0	0
4/26/2024	12:45 AM	0	15	1	0	0	0	0	0	0	0	0	0
4/26/2024	1:00 AM	0	17	1	0	0	0	0	0	0	0	0	0
4/26/2024	1:15 AM	0	16	1	0	0	0	0	0	0	0	0	0
4/26/2024	1:30 AM	0	14	1	0	0	0	0	0	0	0	0	0
4/26/2024	1:45 AM	0	15	0	0	0	0	0	0	0	1	0	0
4/26/2024	2:00 AM	0	14	0	0	0	0	0	0	0	1	0	0
4/26/2024	2:15 AM	0	17	0	0	0	0	0	0	0	1	0	0
4/26/2024	2:30 AM	0	16	0	0	0	0	0	0	0	1	0	0
4/26/2024	2:45 AM	0	17	1	0	0	0	0	0	0	0	0	0
4/26/2024	3:00 AM	0	17	1	0	0	0	0	0	0	0	0	0
4/26/2024	3:15 AM	0	18	1	0	0	0	0	0	0	0	0	0
4/26/2024	3:30 AM	0	20	3	0	0	0	0	0	0	0	0	0
4/26/2024	3:45 AM	0	22	4	0	0	0	0	0	0	0	0	0
4/26/2024	4:00 AM	0	35	6	0	0	0	0	0	0	0	0	0
4/26/2024	4:15 AM	0	46	9	0	0	0	0	0	0	0	0	0
4/26/2024	4:30 AM	0	69	11	0	0	0	0	0	0	0	0	0
4/26/2024	4:45 AM	0	91	17	0	0	0	0	0	0	0	0	0
4/26/2024	5:00 AM	0	115	27	0	0	0	0	0	0	0	0	0
4/26/2024	5:15 AM	0	140	36	1	0	0	0	0	0	0	0	0
4/26/2024	5:30 AM	0	188	47	1	1	0	0	0	1	0	0	0	0
4/26/2024	5:45 AM	1	279	69	1	1	0	0	0	1	0	0	0	0
4/26/2024	6:00 AM	1	364	95	1	2	1	0	0	1	0	0	0	0
4/26/2024	6:15 AM	5	471	139	1	2	1	0	1	1	0	0	0	0
4/26/2024	6:30 AM	8	603	180	1	4	1	0	1	1	0	0	0	0
4/26/2024	6:45 AM	7	701	215	1	5	1	0	1	1	0	0	0	0
4/26/2024	7:00 AM	7	806	241	1	8	0	0	1	1	0	0	0	0
4/26/2024	7:15 AM	4	843	247	0	10	0	0	3	1	0	0	0	0
4/26/2024	7:30 AM	1	794	233	2	9	0	0	5	0	0	0	0	0
4/26/2024	7:45 AM	2	726	220	2	11	0	0	5	3	0	0	0	0
4/26/2024	8:00 AM	2	624	205	4	10	1	0	5	3	0	0	0	0
4/26/2024	8:15 AM	1	549	176	4	10	1	0	2	3	0	0	0	0
4/26/2024	8:30 AM	1	494	173	2	10	1	0	1	4	0	0	0	0
4/26/2024	8:45 AM	0	466	147	2	9	1	0	1	4	1	0	0	0
4/26/2024	9:00 AM	1	434	125	1	7	0	0	2	4	1	0	0	0
4/26/2024	9:15 AM	3	413	127	1	7	1	0	2	4	1	0	0	0
4/26/2024	9:30 AM	3	414	124	1	5	1	0	1	4	1	0	0	0
4/26/2024	9:45 AM	3	379	130	1	7	1	0	2	2	0	0	0	0
4/26/2024	10:00 AM	2	367	136	0	6	1	0	1	2	0	0	0	0
4/26/2024	10:15 AM	6	397	121	0	5	0	0	1	2	0	0	0	0
4/26/2024	10:30 AM	6	406	107	0	7	0	0	1	2	1	0	0	0
4/26/2024	10:45 AM	6	415	112	0	4	0	0	0	2	1	0	0	0
4/26/2024	11:00 AM	8	468	113	0	9	0	0	1	4	1	0	0	0
4/26/2024	11:15 AM	2	464	125	0	9	0	0	2	7	1	0	0	0
4/26/2024	11:30 AM	2	454	128	0	8	0	0	2	7	0	0	0	0
4/26/2024	11:45 AM	12	473	129	0	10	0	0	2	7	0	0	0	0
4/26/2024	12:00 PM	11	466	139	0	8	0	0	1	6	0	0	0	0
4/26/2024	12:15 PM	11	473	146	0	10	0	0	1	4	0	0	0	0
4/26/2024	12:30 PM	17	528	156	0	12	0	0	1	4	0	0	0	0
4/26/2024	12:45 PM	7	557	158	0	10	0	0	1	5	0	0	0	0
4/26/2024	1:00 PM	10	577	153	0	9	0	0	1	6	0	0	0	0
4/26/2024	1:15 PM	10	592	154	0	9	0	0	0	8	0	0	0	0
4/26/2024	1:30 PM	4	570	160	0	9	0	0	0	9	0	0	0	0
4/26/2024	1:45 PM	6	552	159	0	12	0	0	0	7	0	0	0	0
4/26/2024	2:00 PM	4	542	151	0	11	0	0	0	5	0	0	0	0
4/26/2024	2:15 PM	4	547	147	0	11	1	0	1	2	0	0	0	0
4/26/2024	2:30 PM	22	593	148	0	10	2	0	1	1	0	0	0	0
4/26/2024	2:45 PM	29	689	180	1	10	2	0	1	2	0	0	0	0
4/26/2024	3:00 PM	29	766	204	1	13	2	0	3	4	0	0	0	0
4/26/2024	3:15 PM	29	849	220	1	14	2	0	4	5	0	0	0	0
4/26/2024	3:30 PM	11	866	225	1	13	1	0	4	5	0	0	0	0
4/26/2024	3:45 PM	6	864	209	0	12	1	0	4	4	0	0	0	0
4/26/2024	4:00 PM	5	871	203	0	11	1	0	2	2	0	0	0	0
4/26/2024	4:15 PM	11	867	202	0	7	1	0	1	1	0	0	0	0
4/26/2024	4:30 PM	13	890	195	1	8	1	0	1	0	0	0	0	0
4/26/2024	4:45 PM	13	807	178	1	5	1	0	2	0	0	0	0	0
4/26/2024	5:00 PM	14	739	164	1	2	1	0	2	0	0	0	0	0
4/26/2024	5:15 PM	15	661	157	1	5	0	0	2	0	0	0	0	0
4/26/2024	5:30 PM	13	581	142	0	5	0	0	3	0	0	0	0	0
4/26/2024	5:45 PM	10	582	126	0	5	0	0	2	1	0	0	0	0
4/26/2024	6:00 PM	9	539	106	0	5	1	0	3	1	0	0	0	0
4/26/2024	6:15 PM	7	482	84	0	3	1	0	4	1	0	0	0	0
4/26/2024	6:30 PM	14	435	76	0	1	1	1	4	1	0	0	0	0
4/26/2024	6:45 PM	14	376	72	0	2	1	1	4	0	0	0	0	0
4/26/2024	7:00 PM	14	365	72	0	3	0	1	3	0	0	0	0	0
4/26/2024	7:15 PM	12	345	69	0	2	0	1	1	0	0	0	0	0
4/26/2024	7:30 PM	5	310	63	0	2	0	0	0	0	0	0	0	0
4/26/2024	7:45 PM	6	304	57	0	1	0	0	0	0	0	0	0	0
4/26/2024	8:00 PM	5	270	52	0	1	0	0	0	0	1	0	0	0
4/26/2024	8:15 PM	2	251	42	0	2	0	0	0	0	2	0	0	0
4/26/2024	8:30 PM	2	238	41	0	2	0	0	0	0	2	0	0	0
4/26/2024	8:45 PM	0	188	36	0	2	0	0	0	0	2	0	0	0
4/26/2024	9:00 PM	0	160	34	0	1	0	0	0	0	1	0	0	0
4/26/2024	9:15 PM	0	140	32	0	0	0	0	0	0	0	0	0	0
4/26/2024	9:30 PM	1	117	31	0	0	0	0	0	0	0	0	0	0
4/26/2024	9:45 PM	9	113	30	0	0	0	0	0	0	0	0	0	0
4/26/2024	10:00 PM	9	95	27	0	0	0	0	0	0	0	0	0	0
4/26/2024	10:15 PM	9	86	26	0	1	0	0	0	0	0	0	0	0
4/26/2024	10:30 PM	10	75	22	0	1	0	0	0	0	0	0	0	0
4/26/2024	10:45 PM	2	73	21	0	1	0	0	0	0	0	0	0	0
4/26/2024	11:00 PM	2	63	20	0	1	0	0	0	0	0	0	0	0
4/26/2024	11:15 PM	2	45	14	0	0	0	0	0	0	0	0	0	0
4/26/2024	11:30 PM	0	30	9	0	0	0	0	0	0	0	0	0	0
4/26/2024	11:45 PM	0	11	4	0	0	0	0	0	0	0	0	0	0

4/27/2024	12:00 AM	1	39	3	0	0	0	0	0	1	0	0	0	0
4/27/2024	12:15 AM	0	29	2	0	0	0	0	0	0	0	0	0	0
4/27/2024	12:30 AM	0	26	0	0	0	0	0	0	0	0	0	0	0
4/27/2024	12:45 AM	0	22	0	0	0	0	0	0	0	0	0	0	0
4/27/2024	1:00 AM	0	18	1	0	0	0	0	0	0	0	0	0	0
4/27/2024	1:15 AM	0	19	1	0	0	0	0	0	0	0	0	0	0
4/27/2024	1:30 AM	0	16	2	0	0	0	0	0	0	0	0	0	0
4/27/2024	1:45 AM	0	15	2	0	0	0	0	0	0	0	0	0	0
4/27/2024	2:00 AM	8	15	1	0	0	0	0	0	0	0	0	0	0
4/27/2024	2:15 AM	8	10	1	0	0	0	0	0	0	0	0	0	0
4/27/2024	2:30 AM	8	11	0	0	0	0	0	0	0	0	0	0	0
4/27/2024	2:45 AM	8	12	0	0	0	0	0	0	0	0	0	0	0
4/27/2024	3:00 AM	0	14	0	0	0	0	0	0	0	0	0	0	0
4/27/2024	3:15 AM	0	15	0	0	0	0	0	0	0	0	0	0	0
4/27/2024	3:30 AM	1	18	0	0	0	0	0	0	0	0	0	0	0
4/27/2024	3:45 AM	1	18	0	0	0	0	0	0	0	0	0	0	0
4/27/2024	4:00 AM	1	19	1	0	0	0	0	0	0	0	0	0	0
4/27/2024	4:15 AM	1	24	1	0	0	0	0	0	0	0	0	0	0
4/27/2024	4:30 AM	2	21	1	0	0	0	0	0	0	0	0	0	0
4/27/2024	4:45 AM	2	24	3	0	1	0	0	0	0	0	0	0	0
4/27/2024	5:00 AM	2	30	4	0	1	0	0	0	0	0	0	0	0
4/27/2024	5:15 AM	3	33	9	0	1	0	0	0	0	0	0	0	0
4/27/2024	5:30 AM	1	55	14	0	1	0	0	0	1	0	0	0	0
4/27/2024	5:45 AM	1	79	18	0	1	0	0	0	2	0	0	0	0
4/27/2024	6:00 AM	1	106	28	0	1	0	0	0	2	0	0	0	0
4/27/2024	6:15 AM	0	124	32	0	1	0	0	1	3	0	0	0	0
4/27/2024	6:30 AM	1	155	44	0	2	0	0	1	2	0	0	0	0
4/27/2024	6:45 AM	2	179	60	0	1	0	0	1	1	0	0	0	0
4/27/2024	7:00 AM	3	216	66	0	1	0	0	1	1	0	0	0	0
4/27/2024	7:15 AM	4	247	69	0	2	1	0	0	1	0	0	0	0
4/27/2024	7:30 AM	4	270	73	0	1	1	0	0	1	0	0	0	0
4/27/2024	7:45 AM	3	287	72	0	3	1	0	0	2	0	0	0	0
4/27/2024	8:00 AM	3	283	69	0	3	1	0	0	2	0	0	0	0
4/27/2024	8:15 AM	3	282	75	0	2	0	0	0	1	0	0	0	0
4/27/2024	8:30 AM	2	285	84	0	2	0	0	0	1	0	0	0	0
4/27/2024	8:45 AM	2	309	79	0	0	0	0	1	0	0	0	0	0
4/27/2024	9:00 AM	1	338	88	0	1	0	0	1	0	0	0	0	0
4/27/2024	9:15 AM	0	354	89	0	2	0	0	1	0	0	0	0	0
4/27/2024	9:30 AM	3	380	80	0	2	0	0	1	1	0	0	0	0
4/27/2024	9:45 AM	15	402	84	0	3	0	0	0	1	0	0	0	0
4/27/2024	10:00 AM	24	394	85	0	3	0	0	0	1	0	0	0	0
4/27/2024	10:15 AM	24	413	88	0	4	0	0	0	1	0	0	0	0
4/27/2024	10:30 AM	36	411	91	0	6	0	0	0	0	0	0	0	0
4/27/2024	10:45 AM	30	396	92	0	5	0	0	1	0	0	0	0	0
4/27/2024	11:00 AM	22	418	94	0	4	0	0	1	2	0	0	0	0
4/27/2024	11:15 AM	23	428	97	0	4	0	0	2	2	0	0	0	0
4/27/2024	11:30 AM	12	447	95	0	2	1	0	2	3	0	0	0	0
4/27/2024	11:45 AM	8	465	111	0	5	1	0	1	4	0	0	0	0
4/27/2024	12:00 PM	9	473	108	0	5	1	0	1	2	0	0	0	0
4/27/2024	12:15 PM	13	490	116	1	4	1	0	0	2	0	0	0	0
4/27/2024	12:30 PM	28	484	119	1	4	0	0	0	2	0	0	0	0
4/27/2024	12:45 PM	31	485	109	1	1	0	0	0	1	0	0	0	0
4/27/2024	1:00 PM	32	472	112	1	2	0	0	0	2	0	0	0	0
4/27/2024	1:15 PM	32	467	103	0	2	0	0	1	3	0	0	0	0
4/27/2024	1:30 PM	13	463	107	0	4	0	0	1	3	0	0	0	0
4/27/2024	1:45 PM	9	426	102	0	5	0	0	1	3	0	0	0	0
4/27/2024	2:00 PM	7	419	99	0	6	0	0	1	2	0	0	0	0
4/27/2024	2:15 PM	3	425	101	0	6	0	0	1	1	0	0	0	0
4/27/2024	2:30 PM	7	413	92	0	4	0	0	1	0	0	0	0	0
4/27/2024	2:45 PM	14	439	101	0	3	0	0	3	0	0	0	0	0
4/27/2024	3:00 PM	16	446	96	0	1	0	0	3	0	0	0	0	0
4/27/2024	3:15 PM	21	418	84	0	2	0	0	2	0	0	0	0	0
4/27/2024	3:30 PM	21	424	91	0	2	0	0	2	0	0	0	0	0
4/27/2024	3:45 PM	14	407	90	0	3	1	0	0	1	0	0	0	0
4/27/2024	4:00 PM	11	400	80	0	3	1	0	0	2	0	0	0	0
4/27/2024	4:15 PM	5	405	75	0	2	1	0	0	2	0	0	0	0
4/27/2024	4:30 PM	3	396	72	0	3	1	0	0	2	0	0	0	0
4/27/2024	4:45 PM	3	391	54	0	4	0	0	1	2	0	0	0	0
4/27/2024	5:00 PM	3	357	68	0	4	0	0	1	1	0	0	0	0
4/27/2024	5:15 PM	3	326	71	1	3	0	0	1	1	0	0	0	0
4/27/2024	5:30 PM	1	314	57	1	3	0	0	1	1	0	0	0	0
4/27/2024	5:45 PM	0	310	69	1	2	0	0	0	0	0	0	0	0
4/27/2024	6:00 PM	0	312	57	1	2	0	0	1	0	0	0	0	0
4/27/2024	6:15 PM	0	320	59	0	3	0	0	2	1	0	0	0	0
4/27/2024	6:30 PM	1	302	65	0	2	0	0	2	1	0	0	0	0
4/27/2024	6:45 PM	1	289	51	0	1	0	0	2	1	0	0	0	0
4/27/2024	7:00 PM	3	290	56	0	1	0	0	1	1	0	0	0	0
4/27/2024	7:15 PM	5	281	54	0	0	0	0	0	1	0	0	0	0
4/27/2024	7:30 PM	4	267	49	0	0	0	0	0	1	0	0	0	0
4/27/2024	7:45 PM	4	247	49	0	0	0	0	0	1	0	0	0	0
4/27/2024	8:00 PM	2	216	40	0	1	0	0	0	1	0	0	0	0
4/27/2024	8:15 PM	0	196	35	0	1	0	0	0	0	0	0	0	0
4/27/2024	8:30 PM	0	184	29	0	1	0	0	0	0	0	0	0	0
4/27/2024	8:45 PM	0	163	23	0	1	0	0	0	0	0	0	0	0
4/27/2024	9:00 PM	0	136	21	0	1	0	0	0	0	0	0	0	0
4/27/2024	9:15 PM	0	113	18	0	1	0	0	0	0	0	0	0	0
4/27/2024	9:30 PM	0	87	14	0	1	0	0	0	0	0	0	0	0
4/27/2024	9:45 PM	0	77	12	0	1	0	0	0	0	0	0	0	0
4/27/2024	10:00 PM	0	79	9	0	0	0	0	0	0	0	0	0	0
4/27/2024	10:15 PM	0	72	6	0	0	0	0	0	0	0	0	0	0
4/27/2024	10:30 PM	0	70	7	0	0	0	0	0	0	0	0	0	0
4/27/2024	10:45 PM	0	69	6	0	0	0	0	0	0	0	0	0	0
4/27/2024	11:00 PM	0	67	4	0	0	0	0	0	0	0	0	0	0
4/27/2024	11:15 PM	0	50	3	0	0	0	0	0	0	0	0	0	0
4/27/2024	11:30 PM	0	34	1	0	0	0	0	0	0	0	0	0	0
4/27/2024	11:45 PM	0	15	0	0	0	0	0	0	0	0	0	0	0

SB
File Name:
Start Date: 4/21/2024
Start Time: 0
Site Code: 75 Lane 1 NB
Station ID: 1
Location 1: I-20, north of Bush River Rd
Location 2:

Date	Time	1	2	3	4	5	6	7	8	9	10	11	12	13
4/21/2024	12:00 AM	0	0	0	0	0	0	0	0	0	0	0	0	0
4/21/2024	12:15 AM	0	0	0	0	0	0	0	0	0	0	0	0	0
4/21/2024	12:30 AM	0	0	0	0	0	0	0	0	0	0	0	0	0
4/21/2024	12:45 AM	0	0	0	0	0	0	0	0	0	0	0	0	0
4/21/2024	1:00 AM	0	0	0	0	0	0	0	0	0	0	0	0	0
4/21/2024	1:15 AM	0	0	0	0	0	0	0	0	0	0	0	0	0
4/21/2024	1:30 AM	0	0	0	0	0	0	0	0	0	0	0	0	0
4/21/2024	1:45 AM	0	0	0	0	0	0	0	0	0	0	0	0	0
4/21/2024	2:00 AM	0	0	0	0	0	0	0	0	0	0	0	0	0
4/21/2024	2:15 AM	0	0	0	0	0	0	0	0	0	0	0	0	0
4/21/2024	2:30 AM	0	0	0	0	0	0	0	0	0	0	0	0	0
4/21/2024	2:45 AM	0	0	0	0	0	0	0	0	0	0	0	0	0
4/21/2024	3:00 AM	0	0	0	0	0	0	0	0	0	0	0	0	0
4/21/2024	3:15 AM	0	0	0	0	0	0	0	0	0	0	0	0	0
4/21/2024	3:30 AM	0	0	0	0	0	0	0	0	0	0	0	0	0
4/21/2024	3:45 AM	0	0	0	0	0	0	0	0	0	0	0	0	0
4/21/2024	4:00 AM	0	0	0	0	0	0	0	0	0	0	0	0	0
4/21/2024	4:15 AM	0	0	0	0	0	0	0	0	0	0	0	0	0
4/21/2024	4:30 AM	0	0	0	0	0	0	0	0	0	0	0	0	0
4/21/2024	4:45 AM	0	0	0	0	0	0	0	0	0	0	0	0	0
4/21/2024	5:00 AM	0	0	0	0	0	0	0	0	0	0	0	0	0
4/21/2024	5:15 AM	0	0	0	0	0	0	0	0	0	0	0	0	0
4/21/2024	5:30 AM	0	0	0	0	0	0	0	0	0	0	0	0	0
4/21/2024	5:45 AM	0	0	0	0	0	0	0	0	0	0	0	0	0
4/21/2024	6:00 AM	0	0	0	0	0	0	0	0	0	0	0	0	0
4/21/2024	6:15 AM	0	0	0	0	0	0	0	0	0	0	0	0	0
4/21/2024	6:30 AM	0	0	0	0	0	0	0	0	0	0	0	0	0
4/21/2024	6:45 AM	0	0	0	0	0	0	0	0	0	0	0	0	0
4/21/2024	7:00 AM	0	0	0	0	0	0	0	0	0	0	0	0	0
4/21/2024	7:15 AM	0	0	0	0	0	0	0	0	0	0	0	0	0
4/21/2024	7:30 AM	0	0	0	0	0	0	0	0	0	0	0	0	0
4/21/2024	7:45 AM	0	0	0	0	0	0	0	0	0	0	0	0	0
4/21/2024	8:00 AM	0	0	0	0	0	0	0	0	0	0	0	0	0
4/21/2024	8:15 AM	0	0	0	0	0	0	0	0	0	0	0	0	0
4/21/2024	8:30 AM	0	0	0	0	0	0	0	0	0	0	0	0	0
4/21/2024	8:45 AM	0	0	0	0	0	0	0	0	0	0	0	0	0
4/21/2024	9:00 AM	0	0	0	0	0	0	0	0	0	0	0	0	0
4/21/2024	9:15 AM	0	0	0	0	0	0	0	0	0	0	0	0	0
4/21/2024	9:30 AM	0	0	0	0	0	0	0	0	0	0	0	0	0
4/21/2024	9:45 AM	0	0	0	0	0	0	0	0	0	0	0	0	0
4/21/2024	10:00 AM	0	0	0	0	0	0	0	0	0	0	0	0	0
4/21/2024	10:15 AM	0	0	0	0	0	0	0	0	0	0	0	0	0
4/21/2024	10:30 AM	0	0	0	0	0	0	0	0	0	0	0	0	0
4/21/2024	10:45 AM	0	0	0	0	0	0	0	0	0	0	0	0	0
4/21/2024	11:00 AM	0	0	0	0	0	0	0	0	0	0	0	0	0
4/21/2024	11:15 AM	0	0	0	0	0	0	0	0	0	0	0	0	0
4/21/2024	11:30 AM	0	0	0	0	0	0	0	0	0	0	0	0	0
4/21/2024	11:45 AM	0	0	0	0	0	0	0	0	0	0	0	0	0
4/21/2024	12:00 PM	0	0	0	0	0	0	0	0	0	0	0	0	0
4/21/2024	12:15 PM	0	0	0	0	0	0	0	0	0	0	0	0	0
4/21/2024	12:30 PM	0	0	0	0	0	0	0	0	0	0	0	0	0
4/21/2024	12:45 PM	0	0	0	0	0	0	0	0	0	0	0	0	0
4/21/2024	1:00 PM	0	0	0	0	0	0	0	0	0	0	0	0	0
4/21/2024	1:15 PM	0	0	0	0	0	0	0	0	0	0	0	0	0
4/21/2024	1:30 PM	0	0	0	0	0	0	0	0	0	0	0	0	0
4/21/2024	1:45 PM	0	0	0	0	0	0	0	0	0	0	0	0	0
4/21/2024	2:00 PM	0	0	0	0	0	0	0	0	0	0	0	0	0
4/21/2024	2:15 PM	0	0	0	0	0	0	0	0	0	0	0	0	0
4/21/2024	2:30 PM	0	0	0	0	0	0	0	0	0	0	0	0	0
4/21/2024	2:45 PM	0	0	0	0	0	0	0	0	0	0	0	0	0
4/21/2024	3:00 PM	0	0	0	0	0	0	0	0	0	0	0	0	0
4/21/2024	3:15 PM	0	0	0	0	0	0	0	0	0	0	0	0	0
4/21/2024	3:30 PM	0	0	0	0	0	0	0	0	0	0	0	0	0
4/21/2024	3:45 PM	0	0	0	0	0	0	0	0	0	0	0	0	0
4/21/2024	4:00 PM	0	0	0	0	0	0	0	0	0	0	0	0	0
4/21/2024	4:15 PM	0	0	0	0	0	0	0	0	0	0	0	0	0
4/21/2024	4:30 PM	0	0	0	0	0	0	0	0	0	0	0	0	0
4/21/2024	4:45 PM	0	0	0	0	0	0	0	0	0	0	0	0	0
4/21/2024	5:00 PM	0	0	0	0	0	0	0	0	0	0	0	0	0
4/21/2024	5:15 PM	0	0	0	0	0	0	0	0	0	0	0	0	0
4/21/2024	5:30 PM	0	0	0	0	0	0	0	0	0	0	0	0	0
4/21/2024	5:45 PM	0	0	0	0	0	0	0	0	0	0	0	0	0
4/21/2024	6:00 PM	0	0	0	0	0	0	0	0	0	0	0	0	0
4/21/2024	6:15 PM	0	0	0	0	0	0	0	0	0	0	0	0	0
4/21/2024	6:30 PM	0	0	0	0	0	0	0	0	0	0	0	0	0
4/21/2024	6:45 PM	0	0	0	0	0	0	0	0	0	0	0	0	0
4/21/2024	7:00 PM	0	0	0	0	0	0	0	0	0	0	0	0	0
4/21/2024	7:15 PM	0	0	0	0	0	0	0	0	0	0	0	0	0
4/21/2024	7:30 PM	0	0	0	0	0	0	0	0	0	0	0	0	0
4/21/2024	7:45 PM	0	0	0	0	0	0	0	0	0	0	0	0	0
4/21/2024	8:00 PM	0	0	0	0	0	0	0	0	0	0	0	0	0
4/21/2024	8:15 PM	0	0	0	0	0	0	0	0	0	0	0	0	0
4/21/2024	8:30 PM	0	0	0	0	0	0	0	0	0	0	0	0	0
4/21/2024	8:45 PM	0	0	0	0	0	0	0	0	0	0	0	0	0
4/21/2024	9:00 PM	0	0	0	0	0	0	0	0	0	0	0	0	0
4/21/2024	9:15 PM	0	0	0	0	0	0	0	0	0	0	0	0	0
4/21/2024	9:30 PM	0	0	0	0	0	0	0	0	0	0	0	0	0
4/21/2024	9:45 PM	0	0	0	0	0	0	0	0	0	0	0	0	0
4/21/2024	10:00 PM	0	0	0	0	0	0	0	0	0	0	0	0	0
4/21/2024	10:15 PM	0	0	0	0	0	0	0	0	0	0	0	0	0
4/21/2024	10:30 PM	0	0	0	0	0	0	0	0	0	0	0	0	0
4/21/2024	10:45 PM	0	0	0	0	0	0	0	0	0	0	0	0	0
4/21/2024	11:00 PM	0	0	0	0	0	0	0	0	0	0	0	0	0
4/21/2024	11:15 PM	0	0	0	0	0	0	0	0	0	0	0	0	0
4/21/2024	11:30 PM	0	0	0	0	0	0	0	0	0	0	0	0	0
4/21/2024	11:45 PM	0	0	0	0	0	0	0	0	0	0	0	0	0

4/22/2024	12:00 AM	0	0	0	0	0	0	0	0	0	0	0	0	0
4/22/2024	12:15 AM	0	0	0	0	0	0	0	0	0	0	0	0	0
4/22/2024	12:30 AM	0	0	0	0	0	0	0	0	0	0	0	0	0
4/22/2024	12:45 AM	0	0	0	0	0	0	0	0	0	0	0	0	0
4/22/2024	1:00 AM	0	0	0	0	0	0	0	0	0	0	0	0	0
4/22/2024	1:15 AM	0	0	0	0	0	0	0	0	0	0	0	0	0
4/22/2024	1:30 AM	0	0	0	0	0	0	0	0	0	0	0	0	0
4/22/2024	1:45 AM	0	0	0	0	0	0	0	0	0	0	0	0	0
4/22/2024	2:00 AM	0	0	0	0	0	0	0	0	0	0	0	0	0
4/22/2024	2:15 AM	0	0	0	0	0	0	0	0	0	0	0	0	0
4/22/2024	2:30 AM	0	0	0	0	0	0	0	0	0	0	0	0	0
4/22/2024	2:45 AM	0	0	0	0	0	0	0	0	0	0	0	0	0
4/22/2024	3:00 AM	0	0	0	0	0	0	0	0	0	0	0	0	0
4/22/2024	3:15 AM	0	0	0	0	0	0	0	0	0	0	0	0	0
4/22/2024	3:30 AM	0	0	0	0	0	0	0	0	0	0	0	0	0
4/22/2024	3:45 AM	0	0	0	0	0	0	0	0	0	0	0	0	0
4/22/2024	4:00 AM	0	0	0	0	0	0	0	0	0	0	0	0	0
4/22/2024	4:15 AM	0	0	0	0	0	0	0	0	0	0	0	0	0
4/22/2024	4:30 AM	0	0	0	0	0	0	0	0	0	0	0	0	0
4/22/2024	4:45 AM	0	0	0	0	0	0	0	0	0	0	0	0	0
4/22/2024	5:00 AM	0	0	0	0	0	0	0	0	0	0	0	0	0
4/22/2024	5:15 AM	0	0	0	0	0	0	0	0	0	0	0	0	0
4/22/2024	5:30 AM	0	0	0	0	0	0	0	0	0	0	0	0	0
4/22/2024	5:45 AM	0	0	0	0	0	0	0	0	0	0	0	0	0
4/22/2024	6:00 AM	0	0	0	0	0	0	0	0	0	0	0	0	0
4/22/2024	6:15 AM	0	0	0	0	0	0	0	0	0	0	0	0	0
4/22/2024	6:30 AM	0	0	0	0	0	0	0	0	0	0	0	0	0
4/22/2024	6:45 AM	0	0	0	0	0	0	0	0	0	0	0	0	0
4/22/2024	7:00 AM	0	0	0	0	0	0	0	0	0	0	0	0	0
4/22/2024	7:15 AM	0	0	0	0	0	0	0	0	0	0	0	0	0
4/22/2024	7:30 AM	0	0	0	0	0	0	0	0	0	0	0	0	0
4/22/2024	7:45 AM	0	0	0	0	0	0	0	0	0	0	0	0	0
4/22/2024	8:00 AM	0	0	0	0	0	0	0	0	0	0	0	0	0
4/22/2024	8:15 AM	0	0	0	0	0	0	0	0	0	0	0	0	0
4/22/2024	8:30 AM	0	0	0	0	0	0	0	0	0	0	0	0	0
4/22/2024	8:45 AM	0	0	0	0	0	0	0	0	0	0	0	0	0
4/22/2024	9:00 AM	0	0	0	0	0	0	0	0	0	0	0	0	0
4/22/2024	9:15 AM	0	0	0	0	0	0	0	0	0	0	0	0	0
4/22/2024	9:30 AM	0	0	0	0	0	0	0	0	0	0	0	0	0
4/22/2024	9:45 AM	0	0	0	0	0	0	0	0	0	0	0	0	0
4/22/2024	10:00 AM	0	0	0	0	0	0	0	0	0	0	0	0	0
4/22/2024	10:15 AM	0	0	0	0	0	0	0	0	0	0	0	0	0
4/22/2024	10:30 AM	0	0	0	0	0	0	0	0	0	0	0	0	0
4/22/2024	10:45 AM	0	0	0	0	0	0	0	0	0	0	0	0	0
4/22/2024	11:00 AM	0	0	0	0	0	0	0	0	0	0	0	0	0
4/22/2024	11:15 AM	0	0	0	0	0	0	0	0	0	0	0	0	0
4/22/2024	11:30 AM	0	0	0	0	0	0	0	0	0	0	0	0	0
4/22/2024	11:45 AM	0	0	0	0	0	0	0	0	0	0	0	0	0
4/22/2024	12:00 PM	0	0	0	0	0	0	0	0	0	0	0	0	0
4/22/2024	12:15 PM	0	0	0	0	0	0	0	0	0	0	0	0	0
4/22/2024	12:30 PM	0	0	0	0	0	0	0	0	0	0	0	0	0
4/22/2024	12:45 PM	0	0	0	0	0	0	0	0	0	0	0	0	0
4/22/2024	1:00 PM	0	0	0	0	0	0	0	0	0	0	0	0	0
4/22/2024	1:15 PM	0	0	0	0	0	0	0	0	0	0	0	0	0
4/22/2024	1:30 PM	0	0	0	0	0	0	0	0	0	0	0	0	0
4/22/2024	1:45 PM	0	0	0	0	0	0	0	0	0	0	0	0	0
4/22/2024	2:00 PM	0	0	0	0	0	0	0	0	0	0	0	0	0
4/22/2024	2:15 PM	0	0	0	0	0	0	0	0	0	0	0	0	0
4/22/2024	2:30 PM	0	0	0	0	0	0	0	0	0	0	0	0	0
4/22/2024	2:45 PM	0	0	0	0	0	0	0	0	0	0	0	0	0
4/22/2024	3:00 PM	0	0	0	0	0	0	0	0	0	0	0	0	0
4/22/2024	3:15 PM	0	0	0	0	0	0	0	0	0	0	0	0	0
4/22/2024	3:30 PM	0	0	0	0	0	0	0	0	0	0	0	0	0
4/22/2024	3:45 PM	0	0	0	0	0	0	0	0	0	0	0	0	0
4/22/2024	4:00 PM	0	0	0	0	0	0	0	0	0	0	0	0	0
4/22/2024	4:15 PM	0	0	0	0	0	0	0	0	0	0	0	0	0
4/22/2024	4:30 PM	0	0	0	0	0	0	0	0	0	0	0	0	0
4/22/2024	4:45 PM	0	0	0	0	0	0	0	0	0	0	0	0	0
4/22/2024	5:00 PM	0	0	0	0	0	0	0	0	0	0	0	0	0
4/22/2024	5:15 PM	0	0	0	0	0	0	0	0	0	0	0	0	0
4/22/2024	5:30 PM	0	0	0	0	0	0	0	0	0	0	0	0	0
4/22/2024	5:45 PM	0	0	0	0	0	0	0	0	0	0	0	0	0
4/22/2024	6:00 PM	0	0	0	0	0	0	0	0	0	0	0	0	0
4/22/2024	6:15 PM	0	0	0	0	0	0	0	0	0	0	0	0	0
4/22/2024	6:30 PM	0	0	0	0	0	0	0	0	0	0	0	0	0
4/22/2024	6:45 PM	0	0	0	0	0	0	0	0	0	0	0	0	0
4/22/2024	7:00 PM	0	0	0	0	0	0	0	0	0	0	0	0	0
4/22/2024	7:15 PM	0	0	0	0	0	0	0	0	0	0	0	0	0
4/22/2024	7:30 PM	0	0	0	0	0	0	0	0	0	0	0	0	0
4/22/2024	7:45 PM	0	0	0	0	0	0	0	0	0	0	0	0	0
4/22/2024	8:00 PM	0	0	0	0	0	0	0	0	0	0	0	0	0
4/22/2024	8:15 PM	0	0	0	0	0	0	0	0	0	0	0	0	0
4/22/2024	8:30 PM	0	0	0	0	0	0	0	0	0	0	0	0	0
4/22/2024	8:45 PM	0	0	0	0	0	0	0	0	0	0	0	0	0
4/22/2024	9:00 PM	0	0	0	0	0	0	0	0	0	0	0	0	0
4/22/2024	9:15 PM	0	0	0	0	0	0	0	0	0	0	0	0	0
4/22/2024	9:30 PM	0	0	0	0	0	0	0	0	0	0	0	0	0
4/22/2024	9:45 PM	0	0	0	0	0	0	0	0	0	0	0	0	0
4/22/2024	10:00 PM	0	0	0	0	0	0	0	0	0	0	0	0	0
4/22/2024	10:15 PM	0	0	0	0	0	0	0	0	0	0	0	0	0
4/22/2024	10:30 PM	0	0	0	0	0	0	0	0	0	0	0	0	0
4/22/2024	10:45 PM	0	0	0	0	0	0	0	0	0	0	0	0	0
4/22/2024	11:00 PM	0	0	0	0	0	0	0	0	0	0	0	0	0
4/22/2024	11:15 PM	0	0	0	0	0	0	0	0	0	0	0	0	0
4/22/2024	11:30 PM	0	0	0	0	0	0	0	0	0	0	0	0	0
4/22/2024	11:45 PM	0	0	0	0	0	0	0	0	0	0	0	0	0

4/23/2024	12:00 AM	0	0	0	0	0	0	0	0	0	0	0	0	0
4/23/2024	12:15 AM	0	0	0	0	0	0	0	0	0	0	0	0	0
4/23/2024	12:30 AM	0	0	0	0	0	0	0	0	0	0	0	0	0
4/23/2024	12:45 AM	0	0	0	0	0	0	0	0	0	0	0	0	0
4/23/2024	1:00 AM	0	0	0	0	0	0	0	0	0	0	0	0	0
4/23/2024	1:15 AM	0	0	0	0	0	0	0	0	0	0	0	0	0
4/23/2024	1:30 AM	0	0	0	0	0	0	0	0	0	0	0	0	0
4/23/2024	1:45 AM	0	0	0	0	0	0	0	0	0	0	0	0	0
4/23/2024	2:00 AM	0	0	0	0	0	0	0	0	0	0	0	0	0
4/23/2024	2:15 AM	0	0	0	0	0	0	0	0	0	0	0	0	0
4/23/2024	2:30 AM	0	0	0	0	0	0	0	0	0	0	0	0	0
4/23/2024	2:45 AM	0	0	0	0	0	0	0	0	0	0	0	0	0
4/23/2024	3:00 AM	0	0	0	0	0	0	0	0	0	0	0	0	0
4/23/2024	3:15 AM	0	0	0	0	0	0	0	0	0	0	0	0	0
4/23/2024	3:30 AM	0	0	0	0	0	0	0	0	0	0	0	0	0
4/23/2024	3:45 AM	0	0	0	0	0	0	0	0	0	0	0	0	0
4/23/2024	4:00 AM	0	0	0	0	0	0	0	0	0	0	0	0	0
4/23/2024	4:15 AM	0	0	0	0	0	0	0	0	0	0	0	0	0
4/23/2024	4:30 AM	0	0	0	0	0	0	0	0	0	0	0	0	0
4/23/2024	4:45 AM	0	0	0	0	0	0	0	0	0	0	0	0	0
4/23/2024	5:00 AM	0	0	0	0	0	0	0	0	0	0	0	0	0
4/23/2024	5:15 AM	0	0	0	0	0	0	0	0	0	0	0	0	0
4/23/2024	5:30 AM	0	0	0	0	0	0	0	0	0	0	0	0	0
4/23/2024	5:45 AM	0	0	0	0	0	0	0	0	0	0	0	0	0
4/23/2024	6:00 AM	0	0	0	0	0	0	0	0	0	0	0	0	0
4/23/2024	6:15 AM	0	0	0	0	0	0	0	0	0	0	0	0	0
4/23/2024	6:30 AM	0	0	0	0	0	0	0	0	0	0	0	0	0
4/23/2024	6:45 AM	0	0	0	0	0	0	0	0	0	0	0	0	0
4/23/2024	7:00 AM	0	0	0	0	0	0	0	0	0	0	0	0	0
4/23/2024	7:15 AM	0	0	0	0	0	0	0	0	0	0	0	0	0
4/23/2024	7:30 AM	0	0	0	0	0	0	0	0	0	0	0	0	0
4/23/2024	7:45 AM	0	0	0	0	0	0	0	0	0	0	0	0	0
4/23/2024	8:00 AM	0	0	0	0	0	0	0	0	0	0	0	0	0
4/23/2024	8:15 AM	0	0	0	0	0	0	0	0	0	0	0	0	0
4/23/2024	8:30 AM	0	0	0	0	0	0	0	0	0	0	0	0	0
4/23/2024	8:45 AM	0	0	0	0	0	0	0	0	0	0	0	0	0
4/23/2024	9:00 AM	0	0	0	0	0	0	0	0	0	0	0	0	0
4/23/2024	9:15 AM	0	0	0	0	0	0	0	0	0	0	0	0	0
4/23/2024	9:30 AM	0	0	0	0	0	0	0	0	0	0	0	0	0
4/23/2024	9:45 AM	0	0	0	0	0	0	0	0	0	0	0	0	0
4/23/2024	10:00 AM	0	0	0	0	0	0	0	0	0	0	0	0	0
4/23/2024	10:15 AM	0	0	0	0	0	0	0	0	0	0	0	0	0
4/23/2024	10:30 AM	0	0	0	0	0	0	0	0	0	0	0	0	0
4/23/2024	10:45 AM	0	0	0	0	0	0	0	0	0	0	0	0	0
4/23/2024	11:00 AM	0	0	0	0	0	0	0	0	0	0	0	0	0
4/23/2024	11:15 AM	0	0	0	0	0	0	0	0	0	0	0	0	0
4/23/2024	11:30 AM	0	0	0	0	0	0	0	0	0	0	0	0	0
4/23/2024	11:45 AM	0	0	0	0	0	0	0	0	0	0	0	0	0
4/23/2024	12:00 PM	0	0	0	0	0	0	0	0	0	0	0	0	0
4/23/2024	12:15 PM	0	0	0	0	0	0	0	0	0	0	0	0	0
4/23/2024	12:30 PM	0	0	0	0	0	0	0	0	0	0	0	0	0
4/23/2024	12:45 PM	0	0	0	0	0	0	0	0	0	0	0	0	0
4/23/2024	1:00 PM	0	0	0	0	0	0	0	0	0	0	0	0	0
4/23/2024	1:15 PM	0	0	0	0	0	0	0	0	0	0	0	0	0
4/23/2024	1:30 PM	0	0	0	0	0	0	0	0	0	0	0	0	0
4/23/2024	1:45 PM	0	0	0	0	0	0	0	0	0	0	0	0	0
4/23/2024	2:00 PM	0	0	0	0	0	0	0	0	0	0	0	0	0
4/23/2024	2:15 PM	0	0	0	0	0	0	0	0	0	0	0	0	0
4/23/2024	2:30 PM	0	0	0	0	0	0	0	0	0	0	0	0	0
4/23/2024	2:45 PM	0	0	0	0	0	0	0	0	0	0	0	0	0
4/23/2024	3:00 PM	0	0	0	0	0	0	0	0	0	0	0	0	0
4/23/2024	3:15 PM	0	0	0	0	0	0	0	0	0	0	0	0	0
4/23/2024	3:30 PM	0	0	0	0	0	0	0	0	0	0	0	0	0
4/23/2024	3:45 PM	0	0	0	0	0	0	0	0	0	0	0	0	0
4/23/2024	4:00 PM	0	0	0	0	0	0	0	0	0	0	0	0	0
4/23/2024	4:15 PM	0	0	0	0	0	0	0	0	0	0	0	0	0
4/23/2024	4:30 PM	0	0	0	0	0	0	0	0	0	0	0	0	0
4/23/2024	4:45 PM	0	0	0	0	0	0	0	0	0	0	0	0	0
4/23/2024	5:00 PM	0	0	0	0	0	0	0	0	0	0	0	0	0
4/23/2024	5:15 PM	0	0	0	0	0	0	0	0	0	0	0	0	0
4/23/2024	5:30 PM	0	0	0	0	0	0	0	0	0	0	0	0	0
4/23/2024	5:45 PM	0	0	0	0	0	0	0	0	0	0	0	0	0
4/23/2024	6:00 PM	0	0	0	0	0	0	0	0	0	0	0	0	0
4/23/2024	6:15 PM	0	0	0	0	0	0	0	0	0	0	0	0	0
4/23/2024	6:30 PM	0	0	0	0	0	0	0	0	0	0	0	0	0
4/23/2024	6:45 PM	0	0	0	0	0	0	0	0	0	0	0	0	0
4/23/2024	7:00 PM	0	0	0	0	0	0	0	0	0	0	0	0	0
4/23/2024	7:15 PM	0	0	0	0	0	0	0	0	0	0	0	0	0
4/23/2024	7:30 PM	0	0	0	0	0	0	0	0	0	0	0	0	0
4/23/2024	7:45 PM	0	0	0	0	0	0	0	0	0	0	0	0	0
4/23/2024	8:00 PM	0	0	0	0	0	0	0	0	0	0	0	0	0
4/23/2024	8:15 PM	0	0	0	0	0	0	0	0	0	0	0	0	0
4/23/2024	8:30 PM	0	0	0	0	0	0	0	0	0	0	0	0	0
4/23/2024	8:45 PM	0	0	0	0	0	0	0	0	0	0	0	0	0
4/23/2024	9:00 PM	0	0	0	0	0	0	0	0	0	0	0	0	0
4/23/2024	9:15 PM	0	0	0	0	0	0	0	0	0	0	0	0	0
4/23/2024	9:30 PM	0	0	0	0	0	0	0	0	0	0	0	0	0
4/23/2024	9:45 PM	0	0	0	0	0	0	0	0	0	0	0	0	0
4/23/2024	10:00 PM	0	0	0	0	0	0	0	0	0	0	0	0	0
4/23/2024	10:15 PM	0	0	0	0	0	0	0	0	0	0	0	0	0
4/23/2024	10:30 PM	0	0	0	0	0	0	0	0	0	0	0	0	0
4/23/2024	10:45 PM	0	0	0	0	0	0	0	0	0	0	0	0	0
4/23/2024	11:00 PM	0	0	0	0	0	0	0	0	0	0	0	0	0
4/23/2024	11:15 PM	0	0	0	0	0	0	0	0	0	0	0	0	0
4/23/2024	11:30 PM	0	0	0	0	0	0	0	0	0	0	0	0	0
4/23/2024	11:45 PM	0	0	0	0	0	0	0	0	0	0	0	0	0

4/24/2024	12:00 AM	0	0	0	0	0	0	0	0	0	0	0	0	0
4/24/2024	12:15 AM	0	0	0	0	0	0	0	0	0	0	0	0	0
4/24/2024	12:30 AM	0	0	0	0	0	0	0	0	0	0	0	0	0
4/24/2024	12:45 AM	0	0	0	0	0	0	0	0	0	0	0	0	0
4/24/2024	1:00 AM	0	0	0	0	0	0	0	0	0	0	0	0	0
4/24/2024	1:15 AM	0	0	0	0	0	0	0	0	0	0	0	0	0
4/24/2024	1:30 AM	0	0	0	0	0	0	0	0	0	0	0	0	0
4/24/2024	1:45 AM	0	0	0	0	0	0	0	0	0	0	0	0	0
4/24/2024	2:00 AM	0	0	0	0	0	0	0	0	0	0	0	0	0
4/24/2024	2:15 AM	0	0	0	0	0	0	0	0	0	0	0	0	0
4/24/2024	2:30 AM	0	0	0	0	0	0	0	0	0	0	0	0	0
4/24/2024	2:45 AM	0	0	0	0	0	0	0	0	0	0	0	0	0
4/24/2024	3:00 AM	0	0	0	0	0	0	0	0	0	0	0	0	0
4/24/2024	3:15 AM	0	0	0	0	0	0	0	0	0	0	0	0	0
4/24/2024	3:30 AM	0	0	0	0	0	0	0	0	0	0	0	0	0
4/24/2024	3:45 AM	0	0	0	0	0	0	0	0	0	0	0	0	0
4/24/2024	4:00 AM	0	0	0	0	0	0	0	0	0	0	0	0	0
4/24/2024	4:15 AM	0	0	0	0	0	0	0	0	0	0	0	0	0
4/24/2024	4:30 AM	0	0	0	0	0	0	0	0	0	0	0	0	0
4/24/2024	4:45 AM	0	0	0	0	0	0	0	0	0	0	0	0	0
4/24/2024	5:00 AM	0	0	0	0	0	0	0	0	0	0	0	0	0
4/24/2024	5:15 AM	0	0	0	0	0	0	0	0	0	0	0	0	0
4/24/2024	5:30 AM	0	0	0	0	0	0	0	0	0	0	0	0	0
4/24/2024	5:45 AM	0	0	0	0	0	0	0	0	0	0	0	0	0
4/24/2024	6:00 AM	0	0	0	0	0	0	0	0	0	0	0	0	0
4/24/2024	6:15 AM	0	0	0	0	0	0	0	0	0	0	0	0	0
4/24/2024	6:30 AM	0	0	0	0	0	0	0	0	0	0	0	0	0
4/24/2024	6:45 AM	0	0	0	0	0	0	0	0	0	0	0	0	0
4/24/2024	7:00 AM	0	0	0	0	0	0	0	0	0	0	0	0	0
4/24/2024	7:15 AM	0	0	0	0	0	0	0	0	0	0	0	0	0
4/24/2024	7:30 AM	0	0	0	0	0	0	0	0	0	0	0	0	0
4/24/2024	7:45 AM	0	0	0	0	0	0	0	0	0	0	0	0	0
4/24/2024	8:00 AM	0	0	0	0	0	0	0	0	0	0	0	0	0
4/24/2024	8:15 AM	0	0	0	0	0	0	0	0	0	0	0	0	0
4/24/2024	8:30 AM	0	0	0	0	0	0	0	0	0	0	0	0	0
4/24/2024	8:45 AM	0	0	0	0	0	0	0	0	0	0	0	0	0
4/24/2024	9:00 AM	0	0	0	0	0	0	0	0	0	0	0	0	0
4/24/2024	9:15 AM	0	0	0	0	0	0	0	0	0	0	0	0	0
4/24/2024	9:30 AM	0	0	0	0	0	0	0	0	0	0	0	0	0
4/24/2024	9:45 AM	0	0	0	0	0	0	0	0	0	0	0	0	0
4/24/2024	10:00 AM	0	0	0	0	0	0	0	0	0	0	0	0	0
4/24/2024	10:15 AM	0	0	0	0	0	0	0	0	0	0	0	0	0
4/24/2024	10:30 AM	0	0	0	0	0	0	0	0	0	0	0	0	0
4/24/2024	10:45 AM	0	0	0	0	0	0	0	0	0	0	0	0	0
4/24/2024	11:00 AM	0	0	0	0	0	0	0	0	0	0	0	0	0
4/24/2024	11:15 AM	0	0	0	0	0	0	0	0	0	0	0	0	0
4/24/2024	11:30 AM	0	0	0	0	0	0	0	0	0	0	0	0	0
4/24/2024	11:45 AM	0	0	0	0	0	0	0	0	0	0	0	0	0
4/24/2024	12:00 PM	0	0	0	0	0	0	0	0	0	0	0	0	0
4/24/2024	12:15 PM	0	0	0	0	0	0	0	0	0	0	0	0	0
4/24/2024	12:30 PM	0	0	0	0	0	0	0	0	0	0	0	0	0
4/24/2024	12:45 PM	0	0	0	0	0	0	0	0	0	0	0	0	0
4/24/2024	1:00 PM	0	0	0	0	0	0	0	0	0	0	0	0	0
4/24/2024	1:15 PM	0	0	0	0	0	0	0	0	0	0	0	0	0
4/24/2024	1:30 PM	0	0	0	0	0	0	0	0	0	0	0	0	0
4/24/2024	1:45 PM	0	0	0	0	0	0	0	0	0	0	0	0	0
4/24/2024	2:00 PM	0	0	0	0	0	0	0	0	0	0	0	0	0
4/24/2024	2:15 PM	0	0	0	0	0	0	0	0	0	0	0	0	0
4/24/2024	2:30 PM	0	0	0	0	0	0	0	0	0	0	0	0	0
4/24/2024	2:45 PM	0	0	0	0	0	0	0	0	0	0	0	0	0
4/24/2024	3:00 PM	0	0	0	0	0	0	0	0	0	0	0	0	0
4/24/2024	3:15 PM	0	0	0	0	0	0	0	0	0	0	0	0	0
4/24/2024	3:30 PM	0	0	0	0	0	0	0	0	0	0	0	0	0
4/24/2024	3:45 PM	0	0	0	0	0	0	0	0	0	0	0	0	0
4/24/2024	4:00 PM	0	0	0	0	0	0	0	0	0	0	0	0	0
4/24/2024	4:15 PM	0	0	0	0	0	0	0	0	0	0	0	0	0
4/24/2024	4:30 PM	0	0	0	0	0	0	0	0	0	0	0	0	0
4/24/2024	4:45 PM	0	0	0	0	0	0	0	0	0	0	0	0	0
4/24/2024	5:00 PM	0	0	0	0	0	0	0	0	0	0	0	0	0
4/24/2024	5:15 PM	0	0	0	0	0	0	0	0	0	0	0	0	0
4/24/2024	5:30 PM	0	0	0	0	0	0	0	0	0	0	0	0	0
4/24/2024	5:45 PM	0	0	0	0	0	0	0	0	0	0	0	0	0
4/24/2024	6:00 PM	0	0	0	0	0	0	0	0	0	0	0	0	0
4/24/2024	6:15 PM	0	0	0	0	0	0	0	0	0	0	0	0	0
4/24/2024	6:30 PM	0	0	0	0	0	0	0	0	0	0	0	0	0
4/24/2024	6:45 PM	0	0	0	0	0	0	0	0	0	0	0	0	0
4/24/2024	7:00 PM	0	0	0	0	0	0	0	0	0	0	0	0	0
4/24/2024	7:15 PM	0	0	0	0	0	0	0	0	0	0	0	0	0
4/24/2024	7:30 PM	0	0	0	0	0	0	0	0	0	0	0	0	0
4/24/2024	7:45 PM	0	0	0	0	0	0	0	0	0	0	0	0	0
4/24/2024	8:00 PM	0	0	0	0	0	0	0	0	0	0	0	0	0
4/24/2024	8:15 PM	0	0	0	0	0	0	0	0	0	0	0	0	0
4/24/2024	8:30 PM	0	0	0	0	0	0	0	0	0	0	0	0	0
4/24/2024	8:45 PM	0	0	0	0	0	0	0	0	0	0	0	0	0
4/24/2024	9:00 PM	0	0	0	0	0	0	0	0	0	0	0	0	0
4/24/2024	9:15 PM	0	0	0	0	0	0	0	0	0	0	0	0	0
4/24/2024	9:30 PM	0	0	0	0	0	0	0	0	0	0	0	0	0
4/24/2024	9:45 PM	0	0	0	0	0	0	0	0	0	0	0	0	0
4/24/2024	10:00 PM	0	0	0	0	0	0	0	0	0	0	0	0	0
4/24/2024	10:15 PM	0	0	0	0	0	0	0	0	0	0	0	0	0
4/24/2024	10:30 PM	0	0	0	0	0	0	0	0	0	0	0	0	0
4/24/2024	10:45 PM	0	0	0	0	0	0	0	0	0	0	0	0	0
4/24/2024	11:00 PM	0	0	0	0	0	0	0	0	0	0	0	0	0
4/24/2024	11:15 PM	0	0	0	0	0	0	0	0	0	0	0	0	0
4/24/2024	11:30 PM	0	0	0	0	0	0	0	0	0	0	0	0	0
4/24/2024	11:45 PM	0	0	0	0	0	0	0	0	0	0	0	0	0

4/25/2024	12:00 AM	0	0	0	0	0	0	0	0	0	0	0	0	0
4/25/2024	12:15 AM	0	0	0	0	0	0	0	0	0	0	0	0	0
4/25/2024	12:30 AM	0	0	0	0	0	0	0	0	0	0	0	0	0
4/25/2024	12:45 AM	0	0	0	0	0	0	0	0	0	0	0	0	0
4/25/2024	1:00 AM	0	0	0	0	0	0	0	0	0	0	0	0	0
4/25/2024	1:15 AM	0	0	0	0	0	0	0	0	0	0	0	0	0
4/25/2024	1:30 AM	0	0	0	0	0	0	0	0	0	0	0	0	0
4/25/2024	1:45 AM	0	0	0	0	0	0	0	0	0	0	0	0	0
4/25/2024	2:00 AM	0	0	0	0	0	0	0	0	0	0	0	0	0
4/25/2024	2:15 AM	0	0	0	0	0	0	0	0	0	0	0	0	0
4/25/2024	2:30 AM	0	0	0	0	0	0	0	0	0	0	0	0	0
4/25/2024	2:45 AM	0	0	0	0	0	0	0	0	0	0	0	0	0
4/25/2024	3:00 AM	0	0	0	0	0	0	0	0	0	0	0	0	0
4/25/2024	3:15 AM	0	0	0	0	0	0	0	0	0	0	0	0	0
4/25/2024	3:30 AM	0	0	0	0	0	0	0	0	0	0	0	0	0
4/25/2024	3:45 AM	0	0	0	0	0	0	0	0	0	0	0	0	0
4/25/2024	4:00 AM	0	0	0	0	0	0	0	0	0	0	0	0	0
4/25/2024	4:15 AM	0	0	0	0	0	0	0	0	0	0	0	0	0
4/25/2024	4:30 AM	0	0	0	0	0	0	0	0	0	0	0	0	0
4/25/2024	4:45 AM	0	0	0	0	0	0	0	0	0	0	0	0	0
4/25/2024	5:00 AM	0	0	0	0	0	0	0	0	0	0	0	0	0
4/25/2024	5:15 AM	0	0	0	0	0	0	0	0	0	0	0	0	0
4/25/2024	5:30 AM	0	0	0	0	0	0	0	0	0	0	0	0	0
4/25/2024	5:45 AM	0	0	0	0	0	0	0	0	0	0	0	0	0
4/25/2024	6:00 AM	0	0	0	0	0	0	0	0	0	0	0	0	0
4/25/2024	6:15 AM	0	0	0	0	0	0	0	0	0	0	0	0	0
4/25/2024	6:30 AM	0	0	0	0	0	0	0	0	0	0	0	0	0
4/25/2024	6:45 AM	0	0	0	0	0	0	0	0	0	0	0	0	0
4/25/2024	7:00 AM	0	0	0	0	0	0	0	0	0	0	0	0	0
4/25/2024	7:15 AM	0	0	0	0	0	0	0	0	0	0	0	0	0
4/25/2024	7:30 AM	0	0	0	0	0	0	0	0	0	0	0	0	0
4/25/2024	7:45 AM	0	0	0	0	0	0	0	0	0	0	0	0	0
4/25/2024	8:00 AM	0	0	0	0	0	0	0	0	0	0	0	0	0
4/25/2024	8:15 AM	0	0	0	0	0	0	0	0	0	0	0	0	0
4/25/2024	8:30 AM	0	0	0	0	0	0	0	0	0	0	0	0	0
4/25/2024	8:45 AM	0	0	0	0	0	0	0	0	0	0	0	0	0
4/25/2024	9:00 AM	0	0	0	0	0	0	0	0	0	0	0	0	0
4/25/2024	9:15 AM	0	0	0	0	0	0	0	0	0	0	0	0	0
4/25/2024	9:30 AM	0	0	0	0	0	0	0	0	0	0	0	0	0
4/25/2024	9:45 AM	0	0	0	0	0	0	0	0	0	0	0	0	0
4/25/2024	10:00 AM	0	0	0	0	0	0	0	0	0	0	0	0	0
4/25/2024	10:15 AM	0	0	0	0	0	0	0	0	0	0	0	0	0
4/25/2024	10:30 AM	0	0	0	0	0	0	0	0	0	0	0	0	0
4/25/2024	10:45 AM	0	0	0	0	0	0	0	0	0	0	0	0	0
4/25/2024	11:00 AM	0	0	0	0	0	0	0	0	0	0	0	0	0
4/25/2024	11:15 AM	0	0	0	0	0	0	0	0	0	0	0	0	0
4/25/2024	11:30 AM	0	0	0	0	0	0	0	0	0	0	0	0	0
4/25/2024	11:45 AM	0	0	0	0	0	0	0	0	0	0	0	0	0
4/25/2024	12:00 PM	0	0	0	0	0	0	0	0	0	0	0	0	0
4/25/2024	12:15 PM	0	0	0	0	0	0	0	0	0	0	0	0	0
4/25/2024	12:30 PM	0	0	0	0	0	0	0	0	0	0	0	0	0
4/25/2024	12:45 PM	0	0	0	0	0	0	0	0	0	0	0	0	0
4/25/2024	1:00 PM	0	0	0	0	0	0	0	0	0	0	0	0	0
4/25/2024	1:15 PM	0	0	0	0	0	0	0	0	0	0	0	0	0
4/25/2024	1:30 PM	0	0	0	0	0	0	0	0	0	0	0	0	0
4/25/2024	1:45 PM	0	0	0	0	0	0	0	0	0	0	0	0	0
4/25/2024	2:00 PM	0	0	0	0	0	0	0	0	0	0	0	0	0
4/25/2024	2:15 PM	0	0	0	0	0	0	0	0	0	0	0	0	0
4/25/2024	2:30 PM	0	0	0	0	0	0	0	0	0	0	0	0	0
4/25/2024	2:45 PM	0	0	0	0	0	0	0	0	0	0	0	0	0
4/25/2024	3:00 PM	0	0	0	0	0	0	0	0	0	0	0	0	0
4/25/2024	3:15 PM	0	0	0	0	0	0	0	0	0	0	0	0	0
4/25/2024	3:30 PM	0	0	0	0	0	0	0	0	0	0	0	0	0
4/25/2024	3:45 PM	0	0	0	0	0	0	0	0	0	0	0	0	0
4/25/2024	4:00 PM	0	0	0	0	0	0	0	0	0	0	0	0	0
4/25/2024	4:15 PM	0	0	0	0	0	0	0	0	0	0	0	0	0
4/25/2024	4:30 PM	0	0	0	0	0	0	0	0	0	0	0	0	0
4/25/2024	4:45 PM	0	0	0	0	0	0	0	0	0	0	0	0	0
4/25/2024	5:00 PM	0	0	0	0	0	0	0	0	0	0	0	0	0
4/25/2024	5:15 PM	0	0	0	0	0	0	0	0	0	0	0	0	0
4/25/2024	5:30 PM	0	0	0	0	0	0	0	0	0	0	0	0	0
4/25/2024	5:45 PM	0	0	0	0	0	0	0	0	0	0	0	0	0
4/25/2024	6:00 PM	0	0	0	0	0	0	0	0	0	0	0	0	0
4/25/2024	6:15 PM	0	0	0	0	0	0	0	0	0	0	0	0	0
4/25/2024	6:30 PM	0	0	0	0	0	0	0	0	0	0	0	0	0
4/25/2024	6:45 PM	0	0	0	0	0	0	0	0	0	0	0	0	0
4/25/2024	7:00 PM	0	0	0	0	0	0	0	0	0	0	0	0	0
4/25/2024	7:15 PM	0	0	0	0	0	0	0	0	0	0	0	0	0
4/25/2024	7:30 PM	0	0	0	0	0	0	0	0	0	0	0	0	0
4/25/2024	7:45 PM	0	0	0	0	0	0	0	0	0	0	0	0	0
4/25/2024	8:00 PM	0	0	0	0	0	0	0	0	0	0	0	0	0
4/25/2024	8:15 PM	0	0	0	0	0	0	0	0	0	0	0	0	0
4/25/2024	8:30 PM	0	0	0	0	0	0	0	0	0	0	0	0	0
4/25/2024	8:45 PM	0	0	0	0	0	0	0	0	0	0	0	0	0
4/25/2024	9:00 PM	0	0	0	0	0	0	0	0	0	0	0	0	0
4/25/2024	9:15 PM	0	0	0	0	0	0	0	0	0	0	0	0	0
4/25/2024	9:30 PM	0	0	0	0	0	0	0	0	0	0	0	0	0
4/25/2024	9:45 PM	0	0	0	0	0	0	0	0	0	0	0	0	0
4/25/2024	10:00 PM	0	0	0	0	0	0	0	0	0	0	0	0	0
4/25/2024	10:15 PM	0	0	0	0	0	0	0	0	0	0	0	0	0
4/25/2024	10:30 PM	0	0	0	0	0	0	0	0	0	0	0	0	0
4/25/2024	10:45 PM	0	0	0	0	0	0	0	0	0	0	0	0	0
4/25/2024	11:00 PM	0	0	0	0	0	0	0	0	0	0	0	0	0
4/25/2024	11:15 PM	0	0	0	0	0	0	0	0	0	0	0	0	0
4/25/2024	11:30 PM	0	0	0	0	0	0	0	0	0	0	0	0	0
4/25/2024	11:45 PM	0	0	0	0	0	0	0	0	0	0	0	0	0

4/26/2024	12:00 AM	0	0	0	0	0	0	0	0	0	0	0	0	0
4/26/2024	12:15 AM	0	0	0	0	0	0	0	0	0	0	0	0	0
4/26/2024	12:30 AM	0	0	0	0	0	0	0	0	0	0	0	0	0
4/26/2024	12:45 AM	0	0	0	0	0	0	0	0	0	0	0	0	0
4/26/2024	1:00 AM	0	0	0	0	0	0	0	0	0	0	0	0	0
4/26/2024	1:15 AM	0	0	0	0	0	0	0	0	0	0	0	0	0
4/26/2024	1:30 AM	0	0	0	0	0	0	0	0	0	0	0	0	0
4/26/2024	1:45 AM	0	0	0	0	0	0	0	0	0	0	0	0	0
4/26/2024	2:00 AM	0	0	0	0	0	0	0	0	0	0	0	0	0
4/26/2024	2:15 AM	0	0	0	0	0	0	0	0	0	0	0	0	0
4/26/2024	2:30 AM	0	0	0	0	0	0	0	0	0	0	0	0	0
4/26/2024	2:45 AM	0	0	0	0	0	0	0	0	0	0	0	0	0
4/26/2024	3:00 AM	0	0	0	0	0	0	0	0	0	0	0	0	0
4/26/2024	3:15 AM	0	0	0	0	0	0	0	0	0	0	0	0	0
4/26/2024	3:30 AM	0	0	0	0	0	0	0	0	0	0	0	0	0
4/26/2024	3:45 AM	0	0	0	0	0	0	0	0	0	0	0	0	0
4/26/2024	4:00 AM	0	0	0	0	0	0	0	0	0	0	0	0	0
4/26/2024	4:15 AM	0	0	0	0	0	0	0	0	0	0	0	0	0
4/26/2024	4:30 AM	0	0	0	0	0	0	0	0	0	0	0	0	0
4/26/2024	4:45 AM	0	0	0	0	0	0	0	0	0	0	0	0	0
4/26/2024	5:00 AM	0	0	0	0	0	0	0	0	0	0	0	0	0
4/26/2024	5:15 AM	0	0	0	0	0	0	0	0	0	0	0	0	0
4/26/2024	5:30 AM	0	0	0	0	0	0	0	0	0	0	0	0	0
4/26/2024	5:45 AM	0	0	0	0	0	0	0	0	0	0	0	0	0
4/26/2024	6:00 AM	0	0	0	0	0	0	0	0	0	0	0	0	0
4/26/2024	6:15 AM	0	0	0	0	0	0	0	0	0	0	0	0	0
4/26/2024	6:30 AM	0	0	0	0	0	0	0	0	0	0	0	0	0
4/26/2024	6:45 AM	0	0	0	0	0	0	0	0	0	0	0	0	0
4/26/2024	7:00 AM	0	0	0	0	0	0	0	0	0	0	0	0	0
4/26/2024	7:15 AM	0	0	0	0	0	0	0	0	0	0	0	0	0
4/26/2024	7:30 AM	0	0	0	0	0	0	0	0	0	0	0	0	0
4/26/2024	7:45 AM	0	0	0	0	0	0	0	0	0	0	0	0	0
4/26/2024	8:00 AM	0	0	0	0	0	0	0	0	0	0	0	0	0
4/26/2024	8:15 AM	0	0	0	0	0	0	0	0	0	0	0	0	0
4/26/2024	8:30 AM	0	0	0	0	0	0	0	0	0	0	0	0	0
4/26/2024	8:45 AM	0	0	0	0	0	0	0	0	0	0	0	0	0
4/26/2024	9:00 AM	0	0	0	0	0	0	0	0	0	0	0	0	0
4/26/2024	9:15 AM	0	0	0	0	0	0	0	0	0	0	0	0	0
4/26/2024	9:30 AM	0	0	0	0	0	0	0	0	0	0	0	0	0
4/26/2024	9:45 AM	0	0	0	0	0	0	0	0	0	0	0	0	0
4/26/2024	10:00 AM	0	0	0	0	0	0	0	0	0	0	0	0	0
4/26/2024	10:15 AM	0	0	0	0	0	0	0	0	0	0	0	0	0
4/26/2024	10:30 AM	0	0	0	0	0	0	0	0	0	0	0	0	0
4/26/2024	10:45 AM	0	0	0	0	0	0	0	0	0	0	0	0	0
4/26/2024	11:00 AM	0	0	0	0	0	0	0	0	0	0	0	0	0
4/26/2024	11:15 AM	0	0	0	0	0	0	0	0	0	0	0	0	0
4/26/2024	11:30 AM	0	0	0	0	0	0	0	0	0	0	0	0	0
4/26/2024	11:45 AM	0	0	0	0	0	0	0	0	0	0	0	0	0
4/26/2024	12:00 PM	0	0	0	0	0	0	0	0	0	0	0	0	0
4/26/2024	12:15 PM	0	0	0	0	0	0	0	0	0	0	0	0	0
4/26/2024	12:30 PM	0	0	0	0	0	0	0	0	0	0	0	0	0
4/26/2024	12:45 PM	0	0	0	0	0	0	0	0	0	0	0	0	0
4/26/2024	1:00 PM	0	0	0	0	0	0	0	0	0	0	0	0	0
4/26/2024	1:15 PM	0	0	0	0	0	0	0	0	0	0	0	0	0
4/26/2024	1:30 PM	0	0	0	0	0	0	0	0	0	0	0	0	0
4/26/2024	1:45 PM	0	0	0	0	0	0	0	0	0	0	0	0	0
4/26/2024	2:00 PM	0	0	0	0	0	0	0	0	0	0	0	0	0
4/26/2024	2:15 PM	0	0	0	0	0	0	0	0	0	0	0	0	0
4/26/2024	2:30 PM	0	0	0	0	0	0	0	0	0	0	0	0	0
4/26/2024	2:45 PM	0	0	0	0	0	0	0	0	0	0	0	0	0
4/26/2024	3:00 PM	0	0	0	0	0	0	0	0	0	0	0	0	0
4/26/2024	3:15 PM	0	0	0	0	0	0	0	0	0	0	0	0	0
4/26/2024	3:30 PM	0	0	0	0	0	0	0	0	0	0	0	0	0
4/26/2024	3:45 PM	0	0	0	0	0	0	0	0	0	0	0	0	0
4/26/2024	4:00 PM	0	0	0	0	0	0	0	0	0	0	0	0	0
4/26/2024	4:15 PM	0	0	0	0	0	0	0	0	0	0	0	0	0
4/26/2024	4:30 PM	0	0	0	0	0	0	0	0	0	0	0	0	0
4/26/2024	4:45 PM	0	0	0	0	0	0	0	0	0	0	0	0	0
4/26/2024	5:00 PM	0	0	0	0	0	0	0	0	0	0	0	0	0
4/26/2024	5:15 PM	0	0	0	0	0	0	0	0	0	0	0	0	0
4/26/2024	5:30 PM	0	0	0	0	0	0	0	0	0	0	0	0	0
4/26/2024	5:45 PM	0	0	0	0	0	0	0	0	0	0	0	0	0
4/26/2024	6:00 PM	0	0	0	0	0	0	0	0	0	0	0	0	0
4/26/2024	6:15 PM	0	0	0	0	0	0	0	0	0	0	0	0	0
4/26/2024	6:30 PM	0	0	0	0	0	0	0	0	0	0	0	0	0
4/26/2024	6:45 PM	0	0	0	0	0	0	0	0	0	0	0	0	0
4/26/2024	7:00 PM	0	0	0	0	0	0	0	0	0	0	0	0	0
4/26/2024	7:15 PM	0	0	0	0	0	0	0	0	0	0	0	0	0
4/26/2024	7:30 PM	0	0	0	0	0	0	0	0	0	0	0	0	0
4/26/2024	7:45 PM	0	0	0	0	0	0	0	0	0	0	0	0	0
4/26/2024	8:00 PM	0	0	0	0	0	0	0	0	0	0	0	0	0
4/26/2024	8:15 PM	0	0	0	0	0	0	0	0	0	0	0	0	0
4/26/2024	8:30 PM	0	0	0	0	0	0	0	0	0	0	0	0	0
4/26/2024	8:45 PM	0	0	0	0	0	0	0	0	0	0	0	0	0
4/26/2024	9:00 PM	0	0	0	0	0	0	0	0	0	0	0	0	0
4/26/2024	9:15 PM	0	0	0	0	0	0	0	0	0	0	0	0	0
4/26/2024	9:30 PM	0	0	0	0	0	0	0	0	0	0	0	0	0
4/26/2024	9:45 PM	0	0	0	0	0	0	0	0	0	0	0	0	0
4/26/2024	10:00 PM	0	0	0	0	0	0	0	0	0	0	0	0	0
4/26/2024	10:15 PM	0	0	0	0	0	0	0	0	0	0	0	0	0
4/26/2024	10:30 PM	0	0	0	0	0	0	0	0	0	0	0	0	0
4/26/2024	10:45 PM	0	0	0	0	0	0	0	0	0	0	0	0	0
4/26/2024	11:00 PM	0	0	0	0	0	0	0	0	0	0	0	0	0
4/26/2024	11:15 PM	0	0	0	0	0	0	0	0	0	0	0	0	0
4/26/2024	11:30 PM	0	0	0	0	0	0	0	0	0	0	0	0	0
4/26/2024	11:45 PM	0	0	0	0	0	0	0	0	0	0	0	0	0

4/27/2024	12:00 AM	0	0	0	0	0	0	0	0	0	0	0	0	0
4/27/2024	12:15 AM	0	0	0	0	0	0	0	0	0	0	0	0	0
4/27/2024	12:30 AM	0	0	0	0	0	0	0	0	0	0	0	0	0
4/27/2024	12:45 AM	0	0	0	0	0	0	0	0	0	0	0	0	0
4/27/2024	1:00 AM	0	0	0	0	0	0	0	0	0	0	0	0	0
4/27/2024	1:15 AM	0	0	0	0	0	0	0	0	0	0	0	0	0
4/27/2024	1:30 AM	0	0	0	0	0	0	0	0	0	0	0	0	0
4/27/2024	1:45 AM	0	0	0	0	0	0	0	0	0	0	0	0	0
4/27/2024	2:00 AM	0	0	0	0	0	0	0	0	0	0	0	0	0
4/27/2024	2:15 AM	0	0	0	0	0	0	0	0	0	0	0	0	0
4/27/2024	2:30 AM	0	0	0	0	0	0	0	0	0	0	0	0	0
4/27/2024	2:45 AM	0	0	0	0	0	0	0	0	0	0	0	0	0
4/27/2024	3:00 AM	0	0	0	0	0	0	0	0	0	0	0	0	0
4/27/2024	3:15 AM	0	0	0	0	0	0	0	0	0	0	0	0	0
4/27/2024	3:30 AM	0	0	0	0	0	0	0	0	0	0	0	0	0
4/27/2024	3:45 AM	0	0	0	0	0	0	0	0	0	0	0	0	0
4/27/2024	4:00 AM	0	0	0	0	0	0	0	0	0	0	0	0	0
4/27/2024	4:15 AM	0	0	0	0	0	0	0	0	0	0	0	0	0
4/27/2024	4:30 AM	0	0	0	0	0	0	0	0	0	0	0	0	0
4/27/2024	4:45 AM	0	0	0	0	0	0	0	0	0	0	0	0	0
4/27/2024	5:00 AM	0	0	0	0	0	0	0	0	0	0	0	0	0
4/27/2024	5:15 AM	0	0	0	0	0	0	0	0	0	0	0	0	0
4/27/2024	5:30 AM	0	0	0	0	0	0	0	0	0	0	0	0	0
4/27/2024	5:45 AM	0	0	0	0	0	0	0	0	0	0	0	0	0
4/27/2024	6:00 AM	0	0	0	0	0	0	0	0	0	0	0	0	0
4/27/2024	6:15 AM	0	0	0	0	0	0	0	0	0	0	0	0	0
4/27/2024	6:30 AM	0	0	0	0	0	0	0	0	0	0	0	0	0
4/27/2024	6:45 AM	0	0	0	0	0	0	0	0	0	0	0	0	0
4/27/2024	7:00 AM	0	0	0	0	0	0	0	0	0	0	0	0	0
4/27/2024	7:15 AM	0	0	0	0	0	0	0	0	0	0	0	0	0
4/27/2024	7:30 AM	0	0	0	0	0	0	0	0	0	0	0	0	0
4/27/2024	7:45 AM	0	0	0	0	0	0	0	0	0	0	0	0	0
4/27/2024	8:00 AM	0	0	0	0	0	0	0	0	0	0	0	0	0
4/27/2024	8:15 AM	0	0	0	0	0	0	0	0	0	0	0	0	0
4/27/2024	8:30 AM	0	0	0	0	0	0	0	0	0	0	0	0	0
4/27/2024	8:45 AM	0	0	0	0	0	0	0	0	0	0	0	0	0
4/27/2024	9:00 AM	0	0	0	0	0	0	0	0	0	0	0	0	0
4/27/2024	9:15 AM	0	0	0	0	0	0	0	0	0	0	0	0	0
4/27/2024	9:30 AM	0	0	0	0	0	0	0	0	0	0	0	0	0
4/27/2024	9:45 AM	0	0	0	0	0	0	0	0	0	0	0	0	0
4/27/2024	10:00 AM	0	0	0	0	0	0	0	0	0	0	0	0	0
4/27/2024	10:15 AM	0	0	0	0	0	0	0	0	0	0	0	0	0
4/27/2024	10:30 AM	0	0	0	0	0	0	0	0	0	0	0	0	0
4/27/2024	10:45 AM	0	0	0	0	0	0	0	0	0	0	0	0	0
4/27/2024	11:00 AM	0	0	0	0	0	0	0	0	0	0	0	0	0
4/27/2024	11:15 AM	0	0	0	0	0	0	0	0	0	0	0	0	0
4/27/2024	11:30 AM	0	0	0	0	0	0	0	0	0	0	0	0	0
4/27/2024	11:45 AM	0	0	0	0	0	0	0	0	0	0	0	0	0
4/27/2024	12:00 PM	0	0	0	0	0	0	0	0	0	0	0	0	0
4/27/2024	12:15 PM	0	0	0	0	0	0	0	0	0	0	0	0	0
4/27/2024	12:30 PM	0	0	0	0	0	0	0	0	0	0	0	0	0
4/27/2024	12:45 PM	0	0	0	0	0	0	0	0	0	0	0	0	0
4/27/2024	1:00 PM	0	0	0	0	0	0	0	0	0	0	0	0	0
4/27/2024	1:15 PM	0	0	0	0	0	0	0	0	0	0	0	0	0
4/27/2024	1:30 PM	0	0	0	0	0	0	0	0	0	0	0	0	0
4/27/2024	1:45 PM	0	0	0	0	0	0	0	0	0	0	0	0	0
4/27/2024	2:00 PM	0	0	0	0	0	0	0	0	0	0	0	0	0
4/27/2024	2:15 PM	0	0	0	0	0	0	0	0	0	0	0	0	0
4/27/2024	2:30 PM	0	0	0	0	0	0	0	0	0	0	0	0	0
4/27/2024	2:45 PM	0	0	0	0	0	0	0	0	0	0	0	0	0
4/27/2024	3:00 PM	0	0	0	0	0	0	0	0	0	0	0	0	0
4/27/2024	3:15 PM	0	0	0	0	0	0	0	0	0	0	0	0	0
4/27/2024	3:30 PM	0	0	0	0	0	0	0	0	0	0	0	0	0
4/27/2024	3:45 PM	0	0	0	0	0	0	0	0	0	0	0	0	0
4/27/2024	4:00 PM	0	0	0	0	0	0	0	0	0	0	0	0	0
4/27/2024	4:15 PM	0	0	0	0	0	0	0	0	0	0	0	0	0
4/27/2024	4:30 PM	0	0	0	0	0	0	0	0	0	0	0	0	0
4/27/2024	4:45 PM	0	0	0	0	0	0	0	0	0	0	0	0	0
4/27/2024	5:00 PM	0	0	0	0	0	0	0	0	0	0	0	0	0
4/27/2024	5:15 PM	0	0	0	0	0	0	0	0	0	0	0	0	0
4/27/2024	5:30 PM	0	0	0	0	0	0	0	0	0	0	0	0	0
4/27/2024	5:45 PM	0	0	0	0	0	0	0	0	0	0	0	0	0
4/27/2024	6:00 PM	0	0	0	0	0	0	0	0	0	0	0	0	0
4/27/2024	6:15 PM	0	0	0	0	0	0	0	0	0	0	0	0	0
4/27/2024	6:30 PM	0	0	0	0	0	0	0	0	0	0	0	0	0
4/27/2024	6:45 PM	0	0	0	0	0	0	0	0	0	0	0	0	0
4/27/2024	7:00 PM	0	0	0	0	0	0	0	0	0	0	0	0	0
4/27/2024	7:15 PM	0	0	0	0	0	0	0	0	0	0	0	0	0
4/27/2024	7:30 PM	0	0	0	0	0	0	0	0	0	0	0	0	0
4/27/2024	7:45 PM	0	0	0	0	0	0	0	0	0	0	0	0	0
4/27/2024	8:00 PM	0	0	0	0	0	0	0	0	0	0	0	0	0
4/27/2024	8:15 PM	0	0	0	0	0	0	0	0	0	0	0	0	0
4/27/2024	8:30 PM	0	0	0	0	0	0	0	0	0	0	0	0	0
4/27/2024	8:45 PM	0	0	0	0	0	0	0	0	0	0	0	0	0
4/27/2024	9:00 PM	0	0	0	0	0	0	0	0	0	0	0	0	0
4/27/2024	9:15 PM	0	0	0	0	0	0	0	0	0	0	0	0	0
4/27/2024	9:30 PM	0	0	0	0	0	0	0	0	0	0	0	0	0
4/27/2024	9:45 PM	0	0	0	0	0	0	0	0	0	0	0	0	0
4/27/2024	10:00 PM	0	0	0	0	0	0	0	0	0	0	0	0	0
4/27/2024	10:15 PM	0	0	0	0	0	0	0	0	0	0	0	0	0
4/27/2024	10:30 PM	0	0	0	0	0	0	0	0	0	0	0	0	0
4/27/2024	10:45 PM	0	0	0	0	0	0	0	0	0	0	0	0	0
4/27/2024	11:00 PM	0	0	0	0	0	0	0	0	0	0	0	0	0
4/27/2024	11:15 PM	0	0	0	0	0	0	0	0	0	0	0	0	0
4/27/2024	11:30 PM	0	0	0	0	0	0	0	0	0	0	0	0	0
4/27/2024	11:45 PM	0	0	0	0	0	0	0	0	0	0	0	0	0

Bi-Directional Class Count || SB WB 15min

Columbia, SC

Marr Traffic DATA COLLECTION
www.marrtraffic.com

Site 75 Lane 1 SB
I-20,
north of Bush River Rd

Date
Sunday, April 21, 2024

Lat/Long
34.034393°, -81.117736°

Weather
Cloudy
66°F

Click here for Detailed Weather

Click here for Map

0000 - 2400 (Sunday 24h Session) (04-21-2024)
SB WB 15min

	Southbound (Movement 75 Lane 1 SB.1)													15min	60min
Time	1	2	3	4	5	6	7	8	9	10	11	12	13	Total	Total
0000 - 0015	0	17	0	0	0	0	0	0	0	0	0	0	0	**17**	
0015 - 0030	0	20	2	0	0	0	0	0	0	0	0	0	0	**22**	
0030 - 0045	0	9	0	0	0	0	0	0	0	0	0	0	0	**9**	
0045 - 0100	0	5	0	0	0	0	0	0	0	0	0	0	0	**5**	**53**
0100 - 0115	0	5	0	0	0	0	0	0	0	0	0	0	0	**5**	
0115 - 0130	0	9	0	0	0	0	0	0	0	0	0	0	0	**9**	
0130 - 0145	0	5	0	0	0	0	0	0	0	0	0	0	0	**5**	
0145 - 0200	0	4	0	0	0	0	0	0	0	0	0	0	0	**4**	**23**
0200 - 0215	0	5	0	0	0	0	0	0	0	0	0	0	0	**5**	
0215 - 0230	0	7	2	0	0	0	0	0	0	0	0	0	0	**9**	
0230 - 0245	0	2	2	0	0	0	0	0	0	0	0	0	0	**4**	
0245 - 0300	0	3	0	0	0	0	0	0	0	0	0	0	0	**3**	**21**
0300 - 0315	1	5	0	0	0	0	0	0	0	0	0	0	0	**6**	
0315 - 0330	0	3	0	0	0	0	0	0	0	0	0	0	0	**3**	
0330 - 0345	0	1	0	0	0	0	0	0	0	0	0	0	0	**1**	
0345 - 0400	0	6	0	0	0	0	0	0	0	0	0	0	0	**6**	**16**
0400 - 0415	0	1	0	0	0	0	0	0	0	0	0	0	0	**1**	
0415 - 0430	0	3	1	0	0	0	0	0	0	0	0	0	0	**4**	
0430 - 0445	0	3	0	0	0	0	0	0	0	0	0	0	0	**3**	
0445 - 0500	0	7	0	0	0	0	0	0	0	0	0	0	0	**7**	**15**
0500 - 0515	0	3	0	0	0	0	0	0	0	0	0	0	0	**3**	
0515 - 0530	0	5	1	0	0	0	0	0	0	0	0	0	0	**6**	
0530 - 0545	0	10	0	0	0	0	0	0	0	0	0	0	0	**10**	
0545 - 0600	0	11	0	0	0	0	0	0	0	0	0	0	0	**11**	**30**
0600 - 0615	0	8	0	0	0	0	0	0	0	0	0	0	0	**8**	
0615 - 0630	0	12	0	0	0	0	0	0	0	0	0	0	0	**12**	
0630 - 0645	0	23	5	0	0	0	0	0	0	0	0	0	0	**28**	
0645 - 0700	0	20	6	0	0	0	0	0	0	0	0	0	0	**26**	**74**
0700 - 0715	0	22	2	0	0	0	0	0	0	0	0	0	0	**24**	
0715 - 0730	0	15	5	0	0	0	0	0	0	0	0	0	0	**20**	
0730 - 0745	0	13	6	0	0	0	0	0	0	0	0	0	0	**19**	
0745 - 0800	2	21	3	0	0	0	0	0	0	0	0	0	0	**26**	**89**
0800 - 0815	3	21	5	0	0	0	0	0	0	0	0	0	0	**29**	
0815 - 0830	0	23	5	0	0	0	0	0	0	0	0	0	0	**28**	
0830 - 0845	0	28	4	0	0	0	0	0	0	0	0	0	0	**32**	
0845 - 0900	0	39	5	0	0	0	0	0	0	0	0	0	0	**44**	**133**
0900 - 0915	2	43	12	0	0	0	0	0	0	0	0	0	0	**57**	
0915 - 0930	4	66	9	0	0	0	0	0	0	0	0	0	0	**79**	
0930 - 0945	0	68	11	0	0	0	0	0	0	0	0	0	0	**79**	
0945 - 1000	1	51	15	0	1	0	0	0	0	0	0	0	0	**68**	**283**
1000 - 1015	0	46	13	0	0	0	0	0	0	0	0	0	0	**59**	
1015 - 1030	10	84	15	0	0	0	0	0	0	0	0	0	0	**109**	
1030 - 1045	1	68	13	0	1	0	0	0	0	0	0	0	0	**83**	
1045 - 1100	1	81	14	0	0	0	0	0	1	0	0	0	0	**97**	**348**
1100 - 1115	0	102	13	0	0	0	0	0	0	0	0	0	0	**115**	
1115 - 1130	0	93	24	0	0	0	0	0	1	0	0	0	0	**118**	
1130 - 1145	1	84	21	0	1	0	0	0	0	0	0	0	0	**107**	
1145 - 1200	0	98	32	0	0	0	0	0	0	0	0	0	0	**130**	**470**
1200 - 1215	3	111	22	0	0	0	0	0	1	0	0	0	0	**137**	
1215 - 1230	3	120	32	0	1	0	0	0	0	0	0	0	0	**156**	
1230 - 1245	5	97	27	0	0	0	0	0	0	0	0	0	0	**129**	
1245 - 1300	0	126	32	0	1	0	0	0	0	0	0	0	0	**159**	**581**
1300 - 1315	0	160	28	0	0	0	0	0	0	0	0	0	0	**188**	
1315 - 1330	0	163	33	0	0	0	0	0	0	0	0	0	0	**196**	
1330 - 1345	0	152	24	0	0	0	0	1	0	0	0	0	0	**177**	
1345 - 1400	0	152	22	0	0	1	0	0	0	0	0	0	0	**175**	**736**
1400 - 1415	0	148	28	0	0	0	0	0	0	0	0	0	0	**176**	
1415 - 1430	0	149	28	0	1	0	0	0	2	0	0	0	0	**180**	
1430 - 1445	0	127	33	0	0	0	0	0	0	0	0	0	0	**160**	
1445 - 1500	0	117	29	0	0	0	0	0	1	0	0	0	0	**147**	**663**
1500 - 1515	0	127	27	0	1	0	0	0	0	0	0	0	0	**155**	
1515 - 1530	0	103	29	0	0	0	0	0	0	0	0	0	0	**132**	
1530 - 1545	0	127	42	0	0	0	0	0	0	0	0	0	0	**169**	
1545 - 1600	0	130	33	0	0	0	0	0	1	0	0	0	0	**164**	**620**
1600 - 1615	0	131	44	0	0	0	0	0	0	0	0	0	0	**175**	
1615 - 1630	0	148	36	0	0	0	0	0	1	0	0	0	0	**185**	
1630 - 1645	0	128	24	1	0	0	0	0	0	1	0	0	0	**154**	
1645 - 1700	0	139	20	0	0	0	0	0	1	0	0	0	0	**160**	**674**
1700 - 1715	0	116	30	0	0	0	0	0	0	0	0	0	0	**146**	
1715 - 1730	0	96	26	0	0	0	0	0	0	0	0	0	0	**122**	
1730 - 1745	0	108	28	1	0	0	0	0	0	0	0	0	0	**137**	
1745 - 1800	0	111	22	0	0	0	0	1	0	0	0	0	0	**134**	**539**
1800 - 1815	1	80	30	0	0	0	0	0	0	0	0	0	0	**111**	
1815 - 1830	1	93	20	0	1	0	0	0	0	0	0	0	0	**115**	
1830 - 1845	0	89	26	0	0	0	0	0	0	0	0	0	0	**115**	
1845 - 1900	1	114	18	0	0	0	0	0	0	0	0	0	0	**133**	**474**
1900 - 1915	0	94	17	0	0	0	0	0	3	0	0	0	0	**114**	
1915 - 1930	0	67	17	0	0	0	0	0	0	0	0	0	0	**84**	
1930 - 1945	0	71	15	1	1	0	0	0	0	0	0	0	0	**88**	
1945 - 2000	0	70	10	0	0	0	0	0	0	0	0	0	0	**80**	**366**
2000 - 2015	0	59	13	0	1	0	0	0	0	0	0	0	0	**73**	
2015 - 2030	0	56	4	0	0	0	0	0	0	0	0	0	0	**60**	
2030 - 2045	0	49	1	0	0	0	0	0	0	0	0	0	0	**50**	
2045 - 2100	0	44	4	0	0	0	0	0	0	0	0	0	0	**48**	**231**
2100 - 2115	0	46	1	0	0	0	0	0	0	0	0	0	0	**47**	
2115 - 2130	0	36	1	0	0	0	0	0	0	0	0	0	0	**37**	
2130 - 2145	0	27	1	0	0	0	0	0	0	0	0	0	0	**28**	
2145 - 2200	0	20	4	0	0	0	0	0	0	0	0	0	0	**24**	**136**
2200 - 2215	0	30	1	0	0	0	0	0	0	0	0	0	0	**31**	
2215 - 2230	0	20	2	0	0	0	0	0	1	0	0	0	0	**23**	
2230 - 2245	0	17	2	0	0	0	0	0	0	0	0	0	0	**19**	
2245 - 2300	0	20	0	0	0	0	0	0	1	0	0	0	0	**21**	**94**
2300 - 2315	0	12	1	0	0	0	0	0	0	0	0	0	0	**13**	
2315 - 2330	0	10	1	0	0	0	0	0	0	0	0	0	0	**11**	
2330 - 2345	0	14	2	0	0	0	0	0	1	0	0	0	0	**17**	
2345 - 0000	0	6	1	0	0	0	0	0	0	0	0	0	0	**7**	**48**

Session Total	40	5508	1137	3	10	1	0	2	15	1	0	0	0	**6717**
Session Average	0.42	57.38	11.84	0.03	0.10	0.01	0.00	0.02	0.16	0.01	0.00	0.00	0.00	**69.97**
Session Percentage	0.60	82.00	16.93	0.04	0.15	0.01	0.00	0.03	0.22	0.01	0.00	0.00	0.00	

AM Peak Hour	0945 - 1045	0930 - 1030	0945 - 1045	-	0945 - 1045	-	-	-	-	-	-	-	-	**0945 - 1045**
AM Peak Volume	12	249	56	0	2	0	0	0	0	0	0	0	0	**319**

Noon Peak Hour	1000 - 1100	1300 - 1400	1445 - 1545	-	1130 - 1230	1300 - 1400	-	1245 - 1345	1400 - 1500	-	-	-	-	**1300 - 1400**
Noon Peak Volume	12	627	127	0	2	1	0	1	3	0	0	0	0	**736**

PM Peak Hour	1800 - 1900	1600 - 1700	1530 - 1630	1545 - 1645	1915 - 2015	-	-	1700 - 1800	1815 - 1915	1545 - 1645	-	-	-	**1530 - 1630**
PM Peak Volume	3	546	155	1	2	0	0	1	3	1	0	0	0	**693**

Site 75 Lane 1 SB
I-20,
north of Bush River Rd

Date
Monday, April 22, 2024

Lat/Long
34.034393°, -81.117736°

Weather
Mostly Cloudy
57°F

Click here for Detailed Weather

0000 - 2400 (Weekday 24h Session) (04-22-2024)
SB WB 15min

	Southbound (Movement 75 Lane 1 SB.1)													15min	60min
Time	1	2	3	4	5	6	7	8	9	10	11	12	13	Total	Total
0000 - 0015	0	6	0	0	0	0	0	0	0	0	0	0	0	**6**	
0015 - 0030	0	6	0	0	0	0	0	0	0	0	0	0	0	**6**	
0030 - 0045	0	5	1	0	0	0	0	0	0	0	0	0	0	**6**	
0045 - 0100	0	5	0	0	0	0	0	0	0	0	0	0	0	**5**	**23**
0100 - 0115	0	2	0	0	0	0	0	0	0	0	0	0	0	**2**	
0115 - 0130	0	6	0	0	0	0	0	0	0	0	0	0	0	**6**	
0130 - 0145	0	3	0	0	0	0	0	0	0	0	0	0	0	**3**	
0145 - 0200	0	1	0	0	0	0	0	0	0	0	0	0	0	**1**	**12**
0200 - 0215	0	2	0	0	0	0	0	0	0	0	0	0	0	**2**	
0215 - 0230	0	3	0	0	0	1	0	0	0	0	0	0	0	**4**	
0230 - 0245	0	6	0	0	0	0	0	0	0	0	0	0	0	**6**	
0245 - 0300	0	3	1	0	0	0	0	0	0	0	0	0	0	**4**	**16**
0300 - 0315	0	4	0	0	0	0	0	0	0	0	0	0	0	**4**	
0315 - 0330	0	6	0	0	0	0	0	0	0	0	0	0	0	**6**	
0330 - 0345	0	6	0	0	0	0	0	0	0	0	0	0	0	**6**	
0345 - 0400	0	3	0	0	0	0	0	0	0	0	0	0	0	**3**	**19**
0400 - 0415	0	3	0	0	0	0	0	0	0	0	0	0	0	**3**	
0415 - 0430	0	10	1	0	0	0	0	0	0	0	0	0	0	**11**	
0430 - 0445	0	7	1	0	0	0	0	0	0	0	0	0	0	**8**	
0445 - 0500	0	13	1	0	0	0	0	0	0	0	0	0	0	**14**	**36**
0500 - 0515	0	10	0	0	0	0	0	0	0	0	0	0	0	**10**	
0515 - 0530	0	22	4	0	0	0	0	0	0	0	0	0	0	**26**	
0530 - 0545	0	30	6	0	0	0	0	0	0	0	0	0	0	**36**	
0545 - 0600	0	40	7	0	0	0	0	0	0	0	0	0	0	**47**	**119**
0600 - 0615	0	46	7	0	1	0	0	0	0	0	0	0	0	**54**	
0615 - 0630	1	71	16	0	0	0	0	0	0	0	0	0	0	**88**	
0630 - 0645	0	123	36	0	0	0	0	0	0	0	0	0	0	**159**	
0645 - 0700	1	125	44	0	0	0	0	0	0	0	0	0	0	**170**	**471**
0700 - 0715	0	122	35	0	1	0	0	0	0	0	0	0	0	**158**	
0715 - 0730	0	173	57	0	1	0	0	0	0	0	0	0	0	**231**	
0730 - 0745	0	158	38	0	4	0	0	0	0	0	0	0	0	**200**	
0745 - 0800	0	170	49	0	0	0	0	0	0	0	0	0	0	**219**	**808**
0800 - 0815	0	138	34	0	0	0	0	0	0	0	0	0	0	**172**	
0815 - 0830	0	163	31	0	0	0	0	0	0	0	0	0	0	**194**	
0830 - 0845	0	104	46	0	1	0	0	0	2	0	0	0	0	**153**	
0845 - 0900	0	98	30	0	2	1	0	1	1	0	0	0	0	**133**	**652**
0900 - 0915	0	66	29	0	1	1	0	0	0	0	0	0	0	**97**	
0915 - 0930	0	58	31	0	1	1	0	1	2	0	0	0	0	**94**	
0930 - 0945	0	94	35	0	4	0	0	0	0	0	0	0	0	**133**	
0945 - 1000	0	78	26	0	2	0	0	1	0	0	0	0	0	**107**	**431**
1000 - 1015	0	69	35	0	1	0	0	0	0	0	0	0	0	**105**	
1015 - 1030	0	68	29	0	1	0	0	0	0	0	0	0	0	**98**	
1030 - 1045	0	79	20	2	0	0	0	1	2	0	0	0	0	**104**	
1045 - 1100	1	73	36	0	1	0	0	0	0	0	0	0	0	**111**	**418**
1100 - 1115	0	78	33	0	1	0	0	0	0	0	0	0	0	**112**	
1115 - 1130	0	70	39	0	1	0	0	1	0	1	0	0	0	**112**	
1130 - 1145	0	85	27	1	2	0	0	0	2	0	0	0	0	**117**	
1145 - 1200	0	92	33	0	0	0	0	0	0	0	0	0	0	**125**	**466**
1200 - 1215	0	75	24	0	0	1	0	0	0	1	0	0	0	**101**	
1215 - 1230	0	101	29	0	0	0	0	0	1	0	0	0	0	**131**	
1230 - 1245	0	98	27	0	1	0	0	0	0	0	0	0	0	**126**	
1245 - 1300	3	95	34	0	0	0	0	0	5	0	0	0	0	**137**	**495**
1300 - 1315	0	97	31	0	2	0	0	2	3	0	0	0	0	**135**	
1315 - 1330	0	84	32	0	1	0	0	0	1	0	0	0	0	**118**	
1330 - 1345	0	107	39	0	1	0	0	0	1	0	0	0	0	**148**	
1345 - 1400	0	105	34	0	0	0	0	0	2	0	0	0	0	**141**	**542**
1400 - 1415	0	119	43	0	0	0	0	0	2	0	0	0	0	**164**	
1415 - 1430	0	107	42	0	3	0	0	1	1	0	0	0	0	**154**	
1430 - 1445	0	128	40	0	3	0	0	1	2	0	0	0	0	**174**	
1445 - 1500	0	107	42	0	0	0	0	1	0	0	0	0	0	**150**	**642**
1500 - 1515	2	145	38	0	1	0	0	0	0	0	0	0	0	**186**	
1515 - 1530	2	145	44	0	5	0	0	0	1	0	0	0	0	**197**	
1530 - 1545	0	160	60	0	4	0	0	0	1	0	0	0	0	**225**	
1545 - 1600	0	143	49	0	4	0	0	2	3	0	0	0	0	**201**	**809**
1600 - 1615	0	193	57	0	8	0	0	1	0	0	0	0	0	**259**	
1615 - 1630	0	209	76	0	5	0	0	1	0	0	0	0	0	**291**	
1630 - 1645	1	195	71	0	4	0	0	1	1	0	0	0	0	**273**	
1645 - 1700	0	207	70	1	11	0	0	2	0	0	0	0	0	**291**	**1114**
1700 - 1715	0	229	91	0	3	0	0	0	2	0	0	0	0	**325**	
1715 - 1730	1	244	86	0	2	0	0	1	2	0	0	0	0	**336**	
1730 - 1745	0	241	78	0	7	0	0	1	1	0	0	0	0	**328**	
1745 - 1800	2	165	59	1	3	0	0	2	2	0	0	0	0	**234**	**1223**
1800 - 1815	0	143	44	0	5	0	0	0	0	0	0	0	0	**192**	
1815 - 1830	0	134	30	0	2	0	0	1	1	0	0	0	0	**168**	
1830 - 1845	1	98	28	0	1	0	0	2	0	0	0	0	0	**130**	
1845 - 1900	0	89	38	0	0	0	0	0	2	0	0	0	0	**129**	**619**
1900 - 1915	0	77	26	0	0	0	0	2	1	0	0	0	0	**106**	
1915 - 1930	0	77	14	0	2	0	0	1	0	0	0	0	0	**94**	
1930 - 1945	0	67	20	0	0	0	0	0	0	0	1	0	0	**88**	
1945 - 2000	0	54	14	0	0	0	0	1	0	0	0	0	0	**69**	**357**
2000 - 2015	0	54	12	0	0	0	0	1	0	0	0	0	0	**67**	
2015 - 2030	0	34	9	0	0	0	0	1	0	0	0	0	0	**44**	
2030 - 2045	0	38	8	0	1	0	0	0	1	0	0	0	0	**48**	
2045 - 2100	0	40	7	0	0	0	0	0	0	0	0	0	0	**47**	**206**
2100 - 2115	0	31	7	0	0	0	0	0	0	0	0	0	0	**38**	
2115 - 2130	0	25	4	0	0	0	0	0	0	0	0	0	0	**29**	
2130 - 2145	0	13	2	0	0	0	0	0	0	0	0	0	0	**15**	
2145 - 2200	0	12	2	0	0	0	0	0	0	0	0	0	0	**14**	**96**
2200 - 2215	0	8	1	0	0	0	0	0	0	0	0	0	0	**9**	
2215 - 2230	0	12	3	0	0	0	0	0	0	0	0	0	0	**15**	
2230 - 2245	0	13	1	0	0	0	0	0	0	0	0	0	0	**14**	
2245 - 2300	0	10	1	0	0	0	0	0	0	0	0	0	0	**11**	**49**
2300 - 2315	0	11	0	0	0	0	0	0	0	0	0	0	0	**11**	
2315 - 2330	0	8	0	0	0	0	0	0	0	0	0	0	0	**8**	
2330 - 2345	0	12	0	0	0	0	0	0	0	0	0	0	0	**12**	
2345 - 0000	0	9	0	0	0	0	0	0	0	0	0	0	0	**9**	**40**

Session Total	15	7171	2285	5	104	5	0	30	45	2	1	0	0	**9663**
Session Average	0.16	74.70	23.80	0.05	1.08	0.05	0.00	0.31	0.47	0.02	0.01	0.00	0.00	**100.66**
Session Percentage	0.16	74.21	23.65	0.05	1.08	0.05	0.00	0.31	0.47	0.02	0.01	0.00	0.00	

AM Peak Hour	0600 - 0700	0715 - 0815	0700 - 0800	0945 - 1045	0845 - 0945	0830 - 0930	-	0830 - 0930	0830 - 0930	-	-	-	-	**0715 - 0815**
AM Peak Volume	2	639	179	2	8	3	0	2	5	0	0	0	0	**822**

Noon Peak Hour	1430 - 1530	1445 - 1545	1445 - 1545	1000 - 1100	1445 - 1545	1115 - 1215	-	1400 - 1500	1245 - 1345	1115 - 1215	-	-	-	**1445 - 1545**
Noon Peak Volume	4	557	184	2	10	1	0	3	10	2	0	0	0	**758**

PM Peak Hour	1500 - 1600	1645 - 1745	1645 - 1745	1600 - 1700	1600 - 1700	-	-	1545 - 1645	1700 - 1800	-	1845 - 1945	-	-	**1645 - 1745**
PM Peak Volume	4	921	325	1	28	0	0	5	7	0	1	0	0	**1280**

Site 75 Lane 1 SB
I-20,
north of Bush River Rd

Date
Tuesday, April 23, 2024

Lat/Long
34.034393°, -81.117736°

Weather
Fair
58°F

Click here for Detailed Weather

0000 - 2400 (Weekday 24h Session) (04-23-2024)
SB WB 15min

	Southbound (Movement 75 Lane 1 SB.1)													15min	60min
TIME	1	2	3	4	5	6	7	8	9	10	11	12	13	Total	Total
0000 - 0015	0	2	1	0	0	0	0	0	0	0	0	0	0	**3**	
0015 - 0030	0	6	0	0	0	0	0	0	0	0	0	0	0	**6**	
0030 - 0045	0	0	0	0	0	0	0	0	0	0	0	0	0	**0**	
0045 - 0100	0	3	0	0	0	0	0	0	0	0	0	0	0	**3**	**12**
0100 - 0115	0	4	0	0	0	0	0	0	0	0	0	0	0	**4**	
0115 - 0130	0	2	0	0	0	0	0	0	0	0	0	0	0	**2**	
0130 - 0145	0	0	0	0	0	0	0	0	0	0	0	0	0	**0**	
0145 - 0200	0	2	0	0	0	0	0	0	0	0	0	0	0	**2**	**8**
0200 - 0215	0	1	0	0	0	0	0	0	0	0	0	0	0	**1**	
0215 - 0230	0	1	0	0	0	0	0	0	0	0	0	0	0	**1**	
0230 - 0245	0	2	0	0	0	0	0	0	0	0	0	0	0	**2**	
0245 - 0300	0	2	0	0	0	0	0	0	0	0	0	0	0	**2**	**6**
0300 - 0315	0	2	0	0	0	0	0	0	0	0	0	0	0	**2**	
0315 - 0330	0	5	0	0	0	0	0	0	0	0	0	0	0	**5**	
0330 - 0345	0	2	0	0	0	0	0	0	0	0	0	0	0	**2**	
0345 - 0400	0	7	2	0	0	0	0	0	0	0	0	0	0	**9**	**18**
0400 - 0415	0	1	0	0	0	0	0	0	0	0	0	0	0	**1**	
0415 - 0430	0	3	0	0	0	0	0	0	0	0	0	0	0	**3**	
0430 - 0445	0	5	1	0	0	0	0	0	0	0	0	0	0	**6**	
0445 - 0500	0	10	0	0	0	0	0	0	0	0	0	0	0	**10**	**20**
0500 - 0515	0	7	2	0	1	0	0	0	0	0	0	0	0	**10**	
0515 - 0530	0	19	2	0	0	0	0	0	0	0	0	0	0	**21**	
0530 - 0545	0	37	4	0	0	0	0	0	0	0	0	0	0	**41**	
0545 - 0600	0	28	3	0	0	0	0	0	0	0	0	0	0	**31**	**103**
0600 - 0615	0	54	8	0	2	0	0	0	0	0	0	0	0	**64**	
0615 - 0630	0	100	24	0	0	0	0	0	0	0	0	0	0	**124**	
0630 - 0645	0	112	31	0	0	0	0	0	0	0	0	0	0	**143**	
0645 - 0700	0	131	48	0	1	0	0	0	0	0	0	0	0	**180**	**511**
0700 - 0715	0	146	40	0	2	0	0	0	0	0	0	0	0	**188**	
0715 - 0730	0	162	50	1	1	0	0	0	0	0	0	0	0	**214**	
0730 - 0745	0	160	35	1	1	0	0	0	0	0	0	0	0	**197**	
0745 - 0800	0	159	30	0	1	0	0	0	1	0	0	0	0	**191**	**790**
0800 - 0815	0	126	47	0	1	0	0	0	0	0	0	0	0	**174**	
0815 - 0830	0	120	31	0	0	0	0	0	1	0	0	0	0	**152**	
0830 - 0845	0	122	25	1	1	0	0	0	1	0	0	0	0	**150**	
0845 - 0900	0	108	52	0	0	0	0	0	2	0	0	0	0	**162**	**638**
0900 - 0915	0	106	37	0	5	0	0	0	2	0	0	0	0	**150**	
0915 - 0930	1	94	31	0	4	0	0	0	2	0	0	0	0	**132**	
0930 - 0945	0	73	38	0	0	0	0	0	1	0	0	0	0	**112**	
0945 - 1000	0	79	24	0	2	0	0	0	1	0	0	0	0	**106**	**500**
1000 - 1015	0	53	20	0	1	0	0	0	0	0	0	0	0	**74**	
1015 - 1030	0	53	22	0	1	0	0	1	2	0	0	0	0	**79**	
1030 - 1045	0	51	18	0	0	0	0	0	1	0	0	0	0	**70**	
1045 - 1100	0	56	32	0	2	0	0	0	0	0	0	0	0	**90**	**313**
1100 - 1115	0	51	25	0	1	0	0	1	0	0	0	0	0	**78**	
1115 - 1130	1	75	26	0	1	1	0	1	2	0	0	0	0	**107**	
1130 - 1145	1	70	29	0	0	0	0	0	0	0	0	0	0	**100**	
1145 - 1200	1	66	31	0	1	0	0	0	1	0	0	0	0	**100**	**385**
1200 - 1215	0	69	24	0	1	0	0	0	0	0	0	0	0	**94**	
1215 - 1230	0	83	29	0	0	0	0	0	1	0	0	0	0	**113**	
1230 - 1245	0	84	31	0	2	0	0	1	1	0	0	0	0	**119**	
1245 - 1300	0	78	28	0	1	0	0	1	0	0	0	0	0	**108**	**434**
1300 - 1315	1	84	30	0	4	0	0	0	4	0	0	0	0	**123**	
1315 - 1330	0	89	30	0	1	0	0	1	3	0	0	0	0	**124**	
1330 - 1345	0	91	30	0	2	0	0	0	1	0	0	0	0	**124**	
1345 - 1400	0	106	29	0	1	0	0	0	1	0	0	0	0	**137**	**508**
1400 - 1415	0	108	38	0	2	0	0	0	4	0	0	0	0	**152**	
1415 - 1430	0	109	26	0	2	0	0	0	2	0	0	0	0	**139**	
1430 - 1445	0	126	33	0	2	0	0	0	0	0	0	0	0	**161**	
1445 - 1500	0	105	48	0	1	0	0	0	0	0	0	0	0	**154**	**606**
1500 - 1515	1	155	38	1	2	0	0	0	0	0	0	0	0	**197**	
1515 - 1530	0	129	49	0	2	0	0	0	2	0	0	0	0	**182**	
1530 - 1545	1	167	55	0	4	0	0	1	0	0	0	0	0	**228**	
1545 - 1600	0	181	55	0	4	0	0	1	1	0	0	0	0	**242**	**849**
1600 - 1615	0	203	68	0	4	0	0	2	0	0	0	0	0	**277**	
1615 - 1630	1	224	75	0	7	0	0	3	2	0	0	0	0	**312**	
1630 - 1645	1	201	73	0	4	0	0	1	1	0	0	0	0	**281**	
1645 - 1700	0	166	47	0	0	0	0	1	4	0	0	0	0	**218**	**1088**
1700 - 1715	0	118	41	0	2	0	0	0	1	0	0	0	0	**162**	
1715 - 1730	0	258	104	0	4	0	0	0	1	0	0	0	0	**367**	
1730 - 1745	1	237	72	0	4	0	0	4	3	0	0	0	0	**321**	
1745 - 1800	1	187	74	0	2	0	0	1	1	0	0	0	0	**266**	**1116**
1800 - 1815	1	171	67	1	2	0	0	0	0	0	0	0	0	**242**	
1815 - 1830	2	121	27	0	3	0	0	0	1	0	0	0	0	**154**	
1830 - 1845	0	97	24	0	1	0	0	0	0	0	0	0	0	**122**	
1845 - 1900	0	91	22	0	3	1	0	1	0	0	0	0	0	**118**	**636**
1900 - 1915	3	71	20	0	1	0	0	0	0	0	0	0	0	**95**	
1915 - 1930	1	86	24	0	4	0	0	0	0	0	0	0	0	**115**	
1930 - 1945	1	64	23	0	0	0	0	0	1	0	0	0	0	**89**	
1945 - 2000	0	62	24	0	0	0	0	0	0	0	0	0	0	**86**	**385**
2000 - 2015	0	60	14	0	0	0	0	0	1	0	0	0	0	**75**	
2015 - 2030	0	60	10	0	0	0	0	0	1	0	0	0	0	**71**	
2030 - 2045	0	67	11	0	0	0	0	0	0	0	0	0	0	**78**	
2045 - 2100	1	36	3	0	0	0	0	0	1	0	0	0	0	**41**	**265**
2100 - 2115	0	47	2	0	1	0	0	0	0	0	0	0	0	**50**	
2115 - 2130	0	26	5	0	0	0	0	0	0	0	0	0	0	**31**	
2130 - 2145	0	33	3	0	0	0	0	0	0	0	0	0	0	**36**	
2145 - 2200	0	28	3	0	0	0	0	0	0	0	0	0	0	**31**	**148**
2200 - 2215	0	15	0	0	1	0	0	0	1	0	0	0	0	**17**	
2215 - 2230	0	28	2	0	2	0	0	0	0	0	0	0	0	**32**	
2230 - 2245	0	27	3	0	0	0	0	0	1	0	0	0	0	**31**	
2245 - 2300	0	15	0	0	0	0	0	0	0	0	0	0	0	**15**	**95**
2300 - 2315	0	19	2	0	1	0	0	0	1	0	0	0	0	**23**	
2315 - 2330	0	11	1	0	0	0	0	0	0	0	0	0	0	**12**	
2330 - 2345	0	6	0	0	0	0	0	0	0	0	0	0	0	**6**	
2345 - 0000	0	5	0	0	0	0	0	0	0	0	0	0	0	**5**	**46**

Session Total	20	7082	2186	5	106	2	0	21	58	0	0	0	0	**9480**
Session Average	0.21	73.77	22.77	0.05	1.10	0.02	0.00	0.22	0.60	0.00	0.00	0.00	0.00	**98.75**
Session Percentage	0.21	74.70	23.06	0.05	1.12	0.02	0.00	0.22	0.61	0.00	0.00	0.00	0.00	

AM Peak Hour	0830 - 0930	0700 - 0800	0645 - 0745	0645 - 0745	0900 - 1000	-	-	0930 - 1030	0830 - 0930	-	-	-	-	**0700 - 0800**
AM Peak Hour Volume	1	627	173	2	11	0	0	1	7	0	0	0	0	**790**

Noon Peak Hour	1100 - 1200	1445 - 1545	1445 - 1545	1415 - 1515	1445 - 1545	1030 - 1130	-	1230 - 1330	1300 - 1400	-	-	-	-	**1445 - 1545**
Noon Peak Hour Volume	3	556	190	1	9	1	0	3	9	0	0	0	0	**761**

PM Peak Hour	1730 - 1830	1715 - 1815	1715 - 1815	1500 - 1600	1530 - 1630	1800 - 1900	-	1530 - 1630	1645 - 1745	-	-	-	-	**1715 - 1815**
PM Peak Hour Volume	5	853	317	1	19	1	0	7	9	0	0	0	0	**1196**

Site 75 Lane 1 SB
I-20,
north of Bush River Rd

Date
Wednesday, April 24, 2024

Lat/Long
34.034393°, -81.117736°

Weather
Fair
66°F

Click here for Detailed Weather

0000 - 2400 (Weekday 24h Session) (04-24-2024)
SB WB 15min

	Southbound (Movement 75 Lane 1 SB.1)													15min	60min
TIME	1	2	3	4	5	6	7	8	9	10	11	12	13	Total	Total
0000 - 0015	0	8	0	0	0	0	0	0	0	0	0	0	0	**8**	
0015 - 0030	0	7	0	0	0	0	0	0	0	0	0	0	0	**7**	
0030 - 0045	0	6	0	0	0	0	0	0	0	0	0	0	0	**6**	
0045 - 0100	0	6	0	0	0	0	0	0	0	0	0	0	0	**6**	**27**
0100 - 0115	0	4	0	0	0	0	0	0	0	0	0	0	0	**4**	
0115 - 0130	0	3	0	0	0	0	0	0	0	0	0	0	0	**3**	
0130 - 0145	0	5	0	0	0	0	0	0	0	0	0	0	0	**5**	
0145 - 0200	0	5	0	0	0	0	0	0	0	0	0	0	0	**5**	**17**
0200 - 0215	0	2	0	0	0	0	0	0	0	0	0	0	0	**2**	
0215 - 0230	0	5	0	0	0	0	0	0	0	0	0	0	0	**5**	
0230 - 0245	0	2	0	0	0	0	0	0	0	0	0	0	0	**2**	
0245 - 0300	0	1	0	0	0	0	0	0	0	0	0	0	0	**1**	**10**
0300 - 0315	0	3	0	0	0	0	0	0	0	0	0	0	0	**3**	
0315 - 0330	0	4	0	0	0	0	0	0	0	0	0	0	0	**4**	
0330 - 0345	0	3	0	0	0	0	0	0	0	0	0	0	0	**3**	
0345 - 0400	0	4	0	0	0	0	0	0	0	0	0	0	0	**4**	**14**
0400 - 0415	0	2	0	0	0	0	0	0	0	0	0	0	0	**2**	
0415 - 0430	0	2	0	0	0	0	0	0	0	0	0	0	0	**2**	
0430 - 0445	0	6	0	0	0	0	0	0	0	0	0	0	0	**6**	
0445 - 0500	0	5	0	0	0	0	0	0	0	0	0	0	0	**5**	**15**
0500 - 0515	0	2	0	0	0	0	0	0	0	0	0	0	0	**2**	
0515 - 0530	0	11	1	0	0	0	0	0	0	0	0	0	0	**12**	
0530 - 0545	0	11	3	0	0	0	0	0	0	0	0	0	0	**14**	
0545 - 0600	0	24	4	0	0	0	0	0	0	0	0	0	0	**28**	**56**
0600 - 0615	0	49	3	0	0	0	0	0	1	0	0	0	0	**53**	
0615 - 0630	0	85	17	0	0	0	0	0	0	0	0	0	0	**102**	
0630 - 0645	0	128	39	0	0	0	0	0	0	0	0	0	0	**167**	
0645 - 0700	1	126	35	0	1	0	0	0	0	0	0	0	0	**163**	**485**
0700 - 0715	0	136	38	0	3	0	0	1	0	0	0	0	0	**178**	
0715 - 0730	0	158	43	0	2	0	0	1	0	0	0	0	0	**204**	
0730 - 0745	0	173	48	0	2	0	0	0	0	0	0	0	0	**223**	
0745 - 0800	0	152	46	0	2	0	0	0	0	0	0	0	0	**200**	**805**
0800 - 0815	0	80	31	0	2	0	0	0	0	0	0	0	0	**113**	
0815 - 0830	0	108	31	0	1	1	0	0	0	0	0	0	0	**141**	
0830 - 0845	0	152	29	0	1	0	0	0	1	0	0	0	0	**183**	
0845 - 0900	0	133	38	0	2	0	0	1	0	0	0	0	0	**174**	**611**
0900 - 0915	0	68	24	0	2	0	0	1	1	0	0	0	0	**96**	
0915 - 0930	0	44	17	0	1	1	0	0	1	0	0	0	0	**64**	
0930 - 0945	0	91	30	0	0	0	0	0	0	0	0	0	0	**121**	
0945 - 1000	0	122	41	0	4	0	0	0	1	0	0	0	0	**168**	**449**
1000 - 1015	0	86	28	0	1	0	0	0	0	0	0	0	0	**115**	
1015 - 1030	0	72	33	0	1	0	0	0	0	0	0	0	0	**106**	
1030 - 1045	1	84	28	0	0	0	0	2	2	0	0	0	0	**117**	
1045 - 1100	0	85	29	0	2	0	0	1	1	0	0	0	0	**118**	**456**
1100 - 1115	1	78	21	1	0	0	0	1	0	0	0	0	0	**102**	
1115 - 1130	0	74	27	0	1	0	0	0	1	0	0	0	0	**103**	
1130 - 1145	1	81	48	0	2	0	0	1	0	0	0	0	0	**133**	
1145 - 1200	0	86	31	0	1	1	0	1	1	0	0	0	0	**121**	**459**
1200 - 1215	1	86	14	0	1	0	0	1	1	0	0	0	0	**104**	
1215 - 1230	0	115	27	0	4	0	0	0	1	0	0	0	0	**147**	
1230 - 1245	0	72	29	0	0	0	0	1	3	0	0	0	0	**105**	
1245 - 1300	0	75	38	0	1	0	0	0	2	0	0	0	0	**116**	**472**
1300 - 1315	1	62	32	0	0	0	0	0	1	0	0	0	0	**96**	
1315 - 1330	2	88	32	0	0	0	0	0	0	0	0	0	0	**122**	
1330 - 1345	0	112	39	0	3	0	0	0	1	0	0	0	0	**155**	
1345 - 1400	0	102	49	0	2	1	0	2	2	0	0	0	0	**158**	**531**
1400 - 1415	0	111	47	0	1	0	0	2	1	0	0	0	0	**162**	
1415 - 1430	1	115	43	0	2	0	0	1	1	0	0	0	0	**163**	
1430 - 1445	1	112	20	0	1	0	0	0	1	0	0	0	0	**135**	
1445 - 1500	0	137	48	1	0	0	0	0	1	0	0	0	0	**187**	**647**
1500 - 1515	2	135	62	0	1	0	0	2	2	0	0	0	0	**204**	
1515 - 1530	0	182	62	0	0	0	0	1	3	0	0	0	0	**248**	
1530 - 1545	0	170	66	0	7	1	0	0	0	0	0	0	0	**244**	
1545 - 1600	0	179	65	0	10	2	0	3	0	0	0	0	0	**259**	**955**
1600 - 1615	0	203	67	1	2	2	0	1	2	0	0	0	0	**278**	
1615 - 1630	1	213	73	0	6	0	0	0	1	0	0	0	0	**294**	
1630 - 1645	0	217	66	0	9	0	0	1	2	0	0	0	0	**295**	
1645 - 1700	1	225	71	0	4	0	0	0	2	0	0	0	0	**303**	**1170**
1700 - 1715	0	211	75	0	2	0	0	1	2	0	0	0	0	**291**	
1715 - 1730	1	221	66	0	2	0	0	2	1	0	0	0	0	**293**	
1730 - 1745	0	215	62	0	4	0	0	2	1	0	0	0	0	**284**	
1745 - 1800	1	216	57	0	3	0	0	1	1	0	0	0	0	**279**	**1147**
1800 - 1815	0	109	49	0	3	0	0	0	1	0	0	0	0	**162**	
1815 - 1830	1	152	40	1	2	0	0	0	2	0	0	0	0	**198**	
1830 - 1845	1	104	25	0	3	0	0	0	0	0	0	0	0	**133**	
1845 - 1900	0	86	19	0	2	0	0	1	3	0	0	0	0	**111**	**604**
1900 - 1915	0	82	26	0	1	0	0	1	0	0	0	0	0	**110**	
1915 - 1930	0	84	19	0	0	0	0	0	1	0	0	0	0	**104**	
1930 - 1945	0	43	24	0	1	0	0	0	0	0	0	0	0	**68**	
1945 - 2000	0	54	15	0	1	0	0	1	0	0	0	0	0	**71**	**353**
2000 - 2015	0	52	12	0	0	0	0	0	1	0	0	0	0	**65**	
2015 - 2030	0	49	20	0	0	0	0	0	0	0	0	0	0	**69**	
2030 - 2045	0	41	10	0	0	0	0	0	0	0	0	0	0	**51**	
2045 - 2100	0	46	11	0	0	0	0	0	1	0	0	0	0	**58**	**243**
2100 - 2115	0	20	5	0	0	0	0	0	0	0	0	0	0	**25**	
2115 - 2130	0	25	7	0	0	0	0	0	0	0	0	0	0	**32**	
2130 - 2145	0	17	6	0	0	0	0	0	0	0	0	0	0	**23**	
2145 - 2200	0	19	7	0	1	0	0	0	0	0	0	0	0	**27**	**107**
2200 - 2215	1	16	5	0	0	0	0	0	0	0	0	0	0	**22**	
2215 - 2230	0	13	4	0	0	0	0	0	0	0	0	0	0	**17**	
2230 - 2245	0	14	3	0	0	0	0	0	0	0	0	0	0	**17**	
2245 - 2300	0	12	2	0	0	0	0	0	0	0	0	0	0	**14**	**70**
2300 - 2315	0	11	3	0	0	0	0	0	0	0	0	0	0	**14**	
2315 - 2330	0	9	2	0	0	0	0	0	0	0	0	0	0	**11**	
2330 - 2345	0	8	2	0	0	0	0	0	0	0	0	0	0	**10**	
2345 - 0000	0	5	2	0	0	0	0	0	0	0	0	0	0	**7**	**42**

Session Total	19	7227	2291	4	110	9	0	34	51	0	0	0	0	**9745**
Session Average	0.20	75.28	23.86	0.04	1.15	0.09	0.00	0.35	0.53	0.00	0.00	0.00	0.00	**101.51**
Session Percentage	0.19	74.16	23.51	0.04	1.13	0.09	0.00	0.35	0.52	0.00	0.00	0.00	0.00	

AM Peak Hour	0600 - 0700	0700 - 0800	0700 - 0800	-	0700 - 0800	0730 - 0830	-	0630 - 0730	0830 - 0930	-	-	-	-	**0700 - 0800**
AM Peak Hour Volume	1	619	175	0	9	1	0	2	3	0	0	0	0	**805**

Noon Peak Hour	1415 - 1515	1445 - 1545	1445 - 1545	1015 - 1115	1130 - 1230	1100 - 1200	-	1330 - 1430	1200 - 1300	-	-	-	-	**1445 - 1545**
Noon Peak Hour Volume	4	624	238	1	8	1	0	5	7	0	0	0	0	**883**

PM Peak Hour	1745 - 1845	1630 - 1730	1615 - 1715	1515 - 1615	1545 - 1645	1515 - 1615	-	1500 - 1600	1600 - 1700	-	-	-	-	**1615 - 1715**
PM Peak Hour Volume	3	874	285	1	27	5	0	6	7	0	0	0	0	**1183**

Site 75 Lane 1 SB
I-20,
north of Bush River Rd

Date
Thursday, April 25, 2024

Lat/Long
34.034393°, -81.117736°

Weather
Fair
67°F

Click here for Detailed Weather

0000 - 2400 (Weekday 24h Session) (04-25-2024)
SB WB 15min

	Southbound (Movement 75 Lane 1 SB.1)													15min	60min
TIME	1	2	3	4	5	6	7	8	9	10	11	12	13	Total	Total
0000 - 0015	0	7	2	0	0	0	0	0	0	0	0	0	0	**9**	
0015 - 0030	0	2	0	0	0	0	0	0	0	0	0	0	0	**2**	
0030 - 0045	0	5	1	0	0	0	0	0	0	0	0	0	0	**6**	
0045 - 0100	0	4	0	0	0	0	0	0	0	0	0	0	0	**4**	**21**
0100 - 0115	0	3	0	0	0	0	0	0	0	0	0	0	0	**3**	
0115 - 0130	0	4	0	0	0	0	0	0	0	0	0	0	0	**4**	
0130 - 0145	0	2	0	0	0	0	0	0	0	0	0	0	0	**2**	
0145 - 0200	0	0	0	0	0	0	0	0	0	0	0	0	0	**0**	**9**
0200 - 0215	0	2	0	0	0	0	0	0	0	0	0	0	0	**2**	
0215 - 0230	0	3	0	0	0	0	0	0	0	0	0	0	0	**3**	
0230 - 0245	0	2	0	0	1	0	0	0	0	0	0	0	0	**3**	
0245 - 0300	0	0	0	0	0	0	0	0	0	0	0	0	0	**0**	**8**
0300 - 0315	0	2	0	0	0	0	0	0	0	0	0	0	0	**2**	
0315 - 0330	0	2	0	0	0	0	0	0	0	0	0	0	0	**2**	
0330 - 0345	0	2	0	0	0	0	0	0	0	0	0	0	0	**2**	
0345 - 0400	0	5	2	0	0	0	0	0	0	0	0	0	0	**7**	**13**
0400 - 0415	0	6	3	0	0	0	0	0	0	0	0	0	0	**9**	
0415 - 0430	0	4	1	0	0	0	0	0	0	0	0	0	0	**5**	
0430 - 0445	1	8	3	0	0	0	0	0	0	0	0	0	0	**12**	
0445 - 0500	0	13	5	0	0	0	0	0	0	0	0	0	0	**18**	**44**
0500 - 0515	0	10	4	0	0	0	0	0	1	0	0	0	0	**15**	
0515 - 0530	1	8	3	0	0	0	0	0	0	0	0	0	0	**12**	
0530 - 0545	0	12	5	0	0	0	0	0	0	0	0	0	0	**17**	
0545 - 0600	0	26	8	0	1	0	0	0	0	0	0	0	0	**35**	**79**
0600 - 0615	0	22	10	0	0	0	0	0	0	0	0	0	0	**32**	
0615 - 0630	0	77	19	0	2	0	0	0	1	0	0	0	0	**99**	
0630 - 0645	0	111	36	0	0	0	0	0	0	0	0	0	0	**147**	
0645 - 0700	1	146	40	0	0	0	0	0	0	0	0	0	0	**187**	**465**
0700 - 0715	0	131	45	0	1	0	0	1	0	0	0	0	0	**178**	
0715 - 0730	0	180	51	0	1	0	0	1	0	0	0	0	0	**233**	
0730 - 0745	1	153	36	0	2	0	0	0	1	0	0	0	0	**193**	
0745 - 0800	0	173	42	0	3	0	0	0	0	0	0	0	0	**218**	**822**
0800 - 0815	0	139	56	0	0	0	0	1	1	0	0	0	0	**197**	
0815 - 0830	0	147	42	1	1	0	0	1	0	0	0	0	0	**192**	
0830 - 0845	0	139	54	0	4	0	0	0	0	0	0	0	0	**197**	
0845 - 0900	1	107	28	0	0	0	0	0	1	0	0	0	0	**137**	**723**
0900 - 0915	1	82	33	0	0	0	0	0	0	0	0	0	0	**116**	
0915 - 0930	0	79	26	0	1	0	0	0	1	0	0	0	0	**107**	
0930 - 0945	1	93	43	0	2	0	0	0	1	0	0	0	0	**140**	
0945 - 1000	1	103	35	0	3	0	0	0	1	0	0	0	0	**143**	**506**
1000 - 1015	5	80	27	0	1	0	0	0	0	0	0	0	0	**113**	
1015 - 1030	0	96	24	0	2	0	0	0	1	0	0	0	0	**123**	
1030 - 1045	0	91	26	0	3	0	0	1	2	0	0	0	0	**123**	
1045 - 1100	0	106	33	0	2	0	0	2	4	0	0	0	0	**147**	**506**
1100 - 1115	1	106	23	1	3	0	0	0	0	0	0	0	0	**134**	
1115 - 1130	0	85	35	0	3	0	0	0	1	0	0	0	0	**124**	
1130 - 1145	8	96	39	0	0	0	0	1	3	0	0	0	0	**147**	
1145 - 1200	4	105	38	1	0	0	0	0	1	0	0	0	0	**149**	**554**
1200 - 1215	0	99	31	0	4	2	0	0	2	0	0	0	0	**138**	
1215 - 1230	0	135	41	0	3	0	0	1	2	0	0	0	0	**182**	
1230 - 1245	0	105	40	0	3	0	0	0	1	0	0	0	0	**149**	
1245 - 1300	1	121	43	0	4	0	0	1	0	0	0	0	0	**170**	**639**
1300 - 1315	0	139	29	0	3	0	0	1	2	0	0	0	0	**174**	
1315 - 1330	0	115	31	0	2	0	0	0	1	0	0	0	0	**149**	
1330 - 1345	0	152	40	0	3	0	0	0	1	0	0	0	0	**196**	
1345 - 1400	7	147	36	0	3	1	0	0	3	0	0	0	0	**197**	**716**
1400 - 1415	0	127	45	0	2	0	0	4	0	0	0	0	0	**178**	
1415 - 1430	1	141	49	1	3	0	0	0	0	1	0	0	0	**196**	
1430 - 1445	1	152	46	1	2	0	0	0	2	0	0	0	0	**204**	
1445 - 1500	0	138	50	0	2	0	0	0	1	0	0	0	0	**191**	**769**
1500 - 1515	4	143	58	0	3	0	0	1	2	0	0	0	0	**211**	
1515 - 1530	0	198	59	0	5	0	0	0	4	0	0	0	0	**266**	
1530 - 1545	1	184	66	0	3	0	0	1	0	0	0	0	0	**255**	
1545 - 1600	0	202	65	0	3	0	0	2	1	0	0	0	0	**273**	**1005**
1600 - 1615	2	220	92	0	7	0	0	1	0	0	0	0	0	**322**	
1615 - 1630	1	250	77	0	5	0	0	2	0	0	0	0	0	**335**	
1630 - 1645	1	244	68	0	3	0	0	0	2	0	0	0	0	**318**	
1645 - 1700	1	231	68	0	1	1	0	2	1	0	0	0	0	**305**	**1280**
1700 - 1715	0	201	75	0	6	0	0	2	1	0	0	0	0	**285**	
1715 - 1730	0	236	88	0	2	1	0	0	0	0	0	0	0	**327**	
1730 - 1745	1	219	79	0	2	0	0	1	1	0	0	0	0	**303**	
1745 - 1800	1	228	75	0	2	0	0	1	1	0	0	0	0	**308**	**1223**
1800 - 1815	0	170	68	0	4	1	0	1	3	0	0	0	0	**247**	
1815 - 1830	3	168	43	0	4	0	0	0	0	0	0	0	0	**218**	
1830 - 1845	3	117	32	0	2	0	0	2	1	0	0	0	0	**157**	
1845 - 1900	0	107	37	0	1	0	0	2	0	0	0	0	0	**147**	**769**
1900 - 1915	1	94	20	0	1	0	0	0	1	0	0	0	0	**117**	
1915 - 1930	0	104	31	2	0	0	0	1	0	0	0	0	0	**138**	
1930 - 1945	1	88	25	0	0	0	0	1	0	0	0	0	0	**115**	
1945 - 2000	1	80	13	0	0	0	0	0	0	0	0	0	0	**94**	**464**
2000 - 2015	0	59	12	0	1	0	0	0	1	0	0	0	0	**73**	
2015 - 2030	0	70	16	0	0	0	0	0	0	0	0	0	0	**86**	
2030 - 2045	0	34	8	0	0	0	0	0	0	0	0	0	0	**42**	
2045 - 2100	0	53	17	0	1	0	0	0	0	0	0	0	0	**71**	**272**
2100 - 2115	0	36	8	0	0	0	0	0	1	0	0	0	0	**45**	
2115 - 2130	0	39	10	0	0	0	0	0	1	0	0	0	0	**50**	
2130 - 2145	0	27	9	0	0	0	0	0	1	0	1	0	0	**38**	
2145 - 2200	0	26	11	0	0	0	0	0	0	0	0	0	0	**37**	**170**
2200 - 2215	0	18	6	0	0	0	0	0	1	0	0	0	0	**25**	
2215 - 2230	0	19	10	0	1	0	0	0	0	0	0	0	0	**30**	
2230 - 2245	0	21	10	0	0	0	0	0	0	0	0	0	0	**31**	
2245 - 2300	0	12	2	0	0	0	0	0	0	0	0	0	0	**14**	**100**
2300 - 2315	0	13	3	0	0	0	0	0	2	0	0	0	0	**18**	
2315 - 2330	0	7	2	0	1	0	0	0	1	0	0	0	0	**11**	
2330 - 2345	0	11	5	0	0	0	0	0	1	0	0	0	0	**17**	
2345 - 0000	0	15	4	0	1	0	0	0	0	0	0	0	0	**20**	**66**

Session Total	57	8294	2631	7	129	6	0	35	62	1	1	0	0	**11223**
Session Average	0.59	86.40	27.41	0.07	1.34	0.06	0.00	0.36	0.65	0.01	0.01	0.00	0.00	**116.91**
Session Percentage	0.51	73.90	23.44	0.06	1.15	0.05	0.00	0.31	0.55	0.01	0.01	0.00	0.00	

AM Peak Hour	0915 - 1015	0715 - 0815	0745 - 0845	0730 - 0830	0945 - 1045	-	-	0630 - 0730	0945 - 1045	-	-	-	-	**0715 - 0815**
AM Peak Hour Volume	7	645	194	1	9	0	0	2	4	0	0	0	0	**841**

Noon Peak Hour	1100 - 1200	1445 - 1545	1445 - 1545	1100 - 1200	1200 - 1300	1115 - 1215	-	1315 - 1415	1430 - 1530	1330 - 1430	-	-	-	**1445 - 1545**
Noon Peak Hour Volume	13	663	233	2	14	2	0	4	9	1	0	0	0	**923**

PM Peak Hour	1745 - 1845	1600 - 1700	1700 - 1800	1830 - 1930	1515 - 1615	1630 - 1730	-	1530 - 1630	1500 - 1600	-	-	-	-	**1600 - 1700**
PM Peak Hour Volume	7	945	317	2	18	2	0	6	7	0	0	0	0	**1280**

Site 75 Lane 1 SB
I-20,
north of Bush River Rd

Date
Friday, April 26, 2024

Lat/Long
34.034393°, -81.117736°

Weather
Cloudy
69°F

Click here for Detailed Weather

0000 - 2400 (Weekday 24h Session) (04-26-2024)
SB WB 15min

	Southbound (Movement 75 Lane 1 SB.1)													15min	60min
TIME	1	2	3	4	5	6	7	8	9	10	11	12	13	Total	Total
0000 - 0015	0	20	2	0	0	0	0	0	0	0	0	0	0	**22**	
0015 - 0030	0	4	0	0	0	0	0	0	1	0	0	0	0	**5**	
0030 - 0045	0	6	0	0	0	0	0	0	0	0	0	0	0	**6**	
0045 - 0100	0	12	2	0	0	0	0	0	0	0	0	0	0	**14**	**47**
0100 - 0115	0	4	0	0	0	0	0	0	0	0	0	0	0	**4**	
0115 - 0130	0	9	0	0	0	0	0	0	0	0	0	0	0	**9**	
0130 - 0145	0	5	0	0	0	0	0	0	0	0	0	0	0	**5**	
0145 - 0200	0	7	0	0	0	0	0	0	0	0	0	0	0	**7**	**25**
0200 - 0215	0	6	0	0	0	0	0	0	0	0	0	0	0	**6**	
0215 - 0230	0	2	0	0	0	0	0	0	0	0	0	0	0	**2**	
0230 - 0245	0	5	0	0	0	0	0	0	0	0	0	0	0	**5**	
0245 - 0300	0	6	0	0	0	0	0	0	1	0	0	0	0	**7**	**20**
0300 - 0315	0	2	0	0	0	0	0	0	0	0	0	0	0	**2**	
0315 - 0330	0	6	0	0	0	0	0	0	0	0	0	0	0	**6**	
0330 - 0345	0	10	0	0	0	0	0	0	0	0	0	0	0	**10**	
0345 - 0400	0	9	0	0	0	0	0	0	0	0	0	0	0	**9**	**27**
0400 - 0415	0	6	0	0	0	0	0	0	0	0	0	0	0	**6**	
0415 - 0430	0	12	0	0	0	0	0	0	0	0	0	0	0	**12**	
0430 - 0445	0	15	0	0	0	0	0	0	0	0	0	0	0	**15**	
0445 - 0500	0	22	0	0	0	0	0	0	0	0	0	0	0	**22**	**55**
0500 - 0515	0	12	3	0	0	0	0	0	0	0	0	0	0	**15**	
0515 - 0530	0	22	2	0	0	0	0	0	1	0	0	0	0	**25**	
0530 - 0545	0	40	4	0	2	0	0	0	1	0	0	0	0	**47**	
0545 - 0600	0	37	3	0	0	0	0	0	0	0	0	0	0	**40**	**127**
0600 - 0615	0	49	3	0	0	0	0	0	0	0	0	0	0	**52**	
0615 - 0630	0	75	7	0	1	0	0	0	0	0	0	0	0	**83**	
0630 - 0645	0	115	10	0	0	0	0	0	0	0	0	0	0	**125**	
0645 - 0700	0	126	18	0	0	0	0	0	0	0	0	0	0	**144**	**404**
0700 - 0715	1	114	35	0	0	0	0	0	1	0	0	0	0	**151**	
0715 - 0730	0	168	30	0	3	0	0	0	0	0	0	0	0	**201**	
0730 - 0745	1	176	51	0	1	0	0	1	0	0	0	0	0	**230**	
0745 - 0800	2	169	39	1	1	0	0	0	0	0	0	0	0	**212**	**794**
0800 - 0815	1	130	45	0	2	0	0	1	1	0	0	0	0	**180**	
0815 - 0830	0	114	35	0	2	0	0	0	0	0	0	0	0	**151**	
0830 - 0845	7	102	38	0	0	0	0	0	0	0	0	0	0	**147**	
0845 - 0900	1	108	25	0	2	0	0	0	0	0	0	0	0	**136**	**614**
0900 - 0915	1	87	27	0	1	0	0	0	0	0	0	0	0	**116**	
0915 - 0930	2	93	28	0	1	0	0	0	0	0	0	0	0	**124**	
0930 - 0945	0	77	30	0	3	0	0	0	0	0	0	0	0	**110**	
0945 - 1000	1	99	26	0	1	0	0	0	0	0	0	0	0	**127**	**477**
1000 - 1015	0	94	18	0	1	0	0	0	0	0	0	0	0	**113**	
1015 - 1030	0	99	20	0	0	0	0	0	1	0	0	0	0	**120**	
1030 - 1045	0	102	22	0	3	2	0	2	1	0	0	0	0	**132**	
1045 - 1100	1	117	34	0	0	0	0	1	0	0	0	0	0	**153**	**518**
1100 - 1115	0	101	26	0	3	0	0	0	1	0	0	0	0	**131**	
1115 - 1130	0	110	42	0	2	0	0	0	2	0	0	0	0	**156**	
1130 - 1145	0	125	40	0	3	0	0	1	2	0	0	0	0	**171**	
1145 - 1200	3	128	50	0	1	0	0	0	2	0	0	0	0	**184**	**642**
1200 - 1215	0	137	47	0	2	1	0	0	2	0	0	0	0	**189**	
1215 - 1230	0	126	44	0	2	0	0	0	1	0	0	0	0	**173**	
1230 - 1245	1	141	41	0	1	0	0	0	0	0	0	0	0	**184**	
1245 - 1300	1	151	58	0	6	0	0	1	2	0	0	0	0	**219**	**765**
1300 - 1315	3	145	66	0	2	0	0	0	1	0	0	0	0	**217**	
1315 - 1330	0	187	60	0	5	0	0	2	4	0	0	0	0	**258**	
1330 - 1345	0	152	58	0	2	1	0	1	4	0	0	0	0	**218**	
1345 - 1400	0	163	57	1	3	1	0	6	4	0	0	0	0	**235**	**928**
1400 - 1415	2	180	65	0	3	0	0	0	1	0	0	0	0	**251**	
1415 - 1430	3	186	56	0	3	1	0	0	0	0	0	0	0	**249**	
1430 - 1445	0	192	66	0	4	0	0	0	2	0	0	0	0	**264**	
1445 - 1500	1	203	69	0	5	2	0	1	3	0	0	0	0	**284**	**1048**
1500 - 1515	0	209	75	0	7	0	0	2	2	0	0	0	0	**295**	
1515 - 1530	2	204	76	0	2	0	0	0	3	0	0	0	0	**287**	
1530 - 1545	1	197	79	0	0	0	0	0	3	0	0	0	0	**280**	
1545 - 1600	0	215	85	0	4	1	0	0	4	0	0	0	0	**309**	**1171**
1600 - 1615	0	228	76	0	2	0	0	1	0	0	0	0	0	**307**	
1615 - 1630	4	244	80	0	2	0	0	2	0	0	0	0	0	**332**	
1630 - 1645	1	184	62	1	3	0	0	0	2	0	0	0	0	**253**	
1645 - 1700	1	214	62	0	0	0	1	1	0	0	0	0	0	**279**	**1171**
1700 - 1715	1	202	66	0	3	0	0	0	1	0	0	0	0	**273**	
1715 - 1730	0	203	61	0	1	0	0	0	0	0	0	0	0	**265**	
1730 - 1745	1	201	67	0	1	0	0	1	2	0	0	0	0	**273**	
1745 - 1800	0	157	33	0	4	1	0	1	1	0	0	0	0	**197**	**1008**
1800 - 1815	1	160	45	0	3	0	0	0	0	0	0	0	0	**209**	
1815 - 1830	1	158	47	2	1	0	0	1	0	0	0	0	0	**210**	
1830 - 1845	1	142	35	0	0	0	0	0	0	0	0	0	0	**178**	
1845 - 1900	3	106	37	0	0	0	0	0	0	0	0	0	0	**146**	**743**
1900 - 1915	0	124	31	0	1	0	0	1	0	0	0	0	0	**157**	
1915 - 1930	2	117	34	1	0	0	0	1	0	0	0	0	0	**155**	
1930 - 1945	1	98	16	0	0	0	0	0	0	0	0	0	0	**115**	
1945 - 2000	1	89	23	0	0	1	0	0	0	0	0	0	0	**114**	**541**
2000 - 2015	0	80	15	2	0	0	0	0	0	0	0	0	0	**97**	
2015 - 2030	0	88	14	0	0	0	0	0	0	0	0	0	0	**102**	
2030 - 2045	0	71	5	0	0	0	0	0	1	0	0	0	0	**77**	
2045 - 2100	2	85	6	0	0	0	0	0	0	0	0	0	0	**93**	**369**
2100 - 2115	0	71	8	0	0	0	0	0	0	0	0	0	0	**79**	
2115 - 2130	0	83	12	0	0	0	0	0	0	0	0	0	0	**95**	
2130 - 2145	0	63	5	0	0	0	0	0	0	0	0	0	0	**68**	
2145 - 2200	0	56	1	0	0	0	0	0	0	0	0	0	0	**57**	**299**
2200 - 2215	0	50	2	0	0	0	0	0	0	0	0	0	0	**52**	
2215 - 2230	0	53	3	0	0	0	0	0	0	0	0	0	0	**56**	
2230 - 2245	0	52	4	0	0	0	0	0	1	0	0	0	0	**57**	
2245 - 2300	0	60	3	0	0	0	0	0	0	0	0	0	0	**63**	**228**
2300 - 2315	0	46	2	0	0	0	0	0	0	0	0	0	0	**48**	
2315 - 2330	1	35	3	0	0	0	0	0	0	0	0	0	0	**39**	
2330 - 2345	0	27	3	0	0	0	0	0	0	0	0	0	0	**30**	
2345 - 0000	0	23	2	0	0	0	0	0	0	0	0	0	0	**25**	**142**

Session Total	56	9315	2580	8	105	11	1	28	59	0	0	0	0	**12163**
Session Average	0.58	97.03	26.88	0.08	1.09	0.11	0.01	0.29	0.61	0.00	0.00	0.00	0.00	**126.70**
Session Percentage	0.46	76.58	21.21	0.07	0.86	0.09	0.01	0.23	0.49	0.00	0.00	0.00	0.00	

AM Peak Hour	0830 - 0930	0715 - 0815	0730 - 0830	0700 - 0800	0715 - 0815	0945 - 1045	-	0715 - 0815	0500 - 0600	-	-	-	-	**0715 - 0815**
AM Peak Hour Volume	11	643	170	1	7	2	0	2	2	0	0	0	0	**823**

Noon Peak Hour	1400 - 1500	1445 - 1545	1445 - 1545	1300 - 1400	1415 - 1515	1330 - 1430	-	1300 - 1400	1300 - 1400	-	-	-	-	**1445 - 1545**
Noon Peak Hour Volume	6	813	299	1	19	3	0	9	13	0	0	0	0	**1146**

PM Peak Hour	1615 - 1715	1530 - 1630	1530 - 1630	1915 - 2015	1500 - 1600	1500 - 1600	1600 - 1700	1600 - 1700	1500 - 1600	-	-	-	-	**1530 - 1630**
PM Peak Hour Volume	7	884	320	3	13	1	1	4	12	0	0	0	0	**1228**

Site 75 Lane 1 SB
I-20,
north of Bush River Rd

Date
Saturday, April 27, 2024

Lat/Long
34.034393°, -81.117736°

Weather
Mostly Cloudy
69°F

Click here for Detailed Weather

0000 - 2400 (Saturday 24h Session) (04-27-2024)
SB WB 15min

	Southbound (Movement 75 Lane 1 SB.1)													15min	60min
TIME	1	2	3	4	5	6	7	8	9	10	11	12	13	Total	Total
0000 - 0015	1	15	3	0	0	0	0	0	0	0	0	0	0	**19**	
0015 - 0030	0	8	0	0	0	0	0	0	0	0	0	0	0	**8**	
0030 - 0045	0	12	2	0	0	0	0	0	0	0	0	0	0	**14**	
0045 - 0100	0	7	1	0	0	0	0	0	0	0	0	0	0	**8**	**49**
0100 - 0115	0	8	2	0	0	0	0	0	0	0	0	0	0	**10**	
0115 - 0130	0	5	1	0	0	0	0	0	0	0	0	0	0	**6**	
0130 - 0145	1	5	1	0	0	0	0	0	0	0	0	0	0	**7**	
0145 - 0200	0	3	0	0	0	0	0	0	0	0	0	0	0	**3**	**26**
0200 - 0215	0	4	0	0	0	0	0	0	0	0	0	0	0	**4**	
0215 - 0230	0	8	1	0	0	0	0	0	0	0	0	0	0	**9**	
0230 - 0245	0	1	0	0	0	0	0	0	0	0	0	0	0	**1**	
0245 - 0300	0	4	0	0	0	0	0	0	0	0	0	0	0	**4**	**18**
0300 - 0315	0	4	0	0	0	0	0	0	0	0	0	0	0	**4**	
0315 - 0330	0	5	0	0	0	0	0	0	0	0	0	0	0	**5**	
0330 - 0345	0	1	1	0	0	0	0	0	0	0	0	0	0	**2**	
0345 - 0400	0	1	0	0	0	0	0	0	0	0	0	0	0	**1**	**12**
0400 - 0415	0	6	0	0	0	0	0	0	0	0	0	0	0	**6**	
0415 - 0430	0	5	0	0	0	0	0	0	0	0	0	0	0	**5**	
0430 - 0445	0	6	2	0	0	0	0	0	0	0	0	0	0	**8**	
0445 - 0500	0	5	1	0	0	0	0	0	0	0	0	0	0	**6**	**25**
0500 - 0515	0	7	1	0	0	0	0	0	1	0	0	0	0	**9**	
0515 - 0530	3	14	2	0	0	0	0	0	0	0	0	0	0	**19**	
0530 - 0545	0	12	1	0	0	0	0	0	0	0	0	0	0	**13**	
0545 - 0600	0	18	2	0	0	0	0	0	0	0	0	0	0	**20**	**61**
0600 - 0615	0	23	3	0	0	0	0	0	1	0	0	0	0	**27**	
0615 - 0630	0	27	7	0	0	0	0	0	0	0	0	0	0	**34**	
0630 - 0645	0	36	13	0	0	0	0	0	0	0	0	0	0	**49**	
0645 - 0700	1	40	10	0	0	0	0	0	1	0	0	0	0	**52**	**162**
0700 - 0715	0	38	8	0	0	0	0	1	0	0	0	0	0	**47**	
0715 - 0730	0	33	9	0	0	0	0	0	0	0	0	0	0	**42**	
0730 - 0745	0	53	17	0	1	0	0	0	0	0	0	0	0	**71**	
0745 - 0800	2	63	16	0	1	0	0	0	0	0	0	0	0	**82**	**242**
0800 - 0815	0	64	19	0	0	0	0	0	0	0	0	0	0	**83**	
0815 - 0830	0	65	17	0	0	0	0	0	0	0	0	0	0	**82**	
0830 - 0845	1	60	29	0	2	0	0	0	1	0	0	0	0	**93**	
0845 - 0900	0	84	21	0	0	0	0	0	0	0	0	0	0	**105**	**363**
0900 - 0915	0	70	25	0	0	0	0	0	0	0	0	0	0	**95**	
0915 - 0930	0	81	33	1	0	0	0	0	0	0	0	0	0	**115**	
0930 - 0945	0	83	22	0	0	0	0	0	0	0	0	0	0	**105**	
0945 - 1000	0	77	27	0	0	0	0	0	0	0	0	0	0	**104**	**419**
1000 - 1015	1	87	17	0	2	0	0	0	2	0	0	0	0	**109**	
1015 - 1030	1	92	24	0	0	0	0	0	0	0	0	0	0	**117**	
1030 - 1045	0	102	26	0	0	0	0	0	1	0	0	0	0	**129**	
1045 - 1100	1	91	33	0	0	0	0	1	0	0	0	0	0	**126**	**481**
1100 - 1115	1	102	28	0	0	0	0	0	0	0	0	0	0	**131**	
1115 - 1130	0	110	28	0	0		0	0	0	0	0	0	0	**138**	
1130 - 1145	0	85	25	0	0	0	0	0	0	0	0	0	0	**110**	
1145 - 1200	0	116	23	0	1	0	0	0	1	0	0	0	0	**141**	**520**
1200 - 1215	0	98	25	0	0	0	0	0	0	0	0	0	0	**123**	
1215 - 1230	1	125	23	0	2	0	0	0	0	0	0	0	0	**151**	
1230 - 1245	2	110	35	0	0	1	0	0	0	0	0	0	0	**148**	
1245 - 1300	1	127	25	0	1	0	0	0	0	0	0	0	0	**154**	**576**
1300 - 1315	1	124	21	0	1	0	0	0	1	0	0	0	0	**148**	
1315 - 1330	3	121	32	0	2	0	0	1	0	0	0	0	0	**159**	
1330 - 1345	1	118	24	0	0	0	0	0	0	0	0	0	0	**143**	
1345 - 1400	3	118	28	0	0	0	0	0	0	0	0	0	0	**149**	**599**
1400 - 1415	1	123	19	0	2	0	0	0	0	0	0	0	0	**145**	
1415 - 1430	1	136	20	0	1	0	0	0	0	0	0	0	0	**158**	
1430 - 1445	5	108	23	0	2	0	0	1	0	0	0	0	0	**139**	
1445 - 1500	0	124	28	0	0	0	0	1	1	0	0	0	0	**154**	**596**
1500 - 1515	4	101	22	0	0	0	0	0	0	0	0	0	0	**127**	
1515 - 1530	1	95	26	0	2	0	0	0	1	0	0	0	0	**125**	
1530 - 1545	7	106	21	0	1	0	0	1	0	0	0	0	0	**136**	
1545 - 1600	1	115	32	0	0	0	0	0	1	0	0	0	0	**149**	**537**
1600 - 1615	2	112	16	0	0	0	0	0	0	0	0	0	0	**130**	
1615 - 1630	0	94	20	0	0	0	0	1	0	0	0	0	0	**115**	
1630 - 1645	10	108	31	0	1	0	0	1	1	0	0	0	0	**152**	
1645 - 1700	6	103	17	0	0	0	0	0	0	0	0	0	0	**126**	**523**
1700 - 1715	0	120	18	0	0	0	0	0	0	0	0	0	0	**138**	
1715 - 1730	1	85	19	0	0	0	0	0	0	0	0	0	0	**105**	
1730 - 1745	7	105	21	0	0	0	0	0	0	0	0	0	0	**133**	
1745 - 1800	0	88	18	0	0	0	0	0	0	0	0	0	0	**106**	**482**
1800 - 1815	8	101	10	0	1	0	0	0	0	0	0	0	0	**120**	
1815 - 1830	0	96	17	0	2	0	0	1	0	0	0	0	0	**116**	
1830 - 1845	10	103	22	0	0	0	0	0	0	0	0	0	0	**135**	
1845 - 1900	4	77	1	0	1	0	0	1	1	0	0	0	0	**85**	**456**
1900 - 1915	0	79	12	0	0	0	0	0	0	0	0	0	0	**91**	
1915 - 1930	0	61	16	0	1	0	0	0	0	0	0	0	0	**78**	
1930 - 1945	0	59	20	0	0	0	0	1	1	0	0	0	0	**81**	
1945 - 2000	1	64	10	0	0	0	0	0	0	0	0	0	0	**75**	**325**
2000 - 2015	2	64	18	0	0	0	0	1	1	0	0	0	0	**86**	
2015 - 2030	0	40	11	0	0	0	0	0	0	0	0	0	0	**51**	
2030 - 2045	1	47	5	0	0	0	0	0	0	0	0	0	0	**53**	
2045 - 2100	0	49	6	0	0	0	0	0	0	0	0	0	0	**55**	**245**
2100 - 2115	2	55	6	0	0	0	0	0	0	0	0	0	0	**63**	
2115 - 2130	0	61	7	0	0	0	0	0	0	0	0	0	0	**68**	
2130 - 2145	0	59	5	0	0	0	0	0	0	0	0	0	0	**64**	
2145 - 2200	0	37	2	0	0	0	0	0	1	0	0	0	0	**40**	**235**
2200 - 2215	0	42	2	0	0	0	0	0	0	0	0	0	0	**44**	
2215 - 2230	0	45	3	0	0	0	0	0	0	0	0	0	0	**48**	
2230 - 2245	0	32	4	0	0	0	0	0	0	0	0	0	0	**36**	
2245 - 2300	0	28	1	0	0	0	0	0	1	0	0	0	0	**30**	**158**
2300 - 2315	0	23	7	1	0	0	0	0	0	0	0	0	0	**31**	
2315 - 2330	0	15	4	0	0	0	0	0	0	0	0	0	0	**19**	
2330 - 2345	0	15	2	0	0	0	0	0	0	0	0	0	0	**17**	
2345 - 0000	0	13	1	0	0	0	0	0	0	0	0	0	0	**14**	**81**

Session Total	99	5775	1257	2	27	1	0	12	18	0	0	0	0	**7191**
Session Average	1.03	60.16	13.09	0.02	0.28	0.01	0.00	0.13	0.19	0.00	0.00	0.00	0.00	**74.91**
Session Percentage	1.38	80.31	17.48	0.03	0.38	0.01	0.00	0.17	0.25	0.00	0.00	0.00	0.00	

AM Peak Hour	0500 - 0600	0945 - 1045	0830 - 0930	0830 - 0930	0745 - 0845	-	-	0615 - 0715	0945 - 1045	-	-	-	-	**0945 - 1045**
AM Peak Hour Volume	3	358	108	1	3	0	0	1	3	0	0	0	0	**459**

Noon Peak Hour	1445 - 1545	1330 - 1430	1030 - 1130	-	1345 - 1445	1145 - 1245	-	1400 - 1500	1000 - 1100	-	-	-	-	**1230 - 1330**
Noon Peak Hour Volume	12	495	115	0	5	1	0	2	3	0	0	0	0	**609**

PM Peak Hour	1800 - 1900	1545 - 1645	1500 - 1600	-	1800 - 1900	-	-	1530 - 1630	1500 - 1600	-	-	-	-	**1545 - 1645**
PM Peak Hour Volume	22	429	101	0	4	0	0	2	2	0	0	0	0	**546**

Bi-Directional Class Count || SB WB Average 15min

Columbia, SC

Marr Traffic DATA COLLECTION
www.marrtraffic.com

Site 75 Lane 1 SB
I-20,
north of Bush River Rd

Date
Sunday, April 21, 2024

Lat/Long
34.034393°, -81.117736°

Weather
Cloudy
66°F

0000 - 2400 (Weekday 24h Session) (All Dates)
SB WB Average 15min

	SB WB Average 15min													15min	60min
Time	1	2	3	4	5	6	7	8	9	10	11	12	13	Total	Total
0000 - 0015	0	11	1	0	0	0	0	0	0	0	0	0	0	**12**	
0015 - 0030	0	8	0	0	0	0	0	0	0	0	0	0	0	**8**	
0030 - 0045	0	6	1	0	0	0	0	0	0	0	0	0	0	**7**	
0045 - 0100	0	6	0	0	0	0	0	0	0	0	0	0	0	**6**	**33**
0100 - 0115	0	4	0	0	0	0	0	0	0	0	0	0	0	**5**	
0115 - 0130	0	5	0	0	0	0	0	0	0	0	0	0	0	**6**	
0130 - 0145	0	4	0	0	0	0	0	0	0	0	0	0	0	**4**	
0145 - 0200	0	3	0	0	0	0	0	0	0	0	0	0	0	**3**	**17**
0200 - 0215	0	3	0	0	0	0	0	0	0	0	0	0	0	**3**	
0215 - 0230	0	4	0	0	0	0	0	0	0	0	0	0	0	**5**	
0230 - 0245	0	3	0	0	0	0	0	0	0	0	0	0	0	**3**	
0245 - 0300	0	3	0	0	0	0	0	0	0	0	0	0	0	**3**	**14**
0300 - 0315	0	3	0	0	0	0	0	0	0	0	0	0	0	**3**	
0315 - 0330	0	4	0	0	0	0	0	0	0	0	0	0	0	**4**	
0330 - 0345	0	4	0	0	0	0	0	0	0	0	0	0	0	**4**	
0345 - 0400	0	5	1	0	0	0	0	0	0	0	0	0	0	**6**	**17**
0400 - 0415	0	4	0	0	0	0	0	0	0	0	0	0	0	**4**	
0415 - 0430	0	6	0	0	0	0	0	0	0	0	0	0	0	**6**	
0430 - 0445	0	7	1	0	0	0	0	0	0	0	0	0	0	**8**	
0445 - 0500	0	11	1	0	0	0	0	0	0	0	0	0	0	**12**	**30**
0500 - 0515	0	7	1	0	0	0	0	0	0	0	0	0	0	**9**	
0515 - 0530	1	14	2	0	0	0	0	0	0	0	0	0	0	**17**	
0530 - 0545	0	22	3	0	0	0	0	0	0	0	0	0	0	**25**	
0545 - 0600	0	26	4	0	0	0	0	0	0	0	0	0	0	**30**	**82**
0600 - 0615	0	36	5	0	0	0	0	0	0	0	0	0	0	**41**	
0615 - 0630	0	64	13	0	0	0	0	0	0	0	0	0	0	**77**	
0630 - 0645	0	93	24	0	0	0	0	0	0	0	0	0	0	**117**	
0645 - 0700	1	102	29	0	0	0	0	0	0	0	0	0	0	**132**	**367**
0700 - 0715	0	101	29	0	1	0	0	0	0	0	0	0	0	**132**	
0715 - 0730	0	127	35	0	1	0	0	0	0	0	0	0	0	**164**	
0730 - 0745	0	127	33	0	2	0	0	0	0	0	0	0	0	**162**	
0745 - 0800	1	130	32	0	1	0	0	0	0	0	0	0	0	**164**	**621**
0800 - 0815	1	100	34	0	1	0	0	0	0	0	0	0	0	**135**	
0815 - 0830	0	106	27	0	1	0	0	0	0	0	0	0	0	**134**	
0830 - 0845	1	101	32	0	1	0	0	0	1	0	0	0	0	**136**	
0845 - 0900	0	97	28	0	1	0	0	0	1	0	0	0	0	**127**	**533**
0900 - 0915	1	75	27	0	1	0	0	0	0	0	0	0	0	**104**	
0915 - 0930	1	74	25	0	1	0	0	0	1	0	0	0	0	**102**	
0930 - 0945	0	83	30	0	1	0	0	0	0	0	0	0	0	**114**	
0945 - 1000	0	87	28	0	2	0	0	0	0	0	0	0	0	**118**	**438**
1000 - 1015	1	74	23	0	1	0	0	0	0	0	0	0	0	**98**	
1015 - 1030	2	81	24	0	1	0	0	0	1	0	0	0	0	**107**	
1030 - 1045	0	82	22	0	1	0	0	1	1	0	0	0	0	**108**	
1045 - 1100	1	87	30	0	1	0	0	1	1	0	0	0	0	**120**	**434**
1100 - 1115	0	88	24	0	1	0	0	0	0	0	0	0	0	**115**	
1115 - 1130	0	88	32	0	1	0	0	0	1	0	0	0	0	**123**	
1130 - 1145	2	89	33	0	1	0	0	0	1	0	0	0	0	**126**	
1145 - 1200	1	99	34	0	1	0	0	0	1	0	0	0	0	**136**	**499**
1200 - 1215	1	96	27	0	1	1	0	0	1	0	0	0	0	**127**	
1215 - 1230	1	115	32	0	2	0	0	0	1	0	0	0	0	**150**	
1230 - 1245	1	101	33	0	1	0	0	0	1	0	0	0	0	**137**	
1245 - 1300	1	110	37	0	2	0	0	0	1	0	0	0	0	**152**	**566**
1300 - 1315	1	116	34	0	2	0	0	0	2	0	0	0	0	**154**	
1315 - 1330	1	121	36	0	2	0	0	1	1	0	0	0	0	**161**	
1330 - 1345	0	126	36	0	2	0	0	0	1	0	0	0	0	**166**	
1345 - 1400	1	128	36	0	1	1	0	1	2	0	0	0	0	**170**	**651**
1400 - 1415	0	131	41	0	1	0	0	1	1	0	0	0	0	**175**	
1415 - 1430	1	135	38	0	2	0	0	0	1	0	0	0	0	**177**	
1430 - 1445	1	135	37	0	2	0	0	0	1	0	0	0	0	**177**	
1445 - 1500	0	133	45	0	1	0	0	0	1	0	0	0	0	**181**	**710**
1500 - 1515	2	145	46	0	2	0	0	1	1	0	0	0	0	**196**	
1515 - 1530	1	151	49	0	2	0	0	0	2	0	0	0	0	**205**	
1530 - 1545	1	159	56	0	3	0	0	0	1	0	0	0	0	**220**	
1545 - 1600	0	166	55	0	4	0	0	1	2	0	0	0	0	**228**	**849**
1600 - 1615	1	184	60	0	3	0	0	1	0	0	0	0	0	**250**	
1615 - 1630	1	197	62	0	4	0	0	1	1	0	0	0	0	**266**	
1630 - 1645	2	182	56	0	3	0	0	1	1	0	0	0	0	**247**	
1645 - 1700	1	184	51	0	2	0	0	1	1	0	0	0	0	**240**	**1003**
1700 - 1715	0	171	57	0	2	0	0	0	1	0	0	0	0	**231**	
1715 - 1730	0	192	64	0	2	0	0	0	1	0	0	0	0	**259**	
1730 - 1745	1	189	58	0	3	0	0	1	1	0	0	0	0	**254**	
1745 - 1800	1	165	48	0	2	0	0	1	1	0	0	0	0	**218**	**963**
1800 - 1815	2	133	45	0	3	0	0	0	1	0	0	0	0	**183**	
1815 - 1830	1	132	32	0	2	0	0	0	1	0	0	0	0	**168**	
1830 - 1845	2	107	27	0	1	0	0	1	0	0	0	0	0	**139**	
1845 - 1900	1	96	25	0	1	0	0	1	1	0	0	0	0	**124**	**614**
1900 - 1915	1	89	22	0	1	0	0	1	1	0	0	0	0	**113**	
1915 - 1930	0	85	22	0	1	0	0	0	0	0	0	0	0	**110**	
1930 - 1945	0	70	20	0	0	0	0	0	0	0	0	0	0	**92**	
1945 - 2000	0	68	16	0	0	0	0	0	0	0	0	0	0	**84**	**399**
2000 - 2015	0	61	14	0	0	0	0	0	1	0	0	0	0	**77**	
2015 - 2030	0	57	12	0	0	0	0	0	0	0	0	0	0	**69**	
2030 - 2045	0	50	7	0	0	0	0	0	0	0	0	0	0	**57**	
2045 - 2100	0	50	8	0	0	0	0	0	0	0	0	0	0	**59**	**262**
2100 - 2115	0	44	5	0	0	0	0	0	0	0	0	0	0	**50**	
2115 - 2130	0	42	7	0	0	0	0	0	0	0	0	0	0	**49**	
2130 - 2145	0	34	4	0	0	0	0	0	0	0	0	0	0	**39**	
2145 - 2200	0	28	4	0	0	0	0	0	0	0	0	0	0	**33**	**170**
2200 - 2215	0	26	2	0	0	0	0	0	0	0	0	0	0	**29**	
2215 - 2230	0	27	4	0	0	0	0	0	0	0	0	0	0	**32**	
2230 - 2245	0	25	4	0	0	0	0	0	0	0	0	0	0	**29**	
2245 - 2300	0	22	1	0	0	0	0	0	0	0	0	0	0	**24**	**113**
2300 - 2315	0	19	3	0	0	0	0	0	0	0	0	0	0	**23**	
2315 - 2330	0	14	2	0	0	0	0	0	0	0	0	0	0	**16**	
2330 - 2345	0	13	2	0	0	0	0	0	0	0	0	0	0	**16**	
2345 - 0000	0	11	1	0	0	0	0	0	0	0	0	0	0	**12**	**66**

Session Total	44	7196	2052	5	84	5	0	23	44	1	0	0	0	**9455**
Session Average	0.46	74.96	21.38	0.05	0.88	0.05	0.00	0.24	0.46	0.01	0.00	0.00	0.00	**98.49**
Session Percentage	0.46	76.11	21.71	0.05	0.89	0.05	0.00	0.24	0.47	0.01	0.00	0.00	0.00	

AM Peak Hour	0945 - 1045	0700 - 0800	0715 - 0815	0700 - 0800	0900 - 1000	0830 - 0930	-	0945 - 1045	0830 - 0930	-	-	-	-	**0715 - 0815**
AM Peak Volume	3	484	134	0	6	1	0	1	3	0	0	0	0	**625**

Noon Peak Hour	1445 - 1545	1445 - 1545	1445 - 1545	1015 - 1115	1445 - 1545	1115 - 1215	-	1315 - 1415	1300 - 1400	1115 - 1215	-	-	-	**1445 - 1545**
Noon Peak Volume	4	588	195	1	8	1	0	3	6	0	0	0	0	**802**

PM Peak Hour	1800 - 1900	1600 - 1700	1545 - 1645	1730 - 1830	1545 - 1645	1515 - 1615	1600 - 1700	1545 - 1645	1500 - 1600	1545 - 1645	1845 - 1945	-	-	**1600 - 1700**
PM Peak Volume	6	748	234	1	14	1	0	4	5	0	0	0	0	**1003**

Bi-Directional Class Count || Volume Summary 15min

Columbia, SC

Marr Traffic DATA COLLECTION

www.marrtraffic.com

Site 75 Lane 1 SB

I-20,
north of Bush River Rd

Date

Sunday, April 21, 2024

Lat/Long

34.034393°, -81.117736°

Weather

Cloudy
66°F

Click here for Detailed Weather

0000 - 2400 (Sunday 24h Session) (04-21-2024)

Volume Summary 15min

TIME	Volume Summary 15min NB	SB	15min Total	60min Total
0000 - 0015	0	17	**17**	
0015 - 0030	0	22	**22**	
0030 - 0045	0	9	**9**	
0045 - 0100	0	5	**5**	**53**
0100 - 0115	0	5	**5**	
0115 - 0130	0	9	**9**	
0130 - 0145	0	5	**5**	
0145 - 0200	0	4	**4**	**23**
0200 - 0215	0	5	**5**	
0215 - 0230	0	9	**9**	
0230 - 0245	0	4	**4**	
0245 - 0300	0	3	**3**	**21**
0300 - 0315	0	6	**6**	
0315 - 0330	0	3	**3**	
0330 - 0345	0	1	**1**	
0345 - 0400	0	6	**6**	**16**
0400 - 0415	0	1	**1**	
0415 - 0430	0	4	**4**	
0430 - 0445	0	3	**3**	
0445 - 0500	0	7	**7**	**15**
0500 - 0515	0	3	**3**	
0515 - 0530	0	6	**6**	
0530 - 0545	0	10	**10**	
0545 - 0600	0	11	**11**	**30**
0600 - 0615	0	8	**8**	
0615 - 0630	0	12	**12**	
0630 - 0645	0	28	**28**	
0645 - 0700	0	26	**26**	**74**
0700 - 0715	0	24	**24**	
0715 - 0730	0	20	**20**	
0730 - 0745	0	19	**19**	
0745 - 0800	0	26	**26**	**89**
0800 - 0815	0	29	**29**	
0815 - 0830	0	28	**28**	
0830 - 0845	0	32	**32**	
0845 - 0900	0	44	**44**	**133**
0900 - 0915	0	57	**57**	
0915 - 0930	0	79	**79**	
0930 - 0945	0	79	**79**	
0945 - 1000	0	68	**68**	**283**
1000 - 1015	0	59	**59**	
1015 - 1030	0	109	**109**	
1030 - 1045	0	83	**83**	
1045 - 1100	0	97	**97**	**348**
1100 - 1115	0	115	**115**	
1115 - 1130	0	118	**118**	
1130 - 1145	0	107	**107**	
1145 - 1200	0	130	**130**	**470**

Time	Volume Summary 15min NB	SB	15min Total	60min Total
1200 - 1215	0	137	**137**	
1215 - 1230	0	156	**156**	
1230 - 1245	0	129	**129**	
1245 - 1300	0	159	**159**	**581**
1300 - 1315	0	188	**188**	
1315 - 1330	0	196	**196**	
1330 - 1345	0	177	**177**	
1345 - 1400	0	175	**175**	**736**
1400 - 1415	0	176	**176**	
1415 - 1430	0	180	**180**	
1430 - 1445	0	160	**160**	
1445 - 1500	0	147	**147**	**663**
1500 - 1515	0	155	**155**	
1515 - 1530	0	132	**132**	
1530 - 1545	0	169	**169**	
1545 - 1600	0	164	**164**	**620**
1600 - 1615	0	175	**175**	
1615 - 1630	0	185	**185**	
1630 - 1645	0	154	**154**	
1645 - 1700	0	160	**160**	**674**
1700 - 1715	0	146	**146**	
1715 - 1730	0	122	**122**	
1730 - 1745	0	137	**137**	
1745 - 1800	0	134	**134**	**539**
1800 - 1815	0	111	**111**	
1815 - 1830	0	115	**115**	
1830 - 1845	0	115	**115**	
1845 - 1900	0	133	**133**	**474**
1900 - 1915	0	114	**114**	
1915 - 1930	0	84	**84**	
1930 - 1945	0	88	**88**	
1945 - 2000	0	80	**80**	**366**
2000 - 2015	0	73	**73**	
2015 - 2030	0	60	**60**	
2030 - 2045	0	50	**50**	
2045 - 2100	0	48	**48**	**231**
2100 - 2115	0	47	**47**	
2115 - 2130	0	37	**37**	
2130 - 2145	0	28	**28**	
2145 - 2200	0	24	**24**	**136**
2200 - 2215	0	31	**31**	
2215 - 2230	0	23	**23**	
2230 - 2245	0	19	**19**	
2245 - 2300	0	21	**21**	**94**
2300 - 2315	0	13	**13**	
2315 - 2330	0	11	**11**	
2330 - 2345	0	17	**17**	
2345 - 0000	0	7	**7**	**48**

Session Total	0	6717	**6717**
Session Average	0.00	69.97	**69.97**
Session Percentage	0.00	100.00	

Site 75 Lane 1 SB

I-20,
north of Bush River Rd

Date

Monday, April 22, 2024

Lat/Long

34.034393°, -81.117736°

Weather

Mostly Cloudy
57°F

Click here for Detailed Weather

0000 - 2400 (Weekday 24h Session) (04-22-2024)

Volume Summary 15min

TIME	Volume Summary 15min NB	SB	15min Total	60min Total
0000 - 0015	0	6	**6**	
0015 - 0030	0	6	**6**	
0030 - 0045	0	6	**6**	
0045 - 0100	0	5	**5**	**23**
0100 - 0115	0	2	**2**	
0115 - 0130	0	6	**6**	
0130 - 0145	0	3	**3**	
0145 - 0200	0	1	**1**	**12**
0200 - 0215	0	2	**2**	
0215 - 0230	0	4	**4**	
0230 - 0245	0	6	**6**	
0245 - 0300	0	4	**4**	**16**
0300 - 0315	0	4	**4**	
0315 - 0330	0	6	**6**	
0330 - 0345	0	6	**6**	
0345 - 0400	0	3	**3**	**19**
0400 - 0415	0	3	**3**	
0415 - 0430	0	11	**11**	
0430 - 0445	0	8	**8**	
0445 - 0500	0	14	**14**	**36**
0500 - 0515	0	10	**10**	
0515 - 0530	0	26	**26**	
0530 - 0545	0	36	**36**	
0545 - 0600	0	47	**47**	**119**
0600 - 0615	0	54	**54**	
0615 - 0630	0	88	**88**	
0630 - 0645	0	159	**159**	
0645 - 0700	0	170	**170**	**471**
0700 - 0715	0	158	**158**	
0715 - 0730	0	231	**231**	
0730 - 0745	0	200	**200**	
0745 - 0800	0	219	**219**	**808**
0800 - 0815	0	172	**172**	
0815 - 0830	0	194	**194**	
0830 - 0845	0	153	**153**	
0845 - 0900	0	133	**133**	**652**
0900 - 0915	0	97	**97**	
0915 - 0930	0	94	**94**	
0930 - 0945	0	133	**133**	
0945 - 1000	0	107	**107**	**431**
1000 - 1015	0	105	**105**	
1015 - 1030	0	98	**98**	
1030 - 1045	0	104	**104**	
1045 - 1100	0	111	**111**	**418**
1100 - 1115	0	112	**112**	
1115 - 1130	0	112	**112**	
1130 - 1145	0	117	**117**	
1145 - 1200	0	125	**125**	**466**

Time	Volume Summary 15min NB	SB	15min Total	60min Total
1200 - 1215	0	101	**101**	
1215 - 1230	0	131	**131**	
1230 - 1245	0	126	**126**	
1245 - 1300	0	137	**137**	**495**
1300 - 1315	0	135	**135**	
1315 - 1330	0	118	**118**	
1330 - 1345	0	148	**148**	
1345 - 1400	0	141	**141**	**542**
1400 - 1415	0	164	**164**	
1415 - 1430	0	154	**154**	
1430 - 1445	0	174	**174**	
1445 - 1500	0	150	**150**	**642**
1500 - 1515	0	186	**186**	
1515 - 1530	0	197	**197**	
1530 - 1545	0	225	**225**	
1545 - 1600	0	201	**201**	**809**
1600 - 1615	0	259	**259**	
1615 - 1630	0	291	**291**	
1630 - 1645	0	273	**273**	
1645 - 1700	0	291	**291**	**1114**
1700 - 1715	0	325	**325**	
1715 - 1730	0	336	**336**	
1730 - 1745	0	328	**328**	
1745 - 1800	0	234	**234**	**1223**
1800 - 1815	0	192	**192**	
1815 - 1830	0	168	**168**	
1830 - 1845	0	130	**130**	
1845 - 1900	0	129	**129**	**619**
1900 - 1915	0	106	**106**	
1915 - 1930	0	94	**94**	
1930 - 1945	0	88	**88**	
1945 - 2000	0	69	**69**	**357**
2000 - 2015	0	67	**67**	
2015 - 2030	0	44	**44**	
2030 - 2045	0	48	**48**	
2045 - 2100	0	47	**47**	**206**
2100 - 2115	0	38	**38**	
2115 - 2130	0	29	**29**	
2130 - 2145	0	15	**15**	
2145 - 2200	0	14	**14**	**96**
2200 - 2215	0	9	**9**	
2215 - 2230	0	15	**15**	
2230 - 2245	0	14	**14**	
2245 - 2300	0	11	**11**	**49**
2300 - 2315	0	11	**11**	
2315 - 2330	0	8	**8**	
2330 - 2345	0	12	**12**	
2345 - 0000	0	9	**9**	**40**

Session Total	0	9663	**9663**
Session Average	0.00	100.66	**100.66**
Session Percentage	0.00	100.00	

Site 75 Lane 1 SB

I-20,
north of Bush River Rd

Date

Tuesday, April 23, 2024

Lat/Long

34.034393°, -81.117736°

Weather

Fair
58°F

Click here for Detailed Weather

0000 - 2400 (Weekday 24h Session) (04-23-2024)

Volume Summary 15min

TIME	Volume Summary 15min NB	Volume Summary 15min SB	15min Total	60min Total
0000 - 0015	0	3	**3**	
0015 - 0030	0	6	**6**	
0030 - 0045	0	0	**0**	
0045 - 0100	0	3	**3**	**12**
0100 - 0115	0	4	**4**	
0115 - 0130	0	2	**2**	
0130 - 0145	0	0	**0**	
0145 - 0200	0	2	**2**	**8**
0200 - 0215	0	1	**1**	
0215 - 0230	0	1	**1**	
0230 - 0245	0	2	**2**	
0245 - 0300	0	2	**2**	**6**
0300 - 0315	0	2	**2**	
0315 - 0330	0	5	**5**	
0330 - 0345	0	2	**2**	
0345 - 0400	0	9	**9**	**18**
0400 - 0415	0	1	**1**	
0415 - 0430	0	3	**3**	
0430 - 0445	0	6	**6**	
0445 - 0500	0	10	**10**	**20**
0500 - 0515	0	10	**10**	
0515 - 0530	0	21	**21**	
0530 - 0545	0	41	**41**	
0545 - 0600	0	31	**31**	**103**
0600 - 0615	0	64	**64**	
0615 - 0630	0	124	**124**	
0630 - 0645	0	143	**143**	
0645 - 0700	0	180	**180**	**511**
0700 - 0715	0	188	**188**	
0715 - 0730	0	214	**214**	
0730 - 0745	0	197	**197**	
0745 - 0800	0	191	**191**	**790**
0800 - 0815	0	174	**174**	
0815 - 0830	0	152	**152**	
0830 - 0845	0	150	**150**	
0845 - 0900	0	162	**162**	**638**
0900 - 0915	0	150	**150**	
0915 - 0930	0	132	**132**	
0930 - 0945	0	112	**112**	
0945 - 1000	0	106	**106**	**500**
1000 - 1015	0	74	**74**	
1015 - 1030	0	79	**79**	
1030 - 1045	0	70	**70**	
1045 - 1100	0	90	**90**	**313**
1100 - 1115	0	78	**78**	
1115 - 1130	0	107	**107**	
1130 - 1145	0	100	**100**	
1145 - 1200	0	100	**100**	**385**

Time	Volume Summary 15min NB	Volume Summary 15min SB	15min Total	60min Total
1200 - 1215	0	94	**94**	
1215 - 1230	0	113	**113**	
1230 - 1245	0	119	**119**	
1245 - 1300	0	108	**108**	**434**
1300 - 1315	0	123	**123**	
1315 - 1330	0	124	**124**	
1330 - 1345	0	124	**124**	
1345 - 1400	0	137	**137**	**508**
1400 - 1415	0	152	**152**	
1415 - 1430	0	139	**139**	
1430 - 1445	0	161	**161**	
1445 - 1500	0	154	**154**	**606**
1500 - 1515	0	197	**197**	
1515 - 1530	0	182	**182**	
1530 - 1545	0	228	**228**	
1545 - 1600	0	242	**242**	**849**
1600 - 1615	0	277	**277**	
1615 - 1630	0	312	**312**	
1630 - 1645	0	281	**281**	
1645 - 1700	0	218	**218**	**1088**
1700 - 1715	0	162	**162**	
1715 - 1730	0	367	**367**	
1730 - 1745	0	321	**321**	
1745 - 1800	0	266	**266**	**1116**
1800 - 1815	0	242	**242**	
1815 - 1830	0	154	**154**	
1830 - 1845	0	122	**122**	
1845 - 1900	0	118	**118**	**636**
1900 - 1915	0	95	**95**	
1915 - 1930	0	115	**115**	
1930 - 1945	0	89	**89**	
1945 - 2000	0	86	**86**	**385**
2000 - 2015	0	75	**75**	
2015 - 2030	0	71	**71**	
2030 - 2045	0	78	**78**	
2045 - 2100	0	41	**41**	**265**
2100 - 2115	0	50	**50**	
2115 - 2130	0	31	**31**	
2130 - 2145	0	36	**36**	
2145 - 2200	0	31	**31**	**148**
2200 - 2215	0	17	**17**	
2215 - 2230	0	32	**32**	
2230 - 2245	0	31	**31**	
2245 - 2300	0	15	**15**	**95**
2300 - 2315	0	23	**23**	
2315 - 2330	0	12	**12**	
2330 - 2345	0	6	**6**	
2345 - 0000	0	5	**5**	**46**

Session Total	0	9480	**9480**
Session Average	0.00	98.75	**98.75**
Session Percentage	0.00	100.00	

Site 75 Lane 1 SB

I-20,
north of Bush River Rd

Date

Wednesday, April 24, 2024

Lat/Long

34.034393°, -81.117736°

Weather

Fair
66°F

Click here for Detailed Weather

0000 - 2400 (Weekday 24h Session) (04-24-2024)

Volume Summary 15min

TIME	Volume Summary 15min NB	SB	15min Total	60min Total
0000 - 0015	0	8	**8**	
0015 - 0030	0	7	**7**	
0030 - 0045	0	6	**6**	
0045 - 0100	0	6	**6**	**27**
0100 - 0115	0	4	**4**	
0115 - 0130	0	3	**3**	
0130 - 0145	0	5	**5**	
0145 - 0200	0	5	**5**	**17**
0200 - 0215	0	2	**2**	
0215 - 0230	0	5	**5**	
0230 - 0245	0	2	**2**	
0245 - 0300	0	1	**1**	**10**
0300 - 0315	0	3	**3**	
0315 - 0330	0	4	**4**	
0330 - 0345	0	3	**3**	
0345 - 0400	0	4	**4**	**14**
0400 - 0415	0	2	**2**	
0415 - 0430	0	2	**2**	
0430 - 0445	0	6	**6**	
0445 - 0500	0	5	**5**	**15**
0500 - 0515	0	2	**2**	
0515 - 0530	0	12	**12**	
0530 - 0545	0	14	**14**	
0545 - 0600	0	28	**28**	**56**
0600 - 0615	0	53	**53**	
0615 - 0630	0	102	**102**	
0630 - 0645	0	167	**167**	
0645 - 0700	0	163	**163**	**485**
0700 - 0715	0	178	**178**	
0715 - 0730	0	204	**204**	
0730 - 0745	0	223	**223**	
0745 - 0800	0	200	**200**	**805**
0800 - 0815	0	113	**113**	
0815 - 0830	0	141	**141**	
0830 - 0845	0	183	**183**	
0845 - 0900	0	174	**174**	**611**
0900 - 0915	0	96	**96**	
0915 - 0930	0	64	**64**	
0930 - 0945	0	121	**121**	
0945 - 1000	0	168	**168**	**449**
1000 - 1015	0	115	**115**	
1015 - 1030	0	106	**106**	
1030 - 1045	0	117	**117**	
1045 - 1100	0	118	**118**	**456**
1100 - 1115	0	102	**102**	
1115 - 1130	0	103	**103**	
1130 - 1145	0	133	**133**	
1145 - 1200	0	121	**121**	**459**

Time	Volume Summary 15min NB	SB	15min Total	60min Total
1200 - 1215	0	104	**104**	
1215 - 1230	0	147	**147**	
1230 - 1245	0	105	**105**	
1245 - 1300	0	116	**116**	**472**
1300 - 1315	0	96	**96**	
1315 - 1330	0	122	**122**	
1330 - 1345	0	155	**155**	
1345 - 1400	0	158	**158**	**531**
1400 - 1415	0	162	**162**	
1415 - 1430	0	163	**163**	
1430 - 1445	0	135	**135**	
1445 - 1500	0	187	**187**	**647**
1500 - 1515	0	204	**204**	
1515 - 1530	0	248	**248**	
1530 - 1545	0	244	**244**	
1545 - 1600	0	259	**259**	**955**
1600 - 1615	0	278	**278**	
1615 - 1630	0	294	**294**	
1630 - 1645	0	295	**295**	
1645 - 1700	0	303	**303**	**1170**
1700 - 1715	0	291	**291**	
1715 - 1730	0	293	**293**	
1730 - 1745	0	284	**284**	
1745 - 1800	0	279	**279**	**1147**
1800 - 1815	0	162	**162**	
1815 - 1830	0	198	**198**	
1830 - 1845	0	133	**133**	
1845 - 1900	0	111	**111**	**604**
1900 - 1915	0	110	**110**	
1915 - 1930	0	104	**104**	
1930 - 1945	0	68	**68**	
1945 - 2000	0	71	**71**	**353**
2000 - 2015	0	65	**65**	
2015 - 2030	0	69	**69**	
2030 - 2045	0	51	**51**	
2045 - 2100	0	58	**58**	**243**
2100 - 2115	0	25	**25**	
2115 - 2130	0	32	**32**	
2130 - 2145	0	23	**23**	
2145 - 2200	0	27	**27**	**107**
2200 - 2215	0	22	**22**	
2215 - 2230	0	17	**17**	
2230 - 2245	0	17	**17**	
2245 - 2300	0	14	**14**	**70**
2300 - 2315	0	14	**14**	
2315 - 2330	0	11	**11**	
2330 - 2345	0	10	**10**	
2345 - 0000	0	7	**7**	**42**

Session Total	0	9745	**9745**
Session Average	0.00	101.51	**101.51**
Session Percentage	0.00	100.00	

Site 75 Lane 1 SB

I-20,
north of Bush River Rd

Date

Thursday, April 25, 2024

Lat/Long

34.034393°, -81.117736°

Weather

Fair
67°F

Click here for Detailed Weather

0000 - 2400 (Weekday 24h Session) (04-25-2024)

Volume Summary 15min

TIME	Volume Summary 15min NB	Volume Summary 15min SB	15min Total	60min Total
0000 - 0015	0	9	**9**	
0015 - 0030	0	2	**2**	
0030 - 0045	0	6	**6**	
0045 - 0100	0	4	**4**	**21**
0100 - 0115	0	3	**3**	
0115 - 0130	0	4	**4**	
0130 - 0145	0	2	**2**	
0145 - 0200	0	0	**0**	**9**
0200 - 0215	0	2	**2**	
0215 - 0230	0	3	**3**	
0230 - 0245	0	3	**3**	
0245 - 0300	0	0	**0**	**8**
0300 - 0315	0	2	**2**	
0315 - 0330	0	2	**2**	
0330 - 0345	0	2	**2**	
0345 - 0400	0	7	**7**	**13**
0400 - 0415	0	9	**9**	
0415 - 0430	0	5	**5**	
0430 - 0445	0	12	**12**	
0445 - 0500	0	18	**18**	**44**
0500 - 0515	0	15	**15**	
0515 - 0530	0	12	**12**	
0530 - 0545	0	17	**17**	
0545 - 0600	0	35	**35**	**79**
0600 - 0615	0	32	**32**	
0615 - 0630	0	99	**99**	
0630 - 0645	0	147	**147**	
0645 - 0700	0	187	**187**	**465**
0700 - 0715	0	178	**178**	
0715 - 0730	0	233	**233**	
0730 - 0745	0	193	**193**	
0745 - 0800	0	218	**218**	**822**
0800 - 0815	0	197	**197**	
0815 - 0830	0	192	**192**	
0830 - 0845	0	197	**197**	
0845 - 0900	0	137	**137**	**723**
0900 - 0915	0	116	**116**	
0915 - 0930	0	107	**107**	
0930 - 0945	0	140	**140**	
0945 - 1000	0	143	**143**	**506**
1000 - 1015	0	113	**113**	
1015 - 1030	0	123	**123**	
1030 - 1045	0	123	**123**	
1045 - 1100	0	147	**147**	**506**
1100 - 1115	0	134	**134**	
1115 - 1130	0	124	**124**	
1130 - 1145	0	147	**147**	
1145 - 1200	0	149	**149**	**554**

Time	Volume Summary 15min NB	Volume Summary 15min SB	15min Total	60min Total
1200 - 1215	0	138	**138**	
1215 - 1230	0	182	**182**	
1230 - 1245	0	149	**149**	
1245 - 1300	0	170	**170**	**639**
1300 - 1315	0	174	**174**	
1315 - 1330	0	149	**149**	
1330 - 1345	0	196	**196**	
1345 - 1400	0	197	**197**	**716**
1400 - 1415	0	178	**178**	
1415 - 1430	0	196	**196**	
1430 - 1445	0	204	**204**	
1445 - 1500	0	191	**191**	**769**
1500 - 1515	0	211	**211**	
1515 - 1530	0	266	**266**	
1530 - 1545	0	255	**255**	
1545 - 1600	0	273	**273**	**1005**
1600 - 1615	0	322	**322**	
1615 - 1630	0	335	**335**	
1630 - 1645	0	318	**318**	
1645 - 1700	0	305	**305**	**1280**
1700 - 1715	0	285	**285**	
1715 - 1730	0	327	**327**	
1730 - 1745	0	303	**303**	
1745 - 1800	0	308	**308**	**1223**
1800 - 1815	0	247	**247**	
1815 - 1830	0	218	**218**	
1830 - 1845	0	157	**157**	
1845 - 1900	0	147	**147**	**769**
1900 - 1915	0	117	**117**	
1915 - 1930	0	138	**138**	
1930 - 1945	0	115	**115**	
1945 - 2000	0	94	**94**	**464**
2000 - 2015	0	73	**73**	
2015 - 2030	0	86	**86**	
2030 - 2045	0	42	**42**	
2045 - 2100	0	71	**71**	**272**
2100 - 2115	0	45	**45**	
2115 - 2130	0	50	**50**	
2130 - 2145	0	38	**38**	
2145 - 2200	0	37	**37**	**170**
2200 - 2215	0	25	**25**	
2215 - 2230	0	30	**30**	
2230 - 2245	0	31	**31**	
2245 - 2300	0	14	**14**	**100**
2300 - 2315	0	18	**18**	
2315 - 2330	0	11	**11**	
2330 - 2345	0	17	**17**	
2345 - 0000	0	20	**20**	**66**

Session Total	0	11223	**11223**
Session Average	0.00	116.91	**116.91**
Session Percentage	0.00	100.00	

Site 75 Lane 1 SB

I-20,
north of Bush River Rd

Date

Friday, April 26, 2024

Lat/Long

34.034393°, -81.117736°

Weather

Cloudy
69°F

Click here for Detailed Weather

0000 - 2400 (Weekday 24h Session) (04-26-2024)

Volume Summary 15min

TIME	Volume Summary 15min NB	Volume Summary 15min SB	15min Total	60min Total
0000 - 0015	0	22	**22**	
0015 - 0030	0	5	**5**	
0030 - 0045	0	6	**6**	
0045 - 0100	0	14	**14**	**47**
0100 - 0115	0	4	**4**	
0115 - 0130	0	9	**9**	
0130 - 0145	0	5	**5**	
0145 - 0200	0	7	**7**	**25**
0200 - 0215	0	6	**6**	
0215 - 0230	0	2	**2**	
0230 - 0245	0	5	**5**	
0245 - 0300	0	7	**7**	**20**
0300 - 0315	0	2	**2**	
0315 - 0330	0	6	**6**	
0330 - 0345	0	10	**10**	
0345 - 0400	0	9	**9**	**27**
0400 - 0415	0	6	**6**	
0415 - 0430	0	12	**12**	
0430 - 0445	0	15	**15**	
0445 - 0500	0	22	**22**	**55**
0500 - 0515	0	15	**15**	
0515 - 0530	0	25	**25**	
0530 - 0545	0	47	**47**	
0545 - 0600	0	40	**40**	**127**
0600 - 0615	0	52	**52**	
0615 - 0630	0	83	**83**	
0630 - 0645	0	125	**125**	
0645 - 0700	0	144	**144**	**404**
0700 - 0715	0	151	**151**	
0715 - 0730	0	201	**201**	
0730 - 0745	0	230	**230**	
0745 - 0800	0	212	**212**	**794**
0800 - 0815	0	180	**180**	
0815 - 0830	0	151	**151**	
0830 - 0845	0	147	**147**	
0845 - 0900	0	136	**136**	**614**
0900 - 0915	0	116	**116**	
0915 - 0930	0	124	**124**	
0930 - 0945	0	110	**110**	
0945 - 1000	0	127	**127**	**477**
1000 - 1015	0	113	**113**	
1015 - 1030	0	120	**120**	
1030 - 1045	0	132	**132**	
1045 - 1100	0	153	**153**	**518**
1100 - 1115	0	131	**131**	
1115 - 1130	0	156	**156**	
1130 - 1145	0	171	**171**	
1145 - 1200	0	184	**184**	**642**

Time	Volume Summary 15min NB	Volume Summary 15min SB	15min Total	60min Total
1200 - 1215	0	189	**189**	
1215 - 1230	0	173	**173**	
1230 - 1245	0	184	**184**	
1245 - 1300	0	219	**219**	**765**
1300 - 1315	0	217	**217**	
1315 - 1330	0	258	**258**	
1330 - 1345	0	218	**218**	
1345 - 1400	0	235	**235**	**928**
1400 - 1415	0	251	**251**	
1415 - 1430	0	249	**249**	
1430 - 1445	0	264	**264**	
1445 - 1500	0	284	**284**	**1048**
1500 - 1515	0	295	**295**	
1515 - 1530	0	287	**287**	
1530 - 1545	0	280	**280**	
1545 - 1600	0	309	**309**	**1171**
1600 - 1615	0	307	**307**	
1615 - 1630	0	332	**332**	
1630 - 1645	0	253	**253**	
1645 - 1700	0	279	**279**	**1171**
1700 - 1715	0	273	**273**	
1715 - 1730	0	265	**265**	
1730 - 1745	0	273	**273**	
1745 - 1800	0	197	**197**	**1008**
1800 - 1815	0	209	**209**	
1815 - 1830	0	210	**210**	
1830 - 1845	0	178	**178**	
1845 - 1900	0	146	**146**	**743**
1900 - 1915	0	157	**157**	
1915 - 1930	0	155	**155**	
1930 - 1945	0	115	**115**	
1945 - 2000	0	114	**114**	**541**
2000 - 2015	0	97	**97**	
2015 - 2030	0	102	**102**	
2030 - 2045	0	77	**77**	
2045 - 2100	0	93	**93**	**369**
2100 - 2115	0	79	**79**	
2115 - 2130	0	95	**95**	
2130 - 2145	0	68	**68**	
2145 - 2200	0	57	**57**	**299**
2200 - 2215	0	52	**52**	
2215 - 2230	0	56	**56**	
2230 - 2245	0	57	**57**	
2245 - 2300	0	63	**63**	**228**
2300 - 2315	0	48	**48**	
2315 - 2330	0	39	**39**	
2330 - 2345	0	30	**30**	
2345 - 0000	0	25	**25**	**142**

Session Total	0	12163	**12163**
Session Average	0.00	126.70	**126.70**
Session Percentage	0.00	100.00	

Site 75 Lane 1 SB

I-20,
north of Bush River Rd

Date

Saturday, April 27, 2024

Lat/Long

34.034393°, -81.117736°

Weather

Mostly Cloudy
69°F

Click here for Detailed Weather

0000 - 2400 (Saturday 24h Session) (04-27-2024)

Volume Summary 15min

TIME	Volume Summary 15min NB	Volume Summary 15min SB	15min Total	60min Total
0000 - 0015	0	19	**19**	
0015 - 0030	0	8	**8**	
0030 - 0045	0	14	**14**	
0045 - 0100	0	8	**8**	**49**
0100 - 0115	0	10	**10**	
0115 - 0130	0	6	**6**	
0130 - 0145	0	7	**7**	
0145 - 0200	0	3	**3**	**26**
0200 - 0215	0	4	**4**	
0215 - 0230	0	9	**9**	
0230 - 0245	0	1	**1**	
0245 - 0300	0	4	**4**	**18**
0300 - 0315	0	4	**4**	
0315 - 0330	0	5	**5**	
0330 - 0345	0	2	**2**	
0345 - 0400	0	1	**1**	**12**
0400 - 0415	0	6	**6**	
0415 - 0430	0	5	**5**	
0430 - 0445	0	8	**8**	
0445 - 0500	0	6	**6**	**25**
0500 - 0515	0	9	**9**	
0515 - 0530	0	19	**19**	
0530 - 0545	0	13	**13**	
0545 - 0600	0	20	**20**	**61**
0600 - 0615	0	27	**27**	
0615 - 0630	0	34	**34**	
0630 - 0645	0	49	**49**	
0645 - 0700	0	52	**52**	**162**
0700 - 0715	0	47	**47**	
0715 - 0730	0	42	**42**	
0730 - 0745	0	71	**71**	
0745 - 0800	0	82	**82**	**242**
0800 - 0815	0	83	**83**	
0815 - 0830	0	82	**82**	
0830 - 0845	0	93	**93**	
0845 - 0900	0	105	**105**	**363**
0900 - 0915	0	95	**95**	
0915 - 0930	0	115	**115**	
0930 - 0945	0	105	**105**	
0945 - 1000	0	104	**104**	**419**
1000 - 1015	0	109	**109**	
1015 - 1030	0	117	**117**	
1030 - 1045	0	129	**129**	
1045 - 1100	0	126	**126**	**481**
1100 - 1115	0	131	**131**	
1115 - 1130	0	138	**138**	
1130 - 1145	0	110	**110**	
1145 - 1200	0	141	**141**	**520**

Time	Volume Summary 15min NB	Volume Summary 15min SB	15min Total	60min Total
1200 - 1215	0	123	**123**	
1215 - 1230	0	151	**151**	
1230 - 1245	0	148	**148**	
1245 - 1300	0	154	**154**	**576**
1300 - 1315	0	148	**148**	
1315 - 1330	0	159	**159**	
1330 - 1345	0	143	**143**	
1345 - 1400	0	149	**149**	**599**
1400 - 1415	0	145	**145**	
1415 - 1430	0	158	**158**	
1430 - 1445	0	139	**139**	
1445 - 1500	0	154	**154**	**596**
1500 - 1515	0	127	**127**	
1515 - 1530	0	125	**125**	
1530 - 1545	0	136	**136**	
1545 - 1600	0	149	**149**	**537**
1600 - 1615	0	130	**130**	
1615 - 1630	0	115	**115**	
1630 - 1645	0	152	**152**	
1645 - 1700	0	126	**126**	**523**
1700 - 1715	0	138	**138**	
1715 - 1730	0	105	**105**	
1730 - 1745	0	133	**133**	
1745 - 1800	0	106	**106**	**482**
1800 - 1815	0	120	**120**	
1815 - 1830	0	116	**116**	
1830 - 1845	0	135	**135**	
1845 - 1900	0	85	**85**	**456**
1900 - 1915	0	91	**91**	
1915 - 1930	0	78	**78**	
1930 - 1945	0	81	**81**	
1945 - 2000	0	75	**75**	**325**
2000 - 2015	0	86	**86**	
2015 - 2030	0	51	**51**	
2030 - 2045	0	53	**53**	
2045 - 2100	0	55	**55**	**245**
2100 - 2115	0	63	**63**	
2115 - 2130	0	68	**68**	
2130 - 2145	0	64	**64**	
2145 - 2200	0	40	**40**	**235**
2200 - 2215	0	44	**44**	
2215 - 2230	0	48	**48**	
2230 - 2245	0	36	**36**	
2245 - 2300	0	30	**30**	**158**
2300 - 2315	0	31	**31**	
2315 - 2330	0	19	**19**	
2330 - 2345	0	17	**17**	
2345 - 0000	0	14	**14**	**81**

Session Total	0	7191	**7191**
Session Average	0.00	74.91	**74.91**
Session Percentage	0.00	100.00	

Bi-Directional Class Count || SB WB 60min

Columbia, SC

Marr Traffic DATA COLLECTION

www.marrtraffic.com

Site 75 Lane 1 SB
I-20,
north of Bush River Rd

Date
Sunday, April 21, 2024

Lat/Long
34.034393°, -81.117736°

Weather
Cloudy
66°F

Click here for Detailed Weather

0000 - 2400 (Sunday 24h Session) (04-21-2024)
SB WB 60min

	Southbound (Movement 75 Lane 1 SB.1)													
TIME	1	2	3	4	5	6	7	8	9	10	11	12	13	**Total**
0000 - 0100	0	51	2	0	0	0	0	0	0	0	0	0	0	**53**
0100 - 0200	0	23	0	0	0	0	0	0	0	0	0	0	0	**23**
0200 - 0300	0	17	4	0	0	0	0	0	0	0	0	0	0	**21**
0300 - 0400	1	15	0	0	0	0	0	0	0	0	0	0	0	**16**
0400 - 0500	0	14	1	0	0	0	0	0	0	0	0	0	0	**15**
0500 - 0600	0	29	1	0	0	0	0	0	0	0	0	0	0	**30**
0600 - 0700	0	63	11	0	0	0	0	0	0	0	0	0	0	**74**
0700 - 0800	2	71	16	0	0	0	0	0	0	0	0	0	0	**89**
0800 - 0900	3	111	19	0	0	0	0	0	0	0	0	0	0	**133**
0900 - 1000	7	228	47	0	1	0	0	0	0	0	0	0	0	**283**
1000 - 1100	12	279	55	0	1	0	0	0	1	0	0	0	0	**348**
1100 - 1200	1	377	90	0	1	0	0	0	1	0	0	0	0	**470**
1200 - 1300	11	454	113	0	2	0	0	0	1	0	0	0	0	**581**
1300 - 1400	0	627	107	0	0	1	0	1	0	0	0	0	0	**736**
1400 - 1500	0	541	118	0	1	0	0	0	3	0	0	0	0	**663**
1500 - 1600	0	487	131	0	1	0	0	0	1	0	0	0	0	**620**
1600 - 1700	0	546	124	1	0	0	0	0	2	1	0	0	0	**674**
1700 - 1800	0	431	106	1	0	0	0	1	0	0	0	0	0	**539**
1800 - 1900	3	376	94	0	1	0	0	0	0	0	0	0	0	**474**
1900 - 2000	0	302	59	1	1	0	0	0	3	0	0	0	0	**366**
2000 - 2100	0	208	22	0	1	0	0	0	0	0	0	0	0	**231**
2100 - 2200	0	129	7	0	0	0	0	0	0	0	0	0	0	**136**
2200 - 2300	0	87	5	0	0	0	0	0	2	0	0	0	0	**94**
2300 - 2400	0	42	5	0	0	0	0	0	1	0	0	0	0	**48**

Session Total	40	5508	1137	3	10	1	0	2	15	1	0	0	0	**6717**
Session Average	1.67	229.50	47.38	0.13	0.42	0.04	0.00	0.08	0.63	0.04	0.00	0.00	0.00	**279.88**
Session Percentage	0.60	82.00	16.93	0.04	0.15	0.01	0.00	0.03	0.22	0.01	0.00	0.00	0.00	

AM Peak Hour	0900 - 1000	0900 - 1000	0900 - 1000	-	0900 - 1000	-	-	-	-	-	-	-	-	**0900 - 1000**
AM Peak Volume	7	228	47	0	1	0	0	0	0	0	0	0	0	**283**

Noon Peak Hour	1000 - 1100	1300 - 1400	1400 - 1500	-	1200 - 1300	1300 - 1400	-	1300 - 1400	1400 - 1500	-	-	-	-	**1300 - 1400**
Noon Peak Volume	12	627	118	0	2	1	0	1	3	0	0	0	0	**736**

PM Peak Hour	1800 - 1900	1600 - 1700	1500 - 1600	1600 - 1700	1500 - 1600	-	-	1700 - 1800	1900 - 2000	1600 - 1700	-	-	-	**1600 - 1700**
PM Peak Volume	3	546	131	1	1	0	0	1	3	1	0	0	0	**674**

Site 75 Lane 1 SB

I-20,
north of Bush River Rd

Date

Monday, April 22, 2024

Lat/Long

34.034393°, -81.117736°

Weather

Mostly Cloudy
57°F

Click here for Detailed Weather

0000 - 2400 (Weekday 24h Session) (04-22-2024)

SB WB 60min

	Southbound (Movement 75 Lane 1 SB.1)													
TIME	1	2	3	4	5	6	7	8	9	10	11	12	13	**Total**
0000 - 0100	0	22	1	0	0	0	0	0	0	0	0	0	0	**23**
0100 - 0200	0	12	0	0	0	0	0	0	0	0	0	0	0	**12**
0200 - 0300	0	14	1	0	0	1	0	0	0	0	0	0	0	**16**
0300 - 0400	0	19	0	0	0	0	0	0	0	0	0	0	0	**19**
0400 - 0500	0	33	3	0	0	0	0	0	0	0	0	0	0	**36**
0500 - 0600	0	102	17	0	0	0	0	0	0	0	0	0	0	**119**
0600 - 0700	2	365	103	0	1	0	0	0	0	0	0	0	0	**471**
0700 - 0800	0	623	179	0	6	0	0	0	0	0	0	0	0	**808**
0800 - 0900	0	503	141	0	3	1	0	1	3	0	0	0	0	**652**
0900 - 1000	0	296	121	0	8	2	0	2	2	0	0	0	0	**431**
1000 - 1100	1	289	120	2	3	0	0	1	2	0	0	0	0	**418**
1100 - 1200	0	325	132	1	4	0	0	1	2	1	0	0	0	**466**
1200 - 1300	3	369	114	0	1	1	0	0	6	1	0	0	0	**495**
1300 - 1400	0	393	136	0	4	0	0	2	7	0	0	0	0	**542**
1400 - 1500	0	461	167	0	6	0	0	3	5	0	0	0	0	**642**
1500 - 1600	4	593	191	0	14	0	0	2	5	0	0	0	0	**809**
1600 - 1700	1	804	274	1	28	0	0	5	1	0	0	0	0	**1114**
1700 - 1800	3	879	314	1	15	0	0	4	7	0	0	0	0	**1223**
1800 - 1900	1	464	140	0	8	0	0	3	3	0	0	0	0	**619**
1900 - 2000	0	275	74	0	2	0	0	4	1	0	1	0	0	**357**
2000 - 2100	0	166	36	0	1	0	0	2	1	0	0	0	0	**206**
2100 - 2200	0	81	15	0	0	0	0	0	0	0	0	0	0	**96**
2200 - 2300	0	43	6	0	0	0	0	0	0	0	0	0	0	**49**
2300 - 2400	0	40	0	0	0	0	0	0	0	0	0	0	0	**40**

Session Total	15	7171	2285	5	104	5	0	30	45	2	1	0	0	**9663**
Session Average	0.63	298.79	95.21	0.21	4.33	0.21	0.00	1.25	1.88	0.08	0.04	0.00	0.00	**402.63**
Session Percentage	0.16	74.21	23.65	0.05	1.08	0.05	0.00	0.31	0.47	0.02	0.01	0.00	0.00	

AM Peak Hour	0600 - 0700	0700 - 0800	0700 - 0800	-	0900 - 1000	0900 - 1000	-	0900 - 1000	0800 - 0900	-	-	-	-	**0700 - 0800**
AM Peak Volume	2	623	179	0	8	2	0	2	3	0	0	0	0	**808**

Noon Peak Hour	1200 - 1300	1400 - 1500	1400 - 1500	1000 - 1100	1400 - 1500	1200 - 1300	-	1400 - 1500	1300 - 1400	1100 - 1200	-	-	-	**1400 - 1500**
Noon Peak Volume	3	461	167	2	6	1	0	3	7	1	0	0	0	**642**

PM Peak Hour	1500 - 1600	1700 - 1800	1700 - 1800	1600 - 1700	1600 - 1700	-	-	1600 - 1700	1700 - 1800	-	1900 - 2000	-	-	**1700 - 1800**
PM Peak Volume	4	879	314	1	28	0	0	5	7	0	1	0	0	**1223**

Site 75 Lane 1 SB
I-20,
north of Bush River Rd

Date
Tuesday, April 23, 2024

Lat/Long
34.034393°, -81.117736°

Weather
Fair
58°F

Click here for Detailed Weather

0000 - 2400 (Weekday 24h Session) (04-23-2024)
SB WB 60min

	Southbound (Movement 75 Lane 1 SB.1)													
TIME	1	2	3	4	5	6	7	8	9	10	11	12	13	**Total**
0000 - 0100	0	11	1	0	0	0	0	0	0	0	0	0	0	**12**
0100 - 0200	0	8	0	0	0	0	0	0	0	0	0	0	0	**8**
0200 - 0300	0	6	0	0	0	0	0	0	0	0	0	0	0	**6**
0300 - 0400	0	16	2	0	0	0	0	0	0	0	0	0	0	**18**
0400 - 0500	0	19	1	0	0	0	0	0	0	0	0	0	0	**20**
0500 - 0600	0	91	11	0	1	0	0	0	0	0	0	0	0	**103**
0600 - 0700	0	397	111	0	3	0	0	0	0	0	0	0	0	**511**
0700 - 0800	0	627	155	2	5	0	0	0	1	0	0	0	0	**790**
0800 - 0900	0	476	155	1	2	0	0	0	4	0	0	0	0	**638**
0900 - 1000	1	352	130	0	11	0	0	0	6	0	0	0	0	**500**
1000 - 1100	0	213	92	0	4	0	0	1	3	0	0	0	0	**313**
1100 - 1200	3	262	111	0	3	1	0	2	3	0	0	0	0	**385**
1200 - 1300	0	314	112	0	4	0	0	2	2	0	0	0	0	**434**
1300 - 1400	1	370	119	0	8	0	0	1	9	0	0	0	0	**508**
1400 - 1500	0	448	145	0	7	0	0	0	6	0	0	0	0	**606**
1500 - 1600	2	632	197	1	12	0	0	2	3	0	0	0	0	**849**
1600 - 1700	2	794	263	0	15	0	0	7	7	0	0	0	0	**1088**
1700 - 1800	2	800	291	0	12	0	0	5	6	0	0	0	0	**1116**
1800 - 1900	3	480	140	1	9	1	0	1	1	0	0	0	0	**636**
1900 - 2000	5	283	91	0	5	0	0	0	1	0	0	0	0	**385**
2000 - 2100	1	223	38	0	0	0	0	0	3	0	0	0	0	**265**
2100 - 2200	0	134	13	0	1	0	0	0	0	0	0	0	0	**148**
2200 - 2300	0	85	5	0	3	0	0	0	2	0	0	0	0	**95**
2300 - 2400	0	41	3	0	1	0	0	0	1	0	0	0	0	**46**

Session Total	20	7082	2186	5	106	2	0	21	58	0	0	0	0	**9480**
Session Average	0.83	295.08	91.08	0.21	4.42	0.08	0.00	0.88	2.42	0.00	0.00	0.00	0.00	**395.00**
Session Percentage	0.21	74.70	23.06	0.05	1.12	0.02	0.00	0.22	0.61	0.00	0.00	0.00	0.00	

AM Peak Hour	0900 - 1000	0700 - 0800	0700 - 0800	0700 - 0800	0900 - 1000	-	-	-	0900 - 1000	-	-	-	-	**0700 - 0800**
AM Peak Hour Volume	1	627	155	2	11	0	0	0	6	0	0	0	0	**790**

Noon Peak Hour	1100 - 1200	1400 - 1500	1400 - 1500	-	1300 - 1400	1100 - 1200	-	1100 - 1200	1300 - 1400	-	-	-	-	**1400 - 1500**
Noon Peak Hour Volume	3	448	145	0	8	1	0	2	9	0	0	0	0	**606**

PM Peak Hour	1900 - 2000	1700 - 1800	1700 - 1800	1500 - 1600	1600 - 1700	1800 - 1900	-	1600 - 1700	1600 - 1700	-	-	-	-	**1700 - 1800**
PM Peak Hour Volume	5	800	291	1	15	1	0	7	7	0	0	0	0	**1116**

Site 75 Lane 1 SB
I-20,
north of Bush River Rd

Date
Wednesday, April 24, 2024

Lat/Long
34.034393°, -81.117736°

Weather
Fair
66°F

Click here for Detailed Weather

0000 - 2400 (Weekday 24h Session) (04-24-2024)
SB WB 60min

	Southbound (Movement 75 Lane 1 SB.1)													
TIME	1	2	3	4	5	6	7	8	9	10	11	12	13	**Total**
0000 - 0100	0	27	0	0	0	0	0	0	0	0	0	0	0	**27**
0100 - 0200	0	17	0	0	0	0	0	0	0	0	0	0	0	**17**
0200 - 0300	0	10	0	0	0	0	0	0	0	0	0	0	0	**10**
0300 - 0400	0	14	0	0	0	0	0	0	0	0	0	0	0	**14**
0400 - 0500	0	15	0	0	0	0	0	0	0	0	0	0	0	**15**
0500 - 0600	0	48	8	0	0	0	0	0	0	0	0	0	0	**56**
0600 - 0700	1	388	94	0	1	0	0	0	1	0	0	0	0	**485**
0700 - 0800	0	619	175	0	9	0	0	2	0	0	0	0	0	**805**
0800 - 0900	0	473	129	0	6	1	0	1	1	0	0	0	0	**611**
0900 - 1000	0	325	112	0	7	1	0	1	3	0	0	0	0	**449**
1000 - 1100	1	327	118	0	4	0	0	3	3	0	0	0	0	**456**
1100 - 1200	2	319	127	1	4	1	0	3	2	0	0	0	0	**459**
1200 - 1300	1	348	108	0	6	0	0	2	7	0	0	0	0	**472**
1300 - 1400	3	364	152	0	5	1	0	2	4	0	0	0	0	**531**
1400 - 1500	2	475	158	1	4	0	0	3	4	0	0	0	0	**647**
1500 - 1600	2	666	255	0	18	3	0	6	5	0	0	0	0	**955**
1600 - 1700	2	858	277	1	21	2	0	2	7	0	0	0	0	**1170**
1700 - 1800	2	863	260	0	11	0	0	6	5	0	0	0	0	**1147**
1800 - 1900	2	451	133	1	10	0	0	1	6	0	0	0	0	**604**
1900 - 2000	0	263	84	0	3	0	0	2	1	0	0	0	0	**353**
2000 - 2100	0	188	53	0	0	0	0	0	2	0	0	0	0	**243**
2100 - 2200	0	81	25	0	1	0	0	0	0	0	0	0	0	**107**
2200 - 2300	1	55	14	0	0	0	0	0	0	0	0	0	0	**70**
2300 - 2400	0	33	9	0	0	0	0	0	0	0	0	0	0	**42**

Session Total	19	7227	2291	4	110	9	0	34	51	0	0	0	0	**9745**
Session Average	0.79	301.13	95.46	0.17	4.58	0.38	0.00	1.42	2.13	0.00	0.00	0.00	0.00	**406.04**
Session Percentage	0.19	74.16	23.51	0.04	1.13	0.09	0.00	0.35	0.52	0.00	0.00	0.00	0.00	

AM Peak Hour	0600 - 0700	0700 - 0800	0700 - 0800	-	0700 - 0800	0800 - 0900	-	0700 - 0800	0900 - 1000	-	-	-	-	**0700 - 0800**
AM Peak Hour Volume	1	619	175	0	9	1	0	2	3	0	0	0	0	**805**

Noon Peak Hour	1300 - 1400	1400 - 1500	1400 - 1500	1100 - 1200	1200 - 1300	1100 - 1200	-	1000 - 1100	1200 - 1300	-	-	-	-	**1400 - 1500**
Noon Peak Hour Volume	3	475	158	1	6	1	0	3	7	0	0	0	0	**647**

PM Peak Hour	1500 - 1600	1700 - 1800	1600 - 1700	1600 - 1700	1600 - 1700	1500 - 1600	-	1500 - 1600	1600 - 1700	-	-	-	-	**1600 - 1700**
PM Peak Hour Volume	2	863	277	1	21	3	0	6	7	0	0	0	0	**1170**

Site 75 Lane 1 SB

I-20,
north of Bush River Rd

Date

Thursday, April 25, 2024

Lat/Long

34.034393°, -81.117736°

Weather

Fair
67°F

Click here for Detailed Weather

0000 - 2400 (Weekday 24h Session) (04-25-2024)

SB WB 60min

	Southbound (Movement 75 Lane 1 SB.1)													
TIME	1	2	3	4	5	6	7	8	9	10	11	12	13	**Total**
0000 - 0100	0	18	3	0	0	0	0	0	0	0	0	0	0	**21**
0100 - 0200	0	9	0	0	0	0	0	0	0	0	0	0	0	**9**
0200 - 0300	0	7	0	0	1	0	0	0	0	0	0	0	0	**8**
0300 - 0400	0	11	2	0	0	0	0	0	0	0	0	0	0	**13**
0400 - 0500	1	31	12	0	0	0	0	0	0	0	0	0	0	**44**
0500 - 0600	1	56	20	0	1	0	0	0	1	0	0	0	0	**79**
0600 - 0700	1	356	105	0	2	0	0	0	1	0	0	0	0	**465**
0700 - 0800	1	637	174	0	7	0	0	2	1	0	0	0	0	**822**
0800 - 0900	1	532	180	1	5	0	0	2	2	0	0	0	0	**723**
0900 - 1000	3	357	137	0	6	0	0	0	3	0	0	0	0	**506**
1000 - 1100	5	373	110	0	8	0	0	3	7	0	0	0	0	**506**
1100 - 1200	13	392	135	2	6	0	0	1	5	0	0	0	0	**554**
1200 - 1300	1	460	155	0	14	2	0	2	5	0	0	0	0	**639**
1300 - 1400	7	553	136	0	11	1	0	1	7	0	0	0	0	**716**
1400 - 1500	2	558	190	2	9	0	0	4	3	1	0	0	0	**769**
1500 - 1600	5	727	248	0	14	0	0	4	7	0	0	0	0	**1005**
1600 - 1700	5	945	305	0	16	1	0	5	3	0	0	0	0	**1280**
1700 - 1800	2	884	317	0	12	1	0	4	3	0	0	0	0	**1223**
1800 - 1900	6	562	180	0	11	1	0	5	4	0	0	0	0	**769**
1900 - 2000	3	366	89	2	1	0	0	2	1	0	0	0	0	**464**
2000 - 2100	0	216	53	0	2	0	0	0	1	0	0	0	0	**272**
2100 - 2200	0	128	38	0	0	0	0	0	3	0	1	0	0	**170**
2200 - 2300	0	70	28	0	1	0	0	0	1	0	0	0	0	**100**
2300 - 2400	0	46	14	0	2	0	0	0	4	0	0	0	0	**66**

Session Total	57	8294	2631	7	129	6	0	35	62	1	1	0	0	**11223**
Session Average	2.38	345.58	109.63	0.29	5.38	0.25	0.00	1.46	2.58	0.04	0.04	0.00	0.00	**467.63**
Session Percentage	0.51	73.90	23.44	0.06	1.15	0.05	0.00	0.31	0.55	0.01	0.01	0.00	0.00	

AM Peak Hour	0900 - 1000	0700 - 0800	0800 - 0900	0800 - 0900	0700 - 0800	-	-	0700 - 0800	0900 - 1000	-	-	-	-	**0700 - 0800**
AM Peak Hour Volume	3	637	180	1	7	0	0	2	3	0	0	0	0	**822**

Noon Peak Hour	1100 - 1200	1400 - 1500	1400 - 1500	1100 - 1200	1200 - 1300	1200 - 1300	-	1400 - 1500	1000 - 1100	1400 - 1500	-	-	-	**1400 - 1500**
Noon Peak Hour Volume	13	558	190	2	14	2	0	4	7	1	0	0	0	**769**

PM Peak Hour	1800 - 1900	1600 - 1700	1700 - 1800	1900 - 2000	1600 - 1700	1600 - 1700	-	1600 - 1700	1500 - 1600	-	-	-	-	**1600 - 1700**
PM Peak Hour Volume	6	945	317	2	16	1	0	5	7	0	0	0	0	**1280**

Site 75 Lane 1 SB

I-20,
north of Bush River Rd

Date

Friday, April 26, 2024

Lat/Long

34.034393°, -81.117736°

Weather

Cloudy
69°F

Click here for Detailed Weather

0000 - 2400 (Weekday 24h Session) (04-26-2024)

SB WB 60min

	Southbound (Movement 75 Lane 1 SB.1)													
TIME	1	2	3	4	5	6	7	8	9	10	11	12	13	**Total**
0000 - 0100	0	42	4	0	0	0	0	0	1	0	0	0	0	**47**
0100 - 0200	0	25	0	0	0	0	0	0	0	0	0	0	0	**25**
0200 - 0300	0	19	0	0	0	0	0	0	1	0	0	0	0	**20**
0300 - 0400	0	27	0	0	0	0	0	0	0	0	0	0	0	**27**
0400 - 0500	0	55	0	0	0	0	0	0	0	0	0	0	0	**55**
0500 - 0600	0	111	12	0	2	0	0	0	2	0	0	0	0	**127**
0600 - 0700	0	365	38	0	1	0	0	0	0	0	0	0	0	**404**
0700 - 0800	4	627	155	1	5	0	0	1	1	0	0	0	0	**794**
0800 - 0900	9	454	143	0	6	0	0	1	1	0	0	0	0	**614**
0900 - 1000	4	356	111	0	6	0	0	0	0	0	0	0	0	**477**
1000 - 1100	1	412	94	0	4	2	0	3	2	0	0	0	0	**518**
1100 - 1200	3	464	158	0	9	0	0	1	7	0	0	0	0	**642**
1200 - 1300	2	555	190	0	11	1	0	1	5	0	0	0	0	**765**
1300 - 1400	3	647	241	1	12	2	0	9	13	0	0	0	0	**928**
1400 - 1500	6	761	256	0	15	3	0	1	6	0	0	0	0	**1048**
1500 - 1600	3	825	315	0	13	1	0	2	12	0	0	0	0	**1171**
1600 - 1700	6	870	280	1	7	0	1	4	2	0	0	0	0	**1171**
1700 - 1800	2	763	227	0	9	1	0	2	4	0	0	0	0	**1008**
1800 - 1900	6	566	164	2	4	0	0	1	0	0	0	0	0	**743**
1900 - 2000	4	428	104	1	1	1	0	2	0	0	0	0	0	**541**
2000 - 2100	2	324	40	2	0	0	0	0	1	0	0	0	0	**369**
2100 - 2200	0	273	26	0	0	0	0	0	0	0	0	0	0	**299**
2200 - 2300	0	215	12	0	0	0	0	0	1	0	0	0	0	**228**
2300 - 2400	1	131	10	0	0	0	0	0	0	0	0	0	0	**142**

Session Total	56	9315	2580	8	105	11	1	28	59	0	0	0	0	**12163**
Session Average	2.33	388.13	107.50	0.33	4.38	0.46	0.04	1.17	2.46	0.00	0.00	0.00	0.00	**506.79**
Session Percentage	0.46	76.58	21.21	0.07	0.86	0.09	0.01	0.23	0.49	0.00	0.00	0.00	0.00	

AM Peak Hour	0800 - 0900	0700 - 0800	0700 - 0800	0700 - 0800	0800 - 0900	-	-	0700 - 0800	0500 - 0600	-	-	-	-	**0700 - 0800**
AM Peak Hour Volume	9	627	155	1	6	0	0	1	2	0	0	0	0	**794**

Noon Peak Hour	1400 - 1500	1400 - 1500	1400 - 1500	1300 - 1400	1400 - 1500	1400 - 1500	-	1300 - 1400	1300 - 1400	-	-	-	-	**1400 - 1500**
Noon Peak Hour Volume	6	761	256	1	15	3	0	9	13	0	0	0	0	**1048**

PM Peak Hour	1600 - 1700	1600 - 1700	1500 - 1600	1800 - 1900	1500 - 1600	1500 - 1600	1600 - 1700	1600 - 1700	1500 - 1600	-	-	-	-	**1500 - 1600**
PM Peak Hour Volume	6	870	315	2	13	1	1	4	12	0	0	0	0	**1171**

Site 75 Lane 1 SB

I-20,
north of Bush River Rd

Date

Saturday, April 27, 2024

Lat/Long

34.034393°, -81.117736°

Weather

Mostly Cloudy
69°F

Click here for Detailed Weather

0000 - 2400 (Saturday 24h Session) (04-27-2024)

SB WB 60min

	Southbound (Movement 75 Lane 1 SB.1)													
TIME	1	2	3	4	5	6	7	8	9	10	11	12	13	**Total**
0000 - 0100	1	42	6	0	0	0	0	0	0	0	0	0	0	**49**
0100 - 0200	1	21	4	0	0	0	0	0	0	0	0	0	0	**26**
0200 - 0300	0	17	1	0	0	0	0	0	0	0	0	0	0	**18**
0300 - 0400	0	11	1	0	0	0	0	0	0	0	0	0	0	**12**
0400 - 0500	0	22	3	0	0	0	0	0	0	0	0	0	0	**25**
0500 - 0600	3	51	6	0	0	0	0	0	1	0	0	0	0	**61**
0600 - 0700	1	126	33	0	0	0	0	0	2	0	0	0	0	**162**
0700 - 0800	2	187	50	0	2	0	0	1	0	0	0	0	0	**242**
0800 - 0900	1	273	86	0	2	0	0	0	1	0	0	0	0	**363**
0900 - 1000	0	311	107	1	0	0	0	0	0	0	0	0	0	**419**
1000 - 1100	3	372	100	0	2	0	0	1	3	0	0	0	0	**481**
1100 - 1200	1	413	104	0	1	0	0	0	1	0	0	0	0	**520**
1200 - 1300	4	460	108	0	3	1	0	0	0	0	0	0	0	**576**
1300 - 1400	8	481	105	0	3	0	0	1	1	0	0	0	0	**599**
1400 - 1500	7	491	90	0	5	0	0	2	1	0	0	0	0	**596**
1500 - 1600	13	417	101	0	3	0	0	1	2	0	0	0	0	**537**
1600 - 1700	18	417	84	0	1	0	0	2	1	0	0	0	0	**523**
1700 - 1800	8	398	76	0	0	0	0	0	0	0	0	0	0	**482**
1800 - 1900	22	377	50	0	4	0	0	2	1	0	0	0	0	**456**
1900 - 2000	1	263	58	0	1	0	0	1	1	0	0	0	0	**325**
2000 - 2100	3	200	40	0	0	0	0	1	1	0	0	0	0	**245**
2100 - 2200	2	212	20	0	0	0	0	0	1	0	0	0	0	**235**
2200 - 2300	0	147	10	0	0	0	0	0	1	0	0	0	0	**158**
2300 - 2400	0	66	14	1	0	0	0	0	0	0	0	0	0	**81**

Session Total	99	5775	1257	2	27	1	0	12	18	0	0	0	0	**7191**
Session Average	4.13	240.63	52.38	0.08	1.13	0.04	0.00	0.50	0.75	0.00	0.00	0.00	0.00	**299.63**
Session Percentage	1.38	80.31	17.48	0.03	0.38	0.01	0.00	0.17	0.25	0.00	0.00	0.00	0.00	

AM Peak Hour	0500 - 0600	0900 - 1000	0900 - 1000	0900 - 1000	0700 - 0800	-	-	0700 - 0800	0600 - 0700	-	-	-	-	**0900 - 1000**
AM Peak Hour Volume	3	311	107	1	2	0	0	1	2	0	0	0	0	**419**

Noon Peak Hour	1300 - 1400	1400 - 1500	1200 - 1300	-	1400 - 1500	1200 - 1300	-	1400 - 1500	1000 - 1100	-	-	-	-	**1300 - 1400**
Noon Peak Hour Volume	8	491	108	0	5	1	0	2	3	0	0	0	0	**599**

PM Peak Hour	1800 - 1900	1500 - 1600	1500 - 1600	-	1800 - 1900	-	-	1600 - 1700	1500 - 1600	-	-	-	-	**1500 - 1600**
PM Peak Hour Volume	22	417	101	0	4	0	0	2	2	0	0	0	0	**537**

Bi-Directional Class Count || Volume Summary 60min

Columbia, SC

Marr Traffic DATA COLLECTION

www.marrtraffic.com

Site 75 Lane 1 SB

I-20,
north of Bush River Rd

Date

Sunday, April 21, 2024

Lat/Long

34.034393°, -81.117736°

Weather

Cloudy
66°F

Click here for Detailed Weather

0000 - 2400 (Sunday 24h Session) (04-21-2024)

Volume Summary 60min

	Volume Summary 60min		
TIME	NB	SB	**Total**
0000 - 0100	0	53	**53**
0100 - 0200	0	23	**23**
0200 - 0300	0	21	**21**
0300 - 0400	0	16	**16**
0400 - 0500	0	15	**15**
0500 - 0600	0	30	**30**
0600 - 0700	0	74	**74**
0700 - 0800	0	89	**89**
0800 - 0900	0	133	**133**
0900 - 1000	0	283	**283**
1000 - 1100	0	348	**348**
1100 - 1200	0	470	**470**

	Volume Summary 60min		
Time	NB	SB	**Total**
1200 - 1300	0	581	**581**
1300 - 1400	0	736	**736**
1400 - 1500	0	663	**663**
1500 - 1600	0	620	**620**
1600 - 1700	0	674	**674**
1700 - 1800	0	539	**539**
1800 - 1900	0	474	**474**
1900 - 2000	0	366	**366**
2000 - 2100	0	231	**231**
2100 - 2200	0	136	**136**
2200 - 2300	0	94	**94**
2300 - 2400	0	48	**48**

Session Total	0	6717	**6717**
Session Average	0.00	279.88	**279.88**
Session Percentage	0.00	100.00	

Site 75 Lane 1 SB

I-20,
north of Bush River Rd

Date

Monday, April 22, 2024

Lat/Long

34.034393°, -81.117736°

Weather

Mostly Cloudy
57°F

Click here for Detailed Weather

0000 - 2400 (Weekday 24h Session) (04-22-2024)

Volume Summary 60min

	Volume Summary 60min		
TIME	NB	SB	**Total**
0000 - 0100	0	23	**23**
0100 - 0200	0	12	**12**
0200 - 0300	0	16	**16**
0300 - 0400	0	19	**19**
0400 - 0500	0	36	**36**
0500 - 0600	0	119	**119**
0600 - 0700	0	471	**471**
0700 - 0800	0	808	**808**
0800 - 0900	0	652	**652**
0900 - 1000	0	431	**431**
1000 - 1100	0	418	**418**
1100 - 1200	0	466	**466**

	Volume Summary 60min		
Time	NB	SB	**Total**
1200 - 1300	0	495	**495**
1300 - 1400	0	542	**542**
1400 - 1500	0	642	**642**
1500 - 1600	0	809	**809**
1600 - 1700	0	1114	**1114**
1700 - 1800	0	1223	**1223**
1800 - 1900	0	619	**619**
1900 - 2000	0	357	**357**
2000 - 2100	0	206	**206**
2100 - 2200	0	96	**96**
2200 - 2300	0	49	**49**
2300 - 2400	0	40	**40**

Session Total	0	9663	**9663**
Session Average	0.00	402.63	**402.63**
Session Percentage	0.00	100.00	

Site 75 Lane 1 SB

I-20,
north of Bush River Rd

Date

Tuesday, April 23, 2024

Lat/Long

34.034393°, -81.117736°

Weather

Fair
58°F

Click here for Detailed Weather

0000 - 2400 (Weekday 24h Session) (04-23-2024)

Volume Summary 60min

	Volume Summary 60min		
TIME	NB	SB	**Total**
0000 - 0100	0	12	**12**
0100 - 0200	0	8	**8**
0200 - 0300	0	6	**6**
0300 - 0400	0	18	**18**
0400 - 0500	0	20	**20**
0500 - 0600	0	103	**103**
0600 - 0700	0	511	**511**
0700 - 0800	0	790	**790**
0800 - 0900	0	638	**638**
0900 - 1000	0	500	**500**
1000 - 1100	0	313	**313**
1100 - 1200	0	385	**385**

Session Total	0	9480	**9480**
Session Average	0.00	395.00	**395.00**
Session Percentage	0.00	100.00	

	Volume Summary 60min		
Time	NB	SB	**Total**
1200 - 1300	0	434	**434**
1300 - 1400	0	508	**508**
1400 - 1500	0	606	**606**
1500 - 1600	0	849	**849**
1600 - 1700	0	1088	**1088**
1700 - 1800	0	1116	**1116**
1800 - 1900	0	636	**636**
1900 - 2000	0	385	**385**
2000 - 2100	0	265	**265**
2100 - 2200	0	148	**148**
2200 - 2300	0	95	**95**
2300 - 2400	0	46	**46**

Site 75 Lane 1 SB

I-20,
north of Bush River Rd

Date

Wednesday, April 24, 2024

Lat/Long

34.034393°, -81.117736°

Weather

Fair
66°F

Click here for Detailed Weather

0000 - 2400 (Weekday 24h Session) (04-24-2024)

Volume Summary 60min

	Volume Summary 60min		
TIME	NB	SB	**Total**
0000 - 0100	0	27	**27**
0100 - 0200	0	17	**17**
0200 - 0300	0	10	**10**
0300 - 0400	0	14	**14**
0400 - 0500	0	15	**15**
0500 - 0600	0	56	**56**
0600 - 0700	0	485	**485**
0700 - 0800	0	805	**805**
0800 - 0900	0	611	**611**
0900 - 1000	0	449	**449**
1000 - 1100	0	456	**456**
1100 - 1200	0	459	**459**

Session Total	0	9745	**9745**
Session Average	0.00	406.04	**406.04**
Session Percentage	0.00	100.00	

	Volume Summary 60min		
Time	NB	SB	**Total**
1200 - 1300	0	472	**472**
1300 - 1400	0	531	**531**
1400 - 1500	0	647	**647**
1500 - 1600	0	955	**955**
1600 - 1700	0	1170	**1170**
1700 - 1800	0	1147	**1147**
1800 - 1900	0	604	**604**
1900 - 2000	0	353	**353**
2000 - 2100	0	243	**243**
2100 - 2200	0	107	**107**
2200 - 2300	0	70	**70**
2300 - 2400	0	42	**42**

Site 75 Lane 1 SB

I-20,
north of Bush River Rd

Date

Thursday, April 25, 2024

Lat/Long

34.034393°, -81.117736°

Weather

Fair
67°F

Click here for Detailed Weather

0000 - 2400 (Weekday 24h Session) (04-25-2024)

Volume Summary 60min

	Volume Summary 60min		
TIME	NB	SB	**Total**
0000 - 0100	0	21	**21**
0100 - 0200	0	9	**9**
0200 - 0300	0	8	**8**
0300 - 0400	0	13	**13**
0400 - 0500	0	44	**44**
0500 - 0600	0	79	**79**
0600 - 0700	0	465	**465**
0700 - 0800	0	822	**822**
0800 - 0900	0	723	**723**
0900 - 1000	0	506	**506**
1000 - 1100	0	506	**506**
1100 - 1200	0	554	**554**

Session Total	0	11223	**11223**
Session Average	0.00	467.63	**467.63**
Session Percentage	0.00	100.00	

	Volume Summary 60min		
Time	NB	SB	**Total**
1200 - 1300	0	639	**639**
1300 - 1400	0	716	**716**
1400 - 1500	0	769	**769**
1500 - 1600	0	1005	**1005**
1600 - 1700	0	1280	**1280**
1700 - 1800	0	1223	**1223**
1800 - 1900	0	769	**769**
1900 - 2000	0	464	**464**
2000 - 2100	0	272	**272**
2100 - 2200	0	170	**170**
2200 - 2300	0	100	**100**
2300 - 2400	0	66	**66**

Site 75 Lane 1 SB

I-20,
north of Bush River Rd

Date

Friday, April 26, 2024

Lat/Long

34.034393°, -81.117736°

Weather

Cloudy
69°F

Click here for Detailed Weather

0000 - 2400 (Weekday 24h Session) (04-26-2024)

Volume Summary 60min

	Volume Summary 60min		
TIME	NB	SB	**Total**
0000 - 0100	0	47	**47**
0100 - 0200	0	25	**25**
0200 - 0300	0	20	**20**
0300 - 0400	0	27	**27**
0400 - 0500	0	55	**55**
0500 - 0600	0	127	**127**
0600 - 0700	0	404	**404**
0700 - 0800	0	794	**794**
0800 - 0900	0	614	**614**
0900 - 1000	0	477	**477**
1000 - 1100	0	518	**518**
1100 - 1200	0	642	**642**

	Volume Summary 60min		
Time	NB	SB	**Total**
1200 - 1300	0	765	**765**
1300 - 1400	0	928	**928**
1400 - 1500	0	1048	**1048**
1500 - 1600	0	1171	**1171**
1600 - 1700	0	1171	**1171**
1700 - 1800	0	1008	**1008**
1800 - 1900	0	743	**743**
1900 - 2000	0	541	**541**
2000 - 2100	0	369	**369**
2100 - 2200	0	299	**299**
2200 - 2300	0	228	**228**
2300 - 2400	0	142	**142**

Session Total	0	12163	**12163**
Session Average	0.00	506.79	**506.79**
Session Percentage	0.00	100.00	

Site 75 Lane 1 SB

I-20,
north of Bush River Rd

Date

Saturday, April 27, 2024

Lat/Long

34.034393°, -81.117736°

Weather

Mostly Cloudy
69°F

Click here for Detailed Weather

0000 - 2400 (Saturday 24h Session) (04-27-2024)

Volume Summary 60min

	Volume Summary 60min		
TIME	NB	SB	**Total**
0000 - 0100	0	49	**49**
0100 - 0200	0	26	**26**
0200 - 0300	0	18	**18**
0300 - 0400	0	12	**12**
0400 - 0500	0	25	**25**
0500 - 0600	0	61	**61**
0600 - 0700	0	162	**162**
0700 - 0800	0	242	**242**
0800 - 0900	0	363	**363**
0900 - 1000	0	419	**419**
1000 - 1100	0	481	**481**
1100 - 1200	0	520	**520**

	Volume Summary 60min		
Time	NB	SB	**Total**
1200 - 1300	0	576	**576**
1300 - 1400	0	599	**599**
1400 - 1500	0	596	**596**
1500 - 1600	0	537	**537**
1600 - 1700	0	523	**523**
1700 - 1800	0	482	**482**
1800 - 1900	0	456	**456**
1900 - 2000	0	325	**325**
2000 - 2100	0	245	**245**
2100 - 2200	0	235	**235**
2200 - 2300	0	158	**158**
2300 - 2400	0	81	**81**

Session Total	0	7191	**7191**
Session Average	0.00	299.63	**299.63**
Session Percentage	0.00	100.00	

Bi-Directional Class Count || Graphical Analysis SB WB

Columbia, SC

Marr Traffic DATA COLLECTION

www.marrtraffic.com

Site 75 Lane 1 SB

I-20,
north of Bush River Rd

Lat/Long

34.034393°, -81.117736°

0000 - 2400 (Weekday 24h Session)

Graphical Analysis SB WB

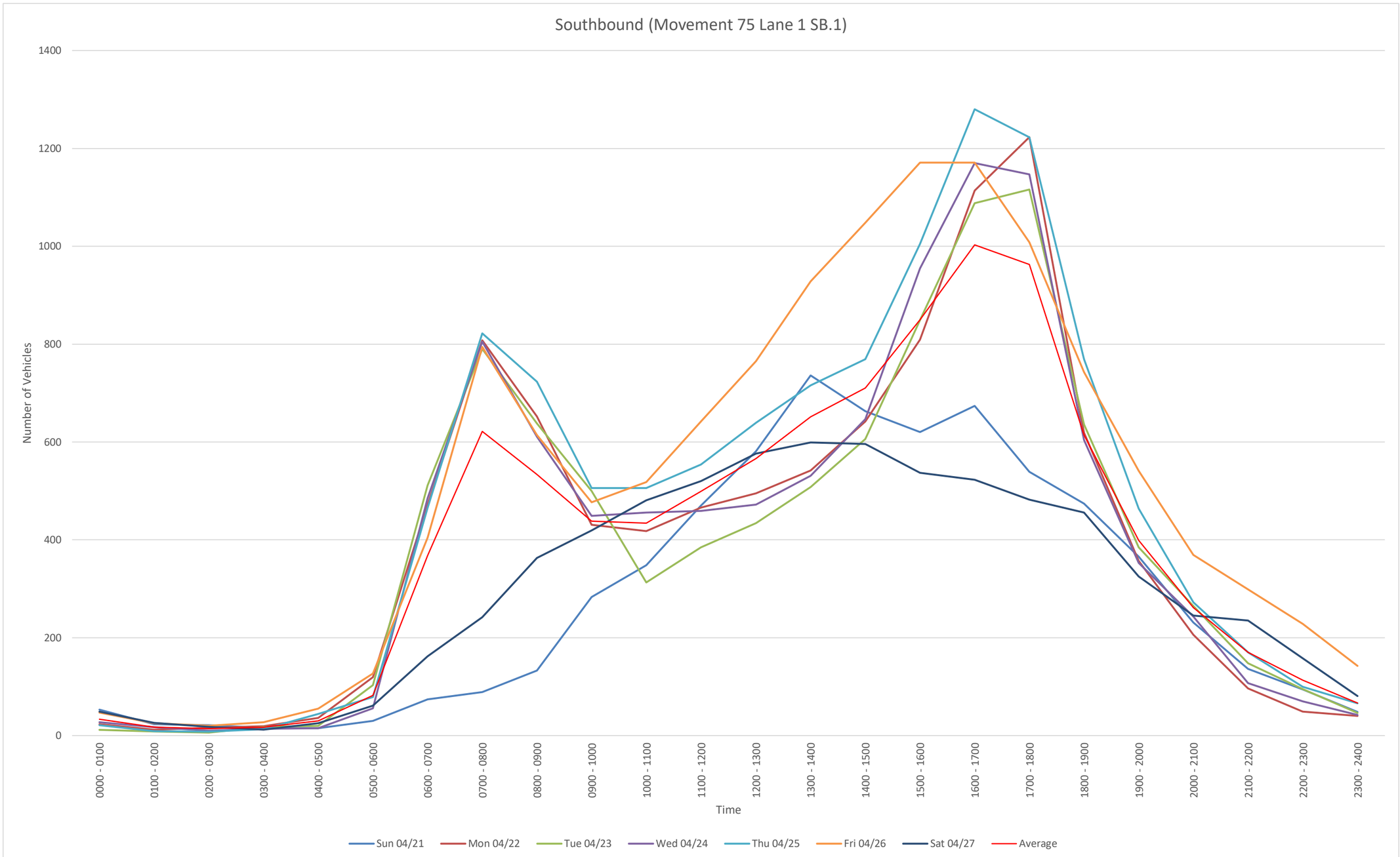

NB
File Name:
Start Date: 4/21/2024
Start Time: 0
Site Code: 75 Lane 1 SB
Station ID: 1
Location 1: I-20, north of Bush River Rd
Location 2:

Date	Time	1	2	3	4	5	6	7	8	9	10	11	12	13
4/21/2024	12:00 AM	0	0	0	0	0	0	0	0	0	0	0	0	0
4/21/2024	12:15 AM	0	0	0	0	0	0	0	0	0	0	0	0	0
4/21/2024	12:30 AM	0	0	0	0	0	0	0	0	0	0	0	0	0
4/21/2024	12:45 AM	0	0	0	0	0	0	0	0	0	0	0	0	0
4/21/2024	1:00 AM	0	0	0	0	0	0	0	0	0	0	0	0	0
4/21/2024	1:15 AM	0	0	0	0	0	0	0	0	0	0	0	0	0
4/21/2024	1:30 AM	0	0	0	0	0	0	0	0	0	0	0	0	0
4/21/2024	1:45 AM	0	0	0	0	0	0	0	0	0	0	0	0	0
4/21/2024	2:00 AM	0	0	0	0	0	0	0	0	0	0	0	0	0
4/21/2024	2:15 AM	0	0	0	0	0	0	0	0	0	0	0	0	0
4/21/2024	2:30 AM	0	0	0	0	0	0	0	0	0	0	0	0	0
4/21/2024	2:45 AM	0	0	0	0	0	0	0	0	0	0	0	0	0
4/21/2024	3:00 AM	0	0	0	0	0	0	0	0	0	0	0	0	0
4/21/2024	3:15 AM	0	0	0	0	0	0	0	0	0	0	0	0	0
4/21/2024	3:30 AM	0	0	0	0	0	0	0	0	0	0	0	0	0
4/21/2024	3:45 AM	0	0	0	0	0	0	0	0	0	0	0	0	0
4/21/2024	4:00 AM	0	0	0	0	0	0	0	0	0	0	0	0	0
4/21/2024	4:15 AM	0	0	0	0	0	0	0	0	0	0	0	0	0
4/21/2024	4:30 AM	0	0	0	0	0	0	0	0	0	0	0	0	0
4/21/2024	4:45 AM	0	0	0	0	0	0	0	0	0	0	0	0	0
4/21/2024	5:00 AM	0	0	0	0	0	0	0	0	0	0	0	0	0
4/21/2024	5:15 AM	0	0	0	0	0	0	0	0	0	0	0	0	0
4/21/2024	5:30 AM	0	0	0	0	0	0	0	0	0	0	0	0	0
4/21/2024	5:45 AM	0	0	0	0	0	0	0	0	0	0	0	0	0
4/21/2024	6:00 AM	0	0	0	0	0	0	0	0	0	0	0	0	0
4/21/2024	6:15 AM	0	0	0	0	0	0	0	0	0	0	0	0	0
4/21/2024	6:30 AM	0	0	0	0	0	0	0	0	0	0	0	0	0
4/21/2024	6:45 AM	0	0	0	0	0	0	0	0	0	0	0	0	0
4/21/2024	7:00 AM	0	0	0	0	0	0	0	0	0	0	0	0	0
4/21/2024	7:15 AM	0	0	0	0	0	0	0	0	0	0	0	0	0
4/21/2024	7:30 AM	0	0	0	0	0	0	0	0	0	0	0	0	0
4/21/2024	7:45 AM	0	0	0	0	0	0	0	0	0	0	0	0	0
4/21/2024	8:00 AM	0	0	0	0	0	0	0	0	0	0	0	0	0
4/21/2024	8:15 AM	0	0	0	0	0	0	0	0	0	0	0	0	0
4/21/2024	8:30 AM	0	0	0	0	0	0	0	0	0	0	0	0	0
4/21/2024	8:45 AM	0	0	0	0	0	0	0	0	0	0	0	0	0
4/21/2024	9:00 AM	0	0	0	0	0	0	0	0	0	0	0	0	0
4/21/2024	9:15 AM	0	0	0	0	0	0	0	0	0	0	0	0	0
4/21/2024	9:30 AM	0	0	0	0	0	0	0	0	0	0	0	0	0
4/21/2024	9:45 AM	0	0	0	0	0	0	0	0	0	0	0	0	0
4/21/2024	10:00 AM	0	0	0	0	0	0	0	0	0	0	0	0	0
4/21/2024	10:15 AM	0	0	0	0	0	0	0	0	0	0	0	0	0
4/21/2024	10:30 AM	0	0	0	0	0	0	0	0	0	0	0	0	0
4/21/2024	10:45 AM	0	0	0	0	0	0	0	0	0	0	0	0	0
4/21/2024	11:00 AM	0	0	0	0	0	0	0	0	0	0	0	0	0
4/21/2024	11:15 AM	0	0	0	0	0	0	0	0	0	0	0	0	0
4/21/2024	11:30 AM	0	0	0	0	0	0	0	0	0	0	0	0	0
4/21/2024	11:45 AM	0	0	0	0	0	0	0	0	0	0	0	0	0
4/21/2024	12:00 PM	0	0	0	0	0	0	0	0	0	0	0	0	0
4/21/2024	12:15 PM	0	0	0	0	0	0	0	0	0	0	0	0	0
4/21/2024	12:30 PM	0	0	0	0	0	0	0	0	0	0	0	0	0
4/21/2024	12:45 PM	0	0	0	0	0	0	0	0	0	0	0	0	0
4/21/2024	1:00 PM	0	0	0	0	0	0	0	0	0	0	0	0	0
4/21/2024	1:15 PM	0	0	0	0	0	0	0	0	0	0	0	0	0
4/21/2024	1:30 PM	0	0	0	0	0	0	0	0	0	0	0	0	0
4/21/2024	1:45 PM	0	0	0	0	0	0	0	0	0	0	0	0	0
4/21/2024	2:00 PM	0	0	0	0	0	0	0	0	0	0	0	0	0
4/21/2024	2:15 PM	0	0	0	0	0	0	0	0	0	0	0	0	0
4/21/2024	2:30 PM	0	0	0	0	0	0	0	0	0	0	0	0	0
4/21/2024	2:45 PM	0	0	0	0	0	0	0	0	0	0	0	0	0
4/21/2024	3:00 PM	0	0	0	0	0	0	0	0	0	0	0	0	0
4/21/2024	3:15 PM	0	0	0	0	0	0	0	0	0	0	0	0	0
4/21/2024	3:30 PM	0	0	0	0	0	0	0	0	0	0	0	0	0
4/21/2024	3:45 PM	0	0	0	0	0	0	0	0	0	0	0	0	0
4/21/2024	4:00 PM	0	0	0	0	0	0	0	0	0	0	0	0	0
4/21/2024	4:15 PM	0	0	0	0	0	0	0	0	0	0	0	0	0
4/21/2024	4:30 PM	0	0	0	0	0	0	0	0	0	0	0	0	0
4/21/2024	4:45 PM	0	0	0	0	0	0	0	0	0	0	0	0	0
4/21/2024	5:00 PM	0	0	0	0	0	0	0	0	0	0	0	0	0
4/21/2024	5:15 PM	0	0	0	0	0	0	0	0	0	0	0	0	0
4/21/2024	5:30 PM	0	0	0	0	0	0	0	0	0	0	0	0	0
4/21/2024	5:45 PM	0	0	0	0	0	0	0	0	0	0	0	0	0
4/21/2024	6:00 PM	0	0	0	0	0	0	0	0	0	0	0	0	0
4/21/2024	6:15 PM	0	0	0	0	0	0	0	0	0	0	0	0	0
4/21/2024	6:30 PM	0	0	0	0	0	0	0	0	0	0	0	0	0
4/21/2024	6:45 PM	0	0	0	0	0	0	0	0	0	0	0	0	0
4/21/2024	7:00 PM	0	0	0	0	0	0	0	0	0	0	0	0	0
4/21/2024	7:15 PM	0	0	0	0	0	0	0	0	0	0	0	0	0
4/21/2024	7:30 PM	0	0	0	0	0	0	0	0	0	0	0	0	0
4/21/2024	7:45 PM	0	0	0	0	0	0	0	0	0	0	0	0	0
4/21/2024	8:00 PM	0	0	0	0	0	0	0	0	0	0	0	0	0
4/21/2024	8:15 PM	0	0	0	0	0	0	0	0	0	0	0	0	0
4/21/2024	8:30 PM	0	0	0	0	0	0	0	0	0	0	0	0	0
4/21/2024	8:45 PM	0	0	0	0	0	0	0	0	0	0	0	0	0
4/21/2024	9:00 PM	0	0	0	0	0	0	0	0	0	0	0	0	0
4/21/2024	9:15 PM	0	0	0	0	0	0	0	0	0	0	0	0	0
4/21/2024	9:30 PM	0	0	0	0	0	0	0	0	0	0	0	0	0
4/21/2024	9:45 PM	0	0	0	0	0	0	0	0	0	0	0	0	0
4/21/2024	10:00 PM	0	0	0	0	0	0	0	0	0	0	0	0	0
4/21/2024	10:15 PM	0	0	0	0	0	0	0	0	0	0	0	0	0
4/21/2024	10:30 PM	0	0	0	0	0	0	0	0	0	0	0	0	0
4/21/2024	10:45 PM	0	0	0	0	0	0	0	0	0	0	0	0	0
4/21/2024	11:00 PM	0	0	0	0	0	0	0	0	0	0	0	0	0
4/21/2024	11:15 PM	0	0	0	0	0	0	0	0	0	0	0	0	0
4/21/2024	11:30 PM	0	0	0	0	0	0	0	0	0	0	0	0	0
4/21/2024	11:45 PM	0	0	0	0	0	0	0	0	0	0	0	0	0

4/22/2024	12:00 AM	0	0	0	0	0	0	0	0	0	0	0	0	0
4/22/2024	12:15 AM	0	0	0	0	0	0	0	0	0	0	0	0	0
4/22/2024	12:30 AM	0	0	0	0	0	0	0	0	0	0	0	0	0
4/22/2024	12:45 AM	0	0	0	0	0	0	0	0	0	0	0	0	0
4/22/2024	1:00 AM	0	0	0	0	0	0	0	0	0	0	0	0	0
4/22/2024	1:15 AM	0	0	0	0	0	0	0	0	0	0	0	0	0
4/22/2024	1:30 AM	0	0	0	0	0	0	0	0	0	0	0	0	0
4/22/2024	1:45 AM	0	0	0	0	0	0	0	0	0	0	0	0	0
4/22/2024	2:00 AM	0	0	0	0	0	0	0	0	0	0	0	0	0
4/22/2024	2:15 AM	0	0	0	0	0	0	0	0	0	0	0	0	0
4/22/2024	2:30 AM	0	0	0	0	0	0	0	0	0	0	0	0	0
4/22/2024	2:45 AM	0	0	0	0	0	0	0	0	0	0	0	0	0
4/22/2024	3:00 AM	0	0	0	0	0	0	0	0	0	0	0	0	0
4/22/2024	3:15 AM	0	0	0	0	0	0	0	0	0	0	0	0	0
4/22/2024	3:30 AM	0	0	0	0	0	0	0	0	0	0	0	0	0
4/22/2024	3:45 AM	0	0	0	0	0	0	0	0	0	0	0	0	0
4/22/2024	4:00 AM	0	0	0	0	0	0	0	0	0	0	0	0	0
4/22/2024	4:15 AM	0	0	0	0	0	0	0	0	0	0	0	0	0
4/22/2024	4:30 AM	0	0	0	0	0	0	0	0	0	0	0	0	0
4/22/2024	4:45 AM	0	0	0	0	0	0	0	0	0	0	0	0	0
4/22/2024	5:00 AM	0	0	0	0	0	0	0	0	0	0	0	0	0
4/22/2024	5:15 AM	0	0	0	0	0	0	0	0	0	0	0	0	0
4/22/2024	5:30 AM	0	0	0	0	0	0	0	0	0	0	0	0	0
4/22/2024	5:45 AM	0	0	0	0	0	0	0	0	0	0	0	0	0
4/22/2024	6:00 AM	0	0	0	0	0	0	0	0	0	0	0	0	0
4/22/2024	6:15 AM	0	0	0	0	0	0	0	0	0	0	0	0	0
4/22/2024	6:30 AM	0	0	0	0	0	0	0	0	0	0	0	0	0
4/22/2024	6:45 AM	0	0	0	0	0	0	0	0	0	0	0	0	0
4/22/2024	7:00 AM	0	0	0	0	0	0	0	0	0	0	0	0	0
4/22/2024	7:15 AM	0	0	0	0	0	0	0	0	0	0	0	0	0
4/22/2024	7:30 AM	0	0	0	0	0	0	0	0	0	0	0	0	0
4/22/2024	7:45 AM	0	0	0	0	0	0	0	0	0	0	0	0	0
4/22/2024	8:00 AM	0	0	0	0	0	0	0	0	0	0	0	0	0
4/22/2024	8:15 AM	0	0	0	0	0	0	0	0	0	0	0	0	0
4/22/2024	8:30 AM	0	0	0	0	0	0	0	0	0	0	0	0	0
4/22/2024	8:45 AM	0	0	0	0	0	0	0	0	0	0	0	0	0
4/22/2024	9:00 AM	0	0	0	0	0	0	0	0	0	0	0	0	0
4/22/2024	9:15 AM	0	0	0	0	0	0	0	0	0	0	0	0	0
4/22/2024	9:30 AM	0	0	0	0	0	0	0	0	0	0	0	0	0
4/22/2024	9:45 AM	0	0	0	0	0	0	0	0	0	0	0	0	0
4/22/2024	10:00 AM	0	0	0	0	0	0	0	0	0	0	0	0	0
4/22/2024	10:15 AM	0	0	0	0	0	0	0	0	0	0	0	0	0
4/22/2024	10:30 AM	0	0	0	0	0	0	0	0	0	0	0	0	0
4/22/2024	10:45 AM	0	0	0	0	0	0	0	0	0	0	0	0	0
4/22/2024	11:00 AM	0	0	0	0	0	0	0	0	0	0	0	0	0
4/22/2024	11:15 AM	0	0	0	0	0	0	0	0	0	0	0	0	0
4/22/2024	11:30 AM	0	0	0	0	0	0	0	0	0	0	0	0	0
4/22/2024	11:45 AM	0	0	0	0	0	0	0	0	0	0	0	0	0
4/22/2024	12:00 PM	0	0	0	0	0	0	0	0	0	0	0	0	0
4/22/2024	12:15 PM	0	0	0	0	0	0	0	0	0	0	0	0	0
4/22/2024	12:30 PM	0	0	0	0	0	0	0	0	0	0	0	0	0
4/22/2024	12:45 PM	0	0	0	0	0	0	0	0	0	0	0	0	0
4/22/2024	1:00 PM	0	0	0	0	0	0	0	0	0	0	0	0	0
4/22/2024	1:15 PM	0	0	0	0	0	0	0	0	0	0	0	0	0
4/22/2024	1:30 PM	0	0	0	0	0	0	0	0	0	0	0	0	0
4/22/2024	1:45 PM	0	0	0	0	0	0	0	0	0	0	0	0	0
4/22/2024	2:00 PM	0	0	0	0	0	0	0	0	0	0	0	0	0
4/22/2024	2:15 PM	0	0	0	0	0	0	0	0	0	0	0	0	0
4/22/2024	2:30 PM	0	0	0	0	0	0	0	0	0	0	0	0	0
4/22/2024	2:45 PM	0	0	0	0	0	0	0	0	0	0	0	0	0
4/22/2024	3:00 PM	0	0	0	0	0	0	0	0	0	0	0	0	0
4/22/2024	3:15 PM	0	0	0	0	0	0	0	0	0	0	0	0	0
4/22/2024	3:30 PM	0	0	0	0	0	0	0	0	0	0	0	0	0
4/22/2024	3:45 PM	0	0	0	0	0	0	0	0	0	0	0	0	0
4/22/2024	4:00 PM	0	0	0	0	0	0	0	0	0	0	0	0	0
4/22/2024	4:15 PM	0	0	0	0	0	0	0	0	0	0	0	0	0
4/22/2024	4:30 PM	0	0	0	0	0	0	0	0	0	0	0	0	0
4/22/2024	4:45 PM	0	0	0	0	0	0	0	0	0	0	0	0	0
4/22/2024	5:00 PM	0	0	0	0	0	0	0	0	0	0	0	0	0
4/22/2024	5:15 PM	0	0	0	0	0	0	0	0	0	0	0	0	0
4/22/2024	5:30 PM	0	0	0	0	0	0	0	0	0	0	0	0	0
4/22/2024	5:45 PM	0	0	0	0	0	0	0	0	0	0	0	0	0
4/22/2024	6:00 PM	0	0	0	0	0	0	0	0	0	0	0	0	0
4/22/2024	6:15 PM	0	0	0	0	0	0	0	0	0	0	0	0	0
4/22/2024	6:30 PM	0	0	0	0	0	0	0	0	0	0	0	0	0
4/22/2024	6:45 PM	0	0	0	0	0	0	0	0	0	0	0	0	0
4/22/2024	7:00 PM	0	0	0	0	0	0	0	0	0	0	0	0	0
4/22/2024	7:15 PM	0	0	0	0	0	0	0	0	0	0	0	0	0
4/22/2024	7:30 PM	0	0	0	0	0	0	0	0	0	0	0	0	0
4/22/2024	7:45 PM	0	0	0	0	0	0	0	0	0	0	0	0	0
4/22/2024	8:00 PM	0	0	0	0	0	0	0	0	0	0	0	0	0
4/22/2024	8:15 PM	0	0	0	0	0	0	0	0	0	0	0	0	0
4/22/2024	8:30 PM	0	0	0	0	0	0	0	0	0	0	0	0	0
4/22/2024	8:45 PM	0	0	0	0	0	0	0	0	0	0	0	0	0
4/22/2024	9:00 PM	0	0	0	0	0	0	0	0	0	0	0	0	0
4/22/2024	9:15 PM	0	0	0	0	0	0	0	0	0	0	0	0	0
4/22/2024	9:30 PM	0	0	0	0	0	0	0	0	0	0	0	0	0
4/22/2024	9:45 PM	0	0	0	0	0	0	0	0	0	0	0	0	0
4/22/2024	10:00 PM	0	0	0	0	0	0	0	0	0	0	0	0	0
4/22/2024	10:15 PM	0	0	0	0	0	0	0	0	0	0	0	0	0
4/22/2024	10:30 PM	0	0	0	0	0	0	0	0	0	0	0	0	0
4/22/2024	10:45 PM	0	0	0	0	0	0	0	0	0	0	0	0	0
4/22/2024	11:00 PM	0	0	0	0	0	0	0	0	0	0	0	0	0
4/22/2024	11:15 PM	0	0	0	0	0	0	0	0	0	0	0	0	0
4/22/2024	11:30 PM	0	0	0	0	0	0	0	0	0	0	0	0	0
4/22/2024	11:45 PM	0	0	0	0	0	0	0	0	0	0	0	0	0

4/23/2024	12:00 AM	0	0	0	0	0	0	0	0	0	0	0	0	0
4/23/2024	12:15 AM	0	0	0	0	0	0	0	0	0	0	0	0	0
4/23/2024	12:30 AM	0	0	0	0	0	0	0	0	0	0	0	0	0
4/23/2024	12:45 AM	0	0	0	0	0	0	0	0	0	0	0	0	0
4/23/2024	1:00 AM	0	0	0	0	0	0	0	0	0	0	0	0	0
4/23/2024	1:15 AM	0	0	0	0	0	0	0	0	0	0	0	0	0
4/23/2024	1:30 AM	0	0	0	0	0	0	0	0	0	0	0	0	0
4/23/2024	1:45 AM	0	0	0	0	0	0	0	0	0	0	0	0	0
4/23/2024	2:00 AM	0	0	0	0	0	0	0	0	0	0	0	0	0
4/23/2024	2:15 AM	0	0	0	0	0	0	0	0	0	0	0	0	0
4/23/2024	2:30 AM	0	0	0	0	0	0	0	0	0	0	0	0	0
4/23/2024	2:45 AM	0	0	0	0	0	0	0	0	0	0	0	0	0
4/23/2024	3:00 AM	0	0	0	0	0	0	0	0	0	0	0	0	0
4/23/2024	3:15 AM	0	0	0	0	0	0	0	0	0	0	0	0	0
4/23/2024	3:30 AM	0	0	0	0	0	0	0	0	0	0	0	0	0
4/23/2024	3:45 AM	0	0	0	0	0	0	0	0	0	0	0	0	0
4/23/2024	4:00 AM	0	0	0	0	0	0	0	0	0	0	0	0	0
4/23/2024	4:15 AM	0	0	0	0	0	0	0	0	0	0	0	0	0
4/23/2024	4:30 AM	0	0	0	0	0	0	0	0	0	0	0	0	0
4/23/2024	4:45 AM	0	0	0	0	0	0	0	0	0	0	0	0	0
4/23/2024	5:00 AM	0	0	0	0	0	0	0	0	0	0	0	0	0
4/23/2024	5:15 AM	0	0	0	0	0	0	0	0	0	0	0	0	0
4/23/2024	5:30 AM	0	0	0	0	0	0	0	0	0	0	0	0	0
4/23/2024	5:45 AM	0	0	0	0	0	0	0	0	0	0	0	0	0
4/23/2024	6:00 AM	0	0	0	0	0	0	0	0	0	0	0	0	0
4/23/2024	6:15 AM	0	0	0	0	0	0	0	0	0	0	0	0	0
4/23/2024	6:30 AM	0	0	0	0	0	0	0	0	0	0	0	0	0
4/23/2024	6:45 AM	0	0	0	0	0	0	0	0	0	0	0	0	0
4/23/2024	7:00 AM	0	0	0	0	0	0	0	0	0	0	0	0	0
4/23/2024	7:15 AM	0	0	0	0	0	0	0	0	0	0	0	0	0
4/23/2024	7:30 AM	0	0	0	0	0	0	0	0	0	0	0	0	0
4/23/2024	7:45 AM	0	0	0	0	0	0	0	0	0	0	0	0	0
4/23/2024	8:00 AM	0	0	0	0	0	0	0	0	0	0	0	0	0
4/23/2024	8:15 AM	0	0	0	0	0	0	0	0	0	0	0	0	0
4/23/2024	8:30 AM	0	0	0	0	0	0	0	0	0	0	0	0	0
4/23/2024	8:45 AM	0	0	0	0	0	0	0	0	0	0	0	0	0
4/23/2024	9:00 AM	0	0	0	0	0	0	0	0	0	0	0	0	0
4/23/2024	9:15 AM	0	0	0	0	0	0	0	0	0	0	0	0	0
4/23/2024	9:30 AM	0	0	0	0	0	0	0	0	0	0	0	0	0
4/23/2024	9:45 AM	0	0	0	0	0	0	0	0	0	0	0	0	0
4/23/2024	10:00 AM	0	0	0	0	0	0	0	0	0	0	0	0	0
4/23/2024	10:15 AM	0	0	0	0	0	0	0	0	0	0	0	0	0
4/23/2024	10:30 AM	0	0	0	0	0	0	0	0	0	0	0	0	0
4/23/2024	10:45 AM	0	0	0	0	0	0	0	0	0	0	0	0	0
4/23/2024	11:00 AM	0	0	0	0	0	0	0	0	0	0	0	0	0
4/23/2024	11:15 AM	0	0	0	0	0	0	0	0	0	0	0	0	0
4/23/2024	11:30 AM	0	0	0	0	0	0	0	0	0	0	0	0	0
4/23/2024	11:45 AM	0	0	0	0	0	0	0	0	0	0	0	0	0
4/23/2024	12:00 PM	0	0	0	0	0	0	0	0	0	0	0	0	0
4/23/2024	12:15 PM	0	0	0	0	0	0	0	0	0	0	0	0	0
4/23/2024	12:30 PM	0	0	0	0	0	0	0	0	0	0	0	0	0
4/23/2024	12:45 PM	0	0	0	0	0	0	0	0	0	0	0	0	0
4/23/2024	1:00 PM	0	0	0	0	0	0	0	0	0	0	0	0	0
4/23/2024	1:15 PM	0	0	0	0	0	0	0	0	0	0	0	0	0
4/23/2024	1:30 PM	0	0	0	0	0	0	0	0	0	0	0	0	0
4/23/2024	1:45 PM	0	0	0	0	0	0	0	0	0	0	0	0	0
4/23/2024	2:00 PM	0	0	0	0	0	0	0	0	0	0	0	0	0
4/23/2024	2:15 PM	0	0	0	0	0	0	0	0	0	0	0	0	0
4/23/2024	2:30 PM	0	0	0	0	0	0	0	0	0	0	0	0	0
4/23/2024	2:45 PM	0	0	0	0	0	0	0	0	0	0	0	0	0
4/23/2024	3:00 PM	0	0	0	0	0	0	0	0	0	0	0	0	0
4/23/2024	3:15 PM	0	0	0	0	0	0	0	0	0	0	0	0	0
4/23/2024	3:30 PM	0	0	0	0	0	0	0	0	0	0	0	0	0
4/23/2024	3:45 PM	0	0	0	0	0	0	0	0	0	0	0	0	0
4/23/2024	4:00 PM	0	0	0	0	0	0	0	0	0	0	0	0	0
4/23/2024	4:15 PM	0	0	0	0	0	0	0	0	0	0	0	0	0
4/23/2024	4:30 PM	0	0	0	0	0	0	0	0	0	0	0	0	0
4/23/2024	4:45 PM	0	0	0	0	0	0	0	0	0	0	0	0	0
4/23/2024	5:00 PM	0	0	0	0	0	0	0	0	0	0	0	0	0
4/23/2024	5:15 PM	0	0	0	0	0	0	0	0	0	0	0	0	0
4/23/2024	5:30 PM	0	0	0	0	0	0	0	0	0	0	0	0	0
4/23/2024	5:45 PM	0	0	0	0	0	0	0	0	0	0	0	0	0
4/23/2024	6:00 PM	0	0	0	0	0	0	0	0	0	0	0	0	0
4/23/2024	6:15 PM	0	0	0	0	0	0	0	0	0	0	0	0	0
4/23/2024	6:30 PM	0	0	0	0	0	0	0	0	0	0	0	0	0
4/23/2024	6:45 PM	0	0	0	0	0	0	0	0	0	0	0	0	0
4/23/2024	7:00 PM	0	0	0	0	0	0	0	0	0	0	0	0	0
4/23/2024	7:15 PM	0	0	0	0	0	0	0	0	0	0	0	0	0
4/23/2024	7:30 PM	0	0	0	0	0	0	0	0	0	0	0	0	0
4/23/2024	7:45 PM	0	0	0	0	0	0	0	0	0	0	0	0	0
4/23/2024	8:00 PM	0	0	0	0	0	0	0	0	0	0	0	0	0
4/23/2024	8:15 PM	0	0	0	0	0	0	0	0	0	0	0	0	0
4/23/2024	8:30 PM	0	0	0	0	0	0	0	0	0	0	0	0	0
4/23/2024	8:45 PM	0	0	0	0	0	0	0	0	0	0	0	0	0
4/23/2024	9:00 PM	0	0	0	0	0	0	0	0	0	0	0	0	0
4/23/2024	9:15 PM	0	0	0	0	0	0	0	0	0	0	0	0	0
4/23/2024	9:30 PM	0	0	0	0	0	0	0	0	0	0	0	0	0
4/23/2024	9:45 PM	0	0	0	0	0	0	0	0	0	0	0	0	0
4/23/2024	10:00 PM	0	0	0	0	0	0	0	0	0	0	0	0	0
4/23/2024	10:15 PM	0	0	0	0	0	0	0	0	0	0	0	0	0
4/23/2024	10:30 PM	0	0	0	0	0	0	0	0	0	0	0	0	0
4/23/2024	10:45 PM	0	0	0	0	0	0	0	0	0	0	0	0	0
4/23/2024	11:00 PM	0	0	0	0	0	0	0	0	0	0	0	0	0
4/23/2024	11:15 PM	0	0	0	0	0	0	0	0	0	0	0	0	0
4/23/2024	11:30 PM	0	0	0	0	0	0	0	0	0	0	0	0	0
4/23/2024	11:45 PM	0	0	0	0	0	0	0	0	0	0	0	0	0

4/24/2024	12:00 AM	0	0	0	0	0	0	0	0	0	0	0	0	0
4/24/2024	12:15 AM	0	0	0	0	0	0	0	0	0	0	0	0	0
4/24/2024	12:30 AM	0	0	0	0	0	0	0	0	0	0	0	0	0
4/24/2024	12:45 AM	0	0	0	0	0	0	0	0	0	0	0	0	0
4/24/2024	1:00 AM	0	0	0	0	0	0	0	0	0	0	0	0	0
4/24/2024	1:15 AM	0	0	0	0	0	0	0	0	0	0	0	0	0
4/24/2024	1:30 AM	0	0	0	0	0	0	0	0	0	0	0	0	0
4/24/2024	1:45 AM	0	0	0	0	0	0	0	0	0	0	0	0	0
4/24/2024	2:00 AM	0	0	0	0	0	0	0	0	0	0	0	0	0
4/24/2024	2:15 AM	0	0	0	0	0	0	0	0	0	0	0	0	0
4/24/2024	2:30 AM	0	0	0	0	0	0	0	0	0	0	0	0	0
4/24/2024	2:45 AM	0	0	0	0	0	0	0	0	0	0	0	0	0
4/24/2024	3:00 AM	0	0	0	0	0	0	0	0	0	0	0	0	0
4/24/2024	3:15 AM	0	0	0	0	0	0	0	0	0	0	0	0	0
4/24/2024	3:30 AM	0	0	0	0	0	0	0	0	0	0	0	0	0
4/24/2024	3:45 AM	0	0	0	0	0	0	0	0	0	0	0	0	0
4/24/2024	4:00 AM	0	0	0	0	0	0	0	0	0	0	0	0	0
4/24/2024	4:15 AM	0	0	0	0	0	0	0	0	0	0	0	0	0
4/24/2024	4:30 AM	0	0	0	0	0	0	0	0	0	0	0	0	0
4/24/2024	4:45 AM	0	0	0	0	0	0	0	0	0	0	0	0	0
4/24/2024	5:00 AM	0	0	0	0	0	0	0	0	0	0	0	0	0
4/24/2024	5:15 AM	0	0	0	0	0	0	0	0	0	0	0	0	0
4/24/2024	5:30 AM	0	0	0	0	0	0	0	0	0	0	0	0	0
4/24/2024	5:45 AM	0	0	0	0	0	0	0	0	0	0	0	0	0
4/24/2024	6:00 AM	0	0	0	0	0	0	0	0	0	0	0	0	0
4/24/2024	6:15 AM	0	0	0	0	0	0	0	0	0	0	0	0	0
4/24/2024	6:30 AM	0	0	0	0	0	0	0	0	0	0	0	0	0
4/24/2024	6:45 AM	0	0	0	0	0	0	0	0	0	0	0	0	0
4/24/2024	7:00 AM	0	0	0	0	0	0	0	0	0	0	0	0	0
4/24/2024	7:15 AM	0	0	0	0	0	0	0	0	0	0	0	0	0
4/24/2024	7:30 AM	0	0	0	0	0	0	0	0	0	0	0	0	0
4/24/2024	7:45 AM	0	0	0	0	0	0	0	0	0	0	0	0	0
4/24/2024	8:00 AM	0	0	0	0	0	0	0	0	0	0	0	0	0
4/24/2024	8:15 AM	0	0	0	0	0	0	0	0	0	0	0	0	0
4/24/2024	8:30 AM	0	0	0	0	0	0	0	0	0	0	0	0	0
4/24/2024	8:45 AM	0	0	0	0	0	0	0	0	0	0	0	0	0
4/24/2024	9:00 AM	0	0	0	0	0	0	0	0	0	0	0	0	0
4/24/2024	9:15 AM	0	0	0	0	0	0	0	0	0	0	0	0	0
4/24/2024	9:30 AM	0	0	0	0	0	0	0	0	0	0	0	0	0
4/24/2024	9:45 AM	0	0	0	0	0	0	0	0	0	0	0	0	0
4/24/2024	10:00 AM	0	0	0	0	0	0	0	0	0	0	0	0	0
4/24/2024	10:15 AM	0	0	0	0	0	0	0	0	0	0	0	0	0
4/24/2024	10:30 AM	0	0	0	0	0	0	0	0	0	0	0	0	0
4/24/2024	10:45 AM	0	0	0	0	0	0	0	0	0	0	0	0	0
4/24/2024	11:00 AM	0	0	0	0	0	0	0	0	0	0	0	0	0
4/24/2024	11:15 AM	0	0	0	0	0	0	0	0	0	0	0	0	0
4/24/2024	11:30 AM	0	0	0	0	0	0	0	0	0	0	0	0	0
4/24/2024	11:45 AM	0	0	0	0	0	0	0	0	0	0	0	0	0
4/24/2024	12:00 PM	0	0	0	0	0	0	0	0	0	0	0	0	0
4/24/2024	12:15 PM	0	0	0	0	0	0	0	0	0	0	0	0	0
4/24/2024	12:30 PM	0	0	0	0	0	0	0	0	0	0	0	0	0
4/24/2024	12:45 PM	0	0	0	0	0	0	0	0	0	0	0	0	0
4/24/2024	1:00 PM	0	0	0	0	0	0	0	0	0	0	0	0	0
4/24/2024	1:15 PM	0	0	0	0	0	0	0	0	0	0	0	0	0
4/24/2024	1:30 PM	0	0	0	0	0	0	0	0	0	0	0	0	0
4/24/2024	1:45 PM	0	0	0	0	0	0	0	0	0	0	0	0	0
4/24/2024	2:00 PM	0	0	0	0	0	0	0	0	0	0	0	0	0
4/24/2024	2:15 PM	0	0	0	0	0	0	0	0	0	0	0	0	0
4/24/2024	2:30 PM	0	0	0	0	0	0	0	0	0	0	0	0	0
4/24/2024	2:45 PM	0	0	0	0	0	0	0	0	0	0	0	0	0
4/24/2024	3:00 PM	0	0	0	0	0	0	0	0	0	0	0	0	0
4/24/2024	3:15 PM	0	0	0	0	0	0	0	0	0	0	0	0	0
4/24/2024	3:30 PM	0	0	0	0	0	0	0	0	0	0	0	0	0
4/24/2024	3:45 PM	0	0	0	0	0	0	0	0	0	0	0	0	0
4/24/2024	4:00 PM	0	0	0	0	0	0	0	0	0	0	0	0	0
4/24/2024	4:15 PM	0	0	0	0	0	0	0	0	0	0	0	0	0
4/24/2024	4:30 PM	0	0	0	0	0	0	0	0	0	0	0	0	0
4/24/2024	4:45 PM	0	0	0	0	0	0	0	0	0	0	0	0	0
4/24/2024	5:00 PM	0	0	0	0	0	0	0	0	0	0	0	0	0
4/24/2024	5:15 PM	0	0	0	0	0	0	0	0	0	0	0	0	0
4/24/2024	5:30 PM	0	0	0	0	0	0	0	0	0	0	0	0	0
4/24/2024	5:45 PM	0	0	0	0	0	0	0	0	0	0	0	0	0
4/24/2024	6:00 PM	0	0	0	0	0	0	0	0	0	0	0	0	0
4/24/2024	6:15 PM	0	0	0	0	0	0	0	0	0	0	0	0	0
4/24/2024	6:30 PM	0	0	0	0	0	0	0	0	0	0	0	0	0
4/24/2024	6:45 PM	0	0	0	0	0	0	0	0	0	0	0	0	0
4/24/2024	7:00 PM	0	0	0	0	0	0	0	0	0	0	0	0	0
4/24/2024	7:15 PM	0	0	0	0	0	0	0	0	0	0	0	0	0
4/24/2024	7:30 PM	0	0	0	0	0	0	0	0	0	0	0	0	0
4/24/2024	7:45 PM	0	0	0	0	0	0	0	0	0	0	0	0	0
4/24/2024	8:00 PM	0	0	0	0	0	0	0	0	0	0	0	0	0
4/24/2024	8:15 PM	0	0	0	0	0	0	0	0	0	0	0	0	0
4/24/2024	8:30 PM	0	0	0	0	0	0	0	0	0	0	0	0	0
4/24/2024	8:45 PM	0	0	0	0	0	0	0	0	0	0	0	0	0
4/24/2024	9:00 PM	0	0	0	0	0	0	0	0	0	0	0	0	0
4/24/2024	9:15 PM	0	0	0	0	0	0	0	0	0	0	0	0	0
4/24/2024	9:30 PM	0	0	0	0	0	0	0	0	0	0	0	0	0
4/24/2024	9:45 PM	0	0	0	0	0	0	0	0	0	0	0	0	0
4/24/2024	10:00 PM	0	0	0	0	0	0	0	0	0	0	0	0	0
4/24/2024	10:15 PM	0	0	0	0	0	0	0	0	0	0	0	0	0
4/24/2024	10:30 PM	0	0	0	0	0	0	0	0	0	0	0	0	0
4/24/2024	10:45 PM	0	0	0	0	0	0	0	0	0	0	0	0	0
4/24/2024	11:00 PM	0	0	0	0	0	0	0	0	0	0	0	0	0
4/24/2024	11:15 PM	0	0	0	0	0	0	0	0	0	0	0	0	0
4/24/2024	11:30 PM	0	0	0	0	0	0	0	0	0	0	0	0	0
4/24/2024	11:45 PM	0	0	0	0	0	0	0	0	0	0	0	0	0

4/25/2024	12:00 AM	0	0	0	0	0	0	0	0	0	0	0	0	0
4/25/2024	12:15 AM	0	0	0	0	0	0	0	0	0	0	0	0	0
4/25/2024	12:30 AM	0	0	0	0	0	0	0	0	0	0	0	0	0
4/25/2024	12:45 AM	0	0	0	0	0	0	0	0	0	0	0	0	0
4/25/2024	1:00 AM	0	0	0	0	0	0	0	0	0	0	0	0	0
4/25/2024	1:15 AM	0	0	0	0	0	0	0	0	0	0	0	0	0
4/25/2024	1:30 AM	0	0	0	0	0	0	0	0	0	0	0	0	0
4/25/2024	1:45 AM	0	0	0	0	0	0	0	0	0	0	0	0	0
4/25/2024	2:00 AM	0	0	0	0	0	0	0	0	0	0	0	0	0
4/25/2024	2:15 AM	0	0	0	0	0	0	0	0	0	0	0	0	0
4/25/2024	2:30 AM	0	0	0	0	0	0	0	0	0	0	0	0	0
4/25/2024	2:45 AM	0	0	0	0	0	0	0	0	0	0	0	0	0
4/25/2024	3:00 AM	0	0	0	0	0	0	0	0	0	0	0	0	0
4/25/2024	3:15 AM	0	0	0	0	0	0	0	0	0	0	0	0	0
4/25/2024	3:30 AM	0	0	0	0	0	0	0	0	0	0	0	0	0
4/25/2024	3:45 AM	0	0	0	0	0	0	0	0	0	0	0	0	0
4/25/2024	4:00 AM	0	0	0	0	0	0	0	0	0	0	0	0	0
4/25/2024	4:15 AM	0	0	0	0	0	0	0	0	0	0	0	0	0
4/25/2024	4:30 AM	0	0	0	0	0	0	0	0	0	0	0	0	0
4/25/2024	4:45 AM	0	0	0	0	0	0	0	0	0	0	0	0	0
4/25/2024	5:00 AM	0	0	0	0	0	0	0	0	0	0	0	0	0
4/25/2024	5:15 AM	0	0	0	0	0	0	0	0	0	0	0	0	0
4/25/2024	5:30 AM	0	0	0	0	0	0	0	0	0	0	0	0	0
4/25/2024	5:45 AM	0	0	0	0	0	0	0	0	0	0	0	0	0
4/25/2024	6:00 AM	0	0	0	0	0	0	0	0	0	0	0	0	0
4/25/2024	6:15 AM	0	0	0	0	0	0	0	0	0	0	0	0	0
4/25/2024	6:30 AM	0	0	0	0	0	0	0	0	0	0	0	0	0
4/25/2024	6:45 AM	0	0	0	0	0	0	0	0	0	0	0	0	0
4/25/2024	7:00 AM	0	0	0	0	0	0	0	0	0	0	0	0	0
4/25/2024	7:15 AM	0	0	0	0	0	0	0	0	0	0	0	0	0
4/25/2024	7:30 AM	0	0	0	0	0	0	0	0	0	0	0	0	0
4/25/2024	7:45 AM	0	0	0	0	0	0	0	0	0	0	0	0	0
4/25/2024	8:00 AM	0	0	0	0	0	0	0	0	0	0	0	0	0
4/25/2024	8:15 AM	0	0	0	0	0	0	0	0	0	0	0	0	0
4/25/2024	8:30 AM	0	0	0	0	0	0	0	0	0	0	0	0	0
4/25/2024	8:45 AM	0	0	0	0	0	0	0	0	0	0	0	0	0
4/25/2024	9:00 AM	0	0	0	0	0	0	0	0	0	0	0	0	0
4/25/2024	9:15 AM	0	0	0	0	0	0	0	0	0	0	0	0	0
4/25/2024	9:30 AM	0	0	0	0	0	0	0	0	0	0	0	0	0
4/25/2024	9:45 AM	0	0	0	0	0	0	0	0	0	0	0	0	0
4/25/2024	10:00 AM	0	0	0	0	0	0	0	0	0	0	0	0	0
4/25/2024	10:15 AM	0	0	0	0	0	0	0	0	0	0	0	0	0
4/25/2024	10:30 AM	0	0	0	0	0	0	0	0	0	0	0	0	0
4/25/2024	10:45 AM	0	0	0	0	0	0	0	0	0	0	0	0	0
4/25/2024	11:00 AM	0	0	0	0	0	0	0	0	0	0	0	0	0
4/25/2024	11:15 AM	0	0	0	0	0	0	0	0	0	0	0	0	0
4/25/2024	11:30 AM	0	0	0	0	0	0	0	0	0	0	0	0	0
4/25/2024	11:45 AM	0	0	0	0	0	0	0	0	0	0	0	0	0
4/25/2024	12:00 PM	0	0	0	0	0	0	0	0	0	0	0	0	0
4/25/2024	12:15 PM	0	0	0	0	0	0	0	0	0	0	0	0	0
4/25/2024	12:30 PM	0	0	0	0	0	0	0	0	0	0	0	0	0
4/25/2024	12:45 PM	0	0	0	0	0	0	0	0	0	0	0	0	0
4/25/2024	1:00 PM	0	0	0	0	0	0	0	0	0	0	0	0	0
4/25/2024	1:15 PM	0	0	0	0	0	0	0	0	0	0	0	0	0
4/25/2024	1:30 PM	0	0	0	0	0	0	0	0	0	0	0	0	0
4/25/2024	1:45 PM	0	0	0	0	0	0	0	0	0	0	0	0	0
4/25/2024	2:00 PM	0	0	0	0	0	0	0	0	0	0	0	0	0
4/25/2024	2:15 PM	0	0	0	0	0	0	0	0	0	0	0	0	0
4/25/2024	2:30 PM	0	0	0	0	0	0	0	0	0	0	0	0	0
4/25/2024	2:45 PM	0	0	0	0	0	0	0	0	0	0	0	0	0
4/25/2024	3:00 PM	0	0	0	0	0	0	0	0	0	0	0	0	0
4/25/2024	3:15 PM	0	0	0	0	0	0	0	0	0	0	0	0	0
4/25/2024	3:30 PM	0	0	0	0	0	0	0	0	0	0	0	0	0
4/25/2024	3:45 PM	0	0	0	0	0	0	0	0	0	0	0	0	0
4/25/2024	4:00 PM	0	0	0	0	0	0	0	0	0	0	0	0	0
4/25/2024	4:15 PM	0	0	0	0	0	0	0	0	0	0	0	0	0
4/25/2024	4:30 PM	0	0	0	0	0	0	0	0	0	0	0	0	0
4/25/2024	4:45 PM	0	0	0	0	0	0	0	0	0	0	0	0	0
4/25/2024	5:00 PM	0	0	0	0	0	0	0	0	0	0	0	0	0
4/25/2024	5:15 PM	0	0	0	0	0	0	0	0	0	0	0	0	0
4/25/2024	5:30 PM	0	0	0	0	0	0	0	0	0	0	0	0	0
4/25/2024	5:45 PM	0	0	0	0	0	0	0	0	0	0	0	0	0
4/25/2024	6:00 PM	0	0	0	0	0	0	0	0	0	0	0	0	0
4/25/2024	6:15 PM	0	0	0	0	0	0	0	0	0	0	0	0	0
4/25/2024	6:30 PM	0	0	0	0	0	0	0	0	0	0	0	0	0
4/25/2024	6:45 PM	0	0	0	0	0	0	0	0	0	0	0	0	0
4/25/2024	7:00 PM	0	0	0	0	0	0	0	0	0	0	0	0	0
4/25/2024	7:15 PM	0	0	0	0	0	0	0	0	0	0	0	0	0
4/25/2024	7:30 PM	0	0	0	0	0	0	0	0	0	0	0	0	0
4/25/2024	7:45 PM	0	0	0	0	0	0	0	0	0	0	0	0	0
4/25/2024	8:00 PM	0	0	0	0	0	0	0	0	0	0	0	0	0
4/25/2024	8:15 PM	0	0	0	0	0	0	0	0	0	0	0	0	0
4/25/2024	8:30 PM	0	0	0	0	0	0	0	0	0	0	0	0	0
4/25/2024	8:45 PM	0	0	0	0	0	0	0	0	0	0	0	0	0
4/25/2024	9:00 PM	0	0	0	0	0	0	0	0	0	0	0	0	0
4/25/2024	9:15 PM	0	0	0	0	0	0	0	0	0	0	0	0	0
4/25/2024	9:30 PM	0	0	0	0	0	0	0	0	0	0	0	0	0
4/25/2024	9:45 PM	0	0	0	0	0	0	0	0	0	0	0	0	0
4/25/2024	10:00 PM	0	0	0	0	0	0	0	0	0	0	0	0	0
4/25/2024	10:15 PM	0	0	0	0	0	0	0	0	0	0	0	0	0
4/25/2024	10:30 PM	0	0	0	0	0	0	0	0	0	0	0	0	0
4/25/2024	10:45 PM	0	0	0	0	0	0	0	0	0	0	0	0	0
4/25/2024	11:00 PM	0	0	0	0	0	0	0	0	0	0	0	0	0
4/25/2024	11:15 PM	0	0	0	0	0	0	0	0	0	0	0	0	0
4/25/2024	11:30 PM	0	0	0	0	0	0	0	0	0	0	0	0	0
4/25/2024	11:45 PM	0	0	0	0	0	0	0	0	0	0	0	0	0

4/26/2024	12:00 AM	0	0	0	0	0	0	0	0	0	0	0	0	0
4/26/2024	12:15 AM	0	0	0	0	0	0	0	0	0	0	0	0	0
4/26/2024	12:30 AM	0	0	0	0	0	0	0	0	0	0	0	0	0
4/26/2024	12:45 AM	0	0	0	0	0	0	0	0	0	0	0	0	0
4/26/2024	1:00 AM	0	0	0	0	0	0	0	0	0	0	0	0	0
4/26/2024	1:15 AM	0	0	0	0	0	0	0	0	0	0	0	0	0
4/26/2024	1:30 AM	0	0	0	0	0	0	0	0	0	0	0	0	0
4/26/2024	1:45 AM	0	0	0	0	0	0	0	0	0	0	0	0	0
4/26/2024	2:00 AM	0	0	0	0	0	0	0	0	0	0	0	0	0
4/26/2024	2:15 AM	0	0	0	0	0	0	0	0	0	0	0	0	0
4/26/2024	2:30 AM	0	0	0	0	0	0	0	0	0	0	0	0	0
4/26/2024	2:45 AM	0	0	0	0	0	0	0	0	0	0	0	0	0
4/26/2024	3:00 AM	0	0	0	0	0	0	0	0	0	0	0	0	0
4/26/2024	3:15 AM	0	0	0	0	0	0	0	0	0	0	0	0	0
4/26/2024	3:30 AM	0	0	0	0	0	0	0	0	0	0	0	0	0
4/26/2024	3:45 AM	0	0	0	0	0	0	0	0	0	0	0	0	0
4/26/2024	4:00 AM	0	0	0	0	0	0	0	0	0	0	0	0	0
4/26/2024	4:15 AM	0	0	0	0	0	0	0	0	0	0	0	0	0
4/26/2024	4:30 AM	0	0	0	0	0	0	0	0	0	0	0	0	0
4/26/2024	4:45 AM	0	0	0	0	0	0	0	0	0	0	0	0	0
4/26/2024	5:00 AM	0	0	0	0	0	0	0	0	0	0	0	0	0
4/26/2024	5:15 AM	0	0	0	0	0	0	0	0	0	0	0	0	0
4/26/2024	5:30 AM	0	0	0	0	0	0	0	0	0	0	0	0	0
4/26/2024	5:45 AM	0	0	0	0	0	0	0	0	0	0	0	0	0
4/26/2024	6:00 AM	0	0	0	0	0	0	0	0	0	0	0	0	0
4/26/2024	6:15 AM	0	0	0	0	0	0	0	0	0	0	0	0	0
4/26/2024	6:30 AM	0	0	0	0	0	0	0	0	0	0	0	0	0
4/26/2024	6:45 AM	0	0	0	0	0	0	0	0	0	0	0	0	0
4/26/2024	7:00 AM	0	0	0	0	0	0	0	0	0	0	0	0	0
4/26/2024	7:15 AM	0	0	0	0	0	0	0	0	0	0	0	0	0
4/26/2024	7:30 AM	0	0	0	0	0	0	0	0	0	0	0	0	0
4/26/2024	7:45 AM	0	0	0	0	0	0	0	0	0	0	0	0	0
4/26/2024	8:00 AM	0	0	0	0	0	0	0	0	0	0	0	0	0
4/26/2024	8:15 AM	0	0	0	0	0	0	0	0	0	0	0	0	0
4/26/2024	8:30 AM	0	0	0	0	0	0	0	0	0	0	0	0	0
4/26/2024	8:45 AM	0	0	0	0	0	0	0	0	0	0	0	0	0
4/26/2024	9:00 AM	0	0	0	0	0	0	0	0	0	0	0	0	0
4/26/2024	9:15 AM	0	0	0	0	0	0	0	0	0	0	0	0	0
4/26/2024	9:30 AM	0	0	0	0	0	0	0	0	0	0	0	0	0
4/26/2024	9:45 AM	0	0	0	0	0	0	0	0	0	0	0	0	0
4/26/2024	10:00 AM	0	0	0	0	0	0	0	0	0	0	0	0	0
4/26/2024	10:15 AM	0	0	0	0	0	0	0	0	0	0	0	0	0
4/26/2024	10:30 AM	0	0	0	0	0	0	0	0	0	0	0	0	0
4/26/2024	10:45 AM	0	0	0	0	0	0	0	0	0	0	0	0	0
4/26/2024	11:00 AM	0	0	0	0	0	0	0	0	0	0	0	0	0
4/26/2024	11:15 AM	0	0	0	0	0	0	0	0	0	0	0	0	0
4/26/2024	11:30 AM	0	0	0	0	0	0	0	0	0	0	0	0	0
4/26/2024	11:45 AM	0	0	0	0	0	0	0	0	0	0	0	0	0
4/26/2024	12:00 PM	0	0	0	0	0	0	0	0	0	0	0	0	0
4/26/2024	12:15 PM	0	0	0	0	0	0	0	0	0	0	0	0	0
4/26/2024	12:30 PM	0	0	0	0	0	0	0	0	0	0	0	0	0
4/26/2024	12:45 PM	0	0	0	0	0	0	0	0	0	0	0	0	0
4/26/2024	1:00 PM	0	0	0	0	0	0	0	0	0	0	0	0	0
4/26/2024	1:15 PM	0	0	0	0	0	0	0	0	0	0	0	0	0
4/26/2024	1:30 PM	0	0	0	0	0	0	0	0	0	0	0	0	0
4/26/2024	1:45 PM	0	0	0	0	0	0	0	0	0	0	0	0	0
4/26/2024	2:00 PM	0	0	0	0	0	0	0	0	0	0	0	0	0
4/26/2024	2:15 PM	0	0	0	0	0	0	0	0	0	0	0	0	0
4/26/2024	2:30 PM	0	0	0	0	0	0	0	0	0	0	0	0	0
4/26/2024	2:45 PM	0	0	0	0	0	0	0	0	0	0	0	0	0
4/26/2024	3:00 PM	0	0	0	0	0	0	0	0	0	0	0	0	0
4/26/2024	3:15 PM	0	0	0	0	0	0	0	0	0	0	0	0	0
4/26/2024	3:30 PM	0	0	0	0	0	0	0	0	0	0	0	0	0
4/26/2024	3:45 PM	0	0	0	0	0	0	0	0	0	0	0	0	0
4/26/2024	4:00 PM	0	0	0	0	0	0	0	0	0	0	0	0	0
4/26/2024	4:15 PM	0	0	0	0	0	0	0	0	0	0	0	0	0
4/26/2024	4:30 PM	0	0	0	0	0	0	0	0	0	0	0	0	0
4/26/2024	4:45 PM	0	0	0	0	0	0	0	0	0	0	0	0	0
4/26/2024	5:00 PM	0	0	0	0	0	0	0	0	0	0	0	0	0
4/26/2024	5:15 PM	0	0	0	0	0	0	0	0	0	0	0	0	0
4/26/2024	5:30 PM	0	0	0	0	0	0	0	0	0	0	0	0	0
4/26/2024	5:45 PM	0	0	0	0	0	0	0	0	0	0	0	0	0
4/26/2024	6:00 PM	0	0	0	0	0	0	0	0	0	0	0	0	0
4/26/2024	6:15 PM	0	0	0	0	0	0	0	0	0	0	0	0	0
4/26/2024	6:30 PM	0	0	0	0	0	0	0	0	0	0	0	0	0
4/26/2024	6:45 PM	0	0	0	0	0	0	0	0	0	0	0	0	0
4/26/2024	7:00 PM	0	0	0	0	0	0	0	0	0	0	0	0	0
4/26/2024	7:15 PM	0	0	0	0	0	0	0	0	0	0	0	0	0
4/26/2024	7:30 PM	0	0	0	0	0	0	0	0	0	0	0	0	0
4/26/2024	7:45 PM	0	0	0	0	0	0	0	0	0	0	0	0	0
4/26/2024	8:00 PM	0	0	0	0	0	0	0	0	0	0	0	0	0
4/26/2024	8:15 PM	0	0	0	0	0	0	0	0	0	0	0	0	0
4/26/2024	8:30 PM	0	0	0	0	0	0	0	0	0	0	0	0	0
4/26/2024	8:45 PM	0	0	0	0	0	0	0	0	0	0	0	0	0
4/26/2024	9:00 PM	0	0	0	0	0	0	0	0	0	0	0	0	0
4/26/2024	9:15 PM	0	0	0	0	0	0	0	0	0	0	0	0	0
4/26/2024	9:30 PM	0	0	0	0	0	0	0	0	0	0	0	0	0
4/26/2024	9:45 PM	0	0	0	0	0	0	0	0	0	0	0	0	0
4/26/2024	10:00 PM	0	0	0	0	0	0	0	0	0	0	0	0	0
4/26/2024	10:15 PM	0	0	0	0	0	0	0	0	0	0	0	0	0
4/26/2024	10:30 PM	0	0	0	0	0	0	0	0	0	0	0	0	0
4/26/2024	10:45 PM	0	0	0	0	0	0	0	0	0	0	0	0	0
4/26/2024	11:00 PM	0	0	0	0	0	0	0	0	0	0	0	0	0
4/26/2024	11:15 PM	0	0	0	0	0	0	0	0	0	0	0	0	0
4/26/2024	11:30 PM	0	0	0	0	0	0	0	0	0	0	0	0	0
4/26/2024	11:45 PM	0	0	0	0	0	0	0	0	0	0	0	0	0

4/27/2024	12:00 AM	0	0	0	0	0	0	0	0	0	0	0	0	0
4/27/2024	12:15 AM	0	0	0	0	0	0	0	0	0	0	0	0	0
4/27/2024	12:30 AM	0	0	0	0	0	0	0	0	0	0	0	0	0
4/27/2024	12:45 AM	0	0	0	0	0	0	0	0	0	0	0	0	0
4/27/2024	1:00 AM	0	0	0	0	0	0	0	0	0	0	0	0	0
4/27/2024	1:15 AM	0	0	0	0	0	0	0	0	0	0	0	0	0
4/27/2024	1:30 AM	0	0	0	0	0	0	0	0	0	0	0	0	0
4/27/2024	1:45 AM	0	0	0	0	0	0	0	0	0	0	0	0	0
4/27/2024	2:00 AM	0	0	0	0	0	0	0	0	0	0	0	0	0
4/27/2024	2:15 AM	0	0	0	0	0	0	0	0	0	0	0	0	0
4/27/2024	2:30 AM	0	0	0	0	0	0	0	0	0	0	0	0	0
4/27/2024	2:45 AM	0	0	0	0	0	0	0	0	0	0	0	0	0
4/27/2024	3:00 AM	0	0	0	0	0	0	0	0	0	0	0	0	0
4/27/2024	3:15 AM	0	0	0	0	0	0	0	0	0	0	0	0	0
4/27/2024	3:30 AM	0	0	0	0	0	0	0	0	0	0	0	0	0
4/27/2024	3:45 AM	0	0	0	0	0	0	0	0	0	0	0	0	0
4/27/2024	4:00 AM	0	0	0	0	0	0	0	0	0	0	0	0	0
4/27/2024	4:15 AM	0	0	0	0	0	0	0	0	0	0	0	0	0
4/27/2024	4:30 AM	0	0	0	0	0	0	0	0	0	0	0	0	0
4/27/2024	4:45 AM	0	0	0	0	0	0	0	0	0	0	0	0	0
4/27/2024	5:00 AM	0	0	0	0	0	0	0	0	0	0	0	0	0
4/27/2024	5:15 AM	0	0	0	0	0	0	0	0	0	0	0	0	0
4/27/2024	5:30 AM	0	0	0	0	0	0	0	0	0	0	0	0	0
4/27/2024	5:45 AM	0	0	0	0	0	0	0	0	0	0	0	0	0
4/27/2024	6:00 AM	0	0	0	0	0	0	0	0	0	0	0	0	0
4/27/2024	6:15 AM	0	0	0	0	0	0	0	0	0	0	0	0	0
4/27/2024	6:30 AM	0	0	0	0	0	0	0	0	0	0	0	0	0
4/27/2024	6:45 AM	0	0	0	0	0	0	0	0	0	0	0	0	0
4/27/2024	7:00 AM	0	0	0	0	0	0	0	0	0	0	0	0	0
4/27/2024	7:15 AM	0	0	0	0	0	0	0	0	0	0	0	0	0
4/27/2024	7:30 AM	0	0	0	0	0	0	0	0	0	0	0	0	0
4/27/2024	7:45 AM	0	0	0	0	0	0	0	0	0	0	0	0	0
4/27/2024	8:00 AM	0	0	0	0	0	0	0	0	0	0	0	0	0
4/27/2024	8:15 AM	0	0	0	0	0	0	0	0	0	0	0	0	0
4/27/2024	8:30 AM	0	0	0	0	0	0	0	0	0	0	0	0	0
4/27/2024	8:45 AM	0	0	0	0	0	0	0	0	0	0	0	0	0
4/27/2024	9:00 AM	0	0	0	0	0	0	0	0	0	0	0	0	0
4/27/2024	9:15 AM	0	0	0	0	0	0	0	0	0	0	0	0	0
4/27/2024	9:30 AM	0	0	0	0	0	0	0	0	0	0	0	0	0
4/27/2024	9:45 AM	0	0	0	0	0	0	0	0	0	0	0	0	0
4/27/2024	10:00 AM	0	0	0	0	0	0	0	0	0	0	0	0	0
4/27/2024	10:15 AM	0	0	0	0	0	0	0	0	0	0	0	0	0
4/27/2024	10:30 AM	0	0	0	0	0	0	0	0	0	0	0	0	0
4/27/2024	10:45 AM	0	0	0	0	0	0	0	0	0	0	0	0	0
4/27/2024	11:00 AM	0	0	0	0	0	0	0	0	0	0	0	0	0
4/27/2024	11:15 AM	0	0	0	0	0	0	0	0	0	0	0	0	0
4/27/2024	11:30 AM	0	0	0	0	0	0	0	0	0	0	0	0	0
4/27/2024	11:45 AM	0	0	0	0	0	0	0	0	0	0	0	0	0
4/27/2024	12:00 PM	0	0	0	0	0	0	0	0	0	0	0	0	0
4/27/2024	12:15 PM	0	0	0	0	0	0	0	0	0	0	0	0	0
4/27/2024	12:30 PM	0	0	0	0	0	0	0	0	0	0	0	0	0
4/27/2024	12:45 PM	0	0	0	0	0	0	0	0	0	0	0	0	0
4/27/2024	1:00 PM	0	0	0	0	0	0	0	0	0	0	0	0	0
4/27/2024	1:15 PM	0	0	0	0	0	0	0	0	0	0	0	0	0
4/27/2024	1:30 PM	0	0	0	0	0	0	0	0	0	0	0	0	0
4/27/2024	1:45 PM	0	0	0	0	0	0	0	0	0	0	0	0	0
4/27/2024	2:00 PM	0	0	0	0	0	0	0	0	0	0	0	0	0
4/27/2024	2:15 PM	0	0	0	0	0	0	0	0	0	0	0	0	0
4/27/2024	2:30 PM	0	0	0	0	0	0	0	0	0	0	0	0	0
4/27/2024	2:45 PM	0	0	0	0	0	0	0	0	0	0	0	0	0
4/27/2024	3:00 PM	0	0	0	0	0	0	0	0	0	0	0	0	0
4/27/2024	3:15 PM	0	0	0	0	0	0	0	0	0	0	0	0	0
4/27/2024	3:30 PM	0	0	0	0	0	0	0	0	0	0	0	0	0
4/27/2024	3:45 PM	0	0	0	0	0	0	0	0	0	0	0	0	0
4/27/2024	4:00 PM	0	0	0	0	0	0	0	0	0	0	0	0	0
4/27/2024	4:15 PM	0	0	0	0	0	0	0	0	0	0	0	0	0
4/27/2024	4:30 PM	0	0	0	0	0	0	0	0	0	0	0	0	0
4/27/2024	4:45 PM	0	0	0	0	0	0	0	0	0	0	0	0	0
4/27/2024	5:00 PM	0	0	0	0	0	0	0	0	0	0	0	0	0
4/27/2024	5:15 PM	0	0	0	0	0	0	0	0	0	0	0	0	0
4/27/2024	5:30 PM	0	0	0	0	0	0	0	0	0	0	0	0	0
4/27/2024	5:45 PM	0	0	0	0	0	0	0	0	0	0	0	0	0
4/27/2024	6:00 PM	0	0	0	0	0	0	0	0	0	0	0	0	0
4/27/2024	6:15 PM	0	0	0	0	0	0	0	0	0	0	0	0	0
4/27/2024	6:30 PM	0	0	0	0	0	0	0	0	0	0	0	0	0
4/27/2024	6:45 PM	0	0	0	0	0	0	0	0	0	0	0	0	0
4/27/2024	7:00 PM	0	0	0	0	0	0	0	0	0	0	0	0	0
4/27/2024	7:15 PM	0	0	0	0	0	0	0	0	0	0	0	0	0
4/27/2024	7:30 PM	0	0	0	0	0	0	0	0	0	0	0	0	0
4/27/2024	7:45 PM	0	0	0	0	0	0	0	0	0	0	0	0	0
4/27/2024	8:00 PM	0	0	0	0	0	0	0	0	0	0	0	0	0
4/27/2024	8:15 PM	0	0	0	0	0	0	0	0	0	0	0	0	0
4/27/2024	8:30 PM	0	0	0	0	0	0	0	0	0	0	0	0	0
4/27/2024	8:45 PM	0	0	0	0	0	0	0	0	0	0	0	0	0
4/27/2024	9:00 PM	0	0	0	0	0	0	0	0	0	0	0	0	0
4/27/2024	9:15 PM	0	0	0	0	0	0	0	0	0	0	0	0	0
4/27/2024	9:30 PM	0	0	0	0	0	0	0	0	0	0	0	0	0
4/27/2024	9:45 PM	0	0	0	0	0	0	0	0	0	0	0	0	0
4/27/2024	10:00 PM	0	0	0	0	0	0	0	0	0	0	0	0	0
4/27/2024	10:15 PM	0	0	0	0	0	0	0	0	0	0	0	0	0
4/27/2024	10:30 PM	0	0	0	0	0	0	0	0	0	0	0	0	0
4/27/2024	10:45 PM	0	0	0	0	0	0	0	0	0	0	0	0	0
4/27/2024	11:00 PM	0	0	0	0	0	0	0	0	0	0	0	0	0
4/27/2024	11:15 PM	0	0	0	0	0	0	0	0	0	0	0	0	0
4/27/2024	11:30 PM	0	0	0	0	0	0	0	0	0	0	0	0	0
4/27/2024	11:45 PM	0	0	0	0	0	0	0	0	0	0	0	0	0

SB
File Name:
Start Date: 4/21/2024
Start Time: 0
Site Code: 75 Lane 1 SB
Station ID: 1
Location 1: I-20, north of Bush River Rd
Location 2:

Date	Time	1	2	3	4	5	6	7	8	9	10	11	12	13
4/21/2024	12:00 AM	0	17	0	0	0	0	0	0	0	0	0	0	0
4/21/2024	12:15 AM	0	20	2	0	0	0	0	0	0	0	0	0	0
4/21/2024	12:30 AM	0	9	0	0	0	0	0	0	0	0	0	0	0
4/21/2024	12:45 AM	0	5	0	0	0	0	0	0	0	0	0	0	0
4/21/2024	1:00 AM	0	5	0	0	0	0	0	0	0	0	0	0	0
4/21/2024	1:15 AM	0	9	0	0	0	0	0	0	0	0	0	0	0
4/21/2024	1:30 AM	0	5	0	0	0	0	0	0	0	0	0	0	0
4/21/2024	1:45 AM	0	4	0	0	0	0	0	0	0	0	0	0	0
4/21/2024	2:00 AM	0	5	0	0	0	0	0	0	0	0	0	0	0
4/21/2024	2:15 AM	0	7	2	0	0	0	0	0	0	0	0	0	0
4/21/2024	2:30 AM	0	2	2	0	0	0	0	0	0	0	0	0	0
4/21/2024	2:45 AM	0	3	0	0	0	0	0	0	0	0	0	0	0
4/21/2024	3:00 AM	1	5	0	0	0	0	0	0	0	0	0	0	0
4/21/2024	3:15 AM	0	3	0	0	0	0	0	0	0	0	0	0	0
4/21/2024	3:30 AM	0	1	0	0	0	0	0	0	0	0	0	0	0
4/21/2024	3:45 AM	0	6	0	0	0	0	0	0	0	0	0	0	0
4/21/2024	4:00 AM	0	1	0	0	0	0	0	0	0	0	0	0	0
4/21/2024	4:15 AM	0	3	1	0	0	0	0	0	0	0	0	0	0
4/21/2024	4:30 AM	0	3	0	0	0	0	0	0	0	0	0	0	0
4/21/2024	4:45 AM	0	7	0	0	0	0	0	0	0	0	0	0	0
4/21/2024	5:00 AM	0	3	0	0	0	0	0	0	0	0	0	0	0
4/21/2024	5:15 AM	0	5	1	0	0	0	0	0	0	0	0	0	0
4/21/2024	5:30 AM	0	10	0	0	0	0	0	0	0	0	0	0	0
4/21/2024	5:45 AM	0	11	0	0	0	0	0	0	0	0	0	0	0
4/21/2024	6:00 AM	0	8	0	0	0	0	0	0	0	0	0	0	0
4/21/2024	6:15 AM	0	12	0	0	0	0	0	0	0	0	0	0	0
4/21/2024	6:30 AM	0	23	5	0	0	0	0	0	0	0	0	0	0
4/21/2024	6:45 AM	0	20	6	0	0	0	0	0	0	0	0	0	0
4/21/2024	7:00 AM	0	22	2	0	0	0	0	0	0	0	0	0	0
4/21/2024	7:15 AM	0	15	5	0	0	0	0	0	0	0	0	0	0
4/21/2024	7:30 AM	0	13	6	0	0	0	0	0	0	0	0	0	0
4/21/2024	7:45 AM	2	21	3	0	0	0	0	0	0	0	0	0	0
4/21/2024	8:00 AM	3	21	5	0	0	0	0	0	0	0	0	0	0
4/21/2024	8:15 AM	0	23	5	0	0	0	0	0	0	0	0	0	0
4/21/2024	8:30 AM	0	28	4	0	0	0	0	0	0	0	0	0	0
4/21/2024	8:45 AM	0	39	5	0	0	0	0	0	0	0	0	0	0
4/21/2024	9:00 AM	2	43	12	0	0	0	0	0	0	0	0	0	0
4/21/2024	9:15 AM	4	66	9	0	0	0	0	0	0	0	0	0	0
4/21/2024	9:30 AM	0	68	11	0	0	0	0	0	0	0	0	0	0
4/21/2024	9:45 AM	1	51	15	0	1	0	0	0	0	0	0	0	0
4/21/2024	10:00 AM	0	46	13	0	0	0	0	0	0	0	0	0	0
4/21/2024	10:15 AM	10	84	15	0	0	0	0	0	0	0	0	0	0
4/21/2024	10:30 AM	1	68	13	0	1	0	0	0	0	0	0	0	0
4/21/2024	10:45 AM	1	81	14	0	0	0	0	0	1	0	0	0	0
4/21/2024	11:00 AM	0	102	13	0	0	0	0	0	0	0	0	0	0
4/21/2024	11:15 AM	0	93	24	0	0	0	0	0	1	0	0	0	0
4/21/2024	11:30 AM	1	84	21	0	1	0	0	0	0	0	0	0	0
4/21/2024	11:45 AM	0	98	32	0	0	0	0	0	0	0	0	0	0
4/21/2024	12:00 PM	3	111	22	0	0	0	0	0	1	0	0	0	0
4/21/2024	12:15 PM	3	120	32	0	1	0	0	0	0	0	0	0	0
4/21/2024	12:30 PM	5	97	27	0	0	0	0	0	0	0	0	0	0
4/21/2024	12:45 PM	0	126	32	0	1	0	0	0	0	0	0	0	0
4/21/2024	1:00 PM	0	160	28	0	0	0	0	0	0	0	0	0	0
4/21/2024	1:15 PM	0	163	33	0	0	0	0	0	0	0	0	0	0
4/21/2024	1:30 PM	0	152	24	0	0	0	0	1	0	0	0	0	0
4/21/2024	1:45 PM	0	152	22	0	0	1	0	0	0	0	0	0	0
4/21/2024	2:00 PM	0	148	28	0	0	0	0	0	0	0	0	0	0
4/21/2024	2:15 PM	0	149	28	0	1	0	0	0	2	0	0	0	0
4/21/2024	2:30 PM	0	127	33	0	0	0	0	0	0	0	0	0	0
4/21/2024	2:45 PM	0	117	29	0	0	0	0	0	1	0	0	0	0
4/21/2024	3:00 PM	0	127	27	0	1	0	0	0	0	0	0	0	0
4/21/2024	3:15 PM	0	103	29	0	0	0	0	0	0	0	0	0	0
4/21/2024	3:30 PM	0	127	42	0	0	0	0	0	0	0	0	0	0
4/21/2024	3:45 PM	0	130	33	0	0	0	0	0	1	0	0	0	0
4/21/2024	4:00 PM	0	131	44	0	0	0	0	0	0	0	0	0	0
4/21/2024	4:15 PM	0	148	36	0	0	0	0	0	1	0	0	0	0
4/21/2024	4:30 PM	0	128	24	1	0	0	0	0	0	1	0	0	0
4/21/2024	4:45 PM	0	139	20	0	0	0	0	0	1	0	0	0	0
4/21/2024	5:00 PM	0	116	30	0	0	0	0	0	0	0	0	0	0
4/21/2024	5:15 PM	0	96	26	0	0	0	0	0	0	0	0	0	0
4/21/2024	5:30 PM	0	108	28	1	0	0	0	0	0	0	0	0	0
4/21/2024	5:45 PM	0	111	22	0	0	0	0	1	0	0	0	0	0
4/21/2024	6:00 PM	1	80	30	0	0	0	0	0	0	0	0	0	0
4/21/2024	6:15 PM	1	93	20	0	1	0	0	0	0	0	0	0	0
4/21/2024	6:30 PM	0	89	26	0	0	0	0	0	0	0	0	0	0
4/21/2024	6:45 PM	1	114	18	0	0	0	0	0	0	0	0	0	0
4/21/2024	7:00 PM	0	94	17	0	0	0	0	0	3	0	0	0	0
4/21/2024	7:15 PM	0	67	17	0	0	0	0	0	0	0	0	0	0
4/21/2024	7:30 PM	0	71	15	1	1	0	0	0	0	0	0	0	0
4/21/2024	7:45 PM	0	70	10	0	0	0	0	0	0	0	0	0	0
4/21/2024	8:00 PM	0	59	13	0	1	0	0	0	0	0	0	0	0
4/21/2024	8:15 PM	0	56	4	0	0	0	0	0	0	0	0	0	0
4/21/2024	8:30 PM	0	49	1	0	0	0	0	0	0	0	0	0	0
4/21/2024	8:45 PM	0	44	4	0	0	0	0	0	0	0	0	0	0
4/21/2024	9:00 PM	0	46	1	0	0	0	0	0	0	0	0	0	0
4/21/2024	9:15 PM	0	36	1	0	0	0	0	0	0	0	0	0	0
4/21/2024	9:30 PM	0	27	1	0	0	0	0	0	0	0	0	0	0
4/21/2024	9:45 PM	0	20	4	0	0	0	0	0	0	0	0	0	0
4/21/2024	10:00 PM	0	30	1	0	0	0	0	0	0	0	0	0	0
4/21/2024	10:15 PM	0	20	2	0	0	0	0	0	1	0	0	0	0
4/21/2024	10:30 PM	0	17	2	0	0	0	0	0	0	0	0	0	0
4/21/2024	10:45 PM	0	20	0	0	0	0	0	0	1	0	0	0	0
4/21/2024	11:00 PM	0	12	1	0	0	0	0	0	0	0	0	0	0
4/21/2024	11:15 PM	0	10	1	0	0	0	0	0	0	0	0	0	0
4/21/2024	11:30 PM	0	14	2	0	0	0	0	0	1	0	0	0	0
4/21/2024	11:45 PM	0	6	1	0	0	0	0	0	0	0	0	0	0

4/22/2024	12:00 AM	0	6	0	0	0	0	0	0	0	0	0	0	0
4/22/2024	12:15 AM	0	6	0	0	0	0	0	0	0	0	0	0	0
4/22/2024	12:30 AM	0	5	1	0	0	0	0	0	0	0	0	0	0
4/22/2024	12:45 AM	0	5	0	0	0	0	0	0	0	0	0	0	0
4/22/2024	1:00 AM	0	2	0	0	0	0	0	0	0	0	0	0	0
4/22/2024	1:15 AM	0	6	0	0	0	0	0	0	0	0	0	0	0
4/22/2024	1:30 AM	0	3	0	0	0	0	0	0	0	0	0	0	0
4/22/2024	1:45 AM	0	1	0	0	0	0	0	0	0	0	0	0	0
4/22/2024	2:00 AM	0	2	0	0	0	0	0	0	0	0	0	0	0
4/22/2024	2:15 AM	0	3	0	0	0	1	0	0	0	0	0	0	0
4/22/2024	2:30 AM	0	6	0	0	0	0	0	0	0	0	0	0	0
4/22/2024	2:45 AM	0	3	1	0	0	0	0	0	0	0	0	0	0
4/22/2024	3:00 AM	0	4	0	0	0	0	0	0	0	0	0	0	0
4/22/2024	3:15 AM	0	6	0	0	0	0	0	0	0	0	0	0	0
4/22/2024	3:30 AM	0	6	0	0	0	0	0	0	0	0	0	0	0
4/22/2024	3:45 AM	0	3	0	0	0	0	0	0	0	0	0	0	0
4/22/2024	4:00 AM	0	3	0	0	0	0	0	0	0	0	0	0	0
4/22/2024	4:15 AM	0	10	1	0	0	0	0	0	0	0	0	0	0
4/22/2024	4:30 AM	0	7	1	0	0	0	0	0	0	0	0	0	0
4/22/2024	4:45 AM	0	13	1	0	0	0	0	0	0	0	0	0	0
4/22/2024	5:00 AM	0	10	0	0	0	0	0	0	0	0	0	0	0
4/22/2024	5:15 AM	0	22	4	0	0	0	0	0	0	0	0	0	0
4/22/2024	5:30 AM	0	30	6	0	0	0	0	0	0	0	0	0	0
4/22/2024	5:45 AM	0	40	7	0	0	0	0	0	0	0	0	0	0
4/22/2024	6:00 AM	0	46	7	0	1	0	0	0	0	0	0	0	0
4/22/2024	6:15 AM	1	71	16	0	0	0	0	0	0	0	0	0	0
4/22/2024	6:30 AM	0	123	36	0	0	0	0	0	0	0	0	0	0
4/22/2024	6:45 AM	1	125	44	0	0	0	0	0	0	0	0	0	0
4/22/2024	7:00 AM	0	122	35	0	1	0	0	0	0	0	0	0	0
4/22/2024	7:15 AM	0	173	57	0	1	0	0	0	0	0	0	0	0
4/22/2024	7:30 AM	0	158	38	0	4	0	0	0	0	0	0	0	0
4/22/2024	7:45 AM	0	170	49	0	0	0	0	0	0	0	0	0	0
4/22/2024	8:00 AM	0	138	34	0	0	0	0	0	0	0	0	0	0
4/22/2024	8:15 AM	0	163	31	0	0	0	0	0	0	0	0	0	0
4/22/2024	8:30 AM	0	104	46	0	1	0	0	0	2	0	0	0	0
4/22/2024	8:45 AM	0	98	30	0	2	1	0	1	1	0	0	0	0
4/22/2024	9:00 AM	0	66	29	0	1	1	0	0	0	0	0	0	0
4/22/2024	9:15 AM	0	58	31	0	1	1	0	1	2	0	0	0	0
4/22/2024	9:30 AM	0	94	35	0	4	0	0	0	0	0	0	0	0
4/22/2024	9:45 AM	0	78	26	0	2	0	0	1	0	0	0	0	0
4/22/2024	10:00 AM	0	69	35	0	1	0	0	0	0	0	0	0	0
4/22/2024	10:15 AM	0	68	29	0	1	0	0	0	0	0	0	0	0
4/22/2024	10:30 AM	0	79	20	2	0	0	0	1	2	0	0	0	0
4/22/2024	10:45 AM	1	73	36	0	1	0	0	0	0	0	0	0	0
4/22/2024	11:00 AM	0	78	33	0	1	0	0	0	0	0	0	0	0
4/22/2024	11:15 AM	0	70	39	0	1	0	0	1	0	1	0	0	0
4/22/2024	11:30 AM	0	85	27	1	2	0	0	0	2	0	0	0	0
4/22/2024	11:45 AM	0	92	33	0	0	0	0	0	0	0	0	0	0
4/22/2024	12:00 PM	0	75	24	0	0	1	0	0	0	1	0	0	0
4/22/2024	12:15 PM	0	101	29	0	0	0	0	0	1	0	0	0	0
4/22/2024	12:30 PM	0	98	27	0	1	0	0	0	0	0	0	0	0
4/22/2024	12:45 PM	3	95	34	0	0	0	0	0	5	0	0	0	0
4/22/2024	1:00 PM	0	97	31	0	2	0	0	2	3	0	0	0	0
4/22/2024	1:15 PM	0	84	32	0	1	0	0	0	1	0	0	0	0
4/22/2024	1:30 PM	0	107	39	0	1	0	0	0	1	0	0	0	0
4/22/2024	1:45 PM	0	105	34	0	0	0	0	0	2	0	0	0	0
4/22/2024	2:00 PM	0	119	43	0	0	0	0	0	2	0	0	0	0
4/22/2024	2:15 PM	0	107	42	0	3	0	0	1	1	0	0	0	0
4/22/2024	2:30 PM	0	128	40	0	3	0	0	1	2	0	0	0	0
4/22/2024	2:45 PM	0	107	42	0	0	0	0	1	0	0	0	0	0
4/22/2024	3:00 PM	2	145	38	0	1	0	0	0	0	0	0	0	0
4/22/2024	3:15 PM	2	145	44	0	5	0	0	0	1	0	0	0	0
4/22/2024	3:30 PM	0	160	60	0	4	0	0	0	1	0	0	0	0
4/22/2024	3:45 PM	0	143	49	0	4	0	0	2	3	0	0	0	0
4/22/2024	4:00 PM	0	193	57	0	8	0	0	1	0	0	0	0	0
4/22/2024	4:15 PM	0	209	76	0	5	0	0	1	0	0	0	0	0
4/22/2024	4:30 PM	1	195	71	0	4	0	0	1	1	0	0	0	0
4/22/2024	4:45 PM	0	207	70	1	11	0	0	2	0	0	0	0	0
4/22/2024	5:00 PM	0	229	91	0	3	0	0	0	2	0	0	0	0
4/22/2024	5:15 PM	1	244	86	0	2	0	0	1	2	0	0	0	0
4/22/2024	5:30 PM	0	241	78	0	7	0	0	1	1	0	0	0	0
4/22/2024	5:45 PM	2	165	59	1	3	0	0	2	2	0	0	0	0
4/22/2024	6:00 PM	0	143	44	0	5	0	0	0	0	0	0	0	0
4/22/2024	6:15 PM	0	134	30	0	2	0	0	1	1	0	0	0	0
4/22/2024	6:30 PM	1	98	28	0	1	0	0	2	0	0	0	0	0
4/22/2024	6:45 PM	0	89	38	0	0	0	0	0	2	0	0	0	0
4/22/2024	7:00 PM	0	77	26	0	0	0	0	2	1	0	0	0	0
4/22/2024	7:15 PM	0	77	14	0	2	0	0	1	0	0	0	0	0
4/22/2024	7:30 PM	0	67	20	0	0	0	0	0	0	0	1	0	0
4/22/2024	7:45 PM	0	54	14	0	0	0	0	1	0	0	0	0	0
4/22/2024	8:00 PM	0	54	12	0	0	0	0	1	0	0	0	0	0
4/22/2024	8:15 PM	0	34	9	0	0	0	0	1	0	0	0	0	0
4/22/2024	8:30 PM	0	38	8	0	1	0	0	0	1	0	0	0	0
4/22/2024	8:45 PM	0	40	7	0	0	0	0	0	0	0	0	0	0
4/22/2024	9:00 PM	0	31	7	0	0	0	0	0	0	0	0	0	0
4/22/2024	9:15 PM	0	25	4	0	0	0	0	0	0	0	0	0	0
4/22/2024	9:30 PM	0	13	2	0	0	0	0	0	0	0	0	0	0
4/22/2024	9:45 PM	0	12	2	0	0	0	0	0	0	0	0	0	0
4/22/2024	10:00 PM	0	8	1	0	0	0	0	0	0	0	0	0	0
4/22/2024	10:15 PM	0	12	3	0	0	0	0	0	0	0	0	0	0
4/22/2024	10:30 PM	0	13	1	0	0	0	0	0	0	0	0	0	0
4/22/2024	10:45 PM	0	10	1	0	0	0	0	0	0	0	0	0	0
4/22/2024	11:00 PM	0	11	0	0	0	0	0	0	0	0	0	0	0
4/22/2024	11:15 PM	0	8	0	0	0	0	0	0	0	0	0	0	0
4/22/2024	11:30 PM	0	12	0	0	0	0	0	0	0	0	0	0	0
4/22/2024	11:45 PM	0	9	0	0	0	0	0	0	0	0	0	0	0

4/23/2024	12:00 AM	0	2	1	0	0	0	0	0	0	0	0	0
4/23/2024	12:15 AM	0	6	0	0	0	0	0	0	0	0	0	0
4/23/2024	12:30 AM	0	0	0	0	0	0	0	0	0	0	0	0
4/23/2024	12:45 AM	0	3	0	0	0	0	0	0	0	0	0	0
4/23/2024	1:00 AM	0	4	0	0	0	0	0	0	0	0	0	0
4/23/2024	1:15 AM	0	2	0	0	0	0	0	0	0	0	0	0
4/23/2024	1:30 AM	0	0	0	0	0	0	0	0	0	0	0	0
4/23/2024	1:45 AM	0	2	0	0	0	0	0	0	0	0	0	0
4/23/2024	2:00 AM	0	1	0	0	0	0	0	0	0	0	0	0
4/23/2024	2:15 AM	0	1	0	0	0	0	0	0	0	0	0	0
4/23/2024	2:30 AM	0	2	0	0	0	0	0	0	0	0	0	0
4/23/2024	2:45 AM	0	2	0	0	0	0	0	0	0	0	0	0
4/23/2024	3:00 AM	0	2	0	0	0	0	0	0	0	0	0	0
4/23/2024	3:15 AM	0	5	0	0	0	0	0	0	0	0	0	0
4/23/2024	3:30 AM	0	2	0	0	0	0	0	0	0	0	0	0
4/23/2024	3:45 AM	0	7	2	0	0	0	0	0	0	0	0	0
4/23/2024	4:00 AM	0	1	0	0	0	0	0	0	0	0	0	0
4/23/2024	4:15 AM	0	3	0	0	0	0	0	0	0	0	0	0
4/23/2024	4:30 AM	0	5	1	0	0	0	0	0	0	0	0	0
4/23/2024	4:45 AM	0	10	0	0	0	0	0	0	0	0	0	0
4/23/2024	5:00 AM	0	7	2	0	1	0	0	0	0	0	0	0
4/23/2024	5:15 AM	0	19	2	0	0	0	0	0	0	0	0	0
4/23/2024	5:30 AM	0	37	4	0	0	0	0	0	0	0	0	0
4/23/2024	5:45 AM	0	28	3	0	0	0	0	0	0	0	0	0
4/23/2024	6:00 AM	0	54	8	0	2	0	0	0	0	0	0	0
4/23/2024	6:15 AM	0	100	24	0	0	0	0	0	0	0	0	0
4/23/2024	6:30 AM	0	112	31	0	0	0	0	0	0	0	0	0
4/23/2024	6:45 AM	0	131	48	0	1	0	0	0	0	0	0	0
4/23/2024	7:00 AM	0	146	40	0	2	0	0	0	0	0	0	0
4/23/2024	7:15 AM	0	162	50	1	1	0	0	0	0	0	0	0
4/23/2024	7:30 AM	0	160	35	1	1	0	0	0	0	0	0	0
4/23/2024	7:45 AM	0	159	30	0	1	0	0	0	1	0	0	0
4/23/2024	8:00 AM	0	126	47	0	1	0	0	0	0	0	0	0
4/23/2024	8:15 AM	0	120	31	0	0	0	0	0	1	0	0	0
4/23/2024	8:30 AM	0	122	25	1	1	0	0	0	1	0	0	0
4/23/2024	8:45 AM	0	108	52	0	0	0	0	0	2	0	0	0
4/23/2024	9:00 AM	0	106	37	0	5	0	0	0	2	0	0	0
4/23/2024	9:15 AM	1	94	31	0	4	0	0	0	2	0	0	0
4/23/2024	9:30 AM	0	73	38	0	0	0	0	0	1	0	0	0
4/23/2024	9:45 AM	0	79	24	0	2	0	0	0	1	0	0	0
4/23/2024	10:00 AM	0	53	20	0	1	0	0	0	0	0	0	0
4/23/2024	10:15 AM	0	53	22	0	1	0	0	1	2	0	0	0
4/23/2024	10:30 AM	0	51	18	0	0	0	0	0	1	0	0	0
4/23/2024	10:45 AM	0	56	32	0	2	0	0	0	0	0	0	0
4/23/2024	11:00 AM	0	51	25	0	1	0	0	1	0	0	0	0
4/23/2024	11:15 AM	1	75	26	0	1	1	0	1	2	0	0	0
4/23/2024	11:30 AM	1	70	29	0	0	0	0	0	0	0	0	0
4/23/2024	11:45 AM	1	66	31	0	1	0	0	0	1	0	0	0
4/23/2024	12:00 PM	0	69	24	0	1	0	0	0	0	0	0	0
4/23/2024	12:15 PM	0	83	29	0	0	0	0	0	1	0	0	0
4/23/2024	12:30 PM	0	84	31	0	2	0	0	1	1	0	0	0
4/23/2024	12:45 PM	0	78	28	0	1	0	0	1	0	0	0	0
4/23/2024	1:00 PM	1	84	30	0	4	0	0	0	4	0	0	0
4/23/2024	1:15 PM	0	89	30	0	1	0	0	1	3	0	0	0
4/23/2024	1:30 PM	0	91	30	0	2	0	0	0	1	0	0	0
4/23/2024	1:45 PM	0	106	29	0	1	0	0	0	1	0	0	0
4/23/2024	2:00 PM	0	108	38	0	2	0	0	0	4	0	0	0
4/23/2024	2:15 PM	0	109	26	0	2	0	0	0	2	0	0	0
4/23/2024	2:30 PM	0	126	33	0	2	0	0	0	0	0	0	0
4/23/2024	2:45 PM	0	105	48	0	1	0	0	0	0	0	0	0
4/23/2024	3:00 PM	1	155	38	1	2	0	0	0	0	0	0	0
4/23/2024	3:15 PM	0	129	49	0	2	0	0	0	2	0	0	0
4/23/2024	3:30 PM	1	167	55	0	4	0	0	1	0	0	0	0
4/23/2024	3:45 PM	0	181	55	0	4	0	0	1	1	0	0	0
4/23/2024	4:00 PM	0	203	68	0	4	0	0	2	0	0	0	0
4/23/2024	4:15 PM	1	224	75	0	7	0	0	3	2	0	0	0
4/23/2024	4:30 PM	1	201	73	0	4	0	0	1	1	0	0	0
4/23/2024	4:45 PM	0	166	47	0	0	0	0	1	4	0	0	0
4/23/2024	5:00 PM	0	118	41	0	2	0	0	0	1	0	0	0
4/23/2024	5:15 PM	0	258	104	0	4	0	0	0	1	0	0	0
4/23/2024	5:30 PM	1	237	72	0	4	0	0	4	3	0	0	0
4/23/2024	5:45 PM	1	187	74	0	2	0	0	1	1	0	0	0
4/23/2024	6:00 PM	1	171	67	1	2	0	0	0	0	0	0	0
4/23/2024	6:15 PM	2	121	27	0	3	0	0	0	1	0	0	0
4/23/2024	6:30 PM	0	97	24	0	1	0	0	0	0	0	0	0
4/23/2024	6:45 PM	0	91	22	0	3	1	0	1	0	0	0	0
4/23/2024	7:00 PM	3	71	20	0	1	0	0	0	0	0	0	0
4/23/2024	7:15 PM	1	86	24	0	4	0	0	0	0	0	0	0
4/23/2024	7:30 PM	1	64	23	0	0	0	0	0	1	0	0	0
4/23/2024	7:45 PM	0	62	24	0	0	0	0	0	0	0	0	0
4/23/2024	8:00 PM	0	60	14	0	0	0	0	0	1	0	0	0
4/23/2024	8:15 PM	0	60	10	0	0	0	0	0	1	0	0	0
4/23/2024	8:30 PM	0	67	11	0	0	0	0	0	0	0	0	0
4/23/2024	8:45 PM	1	36	3	0	0	0	0	0	1	0	0	0
4/23/2024	9:00 PM	0	47	2	0	1	0	0	0	0	0	0	0
4/23/2024	9:15 PM	0	26	5	0	0	0	0	0	0	0	0	0
4/23/2024	9:30 PM	0	33	3	0	0	0	0	0	0	0	0	0
4/23/2024	9:45 PM	0	28	3	0	0	0	0	0	0	0	0	0
4/23/2024	10:00 PM	0	15	0	0	1	0	0	0	1	0	0	0
4/23/2024	10:15 PM	0	28	2	0	2	0	0	0	0	0	0	0
4/23/2024	10:30 PM	0	27	3	0	0	0	0	0	1	0	0	0
4/23/2024	10:45 PM	0	15	0	0	0	0	0	0	0	0	0	0
4/23/2024	11:00 PM	0	19	2	0	1	0	0	0	1	0	0	0
4/23/2024	11:15 PM	0	11	1	0	0	0	0	0	0	0	0	0
4/23/2024	11:30 PM	0	6	0	0	0	0	0	0	0	0	0	0
4/23/2024	11:45 PM	0	5	0	0	0	0	0	0	0	0	0	0

4/24/2024	12:00 AM	0	8	0	0	0	0	0	0	0	0	0	0
4/24/2024	12:15 AM	0	7	0	0	0	0	0	0	0	0	0	0
4/24/2024	12:30 AM	0	6	0	0	0	0	0	0	0	0	0	0
4/24/2024	12:45 AM	0	6	0	0	0	0	0	0	0	0	0	0
4/24/2024	1:00 AM	0	4	0	0	0	0	0	0	0	0	0	0
4/24/2024	1:15 AM	0	3	0	0	0	0	0	0	0	0	0	0
4/24/2024	1:30 AM	0	5	0	0	0	0	0	0	0	0	0	0
4/24/2024	1:45 AM	0	5	0	0	0	0	0	0	0	0	0	0
4/24/2024	2:00 AM	0	2	0	0	0	0	0	0	0	0	0	0
4/24/2024	2:15 AM	0	5	0	0	0	0	0	0	0	0	0	0
4/24/2024	2:30 AM	0	2	0	0	0	0	0	0	0	0	0	0
4/24/2024	2:45 AM	0	1	0	0	0	0	0	0	0	0	0	0
4/24/2024	3:00 AM	0	3	0	0	0	0	0	0	0	0	0	0
4/24/2024	3:15 AM	0	4	0	0	0	0	0	0	0	0	0	0
4/24/2024	3:30 AM	0	3	0	0	0	0	0	0	0	0	0	0
4/24/2024	3:45 AM	0	4	0	0	0	0	0	0	0	0	0	0
4/24/2024	4:00 AM	0	2	0	0	0	0	0	0	0	0	0	0
4/24/2024	4:15 AM	0	2	0	0	0	0	0	0	0	0	0	0
4/24/2024	4:30 AM	0	6	0	0	0	0	0	0	0	0	0	0
4/24/2024	4:45 AM	0	5	0	0	0	0	0	0	0	0	0	0
4/24/2024	5:00 AM	0	2	0	0	0	0	0	0	0	0	0	0
4/24/2024	5:15 AM	0	11	1	0	0	0	0	0	0	0	0	0
4/24/2024	5:30 AM	0	11	3	0	0	0	0	0	0	0	0	0
4/24/2024	5:45 AM	0	24	4	0	0	0	0	0	0	0	0	0
4/24/2024	6:00 AM	0	49	3	0	0	0	0	0	1	0	0	0
4/24/2024	6:15 AM	0	85	17	0	0	0	0	0	0	0	0	0
4/24/2024	6:30 AM	0	128	39	0	0	0	0	0	0	0	0	0
4/24/2024	6:45 AM	1	126	35	0	1	0	0	0	0	0	0	0
4/24/2024	7:00 AM	0	136	38	0	3	0	0	1	0	0	0	0
4/24/2024	7:15 AM	0	158	43	0	2	0	0	1	0	0	0	0
4/24/2024	7:30 AM	0	173	48	0	2	0	0	0	0	0	0	0
4/24/2024	7:45 AM	0	152	46	0	2	0	0	0	0	0	0	0
4/24/2024	8:00 AM	0	80	31	0	2	0	0	0	0	0	0	0
4/24/2024	8:15 AM	0	108	31	0	1	1	0	0	0	0	0	0
4/24/2024	8:30 AM	0	152	29	0	1	0	0	0	1	0	0	0
4/24/2024	8:45 AM	0	133	38	0	2	0	0	1	0	0	0	0
4/24/2024	9:00 AM	0	68	24	0	2	0	0	1	1	0	0	0
4/24/2024	9:15 AM	0	44	17	0	1	1	0	0	1	0	0	0
4/24/2024	9:30 AM	0	91	30	0	0	0	0	0	0	0	0	0
4/24/2024	9:45 AM	0	122	41	0	4	0	0	0	1	0	0	0
4/24/2024	10:00 AM	0	86	28	0	1	0	0	0	0	0	0	0
4/24/2024	10:15 AM	0	72	33	0	1	0	0	0	0	0	0	0
4/24/2024	10:30 AM	1	84	28	0	0	0	0	2	2	0	0	0
4/24/2024	10:45 AM	0	85	29	0	2	0	0	1	1	0	0	0
4/24/2024	11:00 AM	1	78	21	1	0	0	0	1	0	0	0	0
4/24/2024	11:15 AM	0	74	27	0	1	0	0	0	1	0	0	0
4/24/2024	11:30 AM	1	81	48	0	2	0	0	1	0	0	0	0
4/24/2024	11:45 AM	0	86	31	0	1	1	0	1	1	0	0	0
4/24/2024	12:00 PM	1	86	14	0	1	0	0	1	1	0	0	0
4/24/2024	12:15 PM	0	115	27	0	4	0	0	0	1	0	0	0
4/24/2024	12:30 PM	0	72	29	0	0	0	0	1	3	0	0	0
4/24/2024	12:45 PM	0	75	38	0	1	0	0	0	2	0	0	0
4/24/2024	1:00 PM	1	62	32	0	0	0	0	0	1	0	0	0
4/24/2024	1:15 PM	2	88	32	0	0	0	0	0	0	0	0	0
4/24/2024	1:30 PM	0	112	39	0	3	0	0	0	1	0	0	0
4/24/2024	1:45 PM	0	102	49	0	2	1	0	2	2	0	0	0
4/24/2024	2:00 PM	0	111	47	0	1	0	0	2	1	0	0	0
4/24/2024	2:15 PM	1	115	43	0	2	0	0	1	1	0	0	0
4/24/2024	2:30 PM	1	112	20	0	1	0	0	0	1	0	0	0
4/24/2024	2:45 PM	0	137	48	1	0	0	0	0	1	0	0	0
4/24/2024	3:00 PM	2	135	62	0	1	0	0	2	2	0	0	0
4/24/2024	3:15 PM	0	182	62	0	0	0	0	1	3	0	0	0
4/24/2024	3:30 PM	0	170	66	0	7	1	0	0	0	0	0	0
4/24/2024	3:45 PM	0	179	65	0	10	2	0	3	0	0	0	0
4/24/2024	4:00 PM	0	203	67	1	2	2	0	1	2	0	0	0
4/24/2024	4:15 PM	1	213	73	0	6	0	0	0	1	0	0	0
4/24/2024	4:30 PM	0	217	66	0	9	0	0	1	2	0	0	0
4/24/2024	4:45 PM	1	225	71	0	4	0	0	0	2	0	0	0
4/24/2024	5:00 PM	0	211	75	0	2	0	0	1	2	0	0	0
4/24/2024	5:15 PM	1	221	66	0	2	0	0	2	1	0	0	0
4/24/2024	5:30 PM	0	215	62	0	4	0	0	2	1	0	0	0
4/24/2024	5:45 PM	1	216	57	0	3	0	0	1	1	0	0	0
4/24/2024	6:00 PM	0	109	49	0	3	0	0	0	1	0	0	0
4/24/2024	6:15 PM	1	152	40	1	2	0	0	0	2	0	0	0
4/24/2024	6:30 PM	1	104	25	0	3	0	0	0	0	0	0	0
4/24/2024	6:45 PM	0	86	19	0	2	0	0	1	3	0	0	0
4/24/2024	7:00 PM	0	82	26	0	1	0	0	1	0	0	0	0
4/24/2024	7:15 PM	0	84	19	0	0	0	0	0	1	0	0	0
4/24/2024	7:30 PM	0	43	24	0	1	0	0	0	0	0	0	0
4/24/2024	7:45 PM	0	54	15	0	1	0	0	1	0	0	0	0
4/24/2024	8:00 PM	0	52	12	0	0	0	0	0	1	0	0	0
4/24/2024	8:15 PM	0	49	20	0	0	0	0	0	0	0	0	0
4/24/2024	8:30 PM	0	41	10	0	0	0	0	0	0	0	0	0
4/24/2024	8:45 PM	0	46	11	0	0	0	0	0	1	0	0	0
4/24/2024	9:00 PM	0	20	5	0	0	0	0	0	0	0	0	0
4/24/2024	9:15 PM	0	25	7	0	0	0	0	0	0	0	0	0
4/24/2024	9:30 PM	0	17	6	0	0	0	0	0	0	0	0	0
4/24/2024	9:45 PM	0	19	7	0	1	0	0	0	0	0	0	0
4/24/2024	10:00 PM	1	16	5	0	0	0	0	0	0	0	0	0
4/24/2024	10:15 PM	0	13	4	0	0	0	0	0	0	0	0	0
4/24/2024	10:30 PM	0	14	3	0	0	0	0	0	0	0	0	0
4/24/2024	10:45 PM	0	12	2	0	0	0	0	0	0	0	0	0
4/24/2024	11:00 PM	0	11	3	0	0	0	0	0	0	0	0	0
4/24/2024	11:15 PM	0	9	2	0	0	0	0	0	0	0	0	0
4/24/2024	11:30 PM	0	8	2	0	0	0	0	0	0	0	0	0
4/24/2024	11:45 PM	0	5	2	0	0	0	0	0	0	0	0	0

4/25/2024	12:00 AM	0	7	2	0	0	0	0	0	0	0	0	0
4/25/2024	12:15 AM	0	2	0	0	0	0	0	0	0	0	0	0
4/25/2024	12:30 AM	0	5	1	0	0	0	0	0	0	0	0	0
4/25/2024	12:45 AM	0	4	0	0	0	0	0	0	0	0	0	0
4/25/2024	1:00 AM	0	3	0	0	0	0	0	0	0	0	0	0
4/25/2024	1:15 AM	0	4	0	0	0	0	0	0	0	0	0	0
4/25/2024	1:30 AM	0	2	0	0	0	0	0	0	0	0	0	0
4/25/2024	1:45 AM	0	0	0	0	0	0	0	0	0	0	0	0
4/25/2024	2:00 AM	0	2	0	0	0	0	0	0	0	0	0	0
4/25/2024	2:15 AM	0	3	0	0	0	0	0	0	0	0	0	0
4/25/2024	2:30 AM	0	2	0	0	1	0	0	0	0	0	0	0
4/25/2024	2:45 AM	0	0	0	0	0	0	0	0	0	0	0	0
4/25/2024	3:00 AM	0	2	0	0	0	0	0	0	0	0	0	0
4/25/2024	3:15 AM	0	2	0	0	0	0	0	0	0	0	0	0
4/25/2024	3:30 AM	0	2	0	0	0	0	0	0	0	0	0	0
4/25/2024	3:45 AM	0	5	2	0	0	0	0	0	0	0	0	0
4/25/2024	4:00 AM	0	6	3	0	0	0	0	0	0	0	0	0
4/25/2024	4:15 AM	0	4	1	0	0	0	0	0	0	0	0	0
4/25/2024	4:30 AM	1	8	3	0	0	0	0	0	0	0	0	0
4/25/2024	4:45 AM	0	13	5	0	0	0	0	0	0	0	0	0
4/25/2024	5:00 AM	0	10	4	0	0	0	0	0	1	0	0	0
4/25/2024	5:15 AM	1	8	3	0	0	0	0	0	0	0	0	0
4/25/2024	5:30 AM	0	12	5	0	0	0	0	0	0	0	0	0
4/25/2024	5:45 AM	0	26	8	0	1	0	0	0	0	0	0	0
4/25/2024	6:00 AM	0	22	10	0	0	0	0	0	0	0	0	0
4/25/2024	6:15 AM	0	77	19	0	2	0	0	0	1	0	0	0
4/25/2024	6:30 AM	0	111	36	0	0	0	0	0	0	0	0	0
4/25/2024	6:45 AM	1	146	40	0	0	0	0	0	0	0	0	0
4/25/2024	7:00 AM	0	131	45	0	1	0	0	1	0	0	0	0
4/25/2024	7:15 AM	0	180	51	0	1	0	0	1	0	0	0	0
4/25/2024	7:30 AM	1	153	36	0	2	0	0	0	1	0	0	0
4/25/2024	7:45 AM	0	173	42	0	3	0	0	0	0	0	0	0
4/25/2024	8:00 AM	0	139	56	0	0	0	0	1	1	0	0	0
4/25/2024	8:15 AM	0	147	42	1	1	0	0	1	0	0	0	0
4/25/2024	8:30 AM	0	139	54	0	4	0	0	0	0	0	0	0
4/25/2024	8:45 AM	1	107	28	0	0	0	0	0	1	0	0	0
4/25/2024	9:00 AM	1	82	33	0	0	0	0	0	0	0	0	0
4/25/2024	9:15 AM	0	79	26	0	1	0	0	0	1	0	0	0
4/25/2024	9:30 AM	1	93	43	0	2	0	0	0	1	0	0	0
4/25/2024	9:45 AM	1	103	35	0	3	0	0	0	1	0	0	0
4/25/2024	10:00 AM	5	80	27	0	1	0	0	0	0	0	0	0
4/25/2024	10:15 AM	0	96	24	0	2	0	0	0	1	0	0	0
4/25/2024	10:30 AM	0	91	26	0	3	0	0	1	2	0	0	0
4/25/2024	10:45 AM	0	106	33	0	2	0	0	2	4	0	0	0
4/25/2024	11:00 AM	1	106	23	1	3	0	0	0	0	0	0	0
4/25/2024	11:15 AM	0	85	35	0	3	0	0	0	1	0	0	0
4/25/2024	11:30 AM	8	96	39	0	0	0	0	1	3	0	0	0
4/25/2024	11:45 AM	4	105	38	1	0	0	0	0	1	0	0	0
4/25/2024	12:00 PM	0	99	31	0	4	2	0	0	2	0	0	0
4/25/2024	12:15 PM	0	135	41	0	3	0	0	1	2	0	0	0
4/25/2024	12:30 PM	0	105	40	0	3	0	0	0	1	0	0	0
4/25/2024	12:45 PM	1	121	43	0	4	0	0	1	0	0	0	0
4/25/2024	1:00 PM	0	139	29	0	3	0	0	1	2	0	0	0
4/25/2024	1:15 PM	0	115	31	0	2	0	0	0	1	0	0	0
4/25/2024	1:30 PM	0	152	40	0	3	0	0	0	1	0	0	0
4/25/2024	1:45 PM	7	147	36	0	3	1	0	0	3	0	0	0
4/25/2024	2:00 PM	0	127	45	0	2	0	0	4	0	0	0	0
4/25/2024	2:15 PM	1	141	49	1	3	0	0	0	0	1	0	0
4/25/2024	2:30 PM	1	152	46	1	2	0	0	0	2	0	0	0
4/25/2024	2:45 PM	0	138	50	0	2	0	0	0	1	0	0	0
4/25/2024	3:00 PM	4	143	58	0	3	0	0	1	2	0	0	0
4/25/2024	3:15 PM	0	198	59	0	5	0	0	0	4	0	0	0
4/25/2024	3:30 PM	1	184	66	0	3	0	0	1	0	0	0	0
4/25/2024	3:45 PM	0	202	65	0	3	0	0	2	1	0	0	0
4/25/2024	4:00 PM	2	220	92	0	7	0	0	1	0	0	0	0
4/25/2024	4:15 PM	1	250	77	0	5	0	0	2	0	0	0	0
4/25/2024	4:30 PM	1	244	68	0	3	0	0	0	2	0	0	0
4/25/2024	4:45 PM	1	231	68	0	1	1	0	2	1	0	0	0
4/25/2024	5:00 PM	0	201	75	0	6	0	0	2	1	0	0	0
4/25/2024	5:15 PM	0	236	88	0	2	1	0	0	0	0	0	0
4/25/2024	5:30 PM	1	219	79	0	2	0	0	1	1	0	0	0
4/25/2024	5:45 PM	1	228	75	0	2	0	0	1	1	0	0	0
4/25/2024	6:00 PM	0	170	68	0	4	1	0	1	3	0	0	0
4/25/2024	6:15 PM	3	168	43	0	4	0	0	0	0	0	0	0
4/25/2024	6:30 PM	3	117	32	0	2	0	0	2	1	0	0	0
4/25/2024	6:45 PM	0	107	37	0	1	0	0	2	0	0	0	0
4/25/2024	7:00 PM	1	94	20	0	1	0	0	0	1	0	0	0
4/25/2024	7:15 PM	0	104	31	2	0	0	0	1	0	0	0	0
4/25/2024	7:30 PM	1	88	25	0	0	0	0	1	0	0	0	0
4/25/2024	7:45 PM	1	80	13	0	0	0	0	0	0	0	0	0
4/25/2024	8:00 PM	0	59	12	0	1	0	0	0	1	0	0	0
4/25/2024	8:15 PM	0	70	16	0	0	0	0	0	0	0	0	0
4/25/2024	8:30 PM	0	34	8	0	0	0	0	0	0	0	0	0
4/25/2024	8:45 PM	0	53	17	0	1	0	0	0	0	0	0	0
4/25/2024	9:00 PM	0	36	8	0	0	0	0	0	1	0	0	0
4/25/2024	9:15 PM	0	39	10	0	0	0	0	0	1	0	0	0
4/25/2024	9:30 PM	0	27	9	0	0	0	0	0	1	0	1	0
4/25/2024	9:45 PM	0	26	11	0	0	0	0	0	0	0	0	0
4/25/2024	10:00 PM	0	18	6	0	0	0	0	0	1	0	0	0
4/25/2024	10:15 PM	0	19	10	0	1	0	0	0	0	0	0	0
4/25/2024	10:30 PM	0	21	10	0	0	0	0	0	0	0	0	0
4/25/2024	10:45 PM	0	12	2	0	0	0	0	0	0	0	0	0
4/25/2024	11:00 PM	0	13	3	0	0	0	0	0	2	0	0	0
4/25/2024	11:15 PM	0	7	2	0	1	0	0	0	1	0	0	0
4/25/2024	11:30 PM	0	11	5	0	0	0	0	0	1	0	0	0
4/25/2024	11:45 PM	0	15	4	0	1	0	0	0	0	0	0	0

4/26/2024	12:00 AM	0	20	2	0	0	0	0	0	0	0	0	0
4/26/2024	12:15 AM	0	4	0	0	0	0	0	0	1	0	0	0
4/26/2024	12:30 AM	0	6	0	0	0	0	0	0	0	0	0	0
4/26/2024	12:45 AM	0	12	2	0	0	0	0	0	0	0	0	0
4/26/2024	1:00 AM	0	4	0	0	0	0	0	0	0	0	0	0
4/26/2024	1:15 AM	0	9	0	0	0	0	0	0	0	0	0	0
4/26/2024	1:30 AM	0	5	0	0	0	0	0	0	0	0	0	0
4/26/2024	1:45 AM	0	7	0	0	0	0	0	0	0	0	0	0
4/26/2024	2:00 AM	0	6	0	0	0	0	0	0	0	0	0	0
4/26/2024	2:15 AM	0	2	0	0	0	0	0	0	0	0	0	0
4/26/2024	2:30 AM	0	5	0	0	0	0	0	0	0	0	0	0
4/26/2024	2:45 AM	0	6	0	0	0	0	0	0	1	0	0	0
4/26/2024	3:00 AM	0	2	0	0	0	0	0	0	0	0	0	0
4/26/2024	3:15 AM	0	6	0	0	0	0	0	0	0	0	0	0
4/26/2024	3:30 AM	0	10	0	0	0	0	0	0	0	0	0	0
4/26/2024	3:45 AM	0	9	0	0	0	0	0	0	0	0	0	0
4/26/2024	4:00 AM	0	6	0	0	0	0	0	0	0	0	0	0
4/26/2024	4:15 AM	0	12	0	0	0	0	0	0	0	0	0	0
4/26/2024	4:30 AM	0	15	0	0	0	0	0	0	0	0	0	0
4/26/2024	4:45 AM	0	22	0	0	0	0	0	0	0	0	0	0
4/26/2024	5:00 AM	0	12	3	0	0	0	0	0	0	0	0	0
4/26/2024	5:15 AM	0	22	2	0	0	0	0	0	1	0	0	0
4/26/2024	5:30 AM	0	40	4	0	2	0	0	0	1	0	0	0
4/26/2024	5:45 AM	0	37	3	0	0	0	0	0	0	0	0	0
4/26/2024	6:00 AM	0	49	3	0	0	0	0	0	0	0	0	0
4/26/2024	6:15 AM	0	75	7	0	1	0	0	0	0	0	0	0
4/26/2024	6:30 AM	0	115	10	0	0	0	0	0	0	0	0	0
4/26/2024	6:45 AM	0	126	18	0	0	0	0	0	0	0	0	0
4/26/2024	7:00 AM	1	114	35	0	0	0	0	0	1	0	0	0
4/26/2024	7:15 AM	0	168	30	0	3	0	0	0	0	0	0	0
4/26/2024	7:30 AM	1	176	51	0	1	0	0	1	0	0	0	0
4/26/2024	7:45 AM	2	169	39	1	1	0	0	0	0	0	0	0
4/26/2024	8:00 AM	1	130	45	0	2	0	0	1	1	0	0	0
4/26/2024	8:15 AM	0	114	35	0	2	0	0	0	0	0	0	0
4/26/2024	8:30 AM	7	102	38	0	0	0	0	0	0	0	0	0
4/26/2024	8:45 AM	1	108	25	0	2	0	0	0	0	0	0	0
4/26/2024	9:00 AM	1	87	27	0	1	0	0	0	0	0	0	0
4/26/2024	9:15 AM	2	93	28	0	1	0	0	0	0	0	0	0
4/26/2024	9:30 AM	0	77	30	0	3	0	0	0	0	0	0	0
4/26/2024	9:45 AM	1	99	26	0	1	0	0	0	0	0	0	0
4/26/2024	10:00 AM	0	94	18	0	1	0	0	0	0	0	0	0
4/26/2024	10:15 AM	0	99	20	0	0	0	0	0	1	0	0	0
4/26/2024	10:30 AM	0	102	22	0	3	2	0	2	1	0	0	0
4/26/2024	10:45 AM	1	117	34	0	0	0	0	1	0	0	0	0
4/26/2024	11:00 AM	0	101	26	0	3	0	0	0	1	0	0	0
4/26/2024	11:15 AM	0	110	42	0	2	0	0	0	2	0	0	0
4/26/2024	11:30 AM	0	125	40	0	3	0	0	1	2	0	0	0
4/26/2024	11:45 AM	3	128	50	0	1	0	0	0	2	0	0	0
4/26/2024	12:00 PM	0	137	47	0	2	1	0	0	2	0	0	0
4/26/2024	12:15 PM	0	126	44	0	2	0	0	0	1	0	0	0
4/26/2024	12:30 PM	1	141	41	0	1	0	0	0	0	0	0	0
4/26/2024	12:45 PM	1	151	58	0	6	0	0	1	2	0	0	0
4/26/2024	1:00 PM	3	145	66	0	2	0	0	0	1	0	0	0
4/26/2024	1:15 PM	0	187	60	0	5	0	0	2	4	0	0	0
4/26/2024	1:30 PM	0	152	58	0	2	1	0	1	4	0	0	0
4/26/2024	1:45 PM	0	163	57	1	3	1	0	6	4	0	0	0
4/26/2024	2:00 PM	2	180	65	0	3	0	0	0	1	0	0	0
4/26/2024	2:15 PM	3	186	56	0	3	1	0	0	0	0	0	0
4/26/2024	2:30 PM	0	192	66	0	4	0	0	0	2	0	0	0
4/26/2024	2:45 PM	1	203	69	0	5	2	0	1	3	0	0	0
4/26/2024	3:00 PM	0	209	75	0	7	0	0	2	2	0	0	0
4/26/2024	3:15 PM	2	204	76	0	2	0	0	0	3	0	0	0
4/26/2024	3:30 PM	1	197	79	0	0	0	0	0	3	0	0	0
4/26/2024	3:45 PM	0	215	85	0	4	1	0	0	4	0	0	0
4/26/2024	4:00 PM	0	228	76	0	2	0	0	1	0	0	0	0
4/26/2024	4:15 PM	4	244	80	0	2	0	0	2	0	0	0	0
4/26/2024	4:30 PM	1	184	62	1	3	0	0	0	2	0	0	0
4/26/2024	4:45 PM	1	214	62	0	0	0	1	1	0	0	0	0
4/26/2024	5:00 PM	1	202	66	0	3	0	0	0	1	0	0	0
4/26/2024	5:15 PM	0	203	61	0	1	0	0	0	0	0	0	0
4/26/2024	5:30 PM	1	201	67	0	1	0	0	1	2	0	0	0
4/26/2024	5:45 PM	0	157	33	0	4	1	0	1	1	0	0	0
4/26/2024	6:00 PM	1	160	45	0	3	0	0	0	0	0	0	0
4/26/2024	6:15 PM	1	158	47	2	1	0	0	1	0	0	0	0
4/26/2024	6:30 PM	1	142	35	0	0	0	0	0	0	0	0	0
4/26/2024	6:45 PM	3	106	37	0	0	0	0	0	0	0	0	0
4/26/2024	7:00 PM	0	124	31	0	1	0	0	1	0	0	0	0
4/26/2024	7:15 PM	2	117	34	1	0	0	0	1	0	0	0	0
4/26/2024	7:30 PM	1	98	16	0	0	0	0	0	0	0	0	0
4/26/2024	7:45 PM	1	89	23	0	0	1	0	0	0	0	0	0
4/26/2024	8:00 PM	0	80	15	2	0	0	0	0	0	0	0	0
4/26/2024	8:15 PM	0	88	14	0	0	0	0	0	0	0	0	0
4/26/2024	8:30 PM	0	71	5	0	0	0	0	0	1	0	0	0
4/26/2024	8:45 PM	2	85	6	0	0	0	0	0	0	0	0	0
4/26/2024	9:00 PM	0	71	8	0	0	0	0	0	0	0	0	0
4/26/2024	9:15 PM	0	83	12	0	0	0	0	0	0	0	0	0
4/26/2024	9:30 PM	0	63	5	0	0	0	0	0	0	0	0	0
4/26/2024	9:45 PM	0	56	1	0	0	0	0	0	0	0	0	0
4/26/2024	10:00 PM	0	50	2	0	0	0	0	0	0	0	0	0
4/26/2024	10:15 PM	0	53	3	0	0	0	0	0	0	0	0	0
4/26/2024	10:30 PM	0	52	4	0	0	0	0	0	1	0	0	0
4/26/2024	10:45 PM	0	60	3	0	0	0	0	0	0	0	0	0
4/26/2024	11:00 PM	0	46	2	0	0	0	0	0	0	0	0	0
4/26/2024	11:15 PM	1	35	3	0	0	0	0	0	0	0	0	0
4/26/2024	11:30 PM	0	27	3	0	0	0	0	0	0	0	0	0
4/26/2024	11:45 PM	0	23	2	0	0	0	0	0	0	0	0	0

4/27/2024	12:00 AM	1	15	3	0	0	0	0	0	0	0	0	0
4/27/2024	12:15 AM	0	8	0	0	0	0	0	0	0	0	0	0
4/27/2024	12:30 AM	0	12	2	0	0	0	0	0	0	0	0	0
4/27/2024	12:45 AM	0	7	1	0	0	0	0	0	0	0	0	0
4/27/2024	1:00 AM	0	8	2	0	0	0	0	0	0	0	0	0
4/27/2024	1:15 AM	0	5	1	0	0	0	0	0	0	0	0	0
4/27/2024	1:30 AM	1	5	1	0	0	0	0	0	0	0	0	0
4/27/2024	1:45 AM	0	3	0	0	0	0	0	0	0	0	0	0
4/27/2024	2:00 AM	0	4	0	0	0	0	0	0	0	0	0	0
4/27/2024	2:15 AM	0	8	1	0	0	0	0	0	0	0	0	0
4/27/2024	2:30 AM	0	1	0	0	0	0	0	0	0	0	0	0
4/27/2024	2:45 AM	0	4	0	0	0	0	0	0	0	0	0	0
4/27/2024	3:00 AM	0	4	0	0	0	0	0	0	0	0	0	0
4/27/2024	3:15 AM	0	5	0	0	0	0	0	0	0	0	0	0
4/27/2024	3:30 AM	0	1	1	0	0	0	0	0	0	0	0	0
4/27/2024	3:45 AM	0	1	0	0	0	0	0	0	0	0	0	0
4/27/2024	4:00 AM	0	6	0	0	0	0	0	0	0	0	0	0
4/27/2024	4:15 AM	0	5	0	0	0	0	0	0	0	0	0	0
4/27/2024	4:30 AM	0	6	2	0	0	0	0	0	0	0	0	0
4/27/2024	4:45 AM	0	5	1	0	0	0	0	0	0	0	0	0
4/27/2024	5:00 AM	0	7	1	0	0	0	0	0	1	0	0	0
4/27/2024	5:15 AM	3	14	2	0	0	0	0	0	0	0	0	0
4/27/2024	5:30 AM	0	12	1	0	0	0	0	0	0	0	0	0
4/27/2024	5:45 AM	0	18	2	0	0	0	0	0	0	0	0	0
4/27/2024	6:00 AM	0	23	3	0	0	0	0	0	1	0	0	0
4/27/2024	6:15 AM	0	27	7	0	0	0	0	0	0	0	0	0
4/27/2024	6:30 AM	0	36	13	0	0	0	0	0	0	0	0	0
4/27/2024	6:45 AM	1	40	10	0	0	0	0	0	1	0	0	0
4/27/2024	7:00 AM	0	38	8	0	0	0	0	1	0	0	0	0
4/27/2024	7:15 AM	0	33	9	0	0	0	0	0	0	0	0	0
4/27/2024	7:30 AM	0	53	17	0	1	0	0	0	0	0	0	0
4/27/2024	7:45 AM	2	63	16	0	1	0	0	0	0	0	0	0
4/27/2024	8:00 AM	0	64	19	0	0	0	0	0	0	0	0	0
4/27/2024	8:15 AM	0	65	17	0	0	0	0	0	0	0	0	0
4/27/2024	8:30 AM	1	60	29	0	2	0	0	0	1	0	0	0
4/27/2024	8:45 AM	0	84	21	0	0	0	0	0	0	0	0	0
4/27/2024	9:00 AM	0	70	25	0	0	0	0	0	0	0	0	0
4/27/2024	9:15 AM	0	81	33	1	0	0	0	0	0	0	0	0
4/27/2024	9:30 AM	0	83	22	0	0	0	0	0	0	0	0	0
4/27/2024	9:45 AM	0	77	27	0	0	0	0	0	0	0	0	0
4/27/2024	10:00 AM	1	87	17	0	2	0	0	0	2	0	0	0
4/27/2024	10:15 AM	1	92	24	0	0	0	0	0	0	0	0	0
4/27/2024	10:30 AM	0	102	26	0	0	0	0	0	1	0	0	0
4/27/2024	10:45 AM	1	91	33	0	0	0	0	1	0	0	0	0
4/27/2024	11:00 AM	1	102	28	0	0	0	0	0	0	0	0	0
4/27/2024	11:15 AM	0	110	28	0	0	0	0	0	0	0	0	0
4/27/2024	11:30 AM	0	85	25	0	0	0	0	0	0	0	0	0
4/27/2024	11:45 AM	0	116	23	0	1	0	0	0	1	0	0	0
4/27/2024	12:00 PM	0	98	25	0	0	0	0	0	0	0	0	0
4/27/2024	12:15 PM	1	125	23	0	2	0	0	0	0	0	0	0
4/27/2024	12:30 PM	2	110	35	0	0	1	0	0	0	0	0	0
4/27/2024	12:45 PM	1	127	25	0	1	0	0	0	0	0	0	0
4/27/2024	1:00 PM	1	124	21	0	1	0	0	0	1	0	0	0
4/27/2024	1:15 PM	3	121	32	0	2	0	0	1	0	0	0	0
4/27/2024	1:30 PM	1	118	24	0	0	0	0	0	0	0	0	0
4/27/2024	1:45 PM	3	118	28	0	0	0	0	0	0	0	0	0
4/27/2024	2:00 PM	1	123	19	0	2	0	0	0	0	0	0	0
4/27/2024	2:15 PM	1	136	20	0	1	0	0	0	0	0	0	0
4/27/2024	2:30 PM	5	108	23	0	2	0	0	1	0	0	0	0
4/27/2024	2:45 PM	0	124	28	0	0	0	0	1	1	0	0	0
4/27/2024	3:00 PM	4	101	22	0	0	0	0	0	0	0	0	0
4/27/2024	3:15 PM	1	95	26	0	2	0	0	0	1	0	0	0
4/27/2024	3:30 PM	7	106	21	0	1	0	0	1	0	0	0	0
4/27/2024	3:45 PM	1	115	32	0	0	0	0	0	1	0	0	0
4/27/2024	4:00 PM	2	112	16	0	0	0	0	0	0	0	0	0
4/27/2024	4:15 PM	0	94	20	0	0	0	0	1	0	0	0	0
4/27/2024	4:30 PM	10	108	31	0	1	0	0	1	1	0	0	0
4/27/2024	4:45 PM	6	103	17	0	0	0	0	0	0	0	0	0
4/27/2024	5:00 PM	0	120	18	0	0	0	0	0	0	0	0	0
4/27/2024	5:15 PM	1	85	19	0	0	0	0	0	0	0	0	0
4/27/2024	5:30 PM	7	105	21	0	0	0	0	0	0	0	0	0
4/27/2024	5:45 PM	0	88	18	0	0	0	0	0	0	0	0	0
4/27/2024	6:00 PM	8	101	10	0	1	0	0	0	0	0	0	0
4/27/2024	6:15 PM	0	96	17	0	2	0	0	1	0	0	0	0
4/27/2024	6:30 PM	10	103	22	0	0	0	0	0	0	0	0	0
4/27/2024	6:45 PM	4	77	1	0	1	0	0	1	1	0	0	0
4/27/2024	7:00 PM	0	79	12	0	0	0	0	0	0	0	0	0
4/27/2024	7:15 PM	0	61	16	0	1	0	0	0	0	0	0	0
4/27/2024	7:30 PM	0	59	20	0	0	0	0	1	1	0	0	0
4/27/2024	7:45 PM	1	64	10	0	0	0	0	0	0	0	0	0
4/27/2024	8:00 PM	2	64	18	0	0	0	0	1	1	0	0	0
4/27/2024	8:15 PM	0	40	11	0	0	0	0	0	0	0	0	0
4/27/2024	8:30 PM	1	47	5	0	0	0	0	0	0	0	0	0
4/27/2024	8:45 PM	0	49	6	0	0	0	0	0	0	0	0	0
4/27/2024	9:00 PM	2	55	6	0	0	0	0	0	0	0	0	0
4/27/2024	9:15 PM	0	61	7	0	0	0	0	0	0	0	0	0
4/27/2024	9:30 PM	0	59	5	0	0	0	0	0	0	0	0	0
4/27/2024	9:45 PM	0	37	2	0	0	0	0	0	1	0	0	0
4/27/2024	10:00 PM	0	42	2	0	0	0	0	0	0	0	0	0
4/27/2024	10:15 PM	0	45	3	0	0	0	0	0	0	0	0	0
4/27/2024	10:30 PM	0	32	4	0	0	0	0	0	0	0	0	0
4/27/2024	10:45 PM	0	28	1	0	0	0	0	0	1	0	0	0
4/27/2024	11:00 PM	0	23	7	1	0	0	0	0	0	0	0	0
4/27/2024	11:15 PM	0	15	4	0	0	0	0	0	0	0	0	0
4/27/2024	11:30 PM	0	15	2	0	0	0	0	0	0	0	0	0
4/27/2024	11:45 PM	0	13	1	0	0	0	0	0	0	0	0	0

NB
File Name:
Start Date: 4/21/2024
Start Time: 0
Site Code: 75 Lane 1 SB
Station ID: 1
Location 1: I-20, north of Bush River Rd
Location 2:

Date	Time	1	2	3	4	5	6	7	8	9	10	11	12	13
4/21/2024	12:00 AM	0	0	0	0	0	0	0	0	0	0	0	0	0
4/21/2024	12:15 AM	0	0	0	0	0	0	0	0	0	0	0	0	0
4/21/2024	12:30 AM	0	0	0	0	0	0	0	0	0	0	0	0	0
4/21/2024	12:45 AM	0	0	0	0	0	0	0	0	0	0	0	0	0
4/21/2024	1:00 AM	0	0	0	0	0	0	0	0	0	0	0	0	0
4/21/2024	1:15 AM	0	0	0	0	0	0	0	0	0	0	0	0	0
4/21/2024	1:30 AM	0	0	0	0	0	0	0	0	0	0	0	0	0
4/21/2024	1:45 AM	0	0	0	0	0	0	0	0	0	0	0	0	0
4/21/2024	2:00 AM	0	0	0	0	0	0	0	0	0	0	0	0	0
4/21/2024	2:15 AM	0	0	0	0	0	0	0	0	0	0	0	0	0
4/21/2024	2:30 AM	0	0	0	0	0	0	0	0	0	0	0	0	0
4/21/2024	2:45 AM	0	0	0	0	0	0	0	0	0	0	0	0	0
4/21/2024	3:00 AM	0	0	0	0	0	0	0	0	0	0	0	0	0
4/21/2024	3:15 AM	0	0	0	0	0	0	0	0	0	0	0	0	0
4/21/2024	3:30 AM	0	0	0	0	0	0	0	0	0	0	0	0	0
4/21/2024	3:45 AM	0	0	0	0	0	0	0	0	0	0	0	0	0
4/21/2024	4:00 AM	0	0	0	0	0	0	0	0	0	0	0	0	0
4/21/2024	4:15 AM	0	0	0	0	0	0	0	0	0	0	0	0	0
4/21/2024	4:30 AM	0	0	0	0	0	0	0	0	0	0	0	0	0
4/21/2024	4:45 AM	0	0	0	0	0	0	0	0	0	0	0	0	0
4/21/2024	5:00 AM	0	0	0	0	0	0	0	0	0	0	0	0	0
4/21/2024	5:15 AM	0	0	0	0	0	0	0	0	0	0	0	0	0
4/21/2024	5:30 AM	0	0	0	0	0	0	0	0	0	0	0	0	0
4/21/2024	5:45 AM	0	0	0	0	0	0	0	0	0	0	0	0	0
4/21/2024	6:00 AM	0	0	0	0	0	0	0	0	0	0	0	0	0
4/21/2024	6:15 AM	0	0	0	0	0	0	0	0	0	0	0	0	0
4/21/2024	6:30 AM	0	0	0	0	0	0	0	0	0	0	0	0	0
4/21/2024	6:45 AM	0	0	0	0	0	0	0	0	0	0	0	0	0
4/21/2024	7:00 AM	0	0	0	0	0	0	0	0	0	0	0	0	0
4/21/2024	7:15 AM	0	0	0	0	0	0	0	0	0	0	0	0	0
4/21/2024	7:30 AM	0	0	0	0	0	0	0	0	0	0	0	0	0
4/21/2024	7:45 AM	0	0	0	0	0	0	0	0	0	0	0	0	0
4/21/2024	8:00 AM	0	0	0	0	0	0	0	0	0	0	0	0	0
4/21/2024	8:15 AM	0	0	0	0	0	0	0	0	0	0	0	0	0
4/21/2024	8:30 AM	0	0	0	0	0	0	0	0	0	0	0	0	0
4/21/2024	8:45 AM	0	0	0	0	0	0	0	0	0	0	0	0	0
4/21/2024	9:00 AM	0	0	0	0	0	0	0	0	0	0	0	0	0
4/21/2024	9:15 AM	0	0	0	0	0	0	0	0	0	0	0	0	0
4/21/2024	9:30 AM	0	0	0	0	0	0	0	0	0	0	0	0	0
4/21/2024	9:45 AM	0	0	0	0	0	0	0	0	0	0	0	0	0
4/21/2024	10:00 AM	0	0	0	0	0	0	0	0	0	0	0	0	0
4/21/2024	10:15 AM	0	0	0	0	0	0	0	0	0	0	0	0	0
4/21/2024	10:30 AM	0	0	0	0	0	0	0	0	0	0	0	0	0
4/21/2024	10:45 AM	0	0	0	0	0	0	0	0	0	0	0	0	0
4/21/2024	11:00 AM	0	0	0	0	0	0	0	0	0	0	0	0	0
4/21/2024	11:15 AM	0	0	0	0	0	0	0	0	0	0	0	0	0
4/21/2024	11:30 AM	0	0	0	0	0	0	0	0	0	0	0	0	0
4/21/2024	11:45 AM	0	0	0	0	0	0	0	0	0	0	0	0	0
4/21/2024	12:00 PM	0	0	0	0	0	0	0	0	0	0	0	0	0
4/21/2024	12:15 PM	0	0	0	0	0	0	0	0	0	0	0	0	0
4/21/2024	12:30 PM	0	0	0	0	0	0	0	0	0	0	0	0	0
4/21/2024	12:45 PM	0	0	0	0	0	0	0	0	0	0	0	0	0
4/21/2024	1:00 PM	0	0	0	0	0	0	0	0	0	0	0	0	0
4/21/2024	1:15 PM	0	0	0	0	0	0	0	0	0	0	0	0	0
4/21/2024	1:30 PM	0	0	0	0	0	0	0	0	0	0	0	0	0
4/21/2024	1:45 PM	0	0	0	0	0	0	0	0	0	0	0	0	0
4/21/2024	2:00 PM	0	0	0	0	0	0	0	0	0	0	0	0	0
4/21/2024	2:15 PM	0	0	0	0	0	0	0	0	0	0	0	0	0
4/21/2024	2:30 PM	0	0	0	0	0	0	0	0	0	0	0	0	0
4/21/2024	2:45 PM	0	0	0	0	0	0	0	0	0	0	0	0	0
4/21/2024	3:00 PM	0	0	0	0	0	0	0	0	0	0	0	0	0
4/21/2024	3:15 PM	0	0	0	0	0	0	0	0	0	0	0	0	0
4/21/2024	3:30 PM	0	0	0	0	0	0	0	0	0	0	0	0	0
4/21/2024	3:45 PM	0	0	0	0	0	0	0	0	0	0	0	0	0
4/21/2024	4:00 PM	0	0	0	0	0	0	0	0	0	0	0	0	0
4/21/2024	4:15 PM	0	0	0	0	0	0	0	0	0	0	0	0	0
4/21/2024	4:30 PM	0	0	0	0	0	0	0	0	0	0	0	0	0
4/21/2024	4:45 PM	0	0	0	0	0	0	0	0	0	0	0	0	0
4/21/2024	5:00 PM	0	0	0	0	0	0	0	0	0	0	0	0	0
4/21/2024	5:15 PM	0	0	0	0	0	0	0	0	0	0	0	0	0
4/21/2024	5:30 PM	0	0	0	0	0	0	0	0	0	0	0	0	0
4/21/2024	5:45 PM	0	0	0	0	0	0	0	0	0	0	0	0	0
4/21/2024	6:00 PM	0	0	0	0	0	0	0	0	0	0	0	0	0
4/21/2024	6:15 PM	0	0	0	0	0	0	0	0	0	0	0	0	0
4/21/2024	6:30 PM	0	0	0	0	0	0	0	0	0	0	0	0	0
4/21/2024	6:45 PM	0	0	0	0	0	0	0	0	0	0	0	0	0
4/21/2024	7:00 PM	0	0	0	0	0	0	0	0	0	0	0	0	0
4/21/2024	7:15 PM	0	0	0	0	0	0	0	0	0	0	0	0	0
4/21/2024	7:30 PM	0	0	0	0	0	0	0	0	0	0	0	0	0
4/21/2024	7:45 PM	0	0	0	0	0	0	0	0	0	0	0	0	0
4/21/2024	8:00 PM	0	0	0	0	0	0	0	0	0	0	0	0	0
4/21/2024	8:15 PM	0	0	0	0	0	0	0	0	0	0	0	0	0
4/21/2024	8:30 PM	0	0	0	0	0	0	0	0	0	0	0	0	0
4/21/2024	8:45 PM	0	0	0	0	0	0	0	0	0	0	0	0	0
4/21/2024	9:00 PM	0	0	0	0	0	0	0	0	0	0	0	0	0
4/21/2024	9:15 PM	0	0	0	0	0	0	0	0	0	0	0	0	0
4/21/2024	9:30 PM	0	0	0	0	0	0	0	0	0	0	0	0	0
4/21/2024	9:45 PM	0	0	0	0	0	0	0	0	0	0	0	0	0
4/21/2024	10:00 PM	0	0	0	0	0	0	0	0	0	0	0	0	0
4/21/2024	10:15 PM	0	0	0	0	0	0	0	0	0	0	0	0	0
4/21/2024	10:30 PM	0	0	0	0	0	0	0	0	0	0	0	0	0
4/21/2024	10:45 PM	0	0	0	0	0	0	0	0	0	0	0	0	0
4/21/2024	11:00 PM	0	0	0	0	0	0	0	0	0	0	0	0	0
4/21/2024	11:15 PM	0	0	0	0	0	0	0	0	0	0	0	0	0
4/21/2024	11:30 PM	0	0	0	0	0	0	0	0	0	0	0	0	0
4/21/2024	11:45 PM	0	0	0	0	0	0	0	0	0	0	0	0	0

4/22/2024	12:00 AM	0	0	0	0	0	0	0	0	0	0	0	0	0
4/22/2024	12:15 AM	0	0	0	0	0	0	0	0	0	0	0	0	0
4/22/2024	12:30 AM	0	0	0	0	0	0	0	0	0	0	0	0	0
4/22/2024	12:45 AM	0	0	0	0	0	0	0	0	0	0	0	0	0
4/22/2024	1:00 AM	0	0	0	0	0	0	0	0	0	0	0	0	0
4/22/2024	1:15 AM	0	0	0	0	0	0	0	0	0	0	0	0	0
4/22/2024	1:30 AM	0	0	0	0	0	0	0	0	0	0	0	0	0
4/22/2024	1:45 AM	0	0	0	0	0	0	0	0	0	0	0	0	0
4/22/2024	2:00 AM	0	0	0	0	0	0	0	0	0	0	0	0	0
4/22/2024	2:15 AM	0	0	0	0	0	0	0	0	0	0	0	0	0
4/22/2024	2:30 AM	0	0	0	0	0	0	0	0	0	0	0	0	0
4/22/2024	2:45 AM	0	0	0	0	0	0	0	0	0	0	0	0	0
4/22/2024	3:00 AM	0	0	0	0	0	0	0	0	0	0	0	0	0
4/22/2024	3:15 AM	0	0	0	0	0	0	0	0	0	0	0	0	0
4/22/2024	3:30 AM	0	0	0	0	0	0	0	0	0	0	0	0	0
4/22/2024	3:45 AM	0	0	0	0	0	0	0	0	0	0	0	0	0
4/22/2024	4:00 AM	0	0	0	0	0	0	0	0	0	0	0	0	0
4/22/2024	4:15 AM	0	0	0	0	0	0	0	0	0	0	0	0	0
4/22/2024	4:30 AM	0	0	0	0	0	0	0	0	0	0	0	0	0
4/22/2024	4:45 AM	0	0	0	0	0	0	0	0	0	0	0	0	0
4/22/2024	5:00 AM	0	0	0	0	0	0	0	0	0	0	0	0	0
4/22/2024	5:15 AM	0	0	0	0	0	0	0	0	0	0	0	0	0
4/22/2024	5:30 AM	0	0	0	0	0	0	0	0	0	0	0	0	0
4/22/2024	5:45 AM	0	0	0	0	0	0	0	0	0	0	0	0	0
4/22/2024	6:00 AM	0	0	0	0	0	0	0	0	0	0	0	0	0
4/22/2024	6:15 AM	0	0	0	0	0	0	0	0	0	0	0	0	0
4/22/2024	6:30 AM	0	0	0	0	0	0	0	0	0	0	0	0	0
4/22/2024	6:45 AM	0	0	0	0	0	0	0	0	0	0	0	0	0
4/22/2024	7:00 AM	0	0	0	0	0	0	0	0	0	0	0	0	0
4/22/2024	7:15 AM	0	0	0	0	0	0	0	0	0	0	0	0	0
4/22/2024	7:30 AM	0	0	0	0	0	0	0	0	0	0	0	0	0
4/22/2024	7:45 AM	0	0	0	0	0	0	0	0	0	0	0	0	0
4/22/2024	8:00 AM	0	0	0	0	0	0	0	0	0	0	0	0	0
4/22/2024	8:15 AM	0	0	0	0	0	0	0	0	0	0	0	0	0
4/22/2024	8:30 AM	0	0	0	0	0	0	0	0	0	0	0	0	0
4/22/2024	8:45 AM	0	0	0	0	0	0	0	0	0	0	0	0	0
4/22/2024	9:00 AM	0	0	0	0	0	0	0	0	0	0	0	0	0
4/22/2024	9:15 AM	0	0	0	0	0	0	0	0	0	0	0	0	0
4/22/2024	9:30 AM	0	0	0	0	0	0	0	0	0	0	0	0	0
4/22/2024	9:45 AM	0	0	0	0	0	0	0	0	0	0	0	0	0
4/22/2024	10:00 AM	0	0	0	0	0	0	0	0	0	0	0	0	0
4/22/2024	10:15 AM	0	0	0	0	0	0	0	0	0	0	0	0	0
4/22/2024	10:30 AM	0	0	0	0	0	0	0	0	0	0	0	0	0
4/22/2024	10:45 AM	0	0	0	0	0	0	0	0	0	0	0	0	0
4/22/2024	11:00 AM	0	0	0	0	0	0	0	0	0	0	0	0	0
4/22/2024	11:15 AM	0	0	0	0	0	0	0	0	0	0	0	0	0
4/22/2024	11:30 AM	0	0	0	0	0	0	0	0	0	0	0	0	0
4/22/2024	11:45 AM	0	0	0	0	0	0	0	0	0	0	0	0	0
4/22/2024	12:00 PM	0	0	0	0	0	0	0	0	0	0	0	0	0
4/22/2024	12:15 PM	0	0	0	0	0	0	0	0	0	0	0	0	0
4/22/2024	12:30 PM	0	0	0	0	0	0	0	0	0	0	0	0	0
4/22/2024	12:45 PM	0	0	0	0	0	0	0	0	0	0	0	0	0
4/22/2024	1:00 PM	0	0	0	0	0	0	0	0	0	0	0	0	0
4/22/2024	1:15 PM	0	0	0	0	0	0	0	0	0	0	0	0	0
4/22/2024	1:30 PM	0	0	0	0	0	0	0	0	0	0	0	0	0
4/22/2024	1:45 PM	0	0	0	0	0	0	0	0	0	0	0	0	0
4/22/2024	2:00 PM	0	0	0	0	0	0	0	0	0	0	0	0	0
4/22/2024	2:15 PM	0	0	0	0	0	0	0	0	0	0	0	0	0
4/22/2024	2:30 PM	0	0	0	0	0	0	0	0	0	0	0	0	0
4/22/2024	2:45 PM	0	0	0	0	0	0	0	0	0	0	0	0	0
4/22/2024	3:00 PM	0	0	0	0	0	0	0	0	0	0	0	0	0
4/22/2024	3:15 PM	0	0	0	0	0	0	0	0	0	0	0	0	0
4/22/2024	3:30 PM	0	0	0	0	0	0	0	0	0	0	0	0	0
4/22/2024	3:45 PM	0	0	0	0	0	0	0	0	0	0	0	0	0
4/22/2024	4:00 PM	0	0	0	0	0	0	0	0	0	0	0	0	0
4/22/2024	4:15 PM	0	0	0	0	0	0	0	0	0	0	0	0	0
4/22/2024	4:30 PM	0	0	0	0	0	0	0	0	0	0	0	0	0
4/22/2024	4:45 PM	0	0	0	0	0	0	0	0	0	0	0	0	0
4/22/2024	5:00 PM	0	0	0	0	0	0	0	0	0	0	0	0	0
4/22/2024	5:15 PM	0	0	0	0	0	0	0	0	0	0	0	0	0
4/22/2024	5:30 PM	0	0	0	0	0	0	0	0	0	0	0	0	0
4/22/2024	5:45 PM	0	0	0	0	0	0	0	0	0	0	0	0	0
4/22/2024	6:00 PM	0	0	0	0	0	0	0	0	0	0	0	0	0
4/22/2024	6:15 PM	0	0	0	0	0	0	0	0	0	0	0	0	0
4/22/2024	6:30 PM	0	0	0	0	0	0	0	0	0	0	0	0	0
4/22/2024	6:45 PM	0	0	0	0	0	0	0	0	0	0	0	0	0
4/22/2024	7:00 PM	0	0	0	0	0	0	0	0	0	0	0	0	0
4/22/2024	7:15 PM	0	0	0	0	0	0	0	0	0	0	0	0	0
4/22/2024	7:30 PM	0	0	0	0	0	0	0	0	0	0	0	0	0
4/22/2024	7:45 PM	0	0	0	0	0	0	0	0	0	0	0	0	0
4/22/2024	8:00 PM	0	0	0	0	0	0	0	0	0	0	0	0	0
4/22/2024	8:15 PM	0	0	0	0	0	0	0	0	0	0	0	0	0
4/22/2024	8:30 PM	0	0	0	0	0	0	0	0	0	0	0	0	0
4/22/2024	8:45 PM	0	0	0	0	0	0	0	0	0	0	0	0	0
4/22/2024	9:00 PM	0	0	0	0	0	0	0	0	0	0	0	0	0
4/22/2024	9:15 PM	0	0	0	0	0	0	0	0	0	0	0	0	0
4/22/2024	9:30 PM	0	0	0	0	0	0	0	0	0	0	0	0	0
4/22/2024	9:45 PM	0	0	0	0	0	0	0	0	0	0	0	0	0
4/22/2024	10:00 PM	0	0	0	0	0	0	0	0	0	0	0	0	0
4/22/2024	10:15 PM	0	0	0	0	0	0	0	0	0	0	0	0	0
4/22/2024	10:30 PM	0	0	0	0	0	0	0	0	0	0	0	0	0
4/22/2024	10:45 PM	0	0	0	0	0	0	0	0	0	0	0	0	0
4/22/2024	11:00 PM	0	0	0	0	0	0	0	0	0	0	0	0	0
4/22/2024	11:15 PM	0	0	0	0	0	0	0	0	0	0	0	0	0
4/22/2024	11:30 PM	0	0	0	0	0	0	0	0	0	0	0	0	0
4/22/2024	11:45 PM	0	0	0	0	0	0	0	0	0	0	0	0	0

4/23/2024	12:00 AM	0	0	0	0	0	0	0	0	0	0	0	0	0
4/23/2024	12:15 AM	0	0	0	0	0	0	0	0	0	0	0	0	0
4/23/2024	12:30 AM	0	0	0	0	0	0	0	0	0	0	0	0	0
4/23/2024	12:45 AM	0	0	0	0	0	0	0	0	0	0	0	0	0
4/23/2024	1:00 AM	0	0	0	0	0	0	0	0	0	0	0	0	0
4/23/2024	1:15 AM	0	0	0	0	0	0	0	0	0	0	0	0	0
4/23/2024	1:30 AM	0	0	0	0	0	0	0	0	0	0	0	0	0
4/23/2024	1:45 AM	0	0	0	0	0	0	0	0	0	0	0	0	0
4/23/2024	2:00 AM	0	0	0	0	0	0	0	0	0	0	0	0	0
4/23/2024	2:15 AM	0	0	0	0	0	0	0	0	0	0	0	0	0
4/23/2024	2:30 AM	0	0	0	0	0	0	0	0	0	0	0	0	0
4/23/2024	2:45 AM	0	0	0	0	0	0	0	0	0	0	0	0	0
4/23/2024	3:00 AM	0	0	0	0	0	0	0	0	0	0	0	0	0
4/23/2024	3:15 AM	0	0	0	0	0	0	0	0	0	0	0	0	0
4/23/2024	3:30 AM	0	0	0	0	0	0	0	0	0	0	0	0	0
4/23/2024	3:45 AM	0	0	0	0	0	0	0	0	0	0	0	0	0
4/23/2024	4:00 AM	0	0	0	0	0	0	0	0	0	0	0	0	0
4/23/2024	4:15 AM	0	0	0	0	0	0	0	0	0	0	0	0	0
4/23/2024	4:30 AM	0	0	0	0	0	0	0	0	0	0	0	0	0
4/23/2024	4:45 AM	0	0	0	0	0	0	0	0	0	0	0	0	0
4/23/2024	5:00 AM	0	0	0	0	0	0	0	0	0	0	0	0	0
4/23/2024	5:15 AM	0	0	0	0	0	0	0	0	0	0	0	0	0
4/23/2024	5:30 AM	0	0	0	0	0	0	0	0	0	0	0	0	0
4/23/2024	5:45 AM	0	0	0	0	0	0	0	0	0	0	0	0	0
4/23/2024	6:00 AM	0	0	0	0	0	0	0	0	0	0	0	0	0
4/23/2024	6:15 AM	0	0	0	0	0	0	0	0	0	0	0	0	0
4/23/2024	6:30 AM	0	0	0	0	0	0	0	0	0	0	0	0	0
4/23/2024	6:45 AM	0	0	0	0	0	0	0	0	0	0	0	0	0
4/23/2024	7:00 AM	0	0	0	0	0	0	0	0	0	0	0	0	0
4/23/2024	7:15 AM	0	0	0	0	0	0	0	0	0	0	0	0	0
4/23/2024	7:30 AM	0	0	0	0	0	0	0	0	0	0	0	0	0
4/23/2024	7:45 AM	0	0	0	0	0	0	0	0	0	0	0	0	0
4/23/2024	8:00 AM	0	0	0	0	0	0	0	0	0	0	0	0	0
4/23/2024	8:15 AM	0	0	0	0	0	0	0	0	0	0	0	0	0
4/23/2024	8:30 AM	0	0	0	0	0	0	0	0	0	0	0	0	0
4/23/2024	8:45 AM	0	0	0	0	0	0	0	0	0	0	0	0	0
4/23/2024	9:00 AM	0	0	0	0	0	0	0	0	0	0	0	0	0
4/23/2024	9:15 AM	0	0	0	0	0	0	0	0	0	0	0	0	0
4/23/2024	9:30 AM	0	0	0	0	0	0	0	0	0	0	0	0	0
4/23/2024	9:45 AM	0	0	0	0	0	0	0	0	0	0	0	0	0
4/23/2024	10:00 AM	0	0	0	0	0	0	0	0	0	0	0	0	0
4/23/2024	10:15 AM	0	0	0	0	0	0	0	0	0	0	0	0	0
4/23/2024	10:30 AM	0	0	0	0	0	0	0	0	0	0	0	0	0
4/23/2024	10:45 AM	0	0	0	0	0	0	0	0	0	0	0	0	0
4/23/2024	11:00 AM	0	0	0	0	0	0	0	0	0	0	0	0	0
4/23/2024	11:15 AM	0	0	0	0	0	0	0	0	0	0	0	0	0
4/23/2024	11:30 AM	0	0	0	0	0	0	0	0	0	0	0	0	0
4/23/2024	11:45 AM	0	0	0	0	0	0	0	0	0	0	0	0	0
4/23/2024	12:00 PM	0	0	0	0	0	0	0	0	0	0	0	0	0
4/23/2024	12:15 PM	0	0	0	0	0	0	0	0	0	0	0	0	0
4/23/2024	12:30 PM	0	0	0	0	0	0	0	0	0	0	0	0	0
4/23/2024	12:45 PM	0	0	0	0	0	0	0	0	0	0	0	0	0
4/23/2024	1:00 PM	0	0	0	0	0	0	0	0	0	0	0	0	0
4/23/2024	1:15 PM	0	0	0	0	0	0	0	0	0	0	0	0	0
4/23/2024	1:30 PM	0	0	0	0	0	0	0	0	0	0	0	0	0
4/23/2024	1:45 PM	0	0	0	0	0	0	0	0	0	0	0	0	0
4/23/2024	2:00 PM	0	0	0	0	0	0	0	0	0	0	0	0	0
4/23/2024	2:15 PM	0	0	0	0	0	0	0	0	0	0	0	0	0
4/23/2024	2:30 PM	0	0	0	0	0	0	0	0	0	0	0	0	0
4/23/2024	2:45 PM	0	0	0	0	0	0	0	0	0	0	0	0	0
4/23/2024	3:00 PM	0	0	0	0	0	0	0	0	0	0	0	0	0
4/23/2024	3:15 PM	0	0	0	0	0	0	0	0	0	0	0	0	0
4/23/2024	3:30 PM	0	0	0	0	0	0	0	0	0	0	0	0	0
4/23/2024	3:45 PM	0	0	0	0	0	0	0	0	0	0	0	0	0
4/23/2024	4:00 PM	0	0	0	0	0	0	0	0	0	0	0	0	0
4/23/2024	4:15 PM	0	0	0	0	0	0	0	0	0	0	0	0	0
4/23/2024	4:30 PM	0	0	0	0	0	0	0	0	0	0	0	0	0
4/23/2024	4:45 PM	0	0	0	0	0	0	0	0	0	0	0	0	0
4/23/2024	5:00 PM	0	0	0	0	0	0	0	0	0	0	0	0	0
4/23/2024	5:15 PM	0	0	0	0	0	0	0	0	0	0	0	0	0
4/23/2024	5:30 PM	0	0	0	0	0	0	0	0	0	0	0	0	0
4/23/2024	5:45 PM	0	0	0	0	0	0	0	0	0	0	0	0	0
4/23/2024	6:00 PM	0	0	0	0	0	0	0	0	0	0	0	0	0
4/23/2024	6:15 PM	0	0	0	0	0	0	0	0	0	0	0	0	0
4/23/2024	6:30 PM	0	0	0	0	0	0	0	0	0	0	0	0	0
4/23/2024	6:45 PM	0	0	0	0	0	0	0	0	0	0	0	0	0
4/23/2024	7:00 PM	0	0	0	0	0	0	0	0	0	0	0	0	0
4/23/2024	7:15 PM	0	0	0	0	0	0	0	0	0	0	0	0	0
4/23/2024	7:30 PM	0	0	0	0	0	0	0	0	0	0	0	0	0
4/23/2024	7:45 PM	0	0	0	0	0	0	0	0	0	0	0	0	0
4/23/2024	8:00 PM	0	0	0	0	0	0	0	0	0	0	0	0	0
4/23/2024	8:15 PM	0	0	0	0	0	0	0	0	0	0	0	0	0
4/23/2024	8:30 PM	0	0	0	0	0	0	0	0	0	0	0	0	0
4/23/2024	8:45 PM	0	0	0	0	0	0	0	0	0	0	0	0	0
4/23/2024	9:00 PM	0	0	0	0	0	0	0	0	0	0	0	0	0
4/23/2024	9:15 PM	0	0	0	0	0	0	0	0	0	0	0	0	0
4/23/2024	9:30 PM	0	0	0	0	0	0	0	0	0	0	0	0	0
4/23/2024	9:45 PM	0	0	0	0	0	0	0	0	0	0	0	0	0
4/23/2024	10:00 PM	0	0	0	0	0	0	0	0	0	0	0	0	0
4/23/2024	10:15 PM	0	0	0	0	0	0	0	0	0	0	0	0	0
4/23/2024	10:30 PM	0	0	0	0	0	0	0	0	0	0	0	0	0
4/23/2024	10:45 PM	0	0	0	0	0	0	0	0	0	0	0	0	0
4/23/2024	11:00 PM	0	0	0	0	0	0	0	0	0	0	0	0	0
4/23/2024	11:15 PM	0	0	0	0	0	0	0	0	0	0	0	0	0
4/23/2024	11:30 PM	0	0	0	0	0	0	0	0	0	0	0	0	0
4/23/2024	11:45 PM	0	0	0	0	0	0	0	0	0	0	0	0	0

4/24/2024	12:00 AM	0	0	0	0	0	0	0	0	0	0	0	0	0
4/24/2024	12:15 AM	0	0	0	0	0	0	0	0	0	0	0	0	0
4/24/2024	12:30 AM	0	0	0	0	0	0	0	0	0	0	0	0	0
4/24/2024	12:45 AM	0	0	0	0	0	0	0	0	0	0	0	0	0
4/24/2024	1:00 AM	0	0	0	0	0	0	0	0	0	0	0	0	0
4/24/2024	1:15 AM	0	0	0	0	0	0	0	0	0	0	0	0	0
4/24/2024	1:30 AM	0	0	0	0	0	0	0	0	0	0	0	0	0
4/24/2024	1:45 AM	0	0	0	0	0	0	0	0	0	0	0	0	0
4/24/2024	2:00 AM	0	0	0	0	0	0	0	0	0	0	0	0	0
4/24/2024	2:15 AM	0	0	0	0	0	0	0	0	0	0	0	0	0
4/24/2024	2:30 AM	0	0	0	0	0	0	0	0	0	0	0	0	0
4/24/2024	2:45 AM	0	0	0	0	0	0	0	0	0	0	0	0	0
4/24/2024	3:00 AM	0	0	0	0	0	0	0	0	0	0	0	0	0
4/24/2024	3:15 AM	0	0	0	0	0	0	0	0	0	0	0	0	0
4/24/2024	3:30 AM	0	0	0	0	0	0	0	0	0	0	0	0	0
4/24/2024	3:45 AM	0	0	0	0	0	0	0	0	0	0	0	0	0
4/24/2024	4:00 AM	0	0	0	0	0	0	0	0	0	0	0	0	0
4/24/2024	4:15 AM	0	0	0	0	0	0	0	0	0	0	0	0	0
4/24/2024	4:30 AM	0	0	0	0	0	0	0	0	0	0	0	0	0
4/24/2024	4:45 AM	0	0	0	0	0	0	0	0	0	0	0	0	0
4/24/2024	5:00 AM	0	0	0	0	0	0	0	0	0	0	0	0	0
4/24/2024	5:15 AM	0	0	0	0	0	0	0	0	0	0	0	0	0
4/24/2024	5:30 AM	0	0	0	0	0	0	0	0	0	0	0	0	0
4/24/2024	5:45 AM	0	0	0	0	0	0	0	0	0	0	0	0	0
4/24/2024	6:00 AM	0	0	0	0	0	0	0	0	0	0	0	0	0
4/24/2024	6:15 AM	0	0	0	0	0	0	0	0	0	0	0	0	0
4/24/2024	6:30 AM	0	0	0	0	0	0	0	0	0	0	0	0	0
4/24/2024	6:45 AM	0	0	0	0	0	0	0	0	0	0	0	0	0
4/24/2024	7:00 AM	0	0	0	0	0	0	0	0	0	0	0	0	0
4/24/2024	7:15 AM	0	0	0	0	0	0	0	0	0	0	0	0	0
4/24/2024	7:30 AM	0	0	0	0	0	0	0	0	0	0	0	0	0
4/24/2024	7:45 AM	0	0	0	0	0	0	0	0	0	0	0	0	0
4/24/2024	8:00 AM	0	0	0	0	0	0	0	0	0	0	0	0	0
4/24/2024	8:15 AM	0	0	0	0	0	0	0	0	0	0	0	0	0
4/24/2024	8:30 AM	0	0	0	0	0	0	0	0	0	0	0	0	0
4/24/2024	8:45 AM	0	0	0	0	0	0	0	0	0	0	0	0	0
4/24/2024	9:00 AM	0	0	0	0	0	0	0	0	0	0	0	0	0
4/24/2024	9:15 AM	0	0	0	0	0	0	0	0	0	0	0	0	0
4/24/2024	9:30 AM	0	0	0	0	0	0	0	0	0	0	0	0	0
4/24/2024	9:45 AM	0	0	0	0	0	0	0	0	0	0	0	0	0
4/24/2024	10:00 AM	0	0	0	0	0	0	0	0	0	0	0	0	0
4/24/2024	10:15 AM	0	0	0	0	0	0	0	0	0	0	0	0	0
4/24/2024	10:30 AM	0	0	0	0	0	0	0	0	0	0	0	0	0
4/24/2024	10:45 AM	0	0	0	0	0	0	0	0	0	0	0	0	0
4/24/2024	11:00 AM	0	0	0	0	0	0	0	0	0	0	0	0	0
4/24/2024	11:15 AM	0	0	0	0	0	0	0	0	0	0	0	0	0
4/24/2024	11:30 AM	0	0	0	0	0	0	0	0	0	0	0	0	0
4/24/2024	11:45 AM	0	0	0	0	0	0	0	0	0	0	0	0	0
4/24/2024	12:00 PM	0	0	0	0	0	0	0	0	0	0	0	0	0
4/24/2024	12:15 PM	0	0	0	0	0	0	0	0	0	0	0	0	0
4/24/2024	12:30 PM	0	0	0	0	0	0	0	0	0	0	0	0	0
4/24/2024	12:45 PM	0	0	0	0	0	0	0	0	0	0	0	0	0
4/24/2024	1:00 PM	0	0	0	0	0	0	0	0	0	0	0	0	0
4/24/2024	1:15 PM	0	0	0	0	0	0	0	0	0	0	0	0	0
4/24/2024	1:30 PM	0	0	0	0	0	0	0	0	0	0	0	0	0
4/24/2024	1:45 PM	0	0	0	0	0	0	0	0	0	0	0	0	0
4/24/2024	2:00 PM	0	0	0	0	0	0	0	0	0	0	0	0	0
4/24/2024	2:15 PM	0	0	0	0	0	0	0	0	0	0	0	0	0
4/24/2024	2:30 PM	0	0	0	0	0	0	0	0	0	0	0	0	0
4/24/2024	2:45 PM	0	0	0	0	0	0	0	0	0	0	0	0	0
4/24/2024	3:00 PM	0	0	0	0	0	0	0	0	0	0	0	0	0
4/24/2024	3:15 PM	0	0	0	0	0	0	0	0	0	0	0	0	0
4/24/2024	3:30 PM	0	0	0	0	0	0	0	0	0	0	0	0	0
4/24/2024	3:45 PM	0	0	0	0	0	0	0	0	0	0	0	0	0
4/24/2024	4:00 PM	0	0	0	0	0	0	0	0	0	0	0	0	0
4/24/2024	4:15 PM	0	0	0	0	0	0	0	0	0	0	0	0	0
4/24/2024	4:30 PM	0	0	0	0	0	0	0	0	0	0	0	0	0
4/24/2024	4:45 PM	0	0	0	0	0	0	0	0	0	0	0	0	0
4/24/2024	5:00 PM	0	0	0	0	0	0	0	0	0	0	0	0	0
4/24/2024	5:15 PM	0	0	0	0	0	0	0	0	0	0	0	0	0
4/24/2024	5:30 PM	0	0	0	0	0	0	0	0	0	0	0	0	0
4/24/2024	5:45 PM	0	0	0	0	0	0	0	0	0	0	0	0	0
4/24/2024	6:00 PM	0	0	0	0	0	0	0	0	0	0	0	0	0
4/24/2024	6:15 PM	0	0	0	0	0	0	0	0	0	0	0	0	0
4/24/2024	6:30 PM	0	0	0	0	0	0	0	0	0	0	0	0	0
4/24/2024	6:45 PM	0	0	0	0	0	0	0	0	0	0	0	0	0
4/24/2024	7:00 PM	0	0	0	0	0	0	0	0	0	0	0	0	0
4/24/2024	7:15 PM	0	0	0	0	0	0	0	0	0	0	0	0	0
4/24/2024	7:30 PM	0	0	0	0	0	0	0	0	0	0	0	0	0
4/24/2024	7:45 PM	0	0	0	0	0	0	0	0	0	0	0	0	0
4/24/2024	8:00 PM	0	0	0	0	0	0	0	0	0	0	0	0	0
4/24/2024	8:15 PM	0	0	0	0	0	0	0	0	0	0	0	0	0
4/24/2024	8:30 PM	0	0	0	0	0	0	0	0	0	0	0	0	0
4/24/2024	8:45 PM	0	0	0	0	0	0	0	0	0	0	0	0	0
4/24/2024	9:00 PM	0	0	0	0	0	0	0	0	0	0	0	0	0
4/24/2024	9:15 PM	0	0	0	0	0	0	0	0	0	0	0	0	0
4/24/2024	9:30 PM	0	0	0	0	0	0	0	0	0	0	0	0	0
4/24/2024	9:45 PM	0	0	0	0	0	0	0	0	0	0	0	0	0
4/24/2024	10:00 PM	0	0	0	0	0	0	0	0	0	0	0	0	0
4/24/2024	10:15 PM	0	0	0	0	0	0	0	0	0	0	0	0	0
4/24/2024	10:30 PM	0	0	0	0	0	0	0	0	0	0	0	0	0
4/24/2024	10:45 PM	0	0	0	0	0	0	0	0	0	0	0	0	0
4/24/2024	11:00 PM	0	0	0	0	0	0	0	0	0	0	0	0	0
4/24/2024	11:15 PM	0	0	0	0	0	0	0	0	0	0	0	0	0
4/24/2024	11:30 PM	0	0	0	0	0	0	0	0	0	0	0	0	0
4/24/2024	11:45 PM	0	0	0	0	0	0	0	0	0	0	0	0	0

4/25/2024	12:00 AM	0	0	0	0	0	0	0	0	0	0	0	0	0
4/25/2024	12:15 AM	0	0	0	0	0	0	0	0	0	0	0	0	0
4/25/2024	12:30 AM	0	0	0	0	0	0	0	0	0	0	0	0	0
4/25/2024	12:45 AM	0	0	0	0	0	0	0	0	0	0	0	0	0
4/25/2024	1:00 AM	0	0	0	0	0	0	0	0	0	0	0	0	0
4/25/2024	1:15 AM	0	0	0	0	0	0	0	0	0	0	0	0	0
4/25/2024	1:30 AM	0	0	0	0	0	0	0	0	0	0	0	0	0
4/25/2024	1:45 AM	0	0	0	0	0	0	0	0	0	0	0	0	0
4/25/2024	2:00 AM	0	0	0	0	0	0	0	0	0	0	0	0	0
4/25/2024	2:15 AM	0	0	0	0	0	0	0	0	0	0	0	0	0
4/25/2024	2:30 AM	0	0	0	0	0	0	0	0	0	0	0	0	0
4/25/2024	2:45 AM	0	0	0	0	0	0	0	0	0	0	0	0	0
4/25/2024	3:00 AM	0	0	0	0	0	0	0	0	0	0	0	0	0
4/25/2024	3:15 AM	0	0	0	0	0	0	0	0	0	0	0	0	0
4/25/2024	3:30 AM	0	0	0	0	0	0	0	0	0	0	0	0	0
4/25/2024	3:45 AM	0	0	0	0	0	0	0	0	0	0	0	0	0
4/25/2024	4:00 AM	0	0	0	0	0	0	0	0	0	0	0	0	0
4/25/2024	4:15 AM	0	0	0	0	0	0	0	0	0	0	0	0	0
4/25/2024	4:30 AM	0	0	0	0	0	0	0	0	0	0	0	0	0
4/25/2024	4:45 AM	0	0	0	0	0	0	0	0	0	0	0	0	0
4/25/2024	5:00 AM	0	0	0	0	0	0	0	0	0	0	0	0	0
4/25/2024	5:15 AM	0	0	0	0	0	0	0	0	0	0	0	0	0
4/25/2024	5:30 AM	0	0	0	0	0	0	0	0	0	0	0	0	0
4/25/2024	5:45 AM	0	0	0	0	0	0	0	0	0	0	0	0	0
4/25/2024	6:00 AM	0	0	0	0	0	0	0	0	0	0	0	0	0
4/25/2024	6:15 AM	0	0	0	0	0	0	0	0	0	0	0	0	0
4/25/2024	6:30 AM	0	0	0	0	0	0	0	0	0	0	0	0	0
4/25/2024	6:45 AM	0	0	0	0	0	0	0	0	0	0	0	0	0
4/25/2024	7:00 AM	0	0	0	0	0	0	0	0	0	0	0	0	0
4/25/2024	7:15 AM	0	0	0	0	0	0	0	0	0	0	0	0	0
4/25/2024	7:30 AM	0	0	0	0	0	0	0	0	0	0	0	0	0
4/25/2024	7:45 AM	0	0	0	0	0	0	0	0	0	0	0	0	0
4/25/2024	8:00 AM	0	0	0	0	0	0	0	0	0	0	0	0	0
4/25/2024	8:15 AM	0	0	0	0	0	0	0	0	0	0	0	0	0
4/25/2024	8:30 AM	0	0	0	0	0	0	0	0	0	0	0	0	0
4/25/2024	8:45 AM	0	0	0	0	0	0	0	0	0	0	0	0	0
4/25/2024	9:00 AM	0	0	0	0	0	0	0	0	0	0	0	0	0
4/25/2024	9:15 AM	0	0	0	0	0	0	0	0	0	0	0	0	0
4/25/2024	9:30 AM	0	0	0	0	0	0	0	0	0	0	0	0	0
4/25/2024	9:45 AM	0	0	0	0	0	0	0	0	0	0	0	0	0
4/25/2024	10:00 AM	0	0	0	0	0	0	0	0	0	0	0	0	0
4/25/2024	10:15 AM	0	0	0	0	0	0	0	0	0	0	0	0	0
4/25/2024	10:30 AM	0	0	0	0	0	0	0	0	0	0	0	0	0
4/25/2024	10:45 AM	0	0	0	0	0	0	0	0	0	0	0	0	0
4/25/2024	11:00 AM	0	0	0	0	0	0	0	0	0	0	0	0	0
4/25/2024	11:15 AM	0	0	0	0	0	0	0	0	0	0	0	0	0
4/25/2024	11:30 AM	0	0	0	0	0	0	0	0	0	0	0	0	0
4/25/2024	11:45 AM	0	0	0	0	0	0	0	0	0	0	0	0	0
4/25/2024	12:00 PM	0	0	0	0	0	0	0	0	0	0	0	0	0
4/25/2024	12:15 PM	0	0	0	0	0	0	0	0	0	0	0	0	0
4/25/2024	12:30 PM	0	0	0	0	0	0	0	0	0	0	0	0	0
4/25/2024	12:45 PM	0	0	0	0	0	0	0	0	0	0	0	0	0
4/25/2024	1:00 PM	0	0	0	0	0	0	0	0	0	0	0	0	0
4/25/2024	1:15 PM	0	0	0	0	0	0	0	0	0	0	0	0	0
4/25/2024	1:30 PM	0	0	0	0	0	0	0	0	0	0	0	0	0
4/25/2024	1:45 PM	0	0	0	0	0	0	0	0	0	0	0	0	0
4/25/2024	2:00 PM	0	0	0	0	0	0	0	0	0	0	0	0	0
4/25/2024	2:15 PM	0	0	0	0	0	0	0	0	0	0	0	0	0
4/25/2024	2:30 PM	0	0	0	0	0	0	0	0	0	0	0	0	0
4/25/2024	2:45 PM	0	0	0	0	0	0	0	0	0	0	0	0	0
4/25/2024	3:00 PM	0	0	0	0	0	0	0	0	0	0	0	0	0
4/25/2024	3:15 PM	0	0	0	0	0	0	0	0	0	0	0	0	0
4/25/2024	3:30 PM	0	0	0	0	0	0	0	0	0	0	0	0	0
4/25/2024	3:45 PM	0	0	0	0	0	0	0	0	0	0	0	0	0
4/25/2024	4:00 PM	0	0	0	0	0	0	0	0	0	0	0	0	0
4/25/2024	4:15 PM	0	0	0	0	0	0	0	0	0	0	0	0	0
4/25/2024	4:30 PM	0	0	0	0	0	0	0	0	0	0	0	0	0
4/25/2024	4:45 PM	0	0	0	0	0	0	0	0	0	0	0	0	0
4/25/2024	5:00 PM	0	0	0	0	0	0	0	0	0	0	0	0	0
4/25/2024	5:15 PM	0	0	0	0	0	0	0	0	0	0	0	0	0
4/25/2024	5:30 PM	0	0	0	0	0	0	0	0	0	0	0	0	0
4/25/2024	5:45 PM	0	0	0	0	0	0	0	0	0	0	0	0	0
4/25/2024	6:00 PM	0	0	0	0	0	0	0	0	0	0	0	0	0
4/25/2024	6:15 PM	0	0	0	0	0	0	0	0	0	0	0	0	0
4/25/2024	6:30 PM	0	0	0	0	0	0	0	0	0	0	0	0	0
4/25/2024	6:45 PM	0	0	0	0	0	0	0	0	0	0	0	0	0
4/25/2024	7:00 PM	0	0	0	0	0	0	0	0	0	0	0	0	0
4/25/2024	7:15 PM	0	0	0	0	0	0	0	0	0	0	0	0	0
4/25/2024	7:30 PM	0	0	0	0	0	0	0	0	0	0	0	0	0
4/25/2024	7:45 PM	0	0	0	0	0	0	0	0	0	0	0	0	0
4/25/2024	8:00 PM	0	0	0	0	0	0	0	0	0	0	0	0	0
4/25/2024	8:15 PM	0	0	0	0	0	0	0	0	0	0	0	0	0
4/25/2024	8:30 PM	0	0	0	0	0	0	0	0	0	0	0	0	0
4/25/2024	8:45 PM	0	0	0	0	0	0	0	0	0	0	0	0	0
4/25/2024	9:00 PM	0	0	0	0	0	0	0	0	0	0	0	0	0
4/25/2024	9:15 PM	0	0	0	0	0	0	0	0	0	0	0	0	0
4/25/2024	9:30 PM	0	0	0	0	0	0	0	0	0	0	0	0	0
4/25/2024	9:45 PM	0	0	0	0	0	0	0	0	0	0	0	0	0
4/25/2024	10:00 PM	0	0	0	0	0	0	0	0	0	0	0	0	0
4/25/2024	10:15 PM	0	0	0	0	0	0	0	0	0	0	0	0	0
4/25/2024	10:30 PM	0	0	0	0	0	0	0	0	0	0	0	0	0
4/25/2024	10:45 PM	0	0	0	0	0	0	0	0	0	0	0	0	0
4/25/2024	11:00 PM	0	0	0	0	0	0	0	0	0	0	0	0	0
4/25/2024	11:15 PM	0	0	0	0	0	0	0	0	0	0	0	0	0
4/25/2024	11:30 PM	0	0	0	0	0	0	0	0	0	0	0	0	0
4/25/2024	11:45 PM	0	0	0	0	0	0	0	0	0	0	0	0	0

4/26/2024	12:00 AM	0	0	0	0	0	0	0	0	0	0	0	0	0
4/26/2024	12:15 AM	0	0	0	0	0	0	0	0	0	0	0	0	0
4/26/2024	12:30 AM	0	0	0	0	0	0	0	0	0	0	0	0	0
4/26/2024	12:45 AM	0	0	0	0	0	0	0	0	0	0	0	0	0
4/26/2024	1:00 AM	0	0	0	0	0	0	0	0	0	0	0	0	0
4/26/2024	1:15 AM	0	0	0	0	0	0	0	0	0	0	0	0	0
4/26/2024	1:30 AM	0	0	0	0	0	0	0	0	0	0	0	0	0
4/26/2024	1:45 AM	0	0	0	0	0	0	0	0	0	0	0	0	0
4/26/2024	2:00 AM	0	0	0	0	0	0	0	0	0	0	0	0	0
4/26/2024	2:15 AM	0	0	0	0	0	0	0	0	0	0	0	0	0
4/26/2024	2:30 AM	0	0	0	0	0	0	0	0	0	0	0	0	0
4/26/2024	2:45 AM	0	0	0	0	0	0	0	0	0	0	0	0	0
4/26/2024	3:00 AM	0	0	0	0	0	0	0	0	0	0	0	0	0
4/26/2024	3:15 AM	0	0	0	0	0	0	0	0	0	0	0	0	0
4/26/2024	3:30 AM	0	0	0	0	0	0	0	0	0	0	0	0	0
4/26/2024	3:45 AM	0	0	0	0	0	0	0	0	0	0	0	0	0
4/26/2024	4:00 AM	0	0	0	0	0	0	0	0	0	0	0	0	0
4/26/2024	4:15 AM	0	0	0	0	0	0	0	0	0	0	0	0	0
4/26/2024	4:30 AM	0	0	0	0	0	0	0	0	0	0	0	0	0
4/26/2024	4:45 AM	0	0	0	0	0	0	0	0	0	0	0	0	0
4/26/2024	5:00 AM	0	0	0	0	0	0	0	0	0	0	0	0	0
4/26/2024	5:15 AM	0	0	0	0	0	0	0	0	0	0	0	0	0
4/26/2024	5:30 AM	0	0	0	0	0	0	0	0	0	0	0	0	0
4/26/2024	5:45 AM	0	0	0	0	0	0	0	0	0	0	0	0	0
4/26/2024	6:00 AM	0	0	0	0	0	0	0	0	0	0	0	0	0
4/26/2024	6:15 AM	0	0	0	0	0	0	0	0	0	0	0	0	0
4/26/2024	6:30 AM	0	0	0	0	0	0	0	0	0	0	0	0	0
4/26/2024	6:45 AM	0	0	0	0	0	0	0	0	0	0	0	0	0
4/26/2024	7:00 AM	0	0	0	0	0	0	0	0	0	0	0	0	0
4/26/2024	7:15 AM	0	0	0	0	0	0	0	0	0	0	0	0	0
4/26/2024	7:30 AM	0	0	0	0	0	0	0	0	0	0	0	0	0
4/26/2024	7:45 AM	0	0	0	0	0	0	0	0	0	0	0	0	0
4/26/2024	8:00 AM	0	0	0	0	0	0	0	0	0	0	0	0	0
4/26/2024	8:15 AM	0	0	0	0	0	0	0	0	0	0	0	0	0
4/26/2024	8:30 AM	0	0	0	0	0	0	0	0	0	0	0	0	0
4/26/2024	8:45 AM	0	0	0	0	0	0	0	0	0	0	0	0	0
4/26/2024	9:00 AM	0	0	0	0	0	0	0	0	0	0	0	0	0
4/26/2024	9:15 AM	0	0	0	0	0	0	0	0	0	0	0	0	0
4/26/2024	9:30 AM	0	0	0	0	0	0	0	0	0	0	0	0	0
4/26/2024	9:45 AM	0	0	0	0	0	0	0	0	0	0	0	0	0
4/26/2024	10:00 AM	0	0	0	0	0	0	0	0	0	0	0	0	0
4/26/2024	10:15 AM	0	0	0	0	0	0	0	0	0	0	0	0	0
4/26/2024	10:30 AM	0	0	0	0	0	0	0	0	0	0	0	0	0
4/26/2024	10:45 AM	0	0	0	0	0	0	0	0	0	0	0	0	0
4/26/2024	11:00 AM	0	0	0	0	0	0	0	0	0	0	0	0	0
4/26/2024	11:15 AM	0	0	0	0	0	0	0	0	0	0	0	0	0
4/26/2024	11:30 AM	0	0	0	0	0	0	0	0	0	0	0	0	0
4/26/2024	11:45 AM	0	0	0	0	0	0	0	0	0	0	0	0	0
4/26/2024	12:00 PM	0	0	0	0	0	0	0	0	0	0	0	0	0
4/26/2024	12:15 PM	0	0	0	0	0	0	0	0	0	0	0	0	0
4/26/2024	12:30 PM	0	0	0	0	0	0	0	0	0	0	0	0	0
4/26/2024	12:45 PM	0	0	0	0	0	0	0	0	0	0	0	0	0
4/26/2024	1:00 PM	0	0	0	0	0	0	0	0	0	0	0	0	0
4/26/2024	1:15 PM	0	0	0	0	0	0	0	0	0	0	0	0	0
4/26/2024	1:30 PM	0	0	0	0	0	0	0	0	0	0	0	0	0
4/26/2024	1:45 PM	0	0	0	0	0	0	0	0	0	0	0	0	0
4/26/2024	2:00 PM	0	0	0	0	0	0	0	0	0	0	0	0	0
4/26/2024	2:15 PM	0	0	0	0	0	0	0	0	0	0	0	0	0
4/26/2024	2:30 PM	0	0	0	0	0	0	0	0	0	0	0	0	0
4/26/2024	2:45 PM	0	0	0	0	0	0	0	0	0	0	0	0	0
4/26/2024	3:00 PM	0	0	0	0	0	0	0	0	0	0	0	0	0
4/26/2024	3:15 PM	0	0	0	0	0	0	0	0	0	0	0	0	0
4/26/2024	3:30 PM	0	0	0	0	0	0	0	0	0	0	0	0	0
4/26/2024	3:45 PM	0	0	0	0	0	0	0	0	0	0	0	0	0
4/26/2024	4:00 PM	0	0	0	0	0	0	0	0	0	0	0	0	0
4/26/2024	4:15 PM	0	0	0	0	0	0	0	0	0	0	0	0	0
4/26/2024	4:30 PM	0	0	0	0	0	0	0	0	0	0	0	0	0
4/26/2024	4:45 PM	0	0	0	0	0	0	0	0	0	0	0	0	0
4/26/2024	5:00 PM	0	0	0	0	0	0	0	0	0	0	0	0	0
4/26/2024	5:15 PM	0	0	0	0	0	0	0	0	0	0	0	0	0
4/26/2024	5:30 PM	0	0	0	0	0	0	0	0	0	0	0	0	0
4/26/2024	5:45 PM	0	0	0	0	0	0	0	0	0	0	0	0	0
4/26/2024	6:00 PM	0	0	0	0	0	0	0	0	0	0	0	0	0
4/26/2024	6:15 PM	0	0	0	0	0	0	0	0	0	0	0	0	0
4/26/2024	6:30 PM	0	0	0	0	0	0	0	0	0	0	0	0	0
4/26/2024	6:45 PM	0	0	0	0	0	0	0	0	0	0	0	0	0
4/26/2024	7:00 PM	0	0	0	0	0	0	0	0	0	0	0	0	0
4/26/2024	7:15 PM	0	0	0	0	0	0	0	0	0	0	0	0	0
4/26/2024	7:30 PM	0	0	0	0	0	0	0	0	0	0	0	0	0
4/26/2024	7:45 PM	0	0	0	0	0	0	0	0	0	0	0	0	0
4/26/2024	8:00 PM	0	0	0	0	0	0	0	0	0	0	0	0	0
4/26/2024	8:15 PM	0	0	0	0	0	0	0	0	0	0	0	0	0
4/26/2024	8:30 PM	0	0	0	0	0	0	0	0	0	0	0	0	0
4/26/2024	8:45 PM	0	0	0	0	0	0	0	0	0	0	0	0	0
4/26/2024	9:00 PM	0	0	0	0	0	0	0	0	0	0	0	0	0
4/26/2024	9:15 PM	0	0	0	0	0	0	0	0	0	0	0	0	0
4/26/2024	9:30 PM	0	0	0	0	0	0	0	0	0	0	0	0	0
4/26/2024	9:45 PM	0	0	0	0	0	0	0	0	0	0	0	0	0
4/26/2024	10:00 PM	0	0	0	0	0	0	0	0	0	0	0	0	0
4/26/2024	10:15 PM	0	0	0	0	0	0	0	0	0	0	0	0	0
4/26/2024	10:30 PM	0	0	0	0	0	0	0	0	0	0	0	0	0
4/26/2024	10:45 PM	0	0	0	0	0	0	0	0	0	0	0	0	0
4/26/2024	11:00 PM	0	0	0	0	0	0	0	0	0	0	0	0	0
4/26/2024	11:15 PM	0	0	0	0	0	0	0	0	0	0	0	0	0
4/26/2024	11:30 PM	0	0	0	0	0	0	0	0	0	0	0	0	0
4/26/2024	11:45 PM	0	0	0	0	0	0	0	0	0	0	0	0	0

4/27/2024	12:00 AM	0	0	0	0	0	0	0	0	0	0	0	0	0
4/27/2024	12:15 AM	0	0	0	0	0	0	0	0	0	0	0	0	0
4/27/2024	12:30 AM	0	0	0	0	0	0	0	0	0	0	0	0	0
4/27/2024	12:45 AM	0	0	0	0	0	0	0	0	0	0	0	0	0
4/27/2024	1:00 AM	0	0	0	0	0	0	0	0	0	0	0	0	0
4/27/2024	1:15 AM	0	0	0	0	0	0	0	0	0	0	0	0	0
4/27/2024	1:30 AM	0	0	0	0	0	0	0	0	0	0	0	0	0
4/27/2024	1:45 AM	0	0	0	0	0	0	0	0	0	0	0	0	0
4/27/2024	2:00 AM	0	0	0	0	0	0	0	0	0	0	0	0	0
4/27/2024	2:15 AM	0	0	0	0	0	0	0	0	0	0	0	0	0
4/27/2024	2:30 AM	0	0	0	0	0	0	0	0	0	0	0	0	0
4/27/2024	2:45 AM	0	0	0	0	0	0	0	0	0	0	0	0	0
4/27/2024	3:00 AM	0	0	0	0	0	0	0	0	0	0	0	0	0
4/27/2024	3:15 AM	0	0	0	0	0	0	0	0	0	0	0	0	0
4/27/2024	3:30 AM	0	0	0	0	0	0	0	0	0	0	0	0	0
4/27/2024	3:45 AM	0	0	0	0	0	0	0	0	0	0	0	0	0
4/27/2024	4:00 AM	0	0	0	0	0	0	0	0	0	0	0	0	0
4/27/2024	4:15 AM	0	0	0	0	0	0	0	0	0	0	0	0	0
4/27/2024	4:30 AM	0	0	0	0	0	0	0	0	0	0	0	0	0
4/27/2024	4:45 AM	0	0	0	0	0	0	0	0	0	0	0	0	0
4/27/2024	5:00 AM	0	0	0	0	0	0	0	0	0	0	0	0	0
4/27/2024	5:15 AM	0	0	0	0	0	0	0	0	0	0	0	0	0
4/27/2024	5:30 AM	0	0	0	0	0	0	0	0	0	0	0	0	0
4/27/2024	5:45 AM	0	0	0	0	0	0	0	0	0	0	0	0	0
4/27/2024	6:00 AM	0	0	0	0	0	0	0	0	0	0	0	0	0
4/27/2024	6:15 AM	0	0	0	0	0	0	0	0	0	0	0	0	0
4/27/2024	6:30 AM	0	0	0	0	0	0	0	0	0	0	0	0	0
4/27/2024	6:45 AM	0	0	0	0	0	0	0	0	0	0	0	0	0
4/27/2024	7:00 AM	0	0	0	0	0	0	0	0	0	0	0	0	0
4/27/2024	7:15 AM	0	0	0	0	0	0	0	0	0	0	0	0	0
4/27/2024	7:30 AM	0	0	0	0	0	0	0	0	0	0	0	0	0
4/27/2024	7:45 AM	0	0	0	0	0	0	0	0	0	0	0	0	0
4/27/2024	8:00 AM	0	0	0	0	0	0	0	0	0	0	0	0	0
4/27/2024	8:15 AM	0	0	0	0	0	0	0	0	0	0	0	0	0
4/27/2024	8:30 AM	0	0	0	0	0	0	0	0	0	0	0	0	0
4/27/2024	8:45 AM	0	0	0	0	0	0	0	0	0	0	0	0	0
4/27/2024	9:00 AM	0	0	0	0	0	0	0	0	0	0	0	0	0
4/27/2024	9:15 AM	0	0	0	0	0	0	0	0	0	0	0	0	0
4/27/2024	9:30 AM	0	0	0	0	0	0	0	0	0	0	0	0	0
4/27/2024	9:45 AM	0	0	0	0	0	0	0	0	0	0	0	0	0
4/27/2024	10:00 AM	0	0	0	0	0	0	0	0	0	0	0	0	0
4/27/2024	10:15 AM	0	0	0	0	0	0	0	0	0	0	0	0	0
4/27/2024	10:30 AM	0	0	0	0	0	0	0	0	0	0	0	0	0
4/27/2024	10:45 AM	0	0	0	0	0	0	0	0	0	0	0	0	0
4/27/2024	11:00 AM	0	0	0	0	0	0	0	0	0	0	0	0	0
4/27/2024	11:15 AM	0	0	0	0	0	0	0	0	0	0	0	0	0
4/27/2024	11:30 AM	0	0	0	0	0	0	0	0	0	0	0	0	0
4/27/2024	11:45 AM	0	0	0	0	0	0	0	0	0	0	0	0	0
4/27/2024	12:00 PM	0	0	0	0	0	0	0	0	0	0	0	0	0
4/27/2024	12:15 PM	0	0	0	0	0	0	0	0	0	0	0	0	0
4/27/2024	12:30 PM	0	0	0	0	0	0	0	0	0	0	0	0	0
4/27/2024	12:45 PM	0	0	0	0	0	0	0	0	0	0	0	0	0
4/27/2024	1:00 PM	0	0	0	0	0	0	0	0	0	0	0	0	0
4/27/2024	1:15 PM	0	0	0	0	0	0	0	0	0	0	0	0	0
4/27/2024	1:30 PM	0	0	0	0	0	0	0	0	0	0	0	0	0
4/27/2024	1:45 PM	0	0	0	0	0	0	0	0	0	0	0	0	0
4/27/2024	2:00 PM	0	0	0	0	0	0	0	0	0	0	0	0	0
4/27/2024	2:15 PM	0	0	0	0	0	0	0	0	0	0	0	0	0
4/27/2024	2:30 PM	0	0	0	0	0	0	0	0	0	0	0	0	0
4/27/2024	2:45 PM	0	0	0	0	0	0	0	0	0	0	0	0	0
4/27/2024	3:00 PM	0	0	0	0	0	0	0	0	0	0	0	0	0
4/27/2024	3:15 PM	0	0	0	0	0	0	0	0	0	0	0	0	0
4/27/2024	3:30 PM	0	0	0	0	0	0	0	0	0	0	0	0	0
4/27/2024	3:45 PM	0	0	0	0	0	0	0	0	0	0	0	0	0
4/27/2024	4:00 PM	0	0	0	0	0	0	0	0	0	0	0	0	0
4/27/2024	4:15 PM	0	0	0	0	0	0	0	0	0	0	0	0	0
4/27/2024	4:30 PM	0	0	0	0	0	0	0	0	0	0	0	0	0
4/27/2024	4:45 PM	0	0	0	0	0	0	0	0	0	0	0	0	0
4/27/2024	5:00 PM	0	0	0	0	0	0	0	0	0	0	0	0	0
4/27/2024	5:15 PM	0	0	0	0	0	0	0	0	0	0	0	0	0
4/27/2024	5:30 PM	0	0	0	0	0	0	0	0	0	0	0	0	0
4/27/2024	5:45 PM	0	0	0	0	0	0	0	0	0	0	0	0	0
4/27/2024	6:00 PM	0	0	0	0	0	0	0	0	0	0	0	0	0
4/27/2024	6:15 PM	0	0	0	0	0	0	0	0	0	0	0	0	0
4/27/2024	6:30 PM	0	0	0	0	0	0	0	0	0	0	0	0	0
4/27/2024	6:45 PM	0	0	0	0	0	0	0	0	0	0	0	0	0
4/27/2024	7:00 PM	0	0	0	0	0	0	0	0	0	0	0	0	0
4/27/2024	7:15 PM	0	0	0	0	0	0	0	0	0	0	0	0	0
4/27/2024	7:30 PM	0	0	0	0	0	0	0	0	0	0	0	0	0
4/27/2024	7:45 PM	0	0	0	0	0	0	0	0	0	0	0	0	0
4/27/2024	8:00 PM	0	0	0	0	0	0	0	0	0	0	0	0	0
4/27/2024	8:15 PM	0	0	0	0	0	0	0	0	0	0	0	0	0
4/27/2024	8:30 PM	0	0	0	0	0	0	0	0	0	0	0	0	0
4/27/2024	8:45 PM	0	0	0	0	0	0	0	0	0	0	0	0	0
4/27/2024	9:00 PM	0	0	0	0	0	0	0	0	0	0	0	0	0
4/27/2024	9:15 PM	0	0	0	0	0	0	0	0	0	0	0	0	0
4/27/2024	9:30 PM	0	0	0	0	0	0	0	0	0	0	0	0	0
4/27/2024	9:45 PM	0	0	0	0	0	0	0	0	0	0	0	0	0
4/27/2024	10:00 PM	0	0	0	0	0	0	0	0	0	0	0	0	0
4/27/2024	10:15 PM	0	0	0	0	0	0	0	0	0	0	0	0	0
4/27/2024	10:30 PM	0	0	0	0	0	0	0	0	0	0	0	0	0
4/27/2024	10:45 PM	0	0	0	0	0	0	0	0	0	0	0	0	0
4/27/2024	11:00 PM	0	0	0	0	0	0	0	0	0	0	0	0	0
4/27/2024	11:15 PM	0	0	0	0	0	0	0	0	0	0	0	0	0
4/27/2024	11:30 PM	0	0	0	0	0	0	0	0	0	0	0	0	0
4/27/2024	11:45 PM	0	0	0	0	0	0	0	0	0	0	0	0	0

SB
File Name:
Start Date: 4/21/2024
Start Time: 0
Site Code: 75 Lane 1 SB
Station ID: 1
Location 1: I-20, north of Bush River Rd
Location 2:

Date	Time	1	2	3	4	5	6	7	8	9	10	11	12	13
4/21/2024	12:00 AM	0	51	2	0	0	0	0	0	0	0	0	0	0
4/21/2024	12:15 AM	0	39	2	0	0	0	0	0	0	0	0	0	0
4/21/2024	12:30 AM	0	28	0	0	0	0	0	0	0	0	0	0	0
4/21/2024	12:45 AM	0	24	0	0	0	0	0	0	0	0	0	0	0
4/21/2024	1:00 AM	0	23	0	0	0	0	0	0	0	0	0	0	0
4/21/2024	1:15 AM	0	23	0	0	0	0	0	0	0	0	0	0	0
4/21/2024	1:30 AM	0	21	2	0	0	0	0	0	0	0	0	0	0
4/21/2024	1:45 AM	0	18	4	0	0	0	0	0	0	0	0	0	0
4/21/2024	2:00 AM	0	17	4	0	0	0	0	0	0	0	0	0	0
4/21/2024	2:15 AM	1	17	4	0	0	0	0	0	0	0	0	0	0
4/21/2024	2:30 AM	1	13	2	0	0	0	0	0	0	0	0	0	0
4/21/2024	2:45 AM	1	12	0	0	0	0	0	0	0	0	0	0	0
4/21/2024	3:00 AM	1	15	0	0	0	0	0	0	0	0	0	0	0
4/21/2024	3:15 AM	0	11	0	0	0	0	0	0	0	0	0	0	0
4/21/2024	3:30 AM	0	11	1	0	0	0	0	0	0	0	0	0	0
4/21/2024	3:45 AM	0	13	1	0	0	0	0	0	0	0	0	0	0
4/21/2024	4:00 AM	0	14	1	0	0	0	0	0	0	0	0	0	0
4/21/2024	4:15 AM	0	16	1	0	0	0	0	0	0	0	0	0	0
4/21/2024	4:30 AM	0	18	1	0	0	0	0	0	0	0	0	0	0
4/21/2024	4:45 AM	0	25	1	0	0	0	0	0	0	0	0	0	0
4/21/2024	5:00 AM	0	29	1	0	0	0	0	0	0	0	0	0	0
4/21/2024	5:15 AM	0	34	1	0	0	0	0	0	0	0	0	0	0
4/21/2024	5:30 AM	0	41	0	0	0	0	0	0	0	0	0	0	0
4/21/2024	5:45 AM	0	54	5	0	0	0	0	0	0	0	0	0	0
4/21/2024	6:00 AM	0	63	11	0	0	0	0	0	0	0	0	0	0
4/21/2024	6:15 AM	0	77	13	0	0	0	0	0	0	0	0	0	0
4/21/2024	6:30 AM	0	80	18	0	0	0	0	0	0	0	0	0	0
4/21/2024	6:45 AM	0	70	19	0	0	0	0	0	0	0	0	0	0
4/21/2024	7:00 AM	2	71	16	0	0	0	0	0	0	0	0	0	0
4/21/2024	7:15 AM	5	70	19	0	0	0	0	0	0	0	0	0	0
4/21/2024	7:30 AM	5	78	19	0	0	0	0	0	0	0	0	0	0
4/21/2024	7:45 AM	5	93	17	0	0	0	0	0	0	0	0	0	0
4/21/2024	8:00 AM	3	111	19	0	0	0	0	0	0	0	0	0	0
4/21/2024	8:15 AM	2	133	26	0	0	0	0	0	0	0	0	0	0
4/21/2024	8:30 AM	6	176	30	0	0	0	0	0	0	0	0	0	0
4/21/2024	8:45 AM	6	216	37	0	0	0	0	0	0	0	0	0	0
4/21/2024	9:00 AM	7	228	47	0	1	0	0	0	0	0	0	0	0
4/21/2024	9:15 AM	5	231	48	0	1	0	0	0	0	0	0	0	0
4/21/2024	9:30 AM	11	249	54	0	1	0	0	0	0	0	0	0	0
4/21/2024	9:45 AM	12	249	56	0	2	0	0	0	0	0	0	0	0
4/21/2024	10:00 AM	12	279	55	0	1	0	0	0	1	0	0	0	0
4/21/2024	10:15 AM	12	335	55	0	1	0	0	0	1	0	0	0	0
4/21/2024	10:30 AM	2	344	64	0	1	0	0	0	2	0	0	0	0
4/21/2024	10:45 AM	2	360	72	0	1	0	0	0	2	0	0	0	0
4/21/2024	11:00 AM	1	377	90	0	1	0	0	0	1	0	0	0	0
4/21/2024	11:15 AM	4	386	99	0	1	0	0	0	2	0	0	0	0
4/21/2024	11:30 AM	7	413	107	0	2	0	0	0	1	0	0	0	0
4/21/2024	11:45 AM	11	426	113	0	1	0	0	0	1	0	0	0	0
4/21/2024	12:00 PM	11	454	113	0	2	0	0	0	1	0	0	0	0
4/21/2024	12:15 PM	8	503	119	0	2	0	0	0	0	0	0	0	0
4/21/2024	12:30 PM	5	546	120	0	1	0	0	0	0	0	0	0	0
4/21/2024	12:45 PM	0	601	117	0	1	0	0	1	0	0	0	0	0
4/21/2024	1:00 PM	0	627	107	0	0	1	0	1	0	0	0	0	0
4/21/2024	1:15 PM	0	615	107	0	0	1	0	1	0	0	0	0	0
4/21/2024	1:30 PM	0	601	102	0	1	1	0	1	2	0	0	0	0
4/21/2024	1:45 PM	0	576	111	0	1	1	0	0	2	0	0	0	0
4/21/2024	2:00 PM	0	541	118	0	1	0	0	0	3	0	0	0	0
4/21/2024	2:15 PM	0	520	117	0	2	0	0	0	3	0	0	0	0
4/21/2024	2:30 PM	0	474	118	0	1	0	0	0	1	0	0	0	0
4/21/2024	2:45 PM	0	474	127	0	1	0	0	0	1	0	0	0	0
4/21/2024	3:00 PM	0	487	131	0	1	0	0	0	1	0	0	0	0
4/21/2024	3:15 PM	0	491	148	0	0	0	0	0	1	0	0	0	0
4/21/2024	3:30 PM	0	536	155	0	0	0	0	0	2	0	0	0	0
4/21/2024	3:45 PM	0	537	137	1	0	0	0	0	2	1	0	0	0
4/21/2024	4:00 PM	0	546	124	1	0	0	0	0	2	1	0	0	0
4/21/2024	4:15 PM	0	531	110	1	0	0	0	0	2	1	0	0	0
4/21/2024	4:30 PM	0	479	100	1	0	0	0	0	1	1	0	0	0
4/21/2024	4:45 PM	0	459	104	1	0	0	0	0	1	0	0	0	0
4/21/2024	5:00 PM	0	431	106	1	0	0	0	1	0	0	0	0	0
4/21/2024	5:15 PM	1	395	106	1	0	0	0	1	0	0	0	0	0
4/21/2024	5:30 PM	2	392	100	1	1	0	0	1	0	0	0	0	0
4/21/2024	5:45 PM	2	373	98	0	1	0	0	1	0	0	0	0	0
4/21/2024	6:00 PM	3	376	94	0	1	0	0	0	0	0	0	0	0
4/21/2024	6:15 PM	2	390	81	0	1	0	0	0	3	0	0	0	0
4/21/2024	6:30 PM	1	364	78	0	0	0	0	0	3	0	0	0	0
4/21/2024	6:45 PM	1	346	67	1	1	0	0	0	3	0	0	0	0
4/21/2024	7:00 PM	0	302	59	1	1	0	0	0	3	0	0	0	0
4/21/2024	7:15 PM	0	267	55	1	2	0	0	0	0	0	0	0	0
4/21/2024	7:30 PM	0	256	42	1	2	0	0	0	0	0	0	0	0
4/21/2024	7:45 PM	0	234	28	0	1	0	0	0	0	0	0	0	0
4/21/2024	8:00 PM	0	208	22	0	1	0	0	0	0	0	0	0	0
4/21/2024	8:15 PM	0	195	10	0	0	0	0	0	0	0	0	0	0
4/21/2024	8:30 PM	0	175	7	0	0	0	0	0	0	0	0	0	0
4/21/2024	8:45 PM	0	153	7	0	0	0	0	0	0	0	0	0	0
4/21/2024	9:00 PM	0	129	7	0	0	0	0	0	0	0	0	0	0
4/21/2024	9:15 PM	0	113	7	0	0	0	0	0	0	0	0	0	0
4/21/2024	9:30 PM	0	97	8	0	0	0	0	0	1	0	0	0	0
4/21/2024	9:45 PM	0	87	9	0	0	0	0	0	1	0	0	0	0
4/21/2024	10:00 PM	0	87	5	0	0	0	0	0	2	0	0	0	0
4/21/2024	10:15 PM	0	69	5	0	0	0	0	0	2	0	0	0	0
4/21/2024	10:30 PM	0	59	4	0	0	0	0	0	1	0	0	0	0
4/21/2024	10:45 PM	0	56	4	0	0	0	0	0	2	0	0	0	0
4/21/2024	11:00 PM	0	42	5	0	0	0	0	0	1	0	0	0	0
4/21/2024	11:15 PM	0	30	4	0	0	0	0	0	1	0	0	0	0
4/21/2024	11:30 PM	0	20	3	0	0	0	0	0	1	0	0	0	0
4/21/2024	11:45 PM	0	6	1	0	0	0	0	0	0	0	0	0	0

4/22/2024	12:00 AM	0	22	1	0	0	0	0	0	0	0	0	0
4/22/2024	12:15 AM	0	18	1	0	0	0	0	0	0	0	0	0
4/22/2024	12:30 AM	0	18	1	0	0	0	0	0	0	0	0	0
4/22/2024	12:45 AM	0	16	0	0	0	0	0	0	0	0	0	0
4/22/2024	1:00 AM	0	12	0	0	0	0	0	0	0	0	0	0
4/22/2024	1:15 AM	0	12	0	0	0	0	0	0	0	0	0	0
4/22/2024	1:30 AM	0	9	0	0	0	1	0	0	0	0	0	0
4/22/2024	1:45 AM	0	12	0	0	0	1	0	0	0	0	0	0
4/22/2024	2:00 AM	0	14	1	0	0	1	0	0	0	0	0	0
4/22/2024	2:15 AM	0	16	1	0	0	1	0	0	0	0	0	0
4/22/2024	2:30 AM	0	19	1	0	0	0	0	0	0	0	0	0
4/22/2024	2:45 AM	0	19	1	0	0	0	0	0	0	0	0	0
4/22/2024	3:00 AM	0	19	0	0	0	0	0	0	0	0	0	0
4/22/2024	3:15 AM	0	18	0	0	0	0	0	0	0	0	0	0
4/22/2024	3:30 AM	0	22	1	0	0	0	0	0	0	0	0	0
4/22/2024	3:45 AM	0	23	2	0	0	0	0	0	0	0	0	0
4/22/2024	4:00 AM	0	33	3	0	0	0	0	0	0	0	0	0
4/22/2024	4:15 AM	0	40	3	0	0	0	0	0	0	0	0	0
4/22/2024	4:30 AM	0	52	6	0	0	0	0	0	0	0	0	0
4/22/2024	4:45 AM	0	75	11	0	0	0	0	0	0	0	0	0
4/22/2024	5:00 AM	0	102	17	0	0	0	0	0	0	0	0	0
4/22/2024	5:15 AM	0	138	24	0	1	0	0	0	0	0	0	0
4/22/2024	5:30 AM	1	187	36	0	1	0	0	0	0	0	0	0
4/22/2024	5:45 AM	1	280	66	0	1	0	0	0	0	0	0	0
4/22/2024	6:00 AM	2	365	103	0	1	0	0	0	0	0	0	0
4/22/2024	6:15 AM	2	441	131	0	1	0	0	0	0	0	0	0
4/22/2024	6:30 AM	1	543	172	0	2	0	0	0	0	0	0	0
4/22/2024	6:45 AM	1	578	174	0	6	0	0	0	0	0	0	0
4/22/2024	7:00 AM	0	623	179	0	6	0	0	0	0	0	0	0
4/22/2024	7:15 AM	0	639	178	0	5	0	0	0	0	0	0	0
4/22/2024	7:30 AM	0	629	152	0	4	0	0	0	0	0	0	0
4/22/2024	7:45 AM	0	575	160	0	1	0	0	0	2	0	0	0
4/22/2024	8:00 AM	0	503	141	0	3	1	0	1	3	0	0	0
4/22/2024	8:15 AM	0	431	136	0	4	2	0	1	3	0	0	0
4/22/2024	8:30 AM	0	326	136	0	5	3	0	2	5	0	0	0
4/22/2024	8:45 AM	0	316	125	0	8	3	0	2	3	0	0	0
4/22/2024	9:00 AM	0	296	121	0	8	2	0	2	2	0	0	0
4/22/2024	9:15 AM	0	299	127	0	8	1	0	2	2	0	0	0
4/22/2024	9:30 AM	0	309	125	0	8	0	0	1	0	0	0	0
4/22/2024	9:45 AM	0	294	110	2	4	0	0	2	2	0	0	0
4/22/2024	10:00 AM	1	289	120	2	3	0	0	1	2	0	0	0
4/22/2024	10:15 AM	1	298	118	2	3	0	0	1	2	0	0	0
4/22/2024	10:30 AM	1	300	128	2	3	0	0	2	2	1	0	0
4/22/2024	10:45 AM	1	306	135	1	5	0	0	1	2	1	0	0
4/22/2024	11:00 AM	0	325	132	1	4	0	0	1	2	1	0	0
4/22/2024	11:15 AM	0	322	123	1	3	1	0	1	2	2	0	0
4/22/2024	11:30 AM	0	353	113	1	2	1	0	0	3	1	0	0
4/22/2024	11:45 AM	0	366	113	0	1	1	0	0	1	1	0	0
4/22/2024	12:00 PM	3	369	114	0	1	1	0	0	6	1	0	0
4/22/2024	12:15 PM	3	391	121	0	3	0	0	2	9	0	0	0
4/22/2024	12:30 PM	3	374	124	0	4	0	0	2	9	0	0	0
4/22/2024	12:45 PM	3	383	136	0	4	0	0	2	10	0	0	0
4/22/2024	1:00 PM	0	393	136	0	4	0	0	2	7	0	0	0
4/22/2024	1:15 PM	0	415	148	0	2	0	0	0	6	0	0	0
4/22/2024	1:30 PM	0	438	158	0	4	0	0	1	6	0	0	0
4/22/2024	1:45 PM	0	459	159	0	6	0	0	2	7	0	0	0
4/22/2024	2:00 PM	0	461	167	0	6	0	0	3	5	0	0	0
4/22/2024	2:15 PM	2	487	162	0	7	0	0	3	3	0	0	0
4/22/2024	2:30 PM	4	525	164	0	9	0	0	2	3	0	0	0
4/22/2024	2:45 PM	4	557	184	0	10	0	0	1	2	0	0	0
4/22/2024	3:00 PM	4	593	191	0	14	0	0	2	5	0	0	0
4/22/2024	3:15 PM	2	641	210	0	21	0	0	3	5	0	0	0
4/22/2024	3:30 PM	0	705	242	0	21	0	0	4	4	0	0	0
4/22/2024	3:45 PM	1	740	253	0	21	0	0	5	4	0	0	0
4/22/2024	4:00 PM	1	804	274	1	28	0	0	5	1	0	0	0
4/22/2024	4:15 PM	1	840	308	1	23	0	0	4	3	0	0	0
4/22/2024	4:30 PM	2	875	318	1	20	0	0	4	5	0	0	0
4/22/2024	4:45 PM	1	921	325	1	23	0	0	4	5	0	0	0
4/22/2024	5:00 PM	3	879	314	1	15	0	0	4	7	0	0	0
4/22/2024	5:15 PM	3	793	267	1	17	0	0	4	5	0	0	0
4/22/2024	5:30 PM	2	683	211	1	17	0	0	4	4	0	0	0
4/22/2024	5:45 PM	3	540	161	1	11	0	0	5	3	0	0	0
4/22/2024	6:00 PM	1	464	140	0	8	0	0	3	3	0	0	0
4/22/2024	6:15 PM	1	398	122	0	3	0	0	5	4	0	0	0
4/22/2024	6:30 PM	1	341	106	0	3	0	0	5	3	0	0	0
4/22/2024	6:45 PM	0	310	98	0	2	0	0	3	3	0	1	0	0
4/22/2024	7:00 PM	0	275	74	0	2	0	0	4	1	0	1	0	0
4/22/2024	7:15 PM	0	252	60	0	2	0	0	3	0	0	1	0	0
4/22/2024	7:30 PM	0	209	55	0	0	0	0	3	0	0	1	0	0
4/22/2024	7:45 PM	0	180	43	0	1	0	0	3	1	0	0	0	0
4/22/2024	8:00 PM	0	166	36	0	1	0	0	2	1	0	0	0	0
4/22/2024	8:15 PM	0	143	31	0	1	0	0	1	1	0	0	0	0
4/22/2024	8:30 PM	0	134	26	0	1	0	0	0	1	0	0	0	0
4/22/2024	8:45 PM	0	109	20	0	0	0	0	0	0	0	0	0	0
4/22/2024	9:00 PM	0	81	15	0	0	0	0	0	0	0	0	0	0
4/22/2024	9:15 PM	0	58	9	0	0	0	0	0	0	0	0	0	0
4/22/2024	9:30 PM	0	45	8	0	0	0	0	0	0	0	0	0	0
4/22/2024	9:45 PM	0	45	7	0	0	0	0	0	0	0	0	0	0
4/22/2024	10:00 PM	0	43	6	0	0	0	0	0	0	0	0	0	0
4/22/2024	10:15 PM	0	46	5	0	0	0	0	0	0	0	0	0	0
4/22/2024	10:30 PM	0	42	2	0	0	0	0	0	0	0	0	0	0
4/22/2024	10:45 PM	0	41	1	0	0	0	0	0	0	0	0	0	0
4/22/2024	11:00 PM	0	40	0	0	0	0	0	0	0	0	0	0	0
4/22/2024	11:15 PM	0	29	0	0	0	0	0	0	0	0	0	0	0
4/22/2024	11:30 PM	0	21	0	0	0	0	0	0	0	0	0	0	0
4/22/2024	11:45 PM	0	9	0	0	0	0	0	0	0	0	0	0	0

4/23/2024	12:00 AM	0	11	1	0	0	0	0	0	0	0	0	0
4/23/2024	12:15 AM	0	13	0	0	0	0	0	0	0	0	0	0
4/23/2024	12:30 AM	0	9	0	0	0	0	0	0	0	0	0	0
4/23/2024	12:45 AM	0	9	0	0	0	0	0	0	0	0	0	0
4/23/2024	1:00 AM	0	8	0	0	0	0	0	0	0	0	0	0
4/23/2024	1:15 AM	0	5	0	0	0	0	0	0	0	0	0	0
4/23/2024	1:30 AM	0	4	0	0	0	0	0	0	0	0	0	0
4/23/2024	1:45 AM	0	6	0	0	0	0	0	0	0	0	0	0
4/23/2024	2:00 AM	0	6	0	0	0	0	0	0	0	0	0	0
4/23/2024	2:15 AM	0	7	0	0	0	0	0	0	0	0	0	0
4/23/2024	2:30 AM	0	11	0	0	0	0	0	0	0	0	0	0
4/23/2024	2:45 AM	0	11	0	0	0	0	0	0	0	0	0	0
4/23/2024	3:00 AM	0	16	2	0	0	0	0	0	0	0	0	0
4/23/2024	3:15 AM	0	15	2	0	0	0	0	0	0	0	0	0
4/23/2024	3:30 AM	0	13	2	0	0	0	0	0	0	0	0	0
4/23/2024	3:45 AM	0	16	3	0	0	0	0	0	0	0	0	0
4/23/2024	4:00 AM	0	19	1	0	0	0	0	0	0	0	0	0
4/23/2024	4:15 AM	0	25	3	0	1	0	0	0	0	0	0	0
4/23/2024	4:30 AM	0	41	5	0	1	0	0	0	0	0	0	0
4/23/2024	4:45 AM	0	73	8	0	1	0	0	0	0	0	0	0
4/23/2024	5:00 AM	0	91	11	0	1	0	0	0	0	0	0	0
4/23/2024	5:15 AM	0	138	17	0	2	0	0	0	0	0	0	0
4/23/2024	5:30 AM	0	219	39	0	2	0	0	0	0	0	0	0
4/23/2024	5:45 AM	0	294	66	0	2	0	0	0	0	0	0	0
4/23/2024	6:00 AM	0	397	111	0	3	0	0	0	0	0	0	0
4/23/2024	6:15 AM	0	489	143	0	3	0	0	0	0	0	0	0
4/23/2024	6:30 AM	0	551	169	1	4	0	0	0	0	0	0	0
4/23/2024	6:45 AM	0	599	173	2	5	0	0	0	0	0	0	0
4/23/2024	7:00 AM	0	627	155	2	5	0	0	0	1	0	0	0
4/23/2024	7:15 AM	0	607	162	2	4	0	0	0	1	0	0	0
4/23/2024	7:30 AM	0	565	143	1	3	0	0	0	2	0	0	0
4/23/2024	7:45 AM	0	527	133	1	3	0	0	0	3	0	0	0
4/23/2024	8:00 AM	0	476	155	1	2	0	0	0	4	0	0	0
4/23/2024	8:15 AM	0	456	145	1	6	0	0	0	6	0	0	0
4/23/2024	8:30 AM	1	430	145	1	10	0	0	0	7	0	0	0
4/23/2024	8:45 AM	1	381	158	0	9	0	0	0	7	0	0	0
4/23/2024	9:00 AM	1	352	130	0	11	0	0	0	6	0	0	0
4/23/2024	9:15 AM	1	299	113	0	7	0	0	0	4	0	0	0
4/23/2024	9:30 AM	0	258	104	0	4	0	0	1	4	0	0	0
4/23/2024	9:45 AM	0	236	84	0	4	0	0	1	4	0	0	0
4/23/2024	10:00 AM	0	213	92	0	4	0	0	1	3	0	0	0
4/23/2024	10:15 AM	0	211	97	0	4	0	0	2	3	0	0	0
4/23/2024	10:30 AM	1	233	101	0	4	1	0	2	3	0	0	0
4/23/2024	10:45 AM	2	252	112	0	4	1	0	2	2	0	0	0
4/23/2024	11:00 AM	3	262	111	0	3	1	0	2	3	0	0	0
4/23/2024	11:15 AM	3	280	110	0	3	1	0	1	3	0	0	0
4/23/2024	11:30 AM	2	288	113	0	2	0	0	0	2	0	0	0
4/23/2024	11:45 AM	1	302	115	0	4	0	0	1	3	0	0	0
4/23/2024	12:00 PM	0	314	112	0	4	0	0	2	2	0	0	0
4/23/2024	12:15 PM	1	329	118	0	7	0	0	2	6	0	0	0
4/23/2024	12:30 PM	1	335	119	0	8	0	0	3	8	0	0	0
4/23/2024	12:45 PM	1	342	118	0	8	0	0	2	8	0	0	0
4/23/2024	1:00 PM	1	370	119	0	8	0	0	1	9	0	0	0
4/23/2024	1:15 PM	0	394	127	0	6	0	0	1	9	0	0	0
4/23/2024	1:30 PM	0	414	123	0	7	0	0	0	8	0	0	0
4/23/2024	1:45 PM	0	449	126	0	7	0	0	0	7	0	0	0
4/23/2024	2:00 PM	0	448	145	0	7	0	0	0	6	0	0	0
4/23/2024	2:15 PM	1	495	145	1	7	0	0	0	2	0	0	0
4/23/2024	2:30 PM	1	515	168	1	7	0	0	0	2	0	0	0
4/23/2024	2:45 PM	2	556	190	1	9	0	0	1	2	0	0	0
4/23/2024	3:00 PM	2	632	197	1	12	0	0	2	3	0	0	0
4/23/2024	3:15 PM	1	680	227	0	14	0	0	4	3	0	0	0
4/23/2024	3:30 PM	2	775	253	0	19	0	0	7	3	0	0	0
4/23/2024	3:45 PM	2	809	271	0	19	0	0	7	4	0	0	0
4/23/2024	4:00 PM	2	794	263	0	15	0	0	7	7	0	0	0
4/23/2024	4:15 PM	2	709	236	0	13	0	0	5	8	0	0	0
4/23/2024	4:30 PM	1	743	265	0	10	0	0	2	7	0	0	0
4/23/2024	4:45 PM	1	779	264	0	10	0	0	5	9	0	0	0
4/23/2024	5:00 PM	2	800	291	0	12	0	0	5	6	0	0	0
4/23/2024	5:15 PM	3	853	317	1	12	0	0	5	5	0	0	0
4/23/2024	5:30 PM	5	716	240	1	11	0	0	5	5	0	0	0
4/23/2024	5:45 PM	4	576	192	1	8	0	0	1	2	0	0	0
4/23/2024	6:00 PM	3	480	140	1	9	1	0	1	1	0	0	0
4/23/2024	6:15 PM	5	380	93	0	8	1	0	1	1	0	0	0
4/23/2024	6:30 PM	4	345	90	0	9	1	0	1	0	0	0	0
4/23/2024	6:45 PM	5	312	89	0	8	1	0	1	1	0	0	0
4/23/2024	7:00 PM	5	283	91	0	5	0	0	0	1	0	0	0
4/23/2024	7:15 PM	2	272	85	0	4	0	0	0	2	0	0	0
4/23/2024	7:30 PM	1	246	71	0	0	0	0	0	3	0	0	0
4/23/2024	7:45 PM	0	249	59	0	0	0	0	0	2	0	0	0
4/23/2024	8:00 PM	1	223	38	0	0	0	0	0	3	0	0	0
4/23/2024	8:15 PM	1	210	26	0	1	0	0	0	2	0	0	0
4/23/2024	8:30 PM	1	176	21	0	1	0	0	0	1	0	0	0
4/23/2024	8:45 PM	1	142	13	0	1	0	0	0	1	0	0	0
4/23/2024	9:00 PM	0	134	13	0	1	0	0	0	0	0	0	0
4/23/2024	9:15 PM	0	102	11	0	1	0	0	0	1	0	0	0
4/23/2024	9:30 PM	0	104	8	0	3	0	0	0	1	0	0	0
4/23/2024	9:45 PM	0	98	8	0	3	0	0	0	2	0	0	0
4/23/2024	10:00 PM	0	85	5	0	3	0	0	0	2	0	0	0
4/23/2024	10:15 PM	0	89	7	0	3	0	0	0	2	0	0	0
4/23/2024	10:30 PM	0	72	6	0	1	0	0	0	2	0	0	0
4/23/2024	10:45 PM	0	51	3	0	1	0	0	0	1	0	0	0
4/23/2024	11:00 PM	0	41	3	0	1	0	0	0	1	0	0	0
4/23/2024	11:15 PM	0	22	1	0	0	0	0	0	0	0	0	0
4/23/2024	11:30 PM	0	11	0	0	0	0	0	0	0	0	0	0
4/23/2024	11:45 PM	0	5	0	0	0	0	0	0	0	0	0	0

4/24/2024	12:00 AM	0	27	0	0	0	0	0	0	0	0	0	0	0
4/24/2024	12:15 AM	0	23	0	0	0	0	0	0	0	0	0	0	0
4/24/2024	12:30 AM	0	19	0	0	0	0	0	0	0	0	0	0	0
4/24/2024	12:45 AM	0	18	0	0	0	0	0	0	0	0	0	0	0
4/24/2024	1:00 AM	0	17	0	0	0	0	0	0	0	0	0	0	0
4/24/2024	1:15 AM	0	15	0	0	0	0	0	0	0	0	0	0	0
4/24/2024	1:30 AM	0	17	0	0	0	0	0	0	0	0	0	0	0
4/24/2024	1:45 AM	0	14	0	0	0	0	0	0	0	0	0	0	0
4/24/2024	2:00 AM	0	10	0	0	0	0	0	0	0	0	0	0	0
4/24/2024	2:15 AM	0	11	0	0	0	0	0	0	0	0	0	0	0
4/24/2024	2:30 AM	0	10	0	0	0	0	0	0	0	0	0	0	0
4/24/2024	2:45 AM	0	11	0	0	0	0	0	0	0	0	0	0	0
4/24/2024	3:00 AM	0	14	0	0	0	0	0	0	0	0	0	0	0
4/24/2024	3:15 AM	0	13	0	0	0	0	0	0	0	0	0	0	0
4/24/2024	3:30 AM	0	11	0	0	0	0	0	0	0	0	0	0	0
4/24/2024	3:45 AM	0	14	0	0	0	0	0	0	0	0	0	0	0
4/24/2024	4:00 AM	0	15	0	0	0	0	0	0	0	0	0	0	0
4/24/2024	4:15 AM	0	15	0	0	0	0	0	0	0	0	0	0	0
4/24/2024	4:30 AM	0	24	1	0	0	0	0	0	0	0	0	0	0
4/24/2024	4:45 AM	0	29	4	0	0	0	0	0	0	0	0	0	0
4/24/2024	5:00 AM	0	48	8	0	0	0	0	0	0	0	0	0	0
4/24/2024	5:15 AM	0	95	11	0	0	0	0	0	1	0	0	0	0
4/24/2024	5:30 AM	0	169	27	0	0	0	0	0	1	0	0	0	0
4/24/2024	5:45 AM	0	286	63	0	0	0	0	0	1	0	0	0	0
4/24/2024	6:00 AM	1	388	94	0	1	0	0	0	1	0	0	0	0
4/24/2024	6:15 AM	1	475	129	0	4	0	0	1	0	0	0	0	0
4/24/2024	6:30 AM	1	548	155	0	6	0	0	2	0	0	0	0	0
4/24/2024	6:45 AM	1	593	164	0	8	0	0	2	0	0	0	0	0
4/24/2024	7:00 AM	0	619	175	0	9	0	0	2	0	0	0	0	0
4/24/2024	7:15 AM	0	563	168	0	8	0	0	1	0	0	0	0	0
4/24/2024	7:30 AM	0	513	156	0	7	1	0	0	0	0	0	0	0
4/24/2024	7:45 AM	0	492	137	0	6	1	0	0	1	0	0	0	0
4/24/2024	8:00 AM	0	473	129	0	6	1	0	1	1	0	0	0	0
4/24/2024	8:15 AM	0	461	122	0	6	1	0	2	2	0	0	0	0
4/24/2024	8:30 AM	0	397	108	0	6	1	0	2	3	0	0	0	0
4/24/2024	8:45 AM	0	336	109	0	5	1	0	2	2	0	0	0	0
4/24/2024	9:00 AM	0	325	112	0	7	1	0	1	3	0	0	0	0
4/24/2024	9:15 AM	0	343	116	0	6	1	0	0	2	0	0	0	0
4/24/2024	9:30 AM	0	371	132	0	6	0	0	0	1	0	0	0	0
4/24/2024	9:45 AM	1	364	130	0	6	0	0	2	3	0	0	0	0
4/24/2024	10:00 AM	1	327	118	0	4	0	0	3	3	0	0	0	0
4/24/2024	10:15 AM	2	319	111	1	3	0	0	4	3	0	0	0	0
4/24/2024	10:30 AM	2	321	105	1	3	0	0	4	4	0	0	0	0
4/24/2024	10:45 AM	2	318	125	1	5	0	0	3	2	0	0	0	0
4/24/2024	11:00 AM	2	319	127	1	4	1	0	3	2	0	0	0	0
4/24/2024	11:15 AM	2	327	120	0	5	1	0	3	3	0	0	0	0
4/24/2024	11:30 AM	2	368	120	0	8	1	0	3	3	0	0	0	0
4/24/2024	11:45 AM	1	359	101	0	6	1	0	3	6	0	0	0	0
4/24/2024	12:00 PM	1	348	108	0	6	0	0	2	7	0	0	0	0
4/24/2024	12:15 PM	1	324	126	0	5	0	0	1	7	0	0	0	0
4/24/2024	12:30 PM	3	297	131	0	1	0	0	1	6	0	0	0	0
4/24/2024	12:45 PM	3	337	141	0	4	0	0	0	4	0	0	0	0
4/24/2024	1:00 PM	3	364	152	0	5	1	0	2	4	0	0	0	0
4/24/2024	1:15 PM	2	413	167	0	6	1	0	4	4	0	0	0	0
4/24/2024	1:30 PM	1	440	178	0	8	1	0	5	5	0	0	0	0
4/24/2024	1:45 PM	2	440	159	0	6	1	0	5	5	0	0	0	0
4/24/2024	2:00 PM	2	475	158	1	4	0	0	3	4	0	0	0	0
4/24/2024	2:15 PM	4	499	173	1	4	0	0	3	5	0	0	0	0
4/24/2024	2:30 PM	3	566	192	1	2	0	0	3	7	0	0	0	0
4/24/2024	2:45 PM	2	624	238	1	8	1	0	3	6	0	0	0	0
4/24/2024	3:00 PM	2	666	255	0	18	3	0	6	5	0	0	0	0
4/24/2024	3:15 PM	0	734	260	1	19	5	0	5	5	0	0	0	0
4/24/2024	3:30 PM	1	765	271	1	25	5	0	4	3	0	0	0	0
4/24/2024	3:45 PM	1	812	271	1	27	4	0	5	5	0	0	0	0
4/24/2024	4:00 PM	2	858	277	1	21	2	0	2	7	0	0	0	0
4/24/2024	4:15 PM	2	866	285	0	21	0	0	2	7	0	0	0	0
4/24/2024	4:30 PM	2	874	278	0	17	0	0	4	7	0	0	0	0
4/24/2024	4:45 PM	2	872	274	0	12	0	0	5	6	0	0	0	0
4/24/2024	5:00 PM	2	863	260	0	11	0	0	6	5	0	0	0	0
4/24/2024	5:15 PM	2	761	234	0	12	0	0	5	4	0	0	0	0
4/24/2024	5:30 PM	2	692	208	1	12	0	0	3	5	0	0	0	0
4/24/2024	5:45 PM	3	581	171	1	11	0	0	1	4	0	0	0	0
4/24/2024	6:00 PM	2	451	133	1	10	0	0	1	6	0	0	0	0
4/24/2024	6:15 PM	2	424	110	1	8	0	0	2	5	0	0	0	0
4/24/2024	6:30 PM	1	356	89	0	6	0	0	2	4	0	0	0	0
4/24/2024	6:45 PM	0	295	88	0	4	0	0	2	4	0	0	0	0
4/24/2024	7:00 PM	0	263	84	0	3	0	0	2	1	0	0	0	0
4/24/2024	7:15 PM	0	233	70	0	2	0	0	1	2	0	0	0	0
4/24/2024	7:30 PM	0	198	71	0	2	0	0	1	1	0	0	0	0
4/24/2024	7:45 PM	0	196	57	0	1	0	0	1	1	0	0	0	0
4/24/2024	8:00 PM	0	188	53	0	0	0	0	0	2	0	0	0	0
4/24/2024	8:15 PM	0	156	46	0	0	0	0	0	1	0	0	0	0
4/24/2024	8:30 PM	0	132	33	0	0	0	0	0	1	0	0	0	0
4/24/2024	8:45 PM	0	108	29	0	0	0	0	0	1	0	0	0	0
4/24/2024	9:00 PM	0	81	25	0	1	0	0	0	0	0	0	0	0
4/24/2024	9:15 PM	1	77	25	0	1	0	0	0	0	0	0	0	0
4/24/2024	9:30 PM	1	65	22	0	1	0	0	0	0	0	0	0	0
4/24/2024	9:45 PM	1	62	19	0	1	0	0	0	0	0	0	0	0
4/24/2024	10:00 PM	1	55	14	0	0	0	0	0	0	0	0	0	0
4/24/2024	10:15 PM	0	50	12	0	0	0	0	0	0	0	0	0	0
4/24/2024	10:30 PM	0	46	10	0	0	0	0	0	0	0	0	0	0
4/24/2024	10:45 PM	0	40	9	0	0	0	0	0	0	0	0	0	0
4/24/2024	11:00 PM	0	33	9	0	0	0	0	0	0	0	0	0	0
4/24/2024	11:15 PM	0	22	6	0	0	0	0	0	0	0	0	0	0
4/24/2024	11:30 PM	0	13	4	0	0	0	0	0	0	0	0	0	0
4/24/2024	11:45 PM	0	5	2	0	0	0	0	0	0	0	0	0	0

4/25/2024	12:00 AM	0	18	3	0	0	0	0	0	0	0	0	0
4/25/2024	12:15 AM	0	14	1	0	0	0	0	0	0	0	0	0
4/25/2024	12:30 AM	0	16	1	0	0	0	0	0	0	0	0	0
4/25/2024	12:45 AM	0	13	0	0	0	0	0	0	0	0	0	0
4/25/2024	1:00 AM	0	9	0	0	0	0	0	0	0	0	0	0
4/25/2024	1:15 AM	0	8	0	0	0	0	0	0	0	0	0	0
4/25/2024	1:30 AM	0	7	0	0	0	0	0	0	0	0	0	0
4/25/2024	1:45 AM	0	7	0	0	1	0	0	0	0	0	0	0
4/25/2024	2:00 AM	0	7	0	0	1	0	0	0	0	0	0	0
4/25/2024	2:15 AM	0	7	0	0	1	0	0	0	0	0	0	0
4/25/2024	2:30 AM	0	6	0	0	1	0	0	0	0	0	0	0
4/25/2024	2:45 AM	0	6	0	0	0	0	0	0	0	0	0	0
4/25/2024	3:00 AM	0	11	2	0	0	0	0	0	0	0	0	0
4/25/2024	3:15 AM	0	15	5	0	0	0	0	0	0	0	0	0
4/25/2024	3:30 AM	0	17	6	0	0	0	0	0	0	0	0	0
4/25/2024	3:45 AM	1	23	9	0	0	0	0	0	0	0	0	0
4/25/2024	4:00 AM	1	31	12	0	0	0	0	0	0	0	0	0
4/25/2024	4:15 AM	1	35	13	0	0	0	0	0	1	0	0	0
4/25/2024	4:30 AM	2	39	15	0	0	0	0	0	1	0	0	0
4/25/2024	4:45 AM	1	43	17	0	0	0	0	0	1	0	0	0
4/25/2024	5:00 AM	1	56	20	0	1	0	0	0	1	0	0	0
4/25/2024	5:15 AM	1	68	26	0	1	0	0	0	0	0	0	0
4/25/2024	5:30 AM	0	137	42	0	3	0	0	0	1	0	0	0
4/25/2024	5:45 AM	0	236	73	0	3	0	0	0	1	0	0	0
4/25/2024	6:00 AM	1	356	105	0	2	0	0	0	1	0	0	0
4/25/2024	6:15 AM	1	465	140	0	3	0	0	1	1	0	0	0
4/25/2024	6:30 AM	1	568	172	0	2	0	0	2	0	0	0	0
4/25/2024	6:45 AM	2	610	172	0	4	0	0	2	1	0	0	0
4/25/2024	7:00 AM	1	637	174	0	7	0	0	2	1	0	0	0
4/25/2024	7:15 AM	1	645	185	0	6	0	0	2	2	0	0	0
4/25/2024	7:30 AM	1	612	176	1	6	0	0	2	2	0	0	0
4/25/2024	7:45 AM	0	598	194	1	8	0	0	2	1	0	0	0
4/25/2024	8:00 AM	1	532	180	1	5	0	0	2	2	0	0	0
4/25/2024	8:15 AM	2	475	157	1	5	0	0	1	1	0	0	0
4/25/2024	8:30 AM	2	407	141	0	5	0	0	0	2	0	0	0
4/25/2024	8:45 AM	3	361	130	0	3	0	0	0	3	0	0	0
4/25/2024	9:00 AM	3	357	137	0	6	0	0	0	3	0	0	0
4/25/2024	9:15 AM	7	355	131	0	7	0	0	0	3	0	0	0
4/25/2024	9:30 AM	7	372	129	0	8	0	0	0	3	0	0	0
4/25/2024	9:45 AM	6	370	112	0	9	0	0	1	4	0	0	0
4/25/2024	10:00 AM	5	373	110	0	8	0	0	3	7	0	0	0
4/25/2024	10:15 AM	1	399	106	1	10	0	0	3	7	0	0	0
4/25/2024	10:30 AM	1	388	117	1	11	0	0	3	7	0	0	0
4/25/2024	10:45 AM	9	393	130	1	8	0	0	3	8	0	0	0
4/25/2024	11:00 AM	13	392	135	2	6	0	0	1	5	0	0	0
4/25/2024	11:15 AM	12	385	143	1	7	2	0	1	7	0	0	0
4/25/2024	11:30 AM	12	435	149	1	7	2	0	2	8	0	0	0
4/25/2024	11:45 AM	4	444	150	1	10	2	0	1	6	0	0	0
4/25/2024	12:00 PM	1	460	155	0	14	2	0	2	5	0	0	0
4/25/2024	12:15 PM	1	500	153	0	13	0	0	3	5	0	0	0
4/25/2024	12:30 PM	1	480	143	0	12	0	0	2	4	0	0	0
4/25/2024	12:45 PM	1	527	143	0	12	0	0	2	4	0	0	0
4/25/2024	1:00 PM	7	553	136	0	11	1	0	1	7	0	0	0
4/25/2024	1:15 PM	7	541	152	0	10	1	0	4	5	0	0	0
4/25/2024	1:30 PM	8	567	170	1	11	1	0	4	4	1	0	0
4/25/2024	1:45 PM	9	567	176	2	10	1	0	4	5	1	0	0
4/25/2024	2:00 PM	2	558	190	2	9	0	0	4	3	1	0	0
4/25/2024	2:15 PM	6	574	203	2	10	0	0	1	5	1	0	0
4/25/2024	2:30 PM	5	631	213	1	12	0	0	1	9	0	0	0
4/25/2024	2:45 PM	5	663	233	0	13	0	0	2	7	0	0	0
4/25/2024	3:00 PM	5	727	248	0	14	0	0	4	7	0	0	0
4/25/2024	3:15 PM	3	804	282	0	18	0	0	4	5	0	0	0
4/25/2024	3:30 PM	4	856	300	0	18	0	0	6	1	0	0	0
4/25/2024	3:45 PM	4	916	302	0	18	0	0	5	3	0	0	0
4/25/2024	4:00 PM	5	945	305	0	16	1	0	5	3	0	0	0
4/25/2024	4:15 PM	3	926	288	0	15	1	0	6	4	0	0	0
4/25/2024	4:30 PM	2	912	299	0	12	2	0	4	4	0	0	0
4/25/2024	4:45 PM	2	887	310	0	11	2	0	5	3	0	0	0
4/25/2024	5:00 PM	2	884	317	0	12	1	0	4	3	0	0	0
4/25/2024	5:15 PM	2	853	310	0	10	2	0	3	5	0	0	0
4/25/2024	5:30 PM	5	785	265	0	12	1	0	3	5	0	0	0
4/25/2024	5:45 PM	7	683	218	0	12	1	0	4	5	0	0	0
4/25/2024	6:00 PM	6	562	180	0	11	1	0	5	4	0	0	0
4/25/2024	6:15 PM	7	486	132	0	8	0	0	4	2	0	0	0
4/25/2024	6:30 PM	4	422	120	2	4	0	0	5	2	0	0	0
4/25/2024	6:45 PM	2	393	113	2	2	0	0	4	1	0	0	0
4/25/2024	7:00 PM	3	366	89	2	1	0	0	2	1	0	0	0
4/25/2024	7:15 PM	2	331	81	2	1	0	0	2	1	0	0	0
4/25/2024	7:30 PM	2	297	66	0	1	0	0	1	1	0	0	0
4/25/2024	7:45 PM	1	243	49	0	1	0	0	0	1	0	0	0
4/25/2024	8:00 PM	0	216	53	0	2	0	0	0	1	0	0	0
4/25/2024	8:15 PM	0	193	49	0	1	0	0	0	1	0	0	0
4/25/2024	8:30 PM	0	162	43	0	1	0	0	0	2	0	0	0
4/25/2024	8:45 PM	0	155	44	0	1	0	0	0	3	0	1	0
4/25/2024	9:00 PM	0	128	38	0	0	0	0	0	3	0	1	0
4/25/2024	9:15 PM	0	110	36	0	0	0	0	0	3	0	1	0
4/25/2024	9:30 PM	0	90	36	0	1	0	0	0	2	0	1	0
4/25/2024	9:45 PM	0	84	37	0	1	0	0	0	1	0	0	0
4/25/2024	10:00 PM	0	70	28	0	1	0	0	0	1	0	0	0
4/25/2024	10:15 PM	0	65	25	0	1	0	0	0	2	0	0	0
4/25/2024	10:30 PM	0	53	17	0	1	0	0	0	3	0	0	0
4/25/2024	10:45 PM	0	43	12	0	1	0	0	0	4	0	0	0
4/25/2024	11:00 PM	0	46	14	0	2	0	0	0	4	0	0	0
4/25/2024	11:15 PM	0	33	11	0	2	0	0	0	2	0	0	0
4/25/2024	11:30 PM	0	26	9	0	1	0	0	0	1	0	0	0
4/25/2024	11:45 PM	0	15	4	0	1	0	0	0	0	0	0	0

4/26/2024	12:00 AM	0	42	4	0	0	0	0	0	1	0	0	0	0
4/26/2024	12:15 AM	0	26	2	0	0	0	0	0	1	0	0	0	0
4/26/2024	12:30 AM	0	31	2	0	0	0	0	0	0	0	0	0	0
4/26/2024	12:45 AM	0	30	2	0	0	0	0	0	0	0	0	0	0
4/26/2024	1:00 AM	0	25	0	0	0	0	0	0	0	0	0	0	0
4/26/2024	1:15 AM	0	27	0	0	0	0	0	0	0	0	0	0	0
4/26/2024	1:30 AM	0	20	0	0	0	0	0	0	0	0	0	0	0
4/26/2024	1:45 AM	0	20	0	0	0	0	0	0	0	0	0	0	0
4/26/2024	2:00 AM	0	19	0	0	0	0	0	0	1	0	0	0	0
4/26/2024	2:15 AM	0	15	0	0	0	0	0	0	1	0	0	0	0
4/26/2024	2:30 AM	0	19	0	0	0	0	0	0	1	0	0	0	0
4/26/2024	2:45 AM	0	24	0	0	0	0	0	0	1	0	0	0	0
4/26/2024	3:00 AM	0	27	0	0	0	0	0	0	0	0	0	0	0
4/26/2024	3:15 AM	0	31	0	0	0	0	0	0	0	0	0	0	0
4/26/2024	3:30 AM	0	37	0	0	0	0	0	0	0	0	0	0	0
4/26/2024	3:45 AM	0	42	0	0	0	0	0	0	0	0	0	0	0
4/26/2024	4:00 AM	0	55	0	0	0	0	0	0	0	0	0	0	0
4/26/2024	4:15 AM	0	61	3	0	0	0	0	0	0	0	0	0	0
4/26/2024	4:30 AM	0	71	5	0	0	0	0	0	1	0	0	0	0
4/26/2024	4:45 AM	0	96	9	0	2	0	0	0	2	0	0	0	0
4/26/2024	5:00 AM	0	111	12	0	2	0	0	0	2	0	0	0	0
4/26/2024	5:15 AM	0	148	12	0	2	0	0	0	2	0	0	0	0
4/26/2024	5:30 AM	0	201	17	0	3	0	0	0	1	0	0	0	0
4/26/2024	5:45 AM	0	276	23	0	1	0	0	0	0	0	0	0	0
4/26/2024	6:00 AM	0	365	38	0	1	0	0	0	0	0	0	0	0
4/26/2024	6:15 AM	1	430	70	0	1	0	0	0	1	0	0	0	0
4/26/2024	6:30 AM	1	523	93	0	3	0	0	0	1	0	0	0	0
4/26/2024	6:45 AM	2	584	134	0	4	0	0	1	1	0	0	0	0
4/26/2024	7:00 AM	4	627	155	1	5	0	0	1	1	0	0	0	0
4/26/2024	7:15 AM	4	643	165	1	7	0	0	2	1	0	0	0	0
4/26/2024	7:30 AM	4	589	170	1	6	0	0	2	1	0	0	0	0
4/26/2024	7:45 AM	10	515	157	1	5	0	0	1	1	0	0	0	0
4/26/2024	8:00 AM	9	454	143	0	6	0	0	1	1	0	0	0	0
4/26/2024	8:15 AM	9	411	125	0	5	0	0	0	0	0	0	0	0
4/26/2024	8:30 AM	11	390	118	0	4	0	0	0	0	0	0	0	0
4/26/2024	8:45 AM	4	365	110	0	7	0	0	0	0	0	0	0	0
4/26/2024	9:00 AM	4	356	111	0	6	0	0	0	0	0	0	0	0
4/26/2024	9:15 AM	3	363	102	0	6	0	0	0	0	0	0	0	0
4/26/2024	9:30 AM	1	369	94	0	5	0	0	0	1	0	0	0	0
4/26/2024	9:45 AM	1	394	86	0	5	2	0	2	2	0	0	0	0
4/26/2024	10:00 AM	1	412	94	0	4	2	0	3	2	0	0	0	0
4/26/2024	10:15 AM	1	419	102	0	6	2	0	3	3	0	0	0	0
4/26/2024	10:30 AM	1	430	124	0	8	2	0	3	4	0	0	0	0
4/26/2024	10:45 AM	1	453	142	0	8	0	0	2	5	0	0	0	0
4/26/2024	11:00 AM	3	464	158	0	9	0	0	1	7	0	0	0	0
4/26/2024	11:15 AM	3	500	179	0	8	1	0	1	8	0	0	0	0
4/26/2024	11:30 AM	3	516	181	0	8	1	0	1	7	0	0	0	0
4/26/2024	11:45 AM	4	532	182	0	6	1	0	0	5	0	0	0	0
4/26/2024	12:00 PM	2	555	190	0	11	1	0	1	5	0	0	0	0
4/26/2024	12:15 PM	5	563	209	0	11	0	0	1	4	0	0	0	0
4/26/2024	12:30 PM	5	624	225	0	14	0	0	3	7	0	0	0	0
4/26/2024	12:45 PM	4	635	242	0	15	1	0	4	11	0	0	0	0
4/26/2024	1:00 PM	3	647	241	1	12	2	0	9	13	0	0	0	0
4/26/2024	1:15 PM	2	682	240	1	13	2	0	9	13	0	0	0	0
4/26/2024	1:30 PM	5	681	236	1	11	3	0	7	9	0	0	0	0
4/26/2024	1:45 PM	5	721	244	1	13	2	0	6	7	0	0	0	0
4/26/2024	2:00 PM	6	761	256	0	15	3	0	1	6	0	0	0	0
4/26/2024	2:15 PM	4	790	266	0	19	3	0	3	7	0	0	0	0
4/26/2024	2:30 PM	3	808	286	0	18	2	0	3	10	0	0	0	0
4/26/2024	2:45 PM	4	813	299	0	14	2	0	3	11	0	0	0	0
4/26/2024	3:00 PM	3	825	315	0	13	1	0	2	12	0	0	0	0
4/26/2024	3:15 PM	3	844	316	0	8	1	0	1	10	0	0	0	0
4/26/2024	3:30 PM	5	884	320	0	8	1	0	3	7	0	0	0	0
4/26/2024	3:45 PM	5	871	303	1	11	1	0	3	6	0	0	0	0
4/26/2024	4:00 PM	6	870	280	1	7	0	1	4	2	0	0	0	0
4/26/2024	4:15 PM	7	844	270	1	8	0	1	3	3	0	0	0	0
4/26/2024	4:30 PM	3	803	251	1	7	0	1	1	3	0	0	0	0
4/26/2024	4:45 PM	3	820	256	0	5	0	1	2	3	0	0	0	0
4/26/2024	5:00 PM	2	763	227	0	9	1	0	2	4	0	0	0	0
4/26/2024	5:15 PM	2	721	206	0	9	1	0	2	3	0	0	0	0
4/26/2024	5:30 PM	3	676	192	2	9	1	0	3	3	0	0	0	0
4/26/2024	5:45 PM	3	617	160	2	8	1	0	2	1	0	0	0	0
4/26/2024	6:00 PM	6	566	164	2	4	0	0	1	0	0	0	0	0
4/26/2024	6:15 PM	5	530	150	2	2	0	0	2	0	0	0	0	0
4/26/2024	6:30 PM	6	489	137	1	1	0	0	2	0	0	0	0	0
4/26/2024	6:45 PM	6	445	118	1	1	0	0	2	0	0	0	0	0
4/26/2024	7:00 PM	4	428	104	1	1	1	0	2	0	0	0	0	0
4/26/2024	7:15 PM	4	384	88	3	0	1	0	1	0	0	0	0	0
4/26/2024	7:30 PM	2	355	68	2	0	1	0	0	0	0	0	0	0
4/26/2024	7:45 PM	1	328	57	2	0	1	0	0	1	0	0	0	0
4/26/2024	8:00 PM	2	324	40	2	0	0	0	0	1	0	0	0	0
4/26/2024	8:15 PM	2	315	33	0	0	0	0	0	1	0	0	0	0
4/26/2024	8:30 PM	2	310	31	0	0	0	0	0	1	0	0	0	0
4/26/2024	8:45 PM	2	302	31	0	0	0	0	0	0	0	0	0	0
4/26/2024	9:00 PM	0	273	26	0	0	0	0	0	0	0	0	0	0
4/26/2024	9:15 PM	0	252	20	0	0	0	0	0	0	0	0	0	0
4/26/2024	9:30 PM	0	222	11	0	0	0	0	0	0	0	0	0	0
4/26/2024	9:45 PM	0	211	10	0	0	0	0	0	1	0	0	0	0
4/26/2024	10:00 PM	0	215	12	0	0	0	0	0	1	0	0	0	0
4/26/2024	10:15 PM	0	211	12	0	0	0	0	0	1	0	0	0	0
4/26/2024	10:30 PM	1	193	12	0	0	0	0	0	1	0	0	0	0
4/26/2024	10:45 PM	1	168	11	0	0	0	0	0	0	0	0	0	0
4/26/2024	11:00 PM	1	131	10	0	0	0	0	0	0	0	0	0	0
4/26/2024	11:15 PM	1	85	8	0	0	0	0	0	0	0	0	0	0
4/26/2024	11:30 PM	0	50	5	0	0	0	0	0	0	0	0	0	0
4/26/2024	11:45 PM	0	23	2	0	0	0	0	0	0	0	0	0	0

4/27/2024	12:00 AM	1	42	6	0	0	0	0	0	0	0	0	0	0
4/27/2024	12:15 AM	0	35	5	0	0	0	0	0	0	0	0	0	0
4/27/2024	12:30 AM	0	32	6	0	0	0	0	0	0	0	0	0	0
4/27/2024	12:45 AM	1	25	5	0	0	0	0	0	0	0	0	0	0
4/27/2024	1:00 AM	1	21	4	0	0	0	0	0	0	0	0	0	0
4/27/2024	1:15 AM	1	17	2	0	0	0	0	0	0	0	0	0	0
4/27/2024	1:30 AM	1	20	2	0	0	0	0	0	0	0	0	0	0
4/27/2024	1:45 AM	0	16	1	0	0	0	0	0	0	0	0	0	0
4/27/2024	2:00 AM	0	17	1	0	0	0	0	0	0	0	0	0	0
4/27/2024	2:15 AM	0	17	1	0	0	0	0	0	0	0	0	0	0
4/27/2024	2:30 AM	0	14	0	0	0	0	0	0	0	0	0	0	0
4/27/2024	2:45 AM	0	14	1	0	0	0	0	0	0	0	0	0	0
4/27/2024	3:00 AM	0	11	1	0	0	0	0	0	0	0	0	0	0
4/27/2024	3:15 AM	0	13	1	0	0	0	0	0	0	0	0	0	0
4/27/2024	3:30 AM	0	13	1	0	0	0	0	0	0	0	0	0	0
4/27/2024	3:45 AM	0	18	2	0	0	0	0	0	0	0	0	0	0
4/27/2024	4:00 AM	0	22	3	0	0	0	0	0	0	0	0	0	0
4/27/2024	4:15 AM	0	23	4	0	0	0	0	0	1	0	0	0	0
4/27/2024	4:30 AM	3	32	6	0	0	0	0	0	1	0	0	0	0
4/27/2024	4:45 AM	3	38	5	0	0	0	0	0	1	0	0	0	0
4/27/2024	5:00 AM	3	51	6	0	0	0	0	0	1	0	0	0	0
4/27/2024	5:15 AM	3	67	8	0	0	0	0	0	1	0	0	0	0
4/27/2024	5:30 AM	0	80	13	0	0	0	0	0	1	0	0	0	0
4/27/2024	5:45 AM	0	104	25	0	0	0	0	0	1	0	0	0	0
4/27/2024	6:00 AM	1	126	33	0	0	0	0	0	2	0	0	0	0
4/27/2024	6:15 AM	1	141	38	0	0	0	0	1	1	0	0	0	0
4/27/2024	6:30 AM	1	147	40	0	0	0	0	1	1	0	0	0	0
4/27/2024	6:45 AM	1	164	44	0	1	0	0	1	1	0	0	0	0
4/27/2024	7:00 AM	2	187	50	0	2	0	0	1	0	0	0	0	0
4/27/2024	7:15 AM	2	213	61	0	2	0	0	0	0	0	0	0	0
4/27/2024	7:30 AM	2	245	69	0	2	0	0	0	0	0	0	0	0
4/27/2024	7:45 AM	3	252	81	0	3	0	0	0	1	0	0	0	0
4/27/2024	8:00 AM	1	273	86	0	2	0	0	0	1	0	0	0	0
4/27/2024	8:15 AM	1	279	92	0	2	0	0	0	1	0	0	0	0
4/27/2024	8:30 AM	1	295	108	1	2	0	0	0	1	0	0	0	0
4/27/2024	8:45 AM	0	318	101	1	0	0	0	0	0	0	0	0	0
4/27/2024	9:00 AM	0	311	107	1	0	0	0	0	0	0	0	0	0
4/27/2024	9:15 AM	1	328	99	1	2	0	0	0	2	0	0	0	0
4/27/2024	9:30 AM	2	339	90	0	2	0	0	0	2	0	0	0	0
4/27/2024	9:45 AM	2	358	94	0	2	0	0	0	3	0	0	0	0
4/27/2024	10:00 AM	3	372	100	0	2	0	0	1	3	0	0	0	0
4/27/2024	10:15 AM	3	387	111	0	0	0	0	1	1	0	0	0	0
4/27/2024	10:30 AM	2	405	115	0	0	0	0	1	1	0	0	0	0
4/27/2024	10:45 AM	2	388	114	0	0	0	0	1	0	0	0	0	0
4/27/2024	11:00 AM	1	413	104	0	1	0	0	0	1	0	0	0	0
4/27/2024	11:15 AM	0	409	101	0	1	0	0	0	1	0	0	0	0
4/27/2024	11:30 AM	1	424	96	0	3	0	0	0	1	0	0	0	0
4/27/2024	11:45 AM	3	449	106	0	3	1	0	0	1	0	0	0	0
4/27/2024	12:00 PM	4	460	108	0	3	1	0	0	0	0	0	0	0
4/27/2024	12:15 PM	5	486	104	0	4	1	0	0	1	0	0	0	0
4/27/2024	12:30 PM	7	482	113	0	4	1	0	1	1	0	0	0	0
4/27/2024	12:45 PM	6	490	102	0	4	0	0	1	1	0	0	0	0
4/27/2024	1:00 PM	8	481	105	0	3	0	0	1	1	0	0	0	0
4/27/2024	1:15 PM	8	480	103	0	4	0	0	1	0	0	0	0	0
4/27/2024	1:30 PM	6	495	91	0	3	0	0	0	0	0	0	0	0
4/27/2024	1:45 PM	10	485	90	0	5	0	0	1	0	0	0	0	0
4/27/2024	2:00 PM	7	491	90	0	5	0	0	2	1	0	0	0	0
4/27/2024	2:15 PM	10	469	93	0	3	0	0	2	1	0	0	0	0
4/27/2024	2:30 PM	10	428	99	0	4	0	0	2	2	0	0	0	0
4/27/2024	2:45 PM	12	426	97	0	3	0	0	2	2	0	0	0	0
4/27/2024	3:00 PM	13	417	101	0	3	0	0	1	2	0	0	0	0
4/27/2024	3:15 PM	11	428	95	0	3	0	0	1	2	0	0	0	0
4/27/2024	3:30 PM	10	427	89	0	1	0	0	2	1	0	0	0	0
4/27/2024	3:45 PM	13	429	99	0	1	0	0	2	2	0	0	0	0
4/27/2024	4:00 PM	18	417	84	0	1	0	0	2	1	0	0	0	0
4/27/2024	4:15 PM	16	425	86	0	1	0	0	2	1	0	0	0	0
4/27/2024	4:30 PM	17	416	85	0	1	0	0	1	1	0	0	0	0
4/27/2024	4:45 PM	14	413	75	0	0	0	0	0	0	0	0	0	0
4/27/2024	5:00 PM	8	398	76	0	0	0	0	0	0	0	0	0	0
4/27/2024	5:15 PM	16	379	68	0	1	0	0	0	0	0	0	0	0
4/27/2024	5:30 PM	15	390	66	0	3	0	0	1	0	0	0	0	0
4/27/2024	5:45 PM	18	388	67	0	3	0	0	1	0	0	0	0	0
4/27/2024	6:00 PM	22	377	50	0	4	0	0	2	1	0	0	0	0
4/27/2024	6:15 PM	14	355	52	0	3	0	0	2	1	0	0	0	0
4/27/2024	6:30 PM	14	320	51	0	2	0	0	1	1	0	0	0	0
4/27/2024	6:45 PM	4	276	49	0	2	0	0	2	2	0	0	0	0
4/27/2024	7:00 PM	1	263	58	0	1	0	0	1	1	0	0	0	0
4/27/2024	7:15 PM	3	248	64	0	1	0	0	2	2	0	0	0	0
4/27/2024	7:30 PM	3	227	59	0	0	0	0	2	2	0	0	0	0
4/27/2024	7:45 PM	4	215	44	0	0	0	0	1	1	0	0	0	0
4/27/2024	8:00 PM	3	200	40	0	0	0	0	1	1	0	0	0	0
4/27/2024	8:15 PM	3	191	28	0	0	0	0	0	0	0	0	0	0
4/27/2024	8:30 PM	3	212	24	0	0	0	0	0	0	0	0	0	0
4/27/2024	8:45 PM	2	224	24	0	0	0	0	0	0	0	0	0	0
4/27/2024	9:00 PM	2	212	20	0	0	0	0	0	1	0	0	0	0
4/27/2024	9:15 PM	0	199	16	0	0	0	0	0	1	0	0	0	0
4/27/2024	9:30 PM	0	183	12	0	0	0	0	0	1	0	0	0	0
4/27/2024	9:45 PM	0	156	11	0	0	0	0	0	1	0	0	0	0
4/27/2024	10:00 PM	0	147	10	0	0	0	0	0	1	0	0	0	0
4/27/2024	10:15 PM	0	128	15	1	0	0	0	0	1	0	0	0	0
4/27/2024	10:30 PM	0	98	16	1	0	0	0	0	1	0	0	0	0
4/27/2024	10:45 PM	0	81	14	1	0	0	0	0	1	0	0	0	0
4/27/2024	11:00 PM	0	66	14	1	0	0	0	0	0	0	0	0	0
4/27/2024	11:15 PM	0	43	7	0	0	0	0	0	0	0	0	0	0
4/27/2024	11:30 PM	0	28	3	0	0	0	0	0	0	0	0	0	0
4/27/2024	11:45 PM	0	13	1	0	0	0	0	0	0	0	0	0	0

Bi-Directional Class Count || NB EB 15min

Columbia, SC

Marr Traffic DATA COLLECTION
www.marrtraffic.com

Site 75 Lane 2 NB
I-20,
north of Bush River Rd

Date
Sunday, April 21, 2024

Lat/Long
34.034393°, -81.117736°

Weather
Cloudy
66°F

Click here for Detailed Weather

Click here for Map

0000 - 2400 (Sunday 24h Session) (04-21-2024)
NB EB 15min

	Northbound (Movement 75 Lane 2 NB.1)													15min	60min
Time	1	2	3	4	5	6	7	8	9	10	11	12	13	Total	Total
0000 - 0015	0	35	5	0	1	0	0	0	4	0	0	0	0	**45**	
0015 - 0030	0	35	2	0	1	0	0	0	1	0	0	0	0	**39**	
0030 - 0045	0	30	0	0	0	0	0	0	1	0	0	0	0	**31**	
0045 - 0100	0	26	2	0	0	0	0	0	5	0	1	0	0	**34**	**149**
0100 - 0115	0	31	2	0	0	0	0	0	1	0	0	0	0	**34**	
0115 - 0130	0	24	2	0	0	0	0	0	4	0	1	0	0	**31**	
0130 - 0145	0	20	2	0	1	0	0	0	1	0	0	0	0	**24**	
0145 - 0200	0	17	3	0	1	0	0	0	1	0	0	0	0	**22**	**111**
0200 - 0215	0	24	4	0	0	0	0	1	0	0	0	0	0	**29**	
0215 - 0230	0	13	2	0	0	0	0	0	2	0	0	0	0	**17**	
0230 - 0245	0	13	0	1	0	0	0	0	2	0	0	0	0	**16**	
0245 - 0300	0	12	1	0	0	0	0	0	0	0	0	0	0	**13**	**75**
0300 - 0315	0	17	0	0	1	0	0	0	2	0	0	0	0	**20**	
0315 - 0330	0	18	1	0	0	0	0	0	6	0	0	0	0	**25**	
0330 - 0345	0	11	1	0	0	0	0	0	2	0	0	0	0	**14**	
0345 - 0400	0	12	0	0	0	0	0	0	2	0	0	0	0	**14**	**73**
0400 - 0415	0	12	0	0	3	0	0	0	0	0	0	0	0	**15**	
0415 - 0430	0	16	0	0	0	0	0	0	1	0	0	0	0	**17**	
0430 - 0445	0	10	2	0	0	0	0	0	1	0	0	0	0	**13**	
0445 - 0500	0	8	0	0	0	1	0	0	0	0	0	0	0	**9**	**54**
0500 - 0515	0	16	4	0	0	0	0	1	3	0	0	0	0	**24**	
0515 - 0530	0	18	2	0	0	0	0	0	2	0	0	0	0	**22**	
0530 - 0545	0	22	1	0	2	0	0	0	2	0	0	0	0	**27**	
0545 - 0600	0	20	1	0	0	0	0	0	1	0	0	0	0	**22**	**95**
0600 - 0615	0	21	3	0	1	0	0	0	6	0	0	0	0	**31**	
0615 - 0630	0	32	7	0	0	0	0	0	2	0	0	0	0	**41**	
0630 - 0645	0	34	12	0	0	0	0	0	2	0	0	0	0	**48**	
0645 - 0700	0	43	6	0	0	0	0	1	6	0	0	0	0	**56**	**176**
0700 - 0715	0	48	8	0	2	0	0	1	1	0	0	0	0	**60**	
0715 - 0730	0	56	14	0	0	0	0	0	3	0	0	0	0	**73**	
0730 - 0745	0	52	13	0	2	0	0	0	3	0	0	0	0	**70**	
0745 - 0800	0	67	12	0	0	0	0	0	5	0	0	0	0	**84**	**287**
0800 - 0815	0	60	14	1	0	0	0	0	4	0	0	0	0	**79**	
0815 - 0830	1	66	14	0	0	0	0	0	7	0	0	0	0	**88**	
0830 - 0845	0	71	28	0	0	0	0	3	3	0	0	0	0	**105**	
0845 - 0900	0	82	22	0	1	0	0	0	4	1	0	0	0	**110**	**382**
0900 - 0915	0	84	18	0	2	0	0	3	9	0	0	0	0	**116**	
0915 - 0930	0	82	16	0	0	0	0	1	4	0	0	0	0	**103**	
0930 - 0945	0	79	18	0	1	0	0	0	6	0	0	0	0	**104**	
0945 - 1000	0	121	29	0	0	0	0	2	9	0	0	0	0	**161**	**484**
1000 - 1015	0	126	29	0	0	0	0	1	4	0	0	0	0	**160**	
1015 - 1030	0	117	20	0	0	0	0	1	13	0	0	0	0	**151**	
1030 - 1045	0	108	14	0	1	0	0	0	10	0	0	0	0	**133**	
1045 - 1100	0	106	40	1	0	0	0	1	7	0	0	0	0	**155**	**599**
1100 - 1115	1	110	24	0	2	0	0	0	7	0	0	0	0	**144**	
1115 - 1130	0	122	32	0	1	0	0	1	9	0	0	0	0	**165**	
1130 - 1145	0	134	31	0	3	1	0	2	10	0	0	0	0	**181**	
1145 - 1200	0	108	38	0	2	0	0	0	3	0	0	0	0	**151**	**641**
1200 - 1215	1	132	30	0	2	0	0	1	14	1	0	0	0	**181**	
1215 - 1230	0	154	27	2	1	0	0	1	7	0	0	0	0	**192**	
1230 - 1245	0	148	34	0	2	1	0	1	15	0	0	0	0	**201**	
1245 - 1300	0	138	28	2	2	0	0	2	6	0	0	0	0	**178**	**752**
1300 - 1315	0	159	30	0	3	0	0	0	4	1	0	0	0	**197**	
1315 - 1330	0	127	28	0	0	0	0	2	11	0	0	0	0	**168**	
1330 - 1345	1	159	23	1	4	0	0	1	8	1	0	0	0	**198**	
1345 - 1400	0	142	31	0	1	1	0	0	11	0	0	0	0	**186**	**749**
1400 - 1415	0	163	32	0	1	0	0	1	15	1	0	0	0	**213**	
1415 - 1430	0	134	39	1	3	0	0	1	4	0	0	0	0	**182**	
1430 - 1445	0	143	34	1	1	0	0	0	9	0	0	0	0	**188**	
1445 - 1500	0	143	19	1	1	0	0	1	8	0	0	0	0	**173**	**756**
1500 - 1515	1	133	26	0	4	0	0	1	12	0	0	0	0	**177**	
1515 - 1530	0	139	39	0	1	0	0	1	9	0	0	0	0	**189**	
1530 - 1545	0	139	36	0	1	0	0	2	9	0	0	0	0	**187**	
1545 - 1600	0	141	24	0	0	0	0	2	10	0	0	0	0	**177**	**730**
1600 - 1615	1	147	33	0	3	0	0	1	19	0	0	0	0	**204**	
1615 - 1630	1	122	36	0	1	2	0	1	14	0	1	0	0	**178**	
1630 - 1645	0	148	31	0	1	1	0	4	15	0	0	0	0	**200**	
1645 - 1700	0	162	22	1	5	1	0	2	14	2	0	0	0	**209**	**791**
1700 - 1715	0	151	34	0	3	0	0	3	10	1	0	0	0	**202**	
1715 - 1730	0	141	24	3	2	0	0	0	7	1	0	0	0	**178**	
1730 - 1745	0	135	25	0	1	0	0	2	16	1	0	0	0	**180**	
1745 - 1800	3	132	21	0	2	0	0	2	7	0	0	0	0	**167**	**727**
1800 - 1815	0	118	35	0	2	0	0	0	15	0	0	0	0	**170**	
1815 - 1830	0	107	28	0	1	1	0	2	14	1	0	0	0	**154**	
1830 - 1845	0	102	33	0	1	1	0	0	12	0	0	0	0	**149**	
1845 - 1900	0	125	24	0	2	0	0	0	7	0	0	0	0	**158**	**631**
1900 - 1915	0	93	31	0	1	0	0	0	17	0	0	0	0	**142**	
1915 - 1930	0	109	15	0	1	1	0	1	9	0	0	0	0	**136**	
1930 - 1945	0	79	19	0	0	0	0	2	9	0	0	0	0	**109**	
1945 - 2000	0	75	15	1	1	0	0	1	14	0	0	0	0	**107**	**494**
2000 - 2015	0	82	15	0	2	0	0	3	11	0	0	0	0	**113**	
2015 - 2030	0	80	16	0	3	0	0	1	9	0	0	0	0	**109**	
2030 - 2045	0	69	19	0	2	0	0	2	7	0	0	0	0	**99**	
2045 - 2100	0	65	7	0	0	0	0	1	14	0	0	0	0	**87**	**408**
2100 - 2115	0	62	11	3	0	0	0	0	8	0	0	0	0	**84**	
2115 - 2130	0	70	4	0	2	0	0	0	11	0	0	0	0	**87**	
2130 - 2145	0	55	6	0	0	0	0	0	8	0	0	0	0	**69**	
2145 - 2200	0	55	2	0	0	0	0	0	11	0	0	0	0	**68**	**308**
2200 - 2215	0	43	9	0	0	0	0	0	6	0	0	0	0	**58**	
2215 - 2230	0	47	10	0	0	0	0	0	10	0	1	0	0	**68**	
2230 - 2245	0	36	10	0	0	0	0	0	13	0	0	0	0	**59**	
2245 - 2300	0	48	6	0	2	0	0	0	1	0	0	0	0	**57**	**242**
2300 - 2315	0	30	5	0	1	0	0	1	10	0	1	0	0	**48**	
2315 - 2330	0	31	2	0	0	0	0	1	6	0	0	0	0	**40**	
2330 - 2345	0	22	2	0	1	0	0	0	7	0	0	0	0	**32**	
2345 - 0000	0	27	1	0	0	0	0	1	8	0	0	0	0	**37**	**157**

Session Total	10	7451	1530	19	95	11	0	67	672	11	5	0	0	**9871**
Session Average	0.10	77.61	15.94	0.20	0.99	0.11	0.00	0.70	7.00	0.11	0.05	0.00	0.00	**102.82**
Session Percentage	0.10	75.48	15.50	0.19	0.96	0.11	0.00	0.68	6.81	0.11	0.05	0.00	0.00	

AM Peak Hour	0730 - 0830	0945 - 1045	0930 - 1030	0715 - 0815	0645 - 0745	-	-	0830 - 0930	0945 - 1045	0800 - 0900	-	-	-	**0945 - 1045**
AM Peak Volume	1	472	96	1	4	0	0	7	36	1	0	0	0	**605**

Noon Peak Hour	1015 - 1115	1215 - 1315	1345 - 1445	1200 - 1300	1245 - 1345	1045 - 1145	-	1200 - 1300	1315 - 1415	1245 - 1345	-	-	-	**1330 - 1430**
Noon Peak Volume	1	599	136	4	9	1	0	5	45	2	0	0	0	**779**

PM Peak Hour	1700 - 1800	1630 - 1730	1515 - 1615	1630 - 1730	1630 - 1730	1600 - 1700	-	1615 - 1715	1600 - 1700	1645 - 1745	1530 - 1630	-	-	**1600 - 1700**
PM Peak Volume	3	602	132	4	11	4	0	10	62	5	1	0	0	**791**

Site 75 Lane 2 NB
I-20,
north of Bush River Rd

Date
Monday, April 22, 2024

Lat/Long
34.034393°, -81.117736°

Weather
Mostly Cloudy
57°F

Click here for Detailed Weather

0000 - 2400 (Weekday 24h Session) (04-22-2024)
NB EB 15min

	Northbound (Movement 75 Lane 2 NB.1)													15min	60min
Time	1	2	3	4	5	6	7	8	9	10	11	12	13	Total	Total
0000 - 0015	0	19	2	0	1	0	0	0	7	0	0	0	0	**29**	
0015 - 0030	0	17	1	0	0	0	0	1	4	0	0	0	0	**23**	
0030 - 0045	0	14	2	0	1	0	0	0	6	0	2	0	0	**25**	
0045 - 0100	0	16	2	0	0	0	0	0	6	0	0	0	0	**24**	**101**
0100 - 0115	0	12	2	0	0	0	0	0	7	0	1	0	0	**22**	
0115 - 0130	0	16	3	0	1	0	0	0	7	0	0	0	0	**27**	
0130 - 0145	0	18	3	0	2	0	0	0	9	0	1	0	0	**33**	
0145 - 0200	0	17	3	0	0	0	0	0	9	0	0	0	0	**29**	**111**
0200 - 0215	0	12	2	0	0	0	0	0	13	0	1	0	0	**28**	
0215 - 0230	0	13	3	0	0	0	0	0	6	0	1	0	0	**23**	
0230 - 0245	0	10	3	0	1	0	0	0	12	0	0	0	0	**26**	
0245 - 0300	0	6	2	0	0	0	0	0	8	0	0	0	0	**16**	**93**
0300 - 0315	1	8	1	0	2	0	0	0	9	0	0	0	0	**21**	
0315 - 0330	0	13	3	0	3	0	0	0	7	0	1	0	0	**27**	
0330 - 0345	0	17	3	0	1	0	0	0	10	0	1	0	0	**32**	
0345 - 0400	0	16	2	0	0	0	0	0	13	0	1	0	0	**32**	**112**
0400 - 0415	0	22	4	0	0	0	0	0	5	1	0	0	0	**32**	
0415 - 0430	0	23	2	0	2	0	0	0	8	0	0	0	0	**35**	
0430 - 0445	0	33	5	0	1	0	0	0	6	0	0	0	0	**45**	
0445 - 0500	0	31	9	0	0	1	0	0	12	0	0	0	0	**53**	**165**
0500 - 0515	0	42	6	0	2	2	0	2	13	0	3	0	0	**70**	
0515 - 0530	0	64	11	0	2	1	0	1	14	0	1	0	0	**94**	
0530 - 0545	0	92	15	0	1	1	0	0	12	0	0	0	0	**121**	
0545 - 0600	0	70	14	0	0	0	0	0	11	0	1	0	0	**96**	**381**
0600 - 0615	0	86	15	0	3	0	1	1	16	0	0	0	0	**122**	
0615 - 0630	0	94	28	0	4	2	0	0	15	0	0	0	0	**143**	
0630 - 0645	0	108	50	2	7	2	0	0	14	0	0	0	0	**183**	
0645 - 0700	0	111	54	0	7	14	0	3	16	1	0	0	0	**206**	**654**
0700 - 0715	0	134	68	1	4	3	0	1	16	0	0	0	0	**227**	
0715 - 0730	0	135	58	0	10	7	0	0	16	0	0	0	0	**226**	
0730 - 0745	2	159	59	0	12	6	3	3	21	0	0	0	0	**265**	
0745 - 0800	0	147	54	0	12	4	2	2	30	0	0	0	0	**251**	**969**
0800 - 0815	0	145	70	0	8	2	0	5	22	0	1	0	0	**253**	
0815 - 0830	1	122	61	0	8	6	3	1	20	1	0	0	0	**223**	
0830 - 0845	0	120	57	0	7	8	1	4	23	0	0	0	0	**220**	
0845 - 0900	0	120	59	0	11	2	0	4	15	2	0	0	0	**213**	**909**
0900 - 0915	0	122	61	0	6	2	0	1	25	0	0	0	0	**217**	
0915 - 0930	0	101	52	0	4	2	0	2	24	0	0	0	0	**185**	
0930 - 0945	0	119	50	0	6	3	1	3	18	0	0	0	0	**200**	
0945 - 1000	0	102	39	0	6	3	1	3	25	0	0	0	0	**179**	**781**
1000 - 1015	0	84	52	0	4	4	4	3	29	0	0	0	0	**180**	
1015 - 1030	1	90	42	0	6	3	2	3	24	2	0	0	0	**173**	
1030 - 1045	0	97	28	0	6	6	2	4	25	3	0	0	0	**171**	
1045 - 1100	3	96	37	0	7	1	1	2	25	2	0	0	0	**174**	**698**
1100 - 1115	0	90	32	0	4	1	1	5	33	1	0	0	0	**167**	
1115 - 1130	0	95	47	0	7	2	1	2	24	1	0	0	0	**179**	
1130 - 1145	1	106	30	0	6	4	2	3	17	0	0	0	0	**169**	
1145 - 1200	0	86	42	1	6	1	0	0	24	0	0	0	0	**160**	**675**
1200 - 1215	0	108	37	0	5	4	4	2	16	2	0	0	0	**178**	
1215 - 1230	0	97	37	0	3	2	0	8	17	0	0	0	0	**164**	
1230 - 1245	0	101	49	0	6	2	1	5	16	1	0	0	0	**181**	
1245 - 1300	1	103	47	0	9	5	2	3	28	0	0	0	0	**198**	**721**
1300 - 1315	0	105	40	0	6	1	1	1	12	0	0	0	0	**166**	
1315 - 1330	0	86	52	0	6	4	2	3	20	0	0	0	0	**173**	
1330 - 1345	0	90	38	0	11	4	1	3	21	0	0	0	0	**168**	
1345 - 1400	0	103	37	0	6	10	0	1	21	0	0	0	0	**178**	**685**
1400 - 1415	0	111	35	0	6	3	1	4	24	2	0	0	0	**186**	
1415 - 1430	0	122	38	0	9	2	0	4	29	0	0	0	0	**204**	
1430 - 1445	1	134	36	0	9	2	0	4	15	0	0	0	0	**201**	
1445 - 1500	0	132	40	0	4	7	0	4	16	0	0	0	0	**203**	**794**
1500 - 1515	1	115	46	2	5	2	0	3	26	0	0	0	0	**200**	
1515 - 1530	0	118	41	0	5	4	0	3	37	1	0	0	0	**209**	
1530 - 1545	0	123	42	0	5	5	0	9	28	0	0	0	0	**212**	
1545 - 1600	4	127	42	1	6	2	0	6	29	1	0	0	0	**218**	**839**
1600 - 1615	0	146	42	1	4	0	0	3	48	1	0	0	0	**245**	
1615 - 1630	0	139	44	0	3	4	0	1	39	0	2	0	0	**232**	
1630 - 1645	0	135	53	0	7	3	0	4	39	0	0	0	0	**241**	
1645 - 1700	1	136	60	0	6	4	0	5	35	0	0	0	0	**247**	**965**
1700 - 1715	0	160	39	0	6	3	0	3	26	1	0	0	0	**238**	
1715 - 1730	1	142	27	1	1	0	0	1	20	0	0	0	0	**193**	
1730 - 1745	0	143	39	0	3	2	0	2	33	0	0	0	0	**222**	
1745 - 1800	0	125	25	1	4	0	0	1	41	0	0	0	0	**197**	**850**
1800 - 1815	0	114	25	0	3	0	0	0	23	0	0	0	0	**165**	
1815 - 1830	0	103	33	0	2	0	0	1	27	0	0	0	0	**166**	
1830 - 1845	1	88	31	0	2	0	0	2	20	0	0	0	0	**144**	
1845 - 1900	0	87	20	0	2	0	0	1	28	0	0	0	0	**138**	**613**
1900 - 1915	0	90	19	0	4	0	0	0	17	0	0	0	0	**130**	
1915 - 1930	0	78	31	0	1	0	0	0	21	0	0	0	0	**131**	
1930 - 1945	0	97	21	0	1	0	0	0	25	1	0	0	0	**145**	
1945 - 2000	0	67	26	1	3	1	0	2	12	0	0	0	0	**112**	**518**
2000 - 2015	0	55	16	0	1	0	0	2	21	0	0	0	0	**95**	
2015 - 2030	0	54	14	0	0	2	0	0	23	0	0	0	0	**93**	
2030 - 2045	1	65	10	0	2	0	0	1	23	0	0	0	0	**102**	
2045 - 2100	0	51	14	0	1	0	0	0	22	0	2	0	0	**90**	**380**
2100 - 2115	0	60	9	0	0	0	0	0	14	0	0	0	0	**83**	
2115 - 2130	0	64	8	0	0	0	0	1	12	0	2	0	0	**87**	
2130 - 2145	0	60	4	0	3	0	0	0	18	0	4	0	0	**89**	
2145 - 2200	0	41	10	0	0	0	0	1	13	0	1	0	0	**66**	**325**
2200 - 2215	0	45	5	0	1	0	0	0	14	0	0	0	0	**65**	
2215 - 2230	0	40	5	0	0	0	0	0	16	0	0	0	0	**61**	
2230 - 2245	0	31	5	0	1	0	0	0	8	0	0	0	0	**45**	
2245 - 2300	0	30	2	1	1	0	0	0	9	0	2	0	0	**45**	**216**
2300 - 2315	0	31	3	0	1	0	0	0	11	0	2	0	0	**48**	
2315 - 2330	0	29	7	0	0	0	0	0	7	0	2	0	0	**45**	
2330 - 2345	0	17	2	1	1	0	0	0	7	0	0	0	0	**28**	
2345 - 0000	0	18	4	0	1	0	0	0	7	0	0	0	0	**30**	**151**

Session Total	20	7586	2558	13	347	171	37	153	1765	24	32	0	0	**12706**
Session Average	0.21	79.02	26.65	0.14	3.61	1.78	0.39	1.59	18.39	0.25	0.33	0.00	0.00	**132.35**
Session Percentage	0.16	59.70	20.13	0.10	2.73	1.35	0.29	1.20	13.89	0.19	0.25	0.00	0.00	

AM Peak Hour	0730 - 0830	0715 - 0815	0800 - 0900	0615 - 0715	0715 - 0815	0645 - 0745	0945 - 1045	0800 - 0900	0945 - 1045	0945 - 1045	0500 - 0600	-	-	**0715 - 0815**
AM Peak Volume	3	586	247	3	42	30	9	14	103	5	5	0	0	**995**

Noon Peak Hour	1000 - 1100	1415 - 1515	1230 - 1330	1415 - 1515	1245 - 1345	1315 - 1415	1000 - 1100	1445 - 1545	1015 - 1115	1015 - 1115	-	-	-	**1445 - 1545**
Noon Peak Volume	4	503	188	2	32	21	9	19	107	8	0	0	0	**824**

PM Peak Hour	1500 - 1600	1645 - 1745	1600 - 1700	1500 - 1600	1615 - 1715	1615 - 1715	-	1500 - 1600	1600 - 1700	1515 - 1615	1530 - 1630	-	-	**1600 - 1700**
PM Peak Volume	5	581	199	3	22	14	0	21	161	3	2	0	0	**965**

Site 75 Lane 2 NB
I-20,
north of Bush River Rd

Date
Tuesday, April 23, 2024

Lat/Long
34.034393°, -81.117736°

Weather
Fair
58°F

Click here for Detailed Weather

0000 - 2400 (Weekday 24h Session) (04-23-2024)
NB EB 15min

	Northbound (Movement 75 Lane 2 NB.1)													15min	60min
TIME	1	2	3	4	5	6	7	8	9	10	11	12	13	Total	Total
0000 - 0015	1	19	2	1	1	0	0	0	4	0	0	0	0	**28**	
0015 - 0030	0	9	7	0	0	0	0	1	13	0	0	0	0	**30**	
0030 - 0045	0	10	2	0	0	0	0	1	10	0	3	0	0	**26**	
0045 - 0100	0	18	2	0	1	0	0	0	8	0	0	0	0	**29**	**113**
0100 - 0115	0	9	1	0	3	1	0	0	6	0	4	0	0	**24**	
0115 - 0130	0	23	3	0	1	0	0	0	8	0	3	0	0	**38**	
0130 - 0145	0	8	2	0	0	0	0	0	6	0	0	0	0	**16**	
0145 - 0200	0	11	2	0	0	0	0	1	5	0	1	0	0	**20**	**98**
0200 - 0215	0	9	1	0	0	0	0	0	8	0	3	0	0	**21**	
0215 - 0230	0	7	0	0	0	0	0	0	8	0	1	0	0	**16**	
0230 - 0245	0	7	1	0	0	0	0	0	3	0	4	0	0	**15**	
0245 - 0300	0	9	1	0	1	0	0	0	1	0	2	0	0	**14**	**66**
0300 - 0315	0	15	2	0	0	0	0	0	10	0	1	0	0	**28**	
0315 - 0330	0	18	1	0	0	0	0	0	6	0	2	0	0	**27**	
0330 - 0345	0	8	2	0	0	0	0	0	7	0	2	0	0	**19**	
0345 - 0400	0	25	3	0	0	0	0	0	13	0	1	0	0	**42**	**116**
0400 - 0415	0	19	3	0	0	0	0	0	7	0	2	0	0	**31**	
0415 - 0430	0	22	5	0	2	0	0	0	7	0	0	0	0	**36**	
0430 - 0445	0	29	3	0	3	0	0	1	13	0	1	0	0	**50**	
0445 - 0500	0	30	4	0	1	0	0	0	15	0	1	0	0	**51**	**168**
0500 - 0515	0	28	6	1	1	0	0	0	17	0	1	0	0	**54**	
0515 - 0530	0	40	12	0	2	1	0	0	14	0	1	0	0	**70**	
0530 - 0545	0	58	20	0	1	0	0	0	14	0	1	0	0	**94**	
0545 - 0600	0	63	21	0	1	1	0	0	23	0	0	0	0	**109**	**327**
0600 - 0615	0	77	23	2	2	3	0	0	19	0	0	0	0	**126**	
0615 - 0630	0	79	35	2	3	2	0	0	15	0	2	0	0	**138**	
0630 - 0645	0	110	44	0	7	8	0	1	27	0	1	0	0	**198**	
0645 - 0700	0	107	63	0	8	4	0	2	24	0	0	0	0	**208**	**670**
0700 - 0715	0	104	65	0	8	0	0	1	22	0	0	0	0	**200**	
0715 - 0730	0	128	60	0	4	1	0	4	24	0	0	0	0	**221**	
0730 - 0745	0	92	24	0	3	2	0	2	12	0	0	0	0	**135**	
0745 - 0800	0	163	52	0	6	1	2	2	18	1	0	0	0	**245**	**801**
0800 - 0815	1	129	55	0	6	1	0	3	24	2	0	0	0	**221**	
0815 - 0830	0	95	46	0	17	5	1	10	29	1	0	0	0	**204**	
0830 - 0845	0	87	58	0	8	6	1	5	29	0	0	0	0	**194**	
0845 - 0900	1	106	55	0	8	3	0	3	26	2	0	0	0	**204**	**823**
0900 - 0915	0	106	49	0	9	3	1	2	15	0	0	0	0	**185**	
0915 - 0930	0	97	55	0	3	0	0	3	29	0	0	0	0	**187**	
0930 - 0945	0	94	43	0	9	4	0	4	27	1	0	0	0	**182**	
0945 - 1000	0	95	31	0	5	1	1	4	28	0	0	0	0	**165**	**719**
1000 - 1015	1	87	46	0	7	2	0	4	30	1	0	0	0	**178**	
1015 - 1030	0	79	39	0	11	2	0	6	36	0	0	0	0	**173**	
1030 - 1045	1	88	45	0	4	5	1	0	29	0	0	0	0	**173**	
1045 - 1100	0	87	40	0	7	3	0	2	33	1	0	0	0	**173**	**697**
1100 - 1115	0	88	40	0	5	3	0	1	27	1	0	0	0	**165**	
1115 - 1130	0	77	45	0	12	3	1	1	25	2	0	0	0	**166**	
1130 - 1145	0	86	39	1	9	3	1	1	33	0	0	0	0	**173**	
1145 - 1200	0	87	41	0	4	5	0	0	30	0	0	0	0	**167**	**671**
1200 - 1215	0	107	31	1	4	3	0	0	35	2	0	0	0	**183**	
1215 - 1230	0	101	37	0	8	4	1	0	29	1	0	0	0	**181**	
1230 - 1245	0	108	37	0	7	5	0	1	26	0	0	0	0	**184**	
1245 - 1300	0	95	33	0	7	2	0	0	36	0	0	0	0	**173**	**721**
1300 - 1315	0	97	41	0	5	1	1	0	26	0	1	0	0	**172**	
1315 - 1330	0	108	46	2	5	9	3	3	23	0	0	0	0	**199**	
1330 - 1345	0	113	29	1	4	5	1	1	21	1	0	0	0	**176**	
1345 - 1400	0	101	36	0	9	2	0	1	25	0	0	0	0	**174**	**721**
1400 - 1415	0	99	48	0	6	5	1	5	31	0	0	0	0	**195**	
1415 - 1430	0	108	42	1	11	1	3	3	25	0	0	0	0	**194**	
1430 - 1445	0	129	38	0	9	1	0	2	27	0	0	0	0	**206**	
1445 - 1500	0	95	45	2	13	2	0	2	39	0	0	0	0	**198**	**793**
1500 - 1515	0	110	46	0	6	2	1	6	22	0	0	0	0	**193**	
1515 - 1530	0	121	44	0	8	1	0	4	24	0	0	0	0	**202**	
1530 - 1545	0	138	37	0	5	3	0	1	26	0	0	0	0	**210**	
1545 - 1600	3	120	57	0	3	1	0	2	28	0	1	0	0	**215**	**820**
1600 - 1615	0	132	37	0	10	0	1	3	30	0	0	0	0	**213**	
1615 - 1630	0	148	46	0	8	1	0	0	32	0	0	0	0	**235**	
1630 - 1645	1	152	43	1	7	3	0	2	31	0	0	0	0	**240**	
1645 - 1700	0	147	45	0	5	0	0	2	26	0	0	0	0	**225**	**913**
1700 - 1715	0	135	40	0	3	1	0	1	39	0	0	0	0	**219**	
1715 - 1730	1	135	40	0	3	0	0	2	27	0	1	0	0	**209**	
1730 - 1745	0	139	39	0	2	1	0	8	30	0	0	0	0	**219**	
1745 - 1800	0	118	43	0	3	1	0	0	21	0	0	0	0	**186**	**833**
1800 - 1815	0	102	26	5	2	0	0	0	27	0	0	0	0	**162**	
1815 - 1830	0	109	27	0	6	1	0	2	21	0	0	0	0	**166**	
1830 - 1845	2	97	36	0	2	1	0	0	30	0	0	0	0	**168**	
1845 - 1900	0	82	40	0	3	0	0	4	25	0	0	0	0	**154**	**650**
1900 - 1915	0	96	25	0	2	0	0	1	14	0	0	0	0	**138**	
1915 - 1930	0	85	35	0	5	0	0	0	20	0	0	0	0	**145**	
1930 - 1945	0	86	21	0	2	0	0	0	13	0	0	0	0	**122**	
1945 - 2000	0	65	32	1	1	0	0	1	21	0	0	0	0	**121**	**526**
2000 - 2015	0	66	17	1	2	1	0	0	18	0	0	0	0	**105**	
2015 - 2030	0	79	15	1	0	0	0	1	25	0	0	0	0	**121**	
2030 - 2045	0	68	9	0	3	0	0	0	19	0	0	0	0	**99**	
2045 - 2100	0	62	7	0	0	0	0	0	17	0	1	0	0	**87**	**412**
2100 - 2115	0	60	11	0	1	1	0	0	20	0	0	0	0	**93**	
2115 - 2130	0	56	11	0	2	0	0	0	13	0	1	0	0	**83**	
2130 - 2145	0	58	11	0	0	0	0	0	17	0	4	0	0	**90**	
2145 - 2200	1	47	10	0	0	1	0	0	13	0	1	0	0	**73**	**339**
2200 - 2215	1	23	7	0	0	0	0	0	10	0	0	0	0	**41**	
2215 - 2230	0	31	3	0	0	0	0	0	6	0	0	0	0	**40**	
2230 - 2245	0	37	3	1	1	0	0	0	10	0	0	0	0	**52**	
2245 - 2300	0	23	3	0	0	0	0	0	9	0	0	0	0	**35**	**168**
2300 - 2315	0	15	3	0	0	0	0	0	4	0	0	0	0	**22**	
2315 - 2330	0	19	3	0	0	0	0	0	6	0	0	0	0	**28**	
2330 - 2345	0	23	6	0	0	0	0	0	8	0	2	0	0	**39**	
2345 - 0000	0	10	1	0	0	0	0	0	4	0	0	0	0	**15**	**104**

Session Total	14	7097	2541	24	366	132	21	123	1886	16	49	0	0	**12269**
Session Average	0.15	73.93	26.47	0.25	3.81	1.38	0.22	1.28	19.65	0.17	0.51	0.00	0.00	**127.80**
Session Percentage	0.11	57.84	20.71	0.20	2.98	1.08	0.17	1.00	15.37	0.13	0.40	0.00	0.00	

AM Peak Hour	0800 - 0900	0715 - 0815	0630 - 0730	0530 - 0630	0815 - 0915	0600 - 0700	0745 - 0845	0800 - 0900	0945 - 1045	0800 - 0900	0500 - 0600	-	-	**0745 - 0845**
AM Peak Hour Volume	2	512	232	4	42	17	4	21	123	5	3	0	0	**864**

Noon Peak Hour	1000 - 1100	1445 - 1545	1400 - 1500	1245 - 1345	1400 - 1500	1315 - 1415	1245 - 1345	1430 - 1530	1000 - 1100	1030 - 1130	1215 - 1315	-	-	**1445 - 1545**
Noon Peak Hour Volume	2	464	173	3	39	21	5	14	128	4	1	0	0	**803**

PM Peak Hour	1545 - 1645	1615 - 1715	1500 - 1600	1715 - 1815	1600 - 1700	1500 - 1600	1500 - 1600	1500 - 1600	1615 - 1715	-	1500 - 1600	-	-	**1615 - 1715**
PM Peak Hour Volume	4	582	184	5	30	7	1	13	128	0	1	0	0	**919**

Site 75 Lane 2 NB
I-20,
north of Bush River Rd

Date
Wednesday, April 24, 2024

Lat/Long
34.034393°, -81.117736°

Weather
Fair
66°F

Click here for Detailed Weather

0000 - 2400 (Weekday 24h Session) (04-24-2024)
NB EB 15min

	Northbound (Movement 75 Lane 2 NB.1)													15min	60min
TIME	1	2	3	4	5	6	7	8	9	10	11	12	13	Total	Total
0000 - 0015	0	15	2	0	1	0	0	0	10	0	0	0	0	**28**	
0015 - 0030	0	12	2	0	1	0	0	1	5	0	0	0	0	**21**	
0030 - 0045	2	12	0	0	0	0	0	0	0	0	1	0	0	**15**	
0045 - 0100	0	11	1	1	0	0	0	0	6	0	0	0	0	**19**	**83**
0100 - 0115	0	9	0	0	1	0	0	0	0	0	0	0	0	**10**	
0115 - 0130	0	9	2	0	0	0	0	0	1	0	0	0	0	**12**	
0130 - 0145	0	8	0	0	0	0	0	0	3	0	0	0	0	**11**	
0145 - 0200	0	7	1	0	1	0	0	0	5	0	0	0	0	**14**	**47**
0200 - 0215	1	11	1	0	1	0	0	0	7	0	1	0	0	**22**	
0215 - 0230	0	13	2	0	0	0	0	1	5	0	1	0	0	**22**	
0230 - 0245	0	5	3	0	1	0	0	0	10	0	2	0	0	**21**	
0245 - 0300	0	9	0	0	0	0	0	0	5	0	3	0	0	**17**	**82**
0300 - 0315	0	13	2	0	1	0	0	0	10	0	3	0	0	**29**	
0315 - 0330	0	11	1	0	0	0	0	0	11	0	1	0	0	**24**	
0330 - 0345	0	10	0	0	0	0	0	0	6	0	0	0	0	**16**	
0345 - 0400	0	19	3	0	4	0	0	0	6	0	1	0	0	**33**	**102**
0400 - 0415	0	20	5	0	1	0	0	0	5	0	2	0	0	**33**	
0415 - 0430	0	21	8	0	0	0	0	0	7	0	0	0	0	**36**	
0430 - 0445	1	25	2	0	1	0	0	0	13	0	1	0	0	**43**	
0445 - 0500	0	30	10	0	1	0	0	0	17	0	2	0	0	**60**	**172**
0500 - 0515	0	44	12	0	1	0	0	0	9	0	1	0	0	**67**	
0515 - 0530	0	38	8	2	0	0	0	0	15	0	1	0	0	**64**	
0530 - 0545	0	70	6	0	4	0	0	0	11	0	0	0	0	**91**	
0545 - 0600	0	70	14	0	3	1	0	0	13	0	0	0	0	**101**	**323**
0600 - 0615	0	85	17	1	1	1	0	0	21	0	1	0	0	**127**	
0615 - 0630	0	95	30	1	5	0	0	1	18	0	0	0	0	**150**	
0630 - 0645	0	121	48	0	3	1	0	1	13	0	0	0	0	**187**	
0645 - 0700	0	108	59	1	9	12	0	2	22	1	1	0	0	**215**	**679**
0700 - 0715	1	138	58	0	7	6	0	4	18	0	0	0	0	**232**	
0715 - 0730	0	118	60	1	15	3	0	2	26	0	0	0	0	**225**	
0730 - 0745	0	157	42	1	13	5	0	4	22	1	0	0	0	**245**	
0745 - 0800	1	156	56	0	6	10	0	4	27	1	0	0	0	**261**	**963**
0800 - 0815	0	119	55	0	11	7	0	4	27	0	0	0	0	**223**	
0815 - 0830	1	120	54	0	16	1	0	4	31	0	0	0	0	**227**	
0830 - 0845	0	95	53	0	10	2	0	6	22	0	0	0	0	**188**	
0845 - 0900	0	98	54	0	5	1	0	6	25	0	0	0	0	**189**	**827**
0900 - 0915	0	98	59	0	6	3	0	2	32	0	1	0	0	**201**	
0915 - 0930	0	110	45	0	13	6	0	4	24	1	0	0	0	**203**	
0930 - 0945	1	85	43	0	8	4	0	4	25	1	0	0	0	**171**	
0945 - 1000	0	90	37	0	8	6	0	2	24	0	0	0	0	**167**	**742**
1000 - 1015	0	96	35	0	10	5	0	4	21	0	0	0	0	**171**	
1015 - 1030	0	83	47	0	7	3	0	4	30	0	0	0	0	**174**	
1030 - 1045	0	82	41	0	7	8	0	2	20	0	0	0	0	**160**	
1045 - 1100	0	102	42	0	7	2	0	0	26	0	0	0	0	**179**	**684**
1100 - 1115	0	92	35	0	6	2	0	2	26	0	0	0	0	**163**	
1115 - 1130	0	112	39	0	3	6	0	1	26	0	0	0	0	**187**	
1130 - 1145	0	87	43	0	6	5	0	1	29	0	0	0	0	**171**	
1145 - 1200	0	98	43	2	8	4	0	1	30	1	0	0	0	**187**	**708**
1200 - 1215	0	83	34	0	5	1	0	1	27	1	1	0	0	**153**	
1215 - 1230	1	85	40	0	12	3	1	1	28	2	0	0	0	**173**	
1230 - 1245	0	121	41	0	10	4	0	4	40	0	0	0	0	**220**	
1245 - 1300	0	85	41	0	7	9	0	6	39	1	0	0	0	**188**	**734**
1300 - 1315	0	88	43	1	9	2	0	4	37	2	0	0	0	**186**	
1315 - 1330	0	101	38	0	12	6	0	1	16	1	0	0	0	**175**	
1330 - 1345	0	97	50	0	4	1	0	3	29	2	0	0	0	**186**	
1345 - 1400	0	120	48	0	4	6	0	4	29	0	0	0	0	**211**	**758**
1400 - 1415	1	90	29	0	6	4	0	3	38	0	0	0	0	**171**	
1415 - 1430	0	120	44	0	6	5	0	4	27	0	0	0	0	**206**	
1430 - 1445	0	106	40	1	8	6	0	2	30	0	0	0	0	**193**	
1445 - 1500	0	112	37	0	10	4	1	5	25	0	0	0	0	**194**	**764**
1500 - 1515	0	123	38	3	7	5	0	2	23	0	0	0	0	**201**	
1515 - 1530	0	120	47	0	13	0	0	5	24	0	0	0	0	**209**	
1530 - 1545	0	129	49	1	6	6	0	1	23	0	0	0	0	**215**	
1545 - 1600	1	128	52	2	2	2	0	2	36	1	0	0	0	**226**	**851**
1600 - 1615	0	143	57	1	9	3	0	0	31	0	0	0	0	**244**	
1615 - 1630	0	133	37	0	6	1	0	6	27	0	1	0	0	**211**	
1630 - 1645	0	154	42	0	6	1	0	5	26	0	0	0	0	**234**	
1645 - 1700	0	134	54	2	3	3	0	0	24	0	0	0	0	**220**	**909**
1700 - 1715	0	178	40	0	6	0	0	2	25	1	0	0	0	**252**	
1715 - 1730	0	156	45	0	4	1	0	2	28	0	1	0	0	**237**	
1730 - 1745	1	155	40	0	6	1	0	2	28	0	0	0	0	**233**	
1745 - 1800	1	115	46	0	2	0	0	2	29	1	0	0	0	**196**	**918**
1800 - 1815	0	107	35	0	0	1	0	1	44	2	0	0	0	**190**	
1815 - 1830	2	102	25	0	5	0	0	2	23	0	0	0	0	**159**	
1830 - 1845	0	115	38	0	3	1	0	2	33	0	0	0	0	**192**	
1845 - 1900	0	96	31	0	2	1	0	2	29	0	0	0	0	**161**	**702**
1900 - 1915	0	65	26	1	4	0	0	2	28	0	0	0	0	**126**	
1915 - 1930	0	88	25	0	7	0	0	1	22	0	0	0	0	**143**	
1930 - 1945	0	82	15	0	4	2	0	1	14	0	0	0	0	**118**	
1945 - 2000	0	83	30	0	1	0	0	1	25	0	0	0	0	**140**	**527**
2000 - 2015	0	69	23	0	5	1	0	0	18	0	0	0	0	**116**	
2015 - 2030	0	68	24	0	0	0	0	2	19	0	0	0	0	**113**	
2030 - 2045	0	71	14	0	2	0	0	2	20	0	0	0	0	**109**	
2045 - 2100	1	86	7	0	2	0	0	0	11	0	2	0	0	**109**	**447**
2100 - 2115	0	80	6	0	2	0	0	0	17	0	2	0	0	**107**	
2115 - 2130	0	64	4	0	1	0	0	0	8	0	1	0	0	**78**	
2130 - 2145	0	50	7	0	1	0	0	0	22	0	2	0	0	**82**	
2145 - 2200	0	55	8	0	2	0	0	0	11	0	3	0	0	**79**	**346**
2200 - 2215	0	40	12	0	1	1	0	0	13	0	0	0	0	**67**	
2215 - 2230	0	41	3	0	0	0	0	0	8	0	0	0	0	**52**	
2230 - 2245	0	34	4	0	3	0	0	0	6	0	1	0	0	**48**	
2245 - 2300	0	30	5	0	0	0	0	0	17	0	0	0	0	**52**	**219**
2300 - 2315	0	27	2	2	1	0	0	1	5	0	1	0	0	**39**	
2315 - 2330	0	31	4	0	1	1	0	0	4	0	1	0	0	**42**	
2330 - 2345	0	30	2	0	1	0	0	0	10	0	0	0	0	**43**	
2345 - 0000	0	26	2	0	0	0	0	0	4	0	2	0	0	**34**	**158**

Session Total	16	7453	2564	24	423	186	2	151	1865	20	41	0	0	**12745**
Session Average	0.17	77.64	26.71	0.25	4.41	1.94	0.02	1.57	19.43	0.21	0.43	0.00	0.00	**132.76**
Session Percentage	0.13	58.48	20.12	0.19	3.32	1.46	0.02	1.18	14.63	0.16	0.32	0.00	0.00	

AM Peak Hour	0700 - 0800	0700 - 0800	0630 - 0730	0515 - 0615	0730 - 0830	0645 - 0745	-	0800 - 0900	0815 - 0915	0645 - 0745	0500 - 0600	-	-	**0700 - 0800**
AM Peak Hour Volume	2	569	225	3	46	26	0	20	110	2	2	0	0	**963**

Noon Peak Hour	1130 - 1230	1445 - 1545	1300 - 1400	1415 - 1515	1215 - 1315	1230 - 1330	1130 - 1230	1215 - 1315	1215 - 1315	1245 - 1345	1115 - 1215	-	-	**1445 - 1545**
Noon Peak Hour Volume	1	484	179	4	38	21	1	15	144	6	1	0	0	**819**

PM Peak Hour	1730 - 1830	1645 - 1745	1515 - 1615	1500 - 1600	1515 - 1615	1500 - 1600	-	1545 - 1645	1715 - 1815	1715 - 1815	1530 - 1630	-	-	**1630 - 1730**
PM Peak Hour Volume	4	623	205	6	30	13	0	13	129	3	1	0	0	**943**

Site 75 Lane 2 NB
I-20,
north of Bush River Rd

Date
Thursday, April 25, 2024

Lat/Long
34.034393°, -81.117736°

Weather
Fair
67°F

Click here for Detailed Weather

0000 - 2400 (Weekday 24h Session) (04-25-2024)
NB EB 15min

	Northbound (Movement 75 Lane 2 NB.1)													15min	60min
TIME	1	2	3	4	5	6	7	8	9	10	11	12	13	Total	Total
0000 - 0015	0	16	2	0	2	0	0	0	5	0	1	0	0	**26**	
0015 - 0030	0	14	4	0	1	0	0	0	5	0	0	0	0	**24**	
0030 - 0045	0	11	2	0	1	0	0	0	7	0	2	0	0	**23**	
0045 - 0100	1	7	1	0	0	0	0	0	5	0	0	0	0	**14**	**87**
0100 - 0115	0	9	2	0	0	0	0	0	3	0	2	0	0	**16**	
0115 - 0130	0	14	3	0	0	0	0	0	10	0	1	0	0	**28**	
0130 - 0145	0	12	1	0	0	0	0	0	4	0	2	0	0	**19**	
0145 - 0200	0	12	2	0	0	0	0	0	0	0	3	0	0	**17**	**80**
0200 - 0215	0	10	1	0	0	0	0	0	8	0	1	0	0	**20**	
0215 - 0230	0	4	3	0	0	0	0	0	1	0	1	0	0	**9**	
0230 - 0245	0	10	1	0	0	0	0	0	11	1	1	0	0	**24**	
0245 - 0300	0	12	3	0	3	0	0	0	7	0	0	0	0	**25**	**78**
0300 - 0315	0	15	3	0	0	0	0	0	4	0	0	0	0	**22**	
0315 - 0330	0	11	1	0	0	0	0	0	8	0	2	0	0	**22**	
0330 - 0345	0	12	2	0	0	0	0	0	6	0	0	0	0	**20**	
0345 - 0400	0	19	2	0	3	0	0	0	8	0	1	0	0	**33**	**97**
0400 - 0415	0	25	6	0	2	0	0	0	4	0	1	0	0	**38**	
0415 - 0430	0	27	5	0	2	0	0	0	5	0	0	0	0	**39**	
0430 - 0445	0	26	2	0	2	0	0	0	12	0	3	0	0	**45**	
0445 - 0500	0	37	4	0	1	0	0	0	4	0	2	0	0	**48**	**170**
0500 - 0515	0	44	9	0	4	0	0	0	16	0	0	0	0	**73**	
0515 - 0530	0	56	10	0	1	0	0	0	17	0	0	0	0	**84**	
0530 - 0545	1	77	12	0	5	0	0	0	15	0	0	0	0	**110**	
0545 - 0600	0	81	14	0	7	2	0	0	19	0	0	0	0	**123**	**390**
0600 - 0615	0	75	16	2	5	0	0	0	19	0	1	0	0	**118**	
0615 - 0630	0	96	33	1	3	1	0	0	18	0	1	0	0	**153**	
0630 - 0645	0	93	48	1	6	3	0	1	28	0	0	0	0	**180**	
0645 - 0700	0	103	61	0	8	7	0	3	24	0	0	0	0	**206**	**657**
0700 - 0715	1	110	60	0	4	10	0	2	19	1	0	0	0	**207**	
0715 - 0730	0	134	53	2	5	4	0	1	30	0	0	0	0	**229**	
0730 - 0745	2	152	52	3	12	6	3	5	17	0	0	0	0	**252**	
0745 - 0800	0	145	54	1	7	2	1	4	26	1	0	0	0	**241**	**929**
0800 - 0815	1	130	43	1	8	8	0	5	34	0	0	0	0	**230**	
0815 - 0830	0	121	66	0	7	2	1	7	18	0	0	0	0	**222**	
0830 - 0845	0	118	63	1	7	4	0	4	29	0	1	0	0	**227**	
0845 - 0900	0	96	49	0	3	5	2	5	32	1	0	0	0	**193**	**872**
0900 - 0915	0	114	54	0	7	7	0	4	28	0	0	0	0	**214**	
0915 - 0930	0	124	46	0	8	5	0	1	20	0	0	0	0	**204**	
0930 - 0945	0	99	56	0	6	8	0	4	31	0	1	0	0	**205**	
0945 - 1000	0	101	30	0	7	7	0	1	24	2	0	0	0	**172**	**795**
1000 - 1015	0	101	49	0	4	2	0	2	24	2	0	0	0	**184**	
1015 - 1030	0	80	35	0	12	9	1	0	35	1	0	0	0	**173**	
1030 - 1045	1	88	38	0	11	7	0	5	24	2	0	0	0	**176**	
1045 - 1100	1	94	27	0	6	5	1	5	25	1	1	0	0	**166**	**699**
1100 - 1115	1	73	31	1	6	2	0	4	14	0	0	0	0	**132**	
1115 - 1130	0	74	41	0	6	5	0	2	36	0	0	0	0	**164**	
1130 - 1145	0	90	42	1	13	5	2	4	26	1	1	0	0	**185**	
1145 - 1200	0	96	32	0	6	2	1	2	21	0	0	0	0	**160**	**641**
1200 - 1215	0	95	37	1	5	2	1	6	23	0	0	0	0	**170**	
1215 - 1230	0	110	35	0	5	4	2	2	34	0	1	0	0	**193**	
1230 - 1245	0	113	37	0	7	7	0	4	29	0	0	0	0	**197**	
1245 - 1300	0	122	35	1	7	5	1	2	29	0	0	0	0	**202**	**762**
1300 - 1315	2	99	49	0	6	2	0	3	22	0	0	0	0	**183**	
1315 - 1330	0	97	51	1	6	5	1	1	29	0	0	0	0	**191**	
1330 - 1345	1	105	33	1	13	5	0	5	36	1	0	0	0	**200**	
1345 - 1400	0	121	46	0	4	1	0	4	31	1	0	0	0	**208**	**782**
1400 - 1415	1	105	42	1	6	3	0	3	21	0	0	0	0	**182**	
1415 - 1430	2	120	24	0	9	5	1	3	36	0	0	0	0	**200**	
1430 - 1445	0	108	34	0	6	5	0	5	14	1	0	0	0	**173**	
1445 - 1500	0	99	42	4	3	1	0	2	20	1	0	0	0	**172**	**727**
1500 - 1515	0	116	40	1	4	2	1	3	26	0	0	0	0	**193**	
1515 - 1530	0	123	54	1	7	0	0	2	30	1	0	0	0	**218**	
1530 - 1545	0	138	45	0	6	5	0	1	27	0	0	0	0	**222**	
1545 - 1600	0	131	39	1	4	1	0	1	41	2	0	0	0	**220**	**853**
1600 - 1615	0	127	32	0	4	3	0	3	19	1	1	0	0	**190**	
1615 - 1630	0	149	43	3	4	2	0	3	32	1	0	0	0	**237**	
1630 - 1645	0	151	48	0	7	0	0	5	38	0	0	0	0	**249**	
1645 - 1700	0	125	39	0	1	1	0	6	29	0	0	0	0	**201**	**877**
1700 - 1715	0	172	34	0	7	0	0	3	26	1	0	0	0	**243**	
1715 - 1730	0	169	38	0	5	2	1	4	28	0	0	0	0	**247**	
1730 - 1745	1	157	45	0	3	1	1	0	30	0	1	0	0	**239**	
1745 - 1800	0	128	44	0	3	2	0	3	22	0	0	0	0	**202**	**931**
1800 - 1815	0	113	38	0	4	2	0	1	24	0	0	0	0	**182**	
1815 - 1830	0	114	30	1	4	1	0	2	14	0	0	0	0	**166**	
1830 - 1845	0	98	35	0	2	0	0	1	21	0	0	0	0	**157**	
1845 - 1900	0	105	33	0	3	3	0	0	20	0	0	0	0	**164**	**669**
1900 - 1915	0	105	21	2	2	0	0	2	15	0	0	0	0	**147**	
1915 - 1930	0	120	31	0	3	1	0	2	21	0	0	0	0	**178**	
1930 - 1945	0	103	30	4	2	0	0	0	19	0	0	0	0	**158**	
1945 - 2000	0	88	28	0	3	0	0	2	19	0	0	0	0	**140**	**623**
2000 - 2015	0	95	19	0	0	0	0	2	16	0	0	0	0	**132**	
2015 - 2030	0	87	16	0	6	0	0	1	22	0	0	0	0	**132**	
2030 - 2045	0	91	13	0	1	0	0	0	20	0	0	0	0	**125**	
2045 - 2100	0	82	7	0	1	0	0	0	11	0	3	0	0	**104**	**493**
2100 - 2115	0	65	14	0	2	0	0	0	16	0	1	0	0	**98**	
2115 - 2130	0	73	12	0	1	0	0	0	11	0	0	0	0	**97**	
2130 - 2145	0	57	14	1	2	0	0	0	11	0	3	0	0	**88**	
2145 - 2200	0	67	20	1	0	0	0	0	21	1	2	0	0	**112**	**395**
2200 - 2215	0	55	14	2	1	0	0	0	12	0	1	0	0	**85**	
2215 - 2230	0	38	5	0	0	0	0	0	6	0	0	0	0	**49**	
2230 - 2245	0	39	10	0	1	2	0	0	8	0	0	0	0	**60**	
2245 - 2300	0	38	5	0	1	0	0	0	10	0	0	0	0	**54**	**248**
2300 - 2315	0	32	10	0	0	0	0	0	9	0	1	0	0	**52**	
2315 - 2330	0	25	3	0	1	0	0	0	6	0	0	0	0	**35**	
2330 - 2345	0	22	3	0	1	0	0	0	11	0	1	0	0	**38**	
2345 - 0000	0	26	2	0	0	0	0	0	7	0	2	0	0	**37**	**162**

Session Total	16	7786	2553	40	374	191	21	158	1808	24	46	0	0	**13017**
Session Average	0.17	81.10	26.59	0.42	3.90	1.99	0.22	1.65	18.83	0.25	0.48	0.00	0.00	**135.59**
Session Percentage	0.12	59.81	19.61	0.31	2.87	1.47	0.16	1.21	13.89	0.18	0.35	0.00	0.00	

AM Peak Hour	0645 - 0745	0715 - 0815	0815 - 0915	0715 - 0815	0730 - 0830	0645 - 0745	0730 - 0830	0730 - 0830	0930 - 1030	0945 - 1045	0530 - 0630	-	-	**0715 - 0815**
AM Peak Hour Volume	3	561	232	7	34	27	5	21	114	7	2	0	0	**952**

Noon Peak Hour	1330 - 1430	1445 - 1545	1445 - 1545	1430 - 1530	1015 - 1115	1000 - 1100	1130 - 1230	1030 - 1130	1330 - 1430	1000 - 1100	1045 - 1145	-	-	**1445 - 1545**
Noon Peak Hour Volume	4	476	181	6	35	23	6	16	124	6	2	0	0	**805**

PM Peak Hour	1645 - 1745	1700 - 1800	1500 - 1600	1845 - 1945	1500 - 1600	1530 - 1630	1645 - 1745	1630 - 1730	1545 - 1645	1515 - 1615	1515 - 1615	-	-	**1630 - 1730**
PM Peak Hour Volume	1	626	178	6	21	11	2	18	130	4	1	0	0	**940**

Site 75 Lane 2 NB
I-20,
north of Bush River Rd

Date
Friday, April 26, 2024

Lat/Long
34.034393°, -81.117736°

Weather
Cloudy
69°F

Click here for Detailed Weather

0000 - 2400 (Weekday 24h Session) (04-26-2024)
NB EB 15min

	Northbound (Movement 75 Lane 2 NB.1)													15min	60min
TIME	1	2	3	4	5	6	7	8	9	10	11	12	13	Total	Total
0000 - 0015	0	24	4	0	0	0	0	0	5	0	3	0	0	**36**	
0015 - 0030	0	23	3	0	0	0	0	0	6	0	0	0	0	**32**	
0030 - 0045	0	16	2	0	1	0	0	0	8	0	0	0	0	**27**	
0045 - 0100	0	18	1	0	0	0	0	0	4	0	1	0	0	**24**	**119**
0100 - 0115	0	8	0	0	1	0	0	0	2	0	3	0	0	**14**	
0115 - 0130	0	20	1	0	0	0	0	0	4	0	1	0	0	**26**	
0130 - 0145	0	16	2	1	1	0	0	0	8	0	2	0	0	**30**	
0145 - 0200	0	12	1	1	0	1	0	0	4	0	2	0	0	**21**	**91**
0200 - 0215	0	17	2	0	2	0	0	0	3	0	0	0	0	**24**	
0215 - 0230	0	12	0	0	0	0	0	0	10	0	3	0	0	**25**	
0230 - 0245	0	18	2	0	0	0	0	0	9	0	0	0	0	**29**	
0245 - 0300	0	9	0	0	1	0	0	0	6	0	2	0	0	**18**	**96**
0300 - 0315	0	10	1	0	1	0	0	0	7	0	1	0	0	**20**	
0315 - 0330	0	18	2	0	1	1	0	0	7	0	0	0	0	**29**	
0330 - 0345	0	16	1	0	4	0	0	0	10	0	1	0	0	**32**	
0345 - 0400	0	26	4	0	1	0	0	0	12	0	1	0	0	**44**	**125**
0400 - 0415	0	23	2	0	1	2	0	0	4	0	2	0	0	**34**	
0415 - 0430	0	24	3	0	2	0	0	0	5	0	2	0	0	**36**	
0430 - 0445	0	21	2	0	2	1	0	0	10	0	1	0	0	**37**	
0445 - 0500	0	39	5	0	1	0	0	0	10	0	0	0	0	**55**	**162**
0500 - 0515	0	41	3	0	3	0	0	0	9	0	0	0	0	**56**	
0515 - 0530	0	53	5	0	2	0	0	0	12	0	0	0	0	**72**	
0530 - 0545	0	52	9	0	1	3	0	0	9	0	2	0	0	**76**	
0545 - 0600	0	68	14	0	6	3	0	0	11	0	1	0	0	**103**	**307**
0600 - 0615	0	75	22	3	4	1	0	0	18	0	0	0	0	**123**	
0615 - 0630	0	87	25	2	2	2	0	0	26	0	1	0	0	**145**	
0630 - 0645	0	106	31	3	7	7	0	2	19	0	2	0	0	**177**	
0645 - 0700	0	96	38	1	5	6	0	1	23	2	1	0	0	**173**	**618**
0700 - 0715	0	113	53	1	4	0	0	2	26	0	0	0	0	**199**	
0715 - 0730	1	145	54	1	5	3	0	5	21	0	0	0	0	**235**	
0730 - 0745	0	153	53	0	10	3	2	2	27	1	2	0	0	**253**	
0745 - 0800	0	155	63	0	12	7	0	3	22	0	0	0	0	**262**	**949**
0800 - 0815	0	146	59	1	7	2	0	3	23	0	0	0	0	**241**	
0815 - 0830	1	132	49	0	6	3	0	4	24	0	0	0	0	**219**	
0830 - 0845	0	114	63	3	11	5	0	2	18	2	0	0	0	**218**	
0845 - 0900	0	112	45	2	4	3	0	5	26	0	0	0	0	**197**	**875**
0900 - 0915	1	102	49	1	7	3	0	2	19	0	0	0	0	**184**	
0915 - 0930	0	95	58	0	7	1	1	2	22	0	0	0	0	**186**	
0930 - 0945	0	99	50	0	7	1	0	3	24	1	0	0	0	**185**	
0945 - 1000	0	101	54	0	6	1	2	4	19	1	0	0	0	**188**	**743**
1000 - 1015	0	119	33	0	2	0	2	4	24	3	0	0	0	**187**	
1015 - 1030	3	128	52	0	2	1	0	2	21	0	0	0	0	**209**	
1030 - 1045	1	125	41	0	5	0	1	2	20	0	0	0	0	**195**	
1045 - 1100	0	108	43	0	4	2	0	3	23	0	0	0	0	**183**	**774**
1100 - 1115	0	122	50	0	8	2	0	3	26	0	0	0	0	**211**	
1115 - 1130	0	123	30	0	3	1	0	2	26	3	0	0	0	**188**	
1130 - 1145	0	117	37	0	8	4	0	1	23	0	0	0	0	**190**	
1145 - 1200	1	133	57	0	11	4	0	1	21	0	0	0	0	**228**	**817**
1200 - 1215	2	121	42	1	9	3	0	2	26	0	0	0	0	**206**	
1215 - 1230	0	136	49	2	3	3	0	3	21	0	1	0	0	**218**	
1230 - 1245	0	132	43	0	4	2	0	3	25	0	0	0	0	**209**	
1245 - 1300	0	127	56	0	2	0	1	6	16	0	0	0	0	**208**	**841**
1300 - 1315	2	146	50	0	9	3	1	3	22	0	0	0	0	**236**	
1315 - 1330	1	138	56	0	9	2	0	1	29	0	1	0	0	**237**	
1330 - 1345	0	125	39	1	7	6	0	3	26	0	0	0	0	**207**	
1345 - 1400	0	134	39	0	5	4	1	0	15	0	0	0	0	**198**	**878**
1400 - 1415	0	133	46	0	7	3	0	4	18	0	0	0	0	**211**	
1415 - 1430	1	142	47	0	9	1	0	4	19	1	0	0	0	**224**	
1430 - 1445	0	129	29	1	3	3	0	3	38	0	0	0	0	**206**	
1445 - 1500	0	136	38	1	8	0	0	3	17	0	0	0	0	**203**	**844**
1500 - 1515	0	158	45	2	3	0	0	2	16	1	0	0	0	**227**	
1515 - 1530	4	155	51	1	7	4	0	3	20	1	0	0	0	**246**	
1530 - 1545	0	171	54	0	6	2	0	3	29	2	0	0	0	**267**	
1545 - 1600	0	180	43	1	7	2	0	6	25	1	0	0	0	**265**	**1005**
1600 - 1615	2	185	37	0	6	4	1	1	26	0	0	0	0	**262**	
1615 - 1630	1	168	41	1	0	2	0	2	26	1	0	0	0	**242**	
1630 - 1645	1	170	50	0	4	4	0	3	17	0	0	0	0	**249**	
1645 - 1700	4	174	56	0	3	1	0	2	14	0	0	0	0	**254**	**1007**
1700 - 1715	4	172	47	0	5	0	0	2	23	0	0	0	0	**253**	
1715 - 1730	0	184	39	0	5	1	0	3	17	0	0	0	0	**249**	
1730 - 1745	0	152	38	1	3	1	0	1	20	0	0	0	0	**216**	
1745 - 1800	0	159	41	0	4	2	0	1	13	1	0	0	0	**221**	**939**
1800 - 1815	0	139	30	0	3	1	0	5	17	0	0	0	0	**195**	
1815 - 1830	0	148	35	0	2	1	1	2	22	0	0	0	0	**211**	
1830 - 1845	0	131	41	0	3	1	0	0	13	0	1	0	0	**190**	
1845 - 1900	5	97	36	0	2	0	0	2	17	0	1	0	0	**160**	**756**
1900 - 1915	0	120	27	0	0	1	0	2	11	0	0	0	0	**161**	
1915 - 1930	1	118	41	0	3	0	0	0	10	0	0	0	0	**173**	
1930 - 1945	0	105	26	0	3	0	0	0	17	0	0	0	0	**151**	
1945 - 2000	2	116	37	0	0	1	0	2	6	0	0	0	0	**164**	**649**
2000 - 2015	1	81	27	0	0	1	0	0	16	0	0	0	0	**126**	
2015 - 2030	0	113	29	0	2	2	0	0	6	0	0	0	0	**152**	
2030 - 2045	2	92	22	0	2	1	0	0	14	0	0	0	0	**133**	
2045 - 2100	0	110	21	1	3	0	0	1	11	0	0	0	0	**147**	**558**
2100 - 2115	0	86	18	0	2	2	0	0	14	0	0	0	0	**122**	
2115 - 2130	0	77	12	0	1	2	0	1	11	0	1	0	0	**105**	
2130 - 2145	0	83	11	0	2	1	0	0	8	0	0	0	0	**105**	
2145 - 2200	0	73	13	0	0	0	0	0	5	0	2	0	0	**93**	**425**
2200 - 2215	0	74	16	0	1	0	0	0	7	0	0	0	0	**98**	
2215 - 2230	0	58	11	0	2	0	0	1	7	0	2	0	0	**81**	
2230 - 2245	0	55	12	0	1	0	0	0	8	0	0	0	0	**76**	
2245 - 2300	0	44	10	0	0	0	0	0	8	0	0	0	0	**62**	**317**
2300 - 2315	0	53	13	0	1	0	0	0	6	0	1	0	0	**74**	
2315 - 2330	0	45	10	0	2	1	0	0	6	0	1	0	0	**65**	
2330 - 2345	1	40	9	1	0	0	0	0	2	0	2	0	0	**55**	
2345 - 0000	0	38	10	1	2	0	0	0	2	0	1	0	0	**54**	**248**

Session Total	42	9113	2771	35	343	141	13	138	1478	21	48	0	0	**14143**
Session Average	0.44	94.93	28.86	0.36	3.57	1.47	0.14	1.44	15.40	0.22	0.50	0.00	0.00	**147.32**
Session Percentage	0.30	64.43	19.59	0.25	2.43	1.00	0.09	0.98	10.45	0.15	0.34	0.00	0.00	

AM Peak Hour	0945 - 1045	0715 - 0815	0745 - 0845	0600 - 0700	0745 - 0845	0745 - 0845	0915 - 1015	0800 - 0900	0645 - 0745	0915 - 1015	0530 - 0630	-	-	**0715 - 0815**
AM Peak Hour Volume	4	599	234	9	36	17	5	14	97	5	4	0	0	**991**

Noon Peak Hour	1000 - 1100	1445 - 1545	1230 - 1330	1430 - 1530	1115 - 1215	1300 - 1400	1000 - 1100	1215 - 1315	1045 - 1145	1445 - 1545	1130 - 1230	-	-	**1445 - 1545**
Noon Peak Hour Volume	4	620	205	5	31	15	3	15	98	4	1	0	0	**943**

PM Peak Hour	1615 - 1715	1530 - 1630	1615 - 1715	1500 - 1600	1515 - 1615	1515 - 1615	1515 - 1615	1500 - 1600	1530 - 1630	1500 - 1600	1800 - 1900	-	-	**1515 - 1615**
PM Peak Hour Volume	10	704	194	4	26	12	1	14	106	5	2	0	0	**1040**

Site 75 Lane 2 NB
I-20,
north of Bush River Rd

Date
Saturday, April 27, 2024

Lat/Long
34.034393°, -81.117736°

Weather
Mostly Cloudy
69°F

Click here for Detailed Weather

0000 - 2400 (Saturday 24h Session) (04-27-2024)
NB EB 15min

	Northbound (Movement 75 Lane 2 NB.1)													15min	60min
TIME	1	2	3	4	5	6	7	8	9	10	11	12	13	Total	Total
0000 - 0015	0	36	3	0	0	0	0	0	5	0	1	0	0	**45**	
0015 - 0030	0	39	2	1	1	0	0	0	5	0	1	0	0	**49**	
0030 - 0045	0	28	3	0	1	0	0	0	2	0	0	0	0	**34**	
0045 - 0100	1	26	2	0	1	0	0	0	3	0	1	0	0	**34**	**162**
0100 - 0115	0	19	0	0	1	0	0	0	3	0	0	0	0	**23**	
0115 - 0130	1	18	1	0	0	0	0	0	5	0	3	0	0	**28**	
0130 - 0145	0	18	2	0	2	0	0	0	2	0	1	0	0	**25**	
0145 - 0200	0	20	2	0	1	0	0	0	2	0	1	0	0	**26**	**102**
0200 - 0215	0	9	0	0	0	0	0	0	4	0	1	0	0	**14**	
0215 - 0230	0	11	1	0	1	0	0	0	2	0	1	0	0	**16**	
0230 - 0245	0	16	1	0	1	0	0	0	2	0	2	0	0	**22**	
0245 - 0300	0	9	0	0	1	0	0	0	1	0	1	0	0	**12**	**64**
0300 - 0315	0	6	0	0	1	0	0	0	2	0	4	0	0	**13**	
0315 - 0330	0	15	1	0	0	0	0	0	2	0	0	0	0	**18**	
0330 - 0345	0	14	0	0	0	0	0	0	6	0	2	0	0	**22**	
0345 - 0400	0	12	1	0	2	0	0	0	3	0	1	0	0	**19**	**72**
0400 - 0415	0	11	1	0	0	0	0	0	5	0	0	0	0	**17**	
0415 - 0430	0	15	1	0	0	0	0	0	3	0	1	0	0	**20**	
0430 - 0445	0	18	3	1	0	0	0	0	4	0	0	0	0	**26**	
0445 - 0500	0	15	1	0	0	0	0	0	3	0	0	0	0	**19**	**82**
0500 - 0515	1	28	1	0	1	0	0	0	7	0	0	0	0	**38**	
0515 - 0530	0	26	4	0	0	0	0	0	2	0	1	0	0	**33**	
0530 - 0545	0	36	2	0	0	0	0	0	2	0	0	0	0	**40**	
0545 - 0600	0	38	3	0	0	0	0	0	7	0	1	0	0	**49**	**160**
0600 - 0615	0	37	5	0	1	0	0	0	6	0	0	0	0	**49**	
0615 - 0630	0	54	12	0	1	1	0	1	8	0	0	0	0	**77**	
0630 - 0645	0	69	22	0	0	0	0	0	6	0	0	0	0	**97**	
0645 - 0700	0	76	13	0	0	0	0	0	3	0	0	0	0	**92**	**315**
0700 - 0715	0	70	23	0	0	1	0	0	6	1	0	0	0	**101**	
0715 - 0730	0	89	38	0	2	0	0	0	4	0	0	0	0	**133**	
0730 - 0745	0	90	32	0	1	0	0	4	4	0	0	0	0	**131**	
0745 - 0800	2	112	31	0	2	0	0	0	3	0	0	0	0	**150**	**515**
0800 - 0815	0	85	37	0	1	1	0	1	6	0	0	0	0	**131**	
0815 - 0830	1	99	28	0	3	0	0	1	8	0	0	0	0	**140**	
0830 - 0845	3	110	26	5	3	0	0	1	10	0	0	0	0	**158**	
0845 - 0900	1	107	39	1	1	0	0	1	12	0	0	0	0	**162**	**591**
0900 - 0915	2	121	51	0	0	1	0	0	9	0	0	0	0	**184**	
0915 - 0930	1	153	31	0	1	0	0	1	7	0	0	0	0	**194**	
0930 - 0945	1	133	34	0	2	1	0	4	8	1	0	0	0	**184**	
0945 - 1000	0	138	34	0	2	1	0	1	11	1	0	0	0	**188**	**750**
1000 - 1015	0	130	35	0	3	0	0	2	8	1	0	0	0	**179**	
1015 - 1030	0	149	34	0	1	0	0	1	8	1	0	0	0	**194**	
1030 - 1045	0	138	39	0	4	0	0	0	9	0	1	0	0	**191**	
1045 - 1100	2	142	33	0	3	0	0	1	7	0	0	0	0	**188**	**752**
1100 - 1115	1	128	32	1	2	1	0	1	5	0	0	0	0	**171**	
1115 - 1130	0	131	34	0	3	0	0	1	10	0	0	0	0	**179**	
1130 - 1145	1	132	38	2	1	2	0	1	7	0	0	0	0	**184**	
1145 - 1200	0	137	32	0	3	1	0	0	11	0	0	0	0	**184**	**718**
1200 - 1215	0	124	40	2	1	0	0	1	13	0	0	0	0	**181**	
1215 - 1230	1	146	33	0	1	1	0	2	11	0	0	0	0	**195**	
1230 - 1245	0	150	36	0	5	0	0	0	15	0	1	0	0	**207**	
1245 - 1300	0	154	33	1	1	0	0	2	14	1	0	0	0	**206**	**789**
1300 - 1315	1	147	43	0	4	0	0	1	10	0	0	0	0	**206**	
1315 - 1330	0	136	34	0	0	0	0	4	14	0	0	0	0	**188**	
1330 - 1345	1	169	31	0	1	0	0	2	8	0	0	0	0	**212**	
1345 - 1400	2	132	35	0	4	0	0	2	9	0	0	0	0	**184**	**790**
1400 - 1415	3	163	34	0	0	1	0	1	7	0	0	0	0	**209**	
1415 - 1430	3	134	31	0	2	2	0	1	12	1	0	0	0	**186**	
1430 - 1445	0	142	31	1	0	0	0	0	9	0	0	0	0	**183**	
1445 - 1500	0	148	36	0	2	1	0	1	11	0	0	0	0	**199**	**777**
1500 - 1515	1	131	31	0	1	3	0	1	4	0	0	0	0	**172**	
1515 - 1530	0	115	34	0	3	0	0	2	7	0	0	0	0	**161**	
1530 - 1545	0	132	37	0	3	0	0	1	4	0	0	0	0	**177**	
1545 - 1600	1	151	31	0	0	0	0	1	8	0	0	0	0	**192**	**702**
1600 - 1615	0	117	30	0	0	0	0	2	6	0	0	0	0	**155**	
1615 - 1630	0	122	32	0	2	1	0	2	14	1	0	0	0	**174**	
1630 - 1645	0	145	34	0	4	1	0	1	7	0	0	0	0	**192**	
1645 - 1700	0	117	47	0	1	1	0	1	7	0	0	0	0	**174**	**695**
1700 - 1715	0	127	29	0	3	0	0	0	7	0	0	0	0	**166**	
1715 - 1730	1	123	34	0	3	0	0	2	3	0	0	0	0	**166**	
1730 - 1745	0	106	27	0	0	1	0	0	5	0	0	0	0	**139**	
1745 - 1800	0	112	21	0	1	0	0	0	7	0	0	0	0	**141**	**612**
1800 - 1815	0	102	34	1	0	0	0	2	11	0	0	0	0	**150**	
1815 - 1830	0	128	27	0	0	1	0	4	9	0	0	0	0	**169**	
1830 - 1845	1	120	29	0	3	0	0	1	9	0	0	0	0	**163**	
1845 - 1900	0	111	22	1	1	0	0	1	8	0	0	0	0	**144**	**626**
1900 - 1915	0	107	28	1	2	0	0	0	8	0	0	0	0	**146**	
1915 - 1930	0	120	18	0	4	0	0	0	6	0	0	0	0	**148**	
1930 - 1945	1	95	19	0	1	0	0	1	10	0	0	0	0	**127**	
1945 - 2000	1	107	15	0	1	0	0	1	7	0	0	0	0	**132**	**553**
2000 - 2015	0	109	15	1	0	0	0	0	9	1	0	0	0	**135**	
2015 - 2030	0	94	9	0	2	0	0	0	3	0	0	0	0	**108**	
2030 - 2045	0	94	15	0	3	0	0	0	6	0	0	0	0	**118**	
2045 - 2100	0	91	13	0	1	0	0	0	4	0	0	0	0	**109**	**470**
2100 - 2115	0	113	13	1	1	0	0	0	6	0	0	0	0	**134**	
2115 - 2130	0	76	13	0	1	0	0	0	3	0	0	0	0	**93**	
2130 - 2145	0	80	13	0	3	0	0	1	5	0	0	0	0	**102**	
2145 - 2200	0	62	16	0	0	0	0	0	5	0	0	0	0	**83**	**412**
2200 - 2215	1	55	13	0	0	0	0	0	5	0	0	0	0	**74**	
2215 - 2230	0	62	9	1	0	0	0	0	1	0	0	0	0	**73**	
2230 - 2245	0	65	9	0	0	0	0	0	1	0	0	0	0	**75**	
2245 - 2300	1	55	7	1	0	0	0	0	3	0	0	0	0	**67**	**289**
2300 - 2315	0	59	4	0	0	0	0	0	3	0	0	0	0	**66**	
2315 - 2330	0	44	8	0	1	0	0	0	7	0	0	0	0	**60**	
2330 - 2345	1	38	3	0	1	0	0	0	3	0	0	0	0	**46**	
2345 - 0000	0	32	4	0	0	1	0	0	0	0	0	0	0	**37**	**209**

Session Total	38	8375	1928	22	121	24	0	63	602	9	25	0	0	**11207**
Session Average	0.40	87.24	20.08	0.23	1.26	0.25	0.00	0.66	6.27	0.09	0.26	0.00	0.00	**116.74**
Session Percentage	0.34	74.73	17.20	0.20	1.08	0.21	0.00	0.56	5.37	0.08	0.22	0.00	0.00	

AM Peak Hour	0815 - 0915	0945 - 1045	0845 - 0945	0800 - 0900	0945 - 1045	0900 - 1000	-	0915 - 1015	0815 - 0915	0930 - 1030	0500 - 0600	-	-	**0945 - 1045**
AM Peak Hour Volume	7	555	155	6	10	3	0	8	39	4	2	0	0	**752**

Noon Peak Hour	1330 - 1430	1245 - 1345	1230 - 1330	1115 - 1215	1030 - 1130	1415 - 1515	-	1245 - 1345	1200 - 1300	1000 - 1100	1000 - 1100	-	-	**1215 - 1315**
Noon Peak Hour Volume	9	606	146	4	12	6	0	9	53	2	1	0	0	**814**

PM Peak Hour	1500 - 1600	1545 - 1645	1630 - 1730	1800 - 1900	1630 - 1730	1500 - 1600	-	1800 - 1900	1800 - 1900	1530 - 1630	-	-	-	**1545 - 1645**
PM Peak Hour Volume	2	535	144	2	11	3	0	8	37	1	0	0	0	**713**

Bi-Directional Class Count || NB EB Average 15min

Columbia, SC

Marr Traffic DATA COLLECTION
www.marrtraffic.com

Site 75 Lane 2 NB
I-20,
north of Bush River Rd

Date
Sunday, April 21, 2024

Lat/Long
34.034393°, -81.117736°

Weather
Cloudy
66°F

0000 - 2400 (Weekday 24h Session) (All Dates)
NB EB Average 15min

	NB EB Average 15min													15min	60min
Time	1	2	3	4	5	6	7	8	9	10	11	12	13	Total	Total
0000 - 0015	0	23	3	0	1	0	0	0	6	0	1	0	0	**34**	
0015 - 0030	0	21	3	0	1	0	0	0	6	0	0	0	0	**31**	
0030 - 0045	0	17	2	0	1	0	0	0	5	0	1	0	0	**26**	
0045 - 0100	0	17	2	0	0	0	0	0	5	0	0	0	0	**25**	**116**
0100 - 0115	0	14	1	0	1	0	0	0	3	0	1	0	0	**20**	
0115 - 0130	0	18	2	0	0	0	0	0	6	0	1	0	0	**27**	
0130 - 0145	0	14	2	0	1	0	0	0	5	0	1	0	0	**23**	
0145 - 0200	0	14	2	0	0	0	0	0	4	0	1	0	0	**21**	**91**
0200 - 0215	0	13	2	0	0	0	0	0	6	0	1	0	0	**23**	
0215 - 0230	0	10	2	0	0	0	0	0	5	0	1	0	0	**18**	
0230 - 0245	0	11	2	0	0	0	0	0	7	0	1	0	0	**22**	
0245 - 0300	0	9	1	0	1	0	0	0	4	0	1	0	0	**16**	**79**
0300 - 0315	0	12	1	0	1	0	0	0	6	0	1	0	0	**22**	
0315 - 0330	0	15	1	0	1	0	0	0	7	0	1	0	0	**25**	
0330 - 0345	0	13	1	0	1	0	0	0	7	0	1	0	0	**22**	
0345 - 0400	0	18	2	0	1	0	0	0	8	0	1	0	0	**31**	**100**
0400 - 0415	0	19	3	0	1	0	0	0	4	0	1	0	0	**29**	
0415 - 0430	0	21	3	0	1	0	0	0	5	0	0	0	0	**31**	
0430 - 0445	0	23	3	0	1	0	0	0	8	0	1	0	0	**37**	
0445 - 0500	0	27	5	0	1	0	0	0	9	0	1	0	0	**42**	**139**
0500 - 0515	0	35	6	0	2	0	0	0	11	0	1	0	0	**55**	
0515 - 0530	0	42	7	0	1	0	0	0	11	0	1	0	0	**63**	
0530 - 0545	0	58	9	0	2	1	0	0	9	0	0	0	0	**80**	
0545 - 0600	0	59	12	0	2	1	0	0	12	0	0	0	0	**86**	**283**
0600 - 0615	0	65	14	1	2	1	0	0	15	0	0	0	0	**99**	
0615 - 0630	0	77	24	1	3	1	0	0	15	0	1	0	0	**121**	
0630 - 0645	0	92	36	1	4	3	0	1	16	0	0	0	0	**153**	
0645 - 0700	0	92	42	0	5	6	0	2	17	1	0	0	0	**165**	**538**
0700 - 0715	0	102	48	0	4	3	0	2	15	0	0	0	0	**175**	
0715 - 0730	0	115	48	1	6	3	0	2	18	0	0	0	0	**192**	
0730 - 0745	1	122	39	1	8	3	1	3	15	0	0	0	0	**193**	
0745 - 0800	0	135	46	0	6	3	1	2	19	0	0	0	0	**213**	**773**
0800 - 0815	0	116	48	0	6	3	0	3	20	0	0	0	0	**197**	
0815 - 0830	1	108	45	0	8	2	1	4	20	0	0	0	0	**189**	
0830 - 0845	0	102	50	1	7	4	0	4	19	0	0	0	0	**187**	
0845 - 0900	0	103	46	0	5	2	0	3	20	1	0	0	0	**181**	**754**
0900 - 0915	0	107	49	0	5	3	0	2	20	0	0	0	0	**186**	
0915 - 0930	0	109	43	0	5	2	0	2	19	0	0	0	0	**180**	
0930 - 0945	0	101	42	0	6	3	0	3	20	1	0	0	0	**176**	
0945 - 1000	0	107	36	0	5	3	1	2	20	1	0	0	0	**174**	**716**
1000 - 1015	0	106	40	0	4	2	1	3	20	1	0	0	0	**177**	
1015 - 1030	1	104	38	0	6	3	0	2	24	1	0	0	0	**178**	
1030 - 1045	0	104	35	0	5	4	1	2	20	1	0	0	0	**171**	
1045 - 1100	1	105	37	0	5	2	0	2	21	1	0	0	0	**174**	**700**
1100 - 1115	0	100	35	0	5	2	0	2	20	0	0	0	0	**165**	
1115 - 1130	0	105	38	0	5	2	0	1	22	1	0	0	0	**175**	
1130 - 1145	0	107	37	1	7	3	1	2	21	0	0	0	0	**179**	
1145 - 1200	0	106	41	0	6	2	0	1	20	0	0	0	0	**177**	**696**
1200 - 1215	0	110	36	1	4	2	1	2	22	1	0	0	0	**179**	
1215 - 1230	0	118	37	1	5	2	1	2	21	0	0	0	0	**188**	
1230 - 1245	0	125	40	0	6	3	0	3	24	0	0	0	0	**200**	
1245 - 1300	0	118	39	1	5	3	1	3	24	0	0	0	0	**193**	**760**
1300 - 1315	1	120	42	0	6	1	0	2	19	0	0	0	0	**192**	
1315 - 1330	0	113	44	0	5	4	1	2	20	0	0	0	0	**190**	
1330 - 1345	0	123	35	1	6	3	0	3	21	1	0	0	0	**192**	
1345 - 1400	0	122	39	0	5	3	0	2	20	0	0	0	0	**191**	**766**
1400 - 1415	1	123	38	0	5	3	0	3	22	0	0	0	0	**195**	
1415 - 1430	1	126	38	0	7	2	1	3	22	0	0	0	0	**199**	
1430 - 1445	0	127	35	1	5	2	0	2	20	0	0	0	0	**193**	
1445 - 1500	0	124	37	1	6	2	0	3	19	0	0	0	0	**192**	**779**
1500 - 1515	0	127	39	1	4	2	0	3	18	0	0	0	0	**195**	
1515 - 1530	1	127	44	0	6	1	0	3	22	0	0	0	0	**205**	
1530 - 1545	0	139	43	0	5	3	0	3	21	0	0	0	0	**213**	
1545 - 1600	1	140	41	1	3	1	0	3	25	1	0	0	0	**216**	**829**
1600 - 1615	0	142	38	0	5	1	0	2	26	0	0	0	0	**216**	
1615 - 1630	0	140	40	1	3	2	0	2	26	0	1	0	0	**216**	
1630 - 1645	0	151	43	0	5	2	0	3	25	0	0	0	0	**229**	
1645 - 1700	1	142	46	0	3	2	0	3	21	0	0	0	0	**219**	**880**
1700 - 1715	1	156	38	0	5	1	0	2	22	1	0	0	0	**225**	
1715 - 1730	0	150	35	1	3	1	0	2	19	0	0	0	0	**211**	
1730 - 1745	0	141	36	0	3	1	0	2	23	0	0	0	0	**207**	
1745 - 1800	1	127	34	0	3	1	0	1	20	0	0	0	0	**187**	**830**
1800 - 1815	0	114	32	1	2	1	0	1	23	0	0	0	0	**173**	
1815 - 1830	0	116	29	0	3	1	0	2	19	0	0	0	0	**170**	
1830 - 1845	1	107	35	0	2	1	0	1	20	0	0	0	0	**166**	
1845 - 1900	1	100	29	0	2	1	0	1	19	0	0	0	0	**154**	**664**
1900 - 1915	0	97	25	1	2	0	0	1	16	0	0	0	0	**141**	
1915 - 1930	0	103	28	0	3	0	0	1	16	0	0	0	0	**151**	
1930 - 1945	0	92	22	1	2	0	0	1	15	0	0	0	0	**133**	
1945 - 2000	0	86	26	0	1	0	0	1	15	0	0	0	0	**131**	**556**
2000 - 2015	0	80	19	0	1	0	0	1	16	0	0	0	0	**117**	
2015 - 2030	0	82	18	0	2	1	0	1	15	0	0	0	0	**118**	
2030 - 2045	0	79	15	0	2	0	0	1	16	0	0	0	0	**112**	
2045 - 2100	0	78	11	0	1	0	0	0	13	0	1	0	0	**105**	**453**
2100 - 2115	0	75	12	1	1	0	0	0	14	0	0	0	0	**103**	
2115 - 2130	0	69	9	0	1	0	0	0	10	0	1	0	0	**90**	
2130 - 2145	0	63	9	0	2	0	0	0	13	0	2	0	0	**89**	
2145 - 2200	0	57	11	0	0	0	0	0	11	0	1	0	0	**82**	**364**
2200 - 2215	0	48	11	0	1	0	0	0	10	0	0	0	0	**70**	
2215 - 2230	0	45	7	0	0	0	0	0	8	0	0	0	0	**61**	
2230 - 2245	0	42	8	0	1	0	0	0	8	0	0	0	0	**59**	
2245 - 2300	0	38	5	0	1	0	0	0	8	0	0	0	0	**53**	**243**
2300 - 2315	0	35	6	0	1	0	0	0	7	0	1	0	0	**50**	
2315 - 2330	0	32	5	0	1	0	0	0	6	0	1	0	0	**45**	
2330 - 2345	0	27	4	0	1	0	0	0	7	0	1	0	0	**40**	
2345 - 0000	0	25	3	0	0	0	0	0	5	0	1	0	0	**35**	**170**

Session Total	22	7837	2349	25	296	122	13	122	1439	18	35	0	0	**12280**
Session Average	0.23	81.64	24.47	0.26	3.08	1.27	0.14	1.27	14.99	0.19	0.37	0.00	0.00	**127.91**
Session Percentage	0.18	63.82	19.13	0.21	2.41	1.00	0.11	0.99	11.72	0.15	0.29	0.00	0.00	

AM Peak Hour	0730 - 0830	0715 - 0815	0815 - 0915	0600 - 0700	0730 - 0830	0645 - 0745	0730 - 0830	0800 - 0900	0930 - 1030	0945 - 1045	0500 - 0600	-	-	**0715 - 0815**
AM Peak Volume	2	488	190	3	28	15	3	14	84	3	2	0	0	**795**

Noon Peak Hour	1015 - 1115	1445 - 1545	1230 - 1330	1415 - 1515	1245 - 1345	1315 - 1415	1130 - 1230	1400 - 1500	1200 - 1300	1000 - 1100	1130 - 1230	-	-	**1445 - 1545**
Noon Peak Volume	2	516	164	3	23	13	2	11	91	3	1	0	0	**804**

PM Peak Hour	1500 - 1600	1630 - 1730	1600 - 1700	1500 - 1600	1515 - 1615	1500 - 1600	1500 - 1600	1500 - 1600	1545 - 1645	1530 - 1630	1530 - 1630	-	-	**1615 - 1715**
PM Peak Volume	2	599	167	2	19	7	0	11	102	2	1	0	0	**888**

Bi-Directional Class Count || Volume Summary 15min

Columbia, SC

Marr Traffic DATA COLLECTION

www.marrtraffic.com

Site 75 Lane 2 NB

I-20,
north of Bush River Rd

Date

Sunday, April 21, 2024

Lat/Long

34.034393°, -81.117736°

Weather

Cloudy
66°F

Click here for Detailed Weather

0000 - 2400 (Sunday 24h Session) (04-21-2024)

Volume Summary 15min

	Volume Summary 15min		15min	60min
TIME	NB	SB	Total	Total
0000 - 0015	45	0	**45**	
0015 - 0030	39	0	**39**	
0030 - 0045	31	0	**31**	
0045 - 0100	34	0	**34**	**149**
0100 - 0115	34	0	**34**	
0115 - 0130	31	0	**31**	
0130 - 0145	24	0	**24**	
0145 - 0200	22	0	**22**	**111**
0200 - 0215	29	0	**29**	
0215 - 0230	17	0	**17**	
0230 - 0245	16	0	**16**	
0245 - 0300	13	0	**13**	**75**
0300 - 0315	20	0	**20**	
0315 - 0330	25	0	**25**	
0330 - 0345	14	0	**14**	
0345 - 0400	14	0	**14**	**73**
0400 - 0415	15	0	**15**	
0415 - 0430	17	0	**17**	
0430 - 0445	13	0	**13**	
0445 - 0500	9	0	**9**	**54**
0500 - 0515	24	0	**24**	
0515 - 0530	22	0	**22**	
0530 - 0545	27	0	**27**	
0545 - 0600	22	0	**22**	**95**
0600 - 0615	31	0	**31**	
0615 - 0630	41	0	**41**	
0630 - 0645	48	0	**48**	
0645 - 0700	56	0	**56**	**176**
0700 - 0715	60	0	**60**	
0715 - 0730	73	0	**73**	
0730 - 0745	70	0	**70**	
0745 - 0800	84	0	**84**	**287**
0800 - 0815	79	0	**79**	
0815 - 0830	88	0	**88**	
0830 - 0845	105	0	**105**	
0845 - 0900	110	0	**110**	**382**
0900 - 0915	116	0	**116**	
0915 - 0930	103	0	**103**	
0930 - 0945	104	0	**104**	
0945 - 1000	161	0	**161**	**484**
1000 - 1015	160	0	**160**	
1015 - 1030	151	0	**151**	
1030 - 1045	133	0	**133**	
1045 - 1100	155	0	**155**	**599**
1100 - 1115	144	0	**144**	
1115 - 1130	165	0	**165**	
1130 - 1145	181	0	**181**	
1145 - 1200	151	0	**151**	**641**

	Volume Summary 15min		15min	60min
Time	NB	SB	Total	Total
1200 - 1215	181	0	**181**	
1215 - 1230	192	0	**192**	
1230 - 1245	201	0	**201**	
1245 - 1300	178	0	**178**	**752**
1300 - 1315	197	0	**197**	
1315 - 1330	168	0	**168**	
1330 - 1345	198	0	**198**	
1345 - 1400	186	0	**186**	**749**
1400 - 1415	213	0	**213**	
1415 - 1430	182	0	**182**	
1430 - 1445	188	0	**188**	
1445 - 1500	173	0	**173**	**756**
1500 - 1515	177	0	**177**	
1515 - 1530	189	0	**189**	
1530 - 1545	187	0	**187**	
1545 - 1600	177	0	**177**	**730**
1600 - 1615	204	0	**204**	
1615 - 1630	178	0	**178**	
1630 - 1645	200	0	**200**	
1645 - 1700	209	0	**209**	**791**
1700 - 1715	202	0	**202**	
1715 - 1730	178	0	**178**	
1730 - 1745	180	0	**180**	
1745 - 1800	167	0	**167**	**727**
1800 - 1815	170	0	**170**	
1815 - 1830	154	0	**154**	
1830 - 1845	149	0	**149**	
1845 - 1900	158	0	**158**	**631**
1900 - 1915	142	0	**142**	
1915 - 1930	136	0	**136**	
1930 - 1945	109	0	**109**	
1945 - 2000	107	0	**107**	**494**
2000 - 2015	113	0	**113**	
2015 - 2030	109	0	**109**	
2030 - 2045	99	0	**99**	
2045 - 2100	87	0	**87**	**408**
2100 - 2115	84	0	**84**	
2115 - 2130	87	0	**87**	
2130 - 2145	69	0	**69**	
2145 - 2200	68	0	**68**	**308**
2200 - 2215	58	0	**58**	
2215 - 2230	68	0	**68**	
2230 - 2245	59	0	**59**	
2245 - 2300	57	0	**57**	**242**
2300 - 2315	48	0	**48**	
2315 - 2330	40	0	**40**	
2330 - 2345	32	0	**32**	
2345 - 0000	37	0	**37**	**157**

Session Total	9871	0	**9871**
Session Average	102.82	0.00	**102.82**
Session Percentage	100.00	0.00	

Site 75 Lane 2 NB

I-20,
north of Bush River Rd

Date

Monday, April 22, 2024

Lat/Long

34.034393°, -81.117736°

Weather

Mostly Cloudy
57°F

Click here for Detailed Weather

0000 - 2400 (Weekday 24h Session) (04-22-2024)

Volume Summary 15min

TIME	Volume Summary 15min NB	Volume Summary 15min SB	15min Total	60min Total
0000 - 0015	29	0	**29**	
0015 - 0030	23	0	**23**	
0030 - 0045	25	0	**25**	
0045 - 0100	24	0	**24**	**101**
0100 - 0115	22	0	**22**	
0115 - 0130	27	0	**27**	
0130 - 0145	33	0	**33**	
0145 - 0200	29	0	**29**	**111**
0200 - 0215	28	0	**28**	
0215 - 0230	23	0	**23**	
0230 - 0245	26	0	**26**	
0245 - 0300	16	0	**16**	**93**
0300 - 0315	21	0	**21**	
0315 - 0330	27	0	**27**	
0330 - 0345	32	0	**32**	
0345 - 0400	32	0	**32**	**112**
0400 - 0415	32	0	**32**	
0415 - 0430	35	0	**35**	
0430 - 0445	45	0	**45**	
0445 - 0500	53	0	**53**	**165**
0500 - 0515	70	0	**70**	
0515 - 0530	94	0	**94**	
0530 - 0545	121	0	**121**	
0545 - 0600	96	0	**96**	**381**
0600 - 0615	122	0	**122**	
0615 - 0630	143	0	**143**	
0630 - 0645	183	0	**183**	
0645 - 0700	206	0	**206**	**654**
0700 - 0715	227	0	**227**	
0715 - 0730	226	0	**226**	
0730 - 0745	265	0	**265**	
0745 - 0800	251	0	**251**	**969**
0800 - 0815	253	0	**253**	
0815 - 0830	223	0	**223**	
0830 - 0845	220	0	**220**	
0845 - 0900	213	0	**213**	**909**
0900 - 0915	217	0	**217**	
0915 - 0930	185	0	**185**	
0930 - 0945	200	0	**200**	
0945 - 1000	179	0	**179**	**781**
1000 - 1015	180	0	**180**	
1015 - 1030	173	0	**173**	
1030 - 1045	171	0	**171**	
1045 - 1100	174	0	**174**	**698**
1100 - 1115	167	0	**167**	
1115 - 1130	179	0	**179**	
1130 - 1145	169	0	**169**	
1145 - 1200	160	0	**160**	**675**

Time	Volume Summary 15min NB	Volume Summary 15min SB	15min Total	60min Total
1200 - 1215	178	0	**178**	
1215 - 1230	164	0	**164**	
1230 - 1245	181	0	**181**	
1245 - 1300	198	0	**198**	**721**
1300 - 1315	166	0	**166**	
1315 - 1330	173	0	**173**	
1330 - 1345	168	0	**168**	
1345 - 1400	178	0	**178**	**685**
1400 - 1415	186	0	**186**	
1415 - 1430	204	0	**204**	
1430 - 1445	201	0	**201**	
1445 - 1500	203	0	**203**	**794**
1500 - 1515	200	0	**200**	
1515 - 1530	209	0	**209**	
1530 - 1545	212	0	**212**	
1545 - 1600	218	0	**218**	**839**
1600 - 1615	245	0	**245**	
1615 - 1630	232	0	**232**	
1630 - 1645	241	0	**241**	
1645 - 1700	247	0	**247**	**965**
1700 - 1715	238	0	**238**	
1715 - 1730	193	0	**193**	
1730 - 1745	222	0	**222**	
1745 - 1800	197	0	**197**	**850**
1800 - 1815	165	0	**165**	
1815 - 1830	166	0	**166**	
1830 - 1845	144	0	**144**	
1845 - 1900	138	0	**138**	**613**
1900 - 1915	130	0	**130**	
1915 - 1930	131	0	**131**	
1930 - 1945	145	0	**145**	
1945 - 2000	112	0	**112**	**518**
2000 - 2015	95	0	**95**	
2015 - 2030	93	0	**93**	
2030 - 2045	102	0	**102**	
2045 - 2100	90	0	**90**	**380**
2100 - 2115	83	0	**83**	
2115 - 2130	87	0	**87**	
2130 - 2145	89	0	**89**	
2145 - 2200	66	0	**66**	**325**
2200 - 2215	65	0	**65**	
2215 - 2230	61	0	**61**	
2230 - 2245	45	0	**45**	
2245 - 2300	45	0	**45**	**216**
2300 - 2315	48	0	**48**	
2315 - 2330	45	0	**45**	
2330 - 2345	28	0	**28**	
2345 - 0000	30	0	**30**	**151**

Session Total	12706	0	**12706**
Session Average	132.35	0.00	**132.35**
Session Percentage	100.00	0.00	

Site 75 Lane 2 NB

I-20,
north of Bush River Rd

Date

Tuesday, April 23, 2024

Lat/Long

34.034393°, -81.117736°

Weather

Fair
58°F

Click here for Detailed Weather

0000 - 2400 (Weekday 24h Session) (04-23-2024)

Volume Summary 15min

TIME	Volume Summary 15min NB	SB	15min Total	60min Total
0000 - 0015	28	0	**28**	
0015 - 0030	30	0	**30**	
0030 - 0045	26	0	**26**	
0045 - 0100	29	0	**29**	**113**
0100 - 0115	24	0	**24**	
0115 - 0130	38	0	**38**	
0130 - 0145	16	0	**16**	
0145 - 0200	20	0	**20**	**98**
0200 - 0215	21	0	**21**	
0215 - 0230	16	0	**16**	
0230 - 0245	15	0	**15**	
0245 - 0300	14	0	**14**	**66**
0300 - 0315	28	0	**28**	
0315 - 0330	27	0	**27**	
0330 - 0345	19	0	**19**	
0345 - 0400	42	0	**42**	**116**
0400 - 0415	31	0	**31**	
0415 - 0430	36	0	**36**	
0430 - 0445	50	0	**50**	
0445 - 0500	51	0	**51**	**168**
0500 - 0515	54	0	**54**	
0515 - 0530	70	0	**70**	
0530 - 0545	94	0	**94**	
0545 - 0600	109	0	**109**	**327**
0600 - 0615	126	0	**126**	
0615 - 0630	138	0	**138**	
0630 - 0645	198	0	**198**	
0645 - 0700	208	0	**208**	**670**
0700 - 0715	200	0	**200**	
0715 - 0730	221	0	**221**	
0730 - 0745	135	0	**135**	
0745 - 0800	245	0	**245**	**801**
0800 - 0815	221	0	**221**	
0815 - 0830	204	0	**204**	
0830 - 0845	194	0	**194**	
0845 - 0900	204	0	**204**	**823**
0900 - 0915	185	0	**185**	
0915 - 0930	187	0	**187**	
0930 - 0945	182	0	**182**	
0945 - 1000	165	0	**165**	**719**
1000 - 1015	178	0	**178**	
1015 - 1030	173	0	**173**	
1030 - 1045	173	0	**173**	
1045 - 1100	173	0	**173**	**697**
1100 - 1115	165	0	**165**	
1115 - 1130	166	0	**166**	
1130 - 1145	173	0	**173**	
1145 - 1200	167	0	**167**	**671**

Time	Volume Summary 15min NB	SB	15min Total	60min Total
1200 - 1215	183	0	**183**	
1215 - 1230	181	0	**181**	
1230 - 1245	184	0	**184**	
1245 - 1300	173	0	**173**	**721**
1300 - 1315	172	0	**172**	
1315 - 1330	199	0	**199**	
1330 - 1345	176	0	**176**	
1345 - 1400	174	0	**174**	**721**
1400 - 1415	195	0	**195**	
1415 - 1430	194	0	**194**	
1430 - 1445	206	0	**206**	
1445 - 1500	198	0	**198**	**793**
1500 - 1515	193	0	**193**	
1515 - 1530	202	0	**202**	
1530 - 1545	210	0	**210**	
1545 - 1600	215	0	**215**	**820**
1600 - 1615	213	0	**213**	
1615 - 1630	235	0	**235**	
1630 - 1645	240	0	**240**	
1645 - 1700	225	0	**225**	**913**
1700 - 1715	219	0	**219**	
1715 - 1730	209	0	**209**	
1730 - 1745	219	0	**219**	
1745 - 1800	186	0	**186**	**833**
1800 - 1815	162	0	**162**	
1815 - 1830	166	0	**166**	
1830 - 1845	168	0	**168**	
1845 - 1900	154	0	**154**	**650**
1900 - 1915	138	0	**138**	
1915 - 1930	145	0	**145**	
1930 - 1945	122	0	**122**	
1945 - 2000	121	0	**121**	**526**
2000 - 2015	105	0	**105**	
2015 - 2030	121	0	**121**	
2030 - 2045	99	0	**99**	
2045 - 2100	87	0	**87**	**412**
2100 - 2115	93	0	**93**	
2115 - 2130	83	0	**83**	
2130 - 2145	90	0	**90**	
2145 - 2200	73	0	**73**	**339**
2200 - 2215	41	0	**41**	
2215 - 2230	40	0	**40**	
2230 - 2245	52	0	**52**	
2245 - 2300	35	0	**35**	**168**
2300 - 2315	22	0	**22**	
2315 - 2330	28	0	**28**	
2330 - 2345	39	0	**39**	
2345 - 0000	15	0	**15**	**104**

Session Total	12269	0	**12269**
Session Average	127.80	0.00	**127.80**
Session Percentage	100.00	0.00	

Site 75 Lane 2 NB

I-20,
north of Bush River Rd

Date

Wednesday, April 24, 2024

Lat/Long

34.034393°, -81.117736°

Weather

Fair
66°F

Click here for Detailed Weather

0000 - 2400 (Weekday 24h Session) (04-24-2024)

Volume Summary 15min

TIME	Volume Summary 15min NB	SB	15min Total	60min Total
0000 - 0015	28	0	**28**	
0015 - 0030	21	0	**21**	
0030 - 0045	15	0	**15**	
0045 - 0100	19	0	**19**	**83**
0100 - 0115	10	0	**10**	
0115 - 0130	12	0	**12**	
0130 - 0145	11	0	**11**	
0145 - 0200	14	0	**14**	**47**
0200 - 0215	22	0	**22**	
0215 - 0230	22	0	**22**	
0230 - 0245	21	0	**21**	
0245 - 0300	17	0	**17**	**82**
0300 - 0315	29	0	**29**	
0315 - 0330	24	0	**24**	
0330 - 0345	16	0	**16**	
0345 - 0400	33	0	**33**	**102**
0400 - 0415	33	0	**33**	
0415 - 0430	36	0	**36**	
0430 - 0445	43	0	**43**	
0445 - 0500	60	0	**60**	**172**
0500 - 0515	67	0	**67**	
0515 - 0530	64	0	**64**	
0530 - 0545	91	0	**91**	
0545 - 0600	101	0	**101**	**323**
0600 - 0615	127	0	**127**	
0615 - 0630	150	0	**150**	
0630 - 0645	187	0	**187**	
0645 - 0700	215	0	**215**	**679**
0700 - 0715	232	0	**232**	
0715 - 0730	225	0	**225**	
0730 - 0745	245	0	**245**	
0745 - 0800	261	0	**261**	**963**
0800 - 0815	223	0	**223**	
0815 - 0830	227	0	**227**	
0830 - 0845	188	0	**188**	
0845 - 0900	189	0	**189**	**827**
0900 - 0915	201	0	**201**	
0915 - 0930	203	0	**203**	
0930 - 0945	171	0	**171**	
0945 - 1000	167	0	**167**	**742**
1000 - 1015	171	0	**171**	
1015 - 1030	174	0	**174**	
1030 - 1045	160	0	**160**	
1045 - 1100	179	0	**179**	**684**
1100 - 1115	163	0	**163**	
1115 - 1130	187	0	**187**	
1130 - 1145	171	0	**171**	
1145 - 1200	187	0	**187**	**708**

Time	Volume Summary 15min NB	SB	15min Total	60min Total
1200 - 1215	153	0	**153**	
1215 - 1230	173	0	**173**	
1230 - 1245	220	0	**220**	
1245 - 1300	188	0	**188**	**734**
1300 - 1315	186	0	**186**	
1315 - 1330	175	0	**175**	
1330 - 1345	186	0	**186**	
1345 - 1400	211	0	**211**	**758**
1400 - 1415	171	0	**171**	
1415 - 1430	206	0	**206**	
1430 - 1445	193	0	**193**	
1445 - 1500	194	0	**194**	**764**
1500 - 1515	201	0	**201**	
1515 - 1530	209	0	**209**	
1530 - 1545	215	0	**215**	
1545 - 1600	226	0	**226**	**851**
1600 - 1615	244	0	**244**	
1615 - 1630	211	0	**211**	
1630 - 1645	234	0	**234**	
1645 - 1700	220	0	**220**	**909**
1700 - 1715	252	0	**252**	
1715 - 1730	237	0	**237**	
1730 - 1745	233	0	**233**	
1745 - 1800	196	0	**196**	**918**
1800 - 1815	190	0	**190**	
1815 - 1830	159	0	**159**	
1830 - 1845	192	0	**192**	
1845 - 1900	161	0	**161**	**702**
1900 - 1915	126	0	**126**	
1915 - 1930	143	0	**143**	
1930 - 1945	118	0	**118**	
1945 - 2000	140	0	**140**	**527**
2000 - 2015	116	0	**116**	
2015 - 2030	113	0	**113**	
2030 - 2045	109	0	**109**	
2045 - 2100	109	0	**109**	**447**
2100 - 2115	107	0	**107**	
2115 - 2130	78	0	**78**	
2130 - 2145	82	0	**82**	
2145 - 2200	79	0	**79**	**346**
2200 - 2215	67	0	**67**	
2215 - 2230	52	0	**52**	
2230 - 2245	48	0	**48**	
2245 - 2300	52	0	**52**	**219**
2300 - 2315	39	0	**39**	
2315 - 2330	42	0	**42**	
2330 - 2345	43	0	**43**	
2345 - 0000	34	0	**34**	**158**

Session Total	12745	0	**12745**
Session Average	132.76	0.00	**132.76**
Session Percentage	100.00	0.00	

Site 75 Lane 2 NB

I-20,
north of Bush River Rd

Date

Thursday, April 25, 2024

Lat/Long

34.034393°, -81.117736°

Weather

Fair
67°F

Click here for Detailed Weather

0000 - 2400 (Weekday 24h Session) (04-25-2024)

Volume Summary 15min

TIME	Volume Summary 15min NB	SB	15min Total	60min Total
0000 - 0015	26	0	**26**	
0015 - 0030	24	0	**24**	
0030 - 0045	23	0	**23**	
0045 - 0100	14	0	**14**	**87**
0100 - 0115	16	0	**16**	
0115 - 0130	28	0	**28**	
0130 - 0145	19	0	**19**	
0145 - 0200	17	0	**17**	**80**
0200 - 0215	20	0	**20**	
0215 - 0230	9	0	**9**	
0230 - 0245	24	0	**24**	
0245 - 0300	25	0	**25**	**78**
0300 - 0315	22	0	**22**	
0315 - 0330	22	0	**22**	
0330 - 0345	20	0	**20**	
0345 - 0400	33	0	**33**	**97**
0400 - 0415	38	0	**38**	
0415 - 0430	39	0	**39**	
0430 - 0445	45	0	**45**	
0445 - 0500	48	0	**48**	**170**
0500 - 0515	73	0	**73**	
0515 - 0530	84	0	**84**	
0530 - 0545	110	0	**110**	
0545 - 0600	123	0	**123**	**390**
0600 - 0615	118	0	**118**	
0615 - 0630	153	0	**153**	
0630 - 0645	180	0	**180**	
0645 - 0700	206	0	**206**	**657**
0700 - 0715	207	0	**207**	
0715 - 0730	229	0	**229**	
0730 - 0745	252	0	**252**	
0745 - 0800	241	0	**241**	**929**
0800 - 0815	230	0	**230**	
0815 - 0830	222	0	**222**	
0830 - 0845	227	0	**227**	
0845 - 0900	193	0	**193**	**872**
0900 - 0915	214	0	**214**	
0915 - 0930	204	0	**204**	
0930 - 0945	205	0	**205**	
0945 - 1000	172	0	**172**	**795**
1000 - 1015	184	0	**184**	
1015 - 1030	173	0	**173**	
1030 - 1045	176	0	**176**	
1045 - 1100	166	0	**166**	**699**
1100 - 1115	132	0	**132**	
1115 - 1130	164	0	**164**	
1130 - 1145	185	0	**185**	
1145 - 1200	160	0	**160**	**641**

Time	Volume Summary 15min NB	SB	15min Total	60min Total
1200 - 1215	170	0	**170**	
1215 - 1230	193	0	**193**	
1230 - 1245	197	0	**197**	
1245 - 1300	202	0	**202**	**762**
1300 - 1315	183	0	**183**	
1315 - 1330	191	0	**191**	
1330 - 1345	200	0	**200**	
1345 - 1400	208	0	**208**	**782**
1400 - 1415	182	0	**182**	
1415 - 1430	200	0	**200**	
1430 - 1445	173	0	**173**	
1445 - 1500	172	0	**172**	**727**
1500 - 1515	193	0	**193**	
1515 - 1530	218	0	**218**	
1530 - 1545	222	0	**222**	
1545 - 1600	220	0	**220**	**853**
1600 - 1615	190	0	**190**	
1615 - 1630	237	0	**237**	
1630 - 1645	249	0	**249**	
1645 - 1700	201	0	**201**	**877**
1700 - 1715	243	0	**243**	
1715 - 1730	247	0	**247**	
1730 - 1745	239	0	**239**	
1745 - 1800	202	0	**202**	**931**
1800 - 1815	182	0	**182**	
1815 - 1830	166	0	**166**	
1830 - 1845	157	0	**157**	
1845 - 1900	164	0	**164**	**669**
1900 - 1915	147	0	**147**	
1915 - 1930	178	0	**178**	
1930 - 1945	158	0	**158**	
1945 - 2000	140	0	**140**	**623**
2000 - 2015	132	0	**132**	
2015 - 2030	132	0	**132**	
2030 - 2045	125	0	**125**	
2045 - 2100	104	0	**104**	**493**
2100 - 2115	98	0	**98**	
2115 - 2130	97	0	**97**	
2130 - 2145	88	0	**88**	
2145 - 2200	112	0	**112**	**395**
2200 - 2215	85	0	**85**	
2215 - 2230	49	0	**49**	
2230 - 2245	60	0	**60**	
2245 - 2300	54	0	**54**	**248**
2300 - 2315	52	0	**52**	
2315 - 2330	35	0	**35**	
2330 - 2345	38	0	**38**	
2345 - 0000	37	0	**37**	**162**

Session Total	13017	0	**13017**
Session Average	135.59	0.00	**135.59**
Session Percentage	100.00	0.00	

Site 75 Lane 2 NB

I-20,
north of Bush River Rd

Date

Friday, April 26, 2024

Lat/Long

34.034393°, -81.117736°

Weather

Cloudy
69°F

Click here for Detailed Weather

0000 - 2400 (Weekday 24h Session) (04-26-2024)

Volume Summary 15min

TIME	Volume Summary 15min NB	SB	15min Total	60min Total
0000 - 0015	36	0	**36**	
0015 - 0030	32	0	**32**	
0030 - 0045	27	0	**27**	
0045 - 0100	24	0	**24**	**119**
0100 - 0115	14	0	**14**	
0115 - 0130	26	0	**26**	
0130 - 0145	30	0	**30**	
0145 - 0200	21	0	**21**	**91**
0200 - 0215	24	0	**24**	
0215 - 0230	25	0	**25**	
0230 - 0245	29	0	**29**	
0245 - 0300	18	0	**18**	**96**
0300 - 0315	20	0	**20**	
0315 - 0330	29	0	**29**	
0330 - 0345	32	0	**32**	
0345 - 0400	44	0	**44**	**125**
0400 - 0415	34	0	**34**	
0415 - 0430	36	0	**36**	
0430 - 0445	37	0	**37**	
0445 - 0500	55	0	**55**	**162**
0500 - 0515	56	0	**56**	
0515 - 0530	72	0	**72**	
0530 - 0545	76	0	**76**	
0545 - 0600	103	0	**103**	**307**
0600 - 0615	123	0	**123**	
0615 - 0630	145	0	**145**	
0630 - 0645	177	0	**177**	
0645 - 0700	173	0	**173**	**618**
0700 - 0715	199	0	**199**	
0715 - 0730	235	0	**235**	
0730 - 0745	253	0	**253**	
0745 - 0800	262	0	**262**	**949**
0800 - 0815	241	0	**241**	
0815 - 0830	219	0	**219**	
0830 - 0845	218	0	**218**	
0845 - 0900	197	0	**197**	**875**
0900 - 0915	184	0	**184**	
0915 - 0930	186	0	**186**	
0930 - 0945	185	0	**185**	
0945 - 1000	188	0	**188**	**743**
1000 - 1015	187	0	**187**	
1015 - 1030	209	0	**209**	
1030 - 1045	195	0	**195**	
1045 - 1100	183	0	**183**	**774**
1100 - 1115	211	0	**211**	
1115 - 1130	188	0	**188**	
1130 - 1145	190	0	**190**	
1145 - 1200	228	0	**228**	**817**

Time	Volume Summary 15min NB	SB	15min Total	60min Total
1200 - 1215	206	0	**206**	
1215 - 1230	218	0	**218**	
1230 - 1245	209	0	**209**	
1245 - 1300	208	0	**208**	**841**
1300 - 1315	236	0	**236**	
1315 - 1330	237	0	**237**	
1330 - 1345	207	0	**207**	
1345 - 1400	198	0	**198**	**878**
1400 - 1415	211	0	**211**	
1415 - 1430	224	0	**224**	
1430 - 1445	206	0	**206**	
1445 - 1500	203	0	**203**	**844**
1500 - 1515	227	0	**227**	
1515 - 1530	246	0	**246**	
1530 - 1545	267	0	**267**	
1545 - 1600	265	0	**265**	**1005**
1600 - 1615	262	0	**262**	
1615 - 1630	242	0	**242**	
1630 - 1645	249	0	**249**	
1645 - 1700	254	0	**254**	**1007**
1700 - 1715	253	0	**253**	
1715 - 1730	249	0	**249**	
1730 - 1745	216	0	**216**	
1745 - 1800	221	0	**221**	**939**
1800 - 1815	195	0	**195**	
1815 - 1830	211	0	**211**	
1830 - 1845	190	0	**190**	
1845 - 1900	160	0	**160**	**756**
1900 - 1915	161	0	**161**	
1915 - 1930	173	0	**173**	
1930 - 1945	151	0	**151**	
1945 - 2000	164	0	**164**	**649**
2000 - 2015	126	0	**126**	
2015 - 2030	152	0	**152**	
2030 - 2045	133	0	**133**	
2045 - 2100	147	0	**147**	**558**
2100 - 2115	122	0	**122**	
2115 - 2130	105	0	**105**	
2130 - 2145	105	0	**105**	
2145 - 2200	93	0	**93**	**425**
2200 - 2215	98	0	**98**	
2215 - 2230	81	0	**81**	
2230 - 2245	76	0	**76**	
2245 - 2300	62	0	**62**	**317**
2300 - 2315	74	0	**74**	
2315 - 2330	65	0	**65**	
2330 - 2345	55	0	**55**	
2345 - 0000	54	0	**54**	**248**

Session Total	14143	0	**14143**
Session Average	147.32	0.00	**147.32**
Session Percentage	100.00	0.00	

Site 75 Lane 2 NB

I-20,
north of Bush River Rd

Date

Saturday, April 27, 2024

Lat/Long

34.034393°, -81.117736°

Weather

Mostly Cloudy
69°F

Click here for Detailed Weather

0000 - 2400 (Saturday 24h Session) (04-27-2024)

Volume Summary 15min

TIME	Volume Summary 15min NB	SB	15min Total	60min Total
0000 - 0015	45	0	**45**	
0015 - 0030	49	0	**49**	
0030 - 0045	34	0	**34**	
0045 - 0100	34	0	**34**	**162**
0100 - 0115	23	0	**23**	
0115 - 0130	28	0	**28**	
0130 - 0145	25	0	**25**	
0145 - 0200	26	0	**26**	**102**
0200 - 0215	14	0	**14**	
0215 - 0230	16	0	**16**	
0230 - 0245	22	0	**22**	
0245 - 0300	12	0	**12**	**64**
0300 - 0315	13	0	**13**	
0315 - 0330	18	0	**18**	
0330 - 0345	22	0	**22**	
0345 - 0400	19	0	**19**	**72**
0400 - 0415	17	0	**17**	
0415 - 0430	20	0	**20**	
0430 - 0445	26	0	**26**	
0445 - 0500	19	0	**19**	**82**
0500 - 0515	38	0	**38**	
0515 - 0530	33	0	**33**	
0530 - 0545	40	0	**40**	
0545 - 0600	49	0	**49**	**160**
0600 - 0615	49	0	**49**	
0615 - 0630	77	0	**77**	
0630 - 0645	97	0	**97**	
0645 - 0700	92	0	**92**	**315**
0700 - 0715	101	0	**101**	
0715 - 0730	133	0	**133**	
0730 - 0745	131	0	**131**	
0745 - 0800	150	0	**150**	**515**
0800 - 0815	131	0	**131**	
0815 - 0830	140	0	**140**	
0830 - 0845	158	0	**158**	
0845 - 0900	162	0	**162**	**591**
0900 - 0915	184	0	**184**	
0915 - 0930	194	0	**194**	
0930 - 0945	184	0	**184**	
0945 - 1000	188	0	**188**	**750**
1000 - 1015	179	0	**179**	
1015 - 1030	194	0	**194**	
1030 - 1045	191	0	**191**	
1045 - 1100	188	0	**188**	**752**
1100 - 1115	171	0	**171**	
1115 - 1130	179	0	**179**	
1130 - 1145	184	0	**184**	
1145 - 1200	184	0	**184**	**718**

Time	Volume Summary 15min NB	SB	15min Total	60min Total
1200 - 1215	181	0	**181**	
1215 - 1230	195	0	**195**	
1230 - 1245	207	0	**207**	
1245 - 1300	206	0	**206**	**789**
1300 - 1315	206	0	**206**	
1315 - 1330	188	0	**188**	
1330 - 1345	212	0	**212**	
1345 - 1400	184	0	**184**	**790**
1400 - 1415	209	0	**209**	
1415 - 1430	186	0	**186**	
1430 - 1445	183	0	**183**	
1445 - 1500	199	0	**199**	**777**
1500 - 1515	172	0	**172**	
1515 - 1530	161	0	**161**	
1530 - 1545	177	0	**177**	
1545 - 1600	192	0	**192**	**702**
1600 - 1615	155	0	**155**	
1615 - 1630	174	0	**174**	
1630 - 1645	192	0	**192**	
1645 - 1700	174	0	**174**	**695**
1700 - 1715	166	0	**166**	
1715 - 1730	166	0	**166**	
1730 - 1745	139	0	**139**	
1745 - 1800	141	0	**141**	**612**
1800 - 1815	150	0	**150**	
1815 - 1830	169	0	**169**	
1830 - 1845	163	0	**163**	
1845 - 1900	144	0	**144**	**626**
1900 - 1915	146	0	**146**	
1915 - 1930	148	0	**148**	
1930 - 1945	127	0	**127**	
1945 - 2000	132	0	**132**	**553**
2000 - 2015	135	0	**135**	
2015 - 2030	108	0	**108**	
2030 - 2045	118	0	**118**	
2045 - 2100	109	0	**109**	**470**
2100 - 2115	134	0	**134**	
2115 - 2130	93	0	**93**	
2130 - 2145	102	0	**102**	
2145 - 2200	83	0	**83**	**412**
2200 - 2215	74	0	**74**	
2215 - 2230	73	0	**73**	
2230 - 2245	75	0	**75**	
2245 - 2300	67	0	**67**	**289**
2300 - 2315	66	0	**66**	
2315 - 2330	60	0	**60**	
2330 - 2345	46	0	**46**	
2345 - 0000	37	0	**37**	**209**

Session Total	11207	0	**11207**
Session Average	116.74	0.00	**116.74**
Session Percentage	100.00	0.00	

Bi-Directional Class Count || NB EB 60min

Columbia, SC

Marr Traffic DATA COLLECTION

www.marrtraffic.com

Site 75 Lane 2 NB
I-20,
north of Bush River Rd

Date
Sunday, April 21, 2024

Lat/Long
34.034393°, -81.117736°

Weather
Cloudy
66°F

Click here for Detailed Weather

0000 - 2400 (Sunday 24h Session) (04-21-2024)
NB EB 60min

	Northbound (Movement 75 Lane 2 NB.1)													
TIME	1	2	3	4	5	6	7	8	9	10	11	12	13	**Total**
0000 - 0100	0	126	9	0	2	0	0	0	11	0	1	0	0	**149**
0100 - 0200	0	92	9	0	2	0	0	0	7	0	1	0	0	**111**
0200 - 0300	0	62	7	1	0	0	0	1	4	0	0	0	0	**75**
0300 - 0400	0	58	2	0	1	0	0	0	12	0	0	0	0	**73**
0400 - 0500	0	46	2	0	3	1	0	0	2	0	0	0	0	**54**
0500 - 0600	0	76	8	0	2	0	0	1	8	0	0	0	0	**95**
0600 - 0700	0	130	28	0	1	0	0	1	16	0	0	0	0	**176**
0700 - 0800	0	223	47	0	4	0	0	1	12	0	0	0	0	**287**
0800 - 0900	1	279	78	1	1	0	0	3	18	1	0	0	0	**382**
0900 - 1000	0	366	81	0	3	0	0	6	28	0	0	0	0	**484**
1000 - 1100	0	457	103	1	1	0	0	3	34	0	0	0	0	**599**
1100 - 1200	1	474	125	0	8	1	0	3	29	0	0	0	0	**641**
1200 - 1300	1	572	119	4	7	1	0	5	42	1	0	0	0	**752**
1300 - 1400	1	587	112	1	8	1	0	3	34	2	0	0	0	**749**
1400 - 1500	0	583	124	3	6	0	0	3	36	1	0	0	0	**756**
1500 - 1600	1	552	125	0	6	0	0	6	40	0	0	0	0	**730**
1600 - 1700	2	579	122	1	10	4	0	8	62	2	1	0	0	**791**
1700 - 1800	3	559	104	3	8	0	0	7	40	3	0	0	0	**727**
1800 - 1900	0	452	120	0	6	2	0	2	48	1	0	0	0	**631**
1900 - 2000	0	356	80	1	3	1	0	4	49	0	0	0	0	**494**
2000 - 2100	0	296	57	0	7	0	0	7	41	0	0	0	0	**408**
2100 - 2200	0	242	23	3	2	0	0	0	38	0	0	0	0	**308**
2200 - 2300	0	174	35	0	2	0	0	0	30	0	1	0	0	**242**
2300 - 2400	0	110	10	0	2	0	0	3	31	0	1	0	0	**157**

Session Total	10	7451	1530	19	95	11	0	67	672	11	5	0	0	**9871**
Session Average	0.42	310.46	63.75	0.79	3.96	0.46	0.00	2.79	28.00	0.46	0.21	0.00	0.00	**411.29**
Session Percentage	0.10	75.48	15.50	0.19	0.96	0.11	0.00	0.68	6.81	0.11	0.05	0.00	0.00	

AM Peak Hour	0800 - 0900	0900 - 1000	0900 - 1000	0800 - 0900	0700 - 0800	-	-	0900 - 1000	0900 - 1000	0800 - 0900	-	-	-	**0900 - 1000**
AM Peak Volume	1	366	81	1	4	0	0	6	28	1	0	0	0	**484**

Noon Peak Hour	1100 - 1200	1300 - 1400	1100 - 1200	1200 - 1300	1100 - 1200	1100 - 1200	-	1200 - 1300	1200 - 1300	1300 - 1400	-	-	-	**1400 - 1500**
Noon Peak Volume	1	587	125	4	8	1	0	5	42	2	0	0	0	**756**

PM Peak Hour	1700 - 1800	1600 - 1700	1500 - 1600	1700 - 1800	1600 - 1700	1600 - 1700	-	1600 - 1700	1600 - 1700	1700 - 1800	1600 - 1700	-	-	**1600 - 1700**
PM Peak Volume	3	579	125	3	10	4	0	8	62	3	1	0	0	**791**

Site 75 Lane 2 NB

I-20,
north of Bush River Rd

Date

Monday, April 22, 2024

Lat/Long

34.034393°, -81.117736°

Weather

Mostly Cloudy
57°F

Click here for Detailed Weather

0000 - 2400 (Weekday 24h Session) (04-22-2024)

NB EB 60min

	Northbound (Movement 75 Lane 2 NB.1)													
TIME	1	2	3	4	5	6	7	8	9	10	11	12	13	**Total**
0000 - 0100	0	66	7	0	2	0	0	1	23	0	2	0	0	**101**
0100 - 0200	0	63	11	0	3	0	0	0	32	0	2	0	0	**111**
0200 - 0300	0	41	10	0	1	0	0	0	39	0	2	0	0	**93**
0300 - 0400	1	54	9	0	6	0	0	0	39	0	3	0	0	**112**
0400 - 0500	0	109	20	0	3	1	0	0	31	1	0	0	0	**165**
0500 - 0600	0	268	46	0	5	4	0	3	50	0	5	0	0	**381**
0600 - 0700	0	399	147	2	21	18	1	4	61	1	0	0	0	**654**
0700 - 0800	2	575	239	1	38	20	5	6	83	0	0	0	0	**969**
0800 - 0900	1	507	247	0	34	18	4	14	80	3	1	0	0	**909**
0900 - 1000	0	444	202	0	22	10	2	9	92	0	0	0	0	**781**
1000 - 1100	4	367	159	0	23	14	9	12	103	7	0	0	0	**698**
1100 - 1200	1	377	151	1	23	8	4	10	98	2	0	0	0	**675**
1200 - 1300	1	409	170	0	23	13	7	18	77	3	0	0	0	**721**
1300 - 1400	0	384	167	0	29	19	4	8	74	0	0	0	0	**685**
1400 - 1500	1	499	149	0	28	14	1	16	84	2	0	0	0	**794**
1500 - 1600	5	483	171	3	21	13	0	21	120	2	0	0	0	**839**
1600 - 1700	1	556	199	1	20	11	0	13	161	1	2	0	0	**965**
1700 - 1800	1	570	130	2	14	5	0	7	120	1	0	0	0	**850**
1800 - 1900	1	392	109	0	9	0	0	4	98	0	0	0	0	**613**
1900 - 2000	0	332	97	1	9	1	0	2	75	1	0	0	0	**518**
2000 - 2100	1	225	54	0	4	2	0	3	89	0	2	0	0	**380**
2100 - 2200	0	225	31	0	3	0	0	2	57	0	7	0	0	**325**
2200 - 2300	0	146	17	1	3	0	0	0	47	0	2	0	0	**216**
2300 - 2400	0	95	16	1	3	0	0	0	32	0	4	0	0	**151**

Session Total	20	7586	2558	13	347	171	37	153	1765	24	32	0	0	**12706**
Session Average	0.83	316.08	106.58	0.54	14.46	7.13	1.54	6.38	73.54	1.00	1.33	0.00	0.00	**529.42**
Session Percentage	0.16	59.70	20.13	0.10	2.73	1.35	0.29	1.20	13.89	0.19	0.25	0.00	0.00	

AM Peak Hour	0700 - 0800	0700 - 0800	0800 - 0900	0600 - 0700	0700 - 0800	0700 - 0800	0700 - 0800	0800 - 0900	0900 - 1000	0800 - 0900	0500 - 0600	-	-	**0700 - 0800**
AM Peak Volume	2	575	247	2	38	20	5	14	92	3	5	0	0	**969**

Noon Peak Hour	1000 - 1100	1400 - 1500	1200 - 1300	1100 - 1200	1300 - 1400	1300 - 1400	1000 - 1100	1200 - 1300	1000 - 1100	1000 - 1100	-	-	-	**1400 - 1500**
Noon Peak Volume	4	499	170	1	29	19	9	18	103	7	0	0	0	**794**

PM Peak Hour	1500 - 1600	1700 - 1800	1600 - 1700	1500 - 1600	1500 - 1600	1500 - 1600	-	1500 - 1600	1600 - 1700	1500 - 1600	1600 - 1700	-	-	**1600 - 1700**
PM Peak Volume	5	570	199	3	21	13	0	21	161	2	2	0	0	**965**

Site 75 Lane 2 NB

I-20,
north of Bush River Rd

Date

Tuesday, April 23, 2024

Lat/Long

34.034393°, -81.117736°

Weather

Fair
58°F

Click here for Detailed Weather

0000 - 2400 (Weekday 24h Session) (04-23-2024)

NB EB 60min

	Northbound (Movement 75 Lane 2 NB.1)													
TIME	1	2	3	4	5	6	7	8	9	10	11	12	13	**Total**
0000 - 0100	1	56	13	1	2	0	0	2	35	0	3	0	0	**113**
0100 - 0200	0	51	8	0	4	1	0	1	25	0	8	0	0	**98**
0200 - 0300	0	32	3	0	1	0	0	0	20	0	10	0	0	**66**
0300 - 0400	0	66	8	0	0	0	0	0	36	0	6	0	0	**116**
0400 - 0500	0	100	15	0	6	0	0	1	42	0	4	0	0	**168**
0500 - 0600	0	189	59	1	5	2	0	0	68	0	3	0	0	**327**
0600 - 0700	0	373	165	4	20	17	0	3	85	0	3	0	0	**670**
0700 - 0800	0	487	201	0	21	4	2	9	76	1	0	0	0	**801**
0800 - 0900	2	417	214	0	39	15	2	21	108	5	0	0	0	**823**
0900 - 1000	0	392	178	0	26	8	2	13	99	1	0	0	0	**719**
1000 - 1100	2	341	170	0	29	12	1	12	128	2	0	0	0	**697**
1100 - 1200	0	338	165	1	30	14	2	3	115	3	0	0	0	**671**
1200 - 1300	0	411	138	1	26	14	1	1	126	3	0	0	0	**721**
1300 - 1400	0	419	152	3	23	17	5	5	95	1	1	0	0	**721**
1400 - 1500	0	431	173	3	39	9	4	12	122	0	0	0	0	**793**
1500 - 1600	3	489	184	0	22	7	1	13	100	0	1	0	0	**820**
1600 - 1700	1	579	171	1	30	4	1	7	119	0	0	0	0	**913**
1700 - 1800	1	527	162	0	11	3	0	11	117	0	1	0	0	**833**
1800 - 1900	2	390	129	5	13	2	0	6	103	0	0	0	0	**650**
1900 - 2000	0	332	113	1	10	0	0	2	68	0	0	0	0	**526**
2000 - 2100	0	275	48	2	5	1	0	1	79	0	1	0	0	**412**
2100 - 2200	1	221	43	0	3	2	0	0	63	0	6	0	0	**339**
2200 - 2300	1	114	16	1	1	0	0	0	35	0	0	0	0	**168**
2300 - 2400	0	67	13	0	0	0	0	0	22	0	2	0	0	**104**

Session Total	14	7097	2541	24	366	132	21	123	1886	16	49	0	0	**12269**
Session Average	0.58	295.71	105.88	1.00	15.25	5.50	0.88	5.13	78.58	0.67	2.04	0.00	0.00	**511.21**
Session Percentage	0.11	57.84	20.71	0.20	2.98	1.08	0.17	1.00	15.37	0.13	0.40	0.00	0.00	

AM Peak Hour	0800 - 0900	0700 - 0800	0800 - 0900	0600 - 0700	0800 - 0900	0600 - 0700	0700 - 0800	0800 - 0900	0800 - 0900	0800 - 0900	0500 - 0600	-	-	**0800 - 0900**
AM Peak Hour Volume	2	487	214	4	39	17	2	21	108	5	3	0	0	**823**

Noon Peak Hour	1000 - 1100	1400 - 1500	1400 - 1500	1300 - 1400	1400 - 1500	1300 - 1400	1300 - 1400	1000 - 1100	1000 - 1100	1100 - 1200	1300 - 1400	-	-	**1400 - 1500**
Noon Peak Hour Volume	2	431	173	3	39	17	5	12	128	3	1	0	0	**793**

PM Peak Hour	1500 - 1600	1600 - 1700	1500 - 1600	1800 - 1900	1600 - 1700	1500 - 1600	1500 - 1600	1500 - 1600	1600 - 1700	-	1500 - 1600	-	-	**1600 - 1700**
PM Peak Hour Volume	3	579	184	5	30	7	1	13	119	0	1	0	0	**913**

Site 75 Lane 2 NB

I-20,
north of Bush River Rd

Date

Wednesday, April 24, 2024

Lat/Long

34.034393°, -81.117736°

Weather

Fair
66°F

Click here for Detailed Weather

0000 - 2400 (Weekday 24h Session) (04-24-2024)

NB EB 60min

	Northbound (Movement 75 Lane 2 NB.1)													
TIME	1	2	3	4	5	6	7	8	9	10	11	12	13	**Total**
0000 - 0100	2	50	5	1	2	0	0	1	21	0	1	0	0	**83**
0100 - 0200	0	33	3	0	2	0	0	0	9	0	0	0	0	**47**
0200 - 0300	1	38	6	0	2	0	0	1	27	0	7	0	0	**82**
0300 - 0400	0	53	6	0	5	0	0	0	33	0	5	0	0	**102**
0400 - 0500	1	96	25	0	3	0	0	0	42	0	5	0	0	**172**
0500 - 0600	0	222	40	2	8	1	0	0	48	0	2	0	0	**323**
0600 - 0700	0	409	154	3	18	14	0	4	74	1	2	0	0	**679**
0700 - 0800	2	569	216	2	41	24	0	14	93	2	0	0	0	**963**
0800 - 0900	1	432	216	0	42	11	0	20	105	0	0	0	0	**827**
0900 - 1000	1	383	184	0	35	19	0	12	105	2	1	0	0	**742**
1000 - 1100	0	363	165	0	31	18	0	10	97	0	0	0	0	**684**
1100 - 1200	0	389	160	2	23	17	0	5	111	1	0	0	0	**708**
1200 - 1300	1	374	156	0	34	17	1	12	134	4	1	0	0	**734**
1300 - 1400	0	406	179	1	29	15	0	12	111	5	0	0	0	**758**
1400 - 1500	1	428	150	1	30	19	1	14	120	0	0	0	0	**764**
1500 - 1600	1	500	186	6	28	13	0	10	106	1	0	0	0	**851**
1600 - 1700	0	564	190	3	24	8	0	11	108	0	1	0	0	**909**
1700 - 1800	2	604	171	0	18	2	0	8	110	2	1	0	0	**918**
1800 - 1900	2	420	129	0	10	3	0	7	129	2	0	0	0	**702**
1900 - 2000	0	318	96	1	16	2	0	5	89	0	0	0	0	**527**
2000 - 2100	1	294	68	0	9	1	0	4	68	0	2	0	0	**447**
2100 - 2200	0	249	25	0	6	0	0	0	58	0	8	0	0	**346**
2200 - 2300	0	145	24	0	4	1	0	0	44	0	1	0	0	**219**
2300 - 2400	0	114	10	2	3	1	0	1	23	0	4	0	0	**158**

Session Total	16	7453	2564	24	423	186	2	151	1865	20	41	0	0	**12745**
Session Average	0.67	310.54	106.83	1.00	17.63	7.75	0.08	6.29	77.71	0.83	1.71	0.00	0.00	**531.04**
Session Percentage	0.13	58.48	20.12	0.19	3.32	1.46	0.02	1.18	14.63	0.16	0.32	0.00	0.00	

AM Peak Hour	0700 - 0800	0700 - 0800	0700 - 0800	0600 - 0700	0800 - 0900	0700 - 0800	-	0800 - 0900	0800 - 0900	0700 - 0800	0500 - 0600	-	-	**0700 - 0800**
AM Peak Hour Volume	2	569	216	3	42	24	0	20	105	2	2	0	0	**963**

Noon Peak Hour	1200 - 1300	1400 - 1500	1300 - 1400	1100 - 1200	1200 - 1300	1400 - 1500	1200 - 1300	1400 - 1500	1200 - 1300	1300 - 1400	1200 - 1300	-	-	**1400 - 1500**
Noon Peak Hour Volume	1	428	179	2	34	19	1	14	134	5	1	0	0	**764**

PM Peak Hour	1700 - 1800	1700 - 1800	1600 - 1700	1500 - 1600	1500 - 1600	1500 - 1600	-	1600 - 1700	1800 - 1900	1700 - 1800	1600 - 1700	-	-	**1700 - 1800**
PM Peak Hour Volume	2	604	190	6	28	13	0	11	129	2	1	0	0	**918**

Site 75 Lane 2 NB
I-20,
north of Bush River Rd

Date
Thursday, April 25, 2024

Lat/Long
34.034393°, -81.117736°

Weather
Fair
67°F

Click here for Detailed Weather

0000 - 2400 (Weekday 24h Session) (04-25-2024)
NB EB 60min

	Northbound (Movement 75 Lane 2 NB.1)													
TIME	1	2	3	4	5	6	7	8	9	10	11	12	13	**Total**
0000 - 0100	1	48	9	0	4	0	0	0	22	0	3	0	0	**87**
0100 - 0200	0	47	8	0	0	0	0	0	17	0	8	0	0	**80**
0200 - 0300	0	36	8	0	3	0	0	0	27	1	3	0	0	**78**
0300 - 0400	0	57	8	0	3	0	0	0	26	0	3	0	0	**97**
0400 - 0500	0	115	17	0	7	0	0	0	25	0	6	0	0	**170**
0500 - 0600	1	258	45	0	17	2	0	0	67	0	0	0	0	**390**
0600 - 0700	0	367	158	4	22	11	0	4	89	0	2	0	0	**657**
0700 - 0800	3	541	219	6	28	22	4	12	92	2	0	0	0	**929**
0800 - 0900	1	465	221	2	25	19	3	21	113	1	1	0	0	**872**
0900 - 1000	0	438	186	0	28	27	0	10	103	2	1	0	0	**795**
1000 - 1100	2	363	149	0	33	23	2	12	108	6	1	0	0	**699**
1100 - 1200	1	333	146	2	31	14	3	12	97	1	1	0	0	**641**
1200 - 1300	0	440	144	2	24	18	4	14	115	0	1	0	0	**762**
1300 - 1400	3	422	179	2	29	13	1	13	118	2	0	0	0	**782**
1400 - 1500	3	432	142	5	24	14	1	13	91	2	0	0	0	**727**
1500 - 1600	0	508	178	3	21	8	1	7	124	3	0	0	0	**853**
1600 - 1700	0	552	162	3	16	6	0	17	118	2	1	0	0	**877**
1700 - 1800	1	626	161	0	18	5	2	10	106	1	1	0	0	**931**
1800 - 1900	0	430	136	1	13	6	0	4	79	0	0	0	0	**669**
1900 - 2000	0	416	110	6	10	1	0	6	74	0	0	0	0	**623**
2000 - 2100	0	355	55	0	8	0	0	3	69	0	3	0	0	**493**
2100 - 2200	0	262	60	2	5	0	0	0	59	1	6	0	0	**395**
2200 - 2300	0	170	34	2	3	2	0	0	36	0	1	0	0	**248**
2300 - 2400	0	105	18	0	2	0	0	0	33	0	4	0	0	**162**

Session Total	16	7786	2553	40	374	191	21	158	1808	24	46	0	0	**13017**
Session Average	0.67	324.42	106.38	1.67	15.58	7.96	0.88	6.58	75.33	1.00	1.92	0.00	0.00	**542.38**
Session Percentage	0.12	59.81	19.61	0.31	2.87	1.47	0.16	1.21	13.89	0.18	0.35	0.00	0.00	

AM Peak Hour	0700 - 0800	0700 - 0800	0800 - 0900	0700 - 0800	0700 - 0800	0900 - 1000	0700 - 0800	0800 - 0900	0800 - 0900	0700 - 0800	0600 - 0700	-	-	**0700 - 0800**
AM Peak Hour Volume	3	541	221	6	28	27	4	21	113	2	2	0	0	**929**

Noon Peak Hour	1300 - 1400	1200 - 1300	1300 - 1400	1400 - 1500	1000 - 1100	1000 - 1100	1200 - 1300	1200 - 1300	1300 - 1400	1000 - 1100	1000 - 1100	-	-	**1300 - 1400**
Noon Peak Hour Volume	3	440	179	5	33	23	4	14	118	6	1	0	0	**782**

PM Peak Hour	1700 - 1800	1700 - 1800	1500 - 1600	1900 - 2000	1500 - 1600	1500 - 1600	1700 - 1800	1600 - 1700	1500 - 1600	1500 - 1600	1600 - 1700	-	-	**1700 - 1800**
PM Peak Hour Volume	1	626	178	6	21	8	2	17	124	3	1	0	0	**931**

Site 75 Lane 2 NB
I-20,
north of Bush River Rd

Date
Friday, April 26, 2024

Lat/Long
34.034393°, -81.117736°

Weather
Cloudy
69°F

Click here for Detailed Weather

0000 - 2400 (Weekday 24h Session) (04-26-2024)
NB EB 60min

	Northbound (Movement 75 Lane 2 NB.1)													
TIME	1	2	3	4	5	6	7	8	9	10	11	12	13	**Total**
0000 - 0100	0	81	10	0	1	0	0	0	23	0	4	0	0	**119**
0100 - 0200	0	56	4	2	2	1	0	0	18	0	8	0	0	**91**
0200 - 0300	0	56	4	0	3	0	0	0	28	0	5	0	0	**96**
0300 - 0400	0	70	8	0	7	1	0	0	36	0	3	0	0	**125**
0400 - 0500	0	107	12	0	6	3	0	0	29	0	5	0	0	**162**
0500 - 0600	0	214	31	0	12	6	0	0	41	0	3	0	0	**307**
0600 - 0700	0	364	116	9	18	16	0	3	86	2	4	0	0	**618**
0700 - 0800	1	566	223	2	31	13	2	12	96	1	2	0	0	**949**
0800 - 0900	1	504	216	6	28	13	0	14	91	2	0	0	0	**875**
0900 - 1000	1	397	211	1	27	6	3	11	84	2	0	0	0	**743**
1000 - 1100	4	480	169	0	13	3	3	11	88	3	0	0	0	**774**
1100 - 1200	1	495	174	0	30	11	0	7	96	3	0	0	0	**817**
1200 - 1300	2	516	190	3	18	8	1	14	88	0	1	0	0	**841**
1300 - 1400	3	543	184	1	30	15	2	7	92	0	1	0	0	**878**
1400 - 1500	1	540	160	2	27	7	0	14	92	1	0	0	0	**844**
1500 - 1600	4	664	193	4	23	8	0	14	90	5	0	0	0	**1005**
1600 - 1700	8	697	184	1	13	11	1	8	83	1	0	0	0	**1007**
1700 - 1800	4	667	165	1	17	4	0	7	73	1	0	0	0	**939**
1800 - 1900	5	515	142	0	10	3	1	9	69	0	2	0	0	**756**
1900 - 2000	3	459	131	0	6	2	0	4	44	0	0	0	0	**649**
2000 - 2100	3	396	99	1	7	4	0	1	47	0	0	0	0	**558**
2100 - 2200	0	319	54	0	5	5	0	1	38	0	3	0	0	**425**
2200 - 2300	0	231	49	0	4	0	0	1	30	0	2	0	0	**317**
2300 - 2400	1	176	42	2	5	1	0	0	16	0	5	0	0	**248**

Session Total	42	9113	2771	35	343	141	13	138	1478	21	48	0	0	**14143**
Session Average	1.75	379.71	115.46	1.46	14.29	5.88	0.54	5.75	61.58	0.88	2.00	0.00	0.00	**589.29**
Session Percentage	0.30	64.43	19.59	0.25	2.43	1.00	0.09	0.98	10.45	0.15	0.34	0.00	0.00	

AM Peak Hour	0700 - 0800	0700 - 0800	0700 - 0800	0600 - 0700	0700 - 0800	0600 - 0700	0900 - 1000	0800 - 0900	0700 - 0800	0600 - 0700	0600 - 0700	-	-	**0700 - 0800**
AM Peak Hour Volume	1	566	223	9	31	16	3	14	96	2	4	0	0	**949**

Noon Peak Hour	1000 - 1100	1300 - 1400	1200 - 1300	1200 - 1300	1100 - 1200	1300 - 1400	1000 - 1100	1200 - 1300	1100 - 1200	1000 - 1100	1200 - 1300	-	-	**1300 - 1400**
Noon Peak Hour Volume	4	543	190	3	30	15	3	14	96	3	1	0	0	**878**

PM Peak Hour	1600 - 1700	1600 - 1700	1500 - 1600	1500 - 1600	1500 - 1600	1600 - 1700	1600 - 1700	1500 - 1600	1500 - 1600	1500 - 1600	1800 - 1900	-	-	**1600 - 1700**
PM Peak Hour Volume	8	697	193	4	23	11	1	14	90	5	2	0	0	**1007**

Site 75 Lane 2 NB

I-20,
north of Bush River Rd

Date

Saturday, April 27, 2024

Lat/Long

34.034393°, -81.117736°

Weather

Mostly Cloudy
69°F

Click here for Detailed Weather

0000 - 2400 (Saturday 24h Session) (04-27-2024)

NB EB 60min

	Northbound (Movement 75 Lane 2 NB.1)													
TIME	1	2	3	4	5	6	7	8	9	10	11	12	13	**Total**
0000 - 0100	1	129	10	1	3	0	0	0	15	0	3	0	0	**162**
0100 - 0200	1	75	5	0	4	0	0	0	12	0	5	0	0	**102**
0200 - 0300	0	45	2	0	3	0	0	0	9	0	5	0	0	**64**
0300 - 0400	0	47	2	0	3	0	0	0	13	0	7	0	0	**72**
0400 - 0500	0	59	6	1	0	0	0	0	15	0	1	0	0	**82**
0500 - 0600	1	128	10	0	1	0	0	0	18	0	2	0	0	**160**
0600 - 0700	0	236	52	0	2	1	0	1	23	0	0	0	0	**315**
0700 - 0800	2	361	124	0	5	1	0	4	17	1	0	0	0	**515**
0800 - 0900	5	401	130	6	8	1	0	4	36	0	0	0	0	**591**
0900 - 1000	4	545	150	0	5	3	0	6	35	2	0	0	0	**750**
1000 - 1100	2	559	141	0	11	0	0	4	32	2	1	0	0	**752**
1100 - 1200	2	528	136	3	9	4	0	3	33	0	0	0	0	**718**
1200 - 1300	1	574	142	3	8	1	0	5	53	1	1	0	0	**789**
1300 - 1400	4	584	143	0	9	0	0	9	41	0	0	0	0	**790**
1400 - 1500	6	587	132	1	4	4	0	3	39	1	0	0	0	**777**
1500 - 1600	2	529	133	0	7	3	0	5	23	0	0	0	0	**702**
1600 - 1700	0	501	143	0	7	3	0	6	34	1	0	0	0	**695**
1700 - 1800	1	468	111	0	7	1	0	2	22	0	0	0	0	**612**
1800 - 1900	1	461	112	2	4	1	0	8	37	0	0	0	0	**626**
1900 - 2000	2	429	80	1	8	0	0	2	31	0	0	0	0	**553**
2000 - 2100	0	388	52	1	6	0	0	0	22	1	0	0	0	**470**
2100 - 2200	0	331	55	1	5	0	0	1	19	0	0	0	0	**412**
2200 - 2300	2	237	38	2	0	0	0	0	10	0	0	0	0	**289**
2300 - 2400	1	173	19	0	2	1	0	0	13	0	0	0	0	**209**

Session Total	38	8375	1928	22	121	24	0	63	602	9	25	0	0	**11207**
Session Average	1.58	348.96	80.33	0.92	5.04	1.00	0.00	2.63	25.08	0.38	1.04	0.00	0.00	**466.96**
Session Percentage	0.34	74.73	17.20	0.20	1.08	0.21	0.00	0.56	5.37	0.08	0.22	0.00	0.00	

AM Peak Hour	0800 - 0900	0900 - 1000	0900 - 1000	0800 - 0900	0800 - 0900	0900 - 1000	-	0900 - 1000	0800 - 0900	0900 - 1000	0500 - 0600	-	-	**0900 - 1000**
AM Peak Hour Volume	5	545	150	6	8	3	0	6	36	2	2	0	0	**750**

Noon Peak Hour	1400 - 1500	1400 - 1500	1300 - 1400	1100 - 1200	1000 - 1100	1100 - 1200	-	1300 - 1400	1200 - 1300	1000 - 1100	1000 - 1100	-	-	**1300 - 1400**
Noon Peak Hour Volume	6	587	143	3	11	4	0	9	53	2	1	0	0	**790**

PM Peak Hour	1500 - 1600	1500 - 1600	1600 - 1700	1800 - 1900	1900 - 2000	1500 - 1600	-	1800 - 1900	1800 - 1900	1600 - 1700	-	-	-	**1500 - 1600**
PM Peak Hour Volume	2	529	143	2	8	3	0	8	37	1	0	0	0	**702**

Bi-Directional Class Count || Volume Summary 60min

Columbia, SC

Marr Traffic DATA COLLECTION

www.marrtraffic.com

Site 75 Lane 2 NB

I-20,
north of Bush River Rd

Date

Sunday, April 21, 2024

Lat/Long

34.034393°, -81.117736°

Weather

Cloudy
66°F

Click here for Detailed Weather

0000 - 2400 (Sunday 24h Session) (04-21-2024)

Volume Summary 60min

	Volume Summary 60min		
TIME	NB	SB	**Total**
0000 - 0100	149	0	**149**
0100 - 0200	111	0	**111**
0200 - 0300	75	0	**75**
0300 - 0400	73	0	**73**
0400 - 0500	54	0	**54**
0500 - 0600	95	0	**95**
0600 - 0700	176	0	**176**
0700 - 0800	287	0	**287**
0800 - 0900	382	0	**382**
0900 - 1000	484	0	**484**
1000 - 1100	599	0	**599**
1100 - 1200	641	0	**641**

	Volume Summary 60min		
Time	NB	SB	**Total**
1200 - 1300	752	0	**752**
1300 - 1400	749	0	**749**
1400 - 1500	756	0	**756**
1500 - 1600	730	0	**730**
1600 - 1700	791	0	**791**
1700 - 1800	727	0	**727**
1800 - 1900	631	0	**631**
1900 - 2000	494	0	**494**
2000 - 2100	408	0	**408**
2100 - 2200	308	0	**308**
2200 - 2300	242	0	**242**
2300 - 2400	157	0	**157**

Session Total	9871	0	**9871**
Session Average	411.29	0.00	**411.29**
Session Percentage	100.00	0.00	

Site 75 Lane 2 NB

I-20,
north of Bush River Rd

Date

Monday, April 22, 2024

Lat/Long

34.034393°, -81.117736°

Weather

Mostly Cloudy
57°F

Click here for Detailed Weather

0000 - 2400 (Weekday 24h Session) (04-22-2024)

Volume Summary 60min

	Volume Summary 60min		
TIME	NB	SB	**Total**
0000 - 0100	101	0	**101**
0100 - 0200	111	0	**111**
0200 - 0300	93	0	**93**
0300 - 0400	112	0	**112**
0400 - 0500	165	0	**165**
0500 - 0600	381	0	**381**
0600 - 0700	654	0	**654**
0700 - 0800	969	0	**969**
0800 - 0900	909	0	**909**
0900 - 1000	781	0	**781**
1000 - 1100	698	0	**698**
1100 - 1200	675	0	**675**

Session Total	12706	0	**12706**
Session Average	529.42	0.00	**529.42**
Session Percentage	100.00	0.00	

	Volume Summary 60min		
Time	NB	SB	**Total**
1200 - 1300	721	0	**721**
1300 - 1400	685	0	**685**
1400 - 1500	794	0	**794**
1500 - 1600	839	0	**839**
1600 - 1700	965	0	**965**
1700 - 1800	850	0	**850**
1800 - 1900	613	0	**613**
1900 - 2000	518	0	**518**
2000 - 2100	380	0	**380**
2100 - 2200	325	0	**325**
2200 - 2300	216	0	**216**
2300 - 2400	151	0	**151**

Site 75 Lane 2 NB

I-20,
north of Bush River Rd

Date

Tuesday, April 23, 2024

Lat/Long

34.034393°, -81.117736°

Weather

Fair
58°F

Click here for Detailed Weather

0000 - 2400 (Weekday 24h Session) (04-23-2024)

Volume Summary 60min

	Volume Summary 60min		
TIME	NB	SB	**Total**
0000 - 0100	113	0	**113**
0100 - 0200	98	0	**98**
0200 - 0300	66	0	**66**
0300 - 0400	116	0	**116**
0400 - 0500	168	0	**168**
0500 - 0600	327	0	**327**
0600 - 0700	670	0	**670**
0700 - 0800	801	0	**801**
0800 - 0900	823	0	**823**
0900 - 1000	719	0	**719**
1000 - 1100	697	0	**697**
1100 - 1200	671	0	**671**

Session Total	12269	0	**12269**
Session Average	511.21	0.00	**511.21**
Session Percentage	100.00	0.00	

	Volume Summary 60min		
Time	NB	SB	**Total**
1200 - 1300	721	0	**721**
1300 - 1400	721	0	**721**
1400 - 1500	793	0	**793**
1500 - 1600	820	0	**820**
1600 - 1700	913	0	**913**
1700 - 1800	833	0	**833**
1800 - 1900	650	0	**650**
1900 - 2000	526	0	**526**
2000 - 2100	412	0	**412**
2100 - 2200	339	0	**339**
2200 - 2300	168	0	**168**
2300 - 2400	104	0	**104**

Site 75 Lane 2 NB

I-20,
north of Bush River Rd

Date

Wednesday, April 24, 2024

Lat/Long

34.034393°, -81.117736°

Weather

Fair
66°F

Click here for Detailed Weather

0000 - 2400 (Weekday 24h Session) (04-24-2024)

Volume Summary 60min

	Volume Summary 60min		
TIME	NB	SB	**Total**
0000 - 0100	83	0	**83**
0100 - 0200	47	0	**47**
0200 - 0300	82	0	**82**
0300 - 0400	102	0	**102**
0400 - 0500	172	0	**172**
0500 - 0600	323	0	**323**
0600 - 0700	679	0	**679**
0700 - 0800	963	0	**963**
0800 - 0900	827	0	**827**
0900 - 1000	742	0	**742**
1000 - 1100	684	0	**684**
1100 - 1200	708	0	**708**

Session Total	12745	0	**12745**
Session Average	531.04	0.00	**531.04**
Session Percentage	100.00	0.00	

	Volume Summary 60min		
Time	NB	SB	**Total**
1200 - 1300	734	0	**734**
1300 - 1400	758	0	**758**
1400 - 1500	764	0	**764**
1500 - 1600	851	0	**851**
1600 - 1700	909	0	**909**
1700 - 1800	918	0	**918**
1800 - 1900	702	0	**702**
1900 - 2000	527	0	**527**
2000 - 2100	447	0	**447**
2100 - 2200	346	0	**346**
2200 - 2300	219	0	**219**
2300 - 2400	158	0	**158**

Site 75 Lane 2 NB

I-20,
north of Bush River Rd

Date

Thursday, April 25, 2024

Lat/Long

34.034393°, -81.117736°

Weather

Fair
67°F

Click here for Detailed Weather

0000 - 2400 (Weekday 24h Session) (04-25-2024)

Volume Summary 60min

	Volume Summary 60min		
TIME	NB	SB	**Total**
0000 - 0100	87	0	**87**
0100 - 0200	80	0	**80**
0200 - 0300	78	0	**78**
0300 - 0400	97	0	**97**
0400 - 0500	170	0	**170**
0500 - 0600	390	0	**390**
0600 - 0700	657	0	**657**
0700 - 0800	929	0	**929**
0800 - 0900	872	0	**872**
0900 - 1000	795	0	**795**
1000 - 1100	699	0	**699**
1100 - 1200	641	0	**641**

Session Total	13017	0	**13017**
Session Average	542.38	0.00	**542.38**
Session Percentage	100.00	0.00	

	Volume Summary 60min		
Time	NB	SB	**Total**
1200 - 1300	762	0	**762**
1300 - 1400	782	0	**782**
1400 - 1500	727	0	**727**
1500 - 1600	853	0	**853**
1600 - 1700	877	0	**877**
1700 - 1800	931	0	**931**
1800 - 1900	669	0	**669**
1900 - 2000	623	0	**623**
2000 - 2100	493	0	**493**
2100 - 2200	395	0	**395**
2200 - 2300	248	0	**248**
2300 - 2400	162	0	**162**

Site 75 Lane 2 NB

I-20,
north of Bush River Rd

Date

Friday, April 26, 2024

Lat/Long

34.034393°, -81.117736°

Weather

Cloudy
69°F

Click here for Detailed Weather

0000 - 2400 (Weekday 24h Session) (04-26-2024)

Volume Summary 60min

	Volume Summary 60min		
TIME	NB	SB	**Total**
0000 - 0100	119	0	**119**
0100 - 0200	91	0	**91**
0200 - 0300	96	0	**96**
0300 - 0400	125	0	**125**
0400 - 0500	162	0	**162**
0500 - 0600	307	0	**307**
0600 - 0700	618	0	**618**
0700 - 0800	949	0	**949**
0800 - 0900	875	0	**875**
0900 - 1000	743	0	**743**
1000 - 1100	774	0	**774**
1100 - 1200	817	0	**817**
Session Total	14143	0	**14143**
Session Average	589.29	0.00	**589.29**
Session Percentage	100.00	0.00	

	Volume Summary 60min		
Time	NB	SB	**Total**
1200 - 1300	841	0	**841**
1300 - 1400	878	0	**878**
1400 - 1500	844	0	**844**
1500 - 1600	1005	0	**1005**
1600 - 1700	1007	0	**1007**
1700 - 1800	939	0	**939**
1800 - 1900	756	0	**756**
1900 - 2000	649	0	**649**
2000 - 2100	558	0	**558**
2100 - 2200	425	0	**425**
2200 - 2300	317	0	**317**
2300 - 2400	248	0	**248**

Site 75 Lane 2 NB

I-20,
north of Bush River Rd

Date

Saturday, April 27, 2024

Lat/Long

34.034393°, -81.117736°

Weather

Mostly Cloudy
69°F

Click here for Detailed Weather

0000 - 2400 (Saturday 24h Session) (04-27-2024)

Volume Summary 60min

	Volume Summary 60min		
TIME	NB	SB	**Total**
0000 - 0100	162	0	**162**
0100 - 0200	102	0	**102**
0200 - 0300	64	0	**64**
0300 - 0400	72	0	**72**
0400 - 0500	82	0	**82**
0500 - 0600	160	0	**160**
0600 - 0700	315	0	**315**
0700 - 0800	515	0	**515**
0800 - 0900	591	0	**591**
0900 - 1000	750	0	**750**
1000 - 1100	752	0	**752**
1100 - 1200	718	0	**718**

	Volume Summary 60min		
Time	NB	SB	**Total**
1200 - 1300	789	0	**789**
1300 - 1400	790	0	**790**
1400 - 1500	777	0	**777**
1500 - 1600	702	0	**702**
1600 - 1700	695	0	**695**
1700 - 1800	612	0	**612**
1800 - 1900	626	0	**626**
1900 - 2000	553	0	**553**
2000 - 2100	470	0	**470**
2100 - 2200	412	0	**412**
2200 - 2300	289	0	**289**
2300 - 2400	209	0	**209**

Session Total	11207	0	**11207**
Session Average	466.96	0.00	**466.96**
Session Percentage	100.00	0.00	

Bi-Directional Class Count || Graphical Analysis NB EB

Columbia, SC

Marr Traffic DATA COLLECTION

www.marrtraffic.com

Site 75 Lane 2 NB

I-20,
north of Bush River Rd

Lat/Long

34.034393°, -81.117736°

0000 - 2400 (Weekday 24h Session)

Graphical Analysis NB EB

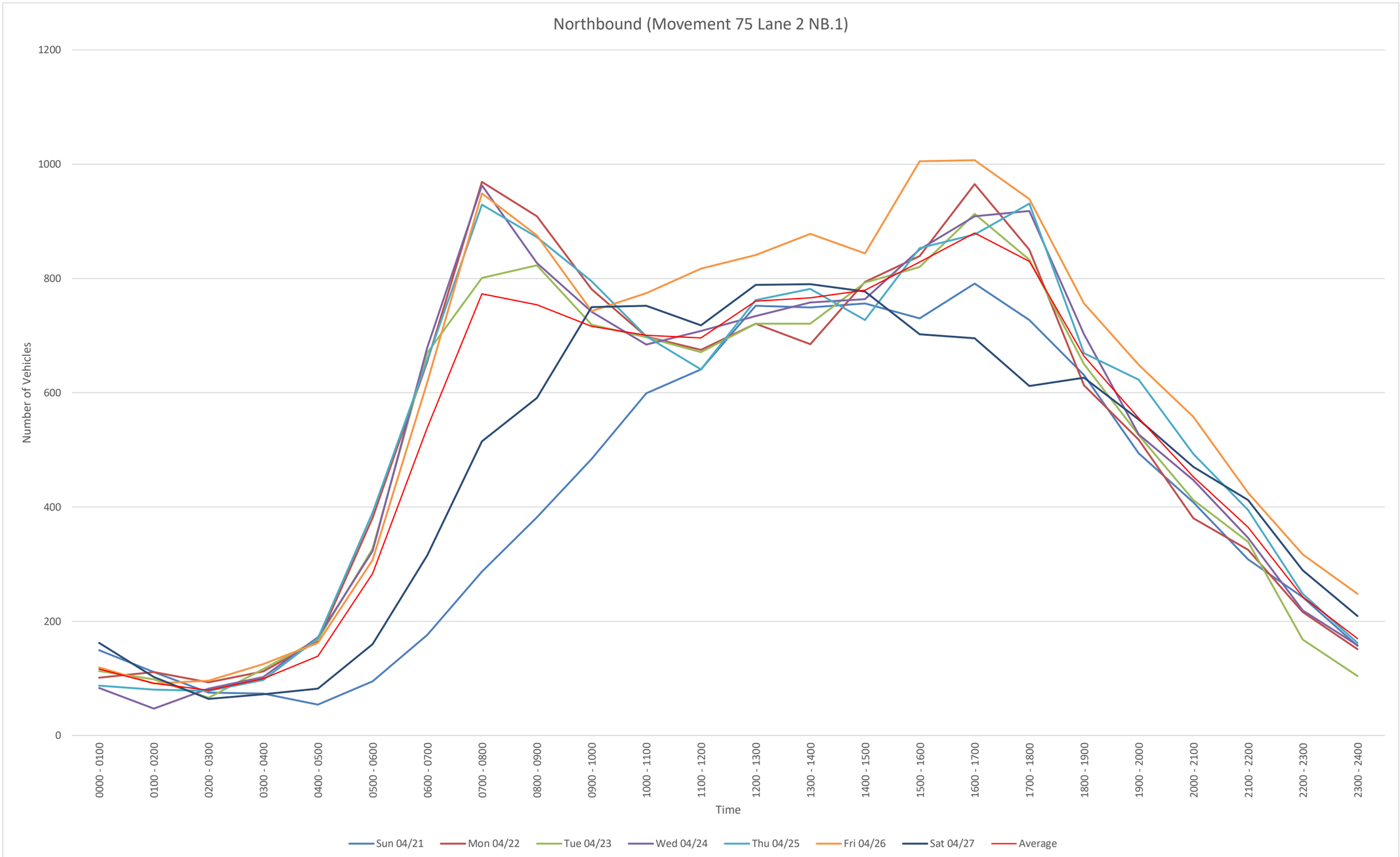

NB
File Name:
Start Date: 4/21/2024
Start Time: 0
Site Code: 75 Lane 2 NB
Station ID: 1
Location 1: I-20, north of Bush River Rd
Location 2:

Date	Time	1	2	3	4	5	6	7	8	9	10	11	12	13
4/21/2024	12:00 AM	0	35	5	0	1	0	0	0	4	0	0	0	0
4/21/2024	12:15 AM	0	35	2	0	1	0	0	0	1	0	0	0	0
4/21/2024	12:30 AM	0	30	0	0	0	0	0	0	1	0	0	0	0
4/21/2024	12:45 AM	0	26	2	0	0	0	0	0	5	0	1	0	0
4/21/2024	1:00 AM	0	31	2	0	0	0	0	0	1	0	0	0	0
4/21/2024	1:15 AM	0	24	2	0	0	0	0	0	4	0	1	0	0
4/21/2024	1:30 AM	0	20	2	0	1	0	0	0	1	0	0	0	0
4/21/2024	1:45 AM	0	17	3	0	1	0	0	0	1	0	0	0	0
4/21/2024	2:00 AM	0	24	4	0	0	0	0	1	0	0	0	0	0
4/21/2024	2:15 AM	0	13	2	0	0	0	0	0	2	0	0	0	0
4/21/2024	2:30 AM	0	13	0	1	0	0	0	0	2	0	0	0	0
4/21/2024	2:45 AM	0	12	1	0	0	0	0	0	0	0	0	0	0
4/21/2024	3:00 AM	0	17	0	0	1	0	0	0	2	0	0	0	0
4/21/2024	3:15 AM	0	18	1	0	0	0	0	0	6	0	0	0	0
4/21/2024	3:30 AM	0	11	1	0	0	0	0	0	2	0	0	0	0
4/21/2024	3:45 AM	0	12	0	0	0	0	0	0	2	0	0	0	0
4/21/2024	4:00 AM	0	12	0	0	3	0	0	0	0	0	0	0	0
4/21/2024	4:15 AM	0	16	0	0	0	0	0	0	1	0	0	0	0
4/21/2024	4:30 AM	0	10	2	0	0	0	0	0	1	0	0	0	0
4/21/2024	4:45 AM	0	8	0	0	0	1	0	0	0	0	0	0	0
4/21/2024	5:00 AM	0	16	4	0	0	0	0	1	3	0	0	0	0
4/21/2024	5:15 AM	0	18	2	0	0	0	0	0	2	0	0	0	0
4/21/2024	5:30 AM	0	22	1	0	2	0	0	0	2	0	0	0	0
4/21/2024	5:45 AM	0	20	1	0	0	0	0	0	1	0	0	0	0
4/21/2024	6:00 AM	0	21	3	0	1	0	0	0	6	0	0	0	0
4/21/2024	6:15 AM	0	32	7	0	0	0	0	0	2	0	0	0	0
4/21/2024	6:30 AM	0	34	12	0	0	0	0	0	2	0	0	0	0
4/21/2024	6:45 AM	0	43	6	0	0	0	0	1	6	0	0	0	0
4/21/2024	7:00 AM	0	48	8	0	2	0	0	1	1	0	0	0	0
4/21/2024	7:15 AM	0	56	14	0	0	0	0	0	3	0	0	0	0
4/21/2024	7:30 AM	0	52	13	0	2	0	0	0	3	0	0	0	0
4/21/2024	7:45 AM	0	67	12	0	0	0	0	0	5	0	0	0	0
4/21/2024	8:00 AM	0	60	14	1	0	0	0	0	4	0	0	0	0
4/21/2024	8:15 AM	1	66	14	0	0	0	0	0	7	0	0	0	0
4/21/2024	8:30 AM	0	71	28	0	0	0	0	3	3	0	0	0	0
4/21/2024	8:45 AM	0	82	22	0	1	0	0	0	4	1	0	0	0
4/21/2024	9:00 AM	0	84	18	0	2	0	0	3	9	0	0	0	0
4/21/2024	9:15 AM	0	82	16	0	0	0	0	1	4	0	0	0	0
4/21/2024	9:30 AM	0	79	18	0	1	0	0	0	6	0	0	0	0
4/21/2024	9:45 AM	0	121	29	0	0	0	0	2	9	0	0	0	0
4/21/2024	10:00 AM	0	126	29	0	0	0	0	1	4	0	0	0	0
4/21/2024	10:15 AM	0	117	20	0	0	0	0	1	13	0	0	0	0
4/21/2024	10:30 AM	0	108	14	0	1	0	0	0	10	0	0	0	0
4/21/2024	10:45 AM	0	106	40	1	0	0	0	1	7	0	0	0	0
4/21/2024	11:00 AM	1	110	24	0	2	0	0	0	7	0	0	0	0
4/21/2024	11:15 AM	0	122	32	0	1	0	0	1	9	0	0	0	0
4/21/2024	11:30 AM	0	134	31	0	3	1	0	2	10	0	0	0	0
4/21/2024	11:45 AM	0	108	38	0	2	0	0	0	3	0	0	0	0
4/21/2024	12:00 PM	1	132	30	0	2	0	0	1	14	1	0	0	0
4/21/2024	12:15 PM	0	154	27	2	1	0	0	1	7	0	0	0	0
4/21/2024	12:30 PM	0	148	34	0	2	1	0	1	15	0	0	0	0
4/21/2024	12:45 PM	0	138	28	2	2	0	0	2	6	0	0	0	0
4/21/2024	1:00 PM	0	159	30	0	3	0	0	0	4	1	0	0	0
4/21/2024	1:15 PM	0	127	28	0	0	0	0	2	11	0	0	0	0
4/21/2024	1:30 PM	1	159	23	1	4	0	0	1	8	1	0	0	0
4/21/2024	1:45 PM	0	142	31	0	1	1	0	0	11	0	0	0	0
4/21/2024	2:00 PM	0	163	32	0	1	0	0	1	15	1	0	0	0
4/21/2024	2:15 PM	0	134	39	1	3	0	0	1	4	0	0	0	0
4/21/2024	2:30 PM	0	143	34	1	1	0	0	0	9	0	0	0	0
4/21/2024	2:45 PM	0	143	19	1	1	0	0	1	8	0	0	0	0
4/21/2024	3:00 PM	1	133	26	0	4	0	0	1	12	0	0	0	0
4/21/2024	3:15 PM	0	139	39	0	1	0	0	1	9	0	0	0	0
4/21/2024	3:30 PM	0	139	36	0	1	0	0	2	9	0	0	0	0
4/21/2024	3:45 PM	0	141	24	0	0	0	0	2	10	0	0	0	0
4/21/2024	4:00 PM	1	147	33	0	3	0	0	1	19	0	0	0	0
4/21/2024	4:15 PM	1	122	36	0	1	2	0	1	14	0	1	0	0
4/21/2024	4:30 PM	0	148	31	0	1	1	0	4	15	0	0	0	0
4/21/2024	4:45 PM	0	162	22	1	5	1	0	2	14	2	0	0	0
4/21/2024	5:00 PM	0	151	34	0	3	0	0	3	10	1	0	0	0
4/21/2024	5:15 PM	0	141	24	3	2	0	0	0	7	1	0	0	0
4/21/2024	5:30 PM	0	135	25	0	1	0	0	2	16	1	0	0	0
4/21/2024	5:45 PM	3	132	21	0	2	0	0	2	7	0	0	0	0
4/21/2024	6:00 PM	0	118	35	0	2	0	0	0	15	0	0	0	0
4/21/2024	6:15 PM	0	107	28	0	1	1	0	2	14	1	0	0	0
4/21/2024	6:30 PM	0	102	33	0	1	1	0	0	12	0	0	0	0
4/21/2024	6:45 PM	0	125	24	0	2	0	0	0	7	0	0	0	0
4/21/2024	7:00 PM	0	93	31	0	1	0	0	0	17	0	0	0	0
4/21/2024	7:15 PM	0	109	15	0	1	1	0	1	9	0	0	0	0
4/21/2024	7:30 PM	0	79	19	0	0	0	0	2	9	0	0	0	0
4/21/2024	7:45 PM	0	75	15	1	1	0	0	1	14	0	0	0	0
4/21/2024	8:00 PM	0	82	15	0	2	0	0	3	11	0	0	0	0
4/21/2024	8:15 PM	0	80	16	0	3	0	0	1	9	0	0	0	0
4/21/2024	8:30 PM	0	69	19	0	2	0	0	2	7	0	0	0	0
4/21/2024	8:45 PM	0	65	7	0	0	0	0	1	14	0	0	0	0
4/21/2024	9:00 PM	0	62	11	3	0	0	0	0	8	0	0	0	0
4/21/2024	9:15 PM	0	70	4	0	2	0	0	0	11	0	0	0	0
4/21/2024	9:30 PM	0	55	6	0	0	0	0	0	8	0	0	0	0
4/21/2024	9:45 PM	0	55	2	0	0	0	0	0	11	0	0	0	0
4/21/2024	10:00 PM	0	43	9	0	0	0	0	0	6	0	0	0	0
4/21/2024	10:15 PM	0	47	10	0	0	0	0	0	10	0	1	0	0
4/21/2024	10:30 PM	0	36	10	0	0	0	0	0	13	0	0	0	0
4/21/2024	10:45 PM	0	48	6	0	2	0	0	0	1	0	0	0	0
4/21/2024	11:00 PM	0	30	5	0	1	0	0	1	10	0	1	0	0
4/21/2024	11:15 PM	0	31	2	0	0	0	0	1	6	0	0	0	0
4/21/2024	11:30 PM	0	22	2	0	1	0	0	0	7	0	0	0	0
4/21/2024	11:45 PM	0	27	1	0	0	0	0	1	8	0	0	0	0

4/22/2024	12:00 AM	0	19	2	0	1	0	0	0	7	0	0	0	0
4/22/2024	12:15 AM	0	17	1	0	0	0	0	1	4	0	0	0	0
4/22/2024	12:30 AM	0	14	2	0	1	0	0	0	6	0	2	0	0
4/22/2024	12:45 AM	0	16	2	0	0	0	0	0	6	0	0	0	0
4/22/2024	1:00 AM	0	12	2	0	0	0	0	0	7	0	1	0	0
4/22/2024	1:15 AM	0	16	3	0	1	0	0	0	7	0	0	0	0
4/22/2024	1:30 AM	0	18	3	0	2	0	0	0	9	0	1	0	0
4/22/2024	1:45 AM	0	17	3	0	0	0	0	0	9	0	0	0	0
4/22/2024	2:00 AM	0	12	2	0	0	0	0	0	13	0	1	0	0
4/22/2024	2:15 AM	0	13	3	0	0	0	0	0	6	0	1	0	0
4/22/2024	2:30 AM	0	10	3	0	1	0	0	0	12	0	0	0	0
4/22/2024	2:45 AM	0	6	2	0	0	0	0	0	8	0	0	0	0
4/22/2024	3:00 AM	1	8	1	0	2	0	0	0	9	0	0	0	0
4/22/2024	3:15 AM	0	13	3	0	3	0	0	0	7	0	1	0	0
4/22/2024	3:30 AM	0	17	3	0	1	0	0	0	10	0	1	0	0
4/22/2024	3:45 AM	0	16	2	0	0	0	0	0	13	0	1	0	0
4/22/2024	4:00 AM	0	22	4	0	0	0	0	0	5	1	0	0	0
4/22/2024	4:15 AM	0	23	2	0	2	0	0	0	8	0	0	0	0
4/22/2024	4:30 AM	0	33	5	0	1	0	0	0	6	0	0	0	0
4/22/2024	4:45 AM	0	31	9	0	0	1	0	0	12	0	0	0	0
4/22/2024	5:00 AM	0	42	6	0	2	2	0	2	13	0	3	0	0
4/22/2024	5:15 AM	0	64	11	0	2	1	0	1	14	0	1	0	0
4/22/2024	5:30 AM	0	92	15	0	1	1	0	0	12	0	0	0	0
4/22/2024	5:45 AM	0	70	14	0	0	0	0	0	11	0	1	0	0
4/22/2024	6:00 AM	0	86	15	0	3	0	1	1	16	0	0	0	0
4/22/2024	6:15 AM	0	94	28	0	4	2	0	0	15	0	0	0	0
4/22/2024	6:30 AM	0	108	50	2	7	2	0	0	14	0	0	0	0
4/22/2024	6:45 AM	0	111	54	0	7	14	0	3	16	1	0	0	0
4/22/2024	7:00 AM	0	134	68	1	4	3	0	1	16	0	0	0	0
4/22/2024	7:15 AM	0	135	58	0	10	7	0	0	16	0	0	0	0
4/22/2024	7:30 AM	2	159	59	0	12	6	3	3	21	0	0	0	0
4/22/2024	7:45 AM	0	147	54	0	12	4	2	2	30	0	0	0	0
4/22/2024	8:00 AM	0	145	70	0	8	2	0	5	22	0	1	0	0
4/22/2024	8:15 AM	1	122	61	0	8	6	3	1	20	1	0	0	0
4/22/2024	8:30 AM	0	120	57	0	7	8	1	4	23	0	0	0	0
4/22/2024	8:45 AM	0	120	59	0	11	2	0	4	15	2	0	0	0
4/22/2024	9:00 AM	0	122	61	0	6	2	0	1	25	0	0	0	0
4/22/2024	9:15 AM	0	101	52	0	4	2	0	2	24	0	0	0	0
4/22/2024	9:30 AM	0	119	50	0	6	3	1	3	18	0	0	0	0
4/22/2024	9:45 AM	0	102	39	0	6	3	1	3	25	0	0	0	0
4/22/2024	10:00 AM	0	84	52	0	4	4	4	3	29	0	0	0	0
4/22/2024	10:15 AM	1	90	42	0	6	3	2	3	24	2	0	0	0
4/22/2024	10:30 AM	0	97	28	0	6	6	2	4	25	3	0	0	0
4/22/2024	10:45 AM	3	96	37	0	7	1	1	2	25	2	0	0	0
4/22/2024	11:00 AM	0	90	32	0	4	1	1	5	33	1	0	0	0
4/22/2024	11:15 AM	0	95	47	0	7	2	1	2	24	1	0	0	0
4/22/2024	11:30 AM	1	106	30	0	6	4	2	3	17	0	0	0	0
4/22/2024	11:45 AM	0	86	42	1	6	1	0	0	24	0	0	0	0
4/22/2024	12:00 PM	0	108	37	0	5	4	4	2	16	2	0	0	0
4/22/2024	12:15 PM	0	97	37	0	3	2	0	8	17	0	0	0	0
4/22/2024	12:30 PM	0	101	49	0	6	2	1	5	16	1	0	0	0
4/22/2024	12:45 PM	1	103	47	0	9	5	2	3	28	0	0	0	0
4/22/2024	1:00 PM	0	105	40	0	6	1	1	1	12	0	0	0	0
4/22/2024	1:15 PM	0	86	52	0	6	4	2	3	20	0	0	0	0
4/22/2024	1:30 PM	0	90	38	0	11	4	1	3	21	0	0	0	0
4/22/2024	1:45 PM	0	103	37	0	6	10	0	1	21	0	0	0	0
4/22/2024	2:00 PM	0	111	35	0	6	3	1	4	24	2	0	0	0
4/22/2024	2:15 PM	0	122	38	0	9	2	0	4	29	0	0	0	0
4/22/2024	2:30 PM	1	134	36	0	9	2	0	4	15	0	0	0	0
4/22/2024	2:45 PM	0	132	40	0	4	7	0	4	16	0	0	0	0
4/22/2024	3:00 PM	1	115	46	2	5	2	0	3	26	0	0	0	0
4/22/2024	3:15 PM	0	118	41	0	5	4	0	3	37	1	0	0	0
4/22/2024	3:30 PM	0	123	42	0	5	5	0	9	28	0	0	0	0
4/22/2024	3:45 PM	4	127	42	1	6	2	0	6	29	1	0	0	0
4/22/2024	4:00 PM	0	146	42	1	4	0	0	3	48	1	0	0	0
4/22/2024	4:15 PM	0	139	44	0	3	4	0	1	39	0	2	0	0
4/22/2024	4:30 PM	0	135	53	0	7	3	0	4	39	0	0	0	0
4/22/2024	4:45 PM	1	136	60	0	6	4	0	5	35	0	0	0	0
4/22/2024	5:00 PM	0	160	39	0	6	3	0	3	26	1	0	0	0
4/22/2024	5:15 PM	1	142	27	1	1	0	0	1	20	0	0	0	0
4/22/2024	5:30 PM	0	143	39	0	3	2	0	2	33	0	0	0	0
4/22/2024	5:45 PM	0	125	25	1	4	0	0	1	41	0	0	0	0
4/22/2024	6:00 PM	0	114	25	0	3	0	0	0	23	0	0	0	0
4/22/2024	6:15 PM	0	103	33	0	2	0	0	1	27	0	0	0	0
4/22/2024	6:30 PM	1	88	31	0	2	0	0	2	20	0	0	0	0
4/22/2024	6:45 PM	0	87	20	0	2	0	0	1	28	0	0	0	0
4/22/2024	7:00 PM	0	90	19	0	4	0	0	0	17	0	0	0	0
4/22/2024	7:15 PM	0	78	31	0	1	0	0	0	21	0	0	0	0
4/22/2024	7:30 PM	0	97	21	0	1	0	0	0	25	1	0	0	0
4/22/2024	7:45 PM	0	67	26	1	3	1	0	2	12	0	0	0	0
4/22/2024	8:00 PM	0	55	16	0	1	0	0	2	21	0	0	0	0
4/22/2024	8:15 PM	0	54	14	0	0	2	0	0	23	0	0	0	0
4/22/2024	8:30 PM	1	65	10	0	2	0	0	1	23	0	0	0	0
4/22/2024	8:45 PM	0	51	14	0	1	0	0	0	22	0	2	0	0
4/22/2024	9:00 PM	0	60	9	0	0	0	0	0	14	0	0	0	0
4/22/2024	9:15 PM	0	64	8	0	0	0	0	1	12	0	2	0	0
4/22/2024	9:30 PM	0	60	4	0	3	0	0	0	18	0	4	0	0
4/22/2024	9:45 PM	0	41	10	0	0	0	0	1	13	0	1	0	0
4/22/2024	10:00 PM	0	45	5	0	1	0	0	0	14	0	0	0	0
4/22/2024	10:15 PM	0	40	5	0	0	0	0	0	16	0	0	0	0
4/22/2024	10:30 PM	0	31	5	0	1	0	0	0	8	0	0	0	0
4/22/2024	10:45 PM	0	30	2	1	1	0	0	0	9	0	2	0	0
4/22/2024	11:00 PM	0	31	3	0	1	0	0	0	11	0	2	0	0
4/22/2024	11:15 PM	0	29	7	0	0	0	0	0	7	0	2	0	0
4/22/2024	11:30 PM	0	17	2	1	1	0	0	0	7	0	0	0	0
4/22/2024	11:45 PM	0	18	4	0	1	0	0	0	7	0	0	0	0

4/23/2024	12:00 AM	1	19	2	1	1	0	0	0	4	0	0	0	0
4/23/2024	12:15 AM	0	9	7	0	0	0	0	1	13	0	0	0	0
4/23/2024	12:30 AM	0	10	2	0	0	0	0	1	10	0	3	0	0
4/23/2024	12:45 AM	0	18	2	0	1	0	0	0	8	0	0	0	0
4/23/2024	1:00 AM	0	9	1	0	3	1	0	0	6	0	4	0	0
4/23/2024	1:15 AM	0	23	3	0	1	0	0	0	8	0	3	0	0
4/23/2024	1:30 AM	0	8	2	0	0	0	0	0	6	0	0	0	0
4/23/2024	1:45 AM	0	11	2	0	0	0	0	1	5	0	1	0	0
4/23/2024	2:00 AM	0	9	1	0	0	0	0	0	8	0	3	0	0
4/23/2024	2:15 AM	0	7	0	0	0	0	0	0	8	0	1	0	0
4/23/2024	2:30 AM	0	7	1	0	0	0	0	0	3	0	4	0	0
4/23/2024	2:45 AM	0	9	1	0	1	0	0	0	1	0	2	0	0
4/23/2024	3:00 AM	0	15	2	0	0	0	0	0	10	0	1	0	0
4/23/2024	3:15 AM	0	18	1	0	0	0	0	0	6	0	2	0	0
4/23/2024	3:30 AM	0	8	2	0	0	0	0	0	7	0	2	0	0
4/23/2024	3:45 AM	0	25	3	0	0	0	0	0	13	0	1	0	0
4/23/2024	4:00 AM	0	19	3	0	0	0	0	0	7	0	2	0	0
4/23/2024	4:15 AM	0	22	5	0	2	0	0	0	7	0	0	0	0
4/23/2024	4:30 AM	0	29	3	0	3	0	0	1	13	0	1	0	0
4/23/2024	4:45 AM	0	30	4	0	1	0	0	0	15	0	1	0	0
4/23/2024	5:00 AM	0	28	6	1	1	0	0	0	17	0	1	0	0
4/23/2024	5:15 AM	0	40	12	0	2	1	0	0	14	0	1	0	0
4/23/2024	5:30 AM	0	58	20	0	1	0	0	0	14	0	1	0	0
4/23/2024	5:45 AM	0	63	21	0	1	1	0	0	23	0	0	0	0
4/23/2024	6:00 AM	0	77	23	2	2	3	0	0	19	0	0	0	0
4/23/2024	6:15 AM	0	79	35	2	3	2	0	0	15	0	2	0	0
4/23/2024	6:30 AM	0	110	44	0	7	8	0	1	27	0	1	0	0
4/23/2024	6:45 AM	0	107	63	0	8	4	0	2	24	0	0	0	0
4/23/2024	7:00 AM	0	104	65	0	8	0	0	1	22	0	0	0	0
4/23/2024	7:15 AM	0	128	60	0	4	1	0	4	24	0	0	0	0
4/23/2024	7:30 AM	0	92	24	0	3	2	0	2	12	0	0	0	0
4/23/2024	7:45 AM	0	163	52	0	6	1	2	2	18	1	0	0	0
4/23/2024	8:00 AM	1	129	55	0	6	1	0	3	24	2	0	0	0
4/23/2024	8:15 AM	0	95	46	0	17	5	1	10	29	1	0	0	0
4/23/2024	8:30 AM	0	87	58	0	8	6	1	5	29	0	0	0	0
4/23/2024	8:45 AM	1	106	55	0	8	3	0	3	26	2	0	0	0
4/23/2024	9:00 AM	0	106	49	0	9	3	1	2	15	0	0	0	0
4/23/2024	9:15 AM	0	97	55	0	3	0	0	3	29	0	0	0	0
4/23/2024	9:30 AM	0	94	43	0	9	4	0	4	27	1	0	0	0
4/23/2024	9:45 AM	0	95	31	0	5	1	1	4	28	0	0	0	0
4/23/2024	10:00 AM	1	87	46	0	7	2	0	4	30	1	0	0	0
4/23/2024	10:15 AM	0	79	39	0	11	2	0	6	36	0	0	0	0
4/23/2024	10:30 AM	1	88	45	0	4	5	1	0	29	0	0	0	0
4/23/2024	10:45 AM	0	87	40	0	7	3	0	2	33	1	0	0	0
4/23/2024	11:00 AM	0	88	40	0	5	3	0	1	27	1	0	0	0
4/23/2024	11:15 AM	0	77	45	0	12	3	1	1	25	2	0	0	0
4/23/2024	11:30 AM	0	86	39	1	9	3	1	1	33	0	0	0	0
4/23/2024	11:45 AM	0	87	41	0	4	5	0	0	30	0	0	0	0
4/23/2024	12:00 PM	0	107	31	1	4	3	0	0	35	2	0	0	0
4/23/2024	12:15 PM	0	101	37	0	8	4	1	0	29	1	0	0	0
4/23/2024	12:30 PM	0	108	37	0	7	5	0	1	26	0	0	0	0
4/23/2024	12:45 PM	0	95	33	0	7	2	0	0	36	0	0	0	0
4/23/2024	1:00 PM	0	97	41	0	5	1	1	0	26	0	1	0	0
4/23/2024	1:15 PM	0	108	46	2	5	9	3	3	23	0	0	0	0
4/23/2024	1:30 PM	0	113	29	1	4	5	1	1	21	1	0	0	0
4/23/2024	1:45 PM	0	101	36	0	9	2	0	1	25	0	0	0	0
4/23/2024	2:00 PM	0	99	48	0	6	5	1	5	31	0	0	0	0
4/23/2024	2:15 PM	0	108	42	1	11	1	3	3	25	0	0	0	0
4/23/2024	2:30 PM	0	129	38	0	9	1	0	2	27	0	0	0	0
4/23/2024	2:45 PM	0	95	45	2	13	2	0	2	39	0	0	0	0
4/23/2024	3:00 PM	0	110	46	0	6	2	1	6	22	0	0	0	0
4/23/2024	3:15 PM	0	121	44	0	8	1	0	4	24	0	0	0	0
4/23/2024	3:30 PM	0	138	37	0	5	3	0	1	26	0	0	0	0
4/23/2024	3:45 PM	3	120	57	0	3	1	0	2	28	0	1	0	0
4/23/2024	4:00 PM	0	132	37	0	10	0	1	3	30	0	0	0	0
4/23/2024	4:15 PM	0	148	46	0	8	1	0	0	32	0	0	0	0
4/23/2024	4:30 PM	1	152	43	1	7	3	0	2	31	0	0	0	0
4/23/2024	4:45 PM	0	147	45	0	5	0	0	2	26	0	0	0	0
4/23/2024	5:00 PM	0	135	40	0	3	1	0	1	39	0	0	0	0
4/23/2024	5:15 PM	1	135	40	0	3	0	0	2	27	0	1	0	0
4/23/2024	5:30 PM	0	139	39	0	2	1	0	8	30	0	0	0	0
4/23/2024	5:45 PM	0	118	43	0	3	1	0	0	21	0	0	0	0
4/23/2024	6:00 PM	0	102	26	5	2	0	0	0	27	0	0	0	0
4/23/2024	6:15 PM	0	109	27	0	6	1	0	2	21	0	0	0	0
4/23/2024	6:30 PM	2	97	36	0	2	1	0	0	30	0	0	0	0
4/23/2024	6:45 PM	0	82	40	0	3	0	0	4	25	0	0	0	0
4/23/2024	7:00 PM	0	96	25	0	2	0	0	1	14	0	0	0	0
4/23/2024	7:15 PM	0	85	35	0	5	0	0	0	20	0	0	0	0
4/23/2024	7:30 PM	0	86	21	0	2	0	0	0	13	0	0	0	0
4/23/2024	7:45 PM	0	65	32	1	1	0	0	1	21	0	0	0	0
4/23/2024	8:00 PM	0	66	17	1	2	1	0	0	18	0	0	0	0
4/23/2024	8:15 PM	0	79	15	1	0	0	0	1	25	0	0	0	0
4/23/2024	8:30 PM	0	68	9	0	3	0	0	0	19	0	0	0	0
4/23/2024	8:45 PM	0	62	7	0	0	0	0	0	17	0	1	0	0
4/23/2024	9:00 PM	0	60	11	0	1	1	0	0	20	0	0	0	0
4/23/2024	9:15 PM	0	56	11	0	2	0	0	0	13	0	1	0	0
4/23/2024	9:30 PM	0	58	11	0	0	0	0	0	17	0	4	0	0
4/23/2024	9:45 PM	1	47	10	0	0	1	0	0	13	0	1	0	0
4/23/2024	10:00 PM	1	23	7	0	0	0	0	0	10	0	0	0	0
4/23/2024	10:15 PM	0	31	3	0	0	0	0	0	6	0	0	0	0
4/23/2024	10:30 PM	0	37	3	1	1	0	0	0	10	0	0	0	0
4/23/2024	10:45 PM	0	23	3	0	0	0	0	0	9	0	0	0	0
4/23/2024	11:00 PM	0	15	3	0	0	0	0	0	4	0	0	0	0
4/23/2024	11:15 PM	0	19	3	0	0	0	0	0	6	0	0	0	0
4/23/2024	11:30 PM	0	23	6	0	0	0	0	0	8	0	2	0	0
4/23/2024	11:45 PM	0	10	1	0	0	0	0	0	4	0	0	0	0

4/24/2024	12:00 AM	0	15	2	0	1	0	0	0	10	0	0	0	0
4/24/2024	12:15 AM	0	12	2	0	1	0	0	1	5	0	0	0	0
4/24/2024	12:30 AM	2	12	0	0	0	0	0	0	0	0	1	0	0
4/24/2024	12:45 AM	0	11	1	1	0	0	0	0	6	0	0	0	0
4/24/2024	1:00 AM	0	9	0	0	1	0	0	0	0	0	0	0	0
4/24/2024	1:15 AM	0	9	2	0	0	0	0	0	1	0	0	0	0
4/24/2024	1:30 AM	0	8	0	0	0	0	0	0	3	0	0	0	0
4/24/2024	1:45 AM	0	7	1	0	1	0	0	0	5	0	0	0	0
4/24/2024	2:00 AM	1	11	1	0	1	0	0	0	7	0	1	0	0
4/24/2024	2:15 AM	0	13	2	0	0	0	0	1	5	0	1	0	0
4/24/2024	2:30 AM	0	5	3	0	1	0	0	0	10	0	2	0	0
4/24/2024	2:45 AM	0	9	0	0	0	0	0	0	5	0	3	0	0
4/24/2024	3:00 AM	0	13	2	0	1	0	0	0	10	0	3	0	0
4/24/2024	3:15 AM	0	11	1	0	0	0	0	0	11	0	1	0	0
4/24/2024	3:30 AM	0	10	0	0	0	0	0	0	6	0	0	0	0
4/24/2024	3:45 AM	0	19	3	0	4	0	0	0	6	0	1	0	0
4/24/2024	4:00 AM	0	20	5	0	1	0	0	0	5	0	2	0	0
4/24/2024	4:15 AM	0	21	8	0	0	0	0	0	7	0	0	0	0
4/24/2024	4:30 AM	1	25	2	0	1	0	0	0	13	0	1	0	0
4/24/2024	4:45 AM	0	30	10	0	1	0	0	0	17	0	2	0	0
4/24/2024	5:00 AM	0	44	12	0	1	0	0	0	9	0	1	0	0
4/24/2024	5:15 AM	0	38	8	2	0	0	0	0	15	0	1	0	0
4/24/2024	5:30 AM	0	70	6	0	4	0	0	0	11	0	0	0	0
4/24/2024	5:45 AM	0	70	14	0	3	1	0	0	13	0	0	0	0
4/24/2024	6:00 AM	0	85	17	1	1	1	0	0	21	0	1	0	0
4/24/2024	6:15 AM	0	95	30	1	5	0	0	1	18	0	0	0	0
4/24/2024	6:30 AM	0	121	48	0	3	1	0	1	13	0	0	0	0
4/24/2024	6:45 AM	0	108	59	1	9	12	0	2	22	1	1	0	0
4/24/2024	7:00 AM	1	138	58	0	7	6	0	4	18	0	0	0	0
4/24/2024	7:15 AM	0	118	60	1	15	3	0	2	26	0	0	0	0
4/24/2024	7:30 AM	0	157	42	1	13	5	0	4	22	1	0	0	0
4/24/2024	7:45 AM	1	156	56	0	6	10	0	4	27	1	0	0	0
4/24/2024	8:00 AM	0	119	55	0	11	7	0	4	27	0	0	0	0
4/24/2024	8:15 AM	1	120	54	0	16	1	0	4	31	0	0	0	0
4/24/2024	8:30 AM	0	95	53	0	10	2	0	6	22	0	0	0	0
4/24/2024	8:45 AM	0	98	54	0	5	1	0	6	25	0	0	0	0
4/24/2024	9:00 AM	0	98	59	0	6	3	0	2	32	0	1	0	0
4/24/2024	9:15 AM	0	110	45	0	13	6	0	4	24	1	0	0	0
4/24/2024	9:30 AM	1	85	43	0	8	4	0	4	25	1	0	0	0
4/24/2024	9:45 AM	0	90	37	0	8	6	0	2	24	0	0	0	0
4/24/2024	10:00 AM	0	96	35	0	10	5	0	4	21	0	0	0	0
4/24/2024	10:15 AM	0	83	47	0	7	3	0	4	30	0	0	0	0
4/24/2024	10:30 AM	0	82	41	0	7	8	0	2	20	0	0	0	0
4/24/2024	10:45 AM	0	102	42	0	7	2	0	0	26	0	0	0	0
4/24/2024	11:00 AM	0	92	35	0	6	2	0	2	26	0	0	0	0
4/24/2024	11:15 AM	0	112	39	0	3	6	0	1	26	0	0	0	0
4/24/2024	11:30 AM	0	87	43	0	6	5	0	1	29	0	0	0	0
4/24/2024	11:45 AM	0	98	43	2	8	4	0	1	30	1	0	0	0
4/24/2024	12:00 PM	0	83	34	0	5	1	0	1	27	1	1	0	0
4/24/2024	12:15 PM	1	85	40	0	12	3	1	1	28	2	0	0	0
4/24/2024	12:30 PM	0	121	41	0	10	4	0	4	40	0	0	0	0
4/24/2024	12:45 PM	0	85	41	0	7	9	0	6	39	1	0	0	0
4/24/2024	1:00 PM	0	88	43	1	9	2	0	4	37	2	0	0	0
4/24/2024	1:15 PM	0	101	38	0	12	6	0	1	16	1	0	0	0
4/24/2024	1:30 PM	0	97	50	0	4	1	0	3	29	2	0	0	0
4/24/2024	1:45 PM	0	120	48	0	4	6	0	4	29	0	0	0	0
4/24/2024	2:00 PM	1	90	29	0	6	4	0	3	38	0	0	0	0
4/24/2024	2:15 PM	0	120	44	0	6	5	0	4	27	0	0	0	0
4/24/2024	2:30 PM	0	106	40	1	8	6	0	2	30	0	0	0	0
4/24/2024	2:45 PM	0	112	37	0	10	4	1	5	25	0	0	0	0
4/24/2024	3:00 PM	0	123	38	3	7	5	0	2	23	0	0	0	0
4/24/2024	3:15 PM	0	120	47	0	13	0	0	5	24	0	0	0	0
4/24/2024	3:30 PM	0	129	49	1	6	6	0	1	23	0	0	0	0
4/24/2024	3:45 PM	1	128	52	2	2	2	0	2	36	1	0	0	0
4/24/2024	4:00 PM	0	143	57	1	9	3	0	0	31	0	0	0	0
4/24/2024	4:15 PM	0	133	37	0	6	1	0	6	27	0	1	0	0
4/24/2024	4:30 PM	0	154	42	0	6	1	0	5	26	0	0	0	0
4/24/2024	4:45 PM	0	134	54	2	3	3	0	0	24	0	0	0	0
4/24/2024	5:00 PM	0	178	40	0	6	0	0	2	25	1	0	0	0
4/24/2024	5:15 PM	0	156	45	0	4	1	0	2	28	0	1	0	0
4/24/2024	5:30 PM	1	155	40	0	6	1	0	2	28	0	0	0	0
4/24/2024	5:45 PM	1	115	46	0	2	0	0	2	29	1	0	0	0
4/24/2024	6:00 PM	0	107	35	0	0	1	0	1	44	2	0	0	0
4/24/2024	6:15 PM	2	102	25	0	5	0	0	2	23	0	0	0	0
4/24/2024	6:30 PM	0	115	38	0	3	1	0	2	33	0	0	0	0
4/24/2024	6:45 PM	0	96	31	0	2	1	0	2	29	0	0	0	0
4/24/2024	7:00 PM	0	65	26	1	4	0	0	2	28	0	0	0	0
4/24/2024	7:15 PM	0	88	25	0	7	0	0	1	22	0	0	0	0
4/24/2024	7:30 PM	0	82	15	0	4	2	0	1	14	0	0	0	0
4/24/2024	7:45 PM	0	83	30	0	1	0	0	1	25	0	0	0	0
4/24/2024	8:00 PM	0	69	23	0	5	1	0	0	18	0	0	0	0
4/24/2024	8:15 PM	0	68	24	0	0	0	0	2	19	0	0	0	0
4/24/2024	8:30 PM	0	71	14	0	2	0	0	2	20	0	0	0	0
4/24/2024	8:45 PM	1	86	7	0	2	0	0	0	11	0	2	0	0
4/24/2024	9:00 PM	0	80	6	0	2	0	0	0	17	0	2	0	0
4/24/2024	9:15 PM	0	64	4	0	1	0	0	0	8	0	1	0	0
4/24/2024	9:30 PM	0	50	7	0	1	0	0	0	22	0	2	0	0
4/24/2024	9:45 PM	0	55	8	0	2	0	0	0	11	0	3	0	0
4/24/2024	10:00 PM	0	40	12	0	1	1	0	0	13	0	0	0	0
4/24/2024	10:15 PM	0	41	3	0	0	0	0	0	8	0	0	0	0
4/24/2024	10:30 PM	0	34	4	0	3	0	0	0	6	0	1	0	0
4/24/2024	10:45 PM	0	30	5	0	0	0	0	0	17	0	0	0	0
4/24/2024	11:00 PM	0	27	2	2	1	0	0	1	5	0	1	0	0
4/24/2024	11:15 PM	0	31	4	0	1	1	0	0	4	0	1	0	0
4/24/2024	11:30 PM	0	30	2	0	1	0	0	0	10	0	0	0	0
4/24/2024	11:45 PM	0	26	2	0	0	0	0	0	4	0	2	0	0

4/25/2024	12:00 AM	0	16	2	0	2	0	0	0	5	0	1	0	0
4/25/2024	12:15 AM	0	14	4	0	1	0	0	0	5	0	0	0	0
4/25/2024	12:30 AM	0	11	2	0	1	0	0	0	7	0	2	0	0
4/25/2024	12:45 AM	1	7	1	0	0	0	0	0	5	0	0	0	0
4/25/2024	1:00 AM	0	9	2	0	0	0	0	0	3	0	2	0	0
4/25/2024	1:15 AM	0	14	3	0	0	0	0	0	10	0	1	0	0
4/25/2024	1:30 AM	0	12	1	0	0	0	0	0	4	0	2	0	0
4/25/2024	1:45 AM	0	12	2	0	0	0	0	0	0	0	3	0	0
4/25/2024	2:00 AM	0	10	1	0	0	0	0	0	8	0	1	0	0
4/25/2024	2:15 AM	0	4	3	0	0	0	0	0	1	0	1	0	0
4/25/2024	2:30 AM	0	10	1	0	0	0	0	0	11	1	1	0	0
4/25/2024	2:45 AM	0	12	3	0	3	0	0	0	7	0	0	0	0
4/25/2024	3:00 AM	0	15	3	0	0	0	0	0	4	0	0	0	0
4/25/2024	3:15 AM	0	11	1	0	0	0	0	0	8	0	2	0	0
4/25/2024	3:30 AM	0	12	2	0	0	0	0	0	6	0	0	0	0
4/25/2024	3:45 AM	0	19	2	0	3	0	0	0	8	0	1	0	0
4/25/2024	4:00 AM	0	25	6	0	2	0	0	0	4	0	1	0	0
4/25/2024	4:15 AM	0	27	5	0	2	0	0	0	5	0	0	0	0
4/25/2024	4:30 AM	0	26	2	0	2	0	0	0	12	0	3	0	0
4/25/2024	4:45 AM	0	37	4	0	1	0	0	0	4	0	2	0	0
4/25/2024	5:00 AM	0	44	9	0	4	0	0	0	16	0	0	0	0
4/25/2024	5:15 AM	0	56	10	0	1	0	0	0	17	0	0	0	0
4/25/2024	5:30 AM	1	77	12	0	5	0	0	0	15	0	0	0	0
4/25/2024	5:45 AM	0	81	14	0	7	2	0	0	19	0	0	0	0
4/25/2024	6:00 AM	0	75	16	2	5	0	0	0	19	0	1	0	0
4/25/2024	6:15 AM	0	96	33	1	3	1	0	0	18	0	1	0	0
4/25/2024	6:30 AM	0	93	48	1	6	3	0	1	28	0	0	0	0
4/25/2024	6:45 AM	0	103	61	0	8	7	0	3	24	0	0	0	0
4/25/2024	7:00 AM	1	110	60	0	4	10	0	2	19	1	0	0	0
4/25/2024	7:15 AM	0	134	53	2	5	4	0	1	30	0	0	0	0
4/25/2024	7:30 AM	2	152	52	3	12	6	3	5	17	0	0	0	0
4/25/2024	7:45 AM	0	145	54	1	7	2	1	4	26	1	0	0	0
4/25/2024	8:00 AM	1	130	43	1	8	8	0	5	34	0	0	0	0
4/25/2024	8:15 AM	0	121	66	0	7	2	1	7	18	0	0	0	0
4/25/2024	8:30 AM	0	118	63	1	7	4	0	4	29	0	1	0	0
4/25/2024	8:45 AM	0	96	49	0	3	5	2	5	32	1	0	0	0
4/25/2024	9:00 AM	0	114	54	0	7	7	0	4	28	0	0	0	0
4/25/2024	9:15 AM	0	124	46	0	8	5	0	1	20	0	0	0	0
4/25/2024	9:30 AM	0	99	56	0	6	8	0	4	31	0	1	0	0
4/25/2024	9:45 AM	0	101	30	0	7	7	0	1	24	2	0	0	0
4/25/2024	10:00 AM	0	101	49	0	4	2	0	2	24	2	0	0	0
4/25/2024	10:15 AM	0	80	35	0	12	9	1	0	35	1	0	0	0
4/25/2024	10:30 AM	1	88	38	0	11	7	0	5	24	2	0	0	0
4/25/2024	10:45 AM	1	94	27	0	6	5	1	5	25	1	1	0	0
4/25/2024	11:00 AM	1	73	31	1	6	2	0	4	14	0	0	0	0
4/25/2024	11:15 AM	0	74	41	0	6	5	0	2	36	0	0	0	0
4/25/2024	11:30 AM	0	90	42	1	13	5	2	4	26	1	1	0	0
4/25/2024	11:45 AM	0	96	32	0	6	2	1	2	21	0	0	0	0
4/25/2024	12:00 PM	0	95	37	1	5	2	1	6	23	0	0	0	0
4/25/2024	12:15 PM	0	110	35	0	5	4	2	2	34	0	1	0	0
4/25/2024	12:30 PM	0	113	37	0	7	7	0	4	29	0	0	0	0
4/25/2024	12:45 PM	0	122	35	1	7	5	1	2	29	0	0	0	0
4/25/2024	1:00 PM	2	99	49	0	6	2	0	3	22	0	0	0	0
4/25/2024	1:15 PM	0	97	51	1	6	5	1	1	29	0	0	0	0
4/25/2024	1:30 PM	1	105	33	1	13	5	0	5	36	1	0	0	0
4/25/2024	1:45 PM	0	121	46	0	4	1	0	4	31	1	0	0	0
4/25/2024	2:00 PM	1	105	42	1	6	3	0	3	21	0	0	0	0
4/25/2024	2:15 PM	2	120	24	0	9	5	1	3	36	0	0	0	0
4/25/2024	2:30 PM	0	108	34	0	6	5	0	5	14	1	0	0	0
4/25/2024	2:45 PM	0	99	42	4	3	1	0	2	20	1	0	0	0
4/25/2024	3:00 PM	0	116	40	1	4	2	1	3	26	0	0	0	0
4/25/2024	3:15 PM	0	123	54	1	7	0	0	2	30	1	0	0	0
4/25/2024	3:30 PM	0	138	45	0	6	5	0	1	27	0	0	0	0
4/25/2024	3:45 PM	0	131	39	1	4	1	0	1	41	2	0	0	0
4/25/2024	4:00 PM	0	127	32	0	4	3	0	3	19	1	1	0	0
4/25/2024	4:15 PM	0	149	43	3	4	2	0	3	32	1	0	0	0
4/25/2024	4:30 PM	0	151	48	0	7	0	0	5	38	0	0	0	0
4/25/2024	4:45 PM	0	125	39	0	1	1	0	6	29	0	0	0	0
4/25/2024	5:00 PM	0	172	34	0	7	0	0	3	26	1	0	0	0
4/25/2024	5:15 PM	0	169	38	0	5	2	1	4	28	0	0	0	0
4/25/2024	5:30 PM	1	157	45	0	3	1	1	0	30	0	1	0	0
4/25/2024	5:45 PM	0	128	44	0	3	2	0	3	22	0	0	0	0
4/25/2024	6:00 PM	0	113	38	0	4	2	0	1	24	0	0	0	0
4/25/2024	6:15 PM	0	114	30	1	4	1	0	2	14	0	0	0	0
4/25/2024	6:30 PM	0	98	35	0	2	0	0	1	21	0	0	0	0
4/25/2024	6:45 PM	0	105	33	0	3	3	0	0	20	0	0	0	0
4/25/2024	7:00 PM	0	105	21	2	2	0	0	2	15	0	0	0	0
4/25/2024	7:15 PM	0	120	31	0	3	1	0	2	21	0	0	0	0
4/25/2024	7:30 PM	0	103	30	4	2	0	0	0	19	0	0	0	0
4/25/2024	7:45 PM	0	88	28	0	3	0	0	2	19	0	0	0	0
4/25/2024	8:00 PM	0	95	19	0	0	0	0	2	16	0	0	0	0
4/25/2024	8:15 PM	0	87	16	0	6	0	0	1	22	0	0	0	0
4/25/2024	8:30 PM	0	91	13	0	1	0	0	0	20	0	0	0	0
4/25/2024	8:45 PM	0	82	7	0	1	0	0	0	11	0	3	0	0
4/25/2024	9:00 PM	0	65	14	0	2	0	0	0	16	0	1	0	0
4/25/2024	9:15 PM	0	73	12	0	1	0	0	0	11	0	0	0	0
4/25/2024	9:30 PM	0	57	14	1	2	0	0	0	11	0	3	0	0
4/25/2024	9:45 PM	0	67	20	1	0	0	0	0	21	1	2	0	0
4/25/2024	10:00 PM	0	55	14	2	1	0	0	0	12	0	1	0	0
4/25/2024	10:15 PM	0	38	5	0	0	0	0	0	6	0	0	0	0
4/25/2024	10:30 PM	0	39	10	0	1	2	0	0	8	0	0	0	0
4/25/2024	10:45 PM	0	38	5	0	1	0	0	0	10	0	0	0	0
4/25/2024	11:00 PM	0	32	10	0	0	0	0	0	9	0	1	0	0
4/25/2024	11:15 PM	0	25	3	0	1	0	0	0	6	0	0	0	0
4/25/2024	11:30 PM	0	22	3	0	1	0	0	0	11	0	1	0	0
4/25/2024	11:45 PM	0	26	2	0	0	0	0	0	7	0	2	0	0

4/26/2024	12:00 AM	0	24	4	0	0	0	0	0	5	0	3	0	0
4/26/2024	12:15 AM	0	23	3	0	0	0	0	0	6	0	0	0	0
4/26/2024	12:30 AM	0	16	2	0	1	0	0	0	8	0	0	0	0
4/26/2024	12:45 AM	0	18	1	0	0	0	0	0	4	0	1	0	0
4/26/2024	1:00 AM	0	8	0	0	1	0	0	0	2	0	3	0	0
4/26/2024	1:15 AM	0	20	1	0	0	0	0	0	4	0	1	0	0
4/26/2024	1:30 AM	0	16	2	1	1	0	0	0	8	0	2	0	0
4/26/2024	1:45 AM	0	12	1	1	0	1	0	0	4	0	2	0	0
4/26/2024	2:00 AM	0	17	2	0	2	0	0	0	3	0	0	0	0
4/26/2024	2:15 AM	0	12	0	0	0	0	0	0	10	0	3	0	0
4/26/2024	2:30 AM	0	18	2	0	0	0	0	0	9	0	0	0	0
4/26/2024	2:45 AM	0	9	0	0	1	0	0	0	6	0	2	0	0
4/26/2024	3:00 AM	0	10	1	0	1	0	0	0	7	0	1	0	0
4/26/2024	3:15 AM	0	18	2	0	1	1	0	0	7	0	0	0	0
4/26/2024	3:30 AM	0	16	1	0	4	0	0	0	10	0	1	0	0
4/26/2024	3:45 AM	0	26	4	0	1	0	0	0	12	0	1	0	0
4/26/2024	4:00 AM	0	23	2	0	1	2	0	0	4	0	2	0	0
4/26/2024	4:15 AM	0	24	3	0	2	0	0	0	5	0	2	0	0
4/26/2024	4:30 AM	0	21	2	0	2	1	0	0	10	0	1	0	0
4/26/2024	4:45 AM	0	39	5	0	1	0	0	0	10	0	0	0	0
4/26/2024	5:00 AM	0	41	3	0	3	0	0	0	9	0	0	0	0
4/26/2024	5:15 AM	0	53	5	0	2	0	0	0	12	0	0	0	0
4/26/2024	5:30 AM	0	52	9	0	1	3	0	0	9	0	2	0	0
4/26/2024	5:45 AM	0	68	14	0	6	3	0	0	11	0	1	0	0
4/26/2024	6:00 AM	0	75	22	3	4	1	0	0	18	0	0	0	0
4/26/2024	6:15 AM	0	87	25	2	2	2	0	0	26	0	1	0	0
4/26/2024	6:30 AM	0	106	31	3	7	7	0	2	19	0	2	0	0
4/26/2024	6:45 AM	0	96	38	1	5	6	0	1	23	2	1	0	0
4/26/2024	7:00 AM	0	113	53	1	4	0	0	2	26	0	0	0	0
4/26/2024	7:15 AM	1	145	54	1	5	3	0	5	21	0	0	0	0
4/26/2024	7:30 AM	0	153	53	0	10	3	2	2	27	1	2	0	0
4/26/2024	7:45 AM	0	155	63	0	12	7	0	3	22	0	0	0	0
4/26/2024	8:00 AM	0	146	59	1	7	2	0	3	23	0	0	0	0
4/26/2024	8:15 AM	1	132	49	0	6	3	0	4	24	0	0	0	0
4/26/2024	8:30 AM	0	114	63	3	11	5	0	2	18	2	0	0	0
4/26/2024	8:45 AM	0	112	45	2	4	3	0	5	26	0	0	0	0
4/26/2024	9:00 AM	1	102	49	1	7	3	0	2	19	0	0	0	0
4/26/2024	9:15 AM	0	95	58	0	7	1	1	2	22	0	0	0	0
4/26/2024	9:30 AM	0	99	50	0	7	1	0	3	24	1	0	0	0
4/26/2024	9:45 AM	0	101	54	0	6	1	2	4	19	1	0	0	0
4/26/2024	10:00 AM	0	119	33	0	2	0	2	4	24	3	0	0	0
4/26/2024	10:15 AM	3	128	52	0	2	1	0	2	21	0	0	0	0
4/26/2024	10:30 AM	1	125	41	0	5	0	1	2	20	0	0	0	0
4/26/2024	10:45 AM	0	108	43	0	4	2	0	3	23	0	0	0	0
4/26/2024	11:00 AM	0	122	50	0	8	2	0	3	26	0	0	0	0
4/26/2024	11:15 AM	0	123	30	0	3	1	0	2	26	3	0	0	0
4/26/2024	11:30 AM	0	117	37	0	8	4	0	1	23	0	0	0	0
4/26/2024	11:45 AM	1	133	57	0	11	4	0	1	21	0	0	0	0
4/26/2024	12:00 PM	2	121	42	1	9	3	0	2	26	0	0	0	0
4/26/2024	12:15 PM	0	136	49	2	3	3	0	3	21	0	1	0	0
4/26/2024	12:30 PM	0	132	43	0	4	2	0	3	25	0	0	0	0
4/26/2024	12:45 PM	0	127	56	0	2	0	1	6	16	0	0	0	0
4/26/2024	1:00 PM	2	146	50	0	9	3	1	3	22	0	0	0	0
4/26/2024	1:15 PM	1	138	56	0	9	2	0	1	29	0	1	0	0
4/26/2024	1:30 PM	0	125	39	1	7	6	0	3	26	0	0	0	0
4/26/2024	1:45 PM	0	134	39	0	5	4	1	0	15	0	0	0	0
4/26/2024	2:00 PM	0	133	46	0	7	3	0	4	18	0	0	0	0
4/26/2024	2:15 PM	1	142	47	0	9	1	0	4	19	1	0	0	0
4/26/2024	2:30 PM	0	129	29	1	3	3	0	3	38	0	0	0	0
4/26/2024	2:45 PM	0	136	38	1	8	0	0	3	17	0	0	0	0
4/26/2024	3:00 PM	0	158	45	2	3	0	0	2	16	1	0	0	0
4/26/2024	3:15 PM	4	155	51	1	7	4	0	3	20	1	0	0	0
4/26/2024	3:30 PM	0	171	54	0	6	2	0	3	29	2	0	0	0
4/26/2024	3:45 PM	0	180	43	1	7	2	0	6	25	1	0	0	0
4/26/2024	4:00 PM	2	185	37	0	6	4	1	1	26	0	0	0	0
4/26/2024	4:15 PM	1	168	41	1	0	2	0	2	26	1	0	0	0
4/26/2024	4:30 PM	1	170	50	0	4	4	0	3	17	0	0	0	0
4/26/2024	4:45 PM	4	174	56	0	3	1	0	2	14	0	0	0	0
4/26/2024	5:00 PM	4	172	47	0	5	0	0	2	23	0	0	0	0
4/26/2024	5:15 PM	0	184	39	0	5	1	0	3	17	0	0	0	0
4/26/2024	5:30 PM	0	152	38	1	3	1	0	1	20	0	0	0	0
4/26/2024	5:45 PM	0	159	41	0	4	2	0	1	13	1	0	0	0
4/26/2024	6:00 PM	0	139	30	0	3	1	0	5	17	0	0	0	0
4/26/2024	6:15 PM	0	148	35	0	2	1	1	2	22	0	0	0	0
4/26/2024	6:30 PM	0	131	41	0	3	1	0	0	13	0	1	0	0
4/26/2024	6:45 PM	5	97	36	0	2	0	0	2	17	0	1	0	0
4/26/2024	7:00 PM	0	120	27	0	0	1	0	2	11	0	0	0	0
4/26/2024	7:15 PM	1	118	41	0	3	0	0	0	10	0	0	0	0
4/26/2024	7:30 PM	0	105	26	0	3	0	0	0	17	0	0	0	0
4/26/2024	7:45 PM	2	116	37	0	0	1	0	2	6	0	0	0	0
4/26/2024	8:00 PM	1	81	27	0	0	1	0	0	16	0	0	0	0
4/26/2024	8:15 PM	0	113	29	0	2	2	0	0	6	0	0	0	0
4/26/2024	8:30 PM	2	92	22	0	2	1	0	0	14	0	0	0	0
4/26/2024	8:45 PM	0	110	21	1	3	0	0	1	11	0	0	0	0
4/26/2024	9:00 PM	0	86	18	0	2	2	0	0	14	0	0	0	0
4/26/2024	9:15 PM	0	77	12	0	1	2	0	1	11	0	1	0	0
4/26/2024	9:30 PM	0	83	11	0	2	1	0	0	8	0	0	0	0
4/26/2024	9:45 PM	0	73	13	0	0	0	0	0	5	0	2	0	0
4/26/2024	10:00 PM	0	74	16	0	1	0	0	0	7	0	0	0	0
4/26/2024	10:15 PM	0	58	11	0	2	0	0	1	7	0	2	0	0
4/26/2024	10:30 PM	0	55	12	0	1	0	0	0	8	0	0	0	0
4/26/2024	10:45 PM	0	44	10	0	0	0	0	0	8	0	0	0	0
4/26/2024	11:00 PM	0	53	13	0	1	0	0	0	6	0	1	0	0
4/26/2024	11:15 PM	0	45	10	0	2	1	0	0	6	0	1	0	0
4/26/2024	11:30 PM	1	40	9	1	0	0	0	0	2	0	2	0	0
4/26/2024	11:45 PM	0	38	10	1	2	0	0	0	2	0	1	0	0

4/27/2024	12:00 AM	0	36	3	0	0	0	0	0	5	0	1	0	0
4/27/2024	12:15 AM	0	39	2	1	1	0	0	0	5	0	1	0	0
4/27/2024	12:30 AM	0	28	3	0	1	0	0	0	2	0	0	0	0
4/27/2024	12:45 AM	1	26	2	0	1	0	0	0	3	0	1	0	0
4/27/2024	1:00 AM	0	19	0	0	1	0	0	0	3	0	0	0	0
4/27/2024	1:15 AM	1	18	1	0	0	0	0	0	5	0	3	0	0
4/27/2024	1:30 AM	0	18	2	0	2	0	0	0	2	0	1	0	0
4/27/2024	1:45 AM	0	20	2	0	1	0	0	0	2	0	1	0	0
4/27/2024	2:00 AM	0	9	0	0	0	0	0	0	4	0	1	0	0
4/27/2024	2:15 AM	0	11	1	0	1	0	0	0	2	0	1	0	0
4/27/2024	2:30 AM	0	16	1	0	1	0	0	0	2	0	2	0	0
4/27/2024	2:45 AM	0	9	0	0	1	0	0	0	1	0	1	0	0
4/27/2024	3:00 AM	0	6	0	0	1	0	0	0	2	0	4	0	0
4/27/2024	3:15 AM	0	15	1	0	0	0	0	0	2	0	0	0	0
4/27/2024	3:30 AM	0	14	0	0	0	0	0	0	6	0	2	0	0
4/27/2024	3:45 AM	0	12	1	0	2	0	0	0	3	0	1	0	0
4/27/2024	4:00 AM	0	11	1	0	0	0	0	0	5	0	0	0	0
4/27/2024	4:15 AM	0	15	1	0	0	0	0	0	3	0	1	0	0
4/27/2024	4:30 AM	0	18	3	1	0	0	0	0	4	0	0	0	0
4/27/2024	4:45 AM	0	15	1	0	0	0	0	0	3	0	0	0	0
4/27/2024	5:00 AM	1	28	1	0	1	0	0	0	7	0	0	0	0
4/27/2024	5:15 AM	0	26	4	0	0	0	0	0	2	0	1	0	0
4/27/2024	5:30 AM	0	36	2	0	0	0	0	0	2	0	0	0	0
4/27/2024	5:45 AM	0	38	3	0	0	0	0	0	7	0	1	0	0
4/27/2024	6:00 AM	0	37	5	0	1	0	0	0	6	0	0	0	0
4/27/2024	6:15 AM	0	54	12	0	1	1	0	1	8	0	0	0	0
4/27/2024	6:30 AM	0	69	22	0	0	0	0	0	6	0	0	0	0
4/27/2024	6:45 AM	0	76	13	0	0	0	0	0	3	0	0	0	0
4/27/2024	7:00 AM	0	70	23	0	0	1	0	0	6	1	0	0	0
4/27/2024	7:15 AM	0	89	38	0	2	0	0	0	4	0	0	0	0
4/27/2024	7:30 AM	0	90	32	0	1	0	0	4	4	0	0	0	0
4/27/2024	7:45 AM	2	112	31	0	2	0	0	0	3	0	0	0	0
4/27/2024	8:00 AM	0	85	37	0	1	1	0	1	6	0	0	0	0
4/27/2024	8:15 AM	1	99	28	0	3	0	0	1	8	0	0	0	0
4/27/2024	8:30 AM	3	110	26	5	3	0	0	1	10	0	0	0	0
4/27/2024	8:45 AM	1	107	39	1	1	0	0	1	12	0	0	0	0
4/27/2024	9:00 AM	2	121	51	0	0	1	0	0	9	0	0	0	0
4/27/2024	9:15 AM	1	153	31	0	1	0	0	1	7	0	0	0	0
4/27/2024	9:30 AM	1	133	34	0	2	1	0	4	8	1	0	0	0
4/27/2024	9:45 AM	0	138	34	0	2	1	0	1	11	1	0	0	0
4/27/2024	10:00 AM	0	130	35	0	3	0	0	2	8	1	0	0	0
4/27/2024	10:15 AM	0	149	34	0	1	0	0	1	8	1	0	0	0
4/27/2024	10:30 AM	0	138	39	0	4	0	0	0	9	0	1	0	0
4/27/2024	10:45 AM	2	142	33	0	3	0	0	1	7	0	0	0	0
4/27/2024	11:00 AM	1	128	32	1	2	1	0	1	5	0	0	0	0
4/27/2024	11:15 AM	0	131	34	0	3	0	0	1	10	0	0	0	0
4/27/2024	11:30 AM	1	132	38	2	1	2	0	1	7	0	0	0	0
4/27/2024	11:45 AM	0	137	32	0	3	1	0	0	11	0	0	0	0
4/27/2024	12:00 PM	0	124	40	2	1	0	0	1	13	0	0	0	0
4/27/2024	12:15 PM	1	146	33	0	1	1	0	2	11	0	0	0	0
4/27/2024	12:30 PM	0	150	36	0	5	0	0	0	15	0	1	0	0
4/27/2024	12:45 PM	0	154	33	1	1	0	0	2	14	1	0	0	0
4/27/2024	1:00 PM	1	147	43	0	4	0	0	1	10	0	0	0	0
4/27/2024	1:15 PM	0	136	34	0	0	0	0	4	14	0	0	0	0
4/27/2024	1:30 PM	1	169	31	0	1	0	0	2	8	0	0	0	0
4/27/2024	1:45 PM	2	132	35	0	4	0	0	2	9	0	0	0	0
4/27/2024	2:00 PM	3	163	34	0	0	1	0	1	7	0	0	0	0
4/27/2024	2:15 PM	3	134	31	0	2	2	0	1	12	1	0	0	0
4/27/2024	2:30 PM	0	142	31	1	0	0	0	0	9	0	0	0	0
4/27/2024	2:45 PM	0	148	36	0	2	1	0	1	11	0	0	0	0
4/27/2024	3:00 PM	1	131	31	0	1	3	0	1	4	0	0	0	0
4/27/2024	3:15 PM	0	115	34	0	3	0	0	2	7	0	0	0	0
4/27/2024	3:30 PM	0	132	37	0	3	0	0	1	4	0	0	0	0
4/27/2024	3:45 PM	1	151	31	0	0	0	0	1	8	0	0	0	0
4/27/2024	4:00 PM	0	117	30	0	0	0	0	2	6	0	0	0	0
4/27/2024	4:15 PM	0	122	32	0	2	1	0	2	14	1	0	0	0
4/27/2024	4:30 PM	0	145	34	0	4	1	0	1	7	0	0	0	0
4/27/2024	4:45 PM	0	117	47	0	1	1	0	1	7	0	0	0	0
4/27/2024	5:00 PM	0	127	29	0	3	0	0	0	7	0	0	0	0
4/27/2024	5:15 PM	1	123	34	0	3	0	0	2	3	0	0	0	0
4/27/2024	5:30 PM	0	106	27	0	0	1	0	0	5	0	0	0	0
4/27/2024	5:45 PM	0	112	21	0	1	0	0	0	7	0	0	0	0
4/27/2024	6:00 PM	0	102	34	1	0	0	0	2	11	0	0	0	0
4/27/2024	6:15 PM	0	128	27	0	0	1	0	4	9	0	0	0	0
4/27/2024	6:30 PM	1	120	29	0	3	0	0	1	9	0	0	0	0
4/27/2024	6:45 PM	0	111	22	1	1	0	0	1	8	0	0	0	0
4/27/2024	7:00 PM	0	107	28	1	2	0	0	0	8	0	0	0	0
4/27/2024	7:15 PM	0	120	18	0	4	0	0	0	6	0	0	0	0
4/27/2024	7:30 PM	1	95	19	0	1	0	0	1	10	0	0	0	0
4/27/2024	7:45 PM	1	107	15	0	1	0	0	1	7	0	0	0	0
4/27/2024	8:00 PM	0	109	15	1	0	0	0	0	9	1	0	0	0
4/27/2024	8:15 PM	0	94	9	0	2	0	0	0	3	0	0	0	0
4/27/2024	8:30 PM	0	94	15	0	3	0	0	0	6	0	0	0	0
4/27/2024	8:45 PM	0	91	13	0	1	0	0	0	4	0	0	0	0
4/27/2024	9:00 PM	0	113	13	1	1	0	0	0	6	0	0	0	0
4/27/2024	9:15 PM	0	76	13	0	1	0	0	0	3	0	0	0	0
4/27/2024	9:30 PM	0	80	13	0	3	0	0	1	5	0	0	0	0
4/27/2024	9:45 PM	0	62	16	0	0	0	0	0	5	0	0	0	0
4/27/2024	10:00 PM	1	55	13	0	0	0	0	0	5	0	0	0	0
4/27/2024	10:15 PM	0	62	9	1	0	0	0	0	1	0	0	0	0
4/27/2024	10:30 PM	0	65	9	0	0	0	0	0	1	0	0	0	0
4/27/2024	10:45 PM	1	55	7	1	0	0	0	0	3	0	0	0	0
4/27/2024	11:00 PM	0	59	4	0	0	0	0	0	3	0	0	0	0
4/27/2024	11:15 PM	0	44	8	0	1	0	0	0	7	0	0	0	0
4/27/2024	11:30 PM	1	38	3	0	1	0	0	0	3	0	0	0	0
4/27/2024	11:45 PM	0	32	4	0	0	1	0	0	0	0	0	0	0

SB
File Name:
Start Date: 4/21/2024
Start Time: 0
Site Code: 75 Lane 2 NB
Station ID: 1
Location 1: I-20, north of Bush River Rd
Location 2:

Date	Time	1	2	3	4	5	6	7	8	9	10	11	12	13
4/21/2024	12:00 AM	0	0	0	0	0	0	0	0	0	0	0	0	0
4/21/2024	12:15 AM	0	0	0	0	0	0	0	0	0	0	0	0	0
4/21/2024	12:30 AM	0	0	0	0	0	0	0	0	0	0	0	0	0
4/21/2024	12:45 AM	0	0	0	0	0	0	0	0	0	0	0	0	0
4/21/2024	1:00 AM	0	0	0	0	0	0	0	0	0	0	0	0	0
4/21/2024	1:15 AM	0	0	0	0	0	0	0	0	0	0	0	0	0
4/21/2024	1:30 AM	0	0	0	0	0	0	0	0	0	0	0	0	0
4/21/2024	1:45 AM	0	0	0	0	0	0	0	0	0	0	0	0	0
4/21/2024	2:00 AM	0	0	0	0	0	0	0	0	0	0	0	0	0
4/21/2024	2:15 AM	0	0	0	0	0	0	0	0	0	0	0	0	0
4/21/2024	2:30 AM	0	0	0	0	0	0	0	0	0	0	0	0	0
4/21/2024	2:45 AM	0	0	0	0	0	0	0	0	0	0	0	0	0
4/21/2024	3:00 AM	0	0	0	0	0	0	0	0	0	0	0	0	0
4/21/2024	3:15 AM	0	0	0	0	0	0	0	0	0	0	0	0	0
4/21/2024	3:30 AM	0	0	0	0	0	0	0	0	0	0	0	0	0
4/21/2024	3:45 AM	0	0	0	0	0	0	0	0	0	0	0	0	0
4/21/2024	4:00 AM	0	0	0	0	0	0	0	0	0	0	0	0	0
4/21/2024	4:15 AM	0	0	0	0	0	0	0	0	0	0	0	0	0
4/21/2024	4:30 AM	0	0	0	0	0	0	0	0	0	0	0	0	0
4/21/2024	4:45 AM	0	0	0	0	0	0	0	0	0	0	0	0	0
4/21/2024	5:00 AM	0	0	0	0	0	0	0	0	0	0	0	0	0
4/21/2024	5:15 AM	0	0	0	0	0	0	0	0	0	0	0	0	0
4/21/2024	5:30 AM	0	0	0	0	0	0	0	0	0	0	0	0	0
4/21/2024	5:45 AM	0	0	0	0	0	0	0	0	0	0	0	0	0
4/21/2024	6:00 AM	0	0	0	0	0	0	0	0	0	0	0	0	0
4/21/2024	6:15 AM	0	0	0	0	0	0	0	0	0	0	0	0	0
4/21/2024	6:30 AM	0	0	0	0	0	0	0	0	0	0	0	0	0
4/21/2024	6:45 AM	0	0	0	0	0	0	0	0	0	0	0	0	0
4/21/2024	7:00 AM	0	0	0	0	0	0	0	0	0	0	0	0	0
4/21/2024	7:15 AM	0	0	0	0	0	0	0	0	0	0	0	0	0
4/21/2024	7:30 AM	0	0	0	0	0	0	0	0	0	0	0	0	0
4/21/2024	7:45 AM	0	0	0	0	0	0	0	0	0	0	0	0	0
4/21/2024	8:00 AM	0	0	0	0	0	0	0	0	0	0	0	0	0
4/21/2024	8:15 AM	0	0	0	0	0	0	0	0	0	0	0	0	0
4/21/2024	8:30 AM	0	0	0	0	0	0	0	0	0	0	0	0	0
4/21/2024	8:45 AM	0	0	0	0	0	0	0	0	0	0	0	0	0
4/21/2024	9:00 AM	0	0	0	0	0	0	0	0	0	0	0	0	0
4/21/2024	9:15 AM	0	0	0	0	0	0	0	0	0	0	0	0	0
4/21/2024	9:30 AM	0	0	0	0	0	0	0	0	0	0	0	0	0
4/21/2024	9:45 AM	0	0	0	0	0	0	0	0	0	0	0	0	0
4/21/2024	10:00 AM	0	0	0	0	0	0	0	0	0	0	0	0	0
4/21/2024	10:15 AM	0	0	0	0	0	0	0	0	0	0	0	0	0
4/21/2024	10:30 AM	0	0	0	0	0	0	0	0	0	0	0	0	0
4/21/2024	10:45 AM	0	0	0	0	0	0	0	0	0	0	0	0	0
4/21/2024	11:00 AM	0	0	0	0	0	0	0	0	0	0	0	0	0
4/21/2024	11:15 AM	0	0	0	0	0	0	0	0	0	0	0	0	0
4/21/2024	11:30 AM	0	0	0	0	0	0	0	0	0	0	0	0	0
4/21/2024	11:45 AM	0	0	0	0	0	0	0	0	0	0	0	0	0
4/21/2024	12:00 PM	0	0	0	0	0	0	0	0	0	0	0	0	0
4/21/2024	12:15 PM	0	0	0	0	0	0	0	0	0	0	0	0	0
4/21/2024	12:30 PM	0	0	0	0	0	0	0	0	0	0	0	0	0
4/21/2024	12:45 PM	0	0	0	0	0	0	0	0	0	0	0	0	0
4/21/2024	1:00 PM	0	0	0	0	0	0	0	0	0	0	0	0	0
4/21/2024	1:15 PM	0	0	0	0	0	0	0	0	0	0	0	0	0
4/21/2024	1:30 PM	0	0	0	0	0	0	0	0	0	0	0	0	0
4/21/2024	1:45 PM	0	0	0	0	0	0	0	0	0	0	0	0	0
4/21/2024	2:00 PM	0	0	0	0	0	0	0	0	0	0	0	0	0
4/21/2024	2:15 PM	0	0	0	0	0	0	0	0	0	0	0	0	0
4/21/2024	2:30 PM	0	0	0	0	0	0	0	0	0	0	0	0	0
4/21/2024	2:45 PM	0	0	0	0	0	0	0	0	0	0	0	0	0
4/21/2024	3:00 PM	0	0	0	0	0	0	0	0	0	0	0	0	0
4/21/2024	3:15 PM	0	0	0	0	0	0	0	0	0	0	0	0	0
4/21/2024	3:30 PM	0	0	0	0	0	0	0	0	0	0	0	0	0
4/21/2024	3:45 PM	0	0	0	0	0	0	0	0	0	0	0	0	0
4/21/2024	4:00 PM	0	0	0	0	0	0	0	0	0	0	0	0	0
4/21/2024	4:15 PM	0	0	0	0	0	0	0	0	0	0	0	0	0
4/21/2024	4:30 PM	0	0	0	0	0	0	0	0	0	0	0	0	0
4/21/2024	4:45 PM	0	0	0	0	0	0	0	0	0	0	0	0	0
4/21/2024	5:00 PM	0	0	0	0	0	0	0	0	0	0	0	0	0
4/21/2024	5:15 PM	0	0	0	0	0	0	0	0	0	0	0	0	0
4/21/2024	5:30 PM	0	0	0	0	0	0	0	0	0	0	0	0	0
4/21/2024	5:45 PM	0	0	0	0	0	0	0	0	0	0	0	0	0
4/21/2024	6:00 PM	0	0	0	0	0	0	0	0	0	0	0	0	0
4/21/2024	6:15 PM	0	0	0	0	0	0	0	0	0	0	0	0	0
4/21/2024	6:30 PM	0	0	0	0	0	0	0	0	0	0	0	0	0
4/21/2024	6:45 PM	0	0	0	0	0	0	0	0	0	0	0	0	0
4/21/2024	7:00 PM	0	0	0	0	0	0	0	0	0	0	0	0	0
4/21/2024	7:15 PM	0	0	0	0	0	0	0	0	0	0	0	0	0
4/21/2024	7:30 PM	0	0	0	0	0	0	0	0	0	0	0	0	0
4/21/2024	7:45 PM	0	0	0	0	0	0	0	0	0	0	0	0	0
4/21/2024	8:00 PM	0	0	0	0	0	0	0	0	0	0	0	0	0
4/21/2024	8:15 PM	0	0	0	0	0	0	0	0	0	0	0	0	0
4/21/2024	8:30 PM	0	0	0	0	0	0	0	0	0	0	0	0	0
4/21/2024	8:45 PM	0	0	0	0	0	0	0	0	0	0	0	0	0
4/21/2024	9:00 PM	0	0	0	0	0	0	0	0	0	0	0	0	0
4/21/2024	9:15 PM	0	0	0	0	0	0	0	0	0	0	0	0	0
4/21/2024	9:30 PM	0	0	0	0	0	0	0	0	0	0	0	0	0
4/21/2024	9:45 PM	0	0	0	0	0	0	0	0	0	0	0	0	0
4/21/2024	10:00 PM	0	0	0	0	0	0	0	0	0	0	0	0	0
4/21/2024	10:15 PM	0	0	0	0	0	0	0	0	0	0	0	0	0
4/21/2024	10:30 PM	0	0	0	0	0	0	0	0	0	0	0	0	0
4/21/2024	10:45 PM	0	0	0	0	0	0	0	0	0	0	0	0	0
4/21/2024	11:00 PM	0	0	0	0	0	0	0	0	0	0	0	0	0
4/21/2024	11:15 PM	0	0	0	0	0	0	0	0	0	0	0	0	0
4/21/2024	11:30 PM	0	0	0	0	0	0	0	0	0	0	0	0	0
4/21/2024	11:45 PM	0	0	0	0	0	0	0	0	0	0	0	0	0

4/22/2024	12:00 AM	0	0	0	0	0	0	0	0	0	0	0	0	0
4/22/2024	12:15 AM	0	0	0	0	0	0	0	0	0	0	0	0	0
4/22/2024	12:30 AM	0	0	0	0	0	0	0	0	0	0	0	0	0
4/22/2024	12:45 AM	0	0	0	0	0	0	0	0	0	0	0	0	0
4/22/2024	1:00 AM	0	0	0	0	0	0	0	0	0	0	0	0	0
4/22/2024	1:15 AM	0	0	0	0	0	0	0	0	0	0	0	0	0
4/22/2024	1:30 AM	0	0	0	0	0	0	0	0	0	0	0	0	0
4/22/2024	1:45 AM	0	0	0	0	0	0	0	0	0	0	0	0	0
4/22/2024	2:00 AM	0	0	0	0	0	0	0	0	0	0	0	0	0
4/22/2024	2:15 AM	0	0	0	0	0	0	0	0	0	0	0	0	0
4/22/2024	2:30 AM	0	0	0	0	0	0	0	0	0	0	0	0	0
4/22/2024	2:45 AM	0	0	0	0	0	0	0	0	0	0	0	0	0
4/22/2024	3:00 AM	0	0	0	0	0	0	0	0	0	0	0	0	0
4/22/2024	3:15 AM	0	0	0	0	0	0	0	0	0	0	0	0	0
4/22/2024	3:30 AM	0	0	0	0	0	0	0	0	0	0	0	0	0
4/22/2024	3:45 AM	0	0	0	0	0	0	0	0	0	0	0	0	0
4/22/2024	4:00 AM	0	0	0	0	0	0	0	0	0	0	0	0	0
4/22/2024	4:15 AM	0	0	0	0	0	0	0	0	0	0	0	0	0
4/22/2024	4:30 AM	0	0	0	0	0	0	0	0	0	0	0	0	0
4/22/2024	4:45 AM	0	0	0	0	0	0	0	0	0	0	0	0	0
4/22/2024	5:00 AM	0	0	0	0	0	0	0	0	0	0	0	0	0
4/22/2024	5:15 AM	0	0	0	0	0	0	0	0	0	0	0	0	0
4/22/2024	5:30 AM	0	0	0	0	0	0	0	0	0	0	0	0	0
4/22/2024	5:45 AM	0	0	0	0	0	0	0	0	0	0	0	0	0
4/22/2024	6:00 AM	0	0	0	0	0	0	0	0	0	0	0	0	0
4/22/2024	6:15 AM	0	0	0	0	0	0	0	0	0	0	0	0	0
4/22/2024	6:30 AM	0	0	0	0	0	0	0	0	0	0	0	0	0
4/22/2024	6:45 AM	0	0	0	0	0	0	0	0	0	0	0	0	0
4/22/2024	7:00 AM	0	0	0	0	0	0	0	0	0	0	0	0	0
4/22/2024	7:15 AM	0	0	0	0	0	0	0	0	0	0	0	0	0
4/22/2024	7:30 AM	0	0	0	0	0	0	0	0	0	0	0	0	0
4/22/2024	7:45 AM	0	0	0	0	0	0	0	0	0	0	0	0	0
4/22/2024	8:00 AM	0	0	0	0	0	0	0	0	0	0	0	0	0
4/22/2024	8:15 AM	0	0	0	0	0	0	0	0	0	0	0	0	0
4/22/2024	8:30 AM	0	0	0	0	0	0	0	0	0	0	0	0	0
4/22/2024	8:45 AM	0	0	0	0	0	0	0	0	0	0	0	0	0
4/22/2024	9:00 AM	0	0	0	0	0	0	0	0	0	0	0	0	0
4/22/2024	9:15 AM	0	0	0	0	0	0	0	0	0	0	0	0	0
4/22/2024	9:30 AM	0	0	0	0	0	0	0	0	0	0	0	0	0
4/22/2024	9:45 AM	0	0	0	0	0	0	0	0	0	0	0	0	0
4/22/2024	10:00 AM	0	0	0	0	0	0	0	0	0	0	0	0	0
4/22/2024	10:15 AM	0	0	0	0	0	0	0	0	0	0	0	0	0
4/22/2024	10:30 AM	0	0	0	0	0	0	0	0	0	0	0	0	0
4/22/2024	10:45 AM	0	0	0	0	0	0	0	0	0	0	0	0	0
4/22/2024	11:00 AM	0	0	0	0	0	0	0	0	0	0	0	0	0
4/22/2024	11:15 AM	0	0	0	0	0	0	0	0	0	0	0	0	0
4/22/2024	11:30 AM	0	0	0	0	0	0	0	0	0	0	0	0	0
4/22/2024	11:45 AM	0	0	0	0	0	0	0	0	0	0	0	0	0
4/22/2024	12:00 PM	0	0	0	0	0	0	0	0	0	0	0	0	0
4/22/2024	12:15 PM	0	0	0	0	0	0	0	0	0	0	0	0	0
4/22/2024	12:30 PM	0	0	0	0	0	0	0	0	0	0	0	0	0
4/22/2024	12:45 PM	0	0	0	0	0	0	0	0	0	0	0	0	0
4/22/2024	1:00 PM	0	0	0	0	0	0	0	0	0	0	0	0	0
4/22/2024	1:15 PM	0	0	0	0	0	0	0	0	0	0	0	0	0
4/22/2024	1:30 PM	0	0	0	0	0	0	0	0	0	0	0	0	0
4/22/2024	1:45 PM	0	0	0	0	0	0	0	0	0	0	0	0	0
4/22/2024	2:00 PM	0	0	0	0	0	0	0	0	0	0	0	0	0
4/22/2024	2:15 PM	0	0	0	0	0	0	0	0	0	0	0	0	0
4/22/2024	2:30 PM	0	0	0	0	0	0	0	0	0	0	0	0	0
4/22/2024	2:45 PM	0	0	0	0	0	0	0	0	0	0	0	0	0
4/22/2024	3:00 PM	0	0	0	0	0	0	0	0	0	0	0	0	0
4/22/2024	3:15 PM	0	0	0	0	0	0	0	0	0	0	0	0	0
4/22/2024	3:30 PM	0	0	0	0	0	0	0	0	0	0	0	0	0
4/22/2024	3:45 PM	0	0	0	0	0	0	0	0	0	0	0	0	0
4/22/2024	4:00 PM	0	0	0	0	0	0	0	0	0	0	0	0	0
4/22/2024	4:15 PM	0	0	0	0	0	0	0	0	0	0	0	0	0
4/22/2024	4:30 PM	0	0	0	0	0	0	0	0	0	0	0	0	0
4/22/2024	4:45 PM	0	0	0	0	0	0	0	0	0	0	0	0	0
4/22/2024	5:00 PM	0	0	0	0	0	0	0	0	0	0	0	0	0
4/22/2024	5:15 PM	0	0	0	0	0	0	0	0	0	0	0	0	0
4/22/2024	5:30 PM	0	0	0	0	0	0	0	0	0	0	0	0	0
4/22/2024	5:45 PM	0	0	0	0	0	0	0	0	0	0	0	0	0
4/22/2024	6:00 PM	0	0	0	0	0	0	0	0	0	0	0	0	0
4/22/2024	6:15 PM	0	0	0	0	0	0	0	0	0	0	0	0	0
4/22/2024	6:30 PM	0	0	0	0	0	0	0	0	0	0	0	0	0
4/22/2024	6:45 PM	0	0	0	0	0	0	0	0	0	0	0	0	0
4/22/2024	7:00 PM	0	0	0	0	0	0	0	0	0	0	0	0	0
4/22/2024	7:15 PM	0	0	0	0	0	0	0	0	0	0	0	0	0
4/22/2024	7:30 PM	0	0	0	0	0	0	0	0	0	0	0	0	0
4/22/2024	7:45 PM	0	0	0	0	0	0	0	0	0	0	0	0	0
4/22/2024	8:00 PM	0	0	0	0	0	0	0	0	0	0	0	0	0
4/22/2024	8:15 PM	0	0	0	0	0	0	0	0	0	0	0	0	0
4/22/2024	8:30 PM	0	0	0	0	0	0	0	0	0	0	0	0	0
4/22/2024	8:45 PM	0	0	0	0	0	0	0	0	0	0	0	0	0
4/22/2024	9:00 PM	0	0	0	0	0	0	0	0	0	0	0	0	0
4/22/2024	9:15 PM	0	0	0	0	0	0	0	0	0	0	0	0	0
4/22/2024	9:30 PM	0	0	0	0	0	0	0	0	0	0	0	0	0
4/22/2024	9:45 PM	0	0	0	0	0	0	0	0	0	0	0	0	0
4/22/2024	10:00 PM	0	0	0	0	0	0	0	0	0	0	0	0	0
4/22/2024	10:15 PM	0	0	0	0	0	0	0	0	0	0	0	0	0
4/22/2024	10:30 PM	0	0	0	0	0	0	0	0	0	0	0	0	0
4/22/2024	10:45 PM	0	0	0	0	0	0	0	0	0	0	0	0	0
4/22/2024	11:00 PM	0	0	0	0	0	0	0	0	0	0	0	0	0
4/22/2024	11:15 PM	0	0	0	0	0	0	0	0	0	0	0	0	0
4/22/2024	11:30 PM	0	0	0	0	0	0	0	0	0	0	0	0	0
4/22/2024	11:45 PM	0	0	0	0	0	0	0	0	0	0	0	0	0

4/23/2024	12:00 AM	0	0	0	0	0	0	0	0	0	0	0	0	0
4/23/2024	12:15 AM	0	0	0	0	0	0	0	0	0	0	0	0	0
4/23/2024	12:30 AM	0	0	0	0	0	0	0	0	0	0	0	0	0
4/23/2024	12:45 AM	0	0	0	0	0	0	0	0	0	0	0	0	0
4/23/2024	1:00 AM	0	0	0	0	0	0	0	0	0	0	0	0	0
4/23/2024	1:15 AM	0	0	0	0	0	0	0	0	0	0	0	0	0
4/23/2024	1:30 AM	0	0	0	0	0	0	0	0	0	0	0	0	0
4/23/2024	1:45 AM	0	0	0	0	0	0	0	0	0	0	0	0	0
4/23/2024	2:00 AM	0	0	0	0	0	0	0	0	0	0	0	0	0
4/23/2024	2:15 AM	0	0	0	0	0	0	0	0	0	0	0	0	0
4/23/2024	2:30 AM	0	0	0	0	0	0	0	0	0	0	0	0	0
4/23/2024	2:45 AM	0	0	0	0	0	0	0	0	0	0	0	0	0
4/23/2024	3:00 AM	0	0	0	0	0	0	0	0	0	0	0	0	0
4/23/2024	3:15 AM	0	0	0	0	0	0	0	0	0	0	0	0	0
4/23/2024	3:30 AM	0	0	0	0	0	0	0	0	0	0	0	0	0
4/23/2024	3:45 AM	0	0	0	0	0	0	0	0	0	0	0	0	0
4/23/2024	4:00 AM	0	0	0	0	0	0	0	0	0	0	0	0	0
4/23/2024	4:15 AM	0	0	0	0	0	0	0	0	0	0	0	0	0
4/23/2024	4:30 AM	0	0	0	0	0	0	0	0	0	0	0	0	0
4/23/2024	4:45 AM	0	0	0	0	0	0	0	0	0	0	0	0	0
4/23/2024	5:00 AM	0	0	0	0	0	0	0	0	0	0	0	0	0
4/23/2024	5:15 AM	0	0	0	0	0	0	0	0	0	0	0	0	0
4/23/2024	5:30 AM	0	0	0	0	0	0	0	0	0	0	0	0	0
4/23/2024	5:45 AM	0	0	0	0	0	0	0	0	0	0	0	0	0
4/23/2024	6:00 AM	0	0	0	0	0	0	0	0	0	0	0	0	0
4/23/2024	6:15 AM	0	0	0	0	0	0	0	0	0	0	0	0	0
4/23/2024	6:30 AM	0	0	0	0	0	0	0	0	0	0	0	0	0
4/23/2024	6:45 AM	0	0	0	0	0	0	0	0	0	0	0	0	0
4/23/2024	7:00 AM	0	0	0	0	0	0	0	0	0	0	0	0	0
4/23/2024	7:15 AM	0	0	0	0	0	0	0	0	0	0	0	0	0
4/23/2024	7:30 AM	0	0	0	0	0	0	0	0	0	0	0	0	0
4/23/2024	7:45 AM	0	0	0	0	0	0	0	0	0	0	0	0	0
4/23/2024	8:00 AM	0	0	0	0	0	0	0	0	0	0	0	0	0
4/23/2024	8:15 AM	0	0	0	0	0	0	0	0	0	0	0	0	0
4/23/2024	8:30 AM	0	0	0	0	0	0	0	0	0	0	0	0	0
4/23/2024	8:45 AM	0	0	0	0	0	0	0	0	0	0	0	0	0
4/23/2024	9:00 AM	0	0	0	0	0	0	0	0	0	0	0	0	0
4/23/2024	9:15 AM	0	0	0	0	0	0	0	0	0	0	0	0	0
4/23/2024	9:30 AM	0	0	0	0	0	0	0	0	0	0	0	0	0
4/23/2024	9:45 AM	0	0	0	0	0	0	0	0	0	0	0	0	0
4/23/2024	10:00 AM	0	0	0	0	0	0	0	0	0	0	0	0	0
4/23/2024	10:15 AM	0	0	0	0	0	0	0	0	0	0	0	0	0
4/23/2024	10:30 AM	0	0	0	0	0	0	0	0	0	0	0	0	0
4/23/2024	10:45 AM	0	0	0	0	0	0	0	0	0	0	0	0	0
4/23/2024	11:00 AM	0	0	0	0	0	0	0	0	0	0	0	0	0
4/23/2024	11:15 AM	0	0	0	0	0	0	0	0	0	0	0	0	0
4/23/2024	11:30 AM	0	0	0	0	0	0	0	0	0	0	0	0	0
4/23/2024	11:45 AM	0	0	0	0	0	0	0	0	0	0	0	0	0
4/23/2024	12:00 PM	0	0	0	0	0	0	0	0	0	0	0	0	0
4/23/2024	12:15 PM	0	0	0	0	0	0	0	0	0	0	0	0	0
4/23/2024	12:30 PM	0	0	0	0	0	0	0	0	0	0	0	0	0
4/23/2024	12:45 PM	0	0	0	0	0	0	0	0	0	0	0	0	0
4/23/2024	1:00 PM	0	0	0	0	0	0	0	0	0	0	0	0	0
4/23/2024	1:15 PM	0	0	0	0	0	0	0	0	0	0	0	0	0
4/23/2024	1:30 PM	0	0	0	0	0	0	0	0	0	0	0	0	0
4/23/2024	1:45 PM	0	0	0	0	0	0	0	0	0	0	0	0	0
4/23/2024	2:00 PM	0	0	0	0	0	0	0	0	0	0	0	0	0
4/23/2024	2:15 PM	0	0	0	0	0	0	0	0	0	0	0	0	0
4/23/2024	2:30 PM	0	0	0	0	0	0	0	0	0	0	0	0	0
4/23/2024	2:45 PM	0	0	0	0	0	0	0	0	0	0	0	0	0
4/23/2024	3:00 PM	0	0	0	0	0	0	0	0	0	0	0	0	0
4/23/2024	3:15 PM	0	0	0	0	0	0	0	0	0	0	0	0	0
4/23/2024	3:30 PM	0	0	0	0	0	0	0	0	0	0	0	0	0
4/23/2024	3:45 PM	0	0	0	0	0	0	0	0	0	0	0	0	0
4/23/2024	4:00 PM	0	0	0	0	0	0	0	0	0	0	0	0	0
4/23/2024	4:15 PM	0	0	0	0	0	0	0	0	0	0	0	0	0
4/23/2024	4:30 PM	0	0	0	0	0	0	0	0	0	0	0	0	0
4/23/2024	4:45 PM	0	0	0	0	0	0	0	0	0	0	0	0	0
4/23/2024	5:00 PM	0	0	0	0	0	0	0	0	0	0	0	0	0
4/23/2024	5:15 PM	0	0	0	0	0	0	0	0	0	0	0	0	0
4/23/2024	5:30 PM	0	0	0	0	0	0	0	0	0	0	0	0	0
4/23/2024	5:45 PM	0	0	0	0	0	0	0	0	0	0	0	0	0
4/23/2024	6:00 PM	0	0	0	0	0	0	0	0	0	0	0	0	0
4/23/2024	6:15 PM	0	0	0	0	0	0	0	0	0	0	0	0	0
4/23/2024	6:30 PM	0	0	0	0	0	0	0	0	0	0	0	0	0
4/23/2024	6:45 PM	0	0	0	0	0	0	0	0	0	0	0	0	0
4/23/2024	7:00 PM	0	0	0	0	0	0	0	0	0	0	0	0	0
4/23/2024	7:15 PM	0	0	0	0	0	0	0	0	0	0	0	0	0
4/23/2024	7:30 PM	0	0	0	0	0	0	0	0	0	0	0	0	0
4/23/2024	7:45 PM	0	0	0	0	0	0	0	0	0	0	0	0	0
4/23/2024	8:00 PM	0	0	0	0	0	0	0	0	0	0	0	0	0
4/23/2024	8:15 PM	0	0	0	0	0	0	0	0	0	0	0	0	0
4/23/2024	8:30 PM	0	0	0	0	0	0	0	0	0	0	0	0	0
4/23/2024	8:45 PM	0	0	0	0	0	0	0	0	0	0	0	0	0
4/23/2024	9:00 PM	0	0	0	0	0	0	0	0	0	0	0	0	0
4/23/2024	9:15 PM	0	0	0	0	0	0	0	0	0	0	0	0	0
4/23/2024	9:30 PM	0	0	0	0	0	0	0	0	0	0	0	0	0
4/23/2024	9:45 PM	0	0	0	0	0	0	0	0	0	0	0	0	0
4/23/2024	10:00 PM	0	0	0	0	0	0	0	0	0	0	0	0	0
4/23/2024	10:15 PM	0	0	0	0	0	0	0	0	0	0	0	0	0
4/23/2024	10:30 PM	0	0	0	0	0	0	0	0	0	0	0	0	0
4/23/2024	10:45 PM	0	0	0	0	0	0	0	0	0	0	0	0	0
4/23/2024	11:00 PM	0	0	0	0	0	0	0	0	0	0	0	0	0
4/23/2024	11:15 PM	0	0	0	0	0	0	0	0	0	0	0	0	0
4/23/2024	11:30 PM	0	0	0	0	0	0	0	0	0	0	0	0	0
4/23/2024	11:45 PM	0	0	0	0	0	0	0	0	0	0	0	0	0

4/24/2024	12:00 AM	0	0	0	0	0	0	0	0	0	0	0	0	0
4/24/2024	12:15 AM	0	0	0	0	0	0	0	0	0	0	0	0	0
4/24/2024	12:30 AM	0	0	0	0	0	0	0	0	0	0	0	0	0
4/24/2024	12:45 AM	0	0	0	0	0	0	0	0	0	0	0	0	0
4/24/2024	1:00 AM	0	0	0	0	0	0	0	0	0	0	0	0	0
4/24/2024	1:15 AM	0	0	0	0	0	0	0	0	0	0	0	0	0
4/24/2024	1:30 AM	0	0	0	0	0	0	0	0	0	0	0	0	0
4/24/2024	1:45 AM	0	0	0	0	0	0	0	0	0	0	0	0	0
4/24/2024	2:00 AM	0	0	0	0	0	0	0	0	0	0	0	0	0
4/24/2024	2:15 AM	0	0	0	0	0	0	0	0	0	0	0	0	0
4/24/2024	2:30 AM	0	0	0	0	0	0	0	0	0	0	0	0	0
4/24/2024	2:45 AM	0	0	0	0	0	0	0	0	0	0	0	0	0
4/24/2024	3:00 AM	0	0	0	0	0	0	0	0	0	0	0	0	0
4/24/2024	3:15 AM	0	0	0	0	0	0	0	0	0	0	0	0	0
4/24/2024	3:30 AM	0	0	0	0	0	0	0	0	0	0	0	0	0
4/24/2024	3:45 AM	0	0	0	0	0	0	0	0	0	0	0	0	0
4/24/2024	4:00 AM	0	0	0	0	0	0	0	0	0	0	0	0	0
4/24/2024	4:15 AM	0	0	0	0	0	0	0	0	0	0	0	0	0
4/24/2024	4:30 AM	0	0	0	0	0	0	0	0	0	0	0	0	0
4/24/2024	4:45 AM	0	0	0	0	0	0	0	0	0	0	0	0	0
4/24/2024	5:00 AM	0	0	0	0	0	0	0	0	0	0	0	0	0
4/24/2024	5:15 AM	0	0	0	0	0	0	0	0	0	0	0	0	0
4/24/2024	5:30 AM	0	0	0	0	0	0	0	0	0	0	0	0	0
4/24/2024	5:45 AM	0	0	0	0	0	0	0	0	0	0	0	0	0
4/24/2024	6:00 AM	0	0	0	0	0	0	0	0	0	0	0	0	0
4/24/2024	6:15 AM	0	0	0	0	0	0	0	0	0	0	0	0	0
4/24/2024	6:30 AM	0	0	0	0	0	0	0	0	0	0	0	0	0
4/24/2024	6:45 AM	0	0	0	0	0	0	0	0	0	0	0	0	0
4/24/2024	7:00 AM	0	0	0	0	0	0	0	0	0	0	0	0	0
4/24/2024	7:15 AM	0	0	0	0	0	0	0	0	0	0	0	0	0
4/24/2024	7:30 AM	0	0	0	0	0	0	0	0	0	0	0	0	0
4/24/2024	7:45 AM	0	0	0	0	0	0	0	0	0	0	0	0	0
4/24/2024	8:00 AM	0	0	0	0	0	0	0	0	0	0	0	0	0
4/24/2024	8:15 AM	0	0	0	0	0	0	0	0	0	0	0	0	0
4/24/2024	8:30 AM	0	0	0	0	0	0	0	0	0	0	0	0	0
4/24/2024	8:45 AM	0	0	0	0	0	0	0	0	0	0	0	0	0
4/24/2024	9:00 AM	0	0	0	0	0	0	0	0	0	0	0	0	0
4/24/2024	9:15 AM	0	0	0	0	0	0	0	0	0	0	0	0	0
4/24/2024	9:30 AM	0	0	0	0	0	0	0	0	0	0	0	0	0
4/24/2024	9:45 AM	0	0	0	0	0	0	0	0	0	0	0	0	0
4/24/2024	10:00 AM	0	0	0	0	0	0	0	0	0	0	0	0	0
4/24/2024	10:15 AM	0	0	0	0	0	0	0	0	0	0	0	0	0
4/24/2024	10:30 AM	0	0	0	0	0	0	0	0	0	0	0	0	0
4/24/2024	10:45 AM	0	0	0	0	0	0	0	0	0	0	0	0	0
4/24/2024	11:00 AM	0	0	0	0	0	0	0	0	0	0	0	0	0
4/24/2024	11:15 AM	0	0	0	0	0	0	0	0	0	0	0	0	0
4/24/2024	11:30 AM	0	0	0	0	0	0	0	0	0	0	0	0	0
4/24/2024	11:45 AM	0	0	0	0	0	0	0	0	0	0	0	0	0
4/24/2024	12:00 PM	0	0	0	0	0	0	0	0	0	0	0	0	0
4/24/2024	12:15 PM	0	0	0	0	0	0	0	0	0	0	0	0	0
4/24/2024	12:30 PM	0	0	0	0	0	0	0	0	0	0	0	0	0
4/24/2024	12:45 PM	0	0	0	0	0	0	0	0	0	0	0	0	0
4/24/2024	1:00 PM	0	0	0	0	0	0	0	0	0	0	0	0	0
4/24/2024	1:15 PM	0	0	0	0	0	0	0	0	0	0	0	0	0
4/24/2024	1:30 PM	0	0	0	0	0	0	0	0	0	0	0	0	0
4/24/2024	1:45 PM	0	0	0	0	0	0	0	0	0	0	0	0	0
4/24/2024	2:00 PM	0	0	0	0	0	0	0	0	0	0	0	0	0
4/24/2024	2:15 PM	0	0	0	0	0	0	0	0	0	0	0	0	0
4/24/2024	2:30 PM	0	0	0	0	0	0	0	0	0	0	0	0	0
4/24/2024	2:45 PM	0	0	0	0	0	0	0	0	0	0	0	0	0
4/24/2024	3:00 PM	0	0	0	0	0	0	0	0	0	0	0	0	0
4/24/2024	3:15 PM	0	0	0	0	0	0	0	0	0	0	0	0	0
4/24/2024	3:30 PM	0	0	0	0	0	0	0	0	0	0	0	0	0
4/24/2024	3:45 PM	0	0	0	0	0	0	0	0	0	0	0	0	0
4/24/2024	4:00 PM	0	0	0	0	0	0	0	0	0	0	0	0	0
4/24/2024	4:15 PM	0	0	0	0	0	0	0	0	0	0	0	0	0
4/24/2024	4:30 PM	0	0	0	0	0	0	0	0	0	0	0	0	0
4/24/2024	4:45 PM	0	0	0	0	0	0	0	0	0	0	0	0	0
4/24/2024	5:00 PM	0	0	0	0	0	0	0	0	0	0	0	0	0
4/24/2024	5:15 PM	0	0	0	0	0	0	0	0	0	0	0	0	0
4/24/2024	5:30 PM	0	0	0	0	0	0	0	0	0	0	0	0	0
4/24/2024	5:45 PM	0	0	0	0	0	0	0	0	0	0	0	0	0
4/24/2024	6:00 PM	0	0	0	0	0	0	0	0	0	0	0	0	0
4/24/2024	6:15 PM	0	0	0	0	0	0	0	0	0	0	0	0	0
4/24/2024	6:30 PM	0	0	0	0	0	0	0	0	0	0	0	0	0
4/24/2024	6:45 PM	0	0	0	0	0	0	0	0	0	0	0	0	0
4/24/2024	7:00 PM	0	0	0	0	0	0	0	0	0	0	0	0	0
4/24/2024	7:15 PM	0	0	0	0	0	0	0	0	0	0	0	0	0
4/24/2024	7:30 PM	0	0	0	0	0	0	0	0	0	0	0	0	0
4/24/2024	7:45 PM	0	0	0	0	0	0	0	0	0	0	0	0	0
4/24/2024	8:00 PM	0	0	0	0	0	0	0	0	0	0	0	0	0
4/24/2024	8:15 PM	0	0	0	0	0	0	0	0	0	0	0	0	0
4/24/2024	8:30 PM	0	0	0	0	0	0	0	0	0	0	0	0	0
4/24/2024	8:45 PM	0	0	0	0	0	0	0	0	0	0	0	0	0
4/24/2024	9:00 PM	0	0	0	0	0	0	0	0	0	0	0	0	0
4/24/2024	9:15 PM	0	0	0	0	0	0	0	0	0	0	0	0	0
4/24/2024	9:30 PM	0	0	0	0	0	0	0	0	0	0	0	0	0
4/24/2024	9:45 PM	0	0	0	0	0	0	0	0	0	0	0	0	0
4/24/2024	10:00 PM	0	0	0	0	0	0	0	0	0	0	0	0	0
4/24/2024	10:15 PM	0	0	0	0	0	0	0	0	0	0	0	0	0
4/24/2024	10:30 PM	0	0	0	0	0	0	0	0	0	0	0	0	0
4/24/2024	10:45 PM	0	0	0	0	0	0	0	0	0	0	0	0	0
4/24/2024	11:00 PM	0	0	0	0	0	0	0	0	0	0	0	0	0
4/24/2024	11:15 PM	0	0	0	0	0	0	0	0	0	0	0	0	0
4/24/2024	11:30 PM	0	0	0	0	0	0	0	0	0	0	0	0	0
4/24/2024	11:45 PM	0	0	0	0	0	0	0	0	0	0	0	0	0

4/25/2024	12:00 AM	0	0	0	0	0	0	0	0	0	0	0	0	0
4/25/2024	12:15 AM	0	0	0	0	0	0	0	0	0	0	0	0	0
4/25/2024	12:30 AM	0	0	0	0	0	0	0	0	0	0	0	0	0
4/25/2024	12:45 AM	0	0	0	0	0	0	0	0	0	0	0	0	0
4/25/2024	1:00 AM	0	0	0	0	0	0	0	0	0	0	0	0	0
4/25/2024	1:15 AM	0	0	0	0	0	0	0	0	0	0	0	0	0
4/25/2024	1:30 AM	0	0	0	0	0	0	0	0	0	0	0	0	0
4/25/2024	1:45 AM	0	0	0	0	0	0	0	0	0	0	0	0	0
4/25/2024	2:00 AM	0	0	0	0	0	0	0	0	0	0	0	0	0
4/25/2024	2:15 AM	0	0	0	0	0	0	0	0	0	0	0	0	0
4/25/2024	2:30 AM	0	0	0	0	0	0	0	0	0	0	0	0	0
4/25/2024	2:45 AM	0	0	0	0	0	0	0	0	0	0	0	0	0
4/25/2024	3:00 AM	0	0	0	0	0	0	0	0	0	0	0	0	0
4/25/2024	3:15 AM	0	0	0	0	0	0	0	0	0	0	0	0	0
4/25/2024	3:30 AM	0	0	0	0	0	0	0	0	0	0	0	0	0
4/25/2024	3:45 AM	0	0	0	0	0	0	0	0	0	0	0	0	0
4/25/2024	4:00 AM	0	0	0	0	0	0	0	0	0	0	0	0	0
4/25/2024	4:15 AM	0	0	0	0	0	0	0	0	0	0	0	0	0
4/25/2024	4:30 AM	0	0	0	0	0	0	0	0	0	0	0	0	0
4/25/2024	4:45 AM	0	0	0	0	0	0	0	0	0	0	0	0	0
4/25/2024	5:00 AM	0	0	0	0	0	0	0	0	0	0	0	0	0
4/25/2024	5:15 AM	0	0	0	0	0	0	0	0	0	0	0	0	0
4/25/2024	5:30 AM	0	0	0	0	0	0	0	0	0	0	0	0	0
4/25/2024	5:45 AM	0	0	0	0	0	0	0	0	0	0	0	0	0
4/25/2024	6:00 AM	0	0	0	0	0	0	0	0	0	0	0	0	0
4/25/2024	6:15 AM	0	0	0	0	0	0	0	0	0	0	0	0	0
4/25/2024	6:30 AM	0	0	0	0	0	0	0	0	0	0	0	0	0
4/25/2024	6:45 AM	0	0	0	0	0	0	0	0	0	0	0	0	0
4/25/2024	7:00 AM	0	0	0	0	0	0	0	0	0	0	0	0	0
4/25/2024	7:15 AM	0	0	0	0	0	0	0	0	0	0	0	0	0
4/25/2024	7:30 AM	0	0	0	0	0	0	0	0	0	0	0	0	0
4/25/2024	7:45 AM	0	0	0	0	0	0	0	0	0	0	0	0	0
4/25/2024	8:00 AM	0	0	0	0	0	0	0	0	0	0	0	0	0
4/25/2024	8:15 AM	0	0	0	0	0	0	0	0	0	0	0	0	0
4/25/2024	8:30 AM	0	0	0	0	0	0	0	0	0	0	0	0	0
4/25/2024	8:45 AM	0	0	0	0	0	0	0	0	0	0	0	0	0
4/25/2024	9:00 AM	0	0	0	0	0	0	0	0	0	0	0	0	0
4/25/2024	9:15 AM	0	0	0	0	0	0	0	0	0	0	0	0	0
4/25/2024	9:30 AM	0	0	0	0	0	0	0	0	0	0	0	0	0
4/25/2024	9:45 AM	0	0	0	0	0	0	0	0	0	0	0	0	0
4/25/2024	10:00 AM	0	0	0	0	0	0	0	0	0	0	0	0	0
4/25/2024	10:15 AM	0	0	0	0	0	0	0	0	0	0	0	0	0
4/25/2024	10:30 AM	0	0	0	0	0	0	0	0	0	0	0	0	0
4/25/2024	10:45 AM	0	0	0	0	0	0	0	0	0	0	0	0	0
4/25/2024	11:00 AM	0	0	0	0	0	0	0	0	0	0	0	0	0
4/25/2024	11:15 AM	0	0	0	0	0	0	0	0	0	0	0	0	0
4/25/2024	11:30 AM	0	0	0	0	0	0	0	0	0	0	0	0	0
4/25/2024	11:45 AM	0	0	0	0	0	0	0	0	0	0	0	0	0
4/25/2024	12:00 PM	0	0	0	0	0	0	0	0	0	0	0	0	0
4/25/2024	12:15 PM	0	0	0	0	0	0	0	0	0	0	0	0	0
4/25/2024	12:30 PM	0	0	0	0	0	0	0	0	0	0	0	0	0
4/25/2024	12:45 PM	0	0	0	0	0	0	0	0	0	0	0	0	0
4/25/2024	1:00 PM	0	0	0	0	0	0	0	0	0	0	0	0	0
4/25/2024	1:15 PM	0	0	0	0	0	0	0	0	0	0	0	0	0
4/25/2024	1:30 PM	0	0	0	0	0	0	0	0	0	0	0	0	0
4/25/2024	1:45 PM	0	0	0	0	0	0	0	0	0	0	0	0	0
4/25/2024	2:00 PM	0	0	0	0	0	0	0	0	0	0	0	0	0
4/25/2024	2:15 PM	0	0	0	0	0	0	0	0	0	0	0	0	0
4/25/2024	2:30 PM	0	0	0	0	0	0	0	0	0	0	0	0	0
4/25/2024	2:45 PM	0	0	0	0	0	0	0	0	0	0	0	0	0
4/25/2024	3:00 PM	0	0	0	0	0	0	0	0	0	0	0	0	0
4/25/2024	3:15 PM	0	0	0	0	0	0	0	0	0	0	0	0	0
4/25/2024	3:30 PM	0	0	0	0	0	0	0	0	0	0	0	0	0
4/25/2024	3:45 PM	0	0	0	0	0	0	0	0	0	0	0	0	0
4/25/2024	4:00 PM	0	0	0	0	0	0	0	0	0	0	0	0	0
4/25/2024	4:15 PM	0	0	0	0	0	0	0	0	0	0	0	0	0
4/25/2024	4:30 PM	0	0	0	0	0	0	0	0	0	0	0	0	0
4/25/2024	4:45 PM	0	0	0	0	0	0	0	0	0	0	0	0	0
4/25/2024	5:00 PM	0	0	0	0	0	0	0	0	0	0	0	0	0
4/25/2024	5:15 PM	0	0	0	0	0	0	0	0	0	0	0	0	0
4/25/2024	5:30 PM	0	0	0	0	0	0	0	0	0	0	0	0	0
4/25/2024	5:45 PM	0	0	0	0	0	0	0	0	0	0	0	0	0
4/25/2024	6:00 PM	0	0	0	0	0	0	0	0	0	0	0	0	0
4/25/2024	6:15 PM	0	0	0	0	0	0	0	0	0	0	0	0	0
4/25/2024	6:30 PM	0	0	0	0	0	0	0	0	0	0	0	0	0
4/25/2024	6:45 PM	0	0	0	0	0	0	0	0	0	0	0	0	0
4/25/2024	7:00 PM	0	0	0	0	0	0	0	0	0	0	0	0	0
4/25/2024	7:15 PM	0	0	0	0	0	0	0	0	0	0	0	0	0
4/25/2024	7:30 PM	0	0	0	0	0	0	0	0	0	0	0	0	0
4/25/2024	7:45 PM	0	0	0	0	0	0	0	0	0	0	0	0	0
4/25/2024	8:00 PM	0	0	0	0	0	0	0	0	0	0	0	0	0
4/25/2024	8:15 PM	0	0	0	0	0	0	0	0	0	0	0	0	0
4/25/2024	8:30 PM	0	0	0	0	0	0	0	0	0	0	0	0	0
4/25/2024	8:45 PM	0	0	0	0	0	0	0	0	0	0	0	0	0
4/25/2024	9:00 PM	0	0	0	0	0	0	0	0	0	0	0	0	0
4/25/2024	9:15 PM	0	0	0	0	0	0	0	0	0	0	0	0	0
4/25/2024	9:30 PM	0	0	0	0	0	0	0	0	0	0	0	0	0
4/25/2024	9:45 PM	0	0	0	0	0	0	0	0	0	0	0	0	0
4/25/2024	10:00 PM	0	0	0	0	0	0	0	0	0	0	0	0	0
4/25/2024	10:15 PM	0	0	0	0	0	0	0	0	0	0	0	0	0
4/25/2024	10:30 PM	0	0	0	0	0	0	0	0	0	0	0	0	0
4/25/2024	10:45 PM	0	0	0	0	0	0	0	0	0	0	0	0	0
4/25/2024	11:00 PM	0	0	0	0	0	0	0	0	0	0	0	0	0
4/25/2024	11:15 PM	0	0	0	0	0	0	0	0	0	0	0	0	0
4/25/2024	11:30 PM	0	0	0	0	0	0	0	0	0	0	0	0	0
4/25/2024	11:45 PM	0	0	0	0	0	0	0	0	0	0	0	0	0

4/26/2024	12:00 AM	0	0	0	0	0	0	0	0	0	0	0	0	0
4/26/2024	12:15 AM	0	0	0	0	0	0	0	0	0	0	0	0	0
4/26/2024	12:30 AM	0	0	0	0	0	0	0	0	0	0	0	0	0
4/26/2024	12:45 AM	0	0	0	0	0	0	0	0	0	0	0	0	0
4/26/2024	1:00 AM	0	0	0	0	0	0	0	0	0	0	0	0	0
4/26/2024	1:15 AM	0	0	0	0	0	0	0	0	0	0	0	0	0
4/26/2024	1:30 AM	0	0	0	0	0	0	0	0	0	0	0	0	0
4/26/2024	1:45 AM	0	0	0	0	0	0	0	0	0	0	0	0	0
4/26/2024	2:00 AM	0	0	0	0	0	0	0	0	0	0	0	0	0
4/26/2024	2:15 AM	0	0	0	0	0	0	0	0	0	0	0	0	0
4/26/2024	2:30 AM	0	0	0	0	0	0	0	0	0	0	0	0	0
4/26/2024	2:45 AM	0	0	0	0	0	0	0	0	0	0	0	0	0
4/26/2024	3:00 AM	0	0	0	0	0	0	0	0	0	0	0	0	0
4/26/2024	3:15 AM	0	0	0	0	0	0	0	0	0	0	0	0	0
4/26/2024	3:30 AM	0	0	0	0	0	0	0	0	0	0	0	0	0
4/26/2024	3:45 AM	0	0	0	0	0	0	0	0	0	0	0	0	0
4/26/2024	4:00 AM	0	0	0	0	0	0	0	0	0	0	0	0	0
4/26/2024	4:15 AM	0	0	0	0	0	0	0	0	0	0	0	0	0
4/26/2024	4:30 AM	0	0	0	0	0	0	0	0	0	0	0	0	0
4/26/2024	4:45 AM	0	0	0	0	0	0	0	0	0	0	0	0	0
4/26/2024	5:00 AM	0	0	0	0	0	0	0	0	0	0	0	0	0
4/26/2024	5:15 AM	0	0	0	0	0	0	0	0	0	0	0	0	0
4/26/2024	5:30 AM	0	0	0	0	0	0	0	0	0	0	0	0	0
4/26/2024	5:45 AM	0	0	0	0	0	0	0	0	0	0	0	0	0
4/26/2024	6:00 AM	0	0	0	0	0	0	0	0	0	0	0	0	0
4/26/2024	6:15 AM	0	0	0	0	0	0	0	0	0	0	0	0	0
4/26/2024	6:30 AM	0	0	0	0	0	0	0	0	0	0	0	0	0
4/26/2024	6:45 AM	0	0	0	0	0	0	0	0	0	0	0	0	0
4/26/2024	7:00 AM	0	0	0	0	0	0	0	0	0	0	0	0	0
4/26/2024	7:15 AM	0	0	0	0	0	0	0	0	0	0	0	0	0
4/26/2024	7:30 AM	0	0	0	0	0	0	0	0	0	0	0	0	0
4/26/2024	7:45 AM	0	0	0	0	0	0	0	0	0	0	0	0	0
4/26/2024	8:00 AM	0	0	0	0	0	0	0	0	0	0	0	0	0
4/26/2024	8:15 AM	0	0	0	0	0	0	0	0	0	0	0	0	0
4/26/2024	8:30 AM	0	0	0	0	0	0	0	0	0	0	0	0	0
4/26/2024	8:45 AM	0	0	0	0	0	0	0	0	0	0	0	0	0
4/26/2024	9:00 AM	0	0	0	0	0	0	0	0	0	0	0	0	0
4/26/2024	9:15 AM	0	0	0	0	0	0	0	0	0	0	0	0	0
4/26/2024	9:30 AM	0	0	0	0	0	0	0	0	0	0	0	0	0
4/26/2024	9:45 AM	0	0	0	0	0	0	0	0	0	0	0	0	0
4/26/2024	10:00 AM	0	0	0	0	0	0	0	0	0	0	0	0	0
4/26/2024	10:15 AM	0	0	0	0	0	0	0	0	0	0	0	0	0
4/26/2024	10:30 AM	0	0	0	0	0	0	0	0	0	0	0	0	0
4/26/2024	10:45 AM	0	0	0	0	0	0	0	0	0	0	0	0	0
4/26/2024	11:00 AM	0	0	0	0	0	0	0	0	0	0	0	0	0
4/26/2024	11:15 AM	0	0	0	0	0	0	0	0	0	0	0	0	0
4/26/2024	11:30 AM	0	0	0	0	0	0	0	0	0	0	0	0	0
4/26/2024	11:45 AM	0	0	0	0	0	0	0	0	0	0	0	0	0
4/26/2024	12:00 PM	0	0	0	0	0	0	0	0	0	0	0	0	0
4/26/2024	12:15 PM	0	0	0	0	0	0	0	0	0	0	0	0	0
4/26/2024	12:30 PM	0	0	0	0	0	0	0	0	0	0	0	0	0
4/26/2024	12:45 PM	0	0	0	0	0	0	0	0	0	0	0	0	0
4/26/2024	1:00 PM	0	0	0	0	0	0	0	0	0	0	0	0	0
4/26/2024	1:15 PM	0	0	0	0	0	0	0	0	0	0	0	0	0
4/26/2024	1:30 PM	0	0	0	0	0	0	0	0	0	0	0	0	0
4/26/2024	1:45 PM	0	0	0	0	0	0	0	0	0	0	0	0	0
4/26/2024	2:00 PM	0	0	0	0	0	0	0	0	0	0	0	0	0
4/26/2024	2:15 PM	0	0	0	0	0	0	0	0	0	0	0	0	0
4/26/2024	2:30 PM	0	0	0	0	0	0	0	0	0	0	0	0	0
4/26/2024	2:45 PM	0	0	0	0	0	0	0	0	0	0	0	0	0
4/26/2024	3:00 PM	0	0	0	0	0	0	0	0	0	0	0	0	0
4/26/2024	3:15 PM	0	0	0	0	0	0	0	0	0	0	0	0	0
4/26/2024	3:30 PM	0	0	0	0	0	0	0	0	0	0	0	0	0
4/26/2024	3:45 PM	0	0	0	0	0	0	0	0	0	0	0	0	0
4/26/2024	4:00 PM	0	0	0	0	0	0	0	0	0	0	0	0	0
4/26/2024	4:15 PM	0	0	0	0	0	0	0	0	0	0	0	0	0
4/26/2024	4:30 PM	0	0	0	0	0	0	0	0	0	0	0	0	0
4/26/2024	4:45 PM	0	0	0	0	0	0	0	0	0	0	0	0	0
4/26/2024	5:00 PM	0	0	0	0	0	0	0	0	0	0	0	0	0
4/26/2024	5:15 PM	0	0	0	0	0	0	0	0	0	0	0	0	0
4/26/2024	5:30 PM	0	0	0	0	0	0	0	0	0	0	0	0	0
4/26/2024	5:45 PM	0	0	0	0	0	0	0	0	0	0	0	0	0
4/26/2024	6:00 PM	0	0	0	0	0	0	0	0	0	0	0	0	0
4/26/2024	6:15 PM	0	0	0	0	0	0	0	0	0	0	0	0	0
4/26/2024	6:30 PM	0	0	0	0	0	0	0	0	0	0	0	0	0
4/26/2024	6:45 PM	0	0	0	0	0	0	0	0	0	0	0	0	0
4/26/2024	7:00 PM	0	0	0	0	0	0	0	0	0	0	0	0	0
4/26/2024	7:15 PM	0	0	0	0	0	0	0	0	0	0	0	0	0
4/26/2024	7:30 PM	0	0	0	0	0	0	0	0	0	0	0	0	0
4/26/2024	7:45 PM	0	0	0	0	0	0	0	0	0	0	0	0	0
4/26/2024	8:00 PM	0	0	0	0	0	0	0	0	0	0	0	0	0
4/26/2024	8:15 PM	0	0	0	0	0	0	0	0	0	0	0	0	0
4/26/2024	8:30 PM	0	0	0	0	0	0	0	0	0	0	0	0	0
4/26/2024	8:45 PM	0	0	0	0	0	0	0	0	0	0	0	0	0
4/26/2024	9:00 PM	0	0	0	0	0	0	0	0	0	0	0	0	0
4/26/2024	9:15 PM	0	0	0	0	0	0	0	0	0	0	0	0	0
4/26/2024	9:30 PM	0	0	0	0	0	0	0	0	0	0	0	0	0
4/26/2024	9:45 PM	0	0	0	0	0	0	0	0	0	0	0	0	0
4/26/2024	10:00 PM	0	0	0	0	0	0	0	0	0	0	0	0	0
4/26/2024	10:15 PM	0	0	0	0	0	0	0	0	0	0	0	0	0
4/26/2024	10:30 PM	0	0	0	0	0	0	0	0	0	0	0	0	0
4/26/2024	10:45 PM	0	0	0	0	0	0	0	0	0	0	0	0	0
4/26/2024	11:00 PM	0	0	0	0	0	0	0	0	0	0	0	0	0
4/26/2024	11:15 PM	0	0	0	0	0	0	0	0	0	0	0	0	0
4/26/2024	11:30 PM	0	0	0	0	0	0	0	0	0	0	0	0	0
4/26/2024	11:45 PM	0	0	0	0	0	0	0	0	0	0	0	0	0

4/27/2024	12:00 AM	0	0	0	0	0	0	0	0	0	0	0	0	0
4/27/2024	12:15 AM	0	0	0	0	0	0	0	0	0	0	0	0	0
4/27/2024	12:30 AM	0	0	0	0	0	0	0	0	0	0	0	0	0
4/27/2024	12:45 AM	0	0	0	0	0	0	0	0	0	0	0	0	0
4/27/2024	1:00 AM	0	0	0	0	0	0	0	0	0	0	0	0	0
4/27/2024	1:15 AM	0	0	0	0	0	0	0	0	0	0	0	0	0
4/27/2024	1:30 AM	0	0	0	0	0	0	0	0	0	0	0	0	0
4/27/2024	1:45 AM	0	0	0	0	0	0	0	0	0	0	0	0	0
4/27/2024	2:00 AM	0	0	0	0	0	0	0	0	0	0	0	0	0
4/27/2024	2:15 AM	0	0	0	0	0	0	0	0	0	0	0	0	0
4/27/2024	2:30 AM	0	0	0	0	0	0	0	0	0	0	0	0	0
4/27/2024	2:45 AM	0	0	0	0	0	0	0	0	0	0	0	0	0
4/27/2024	3:00 AM	0	0	0	0	0	0	0	0	0	0	0	0	0
4/27/2024	3:15 AM	0	0	0	0	0	0	0	0	0	0	0	0	0
4/27/2024	3:30 AM	0	0	0	0	0	0	0	0	0	0	0	0	0
4/27/2024	3:45 AM	0	0	0	0	0	0	0	0	0	0	0	0	0
4/27/2024	4:00 AM	0	0	0	0	0	0	0	0	0	0	0	0	0
4/27/2024	4:15 AM	0	0	0	0	0	0	0	0	0	0	0	0	0
4/27/2024	4:30 AM	0	0	0	0	0	0	0	0	0	0	0	0	0
4/27/2024	4:45 AM	0	0	0	0	0	0	0	0	0	0	0	0	0
4/27/2024	5:00 AM	0	0	0	0	0	0	0	0	0	0	0	0	0
4/27/2024	5:15 AM	0	0	0	0	0	0	0	0	0	0	0	0	0
4/27/2024	5:30 AM	0	0	0	0	0	0	0	0	0	0	0	0	0
4/27/2024	5:45 AM	0	0	0	0	0	0	0	0	0	0	0	0	0
4/27/2024	6:00 AM	0	0	0	0	0	0	0	0	0	0	0	0	0
4/27/2024	6:15 AM	0	0	0	0	0	0	0	0	0	0	0	0	0
4/27/2024	6:30 AM	0	0	0	0	0	0	0	0	0	0	0	0	0
4/27/2024	6:45 AM	0	0	0	0	0	0	0	0	0	0	0	0	0
4/27/2024	7:00 AM	0	0	0	0	0	0	0	0	0	0	0	0	0
4/27/2024	7:15 AM	0	0	0	0	0	0	0	0	0	0	0	0	0
4/27/2024	7:30 AM	0	0	0	0	0	0	0	0	0	0	0	0	0
4/27/2024	7:45 AM	0	0	0	0	0	0	0	0	0	0	0	0	0
4/27/2024	8:00 AM	0	0	0	0	0	0	0	0	0	0	0	0	0
4/27/2024	8:15 AM	0	0	0	0	0	0	0	0	0	0	0	0	0
4/27/2024	8:30 AM	0	0	0	0	0	0	0	0	0	0	0	0	0
4/27/2024	8:45 AM	0	0	0	0	0	0	0	0	0	0	0	0	0
4/27/2024	9:00 AM	0	0	0	0	0	0	0	0	0	0	0	0	0
4/27/2024	9:15 AM	0	0	0	0	0	0	0	0	0	0	0	0	0
4/27/2024	9:30 AM	0	0	0	0	0	0	0	0	0	0	0	0	0
4/27/2024	9:45 AM	0	0	0	0	0	0	0	0	0	0	0	0	0
4/27/2024	10:00 AM	0	0	0	0	0	0	0	0	0	0	0	0	0
4/27/2024	10:15 AM	0	0	0	0	0	0	0	0	0	0	0	0	0
4/27/2024	10:30 AM	0	0	0	0	0	0	0	0	0	0	0	0	0
4/27/2024	10:45 AM	0	0	0	0	0	0	0	0	0	0	0	0	0
4/27/2024	11:00 AM	0	0	0	0	0	0	0	0	0	0	0	0	0
4/27/2024	11:15 AM	0	0	0	0	0	0	0	0	0	0	0	0	0
4/27/2024	11:30 AM	0	0	0	0	0	0	0	0	0	0	0	0	0
4/27/2024	11:45 AM	0	0	0	0	0	0	0	0	0	0	0	0	0
4/27/2024	12:00 PM	0	0	0	0	0	0	0	0	0	0	0	0	0
4/27/2024	12:15 PM	0	0	0	0	0	0	0	0	0	0	0	0	0
4/27/2024	12:30 PM	0	0	0	0	0	0	0	0	0	0	0	0	0
4/27/2024	12:45 PM	0	0	0	0	0	0	0	0	0	0	0	0	0
4/27/2024	1:00 PM	0	0	0	0	0	0	0	0	0	0	0	0	0
4/27/2024	1:15 PM	0	0	0	0	0	0	0	0	0	0	0	0	0
4/27/2024	1:30 PM	0	0	0	0	0	0	0	0	0	0	0	0	0
4/27/2024	1:45 PM	0	0	0	0	0	0	0	0	0	0	0	0	0
4/27/2024	2:00 PM	0	0	0	0	0	0	0	0	0	0	0	0	0
4/27/2024	2:15 PM	0	0	0	0	0	0	0	0	0	0	0	0	0
4/27/2024	2:30 PM	0	0	0	0	0	0	0	0	0	0	0	0	0
4/27/2024	2:45 PM	0	0	0	0	0	0	0	0	0	0	0	0	0
4/27/2024	3:00 PM	0	0	0	0	0	0	0	0	0	0	0	0	0
4/27/2024	3:15 PM	0	0	0	0	0	0	0	0	0	0	0	0	0
4/27/2024	3:30 PM	0	0	0	0	0	0	0	0	0	0	0	0	0
4/27/2024	3:45 PM	0	0	0	0	0	0	0	0	0	0	0	0	0
4/27/2024	4:00 PM	0	0	0	0	0	0	0	0	0	0	0	0	0
4/27/2024	4:15 PM	0	0	0	0	0	0	0	0	0	0	0	0	0
4/27/2024	4:30 PM	0	0	0	0	0	0	0	0	0	0	0	0	0
4/27/2024	4:45 PM	0	0	0	0	0	0	0	0	0	0	0	0	0
4/27/2024	5:00 PM	0	0	0	0	0	0	0	0	0	0	0	0	0
4/27/2024	5:15 PM	0	0	0	0	0	0	0	0	0	0	0	0	0
4/27/2024	5:30 PM	0	0	0	0	0	0	0	0	0	0	0	0	0
4/27/2024	5:45 PM	0	0	0	0	0	0	0	0	0	0	0	0	0
4/27/2024	6:00 PM	0	0	0	0	0	0	0	0	0	0	0	0	0
4/27/2024	6:15 PM	0	0	0	0	0	0	0	0	0	0	0	0	0
4/27/2024	6:30 PM	0	0	0	0	0	0	0	0	0	0	0	0	0
4/27/2024	6:45 PM	0	0	0	0	0	0	0	0	0	0	0	0	0
4/27/2024	7:00 PM	0	0	0	0	0	0	0	0	0	0	0	0	0
4/27/2024	7:15 PM	0	0	0	0	0	0	0	0	0	0	0	0	0
4/27/2024	7:30 PM	0	0	0	0	0	0	0	0	0	0	0	0	0
4/27/2024	7:45 PM	0	0	0	0	0	0	0	0	0	0	0	0	0
4/27/2024	8:00 PM	0	0	0	0	0	0	0	0	0	0	0	0	0
4/27/2024	8:15 PM	0	0	0	0	0	0	0	0	0	0	0	0	0
4/27/2024	8:30 PM	0	0	0	0	0	0	0	0	0	0	0	0	0
4/27/2024	8:45 PM	0	0	0	0	0	0	0	0	0	0	0	0	0
4/27/2024	9:00 PM	0	0	0	0	0	0	0	0	0	0	0	0	0
4/27/2024	9:15 PM	0	0	0	0	0	0	0	0	0	0	0	0	0
4/27/2024	9:30 PM	0	0	0	0	0	0	0	0	0	0	0	0	0
4/27/2024	9:45 PM	0	0	0	0	0	0	0	0	0	0	0	0	0
4/27/2024	10:00 PM	0	0	0	0	0	0	0	0	0	0	0	0	0
4/27/2024	10:15 PM	0	0	0	0	0	0	0	0	0	0	0	0	0
4/27/2024	10:30 PM	0	0	0	0	0	0	0	0	0	0	0	0	0
4/27/2024	10:45 PM	0	0	0	0	0	0	0	0	0	0	0	0	0
4/27/2024	11:00 PM	0	0	0	0	0	0	0	0	0	0	0	0	0
4/27/2024	11:15 PM	0	0	0	0	0	0	0	0	0	0	0	0	0
4/27/2024	11:30 PM	0	0	0	0	0	0	0	0	0	0	0	0	0
4/27/2024	11:45 PM	0	0	0	0	0	0	0	0	0	0	0	0	0

NB
File Name:
Start Date: 4/21/2024
Start Time: 0
Site Code: 75 Lane 2 NB
Station ID: 1
Location 1: I-20, north of Bush River Rd
Location 2:

Date	Time	1	2	3	4	5	6	7	8	9	10	11	12	13
4/21/2024	12:00 AM	0	126	9	0	2	0	0	0	11	0	1	0	0
4/21/2024	12:15 AM	0	122	6	0	1	0	0	0	8	0	1	0	0
4/21/2024	12:30 AM	0	111	6	0	0	0	0	0	11	0	2	0	0
4/21/2024	12:45 AM	0	101	8	0	1	0	0	0	11	0	2	0	0
4/21/2024	1:00 AM	0	92	9	0	2	0	0	0	7	0	1	0	0
4/21/2024	1:15 AM	0	85	11	0	2	0	0	1	6	0	1	0	0
4/21/2024	1:30 AM	0	74	11	0	2	0	0	1	4	0	0	0	0
4/21/2024	1:45 AM	0	67	9	1	1	0	0	1	5	0	0	0	0
4/21/2024	2:00 AM	0	62	7	1	0	0	0	1	4	0	0	0	0
4/21/2024	2:15 AM	0	55	3	1	1	0	0	0	6	0	0	0	0
4/21/2024	2:30 AM	0	60	2	1	1	0	0	0	10	0	0	0	0
4/21/2024	2:45 AM	0	58	3	0	1	0	0	0	10	0	0	0	0
4/21/2024	3:00 AM	0	58	2	0	1	0	0	0	12	0	0	0	0
4/21/2024	3:15 AM	0	53	2	0	3	0	0	0	10	0	0	0	0
4/21/2024	3:30 AM	0	51	1	0	3	0	0	0	5	0	0	0	0
4/21/2024	3:45 AM	0	50	2	0	3	0	0	0	4	0	0	0	0
4/21/2024	4:00 AM	0	46	2	0	3	1	0	0	2	0	0	0	0
4/21/2024	4:15 AM	0	50	6	0	0	1	0	1	5	0	0	0	0
4/21/2024	4:30 AM	0	52	8	0	0	1	0	1	6	0	0	0	0
4/21/2024	4:45 AM	0	64	7	0	2	1	0	1	7	0	0	0	0
4/21/2024	5:00 AM	0	76	8	0	2	0	0	1	8	0	0	0	0
4/21/2024	5:15 AM	0	81	7	0	3	0	0	0	11	0	0	0	0
4/21/2024	5:30 AM	0	95	12	0	3	0	0	0	11	0	0	0	0
4/21/2024	5:45 AM	0	107	23	0	1	0	0	0	11	0	0	0	0
4/21/2024	6:00 AM	0	130	28	0	1	0	0	1	16	0	0	0	0
4/21/2024	6:15 AM	0	157	33	0	2	0	0	2	11	0	0	0	0
4/21/2024	6:30 AM	0	181	40	0	2	0	0	2	12	0	0	0	0
4/21/2024	6:45 AM	0	199	41	0	4	0	0	2	13	0	0	0	0
4/21/2024	7:00 AM	0	223	47	0	4	0	0	1	12	0	0	0	0
4/21/2024	7:15 AM	0	235	53	1	2	0	0	0	15	0	0	0	0
4/21/2024	7:30 AM	1	245	53	1	2	0	0	0	19	0	0	0	0
4/21/2024	7:45 AM	1	264	68	1	0	0	0	3	19	0	0	0	0
4/21/2024	8:00 AM	1	279	78	1	1	0	0	3	18	1	0	0	0
4/21/2024	8:15 AM	1	303	82	0	3	0	0	6	23	1	0	0	0
4/21/2024	8:30 AM	0	319	84	0	3	0	0	7	20	1	0	0	0
4/21/2024	8:45 AM	0	327	74	0	4	0	0	4	23	1	0	0	0
4/21/2024	9:00 AM	0	366	81	0	3	0	0	6	28	0	0	0	0
4/21/2024	9:15 AM	0	408	92	0	1	0	0	4	23	0	0	0	0
4/21/2024	9:30 AM	0	443	96	0	1	0	0	4	32	0	0	0	0
4/21/2024	9:45 AM	0	472	92	0	1	0	0	4	36	0	0	0	0
4/21/2024	10:00 AM	0	457	103	1	1	0	0	3	34	0	0	0	0
4/21/2024	10:15 AM	1	441	98	1	3	0	0	2	37	0	0	0	0
4/21/2024	10:30 AM	1	446	110	1	4	0	0	2	33	0	0	0	0
4/21/2024	10:45 AM	1	472	127	1	6	1	0	4	33	0	0	0	0
4/21/2024	11:00 AM	1	474	125	0	8	1	0	3	29	0	0	0	0
4/21/2024	11:15 AM	1	496	131	0	8	1	0	4	36	1	0	0	0
4/21/2024	11:30 AM	1	528	126	2	8	1	0	4	34	1	0	0	0
4/21/2024	11:45 AM	1	542	129	2	7	1	0	3	39	1	0	0	0
4/21/2024	12:00 PM	1	572	119	4	7	1	0	5	42	1	0	0	0
4/21/2024	12:15 PM	0	599	119	4	8	1	0	4	32	1	0	0	0
4/21/2024	12:30 PM	0	572	120	2	7	1	0	5	36	1	0	0	0
4/21/2024	12:45 PM	1	583	109	3	9	0	0	5	29	2	0	0	0
4/21/2024	1:00 PM	1	587	112	1	8	1	0	3	34	2	0	0	0
4/21/2024	1:15 PM	1	591	114	1	6	1	0	4	45	2	0	0	0
4/21/2024	1:30 PM	1	598	125	2	9	1	0	3	38	2	0	0	0
4/21/2024	1:45 PM	0	582	136	2	6	1	0	2	39	1	0	0	0
4/21/2024	2:00 PM	0	583	124	3	6	0	0	3	36	1	0	0	0
4/21/2024	2:15 PM	1	553	118	3	9	0	0	3	33	0	0	0	0
4/21/2024	2:30 PM	1	558	118	2	7	0	0	3	38	0	0	0	0
4/21/2024	2:45 PM	1	554	120	1	7	0	0	5	38	0	0	0	0
4/21/2024	3:00 PM	1	552	125	0	6	0	0	6	40	0	0	0	0
4/21/2024	3:15 PM	1	566	132	0	5	0	0	6	47	0	0	0	0
4/21/2024	3:30 PM	2	549	129	0	5	2	0	6	52	0	1	0	0
4/21/2024	3:45 PM	2	558	124	0	5	3	0	8	58	0	1	0	0
4/21/2024	4:00 PM	2	579	122	1	10	4	0	8	62	2	1	0	0
4/21/2024	4:15 PM	1	583	123	1	10	4	0	10	53	3	1	0	0
4/21/2024	4:30 PM	0	602	111	4	11	2	0	9	46	4	0	0	0
4/21/2024	4:45 PM	0	589	105	4	11	1	0	7	47	5	0	0	0
4/21/2024	5:00 PM	3	559	104	3	8	0	0	7	40	3	0	0	0
4/21/2024	5:15 PM	3	526	105	3	7	0	0	4	45	2	0	0	0
4/21/2024	5:30 PM	3	492	109	0	6	1	0	6	52	2	0	0	0
4/21/2024	5:45 PM	3	459	117	0	6	2	0	4	48	1	0	0	0
4/21/2024	6:00 PM	0	452	120	0	6	2	0	2	48	1	0	0	0
4/21/2024	6:15 PM	0	427	116	0	5	2	0	2	50	1	0	0	0
4/21/2024	6:30 PM	0	429	103	0	5	2	0	1	45	0	0	0	0
4/21/2024	6:45 PM	0	406	89	0	4	1	0	3	42	0	0	0	0
4/21/2024	7:00 PM	0	356	80	1	3	1	0	4	49	0	0	0	0
4/21/2024	7:15 PM	0	345	64	1	4	1	0	7	43	0	0	0	0
4/21/2024	7:30 PM	0	316	65	1	6	0	0	7	43	0	0	0	0
4/21/2024	7:45 PM	0	306	65	1	8	0	0	7	41	0	0	0	0
4/21/2024	8:00 PM	0	296	57	0	7	0	0	7	41	0	0	0	0
4/21/2024	8:15 PM	0	276	53	3	5	0	0	4	38	0	0	0	0
4/21/2024	8:30 PM	0	266	41	3	4	0	0	3	40	0	0	0	0
4/21/2024	8:45 PM	0	252	28	3	2	0	0	1	41	0	0	0	0
4/21/2024	9:00 PM	0	242	23	3	2	0	0	0	38	0	0	0	0
4/21/2024	9:15 PM	0	223	21	0	2	0	0	0	36	0	0	0	0
4/21/2024	9:30 PM	0	200	27	0	0	0	0	0	35	0	1	0	0
4/21/2024	9:45 PM	0	181	31	0	0	0	0	0	40	0	1	0	0
4/21/2024	10:00 PM	0	174	35	0	2	0	0	0	30	0	1	0	0
4/21/2024	10:15 PM	0	161	31	0	3	0	0	1	34	0	2	0	0
4/21/2024	10:30 PM	0	145	23	0	3	0	0	2	30	0	1	0	0
4/21/2024	10:45 PM	0	131	15	0	4	0	0	2	24	0	1	0	0
4/21/2024	11:00 PM	0	110	10	0	2	0	0	3	31	0	1	0	0
4/21/2024	11:15 PM	0	99	7	0	2	0	0	2	28	0	0	0	0
4/21/2024	11:30 PM	0	85	6	0	2	0	0	2	26	0	0	0	0
4/21/2024	11:45 PM	0	77	6	0	2	0	0	2	25	0	2	0	0

4/22/2024	12:00 AM	0	66	7	0	2	0	0	1	23	0	2	0	0
4/22/2024	12:15 AM	0	59	7	0	1	0	0	1	23	0	3	0	0
4/22/2024	12:30 AM	0	58	9	0	2	0	0	0	26	0	3	0	0
4/22/2024	12:45 AM	0	62	10	0	3	0	0	0	29	0	2	0	0
4/22/2024	1:00 AM	0	63	11	0	3	0	0	0	32	0	2	0	0
4/22/2024	1:15 AM	0	63	11	0	3	0	0	0	38	0	2	0	0
4/22/2024	1:30 AM	0	60	11	0	2	0	0	0	37	0	3	0	0
4/22/2024	1:45 AM	0	52	11	0	1	0	0	0	40	0	2	0	0
4/22/2024	2:00 AM	0	41	10	0	1	0	0	0	39	0	2	0	0
4/22/2024	2:15 AM	1	37	9	0	3	0	0	0	35	0	1	0	0
4/22/2024	2:30 AM	1	37	9	0	6	0	0	0	36	0	1	0	0
4/22/2024	2:45 AM	1	44	9	0	6	0	0	0	34	0	2	0	0
4/22/2024	3:00 AM	1	54	9	0	6	0	0	0	39	0	3	0	0
4/22/2024	3:15 AM	0	68	12	0	4	0	0	0	35	1	3	0	0
4/22/2024	3:30 AM	0	78	11	0	3	0	0	0	36	1	2	0	0
4/22/2024	3:45 AM	0	94	13	0	3	0	0	0	32	1	1	0	0
4/22/2024	4:00 AM	0	109	20	0	3	1	0	0	31	1	0	0	0
4/22/2024	4:15 AM	0	129	22	0	5	3	0	2	39	0	3	0	0
4/22/2024	4:30 AM	0	170	31	0	5	4	0	3	45	0	4	0	0
4/22/2024	4:45 AM	0	229	41	0	5	5	0	3	51	0	4	0	0
4/22/2024	5:00 AM	0	268	46	0	5	4	0	3	50	0	5	0	0
4/22/2024	5:15 AM	0	312	55	0	6	2	1	2	53	0	2	0	0
4/22/2024	5:30 AM	0	342	72	0	8	3	1	1	54	0	1	0	0
4/22/2024	5:45 AM	0	358	107	2	14	4	1	1	56	0	1	0	0
4/22/2024	6:00 AM	0	399	147	2	21	18	1	4	61	1	0	0	0
4/22/2024	6:15 AM	0	447	200	3	22	21	0	4	61	1	0	0	0
4/22/2024	6:30 AM	0	488	230	3	28	26	0	4	62	1	0	0	0
4/22/2024	6:45 AM	2	539	239	1	33	30	3	7	69	1	0	0	0
4/22/2024	7:00 AM	2	575	239	1	38	20	5	6	83	0	0	0	0
4/22/2024	7:15 AM	2	586	241	0	42	19	5	10	89	0	1	0	0
4/22/2024	7:30 AM	3	573	244	0	40	18	8	11	93	1	1	0	0
4/22/2024	7:45 AM	1	534	242	0	35	20	6	12	95	1	1	0	0
4/22/2024	8:00 AM	1	507	247	0	34	18	4	14	80	3	1	0	0
4/22/2024	8:15 AM	1	484	238	0	32	18	4	10	83	3	0	0	0
4/22/2024	8:30 AM	0	463	229	0	28	14	1	11	87	2	0	0	0
4/22/2024	8:45 AM	0	462	222	0	27	9	1	10	82	2	0	0	0
4/22/2024	9:00 AM	0	444	202	0	22	10	2	9	92	0	0	0	0
4/22/2024	9:15 AM	0	406	193	0	20	12	6	11	96	0	0	0	0
4/22/2024	9:30 AM	1	395	183	0	22	13	8	12	96	2	0	0	0
4/22/2024	9:45 AM	1	373	161	0	22	16	9	13	103	5	0	0	0
4/22/2024	10:00 AM	4	367	159	0	23	14	9	12	103	7	0	0	0
4/22/2024	10:15 AM	4	373	139	0	23	11	6	14	107	8	0	0	0
4/22/2024	10:30 AM	3	378	144	0	24	10	5	13	107	7	0	0	0
4/22/2024	10:45 AM	4	387	146	0	24	8	5	12	99	4	0	0	0
4/22/2024	11:00 AM	1	377	151	1	23	8	4	10	98	2	0	0	0
4/22/2024	11:15 AM	1	395	156	1	24	11	7	7	81	3	0	0	0
4/22/2024	11:30 AM	1	397	146	1	20	11	6	13	74	2	0	0	0
4/22/2024	11:45 AM	0	392	165	1	20	9	5	15	73	3	0	0	0
4/22/2024	12:00 PM	1	409	170	0	23	13	7	18	77	3	0	0	0
4/22/2024	12:15 PM	1	406	173	0	24	10	4	17	73	1	0	0	0
4/22/2024	12:30 PM	1	395	188	0	27	12	6	12	76	1	0	0	0
4/22/2024	12:45 PM	1	384	177	0	32	14	6	10	81	0	0	0	0
4/22/2024	1:00 PM	0	384	167	0	29	19	4	8	74	0	0	0	0
4/22/2024	1:15 PM	0	390	162	0	29	21	4	11	86	2	0	0	0
4/22/2024	1:30 PM	0	426	148	0	32	19	2	12	95	2	0	0	0
4/22/2024	1:45 PM	1	470	146	0	30	17	1	13	89	2	0	0	0
4/22/2024	2:00 PM	1	499	149	0	28	14	1	16	84	2	0	0	0
4/22/2024	2:15 PM	2	503	160	2	27	13	0	15	86	0	0	0	0
4/22/2024	2:30 PM	2	499	163	2	23	15	0	14	94	1	0	0	0
4/22/2024	2:45 PM	1	488	169	2	19	18	0	19	107	1	0	0	0
4/22/2024	3:00 PM	5	483	171	3	21	13	0	21	120	2	0	0	0
4/22/2024	3:15 PM	4	514	167	2	20	11	0	21	142	3	0	0	0
4/22/2024	3:30 PM	4	535	170	2	18	11	0	19	144	2	2	0	0
4/22/2024	3:45 PM	4	547	181	2	20	9	0	14	155	2	2	0	0
4/22/2024	4:00 PM	1	556	199	1	20	11	0	13	161	1	2	0	0
4/22/2024	4:15 PM	1	570	196	0	22	14	0	13	139	1	2	0	0
4/22/2024	4:30 PM	2	573	179	1	20	10	0	13	120	1	0	0	0
4/22/2024	4:45 PM	2	581	165	1	16	9	0	11	114	1	0	0	0
4/22/2024	5:00 PM	1	570	130	2	14	5	0	7	120	1	0	0	0
4/22/2024	5:15 PM	1	524	116	2	11	2	0	4	117	0	0	0	0
4/22/2024	5:30 PM	0	485	122	1	12	2	0	4	124	0	0	0	0
4/22/2024	5:45 PM	1	430	114	1	11	0	0	4	111	0	0	0	0
4/22/2024	6:00 PM	1	392	109	0	9	0	0	4	98	0	0	0	0
4/22/2024	6:15 PM	1	368	103	0	10	0	0	4	92	0	0	0	0
4/22/2024	6:30 PM	1	343	101	0	9	0	0	3	86	0	0	0	0
4/22/2024	6:45 PM	0	352	91	0	8	0	0	1	91	1	0	0	0
4/22/2024	7:00 PM	0	332	97	1	9	1	0	2	75	1	0	0	0
4/22/2024	7:15 PM	0	297	94	1	6	1	0	4	79	1	0	0	0
4/22/2024	7:30 PM	0	273	77	1	5	3	0	4	81	1	0	0	0
4/22/2024	7:45 PM	1	241	66	1	6	3	0	5	79	0	0	0	0
4/22/2024	8:00 PM	1	225	54	0	4	2	0	3	89	0	2	0	0
4/22/2024	8:15 PM	1	230	47	0	3	2	0	1	82	0	2	0	0
4/22/2024	8:30 PM	1	240	41	0	3	0	0	2	71	0	4	0	0
4/22/2024	8:45 PM	0	235	35	0	4	0	0	1	66	0	8	0	0
4/22/2024	9:00 PM	0	225	31	0	3	0	0	2	57	0	7	0	0
4/22/2024	9:15 PM	0	210	27	0	4	0	0	2	57	0	7	0	0
4/22/2024	9:30 PM	0	186	24	0	4	0	0	1	61	0	5	0	0
4/22/2024	9:45 PM	0	157	25	0	2	0	0	1	51	0	1	0	0
4/22/2024	10:00 PM	0	146	17	1	3	0	0	0	47	0	2	0	0
4/22/2024	10:15 PM	0	132	15	1	3	0	0	0	44	0	4	0	0
4/22/2024	10:30 PM	0	121	17	1	3	0	0	0	35	0	6	0	0
4/22/2024	10:45 PM	0	107	14	2	3	0	0	0	34	0	6	0	0
4/22/2024	11:00 PM	0	95	16	1	3	0	0	0	32	0	4	0	0
4/22/2024	11:15 PM	1	83	15	2	3	0	0	0	25	0	2	0	0
4/22/2024	11:30 PM	1	63	15	2	3	0	0	1	31	0	0	0	0
4/22/2024	11:45 PM	1	56	15	1	2	0	0	2	34	0	3	0	0

4/23/2024	12:00 AM	1	56	13	1	2	0	0	2	35	0	3	0	0
4/23/2024	12:15 AM	0	46	12	0	4	1	0	2	37	0	7	0	0
4/23/2024	12:30 AM	0	60	8	0	5	1	0	1	32	0	10	0	0
4/23/2024	12:45 AM	0	58	8	0	5	1	0	0	28	0	7	0	0
4/23/2024	1:00 AM	0	51	8	0	4	1	0	1	25	0	8	0	0
4/23/2024	1:15 AM	0	51	8	0	1	0	0	1	27	0	7	0	0
4/23/2024	1:30 AM	0	35	5	0	0	0	0	1	27	0	5	0	0
4/23/2024	1:45 AM	0	34	4	0	0	0	0	1	24	0	9	0	0
4/23/2024	2:00 AM	0	32	3	0	1	0	0	0	20	0	10	0	0
4/23/2024	2:15 AM	0	38	4	0	1	0	0	0	22	0	8	0	0
4/23/2024	2:30 AM	0	49	5	0	1	0	0	0	20	0	9	0	0
4/23/2024	2:45 AM	0	50	6	0	1	0	0	0	24	0	7	0	0
4/23/2024	3:00 AM	0	66	8	0	0	0	0	0	36	0	6	0	0
4/23/2024	3:15 AM	0	70	9	0	0	0	0	0	33	0	7	0	0
4/23/2024	3:30 AM	0	74	13	0	2	0	0	0	34	0	5	0	0
4/23/2024	3:45 AM	0	95	14	0	5	0	0	1	40	0	4	0	0
4/23/2024	4:00 AM	0	100	15	0	6	0	0	1	42	0	4	0	0
4/23/2024	4:15 AM	0	109	18	1	7	0	0	1	52	0	3	0	0
4/23/2024	4:30 AM	0	127	25	1	7	1	0	1	59	0	4	0	0
4/23/2024	4:45 AM	0	156	42	1	5	1	0	0	60	0	4	0	0
4/23/2024	5:00 AM	0	189	59	1	5	2	0	0	68	0	3	0	0
4/23/2024	5:15 AM	0	238	76	2	6	5	0	0	70	0	2	0	0
4/23/2024	5:30 AM	0	277	99	4	7	6	0	0	71	0	3	0	0
4/23/2024	5:45 AM	0	329	123	4	13	14	0	1	84	0	3	0	0
4/23/2024	6:00 AM	0	373	165	4	20	17	0	3	85	0	3	0	0
4/23/2024	6:15 AM	0	400	207	2	26	14	0	4	88	0	3	0	0
4/23/2024	6:30 AM	0	449	232	0	27	13	0	8	97	0	1	0	0
4/23/2024	6:45 AM	0	431	212	0	23	7	0	9	82	0	0	0	0
4/23/2024	7:00 AM	0	487	201	0	21	4	2	9	76	1	0	0	0
4/23/2024	7:15 AM	1	512	191	0	19	5	2	11	78	3	0	0	0
4/23/2024	7:30 AM	1	479	177	0	32	9	3	17	83	4	0	0	0
4/23/2024	7:45 AM	1	474	211	0	37	13	4	20	100	4	0	0	0
4/23/2024	8:00 AM	2	417	214	0	39	15	2	21	108	5	0	0	0
4/23/2024	8:15 AM	1	394	208	0	42	17	3	20	99	3	0	0	0
4/23/2024	8:30 AM	1	396	217	0	28	12	2	13	99	2	0	0	0
4/23/2024	8:45 AM	1	403	202	0	29	10	1	12	97	3	0	0	0
4/23/2024	9:00 AM	0	392	178	0	26	8	2	13	99	1	0	0	0
4/23/2024	9:15 AM	1	373	175	0	24	7	1	15	114	2	0	0	0
4/23/2024	9:30 AM	1	355	159	0	32	9	1	18	121	2	0	0	0
4/23/2024	9:45 AM	2	349	161	0	27	10	2	14	123	1	0	0	0
4/23/2024	10:00 AM	2	341	170	0	29	12	1	12	128	2	0	0	0
4/23/2024	10:15 AM	1	342	164	0	27	13	1	9	125	2	0	0	0
4/23/2024	10:30 AM	1	340	170	0	28	14	2	4	114	4	0	0	0
4/23/2024	10:45 AM	0	338	164	1	33	12	2	5	118	4	0	0	0
4/23/2024	11:00 AM	0	338	165	1	30	14	2	3	115	3	0	0	0
4/23/2024	11:15 AM	0	357	156	2	29	14	2	2	123	4	0	0	0
4/23/2024	11:30 AM	0	381	148	2	25	15	2	1	127	3	0	0	0
4/23/2024	11:45 AM	0	403	146	1	23	17	1	1	120	3	0	0	0
4/23/2024	12:00 PM	0	411	138	1	26	14	1	1	126	3	0	0	0
4/23/2024	12:15 PM	0	401	148	0	27	12	2	1	117	1	1	0	0
4/23/2024	12:30 PM	0	408	157	2	24	17	4	4	111	0	1	0	0
4/23/2024	12:45 PM	0	413	149	3	21	17	5	4	106	1	1	0	0
4/23/2024	1:00 PM	0	419	152	3	23	17	5	5	95	1	1	0	0
4/23/2024	1:15 PM	0	421	159	3	24	21	5	10	100	1	0	0	0
4/23/2024	1:30 PM	0	421	155	2	30	13	5	10	102	1	0	0	0
4/23/2024	1:45 PM	0	437	164	1	35	9	4	11	108	0	0	0	0
4/23/2024	2:00 PM	0	431	173	3	39	9	4	12	122	0	0	0	0
4/23/2024	2:15 PM	0	442	171	3	39	6	4	13	113	0	0	0	0
4/23/2024	2:30 PM	0	455	173	2	36	6	1	14	112	0	0	0	0
4/23/2024	2:45 PM	0	464	172	2	32	8	1	13	111	0	0	0	0
4/23/2024	3:00 PM	3	489	184	0	22	7	1	13	100	0	1	0	0
4/23/2024	3:15 PM	3	511	175	0	26	5	1	10	108	0	1	0	0
4/23/2024	3:30 PM	3	538	177	0	26	5	1	6	116	0	1	0	0
4/23/2024	3:45 PM	4	552	183	1	28	5	1	7	121	0	1	0	0
4/23/2024	4:00 PM	1	579	171	1	30	4	1	7	119	0	0	0	0
4/23/2024	4:15 PM	1	582	174	1	23	5	0	5	128	0	0	0	0
4/23/2024	4:30 PM	2	569	168	1	18	4	0	7	123	0	1	0	0
4/23/2024	4:45 PM	1	556	164	0	13	2	0	13	122	0	1	0	0
4/23/2024	5:00 PM	1	527	162	0	11	3	0	11	117	0	1	0	0
4/23/2024	5:15 PM	1	494	148	5	10	2	0	10	105	0	1	0	0
4/23/2024	5:30 PM	0	468	135	5	13	3	0	10	99	0	0	0	0
4/23/2024	5:45 PM	2	426	132	5	13	3	0	2	99	0	0	0	0
4/23/2024	6:00 PM	2	390	129	5	13	2	0	6	103	0	0	0	0
4/23/2024	6:15 PM	2	384	128	0	13	2	0	7	90	0	0	0	0
4/23/2024	6:30 PM	2	360	136	0	12	1	0	5	89	0	0	0	0
4/23/2024	6:45 PM	0	349	121	0	12	0	0	5	72	0	0	0	0
4/23/2024	7:00 PM	0	332	113	1	10	0	0	2	68	0	0	0	0
4/23/2024	7:15 PM	0	302	105	2	10	1	0	1	72	0	0	0	0
4/23/2024	7:30 PM	0	296	85	3	5	1	0	2	77	0	0	0	0
4/23/2024	7:45 PM	0	278	73	3	6	1	0	2	83	0	0	0	0
4/23/2024	8:00 PM	0	275	48	2	5	1	0	1	79	0	1	0	0
4/23/2024	8:15 PM	0	269	42	1	4	1	0	1	81	0	1	0	0
4/23/2024	8:30 PM	0	246	38	0	6	1	0	0	69	0	2	0	0
4/23/2024	8:45 PM	0	236	40	0	3	1	0	0	67	0	6	0	0
4/23/2024	9:00 PM	1	221	43	0	3	2	0	0	63	0	6	0	0
4/23/2024	9:15 PM	2	184	39	0	2	1	0	0	53	0	6	0	0
4/23/2024	9:30 PM	2	159	31	0	0	1	0	0	46	0	5	0	0
4/23/2024	9:45 PM	2	138	23	1	1	1	0	0	39	0	1	0	0
4/23/2024	10:00 PM	1	114	16	1	1	0	0	0	35	0	0	0	0
4/23/2024	10:15 PM	0	106	12	1	1	0	0	0	29	0	0	0	0
4/23/2024	10:30 PM	0	94	12	1	1	0	0	0	29	0	0	0	0
4/23/2024	10:45 PM	0	80	15	0	0	0	0	0	27	0	2	0	0
4/23/2024	11:00 PM	0	67	13	0	0	0	0	0	22	0	2	0	0
4/23/2024	11:15 PM	0	67	12	0	1	0	0	0	28	0	2	0	0
4/23/2024	11:30 PM	0	60	11	0	2	0	0	1	27	0	2	0	0
4/23/2024	11:45 PM	2	49	5	0	2	0	0	1	19	0	1	0	0

4/24/2024	12:00 AM	2	50	5	1	2	0	0	1	21	0	1	0	0
4/24/2024	12:15 AM	2	44	3	1	2	0	0	1	11	0	1	0	0
4/24/2024	12:30 AM	2	41	3	1	1	0	0	0	7	0	1	0	0
4/24/2024	12:45 AM	0	37	3	1	1	0	0	0	10	0	0	0	0
4/24/2024	1:00 AM	0	33	3	0	2	0	0	0	9	0	0	0	0
4/24/2024	1:15 AM	1	35	4	0	2	0	0	0	16	0	1	0	0
4/24/2024	1:30 AM	1	39	4	0	2	0	0	1	20	0	2	0	0
4/24/2024	1:45 AM	1	36	7	0	3	0	0	1	27	0	4	0	0
4/24/2024	2:00 AM	1	38	6	0	2	0	0	1	27	0	7	0	0
4/24/2024	2:15 AM	0	40	7	0	2	0	0	1	30	0	9	0	0
4/24/2024	2:30 AM	0	38	6	0	2	0	0	0	36	0	9	0	0
4/24/2024	2:45 AM	0	43	3	0	1	0	0	0	32	0	7	0	0
4/24/2024	3:00 AM	0	53	6	0	5	0	0	0	33	0	5	0	0
4/24/2024	3:15 AM	0	60	9	0	5	0	0	0	28	0	4	0	0
4/24/2024	3:30 AM	0	70	16	0	5	0	0	0	24	0	3	0	0
4/24/2024	3:45 AM	1	85	18	0	6	0	0	0	31	0	4	0	0
4/24/2024	4:00 AM	1	96	25	0	3	0	0	0	42	0	5	0	0
4/24/2024	4:15 AM	1	120	32	0	3	0	0	0	46	0	4	0	0
4/24/2024	4:30 AM	1	137	32	2	3	0	0	0	54	0	5	0	0
4/24/2024	4:45 AM	0	182	36	2	6	0	0	0	52	0	4	0	0
4/24/2024	5:00 AM	0	222	40	2	8	1	0	0	48	0	2	0	0
4/24/2024	5:15 AM	0	263	45	3	8	2	0	0	60	0	2	0	0
4/24/2024	5:30 AM	0	320	67	2	13	2	0	1	63	0	1	0	0
4/24/2024	5:45 AM	0	371	109	2	12	3	0	2	65	0	1	0	0
4/24/2024	6:00 AM	0	409	154	3	18	14	0	4	74	1	2	0	0
4/24/2024	6:15 AM	1	462	195	2	24	19	0	8	71	1	1	0	0
4/24/2024	6:30 AM	1	485	225	2	34	22	0	9	79	1	1	0	0
4/24/2024	6:45 AM	1	521	219	3	44	26	0	12	88	2	1	0	0
4/24/2024	7:00 AM	2	569	216	2	41	24	0	14	93	2	0	0	0
4/24/2024	7:15 AM	1	550	213	2	45	25	0	14	102	2	0	0	0
4/24/2024	7:30 AM	2	552	207	1	46	23	0	16	107	2	0	0	0
4/24/2024	7:45 AM	2	490	218	0	43	20	0	18	107	1	0	0	0
4/24/2024	8:00 AM	1	432	216	0	42	11	0	20	105	0	0	0	0
4/24/2024	8:15 AM	1	411	220	0	37	7	0	18	110	0	1	0	0
4/24/2024	8:30 AM	0	401	211	0	34	12	0	18	103	1	1	0	0
4/24/2024	8:45 AM	1	391	201	0	32	14	0	16	106	2	1	0	0
4/24/2024	9:00 AM	1	383	184	0	35	19	0	12	105	2	1	0	0
4/24/2024	9:15 AM	1	381	160	0	39	21	0	14	94	2	0	0	0
4/24/2024	9:30 AM	1	354	162	0	33	18	0	14	100	1	0	0	0
4/24/2024	9:45 AM	0	351	160	0	32	22	0	12	95	0	0	0	0
4/24/2024	10:00 AM	0	363	165	0	31	18	0	10	97	0	0	0	0
4/24/2024	10:15 AM	0	359	165	0	27	15	0	8	102	0	0	0	0
4/24/2024	10:30 AM	0	388	157	0	23	18	0	5	98	0	0	0	0
4/24/2024	10:45 AM	0	393	159	0	22	15	0	4	107	0	0	0	0
4/24/2024	11:00 AM	0	389	160	2	23	17	0	5	111	1	0	0	0
4/24/2024	11:15 AM	0	380	159	2	22	16	0	4	112	2	1	0	0
4/24/2024	11:30 AM	1	353	160	2	31	13	1	4	114	4	1	0	0
4/24/2024	11:45 AM	1	387	158	2	35	12	1	7	125	4	1	0	0
4/24/2024	12:00 PM	1	374	156	0	34	17	1	12	134	4	1	0	0
4/24/2024	12:15 PM	1	379	165	1	38	18	1	15	144	5	0	0	0
4/24/2024	12:30 PM	0	395	163	1	38	21	0	15	132	4	0	0	0
4/24/2024	12:45 PM	0	371	172	1	32	18	0	14	121	6	0	0	0
4/24/2024	1:00 PM	0	406	179	1	29	15	0	12	111	5	0	0	0
4/24/2024	1:15 PM	1	408	165	0	26	17	0	11	112	3	0	0	0
4/24/2024	1:30 PM	1	427	171	0	20	16	0	14	123	2	0	0	0
4/24/2024	1:45 PM	1	436	161	1	24	21	0	13	124	0	0	0	0
4/24/2024	2:00 PM	1	428	150	1	30	19	1	14	120	0	0	0	0
4/24/2024	2:15 PM	0	461	159	4	31	20	1	13	105	0	0	0	0
4/24/2024	2:30 PM	0	461	162	4	38	15	1	14	102	0	0	0	0
4/24/2024	2:45 PM	0	484	171	4	36	15	1	13	95	0	0	0	0
4/24/2024	3:00 PM	1	500	186	6	28	13	0	10	106	1	0	0	0
4/24/2024	3:15 PM	1	520	205	4	30	11	0	8	114	1	0	0	0
4/24/2024	3:30 PM	1	533	195	4	23	12	0	9	117	1	1	0	0
4/24/2024	3:45 PM	1	558	188	3	23	7	0	13	120	1	1	0	0
4/24/2024	4:00 PM	0	564	190	3	24	8	0	11	108	0	1	0	0
4/24/2024	4:15 PM	0	599	173	2	21	5	0	13	102	1	1	0	0
4/24/2024	4:30 PM	0	622	181	2	19	5	0	9	103	1	1	0	0
4/24/2024	4:45 PM	1	623	179	2	19	5	0	6	105	1	1	0	0
4/24/2024	5:00 PM	2	604	171	0	18	2	0	8	110	2	1	0	0
4/24/2024	5:15 PM	2	533	166	0	12	3	0	7	129	3	1	0	0
4/24/2024	5:30 PM	4	479	146	0	13	2	0	7	124	3	0	0	0
4/24/2024	5:45 PM	3	439	144	0	10	2	0	7	129	3	0	0	0
4/24/2024	6:00 PM	2	420	129	0	10	3	0	7	129	2	0	0	0
4/24/2024	6:15 PM	2	378	120	1	14	2	0	8	113	0	0	0	0
4/24/2024	6:30 PM	0	364	120	1	16	2	0	7	112	0	0	0	0
4/24/2024	6:45 PM	0	331	97	1	17	3	0	6	93	0	0	0	0
4/24/2024	7:00 PM	0	318	96	1	16	2	0	5	89	0	0	0	0
4/24/2024	7:15 PM	0	322	93	0	17	3	0	3	79	0	0	0	0
4/24/2024	7:30 PM	0	302	92	0	10	3	0	4	76	0	0	0	0
4/24/2024	7:45 PM	0	291	91	0	8	1	0	5	82	0	0	0	0
4/24/2024	8:00 PM	1	294	68	0	9	1	0	4	68	0	2	0	0
4/24/2024	8:15 PM	1	305	51	0	6	0	0	4	67	0	4	0	0
4/24/2024	8:30 PM	1	301	31	0	7	0	0	2	56	0	5	0	0
4/24/2024	8:45 PM	1	280	24	0	6	0	0	0	58	0	7	0	0
4/24/2024	9:00 PM	0	249	25	0	6	0	0	0	58	0	8	0	0
4/24/2024	9:15 PM	0	209	31	0	5	1	0	0	54	0	6	0	0
4/24/2024	9:30 PM	0	186	30	0	4	1	0	0	54	0	5	0	0
4/24/2024	9:45 PM	0	170	27	0	6	1	0	0	38	0	4	0	0
4/24/2024	10:00 PM	0	145	24	0	4	1	0	0	44	0	1	0	0
4/24/2024	10:15 PM	0	132	14	2	4	0	0	1	36	0	2	0	0
4/24/2024	10:30 PM	0	122	15	2	5	1	0	1	32	0	3	0	0
4/24/2024	10:45 PM	0	118	13	2	3	1	0	1	36	0	2	0	0
4/24/2024	11:00 PM	0	114	10	2	3	1	0	1	23	0	4	0	0
4/24/2024	11:15 PM	0	103	10	0	4	1	0	0	23	0	4	0	0
4/24/2024	11:30 PM	0	86	10	0	4	0	0	0	24	0	3	0	0
4/24/2024	11:45 PM	0	67	10	0	4	0	0	0	21	0	5	0	0

4/25/2024	12:00 AM	1	48	9	0	4	0	0	0	22	0	3	0	0
4/25/2024	12:15 AM	1	41	9	0	2	0	0	0	20	0	4	0	0
4/25/2024	12:30 AM	1	41	8	0	1	0	0	0	25	0	5	0	0
4/25/2024	12:45 AM	1	42	7	0	0	0	0	0	22	0	5	0	0
4/25/2024	1:00 AM	0	47	8	0	0	0	0	0	17	0	8	0	0
4/25/2024	1:15 AM	0	48	7	0	0	0	0	0	22	0	7	0	0
4/25/2024	1:30 AM	0	38	7	0	0	0	0	0	13	0	7	0	0
4/25/2024	1:45 AM	0	36	7	0	0	0	0	0	20	1	6	0	0
4/25/2024	2:00 AM	0	36	8	0	3	0	0	0	27	1	3	0	0
4/25/2024	2:15 AM	0	41	10	0	3	0	0	0	23	1	2	0	0
4/25/2024	2:30 AM	0	48	8	0	3	0	0	0	30	1	3	0	0
4/25/2024	2:45 AM	0	50	9	0	3	0	0	0	25	0	2	0	0
4/25/2024	3:00 AM	0	57	8	0	3	0	0	0	26	0	3	0	0
4/25/2024	3:15 AM	0	67	11	0	5	0	0	0	26	0	4	0	0
4/25/2024	3:30 AM	0	83	15	0	7	0	0	0	23	0	2	0	0
4/25/2024	3:45 AM	0	97	15	0	9	0	0	0	29	0	5	0	0
4/25/2024	4:00 AM	0	115	17	0	7	0	0	0	25	0	6	0	0
4/25/2024	4:15 AM	0	134	20	0	9	0	0	0	37	0	5	0	0
4/25/2024	4:30 AM	0	163	25	0	8	0	0	0	49	0	5	0	0
4/25/2024	4:45 AM	1	214	35	0	11	0	0	0	52	0	2	0	0
4/25/2024	5:00 AM	1	258	45	0	17	2	0	0	67	0	0	0	0
4/25/2024	5:15 AM	1	289	52	2	18	2	0	0	70	0	1	0	0
4/25/2024	5:30 AM	1	329	75	3	20	3	0	0	71	0	2	0	0
4/25/2024	5:45 AM	0	345	111	4	21	6	0	1	84	0	2	0	0
4/25/2024	6:00 AM	0	367	158	4	22	11	0	4	89	0	2	0	0
4/25/2024	6:15 AM	1	402	202	2	21	21	0	6	89	1	1	0	0
4/25/2024	6:30 AM	1	440	222	3	23	24	0	7	101	1	0	0	0
4/25/2024	6:45 AM	3	499	226	5	29	27	3	11	90	1	0	0	0
4/25/2024	7:00 AM	3	541	219	6	28	22	4	12	92	2	0	0	0
4/25/2024	7:15 AM	3	561	202	7	32	20	4	15	107	1	0	0	0
4/25/2024	7:30 AM	3	548	215	5	34	18	5	21	95	1	0	0	0
4/25/2024	7:45 AM	1	514	226	3	29	16	2	20	107	1	1	0	0
4/25/2024	8:00 AM	1	465	221	2	25	19	3	21	113	1	1	0	0
4/25/2024	8:15 AM	0	449	232	1	24	18	3	20	107	1	1	0	0
4/25/2024	8:30 AM	0	452	212	1	25	21	2	14	109	1	1	0	0
4/25/2024	8:45 AM	0	433	205	0	24	25	2	14	111	1	1	0	0
4/25/2024	9:00 AM	0	438	186	0	28	27	0	10	103	2	1	0	0
4/25/2024	9:15 AM	0	425	181	0	25	22	0	8	99	4	1	0	0
4/25/2024	9:30 AM	0	381	170	0	29	26	1	7	114	5	1	0	0
4/25/2024	9:45 AM	1	370	152	0	34	25	1	8	107	7	0	0	0
4/25/2024	10:00 AM	2	363	149	0	33	23	2	12	108	6	1	0	0
4/25/2024	10:15 AM	3	335	131	1	35	23	2	14	98	4	1	0	0
4/25/2024	10:30 AM	3	329	137	1	29	19	1	16	99	3	1	0	0
4/25/2024	10:45 AM	2	331	141	2	31	17	3	15	101	2	2	0	0
4/25/2024	11:00 AM	1	333	146	2	31	14	3	12	97	1	1	0	0
4/25/2024	11:15 AM	0	355	152	2	30	14	4	14	106	1	1	0	0
4/25/2024	11:30 AM	0	391	146	2	29	13	6	14	104	1	2	0	0
4/25/2024	11:45 AM	0	414	141	1	23	15	4	14	107	0	1	0	0
4/25/2024	12:00 PM	0	440	144	2	24	18	4	14	115	0	1	0	0
4/25/2024	12:15 PM	2	444	156	1	25	18	3	11	114	0	1	0	0
4/25/2024	12:30 PM	2	431	172	2	26	19	2	10	109	0	0	0	0
4/25/2024	12:45 PM	3	423	168	3	32	17	2	11	116	1	0	0	0
4/25/2024	1:00 PM	3	422	179	2	29	13	1	13	118	2	0	0	0
4/25/2024	1:15 PM	2	428	172	3	29	14	1	13	117	2	0	0	0
4/25/2024	1:30 PM	4	451	145	2	32	14	1	15	124	2	0	0	0
4/25/2024	1:45 PM	3	454	146	1	25	14	1	15	102	2	0	0	0
4/25/2024	2:00 PM	3	432	142	5	24	14	1	13	91	2	0	0	0
4/25/2024	2:15 PM	2	443	140	5	22	13	2	13	96	2	0	0	0
4/25/2024	2:30 PM	0	446	170	6	20	8	1	12	90	3	0	0	0
4/25/2024	2:45 PM	0	476	181	6	20	8	1	8	103	2	0	0	0
4/25/2024	3:00 PM	0	508	178	3	21	8	1	7	124	3	0	0	0
4/25/2024	3:15 PM	0	519	170	2	21	9	0	7	117	4	1	0	0
4/25/2024	3:30 PM	0	545	159	4	18	11	0	8	119	4	1	0	0
4/25/2024	3:45 PM	0	558	162	4	19	6	0	12	130	4	1	0	0
4/25/2024	4:00 PM	0	552	162	3	16	6	0	17	118	2	1	0	0
4/25/2024	4:15 PM	0	597	164	3	19	3	0	17	125	2	0	0	0
4/25/2024	4:30 PM	0	617	159	0	20	3	1	18	121	1	0	0	0
4/25/2024	4:45 PM	1	623	156	0	16	4	2	13	113	1	1	0	0
4/25/2024	5:00 PM	1	626	161	0	18	5	2	10	106	1	1	0	0
4/25/2024	5:15 PM	1	567	165	0	15	7	2	8	104	0	1	0	0
4/25/2024	5:30 PM	1	512	157	1	14	6	1	6	90	0	1	0	0
4/25/2024	5:45 PM	0	453	147	1	13	5	0	7	81	0	0	0	0
4/25/2024	6:00 PM	0	430	136	1	13	6	0	4	79	0	0	0	0
4/25/2024	6:15 PM	0	422	119	3	11	4	0	5	70	0	0	0	0
4/25/2024	6:30 PM	0	428	120	2	10	4	0	5	77	0	0	0	0
4/25/2024	6:45 PM	0	433	115	6	10	4	0	4	75	0	0	0	0
4/25/2024	7:00 PM	0	416	110	6	10	1	0	6	74	0	0	0	0
4/25/2024	7:15 PM	0	406	108	4	8	1	0	6	75	0	0	0	0
4/25/2024	7:30 PM	0	373	93	4	11	0	0	5	76	0	0	0	0
4/25/2024	7:45 PM	0	361	76	0	10	0	0	5	77	0	0	0	0
4/25/2024	8:00 PM	0	355	55	0	8	0	0	3	69	0	3	0	0
4/25/2024	8:15 PM	0	325	50	0	10	0	0	1	69	0	4	0	0
4/25/2024	8:30 PM	0	311	46	0	5	0	0	0	58	0	4	0	0
4/25/2024	8:45 PM	0	277	47	1	6	0	0	0	49	0	7	0	0
4/25/2024	9:00 PM	0	262	60	2	5	0	0	0	59	1	6	0	0
4/25/2024	9:15 PM	0	252	60	4	4	0	0	0	55	1	6	0	0
4/25/2024	9:30 PM	0	217	53	4	3	0	0	0	50	1	6	0	0
4/25/2024	9:45 PM	0	199	49	3	2	2	0	0	47	1	3	0	0
4/25/2024	10:00 PM	0	170	34	2	3	2	0	0	36	0	1	0	0
4/25/2024	10:15 PM	0	147	30	0	2	2	0	0	33	0	1	0	0
4/25/2024	10:30 PM	0	134	28	0	3	2	0	0	33	0	1	0	0
4/25/2024	10:45 PM	0	117	21	0	3	0	0	0	36	0	2	0	0
4/25/2024	11:00 PM	0	105	18	0	2	0	0	0	33	0	4	0	0
4/25/2024	11:15 PM	0	73	8	0	2	0	0	0	24	0	3	0	0
4/25/2024	11:30 PM	0	48	5	0	1	0	0	0	18	0	3	0	0
4/25/2024	11:45 PM	0	26	2	0	0	0	0	0	7	0	2	0	0

4/26/2024	12:00 AM	0	81	10	0	1	0	0	0	23	0	4	0	0
4/26/2024	12:15 AM	0	65	6	0	2	0	0	0	20	0	4	0	0
4/26/2024	12:30 AM	0	62	4	0	2	0	0	0	18	0	5	0	0
4/26/2024	12:45 AM	0	62	4	1	2	0	0	0	18	0	7	0	0
4/26/2024	1:00 AM	0	56	4	2	2	1	0	0	18	0	8	0	0
4/26/2024	1:15 AM	0	65	6	2	3	1	0	0	19	0	5	0	0
4/26/2024	1:30 AM	0	57	5	2	3	1	0	0	25	0	7	0	0
4/26/2024	1:45 AM	0	59	5	1	2	1	0	0	26	0	5	0	0
4/26/2024	2:00 AM	0	56	4	0	3	0	0	0	28	0	5	0	0
4/26/2024	2:15 AM	0	49	3	0	2	0	0	0	32	0	6	0	0
4/26/2024	2:30 AM	0	55	5	0	3	1	0	0	29	0	3	0	0
4/26/2024	2:45 AM	0	53	4	0	7	1	0	0	30	0	4	0	0
4/26/2024	3:00 AM	0	70	8	0	7	1	0	0	36	0	3	0	0
4/26/2024	3:15 AM	0	83	9	0	7	3	0	0	33	0	4	0	0
4/26/2024	3:30 AM	0	89	10	0	8	2	0	0	31	0	6	0	0
4/26/2024	3:45 AM	0	94	11	0	6	3	0	0	31	0	6	0	0
4/26/2024	4:00 AM	0	107	12	0	6	3	0	0	29	0	5	0	0
4/26/2024	4:15 AM	0	125	13	0	8	1	0	0	34	0	3	0	0
4/26/2024	4:30 AM	0	154	15	0	8	1	0	0	41	0	1	0	0
4/26/2024	4:45 AM	0	185	22	0	7	3	0	0	40	0	2	0	0
4/26/2024	5:00 AM	0	214	31	0	12	6	0	0	41	0	3	0	0
4/26/2024	5:15 AM	0	248	50	3	13	7	0	0	50	0	3	0	0
4/26/2024	5:30 AM	0	282	70	5	13	9	0	0	64	0	4	0	0
4/26/2024	5:45 AM	0	336	92	8	19	13	0	2	74	0	4	0	0
4/26/2024	6:00 AM	0	364	116	9	18	16	0	3	86	2	4	0	0
4/26/2024	6:15 AM	0	402	147	7	18	15	0	5	94	2	4	0	0
4/26/2024	6:30 AM	1	460	176	6	21	16	0	10	89	2	3	0	0
4/26/2024	6:45 AM	1	507	198	3	24	12	2	10	97	3	3	0	0
4/26/2024	7:00 AM	1	566	223	2	31	13	2	12	96	1	2	0	0
4/26/2024	7:15 AM	1	599	229	2	34	15	2	13	93	1	2	0	0
4/26/2024	7:30 AM	1	586	224	1	35	15	2	12	96	1	2	0	0
4/26/2024	7:45 AM	1	547	234	4	36	17	0	12	87	2	0	0	0
4/26/2024	8:00 AM	1	504	216	6	28	13	0	14	91	2	0	0	0
4/26/2024	8:15 AM	2	460	206	6	28	14	0	13	87	2	0	0	0
4/26/2024	8:30 AM	1	423	215	6	29	12	1	11	85	2	0	0	0
4/26/2024	8:45 AM	1	408	202	3	25	8	1	12	91	1	0	0	0
4/26/2024	9:00 AM	1	397	211	1	27	6	3	11	84	2	0	0	0
4/26/2024	9:15 AM	0	414	195	0	22	3	5	13	89	5	0	0	0
4/26/2024	9:30 AM	3	447	189	0	17	3	4	13	88	5	0	0	0
4/26/2024	9:45 AM	4	473	180	0	15	2	5	12	84	4	0	0	0
4/26/2024	10:00 AM	4	480	169	0	13	3	3	11	88	3	0	0	0
4/26/2024	10:15 AM	4	483	186	0	19	5	1	10	90	0	0	0	0
4/26/2024	10:30 AM	1	478	164	0	20	5	1	10	95	3	0	0	0
4/26/2024	10:45 AM	0	470	160	0	23	9	0	9	98	3	0	0	0
4/26/2024	11:00 AM	1	495	174	0	30	11	0	7	96	3	0	0	0
4/26/2024	11:15 AM	3	494	166	1	31	12	0	6	96	3	0	0	0
4/26/2024	11:30 AM	3	507	185	3	31	14	0	7	91	0	1	0	0
4/26/2024	11:45 AM	3	522	191	3	27	12	0	9	93	0	1	0	0
4/26/2024	12:00 PM	2	516	190	3	18	8	1	14	88	0	1	0	0
4/26/2024	12:15 PM	2	541	198	2	18	8	2	15	84	0	1	0	0
4/26/2024	12:30 PM	3	543	205	0	24	7	2	13	92	0	1	0	0
4/26/2024	12:45 PM	3	536	201	1	27	11	2	13	93	0	1	0	0
4/26/2024	1:00 PM	3	543	184	1	30	15	2	7	92	0	1	0	0
4/26/2024	1:15 PM	1	530	180	1	28	15	1	8	88	0	1	0	0
4/26/2024	1:30 PM	1	534	171	1	28	14	1	11	78	1	0	0	0
4/26/2024	1:45 PM	1	538	161	1	24	11	1	11	90	1	0	0	0
4/26/2024	2:00 PM	1	540	160	2	27	7	0	14	92	1	0	0	0
4/26/2024	2:15 PM	1	565	159	4	23	4	0	12	90	2	0	0	0
4/26/2024	2:30 PM	4	578	163	5	21	7	0	11	91	2	0	0	0
4/26/2024	2:45 PM	4	620	188	4	24	6	0	11	82	4	0	0	0
4/26/2024	3:00 PM	4	664	193	4	23	8	0	14	90	5	0	0	0
4/26/2024	3:15 PM	6	691	185	2	26	12	1	13	100	4	0	0	0
4/26/2024	3:30 PM	3	704	175	2	19	10	1	12	106	4	0	0	0
4/26/2024	3:45 PM	4	703	171	2	17	12	1	12	94	2	0	0	0
4/26/2024	4:00 PM	8	697	184	1	13	11	1	8	83	1	0	0	0
4/26/2024	4:15 PM	10	684	194	1	12	7	0	9	80	1	0	0	0
4/26/2024	4:30 PM	9	700	192	0	17	6	0	10	71	0	0	0	0
4/26/2024	4:45 PM	8	682	180	1	16	3	0	8	74	0	0	0	0
4/26/2024	5:00 PM	4	667	165	1	17	4	0	7	73	1	0	0	0
4/26/2024	5:15 PM	0	634	148	1	15	5	0	10	67	1	0	0	0
4/26/2024	5:30 PM	0	598	144	1	12	5	1	9	72	1	0	0	0
4/26/2024	5:45 PM	0	577	147	0	12	5	1	8	65	1	1	0	0
4/26/2024	6:00 PM	5	515	142	0	10	3	1	9	69	0	2	0	0
4/26/2024	6:15 PM	5	496	139	0	7	3	1	6	63	0	2	0	0
4/26/2024	6:30 PM	6	466	145	0	8	2	0	4	51	0	2	0	0
4/26/2024	6:45 PM	6	440	130	0	8	1	0	4	55	0	1	0	0
4/26/2024	7:00 PM	3	459	131	0	6	2	0	4	44	0	0	0	0
4/26/2024	7:15 PM	4	420	131	0	6	2	0	2	49	0	0	0	0
4/26/2024	7:30 PM	3	415	119	0	5	4	0	2	45	0	0	0	0
4/26/2024	7:45 PM	5	402	115	0	4	5	0	2	42	0	0	0	0
4/26/2024	8:00 PM	3	396	99	1	7	4	0	1	47	0	0	0	0
4/26/2024	8:15 PM	2	401	90	1	9	5	0	1	45	0	0	0	0
4/26/2024	8:30 PM	2	365	73	1	8	5	0	2	50	0	1	0	0
4/26/2024	8:45 PM	0	356	62	1	8	5	0	2	44	0	1	0	0
4/26/2024	9:00 PM	0	319	54	0	5	5	0	1	38	0	3	0	0
4/26/2024	9:15 PM	0	307	52	0	4	3	0	1	31	0	3	0	0
4/26/2024	9:30 PM	0	288	51	0	5	1	0	1	27	0	4	0	0
4/26/2024	9:45 PM	0	260	52	0	4	0	0	1	27	0	4	0	0
4/26/2024	10:00 PM	0	231	49	0	4	0	0	1	30	0	2	0	0
4/26/2024	10:15 PM	0	210	46	0	4	0	0	1	29	0	3	0	0
4/26/2024	10:30 PM	0	197	45	0	4	1	0	0	28	0	2	0	0
4/26/2024	10:45 PM	1	182	42	1	3	1	0	0	22	0	4	0	0
4/26/2024	11:00 PM	1	176	42	2	5	1	0	0	16	0	5	0	0
4/26/2024	11:15 PM	1	123	29	2	4	1	0	0	10	0	4	0	0
4/26/2024	11:30 PM	1	78	19	2	2	0	0	0	4	0	3	0	0
4/26/2024	11:45 PM	0	38	10	1	2	0	0	0	2	0	1	0	0

4/27/2024	12:00 AM	1	129	10	1	3	0	0	0	15	0	3	0	0
4/27/2024	12:15 AM	1	112	7	1	4	0	0	0	13	0	2	0	0
4/27/2024	12:30 AM	2	91	6	0	3	0	0	0	13	0	4	0	0
4/27/2024	12:45 AM	2	81	5	0	4	0	0	0	13	0	5	0	0
4/27/2024	1:00 AM	1	75	5	0	4	0	0	0	12	0	5	0	0
4/27/2024	1:15 AM	1	65	5	0	3	0	0	0	13	0	6	0	0
4/27/2024	1:30 AM	0	58	5	0	4	0	0	0	10	0	4	0	0
4/27/2024	1:45 AM	0	56	4	0	3	0	0	0	10	0	5	0	0
4/27/2024	2:00 AM	0	45	2	0	3	0	0	0	9	0	5	0	0
4/27/2024	2:15 AM	0	42	2	0	4	0	0	0	7	0	8	0	0
4/27/2024	2:30 AM	0	46	2	0	3	0	0	0	7	0	7	0	0
4/27/2024	2:45 AM	0	44	1	0	2	0	0	0	11	0	7	0	0
4/27/2024	3:00 AM	0	47	2	0	3	0	0	0	13	0	7	0	0
4/27/2024	3:15 AM	0	52	3	0	2	0	0	0	16	0	3	0	0
4/27/2024	3:30 AM	0	52	3	0	2	0	0	0	17	0	4	0	0
4/27/2024	3:45 AM	0	56	6	1	2	0	0	0	15	0	2	0	0
4/27/2024	4:00 AM	0	59	6	1	0	0	0	0	15	0	1	0	0
4/27/2024	4:15 AM	1	76	6	1	1	0	0	0	17	0	1	0	0
4/27/2024	4:30 AM	1	87	9	1	1	0	0	0	16	0	1	0	0
4/27/2024	4:45 AM	1	105	8	0	1	0	0	0	14	0	1	0	0
4/27/2024	5:00 AM	1	128	10	0	1	0	0	0	18	0	2	0	0
4/27/2024	5:15 AM	0	137	14	0	1	0	0	0	17	0	2	0	0
4/27/2024	5:30 AM	0	165	22	0	2	1	0	1	23	0	1	0	0
4/27/2024	5:45 AM	0	198	42	0	2	1	0	1	27	0	1	0	0
4/27/2024	6:00 AM	0	236	52	0	2	1	0	1	23	0	0	0	0
4/27/2024	6:15 AM	0	269	70	0	1	2	0	1	23	1	0	0	0
4/27/2024	6:30 AM	0	304	96	0	2	1	0	0	19	1	0	0	0
4/27/2024	6:45 AM	0	325	106	0	3	1	0	4	17	1	0	0	0
4/27/2024	7:00 AM	2	361	124	0	5	1	0	4	17	1	0	0	0
4/27/2024	7:15 AM	2	376	138	0	6	1	0	5	17	0	0	0	0
4/27/2024	7:30 AM	3	386	128	0	7	1	0	6	21	0	0	0	0
4/27/2024	7:45 AM	6	406	122	5	9	1	0	3	27	0	0	0	0
4/27/2024	8:00 AM	5	401	130	6	8	1	0	4	36	0	0	0	0
4/27/2024	8:15 AM	7	437	144	6	7	1	0	3	39	0	0	0	0
4/27/2024	8:30 AM	7	491	147	6	5	1	0	3	38	0	0	0	0
4/27/2024	8:45 AM	5	514	155	1	4	2	0	6	36	1	0	0	0
4/27/2024	9:00 AM	4	545	150	0	5	3	0	6	35	2	0	0	0
4/27/2024	9:15 AM	2	554	134	0	8	2	0	8	34	3	0	0	0
4/27/2024	9:30 AM	1	550	137	0	8	2	0	8	35	4	0	0	0
4/27/2024	9:45 AM	0	555	142	0	10	1	0	4	36	3	1	0	0
4/27/2024	10:00 AM	2	559	141	0	11	0	0	4	32	2	1	0	0
4/27/2024	10:15 AM	3	557	138	1	10	1	0	3	29	1	1	0	0
4/27/2024	10:30 AM	3	539	138	1	12	1	0	3	31	0	1	0	0
4/27/2024	10:45 AM	4	533	137	3	9	3	0	4	29	0	0	0	0
4/27/2024	11:00 AM	2	528	136	3	9	4	0	3	33	0	0	0	0
4/27/2024	11:15 AM	1	524	144	4	8	3	0	3	41	0	0	0	0
4/27/2024	11:30 AM	2	539	143	4	6	4	0	4	42	0	0	0	0
4/27/2024	11:45 AM	1	557	141	2	10	2	0	3	50	0	1	0	0
4/27/2024	12:00 PM	1	574	142	3	8	1	0	5	53	1	1	0	0
4/27/2024	12:15 PM	2	597	145	1	11	1	0	5	50	1	1	0	0
4/27/2024	12:30 PM	1	587	146	1	10	0	0	7	53	1	1	0	0
4/27/2024	12:45 PM	2	606	141	1	6	0	0	9	46	1	0	0	0
4/27/2024	1:00 PM	4	584	143	0	9	0	0	9	41	0	0	0	0
4/27/2024	1:15 PM	6	600	134	0	5	1	0	9	38	0	0	0	0
4/27/2024	1:30 PM	9	598	131	0	7	3	0	6	36	1	0	0	0
4/27/2024	1:45 PM	8	571	131	1	6	3	0	4	37	1	0	0	0
4/27/2024	2:00 PM	6	587	132	1	4	4	0	3	39	1	0	0	0
4/27/2024	2:15 PM	4	555	129	1	5	6	0	3	36	1	0	0	0
4/27/2024	2:30 PM	1	536	132	1	6	4	0	4	31	0	0	0	0
4/27/2024	2:45 PM	1	526	138	0	9	4	0	5	26	0	0	0	0
4/27/2024	3:00 PM	2	529	133	0	7	3	0	5	23	0	0	0	0
4/27/2024	3:15 PM	1	515	132	0	6	0	0	6	25	0	0	0	0
4/27/2024	3:30 PM	1	522	130	0	5	1	0	6	32	1	0	0	0
4/27/2024	3:45 PM	1	535	127	0	6	2	0	6	35	1	0	0	0
4/27/2024	4:00 PM	0	501	143	0	7	3	0	6	34	1	0	0	0
4/27/2024	4:15 PM	0	511	142	0	10	3	0	4	35	1	0	0	0
4/27/2024	4:30 PM	1	512	144	0	11	2	0	4	24	0	0	0	0
4/27/2024	4:45 PM	1	473	137	0	7	2	0	3	22	0	0	0	0
4/27/2024	5:00 PM	1	468	111	0	7	1	0	2	22	0	0	0	0
4/27/2024	5:15 PM	1	443	116	1	4	1	0	4	26	0	0	0	0
4/27/2024	5:30 PM	0	448	109	1	1	2	0	6	32	0	0	0	0
4/27/2024	5:45 PM	1	462	111	1	4	1	0	7	36	0	0	0	0
4/27/2024	6:00 PM	1	461	112	2	4	1	0	8	37	0	0	0	0
4/27/2024	6:15 PM	1	466	106	2	6	1	0	6	34	0	0	0	0
4/27/2024	6:30 PM	1	458	97	2	10	0	0	2	31	0	0	0	0
4/27/2024	6:45 PM	1	433	87	2	8	0	0	2	32	0	0	0	0
4/27/2024	7:00 PM	2	429	80	1	8	0	0	2	31	0	0	0	0
4/27/2024	7:15 PM	2	431	67	1	6	0	0	2	32	1	0	0	0
4/27/2024	7:30 PM	2	405	58	1	4	0	0	2	29	1	0	0	0
4/27/2024	7:45 PM	1	404	54	1	6	0	0	1	25	1	0	0	0
4/27/2024	8:00 PM	0	388	52	1	6	0	0	0	22	1	0	0	0
4/27/2024	8:15 PM	0	392	50	1	7	0	0	0	19	0	0	0	0
4/27/2024	8:30 PM	0	374	54	1	6	0	0	0	19	0	0	0	0
4/27/2024	8:45 PM	0	360	52	1	6	0	0	1	18	0	0	0	0
4/27/2024	9:00 PM	0	331	55	1	5	0	0	1	19	0	0	0	0
4/27/2024	9:15 PM	1	273	55	0	4	0	0	1	18	0	0	0	0
4/27/2024	9:30 PM	1	259	51	1	3	0	0	1	16	0	0	0	0
4/27/2024	9:45 PM	1	244	47	1	0	0	0	0	12	0	0	0	0
4/27/2024	10:00 PM	2	237	38	2	0	0	0	0	10	0	0	0	0
4/27/2024	10:15 PM	1	241	29	2	0	0	0	0	8	0	0	0	0
4/27/2024	10:30 PM	1	223	28	1	1	0	0	0	14	0	0	0	0
4/27/2024	10:45 PM	2	196	22	1	2	0	0	0	16	0	0	0	0
4/27/2024	11:00 PM	1	173	19	0	2	1	0	0	13	0	0	0	0
4/27/2024	11:15 PM	1	114	15	0	2	1	0	0	10	0	0	0	0
4/27/2024	11:30 PM	1	70	7	0	1	1	0	0	3	0	0	0	0
4/27/2024	11:45 PM	0	32	4	0	0	1	0	0	0	0	0	0	0

SB
File Name:
Start Date: 4/21/2024
Start Time: 0
Site Code: 75 Lane 2 NB
Station ID: 1
Location 1: I-20, north of Bush River Rd
Location 2:

Date	Time	1	2	3	4	5	6	7	8	9	10	11	12	13
4/21/2024	12:00 AM	0	0	0	0	0	0	0	0	0	0	0	0	0
4/21/2024	12:15 AM	0	0	0	0	0	0	0	0	0	0	0	0	0
4/21/2024	12:30 AM	0	0	0	0	0	0	0	0	0	0	0	0	0
4/21/2024	12:45 AM	0	0	0	0	0	0	0	0	0	0	0	0	0
4/21/2024	1:00 AM	0	0	0	0	0	0	0	0	0	0	0	0	0
4/21/2024	1:15 AM	0	0	0	0	0	0	0	0	0	0	0	0	0
4/21/2024	1:30 AM	0	0	0	0	0	0	0	0	0	0	0	0	0
4/21/2024	1:45 AM	0	0	0	0	0	0	0	0	0	0	0	0	0
4/21/2024	2:00 AM	0	0	0	0	0	0	0	0	0	0	0	0	0
4/21/2024	2:15 AM	0	0	0	0	0	0	0	0	0	0	0	0	0
4/21/2024	2:30 AM	0	0	0	0	0	0	0	0	0	0	0	0	0
4/21/2024	2:45 AM	0	0	0	0	0	0	0	0	0	0	0	0	0
4/21/2024	3:00 AM	0	0	0	0	0	0	0	0	0	0	0	0	0
4/21/2024	3:15 AM	0	0	0	0	0	0	0	0	0	0	0	0	0
4/21/2024	3:30 AM	0	0	0	0	0	0	0	0	0	0	0	0	0
4/21/2024	3:45 AM	0	0	0	0	0	0	0	0	0	0	0	0	0
4/21/2024	4:00 AM	0	0	0	0	0	0	0	0	0	0	0	0	0
4/21/2024	4:15 AM	0	0	0	0	0	0	0	0	0	0	0	0	0
4/21/2024	4:30 AM	0	0	0	0	0	0	0	0	0	0	0	0	0
4/21/2024	4:45 AM	0	0	0	0	0	0	0	0	0	0	0	0	0
4/21/2024	5:00 AM	0	0	0	0	0	0	0	0	0	0	0	0	0
4/21/2024	5:15 AM	0	0	0	0	0	0	0	0	0	0	0	0	0
4/21/2024	5:30 AM	0	0	0	0	0	0	0	0	0	0	0	0	0
4/21/2024	5:45 AM	0	0	0	0	0	0	0	0	0	0	0	0	0
4/21/2024	6:00 AM	0	0	0	0	0	0	0	0	0	0	0	0	0
4/21/2024	6:15 AM	0	0	0	0	0	0	0	0	0	0	0	0	0
4/21/2024	6:30 AM	0	0	0	0	0	0	0	0	0	0	0	0	0
4/21/2024	6:45 AM	0	0	0	0	0	0	0	0	0	0	0	0	0
4/21/2024	7:00 AM	0	0	0	0	0	0	0	0	0	0	0	0	0
4/21/2024	7:15 AM	0	0	0	0	0	0	0	0	0	0	0	0	0
4/21/2024	7:30 AM	0	0	0	0	0	0	0	0	0	0	0	0	0
4/21/2024	7:45 AM	0	0	0	0	0	0	0	0	0	0	0	0	0
4/21/2024	8:00 AM	0	0	0	0	0	0	0	0	0	0	0	0	0
4/21/2024	8:15 AM	0	0	0	0	0	0	0	0	0	0	0	0	0
4/21/2024	8:30 AM	0	0	0	0	0	0	0	0	0	0	0	0	0
4/21/2024	8:45 AM	0	0	0	0	0	0	0	0	0	0	0	0	0
4/21/2024	9:00 AM	0	0	0	0	0	0	0	0	0	0	0	0	0
4/21/2024	9:15 AM	0	0	0	0	0	0	0	0	0	0	0	0	0
4/21/2024	9:30 AM	0	0	0	0	0	0	0	0	0	0	0	0	0
4/21/2024	9:45 AM	0	0	0	0	0	0	0	0	0	0	0	0	0
4/21/2024	10:00 AM	0	0	0	0	0	0	0	0	0	0	0	0	0
4/21/2024	10:15 AM	0	0	0	0	0	0	0	0	0	0	0	0	0
4/21/2024	10:30 AM	0	0	0	0	0	0	0	0	0	0	0	0	0
4/21/2024	10:45 AM	0	0	0	0	0	0	0	0	0	0	0	0	0
4/21/2024	11:00 AM	0	0	0	0	0	0	0	0	0	0	0	0	0
4/21/2024	11:15 AM	0	0	0	0	0	0	0	0	0	0	0	0	0
4/21/2024	11:30 AM	0	0	0	0	0	0	0	0	0	0	0	0	0
4/21/2024	11:45 AM	0	0	0	0	0	0	0	0	0	0	0	0	0
4/21/2024	12:00 PM	0	0	0	0	0	0	0	0	0	0	0	0	0
4/21/2024	12:15 PM	0	0	0	0	0	0	0	0	0	0	0	0	0
4/21/2024	12:30 PM	0	0	0	0	0	0	0	0	0	0	0	0	0
4/21/2024	12:45 PM	0	0	0	0	0	0	0	0	0	0	0	0	0
4/21/2024	1:00 PM	0	0	0	0	0	0	0	0	0	0	0	0	0
4/21/2024	1:15 PM	0	0	0	0	0	0	0	0	0	0	0	0	0
4/21/2024	1:30 PM	0	0	0	0	0	0	0	0	0	0	0	0	0
4/21/2024	1:45 PM	0	0	0	0	0	0	0	0	0	0	0	0	0
4/21/2024	2:00 PM	0	0	0	0	0	0	0	0	0	0	0	0	0
4/21/2024	2:15 PM	0	0	0	0	0	0	0	0	0	0	0	0	0
4/21/2024	2:30 PM	0	0	0	0	0	0	0	0	0	0	0	0	0
4/21/2024	2:45 PM	0	0	0	0	0	0	0	0	0	0	0	0	0
4/21/2024	3:00 PM	0	0	0	0	0	0	0	0	0	0	0	0	0
4/21/2024	3:15 PM	0	0	0	0	0	0	0	0	0	0	0	0	0
4/21/2024	3:30 PM	0	0	0	0	0	0	0	0	0	0	0	0	0
4/21/2024	3:45 PM	0	0	0	0	0	0	0	0	0	0	0	0	0
4/21/2024	4:00 PM	0	0	0	0	0	0	0	0	0	0	0	0	0
4/21/2024	4:15 PM	0	0	0	0	0	0	0	0	0	0	0	0	0
4/21/2024	4:30 PM	0	0	0	0	0	0	0	0	0	0	0	0	0
4/21/2024	4:45 PM	0	0	0	0	0	0	0	0	0	0	0	0	0
4/21/2024	5:00 PM	0	0	0	0	0	0	0	0	0	0	0	0	0
4/21/2024	5:15 PM	0	0	0	0	0	0	0	0	0	0	0	0	0
4/21/2024	5:30 PM	0	0	0	0	0	0	0	0	0	0	0	0	0
4/21/2024	5:45 PM	0	0	0	0	0	0	0	0	0	0	0	0	0
4/21/2024	6:00 PM	0	0	0	0	0	0	0	0	0	0	0	0	0
4/21/2024	6:15 PM	0	0	0	0	0	0	0	0	0	0	0	0	0
4/21/2024	6:30 PM	0	0	0	0	0	0	0	0	0	0	0	0	0
4/21/2024	6:45 PM	0	0	0	0	0	0	0	0	0	0	0	0	0
4/21/2024	7:00 PM	0	0	0	0	0	0	0	0	0	0	0	0	0
4/21/2024	7:15 PM	0	0	0	0	0	0	0	0	0	0	0	0	0
4/21/2024	7:30 PM	0	0	0	0	0	0	0	0	0	0	0	0	0
4/21/2024	7:45 PM	0	0	0	0	0	0	0	0	0	0	0	0	0
4/21/2024	8:00 PM	0	0	0	0	0	0	0	0	0	0	0	0	0
4/21/2024	8:15 PM	0	0	0	0	0	0	0	0	0	0	0	0	0
4/21/2024	8:30 PM	0	0	0	0	0	0	0	0	0	0	0	0	0
4/21/2024	8:45 PM	0	0	0	0	0	0	0	0	0	0	0	0	0
4/21/2024	9:00 PM	0	0	0	0	0	0	0	0	0	0	0	0	0
4/21/2024	9:15 PM	0	0	0	0	0	0	0	0	0	0	0	0	0
4/21/2024	9:30 PM	0	0	0	0	0	0	0	0	0	0	0	0	0
4/21/2024	9:45 PM	0	0	0	0	0	0	0	0	0	0	0	0	0
4/21/2024	10:00 PM	0	0	0	0	0	0	0	0	0	0	0	0	0
4/21/2024	10:15 PM	0	0	0	0	0	0	0	0	0	0	0	0	0
4/21/2024	10:30 PM	0	0	0	0	0	0	0	0	0	0	0	0	0
4/21/2024	10:45 PM	0	0	0	0	0	0	0	0	0	0	0	0	0
4/21/2024	11:00 PM	0	0	0	0	0	0	0	0	0	0	0	0	0
4/21/2024	11:15 PM	0	0	0	0	0	0	0	0	0	0	0	0	0
4/21/2024	11:30 PM	0	0	0	0	0	0	0	0	0	0	0	0	0
4/21/2024	11:45 PM	0	0	0	0	0	0	0	0	0	0	0	0	0

4/22/2024	12:00 AM	0	0	0	0	0	0	0	0	0	0	0	0	0
4/22/2024	12:15 AM	0	0	0	0	0	0	0	0	0	0	0	0	0
4/22/2024	12:30 AM	0	0	0	0	0	0	0	0	0	0	0	0	0
4/22/2024	12:45 AM	0	0	0	0	0	0	0	0	0	0	0	0	0
4/22/2024	1:00 AM	0	0	0	0	0	0	0	0	0	0	0	0	0
4/22/2024	1:15 AM	0	0	0	0	0	0	0	0	0	0	0	0	0
4/22/2024	1:30 AM	0	0	0	0	0	0	0	0	0	0	0	0	0
4/22/2024	1:45 AM	0	0	0	0	0	0	0	0	0	0	0	0	0
4/22/2024	2:00 AM	0	0	0	0	0	0	0	0	0	0	0	0	0
4/22/2024	2:15 AM	0	0	0	0	0	0	0	0	0	0	0	0	0
4/22/2024	2:30 AM	0	0	0	0	0	0	0	0	0	0	0	0	0
4/22/2024	2:45 AM	0	0	0	0	0	0	0	0	0	0	0	0	0
4/22/2024	3:00 AM	0	0	0	0	0	0	0	0	0	0	0	0	0
4/22/2024	3:15 AM	0	0	0	0	0	0	0	0	0	0	0	0	0
4/22/2024	3:30 AM	0	0	0	0	0	0	0	0	0	0	0	0	0
4/22/2024	3:45 AM	0	0	0	0	0	0	0	0	0	0	0	0	0
4/22/2024	4:00 AM	0	0	0	0	0	0	0	0	0	0	0	0	0
4/22/2024	4:15 AM	0	0	0	0	0	0	0	0	0	0	0	0	0
4/22/2024	4:30 AM	0	0	0	0	0	0	0	0	0	0	0	0	0
4/22/2024	4:45 AM	0	0	0	0	0	0	0	0	0	0	0	0	0
4/22/2024	5:00 AM	0	0	0	0	0	0	0	0	0	0	0	0	0
4/22/2024	5:15 AM	0	0	0	0	0	0	0	0	0	0	0	0	0
4/22/2024	5:30 AM	0	0	0	0	0	0	0	0	0	0	0	0	0
4/22/2024	5:45 AM	0	0	0	0	0	0	0	0	0	0	0	0	0
4/22/2024	6:00 AM	0	0	0	0	0	0	0	0	0	0	0	0	0
4/22/2024	6:15 AM	0	0	0	0	0	0	0	0	0	0	0	0	0
4/22/2024	6:30 AM	0	0	0	0	0	0	0	0	0	0	0	0	0
4/22/2024	6:45 AM	0	0	0	0	0	0	0	0	0	0	0	0	0
4/22/2024	7:00 AM	0	0	0	0	0	0	0	0	0	0	0	0	0
4/22/2024	7:15 AM	0	0	0	0	0	0	0	0	0	0	0	0	0
4/22/2024	7:30 AM	0	0	0	0	0	0	0	0	0	0	0	0	0
4/22/2024	7:45 AM	0	0	0	0	0	0	0	0	0	0	0	0	0
4/22/2024	8:00 AM	0	0	0	0	0	0	0	0	0	0	0	0	0
4/22/2024	8:15 AM	0	0	0	0	0	0	0	0	0	0	0	0	0
4/22/2024	8:30 AM	0	0	0	0	0	0	0	0	0	0	0	0	0
4/22/2024	8:45 AM	0	0	0	0	0	0	0	0	0	0	0	0	0
4/22/2024	9:00 AM	0	0	0	0	0	0	0	0	0	0	0	0	0
4/22/2024	9:15 AM	0	0	0	0	0	0	0	0	0	0	0	0	0
4/22/2024	9:30 AM	0	0	0	0	0	0	0	0	0	0	0	0	0
4/22/2024	9:45 AM	0	0	0	0	0	0	0	0	0	0	0	0	0
4/22/2024	10:00 AM	0	0	0	0	0	0	0	0	0	0	0	0	0
4/22/2024	10:15 AM	0	0	0	0	0	0	0	0	0	0	0	0	0
4/22/2024	10:30 AM	0	0	0	0	0	0	0	0	0	0	0	0	0
4/22/2024	10:45 AM	0	0	0	0	0	0	0	0	0	0	0	0	0
4/22/2024	11:00 AM	0	0	0	0	0	0	0	0	0	0	0	0	0
4/22/2024	11:15 AM	0	0	0	0	0	0	0	0	0	0	0	0	0
4/22/2024	11:30 AM	0	0	0	0	0	0	0	0	0	0	0	0	0
4/22/2024	11:45 AM	0	0	0	0	0	0	0	0	0	0	0	0	0
4/22/2024	12:00 PM	0	0	0	0	0	0	0	0	0	0	0	0	0
4/22/2024	12:15 PM	0	0	0	0	0	0	0	0	0	0	0	0	0
4/22/2024	12:30 PM	0	0	0	0	0	0	0	0	0	0	0	0	0
4/22/2024	12:45 PM	0	0	0	0	0	0	0	0	0	0	0	0	0
4/22/2024	1:00 PM	0	0	0	0	0	0	0	0	0	0	0	0	0
4/22/2024	1:15 PM	0	0	0	0	0	0	0	0	0	0	0	0	0
4/22/2024	1:30 PM	0	0	0	0	0	0	0	0	0	0	0	0	0
4/22/2024	1:45 PM	0	0	0	0	0	0	0	0	0	0	0	0	0
4/22/2024	2:00 PM	0	0	0	0	0	0	0	0	0	0	0	0	0
4/22/2024	2:15 PM	0	0	0	0	0	0	0	0	0	0	0	0	0
4/22/2024	2:30 PM	0	0	0	0	0	0	0	0	0	0	0	0	0
4/22/2024	2:45 PM	0	0	0	0	0	0	0	0	0	0	0	0	0
4/22/2024	3:00 PM	0	0	0	0	0	0	0	0	0	0	0	0	0
4/22/2024	3:15 PM	0	0	0	0	0	0	0	0	0	0	0	0	0
4/22/2024	3:30 PM	0	0	0	0	0	0	0	0	0	0	0	0	0
4/22/2024	3:45 PM	0	0	0	0	0	0	0	0	0	0	0	0	0
4/22/2024	4:00 PM	0	0	0	0	0	0	0	0	0	0	0	0	0
4/22/2024	4:15 PM	0	0	0	0	0	0	0	0	0	0	0	0	0
4/22/2024	4:30 PM	0	0	0	0	0	0	0	0	0	0	0	0	0
4/22/2024	4:45 PM	0	0	0	0	0	0	0	0	0	0	0	0	0
4/22/2024	5:00 PM	0	0	0	0	0	0	0	0	0	0	0	0	0
4/22/2024	5:15 PM	0	0	0	0	0	0	0	0	0	0	0	0	0
4/22/2024	5:30 PM	0	0	0	0	0	0	0	0	0	0	0	0	0
4/22/2024	5:45 PM	0	0	0	0	0	0	0	0	0	0	0	0	0
4/22/2024	6:00 PM	0	0	0	0	0	0	0	0	0	0	0	0	0
4/22/2024	6:15 PM	0	0	0	0	0	0	0	0	0	0	0	0	0
4/22/2024	6:30 PM	0	0	0	0	0	0	0	0	0	0	0	0	0
4/22/2024	6:45 PM	0	0	0	0	0	0	0	0	0	0	0	0	0
4/22/2024	7:00 PM	0	0	0	0	0	0	0	0	0	0	0	0	0
4/22/2024	7:15 PM	0	0	0	0	0	0	0	0	0	0	0	0	0
4/22/2024	7:30 PM	0	0	0	0	0	0	0	0	0	0	0	0	0
4/22/2024	7:45 PM	0	0	0	0	0	0	0	0	0	0	0	0	0
4/22/2024	8:00 PM	0	0	0	0	0	0	0	0	0	0	0	0	0
4/22/2024	8:15 PM	0	0	0	0	0	0	0	0	0	0	0	0	0
4/22/2024	8:30 PM	0	0	0	0	0	0	0	0	0	0	0	0	0
4/22/2024	8:45 PM	0	0	0	0	0	0	0	0	0	0	0	0	0
4/22/2024	9:00 PM	0	0	0	0	0	0	0	0	0	0	0	0	0
4/22/2024	9:15 PM	0	0	0	0	0	0	0	0	0	0	0	0	0
4/22/2024	9:30 PM	0	0	0	0	0	0	0	0	0	0	0	0	0
4/22/2024	9:45 PM	0	0	0	0	0	0	0	0	0	0	0	0	0
4/22/2024	10:00 PM	0	0	0	0	0	0	0	0	0	0	0	0	0
4/22/2024	10:15 PM	0	0	0	0	0	0	0	0	0	0	0	0	0
4/22/2024	10:30 PM	0	0	0	0	0	0	0	0	0	0	0	0	0
4/22/2024	10:45 PM	0	0	0	0	0	0	0	0	0	0	0	0	0
4/22/2024	11:00 PM	0	0	0	0	0	0	0	0	0	0	0	0	0
4/22/2024	11:15 PM	0	0	0	0	0	0	0	0	0	0	0	0	0
4/22/2024	11:30 PM	0	0	0	0	0	0	0	0	0	0	0	0	0
4/22/2024	11:45 PM	0	0	0	0	0	0	0	0	0	0	0	0	0

4/23/2024	12:00 AM	0	0	0	0	0	0	0	0	0	0	0	0	0
4/23/2024	12:15 AM	0	0	0	0	0	0	0	0	0	0	0	0	0
4/23/2024	12:30 AM	0	0	0	0	0	0	0	0	0	0	0	0	0
4/23/2024	12:45 AM	0	0	0	0	0	0	0	0	0	0	0	0	0
4/23/2024	1:00 AM	0	0	0	0	0	0	0	0	0	0	0	0	0
4/23/2024	1:15 AM	0	0	0	0	0	0	0	0	0	0	0	0	0
4/23/2024	1:30 AM	0	0	0	0	0	0	0	0	0	0	0	0	0
4/23/2024	1:45 AM	0	0	0	0	0	0	0	0	0	0	0	0	0
4/23/2024	2:00 AM	0	0	0	0	0	0	0	0	0	0	0	0	0
4/23/2024	2:15 AM	0	0	0	0	0	0	0	0	0	0	0	0	0
4/23/2024	2:30 AM	0	0	0	0	0	0	0	0	0	0	0	0	0
4/23/2024	2:45 AM	0	0	0	0	0	0	0	0	0	0	0	0	0
4/23/2024	3:00 AM	0	0	0	0	0	0	0	0	0	0	0	0	0
4/23/2024	3:15 AM	0	0	0	0	0	0	0	0	0	0	0	0	0
4/23/2024	3:30 AM	0	0	0	0	0	0	0	0	0	0	0	0	0
4/23/2024	3:45 AM	0	0	0	0	0	0	0	0	0	0	0	0	0
4/23/2024	4:00 AM	0	0	0	0	0	0	0	0	0	0	0	0	0
4/23/2024	4:15 AM	0	0	0	0	0	0	0	0	0	0	0	0	0
4/23/2024	4:30 AM	0	0	0	0	0	0	0	0	0	0	0	0	0
4/23/2024	4:45 AM	0	0	0	0	0	0	0	0	0	0	0	0	0
4/23/2024	5:00 AM	0	0	0	0	0	0	0	0	0	0	0	0	0
4/23/2024	5:15 AM	0	0	0	0	0	0	0	0	0	0	0	0	0
4/23/2024	5:30 AM	0	0	0	0	0	0	0	0	0	0	0	0	0
4/23/2024	5:45 AM	0	0	0	0	0	0	0	0	0	0	0	0	0
4/23/2024	6:00 AM	0	0	0	0	0	0	0	0	0	0	0	0	0
4/23/2024	6:15 AM	0	0	0	0	0	0	0	0	0	0	0	0	0
4/23/2024	6:30 AM	0	0	0	0	0	0	0	0	0	0	0	0	0
4/23/2024	6:45 AM	0	0	0	0	0	0	0	0	0	0	0	0	0
4/23/2024	7:00 AM	0	0	0	0	0	0	0	0	0	0	0	0	0
4/23/2024	7:15 AM	0	0	0	0	0	0	0	0	0	0	0	0	0
4/23/2024	7:30 AM	0	0	0	0	0	0	0	0	0	0	0	0	0
4/23/2024	7:45 AM	0	0	0	0	0	0	0	0	0	0	0	0	0
4/23/2024	8:00 AM	0	0	0	0	0	0	0	0	0	0	0	0	0
4/23/2024	8:15 AM	0	0	0	0	0	0	0	0	0	0	0	0	0
4/23/2024	8:30 AM	0	0	0	0	0	0	0	0	0	0	0	0	0
4/23/2024	8:45 AM	0	0	0	0	0	0	0	0	0	0	0	0	0
4/23/2024	9:00 AM	0	0	0	0	0	0	0	0	0	0	0	0	0
4/23/2024	9:15 AM	0	0	0	0	0	0	0	0	0	0	0	0	0
4/23/2024	9:30 AM	0	0	0	0	0	0	0	0	0	0	0	0	0
4/23/2024	9:45 AM	0	0	0	0	0	0	0	0	0	0	0	0	0
4/23/2024	10:00 AM	0	0	0	0	0	0	0	0	0	0	0	0	0
4/23/2024	10:15 AM	0	0	0	0	0	0	0	0	0	0	0	0	0
4/23/2024	10:30 AM	0	0	0	0	0	0	0	0	0	0	0	0	0
4/23/2024	10:45 AM	0	0	0	0	0	0	0	0	0	0	0	0	0
4/23/2024	11:00 AM	0	0	0	0	0	0	0	0	0	0	0	0	0
4/23/2024	11:15 AM	0	0	0	0	0	0	0	0	0	0	0	0	0
4/23/2024	11:30 AM	0	0	0	0	0	0	0	0	0	0	0	0	0
4/23/2024	11:45 AM	0	0	0	0	0	0	0	0	0	0	0	0	0
4/23/2024	12:00 PM	0	0	0	0	0	0	0	0	0	0	0	0	0
4/23/2024	12:15 PM	0	0	0	0	0	0	0	0	0	0	0	0	0
4/23/2024	12:30 PM	0	0	0	0	0	0	0	0	0	0	0	0	0
4/23/2024	12:45 PM	0	0	0	0	0	0	0	0	0	0	0	0	0
4/23/2024	1:00 PM	0	0	0	0	0	0	0	0	0	0	0	0	0
4/23/2024	1:15 PM	0	0	0	0	0	0	0	0	0	0	0	0	0
4/23/2024	1:30 PM	0	0	0	0	0	0	0	0	0	0	0	0	0
4/23/2024	1:45 PM	0	0	0	0	0	0	0	0	0	0	0	0	0
4/23/2024	2:00 PM	0	0	0	0	0	0	0	0	0	0	0	0	0
4/23/2024	2:15 PM	0	0	0	0	0	0	0	0	0	0	0	0	0
4/23/2024	2:30 PM	0	0	0	0	0	0	0	0	0	0	0	0	0
4/23/2024	2:45 PM	0	0	0	0	0	0	0	0	0	0	0	0	0
4/23/2024	3:00 PM	0	0	0	0	0	0	0	0	0	0	0	0	0
4/23/2024	3:15 PM	0	0	0	0	0	0	0	0	0	0	0	0	0
4/23/2024	3:30 PM	0	0	0	0	0	0	0	0	0	0	0	0	0
4/23/2024	3:45 PM	0	0	0	0	0	0	0	0	0	0	0	0	0
4/23/2024	4:00 PM	0	0	0	0	0	0	0	0	0	0	0	0	0
4/23/2024	4:15 PM	0	0	0	0	0	0	0	0	0	0	0	0	0
4/23/2024	4:30 PM	0	0	0	0	0	0	0	0	0	0	0	0	0
4/23/2024	4:45 PM	0	0	0	0	0	0	0	0	0	0	0	0	0
4/23/2024	5:00 PM	0	0	0	0	0	0	0	0	0	0	0	0	0
4/23/2024	5:15 PM	0	0	0	0	0	0	0	0	0	0	0	0	0
4/23/2024	5:30 PM	0	0	0	0	0	0	0	0	0	0	0	0	0
4/23/2024	5:45 PM	0	0	0	0	0	0	0	0	0	0	0	0	0
4/23/2024	6:00 PM	0	0	0	0	0	0	0	0	0	0	0	0	0
4/23/2024	6:15 PM	0	0	0	0	0	0	0	0	0	0	0	0	0
4/23/2024	6:30 PM	0	0	0	0	0	0	0	0	0	0	0	0	0
4/23/2024	6:45 PM	0	0	0	0	0	0	0	0	0	0	0	0	0
4/23/2024	7:00 PM	0	0	0	0	0	0	0	0	0	0	0	0	0
4/23/2024	7:15 PM	0	0	0	0	0	0	0	0	0	0	0	0	0
4/23/2024	7:30 PM	0	0	0	0	0	0	0	0	0	0	0	0	0
4/23/2024	7:45 PM	0	0	0	0	0	0	0	0	0	0	0	0	0
4/23/2024	8:00 PM	0	0	0	0	0	0	0	0	0	0	0	0	0
4/23/2024	8:15 PM	0	0	0	0	0	0	0	0	0	0	0	0	0
4/23/2024	8:30 PM	0	0	0	0	0	0	0	0	0	0	0	0	0
4/23/2024	8:45 PM	0	0	0	0	0	0	0	0	0	0	0	0	0
4/23/2024	9:00 PM	0	0	0	0	0	0	0	0	0	0	0	0	0
4/23/2024	9:15 PM	0	0	0	0	0	0	0	0	0	0	0	0	0
4/23/2024	9:30 PM	0	0	0	0	0	0	0	0	0	0	0	0	0
4/23/2024	9:45 PM	0	0	0	0	0	0	0	0	0	0	0	0	0
4/23/2024	10:00 PM	0	0	0	0	0	0	0	0	0	0	0	0	0
4/23/2024	10:15 PM	0	0	0	0	0	0	0	0	0	0	0	0	0
4/23/2024	10:30 PM	0	0	0	0	0	0	0	0	0	0	0	0	0
4/23/2024	10:45 PM	0	0	0	0	0	0	0	0	0	0	0	0	0
4/23/2024	11:00 PM	0	0	0	0	0	0	0	0	0	0	0	0	0
4/23/2024	11:15 PM	0	0	0	0	0	0	0	0	0	0	0	0	0
4/23/2024	11:30 PM	0	0	0	0	0	0	0	0	0	0	0	0	0
4/23/2024	11:45 PM	0	0	0	0	0	0	0	0	0	0	0	0	0

4/24/2024	12:00 AM	0	0	0	0	0	0	0	0	0	0	0	0	0
4/24/2024	12:15 AM	0	0	0	0	0	0	0	0	0	0	0	0	0
4/24/2024	12:30 AM	0	0	0	0	0	0	0	0	0	0	0	0	0
4/24/2024	12:45 AM	0	0	0	0	0	0	0	0	0	0	0	0	0
4/24/2024	1:00 AM	0	0	0	0	0	0	0	0	0	0	0	0	0
4/24/2024	1:15 AM	0	0	0	0	0	0	0	0	0	0	0	0	0
4/24/2024	1:30 AM	0	0	0	0	0	0	0	0	0	0	0	0	0
4/24/2024	1:45 AM	0	0	0	0	0	0	0	0	0	0	0	0	0
4/24/2024	2:00 AM	0	0	0	0	0	0	0	0	0	0	0	0	0
4/24/2024	2:15 AM	0	0	0	0	0	0	0	0	0	0	0	0	0
4/24/2024	2:30 AM	0	0	0	0	0	0	0	0	0	0	0	0	0
4/24/2024	2:45 AM	0	0	0	0	0	0	0	0	0	0	0	0	0
4/24/2024	3:00 AM	0	0	0	0	0	0	0	0	0	0	0	0	0
4/24/2024	3:15 AM	0	0	0	0	0	0	0	0	0	0	0	0	0
4/24/2024	3:30 AM	0	0	0	0	0	0	0	0	0	0	0	0	0
4/24/2024	3:45 AM	0	0	0	0	0	0	0	0	0	0	0	0	0
4/24/2024	4:00 AM	0	0	0	0	0	0	0	0	0	0	0	0	0
4/24/2024	4:15 AM	0	0	0	0	0	0	0	0	0	0	0	0	0
4/24/2024	4:30 AM	0	0	0	0	0	0	0	0	0	0	0	0	0
4/24/2024	4:45 AM	0	0	0	0	0	0	0	0	0	0	0	0	0
4/24/2024	5:00 AM	0	0	0	0	0	0	0	0	0	0	0	0	0
4/24/2024	5:15 AM	0	0	0	0	0	0	0	0	0	0	0	0	0
4/24/2024	5:30 AM	0	0	0	0	0	0	0	0	0	0	0	0	0
4/24/2024	5:45 AM	0	0	0	0	0	0	0	0	0	0	0	0	0
4/24/2024	6:00 AM	0	0	0	0	0	0	0	0	0	0	0	0	0
4/24/2024	6:15 AM	0	0	0	0	0	0	0	0	0	0	0	0	0
4/24/2024	6:30 AM	0	0	0	0	0	0	0	0	0	0	0	0	0
4/24/2024	6:45 AM	0	0	0	0	0	0	0	0	0	0	0	0	0
4/24/2024	7:00 AM	0	0	0	0	0	0	0	0	0	0	0	0	0
4/24/2024	7:15 AM	0	0	0	0	0	0	0	0	0	0	0	0	0
4/24/2024	7:30 AM	0	0	0	0	0	0	0	0	0	0	0	0	0
4/24/2024	7:45 AM	0	0	0	0	0	0	0	0	0	0	0	0	0
4/24/2024	8:00 AM	0	0	0	0	0	0	0	0	0	0	0	0	0
4/24/2024	8:15 AM	0	0	0	0	0	0	0	0	0	0	0	0	0
4/24/2024	8:30 AM	0	0	0	0	0	0	0	0	0	0	0	0	0
4/24/2024	8:45 AM	0	0	0	0	0	0	0	0	0	0	0	0	0
4/24/2024	9:00 AM	0	0	0	0	0	0	0	0	0	0	0	0	0
4/24/2024	9:15 AM	0	0	0	0	0	0	0	0	0	0	0	0	0
4/24/2024	9:30 AM	0	0	0	0	0	0	0	0	0	0	0	0	0
4/24/2024	9:45 AM	0	0	0	0	0	0	0	0	0	0	0	0	0
4/24/2024	10:00 AM	0	0	0	0	0	0	0	0	0	0	0	0	0
4/24/2024	10:15 AM	0	0	0	0	0	0	0	0	0	0	0	0	0
4/24/2024	10:30 AM	0	0	0	0	0	0	0	0	0	0	0	0	0
4/24/2024	10:45 AM	0	0	0	0	0	0	0	0	0	0	0	0	0
4/24/2024	11:00 AM	0	0	0	0	0	0	0	0	0	0	0	0	0
4/24/2024	11:15 AM	0	0	0	0	0	0	0	0	0	0	0	0	0
4/24/2024	11:30 AM	0	0	0	0	0	0	0	0	0	0	0	0	0
4/24/2024	11:45 AM	0	0	0	0	0	0	0	0	0	0	0	0	0
4/24/2024	12:00 PM	0	0	0	0	0	0	0	0	0	0	0	0	0
4/24/2024	12:15 PM	0	0	0	0	0	0	0	0	0	0	0	0	0
4/24/2024	12:30 PM	0	0	0	0	0	0	0	0	0	0	0	0	0
4/24/2024	12:45 PM	0	0	0	0	0	0	0	0	0	0	0	0	0
4/24/2024	1:00 PM	0	0	0	0	0	0	0	0	0	0	0	0	0
4/24/2024	1:15 PM	0	0	0	0	0	0	0	0	0	0	0	0	0
4/24/2024	1:30 PM	0	0	0	0	0	0	0	0	0	0	0	0	0
4/24/2024	1:45 PM	0	0	0	0	0	0	0	0	0	0	0	0	0
4/24/2024	2:00 PM	0	0	0	0	0	0	0	0	0	0	0	0	0
4/24/2024	2:15 PM	0	0	0	0	0	0	0	0	0	0	0	0	0
4/24/2024	2:30 PM	0	0	0	0	0	0	0	0	0	0	0	0	0
4/24/2024	2:45 PM	0	0	0	0	0	0	0	0	0	0	0	0	0
4/24/2024	3:00 PM	0	0	0	0	0	0	0	0	0	0	0	0	0
4/24/2024	3:15 PM	0	0	0	0	0	0	0	0	0	0	0	0	0
4/24/2024	3:30 PM	0	0	0	0	0	0	0	0	0	0	0	0	0
4/24/2024	3:45 PM	0	0	0	0	0	0	0	0	0	0	0	0	0
4/24/2024	4:00 PM	0	0	0	0	0	0	0	0	0	0	0	0	0
4/24/2024	4:15 PM	0	0	0	0	0	0	0	0	0	0	0	0	0
4/24/2024	4:30 PM	0	0	0	0	0	0	0	0	0	0	0	0	0
4/24/2024	4:45 PM	0	0	0	0	0	0	0	0	0	0	0	0	0
4/24/2024	5:00 PM	0	0	0	0	0	0	0	0	0	0	0	0	0
4/24/2024	5:15 PM	0	0	0	0	0	0	0	0	0	0	0	0	0
4/24/2024	5:30 PM	0	0	0	0	0	0	0	0	0	0	0	0	0
4/24/2024	5:45 PM	0	0	0	0	0	0	0	0	0	0	0	0	0
4/24/2024	6:00 PM	0	0	0	0	0	0	0	0	0	0	0	0	0
4/24/2024	6:15 PM	0	0	0	0	0	0	0	0	0	0	0	0	0
4/24/2024	6:30 PM	0	0	0	0	0	0	0	0	0	0	0	0	0
4/24/2024	6:45 PM	0	0	0	0	0	0	0	0	0	0	0	0	0
4/24/2024	7:00 PM	0	0	0	0	0	0	0	0	0	0	0	0	0
4/24/2024	7:15 PM	0	0	0	0	0	0	0	0	0	0	0	0	0
4/24/2024	7:30 PM	0	0	0	0	0	0	0	0	0	0	0	0	0
4/24/2024	7:45 PM	0	0	0	0	0	0	0	0	0	0	0	0	0
4/24/2024	8:00 PM	0	0	0	0	0	0	0	0	0	0	0	0	0
4/24/2024	8:15 PM	0	0	0	0	0	0	0	0	0	0	0	0	0
4/24/2024	8:30 PM	0	0	0	0	0	0	0	0	0	0	0	0	0
4/24/2024	8:45 PM	0	0	0	0	0	0	0	0	0	0	0	0	0
4/24/2024	9:00 PM	0	0	0	0	0	0	0	0	0	0	0	0	0
4/24/2024	9:15 PM	0	0	0	0	0	0	0	0	0	0	0	0	0
4/24/2024	9:30 PM	0	0	0	0	0	0	0	0	0	0	0	0	0
4/24/2024	9:45 PM	0	0	0	0	0	0	0	0	0	0	0	0	0
4/24/2024	10:00 PM	0	0	0	0	0	0	0	0	0	0	0	0	0
4/24/2024	10:15 PM	0	0	0	0	0	0	0	0	0	0	0	0	0
4/24/2024	10:30 PM	0	0	0	0	0	0	0	0	0	0	0	0	0
4/24/2024	10:45 PM	0	0	0	0	0	0	0	0	0	0	0	0	0
4/24/2024	11:00 PM	0	0	0	0	0	0	0	0	0	0	0	0	0
4/24/2024	11:15 PM	0	0	0	0	0	0	0	0	0	0	0	0	0
4/24/2024	11:30 PM	0	0	0	0	0	0	0	0	0	0	0	0	0
4/24/2024	11:45 PM	0	0	0	0	0	0	0	0	0	0	0	0	0

4/25/2024	12:00 AM	0	0	0	0	0	0	0	0	0	0	0	0	0
4/25/2024	12:15 AM	0	0	0	0	0	0	0	0	0	0	0	0	0
4/25/2024	12:30 AM	0	0	0	0	0	0	0	0	0	0	0	0	0
4/25/2024	12:45 AM	0	0	0	0	0	0	0	0	0	0	0	0	0
4/25/2024	1:00 AM	0	0	0	0	0	0	0	0	0	0	0	0	0
4/25/2024	1:15 AM	0	0	0	0	0	0	0	0	0	0	0	0	0
4/25/2024	1:30 AM	0	0	0	0	0	0	0	0	0	0	0	0	0
4/25/2024	1:45 AM	0	0	0	0	0	0	0	0	0	0	0	0	0
4/25/2024	2:00 AM	0	0	0	0	0	0	0	0	0	0	0	0	0
4/25/2024	2:15 AM	0	0	0	0	0	0	0	0	0	0	0	0	0
4/25/2024	2:30 AM	0	0	0	0	0	0	0	0	0	0	0	0	0
4/25/2024	2:45 AM	0	0	0	0	0	0	0	0	0	0	0	0	0
4/25/2024	3:00 AM	0	0	0	0	0	0	0	0	0	0	0	0	0
4/25/2024	3:15 AM	0	0	0	0	0	0	0	0	0	0	0	0	0
4/25/2024	3:30 AM	0	0	0	0	0	0	0	0	0	0	0	0	0
4/25/2024	3:45 AM	0	0	0	0	0	0	0	0	0	0	0	0	0
4/25/2024	4:00 AM	0	0	0	0	0	0	0	0	0	0	0	0	0
4/25/2024	4:15 AM	0	0	0	0	0	0	0	0	0	0	0	0	0
4/25/2024	4:30 AM	0	0	0	0	0	0	0	0	0	0	0	0	0
4/25/2024	4:45 AM	0	0	0	0	0	0	0	0	0	0	0	0	0
4/25/2024	5:00 AM	0	0	0	0	0	0	0	0	0	0	0	0	0
4/25/2024	5:15 AM	0	0	0	0	0	0	0	0	0	0	0	0	0
4/25/2024	5:30 AM	0	0	0	0	0	0	0	0	0	0	0	0	0
4/25/2024	5:45 AM	0	0	0	0	0	0	0	0	0	0	0	0	0
4/25/2024	6:00 AM	0	0	0	0	0	0	0	0	0	0	0	0	0
4/25/2024	6:15 AM	0	0	0	0	0	0	0	0	0	0	0	0	0
4/25/2024	6:30 AM	0	0	0	0	0	0	0	0	0	0	0	0	0
4/25/2024	6:45 AM	0	0	0	0	0	0	0	0	0	0	0	0	0
4/25/2024	7:00 AM	0	0	0	0	0	0	0	0	0	0	0	0	0
4/25/2024	7:15 AM	0	0	0	0	0	0	0	0	0	0	0	0	0
4/25/2024	7:30 AM	0	0	0	0	0	0	0	0	0	0	0	0	0
4/25/2024	7:45 AM	0	0	0	0	0	0	0	0	0	0	0	0	0
4/25/2024	8:00 AM	0	0	0	0	0	0	0	0	0	0	0	0	0
4/25/2024	8:15 AM	0	0	0	0	0	0	0	0	0	0	0	0	0
4/25/2024	8:30 AM	0	0	0	0	0	0	0	0	0	0	0	0	0
4/25/2024	8:45 AM	0	0	0	0	0	0	0	0	0	0	0	0	0
4/25/2024	9:00 AM	0	0	0	0	0	0	0	0	0	0	0	0	0
4/25/2024	9:15 AM	0	0	0	0	0	0	0	0	0	0	0	0	0
4/25/2024	9:30 AM	0	0	0	0	0	0	0	0	0	0	0	0	0
4/25/2024	9:45 AM	0	0	0	0	0	0	0	0	0	0	0	0	0
4/25/2024	10:00 AM	0	0	0	0	0	0	0	0	0	0	0	0	0
4/25/2024	10:15 AM	0	0	0	0	0	0	0	0	0	0	0	0	0
4/25/2024	10:30 AM	0	0	0	0	0	0	0	0	0	0	0	0	0
4/25/2024	10:45 AM	0	0	0	0	0	0	0	0	0	0	0	0	0
4/25/2024	11:00 AM	0	0	0	0	0	0	0	0	0	0	0	0	0
4/25/2024	11:15 AM	0	0	0	0	0	0	0	0	0	0	0	0	0
4/25/2024	11:30 AM	0	0	0	0	0	0	0	0	0	0	0	0	0
4/25/2024	11:45 AM	0	0	0	0	0	0	0	0	0	0	0	0	0
4/25/2024	12:00 PM	0	0	0	0	0	0	0	0	0	0	0	0	0
4/25/2024	12:15 PM	0	0	0	0	0	0	0	0	0	0	0	0	0
4/25/2024	12:30 PM	0	0	0	0	0	0	0	0	0	0	0	0	0
4/25/2024	12:45 PM	0	0	0	0	0	0	0	0	0	0	0	0	0
4/25/2024	1:00 PM	0	0	0	0	0	0	0	0	0	0	0	0	0
4/25/2024	1:15 PM	0	0	0	0	0	0	0	0	0	0	0	0	0
4/25/2024	1:30 PM	0	0	0	0	0	0	0	0	0	0	0	0	0
4/25/2024	1:45 PM	0	0	0	0	0	0	0	0	0	0	0	0	0
4/25/2024	2:00 PM	0	0	0	0	0	0	0	0	0	0	0	0	0
4/25/2024	2:15 PM	0	0	0	0	0	0	0	0	0	0	0	0	0
4/25/2024	2:30 PM	0	0	0	0	0	0	0	0	0	0	0	0	0
4/25/2024	2:45 PM	0	0	0	0	0	0	0	0	0	0	0	0	0
4/25/2024	3:00 PM	0	0	0	0	0	0	0	0	0	0	0	0	0
4/25/2024	3:15 PM	0	0	0	0	0	0	0	0	0	0	0	0	0
4/25/2024	3:30 PM	0	0	0	0	0	0	0	0	0	0	0	0	0
4/25/2024	3:45 PM	0	0	0	0	0	0	0	0	0	0	0	0	0
4/25/2024	4:00 PM	0	0	0	0	0	0	0	0	0	0	0	0	0
4/25/2024	4:15 PM	0	0	0	0	0	0	0	0	0	0	0	0	0
4/25/2024	4:30 PM	0	0	0	0	0	0	0	0	0	0	0	0	0
4/25/2024	4:45 PM	0	0	0	0	0	0	0	0	0	0	0	0	0
4/25/2024	5:00 PM	0	0	0	0	0	0	0	0	0	0	0	0	0
4/25/2024	5:15 PM	0	0	0	0	0	0	0	0	0	0	0	0	0
4/25/2024	5:30 PM	0	0	0	0	0	0	0	0	0	0	0	0	0
4/25/2024	5:45 PM	0	0	0	0	0	0	0	0	0	0	0	0	0
4/25/2024	6:00 PM	0	0	0	0	0	0	0	0	0	0	0	0	0
4/25/2024	6:15 PM	0	0	0	0	0	0	0	0	0	0	0	0	0
4/25/2024	6:30 PM	0	0	0	0	0	0	0	0	0	0	0	0	0
4/25/2024	6:45 PM	0	0	0	0	0	0	0	0	0	0	0	0	0
4/25/2024	7:00 PM	0	0	0	0	0	0	0	0	0	0	0	0	0
4/25/2024	7:15 PM	0	0	0	0	0	0	0	0	0	0	0	0	0
4/25/2024	7:30 PM	0	0	0	0	0	0	0	0	0	0	0	0	0
4/25/2024	7:45 PM	0	0	0	0	0	0	0	0	0	0	0	0	0
4/25/2024	8:00 PM	0	0	0	0	0	0	0	0	0	0	0	0	0
4/25/2024	8:15 PM	0	0	0	0	0	0	0	0	0	0	0	0	0
4/25/2024	8:30 PM	0	0	0	0	0	0	0	0	0	0	0	0	0
4/25/2024	8:45 PM	0	0	0	0	0	0	0	0	0	0	0	0	0
4/25/2024	9:00 PM	0	0	0	0	0	0	0	0	0	0	0	0	0
4/25/2024	9:15 PM	0	0	0	0	0	0	0	0	0	0	0	0	0
4/25/2024	9:30 PM	0	0	0	0	0	0	0	0	0	0	0	0	0
4/25/2024	9:45 PM	0	0	0	0	0	0	0	0	0	0	0	0	0
4/25/2024	10:00 PM	0	0	0	0	0	0	0	0	0	0	0	0	0
4/25/2024	10:15 PM	0	0	0	0	0	0	0	0	0	0	0	0	0
4/25/2024	10:30 PM	0	0	0	0	0	0	0	0	0	0	0	0	0
4/25/2024	10:45 PM	0	0	0	0	0	0	0	0	0	0	0	0	0
4/25/2024	11:00 PM	0	0	0	0	0	0	0	0	0	0	0	0	0
4/25/2024	11:15 PM	0	0	0	0	0	0	0	0	0	0	0	0	0
4/25/2024	11:30 PM	0	0	0	0	0	0	0	0	0	0	0	0	0
4/25/2024	11:45 PM	0	0	0	0	0	0	0	0	0	0	0	0	0

4/26/2024	12:00 AM	0	0	0	0	0	0	0	0	0	0	0	0	0
4/26/2024	12:15 AM	0	0	0	0	0	0	0	0	0	0	0	0	0
4/26/2024	12:30 AM	0	0	0	0	0	0	0	0	0	0	0	0	0
4/26/2024	12:45 AM	0	0	0	0	0	0	0	0	0	0	0	0	0
4/26/2024	1:00 AM	0	0	0	0	0	0	0	0	0	0	0	0	0
4/26/2024	1:15 AM	0	0	0	0	0	0	0	0	0	0	0	0	0
4/26/2024	1:30 AM	0	0	0	0	0	0	0	0	0	0	0	0	0
4/26/2024	1:45 AM	0	0	0	0	0	0	0	0	0	0	0	0	0
4/26/2024	2:00 AM	0	0	0	0	0	0	0	0	0	0	0	0	0
4/26/2024	2:15 AM	0	0	0	0	0	0	0	0	0	0	0	0	0
4/26/2024	2:30 AM	0	0	0	0	0	0	0	0	0	0	0	0	0
4/26/2024	2:45 AM	0	0	0	0	0	0	0	0	0	0	0	0	0
4/26/2024	3:00 AM	0	0	0	0	0	0	0	0	0	0	0	0	0
4/26/2024	3:15 AM	0	0	0	0	0	0	0	0	0	0	0	0	0
4/26/2024	3:30 AM	0	0	0	0	0	0	0	0	0	0	0	0	0
4/26/2024	3:45 AM	0	0	0	0	0	0	0	0	0	0	0	0	0
4/26/2024	4:00 AM	0	0	0	0	0	0	0	0	0	0	0	0	0
4/26/2024	4:15 AM	0	0	0	0	0	0	0	0	0	0	0	0	0
4/26/2024	4:30 AM	0	0	0	0	0	0	0	0	0	0	0	0	0
4/26/2024	4:45 AM	0	0	0	0	0	0	0	0	0	0	0	0	0
4/26/2024	5:00 AM	0	0	0	0	0	0	0	0	0	0	0	0	0
4/26/2024	5:15 AM	0	0	0	0	0	0	0	0	0	0	0	0	0
4/26/2024	5:30 AM	0	0	0	0	0	0	0	0	0	0	0	0	0
4/26/2024	5:45 AM	0	0	0	0	0	0	0	0	0	0	0	0	0
4/26/2024	6:00 AM	0	0	0	0	0	0	0	0	0	0	0	0	0
4/26/2024	6:15 AM	0	0	0	0	0	0	0	0	0	0	0	0	0
4/26/2024	6:30 AM	0	0	0	0	0	0	0	0	0	0	0	0	0
4/26/2024	6:45 AM	0	0	0	0	0	0	0	0	0	0	0	0	0
4/26/2024	7:00 AM	0	0	0	0	0	0	0	0	0	0	0	0	0
4/26/2024	7:15 AM	0	0	0	0	0	0	0	0	0	0	0	0	0
4/26/2024	7:30 AM	0	0	0	0	0	0	0	0	0	0	0	0	0
4/26/2024	7:45 AM	0	0	0	0	0	0	0	0	0	0	0	0	0
4/26/2024	8:00 AM	0	0	0	0	0	0	0	0	0	0	0	0	0
4/26/2024	8:15 AM	0	0	0	0	0	0	0	0	0	0	0	0	0
4/26/2024	8:30 AM	0	0	0	0	0	0	0	0	0	0	0	0	0
4/26/2024	8:45 AM	0	0	0	0	0	0	0	0	0	0	0	0	0
4/26/2024	9:00 AM	0	0	0	0	0	0	0	0	0	0	0	0	0
4/26/2024	9:15 AM	0	0	0	0	0	0	0	0	0	0	0	0	0
4/26/2024	9:30 AM	0	0	0	0	0	0	0	0	0	0	0	0	0
4/26/2024	9:45 AM	0	0	0	0	0	0	0	0	0	0	0	0	0
4/26/2024	10:00 AM	0	0	0	0	0	0	0	0	0	0	0	0	0
4/26/2024	10:15 AM	0	0	0	0	0	0	0	0	0	0	0	0	0
4/26/2024	10:30 AM	0	0	0	0	0	0	0	0	0	0	0	0	0
4/26/2024	10:45 AM	0	0	0	0	0	0	0	0	0	0	0	0	0
4/26/2024	11:00 AM	0	0	0	0	0	0	0	0	0	0	0	0	0
4/26/2024	11:15 AM	0	0	0	0	0	0	0	0	0	0	0	0	0
4/26/2024	11:30 AM	0	0	0	0	0	0	0	0	0	0	0	0	0
4/26/2024	11:45 AM	0	0	0	0	0	0	0	0	0	0	0	0	0
4/26/2024	12:00 PM	0	0	0	0	0	0	0	0	0	0	0	0	0
4/26/2024	12:15 PM	0	0	0	0	0	0	0	0	0	0	0	0	0
4/26/2024	12:30 PM	0	0	0	0	0	0	0	0	0	0	0	0	0
4/26/2024	12:45 PM	0	0	0	0	0	0	0	0	0	0	0	0	0
4/26/2024	1:00 PM	0	0	0	0	0	0	0	0	0	0	0	0	0
4/26/2024	1:15 PM	0	0	0	0	0	0	0	0	0	0	0	0	0
4/26/2024	1:30 PM	0	0	0	0	0	0	0	0	0	0	0	0	0
4/26/2024	1:45 PM	0	0	0	0	0	0	0	0	0	0	0	0	0
4/26/2024	2:00 PM	0	0	0	0	0	0	0	0	0	0	0	0	0
4/26/2024	2:15 PM	0	0	0	0	0	0	0	0	0	0	0	0	0
4/26/2024	2:30 PM	0	0	0	0	0	0	0	0	0	0	0	0	0
4/26/2024	2:45 PM	0	0	0	0	0	0	0	0	0	0	0	0	0
4/26/2024	3:00 PM	0	0	0	0	0	0	0	0	0	0	0	0	0
4/26/2024	3:15 PM	0	0	0	0	0	0	0	0	0	0	0	0	0
4/26/2024	3:30 PM	0	0	0	0	0	0	0	0	0	0	0	0	0
4/26/2024	3:45 PM	0	0	0	0	0	0	0	0	0	0	0	0	0
4/26/2024	4:00 PM	0	0	0	0	0	0	0	0	0	0	0	0	0
4/26/2024	4:15 PM	0	0	0	0	0	0	0	0	0	0	0	0	0
4/26/2024	4:30 PM	0	0	0	0	0	0	0	0	0	0	0	0	0
4/26/2024	4:45 PM	0	0	0	0	0	0	0	0	0	0	0	0	0
4/26/2024	5:00 PM	0	0	0	0	0	0	0	0	0	0	0	0	0
4/26/2024	5:15 PM	0	0	0	0	0	0	0	0	0	0	0	0	0
4/26/2024	5:30 PM	0	0	0	0	0	0	0	0	0	0	0	0	0
4/26/2024	5:45 PM	0	0	0	0	0	0	0	0	0	0	0	0	0
4/26/2024	6:00 PM	0	0	0	0	0	0	0	0	0	0	0	0	0
4/26/2024	6:15 PM	0	0	0	0	0	0	0	0	0	0	0	0	0
4/26/2024	6:30 PM	0	0	0	0	0	0	0	0	0	0	0	0	0
4/26/2024	6:45 PM	0	0	0	0	0	0	0	0	0	0	0	0	0
4/26/2024	7:00 PM	0	0	0	0	0	0	0	0	0	0	0	0	0
4/26/2024	7:15 PM	0	0	0	0	0	0	0	0	0	0	0	0	0
4/26/2024	7:30 PM	0	0	0	0	0	0	0	0	0	0	0	0	0
4/26/2024	7:45 PM	0	0	0	0	0	0	0	0	0	0	0	0	0
4/26/2024	8:00 PM	0	0	0	0	0	0	0	0	0	0	0	0	0
4/26/2024	8:15 PM	0	0	0	0	0	0	0	0	0	0	0	0	0
4/26/2024	8:30 PM	0	0	0	0	0	0	0	0	0	0	0	0	0
4/26/2024	8:45 PM	0	0	0	0	0	0	0	0	0	0	0	0	0
4/26/2024	9:00 PM	0	0	0	0	0	0	0	0	0	0	0	0	0
4/26/2024	9:15 PM	0	0	0	0	0	0	0	0	0	0	0	0	0
4/26/2024	9:30 PM	0	0	0	0	0	0	0	0	0	0	0	0	0
4/26/2024	9:45 PM	0	0	0	0	0	0	0	0	0	0	0	0	0
4/26/2024	10:00 PM	0	0	0	0	0	0	0	0	0	0	0	0	0
4/26/2024	10:15 PM	0	0	0	0	0	0	0	0	0	0	0	0	0
4/26/2024	10:30 PM	0	0	0	0	0	0	0	0	0	0	0	0	0
4/26/2024	10:45 PM	0	0	0	0	0	0	0	0	0	0	0	0	0
4/26/2024	11:00 PM	0	0	0	0	0	0	0	0	0	0	0	0	0
4/26/2024	11:15 PM	0	0	0	0	0	0	0	0	0	0	0	0	0
4/26/2024	11:30 PM	0	0	0	0	0	0	0	0	0	0	0	0	0
4/26/2024	11:45 PM	0	0	0	0	0	0	0	0	0	0	0	0	0

4/27/2024	12:00 AM	0	0	0	0	0	0	0	0	0	0	0	0	0
4/27/2024	12:15 AM	0	0	0	0	0	0	0	0	0	0	0	0	0
4/27/2024	12:30 AM	0	0	0	0	0	0	0	0	0	0	0	0	0
4/27/2024	12:45 AM	0	0	0	0	0	0	0	0	0	0	0	0	0
4/27/2024	1:00 AM	0	0	0	0	0	0	0	0	0	0	0	0	0
4/27/2024	1:15 AM	0	0	0	0	0	0	0	0	0	0	0	0	0
4/27/2024	1:30 AM	0	0	0	0	0	0	0	0	0	0	0	0	0
4/27/2024	1:45 AM	0	0	0	0	0	0	0	0	0	0	0	0	0
4/27/2024	2:00 AM	0	0	0	0	0	0	0	0	0	0	0	0	0
4/27/2024	2:15 AM	0	0	0	0	0	0	0	0	0	0	0	0	0
4/27/2024	2:30 AM	0	0	0	0	0	0	0	0	0	0	0	0	0
4/27/2024	2:45 AM	0	0	0	0	0	0	0	0	0	0	0	0	0
4/27/2024	3:00 AM	0	0	0	0	0	0	0	0	0	0	0	0	0
4/27/2024	3:15 AM	0	0	0	0	0	0	0	0	0	0	0	0	0
4/27/2024	3:30 AM	0	0	0	0	0	0	0	0	0	0	0	0	0
4/27/2024	3:45 AM	0	0	0	0	0	0	0	0	0	0	0	0	0
4/27/2024	4:00 AM	0	0	0	0	0	0	0	0	0	0	0	0	0
4/27/2024	4:15 AM	0	0	0	0	0	0	0	0	0	0	0	0	0
4/27/2024	4:30 AM	0	0	0	0	0	0	0	0	0	0	0	0	0
4/27/2024	4:45 AM	0	0	0	0	0	0	0	0	0	0	0	0	0
4/27/2024	5:00 AM	0	0	0	0	0	0	0	0	0	0	0	0	0
4/27/2024	5:15 AM	0	0	0	0	0	0	0	0	0	0	0	0	0
4/27/2024	5:30 AM	0	0	0	0	0	0	0	0	0	0	0	0	0
4/27/2024	5:45 AM	0	0	0	0	0	0	0	0	0	0	0	0	0
4/27/2024	6:00 AM	0	0	0	0	0	0	0	0	0	0	0	0	0
4/27/2024	6:15 AM	0	0	0	0	0	0	0	0	0	0	0	0	0
4/27/2024	6:30 AM	0	0	0	0	0	0	0	0	0	0	0	0	0
4/27/2024	6:45 AM	0	0	0	0	0	0	0	0	0	0	0	0	0
4/27/2024	7:00 AM	0	0	0	0	0	0	0	0	0	0	0	0	0
4/27/2024	7:15 AM	0	0	0	0	0	0	0	0	0	0	0	0	0
4/27/2024	7:30 AM	0	0	0	0	0	0	0	0	0	0	0	0	0
4/27/2024	7:45 AM	0	0	0	0	0	0	0	0	0	0	0	0	0
4/27/2024	8:00 AM	0	0	0	0	0	0	0	0	0	0	0	0	0
4/27/2024	8:15 AM	0	0	0	0	0	0	0	0	0	0	0	0	0
4/27/2024	8:30 AM	0	0	0	0	0	0	0	0	0	0	0	0	0
4/27/2024	8:45 AM	0	0	0	0	0	0	0	0	0	0	0	0	0
4/27/2024	9:00 AM	0	0	0	0	0	0	0	0	0	0	0	0	0
4/27/2024	9:15 AM	0	0	0	0	0	0	0	0	0	0	0	0	0
4/27/2024	9:30 AM	0	0	0	0	0	0	0	0	0	0	0	0	0
4/27/2024	9:45 AM	0	0	0	0	0	0	0	0	0	0	0	0	0
4/27/2024	10:00 AM	0	0	0	0	0	0	0	0	0	0	0	0	0
4/27/2024	10:15 AM	0	0	0	0	0	0	0	0	0	0	0	0	0
4/27/2024	10:30 AM	0	0	0	0	0	0	0	0	0	0	0	0	0
4/27/2024	10:45 AM	0	0	0	0	0	0	0	0	0	0	0	0	0
4/27/2024	11:00 AM	0	0	0	0	0	0	0	0	0	0	0	0	0
4/27/2024	11:15 AM	0	0	0	0	0	0	0	0	0	0	0	0	0
4/27/2024	11:30 AM	0	0	0	0	0	0	0	0	0	0	0	0	0
4/27/2024	11:45 AM	0	0	0	0	0	0	0	0	0	0	0	0	0
4/27/2024	12:00 PM	0	0	0	0	0	0	0	0	0	0	0	0	0
4/27/2024	12:15 PM	0	0	0	0	0	0	0	0	0	0	0	0	0
4/27/2024	12:30 PM	0	0	0	0	0	0	0	0	0	0	0	0	0
4/27/2024	12:45 PM	0	0	0	0	0	0	0	0	0	0	0	0	0
4/27/2024	1:00 PM	0	0	0	0	0	0	0	0	0	0	0	0	0
4/27/2024	1:15 PM	0	0	0	0	0	0	0	0	0	0	0	0	0
4/27/2024	1:30 PM	0	0	0	0	0	0	0	0	0	0	0	0	0
4/27/2024	1:45 PM	0	0	0	0	0	0	0	0	0	0	0	0	0
4/27/2024	2:00 PM	0	0	0	0	0	0	0	0	0	0	0	0	0
4/27/2024	2:15 PM	0	0	0	0	0	0	0	0	0	0	0	0	0
4/27/2024	2:30 PM	0	0	0	0	0	0	0	0	0	0	0	0	0
4/27/2024	2:45 PM	0	0	0	0	0	0	0	0	0	0	0	0	0
4/27/2024	3:00 PM	0	0	0	0	0	0	0	0	0	0	0	0	0
4/27/2024	3:15 PM	0	0	0	0	0	0	0	0	0	0	0	0	0
4/27/2024	3:30 PM	0	0	0	0	0	0	0	0	0	0	0	0	0
4/27/2024	3:45 PM	0	0	0	0	0	0	0	0	0	0	0	0	0
4/27/2024	4:00 PM	0	0	0	0	0	0	0	0	0	0	0	0	0
4/27/2024	4:15 PM	0	0	0	0	0	0	0	0	0	0	0	0	0
4/27/2024	4:30 PM	0	0	0	0	0	0	0	0	0	0	0	0	0
4/27/2024	4:45 PM	0	0	0	0	0	0	0	0	0	0	0	0	0
4/27/2024	5:00 PM	0	0	0	0	0	0	0	0	0	0	0	0	0
4/27/2024	5:15 PM	0	0	0	0	0	0	0	0	0	0	0	0	0
4/27/2024	5:30 PM	0	0	0	0	0	0	0	0	0	0	0	0	0
4/27/2024	5:45 PM	0	0	0	0	0	0	0	0	0	0	0	0	0
4/27/2024	6:00 PM	0	0	0	0	0	0	0	0	0	0	0	0	0
4/27/2024	6:15 PM	0	0	0	0	0	0	0	0	0	0	0	0	0
4/27/2024	6:30 PM	0	0	0	0	0	0	0	0	0	0	0	0	0
4/27/2024	6:45 PM	0	0	0	0	0	0	0	0	0	0	0	0	0
4/27/2024	7:00 PM	0	0	0	0	0	0	0	0	0	0	0	0	0
4/27/2024	7:15 PM	0	0	0	0	0	0	0	0	0	0	0	0	0
4/27/2024	7:30 PM	0	0	0	0	0	0	0	0	0	0	0	0	0
4/27/2024	7:45 PM	0	0	0	0	0	0	0	0	0	0	0	0	0
4/27/2024	8:00 PM	0	0	0	0	0	0	0	0	0	0	0	0	0
4/27/2024	8:15 PM	0	0	0	0	0	0	0	0	0	0	0	0	0
4/27/2024	8:30 PM	0	0	0	0	0	0	0	0	0	0	0	0	0
4/27/2024	8:45 PM	0	0	0	0	0	0	0	0	0	0	0	0	0
4/27/2024	9:00 PM	0	0	0	0	0	0	0	0	0	0	0	0	0
4/27/2024	9:15 PM	0	0	0	0	0	0	0	0	0	0	0	0	0
4/27/2024	9:30 PM	0	0	0	0	0	0	0	0	0	0	0	0	0
4/27/2024	9:45 PM	0	0	0	0	0	0	0	0	0	0	0	0	0
4/27/2024	10:00 PM	0	0	0	0	0	0	0	0	0	0	0	0	0
4/27/2024	10:15 PM	0	0	0	0	0	0	0	0	0	0	0	0	0
4/27/2024	10:30 PM	0	0	0	0	0	0	0	0	0	0	0	0	0
4/27/2024	10:45 PM	0	0	0	0	0	0	0	0	0	0	0	0	0
4/27/2024	11:00 PM	0	0	0	0	0	0	0	0	0	0	0	0	0
4/27/2024	11:15 PM	0	0	0	0	0	0	0	0	0	0	0	0	0
4/27/2024	11:30 PM	0	0	0	0	0	0	0	0	0	0	0	0	0
4/27/2024	11:45 PM	0	0	0	0	0	0	0	0	0	0	0	0	0

Bi-Directional Class Count || SB WB 15min

Columbia, SC

Marr Traffic DATA COLLECTION
www.marrtraffic.com

Site 75 Lane 2 SB
I-20,
north of Bush River Rd

Date
Sunday, April 21, 2024

Lat/Long
34.034393°, -81.117736°

Weather
Cloudy
66°F

Click here for Detailed Weather

Click here for Map

0000 - 2400 (Sunday 24h Session) (04-21-2024)
SB WB 15min

	Southbound (Movement 75 Lane 2 SB.1)													15min	60min
Time	1	2	3	4	5	6	7	8	9	10	11	12	13	Total	Total
0000 - 0015	0	61	6	0	0	0	0	0	3	0	0	0	0	**70**	
0015 - 0030	0	45	4	0	0	0	0	0	5	0	0	0	0	**54**	
0030 - 0045	0	40	1	0	0	0	0	0	4	0	0	0	0	**45**	
0045 - 0100	0	41	5	0	0	0	0	0	1	0	0	0	0	**47**	**216**
0100 - 0115	0	33	6	0	0	0	0	0	1	0	0	0	0	**40**	
0115 - 0130	0	27	4	0	0	1	0	0	4	0	0	0	0	**36**	
0130 - 0145	0	28	2	1	0	0	0	0	2	0	0	0	0	**33**	
0145 - 0200	0	32	3	0	0	0	0	0	3	0	0	0	0	**38**	**147**
0200 - 0215	0	22	2	0	1	0	0	0	2	0	0	0	0	**27**	
0215 - 0230	0	33	3	0	1	0	0	0	1	0	0	0	0	**38**	
0230 - 0245	0	26	3	0	0	0	0	0	1	0	0	0	0	**30**	
0245 - 0300	0	17	4	0	1	0	0	0	1	0	0	0	0	**23**	**118**
0300 - 0315	0	14	2	0	0	0	0	0	3	0	0	0	0	**19**	
0315 - 0330	0	20	3	0	0	0	0	0	1	0	0	0	0	**24**	
0330 - 0345	0	12	5	0	0	0	0	0	1	0	0	0	0	**18**	
0345 - 0400	0	17	2	0	0	0	0	0	3	0	0	0	0	**22**	**83**
0400 - 0415	0	16	1	1	0	0	0	0	3	0	0	0	0	**21**	
0415 - 0430	0	12	1	1	0	0	0	0	2	0	0	0	0	**16**	
0430 - 0445	0	20	2	0	0	0	0	0	2	0	0	0	0	**24**	
0445 - 0500	0	13	2	0	1	0	0	0	3	0	0	0	0	**19**	**80**
0500 - 0515	0	20	1	0	0	0	0	0	5	0	0	0	0	**26**	
0515 - 0530	0	21	0	0	0	0	0	0	4	0	0	0	0	**25**	
0530 - 0545	0	29	0	0	0	0	0	0	5	0	0	0	0	**34**	
0545 - 0600	0	30	1	0	1	0	0	0	2	0	0	0	0	**34**	**119**
0600 - 0615	0	26	3	0	0	0	0	0	3	0	0	0	0	**32**	
0615 - 0630	0	42	7	0	1	0	0	0	2	0	0	0	0	**52**	
0630 - 0645	0	38	11	0	0	0	0	0	6	0	0	0	0	**55**	
0645 - 0700	0	36	13	0	1	0	0	0	0	0	0	0	0	**50**	**189**
0700 - 0715	0	42	13	0	1	0	0	0	1	0	0	0	0	**57**	
0715 - 0730	1	38	8	0	1	0	0	0	3	0	0	0	0	**51**	
0730 - 0745	0	55	12	1	0	1	0	0	3	0	0	0	0	**72**	
0745 - 0800	0	51	12	0	0	1	0	0	3	0	1	0	0	**68**	**248**
0800 - 0815	1	45	11	0	1	0	0	0	3	0	0	0	0	**61**	
0815 - 0830	1	57	19	1	2	0	0	0	7	1	0	0	0	**88**	
0830 - 0845	1	83	15	0	1	0	0	0	4	0	0	0	0	**104**	
0845 - 0900	0	74	16	0	1	0	0	0	3	0	0	0	0	**94**	**347**
0900 - 0915	1	85	20	1	0	0	0	0	4	1	0	0	0	**112**	
0915 - 0930	0	92	31	1	1	0	0	0	6	0	0	0	0	**131**	
0930 - 0945	0	118	31	0	1	0	0	0	3	0	0	0	0	**153**	
0945 - 1000	0	110	33	0	1	0	0	0	9	0	0	0	0	**153**	**549**
1000 - 1015	0	113	25	0	0	1	0	0	7	0	1	0	0	**147**	
1015 - 1030	0	108	41	0	1	0	0	1	10	0	0	0	0	**161**	
1030 - 1045	0	139	25	1	0	0	0	0	6	0	0	0	0	**171**	
1045 - 1100	0	116	36	0	1	1	0	0	11	0	0	0	0	**165**	**644**
1100 - 1115	0	124	25	0	0	0	0	0	11	0	0	0	0	**160**	
1115 - 1130	0	137	30	0	2	0	0	0	15	0	0	0	0	**184**	
1130 - 1145	0	137	46	0	0	0	0	0	13	0	0	0	0	**196**	
1145 - 1200	0	165	48	0	1	0	0	2	11	0	0	0	0	**227**	**767**
1200 - 1215	0	183	33	0	0	0	0	0	7	0	0	0	0	**223**	
1215 - 1230	0	165	36	1	1	0	0	1	7	0	0	0	0	**211**	
1230 - 1245	0	156	48	0	1	0	0	2	7	0	0	0	0	**214**	
1245 - 1300	0	168	39	0	2	1	0	0	9	0	0	0	0	**219**	**867**
1300 - 1315	0	173	36	0	1	0	0	0	9	0	0	0	0	**219**	
1315 - 1330	0	176	34	0	0	3	0	3	4	0	1	0	0	**221**	
1330 - 1345	0	180	32	0	1	1	0	0	3	0	0	0	0	**217**	
1345 - 1400	1	169	31	1	0	0	0	0	9	0	0	0	0	**211**	**868**
1400 - 1415	0	182	31	0	1	1	0	0	7	0	0	0	0	**222**	
1415 - 1430	1	164	37	0	1	0	0	2	9	0	0	0	0	**214**	
1430 - 1445	0	164	34	0	1	2	0	0	9	0	0	0	0	**210**	
1445 - 1500	0	169	40	0	0	0	0	0	8	0	0	1	0	**218**	**864**
1500 - 1515	0	158	37	0	1	0	0	0	8	0	0	0	0	**204**	
1515 - 1530	0	154	28	0	3	0	0	0	10	1	0	0	0	**196**	
1530 - 1545	1	157	31	0	0	2	0	0	11	0	0	0	0	**202**	
1545 - 1600	0	168	33	0	3	0	0	1	12	1	0	0	0	**218**	**820**
1600 - 1615	0	170	26	0	2	0	0	1	8	0	0	0	0	**207**	
1615 - 1630	0	181	37	0	1	0	0	0	7	0	0	0	0	**226**	
1630 - 1645	0	157	46	0	1	0	0	0	4	0	0	0	0	**208**	
1645 - 1700	0	145	35	1	0	1	0	0	13	0	0	0	0	**195**	**836**
1700 - 1715	1	155	26	0	1	0	0	0	11	0	0	0	0	**194**	
1715 - 1730	0	135	27	0	1	0	0	0	6	0	0	0	0	**169**	
1730 - 1745	0	136	34	1	1	1	0	0	11	0	0	0	0	**184**	
1745 - 1800	0	134	35	1	1	1	0	0	15	0	0	0	0	**187**	**734**
1800 - 1815	0	135	38	0	0	0	0	0	6	0	0	0	0	**179**	
1815 - 1830	1	153	31	0	0	0	0	0	8	1	0	0	0	**194**	
1830 - 1845	0	130	28	0	3	0	0	0	5	0	0	0	0	**166**	
1845 - 1900	0	128	31	0	1	1	0	0	7	0	0	0	0	**168**	**707**
1900 - 1915	0	128	28	0	1	0	0	0	10	0	0	0	0	**167**	
1915 - 1930	0	109	29	0	0	1	0	1	12	0	2	0	0	**154**	
1930 - 1945	0	130	32	0	0	0	0	1	3	0	0	0	0	**166**	
1945 - 2000	0	102	19	0	1	1	0	0	6	0	0	0	0	**129**	**616**
2000 - 2015	0	103	21	0	0	0	0	0	10	0	1	0	0	**135**	
2015 - 2030	0	98	21	0	0	0	0	0	6	0	0	0	0	**125**	
2030 - 2045	0	99	14	0	1	0	0	0	7	0	0	0	0	**121**	
2045 - 2100	0	82	11	0	0	1	0	0	5	0	0	0	0	**99**	**480**
2100 - 2115	0	66	5	1	3	0	0	0	5	0	0	0	0	**80**	
2115 - 2130	0	69	8	0	0	0	0	1	10	0	1	0	0	**89**	
2130 - 2145	0	74	9	0	1	0	0	0	8	0	0	0	0	**92**	
2145 - 2200	0	51	13	0	0	0	0	0	10	0	3	0	0	**77**	**338**
2200 - 2215	0	69	6	0	0	1	0	0	8	0	2	0	0	**86**	
2215 - 2230	0	54	3	1	0	0	0	0	7	0	1	0	0	**66**	
2230 - 2245	0	47	8	1	0	0	0	0	4	0	1	0	0	**61**	
2245 - 2300	0	36	7	2	0	0	0	0	4	0	1	0	0	**50**	**263**
2300 - 2315	0	38	3	0	0	0	0	0	2	0	1	0	0	**44**	
2315 - 2330	0	27	1	1	0	0	0	0	5	0	1	0	0	**35**	
2330 - 2345	0	31	3	0	2	1	0	0	6	0	1	0	0	**44**	
2345 - 0000	0	24	3	0	1	0	0	0	3	0	0	0	0	**31**	**154**

Session Total	10	8542	1792	19	60	24	0	16	567	5	18	1	0	**11054**
Session Average	0.10	88.98	18.67	0.20	0.63	0.25	0.00	0.17	5.91	0.05	0.19	0.01	0.00	**115.15**
Session Percentage	0.09	77.28	16.21	0.17	0.54	0.22	0.00	0.14	5.13	0.05	0.16	0.01	0.00	

AM Peak Hour	0745 - 0845	0945 - 1045	0930 - 1030	0730 - 0830	0800 - 0900	0700 - 0800	-	0930 - 1030	0945 - 1045	0815 - 0915	0700 - 0800	-	-	**0945 - 1045**
AM Peak Volume	3	470	130	2	5	2	0	1	32	2	1	0	0	**632**

Noon Peak Hour	1330 - 1430	1315 - 1415	1145 - 1245	1000 - 1100	1215 - 1315	1245 - 1345	-	1145 - 1245	1045 - 1145	1430 - 1530	1000 - 1100	1400 - 1500	-	**1245 - 1345**
Noon Peak Volume	2	707	165	1	5	5	0	5	50	1	1	1	0	**876**

PM Peak Hour	1500 - 1600	1530 - 1630	1600 - 1700	1645 - 1745	1515 - 1615	1500 - 1600	-	1515 - 1615	1700 - 1800	1500 - 1600	1915 - 2015	-	-	**1545 - 1645**
PM Peak Volume	1	676	144	2	8	2	0	2	43	2	3	0	0	**859**

Site 75 Lane 2 SB
I-20,
north of Bush River Rd

Date
Monday, April 22, 2024

Lat/Long
34.034393°, -81.117736°

Weather
Mostly Cloudy
57°F

Click here for Detailed Weather

0000 - 2400 (Weekday 24h Session) (04-22-2024)
SB WB 15min

	Southbound (Movement 75 Lane 2 SB.1)													15min	60min
Time	1	2	3	4	5	6	7	8	9	10	11	12	13	Total	Total
0000 - 0015	0	21	4	0	0	1	0	0	5	0	0	0	0	**31**	
0015 - 0030	0	20	4	0	0	0	0	0	8	0	1	0	0	**33**	
0030 - 0045	0	19	5	1	0	1	0	0	5	0	0	0	0	**31**	
0045 - 0100	0	15	2	0	1	0	0	0	3	0	0	0	0	**21**	**116**
0100 - 0115	0	12	1	0	0	0	0	0	3	0	0	0	0	**16**	
0115 - 0130	0	13	2	0	1	1	0	0	3	0	0	0	0	**20**	
0130 - 0145	0	12	2	0	0	0	0	0	2	0	0	0	0	**16**	
0145 - 0200	0	14	3	0	0	1	0	0	3	0	0	0	0	**21**	**73**
0200 - 0215	0	12	2	0	0	0	0	0	9	0	0	0	0	**23**	
0215 - 0230	0	9	6	0	0	0	0	0	1	0	0	0	0	**16**	
0230 - 0245	0	12	2	0	0	0	0	0	2	0	0	0	0	**16**	
0245 - 0300	0	9	5	0	1	0	0	0	8	0	0	0	0	**23**	**78**
0300 - 0315	0	17	4	0	0	0	0	0	3	0	0	0	0	**24**	
0315 - 0330	0	14	4	0	1	0	0	0	5	0	0	0	0	**24**	
0330 - 0345	0	17	7	0	0	2	0	0	5	0	0	0	0	**31**	
0345 - 0400	0	20	6	0	0	0	0	0	6	0	0	0	0	**32**	**111**
0400 - 0415	0	21	3	0	0	0	0	0	3	0	0	0	0	**27**	
0415 - 0430	0	18	5	0	1	1	0	0	5	0	0	0	0	**30**	
0430 - 0445	0	36	6	0	2	0	0	0	7	0	1	0	0	**52**	
0445 - 0500	0	39	8	0	1	0	0	0	9	0	0	0	0	**57**	**166**
0500 - 0515	0	35	5	0	2	1	0	0	12	0	0	0	0	**55**	
0515 - 0530	0	62	14	0	1	1	0	1	9	0	0	0	0	**88**	
0530 - 0545	0	68	15	1	2	2	0	0	11	0	0	0	0	**99**	
0545 - 0600	0	84	24	0	1	0	0	1	9	0	0	0	0	**119**	**361**
0600 - 0615	0	91	24	0	3	2	0	0	8	0	0	0	0	**128**	
0615 - 0630	0	109	37	0	2	2	0	0	11	0	0	0	0	**161**	
0630 - 0645	0	120	53	0	3	0	0	2	8	0	0	0	0	**186**	
0645 - 0700	0	114	43	0	7	4	0	0	25	0	0	0	0	**193**	**668**
0700 - 0715	0	130	58	0	5	9	0	1	10	1	0	1	0	**215**	
0715 - 0730	0	166	55	0	8	3	0	3	21	3	0	0	0	**259**	
0730 - 0745	0	160	59	1	3	4	0	3	14	0	0	0	0	**244**	
0745 - 0800	0	149	45	0	6	2	0	0	18	0	0	1	0	**221**	**939**
0800 - 0815	0	132	72	0	2	2	1	2	18	1	0	0	0	**230**	
0815 - 0830	0	137	82	0	5	3	0	2	25	0	0	0	0	**254**	
0830 - 0845	0	106	57	2	10	1	1	2	27	0	0	0	0	**206**	
0845 - 0900	0	125	49	0	6	4	0	2	18	0	0	0	0	**204**	**894**
0900 - 0915	0	104	63	0	8	2	0	1	21	0	0	0	0	**199**	
0915 - 0930	0	101	54	1	6	2	1	3	22	0	0	0	0	**190**	
0930 - 0945	0	102	49	1	6	2	1	3	29	1	0	0	0	**194**	
0945 - 1000	0	112	46	0	9	3	0	3	23	0	0	0	0	**196**	**779**
1000 - 1015	0	110	60	0	5	0	1	3	26	1	0	0	0	**206**	
1015 - 1030	0	122	46	0	9	3	1	2	32	2	0	0	0	**217**	
1030 - 1045	0	101	53	0	6	2	0	1	38	1	0	0	0	**202**	
1045 - 1100	1	96	55	1	6	1	1	2	18	1	0	0	0	**182**	**807**
1100 - 1115	0	105	55	1	5	1	0	3	34	1	0	0	0	**205**	
1115 - 1130	0	107	48	0	6	0	0	0	41	0	0	0	0	**202**	
1130 - 1145	0	111	46	0	6	3	0	0	38	0	0	0	0	**204**	
1145 - 1200	0	124	56	0	8	2	1	2	23	0	0	0	0	**216**	**827**
1200 - 1215	2	126	52	0	1	4	0	2	35	1	0	0	0	**223**	
1215 - 1230	0	135	45	0	6	3	0	1	34	0	0	0	0	**224**	
1230 - 1245	0	116	39	0	8	1	1	6	29	1	0	0	0	**201**	
1245 - 1300	0	120	59	2	4	4	0	3	27	0	0	0	0	**219**	**867**
1300 - 1315	0	102	49	1	10	0	0	4	25	1	0	0	0	**192**	
1315 - 1330	0	117	55	0	4	2	2	3	32	1	0	0	0	**216**	
1330 - 1345	0	134	49	0	8	2	2	1	28	2	0	0	0	**226**	
1345 - 1400	0	136	48	0	6	1	2	1	34	1	0	0	0	**229**	**863**
1400 - 1415	0	124	56	0	5	1	3	1	22	0	0	0	0	**212**	
1415 - 1430	1	139	53	1	4	2	1	2	29	1	0	0	0	**233**	
1430 - 1445	0	136	51	2	5	2	2	4	49	1	0	0	0	**252**	
1445 - 1500	0	141	53	0	1	2	3	2	42	1	0	0	0	**245**	**942**
1500 - 1515	0	140	53	0	7	4	0	2	35	0	0	0	0	**241**	
1515 - 1530	0	156	42	0	7	2	0	3	34	0	0	0	0	**244**	
1530 - 1545	0	154	56	0	9	10	0	0	42	0	0	0	0	**271**	
1545 - 1600	1	171	49	0	3	3	1	1	30	1	0	0	0	**260**	**1016**
1600 - 1615	0	175	64	0	13	4	0	4	35	1	0	0	0	**296**	
1615 - 1630	0	172	61	0	7	4	0	5	32	1	0	0	0	**282**	
1630 - 1645	0	189	59	0	10	1	0	3	27	2	0	0	0	**291**	
1645 - 1700	0	199	41	0	7	3	0	2	38	0	0	0	0	**290**	**1159**
1700 - 1715	0	167	62	0	6	3	0	2	44	0	0	0	0	**284**	
1715 - 1730	0	197	70	0	6	4	1	0	30	0	0	0	0	**308**	
1730 - 1745	1	229	58	0	9	3	0	3	37	0	0	0	0	**340**	
1745 - 1800	0	173	55	1	2	2	0	3	34	1	0	0	0	**271**	**1203**
1800 - 1815	0	160	46	0	2	2	0	2	20	0	0	0	0	**232**	
1815 - 1830	0	142	40	0	3	2	0	2	34	1	0	0	0	**224**	
1830 - 1845	1	129	36	0	1	0	0	0	17	0	0	0	0	**184**	
1845 - 1900	0	107	40	0	5	3	0	2	29	0	0	0	0	**186**	**826**
1900 - 1915	2	97	32	0	2	2	0	2	23	0	0	0	0	**160**	
1915 - 1930	0	109	31	0	0	0	1	4	22	0	0	0	0	**167**	
1930 - 1945	0	101	25	0	2	2	0	2	31	0	0	0	0	**163**	
1945 - 2000	0	99	12	0	3	2	0	1	23	0	3	0	0	**143**	**633**
2000 - 2015	0	91	19	0	1	0	0	2	17	1	1	0	0	**132**	
2015 - 2030	0	75	18	0	3	1	0	2	16	0	1	0	0	**116**	
2030 - 2045	0	78	16	0	0	1	0	1	18	0	0	0	0	**114**	
2045 - 2100	0	85	16	0	1	1	0	2	16	0	0	0	0	**121**	**483**
2100 - 2115	0	71	15	0	2	0	0	1	16	0	0	0	0	**105**	
2115 - 2130	0	80	17	1	0	0	0	1	11	0	1	0	0	**111**	
2130 - 2145	0	44	12	0	1	1	0	3	9	0	0	0	0	**70**	
2145 - 2200	0	46	11	1	0	0	0	0	14	0	1	0	0	**73**	**359**
2200 - 2215	0	47	12	0	1	0	0	0	8	0	3	0	0	**71**	
2215 - 2230	0	47	11	0	0	0	0	0	13	0	2	0	0	**73**	
2230 - 2245	0	42	11	0	0	0	0	0	5	0	1	0	0	**59**	
2245 - 2300	0	36	11	0	1	0	0	0	9	0	4	0	0	**61**	**264**
2300 - 2315	0	40	14	0	0	0	0	0	11	0	1	0	0	**66**	
2315 - 2330	0	25	9	1	0	0	0	0	3	0	3	0	0	**41**	
2330 - 2345	0	30	8	2	0	2	0	0	6	0	0	0	0	**48**	
2345 - 0000	0	25	4	0	0	0	0	0	4	0	0	0	0	**33**	**188**

Session Total	9	8887	3149	21	330	154	27	127	1863	30	23	2	0	**14622**
Session Average	0.09	92.57	32.80	0.22	3.44	1.60	0.28	1.32	19.41	0.31	0.24	0.02	0.00	**152.31**
Session Percentage	0.06	60.78	21.54	0.14	2.26	1.05	0.18	0.87	12.74	0.21	0.16	0.01	0.00	

AM Peak Hour	-	0715 - 0815	0800 - 0900	0830 - 0930	0830 - 0930	0645 - 0745	0915 - 1015	0915 - 1015	0945 - 1045	0630 - 0730	-	0700 - 0800	-	**0715 - 0815**
AM Peak Volume	0	607	260	3	30	20	3	12	119	4	0	2	0	**954**

Noon Peak Hour	1115 - 1215	1445 - 1545	1000 - 1100	1215 - 1315	1215 - 1315	1445 - 1545	1315 - 1415	1230 - 1330	1430 - 1530	1000 - 1100	-	-	-	**1445 - 1545**
Noon Peak Volume	2	591	214	3	28	18	9	16	160	5	0	0	0	**1001**

PM Peak Hour	1815 - 1915	1645 - 1745	1700 - 1800	1700 - 1800	1600 - 1700	1530 - 1630	1500 - 1600	1600 - 1700	1645 - 1745	1545 - 1645	1930 - 2030	-	-	**1645 - 1745**
PM Peak Volume	3	792	245	1	37	21	1	14	149	5	5	0	0	**1222**

Site 75 Lane 2 SB
I-20,
north of Bush River Rd

Date
Tuesday, April 23, 2024

Lat/Long
34.034393°, -81.117736°

Weather
Fair
58°F

Click here for Detailed Weather

0000 - 2400 (Weekday 24h Session) (04-23-2024)
SB WB 15min

	Southbound (Movement 75 Lane 2 SB.1)													15min	60min
TIME	1	2	3	4	5	6	7	8	9	10	11	12	13	Total	Total
0000 - 0015	0	19	5	0	0	0	0	0	7	0	1	0	0	**32**	
0015 - 0030	0	17	10	0	0	0	0	0	9	0	0	0	0	**36**	
0030 - 0045	0	16	2	0	1	0	0	0	5	0	2	0	0	**26**	
0045 - 0100	0	11	6	0	3	0	0	0	3	0	1	0	0	**24**	**118**
0100 - 0115	0	19	0	0	2	0	0	0	6	0	0	0	0	**27**	
0115 - 0130	0	15	2	0	0	1	0	0	4	0	0	0	0	**22**	
0130 - 0145	0	6	3	0	0	0	0	0	4	0	0	0	0	**13**	
0145 - 0200	0	5	3	0	2	0	0	0	6	0	1	0	0	**17**	**79**
0200 - 0215	0	16	1	0	1	0	0	0	4	0	0	0	0	**22**	
0215 - 0230	0	12	3	0	0	0	0	0	8	0	1	0	0	**24**	
0230 - 0245	0	11	2	0	0	0	0	0	9	0	1	0	0	**23**	
0245 - 0300	0	12	4	0	1	1	0	0	6	0	0	0	0	**24**	**93**
0300 - 0315	0	12	1	0	0	0	0	0	9	0	0	0	0	**22**	
0315 - 0330	0	17	3	0	1	2	0	0	11	0	1	0	0	**35**	
0330 - 0345	0	18	5	0	2	0	0	0	18	0	0	0	0	**43**	
0345 - 0400	0	29	6	0	1	0	0	0	13	0	1	0	0	**50**	**150**
0400 - 0415	0	23	6	0	3	0	0	0	9	0	0	0	0	**41**	
0415 - 0430	0	15	5	0	1	0	0	0	8	0	1	0	0	**30**	
0430 - 0445	0	31	6	0	1	0	0	0	7	0	1	0	0	**46**	
0445 - 0500	0	24	6	0	0	0	0	0	13	0	1	0	0	**44**	**161**
0500 - 0515	0	36	7	0	1	0	0	0	12	0	1	0	0	**57**	
0515 - 0530	0	36	5	0	4	0	0	0	21	0	0	0	0	**66**	
0530 - 0545	0	38	13	0	1	0	0	0	19	0	0	0	0	**71**	
0545 - 0600	0	56	14	0	5	0	0	0	8	0	1	0	0	**84**	**278**
0600 - 0615	0	78	16	0	3	1	0	0	20	0	0	0	0	**118**	
0615 - 0630	0	84	38	0	4	2	0	0	27	0	1	0	0	**156**	
0630 - 0645	1	114	34	0	1	6	1	2	14	0	0	0	0	**173**	
0645 - 0700	0	103	51	0	9	2	0	2	20	0	1	0	0	**188**	**635**
0700 - 0715	0	113	44	0	4	2	0	1	11	0	0	0	0	**175**	
0715 - 0730	0	135	51	0	5	3	0	0	22	0	0	0	0	**216**	
0730 - 0745	1	143	56	0	3	3	0	2	13	0	0	0	0	**221**	
0745 - 0800	0	131	58	0	9	5	0	3	21	0	0	0	0	**227**	**839**
0800 - 0815	1	115	49	0	5	2	0	0	20	0	1	0	0	**193**	
0815 - 0830	1	121	64	0	6	2	0	3	20	0	0	0	0	**217**	
0830 - 0845	1	116	39	0	10	2	0	2	17	0	0	0	0	**187**	
0845 - 0900	0	127	67	2	7	3	1	5	23	0	1	0	0	**236**	**833**
0900 - 0915	0	114	50	1	6	1	0	4	39	0	0	0	0	**215**	
0915 - 0930	0	112	39	1	3	3	0	0	36	0	0	0	0	**194**	
0930 - 0945	0	104	53	1	5	2	0	3	21	0	0	0	0	**189**	
0945 - 1000	0	120	41	0	7	2	0	3	29	1	1	0	0	**204**	**802**
1000 - 1015	0	110	30	0	8	5	0	2	21	0	0	0	0	**176**	
1015 - 1030	0	108	28	0	7	2	0	2	21	0	0	0	0	**168**	
1030 - 1045	0	97	44	1	3	3	0	6	28	1	0	0	0	**183**	
1045 - 1100	1	108	50	0	9	5	0	7	36	0	1	0	0	**217**	**744**
1100 - 1115	0	98	42	1	11	4	0	1	33	0	0	0	0	**190**	
1115 - 1130	1	106	39	0	5	4	0	1	42	0	1	0	0	**199**	
1130 - 1145	0	103	38	0	9	2	0	5	39	0	0	0	0	**196**	
1145 - 1200	1	102	50	0	3	3	0	4	31	0	0	0	0	**194**	**779**
1200 - 1215	0	91	70	0	5	3	0	6	29	0	0	0	0	**204**	
1215 - 1230	0	97	38	0	5	3	0	8	39	0	0	0	0	**190**	
1230 - 1245	0	113	34	1	6	3	0	2	42	1	0	0	0	**202**	
1245 - 1300	0	123	54	0	2	2	0	2	34	2	0	0	0	**219**	**815**
1300 - 1315	1	119	39	0	3	1	0	2	42	1	0	0	0	**208**	
1315 - 1330	0	124	45	0	7	0	0	1	36	0	0	0	0	**213**	
1330 - 1345	1	140	51	1	9	2	0	4	33	0	0	0	0	**241**	
1345 - 1400	0	121	52	1	3	6	0	3	41	0	0	0	0	**227**	**889**
1400 - 1415	0	119	45	1	6	5	0	2	48	0	0	0	0	**226**	
1415 - 1430	3	159	48	4	4	1	0	3	36	0	1	0	0	**259**	
1430 - 1445	0	143	53	0	6	1	1	3	29	2	1	0	0	**239**	
1445 - 1500	2	149	57	0	3	2	1	4	31	0	0	1	0	**250**	**974**
1500 - 1515	0	143	63	0	2	2	1	4	49	0	0	0	0	**264**	
1515 - 1530	1	157	52	0	7	3	0	5	31	0	0	0	0	**256**	
1530 - 1545	0	170	58	1	6	1	1	7	52	0	0	0	0	**296**	
1545 - 1600	1	177	64	1	2	0	0	3	37	1	0	0	0	**286**	**1102**
1600 - 1615	0	174	76	0	3	3	1	5	28	0	0	0	0	**290**	
1615 - 1630	1	213	68	0	8	3	0	3	31	1	0	0	0	**328**	
1630 - 1645	0	220	66	0	11	4	0	7	30	0	0	0	0	**338**	
1645 - 1700	0	164	53	1	8	2	0	2	19	0	0	1	0	**250**	**1206**
1700 - 1715	0	178	43	0	2	1	0	3	12	0	0	0	0	**239**	
1715 - 1730	0	199	78	1	10	3	0	3	29	1	0	0	0	**324**	
1730 - 1745	0	206	57	0	9	0	0	4	38	1	0	0	0	**315**	
1745 - 1800	1	167	60	0	4	1	1	6	33	2	0	0	0	**275**	**1153**
1800 - 1815	0	165	54	0	5	1	0	4	28	0	1	0	0	**258**	
1815 - 1830	0	142	41	0	2	2	0	0	22	0	1	0	0	**210**	
1830 - 1845	1	112	45	1	2	0	0	3	28	0	0	0	0	**192**	
1845 - 1900	0	125	37	1	2	0	0	0	27	1	0	0	0	**193**	**853**
1900 - 1915	1	114	42	0	4	0	1	2	18	0	0	0	0	**182**	
1915 - 1930	0	97	23	0	4	1	0	1	26	0	3	0	0	**155**	
1930 - 1945	0	93	34	0	2	2	0	1	28	0	0	0	0	**160**	
1945 - 2000	0	90	26	0	3	0	0	2	21	0	0	0	0	**142**	**639**
2000 - 2015	0	95	22	0	1	1	0	4	20	0	0	0	0	**143**	
2015 - 2030	0	108	21	0	4	0	0	1	23	0	1	0	0	**158**	
2030 - 2045	0	94	17	0	1	0	0	0	21	0	0	0	0	**133**	
2045 - 2100	0	86	10	0	3	0	0	0	29	0	0	0	0	**128**	**562**
2100 - 2115	0	76	11	0	4	0	0	0	25	0	0	0	0	**116**	
2115 - 2130	2	86	14	0	0	0	0	0	22	0	0	0	0	**124**	
2130 - 2145	0	84	10	0	1	0	0	0	16	0	1	0	0	**112**	
2145 - 2200	0	63	11	0	0	0	0	0	20	0	1	0	0	**95**	**447**
2200 - 2215	0	64	3	0	4	0	0	0	22	0	2	0	0	**95**	
2215 - 2230	0	61	8	0	2	0	0	0	16	0	0	0	0	**87**	
2230 - 2245	0	72	15	0	2	0	0	0	19	0	1	0	0	**109**	
2245 - 2300	0	53	3	0	2	0	0	0	17	0	1	0	0	**76**	**367**
2300 - 2315	0	33	2	0	1	0	0	0	15	0	2	0	0	**53**	
2315 - 2330	0	35	8	0	0	1	0	0	20	0	1	0	0	**65**	
2330 - 2345	0	33	9	0	1	0	0	0	11	0	1	0	0	**55**	
2345 - 0000	0	26	4	0	2	1	0	0	15	0	0	0	0	**48**	**221**

Session Total	23	8829	2983	21	355	134	9	168	2161	15	39	2	0	**14739**
Session Average	0.24	91.97	31.07	0.22	3.70	1.40	0.09	1.75	22.51	0.16	0.41	0.02	0.00	**153.53**
Session Percentage	0.16	59.90	20.24	0.14	2.41	0.91	0.06	1.14	14.66	0.10	0.26	0.01	0.00	

AM Peak Hour	0730 - 0830	0715 - 0815	0730 - 0830	0845 - 0945	0745 - 0845	0630 - 0730	0545 - 0645	0815 - 0915	0900 - 1000	0945 - 1045	0500 - 0600	-	-	**0730 - 0830**
AM Peak Hour Volume	3	524	227	5	30	13	1	14	125	2	2	0	0	**858**

Noon Peak Hour	1400 - 1500	1445 - 1545	1445 - 1545	1330 - 1430	1045 - 1145	1030 - 1130	1415 - 1515	1130 - 1230	1445 - 1545	1215 - 1315	1030 - 1130	1400 - 1500	-	**1445 - 1545**
Noon Peak Hour Volume	5	619	230	7	34	16	3	23	163	4	2	1	0	**1066**

PM Peak Hour	1500 - 1600	1545 - 1645	1545 - 1645	1500 - 1600	1630 - 1730	1600 - 1700	1500 - 1600	1515 - 1615	1500 - 1600	1700 - 1800	1830 - 1930	1600 - 1700	-	**1545 - 1645**
PM Peak Hour Volume	2	784	274	2	31	12	2	20	169	4	3	1	0	**1242**

Site 75 Lane 2 SB
I-20,
north of Bush River Rd

Date
Wednesday, April 24, 2024

Lat/Long
34.034393°, -81.117736°

Weather
Fair
66°F

Click here for Detailed Weather

0000 - 2400 (Weekday 24h Session) (04-24-2024)
SB WB 15min

	Southbound (Movement 75 Lane 2 SB.1)													15min	60min
TIME	1	2	3	4	5	6	7	8	9	10	11	12	13	Total	Total
0000 - 0015	0	33	2	0	1	0	0	0	16	0	2	0	0	**54**	
0015 - 0030	0	32	2	0	0	0	0	0	9	0	1	0	0	**44**	
0030 - 0045	0	22	1	0	1	0	0	0	13	0	2	0	0	**39**	
0045 - 0100	0	23	1	0	0	0	0	0	14	0	1	0	0	**39**	**176**
0100 - 0115	0	19	1	0	1	0	0	0	13	0	1	0	0	**35**	
0115 - 0130	0	16	1	0	1	0	0	0	12	0	0	0	0	**30**	
0130 - 0145	0	20	2	0	2	0	0	0	8	0	0	0	0	**32**	
0145 - 0200	0	19	3	0	1	0	0	0	8	0	1	0	0	**32**	**129**
0200 - 0215	0	23	5	0	0	0	0	0	11	0	0	0	0	**39**	
0215 - 0230	0	18	2	0	2	0	0	0	14	0	0	0	0	**36**	
0230 - 0245	0	12	1	0	1	0	0	0	10	0	0	0	0	**24**	
0245 - 0300	0	10	4	0	1	0	0	0	16	0	1	0	0	**32**	**131**
0300 - 0315	0	15	2	0	0	0	0	0	11	0	0	0	0	**28**	
0315 - 0330	0	16	1	0	0	0	0	0	9	0	0	0	0	**26**	
0330 - 0345	0	13	2	0	2	0	0	0	9	0	0	0	0	**26**	
0345 - 0400	0	22	2	0	3	0	0	0	9	0	0	0	0	**36**	**116**
0400 - 0415	0	22	2	0	1	0	0	0	10	0	0	0	0	**35**	
0415 - 0430	0	21	2	0	1	0	0	0	15	0	0	0	0	**39**	
0430 - 0445	0	40	3	0	1	0	0	0	8	0	1	0	0	**53**	
0445 - 0500	0	33	2	0	2	0	0	0	8	0	0	0	0	**45**	**172**
0500 - 0515	0	26	3	0	1	0	0	0	10	0	0	0	0	**40**	
0515 - 0530	0	52	2	0	3	0	0	0	15	0	0	0	0	**72**	
0530 - 0545	0	81	7	0	2	0	0	0	13	0	0	0	0	**103**	
0545 - 0600	0	83	17	0	1	0	0	0	14	0	0	0	0	**115**	**330**
0600 - 0615	1	81	20	0	5	1	0	0	14	0	2	0	0	**124**	
0615 - 0630	0	80	32	0	5	2	0	0	22	0	0	0	0	**141**	
0630 - 0645	0	105	46	0	4	0	0	0	26	0	0	0	0	**181**	
0645 - 0700	0	102	45	0	6	3	0	3	24	1	0	0	0	**184**	**630**
0700 - 0715	0	149	38	0	3	6	0	2	24	0	1	0	0	**223**	
0715 - 0730	0	152	53	0	7	0	1	2	14	0	0	0	0	**229**	
0730 - 0745	1	162	46	1	7	2	0	3	18	0	0	1	0	**241**	
0745 - 0800	1	147	47	0	9	0	0	2	22	0	0	0	0	**228**	**921**
0800 - 0815	0	109	33	0	4	3	0	0	12	0	0	0	0	**161**	
0815 - 0830	0	117	32	0	6	1	0	5	18	0	0	0	0	**179**	
0830 - 0845	0	114	58	0	12	2	0	2	28	1	1	0	0	**218**	
0845 - 0900	0	128	54	0	12	2	0	1	33	0	0	0	0	**230**	**788**
0900 - 0915	0	91	44	1	12	2	0	2	26	0	0	0	0	**178**	
0915 - 0930	0	90	42	0	6	1	1	2	15	1	1	0	0	**159**	
0930 - 0945	0	91	45	1	1	2	1	1	25	0	0	0	0	**167**	
0945 - 1000	0	104	60	0	9	6	0	4	43	0	0	0	0	**226**	**730**
1000 - 1015	0	96	47	1	9	3	1	2	39	0	0	0	0	**198**	
1015 - 1030	0	113	48	0	3	0	2	2	32	0	0	0	0	**200**	
1030 - 1045	0	90	53	0	10	2	0	5	23	0	0	0	0	**183**	
1045 - 1100	0	109	45	1	5	1	0	2	34	2	0	0	0	**199**	**780**
1100 - 1115	0	87	39	1	10	1	0	1	28	1	0	0	0	**168**	
1115 - 1130	0	94	34	0	2	0	4	0	42	2	1	0	0	**179**	
1130 - 1145	0	111	56	0	5	1	0	3	26	0	0	0	0	**202**	
1145 - 1200	1	105	64	0	4	3	0	4	33	0	0	0	0	**214**	**763**
1200 - 1215	0	93	42	0	5	3	0	5	38	1	0	1	0	**188**	
1215 - 1230	0	130	72	0	10	2	1	5	38	1	0	0	0	**259**	
1230 - 1245	0	114	65	0	3	2	1	3	34	0	0	0	0	**222**	
1245 - 1300	0	124	36	0	7	5	1	4	46	3	0	0	0	**226**	**895**
1300 - 1315	0	123	40	1	7	0	1	2	46	0	0	0	0	**220**	
1315 - 1330	0	118	44	0	8	1	0	1	44	0	0	0	0	**216**	
1330 - 1345	0	135	67	0	8	2	1	3	30	0	0	0	0	**246**	
1345 - 1400	0	132	63	0	4	1	1	6	31	0	0	0	0	**238**	**920**
1400 - 1415	0	145	79	0	6	4	1	0	37	0	0	0	0	**272**	
1415 - 1430	0	142	59	0	4	2	0	1	45	0	0	0	0	**253**	
1430 - 1445	0	114	73	1	5	4	1	2	34	0	1	0	0	**235**	
1445 - 1500	0	157	51	1	7	2	1	0	26	0	0	0	0	**245**	**1005**
1500 - 1515	0	162	48	0	9	3	0	1	38	1	0	0	0	**262**	
1515 - 1530	0	167	61	0	11	3	0	2	36	0	0	0	0	**280**	
1530 - 1545	0	166	67	2	10	1	2	7	37	0	1	0	0	**293**	
1545 - 1600	0	167	57	0	9	2	1	1	44	1	0	0	0	**282**	**1117**
1600 - 1615	0	179	73	0	11	2	1	1	45	2	0	0	0	**314**	
1615 - 1630	0	202	66	1	10	0	0	8	33	1	0	0	0	**321**	
1630 - 1645	1	206	59	3	8	0	0	5	38	0	0	0	0	**320**	
1645 - 1700	0	185	68	0	8	2	0	3	40	0	0	0	0	**306**	**1261**
1700 - 1715	0	201	77	0	2	2	1	3	31	0	0	0	0	**317**	
1715 - 1730	0	191	53	0	2	3	0	4	37	0	0	0	0	**290**	
1730 - 1745	1	185	51	0	6	1	0	1	32	0	0	0	0	**277**	
1745 - 1800	2	142	54	2	9	0	0	4	40	0	0	0	0	**253**	**1137**
1800 - 1815	0	147	43	0	9	1	0	2	34	0	0	0	0	**236**	
1815 - 1830	1	145	36	3	0	0	0	4	23	1	0	0	0	**213**	
1830 - 1845	1	114	46	0	5	0	0	1	24	0	0	0	0	**191**	
1845 - 1900	1	123	26	0	8	1	0	1	15	0	1	0	0	**176**	**816**
1900 - 1915	0	84	59	0	9	0	0	4	23	0	0	0	0	**179**	
1915 - 1930	0	130	22	0	2	1	0	2	24	1	1	0	0	**183**	
1930 - 1945	1	96	31	0	2	0	0	2	23	0	0	0	0	**155**	
1945 - 2000	1	112	24	0	4	0	0	0	15	0	2	0	0	**158**	**675**
2000 - 2015	0	86	24	0	3	2	0	1	25	0	0	0	0	**141**	
2015 - 2030	0	75	38	0	3	2	0	0	11	0	0	0	0	**129**	
2030 - 2045	0	82	17	0	3	0	0	0	12	0	0	0	0	**114**	
2045 - 2100	0	84	15	0	2	0	0	0	16	0	0	0	0	**117**	**501**
2100 - 2115	0	81	10	0	0	0	0	0	19	0	0	0	0	**110**	
2115 - 2130	0	81	12	0	0	0	0	0	19	0	0	0	0	**112**	
2130 - 2145	0	66	10	0	0	0	0	0	21	0	0	0	0	**97**	
2145 - 2200	0	38	11	0	1	0	0	0	27	0	2	0	0	**79**	**398**
2200 - 2215	0	53	11	0	1	0	0	0	12	0	1	0	0	**78**	
2215 - 2230	0	66	13	0	2	0	0	0	13	0	0	0	0	**94**	
2230 - 2245	0	61	12	0	0	0	0	0	11	0	0	0	0	**84**	
2245 - 2300	0	40	10	0	0	0	0	0	11	0	1	0	0	**62**	**318**
2300 - 2315	0	30	12	0	0	0	0	0	19	0	0	0	0	**61**	
2315 - 2330	0	29	9	0	2	0	0	0	18	0	0	0	0	**58**	
2330 - 2345	0	30	13	0	0	0	0	0	13	0	0	0	0	**56**	
2345 - 0000	0	29	11	0	1	0	0	0	8	0	0	0	0	**49**	**224**

Session Total	13	8860	3091	20	410	98	24	137	2232	20	26	2	0	**14933**
Session Average	0.14	92.29	32.20	0.21	4.27	1.02	0.25	1.43	23.25	0.21	0.27	0.02	0.00	**155.55**
Session Percentage	0.09	59.33	20.70	0.13	2.75	0.66	0.16	0.92	14.95	0.13	0.17	0.01	0.00	

AM Peak Hour	0700 - 0800	0700 - 0800	0945 - 1045	0845 - 0945	0815 - 0915	0915 - 1015	0930 - 1030	0945 - 1045	0930 - 1030	0830 - 0930	0515 - 0615	0645 - 0745	-	**0700 - 0800**
AM Peak Hour Volume	2	610	208	2	42	12	4	13	139	2	2	1	0	**921**

Noon Peak Hour	1100 - 1200	1445 - 1545	1345 - 1445	1445 - 1545	1445 - 1545	1200 - 1300	1030 - 1130	1130 - 1230	1230 - 1330	1030 - 1130	1030 - 1130	1115 - 1215	-	**1445 - 1545**
Noon Peak Hour Volume	1	652	274	3	37	12	4	17	170	5	1	1	0	**1080**

PM Peak Hour	1730 - 1830	1615 - 1715	1615 - 1715	1730 - 1830	1515 - 1615	1500 - 1600	1515 - 1615	1615 - 1715	1515 - 1615	1530 - 1630	1900 - 2000	-	-	**1615 - 1715**
PM Peak Hour Volume	4	794	270	5	41	9	4	19	162	4	3	0	0	**1264**

Site 75 Lane 2 SB
I-20,
north of Bush River Rd

Date
Thursday, April 25, 2024

Lat/Long
34.034393°, -81.117736°

Weather
Fair
67°F

Click here for Detailed Weather

0000 - 2400 (Weekday 24h Session) (04-25-2024)
SB WB 15min

	Southbound (Movement 75 Lane 2 SB.1)													15min	60min
TIME	1	2	3	4	5	6	7	8	9	10	11	12	13	Total	Total
0000 - 0015	0	23	9	0	1	1	0	0	9	0	0	0	0	**43**	
0015 - 0030	0	22	7	0	0	1	0	0	16	0	1	0	0	**47**	
0030 - 0045	0	21	7	0	0	0	0	1	11	0	5	0	0	**45**	
0045 - 0100	0	15	5	0	0	0	0	0	10	0	1	0	0	**31**	**166**
0100 - 0115	0	18	4	0	2	0	0	0	5	0	0	0	0	**29**	
0115 - 0130	0	14	2	0	0	0	0	1	7	0	0	0	0	**24**	
0130 - 0145	0	10	2	0	0	0	0	0	10	0	0	0	0	**22**	
0145 - 0200	0	9	0	0	0	0	0	0	6	0	0	0	0	**15**	**90**
0200 - 0215	0	15	3	0	0	0	0	0	7	0	0	0	0	**25**	
0215 - 0230	0	13	2	0	0	0	0	0	6	0	2	0	0	**23**	
0230 - 0245	0	11	2	0	2	0	0	0	5	0	1	0	0	**21**	
0245 - 0300	0	13	5	0	0	0	0	0	7	0	0	0	0	**25**	**94**
0300 - 0315	0	17	4	0	3	0	0	0	9	0	0	0	0	**33**	
0315 - 0330	0	16	4	0	0	0	0	0	10	0	0	0	0	**30**	
0330 - 0345	0	20	5	0	0	0	0	0	9	0	0	0	0	**34**	
0345 - 0400	0	28	8	0	3	0	0	0	10	0	2	0	0	**51**	**148**
0400 - 0415	0	14	4	0	0	0	0	0	7	0	1	0	0	**26**	
0415 - 0430	0	21	9	0	1	0	0	0	9	0	1	0	0	**41**	
0430 - 0445	0	36	11	0	1	0	0	0	11	0	1	0	0	**60**	
0445 - 0500	0	21	8	0	1	0	0	0	7	0	0	0	0	**37**	**164**
0500 - 0515	0	26	6	0	0	0	0	0	11	0	2	0	0	**45**	
0515 - 0530	0	51	10	1	3	0	0	0	12	0	2	0	0	**79**	
0530 - 0545	0	73	14	0	1	0	0	0	19	0	0	0	0	**107**	
0545 - 0600	0	90	17	0	3	1	0	0	19	0	2	0	0	**132**	**363**
0600 - 0615	0	99	28	0	4	0	0	0	23	0	0	0	0	**154**	
0615 - 0630	1	87	30	0	5	2	0	0	32	0	0	0	0	**157**	
0630 - 0645	0	105	37	0	2	2	0	0	23	0	0	0	0	**169**	
0645 - 0700	0	113	44	0	7	2	0	2	23	0	0	0	0	**191**	**671**
0700 - 0715	0	133	38	0	4	5	1	1	17	0	1	0	0	**200**	
0715 - 0730	0	157	49	0	7	8	0	3	22	0	0	0	0	**246**	
0730 - 0745	1	136	47	1	5	1	0	4	14	0	0	0	0	**209**	
0745 - 0800	0	135	56	0	2	0	0	4	18	0	0	0	0	**215**	**870**
0800 - 0815	0	131	52	1	5	4	0	0	22	0	0	0	0	**215**	
0815 - 0830	0	124	59	0	7	2	0	5	30	1	0	0	0	**228**	
0830 - 0845	0	119	49	0	11	4	2	2	29	0	0	0	0	**216**	
0845 - 0900	0	122	40	0	6	1	2	1	19	0	0	0	0	**191**	**850**
0900 - 0915	0	92	46	1	5	3	1	2	23	1	0	0	0	**174**	
0915 - 0930	1	98	62	0	6	2	0	0	26	1	0	0	0	**196**	
0930 - 0945	0	124	47	0	6	2	1	2	47	0	0	0	0	**229**	
0945 - 1000	0	114	40	0	8	1	3	5	27	1	0	0	0	**199**	**798**
1000 - 1015	0	115	53	0	5	4	1	0	31	2	0	0	0	**211**	
1015 - 1030	0	122	52	0	7	2	0	3	21	0	0	0	0	**207**	
1030 - 1045	0	122	42	0	6	1	0	5	26	0	0	0	0	**202**	
1045 - 1100	0	110	47	0	7	2	0	3	41	0	0	0	0	**210**	**830**
1100 - 1115	0	107	46	0	4	4	0	4	41	0	0	0	0	**206**	
1115 - 1130	0	133	41	0	5	1	0	1	34	0	0	0	0	**215**	
1130 - 1145	0	134	35	0	13	3	0	3	32	0	0	0	0	**220**	
1145 - 1200	1	127	58	0	3	3	0	1	33	3	0	0	0	**229**	**870**
1200 - 1215	0	119	60	0	12	6	0	1	30	1	0	0	0	**229**	
1215 - 1230	0	126	66	0	5	1	0	5	30	1	1	0	0	**235**	
1230 - 1245	0	137	38	0	9	2	0	3	40	1	0	0	0	**230**	
1245 - 1300	1	149	45	0	6	0	0	3	30	1	0	0	0	**235**	**929**
1300 - 1315	0	138	50	1	11	3	0	6	40	0	1	0	0	**250**	
1315 - 1330	0	143	50	1	9	6	0	2	28	1	0	0	0	**240**	
1330 - 1345	1	150	51	0	5	3	0	2	41	0	0	0	0	**253**	
1345 - 1400	0	141	48	0	6	1	0	3	37	0	0	0	0	**236**	**979**
1400 - 1415	0	168	53	0	5	6	1	4	40	1	0	0	0	**278**	
1415 - 1430	0	165	44	0	6	0	0	2	52	1	0	0	0	**270**	
1430 - 1445	1	135	54	2	5	1	0	5	41	1	0	1	0	**246**	
1445 - 1500	2	163	62	0	7	0	0	1	31	0	0	0	0	**266**	**1060**
1500 - 1515	0	199	50	0	3	0	0	3	31	0	1	0	0	**287**	
1515 - 1530	1	196	69	0	8	0	0	4	37	1	0	0	0	**316**	
1530 - 1545	2	179	59	3	4	4	1	3	36	0	0	0	0	**291**	
1545 - 1600	0	149	61	0	5	3	0	7	33	0	0	0	0	**258**	**1152**
1600 - 1615	0	196	57	0	6	1	1	6	36	1	0	1	0	**305**	
1615 - 1630	0	194	65	1	9	2	0	2	25	0	0	0	0	**298**	
1630 - 1645	1	213	61	0	4	1	1	2	32	0	0	0	0	**315**	
1645 - 1700	0	209	59	0	5	1	2	4	26	1	0	0	0	**307**	**1225**
1700 - 1715	2	209	62	0	1	1	1	3	26	0	0	0	0	**305**	
1715 - 1730	1	214	54	0	6	2	0	2	30	0	0	0	0	**309**	
1730 - 1745	0	184	46	0	7	3	1	1	36	0	0	0	0	**278**	
1745 - 1800	0	161	55	2	4	1	0	3	34	0	0	0	0	**260**	**1152**
1800 - 1815	1	147	43	0	7	3	0	6	36	1	0	0	0	**244**	
1815 - 1830	0	153	41	1	3	1	0	0	25	0	0	0	0	**224**	
1830 - 1845	0	117	43	0	4	1	0	3	20	0	0	0	0	**188**	
1845 - 1900	0	125	46	0	3	0	0	1	16	1	0	0	0	**192**	**848**
1900 - 1915	2	118	40	0	7	1	0	0	18	0	0	0	0	**186**	
1915 - 1930	0	102	31	1	7	1	0	4	20	0	1	0	0	**167**	
1930 - 1945	2	126	33	0	4	0	0	5	19	0	0	0	0	**189**	
1945 - 2000	0	109	16	0	4	1	0	2	21	0	0	0	0	**153**	**695**
2000 - 2015	0	99	25	0	2	0	0	0	22	0	0	0	0	**148**	
2015 - 2030	2	85	21	0	3	1	0	0	14	0	2	0	0	**128**	
2030 - 2045	0	101	39	0	1	0	0	0	23	0	0	0	0	**164**	
2045 - 2100	0	90	21	0	2	0	0	0	17	0	0	0	0	**130**	**570**
2100 - 2115	0	98	19	0	2	1	0	0	17	0	1	0	0	**138**	
2115 - 2130	2	87	21	0	2	1	0	0	18	0	0	0	0	**131**	
2130 - 2145	0	80	15	0	4	0	0	0	21	0	1	0	0	**121**	
2145 - 2200	0	76	14	0	3	0	0	0	18	0	0	0	0	**111**	**501**
2200 - 2215	0	65	12	0	2	1	0	0	18	0	1	0	0	**99**	
2215 - 2230	0	80	23	0	2	1	0	0	15	0	0	0	0	**121**	
2230 - 2245	0	76	18	0	0	0	0	0	17	0	0	0	0	**111**	
2245 - 2300	0	40	15	0	1	0	0	0	20	0	0	0	0	**76**	**407**
2300 - 2315	0	30	8	0	4	0	0	0	14	0	3	0	0	**59**	
2315 - 2330	0	46	10	0	1	0	0	0	11	0	2	0	0	**70**	
2330 - 2345	0	48	11	0	0	0	0	0	12	0	0	0	0	**71**	
2345 - 0000	0	38	9	0	1	0	0	0	7	0	0	0	0	**55**	**255**

Session Total	25	9629	3139	16	378	123	19	151	2147	22	36	2	0	**15687**
Session Average	0.26	100.30	32.70	0.17	3.94	1.28	0.20	1.57	22.36	0.23	0.38	0.02	0.00	**163.41**
Session Percentage	0.16	61.38	20.01	0.10	2.41	0.78	0.12	0.96	13.69	0.14	0.23	0.01	0.00	

AM Peak Hour	0530 - 0630	0700 - 0800	0745 - 0845	0715 - 0815	0800 - 0900	0630 - 0730	0815 - 0915	0730 - 0830	0915 - 1015	0915 - 1015	0500 - 0600	-	-	**0715 - 0815**
AM Peak Hour Volume	1	561	216	2	29	17	5	13	131	4	6	0	0	**885**

Noon Peak Hour	1445 - 1545	1445 - 1545	1445 - 1545	1445 - 1545	1230 - 1330	1315 - 1415	1000 - 1100	1215 - 1315	1330 - 1430	1145 - 1245	1215 - 1315	1345 - 1445	-	**1445 - 1545**
Noon Peak Hour Volume	5	737	240	3	35	16	1	17	170	6	2	1	0	**1160**

PM Peak Hour	1630 - 1730	1630 - 1730	1615 - 1715	1530 - 1630	1530 - 1630	1530 - 1630	1600 - 1700	1515 - 1615	1515 - 1615	1515 - 1615	1930 - 2030	1515 - 1615	-	**1630 - 1730**
PM Peak Hour Volume	4	845	247	4	24	10	4	20	142	2	2	1	0	**1236**

Site 75 Lane 2 SB
I-20,
north of Bush River Rd

Date
Friday, April 26, 2024

Lat/Long
34.034393°, -81.117736°

Weather
Cloudy
69°F

Click here for Detailed Weather

0000 - 2400 (Weekday 24h Session) (04-26-2024)
SB WB 15min

	Southbound (Movement 75 Lane 2 SB.1)													15min	60min
TIME	1	2	3	4	5	6	7	8	9	10	11	12	13	Total	Total
0000 - 0015	0	31	1	0	0	0	0	0	11	0	0	0	0	**43**	
0015 - 0030	0	24	2	0	0	0	0	0	8	0	1	0	0	**35**	
0030 - 0045	0	30	2	0	0	1	0	0	3	0	1	0	0	**37**	
0045 - 0100	0	24	1	0	1	0	0	0	6	0	0	0	0	**32**	**147**
0100 - 0115	0	17	3	0	0	0	0	0	4	0	2	0	0	**26**	
0115 - 0130	0	25	2	0	1	0	0	0	8	0	2	0	0	**38**	
0130 - 0145	0	21	1	0	1	0	0	0	5	0	0	0	0	**28**	
0145 - 0200	0	11	0	0	0	0	0	0	6	0	0	0	0	**17**	**109**
0200 - 0215	0	21	1	0	0	0	0	0	6	0	0	0	0	**28**	
0215 - 0230	1	9	1	0	0	0	0	0	9	0	0	0	0	**20**	
0230 - 0245	0	13	0	0	0	0	0	0	8	0	0	0	0	**21**	
0245 - 0300	0	21	1	0	0	0	0	0	9	0	2	0	0	**33**	**102**
0300 - 0315	0	16	1	0	2	0	0	0	10	0	0	0	0	**29**	
0315 - 0330	0	13	1	0	1	0	0	0	11	0	0	0	0	**26**	
0330 - 0345	0	19	3	0	0	0	0	0	8	0	1	0	0	**31**	
0345 - 0400	0	24	2	0	0	0	0	0	9	0	1	0	0	**36**	**122**
0400 - 0415	0	27	0	0	0	0	0	0	11	0	0	0	0	**38**	
0415 - 0430	0	20	2	0	1	0	0	0	6	0	1	0	0	**30**	
0430 - 0445	0	35	1	0	3	0	0	0	14	0	0	0	0	**53**	
0445 - 0500	0	35	1	0	2	0	0	0	15	0	0	0	0	**53**	**174**
0500 - 0515	0	25	5	0	0	0	0	0	15	0	1	0	0	**46**	
0515 - 0530	1	38	7	2	1	0	0	0	13	0	2	0	0	**64**	
0530 - 0545	0	60	3	0	0	0	0	0	9	0	0	0	0	**72**	
0545 - 0600	1	68	3	0	3	0	0	0	16	0	0	0	0	**91**	**273**
0600 - 0615	1	61	9	0	8	0	0	0	20	0	0	0	0	**99**	
0615 - 0630	0	99	31	0	5	0	0	0	17	0	0	0	0	**152**	
0630 - 0645	0	94	26	0	3	0	0	0	24	0	1	0	0	**148**	
0645 - 0700	0	98	40	0	4	5	0	0	13	0	0	0	0	**160**	**559**
0700 - 0715	0	115	38	0	5	5	0	0	15	0	0	0	0	**178**	
0715 - 0730	0	153	50	0	3	3	0	1	19	0	0	0	0	**229**	
0730 - 0745	1	143	52	0	11	5	0	2	18	1	1	0	0	**234**	
0745 - 0800	0	165	67	0	12	1	0	1	15	0	0	0	0	**261**	**902**
0800 - 0815	0	130	50	0	9	3	0	0	23	0	0	0	0	**215**	
0815 - 0830	0	127	42	1	11	0	0	1	24	0	1	0	0	**207**	
0830 - 0845	0	101	53	2	7	3	0	1	30	0	1	0	0	**198**	
0845 - 0900	0	112	42	0	11	2	0	3	24	1	1	0	0	**196**	**816**
0900 - 0915	0	94	45	0	7	2	0	1	20	0	0	0	0	**169**	
0915 - 0930	0	108	48	0	4	2	0	2	29	0	0	0	0	**193**	
0930 - 0945	0	125	49	0	5	1	0	3	15	1	0	0	0	**199**	
0945 - 1000	0	130	47	0	1	2	1	3	22	0	0	1	0	**207**	**768**
1000 - 1015	0	121	38	0	5	0	1	1	31	0	1	0	0	**198**	
1015 - 1030	1	116	42	0	5	1	0	3	30	1	0	0	0	**199**	
1030 - 1045	0	121	56	1	3	1	0	4	23	0	0	0	0	**209**	
1045 - 1100	2	127	46	0	7	2	0	6	27	1	1	0	0	**219**	**825**
1100 - 1115	0	133	36	0	9	1	2	2	32	1	0	0	0	**216**	
1115 - 1130	0	148	59	0	7	4	0	5	32	1	0	0	0	**256**	
1130 - 1145	0	129	43	1	4	2	2	5	41	0	0	0	0	**227**	
1145 - 1200	0	163	53	0	5	0	1	2	30	0	0	0	0	**254**	**953**
1200 - 1215	0	144	55	0	7	3	0	2	38	0	0	0	0	**249**	
1215 - 1230	0	154	58	1	4	3	0	2	32	0	0	0	0	**254**	
1230 - 1245	1	166	57	1	12	0	0	0	29	0	0	0	0	**266**	
1245 - 1300	0	181	49	0	11	2	0	2	35	0	0	0	0	**280**	**1049**
1300 - 1315	0	144	57	2	5	0	0	2	25	0	0	0	0	**235**	
1315 - 1330	1	145	57	0	3	4	1	4	35	0	0	0	0	**250**	
1330 - 1345	0	136	33	1	7	0	0	3	29	0	0	0	0	**209**	
1345 - 1400	0	167	53	0	2	3	0	5	31	0	0	0	0	**261**	**955**
1400 - 1415	0	141	47	0	8	2	0	3	32	2	0	0	0	**235**	
1415 - 1430	0	135	61	1	8	4	0	2	26	2	0	1	0	**240**	
1430 - 1445	0	150	45	1	9	0	1	2	33	0	0	0	0	**241**	
1445 - 1500	0	160	41	0	7	3	1	4	43	0	0	0	0	**259**	**975**
1500 - 1515	0	166	47	0	6	2	0	3	30	0	0	0	0	**254**	
1515 - 1530	1	173	56	1	3	2	0	3	31	0	0	0	0	**270**	
1530 - 1545	0	155	42	1	6	0	0	2	26	0	0	1	0	**233**	
1545 - 1600	1	170	52	1	2	2	0	8	32	0	0	0	0	**268**	**1025**
1600 - 1615	0	175	61	1	2	2	0	1	38	0	0	0	0	**280**	
1615 - 1630	0	206	60	0	3	2	0	4	32	1	0	0	0	**308**	
1630 - 1645	1	210	66	0	11	1	1	4	25	0	0	0	0	**319**	
1645 - 1700	1	196	56	0	2	2	1	1	30	0	0	0	0	**289**	**1196**
1700 - 1715	0	209	53	1	6	0	0	3	32	1	1	0	0	**306**	
1715 - 1730	1	206	55	0	6	3	0	3	13	0	0	0	0	**287**	
1730 - 1745	0	200	40	0	0	0	0	1	35	0	0	0	0	**276**	
1745 - 1800	1	163	62	0	5	2	0	3	31	0	0	0	0	**267**	**1136**
1800 - 1815	1	154	33	3	5	1	0	2	35	0	0	0	0	**234**	
1815 - 1830	0	175	45	0	2	2	0	1	25	1	0	0	0	**251**	
1830 - 1845	1	163	31	0	4	1	0	1	16	0	0	0	0	**217**	
1845 - 1900	1	163	35	0	0	1	0	2	14	0	0	0	0	**216**	**918**
1900 - 1915	2	131	36	2	0	0	0	2	23	0	0	0	0	**196**	
1915 - 1930	1	126	38	1	4	0	0	2	20	0	0	0	0	**192**	
1930 - 1945	1	125	31	2	1	0	0	1	14	0	0	0	0	**175**	
1945 - 2000	0	125	33	1	1	0	0	2	17	0	1	0	0	**180**	**743**
2000 - 2015	0	117	16	1	1	0	0	0	20	0	0	0	0	**155**	
2015 - 2030	0	107	14	0	3	0	0	0	13	0	1	0	0	**138**	
2030 - 2045	0	105	5	0	1	0	0	0	15	0	1	0	0	**127**	
2045 - 2100	1	124	3	0	2	0	0	0	13	0	1	0	0	**144**	**564**
2100 - 2115	1	101	5	0	3	0	0	0	13	0	1	0	0	**124**	
2115 - 2130	0	118	3	0	1	0	0	0	19	0	1	0	0	**142**	
2130 - 2145	0	96	6	0	1	0	0	0	15	0	0	0	0	**118**	
2145 - 2200	0	92	1	0	0	0	0	0	9	0	1	0	0	**103**	**487**
2200 - 2215	0	94	4	0	0	1	0	0	11	0	0	0	0	**110**	
2215 - 2230	0	96	5	0	0	0	0	0	11	0	1	0	0	**113**	
2230 - 2245	1	91	3	0	1	0	0	0	6	0	1	0	0	**103**	
2245 - 2300	0	98	2	0	1	1	0	0	14	0	1	0	0	**117**	**443**
2300 - 2315	0	92	2	0	0	0	0	0	10	0	3	0	0	**107**	
2315 - 2330	0	61	4	0	0	1	0	0	5	0	0	0	0	**71**	
2330 - 2345	0	52	2	0	0	0	0	0	6	0	0	0	0	**60**	
2345 - 0000	0	54	3	0	2	0	0	0	7	0	0	0	0	**66**	**304**

Session Total	26	10252	2729	29	335	96	12	126	1888	14	35	3	0	**15545**
Session Average	0.27	106.79	28.43	0.30	3.49	1.00	0.13	1.31	19.67	0.15	0.36	0.03	0.00	**161.93**
Session Percentage	0.17	65.95	17.56	0.19	2.16	0.62	0.08	0.81	12.15	0.09	0.23	0.02	0.00	

AM Peak Hour	0515 - 0615	0715 - 0815	0715 - 0815	0745 - 0845	0730 - 0830	0645 - 0745	0915 - 1015	0945 - 1045	0945 - 1045	0845 - 0945	0500 - 0600	0900 - 1000	-	**0715 - 0815**
AM Peak Hour Volume	3	591	219	3	43	18	2	11	106	2	3	1	0	**939**

Noon Peak Hour	1000 - 1100	1445 - 1545	1145 - 1245	1215 - 1315	1200 - 1300	1045 - 1145	1100 - 1200	1045 - 1145	1115 - 1215	1330 - 1430	1000 - 1100	1330 - 1430	-	**1200 - 1300**
Noon Peak Hour Volume	3	654	223	4	34	9	5	18	141	4	2	1	0	**1049**

PM Peak Hour	1830 - 1930	1615 - 1715	1600 - 1700	1900 - 2000	1630 - 1730	1545 - 1645	1600 - 1700	1545 - 1645	1530 - 1630	1615 - 1715	1945 - 2045	1500 - 1600	-	**1615 - 1715**
PM Peak Hour Volume	5	821	243	6	25	7	2	17	128	2	3	1	0	**1222**

Site 75 Lane 2 SB
I-20,
north of Bush River Rd

Date
Saturday, April 27, 2024

Lat/Long
34.034393°, -81.117736°

Weather
Mostly Cloudy
69°F

Click here for Detailed Weather

0000 - 2400 (Saturday 24h Session) (04-27-2024)
SB WB 15min

	Southbound (Movement 75 Lane 2 SB.1)													15min	60min
TIME	1	2	3	4	5	6	7	8	9	10	11	12	13	Total	Total
0000 - 0015	1	34	6	1	0	0	0	0	4	0	1	0	0	**47**	
0015 - 0030	2	50	10	0	0	0	0	1	5	0	3	0	0	**71**	
0030 - 0045	0	30	5	0	1	1	0	0	3	0	0	0	0	**40**	
0045 - 0100	0	26	6	0	0	0	0	0	6	0	0	0	0	**38**	**196**
0100 - 0115	0	16	3	0	2	0	0	0	6	0	1	0	0	**28**	
0115 - 0130	0	21	4	0	0	0	0	0	6	0	2	0	0	**33**	
0130 - 0145	0	30	9	0	0	0	0	0	3	0	0	0	0	**42**	
0145 - 0200	0	19	2	0	0	0	0	0	3	0	0	0	0	**24**	**127**
0200 - 0215	0	20	2	0	0	0	0	0	2	0	0	0	0	**24**	
0215 - 0230	0	27	2	0	1	0	0	0	6	0	0	0	0	**36**	
0230 - 0245	0	19	4	0	0	0	0	0	5	0	0	0	0	**28**	
0245 - 0300	0	11	3	0	0	0	0	0	7	0	0	0	0	**21**	**109**
0300 - 0315	0	16	3	0	0	0	0	0	5	0	0	0	0	**24**	
0315 - 0330	0	11	4	0	1	0	0	0	4	0	0	0	0	**20**	
0330 - 0345	0	17	2	1	0	0	0	0	6	0	0	0	0	**26**	
0345 - 0400	0	17	4	0	0	0	0	0	9	0	0	0	0	**30**	**100**
0400 - 0415	0	22	4	0	0	0	0	0	5	0	1	0	0	**32**	
0415 - 0430	0	13	6	0	0	0	0	0	2	0	1	0	0	**22**	
0430 - 0445	0	20	5	0	0	0	0	0	3	0	0	0	0	**28**	
0445 - 0500	0	15	5	0	0	0	0	0	9	0	1	0	0	**30**	**112**
0500 - 0515	0	18	9	0	0	0	0	0	6	0	2	0	0	**35**	
0515 - 0530	0	30	10	0	3	0	0	0	4	0	2	0	0	**49**	
0530 - 0545	0	37	13	0	0	0	0	0	4	0	1	0	0	**55**	
0545 - 0600	0	38	14	0	1	0	0	0	4	0	1	0	0	**58**	**197**
0600 - 0615	0	43	11	0	2	0	0	0	5	0	0	0	0	**61**	
0615 - 0630	0	45	22	0	1	0	0	0	3	0	0	0	0	**71**	
0630 - 0645	0	63	24	0	3	0	0	0	6	0	1	0	0	**97**	
0645 - 0700	0	75	22	0	0	0	0	1	9	0	0	0	0	**107**	**336**
0700 - 0715	0	66	23	0	1	0	0	0	6	0	0	0	0	**96**	
0715 - 0730	0	74	29	0	0	1	0	1	7	1	0	0	0	**113**	
0730 - 0745	0	77	48	0	0	2	0	0	13	0	0	0	0	**140**	
0745 - 0800	0	86	37	0	1	3	0	0	7	0	0	0	0	**134**	**483**
0800 - 0815	0	95	35	0	2	0	0	0	6	0	0	0	0	**138**	
0815 - 0830	0	92	54	0	3	0	0	0	11	0	0	0	0	**160**	
0830 - 0845	0	119	35	0	2	0	0	1	13	0	0	0	0	**170**	
0845 - 0900	2	121	43	0	1	1	0	1	10	0	1	0	0	**180**	**648**
0900 - 0915	0	112	29	0	1	0	0	2	9	0	0	0	0	**153**	
0915 - 0930	0	130	27	1	2	1	0	1	15	0	0	0	0	**177**	
0930 - 0945	1	147	36	1	3	1	0	1	15	0	0	0	0	**205**	
0945 - 1000	2	143	33	0	3	1	0	2	10	0	0	0	0	**194**	**729**
1000 - 1015	0	136	38	0	0	1	0	0	15	0	0	0	0	**190**	
1015 - 1030	0	134	45	0	0	1	0	0	10	0	0	0	0	**190**	
1030 - 1045	1	156	39	1	2	1	0	0	13	0	0	0	0	**213**	
1045 - 1100	1	151	64	0	0	2	0	0	4	0	1	0	0	**223**	**816**
1100 - 1115	2	154	55	1	1	0	0	4	20	0	0	0	0	**237**	
1115 - 1130	1	160	60	0	2	0	0	2	10	0	0	0	0	**235**	
1130 - 1145	0	126	40	0	2	8	0	2	7	0	0	0	0	**185**	
1145 - 1200	1	127	54	0	5	0	0	1	14	0	0	0	0	**202**	**859**
1200 - 1215	0	159	53	0	4	0	0	1	14	0	0	0	0	**231**	
1215 - 1230	0	168	45	0	3	1	0	0	14	0	0	0	0	**231**	
1230 - 1245	1	159	36	0	2	0	0	2	12	0	0	0	0	**212**	
1245 - 1300	0	163	34	0	3	0	0	2	11	0	0	0	0	**213**	**887**
1300 - 1315	0	135	45	0	1	0	0	0	16	0	0	0	0	**197**	
1315 - 1330	0	180	44	0	3	0	0	1	13	0	0	0	0	**241**	
1330 - 1345	2	165	42	0	4	0	0	0	12	0	0	0	0	**225**	
1345 - 1400	0	188	40	2	0	0	0	1	12	0	0	0	0	**243**	**906**
1400 - 1415	1	149	40	2	3	1	0	1	10	0	0	0	0	**207**	
1415 - 1430	1	158	40	1	1	1	0	4	10	0	0	0	0	**216**	
1430 - 1445	0	129	46	0	0	0	0	1	13	0	0	0	0	**189**	
1445 - 1500	0	138	35	0	1	0	0	1	8	0	0	0	0	**183**	**795**
1500 - 1515	2	148	34	0	2	0	0	0	8	0	0	0	0	**194**	
1515 - 1530	1	169	37	0	0	0	0	1	11	0	0	0	0	**219**	
1530 - 1545	1	137	43	0	1	1	0	1	6	0	0	0	0	**190**	
1545 - 1600	0	190	38	0	2	0	1	2	12	1	0	1	0	**247**	**850**
1600 - 1615	4	148	30	1	0	0	0	1	7	0	0	0	0	**191**	
1615 - 1630	1	146	28	0	4	1	0	1	10	1	0	0	0	**192**	
1630 - 1645	0	165	33	0	1	0	0	1	7	0	0	0	0	**207**	
1645 - 1700	0	143	32	0	1	0	0	0	5	0	0	0	0	**181**	**771**
1700 - 1715	4	161	33	0	1	0	0	0	11	1	0	0	0	**211**	
1715 - 1730	3	134	30	0	4	1	0	0	7	0	0	0	0	**179**	
1730 - 1745	0	125	31	0	2	0	0	2	6	0	0	0	0	**166**	
1745 - 1800	0	110	31	1	3	0	0	0	8	0	0	0	0	**153**	**709**
1800 - 1815	0	141	30	0	0	0	0	2	4	0	0	0	0	**177**	
1815 - 1830	0	141	31	1	2	0	0	2	10	0	0	0	0	**187**	
1830 - 1845	0	133	28	1	2	0	0	2	9	0	0	0	0	**175**	
1845 - 1900	3	118	30	1	3	0	0	1	5	0	0	0	0	**161**	**700**
1900 - 1915	2	94	30	3	3	0	0	2	10	0	0	0	0	**144**	
1915 - 1930	0	117	24	0	3	0	0	1	6	0	0	0	0	**151**	
1930 - 1945	0	112	26	0	3	1	0	1	4	0	0	0	0	**147**	
1945 - 2000	0	131	28	1	3	0	0	0	12	0	0	0	0	**175**	**617**
2000 - 2015	0	110	20	0	0	0	0	0	9	0	0	0	0	**139**	
2015 - 2030	0	102	18	0	0	0	0	0	5	0	0	0	0	**125**	
2030 - 2045	1	98	14	0	0	1	0	1	2	0	0	0	0	**117**	
2045 - 2100	0	97	20	0	1	0	0	1	2	0	0	0	0	**121**	**502**
2100 - 2115	0	98	16	0	1	0	0	1	6	0	0	0	0	**122**	
2115 - 2130	0	102	18	0	0	0	0	0	6	0	0	0	0	**126**	
2130 - 2145	0	105	22	0	2	1	0	0	7	0	0	0	0	**137**	
2145 - 2200	0	98	19	0	0	1	0	0	1	0	0	0	0	**119**	**504**
2200 - 2215	0	104	9	0	1	1	0	0	7	0	0	0	0	**122**	
2215 - 2230	0	97	13	0	0	0	0	0	1	0	0	0	0	**111**	
2230 - 2245	0	87	7	0	1	1	0	0	7	0	0	0	0	**103**	
2245 - 2300	0	69	6	0	0	1	0	0	1	0	0	0	0	**77**	**413**
2300 - 2315	0	60	8	0	0	0	0	0	3	0	0	0	0	**71**	
2315 - 2330	0	53	5	0	0	0	0	0	2	0	0	0	0	**60**	
2330 - 2345	1	67	9	0	0	0	0	0	3	0	0	0	0	**80**	
2345 - 0000	0	49	5	0	0	0	0	0	4	0	0	0	0	**58**	**269**

Session Total	42	9239	2374	20	117	37	1	57	724	4	19	1	0	**12635**
Session Average	0.44	96.24	24.73	0.21	1.22	0.39	0.01	0.59	7.54	0.04	0.20	0.01	0.00	**131.61**
Session Percentage	0.33	73.12	18.79	0.16	0.93	0.29	0.01	0.45	5.73	0.03	0.15	0.01	0.00	

AM Peak Hour	0845 - 0945	0945 - 1045	0730 - 0830	0845 - 0945	0900 - 1000	0700 - 0800	-	0900 - 1000	0915 - 1015	0630 - 0730	0500 - 0600	-	-	**0945 - 1045**
AM Peak Hour Volume	3	569	174	2	9	6	0	6	55	1	6	0	0	**787**

Noon Peak Hour	1030 - 1130	1315 - 1415	1045 - 1145	1330 - 1430	1130 - 1230	1045 - 1145	-	1100 - 1200	1145 - 1245	-	1000 - 1100	-	-	**1315 - 1415**
Noon Peak Hour Volume	5	682	219	5	14	10	0	9	54	0	1	0	0	**916**

PM Peak Hour	1630 - 1730	1545 - 1645	1500 - 1600	1815 - 1915	1845 - 1945	1530 - 1630	1500 - 1600	1800 - 1900	1500 - 1600	1530 - 1630	-	1500 - 1600	-	**1500 - 1600**
PM Peak Hour Volume	7	649	152	6	12	2	1	7	37	2	0	1	0	**850**

Bi-Directional Class Count || SB WB Average 15min

Columbia, SC

Marr Traffic DATA COLLECTION
www.marrtraffic.com

Site 75 Lane 2 SB
I-20,
north of Bush River Rd

Date
Sunday, April 21, 2024

Lat/Long
34.034393°, -81.117736°

Weather
Cloudy
66°F

0000 - 2400 (Weekday 24h Session) (All Dates)
SB WB Average 15min

	SB WB Average 15min													15min	60min
Time	1	2	3	4	5	6	7	8	9	10	11	12	13	Total	Total
0000 - 0015	0	32	5	0	0	0	0	0	8	0	1	0	0	**46**	
0015 - 0030	0	30	6	0	0	0	0	0	9	0	1	0	0	**46**	
0030 - 0045	0	25	3	0	0	0	0	0	6	0	1	0	0	**38**	
0045 - 0100	0	22	4	0	1	0	0	0	6	0	0	0	0	**33**	**162**
0100 - 0115	0	19	3	0	1	0	0	0	5	0	1	0	0	**29**	
0115 - 0130	0	19	2	0	0	0	0	0	6	0	1	0	0	**29**	
0130 - 0145	0	18	3	0	0	0	0	0	5	0	0	0	0	**27**	
0145 - 0200	0	16	2	0	0	0	0	0	5	0	0	0	0	**23**	**108**
0200 - 0215	0	18	2	0	0	0	0	0	6	0	0	0	0	**27**	
0215 - 0230	0	17	3	0	1	0	0	0	6	0	0	0	0	**28**	
0230 - 0245	0	15	2	0	0	0	0	0	6	0	0	0	0	**23**	
0245 - 0300	0	13	4	0	1	0	0	0	8	0	0	0	0	**26**	**104**
0300 - 0315	0	15	2	0	1	0	0	0	7	0	0	0	0	**26**	
0315 - 0330	0	15	3	0	1	0	0	0	7	0	0	0	0	**26**	
0330 - 0345	0	17	4	0	1	0	0	0	8	0	0	0	0	**30**	
0345 - 0400	0	22	4	0	1	0	0	0	8	0	1	0	0	**37**	**119**
0400 - 0415	0	21	3	0	1	0	0	0	7	0	0	0	0	**31**	
0415 - 0430	0	17	4	0	1	0	0	0	7	0	1	0	0	**30**	
0430 - 0445	0	31	5	0	1	0	0	0	7	0	1	0	0	**45**	
0445 - 0500	0	26	5	0	1	0	0	0	9	0	0	0	0	**41**	**147**
0500 - 0515	0	27	5	0	1	0	0	0	10	0	1	0	0	**43**	
0515 - 0530	0	41	7	0	2	0	0	0	11	0	1	0	0	**63**	
0530 - 0545	0	55	9	0	1	0	0	0	11	0	0	0	0	**77**	
0545 - 0600	0	64	13	0	2	0	0	0	10	0	1	0	0	**90**	**274**
0600 - 0615	0	68	16	0	4	1	0	0	13	0	0	0	0	**102**	
0615 - 0630	0	78	28	0	3	1	0	0	16	0	0	0	0	**127**	
0630 - 0645	0	91	33	0	2	1	0	1	15	0	0	0	0	**144**	
0645 - 0700	0	92	37	0	5	2	0	1	16	0	0	0	0	**153**	**527**
0700 - 0715	0	107	36	0	3	4	0	1	12	0	0	0	0	**163**	
0715 - 0730	0	125	42	0	4	3	0	1	15	1	0	0	0	**192**	
0730 - 0745	1	125	46	1	4	3	0	2	13	0	0	0	0	**194**	
0745 - 0800	0	123	46	0	6	2	0	1	15	0	0	0	0	**193**	**743**
0800 - 0815	0	108	43	0	4	2	0	0	15	0	0	0	0	**173**	
0815 - 0830	0	111	50	0	6	1	0	2	19	0	0	0	0	**190**	
0830 - 0845	0	108	44	1	8	2	0	1	21	0	0	0	0	**186**	
0845 - 0900	0	116	44	0	6	2	0	2	19	0	0	0	0	**190**	**739**
0900 - 0915	0	99	42	1	6	1	0	2	20	0	0	0	0	**171**	
0915 - 0930	0	104	43	1	4	2	0	1	21	0	0	0	0	**177**	
0930 - 0945	0	116	44	1	4	1	0	2	22	0	0	0	0	**191**	
0945 - 1000	0	119	43	0	5	2	1	3	23	0	0	0	0	**197**	**736**
1000 - 1015	0	114	42	0	5	2	1	1	24	0	0	0	0	**189**	
1015 - 1030	0	118	43	0	5	1	0	2	22	0	0	0	0	**192**	
1030 - 1045	0	118	45	1	4	1	0	3	22	0	0	0	0	**195**	
1045 - 1100	1	117	49	0	5	2	0	3	24	1	0	0	0	**202**	**778**
1100 - 1115	0	115	43	1	6	2	0	2	28	0	0	0	0	**197**	
1115 - 1130	0	126	44	0	4	1	1	1	31	0	0	0	0	**210**	
1130 - 1145	0	122	43	0	6	3	0	3	28	0	0	0	0	**204**	
1145 - 1200	1	130	55	0	4	2	0	2	25	0	0	0	0	**219**	**831**
1200 - 1215	0	131	52	0	5	3	0	2	27	0	0	0	0	**221**	
1215 - 1230	0	139	51	0	5	2	0	3	28	0	0	0	0	**229**	
1230 - 1245	0	137	45	0	6	1	0	3	28	0	0	0	0	**221**	
1245 - 1300	0	147	45	0	5	2	0	2	27	1	0	0	0	**230**	**901**
1300 - 1315	0	133	45	1	5	1	0	2	29	0	0	0	0	**217**	
1315 - 1330	0	143	47	0	5	2	0	2	27	0	0	0	0	**228**	
1330 - 1345	1	149	46	0	6	1	0	2	25	0	0	0	0	**231**	
1345 - 1400	0	151	48	1	3	2	0	3	28	0	0	0	0	**235**	**911**
1400 - 1415	0	147	50	0	5	3	1	2	28	0	0	0	0	**236**	
1415 - 1430	1	152	49	1	4	1	0	2	30	1	0	0	0	**241**	
1430 - 1445	0	139	51	1	4	1	1	2	30	1	0	0	0	**230**	
1445 - 1500	1	154	48	0	4	1	1	2	27	0	0	0	0	**238**	**945**
1500 - 1515	0	159	47	0	4	2	0	2	28	0	0	0	0	**244**	
1515 - 1530	1	167	49	0	6	1	0	3	27	0	0	0	0	**254**	
1530 - 1545	1	160	51	1	5	3	1	3	30	0	0	0	0	**254**	
1545 - 1600	0	170	51	0	4	1	0	3	29	1	0	0	0	**260**	**1012**
1600 - 1615	1	174	55	0	5	2	0	3	28	1	0	0	0	**269**	
1615 - 1630	0	188	55	0	6	2	0	3	24	1	0	0	0	**279**	
1630 - 1645	0	194	56	0	7	1	0	3	23	0	0	0	0	**285**	
1645 - 1700	0	177	49	0	4	2	0	2	24	0	0	0	0	**260**	**1093**
1700 - 1715	1	183	51	0	3	1	0	2	24	0	0	0	0	**265**	
1715 - 1730	1	182	52	0	5	2	0	2	22	0	0	0	0	**267**	
1730 - 1745	0	181	45	0	5	1	0	2	28	0	0	0	0	**262**	
1745 - 1800	1	150	50	1	4	1	0	3	28	0	0	0	0	**238**	**1032**
1800 - 1815	0	150	41	0	4	1	0	3	23	0	0	0	0	**223**	
1815 - 1830	0	150	38	1	2	1	0	1	21	1	0	0	0	**215**	
1830 - 1845	1	128	37	0	3	0	0	1	17	0	0	0	0	**188**	
1845 - 1900	1	127	35	0	3	1	0	1	16	0	0	0	0	**185**	**810**
1900 - 1915	1	109	38	1	4	0	0	2	18	0	0	0	0	**173**	
1915 - 1930	0	113	28	0	3	1	0	2	19	0	1	0	0	**167**	
1930 - 1945	1	112	30	0	2	1	0	2	17	0	0	0	0	**165**	
1945 - 2000	0	110	23	0	3	1	0	1	16	0	1	0	0	**154**	**660**
2000 - 2015	0	100	21	0	1	0	0	1	18	0	0	0	0	**142**	
2015 - 2030	0	93	22	0	2	1	0	0	13	0	1	0	0	**131**	
2030 - 2045	0	94	17	0	1	0	0	0	14	0	0	0	0	**127**	
2045 - 2100	0	93	14	0	2	0	0	0	14	0	0	0	0	**123**	**523**
2100 - 2115	0	84	12	0	2	0	0	0	14	0	0	0	0	**114**	
2115 - 2130	1	89	13	0	0	0	0	0	15	0	0	0	0	**119**	
2130 - 2145	0	78	12	0	1	0	0	0	14	0	0	0	0	**107**	
2145 - 2200	0	66	11	0	1	0	0	0	14	0	1	0	0	**94**	**433**
2200 - 2215	0	71	8	0	1	1	0	0	12	0	1	0	0	**94**	
2215 - 2230	0	72	11	0	1	0	0	0	11	0	1	0	0	**95**	
2230 - 2245	0	68	11	0	1	0	0	0	10	0	1	0	0	**90**	
2245 - 2300	0	53	8	0	1	0	0	0	11	0	1	0	0	**74**	**354**
2300 - 2315	0	46	7	0	1	0	0	0	11	0	1	0	0	**66**	
2315 - 2330	0	39	7	0	0	0	0	0	9	0	1	0	0	**57**	
2330 - 2345	0	42	8	0	0	0	0	0	8	0	0	0	0	**59**	
2345 - 0000	0	35	6	0	1	0	0	0	7	0	0	0	0	**49**	**231**

Session Total	21	9177	2751	21	284	95	13	112	1655	16	28	2	0	**14174**
Session Average	0.22	95.59	28.66	0.22	2.95	0.99	0.14	1.16	17.24	0.16	0.29	0.02	0.00	**147.64**
Session Percentage	0.15	64.75	19.41	0.15	2.00	0.67	0.09	0.79	11.67	0.11	0.20	0.01	0.00	

AM Peak Hour	0730 - 0830	0715 - 0815	0730 - 0830	0830 - 0930	0815 - 0915	0645 - 0745	0930 - 1030	0945 - 1045	0945 - 1045	0930 - 1030	0500 - 0600	0700 - 0800	-	**0945 - 1045**
AM Peak Volume	1	482	185	2	25	11	2	9	92	1	2	0	0	**773**

Noon Peak Hour	1445 - 1545	1445 - 1545	1145 - 1245	1345 - 1445	1245 - 1345	1130 - 1230	1400 - 1500	1130 - 1230	1345 - 1445	1200 - 1300	1000 - 1100	1400 - 1500	-	**1445 - 1545**
Noon Peak Volume	2	640	204	3	21	9	2	10	115	2	1	1	0	**990**

PM Peak Hour	1815 - 1915	1615 - 1715	1545 - 1645	1745 - 1845	1600 - 1700	1530 - 1630	1515 - 1615	1545 - 1645	1500 - 1600	1545 - 1645	1915 - 2015	1515 - 1615	-	**1545 - 1645**
PM Peak Volume	3	742	217	2	22	8	1	12	114	2	2	0	0	**1094**

Bi-Directional Class Count || Volume Summary 15min

Columbia, SC

Marr Traffic DATA COLLECTION

www.marrtraffic.com

Site 75 Lane 2 SB

I-20,
north of Bush River Rd

Date

Sunday, April 21, 2024

Lat/Long

34.034393°, -81.117736°

Weather

Cloudy
66°F

Click here for Detailed Weather

0000 - 2400 (Sunday 24h Session) (04-21-2024)

Volume Summary 15min

TIME	Volume Summary 15min NB	Volume Summary 15min SB	15min Total	60min Total
0000 - 0015	0	70	**70**	
0015 - 0030	0	54	**54**	
0030 - 0045	0	45	**45**	
0045 - 0100	0	47	**47**	**216**
0100 - 0115	0	40	**40**	
0115 - 0130	0	36	**36**	
0130 - 0145	0	33	**33**	
0145 - 0200	0	38	**38**	**147**
0200 - 0215	0	27	**27**	
0215 - 0230	0	38	**38**	
0230 - 0245	0	30	**30**	
0245 - 0300	0	23	**23**	**118**
0300 - 0315	0	19	**19**	
0315 - 0330	0	24	**24**	
0330 - 0345	0	18	**18**	
0345 - 0400	0	22	**22**	**83**
0400 - 0415	0	21	**21**	
0415 - 0430	0	16	**16**	
0430 - 0445	0	24	**24**	
0445 - 0500	0	19	**19**	**80**
0500 - 0515	0	26	**26**	
0515 - 0530	0	25	**25**	
0530 - 0545	0	34	**34**	
0545 - 0600	0	34	**34**	**119**
0600 - 0615	0	32	**32**	
0615 - 0630	0	52	**52**	
0630 - 0645	0	55	**55**	
0645 - 0700	0	50	**50**	**189**
0700 - 0715	0	57	**57**	
0715 - 0730	0	51	**51**	
0730 - 0745	0	72	**72**	
0745 - 0800	0	68	**68**	**248**
0800 - 0815	0	61	**61**	
0815 - 0830	0	88	**88**	
0830 - 0845	0	104	**104**	
0845 - 0900	0	94	**94**	**347**
0900 - 0915	0	112	**112**	
0915 - 0930	0	131	**131**	
0930 - 0945	0	153	**153**	
0945 - 1000	0	153	**153**	**549**
1000 - 1015	0	147	**147**	
1015 - 1030	0	161	**161**	
1030 - 1045	0	171	**171**	
1045 - 1100	0	165	**165**	**644**
1100 - 1115	0	160	**160**	
1115 - 1130	0	184	**184**	
1130 - 1145	0	196	**196**	
1145 - 1200	0	227	**227**	**767**

Time	Volume Summary 15min NB	Volume Summary 15min SB	15min Total	60min Total
1200 - 1215	0	223	**223**	
1215 - 1230	0	211	**211**	
1230 - 1245	0	214	**214**	
1245 - 1300	0	219	**219**	**867**
1300 - 1315	0	219	**219**	
1315 - 1330	0	221	**221**	
1330 - 1345	0	217	**217**	
1345 - 1400	0	211	**211**	**868**
1400 - 1415	0	222	**222**	
1415 - 1430	0	214	**214**	
1430 - 1445	0	210	**210**	
1445 - 1500	0	218	**218**	**864**
1500 - 1515	0	204	**204**	
1515 - 1530	0	196	**196**	
1530 - 1545	0	202	**202**	
1545 - 1600	0	218	**218**	**820**
1600 - 1615	0	207	**207**	
1615 - 1630	0	226	**226**	
1630 - 1645	0	208	**208**	
1645 - 1700	0	195	**195**	**836**
1700 - 1715	0	194	**194**	
1715 - 1730	0	169	**169**	
1730 - 1745	0	184	**184**	
1745 - 1800	0	187	**187**	**734**
1800 - 1815	0	179	**179**	
1815 - 1830	0	194	**194**	
1830 - 1845	0	166	**166**	
1845 - 1900	0	168	**168**	**707**
1900 - 1915	0	167	**167**	
1915 - 1930	0	154	**154**	
1930 - 1945	0	166	**166**	
1945 - 2000	0	129	**129**	**616**
2000 - 2015	0	135	**135**	
2015 - 2030	0	125	**125**	
2030 - 2045	0	121	**121**	
2045 - 2100	0	99	**99**	**480**
2100 - 2115	0	80	**80**	
2115 - 2130	0	89	**89**	
2130 - 2145	0	92	**92**	
2145 - 2200	0	77	**77**	**338**
2200 - 2215	0	86	**86**	
2215 - 2230	0	66	**66**	
2230 - 2245	0	61	**61**	
2245 - 2300	0	50	**50**	**263**
2300 - 2315	0	44	**44**	
2315 - 2330	0	35	**35**	
2330 - 2345	0	44	**44**	
2345 - 0000	0	31	**31**	**154**

Session Total	0	11054	**11054**
Session Average	0.00	115.15	**115.15**
Session Percentage	0.00	100.00	

Site 75 Lane 2 SB

I-20,
north of Bush River Rd

Date

Monday, April 22, 2024

Lat/Long

34.034393°, -81.117736°

Weather

Mostly Cloudy
57°F

Click here for Detailed Weather

0000 - 2400 (Weekday 24h Session) (04-22-2024)

Volume Summary 15min

TIME	Volume Summary 15min NB	SB	15min Total	60min Total
0000 - 0015	0	31	**31**	
0015 - 0030	0	33	**33**	
0030 - 0045	0	31	**31**	
0045 - 0100	0	21	**21**	**116**
0100 - 0115	0	16	**16**	
0115 - 0130	0	20	**20**	
0130 - 0145	0	16	**16**	
0145 - 0200	0	21	**21**	**73**
0200 - 0215	0	23	**23**	
0215 - 0230	0	16	**16**	
0230 - 0245	0	16	**16**	
0245 - 0300	0	23	**23**	**78**
0300 - 0315	0	24	**24**	
0315 - 0330	0	24	**24**	
0330 - 0345	0	31	**31**	
0345 - 0400	0	32	**32**	**111**
0400 - 0415	0	27	**27**	
0415 - 0430	0	30	**30**	
0430 - 0445	0	52	**52**	
0445 - 0500	0	57	**57**	**166**
0500 - 0515	0	55	**55**	
0515 - 0530	0	88	**88**	
0530 - 0545	0	99	**99**	
0545 - 0600	0	119	**119**	**361**
0600 - 0615	0	128	**128**	
0615 - 0630	0	161	**161**	
0630 - 0645	0	186	**186**	
0645 - 0700	0	193	**193**	**668**
0700 - 0715	0	215	**215**	
0715 - 0730	0	259	**259**	
0730 - 0745	0	244	**244**	
0745 - 0800	0	221	**221**	**939**
0800 - 0815	0	230	**230**	
0815 - 0830	0	254	**254**	
0830 - 0845	0	206	**206**	
0845 - 0900	0	204	**204**	**894**
0900 - 0915	0	199	**199**	
0915 - 0930	0	190	**190**	
0930 - 0945	0	194	**194**	
0945 - 1000	0	196	**196**	**779**
1000 - 1015	0	206	**206**	
1015 - 1030	0	217	**217**	
1030 - 1045	0	202	**202**	
1045 - 1100	0	182	**182**	**807**
1100 - 1115	0	205	**205**	
1115 - 1130	0	202	**202**	
1130 - 1145	0	204	**204**	
1145 - 1200	0	216	**216**	**827**

Time	Volume Summary 15min NB	SB	15min Total	60min Total
1200 - 1215	0	223	**223**	
1215 - 1230	0	224	**224**	
1230 - 1245	0	201	**201**	
1245 - 1300	0	219	**219**	**867**
1300 - 1315	0	192	**192**	
1315 - 1330	0	216	**216**	
1330 - 1345	0	226	**226**	
1345 - 1400	0	229	**229**	**863**
1400 - 1415	0	212	**212**	
1415 - 1430	0	233	**233**	
1430 - 1445	0	252	**252**	
1445 - 1500	0	245	**245**	**942**
1500 - 1515	0	241	**241**	
1515 - 1530	0	244	**244**	
1530 - 1545	0	271	**271**	
1545 - 1600	0	260	**260**	**1016**
1600 - 1615	0	296	**296**	
1615 - 1630	0	282	**282**	
1630 - 1645	0	291	**291**	
1645 - 1700	0	290	**290**	**1159**
1700 - 1715	0	284	**284**	
1715 - 1730	0	308	**308**	
1730 - 1745	0	340	**340**	
1745 - 1800	0	271	**271**	**1203**
1800 - 1815	0	232	**232**	
1815 - 1830	0	224	**224**	
1830 - 1845	0	184	**184**	
1845 - 1900	0	186	**186**	**826**
1900 - 1915	0	160	**160**	
1915 - 1930	0	167	**167**	
1930 - 1945	0	163	**163**	
1945 - 2000	0	143	**143**	**633**
2000 - 2015	0	132	**132**	
2015 - 2030	0	116	**116**	
2030 - 2045	0	114	**114**	
2045 - 2100	0	121	**121**	**483**
2100 - 2115	0	105	**105**	
2115 - 2130	0	111	**111**	
2130 - 2145	0	70	**70**	
2145 - 2200	0	73	**73**	**359**
2200 - 2215	0	71	**71**	
2215 - 2230	0	73	**73**	
2230 - 2245	0	59	**59**	
2245 - 2300	0	61	**61**	**264**
2300 - 2315	0	66	**66**	
2315 - 2330	0	41	**41**	
2330 - 2345	0	48	**48**	
2345 - 0000	0	33	**33**	**188**

Session Total	0	14622	**14622**
Session Average	0.00	152.31	**152.31**
Session Percentage	0.00	100.00	

Site 75 Lane 2 SB

I-20,
north of Bush River Rd

Date

Tuesday, April 23, 2024

Lat/Long

34.034393°, -81.117736°

Weather

Fair
58°F

Click here for Detailed Weather

0000 - 2400 (Weekday 24h Session) (04-23-2024)

Volume Summary 15min

TIME	Volume Summary 15min NB	Volume Summary 15min SB	15min Total	60min Total
0000 - 0015	0	32	**32**	
0015 - 0030	0	36	**36**	
0030 - 0045	0	26	**26**	
0045 - 0100	0	24	**24**	**118**
0100 - 0115	0	27	**27**	
0115 - 0130	0	22	**22**	
0130 - 0145	0	13	**13**	
0145 - 0200	0	17	**17**	**79**
0200 - 0215	0	22	**22**	
0215 - 0230	0	24	**24**	
0230 - 0245	0	23	**23**	
0245 - 0300	0	24	**24**	**93**
0300 - 0315	0	22	**22**	
0315 - 0330	0	35	**35**	
0330 - 0345	0	43	**43**	
0345 - 0400	0	50	**50**	**150**
0400 - 0415	0	41	**41**	
0415 - 0430	0	30	**30**	
0430 - 0445	0	46	**46**	
0445 - 0500	0	44	**44**	**161**
0500 - 0515	0	57	**57**	
0515 - 0530	0	66	**66**	
0530 - 0545	0	71	**71**	
0545 - 0600	0	84	**84**	**278**
0600 - 0615	0	118	**118**	
0615 - 0630	0	156	**156**	
0630 - 0645	0	173	**173**	
0645 - 0700	0	188	**188**	**635**
0700 - 0715	0	175	**175**	
0715 - 0730	0	216	**216**	
0730 - 0745	0	221	**221**	
0745 - 0800	0	227	**227**	**839**
0800 - 0815	0	193	**193**	
0815 - 0830	0	217	**217**	
0830 - 0845	0	187	**187**	
0845 - 0900	0	236	**236**	**833**
0900 - 0915	0	215	**215**	
0915 - 0930	0	194	**194**	
0930 - 0945	0	189	**189**	
0945 - 1000	0	204	**204**	**802**
1000 - 1015	0	176	**176**	
1015 - 1030	0	168	**168**	
1030 - 1045	0	183	**183**	
1045 - 1100	0	217	**217**	**744**
1100 - 1115	0	190	**190**	
1115 - 1130	0	199	**199**	
1130 - 1145	0	196	**196**	
1145 - 1200	0	194	**194**	**779**

Time	Volume Summary 15min NB	Volume Summary 15min SB	15min Total	60min Total
1200 - 1215	0	204	**204**	
1215 - 1230	0	190	**190**	
1230 - 1245	0	202	**202**	
1245 - 1300	0	219	**219**	**815**
1300 - 1315	0	208	**208**	
1315 - 1330	0	213	**213**	
1330 - 1345	0	241	**241**	
1345 - 1400	0	227	**227**	**889**
1400 - 1415	0	226	**226**	
1415 - 1430	0	259	**259**	
1430 - 1445	0	239	**239**	
1445 - 1500	0	250	**250**	**974**
1500 - 1515	0	264	**264**	
1515 - 1530	0	256	**256**	
1530 - 1545	0	296	**296**	
1545 - 1600	0	286	**286**	**1102**
1600 - 1615	0	290	**290**	
1615 - 1630	0	328	**328**	
1630 - 1645	0	338	**338**	
1645 - 1700	0	250	**250**	**1206**
1700 - 1715	0	239	**239**	
1715 - 1730	0	324	**324**	
1730 - 1745	0	315	**315**	
1745 - 1800	0	275	**275**	**1153**
1800 - 1815	0	258	**258**	
1815 - 1830	0	210	**210**	
1830 - 1845	0	192	**192**	
1845 - 1900	0	193	**193**	**853**
1900 - 1915	0	182	**182**	
1915 - 1930	0	155	**155**	
1930 - 1945	0	160	**160**	
1945 - 2000	0	142	**142**	**639**
2000 - 2015	0	143	**143**	
2015 - 2030	0	158	**158**	
2030 - 2045	0	133	**133**	
2045 - 2100	0	128	**128**	**562**
2100 - 2115	0	116	**116**	
2115 - 2130	0	124	**124**	
2130 - 2145	0	112	**112**	
2145 - 2200	0	95	**95**	**447**
2200 - 2215	0	95	**95**	
2215 - 2230	0	87	**87**	
2230 - 2245	0	109	**109**	
2245 - 2300	0	76	**76**	**367**
2300 - 2315	0	53	**53**	
2315 - 2330	0	65	**65**	
2330 - 2345	0	55	**55**	
2345 - 0000	0	48	**48**	**221**

Session Total	0	14739	**14739**
Session Average	0.00	153.53	**153.53**
Session Percentage	0.00	100.00	

Site 75 Lane 2 SB

I-20,
north of Bush River Rd

Date

Wednesday, April 24, 2024

Lat/Long

34.034393°, -81.117736°

Weather

Fair
66°F

Click here for Detailed Weather

0000 - 2400 (Weekday 24h Session) (04-24-2024)

Volume Summary 15min

TIME	Volume Summary 15min NB	Volume Summary 15min SB	15min Total	60min Total
0000 - 0015	0	54	**54**	
0015 - 0030	0	44	**44**	
0030 - 0045	0	39	**39**	
0045 - 0100	0	39	**39**	**176**
0100 - 0115	0	35	**35**	
0115 - 0130	0	30	**30**	
0130 - 0145	0	32	**32**	
0145 - 0200	0	32	**32**	**129**
0200 - 0215	0	39	**39**	
0215 - 0230	0	36	**36**	
0230 - 0245	0	24	**24**	
0245 - 0300	0	32	**32**	**131**
0300 - 0315	0	28	**28**	
0315 - 0330	0	26	**26**	
0330 - 0345	0	26	**26**	
0345 - 0400	0	36	**36**	**116**
0400 - 0415	0	35	**35**	
0415 - 0430	0	39	**39**	
0430 - 0445	0	53	**53**	
0445 - 0500	0	45	**45**	**172**
0500 - 0515	0	40	**40**	
0515 - 0530	0	72	**72**	
0530 - 0545	0	103	**103**	
0545 - 0600	0	115	**115**	**330**
0600 - 0615	0	124	**124**	
0615 - 0630	0	141	**141**	
0630 - 0645	0	181	**181**	
0645 - 0700	0	184	**184**	**630**
0700 - 0715	0	223	**223**	
0715 - 0730	0	229	**229**	
0730 - 0745	0	241	**241**	
0745 - 0800	0	228	**228**	**921**
0800 - 0815	0	161	**161**	
0815 - 0830	0	179	**179**	
0830 - 0845	0	218	**218**	
0845 - 0900	0	230	**230**	**788**
0900 - 0915	0	178	**178**	
0915 - 0930	0	159	**159**	
0930 - 0945	0	167	**167**	
0945 - 1000	0	226	**226**	**730**
1000 - 1015	0	198	**198**	
1015 - 1030	0	200	**200**	
1030 - 1045	0	183	**183**	
1045 - 1100	0	199	**199**	**780**
1100 - 1115	0	168	**168**	
1115 - 1130	0	179	**179**	
1130 - 1145	0	202	**202**	
1145 - 1200	0	214	**214**	**763**

Time	Volume Summary 15min NB	Volume Summary 15min SB	15min Total	60min Total
1200 - 1215	0	188	**188**	
1215 - 1230	0	259	**259**	
1230 - 1245	0	222	**222**	
1245 - 1300	0	226	**226**	**895**
1300 - 1315	0	220	**220**	
1315 - 1330	0	216	**216**	
1330 - 1345	0	246	**246**	
1345 - 1400	0	238	**238**	**920**
1400 - 1415	0	272	**272**	
1415 - 1430	0	253	**253**	
1430 - 1445	0	235	**235**	
1445 - 1500	0	245	**245**	**1005**
1500 - 1515	0	262	**262**	
1515 - 1530	0	280	**280**	
1530 - 1545	0	293	**293**	
1545 - 1600	0	282	**282**	**1117**
1600 - 1615	0	314	**314**	
1615 - 1630	0	321	**321**	
1630 - 1645	0	320	**320**	
1645 - 1700	0	306	**306**	**1261**
1700 - 1715	0	317	**317**	
1715 - 1730	0	290	**290**	
1730 - 1745	0	277	**277**	
1745 - 1800	0	253	**253**	**1137**
1800 - 1815	0	236	**236**	
1815 - 1830	0	213	**213**	
1830 - 1845	0	191	**191**	
1845 - 1900	0	176	**176**	**816**
1900 - 1915	0	179	**179**	
1915 - 1930	0	183	**183**	
1930 - 1945	0	155	**155**	
1945 - 2000	0	158	**158**	**675**
2000 - 2015	0	141	**141**	
2015 - 2030	0	129	**129**	
2030 - 2045	0	114	**114**	
2045 - 2100	0	117	**117**	**501**
2100 - 2115	0	110	**110**	
2115 - 2130	0	112	**112**	
2130 - 2145	0	97	**97**	
2145 - 2200	0	79	**79**	**398**
2200 - 2215	0	78	**78**	
2215 - 2230	0	94	**94**	
2230 - 2245	0	84	**84**	
2245 - 2300	0	62	**62**	**318**
2300 - 2315	0	61	**61**	
2315 - 2330	0	58	**58**	
2330 - 2345	0	56	**56**	
2345 - 0000	0	49	**49**	**224**

Session Total	0	14933	**14933**
Session Average	0.00	155.55	**155.55**
Session Percentage	0.00	100.00	

Site 75 Lane 2 SB

I-20,
north of Bush River Rd

Date

Thursday, April 25, 2024

Lat/Long

34.034393°, -81.117736°

Weather

Fair
67°F

Click here for Detailed Weather

0000 - 2400 (Weekday 24h Session) (04-25-2024)

Volume Summary 15min

TIME	Volume Summary 15min NB	Volume Summary 15min SB	15min Total	60min Total
0000 - 0015	0	43	**43**	
0015 - 0030	0	47	**47**	
0030 - 0045	0	45	**45**	
0045 - 0100	0	31	**31**	**166**
0100 - 0115	0	29	**29**	
0115 - 0130	0	24	**24**	
0130 - 0145	0	22	**22**	
0145 - 0200	0	15	**15**	**90**
0200 - 0215	0	25	**25**	
0215 - 0230	0	23	**23**	
0230 - 0245	0	21	**21**	
0245 - 0300	0	25	**25**	**94**
0300 - 0315	0	33	**33**	
0315 - 0330	0	30	**30**	
0330 - 0345	0	34	**34**	
0345 - 0400	0	51	**51**	**148**
0400 - 0415	0	26	**26**	
0415 - 0430	0	41	**41**	
0430 - 0445	0	60	**60**	
0445 - 0500	0	37	**37**	**164**
0500 - 0515	0	45	**45**	
0515 - 0530	0	79	**79**	
0530 - 0545	0	107	**107**	
0545 - 0600	0	132	**132**	**363**
0600 - 0615	0	154	**154**	
0615 - 0630	0	157	**157**	
0630 - 0645	0	169	**169**	
0645 - 0700	0	191	**191**	**671**
0700 - 0715	0	200	**200**	
0715 - 0730	0	246	**246**	
0730 - 0745	0	209	**209**	
0745 - 0800	0	215	**215**	**870**
0800 - 0815	0	215	**215**	
0815 - 0830	0	228	**228**	
0830 - 0845	0	216	**216**	
0845 - 0900	0	191	**191**	**850**
0900 - 0915	0	174	**174**	
0915 - 0930	0	196	**196**	
0930 - 0945	0	229	**229**	
0945 - 1000	0	199	**199**	**798**
1000 - 1015	0	211	**211**	
1015 - 1030	0	207	**207**	
1030 - 1045	0	202	**202**	
1045 - 1100	0	210	**210**	**830**
1100 - 1115	0	206	**206**	
1115 - 1130	0	215	**215**	
1130 - 1145	0	220	**220**	
1145 - 1200	0	229	**229**	**870**

Time	Volume Summary 15min NB	Volume Summary 15min SB	15min Total	60min Total
1200 - 1215	0	229	**229**	
1215 - 1230	0	235	**235**	
1230 - 1245	0	230	**230**	
1245 - 1300	0	235	**235**	**929**
1300 - 1315	0	250	**250**	
1315 - 1330	0	240	**240**	
1330 - 1345	0	253	**253**	
1345 - 1400	0	236	**236**	**979**
1400 - 1415	0	278	**278**	
1415 - 1430	0	270	**270**	
1430 - 1445	0	246	**246**	
1445 - 1500	0	266	**266**	**1060**
1500 - 1515	0	287	**287**	
1515 - 1530	0	316	**316**	
1530 - 1545	0	291	**291**	
1545 - 1600	0	258	**258**	**1152**
1600 - 1615	0	305	**305**	
1615 - 1630	0	298	**298**	
1630 - 1645	0	315	**315**	
1645 - 1700	0	307	**307**	**1225**
1700 - 1715	0	305	**305**	
1715 - 1730	0	309	**309**	
1730 - 1745	0	278	**278**	
1745 - 1800	0	260	**260**	**1152**
1800 - 1815	0	244	**244**	
1815 - 1830	0	224	**224**	
1830 - 1845	0	188	**188**	
1845 - 1900	0	192	**192**	**848**
1900 - 1915	0	186	**186**	
1915 - 1930	0	167	**167**	
1930 - 1945	0	189	**189**	
1945 - 2000	0	153	**153**	**695**
2000 - 2015	0	148	**148**	
2015 - 2030	0	128	**128**	
2030 - 2045	0	164	**164**	
2045 - 2100	0	130	**130**	**570**
2100 - 2115	0	138	**138**	
2115 - 2130	0	131	**131**	
2130 - 2145	0	121	**121**	
2145 - 2200	0	111	**111**	**501**
2200 - 2215	0	99	**99**	
2215 - 2230	0	121	**121**	
2230 - 2245	0	111	**111**	
2245 - 2300	0	76	**76**	**407**
2300 - 2315	0	59	**59**	
2315 - 2330	0	70	**70**	
2330 - 2345	0	71	**71**	
2345 - 0000	0	55	**55**	**255**

Session Total	0	15687	**15687**
Session Average	0.00	163.41	**163.41**
Session Percentage	0.00	100.00	

Site 75 Lane 2 SB

I-20,
north of Bush River Rd

Date

Friday, April 26, 2024

Lat/Long

34.034393°, -81.117736°

Weather

Cloudy
69°F

Click here for Detailed Weather

0000 - 2400 (Weekday 24h Session) (04-26-2024)

Volume Summary 15min

TIME	Volume Summary 15min NB	SB	15min Total	60min Total
0000 - 0015	0	43	**43**	
0015 - 0030	0	35	**35**	
0030 - 0045	0	37	**37**	
0045 - 0100	0	32	**32**	**147**
0100 - 0115	0	26	**26**	
0115 - 0130	0	38	**38**	
0130 - 0145	0	28	**28**	
0145 - 0200	0	17	**17**	**109**
0200 - 0215	0	28	**28**	
0215 - 0230	0	20	**20**	
0230 - 0245	0	21	**21**	
0245 - 0300	0	33	**33**	**102**
0300 - 0315	0	29	**29**	
0315 - 0330	0	26	**26**	
0330 - 0345	0	31	**31**	
0345 - 0400	0	36	**36**	**122**
0400 - 0415	0	38	**38**	
0415 - 0430	0	30	**30**	
0430 - 0445	0	53	**53**	
0445 - 0500	0	53	**53**	**174**
0500 - 0515	0	46	**46**	
0515 - 0530	0	64	**64**	
0530 - 0545	0	72	**72**	
0545 - 0600	0	91	**91**	**273**
0600 - 0615	0	99	**99**	
0615 - 0630	0	152	**152**	
0630 - 0645	0	148	**148**	
0645 - 0700	0	160	**160**	**559**
0700 - 0715	0	178	**178**	
0715 - 0730	0	229	**229**	
0730 - 0745	0	234	**234**	
0745 - 0800	0	261	**261**	**902**
0800 - 0815	0	215	**215**	
0815 - 0830	0	207	**207**	
0830 - 0845	0	198	**198**	
0845 - 0900	0	196	**196**	**816**
0900 - 0915	0	169	**169**	
0915 - 0930	0	193	**193**	
0930 - 0945	0	199	**199**	
0945 - 1000	0	207	**207**	**768**
1000 - 1015	0	198	**198**	
1015 - 1030	0	199	**199**	
1030 - 1045	0	209	**209**	
1045 - 1100	0	219	**219**	**825**
1100 - 1115	0	216	**216**	
1115 - 1130	0	256	**256**	
1130 - 1145	0	227	**227**	
1145 - 1200	0	254	**254**	**953**

Time	Volume Summary 15min NB	SB	15min Total	60min Total
1200 - 1215	0	249	**249**	
1215 - 1230	0	254	**254**	
1230 - 1245	0	266	**266**	
1245 - 1300	0	280	**280**	**1049**
1300 - 1315	0	235	**235**	
1315 - 1330	0	250	**250**	
1330 - 1345	0	209	**209**	
1345 - 1400	0	261	**261**	**955**
1400 - 1415	0	235	**235**	
1415 - 1430	0	240	**240**	
1430 - 1445	0	241	**241**	
1445 - 1500	0	259	**259**	**975**
1500 - 1515	0	254	**254**	
1515 - 1530	0	270	**270**	
1530 - 1545	0	233	**233**	
1545 - 1600	0	268	**268**	**1025**
1600 - 1615	0	280	**280**	
1615 - 1630	0	308	**308**	
1630 - 1645	0	319	**319**	
1645 - 1700	0	289	**289**	**1196**
1700 - 1715	0	306	**306**	
1715 - 1730	0	287	**287**	
1730 - 1745	0	276	**276**	
1745 - 1800	0	267	**267**	**1136**
1800 - 1815	0	234	**234**	
1815 - 1830	0	251	**251**	
1830 - 1845	0	217	**217**	
1845 - 1900	0	216	**216**	**918**
1900 - 1915	0	196	**196**	
1915 - 1930	0	192	**192**	
1930 - 1945	0	175	**175**	
1945 - 2000	0	180	**180**	**743**
2000 - 2015	0	155	**155**	
2015 - 2030	0	138	**138**	
2030 - 2045	0	127	**127**	
2045 - 2100	0	144	**144**	**564**
2100 - 2115	0	124	**124**	
2115 - 2130	0	142	**142**	
2130 - 2145	0	118	**118**	
2145 - 2200	0	103	**103**	**487**
2200 - 2215	0	110	**110**	
2215 - 2230	0	113	**113**	
2230 - 2245	0	103	**103**	
2245 - 2300	0	117	**117**	**443**
2300 - 2315	0	107	**107**	
2315 - 2330	0	71	**71**	
2330 - 2345	0	60	**60**	
2345 - 0000	0	66	**66**	**304**

Session Total	0	15545	**15545**
Session Average	0.00	161.93	**161.93**
Session Percentage	0.00	100.00	

Site 75 Lane 2 SB

I-20,
north of Bush River Rd

Date

Saturday, April 27, 2024

Lat/Long

34.034393°, -81.117736°

Weather

Mostly Cloudy
69°F

Click here for Detailed Weather

0000 - 2400 (Saturday 24h Session) (04-27-2024)

Volume Summary 15min

TIME	Volume Summary 15min NB	SB	15min Total	60min Total
0000 - 0015	0	47	**47**	
0015 - 0030	0	71	**71**	
0030 - 0045	0	40	**40**	
0045 - 0100	0	38	**38**	**196**
0100 - 0115	0	28	**28**	
0115 - 0130	0	33	**33**	
0130 - 0145	0	42	**42**	
0145 - 0200	0	24	**24**	**127**
0200 - 0215	0	24	**24**	
0215 - 0230	0	36	**36**	
0230 - 0245	0	28	**28**	
0245 - 0300	0	21	**21**	**109**
0300 - 0315	0	24	**24**	
0315 - 0330	0	20	**20**	
0330 - 0345	0	26	**26**	
0345 - 0400	0	30	**30**	**100**
0400 - 0415	0	32	**32**	
0415 - 0430	0	22	**22**	
0430 - 0445	0	28	**28**	
0445 - 0500	0	30	**30**	**112**
0500 - 0515	0	35	**35**	
0515 - 0530	0	49	**49**	
0530 - 0545	0	55	**55**	
0545 - 0600	0	58	**58**	**197**
0600 - 0615	0	61	**61**	
0615 - 0630	0	71	**71**	
0630 - 0645	0	97	**97**	
0645 - 0700	0	107	**107**	**336**
0700 - 0715	0	96	**96**	
0715 - 0730	0	113	**113**	
0730 - 0745	0	140	**140**	
0745 - 0800	0	134	**134**	**483**
0800 - 0815	0	138	**138**	
0815 - 0830	0	160	**160**	
0830 - 0845	0	170	**170**	
0845 - 0900	0	180	**180**	**648**
0900 - 0915	0	153	**153**	
0915 - 0930	0	177	**177**	
0930 - 0945	0	205	**205**	
0945 - 1000	0	194	**194**	**729**
1000 - 1015	0	190	**190**	
1015 - 1030	0	190	**190**	
1030 - 1045	0	213	**213**	
1045 - 1100	0	223	**223**	**816**
1100 - 1115	0	237	**237**	
1115 - 1130	0	235	**235**	
1130 - 1145	0	185	**185**	
1145 - 1200	0	202	**202**	**859**

Time	Volume Summary 15min NB	SB	15min Total	60min Total
1200 - 1215	0	231	**231**	
1215 - 1230	0	231	**231**	
1230 - 1245	0	212	**212**	
1245 - 1300	0	213	**213**	**887**
1300 - 1315	0	197	**197**	
1315 - 1330	0	241	**241**	
1330 - 1345	0	225	**225**	
1345 - 1400	0	243	**243**	**906**
1400 - 1415	0	207	**207**	
1415 - 1430	0	216	**216**	
1430 - 1445	0	189	**189**	
1445 - 1500	0	183	**183**	**795**
1500 - 1515	0	194	**194**	
1515 - 1530	0	219	**219**	
1530 - 1545	0	190	**190**	
1545 - 1600	0	247	**247**	**850**
1600 - 1615	0	191	**191**	
1615 - 1630	0	192	**192**	
1630 - 1645	0	207	**207**	
1645 - 1700	0	181	**181**	**771**
1700 - 1715	0	211	**211**	
1715 - 1730	0	179	**179**	
1730 - 1745	0	166	**166**	
1745 - 1800	0	153	**153**	**709**
1800 - 1815	0	177	**177**	
1815 - 1830	0	187	**187**	
1830 - 1845	0	175	**175**	
1845 - 1900	0	161	**161**	**700**
1900 - 1915	0	144	**144**	
1915 - 1930	0	151	**151**	
1930 - 1945	0	147	**147**	
1945 - 2000	0	175	**175**	**617**
2000 - 2015	0	139	**139**	
2015 - 2030	0	125	**125**	
2030 - 2045	0	117	**117**	
2045 - 2100	0	121	**121**	**502**
2100 - 2115	0	122	**122**	
2115 - 2130	0	126	**126**	
2130 - 2145	0	137	**137**	
2145 - 2200	0	119	**119**	**504**
2200 - 2215	0	122	**122**	
2215 - 2230	0	111	**111**	
2230 - 2245	0	103	**103**	
2245 - 2300	0	77	**77**	**413**
2300 - 2315	0	71	**71**	
2315 - 2330	0	60	**60**	
2330 - 2345	0	80	**80**	
2345 - 0000	0	58	**58**	**269**

Session Total	0	12635	**12635**
Session Average	0.00	131.61	**131.61**
Session Percentage	0.00	100.00	

Bi-Directional Class Count || SB WB 60min

Columbia, SC

Marr Traffic DATA COLLECTION

www.marrtraffic.com

Site 75 Lane 2 SB
I-20,
north of Bush River Rd

Date
Sunday, April 21, 2024

Lat/Long
34.034393°, -81.117736°

Weather
Cloudy
66°F

Click here for Detailed Weather

0000 - 2400 (Sunday 24h Session) (04-21-2024)
SB WB 60min

	Southbound (Movement 75 Lane 2 SB.1)													
TIME	1	2	3	4	5	6	7	8	9	10	11	12	13	**Total**
0000 - 0100	0	187	16	0	0	0	0	0	13	0	0	0	0	**216**
0100 - 0200	0	120	15	1	0	1	0	0	10	0	0	0	0	**147**
0200 - 0300	0	98	12	0	3	0	0	0	5	0	0	0	0	**118**
0300 - 0400	0	63	12	0	0	0	0	0	8	0	0	0	0	**83**
0400 - 0500	0	61	6	2	1	0	0	0	10	0	0	0	0	**80**
0500 - 0600	0	100	2	0	1	0	0	0	16	0	0	0	0	**119**
0600 - 0700	0	142	34	0	2	0	0	0	11	0	0	0	0	**189**
0700 - 0800	1	186	45	1	2	2	0	0	10	0	1	0	0	**248**
0800 - 0900	3	259	61	1	5	0	0	0	17	1	0	0	0	**347**
0900 - 1000	1	405	115	2	3	0	0	0	22	1	0	0	0	**549**
1000 - 1100	0	476	127	1	2	2	0	1	34	0	1	0	0	**644**
1100 - 1200	0	563	149	0	3	0	0	2	50	0	0	0	0	**767**
1200 - 1300	0	672	156	1	4	1	0	3	30	0	0	0	0	**867**
1300 - 1400	1	698	133	1	2	4	0	3	25	0	1	0	0	**868**
1400 - 1500	1	679	142	0	3	3	0	2	33	0	0	1	0	**864**
1500 - 1600	1	637	129	0	7	2	0	1	41	2	0	0	0	**820**
1600 - 1700	0	653	144	1	4	1	0	1	32	0	0	0	0	**836**
1700 - 1800	1	560	122	2	4	2	0	0	43	0	0	0	0	**734**
1800 - 1900	1	546	128	0	4	1	0	0	26	1	0	0	0	**707**
1900 - 2000	0	469	108	0	2	2	0	2	31	0	2	0	0	**616**
2000 - 2100	0	382	67	0	1	1	0	0	28	0	1	0	0	**480**
2100 - 2200	0	260	35	1	4	0	0	1	33	0	4	0	0	**338**
2200 - 2300	0	206	24	4	0	1	0	0	23	0	5	0	0	**263**
2300 - 2400	0	120	10	1	3	1	0	0	16	0	3	0	0	**154**

Session Total	10	8542	1792	19	60	24	0	16	567	5	18	1	0	**11054**
Session Average	0.42	355.92	74.67	0.79	2.50	1.00	0.00	0.67	23.63	0.21	0.75	0.04	0.00	**460.58**
Session Percentage	0.09	77.28	16.21	0.17	0.54	0.22	0.00	0.14	5.13	0.05	0.16	0.01	0.00	

AM Peak Hour	0800 - 0900	0900 - 1000	0900 - 1000	0900 - 1000	0800 - 0900	0700 - 0800	-	-	0900 - 1000	0800 - 0900	0700 - 0800	-	-	**0900 - 1000**
AM Peak Volume	3	405	115	2	5	2	0	0	22	1	1	0	0	**549**

Noon Peak Hour	1300 - 1400	1300 - 1400	1200 - 1300	1000 - 1100	1200 - 1300	1300 - 1400	-	1200 - 1300	1100 - 1200	-	1000 - 1100	1400 - 1500	-	**1300 - 1400**
Noon Peak Volume	1	698	156	1	4	4	0	3	50	0	1	1	0	**868**

PM Peak Hour	1500 - 1600	1600 - 1700	1600 - 1700	1700 - 1800	1500 - 1600	1500 - 1600	-	1900 - 2000	1700 - 1800	1500 - 1600	1900 - 2000	-	-	**1600 - 1700**
PM Peak Volume	1	653	144	2	7	2	0	2	43	2	2	0	0	**836**

Site 75 Lane 2 SB
I-20,
north of Bush River Rd

Date
Monday, April 22, 2024

Lat/Long
34.034393°, -81.117736°

Weather
Mostly Cloudy
57°F

Click here for Detailed Weather

0000 - 2400 (Weekday 24h Session) (04-22-2024)
SB WB 60min

	Southbound (Movement 75 Lane 2 SB.1)													
TIME	1	2	3	4	5	6	7	8	9	10	11	12	13	**Total**
0000 - 0100	0	75	15	1	1	2	0	0	21	0	1	0	0	**116**
0100 - 0200	0	51	8	0	1	2	0	0	11	0	0	0	0	**73**
0200 - 0300	0	42	15	0	1	0	0	0	20	0	0	0	0	**78**
0300 - 0400	0	68	21	0	1	2	0	0	19	0	0	0	0	**111**
0400 - 0500	0	114	22	0	4	1	0	0	24	0	1	0	0	**166**
0500 - 0600	0	249	58	1	6	4	0	2	41	0	0	0	0	**361**
0600 - 0700	0	434	157	0	15	8	0	2	52	0	0	0	0	**668**
0700 - 0800	0	605	217	1	22	18	0	7	63	4	0	2	0	**939**
0800 - 0900	0	500	260	2	23	10	2	8	88	1	0	0	0	**894**
0900 - 1000	0	419	212	2	29	9	2	10	95	1	0	0	0	**779**
1000 - 1100	1	429	214	1	26	6	3	8	114	5	0	0	0	**807**
1100 - 1200	0	447	205	1	25	6	1	5	136	1	0	0	0	**827**
1200 - 1300	2	497	195	2	19	12	1	12	125	2	0	0	0	**867**
1300 - 1400	0	489	201	1	28	5	6	9	119	5	0	0	0	**863**
1400 - 1500	1	540	213	3	15	7	9	9	142	3	0	0	0	**942**
1500 - 1600	1	621	200	0	26	19	1	6	141	1	0	0	0	**1016**
1600 - 1700	0	735	225	0	37	12	0	14	132	4	0	0	0	**1159**
1700 - 1800	1	766	245	1	23	12	1	8	145	1	0	0	0	**1203**
1800 - 1900	1	538	162	0	11	7	0	6	100	1	0	0	0	**826**
1900 - 2000	2	406	100	0	7	6	1	9	99	0	3	0	0	**633**
2000 - 2100	0	329	69	0	5	3	0	7	67	1	2	0	0	**483**
2100 - 2200	0	241	55	2	3	1	0	5	50	0	2	0	0	**359**
2200 - 2300	0	172	45	0	2	0	0	0	35	0	10	0	0	**264**
2300 - 2400	0	120	35	3	0	2	0	0	24	0	4	0	0	**188**

Session Total	9	8887	3149	21	330	154	27	127	1863	30	23	2	0	**14622**
Session Average	0.38	370.29	131.21	0.88	13.75	6.42	1.13	5.29	77.63	1.25	0.96	0.08	0.00	**609.25**
Session Percentage	0.06	60.78	21.54	0.14	2.26	1.05	0.18	0.87	12.74	0.21	0.16	0.01	0.00	

AM Peak Hour	-	0700 - 0800	0800 - 0900	0800 - 0900	0900 - 1000	0700 - 0800	0800 - 0900	0900 - 1000	0900 - 1000	0700 - 0800	-	0700 - 0800	-	**0700 - 0800**
AM Peak Volume	0	605	260	2	29	18	2	10	95	4	0	2	0	**939**

Noon Peak Hour	1200 - 1300	1400 - 1500	1000 - 1100	1400 - 1500	1300 - 1400	1200 - 1300	1400 - 1500	1200 - 1300	1400 - 1500	1000 - 1100	-	-	-	**1400 - 1500**
Noon Peak Volume	2	540	214	3	28	12	9	12	142	5	0	0	0	**942**

PM Peak Hour	1900 - 2000	1700 - 1800	1700 - 1800	1700 - 1800	1600 - 1700	1500 - 1600	1500 - 1600	1600 - 1700	1700 - 1800	1600 - 1700	1900 - 2000	-	-	**1700 - 1800**
PM Peak Volume	2	766	245	1	37	19	1	14	145	4	3	0	0	**1203**

Site 75 Lane 2 SB
I-20,
north of Bush River Rd

Date
Tuesday, April 23, 2024

Lat/Long
34.034393°, -81.117736°

Weather
Fair
58°F

Click here for Detailed Weather

0000 - 2400 (Weekday 24h Session) (04-23-2024)
SB WB 60min

	Southbound (Movement 75 Lane 2 SB.1)													
TIME	1	2	3	4	5	6	7	8	9	10	11	12	13	**Total**
0000 - 0100	0	63	23	0	4	0	0	0	24	0	4	0	0	**118**
0100 - 0200	0	45	8	0	4	1	0	0	20	0	1	0	0	**79**
0200 - 0300	0	51	10	0	2	1	0	0	27	0	2	0	0	**93**
0300 - 0400	0	76	15	0	4	2	0	0	51	0	2	0	0	**150**
0400 - 0500	0	93	23	0	5	0	0	0	37	0	3	0	0	**161**
0500 - 0600	0	166	39	0	11	0	0	0	60	0	2	0	0	**278**
0600 - 0700	1	379	139	0	17	11	1	4	81	0	2	0	0	**635**
0700 - 0800	1	522	209	0	21	13	0	6	67	0	0	0	0	**839**
0800 - 0900	3	479	219	2	28	9	1	10	80	0	2	0	0	**833**
0900 - 1000	0	450	183	3	21	8	0	10	125	1	1	0	0	**802**
1000 - 1100	1	423	152	1	27	15	0	17	106	1	1	0	0	**744**
1100 - 1200	2	409	169	1	28	13	0	11	145	0	1	0	0	**779**
1200 - 1300	0	424	196	1	18	11	0	18	144	3	0	0	0	**815**
1300 - 1400	2	504	187	2	22	9	0	10	152	1	0	0	0	**889**
1400 - 1500	5	570	203	5	19	9	2	12	144	2	2	1	0	**974**
1500 - 1600	2	647	237	2	17	6	2	19	169	1	0	0	0	**1102**
1600 - 1700	1	771	263	1	30	12	1	17	108	1	0	1	0	**1206**
1700 - 1800	1	750	238	1	25	5	1	16	112	4	0	0	0	**1153**
1800 - 1900	1	544	177	2	11	3	0	7	105	1	2	0	0	**853**
1900 - 2000	1	394	125	0	13	3	1	6	93	0	3	0	0	**639**
2000 - 2100	0	383	70	0	9	1	0	5	93	0	1	0	0	**562**
2100 - 2200	2	309	46	0	5	0	0	0	83	0	2	0	0	**447**
2200 - 2300	0	250	29	0	10	0	0	0	74	0	4	0	0	**367**
2300 - 2400	0	127	23	0	4	2	0	0	61	0	4	0	0	**221**

Session Total	23	8829	2983	21	355	134	9	168	2161	15	39	2	0	**14739**
Session Average	0.96	367.88	124.29	0.88	14.79	5.58	0.38	7.00	90.04	0.63	1.63	0.08	0.00	**614.13**
Session Percentage	0.16	59.90	20.24	0.14	2.41	0.91	0.06	1.14	14.66	0.10	0.26	0.01	0.00	

AM Peak Hour	0800 - 0900	0700 - 0800	0800 - 0900	0900 - 1000	0800 - 0900	0700 - 0800	0600 - 0700	0800 - 0900	0900 - 1000	0900 - 1000	0500 - 0600	-	-	**0700 - 0800**
AM Peak Hour Volume	3	522	219	3	28	13	1	10	125	1	2	0	0	**839**

Noon Peak Hour	1400 - 1500	1400 - 1500	1400 - 1500	1400 - 1500	1100 - 1200	1000 - 1100	1400 - 1500	1200 - 1300	1300 - 1400	1200 - 1300	1400 - 1500	1400 - 1500	-	**1400 - 1500**
Noon Peak Hour Volume	5	570	203	5	28	15	2	18	152	3	2	1	0	**974**

PM Peak Hour	1500 - 1600	1600 - 1700	1600 - 1700	1500 - 1600	1600 - 1700	1600 - 1700	1500 - 1600	1500 - 1600	1500 - 1600	1700 - 1800	1900 - 2000	1600 - 1700	-	**1600 - 1700**
PM Peak Hour Volume	2	771	263	2	30	12	2	19	169	4	3	1	0	**1206**

Site 75 Lane 2 SB

I-20,
north of Bush River Rd

Date

Wednesday, April 24, 2024

Lat/Long

34.034393°, -81.117736°

Weather

Fair
66°F

Click here for Detailed Weather

0000 - 2400 (Weekday 24h Session) (04-24-2024)

SB WB 60min

	Southbound (Movement 75 Lane 2 SB.1)													
TIME	1	2	3	4	5	6	7	8	9	10	11	12	13	**Total**
0000 - 0100	0	110	6	0	2	0	0	0	52	0	6	0	0	**176**
0100 - 0200	0	74	7	0	5	0	0	0	41	0	2	0	0	**129**
0200 - 0300	0	63	12	0	4	0	0	0	51	0	1	0	0	**131**
0300 - 0400	0	66	7	0	5	0	0	0	38	0	0	0	0	**116**
0400 - 0500	0	116	9	0	5	0	0	0	41	0	1	0	0	**172**
0500 - 0600	0	242	29	0	7	0	0	0	52	0	0	0	0	**330**
0600 - 0700	1	368	143	0	20	6	0	3	86	1	2	0	0	**630**
0700 - 0800	2	610	184	1	26	8	1	9	78	0	1	1	0	**921**
0800 - 0900	0	468	177	0	34	8	0	8	91	1	1	0	0	**788**
0900 - 1000	0	376	191	2	28	11	2	9	109	1	1	0	0	**730**
1000 - 1100	0	408	193	2	27	6	3	11	128	2	0	0	0	**780**
1100 - 1200	1	397	193	1	21	5	4	8	129	3	1	0	0	**763**
1200 - 1300	0	461	215	0	25	12	3	17	156	5	0	1	0	**895**
1300 - 1400	0	508	214	1	27	4	3	12	151	0	0	0	0	**920**
1400 - 1500	0	558	262	2	22	12	3	3	142	0	1	0	0	**1005**
1500 - 1600	0	662	233	2	39	9	3	11	155	2	1	0	0	**1117**
1600 - 1700	1	772	266	4	37	4	1	17	156	3	0	0	0	**1261**
1700 - 1800	3	719	235	2	19	6	1	12	140	0	0	0	0	**1137**
1800 - 1900	3	529	151	3	22	2	0	8	96	1	1	0	0	**816**
1900 - 2000	2	422	136	0	17	1	0	8	85	1	3	0	0	**675**
2000 - 2100	0	327	94	0	11	4	0	1	64	0	0	0	0	**501**
2100 - 2200	0	266	43	0	1	0	0	0	86	0	2	0	0	**398**
2200 - 2300	0	220	46	0	3	0	0	0	47	0	2	0	0	**318**
2300 - 2400	0	118	45	0	3	0	0	0	58	0	0	0	0	**224**

Session Total	13	8860	3091	20	410	98	24	137	2232	20	26	2	0	**14933**
Session Average	0.54	369.17	128.79	0.83	17.08	4.08	1.00	5.71	93.00	0.83	1.08	0.08	0.00	**622.21**
Session Percentage	0.09	59.33	20.70	0.13	2.75	0.66	0.16	0.92	14.95	0.13	0.17	0.01	0.00	

AM Peak Hour	0700 - 0800	0700 - 0800	0900 - 1000	0900 - 1000	0800 - 0900	0900 - 1000	0900 - 1000	0700 - 0800	0900 - 1000	0600 - 0700	0600 - 0700	0700 - 0800	-	**0700 - 0800**
AM Peak Hour Volume	2	610	191	2	34	11	2	9	109	1	2	1	0	**921**

Noon Peak Hour	1100 - 1200	1400 - 1500	1400 - 1500	1000 - 1100	1000 - 1100	1200 - 1300	1100 - 1200	1200 - 1300	1200 - 1300	1200 - 1300	1100 - 1200	1200 - 1300	-	**1400 - 1500**
Noon Peak Hour Volume	1	558	262	2	27	12	4	17	156	5	1	1	0	**1005**

PM Peak Hour	1700 - 1800	1600 - 1700	1600 - 1700	1600 - 1700	1500 - 1600	1500 - 1600	1500 - 1600	1600 - 1700	1600 - 1700	1600 - 1700	1900 - 2000	-	-	**1600 - 1700**
PM Peak Hour Volume	3	772	266	4	39	9	3	17	156	3	3	0	0	**1261**

Site 75 Lane 2 SB

I-20,
north of Bush River Rd

Date

Thursday, April 25, 2024

Lat/Long

34.034393°, -81.117736°

Weather

Fair
67°F

Click here for Detailed Weather

0000 - 2400 (Weekday 24h Session) (04-25-2024)

SB WB 60min

	Southbound (Movement 75 Lane 2 SB.1)													
TIME	1	2	3	4	5	6	7	8	9	10	11	12	13	**Total**
0000 - 0100	0	81	28	0	1	2	0	1	46	0	7	0	0	**166**
0100 - 0200	0	51	8	0	2	0	0	1	28	0	0	0	0	**90**
0200 - 0300	0	52	12	0	2	0	0	0	25	0	3	0	0	**94**
0300 - 0400	0	81	21	0	6	0	0	0	38	0	2	0	0	**148**
0400 - 0500	0	92	32	0	3	0	0	0	34	0	3	0	0	**164**
0500 - 0600	0	240	47	1	7	1	0	0	61	0	6	0	0	**363**
0600 - 0700	1	404	139	0	18	6	0	2	101	0	0	0	0	**671**
0700 - 0800	1	561	190	1	18	14	1	12	71	0	1	0	0	**870**
0800 - 0900	0	496	200	1	29	11	4	8	100	1	0	0	0	**850**
0900 - 1000	1	428	195	1	25	8	5	9	123	3	0	0	0	**798**
1000 - 1100	0	469	194	0	25	9	1	11	119	2	0	0	0	**830**
1100 - 1200	1	501	180	0	25	11	0	9	140	3	0	0	0	**870**
1200 - 1300	1	531	209	0	32	9	0	12	130	4	1	0	0	**929**
1300 - 1400	1	572	199	2	31	13	0	13	146	1	1	0	0	**979**
1400 - 1500	3	631	213	2	23	7	1	12	164	3	0	1	0	**1060**
1500 - 1600	3	723	239	3	20	7	1	17	137	1	1	0	0	**1152**
1600 - 1700	1	812	242	1	24	5	4	14	119	2	0	1	0	**1225**
1700 - 1800	3	768	217	2	18	7	2	9	126	0	0	0	0	**1152**
1800 - 1900	1	542	173	1	17	5	0	10	97	2	0	0	0	**848**
1900 - 2000	4	455	120	1	22	3	0	11	78	0	1	0	0	**695**
2000 - 2100	2	375	106	0	8	1	0	0	76	0	2	0	0	**570**
2100 - 2200	2	341	69	0	11	2	0	0	74	0	2	0	0	**501**
2200 - 2300	0	261	68	0	5	2	0	0	70	0	1	0	0	**407**
2300 - 2400	0	162	38	0	6	0	0	0	44	0	5	0	0	**255**

Session Total	25	9629	3139	16	378	123	19	151	2147	22	36	2	0	**15687**
Session Average	1.04	401.21	130.79	0.67	15.75	5.13	0.79	6.29	89.46	0.92	1.50	0.08	0.00	**653.63**
Session Percentage	0.16	61.38	20.01	0.10	2.41	0.78	0.12	0.96	13.69	0.14	0.23	0.01	0.00	

AM Peak Hour	0600 - 0700	0700 - 0800	0800 - 0900	0500 - 0600	0800 - 0900	0700 - 0800	0900 - 1000	0700 - 0800	0900 - 1000	0900 - 1000	0500 - 0600	-	-	**0700 - 0800**
AM Peak Hour Volume	1	561	200	1	29	14	5	12	123	3	6	0	0	**870**

Noon Peak Hour	1400 - 1500	1400 - 1500	1400 - 1500	1300 - 1400	1200 - 1300	1300 - 1400	1000 - 1100	1300 - 1400	1400 - 1500	1200 - 1300	1200 - 1300	1400 - 1500	-	**1400 - 1500**
Noon Peak Hour Volume	3	631	213	2	32	13	1	13	164	4	1	1	0	**1060**

PM Peak Hour	1900 - 2000	1600 - 1700	1600 - 1700	1500 - 1600	1600 - 1700	1500 - 1600	1600 - 1700	1500 - 1600	1500 - 1600	1600 - 1700	1500 - 1600	1600 - 1700	-	**1600 - 1700**
PM Peak Hour Volume	4	812	242	3	24	7	4	17	137	2	1	1	0	**1225**

Site 75 Lane 2 SB

I-20,
north of Bush River Rd

Date

Friday, April 26, 2024

Lat/Long

34.034393°, -81.117736°

Weather

Cloudy
69°F

Click here for Detailed Weather

0000 - 2400 (Weekday 24h Session) (04-26-2024)

SB WB 60min

	Southbound (Movement 75 Lane 2 SB.1)													
TIME	1	2	3	4	5	6	7	8	9	10	11	12	13	**Total**
0000 - 0100	0	109	6	0	1	1	0	0	28	0	2	0	0	**147**
0100 - 0200	0	74	6	0	2	0	0	0	23	0	4	0	0	**109**
0200 - 0300	1	64	3	0	0	0	0	0	32	0	2	0	0	**102**
0300 - 0400	0	72	7	0	3	0	0	0	38	0	2	0	0	**122**
0400 - 0500	0	117	4	0	6	0	0	0	46	0	1	0	0	**174**
0500 - 0600	2	191	18	2	4	0	0	0	53	0	3	0	0	**273**
0600 - 0700	1	352	106	0	20	5	0	0	74	0	1	0	0	**559**
0700 - 0800	1	576	207	0	31	14	0	4	67	1	1	0	0	**902**
0800 - 0900	0	470	187	3	38	8	0	5	101	1	3	0	0	**816**
0900 - 1000	0	457	189	0	17	7	1	9	86	1	0	1	0	**768**
1000 - 1100	3	485	182	1	20	4	1	14	111	2	2	0	0	**825**
1100 - 1200	0	573	191	1	25	7	5	14	135	2	0	0	0	**953**
1200 - 1300	1	645	219	2	34	8	0	6	134	0	0	0	0	**1049**
1300 - 1400	1	592	200	3	17	7	1	14	120	0	0	0	0	**955**
1400 - 1500	0	586	194	2	32	9	2	11	134	4	0	1	0	**975**
1500 - 1600	2	664	197	3	17	6	0	16	119	0	0	1	0	**1025**
1600 - 1700	2	787	243	1	18	7	2	10	125	1	0	0	0	**1196**
1700 - 1800	2	778	210	1	17	5	0	10	111	1	1	0	0	**1136**
1800 - 1900	3	655	144	3	11	5	0	6	90	1	0	0	0	**918**
1900 - 2000	4	507	138	6	6	0	0	7	74	0	1	0	0	**743**
2000 - 2100	1	453	38	1	7	0	0	0	61	0	3	0	0	**564**
2100 - 2200	1	407	15	0	5	0	0	0	56	0	3	0	0	**487**
2200 - 2300	1	379	14	0	2	2	0	0	42	0	3	0	0	**443**
2300 - 2400	0	259	11	0	2	1	0	0	28	0	3	0	0	**304**

Session Total	26	10252	2729	29	335	96	12	126	1888	14	35	3	0	**15545**
Session Average	1.08	427.17	113.71	1.21	13.96	4.00	0.50	5.25	78.67	0.58	1.46	0.13	0.00	**647.71**
Session Percentage	0.17	65.95	17.56	0.19	2.16	0.62	0.08	0.81	12.15	0.09	0.23	0.02	0.00	

AM Peak Hour	0500 - 0600	0700 - 0800	0700 - 0800	0800 - 0900	0800 - 0900	0700 - 0800	0900 - 1000	0900 - 1000	0800 - 0900	0700 - 0800	0500 - 0600	0900 - 1000	-	**0700 - 0800**
AM Peak Hour Volume	2	576	207	3	38	14	1	9	101	1	3	1	0	**902**

Noon Peak Hour	1000 - 1100	1200 - 1300	1200 - 1300	1300 - 1400	1200 - 1300	1400 - 1500	1100 - 1200	1000 - 1100	1100 - 1200	1400 - 1500	1000 - 1100	1400 - 1500	-	**1200 - 1300**
Noon Peak Hour Volume	3	645	219	3	34	9	5	14	135	4	2	1	0	**1049**

PM Peak Hour	1900 - 2000	1600 - 1700	1600 - 1700	1900 - 2000	1600 - 1700	1600 - 1700	1600 - 1700	1500 - 1600	1600 - 1700	1600 - 1700	1700 - 1800	1500 - 1600	-	**1600 - 1700**
PM Peak Hour Volume	4	787	243	6	18	7	2	16	125	1	1	1	0	**1196**

Site 75 Lane 2 SB
I-20,
north of Bush River Rd

Date
Saturday, April 27, 2024

Lat/Long
34.034393°, -81.117736°

Weather
Mostly Cloudy
69°F

Click here for Detailed Weather

0000 - 2400 (Saturday 24h Session) (04-27-2024)
SB WB 60min

	Southbound (Movement 75 Lane 2 SB.1)													
TIME	1	2	3	4	5	6	7	8	9	10	11	12	13	**Total**
0000 - 0100	3	140	27	1	1	1	0	1	18	0	4	0	0	**196**
0100 - 0200	0	86	18	0	2	0	0	0	18	0	3	0	0	**127**
0200 - 0300	0	77	11	0	1	0	0	0	20	0	0	0	0	**109**
0300 - 0400	0	61	13	1	1	0	0	0	24	0	0	0	0	**100**
0400 - 0500	0	70	20	0	0	0	0	0	19	0	3	0	0	**112**
0500 - 0600	0	123	46	0	4	0	0	0	18	0	6	0	0	**197**
0600 - 0700	0	226	79	0	6	0	0	1	23	0	1	0	0	**336**
0700 - 0800	0	303	137	0	2	6	0	1	33	1	0	0	0	**483**
0800 - 0900	2	427	167	0	8	1	0	2	40	0	1	0	0	**648**
0900 - 1000	3	532	125	2	9	3	0	6	49	0	0	0	0	**729**
1000 - 1100	2	577	186	1	2	5	0	0	42	0	1	0	0	**816**
1100 - 1200	4	567	209	1	10	8	0	9	51	0	0	0	0	**859**
1200 - 1300	1	649	168	0	12	1	0	5	51	0	0	0	0	**887**
1300 - 1400	2	668	171	2	8	0	0	2	53	0	0	0	0	**906**
1400 - 1500	2	574	161	3	5	2	0	7	41	0	0	0	0	**795**
1500 - 1600	4	644	152	0	5	1	1	4	37	1	0	1	0	**850**
1600 - 1700	5	602	123	1	6	1	0	3	29	1	0	0	0	**771**
1700 - 1800	7	530	125	1	10	1	0	2	32	1	0	0	0	**709**
1800 - 1900	3	533	119	3	7	0	0	7	28	0	0	0	0	**700**
1900 - 2000	2	454	108	4	12	1	0	4	32	0	0	0	0	**617**
2000 - 2100	1	407	72	0	1	1	0	2	18	0	0	0	0	**502**
2100 - 2200	0	403	75	0	3	2	0	1	20	0	0	0	0	**504**
2200 - 2300	0	357	35	0	2	3	0	0	16	0	0	0	0	**413**
2300 - 2400	1	229	27	0	0	0	0	0	12	0	0	0	0	**269**

Session Total	42	9239	2374	20	117	37	1	57	724	4	19	1	0	**12635**
Session Average	1.75	384.96	98.92	0.83	4.88	1.54	0.04	2.38	30.17	0.17	0.79	0.04	0.00	**526.46**
Session Percentage	0.33	73.12	18.79	0.16	0.93	0.29	0.01	0.45	5.73	0.03	0.15	0.01	0.00	

AM Peak Hour	0900 - 1000	0900 - 1000	0800 - 0900	0900 - 1000	0900 - 1000	0700 - 0800	-	0900 - 1000	0900 - 1000	0700 - 0800	0500 - 0600	-	-	**0900 - 1000**
AM Peak Hour Volume	3	532	167	2	9	6	0	6	49	1	6	0	0	**729**

Noon Peak Hour	1100 - 1200	1300 - 1400	1100 - 1200	1400 - 1500	1200 - 1300	1100 - 1200	-	1100 - 1200	1300 - 1400	-	1000 - 1100	-	-	**1300 - 1400**
Noon Peak Hour Volume	4	668	209	3	12	8	0	9	53	0	1	0	0	**906**

PM Peak Hour	1700 - 1800	1500 - 1600	1500 - 1600	1900 - 2000	1900 - 2000	1500 - 1600	1500 - 1600	1800 - 1900	1500 - 1600	1500 - 1600	-	1500 - 1600	-	**1500 - 1600**
PM Peak Hour Volume	7	644	152	4	12	1	1	7	37	1	0	1	0	**850**

Bi-Directional Class Count || Volume Summary 60min

Columbia, SC

Marr Traffic DATA COLLECTION

www.marrtraffic.com

Site 75 Lane 2 SB

I-20,
north of Bush River Rd

Date

Sunday, April 21, 2024

Lat/Long

34.034393°, -81.117736°

Weather

Cloudy
66°F

Click here for Detailed Weather

0000 - 2400 (Sunday 24h Session) (04-21-2024)

Volume Summary 60min

	Volume Summary 60min		
TIME	NB	SB	**Total**
0000 - 0100	0	216	**216**
0100 - 0200	0	147	**147**
0200 - 0300	0	118	**118**
0300 - 0400	0	83	**83**
0400 - 0500	0	80	**80**
0500 - 0600	0	119	**119**
0600 - 0700	0	189	**189**
0700 - 0800	0	248	**248**
0800 - 0900	0	347	**347**
0900 - 1000	0	549	**549**
1000 - 1100	0	644	**644**
1100 - 1200	0	767	**767**

	Volume Summary 60min		
Time	NB	SB	**Total**
1200 - 1300	0	867	**867**
1300 - 1400	0	868	**868**
1400 - 1500	0	864	**864**
1500 - 1600	0	820	**820**
1600 - 1700	0	836	**836**
1700 - 1800	0	734	**734**
1800 - 1900	0	707	**707**
1900 - 2000	0	616	**616**
2000 - 2100	0	480	**480**
2100 - 2200	0	338	**338**
2200 - 2300	0	263	**263**
2300 - 2400	0	154	**154**

Session Total	0	11054	**11054**
Session Average	0.00	460.58	**460.58**
Session Percentage	0.00	100.00	

Site 75 Lane 2 SB

I-20,
north of Bush River Rd

Date

Monday, April 22, 2024

Lat/Long

34.034393°, -81.117736°

Weather

Mostly Cloudy
57°F

Click here for Detailed Weather

0000 - 2400 (Weekday 24h Session) (04-22-2024)

Volume Summary 60min

	Volume Summary 60min		
TIME	NB	SB	**Total**
0000 - 0100	0	116	**116**
0100 - 0200	0	73	**73**
0200 - 0300	0	78	**78**
0300 - 0400	0	111	**111**
0400 - 0500	0	166	**166**
0500 - 0600	0	361	**361**
0600 - 0700	0	668	**668**
0700 - 0800	0	939	**939**
0800 - 0900	0	894	**894**
0900 - 1000	0	779	**779**
1000 - 1100	0	807	**807**
1100 - 1200	0	827	**827**

Session Total	0	14622	**14622**
Session Average	0.00	609.25	**609.25**
Session Percentage	0.00	100.00	

	Volume Summary 60min		
Time	NB	SB	**Total**
1200 - 1300	0	867	**867**
1300 - 1400	0	863	**863**
1400 - 1500	0	942	**942**
1500 - 1600	0	1016	**1016**
1600 - 1700	0	1159	**1159**
1700 - 1800	0	1203	**1203**
1800 - 1900	0	826	**826**
1900 - 2000	0	633	**633**
2000 - 2100	0	483	**483**
2100 - 2200	0	359	**359**
2200 - 2300	0	264	**264**
2300 - 2400	0	188	**188**

Site 75 Lane 2 SB

I-20,
north of Bush River Rd

Date

Tuesday, April 23, 2024

Lat/Long

34.034393°, -81.117736°

Weather

Fair
58°F

Click here for Detailed Weather

0000 - 2400 (Weekday 24h Session) (04-23-2024)

Volume Summary 60min

	Volume Summary 60min		
TIME	NB	SB	**Total**
0000 - 0100	0	118	**118**
0100 - 0200	0	79	**79**
0200 - 0300	0	93	**93**
0300 - 0400	0	150	**150**
0400 - 0500	0	161	**161**
0500 - 0600	0	278	**278**
0600 - 0700	0	635	**635**
0700 - 0800	0	839	**839**
0800 - 0900	0	833	**833**
0900 - 1000	0	802	**802**
1000 - 1100	0	744	**744**
1100 - 1200	0	779	**779**

Session Total	0	14739	**14739**
Session Average	0.00	614.13	**614.13**
Session Percentage	0.00	100.00	

	Volume Summary 60min		
Time	NB	SB	**Total**
1200 - 1300	0	815	**815**
1300 - 1400	0	889	**889**
1400 - 1500	0	974	**974**
1500 - 1600	0	1102	**1102**
1600 - 1700	0	1206	**1206**
1700 - 1800	0	1153	**1153**
1800 - 1900	0	853	**853**
1900 - 2000	0	639	**639**
2000 - 2100	0	562	**562**
2100 - 2200	0	447	**447**
2200 - 2300	0	367	**367**
2300 - 2400	0	221	**221**

Site 75 Lane 2 SB

I-20,
north of Bush River Rd

Date

Wednesday, April 24, 2024

Lat/Long

34.034393°, -81.117736°

Weather

Fair
66°F

Click here for Detailed Weather

0000 - 2400 (Weekday 24h Session) (04-24-2024)

Volume Summary 60min

	Volume Summary 60min		
TIME	NB	SB	**Total**
0000 - 0100	0	176	**176**
0100 - 0200	0	129	**129**
0200 - 0300	0	131	**131**
0300 - 0400	0	116	**116**
0400 - 0500	0	172	**172**
0500 - 0600	0	330	**330**
0600 - 0700	0	630	**630**
0700 - 0800	0	921	**921**
0800 - 0900	0	788	**788**
0900 - 1000	0	730	**730**
1000 - 1100	0	780	**780**
1100 - 1200	0	763	**763**

	Volume Summary 60min		
Time	NB	SB	**Total**
1200 - 1300	0	895	**895**
1300 - 1400	0	920	**920**
1400 - 1500	0	1005	**1005**
1500 - 1600	0	1117	**1117**
1600 - 1700	0	1261	**1261**
1700 - 1800	0	1137	**1137**
1800 - 1900	0	816	**816**
1900 - 2000	0	675	**675**
2000 - 2100	0	501	**501**
2100 - 2200	0	398	**398**
2200 - 2300	0	318	**318**
2300 - 2400	0	224	**224**

Session Total	0	14933	**14933**
Session Average	0.00	622.21	**622.21**
Session Percentage	0.00	100.00	

Site 75 Lane 2 SB

I-20,
north of Bush River Rd

Date

Thursday, April 25, 2024

Lat/Long

34.034393°, -81.117736°

Weather

Fair
67°F

Click here for Detailed Weather

0000 - 2400 (Weekday 24h Session) (04-25-2024)

Volume Summary 60min

	Volume Summary 60min		
TIME	NB	SB	**Total**
0000 - 0100	0	166	**166**
0100 - 0200	0	90	**90**
0200 - 0300	0	94	**94**
0300 - 0400	0	148	**148**
0400 - 0500	0	164	**164**
0500 - 0600	0	363	**363**
0600 - 0700	0	671	**671**
0700 - 0800	0	870	**870**
0800 - 0900	0	850	**850**
0900 - 1000	0	798	**798**
1000 - 1100	0	830	**830**
1100 - 1200	0	870	**870**

Session Total	0	15687	**15687**
Session Average	0.00	653.63	**653.63**
Session Percentage	0.00	100.00	

	Volume Summary 60min		
Time	NB	SB	**Total**
1200 - 1300	0	929	**929**
1300 - 1400	0	979	**979**
1400 - 1500	0	1060	**1060**
1500 - 1600	0	1152	**1152**
1600 - 1700	0	1225	**1225**
1700 - 1800	0	1152	**1152**
1800 - 1900	0	848	**848**
1900 - 2000	0	695	**695**
2000 - 2100	0	570	**570**
2100 - 2200	0	501	**501**
2200 - 2300	0	407	**407**
2300 - 2400	0	255	**255**

Site 75 Lane 2 SB

I-20,
north of Bush River Rd

Date

Friday, April 26, 2024

Lat/Long

34.034393°, -81.117736°

Weather

Cloudy
69°F

Click here for Detailed Weather

0000 - 2400 (Weekday 24h Session) (04-26-2024)

Volume Summary 60min

	Volume Summary 60min		
TIME	NB	SB	**Total**
0000 - 0100	0	147	**147**
0100 - 0200	0	109	**109**
0200 - 0300	0	102	**102**
0300 - 0400	0	122	**122**
0400 - 0500	0	174	**174**
0500 - 0600	0	273	**273**
0600 - 0700	0	559	**559**
0700 - 0800	0	902	**902**
0800 - 0900	0	816	**816**
0900 - 1000	0	768	**768**
1000 - 1100	0	825	**825**
1100 - 1200	0	953	**953**
1200 - 1300	0	1049	**1049**
1300 - 1400	0	955	**955**
1400 - 1500	0	975	**975**
1500 - 1600	0	1025	**1025**
1600 - 1700	0	1196	**1196**
1700 - 1800	0	1136	**1136**
1800 - 1900	0	918	**918**
1900 - 2000	0	743	**743**
2000 - 2100	0	564	**564**
2100 - 2200	0	487	**487**
2200 - 2300	0	443	**443**
2300 - 2400	0	304	**304**
Session Total	0	15545	**15545**
Session Average	0.00	647.71	**647.71**
Session Percentage	0.00	100.00	

Site 75 Lane 2 SB

I-20,
north of Bush River Rd

Date

Saturday, April 27, 2024

Lat/Long

34.034393°, -81.117736°

Weather

Mostly Cloudy
69°F

Click here for Detailed Weather

0000 - 2400 (Saturday 24h Session) (04-27-2024)

Volume Summary 60min

	Volume Summary 60min		
TIME	NB	SB	**Total**
0000 - 0100	0	196	**196**
0100 - 0200	0	127	**127**
0200 - 0300	0	109	**109**
0300 - 0400	0	100	**100**
0400 - 0500	0	112	**112**
0500 - 0600	0	197	**197**
0600 - 0700	0	336	**336**
0700 - 0800	0	483	**483**
0800 - 0900	0	648	**648**
0900 - 1000	0	729	**729**
1000 - 1100	0	816	**816**
1100 - 1200	0	859	**859**

	Volume Summary 60min		
Time	NB	SB	**Total**
1200 - 1300	0	887	**887**
1300 - 1400	0	906	**906**
1400 - 1500	0	795	**795**
1500 - 1600	0	850	**850**
1600 - 1700	0	771	**771**
1700 - 1800	0	709	**709**
1800 - 1900	0	700	**700**
1900 - 2000	0	617	**617**
2000 - 2100	0	502	**502**
2100 - 2200	0	504	**504**
2200 - 2300	0	413	**413**
2300 - 2400	0	269	**269**

Session Total	0	12635	**12635**
Session Average	0.00	526.46	**526.46**
Session Percentage	0.00	100.00	

Bi-Directional Class Count || Graphical Analysis SB WB

Columbia, SC

Marr Traffic DATA COLLECTION

www.marrtraffic.com

Site 75 Lane 2 SB

I-20,
north of Bush River Rd

Lat/Long

34.034393°, -81.117736°

0000 - 2400 (Weekday 24h Session)

Graphical Analysis SB WB

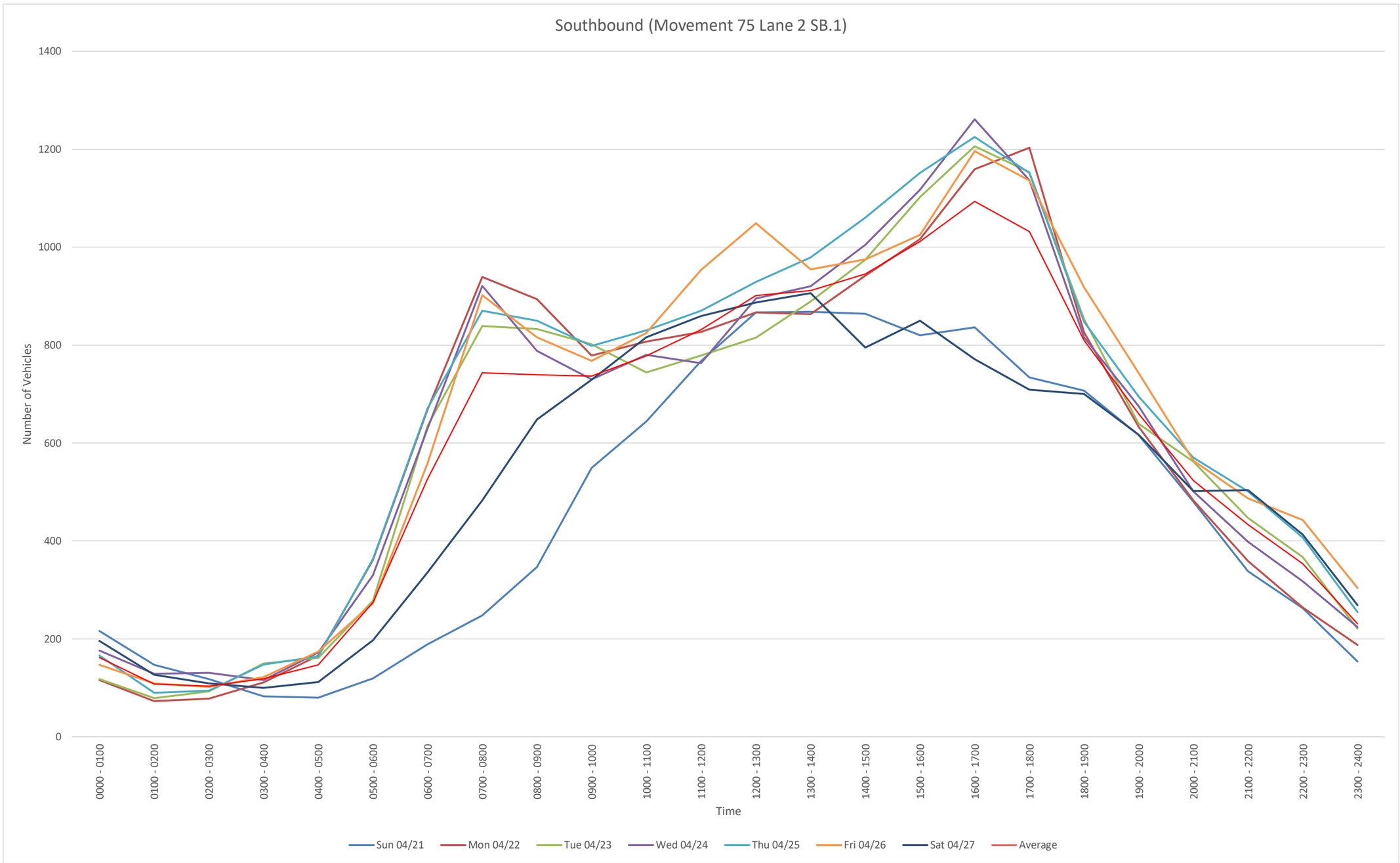

NB
File Name:
Start Date: 4/21/2024
Start Time: 0
Site Code: 75 Lane 2 SB
Station ID: 1
Location 1: I-20, north of Bush River Rd
Location 2:

Date	Time	1	2	3	4	5	6	7	8	9	10	11	12	13
4/21/2024	12:00 AM	0	0	0	0	0	0	0	0	0	0	0	0	0
4/21/2024	12:15 AM	0	0	0	0	0	0	0	0	0	0	0	0	0
4/21/2024	12:30 AM	0	0	0	0	0	0	0	0	0	0	0	0	0
4/21/2024	12:45 AM	0	0	0	0	0	0	0	0	0	0	0	0	0
4/21/2024	1:00 AM	0	0	0	0	0	0	0	0	0	0	0	0	0
4/21/2024	1:15 AM	0	0	0	0	0	0	0	0	0	0	0	0	0
4/21/2024	1:30 AM	0	0	0	0	0	0	0	0	0	0	0	0	0
4/21/2024	1:45 AM	0	0	0	0	0	0	0	0	0	0	0	0	0
4/21/2024	2:00 AM	0	0	0	0	0	0	0	0	0	0	0	0	0
4/21/2024	2:15 AM	0	0	0	0	0	0	0	0	0	0	0	0	0
4/21/2024	2:30 AM	0	0	0	0	0	0	0	0	0	0	0	0	0
4/21/2024	2:45 AM	0	0	0	0	0	0	0	0	0	0	0	0	0
4/21/2024	3:00 AM	0	0	0	0	0	0	0	0	0	0	0	0	0
4/21/2024	3:15 AM	0	0	0	0	0	0	0	0	0	0	0	0	0
4/21/2024	3:30 AM	0	0	0	0	0	0	0	0	0	0	0	0	0
4/21/2024	3:45 AM	0	0	0	0	0	0	0	0	0	0	0	0	0
4/21/2024	4:00 AM	0	0	0	0	0	0	0	0	0	0	0	0	0
4/21/2024	4:15 AM	0	0	0	0	0	0	0	0	0	0	0	0	0
4/21/2024	4:30 AM	0	0	0	0	0	0	0	0	0	0	0	0	0
4/21/2024	4:45 AM	0	0	0	0	0	0	0	0	0	0	0	0	0
4/21/2024	5:00 AM	0	0	0	0	0	0	0	0	0	0	0	0	0
4/21/2024	5:15 AM	0	0	0	0	0	0	0	0	0	0	0	0	0
4/21/2024	5:30 AM	0	0	0	0	0	0	0	0	0	0	0	0	0
4/21/2024	5:45 AM	0	0	0	0	0	0	0	0	0	0	0	0	0
4/21/2024	6:00 AM	0	0	0	0	0	0	0	0	0	0	0	0	0
4/21/2024	6:15 AM	0	0	0	0	0	0	0	0	0	0	0	0	0
4/21/2024	6:30 AM	0	0	0	0	0	0	0	0	0	0	0	0	0
4/21/2024	6:45 AM	0	0	0	0	0	0	0	0	0	0	0	0	0
4/21/2024	7:00 AM	0	0	0	0	0	0	0	0	0	0	0	0	0
4/21/2024	7:15 AM	0	0	0	0	0	0	0	0	0	0	0	0	0
4/21/2024	7:30 AM	0	0	0	0	0	0	0	0	0	0	0	0	0
4/21/2024	7:45 AM	0	0	0	0	0	0	0	0	0	0	0	0	0
4/21/2024	8:00 AM	0	0	0	0	0	0	0	0	0	0	0	0	0
4/21/2024	8:15 AM	0	0	0	0	0	0	0	0	0	0	0	0	0
4/21/2024	8:30 AM	0	0	0	0	0	0	0	0	0	0	0	0	0
4/21/2024	8:45 AM	0	0	0	0	0	0	0	0	0	0	0	0	0
4/21/2024	9:00 AM	0	0	0	0	0	0	0	0	0	0	0	0	0
4/21/2024	9:15 AM	0	0	0	0	0	0	0	0	0	0	0	0	0
4/21/2024	9:30 AM	0	0	0	0	0	0	0	0	0	0	0	0	0
4/21/2024	9:45 AM	0	0	0	0	0	0	0	0	0	0	0	0	0
4/21/2024	10:00 AM	0	0	0	0	0	0	0	0	0	0	0	0	0
4/21/2024	10:15 AM	0	0	0	0	0	0	0	0	0	0	0	0	0
4/21/2024	10:30 AM	0	0	0	0	0	0	0	0	0	0	0	0	0
4/21/2024	10:45 AM	0	0	0	0	0	0	0	0	0	0	0	0	0
4/21/2024	11:00 AM	0	0	0	0	0	0	0	0	0	0	0	0	0
4/21/2024	11:15 AM	0	0	0	0	0	0	0	0	0	0	0	0	0
4/21/2024	11:30 AM	0	0	0	0	0	0	0	0	0	0	0	0	0
4/21/2024	11:45 AM	0	0	0	0	0	0	0	0	0	0	0	0	0
4/21/2024	12:00 PM	0	0	0	0	0	0	0	0	0	0	0	0	0
4/21/2024	12:15 PM	0	0	0	0	0	0	0	0	0	0	0	0	0
4/21/2024	12:30 PM	0	0	0	0	0	0	0	0	0	0	0	0	0
4/21/2024	12:45 PM	0	0	0	0	0	0	0	0	0	0	0	0	0
4/21/2024	1:00 PM	0	0	0	0	0	0	0	0	0	0	0	0	0
4/21/2024	1:15 PM	0	0	0	0	0	0	0	0	0	0	0	0	0
4/21/2024	1:30 PM	0	0	0	0	0	0	0	0	0	0	0	0	0
4/21/2024	1:45 PM	0	0	0	0	0	0	0	0	0	0	0	0	0
4/21/2024	2:00 PM	0	0	0	0	0	0	0	0	0	0	0	0	0
4/21/2024	2:15 PM	0	0	0	0	0	0	0	0	0	0	0	0	0
4/21/2024	2:30 PM	0	0	0	0	0	0	0	0	0	0	0	0	0
4/21/2024	2:45 PM	0	0	0	0	0	0	0	0	0	0	0	0	0
4/21/2024	3:00 PM	0	0	0	0	0	0	0	0	0	0	0	0	0
4/21/2024	3:15 PM	0	0	0	0	0	0	0	0	0	0	0	0	0
4/21/2024	3:30 PM	0	0	0	0	0	0	0	0	0	0	0	0	0
4/21/2024	3:45 PM	0	0	0	0	0	0	0	0	0	0	0	0	0
4/21/2024	4:00 PM	0	0	0	0	0	0	0	0	0	0	0	0	0
4/21/2024	4:15 PM	0	0	0	0	0	0	0	0	0	0	0	0	0
4/21/2024	4:30 PM	0	0	0	0	0	0	0	0	0	0	0	0	0
4/21/2024	4:45 PM	0	0	0	0	0	0	0	0	0	0	0	0	0
4/21/2024	5:00 PM	0	0	0	0	0	0	0	0	0	0	0	0	0
4/21/2024	5:15 PM	0	0	0	0	0	0	0	0	0	0	0	0	0
4/21/2024	5:30 PM	0	0	0	0	0	0	0	0	0	0	0	0	0
4/21/2024	5:45 PM	0	0	0	0	0	0	0	0	0	0	0	0	0
4/21/2024	6:00 PM	0	0	0	0	0	0	0	0	0	0	0	0	0
4/21/2024	6:15 PM	0	0	0	0	0	0	0	0	0	0	0	0	0
4/21/2024	6:30 PM	0	0	0	0	0	0	0	0	0	0	0	0	0
4/21/2024	6:45 PM	0	0	0	0	0	0	0	0	0	0	0	0	0
4/21/2024	7:00 PM	0	0	0	0	0	0	0	0	0	0	0	0	0
4/21/2024	7:15 PM	0	0	0	0	0	0	0	0	0	0	0	0	0
4/21/2024	7:30 PM	0	0	0	0	0	0	0	0	0	0	0	0	0
4/21/2024	7:45 PM	0	0	0	0	0	0	0	0	0	0	0	0	0
4/21/2024	8:00 PM	0	0	0	0	0	0	0	0	0	0	0	0	0
4/21/2024	8:15 PM	0	0	0	0	0	0	0	0	0	0	0	0	0
4/21/2024	8:30 PM	0	0	0	0	0	0	0	0	0	0	0	0	0
4/21/2024	8:45 PM	0	0	0	0	0	0	0	0	0	0	0	0	0
4/21/2024	9:00 PM	0	0	0	0	0	0	0	0	0	0	0	0	0
4/21/2024	9:15 PM	0	0	0	0	0	0	0	0	0	0	0	0	0
4/21/2024	9:30 PM	0	0	0	0	0	0	0	0	0	0	0	0	0
4/21/2024	9:45 PM	0	0	0	0	0	0	0	0	0	0	0	0	0
4/21/2024	10:00 PM	0	0	0	0	0	0	0	0	0	0	0	0	0
4/21/2024	10:15 PM	0	0	0	0	0	0	0	0	0	0	0	0	0
4/21/2024	10:30 PM	0	0	0	0	0	0	0	0	0	0	0	0	0
4/21/2024	10:45 PM	0	0	0	0	0	0	0	0	0	0	0	0	0
4/21/2024	11:00 PM	0	0	0	0	0	0	0	0	0	0	0	0	0
4/21/2024	11:15 PM	0	0	0	0	0	0	0	0	0	0	0	0	0
4/21/2024	11:30 PM	0	0	0	0	0	0	0	0	0	0	0	0	0
4/21/2024	11:45 PM	0	0	0	0	0	0	0	0	0	0	0	0	0

4/22/2024	12:00 AM	0	0	0	0	0	0	0	0	0	0	0	0	0
4/22/2024	12:15 AM	0	0	0	0	0	0	0	0	0	0	0	0	0
4/22/2024	12:30 AM	0	0	0	0	0	0	0	0	0	0	0	0	0
4/22/2024	12:45 AM	0	0	0	0	0	0	0	0	0	0	0	0	0
4/22/2024	1:00 AM	0	0	0	0	0	0	0	0	0	0	0	0	0
4/22/2024	1:15 AM	0	0	0	0	0	0	0	0	0	0	0	0	0
4/22/2024	1:30 AM	0	0	0	0	0	0	0	0	0	0	0	0	0
4/22/2024	1:45 AM	0	0	0	0	0	0	0	0	0	0	0	0	0
4/22/2024	2:00 AM	0	0	0	0	0	0	0	0	0	0	0	0	0
4/22/2024	2:15 AM	0	0	0	0	0	0	0	0	0	0	0	0	0
4/22/2024	2:30 AM	0	0	0	0	0	0	0	0	0	0	0	0	0
4/22/2024	2:45 AM	0	0	0	0	0	0	0	0	0	0	0	0	0
4/22/2024	3:00 AM	0	0	0	0	0	0	0	0	0	0	0	0	0
4/22/2024	3:15 AM	0	0	0	0	0	0	0	0	0	0	0	0	0
4/22/2024	3:30 AM	0	0	0	0	0	0	0	0	0	0	0	0	0
4/22/2024	3:45 AM	0	0	0	0	0	0	0	0	0	0	0	0	0
4/22/2024	4:00 AM	0	0	0	0	0	0	0	0	0	0	0	0	0
4/22/2024	4:15 AM	0	0	0	0	0	0	0	0	0	0	0	0	0
4/22/2024	4:30 AM	0	0	0	0	0	0	0	0	0	0	0	0	0
4/22/2024	4:45 AM	0	0	0	0	0	0	0	0	0	0	0	0	0
4/22/2024	5:00 AM	0	0	0	0	0	0	0	0	0	0	0	0	0
4/22/2024	5:15 AM	0	0	0	0	0	0	0	0	0	0	0	0	0
4/22/2024	5:30 AM	0	0	0	0	0	0	0	0	0	0	0	0	0
4/22/2024	5:45 AM	0	0	0	0	0	0	0	0	0	0	0	0	0
4/22/2024	6:00 AM	0	0	0	0	0	0	0	0	0	0	0	0	0
4/22/2024	6:15 AM	0	0	0	0	0	0	0	0	0	0	0	0	0
4/22/2024	6:30 AM	0	0	0	0	0	0	0	0	0	0	0	0	0
4/22/2024	6:45 AM	0	0	0	0	0	0	0	0	0	0	0	0	0
4/22/2024	7:00 AM	0	0	0	0	0	0	0	0	0	0	0	0	0
4/22/2024	7:15 AM	0	0	0	0	0	0	0	0	0	0	0	0	0
4/22/2024	7:30 AM	0	0	0	0	0	0	0	0	0	0	0	0	0
4/22/2024	7:45 AM	0	0	0	0	0	0	0	0	0	0	0	0	0
4/22/2024	8:00 AM	0	0	0	0	0	0	0	0	0	0	0	0	0
4/22/2024	8:15 AM	0	0	0	0	0	0	0	0	0	0	0	0	0
4/22/2024	8:30 AM	0	0	0	0	0	0	0	0	0	0	0	0	0
4/22/2024	8:45 AM	0	0	0	0	0	0	0	0	0	0	0	0	0
4/22/2024	9:00 AM	0	0	0	0	0	0	0	0	0	0	0	0	0
4/22/2024	9:15 AM	0	0	0	0	0	0	0	0	0	0	0	0	0
4/22/2024	9:30 AM	0	0	0	0	0	0	0	0	0	0	0	0	0
4/22/2024	9:45 AM	0	0	0	0	0	0	0	0	0	0	0	0	0
4/22/2024	10:00 AM	0	0	0	0	0	0	0	0	0	0	0	0	0
4/22/2024	10:15 AM	0	0	0	0	0	0	0	0	0	0	0	0	0
4/22/2024	10:30 AM	0	0	0	0	0	0	0	0	0	0	0	0	0
4/22/2024	10:45 AM	0	0	0	0	0	0	0	0	0	0	0	0	0
4/22/2024	11:00 AM	0	0	0	0	0	0	0	0	0	0	0	0	0
4/22/2024	11:15 AM	0	0	0	0	0	0	0	0	0	0	0	0	0
4/22/2024	11:30 AM	0	0	0	0	0	0	0	0	0	0	0	0	0
4/22/2024	11:45 AM	0	0	0	0	0	0	0	0	0	0	0	0	0
4/22/2024	12:00 PM	0	0	0	0	0	0	0	0	0	0	0	0	0
4/22/2024	12:15 PM	0	0	0	0	0	0	0	0	0	0	0	0	0
4/22/2024	12:30 PM	0	0	0	0	0	0	0	0	0	0	0	0	0
4/22/2024	12:45 PM	0	0	0	0	0	0	0	0	0	0	0	0	0
4/22/2024	1:00 PM	0	0	0	0	0	0	0	0	0	0	0	0	0
4/22/2024	1:15 PM	0	0	0	0	0	0	0	0	0	0	0	0	0
4/22/2024	1:30 PM	0	0	0	0	0	0	0	0	0	0	0	0	0
4/22/2024	1:45 PM	0	0	0	0	0	0	0	0	0	0	0	0	0
4/22/2024	2:00 PM	0	0	0	0	0	0	0	0	0	0	0	0	0
4/22/2024	2:15 PM	0	0	0	0	0	0	0	0	0	0	0	0	0
4/22/2024	2:30 PM	0	0	0	0	0	0	0	0	0	0	0	0	0
4/22/2024	2:45 PM	0	0	0	0	0	0	0	0	0	0	0	0	0
4/22/2024	3:00 PM	0	0	0	0	0	0	0	0	0	0	0	0	0
4/22/2024	3:15 PM	0	0	0	0	0	0	0	0	0	0	0	0	0
4/22/2024	3:30 PM	0	0	0	0	0	0	0	0	0	0	0	0	0
4/22/2024	3:45 PM	0	0	0	0	0	0	0	0	0	0	0	0	0
4/22/2024	4:00 PM	0	0	0	0	0	0	0	0	0	0	0	0	0
4/22/2024	4:15 PM	0	0	0	0	0	0	0	0	0	0	0	0	0
4/22/2024	4:30 PM	0	0	0	0	0	0	0	0	0	0	0	0	0
4/22/2024	4:45 PM	0	0	0	0	0	0	0	0	0	0	0	0	0
4/22/2024	5:00 PM	0	0	0	0	0	0	0	0	0	0	0	0	0
4/22/2024	5:15 PM	0	0	0	0	0	0	0	0	0	0	0	0	0
4/22/2024	5:30 PM	0	0	0	0	0	0	0	0	0	0	0	0	0
4/22/2024	5:45 PM	0	0	0	0	0	0	0	0	0	0	0	0	0
4/22/2024	6:00 PM	0	0	0	0	0	0	0	0	0	0	0	0	0
4/22/2024	6:15 PM	0	0	0	0	0	0	0	0	0	0	0	0	0
4/22/2024	6:30 PM	0	0	0	0	0	0	0	0	0	0	0	0	0
4/22/2024	6:45 PM	0	0	0	0	0	0	0	0	0	0	0	0	0
4/22/2024	7:00 PM	0	0	0	0	0	0	0	0	0	0	0	0	0
4/22/2024	7:15 PM	0	0	0	0	0	0	0	0	0	0	0	0	0
4/22/2024	7:30 PM	0	0	0	0	0	0	0	0	0	0	0	0	0
4/22/2024	7:45 PM	0	0	0	0	0	0	0	0	0	0	0	0	0
4/22/2024	8:00 PM	0	0	0	0	0	0	0	0	0	0	0	0	0
4/22/2024	8:15 PM	0	0	0	0	0	0	0	0	0	0	0	0	0
4/22/2024	8:30 PM	0	0	0	0	0	0	0	0	0	0	0	0	0
4/22/2024	8:45 PM	0	0	0	0	0	0	0	0	0	0	0	0	0
4/22/2024	9:00 PM	0	0	0	0	0	0	0	0	0	0	0	0	0
4/22/2024	9:15 PM	0	0	0	0	0	0	0	0	0	0	0	0	0
4/22/2024	9:30 PM	0	0	0	0	0	0	0	0	0	0	0	0	0
4/22/2024	9:45 PM	0	0	0	0	0	0	0	0	0	0	0	0	0
4/22/2024	10:00 PM	0	0	0	0	0	0	0	0	0	0	0	0	0
4/22/2024	10:15 PM	0	0	0	0	0	0	0	0	0	0	0	0	0
4/22/2024	10:30 PM	0	0	0	0	0	0	0	0	0	0	0	0	0
4/22/2024	10:45 PM	0	0	0	0	0	0	0	0	0	0	0	0	0
4/22/2024	11:00 PM	0	0	0	0	0	0	0	0	0	0	0	0	0
4/22/2024	11:15 PM	0	0	0	0	0	0	0	0	0	0	0	0	0
4/22/2024	11:30 PM	0	0	0	0	0	0	0	0	0	0	0	0	0
4/22/2024	11:45 PM	0	0	0	0	0	0	0	0	0	0	0	0	0

4/23/2024	12:00 AM	0	0	0	0	0	0	0	0	0	0	0	0	0
4/23/2024	12:15 AM	0	0	0	0	0	0	0	0	0	0	0	0	0
4/23/2024	12:30 AM	0	0	0	0	0	0	0	0	0	0	0	0	0
4/23/2024	12:45 AM	0	0	0	0	0	0	0	0	0	0	0	0	0
4/23/2024	1:00 AM	0	0	0	0	0	0	0	0	0	0	0	0	0
4/23/2024	1:15 AM	0	0	0	0	0	0	0	0	0	0	0	0	0
4/23/2024	1:30 AM	0	0	0	0	0	0	0	0	0	0	0	0	0
4/23/2024	1:45 AM	0	0	0	0	0	0	0	0	0	0	0	0	0
4/23/2024	2:00 AM	0	0	0	0	0	0	0	0	0	0	0	0	0
4/23/2024	2:15 AM	0	0	0	0	0	0	0	0	0	0	0	0	0
4/23/2024	2:30 AM	0	0	0	0	0	0	0	0	0	0	0	0	0
4/23/2024	2:45 AM	0	0	0	0	0	0	0	0	0	0	0	0	0
4/23/2024	3:00 AM	0	0	0	0	0	0	0	0	0	0	0	0	0
4/23/2024	3:15 AM	0	0	0	0	0	0	0	0	0	0	0	0	0
4/23/2024	3:30 AM	0	0	0	0	0	0	0	0	0	0	0	0	0
4/23/2024	3:45 AM	0	0	0	0	0	0	0	0	0	0	0	0	0
4/23/2024	4:00 AM	0	0	0	0	0	0	0	0	0	0	0	0	0
4/23/2024	4:15 AM	0	0	0	0	0	0	0	0	0	0	0	0	0
4/23/2024	4:30 AM	0	0	0	0	0	0	0	0	0	0	0	0	0
4/23/2024	4:45 AM	0	0	0	0	0	0	0	0	0	0	0	0	0
4/23/2024	5:00 AM	0	0	0	0	0	0	0	0	0	0	0	0	0
4/23/2024	5:15 AM	0	0	0	0	0	0	0	0	0	0	0	0	0
4/23/2024	5:30 AM	0	0	0	0	0	0	0	0	0	0	0	0	0
4/23/2024	5:45 AM	0	0	0	0	0	0	0	0	0	0	0	0	0
4/23/2024	6:00 AM	0	0	0	0	0	0	0	0	0	0	0	0	0
4/23/2024	6:15 AM	0	0	0	0	0	0	0	0	0	0	0	0	0
4/23/2024	6:30 AM	0	0	0	0	0	0	0	0	0	0	0	0	0
4/23/2024	6:45 AM	0	0	0	0	0	0	0	0	0	0	0	0	0
4/23/2024	7:00 AM	0	0	0	0	0	0	0	0	0	0	0	0	0
4/23/2024	7:15 AM	0	0	0	0	0	0	0	0	0	0	0	0	0
4/23/2024	7:30 AM	0	0	0	0	0	0	0	0	0	0	0	0	0
4/23/2024	7:45 AM	0	0	0	0	0	0	0	0	0	0	0	0	0
4/23/2024	8:00 AM	0	0	0	0	0	0	0	0	0	0	0	0	0
4/23/2024	8:15 AM	0	0	0	0	0	0	0	0	0	0	0	0	0
4/23/2024	8:30 AM	0	0	0	0	0	0	0	0	0	0	0	0	0
4/23/2024	8:45 AM	0	0	0	0	0	0	0	0	0	0	0	0	0
4/23/2024	9:00 AM	0	0	0	0	0	0	0	0	0	0	0	0	0
4/23/2024	9:15 AM	0	0	0	0	0	0	0	0	0	0	0	0	0
4/23/2024	9:30 AM	0	0	0	0	0	0	0	0	0	0	0	0	0
4/23/2024	9:45 AM	0	0	0	0	0	0	0	0	0	0	0	0	0
4/23/2024	10:00 AM	0	0	0	0	0	0	0	0	0	0	0	0	0
4/23/2024	10:15 AM	0	0	0	0	0	0	0	0	0	0	0	0	0
4/23/2024	10:30 AM	0	0	0	0	0	0	0	0	0	0	0	0	0
4/23/2024	10:45 AM	0	0	0	0	0	0	0	0	0	0	0	0	0
4/23/2024	11:00 AM	0	0	0	0	0	0	0	0	0	0	0	0	0
4/23/2024	11:15 AM	0	0	0	0	0	0	0	0	0	0	0	0	0
4/23/2024	11:30 AM	0	0	0	0	0	0	0	0	0	0	0	0	0
4/23/2024	11:45 AM	0	0	0	0	0	0	0	0	0	0	0	0	0
4/23/2024	12:00 PM	0	0	0	0	0	0	0	0	0	0	0	0	0
4/23/2024	12:15 PM	0	0	0	0	0	0	0	0	0	0	0	0	0
4/23/2024	12:30 PM	0	0	0	0	0	0	0	0	0	0	0	0	0
4/23/2024	12:45 PM	0	0	0	0	0	0	0	0	0	0	0	0	0
4/23/2024	1:00 PM	0	0	0	0	0	0	0	0	0	0	0	0	0
4/23/2024	1:15 PM	0	0	0	0	0	0	0	0	0	0	0	0	0
4/23/2024	1:30 PM	0	0	0	0	0	0	0	0	0	0	0	0	0
4/23/2024	1:45 PM	0	0	0	0	0	0	0	0	0	0	0	0	0
4/23/2024	2:00 PM	0	0	0	0	0	0	0	0	0	0	0	0	0
4/23/2024	2:15 PM	0	0	0	0	0	0	0	0	0	0	0	0	0
4/23/2024	2:30 PM	0	0	0	0	0	0	0	0	0	0	0	0	0
4/23/2024	2:45 PM	0	0	0	0	0	0	0	0	0	0	0	0	0
4/23/2024	3:00 PM	0	0	0	0	0	0	0	0	0	0	0	0	0
4/23/2024	3:15 PM	0	0	0	0	0	0	0	0	0	0	0	0	0
4/23/2024	3:30 PM	0	0	0	0	0	0	0	0	0	0	0	0	0
4/23/2024	3:45 PM	0	0	0	0	0	0	0	0	0	0	0	0	0
4/23/2024	4:00 PM	0	0	0	0	0	0	0	0	0	0	0	0	0
4/23/2024	4:15 PM	0	0	0	0	0	0	0	0	0	0	0	0	0
4/23/2024	4:30 PM	0	0	0	0	0	0	0	0	0	0	0	0	0
4/23/2024	4:45 PM	0	0	0	0	0	0	0	0	0	0	0	0	0
4/23/2024	5:00 PM	0	0	0	0	0	0	0	0	0	0	0	0	0
4/23/2024	5:15 PM	0	0	0	0	0	0	0	0	0	0	0	0	0
4/23/2024	5:30 PM	0	0	0	0	0	0	0	0	0	0	0	0	0
4/23/2024	5:45 PM	0	0	0	0	0	0	0	0	0	0	0	0	0
4/23/2024	6:00 PM	0	0	0	0	0	0	0	0	0	0	0	0	0
4/23/2024	6:15 PM	0	0	0	0	0	0	0	0	0	0	0	0	0
4/23/2024	6:30 PM	0	0	0	0	0	0	0	0	0	0	0	0	0
4/23/2024	6:45 PM	0	0	0	0	0	0	0	0	0	0	0	0	0
4/23/2024	7:00 PM	0	0	0	0	0	0	0	0	0	0	0	0	0
4/23/2024	7:15 PM	0	0	0	0	0	0	0	0	0	0	0	0	0
4/23/2024	7:30 PM	0	0	0	0	0	0	0	0	0	0	0	0	0
4/23/2024	7:45 PM	0	0	0	0	0	0	0	0	0	0	0	0	0
4/23/2024	8:00 PM	0	0	0	0	0	0	0	0	0	0	0	0	0
4/23/2024	8:15 PM	0	0	0	0	0	0	0	0	0	0	0	0	0
4/23/2024	8:30 PM	0	0	0	0	0	0	0	0	0	0	0	0	0
4/23/2024	8:45 PM	0	0	0	0	0	0	0	0	0	0	0	0	0
4/23/2024	9:00 PM	0	0	0	0	0	0	0	0	0	0	0	0	0
4/23/2024	9:15 PM	0	0	0	0	0	0	0	0	0	0	0	0	0
4/23/2024	9:30 PM	0	0	0	0	0	0	0	0	0	0	0	0	0
4/23/2024	9:45 PM	0	0	0	0	0	0	0	0	0	0	0	0	0
4/23/2024	10:00 PM	0	0	0	0	0	0	0	0	0	0	0	0	0
4/23/2024	10:15 PM	0	0	0	0	0	0	0	0	0	0	0	0	0
4/23/2024	10:30 PM	0	0	0	0	0	0	0	0	0	0	0	0	0
4/23/2024	10:45 PM	0	0	0	0	0	0	0	0	0	0	0	0	0
4/23/2024	11:00 PM	0	0	0	0	0	0	0	0	0	0	0	0	0
4/23/2024	11:15 PM	0	0	0	0	0	0	0	0	0	0	0	0	0
4/23/2024	11:30 PM	0	0	0	0	0	0	0	0	0	0	0	0	0
4/23/2024	11:45 PM	0	0	0	0	0	0	0	0	0	0	0	0	0

4/24/2024	12:00 AM	0	0	0	0	0	0	0	0	0	0	0	0	0
4/24/2024	12:15 AM	0	0	0	0	0	0	0	0	0	0	0	0	0
4/24/2024	12:30 AM	0	0	0	0	0	0	0	0	0	0	0	0	0
4/24/2024	12:45 AM	0	0	0	0	0	0	0	0	0	0	0	0	0
4/24/2024	1:00 AM	0	0	0	0	0	0	0	0	0	0	0	0	0
4/24/2024	1:15 AM	0	0	0	0	0	0	0	0	0	0	0	0	0
4/24/2024	1:30 AM	0	0	0	0	0	0	0	0	0	0	0	0	0
4/24/2024	1:45 AM	0	0	0	0	0	0	0	0	0	0	0	0	0
4/24/2024	2:00 AM	0	0	0	0	0	0	0	0	0	0	0	0	0
4/24/2024	2:15 AM	0	0	0	0	0	0	0	0	0	0	0	0	0
4/24/2024	2:30 AM	0	0	0	0	0	0	0	0	0	0	0	0	0
4/24/2024	2:45 AM	0	0	0	0	0	0	0	0	0	0	0	0	0
4/24/2024	3:00 AM	0	0	0	0	0	0	0	0	0	0	0	0	0
4/24/2024	3:15 AM	0	0	0	0	0	0	0	0	0	0	0	0	0
4/24/2024	3:30 AM	0	0	0	0	0	0	0	0	0	0	0	0	0
4/24/2024	3:45 AM	0	0	0	0	0	0	0	0	0	0	0	0	0
4/24/2024	4:00 AM	0	0	0	0	0	0	0	0	0	0	0	0	0
4/24/2024	4:15 AM	0	0	0	0	0	0	0	0	0	0	0	0	0
4/24/2024	4:30 AM	0	0	0	0	0	0	0	0	0	0	0	0	0
4/24/2024	4:45 AM	0	0	0	0	0	0	0	0	0	0	0	0	0
4/24/2024	5:00 AM	0	0	0	0	0	0	0	0	0	0	0	0	0
4/24/2024	5:15 AM	0	0	0	0	0	0	0	0	0	0	0	0	0
4/24/2024	5:30 AM	0	0	0	0	0	0	0	0	0	0	0	0	0
4/24/2024	5:45 AM	0	0	0	0	0	0	0	0	0	0	0	0	0
4/24/2024	6:00 AM	0	0	0	0	0	0	0	0	0	0	0	0	0
4/24/2024	6:15 AM	0	0	0	0	0	0	0	0	0	0	0	0	0
4/24/2024	6:30 AM	0	0	0	0	0	0	0	0	0	0	0	0	0
4/24/2024	6:45 AM	0	0	0	0	0	0	0	0	0	0	0	0	0
4/24/2024	7:00 AM	0	0	0	0	0	0	0	0	0	0	0	0	0
4/24/2024	7:15 AM	0	0	0	0	0	0	0	0	0	0	0	0	0
4/24/2024	7:30 AM	0	0	0	0	0	0	0	0	0	0	0	0	0
4/24/2024	7:45 AM	0	0	0	0	0	0	0	0	0	0	0	0	0
4/24/2024	8:00 AM	0	0	0	0	0	0	0	0	0	0	0	0	0
4/24/2024	8:15 AM	0	0	0	0	0	0	0	0	0	0	0	0	0
4/24/2024	8:30 AM	0	0	0	0	0	0	0	0	0	0	0	0	0
4/24/2024	8:45 AM	0	0	0	0	0	0	0	0	0	0	0	0	0
4/24/2024	9:00 AM	0	0	0	0	0	0	0	0	0	0	0	0	0
4/24/2024	9:15 AM	0	0	0	0	0	0	0	0	0	0	0	0	0
4/24/2024	9:30 AM	0	0	0	0	0	0	0	0	0	0	0	0	0
4/24/2024	9:45 AM	0	0	0	0	0	0	0	0	0	0	0	0	0
4/24/2024	10:00 AM	0	0	0	0	0	0	0	0	0	0	0	0	0
4/24/2024	10:15 AM	0	0	0	0	0	0	0	0	0	0	0	0	0
4/24/2024	10:30 AM	0	0	0	0	0	0	0	0	0	0	0	0	0
4/24/2024	10:45 AM	0	0	0	0	0	0	0	0	0	0	0	0	0
4/24/2024	11:00 AM	0	0	0	0	0	0	0	0	0	0	0	0	0
4/24/2024	11:15 AM	0	0	0	0	0	0	0	0	0	0	0	0	0
4/24/2024	11:30 AM	0	0	0	0	0	0	0	0	0	0	0	0	0
4/24/2024	11:45 AM	0	0	0	0	0	0	0	0	0	0	0	0	0
4/24/2024	12:00 PM	0	0	0	0	0	0	0	0	0	0	0	0	0
4/24/2024	12:15 PM	0	0	0	0	0	0	0	0	0	0	0	0	0
4/24/2024	12:30 PM	0	0	0	0	0	0	0	0	0	0	0	0	0
4/24/2024	12:45 PM	0	0	0	0	0	0	0	0	0	0	0	0	0
4/24/2024	1:00 PM	0	0	0	0	0	0	0	0	0	0	0	0	0
4/24/2024	1:15 PM	0	0	0	0	0	0	0	0	0	0	0	0	0
4/24/2024	1:30 PM	0	0	0	0	0	0	0	0	0	0	0	0	0
4/24/2024	1:45 PM	0	0	0	0	0	0	0	0	0	0	0	0	0
4/24/2024	2:00 PM	0	0	0	0	0	0	0	0	0	0	0	0	0
4/24/2024	2:15 PM	0	0	0	0	0	0	0	0	0	0	0	0	0
4/24/2024	2:30 PM	0	0	0	0	0	0	0	0	0	0	0	0	0
4/24/2024	2:45 PM	0	0	0	0	0	0	0	0	0	0	0	0	0
4/24/2024	3:00 PM	0	0	0	0	0	0	0	0	0	0	0	0	0
4/24/2024	3:15 PM	0	0	0	0	0	0	0	0	0	0	0	0	0
4/24/2024	3:30 PM	0	0	0	0	0	0	0	0	0	0	0	0	0
4/24/2024	3:45 PM	0	0	0	0	0	0	0	0	0	0	0	0	0
4/24/2024	4:00 PM	0	0	0	0	0	0	0	0	0	0	0	0	0
4/24/2024	4:15 PM	0	0	0	0	0	0	0	0	0	0	0	0	0
4/24/2024	4:30 PM	0	0	0	0	0	0	0	0	0	0	0	0	0
4/24/2024	4:45 PM	0	0	0	0	0	0	0	0	0	0	0	0	0
4/24/2024	5:00 PM	0	0	0	0	0	0	0	0	0	0	0	0	0
4/24/2024	5:15 PM	0	0	0	0	0	0	0	0	0	0	0	0	0
4/24/2024	5:30 PM	0	0	0	0	0	0	0	0	0	0	0	0	0
4/24/2024	5:45 PM	0	0	0	0	0	0	0	0	0	0	0	0	0
4/24/2024	6:00 PM	0	0	0	0	0	0	0	0	0	0	0	0	0
4/24/2024	6:15 PM	0	0	0	0	0	0	0	0	0	0	0	0	0
4/24/2024	6:30 PM	0	0	0	0	0	0	0	0	0	0	0	0	0
4/24/2024	6:45 PM	0	0	0	0	0	0	0	0	0	0	0	0	0
4/24/2024	7:00 PM	0	0	0	0	0	0	0	0	0	0	0	0	0
4/24/2024	7:15 PM	0	0	0	0	0	0	0	0	0	0	0	0	0
4/24/2024	7:30 PM	0	0	0	0	0	0	0	0	0	0	0	0	0
4/24/2024	7:45 PM	0	0	0	0	0	0	0	0	0	0	0	0	0
4/24/2024	8:00 PM	0	0	0	0	0	0	0	0	0	0	0	0	0
4/24/2024	8:15 PM	0	0	0	0	0	0	0	0	0	0	0	0	0
4/24/2024	8:30 PM	0	0	0	0	0	0	0	0	0	0	0	0	0
4/24/2024	8:45 PM	0	0	0	0	0	0	0	0	0	0	0	0	0
4/24/2024	9:00 PM	0	0	0	0	0	0	0	0	0	0	0	0	0
4/24/2024	9:15 PM	0	0	0	0	0	0	0	0	0	0	0	0	0
4/24/2024	9:30 PM	0	0	0	0	0	0	0	0	0	0	0	0	0
4/24/2024	9:45 PM	0	0	0	0	0	0	0	0	0	0	0	0	0
4/24/2024	10:00 PM	0	0	0	0	0	0	0	0	0	0	0	0	0
4/24/2024	10:15 PM	0	0	0	0	0	0	0	0	0	0	0	0	0
4/24/2024	10:30 PM	0	0	0	0	0	0	0	0	0	0	0	0	0
4/24/2024	10:45 PM	0	0	0	0	0	0	0	0	0	0	0	0	0
4/24/2024	11:00 PM	0	0	0	0	0	0	0	0	0	0	0	0	0
4/24/2024	11:15 PM	0	0	0	0	0	0	0	0	0	0	0	0	0
4/24/2024	11:30 PM	0	0	0	0	0	0	0	0	0	0	0	0	0
4/24/2024	11:45 PM	0	0	0	0	0	0	0	0	0	0	0	0	0

4/25/2024	12:00 AM	0	0	0	0	0	0	0	0	0	0	0	0	0
4/25/2024	12:15 AM	0	0	0	0	0	0	0	0	0	0	0	0	0
4/25/2024	12:30 AM	0	0	0	0	0	0	0	0	0	0	0	0	0
4/25/2024	12:45 AM	0	0	0	0	0	0	0	0	0	0	0	0	0
4/25/2024	1:00 AM	0	0	0	0	0	0	0	0	0	0	0	0	0
4/25/2024	1:15 AM	0	0	0	0	0	0	0	0	0	0	0	0	0
4/25/2024	1:30 AM	0	0	0	0	0	0	0	0	0	0	0	0	0
4/25/2024	1:45 AM	0	0	0	0	0	0	0	0	0	0	0	0	0
4/25/2024	2:00 AM	0	0	0	0	0	0	0	0	0	0	0	0	0
4/25/2024	2:15 AM	0	0	0	0	0	0	0	0	0	0	0	0	0
4/25/2024	2:30 AM	0	0	0	0	0	0	0	0	0	0	0	0	0
4/25/2024	2:45 AM	0	0	0	0	0	0	0	0	0	0	0	0	0
4/25/2024	3:00 AM	0	0	0	0	0	0	0	0	0	0	0	0	0
4/25/2024	3:15 AM	0	0	0	0	0	0	0	0	0	0	0	0	0
4/25/2024	3:30 AM	0	0	0	0	0	0	0	0	0	0	0	0	0
4/25/2024	3:45 AM	0	0	0	0	0	0	0	0	0	0	0	0	0
4/25/2024	4:00 AM	0	0	0	0	0	0	0	0	0	0	0	0	0
4/25/2024	4:15 AM	0	0	0	0	0	0	0	0	0	0	0	0	0
4/25/2024	4:30 AM	0	0	0	0	0	0	0	0	0	0	0	0	0
4/25/2024	4:45 AM	0	0	0	0	0	0	0	0	0	0	0	0	0
4/25/2024	5:00 AM	0	0	0	0	0	0	0	0	0	0	0	0	0
4/25/2024	5:15 AM	0	0	0	0	0	0	0	0	0	0	0	0	0
4/25/2024	5:30 AM	0	0	0	0	0	0	0	0	0	0	0	0	0
4/25/2024	5:45 AM	0	0	0	0	0	0	0	0	0	0	0	0	0
4/25/2024	6:00 AM	0	0	0	0	0	0	0	0	0	0	0	0	0
4/25/2024	6:15 AM	0	0	0	0	0	0	0	0	0	0	0	0	0
4/25/2024	6:30 AM	0	0	0	0	0	0	0	0	0	0	0	0	0
4/25/2024	6:45 AM	0	0	0	0	0	0	0	0	0	0	0	0	0
4/25/2024	7:00 AM	0	0	0	0	0	0	0	0	0	0	0	0	0
4/25/2024	7:15 AM	0	0	0	0	0	0	0	0	0	0	0	0	0
4/25/2024	7:30 AM	0	0	0	0	0	0	0	0	0	0	0	0	0
4/25/2024	7:45 AM	0	0	0	0	0	0	0	0	0	0	0	0	0
4/25/2024	8:00 AM	0	0	0	0	0	0	0	0	0	0	0	0	0
4/25/2024	8:15 AM	0	0	0	0	0	0	0	0	0	0	0	0	0
4/25/2024	8:30 AM	0	0	0	0	0	0	0	0	0	0	0	0	0
4/25/2024	8:45 AM	0	0	0	0	0	0	0	0	0	0	0	0	0
4/25/2024	9:00 AM	0	0	0	0	0	0	0	0	0	0	0	0	0
4/25/2024	9:15 AM	0	0	0	0	0	0	0	0	0	0	0	0	0
4/25/2024	9:30 AM	0	0	0	0	0	0	0	0	0	0	0	0	0
4/25/2024	9:45 AM	0	0	0	0	0	0	0	0	0	0	0	0	0
4/25/2024	10:00 AM	0	0	0	0	0	0	0	0	0	0	0	0	0
4/25/2024	10:15 AM	0	0	0	0	0	0	0	0	0	0	0	0	0
4/25/2024	10:30 AM	0	0	0	0	0	0	0	0	0	0	0	0	0
4/25/2024	10:45 AM	0	0	0	0	0	0	0	0	0	0	0	0	0
4/25/2024	11:00 AM	0	0	0	0	0	0	0	0	0	0	0	0	0
4/25/2024	11:15 AM	0	0	0	0	0	0	0	0	0	0	0	0	0
4/25/2024	11:30 AM	0	0	0	0	0	0	0	0	0	0	0	0	0
4/25/2024	11:45 AM	0	0	0	0	0	0	0	0	0	0	0	0	0
4/25/2024	12:00 PM	0	0	0	0	0	0	0	0	0	0	0	0	0
4/25/2024	12:15 PM	0	0	0	0	0	0	0	0	0	0	0	0	0
4/25/2024	12:30 PM	0	0	0	0	0	0	0	0	0	0	0	0	0
4/25/2024	12:45 PM	0	0	0	0	0	0	0	0	0	0	0	0	0
4/25/2024	1:00 PM	0	0	0	0	0	0	0	0	0	0	0	0	0
4/25/2024	1:15 PM	0	0	0	0	0	0	0	0	0	0	0	0	0
4/25/2024	1:30 PM	0	0	0	0	0	0	0	0	0	0	0	0	0
4/25/2024	1:45 PM	0	0	0	0	0	0	0	0	0	0	0	0	0
4/25/2024	2:00 PM	0	0	0	0	0	0	0	0	0	0	0	0	0
4/25/2024	2:15 PM	0	0	0	0	0	0	0	0	0	0	0	0	0
4/25/2024	2:30 PM	0	0	0	0	0	0	0	0	0	0	0	0	0
4/25/2024	2:45 PM	0	0	0	0	0	0	0	0	0	0	0	0	0
4/25/2024	3:00 PM	0	0	0	0	0	0	0	0	0	0	0	0	0
4/25/2024	3:15 PM	0	0	0	0	0	0	0	0	0	0	0	0	0
4/25/2024	3:30 PM	0	0	0	0	0	0	0	0	0	0	0	0	0
4/25/2024	3:45 PM	0	0	0	0	0	0	0	0	0	0	0	0	0
4/25/2024	4:00 PM	0	0	0	0	0	0	0	0	0	0	0	0	0
4/25/2024	4:15 PM	0	0	0	0	0	0	0	0	0	0	0	0	0
4/25/2024	4:30 PM	0	0	0	0	0	0	0	0	0	0	0	0	0
4/25/2024	4:45 PM	0	0	0	0	0	0	0	0	0	0	0	0	0
4/25/2024	5:00 PM	0	0	0	0	0	0	0	0	0	0	0	0	0
4/25/2024	5:15 PM	0	0	0	0	0	0	0	0	0	0	0	0	0
4/25/2024	5:30 PM	0	0	0	0	0	0	0	0	0	0	0	0	0
4/25/2024	5:45 PM	0	0	0	0	0	0	0	0	0	0	0	0	0
4/25/2024	6:00 PM	0	0	0	0	0	0	0	0	0	0	0	0	0
4/25/2024	6:15 PM	0	0	0	0	0	0	0	0	0	0	0	0	0
4/25/2024	6:30 PM	0	0	0	0	0	0	0	0	0	0	0	0	0
4/25/2024	6:45 PM	0	0	0	0	0	0	0	0	0	0	0	0	0
4/25/2024	7:00 PM	0	0	0	0	0	0	0	0	0	0	0	0	0
4/25/2024	7:15 PM	0	0	0	0	0	0	0	0	0	0	0	0	0
4/25/2024	7:30 PM	0	0	0	0	0	0	0	0	0	0	0	0	0
4/25/2024	7:45 PM	0	0	0	0	0	0	0	0	0	0	0	0	0
4/25/2024	8:00 PM	0	0	0	0	0	0	0	0	0	0	0	0	0
4/25/2024	8:15 PM	0	0	0	0	0	0	0	0	0	0	0	0	0
4/25/2024	8:30 PM	0	0	0	0	0	0	0	0	0	0	0	0	0
4/25/2024	8:45 PM	0	0	0	0	0	0	0	0	0	0	0	0	0
4/25/2024	9:00 PM	0	0	0	0	0	0	0	0	0	0	0	0	0
4/25/2024	9:15 PM	0	0	0	0	0	0	0	0	0	0	0	0	0
4/25/2024	9:30 PM	0	0	0	0	0	0	0	0	0	0	0	0	0
4/25/2024	9:45 PM	0	0	0	0	0	0	0	0	0	0	0	0	0
4/25/2024	10:00 PM	0	0	0	0	0	0	0	0	0	0	0	0	0
4/25/2024	10:15 PM	0	0	0	0	0	0	0	0	0	0	0	0	0
4/25/2024	10:30 PM	0	0	0	0	0	0	0	0	0	0	0	0	0
4/25/2024	10:45 PM	0	0	0	0	0	0	0	0	0	0	0	0	0
4/25/2024	11:00 PM	0	0	0	0	0	0	0	0	0	0	0	0	0
4/25/2024	11:15 PM	0	0	0	0	0	0	0	0	0	0	0	0	0
4/25/2024	11:30 PM	0	0	0	0	0	0	0	0	0	0	0	0	0
4/25/2024	11:45 PM	0	0	0	0	0	0	0	0	0	0	0	0	0

4/26/2024	12:00 AM	0	0	0	0	0	0	0	0	0	0	0	0	0
4/26/2024	12:15 AM	0	0	0	0	0	0	0	0	0	0	0	0	0
4/26/2024	12:30 AM	0	0	0	0	0	0	0	0	0	0	0	0	0
4/26/2024	12:45 AM	0	0	0	0	0	0	0	0	0	0	0	0	0
4/26/2024	1:00 AM	0	0	0	0	0	0	0	0	0	0	0	0	0
4/26/2024	1:15 AM	0	0	0	0	0	0	0	0	0	0	0	0	0
4/26/2024	1:30 AM	0	0	0	0	0	0	0	0	0	0	0	0	0
4/26/2024	1:45 AM	0	0	0	0	0	0	0	0	0	0	0	0	0
4/26/2024	2:00 AM	0	0	0	0	0	0	0	0	0	0	0	0	0
4/26/2024	2:15 AM	0	0	0	0	0	0	0	0	0	0	0	0	0
4/26/2024	2:30 AM	0	0	0	0	0	0	0	0	0	0	0	0	0
4/26/2024	2:45 AM	0	0	0	0	0	0	0	0	0	0	0	0	0
4/26/2024	3:00 AM	0	0	0	0	0	0	0	0	0	0	0	0	0
4/26/2024	3:15 AM	0	0	0	0	0	0	0	0	0	0	0	0	0
4/26/2024	3:30 AM	0	0	0	0	0	0	0	0	0	0	0	0	0
4/26/2024	3:45 AM	0	0	0	0	0	0	0	0	0	0	0	0	0
4/26/2024	4:00 AM	0	0	0	0	0	0	0	0	0	0	0	0	0
4/26/2024	4:15 AM	0	0	0	0	0	0	0	0	0	0	0	0	0
4/26/2024	4:30 AM	0	0	0	0	0	0	0	0	0	0	0	0	0
4/26/2024	4:45 AM	0	0	0	0	0	0	0	0	0	0	0	0	0
4/26/2024	5:00 AM	0	0	0	0	0	0	0	0	0	0	0	0	0
4/26/2024	5:15 AM	0	0	0	0	0	0	0	0	0	0	0	0	0
4/26/2024	5:30 AM	0	0	0	0	0	0	0	0	0	0	0	0	0
4/26/2024	5:45 AM	0	0	0	0	0	0	0	0	0	0	0	0	0
4/26/2024	6:00 AM	0	0	0	0	0	0	0	0	0	0	0	0	0
4/26/2024	6:15 AM	0	0	0	0	0	0	0	0	0	0	0	0	0
4/26/2024	6:30 AM	0	0	0	0	0	0	0	0	0	0	0	0	0
4/26/2024	6:45 AM	0	0	0	0	0	0	0	0	0	0	0	0	0
4/26/2024	7:00 AM	0	0	0	0	0	0	0	0	0	0	0	0	0
4/26/2024	7:15 AM	0	0	0	0	0	0	0	0	0	0	0	0	0
4/26/2024	7:30 AM	0	0	0	0	0	0	0	0	0	0	0	0	0
4/26/2024	7:45 AM	0	0	0	0	0	0	0	0	0	0	0	0	0
4/26/2024	8:00 AM	0	0	0	0	0	0	0	0	0	0	0	0	0
4/26/2024	8:15 AM	0	0	0	0	0	0	0	0	0	0	0	0	0
4/26/2024	8:30 AM	0	0	0	0	0	0	0	0	0	0	0	0	0
4/26/2024	8:45 AM	0	0	0	0	0	0	0	0	0	0	0	0	0
4/26/2024	9:00 AM	0	0	0	0	0	0	0	0	0	0	0	0	0
4/26/2024	9:15 AM	0	0	0	0	0	0	0	0	0	0	0	0	0
4/26/2024	9:30 AM	0	0	0	0	0	0	0	0	0	0	0	0	0
4/26/2024	9:45 AM	0	0	0	0	0	0	0	0	0	0	0	0	0
4/26/2024	10:00 AM	0	0	0	0	0	0	0	0	0	0	0	0	0
4/26/2024	10:15 AM	0	0	0	0	0	0	0	0	0	0	0	0	0
4/26/2024	10:30 AM	0	0	0	0	0	0	0	0	0	0	0	0	0
4/26/2024	10:45 AM	0	0	0	0	0	0	0	0	0	0	0	0	0
4/26/2024	11:00 AM	0	0	0	0	0	0	0	0	0	0	0	0	0
4/26/2024	11:15 AM	0	0	0	0	0	0	0	0	0	0	0	0	0
4/26/2024	11:30 AM	0	0	0	0	0	0	0	0	0	0	0	0	0
4/26/2024	11:45 AM	0	0	0	0	0	0	0	0	0	0	0	0	0
4/26/2024	12:00 PM	0	0	0	0	0	0	0	0	0	0	0	0	0
4/26/2024	12:15 PM	0	0	0	0	0	0	0	0	0	0	0	0	0
4/26/2024	12:30 PM	0	0	0	0	0	0	0	0	0	0	0	0	0
4/26/2024	12:45 PM	0	0	0	0	0	0	0	0	0	0	0	0	0
4/26/2024	1:00 PM	0	0	0	0	0	0	0	0	0	0	0	0	0
4/26/2024	1:15 PM	0	0	0	0	0	0	0	0	0	0	0	0	0
4/26/2024	1:30 PM	0	0	0	0	0	0	0	0	0	0	0	0	0
4/26/2024	1:45 PM	0	0	0	0	0	0	0	0	0	0	0	0	0
4/26/2024	2:00 PM	0	0	0	0	0	0	0	0	0	0	0	0	0
4/26/2024	2:15 PM	0	0	0	0	0	0	0	0	0	0	0	0	0
4/26/2024	2:30 PM	0	0	0	0	0	0	0	0	0	0	0	0	0
4/26/2024	2:45 PM	0	0	0	0	0	0	0	0	0	0	0	0	0
4/26/2024	3:00 PM	0	0	0	0	0	0	0	0	0	0	0	0	0
4/26/2024	3:15 PM	0	0	0	0	0	0	0	0	0	0	0	0	0
4/26/2024	3:30 PM	0	0	0	0	0	0	0	0	0	0	0	0	0
4/26/2024	3:45 PM	0	0	0	0	0	0	0	0	0	0	0	0	0
4/26/2024	4:00 PM	0	0	0	0	0	0	0	0	0	0	0	0	0
4/26/2024	4:15 PM	0	0	0	0	0	0	0	0	0	0	0	0	0
4/26/2024	4:30 PM	0	0	0	0	0	0	0	0	0	0	0	0	0
4/26/2024	4:45 PM	0	0	0	0	0	0	0	0	0	0	0	0	0
4/26/2024	5:00 PM	0	0	0	0	0	0	0	0	0	0	0	0	0
4/26/2024	5:15 PM	0	0	0	0	0	0	0	0	0	0	0	0	0
4/26/2024	5:30 PM	0	0	0	0	0	0	0	0	0	0	0	0	0
4/26/2024	5:45 PM	0	0	0	0	0	0	0	0	0	0	0	0	0
4/26/2024	6:00 PM	0	0	0	0	0	0	0	0	0	0	0	0	0
4/26/2024	6:15 PM	0	0	0	0	0	0	0	0	0	0	0	0	0
4/26/2024	6:30 PM	0	0	0	0	0	0	0	0	0	0	0	0	0
4/26/2024	6:45 PM	0	0	0	0	0	0	0	0	0	0	0	0	0
4/26/2024	7:00 PM	0	0	0	0	0	0	0	0	0	0	0	0	0
4/26/2024	7:15 PM	0	0	0	0	0	0	0	0	0	0	0	0	0
4/26/2024	7:30 PM	0	0	0	0	0	0	0	0	0	0	0	0	0
4/26/2024	7:45 PM	0	0	0	0	0	0	0	0	0	0	0	0	0
4/26/2024	8:00 PM	0	0	0	0	0	0	0	0	0	0	0	0	0
4/26/2024	8:15 PM	0	0	0	0	0	0	0	0	0	0	0	0	0
4/26/2024	8:30 PM	0	0	0	0	0	0	0	0	0	0	0	0	0
4/26/2024	8:45 PM	0	0	0	0	0	0	0	0	0	0	0	0	0
4/26/2024	9:00 PM	0	0	0	0	0	0	0	0	0	0	0	0	0
4/26/2024	9:15 PM	0	0	0	0	0	0	0	0	0	0	0	0	0
4/26/2024	9:30 PM	0	0	0	0	0	0	0	0	0	0	0	0	0
4/26/2024	9:45 PM	0	0	0	0	0	0	0	0	0	0	0	0	0
4/26/2024	10:00 PM	0	0	0	0	0	0	0	0	0	0	0	0	0
4/26/2024	10:15 PM	0	0	0	0	0	0	0	0	0	0	0	0	0
4/26/2024	10:30 PM	0	0	0	0	0	0	0	0	0	0	0	0	0
4/26/2024	10:45 PM	0	0	0	0	0	0	0	0	0	0	0	0	0
4/26/2024	11:00 PM	0	0	0	0	0	0	0	0	0	0	0	0	0
4/26/2024	11:15 PM	0	0	0	0	0	0	0	0	0	0	0	0	0
4/26/2024	11:30 PM	0	0	0	0	0	0	0	0	0	0	0	0	0
4/26/2024	11:45 PM	0	0	0	0	0	0	0	0	0	0	0	0	0

4/27/2024	12:00 AM	0	0	0	0	0	0	0	0	0	0	0	0	0
4/27/2024	12:15 AM	0	0	0	0	0	0	0	0	0	0	0	0	0
4/27/2024	12:30 AM	0	0	0	0	0	0	0	0	0	0	0	0	0
4/27/2024	12:45 AM	0	0	0	0	0	0	0	0	0	0	0	0	0
4/27/2024	1:00 AM	0	0	0	0	0	0	0	0	0	0	0	0	0
4/27/2024	1:15 AM	0	0	0	0	0	0	0	0	0	0	0	0	0
4/27/2024	1:30 AM	0	0	0	0	0	0	0	0	0	0	0	0	0
4/27/2024	1:45 AM	0	0	0	0	0	0	0	0	0	0	0	0	0
4/27/2024	2:00 AM	0	0	0	0	0	0	0	0	0	0	0	0	0
4/27/2024	2:15 AM	0	0	0	0	0	0	0	0	0	0	0	0	0
4/27/2024	2:30 AM	0	0	0	0	0	0	0	0	0	0	0	0	0
4/27/2024	2:45 AM	0	0	0	0	0	0	0	0	0	0	0	0	0
4/27/2024	3:00 AM	0	0	0	0	0	0	0	0	0	0	0	0	0
4/27/2024	3:15 AM	0	0	0	0	0	0	0	0	0	0	0	0	0
4/27/2024	3:30 AM	0	0	0	0	0	0	0	0	0	0	0	0	0
4/27/2024	3:45 AM	0	0	0	0	0	0	0	0	0	0	0	0	0
4/27/2024	4:00 AM	0	0	0	0	0	0	0	0	0	0	0	0	0
4/27/2024	4:15 AM	0	0	0	0	0	0	0	0	0	0	0	0	0
4/27/2024	4:30 AM	0	0	0	0	0	0	0	0	0	0	0	0	0
4/27/2024	4:45 AM	0	0	0	0	0	0	0	0	0	0	0	0	0
4/27/2024	5:00 AM	0	0	0	0	0	0	0	0	0	0	0	0	0
4/27/2024	5:15 AM	0	0	0	0	0	0	0	0	0	0	0	0	0
4/27/2024	5:30 AM	0	0	0	0	0	0	0	0	0	0	0	0	0
4/27/2024	5:45 AM	0	0	0	0	0	0	0	0	0	0	0	0	0
4/27/2024	6:00 AM	0	0	0	0	0	0	0	0	0	0	0	0	0
4/27/2024	6:15 AM	0	0	0	0	0	0	0	0	0	0	0	0	0
4/27/2024	6:30 AM	0	0	0	0	0	0	0	0	0	0	0	0	0
4/27/2024	6:45 AM	0	0	0	0	0	0	0	0	0	0	0	0	0
4/27/2024	7:00 AM	0	0	0	0	0	0	0	0	0	0	0	0	0
4/27/2024	7:15 AM	0	0	0	0	0	0	0	0	0	0	0	0	0
4/27/2024	7:30 AM	0	0	0	0	0	0	0	0	0	0	0	0	0
4/27/2024	7:45 AM	0	0	0	0	0	0	0	0	0	0	0	0	0
4/27/2024	8:00 AM	0	0	0	0	0	0	0	0	0	0	0	0	0
4/27/2024	8:15 AM	0	0	0	0	0	0	0	0	0	0	0	0	0
4/27/2024	8:30 AM	0	0	0	0	0	0	0	0	0	0	0	0	0
4/27/2024	8:45 AM	0	0	0	0	0	0	0	0	0	0	0	0	0
4/27/2024	9:00 AM	0	0	0	0	0	0	0	0	0	0	0	0	0
4/27/2024	9:15 AM	0	0	0	0	0	0	0	0	0	0	0	0	0
4/27/2024	9:30 AM	0	0	0	0	0	0	0	0	0	0	0	0	0
4/27/2024	9:45 AM	0	0	0	0	0	0	0	0	0	0	0	0	0
4/27/2024	10:00 AM	0	0	0	0	0	0	0	0	0	0	0	0	0
4/27/2024	10:15 AM	0	0	0	0	0	0	0	0	0	0	0	0	0
4/27/2024	10:30 AM	0	0	0	0	0	0	0	0	0	0	0	0	0
4/27/2024	10:45 AM	0	0	0	0	0	0	0	0	0	0	0	0	0
4/27/2024	11:00 AM	0	0	0	0	0	0	0	0	0	0	0	0	0
4/27/2024	11:15 AM	0	0	0	0	0	0	0	0	0	0	0	0	0
4/27/2024	11:30 AM	0	0	0	0	0	0	0	0	0	0	0	0	0
4/27/2024	11:45 AM	0	0	0	0	0	0	0	0	0	0	0	0	0
4/27/2024	12:00 PM	0	0	0	0	0	0	0	0	0	0	0	0	0
4/27/2024	12:15 PM	0	0	0	0	0	0	0	0	0	0	0	0	0
4/27/2024	12:30 PM	0	0	0	0	0	0	0	0	0	0	0	0	0
4/27/2024	12:45 PM	0	0	0	0	0	0	0	0	0	0	0	0	0
4/27/2024	1:00 PM	0	0	0	0	0	0	0	0	0	0	0	0	0
4/27/2024	1:15 PM	0	0	0	0	0	0	0	0	0	0	0	0	0
4/27/2024	1:30 PM	0	0	0	0	0	0	0	0	0	0	0	0	0
4/27/2024	1:45 PM	0	0	0	0	0	0	0	0	0	0	0	0	0
4/27/2024	2:00 PM	0	0	0	0	0	0	0	0	0	0	0	0	0
4/27/2024	2:15 PM	0	0	0	0	0	0	0	0	0	0	0	0	0
4/27/2024	2:30 PM	0	0	0	0	0	0	0	0	0	0	0	0	0
4/27/2024	2:45 PM	0	0	0	0	0	0	0	0	0	0	0	0	0
4/27/2024	3:00 PM	0	0	0	0	0	0	0	0	0	0	0	0	0
4/27/2024	3:15 PM	0	0	0	0	0	0	0	0	0	0	0	0	0
4/27/2024	3:30 PM	0	0	0	0	0	0	0	0	0	0	0	0	0
4/27/2024	3:45 PM	0	0	0	0	0	0	0	0	0	0	0	0	0
4/27/2024	4:00 PM	0	0	0	0	0	0	0	0	0	0	0	0	0
4/27/2024	4:15 PM	0	0	0	0	0	0	0	0	0	0	0	0	0
4/27/2024	4:30 PM	0	0	0	0	0	0	0	0	0	0	0	0	0
4/27/2024	4:45 PM	0	0	0	0	0	0	0	0	0	0	0	0	0
4/27/2024	5:00 PM	0	0	0	0	0	0	0	0	0	0	0	0	0
4/27/2024	5:15 PM	0	0	0	0	0	0	0	0	0	0	0	0	0
4/27/2024	5:30 PM	0	0	0	0	0	0	0	0	0	0	0	0	0
4/27/2024	5:45 PM	0	0	0	0	0	0	0	0	0	0	0	0	0
4/27/2024	6:00 PM	0	0	0	0	0	0	0	0	0	0	0	0	0
4/27/2024	6:15 PM	0	0	0	0	0	0	0	0	0	0	0	0	0
4/27/2024	6:30 PM	0	0	0	0	0	0	0	0	0	0	0	0	0
4/27/2024	6:45 PM	0	0	0	0	0	0	0	0	0	0	0	0	0
4/27/2024	7:00 PM	0	0	0	0	0	0	0	0	0	0	0	0	0
4/27/2024	7:15 PM	0	0	0	0	0	0	0	0	0	0	0	0	0
4/27/2024	7:30 PM	0	0	0	0	0	0	0	0	0	0	0	0	0
4/27/2024	7:45 PM	0	0	0	0	0	0	0	0	0	0	0	0	0
4/27/2024	8:00 PM	0	0	0	0	0	0	0	0	0	0	0	0	0
4/27/2024	8:15 PM	0	0	0	0	0	0	0	0	0	0	0	0	0
4/27/2024	8:30 PM	0	0	0	0	0	0	0	0	0	0	0	0	0
4/27/2024	8:45 PM	0	0	0	0	0	0	0	0	0	0	0	0	0
4/27/2024	9:00 PM	0	0	0	0	0	0	0	0	0	0	0	0	0
4/27/2024	9:15 PM	0	0	0	0	0	0	0	0	0	0	0	0	0
4/27/2024	9:30 PM	0	0	0	0	0	0	0	0	0	0	0	0	0
4/27/2024	9:45 PM	0	0	0	0	0	0	0	0	0	0	0	0	0
4/27/2024	10:00 PM	0	0	0	0	0	0	0	0	0	0	0	0	0
4/27/2024	10:15 PM	0	0	0	0	0	0	0	0	0	0	0	0	0
4/27/2024	10:30 PM	0	0	0	0	0	0	0	0	0	0	0	0	0
4/27/2024	10:45 PM	0	0	0	0	0	0	0	0	0	0	0	0	0
4/27/2024	11:00 PM	0	0	0	0	0	0	0	0	0	0	0	0	0
4/27/2024	11:15 PM	0	0	0	0	0	0	0	0	0	0	0	0	0
4/27/2024	11:30 PM	0	0	0	0	0	0	0	0	0	0	0	0	0
4/27/2024	11:45 PM	0	0	0	0	0	0	0	0	0	0	0	0	0

SB
File Name:
Start Date: 4/21/2024
Start Time: 0
Site Code: 75 Lane 2 SB
Station ID: 1
Location 1: I-20, north of Bush River Rd
Location 2:

Date	Time	1	2	3	4	5	6	7	8	9	10	11	12	13
4/21/2024	12:00 AM	0	61	6	0	0	0	0	0	3	0	0	0	0
4/21/2024	12:15 AM	0	45	4	0	0	0	0	0	5	0	0	0	0
4/21/2024	12:30 AM	0	40	1	0	0	0	0	0	4	0	0	0	0
4/21/2024	12:45 AM	0	41	5	0	0	0	0	0	1	0	0	0	0
4/21/2024	1:00 AM	0	33	6	0	0	0	0	0	1	0	0	0	0
4/21/2024	1:15 AM	0	27	4	0	0	1	0	0	4	0	0	0	0
4/21/2024	1:30 AM	0	28	2	1	0	0	0	0	2	0	0	0	0
4/21/2024	1:45 AM	0	32	3	0	0	0	0	0	3	0	0	0	0
4/21/2024	2:00 AM	0	22	2	0	1	0	0	0	2	0	0	0	0
4/21/2024	2:15 AM	0	33	3	0	1	0	0	0	1	0	0	0	0
4/21/2024	2:30 AM	0	26	3	0	0	0	0	0	1	0	0	0	0
4/21/2024	2:45 AM	0	17	4	0	1	0	0	0	1	0	0	0	0
4/21/2024	3:00 AM	0	14	2	0	0	0	0	0	3	0	0	0	0
4/21/2024	3:15 AM	0	20	3	0	0	0	0	0	1	0	0	0	0
4/21/2024	3:30 AM	0	12	5	0	0	0	0	0	1	0	0	0	0
4/21/2024	3:45 AM	0	17	2	0	0	0	0	0	3	0	0	0	0
4/21/2024	4:00 AM	0	16	1	1	0	0	0	0	3	0	0	0	0
4/21/2024	4:15 AM	0	12	1	1	0	0	0	0	2	0	0	0	0
4/21/2024	4:30 AM	0	20	2	0	0	0	0	0	2	0	0	0	0
4/21/2024	4:45 AM	0	13	2	0	1	0	0	0	3	0	0	0	0
4/21/2024	5:00 AM	0	20	1	0	0	0	0	0	5	0	0	0	0
4/21/2024	5:15 AM	0	21	0	0	0	0	0	0	4	0	0	0	0
4/21/2024	5:30 AM	0	29	0	0	0	0	0	0	5	0	0	0	0
4/21/2024	5:45 AM	0	30	1	0	1	0	0	0	2	0	0	0	0
4/21/2024	6:00 AM	0	26	3	0	0	0	0	0	3	0	0	0	0
4/21/2024	6:15 AM	0	42	7	0	1	0	0	0	2	0	0	0	0
4/21/2024	6:30 AM	0	38	11	0	0	0	0	0	6	0	0	0	0
4/21/2024	6:45 AM	0	36	13	0	1	0	0	0	0	0	0	0	0
4/21/2024	7:00 AM	0	42	13	0	1	0	0	0	1	0	0	0	0
4/21/2024	7:15 AM	1	38	8	0	1	0	0	0	3	0	0	0	0
4/21/2024	7:30 AM	0	55	12	1	0	1	0	0	3	0	0	0	0
4/21/2024	7:45 AM	0	51	12	0	0	1	0	0	3	0	1	0	0
4/21/2024	8:00 AM	1	45	11	0	1	0	0	0	3	0	0	0	0
4/21/2024	8:15 AM	1	57	19	1	2	0	0	0	7	1	0	0	0
4/21/2024	8:30 AM	1	83	15	0	1	0	0	0	4	0	0	0	0
4/21/2024	8:45 AM	0	74	16	0	1	0	0	0	3	0	0	0	0
4/21/2024	9:00 AM	1	85	20	1	0	0	0	0	4	1	0	0	0
4/21/2024	9:15 AM	0	92	31	1	1	0	0	0	6	0	0	0	0
4/21/2024	9:30 AM	0	118	31	0	1	0	0	0	3	0	0	0	0
4/21/2024	9:45 AM	0	110	33	0	1	0	0	0	9	0	0	0	0
4/21/2024	10:00 AM	0	113	25	0	0	1	0	0	7	0	1	0	0
4/21/2024	10:15 AM	0	108	41	0	1	0	0	1	10	0	0	0	0
4/21/2024	10:30 AM	0	139	25	1	0	0	0	0	6	0	0	0	0
4/21/2024	10:45 AM	0	116	36	0	1	1	0	0	11	0	0	0	0
4/21/2024	11:00 AM	0	124	25	0	0	0	0	0	11	0	0	0	0
4/21/2024	11:15 AM	0	137	30	0	2	0	0	0	15	0	0	0	0
4/21/2024	11:30 AM	0	137	46	0	0	0	0	0	13	0	0	0	0
4/21/2024	11:45 AM	0	165	48	0	1	0	0	2	11	0	0	0	0
4/21/2024	12:00 PM	0	183	33	0	0	0	0	0	7	0	0	0	0
4/21/2024	12:15 PM	0	165	36	1	1	0	0	1	7	0	0	0	0
4/21/2024	12:30 PM	0	156	48	0	1	0	0	2	7	0	0	0	0
4/21/2024	12:45 PM	0	168	39	0	2	1	0	0	9	0	0	0	0
4/21/2024	1:00 PM	0	173	36	0	1	0	0	0	9	0	0	0	0
4/21/2024	1:15 PM	0	176	34	0	0	3	0	3	4	0	1	0	0
4/21/2024	1:30 PM	0	180	32	0	1	1	0	0	3	0	0	0	0
4/21/2024	1:45 PM	1	169	31	1	0	0	0	0	9	0	0	0	0
4/21/2024	2:00 PM	0	182	31	0	1	1	0	0	7	0	0	0	0
4/21/2024	2:15 PM	1	164	37	0	1	0	0	2	9	0	0	0	0
4/21/2024	2:30 PM	0	164	34	0	1	2	0	0	9	0	0	0	0
4/21/2024	2:45 PM	0	169	40	0	0	0	0	0	8	0	0	1	0
4/21/2024	3:00 PM	0	158	37	0	1	0	0	0	8	0	0	0	0
4/21/2024	3:15 PM	0	154	28	0	3	0	0	0	10	1	0	0	0
4/21/2024	3:30 PM	1	157	31	0	0	2	0	0	11	0	0	0	0
4/21/2024	3:45 PM	0	168	33	0	3	0	0	1	12	1	0	0	0
4/21/2024	4:00 PM	0	170	26	0	2	0	0	1	8	0	0	0	0
4/21/2024	4:15 PM	0	181	37	0	1	0	0	0	7	0	0	0	0
4/21/2024	4:30 PM	0	157	46	0	1	0	0	0	4	0	0	0	0
4/21/2024	4:45 PM	0	145	35	1	0	1	0	0	13	0	0	0	0
4/21/2024	5:00 PM	1	155	26	0	1	0	0	0	11	0	0	0	0
4/21/2024	5:15 PM	0	135	27	0	1	0	0	0	6	0	0	0	0
4/21/2024	5:30 PM	0	136	34	1	1	1	0	0	11	0	0	0	0
4/21/2024	5:45 PM	0	134	35	1	1	1	0	0	15	0	0	0	0
4/21/2024	6:00 PM	0	135	38	0	0	0	0	0	6	0	0	0	0
4/21/2024	6:15 PM	1	153	31	0	0	0	0	0	8	1	0	0	0
4/21/2024	6:30 PM	0	130	28	0	3	0	0	0	5	0	0	0	0
4/21/2024	6:45 PM	0	128	31	0	1	1	0	0	7	0	0	0	0
4/21/2024	7:00 PM	0	128	28	0	1	0	0	0	10	0	0	0	0
4/21/2024	7:15 PM	0	109	29	0	0	1	0	1	12	0	2	0	0
4/21/2024	7:30 PM	0	130	32	0	0	0	0	1	3	0	0	0	0
4/21/2024	7:45 PM	0	102	19	0	1	1	0	0	6	0	0	0	0
4/21/2024	8:00 PM	0	103	21	0	0	0	0	0	10	0	1	0	0
4/21/2024	8:15 PM	0	98	21	0	0	0	0	0	6	0	0	0	0
4/21/2024	8:30 PM	0	99	14	0	1	0	0	0	7	0	0	0	0
4/21/2024	8:45 PM	0	82	11	0	0	1	0	0	5	0	0	0	0
4/21/2024	9:00 PM	0	66	5	1	3	0	0	0	5	0	0	0	0
4/21/2024	9:15 PM	0	69	8	0	0	0	0	1	10	0	1	0	0
4/21/2024	9:30 PM	0	74	9	0	1	0	0	0	8	0	0	0	0
4/21/2024	9:45 PM	0	51	13	0	0	0	0	0	10	0	3	0	0
4/21/2024	10:00 PM	0	69	6	0	0	1	0	0	8	0	2	0	0
4/21/2024	10:15 PM	0	54	3	1	0	0	0	0	7	0	1	0	0
4/21/2024	10:30 PM	0	47	8	1	0	0	0	0	4	0	1	0	0
4/21/2024	10:45 PM	0	36	7	2	0	0	0	0	4	0	1	0	0
4/21/2024	11:00 PM	0	38	3	0	0	0	0	0	2	0	1	0	0
4/21/2024	11:15 PM	0	27	1	1	0	0	0	0	5	0	1	0	0
4/21/2024	11:30 PM	0	31	3	0	2	1	0	0	6	0	1	0	0
4/21/2024	11:45 PM	0	24	3	0	1	0	0	0	3	0	0	0	0

4/22/2024	12:00 AM	0	21	4	0	0	1	0	0	5	0	0	0	0
4/22/2024	12:15 AM	0	20	4	0	0	0	0	0	8	0	1	0	0
4/22/2024	12:30 AM	0	19	5	1	0	1	0	0	5	0	0	0	0
4/22/2024	12:45 AM	0	15	2	0	1	0	0	0	3	0	0	0	0
4/22/2024	1:00 AM	0	12	1	0	0	0	0	0	3	0	0	0	0
4/22/2024	1:15 AM	0	13	2	0	1	1	0	0	3	0	0	0	0
4/22/2024	1:30 AM	0	12	2	0	0	0	0	0	2	0	0	0	0
4/22/2024	1:45 AM	0	14	3	0	0	1	0	0	3	0	0	0	0
4/22/2024	2:00 AM	0	12	2	0	0	0	0	0	9	0	0	0	0
4/22/2024	2:15 AM	0	9	6	0	0	0	0	0	1	0	0	0	0
4/22/2024	2:30 AM	0	12	2	0	0	0	0	0	2	0	0	0	0
4/22/2024	2:45 AM	0	9	5	0	1	0	0	0	8	0	0	0	0
4/22/2024	3:00 AM	0	17	4	0	0	0	0	0	3	0	0	0	0
4/22/2024	3:15 AM	0	14	4	0	1	0	0	0	5	0	0	0	0
4/22/2024	3:30 AM	0	17	7	0	0	2	0	0	5	0	0	0	0
4/22/2024	3:45 AM	0	20	6	0	0	0	0	0	6	0	0	0	0
4/22/2024	4:00 AM	0	21	3	0	0	0	0	0	3	0	0	0	0
4/22/2024	4:15 AM	0	18	5	0	1	1	0	0	5	0	0	0	0
4/22/2024	4:30 AM	0	36	6	0	2	0	0	0	7	0	1	0	0
4/22/2024	4:45 AM	0	39	8	0	1	0	0	0	9	0	0	0	0
4/22/2024	5:00 AM	0	35	5	0	2	1	0	0	12	0	0	0	0
4/22/2024	5:15 AM	0	62	14	0	1	1	0	1	9	0	0	0	0
4/22/2024	5:30 AM	0	68	15	1	2	2	0	0	11	0	0	0	0
4/22/2024	5:45 AM	0	84	24	0	1	0	0	1	9	0	0	0	0
4/22/2024	6:00 AM	0	91	24	0	3	2	0	0	8	0	0	0	0
4/22/2024	6:15 AM	0	109	37	0	2	2	0	0	11	0	0	0	0
4/22/2024	6:30 AM	0	120	53	0	3	0	0	2	8	0	0	0	0
4/22/2024	6:45 AM	0	114	43	0	7	4	0	0	25	0	0	0	0
4/22/2024	7:00 AM	0	130	58	0	5	9	0	1	10	1	0	1	0
4/22/2024	7:15 AM	0	166	55	0	8	3	0	3	21	3	0	0	0
4/22/2024	7:30 AM	0	160	59	1	3	4	0	3	14	0	0	0	0
4/22/2024	7:45 AM	0	149	45	0	6	2	0	0	18	0	0	1	0
4/22/2024	8:00 AM	0	132	72	0	2	2	1	2	18	1	0	0	0
4/22/2024	8:15 AM	0	137	82	0	5	3	0	2	25	0	0	0	0
4/22/2024	8:30 AM	0	106	57	2	10	1	1	2	27	0	0	0	0
4/22/2024	8:45 AM	0	125	49	0	6	4	0	2	18	0	0	0	0
4/22/2024	9:00 AM	0	104	63	0	8	2	0	1	21	0	0	0	0
4/22/2024	9:15 AM	0	101	54	1	6	2	1	3	22	0	0	0	0
4/22/2024	9:30 AM	0	102	49	1	6	2	1	3	29	1	0	0	0
4/22/2024	9:45 AM	0	112	46	0	9	3	0	3	23	0	0	0	0
4/22/2024	10:00 AM	0	110	60	0	5	0	1	3	26	1	0	0	0
4/22/2024	10:15 AM	0	122	46	0	9	3	1	2	32	2	0	0	0
4/22/2024	10:30 AM	0	101	53	0	6	2	0	1	38	1	0	0	0
4/22/2024	10:45 AM	1	96	55	1	6	1	1	2	18	1	0	0	0
4/22/2024	11:00 AM	0	105	55	1	5	1	0	3	34	1	0	0	0
4/22/2024	11:15 AM	0	107	48	0	6	0	0	0	41	0	0	0	0
4/22/2024	11:30 AM	0	111	46	0	6	3	0	0	38	0	0	0	0
4/22/2024	11:45 AM	0	124	56	0	8	2	1	2	23	0	0	0	0
4/22/2024	12:00 PM	2	126	52	0	1	4	0	2	35	1	0	0	0
4/22/2024	12:15 PM	0	135	45	0	6	3	0	1	34	0	0	0	0
4/22/2024	12:30 PM	0	116	39	0	8	1	1	6	29	1	0	0	0
4/22/2024	12:45 PM	0	120	59	2	4	4	0	3	27	0	0	0	0
4/22/2024	1:00 PM	0	102	49	1	10	0	0	4	25	1	0	0	0
4/22/2024	1:15 PM	0	117	55	0	4	2	2	3	32	1	0	0	0
4/22/2024	1:30 PM	0	134	49	0	8	2	2	1	28	2	0	0	0
4/22/2024	1:45 PM	0	136	48	0	6	1	2	1	34	1	0	0	0
4/22/2024	2:00 PM	0	124	56	0	5	1	3	1	22	0	0	0	0
4/22/2024	2:15 PM	1	139	53	1	4	2	1	2	29	1	0	0	0
4/22/2024	2:30 PM	0	136	51	2	5	2	2	4	49	1	0	0	0
4/22/2024	2:45 PM	0	141	53	0	1	2	3	2	42	1	0	0	0
4/22/2024	3:00 PM	0	140	53	0	7	4	0	2	35	0	0	0	0
4/22/2024	3:15 PM	0	156	42	0	7	2	0	3	34	0	0	0	0
4/22/2024	3:30 PM	0	154	56	0	9	10	0	0	42	0	0	0	0
4/22/2024	3:45 PM	1	171	49	0	3	3	1	1	30	1	0	0	0
4/22/2024	4:00 PM	0	175	64	0	13	4	0	4	35	1	0	0	0
4/22/2024	4:15 PM	0	172	61	0	7	4	0	5	32	1	0	0	0
4/22/2024	4:30 PM	0	189	59	0	10	1	0	3	27	2	0	0	0
4/22/2024	4:45 PM	0	199	41	0	7	3	0	2	38	0	0	0	0
4/22/2024	5:00 PM	0	167	62	0	6	3	0	2	44	0	0	0	0
4/22/2024	5:15 PM	0	197	70	0	6	4	1	0	30	0	0	0	0
4/22/2024	5:30 PM	1	229	58	0	9	3	0	3	37	0	0	0	0
4/22/2024	5:45 PM	0	173	55	1	2	2	0	3	34	1	0	0	0
4/22/2024	6:00 PM	0	160	46	0	2	2	0	2	20	0	0	0	0
4/22/2024	6:15 PM	0	142	40	0	3	2	0	2	34	1	0	0	0
4/22/2024	6:30 PM	1	129	36	0	1	0	0	0	17	0	0	0	0
4/22/2024	6:45 PM	0	107	40	0	5	3	0	2	29	0	0	0	0
4/22/2024	7:00 PM	2	97	32	0	2	2	0	2	23	0	0	0	0
4/22/2024	7:15 PM	0	109	31	0	0	0	1	4	22	0	0	0	0
4/22/2024	7:30 PM	0	101	25	0	2	2	0	2	31	0	0	0	0
4/22/2024	7:45 PM	0	99	12	0	3	2	0	1	23	0	3	0	0
4/22/2024	8:00 PM	0	91	19	0	1	0	0	2	17	1	1	0	0
4/22/2024	8:15 PM	0	75	18	0	3	1	0	2	16	0	1	0	0
4/22/2024	8:30 PM	0	78	16	0	0	1	0	1	18	0	0	0	0
4/22/2024	8:45 PM	0	85	16	0	1	1	0	2	16	0	0	0	0
4/22/2024	9:00 PM	0	71	15	0	2	0	0	1	16	0	0	0	0
4/22/2024	9:15 PM	0	80	17	1	0	0	0	1	11	0	1	0	0
4/22/2024	9:30 PM	0	44	12	0	1	1	0	3	9	0	0	0	0
4/22/2024	9:45 PM	0	46	11	1	0	0	0	0	14	0	1	0	0
4/22/2024	10:00 PM	0	47	12	0	1	0	0	0	8	0	3	0	0
4/22/2024	10:15 PM	0	47	11	0	0	0	0	0	13	0	2	0	0
4/22/2024	10:30 PM	0	42	11	0	0	0	0	0	5	0	1	0	0
4/22/2024	10:45 PM	0	36	11	0	1	0	0	0	9	0	4	0	0
4/22/2024	11:00 PM	0	40	14	0	0	0	0	0	11	0	1	0	0
4/22/2024	11:15 PM	0	25	9	1	0	0	0	0	3	0	3	0	0
4/22/2024	11:30 PM	0	30	8	2	0	2	0	0	6	0	0	0	0
4/22/2024	11:45 PM	0	25	4	0	0	0	0	0	4	0	0	0	0

4/23/2024	12:00 AM	0	19	5	0	0	0	0	0	7	0	1	0	0
4/23/2024	12:15 AM	0	17	10	0	0	0	0	0	9	0	0	0	0
4/23/2024	12:30 AM	0	16	2	0	1	0	0	0	5	0	2	0	0
4/23/2024	12:45 AM	0	11	6	0	3	0	0	0	3	0	1	0	0
4/23/2024	1:00 AM	0	19	0	0	2	0	0	0	6	0	0	0	0
4/23/2024	1:15 AM	0	15	2	0	0	1	0	0	4	0	0	0	0
4/23/2024	1:30 AM	0	6	3	0	0	0	0	0	4	0	0	0	0
4/23/2024	1:45 AM	0	5	3	0	2	0	0	0	6	0	1	0	0
4/23/2024	2:00 AM	0	16	1	0	1	0	0	0	4	0	0	0	0
4/23/2024	2:15 AM	0	12	3	0	0	0	0	0	8	0	1	0	0
4/23/2024	2:30 AM	0	11	2	0	0	0	0	0	9	0	1	0	0
4/23/2024	2:45 AM	0	12	4	0	1	1	0	0	6	0	0	0	0
4/23/2024	3:00 AM	0	12	1	0	0	0	0	0	9	0	0	0	0
4/23/2024	3:15 AM	0	17	3	0	1	2	0	0	11	0	1	0	0
4/23/2024	3:30 AM	0	18	5	0	2	0	0	0	18	0	0	0	0
4/23/2024	3:45 AM	0	29	6	0	1	0	0	0	13	0	1	0	0
4/23/2024	4:00 AM	0	23	6	0	3	0	0	0	9	0	0	0	0
4/23/2024	4:15 AM	0	15	5	0	1	0	0	0	8	0	1	0	0
4/23/2024	4:30 AM	0	31	6	0	1	0	0	0	7	0	1	0	0
4/23/2024	4:45 AM	0	24	6	0	0	0	0	0	13	0	1	0	0
4/23/2024	5:00 AM	0	36	7	0	1	0	0	0	12	0	1	0	0
4/23/2024	5:15 AM	0	36	5	0	4	0	0	0	21	0	0	0	0
4/23/2024	5:30 AM	0	38	13	0	1	0	0	0	19	0	0	0	0
4/23/2024	5:45 AM	0	56	14	0	5	0	0	0	8	0	1	0	0
4/23/2024	6:00 AM	0	78	16	0	3	1	0	0	20	0	0	0	0
4/23/2024	6:15 AM	0	84	38	0	4	2	0	0	27	0	1	0	0
4/23/2024	6:30 AM	1	114	34	0	1	6	1	2	14	0	0	0	0
4/23/2024	6:45 AM	0	103	51	0	9	2	0	2	20	0	1	0	0
4/23/2024	7:00 AM	0	113	44	0	4	2	0	1	11	0	0	0	0
4/23/2024	7:15 AM	0	135	51	0	5	3	0	0	22	0	0	0	0
4/23/2024	7:30 AM	1	143	56	0	3	3	0	2	13	0	0	0	0
4/23/2024	7:45 AM	0	131	58	0	9	5	0	3	21	0	0	0	0
4/23/2024	8:00 AM	1	115	49	0	5	2	0	0	20	0	1	0	0
4/23/2024	8:15 AM	1	121	64	0	6	2	0	3	20	0	0	0	0
4/23/2024	8:30 AM	1	116	39	0	10	2	0	2	17	0	0	0	0
4/23/2024	8:45 AM	0	127	67	2	7	3	1	5	23	0	1	0	0
4/23/2024	9:00 AM	0	114	50	1	6	1	0	4	39	0	0	0	0
4/23/2024	9:15 AM	0	112	39	1	3	3	0	0	36	0	0	0	0
4/23/2024	9:30 AM	0	104	53	1	5	2	0	3	21	0	0	0	0
4/23/2024	9:45 AM	0	120	41	0	7	2	0	3	29	1	1	0	0
4/23/2024	10:00 AM	0	110	30	0	8	5	0	2	21	0	0	0	0
4/23/2024	10:15 AM	0	108	28	0	7	2	0	2	21	0	0	0	0
4/23/2024	10:30 AM	0	97	44	1	3	3	0	6	28	1	0	0	0
4/23/2024	10:45 AM	1	108	50	0	9	5	0	7	36	0	1	0	0
4/23/2024	11:00 AM	0	98	42	1	11	4	0	1	33	0	0	0	0
4/23/2024	11:15 AM	1	106	39	0	5	4	0	1	42	0	1	0	0
4/23/2024	11:30 AM	0	103	38	0	9	2	0	5	39	0	0	0	0
4/23/2024	11:45 AM	1	102	50	0	3	3	0	4	31	0	0	0	0
4/23/2024	12:00 PM	0	91	70	0	5	3	0	6	29	0	0	0	0
4/23/2024	12:15 PM	0	97	38	0	5	3	0	8	39	0	0	0	0
4/23/2024	12:30 PM	0	113	34	1	6	3	0	2	42	1	0	0	0
4/23/2024	12:45 PM	0	123	54	0	2	2	0	2	34	2	0	0	0
4/23/2024	1:00 PM	1	119	39	0	3	1	0	2	42	1	0	0	0
4/23/2024	1:15 PM	0	124	45	0	7	0	0	1	36	0	0	0	0
4/23/2024	1:30 PM	1	140	51	1	9	2	0	4	33	0	0	0	0
4/23/2024	1:45 PM	0	121	52	1	3	6	0	3	41	0	0	0	0
4/23/2024	2:00 PM	0	119	45	1	6	5	0	2	48	0	0	0	0
4/23/2024	2:15 PM	3	159	48	4	4	1	0	3	36	0	1	0	0
4/23/2024	2:30 PM	0	143	53	0	6	1	1	3	29	2	1	0	0
4/23/2024	2:45 PM	2	149	57	0	3	2	1	4	31	0	0	1	0
4/23/2024	3:00 PM	0	143	63	0	2	2	1	4	49	0	0	0	0
4/23/2024	3:15 PM	1	157	52	0	7	3	0	5	31	0	0	0	0
4/23/2024	3:30 PM	0	170	58	1	6	1	1	7	52	0	0	0	0
4/23/2024	3:45 PM	1	177	64	1	2	0	0	3	37	1	0	0	0
4/23/2024	4:00 PM	0	174	76	0	3	3	1	5	28	0	0	0	0
4/23/2024	4:15 PM	1	213	68	0	8	3	0	3	31	1	0	0	0
4/23/2024	4:30 PM	0	220	66	0	11	4	0	7	30	0	0	0	0
4/23/2024	4:45 PM	0	164	53	1	8	2	0	2	19	0	0	1	0
4/23/2024	5:00 PM	0	178	43	0	2	1	0	3	12	0	0	0	0
4/23/2024	5:15 PM	0	199	78	1	10	3	0	3	29	1	0	0	0
4/23/2024	5:30 PM	0	206	57	0	9	0	0	4	38	1	0	0	0
4/23/2024	5:45 PM	1	167	60	0	4	1	1	6	33	2	0	0	0
4/23/2024	6:00 PM	0	165	54	0	5	1	0	4	28	0	1	0	0
4/23/2024	6:15 PM	0	142	41	0	2	2	0	0	22	0	1	0	0
4/23/2024	6:30 PM	1	112	45	1	2	0	0	3	28	0	0	0	0
4/23/2024	6:45 PM	0	125	37	1	2	0	0	0	27	1	0	0	0
4/23/2024	7:00 PM	1	114	42	0	4	0	1	2	18	0	0	0	0
4/23/2024	7:15 PM	0	97	23	0	4	1	0	1	26	0	3	0	0
4/23/2024	7:30 PM	0	93	34	0	2	2	0	1	28	0	0	0	0
4/23/2024	7:45 PM	0	90	26	0	3	0	0	2	21	0	0	0	0
4/23/2024	8:00 PM	0	95	22	0	1	1	0	4	20	0	0	0	0
4/23/2024	8:15 PM	0	108	21	0	4	0	0	1	23	0	1	0	0
4/23/2024	8:30 PM	0	94	17	0	1	0	0	0	21	0	0	0	0
4/23/2024	8:45 PM	0	86	10	0	3	0	0	0	29	0	0	0	0
4/23/2024	9:00 PM	0	76	11	0	4	0	0	0	25	0	0	0	0
4/23/2024	9:15 PM	2	86	14	0	0	0	0	0	22	0	0	0	0
4/23/2024	9:30 PM	0	84	10	0	1	0	0	0	16	0	1	0	0
4/23/2024	9:45 PM	0	63	11	0	0	0	0	0	20	0	1	0	0
4/23/2024	10:00 PM	0	64	3	0	4	0	0	0	22	0	2	0	0
4/23/2024	10:15 PM	0	61	8	0	2	0	0	0	16	0	0	0	0
4/23/2024	10:30 PM	0	72	15	0	2	0	0	0	19	0	1	0	0
4/23/2024	10:45 PM	0	53	3	0	2	0	0	0	17	0	1	0	0
4/23/2024	11:00 PM	0	33	2	0	1	0	0	0	15	0	2	0	0
4/23/2024	11:15 PM	0	35	8	0	0	1	0	0	20	0	1	0	0
4/23/2024	11:30 PM	0	33	9	0	1	0	0	0	11	0	1	0	0
4/23/2024	11:45 PM	0	26	4	0	2	1	0	0	15	0	0	0	0

4/24/2024	12:00 AM	0	33	2	0	1	0	0	0	16	0	2	0	0
4/24/2024	12:15 AM	0	32	2	0	0	0	0	0	9	0	1	0	0
4/24/2024	12:30 AM	0	22	1	0	1	0	0	0	13	0	2	0	0
4/24/2024	12:45 AM	0	23	1	0	0	0	0	0	14	0	1	0	0
4/24/2024	1:00 AM	0	19	1	0	1	0	0	0	13	0	1	0	0
4/24/2024	1:15 AM	0	16	1	0	1	0	0	0	12	0	0	0	0
4/24/2024	1:30 AM	0	20	2	0	2	0	0	0	8	0	0	0	0
4/24/2024	1:45 AM	0	19	3	0	1	0	0	0	8	0	1	0	0
4/24/2024	2:00 AM	0	23	5	0	0	0	0	0	11	0	0	0	0
4/24/2024	2:15 AM	0	18	2	0	2	0	0	0	14	0	0	0	0
4/24/2024	2:30 AM	0	12	1	0	1	0	0	0	10	0	0	0	0
4/24/2024	2:45 AM	0	10	4	0	1	0	0	0	16	0	1	0	0
4/24/2024	3:00 AM	0	15	2	0	0	0	0	0	11	0	0	0	0
4/24/2024	3:15 AM	0	16	1	0	0	0	0	0	9	0	0	0	0
4/24/2024	3:30 AM	0	13	2	0	2	0	0	0	9	0	0	0	0
4/24/2024	3:45 AM	0	22	2	0	3	0	0	0	9	0	0	0	0
4/24/2024	4:00 AM	0	22	2	0	1	0	0	0	10	0	0	0	0
4/24/2024	4:15 AM	0	21	2	0	1	0	0	0	15	0	0	0	0
4/24/2024	4:30 AM	0	40	3	0	1	0	0	0	8	0	1	0	0
4/24/2024	4:45 AM	0	33	2	0	2	0	0	0	8	0	0	0	0
4/24/2024	5:00 AM	0	26	3	0	1	0	0	0	10	0	0	0	0
4/24/2024	5:15 AM	0	52	2	0	3	0	0	0	15	0	0	0	0
4/24/2024	5:30 AM	0	81	7	0	2	0	0	0	13	0	0	0	0
4/24/2024	5:45 AM	0	83	17	0	1	0	0	0	14	0	0	0	0
4/24/2024	6:00 AM	1	81	20	0	5	1	0	0	14	0	2	0	0
4/24/2024	6:15 AM	0	80	32	0	5	2	0	0	22	0	0	0	0
4/24/2024	6:30 AM	0	105	46	0	4	0	0	0	26	0	0	0	0
4/24/2024	6:45 AM	0	102	45	0	6	3	0	3	24	1	0	0	0
4/24/2024	7:00 AM	0	149	38	0	3	6	0	2	24	0	1	0	0
4/24/2024	7:15 AM	0	152	53	0	7	0	1	2	14	0	0	0	0
4/24/2024	7:30 AM	1	162	46	1	7	2	0	3	18	0	0	1	0
4/24/2024	7:45 AM	1	147	47	0	9	0	0	2	22	0	0	0	0
4/24/2024	8:00 AM	0	109	33	0	4	3	0	0	12	0	0	0	0
4/24/2024	8:15 AM	0	117	32	0	6	1	0	5	18	0	0	0	0
4/24/2024	8:30 AM	0	114	58	0	12	2	0	2	28	1	1	0	0
4/24/2024	8:45 AM	0	128	54	0	12	2	0	1	33	0	0	0	0
4/24/2024	9:00 AM	0	91	44	1	12	2	0	2	26	0	0	0	0
4/24/2024	9:15 AM	0	90	42	0	6	1	1	2	15	1	1	0	0
4/24/2024	9:30 AM	0	91	45	1	1	2	1	1	25	0	0	0	0
4/24/2024	9:45 AM	0	104	60	0	9	6	0	4	43	0	0	0	0
4/24/2024	10:00 AM	0	96	47	1	9	3	1	2	39	0	0	0	0
4/24/2024	10:15 AM	0	113	48	0	3	0	2	2	32	0	0	0	0
4/24/2024	10:30 AM	0	90	53	0	10	2	0	5	23	0	0	0	0
4/24/2024	10:45 AM	0	109	45	1	5	1	0	2	34	2	0	0	0
4/24/2024	11:00 AM	0	87	39	1	10	1	0	1	28	1	0	0	0
4/24/2024	11:15 AM	0	94	34	0	2	0	4	0	42	2	1	0	0
4/24/2024	11:30 AM	0	111	56	0	5	1	0	3	26	0	0	0	0
4/24/2024	11:45 AM	1	105	64	0	4	3	0	4	33	0	0	0	0
4/24/2024	12:00 PM	0	93	42	0	5	3	0	5	38	1	0	1	0
4/24/2024	12:15 PM	0	130	72	0	10	2	1	5	38	1	0	0	0
4/24/2024	12:30 PM	0	114	65	0	3	2	1	3	34	0	0	0	0
4/24/2024	12:45 PM	0	124	36	0	7	5	1	4	46	3	0	0	0
4/24/2024	1:00 PM	0	123	40	1	7	0	1	2	46	0	0	0	0
4/24/2024	1:15 PM	0	118	44	0	8	1	0	1	44	0	0	0	0
4/24/2024	1:30 PM	0	135	67	0	8	2	1	3	30	0	0	0	0
4/24/2024	1:45 PM	0	132	63	0	4	1	1	6	31	0	0	0	0
4/24/2024	2:00 PM	0	145	79	0	6	4	1	0	37	0	0	0	0
4/24/2024	2:15 PM	0	142	59	0	4	2	0	1	45	0	0	0	0
4/24/2024	2:30 PM	0	114	73	1	5	4	1	2	34	0	1	0	0
4/24/2024	2:45 PM	0	157	51	1	7	2	1	0	26	0	0	0	0
4/24/2024	3:00 PM	0	162	48	0	9	3	0	1	38	1	0	0	0
4/24/2024	3:15 PM	0	167	61	0	11	3	0	2	36	0	0	0	0
4/24/2024	3:30 PM	0	166	67	2	10	1	2	7	37	0	1	0	0
4/24/2024	3:45 PM	0	167	57	0	9	2	1	1	44	1	0	0	0
4/24/2024	4:00 PM	0	179	73	0	11	2	1	1	45	2	0	0	0
4/24/2024	4:15 PM	0	202	66	1	10	0	0	8	33	1	0	0	0
4/24/2024	4:30 PM	1	206	59	3	8	0	0	5	38	0	0	0	0
4/24/2024	4:45 PM	0	185	68	0	8	2	0	3	40	0	0	0	0
4/24/2024	5:00 PM	0	201	77	0	2	2	1	3	31	0	0	0	0
4/24/2024	5:15 PM	0	191	53	0	2	3	0	4	37	0	0	0	0
4/24/2024	5:30 PM	1	185	51	0	6	1	0	1	32	0	0	0	0
4/24/2024	5:45 PM	2	142	54	2	9	0	0	4	40	0	0	0	0
4/24/2024	6:00 PM	0	147	43	0	9	1	0	2	34	0	0	0	0
4/24/2024	6:15 PM	1	145	36	3	0	0	0	4	23	1	0	0	0
4/24/2024	6:30 PM	1	114	46	0	5	0	0	1	24	0	0	0	0
4/24/2024	6:45 PM	1	123	26	0	8	1	0	1	15	0	1	0	0
4/24/2024	7:00 PM	0	84	59	0	9	0	0	4	23	0	0	0	0
4/24/2024	7:15 PM	0	130	22	0	2	1	0	2	24	1	1	0	0
4/24/2024	7:30 PM	1	96	31	0	2	0	0	2	23	0	0	0	0
4/24/2024	7:45 PM	1	112	24	0	4	0	0	0	15	0	2	0	0
4/24/2024	8:00 PM	0	86	24	0	3	2	0	1	25	0	0	0	0
4/24/2024	8:15 PM	0	75	38	0	3	2	0	0	11	0	0	0	0
4/24/2024	8:30 PM	0	82	17	0	3	0	0	0	12	0	0	0	0
4/24/2024	8:45 PM	0	84	15	0	2	0	0	0	16	0	0	0	0
4/24/2024	9:00 PM	0	81	10	0	0	0	0	0	19	0	0	0	0
4/24/2024	9:15 PM	0	81	12	0	0	0	0	0	19	0	0	0	0
4/24/2024	9:30 PM	0	66	10	0	0	0	0	0	21	0	0	0	0
4/24/2024	9:45 PM	0	38	11	0	1	0	0	0	27	0	2	0	0
4/24/2024	10:00 PM	0	53	11	0	1	0	0	0	12	0	1	0	0
4/24/2024	10:15 PM	0	66	13	0	2	0	0	0	13	0	0	0	0
4/24/2024	10:30 PM	0	61	12	0	0	0	0	0	11	0	0	0	0
4/24/2024	10:45 PM	0	40	10	0	0	0	0	0	11	0	1	0	0
4/24/2024	11:00 PM	0	30	12	0	0	0	0	0	19	0	0	0	0
4/24/2024	11:15 PM	0	29	9	0	2	0	0	0	18	0	0	0	0
4/24/2024	11:30 PM	0	30	13	0	0	0	0	0	13	0	0	0	0
4/24/2024	11:45 PM	0	29	11	0	1	0	0	0	8	0	0	0	0

4/25/2024	12:00 AM	0	23	9	0	1	1	0	0	9	0	0	0	0
4/25/2024	12:15 AM	0	22	7	0	0	1	0	0	16	0	1	0	0
4/25/2024	12:30 AM	0	21	7	0	0	0	0	1	11	0	5	0	0
4/25/2024	12:45 AM	0	15	5	0	0	0	0	0	10	0	1	0	0
4/25/2024	1:00 AM	0	18	4	0	2	0	0	0	5	0	0	0	0
4/25/2024	1:15 AM	0	14	2	0	0	0	0	1	7	0	0	0	0
4/25/2024	1:30 AM	0	10	2	0	0	0	0	0	10	0	0	0	0
4/25/2024	1:45 AM	0	9	0	0	0	0	0	0	6	0	0	0	0
4/25/2024	2:00 AM	0	15	3	0	0	0	0	0	7	0	0	0	0
4/25/2024	2:15 AM	0	13	2	0	0	0	0	0	6	0	2	0	0
4/25/2024	2:30 AM	0	11	2	0	2	0	0	0	5	0	1	0	0
4/25/2024	2:45 AM	0	13	5	0	0	0	0	0	7	0	0	0	0
4/25/2024	3:00 AM	0	17	4	0	3	0	0	0	9	0	0	0	0
4/25/2024	3:15 AM	0	16	4	0	0	0	0	0	10	0	0	0	0
4/25/2024	3:30 AM	0	20	5	0	0	0	0	0	9	0	0	0	0
4/25/2024	3:45 AM	0	28	8	0	3	0	0	0	10	0	2	0	0
4/25/2024	4:00 AM	0	14	4	0	0	0	0	0	7	0	1	0	0
4/25/2024	4:15 AM	0	21	9	0	1	0	0	0	9	0	1	0	0
4/25/2024	4:30 AM	0	36	11	0	1	0	0	0	11	0	1	0	0
4/25/2024	4:45 AM	0	21	8	0	1	0	0	0	7	0	0	0	0
4/25/2024	5:00 AM	0	26	6	0	0	0	0	0	11	0	2	0	0
4/25/2024	5:15 AM	0	51	10	1	3	0	0	0	12	0	2	0	0
4/25/2024	5:30 AM	0	73	14	0	1	0	0	0	19	0	0	0	0
4/25/2024	5:45 AM	0	90	17	0	3	1	0	0	19	0	2	0	0
4/25/2024	6:00 AM	0	99	28	0	4	0	0	0	23	0	0	0	0
4/25/2024	6:15 AM	1	87	30	0	5	2	0	0	32	0	0	0	0
4/25/2024	6:30 AM	0	105	37	0	2	2	0	0	23	0	0	0	0
4/25/2024	6:45 AM	0	113	44	0	7	2	0	2	23	0	0	0	0
4/25/2024	7:00 AM	0	133	38	0	4	5	1	1	17	0	1	0	0
4/25/2024	7:15 AM	0	157	49	0	7	8	0	3	22	0	0	0	0
4/25/2024	7:30 AM	1	136	47	1	5	1	0	4	14	0	0	0	0
4/25/2024	7:45 AM	0	135	56	0	2	0	0	4	18	0	0	0	0
4/25/2024	8:00 AM	0	131	52	1	5	4	0	0	22	0	0	0	0
4/25/2024	8:15 AM	0	124	59	0	7	2	0	5	30	1	0	0	0
4/25/2024	8:30 AM	0	119	49	0	11	4	2	2	29	0	0	0	0
4/25/2024	8:45 AM	0	122	40	0	6	1	2	1	19	0	0	0	0
4/25/2024	9:00 AM	0	92	46	1	5	3	1	2	23	1	0	0	0
4/25/2024	9:15 AM	1	98	62	0	6	2	0	0	26	1	0	0	0
4/25/2024	9:30 AM	0	124	47	0	6	2	1	2	47	0	0	0	0
4/25/2024	9:45 AM	0	114	40	0	8	1	3	5	27	1	0	0	0
4/25/2024	10:00 AM	0	115	53	0	5	4	1	0	31	2	0	0	0
4/25/2024	10:15 AM	0	122	52	0	7	2	0	3	21	0	0	0	0
4/25/2024	10:30 AM	0	122	42	0	6	1	0	5	26	0	0	0	0
4/25/2024	10:45 AM	0	110	47	0	7	2	0	3	41	0	0	0	0
4/25/2024	11:00 AM	0	107	46	0	4	4	0	4	41	0	0	0	0
4/25/2024	11:15 AM	0	133	41	0	5	1	0	1	34	0	0	0	0
4/25/2024	11:30 AM	0	134	35	0	13	3	0	3	32	0	0	0	0
4/25/2024	11:45 AM	1	127	58	0	3	3	0	1	33	3	0	0	0
4/25/2024	12:00 PM	0	119	60	0	12	6	0	1	30	1	0	0	0
4/25/2024	12:15 PM	0	126	66	0	5	1	0	5	30	1	1	0	0
4/25/2024	12:30 PM	0	137	38	0	9	2	0	3	40	1	0	0	0
4/25/2024	12:45 PM	1	149	45	0	6	0	0	3	30	1	0	0	0
4/25/2024	1:00 PM	0	138	50	1	11	3	0	6	40	0	1	0	0
4/25/2024	1:15 PM	0	143	50	1	9	6	0	2	28	1	0	0	0
4/25/2024	1:30 PM	1	150	51	0	5	3	0	2	41	0	0	0	0
4/25/2024	1:45 PM	0	141	48	0	6	1	0	3	37	0	0	0	0
4/25/2024	2:00 PM	0	168	53	0	5	6	1	4	40	1	0	0	0
4/25/2024	2:15 PM	0	165	44	0	6	0	0	2	52	1	0	0	0
4/25/2024	2:30 PM	1	135	54	2	5	1	0	5	41	1	0	1	0
4/25/2024	2:45 PM	2	163	62	0	7	0	0	1	31	0	0	0	0
4/25/2024	3:00 PM	0	199	50	0	3	0	0	3	31	0	1	0	0
4/25/2024	3:15 PM	1	196	69	0	8	0	0	4	37	1	0	0	0
4/25/2024	3:30 PM	2	179	59	3	4	4	1	3	36	0	0	0	0
4/25/2024	3:45 PM	0	149	61	0	5	3	0	7	33	0	0	0	0
4/25/2024	4:00 PM	0	196	57	0	6	1	1	6	36	1	0	1	0
4/25/2024	4:15 PM	0	194	65	1	9	2	0	2	25	0	0	0	0
4/25/2024	4:30 PM	1	213	61	0	4	1	1	2	32	0	0	0	0
4/25/2024	4:45 PM	0	209	59	0	5	1	2	4	26	1	0	0	0
4/25/2024	5:00 PM	2	209	62	0	1	1	1	3	26	0	0	0	0
4/25/2024	5:15 PM	1	214	54	0	6	2	0	2	30	0	0	0	0
4/25/2024	5:30 PM	0	184	46	0	7	3	1	1	36	0	0	0	0
4/25/2024	5:45 PM	0	161	55	2	4	1	0	3	34	0	0	0	0
4/25/2024	6:00 PM	1	147	43	0	7	3	0	6	36	1	0	0	0
4/25/2024	6:15 PM	0	153	41	1	3	1	0	0	25	0	0	0	0
4/25/2024	6:30 PM	0	117	43	0	4	1	0	3	20	0	0	0	0
4/25/2024	6:45 PM	0	125	46	0	3	0	0	1	16	1	0	0	0
4/25/2024	7:00 PM	2	118	40	0	7	1	0	0	18	0	0	0	0
4/25/2024	7:15 PM	0	102	31	1	7	1	0	4	20	0	1	0	0
4/25/2024	7:30 PM	2	126	33	0	4	0	0	5	19	0	0	0	0
4/25/2024	7:45 PM	0	109	16	0	4	1	0	2	21	0	0	0	0
4/25/2024	8:00 PM	0	99	25	0	2	0	0	0	22	0	0	0	0
4/25/2024	8:15 PM	2	85	21	0	3	1	0	0	14	0	2	0	0
4/25/2024	8:30 PM	0	101	39	0	1	0	0	0	23	0	0	0	0
4/25/2024	8:45 PM	0	90	21	0	2	0	0	0	17	0	0	0	0
4/25/2024	9:00 PM	0	98	19	0	2	1	0	0	17	0	1	0	0
4/25/2024	9:15 PM	2	87	21	0	2	1	0	0	18	0	0	0	0
4/25/2024	9:30 PM	0	80	15	0	4	0	0	0	21	0	1	0	0
4/25/2024	9:45 PM	0	76	14	0	3	0	0	0	18	0	0	0	0
4/25/2024	10:00 PM	0	65	12	0	2	1	0	0	18	0	1	0	0
4/25/2024	10:15 PM	0	80	23	0	2	1	0	0	15	0	0	0	0
4/25/2024	10:30 PM	0	76	18	0	0	0	0	0	17	0	0	0	0
4/25/2024	10:45 PM	0	40	15	0	1	0	0	0	20	0	0	0	0
4/25/2024	11:00 PM	0	30	8	0	4	0	0	0	14	0	3	0	0
4/25/2024	11:15 PM	0	46	10	0	1	0	0	0	11	0	2	0	0
4/25/2024	11:30 PM	0	48	11	0	0	0	0	0	12	0	0	0	0
4/25/2024	11:45 PM	0	38	9	0	1	0	0	0	7	0	0	0	0

4/26/2024	12:00 AM	0	31	1	0	0	0	0	0	11	0	0	0	0
4/26/2024	12:15 AM	0	24	2	0	0	0	0	0	8	0	1	0	0
4/26/2024	12:30 AM	0	30	2	0	0	1	0	0	3	0	1	0	0
4/26/2024	12:45 AM	0	24	1	0	1	0	0	0	6	0	0	0	0
4/26/2024	1:00 AM	0	17	3	0	0	0	0	0	4	0	2	0	0
4/26/2024	1:15 AM	0	25	2	0	1	0	0	0	8	0	2	0	0
4/26/2024	1:30 AM	0	21	1	0	1	0	0	0	5	0	0	0	0
4/26/2024	1:45 AM	0	11	0	0	0	0	0	0	6	0	0	0	0
4/26/2024	2:00 AM	0	21	1	0	0	0	0	0	6	0	0	0	0
4/26/2024	2:15 AM	1	9	1	0	0	0	0	0	9	0	0	0	0
4/26/2024	2:30 AM	0	13	0	0	0	0	0	0	8	0	0	0	0
4/26/2024	2:45 AM	0	21	1	0	0	0	0	0	9	0	2	0	0
4/26/2024	3:00 AM	0	16	1	0	2	0	0	0	10	0	0	0	0
4/26/2024	3:15 AM	0	13	1	0	1	0	0	0	11	0	0	0	0
4/26/2024	3:30 AM	0	19	3	0	0	0	0	0	8	0	1	0	0
4/26/2024	3:45 AM	0	24	2	0	0	0	0	0	9	0	1	0	0
4/26/2024	4:00 AM	0	27	0	0	0	0	0	0	11	0	0	0	0
4/26/2024	4:15 AM	0	20	2	0	1	0	0	0	6	0	1	0	0
4/26/2024	4:30 AM	0	35	1	0	3	0	0	0	14	0	0	0	0
4/26/2024	4:45 AM	0	35	1	0	2	0	0	0	15	0	0	0	0
4/26/2024	5:00 AM	0	25	5	0	0	0	0	0	15	0	1	0	0
4/26/2024	5:15 AM	1	38	7	2	1	0	0	0	13	0	2	0	0
4/26/2024	5:30 AM	0	60	3	0	0	0	0	0	9	0	0	0	0
4/26/2024	5:45 AM	1	68	3	0	3	0	0	0	16	0	0	0	0
4/26/2024	6:00 AM	1	61	9	0	8	0	0	0	20	0	0	0	0
4/26/2024	6:15 AM	0	99	31	0	5	0	0	0	17	0	0	0	0
4/26/2024	6:30 AM	0	94	26	0	3	0	0	0	24	0	1	0	0
4/26/2024	6:45 AM	0	98	40	0	4	5	0	0	13	0	0	0	0
4/26/2024	7:00 AM	0	115	38	0	5	5	0	0	15	0	0	0	0
4/26/2024	7:15 AM	0	153	50	0	3	3	0	1	19	0	0	0	0
4/26/2024	7:30 AM	1	143	52	0	11	5	0	2	18	1	1	0	0
4/26/2024	7:45 AM	0	165	67	0	12	1	0	1	15	0	0	0	0
4/26/2024	8:00 AM	0	130	50	0	9	3	0	0	23	0	0	0	0
4/26/2024	8:15 AM	0	127	42	1	11	0	0	1	24	0	1	0	0
4/26/2024	8:30 AM	0	101	53	2	7	3	0	1	30	0	1	0	0
4/26/2024	8:45 AM	0	112	42	0	11	2	0	3	24	1	1	0	0
4/26/2024	9:00 AM	0	94	45	0	7	2	0	1	20	0	0	0	0
4/26/2024	9:15 AM	0	108	48	0	4	2	0	2	29	0	0	0	0
4/26/2024	9:30 AM	0	125	49	0	5	1	0	3	15	1	0	0	0
4/26/2024	9:45 AM	0	130	47	0	1	2	1	3	22	0	0	1	0
4/26/2024	10:00 AM	0	121	38	0	5	0	1	1	31	0	1	0	0
4/26/2024	10:15 AM	1	116	42	0	5	1	0	3	30	1	0	0	0
4/26/2024	10:30 AM	0	121	56	1	3	1	0	4	23	0	0	0	0
4/26/2024	10:45 AM	2	127	46	0	7	2	0	6	27	1	1	0	0
4/26/2024	11:00 AM	0	133	36	0	9	1	2	2	32	1	0	0	0
4/26/2024	11:15 AM	0	148	59	0	7	4	0	5	32	1	0	0	0
4/26/2024	11:30 AM	0	129	43	1	4	2	2	5	41	0	0	0	0
4/26/2024	11:45 AM	0	163	53	0	5	0	1	2	30	0	0	0	0
4/26/2024	12:00 PM	0	144	55	0	7	3	0	2	38	0	0	0	0
4/26/2024	12:15 PM	0	154	58	1	4	3	0	2	32	0	0	0	0
4/26/2024	12:30 PM	1	166	57	1	12	0	0	0	29	0	0	0	0
4/26/2024	12:45 PM	0	181	49	0	11	2	0	2	35	0	0	0	0
4/26/2024	1:00 PM	0	144	57	2	5	0	0	2	25	0	0	0	0
4/26/2024	1:15 PM	1	145	57	0	3	4	1	4	35	0	0	0	0
4/26/2024	1:30 PM	0	136	33	1	7	0	0	3	29	0	0	0	0
4/26/2024	1:45 PM	0	167	53	0	2	3	0	5	31	0	0	0	0
4/26/2024	2:00 PM	0	141	47	0	8	2	0	3	32	2	0	0	0
4/26/2024	2:15 PM	0	135	61	1	8	4	0	2	26	2	0	1	0
4/26/2024	2:30 PM	0	150	45	1	9	0	1	2	33	0	0	0	0
4/26/2024	2:45 PM	0	160	41	0	7	3	1	4	43	0	0	0	0
4/26/2024	3:00 PM	0	166	47	0	6	2	0	3	30	0	0	0	0
4/26/2024	3:15 PM	1	173	56	1	3	2	0	3	31	0	0	0	0
4/26/2024	3:30 PM	0	155	42	1	6	0	0	2	26	0	0	1	0
4/26/2024	3:45 PM	1	170	52	1	2	2	0	8	32	0	0	0	0
4/26/2024	4:00 PM	0	175	61	1	2	2	0	1	38	0	0	0	0
4/26/2024	4:15 PM	0	206	60	0	3	2	0	4	32	1	0	0	0
4/26/2024	4:30 PM	1	210	66	0	11	1	1	4	25	0	0	0	0
4/26/2024	4:45 PM	1	196	56	0	2	2	1	1	30	0	0	0	0
4/26/2024	5:00 PM	0	209	53	1	6	0	0	3	32	1	1	0	0
4/26/2024	5:15 PM	1	206	55	0	6	3	0	3	13	0	0	0	0
4/26/2024	5:30 PM	0	200	40	0	0	0	0	1	35	0	0	0	0
4/26/2024	5:45 PM	1	163	62	0	5	2	0	3	31	0	0	0	0
4/26/2024	6:00 PM	1	154	33	3	5	1	0	2	35	0	0	0	0
4/26/2024	6:15 PM	0	175	45	0	2	2	0	1	25	1	0	0	0
4/26/2024	6:30 PM	1	163	31	0	4	1	0	1	16	0	0	0	0
4/26/2024	6:45 PM	1	163	35	0	0	1	0	2	14	0	0	0	0
4/26/2024	7:00 PM	2	131	36	2	0	0	0	2	23	0	0	0	0
4/26/2024	7:15 PM	1	126	38	1	4	0	0	2	20	0	0	0	0
4/26/2024	7:30 PM	1	125	31	2	1	0	0	1	14	0	0	0	0
4/26/2024	7:45 PM	0	125	33	1	1	0	0	2	17	0	1	0	0
4/26/2024	8:00 PM	0	117	16	1	1	0	0	0	20	0	0	0	0
4/26/2024	8:15 PM	0	107	14	0	3	0	0	0	13	0	1	0	0
4/26/2024	8:30 PM	0	105	5	0	1	0	0	0	15	0	1	0	0
4/26/2024	8:45 PM	1	124	3	0	2	0	0	0	13	0	1	0	0
4/26/2024	9:00 PM	1	101	5	0	3	0	0	0	13	0	1	0	0
4/26/2024	9:15 PM	0	118	3	0	1	0	0	0	19	0	1	0	0
4/26/2024	9:30 PM	0	96	6	0	1	0	0	0	15	0	0	0	0
4/26/2024	9:45 PM	0	92	1	0	0	0	0	0	9	0	1	0	0
4/26/2024	10:00 PM	0	94	4	0	0	1	0	0	11	0	0	0	0
4/26/2024	10:15 PM	0	96	5	0	0	0	0	0	11	0	1	0	0
4/26/2024	10:30 PM	1	91	3	0	1	0	0	0	6	0	1	0	0
4/26/2024	10:45 PM	0	98	2	0	1	1	0	0	14	0	1	0	0
4/26/2024	11:00 PM	0	92	2	0	0	0	0	0	10	0	3	0	0
4/26/2024	11:15 PM	0	61	4	0	0	1	0	0	5	0	0	0	0
4/26/2024	11:30 PM	0	52	2	0	0	0	0	0	6	0	0	0	0
4/26/2024	11:45 PM	0	54	3	0	2	0	0	0	7	0	0	0	0

4/27/2024	12:00 AM	1	34	6	1	0	0	0	0	4	0	1	0	0
4/27/2024	12:15 AM	2	50	10	0	0	0	0	1	5	0	3	0	0
4/27/2024	12:30 AM	0	30	5	0	1	1	0	0	3	0	0	0	0
4/27/2024	12:45 AM	0	26	6	0	0	0	0	0	6	0	0	0	0
4/27/2024	1:00 AM	0	16	3	0	2	0	0	0	6	0	1	0	0
4/27/2024	1:15 AM	0	21	4	0	0	0	0	0	6	0	2	0	0
4/27/2024	1:30 AM	0	30	9	0	0	0	0	0	3	0	0	0	0
4/27/2024	1:45 AM	0	19	2	0	0	0	0	0	3	0	0	0	0
4/27/2024	2:00 AM	0	20	2	0	0	0	0	0	2	0	0	0	0
4/27/2024	2:15 AM	0	27	2	0	1	0	0	0	6	0	0	0	0
4/27/2024	2:30 AM	0	19	4	0	0	0	0	0	5	0	0	0	0
4/27/2024	2:45 AM	0	11	3	0	0	0	0	0	7	0	0	0	0
4/27/2024	3:00 AM	0	16	3	0	0	0	0	0	5	0	0	0	0
4/27/2024	3:15 AM	0	11	4	0	1	0	0	0	4	0	0	0	0
4/27/2024	3:30 AM	0	17	2	1	0	0	0	0	6	0	0	0	0
4/27/2024	3:45 AM	0	17	4	0	0	0	0	0	9	0	0	0	0
4/27/2024	4:00 AM	0	22	4	0	0	0	0	0	5	0	1	0	0
4/27/2024	4:15 AM	0	13	6	0	0	0	0	0	2	0	1	0	0
4/27/2024	4:30 AM	0	20	5	0	0	0	0	0	3	0	0	0	0
4/27/2024	4:45 AM	0	15	5	0	0	0	0	0	9	0	1	0	0
4/27/2024	5:00 AM	0	18	9	0	0	0	0	0	6	0	2	0	0
4/27/2024	5:15 AM	0	30	10	0	3	0	0	0	4	0	2	0	0
4/27/2024	5:30 AM	0	37	13	0	0	0	0	0	4	0	1	0	0
4/27/2024	5:45 AM	0	38	14	0	1	0	0	0	4	0	1	0	0
4/27/2024	6:00 AM	0	43	11	0	2	0	0	0	5	0	0	0	0
4/27/2024	6:15 AM	0	45	22	0	1	0	0	0	3	0	0	0	0
4/27/2024	6:30 AM	0	63	24	0	3	0	0	0	6	0	1	0	0
4/27/2024	6:45 AM	0	75	22	0	0	0	0	1	9	0	0	0	0
4/27/2024	7:00 AM	0	66	23	0	1	0	0	0	6	0	0	0	0
4/27/2024	7:15 AM	0	74	29	0	0	1	0	1	7	1	0	0	0
4/27/2024	7:30 AM	0	77	48	0	0	2	0	0	13	0	0	0	0
4/27/2024	7:45 AM	0	86	37	0	1	3	0	0	7	0	0	0	0
4/27/2024	8:00 AM	0	95	35	0	2	0	0	0	6	0	0	0	0
4/27/2024	8:15 AM	0	92	54	0	3	0	0	0	11	0	0	0	0
4/27/2024	8:30 AM	0	119	35	0	2	0	0	1	13	0	0	0	0
4/27/2024	8:45 AM	2	121	43	0	1	1	0	1	10	0	1	0	0
4/27/2024	9:00 AM	0	112	29	0	1	0	0	2	9	0	0	0	0
4/27/2024	9:15 AM	0	130	27	1	2	1	0	1	15	0	0	0	0
4/27/2024	9:30 AM	1	147	36	1	3	1	0	1	15	0	0	0	0
4/27/2024	9:45 AM	2	143	33	0	3	1	0	2	10	0	0	0	0
4/27/2024	10:00 AM	0	136	38	0	0	1	0	0	15	0	0	0	0
4/27/2024	10:15 AM	0	134	45	0	0	1	0	0	10	0	0	0	0
4/27/2024	10:30 AM	1	156	39	1	2	1	0	0	13	0	0	0	0
4/27/2024	10:45 AM	1	151	64	0	0	2	0	0	4	0	1	0	0
4/27/2024	11:00 AM	2	154	55	1	1	0	0	4	20	0	0	0	0
4/27/2024	11:15 AM	1	160	60	0	2	0	0	2	10	0	0	0	0
4/27/2024	11:30 AM	0	126	40	0	2	8	0	2	7	0	0	0	0
4/27/2024	11:45 AM	1	127	54	0	5	0	0	1	14	0	0	0	0
4/27/2024	12:00 PM	0	159	53	0	4	0	0	1	14	0	0	0	0
4/27/2024	12:15 PM	0	168	45	0	3	1	0	0	14	0	0	0	0
4/27/2024	12:30 PM	1	159	36	0	2	0	0	2	12	0	0	0	0
4/27/2024	12:45 PM	0	163	34	0	3	0	0	2	11	0	0	0	0
4/27/2024	1:00 PM	0	135	45	0	1	0	0	0	16	0	0	0	0
4/27/2024	1:15 PM	0	180	44	0	3	0	0	1	13	0	0	0	0
4/27/2024	1:30 PM	2	165	42	0	4	0	0	0	12	0	0	0	0
4/27/2024	1:45 PM	0	188	40	2	0	0	0	1	12	0	0	0	0
4/27/2024	2:00 PM	1	149	40	2	3	1	0	1	10	0	0	0	0
4/27/2024	2:15 PM	1	158	40	1	1	1	0	4	10	0	0	0	0
4/27/2024	2:30 PM	0	129	46	0	0	0	0	1	13	0	0	0	0
4/27/2024	2:45 PM	0	138	35	0	1	0	0	1	8	0	0	0	0
4/27/2024	3:00 PM	2	148	34	0	2	0	0	0	8	0	0	0	0
4/27/2024	3:15 PM	1	169	37	0	0	0	0	1	11	0	0	0	0
4/27/2024	3:30 PM	1	137	43	0	1	1	0	1	6	0	0	0	0
4/27/2024	3:45 PM	0	190	38	0	2	0	1	2	12	1	0	1	0
4/27/2024	4:00 PM	4	148	30	1	0	0	0	1	7	0	0	0	0
4/27/2024	4:15 PM	1	146	28	0	4	1	0	1	10	1	0	0	0
4/27/2024	4:30 PM	0	165	33	0	1	0	0	1	7	0	0	0	0
4/27/2024	4:45 PM	0	143	32	0	1	0	0	0	5	0	0	0	0
4/27/2024	5:00 PM	4	161	33	0	1	0	0	0	11	1	0	0	0
4/27/2024	5:15 PM	3	134	30	0	4	1	0	0	7	0	0	0	0
4/27/2024	5:30 PM	0	125	31	0	2	0	0	2	6	0	0	0	0
4/27/2024	5:45 PM	0	110	31	1	3	0	0	0	8	0	0	0	0
4/27/2024	6:00 PM	0	141	30	0	0	0	0	2	4	0	0	0	0
4/27/2024	6:15 PM	0	141	31	1	2	0	0	2	10	0	0	0	0
4/27/2024	6:30 PM	0	133	28	1	2	0	0	2	9	0	0	0	0
4/27/2024	6:45 PM	3	118	30	1	3	0	0	1	5	0	0	0	0
4/27/2024	7:00 PM	2	94	30	3	3	0	0	2	10	0	0	0	0
4/27/2024	7:15 PM	0	117	24	0	3	0	0	1	6	0	0	0	0
4/27/2024	7:30 PM	0	112	26	0	3	1	0	1	4	0	0	0	0
4/27/2024	7:45 PM	0	131	28	1	3	0	0	0	12	0	0	0	0
4/27/2024	8:00 PM	0	110	20	0	0	0	0	0	9	0	0	0	0
4/27/2024	8:15 PM	0	102	18	0	0	0	0	0	5	0	0	0	0
4/27/2024	8:30 PM	1	98	14	0	0	1	0	1	2	0	0	0	0
4/27/2024	8:45 PM	0	97	20	0	1	0	0	1	2	0	0	0	0
4/27/2024	9:00 PM	0	98	16	0	1	0	0	1	6	0	0	0	0
4/27/2024	9:15 PM	0	102	18	0	0	0	0	0	6	0	0	0	0
4/27/2024	9:30 PM	0	105	22	0	2	1	0	0	7	0	0	0	0
4/27/2024	9:45 PM	0	98	19	0	0	1	0	0	1	0	0	0	0
4/27/2024	10:00 PM	0	104	9	0	1	1	0	0	7	0	0	0	0
4/27/2024	10:15 PM	0	97	13	0	0	0	0	0	1	0	0	0	0
4/27/2024	10:30 PM	0	87	7	0	1	1	0	0	7	0	0	0	0
4/27/2024	10:45 PM	0	69	6	0	0	1	0	0	1	0	0	0	0
4/27/2024	11:00 PM	0	60	8	0	0	0	0	0	3	0	0	0	0
4/27/2024	11:15 PM	0	53	5	0	0	0	0	0	2	0	0	0	0
4/27/2024	11:30 PM	1	67	9	0	0	0	0	0	3	0	0	0	0
4/27/2024	11:45 PM	0	49	5	0	0	0	0	0	4	0	0	0	0

NB
File Name:
Start Date: 4/21/2024
Start Time: 0
Site Code: 75 Lane 2 SB
Station ID: 1
Location 1: I-20, north of Bush River Rd
Location 2:

Date	Time	1	2	3	4	5	6	7	8	9	10	11	12	13
4/21/2024	12:00 AM	0	0	0	0	0	0	0	0	0	0	0	0	0
4/21/2024	12:15 AM	0	0	0	0	0	0	0	0	0	0	0	0	0
4/21/2024	12:30 AM	0	0	0	0	0	0	0	0	0	0	0	0	0
4/21/2024	12:45 AM	0	0	0	0	0	0	0	0	0	0	0	0	0
4/21/2024	1:00 AM	0	0	0	0	0	0	0	0	0	0	0	0	0
4/21/2024	1:15 AM	0	0	0	0	0	0	0	0	0	0	0	0	0
4/21/2024	1:30 AM	0	0	0	0	0	0	0	0	0	0	0	0	0
4/21/2024	1:45 AM	0	0	0	0	0	0	0	0	0	0	0	0	0
4/21/2024	2:00 AM	0	0	0	0	0	0	0	0	0	0	0	0	0
4/21/2024	2:15 AM	0	0	0	0	0	0	0	0	0	0	0	0	0
4/21/2024	2:30 AM	0	0	0	0	0	0	0	0	0	0	0	0	0
4/21/2024	2:45 AM	0	0	0	0	0	0	0	0	0	0	0	0	0
4/21/2024	3:00 AM	0	0	0	0	0	0	0	0	0	0	0	0	0
4/21/2024	3:15 AM	0	0	0	0	0	0	0	0	0	0	0	0	0
4/21/2024	3:30 AM	0	0	0	0	0	0	0	0	0	0	0	0	0
4/21/2024	3:45 AM	0	0	0	0	0	0	0	0	0	0	0	0	0
4/21/2024	4:00 AM	0	0	0	0	0	0	0	0	0	0	0	0	0
4/21/2024	4:15 AM	0	0	0	0	0	0	0	0	0	0	0	0	0
4/21/2024	4:30 AM	0	0	0	0	0	0	0	0	0	0	0	0	0
4/21/2024	4:45 AM	0	0	0	0	0	0	0	0	0	0	0	0	0
4/21/2024	5:00 AM	0	0	0	0	0	0	0	0	0	0	0	0	0
4/21/2024	5:15 AM	0	0	0	0	0	0	0	0	0	0	0	0	0
4/21/2024	5:30 AM	0	0	0	0	0	0	0	0	0	0	0	0	0
4/21/2024	5:45 AM	0	0	0	0	0	0	0	0	0	0	0	0	0
4/21/2024	6:00 AM	0	0	0	0	0	0	0	0	0	0	0	0	0
4/21/2024	6:15 AM	0	0	0	0	0	0	0	0	0	0	0	0	0
4/21/2024	6:30 AM	0	0	0	0	0	0	0	0	0	0	0	0	0
4/21/2024	6:45 AM	0	0	0	0	0	0	0	0	0	0	0	0	0
4/21/2024	7:00 AM	0	0	0	0	0	0	0	0	0	0	0	0	0
4/21/2024	7:15 AM	0	0	0	0	0	0	0	0	0	0	0	0	0
4/21/2024	7:30 AM	0	0	0	0	0	0	0	0	0	0	0	0	0
4/21/2024	7:45 AM	0	0	0	0	0	0	0	0	0	0	0	0	0
4/21/2024	8:00 AM	0	0	0	0	0	0	0	0	0	0	0	0	0
4/21/2024	8:15 AM	0	0	0	0	0	0	0	0	0	0	0	0	0
4/21/2024	8:30 AM	0	0	0	0	0	0	0	0	0	0	0	0	0
4/21/2024	8:45 AM	0	0	0	0	0	0	0	0	0	0	0	0	0
4/21/2024	9:00 AM	0	0	0	0	0	0	0	0	0	0	0	0	0
4/21/2024	9:15 AM	0	0	0	0	0	0	0	0	0	0	0	0	0
4/21/2024	9:30 AM	0	0	0	0	0	0	0	0	0	0	0	0	0
4/21/2024	9:45 AM	0	0	0	0	0	0	0	0	0	0	0	0	0
4/21/2024	10:00 AM	0	0	0	0	0	0	0	0	0	0	0	0	0
4/21/2024	10:15 AM	0	0	0	0	0	0	0	0	0	0	0	0	0
4/21/2024	10:30 AM	0	0	0	0	0	0	0	0	0	0	0	0	0
4/21/2024	10:45 AM	0	0	0	0	0	0	0	0	0	0	0	0	0
4/21/2024	11:00 AM	0	0	0	0	0	0	0	0	0	0	0	0	0
4/21/2024	11:15 AM	0	0	0	0	0	0	0	0	0	0	0	0	0
4/21/2024	11:30 AM	0	0	0	0	0	0	0	0	0	0	0	0	0
4/21/2024	11:45 AM	0	0	0	0	0	0	0	0	0	0	0	0	0
4/21/2024	12:00 PM	0	0	0	0	0	0	0	0	0	0	0	0	0
4/21/2024	12:15 PM	0	0	0	0	0	0	0	0	0	0	0	0	0
4/21/2024	12:30 PM	0	0	0	0	0	0	0	0	0	0	0	0	0
4/21/2024	12:45 PM	0	0	0	0	0	0	0	0	0	0	0	0	0
4/21/2024	1:00 PM	0	0	0	0	0	0	0	0	0	0	0	0	0
4/21/2024	1:15 PM	0	0	0	0	0	0	0	0	0	0	0	0	0
4/21/2024	1:30 PM	0	0	0	0	0	0	0	0	0	0	0	0	0
4/21/2024	1:45 PM	0	0	0	0	0	0	0	0	0	0	0	0	0
4/21/2024	2:00 PM	0	0	0	0	0	0	0	0	0	0	0	0	0
4/21/2024	2:15 PM	0	0	0	0	0	0	0	0	0	0	0	0	0
4/21/2024	2:30 PM	0	0	0	0	0	0	0	0	0	0	0	0	0
4/21/2024	2:45 PM	0	0	0	0	0	0	0	0	0	0	0	0	0
4/21/2024	3:00 PM	0	0	0	0	0	0	0	0	0	0	0	0	0
4/21/2024	3:15 PM	0	0	0	0	0	0	0	0	0	0	0	0	0
4/21/2024	3:30 PM	0	0	0	0	0	0	0	0	0	0	0	0	0
4/21/2024	3:45 PM	0	0	0	0	0	0	0	0	0	0	0	0	0
4/21/2024	4:00 PM	0	0	0	0	0	0	0	0	0	0	0	0	0
4/21/2024	4:15 PM	0	0	0	0	0	0	0	0	0	0	0	0	0
4/21/2024	4:30 PM	0	0	0	0	0	0	0	0	0	0	0	0	0
4/21/2024	4:45 PM	0	0	0	0	0	0	0	0	0	0	0	0	0
4/21/2024	5:00 PM	0	0	0	0	0	0	0	0	0	0	0	0	0
4/21/2024	5:15 PM	0	0	0	0	0	0	0	0	0	0	0	0	0
4/21/2024	5:30 PM	0	0	0	0	0	0	0	0	0	0	0	0	0
4/21/2024	5:45 PM	0	0	0	0	0	0	0	0	0	0	0	0	0
4/21/2024	6:00 PM	0	0	0	0	0	0	0	0	0	0	0	0	0
4/21/2024	6:15 PM	0	0	0	0	0	0	0	0	0	0	0	0	0
4/21/2024	6:30 PM	0	0	0	0	0	0	0	0	0	0	0	0	0
4/21/2024	6:45 PM	0	0	0	0	0	0	0	0	0	0	0	0	0
4/21/2024	7:00 PM	0	0	0	0	0	0	0	0	0	0	0	0	0
4/21/2024	7:15 PM	0	0	0	0	0	0	0	0	0	0	0	0	0
4/21/2024	7:30 PM	0	0	0	0	0	0	0	0	0	0	0	0	0
4/21/2024	7:45 PM	0	0	0	0	0	0	0	0	0	0	0	0	0
4/21/2024	8:00 PM	0	0	0	0	0	0	0	0	0	0	0	0	0
4/21/2024	8:15 PM	0	0	0	0	0	0	0	0	0	0	0	0	0
4/21/2024	8:30 PM	0	0	0	0	0	0	0	0	0	0	0	0	0
4/21/2024	8:45 PM	0	0	0	0	0	0	0	0	0	0	0	0	0
4/21/2024	9:00 PM	0	0	0	0	0	0	0	0	0	0	0	0	0
4/21/2024	9:15 PM	0	0	0	0	0	0	0	0	0	0	0	0	0
4/21/2024	9:30 PM	0	0	0	0	0	0	0	0	0	0	0	0	0
4/21/2024	9:45 PM	0	0	0	0	0	0	0	0	0	0	0	0	0
4/21/2024	10:00 PM	0	0	0	0	0	0	0	0	0	0	0	0	0
4/21/2024	10:15 PM	0	0	0	0	0	0	0	0	0	0	0	0	0
4/21/2024	10:30 PM	0	0	0	0	0	0	0	0	0	0	0	0	0
4/21/2024	10:45 PM	0	0	0	0	0	0	0	0	0	0	0	0	0
4/21/2024	11:00 PM	0	0	0	0	0	0	0	0	0	0	0	0	0
4/21/2024	11:15 PM	0	0	0	0	0	0	0	0	0	0	0	0	0
4/21/2024	11:30 PM	0	0	0	0	0	0	0	0	0	0	0	0	0
4/21/2024	11:45 PM	0	0	0	0	0	0	0	0	0	0	0	0	0

4/22/2024	12:00 AM	0	0	0	0	0	0	0	0	0	0	0	0	0
4/22/2024	12:15 AM	0	0	0	0	0	0	0	0	0	0	0	0	0
4/22/2024	12:30 AM	0	0	0	0	0	0	0	0	0	0	0	0	0
4/22/2024	12:45 AM	0	0	0	0	0	0	0	0	0	0	0	0	0
4/22/2024	1:00 AM	0	0	0	0	0	0	0	0	0	0	0	0	0
4/22/2024	1:15 AM	0	0	0	0	0	0	0	0	0	0	0	0	0
4/22/2024	1:30 AM	0	0	0	0	0	0	0	0	0	0	0	0	0
4/22/2024	1:45 AM	0	0	0	0	0	0	0	0	0	0	0	0	0
4/22/2024	2:00 AM	0	0	0	0	0	0	0	0	0	0	0	0	0
4/22/2024	2:15 AM	0	0	0	0	0	0	0	0	0	0	0	0	0
4/22/2024	2:30 AM	0	0	0	0	0	0	0	0	0	0	0	0	0
4/22/2024	2:45 AM	0	0	0	0	0	0	0	0	0	0	0	0	0
4/22/2024	3:00 AM	0	0	0	0	0	0	0	0	0	0	0	0	0
4/22/2024	3:15 AM	0	0	0	0	0	0	0	0	0	0	0	0	0
4/22/2024	3:30 AM	0	0	0	0	0	0	0	0	0	0	0	0	0
4/22/2024	3:45 AM	0	0	0	0	0	0	0	0	0	0	0	0	0
4/22/2024	4:00 AM	0	0	0	0	0	0	0	0	0	0	0	0	0
4/22/2024	4:15 AM	0	0	0	0	0	0	0	0	0	0	0	0	0
4/22/2024	4:30 AM	0	0	0	0	0	0	0	0	0	0	0	0	0
4/22/2024	4:45 AM	0	0	0	0	0	0	0	0	0	0	0	0	0
4/22/2024	5:00 AM	0	0	0	0	0	0	0	0	0	0	0	0	0
4/22/2024	5:15 AM	0	0	0	0	0	0	0	0	0	0	0	0	0
4/22/2024	5:30 AM	0	0	0	0	0	0	0	0	0	0	0	0	0
4/22/2024	5:45 AM	0	0	0	0	0	0	0	0	0	0	0	0	0
4/22/2024	6:00 AM	0	0	0	0	0	0	0	0	0	0	0	0	0
4/22/2024	6:15 AM	0	0	0	0	0	0	0	0	0	0	0	0	0
4/22/2024	6:30 AM	0	0	0	0	0	0	0	0	0	0	0	0	0
4/22/2024	6:45 AM	0	0	0	0	0	0	0	0	0	0	0	0	0
4/22/2024	7:00 AM	0	0	0	0	0	0	0	0	0	0	0	0	0
4/22/2024	7:15 AM	0	0	0	0	0	0	0	0	0	0	0	0	0
4/22/2024	7:30 AM	0	0	0	0	0	0	0	0	0	0	0	0	0
4/22/2024	7:45 AM	0	0	0	0	0	0	0	0	0	0	0	0	0
4/22/2024	8:00 AM	0	0	0	0	0	0	0	0	0	0	0	0	0
4/22/2024	8:15 AM	0	0	0	0	0	0	0	0	0	0	0	0	0
4/22/2024	8:30 AM	0	0	0	0	0	0	0	0	0	0	0	0	0
4/22/2024	8:45 AM	0	0	0	0	0	0	0	0	0	0	0	0	0
4/22/2024	9:00 AM	0	0	0	0	0	0	0	0	0	0	0	0	0
4/22/2024	9:15 AM	0	0	0	0	0	0	0	0	0	0	0	0	0
4/22/2024	9:30 AM	0	0	0	0	0	0	0	0	0	0	0	0	0
4/22/2024	9:45 AM	0	0	0	0	0	0	0	0	0	0	0	0	0
4/22/2024	10:00 AM	0	0	0	0	0	0	0	0	0	0	0	0	0
4/22/2024	10:15 AM	0	0	0	0	0	0	0	0	0	0	0	0	0
4/22/2024	10:30 AM	0	0	0	0	0	0	0	0	0	0	0	0	0
4/22/2024	10:45 AM	0	0	0	0	0	0	0	0	0	0	0	0	0
4/22/2024	11:00 AM	0	0	0	0	0	0	0	0	0	0	0	0	0
4/22/2024	11:15 AM	0	0	0	0	0	0	0	0	0	0	0	0	0
4/22/2024	11:30 AM	0	0	0	0	0	0	0	0	0	0	0	0	0
4/22/2024	11:45 AM	0	0	0	0	0	0	0	0	0	0	0	0	0
4/22/2024	12:00 PM	0	0	0	0	0	0	0	0	0	0	0	0	0
4/22/2024	12:15 PM	0	0	0	0	0	0	0	0	0	0	0	0	0
4/22/2024	12:30 PM	0	0	0	0	0	0	0	0	0	0	0	0	0
4/22/2024	12:45 PM	0	0	0	0	0	0	0	0	0	0	0	0	0
4/22/2024	1:00 PM	0	0	0	0	0	0	0	0	0	0	0	0	0
4/22/2024	1:15 PM	0	0	0	0	0	0	0	0	0	0	0	0	0
4/22/2024	1:30 PM	0	0	0	0	0	0	0	0	0	0	0	0	0
4/22/2024	1:45 PM	0	0	0	0	0	0	0	0	0	0	0	0	0
4/22/2024	2:00 PM	0	0	0	0	0	0	0	0	0	0	0	0	0
4/22/2024	2:15 PM	0	0	0	0	0	0	0	0	0	0	0	0	0
4/22/2024	2:30 PM	0	0	0	0	0	0	0	0	0	0	0	0	0
4/22/2024	2:45 PM	0	0	0	0	0	0	0	0	0	0	0	0	0
4/22/2024	3:00 PM	0	0	0	0	0	0	0	0	0	0	0	0	0
4/22/2024	3:15 PM	0	0	0	0	0	0	0	0	0	0	0	0	0
4/22/2024	3:30 PM	0	0	0	0	0	0	0	0	0	0	0	0	0
4/22/2024	3:45 PM	0	0	0	0	0	0	0	0	0	0	0	0	0
4/22/2024	4:00 PM	0	0	0	0	0	0	0	0	0	0	0	0	0
4/22/2024	4:15 PM	0	0	0	0	0	0	0	0	0	0	0	0	0
4/22/2024	4:30 PM	0	0	0	0	0	0	0	0	0	0	0	0	0
4/22/2024	4:45 PM	0	0	0	0	0	0	0	0	0	0	0	0	0
4/22/2024	5:00 PM	0	0	0	0	0	0	0	0	0	0	0	0	0
4/22/2024	5:15 PM	0	0	0	0	0	0	0	0	0	0	0	0	0
4/22/2024	5:30 PM	0	0	0	0	0	0	0	0	0	0	0	0	0
4/22/2024	5:45 PM	0	0	0	0	0	0	0	0	0	0	0	0	0
4/22/2024	6:00 PM	0	0	0	0	0	0	0	0	0	0	0	0	0
4/22/2024	6:15 PM	0	0	0	0	0	0	0	0	0	0	0	0	0
4/22/2024	6:30 PM	0	0	0	0	0	0	0	0	0	0	0	0	0
4/22/2024	6:45 PM	0	0	0	0	0	0	0	0	0	0	0	0	0
4/22/2024	7:00 PM	0	0	0	0	0	0	0	0	0	0	0	0	0
4/22/2024	7:15 PM	0	0	0	0	0	0	0	0	0	0	0	0	0
4/22/2024	7:30 PM	0	0	0	0	0	0	0	0	0	0	0	0	0
4/22/2024	7:45 PM	0	0	0	0	0	0	0	0	0	0	0	0	0
4/22/2024	8:00 PM	0	0	0	0	0	0	0	0	0	0	0	0	0
4/22/2024	8:15 PM	0	0	0	0	0	0	0	0	0	0	0	0	0
4/22/2024	8:30 PM	0	0	0	0	0	0	0	0	0	0	0	0	0
4/22/2024	8:45 PM	0	0	0	0	0	0	0	0	0	0	0	0	0
4/22/2024	9:00 PM	0	0	0	0	0	0	0	0	0	0	0	0	0
4/22/2024	9:15 PM	0	0	0	0	0	0	0	0	0	0	0	0	0
4/22/2024	9:30 PM	0	0	0	0	0	0	0	0	0	0	0	0	0
4/22/2024	9:45 PM	0	0	0	0	0	0	0	0	0	0	0	0	0
4/22/2024	10:00 PM	0	0	0	0	0	0	0	0	0	0	0	0	0
4/22/2024	10:15 PM	0	0	0	0	0	0	0	0	0	0	0	0	0
4/22/2024	10:30 PM	0	0	0	0	0	0	0	0	0	0	0	0	0
4/22/2024	10:45 PM	0	0	0	0	0	0	0	0	0	0	0	0	0
4/22/2024	11:00 PM	0	0	0	0	0	0	0	0	0	0	0	0	0
4/22/2024	11:15 PM	0	0	0	0	0	0	0	0	0	0	0	0	0
4/22/2024	11:30 PM	0	0	0	0	0	0	0	0	0	0	0	0	0
4/22/2024	11:45 PM	0	0	0	0	0	0	0	0	0	0	0	0	0

4/23/2024	12:00 AM	0	0	0	0	0	0	0	0	0	0	0	0	0
4/23/2024	12:15 AM	0	0	0	0	0	0	0	0	0	0	0	0	0
4/23/2024	12:30 AM	0	0	0	0	0	0	0	0	0	0	0	0	0
4/23/2024	12:45 AM	0	0	0	0	0	0	0	0	0	0	0	0	0
4/23/2024	1:00 AM	0	0	0	0	0	0	0	0	0	0	0	0	0
4/23/2024	1:15 AM	0	0	0	0	0	0	0	0	0	0	0	0	0
4/23/2024	1:30 AM	0	0	0	0	0	0	0	0	0	0	0	0	0
4/23/2024	1:45 AM	0	0	0	0	0	0	0	0	0	0	0	0	0
4/23/2024	2:00 AM	0	0	0	0	0	0	0	0	0	0	0	0	0
4/23/2024	2:15 AM	0	0	0	0	0	0	0	0	0	0	0	0	0
4/23/2024	2:30 AM	0	0	0	0	0	0	0	0	0	0	0	0	0
4/23/2024	2:45 AM	0	0	0	0	0	0	0	0	0	0	0	0	0
4/23/2024	3:00 AM	0	0	0	0	0	0	0	0	0	0	0	0	0
4/23/2024	3:15 AM	0	0	0	0	0	0	0	0	0	0	0	0	0
4/23/2024	3:30 AM	0	0	0	0	0	0	0	0	0	0	0	0	0
4/23/2024	3:45 AM	0	0	0	0	0	0	0	0	0	0	0	0	0
4/23/2024	4:00 AM	0	0	0	0	0	0	0	0	0	0	0	0	0
4/23/2024	4:15 AM	0	0	0	0	0	0	0	0	0	0	0	0	0
4/23/2024	4:30 AM	0	0	0	0	0	0	0	0	0	0	0	0	0
4/23/2024	4:45 AM	0	0	0	0	0	0	0	0	0	0	0	0	0
4/23/2024	5:00 AM	0	0	0	0	0	0	0	0	0	0	0	0	0
4/23/2024	5:15 AM	0	0	0	0	0	0	0	0	0	0	0	0	0
4/23/2024	5:30 AM	0	0	0	0	0	0	0	0	0	0	0	0	0
4/23/2024	5:45 AM	0	0	0	0	0	0	0	0	0	0	0	0	0
4/23/2024	6:00 AM	0	0	0	0	0	0	0	0	0	0	0	0	0
4/23/2024	6:15 AM	0	0	0	0	0	0	0	0	0	0	0	0	0
4/23/2024	6:30 AM	0	0	0	0	0	0	0	0	0	0	0	0	0
4/23/2024	6:45 AM	0	0	0	0	0	0	0	0	0	0	0	0	0
4/23/2024	7:00 AM	0	0	0	0	0	0	0	0	0	0	0	0	0
4/23/2024	7:15 AM	0	0	0	0	0	0	0	0	0	0	0	0	0
4/23/2024	7:30 AM	0	0	0	0	0	0	0	0	0	0	0	0	0
4/23/2024	7:45 AM	0	0	0	0	0	0	0	0	0	0	0	0	0
4/23/2024	8:00 AM	0	0	0	0	0	0	0	0	0	0	0	0	0
4/23/2024	8:15 AM	0	0	0	0	0	0	0	0	0	0	0	0	0
4/23/2024	8:30 AM	0	0	0	0	0	0	0	0	0	0	0	0	0
4/23/2024	8:45 AM	0	0	0	0	0	0	0	0	0	0	0	0	0
4/23/2024	9:00 AM	0	0	0	0	0	0	0	0	0	0	0	0	0
4/23/2024	9:15 AM	0	0	0	0	0	0	0	0	0	0	0	0	0
4/23/2024	9:30 AM	0	0	0	0	0	0	0	0	0	0	0	0	0
4/23/2024	9:45 AM	0	0	0	0	0	0	0	0	0	0	0	0	0
4/23/2024	10:00 AM	0	0	0	0	0	0	0	0	0	0	0	0	0
4/23/2024	10:15 AM	0	0	0	0	0	0	0	0	0	0	0	0	0
4/23/2024	10:30 AM	0	0	0	0	0	0	0	0	0	0	0	0	0
4/23/2024	10:45 AM	0	0	0	0	0	0	0	0	0	0	0	0	0
4/23/2024	11:00 AM	0	0	0	0	0	0	0	0	0	0	0	0	0
4/23/2024	11:15 AM	0	0	0	0	0	0	0	0	0	0	0	0	0
4/23/2024	11:30 AM	0	0	0	0	0	0	0	0	0	0	0	0	0
4/23/2024	11:45 AM	0	0	0	0	0	0	0	0	0	0	0	0	0
4/23/2024	12:00 PM	0	0	0	0	0	0	0	0	0	0	0	0	0
4/23/2024	12:15 PM	0	0	0	0	0	0	0	0	0	0	0	0	0
4/23/2024	12:30 PM	0	0	0	0	0	0	0	0	0	0	0	0	0
4/23/2024	12:45 PM	0	0	0	0	0	0	0	0	0	0	0	0	0
4/23/2024	1:00 PM	0	0	0	0	0	0	0	0	0	0	0	0	0
4/23/2024	1:15 PM	0	0	0	0	0	0	0	0	0	0	0	0	0
4/23/2024	1:30 PM	0	0	0	0	0	0	0	0	0	0	0	0	0
4/23/2024	1:45 PM	0	0	0	0	0	0	0	0	0	0	0	0	0
4/23/2024	2:00 PM	0	0	0	0	0	0	0	0	0	0	0	0	0
4/23/2024	2:15 PM	0	0	0	0	0	0	0	0	0	0	0	0	0
4/23/2024	2:30 PM	0	0	0	0	0	0	0	0	0	0	0	0	0
4/23/2024	2:45 PM	0	0	0	0	0	0	0	0	0	0	0	0	0
4/23/2024	3:00 PM	0	0	0	0	0	0	0	0	0	0	0	0	0
4/23/2024	3:15 PM	0	0	0	0	0	0	0	0	0	0	0	0	0
4/23/2024	3:30 PM	0	0	0	0	0	0	0	0	0	0	0	0	0
4/23/2024	3:45 PM	0	0	0	0	0	0	0	0	0	0	0	0	0
4/23/2024	4:00 PM	0	0	0	0	0	0	0	0	0	0	0	0	0
4/23/2024	4:15 PM	0	0	0	0	0	0	0	0	0	0	0	0	0
4/23/2024	4:30 PM	0	0	0	0	0	0	0	0	0	0	0	0	0
4/23/2024	4:45 PM	0	0	0	0	0	0	0	0	0	0	0	0	0
4/23/2024	5:00 PM	0	0	0	0	0	0	0	0	0	0	0	0	0
4/23/2024	5:15 PM	0	0	0	0	0	0	0	0	0	0	0	0	0
4/23/2024	5:30 PM	0	0	0	0	0	0	0	0	0	0	0	0	0
4/23/2024	5:45 PM	0	0	0	0	0	0	0	0	0	0	0	0	0
4/23/2024	6:00 PM	0	0	0	0	0	0	0	0	0	0	0	0	0
4/23/2024	6:15 PM	0	0	0	0	0	0	0	0	0	0	0	0	0
4/23/2024	6:30 PM	0	0	0	0	0	0	0	0	0	0	0	0	0
4/23/2024	6:45 PM	0	0	0	0	0	0	0	0	0	0	0	0	0
4/23/2024	7:00 PM	0	0	0	0	0	0	0	0	0	0	0	0	0
4/23/2024	7:15 PM	0	0	0	0	0	0	0	0	0	0	0	0	0
4/23/2024	7:30 PM	0	0	0	0	0	0	0	0	0	0	0	0	0
4/23/2024	7:45 PM	0	0	0	0	0	0	0	0	0	0	0	0	0
4/23/2024	8:00 PM	0	0	0	0	0	0	0	0	0	0	0	0	0
4/23/2024	8:15 PM	0	0	0	0	0	0	0	0	0	0	0	0	0
4/23/2024	8:30 PM	0	0	0	0	0	0	0	0	0	0	0	0	0
4/23/2024	8:45 PM	0	0	0	0	0	0	0	0	0	0	0	0	0
4/23/2024	9:00 PM	0	0	0	0	0	0	0	0	0	0	0	0	0
4/23/2024	9:15 PM	0	0	0	0	0	0	0	0	0	0	0	0	0
4/23/2024	9:30 PM	0	0	0	0	0	0	0	0	0	0	0	0	0
4/23/2024	9:45 PM	0	0	0	0	0	0	0	0	0	0	0	0	0
4/23/2024	10:00 PM	0	0	0	0	0	0	0	0	0	0	0	0	0
4/23/2024	10:15 PM	0	0	0	0	0	0	0	0	0	0	0	0	0
4/23/2024	10:30 PM	0	0	0	0	0	0	0	0	0	0	0	0	0
4/23/2024	10:45 PM	0	0	0	0	0	0	0	0	0	0	0	0	0
4/23/2024	11:00 PM	0	0	0	0	0	0	0	0	0	0	0	0	0
4/23/2024	11:15 PM	0	0	0	0	0	0	0	0	0	0	0	0	0
4/23/2024	11:30 PM	0	0	0	0	0	0	0	0	0	0	0	0	0
4/23/2024	11:45 PM	0	0	0	0	0	0	0	0	0	0	0	0	0

4/24/2024	12:00 AM	0	0	0	0	0	0	0	0	0	0	0	0	0
4/24/2024	12:15 AM	0	0	0	0	0	0	0	0	0	0	0	0	0
4/24/2024	12:30 AM	0	0	0	0	0	0	0	0	0	0	0	0	0
4/24/2024	12:45 AM	0	0	0	0	0	0	0	0	0	0	0	0	0
4/24/2024	1:00 AM	0	0	0	0	0	0	0	0	0	0	0	0	0
4/24/2024	1:15 AM	0	0	0	0	0	0	0	0	0	0	0	0	0
4/24/2024	1:30 AM	0	0	0	0	0	0	0	0	0	0	0	0	0
4/24/2024	1:45 AM	0	0	0	0	0	0	0	0	0	0	0	0	0
4/24/2024	2:00 AM	0	0	0	0	0	0	0	0	0	0	0	0	0
4/24/2024	2:15 AM	0	0	0	0	0	0	0	0	0	0	0	0	0
4/24/2024	2:30 AM	0	0	0	0	0	0	0	0	0	0	0	0	0
4/24/2024	2:45 AM	0	0	0	0	0	0	0	0	0	0	0	0	0
4/24/2024	3:00 AM	0	0	0	0	0	0	0	0	0	0	0	0	0
4/24/2024	3:15 AM	0	0	0	0	0	0	0	0	0	0	0	0	0
4/24/2024	3:30 AM	0	0	0	0	0	0	0	0	0	0	0	0	0
4/24/2024	3:45 AM	0	0	0	0	0	0	0	0	0	0	0	0	0
4/24/2024	4:00 AM	0	0	0	0	0	0	0	0	0	0	0	0	0
4/24/2024	4:15 AM	0	0	0	0	0	0	0	0	0	0	0	0	0
4/24/2024	4:30 AM	0	0	0	0	0	0	0	0	0	0	0	0	0
4/24/2024	4:45 AM	0	0	0	0	0	0	0	0	0	0	0	0	0
4/24/2024	5:00 AM	0	0	0	0	0	0	0	0	0	0	0	0	0
4/24/2024	5:15 AM	0	0	0	0	0	0	0	0	0	0	0	0	0
4/24/2024	5:30 AM	0	0	0	0	0	0	0	0	0	0	0	0	0
4/24/2024	5:45 AM	0	0	0	0	0	0	0	0	0	0	0	0	0
4/24/2024	6:00 AM	0	0	0	0	0	0	0	0	0	0	0	0	0
4/24/2024	6:15 AM	0	0	0	0	0	0	0	0	0	0	0	0	0
4/24/2024	6:30 AM	0	0	0	0	0	0	0	0	0	0	0	0	0
4/24/2024	6:45 AM	0	0	0	0	0	0	0	0	0	0	0	0	0
4/24/2024	7:00 AM	0	0	0	0	0	0	0	0	0	0	0	0	0
4/24/2024	7:15 AM	0	0	0	0	0	0	0	0	0	0	0	0	0
4/24/2024	7:30 AM	0	0	0	0	0	0	0	0	0	0	0	0	0
4/24/2024	7:45 AM	0	0	0	0	0	0	0	0	0	0	0	0	0
4/24/2024	8:00 AM	0	0	0	0	0	0	0	0	0	0	0	0	0
4/24/2024	8:15 AM	0	0	0	0	0	0	0	0	0	0	0	0	0
4/24/2024	8:30 AM	0	0	0	0	0	0	0	0	0	0	0	0	0
4/24/2024	8:45 AM	0	0	0	0	0	0	0	0	0	0	0	0	0
4/24/2024	9:00 AM	0	0	0	0	0	0	0	0	0	0	0	0	0
4/24/2024	9:15 AM	0	0	0	0	0	0	0	0	0	0	0	0	0
4/24/2024	9:30 AM	0	0	0	0	0	0	0	0	0	0	0	0	0
4/24/2024	9:45 AM	0	0	0	0	0	0	0	0	0	0	0	0	0
4/24/2024	10:00 AM	0	0	0	0	0	0	0	0	0	0	0	0	0
4/24/2024	10:15 AM	0	0	0	0	0	0	0	0	0	0	0	0	0
4/24/2024	10:30 AM	0	0	0	0	0	0	0	0	0	0	0	0	0
4/24/2024	10:45 AM	0	0	0	0	0	0	0	0	0	0	0	0	0
4/24/2024	11:00 AM	0	0	0	0	0	0	0	0	0	0	0	0	0
4/24/2024	11:15 AM	0	0	0	0	0	0	0	0	0	0	0	0	0
4/24/2024	11:30 AM	0	0	0	0	0	0	0	0	0	0	0	0	0
4/24/2024	11:45 AM	0	0	0	0	0	0	0	0	0	0	0	0	0
4/24/2024	12:00 PM	0	0	0	0	0	0	0	0	0	0	0	0	0
4/24/2024	12:15 PM	0	0	0	0	0	0	0	0	0	0	0	0	0
4/24/2024	12:30 PM	0	0	0	0	0	0	0	0	0	0	0	0	0
4/24/2024	12:45 PM	0	0	0	0	0	0	0	0	0	0	0	0	0
4/24/2024	1:00 PM	0	0	0	0	0	0	0	0	0	0	0	0	0
4/24/2024	1:15 PM	0	0	0	0	0	0	0	0	0	0	0	0	0
4/24/2024	1:30 PM	0	0	0	0	0	0	0	0	0	0	0	0	0
4/24/2024	1:45 PM	0	0	0	0	0	0	0	0	0	0	0	0	0
4/24/2024	2:00 PM	0	0	0	0	0	0	0	0	0	0	0	0	0
4/24/2024	2:15 PM	0	0	0	0	0	0	0	0	0	0	0	0	0
4/24/2024	2:30 PM	0	0	0	0	0	0	0	0	0	0	0	0	0
4/24/2024	2:45 PM	0	0	0	0	0	0	0	0	0	0	0	0	0
4/24/2024	3:00 PM	0	0	0	0	0	0	0	0	0	0	0	0	0
4/24/2024	3:15 PM	0	0	0	0	0	0	0	0	0	0	0	0	0
4/24/2024	3:30 PM	0	0	0	0	0	0	0	0	0	0	0	0	0
4/24/2024	3:45 PM	0	0	0	0	0	0	0	0	0	0	0	0	0
4/24/2024	4:00 PM	0	0	0	0	0	0	0	0	0	0	0	0	0
4/24/2024	4:15 PM	0	0	0	0	0	0	0	0	0	0	0	0	0
4/24/2024	4:30 PM	0	0	0	0	0	0	0	0	0	0	0	0	0
4/24/2024	4:45 PM	0	0	0	0	0	0	0	0	0	0	0	0	0
4/24/2024	5:00 PM	0	0	0	0	0	0	0	0	0	0	0	0	0
4/24/2024	5:15 PM	0	0	0	0	0	0	0	0	0	0	0	0	0
4/24/2024	5:30 PM	0	0	0	0	0	0	0	0	0	0	0	0	0
4/24/2024	5:45 PM	0	0	0	0	0	0	0	0	0	0	0	0	0
4/24/2024	6:00 PM	0	0	0	0	0	0	0	0	0	0	0	0	0
4/24/2024	6:15 PM	0	0	0	0	0	0	0	0	0	0	0	0	0
4/24/2024	6:30 PM	0	0	0	0	0	0	0	0	0	0	0	0	0
4/24/2024	6:45 PM	0	0	0	0	0	0	0	0	0	0	0	0	0
4/24/2024	7:00 PM	0	0	0	0	0	0	0	0	0	0	0	0	0
4/24/2024	7:15 PM	0	0	0	0	0	0	0	0	0	0	0	0	0
4/24/2024	7:30 PM	0	0	0	0	0	0	0	0	0	0	0	0	0
4/24/2024	7:45 PM	0	0	0	0	0	0	0	0	0	0	0	0	0
4/24/2024	8:00 PM	0	0	0	0	0	0	0	0	0	0	0	0	0
4/24/2024	8:15 PM	0	0	0	0	0	0	0	0	0	0	0	0	0
4/24/2024	8:30 PM	0	0	0	0	0	0	0	0	0	0	0	0	0
4/24/2024	8:45 PM	0	0	0	0	0	0	0	0	0	0	0	0	0
4/24/2024	9:00 PM	0	0	0	0	0	0	0	0	0	0	0	0	0
4/24/2024	9:15 PM	0	0	0	0	0	0	0	0	0	0	0	0	0
4/24/2024	9:30 PM	0	0	0	0	0	0	0	0	0	0	0	0	0
4/24/2024	9:45 PM	0	0	0	0	0	0	0	0	0	0	0	0	0
4/24/2024	10:00 PM	0	0	0	0	0	0	0	0	0	0	0	0	0
4/24/2024	10:15 PM	0	0	0	0	0	0	0	0	0	0	0	0	0
4/24/2024	10:30 PM	0	0	0	0	0	0	0	0	0	0	0	0	0
4/24/2024	10:45 PM	0	0	0	0	0	0	0	0	0	0	0	0	0
4/24/2024	11:00 PM	0	0	0	0	0	0	0	0	0	0	0	0	0
4/24/2024	11:15 PM	0	0	0	0	0	0	0	0	0	0	0	0	0
4/24/2024	11:30 PM	0	0	0	0	0	0	0	0	0	0	0	0	0
4/24/2024	11:45 PM	0	0	0	0	0	0	0	0	0	0	0	0	0

4/25/2024	12:00 AM	0	0	0	0	0	0	0	0	0	0	0	0	0
4/25/2024	12:15 AM	0	0	0	0	0	0	0	0	0	0	0	0	0
4/25/2024	12:30 AM	0	0	0	0	0	0	0	0	0	0	0	0	0
4/25/2024	12:45 AM	0	0	0	0	0	0	0	0	0	0	0	0	0
4/25/2024	1:00 AM	0	0	0	0	0	0	0	0	0	0	0	0	0
4/25/2024	1:15 AM	0	0	0	0	0	0	0	0	0	0	0	0	0
4/25/2024	1:30 AM	0	0	0	0	0	0	0	0	0	0	0	0	0
4/25/2024	1:45 AM	0	0	0	0	0	0	0	0	0	0	0	0	0
4/25/2024	2:00 AM	0	0	0	0	0	0	0	0	0	0	0	0	0
4/25/2024	2:15 AM	0	0	0	0	0	0	0	0	0	0	0	0	0
4/25/2024	2:30 AM	0	0	0	0	0	0	0	0	0	0	0	0	0
4/25/2024	2:45 AM	0	0	0	0	0	0	0	0	0	0	0	0	0
4/25/2024	3:00 AM	0	0	0	0	0	0	0	0	0	0	0	0	0
4/25/2024	3:15 AM	0	0	0	0	0	0	0	0	0	0	0	0	0
4/25/2024	3:30 AM	0	0	0	0	0	0	0	0	0	0	0	0	0
4/25/2024	3:45 AM	0	0	0	0	0	0	0	0	0	0	0	0	0
4/25/2024	4:00 AM	0	0	0	0	0	0	0	0	0	0	0	0	0
4/25/2024	4:15 AM	0	0	0	0	0	0	0	0	0	0	0	0	0
4/25/2024	4:30 AM	0	0	0	0	0	0	0	0	0	0	0	0	0
4/25/2024	4:45 AM	0	0	0	0	0	0	0	0	0	0	0	0	0
4/25/2024	5:00 AM	0	0	0	0	0	0	0	0	0	0	0	0	0
4/25/2024	5:15 AM	0	0	0	0	0	0	0	0	0	0	0	0	0
4/25/2024	5:30 AM	0	0	0	0	0	0	0	0	0	0	0	0	0
4/25/2024	5:45 AM	0	0	0	0	0	0	0	0	0	0	0	0	0
4/25/2024	6:00 AM	0	0	0	0	0	0	0	0	0	0	0	0	0
4/25/2024	6:15 AM	0	0	0	0	0	0	0	0	0	0	0	0	0
4/25/2024	6:30 AM	0	0	0	0	0	0	0	0	0	0	0	0	0
4/25/2024	6:45 AM	0	0	0	0	0	0	0	0	0	0	0	0	0
4/25/2024	7:00 AM	0	0	0	0	0	0	0	0	0	0	0	0	0
4/25/2024	7:15 AM	0	0	0	0	0	0	0	0	0	0	0	0	0
4/25/2024	7:30 AM	0	0	0	0	0	0	0	0	0	0	0	0	0
4/25/2024	7:45 AM	0	0	0	0	0	0	0	0	0	0	0	0	0
4/25/2024	8:00 AM	0	0	0	0	0	0	0	0	0	0	0	0	0
4/25/2024	8:15 AM	0	0	0	0	0	0	0	0	0	0	0	0	0
4/25/2024	8:30 AM	0	0	0	0	0	0	0	0	0	0	0	0	0
4/25/2024	8:45 AM	0	0	0	0	0	0	0	0	0	0	0	0	0
4/25/2024	9:00 AM	0	0	0	0	0	0	0	0	0	0	0	0	0
4/25/2024	9:15 AM	0	0	0	0	0	0	0	0	0	0	0	0	0
4/25/2024	9:30 AM	0	0	0	0	0	0	0	0	0	0	0	0	0
4/25/2024	9:45 AM	0	0	0	0	0	0	0	0	0	0	0	0	0
4/25/2024	10:00 AM	0	0	0	0	0	0	0	0	0	0	0	0	0
4/25/2024	10:15 AM	0	0	0	0	0	0	0	0	0	0	0	0	0
4/25/2024	10:30 AM	0	0	0	0	0	0	0	0	0	0	0	0	0
4/25/2024	10:45 AM	0	0	0	0	0	0	0	0	0	0	0	0	0
4/25/2024	11:00 AM	0	0	0	0	0	0	0	0	0	0	0	0	0
4/25/2024	11:15 AM	0	0	0	0	0	0	0	0	0	0	0	0	0
4/25/2024	11:30 AM	0	0	0	0	0	0	0	0	0	0	0	0	0
4/25/2024	11:45 AM	0	0	0	0	0	0	0	0	0	0	0	0	0
4/25/2024	12:00 PM	0	0	0	0	0	0	0	0	0	0	0	0	0
4/25/2024	12:15 PM	0	0	0	0	0	0	0	0	0	0	0	0	0
4/25/2024	12:30 PM	0	0	0	0	0	0	0	0	0	0	0	0	0
4/25/2024	12:45 PM	0	0	0	0	0	0	0	0	0	0	0	0	0
4/25/2024	1:00 PM	0	0	0	0	0	0	0	0	0	0	0	0	0
4/25/2024	1:15 PM	0	0	0	0	0	0	0	0	0	0	0	0	0
4/25/2024	1:30 PM	0	0	0	0	0	0	0	0	0	0	0	0	0
4/25/2024	1:45 PM	0	0	0	0	0	0	0	0	0	0	0	0	0
4/25/2024	2:00 PM	0	0	0	0	0	0	0	0	0	0	0	0	0
4/25/2024	2:15 PM	0	0	0	0	0	0	0	0	0	0	0	0	0
4/25/2024	2:30 PM	0	0	0	0	0	0	0	0	0	0	0	0	0
4/25/2024	2:45 PM	0	0	0	0	0	0	0	0	0	0	0	0	0
4/25/2024	3:00 PM	0	0	0	0	0	0	0	0	0	0	0	0	0
4/25/2024	3:15 PM	0	0	0	0	0	0	0	0	0	0	0	0	0
4/25/2024	3:30 PM	0	0	0	0	0	0	0	0	0	0	0	0	0
4/25/2024	3:45 PM	0	0	0	0	0	0	0	0	0	0	0	0	0
4/25/2024	4:00 PM	0	0	0	0	0	0	0	0	0	0	0	0	0
4/25/2024	4:15 PM	0	0	0	0	0	0	0	0	0	0	0	0	0
4/25/2024	4:30 PM	0	0	0	0	0	0	0	0	0	0	0	0	0
4/25/2024	4:45 PM	0	0	0	0	0	0	0	0	0	0	0	0	0
4/25/2024	5:00 PM	0	0	0	0	0	0	0	0	0	0	0	0	0
4/25/2024	5:15 PM	0	0	0	0	0	0	0	0	0	0	0	0	0
4/25/2024	5:30 PM	0	0	0	0	0	0	0	0	0	0	0	0	0
4/25/2024	5:45 PM	0	0	0	0	0	0	0	0	0	0	0	0	0
4/25/2024	6:00 PM	0	0	0	0	0	0	0	0	0	0	0	0	0
4/25/2024	6:15 PM	0	0	0	0	0	0	0	0	0	0	0	0	0
4/25/2024	6:30 PM	0	0	0	0	0	0	0	0	0	0	0	0	0
4/25/2024	6:45 PM	0	0	0	0	0	0	0	0	0	0	0	0	0
4/25/2024	7:00 PM	0	0	0	0	0	0	0	0	0	0	0	0	0
4/25/2024	7:15 PM	0	0	0	0	0	0	0	0	0	0	0	0	0
4/25/2024	7:30 PM	0	0	0	0	0	0	0	0	0	0	0	0	0
4/25/2024	7:45 PM	0	0	0	0	0	0	0	0	0	0	0	0	0
4/25/2024	8:00 PM	0	0	0	0	0	0	0	0	0	0	0	0	0
4/25/2024	8:15 PM	0	0	0	0	0	0	0	0	0	0	0	0	0
4/25/2024	8:30 PM	0	0	0	0	0	0	0	0	0	0	0	0	0
4/25/2024	8:45 PM	0	0	0	0	0	0	0	0	0	0	0	0	0
4/25/2024	9:00 PM	0	0	0	0	0	0	0	0	0	0	0	0	0
4/25/2024	9:15 PM	0	0	0	0	0	0	0	0	0	0	0	0	0
4/25/2024	9:30 PM	0	0	0	0	0	0	0	0	0	0	0	0	0
4/25/2024	9:45 PM	0	0	0	0	0	0	0	0	0	0	0	0	0
4/25/2024	10:00 PM	0	0	0	0	0	0	0	0	0	0	0	0	0
4/25/2024	10:15 PM	0	0	0	0	0	0	0	0	0	0	0	0	0
4/25/2024	10:30 PM	0	0	0	0	0	0	0	0	0	0	0	0	0
4/25/2024	10:45 PM	0	0	0	0	0	0	0	0	0	0	0	0	0
4/25/2024	11:00 PM	0	0	0	0	0	0	0	0	0	0	0	0	0
4/25/2024	11:15 PM	0	0	0	0	0	0	0	0	0	0	0	0	0
4/25/2024	11:30 PM	0	0	0	0	0	0	0	0	0	0	0	0	0
4/25/2024	11:45 PM	0	0	0	0	0	0	0	0	0	0	0	0	0

4/26/2024	12:00 AM	0	0	0	0	0	0	0	0	0	0	0	0	0
4/26/2024	12:15 AM	0	0	0	0	0	0	0	0	0	0	0	0	0
4/26/2024	12:30 AM	0	0	0	0	0	0	0	0	0	0	0	0	0
4/26/2024	12:45 AM	0	0	0	0	0	0	0	0	0	0	0	0	0
4/26/2024	1:00 AM	0	0	0	0	0	0	0	0	0	0	0	0	0
4/26/2024	1:15 AM	0	0	0	0	0	0	0	0	0	0	0	0	0
4/26/2024	1:30 AM	0	0	0	0	0	0	0	0	0	0	0	0	0
4/26/2024	1:45 AM	0	0	0	0	0	0	0	0	0	0	0	0	0
4/26/2024	2:00 AM	0	0	0	0	0	0	0	0	0	0	0	0	0
4/26/2024	2:15 AM	0	0	0	0	0	0	0	0	0	0	0	0	0
4/26/2024	2:30 AM	0	0	0	0	0	0	0	0	0	0	0	0	0
4/26/2024	2:45 AM	0	0	0	0	0	0	0	0	0	0	0	0	0
4/26/2024	3:00 AM	0	0	0	0	0	0	0	0	0	0	0	0	0
4/26/2024	3:15 AM	0	0	0	0	0	0	0	0	0	0	0	0	0
4/26/2024	3:30 AM	0	0	0	0	0	0	0	0	0	0	0	0	0
4/26/2024	3:45 AM	0	0	0	0	0	0	0	0	0	0	0	0	0
4/26/2024	4:00 AM	0	0	0	0	0	0	0	0	0	0	0	0	0
4/26/2024	4:15 AM	0	0	0	0	0	0	0	0	0	0	0	0	0
4/26/2024	4:30 AM	0	0	0	0	0	0	0	0	0	0	0	0	0
4/26/2024	4:45 AM	0	0	0	0	0	0	0	0	0	0	0	0	0
4/26/2024	5:00 AM	0	0	0	0	0	0	0	0	0	0	0	0	0
4/26/2024	5:15 AM	0	0	0	0	0	0	0	0	0	0	0	0	0
4/26/2024	5:30 AM	0	0	0	0	0	0	0	0	0	0	0	0	0
4/26/2024	5:45 AM	0	0	0	0	0	0	0	0	0	0	0	0	0
4/26/2024	6:00 AM	0	0	0	0	0	0	0	0	0	0	0	0	0
4/26/2024	6:15 AM	0	0	0	0	0	0	0	0	0	0	0	0	0
4/26/2024	6:30 AM	0	0	0	0	0	0	0	0	0	0	0	0	0
4/26/2024	6:45 AM	0	0	0	0	0	0	0	0	0	0	0	0	0
4/26/2024	7:00 AM	0	0	0	0	0	0	0	0	0	0	0	0	0
4/26/2024	7:15 AM	0	0	0	0	0	0	0	0	0	0	0	0	0
4/26/2024	7:30 AM	0	0	0	0	0	0	0	0	0	0	0	0	0
4/26/2024	7:45 AM	0	0	0	0	0	0	0	0	0	0	0	0	0
4/26/2024	8:00 AM	0	0	0	0	0	0	0	0	0	0	0	0	0
4/26/2024	8:15 AM	0	0	0	0	0	0	0	0	0	0	0	0	0
4/26/2024	8:30 AM	0	0	0	0	0	0	0	0	0	0	0	0	0
4/26/2024	8:45 AM	0	0	0	0	0	0	0	0	0	0	0	0	0
4/26/2024	9:00 AM	0	0	0	0	0	0	0	0	0	0	0	0	0
4/26/2024	9:15 AM	0	0	0	0	0	0	0	0	0	0	0	0	0
4/26/2024	9:30 AM	0	0	0	0	0	0	0	0	0	0	0	0	0
4/26/2024	9:45 AM	0	0	0	0	0	0	0	0	0	0	0	0	0
4/26/2024	10:00 AM	0	0	0	0	0	0	0	0	0	0	0	0	0
4/26/2024	10:15 AM	0	0	0	0	0	0	0	0	0	0	0	0	0
4/26/2024	10:30 AM	0	0	0	0	0	0	0	0	0	0	0	0	0
4/26/2024	10:45 AM	0	0	0	0	0	0	0	0	0	0	0	0	0
4/26/2024	11:00 AM	0	0	0	0	0	0	0	0	0	0	0	0	0
4/26/2024	11:15 AM	0	0	0	0	0	0	0	0	0	0	0	0	0
4/26/2024	11:30 AM	0	0	0	0	0	0	0	0	0	0	0	0	0
4/26/2024	11:45 AM	0	0	0	0	0	0	0	0	0	0	0	0	0
4/26/2024	12:00 PM	0	0	0	0	0	0	0	0	0	0	0	0	0
4/26/2024	12:15 PM	0	0	0	0	0	0	0	0	0	0	0	0	0
4/26/2024	12:30 PM	0	0	0	0	0	0	0	0	0	0	0	0	0
4/26/2024	12:45 PM	0	0	0	0	0	0	0	0	0	0	0	0	0
4/26/2024	1:00 PM	0	0	0	0	0	0	0	0	0	0	0	0	0
4/26/2024	1:15 PM	0	0	0	0	0	0	0	0	0	0	0	0	0
4/26/2024	1:30 PM	0	0	0	0	0	0	0	0	0	0	0	0	0
4/26/2024	1:45 PM	0	0	0	0	0	0	0	0	0	0	0	0	0
4/26/2024	2:00 PM	0	0	0	0	0	0	0	0	0	0	0	0	0
4/26/2024	2:15 PM	0	0	0	0	0	0	0	0	0	0	0	0	0
4/26/2024	2:30 PM	0	0	0	0	0	0	0	0	0	0	0	0	0
4/26/2024	2:45 PM	0	0	0	0	0	0	0	0	0	0	0	0	0
4/26/2024	3:00 PM	0	0	0	0	0	0	0	0	0	0	0	0	0
4/26/2024	3:15 PM	0	0	0	0	0	0	0	0	0	0	0	0	0
4/26/2024	3:30 PM	0	0	0	0	0	0	0	0	0	0	0	0	0
4/26/2024	3:45 PM	0	0	0	0	0	0	0	0	0	0	0	0	0
4/26/2024	4:00 PM	0	0	0	0	0	0	0	0	0	0	0	0	0
4/26/2024	4:15 PM	0	0	0	0	0	0	0	0	0	0	0	0	0
4/26/2024	4:30 PM	0	0	0	0	0	0	0	0	0	0	0	0	0
4/26/2024	4:45 PM	0	0	0	0	0	0	0	0	0	0	0	0	0
4/26/2024	5:00 PM	0	0	0	0	0	0	0	0	0	0	0	0	0
4/26/2024	5:15 PM	0	0	0	0	0	0	0	0	0	0	0	0	0
4/26/2024	5:30 PM	0	0	0	0	0	0	0	0	0	0	0	0	0
4/26/2024	5:45 PM	0	0	0	0	0	0	0	0	0	0	0	0	0
4/26/2024	6:00 PM	0	0	0	0	0	0	0	0	0	0	0	0	0
4/26/2024	6:15 PM	0	0	0	0	0	0	0	0	0	0	0	0	0
4/26/2024	6:30 PM	0	0	0	0	0	0	0	0	0	0	0	0	0
4/26/2024	6:45 PM	0	0	0	0	0	0	0	0	0	0	0	0	0
4/26/2024	7:00 PM	0	0	0	0	0	0	0	0	0	0	0	0	0
4/26/2024	7:15 PM	0	0	0	0	0	0	0	0	0	0	0	0	0
4/26/2024	7:30 PM	0	0	0	0	0	0	0	0	0	0	0	0	0
4/26/2024	7:45 PM	0	0	0	0	0	0	0	0	0	0	0	0	0
4/26/2024	8:00 PM	0	0	0	0	0	0	0	0	0	0	0	0	0
4/26/2024	8:15 PM	0	0	0	0	0	0	0	0	0	0	0	0	0
4/26/2024	8:30 PM	0	0	0	0	0	0	0	0	0	0	0	0	0
4/26/2024	8:45 PM	0	0	0	0	0	0	0	0	0	0	0	0	0
4/26/2024	9:00 PM	0	0	0	0	0	0	0	0	0	0	0	0	0
4/26/2024	9:15 PM	0	0	0	0	0	0	0	0	0	0	0	0	0
4/26/2024	9:30 PM	0	0	0	0	0	0	0	0	0	0	0	0	0
4/26/2024	9:45 PM	0	0	0	0	0	0	0	0	0	0	0	0	0
4/26/2024	10:00 PM	0	0	0	0	0	0	0	0	0	0	0	0	0
4/26/2024	10:15 PM	0	0	0	0	0	0	0	0	0	0	0	0	0
4/26/2024	10:30 PM	0	0	0	0	0	0	0	0	0	0	0	0	0
4/26/2024	10:45 PM	0	0	0	0	0	0	0	0	0	0	0	0	0
4/26/2024	11:00 PM	0	0	0	0	0	0	0	0	0	0	0	0	0
4/26/2024	11:15 PM	0	0	0	0	0	0	0	0	0	0	0	0	0
4/26/2024	11:30 PM	0	0	0	0	0	0	0	0	0	0	0	0	0
4/26/2024	11:45 PM	0	0	0	0	0	0	0	0	0	0	0	0	0

4/27/2024	12:00 AM	0	0	0	0	0	0	0	0	0	0	0	0	0
4/27/2024	12:15 AM	0	0	0	0	0	0	0	0	0	0	0	0	0
4/27/2024	12:30 AM	0	0	0	0	0	0	0	0	0	0	0	0	0
4/27/2024	12:45 AM	0	0	0	0	0	0	0	0	0	0	0	0	0
4/27/2024	1:00 AM	0	0	0	0	0	0	0	0	0	0	0	0	0
4/27/2024	1:15 AM	0	0	0	0	0	0	0	0	0	0	0	0	0
4/27/2024	1:30 AM	0	0	0	0	0	0	0	0	0	0	0	0	0
4/27/2024	1:45 AM	0	0	0	0	0	0	0	0	0	0	0	0	0
4/27/2024	2:00 AM	0	0	0	0	0	0	0	0	0	0	0	0	0
4/27/2024	2:15 AM	0	0	0	0	0	0	0	0	0	0	0	0	0
4/27/2024	2:30 AM	0	0	0	0	0	0	0	0	0	0	0	0	0
4/27/2024	2:45 AM	0	0	0	0	0	0	0	0	0	0	0	0	0
4/27/2024	3:00 AM	0	0	0	0	0	0	0	0	0	0	0	0	0
4/27/2024	3:15 AM	0	0	0	0	0	0	0	0	0	0	0	0	0
4/27/2024	3:30 AM	0	0	0	0	0	0	0	0	0	0	0	0	0
4/27/2024	3:45 AM	0	0	0	0	0	0	0	0	0	0	0	0	0
4/27/2024	4:00 AM	0	0	0	0	0	0	0	0	0	0	0	0	0
4/27/2024	4:15 AM	0	0	0	0	0	0	0	0	0	0	0	0	0
4/27/2024	4:30 AM	0	0	0	0	0	0	0	0	0	0	0	0	0
4/27/2024	4:45 AM	0	0	0	0	0	0	0	0	0	0	0	0	0
4/27/2024	5:00 AM	0	0	0	0	0	0	0	0	0	0	0	0	0
4/27/2024	5:15 AM	0	0	0	0	0	0	0	0	0	0	0	0	0
4/27/2024	5:30 AM	0	0	0	0	0	0	0	0	0	0	0	0	0
4/27/2024	5:45 AM	0	0	0	0	0	0	0	0	0	0	0	0	0
4/27/2024	6:00 AM	0	0	0	0	0	0	0	0	0	0	0	0	0
4/27/2024	6:15 AM	0	0	0	0	0	0	0	0	0	0	0	0	0
4/27/2024	6:30 AM	0	0	0	0	0	0	0	0	0	0	0	0	0
4/27/2024	6:45 AM	0	0	0	0	0	0	0	0	0	0	0	0	0
4/27/2024	7:00 AM	0	0	0	0	0	0	0	0	0	0	0	0	0
4/27/2024	7:15 AM	0	0	0	0	0	0	0	0	0	0	0	0	0
4/27/2024	7:30 AM	0	0	0	0	0	0	0	0	0	0	0	0	0
4/27/2024	7:45 AM	0	0	0	0	0	0	0	0	0	0	0	0	0
4/27/2024	8:00 AM	0	0	0	0	0	0	0	0	0	0	0	0	0
4/27/2024	8:15 AM	0	0	0	0	0	0	0	0	0	0	0	0	0
4/27/2024	8:30 AM	0	0	0	0	0	0	0	0	0	0	0	0	0
4/27/2024	8:45 AM	0	0	0	0	0	0	0	0	0	0	0	0	0
4/27/2024	9:00 AM	0	0	0	0	0	0	0	0	0	0	0	0	0
4/27/2024	9:15 AM	0	0	0	0	0	0	0	0	0	0	0	0	0
4/27/2024	9:30 AM	0	0	0	0	0	0	0	0	0	0	0	0	0
4/27/2024	9:45 AM	0	0	0	0	0	0	0	0	0	0	0	0	0
4/27/2024	10:00 AM	0	0	0	0	0	0	0	0	0	0	0	0	0
4/27/2024	10:15 AM	0	0	0	0	0	0	0	0	0	0	0	0	0
4/27/2024	10:30 AM	0	0	0	0	0	0	0	0	0	0	0	0	0
4/27/2024	10:45 AM	0	0	0	0	0	0	0	0	0	0	0	0	0
4/27/2024	11:00 AM	0	0	0	0	0	0	0	0	0	0	0	0	0
4/27/2024	11:15 AM	0	0	0	0	0	0	0	0	0	0	0	0	0
4/27/2024	11:30 AM	0	0	0	0	0	0	0	0	0	0	0	0	0
4/27/2024	11:45 AM	0	0	0	0	0	0	0	0	0	0	0	0	0
4/27/2024	12:00 PM	0	0	0	0	0	0	0	0	0	0	0	0	0
4/27/2024	12:15 PM	0	0	0	0	0	0	0	0	0	0	0	0	0
4/27/2024	12:30 PM	0	0	0	0	0	0	0	0	0	0	0	0	0
4/27/2024	12:45 PM	0	0	0	0	0	0	0	0	0	0	0	0	0
4/27/2024	1:00 PM	0	0	0	0	0	0	0	0	0	0	0	0	0
4/27/2024	1:15 PM	0	0	0	0	0	0	0	0	0	0	0	0	0
4/27/2024	1:30 PM	0	0	0	0	0	0	0	0	0	0	0	0	0
4/27/2024	1:45 PM	0	0	0	0	0	0	0	0	0	0	0	0	0
4/27/2024	2:00 PM	0	0	0	0	0	0	0	0	0	0	0	0	0
4/27/2024	2:15 PM	0	0	0	0	0	0	0	0	0	0	0	0	0
4/27/2024	2:30 PM	0	0	0	0	0	0	0	0	0	0	0	0	0
4/27/2024	2:45 PM	0	0	0	0	0	0	0	0	0	0	0	0	0
4/27/2024	3:00 PM	0	0	0	0	0	0	0	0	0	0	0	0	0
4/27/2024	3:15 PM	0	0	0	0	0	0	0	0	0	0	0	0	0
4/27/2024	3:30 PM	0	0	0	0	0	0	0	0	0	0	0	0	0
4/27/2024	3:45 PM	0	0	0	0	0	0	0	0	0	0	0	0	0
4/27/2024	4:00 PM	0	0	0	0	0	0	0	0	0	0	0	0	0
4/27/2024	4:15 PM	0	0	0	0	0	0	0	0	0	0	0	0	0
4/27/2024	4:30 PM	0	0	0	0	0	0	0	0	0	0	0	0	0
4/27/2024	4:45 PM	0	0	0	0	0	0	0	0	0	0	0	0	0
4/27/2024	5:00 PM	0	0	0	0	0	0	0	0	0	0	0	0	0
4/27/2024	5:15 PM	0	0	0	0	0	0	0	0	0	0	0	0	0
4/27/2024	5:30 PM	0	0	0	0	0	0	0	0	0	0	0	0	0
4/27/2024	5:45 PM	0	0	0	0	0	0	0	0	0	0	0	0	0
4/27/2024	6:00 PM	0	0	0	0	0	0	0	0	0	0	0	0	0
4/27/2024	6:15 PM	0	0	0	0	0	0	0	0	0	0	0	0	0
4/27/2024	6:30 PM	0	0	0	0	0	0	0	0	0	0	0	0	0
4/27/2024	6:45 PM	0	0	0	0	0	0	0	0	0	0	0	0	0
4/27/2024	7:00 PM	0	0	0	0	0	0	0	0	0	0	0	0	0
4/27/2024	7:15 PM	0	0	0	0	0	0	0	0	0	0	0	0	0
4/27/2024	7:30 PM	0	0	0	0	0	0	0	0	0	0	0	0	0
4/27/2024	7:45 PM	0	0	0	0	0	0	0	0	0	0	0	0	0
4/27/2024	8:00 PM	0	0	0	0	0	0	0	0	0	0	0	0	0
4/27/2024	8:15 PM	0	0	0	0	0	0	0	0	0	0	0	0	0
4/27/2024	8:30 PM	0	0	0	0	0	0	0	0	0	0	0	0	0
4/27/2024	8:45 PM	0	0	0	0	0	0	0	0	0	0	0	0	0
4/27/2024	9:00 PM	0	0	0	0	0	0	0	0	0	0	0	0	0
4/27/2024	9:15 PM	0	0	0	0	0	0	0	0	0	0	0	0	0
4/27/2024	9:30 PM	0	0	0	0	0	0	0	0	0	0	0	0	0
4/27/2024	9:45 PM	0	0	0	0	0	0	0	0	0	0	0	0	0
4/27/2024	10:00 PM	0	0	0	0	0	0	0	0	0	0	0	0	0
4/27/2024	10:15 PM	0	0	0	0	0	0	0	0	0	0	0	0	0
4/27/2024	10:30 PM	0	0	0	0	0	0	0	0	0	0	0	0	0
4/27/2024	10:45 PM	0	0	0	0	0	0	0	0	0	0	0	0	0
4/27/2024	11:00 PM	0	0	0	0	0	0	0	0	0	0	0	0	0
4/27/2024	11:15 PM	0	0	0	0	0	0	0	0	0	0	0	0	0
4/27/2024	11:30 PM	0	0	0	0	0	0	0	0	0	0	0	0	0
4/27/2024	11:45 PM	0	0	0	0	0	0	0	0	0	0	0	0	0

SB
File Name:
Start Date: 4/21/2024
Start Time: 0
Site Code: 75 Lane 2 SB
Station ID: 1
Location 1: I-20, north of Bush River Rd
Location 2:

Date	Time	1	2	3	4	5	6	7	8	9	10	11	12	13
4/21/2024	12:00 AM	0	187	16	0	0	0	0	0	13	0	0	0	0
4/21/2024	12:15 AM	0	159	16	0	0	0	0	0	11	0	0	0	0
4/21/2024	12:30 AM	0	141	16	0	0	1	0	0	10	0	0	0	0
4/21/2024	12:45 AM	0	129	17	1	0	1	0	0	8	0	0	0	0
4/21/2024	1:00 AM	0	120	15	1	0	1	0	0	10	0	0	0	0
4/21/2024	1:15 AM	0	109	11	1	1	1	0	0	11	0	0	0	0
4/21/2024	1:30 AM	0	115	10	1	2	0	0	0	8	0	0	0	0
4/21/2024	1:45 AM	0	113	11	0	2	0	0	0	7	0	0	0	0
4/21/2024	2:00 AM	0	98	12	0	3	0	0	0	5	0	0	0	0
4/21/2024	2:15 AM	0	90	12	0	2	0	0	0	6	0	0	0	0
4/21/2024	2:30 AM	0	77	12	0	1	0	0	0	6	0	0	0	0
4/21/2024	2:45 AM	0	63	14	0	1	0	0	0	6	0	0	0	0
4/21/2024	3:00 AM	0	63	12	0	0	0	0	0	8	0	0	0	0
4/21/2024	3:15 AM	0	65	11	1	0	0	0	0	8	0	0	0	0
4/21/2024	3:30 AM	0	57	9	2	0	0	0	0	9	0	0	0	0
4/21/2024	3:45 AM	0	65	6	2	0	0	0	0	10	0	0	0	0
4/21/2024	4:00 AM	0	61	6	2	1	0	0	0	10	0	0	0	0
4/21/2024	4:15 AM	0	65	6	1	1	0	0	0	12	0	0	0	0
4/21/2024	4:30 AM	0	74	5	0	1	0	0	0	14	0	0	0	0
4/21/2024	4:45 AM	0	83	3	0	1	0	0	0	17	0	0	0	0
4/21/2024	5:00 AM	0	100	2	0	1	0	0	0	16	0	0	0	0
4/21/2024	5:15 AM	0	106	4	0	1	0	0	0	14	0	0	0	0
4/21/2024	5:30 AM	0	127	11	0	2	0	0	0	12	0	0	0	0
4/21/2024	5:45 AM	0	136	22	0	2	0	0	0	13	0	0	0	0
4/21/2024	6:00 AM	0	142	34	0	2	0	0	0	11	0	0	0	0
4/21/2024	6:15 AM	0	158	44	0	3	0	0	0	9	0	0	0	0
4/21/2024	6:30 AM	1	154	45	0	3	0	0	0	10	0	0	0	0
4/21/2024	6:45 AM	1	171	46	1	3	1	0	0	7	0	0	0	0
4/21/2024	7:00 AM	1	186	45	1	2	2	0	0	10	0	1	0	0
4/21/2024	7:15 AM	2	189	43	1	2	2	0	0	12	0	1	0	0
4/21/2024	7:30 AM	2	208	54	2	3	2	0	0	16	1	1	0	0
4/21/2024	7:45 AM	3	236	57	1	4	1	0	0	17	1	1	0	0
4/21/2024	8:00 AM	3	259	61	1	5	0	0	0	17	1	0	0	0
4/21/2024	8:15 AM	3	299	70	2	4	0	0	0	18	2	0	0	0
4/21/2024	8:30 AM	2	334	82	2	3	0	0	0	17	1	0	0	0
4/21/2024	8:45 AM	1	369	98	2	3	0	0	0	16	1	0	0	0
4/21/2024	9:00 AM	1	405	115	2	3	0	0	0	22	1	0	0	0
4/21/2024	9:15 AM	0	433	120	1	3	1	0	0	25	0	1	0	0
4/21/2024	9:30 AM	0	449	130	0	3	1	0	1	29	0	1	0	0
4/21/2024	9:45 AM	0	470	124	1	2	1	0	1	32	0	1	0	0
4/21/2024	10:00 AM	0	476	127	1	2	2	0	1	34	0	1	0	0
4/21/2024	10:15 AM	0	487	127	1	2	1	0	1	38	0	0	0	0
4/21/2024	10:30 AM	0	516	116	1	3	1	0	0	43	0	0	0	0
4/21/2024	10:45 AM	0	514	137	0	3	1	0	0	50	0	0	0	0
4/21/2024	11:00 AM	0	563	149	0	3	0	0	2	50	0	0	0	0
4/21/2024	11:15 AM	0	622	157	0	3	0	0	2	46	0	0	0	0
4/21/2024	11:30 AM	0	650	163	1	2	0	0	3	38	0	0	0	0
4/21/2024	11:45 AM	0	669	165	1	3	0	0	5	32	0	0	0	0
4/21/2024	12:00 PM	0	672	156	1	4	1	0	3	30	0	0	0	0
4/21/2024	12:15 PM	0	662	159	1	5	1	0	3	32	0	0	0	0
4/21/2024	12:30 PM	0	673	157	0	4	4	0	5	29	0	1	0	0
4/21/2024	12:45 PM	0	697	141	0	4	5	0	3	25	0	1	0	0
4/21/2024	1:00 PM	1	698	133	1	2	4	0	3	25	0	1	0	0
4/21/2024	1:15 PM	1	707	128	1	2	5	0	3	23	0	1	0	0
4/21/2024	1:30 PM	2	695	131	1	3	2	0	2	28	0	0	0	0
4/21/2024	1:45 PM	2	679	133	1	3	3	0	2	34	0	0	0	0
4/21/2024	2:00 PM	1	679	142	0	3	3	0	2	33	0	0	1	0
4/21/2024	2:15 PM	1	655	148	0	3	2	0	2	34	0	0	1	0
4/21/2024	2:30 PM	0	645	139	0	5	2	0	0	35	1	0	1	0
4/21/2024	2:45 PM	1	638	136	0	4	2	0	0	37	1	0	1	0
4/21/2024	3:00 PM	1	637	129	0	7	2	0	1	41	2	0	0	0
4/21/2024	3:15 PM	1	649	118	0	8	2	0	2	41	2	0	0	0
4/21/2024	3:30 PM	1	676	127	0	6	2	0	2	38	1	0	0	0
4/21/2024	3:45 PM	0	676	142	0	7	0	0	2	31	1	0	0	0
4/21/2024	4:00 PM	0	653	144	1	4	1	0	1	32	0	0	0	0
4/21/2024	4:15 PM	1	638	144	1	3	1	0	0	35	0	0	0	0
4/21/2024	4:30 PM	1	592	134	1	3	1	0	0	34	0	0	0	0
4/21/2024	4:45 PM	1	571	122	2	3	2	0	0	41	0	0	0	0
4/21/2024	5:00 PM	1	560	122	2	4	2	0	0	43	0	0	0	0
4/21/2024	5:15 PM	0	540	134	2	3	2	0	0	38	0	0	0	0
4/21/2024	5:30 PM	1	558	138	2	2	2	0	0	40	1	0	0	0
4/21/2024	5:45 PM	1	552	132	1	4	1	0	0	34	1	0	0	0
4/21/2024	6:00 PM	1	546	128	0	4	1	0	0	26	1	0	0	0
4/21/2024	6:15 PM	1	539	118	0	5	1	0	0	30	1	0	0	0
4/21/2024	6:30 PM	0	495	116	0	5	2	0	1	34	0	2	0	0
4/21/2024	6:45 PM	0	495	120	0	2	2	0	2	32	0	2	0	0
4/21/2024	7:00 PM	0	469	108	0	2	2	0	2	31	0	2	0	0
4/21/2024	7:15 PM	0	444	101	0	1	2	0	2	31	0	3	0	0
4/21/2024	7:30 PM	0	433	93	0	1	1	0	1	25	0	1	0	0
4/21/2024	7:45 PM	0	402	75	0	2	1	0	0	29	0	1	0	0
4/21/2024	8:00 PM	0	382	67	0	1	1	0	0	28	0	1	0	0
4/21/2024	8:15 PM	0	345	51	1	4	1	0	0	23	0	0	0	0
4/21/2024	8:30 PM	0	316	38	1	4	1	0	1	27	0	1	0	0
4/21/2024	8:45 PM	0	291	33	1	4	1	0	1	28	0	1	0	0
4/21/2024	9:00 PM	0	260	35	1	4	0	0	1	33	0	4	0	0
4/21/2024	9:15 PM	0	263	36	0	1	1	0	1	36	0	6	0	0
4/21/2024	9:30 PM	0	248	31	1	1	1	0	0	33	0	6	0	0
4/21/2024	9:45 PM	0	221	30	2	0	1	0	0	29	0	7	0	0
4/21/2024	10:00 PM	0	206	24	4	0	1	0	0	23	0	5	0	0
4/21/2024	10:15 PM	0	175	21	4	0	0	0	0	17	0	4	0	0
4/21/2024	10:30 PM	0	148	19	4	0	0	0	0	15	0	4	0	0
4/21/2024	10:45 PM	0	132	14	3	2	1	0	0	17	0	4	0	0
4/21/2024	11:00 PM	0	120	10	1	3	1	0	0	16	0	3	0	0
4/21/2024	11:15 PM	0	82	7	1	3	1	0	0	14	0	2	0	0
4/21/2024	11:30 PM	0	55	6	0	3	1	0	0	9	0	1	0	0
4/21/2024	11:45 PM	0	24	3	0	1	0	0	0	3	0	0	0	0

4/22/2024	12:00 AM	0	75	15	1	1	2	0	0	21	0	1	0	0
4/22/2024	12:15 AM	0	66	12	1	1	1	0	0	19	0	1	0	0
4/22/2024	12:30 AM	0	59	10	1	2	2	0	0	14	0	0	0	0
4/22/2024	12:45 AM	0	52	7	0	2	1	0	0	11	0	0	0	0
4/22/2024	1:00 AM	0	51	8	0	1	2	0	0	11	0	0	0	0
4/22/2024	1:15 AM	0	51	9	0	1	2	0	0	17	0	0	0	0
4/22/2024	1:30 AM	0	47	13	0	0	1	0	0	15	0	0	0	0
4/22/2024	1:45 AM	0	47	13	0	0	1	0	0	15	0	0	0	0
4/22/2024	2:00 AM	0	42	15	0	1	0	0	0	20	0	0	0	0
4/22/2024	2:15 AM	0	47	17	0	1	0	0	0	14	0	0	0	0
4/22/2024	2:30 AM	0	52	15	0	2	0	0	0	18	0	0	0	0
4/22/2024	2:45 AM	0	57	20	0	2	2	0	0	21	0	0	0	0
4/22/2024	3:00 AM	0	68	21	0	1	2	0	0	19	0	0	0	0
4/22/2024	3:15 AM	0	72	20	0	1	2	0	0	19	0	0	0	0
4/22/2024	3:30 AM	0	76	21	0	1	3	0	0	19	0	0	0	0
4/22/2024	3:45 AM	0	95	20	0	3	1	0	0	21	0	1	0	0
4/22/2024	4:00 AM	0	114	22	0	4	1	0	0	24	0	1	0	0
4/22/2024	4:15 AM	0	128	24	0	6	2	0	0	33	0	1	0	0
4/22/2024	4:30 AM	0	172	33	0	6	2	0	1	37	0	1	0	0
4/22/2024	4:45 AM	0	204	42	1	6	4	0	1	41	0	0	0	0
4/22/2024	5:00 AM	0	249	58	1	6	4	0	2	41	0	0	0	0
4/22/2024	5:15 AM	0	305	77	1	7	5	0	2	37	0	0	0	0
4/22/2024	5:30 AM	0	352	100	1	8	6	0	1	39	0	0	0	0
4/22/2024	5:45 AM	0	404	138	0	9	4	0	3	36	0	0	0	0
4/22/2024	6:00 AM	0	434	157	0	15	8	0	2	52	0	0	0	0
4/22/2024	6:15 AM	0	473	191	0	17	15	0	3	54	1	0	1	0
4/22/2024	6:30 AM	0	530	209	0	23	16	0	6	64	4	0	1	0
4/22/2024	6:45 AM	0	570	215	1	23	20	0	7	70	4	0	1	0
4/22/2024	7:00 AM	0	605	217	1	22	18	0	7	63	4	0	2	0
4/22/2024	7:15 AM	0	607	231	1	19	11	1	8	71	4	0	1	0
4/22/2024	7:30 AM	0	578	258	1	16	11	1	7	75	1	0	1	0
4/22/2024	7:45 AM	0	524	256	2	23	8	2	6	88	1	0	1	0
4/22/2024	8:00 AM	0	500	260	2	23	10	2	8	88	1	0	0	0
4/22/2024	8:15 AM	0	472	251	2	29	10	1	7	91	0	0	0	0
4/22/2024	8:30 AM	0	436	223	3	30	9	2	8	88	0	0	0	0
4/22/2024	8:45 AM	0	432	215	2	26	10	2	9	90	1	0	0	0
4/22/2024	9:00 AM	0	419	212	2	29	9	2	10	95	1	0	0	0
4/22/2024	9:15 AM	0	425	209	2	26	7	3	12	100	2	0	0	0
4/22/2024	9:30 AM	0	446	201	1	29	8	3	11	110	4	0	0	0
4/22/2024	9:45 AM	0	445	205	0	29	8	2	9	119	4	0	0	0
4/22/2024	10:00 AM	1	429	214	1	26	6	3	8	114	5	0	0	0
4/22/2024	10:15 AM	1	424	209	2	26	7	2	8	122	5	0	0	0
4/22/2024	10:30 AM	1	409	211	2	23	4	1	6	131	3	0	0	0
4/22/2024	10:45 AM	1	419	204	2	23	5	1	5	131	2	0	0	0
4/22/2024	11:00 AM	0	447	205	1	25	6	1	5	136	1	0	0	0
4/22/2024	11:15 AM	2	468	202	0	21	9	1	4	137	1	0	0	0
4/22/2024	11:30 AM	2	496	199	0	21	12	1	5	130	1	0	0	0
4/22/2024	11:45 AM	2	501	192	0	23	10	2	11	121	2	0	0	0
4/22/2024	12:00 PM	2	497	195	2	19	12	1	12	125	2	0	0	0
4/22/2024	12:15 PM	0	473	192	3	28	8	1	14	115	2	0	0	0
4/22/2024	12:30 PM	0	455	202	3	26	7	3	16	113	3	0	0	0
4/22/2024	12:45 PM	0	473	212	3	26	8	4	11	112	4	0	0	0
4/22/2024	1:00 PM	0	489	201	1	28	5	6	9	119	5	0	0	0
4/22/2024	1:15 PM	0	511	208	0	23	6	9	6	116	4	0	0	0
4/22/2024	1:30 PM	1	533	206	1	23	6	8	5	113	4	0	0	0
4/22/2024	1:45 PM	1	535	208	3	20	6	8	8	134	3	0	0	0
4/22/2024	2:00 PM	1	540	213	3	15	7	9	9	142	3	0	0	0
4/22/2024	2:15 PM	1	556	210	3	17	10	6	10	155	3	0	0	0
4/22/2024	2:30 PM	0	573	199	2	20	10	5	11	160	2	0	0	0
4/22/2024	2:45 PM	0	591	204	0	24	18	3	7	153	1	0	0	0
4/22/2024	3:00 PM	1	621	200	0	26	19	1	6	141	1	0	0	0
4/22/2024	3:15 PM	1	656	211	0	32	19	1	8	141	2	0	0	0
4/22/2024	3:30 PM	1	672	230	0	32	21	1	10	139	3	0	0	0
4/22/2024	3:45 PM	1	707	233	0	33	12	1	13	124	5	0	0	0
4/22/2024	4:00 PM	0	735	225	0	37	12	0	14	132	4	0	0	0
4/22/2024	4:15 PM	0	727	223	0	30	11	0	12	141	3	0	0	0
4/22/2024	4:30 PM	0	752	232	0	29	11	1	7	139	2	0	0	0
4/22/2024	4:45 PM	1	792	231	0	28	13	1	7	149	0	0	0	0
4/22/2024	5:00 PM	1	766	245	1	23	12	1	8	145	1	0	0	0
4/22/2024	5:15 PM	1	759	229	1	19	11	1	8	121	1	0	0	0
4/22/2024	5:30 PM	1	704	199	1	16	9	0	10	125	2	0	0	0
4/22/2024	5:45 PM	1	604	177	1	8	6	0	7	105	2	0	0	0
4/22/2024	6:00 PM	1	538	162	0	11	7	0	6	100	1	0	0	0
4/22/2024	6:15 PM	3	475	148	0	11	7	0	6	103	1	0	0	0
4/22/2024	6:30 PM	3	442	139	0	8	5	1	8	91	0	0	0	0
4/22/2024	6:45 PM	2	414	128	0	9	7	1	10	105	0	0	0	0
4/22/2024	7:00 PM	2	406	100	0	7	6	1	9	99	0	3	0	0
4/22/2024	7:15 PM	0	400	87	0	6	4	1	9	93	1	4	0	0
4/22/2024	7:30 PM	0	366	74	0	9	5	0	7	87	1	5	0	0
4/22/2024	7:45 PM	0	343	65	0	7	4	0	6	74	1	5	0	0
4/22/2024	8:00 PM	0	329	69	0	5	3	0	7	67	1	2	0	0
4/22/2024	8:15 PM	0	309	65	0	6	3	0	6	66	0	1	0	0
4/22/2024	8:30 PM	0	314	64	1	3	2	0	5	61	0	1	0	0
4/22/2024	8:45 PM	0	280	60	1	4	2	0	7	52	0	1	0	0
4/22/2024	9:00 PM	0	241	55	2	3	1	0	5	50	0	2	0	0
4/22/2024	9:15 PM	0	217	52	2	2	1	0	4	42	0	5	0	0
4/22/2024	9:30 PM	0	184	46	1	2	1	0	3	44	0	6	0	0
4/22/2024	9:45 PM	0	182	45	1	1	0	0	0	40	0	7	0	0
4/22/2024	10:00 PM	0	172	45	0	2	0	0	0	35	0	10	0	0
4/22/2024	10:15 PM	0	165	47	0	1	0	0	0	38	0	8	0	0
4/22/2024	10:30 PM	0	143	45	1	1	0	0	0	28	0	9	0	0
4/22/2024	10:45 PM	0	131	42	3	1	2	0	0	29	0	8	0	0
4/22/2024	11:00 PM	0	120	35	3	0	2	0	0	24	0	4	0	0
4/22/2024	11:15 PM	0	80	21	3	0	2	0	0	13	0	3	0	0
4/22/2024	11:30 PM	0	55	12	2	0	2	0	0	10	0	0	0	0
4/22/2024	11:45 PM	0	25	4	0	0	0	0	0	4	0	0	0	0

4/23/2024	12:00 AM	0	63	23	0	4	0	0	0	24	0	4	0	0
4/23/2024	12:15 AM	0	63	18	0	6	0	0	0	23	0	3	0	0
4/23/2024	12:30 AM	0	61	10	0	6	1	0	0	18	0	3	0	0
4/23/2024	12:45 AM	0	51	11	0	5	1	0	0	17	0	1	0	0
4/23/2024	1:00 AM	0	45	8	0	4	1	0	0	20	0	1	0	0
4/23/2024	1:15 AM	0	42	9	0	3	1	0	0	18	0	1	0	0
4/23/2024	1:30 AM	0	39	10	0	3	0	0	0	22	0	2	0	0
4/23/2024	1:45 AM	0	44	9	0	3	0	0	0	27	0	3	0	0
4/23/2024	2:00 AM	0	51	10	0	2	1	0	0	27	0	2	0	0
4/23/2024	2:15 AM	0	47	10	0	1	1	0	0	32	0	2	0	0
4/23/2024	2:30 AM	0	52	10	0	2	3	0	0	35	0	2	0	0
4/23/2024	2:45 AM	0	59	13	0	4	3	0	0	44	0	1	0	0
4/23/2024	3:00 AM	0	76	15	0	4	2	0	0	51	0	2	0	0
4/23/2024	3:15 AM	0	87	20	0	7	2	0	0	51	0	2	0	0
4/23/2024	3:30 AM	0	85	22	0	7	0	0	0	48	0	2	0	0
4/23/2024	3:45 AM	0	98	23	0	6	0	0	0	37	0	3	0	0
4/23/2024	4:00 AM	0	93	23	0	5	0	0	0	37	0	3	0	0
4/23/2024	4:15 AM	0	106	24	0	3	0	0	0	40	0	4	0	0
4/23/2024	4:30 AM	0	127	24	0	6	0	0	0	53	0	3	0	0
4/23/2024	4:45 AM	0	134	31	0	6	0	0	0	65	0	2	0	0
4/23/2024	5:00 AM	0	166	39	0	11	0	0	0	60	0	2	0	0
4/23/2024	5:15 AM	0	208	48	0	13	1	0	0	68	0	1	0	0
4/23/2024	5:30 AM	0	256	81	0	13	3	0	0	74	0	2	0	0
4/23/2024	5:45 AM	1	332	102	0	13	9	1	2	69	0	2	0	0
4/23/2024	6:00 AM	1	379	139	0	17	11	1	4	81	0	2	0	0
4/23/2024	6:15 AM	1	414	167	0	18	12	1	5	72	0	2	0	0
4/23/2024	6:30 AM	1	465	180	0	19	13	1	5	67	0	1	0	0
4/23/2024	6:45 AM	1	494	202	0	21	10	0	5	66	0	1	0	0
4/23/2024	7:00 AM	1	522	209	0	21	13	0	6	67	0	0	0	0
4/23/2024	7:15 AM	2	524	214	0	22	13	0	5	76	0	1	0	0
4/23/2024	7:30 AM	3	510	227	0	23	12	0	8	74	0	1	0	0
4/23/2024	7:45 AM	3	483	210	0	30	11	0	8	78	0	1	0	0
4/23/2024	8:00 AM	3	479	219	2	28	9	1	10	80	0	2	0	0
4/23/2024	8:15 AM	2	478	220	3	29	8	1	14	99	0	1	0	0
4/23/2024	8:30 AM	1	469	195	4	26	9	1	11	115	0	1	0	0
4/23/2024	8:45 AM	0	457	209	5	21	9	1	12	119	0	1	0	0
4/23/2024	9:00 AM	0	450	183	3	21	8	0	10	125	1	1	0	0
4/23/2024	9:15 AM	0	446	163	2	23	12	0	8	107	1	1	0	0
4/23/2024	9:30 AM	0	442	152	1	27	11	0	10	92	1	1	0	0
4/23/2024	9:45 AM	0	435	143	1	25	12	0	13	99	2	1	0	0
4/23/2024	10:00 AM	1	423	152	1	27	15	0	17	106	1	1	0	0
4/23/2024	10:15 AM	1	411	164	2	30	14	0	16	118	1	1	0	0
4/23/2024	10:30 AM	2	409	175	2	28	16	0	15	139	1	2	0	0
4/23/2024	10:45 AM	2	415	169	1	34	15	0	14	150	0	2	0	0
4/23/2024	11:00 AM	2	409	169	1	28	13	0	11	145	0	1	0	0
4/23/2024	11:15 AM	2	402	197	0	22	12	0	16	141	0	1	0	0
4/23/2024	11:30 AM	1	393	196	0	22	11	0	23	138	0	0	0	0
4/23/2024	11:45 AM	1	403	192	1	19	12	0	20	141	1	0	0	0
4/23/2024	12:00 PM	0	424	196	1	18	11	0	18	144	3	0	0	0
4/23/2024	12:15 PM	1	452	165	1	16	9	0	14	157	4	0	0	0
4/23/2024	12:30 PM	1	479	172	1	18	6	0	7	154	4	0	0	0
4/23/2024	12:45 PM	2	506	189	1	21	5	0	9	145	3	0	0	0
4/23/2024	1:00 PM	2	504	187	2	22	9	0	10	152	1	0	0	0
4/23/2024	1:15 PM	1	504	193	3	25	13	0	10	158	0	0	0	0
4/23/2024	1:30 PM	4	539	196	7	22	14	0	12	158	0	1	0	0
4/23/2024	1:45 PM	3	542	198	6	19	13	1	11	154	2	2	0	0
4/23/2024	2:00 PM	5	570	203	5	19	9	2	12	144	2	2	1	0
4/23/2024	2:15 PM	5	594	221	4	15	6	3	14	145	2	2	1	0
4/23/2024	2:30 PM	3	592	225	0	18	8	3	16	140	2	1	1	0
4/23/2024	2:45 PM	3	619	230	1	18	8	3	20	163	0	0	1	0
4/23/2024	3:00 PM	2	647	237	2	17	6	2	19	169	1	0	0	0
4/23/2024	3:15 PM	2	678	250	2	18	7	2	20	148	1	0	0	0
4/23/2024	3:30 PM	2	734	266	2	19	7	2	18	148	2	0	0	0
4/23/2024	3:45 PM	2	784	274	1	24	10	1	18	126	2	0	0	0
4/23/2024	4:00 PM	1	771	263	1	30	12	1	17	108	1	0	1	0
4/23/2024	4:15 PM	1	775	230	1	29	10	0	15	92	1	0	1	0
4/23/2024	4:30 PM	0	761	240	2	31	10	0	15	90	1	0	1	0
4/23/2024	4:45 PM	0	747	231	2	29	6	0	12	98	2	0	1	0
4/23/2024	5:00 PM	1	750	238	1	25	5	1	16	112	4	0	0	0
4/23/2024	5:15 PM	1	737	249	1	28	5	1	17	128	4	1	0	0
4/23/2024	5:30 PM	1	680	212	0	20	4	1	14	121	3	2	0	0
4/23/2024	5:45 PM	2	586	200	1	13	4	1	13	111	2	2	0	0
4/23/2024	6:00 PM	1	544	177	2	11	3	0	7	105	1	2	0	0
4/23/2024	6:15 PM	2	493	165	2	10	2	1	5	95	1	1	0	0
4/23/2024	6:30 PM	2	448	147	2	12	1	1	6	99	1	3	0	0
4/23/2024	6:45 PM	1	429	136	1	12	3	1	4	99	1	3	0	0
4/23/2024	7:00 PM	1	394	125	0	13	3	1	6	93	0	3	0	0
4/23/2024	7:15 PM	0	375	105	0	10	4	0	8	95	0	3	0	0
4/23/2024	7:30 PM	0	386	103	0	10	3	0	8	92	0	1	0	0
4/23/2024	7:45 PM	0	387	86	0	9	1	0	7	85	0	1	0	0
4/23/2024	8:00 PM	0	383	70	0	9	1	0	5	93	0	1	0	0
4/23/2024	8:15 PM	0	364	59	0	12	0	0	1	98	0	1	0	0
4/23/2024	8:30 PM	2	342	52	0	8	0	0	0	97	0	0	0	0
4/23/2024	8:45 PM	2	332	45	0	8	0	0	0	92	0	1	0	0
4/23/2024	9:00 PM	2	309	46	0	5	0	0	0	83	0	2	0	0
4/23/2024	9:15 PM	2	297	38	0	5	0	0	0	80	0	4	0	0
4/23/2024	9:30 PM	0	272	32	0	7	0	0	0	74	0	4	0	0
4/23/2024	9:45 PM	0	260	37	0	8	0	0	0	77	0	4	0	0
4/23/2024	10:00 PM	0	250	29	0	10	0	0	0	74	0	4	0	0
4/23/2024	10:15 PM	0	219	28	0	7	0	0	0	67	0	4	0	0
4/23/2024	10:30 PM	0	193	28	0	5	1	0	0	71	0	5	0	0
4/23/2024	10:45 PM	0	154	22	0	4	1	0	0	63	0	5	0	0
4/23/2024	11:00 PM	0	127	23	0	4	2	0	0	61	0	4	0	0
4/23/2024	11:15 PM	0	94	21	0	3	2	0	0	46	0	2	0	0
4/23/2024	11:30 PM	0	59	13	0	3	1	0	0	26	0	1	0	0
4/23/2024	11:45 PM	0	26	4	0	2	1	0	0	15	0	0	0	0

4/24/2024	12:00 AM	0	110	6	0	2	0	0	0	52	0	6	0	0
4/24/2024	12:15 AM	0	96	5	0	2	0	0	0	49	0	5	0	0
4/24/2024	12:30 AM	0	80	4	0	3	0	0	0	52	0	4	0	0
4/24/2024	12:45 AM	0	78	5	0	4	0	0	0	47	0	2	0	0
4/24/2024	1:00 AM	0	74	7	0	5	0	0	0	41	0	2	0	0
4/24/2024	1:15 AM	0	78	11	0	4	0	0	0	39	0	1	0	0
4/24/2024	1:30 AM	0	80	12	0	5	0	0	0	41	0	1	0	0
4/24/2024	1:45 AM	0	72	11	0	4	0	0	0	43	0	1	0	0
4/24/2024	2:00 AM	0	63	12	0	4	0	0	0	51	0	1	0	0
4/24/2024	2:15 AM	0	55	9	0	4	0	0	0	51	0	1	0	0
4/24/2024	2:30 AM	0	53	8	0	2	0	0	0	46	0	1	0	0
4/24/2024	2:45 AM	0	54	9	0	3	0	0	0	45	0	1	0	0
4/24/2024	3:00 AM	0	66	7	0	5	0	0	0	38	0	0	0	0
4/24/2024	3:15 AM	0	73	7	0	6	0	0	0	37	0	0	0	0
4/24/2024	3:30 AM	0	78	8	0	7	0	0	0	43	0	0	0	0
4/24/2024	3:45 AM	0	105	9	0	6	0	0	0	42	0	1	0	0
4/24/2024	4:00 AM	0	116	9	0	5	0	0	0	41	0	1	0	0
4/24/2024	4:15 AM	0	120	10	0	5	0	0	0	41	0	1	0	0
4/24/2024	4:30 AM	0	151	10	0	7	0	0	0	41	0	1	0	0
4/24/2024	4:45 AM	0	192	14	0	8	0	0	0	46	0	0	0	0
4/24/2024	5:00 AM	0	242	29	0	7	0	0	0	52	0	0	0	0
4/24/2024	5:15 AM	1	297	46	0	11	1	0	0	56	0	2	0	0
4/24/2024	5:30 AM	1	325	76	0	13	3	0	0	63	0	2	0	0
4/24/2024	5:45 AM	1	349	115	0	15	3	0	0	76	0	2	0	0
4/24/2024	6:00 AM	1	368	143	0	20	6	0	3	86	1	2	0	0
4/24/2024	6:15 AM	0	436	161	0	18	11	0	5	96	1	1	0	0
4/24/2024	6:30 AM	0	508	182	0	20	9	1	7	88	1	1	0	0
4/24/2024	6:45 AM	1	565	182	1	23	11	1	10	80	1	1	1	0
4/24/2024	7:00 AM	2	610	184	1	26	8	1	9	78	0	1	1	0
4/24/2024	7:15 AM	2	570	179	1	27	5	1	7	66	0	0	1	0
4/24/2024	7:30 AM	2	535	158	1	26	6	0	10	70	0	0	1	0
4/24/2024	7:45 AM	1	487	170	0	31	6	0	9	80	1	1	0	0
4/24/2024	8:00 AM	0	468	177	0	34	8	0	8	91	1	1	0	0
4/24/2024	8:15 AM	0	450	188	1	42	7	0	10	105	1	1	0	0
4/24/2024	8:30 AM	0	423	198	1	42	7	1	7	102	2	2	0	0
4/24/2024	8:45 AM	0	400	185	2	31	7	2	6	99	1	1	0	0
4/24/2024	9:00 AM	0	376	191	2	28	11	2	9	109	1	1	0	0
4/24/2024	9:15 AM	0	381	194	2	25	12	3	9	122	1	1	0	0
4/24/2024	9:30 AM	0	404	200	2	22	11	4	9	139	0	0	0	0
4/24/2024	9:45 AM	0	403	208	1	31	11	3	13	137	0	0	0	0
4/24/2024	10:00 AM	0	408	193	2	27	6	3	11	128	2	0	0	0
4/24/2024	10:15 AM	0	399	185	2	28	4	2	10	117	3	0	0	0
4/24/2024	10:30 AM	0	380	171	2	27	4	4	8	127	5	1	0	0
4/24/2024	10:45 AM	0	401	174	2	22	3	4	6	130	5	1	0	0
4/24/2024	11:00 AM	1	397	193	1	21	5	4	8	129	3	1	0	0
4/24/2024	11:15 AM	1	403	196	0	16	7	4	12	139	3	1	1	0
4/24/2024	11:30 AM	1	439	234	0	24	9	1	17	135	2	0	1	0
4/24/2024	11:45 AM	1	442	243	0	22	10	2	17	143	2	0	1	0
4/24/2024	12:00 PM	0	461	215	0	25	12	3	17	156	5	0	1	0
4/24/2024	12:15 PM	0	491	213	1	27	9	4	14	164	4	0	0	0
4/24/2024	12:30 PM	0	479	185	1	25	8	3	10	170	3	0	0	0
4/24/2024	12:45 PM	0	500	187	1	30	8	3	10	166	3	0	0	0
4/24/2024	1:00 PM	0	508	214	1	27	4	3	12	151	0	0	0	0
4/24/2024	1:15 PM	0	530	253	0	26	8	3	10	142	0	0	0	0
4/24/2024	1:30 PM	0	554	268	0	22	9	3	10	143	0	0	0	0
4/24/2024	1:45 PM	0	533	274	1	19	11	3	9	147	0	1	0	0
4/24/2024	2:00 PM	0	558	262	2	22	12	3	3	142	0	1	0	0
4/24/2024	2:15 PM	0	575	231	2	25	11	2	4	143	1	1	0	0
4/24/2024	2:30 PM	0	600	233	2	32	12	2	5	134	1	1	0	0
4/24/2024	2:45 PM	0	652	227	3	37	9	3	10	137	1	1	0	0
4/24/2024	3:00 PM	0	662	233	2	39	9	3	11	155	2	1	0	0
4/24/2024	3:15 PM	0	679	258	2	41	8	4	11	162	3	1	0	0
4/24/2024	3:30 PM	0	714	263	3	40	5	4	17	159	4	1	0	0
4/24/2024	3:45 PM	1	754	255	4	38	4	2	15	160	4	0	0	0
4/24/2024	4:00 PM	1	772	266	4	37	4	1	17	156	3	0	0	0
4/24/2024	4:15 PM	1	794	270	4	28	4	1	19	142	1	0	0	0
4/24/2024	4:30 PM	1	783	257	3	20	7	1	15	146	0	0	0	0
4/24/2024	4:45 PM	1	762	249	0	18	8	1	11	140	0	0	0	0
4/24/2024	5:00 PM	3	719	235	2	19	6	1	12	140	0	0	0	0
4/24/2024	5:15 PM	3	665	201	2	26	5	0	11	143	0	0	0	0
4/24/2024	5:30 PM	4	619	184	5	24	2	0	11	129	1	0	0	0
4/24/2024	5:45 PM	4	548	179	5	23	1	0	11	121	1	0	0	0
4/24/2024	6:00 PM	3	529	151	3	22	2	0	8	96	1	1	0	0
4/24/2024	6:15 PM	3	466	167	3	22	1	0	10	85	1	1	0	0
4/24/2024	6:30 PM	2	451	153	0	24	2	0	8	86	1	2	0	0
4/24/2024	6:45 PM	2	433	138	0	21	2	0	9	85	1	2	0	0
4/24/2024	7:00 PM	2	422	136	0	17	1	0	8	85	1	3	0	0
4/24/2024	7:15 PM	2	424	101	0	11	3	0	5	87	1	3	0	0
4/24/2024	7:30 PM	2	369	117	0	12	4	0	3	74	0	2	0	0
4/24/2024	7:45 PM	1	355	103	0	13	4	0	1	63	0	2	0	0
4/24/2024	8:00 PM	0	327	94	0	11	4	0	1	64	0	0	0	0
4/24/2024	8:15 PM	0	322	80	0	8	2	0	0	58	0	0	0	0
4/24/2024	8:30 PM	0	328	54	0	5	0	0	0	66	0	0	0	0
4/24/2024	8:45 PM	0	312	47	0	2	0	0	0	75	0	0	0	0
4/24/2024	9:00 PM	0	266	43	0	1	0	0	0	86	0	2	0	0
4/24/2024	9:15 PM	0	238	44	0	2	0	0	0	79	0	3	0	0
4/24/2024	9:30 PM	0	223	45	0	4	0	0	0	73	0	3	0	0
4/24/2024	9:45 PM	0	218	47	0	4	0	0	0	63	0	3	0	0
4/24/2024	10:00 PM	0	220	46	0	3	0	0	0	47	0	2	0	0
4/24/2024	10:15 PM	0	197	47	0	2	0	0	0	54	0	1	0	0
4/24/2024	10:30 PM	0	160	43	0	2	0	0	0	59	0	1	0	0
4/24/2024	10:45 PM	0	129	44	0	2	0	0	0	61	0	1	0	0
4/24/2024	11:00 PM	0	118	45	0	3	0	0	0	58	0	0	0	0
4/24/2024	11:15 PM	0	88	33	0	3	0	0	0	39	0	0	0	0
4/24/2024	11:30 PM	0	59	24	0	1	0	0	0	21	0	0	0	0
4/24/2024	11:45 PM	0	29	11	0	1	0	0	0	8	0	0	0	0

4/25/2024	12:00 AM	0	81	28	0	1	2	0	1	46	0	7	0	0
4/25/2024	12:15 AM	0	76	23	0	2	1	0	1	42	0	7	0	0
4/25/2024	12:30 AM	0	68	18	0	2	0	0	2	33	0	6	0	0
4/25/2024	12:45 AM	0	57	13	0	2	0	0	1	32	0	1	0	0
4/25/2024	1:00 AM	0	51	8	0	2	0	0	1	28	0	0	0	0
4/25/2024	1:15 AM	0	48	7	0	0	0	0	1	30	0	0	0	0
4/25/2024	1:30 AM	0	47	7	0	0	0	0	0	29	0	2	0	0
4/25/2024	1:45 AM	0	48	7	0	2	0	0	0	24	0	3	0	0
4/25/2024	2:00 AM	0	52	12	0	2	0	0	0	25	0	3	0	0
4/25/2024	2:15 AM	0	54	13	0	5	0	0	0	27	0	3	0	0
4/25/2024	2:30 AM	0	57	15	0	5	0	0	0	31	0	1	0	0
4/25/2024	2:45 AM	0	66	18	0	3	0	0	0	35	0	0	0	0
4/25/2024	3:00 AM	0	81	21	0	6	0	0	0	38	0	2	0	0
4/25/2024	3:15 AM	0	78	21	0	3	0	0	0	36	0	3	0	0
4/25/2024	3:30 AM	0	83	26	0	4	0	0	0	35	0	4	0	0
4/25/2024	3:45 AM	0	99	32	0	5	0	0	0	37	0	5	0	0
4/25/2024	4:00 AM	0	92	32	0	3	0	0	0	34	0	3	0	0
4/25/2024	4:15 AM	0	104	34	0	3	0	0	0	38	0	4	0	0
4/25/2024	4:30 AM	0	134	35	1	5	0	0	0	41	0	5	0	0
4/25/2024	4:45 AM	0	171	38	1	5	0	0	0	49	0	4	0	0
4/25/2024	5:00 AM	0	240	47	1	7	1	0	0	61	0	6	0	0
4/25/2024	5:15 AM	0	313	69	1	11	1	0	0	73	0	4	0	0
4/25/2024	5:30 AM	1	349	89	0	13	3	0	0	93	0	2	0	0
4/25/2024	5:45 AM	1	381	112	0	14	5	0	0	97	0	2	0	0
4/25/2024	6:00 AM	1	404	139	0	18	6	0	2	101	0	0	0	0
4/25/2024	6:15 AM	1	438	149	0	18	11	1	3	95	0	1	0	0
4/25/2024	6:30 AM	0	508	168	0	20	17	1	6	85	0	1	0	0
4/25/2024	6:45 AM	1	539	178	1	23	16	1	10	76	0	1	0	0
4/25/2024	7:00 AM	1	561	190	1	18	14	1	12	71	0	1	0	0
4/25/2024	7:15 AM	1	559	204	2	19	13	0	11	76	0	0	0	0
4/25/2024	7:30 AM	1	526	214	2	19	7	0	13	84	1	0	0	0
4/25/2024	7:45 AM	0	509	216	1	25	10	2	11	99	1	0	0	0
4/25/2024	8:00 AM	0	496	200	1	29	11	4	8	100	1	0	0	0
4/25/2024	8:15 AM	0	457	194	1	29	10	5	10	101	2	0	0	0
4/25/2024	8:30 AM	1	431	197	1	28	10	5	5	97	2	0	0	0
4/25/2024	8:45 AM	1	436	195	1	23	8	4	5	115	2	0	0	0
4/25/2024	9:00 AM	1	428	195	1	25	8	5	9	123	3	0	0	0
4/25/2024	9:15 AM	1	451	202	0	25	9	5	7	131	4	0	0	0
4/25/2024	9:30 AM	0	475	192	0	26	9	5	10	126	3	0	0	0
4/25/2024	9:45 AM	0	473	187	0	26	8	4	13	105	3	0	0	0
4/25/2024	10:00 AM	0	469	194	0	25	9	1	11	119	2	0	0	0
4/25/2024	10:15 AM	0	461	187	0	24	9	0	15	129	0	0	0	0
4/25/2024	10:30 AM	0	472	176	0	22	8	0	13	142	0	0	0	0
4/25/2024	10:45 AM	0	484	169	0	29	10	0	11	148	0	0	0	0
4/25/2024	11:00 AM	1	501	180	0	25	11	0	9	140	3	0	0	0
4/25/2024	11:15 AM	1	513	194	0	33	13	0	6	129	4	0	0	0
4/25/2024	11:30 AM	1	506	219	0	33	13	0	10	125	5	1	0	0
4/25/2024	11:45 AM	1	509	222	0	29	12	0	10	133	6	1	0	0
4/25/2024	12:00 PM	1	531	209	0	32	9	0	12	130	4	1	0	0
4/25/2024	12:15 PM	1	550	199	1	31	6	0	17	140	3	2	0	0
4/25/2024	12:30 PM	1	567	183	2	35	11	0	14	138	3	1	0	0
4/25/2024	12:45 PM	2	580	196	2	31	12	0	13	139	2	1	0	0
4/25/2024	1:00 PM	1	572	199	2	31	13	0	13	146	1	1	0	0
4/25/2024	1:15 PM	1	602	202	1	25	16	1	11	146	2	0	0	0
4/25/2024	1:30 PM	1	624	196	0	22	10	1	11	170	2	0	0	0
4/25/2024	1:45 PM	1	609	199	2	22	8	1	14	170	3	0	1	0
4/25/2024	2:00 PM	3	631	213	2	23	7	1	12	164	3	0	1	0
4/25/2024	2:15 PM	3	662	210	2	21	1	0	11	155	2	1	1	0
4/25/2024	2:30 PM	4	693	235	2	23	1	0	13	140	2	1	1	0
4/25/2024	2:45 PM	5	737	240	3	22	4	1	11	135	1	1	0	0
4/25/2024	3:00 PM	3	723	239	3	20	7	1	17	137	1	1	0	0
4/25/2024	3:15 PM	3	720	246	3	23	8	2	20	142	2	0	1	0
4/25/2024	3:30 PM	2	718	242	4	24	10	2	18	130	1	0	1	0
4/25/2024	3:45 PM	1	752	244	1	24	7	2	17	126	1	0	1	0
4/25/2024	4:00 PM	1	812	242	1	24	5	4	14	119	2	0	1	0
4/25/2024	4:15 PM	3	825	247	1	19	5	4	11	109	1	0	0	0
4/25/2024	4:30 PM	4	845	236	0	16	5	4	11	114	1	0	0	0
4/25/2024	4:45 PM	3	816	221	0	19	7	4	10	118	1	0	0	0
4/25/2024	5:00 PM	3	768	217	2	18	7	2	9	126	0	0	0	0
4/25/2024	5:15 PM	2	706	198	2	24	9	1	12	136	1	0	0	0
4/25/2024	5:30 PM	1	645	185	3	21	8	1	10	131	1	0	0	0
4/25/2024	5:45 PM	1	578	182	3	18	6	0	12	115	1	0	0	0
4/25/2024	6:00 PM	1	542	173	1	17	5	0	10	97	2	0	0	0
4/25/2024	6:15 PM	2	513	170	1	17	3	0	4	79	1	0	0	0
4/25/2024	6:30 PM	2	462	160	1	21	3	0	8	74	1	1	0	0
4/25/2024	6:45 PM	4	471	150	1	21	2	0	10	73	1	1	0	0
4/25/2024	7:00 PM	4	455	120	1	22	3	0	11	78	0	1	0	0
4/25/2024	7:15 PM	2	436	105	1	17	2	0	11	82	0	1	0	0
4/25/2024	7:30 PM	4	419	95	0	13	2	0	7	76	0	2	0	0
4/25/2024	7:45 PM	2	394	101	0	10	2	0	2	80	0	2	0	0
4/25/2024	8:00 PM	2	375	106	0	8	1	0	0	76	0	2	0	0
4/25/2024	8:15 PM	2	374	100	0	8	2	0	0	71	0	3	0	0
4/25/2024	8:30 PM	2	376	100	0	7	2	0	0	75	0	1	0	0
4/25/2024	8:45 PM	2	355	76	0	10	2	0	0	73	0	2	0	0
4/25/2024	9:00 PM	2	341	69	0	11	2	0	0	74	0	2	0	0
4/25/2024	9:15 PM	2	308	62	0	11	2	0	0	75	0	2	0	0
4/25/2024	9:30 PM	0	301	64	0	11	2	0	0	72	0	2	0	0
4/25/2024	9:45 PM	0	297	67	0	7	2	0	0	68	0	1	0	0
4/25/2024	10:00 PM	0	261	68	0	5	2	0	0	70	0	1	0	0
4/25/2024	10:15 PM	0	226	64	0	7	1	0	0	66	0	3	0	0
4/25/2024	10:30 PM	0	192	51	0	6	0	0	0	62	0	5	0	0
4/25/2024	10:45 PM	0	164	44	0	6	0	0	0	57	0	5	0	0
4/25/2024	11:00 PM	0	162	38	0	6	0	0	0	44	0	5	0	0
4/25/2024	11:15 PM	0	132	30	0	2	0	0	0	30	0	2	0	0
4/25/2024	11:30 PM	0	86	20	0	1	0	0	0	19	0	0	0	0
4/25/2024	11:45 PM	0	38	9	0	1	0	0	0	7	0	0	0	0

4/26/2024	12:00 AM	0	109	6	0	1	1	0	0	28	0	2	0	0
4/26/2024	12:15 AM	0	95	8	0	1	1	0	0	21	0	4	0	0
4/26/2024	12:30 AM	0	96	8	0	2	1	0	0	21	0	5	0	0
4/26/2024	12:45 AM	0	87	7	0	3	0	0	0	23	0	4	0	0
4/26/2024	1:00 AM	0	74	6	0	2	0	0	0	23	0	4	0	0
4/26/2024	1:15 AM	0	78	4	0	2	0	0	0	25	0	2	0	0
4/26/2024	1:30 AM	1	62	3	0	1	0	0	0	26	0	0	0	0
4/26/2024	1:45 AM	1	54	2	0	0	0	0	0	29	0	0	0	0
4/26/2024	2:00 AM	1	64	3	0	0	0	0	0	32	0	2	0	0
4/26/2024	2:15 AM	1	59	3	0	2	0	0	0	36	0	2	0	0
4/26/2024	2:30 AM	0	63	3	0	3	0	0	0	38	0	2	0	0
4/26/2024	2:45 AM	0	69	6	0	3	0	0	0	38	0	3	0	0
4/26/2024	3:00 AM	0	72	7	0	3	0	0	0	38	0	2	0	0
4/26/2024	3:15 AM	0	83	6	0	1	0	0	0	39	0	2	0	0
4/26/2024	3:30 AM	0	90	7	0	1	0	0	0	34	0	3	0	0
4/26/2024	3:45 AM	0	106	5	0	4	0	0	0	40	0	2	0	0
4/26/2024	4:00 AM	0	117	4	0	6	0	0	0	46	0	1	0	0
4/26/2024	4:15 AM	0	115	9	0	6	0	0	0	50	0	2	0	0
4/26/2024	4:30 AM	1	133	14	2	6	0	0	0	57	0	3	0	0
4/26/2024	4:45 AM	1	158	16	2	3	0	0	0	52	0	3	0	0
4/26/2024	5:00 AM	2	191	18	2	4	0	0	0	53	0	3	0	0
4/26/2024	5:15 AM	3	227	22	2	12	0	0	0	58	0	2	0	0
4/26/2024	5:30 AM	2	288	46	0	16	0	0	0	62	0	0	0	0
4/26/2024	5:45 AM	2	322	69	0	19	0	0	0	77	0	1	0	0
4/26/2024	6:00 AM	1	352	106	0	20	5	0	0	74	0	1	0	0
4/26/2024	6:15 AM	0	406	135	0	17	10	0	0	69	0	1	0	0
4/26/2024	6:30 AM	0	460	154	0	15	13	0	1	71	0	1	0	0
4/26/2024	6:45 AM	1	509	180	0	23	18	0	3	65	1	1	0	0
4/26/2024	7:00 AM	1	576	207	0	31	14	0	4	67	1	1	0	0
4/26/2024	7:15 AM	1	591	219	0	35	12	0	4	75	1	1	0	0
4/26/2024	7:30 AM	1	565	211	1	43	9	0	4	80	1	2	0	0
4/26/2024	7:45 AM	0	523	212	3	39	7	0	3	92	0	2	0	0
4/26/2024	8:00 AM	0	470	187	3	38	8	0	5	101	1	3	0	0
4/26/2024	8:15 AM	0	434	182	3	36	7	0	6	98	1	3	0	0
4/26/2024	8:30 AM	0	415	188	2	29	9	0	7	103	1	2	0	0
4/26/2024	8:45 AM	0	439	184	0	27	7	0	9	88	2	1	0	0
4/26/2024	9:00 AM	0	457	189	0	17	7	1	9	86	1	0	1	0
4/26/2024	9:15 AM	0	484	182	0	15	5	2	9	97	1	1	1	0
4/26/2024	9:30 AM	1	492	176	0	16	4	2	10	98	2	1	1	0
4/26/2024	9:45 AM	1	488	183	1	14	4	2	11	106	1	1	1	0
4/26/2024	10:00 AM	3	485	182	1	20	4	1	14	111	2	2	0	0
4/26/2024	10:15 AM	3	497	180	1	24	5	2	15	112	3	1	0	0
4/26/2024	10:30 AM	2	529	197	1	26	8	2	17	114	3	1	0	0
4/26/2024	10:45 AM	2	537	184	1	27	9	4	18	132	3	1	0	0
4/26/2024	11:00 AM	0	573	191	1	25	7	5	14	135	2	0	0	0
4/26/2024	11:15 AM	0	584	210	1	23	9	3	14	141	1	0	0	0
4/26/2024	11:30 AM	0	590	209	2	20	8	3	11	141	0	0	0	0
4/26/2024	11:45 AM	1	627	223	2	28	6	1	6	129	0	0	0	0
4/26/2024	12:00 PM	1	645	219	2	34	8	0	6	134	0	0	0	0
4/26/2024	12:15 PM	1	645	221	4	32	5	0	6	121	0	0	0	0
4/26/2024	12:30 PM	2	636	220	3	31	6	1	8	124	0	0	0	0
4/26/2024	12:45 PM	1	606	196	3	26	6	1	11	124	0	0	0	0
4/26/2024	1:00 PM	1	592	200	3	17	7	1	14	120	0	0	0	0
4/26/2024	1:15 PM	1	589	190	1	20	9	1	15	127	2	0	0	0
4/26/2024	1:30 PM	0	579	194	2	25	9	0	13	118	4	0	1	0
4/26/2024	1:45 PM	0	593	206	2	27	9	1	12	122	4	0	1	0
4/26/2024	2:00 PM	0	586	194	2	32	9	2	11	134	4	0	1	0
4/26/2024	2:15 PM	0	611	194	2	30	9	2	11	132	2	0	1	0
4/26/2024	2:30 PM	1	649	189	2	25	7	2	12	137	0	0	0	0
4/26/2024	2:45 PM	1	654	186	2	22	7	1	12	130	0	0	1	0
4/26/2024	3:00 PM	2	664	197	3	17	6	0	16	119	0	0	1	0
4/26/2024	3:15 PM	2	673	211	4	13	6	0	14	127	0	0	1	0
4/26/2024	3:30 PM	1	706	215	3	13	6	0	15	128	1	0	1	0
4/26/2024	3:45 PM	2	761	239	2	18	7	1	17	127	1	0	0	0
4/26/2024	4:00 PM	2	787	243	1	18	7	2	10	125	1	0	0	0
4/26/2024	4:15 PM	2	821	235	1	22	5	2	12	119	2	1	0	0
4/26/2024	4:30 PM	3	821	230	1	25	6	2	11	100	1	1	0	0
4/26/2024	4:45 PM	2	811	204	1	14	5	1	8	110	1	1	0	0
4/26/2024	5:00 PM	2	778	210	1	17	5	0	10	111	1	1	0	0
4/26/2024	5:15 PM	3	723	190	3	16	6	0	9	114	0	0	0	0
4/26/2024	5:30 PM	2	692	180	3	12	5	0	7	126	1	0	0	0
4/26/2024	5:45 PM	3	655	171	3	16	6	0	7	107	1	0	0	0
4/26/2024	6:00 PM	3	655	144	3	11	5	0	6	90	1	0	0	0
4/26/2024	6:15 PM	4	632	147	2	6	4	0	6	78	1	0	0	0
4/26/2024	6:30 PM	5	583	140	3	8	2	0	7	73	0	0	0	0
4/26/2024	6:45 PM	5	545	140	5	5	1	0	7	71	0	0	0	0
4/26/2024	7:00 PM	4	507	138	6	6	0	0	7	74	0	1	0	0
4/26/2024	7:15 PM	2	493	118	5	7	0	0	5	71	0	1	0	0
4/26/2024	7:30 PM	1	474	94	4	6	0	0	3	64	0	2	0	0
4/26/2024	7:45 PM	0	454	68	2	6	0	0	2	65	0	3	0	0
4/26/2024	8:00 PM	1	453	38	1	7	0	0	0	61	0	3	0	0
4/26/2024	8:15 PM	2	437	27	0	9	0	0	0	54	0	4	0	0
4/26/2024	8:30 PM	2	448	16	0	7	0	0	0	60	0	4	0	0
4/26/2024	8:45 PM	2	439	17	0	7	0	0	0	60	0	3	0	0
4/26/2024	9:00 PM	1	407	15	0	5	0	0	0	56	0	3	0	0
4/26/2024	9:15 PM	0	400	14	0	2	1	0	0	54	0	2	0	0
4/26/2024	9:30 PM	0	378	16	0	1	1	0	0	46	0	2	0	0
4/26/2024	9:45 PM	1	373	13	0	1	1	0	0	37	0	3	0	0
4/26/2024	10:00 PM	1	379	14	0	2	2	0	0	42	0	3	0	0
4/26/2024	10:15 PM	1	377	12	0	2	1	0	0	41	0	6	0	0
4/26/2024	10:30 PM	1	342	11	0	2	2	0	0	35	0	5	0	0
4/26/2024	10:45 PM	0	303	10	0	1	2	0	0	35	0	4	0	0
4/26/2024	11:00 PM	0	259	11	0	2	1	0	0	28	0	3	0	0
4/26/2024	11:15 PM	0	167	9	0	2	1	0	0	18	0	0	0	0
4/26/2024	11:30 PM	0	106	5	0	2	0	0	0	13	0	0	0	0
4/26/2024	11:45 PM	0	54	3	0	2	0	0	0	7	0	0	0	0

4/27/2024	12:00 AM	3	140	27	1	1	1	0	1	18	0	4	0	0
4/27/2024	12:15 AM	2	122	24	0	3	1	0	1	20	0	4	0	0
4/27/2024	12:30 AM	0	93	18	0	3	1	0	0	21	0	3	0	0
4/27/2024	12:45 AM	0	93	22	0	2	0	0	0	21	0	3	0	0
4/27/2024	1:00 AM	0	86	18	0	2	0	0	0	18	0	3	0	0
4/27/2024	1:15 AM	0	90	17	0	0	0	0	0	14	0	2	0	0
4/27/2024	1:30 AM	0	96	15	0	1	0	0	0	14	0	0	0	0
4/27/2024	1:45 AM	0	85	10	0	1	0	0	0	16	0	0	0	0
4/27/2024	2:00 AM	0	77	11	0	1	0	0	0	20	0	0	0	0
4/27/2024	2:15 AM	0	73	12	0	1	0	0	0	23	0	0	0	0
4/27/2024	2:30 AM	0	57	14	0	1	0	0	0	21	0	0	0	0
4/27/2024	2:45 AM	0	55	12	1	1	0	0	0	22	0	0	0	0
4/27/2024	3:00 AM	0	61	13	1	1	0	0	0	24	0	0	0	0
4/27/2024	3:15 AM	0	67	14	1	1	0	0	0	24	0	1	0	0
4/27/2024	3:30 AM	0	69	16	1	0	0	0	0	22	0	2	0	0
4/27/2024	3:45 AM	0	72	19	0	0	0	0	0	19	0	2	0	0
4/27/2024	4:00 AM	0	70	20	0	0	0	0	0	19	0	3	0	0
4/27/2024	4:15 AM	0	66	25	0	0	0	0	0	20	0	4	0	0
4/27/2024	4:30 AM	0	83	29	0	3	0	0	0	22	0	5	0	0
4/27/2024	4:45 AM	0	100	37	0	3	0	0	0	23	0	6	0	0
4/27/2024	5:00 AM	0	123	46	0	4	0	0	0	18	0	6	0	0
4/27/2024	5:15 AM	0	148	48	0	6	0	0	0	17	0	4	0	0
4/27/2024	5:30 AM	0	163	60	0	4	0	0	0	16	0	2	0	0
4/27/2024	5:45 AM	0	189	71	0	7	0	0	0	18	0	2	0	0
4/27/2024	6:00 AM	0	226	79	0	6	0	0	1	23	0	1	0	0
4/27/2024	6:15 AM	0	249	91	0	5	0	0	1	24	0	1	0	0
4/27/2024	6:30 AM	0	278	98	0	4	1	0	2	28	1	1	0	0
4/27/2024	6:45 AM	0	292	122	0	1	3	0	2	35	1	0	0	0
4/27/2024	7:00 AM	0	303	137	0	2	6	0	1	33	1	0	0	0
4/27/2024	7:15 AM	0	332	149	0	3	6	0	1	33	1	0	0	0
4/27/2024	7:30 AM	0	350	174	0	6	5	0	0	37	0	0	0	0
4/27/2024	7:45 AM	0	392	161	0	8	3	0	1	37	0	0	0	0
4/27/2024	8:00 AM	2	427	167	0	8	1	0	2	40	0	1	0	0
4/27/2024	8:15 AM	2	444	161	0	7	1	0	4	43	0	1	0	0
4/27/2024	8:30 AM	2	482	134	1	6	2	0	5	47	0	1	0	0
4/27/2024	8:45 AM	3	510	135	2	7	3	0	5	49	0	1	0	0
4/27/2024	9:00 AM	3	532	125	2	9	3	0	6	49	0	0	0	0
4/27/2024	9:15 AM	3	556	134	2	8	4	0	4	55	0	0	0	0
4/27/2024	9:30 AM	3	560	152	1	6	4	0	3	50	0	0	0	0
4/27/2024	9:45 AM	3	569	155	1	5	4	0	2	48	0	0	0	0
4/27/2024	10:00 AM	2	577	186	1	2	5	0	0	42	0	1	0	0
4/27/2024	10:15 AM	4	595	203	2	3	4	0	4	47	0	1	0	0
4/27/2024	10:30 AM	5	621	218	2	5	3	0	6	47	0	1	0	0
4/27/2024	10:45 AM	4	591	219	1	5	10	0	8	41	0	1	0	0
4/27/2024	11:00 AM	4	567	209	1	10	8	0	9	51	0	0	0	0
4/27/2024	11:15 AM	2	572	207	0	13	8	0	6	45	0	0	0	0
4/27/2024	11:30 AM	1	580	192	0	14	9	0	4	49	0	0	0	0
4/27/2024	11:45 AM	2	613	188	0	14	1	0	4	54	0	0	0	0
4/27/2024	12:00 PM	1	649	168	0	12	1	0	5	51	0	0	0	0
4/27/2024	12:15 PM	1	625	160	0	9	1	0	4	53	0	0	0	0
4/27/2024	12:30 PM	1	637	159	0	9	0	0	5	52	0	0	0	0
4/27/2024	12:45 PM	2	643	165	0	11	0	0	3	52	0	0	0	0
4/27/2024	1:00 PM	2	668	171	2	8	0	0	2	53	0	0	0	0
4/27/2024	1:15 PM	3	682	166	4	10	1	0	3	47	0	0	0	0
4/27/2024	1:30 PM	4	660	162	5	8	2	0	6	44	0	0	0	0
4/27/2024	1:45 PM	2	624	166	5	4	2	0	7	45	0	0	0	0
4/27/2024	2:00 PM	2	574	161	3	5	2	0	7	41	0	0	0	0
4/27/2024	2:15 PM	3	573	155	1	4	1	0	6	39	0	0	0	0
4/27/2024	2:30 PM	3	584	152	0	3	0	0	3	40	0	0	0	0
4/27/2024	2:45 PM	4	592	149	0	4	1	0	3	33	0	0	0	0
4/27/2024	3:00 PM	4	644	152	0	5	1	1	4	37	1	0	1	0
4/27/2024	3:15 PM	6	644	148	1	3	1	1	5	36	1	0	1	0
4/27/2024	3:30 PM	6	621	139	1	7	2	1	5	35	2	0	1	0
4/27/2024	3:45 PM	5	649	129	1	7	1	1	5	36	2	0	1	0
4/27/2024	4:00 PM	5	602	123	1	6	1	0	3	29	1	0	0	0
4/27/2024	4:15 PM	5	615	126	0	7	1	0	2	33	2	0	0	0
4/27/2024	4:30 PM	7	603	128	0	7	1	0	1	30	1	0	0	0
4/27/2024	4:45 PM	7	563	126	0	8	1	0	2	29	1	0	0	0
4/27/2024	5:00 PM	7	530	125	1	10	1	0	2	32	1	0	0	0
4/27/2024	5:15 PM	3	510	122	1	9	1	0	4	25	0	0	0	0
4/27/2024	5:30 PM	0	517	123	2	7	0	0	6	28	0	0	0	0
4/27/2024	5:45 PM	0	525	120	3	7	0	0	6	31	0	0	0	0
4/27/2024	6:00 PM	3	533	119	3	7	0	0	7	28	0	0	0	0
4/27/2024	6:15 PM	5	486	119	6	10	0	0	7	34	0	0	0	0
4/27/2024	6:30 PM	5	462	112	5	11	0	0	6	30	0	0	0	0
4/27/2024	6:45 PM	5	441	110	4	12	1	0	5	25	0	0	0	0
4/27/2024	7:00 PM	2	454	108	4	12	1	0	4	32	0	0	0	0
4/27/2024	7:15 PM	0	470	98	1	9	1	0	2	31	0	0	0	0
4/27/2024	7:30 PM	0	455	92	1	6	1	0	1	30	0	0	0	0
4/27/2024	7:45 PM	1	441	80	1	3	1	0	1	28	0	0	0	0
4/27/2024	8:00 PM	1	407	72	0	1	1	0	2	18	0	0	0	0
4/27/2024	8:15 PM	1	395	68	0	2	1	0	3	15	0	0	0	0
4/27/2024	8:30 PM	1	395	68	0	2	1	0	3	16	0	0	0	0
4/27/2024	8:45 PM	0	402	76	0	4	1	0	2	21	0	0	0	0
4/27/2024	9:00 PM	0	403	75	0	3	2	0	1	20	0	0	0	0
4/27/2024	9:15 PM	0	409	68	0	3	3	0	0	21	0	0	0	0
4/27/2024	9:30 PM	0	404	63	0	3	3	0	0	16	0	0	0	0
4/27/2024	9:45 PM	0	386	48	0	2	3	0	0	16	0	0	0	0
4/27/2024	10:00 PM	0	357	35	0	2	3	0	0	16	0	0	0	0
4/27/2024	10:15 PM	0	313	34	0	1	2	0	0	12	0	0	0	0
4/27/2024	10:30 PM	0	269	26	0	1	2	0	0	13	0	0	0	0
4/27/2024	10:45 PM	1	249	28	0	0	1	0	0	9	0	0	0	0
4/27/2024	11:00 PM	1	229	27	0	0	0	0	0	12	0	0	0	0
4/27/2024	11:15 PM	1	169	19	0	0	0	0	0	9	0	0	0	0
4/27/2024	11:30 PM	1	116	14	0	0	0	0	0	7	0	0	0	0
4/27/2024	11:45 PM	0	49	5	0	0	0	0	0	4	0	0	0	0

Bi-Directional Class Count || NB EB 15min

Columbia, SC

Marr Traffic DATA COLLECTION
www.marrtraffic.com

Site 75 Lane 3 NB
I-20,
north of Bush River Rd

Date
Sunday, April 21, 2024

Lat/Long
34.034393°, -81.117736°

Weather
Cloudy
66°F

Click here for Detailed Weather

Click here for Map

0000 - 2400 (Sunday 24h Session) (04-21-2024)
NB EB 15min

	Northbound (Movement 75 Lane 3 NB.1)													15min	60min
Time	1	2	3	4	5	6	7	8	9	10	11	12	13	Total	Total
0000 - 0015	0	36	3	0	1	0	0	0	5	0	0	0	0	**45**	
0015 - 0030	0	47	4	0	1	0	0	0	6	0	0	0	0	**58**	
0030 - 0045	0	34	2	0	1	0	0	0	6	0	0	0	0	**43**	
0045 - 0100	2	52	5	0	0	0	0	0	3	0	0	0	0	**62**	**208**
0100 - 0115	0	25	5	0	1	0	0	0	4	0	0	0	0	**35**	
0115 - 0130	0	33	3	0	0	0	0	0	3	0	0	0	0	**39**	
0130 - 0145	0	25	2	0	1	0	0	0	3	0	0	0	0	**31**	
0145 - 0200	0	20	1	0	0	0	0	0	5	0	0	0	0	**26**	**131**
0200 - 0215	0	20	0	1	1	0	0	0	2	0	0	0	0	**24**	
0215 - 0230	0	23	2	0	0	0	0	0	3	0	0	0	0	**28**	
0230 - 0245	0	20	2	0	0	0	0	0	7	0	0	0	0	**29**	
0245 - 0300	0	12	0	0	0	0	0	0	8	0	0	0	0	**20**	**101**
0300 - 0315	0	15	0	0	0	1	0	0	2	0	0	0	0	**18**	
0315 - 0330	0	19	1	0	1	0	0	0	9	0	0	0	0	**30**	
0330 - 0345	0	13	2	0	0	0	0	0	4	0	0	0	0	**19**	
0345 - 0400	0	16	1	0	0	0	0	0	7	0	0	0	0	**24**	**91**
0400 - 0415	0	7	2	0	0	0	0	0	3	0	0	0	0	**12**	
0415 - 0430	0	17	0	0	1	0	0	0	3	0	0	0	0	**21**	
0430 - 0445	0	8	2	0	1	0	0	0	2	0	0	0	0	**13**	
0445 - 0500	0	15	3	0	0	0	0	0	0	0	0	0	0	**18**	**64**
0500 - 0515	0	10	0	0	0	0	0	0	3	0	0	0	0	**13**	
0515 - 0530	0	14	2	0	1	0	0	0	3	0	0	0	0	**20**	
0530 - 0545	0	15	3	0	0	0	0	0	0	0	0	0	0	**18**	
0545 - 0600	0	14	1	0	0	0	0	0	5	0	0	0	0	**20**	**71**
0600 - 0615	0	27	3	0	0	1	0	0	9	0	0	0	0	**40**	
0615 - 0630	0	27	3	0	2	1	0	0	1	0	0	0	0	**34**	
0630 - 0645	0	54	8	0	1	0	0	0	3	0	0	0	0	**66**	
0645 - 0700	0	36	9	2	0	0	0	0	6	0	0	0	0	**53**	**193**
0700 - 0715	0	45	9	0	1	0	0	0	8	0	0	0	0	**63**	
0715 - 0730	0	57	14	0	0	0	0	1	10	0	0	0	0	**82**	
0730 - 0745	0	56	15	0	0	0	0	1	4	0	0	0	0	**76**	
0745 - 0800	0	68	23	0	0	0	0	0	5	0	0	0	0	**96**	**317**
0800 - 0815	0	52	12	0	0	1	0	0	9	0	0	0	0	**74**	
0815 - 0830	1	61	14	0	2	1	0	1	3	0	0	0	0	**83**	
0830 - 0845	0	57	23	0	1	0	0	1	9	0	0	0	0	**91**	
0845 - 0900	0	96	16	0	4	0	0	1	3	0	0	0	0	**120**	**368**
0900 - 0915	0	89	25	0	1	1	0	0	7	0	0	0	0	**123**	
0915 - 0930	0	83	20	0	1	0	0	1	4	0	0	0	0	**109**	
0930 - 0945	0	87	28	0	0	0	0	1	10	0	0	0	0	**126**	
0945 - 1000	0	123	22	0	0	1	0	1	6	0	0	0	0	**153**	**511**
1000 - 1015	0	102	22	0	1	0	1	0	8	0	0	0	0	**134**	
1015 - 1030	0	126	28	0	3	0	0	1	11	0	1	0	0	**170**	
1030 - 1045	0	125	33	0	2	0	0	4	10	0	0	0	0	**174**	
1045 - 1100	0	138	25	0	2	0	0	1	6	0	0	0	0	**172**	**650**
1100 - 1115	0	133	24	0	1	1	0	1	11	0	0	0	0	**171**	
1115 - 1130	0	120	38	0	1	1	0	2	11	0	0	0	0	**173**	
1130 - 1145	0	146	38	0	1	0	0	1	6	0	0	0	0	**192**	
1145 - 1200	0	164	28	0	3	0	0	0	11	0	0	0	0	**206**	**742**
1200 - 1215	0	186	33	0	2	0	0	0	8	0	0	0	0	**229**	
1215 - 1230	0	203	51	0	1	0	0	4	8	0	0	0	0	**267**	
1230 - 1245	0	183	33	0	4	0	0	1	9	1	0	0	0	**231**	
1245 - 1300	0	158	30	5	4	0	0	1	8	0	0	0	0	**206**	**933**
1300 - 1315	1	166	25	0	0	0	0	0	8	0	0	0	0	**200**	
1315 - 1330	0	185	40	0	4	0	0	3	13	0	0	0	0	**245**	
1330 - 1345	0	166	35	0	4	0	0	0	14	0	0	0	0	**219**	
1345 - 1400	0	168	38	0	0	0	0	2	10	0	0	0	0	**218**	**882**
1400 - 1415	0	177	28	0	2	0	0	1	7	0	0	0	0	**215**	
1415 - 1430	0	160	39	0	1	0	0	2	6	0	0	0	0	**208**	
1430 - 1445	0	172	35	0	2	0	0	2	7	0	0	0	0	**218**	
1445 - 1500	0	174	41	0	2	0	0	0	11	0	0	0	0	**228**	**869**
1500 - 1515	0	147	39	1	0	0	0	1	6	0	0	0	0	**194**	
1515 - 1530	0	156	32	0	0	0	0	0	6	0	0	0	0	**194**	
1530 - 1545	0	169	36	0	2	0	0	4	5	0	0	0	0	**216**	
1545 - 1600	0	151	29	0	2	1	0	1	4	0	0	0	0	**188**	**792**
1600 - 1615	0	166	23	0	0	0	0	0	10	0	0	0	0	**199**	
1615 - 1630	0	147	32	0	7	2	0	0	15	1	0	0	0	**204**	
1630 - 1645	0	143	36	0	5	0	0	1	8	0	0	0	0	**193**	
1645 - 1700	0	148	26	0	2	0	0	0	9	0	0	0	0	**185**	**781**
1700 - 1715	0	159	33	0	4	1	0	0	10	0	0	0	0	**207**	
1715 - 1730	0	135	27	0	0	0	0	1	7	0	0	0	0	**170**	
1730 - 1745	0	145	23	0	3	0	0	2	14	0	0	0	0	**187**	
1745 - 1800	0	141	17	0	2	0	0	1	10	0	0	0	0	**171**	**735**
1800 - 1815	0	121	32	0	0	1	0	0	10	0	0	0	0	**164**	
1815 - 1830	0	117	20	0	1	0	0	0	6	0	0	0	0	**144**	
1830 - 1845	0	115	25	0	1	0	0	3	22	0	0	0	0	**166**	
1845 - 1900	1	99	15	0	2	0	0	2	9	1	0	0	0	**129**	**603**
1900 - 1915	0	75	17	2	1	0	0	0	14	0	0	0	0	**109**	
1915 - 1930	0	107	11	0	1	0	0	0	5	0	0	0	0	**124**	
1930 - 1945	0	86	11	0	1	0	0	0	9	0	0	0	0	**107**	
1945 - 2000	0	106	20	0	0	1	0	0	7	0	0	0	0	**134**	**474**
2000 - 2015	0	96	22	0	0	0	0	0	8	0	0	0	0	**126**	
2015 - 2030	0	62	14	0	1	0	0	0	9	0	0	0	0	**86**	
2030 - 2045	0	46	8	0	1	0	0	0	11	0	0	0	0	**66**	
2045 - 2100	1	75	9	0	0	0	0	0	10	0	0	0	0	**95**	**373**
2100 - 2115	0	65	9	0	0	1	0	0	5	0	0	0	0	**80**	
2115 - 2130	0	37	4	0	0	0	0	0	9	0	0	0	0	**50**	
2130 - 2145	0	41	8	0	1	0	0	0	11	0	0	0	0	**61**	
2145 - 2200	0	44	3	0	0	0	0	2	12	0	0	0	0	**61**	**252**
2200 - 2215	0	47	3	0	1	1	0	0	9	0	1	0	0	**62**	
2215 - 2230	0	38	7	0	1	2	0	0	7	0	0	0	0	**55**	
2230 - 2245	0	25	2	0	2	0	0	0	9	0	0	0	0	**38**	
2245 - 2300	0	28	3	1	0	0	0	0	11	0	0	0	0	**43**	**198**
2300 - 2315	0	30	1	0	0	0	0	0	4	0	0	0	0	**35**	
2315 - 2330	0	29	5	0	0	0	0	0	7	0	0	0	0	**41**	
2330 - 2345	0	18	1	0	0	0	0	1	9	0	0	0	0	**29**	
2345 - 0000	0	18	1	0	0	0	0	1	7	0	0	0	0	**27**	**132**

Session Total	6	8012	1558	12	104	19	1	54	700	3	2	0	0	**10471**
Session Average	0.06	83.46	16.23	0.13	1.08	0.20	0.01	0.56	7.29	0.03	0.02	0.00	0.00	**109.07**
Session Percentage	0.06	76.52	14.88	0.11	0.99	0.18	0.01	0.52	6.69	0.03	0.02	0.00	0.00	

AM Peak Hour	0730 - 0830	0945 - 1045	0945 - 1045	0600 - 0700	0815 - 0915	0530 - 0630	0915 - 1015	0945 - 1045	0930 - 1030	-	0930 - 1030	-	-	**0945 - 1045**
AM Peak Volume	1	476	105	2	8	2	1	6	35	0	1	0	0	**631**

Noon Peak Hour	1215 - 1315	1145 - 1245	1415 - 1515	1200 - 1300	1230 - 1330	1030 - 1130	1000 - 1100	1030 - 1130	1300 - 1400	1145 - 1245	1000 - 1100	-	-	**1145 - 1245**
Noon Peak Volume	1	736	154	5	12	2	1	8	45	1	1	0	0	**933**

PM Peak Hour	1800 - 1900	1515 - 1615	1500 - 1600	1815 - 1915	1615 - 1715	1530 - 1630	-	1500 - 1600	1815 - 1915	1530 - 1630	-	-	-	**1530 - 1630**
PM Peak Volume	1	642	136	2	18	3	0	6	51	1	0	0	0	**807**

Site 75 Lane 3 NB
I-20,
north of Bush River Rd

Date
Monday, April 22, 2024

Lat/Long
34.034393°, -81.117736°

Weather
Mostly Cloudy
57°F

Click here for Detailed Weather

0000 - 2400 (Weekday 24h Session) (04-22-2024)
NB EB 15min

	Northbound (Movement 75 Lane 3 NB.1)													15min	60min
Time	1	2	3	4	5	6	7	8	9	10	11	12	13	Total	Total
0000 - 0015	0	20	1	0	0	0	0	1	5	0	1	0	0	**28**	
0015 - 0030	0	17	2	0	0	0	0	0	2	0	0	0	0	**21**	
0030 - 0045	0	11	1	0	0	1	0	0	6	0	0	0	0	**19**	
0045 - 0100	0	12	1	0	1	0	0	0	3	0	0	0	0	**17**	**85**
0100 - 0115	0	7	0	0	0	0	0	0	14	0	0	0	0	**21**	
0115 - 0130	0	9	1	0	0	0	0	0	8	0	2	0	0	**20**	
0130 - 0145	0	9	1	0	1	0	0	0	7	0	0	0	0	**18**	
0145 - 0200	0	5	1	0	0	0	0	0	5	0	0	0	0	**11**	**70**
0200 - 0215	0	6	1	0	1	0	0	0	3	0	1	0	0	**12**	
0215 - 0230	0	5	1	0	1	2	0	0	3	0	0	0	0	**12**	
0230 - 0245	0	5	0	0	1	0	0	0	6	0	2	0	0	**14**	
0245 - 0300	0	5	1	0	0	1	0	0	6	0	0	0	0	**13**	**51**
0300 - 0315	0	6	2	0	0	0	0	0	10	0	0	0	0	**18**	
0315 - 0330	0	5	1	0	2	0	0	0	14	0	0	0	0	**22**	
0330 - 0345	0	14	1	0	0	0	0	0	7	0	0	0	0	**22**	
0345 - 0400	0	10	1	0	1	0	0	0	7	0	0	0	0	**19**	**81**
0400 - 0415	0	11	0	0	0	0	0	1	7	0	0	0	0	**19**	
0415 - 0430	0	13	1	0	3	1	0	0	16	0	0	0	0	**34**	
0430 - 0445	0	20	3	0	2	0	0	0	16	0	1	0	0	**42**	
0445 - 0500	0	24	5	0	0	1	0	0	13	0	1	0	0	**44**	**139**
0500 - 0515	0	32	7	0	1	0	0	0	13	0	1	0	0	**54**	
0515 - 0530	0	43	11	0	2	0	0	0	6	1	0	0	0	**63**	
0530 - 0545	0	46	9	0	5	1	0	0	16	0	0	0	0	**77**	
0545 - 0600	0	61	10	0	3	1	1	0	15	0	0	0	0	**91**	**285**
0600 - 0615	0	62	9	0	2	0	1	1	15	0	0	0	0	**90**	
0615 - 0630	0	70	31	3	1	2	0	0	12	0	0	0	0	**119**	
0630 - 0645	0	103	44	1	5	2	0	1	19	0	0	0	0	**175**	
0645 - 0700	0	99	44	1	4	4	0	1	12	1	0	0	0	**166**	**550**
0700 - 0715	0	129	41	0	10	2	0	2	12	0	0	0	0	**196**	
0715 - 0730	0	178	45	0	7	5	0	1	8	0	0	0	0	**244**	
0730 - 0745	0	172	48	2	8	2	0	6	10	0	0	0	0	**248**	
0745 - 0800	0	191	62	0	6	1	1	1	4	0	0	0	0	**266**	**954**
0800 - 0815	0	159	53	1	9	3	0	2	11	0	0	0	0	**238**	
0815 - 0830	0	132	72	0	4	2	0	5	12	0	0	0	0	**227**	
0830 - 0845	0	110	67	1	10	4	2	4	19	0	0	0	0	**217**	
0845 - 0900	0	131	50	0	8	1	0	5	13	1	0	0	0	**209**	**891**
0900 - 0915	0	101	47	0	7	1	0	6	14	0	0	0	0	**176**	
0915 - 0930	1	113	47	1	17	1	1	4	7	0	0	0	0	**192**	
0930 - 0945	0	101	55	1	5	3	1	3	8	0	0	0	0	**177**	
0945 - 1000	0	117	54	0	10	1	0	4	12	1	0	0	0	**199**	**744**
1000 - 1015	0	101	37	0	11	1	2	4	25	0	0	0	0	**181**	
1015 - 1030	1	108	45	0	7	1	1	3	13	0	0	0	0	**179**	
1030 - 1045	0	102	39	0	11	2	2	4	28	0	0	0	0	**188**	
1045 - 1100	0	117	50	0	3	1	0	4	26	0	0	0	0	**201**	**749**
1100 - 1115	0	105	58	0	8	3	1	3	16	1	0	0	0	**195**	
1115 - 1130	0	117	45	0	10	1	0	1	24	0	0	0	0	**198**	
1130 - 1145	0	99	41	0	8	2	1	2	20	0	0	0	0	**173**	
1145 - 1200	0	112	50	0	4	1	0	3	25	0	0	0	0	**195**	**761**
1200 - 1215	0	122	49	1	10	1	0	5	19	2	0	0	0	**209**	
1215 - 1230	0	107	41	0	6	3	0	0	13	0	0	0	0	**170**	
1230 - 1245	0	135	46	0	10	0	2	5	17	3	0	0	0	**218**	
1245 - 1300	0	121	42	0	9	1	0	2	12	0	0	0	0	**187**	**784**
1300 - 1315	0	120	44	2	6	5	2	2	12	2	0	0	0	**195**	
1315 - 1330	0	129	44	0	7	2	1	1	9	0	0	0	0	**193**	
1330 - 1345	0	133	37	4	6	2	0	2	19	0	0	0	0	**203**	
1345 - 1400	0	113	46	2	6	1	1	0	17	0	0	0	0	**186**	**777**
1400 - 1415	0	123	42	0	3	0	0	0	15	0	0	0	0	**183**	
1415 - 1430	0	129	50	0	5	2	0	0	16	1	0	0	0	**203**	
1430 - 1445	0	128	54	0	7	0	0	3	15	0	0	0	0	**207**	
1445 - 1500	0	158	36	1	9	1	0	3	14	0	0	0	0	**222**	**815**
1500 - 1515	1	139	37	0	3	2	1	4	14	0	0	0	0	**201**	
1515 - 1530	0	159	49	1	6	1	2	2	13	1	0	0	0	**234**	
1530 - 1545	1	151	39	1	5	1	0	0	14	0	0	0	0	**212**	
1545 - 1600	0	179	34	1	4	2	0	4	13	1	0	0	0	**238**	**885**
1600 - 1615	1	208	61	0	7	2	0	2	25	0	0	0	0	**306**	
1615 - 1630	0	190	61	0	5	3	0	1	19	1	0	0	0	**280**	
1630 - 1645	0	180	50	0	5	2	1	2	17	0	0	0	0	**257**	
1645 - 1700	0	182	41	0	5	0	0	2	21	0	0	0	0	**251**	**1094**
1700 - 1715	0	162	52	0	3	0	0	1	16	0	0	0	0	**234**	
1715 - 1730	0	150	44	0	2	0	0	0	8	0	0	0	0	**204**	
1730 - 1745	1	163	50	0	2	0	0	3	14	0	0	0	0	**233**	
1745 - 1800	0	140	48	0	3	0	0	1	17	0	0	0	0	**209**	**880**
1800 - 1815	0	145	29	0	1	0	0	0	10	0	0	0	0	**185**	
1815 - 1830	0	131	35	0	1	1	0	0	14	0	0	0	0	**182**	
1830 - 1845	0	117	27	0	1	3	0	2	10	0	0	0	0	**160**	
1845 - 1900	1	94	26	0	0	1	0	0	12	0	0	0	0	**134**	**661**
1900 - 1915	2	82	26	0	0	0	0	0	12	0	0	0	0	**122**	
1915 - 1930	0	99	17	0	4	2	0	1	14	0	0	0	0	**137**	
1930 - 1945	2	74	14	0	0	0	0	0	18	0	1	0	0	**109**	
1945 - 2000	0	84	19	0	3	0	0	1	9	1	0	0	0	**117**	**485**
2000 - 2015	0	69	20	0	1	0	0	0	12	0	0	0	0	**102**	
2015 - 2030	0	54	7	0	0	0	0	0	8	0	0	0	0	**69**	
2030 - 2045	0	67	10	1	3	0	0	0	14	0	0	0	0	**95**	
2045 - 2100	0	57	10	0	0	0	0	0	10	0	0	0	0	**77**	**343**
2100 - 2115	0	66	9	0	0	0	0	0	9	0	0	0	0	**84**	
2115 - 2130	0	57	5	0	1	0	0	1	7	0	0	0	0	**71**	
2130 - 2145	0	49	6	0	0	0	0	0	5	0	0	0	0	**60**	
2145 - 2200	0	44	6	0	0	0	0	0	8	0	0	0	0	**58**	**273**
2200 - 2215	0	33	5	0	0	0	0	0	8	0	1	0	0	**47**	
2215 - 2230	0	26	2	0	1	0	0	0	10	0	2	0	0	**41**	
2230 - 2245	0	32	4	0	1	1	0	0	8	0	0	0	0	**46**	
2245 - 2300	0	28	3	0	0	0	0	1	8	0	1	0	0	**41**	**175**
2300 - 2315	0	39	3	0	0	0	0	1	10	0	0	0	0	**53**	
2315 - 2330	0	22	4	0	0	0	0	0	3	0	1	0	0	**30**	
2330 - 2345	0	11	4	0	0	0	0	0	10	0	0	0	0	**25**	
2345 - 0000	0	15	3	0	0	2	0	0	7	0	3	0	0	**30**	**138**

Session Total	11	8241	2587	25	350	95	24	124	1178	17	18	0	0	**12670**
Session Average	0.11	85.84	26.95	0.26	3.65	0.99	0.25	1.29	12.27	0.18	0.19	0.00	0.00	**131.98**
Session Percentage	0.09	65.04	20.42	0.20	2.76	0.75	0.19	0.98	9.30	0.13	0.14	0.00	0.00	

AM Peak Hour	0830 - 0930	0715 - 0815	0745 - 0845	0600 - 0700	0915 - 1015	0630 - 0730	0945 - 1045	0815 - 0915	0945 - 1045	0500 - 0600	0500 - 0600	-	-	**0715 - 0815**
AM Peak Volume	1	700	254	5	43	13	5	20	78	1	1	0	0	**996**

Noon Peak Hour	1445 - 1545	1445 - 1545	1045 - 1145	1300 - 1400	1200 - 1300	1245 - 1345	1000 - 1100	1000 - 1100	1030 - 1130	1145 - 1245	-	-	-	**1445 - 1545**
Noon Peak Volume	2	607	194	8	35	10	5	15	94	5	0	0	0	**869**

PM Peak Hour	1845 - 1945	1600 - 1700	1600 - 1700	1500 - 1600	1515 - 1615	1545 - 1645	1500 - 1600	1500 - 1600	1600 - 1700	1500 - 1600	1845 - 1945	-	-	**1600 - 1700**
PM Peak Volume	5	760	213	3	22	9	3	10	82	2	1	0	0	**1094**

Site 75 Lane 3 NB
I-20,
north of Bush River Rd

Date
Tuesday, April 23, 2024

Lat/Long
34.034393°, -81.117736°

Weather
Fair
58°F

Click here for Detailed Weather

0000 - 2400 (Weekday 24h Session) (04-23-2024)
NB EB 15min

	Northbound (Movement 75 Lane 3 NB.1)													15min	60min
TIME	1	2	3	4	5	6	7	8	9	10	11	12	13	Total	Total
0000 - 0015	0	17	1	0	0	1	0	0	5	0	0	0	0	**24**	
0015 - 0030	0	10	2	0	0	0	0	0	11	0	1	0	0	**24**	
0030 - 0045	0	11	2	1	1	1	0	0	5	0	1	0	0	**22**	
0045 - 0100	0	17	3	0	0	1	0	0	6	0	2	0	0	**29**	**99**
0100 - 0115	0	4	1	0	1	0	0	0	4	0	0	0	0	**10**	
0115 - 0130	0	11	1	0	1	0	0	0	9	0	1	0	0	**23**	
0130 - 0145	0	12	3	0	0	0	0	0	8	0	2	0	0	**25**	
0145 - 0200	0	10	1	0	0	0	0	0	12	0	3	0	0	**26**	**84**
0200 - 0215	0	7	1	0	0	1	0	0	10	0	0	0	0	**19**	
0215 - 0230	0	6	1	0	2	0	0	0	8	0	2	0	0	**19**	
0230 - 0245	0	9	0	0	1	0	0	0	12	0	1	0	0	**23**	
0245 - 0300	0	6	0	0	1	0	0	0	10	0	2	0	0	**19**	**80**
0300 - 0315	1	10	0	0	0	1	0	0	11	0	1	0	0	**24**	
0315 - 0330	0	14	1	0	0	0	0	0	15	0	3	0	0	**33**	
0330 - 0345	0	12	3	0	2	0	0	0	11	0	1	0	0	**29**	
0345 - 0400	0	18	2	0	0	2	0	0	8	0	0	0	0	**30**	**116**
0400 - 0415	0	22	2	0	2	0	0	0	12	0	1	0	0	**39**	
0415 - 0430	0	19	5	0	2	1	0	0	13	0	2	0	0	**42**	
0430 - 0445	0	25	4	0	0	2	0	0	11	0	0	0	0	**42**	
0445 - 0500	0	30	3	0	1	0	0	0	16	0	0	0	0	**50**	**173**
0500 - 0515	0	26	9	0	0	2	0	0	14	0	0	0	0	**51**	
0515 - 0530	0	30	6	0	2	2	0	1	16	0	1	0	0	**58**	
0530 - 0545	0	50	20	0	2	3	0	1	18	0	0	0	0	**94**	
0545 - 0600	0	44	13	0	2	4	0	0	16	0	2	0	0	**81**	**284**
0600 - 0615	0	59	16	0	4	2	0	1	7	0	0	0	0	**89**	
0615 - 0630	0	66	27	3	5	0	1	0	15	0	0	0	0	**117**	
0630 - 0645	0	101	45	1	5	5	0	1	14	0	0	0	0	**172**	
0645 - 0700	0	98	39	1	3	3	0	3	15	1	0	0	0	**163**	**541**
0700 - 0715	0	118	43	0	6	2	0	2	15	0	0	0	0	**186**	
0715 - 0730	0	184	50	0	9	1	2	1	10	0	1	0	0	**258**	
0730 - 0745	0	109	32	0	3	1	0	1	5	0	0	0	0	**151**	
0745 - 0800	1	182	55	1	5	1	0	0	6	0	0	0	0	**251**	**846**
0800 - 0815	0	158	45	0	5	0	0	2	13	0	0	0	0	**223**	
0815 - 0830	1	141	50	0	4	1	0	3	15	0	1	0	0	**216**	
0830 - 0845	1	141	49	0	7	5	0	3	10	0	1	0	0	**217**	
0845 - 0900	0	147	49	0	11	1	1	5	13	2	0	0	0	**229**	**885**
0900 - 0915	0	102	48	0	11	1	0	5	13	0	0	0	0	**180**	
0915 - 0930	0	119	42	2	14	0	1	3	16	0	0	0	0	**197**	
0930 - 0945	0	116	52	0	8	3	0	2	14	0	1	0	0	**196**	
0945 - 1000	2	116	49	0	12	1	1	2	22	0	0	0	0	**205**	**778**
1000 - 1015	0	110	51	1	6	5	2	1	13	0	0	0	0	**189**	
1015 - 1030	0	118	48	0	9	1	0	4	16	0	0	0	0	**196**	
1030 - 1045	0	111	38	0	5	4	1	2	17	0	0	0	0	**178**	
1045 - 1100	0	127	50	1	8	2	0	1	26	1	0	0	0	**216**	**779**
1100 - 1115	0	113	43	0	3	3	0	2	28	1	0	0	0	**193**	
1115 - 1130	1	116	53	2	7	0	1	3	8	1	0	0	0	**192**	
1130 - 1145	0	114	36	0	6	1	0	2	23	1	0	0	0	**183**	
1145 - 1200	0	119	48	0	3	3	0	3	14	1	0	0	0	**191**	**759**
1200 - 1215	1	132	49	0	6	3	0	1	24	0	0	0	0	**216**	
1215 - 1230	0	123	59	1	4	2	1	2	16	0	0	0	0	**208**	
1230 - 1245	1	121	38	0	5	7	0	1	14	1	0	0	0	**188**	
1245 - 1300	0	122	41	0	7	3	0	0	12	0	0	0	0	**185**	**797**
1300 - 1315	1	120	48	2	5	2	2	4	17	0	0	0	0	**201**	
1315 - 1330	0	128	41	0	6	3	1	2	23	0	0	0	0	**204**	
1330 - 1345	0	136	42	2	3	1	0	4	18	0	0	0	0	**206**	
1345 - 1400	0	120	40	0	9	0	1	2	14	0	0	0	0	**186**	**797**
1400 - 1415	1	118	48	0	9	2	1	1	17	0	0	0	0	**197**	
1415 - 1430	0	129	47	1	3	1	0	2	18	1	0	0	0	**202**	
1430 - 1445	0	132	31	1	7	1	0	3	14	0	0	0	0	**189**	
1445 - 1500	0	173	50	1	5	2	0	1	17	0	0	0	0	**249**	**837**
1500 - 1515	1	154	40	0	5	1	0	2	27	1	0	0	0	**231**	
1515 - 1530	0	156	51	0	9	1	0	3	19	0	0	0	0	**239**	
1530 - 1545	1	154	33	0	5	3	0	4	11	0	0	0	0	**211**	
1545 - 1600	0	158	37	0	4	3	1	2	17	0	0	0	0	**222**	**903**
1600 - 1615	0	174	55	1	3	0	0	1	19	0	0	0	0	**253**	
1615 - 1630	0	159	48	0	3	1	0	3	17	0	0	0	0	**231**	
1630 - 1645	0	210	50	1	5	1	0	2	9	0	0	0	0	**278**	
1645 - 1700	0	172	45	0	5	3	0	1	14	0	0	0	0	**240**	**1002**
1700 - 1715	0	177	58	0	6	1	0	0	11	0	0	0	0	**253**	
1715 - 1730	0	166	36	0	2	0	0	1	8	0	0	0	0	**213**	
1730 - 1745	0	144	51	0	2	0	0	3	14	0	0	0	0	**214**	
1745 - 1800	1	158	33	1	4	1	0	0	16	0	0	0	0	**214**	**894**
1800 - 1815	0	126	43	0	2	1	0	2	11	0	0	0	0	**185**	
1815 - 1830	0	127	45	0	6	0	0	1	22	0	0	0	0	**201**	
1830 - 1845	0	115	28	0	3	0	0	1	17	0	0	0	0	**164**	
1845 - 1900	0	11	28	0	2	0	0	1	18	0	0	0	0	**60**	**610**
1900 - 1915	1	101	31	2	1	1	0	1	17	0	0	0	0	**155**	
1915 - 1930	2	118	27	0	1	0	0	0	9	0	0	0	0	**157**	
1930 - 1945	0	90	34	0	4	2	0	1	10	0	0	0	0	**141**	
1945 - 2000	0	104	27	0	2	0	0	0	20	0	1	0	0	**154**	**607**
2000 - 2015	0	75	20	1	1	0	0	1	14	0	0	0	0	**112**	
2015 - 2030	0	80	12	0	2	0	0	1	12	0	0	0	0	**107**	
2030 - 2045	0	91	12	1	2	0	0	0	11	0	0	0	0	**117**	
2045 - 2100	0	68	14	0	0	0	0	0	13	0	0	0	0	**95**	**431**
2100 - 2115	1	94	17	0	1	1	0	0	10	0	1	0	0	**125**	
2115 - 2130	0	69	24	1	1	1	0	0	8	0	0	0	0	**104**	
2130 - 2145	0	65	16	0	2	1	0	0	17	0	0	0	0	**101**	
2145 - 2200	0	44	20	1	0	0	0	0	11	0	1	0	0	**77**	**407**
2200 - 2215	0	80	15	0	1	0	0	0	21	0	1	0	0	**118**	
2215 - 2230	0	61	15	0	1	0	0	0	21	0	3	0	0	**101**	
2230 - 2245	0	50	5	1	1	1	0	0	18	0	2	0	0	**78**	
2245 - 2300	0	52	6	0	2	0	0	0	23	0	3	0	0	**86**	**383**
2300 - 2315	0	41	4	0	1	0	0	0	14	0	1	0	0	**61**	
2315 - 2330	0	34	6	0	0	0	0	0	18	0	3	0	0	**61**	
2330 - 2345	0	32	7	0	1	1	0	0	15	0	4	0	0	**60**	
2345 - 0000	0	19	4	0	1	0	0	0	12	0	0	0	0	**36**	**218**

Session Total	18	8588	2673	31	339	118	17	108	1357	11	50	0	0	**13310**
Session Average	0.19	89.46	27.84	0.32	3.53	1.23	0.18	1.13	14.14	0.11	0.52	0.00	0.00	**138.65**
Session Percentage	0.14	64.52	20.08	0.23	2.55	0.89	0.13	0.81	10.20	0.08	0.38	0.00	0.00	

AM Peak Hour	0745 - 0845	0715 - 0815	0930 - 1030	0600 - 0700	0900 - 1000	0500 - 0600	0915 - 1015	0815 - 0915	0945 - 1045	0800 - 0900	0500 - 0600	-	-	**0745 - 0845**
AM Peak Hour Volume	3	633	200	5	45	11	4	16	68	2	3	0	0	**907**

Noon Peak Hour	1115 - 1215	1445 - 1545	1145 - 1245	1245 - 1345	1000 - 1100	1145 - 1245	1300 - 1400	1300 - 1400	1015 - 1115	1045 - 1145	-	-	-	**1445 - 1545**
Noon Peak Hour Volume	2	637	194	4	28	15	4	12	87	4	0	0	0	**930**

PM Peak Hour	1830 - 1930	1630 - 1730	1615 - 1715	1545 - 1645	1500 - 1600	1500 - 1600	1500 - 1600	1500 - 1600	1500 - 1600	1500 - 1600	1900 - 2000	-	-	**1600 - 1700**
PM Peak Hour Volume	3	725	201	2	23	8	1	11	74	1	1	0	0	**1002**

Site 75 Lane 3 NB
I-20,
north of Bush River Rd

Date
Wednesday, April 24, 2024

Lat/Long
34.034393°, -81.117736°

Weather
Fair
66°F

Click here for Detailed Weather

0000 - 2400 (Weekday 24h Session) (04-24-2024)
NB EB 15min

	Northbound (Movement 75 Lane 3 NB.1)													15min	60min
TIME	1	2	3	4	5	6	7	8	9	10	11	12	13	Total	Total
0000 - 0015	0	20	5	0	2	0	0	0	30	0	3	0	0	**60**	
0015 - 0030	0	22	1	0	1	0	0	0	9	0	0	0	0	**33**	
0030 - 0045	0	20	3	0	1	0	0	0	13	0	4	0	0	**41**	
0045 - 0100	0	15	3	0	0	0	0	0	15	0	2	0	0	**35**	**169**
0100 - 0115	0	20	2	0	1	1	0	1	8	0	3	0	0	**36**	
0115 - 0130	0	15	1	0	1	0	0	0	15	0	2	0	0	**34**	
0130 - 0145	0	16	0	0	1	0	0	0	8	0	1	0	0	**26**	
0145 - 0200	0	13	2	0	0	0	0	1	9	0	1	0	0	**26**	**122**
0200 - 0215	0	11	2	0	0	1	0	0	12	0	3	0	0	**29**	
0215 - 0230	0	19	4	0	0	0	0	0	15	0	2	0	0	**40**	
0230 - 0245	0	8	0	0	0	0	0	0	8	0	4	0	0	**20**	
0245 - 0300	0	10	2	0	2	0	0	0	11	0	5	0	0	**30**	**119**
0300 - 0315	0	12	5	0	2	0	0	0	9	0	0	0	0	**28**	
0315 - 0330	0	10	1	0	1	0	0	0	23	0	2	0	0	**37**	
0330 - 0345	0	14	2	0	1	0	0	0	10	0	1	0	0	**28**	
0345 - 0400	0	19	3	0	1	0	0	0	11	0	0	0	0	**34**	**127**
0400 - 0415	0	18	3	0	1	0	0	0	18	0	1	0	0	**41**	
0415 - 0430	0	19	4	0	3	3	0	0	10	0	0	0	0	**39**	
0430 - 0445	0	21	3	0	2	0	0	1	15	0	1	0	0	**43**	
0445 - 0500	0	27	6	0	2	0	0	0	19	0	0	0	0	**54**	**177**
0500 - 0515	0	31	6	0	5	0	0	0	18	0	1	0	0	**61**	
0515 - 0530	0	48	9	0	4	0	0	0	15	0	2	0	0	**78**	
0530 - 0545	0	50	13	0	4	1	0	0	18	0	0	0	0	**86**	
0545 - 0600	0	48	12	0	8	0	0	0	18	0	1	0	0	**87**	**312**
0600 - 0615	0	59	13	1	2	0	0	0	11	0	1	0	0	**87**	
0615 - 0630	0	71	23	2	1	0	0	0	18	0	1	0	0	**116**	
0630 - 0645	0	105	36	0	6	3	0	1	7	0	0	0	0	**158**	
0645 - 0700	0	97	59	2	6	4	0	1	20	0	0	0	0	**189**	**550**
0700 - 0715	0	137	55	0	8	2	0	0	9	2	0	0	0	**213**	
0715 - 0730	1	161	53	0	12	3	0	1	14	1	0	0	0	**246**	
0730 - 0745	0	175	54	0	5	0	0	1	13	0	0	0	0	**248**	
0745 - 0800	0	187	54	0	4	3	1	1	11	0	0	0	0	**261**	**968**
0800 - 0815	0	155	40	0	9	5	1	1	12	1	0	0	0	**224**	
0815 - 0830	0	129	47	3	7	2	0	2	8	0	0	0	0	**198**	
0830 - 0845	0	144	60	0	11	3	0	3	11	0	0	0	0	**232**	
0845 - 0900	1	126	59	0	9	6	0	7	18	0	0	0	0	**226**	**880**
0900 - 0915	0	105	51	3	11	1	1	2	15	0	0	0	0	**189**	
0915 - 0930	1	131	40	1	12	4	0	1	6	0	0	0	0	**196**	
0930 - 0945	0	130	46	0	10	1	0	4	14	0	0	0	0	**205**	
0945 - 1000	0	138	37	0	2	1	0	4	18	2	0	0	0	**202**	**792**
1000 - 1015	0	117	36	0	5	0	0	3	17	1	0	0	0	**179**	
1015 - 1030	1	108	51	0	6	4	0	0	16	1	0	0	0	**187**	
1030 - 1045	1	118	57	1	11	3	0	3	18	1	0	0	0	**213**	
1045 - 1100	0	135	38	0	6	2	1	1	18	0	0	0	0	**201**	**780**
1100 - 1115	0	116	35	0	6	3	1	3	17	2	0	0	0	**183**	
1115 - 1130	1	136	42	0	6	2	0	2	19	0	0	0	0	**208**	
1130 - 1145	0	98	50	0	6	3	0	4	19	1	0	0	0	**181**	
1145 - 1200	0	139	47	0	3	1	0	5	12	0	0	0	0	**207**	**779**
1200 - 1215	0	138	49	0	7	2	0	1	22	3	0	0	0	**222**	
1215 - 1230	0	126	36	0	7	4	0	1	18	0	0	0	0	**192**	
1230 - 1245	0	116	32	0	2	1	0	1	7	0	0	0	0	**159**	
1245 - 1300	2	149	40	0	5	1	0	1	5	0	0	0	0	**203**	**776**
1300 - 1315	0	111	43	3	4	5	0	5	20	2	0	0	0	**193**	
1315 - 1330	0	143	41	0	7	1	0	1	17	2	0	0	0	**212**	
1330 - 1345	2	158	51	0	4	3	0	2	13	1	0	0	0	**234**	
1345 - 1400	1	139	53	0	10	1	0	0	16	1	0	0	0	**221**	**860**
1400 - 1415	1	125	41	1	4	5	0	3	16	0	0	0	0	**196**	
1415 - 1430	0	140	35	0	10	2	0	4	21	3	0	0	0	**215**	
1430 - 1445	0	137	42	0	8	0	0	3	15	0	0	0	0	**205**	
1445 - 1500	0	129	41	1	4	1	0	1	14	0	0	0	0	**191**	**807**
1500 - 1515	0	151	48	0	2	5	0	0	12	1	0	0	0	**219**	
1515 - 1530	0	143	55	2	7	3	0	1	16	1	0	0	0	**228**	
1530 - 1545	1	179	41	1	6	3	0	1	16	1	0	0	0	**249**	
1545 - 1600	0	172	46	2	6	1	0	3	12	0	0	0	0	**242**	**938**
1600 - 1615	0	190	59	0	2	3	0	1	9	0	0	0	0	**264**	
1615 - 1630	0	173	41	0	2	2	0	2	15	0	0	0	0	**235**	
1630 - 1645	0	164	44	0	8	0	0	0	7	0	0	0	0	**223**	
1645 - 1700	0	195	50	0	4	0	0	0	11	0	0	0	0	**260**	**982**
1700 - 1715	0	190	56	0	4	2	0	1	12	1	0	0	0	**266**	
1715 - 1730	0	195	50	0	5	3	2	2	14	0	0	0	0	**271**	
1730 - 1745	0	185	46	0	5	0	0	1	9	0	0	0	0	**246**	
1745 - 1800	0	154	37	0	4	3	0	2	7	0	0	0	0	**207**	**990**
1800 - 1815	1	154	38	0	3	1	0	1	7	1	0	0	0	**206**	
1815 - 1830	0	136	35	0	4	1	0	1	16	0	0	0	0	**193**	
1830 - 1845	0	137	24	0	3	3	0	2	27	1	0	0	0	**197**	
1845 - 1900	1	133	33	0	1	1	0	1	22	0	0	0	0	**192**	**788**
1900 - 1915	0	110	21	0	3	1	0	0	18	1	0	0	0	**154**	
1915 - 1930	1	109	31	0	1	0	0	2	15	0	0	0	0	**159**	
1930 - 1945	1	93	28	0	5	0	0	0	18	0	1	0	0	**146**	
1945 - 2000	0	98	27	1	2	1	0	1	11	0	0	0	0	**141**	**600**
2000 - 2015	2	89	24	0	1	1	0	0	12	0	1	0	0	**130**	
2015 - 2030	0	85	19	0	1	0	0	0	10	0	0	0	0	**115**	
2030 - 2045	0	98	12	1	0	0	0	0	18	0	0	0	0	**129**	
2045 - 2100	0	91	8	1	1	0	0	0	13	0	0	0	0	**114**	**488**
2100 - 2115	0	60	13	0	1	0	0	0	9	0	0	0	0	**83**	
2115 - 2130	0	75	10	0	0	0	0	0	8	0	1	0	0	**94**	
2130 - 2145	0	60	7	0	0	0	0	0	12	0	0	0	0	**79**	
2145 - 2200	0	46	8	0	0	1	0	0	17	0	1	0	0	**73**	**329**
2200 - 2215	0	60	9	0	1	0	0	0	12	0	1	0	0	**83**	
2215 - 2230	0	34	7	1	1	0	0	0	14	0	1	0	0	**58**	
2230 - 2245	0	39	8	0	1	0	0	0	15	0	1	0	0	**64**	
2245 - 2300	0	40	6	1	1	0	0	0	12	0	3	0	0	**63**	**268**
2300 - 2315	1	37	3	0	0	0	0	0	11	0	2	0	0	**54**	
2315 - 2330	0	30	6	0	0	0	0	0	15	0	1	0	0	**52**	
2330 - 2345	0	35	9	0	2	0	0	0	5	0	1	0	0	**52**	
2345 - 0000	0	31	4	1	2	0	0	0	11	0	2	0	0	**51**	**209**

Session Total	20	9105	2642	29	368	123	7	98	1330	31	57	0	0	**13810**
Session Average	0.21	94.84	27.52	0.30	3.83	1.28	0.07	1.02	13.85	0.32	0.59	0.00	0.00	**143.85**
Session Percentage	0.14	65.93	19.13	0.21	2.66	0.89	0.05	0.71	9.63	0.22	0.41	0.00	0.00	

AM Peak Hour	0830 - 0930	0715 - 0815	0645 - 0745	0815 - 0915	0830 - 0930	0800 - 0900	0715 - 0815	0815 - 0915	0500 - 0600	0945 - 1045	0500 - 0600	-	-	**0715 - 0815**
AM Peak Hour Volume	2	678	221	6	43	16	2	14	69	5	4	0	0	**979**

Noon Peak Hour	1245 - 1345	1445 - 1545	1115 - 1215	1445 - 1545	1345 - 1445	1015 - 1115	1015 - 1115	1100 - 1200	1045 - 1145	1300 - 1400	-	-	-	**1445 - 1545**
Noon Peak Hour Volume	4	602	188	4	32	12	2	14	73	6	0	0	0	**887**

PM Peak Hour	1915 - 2015	1645 - 1745	1645 - 1745	1500 - 1600	1500 - 1600	1500 - 1600	1630 - 1730	1530 - 1630	1815 - 1915	1500 - 1600	1915 - 2015	-	-	**1645 - 1745**
PM Peak Hour Volume	4	765	202	5	21	12	2	7	83	3	2	0	0	**1043**

Site 75 Lane 3 NB
I-20,
north of Bush River Rd

Date
Thursday, April 25, 2024

Lat/Long
34.034393°, -81.117736°

Weather
Fair
67°F

Click here for Detailed Weather

0000 - 2400 (Weekday 24h Session) (04-25-2024)
NB EB 15min

	Northbound (Movement 75 Lane 3 NB.1)													15min	60min
TIME	1	2	3	4	5	6	7	8	9	10	11	12	13	Total	Total
0000 - 0015	0	15	5	0	1	0	0	0	5	0	0	0	0	**26**	
0015 - 0030	0	17	2	0	1	0	0	0	11	0	0	0	0	**31**	
0030 - 0045	0	10	3	0	1	0	0	0	11	0	1	0	0	**26**	
0045 - 0100	0	15	2	0	0	0	0	0	12	0	2	0	0	**31**	**114**
0100 - 0115	0	16	3	0	0	0	0	0	13	0	5	0	0	**37**	
0115 - 0130	0	9	1	0	0	0	0	0	11	0	4	0	0	**25**	
0130 - 0145	0	10	3	0	0	0	0	0	6	0	4	0	0	**23**	
0145 - 0200	0	10	1	0	0	0	0	0	8	0	2	0	0	**21**	**106**
0200 - 0215	0	13	3	0	2	0	0	0	6	0	4	0	0	**28**	
0215 - 0230	0	11	2	0	0	0	0	0	11	0	2	0	0	**26**	
0230 - 0245	0	18	3	0	1	0	0	0	9	0	3	0	0	**34**	
0245 - 0300	0	9	1	0	2	0	0	0	4	0	4	0	0	**20**	**108**
0300 - 0315	0	12	3	0	0	0	0	0	14	0	0	0	0	**29**	
0315 - 0330	0	11	1	0	2	0	0	0	6	0	3	0	0	**23**	
0330 - 0345	0	20	5	0	3	0	0	0	17	0	4	0	0	**49**	
0345 - 0400	0	18	3	0	1	0	0	0	11	0	2	0	0	**35**	**136**
0400 - 0415	0	18	2	0	0	2	0	0	8	0	0	0	0	**30**	
0415 - 0430	0	26	2	0	0	0	0	0	11	0	1	0	0	**40**	
0430 - 0445	0	24	3	0	2	0	0	0	15	0	1	0	0	**45**	
0445 - 0500	0	37	2	0	1	0	0	0	14	0	1	0	0	**55**	**170**
0500 - 0515	0	28	2	0	2	0	0	0	11	0	0	0	0	**43**	
0515 - 0530	0	42	7	1	4	0	0	0	16	0	0	0	0	**70**	
0530 - 0545	0	53	15	0	5	0	0	0	16	0	0	0	0	**89**	
0545 - 0600	0	55	11	0	6	3	0	0	15	0	0	0	0	**90**	**292**
0600 - 0615	2	58	14	0	4	1	0	0	14	0	1	0	0	**94**	
0615 - 0630	0	75	35	3	3	0	0	0	21	0	1	0	0	**138**	
0630 - 0645	0	107	28	0	3	0	1	0	16	0	0	0	0	**155**	
0645 - 0700	0	119	40	1	4	4	1	0	16	0	0	0	0	**185**	**572**
0700 - 0715	0	109	47	0	4	1	1	2	15	0	0	0	0	**179**	
0715 - 0730	2	175	58	0	7	0	0	2	14	1	0	0	0	**259**	
0730 - 0745	0	171	43	1	9	4	1	4	12	1	0	0	0	**246**	
0745 - 0800	0	178	58	0	2	1	0	2	10	0	0	0	0	**251**	**935**
0800 - 0815	1	170	50	0	2	0	1	3	12	0	0	0	0	**239**	
0815 - 0830	1	155	50	0	5	0	1	3	10	0	0	0	0	**225**	
0830 - 0845	1	139	67	0	9	5	0	4	9	0	0	0	0	**234**	
0845 - 0900	3	138	63	1	14	2	0	3	6	2	0	1	0	**233**	**931**
0900 - 0915	0	123	48	0	15	2	0	6	15	0	0	0	0	**209**	
0915 - 0930	0	149	58	0	7	2	0	4	20	0	0	0	0	**240**	
0930 - 0945	0	122	38	0	7	1	0	1	24	0	0	0	0	**193**	
0945 - 1000	0	112	37	0	5	2	0	3	21	0	0	0	0	**180**	**822**
1000 - 1015	0	97	49	0	6	3	0	3	17	0	0	0	0	**175**	
1015 - 1030	2	120	43	0	7	5	0	2	18	1	0	0	0	**198**	
1030 - 1045	0	144	47	0	5	3	1	1	15	0	0	0	0	**216**	
1045 - 1100	0	124	56	0	2	3	0	2	23	0	0	0	0	**210**	**799**
1100 - 1115	0	120	34	0	3	5	0	2	11	0	1	0	0	**176**	
1115 - 1130	2	122	33	0	6	1	0	6	18	2	0	0	0	**190**	
1130 - 1145	1	116	56	1	7	3	0	1	18	0	0	0	0	**203**	
1145 - 1200	0	119	49	1	7	0	1	4	14	0	0	0	0	**195**	**764**
1200 - 1215	0	124	40	0	3	2	0	2	21	0	0	0	0	**192**	
1215 - 1230	0	128	54	0	7	0	1	2	9	2	0	0	0	**203**	
1230 - 1245	0	146	50	0	8	2	0	2	11	0	0	0	0	**219**	
1245 - 1300	0	152	45	0	15	2	0	4	13	2	0	0	0	**233**	**847**
1300 - 1315	0	123	48	1	9	2	0	4	10	1	0	0	0	**198**	
1315 - 1330	0	134	49	0	6	1	0	1	17	1	0	0	0	**209**	
1330 - 1345	2	135	36	0	7	2	0	4	15	2	0	0	0	**203**	
1345 - 1400	0	152	41	0	7	5	0	1	15	2	0	0	0	**223**	**833**
1400 - 1415	0	163	41	1	6	0	0	3	11	0	0	0	0	**225**	
1415 - 1430	0	165	47	2	7	0	0	3	16	1	0	0	0	**241**	
1430 - 1445	0	140	41	1	5	2	2	1	13	0	0	0	0	**205**	
1445 - 1500	1	143	42	1	5	3	0	2	15	0	0	0	0	**212**	**883**
1500 - 1515	0	145	41	0	5	3	0	3	8	0	0	0	0	**205**	
1515 - 1530	0	141	57	1	4	1	0	1	18	0	0	0	0	**223**	
1530 - 1545	0	165	42	1	10	1	0	2	21	0	0	0	0	**242**	
1545 - 1600	0	166	53	0	2	0	0	1	12	0	0	0	0	**234**	**904**
1600 - 1615	0	171	65	0	5	0	0	1	15	1	0	0	0	**258**	
1615 - 1630	0	170	46	0	3	1	0	2	12	0	0	0	0	**234**	
1630 - 1645	0	190	38	1	3	4	0	0	18	0	0	0	0	**254**	
1645 - 1700	1	162	54	1	10	2	0	0	14	0	0	0	0	**244**	**990**
1700 - 1715	0	206	52	1	3	0	0	1	9	0	0	0	0	**272**	
1715 - 1730	0	204	46	0	2	1	0	1	10	1	0	0	0	**265**	
1730 - 1745	1	154	47	0	5	0	0	1	11	0	0	0	0	**219**	
1745 - 1800	0	150	45	0	4	0	0	2	16	0	0	0	0	**217**	**973**
1800 - 1815	0	172	44	0	2	2	0	0	10	0	0	0	0	**230**	
1815 - 1830	1	141	44	0	3	0	0	3	6	0	0	0	0	**198**	
1830 - 1845	0	146	38	0	5	2	0	0	15	0	0	0	0	**206**	
1845 - 1900	0	123	26	0	2	1	0	1	15	0	0	0	0	**168**	**802**
1900 - 1915	0	108	36	0	1	0	0	0	18	0	0	0	0	**163**	
1915 - 1930	0	133	31	0	4	0	0	0	13	0	0	0	0	**181**	
1930 - 1945	1	115	39	0	3	0	0	0	11	0	1	0	0	**170**	
1945 - 2000	0	91	29	0	5	0	0	2	12	0	0	0	0	**139**	**653**
2000 - 2015	0	97	18	0	1	0	0	1	12	0	0	0	0	**129**	
2015 - 2030	0	95	14	0	0	1	0	2	16	0	0	0	0	**128**	
2030 - 2045	1	94	11	0	2	0	0	0	11	0	0	0	0	**119**	
2045 - 2100	0	74	10	0	0	0	0	0	17	0	0	0	0	**101**	**477**
2100 - 2115	0	68	15	0	2	0	0	0	13	0	0	0	0	**98**	
2115 - 2130	0	73	14	1	1	0	0	1	7	0	1	0	0	**98**	
2130 - 2145	0	59	12	0	0	0	0	0	11	0	1	0	0	**83**	
2145 - 2200	0	64	15	1	0	0	0	0	13	0	1	0	0	**94**	**373**
2200 - 2215	0	63	12	0	0	0	0	0	17	0	0	0	0	**92**	
2215 - 2230	0	49	13	0	2	0	0	0	13	0	3	0	0	**80**	
2230 - 2245	0	52	8	0	3	0	0	0	10	0	0	0	0	**73**	
2245 - 2300	0	40	4	1	0	0	0	0	6	0	1	0	0	**52**	**297**
2300 - 2315	0	41	5	0	1	1	0	0	10	0	3	0	0	**61**	
2315 - 2330	0	35	7	0	2	0	0	0	11	0	0	0	0	**55**	
2330 - 2345	0	32	5	0	1	1	0	0	10	0	0	0	0	**49**	
2345 - 0000	0	21	4	0	1	0	0	0	6	0	1	0	0	**33**	**198**

Session Total	23	9274	2760	23	359	95	11	112	1243	20	58	1	0	**13979**
Session Average	0.24	96.60	28.75	0.24	3.74	0.99	0.11	1.17	12.95	0.21	0.60	0.01	0.00	**145.61**
Session Percentage	0.16	66.34	19.74	0.16	2.57	0.68	0.08	0.80	8.89	0.14	0.41	0.01	0.00	

AM Peak Hour	0800 - 0900	0715 - 0815	0830 - 0930	0600 - 0700	0830 - 0930	0945 - 1045	0615 - 0715	0830 - 0930	0915 - 1015	0645 - 0745	0530 - 0630	0800 - 0900	-	**0715 - 0815**
AM Peak Hour Volume	6	694	236	4	45	13	3	17	82	2	2	1	0	**995**

Noon Peak Hour	1045 - 1145	1345 - 1445	1130 - 1230	1400 - 1500	1215 - 1315	1015 - 1115	1130 - 1230	1100 - 1200	1000 - 1100	1245 - 1345	1015 - 1115	-	-	**1345 - 1445**
Noon Peak Hour Volume	3	620	199	5	39	16	2	13	73	6	1	0	0	**894**

PM Peak Hour	1645 - 1745	1630 - 1730	1515 - 1615	1615 - 1715	1500 - 1600	1600 - 1700	-	1500 - 1600	1515 - 1615	1515 - 1615	1845 - 1945	-	-	**1630 - 1730**
PM Peak Hour Volume	2	762	217	3	21	7	0	7	66	1	1	0	0	**1035**

Site 75 Lane 3 NB
I-20,
north of Bush River Rd

Date
Friday, April 26, 2024

Lat/Long
34.034393°, -81.117736°

Weather
Cloudy
69°F

Click here for Detailed Weather

0000 - 2400 (Weekday 24h Session) (04-26-2024)
NB EB 15min

	Northbound (Movement 75 Lane 3 NB.1)													15min	60min
TIME	1	2	3	4	5	6	7	8	9	10	11	12	13	Total	Total
0000 - 0015	0	16	1	0	1	0	0	0	6	0	0	0	0	**24**	
0015 - 0030	0	18	2	0	1	1	0	0	9	0	1	0	0	**32**	
0030 - 0045	0	23	4	1	1	0	0	0	10	0	2	0	0	**41**	
0045 - 0100	0	17	2	0	1	0	0	0	5	0	2	0	0	**27**	**124**
0100 - 0115	0	9	2	0	0	1	0	0	7	0	0	0	0	**19**	
0115 - 0130	0	18	3	0	1	0	0	0	5	0	2	0	0	**29**	
0130 - 0145	0	14	2	0	3	0	0	0	9	0	3	0	0	**31**	
0145 - 0200	0	17	1	0	0	0	0	0	8	0	4	0	0	**30**	**109**
0200 - 0215	0	11	0	0	0	0	0	0	11	0	0	0	0	**22**	
0215 - 0230	0	12	1	3	0	1	0	0	14	0	0	0	0	**31**	
0230 - 0245	0	13	0	0	1	2	0	0	15	0	3	0	0	**34**	
0245 - 0300	0	12	1	0	0	2	0	0	8	0	0	0	0	**23**	**110**
0300 - 0315	0	11	0	0	2	2	0	0	13	0	2	0	0	**30**	
0315 - 0330	0	14	2	0	3	0	0	0	12	0	1	0	0	**32**	
0330 - 0345	0	16	2	2	1	0	0	0	11	0	1	0	0	**33**	
0345 - 0400	0	17	1	0	0	0	0	0	13	0	1	0	0	**32**	**127**
0400 - 0415	0	13	1	0	0	0	0	0	8	0	4	1	0	**27**	
0415 - 0430	0	16	2	0	3	1	0	0	16	0	2	0	0	**40**	
0430 - 0445	0	27	4	0	2	0	0	1	15	0	2	0	0	**51**	
0445 - 0500	0	27	3	0	4	1	0	3	12	0	0	0	0	**50**	**168**
0500 - 0515	0	23	1	1	2	0	0	0	13	0	0	0	0	**40**	
0515 - 0530	0	35	4	0	2	1	0	1	14	0	0	0	0	**57**	
0530 - 0545	0	62	11	0	4	3	0	0	11	0	0	0	0	**91**	
0545 - 0600	0	65	12	2	5	2	0	0	17	0	0	0	0	**103**	**291**
0600 - 0615	0	63	16	0	3	1	0	0	11	0	0	0	0	**94**	
0615 - 0630	0	84	13	3	3	1	0	0	8	0	1	0	0	**113**	
0630 - 0645	0	103	19	0	1	4	0	0	21	0	0	0	0	**148**	
0645 - 0700	0	115	30	3	5	3	0	1	15	0	0	0	0	**172**	**527**
0700 - 0715	0	103	45	0	7	1	0	3	16	1	0	0	0	**176**	
0715 - 0730	1	167	49	0	9	0	1	2	10	0	0	0	0	**239**	
0730 - 0745	0	179	51	0	3	5	0	2	17	0	0	0	0	**257**	
0745 - 0800	0	212	57	0	5	2	1	2	3	0	0	0	0	**282**	**954**
0800 - 0815	0	165	63	0	10	0	0	2	5	0	0	0	0	**245**	
0815 - 0830	1	155	62	0	6	1	0	3	12	1	0	0	0	**241**	
0830 - 0845	0	126	53	3	7	4	1	2	11	0	0	0	0	**207**	
0845 - 0900	0	117	56	0	14	3	0	3	16	0	0	0	0	**209**	**902**
0900 - 0915	0	126	56	1	11	4	0	3	14	0	0	0	0	**215**	
0915 - 0930	0	135	38	0	7	4	0	3	9	0	0	0	0	**196**	
0930 - 0945	0	150	48	0	6	0	1	7	18	0	0	0	0	**230**	
0945 - 1000	0	135	47	0	8	2	0	0	11	0	0	0	0	**203**	**844**
1000 - 1015	0	125	37	0	7	4	0	1	22	1	0	0	0	**197**	
1015 - 1030	0	135	41	0	11	4	0	2	15	0	0	0	0	**208**	
1030 - 1045	0	143	39	0	2	3	1	3	20	1	0	0	0	**212**	
1045 - 1100	2	140	63	1	3	4	0	2	11	3	0	0	0	**229**	**846**
1100 - 1115	0	129	40	0	9	3	1	3	9	0	0	0	0	**194**	
1115 - 1130	1	140	39	0	2	2	2	5	19	0	0	0	0	**210**	
1130 - 1145	0	130	43	0	2	1	0	0	14	1	0	0	0	**191**	
1145 - 1200	0	156	39	0	9	3	0	2	11	0	0	0	0	**220**	**815**
1200 - 1215	0	138	52	0	7	2	0	3	15	1	0	0	0	**218**	
1215 - 1230	0	150	40	0	8	1	0	4	18	0	0	0	0	**221**	
1230 - 1245	0	162	55	0	1	2	0	1	21	0	0	0	0	**242**	
1245 - 1300	0	125	42	0	5	1	1	5	10	0	0	0	0	**189**	**870**
1300 - 1315	1	122	42	0	8	0	0	1	18	0	0	0	0	**192**	
1315 - 1330	0	134	40	0	8	4	0	2	12	0	0	0	0	**200**	
1330 - 1345	1	175	46	3	7	1	0	2	17	0	0	0	0	**252**	
1345 - 1400	0	176	52	0	9	1	1	4	7	0	0	0	0	**250**	**894**
1400 - 1415	0	170	43	2	8	1	0	2	15	0	0	0	0	**241**	
1415 - 1430	0	147	54	0	5	3	1	1	9	1	0	0	0	**221**	
1430 - 1445	0	145	54	1	7	4	0	5	10	0	0	0	0	**226**	
1445 - 1500	2	165	38	1	12	3	0	3	11	0	0	0	0	**235**	**923**
1500 - 1515	0	168	43	0	7	2	0	2	19	0	0	0	0	**241**	
1515 - 1530	0	178	49	0	3	0	0	3	7	1	0	0	0	**241**	
1530 - 1545	0	197	50	0	7	2	0	2	7	0	0	0	0	**265**	
1545 - 1600	1	191	45	2	4	2	0	0	13	1	1	0	0	**260**	**1007**
1600 - 1615	1	202	40	1	3	1	0	3	7	0	0	0	0	**258**	
1615 - 1630	0	185	45	1	3	0	0	1	15	0	0	0	0	**250**	
1630 - 1645	0	190	48	0	2	2	0	2	3	0	0	0	0	**247**	
1645 - 1700	0	195	47	0	6	1	0	1	10	0	0	0	0	**260**	**1015**
1700 - 1715	0	172	29	0	6	2	1	3	10	1	0	0	0	**224**	
1715 - 1730	0	179	46	0	3	1	0	1	14	0	0	0	0	**244**	
1730 - 1745	0	169	35	0	3	1	0	2	4	0	0	0	0	**214**	
1745 - 1800	0	157	38	0	4	2	0	2	7	0	0	0	0	**210**	**892**
1800 - 1815	1	171	35	1	1	1	0	2	4	0	0	0	0	**216**	
1815 - 1830	2	147	36	0	3	1	0	0	5	0	0	0	0	**194**	
1830 - 1845	0	148	45	0	5	1	0	0	11	0	0	0	0	**210**	
1845 - 1900	0	161	30	0	3	1	0	0	12	0	0	0	0	**207**	**827**
1900 - 1915	0	112	37	0	3	1	0	1	12	2	0	0	0	**168**	
1915 - 1930	0	148	34	0	1	3	0	1	10	0	0	0	0	**197**	
1930 - 1945	2	119	26	1	1	1	0	1	12	0	0	0	0	**163**	
1945 - 2000	1	125	34	0	1	0	0	0	10	0	1	0	0	**172**	**700**
2000 - 2015	0	93	26	0	1	0	0	1	11	0	0	0	0	**132**	
2015 - 2030	1	95	26	0	2	1	0	0	10	0	1	0	0	**136**	
2030 - 2045	0	92	24	0	0	0	0	0	7	0	0	0	0	**123**	
2045 - 2100	3	79	21	1	4	2	0	0	9	0	1	0	0	**120**	**511**
2100 - 2115	0	88	22	0	3	1	0	0	10	0	0	0	0	**124**	
2115 - 2130	0	81	23	0	1	1	0	0	10	0	1	0	0	**117**	
2130 - 2145	0	64	18	0	1	0	0	0	3	0	1	0	0	**87**	
2145 - 2200	0	71	16	0	0	0	0	0	6	0	1	0	0	**94**	**422**
2200 - 2215	0	75	15	0	0	0	0	0	8	0	1	0	0	**99**	
2215 - 2230	0	72	12	0	0	0	0	0	7	0	2	0	0	**93**	
2230 - 2245	0	63	10	0	1	0	0	0	8	0	0	0	0	**82**	
2245 - 2300	0	38	9	1	0	0	0	0	7	0	1	0	0	**56**	**330**
2300 - 2315	0	46	14	0	0	0	0	0	7	0	2	0	0	**69**	
2315 - 2330	0	47	15	0	0	0	0	0	4	0	1	0	0	**67**	
2330 - 2345	0	34	11	0	2	0	0	0	8	0	0	0	0	**55**	
2345 - 0000	0	45	10	0	1	0	0	0	8	0	1	0	0	**65**	**256**

Session Total	21	9945	2728	35	357	129	12	117	1058	15	46	1	0	**14464**
Session Average	0.22	103.59	28.42	0.36	3.72	1.34	0.13	1.22	11.02	0.16	0.48	0.01	0.00	**150.67**
Session Percentage	0.15	68.76	18.86	0.24	2.47	0.89	0.08	0.81	7.31	0.10	0.32	0.01	0.00	

AM Peak Hour	0630 - 0730	0715 - 0815	0745 - 0845	0600 - 0700	0830 - 0930	0830 - 0930	0700 - 0800	0845 - 0945	0945 - 1045	0945 - 1045	0530 - 0630	-	-	**0730 - 0830**
AM Peak Hour Volume	1	723	235	6	39	15	2	16	68	2	1	0	0	**1025**

Noon Peak Hour	1030 - 1130	1445 - 1545	1345 - 1445	1315 - 1415	1300 - 1400	1000 - 1100	1030 - 1130	1030 - 1130	1000 - 1100	1000 - 1100	-	-	-	**1445 - 1545**
Noon Peak Hour Volume	3	708	203	5	32	15	4	13	68	5	0	0	0	**982**

PM Peak Hour	1930 - 2030	1530 - 1630	1500 - 1600	1530 - 1630	1500 - 1600	1500 - 1600	1615 - 1715	1515 - 1615	1500 - 1600	1500 - 1600	1930 - 2030	-	-	**1530 - 1630**
PM Peak Hour Volume	4	775	187	4	21	6	1	8	46	2	2	0	0	**1033**

Site 75 Lane 3 NB
I-20,
north of Bush River Rd

Date
Saturday, April 27, 2024

Lat/Long
34.034393°, -81.117736°

Weather
Mostly Cloudy
69°F

Click here for Detailed Weather

0000 - 2400 (Saturday 24h Session) (04-27-2024)
NB EB 15min

	Northbound (Movement 75 Lane 3 NB.1)													15min	60min
TIME	1	2	3	4	5	6	7	8	9	10	11	12	13	Total	Total
0000 - 0015	0	25	2	0	1	0	0	0	5	0	0	0	0	**33**	
0015 - 0030	0	42	2	0	1	0	0	0	8	0	0	0	0	**53**	
0030 - 0045	1	33	5	0	3	0	0	0	2	0	0	0	0	**44**	
0045 - 0100	0	16	1	0	0	0	0	0	3	0	1	0	0	**21**	**151**
0100 - 0115	0	19	2	0	1	0	0	0	2	0	1	0	0	**25**	
0115 - 0130	0	22	3	0	2	0	0	0	7	0	2	0	0	**36**	
0130 - 0145	0	21	1	0	0	0	0	0	1	0	2	0	0	**25**	
0145 - 0200	0	11	0	0	1	0	0	0	6	0	2	0	0	**20**	**106**
0200 - 0215	0	14	1	0	0	0	0	0	5	0	0	0	0	**20**	
0215 - 0230	0	20	1	0	1	0	0	0	12	0	2	0	0	**36**	
0230 - 0245	0	12	1	0	1	0	0	0	5	0	3	0	0	**22**	
0245 - 0300	0	16	1	0	1	0	0	0	5	0	1	0	0	**24**	**102**
0300 - 0315	0	11	2	0	1	0	0	0	6	0	2	0	0	**22**	
0315 - 0330	0	11	1	0	0	0	0	0	9	0	1	0	0	**22**	
0330 - 0345	1	14	2	0	0	0	0	0	3	0	4	0	0	**24**	
0345 - 0400	1	19	1	0	3	0	0	0	4	0	1	0	0	**29**	**97**
0400 - 0415	0	11	2	0	1	0	0	0	5	0	0	0	0	**19**	
0415 - 0430	0	18	2	0	0	0	0	0	4	0	0	0	0	**24**	
0430 - 0445	0	16	0	0	2	0	0	0	2	0	4	0	0	**24**	
0445 - 0500	0	14	1	0	0	0	0	0	8	0	2	0	0	**25**	**92**
0500 - 0515	0	24	1	1	0	0	0	0	7	0	1	0	0	**34**	
0515 - 0530	0	21	3	0	2	0	0	0	7	0	0	0	0	**33**	
0530 - 0545	0	33	1	0	1	0	0	0	9	0	1	0	0	**45**	
0545 - 0600	0	25	3	1	1	0	0	0	13	0	0	0	0	**43**	**155**
0600 - 0615	0	38	6	0	3	0	0	1	4	0	0	0	0	**52**	
0615 - 0630	0	57	7	0	1	0	0	0	6	0	0	0	0	**71**	
0630 - 0645	0	51	14	0	1	1	0	0	7	0	0	0	0	**74**	
0645 - 0700	1	58	14	1	1	0	0	0	11	1	1	0	0	**88**	**285**
0700 - 0715	0	56	23	0	3	0	0	1	12	0	0	0	0	**95**	
0715 - 0730	0	80	20	0	2	0	0	1	9	0	1	0	0	**113**	
0730 - 0745	0	64	29	0	4	2	1	0	4	0	0	0	0	**104**	
0745 - 0800	0	80	33	0	1	1	0	3	9	0	1	0	0	**128**	**440**
0800 - 0815	0	98	19	0	0	0	0	1	10	0	0	0	0	**128**	
0815 - 0830	1	98	32	1	2	0	0	1	10	0	0	0	0	**145**	
0830 - 0845	0	112	32	0	3	0	0	0	8	0	0	0	0	**155**	
0845 - 0900	1	128	35	0	2	0	0	1	8	1	0	0	0	**176**	**604**
0900 - 0915	0	126	31	0	9	0	0	0	13	0	0	0	0	**179**	
0915 - 0930	0	131	35	0	7	0	0	0	8	0	0	0	0	**181**	
0930 - 0945	3	145	51	0	2	0	0	2	11	2	0	0	0	**216**	
0945 - 1000	1	154	47	0	2	0	0	1	8	0	0	0	0	**213**	**789**
1000 - 1015	1	137	29	0	4	0	0	0	8	0	0	0	0	**179**	
1015 - 1030	0	153	48	0	1	1	0	1	9	0	0	0	0	**213**	
1030 - 1045	3	166	40	0	2	0	0	2	4	0	0	0	0	**217**	
1045 - 1100	0	162	44	0	1	0	0	2	7	0	0	0	0	**216**	**825**
1100 - 1115	1	168	47	0	2	0	0	1	10	0	0	0	0	**229**	
1115 - 1130	1	170	37	0	2	1	0	0	12	0	0	0	0	**223**	
1130 - 1145	1	170	42	0	1	0	0	1	9	0	0	0	0	**224**	
1145 - 1200	2	188	36	0	5	0	0	2	9	0	0	0	0	**242**	**918**
1200 - 1215	0	165	47	0	2	0	0	1	8	1	0	0	0	**224**	
1215 - 1230	0	192	40	0	2	0	0	0	4	0	0	0	0	**238**	
1230 - 1245	2	183	35	0	2	1	0	0	9	0	0	0	0	**232**	
1245 - 1300	0	164	44	0	2	2	0	1	4	0	0	0	0	**217**	**911**
1300 - 1315	0	201	38	0	1	0	0	2	10	0	0	0	0	**252**	
1315 - 1330	2	173	39	0	2	0	0	3	11	0	0	0	0	**230**	
1330 - 1345	1	181	47	0	0	0	0	2	9	0	0	0	0	**240**	
1345 - 1400	1	175	27	0	2	0	0	1	8	0	0	0	0	**214**	**936**
1400 - 1415	0	164	43	0	1	1	0	0	8	0	0	0	0	**217**	
1415 - 1430	1	196	39	0	2	0	0	0	4	0	0	0	0	**242**	
1430 - 1445	1	177	45	0	3	1	0	1	7	0	0	0	0	**235**	
1445 - 1500	0	167	32	3	2	1	0	0	8	0	0	0	0	**213**	**907**
1500 - 1515	0	166	34	1	1	0	0	0	3	0	1	0	0	**206**	
1515 - 1530	3	156	36	0	1	0	0	1	7	0	0	0	0	**204**	
1530 - 1545	1	155	37	0	1	0	0	0	5	2	0	0	0	**201**	
1545 - 1600	0	186	35	0	0	0	0	1	4	0	0	0	0	**226**	**837**
1600 - 1615	0	174	35	1	3	1	0	1	4	0	0	0	0	**219**	
1615 - 1630	0	164	30	0	3	0	0	1	6	0	0	0	0	**204**	
1630 - 1645	0	162	32	0	1	0	0	2	9	0	0	0	0	**206**	
1645 - 1700	1	170	33	0	1	0	0	0	4	0	0	0	0	**209**	**838**
1700 - 1715	0	141	31	0	4	0	0	0	7	1	0	0	0	**184**	
1715 - 1730	0	153	29	0	1	1	0	1	10	0	0	0	0	**195**	
1730 - 1745	1	151	25	0	3	0	0	0	8	0	0	0	0	**188**	
1745 - 1800	0	132	37	0	2	1	0	1	7	0	0	0	0	**180**	**747**
1800 - 1815	0	136	21	0	0	0	0	1	4	0	0	0	0	**162**	
1815 - 1830	3	142	21	0	8	0	0	1	5	0	0	0	0	**180**	
1830 - 1845	0	143	24	0	1	1	0	1	13	0	0	0	0	**183**	
1845 - 1900	0	123	31	0	1	1	0	0	6	1	0	0	0	**163**	**688**
1900 - 1915	0	135	27	0	3	0	0	1	5	0	0	0	0	**171**	
1915 - 1930	0	123	32	0	3	0	0	1	7	0	0	0	0	**166**	
1930 - 1945	0	117	29	0	1	1	0	0	8	0	0	0	0	**156**	
1945 - 2000	0	115	19	0	2	0	0	0	1	0	0	0	0	**137**	**630**
2000 - 2015	0	113	26	0	1	0	0	0	4	0	0	0	0	**144**	
2015 - 2030	0	107	11	0	0	0	0	0	3	0	0	0	0	**121**	
2030 - 2045	0	107	13	0	1	0	0	0	8	0	0	0	0	**129**	
2045 - 2100	0	86	11	0	4	0	0	0	6	0	0	0	0	**107**	**501**
2100 - 2115	0	79	15	0	2	0	0	0	4	0	0	0	0	**100**	
2115 - 2130	0	81	12	0	2	0	0	0	4	0	0	0	0	**99**	
2130 - 2145	0	85	15	0	2	0	0	0	4	0	0	0	0	**106**	
2145 - 2200	0	66	3	0	0	0	0	0	6	0	0	0	0	**75**	**380**
2200 - 2215	0	61	14	0	0	0	0	0	6	0	0	0	0	**81**	
2215 - 2230	0	64	10	0	0	0	0	0	8	0	0	0	0	**82**	
2230 - 2245	0	75	8	0	0	0	0	0	6	0	0	0	0	**89**	
2245 - 2300	0	56	11	0	1	0	0	0	2	0	0	0	0	**70**	**322**
2300 - 2315	0	53	5	0	0	0	0	0	3	0	0	0	0	**61**	
2315 - 2330	0	51	3	0	1	0	0	0	2	0	0	0	0	**57**	
2330 - 2345	1	52	3	0	0	0	0	0	4	0	0	0	0	**60**	
2345 - 0000	1	36	4	0	1	0	0	0	4	0	0	0	0	**46**	**224**

Session Total	38	9512	2028	9	160	18	1	45	631	9	34	0	0	**12485**
Session Average	0.40	99.08	21.13	0.09	1.67	0.19	0.01	0.47	6.57	0.09	0.35	0.00	0.00	**130.05**
Session Percentage	0.30	76.19	16.24	0.07	1.28	0.14	0.01	0.36	5.05	0.07	0.27	0.00	0.00	

AM Peak Hour	0915 - 1015	0945 - 1045	0930 - 1030	0500 - 0600	0830 - 0930	0700 - 0800	0645 - 0745	0700 - 0800	0845 - 0945	0845 - 0945	0500 - 0600	-	-	**0945 - 1045**
AM Peak Hour Volume	5	610	175	2	21	3	1	5	40	3	2	0	0	**822**

Noon Peak Hour	1030 - 1130	1215 - 1315	1015 - 1115	1415 - 1515	1145 - 1245	1200 - 1300	-	1245 - 1345	1100 - 1200	1445 - 1545	1415 - 1515	-	-	**1215 - 1315**
Noon Peak Hour Volume	5	740	179	4	11	3	0	8	40	2	1	0	0	**939**

PM Peak Hour	1500 - 1600	1545 - 1645	1515 - 1615	1500 - 1600	1730 - 1830	1700 - 1800	-	1545 - 1645	1700 - 1800	1500 - 1600	1500 - 1600	-	-	**1545 - 1645**
PM Peak Hour Volume	4	686	143	1	13	2	0	5	32	2	1	0	0	**855**

Bi-Directional Class Count || NB EB Average 15min

Columbia, SC

Marr Traffic DATA COLLECTION
www.marrtraffic.com

Site 75 Lane 3 NB
I-20,
north of Bush River Rd

Date
Sunday, April 21, 2024

Lat/Long
34.034393°, -81.117736°

Weather
Cloudy
66°F

0000 - 2400 (Weekday 24h Session) (All Dates)
NB EB Average 15min

	NB EB Average 15min													15min	60min
Time	1	2	3	4	5	6	7	8	9	10	11	12	13	Total	Total
0000 - 0015	0	21	3	0	1	0	0	0	9	0	1	0	0	**34**	
0015 - 0030	0	25	2	0	1	0	0	0	8	0	0	0	0	**36**	
0030 - 0045	0	20	3	0	1	0	0	0	8	0	1	0	0	**34**	
0045 - 0100	0	21	2	0	0	0	0	0	7	0	1	0	0	**32**	**136**
0100 - 0115	0	14	2	0	1	0	0	0	7	0	1	0	0	**26**	
0115 - 0130	0	17	2	0	1	0	0	0	8	0	2	0	0	**29**	
0130 - 0145	0	15	2	0	1	0	0	0	6	0	2	0	0	**26**	
0145 - 0200	0	12	1	0	0	0	0	0	8	0	2	0	0	**23**	**104**
0200 - 0215	0	12	1	0	1	0	0	0	7	0	1	0	0	**22**	
0215 - 0230	0	14	2	0	1	0	0	0	9	0	1	0	0	**27**	
0230 - 0245	0	12	1	0	1	0	0	0	9	0	2	0	0	**25**	
0245 - 0300	0	10	1	0	1	0	0	0	7	0	2	0	0	**21**	**96**
0300 - 0315	0	11	2	0	1	1	0	0	9	0	1	0	0	**24**	
0315 - 0330	0	12	1	0	1	0	0	0	13	0	1	0	0	**28**	
0330 - 0345	0	15	2	0	1	0	0	0	9	0	2	0	0	**29**	
0345 - 0400	0	17	2	0	1	0	0	0	9	0	1	0	0	**29**	**111**
0400 - 0415	0	14	2	0	1	0	0	0	9	0	1	0	0	**27**	
0415 - 0430	0	18	2	0	2	1	0	0	10	0	1	0	0	**34**	
0430 - 0445	0	20	3	0	2	0	0	0	11	0	1	0	0	**37**	
0445 - 0500	0	25	3	0	1	0	0	0	12	0	1	0	0	**42**	**140**
0500 - 0515	0	25	4	0	1	0	0	0	11	0	0	0	0	**42**	
0515 - 0530	0	33	6	0	2	0	0	0	11	0	0	0	0	**54**	
0530 - 0545	0	44	10	0	3	1	0	0	13	0	0	0	0	**71**	
0545 - 0600	0	45	9	0	4	1	0	0	14	0	0	0	0	**74**	**241**
0600 - 0615	0	52	11	0	3	1	0	0	10	0	0	0	0	**78**	
0615 - 0630	0	64	20	2	2	1	0	0	12	0	0	0	0	**101**	
0630 - 0645	0	89	28	0	3	2	0	0	12	0	0	0	0	**135**	
0645 - 0700	0	89	34	2	3	3	0	1	14	0	0	0	0	**145**	**460**
0700 - 0715	0	100	38	0	6	1	0	1	12	0	0	0	0	**158**	
0715 - 0730	1	143	41	0	7	1	0	1	11	0	0	0	0	**206**	
0730 - 0745	0	132	39	0	5	2	0	2	9	0	0	0	0	**190**	
0745 - 0800	0	157	49	0	3	1	0	1	7	0	0	0	0	**219**	**773**
0800 - 0815	0	137	40	0	5	1	0	2	10	0	0	0	0	**196**	
0815 - 0830	1	124	47	1	4	1	0	3	10	0	0	0	0	**191**	
0830 - 0845	0	118	50	1	7	3	0	2	11	0	0	0	0	**193**	
0845 - 0900	1	126	47	0	9	2	0	4	11	1	0	0	0	**200**	**780**
0900 - 0915	0	110	44	1	9	1	0	3	13	0	0	0	0	**182**	
0915 - 0930	0	123	40	1	9	2	0	2	10	0	0	0	0	**187**	
0930 - 0945	0	122	45	0	5	1	0	3	14	0	0	0	0	**192**	
0945 - 1000	0	128	42	0	6	1	0	2	14	0	0	0	0	**194**	**754**
1000 - 1015	0	113	37	0	6	2	1	2	16	0	0	0	0	**176**	
1015 - 1030	1	124	43	0	6	2	0	2	14	0	0	0	0	**193**	
1030 - 1045	1	130	42	0	5	2	1	3	16	0	0	0	0	**200**	
1045 - 1100	0	135	47	0	4	2	0	2	17	1	0	0	0	**206**	**775**
1100 - 1115	0	126	40	0	5	3	0	2	15	1	0	0	0	**192**	
1115 - 1130	1	132	41	0	5	1	0	3	16	0	0	0	0	**199**	
1130 - 1145	0	125	44	0	4	1	0	2	16	0	0	0	0	**192**	
1145 - 1200	0	142	42	0	5	1	0	3	14	0	0	0	0	**208**	**791**
1200 - 1215	0	144	46	0	5	1	0	2	17	1	0	0	0	**216**	
1215 - 1230	0	147	46	0	5	1	0	2	12	0	0	0	0	**214**	
1230 - 1245	0	149	41	0	5	2	0	2	13	1	0	0	0	**213**	
1245 - 1300	0	142	41	1	7	1	0	2	9	0	0	0	0	**203**	**845**
1300 - 1315	0	138	41	1	5	2	1	3	14	1	0	0	0	**204**	
1315 - 1330	0	147	42	0	6	2	0	2	15	0	0	0	0	**213**	
1330 - 1345	1	155	42	1	4	1	0	2	15	0	0	0	0	**222**	
1345 - 1400	0	149	42	0	6	1	0	1	12	0	0	0	0	**214**	**854**
1400 - 1415	0	149	41	1	5	1	0	1	13	0	0	0	0	**211**	
1415 - 1430	0	152	44	0	5	1	0	2	13	1	0	0	0	**219**	
1430 - 1445	0	147	43	0	6	1	0	3	12	0	0	0	0	**212**	
1445 - 1500	0	158	40	1	6	2	0	1	13	0	0	0	0	**221**	**863**
1500 - 1515	0	153	40	0	3	2	0	2	13	0	0	0	0	**214**	
1515 - 1530	0	156	47	1	4	1	0	2	12	0	0	0	0	**223**	
1530 - 1545	1	167	40	0	5	1	0	2	11	0	0	0	0	**228**	
1545 - 1600	0	172	40	1	3	1	0	2	11	0	0	0	0	**230**	**895**
1600 - 1615	0	184	48	0	3	1	0	1	13	0	0	0	0	**251**	
1615 - 1630	0	170	43	0	4	1	0	1	14	0	0	0	0	**234**	
1630 - 1645	0	177	43	0	4	1	0	1	10	0	0	0	0	**237**	
1645 - 1700	0	175	42	0	5	1	0	1	12	0	0	0	0	**236**	**957**
1700 - 1715	0	172	44	0	4	1	0	1	11	0	0	0	0	**234**	
1715 - 1730	0	169	40	0	2	1	0	1	10	0	0	0	0	**223**	
1730 - 1745	0	159	40	0	3	0	0	2	11	0	0	0	0	**214**	
1745 - 1800	0	147	36	0	3	1	0	1	11	0	0	0	0	**201**	**873**
1800 - 1815	0	146	35	0	1	1	0	1	8	0	0	0	0	**193**	
1815 - 1830	1	134	34	0	4	0	0	1	11	0	0	0	0	**185**	
1830 - 1845	0	132	30	0	3	1	0	1	16	0	0	0	0	**184**	
1845 - 1900	0	106	27	0	2	1	0	1	13	0	0	0	0	**150**	**711**
1900 - 1915	0	103	28	1	2	0	0	0	14	0	0	0	0	**149**	
1915 - 1930	0	120	26	0	2	1	0	1	10	0	0	0	0	**160**	
1930 - 1945	1	99	26	0	2	1	0	0	12	0	0	0	0	**142**	
1945 - 2000	0	103	25	0	2	0	0	1	10	0	0	0	0	**142**	**593**
2000 - 2015	0	90	22	0	1	0	0	0	10	0	0	0	0	**125**	
2015 - 2030	0	83	15	0	1	0	0	0	10	0	0	0	0	**109**	
2030 - 2045	0	85	13	0	1	0	0	0	11	0	0	0	0	**111**	
2045 - 2100	1	76	12	0	1	0	0	0	11	0	0	0	0	**101**	**446**
2100 - 2115	0	74	14	0	1	0	0	0	9	0	0	0	0	**99**	
2115 - 2130	0	68	13	0	1	0	0	0	8	0	0	0	0	**90**	
2130 - 2145	0	60	12	0	1	0	0	0	9	0	0	0	0	**82**	
2145 - 2200	0	54	10	0	0	0	0	0	10	0	1	0	0	**76**	**348**
2200 - 2215	0	60	10	0	0	0	0	0	12	0	1	0	0	**83**	
2215 - 2230	0	49	9	0	1	0	0	0	11	0	2	0	0	**73**	
2230 - 2245	0	48	6	0	1	0	0	0	11	0	0	0	0	**67**	
2245 - 2300	0	40	6	1	1	0	0	0	10	0	1	0	0	**59**	**282**
2300 - 2315	0	41	5	0	0	0	0	0	8	0	1	0	0	**56**	
2315 - 2330	0	35	7	0	0	0	0	0	9	0	1	0	0	**52**	
2330 - 2345	0	31	6	0	1	0	0	0	9	0	1	0	0	**47**	
2345 - 0000	0	26	4	0	1	0	0	0	8	0	1	0	0	**41**	**196**

Session Total	20	8954	2425	23	291	85	10	94	1071	15	38	0	0	**13027**
Session Average	0.20	93.27	25.26	0.24	3.03	0.89	0.11	0.98	11.16	0.16	0.39	0.00	0.00	**135.70**
Session Percentage	0.15	68.73	18.62	0.18	2.23	0.65	0.08	0.72	8.22	0.12	0.29	0.00	0.00	

AM Peak Hour	0800 - 0900	0715 - 0815	0815 - 0915	0600 - 0700	0830 - 0930	0830 - 0930	0945 - 1045	0845 - 0945	0945 - 1045	0645 - 0745	0500 - 0600	0800 - 0900	-	**0715 - 0815**
AM Peak Volume	2	569	187	4	34	8	2	12	60	1	1	0	0	**811**

Noon Peak Hour	1030 - 1130	1445 - 1545	1130 - 1230	1245 - 1345	1230 - 1330	1015 - 1115	1000 - 1100	1030 - 1130	1030 - 1130	1200 - 1300	1015 - 1115	-	-	**1445 - 1545**
Noon Peak Volume	2	634	178	3	22	9	2	9	63	2	0	0	0	**887**

PM Peak Hour	1845 - 1945	1600 - 1700	1600 - 1700	1515 - 1615	1615 - 1715	1500 - 1600	1500 - 1600	1500 - 1600	1815 - 1915	1500 - 1600	1930 - 2030	-	-	**1600 - 1700**
PM Peak Volume	2	705	176	2	17	5	1	7	54	1	1	0	0	**957**

Bi-Directional Class Count || Volume Summary 15min

Columbia, SC

Marr Traffic DATA COLLECTION

www.marrtraffic.com

Site 75 Lane 3 NB

I-20,
north of Bush River Rd

Date

Sunday, April 21, 2024

Lat/Long

34.034393°, -81.117736°

Weather

Cloudy
66°F

Click here for Detailed Weather

0000 - 2400 (Sunday 24h Session) (04-21-2024)

Volume Summary 15min

	Volume Summary 15min		15min	60min
TIME	NB	SB	Total	Total
0000 - 0015	45	0	**45**	
0015 - 0030	58	0	**58**	
0030 - 0045	43	0	**43**	
0045 - 0100	62	0	**62**	**208**
0100 - 0115	35	0	**35**	
0115 - 0130	39	0	**39**	
0130 - 0145	31	0	**31**	
0145 - 0200	26	0	**26**	**131**
0200 - 0215	24	0	**24**	
0215 - 0230	28	0	**28**	
0230 - 0245	29	0	**29**	
0245 - 0300	20	0	**20**	**101**
0300 - 0315	18	0	**18**	
0315 - 0330	30	0	**30**	
0330 - 0345	19	0	**19**	
0345 - 0400	24	0	**24**	**91**
0400 - 0415	12	0	**12**	
0415 - 0430	21	0	**21**	
0430 - 0445	13	0	**13**	
0445 - 0500	18	0	**18**	**64**
0500 - 0515	13	0	**13**	
0515 - 0530	20	0	**20**	
0530 - 0545	18	0	**18**	
0545 - 0600	20	0	**20**	**71**
0600 - 0615	40	0	**40**	
0615 - 0630	34	0	**34**	
0630 - 0645	66	0	**66**	
0645 - 0700	53	0	**53**	**193**
0700 - 0715	63	0	**63**	
0715 - 0730	82	0	**82**	
0730 - 0745	76	0	**76**	
0745 - 0800	96	0	**96**	**317**
0800 - 0815	74	0	**74**	
0815 - 0830	83	0	**83**	
0830 - 0845	91	0	**91**	
0845 - 0900	120	0	**120**	**368**
0900 - 0915	123	0	**123**	
0915 - 0930	109	0	**109**	
0930 - 0945	126	0	**126**	
0945 - 1000	153	0	**153**	**511**
1000 - 1015	134	0	**134**	
1015 - 1030	170	0	**170**	
1030 - 1045	174	0	**174**	
1045 - 1100	172	0	**172**	**650**
1100 - 1115	171	0	**171**	
1115 - 1130	173	0	**173**	
1130 - 1145	192	0	**192**	
1145 - 1200	206	0	**206**	**742**

	Volume Summary 15min		15min	60min
Time	NB	SB	Total	Total
1200 - 1215	229	0	**229**	
1215 - 1230	267	0	**267**	
1230 - 1245	231	0	**231**	
1245 - 1300	206	0	**206**	**933**
1300 - 1315	200	0	**200**	
1315 - 1330	245	0	**245**	
1330 - 1345	219	0	**219**	
1345 - 1400	218	0	**218**	**882**
1400 - 1415	215	0	**215**	
1415 - 1430	208	0	**208**	
1430 - 1445	218	0	**218**	
1445 - 1500	228	0	**228**	**869**
1500 - 1515	194	0	**194**	
1515 - 1530	194	0	**194**	
1530 - 1545	216	0	**216**	
1545 - 1600	188	0	**188**	**792**
1600 - 1615	199	0	**199**	
1615 - 1630	204	0	**204**	
1630 - 1645	193	0	**193**	
1645 - 1700	185	0	**185**	**781**
1700 - 1715	207	0	**207**	
1715 - 1730	170	0	**170**	
1730 - 1745	187	0	**187**	
1745 - 1800	171	0	**171**	**735**
1800 - 1815	164	0	**164**	
1815 - 1830	144	0	**144**	
1830 - 1845	166	0	**166**	
1845 - 1900	129	0	**129**	**603**
1900 - 1915	109	0	**109**	
1915 - 1930	124	0	**124**	
1930 - 1945	107	0	**107**	
1945 - 2000	134	0	**134**	**474**
2000 - 2015	126	0	**126**	
2015 - 2030	86	0	**86**	
2030 - 2045	66	0	**66**	
2045 - 2100	95	0	**95**	**373**
2100 - 2115	80	0	**80**	
2115 - 2130	50	0	**50**	
2130 - 2145	61	0	**61**	
2145 - 2200	61	0	**61**	**252**
2200 - 2215	62	0	**62**	
2215 - 2230	55	0	**55**	
2230 - 2245	38	0	**38**	
2245 - 2300	43	0	**43**	**198**
2300 - 2315	35	0	**35**	
2315 - 2330	41	0	**41**	
2330 - 2345	29	0	**29**	
2345 - 0000	27	0	**27**	**132**

Session Total	10471	0	**10471**
Session Average	109.07	0.00	**109.07**
Session Percentage	100.00	0.00	

Site 75 Lane 3 NB

I-20,
north of Bush River Rd

Date

Monday, April 22, 2024

Lat/Long

34.034393°, -81.117736°

Weather

Mostly Cloudy
57°F

Click here for Detailed Weather

0000 - 2400 (Weekday 24h Session) (04-22-2024)

Volume Summary 15min

TIME	Volume Summary 15min NB	SB	15min Total	60min Total
0000 - 0015	28	0	**28**	
0015 - 0030	21	0	**21**	
0030 - 0045	19	0	**19**	
0045 - 0100	17	0	**17**	**85**
0100 - 0115	21	0	**21**	
0115 - 0130	20	0	**20**	
0130 - 0145	18	0	**18**	
0145 - 0200	11	0	**11**	**70**
0200 - 0215	12	0	**12**	
0215 - 0230	12	0	**12**	
0230 - 0245	14	0	**14**	
0245 - 0300	13	0	**13**	**51**
0300 - 0315	18	0	**18**	
0315 - 0330	22	0	**22**	
0330 - 0345	22	0	**22**	
0345 - 0400	19	0	**19**	**81**
0400 - 0415	19	0	**19**	
0415 - 0430	34	0	**34**	
0430 - 0445	42	0	**42**	
0445 - 0500	44	0	**44**	**139**
0500 - 0515	54	0	**54**	
0515 - 0530	63	0	**63**	
0530 - 0545	77	0	**77**	
0545 - 0600	91	0	**91**	**285**
0600 - 0615	90	0	**90**	
0615 - 0630	119	0	**119**	
0630 - 0645	175	0	**175**	
0645 - 0700	166	0	**166**	**550**
0700 - 0715	196	0	**196**	
0715 - 0730	244	0	**244**	
0730 - 0745	248	0	**248**	
0745 - 0800	266	0	**266**	**954**
0800 - 0815	238	0	**238**	
0815 - 0830	227	0	**227**	
0830 - 0845	217	0	**217**	
0845 - 0900	209	0	**209**	**891**
0900 - 0915	176	0	**176**	
0915 - 0930	192	0	**192**	
0930 - 0945	177	0	**177**	
0945 - 1000	199	0	**199**	**744**
1000 - 1015	181	0	**181**	
1015 - 1030	179	0	**179**	
1030 - 1045	188	0	**188**	
1045 - 1100	201	0	**201**	**749**
1100 - 1115	195	0	**195**	
1115 - 1130	198	0	**198**	
1130 - 1145	173	0	**173**	
1145 - 1200	195	0	**195**	**761**

Time	Volume Summary 15min NB	SB	15min Total	60min Total
1200 - 1215	209	0	**209**	
1215 - 1230	170	0	**170**	
1230 - 1245	218	0	**218**	
1245 - 1300	187	0	**187**	**784**
1300 - 1315	195	0	**195**	
1315 - 1330	193	0	**193**	
1330 - 1345	203	0	**203**	
1345 - 1400	186	0	**186**	**777**
1400 - 1415	183	0	**183**	
1415 - 1430	203	0	**203**	
1430 - 1445	207	0	**207**	
1445 - 1500	222	0	**222**	**815**
1500 - 1515	201	0	**201**	
1515 - 1530	234	0	**234**	
1530 - 1545	212	0	**212**	
1545 - 1600	238	0	**238**	**885**
1600 - 1615	306	0	**306**	
1615 - 1630	280	0	**280**	
1630 - 1645	257	0	**257**	
1645 - 1700	251	0	**251**	**1094**
1700 - 1715	234	0	**234**	
1715 - 1730	204	0	**204**	
1730 - 1745	233	0	**233**	
1745 - 1800	209	0	**209**	**880**
1800 - 1815	185	0	**185**	
1815 - 1830	182	0	**182**	
1830 - 1845	160	0	**160**	
1845 - 1900	134	0	**134**	**661**
1900 - 1915	122	0	**122**	
1915 - 1930	137	0	**137**	
1930 - 1945	109	0	**109**	
1945 - 2000	117	0	**117**	**485**
2000 - 2015	102	0	**102**	
2015 - 2030	69	0	**69**	
2030 - 2045	95	0	**95**	
2045 - 2100	77	0	**77**	**343**
2100 - 2115	84	0	**84**	
2115 - 2130	71	0	**71**	
2130 - 2145	60	0	**60**	
2145 - 2200	58	0	**58**	**273**
2200 - 2215	47	0	**47**	
2215 - 2230	41	0	**41**	
2230 - 2245	46	0	**46**	
2245 - 2300	41	0	**41**	**175**
2300 - 2315	53	0	**53**	
2315 - 2330	30	0	**30**	
2330 - 2345	25	0	**25**	
2345 - 0000	30	0	**30**	**138**

Session Total	12670	0	**12670**
Session Average	131.98	0.00	**131.98**
Session Percentage	100.00	0.00	

Site 75 Lane 3 NB

I-20,
north of Bush River Rd

Date

Tuesday, April 23, 2024

Lat/Long

34.034393°, -81.117736°

Weather

Fair
58°F

Click here for Detailed Weather

0000 - 2400 (Weekday 24h Session) (04-23-2024)

Volume Summary 15min

TIME	Volume Summary 15min NB	Volume Summary 15min SB	15min Total	60min Total
0000 - 0015	24	0	**24**	
0015 - 0030	24	0	**24**	
0030 - 0045	22	0	**22**	
0045 - 0100	29	0	**29**	**99**
0100 - 0115	10	0	**10**	
0115 - 0130	23	0	**23**	
0130 - 0145	25	0	**25**	
0145 - 0200	26	0	**26**	**84**
0200 - 0215	19	0	**19**	
0215 - 0230	19	0	**19**	
0230 - 0245	23	0	**23**	
0245 - 0300	19	0	**19**	**80**
0300 - 0315	24	0	**24**	
0315 - 0330	33	0	**33**	
0330 - 0345	29	0	**29**	
0345 - 0400	30	0	**30**	**116**
0400 - 0415	39	0	**39**	
0415 - 0430	42	0	**42**	
0430 - 0445	42	0	**42**	
0445 - 0500	50	0	**50**	**173**
0500 - 0515	51	0	**51**	
0515 - 0530	58	0	**58**	
0530 - 0545	94	0	**94**	
0545 - 0600	81	0	**81**	**284**
0600 - 0615	89	0	**89**	
0615 - 0630	117	0	**117**	
0630 - 0645	172	0	**172**	
0645 - 0700	163	0	**163**	**541**
0700 - 0715	186	0	**186**	
0715 - 0730	258	0	**258**	
0730 - 0745	151	0	**151**	
0745 - 0800	251	0	**251**	**846**
0800 - 0815	223	0	**223**	
0815 - 0830	216	0	**216**	
0830 - 0845	217	0	**217**	
0845 - 0900	229	0	**229**	**885**
0900 - 0915	180	0	**180**	
0915 - 0930	197	0	**197**	
0930 - 0945	196	0	**196**	
0945 - 1000	205	0	**205**	**778**
1000 - 1015	189	0	**189**	
1015 - 1030	196	0	**196**	
1030 - 1045	178	0	**178**	
1045 - 1100	216	0	**216**	**779**
1100 - 1115	193	0	**193**	
1115 - 1130	192	0	**192**	
1130 - 1145	183	0	**183**	
1145 - 1200	191	0	**191**	**759**

Time	Volume Summary 15min NB	Volume Summary 15min SB	15min Total	60min Total
1200 - 1215	216	0	**216**	
1215 - 1230	208	0	**208**	
1230 - 1245	188	0	**188**	
1245 - 1300	185	0	**185**	**797**
1300 - 1315	201	0	**201**	
1315 - 1330	204	0	**204**	
1330 - 1345	206	0	**206**	
1345 - 1400	186	0	**186**	**797**
1400 - 1415	197	0	**197**	
1415 - 1430	202	0	**202**	
1430 - 1445	189	0	**189**	
1445 - 1500	249	0	**249**	**837**
1500 - 1515	231	0	**231**	
1515 - 1530	239	0	**239**	
1530 - 1545	211	0	**211**	
1545 - 1600	222	0	**222**	**903**
1600 - 1615	253	0	**253**	
1615 - 1630	231	0	**231**	
1630 - 1645	278	0	**278**	
1645 - 1700	240	0	**240**	**1002**
1700 - 1715	253	0	**253**	
1715 - 1730	213	0	**213**	
1730 - 1745	214	0	**214**	
1745 - 1800	214	0	**214**	**894**
1800 - 1815	185	0	**185**	
1815 - 1830	201	0	**201**	
1830 - 1845	164	0	**164**	
1845 - 1900	60	0	**60**	**610**
1900 - 1915	155	0	**155**	
1915 - 1930	157	0	**157**	
1930 - 1945	141	0	**141**	
1945 - 2000	154	0	**154**	**607**
2000 - 2015	112	0	**112**	
2015 - 2030	107	0	**107**	
2030 - 2045	117	0	**117**	
2045 - 2100	95	0	**95**	**431**
2100 - 2115	125	0	**125**	
2115 - 2130	104	0	**104**	
2130 - 2145	101	0	**101**	
2145 - 2200	77	0	**77**	**407**
2200 - 2215	118	0	**118**	
2215 - 2230	101	0	**101**	
2230 - 2245	78	0	**78**	
2245 - 2300	86	0	**86**	**383**
2300 - 2315	61	0	**61**	
2315 - 2330	61	0	**61**	
2330 - 2345	60	0	**60**	
2345 - 0000	36	0	**36**	**218**

Session Total	13310	0	**13310**
Session Average	138.65	0.00	**138.65**
Session Percentage	100.00	0.00	

Site 75 Lane 3 NB

I-20,
north of Bush River Rd

Date

Wednesday, April 24, 2024

Lat/Long

34.034393°, -81.117736°

Weather

Fair
66°F

Click here for Detailed Weather

0000 - 2400 (Weekday 24h Session) (04-24-2024)

Volume Summary 15min

TIME	Volume Summary 15min NB	SB	15min Total	60min Total
0000 - 0015	60	0	**60**	
0015 - 0030	33	0	**33**	
0030 - 0045	41	0	**41**	
0045 - 0100	35	0	**35**	**169**
0100 - 0115	36	0	**36**	
0115 - 0130	34	0	**34**	
0130 - 0145	26	0	**26**	
0145 - 0200	26	0	**26**	**122**
0200 - 0215	29	0	**29**	
0215 - 0230	40	0	**40**	
0230 - 0245	20	0	**20**	
0245 - 0300	30	0	**30**	**119**
0300 - 0315	28	0	**28**	
0315 - 0330	37	0	**37**	
0330 - 0345	28	0	**28**	
0345 - 0400	34	0	**34**	**127**
0400 - 0415	41	0	**41**	
0415 - 0430	39	0	**39**	
0430 - 0445	43	0	**43**	
0445 - 0500	54	0	**54**	**177**
0500 - 0515	61	0	**61**	
0515 - 0530	78	0	**78**	
0530 - 0545	86	0	**86**	
0545 - 0600	87	0	**87**	**312**
0600 - 0615	87	0	**87**	
0615 - 0630	116	0	**116**	
0630 - 0645	158	0	**158**	
0645 - 0700	189	0	**189**	**550**
0700 - 0715	213	0	**213**	
0715 - 0730	246	0	**246**	
0730 - 0745	248	0	**248**	
0745 - 0800	261	0	**261**	**968**
0800 - 0815	224	0	**224**	
0815 - 0830	198	0	**198**	
0830 - 0845	232	0	**232**	
0845 - 0900	226	0	**226**	**880**
0900 - 0915	189	0	**189**	
0915 - 0930	196	0	**196**	
0930 - 0945	205	0	**205**	
0945 - 1000	202	0	**202**	**792**
1000 - 1015	179	0	**179**	
1015 - 1030	187	0	**187**	
1030 - 1045	213	0	**213**	
1045 - 1100	201	0	**201**	**780**
1100 - 1115	183	0	**183**	
1115 - 1130	208	0	**208**	
1130 - 1145	181	0	**181**	
1145 - 1200	207	0	**207**	**779**

Time	Volume Summary 15min NB	SB	15min Total	60min Total
1200 - 1215	222	0	**222**	
1215 - 1230	192	0	**192**	
1230 - 1245	159	0	**159**	
1245 - 1300	203	0	**203**	**776**
1300 - 1315	193	0	**193**	
1315 - 1330	212	0	**212**	
1330 - 1345	234	0	**234**	
1345 - 1400	221	0	**221**	**860**
1400 - 1415	196	0	**196**	
1415 - 1430	215	0	**215**	
1430 - 1445	205	0	**205**	
1445 - 1500	191	0	**191**	**807**
1500 - 1515	219	0	**219**	
1515 - 1530	228	0	**228**	
1530 - 1545	249	0	**249**	
1545 - 1600	242	0	**242**	**938**
1600 - 1615	264	0	**264**	
1615 - 1630	235	0	**235**	
1630 - 1645	223	0	**223**	
1645 - 1700	260	0	**260**	**982**
1700 - 1715	266	0	**266**	
1715 - 1730	271	0	**271**	
1730 - 1745	246	0	**246**	
1745 - 1800	207	0	**207**	**990**
1800 - 1815	206	0	**206**	
1815 - 1830	193	0	**193**	
1830 - 1845	197	0	**197**	
1845 - 1900	192	0	**192**	**788**
1900 - 1915	154	0	**154**	
1915 - 1930	159	0	**159**	
1930 - 1945	146	0	**146**	
1945 - 2000	141	0	**141**	**600**
2000 - 2015	130	0	**130**	
2015 - 2030	115	0	**115**	
2030 - 2045	129	0	**129**	
2045 - 2100	114	0	**114**	**488**
2100 - 2115	83	0	**83**	
2115 - 2130	94	0	**94**	
2130 - 2145	79	0	**79**	
2145 - 2200	73	0	**73**	**329**
2200 - 2215	83	0	**83**	
2215 - 2230	58	0	**58**	
2230 - 2245	64	0	**64**	
2245 - 2300	63	0	**63**	**268**
2300 - 2315	54	0	**54**	
2315 - 2330	52	0	**52**	
2330 - 2345	52	0	**52**	
2345 - 0000	51	0	**51**	**209**

Session Total	13810	0	**13810**
Session Average	143.85	0.00	**143.85**
Session Percentage	100.00	0.00	

Site 75 Lane 3 NB

I-20,
north of Bush River Rd

Date

Thursday, April 25, 2024

Lat/Long

34.034393°, -81.117736°

Weather

Fair
67°F

Click here for Detailed Weather

0000 - 2400 (Weekday 24h Session) (04-25-2024)

Volume Summary 15min

TIME	Volume Summary 15min NB	SB	15min Total	60min Total
0000 - 0015	26	0	**26**	
0015 - 0030	31	0	**31**	
0030 - 0045	26	0	**26**	
0045 - 0100	31	0	**31**	**114**
0100 - 0115	37	0	**37**	
0115 - 0130	25	0	**25**	
0130 - 0145	23	0	**23**	
0145 - 0200	21	0	**21**	**106**
0200 - 0215	28	0	**28**	
0215 - 0230	26	0	**26**	
0230 - 0245	34	0	**34**	
0245 - 0300	20	0	**20**	**108**
0300 - 0315	29	0	**29**	
0315 - 0330	23	0	**23**	
0330 - 0345	49	0	**49**	
0345 - 0400	35	0	**35**	**136**
0400 - 0415	30	0	**30**	
0415 - 0430	40	0	**40**	
0430 - 0445	45	0	**45**	
0445 - 0500	55	0	**55**	**170**
0500 - 0515	43	0	**43**	
0515 - 0530	70	0	**70**	
0530 - 0545	89	0	**89**	
0545 - 0600	90	0	**90**	**292**
0600 - 0615	94	0	**94**	
0615 - 0630	138	0	**138**	
0630 - 0645	155	0	**155**	
0645 - 0700	185	0	**185**	**572**
0700 - 0715	179	0	**179**	
0715 - 0730	259	0	**259**	
0730 - 0745	246	0	**246**	
0745 - 0800	251	0	**251**	**935**
0800 - 0815	239	0	**239**	
0815 - 0830	225	0	**225**	
0830 - 0845	234	0	**234**	
0845 - 0900	233	0	**233**	**931**
0900 - 0915	209	0	**209**	
0915 - 0930	240	0	**240**	
0930 - 0945	193	0	**193**	
0945 - 1000	180	0	**180**	**822**
1000 - 1015	175	0	**175**	
1015 - 1030	198	0	**198**	
1030 - 1045	216	0	**216**	
1045 - 1100	210	0	**210**	**799**
1100 - 1115	176	0	**176**	
1115 - 1130	190	0	**190**	
1130 - 1145	203	0	**203**	
1145 - 1200	195	0	**195**	**764**

Time	Volume Summary 15min NB	SB	15min Total	60min Total
1200 - 1215	192	0	**192**	
1215 - 1230	203	0	**203**	
1230 - 1245	219	0	**219**	
1245 - 1300	233	0	**233**	**847**
1300 - 1315	198	0	**198**	
1315 - 1330	209	0	**209**	
1330 - 1345	203	0	**203**	
1345 - 1400	223	0	**223**	**833**
1400 - 1415	225	0	**225**	
1415 - 1430	241	0	**241**	
1430 - 1445	205	0	**205**	
1445 - 1500	212	0	**212**	**883**
1500 - 1515	205	0	**205**	
1515 - 1530	223	0	**223**	
1530 - 1545	242	0	**242**	
1545 - 1600	234	0	**234**	**904**
1600 - 1615	258	0	**258**	
1615 - 1630	234	0	**234**	
1630 - 1645	254	0	**254**	
1645 - 1700	244	0	**244**	**990**
1700 - 1715	272	0	**272**	
1715 - 1730	265	0	**265**	
1730 - 1745	219	0	**219**	
1745 - 1800	217	0	**217**	**973**
1800 - 1815	230	0	**230**	
1815 - 1830	198	0	**198**	
1830 - 1845	206	0	**206**	
1845 - 1900	168	0	**168**	**802**
1900 - 1915	163	0	**163**	
1915 - 1930	181	0	**181**	
1930 - 1945	170	0	**170**	
1945 - 2000	139	0	**139**	**653**
2000 - 2015	129	0	**129**	
2015 - 2030	128	0	**128**	
2030 - 2045	119	0	**119**	
2045 - 2100	101	0	**101**	**477**
2100 - 2115	98	0	**98**	
2115 - 2130	98	0	**98**	
2130 - 2145	83	0	**83**	
2145 - 2200	94	0	**94**	**373**
2200 - 2215	92	0	**92**	
2215 - 2230	80	0	**80**	
2230 - 2245	73	0	**73**	
2245 - 2300	52	0	**52**	**297**
2300 - 2315	61	0	**61**	
2315 - 2330	55	0	**55**	
2330 - 2345	49	0	**49**	
2345 - 0000	33	0	**33**	**198**

Session Total	13979	0	**13979**
Session Average	145.61	0.00	**145.61**
Session Percentage	100.00	0.00	

Site 75 Lane 3 NB

I-20,
north of Bush River Rd

Date

Friday, April 26, 2024

Lat/Long

34.034393°, -81.117736°

Weather

Cloudy
69°F

Click here for Detailed Weather

0000 - 2400 (Weekday 24h Session) (04-26-2024)

Volume Summary 15min

TIME	Volume Summary 15min NB	Volume Summary 15min SB	15min Total	60min Total
0000 - 0015	24	0	**24**	
0015 - 0030	32	0	**32**	
0030 - 0045	41	0	**41**	
0045 - 0100	27	0	**27**	**124**
0100 - 0115	19	0	**19**	
0115 - 0130	29	0	**29**	
0130 - 0145	31	0	**31**	
0145 - 0200	30	0	**30**	**109**
0200 - 0215	22	0	**22**	
0215 - 0230	31	0	**31**	
0230 - 0245	34	0	**34**	
0245 - 0300	23	0	**23**	**110**
0300 - 0315	30	0	**30**	
0315 - 0330	32	0	**32**	
0330 - 0345	33	0	**33**	
0345 - 0400	32	0	**32**	**127**
0400 - 0415	27	0	**27**	
0415 - 0430	40	0	**40**	
0430 - 0445	51	0	**51**	
0445 - 0500	50	0	**50**	**168**
0500 - 0515	40	0	**40**	
0515 - 0530	57	0	**57**	
0530 - 0545	91	0	**91**	
0545 - 0600	103	0	**103**	**291**
0600 - 0615	94	0	**94**	
0615 - 0630	113	0	**113**	
0630 - 0645	148	0	**148**	
0645 - 0700	172	0	**172**	**527**
0700 - 0715	176	0	**176**	
0715 - 0730	239	0	**239**	
0730 - 0745	257	0	**257**	
0745 - 0800	282	0	**282**	**954**
0800 - 0815	245	0	**245**	
0815 - 0830	241	0	**241**	
0830 - 0845	207	0	**207**	
0845 - 0900	209	0	**209**	**902**
0900 - 0915	215	0	**215**	
0915 - 0930	196	0	**196**	
0930 - 0945	230	0	**230**	
0945 - 1000	203	0	**203**	**844**
1000 - 1015	197	0	**197**	
1015 - 1030	208	0	**208**	
1030 - 1045	212	0	**212**	
1045 - 1100	229	0	**229**	**846**
1100 - 1115	194	0	**194**	
1115 - 1130	210	0	**210**	
1130 - 1145	191	0	**191**	
1145 - 1200	220	0	**220**	**815**

Time	Volume Summary 15min NB	Volume Summary 15min SB	15min Total	60min Total
1200 - 1215	218	0	**218**	
1215 - 1230	221	0	**221**	
1230 - 1245	242	0	**242**	
1245 - 1300	189	0	**189**	**870**
1300 - 1315	192	0	**192**	
1315 - 1330	200	0	**200**	
1330 - 1345	252	0	**252**	
1345 - 1400	250	0	**250**	**894**
1400 - 1415	241	0	**241**	
1415 - 1430	221	0	**221**	
1430 - 1445	226	0	**226**	
1445 - 1500	235	0	**235**	**923**
1500 - 1515	241	0	**241**	
1515 - 1530	241	0	**241**	
1530 - 1545	265	0	**265**	
1545 - 1600	260	0	**260**	**1007**
1600 - 1615	258	0	**258**	
1615 - 1630	250	0	**250**	
1630 - 1645	247	0	**247**	
1645 - 1700	260	0	**260**	**1015**
1700 - 1715	224	0	**224**	
1715 - 1730	244	0	**244**	
1730 - 1745	214	0	**214**	
1745 - 1800	210	0	**210**	**892**
1800 - 1815	216	0	**216**	
1815 - 1830	194	0	**194**	
1830 - 1845	210	0	**210**	
1845 - 1900	207	0	**207**	**827**
1900 - 1915	168	0	**168**	
1915 - 1930	197	0	**197**	
1930 - 1945	163	0	**163**	
1945 - 2000	172	0	**172**	**700**
2000 - 2015	132	0	**132**	
2015 - 2030	136	0	**136**	
2030 - 2045	123	0	**123**	
2045 - 2100	120	0	**120**	**511**
2100 - 2115	124	0	**124**	
2115 - 2130	117	0	**117**	
2130 - 2145	87	0	**87**	
2145 - 2200	94	0	**94**	**422**
2200 - 2215	99	0	**99**	
2215 - 2230	93	0	**93**	
2230 - 2245	82	0	**82**	
2245 - 2300	56	0	**56**	**330**
2300 - 2315	69	0	**69**	
2315 - 2330	67	0	**67**	
2330 - 2345	55	0	**55**	
2345 - 0000	65	0	**65**	**256**

Session Total	14464	0	**14464**
Session Average	150.67	0.00	**150.67**
Session Percentage	100.00	0.00	

Site 75 Lane 3 NB

I-20,
north of Bush River Rd

Date

Saturday, April 27, 2024

Lat/Long

34.034393°, -81.117736°

Weather

Mostly Cloudy
69°F

Click here for Detailed Weather

0000 - 2400 (Saturday 24h Session) (04-27-2024)

Volume Summary 15min

TIME	Volume Summary 15min NB	SB	15min Total	60min Total
0000 - 0015	33	0	**33**	
0015 - 0030	53	0	**53**	
0030 - 0045	44	0	**44**	
0045 - 0100	21	0	**21**	**151**
0100 - 0115	25	0	**25**	
0115 - 0130	36	0	**36**	
0130 - 0145	25	0	**25**	
0145 - 0200	20	0	**20**	**106**
0200 - 0215	20	0	**20**	
0215 - 0230	36	0	**36**	
0230 - 0245	22	0	**22**	
0245 - 0300	24	0	**24**	**102**
0300 - 0315	22	0	**22**	
0315 - 0330	22	0	**22**	
0330 - 0345	24	0	**24**	
0345 - 0400	29	0	**29**	**97**
0400 - 0415	19	0	**19**	
0415 - 0430	24	0	**24**	
0430 - 0445	24	0	**24**	
0445 - 0500	25	0	**25**	**92**
0500 - 0515	34	0	**34**	
0515 - 0530	33	0	**33**	
0530 - 0545	45	0	**45**	
0545 - 0600	43	0	**43**	**155**
0600 - 0615	52	0	**52**	
0615 - 0630	71	0	**71**	
0630 - 0645	74	0	**74**	
0645 - 0700	88	0	**88**	**285**
0700 - 0715	95	0	**95**	
0715 - 0730	113	0	**113**	
0730 - 0745	104	0	**104**	
0745 - 0800	128	0	**128**	**440**
0800 - 0815	128	0	**128**	
0815 - 0830	145	0	**145**	
0830 - 0845	155	0	**155**	
0845 - 0900	176	0	**176**	**604**
0900 - 0915	179	0	**179**	
0915 - 0930	181	0	**181**	
0930 - 0945	216	0	**216**	
0945 - 1000	213	0	**213**	**789**
1000 - 1015	179	0	**179**	
1015 - 1030	213	0	**213**	
1030 - 1045	217	0	**217**	
1045 - 1100	216	0	**216**	**825**
1100 - 1115	229	0	**229**	
1115 - 1130	223	0	**223**	
1130 - 1145	224	0	**224**	
1145 - 1200	242	0	**242**	**918**

Time	Volume Summary 15min NB	SB	15min Total	60min Total
1200 - 1215	224	0	**224**	
1215 - 1230	238	0	**238**	
1230 - 1245	232	0	**232**	
1245 - 1300	217	0	**217**	**911**
1300 - 1315	252	0	**252**	
1315 - 1330	230	0	**230**	
1330 - 1345	240	0	**240**	
1345 - 1400	214	0	**214**	**936**
1400 - 1415	217	0	**217**	
1415 - 1430	242	0	**242**	
1430 - 1445	235	0	**235**	
1445 - 1500	213	0	**213**	**907**
1500 - 1515	206	0	**206**	
1515 - 1530	204	0	**204**	
1530 - 1545	201	0	**201**	
1545 - 1600	226	0	**226**	**837**
1600 - 1615	219	0	**219**	
1615 - 1630	204	0	**204**	
1630 - 1645	206	0	**206**	
1645 - 1700	209	0	**209**	**838**
1700 - 1715	184	0	**184**	
1715 - 1730	195	0	**195**	
1730 - 1745	188	0	**188**	
1745 - 1800	180	0	**180**	**747**
1800 - 1815	162	0	**162**	
1815 - 1830	180	0	**180**	
1830 - 1845	183	0	**183**	
1845 - 1900	163	0	**163**	**688**
1900 - 1915	171	0	**171**	
1915 - 1930	166	0	**166**	
1930 - 1945	156	0	**156**	
1945 - 2000	137	0	**137**	**630**
2000 - 2015	144	0	**144**	
2015 - 2030	121	0	**121**	
2030 - 2045	129	0	**129**	
2045 - 2100	107	0	**107**	**501**
2100 - 2115	100	0	**100**	
2115 - 2130	99	0	**99**	
2130 - 2145	106	0	**106**	
2145 - 2200	75	0	**75**	**380**
2200 - 2215	81	0	**81**	
2215 - 2230	82	0	**82**	
2230 - 2245	89	0	**89**	
2245 - 2300	70	0	**70**	**322**
2300 - 2315	61	0	**61**	
2315 - 2330	57	0	**57**	
2330 - 2345	60	0	**60**	
2345 - 0000	46	0	**46**	**224**

Session Total	12485	0	**12485**
Session Average	130.05	0.00	**130.05**
Session Percentage	100.00	0.00	

Bi-Directional Class Count || NB EB 60min

Columbia, SC

Marr Traffic DATA COLLECTION

www.marrtraffic.com

Site 75 Lane 3 NB
I-20,
north of Bush River Rd

Date
Sunday, April 21, 2024

Lat/Long
34.034393°, -81.117736°

Weather
Cloudy
66°F

Click here for Detailed Weather

0000 - 2400 (Sunday 24h Session) (04-21-2024)
NB EB 60min

	Northbound (Movement 75 Lane 3 NB.1)													
TIME	1	2	3	4	5	6	7	8	9	10	11	12	13	**Total**
0000 - 0100	2	169	14	0	3	0	0	0	20	0	0	0	0	**208**
0100 - 0200	0	103	11	0	2	0	0	0	15	0	0	0	0	**131**
0200 - 0300	0	75	4	1	1	0	0	0	20	0	0	0	0	**101**
0300 - 0400	0	63	4	0	1	1	0	0	22	0	0	0	0	**91**
0400 - 0500	0	47	7	0	2	0	0	0	8	0	0	0	0	**64**
0500 - 0600	0	53	6	0	1	0	0	0	11	0	0	0	0	**71**
0600 - 0700	0	144	23	2	3	2	0	0	19	0	0	0	0	**193**
0700 - 0800	0	226	61	0	1	0	0	2	27	0	0	0	0	**317**
0800 - 0900	1	266	65	0	7	2	0	3	24	0	0	0	0	**368**
0900 - 1000	0	382	95	0	2	2	0	3	27	0	0	0	0	**511**
1000 - 1100	0	491	108	0	8	0	1	6	35	0	1	0	0	**650**
1100 - 1200	0	563	128	0	6	2	0	4	39	0	0	0	0	**742**
1200 - 1300	0	730	147	5	11	0	0	6	33	1	0	0	0	**933**
1300 - 1400	1	685	138	0	8	0	0	5	45	0	0	0	0	**882**
1400 - 1500	0	683	143	0	7	0	0	5	31	0	0	0	0	**869**
1500 - 1600	0	623	136	1	4	1	0	6	21	0	0	0	0	**792**
1600 - 1700	0	604	117	0	14	2	0	1	42	1	0	0	0	**781**
1700 - 1800	0	580	100	0	9	1	0	4	41	0	0	0	0	**735**
1800 - 1900	1	452	92	0	4	1	0	5	47	1	0	0	0	**603**
1900 - 2000	0	374	59	2	3	1	0	0	35	0	0	0	0	**474**
2000 - 2100	1	279	53	0	2	0	0	0	38	0	0	0	0	**373**
2100 - 2200	0	187	24	0	1	1	0	2	37	0	0	0	0	**252**
2200 - 2300	0	138	15	1	4	3	0	0	36	0	1	0	0	**198**
2300 - 2400	0	95	8	0	0	0	0	2	27	0	0	0	0	**132**

Session Total	6	8012	1558	12	104	19	1	54	700	3	2	0	0	**10471**
Session Average	0.25	333.83	64.92	0.50	4.33	0.79	0.04	2.25	29.17	0.13	0.08	0.00	0.00	**436.29**
Session Percentage	0.06	76.52	14.88	0.11	0.99	0.18	0.01	0.52	6.69	0.03	0.02	0.00	0.00	

AM Peak Hour	0800 - 0900	0900 - 1000	0900 - 1000	0600 - 0700	0800 - 0900	0600 - 0700	-	0800 - 0900	0700 - 0800	-	-	-	-	**0900 - 1000**
AM Peak Volume	1	382	95	2	7	2	0	3	27	0	0	0	0	**511**

Noon Peak Hour	1300 - 1400	1200 - 1300	1200 - 1300	1200 - 1300	1200 - 1300	1100 - 1200	1000 - 1100	1000 - 1100	1300 - 1400	1200 - 1300	1000 - 1100	-	-	**1200 - 1300**
Noon Peak Volume	1	730	147	5	11	2	1	6	45	1	1	0	0	**933**

PM Peak Hour	1800 - 1900	1500 - 1600	1500 - 1600	1900 - 2000	1600 - 1700	1600 - 1700	-	1500 - 1600	1800 - 1900	1600 - 1700	-	-	-	**1500 - 1600**
PM Peak Volume	1	623	136	2	14	2	0	6	47	1	0	0	0	**792**

Site 75 Lane 3 NB

I-20,
north of Bush River Rd

Date

Monday, April 22, 2024

Lat/Long

34.034393°, -81.117736°

Weather

Mostly Cloudy
57°F

Click here for Detailed Weather

0000 - 2400 (Weekday 24h Session) (04-22-2024)

NB EB 60min

	Northbound (Movement 75 Lane 3 NB.1)													
TIME	1	2	3	4	5	6	7	8	9	10	11	12	13	**Total**
0000 - 0100	0	60	5	0	1	1	0	1	16	0	1	0	0	**85**
0100 - 0200	0	30	3	0	1	0	0	0	34	0	2	0	0	**70**
0200 - 0300	0	21	3	0	3	3	0	0	18	0	3	0	0	**51**
0300 - 0400	0	35	5	0	3	0	0	0	38	0	0	0	0	**81**
0400 - 0500	0	68	9	0	5	2	0	1	52	0	2	0	0	**139**
0500 - 0600	0	182	37	0	11	2	1	0	50	1	1	0	0	**285**
0600 - 0700	0	334	128	5	12	8	1	3	58	1	0	0	0	**550**
0700 - 0800	0	670	196	2	31	10	1	10	34	0	0	0	0	**954**
0800 - 0900	0	532	242	2	31	10	2	16	55	1	0	0	0	**891**
0900 - 1000	1	432	203	2	39	6	2	17	41	1	0	0	0	**744**
1000 - 1100	1	428	171	0	32	5	5	15	92	0	0	0	0	**749**
1100 - 1200	0	433	194	0	30	7	2	9	85	1	0	0	0	**761**
1200 - 1300	0	485	178	1	35	5	2	12	61	5	0	0	0	**784**
1300 - 1400	0	495	171	8	25	10	4	5	57	2	0	0	0	**777**
1400 - 1500	0	538	182	1	24	3	0	6	60	1	0	0	0	**815**
1500 - 1600	2	628	159	3	18	6	3	10	54	2	0	0	0	**885**
1600 - 1700	1	760	213	0	22	7	1	7	82	1	0	0	0	**1094**
1700 - 1800	1	615	194	0	10	0	0	5	55	0	0	0	0	**880**
1800 - 1900	1	487	117	0	3	5	0	2	46	0	0	0	0	**661**
1900 - 2000	4	339	76	0	7	2	0	2	53	1	1	0	0	**485**
2000 - 2100	0	247	47	1	4	0	0	0	44	0	0	0	0	**343**
2100 - 2200	0	216	26	0	1	0	0	1	29	0	0	0	0	**273**
2200 - 2300	0	119	14	0	2	1	0	1	34	0	4	0	0	**175**
2300 - 2400	0	87	14	0	0	2	0	1	30	0	4	0	0	**138**

Session Total	11	8241	2587	25	350	95	24	124	1178	17	18	0	0	**12670**
Session Average	0.46	343.38	107.79	1.04	14.58	3.96	1.00	5.17	49.08	0.71	0.75	0.00	0.00	**527.92**
Session Percentage	0.09	65.04	20.42	0.20	2.76	0.75	0.19	0.98	9.30	0.13	0.14	0.00	0.00	

AM Peak Hour	0900 - 1000	0700 - 0800	0800 - 0900	0600 - 0700	0900 - 1000	0700 - 0800	0800 - 0900	0900 - 1000	0600 - 0700	0500 - 0600	0500 - 0600	-	-	**0700 - 0800**
AM Peak Volume	1	670	242	5	39	10	2	17	58	1	1	0	0	**954**

Noon Peak Hour	1000 - 1100	1400 - 1500	1100 - 1200	1300 - 1400	1200 - 1300	1300 - 1400	1000 - 1100	1000 - 1100	1000 - 1100	1200 - 1300	-	-	-	**1400 - 1500**
Noon Peak Volume	1	538	194	8	35	10	5	15	92	5	0	0	0	**815**

PM Peak Hour	1900 - 2000	1600 - 1700	1600 - 1700	1500 - 1600	1600 - 1700	1600 - 1700	1500 - 1600	1500 - 1600	1600 - 1700	1500 - 1600	1900 - 2000	-	-	**1600 - 1700**
PM Peak Volume	4	760	213	3	22	7	3	10	82	2	1	0	0	**1094**

Site 75 Lane 3 NB

I-20,
north of Bush River Rd

Date

Tuesday, April 23, 2024

Lat/Long

34.034393°, -81.117736°

Weather

Fair
58°F

Click here for Detailed Weather

0000 - 2400 (Weekday 24h Session) (04-23-2024)

NB EB 60min

	Northbound (Movement 75 Lane 3 NB.1)													
TIME	1	2	3	4	5	6	7	8	9	10	11	12	13	**Total**
0000 - 0100	0	55	8	1	1	3	0	0	27	0	4	0	0	**99**
0100 - 0200	0	37	6	0	2	0	0	0	33	0	6	0	0	**84**
0200 - 0300	0	28	2	0	4	1	0	0	40	0	5	0	0	**80**
0300 - 0400	1	54	6	0	2	3	0	0	45	0	5	0	0	**116**
0400 - 0500	0	96	14	0	5	3	0	0	52	0	3	0	0	**173**
0500 - 0600	0	150	48	0	6	11	0	2	64	0	3	0	0	**284**
0600 - 0700	0	324	127	5	17	10	1	5	51	1	0	0	0	**541**
0700 - 0800	1	593	180	1	23	5	2	4	36	0	1	0	0	**846**
0800 - 0900	2	587	193	0	27	7	1	13	51	2	2	0	0	**885**
0900 - 1000	2	453	191	2	45	5	2	12	65	0	1	0	0	**778**
1000 - 1100	0	466	187	2	28	12	3	8	72	1	0	0	0	**779**
1100 - 1200	1	462	180	2	19	7	1	10	73	4	0	0	0	**759**
1200 - 1300	2	498	187	1	22	15	1	4	66	1	0	0	0	**797**
1300 - 1400	1	504	171	4	23	6	4	12	72	0	0	0	0	**797**
1400 - 1500	1	552	176	3	24	6	1	7	66	1	0	0	0	**837**
1500 - 1600	2	622	161	0	23	8	1	11	74	1	0	0	0	**903**
1600 - 1700	0	715	198	2	16	5	0	7	59	0	0	0	0	**1002**
1700 - 1800	1	645	178	1	14	2	0	4	49	0	0	0	0	**894**
1800 - 1900	0	379	144	0	13	1	0	5	68	0	0	0	0	**610**
1900 - 2000	3	413	119	2	8	3	0	2	56	0	1	0	0	**607**
2000 - 2100	0	314	58	2	5	0	0	2	50	0	0	0	0	**431**
2100 - 2200	1	272	77	2	4	3	0	0	46	0	2	0	0	**407**
2200 - 2300	0	243	41	1	5	1	0	0	83	0	9	0	0	**383**
2300 - 2400	0	126	21	0	3	1	0	0	59	0	8	0	0	**218**

Session Total	18	8588	2673	31	339	118	17	108	1357	11	50	0	0	**13310**
Session Average	0.75	357.83	111.38	1.29	14.13	4.92	0.71	4.50	56.54	0.46	2.08	0.00	0.00	**554.58**
Session Percentage	0.14	64.52	20.08	0.23	2.55	0.89	0.13	0.81	10.20	0.08	0.38	0.00	0.00	

AM Peak Hour	0800 - 0900	0700 - 0800	0800 - 0900	0600 - 0700	0900 - 1000	0500 - 0600	0700 - 0800	0800 - 0900	0900 - 1000	0800 - 0900	0500 - 0600	-	-	**0800 - 0900**
AM Peak Hour Volume	2	593	193	5	45	11	2	13	65	2	3	0	0	**885**

Noon Peak Hour	1200 - 1300	1400 - 1500	1000 - 1100	1300 - 1400	1000 - 1100	1200 - 1300	1300 - 1400	1300 - 1400	1100 - 1200	1100 - 1200	-	-	-	**1400 - 1500**
Noon Peak Hour Volume	2	552	187	4	28	15	4	12	73	4	0	0	0	**837**

PM Peak Hour	1900 - 2000	1600 - 1700	1600 - 1700	1600 - 1700	1500 - 1600	1500 - 1600	1500 - 1600	1500 - 1600	1500 - 1600	1500 - 1600	1900 - 2000	-	-	**1600 - 1700**
PM Peak Hour Volume	3	715	198	2	23	8	1	11	74	1	1	0	0	**1002**

Site 75 Lane 3 NB

I-20,
north of Bush River Rd

Date

Wednesday, April 24, 2024

Lat/Long

34.034393°, -81.117736°

Weather

Fair
66°F

Click here for Detailed Weather

0000 - 2400 (Weekday 24h Session) (04-24-2024)

NB EB 60min

	Northbound (Movement 75 Lane 3 NB.1)													
TIME	1	2	3	4	5	6	7	8	9	10	11	12	13	**Total**
0000 - 0100	0	77	12	0	4	0	0	0	67	0	9	0	0	**169**
0100 - 0200	0	64	5	0	3	1	0	2	40	0	7	0	0	**122**
0200 - 0300	0	48	8	0	2	1	0	0	46	0	14	0	0	**119**
0300 - 0400	0	55	11	0	5	0	0	0	53	0	3	0	0	**127**
0400 - 0500	0	85	16	0	8	3	0	1	62	0	2	0	0	**177**
0500 - 0600	0	177	40	0	21	1	0	0	69	0	4	0	0	**312**
0600 - 0700	0	332	131	5	15	7	0	2	56	0	2	0	0	**550**
0700 - 0800	1	660	216	0	29	8	1	3	47	3	0	0	0	**968**
0800 - 0900	1	554	206	3	36	16	1	13	49	1	0	0	0	**880**
0900 - 1000	1	504	174	4	35	7	1	11	53	2	0	0	0	**792**
1000 - 1100	2	478	182	1	28	9	1	7	69	3	0	0	0	**780**
1100 - 1200	1	489	174	0	21	9	1	14	67	3	0	0	0	**779**
1200 - 1300	2	529	157	0	21	8	0	4	52	3	0	0	0	**776**
1300 - 1400	3	551	188	3	25	10	0	8	66	6	0	0	0	**860**
1400 - 1500	1	531	159	2	26	8	0	11	66	3	0	0	0	**807**
1500 - 1600	1	645	190	5	21	12	0	5	56	3	0	0	0	**938**
1600 - 1700	0	722	194	0	16	5	0	3	42	0	0	0	0	**982**
1700 - 1800	0	724	189	0	18	8	2	6	42	1	0	0	0	**990**
1800 - 1900	2	560	130	0	11	6	0	5	72	2	0	0	0	**788**
1900 - 2000	2	410	107	1	11	2	0	3	62	1	1	0	0	**600**
2000 - 2100	2	363	63	2	3	1	0	0	53	0	1	0	0	**488**
2100 - 2200	0	241	38	0	1	1	0	0	46	0	2	0	0	**329**
2200 - 2300	0	173	30	2	4	0	0	0	53	0	6	0	0	**268**
2300 - 2400	1	133	22	1	4	0	0	0	42	0	6	0	0	**209**

Session Total	20	9105	2642	29	368	123	7	98	1330	31	57	0	0	**13810**
Session Average	0.83	379.38	110.08	1.21	15.33	5.13	0.29	4.08	55.42	1.29	2.38	0.00	0.00	**575.42**
Session Percentage	0.14	65.93	19.13	0.21	2.66	0.89	0.05	0.71	9.63	0.22	0.41	0.00	0.00	

AM Peak Hour	0700 - 0800	0700 - 0800	0700 - 0800	0600 - 0700	0800 - 0900	0800 - 0900	0700 - 0800	0800 - 0900	0500 - 0600	0700 - 0800	0500 - 0600	-	-	**0700 - 0800**
AM Peak Hour Volume	1	660	216	5	36	16	1	13	69	3	4	0	0	**968**

Noon Peak Hour	1300 - 1400	1300 - 1400	1300 - 1400	1300 - 1400	1000 - 1100	1300 - 1400	1000 - 1100	1100 - 1200	1000 - 1100	1300 - 1400	-	-	-	**1300 - 1400**
Noon Peak Hour Volume	3	551	188	3	28	10	1	14	69	6	0	0	0	**860**

PM Peak Hour	1800 - 1900	1700 - 1800	1600 - 1700	1500 - 1600	1500 - 1600	1500 - 1600	1700 - 1800	1700 - 1800	1800 - 1900	1500 - 1600	1900 - 2000	-	-	**1700 - 1800**
PM Peak Hour Volume	2	724	194	5	21	12	2	6	72	3	1	0	0	**990**

Site 75 Lane 3 NB

I-20,
north of Bush River Rd

Date

Thursday, April 25, 2024

Weather

Fair
67°F

Lat/Long

34.034393°, -81.117736°

Click here for Detailed Weather

0000 - 2400 (Weekday 24h Session) (04-25-2024)

NB EB 60min

	Northbound (Movement 75 Lane 3 NB.1)													
TIME	1	2	3	4	5	6	7	8	9	10	11	12	13	**Total**
0000 - 0100	0	57	12	0	3	0	0	0	39	0	3	0	0	**114**
0100 - 0200	0	45	8	0	0	0	0	0	38	0	15	0	0	**106**
0200 - 0300	0	51	9	0	5	0	0	0	30	0	13	0	0	**108**
0300 - 0400	0	61	12	0	6	0	0	0	48	0	9	0	0	**136**
0400 - 0500	0	105	9	0	3	2	0	0	48	0	3	0	0	**170**
0500 - 0600	0	178	35	1	17	3	0	0	58	0	0	0	0	**292**
0600 - 0700	2	359	117	4	14	5	2	0	67	0	2	0	0	**572**
0700 - 0800	2	633	206	1	22	6	2	10	51	2	0	0	0	**935**
0800 - 0900	6	602	230	1	30	7	2	13	37	2	0	1	0	**931**
0900 - 1000	0	506	181	0	34	7	0	14	80	0	0	0	0	**822**
1000 - 1100	2	485	195	0	20	14	1	8	73	1	0	0	0	**799**
1100 - 1200	3	477	172	2	23	9	1	13	61	2	1	0	0	**764**
1200 - 1300	0	550	189	0	33	6	1	10	54	4	0	0	0	**847**
1300 - 1400	2	544	174	1	29	10	0	10	57	6	0	0	0	**833**
1400 - 1500	1	611	171	5	23	5	2	9	55	1	0	0	0	**883**
1500 - 1600	0	617	193	2	21	5	0	7	59	0	0	0	0	**904**
1600 - 1700	1	693	203	2	21	7	0	3	59	1	0	0	0	**990**
1700 - 1800	1	714	190	1	14	1	0	5	46	1	0	0	0	**973**
1800 - 1900	1	582	152	0	12	5	0	4	46	0	0	0	0	**802**
1900 - 2000	1	447	135	0	13	0	0	2	54	0	1	0	0	**653**
2000 - 2100	1	360	53	0	3	1	0	3	56	0	0	0	0	**477**
2100 - 2200	0	264	56	2	3	0	0	1	44	0	3	0	0	**373**
2200 - 2300	0	204	37	1	5	0	0	0	46	0	4	0	0	**297**
2300 - 2400	0	129	21	0	5	2	0	0	37	0	4	0	0	**198**

Session Total	23	9274	2760	23	359	95	11	112	1243	20	58	1	0	**13979**
Session Average	0.96	386.42	115.00	0.96	14.96	3.96	0.46	4.67	51.79	0.83	2.42	0.04	0.00	**582.46**
Session Percentage	0.16	66.34	19.74	0.16	2.57	0.68	0.08	0.80	8.89	0.14	0.41	0.01	0.00	

AM Peak Hour	0800 - 0900	0700 - 0800	0800 - 0900	0600 - 0700	0900 - 1000	0800 - 0900	0600 - 0700	0900 - 1000	0900 - 1000	0700 - 0800	0600 - 0700	0800 - 0900	-	**0700 - 0800**
AM Peak Hour Volume	6	633	230	4	34	7	2	14	80	2	2	1	0	**935**

Noon Peak Hour	1100 - 1200	1400 - 1500	1000 - 1100	1400 - 1500	1200 - 1300	1000 - 1100	1400 - 1500	1100 - 1200	1000 - 1100	1300 - 1400	1100 - 1200	-	-	**1400 - 1500**
Noon Peak Hour Volume	3	611	195	5	33	14	2	13	73	6	1	0	0	**883**

PM Peak Hour	1600 - 1700	1700 - 1800	1600 - 1700	1500 - 1600	1500 - 1600	1600 - 1700	-	1500 - 1600	1500 - 1600	1600 - 1700	1900 - 2000	-	-	**1600 - 1700**
PM Peak Hour Volume	1	714	203	2	21	7	0	7	59	1	1	0	0	**990**

Site 75 Lane 3 NB

I-20,
north of Bush River Rd

Date

Friday, April 26, 2024

Lat/Long

34.034393°, -81.117736°

Weather

Cloudy
69°F

Click here for Detailed Weather

0000 - 2400 (Weekday 24h Session) (04-26-2024)

NB EB 60min

	Northbound (Movement 75 Lane 3 NB.1)													
TIME	1	2	3	4	5	6	7	8	9	10	11	12	13	**Total**
0000 - 0100	0	74	9	1	4	1	0	0	30	0	5	0	0	**124**
0100 - 0200	0	58	8	0	4	1	0	0	29	0	9	0	0	**109**
0200 - 0300	0	48	2	3	1	5	0	0	48	0	3	0	0	**110**
0300 - 0400	0	58	5	2	6	2	0	0	49	0	5	0	0	**127**
0400 - 0500	0	83	10	0	9	2	0	4	51	0	8	1	0	**168**
0500 - 0600	0	185	28	3	13	6	0	1	55	0	0	0	0	**291**
0600 - 0700	0	365	78	6	12	9	0	1	55	0	1	0	0	**527**
0700 - 0800	1	661	202	0	24	8	2	9	46	1	0	0	0	**954**
0800 - 0900	1	563	234	3	37	8	1	10	44	1	0	0	0	**902**
0900 - 1000	0	546	189	1	32	10	1	13	52	0	0	0	0	**844**
1000 - 1100	2	543	180	1	23	15	1	8	68	5	0	0	0	**846**
1100 - 1200	1	555	161	0	22	9	3	10	53	1	0	0	0	**815**
1200 - 1300	0	575	189	0	21	6	1	13	64	1	0	0	0	**870**
1300 - 1400	2	607	180	3	32	6	1	9	54	0	0	0	0	**894**
1400 - 1500	2	627	189	4	32	11	1	11	45	1	0	0	0	**923**
1500 - 1600	1	734	187	2	21	6	0	7	46	2	1	0	0	**1007**
1600 - 1700	1	772	180	2	14	4	0	7	35	0	0	0	0	**1015**
1700 - 1800	0	677	148	0	16	6	1	8	35	1	0	0	0	**892**
1800 - 1900	3	627	146	1	12	4	0	2	32	0	0	0	0	**827**
1900 - 2000	3	504	131	1	6	5	0	3	44	2	1	0	0	**700**
2000 - 2100	4	359	97	1	7	3	0	1	37	0	2	0	0	**511**
2100 - 2200	0	304	79	0	5	2	0	0	29	0	3	0	0	**422**
2200 - 2300	0	248	46	1	1	0	0	0	30	0	4	0	0	**330**
2300 - 2400	0	172	50	0	3	0	0	0	27	0	4	0	0	**256**

Session Total	21	9945	2728	35	357	129	12	117	1058	15	46	1	0	**14464**
Session Average	0.88	414.38	113.67	1.46	14.88	5.38	0.50	4.88	44.08	0.63	1.92	0.04	0.00	**602.67**
Session Percentage	0.15	68.76	18.86	0.24	2.47	0.89	0.08	0.81	7.31	0.10	0.32	0.01	0.00	

AM Peak Hour	0700 - 0800	0700 - 0800	0800 - 0900	0600 - 0700	0800 - 0900	0900 - 1000	0700 - 0800	0900 - 1000	0500 - 0600	0700 - 0800	0600 - 0700	-	-	**0700 - 0800**
AM Peak Hour Volume	1	661	234	6	37	10	2	13	55	1	1	0	0	**954**

Noon Peak Hour	1000 - 1100	1400 - 1500	1200 - 1300	1400 - 1500	1300 - 1400	1000 - 1100	1100 - 1200	1200 - 1300	1000 - 1100	1000 - 1100	-	-	-	**1400 - 1500**
Noon Peak Hour Volume	2	627	189	4	32	15	3	13	68	5	0	0	0	**923**

PM Peak Hour	1800 - 1900	1600 - 1700	1500 - 1600	1500 - 1600	1500 - 1600	1500 - 1600	1700 - 1800	1700 - 1800	1500 - 1600	1500 - 1600	1500 - 1600	-	-	**1600 - 1700**
PM Peak Hour Volume	3	772	187	2	21	6	1	8	46	2	1	0	0	**1015**

Site 75 Lane 3 NB

I-20,
north of Bush River Rd

Date

Saturday, April 27, 2024

Lat/Long

34.034393°, -81.117736°

Weather

Mostly Cloudy
69°F

Click here for Detailed Weather

0000 - 2400 (Saturday 24h Session) (04-27-2024)

NB EB 60min

	Northbound (Movement 75 Lane 3 NB.1)													
TIME	1	2	3	4	5	6	7	8	9	10	11	12	13	**Total**
0000 - 0100	1	116	10	0	5	0	0	0	18	0	1	0	0	**151**
0100 - 0200	0	73	6	0	4	0	0	0	16	0	7	0	0	**106**
0200 - 0300	0	62	4	0	3	0	0	0	27	0	6	0	0	**102**
0300 - 0400	2	55	6	0	4	0	0	0	22	0	8	0	0	**97**
0400 - 0500	0	59	5	0	3	0	0	0	19	0	6	0	0	**92**
0500 - 0600	0	103	8	2	4	0	0	0	36	0	2	0	0	**155**
0600 - 0700	1	204	41	1	6	1	0	1	28	1	1	0	0	**285**
0700 - 0800	0	280	105	0	10	3	1	5	34	0	2	0	0	**440**
0800 - 0900	2	436	118	1	7	0	0	3	36	1	0	0	0	**604**
0900 - 1000	4	556	164	0	20	0	0	3	40	2	0	0	0	**789**
1000 - 1100	4	618	161	0	8	1	0	5	28	0	0	0	0	**825**
1100 - 1200	5	696	162	0	10	1	0	4	40	0	0	0	0	**918**
1200 - 1300	2	704	166	0	8	3	0	2	25	1	0	0	0	**911**
1300 - 1400	4	730	151	0	5	0	0	8	38	0	0	0	0	**936**
1400 - 1500	2	704	159	3	8	3	0	1	27	0	0	0	0	**907**
1500 - 1600	4	663	142	1	3	0	0	2	19	2	1	0	0	**837**
1600 - 1700	1	670	130	1	8	1	0	4	23	0	0	0	0	**838**
1700 - 1800	1	577	122	0	10	2	0	2	32	1	0	0	0	**747**
1800 - 1900	3	544	97	0	10	2	0	3	28	1	0	0	0	**688**
1900 - 2000	0	490	107	0	9	1	0	2	21	0	0	0	0	**630**
2000 - 2100	0	413	61	0	6	0	0	0	21	0	0	0	0	**501**
2100 - 2200	0	311	45	0	6	0	0	0	18	0	0	0	0	**380**
2200 - 2300	0	256	43	0	1	0	0	0	22	0	0	0	0	**322**
2300 - 2400	2	192	15	0	2	0	0	0	13	0	0	0	0	**224**

Session Total	38	9512	2028	9	160	18	1	45	631	9	34	0	0	**12485**
Session Average	1.58	396.33	84.50	0.38	6.67	0.75	0.04	1.88	26.29	0.38	1.42	0.00	0.00	**520.21**
Session Percentage	0.30	76.19	16.24	0.07	1.28	0.14	0.01	0.36	5.05	0.07	0.27	0.00	0.00	

AM Peak Hour	0900 - 1000	0900 - 1000	0900 - 1000	0500 - 0600	0900 - 1000	0700 - 0800	0700 - 0800	0700 - 0800	0900 - 1000	0900 - 1000	0500 - 0600	-	-	**0900 - 1000**
AM Peak Hour Volume	4	556	164	2	20	3	1	5	40	2	2	0	0	**789**

Noon Peak Hour	1100 - 1200	1300 - 1400	1200 - 1300	1400 - 1500	1100 - 1200	1200 - 1300	-	1300 - 1400	1100 - 1200	1200 - 1300	-	-	-	**1300 - 1400**
Noon Peak Hour Volume	5	730	166	3	10	3	0	8	40	1	0	0	0	**936**

PM Peak Hour	1500 - 1600	1600 - 1700	1500 - 1600	1500 - 1600	1700 - 1800	1700 - 1800	-	1600 - 1700	1700 - 1800	1500 - 1600	1500 - 1600	-	-	**1600 - 1700**
PM Peak Hour Volume	4	670	142	1	10	2	0	4	32	2	1	0	0	**838**

Bi-Directional Class Count || Volume Summary 60min

Columbia, SC

Marr Traffic DATA COLLECTION

www.marrtraffic.com

Site 75 Lane 3 NB

I-20,
north of Bush River Rd

Date

Sunday, April 21, 2024

Lat/Long

34.034393°, -81.117736°

Weather

Cloudy
66°F

Click here for Detailed Weather

0000 - 2400 (Sunday 24h Session) (04-21-2024)

Volume Summary 60min

	Volume Summary 60min		
TIME	NB	SB	**Total**
0000 - 0100	208	0	**208**
0100 - 0200	131	0	**131**
0200 - 0300	101	0	**101**
0300 - 0400	91	0	**91**
0400 - 0500	64	0	**64**
0500 - 0600	71	0	**71**
0600 - 0700	193	0	**193**
0700 - 0800	317	0	**317**
0800 - 0900	368	0	**368**
0900 - 1000	511	0	**511**
1000 - 1100	650	0	**650**
1100 - 1200	742	0	**742**

	Volume Summary 60min		
Time	NB	SB	**Total**
1200 - 1300	933	0	**933**
1300 - 1400	882	0	**882**
1400 - 1500	869	0	**869**
1500 - 1600	792	0	**792**
1600 - 1700	781	0	**781**
1700 - 1800	735	0	**735**
1800 - 1900	603	0	**603**
1900 - 2000	474	0	**474**
2000 - 2100	373	0	**373**
2100 - 2200	252	0	**252**
2200 - 2300	198	0	**198**
2300 - 2400	132	0	**132**

Session Total	10471	0	**10471**
Session Average	436.29	0.00	**436.29**
Session Percentage	100.00	0.00	

Site 75 Lane 3 NB

I-20,
north of Bush River Rd

Date

Monday, April 22, 2024

Lat/Long

34.034393°, -81.117736°

Weather

Mostly Cloudy
57°F

Click here for Detailed Weather

0000 - 2400 (Weekday 24h Session) (04-22-2024)

Volume Summary 60min

	Volume Summary 60min		
TIME	NB	SB	**Total**
0000 - 0100	85	0	**85**
0100 - 0200	70	0	**70**
0200 - 0300	51	0	**51**
0300 - 0400	81	0	**81**
0400 - 0500	139	0	**139**
0500 - 0600	285	0	**285**
0600 - 0700	550	0	**550**
0700 - 0800	954	0	**954**
0800 - 0900	891	0	**891**
0900 - 1000	744	0	**744**
1000 - 1100	749	0	**749**
1100 - 1200	761	0	**761**

	Volume Summary 60min		
Time	NB	SB	**Total**
1200 - 1300	784	0	**784**
1300 - 1400	777	0	**777**
1400 - 1500	815	0	**815**
1500 - 1600	885	0	**885**
1600 - 1700	1094	0	**1094**
1700 - 1800	880	0	**880**
1800 - 1900	661	0	**661**
1900 - 2000	485	0	**485**
2000 - 2100	343	0	**343**
2100 - 2200	273	0	**273**
2200 - 2300	175	0	**175**
2300 - 2400	138	0	**138**

Session Total	12670	0	**12670**
Session Average	527.92	0.00	**527.92**
Session Percentage	100.00	0.00	

Site 75 Lane 3 NB

I-20,
north of Bush River Rd

Date

Tuesday, April 23, 2024

Lat/Long

34.034393°, -81.117736°

Weather

Fair
58°F

Click here for Detailed Weather

0000 - 2400 (Weekday 24h Session) (04-23-2024)

Volume Summary 60min

	Volume Summary 60min		
TIME	NB	SB	**Total**
0000 - 0100	99	0	**99**
0100 - 0200	84	0	**84**
0200 - 0300	80	0	**80**
0300 - 0400	116	0	**116**
0400 - 0500	173	0	**173**
0500 - 0600	284	0	**284**
0600 - 0700	541	0	**541**
0700 - 0800	846	0	**846**
0800 - 0900	885	0	**885**
0900 - 1000	778	0	**778**
1000 - 1100	779	0	**779**
1100 - 1200	759	0	**759**

Session Total	13310	0	**13310**
Session Average	554.58	0.00	**554.58**
Session Percentage	100.00	0.00	

	Volume Summary 60min		
Time	NB	SB	**Total**
1200 - 1300	797	0	**797**
1300 - 1400	797	0	**797**
1400 - 1500	837	0	**837**
1500 - 1600	903	0	**903**
1600 - 1700	1002	0	**1002**
1700 - 1800	894	0	**894**
1800 - 1900	610	0	**610**
1900 - 2000	607	0	**607**
2000 - 2100	431	0	**431**
2100 - 2200	407	0	**407**
2200 - 2300	383	0	**383**
2300 - 2400	218	0	**218**

Site 75 Lane 3 NB

I-20,
north of Bush River Rd

Date

Wednesday, April 24, 2024

Lat/Long

34.034393°, -81.117736°

Weather

Fair
66°F

Click here for Detailed Weather

0000 - 2400 (Weekday 24h Session) (04-24-2024)

Volume Summary 60min

	Volume Summary 60min		
TIME	NB	SB	**Total**
0000 - 0100	169	0	**169**
0100 - 0200	122	0	**122**
0200 - 0300	119	0	**119**
0300 - 0400	127	0	**127**
0400 - 0500	177	0	**177**
0500 - 0600	312	0	**312**
0600 - 0700	550	0	**550**
0700 - 0800	968	0	**968**
0800 - 0900	880	0	**880**
0900 - 1000	792	0	**792**
1000 - 1100	780	0	**780**
1100 - 1200	779	0	**779**

	Volume Summary 60min		
Time	NB	SB	**Total**
1200 - 1300	776	0	**776**
1300 - 1400	860	0	**860**
1400 - 1500	807	0	**807**
1500 - 1600	938	0	**938**
1600 - 1700	982	0	**982**
1700 - 1800	990	0	**990**
1800 - 1900	788	0	**788**
1900 - 2000	600	0	**600**
2000 - 2100	488	0	**488**
2100 - 2200	329	0	**329**
2200 - 2300	268	0	**268**
2300 - 2400	209	0	**209**

Session Total	13810	0	**13810**
Session Average	575.42	0.00	**575.42**
Session Percentage	100.00	0.00	

Site 75 Lane 3 NB

I-20,
north of Bush River Rd

Date

Thursday, April 25, 2024

Lat/Long

34.034393°, -81.117736°

Weather

Fair
67°F

Click here for Detailed Weather

0000 - 2400 (Weekday 24h Session) (04-25-2024)

Volume Summary 60min

	Volume Summary 60min		
TIME	NB	SB	**Total**
0000 - 0100	114	0	**114**
0100 - 0200	106	0	**106**
0200 - 0300	108	0	**108**
0300 - 0400	136	0	**136**
0400 - 0500	170	0	**170**
0500 - 0600	292	0	**292**
0600 - 0700	572	0	**572**
0700 - 0800	935	0	**935**
0800 - 0900	931	0	**931**
0900 - 1000	822	0	**822**
1000 - 1100	799	0	**799**
1100 - 1200	764	0	**764**

	Volume Summary 60min		
Time	NB	SB	**Total**
1200 - 1300	847	0	**847**
1300 - 1400	833	0	**833**
1400 - 1500	883	0	**883**
1500 - 1600	904	0	**904**
1600 - 1700	990	0	**990**
1700 - 1800	973	0	**973**
1800 - 1900	802	0	**802**
1900 - 2000	653	0	**653**
2000 - 2100	477	0	**477**
2100 - 2200	373	0	**373**
2200 - 2300	297	0	**297**
2300 - 2400	198	0	**198**

Session Total	13979	0	**13979**
Session Average	582.46	0.00	**582.46**
Session Percentage	100.00	0.00	

Site 75 Lane 3 NB

I-20,
north of Bush River Rd

Date

Friday, April 26, 2024

Lat/Long

34.034393°, -81.117736°

Weather

Cloudy
69°F

Click here for Detailed Weather

0000 - 2400 (Weekday 24h Session) (04-26-2024)

Volume Summary 60min

	Volume Summary 60min		
TIME	NB	SB	**Total**
0000 - 0100	124	0	**124**
0100 - 0200	109	0	**109**
0200 - 0300	110	0	**110**
0300 - 0400	127	0	**127**
0400 - 0500	168	0	**168**
0500 - 0600	291	0	**291**
0600 - 0700	527	0	**527**
0700 - 0800	954	0	**954**
0800 - 0900	902	0	**902**
0900 - 1000	844	0	**844**
1000 - 1100	846	0	**846**
1100 - 1200	815	0	**815**

	Volume Summary 60min		
Time	NB	SB	**Total**
1200 - 1300	870	0	**870**
1300 - 1400	894	0	**894**
1400 - 1500	923	0	**923**
1500 - 1600	1007	0	**1007**
1600 - 1700	1015	0	**1015**
1700 - 1800	892	0	**892**
1800 - 1900	827	0	**827**
1900 - 2000	700	0	**700**
2000 - 2100	511	0	**511**
2100 - 2200	422	0	**422**
2200 - 2300	330	0	**330**
2300 - 2400	256	0	**256**

Session Total	14464	0	**14464**
Session Average	602.67	0.00	**602.67**
Session Percentage	100.00	0.00	

Site 75 Lane 3 NB

I-20,
north of Bush River Rd

Date

Saturday, April 27, 2024

Lat/Long

34.034393°, -81.117736°

Weather

Mostly Cloudy
69°F

Click here for Detailed Weather

0000 - 2400 (Saturday 24h Session) (04-27-2024)

Volume Summary 60min

	Volume Summary 60min		
TIME	NB	SB	**Total**
0000 - 0100	151	0	**151**
0100 - 0200	106	0	**106**
0200 - 0300	102	0	**102**
0300 - 0400	97	0	**97**
0400 - 0500	92	0	**92**
0500 - 0600	155	0	**155**
0600 - 0700	285	0	**285**
0700 - 0800	440	0	**440**
0800 - 0900	604	0	**604**
0900 - 1000	789	0	**789**
1000 - 1100	825	0	**825**
1100 - 1200	918	0	**918**
Session Total	12485	0	**12485**
Session Average	520.21	0.00	**520.21**
Session Percentage	100.00	0.00	

	Volume Summary 60min		
Time	NB	SB	**Total**
1200 - 1300	911	0	**911**
1300 - 1400	936	0	**936**
1400 - 1500	907	0	**907**
1500 - 1600	837	0	**837**
1600 - 1700	838	0	**838**
1700 - 1800	747	0	**747**
1800 - 1900	688	0	**688**
1900 - 2000	630	0	**630**
2000 - 2100	501	0	**501**
2100 - 2200	380	0	**380**
2200 - 2300	322	0	**322**
2300 - 2400	224	0	**224**

Bi-Directional Class Count || Graphical Analysis NB EB

Columbia, SC

Marr Traffic DATA COLLECTION

www.marrtraffic.com

Site 75 Lane 3 NB

I-20,
north of Bush River Rd

Lat/Long

34.034393°, -81.117736°

0000 - 2400 (Weekday 24h Session)

Graphical Analysis NB EB

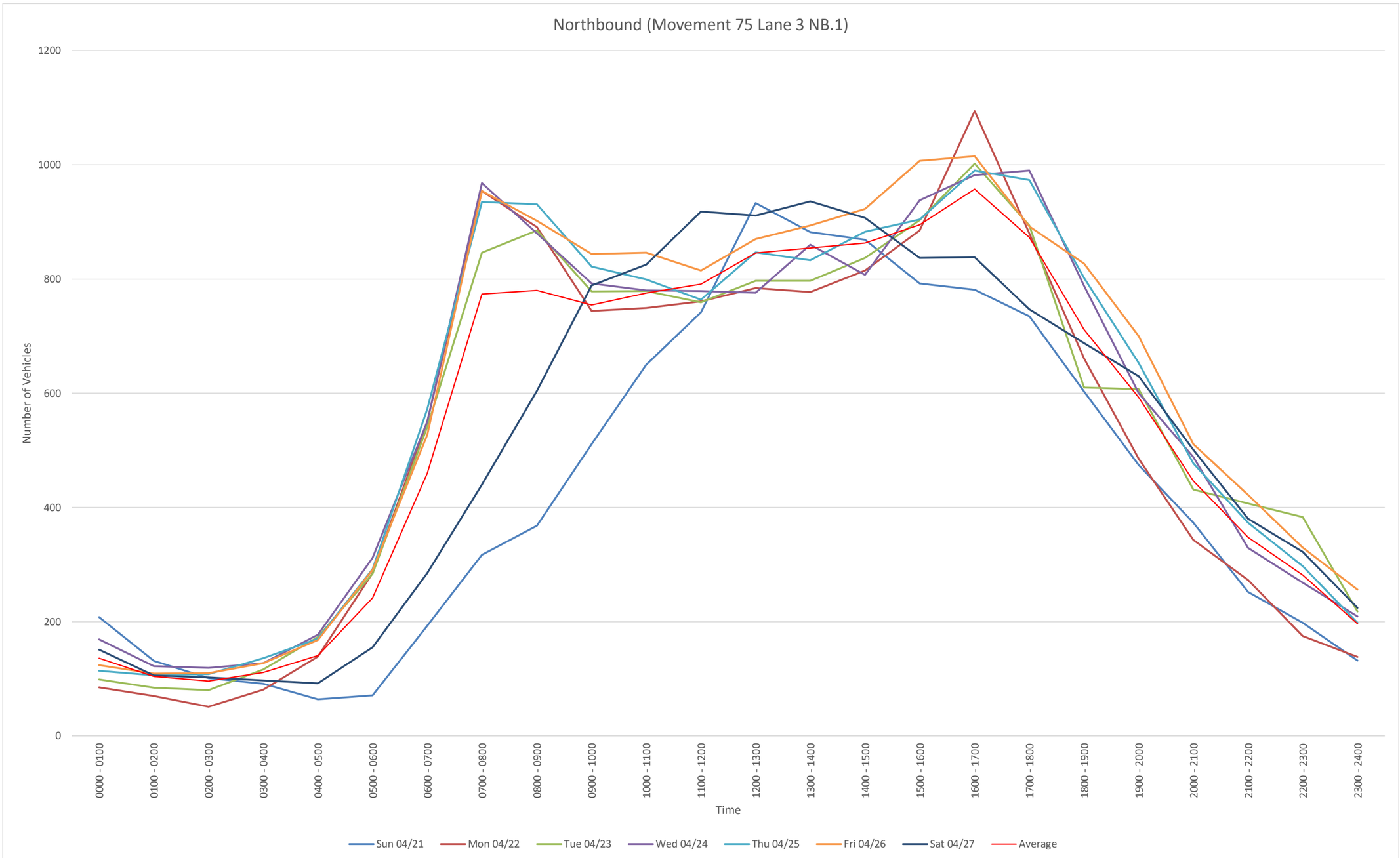

NB
File Name:
Start Date: 4/21/2024
Start Time: 0
Site Code: 75 Lane 3 NB
Station ID: 1
Location 1: I-20, north of Bush River Rd
Location 2:

Date	Time	1	2	3	4	5	6	7	8	9	10	11	12	13
4/21/2024	12:00 AM	0	36	3	0	1	0	0	0	5	0	0	0	0
4/21/2024	12:15 AM	0	47	4	0	1	0	0	0	6	0	0	0	0
4/21/2024	12:30 AM	0	34	2	0	1	0	0	0	6	0	0	0	0
4/21/2024	12:45 AM	2	52	5	0	0	0	0	0	3	0	0	0	0
4/21/2024	1:00 AM	0	25	5	0	1	0	0	0	4	0	0	0	0
4/21/2024	1:15 AM	0	33	3	0	0	0	0	0	3	0	0	0	0
4/21/2024	1:30 AM	0	25	2	0	1	0	0	0	3	0	0	0	0
4/21/2024	1:45 AM	0	20	1	0	0	0	0	0	5	0	0	0	0
4/21/2024	2:00 AM	0	20	0	1	1	0	0	0	2	0	0	0	0
4/21/2024	2:15 AM	0	23	2	0	0	0	0	0	3	0	0	0	0
4/21/2024	2:30 AM	0	20	2	0	0	0	0	0	7	0	0	0	0
4/21/2024	2:45 AM	0	12	0	0	0	0	0	0	8	0	0	0	0
4/21/2024	3:00 AM	0	15	0	0	0	1	0	0	2	0	0	0	0
4/21/2024	3:15 AM	0	19	1	0	1	0	0	0	9	0	0	0	0
4/21/2024	3:30 AM	0	13	2	0	0	0	0	0	4	0	0	0	0
4/21/2024	3:45 AM	0	16	1	0	0	0	0	0	7	0	0	0	0
4/21/2024	4:00 AM	0	7	2	0	0	0	0	0	3	0	0	0	0
4/21/2024	4:15 AM	0	17	0	0	1	0	0	0	3	0	0	0	0
4/21/2024	4:30 AM	0	8	2	0	1	0	0	0	2	0	0	0	0
4/21/2024	4:45 AM	0	15	3	0	0	0	0	0	0	0	0	0	0
4/21/2024	5:00 AM	0	10	0	0	0	0	0	0	3	0	0	0	0
4/21/2024	5:15 AM	0	14	2	0	1	0	0	0	3	0	0	0	0
4/21/2024	5:30 AM	0	15	3	0	0	0	0	0	0	0	0	0	0
4/21/2024	5:45 AM	0	14	1	0	0	0	0	0	5	0	0	0	0
4/21/2024	6:00 AM	0	27	3	0	0	1	0	0	9	0	0	0	0
4/21/2024	6:15 AM	0	27	3	0	2	1	0	0	1	0	0	0	0
4/21/2024	6:30 AM	0	54	8	0	1	0	0	0	3	0	0	0	0
4/21/2024	6:45 AM	0	36	9	2	0	0	0	0	6	0	0	0	0
4/21/2024	7:00 AM	0	45	9	0	1	0	0	0	8	0	0	0	0
4/21/2024	7:15 AM	0	57	14	0	0	0	0	1	10	0	0	0	0
4/21/2024	7:30 AM	0	56	15	0	0	0	0	1	4	0	0	0	0
4/21/2024	7:45 AM	0	68	23	0	0	0	0	0	5	0	0	0	0
4/21/2024	8:00 AM	0	52	12	0	0	1	0	0	9	0	0	0	0
4/21/2024	8:15 AM	1	61	14	0	2	1	0	1	3	0	0	0	0
4/21/2024	8:30 AM	0	57	23	0	1	0	0	1	9	0	0	0	0
4/21/2024	8:45 AM	0	96	16	0	4	0	0	1	3	0	0	0	0
4/21/2024	9:00 AM	0	89	25	0	1	1	0	0	7	0	0	0	0
4/21/2024	9:15 AM	0	83	20	0	1	0	0	1	4	0	0	0	0
4/21/2024	9:30 AM	0	87	28	0	0	0	0	1	10	0	0	0	0
4/21/2024	9:45 AM	0	123	22	0	0	1	0	1	6	0	0	0	0
4/21/2024	10:00 AM	0	102	22	0	1	0	1	0	8	0	0	0	0
4/21/2024	10:15 AM	0	126	28	0	3	0	0	1	11	0	1	0	0
4/21/2024	10:30 AM	0	125	33	0	2	0	0	4	10	0	0	0	0
4/21/2024	10:45 AM	0	138	25	0	2	0	0	1	6	0	0	0	0
4/21/2024	11:00 AM	0	133	24	0	1	1	0	1	11	0	0	0	0
4/21/2024	11:15 AM	0	120	38	0	1	1	0	2	11	0	0	0	0
4/21/2024	11:30 AM	0	146	38	0	1	0	0	1	6	0	0	0	0
4/21/2024	11:45 AM	0	164	28	0	3	0	0	0	11	0	0	0	0
4/21/2024	12:00 PM	0	186	33	0	2	0	0	0	8	0	0	0	0
4/21/2024	12:15 PM	0	203	51	0	1	0	0	4	8	0	0	0	0
4/21/2024	12:30 PM	0	183	33	0	4	0	0	1	9	1	0	0	0
4/21/2024	12:45 PM	0	158	30	5	4	0	0	1	8	0	0	0	0
4/21/2024	1:00 PM	1	166	25	0	0	0	0	0	8	0	0	0	0
4/21/2024	1:15 PM	0	185	40	0	4	0	0	3	13	0	0	0	0
4/21/2024	1:30 PM	0	166	35	0	4	0	0	0	14	0	0	0	0
4/21/2024	1:45 PM	0	168	38	0	0	0	0	2	10	0	0	0	0
4/21/2024	2:00 PM	0	177	28	0	2	0	0	1	7	0	0	0	0
4/21/2024	2:15 PM	0	160	39	0	1	0	0	2	6	0	0	0	0
4/21/2024	2:30 PM	0	172	35	0	2	0	0	2	7	0	0	0	0
4/21/2024	2:45 PM	0	174	41	0	2	0	0	0	11	0	0	0	0
4/21/2024	3:00 PM	0	147	39	1	0	0	0	1	6	0	0	0	0
4/21/2024	3:15 PM	0	156	32	0	0	0	0	0	6	0	0	0	0
4/21/2024	3:30 PM	0	169	36	0	2	0	0	4	5	0	0	0	0
4/21/2024	3:45 PM	0	151	29	0	2	1	0	1	4	0	0	0	0
4/21/2024	4:00 PM	0	166	23	0	0	0	0	0	10	0	0	0	0
4/21/2024	4:15 PM	0	147	32	0	7	2	0	0	15	1	0	0	0
4/21/2024	4:30 PM	0	143	36	0	5	0	0	1	8	0	0	0	0
4/21/2024	4:45 PM	0	148	26	0	2	0	0	0	9	0	0	0	0
4/21/2024	5:00 PM	0	159	33	0	4	1	0	0	10	0	0	0	0
4/21/2024	5:15 PM	0	135	27	0	0	0	0	1	7	0	0	0	0
4/21/2024	5:30 PM	0	145	23	0	3	0	0	2	14	0	0	0	0
4/21/2024	5:45 PM	0	141	17	0	2	0	0	1	10	0	0	0	0
4/21/2024	6:00 PM	0	121	32	0	0	1	0	0	10	0	0	0	0
4/21/2024	6:15 PM	0	117	20	0	1	0	0	0	6	0	0	0	0
4/21/2024	6:30 PM	0	115	25	0	1	0	0	3	22	0	0	0	0
4/21/2024	6:45 PM	1	99	15	0	2	0	0	2	9	1	0	0	0
4/21/2024	7:00 PM	0	75	17	2	1	0	0	0	14	0	0	0	0
4/21/2024	7:15 PM	0	107	11	0	1	0	0	0	5	0	0	0	0
4/21/2024	7:30 PM	0	86	11	0	1	0	0	0	9	0	0	0	0
4/21/2024	7:45 PM	0	106	20	0	0	1	0	0	7	0	0	0	0
4/21/2024	8:00 PM	0	96	22	0	0	0	0	0	8	0	0	0	0
4/21/2024	8:15 PM	0	62	14	0	1	0	0	0	9	0	0	0	0
4/21/2024	8:30 PM	0	46	8	0	1	0	0	0	11	0	0	0	0
4/21/2024	8:45 PM	1	75	9	0	0	0	0	0	10	0	0	0	0
4/21/2024	9:00 PM	0	65	9	0	0	1	0	0	5	0	0	0	0
4/21/2024	9:15 PM	0	37	4	0	0	0	0	0	9	0	0	0	0
4/21/2024	9:30 PM	0	41	8	0	1	0	0	0	11	0	0	0	0
4/21/2024	9:45 PM	0	44	3	0	0	0	0	2	12	0	0	0	0
4/21/2024	10:00 PM	0	47	3	0	1	1	0	0	9	0	1	0	0
4/21/2024	10:15 PM	0	38	7	0	1	2	0	0	7	0	0	0	0
4/21/2024	10:30 PM	0	25	2	0	2	0	0	0	9	0	0	0	0
4/21/2024	10:45 PM	0	28	3	1	0	0	0	0	11	0	0	0	0
4/21/2024	11:00 PM	0	30	1	0	0	0	0	0	4	0	0	0	0
4/21/2024	11:15 PM	0	29	5	0	0	0	0	0	7	0	0	0	0
4/21/2024	11:30 PM	0	18	1	0	0	0	0	1	9	0	0	0	0
4/21/2024	11:45 PM	0	18	1	0	0	0	0	1	7	0	0	0	0

4/22/2024	12:00 AM	0	20	1	0	0	0	0	1	5	0	1	0	0
4/22/2024	12:15 AM	0	17	2	0	0	0	0	0	2	0	0	0	0
4/22/2024	12:30 AM	0	11	1	0	0	1	0	0	6	0	0	0	0
4/22/2024	12:45 AM	0	12	1	0	1	0	0	0	3	0	0	0	0
4/22/2024	1:00 AM	0	7	0	0	0	0	0	0	14	0	0	0	0
4/22/2024	1:15 AM	0	9	1	0	0	0	0	0	8	0	2	0	0
4/22/2024	1:30 AM	0	9	1	0	1	0	0	0	7	0	0	0	0
4/22/2024	1:45 AM	0	5	1	0	0	0	0	0	5	0	0	0	0
4/22/2024	2:00 AM	0	6	1	0	1	0	0	0	3	0	1	0	0
4/22/2024	2:15 AM	0	5	1	0	1	2	0	0	3	0	0	0	0
4/22/2024	2:30 AM	0	5	0	0	1	0	0	0	6	0	2	0	0
4/22/2024	2:45 AM	0	5	1	0	0	1	0	0	6	0	0	0	0
4/22/2024	3:00 AM	0	6	2	0	0	0	0	0	10	0	0	0	0
4/22/2024	3:15 AM	0	5	1	0	2	0	0	0	14	0	0	0	0
4/22/2024	3:30 AM	0	14	1	0	0	0	0	0	7	0	0	0	0
4/22/2024	3:45 AM	0	10	1	0	1	0	0	0	7	0	0	0	0
4/22/2024	4:00 AM	0	11	0	0	0	0	0	1	7	0	0	0	0
4/22/2024	4:15 AM	0	13	1	0	3	1	0	0	16	0	0	0	0
4/22/2024	4:30 AM	0	20	3	0	2	0	0	0	16	0	1	0	0
4/22/2024	4:45 AM	0	24	5	0	0	1	0	0	13	0	1	0	0
4/22/2024	5:00 AM	0	32	7	0	1	0	0	0	13	0	1	0	0
4/22/2024	5:15 AM	0	43	11	0	2	0	0	0	6	1	0	0	0
4/22/2024	5:30 AM	0	46	9	0	5	1	0	0	16	0	0	0	0
4/22/2024	5:45 AM	0	61	10	0	3	1	1	0	15	0	0	0	0
4/22/2024	6:00 AM	0	62	9	0	2	0	1	1	15	0	0	0	0
4/22/2024	6:15 AM	0	70	31	3	1	2	0	0	12	0	0	0	0
4/22/2024	6:30 AM	0	103	44	1	5	2	0	1	19	0	0	0	0
4/22/2024	6:45 AM	0	99	44	1	4	4	0	1	12	1	0	0	0
4/22/2024	7:00 AM	0	129	41	0	10	2	0	2	12	0	0	0	0
4/22/2024	7:15 AM	0	178	45	0	7	5	0	1	8	0	0	0	0
4/22/2024	7:30 AM	0	172	48	2	8	2	0	6	10	0	0	0	0
4/22/2024	7:45 AM	0	191	62	0	6	1	1	1	4	0	0	0	0
4/22/2024	8:00 AM	0	159	53	1	9	3	0	2	11	0	0	0	0
4/22/2024	8:15 AM	0	132	72	0	4	2	0	5	12	0	0	0	0
4/22/2024	8:30 AM	0	110	67	1	10	4	2	4	19	0	0	0	0
4/22/2024	8:45 AM	0	131	50	0	8	1	0	5	13	1	0	0	0
4/22/2024	9:00 AM	0	101	47	0	7	1	0	6	14	0	0	0	0
4/22/2024	9:15 AM	1	113	47	1	17	1	1	4	7	0	0	0	0
4/22/2024	9:30 AM	0	101	55	1	5	3	1	3	8	0	0	0	0
4/22/2024	9:45 AM	0	117	54	0	10	1	0	4	12	1	0	0	0
4/22/2024	10:00 AM	0	101	37	0	11	1	2	4	25	0	0	0	0
4/22/2024	10:15 AM	1	108	45	0	7	1	1	3	13	0	0	0	0
4/22/2024	10:30 AM	0	102	39	0	11	2	2	4	28	0	0	0	0
4/22/2024	10:45 AM	0	117	50	0	3	1	0	4	26	0	0	0	0
4/22/2024	11:00 AM	0	105	58	0	8	3	1	3	16	1	0	0	0
4/22/2024	11:15 AM	0	117	45	0	10	1	0	1	24	0	0	0	0
4/22/2024	11:30 AM	0	99	41	0	8	2	1	2	20	0	0	0	0
4/22/2024	11:45 AM	0	112	50	0	4	1	0	3	25	0	0	0	0
4/22/2024	12:00 PM	0	122	49	1	10	1	0	5	19	2	0	0	0
4/22/2024	12:15 PM	0	107	41	0	6	3	0	0	13	0	0	0	0
4/22/2024	12:30 PM	0	135	46	0	10	0	2	5	17	3	0	0	0
4/22/2024	12:45 PM	0	121	42	0	9	1	0	2	12	0	0	0	0
4/22/2024	1:00 PM	0	120	44	2	6	5	2	2	12	2	0	0	0
4/22/2024	1:15 PM	0	129	44	0	7	2	1	1	9	0	0	0	0
4/22/2024	1:30 PM	0	133	37	4	6	2	0	2	19	0	0	0	0
4/22/2024	1:45 PM	0	113	46	2	6	1	1	0	17	0	0	0	0
4/22/2024	2:00 PM	0	123	42	0	3	0	0	0	15	0	0	0	0
4/22/2024	2:15 PM	0	129	50	0	5	2	0	0	16	1	0	0	0
4/22/2024	2:30 PM	0	128	54	0	7	0	0	3	15	0	0	0	0
4/22/2024	2:45 PM	0	158	36	1	9	1	0	3	14	0	0	0	0
4/22/2024	3:00 PM	1	139	37	0	3	2	1	4	14	0	0	0	0
4/22/2024	3:15 PM	0	159	49	1	6	1	2	2	13	1	0	0	0
4/22/2024	3:30 PM	1	151	39	1	5	1	0	0	14	0	0	0	0
4/22/2024	3:45 PM	0	179	34	1	4	2	0	4	13	1	0	0	0
4/22/2024	4:00 PM	1	208	61	0	7	2	0	2	25	0	0	0	0
4/22/2024	4:15 PM	0	190	61	0	5	3	0	1	19	1	0	0	0
4/22/2024	4:30 PM	0	180	50	0	5	2	1	2	17	0	0	0	0
4/22/2024	4:45 PM	0	182	41	0	5	0	0	2	21	0	0	0	0
4/22/2024	5:00 PM	0	162	52	0	3	0	0	1	16	0	0	0	0
4/22/2024	5:15 PM	0	150	44	0	2	0	0	0	8	0	0	0	0
4/22/2024	5:30 PM	1	163	50	0	2	0	0	3	14	0	0	0	0
4/22/2024	5:45 PM	0	140	48	0	3	0	0	1	17	0	0	0	0
4/22/2024	6:00 PM	0	145	29	0	1	0	0	0	10	0	0	0	0
4/22/2024	6:15 PM	0	131	35	0	1	1	0	0	14	0	0	0	0
4/22/2024	6:30 PM	0	117	27	0	1	3	0	2	10	0	0	0	0
4/22/2024	6:45 PM	1	94	26	0	0	1	0	0	12	0	0	0	0
4/22/2024	7:00 PM	2	82	26	0	0	0	0	0	12	0	0	0	0
4/22/2024	7:15 PM	0	99	17	0	4	2	0	1	14	0	0	0	0
4/22/2024	7:30 PM	2	74	14	0	0	0	0	0	18	0	1	0	0
4/22/2024	7:45 PM	0	84	19	0	3	0	0	1	9	1	0	0	0
4/22/2024	8:00 PM	0	69	20	0	1	0	0	0	12	0	0	0	0
4/22/2024	8:15 PM	0	54	7	0	0	0	0	0	8	0	0	0	0
4/22/2024	8:30 PM	0	67	10	1	3	0	0	0	14	0	0	0	0
4/22/2024	8:45 PM	0	57	10	0	0	0	0	0	10	0	0	0	0
4/22/2024	9:00 PM	0	66	9	0	0	0	0	0	9	0	0	0	0
4/22/2024	9:15 PM	0	57	5	0	1	0	0	1	7	0	0	0	0
4/22/2024	9:30 PM	0	49	6	0	0	0	0	0	5	0	0	0	0
4/22/2024	9:45 PM	0	44	6	0	0	0	0	0	8	0	0	0	0
4/22/2024	10:00 PM	0	33	5	0	0	0	0	0	8	0	1	0	0
4/22/2024	10:15 PM	0	26	2	0	1	0	0	0	10	0	2	0	0
4/22/2024	10:30 PM	0	32	4	0	1	1	0	0	8	0	0	0	0
4/22/2024	10:45 PM	0	28	3	0	0	0	0	1	8	0	1	0	0
4/22/2024	11:00 PM	0	39	3	0	0	0	0	1	10	0	0	0	0
4/22/2024	11:15 PM	0	22	4	0	0	0	0	0	3	0	1	0	0
4/22/2024	11:30 PM	0	11	4	0	0	0	0	0	10	0	0	0	0
4/22/2024	11:45 PM	0	15	3	0	0	2	0	0	7	0	3	0	0

4/23/2024	12:00 AM	0	17	1	0	0	1	0	0	5	0	0	0	0
4/23/2024	12:15 AM	0	10	2	0	0	0	0	0	11	0	1	0	0
4/23/2024	12:30 AM	0	11	2	1	1	1	0	0	5	0	1	0	0
4/23/2024	12:45 AM	0	17	3	0	0	1	0	0	6	0	2	0	0
4/23/2024	1:00 AM	0	4	1	0	1	0	0	0	4	0	0	0	0
4/23/2024	1:15 AM	0	11	1	0	1	0	0	0	9	0	1	0	0
4/23/2024	1:30 AM	0	12	3	0	0	0	0	0	8	0	2	0	0
4/23/2024	1:45 AM	0	10	1	0	0	0	0	0	12	0	3	0	0
4/23/2024	2:00 AM	0	7	1	0	0	1	0	0	10	0	0	0	0
4/23/2024	2:15 AM	0	6	1	0	2	0	0	0	8	0	2	0	0
4/23/2024	2:30 AM	0	9	0	0	1	0	0	0	12	0	1	0	0
4/23/2024	2:45 AM	0	6	0	0	1	0	0	0	10	0	2	0	0
4/23/2024	3:00 AM	1	10	0	0	0	1	0	0	11	0	1	0	0
4/23/2024	3:15 AM	0	14	1	0	0	0	0	0	15	0	3	0	0
4/23/2024	3:30 AM	0	12	3	0	2	0	0	0	11	0	1	0	0
4/23/2024	3:45 AM	0	18	2	0	0	2	0	0	8	0	0	0	0
4/23/2024	4:00 AM	0	22	2	0	2	0	0	0	12	0	1	0	0
4/23/2024	4:15 AM	0	19	5	0	2	1	0	0	13	0	2	0	0
4/23/2024	4:30 AM	0	25	4	0	0	2	0	0	11	0	0	0	0
4/23/2024	4:45 AM	0	30	3	0	1	0	0	0	16	0	0	0	0
4/23/2024	5:00 AM	0	26	9	0	0	2	0	0	14	0	0	0	0
4/23/2024	5:15 AM	0	30	6	0	2	2	0	1	16	0	1	0	0
4/23/2024	5:30 AM	0	50	20	0	2	3	0	1	18	0	0	0	0
4/23/2024	5:45 AM	0	44	13	0	2	4	0	0	16	0	2	0	0
4/23/2024	6:00 AM	0	59	16	0	4	2	0	1	7	0	0	0	0
4/23/2024	6:15 AM	0	66	27	3	5	0	1	0	15	0	0	0	0
4/23/2024	6:30 AM	0	101	45	1	5	5	0	1	14	0	0	0	0
4/23/2024	6:45 AM	0	98	39	1	3	3	0	3	15	1	0	0	0
4/23/2024	7:00 AM	0	118	43	0	6	2	0	2	15	0	0	0	0
4/23/2024	7:15 AM	0	184	50	0	9	1	2	1	10	0	1	0	0
4/23/2024	7:30 AM	0	109	32	0	3	1	0	1	5	0	0	0	0
4/23/2024	7:45 AM	1	182	55	1	5	1	0	0	6	0	0	0	0
4/23/2024	8:00 AM	0	158	45	0	5	0	0	2	13	0	0	0	0
4/23/2024	8:15 AM	1	141	50	0	4	1	0	3	15	0	1	0	0
4/23/2024	8:30 AM	1	141	49	0	7	5	0	3	10	0	1	0	0
4/23/2024	8:45 AM	0	147	49	0	11	1	1	5	13	2	0	0	0
4/23/2024	9:00 AM	0	102	48	0	11	1	0	5	13	0	0	0	0
4/23/2024	9:15 AM	0	119	42	2	14	0	1	3	16	0	0	0	0
4/23/2024	9:30 AM	0	116	52	0	8	3	0	2	14	0	1	0	0
4/23/2024	9:45 AM	2	116	49	0	12	1	1	2	22	0	0	0	0
4/23/2024	10:00 AM	0	110	51	1	6	5	2	1	13	0	0	0	0
4/23/2024	10:15 AM	0	118	48	0	9	1	0	4	16	0	0	0	0
4/23/2024	10:30 AM	0	111	38	0	5	4	1	2	17	0	0	0	0
4/23/2024	10:45 AM	0	127	50	1	8	2	0	1	26	1	0	0	0
4/23/2024	11:00 AM	0	113	43	0	3	3	0	2	28	1	0	0	0
4/23/2024	11:15 AM	1	116	53	2	7	0	1	3	8	1	0	0	0
4/23/2024	11:30 AM	0	114	36	0	6	1	0	2	23	1	0	0	0
4/23/2024	11:45 AM	0	119	48	0	3	3	0	3	14	1	0	0	0
4/23/2024	12:00 PM	1	132	49	0	6	3	0	1	24	0	0	0	0
4/23/2024	12:15 PM	0	123	59	1	4	2	1	2	16	0	0	0	0
4/23/2024	12:30 PM	1	121	38	0	5	7	0	1	14	1	0	0	0
4/23/2024	12:45 PM	0	122	41	0	7	3	0	0	12	0	0	0	0
4/23/2024	1:00 PM	1	120	48	2	5	2	2	4	17	0	0	0	0
4/23/2024	1:15 PM	0	128	41	0	6	3	1	2	23	0	0	0	0
4/23/2024	1:30 PM	0	136	42	2	3	1	0	4	18	0	0	0	0
4/23/2024	1:45 PM	0	120	40	0	9	0	1	2	14	0	0	0	0
4/23/2024	2:00 PM	1	118	48	0	9	2	1	1	17	0	0	0	0
4/23/2024	2:15 PM	0	129	47	1	3	1	0	2	18	1	0	0	0
4/23/2024	2:30 PM	0	132	31	1	7	1	0	3	14	0	0	0	0
4/23/2024	2:45 PM	0	173	50	1	5	2	0	1	17	0	0	0	0
4/23/2024	3:00 PM	1	154	40	0	5	1	0	2	27	1	0	0	0
4/23/2024	3:15 PM	0	156	51	0	9	1	0	3	19	0	0	0	0
4/23/2024	3:30 PM	1	154	33	0	5	3	0	4	11	0	0	0	0
4/23/2024	3:45 PM	0	158	37	0	4	3	1	2	17	0	0	0	0
4/23/2024	4:00 PM	0	174	55	1	3	0	0	1	19	0	0	0	0
4/23/2024	4:15 PM	0	159	48	0	3	1	0	3	17	0	0	0	0
4/23/2024	4:30 PM	0	210	50	1	5	1	0	2	9	0	0	0	0
4/23/2024	4:45 PM	0	172	45	0	5	3	0	1	14	0	0	0	0
4/23/2024	5:00 PM	0	177	58	0	6	1	0	0	11	0	0	0	0
4/23/2024	5:15 PM	0	166	36	0	2	0	0	1	8	0	0	0	0
4/23/2024	5:30 PM	0	144	51	0	2	0	0	3	14	0	0	0	0
4/23/2024	5:45 PM	1	158	33	1	4	1	0	0	16	0	0	0	0
4/23/2024	6:00 PM	0	126	43	0	2	1	0	2	11	0	0	0	0
4/23/2024	6:15 PM	0	127	45	0	6	0	0	1	22	0	0	0	0
4/23/2024	6:30 PM	0	115	28	0	3	0	0	1	17	0	0	0	0
4/23/2024	6:45 PM	0	11	28	0	2	0	0	1	18	0	0	0	0
4/23/2024	7:00 PM	1	101	31	2	1	1	0	1	17	0	0	0	0
4/23/2024	7:15 PM	2	118	27	0	1	0	0	0	9	0	0	0	0
4/23/2024	7:30 PM	0	90	34	0	4	2	0	1	10	0	0	0	0
4/23/2024	7:45 PM	0	104	27	0	2	0	0	0	20	0	1	0	0
4/23/2024	8:00 PM	0	75	20	1	1	0	0	1	14	0	0	0	0
4/23/2024	8:15 PM	0	80	12	0	2	0	0	1	12	0	0	0	0
4/23/2024	8:30 PM	0	91	12	1	2	0	0	0	11	0	0	0	0
4/23/2024	8:45 PM	0	68	14	0	0	0	0	0	13	0	0	0	0
4/23/2024	9:00 PM	1	94	17	0	1	1	0	0	10	0	1	0	0
4/23/2024	9:15 PM	0	69	24	1	1	1	0	0	8	0	0	0	0
4/23/2024	9:30 PM	0	65	16	0	2	1	0	0	17	0	0	0	0
4/23/2024	9:45 PM	0	44	20	1	0	0	0	0	11	0	1	0	0
4/23/2024	10:00 PM	0	80	15	0	1	0	0	0	21	0	1	0	0
4/23/2024	10:15 PM	0	61	15	0	1	0	0	0	21	0	3	0	0
4/23/2024	10:30 PM	0	50	5	1	1	1	0	0	18	0	2	0	0
4/23/2024	10:45 PM	0	52	6	0	2	0	0	0	23	0	3	0	0
4/23/2024	11:00 PM	0	41	4	0	1	0	0	0	14	0	1	0	0
4/23/2024	11:15 PM	0	34	6	0	0	0	0	0	18	0	3	0	0
4/23/2024	11:30 PM	0	32	7	0	1	1	0	0	15	0	4	0	0
4/23/2024	11:45 PM	0	19	4	0	1	0	0	0	12	0	0	0	0

4/24/2024	12:00 AM	0	20	5	0	2	0	0	0	30	0	3	0	0
4/24/2024	12:15 AM	0	22	1	0	1	0	0	0	9	0	0	0	0
4/24/2024	12:30 AM	0	20	3	0	1	0	0	0	13	0	4	0	0
4/24/2024	12:45 AM	0	15	3	0	0	0	0	0	15	0	2	0	0
4/24/2024	1:00 AM	0	20	2	0	1	1	0	1	8	0	3	0	0
4/24/2024	1:15 AM	0	15	1	0	1	0	0	0	15	0	2	0	0
4/24/2024	1:30 AM	0	16	0	0	1	0	0	0	8	0	1	0	0
4/24/2024	1:45 AM	0	13	2	0	0	0	0	1	9	0	1	0	0
4/24/2024	2:00 AM	0	11	2	0	0	1	0	0	12	0	3	0	0
4/24/2024	2:15 AM	0	19	4	0	0	0	0	0	15	0	2	0	0
4/24/2024	2:30 AM	0	8	0	0	0	0	0	0	8	0	4	0	0
4/24/2024	2:45 AM	0	10	2	0	2	0	0	0	11	0	5	0	0
4/24/2024	3:00 AM	0	12	5	0	2	0	0	0	9	0	0	0	0
4/24/2024	3:15 AM	0	10	1	0	1	0	0	0	23	0	2	0	0
4/24/2024	3:30 AM	0	14	2	0	1	0	0	0	10	0	1	0	0
4/24/2024	3:45 AM	0	19	3	0	1	0	0	0	11	0	0	0	0
4/24/2024	4:00 AM	0	18	3	0	1	0	0	0	18	0	1	0	0
4/24/2024	4:15 AM	0	19	4	0	3	3	0	0	10	0	0	0	0
4/24/2024	4:30 AM	0	21	3	0	2	0	0	1	15	0	1	0	0
4/24/2024	4:45 AM	0	27	6	0	2	0	0	0	19	0	0	0	0
4/24/2024	5:00 AM	0	31	6	0	5	0	0	0	18	0	1	0	0
4/24/2024	5:15 AM	0	48	9	0	4	0	0	0	15	0	2	0	0
4/24/2024	5:30 AM	0	50	13	0	4	1	0	0	18	0	0	0	0
4/24/2024	5:45 AM	0	48	12	0	8	0	0	0	18	0	1	0	0
4/24/2024	6:00 AM	0	59	13	1	2	0	0	0	11	0	1	0	0
4/24/2024	6:15 AM	0	71	23	2	1	0	0	0	18	0	1	0	0
4/24/2024	6:30 AM	0	105	36	0	6	3	0	1	7	0	0	0	0
4/24/2024	6:45 AM	0	97	59	2	6	4	0	1	20	0	0	0	0
4/24/2024	7:00 AM	0	137	55	0	8	2	0	0	9	2	0	0	0
4/24/2024	7:15 AM	1	161	53	0	12	3	0	1	14	1	0	0	0
4/24/2024	7:30 AM	0	175	54	0	5	0	0	1	13	0	0	0	0
4/24/2024	7:45 AM	0	187	54	0	4	3	1	1	11	0	0	0	0
4/24/2024	8:00 AM	0	155	40	0	9	5	1	1	12	1	0	0	0
4/24/2024	8:15 AM	0	129	47	3	7	2	0	2	8	0	0	0	0
4/24/2024	8:30 AM	0	144	60	0	11	3	0	3	11	0	0	0	0
4/24/2024	8:45 AM	1	126	59	0	9	6	0	7	18	0	0	0	0
4/24/2024	9:00 AM	0	105	51	3	11	1	1	2	15	0	0	0	0
4/24/2024	9:15 AM	1	131	40	1	12	4	0	1	6	0	0	0	0
4/24/2024	9:30 AM	0	130	46	0	10	1	0	4	14	0	0	0	0
4/24/2024	9:45 AM	0	138	37	0	2	1	0	4	18	2	0	0	0
4/24/2024	10:00 AM	0	117	36	0	5	0	0	3	17	1	0	0	0
4/24/2024	10:15 AM	1	108	51	0	6	4	0	0	16	1	0	0	0
4/24/2024	10:30 AM	1	118	57	1	11	3	0	3	18	1	0	0	0
4/24/2024	10:45 AM	0	135	38	0	6	2	1	1	18	0	0	0	0
4/24/2024	11:00 AM	0	116	35	0	6	3	1	3	17	2	0	0	0
4/24/2024	11:15 AM	1	136	42	0	6	2	0	2	19	0	0	0	0
4/24/2024	11:30 AM	0	98	50	0	6	3	0	4	19	1	0	0	0
4/24/2024	11:45 AM	0	139	47	0	3	1	0	5	12	0	0	0	0
4/24/2024	12:00 PM	0	138	49	0	7	2	0	1	22	3	0	0	0
4/24/2024	12:15 PM	0	126	36	0	7	4	0	1	18	0	0	0	0
4/24/2024	12:30 PM	0	116	32	0	2	1	0	1	7	0	0	0	0
4/24/2024	12:45 PM	2	149	40	0	5	1	0	1	5	0	0	0	0
4/24/2024	1:00 PM	0	111	43	3	4	5	0	5	20	2	0	0	0
4/24/2024	1:15 PM	0	143	41	0	7	1	0	1	17	2	0	0	0
4/24/2024	1:30 PM	2	158	51	0	4	3	0	2	13	1	0	0	0
4/24/2024	1:45 PM	1	139	53	0	10	1	0	0	16	1	0	0	0
4/24/2024	2:00 PM	1	125	41	1	4	5	0	3	16	0	0	0	0
4/24/2024	2:15 PM	0	140	35	0	10	2	0	4	21	3	0	0	0
4/24/2024	2:30 PM	0	137	42	0	8	0	0	3	15	0	0	0	0
4/24/2024	2:45 PM	0	129	41	1	4	1	0	1	14	0	0	0	0
4/24/2024	3:00 PM	0	151	48	0	2	5	0	0	12	1	0	0	0
4/24/2024	3:15 PM	0	143	55	2	7	3	0	1	16	1	0	0	0
4/24/2024	3:30 PM	1	179	41	1	6	3	0	1	16	1	0	0	0
4/24/2024	3:45 PM	0	172	46	2	6	1	0	3	12	0	0	0	0
4/24/2024	4:00 PM	0	190	59	0	2	3	0	1	9	0	0	0	0
4/24/2024	4:15 PM	0	173	41	0	2	2	0	2	15	0	0	0	0
4/24/2024	4:30 PM	0	164	44	0	8	0	0	0	7	0	0	0	0
4/24/2024	4:45 PM	0	195	50	0	4	0	0	0	11	0	0	0	0
4/24/2024	5:00 PM	0	190	56	0	4	2	0	1	12	1	0	0	0
4/24/2024	5:15 PM	0	195	50	0	5	3	2	2	14	0	0	0	0
4/24/2024	5:30 PM	0	185	46	0	5	0	0	1	9	0	0	0	0
4/24/2024	5:45 PM	0	154	37	0	4	3	0	2	7	0	0	0	0
4/24/2024	6:00 PM	1	154	38	0	3	1	0	1	7	1	0	0	0
4/24/2024	6:15 PM	0	136	35	0	4	1	0	1	16	0	0	0	0
4/24/2024	6:30 PM	0	137	24	0	3	3	0	2	27	1	0	0	0
4/24/2024	6:45 PM	1	133	33	0	1	1	0	1	22	0	0	0	0
4/24/2024	7:00 PM	0	110	21	0	3	1	0	0	18	1	0	0	0
4/24/2024	7:15 PM	1	109	31	0	1	0	0	2	15	0	0	0	0
4/24/2024	7:30 PM	1	93	28	0	5	0	0	0	18	0	1	0	0
4/24/2024	7:45 PM	0	98	27	1	2	1	0	1	11	0	0	0	0
4/24/2024	8:00 PM	2	89	24	0	1	1	0	0	12	0	1	0	0
4/24/2024	8:15 PM	0	85	19	0	1	0	0	0	10	0	0	0	0
4/24/2024	8:30 PM	0	98	12	1	0	0	0	0	18	0	0	0	0
4/24/2024	8:45 PM	0	91	8	1	1	0	0	0	13	0	0	0	0
4/24/2024	9:00 PM	0	60	13	0	1	0	0	0	9	0	0	0	0
4/24/2024	9:15 PM	0	75	10	0	0	0	0	0	8	0	1	0	0
4/24/2024	9:30 PM	0	60	7	0	0	0	0	0	12	0	0	0	0
4/24/2024	9:45 PM	0	46	8	0	0	1	0	0	17	0	1	0	0
4/24/2024	10:00 PM	0	60	9	0	1	0	0	0	12	0	1	0	0
4/24/2024	10:15 PM	0	34	7	1	1	0	0	0	14	0	1	0	0
4/24/2024	10:30 PM	0	39	8	0	1	0	0	0	15	0	1	0	0
4/24/2024	10:45 PM	0	40	6	1	1	0	0	0	12	0	3	0	0
4/24/2024	11:00 PM	1	37	3	0	0	0	0	0	11	0	2	0	0
4/24/2024	11:15 PM	0	30	6	0	0	0	0	0	15	0	1	0	0
4/24/2024	11:30 PM	0	35	9	0	2	0	0	0	5	0	1	0	0
4/24/2024	11:45 PM	0	31	4	1	2	0	0	0	11	0	2	0	0

4/25/2024	12:00 AM	0	15	5	0	1	0	0	0	5	0	0	0	0
4/25/2024	12:15 AM	0	17	2	0	1	0	0	0	11	0	0	0	0
4/25/2024	12:30 AM	0	10	3	0	1	0	0	0	11	0	1	0	0
4/25/2024	12:45 AM	0	15	2	0	0	0	0	0	12	0	2	0	0
4/25/2024	1:00 AM	0	16	3	0	0	0	0	0	13	0	5	0	0
4/25/2024	1:15 AM	0	9	1	0	0	0	0	0	11	0	4	0	0
4/25/2024	1:30 AM	0	10	3	0	0	0	0	0	6	0	4	0	0
4/25/2024	1:45 AM	0	10	1	0	0	0	0	0	8	0	2	0	0
4/25/2024	2:00 AM	0	13	3	0	2	0	0	0	6	0	4	0	0
4/25/2024	2:15 AM	0	11	2	0	0	0	0	0	11	0	2	0	0
4/25/2024	2:30 AM	0	18	3	0	1	0	0	0	9	0	3	0	0
4/25/2024	2:45 AM	0	9	1	0	2	0	0	0	4	0	4	0	0
4/25/2024	3:00 AM	0	12	3	0	0	0	0	0	14	0	0	0	0
4/25/2024	3:15 AM	0	11	1	0	2	0	0	0	6	0	3	0	0
4/25/2024	3:30 AM	0	20	5	0	3	0	0	0	17	0	4	0	0
4/25/2024	3:45 AM	0	18	3	0	1	0	0	0	11	0	2	0	0
4/25/2024	4:00 AM	0	18	2	0	0	2	0	0	8	0	0	0	0
4/25/2024	4:15 AM	0	26	2	0	0	0	0	0	11	0	1	0	0
4/25/2024	4:30 AM	0	24	3	0	2	0	0	0	15	0	1	0	0
4/25/2024	4:45 AM	0	37	2	0	1	0	0	0	14	0	1	0	0
4/25/2024	5:00 AM	0	28	2	0	2	0	0	0	11	0	0	0	0
4/25/2024	5:15 AM	0	42	7	1	4	0	0	0	16	0	0	0	0
4/25/2024	5:30 AM	0	53	15	0	5	0	0	0	16	0	0	0	0
4/25/2024	5:45 AM	0	55	11	0	6	3	0	0	15	0	0	0	0
4/25/2024	6:00 AM	2	58	14	0	4	1	0	0	14	0	1	0	0
4/25/2024	6:15 AM	0	75	35	3	3	0	0	0	21	0	1	0	0
4/25/2024	6:30 AM	0	107	28	0	3	0	1	0	16	0	0	0	0
4/25/2024	6:45 AM	0	119	40	1	4	4	1	0	16	0	0	0	0
4/25/2024	7:00 AM	0	109	47	0	4	1	1	2	15	0	0	0	0
4/25/2024	7:15 AM	2	175	58	0	7	0	0	2	14	1	0	0	0
4/25/2024	7:30 AM	0	171	43	1	9	4	1	4	12	1	0	0	0
4/25/2024	7:45 AM	0	178	58	0	2	1	0	2	10	0	0	0	0
4/25/2024	8:00 AM	1	170	50	0	2	0	1	3	12	0	0	0	0
4/25/2024	8:15 AM	1	155	50	0	5	0	1	3	10	0	0	0	0
4/25/2024	8:30 AM	1	139	67	0	9	5	0	4	9	0	0	0	0
4/25/2024	8:45 AM	3	138	63	1	14	2	0	3	6	2	0	1	0
4/25/2024	9:00 AM	0	123	48	0	15	2	0	6	15	0	0	0	0
4/25/2024	9:15 AM	0	149	58	0	7	2	0	4	20	0	0	0	0
4/25/2024	9:30 AM	0	122	38	0	7	1	0	1	24	0	0	0	0
4/25/2024	9:45 AM	0	112	37	0	5	2	0	3	21	0	0	0	0
4/25/2024	10:00 AM	0	97	49	0	6	3	0	3	17	0	0	0	0
4/25/2024	10:15 AM	2	120	43	0	7	5	0	2	18	1	0	0	0
4/25/2024	10:30 AM	0	144	47	0	5	3	1	1	15	0	0	0	0
4/25/2024	10:45 AM	0	124	56	0	2	3	0	2	23	0	0	0	0
4/25/2024	11:00 AM	0	120	34	0	3	5	0	2	11	0	1	0	0
4/25/2024	11:15 AM	2	122	33	0	6	1	0	6	18	2	0	0	0
4/25/2024	11:30 AM	1	116	56	1	7	3	0	1	18	0	0	0	0
4/25/2024	11:45 AM	0	119	49	1	7	0	1	4	14	0	0	0	0
4/25/2024	12:00 PM	0	124	40	0	3	2	0	2	21	0	0	0	0
4/25/2024	12:15 PM	0	128	54	0	7	0	1	2	9	2	0	0	0
4/25/2024	12:30 PM	0	146	50	0	8	2	0	2	11	0	0	0	0
4/25/2024	12:45 PM	0	152	45	0	15	2	0	4	13	2	0	0	0
4/25/2024	1:00 PM	0	123	48	1	9	2	0	4	10	1	0	0	0
4/25/2024	1:15 PM	0	134	49	0	6	1	0	1	17	1	0	0	0
4/25/2024	1:30 PM	2	135	36	0	7	2	0	4	15	2	0	0	0
4/25/2024	1:45 PM	0	152	41	0	7	5	0	1	15	2	0	0	0
4/25/2024	2:00 PM	0	163	41	1	6	0	0	3	11	0	0	0	0
4/25/2024	2:15 PM	0	165	47	2	7	0	0	3	16	1	0	0	0
4/25/2024	2:30 PM	0	140	41	1	5	2	2	1	13	0	0	0	0
4/25/2024	2:45 PM	1	143	42	1	5	3	0	2	15	0	0	0	0
4/25/2024	3:00 PM	0	145	41	0	5	3	0	3	8	0	0	0	0
4/25/2024	3:15 PM	0	141	57	1	4	1	0	1	18	0	0	0	0
4/25/2024	3:30 PM	0	165	42	1	10	1	0	2	21	0	0	0	0
4/25/2024	3:45 PM	0	166	53	0	2	0	0	1	12	0	0	0	0
4/25/2024	4:00 PM	0	171	65	0	5	0	0	1	15	1	0	0	0
4/25/2024	4:15 PM	0	170	46	0	3	1	0	2	12	0	0	0	0
4/25/2024	4:30 PM	0	190	38	1	3	4	0	0	18	0	0	0	0
4/25/2024	4:45 PM	1	162	54	1	10	2	0	0	14	0	0	0	0
4/25/2024	5:00 PM	0	206	52	1	3	0	0	1	9	0	0	0	0
4/25/2024	5:15 PM	0	204	46	0	2	1	0	1	10	1	0	0	0
4/25/2024	5:30 PM	1	154	47	0	5	0	0	1	11	0	0	0	0
4/25/2024	5:45 PM	0	150	45	0	4	0	0	2	16	0	0	0	0
4/25/2024	6:00 PM	0	172	44	0	2	2	0	0	10	0	0	0	0
4/25/2024	6:15 PM	1	141	44	0	3	0	0	3	6	0	0	0	0
4/25/2024	6:30 PM	0	146	38	0	5	2	0	0	15	0	0	0	0
4/25/2024	6:45 PM	0	123	26	0	2	1	0	1	15	0	0	0	0
4/25/2024	7:00 PM	0	108	36	0	1	0	0	0	18	0	0	0	0
4/25/2024	7:15 PM	0	133	31	0	4	0	0	0	13	0	0	0	0
4/25/2024	7:30 PM	1	115	39	0	3	0	0	0	11	0	1	0	0
4/25/2024	7:45 PM	0	91	29	0	5	0	0	2	12	0	0	0	0
4/25/2024	8:00 PM	0	97	18	0	1	0	0	1	12	0	0	0	0
4/25/2024	8:15 PM	0	95	14	0	0	1	0	2	16	0	0	0	0
4/25/2024	8:30 PM	1	94	11	0	2	0	0	0	11	0	0	0	0
4/25/2024	8:45 PM	0	74	10	0	0	0	0	0	17	0	0	0	0
4/25/2024	9:00 PM	0	68	15	0	2	0	0	0	13	0	0	0	0
4/25/2024	9:15 PM	0	73	14	1	1	0	0	1	7	0	1	0	0
4/25/2024	9:30 PM	0	59	12	0	0	0	0	0	11	0	1	0	0
4/25/2024	9:45 PM	0	64	15	1	0	0	0	0	13	0	1	0	0
4/25/2024	10:00 PM	0	63	12	0	0	0	0	0	17	0	0	0	0
4/25/2024	10:15 PM	0	49	13	0	2	0	0	0	13	0	3	0	0
4/25/2024	10:30 PM	0	52	8	0	3	0	0	0	10	0	0	0	0
4/25/2024	10:45 PM	0	40	4	1	0	0	0	0	6	0	1	0	0
4/25/2024	11:00 PM	0	41	5	0	1	1	0	0	10	0	3	0	0
4/25/2024	11:15 PM	0	35	7	0	2	0	0	0	11	0	0	0	0
4/25/2024	11:30 PM	0	32	5	0	1	1	0	0	10	0	0	0	0
4/25/2024	11:45 PM	0	21	4	0	1	0	0	0	6	0	1	0	0

4/26/2024	12:00 AM	0	16	1	0	1	0	0	0	6	0	0	0	0
4/26/2024	12:15 AM	0	18	2	0	1	1	0	0	9	0	1	0	0
4/26/2024	12:30 AM	0	23	4	1	1	0	0	0	10	0	2	0	0
4/26/2024	12:45 AM	0	17	2	0	1	0	0	0	5	0	2	0	0
4/26/2024	1:00 AM	0	9	2	0	0	1	0	0	7	0	0	0	0
4/26/2024	1:15 AM	0	18	3	0	1	0	0	0	5	0	2	0	0
4/26/2024	1:30 AM	0	14	2	0	3	0	0	0	9	0	3	0	0
4/26/2024	1:45 AM	0	17	1	0	0	0	0	0	8	0	4	0	0
4/26/2024	2:00 AM	0	11	0	0	0	0	0	0	11	0	0	0	0
4/26/2024	2:15 AM	0	12	1	3	0	1	0	0	14	0	0	0	0
4/26/2024	2:30 AM	0	13	0	0	1	2	0	0	15	0	3	0	0
4/26/2024	2:45 AM	0	12	1	0	0	2	0	0	8	0	0	0	0
4/26/2024	3:00 AM	0	11	0	0	2	2	0	0	13	0	2	0	0
4/26/2024	3:15 AM	0	14	2	0	3	0	0	0	12	0	1	0	0
4/26/2024	3:30 AM	0	16	2	2	1	0	0	0	11	0	1	0	0
4/26/2024	3:45 AM	0	17	1	0	0	0	0	0	13	0	1	0	0
4/26/2024	4:00 AM	0	13	1	0	0	0	0	0	8	0	4	1	0
4/26/2024	4:15 AM	0	16	2	0	3	1	0	0	16	0	2	0	0
4/26/2024	4:30 AM	0	27	4	0	2	0	0	1	15	0	2	0	0
4/26/2024	4:45 AM	0	27	3	0	4	1	0	3	12	0	0	0	0
4/26/2024	5:00 AM	0	23	1	1	2	0	0	0	13	0	0	0	0
4/26/2024	5:15 AM	0	35	4	0	2	1	0	1	14	0	0	0	0
4/26/2024	5:30 AM	0	62	11	0	4	3	0	0	11	0	0	0	0
4/26/2024	5:45 AM	0	65	12	2	5	2	0	0	17	0	0	0	0
4/26/2024	6:00 AM	0	63	16	0	3	1	0	0	11	0	0	0	0
4/26/2024	6:15 AM	0	84	13	3	3	1	0	0	8	0	1	0	0
4/26/2024	6:30 AM	0	103	19	0	1	4	0	0	21	0	0	0	0
4/26/2024	6:45 AM	0	115	30	3	5	3	0	1	15	0	0	0	0
4/26/2024	7:00 AM	0	103	45	0	7	1	0	3	16	1	0	0	0
4/26/2024	7:15 AM	1	167	49	0	9	0	1	2	10	0	0	0	0
4/26/2024	7:30 AM	0	179	51	0	3	5	0	2	17	0	0	0	0
4/26/2024	7:45 AM	0	212	57	0	5	2	1	2	3	0	0	0	0
4/26/2024	8:00 AM	0	165	63	0	10	0	0	2	5	0	0	0	0
4/26/2024	8:15 AM	1	155	62	0	6	1	0	3	12	1	0	0	0
4/26/2024	8:30 AM	0	126	53	3	7	4	1	2	11	0	0	0	0
4/26/2024	8:45 AM	0	117	56	0	14	3	0	3	16	0	0	0	0
4/26/2024	9:00 AM	0	126	56	1	11	4	0	3	14	0	0	0	0
4/26/2024	9:15 AM	0	135	38	0	7	4	0	3	9	0	0	0	0
4/26/2024	9:30 AM	0	150	48	0	6	0	1	7	18	0	0	0	0
4/26/2024	9:45 AM	0	135	47	0	8	2	0	0	11	0	0	0	0
4/26/2024	10:00 AM	0	125	37	0	7	4	0	1	22	1	0	0	0
4/26/2024	10:15 AM	0	135	41	0	11	4	0	2	15	0	0	0	0
4/26/2024	10:30 AM	0	143	39	0	2	3	1	3	20	1	0	0	0
4/26/2024	10:45 AM	2	140	63	1	3	4	0	2	11	3	0	0	0
4/26/2024	11:00 AM	0	129	40	0	9	3	1	3	9	0	0	0	0
4/26/2024	11:15 AM	1	140	39	0	2	2	2	5	19	0	0	0	0
4/26/2024	11:30 AM	0	130	43	0	2	1	0	0	14	1	0	0	0
4/26/2024	11:45 AM	0	156	39	0	9	3	0	2	11	0	0	0	0
4/26/2024	12:00 PM	0	138	52	0	7	2	0	3	15	1	0	0	0
4/26/2024	12:15 PM	0	150	40	0	8	1	0	4	18	0	0	0	0
4/26/2024	12:30 PM	0	162	55	0	1	2	0	1	21	0	0	0	0
4/26/2024	12:45 PM	0	125	42	0	5	1	1	5	10	0	0	0	0
4/26/2024	1:00 PM	1	122	42	0	8	0	0	1	18	0	0	0	0
4/26/2024	1:15 PM	0	134	40	0	8	4	0	2	12	0	0	0	0
4/26/2024	1:30 PM	1	175	46	3	7	1	0	2	17	0	0	0	0
4/26/2024	1:45 PM	0	176	52	0	9	1	1	4	7	0	0	0	0
4/26/2024	2:00 PM	0	170	43	2	8	1	0	2	15	0	0	0	0
4/26/2024	2:15 PM	0	147	54	0	5	3	1	1	9	1	0	0	0
4/26/2024	2:30 PM	0	145	54	1	7	4	0	5	10	0	0	0	0
4/26/2024	2:45 PM	2	165	38	1	12	3	0	3	11	0	0	0	0
4/26/2024	3:00 PM	0	168	43	0	7	2	0	2	19	0	0	0	0
4/26/2024	3:15 PM	0	178	49	0	3	0	0	3	7	1	0	0	0
4/26/2024	3:30 PM	0	197	50	0	7	2	0	2	7	0	0	0	0
4/26/2024	3:45 PM	1	191	45	2	4	2	0	0	13	1	1	0	0
4/26/2024	4:00 PM	1	202	40	1	3	1	0	3	7	0	0	0	0
4/26/2024	4:15 PM	0	185	45	1	3	0	0	1	15	0	0	0	0
4/26/2024	4:30 PM	0	190	48	0	2	2	0	2	3	0	0	0	0
4/26/2024	4:45 PM	0	195	47	0	6	1	0	1	10	0	0	0	0
4/26/2024	5:00 PM	0	172	29	0	6	2	1	3	10	1	0	0	0
4/26/2024	5:15 PM	0	179	46	0	3	1	0	1	14	0	0	0	0
4/26/2024	5:30 PM	0	169	35	0	3	1	0	2	4	0	0	0	0
4/26/2024	5:45 PM	0	157	38	0	4	2	0	2	7	0	0	0	0
4/26/2024	6:00 PM	1	171	35	1	1	1	0	2	4	0	0	0	0
4/26/2024	6:15 PM	2	147	36	0	3	1	0	0	5	0	0	0	0
4/26/2024	6:30 PM	0	148	45	0	5	1	0	0	11	0	0	0	0
4/26/2024	6:45 PM	0	161	30	0	3	1	0	0	12	0	0	0	0
4/26/2024	7:00 PM	0	112	37	0	3	1	0	1	12	2	0	0	0
4/26/2024	7:15 PM	0	148	34	0	1	3	0	1	10	0	0	0	0
4/26/2024	7:30 PM	2	119	26	1	1	1	0	1	12	0	0	0	0
4/26/2024	7:45 PM	1	125	34	0	1	0	0	0	10	0	1	0	0
4/26/2024	8:00 PM	0	93	26	0	1	0	0	1	11	0	0	0	0
4/26/2024	8:15 PM	1	95	26	0	2	1	0	0	10	0	1	0	0
4/26/2024	8:30 PM	0	92	24	0	0	0	0	0	7	0	0	0	0
4/26/2024	8:45 PM	3	79	21	1	4	2	0	0	9	0	1	0	0
4/26/2024	9:00 PM	0	88	22	0	3	1	0	0	10	0	0	0	0
4/26/2024	9:15 PM	0	81	23	0	1	1	0	0	10	0	1	0	0
4/26/2024	9:30 PM	0	64	18	0	1	0	0	0	3	0	1	0	0
4/26/2024	9:45 PM	0	71	16	0	0	0	0	0	6	0	1	0	0
4/26/2024	10:00 PM	0	75	15	0	0	0	0	0	8	0	1	0	0
4/26/2024	10:15 PM	0	72	12	0	0	0	0	0	7	0	2	0	0
4/26/2024	10:30 PM	0	63	10	0	1	0	0	0	8	0	0	0	0
4/26/2024	10:45 PM	0	38	9	1	0	0	0	0	7	0	1	0	0
4/26/2024	11:00 PM	0	46	14	0	0	0	0	0	7	0	2	0	0
4/26/2024	11:15 PM	0	47	15	0	0	0	0	0	4	0	1	0	0
4/26/2024	11:30 PM	0	34	11	0	2	0	0	0	8	0	0	0	0
4/26/2024	11:45 PM	0	45	10	0	1	0	0	0	8	0	1	0	0

4/27/2024	12:00 AM	0	25	2	0	1	0	0	0	5	0	0	0	0
4/27/2024	12:15 AM	0	42	2	0	1	0	0	0	8	0	0	0	0
4/27/2024	12:30 AM	1	33	5	0	3	0	0	0	2	0	0	0	0
4/27/2024	12:45 AM	0	16	1	0	0	0	0	0	3	0	1	0	0
4/27/2024	1:00 AM	0	19	2	0	1	0	0	0	2	0	1	0	0
4/27/2024	1:15 AM	0	22	3	0	2	0	0	0	7	0	2	0	0
4/27/2024	1:30 AM	0	21	1	0	0	0	0	0	1	0	2	0	0
4/27/2024	1:45 AM	0	11	0	0	1	0	0	0	6	0	2	0	0
4/27/2024	2:00 AM	0	14	1	0	0	0	0	0	5	0	0	0	0
4/27/2024	2:15 AM	0	20	1	0	1	0	0	0	12	0	2	0	0
4/27/2024	2:30 AM	0	12	1	0	1	0	0	0	5	0	3	0	0
4/27/2024	2:45 AM	0	16	1	0	1	0	0	0	5	0	1	0	0
4/27/2024	3:00 AM	0	11	2	0	1	0	0	0	6	0	2	0	0
4/27/2024	3:15 AM	0	11	1	0	0	0	0	0	9	0	1	0	0
4/27/2024	3:30 AM	1	14	2	0	0	0	0	0	3	0	4	0	0
4/27/2024	3:45 AM	1	19	1	0	3	0	0	0	4	0	1	0	0
4/27/2024	4:00 AM	0	11	2	0	1	0	0	0	5	0	0	0	0
4/27/2024	4:15 AM	0	18	2	0	0	0	0	0	4	0	0	0	0
4/27/2024	4:30 AM	0	16	0	0	2	0	0	0	2	0	4	0	0
4/27/2024	4:45 AM	0	14	1	0	0	0	0	0	8	0	2	0	0
4/27/2024	5:00 AM	0	24	1	1	0	0	0	0	7	0	1	0	0
4/27/2024	5:15 AM	0	21	3	0	2	0	0	0	7	0	0	0	0
4/27/2024	5:30 AM	0	33	1	0	1	0	0	0	9	0	1	0	0
4/27/2024	5:45 AM	0	25	3	1	1	0	0	0	13	0	0	0	0
4/27/2024	6:00 AM	0	38	6	0	3	0	0	1	4	0	0	0	0
4/27/2024	6:15 AM	0	57	7	0	1	0	0	0	6	0	0	0	0
4/27/2024	6:30 AM	0	51	14	0	1	1	0	0	7	0	0	0	0
4/27/2024	6:45 AM	1	58	14	1	1	0	0	0	11	1	1	0	0
4/27/2024	7:00 AM	0	56	23	0	3	0	0	1	12	0	0	0	0
4/27/2024	7:15 AM	0	80	20	0	2	0	0	1	9	0	1	0	0
4/27/2024	7:30 AM	0	64	29	0	4	2	1	0	4	0	0	0	0
4/27/2024	7:45 AM	0	80	33	0	1	1	0	3	9	0	1	0	0
4/27/2024	8:00 AM	0	98	19	0	0	0	0	1	10	0	0	0	0
4/27/2024	8:15 AM	1	98	32	1	2	0	0	1	10	0	0	0	0
4/27/2024	8:30 AM	0	112	32	0	3	0	0	0	8	0	0	0	0
4/27/2024	8:45 AM	1	128	35	0	2	0	0	1	8	1	0	0	0
4/27/2024	9:00 AM	0	126	31	0	9	0	0	0	13	0	0	0	0
4/27/2024	9:15 AM	0	131	35	0	7	0	0	0	8	0	0	0	0
4/27/2024	9:30 AM	3	145	51	0	2	0	0	2	11	2	0	0	0
4/27/2024	9:45 AM	1	154	47	0	2	0	0	1	8	0	0	0	0
4/27/2024	10:00 AM	1	137	29	0	4	0	0	0	8	0	0	0	0
4/27/2024	10:15 AM	0	153	48	0	1	1	0	1	9	0	0	0	0
4/27/2024	10:30 AM	3	166	40	0	2	0	0	2	4	0	0	0	0
4/27/2024	10:45 AM	0	162	44	0	1	0	0	2	7	0	0	0	0
4/27/2024	11:00 AM	1	168	47	0	2	0	0	1	10	0	0	0	0
4/27/2024	11:15 AM	1	170	37	0	2	1	0	0	12	0	0	0	0
4/27/2024	11:30 AM	1	170	42	0	1	0	0	1	9	0	0	0	0
4/27/2024	11:45 AM	2	188	36	0	5	0	0	2	9	0	0	0	0
4/27/2024	12:00 PM	0	165	47	0	2	0	0	1	8	1	0	0	0
4/27/2024	12:15 PM	0	192	40	0	2	0	0	0	4	0	0	0	0
4/27/2024	12:30 PM	2	183	35	0	2	1	0	0	9	0	0	0	0
4/27/2024	12:45 PM	0	164	44	0	2	2	0	1	4	0	0	0	0
4/27/2024	1:00 PM	0	201	38	0	1	0	0	2	10	0	0	0	0
4/27/2024	1:15 PM	2	173	39	0	2	0	0	3	11	0	0	0	0
4/27/2024	1:30 PM	1	181	47	0	0	0	0	2	9	0	0	0	0
4/27/2024	1:45 PM	1	175	27	0	2	0	0	1	8	0	0	0	0
4/27/2024	2:00 PM	0	164	43	0	1	1	0	0	8	0	0	0	0
4/27/2024	2:15 PM	1	196	39	0	2	0	0	0	4	0	0	0	0
4/27/2024	2:30 PM	1	177	45	0	3	1	0	1	7	0	0	0	0
4/27/2024	2:45 PM	0	167	32	3	2	1	0	0	8	0	0	0	0
4/27/2024	3:00 PM	0	166	34	1	1	0	0	0	3	0	1	0	0
4/27/2024	3:15 PM	3	156	36	0	1	0	0	1	7	0	0	0	0
4/27/2024	3:30 PM	1	155	37	0	1	0	0	0	5	2	0	0	0
4/27/2024	3:45 PM	0	186	35	0	0	0	0	1	4	0	0	0	0
4/27/2024	4:00 PM	0	174	35	1	3	1	0	1	4	0	0	0	0
4/27/2024	4:15 PM	0	164	30	0	3	0	0	1	6	0	0	0	0
4/27/2024	4:30 PM	0	162	32	0	1	0	0	2	9	0	0	0	0
4/27/2024	4:45 PM	1	170	33	0	1	0	0	0	4	0	0	0	0
4/27/2024	5:00 PM	0	141	31	0	4	0	0	0	7	1	0	0	0
4/27/2024	5:15 PM	0	153	29	0	1	1	0	1	10	0	0	0	0
4/27/2024	5:30 PM	1	151	25	0	3	0	0	0	8	0	0	0	0
4/27/2024	5:45 PM	0	132	37	0	2	1	0	1	7	0	0	0	0
4/27/2024	6:00 PM	0	136	21	0	0	0	0	1	4	0	0	0	0
4/27/2024	6:15 PM	3	142	21	0	8	0	0	1	5	0	0	0	0
4/27/2024	6:30 PM	0	143	24	0	1	1	0	1	13	0	0	0	0
4/27/2024	6:45 PM	0	123	31	0	1	1	0	0	6	1	0	0	0
4/27/2024	7:00 PM	0	135	27	0	3	0	0	1	5	0	0	0	0
4/27/2024	7:15 PM	0	123	32	0	3	0	0	1	7	0	0	0	0
4/27/2024	7:30 PM	0	117	29	0	1	1	0	0	8	0	0	0	0
4/27/2024	7:45 PM	0	115	19	0	2	0	0	0	1	0	0	0	0
4/27/2024	8:00 PM	0	113	26	0	1	0	0	0	4	0	0	0	0
4/27/2024	8:15 PM	0	107	11	0	0	0	0	0	3	0	0	0	0
4/27/2024	8:30 PM	0	107	13	0	1	0	0	0	8	0	0	0	0
4/27/2024	8:45 PM	0	86	11	0	4	0	0	0	6	0	0	0	0
4/27/2024	9:00 PM	0	79	15	0	2	0	0	0	4	0	0	0	0
4/27/2024	9:15 PM	0	81	12	0	2	0	0	0	4	0	0	0	0
4/27/2024	9:30 PM	0	85	15	0	2	0	0	0	4	0	0	0	0
4/27/2024	9:45 PM	0	66	3	0	0	0	0	0	6	0	0	0	0
4/27/2024	10:00 PM	0	61	14	0	0	0	0	0	6	0	0	0	0
4/27/2024	10:15 PM	0	64	10	0	0	0	0	0	8	0	0	0	0
4/27/2024	10:30 PM	0	75	8	0	0	0	0	0	6	0	0	0	0
4/27/2024	10:45 PM	0	56	11	0	1	0	0	0	2	0	0	0	0
4/27/2024	11:00 PM	0	53	5	0	0	0	0	0	3	0	0	0	0
4/27/2024	11:15 PM	0	51	3	0	1	0	0	0	2	0	0	0	0
4/27/2024	11:30 PM	1	52	3	0	0	0	0	0	4	0	0	0	0
4/27/2024	11:45 PM	1	36	4	0	1	0	0	0	4	0	0	0	0

SB
File Name:
Start Date: 4/21/2024
Start Time: 0
Site Code: 75 Lane 3 NB
Station ID: 1
Location 1: I-20, north of Bush River Rd
Location 2:

Date	Time	1	2	3	4	5	6	7	8	9	10	11	12	13
4/21/2024	12:00 AM	0	0	0	0	0	0	0	0	0	0	0	0	0
4/21/2024	12:15 AM	0	0	0	0	0	0	0	0	0	0	0	0	0
4/21/2024	12:30 AM	0	0	0	0	0	0	0	0	0	0	0	0	0
4/21/2024	12:45 AM	0	0	0	0	0	0	0	0	0	0	0	0	0
4/21/2024	1:00 AM	0	0	0	0	0	0	0	0	0	0	0	0	0
4/21/2024	1:15 AM	0	0	0	0	0	0	0	0	0	0	0	0	0
4/21/2024	1:30 AM	0	0	0	0	0	0	0	0	0	0	0	0	0
4/21/2024	1:45 AM	0	0	0	0	0	0	0	0	0	0	0	0	0
4/21/2024	2:00 AM	0	0	0	0	0	0	0	0	0	0	0	0	0
4/21/2024	2:15 AM	0	0	0	0	0	0	0	0	0	0	0	0	0
4/21/2024	2:30 AM	0	0	0	0	0	0	0	0	0	0	0	0	0
4/21/2024	2:45 AM	0	0	0	0	0	0	0	0	0	0	0	0	0
4/21/2024	3:00 AM	0	0	0	0	0	0	0	0	0	0	0	0	0
4/21/2024	3:15 AM	0	0	0	0	0	0	0	0	0	0	0	0	0
4/21/2024	3:30 AM	0	0	0	0	0	0	0	0	0	0	0	0	0
4/21/2024	3:45 AM	0	0	0	0	0	0	0	0	0	0	0	0	0
4/21/2024	4:00 AM	0	0	0	0	0	0	0	0	0	0	0	0	0
4/21/2024	4:15 AM	0	0	0	0	0	0	0	0	0	0	0	0	0
4/21/2024	4:30 AM	0	0	0	0	0	0	0	0	0	0	0	0	0
4/21/2024	4:45 AM	0	0	0	0	0	0	0	0	0	0	0	0	0
4/21/2024	5:00 AM	0	0	0	0	0	0	0	0	0	0	0	0	0
4/21/2024	5:15 AM	0	0	0	0	0	0	0	0	0	0	0	0	0
4/21/2024	5:30 AM	0	0	0	0	0	0	0	0	0	0	0	0	0
4/21/2024	5:45 AM	0	0	0	0	0	0	0	0	0	0	0	0	0
4/21/2024	6:00 AM	0	0	0	0	0	0	0	0	0	0	0	0	0
4/21/2024	6:15 AM	0	0	0	0	0	0	0	0	0	0	0	0	0
4/21/2024	6:30 AM	0	0	0	0	0	0	0	0	0	0	0	0	0
4/21/2024	6:45 AM	0	0	0	0	0	0	0	0	0	0	0	0	0
4/21/2024	7:00 AM	0	0	0	0	0	0	0	0	0	0	0	0	0
4/21/2024	7:15 AM	0	0	0	0	0	0	0	0	0	0	0	0	0
4/21/2024	7:30 AM	0	0	0	0	0	0	0	0	0	0	0	0	0
4/21/2024	7:45 AM	0	0	0	0	0	0	0	0	0	0	0	0	0
4/21/2024	8:00 AM	0	0	0	0	0	0	0	0	0	0	0	0	0
4/21/2024	8:15 AM	0	0	0	0	0	0	0	0	0	0	0	0	0
4/21/2024	8:30 AM	0	0	0	0	0	0	0	0	0	0	0	0	0
4/21/2024	8:45 AM	0	0	0	0	0	0	0	0	0	0	0	0	0
4/21/2024	9:00 AM	0	0	0	0	0	0	0	0	0	0	0	0	0
4/21/2024	9:15 AM	0	0	0	0	0	0	0	0	0	0	0	0	0
4/21/2024	9:30 AM	0	0	0	0	0	0	0	0	0	0	0	0	0
4/21/2024	9:45 AM	0	0	0	0	0	0	0	0	0	0	0	0	0
4/21/2024	10:00 AM	0	0	0	0	0	0	0	0	0	0	0	0	0
4/21/2024	10:15 AM	0	0	0	0	0	0	0	0	0	0	0	0	0
4/21/2024	10:30 AM	0	0	0	0	0	0	0	0	0	0	0	0	0
4/21/2024	10:45 AM	0	0	0	0	0	0	0	0	0	0	0	0	0
4/21/2024	11:00 AM	0	0	0	0	0	0	0	0	0	0	0	0	0
4/21/2024	11:15 AM	0	0	0	0	0	0	0	0	0	0	0	0	0
4/21/2024	11:30 AM	0	0	0	0	0	0	0	0	0	0	0	0	0
4/21/2024	11:45 AM	0	0	0	0	0	0	0	0	0	0	0	0	0
4/21/2024	12:00 PM	0	0	0	0	0	0	0	0	0	0	0	0	0
4/21/2024	12:15 PM	0	0	0	0	0	0	0	0	0	0	0	0	0
4/21/2024	12:30 PM	0	0	0	0	0	0	0	0	0	0	0	0	0
4/21/2024	12:45 PM	0	0	0	0	0	0	0	0	0	0	0	0	0
4/21/2024	1:00 PM	0	0	0	0	0	0	0	0	0	0	0	0	0
4/21/2024	1:15 PM	0	0	0	0	0	0	0	0	0	0	0	0	0
4/21/2024	1:30 PM	0	0	0	0	0	0	0	0	0	0	0	0	0
4/21/2024	1:45 PM	0	0	0	0	0	0	0	0	0	0	0	0	0
4/21/2024	2:00 PM	0	0	0	0	0	0	0	0	0	0	0	0	0
4/21/2024	2:15 PM	0	0	0	0	0	0	0	0	0	0	0	0	0
4/21/2024	2:30 PM	0	0	0	0	0	0	0	0	0	0	0	0	0
4/21/2024	2:45 PM	0	0	0	0	0	0	0	0	0	0	0	0	0
4/21/2024	3:00 PM	0	0	0	0	0	0	0	0	0	0	0	0	0
4/21/2024	3:15 PM	0	0	0	0	0	0	0	0	0	0	0	0	0
4/21/2024	3:30 PM	0	0	0	0	0	0	0	0	0	0	0	0	0
4/21/2024	3:45 PM	0	0	0	0	0	0	0	0	0	0	0	0	0
4/21/2024	4:00 PM	0	0	0	0	0	0	0	0	0	0	0	0	0
4/21/2024	4:15 PM	0	0	0	0	0	0	0	0	0	0	0	0	0
4/21/2024	4:30 PM	0	0	0	0	0	0	0	0	0	0	0	0	0
4/21/2024	4:45 PM	0	0	0	0	0	0	0	0	0	0	0	0	0
4/21/2024	5:00 PM	0	0	0	0	0	0	0	0	0	0	0	0	0
4/21/2024	5:15 PM	0	0	0	0	0	0	0	0	0	0	0	0	0
4/21/2024	5:30 PM	0	0	0	0	0	0	0	0	0	0	0	0	0
4/21/2024	5:45 PM	0	0	0	0	0	0	0	0	0	0	0	0	0
4/21/2024	6:00 PM	0	0	0	0	0	0	0	0	0	0	0	0	0
4/21/2024	6:15 PM	0	0	0	0	0	0	0	0	0	0	0	0	0
4/21/2024	6:30 PM	0	0	0	0	0	0	0	0	0	0	0	0	0
4/21/2024	6:45 PM	0	0	0	0	0	0	0	0	0	0	0	0	0
4/21/2024	7:00 PM	0	0	0	0	0	0	0	0	0	0	0	0	0
4/21/2024	7:15 PM	0	0	0	0	0	0	0	0	0	0	0	0	0
4/21/2024	7:30 PM	0	0	0	0	0	0	0	0	0	0	0	0	0
4/21/2024	7:45 PM	0	0	0	0	0	0	0	0	0	0	0	0	0
4/21/2024	8:00 PM	0	0	0	0	0	0	0	0	0	0	0	0	0
4/21/2024	8:15 PM	0	0	0	0	0	0	0	0	0	0	0	0	0
4/21/2024	8:30 PM	0	0	0	0	0	0	0	0	0	0	0	0	0
4/21/2024	8:45 PM	0	0	0	0	0	0	0	0	0	0	0	0	0
4/21/2024	9:00 PM	0	0	0	0	0	0	0	0	0	0	0	0	0
4/21/2024	9:15 PM	0	0	0	0	0	0	0	0	0	0	0	0	0
4/21/2024	9:30 PM	0	0	0	0	0	0	0	0	0	0	0	0	0
4/21/2024	9:45 PM	0	0	0	0	0	0	0	0	0	0	0	0	0
4/21/2024	10:00 PM	0	0	0	0	0	0	0	0	0	0	0	0	0
4/21/2024	10:15 PM	0	0	0	0	0	0	0	0	0	0	0	0	0
4/21/2024	10:30 PM	0	0	0	0	0	0	0	0	0	0	0	0	0
4/21/2024	10:45 PM	0	0	0	0	0	0	0	0	0	0	0	0	0
4/21/2024	11:00 PM	0	0	0	0	0	0	0	0	0	0	0	0	0
4/21/2024	11:15 PM	0	0	0	0	0	0	0	0	0	0	0	0	0
4/21/2024	11:30 PM	0	0	0	0	0	0	0	0	0	0	0	0	0
4/21/2024	11:45 PM	0	0	0	0	0	0	0	0	0	0	0	0	0

4/22/2024	12:00 AM	0	0	0	0	0	0	0	0	0	0	0	0	0
4/22/2024	12:15 AM	0	0	0	0	0	0	0	0	0	0	0	0	0
4/22/2024	12:30 AM	0	0	0	0	0	0	0	0	0	0	0	0	0
4/22/2024	12:45 AM	0	0	0	0	0	0	0	0	0	0	0	0	0
4/22/2024	1:00 AM	0	0	0	0	0	0	0	0	0	0	0	0	0
4/22/2024	1:15 AM	0	0	0	0	0	0	0	0	0	0	0	0	0
4/22/2024	1:30 AM	0	0	0	0	0	0	0	0	0	0	0	0	0
4/22/2024	1:45 AM	0	0	0	0	0	0	0	0	0	0	0	0	0
4/22/2024	2:00 AM	0	0	0	0	0	0	0	0	0	0	0	0	0
4/22/2024	2:15 AM	0	0	0	0	0	0	0	0	0	0	0	0	0
4/22/2024	2:30 AM	0	0	0	0	0	0	0	0	0	0	0	0	0
4/22/2024	2:45 AM	0	0	0	0	0	0	0	0	0	0	0	0	0
4/22/2024	3:00 AM	0	0	0	0	0	0	0	0	0	0	0	0	0
4/22/2024	3:15 AM	0	0	0	0	0	0	0	0	0	0	0	0	0
4/22/2024	3:30 AM	0	0	0	0	0	0	0	0	0	0	0	0	0
4/22/2024	3:45 AM	0	0	0	0	0	0	0	0	0	0	0	0	0
4/22/2024	4:00 AM	0	0	0	0	0	0	0	0	0	0	0	0	0
4/22/2024	4:15 AM	0	0	0	0	0	0	0	0	0	0	0	0	0
4/22/2024	4:30 AM	0	0	0	0	0	0	0	0	0	0	0	0	0
4/22/2024	4:45 AM	0	0	0	0	0	0	0	0	0	0	0	0	0
4/22/2024	5:00 AM	0	0	0	0	0	0	0	0	0	0	0	0	0
4/22/2024	5:15 AM	0	0	0	0	0	0	0	0	0	0	0	0	0
4/22/2024	5:30 AM	0	0	0	0	0	0	0	0	0	0	0	0	0
4/22/2024	5:45 AM	0	0	0	0	0	0	0	0	0	0	0	0	0
4/22/2024	6:00 AM	0	0	0	0	0	0	0	0	0	0	0	0	0
4/22/2024	6:15 AM	0	0	0	0	0	0	0	0	0	0	0	0	0
4/22/2024	6:30 AM	0	0	0	0	0	0	0	0	0	0	0	0	0
4/22/2024	6:45 AM	0	0	0	0	0	0	0	0	0	0	0	0	0
4/22/2024	7:00 AM	0	0	0	0	0	0	0	0	0	0	0	0	0
4/22/2024	7:15 AM	0	0	0	0	0	0	0	0	0	0	0	0	0
4/22/2024	7:30 AM	0	0	0	0	0	0	0	0	0	0	0	0	0
4/22/2024	7:45 AM	0	0	0	0	0	0	0	0	0	0	0	0	0
4/22/2024	8:00 AM	0	0	0	0	0	0	0	0	0	0	0	0	0
4/22/2024	8:15 AM	0	0	0	0	0	0	0	0	0	0	0	0	0
4/22/2024	8:30 AM	0	0	0	0	0	0	0	0	0	0	0	0	0
4/22/2024	8:45 AM	0	0	0	0	0	0	0	0	0	0	0	0	0
4/22/2024	9:00 AM	0	0	0	0	0	0	0	0	0	0	0	0	0
4/22/2024	9:15 AM	0	0	0	0	0	0	0	0	0	0	0	0	0
4/22/2024	9:30 AM	0	0	0	0	0	0	0	0	0	0	0	0	0
4/22/2024	9:45 AM	0	0	0	0	0	0	0	0	0	0	0	0	0
4/22/2024	10:00 AM	0	0	0	0	0	0	0	0	0	0	0	0	0
4/22/2024	10:15 AM	0	0	0	0	0	0	0	0	0	0	0	0	0
4/22/2024	10:30 AM	0	0	0	0	0	0	0	0	0	0	0	0	0
4/22/2024	10:45 AM	0	0	0	0	0	0	0	0	0	0	0	0	0
4/22/2024	11:00 AM	0	0	0	0	0	0	0	0	0	0	0	0	0
4/22/2024	11:15 AM	0	0	0	0	0	0	0	0	0	0	0	0	0
4/22/2024	11:30 AM	0	0	0	0	0	0	0	0	0	0	0	0	0
4/22/2024	11:45 AM	0	0	0	0	0	0	0	0	0	0	0	0	0
4/22/2024	12:00 PM	0	0	0	0	0	0	0	0	0	0	0	0	0
4/22/2024	12:15 PM	0	0	0	0	0	0	0	0	0	0	0	0	0
4/22/2024	12:30 PM	0	0	0	0	0	0	0	0	0	0	0	0	0
4/22/2024	12:45 PM	0	0	0	0	0	0	0	0	0	0	0	0	0
4/22/2024	1:00 PM	0	0	0	0	0	0	0	0	0	0	0	0	0
4/22/2024	1:15 PM	0	0	0	0	0	0	0	0	0	0	0	0	0
4/22/2024	1:30 PM	0	0	0	0	0	0	0	0	0	0	0	0	0
4/22/2024	1:45 PM	0	0	0	0	0	0	0	0	0	0	0	0	0
4/22/2024	2:00 PM	0	0	0	0	0	0	0	0	0	0	0	0	0
4/22/2024	2:15 PM	0	0	0	0	0	0	0	0	0	0	0	0	0
4/22/2024	2:30 PM	0	0	0	0	0	0	0	0	0	0	0	0	0
4/22/2024	2:45 PM	0	0	0	0	0	0	0	0	0	0	0	0	0
4/22/2024	3:00 PM	0	0	0	0	0	0	0	0	0	0	0	0	0
4/22/2024	3:15 PM	0	0	0	0	0	0	0	0	0	0	0	0	0
4/22/2024	3:30 PM	0	0	0	0	0	0	0	0	0	0	0	0	0
4/22/2024	3:45 PM	0	0	0	0	0	0	0	0	0	0	0	0	0
4/22/2024	4:00 PM	0	0	0	0	0	0	0	0	0	0	0	0	0
4/22/2024	4:15 PM	0	0	0	0	0	0	0	0	0	0	0	0	0
4/22/2024	4:30 PM	0	0	0	0	0	0	0	0	0	0	0	0	0
4/22/2024	4:45 PM	0	0	0	0	0	0	0	0	0	0	0	0	0
4/22/2024	5:00 PM	0	0	0	0	0	0	0	0	0	0	0	0	0
4/22/2024	5:15 PM	0	0	0	0	0	0	0	0	0	0	0	0	0
4/22/2024	5:30 PM	0	0	0	0	0	0	0	0	0	0	0	0	0
4/22/2024	5:45 PM	0	0	0	0	0	0	0	0	0	0	0	0	0
4/22/2024	6:00 PM	0	0	0	0	0	0	0	0	0	0	0	0	0
4/22/2024	6:15 PM	0	0	0	0	0	0	0	0	0	0	0	0	0
4/22/2024	6:30 PM	0	0	0	0	0	0	0	0	0	0	0	0	0
4/22/2024	6:45 PM	0	0	0	0	0	0	0	0	0	0	0	0	0
4/22/2024	7:00 PM	0	0	0	0	0	0	0	0	0	0	0	0	0
4/22/2024	7:15 PM	0	0	0	0	0	0	0	0	0	0	0	0	0
4/22/2024	7:30 PM	0	0	0	0	0	0	0	0	0	0	0	0	0
4/22/2024	7:45 PM	0	0	0	0	0	0	0	0	0	0	0	0	0
4/22/2024	8:00 PM	0	0	0	0	0	0	0	0	0	0	0	0	0
4/22/2024	8:15 PM	0	0	0	0	0	0	0	0	0	0	0	0	0
4/22/2024	8:30 PM	0	0	0	0	0	0	0	0	0	0	0	0	0
4/22/2024	8:45 PM	0	0	0	0	0	0	0	0	0	0	0	0	0
4/22/2024	9:00 PM	0	0	0	0	0	0	0	0	0	0	0	0	0
4/22/2024	9:15 PM	0	0	0	0	0	0	0	0	0	0	0	0	0
4/22/2024	9:30 PM	0	0	0	0	0	0	0	0	0	0	0	0	0
4/22/2024	9:45 PM	0	0	0	0	0	0	0	0	0	0	0	0	0
4/22/2024	10:00 PM	0	0	0	0	0	0	0	0	0	0	0	0	0
4/22/2024	10:15 PM	0	0	0	0	0	0	0	0	0	0	0	0	0
4/22/2024	10:30 PM	0	0	0	0	0	0	0	0	0	0	0	0	0
4/22/2024	10:45 PM	0	0	0	0	0	0	0	0	0	0	0	0	0
4/22/2024	11:00 PM	0	0	0	0	0	0	0	0	0	0	0	0	0
4/22/2024	11:15 PM	0	0	0	0	0	0	0	0	0	0	0	0	0
4/22/2024	11:30 PM	0	0	0	0	0	0	0	0	0	0	0	0	0
4/22/2024	11:45 PM	0	0	0	0	0	0	0	0	0	0	0	0	0

4/23/2024	12:00 AM	0	0	0	0	0	0	0	0	0	0	0	0	0
4/23/2024	12:15 AM	0	0	0	0	0	0	0	0	0	0	0	0	0
4/23/2024	12:30 AM	0	0	0	0	0	0	0	0	0	0	0	0	0
4/23/2024	12:45 AM	0	0	0	0	0	0	0	0	0	0	0	0	0
4/23/2024	1:00 AM	0	0	0	0	0	0	0	0	0	0	0	0	0
4/23/2024	1:15 AM	0	0	0	0	0	0	0	0	0	0	0	0	0
4/23/2024	1:30 AM	0	0	0	0	0	0	0	0	0	0	0	0	0
4/23/2024	1:45 AM	0	0	0	0	0	0	0	0	0	0	0	0	0
4/23/2024	2:00 AM	0	0	0	0	0	0	0	0	0	0	0	0	0
4/23/2024	2:15 AM	0	0	0	0	0	0	0	0	0	0	0	0	0
4/23/2024	2:30 AM	0	0	0	0	0	0	0	0	0	0	0	0	0
4/23/2024	2:45 AM	0	0	0	0	0	0	0	0	0	0	0	0	0
4/23/2024	3:00 AM	0	0	0	0	0	0	0	0	0	0	0	0	0
4/23/2024	3:15 AM	0	0	0	0	0	0	0	0	0	0	0	0	0
4/23/2024	3:30 AM	0	0	0	0	0	0	0	0	0	0	0	0	0
4/23/2024	3:45 AM	0	0	0	0	0	0	0	0	0	0	0	0	0
4/23/2024	4:00 AM	0	0	0	0	0	0	0	0	0	0	0	0	0
4/23/2024	4:15 AM	0	0	0	0	0	0	0	0	0	0	0	0	0
4/23/2024	4:30 AM	0	0	0	0	0	0	0	0	0	0	0	0	0
4/23/2024	4:45 AM	0	0	0	0	0	0	0	0	0	0	0	0	0
4/23/2024	5:00 AM	0	0	0	0	0	0	0	0	0	0	0	0	0
4/23/2024	5:15 AM	0	0	0	0	0	0	0	0	0	0	0	0	0
4/23/2024	5:30 AM	0	0	0	0	0	0	0	0	0	0	0	0	0
4/23/2024	5:45 AM	0	0	0	0	0	0	0	0	0	0	0	0	0
4/23/2024	6:00 AM	0	0	0	0	0	0	0	0	0	0	0	0	0
4/23/2024	6:15 AM	0	0	0	0	0	0	0	0	0	0	0	0	0
4/23/2024	6:30 AM	0	0	0	0	0	0	0	0	0	0	0	0	0
4/23/2024	6:45 AM	0	0	0	0	0	0	0	0	0	0	0	0	0
4/23/2024	7:00 AM	0	0	0	0	0	0	0	0	0	0	0	0	0
4/23/2024	7:15 AM	0	0	0	0	0	0	0	0	0	0	0	0	0
4/23/2024	7:30 AM	0	0	0	0	0	0	0	0	0	0	0	0	0
4/23/2024	7:45 AM	0	0	0	0	0	0	0	0	0	0	0	0	0
4/23/2024	8:00 AM	0	0	0	0	0	0	0	0	0	0	0	0	0
4/23/2024	8:15 AM	0	0	0	0	0	0	0	0	0	0	0	0	0
4/23/2024	8:30 AM	0	0	0	0	0	0	0	0	0	0	0	0	0
4/23/2024	8:45 AM	0	0	0	0	0	0	0	0	0	0	0	0	0
4/23/2024	9:00 AM	0	0	0	0	0	0	0	0	0	0	0	0	0
4/23/2024	9:15 AM	0	0	0	0	0	0	0	0	0	0	0	0	0
4/23/2024	9:30 AM	0	0	0	0	0	0	0	0	0	0	0	0	0
4/23/2024	9:45 AM	0	0	0	0	0	0	0	0	0	0	0	0	0
4/23/2024	10:00 AM	0	0	0	0	0	0	0	0	0	0	0	0	0
4/23/2024	10:15 AM	0	0	0	0	0	0	0	0	0	0	0	0	0
4/23/2024	10:30 AM	0	0	0	0	0	0	0	0	0	0	0	0	0
4/23/2024	10:45 AM	0	0	0	0	0	0	0	0	0	0	0	0	0
4/23/2024	11:00 AM	0	0	0	0	0	0	0	0	0	0	0	0	0
4/23/2024	11:15 AM	0	0	0	0	0	0	0	0	0	0	0	0	0
4/23/2024	11:30 AM	0	0	0	0	0	0	0	0	0	0	0	0	0
4/23/2024	11:45 AM	0	0	0	0	0	0	0	0	0	0	0	0	0
4/23/2024	12:00 PM	0	0	0	0	0	0	0	0	0	0	0	0	0
4/23/2024	12:15 PM	0	0	0	0	0	0	0	0	0	0	0	0	0
4/23/2024	12:30 PM	0	0	0	0	0	0	0	0	0	0	0	0	0
4/23/2024	12:45 PM	0	0	0	0	0	0	0	0	0	0	0	0	0
4/23/2024	1:00 PM	0	0	0	0	0	0	0	0	0	0	0	0	0
4/23/2024	1:15 PM	0	0	0	0	0	0	0	0	0	0	0	0	0
4/23/2024	1:30 PM	0	0	0	0	0	0	0	0	0	0	0	0	0
4/23/2024	1:45 PM	0	0	0	0	0	0	0	0	0	0	0	0	0
4/23/2024	2:00 PM	0	0	0	0	0	0	0	0	0	0	0	0	0
4/23/2024	2:15 PM	0	0	0	0	0	0	0	0	0	0	0	0	0
4/23/2024	2:30 PM	0	0	0	0	0	0	0	0	0	0	0	0	0
4/23/2024	2:45 PM	0	0	0	0	0	0	0	0	0	0	0	0	0
4/23/2024	3:00 PM	0	0	0	0	0	0	0	0	0	0	0	0	0
4/23/2024	3:15 PM	0	0	0	0	0	0	0	0	0	0	0	0	0
4/23/2024	3:30 PM	0	0	0	0	0	0	0	0	0	0	0	0	0
4/23/2024	3:45 PM	0	0	0	0	0	0	0	0	0	0	0	0	0
4/23/2024	4:00 PM	0	0	0	0	0	0	0	0	0	0	0	0	0
4/23/2024	4:15 PM	0	0	0	0	0	0	0	0	0	0	0	0	0
4/23/2024	4:30 PM	0	0	0	0	0	0	0	0	0	0	0	0	0
4/23/2024	4:45 PM	0	0	0	0	0	0	0	0	0	0	0	0	0
4/23/2024	5:00 PM	0	0	0	0	0	0	0	0	0	0	0	0	0
4/23/2024	5:15 PM	0	0	0	0	0	0	0	0	0	0	0	0	0
4/23/2024	5:30 PM	0	0	0	0	0	0	0	0	0	0	0	0	0
4/23/2024	5:45 PM	0	0	0	0	0	0	0	0	0	0	0	0	0
4/23/2024	6:00 PM	0	0	0	0	0	0	0	0	0	0	0	0	0
4/23/2024	6:15 PM	0	0	0	0	0	0	0	0	0	0	0	0	0
4/23/2024	6:30 PM	0	0	0	0	0	0	0	0	0	0	0	0	0
4/23/2024	6:45 PM	0	0	0	0	0	0	0	0	0	0	0	0	0
4/23/2024	7:00 PM	0	0	0	0	0	0	0	0	0	0	0	0	0
4/23/2024	7:15 PM	0	0	0	0	0	0	0	0	0	0	0	0	0
4/23/2024	7:30 PM	0	0	0	0	0	0	0	0	0	0	0	0	0
4/23/2024	7:45 PM	0	0	0	0	0	0	0	0	0	0	0	0	0
4/23/2024	8:00 PM	0	0	0	0	0	0	0	0	0	0	0	0	0
4/23/2024	8:15 PM	0	0	0	0	0	0	0	0	0	0	0	0	0
4/23/2024	8:30 PM	0	0	0	0	0	0	0	0	0	0	0	0	0
4/23/2024	8:45 PM	0	0	0	0	0	0	0	0	0	0	0	0	0
4/23/2024	9:00 PM	0	0	0	0	0	0	0	0	0	0	0	0	0
4/23/2024	9:15 PM	0	0	0	0	0	0	0	0	0	0	0	0	0
4/23/2024	9:30 PM	0	0	0	0	0	0	0	0	0	0	0	0	0
4/23/2024	9:45 PM	0	0	0	0	0	0	0	0	0	0	0	0	0
4/23/2024	10:00 PM	0	0	0	0	0	0	0	0	0	0	0	0	0
4/23/2024	10:15 PM	0	0	0	0	0	0	0	0	0	0	0	0	0
4/23/2024	10:30 PM	0	0	0	0	0	0	0	0	0	0	0	0	0
4/23/2024	10:45 PM	0	0	0	0	0	0	0	0	0	0	0	0	0
4/23/2024	11:00 PM	0	0	0	0	0	0	0	0	0	0	0	0	0
4/23/2024	11:15 PM	0	0	0	0	0	0	0	0	0	0	0	0	0
4/23/2024	11:30 PM	0	0	0	0	0	0	0	0	0	0	0	0	0
4/23/2024	11:45 PM	0	0	0	0	0	0	0	0	0	0	0	0	0

4/24/2024	12:00 AM	0	0	0	0	0	0	0	0	0	0	0	0	0
4/24/2024	12:15 AM	0	0	0	0	0	0	0	0	0	0	0	0	0
4/24/2024	12:30 AM	0	0	0	0	0	0	0	0	0	0	0	0	0
4/24/2024	12:45 AM	0	0	0	0	0	0	0	0	0	0	0	0	0
4/24/2024	1:00 AM	0	0	0	0	0	0	0	0	0	0	0	0	0
4/24/2024	1:15 AM	0	0	0	0	0	0	0	0	0	0	0	0	0
4/24/2024	1:30 AM	0	0	0	0	0	0	0	0	0	0	0	0	0
4/24/2024	1:45 AM	0	0	0	0	0	0	0	0	0	0	0	0	0
4/24/2024	2:00 AM	0	0	0	0	0	0	0	0	0	0	0	0	0
4/24/2024	2:15 AM	0	0	0	0	0	0	0	0	0	0	0	0	0
4/24/2024	2:30 AM	0	0	0	0	0	0	0	0	0	0	0	0	0
4/24/2024	2:45 AM	0	0	0	0	0	0	0	0	0	0	0	0	0
4/24/2024	3:00 AM	0	0	0	0	0	0	0	0	0	0	0	0	0
4/24/2024	3:15 AM	0	0	0	0	0	0	0	0	0	0	0	0	0
4/24/2024	3:30 AM	0	0	0	0	0	0	0	0	0	0	0	0	0
4/24/2024	3:45 AM	0	0	0	0	0	0	0	0	0	0	0	0	0
4/24/2024	4:00 AM	0	0	0	0	0	0	0	0	0	0	0	0	0
4/24/2024	4:15 AM	0	0	0	0	0	0	0	0	0	0	0	0	0
4/24/2024	4:30 AM	0	0	0	0	0	0	0	0	0	0	0	0	0
4/24/2024	4:45 AM	0	0	0	0	0	0	0	0	0	0	0	0	0
4/24/2024	5:00 AM	0	0	0	0	0	0	0	0	0	0	0	0	0
4/24/2024	5:15 AM	0	0	0	0	0	0	0	0	0	0	0	0	0
4/24/2024	5:30 AM	0	0	0	0	0	0	0	0	0	0	0	0	0
4/24/2024	5:45 AM	0	0	0	0	0	0	0	0	0	0	0	0	0
4/24/2024	6:00 AM	0	0	0	0	0	0	0	0	0	0	0	0	0
4/24/2024	6:15 AM	0	0	0	0	0	0	0	0	0	0	0	0	0
4/24/2024	6:30 AM	0	0	0	0	0	0	0	0	0	0	0	0	0
4/24/2024	6:45 AM	0	0	0	0	0	0	0	0	0	0	0	0	0
4/24/2024	7:00 AM	0	0	0	0	0	0	0	0	0	0	0	0	0
4/24/2024	7:15 AM	0	0	0	0	0	0	0	0	0	0	0	0	0
4/24/2024	7:30 AM	0	0	0	0	0	0	0	0	0	0	0	0	0
4/24/2024	7:45 AM	0	0	0	0	0	0	0	0	0	0	0	0	0
4/24/2024	8:00 AM	0	0	0	0	0	0	0	0	0	0	0	0	0
4/24/2024	8:15 AM	0	0	0	0	0	0	0	0	0	0	0	0	0
4/24/2024	8:30 AM	0	0	0	0	0	0	0	0	0	0	0	0	0
4/24/2024	8:45 AM	0	0	0	0	0	0	0	0	0	0	0	0	0
4/24/2024	9:00 AM	0	0	0	0	0	0	0	0	0	0	0	0	0
4/24/2024	9:15 AM	0	0	0	0	0	0	0	0	0	0	0	0	0
4/24/2024	9:30 AM	0	0	0	0	0	0	0	0	0	0	0	0	0
4/24/2024	9:45 AM	0	0	0	0	0	0	0	0	0	0	0	0	0
4/24/2024	10:00 AM	0	0	0	0	0	0	0	0	0	0	0	0	0
4/24/2024	10:15 AM	0	0	0	0	0	0	0	0	0	0	0	0	0
4/24/2024	10:30 AM	0	0	0	0	0	0	0	0	0	0	0	0	0
4/24/2024	10:45 AM	0	0	0	0	0	0	0	0	0	0	0	0	0
4/24/2024	11:00 AM	0	0	0	0	0	0	0	0	0	0	0	0	0
4/24/2024	11:15 AM	0	0	0	0	0	0	0	0	0	0	0	0	0
4/24/2024	11:30 AM	0	0	0	0	0	0	0	0	0	0	0	0	0
4/24/2024	11:45 AM	0	0	0	0	0	0	0	0	0	0	0	0	0
4/24/2024	12:00 PM	0	0	0	0	0	0	0	0	0	0	0	0	0
4/24/2024	12:15 PM	0	0	0	0	0	0	0	0	0	0	0	0	0
4/24/2024	12:30 PM	0	0	0	0	0	0	0	0	0	0	0	0	0
4/24/2024	12:45 PM	0	0	0	0	0	0	0	0	0	0	0	0	0
4/24/2024	1:00 PM	0	0	0	0	0	0	0	0	0	0	0	0	0
4/24/2024	1:15 PM	0	0	0	0	0	0	0	0	0	0	0	0	0
4/24/2024	1:30 PM	0	0	0	0	0	0	0	0	0	0	0	0	0
4/24/2024	1:45 PM	0	0	0	0	0	0	0	0	0	0	0	0	0
4/24/2024	2:00 PM	0	0	0	0	0	0	0	0	0	0	0	0	0
4/24/2024	2:15 PM	0	0	0	0	0	0	0	0	0	0	0	0	0
4/24/2024	2:30 PM	0	0	0	0	0	0	0	0	0	0	0	0	0
4/24/2024	2:45 PM	0	0	0	0	0	0	0	0	0	0	0	0	0
4/24/2024	3:00 PM	0	0	0	0	0	0	0	0	0	0	0	0	0
4/24/2024	3:15 PM	0	0	0	0	0	0	0	0	0	0	0	0	0
4/24/2024	3:30 PM	0	0	0	0	0	0	0	0	0	0	0	0	0
4/24/2024	3:45 PM	0	0	0	0	0	0	0	0	0	0	0	0	0
4/24/2024	4:00 PM	0	0	0	0	0	0	0	0	0	0	0	0	0
4/24/2024	4:15 PM	0	0	0	0	0	0	0	0	0	0	0	0	0
4/24/2024	4:30 PM	0	0	0	0	0	0	0	0	0	0	0	0	0
4/24/2024	4:45 PM	0	0	0	0	0	0	0	0	0	0	0	0	0
4/24/2024	5:00 PM	0	0	0	0	0	0	0	0	0	0	0	0	0
4/24/2024	5:15 PM	0	0	0	0	0	0	0	0	0	0	0	0	0
4/24/2024	5:30 PM	0	0	0	0	0	0	0	0	0	0	0	0	0
4/24/2024	5:45 PM	0	0	0	0	0	0	0	0	0	0	0	0	0
4/24/2024	6:00 PM	0	0	0	0	0	0	0	0	0	0	0	0	0
4/24/2024	6:15 PM	0	0	0	0	0	0	0	0	0	0	0	0	0
4/24/2024	6:30 PM	0	0	0	0	0	0	0	0	0	0	0	0	0
4/24/2024	6:45 PM	0	0	0	0	0	0	0	0	0	0	0	0	0
4/24/2024	7:00 PM	0	0	0	0	0	0	0	0	0	0	0	0	0
4/24/2024	7:15 PM	0	0	0	0	0	0	0	0	0	0	0	0	0
4/24/2024	7:30 PM	0	0	0	0	0	0	0	0	0	0	0	0	0
4/24/2024	7:45 PM	0	0	0	0	0	0	0	0	0	0	0	0	0
4/24/2024	8:00 PM	0	0	0	0	0	0	0	0	0	0	0	0	0
4/24/2024	8:15 PM	0	0	0	0	0	0	0	0	0	0	0	0	0
4/24/2024	8:30 PM	0	0	0	0	0	0	0	0	0	0	0	0	0
4/24/2024	8:45 PM	0	0	0	0	0	0	0	0	0	0	0	0	0
4/24/2024	9:00 PM	0	0	0	0	0	0	0	0	0	0	0	0	0
4/24/2024	9:15 PM	0	0	0	0	0	0	0	0	0	0	0	0	0
4/24/2024	9:30 PM	0	0	0	0	0	0	0	0	0	0	0	0	0
4/24/2024	9:45 PM	0	0	0	0	0	0	0	0	0	0	0	0	0
4/24/2024	10:00 PM	0	0	0	0	0	0	0	0	0	0	0	0	0
4/24/2024	10:15 PM	0	0	0	0	0	0	0	0	0	0	0	0	0
4/24/2024	10:30 PM	0	0	0	0	0	0	0	0	0	0	0	0	0
4/24/2024	10:45 PM	0	0	0	0	0	0	0	0	0	0	0	0	0
4/24/2024	11:00 PM	0	0	0	0	0	0	0	0	0	0	0	0	0
4/24/2024	11:15 PM	0	0	0	0	0	0	0	0	0	0	0	0	0
4/24/2024	11:30 PM	0	0	0	0	0	0	0	0	0	0	0	0	0
4/24/2024	11:45 PM	0	0	0	0	0	0	0	0	0	0	0	0	0

4/25/2024	12:00 AM	0	0	0	0	0	0	0	0	0	0	0	0	0
4/25/2024	12:15 AM	0	0	0	0	0	0	0	0	0	0	0	0	0
4/25/2024	12:30 AM	0	0	0	0	0	0	0	0	0	0	0	0	0
4/25/2024	12:45 AM	0	0	0	0	0	0	0	0	0	0	0	0	0
4/25/2024	1:00 AM	0	0	0	0	0	0	0	0	0	0	0	0	0
4/25/2024	1:15 AM	0	0	0	0	0	0	0	0	0	0	0	0	0
4/25/2024	1:30 AM	0	0	0	0	0	0	0	0	0	0	0	0	0
4/25/2024	1:45 AM	0	0	0	0	0	0	0	0	0	0	0	0	0
4/25/2024	2:00 AM	0	0	0	0	0	0	0	0	0	0	0	0	0
4/25/2024	2:15 AM	0	0	0	0	0	0	0	0	0	0	0	0	0
4/25/2024	2:30 AM	0	0	0	0	0	0	0	0	0	0	0	0	0
4/25/2024	2:45 AM	0	0	0	0	0	0	0	0	0	0	0	0	0
4/25/2024	3:00 AM	0	0	0	0	0	0	0	0	0	0	0	0	0
4/25/2024	3:15 AM	0	0	0	0	0	0	0	0	0	0	0	0	0
4/25/2024	3:30 AM	0	0	0	0	0	0	0	0	0	0	0	0	0
4/25/2024	3:45 AM	0	0	0	0	0	0	0	0	0	0	0	0	0
4/25/2024	4:00 AM	0	0	0	0	0	0	0	0	0	0	0	0	0
4/25/2024	4:15 AM	0	0	0	0	0	0	0	0	0	0	0	0	0
4/25/2024	4:30 AM	0	0	0	0	0	0	0	0	0	0	0	0	0
4/25/2024	4:45 AM	0	0	0	0	0	0	0	0	0	0	0	0	0
4/25/2024	5:00 AM	0	0	0	0	0	0	0	0	0	0	0	0	0
4/25/2024	5:15 AM	0	0	0	0	0	0	0	0	0	0	0	0	0
4/25/2024	5:30 AM	0	0	0	0	0	0	0	0	0	0	0	0	0
4/25/2024	5:45 AM	0	0	0	0	0	0	0	0	0	0	0	0	0
4/25/2024	6:00 AM	0	0	0	0	0	0	0	0	0	0	0	0	0
4/25/2024	6:15 AM	0	0	0	0	0	0	0	0	0	0	0	0	0
4/25/2024	6:30 AM	0	0	0	0	0	0	0	0	0	0	0	0	0
4/25/2024	6:45 AM	0	0	0	0	0	0	0	0	0	0	0	0	0
4/25/2024	7:00 AM	0	0	0	0	0	0	0	0	0	0	0	0	0
4/25/2024	7:15 AM	0	0	0	0	0	0	0	0	0	0	0	0	0
4/25/2024	7:30 AM	0	0	0	0	0	0	0	0	0	0	0	0	0
4/25/2024	7:45 AM	0	0	0	0	0	0	0	0	0	0	0	0	0
4/25/2024	8:00 AM	0	0	0	0	0	0	0	0	0	0	0	0	0
4/25/2024	8:15 AM	0	0	0	0	0	0	0	0	0	0	0	0	0
4/25/2024	8:30 AM	0	0	0	0	0	0	0	0	0	0	0	0	0
4/25/2024	8:45 AM	0	0	0	0	0	0	0	0	0	0	0	0	0
4/25/2024	9:00 AM	0	0	0	0	0	0	0	0	0	0	0	0	0
4/25/2024	9:15 AM	0	0	0	0	0	0	0	0	0	0	0	0	0
4/25/2024	9:30 AM	0	0	0	0	0	0	0	0	0	0	0	0	0
4/25/2024	9:45 AM	0	0	0	0	0	0	0	0	0	0	0	0	0
4/25/2024	10:00 AM	0	0	0	0	0	0	0	0	0	0	0	0	0
4/25/2024	10:15 AM	0	0	0	0	0	0	0	0	0	0	0	0	0
4/25/2024	10:30 AM	0	0	0	0	0	0	0	0	0	0	0	0	0
4/25/2024	10:45 AM	0	0	0	0	0	0	0	0	0	0	0	0	0
4/25/2024	11:00 AM	0	0	0	0	0	0	0	0	0	0	0	0	0
4/25/2024	11:15 AM	0	0	0	0	0	0	0	0	0	0	0	0	0
4/25/2024	11:30 AM	0	0	0	0	0	0	0	0	0	0	0	0	0
4/25/2024	11:45 AM	0	0	0	0	0	0	0	0	0	0	0	0	0
4/25/2024	12:00 PM	0	0	0	0	0	0	0	0	0	0	0	0	0
4/25/2024	12:15 PM	0	0	0	0	0	0	0	0	0	0	0	0	0
4/25/2024	12:30 PM	0	0	0	0	0	0	0	0	0	0	0	0	0
4/25/2024	12:45 PM	0	0	0	0	0	0	0	0	0	0	0	0	0
4/25/2024	1:00 PM	0	0	0	0	0	0	0	0	0	0	0	0	0
4/25/2024	1:15 PM	0	0	0	0	0	0	0	0	0	0	0	0	0
4/25/2024	1:30 PM	0	0	0	0	0	0	0	0	0	0	0	0	0
4/25/2024	1:45 PM	0	0	0	0	0	0	0	0	0	0	0	0	0
4/25/2024	2:00 PM	0	0	0	0	0	0	0	0	0	0	0	0	0
4/25/2024	2:15 PM	0	0	0	0	0	0	0	0	0	0	0	0	0
4/25/2024	2:30 PM	0	0	0	0	0	0	0	0	0	0	0	0	0
4/25/2024	2:45 PM	0	0	0	0	0	0	0	0	0	0	0	0	0
4/25/2024	3:00 PM	0	0	0	0	0	0	0	0	0	0	0	0	0
4/25/2024	3:15 PM	0	0	0	0	0	0	0	0	0	0	0	0	0
4/25/2024	3:30 PM	0	0	0	0	0	0	0	0	0	0	0	0	0
4/25/2024	3:45 PM	0	0	0	0	0	0	0	0	0	0	0	0	0
4/25/2024	4:00 PM	0	0	0	0	0	0	0	0	0	0	0	0	0
4/25/2024	4:15 PM	0	0	0	0	0	0	0	0	0	0	0	0	0
4/25/2024	4:30 PM	0	0	0	0	0	0	0	0	0	0	0	0	0
4/25/2024	4:45 PM	0	0	0	0	0	0	0	0	0	0	0	0	0
4/25/2024	5:00 PM	0	0	0	0	0	0	0	0	0	0	0	0	0
4/25/2024	5:15 PM	0	0	0	0	0	0	0	0	0	0	0	0	0
4/25/2024	5:30 PM	0	0	0	0	0	0	0	0	0	0	0	0	0
4/25/2024	5:45 PM	0	0	0	0	0	0	0	0	0	0	0	0	0
4/25/2024	6:00 PM	0	0	0	0	0	0	0	0	0	0	0	0	0
4/25/2024	6:15 PM	0	0	0	0	0	0	0	0	0	0	0	0	0
4/25/2024	6:30 PM	0	0	0	0	0	0	0	0	0	0	0	0	0
4/25/2024	6:45 PM	0	0	0	0	0	0	0	0	0	0	0	0	0
4/25/2024	7:00 PM	0	0	0	0	0	0	0	0	0	0	0	0	0
4/25/2024	7:15 PM	0	0	0	0	0	0	0	0	0	0	0	0	0
4/25/2024	7:30 PM	0	0	0	0	0	0	0	0	0	0	0	0	0
4/25/2024	7:45 PM	0	0	0	0	0	0	0	0	0	0	0	0	0
4/25/2024	8:00 PM	0	0	0	0	0	0	0	0	0	0	0	0	0
4/25/2024	8:15 PM	0	0	0	0	0	0	0	0	0	0	0	0	0
4/25/2024	8:30 PM	0	0	0	0	0	0	0	0	0	0	0	0	0
4/25/2024	8:45 PM	0	0	0	0	0	0	0	0	0	0	0	0	0
4/25/2024	9:00 PM	0	0	0	0	0	0	0	0	0	0	0	0	0
4/25/2024	9:15 PM	0	0	0	0	0	0	0	0	0	0	0	0	0
4/25/2024	9:30 PM	0	0	0	0	0	0	0	0	0	0	0	0	0
4/25/2024	9:45 PM	0	0	0	0	0	0	0	0	0	0	0	0	0
4/25/2024	10:00 PM	0	0	0	0	0	0	0	0	0	0	0	0	0
4/25/2024	10:15 PM	0	0	0	0	0	0	0	0	0	0	0	0	0
4/25/2024	10:30 PM	0	0	0	0	0	0	0	0	0	0	0	0	0
4/25/2024	10:45 PM	0	0	0	0	0	0	0	0	0	0	0	0	0
4/25/2024	11:00 PM	0	0	0	0	0	0	0	0	0	0	0	0	0
4/25/2024	11:15 PM	0	0	0	0	0	0	0	0	0	0	0	0	0
4/25/2024	11:30 PM	0	0	0	0	0	0	0	0	0	0	0	0	0
4/25/2024	11:45 PM	0	0	0	0	0	0	0	0	0	0	0	0	0

4/26/2024	12:00 AM	0	0	0	0	0	0	0	0	0	0	0	0	0
4/26/2024	12:15 AM	0	0	0	0	0	0	0	0	0	0	0	0	0
4/26/2024	12:30 AM	0	0	0	0	0	0	0	0	0	0	0	0	0
4/26/2024	12:45 AM	0	0	0	0	0	0	0	0	0	0	0	0	0
4/26/2024	1:00 AM	0	0	0	0	0	0	0	0	0	0	0	0	0
4/26/2024	1:15 AM	0	0	0	0	0	0	0	0	0	0	0	0	0
4/26/2024	1:30 AM	0	0	0	0	0	0	0	0	0	0	0	0	0
4/26/2024	1:45 AM	0	0	0	0	0	0	0	0	0	0	0	0	0
4/26/2024	2:00 AM	0	0	0	0	0	0	0	0	0	0	0	0	0
4/26/2024	2:15 AM	0	0	0	0	0	0	0	0	0	0	0	0	0
4/26/2024	2:30 AM	0	0	0	0	0	0	0	0	0	0	0	0	0
4/26/2024	2:45 AM	0	0	0	0	0	0	0	0	0	0	0	0	0
4/26/2024	3:00 AM	0	0	0	0	0	0	0	0	0	0	0	0	0
4/26/2024	3:15 AM	0	0	0	0	0	0	0	0	0	0	0	0	0
4/26/2024	3:30 AM	0	0	0	0	0	0	0	0	0	0	0	0	0
4/26/2024	3:45 AM	0	0	0	0	0	0	0	0	0	0	0	0	0
4/26/2024	4:00 AM	0	0	0	0	0	0	0	0	0	0	0	0	0
4/26/2024	4:15 AM	0	0	0	0	0	0	0	0	0	0	0	0	0
4/26/2024	4:30 AM	0	0	0	0	0	0	0	0	0	0	0	0	0
4/26/2024	4:45 AM	0	0	0	0	0	0	0	0	0	0	0	0	0
4/26/2024	5:00 AM	0	0	0	0	0	0	0	0	0	0	0	0	0
4/26/2024	5:15 AM	0	0	0	0	0	0	0	0	0	0	0	0	0
4/26/2024	5:30 AM	0	0	0	0	0	0	0	0	0	0	0	0	0
4/26/2024	5:45 AM	0	0	0	0	0	0	0	0	0	0	0	0	0
4/26/2024	6:00 AM	0	0	0	0	0	0	0	0	0	0	0	0	0
4/26/2024	6:15 AM	0	0	0	0	0	0	0	0	0	0	0	0	0
4/26/2024	6:30 AM	0	0	0	0	0	0	0	0	0	0	0	0	0
4/26/2024	6:45 AM	0	0	0	0	0	0	0	0	0	0	0	0	0
4/26/2024	7:00 AM	0	0	0	0	0	0	0	0	0	0	0	0	0
4/26/2024	7:15 AM	0	0	0	0	0	0	0	0	0	0	0	0	0
4/26/2024	7:30 AM	0	0	0	0	0	0	0	0	0	0	0	0	0
4/26/2024	7:45 AM	0	0	0	0	0	0	0	0	0	0	0	0	0
4/26/2024	8:00 AM	0	0	0	0	0	0	0	0	0	0	0	0	0
4/26/2024	8:15 AM	0	0	0	0	0	0	0	0	0	0	0	0	0
4/26/2024	8:30 AM	0	0	0	0	0	0	0	0	0	0	0	0	0
4/26/2024	8:45 AM	0	0	0	0	0	0	0	0	0	0	0	0	0
4/26/2024	9:00 AM	0	0	0	0	0	0	0	0	0	0	0	0	0
4/26/2024	9:15 AM	0	0	0	0	0	0	0	0	0	0	0	0	0
4/26/2024	9:30 AM	0	0	0	0	0	0	0	0	0	0	0	0	0
4/26/2024	9:45 AM	0	0	0	0	0	0	0	0	0	0	0	0	0
4/26/2024	10:00 AM	0	0	0	0	0	0	0	0	0	0	0	0	0
4/26/2024	10:15 AM	0	0	0	0	0	0	0	0	0	0	0	0	0
4/26/2024	10:30 AM	0	0	0	0	0	0	0	0	0	0	0	0	0
4/26/2024	10:45 AM	0	0	0	0	0	0	0	0	0	0	0	0	0
4/26/2024	11:00 AM	0	0	0	0	0	0	0	0	0	0	0	0	0
4/26/2024	11:15 AM	0	0	0	0	0	0	0	0	0	0	0	0	0
4/26/2024	11:30 AM	0	0	0	0	0	0	0	0	0	0	0	0	0
4/26/2024	11:45 AM	0	0	0	0	0	0	0	0	0	0	0	0	0
4/26/2024	12:00 PM	0	0	0	0	0	0	0	0	0	0	0	0	0
4/26/2024	12:15 PM	0	0	0	0	0	0	0	0	0	0	0	0	0
4/26/2024	12:30 PM	0	0	0	0	0	0	0	0	0	0	0	0	0
4/26/2024	12:45 PM	0	0	0	0	0	0	0	0	0	0	0	0	0
4/26/2024	1:00 PM	0	0	0	0	0	0	0	0	0	0	0	0	0
4/26/2024	1:15 PM	0	0	0	0	0	0	0	0	0	0	0	0	0
4/26/2024	1:30 PM	0	0	0	0	0	0	0	0	0	0	0	0	0
4/26/2024	1:45 PM	0	0	0	0	0	0	0	0	0	0	0	0	0
4/26/2024	2:00 PM	0	0	0	0	0	0	0	0	0	0	0	0	0
4/26/2024	2:15 PM	0	0	0	0	0	0	0	0	0	0	0	0	0
4/26/2024	2:30 PM	0	0	0	0	0	0	0	0	0	0	0	0	0
4/26/2024	2:45 PM	0	0	0	0	0	0	0	0	0	0	0	0	0
4/26/2024	3:00 PM	0	0	0	0	0	0	0	0	0	0	0	0	0
4/26/2024	3:15 PM	0	0	0	0	0	0	0	0	0	0	0	0	0
4/26/2024	3:30 PM	0	0	0	0	0	0	0	0	0	0	0	0	0
4/26/2024	3:45 PM	0	0	0	0	0	0	0	0	0	0	0	0	0
4/26/2024	4:00 PM	0	0	0	0	0	0	0	0	0	0	0	0	0
4/26/2024	4:15 PM	0	0	0	0	0	0	0	0	0	0	0	0	0
4/26/2024	4:30 PM	0	0	0	0	0	0	0	0	0	0	0	0	0
4/26/2024	4:45 PM	0	0	0	0	0	0	0	0	0	0	0	0	0
4/26/2024	5:00 PM	0	0	0	0	0	0	0	0	0	0	0	0	0
4/26/2024	5:15 PM	0	0	0	0	0	0	0	0	0	0	0	0	0
4/26/2024	5:30 PM	0	0	0	0	0	0	0	0	0	0	0	0	0
4/26/2024	5:45 PM	0	0	0	0	0	0	0	0	0	0	0	0	0
4/26/2024	6:00 PM	0	0	0	0	0	0	0	0	0	0	0	0	0
4/26/2024	6:15 PM	0	0	0	0	0	0	0	0	0	0	0	0	0
4/26/2024	6:30 PM	0	0	0	0	0	0	0	0	0	0	0	0	0
4/26/2024	6:45 PM	0	0	0	0	0	0	0	0	0	0	0	0	0
4/26/2024	7:00 PM	0	0	0	0	0	0	0	0	0	0	0	0	0
4/26/2024	7:15 PM	0	0	0	0	0	0	0	0	0	0	0	0	0
4/26/2024	7:30 PM	0	0	0	0	0	0	0	0	0	0	0	0	0
4/26/2024	7:45 PM	0	0	0	0	0	0	0	0	0	0	0	0	0
4/26/2024	8:00 PM	0	0	0	0	0	0	0	0	0	0	0	0	0
4/26/2024	8:15 PM	0	0	0	0	0	0	0	0	0	0	0	0	0
4/26/2024	8:30 PM	0	0	0	0	0	0	0	0	0	0	0	0	0
4/26/2024	8:45 PM	0	0	0	0	0	0	0	0	0	0	0	0	0
4/26/2024	9:00 PM	0	0	0	0	0	0	0	0	0	0	0	0	0
4/26/2024	9:15 PM	0	0	0	0	0	0	0	0	0	0	0	0	0
4/26/2024	9:30 PM	0	0	0	0	0	0	0	0	0	0	0	0	0
4/26/2024	9:45 PM	0	0	0	0	0	0	0	0	0	0	0	0	0
4/26/2024	10:00 PM	0	0	0	0	0	0	0	0	0	0	0	0	0
4/26/2024	10:15 PM	0	0	0	0	0	0	0	0	0	0	0	0	0
4/26/2024	10:30 PM	0	0	0	0	0	0	0	0	0	0	0	0	0
4/26/2024	10:45 PM	0	0	0	0	0	0	0	0	0	0	0	0	0
4/26/2024	11:00 PM	0	0	0	0	0	0	0	0	0	0	0	0	0
4/26/2024	11:15 PM	0	0	0	0	0	0	0	0	0	0	0	0	0
4/26/2024	11:30 PM	0	0	0	0	0	0	0	0	0	0	0	0	0
4/26/2024	11:45 PM	0	0	0	0	0	0	0	0	0	0	0	0	0

4/27/2024	12:00 AM	0	0	0	0	0	0	0	0	0	0	0	0	0
4/27/2024	12:15 AM	0	0	0	0	0	0	0	0	0	0	0	0	0
4/27/2024	12:30 AM	0	0	0	0	0	0	0	0	0	0	0	0	0
4/27/2024	12:45 AM	0	0	0	0	0	0	0	0	0	0	0	0	0
4/27/2024	1:00 AM	0	0	0	0	0	0	0	0	0	0	0	0	0
4/27/2024	1:15 AM	0	0	0	0	0	0	0	0	0	0	0	0	0
4/27/2024	1:30 AM	0	0	0	0	0	0	0	0	0	0	0	0	0
4/27/2024	1:45 AM	0	0	0	0	0	0	0	0	0	0	0	0	0
4/27/2024	2:00 AM	0	0	0	0	0	0	0	0	0	0	0	0	0
4/27/2024	2:15 AM	0	0	0	0	0	0	0	0	0	0	0	0	0
4/27/2024	2:30 AM	0	0	0	0	0	0	0	0	0	0	0	0	0
4/27/2024	2:45 AM	0	0	0	0	0	0	0	0	0	0	0	0	0
4/27/2024	3:00 AM	0	0	0	0	0	0	0	0	0	0	0	0	0
4/27/2024	3:15 AM	0	0	0	0	0	0	0	0	0	0	0	0	0
4/27/2024	3:30 AM	0	0	0	0	0	0	0	0	0	0	0	0	0
4/27/2024	3:45 AM	0	0	0	0	0	0	0	0	0	0	0	0	0
4/27/2024	4:00 AM	0	0	0	0	0	0	0	0	0	0	0	0	0
4/27/2024	4:15 AM	0	0	0	0	0	0	0	0	0	0	0	0	0
4/27/2024	4:30 AM	0	0	0	0	0	0	0	0	0	0	0	0	0
4/27/2024	4:45 AM	0	0	0	0	0	0	0	0	0	0	0	0	0
4/27/2024	5:00 AM	0	0	0	0	0	0	0	0	0	0	0	0	0
4/27/2024	5:15 AM	0	0	0	0	0	0	0	0	0	0	0	0	0
4/27/2024	5:30 AM	0	0	0	0	0	0	0	0	0	0	0	0	0
4/27/2024	5:45 AM	0	0	0	0	0	0	0	0	0	0	0	0	0
4/27/2024	6:00 AM	0	0	0	0	0	0	0	0	0	0	0	0	0
4/27/2024	6:15 AM	0	0	0	0	0	0	0	0	0	0	0	0	0
4/27/2024	6:30 AM	0	0	0	0	0	0	0	0	0	0	0	0	0
4/27/2024	6:45 AM	0	0	0	0	0	0	0	0	0	0	0	0	0
4/27/2024	7:00 AM	0	0	0	0	0	0	0	0	0	0	0	0	0
4/27/2024	7:15 AM	0	0	0	0	0	0	0	0	0	0	0	0	0
4/27/2024	7:30 AM	0	0	0	0	0	0	0	0	0	0	0	0	0
4/27/2024	7:45 AM	0	0	0	0	0	0	0	0	0	0	0	0	0
4/27/2024	8:00 AM	0	0	0	0	0	0	0	0	0	0	0	0	0
4/27/2024	8:15 AM	0	0	0	0	0	0	0	0	0	0	0	0	0
4/27/2024	8:30 AM	0	0	0	0	0	0	0	0	0	0	0	0	0
4/27/2024	8:45 AM	0	0	0	0	0	0	0	0	0	0	0	0	0
4/27/2024	9:00 AM	0	0	0	0	0	0	0	0	0	0	0	0	0
4/27/2024	9:15 AM	0	0	0	0	0	0	0	0	0	0	0	0	0
4/27/2024	9:30 AM	0	0	0	0	0	0	0	0	0	0	0	0	0
4/27/2024	9:45 AM	0	0	0	0	0	0	0	0	0	0	0	0	0
4/27/2024	10:00 AM	0	0	0	0	0	0	0	0	0	0	0	0	0
4/27/2024	10:15 AM	0	0	0	0	0	0	0	0	0	0	0	0	0
4/27/2024	10:30 AM	0	0	0	0	0	0	0	0	0	0	0	0	0
4/27/2024	10:45 AM	0	0	0	0	0	0	0	0	0	0	0	0	0
4/27/2024	11:00 AM	0	0	0	0	0	0	0	0	0	0	0	0	0
4/27/2024	11:15 AM	0	0	0	0	0	0	0	0	0	0	0	0	0
4/27/2024	11:30 AM	0	0	0	0	0	0	0	0	0	0	0	0	0
4/27/2024	11:45 AM	0	0	0	0	0	0	0	0	0	0	0	0	0
4/27/2024	12:00 PM	0	0	0	0	0	0	0	0	0	0	0	0	0
4/27/2024	12:15 PM	0	0	0	0	0	0	0	0	0	0	0	0	0
4/27/2024	12:30 PM	0	0	0	0	0	0	0	0	0	0	0	0	0
4/27/2024	12:45 PM	0	0	0	0	0	0	0	0	0	0	0	0	0
4/27/2024	1:00 PM	0	0	0	0	0	0	0	0	0	0	0	0	0
4/27/2024	1:15 PM	0	0	0	0	0	0	0	0	0	0	0	0	0
4/27/2024	1:30 PM	0	0	0	0	0	0	0	0	0	0	0	0	0
4/27/2024	1:45 PM	0	0	0	0	0	0	0	0	0	0	0	0	0
4/27/2024	2:00 PM	0	0	0	0	0	0	0	0	0	0	0	0	0
4/27/2024	2:15 PM	0	0	0	0	0	0	0	0	0	0	0	0	0
4/27/2024	2:30 PM	0	0	0	0	0	0	0	0	0	0	0	0	0
4/27/2024	2:45 PM	0	0	0	0	0	0	0	0	0	0	0	0	0
4/27/2024	3:00 PM	0	0	0	0	0	0	0	0	0	0	0	0	0
4/27/2024	3:15 PM	0	0	0	0	0	0	0	0	0	0	0	0	0
4/27/2024	3:30 PM	0	0	0	0	0	0	0	0	0	0	0	0	0
4/27/2024	3:45 PM	0	0	0	0	0	0	0	0	0	0	0	0	0
4/27/2024	4:00 PM	0	0	0	0	0	0	0	0	0	0	0	0	0
4/27/2024	4:15 PM	0	0	0	0	0	0	0	0	0	0	0	0	0
4/27/2024	4:30 PM	0	0	0	0	0	0	0	0	0	0	0	0	0
4/27/2024	4:45 PM	0	0	0	0	0	0	0	0	0	0	0	0	0
4/27/2024	5:00 PM	0	0	0	0	0	0	0	0	0	0	0	0	0
4/27/2024	5:15 PM	0	0	0	0	0	0	0	0	0	0	0	0	0
4/27/2024	5:30 PM	0	0	0	0	0	0	0	0	0	0	0	0	0
4/27/2024	5:45 PM	0	0	0	0	0	0	0	0	0	0	0	0	0
4/27/2024	6:00 PM	0	0	0	0	0	0	0	0	0	0	0	0	0
4/27/2024	6:15 PM	0	0	0	0	0	0	0	0	0	0	0	0	0
4/27/2024	6:30 PM	0	0	0	0	0	0	0	0	0	0	0	0	0
4/27/2024	6:45 PM	0	0	0	0	0	0	0	0	0	0	0	0	0
4/27/2024	7:00 PM	0	0	0	0	0	0	0	0	0	0	0	0	0
4/27/2024	7:15 PM	0	0	0	0	0	0	0	0	0	0	0	0	0
4/27/2024	7:30 PM	0	0	0	0	0	0	0	0	0	0	0	0	0
4/27/2024	7:45 PM	0	0	0	0	0	0	0	0	0	0	0	0	0
4/27/2024	8:00 PM	0	0	0	0	0	0	0	0	0	0	0	0	0
4/27/2024	8:15 PM	0	0	0	0	0	0	0	0	0	0	0	0	0
4/27/2024	8:30 PM	0	0	0	0	0	0	0	0	0	0	0	0	0
4/27/2024	8:45 PM	0	0	0	0	0	0	0	0	0	0	0	0	0
4/27/2024	9:00 PM	0	0	0	0	0	0	0	0	0	0	0	0	0
4/27/2024	9:15 PM	0	0	0	0	0	0	0	0	0	0	0	0	0
4/27/2024	9:30 PM	0	0	0	0	0	0	0	0	0	0	0	0	0
4/27/2024	9:45 PM	0	0	0	0	0	0	0	0	0	0	0	0	0
4/27/2024	10:00 PM	0	0	0	0	0	0	0	0	0	0	0	0	0
4/27/2024	10:15 PM	0	0	0	0	0	0	0	0	0	0	0	0	0
4/27/2024	10:30 PM	0	0	0	0	0	0	0	0	0	0	0	0	0
4/27/2024	10:45 PM	0	0	0	0	0	0	0	0	0	0	0	0	0
4/27/2024	11:00 PM	0	0	0	0	0	0	0	0	0	0	0	0	0
4/27/2024	11:15 PM	0	0	0	0	0	0	0	0	0	0	0	0	0
4/27/2024	11:30 PM	0	0	0	0	0	0	0	0	0	0	0	0	0
4/27/2024	11:45 PM	0	0	0	0	0	0	0	0	0	0	0	0	0

NB
File Name:
Start Date: 4/21/2024
Start Time: 0
Site Code: 75 Lane 3 NB
Station ID: 1
Location 1: I-20, north of Bush River Rd
Location 2:

Date	Time	1	2	3	4	5	6	7	8	9	10	11	12	13
4/21/2024	12:00 AM	2	169	14	0	3	0	0	0	20	0	0	0	0
4/21/2024	12:15 AM	2	158	16	0	3	0	0	0	19	0	0	0	0
4/21/2024	12:30 AM	2	144	15	0	2	0	0	0	16	0	0	0	0
4/21/2024	12:45 AM	2	135	15	0	2	0	0	0	13	0	0	0	0
4/21/2024	1:00 AM	0	103	11	0	2	0	0	0	15	0	0	0	0
4/21/2024	1:15 AM	0	98	6	1	2	0	0	0	13	0	0	0	0
4/21/2024	1:30 AM	0	88	5	1	2	0	0	0	13	0	0	0	0
4/21/2024	1:45 AM	0	83	5	1	1	0	0	0	17	0	0	0	0
4/21/2024	2:00 AM	0	75	4	1	1	0	0	0	20	0	0	0	0
4/21/2024	2:15 AM	0	70	4	0	0	1	0	0	20	0	0	0	0
4/21/2024	2:30 AM	0	66	3	0	1	1	0	0	26	0	0	0	0
4/21/2024	2:45 AM	0	59	3	0	1	1	0	0	23	0	0	0	0
4/21/2024	3:00 AM	0	63	4	0	1	1	0	0	22	0	0	0	0
4/21/2024	3:15 AM	0	55	6	0	1	0	0	0	23	0	0	0	0
4/21/2024	3:30 AM	0	53	5	0	1	0	0	0	17	0	0	0	0
4/21/2024	3:45 AM	0	48	5	0	2	0	0	0	15	0	0	0	0
4/21/2024	4:00 AM	0	47	7	0	2	0	0	0	8	0	0	0	0
4/21/2024	4:15 AM	0	50	5	0	2	0	0	0	8	0	0	0	0
4/21/2024	4:30 AM	0	47	7	0	2	0	0	0	8	0	0	0	0
4/21/2024	4:45 AM	0	54	8	0	1	0	0	0	6	0	0	0	0
4/21/2024	5:00 AM	0	53	6	0	1	0	0	0	11	0	0	0	0
4/21/2024	5:15 AM	0	70	9	0	1	1	0	0	17	0	0	0	0
4/21/2024	5:30 AM	0	83	10	0	2	2	0	0	15	0	0	0	0
4/21/2024	5:45 AM	0	122	15	0	3	2	0	0	18	0	0	0	0
4/21/2024	6:00 AM	0	144	23	2	3	2	0	0	19	0	0	0	0
4/21/2024	6:15 AM	0	162	29	2	4	1	0	0	18	0	0	0	0
4/21/2024	6:30 AM	0	192	40	2	2	0	0	1	27	0	0	0	0
4/21/2024	6:45 AM	0	194	47	2	1	0	0	2	28	0	0	0	0
4/21/2024	7:00 AM	0	226	61	0	1	0	0	2	27	0	0	0	0
4/21/2024	7:15 AM	0	233	64	0	0	1	0	2	28	0	0	0	0
4/21/2024	7:30 AM	1	237	64	0	2	2	0	2	21	0	0	0	0
4/21/2024	7:45 AM	1	238	72	0	3	2	0	2	26	0	0	0	0
4/21/2024	8:00 AM	1	266	65	0	7	2	0	3	24	0	0	0	0
4/21/2024	8:15 AM	1	303	78	0	8	2	0	3	22	0	0	0	0
4/21/2024	8:30 AM	0	325	84	0	7	1	0	3	23	0	0	0	0
4/21/2024	8:45 AM	0	355	89	0	6	1	0	3	24	0	0	0	0
4/21/2024	9:00 AM	0	382	95	0	2	2	0	3	27	0	0	0	0
4/21/2024	9:15 AM	0	395	92	0	2	1	1	3	28	0	0	0	0
4/21/2024	9:30 AM	0	438	100	0	4	1	1	3	35	0	1	0	0
4/21/2024	9:45 AM	0	476	105	0	6	1	1	6	35	0	1	0	0
4/21/2024	10:00 AM	0	491	108	0	8	0	1	6	35	0	1	0	0
4/21/2024	10:15 AM	0	522	110	0	8	1	0	7	38	0	1	0	0
4/21/2024	10:30 AM	0	516	120	0	6	2	0	8	38	0	0	0	0
4/21/2024	10:45 AM	0	537	125	0	5	2	0	5	34	0	0	0	0
4/21/2024	11:00 AM	0	563	128	0	6	2	0	4	39	0	0	0	0
4/21/2024	11:15 AM	0	616	137	0	7	1	0	3	36	0	0	0	0
4/21/2024	11:30 AM	0	699	150	0	7	0	0	5	33	0	0	0	0
4/21/2024	11:45 AM	0	736	145	0	10	0	0	5	36	1	0	0	0
4/21/2024	12:00 PM	0	730	147	5	11	0	0	6	33	1	0	0	0
4/21/2024	12:15 PM	1	710	139	5	9	0	0	6	33	1	0	0	0
4/21/2024	12:30 PM	1	692	128	5	12	0	0	5	38	1	0	0	0
4/21/2024	12:45 PM	1	675	130	5	12	0	0	4	43	0	0	0	0
4/21/2024	1:00 PM	1	685	138	0	8	0	0	5	45	0	0	0	0
4/21/2024	1:15 PM	0	696	141	0	10	0	0	6	44	0	0	0	0
4/21/2024	1:30 PM	0	671	140	0	7	0	0	5	37	0	0	0	0
4/21/2024	1:45 PM	0	677	140	0	5	0	0	7	30	0	0	0	0
4/21/2024	2:00 PM	0	683	143	0	7	0	0	5	31	0	0	0	0
4/21/2024	2:15 PM	0	653	154	1	5	0	0	5	30	0	0	0	0
4/21/2024	2:30 PM	0	649	147	1	4	0	0	3	30	0	0	0	0
4/21/2024	2:45 PM	0	646	148	1	4	0	0	5	28	0	0	0	0
4/21/2024	3:00 PM	0	623	136	1	4	1	0	6	21	0	0	0	0
4/21/2024	3:15 PM	0	642	120	0	4	1	0	5	25	0	0	0	0
4/21/2024	3:30 PM	0	633	120	0	11	3	0	5	34	1	0	0	0
4/21/2024	3:45 PM	0	607	120	0	14	3	0	2	37	1	0	0	0
4/21/2024	4:00 PM	0	604	117	0	14	2	0	1	42	1	0	0	0
4/21/2024	4:15 PM	0	597	127	0	18	3	0	1	42	1	0	0	0
4/21/2024	4:30 PM	0	585	122	0	11	1	0	2	34	0	0	0	0
4/21/2024	4:45 PM	0	587	109	0	9	1	0	3	40	0	0	0	0
4/21/2024	5:00 PM	0	580	100	0	9	1	0	4	41	0	0	0	0
4/21/2024	5:15 PM	0	542	99	0	5	1	0	4	41	0	0	0	0
4/21/2024	5:30 PM	0	524	92	0	6	1	0	3	40	0	0	0	0
4/21/2024	5:45 PM	0	494	94	0	4	1	0	4	48	0	0	0	0
4/21/2024	6:00 PM	1	452	92	0	4	1	0	5	47	1	0	0	0
4/21/2024	6:15 PM	1	406	77	2	5	0	0	5	51	1	0	0	0
4/21/2024	6:30 PM	1	396	68	2	5	0	0	5	50	1	0	0	0
4/21/2024	6:45 PM	1	367	54	2	5	0	0	2	37	1	0	0	0
4/21/2024	7:00 PM	0	374	59	2	3	1	0	0	35	0	0	0	0
4/21/2024	7:15 PM	0	395	64	0	2	1	0	0	29	0	0	0	0
4/21/2024	7:30 PM	0	350	67	0	2	1	0	0	33	0	0	0	0
4/21/2024	7:45 PM	0	310	64	0	2	1	0	0	35	0	0	0	0
4/21/2024	8:00 PM	1	279	53	0	2	0	0	0	38	0	0	0	0
4/21/2024	8:15 PM	1	248	40	0	2	1	0	0	35	0	0	0	0
4/21/2024	8:30 PM	1	223	30	0	1	1	0	0	35	0	0	0	0
4/21/2024	8:45 PM	1	218	30	0	1	1	0	0	35	0	0	0	0
4/21/2024	9:00 PM	0	187	24	0	1	1	0	2	37	0	0	0	0
4/21/2024	9:15 PM	0	169	18	0	2	1	0	2	41	0	1	0	0
4/21/2024	9:30 PM	0	170	21	0	3	3	0	2	39	0	1	0	0
4/21/2024	9:45 PM	0	154	15	0	4	3	0	2	37	0	1	0	0
4/21/2024	10:00 PM	0	138	15	1	4	3	0	0	36	0	1	0	0
4/21/2024	10:15 PM	0	121	13	1	3	2	0	0	31	0	0	0	0
4/21/2024	10:30 PM	0	112	11	1	2	0	0	0	31	0	0	0	0
4/21/2024	10:45 PM	0	105	10	1	0	0	0	1	31	0	0	0	0
4/21/2024	11:00 PM	0	95	8	0	0	0	0	2	27	0	0	0	0
4/21/2024	11:15 PM	0	85	8	0	0	0	0	3	28	0	1	0	0
4/21/2024	11:30 PM	0	73	5	0	0	0	0	3	23	0	1	0	0
4/21/2024	11:45 PM	0	66	5	0	0	1	0	2	20	0	1	0	0

4/22/2024	12:00 AM	0	60	5	0	1	1	0	1	16	0	1	0	0
4/22/2024	12:15 AM	0	47	4	0	1	1	0	0	25	0	0	0	0
4/22/2024	12:30 AM	0	39	3	0	1	1	0	0	31	0	2	0	0
4/22/2024	12:45 AM	0	37	3	0	2	0	0	0	32	0	2	0	0
4/22/2024	1:00 AM	0	30	3	0	1	0	0	0	34	0	2	0	0
4/22/2024	1:15 AM	0	29	4	0	2	0	0	0	23	0	3	0	0
4/22/2024	1:30 AM	0	25	4	0	3	2	0	0	18	0	1	0	0
4/22/2024	1:45 AM	0	21	3	0	3	2	0	0	17	0	3	0	0
4/22/2024	2:00 AM	0	21	3	0	3	3	0	0	18	0	3	0	0
4/22/2024	2:15 AM	0	21	4	0	2	3	0	0	25	0	2	0	0
4/22/2024	2:30 AM	0	21	4	0	3	1	0	0	36	0	2	0	0
4/22/2024	2:45 AM	0	30	5	0	2	1	0	0	37	0	0	0	0
4/22/2024	3:00 AM	0	35	5	0	3	0	0	0	38	0	0	0	0
4/22/2024	3:15 AM	0	40	3	0	3	0	0	1	35	0	0	0	0
4/22/2024	3:30 AM	0	48	3	0	4	1	0	1	37	0	0	0	0
4/22/2024	3:45 AM	0	54	5	0	6	1	0	1	46	0	1	0	0
4/22/2024	4:00 AM	0	68	9	0	5	2	0	1	52	0	2	0	0
4/22/2024	4:15 AM	0	89	16	0	6	2	0	0	58	0	3	0	0
4/22/2024	4:30 AM	0	119	26	0	5	1	0	0	48	1	3	0	0
4/22/2024	4:45 AM	0	145	32	0	8	2	0	0	48	1	2	0	0
4/22/2024	5:00 AM	0	182	37	0	11	2	1	0	50	1	1	0	0
4/22/2024	5:15 AM	0	212	39	0	12	2	2	1	52	1	0	0	0
4/22/2024	5:30 AM	0	239	59	3	11	4	2	1	58	0	0	0	0
4/22/2024	5:45 AM	0	296	94	4	11	5	2	2	61	0	0	0	0
4/22/2024	6:00 AM	0	334	128	5	12	8	1	3	58	1	0	0	0
4/22/2024	6:15 AM	0	401	160	5	20	10	0	4	55	1	0	0	0
4/22/2024	6:30 AM	0	509	174	2	26	13	0	5	51	1	0	0	0
4/22/2024	6:45 AM	0	578	178	3	29	13	0	10	42	1	0	0	0
4/22/2024	7:00 AM	0	670	196	2	31	10	1	10	34	0	0	0	0
4/22/2024	7:15 AM	0	700	208	3	30	11	1	10	33	0	0	0	0
4/22/2024	7:30 AM	0	654	235	3	27	8	1	14	37	0	0	0	0
4/22/2024	7:45 AM	0	592	254	2	29	10	3	12	46	0	0	0	0
4/22/2024	8:00 AM	0	532	242	2	31	10	2	16	55	1	0	0	0
4/22/2024	8:15 AM	0	474	236	1	29	8	2	20	58	1	0	0	0
4/22/2024	8:30 AM	1	455	211	2	42	7	3	19	53	1	0	0	0
4/22/2024	8:45 AM	1	446	199	2	37	6	2	18	42	1	0	0	0
4/22/2024	9:00 AM	1	432	203	2	39	6	2	17	41	1	0	0	0
4/22/2024	9:15 AM	1	432	193	2	43	6	4	15	52	1	0	0	0
4/22/2024	9:30 AM	1	427	191	1	33	6	4	14	58	1	0	0	0
4/22/2024	9:45 AM	1	428	175	0	39	5	5	15	78	1	0	0	0
4/22/2024	10:00 AM	1	428	171	0	32	5	5	15	92	0	0	0	0
4/22/2024	10:15 AM	1	432	192	0	29	7	4	14	83	1	0	0	0
4/22/2024	10:30 AM	0	441	192	0	32	7	3	12	94	1	0	0	0
4/22/2024	10:45 AM	0	438	194	0	29	7	2	10	86	1	0	0	0
4/22/2024	11:00 AM	0	433	194	0	30	7	2	9	85	1	0	0	0
4/22/2024	11:15 AM	0	450	185	1	32	5	1	11	88	2	0	0	0
4/22/2024	11:30 AM	0	440	181	1	28	7	1	10	77	2	0	0	0
4/22/2024	11:45 AM	0	476	186	1	30	5	2	13	74	5	0	0	0
4/22/2024	12:00 PM	0	485	178	1	35	5	2	12	61	5	0	0	0
4/22/2024	12:15 PM	0	483	173	2	31	9	4	9	54	5	0	0	0
4/22/2024	12:30 PM	0	505	176	2	32	8	5	10	50	5	0	0	0
4/22/2024	12:45 PM	0	503	167	6	28	10	3	7	52	2	0	0	0
4/22/2024	1:00 PM	0	495	171	8	25	10	4	5	57	2	0	0	0
4/22/2024	1:15 PM	0	498	169	6	22	5	2	3	60	0	0	0	0
4/22/2024	1:30 PM	0	498	175	6	20	5	1	2	67	1	0	0	0
4/22/2024	1:45 PM	0	493	192	2	21	3	1	3	63	1	0	0	0
4/22/2024	2:00 PM	0	538	182	1	24	3	0	6	60	1	0	0	0
4/22/2024	2:15 PM	1	554	177	1	24	5	1	10	59	1	0	0	0
4/22/2024	2:30 PM	1	584	176	2	25	4	3	12	56	1	0	0	0
4/22/2024	2:45 PM	2	607	161	3	23	5	3	9	55	1	0	0	0
4/22/2024	3:00 PM	2	628	159	3	18	6	3	10	54	2	0	0	0
4/22/2024	3:15 PM	2	697	183	3	22	6	2	8	65	2	0	0	0
4/22/2024	3:30 PM	2	728	195	2	21	8	0	7	71	2	0	0	0
4/22/2024	3:45 PM	1	757	206	1	21	9	1	9	74	2	0	0	0
4/22/2024	4:00 PM	1	760	213	0	22	7	1	7	82	1	0	0	0
4/22/2024	4:15 PM	0	714	204	0	18	5	1	6	73	1	0	0	0
4/22/2024	4:30 PM	0	674	187	0	15	2	1	5	62	0	0	0	0
4/22/2024	4:45 PM	1	657	187	0	12	0	0	6	59	0	0	0	0
4/22/2024	5:00 PM	1	615	194	0	10	0	0	5	55	0	0	0	0
4/22/2024	5:15 PM	1	598	171	0	8	0	0	4	49	0	0	0	0
4/22/2024	5:30 PM	1	579	162	0	7	1	0	4	55	0	0	0	0
4/22/2024	5:45 PM	0	533	139	0	6	4	0	3	51	0	0	0	0
4/22/2024	6:00 PM	1	487	117	0	3	5	0	2	46	0	0	0	0
4/22/2024	6:15 PM	3	424	114	0	2	5	0	2	48	0	0	0	0
4/22/2024	6:30 PM	3	392	96	0	5	6	0	3	48	0	0	0	0
4/22/2024	6:45 PM	5	349	83	0	4	3	0	1	56	0	1	0	0
4/22/2024	7:00 PM	4	339	76	0	7	2	0	2	53	1	1	0	0
4/22/2024	7:15 PM	2	326	70	0	8	2	0	2	53	1	1	0	0
4/22/2024	7:30 PM	2	281	60	0	4	0	0	1	47	1	1	0	0
4/22/2024	7:45 PM	0	274	56	1	7	0	0	1	43	1	0	0	0
4/22/2024	8:00 PM	0	247	47	1	4	0	0	0	44	0	0	0	0
4/22/2024	8:15 PM	0	244	36	1	3	0	0	0	41	0	0	0	0
4/22/2024	8:30 PM	0	247	34	1	4	0	0	1	40	0	0	0	0
4/22/2024	8:45 PM	0	229	30	0	1	0	0	1	31	0	0	0	0
4/22/2024	9:00 PM	0	216	26	0	1	0	0	1	29	0	0	0	0
4/22/2024	9:15 PM	0	183	22	0	1	0	0	1	28	0	1	0	0
4/22/2024	9:30 PM	0	152	19	0	1	0	0	0	31	0	3	0	0
4/22/2024	9:45 PM	0	135	17	0	2	1	0	0	34	0	3	0	0
4/22/2024	10:00 PM	0	119	14	0	2	1	0	1	34	0	4	0	0
4/22/2024	10:15 PM	0	125	12	0	2	1	0	2	36	0	3	0	0
4/22/2024	10:30 PM	0	121	14	0	1	1	0	2	29	0	2	0	0
4/22/2024	10:45 PM	0	100	14	0	0	0	0	2	31	0	2	0	0
4/22/2024	11:00 PM	0	87	14	0	0	2	0	1	30	0	4	0	0
4/22/2024	11:15 PM	0	65	12	0	0	3	0	0	25	0	4	0	0
4/22/2024	11:30 PM	0	53	10	0	0	3	0	0	33	0	4	0	0
4/22/2024	11:45 PM	0	53	8	1	1	4	0	0	28	0	5	0	0

4/23/2024	12:00 AM	0	55	8	1	1	3	0	0	27	0	4	0	0
4/23/2024	12:15 AM	0	42	8	1	2	2	0	0	26	0	4	0	0
4/23/2024	12:30 AM	0	43	7	1	3	2	0	0	24	0	4	0	0
4/23/2024	12:45 AM	0	44	8	0	2	1	0	0	27	0	5	0	0
4/23/2024	1:00 AM	0	37	6	0	2	0	0	0	33	0	6	0	0
4/23/2024	1:15 AM	0	40	6	0	1	1	0	0	39	0	6	0	0
4/23/2024	1:30 AM	0	35	6	0	2	1	0	0	38	0	7	0	0
4/23/2024	1:45 AM	0	32	3	0	3	1	0	0	42	0	6	0	0
4/23/2024	2:00 AM	0	28	2	0	4	1	0	0	40	0	5	0	0
4/23/2024	2:15 AM	1	31	1	0	4	1	0	0	41	0	6	0	0
4/23/2024	2:30 AM	1	39	1	0	2	1	0	0	48	0	7	0	0
4/23/2024	2:45 AM	1	42	4	0	3	1	0	0	47	0	7	0	0
4/23/2024	3:00 AM	1	54	6	0	2	3	0	0	45	0	5	0	0
4/23/2024	3:15 AM	0	66	8	0	4	2	0	0	46	0	5	0	0
4/23/2024	3:30 AM	0	71	12	0	6	3	0	0	44	0	4	0	0
4/23/2024	3:45 AM	0	84	13	0	4	5	0	0	44	0	3	0	0
4/23/2024	4:00 AM	0	96	14	0	5	3	0	0	52	0	3	0	0
4/23/2024	4:15 AM	0	100	21	0	3	5	0	0	54	0	2	0	0
4/23/2024	4:30 AM	0	111	22	0	3	6	0	1	57	0	1	0	0
4/23/2024	4:45 AM	0	136	38	0	5	7	0	2	64	0	1	0	0
4/23/2024	5:00 AM	0	150	48	0	6	11	0	2	64	0	3	0	0
4/23/2024	5:15 AM	0	183	55	0	10	11	0	3	57	0	3	0	0
4/23/2024	5:30 AM	0	219	76	3	13	9	1	2	56	0	2	0	0
4/23/2024	5:45 AM	0	270	101	4	16	11	1	2	52	0	2	0	0
4/23/2024	6:00 AM	0	324	127	5	17	10	1	5	51	1	0	0	0
4/23/2024	6:15 AM	0	383	154	5	19	10	1	6	59	1	0	0	0
4/23/2024	6:30 AM	0	501	177	2	23	11	2	7	54	1	1	0	0
4/23/2024	6:45 AM	0	509	164	1	21	7	2	7	45	1	1	0	0
4/23/2024	7:00 AM	1	593	180	1	23	5	2	4	36	0	1	0	0
4/23/2024	7:15 AM	1	633	182	1	22	3	2	4	34	0	1	0	0
4/23/2024	7:30 AM	2	590	182	1	17	3	0	6	39	0	1	0	0
4/23/2024	7:45 AM	3	622	199	1	21	7	0	8	44	0	2	0	0
4/23/2024	8:00 AM	2	587	193	0	27	7	1	13	51	2	2	0	0
4/23/2024	8:15 AM	2	531	196	0	33	8	1	16	51	2	2	0	0
4/23/2024	8:30 AM	1	509	188	2	43	7	2	16	52	2	1	0	0
4/23/2024	8:45 AM	0	484	191	2	44	5	2	15	56	2	1	0	0
4/23/2024	9:00 AM	2	453	191	2	45	5	2	12	65	0	1	0	0
4/23/2024	9:15 AM	2	461	194	3	40	9	4	8	65	0	1	0	0
4/23/2024	9:30 AM	2	460	200	1	35	10	3	9	65	0	1	0	0
4/23/2024	9:45 AM	2	455	186	1	32	11	4	9	68	0	0	0	0
4/23/2024	10:00 AM	0	466	187	2	28	12	3	8	72	1	0	0	0
4/23/2024	10:15 AM	0	469	179	1	25	10	1	9	87	2	0	0	0
4/23/2024	10:30 AM	1	467	184	3	23	9	2	8	79	3	0	0	0
4/23/2024	10:45 AM	1	470	182	3	24	6	1	8	85	4	0	0	0
4/23/2024	11:00 AM	1	462	180	2	19	7	1	10	73	4	0	0	0
4/23/2024	11:15 AM	2	481	186	2	22	7	1	9	69	3	0	0	0
4/23/2024	11:30 AM	1	488	192	1	19	9	1	8	77	2	0	0	0
4/23/2024	11:45 AM	2	495	194	1	18	15	1	7	68	2	0	0	0
4/23/2024	12:00 PM	2	498	187	1	22	15	1	4	66	1	0	0	0
4/23/2024	12:15 PM	2	486	186	3	21	14	3	7	59	1	0	0	0
4/23/2024	12:30 PM	2	491	168	2	23	15	3	7	66	1	0	0	0
4/23/2024	12:45 PM	1	506	172	4	21	9	3	10	70	0	0	0	0
4/23/2024	1:00 PM	1	504	171	4	23	6	4	12	72	0	0	0	0
4/23/2024	1:15 PM	1	502	171	2	27	6	3	9	72	0	0	0	0
4/23/2024	1:30 PM	1	503	177	3	24	4	2	9	67	1	0	0	0
4/23/2024	1:45 PM	1	499	166	2	28	4	2	8	63	1	0	0	0
4/23/2024	2:00 PM	1	552	176	3	24	6	1	7	66	1	0	0	0
4/23/2024	2:15 PM	1	588	168	3	20	5	0	8	76	2	0	0	0
4/23/2024	2:30 PM	1	615	172	2	26	5	0	9	77	1	0	0	0
4/23/2024	2:45 PM	2	637	174	1	24	7	0	10	74	1	0	0	0
4/23/2024	3:00 PM	2	622	161	0	23	8	1	11	74	1	0	0	0
4/23/2024	3:15 PM	1	642	176	1	21	7	1	10	66	0	0	0	0
4/23/2024	3:30 PM	1	645	173	1	15	7	1	10	64	0	0	0	0
4/23/2024	3:45 PM	0	701	190	2	15	5	1	8	62	0	0	0	0
4/23/2024	4:00 PM	0	715	198	2	16	5	0	7	59	0	0	0	0
4/23/2024	4:15 PM	0	718	201	1	19	6	0	6	51	0	0	0	0
4/23/2024	4:30 PM	0	725	189	1	18	5	0	4	42	0	0	0	0
4/23/2024	4:45 PM	0	659	190	0	15	4	0	5	47	0	0	0	0
4/23/2024	5:00 PM	1	645	178	1	14	2	0	4	49	0	0	0	0
4/23/2024	5:15 PM	1	594	163	1	10	2	0	6	49	0	0	0	0
4/23/2024	5:30 PM	1	555	172	1	14	2	0	6	63	0	0	0	0
4/23/2024	5:45 PM	1	526	149	1	15	2	0	4	66	0	0	0	0
4/23/2024	6:00 PM	0	379	144	0	13	1	0	5	68	0	0	0	0
4/23/2024	6:15 PM	1	354	132	2	12	1	0	4	74	0	0	0	0
4/23/2024	6:30 PM	3	345	114	2	7	1	0	3	61	0	0	0	0
4/23/2024	6:45 PM	3	320	120	2	8	3	0	3	54	0	0	0	0
4/23/2024	7:00 PM	3	413	119	2	8	3	0	2	56	0	1	0	0
4/23/2024	7:15 PM	2	387	108	1	8	2	0	2	53	0	1	0	0
4/23/2024	7:30 PM	0	349	93	1	9	2	0	3	56	0	1	0	0
4/23/2024	7:45 PM	0	350	71	2	7	0	0	2	57	0	1	0	0
4/23/2024	8:00 PM	0	314	58	2	5	0	0	2	50	0	0	0	0
4/23/2024	8:15 PM	1	333	55	1	5	1	0	1	46	0	1	0	0
4/23/2024	8:30 PM	1	322	67	2	4	2	0	0	42	0	1	0	0
4/23/2024	8:45 PM	1	296	71	1	4	3	0	0	48	0	1	0	0
4/23/2024	9:00 PM	1	272	77	2	4	3	0	0	46	0	2	0	0
4/23/2024	9:15 PM	0	258	75	2	4	2	0	0	57	0	2	0	0
4/23/2024	9:30 PM	0	250	66	1	4	1	0	0	70	0	5	0	0
4/23/2024	9:45 PM	0	235	55	2	3	1	0	0	71	0	7	0	0
4/23/2024	10:00 PM	0	243	41	1	5	1	0	0	83	0	9	0	0
4/23/2024	10:15 PM	0	204	30	1	5	1	0	0	76	0	9	0	0
4/23/2024	10:30 PM	0	177	21	1	4	1	0	0	73	0	9	0	0
4/23/2024	10:45 PM	0	159	23	0	4	1	0	0	70	0	11	0	0
4/23/2024	11:00 PM	0	126	21	0	3	1	0	0	59	0	8	0	0
4/23/2024	11:15 PM	0	105	22	0	4	1	0	0	75	0	10	0	0
4/23/2024	11:30 PM	0	93	17	0	5	1	0	0	66	0	7	0	0
4/23/2024	11:45 PM	0	81	13	0	5	0	0	0	64	0	7	0	0

4/24/2024	12:00 AM	0	77	12	0	4	0	0	0	67	0	9	0	0
4/24/2024	12:15 AM	0	77	9	0	3	1	0	1	45	0	9	0	0
4/24/2024	12:30 AM	0	70	9	0	3	1	0	1	51	0	11	0	0
4/24/2024	12:45 AM	0	66	6	0	3	1	0	1	46	0	8	0	0
4/24/2024	1:00 AM	0	64	5	0	3	1	0	2	40	0	7	0	0
4/24/2024	1:15 AM	0	55	5	0	2	1	0	1	44	0	7	0	0
4/24/2024	1:30 AM	0	59	8	0	1	1	0	1	44	0	7	0	0
4/24/2024	1:45 AM	0	51	8	0	0	1	0	1	44	0	10	0	0
4/24/2024	2:00 AM	0	48	8	0	2	1	0	0	46	0	14	0	0
4/24/2024	2:15 AM	0	49	11	0	4	0	0	0	43	0	11	0	0
4/24/2024	2:30 AM	0	40	8	0	5	0	0	0	51	0	11	0	0
4/24/2024	2:45 AM	0	46	10	0	6	0	0	0	53	0	8	0	0
4/24/2024	3:00 AM	0	55	11	0	5	0	0	0	53	0	3	0	0
4/24/2024	3:15 AM	0	61	9	0	4	0	0	0	62	0	4	0	0
4/24/2024	3:30 AM	0	70	12	0	6	3	0	0	49	0	2	0	0
4/24/2024	3:45 AM	0	77	13	0	7	3	0	1	54	0	2	0	0
4/24/2024	4:00 AM	0	85	16	0	8	3	0	1	62	0	2	0	0
4/24/2024	4:15 AM	0	98	19	0	12	3	0	1	62	0	2	0	0
4/24/2024	4:30 AM	0	127	24	0	13	0	0	1	67	0	4	0	0
4/24/2024	4:45 AM	0	156	34	0	15	1	0	0	70	0	3	0	0
4/24/2024	5:00 AM	0	177	40	0	21	1	0	0	69	0	4	0	0
4/24/2024	5:15 AM	0	205	47	1	18	1	0	0	62	0	4	0	0
4/24/2024	5:30 AM	0	228	61	3	15	1	0	0	65	0	3	0	0
4/24/2024	5:45 AM	0	283	84	3	17	3	0	1	54	0	3	0	0
4/24/2024	6:00 AM	0	332	131	5	15	7	0	2	56	0	2	0	0
4/24/2024	6:15 AM	0	410	173	4	21	9	0	2	54	2	1	0	0
4/24/2024	6:30 AM	1	500	203	2	32	12	0	3	50	3	0	0	0
4/24/2024	6:45 AM	1	570	221	2	31	9	0	3	56	3	0	0	0
4/24/2024	7:00 AM	1	660	216	0	29	8	1	3	47	3	0	0	0
4/24/2024	7:15 AM	1	678	201	0	30	11	2	4	50	2	0	0	0
4/24/2024	7:30 AM	0	646	195	3	25	10	2	5	44	1	0	0	0
4/24/2024	7:45 AM	0	615	201	3	31	13	2	7	42	1	0	0	0
4/24/2024	8:00 AM	1	554	206	3	36	16	1	13	49	1	0	0	0
4/24/2024	8:15 AM	1	504	217	6	38	12	1	14	52	0	0	0	0
4/24/2024	8:30 AM	2	506	210	4	43	14	1	13	50	0	0	0	0
4/24/2024	8:45 AM	2	492	196	4	42	12	1	14	53	0	0	0	0
4/24/2024	9:00 AM	1	504	174	4	35	7	1	11	53	2	0	0	0
4/24/2024	9:15 AM	1	516	159	1	29	6	0	12	55	3	0	0	0
4/24/2024	9:30 AM	1	493	170	0	23	6	0	11	65	4	0	0	0
4/24/2024	9:45 AM	2	481	181	1	24	8	0	10	69	5	0	0	0
4/24/2024	10:00 AM	2	478	182	1	28	9	1	7	69	3	0	0	0
4/24/2024	10:15 AM	2	477	181	1	29	12	2	7	69	4	0	0	0
4/24/2024	10:30 AM	2	505	172	1	29	10	2	9	72	3	0	0	0
4/24/2024	10:45 AM	1	485	165	0	24	10	2	10	73	3	0	0	0
4/24/2024	11:00 AM	1	489	174	0	21	9	1	14	67	3	0	0	0
4/24/2024	11:15 AM	1	511	188	0	22	8	0	12	72	4	0	0	0
4/24/2024	11:30 AM	0	501	182	0	23	10	0	11	71	4	0	0	0
4/24/2024	11:45 AM	0	519	164	0	19	8	0	8	59	3	0	0	0
4/24/2024	12:00 PM	2	529	157	0	21	8	0	4	52	3	0	0	0
4/24/2024	12:15 PM	2	502	151	3	18	11	0	8	50	2	0	0	0
4/24/2024	12:30 PM	2	519	156	3	18	8	0	8	49	4	0	0	0
4/24/2024	12:45 PM	4	561	175	3	20	10	0	9	55	5	0	0	0
4/24/2024	1:00 PM	3	551	188	3	25	10	0	8	66	6	0	0	0
4/24/2024	1:15 PM	4	565	186	1	25	10	0	6	62	4	0	0	0
4/24/2024	1:30 PM	4	562	180	1	28	11	0	9	66	5	0	0	0
4/24/2024	1:45 PM	2	541	171	1	32	8	0	10	68	4	0	0	0
4/24/2024	2:00 PM	1	531	159	2	26	8	0	11	66	3	0	0	0
4/24/2024	2:15 PM	0	557	166	1	24	8	0	8	62	4	0	0	0
4/24/2024	2:30 PM	0	560	186	3	21	9	0	5	57	2	0	0	0
4/24/2024	2:45 PM	1	602	185	4	19	12	0	3	58	3	0	0	0
4/24/2024	3:00 PM	1	645	190	5	21	12	0	5	56	3	0	0	0
4/24/2024	3:15 PM	1	684	201	5	21	10	0	6	53	2	0	0	0
4/24/2024	3:30 PM	1	714	187	3	16	9	0	7	52	1	0	0	0
4/24/2024	3:45 PM	0	699	190	2	18	6	0	6	43	0	0	0	0
4/24/2024	4:00 PM	0	722	194	0	16	5	0	3	42	0	0	0	0
4/24/2024	4:15 PM	0	722	191	0	18	4	0	3	45	1	0	0	0
4/24/2024	4:30 PM	0	744	200	0	21	5	2	3	44	1	0	0	0
4/24/2024	4:45 PM	0	765	202	0	18	5	2	4	46	1	0	0	0
4/24/2024	5:00 PM	0	724	189	0	18	8	2	6	42	1	0	0	0
4/24/2024	5:15 PM	1	688	171	0	17	7	2	6	37	1	0	0	0
4/24/2024	5:30 PM	1	629	156	0	16	5	0	5	39	1	0	0	0
4/24/2024	5:45 PM	1	581	134	0	14	8	0	6	57	2	0	0	0
4/24/2024	6:00 PM	2	560	130	0	11	6	0	5	72	2	0	0	0
4/24/2024	6:15 PM	1	516	113	0	11	6	0	4	83	2	0	0	0
4/24/2024	6:30 PM	2	489	109	0	8	5	0	5	82	2	0	0	0
4/24/2024	6:45 PM	3	445	113	0	10	2	0	3	73	1	1	0	0
4/24/2024	7:00 PM	2	410	107	1	11	2	0	3	62	1	1	0	0
4/24/2024	7:15 PM	4	389	110	1	9	2	0	3	56	0	2	0	0
4/24/2024	7:30 PM	3	365	98	1	9	2	0	1	51	0	2	0	0
4/24/2024	7:45 PM	2	370	82	2	4	2	0	1	51	0	1	0	0
4/24/2024	8:00 PM	2	363	63	2	3	1	0	0	53	0	1	0	0
4/24/2024	8:15 PM	0	334	52	2	3	0	0	0	50	0	0	0	0
4/24/2024	8:30 PM	0	324	43	2	2	0	0	0	48	0	1	0	0
4/24/2024	8:45 PM	0	286	38	1	2	0	0	0	42	0	1	0	0
4/24/2024	9:00 PM	0	241	38	0	1	1	0	0	46	0	2	0	0
4/24/2024	9:15 PM	0	241	34	0	1	1	0	0	49	0	3	0	0
4/24/2024	9:30 PM	0	200	31	1	2	1	0	0	55	0	3	0	0
4/24/2024	9:45 PM	0	179	32	1	3	1	0	0	58	0	4	0	0
4/24/2024	10:00 PM	0	173	30	2	4	0	0	0	53	0	6	0	0
4/24/2024	10:15 PM	1	150	24	2	3	0	0	0	52	0	7	0	0
4/24/2024	10:30 PM	1	146	23	1	2	0	0	0	53	0	7	0	0
4/24/2024	10:45 PM	1	142	24	1	3	0	0	0	43	0	7	0	0
4/24/2024	11:00 PM	1	133	22	1	4	0	0	0	42	0	6	0	0
4/24/2024	11:15 PM	0	111	24	1	5	0	0	0	36	0	4	0	0
4/24/2024	11:30 PM	0	98	20	1	6	0	0	0	32	0	3	0	0
4/24/2024	11:45 PM	0	73	14	1	5	0	0	0	38	0	3	0	0

4/25/2024	12:00 AM	0	57	12	0	3	0	0	0	39	0	3	0	0
4/25/2024	12:15 AM	0	58	10	0	2	0	0	0	47	0	8	0	0
4/25/2024	12:30 AM	0	50	9	0	1	0	0	0	47	0	12	0	0
4/25/2024	12:45 AM	0	50	9	0	0	0	0	0	42	0	15	0	0
4/25/2024	1:00 AM	0	45	8	0	0	0	0	0	38	0	15	0	0
4/25/2024	1:15 AM	0	42	8	0	2	0	0	0	31	0	14	0	0
4/25/2024	1:30 AM	0	44	9	0	2	0	0	0	31	0	12	0	0
4/25/2024	1:45 AM	0	52	9	0	3	0	0	0	34	0	11	0	0
4/25/2024	2:00 AM	0	51	9	0	5	0	0	0	30	0	13	0	0
4/25/2024	2:15 AM	0	50	9	0	3	0	0	0	38	0	9	0	0
4/25/2024	2:30 AM	0	50	8	0	5	0	0	0	33	0	10	0	0
4/25/2024	2:45 AM	0	52	10	0	7	0	0	0	41	0	11	0	0
4/25/2024	3:00 AM	0	61	12	0	6	0	0	0	48	0	9	0	0
4/25/2024	3:15 AM	0	67	11	0	6	2	0	0	42	0	9	0	0
4/25/2024	3:30 AM	0	82	12	0	4	2	0	0	47	0	7	0	0
4/25/2024	3:45 AM	0	86	10	0	3	2	0	0	45	0	4	0	0
4/25/2024	4:00 AM	0	105	9	0	3	2	0	0	48	0	3	0	0
4/25/2024	4:15 AM	0	115	9	0	5	0	0	0	51	0	3	0	0
4/25/2024	4:30 AM	0	131	14	1	9	0	0	0	56	0	2	0	0
4/25/2024	4:45 AM	0	160	26	1	12	0	0	0	57	0	1	0	0
4/25/2024	5:00 AM	0	178	35	1	17	3	0	0	58	0	0	0	0
4/25/2024	5:15 AM	2	208	47	1	19	4	0	0	61	0	1	0	0
4/25/2024	5:30 AM	2	241	75	3	18	4	0	0	66	0	2	0	0
4/25/2024	5:45 AM	2	295	88	3	16	4	1	0	66	0	2	0	0
4/25/2024	6:00 AM	2	359	117	4	14	5	2	0	67	0	2	0	0
4/25/2024	6:15 AM	0	410	150	4	14	5	3	2	68	0	1	0	0
4/25/2024	6:30 AM	2	510	173	1	18	5	3	4	61	1	0	0	0
4/25/2024	6:45 AM	2	574	188	2	24	9	3	8	57	2	0	0	0
4/25/2024	7:00 AM	2	633	206	1	22	6	2	10	51	2	0	0	0
4/25/2024	7:15 AM	3	694	209	1	20	5	2	11	48	2	0	0	0
4/25/2024	7:30 AM	2	674	201	1	18	5	3	12	44	1	0	0	0
4/25/2024	7:45 AM	3	642	225	0	18	6	2	12	41	0	0	0	0
4/25/2024	8:00 AM	6	602	230	1	30	7	2	13	37	2	0	1	0
4/25/2024	8:15 AM	5	555	228	1	43	9	1	16	40	2	0	1	0
4/25/2024	8:30 AM	4	549	236	1	45	11	0	17	50	2	0	1	0
4/25/2024	8:45 AM	3	532	207	1	43	7	0	14	65	2	0	1	0
4/25/2024	9:00 AM	0	506	181	0	34	7	0	14	80	0	0	0	0
4/25/2024	9:15 AM	0	480	182	0	25	8	0	11	82	0	0	0	0
4/25/2024	9:30 AM	2	451	167	0	25	11	0	9	80	1	0	0	0
4/25/2024	9:45 AM	2	473	176	0	23	13	1	9	71	1	0	0	0
4/25/2024	10:00 AM	2	485	195	0	20	14	1	8	73	1	0	0	0
4/25/2024	10:15 AM	2	508	180	0	17	16	1	7	67	1	1	0	0
4/25/2024	10:30 AM	2	510	170	0	16	12	1	11	67	2	1	0	0
4/25/2024	10:45 AM	3	482	179	1	18	12	0	11	70	2	1	0	0
4/25/2024	11:00 AM	3	477	172	2	23	9	1	13	61	2	1	0	0
4/25/2024	11:15 AM	3	481	178	2	23	6	1	13	71	2	0	0	0
4/25/2024	11:30 AM	1	487	199	2	24	5	2	9	62	2	0	0	0
4/25/2024	11:45 AM	0	517	193	1	25	4	2	10	55	2	0	0	0
4/25/2024	12:00 PM	0	550	189	0	33	6	1	10	54	4	0	0	0
4/25/2024	12:15 PM	0	549	197	1	39	6	1	12	43	5	0	0	0
4/25/2024	12:30 PM	0	555	192	1	38	7	0	11	51	4	0	0	0
4/25/2024	12:45 PM	2	544	178	1	37	7	0	13	55	6	0	0	0
4/25/2024	1:00 PM	2	544	174	1	29	10	0	10	57	6	0	0	0
4/25/2024	1:15 PM	2	584	167	1	26	8	0	9	58	5	0	0	0
4/25/2024	1:30 PM	2	615	165	3	27	7	0	11	57	5	0	0	0
4/25/2024	1:45 PM	0	620	170	4	25	7	2	8	55	3	0	0	0
4/25/2024	2:00 PM	1	611	171	5	23	5	2	9	55	1	0	0	0
4/25/2024	2:15 PM	1	593	171	4	22	8	2	9	52	1	0	0	0
4/25/2024	2:30 PM	1	569	181	3	19	9	2	7	54	0	0	0	0
4/25/2024	2:45 PM	1	594	182	3	24	8	0	8	62	0	0	0	0
4/25/2024	3:00 PM	0	617	193	2	21	5	0	7	59	0	0	0	0
4/25/2024	3:15 PM	0	643	217	2	21	2	0	5	66	1	0	0	0
4/25/2024	3:30 PM	0	672	206	1	20	2	0	6	60	1	0	0	0
4/25/2024	3:45 PM	0	697	202	1	13	5	0	4	57	1	0	0	0
4/25/2024	4:00 PM	1	693	203	2	21	7	0	3	59	1	0	0	0
4/25/2024	4:15 PM	1	728	190	3	19	7	0	3	53	0	0	0	0
4/25/2024	4:30 PM	1	762	190	3	18	7	0	2	51	1	0	0	0
4/25/2024	4:45 PM	2	726	199	2	20	3	0	3	44	1	0	0	0
4/25/2024	5:00 PM	1	714	190	1	14	1	0	5	46	1	0	0	0
4/25/2024	5:15 PM	1	680	182	0	13	3	0	4	47	1	0	0	0
4/25/2024	5:30 PM	2	617	180	0	14	2	0	6	43	0	0	0	0
4/25/2024	5:45 PM	1	609	171	0	14	4	0	5	47	0	0	0	0
4/25/2024	6:00 PM	1	582	152	0	12	5	0	4	46	0	0	0	0
4/25/2024	6:15 PM	1	518	144	0	11	3	0	4	54	0	0	0	0
4/25/2024	6:30 PM	0	510	131	0	12	3	0	1	61	0	0	0	0
4/25/2024	6:45 PM	1	479	132	0	10	1	0	1	57	0	1	0	0
4/25/2024	7:00 PM	1	447	135	0	13	0	0	2	54	0	1	0	0
4/25/2024	7:15 PM	1	436	117	0	13	0	0	3	48	0	1	0	0
4/25/2024	7:30 PM	1	398	100	0	9	1	0	5	51	0	1	0	0
4/25/2024	7:45 PM	1	377	72	0	8	1	0	5	51	0	0	0	0
4/25/2024	8:00 PM	1	360	53	0	3	1	0	3	56	0	0	0	0
4/25/2024	8:15 PM	1	331	50	0	4	1	0	2	57	0	0	0	0
4/25/2024	8:30 PM	1	309	50	1	5	0	0	1	48	0	1	0	0
4/25/2024	8:45 PM	0	274	51	1	3	0	0	1	48	0	2	0	0
4/25/2024	9:00 PM	0	264	56	2	3	0	0	1	44	0	3	0	0
4/25/2024	9:15 PM	0	259	53	2	1	0	0	1	48	0	3	0	0
4/25/2024	9:30 PM	0	235	52	1	2	0	0	0	54	0	5	0	0
4/25/2024	9:45 PM	0	228	48	1	5	0	0	0	53	0	4	0	0
4/25/2024	10:00 PM	0	204	37	1	5	0	0	0	46	0	4	0	0
4/25/2024	10:15 PM	0	182	30	1	6	1	0	0	39	0	7	0	0
4/25/2024	10:30 PM	0	168	24	1	6	1	0	0	37	0	4	0	0
4/25/2024	10:45 PM	0	148	21	1	4	2	0	0	37	0	4	0	0
4/25/2024	11:00 PM	0	129	21	0	5	2	0	0	37	0	4	0	0
4/25/2024	11:15 PM	0	88	16	0	4	1	0	0	27	0	1	0	0
4/25/2024	11:30 PM	0	53	9	0	2	1	0	0	16	0	1	0	0
4/25/2024	11:45 PM	0	21	4	0	1	0	0	0	6	0	1	0	0

4/26/2024	12:00 AM	0	74	9	1	4	1	0	0	30	0	5	0	0
4/26/2024	12:15 AM	0	67	10	1	3	2	0	0	31	0	5	0	0
4/26/2024	12:30 AM	0	67	11	1	3	1	0	0	27	0	6	0	0
4/26/2024	12:45 AM	0	58	9	0	5	1	0	0	26	0	7	0	0
4/26/2024	1:00 AM	0	58	8	0	4	1	0	0	29	0	9	0	0
4/26/2024	1:15 AM	0	60	6	0	4	0	0	0	33	0	9	0	0
4/26/2024	1:30 AM	0	54	4	3	3	1	0	0	42	0	7	0	0
4/26/2024	1:45 AM	0	53	2	3	1	3	0	0	48	0	7	0	0
4/26/2024	2:00 AM	0	48	2	3	1	5	0	0	48	0	3	0	0
4/26/2024	2:15 AM	0	48	2	3	3	7	0	0	50	0	5	0	0
4/26/2024	2:30 AM	0	50	3	0	6	6	0	0	48	0	6	0	0
4/26/2024	2:45 AM	0	53	5	2	6	4	0	0	44	0	4	0	0
4/26/2024	3:00 AM	0	58	5	2	6	2	0	0	49	0	5	0	0
4/26/2024	3:15 AM	0	60	6	2	4	0	0	0	44	0	7	1	0
4/26/2024	3:30 AM	0	62	6	2	4	1	0	0	48	0	8	1	0
4/26/2024	3:45 AM	0	73	8	0	5	1	0	1	52	0	9	1	0
4/26/2024	4:00 AM	0	83	10	0	9	2	0	4	51	0	8	1	0
4/26/2024	4:15 AM	0	93	10	1	11	2	0	4	56	0	4	0	0
4/26/2024	4:30 AM	0	112	12	1	10	2	0	5	54	0	2	0	0
4/26/2024	4:45 AM	0	147	19	1	12	5	0	4	50	0	0	0	0
4/26/2024	5:00 AM	0	185	28	3	13	6	0	1	55	0	0	0	0
4/26/2024	5:15 AM	0	225	43	2	14	7	0	1	53	0	0	0	0
4/26/2024	5:30 AM	0	274	52	5	15	7	0	0	47	0	1	0	0
4/26/2024	5:45 AM	0	315	60	5	12	8	0	0	57	0	1	0	0
4/26/2024	6:00 AM	0	365	78	6	12	9	0	1	55	0	1	0	0
4/26/2024	6:15 AM	0	405	107	6	16	9	0	4	60	1	1	0	0
4/26/2024	6:30 AM	1	488	143	3	22	8	1	6	62	1	0	0	0
4/26/2024	6:45 AM	1	564	175	3	24	9	1	8	58	1	0	0	0
4/26/2024	7:00 AM	1	661	202	0	24	8	2	9	46	1	0	0	0
4/26/2024	7:15 AM	1	723	220	0	27	7	2	8	35	0	0	0	0
4/26/2024	7:30 AM	1	711	233	0	24	8	1	9	37	1	0	0	0
4/26/2024	7:45 AM	1	658	235	3	28	7	2	9	31	1	0	0	0
4/26/2024	8:00 AM	1	563	234	3	37	8	1	10	44	1	0	0	0
4/26/2024	8:15 AM	1	524	227	4	38	12	1	11	53	1	0	0	0
4/26/2024	8:30 AM	0	504	203	4	39	15	1	11	50	0	0	0	0
4/26/2024	8:45 AM	0	528	198	1	38	11	1	16	57	0	0	0	0
4/26/2024	9:00 AM	0	546	189	1	32	10	1	13	52	0	0	0	0
4/26/2024	9:15 AM	0	545	170	0	28	10	1	11	60	1	0	0	0
4/26/2024	9:30 AM	0	545	173	0	32	10	1	10	66	1	0	0	0
4/26/2024	9:45 AM	0	538	164	0	28	13	1	6	68	2	0	0	0
4/26/2024	10:00 AM	2	543	180	1	23	15	1	8	68	5	0	0	0
4/26/2024	10:15 AM	2	547	183	1	25	14	2	10	55	4	0	0	0
4/26/2024	10:30 AM	3	552	181	1	16	12	4	13	59	4	0	0	0
4/26/2024	10:45 AM	3	539	185	1	16	10	3	10	53	4	0	0	0
4/26/2024	11:00 AM	1	555	161	0	22	9	3	10	53	1	0	0	0
4/26/2024	11:15 AM	1	564	173	0	20	8	2	10	59	2	0	0	0
4/26/2024	11:30 AM	0	574	174	0	26	7	0	9	58	2	0	0	0
4/26/2024	11:45 AM	0	606	186	0	25	8	0	10	65	1	0	0	0
4/26/2024	12:00 PM	0	575	189	0	21	6	1	13	64	1	0	0	0
4/26/2024	12:15 PM	1	559	179	0	22	4	1	11	67	0	0	0	0
4/26/2024	12:30 PM	1	543	179	0	22	7	1	9	61	0	0	0	0
4/26/2024	12:45 PM	2	556	170	3	28	6	1	10	57	0	0	0	0
4/26/2024	1:00 PM	2	607	180	3	32	6	1	9	54	0	0	0	0
4/26/2024	1:15 PM	1	655	181	5	32	7	1	10	51	0	0	0	0
4/26/2024	1:30 PM	1	668	195	5	29	6	2	9	48	1	0	0	0
4/26/2024	1:45 PM	0	638	203	3	29	9	2	12	41	1	0	0	0
4/26/2024	2:00 PM	2	627	189	4	32	11	1	11	45	1	0	0	0
4/26/2024	2:15 PM	2	625	189	2	31	12	1	11	49	1	0	0	0
4/26/2024	2:30 PM	2	656	184	2	29	9	0	13	47	1	0	0	0
4/26/2024	2:45 PM	2	708	180	1	29	7	0	10	44	1	0	0	0
4/26/2024	3:00 PM	1	734	187	2	21	6	0	7	46	2	1	0	0
4/26/2024	3:15 PM	2	768	184	3	17	5	0	8	34	2	1	0	0
4/26/2024	3:30 PM	2	775	180	4	17	5	0	6	42	1	1	0	0
4/26/2024	3:45 PM	2	768	178	4	12	5	0	6	38	1	1	0	0
4/26/2024	4:00 PM	1	772	180	2	14	4	0	7	35	0	0	0	0
4/26/2024	4:15 PM	0	742	169	1	17	5	1	7	38	1	0	0	0
4/26/2024	4:30 PM	0	736	170	0	17	6	1	7	37	1	0	0	0
4/26/2024	4:45 PM	0	715	157	0	18	5	1	7	38	1	0	0	0
4/26/2024	5:00 PM	0	677	148	0	16	6	1	8	35	1	0	0	0
4/26/2024	5:15 PM	1	676	154	1	11	5	0	7	29	0	0	0	0
4/26/2024	5:30 PM	3	644	144	1	11	5	0	6	20	0	0	0	0
4/26/2024	5:45 PM	3	623	154	1	13	5	0	4	27	0	0	0	0
4/26/2024	6:00 PM	3	627	146	1	12	4	0	2	32	0	0	0	0
4/26/2024	6:15 PM	2	568	148	0	14	4	0	1	40	2	0	0	0
4/26/2024	6:30 PM	0	569	146	0	12	6	0	2	45	2	0	0	0
4/26/2024	6:45 PM	2	540	127	1	8	6	0	3	46	2	0	0	0
4/26/2024	7:00 PM	3	504	131	1	6	5	0	3	44	2	1	0	0
4/26/2024	7:15 PM	3	485	120	1	4	4	0	3	43	0	1	0	0
4/26/2024	7:30 PM	4	432	112	1	5	2	0	2	43	0	2	0	0
4/26/2024	7:45 PM	2	405	110	0	4	1	0	1	38	0	2	0	0
4/26/2024	8:00 PM	4	359	97	1	7	3	0	1	37	0	2	0	0
4/26/2024	8:15 PM	4	354	93	1	9	4	0	0	36	0	2	0	0
4/26/2024	8:30 PM	3	340	90	1	8	4	0	0	36	0	2	0	0
4/26/2024	8:45 PM	3	312	84	1	9	4	0	0	32	0	3	0	0
4/26/2024	9:00 PM	0	304	79	0	5	2	0	0	29	0	3	0	0
4/26/2024	9:15 PM	0	291	72	0	2	1	0	0	27	0	4	0	0
4/26/2024	9:30 PM	0	282	61	0	1	0	0	0	24	0	5	0	0
4/26/2024	9:45 PM	0	281	53	0	1	0	0	0	29	0	4	0	0
4/26/2024	10:00 PM	0	248	46	1	1	0	0	0	30	0	4	0	0
4/26/2024	10:15 PM	0	219	45	1	1	0	0	0	29	0	5	0	0
4/26/2024	10:30 PM	0	194	48	1	1	0	0	0	26	0	4	0	0
4/26/2024	10:45 PM	0	165	49	1	2	0	0	0	26	0	4	0	0
4/26/2024	11:00 PM	0	172	50	0	3	0	0	0	27	0	4	0	0
4/26/2024	11:15 PM	0	126	36	0	3	0	0	0	20	0	2	0	0
4/26/2024	11:30 PM	0	79	21	0	3	0	0	0	16	0	1	0	0
4/26/2024	11:45 PM	0	45	10	0	1	0	0	0	8	0	1	0	0

4/27/2024	12:00 AM	1	116	10	0	5	0	0	0	18	0	1	0	0
4/27/2024	12:15 AM	1	110	10	0	5	0	0	0	15	0	2	0	0
4/27/2024	12:30 AM	1	90	11	0	6	0	0	0	14	0	4	0	0
4/27/2024	12:45 AM	0	78	7	0	3	0	0	0	13	0	6	0	0
4/27/2024	1:00 AM	0	73	6	0	4	0	0	0	16	0	7	0	0
4/27/2024	1:15 AM	0	68	5	0	3	0	0	0	19	0	6	0	0
4/27/2024	1:30 AM	0	66	3	0	2	0	0	0	24	0	6	0	0
4/27/2024	1:45 AM	0	57	3	0	3	0	0	0	28	0	7	0	0
4/27/2024	2:00 AM	0	62	4	0	3	0	0	0	27	0	6	0	0
4/27/2024	2:15 AM	0	59	5	0	4	0	0	0	28	0	8	0	0
4/27/2024	2:30 AM	0	50	5	0	3	0	0	0	25	0	7	0	0
4/27/2024	2:45 AM	1	52	6	0	2	0	0	0	23	0	8	0	0
4/27/2024	3:00 AM	2	55	6	0	4	0	0	0	22	0	8	0	0
4/27/2024	3:15 AM	2	55	6	0	4	0	0	0	21	0	6	0	0
4/27/2024	3:30 AM	2	62	7	0	4	0	0	0	16	0	5	0	0
4/27/2024	3:45 AM	1	64	5	0	6	0	0	0	15	0	5	0	0
4/27/2024	4:00 AM	0	59	5	0	3	0	0	0	19	0	6	0	0
4/27/2024	4:15 AM	0	72	4	1	2	0	0	0	21	0	7	0	0
4/27/2024	4:30 AM	0	75	5	1	4	0	0	0	24	0	7	0	0
4/27/2024	4:45 AM	0	92	6	1	3	0	0	0	31	0	4	0	0
4/27/2024	5:00 AM	0	103	8	2	4	0	0	0	36	0	2	0	0
4/27/2024	5:15 AM	0	117	13	1	7	0	0	1	33	0	1	0	0
4/27/2024	5:30 AM	0	153	17	1	6	0	0	1	32	0	1	0	0
4/27/2024	5:45 AM	0	171	30	1	6	1	0	1	30	0	0	0	0
4/27/2024	6:00 AM	1	204	41	1	6	1	0	1	28	1	1	0	0
4/27/2024	6:15 AM	1	222	58	1	6	1	0	1	36	1	1	0	0
4/27/2024	6:30 AM	1	245	71	1	7	1	0	2	39	1	2	0	0
4/27/2024	6:45 AM	1	258	86	1	10	2	1	2	36	1	2	0	0
4/27/2024	7:00 AM	0	280	105	0	10	3	1	5	34	0	2	0	0
4/27/2024	7:15 AM	0	322	101	0	7	3	1	5	32	0	2	0	0
4/27/2024	7:30 AM	1	340	113	1	7	3	1	5	33	0	1	0	0
4/27/2024	7:45 AM	1	388	116	1	6	1	0	5	37	0	1	0	0
4/27/2024	8:00 AM	2	436	118	1	7	0	0	3	36	1	0	0	0
4/27/2024	8:15 AM	2	464	130	1	16	0	0	2	39	1	0	0	0
4/27/2024	8:30 AM	1	497	133	0	21	0	0	1	37	1	0	0	0
4/27/2024	8:45 AM	4	530	152	0	20	0	0	3	40	3	0	0	0
4/27/2024	9:00 AM	4	556	164	0	20	0	0	3	40	2	0	0	0
4/27/2024	9:15 AM	5	567	162	0	15	0	0	3	35	2	0	0	0
4/27/2024	9:30 AM	5	589	175	0	9	1	0	4	36	2	0	0	0
4/27/2024	9:45 AM	5	610	164	0	9	1	0	4	29	0	0	0	0
4/27/2024	10:00 AM	4	618	161	0	8	1	0	5	28	0	0	0	0
4/27/2024	10:15 AM	4	649	179	0	6	1	0	6	30	0	0	0	0
4/27/2024	10:30 AM	5	666	168	0	7	1	0	5	33	0	0	0	0
4/27/2024	10:45 AM	3	670	170	0	6	1	0	4	38	0	0	0	0
4/27/2024	11:00 AM	5	696	162	0	10	1	0	4	40	0	0	0	0
4/27/2024	11:15 AM	4	693	162	0	10	1	0	4	38	1	0	0	0
4/27/2024	11:30 AM	3	715	165	0	10	0	0	4	30	1	0	0	0
4/27/2024	11:45 AM	4	728	158	0	11	1	0	3	30	1	0	0	0
4/27/2024	12:00 PM	2	704	166	0	8	3	0	2	25	1	0	0	0
4/27/2024	12:15 PM	2	740	157	0	7	3	0	3	27	0	0	0	0
4/27/2024	12:30 PM	4	721	156	0	7	3	0	6	34	0	0	0	0
4/27/2024	12:45 PM	3	719	168	0	5	2	0	8	34	0	0	0	0
4/27/2024	1:00 PM	4	730	151	0	5	0	0	8	38	0	0	0	0
4/27/2024	1:15 PM	4	693	156	0	5	1	0	6	36	0	0	0	0
4/27/2024	1:30 PM	3	716	156	0	5	1	0	3	29	0	0	0	0
4/27/2024	1:45 PM	3	712	154	0	8	2	0	2	27	0	0	0	0
4/27/2024	2:00 PM	2	704	159	3	8	3	0	1	27	0	0	0	0
4/27/2024	2:15 PM	2	706	150	4	8	2	0	1	22	0	1	0	0
4/27/2024	2:30 PM	4	666	147	4	7	2	0	2	25	0	1	0	0
4/27/2024	2:45 PM	4	644	139	4	5	1	0	1	23	2	1	0	0
4/27/2024	3:00 PM	4	663	142	1	3	0	0	2	19	2	1	0	0
4/27/2024	3:15 PM	4	671	143	1	5	1	0	3	20	2	0	0	0
4/27/2024	3:30 PM	1	679	137	1	7	1	0	3	19	2	0	0	0
4/27/2024	3:45 PM	0	686	132	1	7	1	0	5	23	0	0	0	0
4/27/2024	4:00 PM	1	670	130	1	8	1	0	4	23	0	0	0	0
4/27/2024	4:15 PM	1	637	126	0	9	0	0	3	26	1	0	0	0
4/27/2024	4:30 PM	1	626	125	0	7	1	0	3	30	1	0	0	0
4/27/2024	4:45 PM	2	615	118	0	9	1	0	1	29	1	0	0	0
4/27/2024	5:00 PM	1	577	122	0	10	2	0	2	32	1	0	0	0
4/27/2024	5:15 PM	1	572	112	0	6	2	0	3	29	0	0	0	0
4/27/2024	5:30 PM	4	561	104	0	13	1	0	3	24	0	0	0	0
4/27/2024	5:45 PM	3	553	103	0	11	2	0	4	29	0	0	0	0
4/27/2024	6:00 PM	3	544	97	0	10	2	0	3	28	1	0	0	0
4/27/2024	6:15 PM	3	543	103	0	13	2	0	3	29	1	0	0	0
4/27/2024	6:30 PM	0	524	114	0	8	2	0	3	31	1	0	0	0
4/27/2024	6:45 PM	0	498	119	0	8	2	0	2	26	1	0	0	0
4/27/2024	7:00 PM	0	490	107	0	9	1	0	2	21	0	0	0	0
4/27/2024	7:15 PM	0	468	106	0	7	1	0	1	20	0	0	0	0
4/27/2024	7:30 PM	0	452	85	0	4	1	0	0	16	0	0	0	0
4/27/2024	7:45 PM	0	442	69	0	4	0	0	0	16	0	0	0	0
4/27/2024	8:00 PM	0	413	61	0	6	0	0	0	21	0	0	0	0
4/27/2024	8:15 PM	0	379	50	0	7	0	0	0	21	0	0	0	0
4/27/2024	8:30 PM	0	353	51	0	9	0	0	0	22	0	0	0	0
4/27/2024	8:45 PM	0	331	53	0	10	0	0	0	18	0	0	0	0
4/27/2024	9:00 PM	0	311	45	0	6	0	0	0	18	0	0	0	0
4/27/2024	9:15 PM	0	293	44	0	4	0	0	0	20	0	0	0	0
4/27/2024	9:30 PM	0	276	42	0	2	0	0	0	24	0	0	0	0
4/27/2024	9:45 PM	0	266	35	0	0	0	0	0	26	0	0	0	0
4/27/2024	10:00 PM	0	256	43	0	1	0	0	0	22	0	0	0	0
4/27/2024	10:15 PM	0	248	34	0	1	0	0	0	19	0	0	0	0
4/27/2024	10:30 PM	0	235	27	0	2	0	0	0	13	0	0	0	0
4/27/2024	10:45 PM	1	212	22	0	2	0	0	0	11	0	0	0	0
4/27/2024	11:00 PM	2	192	15	0	2	0	0	0	13	0	0	0	0
4/27/2024	11:15 PM	2	139	10	0	2	0	0	0	10	0	0	0	0
4/27/2024	11:30 PM	2	88	7	0	1	0	0	0	8	0	0	0	0
4/27/2024	11:45 PM	1	36	4	0	1	0	0	0	4	0	0	0	0

SB
File Name:
Start Date: 4/21/2024
Start Time: 0
Site Code: 75 Lane 3 NB
Station ID: 1
Location 1: I-20, north of Bush River Rd
Location 2:

Date	Time	1	2	3	4	5	6	7	8	9	10	11	12	13
4/21/2024	12:00 AM	0	0	0	0	0	0	0	0	0	0	0	0	0
4/21/2024	12:15 AM	0	0	0	0	0	0	0	0	0	0	0	0	0
4/21/2024	12:30 AM	0	0	0	0	0	0	0	0	0	0	0	0	0
4/21/2024	12:45 AM	0	0	0	0	0	0	0	0	0	0	0	0	0
4/21/2024	1:00 AM	0	0	0	0	0	0	0	0	0	0	0	0	0
4/21/2024	1:15 AM	0	0	0	0	0	0	0	0	0	0	0	0	0
4/21/2024	1:30 AM	0	0	0	0	0	0	0	0	0	0	0	0	0
4/21/2024	1:45 AM	0	0	0	0	0	0	0	0	0	0	0	0	0
4/21/2024	2:00 AM	0	0	0	0	0	0	0	0	0	0	0	0	0
4/21/2024	2:15 AM	0	0	0	0	0	0	0	0	0	0	0	0	0
4/21/2024	2:30 AM	0	0	0	0	0	0	0	0	0	0	0	0	0
4/21/2024	2:45 AM	0	0	0	0	0	0	0	0	0	0	0	0	0
4/21/2024	3:00 AM	0	0	0	0	0	0	0	0	0	0	0	0	0
4/21/2024	3:15 AM	0	0	0	0	0	0	0	0	0	0	0	0	0
4/21/2024	3:30 AM	0	0	0	0	0	0	0	0	0	0	0	0	0
4/21/2024	3:45 AM	0	0	0	0	0	0	0	0	0	0	0	0	0
4/21/2024	4:00 AM	0	0	0	0	0	0	0	0	0	0	0	0	0
4/21/2024	4:15 AM	0	0	0	0	0	0	0	0	0	0	0	0	0
4/21/2024	4:30 AM	0	0	0	0	0	0	0	0	0	0	0	0	0
4/21/2024	4:45 AM	0	0	0	0	0	0	0	0	0	0	0	0	0
4/21/2024	5:00 AM	0	0	0	0	0	0	0	0	0	0	0	0	0
4/21/2024	5:15 AM	0	0	0	0	0	0	0	0	0	0	0	0	0
4/21/2024	5:30 AM	0	0	0	0	0	0	0	0	0	0	0	0	0
4/21/2024	5:45 AM	0	0	0	0	0	0	0	0	0	0	0	0	0
4/21/2024	6:00 AM	0	0	0	0	0	0	0	0	0	0	0	0	0
4/21/2024	6:15 AM	0	0	0	0	0	0	0	0	0	0	0	0	0
4/21/2024	6:30 AM	0	0	0	0	0	0	0	0	0	0	0	0	0
4/21/2024	6:45 AM	0	0	0	0	0	0	0	0	0	0	0	0	0
4/21/2024	7:00 AM	0	0	0	0	0	0	0	0	0	0	0	0	0
4/21/2024	7:15 AM	0	0	0	0	0	0	0	0	0	0	0	0	0
4/21/2024	7:30 AM	0	0	0	0	0	0	0	0	0	0	0	0	0
4/21/2024	7:45 AM	0	0	0	0	0	0	0	0	0	0	0	0	0
4/21/2024	8:00 AM	0	0	0	0	0	0	0	0	0	0	0	0	0
4/21/2024	8:15 AM	0	0	0	0	0	0	0	0	0	0	0	0	0
4/21/2024	8:30 AM	0	0	0	0	0	0	0	0	0	0	0	0	0
4/21/2024	8:45 AM	0	0	0	0	0	0	0	0	0	0	0	0	0
4/21/2024	9:00 AM	0	0	0	0	0	0	0	0	0	0	0	0	0
4/21/2024	9:15 AM	0	0	0	0	0	0	0	0	0	0	0	0	0
4/21/2024	9:30 AM	0	0	0	0	0	0	0	0	0	0	0	0	0
4/21/2024	9:45 AM	0	0	0	0	0	0	0	0	0	0	0	0	0
4/21/2024	10:00 AM	0	0	0	0	0	0	0	0	0	0	0	0	0
4/21/2024	10:15 AM	0	0	0	0	0	0	0	0	0	0	0	0	0
4/21/2024	10:30 AM	0	0	0	0	0	0	0	0	0	0	0	0	0
4/21/2024	10:45 AM	0	0	0	0	0	0	0	0	0	0	0	0	0
4/21/2024	11:00 AM	0	0	0	0	0	0	0	0	0	0	0	0	0
4/21/2024	11:15 AM	0	0	0	0	0	0	0	0	0	0	0	0	0
4/21/2024	11:30 AM	0	0	0	0	0	0	0	0	0	0	0	0	0
4/21/2024	11:45 AM	0	0	0	0	0	0	0	0	0	0	0	0	0
4/21/2024	12:00 PM	0	0	0	0	0	0	0	0	0	0	0	0	0
4/21/2024	12:15 PM	0	0	0	0	0	0	0	0	0	0	0	0	0
4/21/2024	12:30 PM	0	0	0	0	0	0	0	0	0	0	0	0	0
4/21/2024	12:45 PM	0	0	0	0	0	0	0	0	0	0	0	0	0
4/21/2024	1:00 PM	0	0	0	0	0	0	0	0	0	0	0	0	0
4/21/2024	1:15 PM	0	0	0	0	0	0	0	0	0	0	0	0	0
4/21/2024	1:30 PM	0	0	0	0	0	0	0	0	0	0	0	0	0
4/21/2024	1:45 PM	0	0	0	0	0	0	0	0	0	0	0	0	0
4/21/2024	2:00 PM	0	0	0	0	0	0	0	0	0	0	0	0	0
4/21/2024	2:15 PM	0	0	0	0	0	0	0	0	0	0	0	0	0
4/21/2024	2:30 PM	0	0	0	0	0	0	0	0	0	0	0	0	0
4/21/2024	2:45 PM	0	0	0	0	0	0	0	0	0	0	0	0	0
4/21/2024	3:00 PM	0	0	0	0	0	0	0	0	0	0	0	0	0
4/21/2024	3:15 PM	0	0	0	0	0	0	0	0	0	0	0	0	0
4/21/2024	3:30 PM	0	0	0	0	0	0	0	0	0	0	0	0	0
4/21/2024	3:45 PM	0	0	0	0	0	0	0	0	0	0	0	0	0
4/21/2024	4:00 PM	0	0	0	0	0	0	0	0	0	0	0	0	0
4/21/2024	4:15 PM	0	0	0	0	0	0	0	0	0	0	0	0	0
4/21/2024	4:30 PM	0	0	0	0	0	0	0	0	0	0	0	0	0
4/21/2024	4:45 PM	0	0	0	0	0	0	0	0	0	0	0	0	0
4/21/2024	5:00 PM	0	0	0	0	0	0	0	0	0	0	0	0	0
4/21/2024	5:15 PM	0	0	0	0	0	0	0	0	0	0	0	0	0
4/21/2024	5:30 PM	0	0	0	0	0	0	0	0	0	0	0	0	0
4/21/2024	5:45 PM	0	0	0	0	0	0	0	0	0	0	0	0	0
4/21/2024	6:00 PM	0	0	0	0	0	0	0	0	0	0	0	0	0
4/21/2024	6:15 PM	0	0	0	0	0	0	0	0	0	0	0	0	0
4/21/2024	6:30 PM	0	0	0	0	0	0	0	0	0	0	0	0	0
4/21/2024	6:45 PM	0	0	0	0	0	0	0	0	0	0	0	0	0
4/21/2024	7:00 PM	0	0	0	0	0	0	0	0	0	0	0	0	0
4/21/2024	7:15 PM	0	0	0	0	0	0	0	0	0	0	0	0	0
4/21/2024	7:30 PM	0	0	0	0	0	0	0	0	0	0	0	0	0
4/21/2024	7:45 PM	0	0	0	0	0	0	0	0	0	0	0	0	0
4/21/2024	8:00 PM	0	0	0	0	0	0	0	0	0	0	0	0	0
4/21/2024	8:15 PM	0	0	0	0	0	0	0	0	0	0	0	0	0
4/21/2024	8:30 PM	0	0	0	0	0	0	0	0	0	0	0	0	0
4/21/2024	8:45 PM	0	0	0	0	0	0	0	0	0	0	0	0	0
4/21/2024	9:00 PM	0	0	0	0	0	0	0	0	0	0	0	0	0
4/21/2024	9:15 PM	0	0	0	0	0	0	0	0	0	0	0	0	0
4/21/2024	9:30 PM	0	0	0	0	0	0	0	0	0	0	0	0	0
4/21/2024	9:45 PM	0	0	0	0	0	0	0	0	0	0	0	0	0
4/21/2024	10:00 PM	0	0	0	0	0	0	0	0	0	0	0	0	0
4/21/2024	10:15 PM	0	0	0	0	0	0	0	0	0	0	0	0	0
4/21/2024	10:30 PM	0	0	0	0	0	0	0	0	0	0	0	0	0
4/21/2024	10:45 PM	0	0	0	0	0	0	0	0	0	0	0	0	0
4/21/2024	11:00 PM	0	0	0	0	0	0	0	0	0	0	0	0	0
4/21/2024	11:15 PM	0	0	0	0	0	0	0	0	0	0	0	0	0
4/21/2024	11:30 PM	0	0	0	0	0	0	0	0	0	0	0	0	0
4/21/2024	11:45 PM	0	0	0	0	0	0	0	0	0	0	0	0	0

4/22/2024	12:00 AM	0	0	0	0	0	0	0	0	0	0	0	0	0
4/22/2024	12:15 AM	0	0	0	0	0	0	0	0	0	0	0	0	0
4/22/2024	12:30 AM	0	0	0	0	0	0	0	0	0	0	0	0	0
4/22/2024	12:45 AM	0	0	0	0	0	0	0	0	0	0	0	0	0
4/22/2024	1:00 AM	0	0	0	0	0	0	0	0	0	0	0	0	0
4/22/2024	1:15 AM	0	0	0	0	0	0	0	0	0	0	0	0	0
4/22/2024	1:30 AM	0	0	0	0	0	0	0	0	0	0	0	0	0
4/22/2024	1:45 AM	0	0	0	0	0	0	0	0	0	0	0	0	0
4/22/2024	2:00 AM	0	0	0	0	0	0	0	0	0	0	0	0	0
4/22/2024	2:15 AM	0	0	0	0	0	0	0	0	0	0	0	0	0
4/22/2024	2:30 AM	0	0	0	0	0	0	0	0	0	0	0	0	0
4/22/2024	2:45 AM	0	0	0	0	0	0	0	0	0	0	0	0	0
4/22/2024	3:00 AM	0	0	0	0	0	0	0	0	0	0	0	0	0
4/22/2024	3:15 AM	0	0	0	0	0	0	0	0	0	0	0	0	0
4/22/2024	3:30 AM	0	0	0	0	0	0	0	0	0	0	0	0	0
4/22/2024	3:45 AM	0	0	0	0	0	0	0	0	0	0	0	0	0
4/22/2024	4:00 AM	0	0	0	0	0	0	0	0	0	0	0	0	0
4/22/2024	4:15 AM	0	0	0	0	0	0	0	0	0	0	0	0	0
4/22/2024	4:30 AM	0	0	0	0	0	0	0	0	0	0	0	0	0
4/22/2024	4:45 AM	0	0	0	0	0	0	0	0	0	0	0	0	0
4/22/2024	5:00 AM	0	0	0	0	0	0	0	0	0	0	0	0	0
4/22/2024	5:15 AM	0	0	0	0	0	0	0	0	0	0	0	0	0
4/22/2024	5:30 AM	0	0	0	0	0	0	0	0	0	0	0	0	0
4/22/2024	5:45 AM	0	0	0	0	0	0	0	0	0	0	0	0	0
4/22/2024	6:00 AM	0	0	0	0	0	0	0	0	0	0	0	0	0
4/22/2024	6:15 AM	0	0	0	0	0	0	0	0	0	0	0	0	0
4/22/2024	6:30 AM	0	0	0	0	0	0	0	0	0	0	0	0	0
4/22/2024	6:45 AM	0	0	0	0	0	0	0	0	0	0	0	0	0
4/22/2024	7:00 AM	0	0	0	0	0	0	0	0	0	0	0	0	0
4/22/2024	7:15 AM	0	0	0	0	0	0	0	0	0	0	0	0	0
4/22/2024	7:30 AM	0	0	0	0	0	0	0	0	0	0	0	0	0
4/22/2024	7:45 AM	0	0	0	0	0	0	0	0	0	0	0	0	0
4/22/2024	8:00 AM	0	0	0	0	0	0	0	0	0	0	0	0	0
4/22/2024	8:15 AM	0	0	0	0	0	0	0	0	0	0	0	0	0
4/22/2024	8:30 AM	0	0	0	0	0	0	0	0	0	0	0	0	0
4/22/2024	8:45 AM	0	0	0	0	0	0	0	0	0	0	0	0	0
4/22/2024	9:00 AM	0	0	0	0	0	0	0	0	0	0	0	0	0
4/22/2024	9:15 AM	0	0	0	0	0	0	0	0	0	0	0	0	0
4/22/2024	9:30 AM	0	0	0	0	0	0	0	0	0	0	0	0	0
4/22/2024	9:45 AM	0	0	0	0	0	0	0	0	0	0	0	0	0
4/22/2024	10:00 AM	0	0	0	0	0	0	0	0	0	0	0	0	0
4/22/2024	10:15 AM	0	0	0	0	0	0	0	0	0	0	0	0	0
4/22/2024	10:30 AM	0	0	0	0	0	0	0	0	0	0	0	0	0
4/22/2024	10:45 AM	0	0	0	0	0	0	0	0	0	0	0	0	0
4/22/2024	11:00 AM	0	0	0	0	0	0	0	0	0	0	0	0	0
4/22/2024	11:15 AM	0	0	0	0	0	0	0	0	0	0	0	0	0
4/22/2024	11:30 AM	0	0	0	0	0	0	0	0	0	0	0	0	0
4/22/2024	11:45 AM	0	0	0	0	0	0	0	0	0	0	0	0	0
4/22/2024	12:00 PM	0	0	0	0	0	0	0	0	0	0	0	0	0
4/22/2024	12:15 PM	0	0	0	0	0	0	0	0	0	0	0	0	0
4/22/2024	12:30 PM	0	0	0	0	0	0	0	0	0	0	0	0	0
4/22/2024	12:45 PM	0	0	0	0	0	0	0	0	0	0	0	0	0
4/22/2024	1:00 PM	0	0	0	0	0	0	0	0	0	0	0	0	0
4/22/2024	1:15 PM	0	0	0	0	0	0	0	0	0	0	0	0	0
4/22/2024	1:30 PM	0	0	0	0	0	0	0	0	0	0	0	0	0
4/22/2024	1:45 PM	0	0	0	0	0	0	0	0	0	0	0	0	0
4/22/2024	2:00 PM	0	0	0	0	0	0	0	0	0	0	0	0	0
4/22/2024	2:15 PM	0	0	0	0	0	0	0	0	0	0	0	0	0
4/22/2024	2:30 PM	0	0	0	0	0	0	0	0	0	0	0	0	0
4/22/2024	2:45 PM	0	0	0	0	0	0	0	0	0	0	0	0	0
4/22/2024	3:00 PM	0	0	0	0	0	0	0	0	0	0	0	0	0
4/22/2024	3:15 PM	0	0	0	0	0	0	0	0	0	0	0	0	0
4/22/2024	3:30 PM	0	0	0	0	0	0	0	0	0	0	0	0	0
4/22/2024	3:45 PM	0	0	0	0	0	0	0	0	0	0	0	0	0
4/22/2024	4:00 PM	0	0	0	0	0	0	0	0	0	0	0	0	0
4/22/2024	4:15 PM	0	0	0	0	0	0	0	0	0	0	0	0	0
4/22/2024	4:30 PM	0	0	0	0	0	0	0	0	0	0	0	0	0
4/22/2024	4:45 PM	0	0	0	0	0	0	0	0	0	0	0	0	0
4/22/2024	5:00 PM	0	0	0	0	0	0	0	0	0	0	0	0	0
4/22/2024	5:15 PM	0	0	0	0	0	0	0	0	0	0	0	0	0
4/22/2024	5:30 PM	0	0	0	0	0	0	0	0	0	0	0	0	0
4/22/2024	5:45 PM	0	0	0	0	0	0	0	0	0	0	0	0	0
4/22/2024	6:00 PM	0	0	0	0	0	0	0	0	0	0	0	0	0
4/22/2024	6:15 PM	0	0	0	0	0	0	0	0	0	0	0	0	0
4/22/2024	6:30 PM	0	0	0	0	0	0	0	0	0	0	0	0	0
4/22/2024	6:45 PM	0	0	0	0	0	0	0	0	0	0	0	0	0
4/22/2024	7:00 PM	0	0	0	0	0	0	0	0	0	0	0	0	0
4/22/2024	7:15 PM	0	0	0	0	0	0	0	0	0	0	0	0	0
4/22/2024	7:30 PM	0	0	0	0	0	0	0	0	0	0	0	0	0
4/22/2024	7:45 PM	0	0	0	0	0	0	0	0	0	0	0	0	0
4/22/2024	8:00 PM	0	0	0	0	0	0	0	0	0	0	0	0	0
4/22/2024	8:15 PM	0	0	0	0	0	0	0	0	0	0	0	0	0
4/22/2024	8:30 PM	0	0	0	0	0	0	0	0	0	0	0	0	0
4/22/2024	8:45 PM	0	0	0	0	0	0	0	0	0	0	0	0	0
4/22/2024	9:00 PM	0	0	0	0	0	0	0	0	0	0	0	0	0
4/22/2024	9:15 PM	0	0	0	0	0	0	0	0	0	0	0	0	0
4/22/2024	9:30 PM	0	0	0	0	0	0	0	0	0	0	0	0	0
4/22/2024	9:45 PM	0	0	0	0	0	0	0	0	0	0	0	0	0
4/22/2024	10:00 PM	0	0	0	0	0	0	0	0	0	0	0	0	0
4/22/2024	10:15 PM	0	0	0	0	0	0	0	0	0	0	0	0	0
4/22/2024	10:30 PM	0	0	0	0	0	0	0	0	0	0	0	0	0
4/22/2024	10:45 PM	0	0	0	0	0	0	0	0	0	0	0	0	0
4/22/2024	11:00 PM	0	0	0	0	0	0	0	0	0	0	0	0	0
4/22/2024	11:15 PM	0	0	0	0	0	0	0	0	0	0	0	0	0
4/22/2024	11:30 PM	0	0	0	0	0	0	0	0	0	0	0	0	0
4/22/2024	11:45 PM	0	0	0	0	0	0	0	0	0	0	0	0	0

4/23/2024	12:00 AM	0	0	0	0	0	0	0	0	0	0	0	0	0
4/23/2024	12:15 AM	0	0	0	0	0	0	0	0	0	0	0	0	0
4/23/2024	12:30 AM	0	0	0	0	0	0	0	0	0	0	0	0	0
4/23/2024	12:45 AM	0	0	0	0	0	0	0	0	0	0	0	0	0
4/23/2024	1:00 AM	0	0	0	0	0	0	0	0	0	0	0	0	0
4/23/2024	1:15 AM	0	0	0	0	0	0	0	0	0	0	0	0	0
4/23/2024	1:30 AM	0	0	0	0	0	0	0	0	0	0	0	0	0
4/23/2024	1:45 AM	0	0	0	0	0	0	0	0	0	0	0	0	0
4/23/2024	2:00 AM	0	0	0	0	0	0	0	0	0	0	0	0	0
4/23/2024	2:15 AM	0	0	0	0	0	0	0	0	0	0	0	0	0
4/23/2024	2:30 AM	0	0	0	0	0	0	0	0	0	0	0	0	0
4/23/2024	2:45 AM	0	0	0	0	0	0	0	0	0	0	0	0	0
4/23/2024	3:00 AM	0	0	0	0	0	0	0	0	0	0	0	0	0
4/23/2024	3:15 AM	0	0	0	0	0	0	0	0	0	0	0	0	0
4/23/2024	3:30 AM	0	0	0	0	0	0	0	0	0	0	0	0	0
4/23/2024	3:45 AM	0	0	0	0	0	0	0	0	0	0	0	0	0
4/23/2024	4:00 AM	0	0	0	0	0	0	0	0	0	0	0	0	0
4/23/2024	4:15 AM	0	0	0	0	0	0	0	0	0	0	0	0	0
4/23/2024	4:30 AM	0	0	0	0	0	0	0	0	0	0	0	0	0
4/23/2024	4:45 AM	0	0	0	0	0	0	0	0	0	0	0	0	0
4/23/2024	5:00 AM	0	0	0	0	0	0	0	0	0	0	0	0	0
4/23/2024	5:15 AM	0	0	0	0	0	0	0	0	0	0	0	0	0
4/23/2024	5:30 AM	0	0	0	0	0	0	0	0	0	0	0	0	0
4/23/2024	5:45 AM	0	0	0	0	0	0	0	0	0	0	0	0	0
4/23/2024	6:00 AM	0	0	0	0	0	0	0	0	0	0	0	0	0
4/23/2024	6:15 AM	0	0	0	0	0	0	0	0	0	0	0	0	0
4/23/2024	6:30 AM	0	0	0	0	0	0	0	0	0	0	0	0	0
4/23/2024	6:45 AM	0	0	0	0	0	0	0	0	0	0	0	0	0
4/23/2024	7:00 AM	0	0	0	0	0	0	0	0	0	0	0	0	0
4/23/2024	7:15 AM	0	0	0	0	0	0	0	0	0	0	0	0	0
4/23/2024	7:30 AM	0	0	0	0	0	0	0	0	0	0	0	0	0
4/23/2024	7:45 AM	0	0	0	0	0	0	0	0	0	0	0	0	0
4/23/2024	8:00 AM	0	0	0	0	0	0	0	0	0	0	0	0	0
4/23/2024	8:15 AM	0	0	0	0	0	0	0	0	0	0	0	0	0
4/23/2024	8:30 AM	0	0	0	0	0	0	0	0	0	0	0	0	0
4/23/2024	8:45 AM	0	0	0	0	0	0	0	0	0	0	0	0	0
4/23/2024	9:00 AM	0	0	0	0	0	0	0	0	0	0	0	0	0
4/23/2024	9:15 AM	0	0	0	0	0	0	0	0	0	0	0	0	0
4/23/2024	9:30 AM	0	0	0	0	0	0	0	0	0	0	0	0	0
4/23/2024	9:45 AM	0	0	0	0	0	0	0	0	0	0	0	0	0
4/23/2024	10:00 AM	0	0	0	0	0	0	0	0	0	0	0	0	0
4/23/2024	10:15 AM	0	0	0	0	0	0	0	0	0	0	0	0	0
4/23/2024	10:30 AM	0	0	0	0	0	0	0	0	0	0	0	0	0
4/23/2024	10:45 AM	0	0	0	0	0	0	0	0	0	0	0	0	0
4/23/2024	11:00 AM	0	0	0	0	0	0	0	0	0	0	0	0	0
4/23/2024	11:15 AM	0	0	0	0	0	0	0	0	0	0	0	0	0
4/23/2024	11:30 AM	0	0	0	0	0	0	0	0	0	0	0	0	0
4/23/2024	11:45 AM	0	0	0	0	0	0	0	0	0	0	0	0	0
4/23/2024	12:00 PM	0	0	0	0	0	0	0	0	0	0	0	0	0
4/23/2024	12:15 PM	0	0	0	0	0	0	0	0	0	0	0	0	0
4/23/2024	12:30 PM	0	0	0	0	0	0	0	0	0	0	0	0	0
4/23/2024	12:45 PM	0	0	0	0	0	0	0	0	0	0	0	0	0
4/23/2024	1:00 PM	0	0	0	0	0	0	0	0	0	0	0	0	0
4/23/2024	1:15 PM	0	0	0	0	0	0	0	0	0	0	0	0	0
4/23/2024	1:30 PM	0	0	0	0	0	0	0	0	0	0	0	0	0
4/23/2024	1:45 PM	0	0	0	0	0	0	0	0	0	0	0	0	0
4/23/2024	2:00 PM	0	0	0	0	0	0	0	0	0	0	0	0	0
4/23/2024	2:15 PM	0	0	0	0	0	0	0	0	0	0	0	0	0
4/23/2024	2:30 PM	0	0	0	0	0	0	0	0	0	0	0	0	0
4/23/2024	2:45 PM	0	0	0	0	0	0	0	0	0	0	0	0	0
4/23/2024	3:00 PM	0	0	0	0	0	0	0	0	0	0	0	0	0
4/23/2024	3:15 PM	0	0	0	0	0	0	0	0	0	0	0	0	0
4/23/2024	3:30 PM	0	0	0	0	0	0	0	0	0	0	0	0	0
4/23/2024	3:45 PM	0	0	0	0	0	0	0	0	0	0	0	0	0
4/23/2024	4:00 PM	0	0	0	0	0	0	0	0	0	0	0	0	0
4/23/2024	4:15 PM	0	0	0	0	0	0	0	0	0	0	0	0	0
4/23/2024	4:30 PM	0	0	0	0	0	0	0	0	0	0	0	0	0
4/23/2024	4:45 PM	0	0	0	0	0	0	0	0	0	0	0	0	0
4/23/2024	5:00 PM	0	0	0	0	0	0	0	0	0	0	0	0	0
4/23/2024	5:15 PM	0	0	0	0	0	0	0	0	0	0	0	0	0
4/23/2024	5:30 PM	0	0	0	0	0	0	0	0	0	0	0	0	0
4/23/2024	5:45 PM	0	0	0	0	0	0	0	0	0	0	0	0	0
4/23/2024	6:00 PM	0	0	0	0	0	0	0	0	0	0	0	0	0
4/23/2024	6:15 PM	0	0	0	0	0	0	0	0	0	0	0	0	0
4/23/2024	6:30 PM	0	0	0	0	0	0	0	0	0	0	0	0	0
4/23/2024	6:45 PM	0	0	0	0	0	0	0	0	0	0	0	0	0
4/23/2024	7:00 PM	0	0	0	0	0	0	0	0	0	0	0	0	0
4/23/2024	7:15 PM	0	0	0	0	0	0	0	0	0	0	0	0	0
4/23/2024	7:30 PM	0	0	0	0	0	0	0	0	0	0	0	0	0
4/23/2024	7:45 PM	0	0	0	0	0	0	0	0	0	0	0	0	0
4/23/2024	8:00 PM	0	0	0	0	0	0	0	0	0	0	0	0	0
4/23/2024	8:15 PM	0	0	0	0	0	0	0	0	0	0	0	0	0
4/23/2024	8:30 PM	0	0	0	0	0	0	0	0	0	0	0	0	0
4/23/2024	8:45 PM	0	0	0	0	0	0	0	0	0	0	0	0	0
4/23/2024	9:00 PM	0	0	0	0	0	0	0	0	0	0	0	0	0
4/23/2024	9:15 PM	0	0	0	0	0	0	0	0	0	0	0	0	0
4/23/2024	9:30 PM	0	0	0	0	0	0	0	0	0	0	0	0	0
4/23/2024	9:45 PM	0	0	0	0	0	0	0	0	0	0	0	0	0
4/23/2024	10:00 PM	0	0	0	0	0	0	0	0	0	0	0	0	0
4/23/2024	10:15 PM	0	0	0	0	0	0	0	0	0	0	0	0	0
4/23/2024	10:30 PM	0	0	0	0	0	0	0	0	0	0	0	0	0
4/23/2024	10:45 PM	0	0	0	0	0	0	0	0	0	0	0	0	0
4/23/2024	11:00 PM	0	0	0	0	0	0	0	0	0	0	0	0	0
4/23/2024	11:15 PM	0	0	0	0	0	0	0	0	0	0	0	0	0
4/23/2024	11:30 PM	0	0	0	0	0	0	0	0	0	0	0	0	0
4/23/2024	11:45 PM	0	0	0	0	0	0	0	0	0	0	0	0	0

4/24/2024	12:00 AM	0	0	0	0	0	0	0	0	0	0	0	0	0
4/24/2024	12:15 AM	0	0	0	0	0	0	0	0	0	0	0	0	0
4/24/2024	12:30 AM	0	0	0	0	0	0	0	0	0	0	0	0	0
4/24/2024	12:45 AM	0	0	0	0	0	0	0	0	0	0	0	0	0
4/24/2024	1:00 AM	0	0	0	0	0	0	0	0	0	0	0	0	0
4/24/2024	1:15 AM	0	0	0	0	0	0	0	0	0	0	0	0	0
4/24/2024	1:30 AM	0	0	0	0	0	0	0	0	0	0	0	0	0
4/24/2024	1:45 AM	0	0	0	0	0	0	0	0	0	0	0	0	0
4/24/2024	2:00 AM	0	0	0	0	0	0	0	0	0	0	0	0	0
4/24/2024	2:15 AM	0	0	0	0	0	0	0	0	0	0	0	0	0
4/24/2024	2:30 AM	0	0	0	0	0	0	0	0	0	0	0	0	0
4/24/2024	2:45 AM	0	0	0	0	0	0	0	0	0	0	0	0	0
4/24/2024	3:00 AM	0	0	0	0	0	0	0	0	0	0	0	0	0
4/24/2024	3:15 AM	0	0	0	0	0	0	0	0	0	0	0	0	0
4/24/2024	3:30 AM	0	0	0	0	0	0	0	0	0	0	0	0	0
4/24/2024	3:45 AM	0	0	0	0	0	0	0	0	0	0	0	0	0
4/24/2024	4:00 AM	0	0	0	0	0	0	0	0	0	0	0	0	0
4/24/2024	4:15 AM	0	0	0	0	0	0	0	0	0	0	0	0	0
4/24/2024	4:30 AM	0	0	0	0	0	0	0	0	0	0	0	0	0
4/24/2024	4:45 AM	0	0	0	0	0	0	0	0	0	0	0	0	0
4/24/2024	5:00 AM	0	0	0	0	0	0	0	0	0	0	0	0	0
4/24/2024	5:15 AM	0	0	0	0	0	0	0	0	0	0	0	0	0
4/24/2024	5:30 AM	0	0	0	0	0	0	0	0	0	0	0	0	0
4/24/2024	5:45 AM	0	0	0	0	0	0	0	0	0	0	0	0	0
4/24/2024	6:00 AM	0	0	0	0	0	0	0	0	0	0	0	0	0
4/24/2024	6:15 AM	0	0	0	0	0	0	0	0	0	0	0	0	0
4/24/2024	6:30 AM	0	0	0	0	0	0	0	0	0	0	0	0	0
4/24/2024	6:45 AM	0	0	0	0	0	0	0	0	0	0	0	0	0
4/24/2024	7:00 AM	0	0	0	0	0	0	0	0	0	0	0	0	0
4/24/2024	7:15 AM	0	0	0	0	0	0	0	0	0	0	0	0	0
4/24/2024	7:30 AM	0	0	0	0	0	0	0	0	0	0	0	0	0
4/24/2024	7:45 AM	0	0	0	0	0	0	0	0	0	0	0	0	0
4/24/2024	8:00 AM	0	0	0	0	0	0	0	0	0	0	0	0	0
4/24/2024	8:15 AM	0	0	0	0	0	0	0	0	0	0	0	0	0
4/24/2024	8:30 AM	0	0	0	0	0	0	0	0	0	0	0	0	0
4/24/2024	8:45 AM	0	0	0	0	0	0	0	0	0	0	0	0	0
4/24/2024	9:00 AM	0	0	0	0	0	0	0	0	0	0	0	0	0
4/24/2024	9:15 AM	0	0	0	0	0	0	0	0	0	0	0	0	0
4/24/2024	9:30 AM	0	0	0	0	0	0	0	0	0	0	0	0	0
4/24/2024	9:45 AM	0	0	0	0	0	0	0	0	0	0	0	0	0
4/24/2024	10:00 AM	0	0	0	0	0	0	0	0	0	0	0	0	0
4/24/2024	10:15 AM	0	0	0	0	0	0	0	0	0	0	0	0	0
4/24/2024	10:30 AM	0	0	0	0	0	0	0	0	0	0	0	0	0
4/24/2024	10:45 AM	0	0	0	0	0	0	0	0	0	0	0	0	0
4/24/2024	11:00 AM	0	0	0	0	0	0	0	0	0	0	0	0	0
4/24/2024	11:15 AM	0	0	0	0	0	0	0	0	0	0	0	0	0
4/24/2024	11:30 AM	0	0	0	0	0	0	0	0	0	0	0	0	0
4/24/2024	11:45 AM	0	0	0	0	0	0	0	0	0	0	0	0	0
4/24/2024	12:00 PM	0	0	0	0	0	0	0	0	0	0	0	0	0
4/24/2024	12:15 PM	0	0	0	0	0	0	0	0	0	0	0	0	0
4/24/2024	12:30 PM	0	0	0	0	0	0	0	0	0	0	0	0	0
4/24/2024	12:45 PM	0	0	0	0	0	0	0	0	0	0	0	0	0
4/24/2024	1:00 PM	0	0	0	0	0	0	0	0	0	0	0	0	0
4/24/2024	1:15 PM	0	0	0	0	0	0	0	0	0	0	0	0	0
4/24/2024	1:30 PM	0	0	0	0	0	0	0	0	0	0	0	0	0
4/24/2024	1:45 PM	0	0	0	0	0	0	0	0	0	0	0	0	0
4/24/2024	2:00 PM	0	0	0	0	0	0	0	0	0	0	0	0	0
4/24/2024	2:15 PM	0	0	0	0	0	0	0	0	0	0	0	0	0
4/24/2024	2:30 PM	0	0	0	0	0	0	0	0	0	0	0	0	0
4/24/2024	2:45 PM	0	0	0	0	0	0	0	0	0	0	0	0	0
4/24/2024	3:00 PM	0	0	0	0	0	0	0	0	0	0	0	0	0
4/24/2024	3:15 PM	0	0	0	0	0	0	0	0	0	0	0	0	0
4/24/2024	3:30 PM	0	0	0	0	0	0	0	0	0	0	0	0	0
4/24/2024	3:45 PM	0	0	0	0	0	0	0	0	0	0	0	0	0
4/24/2024	4:00 PM	0	0	0	0	0	0	0	0	0	0	0	0	0
4/24/2024	4:15 PM	0	0	0	0	0	0	0	0	0	0	0	0	0
4/24/2024	4:30 PM	0	0	0	0	0	0	0	0	0	0	0	0	0
4/24/2024	4:45 PM	0	0	0	0	0	0	0	0	0	0	0	0	0
4/24/2024	5:00 PM	0	0	0	0	0	0	0	0	0	0	0	0	0
4/24/2024	5:15 PM	0	0	0	0	0	0	0	0	0	0	0	0	0
4/24/2024	5:30 PM	0	0	0	0	0	0	0	0	0	0	0	0	0
4/24/2024	5:45 PM	0	0	0	0	0	0	0	0	0	0	0	0	0
4/24/2024	6:00 PM	0	0	0	0	0	0	0	0	0	0	0	0	0
4/24/2024	6:15 PM	0	0	0	0	0	0	0	0	0	0	0	0	0
4/24/2024	6:30 PM	0	0	0	0	0	0	0	0	0	0	0	0	0
4/24/2024	6:45 PM	0	0	0	0	0	0	0	0	0	0	0	0	0
4/24/2024	7:00 PM	0	0	0	0	0	0	0	0	0	0	0	0	0
4/24/2024	7:15 PM	0	0	0	0	0	0	0	0	0	0	0	0	0
4/24/2024	7:30 PM	0	0	0	0	0	0	0	0	0	0	0	0	0
4/24/2024	7:45 PM	0	0	0	0	0	0	0	0	0	0	0	0	0
4/24/2024	8:00 PM	0	0	0	0	0	0	0	0	0	0	0	0	0
4/24/2024	8:15 PM	0	0	0	0	0	0	0	0	0	0	0	0	0
4/24/2024	8:30 PM	0	0	0	0	0	0	0	0	0	0	0	0	0
4/24/2024	8:45 PM	0	0	0	0	0	0	0	0	0	0	0	0	0
4/24/2024	9:00 PM	0	0	0	0	0	0	0	0	0	0	0	0	0
4/24/2024	9:15 PM	0	0	0	0	0	0	0	0	0	0	0	0	0
4/24/2024	9:30 PM	0	0	0	0	0	0	0	0	0	0	0	0	0
4/24/2024	9:45 PM	0	0	0	0	0	0	0	0	0	0	0	0	0
4/24/2024	10:00 PM	0	0	0	0	0	0	0	0	0	0	0	0	0
4/24/2024	10:15 PM	0	0	0	0	0	0	0	0	0	0	0	0	0
4/24/2024	10:30 PM	0	0	0	0	0	0	0	0	0	0	0	0	0
4/24/2024	10:45 PM	0	0	0	0	0	0	0	0	0	0	0	0	0
4/24/2024	11:00 PM	0	0	0	0	0	0	0	0	0	0	0	0	0
4/24/2024	11:15 PM	0	0	0	0	0	0	0	0	0	0	0	0	0
4/24/2024	11:30 PM	0	0	0	0	0	0	0	0	0	0	0	0	0
4/24/2024	11:45 PM	0	0	0	0	0	0	0	0	0	0	0	0	0

4/25/2024	12:00 AM	0	0	0	0	0	0	0	0	0	0	0	0	0
4/25/2024	12:15 AM	0	0	0	0	0	0	0	0	0	0	0	0	0
4/25/2024	12:30 AM	0	0	0	0	0	0	0	0	0	0	0	0	0
4/25/2024	12:45 AM	0	0	0	0	0	0	0	0	0	0	0	0	0
4/25/2024	1:00 AM	0	0	0	0	0	0	0	0	0	0	0	0	0
4/25/2024	1:15 AM	0	0	0	0	0	0	0	0	0	0	0	0	0
4/25/2024	1:30 AM	0	0	0	0	0	0	0	0	0	0	0	0	0
4/25/2024	1:45 AM	0	0	0	0	0	0	0	0	0	0	0	0	0
4/25/2024	2:00 AM	0	0	0	0	0	0	0	0	0	0	0	0	0
4/25/2024	2:15 AM	0	0	0	0	0	0	0	0	0	0	0	0	0
4/25/2024	2:30 AM	0	0	0	0	0	0	0	0	0	0	0	0	0
4/25/2024	2:45 AM	0	0	0	0	0	0	0	0	0	0	0	0	0
4/25/2024	3:00 AM	0	0	0	0	0	0	0	0	0	0	0	0	0
4/25/2024	3:15 AM	0	0	0	0	0	0	0	0	0	0	0	0	0
4/25/2024	3:30 AM	0	0	0	0	0	0	0	0	0	0	0	0	0
4/25/2024	3:45 AM	0	0	0	0	0	0	0	0	0	0	0	0	0
4/25/2024	4:00 AM	0	0	0	0	0	0	0	0	0	0	0	0	0
4/25/2024	4:15 AM	0	0	0	0	0	0	0	0	0	0	0	0	0
4/25/2024	4:30 AM	0	0	0	0	0	0	0	0	0	0	0	0	0
4/25/2024	4:45 AM	0	0	0	0	0	0	0	0	0	0	0	0	0
4/25/2024	5:00 AM	0	0	0	0	0	0	0	0	0	0	0	0	0
4/25/2024	5:15 AM	0	0	0	0	0	0	0	0	0	0	0	0	0
4/25/2024	5:30 AM	0	0	0	0	0	0	0	0	0	0	0	0	0
4/25/2024	5:45 AM	0	0	0	0	0	0	0	0	0	0	0	0	0
4/25/2024	6:00 AM	0	0	0	0	0	0	0	0	0	0	0	0	0
4/25/2024	6:15 AM	0	0	0	0	0	0	0	0	0	0	0	0	0
4/25/2024	6:30 AM	0	0	0	0	0	0	0	0	0	0	0	0	0
4/25/2024	6:45 AM	0	0	0	0	0	0	0	0	0	0	0	0	0
4/25/2024	7:00 AM	0	0	0	0	0	0	0	0	0	0	0	0	0
4/25/2024	7:15 AM	0	0	0	0	0	0	0	0	0	0	0	0	0
4/25/2024	7:30 AM	0	0	0	0	0	0	0	0	0	0	0	0	0
4/25/2024	7:45 AM	0	0	0	0	0	0	0	0	0	0	0	0	0
4/25/2024	8:00 AM	0	0	0	0	0	0	0	0	0	0	0	0	0
4/25/2024	8:15 AM	0	0	0	0	0	0	0	0	0	0	0	0	0
4/25/2024	8:30 AM	0	0	0	0	0	0	0	0	0	0	0	0	0
4/25/2024	8:45 AM	0	0	0	0	0	0	0	0	0	0	0	0	0
4/25/2024	9:00 AM	0	0	0	0	0	0	0	0	0	0	0	0	0
4/25/2024	9:15 AM	0	0	0	0	0	0	0	0	0	0	0	0	0
4/25/2024	9:30 AM	0	0	0	0	0	0	0	0	0	0	0	0	0
4/25/2024	9:45 AM	0	0	0	0	0	0	0	0	0	0	0	0	0
4/25/2024	10:00 AM	0	0	0	0	0	0	0	0	0	0	0	0	0
4/25/2024	10:15 AM	0	0	0	0	0	0	0	0	0	0	0	0	0
4/25/2024	10:30 AM	0	0	0	0	0	0	0	0	0	0	0	0	0
4/25/2024	10:45 AM	0	0	0	0	0	0	0	0	0	0	0	0	0
4/25/2024	11:00 AM	0	0	0	0	0	0	0	0	0	0	0	0	0
4/25/2024	11:15 AM	0	0	0	0	0	0	0	0	0	0	0	0	0
4/25/2024	11:30 AM	0	0	0	0	0	0	0	0	0	0	0	0	0
4/25/2024	11:45 AM	0	0	0	0	0	0	0	0	0	0	0	0	0
4/25/2024	12:00 PM	0	0	0	0	0	0	0	0	0	0	0	0	0
4/25/2024	12:15 PM	0	0	0	0	0	0	0	0	0	0	0	0	0
4/25/2024	12:30 PM	0	0	0	0	0	0	0	0	0	0	0	0	0
4/25/2024	12:45 PM	0	0	0	0	0	0	0	0	0	0	0	0	0
4/25/2024	1:00 PM	0	0	0	0	0	0	0	0	0	0	0	0	0
4/25/2024	1:15 PM	0	0	0	0	0	0	0	0	0	0	0	0	0
4/25/2024	1:30 PM	0	0	0	0	0	0	0	0	0	0	0	0	0
4/25/2024	1:45 PM	0	0	0	0	0	0	0	0	0	0	0	0	0
4/25/2024	2:00 PM	0	0	0	0	0	0	0	0	0	0	0	0	0
4/25/2024	2:15 PM	0	0	0	0	0	0	0	0	0	0	0	0	0
4/25/2024	2:30 PM	0	0	0	0	0	0	0	0	0	0	0	0	0
4/25/2024	2:45 PM	0	0	0	0	0	0	0	0	0	0	0	0	0
4/25/2024	3:00 PM	0	0	0	0	0	0	0	0	0	0	0	0	0
4/25/2024	3:15 PM	0	0	0	0	0	0	0	0	0	0	0	0	0
4/25/2024	3:30 PM	0	0	0	0	0	0	0	0	0	0	0	0	0
4/25/2024	3:45 PM	0	0	0	0	0	0	0	0	0	0	0	0	0
4/25/2024	4:00 PM	0	0	0	0	0	0	0	0	0	0	0	0	0
4/25/2024	4:15 PM	0	0	0	0	0	0	0	0	0	0	0	0	0
4/25/2024	4:30 PM	0	0	0	0	0	0	0	0	0	0	0	0	0
4/25/2024	4:45 PM	0	0	0	0	0	0	0	0	0	0	0	0	0
4/25/2024	5:00 PM	0	0	0	0	0	0	0	0	0	0	0	0	0
4/25/2024	5:15 PM	0	0	0	0	0	0	0	0	0	0	0	0	0
4/25/2024	5:30 PM	0	0	0	0	0	0	0	0	0	0	0	0	0
4/25/2024	5:45 PM	0	0	0	0	0	0	0	0	0	0	0	0	0
4/25/2024	6:00 PM	0	0	0	0	0	0	0	0	0	0	0	0	0
4/25/2024	6:15 PM	0	0	0	0	0	0	0	0	0	0	0	0	0
4/25/2024	6:30 PM	0	0	0	0	0	0	0	0	0	0	0	0	0
4/25/2024	6:45 PM	0	0	0	0	0	0	0	0	0	0	0	0	0
4/25/2024	7:00 PM	0	0	0	0	0	0	0	0	0	0	0	0	0
4/25/2024	7:15 PM	0	0	0	0	0	0	0	0	0	0	0	0	0
4/25/2024	7:30 PM	0	0	0	0	0	0	0	0	0	0	0	0	0
4/25/2024	7:45 PM	0	0	0	0	0	0	0	0	0	0	0	0	0
4/25/2024	8:00 PM	0	0	0	0	0	0	0	0	0	0	0	0	0
4/25/2024	8:15 PM	0	0	0	0	0	0	0	0	0	0	0	0	0
4/25/2024	8:30 PM	0	0	0	0	0	0	0	0	0	0	0	0	0
4/25/2024	8:45 PM	0	0	0	0	0	0	0	0	0	0	0	0	0
4/25/2024	9:00 PM	0	0	0	0	0	0	0	0	0	0	0	0	0
4/25/2024	9:15 PM	0	0	0	0	0	0	0	0	0	0	0	0	0
4/25/2024	9:30 PM	0	0	0	0	0	0	0	0	0	0	0	0	0
4/25/2024	9:45 PM	0	0	0	0	0	0	0	0	0	0	0	0	0
4/25/2024	10:00 PM	0	0	0	0	0	0	0	0	0	0	0	0	0
4/25/2024	10:15 PM	0	0	0	0	0	0	0	0	0	0	0	0	0
4/25/2024	10:30 PM	0	0	0	0	0	0	0	0	0	0	0	0	0
4/25/2024	10:45 PM	0	0	0	0	0	0	0	0	0	0	0	0	0
4/25/2024	11:00 PM	0	0	0	0	0	0	0	0	0	0	0	0	0
4/25/2024	11:15 PM	0	0	0	0	0	0	0	0	0	0	0	0	0
4/25/2024	11:30 PM	0	0	0	0	0	0	0	0	0	0	0	0	0
4/25/2024	11:45 PM	0	0	0	0	0	0	0	0	0	0	0	0	0

4/26/2024	12:00 AM	0	0	0	0	0	0	0	0	0	0	0	0	0
4/26/2024	12:15 AM	0	0	0	0	0	0	0	0	0	0	0	0	0
4/26/2024	12:30 AM	0	0	0	0	0	0	0	0	0	0	0	0	0
4/26/2024	12:45 AM	0	0	0	0	0	0	0	0	0	0	0	0	0
4/26/2024	1:00 AM	0	0	0	0	0	0	0	0	0	0	0	0	0
4/26/2024	1:15 AM	0	0	0	0	0	0	0	0	0	0	0	0	0
4/26/2024	1:30 AM	0	0	0	0	0	0	0	0	0	0	0	0	0
4/26/2024	1:45 AM	0	0	0	0	0	0	0	0	0	0	0	0	0
4/26/2024	2:00 AM	0	0	0	0	0	0	0	0	0	0	0	0	0
4/26/2024	2:15 AM	0	0	0	0	0	0	0	0	0	0	0	0	0
4/26/2024	2:30 AM	0	0	0	0	0	0	0	0	0	0	0	0	0
4/26/2024	2:45 AM	0	0	0	0	0	0	0	0	0	0	0	0	0
4/26/2024	3:00 AM	0	0	0	0	0	0	0	0	0	0	0	0	0
4/26/2024	3:15 AM	0	0	0	0	0	0	0	0	0	0	0	0	0
4/26/2024	3:30 AM	0	0	0	0	0	0	0	0	0	0	0	0	0
4/26/2024	3:45 AM	0	0	0	0	0	0	0	0	0	0	0	0	0
4/26/2024	4:00 AM	0	0	0	0	0	0	0	0	0	0	0	0	0
4/26/2024	4:15 AM	0	0	0	0	0	0	0	0	0	0	0	0	0
4/26/2024	4:30 AM	0	0	0	0	0	0	0	0	0	0	0	0	0
4/26/2024	4:45 AM	0	0	0	0	0	0	0	0	0	0	0	0	0
4/26/2024	5:00 AM	0	0	0	0	0	0	0	0	0	0	0	0	0
4/26/2024	5:15 AM	0	0	0	0	0	0	0	0	0	0	0	0	0
4/26/2024	5:30 AM	0	0	0	0	0	0	0	0	0	0	0	0	0
4/26/2024	5:45 AM	0	0	0	0	0	0	0	0	0	0	0	0	0
4/26/2024	6:00 AM	0	0	0	0	0	0	0	0	0	0	0	0	0
4/26/2024	6:15 AM	0	0	0	0	0	0	0	0	0	0	0	0	0
4/26/2024	6:30 AM	0	0	0	0	0	0	0	0	0	0	0	0	0
4/26/2024	6:45 AM	0	0	0	0	0	0	0	0	0	0	0	0	0
4/26/2024	7:00 AM	0	0	0	0	0	0	0	0	0	0	0	0	0
4/26/2024	7:15 AM	0	0	0	0	0	0	0	0	0	0	0	0	0
4/26/2024	7:30 AM	0	0	0	0	0	0	0	0	0	0	0	0	0
4/26/2024	7:45 AM	0	0	0	0	0	0	0	0	0	0	0	0	0
4/26/2024	8:00 AM	0	0	0	0	0	0	0	0	0	0	0	0	0
4/26/2024	8:15 AM	0	0	0	0	0	0	0	0	0	0	0	0	0
4/26/2024	8:30 AM	0	0	0	0	0	0	0	0	0	0	0	0	0
4/26/2024	8:45 AM	0	0	0	0	0	0	0	0	0	0	0	0	0
4/26/2024	9:00 AM	0	0	0	0	0	0	0	0	0	0	0	0	0
4/26/2024	9:15 AM	0	0	0	0	0	0	0	0	0	0	0	0	0
4/26/2024	9:30 AM	0	0	0	0	0	0	0	0	0	0	0	0	0
4/26/2024	9:45 AM	0	0	0	0	0	0	0	0	0	0	0	0	0
4/26/2024	10:00 AM	0	0	0	0	0	0	0	0	0	0	0	0	0
4/26/2024	10:15 AM	0	0	0	0	0	0	0	0	0	0	0	0	0
4/26/2024	10:30 AM	0	0	0	0	0	0	0	0	0	0	0	0	0
4/26/2024	10:45 AM	0	0	0	0	0	0	0	0	0	0	0	0	0
4/26/2024	11:00 AM	0	0	0	0	0	0	0	0	0	0	0	0	0
4/26/2024	11:15 AM	0	0	0	0	0	0	0	0	0	0	0	0	0
4/26/2024	11:30 AM	0	0	0	0	0	0	0	0	0	0	0	0	0
4/26/2024	11:45 AM	0	0	0	0	0	0	0	0	0	0	0	0	0
4/26/2024	12:00 PM	0	0	0	0	0	0	0	0	0	0	0	0	0
4/26/2024	12:15 PM	0	0	0	0	0	0	0	0	0	0	0	0	0
4/26/2024	12:30 PM	0	0	0	0	0	0	0	0	0	0	0	0	0
4/26/2024	12:45 PM	0	0	0	0	0	0	0	0	0	0	0	0	0
4/26/2024	1:00 PM	0	0	0	0	0	0	0	0	0	0	0	0	0
4/26/2024	1:15 PM	0	0	0	0	0	0	0	0	0	0	0	0	0
4/26/2024	1:30 PM	0	0	0	0	0	0	0	0	0	0	0	0	0
4/26/2024	1:45 PM	0	0	0	0	0	0	0	0	0	0	0	0	0
4/26/2024	2:00 PM	0	0	0	0	0	0	0	0	0	0	0	0	0
4/26/2024	2:15 PM	0	0	0	0	0	0	0	0	0	0	0	0	0
4/26/2024	2:30 PM	0	0	0	0	0	0	0	0	0	0	0	0	0
4/26/2024	2:45 PM	0	0	0	0	0	0	0	0	0	0	0	0	0
4/26/2024	3:00 PM	0	0	0	0	0	0	0	0	0	0	0	0	0
4/26/2024	3:15 PM	0	0	0	0	0	0	0	0	0	0	0	0	0
4/26/2024	3:30 PM	0	0	0	0	0	0	0	0	0	0	0	0	0
4/26/2024	3:45 PM	0	0	0	0	0	0	0	0	0	0	0	0	0
4/26/2024	4:00 PM	0	0	0	0	0	0	0	0	0	0	0	0	0
4/26/2024	4:15 PM	0	0	0	0	0	0	0	0	0	0	0	0	0
4/26/2024	4:30 PM	0	0	0	0	0	0	0	0	0	0	0	0	0
4/26/2024	4:45 PM	0	0	0	0	0	0	0	0	0	0	0	0	0
4/26/2024	5:00 PM	0	0	0	0	0	0	0	0	0	0	0	0	0
4/26/2024	5:15 PM	0	0	0	0	0	0	0	0	0	0	0	0	0
4/26/2024	5:30 PM	0	0	0	0	0	0	0	0	0	0	0	0	0
4/26/2024	5:45 PM	0	0	0	0	0	0	0	0	0	0	0	0	0
4/26/2024	6:00 PM	0	0	0	0	0	0	0	0	0	0	0	0	0
4/26/2024	6:15 PM	0	0	0	0	0	0	0	0	0	0	0	0	0
4/26/2024	6:30 PM	0	0	0	0	0	0	0	0	0	0	0	0	0
4/26/2024	6:45 PM	0	0	0	0	0	0	0	0	0	0	0	0	0
4/26/2024	7:00 PM	0	0	0	0	0	0	0	0	0	0	0	0	0
4/26/2024	7:15 PM	0	0	0	0	0	0	0	0	0	0	0	0	0
4/26/2024	7:30 PM	0	0	0	0	0	0	0	0	0	0	0	0	0
4/26/2024	7:45 PM	0	0	0	0	0	0	0	0	0	0	0	0	0
4/26/2024	8:00 PM	0	0	0	0	0	0	0	0	0	0	0	0	0
4/26/2024	8:15 PM	0	0	0	0	0	0	0	0	0	0	0	0	0
4/26/2024	8:30 PM	0	0	0	0	0	0	0	0	0	0	0	0	0
4/26/2024	8:45 PM	0	0	0	0	0	0	0	0	0	0	0	0	0
4/26/2024	9:00 PM	0	0	0	0	0	0	0	0	0	0	0	0	0
4/26/2024	9:15 PM	0	0	0	0	0	0	0	0	0	0	0	0	0
4/26/2024	9:30 PM	0	0	0	0	0	0	0	0	0	0	0	0	0
4/26/2024	9:45 PM	0	0	0	0	0	0	0	0	0	0	0	0	0
4/26/2024	10:00 PM	0	0	0	0	0	0	0	0	0	0	0	0	0
4/26/2024	10:15 PM	0	0	0	0	0	0	0	0	0	0	0	0	0
4/26/2024	10:30 PM	0	0	0	0	0	0	0	0	0	0	0	0	0
4/26/2024	10:45 PM	0	0	0	0	0	0	0	0	0	0	0	0	0
4/26/2024	11:00 PM	0	0	0	0	0	0	0	0	0	0	0	0	0
4/26/2024	11:15 PM	0	0	0	0	0	0	0	0	0	0	0	0	0
4/26/2024	11:30 PM	0	0	0	0	0	0	0	0	0	0	0	0	0
4/26/2024	11:45 PM	0	0	0	0	0	0	0	0	0	0	0	0	0

4/27/2024	12:00 AM	0	0	0	0	0	0	0	0	0	0	0	0	0
4/27/2024	12:15 AM	0	0	0	0	0	0	0	0	0	0	0	0	0
4/27/2024	12:30 AM	0	0	0	0	0	0	0	0	0	0	0	0	0
4/27/2024	12:45 AM	0	0	0	0	0	0	0	0	0	0	0	0	0
4/27/2024	1:00 AM	0	0	0	0	0	0	0	0	0	0	0	0	0
4/27/2024	1:15 AM	0	0	0	0	0	0	0	0	0	0	0	0	0
4/27/2024	1:30 AM	0	0	0	0	0	0	0	0	0	0	0	0	0
4/27/2024	1:45 AM	0	0	0	0	0	0	0	0	0	0	0	0	0
4/27/2024	2:00 AM	0	0	0	0	0	0	0	0	0	0	0	0	0
4/27/2024	2:15 AM	0	0	0	0	0	0	0	0	0	0	0	0	0
4/27/2024	2:30 AM	0	0	0	0	0	0	0	0	0	0	0	0	0
4/27/2024	2:45 AM	0	0	0	0	0	0	0	0	0	0	0	0	0
4/27/2024	3:00 AM	0	0	0	0	0	0	0	0	0	0	0	0	0
4/27/2024	3:15 AM	0	0	0	0	0	0	0	0	0	0	0	0	0
4/27/2024	3:30 AM	0	0	0	0	0	0	0	0	0	0	0	0	0
4/27/2024	3:45 AM	0	0	0	0	0	0	0	0	0	0	0	0	0
4/27/2024	4:00 AM	0	0	0	0	0	0	0	0	0	0	0	0	0
4/27/2024	4:15 AM	0	0	0	0	0	0	0	0	0	0	0	0	0
4/27/2024	4:30 AM	0	0	0	0	0	0	0	0	0	0	0	0	0
4/27/2024	4:45 AM	0	0	0	0	0	0	0	0	0	0	0	0	0
4/27/2024	5:00 AM	0	0	0	0	0	0	0	0	0	0	0	0	0
4/27/2024	5:15 AM	0	0	0	0	0	0	0	0	0	0	0	0	0
4/27/2024	5:30 AM	0	0	0	0	0	0	0	0	0	0	0	0	0
4/27/2024	5:45 AM	0	0	0	0	0	0	0	0	0	0	0	0	0
4/27/2024	6:00 AM	0	0	0	0	0	0	0	0	0	0	0	0	0
4/27/2024	6:15 AM	0	0	0	0	0	0	0	0	0	0	0	0	0
4/27/2024	6:30 AM	0	0	0	0	0	0	0	0	0	0	0	0	0
4/27/2024	6:45 AM	0	0	0	0	0	0	0	0	0	0	0	0	0
4/27/2024	7:00 AM	0	0	0	0	0	0	0	0	0	0	0	0	0
4/27/2024	7:15 AM	0	0	0	0	0	0	0	0	0	0	0	0	0
4/27/2024	7:30 AM	0	0	0	0	0	0	0	0	0	0	0	0	0
4/27/2024	7:45 AM	0	0	0	0	0	0	0	0	0	0	0	0	0
4/27/2024	8:00 AM	0	0	0	0	0	0	0	0	0	0	0	0	0
4/27/2024	8:15 AM	0	0	0	0	0	0	0	0	0	0	0	0	0
4/27/2024	8:30 AM	0	0	0	0	0	0	0	0	0	0	0	0	0
4/27/2024	8:45 AM	0	0	0	0	0	0	0	0	0	0	0	0	0
4/27/2024	9:00 AM	0	0	0	0	0	0	0	0	0	0	0	0	0
4/27/2024	9:15 AM	0	0	0	0	0	0	0	0	0	0	0	0	0
4/27/2024	9:30 AM	0	0	0	0	0	0	0	0	0	0	0	0	0
4/27/2024	9:45 AM	0	0	0	0	0	0	0	0	0	0	0	0	0
4/27/2024	10:00 AM	0	0	0	0	0	0	0	0	0	0	0	0	0
4/27/2024	10:15 AM	0	0	0	0	0	0	0	0	0	0	0	0	0
4/27/2024	10:30 AM	0	0	0	0	0	0	0	0	0	0	0	0	0
4/27/2024	10:45 AM	0	0	0	0	0	0	0	0	0	0	0	0	0
4/27/2024	11:00 AM	0	0	0	0	0	0	0	0	0	0	0	0	0
4/27/2024	11:15 AM	0	0	0	0	0	0	0	0	0	0	0	0	0
4/27/2024	11:30 AM	0	0	0	0	0	0	0	0	0	0	0	0	0
4/27/2024	11:45 AM	0	0	0	0	0	0	0	0	0	0	0	0	0
4/27/2024	12:00 PM	0	0	0	0	0	0	0	0	0	0	0	0	0
4/27/2024	12:15 PM	0	0	0	0	0	0	0	0	0	0	0	0	0
4/27/2024	12:30 PM	0	0	0	0	0	0	0	0	0	0	0	0	0
4/27/2024	12:45 PM	0	0	0	0	0	0	0	0	0	0	0	0	0
4/27/2024	1:00 PM	0	0	0	0	0	0	0	0	0	0	0	0	0
4/27/2024	1:15 PM	0	0	0	0	0	0	0	0	0	0	0	0	0
4/27/2024	1:30 PM	0	0	0	0	0	0	0	0	0	0	0	0	0
4/27/2024	1:45 PM	0	0	0	0	0	0	0	0	0	0	0	0	0
4/27/2024	2:00 PM	0	0	0	0	0	0	0	0	0	0	0	0	0
4/27/2024	2:15 PM	0	0	0	0	0	0	0	0	0	0	0	0	0
4/27/2024	2:30 PM	0	0	0	0	0	0	0	0	0	0	0	0	0
4/27/2024	2:45 PM	0	0	0	0	0	0	0	0	0	0	0	0	0
4/27/2024	3:00 PM	0	0	0	0	0	0	0	0	0	0	0	0	0
4/27/2024	3:15 PM	0	0	0	0	0	0	0	0	0	0	0	0	0
4/27/2024	3:30 PM	0	0	0	0	0	0	0	0	0	0	0	0	0
4/27/2024	3:45 PM	0	0	0	0	0	0	0	0	0	0	0	0	0
4/27/2024	4:00 PM	0	0	0	0	0	0	0	0	0	0	0	0	0
4/27/2024	4:15 PM	0	0	0	0	0	0	0	0	0	0	0	0	0
4/27/2024	4:30 PM	0	0	0	0	0	0	0	0	0	0	0	0	0
4/27/2024	4:45 PM	0	0	0	0	0	0	0	0	0	0	0	0	0
4/27/2024	5:00 PM	0	0	0	0	0	0	0	0	0	0	0	0	0
4/27/2024	5:15 PM	0	0	0	0	0	0	0	0	0	0	0	0	0
4/27/2024	5:30 PM	0	0	0	0	0	0	0	0	0	0	0	0	0
4/27/2024	5:45 PM	0	0	0	0	0	0	0	0	0	0	0	0	0
4/27/2024	6:00 PM	0	0	0	0	0	0	0	0	0	0	0	0	0
4/27/2024	6:15 PM	0	0	0	0	0	0	0	0	0	0	0	0	0
4/27/2024	6:30 PM	0	0	0	0	0	0	0	0	0	0	0	0	0
4/27/2024	6:45 PM	0	0	0	0	0	0	0	0	0	0	0	0	0
4/27/2024	7:00 PM	0	0	0	0	0	0	0	0	0	0	0	0	0
4/27/2024	7:15 PM	0	0	0	0	0	0	0	0	0	0	0	0	0
4/27/2024	7:30 PM	0	0	0	0	0	0	0	0	0	0	0	0	0
4/27/2024	7:45 PM	0	0	0	0	0	0	0	0	0	0	0	0	0
4/27/2024	8:00 PM	0	0	0	0	0	0	0	0	0	0	0	0	0
4/27/2024	8:15 PM	0	0	0	0	0	0	0	0	0	0	0	0	0
4/27/2024	8:30 PM	0	0	0	0	0	0	0	0	0	0	0	0	0
4/27/2024	8:45 PM	0	0	0	0	0	0	0	0	0	0	0	0	0
4/27/2024	9:00 PM	0	0	0	0	0	0	0	0	0	0	0	0	0
4/27/2024	9:15 PM	0	0	0	0	0	0	0	0	0	0	0	0	0
4/27/2024	9:30 PM	0	0	0	0	0	0	0	0	0	0	0	0	0
4/27/2024	9:45 PM	0	0	0	0	0	0	0	0	0	0	0	0	0
4/27/2024	10:00 PM	0	0	0	0	0	0	0	0	0	0	0	0	0
4/27/2024	10:15 PM	0	0	0	0	0	0	0	0	0	0	0	0	0
4/27/2024	10:30 PM	0	0	0	0	0	0	0	0	0	0	0	0	0
4/27/2024	10:45 PM	0	0	0	0	0	0	0	0	0	0	0	0	0
4/27/2024	11:00 PM	0	0	0	0	0	0	0	0	0	0	0	0	0
4/27/2024	11:15 PM	0	0	0	0	0	0	0	0	0	0	0	0	0
4/27/2024	11:30 PM	0	0	0	0	0	0	0	0	0	0	0	0	0
4/27/2024	11:45 PM	0	0	0	0	0	0	0	0	0	0	0	0	0

Bi-Directional Class Count || SB WB 15min

Columbia, SC

Marr Traffic DATA COLLECTION
www.marrtraffic.com

Site 75 Lane 3 SB
I-20,
north of Bush River Rd

Date
Sunday, April 21, 2024

Lat/Long
34.034393°, -81.117736°

Weather
Cloudy
66°F

Click here for Detailed Weather

Click here for Map

0000 - 2400 (Sunday 24h Session) (04-21-2024)
SB WB 15min

	Southbound (Movement 75 Lane 3 SB.1)													15min	60min
Time	1	2	3	4	5	6	7	8	9	10	11	12	13	Total	Total
0000 - 0015	0	63	4	0	0	0	0	0	1	0	0	0	0	**68**	
0015 - 0030	0	46	3	0	0	0	0	0	1	0	0	0	0	**50**	
0030 - 0045	0	31	8	1	1	0	0	0	1	0	0	0	0	**42**	
0045 - 0100	0	38	2	0	1	0	0	0	3	0	0	0	0	**44**	**204**
0100 - 0115	0	25	3	0	0	0	0	0	2	0	0	0	0	**30**	
0115 - 0130	0	42	3	0	1	0	0	0	4	0	0	0	0	**50**	
0130 - 0145	0	23	4	0	0	0	0	0	2	0	0	0	0	**29**	
0145 - 0200	0	30	4	0	3	0	0	0	1	0	0	0	0	**38**	**147**
0200 - 0215	0	28	6	0	0	0	0	0	2	0	0	0	0	**36**	
0215 - 0230	0	25	2	0	0	0	0	0	2	0	0	0	0	**29**	
0230 - 0245	0	23	2	0	1	0	0	0	3	0	0	0	0	**29**	
0245 - 0300	1	10	2	0	0	0	0	0	5	0	0	0	0	**18**	**112**
0300 - 0315	0	15	3	0	0	0	0	0	1	0	0	0	0	**19**	
0315 - 0330	0	10	1	0	0	0	0	0	1	0	0	0	0	**12**	
0330 - 0345	0	15	1	0	0	0	0	0	1	0	0	0	0	**17**	
0345 - 0400	0	8	3	0	0	0	0	0	4	0	0	0	0	**15**	**63**
0400 - 0415	1	14	1	0	1	0	0	0	1	0	0	0	0	**18**	
0415 - 0430	0	13	0	0	2	0	0	0	3	0	0	0	0	**18**	
0430 - 0445	0	13	3	0	0	0	0	0	1	0	1	0	0	**18**	
0445 - 0500	0	22	1	0	1	0	0	0	1	0	0	0	0	**25**	**79**
0500 - 0515	0	13	0	0	0	0	0	0	2	0	0	0	0	**15**	
0515 - 0530	0	15	2	1	1	0	0	0	1	0	0	0	0	**20**	
0530 - 0545	0	17	0	0	1	0	0	0	5	0	0	0	0	**23**	
0545 - 0600	0	17	2	0	0	0	0	0	4	0	0	0	0	**23**	**81**
0600 - 0615	0	22	1	0	0	0	0	0	3	0	0	0	0	**26**	
0615 - 0630	0	26	6	0	0	0	0	0	0	0	0	0	0	**32**	
0630 - 0645	1	32	4	0	0	0	0	0	4	0	0	0	0	**41**	
0645 - 0700	0	28	8	0	0	0	0	0	2	0	0	0	0	**38**	**137**
0700 - 0715	0	31	6	0	0	0	0	0	4	0	0	0	0	**41**	
0715 - 0730	0	45	6	0	0	0	0	0	4	0	0	0	0	**55**	
0730 - 0745	0	45	8	0	0	0	0	0	4	0	0	0	0	**57**	
0745 - 0800	0	57	11	0	0	0	0	0	5	0	0	0	0	**73**	**226**
0800 - 0815	0	51	13	0	0	1	0	0	3	0	0	0	0	**68**	
0815 - 0830	0	51	21	0	1	0	0	0	4	0	0	0	0	**77**	
0830 - 0845	0	56	10	1	0	0	0	0	6	0	0	0	0	**73**	
0845 - 0900	0	56	11	0	0	0	0	1	5	0	0	0	0	**73**	**291**
0900 - 0915	1	70	11	0	3	1	0	0	4	0	0	1	0	**91**	
0915 - 0930	0	84	9	0	0	1	0	0	6	0	0	0	0	**100**	
0930 - 0945	0	83	13	0	2	0	0	0	4	0	0	0	0	**102**	
0945 - 1000	0	103	16	1	2	0	0	0	4	0	0	0	0	**126**	**419**
1000 - 1015	0	100	22	0	1	0	0	0	5	0	0	0	0	**128**	
1015 - 1030	0	90	15	0	0	0	0	0	9	0	0	0	0	**114**	
1030 - 1045	0	85	31	0	1	0	0	1	5	0	0	0	0	**123**	
1045 - 1100	0	117	17	0	0	0	0	0	2	0	0	0	0	**136**	**501**
1100 - 1115	0	97	21	0	2	0	0	0	4	0	0	0	0	**124**	
1115 - 1130	0	90	28	0	3	1	0	0	7	0	0	0	0	**129**	
1130 - 1145	0	125	26	0	0	0	0	1	5	0	0	1	0	**158**	
1145 - 1200	0	121	31	0	3	0	0	0	10	0	0	0	0	**165**	**576**
1200 - 1215	0	135	25	0	2	0	0	0	7	0	0	0	0	**169**	
1215 - 1230	0	125	31	0	0	0	0	0	4	0	0	0	0	**160**	
1230 - 1245	0	127	35	0	1	1	0	0	6	0	0	0	0	**170**	
1245 - 1300	0	132	27	0	1	1	0	0	8	0	0	0	0	**169**	**668**
1300 - 1315	1	120	30	0	1	0	0	0	10	0	0	0	0	**162**	
1315 - 1330	0	124	26	0	0	0	0	1	4	0	0	0	0	**155**	
1330 - 1345	0	128	39	0	0	0	0	0	4	0	0	0	0	**171**	
1345 - 1400	0	120	31	0	2	0	0	0	6	0	0	0	0	**159**	**647**
1400 - 1415	0	140	22	0	1	0	0	1	5	0	0	0	0	**169**	
1415 - 1430	0	135	28	0	1	0	0	0	4	0	0	0	0	**168**	
1430 - 1445	1	110	25	0	1	1	0	1	6	0	0	0	0	**145**	
1445 - 1500	0	129	20	0	0	0	0	0	5	0	0	0	0	**154**	**636**
1500 - 1515	0	125	15	2	0	0	0	0	2	0	0	0	0	**144**	
1515 - 1530	0	105	20	0	0	0	0	0	3	0	0	0	0	**128**	
1530 - 1545	0	109	30	0	0	0	0	1	1	0	0	0	0	**141**	
1545 - 1600	0	116	16	0	1	0	0	0	5	0	0	0	0	**138**	**551**
1600 - 1615	0	119	22	1	0	0	0	0	9	0	0	0	0	**151**	
1615 - 1630	0	122	18	0	1	0	0	0	3	0	0	0	0	**144**	
1630 - 1645	0	108	13	0	1	0	0	2	5	0	0	0	0	**129**	
1645 - 1700	0	110	14	0	0	0	0	0	5	0	0	0	0	**129**	**553**
1700 - 1715	0	91	16	0	0	0	0	1	4	0	0	0	0	**112**	
1715 - 1730	0	102	16	0	1	2	0	0	4	0	0	0	0	**125**	
1730 - 1745	0	112	13	0	1	0	0	0	7	0	0	0	0	**133**	
1745 - 1800	0	100	21	0	0	0	0	0	10	0	0	0	0	**131**	**501**
1800 - 1815	0	112	18	0	0	0	0	0	7	0	0	0	0	**137**	
1815 - 1830	0	113	18	1	1	0	0	0	7	0	0	0	0	**140**	
1830 - 1845	0	92	17	0	0	1	0	0	8	0	0	0	0	**118**	
1845 - 1900	0	91	6	0	0	0	0	0	9	0	0	0	0	**106**	**501**
1900 - 1915	0	81	17	0	0	0	0	0	10	0	0	0	0	**108**	
1915 - 1930	0	91	16	0	1	0	0	0	6	0	0	0	0	**114**	
1930 - 1945	0	102	17	0	0	0	0	0	7	0	0	0	0	**126**	
1945 - 2000	0	77	12	0	0	0	0	0	8	0	2	0	0	**99**	**447**
2000 - 2015	0	69	12	0	1	0	0	0	4	0	0	0	0	**86**	
2015 - 2030	0	71	10	0	0	0	0	0	3	0	0	0	0	**84**	
2030 - 2045	0	73	7	0	0	0	0	0	7	0	0	0	0	**87**	
2045 - 2100	0	59	10	0	1	0	0	0	3	0	0	0	0	**73**	**330**
2100 - 2115	0	70	6	0	1	0	0	1	6	0	0	0	0	**84**	
2115 - 2130	0	56	6	0	0	0	0	0	3	0	0	0	0	**65**	
2130 - 2145	0	42	10	0	0	0	0	0	2	0	0	0	0	**54**	
2145 - 2200	0	46	4	0	0	0	0	0	7	0	0	0	0	**57**	**260**
2200 - 2215	0	41	4	0	0	0	0	0	11	0	0	0	0	**56**	
2215 - 2230	0	32	4	0	1	0	0	0	6	0	0	0	0	**43**	
2230 - 2245	0	31	2	0	2	0	0	0	6	0	0	0	0	**41**	
2245 - 2300	0	28	5	0	0	2	0	0	3	0	1	0	0	**39**	**179**
2300 - 2315	0	22	1	0	0	0	0	0	2	0	2	0	0	**27**	
2315 - 2330	0	21	3	0	1	0	0	0	3	0	0	0	0	**28**	
2330 - 2345	0	32	2	0	0	2	0	0	3	0	0	0	0	**39**	
2345 - 0000	0	17	1	0	0	0	0	0	4	0	2	0	0	**24**	**118**

Session Total	6	6534	1166	8	55	14	0	11	423	0	8	2	0	**8227**
Session Average	0.06	68.06	12.15	0.08	0.57	0.15	0.00	0.11	4.41	0.00	0.08	0.02	0.00	**85.70**
Session Percentage	0.07	79.42	14.17	0.10	0.67	0.17	0.00	0.13	5.14	0.00	0.10	0.02	0.00	

AM Peak Hour	0545 - 0645	0945 - 1045	0945 - 1045	0500 - 0600	0900 - 1000	0830 - 0930	-	0800 - 0900	0945 - 1045	-	-	0815 - 0915	-	**0945 - 1045**
AM Peak Volume	1	378	84	1	7	2	0	1	23	0	0	1	0	**491**

Noon Peak Hour	1215 - 1315	1330 - 1430	1300 - 1400	1415 - 1515	1100 - 1200	1200 - 1300	-	1315 - 1415	1115 - 1215	-	-	1045 - 1145	-	**1200 - 1300**
Noon Peak Volume	1	523	126	2	8	2	0	2	29	0	0	1	0	**668**

PM Peak Hour	-	1530 - 1630	1515 - 1615	1500 - 1600	1545 - 1645	1630 - 1730	-	1615 - 1715	1815 - 1915	-	1900 - 2000	-	-	**1530 - 1630**
PM Peak Volume	0	466	88	2	3	2	0	3	34	0	2	0	0	**574**

Site 75 Lane 3 SB
I-20,
north of Bush River Rd

Date
Monday, April 22, 2024

Lat/Long
34.034393°, -81.117736°

Weather
Mostly Cloudy
57°F

Click here for Detailed Weather

0000 - 2400 (Weekday 24h Session) (04-22-2024)
SB WB 15min

	Southbound (Movement 75 Lane 3 SB.1)													15min	60min
Time	1	2	3	4	5	6	7	8	9	10	11	12	13	Total	Total
0000 - 0015	0	13	3	0	0	1	0	0	2	0	0	0	0	**19**	
0015 - 0030	0	12	4	0	2	0	0	0	3	0	0	0	0	**21**	
0030 - 0045	0	13	1	0	0	0	0	0	4	0	0	0	0	**18**	
0045 - 0100	0	11	2	0	0	0	0	0	7	0	1	0	0	**21**	**79**
0100 - 0115	0	10	4	0	0	0	0	0	1	0	0	0	0	**15**	
0115 - 0130	0	9	1	0	0	0	0	0	6	0	0	0	0	**16**	
0130 - 0145	0	11	1	0	0	0	0	0	5	0	0	0	0	**17**	
0145 - 0200	0	10	0	0	0	0	0	0	3	0	0	0	0	**13**	**61**
0200 - 0215	0	13	6	1	1	1	0	0	6	0	0	0	0	**28**	
0215 - 0230	0	6	3	0	0	0	0	0	4	0	0	0	0	**13**	
0230 - 0245	0	7	2	0	0	1	0	0	5	0	0	0	0	**15**	
0245 - 0300	0	9	1	0	0	0	0	0	9	0	0	0	0	**19**	**75**
0300 - 0315	0	8	2	1	0	0	0	0	8	0	0	0	0	**19**	
0315 - 0330	0	7	0	0	2	1	0	0	9	0	0	0	0	**19**	
0330 - 0345	0	10	4	0	0	1	0	0	5	0	1	0	0	**21**	
0345 - 0400	0	9	1	0	2	0	0	0	7	0	0	0	0	**19**	**78**
0400 - 0415	0	7	2	0	0	2	0	0	6	0	1	0	0	**18**	
0415 - 0430	0	11	0	0	0	0	0	1	9	0	0	0	0	**21**	
0430 - 0445	0	19	6	0	2	2	0	1	5	0	0	0	0	**35**	
0445 - 0500	0	13	4	0	1	0	0	0	15	0	0	0	0	**33**	**107**
0500 - 0515	0	22	4	0	1	0	0	0	5	0	0	0	0	**32**	
0515 - 0530	0	26	3	0	0	2	0	0	15	0	0	0	0	**46**	
0530 - 0545	0	27	6	0	0	0	0	0	14	0	1	0	0	**48**	
0545 - 0600	0	33	7	0	2	1	0	0	13	0	0	0	0	**56**	**182**
0600 - 0615	0	36	9	0	1	2	0	0	9	0	1	0	0	**58**	
0615 - 0630	0	56	17	0	3	2	0	0	9	0	0	0	0	**87**	
0630 - 0645	0	75	26	0	1	8	0	2	9	1	0	0	0	**122**	
0645 - 0700	0	75	25	0	6	4	0	3	11	0	0	0	0	**124**	**391**
0700 - 0715	0	98	30	0	6	7	0	0	14	0	0	0	0	**155**	
0715 - 0730	0	124	34	0	9	7	0	2	10	0	0	0	0	**186**	
0730 - 0745	0	136	42	0	11	5	0	0	11	0	0	0	0	**205**	
0745 - 0800	0	179	39	0	8	3	0	0	7	2	0	0	0	**238**	**784**
0800 - 0815	0	165	37	1	3	1	0	1	15	1	0	0	0	**224**	
0815 - 0830	0	184	46	1	5	2	0	1	17	1	0	0	0	**257**	
0830 - 0845	0	167	30	0	11	3	0	3	9	0	0	0	0	**223**	
0845 - 0900	0	121	40	0	10	5	0	1	8	1	0	0	0	**186**	**890**
0900 - 0915	0	102	43	0	9	5	0	1	8	1	0	0	0	**169**	
0915 - 0930	0	111	31	0	7	4	0	3	16	1	0	1	0	**174**	
0930 - 0945	0	98	38	0	9	6	1	2	21	0	0	0	0	**175**	
0945 - 1000	0	93	36	0	6	3	0	3	16	1	0	0	0	**158**	**676**
1000 - 1015	0	114	39	1	11	4	0	3	17	0	0	0	0	**189**	
1015 - 1030	1	105	37	4	6	3	4	1	13	0	0	0	0	**174**	
1030 - 1045	0	119	37	0	5	3	0	1	18	0	0	0	0	**183**	
1045 - 1100	0	91	35	0	6	5	1	1	28	1	0	0	0	**168**	**714**
1100 - 1115	0	115	37	0	3	6	0	3	20	1	0	0	0	**185**	
1115 - 1130	0	98	49	0	4	2	0	1	16	0	0	0	0	**170**	
1130 - 1145	0	103	45	0	6	4	0	2	19	0	1	0	0	**180**	
1145 - 1200	0	118	45	0	5	3	0	2	19	0	0	0	0	**192**	**727**
1200 - 1215	0	115	45	0	4	4	2	3	15	0	0	0	0	**188**	
1215 - 1230	0	138	47	0	8	2	1	3	14	0	0	0	0	**213**	
1230 - 1245	0	119	48	0	6	4	0	0	14	0	0	0	0	**191**	
1245 - 1300	0	118	39	0	7	4	1	2	12	1	0	0	0	**184**	**776**
1300 - 1315	0	143	32	0	3	5	0	1	16	1	0	0	0	**201**	
1315 - 1330	0	147	35	0	4	2	1	1	12	0	0	0	0	**202**	
1330 - 1345	0	134	36	3	3	1	4	1	16	1	0	0	0	**199**	
1345 - 1400	0	139	26	0	4	2	2	0	16	0	0	0	0	**189**	**791**
1400 - 1415	0	133	38	0	8	1	0	1	11	0	0	0	0	**192**	
1415 - 1430	0	147	32	2	6	2	3	1	19	0	0	0	0	**212**	
1430 - 1445	0	135	35	0	2	0	1	2	16	0	0	0	0	**191**	
1445 - 1500	0	153	33	1	5	0	3	3	8	1	0	0	0	**207**	**802**
1500 - 1515	0	155	42	1	5	1	0	1	25	0	0	0	0	**230**	
1515 - 1530	0	170	35	0	7	2	1	2	12	0	0	0	0	**229**	
1530 - 1545	0	156	45	0	2	5	0	2	15	0	0	0	0	**225**	
1545 - 1600	0	160	44	1	7	6	0	0	14	1	0	0	0	**233**	**917**
1600 - 1615	0	169	36	1	10	2	0	1	18	1	0	0	0	**238**	
1615 - 1630	1	178	31	0	14	0	1	0	18	0	0	0	0	**243**	
1630 - 1645	0	187	41	0	1	2	0	1	7	1	0	0	0	**240**	
1645 - 1700	0	174	35	2	1	4	0	0	12	0	0	0	0	**228**	**949**
1700 - 1715	0	185	44	0	2	4	0	2	11	0	0	0	0	**248**	
1715 - 1730	0	198	30	0	1	0	0	0	13	1	0	0	0	**243**	
1730 - 1745	0	185	46	0	5	1	0	1	12	1	0	0	0	**251**	
1745 - 1800	0	172	39	0	2	0	0	1	17	1	0	0	0	**232**	**974**
1800 - 1815	0	125	29	0	3	2	0	0	17	0	0	0	0	**176**	
1815 - 1830	0	153	31	0	2	0	0	1	17	1	0	0	0	**205**	
1830 - 1845	0	120	25	0	4	3	0	0	12	0	0	0	0	**164**	
1845 - 1900	0	118	25	0	5	4	0	1	13	0	0	0	0	**166**	**711**
1900 - 1915	0	101	20	0	2	0	0	2	9	0	0	0	0	**134**	
1915 - 1930	0	98	19	0	1	0	0	1	24	1	0	0	0	**144**	
1930 - 1945	0	66	20	0	2	3	0	1	16	0	0	0	0	**108**	
1945 - 2000	0	82	17	0	1	0	0	0	18	0	0	0	0	**118**	**504**
2000 - 2015	0	76	18	0	0	0	0	1	12	0	0	0	0	**107**	
2015 - 2030	0	67	10	0	1	0	0	0	9	0	0	0	0	**87**	
2030 - 2045	0	62	16	0	1	0	0	2	8	0	1	0	0	**90**	
2045 - 2100	1	56	14	0	0	1	0	0	10	0	0	0	0	**82**	**366**
2100 - 2115	0	56	13	0	0	2	0	0	10	0	1	0	0	**82**	
2115 - 2130	0	52	14	0	1	1	0	0	13	0	0	0	0	**81**	
2130 - 2145	0	38	11	0	0	2	0	0	11	0	0	0	0	**62**	
2145 - 2200	0	47	12	0	0	1	0	0	5	0	1	0	0	**66**	**291**
2200 - 2215	0	46	13	0	0	0	0	1	10	0	1	0	0	**71**	
2215 - 2230	0	37	12	0	1	0	0	1	14	0	1	0	0	**66**	
2230 - 2245	0	34	10	0	3	2	0	1	9	0	4	0	0	**63**	
2245 - 2300	0	33	9	0	0	2	0	1	17	0	2	0	0	**64**	**264**
2300 - 2315	0	34	8	0	0	0	0	1	11	0	2	0	0	**56**	
2315 - 2330	0	30	6	0	0	3	0	1	11	0	3	0	0	**54**	
2330 - 2345	0	29	4	0	1	3	0	0	12	0	0	0	0	**49**	
2345 - 0000	0	30	5	0	0	0	0	1	12	0	0	0	0	**48**	**207**

Session Total	3	8299	2189	20	309	192	26	83	1149	23	22	1	0	**12316**
Session Average	0.03	86.45	22.80	0.21	3.22	2.00	0.27	0.86	11.97	0.24	0.23	0.01	0.00	**128.29**
Session Percentage	0.02	67.38	17.77	0.16	2.51	1.56	0.21	0.67	9.33	0.19	0.18	0.01	0.00	

AM Peak Hour	0930 - 1030	0745 - 0845	0730 - 0830	0930 - 1030	0830 - 0930	0630 - 0730	0930 - 1030	0915 - 1015	0915 - 1015	0730 - 0830	0515 - 0615	0830 - 0930	-	**0745 - 0845**
AM Peak Volume	1	695	164	5	37	26	5	11	70	4	2	1	0	**942**

Noon Peak Hour	1000 - 1100	1445 - 1545	1145 - 1245	1000 - 1100	1000 - 1100	1015 - 1115	1330 - 1430	1130 - 1230	1045 - 1145	1245 - 1345	1045 - 1145	-	-	**1445 - 1545**
Noon Peak Volume	1	634	185	5	28	17	9	10	83	3	1	0	0	**891**

PM Peak Hour	1530 - 1630	1630 - 1730	1500 - 1600	1600 - 1700	1530 - 1630	1515 - 1615	1500 - 1600	1500 - 1600	1915 - 2015	1545 - 1645	1945 - 2045	-	-	**1700 - 1800**
PM Peak Volume	1	744	166	3	33	15	1	5	70	3	1	0	0	**974**

Site 75 Lane 3 SB
I-20,
north of Bush River Rd

Date
Tuesday, April 23, 2024

Lat/Long
34.034393°, -81.117736°

Weather
Fair
58°F

Click here for Detailed Weather

0000 - 2400 (Weekday 24h Session) (04-23-2024)
SB WB 15min

	Southbound (Movement 75 Lane 3 SB.1)													15min	60min
TIME	1	2	3	4	5	6	7	8	9	10	11	12	13	Total	Total
0000 - 0015	0	18	5	0	4	0	0	2	18	0	1	0	0	**48**	
0015 - 0030	0	15	7	0	1	0	0	0	10	0	3	0	0	**36**	
0030 - 0045	0	8	3	0	0	0	0	0	6	0	1	0	0	**18**	
0045 - 0100	0	9	3	0	1	0	0	0	6	0	2	0	0	**21**	**123**
0100 - 0115	0	10	4	0	2	0	0	0	7	0	1	0	0	**24**	
0115 - 0130	0	10	2	0	1	0	0	0	5	0	1	0	0	**19**	
0130 - 0145	0	6	2	0	1	0	0	0	8	0	0	0	0	**17**	
0145 - 0200	0	15	0	0	1	0	0	0	7	0	2	0	0	**25**	**85**
0200 - 0215	0	5	3	0	1	0	0	0	14	0	0	0	0	**23**	
0215 - 0230	0	4	5	0	1	0	0	0	11	0	1	0	0	**22**	
0230 - 0245	0	6	1	0	0	0	0	0	11	0	0	0	0	**18**	
0245 - 0300	0	9	2	0	0	2	0	0	10	0	2	0	0	**25**	**88**
0300 - 0315	0	5	0	0	0	1	0	0	4	0	1	0	0	**11**	
0315 - 0330	0	3	0	0	0	0	0	0	9	0	0	0	0	**12**	
0330 - 0345	0	6	0	0	0	0	0	0	1	0	1	0	0	**8**	
0345 - 0400	0	5	1	0	1	1	0	0	14	0	2	0	0	**24**	**55**
0400 - 0415	0	11	4	0	0	0	0	0	15	0	1	0	0	**31**	
0415 - 0430	0	5	3	0	1	1	0	1	15	0	2	0	0	**28**	
0430 - 0445	1	23	0	0	1	3	0	0	8	0	0	0	0	**36**	
0445 - 0500	0	11	6	0	0	0	0	0	14	0	2	0	0	**33**	**128**
0500 - 0515	0	18	8	0	1	0	0	0	8	0	0	0	0	**35**	
0515 - 0530	0	27	4	0	5	0	0	0	20	0	0	0	0	**56**	
0530 - 0545	0	30	5	0	2	0	0	0	14	0	0	0	0	**51**	
0545 - 0600	0	22	10	0	0	1	0	0	13	0	0	0	0	**46**	**188**
0600 - 0615	0	33	16	0	1	0	0	0	13	0	0	0	0	**63**	
0615 - 0630	1	72	23	0	2	3	0	0	19	0	0	0	0	**120**	
0630 - 0645	0	78	15	0	4	10	0	0	15	0	0	0	0	**122**	
0645 - 0700	0	75	19	0	3	5	1	1	10	3	0	0	0	**117**	**422**
0700 - 0715	0	84	33	1	8	4	0	2	19	0	0	0	0	**151**	
0715 - 0730	0	153	34	0	10	7	0	2	7	2	0	0	0	**215**	
0730 - 0745	0	160	41	1	4	5	0	2	10	1	0	0	0	**224**	
0745 - 0800	0	198	30	1	8	3	0	1	8	0	0	0	0	**249**	**839**
0800 - 0815	0	151	42	0	4	1	0	0	12	0	0	0	0	**210**	
0815 - 0830	0	188	47	0	7	2	0	1	10	0	0	0	0	**255**	
0830 - 0845	0	158	26	0	12	5	1	3	13	0	1	0	0	**219**	
0845 - 0900	0	149	35	0	9	3	0	2	15	0	0	0	0	**213**	**897**
0900 - 0915	0	116	40	0	7	3	0	0	20	0	1	0	0	**187**	
0915 - 0930	0	123	29	0	10	2	0	2	18	2	0	0	0	**186**	
0930 - 0945	0	114	27	0	8	5	0	5	18	0	0	0	0	**177**	
0945 - 1000	0	111	25	2	7	3	0	3	27	0	0	0	0	**178**	**728**
1000 - 1015	0	88	23	2	3	2	0	1	22	0	0	0	0	**141**	
1015 - 1030	0	84	33	0	11	5	0	3	14	0	0	0	0	**150**	
1030 - 1045	0	85	39	0	4	1	0	4	23	1	0	0	0	**157**	
1045 - 1100	0	102	35	0	7	4	1	1	19	0	0	0	0	**169**	**617**
1100 - 1115	0	111	43	0	4	1	0	0	18	0	0	0	0	**177**	
1115 - 1130	0	136	35	0	4	0	0	3	13	0	0	0	0	**191**	
1130 - 1145	1	104	38	0	9	4	0	3	14	3	0	0	0	**176**	
1145 - 1200	0	123	28	0	4	2	0	2	26	0	0	0	0	**185**	**729**
1200 - 1215	0	111	48	0	3	2	0	3	13	1	0	0	0	**181**	
1215 - 1230	0	97	42	0	6	2	0	1	19	0	0	0	0	**167**	
1230 - 1245	0	135	49	0	7	2	0	2	24	0	0	0	0	**219**	
1245 - 1300	0	110	41	2	7	1	0	1	18	0	0	0	0	**180**	**747**
1300 - 1315	0	125	30	2	3	4	0	3	28	0	0	0	0	**195**	
1315 - 1330	0	138	39	3	4	4	0	1	13	1	0	0	0	**203**	
1330 - 1345	0	142	33	3	6	1	0	2	17	0	0	0	0	**204**	
1345 - 1400	1	129	39	0	6	2	0	3	22	0	0	0	0	**202**	**804**
1400 - 1415	0	137	32	0	2	3	0	0	19	0	0	0	0	**193**	
1415 - 1430	0	146	34	2	8	0	0	1	18	0	0	0	0	**209**	
1430 - 1445	0	147	38	1	5	2	0	0	24	0	0	0	0	**217**	
1445 - 1500	0	132	40	0	3	0	1	1	23	0	0	0	0	**200**	**819**
1500 - 1515	0	157	47	0	8	2	1	7	19	0	0	0	0	**241**	
1515 - 1530	0	151	51	0	6	1	1	3	17	0	0	0	0	**230**	
1530 - 1545	0	165	39	0	3	0	1	1	18	0	0	0	0	**227**	
1545 - 1600	0	161	51	0	5	1	0	3	18	1	0	0	0	**240**	**938**
1600 - 1615	0	182	45	1	5	0	2	4	12	1	1	0	0	**253**	
1615 - 1630	0	214	51	0	6	2	0	3	13	1	0	0	0	**290**	
1630 - 1645	0	196	46	0	10	1	0	2	10	0	0	0	0	**265**	
1645 - 1700	0	168	26	0	5	2	0	0	12	0	0	0	0	**213**	**1021**
1700 - 1715	0	142	38	0	4	2	0	1	8	0	0	0	0	**195**	
1715 - 1730	0	221	38	0	2	1	0	0	16	0	0	0	0	**278**	
1730 - 1745	2	192	47	0	3	1	0	1	13	0	0	0	0	**259**	
1745 - 1800	2	163	39	1	2	0	0	3	13	1	0	0	0	**224**	**956**
1800 - 1815	0	146	45	0	2	2	0	0	11	0	0	0	0	**206**	
1815 - 1830	0	136	24	0	4	0	0	2	16	0	0	0	0	**182**	
1830 - 1845	0	128	28	0	3	2	0	3	13	0	0	0	0	**177**	
1845 - 1900	0	83	16	0	1	0	0	2	7	0	0	0	0	**109**	**674**
1900 - 1915	0	98	21	0	3	0	0	0	7	0	0	0	0	**129**	
1915 - 1930	1	106	18	0	1	2	0	0	10	0	0	0	0	**138**	
1930 - 1945	0	101	20	0	0	1	0	1	12	0	0	0	0	**135**	
1945 - 2000	0	85	16	0	3	2	0	0	11	0	0	0	0	**117**	**519**
2000 - 2015	0	70	17	0	0	1	0	0	6	0	0	0	0	**94**	
2015 - 2030	0	76	13	0	1	0	0	0	11	0	0	0	0	**101**	
2030 - 2045	0	55	14	0	2	0	0	0	8	0	0	0	0	**79**	
2045 - 2100	0	34	8	0	2	0	0	0	10	0	0	0	0	**54**	**328**
2100 - 2115	0	38	15	0	1	0	0	0	10	0	0	0	0	**64**	
2115 - 2130	0	36	9	0	5	0	0	0	6	0	0	0	0	**56**	
2130 - 2145	0	39	9	0	3	0	0	0	6	0	0	0	0	**57**	
2145 - 2200	0	35	4	0	1	0	0	0	7	0	0	0	0	**47**	**224**
2200 - 2215	0	38	5	0	3	0	0	0	6	0	1	0	0	**53**	
2215 - 2230	0	43	11	0	2	0	0	0	3	0	0	0	0	**59**	
2230 - 2245	0	35	10	0	0	1	0	0	6	0	1	0	0	**53**	
2245 - 2300	0	19	3	0	1	0	0	0	2	0	0	0	0	**25**	**190**
2300 - 2315	0	19	3	0	0	0	0	0	5	0	1	0	0	**28**	
2315 - 2330	0	21	5	0	4	1	0	0	6	0	0	0	0	**37**	
2330 - 2345	0	13	3	0	2	1	0	0	3	0	0	0	0	**22**	
2345 - 0000	0	11	3	0	1	0	0	0	7	0	0	0	0	**22**	**109**

Session Total	9	8203	2137	22	338	138	9	98	1227	18	29	0	0	**12228**
Session Average	0.09	85.45	22.26	0.23	3.52	1.44	0.09	1.02	12.78	0.19	0.30	0.00	0.00	**127.38**
Session Percentage	0.07	67.08	17.48	0.18	2.76	1.13	0.07	0.80	10.03	0.15	0.24	0.00	0.00	

AM Peak Hour	0530 - 0630	0730 - 0830	0730 - 0830	0915 - 1015	0830 - 0930	0630 - 0730	0600 - 0700	0930 - 1030	0945 - 1045	0645 - 0745	0815 - 0915	-	-	**0730 - 0830**
AM Peak Hour Volume	1	697	160	4	38	26	1	12	86	6	2	0	0	**938**

Noon Peak Hour	1045 - 1145	1445 - 1545	1200 - 1300	1245 - 1345	1015 - 1115	1000 - 1100	1445 - 1545	1445 - 1545	1215 - 1315	1115 - 1215	-	-	-	**1445 - 1545**
Noon Peak Hour Volume	1	605	180	10	26	12	4	12	89	4	0	0	0	**898**

PM Peak Hour	1700 - 1800	1600 - 1700	1545 - 1645	1515 - 1615	1545 - 1645	1615 - 1715	1515 - 1615	1500 - 1600	1500 - 1600	1530 - 1630	1515 - 1615	-	-	**1545 - 1645**
PM Peak Hour Volume	4	760	193	1	26	7	4	14	72	3	1	0	0	**1048**

Site 75 Lane 3 SB
I-20,
north of Bush River Rd

Date
Wednesday, April 24, 2024

Lat/Long
34.034393°, -81.117736°

Weather
Fair
66°F

Click here for Detailed Weather

0000 - 2400 (Weekday 24h Session) (04-24-2024)
SB WB 15min

	Southbound (Movement 75 Lane 3 SB.1)													15min	60min
TIME	1	2	3	4	5	6	7	8	9	10	11	12	13	Total	Total
0000 - 0015	0	22	5	0	2	0	0	0	5	0	0	0	0	**34**	
0015 - 0030	0	19	3	1	0	0	0	0	5	0	0	0	0	**28**	
0030 - 0045	0	22	1	0	0	0	0	0	5	0	0	0	0	**28**	
0045 - 0100	0	11	1	0	4	0	0	0	6	0	0	0	0	**22**	**112**
0100 - 0115	0	12	4	0	3	0	0	0	3	0	0	0	0	**22**	
0115 - 0130	0	10	2	0	1	0	0	0	5	0	0	0	0	**18**	
0130 - 0145	0	11	1	0	1	0	0	0	3	0	0	0	0	**16**	
0145 - 0200	0	6	2	0	0	0	0	0	3	0	0	0	0	**11**	**67**
0200 - 0215	0	14	2	0	0	0	0	0	5	0	0	0	0	**21**	
0215 - 0230	0	10	3	0	1	0	0	0	6	0	0	0	0	**20**	
0230 - 0245	0	4	0	0	0	0	0	0	2	0	0	0	0	**6**	
0245 - 0300	0	10	2	0	2	0	0	0	2	0	0	0	0	**16**	**63**
0300 - 0315	0	17	2	0	0	0	0	0	4	0	0	0	0	**23**	
0315 - 0330	0	10	1	0	2	0	0	0	8	0	0	0	0	**21**	
0330 - 0345	0	13	2	0	3	0	0	0	2	0	0	0	0	**20**	
0345 - 0400	0	14	3	0	1	0	0	0	6	0	0	0	0	**24**	**88**
0400 - 0415	0	15	2	0	2	0	0	0	10	0	0	0	0	**29**	
0415 - 0430	0	16	3	0	1	0	0	0	13	0	0	0	0	**33**	
0430 - 0445	0	34	5	0	2	0	0	0	12	0	1	0	0	**54**	
0445 - 0500	0	16	4	0	5	0	0	0	11	0	0	0	0	**36**	**152**
0500 - 0515	0	11	1	0	0	0	0	0	12	0	0	0	0	**24**	
0515 - 0530	0	25	1	0	2	0	0	0	17	0	1	0	0	**46**	
0530 - 0545	0	43	6	0	3	0	0	0	10	0	0	0	0	**62**	
0545 - 0600	0	37	7	0	1	0	0	0	14	0	0	0	0	**59**	**191**
0600 - 0615	1	45	12	0	6	0	0	0	16	0	0	0	0	**80**	
0615 - 0630	1	59	18	0	2	1	0	0	7	0	0	0	0	**88**	
0630 - 0645	0	82	21	0	5	5	0	1	14	0	2	0	0	**130**	
0645 - 0700	0	88	18	0	8	2	1	2	17	1	0	0	0	**137**	**435**
0700 - 0715	0	107	37	0	2	5	0	1	12	1	0	0	0	**165**	
0715 - 0730	0	138	36	0	6	5	0	5	9	1	1	0	0	**201**	
0730 - 0745	0	161	45	0	10	3	3	3	9	0	0	0	0	**234**	
0745 - 0800	1	190	46	0	11	2	1	5	9	0	1	0	0	**266**	**866**
0800 - 0815	0	147	33	0	7	3	0	1	6	0	0	0	0	**197**	
0815 - 0830	0	172	31	0	16	2	1	0	17	1	0	0	0	**240**	
0830 - 0845	0	169	46	0	9	2	2	5	15	0	0	0	0	**248**	
0845 - 0900	0	147	36	0	6	0	1	4	18	0	0	0	0	**212**	**897**
0900 - 0915	1	102	27	0	7	1	2	1	12	1	0	0	0	**154**	
0915 - 0930	0	98	28	2	8	1	2	2	14	0	0	0	0	**155**	
0930 - 0945	0	112	41	0	5	2	2	0	8	0	0	0	0	**170**	
0945 - 1000	0	110	42	0	6	0	1	3	17	1	0	0	0	**180**	**659**
1000 - 1015	0	107	35	1	4	2	3	2	18	1	0	0	0	**173**	
1015 - 1030	0	101	26	0	10	1	6	0	16	1	0	0	0	**161**	
1030 - 1045	0	120	32	1	4	1	0	1	12	2	0	0	0	**173**	
1045 - 1100	0	127	48	1	7	0	1	2	16	1	0	0	0	**203**	**710**
1100 - 1115	0	95	33	1	10	0	1	0	17	1	0	0	0	**158**	
1115 - 1130	0	96	38	0	4	0	6	1	19	0	0	0	0	**164**	
1130 - 1145	1	113	40	0	7	1	0	2	18	0	0	0	0	**182**	
1145 - 1200	0	124	38	1	1	1	1	2	24	1	0	0	0	**193**	**697**
1200 - 1215	0	103	46	3	3	1	3	1	20	1	0	0	0	**181**	
1215 - 1230	0	128	36	1	5	1	4	3	18	1	0	0	0	**197**	
1230 - 1245	0	121	47	3	2	0	1	4	12	0	0	0	0	**190**	
1245 - 1300	0	149	47	0	5	3	1	1	16	2	0	0	0	**224**	**792**
1300 - 1315	0	140	42	0	4	1	2	0	17	1	0	0	0	**207**	
1315 - 1330	0	127	39	0	7	0	3	1	18	0	0	0	0	**195**	
1330 - 1345	1	141	37	0	4	0	2	3	14	2	0	0	0	**204**	
1345 - 1400	0	138	38	0	5	0	2	3	16	0	0	0	0	**202**	**808**
1400 - 1415	0	134	40	0	7	2	1	1	16	1	0	0	0	**202**	
1415 - 1430	0	154	32	1	5	0	0	1	27	0	0	0	0	**220**	
1430 - 1445	0	145	36	1	6	2	1	4	10	0	0	0	0	**205**	
1445 - 1500	0	123	38	2	7	1	1	4	20	0	0	0	0	**196**	**823**
1500 - 1515	0	166	81	0	4	1	0	3	25	1	0	0	0	**281**	
1515 - 1530	0	177	47	0	1	0	0	1	23	0	0	0	0	**249**	
1530 - 1545	0	157	46	1	6	2	0	0	14	0	0	0	0	**226**	
1545 - 1600	1	163	52	0	13	5	1	1	16	2	0	0	0	**254**	**1010**
1600 - 1615	0	175	55	0	5	4	1	1	20	1	0	0	0	**262**	
1615 - 1630	0	207	102	0	11	2	0	2	10	0	0	0	0	**334**	
1630 - 1645	1	172	38	0	3	3	0	4	11	0	0	0	0	**232**	
1645 - 1700	0	228	33	1	3	3	0	0	13	0	0	0	0	**281**	**1109**
1700 - 1715	0	199	46	0	6	1	0	0	17	2	0	0	0	**271**	
1715 - 1730	0	193	42	0	10	0	0	0	12	0	0	0	0	**257**	
1730 - 1745	0	192	44	0	3	1	0	1	2	0	0	0	0	**243**	
1745 - 1800	0	201	36	0	6	1	0	0	10	0	0	0	0	**254**	**1025**
1800 - 1815	0	145	32	1	5	2	0	0	19	0	0	0	0	**204**	
1815 - 1830	0	145	31	1	4	2	0	1	14	0	0	0	0	**198**	
1830 - 1845	0	140	28	0	2	2	0	1	16	0	0	0	0	**189**	
1845 - 1900	0	122	33	0	2	1	0	0	8	0	0	0	0	**166**	**757**
1900 - 1915	1	92	29	0	2	0	0	0	10	0	0	0	0	**134**	
1915 - 1930	0	107	21	1	0	1	0	2	12	1	1	0	0	**146**	
1930 - 1945	0	91	28	0	1	3	0	0	9	0	0	0	0	**132**	
1945 - 2000	1	92	25	1	0	1	0	1	11	0	0	0	0	**132**	**544**
2000 - 2015	0	81	15	0	2	0	0	0	13	0	0	0	0	**111**	
2015 - 2030	0	79	38	0	1	0	0	0	11	0	0	0	0	**129**	
2030 - 2045	0	91	11	0	1	0	0	1	14	0	2	0	0	**120**	
2045 - 2100	0	73	10	0	0	0	0	0	7	0	0	0	0	**90**	**450**
2100 - 2115	0	77	10	0	0	0	0	0	8	0	0	0	0	**95**	
2115 - 2130	0	62	14	0	4	0	0	0	12	0	0	0	0	**92**	
2130 - 2145	0	59	12	0	0	0	0	0	9	0	1	0	0	**81**	
2145 - 2200	0	67	11	0	0	0	0	0	12	0	0	0	0	**90**	**358**
2200 - 2215	0	47	12	0	3	0	0	0	6	0	0	0	0	**68**	
2215 - 2230	0	45	10	0	3	0	0	0	11	0	1	0	0	**70**	
2230 - 2245	0	79	15	0	1	0	0	0	8	0	0	0	0	**103**	
2245 - 2300	0	30	7	0	2	0	0	0	8	0	1	0	0	**48**	**289**
2300 - 2315	0	40	12	0	0	0	0	0	15	0	1	0	0	**68**	
2315 - 2330	0	39	6	0	0	0	0	0	6	0	0	0	0	**51**	
2330 - 2345	0	30	5	0	0	0	0	0	4	0	0	0	0	**39**	
2345 - 0000	0	21	6	0	0	0	0	0	9	0	0	0	0	**36**	**194**

Session Total	10	8899	2391	25	361	86	57	88	1138	28	13	0	0	**13096**
Session Average	0.10	92.70	24.91	0.26	3.76	0.90	0.59	0.92	11.85	0.29	0.14	0.00	0.00	**136.42**
Session Percentage	0.08	67.95	18.26	0.19	2.76	0.66	0.44	0.67	8.69	0.21	0.10	0.00	0.00	

AM Peak Hour	0530 - 0630	0745 - 0845	0700 - 0800	0915 - 1015	0730 - 0830	0630 - 0730	0930 - 1030	0700 - 0800	0945 - 1045	0945 - 1045	0630 - 0730	-	-	**0745 - 0845**
AM Peak Hour Volume	2	678	164	3	44	17	12	14	63	5	3	0	0	**951**

Noon Peak Hour	1045 - 1145	1445 - 1545	1445 - 1545	1145 - 1245	1015 - 1115	1200 - 1300	1000 - 1100	1415 - 1515	1415 - 1515	1000 - 1100	-	-	-	**1445 - 1545**
Noon Peak Hour Volume	1	623	212	8	31	5	10	12	82	5	0	0	0	**952**

PM Peak Hour	1545 - 1645	1645 - 1745	1530 - 1630	1730 - 1830	1530 - 1630	1545 - 1645	1515 - 1615	1545 - 1645	1500 - 1600	1500 - 1600	1945 - 2045	-	-	**1615 - 1715**
PM Peak Hour Volume	2	812	255	2	35	14	2	8	78	3	2	0	0	**1118**

Site 75 Lane 3 SB
I-20,
north of Bush River Rd

Date
Thursday, April 25, 2024

Lat/Long
34.034393°, -81.117736°

Weather
Fair
67°F

Click here for Detailed Weather

0000 - 2400 (Weekday 24h Session) (04-25-2024)
SB WB 15min

	Southbound (Movement 75 Lane 3 SB.1)													15min	60min
TIME	1	2	3	4	5	6	7	8	9	10	11	12	13	Total	Total
0000 - 0015	0	13	3	0	2	0	0	0	14	0	0	0	0	**32**	
0015 - 0030	0	18	5	0	0	0	0	0	15	0	0	0	0	**38**	
0030 - 0045	0	19	5	0	2	0	0	0	8	0	1	0	0	**35**	
0045 - 0100	0	10	2	0	1	0	0	0	10	0	0	0	0	**23**	**128**
0100 - 0115	0	9	1	0	1	0	0	0	10	0	0	0	0	**21**	
0115 - 0130	0	12	2	0	0	0	0	0	1	0	0	0	0	**15**	
0130 - 0145	0	8	0	0	2	0	0	0	5	0	0	0	0	**15**	
0145 - 0200	0	13	1	0	0	0	0	0	5	0	0	0	0	**19**	**70**
0200 - 0215	0	8	3	0	0	0	0	0	6	0	1	0	0	**18**	
0215 - 0230	0	9	1	0	1	1	0	0	6	0	0	0	0	**18**	
0230 - 0245	0	14	3	0	1	0	0	0	8	0	0	0	0	**26**	
0245 - 0300	0	6	2	0	1	0	0	0	10	0	1	0	0	**20**	**82**
0300 - 0315	0	4	0	0	1	0	0	0	7	0	0	0	0	**12**	
0315 - 0330	0	11	3	0	0	0	0	0	12	0	0	0	0	**26**	
0330 - 0345	0	4	2	0	0	0	0	0	5	0	0	0	0	**11**	
0345 - 0400	0	6	2	0	0	0	0	0	5	0	0	0	0	**13**	**62**
0400 - 0415	0	9	1	0	1	0	0	0	6	0	1	0	0	**18**	
0415 - 0430	0	7	3	0	0	0	0	0	11	0	0	0	0	**21**	
0430 - 0445	0	12	6	0	0	0	0	0	17	0	0	0	0	**35**	
0445 - 0500	0	13	4	0	2	0	0	0	14	0	0	0	0	**33**	**107**
0500 - 0515	0	16	5	0	3	0	0	0	13	0	1	0	0	**38**	
0515 - 0530	0	22	8	0	2	0	0	0	12	0	1	0	0	**45**	
0530 - 0545	0	30	9	1	2	0	0	0	15	0	0	0	0	**57**	
0545 - 0600	0	28	8	0	1	0	0	0	24	0	0	0	0	**61**	**201**
0600 - 0615	0	35	14	0	0	0	0	0	27	0	0	0	0	**76**	
0615 - 0630	0	47	19	1	4	3	0	0	17	0	0	0	0	**91**	
0630 - 0645	0	59	21	0	3	7	0	0	23	0	0	0	0	**113**	
0645 - 0700	0	78	24	0	2	6	0	0	12	0	0	0	0	**122**	**402**
0700 - 0715	0	105	15	2	8	4	4	1	13	1	0	0	0	**153**	
0715 - 0730	0	123	30	1	6	4	2	1	21	0	0	0	0	**188**	
0730 - 0745	0	127	31	0	5	2	2	2	13	1	0	0	0	**183**	
0745 - 0800	0	201	31	0	8	4	2	0	9	0	0	0	0	**255**	**779**
0800 - 0815	0	161	39	0	5	3	1	1	18	1	0	0	0	**229**	
0815 - 0830	1	170	46	0	2	2	3	3	13	3	1	0	0	**244**	
0830 - 0845	0	159	47	1	12	1	2	0	9	1	0	0	0	**232**	
0845 - 0900	0	124	46	0	4	2	2	2	16	1	0	0	0	**197**	**902**
0900 - 0915	0	95	40	0	8	0	0	1	20	2	0	0	0	**166**	
0915 - 0930	0	102	29	0	5	2	2	0	14	1	0	0	0	**155**	
0930 - 0945	1	112	34	1	6	3	3	1	22	0	0	0	0	**183**	
0945 - 1000	0	123	23	0	3	0	5	2	15	0	0	0	0	**171**	**675**
1000 - 1015	0	124	37	0	6	3	0	1	12	0	0	0	0	**183**	
1015 - 1030	0	114	26	1	5	8	1	4	18	1	0	0	0	**178**	
1030 - 1045	0	99	24	0	5	2	1	1	18	0	0	0	0	**150**	
1045 - 1100	0	101	38	0	14	5	0	1	20	0	0	0	0	**179**	**690**
1100 - 1115	0	95	29	1	6	6	0	2	21	1	0	0	0	**161**	
1115 - 1130	0	111	46	1	10	3	0	0	13	0	1	0	0	**185**	
1130 - 1145	0	117	40	0	3	3	1	3	21	1	1	0	0	**190**	
1145 - 1200	0	123	43	1	7	4	0	2	15	0	0	0	0	**195**	**731**
1200 - 1215	1	123	46	0	8	0	0	1	20	2	0	0	0	**201**	
1215 - 1230	0	113	50	0	7	6	0	0	16	0	0	0	0	**192**	
1230 - 1245	1	133	42	0	5	6	0	0	19	0	0	0	0	**206**	
1245 - 1300	0	138	34	4	5	2	0	1	19	1	0	0	0	**204**	**803**
1300 - 1315	0	131	41	0	2	4	0	1	14	1	0	0	0	**194**	
1315 - 1330	1	119	36	2	6	2	0	4	18	2	0	0	0	**190**	
1330 - 1345	0	126	23	0	5	4	0	3	19	1	0	0	0	**181**	
1345 - 1400	0	124	32	0	6	1	2	1	17	1	1	0	0	**185**	**750**
1400 - 1415	0	141	41	0	5	2	1	1	18	1	0	0	0	**210**	
1415 - 1430	0	153	29	1	2	3	2	3	20	1	0	0	0	**214**	
1430 - 1445	0	149	35	2	5	1	0	4	18	2	0	0	0	**216**	
1445 - 1500	1	157	46	0	7	1	1	2	14	0	0	0	0	**229**	**869**
1500 - 1515	0	161	40	2	8	2	1	1	13	0	0	0	0	**228**	
1515 - 1530	0	177	50	0	7	2	3	1	14	0	0	0	0	**254**	
1530 - 1545	0	163	48	2	4	4	0	2	13	1	0	0	0	**237**	
1545 - 1600	0	179	33	0	7	0	0	3	14	0	0	0	0	**236**	**955**
1600 - 1615	1	192	53	1	3	2	2	4	13	1	0	0	0	**272**	
1615 - 1630	0	174	49	1	7	2	0	0	6	0	0	0	0	**239**	
1630 - 1645	0	206	43	0	3	3	0	0	12	1	0	0	0	**268**	
1645 - 1700	0	207	38	0	1	5	0	3	10	0	0	0	0	**264**	**1043**
1700 - 1715	1	189	44	2	1	9	0	0	11	0	0	0	0	**257**	
1715 - 1730	1	188	31	0	1	4	0	1	15	0	0	0	0	**241**	
1730 - 1745	0	193	39	0	5	4	0	0	4	1	0	0	0	**246**	
1745 - 1800	0	166	51	0	0	5	0	4	12	0	0	0	0	**238**	**982**
1800 - 1815	3	160	43	0	1	2	0	2	15	0	0	0	0	**226**	
1815 - 1830	0	166	33	0	0	1	0	2	6	0	0	0	0	**208**	
1830 - 1845	0	125	29	1	2	2	0	1	10	0	0	0	0	**170**	
1845 - 1900	0	122	17	3	4	0	0	0	8	0	0	0	0	**154**	**758**
1900 - 1915	0	112	18	0	1	0	0	2	18	0	0	0	0	**151**	
1915 - 1930	0	117	23	0	4	2	0	1	10	0	0	0	0	**157**	
1930 - 1945	0	113	17	0	2	0	0	0	8	0	0	0	0	**140**	
1945 - 2000	0	119	13	0	2	1	0	3	17	0	0	0	0	**155**	**603**
2000 - 2015	0	98	22	0	0	1	0	0	7	0	0	0	0	**128**	
2015 - 2030	0	71	24	1	1	2	0	0	14	0	0	0	0	**113**	
2030 - 2045	0	74	20	0	1	1	0	0	14	0	0	0	0	**110**	
2045 - 2100	0	84	21	0	0	0	0	0	13	0	0	0	0	**118**	**469**
2100 - 2115	0	72	11	0	3	0	0	0	13	0	0	0	0	**99**	
2115 - 2130	0	70	14	0	0	0	0	0	13	0	0	0	0	**97**	
2130 - 2145	0	55	15	0	2	0	0	0	15	0	0	0	0	**87**	
2145 - 2200	0	78	18	0	4	0	0	0	10	0	0	0	0	**110**	**393**
2200 - 2215	0	45	10	0	1	1	0	0	7	0	0	0	0	**64**	
2215 - 2230	0	77	20	0	0	0	0	0	10	0	0	0	0	**107**	
2230 - 2245	0	58	16	0	1	1	0	0	8	0	0	0	0	**84**	
2245 - 2300	0	34	9	0	0	0	0	0	11	0	0	0	0	**54**	**309**
2300 - 2315	0	39	11	0	0	0	0	0	7	0	1	0	0	**58**	
2315 - 2330	0	20	5	0	1	0	0	0	9	0	1	0	0	**36**	
2330 - 2345	0	28	8	0	1	0	0	0	6	0	0	0	0	**43**	
2345 - 0000	0	20	4	0	0	0	0	0	4	0	1	0	0	**29**	**166**

Session Total	12	8765	2246	33	301	166	43	79	1241	30	13	0	0	**12929**
Session Average	0.13	91.30	23.40	0.34	3.14	1.73	0.45	0.82	12.93	0.31	0.14	0.00	0.00	**134.68**
Session Percentage	0.09	67.79	17.37	0.26	2.33	1.28	0.33	0.61	9.60	0.23	0.10	0.00	0.00	

AM Peak Hour	0730 - 0830	0745 - 0845	0815 - 0915	0615 - 0715	0830 - 0930	0630 - 0730	0700 - 0800	0930 - 1030	0545 - 0645	0815 - 0915	0500 - 0600	-	-	**0745 - 0845**
AM Peak Hour Volume	1	691	179	3	29	21	10	8	91	7	2	0	0	**960**

Noon Peak Hour	1145 - 1245	1445 - 1545	1445 - 1545	1230 - 1330	1030 - 1130	1015 - 1115	1330 - 1430	1400 - 1500	1015 - 1115	1245 - 1345	1045 - 1145	-	-	**1445 - 1545**
Noon Peak Hour Volume	2	658	184	6	35	21	5	10	77	5	2	0	0	**948**

PM Peak Hour	1715 - 1815	1630 - 1730	1515 - 1615	1500 - 1600	1500 - 1600	1645 - 1745	1515 - 1615	1515 - 1615	1500 - 1600	1515 - 1615	-	-	-	**1600 - 1700**
PM Peak Hour Volume	4	790	184	4	26	22	5	10	54	2	0	0	0	**1043**

Site 75 Lane 3 SB
I-20,
north of Bush River Rd

Date
Friday, April 26, 2024

Lat/Long
34.034393°, -81.117736°

Weather
Cloudy
69°F

Click here for Detailed Weather

0000 - 2400 (Weekday 24h Session) (04-26-2024)
SB WB 15min

	Southbound (Movement 75 Lane 3 SB.1)													15min	60min
TIME	1	2	3	4	5	6	7	8	9	10	11	12	13	Total	Total
0000 - 0015	0	16	2	0	4	0	0	0	8	0	1	0	0	**31**	
0015 - 0030	0	17	1	0	1	0	0	0	1	0	1	0	0	**21**	
0030 - 0045	0	14	1	0	1	0	0	0	7	0	1	0	0	**24**	
0045 - 0100	0	21	2	0	0	0	0	0	8	0	1	0	0	**32**	**108**
0100 - 0115	0	14	1	0	2	0	0	0	10	0	0	0	0	**27**	
0115 - 0130	0	12	1	0	2	0	0	0	13	0	0	0	0	**28**	
0130 - 0145	0	12	0	0	0	0	0	0	5	0	0	0	0	**17**	
0145 - 0200	0	12	0	0	1	0	0	0	7	0	1	0	0	**21**	**93**
0200 - 0215	0	16	0	0	1	0	0	0	6	0	0	0	0	**23**	
0215 - 0230	0	10	0	0	2	0	0	0	7	0	0	0	0	**19**	
0230 - 0245	0	11	1	0	0	0	0	0	8	0	0	0	0	**20**	
0245 - 0300	0	10	1	0	1	0	0	0	10	0	1	0	0	**23**	**85**
0300 - 0315	0	16	1	0	2	1	0	0	8	0	1	0	0	**29**	
0315 - 0330	0	10	0	0	1	1	0	0	8	0	1	0	0	**21**	
0330 - 0345	0	14	0	0	0	0	0	0	11	0	0	0	0	**25**	
0345 - 0400	0	12	1	0	1	0	0	0	11	0	1	0	0	**26**	**101**
0400 - 0415	0	10	0	0	2	0	0	0	9	0	0	0	0	**21**	
0415 - 0430	0	19	1	0	1	0	0	0	11	0	0	0	0	**32**	
0430 - 0445	0	15	1	0	1	0	0	0	9	0	0	0	0	**26**	
0445 - 0500	0	13	1	0	2	0	0	0	21	0	0	0	0	**37**	**116**
0500 - 0515	0	22	3	0	0	0	0	0	12	0	0	0	0	**37**	
0515 - 0530	0	30	2	0	0	0	0	0	15	0	0	0	0	**47**	
0530 - 0545	0	26	2	0	5	1	0	0	6	0	1	0	0	**41**	
0545 - 0600	0	35	3	0	3	0	0	0	14	0	0	0	0	**55**	**180**
0600 - 0615	0	33	7	0	5	0	0	0	12	0	0	0	0	**57**	
0615 - 0630	0	55	22	0	1	1	0	0	8	0	1	0	0	**88**	
0630 - 0645	0	60	22	0	5	6	0	0	12	0	0	0	0	**105**	
0645 - 0700	0	53	25	0	2	6	0	0	13	0	1	0	0	**100**	**350**
0700 - 0715	0	78	26	1	8	3	1	1	14	0	0	0	0	**132**	
0715 - 0730	0	106	23	1	6	4	5	0	12	0	0	0	0	**157**	
0730 - 0745	1	123	29	1	6	2	2	0	12	1	1	0	0	**178**	
0745 - 0800	0	175	34	0	4	5	3	1	11	0	0	0	0	**233**	**700**
0800 - 0815	0	141	32	0	9	1	0	3	14	0	0	0	0	**200**	
0815 - 0830	0	148	52	1	6	1	4	1	14	0	0	0	0	**227**	
0830 - 0845	0	151	44	0	11	3	0	2	11	0	0	0	0	**222**	
0845 - 0900	0	113	35	2	9	1	1	2	12	0	0	0	0	**175**	**824**
0900 - 0915	1	91	41	1	4	4	2	2	12	0	0	1	0	**159**	
0915 - 0930	0	96	35	0	11	3	1	1	11	0	0	0	0	**158**	
0930 - 0945	0	120	32	0	8	2	2	2	19	1	0	0	0	**186**	
0945 - 1000	0	86	35	2	7	2	2	3	19	1	0	0	0	**157**	**660**
1000 - 1015	0	112	45	0	9	0	1	0	15	0	0	0	0	**182**	
1015 - 1030	0	106	28	0	6	3	1	1	10	1	0	0	0	**156**	
1030 - 1045	0	110	28	0	6	1	5	0	22	0	0	0	0	**172**	
1045 - 1100	0	100	34	0	7	2	0	2	16	0	0	0	0	**161**	**671**
1100 - 1115	0	124	37	2	5	3	1	2	18	1	0	0	0	**193**	
1115 - 1130	1	133	49	0	7	2	1	1	16	0	0	0	0	**210**	
1130 - 1145	0	138	48	0	5	3	2	2	16	0	0	0	0	**214**	
1145 - 1200	0	109	31	1	8	0	0	4	24	1	0	0	0	**178**	**795**
1200 - 1215	0	135	41	1	6	1	2	2	16	1	0	0	0	**205**	
1215 - 1230	0	137	42	5	3	0	3	3	15	1	0	0	0	**209**	
1230 - 1245	1	152	45	5	2	1	2	3	12	0	0	0	0	**223**	
1245 - 1300	0	146	44	1	7	0	1	2	13	2	0	0	0	**216**	**853**
1300 - 1315	0	154	37	2	7	2	1	1	9	2	0	0	0	**215**	
1315 - 1330	0	176	46	0	4	1	1	2	18	0	0	0	0	**248**	
1330 - 1345	0	161	45	4	4	0	2	1	10	0	0	0	0	**227**	
1345 - 1400	1	168	36	0	4	1	0	0	8	1	0	0	0	**219**	**909**
1400 - 1415	0	139	44	0	4	0	1	0	14	0	0	0	0	**202**	
1415 - 1430	0	163	32	1	4	1	0	2	13	0	0	0	0	**216**	
1430 - 1445	0	158	45	0	5	5	0	3	14	0	0	0	0	**230**	
1445 - 1500	1	173	30	0	2	1	0	0	21	0	0	0	0	**228**	**876**
1500 - 1515	0	169	42	0	4	1	2	0	12	0	0	0	0	**230**	
1515 - 1530	0	150	49	1	6	3	2	1	9	0	0	0	0	**221**	
1530 - 1545	0	169	50	0	5	9	0	2	12	0	0	0	0	**247**	
1545 - 1600	1	193	38	1	5	6	0	1	15	1	0	0	0	**261**	**959**
1600 - 1615	0	144	48	0	5	8	0	4	17	0	0	0	0	**226**	
1615 - 1630	0	206	50	0	3	1	0	0	13	1	0	0	0	**274**	
1630 - 1645	0	185	43	1	4	1	0	1	8	0	0	0	0	**243**	
1645 - 1700	0	183	36	0	5	1	0	1	14	0	0	0	0	**240**	**983**
1700 - 1715	1	197	41	0	2	1	0	1	14	0	0	0	0	**257**	
1715 - 1730	0	197	34	0	2	0	0	3	11	0	0	0	0	**247**	
1730 - 1745	0	151	37	0	4	0	0	2	14	0	0	0	0	**208**	
1745 - 1800	0	154	25	0	6	1	0	1	8	0	0	0	0	**195**	**907**
1800 - 1815	0	145	27	1	4	2	0	1	12	0	0	0	0	**192**	
1815 - 1830	0	170	26	0	3	0	0	1	13	0	0	0	0	**213**	
1830 - 1845	0	122	25	0	1	0	0	2	16	0	0	0	0	**166**	
1845 - 1900	1	133	22	0	1	0	0	1	13	0	0	0	0	**171**	**742**
1900 - 1915	0	109	33	0	6	1	0	2	5	0	0	0	0	**156**	
1915 - 1930	0	127	20	0	4	1	0	1	10	0	0	0	0	**163**	
1930 - 1945	1	120	19	0	1	1	0	0	12	0	0	0	0	**154**	
1945 - 2000	0	109	11	1	2	0	0	0	6	0	0	0	0	**129**	**602**
2000 - 2015	0	105	20	1	0	0	0	0	9	0	0	0	0	**135**	
2015 - 2030	0	95	11	0	1	1	0	0	13	0	0	0	0	**121**	
2030 - 2045	0	93	3	0	1	0	0	0	5	0	0	0	0	**102**	
2045 - 2100	0	91	2	0	1	0	0	0	12	0	1	0	0	**107**	**465**
2100 - 2115	0	95	3	0	1	0	0	0	11	0	1	0	0	**111**	
2115 - 2130	0	92	2	0	0	0	0	0	12	0	0	0	0	**106**	
2130 - 2145	0	88	4	0	1	0	0	0	4	0	2	0	0	**99**	
2145 - 2200	0	99	2	0	1	0	0	0	5	0	0	0	0	**107**	**423**
2200 - 2215	0	89	2	0	0	0	0	0	9	0	0	0	0	**100**	
2215 - 2230	0	72	3	0	1	0	0	0	13	0	1	0	0	**90**	
2230 - 2245	0	75	4	0	0	0	0	0	7	0	2	0	0	**88**	
2245 - 2300	0	88	4	0	0	0	0	0	7	0	1	0	0	**100**	**378**
2300 - 2315	0	86	5	0	0	0	0	0	3	0	0	0	0	**94**	
2315 - 2330	0	64	3	0	0	0	0	0	5	0	0	0	0	**72**	
2330 - 2345	0	38	2	0	0	0	0	0	14	0	1	0	0	**55**	
2345 - 0000	0	40	2	0	0	0	0	0	5	0	0	0	0	**47**	**268**

Session Total	10	9253	2054	37	320	112	51	74	1099	15	22	1	0	**13048**
Session Average	0.10	96.39	21.40	0.39	3.33	1.17	0.53	0.77	11.45	0.16	0.23	0.01	0.00	**135.92**
Session Percentage	0.08	70.92	15.74	0.28	2.45	0.86	0.39	0.57	8.42	0.11	0.17	0.01	0.00	

AM Peak Hour	0645 - 0745	0745 - 0845	0815 - 0915	0815 - 0915	0800 - 0900	0630 - 0730	0700 - 0800	0800 - 0900	0945 - 1045	0930 - 1030	0530 - 0630	0815 - 0915	-	**0745 - 0845**
AM Peak Hour Volume	1	615	172	4	35	19	11	8	66	3	2	1	0	**882**

Noon Peak Hour	1030 - 1130	1415 - 1515	1200 - 1300	1215 - 1315	1000 - 1100	1445 - 1545	1200 - 1300	1145 - 1245	1100 - 1200	1215 - 1315	-	-	-	**1445 - 1545**
Noon Peak Hour Volume	1	663	172	13	28	14	8	12	74	5	0	0	0	**926**

PM Peak Hour	1845 - 1945	1615 - 1715	1530 - 1630	1500 - 1600	1515 - 1615	1515 - 1615	1500 - 1600	1515 - 1615	1530 - 1630	1530 - 1630	-	-	-	**1615 - 1715**
PM Peak Hour Volume	2	771	186	2	21	26	4	8	57	2	0	0	0	**1014**

Site 75 Lane 3 SB
I-20,
north of Bush River Rd

Date
Saturday, April 27, 2024

Lat/Long
34.034393°, -81.117736°

Weather
Mostly Cloudy
69°F

Click here for Detailed Weather

0000 - 2400 (Saturday 24h Session) (04-27-2024)
SB WB 15min

	Southbound (Movement 75 Lane 3 SB.1)													15min	60min
TIME	1	2	3	4	5	6	7	8	9	10	11	12	13	Total	Total
0000 - 0015	0	34	4	0	1	0	0	0	5	0	0	0	0	**44**	
0015 - 0030	0	31	7	0	2	0	0	0	3	0	1	0	0	**44**	
0030 - 0045	1	32	7	0	1	0	0	0	4	0	1	0	0	**46**	
0045 - 0100	0	23	6	0	2	1	0	0	4	0	0	0	0	**36**	**170**
0100 - 0115	0	22	5	0	0	0	0	0	7	0	1	0	0	**35**	
0115 - 0130	1	19	4	0	0	0	0	0	4	0	0	0	0	**28**	
0130 - 0145	0	21	3	0	0	0	0	1	4	0	0	0	0	**29**	
0145 - 0200	0	15	1	0	0	0	0	0	3	0	0	0	0	**19**	**111**
0200 - 0215	0	17	5	0	0	0	0	0	0	0	0	0	0	**22**	
0215 - 0230	0	14	2	0	1	0	0	0	4	0	1	0	0	**22**	
0230 - 0245	0	15	2	0	0	0	0	0	6	0	1	0	0	**24**	
0245 - 0300	0	24	4	0	0	0	0	0	6	0	0	0	0	**34**	**102**
0300 - 0315	0	16	3	0	1	0	0	0	5	0	0	0	0	**25**	
0315 - 0330	0	21	4	0	0	0	0	0	6	0	1	0	0	**32**	
0330 - 0345	0	9	2	0	0	0	0	0	9	0	0	0	0	**20**	
0345 - 0400	0	15	3	0	0	1	0	0	8	0	0	0	0	**27**	**104**
0400 - 0415	0	6	1	0	4	0	0	0	8	0	1	0	0	**20**	
0415 - 0430	0	15	5	0	0	0	0	0	6	0	0	0	0	**26**	
0430 - 0445	0	11	3	0	1	0	0	0	4	0	0	0	0	**19**	
0445 - 0500	0	5	5	0	2	0	0	0	7	0	2	0	0	**21**	**86**
0500 - 0515	0	21	7	0	0	0	0	0	5	0	0	0	0	**33**	
0515 - 0530	0	17	6	0	0	0	0	0	8	0	1	0	0	**32**	
0530 - 0545	0	16	7	0	0	0	0	0	9	0	0	0	0	**32**	
0545 - 0600	0	21	7	0	1	0	0	0	6	0	1	0	0	**36**	**133**
0600 - 0615	0	29	6	0	2	0	0	0	4	0	0	0	0	**41**	
0615 - 0630	0	27	6	0	1	0	0	0	6	0	0	0	0	**40**	
0630 - 0645	0	42	18	0	1	0	0	0	5	0	0	0	0	**66**	
0645 - 0700	0	30	14	0	1	1	0	1	4	0	0	0	0	**51**	**198**
0700 - 0715	0	46	9	0	0	1	0	0	14	0	1	0	0	**71**	
0715 - 0730	0	60	15	0	2	1	1	0	5	1	0	0	0	**85**	
0730 - 0745	0	52	11	1	2	0	1	2	9	0	1	0	0	**79**	
0745 - 0800	0	56	19	0	4	0	0	1	8	2	0	0	0	**90**	**325**
0800 - 0815	0	57	15	0	5	3	0	0	11	0	0	0	0	**91**	
0815 - 0830	0	70	23	0	3	2	0	0	8	0	0	0	0	**106**	
0830 - 0845	0	82	12	0	0	1	0	0	12	1	0	0	0	**108**	
0845 - 0900	0	76	16	0	3	1	0	2	9	0	0	0	0	**107**	**412**
0900 - 0915	1	70	17	0	1	1	0	1	10	0	1	0	0	**102**	
0915 - 0930	0	86	17	0	1	0	0	0	13	0	0	0	0	**117**	
0930 - 0945	0	104	11	0	3	1	1	2	10	0	0	0	0	**132**	
0945 - 1000	0	103	21	0	4	0	0	0	12	0	0	0	0	**140**	**491**
1000 - 1015	0	96	20	0	4	0	0	1	11	0	0	0	0	**132**	
1015 - 1030	0	95	19	1	3	1	0	0	12	1	0	0	0	**132**	
1030 - 1045	0	126	29	0	2	0	0	0	9	0	0	0	0	**166**	
1045 - 1100	0	109	33	0	2	1	1	1	7	0	0	0	0	**154**	**584**
1100 - 1115	0	136	15	0	3	3	0	0	11	0	0	0	0	**168**	
1115 - 1130	0	120	26	0	4	2	0	0	3	0	0	0	0	**155**	
1130 - 1145	0	113	20	0	0	0	0	1	6	2	0	0	0	**142**	
1145 - 1200	0	126	29	0	2	1	0	1	11	0	0	0	0	**170**	**635**
1200 - 1215	0	137	25	0	1	1	0	0	5	0	0	0	0	**169**	
1215 - 1230	0	116	37	0	2	0	0	1	9	0	0	0	0	**165**	
1230 - 1245	1	143	30	0	1	1	0	0	12	0	0	0	0	**188**	
1245 - 1300	0	118	19	0	6	0	0	0	9	0	0	0	0	**152**	**674**
1300 - 1315	0	125	32	1	1	0	0	0	8	0	0	0	0	**167**	
1315 - 1330	0	149	31	0	2	0	0	1	7	0	0	0	0	**190**	
1330 - 1345	0	141	28	0	1	0	0	0	6	0	0	0	0	**176**	
1345 - 1400	0	130	28	0	5	0	0	0	10	0	0	0	0	**173**	**706**
1400 - 1415	2	143	28	0	2	1	0	1	6	0	0	0	0	**183**	
1415 - 1430	1	150	39	1	3	0	0	3	5	0	0	0	0	**202**	
1430 - 1445	1	123	21	0	3	0	0	0	8	0	0	0	0	**156**	
1445 - 1500	2	133	16	0	1	0	0	1	11	0	0	0	0	**164**	**705**
1500 - 1515	1	137	23	0	2	0	0	0	2	1	0	0	0	**166**	
1515 - 1530	1	129	32	0	1	0	1	1	7	0	0	0	0	**172**	
1530 - 1545	3	145	14	0	3	1	0	1	6	1	0	0	0	**174**	
1545 - 1600	0	146	24	1	1	0	0	0	10	1	0	0	0	**183**	**695**
1600 - 1615	0	136	24	0	1	1	0	0	6	0	0	0	0	**168**	
1615 - 1630	0	116	26	0	2	1	0	2	7	0	0	0	0	**154**	
1630 - 1645	0	125	14	0	2	0	0	0	5	0	0	0	0	**146**	
1645 - 1700	0	125	21	0	2	0	0	0	5	0	0	0	0	**153**	**621**
1700 - 1715	0	128	21	0	2	2	0	1	7	0	0	0	0	**161**	
1715 - 1730	1	141	18	0	1	0	0	1	2	0	0	0	0	**164**	
1730 - 1745	0	117	27	0	3	0	0	1	6	0	0	0	0	**154**	
1745 - 1800	0	86	23	1	3	0	0	1	3	0	0	0	0	**117**	**596**
1800 - 1815	0	95	27	0	3	0	0	2	4	0	0	0	0	**131**	
1815 - 1830	0	140	18	0	1	0	0	0	3	0	0	0	0	**162**	
1830 - 1845	0	121	30	1	1	0	0	0	3	0	0	0	0	**156**	
1845 - 1900	0	114	16	0	0	0	0	0	6	1	0	0	0	**137**	**586**
1900 - 1915	0	97	20	0	1	0	0	0	1	0	0	0	0	**119**	
1915 - 1930	0	110	10	0	1	1	0	0	4	0	0	0	0	**126**	
1930 - 1945	0	115	24	0	1	0	0	1	1	0	0	0	0	**142**	
1945 - 2000	0	119	12	0	0	0	0	0	4	0	0	0	0	**135**	**522**
2000 - 2015	0	91	20	0	0	0	0	1	7	0	0	0	0	**119**	
2015 - 2030	0	79	13	0	0	2	0	0	0	0	0	0	0	**94**	
2030 - 2045	0	84	16	0	0	0	0	1	5	0	0	0	0	**106**	
2045 - 2100	0	80	13	0	1	0	0	0	0	0	0	0	0	**94**	**413**
2100 - 2115	1	66	11	0	1	1	0	0	0	0	0	0	0	**80**	
2115 - 2130	0	103	11	0	1	0	0	0	2	0	0	0	0	**117**	
2130 - 2145	0	101	16	0	3	0	0	0	5	0	0	0	0	**125**	
2145 - 2200	0	85	7	0	0	0	0	0	2	0	0	0	0	**94**	**416**
2200 - 2215	0	82	10	1	2	0	0	0	0	0	0	0	0	**95**	
2215 - 2230	0	83	16	0	1	0	0	0	3	0	0	0	0	**103**	
2230 - 2245	0	75	10	0	0	0	0	0	3	0	0	0	0	**88**	
2245 - 2300	0	50	11	0	0	0	0	0	4	0	1	0	0	**66**	**352**
2300 - 2315	0	52	7	0	0	0	0	0	1	0	0	0	0	**60**	
2315 - 2330	0	38	9	0	0	0	0	0	3	0	0	0	0	**50**	
2330 - 2345	0	40	9	0	0	0	0	0	5	0	0	0	0	**54**	
2345 - 0000	0	40	8	0	1	1	0	0	2	0	0	0	0	**52**	**216**

Session Total	17	7550	1469	8	138	35	5	34	571	11	15	0	0	**9853**
Session Average	0.18	78.65	15.30	0.08	1.44	0.36	0.05	0.35	5.95	0.11	0.16	0.00	0.00	**102.64**
Session Percentage	0.17	76.63	14.91	0.08	1.40	0.36	0.05	0.35	5.80	0.11	0.15	0.00	0.00	

AM Peak Hour	0815 - 0915	0945 - 1045	0945 - 1045	0645 - 0745	0730 - 0830	0800 - 0900	0645 - 0745	0845 - 0945	0915 - 1015	0700 - 0800	0500 - 0600	-	-	**0945 - 1045**
AM Peak Hour Volume	1	420	89	1	14	7	2	5	46	3	2	0	0	**570**

Noon Peak Hour	1445 - 1545	1330 - 1430	1330 - 1430	1000 - 1100	1345 - 1445	1030 - 1130	1000 - 1100	1400 - 1500	1000 - 1100	1045 - 1145	-	-	-	**1330 - 1430**
Noon Peak Hour Volume	7	564	123	1	13	6	1	5	39	2	0	0	0	**734**

PM Peak Hour	1500 - 1600	1500 - 1600	1745 - 1845	1745 - 1845	1715 - 1815	1530 - 1630	1500 - 1600	1715 - 1815	1515 - 1615	1500 - 1600	-	-	-	**1515 - 1615**
PM Peak Hour Volume	5	557	98	2	10	3	1	5	29	3	0	0	0	**697**

Bi-Directional Class Count || SB WB Average 15min

Columbia, SC

Marr Traffic DATA COLLECTION
www.marrtraffic.com

Site 75 Lane 3 SB
I-20,
north of Bush River Rd

Date
Sunday, April 21, 2024

Lat/Long
34.034393°, -81.117736°

Weather
Cloudy
66°F

0000 - 2400 (Weekday 24h Session) (All Dates)
SB WB Average 15min

	SB WB Average 15min													15min	60min
Time	1	2	3	4	5	6	7	8	9	10	11	12	13	Total	Total
0000 - 0015	0	26	4	0	2	0	0	0	8	0	0	0	0	**39**	
0015 - 0030	0	23	4	0	1	0	0	0	5	0	1	0	0	**34**	
0030 - 0045	0	20	4	0	1	0	0	0	5	0	1	0	0	**30**	
0045 - 0100	0	18	3	0	1	0	0	0	6	0	1	0	0	**28**	**132**
0100 - 0115	0	15	3	0	1	0	0	0	6	0	0	0	0	**25**	
0115 - 0130	0	16	2	0	1	0	0	0	5	0	0	0	0	**25**	
0130 - 0145	0	13	2	0	1	0	0	0	5	0	0	0	0	**20**	
0145 - 0200	0	14	1	0	1	0	0	0	4	0	0	0	0	**21**	**91**
0200 - 0215	0	14	4	0	0	0	0	0	6	0	0	0	0	**24**	
0215 - 0230	0	11	2	0	1	0	0	0	6	0	0	0	0	**20**	
0230 - 0245	0	11	2	0	0	0	0	0	6	0	0	0	0	**20**	
0245 - 0300	0	11	2	0	1	0	0	0	7	0	1	0	0	**22**	**87**
0300 - 0315	0	12	2	0	1	0	0	0	5	0	0	0	0	**20**	
0315 - 0330	0	10	1	0	1	0	0	0	8	0	0	0	0	**20**	
0330 - 0345	0	10	2	0	0	0	0	0	5	0	0	0	0	**17**	
0345 - 0400	0	10	2	0	1	0	0	0	8	0	0	0	0	**21**	**79**
0400 - 0415	0	10	2	0	1	0	0	0	8	0	1	0	0	**22**	
0415 - 0430	0	12	2	0	1	0	0	0	10	0	0	0	0	**26**	
0430 - 0445	0	18	3	0	1	1	0	0	8	0	0	0	0	**32**	
0445 - 0500	0	13	4	0	2	0	0	0	12	0	1	0	0	**31**	**111**
0500 - 0515	0	18	4	0	1	0	0	0	8	0	0	0	0	**31**	
0515 - 0530	0	23	4	0	1	0	0	0	13	0	0	0	0	**42**	
0530 - 0545	0	27	5	0	2	0	0	0	10	0	0	0	0	**45**	
0545 - 0600	0	28	6	0	1	0	0	0	13	0	0	0	0	**48**	**165**
0600 - 0615	0	33	9	0	2	0	0	0	12	0	0	0	0	**57**	
0615 - 0630	0	49	16	0	2	1	0	0	9	0	0	0	0	**78**	
0630 - 0645	0	61	18	0	3	5	0	0	12	0	0	0	0	**100**	
0645 - 0700	0	61	19	0	3	3	0	1	10	1	0	0	0	**98**	**334**
0700 - 0715	0	78	22	1	5	3	1	1	13	0	0	0	0	**124**	
0715 - 0730	0	107	25	0	6	4	1	1	10	1	0	0	0	**155**	
0730 - 0745	0	115	30	0	5	2	1	1	10	0	0	0	0	**166**	
0745 - 0800	0	151	30	0	6	2	1	1	8	1	0	0	0	**201**	**646**
0800 - 0815	0	125	30	0	5	2	0	1	11	0	0	0	0	**174**	
0815 - 0830	0	140	38	0	6	2	1	1	12	1	0	0	0	**201**	
0830 - 0845	0	135	31	0	8	2	1	2	11	0	0	0	0	**189**	
0845 - 0900	0	112	31	0	6	2	1	2	12	0	0	0	0	**166**	**730**
0900 - 0915	1	92	31	0	6	2	1	1	12	1	0	0	0	**147**	
0915 - 0930	0	100	25	0	6	2	1	1	13	1	0	0	0	**149**	
0930 - 0945	0	106	28	0	6	3	1	2	15	0	0	0	0	**161**	
0945 - 1000	0	104	28	1	5	1	1	2	16	0	0	0	0	**159**	**615**
1000 - 1015	0	106	32	1	5	2	1	1	14	0	0	0	0	**161**	
1015 - 1030	0	99	26	1	6	3	2	1	13	1	0	0	0	**152**	
1030 - 1045	0	106	31	0	4	1	1	1	15	0	0	0	0	**161**	
1045 - 1100	0	107	34	0	6	2	1	1	15	0	0	0	0	**167**	**641**
1100 - 1115	0	110	31	1	5	3	0	1	16	1	0	0	0	**167**	
1115 - 1130	0	112	39	0	5	1	1	1	12	0	0	0	0	**172**	
1130 - 1145	0	116	37	0	4	2	0	2	14	1	0	0	0	**177**	
1145 - 1200	0	121	35	0	4	2	0	2	18	0	0	0	0	**183**	**699**
1200 - 1215	0	123	39	1	4	1	1	1	14	1	0	0	0	**185**	
1215 - 1230	0	122	41	1	4	2	1	2	14	0	0	0	0	**186**	
1230 - 1245	0	133	42	1	3	2	0	1	14	0	0	0	0	**198**	
1245 - 1300	0	130	36	1	5	2	0	1	14	1	0	0	0	**190**	**759**
1300 - 1315	0	134	35	1	3	2	0	1	15	1	0	0	0	**192**	
1315 - 1330	0	140	36	1	4	1	1	2	13	0	0	0	0	**198**	
1330 - 1345	0	139	34	1	3	1	1	1	12	1	0	0	0	**195**	
1345 - 1400	0	135	33	0	5	1	1	1	14	0	0	0	0	**190**	**774**
1400 - 1415	0	138	35	0	4	1	0	1	13	0	0	0	0	**193**	
1415 - 1430	0	150	32	1	4	1	1	2	15	0	0	0	0	**206**	
1430 - 1445	0	138	34	1	4	2	0	2	14	0	0	0	0	**194**	
1445 - 1500	1	143	32	0	4	0	1	2	15	0	0	0	0	**197**	**790**
1500 - 1515	0	153	41	1	4	1	1	2	14	0	0	0	0	**217**	
1515 - 1530	0	151	41	0	4	1	1	1	12	0	0	0	0	**212**	
1530 - 1545	0	152	39	0	3	3	0	1	11	0	0	0	0	**211**	
1545 - 1600	0	160	37	0	6	3	0	1	13	1	0	0	0	**221**	**861**
1600 - 1615	0	160	40	1	4	2	1	2	14	1	0	0	0	**224**	
1615 - 1630	0	174	47	0	6	1	0	1	10	0	0	0	0	**240**	
1630 - 1645	0	168	34	0	3	1	0	1	8	0	0	0	0	**218**	
1645 - 1700	0	171	29	0	2	2	0	1	10	0	0	0	0	**215**	**897**
1700 - 1715	0	162	36	0	2	3	0	1	10	0	0	0	0	**214**	
1715 - 1730	0	177	30	0	3	1	0	1	10	0	0	0	0	**222**	
1730 - 1745	0	163	36	0	3	1	0	1	8	0	0	0	0	**213**	
1745 - 1800	0	149	33	0	3	1	0	1	10	0	0	0	0	**199**	**849**
1800 - 1815	0	133	32	0	3	1	0	1	12	0	0	0	0	**182**	
1815 - 1830	0	146	26	0	2	0	0	1	11	0	0	0	0	**187**	
1830 - 1845	0	121	26	0	2	1	0	1	11	0	0	0	0	**163**	
1845 - 1900	0	112	19	0	2	1	0	1	9	0	0	0	0	**144**	**676**
1900 - 1915	0	99	23	0	2	0	0	1	9	0	0	0	0	**133**	
1915 - 1930	0	108	18	0	2	1	0	1	11	0	0	0	0	**141**	
1930 - 1945	0	101	21	0	1	1	0	0	9	0	0	0	0	**134**	
1945 - 2000	0	98	15	0	1	1	0	1	11	0	0	0	0	**126**	**534**
2000 - 2015	0	84	18	0	0	0	0	0	8	0	0	0	0	**111**	
2015 - 2030	0	77	17	0	1	1	0	0	9	0	0	0	0	**104**	
2030 - 2045	0	76	12	0	1	0	0	1	9	0	0	0	0	**99**	
2045 - 2100	0	68	11	0	1	0	0	0	8	0	0	0	0	**88**	**403**
2100 - 2115	0	68	10	0	1	0	0	0	8	0	0	0	0	**88**	
2115 - 2130	0	67	10	0	2	0	0	0	9	0	0	0	0	**88**	
2130 - 2145	0	60	11	0	1	0	0	0	7	0	0	0	0	**81**	
2145 - 2200	0	65	8	0	1	0	0	0	7	0	0	0	0	**82**	**338**
2200 - 2215	0	55	8	0	1	0	0	0	7	0	0	0	0	**72**	
2215 - 2230	0	56	11	0	1	0	0	0	9	0	0	0	0	**77**	
2230 - 2245	0	55	10	0	1	1	0	0	7	0	1	0	0	**74**	
2245 - 2300	0	40	7	0	0	1	0	0	7	0	1	0	0	**57**	**280**
2300 - 2315	0	42	7	0	0	0	0	0	6	0	1	0	0	**56**	
2315 - 2330	0	33	5	0	1	1	0	0	6	0	1	0	0	**47**	
2330 - 2345	0	30	5	0	1	1	0	0	7	0	0	0	0	**43**	
2345 - 0000	0	26	4	0	0	0	0	0	6	0	0	0	0	**37**	**183**

Session Total	10	8215	1950	22	260	106	27	67	978	18	17	1	0	**11671**
Session Average	0.10	85.57	20.32	0.23	2.71	1.11	0.28	0.69	10.19	0.19	0.18	0.01	0.00	**121.57**
Session Percentage	0.08	70.39	16.71	0.19	2.23	0.91	0.23	0.57	8.38	0.15	0.15	0.00	0.00	

AM Peak Hour	0815 - 0915	0745 - 0845	0815 - 0915	0930 - 1030	0830 - 0930	0630 - 0730	0930 - 1030	0930 - 1030	0945 - 1045	0730 - 0830	0500 - 0600	0830 - 0930	-	**0745 - 0845**
AM Peak Volume	1	551	131	2	25	16	5	6	58	2	1	0	0	**765**

Noon Peak Hour	1400 - 1500	1445 - 1545	1200 - 1300	1245 - 1345	1000 - 1100	1015 - 1115	1000 - 1100	1130 - 1230	1100 - 1200	1245 - 1345	1045 - 1145	1045 - 1145	-	**1445 - 1545**
Noon Peak Volume	1	599	158	4	21	9	4	7	61	3	0	0	0	**837**

PM Peak Hour	1715 - 1815	1630 - 1730	1530 - 1630	1500 - 1600	1545 - 1645	1515 - 1615	1515 - 1615	1515 - 1615	1500 - 1600	1530 - 1630	1945 - 2045	-	-	**1545 - 1645**
PM Peak Volume	1	678	163	2	19	9	2	6	51	2	1	0	0	**902**

Bi-Directional Class Count || Volume Summary 15min

Columbia, SC

Marr Traffic DATA COLLECTION
www.marrtraffic.com

Site 75 Lane 3 SB
I-20,
north of Bush River Rd

Date
Sunday, April 21, 2024

Lat/Long
34.034393°, -81.117736°

Weather
Cloudy
66°F

Click here for Detailed Weather

0000 - 2400 (Sunday 24h Session) (04-21-2024)

Volume Summary 15min

TIME	Volume Summary 15min NB	SB	15min Total	60min Total
0000 - 0015	0	68	**68**	
0015 - 0030	0	50	**50**	
0030 - 0045	0	42	**42**	
0045 - 0100	0	44	**44**	**204**
0100 - 0115	0	30	**30**	
0115 - 0130	0	50	**50**	
0130 - 0145	0	29	**29**	
0145 - 0200	0	38	**38**	**147**
0200 - 0215	0	36	**36**	
0215 - 0230	0	29	**29**	
0230 - 0245	0	29	**29**	
0245 - 0300	0	18	**18**	**112**
0300 - 0315	0	19	**19**	
0315 - 0330	0	12	**12**	
0330 - 0345	0	17	**17**	
0345 - 0400	0	15	**15**	**63**
0400 - 0415	0	18	**18**	
0415 - 0430	0	18	**18**	
0430 - 0445	0	18	**18**	
0445 - 0500	0	25	**25**	**79**
0500 - 0515	0	15	**15**	
0515 - 0530	0	20	**20**	
0530 - 0545	0	23	**23**	
0545 - 0600	0	23	**23**	**81**
0600 - 0615	0	26	**26**	
0615 - 0630	0	32	**32**	
0630 - 0645	0	41	**41**	
0645 - 0700	0	38	**38**	**137**
0700 - 0715	0	41	**41**	
0715 - 0730	0	55	**55**	
0730 - 0745	0	57	**57**	
0745 - 0800	0	73	**73**	**226**
0800 - 0815	0	68	**68**	
0815 - 0830	0	77	**77**	
0830 - 0845	0	73	**73**	
0845 - 0900	0	73	**73**	**291**
0900 - 0915	0	91	**91**	
0915 - 0930	0	100	**100**	
0930 - 0945	0	102	**102**	
0945 - 1000	0	126	**126**	**419**
1000 - 1015	0	128	**128**	
1015 - 1030	0	114	**114**	
1030 - 1045	0	123	**123**	
1045 - 1100	0	136	**136**	**501**
1100 - 1115	0	124	**124**	
1115 - 1130	0	129	**129**	
1130 - 1145	0	158	**158**	
1145 - 1200	0	165	**165**	**576**

Time	Volume Summary 15min NB	SB	15min Total	60min Total
1200 - 1215	0	169	**169**	
1215 - 1230	0	160	**160**	
1230 - 1245	0	170	**170**	
1245 - 1300	0	169	**169**	**668**
1300 - 1315	0	162	**162**	
1315 - 1330	0	155	**155**	
1330 - 1345	0	171	**171**	
1345 - 1400	0	159	**159**	**647**
1400 - 1415	0	169	**169**	
1415 - 1430	0	168	**168**	
1430 - 1445	0	145	**145**	
1445 - 1500	0	154	**154**	**636**
1500 - 1515	0	144	**144**	
1515 - 1530	0	128	**128**	
1530 - 1545	0	141	**141**	
1545 - 1600	0	138	**138**	**551**
1600 - 1615	0	151	**151**	
1615 - 1630	0	144	**144**	
1630 - 1645	0	129	**129**	
1645 - 1700	0	129	**129**	**553**
1700 - 1715	0	112	**112**	
1715 - 1730	0	125	**125**	
1730 - 1745	0	133	**133**	
1745 - 1800	0	131	**131**	**501**
1800 - 1815	0	137	**137**	
1815 - 1830	0	140	**140**	
1830 - 1845	0	118	**118**	
1845 - 1900	0	106	**106**	**501**
1900 - 1915	0	108	**108**	
1915 - 1930	0	114	**114**	
1930 - 1945	0	126	**126**	
1945 - 2000	0	99	**99**	**447**
2000 - 2015	0	86	**86**	
2015 - 2030	0	84	**84**	
2030 - 2045	0	87	**87**	
2045 - 2100	0	73	**73**	**330**
2100 - 2115	0	84	**84**	
2115 - 2130	0	65	**65**	
2130 - 2145	0	54	**54**	
2145 - 2200	0	57	**57**	**260**
2200 - 2215	0	56	**56**	
2215 - 2230	0	43	**43**	
2230 - 2245	0	41	**41**	
2245 - 2300	0	39	**39**	**179**
2300 - 2315	0	27	**27**	
2315 - 2330	0	28	**28**	
2330 - 2345	0	39	**39**	
2345 - 0000	0	24	**24**	**118**

Session Total	0	8227	**8227**
Session Average	0.00	85.70	**85.70**
Session Percentage	0.00	100.00	

Site 75 Lane 3 SB

I-20,
north of Bush River Rd

Date

Monday, April 22, 2024

Lat/Long

34.034393°, -81.117736°

Weather

Mostly Cloudy
57°F

Click here for Detailed Weather

0000 - 2400 (Weekday 24h Session) (04-22-2024)

Volume Summary 15min

TIME	Volume Summary 15min NB	Volume Summary 15min SB	15min Total	60min Total
0000 - 0015	0	19	**19**	
0015 - 0030	0	21	**21**	
0030 - 0045	0	18	**18**	
0045 - 0100	0	21	**21**	**79**
0100 - 0115	0	15	**15**	
0115 - 0130	0	16	**16**	
0130 - 0145	0	17	**17**	
0145 - 0200	0	13	**13**	**61**
0200 - 0215	0	28	**28**	
0215 - 0230	0	13	**13**	
0230 - 0245	0	15	**15**	
0245 - 0300	0	19	**19**	**75**
0300 - 0315	0	19	**19**	
0315 - 0330	0	19	**19**	
0330 - 0345	0	21	**21**	
0345 - 0400	0	19	**19**	**78**
0400 - 0415	0	18	**18**	
0415 - 0430	0	21	**21**	
0430 - 0445	0	35	**35**	
0445 - 0500	0	33	**33**	**107**
0500 - 0515	0	32	**32**	
0515 - 0530	0	46	**46**	
0530 - 0545	0	48	**48**	
0545 - 0600	0	56	**56**	**182**
0600 - 0615	0	58	**58**	
0615 - 0630	0	87	**87**	
0630 - 0645	0	122	**122**	
0645 - 0700	0	124	**124**	**391**
0700 - 0715	0	155	**155**	
0715 - 0730	0	186	**186**	
0730 - 0745	0	205	**205**	
0745 - 0800	0	238	**238**	**784**
0800 - 0815	0	224	**224**	
0815 - 0830	0	257	**257**	
0830 - 0845	0	223	**223**	
0845 - 0900	0	186	**186**	**890**
0900 - 0915	0	169	**169**	
0915 - 0930	0	174	**174**	
0930 - 0945	0	175	**175**	
0945 - 1000	0	158	**158**	**676**
1000 - 1015	0	189	**189**	
1015 - 1030	0	174	**174**	
1030 - 1045	0	183	**183**	
1045 - 1100	0	168	**168**	**714**
1100 - 1115	0	185	**185**	
1115 - 1130	0	170	**170**	
1130 - 1145	0	180	**180**	
1145 - 1200	0	192	**192**	**727**

Time	Volume Summary 15min NB	Volume Summary 15min SB	15min Total	60min Total
1200 - 1215	0	188	**188**	
1215 - 1230	0	213	**213**	
1230 - 1245	0	191	**191**	
1245 - 1300	0	184	**184**	**776**
1300 - 1315	0	201	**201**	
1315 - 1330	0	202	**202**	
1330 - 1345	0	199	**199**	
1345 - 1400	0	189	**189**	**791**
1400 - 1415	0	192	**192**	
1415 - 1430	0	212	**212**	
1430 - 1445	0	191	**191**	
1445 - 1500	0	207	**207**	**802**
1500 - 1515	0	230	**230**	
1515 - 1530	0	229	**229**	
1530 - 1545	0	225	**225**	
1545 - 1600	0	233	**233**	**917**
1600 - 1615	0	238	**238**	
1615 - 1630	0	243	**243**	
1630 - 1645	0	240	**240**	
1645 - 1700	0	228	**228**	**949**
1700 - 1715	0	248	**248**	
1715 - 1730	0	243	**243**	
1730 - 1745	0	251	**251**	
1745 - 1800	0	232	**232**	**974**
1800 - 1815	0	176	**176**	
1815 - 1830	0	205	**205**	
1830 - 1845	0	164	**164**	
1845 - 1900	0	166	**166**	**711**
1900 - 1915	0	134	**134**	
1915 - 1930	0	144	**144**	
1930 - 1945	0	108	**108**	
1945 - 2000	0	118	**118**	**504**
2000 - 2015	0	107	**107**	
2015 - 2030	0	87	**87**	
2030 - 2045	0	90	**90**	
2045 - 2100	0	82	**82**	**366**
2100 - 2115	0	82	**82**	
2115 - 2130	0	81	**81**	
2130 - 2145	0	62	**62**	
2145 - 2200	0	66	**66**	**291**
2200 - 2215	0	71	**71**	
2215 - 2230	0	66	**66**	
2230 - 2245	0	63	**63**	
2245 - 2300	0	64	**64**	**264**
2300 - 2315	0	56	**56**	
2315 - 2330	0	54	**54**	
2330 - 2345	0	49	**49**	
2345 - 0000	0	48	**48**	**207**

Session Total	0	12316	**12316**
Session Average	0.00	128.29	**128.29**
Session Percentage	0.00	100.00	

Site 75 Lane 3 SB

I-20,
north of Bush River Rd

Date

Tuesday, April 23, 2024

Lat/Long

34.034393°, -81.117736°

Weather

Fair
58°F

Click here for Detailed Weather

0000 - 2400 (Weekday 24h Session) (04-23-2024)

Volume Summary 15min

TIME	Volume Summary 15min NB	SB	15min Total	60min Total
0000 - 0015	0	48	**48**	
0015 - 0030	0	36	**36**	
0030 - 0045	0	18	**18**	
0045 - 0100	0	21	**21**	**123**
0100 - 0115	0	24	**24**	
0115 - 0130	0	19	**19**	
0130 - 0145	0	17	**17**	
0145 - 0200	0	25	**25**	**85**
0200 - 0215	0	23	**23**	
0215 - 0230	0	22	**22**	
0230 - 0245	0	18	**18**	
0245 - 0300	0	25	**25**	**88**
0300 - 0315	0	11	**11**	
0315 - 0330	0	12	**12**	
0330 - 0345	0	8	**8**	
0345 - 0400	0	24	**24**	**55**
0400 - 0415	0	31	**31**	
0415 - 0430	0	28	**28**	
0430 - 0445	0	36	**36**	
0445 - 0500	0	33	**33**	**128**
0500 - 0515	0	35	**35**	
0515 - 0530	0	56	**56**	
0530 - 0545	0	51	**51**	
0545 - 0600	0	46	**46**	**188**
0600 - 0615	0	63	**63**	
0615 - 0630	0	120	**120**	
0630 - 0645	0	122	**122**	
0645 - 0700	0	117	**117**	**422**
0700 - 0715	0	151	**151**	
0715 - 0730	0	215	**215**	
0730 - 0745	0	224	**224**	
0745 - 0800	0	249	**249**	**839**
0800 - 0815	0	210	**210**	
0815 - 0830	0	255	**255**	
0830 - 0845	0	219	**219**	
0845 - 0900	0	213	**213**	**897**
0900 - 0915	0	187	**187**	
0915 - 0930	0	186	**186**	
0930 - 0945	0	177	**177**	
0945 - 1000	0	178	**178**	**728**
1000 - 1015	0	141	**141**	
1015 - 1030	0	150	**150**	
1030 - 1045	0	157	**157**	
1045 - 1100	0	169	**169**	**617**
1100 - 1115	0	177	**177**	
1115 - 1130	0	191	**191**	
1130 - 1145	0	176	**176**	
1145 - 1200	0	185	**185**	**729**

Time	Volume Summary 15min NB	SB	15min Total	60min Total
1200 - 1215	0	181	**181**	
1215 - 1230	0	167	**167**	
1230 - 1245	0	219	**219**	
1245 - 1300	0	180	**180**	**747**
1300 - 1315	0	195	**195**	
1315 - 1330	0	203	**203**	
1330 - 1345	0	204	**204**	
1345 - 1400	0	202	**202**	**804**
1400 - 1415	0	193	**193**	
1415 - 1430	0	209	**209**	
1430 - 1445	0	217	**217**	
1445 - 1500	0	200	**200**	**819**
1500 - 1515	0	241	**241**	
1515 - 1530	0	230	**230**	
1530 - 1545	0	227	**227**	
1545 - 1600	0	240	**240**	**938**
1600 - 1615	0	253	**253**	
1615 - 1630	0	290	**290**	
1630 - 1645	0	265	**265**	
1645 - 1700	0	213	**213**	**1021**
1700 - 1715	0	195	**195**	
1715 - 1730	0	278	**278**	
1730 - 1745	0	259	**259**	
1745 - 1800	0	224	**224**	**956**
1800 - 1815	0	206	**206**	
1815 - 1830	0	182	**182**	
1830 - 1845	0	177	**177**	
1845 - 1900	0	109	**109**	**674**
1900 - 1915	0	129	**129**	
1915 - 1930	0	138	**138**	
1930 - 1945	0	135	**135**	
1945 - 2000	0	117	**117**	**519**
2000 - 2015	0	94	**94**	
2015 - 2030	0	101	**101**	
2030 - 2045	0	79	**79**	
2045 - 2100	0	54	**54**	**328**
2100 - 2115	0	64	**64**	
2115 - 2130	0	56	**56**	
2130 - 2145	0	57	**57**	
2145 - 2200	0	47	**47**	**224**
2200 - 2215	0	53	**53**	
2215 - 2230	0	59	**59**	
2230 - 2245	0	53	**53**	
2245 - 2300	0	25	**25**	**190**
2300 - 2315	0	28	**28**	
2315 - 2330	0	37	**37**	
2330 - 2345	0	22	**22**	
2345 - 0000	0	22	**22**	**109**

Session Total	0	12228	**12228**
Session Average	0.00	127.38	**127.38**
Session Percentage	0.00	100.00	

Site 75 Lane 3 SB

I-20,
north of Bush River Rd

Date

Wednesday, April 24, 2024

Lat/Long

34.034393°, -81.117736°

Weather

Fair
66°F

Click here for Detailed Weather

0000 - 2400 (Weekday 24h Session) (04-24-2024)

Volume Summary 15min

TIME	Volume Summary 15min NB	Volume Summary 15min SB	15min Total	60min Total
0000 - 0015	0	34	**34**	
0015 - 0030	0	28	**28**	
0030 - 0045	0	28	**28**	
0045 - 0100	0	22	**22**	**112**
0100 - 0115	0	22	**22**	
0115 - 0130	0	18	**18**	
0130 - 0145	0	16	**16**	
0145 - 0200	0	11	**11**	**67**
0200 - 0215	0	21	**21**	
0215 - 0230	0	20	**20**	
0230 - 0245	0	6	**6**	
0245 - 0300	0	16	**16**	**63**
0300 - 0315	0	23	**23**	
0315 - 0330	0	21	**21**	
0330 - 0345	0	20	**20**	
0345 - 0400	0	24	**24**	**88**
0400 - 0415	0	29	**29**	
0415 - 0430	0	33	**33**	
0430 - 0445	0	54	**54**	
0445 - 0500	0	36	**36**	**152**
0500 - 0515	0	24	**24**	
0515 - 0530	0	46	**46**	
0530 - 0545	0	62	**62**	
0545 - 0600	0	59	**59**	**191**
0600 - 0615	0	80	**80**	
0615 - 0630	0	88	**88**	
0630 - 0645	0	130	**130**	
0645 - 0700	0	137	**137**	**435**
0700 - 0715	0	165	**165**	
0715 - 0730	0	201	**201**	
0730 - 0745	0	234	**234**	
0745 - 0800	0	266	**266**	**866**
0800 - 0815	0	197	**197**	
0815 - 0830	0	240	**240**	
0830 - 0845	0	248	**248**	
0845 - 0900	0	212	**212**	**897**
0900 - 0915	0	154	**154**	
0915 - 0930	0	155	**155**	
0930 - 0945	0	170	**170**	
0945 - 1000	0	180	**180**	**659**
1000 - 1015	0	173	**173**	
1015 - 1030	0	161	**161**	
1030 - 1045	0	173	**173**	
1045 - 1100	0	203	**203**	**710**
1100 - 1115	0	158	**158**	
1115 - 1130	0	164	**164**	
1130 - 1145	0	182	**182**	
1145 - 1200	0	193	**193**	**697**

Time	Volume Summary 15min NB	Volume Summary 15min SB	15min Total	60min Total
1200 - 1215	0	181	**181**	
1215 - 1230	0	197	**197**	
1230 - 1245	0	190	**190**	
1245 - 1300	0	224	**224**	**792**
1300 - 1315	0	207	**207**	
1315 - 1330	0	195	**195**	
1330 - 1345	0	204	**204**	
1345 - 1400	0	202	**202**	**808**
1400 - 1415	0	202	**202**	
1415 - 1430	0	220	**220**	
1430 - 1445	0	205	**205**	
1445 - 1500	0	196	**196**	**823**
1500 - 1515	0	281	**281**	
1515 - 1530	0	249	**249**	
1530 - 1545	0	226	**226**	
1545 - 1600	0	254	**254**	**1010**
1600 - 1615	0	262	**262**	
1615 - 1630	0	334	**334**	
1630 - 1645	0	232	**232**	
1645 - 1700	0	281	**281**	**1109**
1700 - 1715	0	271	**271**	
1715 - 1730	0	257	**257**	
1730 - 1745	0	243	**243**	
1745 - 1800	0	254	**254**	**1025**
1800 - 1815	0	204	**204**	
1815 - 1830	0	198	**198**	
1830 - 1845	0	189	**189**	
1845 - 1900	0	166	**166**	**757**
1900 - 1915	0	134	**134**	
1915 - 1930	0	146	**146**	
1930 - 1945	0	132	**132**	
1945 - 2000	0	132	**132**	**544**
2000 - 2015	0	111	**111**	
2015 - 2030	0	129	**129**	
2030 - 2045	0	120	**120**	
2045 - 2100	0	90	**90**	**450**
2100 - 2115	0	95	**95**	
2115 - 2130	0	92	**92**	
2130 - 2145	0	81	**81**	
2145 - 2200	0	90	**90**	**358**
2200 - 2215	0	68	**68**	
2215 - 2230	0	70	**70**	
2230 - 2245	0	103	**103**	
2245 - 2300	0	48	**48**	**289**
2300 - 2315	0	68	**68**	
2315 - 2330	0	51	**51**	
2330 - 2345	0	39	**39**	
2345 - 0000	0	36	**36**	**194**

Session Total	0	13096	**13096**
Session Average	0.00	136.42	**136.42**
Session Percentage	0.00	100.00	

Site 75 Lane 3 SB

I-20,
north of Bush River Rd

Date

Thursday, April 25, 2024

Lat/Long

34.034393°, -81.117736°

Weather

Fair
67°F

Click here for Detailed Weather

0000 - 2400 (Weekday 24h Session) (04-25-2024)

Volume Summary 15min

TIME	Volume Summary 15min NB	SB	15min Total	60min Total
0000 - 0015	0	32	**32**	
0015 - 0030	0	38	**38**	
0030 - 0045	0	35	**35**	
0045 - 0100	0	23	**23**	**128**
0100 - 0115	0	21	**21**	
0115 - 0130	0	15	**15**	
0130 - 0145	0	15	**15**	
0145 - 0200	0	19	**19**	**70**
0200 - 0215	0	18	**18**	
0215 - 0230	0	18	**18**	
0230 - 0245	0	26	**26**	
0245 - 0300	0	20	**20**	**82**
0300 - 0315	0	12	**12**	
0315 - 0330	0	26	**26**	
0330 - 0345	0	11	**11**	
0345 - 0400	0	13	**13**	**62**
0400 - 0415	0	18	**18**	
0415 - 0430	0	21	**21**	
0430 - 0445	0	35	**35**	
0445 - 0500	0	33	**33**	**107**
0500 - 0515	0	38	**38**	
0515 - 0530	0	45	**45**	
0530 - 0545	0	57	**57**	
0545 - 0600	0	61	**61**	**201**
0600 - 0615	0	76	**76**	
0615 - 0630	0	91	**91**	
0630 - 0645	0	113	**113**	
0645 - 0700	0	122	**122**	**402**
0700 - 0715	0	153	**153**	
0715 - 0730	0	188	**188**	
0730 - 0745	0	183	**183**	
0745 - 0800	0	255	**255**	**779**
0800 - 0815	0	229	**229**	
0815 - 0830	0	244	**244**	
0830 - 0845	0	232	**232**	
0845 - 0900	0	197	**197**	**902**
0900 - 0915	0	166	**166**	
0915 - 0930	0	155	**155**	
0930 - 0945	0	183	**183**	
0945 - 1000	0	171	**171**	**675**
1000 - 1015	0	183	**183**	
1015 - 1030	0	178	**178**	
1030 - 1045	0	150	**150**	
1045 - 1100	0	179	**179**	**690**
1100 - 1115	0	161	**161**	
1115 - 1130	0	185	**185**	
1130 - 1145	0	190	**190**	
1145 - 1200	0	195	**195**	**731**

Time	Volume Summary 15min NB	SB	15min Total	60min Total
1200 - 1215	0	201	**201**	
1215 - 1230	0	192	**192**	
1230 - 1245	0	206	**206**	
1245 - 1300	0	204	**204**	**803**
1300 - 1315	0	194	**194**	
1315 - 1330	0	190	**190**	
1330 - 1345	0	181	**181**	
1345 - 1400	0	185	**185**	**750**
1400 - 1415	0	210	**210**	
1415 - 1430	0	214	**214**	
1430 - 1445	0	216	**216**	
1445 - 1500	0	229	**229**	**869**
1500 - 1515	0	228	**228**	
1515 - 1530	0	254	**254**	
1530 - 1545	0	237	**237**	
1545 - 1600	0	236	**236**	**955**
1600 - 1615	0	272	**272**	
1615 - 1630	0	239	**239**	
1630 - 1645	0	268	**268**	
1645 - 1700	0	264	**264**	**1043**
1700 - 1715	0	257	**257**	
1715 - 1730	0	241	**241**	
1730 - 1745	0	246	**246**	
1745 - 1800	0	238	**238**	**982**
1800 - 1815	0	226	**226**	
1815 - 1830	0	208	**208**	
1830 - 1845	0	170	**170**	
1845 - 1900	0	154	**154**	**758**
1900 - 1915	0	151	**151**	
1915 - 1930	0	157	**157**	
1930 - 1945	0	140	**140**	
1945 - 2000	0	155	**155**	**603**
2000 - 2015	0	128	**128**	
2015 - 2030	0	113	**113**	
2030 - 2045	0	110	**110**	
2045 - 2100	0	118	**118**	**469**
2100 - 2115	0	99	**99**	
2115 - 2130	0	97	**97**	
2130 - 2145	0	87	**87**	
2145 - 2200	0	110	**110**	**393**
2200 - 2215	0	64	**64**	
2215 - 2230	0	107	**107**	
2230 - 2245	0	84	**84**	
2245 - 2300	0	54	**54**	**309**
2300 - 2315	0	58	**58**	
2315 - 2330	0	36	**36**	
2330 - 2345	0	43	**43**	
2345 - 0000	0	29	**29**	**166**

Session Total	0	12929	**12929**
Session Average	0.00	134.68	**134.68**
Session Percentage	0.00	100.00	

Site 75 Lane 3 SB

I-20,
north of Bush River Rd

Date

Friday, April 26, 2024

Lat/Long

34.034393°, -81.117736°

Weather

Cloudy
69°F

Click here for Detailed Weather

0000 - 2400 (Weekday 24h Session) (04-26-2024)

Volume Summary 15min

TIME	Volume Summary 15min NB	SB	15min Total	60min Total
0000 - 0015	0	31	**31**	
0015 - 0030	0	21	**21**	
0030 - 0045	0	24	**24**	
0045 - 0100	0	32	**32**	**108**
0100 - 0115	0	27	**27**	
0115 - 0130	0	28	**28**	
0130 - 0145	0	17	**17**	
0145 - 0200	0	21	**21**	**93**
0200 - 0215	0	23	**23**	
0215 - 0230	0	19	**19**	
0230 - 0245	0	20	**20**	
0245 - 0300	0	23	**23**	**85**
0300 - 0315	0	29	**29**	
0315 - 0330	0	21	**21**	
0330 - 0345	0	25	**25**	
0345 - 0400	0	26	**26**	**101**
0400 - 0415	0	21	**21**	
0415 - 0430	0	32	**32**	
0430 - 0445	0	26	**26**	
0445 - 0500	0	37	**37**	**116**
0500 - 0515	0	37	**37**	
0515 - 0530	0	47	**47**	
0530 - 0545	0	41	**41**	
0545 - 0600	0	55	**55**	**180**
0600 - 0615	0	57	**57**	
0615 - 0630	0	88	**88**	
0630 - 0645	0	105	**105**	
0645 - 0700	0	100	**100**	**350**
0700 - 0715	0	132	**132**	
0715 - 0730	0	157	**157**	
0730 - 0745	0	178	**178**	
0745 - 0800	0	233	**233**	**700**
0800 - 0815	0	200	**200**	
0815 - 0830	0	227	**227**	
0830 - 0845	0	222	**222**	
0845 - 0900	0	175	**175**	**824**
0900 - 0915	0	159	**159**	
0915 - 0930	0	158	**158**	
0930 - 0945	0	186	**186**	
0945 - 1000	0	157	**157**	**660**
1000 - 1015	0	182	**182**	
1015 - 1030	0	156	**156**	
1030 - 1045	0	172	**172**	
1045 - 1100	0	161	**161**	**671**
1100 - 1115	0	193	**193**	
1115 - 1130	0	210	**210**	
1130 - 1145	0	214	**214**	
1145 - 1200	0	178	**178**	**795**

Time	Volume Summary 15min NB	SB	15min Total	60min Total
1200 - 1215	0	205	**205**	
1215 - 1230	0	209	**209**	
1230 - 1245	0	223	**223**	
1245 - 1300	0	216	**216**	**853**
1300 - 1315	0	215	**215**	
1315 - 1330	0	248	**248**	
1330 - 1345	0	227	**227**	
1345 - 1400	0	219	**219**	**909**
1400 - 1415	0	202	**202**	
1415 - 1430	0	216	**216**	
1430 - 1445	0	230	**230**	
1445 - 1500	0	228	**228**	**876**
1500 - 1515	0	230	**230**	
1515 - 1530	0	221	**221**	
1530 - 1545	0	247	**247**	
1545 - 1600	0	261	**261**	**959**
1600 - 1615	0	226	**226**	
1615 - 1630	0	274	**274**	
1630 - 1645	0	243	**243**	
1645 - 1700	0	240	**240**	**983**
1700 - 1715	0	257	**257**	
1715 - 1730	0	247	**247**	
1730 - 1745	0	208	**208**	
1745 - 1800	0	195	**195**	**907**
1800 - 1815	0	192	**192**	
1815 - 1830	0	213	**213**	
1830 - 1845	0	166	**166**	
1845 - 1900	0	171	**171**	**742**
1900 - 1915	0	156	**156**	
1915 - 1930	0	163	**163**	
1930 - 1945	0	154	**154**	
1945 - 2000	0	129	**129**	**602**
2000 - 2015	0	135	**135**	
2015 - 2030	0	121	**121**	
2030 - 2045	0	102	**102**	
2045 - 2100	0	107	**107**	**465**
2100 - 2115	0	111	**111**	
2115 - 2130	0	106	**106**	
2130 - 2145	0	99	**99**	
2145 - 2200	0	107	**107**	**423**
2200 - 2215	0	100	**100**	
2215 - 2230	0	90	**90**	
2230 - 2245	0	88	**88**	
2245 - 2300	0	100	**100**	**378**
2300 - 2315	0	94	**94**	
2315 - 2330	0	72	**72**	
2330 - 2345	0	55	**55**	
2345 - 0000	0	47	**47**	**268**

Session Total	0	13048	**13048**
Session Average	0.00	135.92	**135.92**
Session Percentage	0.00	100.00	

Site 75 Lane 3 SB

I-20,
north of Bush River Rd

Date

Saturday, April 27, 2024

Lat/Long

34.034393°, -81.117736°

Weather

Mostly Cloudy
69°F

Click here for Detailed Weather

0000 - 2400 (Saturday 24h Session) (04-27-2024)

Volume Summary 15min

TIME	Volume Summary 15min NB	SB	15min Total	60min Total
0000 - 0015	0	44	**44**	
0015 - 0030	0	44	**44**	
0030 - 0045	0	46	**46**	
0045 - 0100	0	36	**36**	**170**
0100 - 0115	0	35	**35**	
0115 - 0130	0	28	**28**	
0130 - 0145	0	29	**29**	
0145 - 0200	0	19	**19**	**111**
0200 - 0215	0	22	**22**	
0215 - 0230	0	22	**22**	
0230 - 0245	0	24	**24**	
0245 - 0300	0	34	**34**	**102**
0300 - 0315	0	25	**25**	
0315 - 0330	0	32	**32**	
0330 - 0345	0	20	**20**	
0345 - 0400	0	27	**27**	**104**
0400 - 0415	0	20	**20**	
0415 - 0430	0	26	**26**	
0430 - 0445	0	19	**19**	
0445 - 0500	0	21	**21**	**86**
0500 - 0515	0	33	**33**	
0515 - 0530	0	32	**32**	
0530 - 0545	0	32	**32**	
0545 - 0600	0	36	**36**	**133**
0600 - 0615	0	41	**41**	
0615 - 0630	0	40	**40**	
0630 - 0645	0	66	**66**	
0645 - 0700	0	51	**51**	**198**
0700 - 0715	0	71	**71**	
0715 - 0730	0	85	**85**	
0730 - 0745	0	79	**79**	
0745 - 0800	0	90	**90**	**325**
0800 - 0815	0	91	**91**	
0815 - 0830	0	106	**106**	
0830 - 0845	0	108	**108**	
0845 - 0900	0	107	**107**	**412**
0900 - 0915	0	102	**102**	
0915 - 0930	0	117	**117**	
0930 - 0945	0	132	**132**	
0945 - 1000	0	140	**140**	**491**
1000 - 1015	0	132	**132**	
1015 - 1030	0	132	**132**	
1030 - 1045	0	166	**166**	
1045 - 1100	0	154	**154**	**584**
1100 - 1115	0	168	**168**	
1115 - 1130	0	155	**155**	
1130 - 1145	0	142	**142**	
1145 - 1200	0	170	**170**	**635**

Time	Volume Summary 15min NB	SB	15min Total	60min Total
1200 - 1215	0	169	**169**	
1215 - 1230	0	165	**165**	
1230 - 1245	0	188	**188**	
1245 - 1300	0	152	**152**	**674**
1300 - 1315	0	167	**167**	
1315 - 1330	0	190	**190**	
1330 - 1345	0	176	**176**	
1345 - 1400	0	173	**173**	**706**
1400 - 1415	0	183	**183**	
1415 - 1430	0	202	**202**	
1430 - 1445	0	156	**156**	
1445 - 1500	0	164	**164**	**705**
1500 - 1515	0	166	**166**	
1515 - 1530	0	172	**172**	
1530 - 1545	0	174	**174**	
1545 - 1600	0	183	**183**	**695**
1600 - 1615	0	168	**168**	
1615 - 1630	0	154	**154**	
1630 - 1645	0	146	**146**	
1645 - 1700	0	153	**153**	**621**
1700 - 1715	0	161	**161**	
1715 - 1730	0	164	**164**	
1730 - 1745	0	154	**154**	
1745 - 1800	0	117	**117**	**596**
1800 - 1815	0	131	**131**	
1815 - 1830	0	162	**162**	
1830 - 1845	0	156	**156**	
1845 - 1900	0	137	**137**	**586**
1900 - 1915	0	119	**119**	
1915 - 1930	0	126	**126**	
1930 - 1945	0	142	**142**	
1945 - 2000	0	135	**135**	**522**
2000 - 2015	0	119	**119**	
2015 - 2030	0	94	**94**	
2030 - 2045	0	106	**106**	
2045 - 2100	0	94	**94**	**413**
2100 - 2115	0	80	**80**	
2115 - 2130	0	117	**117**	
2130 - 2145	0	125	**125**	
2145 - 2200	0	94	**94**	**416**
2200 - 2215	0	95	**95**	
2215 - 2230	0	103	**103**	
2230 - 2245	0	88	**88**	
2245 - 2300	0	66	**66**	**352**
2300 - 2315	0	60	**60**	
2315 - 2330	0	50	**50**	
2330 - 2345	0	54	**54**	
2345 - 0000	0	52	**52**	**216**

Session Total	0	9853	**9853**
Session Average	0.00	102.64	**102.64**
Session Percentage	0.00	100.00	

Bi-Directional Class Count || SB WB 60min

Columbia, SC

Marr Traffic DATA COLLECTION

www.marrtraffic.com

Site 75 Lane 3 SB
I-20,
north of Bush River Rd

Date
Sunday, April 21, 2024

Lat/Long
34.034393°, -81.117736°

Weather
Cloudy
66°F

Click here for Detailed Weather

0000 - 2400 (Sunday 24h Session) (04-21-2024)
SB WB 60min

	Southbound (Movement 75 Lane 3 SB.1)													
TIME	1	2	3	4	5	6	7	8	9	10	11	12	13	**Total**
0000 - 0100	0	178	17	1	2	0	0	0	6	0	0	0	0	**204**
0100 - 0200	0	120	14	0	4	0	0	0	9	0	0	0	0	**147**
0200 - 0300	1	86	12	0	1	0	0	0	12	0	0	0	0	**112**
0300 - 0400	0	48	8	0	0	0	0	0	7	0	0	0	0	**63**
0400 - 0500	1	62	5	0	4	0	0	0	6	0	1	0	0	**79**
0500 - 0600	0	62	4	1	2	0	0	0	12	0	0	0	0	**81**
0600 - 0700	1	108	19	0	0	0	0	0	9	0	0	0	0	**137**
0700 - 0800	0	178	31	0	0	0	0	0	17	0	0	0	0	**226**
0800 - 0900	0	214	55	1	1	1	0	1	18	0	0	0	0	**291**
0900 - 1000	1	340	49	1	7	2	0	0	18	0	0	1	0	**419**
1000 - 1100	0	392	85	0	2	0	0	1	21	0	0	0	0	**501**
1100 - 1200	0	433	106	0	8	1	0	1	26	0	0	1	0	**576**
1200 - 1300	0	519	118	0	4	2	0	0	25	0	0	0	0	**668**
1300 - 1400	1	492	126	0	3	0	0	1	24	0	0	0	0	**647**
1400 - 1500	1	514	95	0	3	1	0	2	20	0	0	0	0	**636**
1500 - 1600	0	455	81	2	1	0	0	1	11	0	0	0	0	**551**
1600 - 1700	0	459	67	1	2	0	0	2	22	0	0	0	0	**553**
1700 - 1800	0	405	66	0	2	2	0	1	25	0	0	0	0	**501**
1800 - 1900	0	408	59	1	1	1	0	0	31	0	0	0	0	**501**
1900 - 2000	0	351	62	0	1	0	0	0	31	0	2	0	0	**447**
2000 - 2100	0	272	39	0	2	0	0	0	17	0	0	0	0	**330**
2100 - 2200	0	214	26	0	1	0	0	1	18	0	0	0	0	**260**
2200 - 2300	0	132	15	0	3	2	0	0	26	0	1	0	0	**179**
2300 - 2400	0	92	7	0	1	2	0	0	12	0	4	0	0	**118**

Session Total	6	6534	1166	8	55	14	0	11	423	0	8	2	0	**8227**
Session Average	0.25	272.25	48.58	0.33	2.29	0.58	0.00	0.46	17.63	0.00	0.33	0.08	0.00	**342.79**
Session Percentage	0.07	79.42	14.17	0.10	0.67	0.17	0.00	0.13	5.14	0.00	0.10	0.02	0.00	

AM Peak Hour	0600 - 0700	0900 - 1000	0800 - 0900	0500 - 0600	0900 - 1000	0900 - 1000	-	0800 - 0900	0800 - 0900	-	-	0900 - 1000	-	**0900 - 1000**
AM Peak Volume	1	340	55	1	7	2	0	1	18	0	0	1	0	**419**

Noon Peak Hour	1300 - 1400	1200 - 1300	1300 - 1400	-	1100 - 1200	1200 - 1300	-	1400 - 1500	1100 - 1200	-	-	1100 - 1200	-	**1200 - 1300**
Noon Peak Volume	1	519	126	0	8	2	0	2	26	0	0	1	0	**668**

PM Peak Hour	-	1600 - 1700	1500 - 1600	1500 - 1600	1600 - 1700	1700 - 1800	-	1600 - 1700	1800 - 1900	-	1900 - 2000	-	-	**1600 - 1700**
PM Peak Volume	0	459	81	2	2	2	0	2	31	0	2	0	0	**553**

Site 75 Lane 3 SB

I-20,
north of Bush River Rd

Date

Monday, April 22, 2024

Lat/Long

34.034393°, -81.117736°

Weather

Mostly Cloudy
57°F

Click here for Detailed Weather

0000 - 2400 (Weekday 24h Session) (04-22-2024)

SB WB 60min

	Southbound (Movement 75 Lane 3 SB.1)													
TIME	1	2	3	4	5	6	7	8	9	10	11	12	13	**Total**
0000 - 0100	0	49	10	0	2	1	0	0	16	0	1	0	0	**79**
0100 - 0200	0	40	6	0	0	0	0	0	15	0	0	0	0	**61**
0200 - 0300	0	35	12	1	1	2	0	0	24	0	0	0	0	**75**
0300 - 0400	0	34	7	1	4	2	0	0	29	0	1	0	0	**78**
0400 - 0500	0	50	12	0	3	4	0	2	35	0	1	0	0	**107**
0500 - 0600	0	108	20	0	3	3	0	0	47	0	1	0	0	**182**
0600 - 0700	0	242	77	0	11	16	0	5	38	1	1	0	0	**391**
0700 - 0800	0	537	145	0	34	22	0	2	42	2	0	0	0	**784**
0800 - 0900	0	637	153	2	29	11	0	6	49	3	0	0	0	**890**
0900 - 1000	0	404	148	0	31	18	1	9	61	3	0	1	0	**676**
1000 - 1100	1	429	148	5	28	15	5	6	76	1	0	0	0	**714**
1100 - 1200	0	434	176	0	18	15	0	8	74	1	1	0	0	**727**
1200 - 1300	0	490	179	0	25	14	4	8	55	1	0	0	0	**776**
1300 - 1400	0	563	129	3	14	10	7	3	60	2	0	0	0	**791**
1400 - 1500	0	568	138	3	21	3	7	7	54	1	0	0	0	**802**
1500 - 1600	0	641	166	2	21	14	1	5	66	1	0	0	0	**917**
1600 - 1700	1	708	143	3	26	8	1	2	55	2	0	0	0	**949**
1700 - 1800	0	740	159	0	10	5	0	4	53	3	0	0	0	**974**
1800 - 1900	0	516	110	0	14	9	0	2	59	1	0	0	0	**711**
1900 - 2000	0	347	76	0	6	3	0	4	67	1	0	0	0	**504**
2000 - 2100	1	261	58	0	2	1	0	3	39	0	1	0	0	**366**
2100 - 2200	0	193	50	0	1	6	0	0	39	0	2	0	0	**291**
2200 - 2300	0	150	44	0	4	4	0	4	50	0	8	0	0	**264**
2300 - 2400	0	123	23	0	1	6	0	3	46	0	5	0	0	**207**

Session Total	3	8299	2189	20	309	192	26	83	1149	23	22	1	0	**12316**
Session Average	0.13	345.79	91.21	0.83	12.88	8.00	1.08	3.46	47.88	0.96	0.92	0.04	0.00	**513.17**
Session Percentage	0.02	67.38	17.77	0.16	2.51	1.56	0.21	0.67	9.33	0.19	0.18	0.01	0.00	

AM Peak Hour	-	0800 - 0900	0800 - 0900	0800 - 0900	0700 - 0800	0700 - 0800	0900 - 1000	0900 - 1000	0900 - 1000	0800 - 0900	0500 - 0600	0900 - 1000	-	**0800 - 0900**
AM Peak Volume	0	637	153	2	34	22	1	9	61	3	1	1	0	**890**

Noon Peak Hour	1000 - 1100	1400 - 1500	1200 - 1300	1000 - 1100	1000 - 1100	1000 - 1100	1300 - 1400	1100 - 1200	1000 - 1100	1300 - 1400	1100 - 1200	-	-	**1400 - 1500**
Noon Peak Volume	1	568	179	5	28	15	7	8	76	2	1	0	0	**802**

PM Peak Hour	1600 - 1700	1700 - 1800	1500 - 1600	1600 - 1700	1600 - 1700	1500 - 1600	1500 - 1600	1500 - 1600	1900 - 2000	1700 - 1800	-	-	-	**1700 - 1800**
PM Peak Volume	1	740	166	3	26	14	1	5	67	3	0	0	0	**974**

Site 75 Lane 3 SB
I-20,
north of Bush River Rd

Date
Tuesday, April 23, 2024

Lat/Long
34.034393°, -81.117736°

Weather
Fair
58°F

Click here for Detailed Weather

0000 - 2400 (Weekday 24h Session) (04-23-2024)
SB WB 60min

	Southbound (Movement 75 Lane 3 SB.1)													
TIME	1	2	3	4	5	6	7	8	9	10	11	12	13	**Total**
0000 - 0100	0	50	18	0	6	0	0	2	40	0	7	0	0	**123**
0100 - 0200	0	41	8	0	5	0	0	0	27	0	4	0	0	**85**
0200 - 0300	0	24	11	0	2	2	0	0	46	0	3	0	0	**88**
0300 - 0400	0	19	1	0	1	2	0	0	28	0	4	0	0	**55**
0400 - 0500	1	50	13	0	2	4	0	1	52	0	5	0	0	**128**
0500 - 0600	0	97	27	0	8	1	0	0	55	0	0	0	0	**188**
0600 - 0700	1	258	73	0	10	18	1	1	57	3	0	0	0	**422**
0700 - 0800	0	595	138	3	30	19	0	7	44	3	0	0	0	**839**
0800 - 0900	0	646	150	0	32	11	1	6	50	0	1	0	0	**897**
0900 - 1000	0	464	121	2	32	13	0	10	83	2	1	0	0	**728**
1000 - 1100	0	359	130	2	25	12	1	9	78	1	0	0	0	**617**
1100 - 1200	1	474	144	0	21	7	0	8	71	3	0	0	0	**729**
1200 - 1300	0	453	180	2	23	7	0	7	74	1	0	0	0	**747**
1300 - 1400	1	534	141	8	19	11	0	9	80	1	0	0	0	**804**
1400 - 1500	0	562	144	3	18	5	1	2	84	0	0	0	0	**819**
1500 - 1600	0	634	188	0	22	4	3	14	72	1	0	0	0	**938**
1600 - 1700	0	760	168	1	26	5	2	9	47	2	1	0	0	**1021**
1700 - 1800	4	718	162	1	11	4	0	5	50	1	0	0	0	**956**
1800 - 1900	0	493	113	0	10	4	0	7	47	0	0	0	0	**674**
1900 - 2000	1	390	75	0	7	5	0	1	40	0	0	0	0	**519**
2000 - 2100	0	235	52	0	5	1	0	0	35	0	0	0	0	**328**
2100 - 2200	0	148	37	0	10	0	0	0	29	0	0	0	0	**224**
2200 - 2300	0	135	29	0	6	1	0	0	17	0	2	0	0	**190**
2300 - 2400	0	64	14	0	7	2	0	0	21	0	1	0	0	**109**

Session Total	9	8203	2137	22	338	138	9	98	1227	18	29	0	0	**12228**
Session Average	0.38	341.79	89.04	0.92	14.08	5.75	0.38	4.08	51.13	0.75	1.21	0.00	0.00	**509.50**
Session Percentage	0.07	67.08	17.48	0.18	2.76	1.13	0.07	0.80	10.03	0.15	0.24	0.00	0.00	

AM Peak Hour	0600 - 0700	0800 - 0900	0800 - 0900	0700 - 0800	0800 - 0900	0700 - 0800	0600 - 0700	0900 - 1000	0900 - 1000	0600 - 0700	0800 - 0900	-	-	**0800 - 0900**
AM Peak Hour Volume	1	646	150	3	32	19	1	10	83	3	1	0	0	**897**

Noon Peak Hour	1100 - 1200	1400 - 1500	1200 - 1300	1300 - 1400	1000 - 1100	1000 - 1100	1000 - 1100	1000 - 1100	1400 - 1500	1100 - 1200	-	-	-	**1400 - 1500**
Noon Peak Hour Volume	1	562	180	8	25	12	1	9	84	3	0	0	0	**819**

PM Peak Hour	1700 - 1800	1600 - 1700	1500 - 1600	1600 - 1700	1600 - 1700	1600 - 1700	1500 - 1600	1500 - 1600	1500 - 1600	1600 - 1700	1600 - 1700	-	-	**1600 - 1700**
PM Peak Hour Volume	4	760	188	1	26	5	3	14	72	2	1	0	0	**1021**

Site 75 Lane 3 SB

I-20,
north of Bush River Rd

Date

Wednesday, April 24, 2024

Lat/Long

34.034393°, -81.117736°

Weather

Fair
66°F

Click here for Detailed Weather

0000 - 2400 (Weekday 24h Session) (04-24-2024)

SB WB 60min

	Southbound (Movement 75 Lane 3 SB.1)													
TIME	1	2	3	4	5	6	7	8	9	10	11	12	13	**Total**
0000 - 0100	0	74	10	1	6	0	0	0	21	0	0	0	0	**112**
0100 - 0200	0	39	9	0	5	0	0	0	14	0	0	0	0	**67**
0200 - 0300	0	38	7	0	3	0	0	0	15	0	0	0	0	**63**
0300 - 0400	0	54	8	0	6	0	0	0	20	0	0	0	0	**88**
0400 - 0500	0	81	14	0	10	0	0	0	46	0	1	0	0	**152**
0500 - 0600	0	116	15	0	6	0	0	0	53	0	1	0	0	**191**
0600 - 0700	2	274	69	0	21	8	1	3	54	1	2	0	0	**435**
0700 - 0800	1	596	164	0	29	15	4	14	39	2	2	0	0	**866**
0800 - 0900	0	635	146	0	38	7	4	10	56	1	0	0	0	**897**
0900 - 1000	1	422	138	2	26	4	7	6	51	2	0	0	0	**659**
1000 - 1100	0	455	141	3	25	4	10	5	62	5	0	0	0	**710**
1100 - 1200	1	428	149	2	22	2	8	5	78	2	0	0	0	**697**
1200 - 1300	0	501	176	7	15	5	9	9	66	4	0	0	0	**792**
1300 - 1400	1	546	156	0	20	1	9	7	65	3	0	0	0	**808**
1400 - 1500	0	556	146	4	25	5	3	10	73	1	0	0	0	**823**
1500 - 1600	1	663	226	1	24	8	1	5	78	3	0	0	0	**1010**
1600 - 1700	1	782	228	1	22	12	1	7	54	1	0	0	0	**1109**
1700 - 1800	0	785	168	0	25	3	0	1	41	2	0	0	0	**1025**
1800 - 1900	0	552	124	2	13	7	0	2	57	0	0	0	0	**757**
1900 - 2000	2	382	103	2	3	5	0	3	42	1	1	0	0	**544**
2000 - 2100	0	324	74	0	4	0	0	1	45	0	2	0	0	**450**
2100 - 2200	0	265	47	0	4	0	0	0	41	0	1	0	0	**358**
2200 - 2300	0	201	44	0	9	0	0	0	33	0	2	0	0	**289**
2300 - 2400	0	130	29	0	0	0	0	0	34	0	1	0	0	**194**

Session Total	10	8899	2391	25	361	86	57	88	1138	28	13	0	0	**13096**
Session Average	0.42	370.79	99.63	1.04	15.04	3.58	2.38	3.67	47.42	1.17	0.54	0.00	0.00	**545.67**
Session Percentage	0.08	67.95	18.26	0.19	2.76	0.66	0.44	0.67	8.69	0.21	0.10	0.00	0.00	

AM Peak Hour	0600 - 0700	0800 - 0900	0700 - 0800	0900 - 1000	0800 - 0900	0700 - 0800	0900 - 1000	0700 - 0800	0800 - 0900	0700 - 0800	0600 - 0700	-	-	**0800 - 0900**
AM Peak Hour Volume	2	635	164	2	38	15	7	14	56	2	2	0	0	**897**

Noon Peak Hour	1100 - 1200	1400 - 1500	1200 - 1300	1200 - 1300	1000 - 1100	1200 - 1300	1000 - 1100	1400 - 1500	1100 - 1200	1000 - 1100	-	-	-	**1400 - 1500**
Noon Peak Hour Volume	1	556	176	7	25	5	10	10	78	5	0	0	0	**823**

PM Peak Hour	1900 - 2000	1700 - 1800	1600 - 1700	1800 - 1900	1700 - 1800	1600 - 1700	1500 - 1600	1600 - 1700	1500 - 1600	1500 - 1600	1900 - 2000	-	-	**1600 - 1700**
PM Peak Hour Volume	2	785	228	2	25	12	1	7	78	3	1	0	0	**1109**

Site 75 Lane 3 SB
I-20,
north of Bush River Rd

Date
Thursday, April 25, 2024

Lat/Long
34.034393°, -81.117736°

Weather
Fair
67°F

Click here for Detailed Weather

0000 - 2400 (Weekday 24h Session) (04-25-2024)
SB WB 60min

	Southbound (Movement 75 Lane 3 SB.1)													
TIME	1	2	3	4	5	6	7	8	9	10	11	12	13	**Total**
0000 - 0100	0	60	15	0	5	0	0	0	47	0	1	0	0	**128**
0100 - 0200	0	42	4	0	3	0	0	0	21	0	0	0	0	**70**
0200 - 0300	0	37	9	0	3	1	0	0	30	0	2	0	0	**82**
0300 - 0400	0	25	7	0	1	0	0	0	29	0	0	0	0	**62**
0400 - 0500	0	41	14	0	3	0	0	0	48	0	1	0	0	**107**
0500 - 0600	0	96	30	1	8	0	0	0	64	0	2	0	0	**201**
0600 - 0700	0	219	78	1	9	16	0	0	79	0	0	0	0	**402**
0700 - 0800	0	556	107	3	27	14	10	4	56	2	0	0	0	**779**
0800 - 0900	1	614	178	1	23	8	8	6	56	6	1	0	0	**902**
0900 - 1000	1	432	126	1	22	5	10	4	71	3	0	0	0	**675**
1000 - 1100	0	438	125	1	30	18	2	7	68	1	0	0	0	**690**
1100 - 1200	0	446	158	3	26	16	1	7	70	2	2	0	0	**731**
1200 - 1300	2	507	172	4	25	14	0	2	74	3	0	0	0	**803**
1300 - 1400	1	500	132	2	19	11	2	9	68	5	1	0	0	**750**
1400 - 1500	1	600	151	3	19	7	4	10	70	4	0	0	0	**869**
1500 - 1600	0	680	171	4	26	8	4	7	54	1	0	0	0	**955**
1600 - 1700	1	779	183	2	14	12	2	7	41	2	0	0	0	**1043**
1700 - 1800	2	736	165	2	7	22	0	5	42	1	0	0	0	**982**
1800 - 1900	3	573	122	4	7	5	0	5	39	0	0	0	0	**758**
1900 - 2000	0	461	71	0	9	3	0	6	53	0	0	0	0	**603**
2000 - 2100	0	327	87	1	2	4	0	0	48	0	0	0	0	**469**
2100 - 2200	0	275	58	0	9	0	0	0	51	0	0	0	0	**393**
2200 - 2300	0	214	55	0	2	2	0	0	36	0	0	0	0	**309**
2300 - 2400	0	107	28	0	2	0	0	0	26	0	3	0	0	**166**

Session Total	12	8765	2246	33	301	166	43	79	1241	30	13	0	0	**12929**
Session Average	0.50	365.21	93.58	1.38	12.54	6.92	1.79	3.29	51.71	1.25	0.54	0.00	0.00	**538.71**
Session Percentage	0.09	67.79	17.37	0.26	2.33	1.28	0.33	0.61	9.60	0.23	0.10	0.00	0.00	

AM Peak Hour	0800 - 0900	0800 - 0900	0800 - 0900	0700 - 0800	0700 - 0800	0600 - 0700	0700 - 0800	0800 - 0900	0600 - 0700	0800 - 0900	0500 - 0600	-	-	**0800 - 0900**
AM Peak Hour Volume	1	614	178	3	27	16	10	6	79	6	2	0	0	**902**

Noon Peak Hour	1200 - 1300	1400 - 1500	1200 - 1300	1200 - 1300	1000 - 1100	1000 - 1100	1400 - 1500	1400 - 1500	1200 - 1300	1300 - 1400	1100 - 1200	-	-	**1400 - 1500**
Noon Peak Hour Volume	2	600	172	4	30	18	4	10	74	5	2	0	0	**869**

PM Peak Hour	1800 - 1900	1600 - 1700	1600 - 1700	1500 - 1600	1500 - 1600	1700 - 1800	1500 - 1600	1500 - 1600	1500 - 1600	1600 - 1700	-	-	-	**1600 - 1700**
PM Peak Hour Volume	3	779	183	4	26	22	4	7	54	2	0	0	0	**1043**

Site 75 Lane 3 SB
I-20,
north of Bush River Rd

Date
Friday, April 26, 2024

Lat/Long
34.034393°, -81.117736°

Weather
Cloudy
69°F

Click here for Detailed Weather

0000 - 2400 (Weekday 24h Session) (04-26-2024)
SB WB 60min

	Southbound (Movement 75 Lane 3 SB.1)													
TIME	1	2	3	4	5	6	7	8	9	10	11	12	13	**Total**
0000 - 0100	0	68	6	0	6	0	0	0	24	0	4	0	0	**108**
0100 - 0200	0	50	2	0	5	0	0	0	35	0	1	0	0	**93**
0200 - 0300	0	47	2	0	4	0	0	0	31	0	1	0	0	**85**
0300 - 0400	0	52	2	0	4	2	0	0	38	0	3	0	0	**101**
0400 - 0500	0	57	3	0	6	0	0	0	50	0	0	0	0	**116**
0500 - 0600	0	113	10	0	8	1	0	0	47	0	1	0	0	**180**
0600 - 0700	0	201	76	0	13	13	0	0	45	0	2	0	0	**350**
0700 - 0800	1	482	112	3	24	14	11	2	49	1	1	0	0	**700**
0800 - 0900	0	553	163	3	35	6	5	8	51	0	0	0	0	**824**
0900 - 1000	1	393	143	3	30	11	7	8	61	2	0	1	0	**660**
1000 - 1100	0	428	135	0	28	6	7	3	63	1	0	0	0	**671**
1100 - 1200	1	504	165	3	25	8	4	9	74	2	0	0	0	**795**
1200 - 1300	1	570	172	12	18	2	8	10	56	4	0	0	0	**853**
1300 - 1400	1	659	164	6	19	4	4	4	45	3	0	0	0	**909**
1400 - 1500	1	633	151	1	15	7	1	5	62	0	0	0	0	**876**
1500 - 1600	1	681	179	2	20	19	4	4	48	1	0	0	0	**959**
1600 - 1700	0	718	177	1	17	11	0	6	52	1	0	0	0	**983**
1700 - 1800	1	699	137	0	14	2	0	7	47	0	0	0	0	**907**
1800 - 1900	1	570	100	1	9	2	0	5	54	0	0	0	0	**742**
1900 - 2000	1	465	83	1	13	3	0	3	33	0	0	0	0	**602**
2000 - 2100	0	384	36	1	3	1	0	0	39	0	1	0	0	**465**
2100 - 2200	0	374	11	0	3	0	0	0	32	0	3	0	0	**423**
2200 - 2300	0	324	13	0	1	0	0	0	36	0	4	0	0	**378**
2300 - 2400	0	228	12	0	0	0	0	0	27	0	1	0	0	**268**

Session Total	10	9253	2054	37	320	112	51	74	1099	15	22	1	0	**13048**
Session Average	0.42	385.54	85.58	1.54	13.33	4.67	2.13	3.08	45.79	0.63	0.92	0.04	0.00	**543.67**
Session Percentage	0.08	70.92	15.74	0.28	2.45	0.86	0.39	0.57	8.42	0.11	0.17	0.01	0.00	

AM Peak Hour	0700 - 0800	0800 - 0900	0800 - 0900	0700 - 0800	0800 - 0900	0700 - 0800	0700 - 0800	0800 - 0900	0900 - 1000	0900 - 1000	0600 - 0700	0900 - 1000	-	**0800 - 0900**
AM Peak Hour Volume	1	553	163	3	35	14	11	8	61	2	2	1	0	**824**

Noon Peak Hour	1100 - 1200	1300 - 1400	1200 - 1300	1200 - 1300	1000 - 1100	1100 - 1200	1200 - 1300	1200 - 1300	1100 - 1200	1200 - 1300	-	-	-	**1300 - 1400**
Noon Peak Hour Volume	1	659	172	12	28	8	8	10	74	4	0	0	0	**909**

PM Peak Hour	1500 - 1600	1600 - 1700	1500 - 1600	1500 - 1600	1500 - 1600	1500 - 1600	1500 - 1600	1700 - 1800	1800 - 1900	1500 - 1600	-	-	-	**1600 - 1700**
PM Peak Hour Volume	1	718	179	2	20	19	4	7	54	1	0	0	0	**983**

Site 75 Lane 3 SB

I-20,
north of Bush River Rd

Date

Saturday, April 27, 2024

Lat/Long

34.034393°, -81.117736°

Weather

Mostly Cloudy
69°F

Click here for Detailed Weather

0000 - 2400 (Saturday 24h Session) (04-27-2024)

SB WB 60min

	Southbound (Movement 75 Lane 3 SB.1)													
TIME	1	2	3	4	5	6	7	8	9	10	11	12	13	**Total**
0000 - 0100	1	120	24	0	6	1	0	0	16	0	2	0	0	**170**
0100 - 0200	1	77	13	0	0	0	0	1	18	0	1	0	0	**111**
0200 - 0300	0	70	13	0	1	0	0	0	16	0	2	0	0	**102**
0300 - 0400	0	61	12	0	1	1	0	0	28	0	1	0	0	**104**
0400 - 0500	0	37	14	0	7	0	0	0	25	0	3	0	0	**86**
0500 - 0600	0	75	27	0	1	0	0	0	28	0	2	0	0	**133**
0600 - 0700	0	128	44	0	5	1	0	1	19	0	0	0	0	**198**
0700 - 0800	0	214	54	1	8	2	2	3	36	3	2	0	0	**325**
0800 - 0900	0	285	66	0	11	7	0	2	40	1	0	0	0	**412**
0900 - 1000	1	363	66	0	9	2	1	3	45	0	1	0	0	**491**
1000 - 1100	0	426	101	1	11	2	1	2	39	1	0	0	0	**584**
1100 - 1200	0	495	90	0	9	6	0	2	31	2	0	0	0	**635**
1200 - 1300	1	514	111	0	10	2	0	1	35	0	0	0	0	**674**
1300 - 1400	0	545	119	1	9	0	0	1	31	0	0	0	0	**706**
1400 - 1500	6	549	104	1	9	1	0	5	30	0	0	0	0	**705**
1500 - 1600	5	557	93	1	7	1	1	2	25	3	0	0	0	**695**
1600 - 1700	0	502	85	0	7	2	0	2	23	0	0	0	0	**621**
1700 - 1800	1	472	89	1	9	2	0	4	18	0	0	0	0	**596**
1800 - 1900	0	470	91	1	5	0	0	2	16	1	0	0	0	**586**
1900 - 2000	0	441	66	0	3	1	0	1	10	0	0	0	0	**522**
2000 - 2100	0	334	62	0	1	2	0	2	12	0	0	0	0	**413**
2100 - 2200	1	355	45	0	5	1	0	0	9	0	0	0	0	**416**
2200 - 2300	0	290	47	1	3	0	0	0	10	0	1	0	0	**352**
2300 - 2400	0	170	33	0	1	1	0	0	11	0	0	0	0	**216**

Session Total	17	7550	1469	8	138	35	5	34	571	11	15	0	0	**9853**
Session Average	0.71	314.58	61.21	0.33	5.75	1.46	0.21	1.42	23.79	0.46	0.63	0.00	0.00	**410.54**
Session Percentage	0.17	76.63	14.91	0.08	1.40	0.36	0.05	0.35	5.80	0.11	0.15	0.00	0.00	

AM Peak Hour	0900 - 1000	0900 - 1000	0800 - 0900	0700 - 0800	0800 - 0900	0800 - 0900	0700 - 0800	0700 - 0800	0900 - 1000	0700 - 0800	0500 - 0600	-	-	**0900 - 1000**
AM Peak Hour Volume	1	363	66	1	11	7	2	3	45	3	2	0	0	**491**

Noon Peak Hour	1400 - 1500	1400 - 1500	1300 - 1400	1000 - 1100	1000 - 1100	1100 - 1200	1000 - 1100	1400 - 1500	1000 - 1100	1100 - 1200	-	-	-	**1300 - 1400**
Noon Peak Hour Volume	6	549	119	1	11	6	1	5	39	2	0	0	0	**706**

PM Peak Hour	1500 - 1600	1500 - 1600	1500 - 1600	1500 - 1600	1700 - 1800	1600 - 1700	1500 - 1600	1700 - 1800	1500 - 1600	1500 - 1600	-	-	-	**1500 - 1600**
PM Peak Hour Volume	5	557	93	1	9	2	1	4	25	3	0	0	0	**695**

Bi-Directional Class Count || Volume Summary 60min

Columbia, SC

Marr Traffic DATA COLLECTION

www.marrtraffic.com

Site 75 Lane 3 SB

I-20,
north of Bush River Rd

Date

Sunday, April 21, 2024

Lat/Long

34.034393°, -81.117736°

Weather

Cloudy
66°F

Click here for Detailed Weather

0000 - 2400 (Sunday 24h Session) (04-21-2024)

Volume Summary 60min

	Volume Summary 60min		
TIME	NB	SB	**Total**
0000 - 0100	0	204	**204**
0100 - 0200	0	147	**147**
0200 - 0300	0	112	**112**
0300 - 0400	0	63	**63**
0400 - 0500	0	79	**79**
0500 - 0600	0	81	**81**
0600 - 0700	0	137	**137**
0700 - 0800	0	226	**226**
0800 - 0900	0	291	**291**
0900 - 1000	0	419	**419**
1000 - 1100	0	501	**501**
1100 - 1200	0	576	**576**

	Volume Summary 60min		
Time	NB	SB	**Total**
1200 - 1300	0	668	**668**
1300 - 1400	0	647	**647**
1400 - 1500	0	636	**636**
1500 - 1600	0	551	**551**
1600 - 1700	0	553	**553**
1700 - 1800	0	501	**501**
1800 - 1900	0	501	**501**
1900 - 2000	0	447	**447**
2000 - 2100	0	330	**330**
2100 - 2200	0	260	**260**
2200 - 2300	0	179	**179**
2300 - 2400	0	118	**118**

Session Total	0	8227	**8227**
Session Average	0.00	342.79	**342.79**
Session Percentage	0.00	100.00	

Site 75 Lane 3 SB

I-20,
north of Bush River Rd

Date

Monday, April 22, 2024

Lat/Long

34.034393°, -81.117736°

Weather

Mostly Cloudy
57°F

Click here for Detailed Weather

0000 - 2400 (Weekday 24h Session) (04-22-2024)

Volume Summary 60min

	Volume Summary 60min		
TIME	NB	SB	**Total**
0000 - 0100	0	79	**79**
0100 - 0200	0	61	**61**
0200 - 0300	0	75	**75**
0300 - 0400	0	78	**78**
0400 - 0500	0	107	**107**
0500 - 0600	0	182	**182**
0600 - 0700	0	391	**391**
0700 - 0800	0	784	**784**
0800 - 0900	0	890	**890**
0900 - 1000	0	676	**676**
1000 - 1100	0	714	**714**
1100 - 1200	0	727	**727**

Session Total	0	12316	**12316**
Session Average	0.00	513.17	**513.17**
Session Percentage	0.00	100.00	

	Volume Summary 60min		
Time	NB	SB	**Total**
1200 - 1300	0	776	**776**
1300 - 1400	0	791	**791**
1400 - 1500	0	802	**802**
1500 - 1600	0	917	**917**
1600 - 1700	0	949	**949**
1700 - 1800	0	974	**974**
1800 - 1900	0	711	**711**
1900 - 2000	0	504	**504**
2000 - 2100	0	366	**366**
2100 - 2200	0	291	**291**
2200 - 2300	0	264	**264**
2300 - 2400	0	207	**207**

Site 75 Lane 3 SB

I-20,
north of Bush River Rd

Date

Tuesday, April 23, 2024

Lat/Long

34.034393°, -81.117736°

Weather

Fair
58°F

Click here for Detailed Weather

0000 - 2400 (Weekday 24h Session) (04-23-2024)

Volume Summary 60min

	Volume Summary 60min		
TIME	NB	SB	**Total**
0000 - 0100	0	123	**123**
0100 - 0200	0	85	**85**
0200 - 0300	0	88	**88**
0300 - 0400	0	55	**55**
0400 - 0500	0	128	**128**
0500 - 0600	0	188	**188**
0600 - 0700	0	422	**422**
0700 - 0800	0	839	**839**
0800 - 0900	0	897	**897**
0900 - 1000	0	728	**728**
1000 - 1100	0	617	**617**
1100 - 1200	0	729	**729**

	Volume Summary 60min		
Time	NB	SB	**Total**
1200 - 1300	0	747	**747**
1300 - 1400	0	804	**804**
1400 - 1500	0	819	**819**
1500 - 1600	0	938	**938**
1600 - 1700	0	1021	**1021**
1700 - 1800	0	956	**956**
1800 - 1900	0	674	**674**
1900 - 2000	0	519	**519**
2000 - 2100	0	328	**328**
2100 - 2200	0	224	**224**
2200 - 2300	0	190	**190**
2300 - 2400	0	109	**109**

Session Total	0	12228	**12228**
Session Average	0.00	509.50	**509.50**
Session Percentage	0.00	100.00	

Site 75 Lane 3 SB

I-20,
north of Bush River Rd

Date

Wednesday, April 24, 2024

Lat/Long

34.034393°, -81.117736°

Weather

Fair
66°F

Click here for Detailed Weather

0000 - 2400 (Weekday 24h Session) (04-24-2024)

Volume Summary 60min

	Volume Summary 60min		
TIME	NB	SB	**Total**
0000 - 0100	0	112	**112**
0100 - 0200	0	67	**67**
0200 - 0300	0	63	**63**
0300 - 0400	0	88	**88**
0400 - 0500	0	152	**152**
0500 - 0600	0	191	**191**
0600 - 0700	0	435	**435**
0700 - 0800	0	866	**866**
0800 - 0900	0	897	**897**
0900 - 1000	0	659	**659**
1000 - 1100	0	710	**710**
1100 - 1200	0	697	**697**

	Volume Summary 60min		
Time	NB	SB	**Total**
1200 - 1300	0	792	**792**
1300 - 1400	0	808	**808**
1400 - 1500	0	823	**823**
1500 - 1600	0	1010	**1010**
1600 - 1700	0	1109	**1109**
1700 - 1800	0	1025	**1025**
1800 - 1900	0	757	**757**
1900 - 2000	0	544	**544**
2000 - 2100	0	450	**450**
2100 - 2200	0	358	**358**
2200 - 2300	0	289	**289**
2300 - 2400	0	194	**194**

Session Total	0	13096	**13096**
Session Average	0.00	545.67	**545.67**
Session Percentage	0.00	100.00	

Site 75 Lane 3 SB

I-20,
north of Bush River Rd

Date

Thursday, April 25, 2024

Lat/Long

34.034393°, -81.117736°

Weather

Fair
67°F

Click here for Detailed Weather

0000 - 2400 (Weekday 24h Session) (04-25-2024)

Volume Summary 60min

	Volume Summary 60min		
TIME	NB	SB	**Total**
0000 - 0100	0	128	**128**
0100 - 0200	0	70	**70**
0200 - 0300	0	82	**82**
0300 - 0400	0	62	**62**
0400 - 0500	0	107	**107**
0500 - 0600	0	201	**201**
0600 - 0700	0	402	**402**
0700 - 0800	0	779	**779**
0800 - 0900	0	902	**902**
0900 - 1000	0	675	**675**
1000 - 1100	0	690	**690**
1100 - 1200	0	731	**731**

	Volume Summary 60min		
Time	NB	SB	**Total**
1200 - 1300	0	803	**803**
1300 - 1400	0	750	**750**
1400 - 1500	0	869	**869**
1500 - 1600	0	955	**955**
1600 - 1700	0	1043	**1043**
1700 - 1800	0	982	**982**
1800 - 1900	0	758	**758**
1900 - 2000	0	603	**603**
2000 - 2100	0	469	**469**
2100 - 2200	0	393	**393**
2200 - 2300	0	309	**309**
2300 - 2400	0	166	**166**

Session Total	0	12929	**12929**
Session Average	0.00	538.71	**538.71**
Session Percentage	0.00	100.00	

Site 75 Lane 3 SB

I-20,
north of Bush River Rd

Date

Friday, April 26, 2024

Lat/Long

34.034393°, -81.117736°

Weather

Cloudy
69°F

Click here for Detailed Weather

0000 - 2400 (Weekday 24h Session) (04-26-2024)

Volume Summary 60min

	Volume Summary 60min		
TIME	NB	SB	**Total**
0000 - 0100	0	108	**108**
0100 - 0200	0	93	**93**
0200 - 0300	0	85	**85**
0300 - 0400	0	101	**101**
0400 - 0500	0	116	**116**
0500 - 0600	0	180	**180**
0600 - 0700	0	350	**350**
0700 - 0800	0	700	**700**
0800 - 0900	0	824	**824**
0900 - 1000	0	660	**660**
1000 - 1100	0	671	**671**
1100 - 1200	0	795	**795**
1200 - 1300	0	853	**853**
1300 - 1400	0	909	**909**
1400 - 1500	0	876	**876**
1500 - 1600	0	959	**959**
1600 - 1700	0	983	**983**
1700 - 1800	0	907	**907**
1800 - 1900	0	742	**742**
1900 - 2000	0	602	**602**
2000 - 2100	0	465	**465**
2100 - 2200	0	423	**423**
2200 - 2300	0	378	**378**
2300 - 2400	0	268	**268**
Session Total	0	13048	**13048**
Session Average	0.00	543.67	**543.67**
Session Percentage	0.00	100.00	

Site 75 Lane 3 SB

I-20,
north of Bush River Rd

Date

Saturday, April 27, 2024

Lat/Long

34.034393°, -81.117736°

Weather

Mostly Cloudy
69°F

Click here for Detailed Weather

0000 - 2400 (Saturday 24h Session) (04-27-2024)

Volume Summary 60min

	Volume Summary 60min		
TIME	NB	SB	**Total**
0000 - 0100	0	170	**170**
0100 - 0200	0	111	**111**
0200 - 0300	0	102	**102**
0300 - 0400	0	104	**104**
0400 - 0500	0	86	**86**
0500 - 0600	0	133	**133**
0600 - 0700	0	198	**198**
0700 - 0800	0	325	**325**
0800 - 0900	0	412	**412**
0900 - 1000	0	491	**491**
1000 - 1100	0	584	**584**
1100 - 1200	0	635	**635**

	Volume Summary 60min		
Time	NB	SB	**Total**
1200 - 1300	0	674	**674**
1300 - 1400	0	706	**706**
1400 - 1500	0	705	**705**
1500 - 1600	0	695	**695**
1600 - 1700	0	621	**621**
1700 - 1800	0	596	**596**
1800 - 1900	0	586	**586**
1900 - 2000	0	522	**522**
2000 - 2100	0	413	**413**
2100 - 2200	0	416	**416**
2200 - 2300	0	352	**352**
2300 - 2400	0	216	**216**

Session Total	0	9853	**9853**
Session Average	0.00	410.54	**410.54**
Session Percentage	0.00	100.00	

Bi-Directional Class Count || Graphical Analysis SB WB

Columbia, SC

Marr Traffic DATA COLLECTION

www.marrtraffic.com

Site 75 Lane 3 SB

I-20,
north of Bush River Rd

Lat/Long

34.034393°, -81.117736°

0000 - 2400 (Weekday 24h Session)

Graphical Analysis SB WB

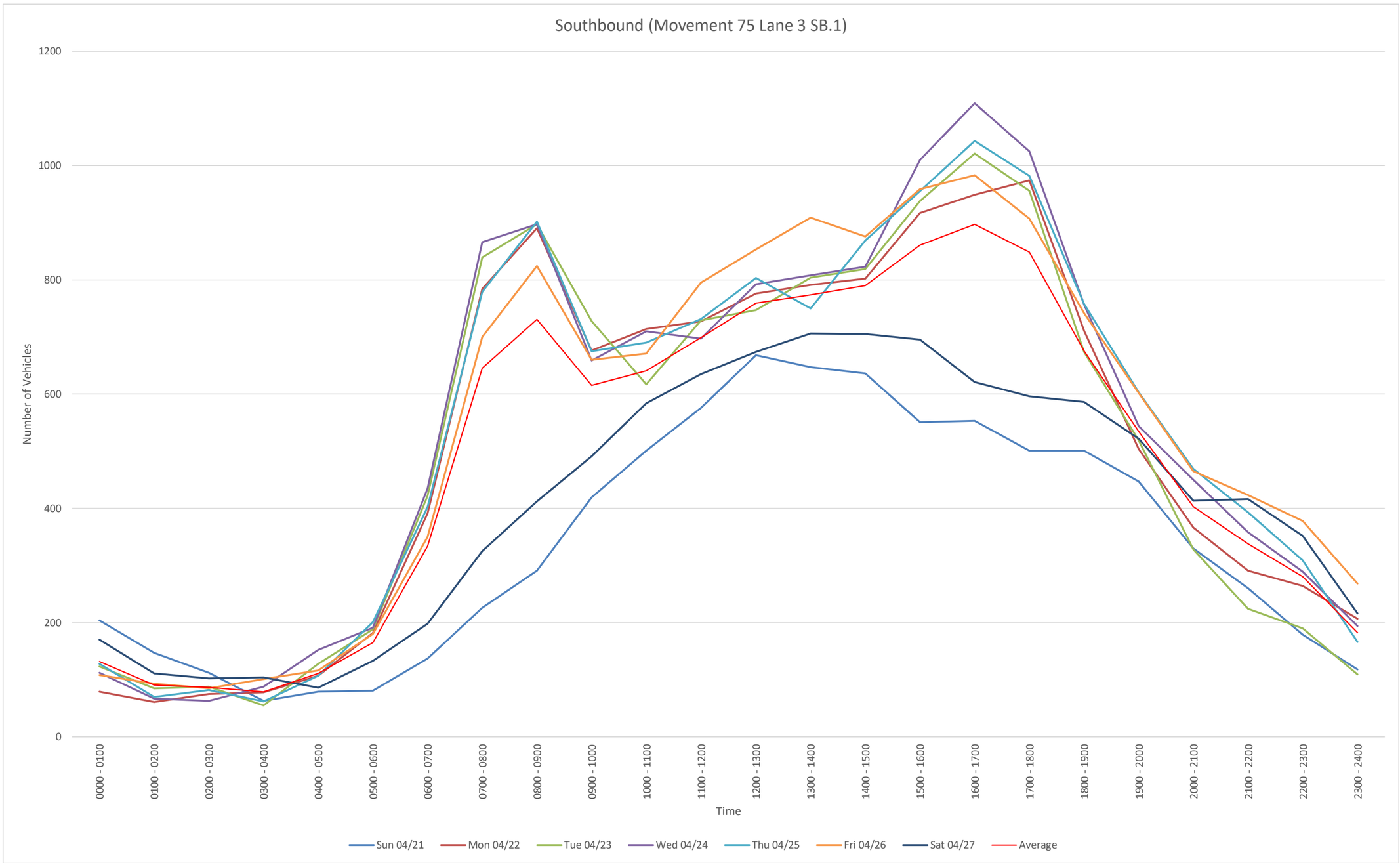

NB
File Name:
Start Date: 4/21/2024
Start Time: 0
Site Code: 75 Lane 3 SB
Station ID: 1
Location 1: I-20, north of Bush River Rd
Location 2:

Date	Time	1	2	3	4	5	6	7	8	9	10	11	12	13
4/21/2024	12:00 AM	0	0	0	0	0	0	0	0	0	0	0	0	0
4/21/2024	12:15 AM	0	0	0	0	0	0	0	0	0	0	0	0	0
4/21/2024	12:30 AM	0	0	0	0	0	0	0	0	0	0	0	0	0
4/21/2024	12:45 AM	0	0	0	0	0	0	0	0	0	0	0	0	0
4/21/2024	1:00 AM	0	0	0	0	0	0	0	0	0	0	0	0	0
4/21/2024	1:15 AM	0	0	0	0	0	0	0	0	0	0	0	0	0
4/21/2024	1:30 AM	0	0	0	0	0	0	0	0	0	0	0	0	0
4/21/2024	1:45 AM	0	0	0	0	0	0	0	0	0	0	0	0	0
4/21/2024	2:00 AM	0	0	0	0	0	0	0	0	0	0	0	0	0
4/21/2024	2:15 AM	0	0	0	0	0	0	0	0	0	0	0	0	0
4/21/2024	2:30 AM	0	0	0	0	0	0	0	0	0	0	0	0	0
4/21/2024	2:45 AM	0	0	0	0	0	0	0	0	0	0	0	0	0
4/21/2024	3:00 AM	0	0	0	0	0	0	0	0	0	0	0	0	0
4/21/2024	3:15 AM	0	0	0	0	0	0	0	0	0	0	0	0	0
4/21/2024	3:30 AM	0	0	0	0	0	0	0	0	0	0	0	0	0
4/21/2024	3:45 AM	0	0	0	0	0	0	0	0	0	0	0	0	0
4/21/2024	4:00 AM	0	0	0	0	0	0	0	0	0	0	0	0	0
4/21/2024	4:15 AM	0	0	0	0	0	0	0	0	0	0	0	0	0
4/21/2024	4:30 AM	0	0	0	0	0	0	0	0	0	0	0	0	0
4/21/2024	4:45 AM	0	0	0	0	0	0	0	0	0	0	0	0	0
4/21/2024	5:00 AM	0	0	0	0	0	0	0	0	0	0	0	0	0
4/21/2024	5:15 AM	0	0	0	0	0	0	0	0	0	0	0	0	0
4/21/2024	5:30 AM	0	0	0	0	0	0	0	0	0	0	0	0	0
4/21/2024	5:45 AM	0	0	0	0	0	0	0	0	0	0	0	0	0
4/21/2024	6:00 AM	0	0	0	0	0	0	0	0	0	0	0	0	0
4/21/2024	6:15 AM	0	0	0	0	0	0	0	0	0	0	0	0	0
4/21/2024	6:30 AM	0	0	0	0	0	0	0	0	0	0	0	0	0
4/21/2024	6:45 AM	0	0	0	0	0	0	0	0	0	0	0	0	0
4/21/2024	7:00 AM	0	0	0	0	0	0	0	0	0	0	0	0	0
4/21/2024	7:15 AM	0	0	0	0	0	0	0	0	0	0	0	0	0
4/21/2024	7:30 AM	0	0	0	0	0	0	0	0	0	0	0	0	0
4/21/2024	7:45 AM	0	0	0	0	0	0	0	0	0	0	0	0	0
4/21/2024	8:00 AM	0	0	0	0	0	0	0	0	0	0	0	0	0
4/21/2024	8:15 AM	0	0	0	0	0	0	0	0	0	0	0	0	0
4/21/2024	8:30 AM	0	0	0	0	0	0	0	0	0	0	0	0	0
4/21/2024	8:45 AM	0	0	0	0	0	0	0	0	0	0	0	0	0
4/21/2024	9:00 AM	0	0	0	0	0	0	0	0	0	0	0	0	0
4/21/2024	9:15 AM	0	0	0	0	0	0	0	0	0	0	0	0	0
4/21/2024	9:30 AM	0	0	0	0	0	0	0	0	0	0	0	0	0
4/21/2024	9:45 AM	0	0	0	0	0	0	0	0	0	0	0	0	0
4/21/2024	10:00 AM	0	0	0	0	0	0	0	0	0	0	0	0	0
4/21/2024	10:15 AM	0	0	0	0	0	0	0	0	0	0	0	0	0
4/21/2024	10:30 AM	0	0	0	0	0	0	0	0	0	0	0	0	0
4/21/2024	10:45 AM	0	0	0	0	0	0	0	0	0	0	0	0	0
4/21/2024	11:00 AM	0	0	0	0	0	0	0	0	0	0	0	0	0
4/21/2024	11:15 AM	0	0	0	0	0	0	0	0	0	0	0	0	0
4/21/2024	11:30 AM	0	0	0	0	0	0	0	0	0	0	0	0	0
4/21/2024	11:45 AM	0	0	0	0	0	0	0	0	0	0	0	0	0
4/21/2024	12:00 PM	0	0	0	0	0	0	0	0	0	0	0	0	0
4/21/2024	12:15 PM	0	0	0	0	0	0	0	0	0	0	0	0	0
4/21/2024	12:30 PM	0	0	0	0	0	0	0	0	0	0	0	0	0
4/21/2024	12:45 PM	0	0	0	0	0	0	0	0	0	0	0	0	0
4/21/2024	1:00 PM	0	0	0	0	0	0	0	0	0	0	0	0	0
4/21/2024	1:15 PM	0	0	0	0	0	0	0	0	0	0	0	0	0
4/21/2024	1:30 PM	0	0	0	0	0	0	0	0	0	0	0	0	0
4/21/2024	1:45 PM	0	0	0	0	0	0	0	0	0	0	0	0	0
4/21/2024	2:00 PM	0	0	0	0	0	0	0	0	0	0	0	0	0
4/21/2024	2:15 PM	0	0	0	0	0	0	0	0	0	0	0	0	0
4/21/2024	2:30 PM	0	0	0	0	0	0	0	0	0	0	0	0	0
4/21/2024	2:45 PM	0	0	0	0	0	0	0	0	0	0	0	0	0
4/21/2024	3:00 PM	0	0	0	0	0	0	0	0	0	0	0	0	0
4/21/2024	3:15 PM	0	0	0	0	0	0	0	0	0	0	0	0	0
4/21/2024	3:30 PM	0	0	0	0	0	0	0	0	0	0	0	0	0
4/21/2024	3:45 PM	0	0	0	0	0	0	0	0	0	0	0	0	0
4/21/2024	4:00 PM	0	0	0	0	0	0	0	0	0	0	0	0	0
4/21/2024	4:15 PM	0	0	0	0	0	0	0	0	0	0	0	0	0
4/21/2024	4:30 PM	0	0	0	0	0	0	0	0	0	0	0	0	0
4/21/2024	4:45 PM	0	0	0	0	0	0	0	0	0	0	0	0	0
4/21/2024	5:00 PM	0	0	0	0	0	0	0	0	0	0	0	0	0
4/21/2024	5:15 PM	0	0	0	0	0	0	0	0	0	0	0	0	0
4/21/2024	5:30 PM	0	0	0	0	0	0	0	0	0	0	0	0	0
4/21/2024	5:45 PM	0	0	0	0	0	0	0	0	0	0	0	0	0
4/21/2024	6:00 PM	0	0	0	0	0	0	0	0	0	0	0	0	0
4/21/2024	6:15 PM	0	0	0	0	0	0	0	0	0	0	0	0	0
4/21/2024	6:30 PM	0	0	0	0	0	0	0	0	0	0	0	0	0
4/21/2024	6:45 PM	0	0	0	0	0	0	0	0	0	0	0	0	0
4/21/2024	7:00 PM	0	0	0	0	0	0	0	0	0	0	0	0	0
4/21/2024	7:15 PM	0	0	0	0	0	0	0	0	0	0	0	0	0
4/21/2024	7:30 PM	0	0	0	0	0	0	0	0	0	0	0	0	0
4/21/2024	7:45 PM	0	0	0	0	0	0	0	0	0	0	0	0	0
4/21/2024	8:00 PM	0	0	0	0	0	0	0	0	0	0	0	0	0
4/21/2024	8:15 PM	0	0	0	0	0	0	0	0	0	0	0	0	0
4/21/2024	8:30 PM	0	0	0	0	0	0	0	0	0	0	0	0	0
4/21/2024	8:45 PM	0	0	0	0	0	0	0	0	0	0	0	0	0
4/21/2024	9:00 PM	0	0	0	0	0	0	0	0	0	0	0	0	0
4/21/2024	9:15 PM	0	0	0	0	0	0	0	0	0	0	0	0	0
4/21/2024	9:30 PM	0	0	0	0	0	0	0	0	0	0	0	0	0
4/21/2024	9:45 PM	0	0	0	0	0	0	0	0	0	0	0	0	0
4/21/2024	10:00 PM	0	0	0	0	0	0	0	0	0	0	0	0	0
4/21/2024	10:15 PM	0	0	0	0	0	0	0	0	0	0	0	0	0
4/21/2024	10:30 PM	0	0	0	0	0	0	0	0	0	0	0	0	0
4/21/2024	10:45 PM	0	0	0	0	0	0	0	0	0	0	0	0	0
4/21/2024	11:00 PM	0	0	0	0	0	0	0	0	0	0	0	0	0
4/21/2024	11:15 PM	0	0	0	0	0	0	0	0	0	0	0	0	0
4/21/2024	11:30 PM	0	0	0	0	0	0	0	0	0	0	0	0	0
4/21/2024	11:45 PM	0	0	0	0	0	0	0	0	0	0	0	0	0

4/22/2024	12:00 AM	0	0	0	0	0	0	0	0	0	0	0	0	0
4/22/2024	12:15 AM	0	0	0	0	0	0	0	0	0	0	0	0	0
4/22/2024	12:30 AM	0	0	0	0	0	0	0	0	0	0	0	0	0
4/22/2024	12:45 AM	0	0	0	0	0	0	0	0	0	0	0	0	0
4/22/2024	1:00 AM	0	0	0	0	0	0	0	0	0	0	0	0	0
4/22/2024	1:15 AM	0	0	0	0	0	0	0	0	0	0	0	0	0
4/22/2024	1:30 AM	0	0	0	0	0	0	0	0	0	0	0	0	0
4/22/2024	1:45 AM	0	0	0	0	0	0	0	0	0	0	0	0	0
4/22/2024	2:00 AM	0	0	0	0	0	0	0	0	0	0	0	0	0
4/22/2024	2:15 AM	0	0	0	0	0	0	0	0	0	0	0	0	0
4/22/2024	2:30 AM	0	0	0	0	0	0	0	0	0	0	0	0	0
4/22/2024	2:45 AM	0	0	0	0	0	0	0	0	0	0	0	0	0
4/22/2024	3:00 AM	0	0	0	0	0	0	0	0	0	0	0	0	0
4/22/2024	3:15 AM	0	0	0	0	0	0	0	0	0	0	0	0	0
4/22/2024	3:30 AM	0	0	0	0	0	0	0	0	0	0	0	0	0
4/22/2024	3:45 AM	0	0	0	0	0	0	0	0	0	0	0	0	0
4/22/2024	4:00 AM	0	0	0	0	0	0	0	0	0	0	0	0	0
4/22/2024	4:15 AM	0	0	0	0	0	0	0	0	0	0	0	0	0
4/22/2024	4:30 AM	0	0	0	0	0	0	0	0	0	0	0	0	0
4/22/2024	4:45 AM	0	0	0	0	0	0	0	0	0	0	0	0	0
4/22/2024	5:00 AM	0	0	0	0	0	0	0	0	0	0	0	0	0
4/22/2024	5:15 AM	0	0	0	0	0	0	0	0	0	0	0	0	0
4/22/2024	5:30 AM	0	0	0	0	0	0	0	0	0	0	0	0	0
4/22/2024	5:45 AM	0	0	0	0	0	0	0	0	0	0	0	0	0
4/22/2024	6:00 AM	0	0	0	0	0	0	0	0	0	0	0	0	0
4/22/2024	6:15 AM	0	0	0	0	0	0	0	0	0	0	0	0	0
4/22/2024	6:30 AM	0	0	0	0	0	0	0	0	0	0	0	0	0
4/22/2024	6:45 AM	0	0	0	0	0	0	0	0	0	0	0	0	0
4/22/2024	7:00 AM	0	0	0	0	0	0	0	0	0	0	0	0	0
4/22/2024	7:15 AM	0	0	0	0	0	0	0	0	0	0	0	0	0
4/22/2024	7:30 AM	0	0	0	0	0	0	0	0	0	0	0	0	0
4/22/2024	7:45 AM	0	0	0	0	0	0	0	0	0	0	0	0	0
4/22/2024	8:00 AM	0	0	0	0	0	0	0	0	0	0	0	0	0
4/22/2024	8:15 AM	0	0	0	0	0	0	0	0	0	0	0	0	0
4/22/2024	8:30 AM	0	0	0	0	0	0	0	0	0	0	0	0	0
4/22/2024	8:45 AM	0	0	0	0	0	0	0	0	0	0	0	0	0
4/22/2024	9:00 AM	0	0	0	0	0	0	0	0	0	0	0	0	0
4/22/2024	9:15 AM	0	0	0	0	0	0	0	0	0	0	0	0	0
4/22/2024	9:30 AM	0	0	0	0	0	0	0	0	0	0	0	0	0
4/22/2024	9:45 AM	0	0	0	0	0	0	0	0	0	0	0	0	0
4/22/2024	10:00 AM	0	0	0	0	0	0	0	0	0	0	0	0	0
4/22/2024	10:15 AM	0	0	0	0	0	0	0	0	0	0	0	0	0
4/22/2024	10:30 AM	0	0	0	0	0	0	0	0	0	0	0	0	0
4/22/2024	10:45 AM	0	0	0	0	0	0	0	0	0	0	0	0	0
4/22/2024	11:00 AM	0	0	0	0	0	0	0	0	0	0	0	0	0
4/22/2024	11:15 AM	0	0	0	0	0	0	0	0	0	0	0	0	0
4/22/2024	11:30 AM	0	0	0	0	0	0	0	0	0	0	0	0	0
4/22/2024	11:45 AM	0	0	0	0	0	0	0	0	0	0	0	0	0
4/22/2024	12:00 PM	0	0	0	0	0	0	0	0	0	0	0	0	0
4/22/2024	12:15 PM	0	0	0	0	0	0	0	0	0	0	0	0	0
4/22/2024	12:30 PM	0	0	0	0	0	0	0	0	0	0	0	0	0
4/22/2024	12:45 PM	0	0	0	0	0	0	0	0	0	0	0	0	0
4/22/2024	1:00 PM	0	0	0	0	0	0	0	0	0	0	0	0	0
4/22/2024	1:15 PM	0	0	0	0	0	0	0	0	0	0	0	0	0
4/22/2024	1:30 PM	0	0	0	0	0	0	0	0	0	0	0	0	0
4/22/2024	1:45 PM	0	0	0	0	0	0	0	0	0	0	0	0	0
4/22/2024	2:00 PM	0	0	0	0	0	0	0	0	0	0	0	0	0
4/22/2024	2:15 PM	0	0	0	0	0	0	0	0	0	0	0	0	0
4/22/2024	2:30 PM	0	0	0	0	0	0	0	0	0	0	0	0	0
4/22/2024	2:45 PM	0	0	0	0	0	0	0	0	0	0	0	0	0
4/22/2024	3:00 PM	0	0	0	0	0	0	0	0	0	0	0	0	0
4/22/2024	3:15 PM	0	0	0	0	0	0	0	0	0	0	0	0	0
4/22/2024	3:30 PM	0	0	0	0	0	0	0	0	0	0	0	0	0
4/22/2024	3:45 PM	0	0	0	0	0	0	0	0	0	0	0	0	0
4/22/2024	4:00 PM	0	0	0	0	0	0	0	0	0	0	0	0	0
4/22/2024	4:15 PM	0	0	0	0	0	0	0	0	0	0	0	0	0
4/22/2024	4:30 PM	0	0	0	0	0	0	0	0	0	0	0	0	0
4/22/2024	4:45 PM	0	0	0	0	0	0	0	0	0	0	0	0	0
4/22/2024	5:00 PM	0	0	0	0	0	0	0	0	0	0	0	0	0
4/22/2024	5:15 PM	0	0	0	0	0	0	0	0	0	0	0	0	0
4/22/2024	5:30 PM	0	0	0	0	0	0	0	0	0	0	0	0	0
4/22/2024	5:45 PM	0	0	0	0	0	0	0	0	0	0	0	0	0
4/22/2024	6:00 PM	0	0	0	0	0	0	0	0	0	0	0	0	0
4/22/2024	6:15 PM	0	0	0	0	0	0	0	0	0	0	0	0	0
4/22/2024	6:30 PM	0	0	0	0	0	0	0	0	0	0	0	0	0
4/22/2024	6:45 PM	0	0	0	0	0	0	0	0	0	0	0	0	0
4/22/2024	7:00 PM	0	0	0	0	0	0	0	0	0	0	0	0	0
4/22/2024	7:15 PM	0	0	0	0	0	0	0	0	0	0	0	0	0
4/22/2024	7:30 PM	0	0	0	0	0	0	0	0	0	0	0	0	0
4/22/2024	7:45 PM	0	0	0	0	0	0	0	0	0	0	0	0	0
4/22/2024	8:00 PM	0	0	0	0	0	0	0	0	0	0	0	0	0
4/22/2024	8:15 PM	0	0	0	0	0	0	0	0	0	0	0	0	0
4/22/2024	8:30 PM	0	0	0	0	0	0	0	0	0	0	0	0	0
4/22/2024	8:45 PM	0	0	0	0	0	0	0	0	0	0	0	0	0
4/22/2024	9:00 PM	0	0	0	0	0	0	0	0	0	0	0	0	0
4/22/2024	9:15 PM	0	0	0	0	0	0	0	0	0	0	0	0	0
4/22/2024	9:30 PM	0	0	0	0	0	0	0	0	0	0	0	0	0
4/22/2024	9:45 PM	0	0	0	0	0	0	0	0	0	0	0	0	0
4/22/2024	10:00 PM	0	0	0	0	0	0	0	0	0	0	0	0	0
4/22/2024	10:15 PM	0	0	0	0	0	0	0	0	0	0	0	0	0
4/22/2024	10:30 PM	0	0	0	0	0	0	0	0	0	0	0	0	0
4/22/2024	10:45 PM	0	0	0	0	0	0	0	0	0	0	0	0	0
4/22/2024	11:00 PM	0	0	0	0	0	0	0	0	0	0	0	0	0
4/22/2024	11:15 PM	0	0	0	0	0	0	0	0	0	0	0	0	0
4/22/2024	11:30 PM	0	0	0	0	0	0	0	0	0	0	0	0	0
4/22/2024	11:45 PM	0	0	0	0	0	0	0	0	0	0	0	0	0

4/23/2024	12:00 AM	0	0	0	0	0	0	0	0	0	0	0	0	0
4/23/2024	12:15 AM	0	0	0	0	0	0	0	0	0	0	0	0	0
4/23/2024	12:30 AM	0	0	0	0	0	0	0	0	0	0	0	0	0
4/23/2024	12:45 AM	0	0	0	0	0	0	0	0	0	0	0	0	0
4/23/2024	1:00 AM	0	0	0	0	0	0	0	0	0	0	0	0	0
4/23/2024	1:15 AM	0	0	0	0	0	0	0	0	0	0	0	0	0
4/23/2024	1:30 AM	0	0	0	0	0	0	0	0	0	0	0	0	0
4/23/2024	1:45 AM	0	0	0	0	0	0	0	0	0	0	0	0	0
4/23/2024	2:00 AM	0	0	0	0	0	0	0	0	0	0	0	0	0
4/23/2024	2:15 AM	0	0	0	0	0	0	0	0	0	0	0	0	0
4/23/2024	2:30 AM	0	0	0	0	0	0	0	0	0	0	0	0	0
4/23/2024	2:45 AM	0	0	0	0	0	0	0	0	0	0	0	0	0
4/23/2024	3:00 AM	0	0	0	0	0	0	0	0	0	0	0	0	0
4/23/2024	3:15 AM	0	0	0	0	0	0	0	0	0	0	0	0	0
4/23/2024	3:30 AM	0	0	0	0	0	0	0	0	0	0	0	0	0
4/23/2024	3:45 AM	0	0	0	0	0	0	0	0	0	0	0	0	0
4/23/2024	4:00 AM	0	0	0	0	0	0	0	0	0	0	0	0	0
4/23/2024	4:15 AM	0	0	0	0	0	0	0	0	0	0	0	0	0
4/23/2024	4:30 AM	0	0	0	0	0	0	0	0	0	0	0	0	0
4/23/2024	4:45 AM	0	0	0	0	0	0	0	0	0	0	0	0	0
4/23/2024	5:00 AM	0	0	0	0	0	0	0	0	0	0	0	0	0
4/23/2024	5:15 AM	0	0	0	0	0	0	0	0	0	0	0	0	0
4/23/2024	5:30 AM	0	0	0	0	0	0	0	0	0	0	0	0	0
4/23/2024	5:45 AM	0	0	0	0	0	0	0	0	0	0	0	0	0
4/23/2024	6:00 AM	0	0	0	0	0	0	0	0	0	0	0	0	0
4/23/2024	6:15 AM	0	0	0	0	0	0	0	0	0	0	0	0	0
4/23/2024	6:30 AM	0	0	0	0	0	0	0	0	0	0	0	0	0
4/23/2024	6:45 AM	0	0	0	0	0	0	0	0	0	0	0	0	0
4/23/2024	7:00 AM	0	0	0	0	0	0	0	0	0	0	0	0	0
4/23/2024	7:15 AM	0	0	0	0	0	0	0	0	0	0	0	0	0
4/23/2024	7:30 AM	0	0	0	0	0	0	0	0	0	0	0	0	0
4/23/2024	7:45 AM	0	0	0	0	0	0	0	0	0	0	0	0	0
4/23/2024	8:00 AM	0	0	0	0	0	0	0	0	0	0	0	0	0
4/23/2024	8:15 AM	0	0	0	0	0	0	0	0	0	0	0	0	0
4/23/2024	8:30 AM	0	0	0	0	0	0	0	0	0	0	0	0	0
4/23/2024	8:45 AM	0	0	0	0	0	0	0	0	0	0	0	0	0
4/23/2024	9:00 AM	0	0	0	0	0	0	0	0	0	0	0	0	0
4/23/2024	9:15 AM	0	0	0	0	0	0	0	0	0	0	0	0	0
4/23/2024	9:30 AM	0	0	0	0	0	0	0	0	0	0	0	0	0
4/23/2024	9:45 AM	0	0	0	0	0	0	0	0	0	0	0	0	0
4/23/2024	10:00 AM	0	0	0	0	0	0	0	0	0	0	0	0	0
4/23/2024	10:15 AM	0	0	0	0	0	0	0	0	0	0	0	0	0
4/23/2024	10:30 AM	0	0	0	0	0	0	0	0	0	0	0	0	0
4/23/2024	10:45 AM	0	0	0	0	0	0	0	0	0	0	0	0	0
4/23/2024	11:00 AM	0	0	0	0	0	0	0	0	0	0	0	0	0
4/23/2024	11:15 AM	0	0	0	0	0	0	0	0	0	0	0	0	0
4/23/2024	11:30 AM	0	0	0	0	0	0	0	0	0	0	0	0	0
4/23/2024	11:45 AM	0	0	0	0	0	0	0	0	0	0	0	0	0
4/23/2024	12:00 PM	0	0	0	0	0	0	0	0	0	0	0	0	0
4/23/2024	12:15 PM	0	0	0	0	0	0	0	0	0	0	0	0	0
4/23/2024	12:30 PM	0	0	0	0	0	0	0	0	0	0	0	0	0
4/23/2024	12:45 PM	0	0	0	0	0	0	0	0	0	0	0	0	0
4/23/2024	1:00 PM	0	0	0	0	0	0	0	0	0	0	0	0	0
4/23/2024	1:15 PM	0	0	0	0	0	0	0	0	0	0	0	0	0
4/23/2024	1:30 PM	0	0	0	0	0	0	0	0	0	0	0	0	0
4/23/2024	1:45 PM	0	0	0	0	0	0	0	0	0	0	0	0	0
4/23/2024	2:00 PM	0	0	0	0	0	0	0	0	0	0	0	0	0
4/23/2024	2:15 PM	0	0	0	0	0	0	0	0	0	0	0	0	0
4/23/2024	2:30 PM	0	0	0	0	0	0	0	0	0	0	0	0	0
4/23/2024	2:45 PM	0	0	0	0	0	0	0	0	0	0	0	0	0
4/23/2024	3:00 PM	0	0	0	0	0	0	0	0	0	0	0	0	0
4/23/2024	3:15 PM	0	0	0	0	0	0	0	0	0	0	0	0	0
4/23/2024	3:30 PM	0	0	0	0	0	0	0	0	0	0	0	0	0
4/23/2024	3:45 PM	0	0	0	0	0	0	0	0	0	0	0	0	0
4/23/2024	4:00 PM	0	0	0	0	0	0	0	0	0	0	0	0	0
4/23/2024	4:15 PM	0	0	0	0	0	0	0	0	0	0	0	0	0
4/23/2024	4:30 PM	0	0	0	0	0	0	0	0	0	0	0	0	0
4/23/2024	4:45 PM	0	0	0	0	0	0	0	0	0	0	0	0	0
4/23/2024	5:00 PM	0	0	0	0	0	0	0	0	0	0	0	0	0
4/23/2024	5:15 PM	0	0	0	0	0	0	0	0	0	0	0	0	0
4/23/2024	5:30 PM	0	0	0	0	0	0	0	0	0	0	0	0	0
4/23/2024	5:45 PM	0	0	0	0	0	0	0	0	0	0	0	0	0
4/23/2024	6:00 PM	0	0	0	0	0	0	0	0	0	0	0	0	0
4/23/2024	6:15 PM	0	0	0	0	0	0	0	0	0	0	0	0	0
4/23/2024	6:30 PM	0	0	0	0	0	0	0	0	0	0	0	0	0
4/23/2024	6:45 PM	0	0	0	0	0	0	0	0	0	0	0	0	0
4/23/2024	7:00 PM	0	0	0	0	0	0	0	0	0	0	0	0	0
4/23/2024	7:15 PM	0	0	0	0	0	0	0	0	0	0	0	0	0
4/23/2024	7:30 PM	0	0	0	0	0	0	0	0	0	0	0	0	0
4/23/2024	7:45 PM	0	0	0	0	0	0	0	0	0	0	0	0	0
4/23/2024	8:00 PM	0	0	0	0	0	0	0	0	0	0	0	0	0
4/23/2024	8:15 PM	0	0	0	0	0	0	0	0	0	0	0	0	0
4/23/2024	8:30 PM	0	0	0	0	0	0	0	0	0	0	0	0	0
4/23/2024	8:45 PM	0	0	0	0	0	0	0	0	0	0	0	0	0
4/23/2024	9:00 PM	0	0	0	0	0	0	0	0	0	0	0	0	0
4/23/2024	9:15 PM	0	0	0	0	0	0	0	0	0	0	0	0	0
4/23/2024	9:30 PM	0	0	0	0	0	0	0	0	0	0	0	0	0
4/23/2024	9:45 PM	0	0	0	0	0	0	0	0	0	0	0	0	0
4/23/2024	10:00 PM	0	0	0	0	0	0	0	0	0	0	0	0	0
4/23/2024	10:15 PM	0	0	0	0	0	0	0	0	0	0	0	0	0
4/23/2024	10:30 PM	0	0	0	0	0	0	0	0	0	0	0	0	0
4/23/2024	10:45 PM	0	0	0	0	0	0	0	0	0	0	0	0	0
4/23/2024	11:00 PM	0	0	0	0	0	0	0	0	0	0	0	0	0
4/23/2024	11:15 PM	0	0	0	0	0	0	0	0	0	0	0	0	0
4/23/2024	11:30 PM	0	0	0	0	0	0	0	0	0	0	0	0	0
4/23/2024	11:45 PM	0	0	0	0	0	0	0	0	0	0	0	0	0

4/24/2024	12:00 AM	0	0	0	0	0	0	0	0	0	0	0	0	0
4/24/2024	12:15 AM	0	0	0	0	0	0	0	0	0	0	0	0	0
4/24/2024	12:30 AM	0	0	0	0	0	0	0	0	0	0	0	0	0
4/24/2024	12:45 AM	0	0	0	0	0	0	0	0	0	0	0	0	0
4/24/2024	1:00 AM	0	0	0	0	0	0	0	0	0	0	0	0	0
4/24/2024	1:15 AM	0	0	0	0	0	0	0	0	0	0	0	0	0
4/24/2024	1:30 AM	0	0	0	0	0	0	0	0	0	0	0	0	0
4/24/2024	1:45 AM	0	0	0	0	0	0	0	0	0	0	0	0	0
4/24/2024	2:00 AM	0	0	0	0	0	0	0	0	0	0	0	0	0
4/24/2024	2:15 AM	0	0	0	0	0	0	0	0	0	0	0	0	0
4/24/2024	2:30 AM	0	0	0	0	0	0	0	0	0	0	0	0	0
4/24/2024	2:45 AM	0	0	0	0	0	0	0	0	0	0	0	0	0
4/24/2024	3:00 AM	0	0	0	0	0	0	0	0	0	0	0	0	0
4/24/2024	3:15 AM	0	0	0	0	0	0	0	0	0	0	0	0	0
4/24/2024	3:30 AM	0	0	0	0	0	0	0	0	0	0	0	0	0
4/24/2024	3:45 AM	0	0	0	0	0	0	0	0	0	0	0	0	0
4/24/2024	4:00 AM	0	0	0	0	0	0	0	0	0	0	0	0	0
4/24/2024	4:15 AM	0	0	0	0	0	0	0	0	0	0	0	0	0
4/24/2024	4:30 AM	0	0	0	0	0	0	0	0	0	0	0	0	0
4/24/2024	4:45 AM	0	0	0	0	0	0	0	0	0	0	0	0	0
4/24/2024	5:00 AM	0	0	0	0	0	0	0	0	0	0	0	0	0
4/24/2024	5:15 AM	0	0	0	0	0	0	0	0	0	0	0	0	0
4/24/2024	5:30 AM	0	0	0	0	0	0	0	0	0	0	0	0	0
4/24/2024	5:45 AM	0	0	0	0	0	0	0	0	0	0	0	0	0
4/24/2024	6:00 AM	0	0	0	0	0	0	0	0	0	0	0	0	0
4/24/2024	6:15 AM	0	0	0	0	0	0	0	0	0	0	0	0	0
4/24/2024	6:30 AM	0	0	0	0	0	0	0	0	0	0	0	0	0
4/24/2024	6:45 AM	0	0	0	0	0	0	0	0	0	0	0	0	0
4/24/2024	7:00 AM	0	0	0	0	0	0	0	0	0	0	0	0	0
4/24/2024	7:15 AM	0	0	0	0	0	0	0	0	0	0	0	0	0
4/24/2024	7:30 AM	0	0	0	0	0	0	0	0	0	0	0	0	0
4/24/2024	7:45 AM	0	0	0	0	0	0	0	0	0	0	0	0	0
4/24/2024	8:00 AM	0	0	0	0	0	0	0	0	0	0	0	0	0
4/24/2024	8:15 AM	0	0	0	0	0	0	0	0	0	0	0	0	0
4/24/2024	8:30 AM	0	0	0	0	0	0	0	0	0	0	0	0	0
4/24/2024	8:45 AM	0	0	0	0	0	0	0	0	0	0	0	0	0
4/24/2024	9:00 AM	0	0	0	0	0	0	0	0	0	0	0	0	0
4/24/2024	9:15 AM	0	0	0	0	0	0	0	0	0	0	0	0	0
4/24/2024	9:30 AM	0	0	0	0	0	0	0	0	0	0	0	0	0
4/24/2024	9:45 AM	0	0	0	0	0	0	0	0	0	0	0	0	0
4/24/2024	10:00 AM	0	0	0	0	0	0	0	0	0	0	0	0	0
4/24/2024	10:15 AM	0	0	0	0	0	0	0	0	0	0	0	0	0
4/24/2024	10:30 AM	0	0	0	0	0	0	0	0	0	0	0	0	0
4/24/2024	10:45 AM	0	0	0	0	0	0	0	0	0	0	0	0	0
4/24/2024	11:00 AM	0	0	0	0	0	0	0	0	0	0	0	0	0
4/24/2024	11:15 AM	0	0	0	0	0	0	0	0	0	0	0	0	0
4/24/2024	11:30 AM	0	0	0	0	0	0	0	0	0	0	0	0	0
4/24/2024	11:45 AM	0	0	0	0	0	0	0	0	0	0	0	0	0
4/24/2024	12:00 PM	0	0	0	0	0	0	0	0	0	0	0	0	0
4/24/2024	12:15 PM	0	0	0	0	0	0	0	0	0	0	0	0	0
4/24/2024	12:30 PM	0	0	0	0	0	0	0	0	0	0	0	0	0
4/24/2024	12:45 PM	0	0	0	0	0	0	0	0	0	0	0	0	0
4/24/2024	1:00 PM	0	0	0	0	0	0	0	0	0	0	0	0	0
4/24/2024	1:15 PM	0	0	0	0	0	0	0	0	0	0	0	0	0
4/24/2024	1:30 PM	0	0	0	0	0	0	0	0	0	0	0	0	0
4/24/2024	1:45 PM	0	0	0	0	0	0	0	0	0	0	0	0	0
4/24/2024	2:00 PM	0	0	0	0	0	0	0	0	0	0	0	0	0
4/24/2024	2:15 PM	0	0	0	0	0	0	0	0	0	0	0	0	0
4/24/2024	2:30 PM	0	0	0	0	0	0	0	0	0	0	0	0	0
4/24/2024	2:45 PM	0	0	0	0	0	0	0	0	0	0	0	0	0
4/24/2024	3:00 PM	0	0	0	0	0	0	0	0	0	0	0	0	0
4/24/2024	3:15 PM	0	0	0	0	0	0	0	0	0	0	0	0	0
4/24/2024	3:30 PM	0	0	0	0	0	0	0	0	0	0	0	0	0
4/24/2024	3:45 PM	0	0	0	0	0	0	0	0	0	0	0	0	0
4/24/2024	4:00 PM	0	0	0	0	0	0	0	0	0	0	0	0	0
4/24/2024	4:15 PM	0	0	0	0	0	0	0	0	0	0	0	0	0
4/24/2024	4:30 PM	0	0	0	0	0	0	0	0	0	0	0	0	0
4/24/2024	4:45 PM	0	0	0	0	0	0	0	0	0	0	0	0	0
4/24/2024	5:00 PM	0	0	0	0	0	0	0	0	0	0	0	0	0
4/24/2024	5:15 PM	0	0	0	0	0	0	0	0	0	0	0	0	0
4/24/2024	5:30 PM	0	0	0	0	0	0	0	0	0	0	0	0	0
4/24/2024	5:45 PM	0	0	0	0	0	0	0	0	0	0	0	0	0
4/24/2024	6:00 PM	0	0	0	0	0	0	0	0	0	0	0	0	0
4/24/2024	6:15 PM	0	0	0	0	0	0	0	0	0	0	0	0	0
4/24/2024	6:30 PM	0	0	0	0	0	0	0	0	0	0	0	0	0
4/24/2024	6:45 PM	0	0	0	0	0	0	0	0	0	0	0	0	0
4/24/2024	7:00 PM	0	0	0	0	0	0	0	0	0	0	0	0	0
4/24/2024	7:15 PM	0	0	0	0	0	0	0	0	0	0	0	0	0
4/24/2024	7:30 PM	0	0	0	0	0	0	0	0	0	0	0	0	0
4/24/2024	7:45 PM	0	0	0	0	0	0	0	0	0	0	0	0	0
4/24/2024	8:00 PM	0	0	0	0	0	0	0	0	0	0	0	0	0
4/24/2024	8:15 PM	0	0	0	0	0	0	0	0	0	0	0	0	0
4/24/2024	8:30 PM	0	0	0	0	0	0	0	0	0	0	0	0	0
4/24/2024	8:45 PM	0	0	0	0	0	0	0	0	0	0	0	0	0
4/24/2024	9:00 PM	0	0	0	0	0	0	0	0	0	0	0	0	0
4/24/2024	9:15 PM	0	0	0	0	0	0	0	0	0	0	0	0	0
4/24/2024	9:30 PM	0	0	0	0	0	0	0	0	0	0	0	0	0
4/24/2024	9:45 PM	0	0	0	0	0	0	0	0	0	0	0	0	0
4/24/2024	10:00 PM	0	0	0	0	0	0	0	0	0	0	0	0	0
4/24/2024	10:15 PM	0	0	0	0	0	0	0	0	0	0	0	0	0
4/24/2024	10:30 PM	0	0	0	0	0	0	0	0	0	0	0	0	0
4/24/2024	10:45 PM	0	0	0	0	0	0	0	0	0	0	0	0	0
4/24/2024	11:00 PM	0	0	0	0	0	0	0	0	0	0	0	0	0
4/24/2024	11:15 PM	0	0	0	0	0	0	0	0	0	0	0	0	0
4/24/2024	11:30 PM	0	0	0	0	0	0	0	0	0	0	0	0	0
4/24/2024	11:45 PM	0	0	0	0	0	0	0	0	0	0	0	0	0

4/25/2024	12:00 AM	0	0	0	0	0	0	0	0	0	0	0	0	0
4/25/2024	12:15 AM	0	0	0	0	0	0	0	0	0	0	0	0	0
4/25/2024	12:30 AM	0	0	0	0	0	0	0	0	0	0	0	0	0
4/25/2024	12:45 AM	0	0	0	0	0	0	0	0	0	0	0	0	0
4/25/2024	1:00 AM	0	0	0	0	0	0	0	0	0	0	0	0	0
4/25/2024	1:15 AM	0	0	0	0	0	0	0	0	0	0	0	0	0
4/25/2024	1:30 AM	0	0	0	0	0	0	0	0	0	0	0	0	0
4/25/2024	1:45 AM	0	0	0	0	0	0	0	0	0	0	0	0	0
4/25/2024	2:00 AM	0	0	0	0	0	0	0	0	0	0	0	0	0
4/25/2024	2:15 AM	0	0	0	0	0	0	0	0	0	0	0	0	0
4/25/2024	2:30 AM	0	0	0	0	0	0	0	0	0	0	0	0	0
4/25/2024	2:45 AM	0	0	0	0	0	0	0	0	0	0	0	0	0
4/25/2024	3:00 AM	0	0	0	0	0	0	0	0	0	0	0	0	0
4/25/2024	3:15 AM	0	0	0	0	0	0	0	0	0	0	0	0	0
4/25/2024	3:30 AM	0	0	0	0	0	0	0	0	0	0	0	0	0
4/25/2024	3:45 AM	0	0	0	0	0	0	0	0	0	0	0	0	0
4/25/2024	4:00 AM	0	0	0	0	0	0	0	0	0	0	0	0	0
4/25/2024	4:15 AM	0	0	0	0	0	0	0	0	0	0	0	0	0
4/25/2024	4:30 AM	0	0	0	0	0	0	0	0	0	0	0	0	0
4/25/2024	4:45 AM	0	0	0	0	0	0	0	0	0	0	0	0	0
4/25/2024	5:00 AM	0	0	0	0	0	0	0	0	0	0	0	0	0
4/25/2024	5:15 AM	0	0	0	0	0	0	0	0	0	0	0	0	0
4/25/2024	5:30 AM	0	0	0	0	0	0	0	0	0	0	0	0	0
4/25/2024	5:45 AM	0	0	0	0	0	0	0	0	0	0	0	0	0
4/25/2024	6:00 AM	0	0	0	0	0	0	0	0	0	0	0	0	0
4/25/2024	6:15 AM	0	0	0	0	0	0	0	0	0	0	0	0	0
4/25/2024	6:30 AM	0	0	0	0	0	0	0	0	0	0	0	0	0
4/25/2024	6:45 AM	0	0	0	0	0	0	0	0	0	0	0	0	0
4/25/2024	7:00 AM	0	0	0	0	0	0	0	0	0	0	0	0	0
4/25/2024	7:15 AM	0	0	0	0	0	0	0	0	0	0	0	0	0
4/25/2024	7:30 AM	0	0	0	0	0	0	0	0	0	0	0	0	0
4/25/2024	7:45 AM	0	0	0	0	0	0	0	0	0	0	0	0	0
4/25/2024	8:00 AM	0	0	0	0	0	0	0	0	0	0	0	0	0
4/25/2024	8:15 AM	0	0	0	0	0	0	0	0	0	0	0	0	0
4/25/2024	8:30 AM	0	0	0	0	0	0	0	0	0	0	0	0	0
4/25/2024	8:45 AM	0	0	0	0	0	0	0	0	0	0	0	0	0
4/25/2024	9:00 AM	0	0	0	0	0	0	0	0	0	0	0	0	0
4/25/2024	9:15 AM	0	0	0	0	0	0	0	0	0	0	0	0	0
4/25/2024	9:30 AM	0	0	0	0	0	0	0	0	0	0	0	0	0
4/25/2024	9:45 AM	0	0	0	0	0	0	0	0	0	0	0	0	0
4/25/2024	10:00 AM	0	0	0	0	0	0	0	0	0	0	0	0	0
4/25/2024	10:15 AM	0	0	0	0	0	0	0	0	0	0	0	0	0
4/25/2024	10:30 AM	0	0	0	0	0	0	0	0	0	0	0	0	0
4/25/2024	10:45 AM	0	0	0	0	0	0	0	0	0	0	0	0	0
4/25/2024	11:00 AM	0	0	0	0	0	0	0	0	0	0	0	0	0
4/25/2024	11:15 AM	0	0	0	0	0	0	0	0	0	0	0	0	0
4/25/2024	11:30 AM	0	0	0	0	0	0	0	0	0	0	0	0	0
4/25/2024	11:45 AM	0	0	0	0	0	0	0	0	0	0	0	0	0
4/25/2024	12:00 PM	0	0	0	0	0	0	0	0	0	0	0	0	0
4/25/2024	12:15 PM	0	0	0	0	0	0	0	0	0	0	0	0	0
4/25/2024	12:30 PM	0	0	0	0	0	0	0	0	0	0	0	0	0
4/25/2024	12:45 PM	0	0	0	0	0	0	0	0	0	0	0	0	0
4/25/2024	1:00 PM	0	0	0	0	0	0	0	0	0	0	0	0	0
4/25/2024	1:15 PM	0	0	0	0	0	0	0	0	0	0	0	0	0
4/25/2024	1:30 PM	0	0	0	0	0	0	0	0	0	0	0	0	0
4/25/2024	1:45 PM	0	0	0	0	0	0	0	0	0	0	0	0	0
4/25/2024	2:00 PM	0	0	0	0	0	0	0	0	0	0	0	0	0
4/25/2024	2:15 PM	0	0	0	0	0	0	0	0	0	0	0	0	0
4/25/2024	2:30 PM	0	0	0	0	0	0	0	0	0	0	0	0	0
4/25/2024	2:45 PM	0	0	0	0	0	0	0	0	0	0	0	0	0
4/25/2024	3:00 PM	0	0	0	0	0	0	0	0	0	0	0	0	0
4/25/2024	3:15 PM	0	0	0	0	0	0	0	0	0	0	0	0	0
4/25/2024	3:30 PM	0	0	0	0	0	0	0	0	0	0	0	0	0
4/25/2024	3:45 PM	0	0	0	0	0	0	0	0	0	0	0	0	0
4/25/2024	4:00 PM	0	0	0	0	0	0	0	0	0	0	0	0	0
4/25/2024	4:15 PM	0	0	0	0	0	0	0	0	0	0	0	0	0
4/25/2024	4:30 PM	0	0	0	0	0	0	0	0	0	0	0	0	0
4/25/2024	4:45 PM	0	0	0	0	0	0	0	0	0	0	0	0	0
4/25/2024	5:00 PM	0	0	0	0	0	0	0	0	0	0	0	0	0
4/25/2024	5:15 PM	0	0	0	0	0	0	0	0	0	0	0	0	0
4/25/2024	5:30 PM	0	0	0	0	0	0	0	0	0	0	0	0	0
4/25/2024	5:45 PM	0	0	0	0	0	0	0	0	0	0	0	0	0
4/25/2024	6:00 PM	0	0	0	0	0	0	0	0	0	0	0	0	0
4/25/2024	6:15 PM	0	0	0	0	0	0	0	0	0	0	0	0	0
4/25/2024	6:30 PM	0	0	0	0	0	0	0	0	0	0	0	0	0
4/25/2024	6:45 PM	0	0	0	0	0	0	0	0	0	0	0	0	0
4/25/2024	7:00 PM	0	0	0	0	0	0	0	0	0	0	0	0	0
4/25/2024	7:15 PM	0	0	0	0	0	0	0	0	0	0	0	0	0
4/25/2024	7:30 PM	0	0	0	0	0	0	0	0	0	0	0	0	0
4/25/2024	7:45 PM	0	0	0	0	0	0	0	0	0	0	0	0	0
4/25/2024	8:00 PM	0	0	0	0	0	0	0	0	0	0	0	0	0
4/25/2024	8:15 PM	0	0	0	0	0	0	0	0	0	0	0	0	0
4/25/2024	8:30 PM	0	0	0	0	0	0	0	0	0	0	0	0	0
4/25/2024	8:45 PM	0	0	0	0	0	0	0	0	0	0	0	0	0
4/25/2024	9:00 PM	0	0	0	0	0	0	0	0	0	0	0	0	0
4/25/2024	9:15 PM	0	0	0	0	0	0	0	0	0	0	0	0	0
4/25/2024	9:30 PM	0	0	0	0	0	0	0	0	0	0	0	0	0
4/25/2024	9:45 PM	0	0	0	0	0	0	0	0	0	0	0	0	0
4/25/2024	10:00 PM	0	0	0	0	0	0	0	0	0	0	0	0	0
4/25/2024	10:15 PM	0	0	0	0	0	0	0	0	0	0	0	0	0
4/25/2024	10:30 PM	0	0	0	0	0	0	0	0	0	0	0	0	0
4/25/2024	10:45 PM	0	0	0	0	0	0	0	0	0	0	0	0	0
4/25/2024	11:00 PM	0	0	0	0	0	0	0	0	0	0	0	0	0
4/25/2024	11:15 PM	0	0	0	0	0	0	0	0	0	0	0	0	0
4/25/2024	11:30 PM	0	0	0	0	0	0	0	0	0	0	0	0	0
4/25/2024	11:45 PM	0	0	0	0	0	0	0	0	0	0	0	0	0

4/26/2024	12:00 AM	0	0	0	0	0	0	0	0	0	0	0	0	0
4/26/2024	12:15 AM	0	0	0	0	0	0	0	0	0	0	0	0	0
4/26/2024	12:30 AM	0	0	0	0	0	0	0	0	0	0	0	0	0
4/26/2024	12:45 AM	0	0	0	0	0	0	0	0	0	0	0	0	0
4/26/2024	1:00 AM	0	0	0	0	0	0	0	0	0	0	0	0	0
4/26/2024	1:15 AM	0	0	0	0	0	0	0	0	0	0	0	0	0
4/26/2024	1:30 AM	0	0	0	0	0	0	0	0	0	0	0	0	0
4/26/2024	1:45 AM	0	0	0	0	0	0	0	0	0	0	0	0	0
4/26/2024	2:00 AM	0	0	0	0	0	0	0	0	0	0	0	0	0
4/26/2024	2:15 AM	0	0	0	0	0	0	0	0	0	0	0	0	0
4/26/2024	2:30 AM	0	0	0	0	0	0	0	0	0	0	0	0	0
4/26/2024	2:45 AM	0	0	0	0	0	0	0	0	0	0	0	0	0
4/26/2024	3:00 AM	0	0	0	0	0	0	0	0	0	0	0	0	0
4/26/2024	3:15 AM	0	0	0	0	0	0	0	0	0	0	0	0	0
4/26/2024	3:30 AM	0	0	0	0	0	0	0	0	0	0	0	0	0
4/26/2024	3:45 AM	0	0	0	0	0	0	0	0	0	0	0	0	0
4/26/2024	4:00 AM	0	0	0	0	0	0	0	0	0	0	0	0	0
4/26/2024	4:15 AM	0	0	0	0	0	0	0	0	0	0	0	0	0
4/26/2024	4:30 AM	0	0	0	0	0	0	0	0	0	0	0	0	0
4/26/2024	4:45 AM	0	0	0	0	0	0	0	0	0	0	0	0	0
4/26/2024	5:00 AM	0	0	0	0	0	0	0	0	0	0	0	0	0
4/26/2024	5:15 AM	0	0	0	0	0	0	0	0	0	0	0	0	0
4/26/2024	5:30 AM	0	0	0	0	0	0	0	0	0	0	0	0	0
4/26/2024	5:45 AM	0	0	0	0	0	0	0	0	0	0	0	0	0
4/26/2024	6:00 AM	0	0	0	0	0	0	0	0	0	0	0	0	0
4/26/2024	6:15 AM	0	0	0	0	0	0	0	0	0	0	0	0	0
4/26/2024	6:30 AM	0	0	0	0	0	0	0	0	0	0	0	0	0
4/26/2024	6:45 AM	0	0	0	0	0	0	0	0	0	0	0	0	0
4/26/2024	7:00 AM	0	0	0	0	0	0	0	0	0	0	0	0	0
4/26/2024	7:15 AM	0	0	0	0	0	0	0	0	0	0	0	0	0
4/26/2024	7:30 AM	0	0	0	0	0	0	0	0	0	0	0	0	0
4/26/2024	7:45 AM	0	0	0	0	0	0	0	0	0	0	0	0	0
4/26/2024	8:00 AM	0	0	0	0	0	0	0	0	0	0	0	0	0
4/26/2024	8:15 AM	0	0	0	0	0	0	0	0	0	0	0	0	0
4/26/2024	8:30 AM	0	0	0	0	0	0	0	0	0	0	0	0	0
4/26/2024	8:45 AM	0	0	0	0	0	0	0	0	0	0	0	0	0
4/26/2024	9:00 AM	0	0	0	0	0	0	0	0	0	0	0	0	0
4/26/2024	9:15 AM	0	0	0	0	0	0	0	0	0	0	0	0	0
4/26/2024	9:30 AM	0	0	0	0	0	0	0	0	0	0	0	0	0
4/26/2024	9:45 AM	0	0	0	0	0	0	0	0	0	0	0	0	0
4/26/2024	10:00 AM	0	0	0	0	0	0	0	0	0	0	0	0	0
4/26/2024	10:15 AM	0	0	0	0	0	0	0	0	0	0	0	0	0
4/26/2024	10:30 AM	0	0	0	0	0	0	0	0	0	0	0	0	0
4/26/2024	10:45 AM	0	0	0	0	0	0	0	0	0	0	0	0	0
4/26/2024	11:00 AM	0	0	0	0	0	0	0	0	0	0	0	0	0
4/26/2024	11:15 AM	0	0	0	0	0	0	0	0	0	0	0	0	0
4/26/2024	11:30 AM	0	0	0	0	0	0	0	0	0	0	0	0	0
4/26/2024	11:45 AM	0	0	0	0	0	0	0	0	0	0	0	0	0
4/26/2024	12:00 PM	0	0	0	0	0	0	0	0	0	0	0	0	0
4/26/2024	12:15 PM	0	0	0	0	0	0	0	0	0	0	0	0	0
4/26/2024	12:30 PM	0	0	0	0	0	0	0	0	0	0	0	0	0
4/26/2024	12:45 PM	0	0	0	0	0	0	0	0	0	0	0	0	0
4/26/2024	1:00 PM	0	0	0	0	0	0	0	0	0	0	0	0	0
4/26/2024	1:15 PM	0	0	0	0	0	0	0	0	0	0	0	0	0
4/26/2024	1:30 PM	0	0	0	0	0	0	0	0	0	0	0	0	0
4/26/2024	1:45 PM	0	0	0	0	0	0	0	0	0	0	0	0	0
4/26/2024	2:00 PM	0	0	0	0	0	0	0	0	0	0	0	0	0
4/26/2024	2:15 PM	0	0	0	0	0	0	0	0	0	0	0	0	0
4/26/2024	2:30 PM	0	0	0	0	0	0	0	0	0	0	0	0	0
4/26/2024	2:45 PM	0	0	0	0	0	0	0	0	0	0	0	0	0
4/26/2024	3:00 PM	0	0	0	0	0	0	0	0	0	0	0	0	0
4/26/2024	3:15 PM	0	0	0	0	0	0	0	0	0	0	0	0	0
4/26/2024	3:30 PM	0	0	0	0	0	0	0	0	0	0	0	0	0
4/26/2024	3:45 PM	0	0	0	0	0	0	0	0	0	0	0	0	0
4/26/2024	4:00 PM	0	0	0	0	0	0	0	0	0	0	0	0	0
4/26/2024	4:15 PM	0	0	0	0	0	0	0	0	0	0	0	0	0
4/26/2024	4:30 PM	0	0	0	0	0	0	0	0	0	0	0	0	0
4/26/2024	4:45 PM	0	0	0	0	0	0	0	0	0	0	0	0	0
4/26/2024	5:00 PM	0	0	0	0	0	0	0	0	0	0	0	0	0
4/26/2024	5:15 PM	0	0	0	0	0	0	0	0	0	0	0	0	0
4/26/2024	5:30 PM	0	0	0	0	0	0	0	0	0	0	0	0	0
4/26/2024	5:45 PM	0	0	0	0	0	0	0	0	0	0	0	0	0
4/26/2024	6:00 PM	0	0	0	0	0	0	0	0	0	0	0	0	0
4/26/2024	6:15 PM	0	0	0	0	0	0	0	0	0	0	0	0	0
4/26/2024	6:30 PM	0	0	0	0	0	0	0	0	0	0	0	0	0
4/26/2024	6:45 PM	0	0	0	0	0	0	0	0	0	0	0	0	0
4/26/2024	7:00 PM	0	0	0	0	0	0	0	0	0	0	0	0	0
4/26/2024	7:15 PM	0	0	0	0	0	0	0	0	0	0	0	0	0
4/26/2024	7:30 PM	0	0	0	0	0	0	0	0	0	0	0	0	0
4/26/2024	7:45 PM	0	0	0	0	0	0	0	0	0	0	0	0	0
4/26/2024	8:00 PM	0	0	0	0	0	0	0	0	0	0	0	0	0
4/26/2024	8:15 PM	0	0	0	0	0	0	0	0	0	0	0	0	0
4/26/2024	8:30 PM	0	0	0	0	0	0	0	0	0	0	0	0	0
4/26/2024	8:45 PM	0	0	0	0	0	0	0	0	0	0	0	0	0
4/26/2024	9:00 PM	0	0	0	0	0	0	0	0	0	0	0	0	0
4/26/2024	9:15 PM	0	0	0	0	0	0	0	0	0	0	0	0	0
4/26/2024	9:30 PM	0	0	0	0	0	0	0	0	0	0	0	0	0
4/26/2024	9:45 PM	0	0	0	0	0	0	0	0	0	0	0	0	0
4/26/2024	10:00 PM	0	0	0	0	0	0	0	0	0	0	0	0	0
4/26/2024	10:15 PM	0	0	0	0	0	0	0	0	0	0	0	0	0
4/26/2024	10:30 PM	0	0	0	0	0	0	0	0	0	0	0	0	0
4/26/2024	10:45 PM	0	0	0	0	0	0	0	0	0	0	0	0	0
4/26/2024	11:00 PM	0	0	0	0	0	0	0	0	0	0	0	0	0
4/26/2024	11:15 PM	0	0	0	0	0	0	0	0	0	0	0	0	0
4/26/2024	11:30 PM	0	0	0	0	0	0	0	0	0	0	0	0	0
4/26/2024	11:45 PM	0	0	0	0	0	0	0	0	0	0	0	0	0

4/27/2024	12:00 AM	0	0	0	0	0	0	0	0	0	0	0	0	0
4/27/2024	12:15 AM	0	0	0	0	0	0	0	0	0	0	0	0	0
4/27/2024	12:30 AM	0	0	0	0	0	0	0	0	0	0	0	0	0
4/27/2024	12:45 AM	0	0	0	0	0	0	0	0	0	0	0	0	0
4/27/2024	1:00 AM	0	0	0	0	0	0	0	0	0	0	0	0	0
4/27/2024	1:15 AM	0	0	0	0	0	0	0	0	0	0	0	0	0
4/27/2024	1:30 AM	0	0	0	0	0	0	0	0	0	0	0	0	0
4/27/2024	1:45 AM	0	0	0	0	0	0	0	0	0	0	0	0	0
4/27/2024	2:00 AM	0	0	0	0	0	0	0	0	0	0	0	0	0
4/27/2024	2:15 AM	0	0	0	0	0	0	0	0	0	0	0	0	0
4/27/2024	2:30 AM	0	0	0	0	0	0	0	0	0	0	0	0	0
4/27/2024	2:45 AM	0	0	0	0	0	0	0	0	0	0	0	0	0
4/27/2024	3:00 AM	0	0	0	0	0	0	0	0	0	0	0	0	0
4/27/2024	3:15 AM	0	0	0	0	0	0	0	0	0	0	0	0	0
4/27/2024	3:30 AM	0	0	0	0	0	0	0	0	0	0	0	0	0
4/27/2024	3:45 AM	0	0	0	0	0	0	0	0	0	0	0	0	0
4/27/2024	4:00 AM	0	0	0	0	0	0	0	0	0	0	0	0	0
4/27/2024	4:15 AM	0	0	0	0	0	0	0	0	0	0	0	0	0
4/27/2024	4:30 AM	0	0	0	0	0	0	0	0	0	0	0	0	0
4/27/2024	4:45 AM	0	0	0	0	0	0	0	0	0	0	0	0	0
4/27/2024	5:00 AM	0	0	0	0	0	0	0	0	0	0	0	0	0
4/27/2024	5:15 AM	0	0	0	0	0	0	0	0	0	0	0	0	0
4/27/2024	5:30 AM	0	0	0	0	0	0	0	0	0	0	0	0	0
4/27/2024	5:45 AM	0	0	0	0	0	0	0	0	0	0	0	0	0
4/27/2024	6:00 AM	0	0	0	0	0	0	0	0	0	0	0	0	0
4/27/2024	6:15 AM	0	0	0	0	0	0	0	0	0	0	0	0	0
4/27/2024	6:30 AM	0	0	0	0	0	0	0	0	0	0	0	0	0
4/27/2024	6:45 AM	0	0	0	0	0	0	0	0	0	0	0	0	0
4/27/2024	7:00 AM	0	0	0	0	0	0	0	0	0	0	0	0	0
4/27/2024	7:15 AM	0	0	0	0	0	0	0	0	0	0	0	0	0
4/27/2024	7:30 AM	0	0	0	0	0	0	0	0	0	0	0	0	0
4/27/2024	7:45 AM	0	0	0	0	0	0	0	0	0	0	0	0	0
4/27/2024	8:00 AM	0	0	0	0	0	0	0	0	0	0	0	0	0
4/27/2024	8:15 AM	0	0	0	0	0	0	0	0	0	0	0	0	0
4/27/2024	8:30 AM	0	0	0	0	0	0	0	0	0	0	0	0	0
4/27/2024	8:45 AM	0	0	0	0	0	0	0	0	0	0	0	0	0
4/27/2024	9:00 AM	0	0	0	0	0	0	0	0	0	0	0	0	0
4/27/2024	9:15 AM	0	0	0	0	0	0	0	0	0	0	0	0	0
4/27/2024	9:30 AM	0	0	0	0	0	0	0	0	0	0	0	0	0
4/27/2024	9:45 AM	0	0	0	0	0	0	0	0	0	0	0	0	0
4/27/2024	10:00 AM	0	0	0	0	0	0	0	0	0	0	0	0	0
4/27/2024	10:15 AM	0	0	0	0	0	0	0	0	0	0	0	0	0
4/27/2024	10:30 AM	0	0	0	0	0	0	0	0	0	0	0	0	0
4/27/2024	10:45 AM	0	0	0	0	0	0	0	0	0	0	0	0	0
4/27/2024	11:00 AM	0	0	0	0	0	0	0	0	0	0	0	0	0
4/27/2024	11:15 AM	0	0	0	0	0	0	0	0	0	0	0	0	0
4/27/2024	11:30 AM	0	0	0	0	0	0	0	0	0	0	0	0	0
4/27/2024	11:45 AM	0	0	0	0	0	0	0	0	0	0	0	0	0
4/27/2024	12:00 PM	0	0	0	0	0	0	0	0	0	0	0	0	0
4/27/2024	12:15 PM	0	0	0	0	0	0	0	0	0	0	0	0	0
4/27/2024	12:30 PM	0	0	0	0	0	0	0	0	0	0	0	0	0
4/27/2024	12:45 PM	0	0	0	0	0	0	0	0	0	0	0	0	0
4/27/2024	1:00 PM	0	0	0	0	0	0	0	0	0	0	0	0	0
4/27/2024	1:15 PM	0	0	0	0	0	0	0	0	0	0	0	0	0
4/27/2024	1:30 PM	0	0	0	0	0	0	0	0	0	0	0	0	0
4/27/2024	1:45 PM	0	0	0	0	0	0	0	0	0	0	0	0	0
4/27/2024	2:00 PM	0	0	0	0	0	0	0	0	0	0	0	0	0
4/27/2024	2:15 PM	0	0	0	0	0	0	0	0	0	0	0	0	0
4/27/2024	2:30 PM	0	0	0	0	0	0	0	0	0	0	0	0	0
4/27/2024	2:45 PM	0	0	0	0	0	0	0	0	0	0	0	0	0
4/27/2024	3:00 PM	0	0	0	0	0	0	0	0	0	0	0	0	0
4/27/2024	3:15 PM	0	0	0	0	0	0	0	0	0	0	0	0	0
4/27/2024	3:30 PM	0	0	0	0	0	0	0	0	0	0	0	0	0
4/27/2024	3:45 PM	0	0	0	0	0	0	0	0	0	0	0	0	0
4/27/2024	4:00 PM	0	0	0	0	0	0	0	0	0	0	0	0	0
4/27/2024	4:15 PM	0	0	0	0	0	0	0	0	0	0	0	0	0
4/27/2024	4:30 PM	0	0	0	0	0	0	0	0	0	0	0	0	0
4/27/2024	4:45 PM	0	0	0	0	0	0	0	0	0	0	0	0	0
4/27/2024	5:00 PM	0	0	0	0	0	0	0	0	0	0	0	0	0
4/27/2024	5:15 PM	0	0	0	0	0	0	0	0	0	0	0	0	0
4/27/2024	5:30 PM	0	0	0	0	0	0	0	0	0	0	0	0	0
4/27/2024	5:45 PM	0	0	0	0	0	0	0	0	0	0	0	0	0
4/27/2024	6:00 PM	0	0	0	0	0	0	0	0	0	0	0	0	0
4/27/2024	6:15 PM	0	0	0	0	0	0	0	0	0	0	0	0	0
4/27/2024	6:30 PM	0	0	0	0	0	0	0	0	0	0	0	0	0
4/27/2024	6:45 PM	0	0	0	0	0	0	0	0	0	0	0	0	0
4/27/2024	7:00 PM	0	0	0	0	0	0	0	0	0	0	0	0	0
4/27/2024	7:15 PM	0	0	0	0	0	0	0	0	0	0	0	0	0
4/27/2024	7:30 PM	0	0	0	0	0	0	0	0	0	0	0	0	0
4/27/2024	7:45 PM	0	0	0	0	0	0	0	0	0	0	0	0	0
4/27/2024	8:00 PM	0	0	0	0	0	0	0	0	0	0	0	0	0
4/27/2024	8:15 PM	0	0	0	0	0	0	0	0	0	0	0	0	0
4/27/2024	8:30 PM	0	0	0	0	0	0	0	0	0	0	0	0	0
4/27/2024	8:45 PM	0	0	0	0	0	0	0	0	0	0	0	0	0
4/27/2024	9:00 PM	0	0	0	0	0	0	0	0	0	0	0	0	0
4/27/2024	9:15 PM	0	0	0	0	0	0	0	0	0	0	0	0	0
4/27/2024	9:30 PM	0	0	0	0	0	0	0	0	0	0	0	0	0
4/27/2024	9:45 PM	0	0	0	0	0	0	0	0	0	0	0	0	0
4/27/2024	10:00 PM	0	0	0	0	0	0	0	0	0	0	0	0	0
4/27/2024	10:15 PM	0	0	0	0	0	0	0	0	0	0	0	0	0
4/27/2024	10:30 PM	0	0	0	0	0	0	0	0	0	0	0	0	0
4/27/2024	10:45 PM	0	0	0	0	0	0	0	0	0	0	0	0	0
4/27/2024	11:00 PM	0	0	0	0	0	0	0	0	0	0	0	0	0
4/27/2024	11:15 PM	0	0	0	0	0	0	0	0	0	0	0	0	0
4/27/2024	11:30 PM	0	0	0	0	0	0	0	0	0	0	0	0	0
4/27/2024	11:45 PM	0	0	0	0	0	0	0	0	0	0	0	0	0

SB
File Name:
Start Date: 4/21/2024
Start Time: 0
Site Code: 75 Lane 3 SB
Station ID: 1
Location 1: I-20, north of Bush River Rd
Location 2:

Date	Time	1	2	3	4	5	6	7	8	9	10	11	12	13
4/21/2024	12:00 AM	0	63	4	0	0	0	0	0	1	0	0	0	0
4/21/2024	12:15 AM	0	46	3	0	0	0	0	0	1	0	0	0	0
4/21/2024	12:30 AM	0	31	8	1	1	0	0	0	1	0	0	0	0
4/21/2024	12:45 AM	0	38	2	0	1	0	0	0	3	0	0	0	0
4/21/2024	1:00 AM	0	25	3	0	0	0	0	0	2	0	0	0	0
4/21/2024	1:15 AM	0	42	3	0	1	0	0	0	4	0	0	0	0
4/21/2024	1:30 AM	0	23	4	0	0	0	0	0	2	0	0	0	0
4/21/2024	1:45 AM	0	30	4	0	3	0	0	0	1	0	0	0	0
4/21/2024	2:00 AM	0	28	6	0	0	0	0	0	2	0	0	0	0
4/21/2024	2:15 AM	0	25	2	0	0	0	0	0	2	0	0	0	0
4/21/2024	2:30 AM	0	23	2	0	1	0	0	0	3	0	0	0	0
4/21/2024	2:45 AM	1	10	2	0	0	0	0	0	5	0	0	0	0
4/21/2024	3:00 AM	0	15	3	0	0	0	0	0	1	0	0	0	0
4/21/2024	3:15 AM	0	10	1	0	0	0	0	0	1	0	0	0	0
4/21/2024	3:30 AM	0	15	1	0	0	0	0	0	1	0	0	0	0
4/21/2024	3:45 AM	0	8	3	0	0	0	0	0	4	0	0	0	0
4/21/2024	4:00 AM	1	14	1	0	1	0	0	0	1	0	0	0	0
4/21/2024	4:15 AM	0	13	0	0	2	0	0	0	3	0	0	0	0
4/21/2024	4:30 AM	0	13	3	0	0	0	0	0	1	0	1	0	0
4/21/2024	4:45 AM	0	22	1	0	1	0	0	0	1	0	0	0	0
4/21/2024	5:00 AM	0	13	0	0	0	0	0	0	2	0	0	0	0
4/21/2024	5:15 AM	0	15	2	1	1	0	0	0	1	0	0	0	0
4/21/2024	5:30 AM	0	17	0	0	1	0	0	0	5	0	0	0	0
4/21/2024	5:45 AM	0	17	2	0	0	0	0	0	4	0	0	0	0
4/21/2024	6:00 AM	0	22	1	0	0	0	0	0	3	0	0	0	0
4/21/2024	6:15 AM	0	26	6	0	0	0	0	0	0	0	0	0	0
4/21/2024	6:30 AM	1	32	4	0	0	0	0	0	4	0	0	0	0
4/21/2024	6:45 AM	0	28	8	0	0	0	0	0	2	0	0	0	0
4/21/2024	7:00 AM	0	31	6	0	0	0	0	0	4	0	0	0	0
4/21/2024	7:15 AM	0	45	6	0	0	0	0	0	4	0	0	0	0
4/21/2024	7:30 AM	0	45	8	0	0	0	0	0	4	0	0	0	0
4/21/2024	7:45 AM	0	57	11	0	0	0	0	0	5	0	0	0	0
4/21/2024	8:00 AM	0	51	13	0	0	1	0	0	3	0	0	0	0
4/21/2024	8:15 AM	0	51	21	0	1	0	0	0	4	0	0	0	0
4/21/2024	8:30 AM	0	56	10	1	0	0	0	0	6	0	0	0	0
4/21/2024	8:45 AM	0	56	11	0	0	0	0	1	5	0	0	0	0
4/21/2024	9:00 AM	1	70	11	0	3	1	0	0	4	0	0	1	0
4/21/2024	9:15 AM	0	84	9	0	0	1	0	0	6	0	0	0	0
4/21/2024	9:30 AM	0	83	13	0	2	0	0	0	4	0	0	0	0
4/21/2024	9:45 AM	0	103	16	1	2	0	0	0	4	0	0	0	0
4/21/2024	10:00 AM	0	100	22	0	1	0	0	0	5	0	0	0	0
4/21/2024	10:15 AM	0	90	15	0	0	0	0	0	9	0	0	0	0
4/21/2024	10:30 AM	0	85	31	0	1	0	0	1	5	0	0	0	0
4/21/2024	10:45 AM	0	117	17	0	0	0	0	0	2	0	0	0	0
4/21/2024	11:00 AM	0	97	21	0	2	0	0	0	4	0	0	0	0
4/21/2024	11:15 AM	0	90	28	0	3	1	0	0	7	0	0	0	0
4/21/2024	11:30 AM	0	125	26	0	0	0	0	1	5	0	0	1	0
4/21/2024	11:45 AM	0	121	31	0	3	0	0	0	10	0	0	0	0
4/21/2024	12:00 PM	0	135	25	0	2	0	0	0	7	0	0	0	0
4/21/2024	12:15 PM	0	125	31	0	0	0	0	0	4	0	0	0	0
4/21/2024	12:30 PM	0	127	35	0	1	1	0	0	6	0	0	0	0
4/21/2024	12:45 PM	0	132	27	0	1	1	0	0	8	0	0	0	0
4/21/2024	1:00 PM	1	120	30	0	1	0	0	0	10	0	0	0	0
4/21/2024	1:15 PM	0	124	26	0	0	0	0	1	4	0	0	0	0
4/21/2024	1:30 PM	0	128	39	0	0	0	0	0	4	0	0	0	0
4/21/2024	1:45 PM	0	120	31	0	2	0	0	0	6	0	0	0	0
4/21/2024	2:00 PM	0	140	22	0	1	0	0	1	5	0	0	0	0
4/21/2024	2:15 PM	0	135	28	0	1	0	0	0	4	0	0	0	0
4/21/2024	2:30 PM	1	110	25	0	1	1	0	1	6	0	0	0	0
4/21/2024	2:45 PM	0	129	20	0	0	0	0	0	5	0	0	0	0
4/21/2024	3:00 PM	0	125	15	2	0	0	0	0	2	0	0	0	0
4/21/2024	3:15 PM	0	105	20	0	0	0	0	0	3	0	0	0	0
4/21/2024	3:30 PM	0	109	30	0	0	0	0	1	1	0	0	0	0
4/21/2024	3:45 PM	0	116	16	0	1	0	0	0	5	0	0	0	0
4/21/2024	4:00 PM	0	119	22	1	0	0	0	0	9	0	0	0	0
4/21/2024	4:15 PM	0	122	18	0	1	0	0	0	3	0	0	0	0
4/21/2024	4:30 PM	0	108	13	0	1	0	0	2	5	0	0	0	0
4/21/2024	4:45 PM	0	110	14	0	0	0	0	0	5	0	0	0	0
4/21/2024	5:00 PM	0	91	16	0	0	0	0	1	4	0	0	0	0
4/21/2024	5:15 PM	0	102	16	0	1	2	0	0	4	0	0	0	0
4/21/2024	5:30 PM	0	112	13	0	1	0	0	0	7	0	0	0	0
4/21/2024	5:45 PM	0	100	21	0	0	0	0	0	10	0	0	0	0
4/21/2024	6:00 PM	0	112	18	0	0	0	0	0	7	0	0	0	0
4/21/2024	6:15 PM	0	113	18	1	1	0	0	0	7	0	0	0	0
4/21/2024	6:30 PM	0	92	17	0	0	1	0	0	8	0	0	0	0
4/21/2024	6:45 PM	0	91	6	0	0	0	0	0	9	0	0	0	0
4/21/2024	7:00 PM	0	81	17	0	0	0	0	0	10	0	0	0	0
4/21/2024	7:15 PM	0	91	16	0	1	0	0	0	6	0	0	0	0
4/21/2024	7:30 PM	0	102	17	0	0	0	0	0	7	0	0	0	0
4/21/2024	7:45 PM	0	77	12	0	0	0	0	0	8	0	2	0	0
4/21/2024	8:00 PM	0	69	12	0	1	0	0	0	4	0	0	0	0
4/21/2024	8:15 PM	0	71	10	0	0	0	0	0	3	0	0	0	0
4/21/2024	8:30 PM	0	73	7	0	0	0	0	0	7	0	0	0	0
4/21/2024	8:45 PM	0	59	10	0	1	0	0	0	3	0	0	0	0
4/21/2024	9:00 PM	0	70	6	0	1	0	0	1	6	0	0	0	0
4/21/2024	9:15 PM	0	56	6	0	0	0	0	0	3	0	0	0	0
4/21/2024	9:30 PM	0	42	10	0	0	0	0	0	2	0	0	0	0
4/21/2024	9:45 PM	0	46	4	0	0	0	0	0	7	0	0	0	0
4/21/2024	10:00 PM	0	41	4	0	0	0	0	0	11	0	0	0	0
4/21/2024	10:15 PM	0	32	4	0	1	0	0	0	6	0	0	0	0
4/21/2024	10:30 PM	0	31	2	0	2	0	0	0	6	0	0	0	0
4/21/2024	10:45 PM	0	28	5	0	0	2	0	0	3	0	1	0	0
4/21/2024	11:00 PM	0	22	1	0	0	0	0	0	2	0	2	0	0
4/21/2024	11:15 PM	0	21	3	0	1	0	0	0	3	0	0	0	0
4/21/2024	11:30 PM	0	32	2	0	0	2	0	0	3	0	0	0	0
4/21/2024	11:45 PM	0	17	1	0	0	0	0	0	4	0	2	0	0

4/22/2024	12:00 AM	0	13	3	0	0	1	0	0	2	0	0	0	0
4/22/2024	12:15 AM	0	12	4	0	2	0	0	0	3	0	0	0	0
4/22/2024	12:30 AM	0	13	1	0	0	0	0	0	4	0	0	0	0
4/22/2024	12:45 AM	0	11	2	0	0	0	0	0	7	0	1	0	0
4/22/2024	1:00 AM	0	10	4	0	0	0	0	0	1	0	0	0	0
4/22/2024	1:15 AM	0	9	1	0	0	0	0	0	6	0	0	0	0
4/22/2024	1:30 AM	0	11	1	0	0	0	0	0	5	0	0	0	0
4/22/2024	1:45 AM	0	10	0	0	0	0	0	0	3	0	0	0	0
4/22/2024	2:00 AM	0	13	6	1	1	1	0	0	6	0	0	0	0
4/22/2024	2:15 AM	0	6	3	0	0	0	0	0	4	0	0	0	0
4/22/2024	2:30 AM	0	7	2	0	0	1	0	0	5	0	0	0	0
4/22/2024	2:45 AM	0	9	1	0	0	0	0	0	9	0	0	0	0
4/22/2024	3:00 AM	0	8	2	1	0	0	0	0	8	0	0	0	0
4/22/2024	3:15 AM	0	7	0	0	2	1	0	0	9	0	0	0	0
4/22/2024	3:30 AM	0	10	4	0	0	1	0	0	5	0	1	0	0
4/22/2024	3:45 AM	0	9	1	0	2	0	0	0	7	0	0	0	0
4/22/2024	4:00 AM	0	7	2	0	0	2	0	0	6	0	1	0	0
4/22/2024	4:15 AM	0	11	0	0	0	0	0	1	9	0	0	0	0
4/22/2024	4:30 AM	0	19	6	0	2	2	0	1	5	0	0	0	0
4/22/2024	4:45 AM	0	13	4	0	1	0	0	0	15	0	0	0	0
4/22/2024	5:00 AM	0	22	4	0	1	0	0	0	5	0	0	0	0
4/22/2024	5:15 AM	0	26	3	0	0	2	0	0	15	0	0	0	0
4/22/2024	5:30 AM	0	27	6	0	0	0	0	0	14	0	1	0	0
4/22/2024	5:45 AM	0	33	7	0	2	1	0	0	13	0	0	0	0
4/22/2024	6:00 AM	0	36	9	0	1	2	0	0	9	0	1	0	0
4/22/2024	6:15 AM	0	56	17	0	3	2	0	0	9	0	0	0	0
4/22/2024	6:30 AM	0	75	26	0	1	8	0	2	9	1	0	0	0
4/22/2024	6:45 AM	0	75	25	0	6	4	0	3	11	0	0	0	0
4/22/2024	7:00 AM	0	98	30	0	6	7	0	0	14	0	0	0	0
4/22/2024	7:15 AM	0	124	34	0	9	7	0	2	10	0	0	0	0
4/22/2024	7:30 AM	0	136	42	0	11	5	0	0	11	0	0	0	0
4/22/2024	7:45 AM	0	179	39	0	8	3	0	0	7	2	0	0	0
4/22/2024	8:00 AM	0	165	37	1	3	1	0	1	15	1	0	0	0
4/22/2024	8:15 AM	0	184	46	1	5	2	0	1	17	1	0	0	0
4/22/2024	8:30 AM	0	167	30	0	11	3	0	3	9	0	0	0	0
4/22/2024	8:45 AM	0	121	40	0	10	5	0	1	8	1	0	0	0
4/22/2024	9:00 AM	0	102	43	0	9	5	0	1	8	1	0	0	0
4/22/2024	9:15 AM	0	111	31	0	7	4	0	3	16	1	0	1	0
4/22/2024	9:30 AM	0	98	38	0	9	6	1	2	21	0	0	0	0
4/22/2024	9:45 AM	0	93	36	0	6	3	0	3	16	1	0	0	0
4/22/2024	10:00 AM	0	114	39	1	11	4	0	3	17	0	0	0	0
4/22/2024	10:15 AM	1	105	37	4	6	3	4	1	13	0	0	0	0
4/22/2024	10:30 AM	0	119	37	0	5	3	0	1	18	0	0	0	0
4/22/2024	10:45 AM	0	91	35	0	6	5	1	1	28	1	0	0	0
4/22/2024	11:00 AM	0	115	37	0	3	6	0	3	20	1	0	0	0
4/22/2024	11:15 AM	0	98	49	0	4	2	0	1	16	0	0	0	0
4/22/2024	11:30 AM	0	103	45	0	6	4	0	2	19	0	1	0	0
4/22/2024	11:45 AM	0	118	45	0	5	3	0	2	19	0	0	0	0
4/22/2024	12:00 PM	0	115	45	0	4	4	2	3	15	0	0	0	0
4/22/2024	12:15 PM	0	138	47	0	8	2	1	3	14	0	0	0	0
4/22/2024	12:30 PM	0	119	48	0	6	4	0	0	14	0	0	0	0
4/22/2024	12:45 PM	0	118	39	0	7	4	1	2	12	1	0	0	0
4/22/2024	1:00 PM	0	143	32	0	3	5	0	1	16	1	0	0	0
4/22/2024	1:15 PM	0	147	35	0	4	2	1	1	12	0	0	0	0
4/22/2024	1:30 PM	0	134	36	3	3	1	4	1	16	1	0	0	0
4/22/2024	1:45 PM	0	139	26	0	4	2	2	0	16	0	0	0	0
4/22/2024	2:00 PM	0	133	38	0	8	1	0	1	11	0	0	0	0
4/22/2024	2:15 PM	0	147	32	2	6	2	3	1	19	0	0	0	0
4/22/2024	2:30 PM	0	135	35	0	2	0	1	2	16	0	0	0	0
4/22/2024	2:45 PM	0	153	33	1	5	0	3	3	8	1	0	0	0
4/22/2024	3:00 PM	0	155	42	1	5	1	0	1	25	0	0	0	0
4/22/2024	3:15 PM	0	170	35	0	7	2	1	2	12	0	0	0	0
4/22/2024	3:30 PM	0	156	45	0	2	5	0	2	15	0	0	0	0
4/22/2024	3:45 PM	0	160	44	1	7	6	0	0	14	1	0	0	0
4/22/2024	4:00 PM	0	169	36	1	10	2	0	1	18	1	0	0	0
4/22/2024	4:15 PM	1	178	31	0	14	0	1	0	18	0	0	0	0
4/22/2024	4:30 PM	0	187	41	0	1	2	0	1	7	1	0	0	0
4/22/2024	4:45 PM	0	174	35	2	1	4	0	0	12	0	0	0	0
4/22/2024	5:00 PM	0	185	44	0	2	4	0	2	11	0	0	0	0
4/22/2024	5:15 PM	0	198	30	0	1	0	0	0	13	1	0	0	0
4/22/2024	5:30 PM	0	185	46	0	5	1	0	1	12	1	0	0	0
4/22/2024	5:45 PM	0	172	39	0	2	0	0	1	17	1	0	0	0
4/22/2024	6:00 PM	0	125	29	0	3	2	0	0	17	0	0	0	0
4/22/2024	6:15 PM	0	153	31	0	2	0	0	1	17	1	0	0	0
4/22/2024	6:30 PM	0	120	25	0	4	3	0	0	12	0	0	0	0
4/22/2024	6:45 PM	0	118	25	0	5	4	0	1	13	0	0	0	0
4/22/2024	7:00 PM	0	101	20	0	2	0	0	2	9	0	0	0	0
4/22/2024	7:15 PM	0	98	19	0	1	0	0	1	24	1	0	0	0
4/22/2024	7:30 PM	0	66	20	0	2	3	0	1	16	0	0	0	0
4/22/2024	7:45 PM	0	82	17	0	1	0	0	0	18	0	0	0	0
4/22/2024	8:00 PM	0	76	18	0	0	0	0	1	12	0	0	0	0
4/22/2024	8:15 PM	0	67	10	0	1	0	0	0	9	0	0	0	0
4/22/2024	8:30 PM	0	62	16	0	1	0	0	2	8	0	1	0	0
4/22/2024	8:45 PM	1	56	14	0	0	1	0	0	10	0	0	0	0
4/22/2024	9:00 PM	0	56	13	0	0	2	0	0	10	0	1	0	0
4/22/2024	9:15 PM	0	52	14	0	1	1	0	0	13	0	0	0	0
4/22/2024	9:30 PM	0	38	11	0	0	2	0	0	11	0	0	0	0
4/22/2024	9:45 PM	0	47	12	0	0	1	0	0	5	0	1	0	0
4/22/2024	10:00 PM	0	46	13	0	0	0	0	1	10	0	1	0	0
4/22/2024	10:15 PM	0	37	12	0	1	0	0	1	14	0	1	0	0
4/22/2024	10:30 PM	0	34	10	0	3	2	0	1	9	0	4	0	0
4/22/2024	10:45 PM	0	33	9	0	0	2	0	1	17	0	2	0	0
4/22/2024	11:00 PM	0	34	8	0	0	0	0	1	11	0	2	0	0
4/22/2024	11:15 PM	0	30	6	0	0	3	0	1	11	0	3	0	0
4/22/2024	11:30 PM	0	29	4	0	1	3	0	0	12	0	0	0	0
4/22/2024	11:45 PM	0	30	5	0	0	0	0	1	12	0	0	0	0

4/23/2024	12:00 AM	0	18	5	0	4	0	0	2	18	0	1	0	0
4/23/2024	12:15 AM	0	15	7	0	1	0	0	0	10	0	3	0	0
4/23/2024	12:30 AM	0	8	3	0	0	0	0	0	6	0	1	0	0
4/23/2024	12:45 AM	0	9	3	0	1	0	0	0	6	0	2	0	0
4/23/2024	1:00 AM	0	10	4	0	2	0	0	0	7	0	1	0	0
4/23/2024	1:15 AM	0	10	2	0	1	0	0	0	5	0	1	0	0
4/23/2024	1:30 AM	0	6	2	0	1	0	0	0	8	0	0	0	0
4/23/2024	1:45 AM	0	15	0	0	1	0	0	0	7	0	2	0	0
4/23/2024	2:00 AM	0	5	3	0	1	0	0	0	14	0	0	0	0
4/23/2024	2:15 AM	0	4	5	0	1	0	0	0	11	0	1	0	0
4/23/2024	2:30 AM	0	6	1	0	0	0	0	0	11	0	0	0	0
4/23/2024	2:45 AM	0	9	2	0	0	2	0	0	10	0	2	0	0
4/23/2024	3:00 AM	0	5	0	0	0	1	0	0	4	0	1	0	0
4/23/2024	3:15 AM	0	3	0	0	0	0	0	0	9	0	0	0	0
4/23/2024	3:30 AM	0	6	0	0	0	0	0	0	1	0	1	0	0
4/23/2024	3:45 AM	0	5	1	0	1	1	0	0	14	0	2	0	0
4/23/2024	4:00 AM	0	11	4	0	0	0	0	0	15	0	1	0	0
4/23/2024	4:15 AM	0	5	3	0	1	1	0	1	15	0	2	0	0
4/23/2024	4:30 AM	1	23	0	0	1	3	0	0	8	0	0	0	0
4/23/2024	4:45 AM	0	11	6	0	0	0	0	0	14	0	2	0	0
4/23/2024	5:00 AM	0	18	8	0	1	0	0	0	8	0	0	0	0
4/23/2024	5:15 AM	0	27	4	0	5	0	0	0	20	0	0	0	0
4/23/2024	5:30 AM	0	30	5	0	2	0	0	0	14	0	0	0	0
4/23/2024	5:45 AM	0	22	10	0	0	1	0	0	13	0	0	0	0
4/23/2024	6:00 AM	0	33	16	0	1	0	0	0	13	0	0	0	0
4/23/2024	6:15 AM	1	72	23	0	2	3	0	0	19	0	0	0	0
4/23/2024	6:30 AM	0	78	15	0	4	10	0	0	15	0	0	0	0
4/23/2024	6:45 AM	0	75	19	0	3	5	1	1	10	3	0	0	0
4/23/2024	7:00 AM	0	84	33	1	8	4	0	2	19	0	0	0	0
4/23/2024	7:15 AM	0	153	34	0	10	7	0	2	7	2	0	0	0
4/23/2024	7:30 AM	0	160	41	1	4	5	0	2	10	1	0	0	0
4/23/2024	7:45 AM	0	198	30	1	8	3	0	1	8	0	0	0	0
4/23/2024	8:00 AM	0	151	42	0	4	1	0	0	12	0	0	0	0
4/23/2024	8:15 AM	0	188	47	0	7	2	0	1	10	0	0	0	0
4/23/2024	8:30 AM	0	158	26	0	12	5	1	3	13	0	1	0	0
4/23/2024	8:45 AM	0	149	35	0	9	3	0	2	15	0	0	0	0
4/23/2024	9:00 AM	0	116	40	0	7	3	0	0	20	0	1	0	0
4/23/2024	9:15 AM	0	123	29	0	10	2	0	2	18	2	0	0	0
4/23/2024	9:30 AM	0	114	27	0	8	5	0	5	18	0	0	0	0
4/23/2024	9:45 AM	0	111	25	2	7	3	0	3	27	0	0	0	0
4/23/2024	10:00 AM	0	88	23	2	3	2	0	1	22	0	0	0	0
4/23/2024	10:15 AM	0	84	33	0	11	5	0	3	14	0	0	0	0
4/23/2024	10:30 AM	0	85	39	0	4	1	0	4	23	1	0	0	0
4/23/2024	10:45 AM	0	102	35	0	7	4	1	1	19	0	0	0	0
4/23/2024	11:00 AM	0	111	43	0	4	1	0	0	18	0	0	0	0
4/23/2024	11:15 AM	0	136	35	0	4	0	0	3	13	0	0	0	0
4/23/2024	11:30 AM	1	104	38	0	9	4	0	3	14	3	0	0	0
4/23/2024	11:45 AM	0	123	28	0	4	2	0	2	26	0	0	0	0
4/23/2024	12:00 PM	0	111	48	0	3	2	0	3	13	1	0	0	0
4/23/2024	12:15 PM	0	97	42	0	6	2	0	1	19	0	0	0	0
4/23/2024	12:30 PM	0	135	49	0	7	2	0	2	24	0	0	0	0
4/23/2024	12:45 PM	0	110	41	2	7	1	0	1	18	0	0	0	0
4/23/2024	1:00 PM	0	125	30	2	3	4	0	3	28	0	0	0	0
4/23/2024	1:15 PM	0	138	39	3	4	4	0	1	13	1	0	0	0
4/23/2024	1:30 PM	0	142	33	3	6	1	0	2	17	0	0	0	0
4/23/2024	1:45 PM	1	129	39	0	6	2	0	3	22	0	0	0	0
4/23/2024	2:00 PM	0	137	32	0	2	3	0	0	19	0	0	0	0
4/23/2024	2:15 PM	0	146	34	2	8	0	0	1	18	0	0	0	0
4/23/2024	2:30 PM	0	147	38	1	5	2	0	0	24	0	0	0	0
4/23/2024	2:45 PM	0	132	40	0	3	0	1	1	23	0	0	0	0
4/23/2024	3:00 PM	0	157	47	0	8	2	1	7	19	0	0	0	0
4/23/2024	3:15 PM	0	151	51	0	6	1	1	3	17	0	0	0	0
4/23/2024	3:30 PM	0	165	39	0	3	0	1	1	18	0	0	0	0
4/23/2024	3:45 PM	0	161	51	0	5	1	0	3	18	1	0	0	0
4/23/2024	4:00 PM	0	182	45	1	5	0	2	4	12	1	1	0	0
4/23/2024	4:15 PM	0	214	51	0	6	2	0	3	13	1	0	0	0
4/23/2024	4:30 PM	0	196	46	0	10	1	0	2	10	0	0	0	0
4/23/2024	4:45 PM	0	168	26	0	5	2	0	0	12	0	0	0	0
4/23/2024	5:00 PM	0	142	38	0	4	2	0	1	8	0	0	0	0
4/23/2024	5:15 PM	0	221	38	0	2	1	0	0	16	0	0	0	0
4/23/2024	5:30 PM	2	192	47	0	3	1	0	1	13	0	0	0	0
4/23/2024	5:45 PM	2	163	39	1	2	0	0	3	13	1	0	0	0
4/23/2024	6:00 PM	0	146	45	0	2	2	0	0	11	0	0	0	0
4/23/2024	6:15 PM	0	136	24	0	4	0	0	2	16	0	0	0	0
4/23/2024	6:30 PM	0	128	28	0	3	2	0	3	13	0	0	0	0
4/23/2024	6:45 PM	0	83	16	0	1	0	0	2	7	0	0	0	0
4/23/2024	7:00 PM	0	98	21	0	3	0	0	0	7	0	0	0	0
4/23/2024	7:15 PM	1	106	18	0	1	2	0	0	10	0	0	0	0
4/23/2024	7:30 PM	0	101	20	0	0	1	0	1	12	0	0	0	0
4/23/2024	7:45 PM	0	85	16	0	3	2	0	0	11	0	0	0	0
4/23/2024	8:00 PM	0	70	17	0	0	1	0	0	6	0	0	0	0
4/23/2024	8:15 PM	0	76	13	0	1	0	0	0	11	0	0	0	0
4/23/2024	8:30 PM	0	55	14	0	2	0	0	0	8	0	0	0	0
4/23/2024	8:45 PM	0	34	8	0	2	0	0	0	10	0	0	0	0
4/23/2024	9:00 PM	0	38	15	0	1	0	0	0	10	0	0	0	0
4/23/2024	9:15 PM	0	36	9	0	5	0	0	0	6	0	0	0	0
4/23/2024	9:30 PM	0	39	9	0	3	0	0	0	6	0	0	0	0
4/23/2024	9:45 PM	0	35	4	0	1	0	0	0	7	0	0	0	0
4/23/2024	10:00 PM	0	38	5	0	3	0	0	0	6	0	1	0	0
4/23/2024	10:15 PM	0	43	11	0	2	0	0	0	3	0	0	0	0
4/23/2024	10:30 PM	0	35	10	0	0	1	0	0	6	0	1	0	0
4/23/2024	10:45 PM	0	19	3	0	1	0	0	0	2	0	0	0	0
4/23/2024	11:00 PM	0	19	3	0	0	0	0	0	5	0	1	0	0
4/23/2024	11:15 PM	0	21	5	0	4	1	0	0	6	0	0	0	0
4/23/2024	11:30 PM	0	13	3	0	2	1	0	0	3	0	0	0	0
4/23/2024	11:45 PM	0	11	3	0	1	0	0	0	7	0	0	0	0

4/24/2024	12:00 AM	0	22	5	0	2	0	0	0	5	0	0	0	0
4/24/2024	12:15 AM	0	19	3	1	0	0	0	0	5	0	0	0	0
4/24/2024	12:30 AM	0	22	1	0	0	0	0	0	5	0	0	0	0
4/24/2024	12:45 AM	0	11	1	0	4	0	0	0	6	0	0	0	0
4/24/2024	1:00 AM	0	12	4	0	3	0	0	0	3	0	0	0	0
4/24/2024	1:15 AM	0	10	2	0	1	0	0	0	5	0	0	0	0
4/24/2024	1:30 AM	0	11	1	0	1	0	0	0	3	0	0	0	0
4/24/2024	1:45 AM	0	6	2	0	0	0	0	0	3	0	0	0	0
4/24/2024	2:00 AM	0	14	2	0	0	0	0	0	5	0	0	0	0
4/24/2024	2:15 AM	0	10	3	0	1	0	0	0	6	0	0	0	0
4/24/2024	2:30 AM	0	4	0	0	0	0	0	0	2	0	0	0	0
4/24/2024	2:45 AM	0	10	2	0	2	0	0	0	2	0	0	0	0
4/24/2024	3:00 AM	0	17	2	0	0	0	0	0	4	0	0	0	0
4/24/2024	3:15 AM	0	10	1	0	2	0	0	0	8	0	0	0	0
4/24/2024	3:30 AM	0	13	2	0	3	0	0	0	2	0	0	0	0
4/24/2024	3:45 AM	0	14	3	0	1	0	0	0	6	0	0	0	0
4/24/2024	4:00 AM	0	15	2	0	2	0	0	0	10	0	0	0	0
4/24/2024	4:15 AM	0	16	3	0	1	0	0	0	13	0	0	0	0
4/24/2024	4:30 AM	0	34	5	0	2	0	0	0	12	0	1	0	0
4/24/2024	4:45 AM	0	16	4	0	5	0	0	0	11	0	0	0	0
4/24/2024	5:00 AM	0	11	1	0	0	0	0	0	12	0	0	0	0
4/24/2024	5:15 AM	0	25	1	0	2	0	0	0	17	0	1	0	0
4/24/2024	5:30 AM	0	43	6	0	3	0	0	0	10	0	0	0	0
4/24/2024	5:45 AM	0	37	7	0	1	0	0	0	14	0	0	0	0
4/24/2024	6:00 AM	1	45	12	0	6	0	0	0	16	0	0	0	0
4/24/2024	6:15 AM	1	59	18	0	2	1	0	0	7	0	0	0	0
4/24/2024	6:30 AM	0	82	21	0	5	5	0	1	14	0	2	0	0
4/24/2024	6:45 AM	0	88	18	0	8	2	1	2	17	1	0	0	0
4/24/2024	7:00 AM	0	107	37	0	2	5	0	1	12	1	0	0	0
4/24/2024	7:15 AM	0	138	36	0	6	5	0	5	9	1	1	0	0
4/24/2024	7:30 AM	0	161	45	0	10	3	3	3	9	0	0	0	0
4/24/2024	7:45 AM	1	190	46	0	11	2	1	5	9	0	1	0	0
4/24/2024	8:00 AM	0	147	33	0	7	3	0	1	6	0	0	0	0
4/24/2024	8:15 AM	0	172	31	0	16	2	1	0	17	1	0	0	0
4/24/2024	8:30 AM	0	169	46	0	9	2	2	5	15	0	0	0	0
4/24/2024	8:45 AM	0	147	36	0	6	0	1	4	18	0	0	0	0
4/24/2024	9:00 AM	1	102	27	0	7	1	2	1	12	1	0	0	0
4/24/2024	9:15 AM	0	98	28	2	8	1	2	2	14	0	0	0	0
4/24/2024	9:30 AM	0	112	41	0	5	2	2	0	8	0	0	0	0
4/24/2024	9:45 AM	0	110	42	0	6	0	1	3	17	1	0	0	0
4/24/2024	10:00 AM	0	107	35	1	4	2	3	2	18	1	0	0	0
4/24/2024	10:15 AM	0	101	26	0	10	1	6	0	16	1	0	0	0
4/24/2024	10:30 AM	0	120	32	1	4	1	0	1	12	2	0	0	0
4/24/2024	10:45 AM	0	127	48	1	7	0	1	2	16	1	0	0	0
4/24/2024	11:00 AM	0	95	33	1	10	0	1	0	17	1	0	0	0
4/24/2024	11:15 AM	0	96	38	0	4	0	6	1	19	0	0	0	0
4/24/2024	11:30 AM	1	113	40	0	7	1	0	2	18	0	0	0	0
4/24/2024	11:45 AM	0	124	38	1	1	1	1	2	24	1	0	0	0
4/24/2024	12:00 PM	0	103	46	3	3	1	3	1	20	1	0	0	0
4/24/2024	12:15 PM	0	128	36	1	5	1	4	3	18	1	0	0	0
4/24/2024	12:30 PM	0	121	47	3	2	0	1	4	12	0	0	0	0
4/24/2024	12:45 PM	0	149	47	0	5	3	1	1	16	2	0	0	0
4/24/2024	1:00 PM	0	140	42	0	4	1	2	0	17	1	0	0	0
4/24/2024	1:15 PM	0	127	39	0	7	0	3	1	18	0	0	0	0
4/24/2024	1:30 PM	1	141	37	0	4	0	2	3	14	2	0	0	0
4/24/2024	1:45 PM	0	138	38	0	5	0	2	3	16	0	0	0	0
4/24/2024	2:00 PM	0	134	40	0	7	2	1	1	16	1	0	0	0
4/24/2024	2:15 PM	0	154	32	1	5	0	0	1	27	0	0	0	0
4/24/2024	2:30 PM	0	145	36	1	6	2	1	4	10	0	0	0	0
4/24/2024	2:45 PM	0	123	38	2	7	1	1	4	20	0	0	0	0
4/24/2024	3:00 PM	0	166	81	0	4	1	0	3	25	1	0	0	0
4/24/2024	3:15 PM	0	177	47	0	1	0	0	1	23	0	0	0	0
4/24/2024	3:30 PM	0	157	46	1	6	2	0	0	14	0	0	0	0
4/24/2024	3:45 PM	1	163	52	0	13	5	1	1	16	2	0	0	0
4/24/2024	4:00 PM	0	175	55	0	5	4	1	1	20	1	0	0	0
4/24/2024	4:15 PM	0	207	102	0	11	2	0	2	10	0	0	0	0
4/24/2024	4:30 PM	1	172	38	0	3	3	0	4	11	0	0	0	0
4/24/2024	4:45 PM	0	228	33	1	3	3	0	0	13	0	0	0	0
4/24/2024	5:00 PM	0	199	46	0	6	1	0	0	17	2	0	0	0
4/24/2024	5:15 PM	0	193	42	0	10	0	0	0	12	0	0	0	0
4/24/2024	5:30 PM	0	192	44	0	3	1	0	1	2	0	0	0	0
4/24/2024	5:45 PM	0	201	36	0	6	1	0	0	10	0	0	0	0
4/24/2024	6:00 PM	0	145	32	1	5	2	0	0	19	0	0	0	0
4/24/2024	6:15 PM	0	145	31	1	4	2	0	1	14	0	0	0	0
4/24/2024	6:30 PM	0	140	28	0	2	2	0	1	16	0	0	0	0
4/24/2024	6:45 PM	0	122	33	0	2	1	0	0	8	0	0	0	0
4/24/2024	7:00 PM	1	92	29	0	2	0	0	0	10	0	0	0	0
4/24/2024	7:15 PM	0	107	21	1	0	1	0	2	12	1	1	0	0
4/24/2024	7:30 PM	0	91	28	0	1	3	0	0	9	0	0	0	0
4/24/2024	7:45 PM	1	92	25	1	0	1	0	1	11	0	0	0	0
4/24/2024	8:00 PM	0	81	15	0	2	0	0	0	13	0	0	0	0
4/24/2024	8:15 PM	0	79	38	0	1	0	0	0	11	0	0	0	0
4/24/2024	8:30 PM	0	91	11	0	1	0	0	1	14	0	2	0	0
4/24/2024	8:45 PM	0	73	10	0	0	0	0	0	7	0	0	0	0
4/24/2024	9:00 PM	0	77	10	0	0	0	0	0	8	0	0	0	0
4/24/2024	9:15 PM	0	62	14	0	4	0	0	0	12	0	0	0	0
4/24/2024	9:30 PM	0	59	12	0	0	0	0	0	9	0	1	0	0
4/24/2024	9:45 PM	0	67	11	0	0	0	0	0	12	0	0	0	0
4/24/2024	10:00 PM	0	47	12	0	3	0	0	0	6	0	0	0	0
4/24/2024	10:15 PM	0	45	10	0	3	0	0	0	11	0	1	0	0
4/24/2024	10:30 PM	0	79	15	0	1	0	0	0	8	0	0	0	0
4/24/2024	10:45 PM	0	30	7	0	2	0	0	0	8	0	1	0	0
4/24/2024	11:00 PM	0	40	12	0	0	0	0	0	15	0	1	0	0
4/24/2024	11:15 PM	0	39	6	0	0	0	0	0	6	0	0	0	0
4/24/2024	11:30 PM	0	30	5	0	0	0	0	0	4	0	0	0	0
4/24/2024	11:45 PM	0	21	6	0	0	0	0	0	9	0	0	0	0

4/25/2024	12:00 AM	0	13	3	0	2	0	0	0	14	0	0	0	0
4/25/2024	12:15 AM	0	18	5	0	0	0	0	0	15	0	0	0	0
4/25/2024	12:30 AM	0	19	5	0	2	0	0	0	8	0	1	0	0
4/25/2024	12:45 AM	0	10	2	0	1	0	0	0	10	0	0	0	0
4/25/2024	1:00 AM	0	9	1	0	1	0	0	0	10	0	0	0	0
4/25/2024	1:15 AM	0	12	2	0	0	0	0	0	1	0	0	0	0
4/25/2024	1:30 AM	0	8	0	0	2	0	0	0	5	0	0	0	0
4/25/2024	1:45 AM	0	13	1	0	0	0	0	0	5	0	0	0	0
4/25/2024	2:00 AM	0	8	3	0	0	0	0	0	6	0	1	0	0
4/25/2024	2:15 AM	0	9	1	0	1	1	0	0	6	0	0	0	0
4/25/2024	2:30 AM	0	14	3	0	1	0	0	0	8	0	0	0	0
4/25/2024	2:45 AM	0	6	2	0	1	0	0	0	10	0	1	0	0
4/25/2024	3:00 AM	0	4	0	0	1	0	0	0	7	0	0	0	0
4/25/2024	3:15 AM	0	11	3	0	0	0	0	0	12	0	0	0	0
4/25/2024	3:30 AM	0	4	2	0	0	0	0	0	5	0	0	0	0
4/25/2024	3:45 AM	0	6	2	0	0	0	0	0	5	0	0	0	0
4/25/2024	4:00 AM	0	9	1	0	1	0	0	0	6	0	1	0	0
4/25/2024	4:15 AM	0	7	3	0	0	0	0	0	11	0	0	0	0
4/25/2024	4:30 AM	0	12	6	0	0	0	0	0	17	0	0	0	0
4/25/2024	4:45 AM	0	13	4	0	2	0	0	0	14	0	0	0	0
4/25/2024	5:00 AM	0	16	5	0	3	0	0	0	13	0	1	0	0
4/25/2024	5:15 AM	0	22	8	0	2	0	0	0	12	0	1	0	0
4/25/2024	5:30 AM	0	30	9	1	2	0	0	0	15	0	0	0	0
4/25/2024	5:45 AM	0	28	8	0	1	0	0	0	24	0	0	0	0
4/25/2024	6:00 AM	0	35	14	0	0	0	0	0	27	0	0	0	0
4/25/2024	6:15 AM	0	47	19	1	4	3	0	0	17	0	0	0	0
4/25/2024	6:30 AM	0	59	21	0	3	7	0	0	23	0	0	0	0
4/25/2024	6:45 AM	0	78	24	0	2	6	0	0	12	0	0	0	0
4/25/2024	7:00 AM	0	105	15	2	8	4	4	1	13	1	0	0	0
4/25/2024	7:15 AM	0	123	30	1	6	4	2	1	21	0	0	0	0
4/25/2024	7:30 AM	0	127	31	0	5	2	2	2	13	1	0	0	0
4/25/2024	7:45 AM	0	201	31	0	8	4	2	0	9	0	0	0	0
4/25/2024	8:00 AM	0	161	39	0	5	3	1	1	18	1	0	0	0
4/25/2024	8:15 AM	1	170	46	0	2	2	3	3	13	3	1	0	0
4/25/2024	8:30 AM	0	159	47	1	12	1	2	0	9	1	0	0	0
4/25/2024	8:45 AM	0	124	46	0	4	2	2	2	16	1	0	0	0
4/25/2024	9:00 AM	0	95	40	0	8	0	0	1	20	2	0	0	0
4/25/2024	9:15 AM	0	102	29	0	5	2	2	0	14	1	0	0	0
4/25/2024	9:30 AM	1	112	34	1	6	3	3	1	22	0	0	0	0
4/25/2024	9:45 AM	0	123	23	0	3	0	5	2	15	0	0	0	0
4/25/2024	10:00 AM	0	124	37	0	6	3	0	1	12	0	0	0	0
4/25/2024	10:15 AM	0	114	26	1	5	8	1	4	18	1	0	0	0
4/25/2024	10:30 AM	0	99	24	0	5	2	1	1	18	0	0	0	0
4/25/2024	10:45 AM	0	101	38	0	14	5	0	1	20	0	0	0	0
4/25/2024	11:00 AM	0	95	29	1	6	6	0	2	21	1	0	0	0
4/25/2024	11:15 AM	0	111	46	1	10	3	0	0	13	0	1	0	0
4/25/2024	11:30 AM	0	117	40	0	3	3	1	3	21	1	1	0	0
4/25/2024	11:45 AM	0	123	43	1	7	4	0	2	15	0	0	0	0
4/25/2024	12:00 PM	1	123	46	0	8	0	0	1	20	2	0	0	0
4/25/2024	12:15 PM	0	113	50	0	7	6	0	0	16	0	0	0	0
4/25/2024	12:30 PM	1	133	42	0	5	6	0	0	19	0	0	0	0
4/25/2024	12:45 PM	0	138	34	4	5	2	0	1	19	1	0	0	0
4/25/2024	1:00 PM	0	131	41	0	2	4	0	1	14	1	0	0	0
4/25/2024	1:15 PM	1	119	36	2	6	2	0	4	18	2	0	0	0
4/25/2024	1:30 PM	0	126	23	0	5	4	0	3	19	1	0	0	0
4/25/2024	1:45 PM	0	124	32	0	6	1	2	1	17	1	1	0	0
4/25/2024	2:00 PM	0	141	41	0	5	2	1	1	18	1	0	0	0
4/25/2024	2:15 PM	0	153	29	1	2	3	2	3	20	1	0	0	0
4/25/2024	2:30 PM	0	149	35	2	5	1	0	4	18	2	0	0	0
4/25/2024	2:45 PM	1	157	46	0	7	1	1	2	14	0	0	0	0
4/25/2024	3:00 PM	0	161	40	2	8	2	1	1	13	0	0	0	0
4/25/2024	3:15 PM	0	177	50	0	7	2	3	1	14	0	0	0	0
4/25/2024	3:30 PM	0	163	48	2	4	4	0	2	13	1	0	0	0
4/25/2024	3:45 PM	0	179	33	0	7	0	0	3	14	0	0	0	0
4/25/2024	4:00 PM	1	192	53	1	3	2	2	4	13	1	0	0	0
4/25/2024	4:15 PM	0	174	49	1	7	2	0	0	6	0	0	0	0
4/25/2024	4:30 PM	0	206	43	0	3	3	0	0	12	1	0	0	0
4/25/2024	4:45 PM	0	207	38	0	1	5	0	3	10	0	0	0	0
4/25/2024	5:00 PM	1	189	44	2	1	9	0	0	11	0	0	0	0
4/25/2024	5:15 PM	1	188	31	0	1	4	0	1	15	0	0	0	0
4/25/2024	5:30 PM	0	193	39	0	5	4	0	0	4	1	0	0	0
4/25/2024	5:45 PM	0	166	51	0	0	5	0	4	12	0	0	0	0
4/25/2024	6:00 PM	3	160	43	0	1	2	0	2	15	0	0	0	0
4/25/2024	6:15 PM	0	166	33	0	0	1	0	2	6	0	0	0	0
4/25/2024	6:30 PM	0	125	29	1	2	2	0	1	10	0	0	0	0
4/25/2024	6:45 PM	0	122	17	3	4	0	0	0	8	0	0	0	0
4/25/2024	7:00 PM	0	112	18	0	1	0	0	2	18	0	0	0	0
4/25/2024	7:15 PM	0	117	23	0	4	2	0	1	10	0	0	0	0
4/25/2024	7:30 PM	0	113	17	0	2	0	0	0	8	0	0	0	0
4/25/2024	7:45 PM	0	119	13	0	2	1	0	3	17	0	0	0	0
4/25/2024	8:00 PM	0	98	22	0	0	1	0	0	7	0	0	0	0
4/25/2024	8:15 PM	0	71	24	1	1	2	0	0	14	0	0	0	0
4/25/2024	8:30 PM	0	74	20	0	1	1	0	0	14	0	0	0	0
4/25/2024	8:45 PM	0	84	21	0	0	0	0	0	13	0	0	0	0
4/25/2024	9:00 PM	0	72	11	0	3	0	0	0	13	0	0	0	0
4/25/2024	9:15 PM	0	70	14	0	0	0	0	0	13	0	0	0	0
4/25/2024	9:30 PM	0	55	15	0	2	0	0	0	15	0	0	0	0
4/25/2024	9:45 PM	0	78	18	0	4	0	0	0	10	0	0	0	0
4/25/2024	10:00 PM	0	45	10	0	1	1	0	0	7	0	0	0	0
4/25/2024	10:15 PM	0	77	20	0	0	0	0	0	10	0	0	0	0
4/25/2024	10:30 PM	0	58	16	0	1	1	0	0	8	0	0	0	0
4/25/2024	10:45 PM	0	34	9	0	0	0	0	0	11	0	0	0	0
4/25/2024	11:00 PM	0	39	11	0	0	0	0	0	7	0	1	0	0
4/25/2024	11:15 PM	0	20	5	0	1	0	0	0	9	0	1	0	0
4/25/2024	11:30 PM	0	28	8	0	1	0	0	0	6	0	0	0	0
4/25/2024	11:45 PM	0	20	4	0	0	0	0	0	4	0	1	0	0

4/26/2024	12:00 AM	0	16	2	0	4	0	0	0	8	0	1	0	0
4/26/2024	12:15 AM	0	17	1	0	1	0	0	0	1	0	1	0	0
4/26/2024	12:30 AM	0	14	1	0	1	0	0	0	7	0	1	0	0
4/26/2024	12:45 AM	0	21	2	0	0	0	0	0	8	0	1	0	0
4/26/2024	1:00 AM	0	14	1	0	2	0	0	0	10	0	0	0	0
4/26/2024	1:15 AM	0	12	1	0	2	0	0	0	13	0	0	0	0
4/26/2024	1:30 AM	0	12	0	0	0	0	0	0	5	0	0	0	0
4/26/2024	1:45 AM	0	12	0	0	1	0	0	0	7	0	1	0	0
4/26/2024	2:00 AM	0	16	0	0	1	0	0	0	6	0	0	0	0
4/26/2024	2:15 AM	0	10	0	0	2	0	0	0	7	0	0	0	0
4/26/2024	2:30 AM	0	11	1	0	0	0	0	0	8	0	0	0	0
4/26/2024	2:45 AM	0	10	1	0	1	0	0	0	10	0	1	0	0
4/26/2024	3:00 AM	0	16	1	0	2	1	0	0	8	0	1	0	0
4/26/2024	3:15 AM	0	10	0	0	1	1	0	0	8	0	1	0	0
4/26/2024	3:30 AM	0	14	0	0	0	0	0	0	11	0	0	0	0
4/26/2024	3:45 AM	0	12	1	0	1	0	0	0	11	0	1	0	0
4/26/2024	4:00 AM	0	10	0	0	2	0	0	0	9	0	0	0	0
4/26/2024	4:15 AM	0	19	1	0	1	0	0	0	11	0	0	0	0
4/26/2024	4:30 AM	0	15	1	0	1	0	0	0	9	0	0	0	0
4/26/2024	4:45 AM	0	13	1	0	2	0	0	0	21	0	0	0	0
4/26/2024	5:00 AM	0	22	3	0	0	0	0	0	12	0	0	0	0
4/26/2024	5:15 AM	0	30	2	0	0	0	0	0	15	0	0	0	0
4/26/2024	5:30 AM	0	26	2	0	5	1	0	0	6	0	1	0	0
4/26/2024	5:45 AM	0	35	3	0	3	0	0	0	14	0	0	0	0
4/26/2024	6:00 AM	0	33	7	0	5	0	0	0	12	0	0	0	0
4/26/2024	6:15 AM	0	55	22	0	1	1	0	0	8	0	1	0	0
4/26/2024	6:30 AM	0	60	22	0	5	6	0	0	12	0	0	0	0
4/26/2024	6:45 AM	0	53	25	0	2	6	0	0	13	0	1	0	0
4/26/2024	7:00 AM	0	78	26	1	8	3	1	1	14	0	0	0	0
4/26/2024	7:15 AM	0	106	23	1	6	4	5	0	12	0	0	0	0
4/26/2024	7:30 AM	1	123	29	1	6	2	2	0	12	1	1	0	0
4/26/2024	7:45 AM	0	175	34	0	4	5	3	1	11	0	0	0	0
4/26/2024	8:00 AM	0	141	32	0	9	1	0	3	14	0	0	0	0
4/26/2024	8:15 AM	0	148	52	1	6	1	4	1	14	0	0	0	0
4/26/2024	8:30 AM	0	151	44	0	11	3	0	2	11	0	0	0	0
4/26/2024	8:45 AM	0	113	35	2	9	1	1	2	12	0	0	0	0
4/26/2024	9:00 AM	1	91	41	1	4	4	2	2	12	0	0	1	0
4/26/2024	9:15 AM	0	96	35	0	11	3	1	1	11	0	0	0	0
4/26/2024	9:30 AM	0	120	32	0	8	2	2	2	19	1	0	0	0
4/26/2024	9:45 AM	0	86	35	2	7	2	2	3	19	1	0	0	0
4/26/2024	10:00 AM	0	112	45	0	9	0	1	0	15	0	0	0	0
4/26/2024	10:15 AM	0	106	28	0	6	3	1	1	10	1	0	0	0
4/26/2024	10:30 AM	0	110	28	0	6	1	5	0	22	0	0	0	0
4/26/2024	10:45 AM	0	100	34	0	7	2	0	2	16	0	0	0	0
4/26/2024	11:00 AM	0	124	37	2	5	3	1	2	18	1	0	0	0
4/26/2024	11:15 AM	1	133	49	0	7	2	1	1	16	0	0	0	0
4/26/2024	11:30 AM	0	138	48	0	5	3	2	2	16	0	0	0	0
4/26/2024	11:45 AM	0	109	31	1	8	0	0	4	24	1	0	0	0
4/26/2024	12:00 PM	0	135	41	1	6	1	2	2	16	1	0	0	0
4/26/2024	12:15 PM	0	137	42	5	3	0	3	3	15	1	0	0	0
4/26/2024	12:30 PM	1	152	45	5	2	1	2	3	12	0	0	0	0
4/26/2024	12:45 PM	0	146	44	1	7	0	1	2	13	2	0	0	0
4/26/2024	1:00 PM	0	154	37	2	7	2	1	1	9	2	0	0	0
4/26/2024	1:15 PM	0	176	46	0	4	1	1	2	18	0	0	0	0
4/26/2024	1:30 PM	0	161	45	4	4	0	2	1	10	0	0	0	0
4/26/2024	1:45 PM	1	168	36	0	4	1	0	0	8	1	0	0	0
4/26/2024	2:00 PM	0	139	44	0	4	0	1	0	14	0	0	0	0
4/26/2024	2:15 PM	0	163	32	1	4	1	0	2	13	0	0	0	0
4/26/2024	2:30 PM	0	158	45	0	5	5	0	3	14	0	0	0	0
4/26/2024	2:45 PM	1	173	30	0	2	1	0	0	21	0	0	0	0
4/26/2024	3:00 PM	0	169	42	0	4	1	2	0	12	0	0	0	0
4/26/2024	3:15 PM	0	150	49	1	6	3	2	1	9	0	0	0	0
4/26/2024	3:30 PM	0	169	50	0	5	9	0	2	12	0	0	0	0
4/26/2024	3:45 PM	1	193	38	1	5	6	0	1	15	1	0	0	0
4/26/2024	4:00 PM	0	144	48	0	5	8	0	4	17	0	0	0	0
4/26/2024	4:15 PM	0	206	50	0	3	1	0	0	13	1	0	0	0
4/26/2024	4:30 PM	0	185	43	1	4	1	0	1	8	0	0	0	0
4/26/2024	4:45 PM	0	183	36	0	5	1	0	1	14	0	0	0	0
4/26/2024	5:00 PM	1	197	41	0	2	1	0	1	14	0	0	0	0
4/26/2024	5:15 PM	0	197	34	0	2	0	0	3	11	0	0	0	0
4/26/2024	5:30 PM	0	151	37	0	4	0	0	2	14	0	0	0	0
4/26/2024	5:45 PM	0	154	25	0	6	1	0	1	8	0	0	0	0
4/26/2024	6:00 PM	0	145	27	1	4	2	0	1	12	0	0	0	0
4/26/2024	6:15 PM	0	170	26	0	3	0	0	1	13	0	0	0	0
4/26/2024	6:30 PM	0	122	25	0	1	0	0	2	16	0	0	0	0
4/26/2024	6:45 PM	1	133	22	0	1	0	0	1	13	0	0	0	0
4/26/2024	7:00 PM	0	109	33	0	6	1	0	2	5	0	0	0	0
4/26/2024	7:15 PM	0	127	20	0	4	1	0	1	10	0	0	0	0
4/26/2024	7:30 PM	1	120	19	0	1	1	0	0	12	0	0	0	0
4/26/2024	7:45 PM	0	109	11	1	2	0	0	0	6	0	0	0	0
4/26/2024	8:00 PM	0	105	20	1	0	0	0	0	9	0	0	0	0
4/26/2024	8:15 PM	0	95	11	0	1	1	0	0	13	0	0	0	0
4/26/2024	8:30 PM	0	93	3	0	1	0	0	0	5	0	0	0	0
4/26/2024	8:45 PM	0	91	2	0	1	0	0	0	12	0	1	0	0
4/26/2024	9:00 PM	0	95	3	0	1	0	0	0	11	0	1	0	0
4/26/2024	9:15 PM	0	92	2	0	0	0	0	0	12	0	0	0	0
4/26/2024	9:30 PM	0	88	4	0	1	0	0	0	4	0	2	0	0
4/26/2024	9:45 PM	0	99	2	0	1	0	0	0	5	0	0	0	0
4/26/2024	10:00 PM	0	89	2	0	0	0	0	0	9	0	0	0	0
4/26/2024	10:15 PM	0	72	3	0	1	0	0	0	13	0	1	0	0
4/26/2024	10:30 PM	0	75	4	0	0	0	0	0	7	0	2	0	0
4/26/2024	10:45 PM	0	88	4	0	0	0	0	0	7	0	1	0	0
4/26/2024	11:00 PM	0	86	5	0	0	0	0	0	3	0	0	0	0
4/26/2024	11:15 PM	0	64	3	0	0	0	0	0	5	0	0	0	0
4/26/2024	11:30 PM	0	38	2	0	0	0	0	0	14	0	1	0	0
4/26/2024	11:45 PM	0	40	2	0	0	0	0	0	5	0	0	0	0

4/27/2024	12:00 AM	0	34	4	0	1	0	0	0	5	0	0	0	0
4/27/2024	12:15 AM	0	31	7	0	2	0	0	0	3	0	1	0	0
4/27/2024	12:30 AM	1	32	7	0	1	0	0	0	4	0	1	0	0
4/27/2024	12:45 AM	0	23	6	0	2	1	0	0	4	0	0	0	0
4/27/2024	1:00 AM	0	22	5	0	0	0	0	0	7	0	1	0	0
4/27/2024	1:15 AM	1	19	4	0	0	0	0	0	4	0	0	0	0
4/27/2024	1:30 AM	0	21	3	0	0	0	0	1	4	0	0	0	0
4/27/2024	1:45 AM	0	15	1	0	0	0	0	0	3	0	0	0	0
4/27/2024	2:00 AM	0	17	5	0	0	0	0	0	0	0	0	0	0
4/27/2024	2:15 AM	0	14	2	0	1	0	0	0	4	0	1	0	0
4/27/2024	2:30 AM	0	15	2	0	0	0	0	0	6	0	1	0	0
4/27/2024	2:45 AM	0	24	4	0	0	0	0	0	6	0	0	0	0
4/27/2024	3:00 AM	0	16	3	0	1	0	0	0	5	0	0	0	0
4/27/2024	3:15 AM	0	21	4	0	0	0	0	0	6	0	1	0	0
4/27/2024	3:30 AM	0	9	2	0	0	0	0	0	9	0	0	0	0
4/27/2024	3:45 AM	0	15	3	0	0	1	0	0	8	0	0	0	0
4/27/2024	4:00 AM	0	6	1	0	4	0	0	0	8	0	1	0	0
4/27/2024	4:15 AM	0	15	5	0	0	0	0	0	6	0	0	0	0
4/27/2024	4:30 AM	0	11	3	0	1	0	0	0	4	0	0	0	0
4/27/2024	4:45 AM	0	5	5	0	2	0	0	0	7	0	2	0	0
4/27/2024	5:00 AM	0	21	7	0	0	0	0	0	5	0	0	0	0
4/27/2024	5:15 AM	0	17	6	0	0	0	0	0	8	0	1	0	0
4/27/2024	5:30 AM	0	16	7	0	0	0	0	0	9	0	0	0	0
4/27/2024	5:45 AM	0	21	7	0	1	0	0	0	6	0	1	0	0
4/27/2024	6:00 AM	0	29	6	0	2	0	0	0	4	0	0	0	0
4/27/2024	6:15 AM	0	27	6	0	1	0	0	0	6	0	0	0	0
4/27/2024	6:30 AM	0	42	18	0	1	0	0	0	5	0	0	0	0
4/27/2024	6:45 AM	0	30	14	0	1	1	0	1	4	0	0	0	0
4/27/2024	7:00 AM	0	46	9	0	0	1	0	0	14	0	1	0	0
4/27/2024	7:15 AM	0	60	15	0	2	1	1	0	5	1	0	0	0
4/27/2024	7:30 AM	0	52	11	1	2	0	1	2	9	0	1	0	0
4/27/2024	7:45 AM	0	56	19	0	4	0	0	1	8	2	0	0	0
4/27/2024	8:00 AM	0	57	15	0	5	3	0	0	11	0	0	0	0
4/27/2024	8:15 AM	0	70	23	0	3	2	0	0	8	0	0	0	0
4/27/2024	8:30 AM	0	82	12	0	0	1	0	0	12	1	0	0	0
4/27/2024	8:45 AM	0	76	16	0	3	1	0	2	9	0	0	0	0
4/27/2024	9:00 AM	1	70	17	0	1	1	0	1	10	0	1	0	0
4/27/2024	9:15 AM	0	86	17	0	1	0	0	0	13	0	0	0	0
4/27/2024	9:30 AM	0	104	11	0	3	1	1	2	10	0	0	0	0
4/27/2024	9:45 AM	0	103	21	0	4	0	0	0	12	0	0	0	0
4/27/2024	10:00 AM	0	96	20	0	4	0	0	1	11	0	0	0	0
4/27/2024	10:15 AM	0	95	19	1	3	1	0	0	12	1	0	0	0
4/27/2024	10:30 AM	0	126	29	0	2	0	0	0	9	0	0	0	0
4/27/2024	10:45 AM	0	109	33	0	2	1	1	1	7	0	0	0	0
4/27/2024	11:00 AM	0	136	15	0	3	3	0	0	11	0	0	0	0
4/27/2024	11:15 AM	0	120	26	0	4	2	0	0	3	0	0	0	0
4/27/2024	11:30 AM	0	113	20	0	0	0	0	1	6	2	0	0	0
4/27/2024	11:45 AM	0	126	29	0	2	1	0	1	11	0	0	0	0
4/27/2024	12:00 PM	0	137	25	0	1	1	0	0	5	0	0	0	0
4/27/2024	12:15 PM	0	116	37	0	2	0	0	1	9	0	0	0	0
4/27/2024	12:30 PM	1	143	30	0	1	1	0	0	12	0	0	0	0
4/27/2024	12:45 PM	0	118	19	0	6	0	0	0	9	0	0	0	0
4/27/2024	1:00 PM	0	125	32	1	1	0	0	0	8	0	0	0	0
4/27/2024	1:15 PM	0	149	31	0	2	0	0	1	7	0	0	0	0
4/27/2024	1:30 PM	0	141	28	0	1	0	0	0	6	0	0	0	0
4/27/2024	1:45 PM	0	130	28	0	5	0	0	0	10	0	0	0	0
4/27/2024	2:00 PM	2	143	28	0	2	1	0	1	6	0	0	0	0
4/27/2024	2:15 PM	1	150	39	1	3	0	0	3	5	0	0	0	0
4/27/2024	2:30 PM	1	123	21	0	3	0	0	0	8	0	0	0	0
4/27/2024	2:45 PM	2	133	16	0	1	0	0	1	11	0	0	0	0
4/27/2024	3:00 PM	1	137	23	0	2	0	0	0	2	1	0	0	0
4/27/2024	3:15 PM	1	129	32	0	1	0	1	1	7	0	0	0	0
4/27/2024	3:30 PM	3	145	14	0	3	1	0	1	6	1	0	0	0
4/27/2024	3:45 PM	0	146	24	1	1	0	0	0	10	1	0	0	0
4/27/2024	4:00 PM	0	136	24	0	1	1	0	0	6	0	0	0	0
4/27/2024	4:15 PM	0	116	26	0	2	1	0	2	7	0	0	0	0
4/27/2024	4:30 PM	0	125	14	0	2	0	0	0	5	0	0	0	0
4/27/2024	4:45 PM	0	125	21	0	2	0	0	0	5	0	0	0	0
4/27/2024	5:00 PM	0	128	21	0	2	2	0	1	7	0	0	0	0
4/27/2024	5:15 PM	1	141	18	0	1	0	0	1	2	0	0	0	0
4/27/2024	5:30 PM	0	117	27	0	3	0	0	1	6	0	0	0	0
4/27/2024	5:45 PM	0	86	23	1	3	0	0	1	3	0	0	0	0
4/27/2024	6:00 PM	0	95	27	0	3	0	0	2	4	0	0	0	0
4/27/2024	6:15 PM	0	140	18	0	1	0	0	0	3	0	0	0	0
4/27/2024	6:30 PM	0	121	30	1	1	0	0	0	3	0	0	0	0
4/27/2024	6:45 PM	0	114	16	0	0	0	0	0	6	1	0	0	0
4/27/2024	7:00 PM	0	97	20	0	1	0	0	0	1	0	0	0	0
4/27/2024	7:15 PM	0	110	10	0	1	1	0	0	4	0	0	0	0
4/27/2024	7:30 PM	0	115	24	0	1	0	0	1	1	0	0	0	0
4/27/2024	7:45 PM	0	119	12	0	0	0	0	0	4	0	0	0	0
4/27/2024	8:00 PM	0	91	20	0	0	0	0	1	7	0	0	0	0
4/27/2024	8:15 PM	0	79	13	0	0	2	0	0	0	0	0	0	0
4/27/2024	8:30 PM	0	84	16	0	0	0	0	1	5	0	0	0	0
4/27/2024	8:45 PM	0	80	13	0	1	0	0	0	0	0	0	0	0
4/27/2024	9:00 PM	1	66	11	0	1	1	0	0	0	0	0	0	0
4/27/2024	9:15 PM	0	103	11	0	1	0	0	0	2	0	0	0	0
4/27/2024	9:30 PM	0	101	16	0	3	0	0	0	5	0	0	0	0
4/27/2024	9:45 PM	0	85	7	0	0	0	0	0	2	0	0	0	0
4/27/2024	10:00 PM	0	82	10	1	2	0	0	0	0	0	0	0	0
4/27/2024	10:15 PM	0	83	16	0	1	0	0	0	3	0	0	0	0
4/27/2024	10:30 PM	0	75	10	0	0	0	0	0	3	0	0	0	0
4/27/2024	10:45 PM	0	50	11	0	0	0	0	0	4	0	1	0	0
4/27/2024	11:00 PM	0	52	7	0	0	0	0	0	1	0	0	0	0
4/27/2024	11:15 PM	0	38	9	0	0	0	0	0	3	0	0	0	0
4/27/2024	11:30 PM	0	40	9	0	0	0	0	0	5	0	0	0	0
4/27/2024	11:45 PM	0	40	8	0	1	1	0	0	2	0	0	0	0

NB
File Name:
Start Date: 4/21/2024
Start Time: 0
Site Code: 75 Lane 3 SB
Station ID: 1
Location 1: I-20, north of Bush River Rd
Location 2:

Date	Time	1	2	3	4	5	6	7	8	9	10	11	12	13
4/21/2024	12:00 AM	0	0	0	0	0	0	0	0	0	0	0	0	0
4/21/2024	12:15 AM	0	0	0	0	0	0	0	0	0	0	0	0	0
4/21/2024	12:30 AM	0	0	0	0	0	0	0	0	0	0	0	0	0
4/21/2024	12:45 AM	0	0	0	0	0	0	0	0	0	0	0	0	0
4/21/2024	1:00 AM	0	0	0	0	0	0	0	0	0	0	0	0	0
4/21/2024	1:15 AM	0	0	0	0	0	0	0	0	0	0	0	0	0
4/21/2024	1:30 AM	0	0	0	0	0	0	0	0	0	0	0	0	0
4/21/2024	1:45 AM	0	0	0	0	0	0	0	0	0	0	0	0	0
4/21/2024	2:00 AM	0	0	0	0	0	0	0	0	0	0	0	0	0
4/21/2024	2:15 AM	0	0	0	0	0	0	0	0	0	0	0	0	0
4/21/2024	2:30 AM	0	0	0	0	0	0	0	0	0	0	0	0	0
4/21/2024	2:45 AM	0	0	0	0	0	0	0	0	0	0	0	0	0
4/21/2024	3:00 AM	0	0	0	0	0	0	0	0	0	0	0	0	0
4/21/2024	3:15 AM	0	0	0	0	0	0	0	0	0	0	0	0	0
4/21/2024	3:30 AM	0	0	0	0	0	0	0	0	0	0	0	0	0
4/21/2024	3:45 AM	0	0	0	0	0	0	0	0	0	0	0	0	0
4/21/2024	4:00 AM	0	0	0	0	0	0	0	0	0	0	0	0	0
4/21/2024	4:15 AM	0	0	0	0	0	0	0	0	0	0	0	0	0
4/21/2024	4:30 AM	0	0	0	0	0	0	0	0	0	0	0	0	0
4/21/2024	4:45 AM	0	0	0	0	0	0	0	0	0	0	0	0	0
4/21/2024	5:00 AM	0	0	0	0	0	0	0	0	0	0	0	0	0
4/21/2024	5:15 AM	0	0	0	0	0	0	0	0	0	0	0	0	0
4/21/2024	5:30 AM	0	0	0	0	0	0	0	0	0	0	0	0	0
4/21/2024	5:45 AM	0	0	0	0	0	0	0	0	0	0	0	0	0
4/21/2024	6:00 AM	0	0	0	0	0	0	0	0	0	0	0	0	0
4/21/2024	6:15 AM	0	0	0	0	0	0	0	0	0	0	0	0	0
4/21/2024	6:30 AM	0	0	0	0	0	0	0	0	0	0	0	0	0
4/21/2024	6:45 AM	0	0	0	0	0	0	0	0	0	0	0	0	0
4/21/2024	7:00 AM	0	0	0	0	0	0	0	0	0	0	0	0	0
4/21/2024	7:15 AM	0	0	0	0	0	0	0	0	0	0	0	0	0
4/21/2024	7:30 AM	0	0	0	0	0	0	0	0	0	0	0	0	0
4/21/2024	7:45 AM	0	0	0	0	0	0	0	0	0	0	0	0	0
4/21/2024	8:00 AM	0	0	0	0	0	0	0	0	0	0	0	0	0
4/21/2024	8:15 AM	0	0	0	0	0	0	0	0	0	0	0	0	0
4/21/2024	8:30 AM	0	0	0	0	0	0	0	0	0	0	0	0	0
4/21/2024	8:45 AM	0	0	0	0	0	0	0	0	0	0	0	0	0
4/21/2024	9:00 AM	0	0	0	0	0	0	0	0	0	0	0	0	0
4/21/2024	9:15 AM	0	0	0	0	0	0	0	0	0	0	0	0	0
4/21/2024	9:30 AM	0	0	0	0	0	0	0	0	0	0	0	0	0
4/21/2024	9:45 AM	0	0	0	0	0	0	0	0	0	0	0	0	0
4/21/2024	10:00 AM	0	0	0	0	0	0	0	0	0	0	0	0	0
4/21/2024	10:15 AM	0	0	0	0	0	0	0	0	0	0	0	0	0
4/21/2024	10:30 AM	0	0	0	0	0	0	0	0	0	0	0	0	0
4/21/2024	10:45 AM	0	0	0	0	0	0	0	0	0	0	0	0	0
4/21/2024	11:00 AM	0	0	0	0	0	0	0	0	0	0	0	0	0
4/21/2024	11:15 AM	0	0	0	0	0	0	0	0	0	0	0	0	0
4/21/2024	11:30 AM	0	0	0	0	0	0	0	0	0	0	0	0	0
4/21/2024	11:45 AM	0	0	0	0	0	0	0	0	0	0	0	0	0
4/21/2024	12:00 PM	0	0	0	0	0	0	0	0	0	0	0	0	0
4/21/2024	12:15 PM	0	0	0	0	0	0	0	0	0	0	0	0	0
4/21/2024	12:30 PM	0	0	0	0	0	0	0	0	0	0	0	0	0
4/21/2024	12:45 PM	0	0	0	0	0	0	0	0	0	0	0	0	0
4/21/2024	1:00 PM	0	0	0	0	0	0	0	0	0	0	0	0	0
4/21/2024	1:15 PM	0	0	0	0	0	0	0	0	0	0	0	0	0
4/21/2024	1:30 PM	0	0	0	0	0	0	0	0	0	0	0	0	0
4/21/2024	1:45 PM	0	0	0	0	0	0	0	0	0	0	0	0	0
4/21/2024	2:00 PM	0	0	0	0	0	0	0	0	0	0	0	0	0
4/21/2024	2:15 PM	0	0	0	0	0	0	0	0	0	0	0	0	0
4/21/2024	2:30 PM	0	0	0	0	0	0	0	0	0	0	0	0	0
4/21/2024	2:45 PM	0	0	0	0	0	0	0	0	0	0	0	0	0
4/21/2024	3:00 PM	0	0	0	0	0	0	0	0	0	0	0	0	0
4/21/2024	3:15 PM	0	0	0	0	0	0	0	0	0	0	0	0	0
4/21/2024	3:30 PM	0	0	0	0	0	0	0	0	0	0	0	0	0
4/21/2024	3:45 PM	0	0	0	0	0	0	0	0	0	0	0	0	0
4/21/2024	4:00 PM	0	0	0	0	0	0	0	0	0	0	0	0	0
4/21/2024	4:15 PM	0	0	0	0	0	0	0	0	0	0	0	0	0
4/21/2024	4:30 PM	0	0	0	0	0	0	0	0	0	0	0	0	0
4/21/2024	4:45 PM	0	0	0	0	0	0	0	0	0	0	0	0	0
4/21/2024	5:00 PM	0	0	0	0	0	0	0	0	0	0	0	0	0
4/21/2024	5:15 PM	0	0	0	0	0	0	0	0	0	0	0	0	0
4/21/2024	5:30 PM	0	0	0	0	0	0	0	0	0	0	0	0	0
4/21/2024	5:45 PM	0	0	0	0	0	0	0	0	0	0	0	0	0
4/21/2024	6:00 PM	0	0	0	0	0	0	0	0	0	0	0	0	0
4/21/2024	6:15 PM	0	0	0	0	0	0	0	0	0	0	0	0	0
4/21/2024	6:30 PM	0	0	0	0	0	0	0	0	0	0	0	0	0
4/21/2024	6:45 PM	0	0	0	0	0	0	0	0	0	0	0	0	0
4/21/2024	7:00 PM	0	0	0	0	0	0	0	0	0	0	0	0	0
4/21/2024	7:15 PM	0	0	0	0	0	0	0	0	0	0	0	0	0
4/21/2024	7:30 PM	0	0	0	0	0	0	0	0	0	0	0	0	0
4/21/2024	7:45 PM	0	0	0	0	0	0	0	0	0	0	0	0	0
4/21/2024	8:00 PM	0	0	0	0	0	0	0	0	0	0	0	0	0
4/21/2024	8:15 PM	0	0	0	0	0	0	0	0	0	0	0	0	0
4/21/2024	8:30 PM	0	0	0	0	0	0	0	0	0	0	0	0	0
4/21/2024	8:45 PM	0	0	0	0	0	0	0	0	0	0	0	0	0
4/21/2024	9:00 PM	0	0	0	0	0	0	0	0	0	0	0	0	0
4/21/2024	9:15 PM	0	0	0	0	0	0	0	0	0	0	0	0	0
4/21/2024	9:30 PM	0	0	0	0	0	0	0	0	0	0	0	0	0
4/21/2024	9:45 PM	0	0	0	0	0	0	0	0	0	0	0	0	0
4/21/2024	10:00 PM	0	0	0	0	0	0	0	0	0	0	0	0	0
4/21/2024	10:15 PM	0	0	0	0	0	0	0	0	0	0	0	0	0
4/21/2024	10:30 PM	0	0	0	0	0	0	0	0	0	0	0	0	0
4/21/2024	10:45 PM	0	0	0	0	0	0	0	0	0	0	0	0	0
4/21/2024	11:00 PM	0	0	0	0	0	0	0	0	0	0	0	0	0
4/21/2024	11:15 PM	0	0	0	0	0	0	0	0	0	0	0	0	0
4/21/2024	11:30 PM	0	0	0	0	0	0	0	0	0	0	0	0	0
4/21/2024	11:45 PM	0	0	0	0	0	0	0	0	0	0	0	0	0

4/22/2024	12:00 AM	0	0	0	0	0	0	0	0	0	0	0	0	0
4/22/2024	12:15 AM	0	0	0	0	0	0	0	0	0	0	0	0	0
4/22/2024	12:30 AM	0	0	0	0	0	0	0	0	0	0	0	0	0
4/22/2024	12:45 AM	0	0	0	0	0	0	0	0	0	0	0	0	0
4/22/2024	1:00 AM	0	0	0	0	0	0	0	0	0	0	0	0	0
4/22/2024	1:15 AM	0	0	0	0	0	0	0	0	0	0	0	0	0
4/22/2024	1:30 AM	0	0	0	0	0	0	0	0	0	0	0	0	0
4/22/2024	1:45 AM	0	0	0	0	0	0	0	0	0	0	0	0	0
4/22/2024	2:00 AM	0	0	0	0	0	0	0	0	0	0	0	0	0
4/22/2024	2:15 AM	0	0	0	0	0	0	0	0	0	0	0	0	0
4/22/2024	2:30 AM	0	0	0	0	0	0	0	0	0	0	0	0	0
4/22/2024	2:45 AM	0	0	0	0	0	0	0	0	0	0	0	0	0
4/22/2024	3:00 AM	0	0	0	0	0	0	0	0	0	0	0	0	0
4/22/2024	3:15 AM	0	0	0	0	0	0	0	0	0	0	0	0	0
4/22/2024	3:30 AM	0	0	0	0	0	0	0	0	0	0	0	0	0
4/22/2024	3:45 AM	0	0	0	0	0	0	0	0	0	0	0	0	0
4/22/2024	4:00 AM	0	0	0	0	0	0	0	0	0	0	0	0	0
4/22/2024	4:15 AM	0	0	0	0	0	0	0	0	0	0	0	0	0
4/22/2024	4:30 AM	0	0	0	0	0	0	0	0	0	0	0	0	0
4/22/2024	4:45 AM	0	0	0	0	0	0	0	0	0	0	0	0	0
4/22/2024	5:00 AM	0	0	0	0	0	0	0	0	0	0	0	0	0
4/22/2024	5:15 AM	0	0	0	0	0	0	0	0	0	0	0	0	0
4/22/2024	5:30 AM	0	0	0	0	0	0	0	0	0	0	0	0	0
4/22/2024	5:45 AM	0	0	0	0	0	0	0	0	0	0	0	0	0
4/22/2024	6:00 AM	0	0	0	0	0	0	0	0	0	0	0	0	0
4/22/2024	6:15 AM	0	0	0	0	0	0	0	0	0	0	0	0	0
4/22/2024	6:30 AM	0	0	0	0	0	0	0	0	0	0	0	0	0
4/22/2024	6:45 AM	0	0	0	0	0	0	0	0	0	0	0	0	0
4/22/2024	7:00 AM	0	0	0	0	0	0	0	0	0	0	0	0	0
4/22/2024	7:15 AM	0	0	0	0	0	0	0	0	0	0	0	0	0
4/22/2024	7:30 AM	0	0	0	0	0	0	0	0	0	0	0	0	0
4/22/2024	7:45 AM	0	0	0	0	0	0	0	0	0	0	0	0	0
4/22/2024	8:00 AM	0	0	0	0	0	0	0	0	0	0	0	0	0
4/22/2024	8:15 AM	0	0	0	0	0	0	0	0	0	0	0	0	0
4/22/2024	8:30 AM	0	0	0	0	0	0	0	0	0	0	0	0	0
4/22/2024	8:45 AM	0	0	0	0	0	0	0	0	0	0	0	0	0
4/22/2024	9:00 AM	0	0	0	0	0	0	0	0	0	0	0	0	0
4/22/2024	9:15 AM	0	0	0	0	0	0	0	0	0	0	0	0	0
4/22/2024	9:30 AM	0	0	0	0	0	0	0	0	0	0	0	0	0
4/22/2024	9:45 AM	0	0	0	0	0	0	0	0	0	0	0	0	0
4/22/2024	10:00 AM	0	0	0	0	0	0	0	0	0	0	0	0	0
4/22/2024	10:15 AM	0	0	0	0	0	0	0	0	0	0	0	0	0
4/22/2024	10:30 AM	0	0	0	0	0	0	0	0	0	0	0	0	0
4/22/2024	10:45 AM	0	0	0	0	0	0	0	0	0	0	0	0	0
4/22/2024	11:00 AM	0	0	0	0	0	0	0	0	0	0	0	0	0
4/22/2024	11:15 AM	0	0	0	0	0	0	0	0	0	0	0	0	0
4/22/2024	11:30 AM	0	0	0	0	0	0	0	0	0	0	0	0	0
4/22/2024	11:45 AM	0	0	0	0	0	0	0	0	0	0	0	0	0
4/22/2024	12:00 PM	0	0	0	0	0	0	0	0	0	0	0	0	0
4/22/2024	12:15 PM	0	0	0	0	0	0	0	0	0	0	0	0	0
4/22/2024	12:30 PM	0	0	0	0	0	0	0	0	0	0	0	0	0
4/22/2024	12:45 PM	0	0	0	0	0	0	0	0	0	0	0	0	0
4/22/2024	1:00 PM	0	0	0	0	0	0	0	0	0	0	0	0	0
4/22/2024	1:15 PM	0	0	0	0	0	0	0	0	0	0	0	0	0
4/22/2024	1:30 PM	0	0	0	0	0	0	0	0	0	0	0	0	0
4/22/2024	1:45 PM	0	0	0	0	0	0	0	0	0	0	0	0	0
4/22/2024	2:00 PM	0	0	0	0	0	0	0	0	0	0	0	0	0
4/22/2024	2:15 PM	0	0	0	0	0	0	0	0	0	0	0	0	0
4/22/2024	2:30 PM	0	0	0	0	0	0	0	0	0	0	0	0	0
4/22/2024	2:45 PM	0	0	0	0	0	0	0	0	0	0	0	0	0
4/22/2024	3:00 PM	0	0	0	0	0	0	0	0	0	0	0	0	0
4/22/2024	3:15 PM	0	0	0	0	0	0	0	0	0	0	0	0	0
4/22/2024	3:30 PM	0	0	0	0	0	0	0	0	0	0	0	0	0
4/22/2024	3:45 PM	0	0	0	0	0	0	0	0	0	0	0	0	0
4/22/2024	4:00 PM	0	0	0	0	0	0	0	0	0	0	0	0	0
4/22/2024	4:15 PM	0	0	0	0	0	0	0	0	0	0	0	0	0
4/22/2024	4:30 PM	0	0	0	0	0	0	0	0	0	0	0	0	0
4/22/2024	4:45 PM	0	0	0	0	0	0	0	0	0	0	0	0	0
4/22/2024	5:00 PM	0	0	0	0	0	0	0	0	0	0	0	0	0
4/22/2024	5:15 PM	0	0	0	0	0	0	0	0	0	0	0	0	0
4/22/2024	5:30 PM	0	0	0	0	0	0	0	0	0	0	0	0	0
4/22/2024	5:45 PM	0	0	0	0	0	0	0	0	0	0	0	0	0
4/22/2024	6:00 PM	0	0	0	0	0	0	0	0	0	0	0	0	0
4/22/2024	6:15 PM	0	0	0	0	0	0	0	0	0	0	0	0	0
4/22/2024	6:30 PM	0	0	0	0	0	0	0	0	0	0	0	0	0
4/22/2024	6:45 PM	0	0	0	0	0	0	0	0	0	0	0	0	0
4/22/2024	7:00 PM	0	0	0	0	0	0	0	0	0	0	0	0	0
4/22/2024	7:15 PM	0	0	0	0	0	0	0	0	0	0	0	0	0
4/22/2024	7:30 PM	0	0	0	0	0	0	0	0	0	0	0	0	0
4/22/2024	7:45 PM	0	0	0	0	0	0	0	0	0	0	0	0	0
4/22/2024	8:00 PM	0	0	0	0	0	0	0	0	0	0	0	0	0
4/22/2024	8:15 PM	0	0	0	0	0	0	0	0	0	0	0	0	0
4/22/2024	8:30 PM	0	0	0	0	0	0	0	0	0	0	0	0	0
4/22/2024	8:45 PM	0	0	0	0	0	0	0	0	0	0	0	0	0
4/22/2024	9:00 PM	0	0	0	0	0	0	0	0	0	0	0	0	0
4/22/2024	9:15 PM	0	0	0	0	0	0	0	0	0	0	0	0	0
4/22/2024	9:30 PM	0	0	0	0	0	0	0	0	0	0	0	0	0
4/22/2024	9:45 PM	0	0	0	0	0	0	0	0	0	0	0	0	0
4/22/2024	10:00 PM	0	0	0	0	0	0	0	0	0	0	0	0	0
4/22/2024	10:15 PM	0	0	0	0	0	0	0	0	0	0	0	0	0
4/22/2024	10:30 PM	0	0	0	0	0	0	0	0	0	0	0	0	0
4/22/2024	10:45 PM	0	0	0	0	0	0	0	0	0	0	0	0	0
4/22/2024	11:00 PM	0	0	0	0	0	0	0	0	0	0	0	0	0
4/22/2024	11:15 PM	0	0	0	0	0	0	0	0	0	0	0	0	0
4/22/2024	11:30 PM	0	0	0	0	0	0	0	0	0	0	0	0	0
4/22/2024	11:45 PM	0	0	0	0	0	0	0	0	0	0	0	0	0

4/23/2024	12:00 AM	0	0	0	0	0	0	0	0	0	0	0	0	0
4/23/2024	12:15 AM	0	0	0	0	0	0	0	0	0	0	0	0	0
4/23/2024	12:30 AM	0	0	0	0	0	0	0	0	0	0	0	0	0
4/23/2024	12:45 AM	0	0	0	0	0	0	0	0	0	0	0	0	0
4/23/2024	1:00 AM	0	0	0	0	0	0	0	0	0	0	0	0	0
4/23/2024	1:15 AM	0	0	0	0	0	0	0	0	0	0	0	0	0
4/23/2024	1:30 AM	0	0	0	0	0	0	0	0	0	0	0	0	0
4/23/2024	1:45 AM	0	0	0	0	0	0	0	0	0	0	0	0	0
4/23/2024	2:00 AM	0	0	0	0	0	0	0	0	0	0	0	0	0
4/23/2024	2:15 AM	0	0	0	0	0	0	0	0	0	0	0	0	0
4/23/2024	2:30 AM	0	0	0	0	0	0	0	0	0	0	0	0	0
4/23/2024	2:45 AM	0	0	0	0	0	0	0	0	0	0	0	0	0
4/23/2024	3:00 AM	0	0	0	0	0	0	0	0	0	0	0	0	0
4/23/2024	3:15 AM	0	0	0	0	0	0	0	0	0	0	0	0	0
4/23/2024	3:30 AM	0	0	0	0	0	0	0	0	0	0	0	0	0
4/23/2024	3:45 AM	0	0	0	0	0	0	0	0	0	0	0	0	0
4/23/2024	4:00 AM	0	0	0	0	0	0	0	0	0	0	0	0	0
4/23/2024	4:15 AM	0	0	0	0	0	0	0	0	0	0	0	0	0
4/23/2024	4:30 AM	0	0	0	0	0	0	0	0	0	0	0	0	0
4/23/2024	4:45 AM	0	0	0	0	0	0	0	0	0	0	0	0	0
4/23/2024	5:00 AM	0	0	0	0	0	0	0	0	0	0	0	0	0
4/23/2024	5:15 AM	0	0	0	0	0	0	0	0	0	0	0	0	0
4/23/2024	5:30 AM	0	0	0	0	0	0	0	0	0	0	0	0	0
4/23/2024	5:45 AM	0	0	0	0	0	0	0	0	0	0	0	0	0
4/23/2024	6:00 AM	0	0	0	0	0	0	0	0	0	0	0	0	0
4/23/2024	6:15 AM	0	0	0	0	0	0	0	0	0	0	0	0	0
4/23/2024	6:30 AM	0	0	0	0	0	0	0	0	0	0	0	0	0
4/23/2024	6:45 AM	0	0	0	0	0	0	0	0	0	0	0	0	0
4/23/2024	7:00 AM	0	0	0	0	0	0	0	0	0	0	0	0	0
4/23/2024	7:15 AM	0	0	0	0	0	0	0	0	0	0	0	0	0
4/23/2024	7:30 AM	0	0	0	0	0	0	0	0	0	0	0	0	0
4/23/2024	7:45 AM	0	0	0	0	0	0	0	0	0	0	0	0	0
4/23/2024	8:00 AM	0	0	0	0	0	0	0	0	0	0	0	0	0
4/23/2024	8:15 AM	0	0	0	0	0	0	0	0	0	0	0	0	0
4/23/2024	8:30 AM	0	0	0	0	0	0	0	0	0	0	0	0	0
4/23/2024	8:45 AM	0	0	0	0	0	0	0	0	0	0	0	0	0
4/23/2024	9:00 AM	0	0	0	0	0	0	0	0	0	0	0	0	0
4/23/2024	9:15 AM	0	0	0	0	0	0	0	0	0	0	0	0	0
4/23/2024	9:30 AM	0	0	0	0	0	0	0	0	0	0	0	0	0
4/23/2024	9:45 AM	0	0	0	0	0	0	0	0	0	0	0	0	0
4/23/2024	10:00 AM	0	0	0	0	0	0	0	0	0	0	0	0	0
4/23/2024	10:15 AM	0	0	0	0	0	0	0	0	0	0	0	0	0
4/23/2024	10:30 AM	0	0	0	0	0	0	0	0	0	0	0	0	0
4/23/2024	10:45 AM	0	0	0	0	0	0	0	0	0	0	0	0	0
4/23/2024	11:00 AM	0	0	0	0	0	0	0	0	0	0	0	0	0
4/23/2024	11:15 AM	0	0	0	0	0	0	0	0	0	0	0	0	0
4/23/2024	11:30 AM	0	0	0	0	0	0	0	0	0	0	0	0	0
4/23/2024	11:45 AM	0	0	0	0	0	0	0	0	0	0	0	0	0
4/23/2024	12:00 PM	0	0	0	0	0	0	0	0	0	0	0	0	0
4/23/2024	12:15 PM	0	0	0	0	0	0	0	0	0	0	0	0	0
4/23/2024	12:30 PM	0	0	0	0	0	0	0	0	0	0	0	0	0
4/23/2024	12:45 PM	0	0	0	0	0	0	0	0	0	0	0	0	0
4/23/2024	1:00 PM	0	0	0	0	0	0	0	0	0	0	0	0	0
4/23/2024	1:15 PM	0	0	0	0	0	0	0	0	0	0	0	0	0
4/23/2024	1:30 PM	0	0	0	0	0	0	0	0	0	0	0	0	0
4/23/2024	1:45 PM	0	0	0	0	0	0	0	0	0	0	0	0	0
4/23/2024	2:00 PM	0	0	0	0	0	0	0	0	0	0	0	0	0
4/23/2024	2:15 PM	0	0	0	0	0	0	0	0	0	0	0	0	0
4/23/2024	2:30 PM	0	0	0	0	0	0	0	0	0	0	0	0	0
4/23/2024	2:45 PM	0	0	0	0	0	0	0	0	0	0	0	0	0
4/23/2024	3:00 PM	0	0	0	0	0	0	0	0	0	0	0	0	0
4/23/2024	3:15 PM	0	0	0	0	0	0	0	0	0	0	0	0	0
4/23/2024	3:30 PM	0	0	0	0	0	0	0	0	0	0	0	0	0
4/23/2024	3:45 PM	0	0	0	0	0	0	0	0	0	0	0	0	0
4/23/2024	4:00 PM	0	0	0	0	0	0	0	0	0	0	0	0	0
4/23/2024	4:15 PM	0	0	0	0	0	0	0	0	0	0	0	0	0
4/23/2024	4:30 PM	0	0	0	0	0	0	0	0	0	0	0	0	0
4/23/2024	4:45 PM	0	0	0	0	0	0	0	0	0	0	0	0	0
4/23/2024	5:00 PM	0	0	0	0	0	0	0	0	0	0	0	0	0
4/23/2024	5:15 PM	0	0	0	0	0	0	0	0	0	0	0	0	0
4/23/2024	5:30 PM	0	0	0	0	0	0	0	0	0	0	0	0	0
4/23/2024	5:45 PM	0	0	0	0	0	0	0	0	0	0	0	0	0
4/23/2024	6:00 PM	0	0	0	0	0	0	0	0	0	0	0	0	0
4/23/2024	6:15 PM	0	0	0	0	0	0	0	0	0	0	0	0	0
4/23/2024	6:30 PM	0	0	0	0	0	0	0	0	0	0	0	0	0
4/23/2024	6:45 PM	0	0	0	0	0	0	0	0	0	0	0	0	0
4/23/2024	7:00 PM	0	0	0	0	0	0	0	0	0	0	0	0	0
4/23/2024	7:15 PM	0	0	0	0	0	0	0	0	0	0	0	0	0
4/23/2024	7:30 PM	0	0	0	0	0	0	0	0	0	0	0	0	0
4/23/2024	7:45 PM	0	0	0	0	0	0	0	0	0	0	0	0	0
4/23/2024	8:00 PM	0	0	0	0	0	0	0	0	0	0	0	0	0
4/23/2024	8:15 PM	0	0	0	0	0	0	0	0	0	0	0	0	0
4/23/2024	8:30 PM	0	0	0	0	0	0	0	0	0	0	0	0	0
4/23/2024	8:45 PM	0	0	0	0	0	0	0	0	0	0	0	0	0
4/23/2024	9:00 PM	0	0	0	0	0	0	0	0	0	0	0	0	0
4/23/2024	9:15 PM	0	0	0	0	0	0	0	0	0	0	0	0	0
4/23/2024	9:30 PM	0	0	0	0	0	0	0	0	0	0	0	0	0
4/23/2024	9:45 PM	0	0	0	0	0	0	0	0	0	0	0	0	0
4/23/2024	10:00 PM	0	0	0	0	0	0	0	0	0	0	0	0	0
4/23/2024	10:15 PM	0	0	0	0	0	0	0	0	0	0	0	0	0
4/23/2024	10:30 PM	0	0	0	0	0	0	0	0	0	0	0	0	0
4/23/2024	10:45 PM	0	0	0	0	0	0	0	0	0	0	0	0	0
4/23/2024	11:00 PM	0	0	0	0	0	0	0	0	0	0	0	0	0
4/23/2024	11:15 PM	0	0	0	0	0	0	0	0	0	0	0	0	0
4/23/2024	11:30 PM	0	0	0	0	0	0	0	0	0	0	0	0	0
4/23/2024	11:45 PM	0	0	0	0	0	0	0	0	0	0	0	0	0

4/24/2024	12:00 AM	0	0	0	0	0	0	0	0	0	0	0	0	0
4/24/2024	12:15 AM	0	0	0	0	0	0	0	0	0	0	0	0	0
4/24/2024	12:30 AM	0	0	0	0	0	0	0	0	0	0	0	0	0
4/24/2024	12:45 AM	0	0	0	0	0	0	0	0	0	0	0	0	0
4/24/2024	1:00 AM	0	0	0	0	0	0	0	0	0	0	0	0	0
4/24/2024	1:15 AM	0	0	0	0	0	0	0	0	0	0	0	0	0
4/24/2024	1:30 AM	0	0	0	0	0	0	0	0	0	0	0	0	0
4/24/2024	1:45 AM	0	0	0	0	0	0	0	0	0	0	0	0	0
4/24/2024	2:00 AM	0	0	0	0	0	0	0	0	0	0	0	0	0
4/24/2024	2:15 AM	0	0	0	0	0	0	0	0	0	0	0	0	0
4/24/2024	2:30 AM	0	0	0	0	0	0	0	0	0	0	0	0	0
4/24/2024	2:45 AM	0	0	0	0	0	0	0	0	0	0	0	0	0
4/24/2024	3:00 AM	0	0	0	0	0	0	0	0	0	0	0	0	0
4/24/2024	3:15 AM	0	0	0	0	0	0	0	0	0	0	0	0	0
4/24/2024	3:30 AM	0	0	0	0	0	0	0	0	0	0	0	0	0
4/24/2024	3:45 AM	0	0	0	0	0	0	0	0	0	0	0	0	0
4/24/2024	4:00 AM	0	0	0	0	0	0	0	0	0	0	0	0	0
4/24/2024	4:15 AM	0	0	0	0	0	0	0	0	0	0	0	0	0
4/24/2024	4:30 AM	0	0	0	0	0	0	0	0	0	0	0	0	0
4/24/2024	4:45 AM	0	0	0	0	0	0	0	0	0	0	0	0	0
4/24/2024	5:00 AM	0	0	0	0	0	0	0	0	0	0	0	0	0
4/24/2024	5:15 AM	0	0	0	0	0	0	0	0	0	0	0	0	0
4/24/2024	5:30 AM	0	0	0	0	0	0	0	0	0	0	0	0	0
4/24/2024	5:45 AM	0	0	0	0	0	0	0	0	0	0	0	0	0
4/24/2024	6:00 AM	0	0	0	0	0	0	0	0	0	0	0	0	0
4/24/2024	6:15 AM	0	0	0	0	0	0	0	0	0	0	0	0	0
4/24/2024	6:30 AM	0	0	0	0	0	0	0	0	0	0	0	0	0
4/24/2024	6:45 AM	0	0	0	0	0	0	0	0	0	0	0	0	0
4/24/2024	7:00 AM	0	0	0	0	0	0	0	0	0	0	0	0	0
4/24/2024	7:15 AM	0	0	0	0	0	0	0	0	0	0	0	0	0
4/24/2024	7:30 AM	0	0	0	0	0	0	0	0	0	0	0	0	0
4/24/2024	7:45 AM	0	0	0	0	0	0	0	0	0	0	0	0	0
4/24/2024	8:00 AM	0	0	0	0	0	0	0	0	0	0	0	0	0
4/24/2024	8:15 AM	0	0	0	0	0	0	0	0	0	0	0	0	0
4/24/2024	8:30 AM	0	0	0	0	0	0	0	0	0	0	0	0	0
4/24/2024	8:45 AM	0	0	0	0	0	0	0	0	0	0	0	0	0
4/24/2024	9:00 AM	0	0	0	0	0	0	0	0	0	0	0	0	0
4/24/2024	9:15 AM	0	0	0	0	0	0	0	0	0	0	0	0	0
4/24/2024	9:30 AM	0	0	0	0	0	0	0	0	0	0	0	0	0
4/24/2024	9:45 AM	0	0	0	0	0	0	0	0	0	0	0	0	0
4/24/2024	10:00 AM	0	0	0	0	0	0	0	0	0	0	0	0	0
4/24/2024	10:15 AM	0	0	0	0	0	0	0	0	0	0	0	0	0
4/24/2024	10:30 AM	0	0	0	0	0	0	0	0	0	0	0	0	0
4/24/2024	10:45 AM	0	0	0	0	0	0	0	0	0	0	0	0	0
4/24/2024	11:00 AM	0	0	0	0	0	0	0	0	0	0	0	0	0
4/24/2024	11:15 AM	0	0	0	0	0	0	0	0	0	0	0	0	0
4/24/2024	11:30 AM	0	0	0	0	0	0	0	0	0	0	0	0	0
4/24/2024	11:45 AM	0	0	0	0	0	0	0	0	0	0	0	0	0
4/24/2024	12:00 PM	0	0	0	0	0	0	0	0	0	0	0	0	0
4/24/2024	12:15 PM	0	0	0	0	0	0	0	0	0	0	0	0	0
4/24/2024	12:30 PM	0	0	0	0	0	0	0	0	0	0	0	0	0
4/24/2024	12:45 PM	0	0	0	0	0	0	0	0	0	0	0	0	0
4/24/2024	1:00 PM	0	0	0	0	0	0	0	0	0	0	0	0	0
4/24/2024	1:15 PM	0	0	0	0	0	0	0	0	0	0	0	0	0
4/24/2024	1:30 PM	0	0	0	0	0	0	0	0	0	0	0	0	0
4/24/2024	1:45 PM	0	0	0	0	0	0	0	0	0	0	0	0	0
4/24/2024	2:00 PM	0	0	0	0	0	0	0	0	0	0	0	0	0
4/24/2024	2:15 PM	0	0	0	0	0	0	0	0	0	0	0	0	0
4/24/2024	2:30 PM	0	0	0	0	0	0	0	0	0	0	0	0	0
4/24/2024	2:45 PM	0	0	0	0	0	0	0	0	0	0	0	0	0
4/24/2024	3:00 PM	0	0	0	0	0	0	0	0	0	0	0	0	0
4/24/2024	3:15 PM	0	0	0	0	0	0	0	0	0	0	0	0	0
4/24/2024	3:30 PM	0	0	0	0	0	0	0	0	0	0	0	0	0
4/24/2024	3:45 PM	0	0	0	0	0	0	0	0	0	0	0	0	0
4/24/2024	4:00 PM	0	0	0	0	0	0	0	0	0	0	0	0	0
4/24/2024	4:15 PM	0	0	0	0	0	0	0	0	0	0	0	0	0
4/24/2024	4:30 PM	0	0	0	0	0	0	0	0	0	0	0	0	0
4/24/2024	4:45 PM	0	0	0	0	0	0	0	0	0	0	0	0	0
4/24/2024	5:00 PM	0	0	0	0	0	0	0	0	0	0	0	0	0
4/24/2024	5:15 PM	0	0	0	0	0	0	0	0	0	0	0	0	0
4/24/2024	5:30 PM	0	0	0	0	0	0	0	0	0	0	0	0	0
4/24/2024	5:45 PM	0	0	0	0	0	0	0	0	0	0	0	0	0
4/24/2024	6:00 PM	0	0	0	0	0	0	0	0	0	0	0	0	0
4/24/2024	6:15 PM	0	0	0	0	0	0	0	0	0	0	0	0	0
4/24/2024	6:30 PM	0	0	0	0	0	0	0	0	0	0	0	0	0
4/24/2024	6:45 PM	0	0	0	0	0	0	0	0	0	0	0	0	0
4/24/2024	7:00 PM	0	0	0	0	0	0	0	0	0	0	0	0	0
4/24/2024	7:15 PM	0	0	0	0	0	0	0	0	0	0	0	0	0
4/24/2024	7:30 PM	0	0	0	0	0	0	0	0	0	0	0	0	0
4/24/2024	7:45 PM	0	0	0	0	0	0	0	0	0	0	0	0	0
4/24/2024	8:00 PM	0	0	0	0	0	0	0	0	0	0	0	0	0
4/24/2024	8:15 PM	0	0	0	0	0	0	0	0	0	0	0	0	0
4/24/2024	8:30 PM	0	0	0	0	0	0	0	0	0	0	0	0	0
4/24/2024	8:45 PM	0	0	0	0	0	0	0	0	0	0	0	0	0
4/24/2024	9:00 PM	0	0	0	0	0	0	0	0	0	0	0	0	0
4/24/2024	9:15 PM	0	0	0	0	0	0	0	0	0	0	0	0	0
4/24/2024	9:30 PM	0	0	0	0	0	0	0	0	0	0	0	0	0
4/24/2024	9:45 PM	0	0	0	0	0	0	0	0	0	0	0	0	0
4/24/2024	10:00 PM	0	0	0	0	0	0	0	0	0	0	0	0	0
4/24/2024	10:15 PM	0	0	0	0	0	0	0	0	0	0	0	0	0
4/24/2024	10:30 PM	0	0	0	0	0	0	0	0	0	0	0	0	0
4/24/2024	10:45 PM	0	0	0	0	0	0	0	0	0	0	0	0	0
4/24/2024	11:00 PM	0	0	0	0	0	0	0	0	0	0	0	0	0
4/24/2024	11:15 PM	0	0	0	0	0	0	0	0	0	0	0	0	0
4/24/2024	11:30 PM	0	0	0	0	0	0	0	0	0	0	0	0	0
4/24/2024	11:45 PM	0	0	0	0	0	0	0	0	0	0	0	0	0

4/25/2024	12:00 AM	0	0	0	0	0	0	0	0	0	0	0	0	0
4/25/2024	12:15 AM	0	0	0	0	0	0	0	0	0	0	0	0	0
4/25/2024	12:30 AM	0	0	0	0	0	0	0	0	0	0	0	0	0
4/25/2024	12:45 AM	0	0	0	0	0	0	0	0	0	0	0	0	0
4/25/2024	1:00 AM	0	0	0	0	0	0	0	0	0	0	0	0	0
4/25/2024	1:15 AM	0	0	0	0	0	0	0	0	0	0	0	0	0
4/25/2024	1:30 AM	0	0	0	0	0	0	0	0	0	0	0	0	0
4/25/2024	1:45 AM	0	0	0	0	0	0	0	0	0	0	0	0	0
4/25/2024	2:00 AM	0	0	0	0	0	0	0	0	0	0	0	0	0
4/25/2024	2:15 AM	0	0	0	0	0	0	0	0	0	0	0	0	0
4/25/2024	2:30 AM	0	0	0	0	0	0	0	0	0	0	0	0	0
4/25/2024	2:45 AM	0	0	0	0	0	0	0	0	0	0	0	0	0
4/25/2024	3:00 AM	0	0	0	0	0	0	0	0	0	0	0	0	0
4/25/2024	3:15 AM	0	0	0	0	0	0	0	0	0	0	0	0	0
4/25/2024	3:30 AM	0	0	0	0	0	0	0	0	0	0	0	0	0
4/25/2024	3:45 AM	0	0	0	0	0	0	0	0	0	0	0	0	0
4/25/2024	4:00 AM	0	0	0	0	0	0	0	0	0	0	0	0	0
4/25/2024	4:15 AM	0	0	0	0	0	0	0	0	0	0	0	0	0
4/25/2024	4:30 AM	0	0	0	0	0	0	0	0	0	0	0	0	0
4/25/2024	4:45 AM	0	0	0	0	0	0	0	0	0	0	0	0	0
4/25/2024	5:00 AM	0	0	0	0	0	0	0	0	0	0	0	0	0
4/25/2024	5:15 AM	0	0	0	0	0	0	0	0	0	0	0	0	0
4/25/2024	5:30 AM	0	0	0	0	0	0	0	0	0	0	0	0	0
4/25/2024	5:45 AM	0	0	0	0	0	0	0	0	0	0	0	0	0
4/25/2024	6:00 AM	0	0	0	0	0	0	0	0	0	0	0	0	0
4/25/2024	6:15 AM	0	0	0	0	0	0	0	0	0	0	0	0	0
4/25/2024	6:30 AM	0	0	0	0	0	0	0	0	0	0	0	0	0
4/25/2024	6:45 AM	0	0	0	0	0	0	0	0	0	0	0	0	0
4/25/2024	7:00 AM	0	0	0	0	0	0	0	0	0	0	0	0	0
4/25/2024	7:15 AM	0	0	0	0	0	0	0	0	0	0	0	0	0
4/25/2024	7:30 AM	0	0	0	0	0	0	0	0	0	0	0	0	0
4/25/2024	7:45 AM	0	0	0	0	0	0	0	0	0	0	0	0	0
4/25/2024	8:00 AM	0	0	0	0	0	0	0	0	0	0	0	0	0
4/25/2024	8:15 AM	0	0	0	0	0	0	0	0	0	0	0	0	0
4/25/2024	8:30 AM	0	0	0	0	0	0	0	0	0	0	0	0	0
4/25/2024	8:45 AM	0	0	0	0	0	0	0	0	0	0	0	0	0
4/25/2024	9:00 AM	0	0	0	0	0	0	0	0	0	0	0	0	0
4/25/2024	9:15 AM	0	0	0	0	0	0	0	0	0	0	0	0	0
4/25/2024	9:30 AM	0	0	0	0	0	0	0	0	0	0	0	0	0
4/25/2024	9:45 AM	0	0	0	0	0	0	0	0	0	0	0	0	0
4/25/2024	10:00 AM	0	0	0	0	0	0	0	0	0	0	0	0	0
4/25/2024	10:15 AM	0	0	0	0	0	0	0	0	0	0	0	0	0
4/25/2024	10:30 AM	0	0	0	0	0	0	0	0	0	0	0	0	0
4/25/2024	10:45 AM	0	0	0	0	0	0	0	0	0	0	0	0	0
4/25/2024	11:00 AM	0	0	0	0	0	0	0	0	0	0	0	0	0
4/25/2024	11:15 AM	0	0	0	0	0	0	0	0	0	0	0	0	0
4/25/2024	11:30 AM	0	0	0	0	0	0	0	0	0	0	0	0	0
4/25/2024	11:45 AM	0	0	0	0	0	0	0	0	0	0	0	0	0
4/25/2024	12:00 PM	0	0	0	0	0	0	0	0	0	0	0	0	0
4/25/2024	12:15 PM	0	0	0	0	0	0	0	0	0	0	0	0	0
4/25/2024	12:30 PM	0	0	0	0	0	0	0	0	0	0	0	0	0
4/25/2024	12:45 PM	0	0	0	0	0	0	0	0	0	0	0	0	0
4/25/2024	1:00 PM	0	0	0	0	0	0	0	0	0	0	0	0	0
4/25/2024	1:15 PM	0	0	0	0	0	0	0	0	0	0	0	0	0
4/25/2024	1:30 PM	0	0	0	0	0	0	0	0	0	0	0	0	0
4/25/2024	1:45 PM	0	0	0	0	0	0	0	0	0	0	0	0	0
4/25/2024	2:00 PM	0	0	0	0	0	0	0	0	0	0	0	0	0
4/25/2024	2:15 PM	0	0	0	0	0	0	0	0	0	0	0	0	0
4/25/2024	2:30 PM	0	0	0	0	0	0	0	0	0	0	0	0	0
4/25/2024	2:45 PM	0	0	0	0	0	0	0	0	0	0	0	0	0
4/25/2024	3:00 PM	0	0	0	0	0	0	0	0	0	0	0	0	0
4/25/2024	3:15 PM	0	0	0	0	0	0	0	0	0	0	0	0	0
4/25/2024	3:30 PM	0	0	0	0	0	0	0	0	0	0	0	0	0
4/25/2024	3:45 PM	0	0	0	0	0	0	0	0	0	0	0	0	0
4/25/2024	4:00 PM	0	0	0	0	0	0	0	0	0	0	0	0	0
4/25/2024	4:15 PM	0	0	0	0	0	0	0	0	0	0	0	0	0
4/25/2024	4:30 PM	0	0	0	0	0	0	0	0	0	0	0	0	0
4/25/2024	4:45 PM	0	0	0	0	0	0	0	0	0	0	0	0	0
4/25/2024	5:00 PM	0	0	0	0	0	0	0	0	0	0	0	0	0
4/25/2024	5:15 PM	0	0	0	0	0	0	0	0	0	0	0	0	0
4/25/2024	5:30 PM	0	0	0	0	0	0	0	0	0	0	0	0	0
4/25/2024	5:45 PM	0	0	0	0	0	0	0	0	0	0	0	0	0
4/25/2024	6:00 PM	0	0	0	0	0	0	0	0	0	0	0	0	0
4/25/2024	6:15 PM	0	0	0	0	0	0	0	0	0	0	0	0	0
4/25/2024	6:30 PM	0	0	0	0	0	0	0	0	0	0	0	0	0
4/25/2024	6:45 PM	0	0	0	0	0	0	0	0	0	0	0	0	0
4/25/2024	7:00 PM	0	0	0	0	0	0	0	0	0	0	0	0	0
4/25/2024	7:15 PM	0	0	0	0	0	0	0	0	0	0	0	0	0
4/25/2024	7:30 PM	0	0	0	0	0	0	0	0	0	0	0	0	0
4/25/2024	7:45 PM	0	0	0	0	0	0	0	0	0	0	0	0	0
4/25/2024	8:00 PM	0	0	0	0	0	0	0	0	0	0	0	0	0
4/25/2024	8:15 PM	0	0	0	0	0	0	0	0	0	0	0	0	0
4/25/2024	8:30 PM	0	0	0	0	0	0	0	0	0	0	0	0	0
4/25/2024	8:45 PM	0	0	0	0	0	0	0	0	0	0	0	0	0
4/25/2024	9:00 PM	0	0	0	0	0	0	0	0	0	0	0	0	0
4/25/2024	9:15 PM	0	0	0	0	0	0	0	0	0	0	0	0	0
4/25/2024	9:30 PM	0	0	0	0	0	0	0	0	0	0	0	0	0
4/25/2024	9:45 PM	0	0	0	0	0	0	0	0	0	0	0	0	0
4/25/2024	10:00 PM	0	0	0	0	0	0	0	0	0	0	0	0	0
4/25/2024	10:15 PM	0	0	0	0	0	0	0	0	0	0	0	0	0
4/25/2024	10:30 PM	0	0	0	0	0	0	0	0	0	0	0	0	0
4/25/2024	10:45 PM	0	0	0	0	0	0	0	0	0	0	0	0	0
4/25/2024	11:00 PM	0	0	0	0	0	0	0	0	0	0	0	0	0
4/25/2024	11:15 PM	0	0	0	0	0	0	0	0	0	0	0	0	0
4/25/2024	11:30 PM	0	0	0	0	0	0	0	0	0	0	0	0	0
4/25/2024	11:45 PM	0	0	0	0	0	0	0	0	0	0	0	0	0

4/26/2024	12:00 AM	0	0	0	0	0	0	0	0	0	0	0	0	0
4/26/2024	12:15 AM	0	0	0	0	0	0	0	0	0	0	0	0	0
4/26/2024	12:30 AM	0	0	0	0	0	0	0	0	0	0	0	0	0
4/26/2024	12:45 AM	0	0	0	0	0	0	0	0	0	0	0	0	0
4/26/2024	1:00 AM	0	0	0	0	0	0	0	0	0	0	0	0	0
4/26/2024	1:15 AM	0	0	0	0	0	0	0	0	0	0	0	0	0
4/26/2024	1:30 AM	0	0	0	0	0	0	0	0	0	0	0	0	0
4/26/2024	1:45 AM	0	0	0	0	0	0	0	0	0	0	0	0	0
4/26/2024	2:00 AM	0	0	0	0	0	0	0	0	0	0	0	0	0
4/26/2024	2:15 AM	0	0	0	0	0	0	0	0	0	0	0	0	0
4/26/2024	2:30 AM	0	0	0	0	0	0	0	0	0	0	0	0	0
4/26/2024	2:45 AM	0	0	0	0	0	0	0	0	0	0	0	0	0
4/26/2024	3:00 AM	0	0	0	0	0	0	0	0	0	0	0	0	0
4/26/2024	3:15 AM	0	0	0	0	0	0	0	0	0	0	0	0	0
4/26/2024	3:30 AM	0	0	0	0	0	0	0	0	0	0	0	0	0
4/26/2024	3:45 AM	0	0	0	0	0	0	0	0	0	0	0	0	0
4/26/2024	4:00 AM	0	0	0	0	0	0	0	0	0	0	0	0	0
4/26/2024	4:15 AM	0	0	0	0	0	0	0	0	0	0	0	0	0
4/26/2024	4:30 AM	0	0	0	0	0	0	0	0	0	0	0	0	0
4/26/2024	4:45 AM	0	0	0	0	0	0	0	0	0	0	0	0	0
4/26/2024	5:00 AM	0	0	0	0	0	0	0	0	0	0	0	0	0
4/26/2024	5:15 AM	0	0	0	0	0	0	0	0	0	0	0	0	0
4/26/2024	5:30 AM	0	0	0	0	0	0	0	0	0	0	0	0	0
4/26/2024	5:45 AM	0	0	0	0	0	0	0	0	0	0	0	0	0
4/26/2024	6:00 AM	0	0	0	0	0	0	0	0	0	0	0	0	0
4/26/2024	6:15 AM	0	0	0	0	0	0	0	0	0	0	0	0	0
4/26/2024	6:30 AM	0	0	0	0	0	0	0	0	0	0	0	0	0
4/26/2024	6:45 AM	0	0	0	0	0	0	0	0	0	0	0	0	0
4/26/2024	7:00 AM	0	0	0	0	0	0	0	0	0	0	0	0	0
4/26/2024	7:15 AM	0	0	0	0	0	0	0	0	0	0	0	0	0
4/26/2024	7:30 AM	0	0	0	0	0	0	0	0	0	0	0	0	0
4/26/2024	7:45 AM	0	0	0	0	0	0	0	0	0	0	0	0	0
4/26/2024	8:00 AM	0	0	0	0	0	0	0	0	0	0	0	0	0
4/26/2024	8:15 AM	0	0	0	0	0	0	0	0	0	0	0	0	0
4/26/2024	8:30 AM	0	0	0	0	0	0	0	0	0	0	0	0	0
4/26/2024	8:45 AM	0	0	0	0	0	0	0	0	0	0	0	0	0
4/26/2024	9:00 AM	0	0	0	0	0	0	0	0	0	0	0	0	0
4/26/2024	9:15 AM	0	0	0	0	0	0	0	0	0	0	0	0	0
4/26/2024	9:30 AM	0	0	0	0	0	0	0	0	0	0	0	0	0
4/26/2024	9:45 AM	0	0	0	0	0	0	0	0	0	0	0	0	0
4/26/2024	10:00 AM	0	0	0	0	0	0	0	0	0	0	0	0	0
4/26/2024	10:15 AM	0	0	0	0	0	0	0	0	0	0	0	0	0
4/26/2024	10:30 AM	0	0	0	0	0	0	0	0	0	0	0	0	0
4/26/2024	10:45 AM	0	0	0	0	0	0	0	0	0	0	0	0	0
4/26/2024	11:00 AM	0	0	0	0	0	0	0	0	0	0	0	0	0
4/26/2024	11:15 AM	0	0	0	0	0	0	0	0	0	0	0	0	0
4/26/2024	11:30 AM	0	0	0	0	0	0	0	0	0	0	0	0	0
4/26/2024	11:45 AM	0	0	0	0	0	0	0	0	0	0	0	0	0
4/26/2024	12:00 PM	0	0	0	0	0	0	0	0	0	0	0	0	0
4/26/2024	12:15 PM	0	0	0	0	0	0	0	0	0	0	0	0	0
4/26/2024	12:30 PM	0	0	0	0	0	0	0	0	0	0	0	0	0
4/26/2024	12:45 PM	0	0	0	0	0	0	0	0	0	0	0	0	0
4/26/2024	1:00 PM	0	0	0	0	0	0	0	0	0	0	0	0	0
4/26/2024	1:15 PM	0	0	0	0	0	0	0	0	0	0	0	0	0
4/26/2024	1:30 PM	0	0	0	0	0	0	0	0	0	0	0	0	0
4/26/2024	1:45 PM	0	0	0	0	0	0	0	0	0	0	0	0	0
4/26/2024	2:00 PM	0	0	0	0	0	0	0	0	0	0	0	0	0
4/26/2024	2:15 PM	0	0	0	0	0	0	0	0	0	0	0	0	0
4/26/2024	2:30 PM	0	0	0	0	0	0	0	0	0	0	0	0	0
4/26/2024	2:45 PM	0	0	0	0	0	0	0	0	0	0	0	0	0
4/26/2024	3:00 PM	0	0	0	0	0	0	0	0	0	0	0	0	0
4/26/2024	3:15 PM	0	0	0	0	0	0	0	0	0	0	0	0	0
4/26/2024	3:30 PM	0	0	0	0	0	0	0	0	0	0	0	0	0
4/26/2024	3:45 PM	0	0	0	0	0	0	0	0	0	0	0	0	0
4/26/2024	4:00 PM	0	0	0	0	0	0	0	0	0	0	0	0	0
4/26/2024	4:15 PM	0	0	0	0	0	0	0	0	0	0	0	0	0
4/26/2024	4:30 PM	0	0	0	0	0	0	0	0	0	0	0	0	0
4/26/2024	4:45 PM	0	0	0	0	0	0	0	0	0	0	0	0	0
4/26/2024	5:00 PM	0	0	0	0	0	0	0	0	0	0	0	0	0
4/26/2024	5:15 PM	0	0	0	0	0	0	0	0	0	0	0	0	0
4/26/2024	5:30 PM	0	0	0	0	0	0	0	0	0	0	0	0	0
4/26/2024	5:45 PM	0	0	0	0	0	0	0	0	0	0	0	0	0
4/26/2024	6:00 PM	0	0	0	0	0	0	0	0	0	0	0	0	0
4/26/2024	6:15 PM	0	0	0	0	0	0	0	0	0	0	0	0	0
4/26/2024	6:30 PM	0	0	0	0	0	0	0	0	0	0	0	0	0
4/26/2024	6:45 PM	0	0	0	0	0	0	0	0	0	0	0	0	0
4/26/2024	7:00 PM	0	0	0	0	0	0	0	0	0	0	0	0	0
4/26/2024	7:15 PM	0	0	0	0	0	0	0	0	0	0	0	0	0
4/26/2024	7:30 PM	0	0	0	0	0	0	0	0	0	0	0	0	0
4/26/2024	7:45 PM	0	0	0	0	0	0	0	0	0	0	0	0	0
4/26/2024	8:00 PM	0	0	0	0	0	0	0	0	0	0	0	0	0
4/26/2024	8:15 PM	0	0	0	0	0	0	0	0	0	0	0	0	0
4/26/2024	8:30 PM	0	0	0	0	0	0	0	0	0	0	0	0	0
4/26/2024	8:45 PM	0	0	0	0	0	0	0	0	0	0	0	0	0
4/26/2024	9:00 PM	0	0	0	0	0	0	0	0	0	0	0	0	0
4/26/2024	9:15 PM	0	0	0	0	0	0	0	0	0	0	0	0	0
4/26/2024	9:30 PM	0	0	0	0	0	0	0	0	0	0	0	0	0
4/26/2024	9:45 PM	0	0	0	0	0	0	0	0	0	0	0	0	0
4/26/2024	10:00 PM	0	0	0	0	0	0	0	0	0	0	0	0	0
4/26/2024	10:15 PM	0	0	0	0	0	0	0	0	0	0	0	0	0
4/26/2024	10:30 PM	0	0	0	0	0	0	0	0	0	0	0	0	0
4/26/2024	10:45 PM	0	0	0	0	0	0	0	0	0	0	0	0	0
4/26/2024	11:00 PM	0	0	0	0	0	0	0	0	0	0	0	0	0
4/26/2024	11:15 PM	0	0	0	0	0	0	0	0	0	0	0	0	0
4/26/2024	11:30 PM	0	0	0	0	0	0	0	0	0	0	0	0	0
4/26/2024	11:45 PM	0	0	0	0	0	0	0	0	0	0	0	0	0

4/27/2024	12:00 AM	0	0	0	0	0	0	0	0	0	0	0	0	0
4/27/2024	12:15 AM	0	0	0	0	0	0	0	0	0	0	0	0	0
4/27/2024	12:30 AM	0	0	0	0	0	0	0	0	0	0	0	0	0
4/27/2024	12:45 AM	0	0	0	0	0	0	0	0	0	0	0	0	0
4/27/2024	1:00 AM	0	0	0	0	0	0	0	0	0	0	0	0	0
4/27/2024	1:15 AM	0	0	0	0	0	0	0	0	0	0	0	0	0
4/27/2024	1:30 AM	0	0	0	0	0	0	0	0	0	0	0	0	0
4/27/2024	1:45 AM	0	0	0	0	0	0	0	0	0	0	0	0	0
4/27/2024	2:00 AM	0	0	0	0	0	0	0	0	0	0	0	0	0
4/27/2024	2:15 AM	0	0	0	0	0	0	0	0	0	0	0	0	0
4/27/2024	2:30 AM	0	0	0	0	0	0	0	0	0	0	0	0	0
4/27/2024	2:45 AM	0	0	0	0	0	0	0	0	0	0	0	0	0
4/27/2024	3:00 AM	0	0	0	0	0	0	0	0	0	0	0	0	0
4/27/2024	3:15 AM	0	0	0	0	0	0	0	0	0	0	0	0	0
4/27/2024	3:30 AM	0	0	0	0	0	0	0	0	0	0	0	0	0
4/27/2024	3:45 AM	0	0	0	0	0	0	0	0	0	0	0	0	0
4/27/2024	4:00 AM	0	0	0	0	0	0	0	0	0	0	0	0	0
4/27/2024	4:15 AM	0	0	0	0	0	0	0	0	0	0	0	0	0
4/27/2024	4:30 AM	0	0	0	0	0	0	0	0	0	0	0	0	0
4/27/2024	4:45 AM	0	0	0	0	0	0	0	0	0	0	0	0	0
4/27/2024	5:00 AM	0	0	0	0	0	0	0	0	0	0	0	0	0
4/27/2024	5:15 AM	0	0	0	0	0	0	0	0	0	0	0	0	0
4/27/2024	5:30 AM	0	0	0	0	0	0	0	0	0	0	0	0	0
4/27/2024	5:45 AM	0	0	0	0	0	0	0	0	0	0	0	0	0
4/27/2024	6:00 AM	0	0	0	0	0	0	0	0	0	0	0	0	0
4/27/2024	6:15 AM	0	0	0	0	0	0	0	0	0	0	0	0	0
4/27/2024	6:30 AM	0	0	0	0	0	0	0	0	0	0	0	0	0
4/27/2024	6:45 AM	0	0	0	0	0	0	0	0	0	0	0	0	0
4/27/2024	7:00 AM	0	0	0	0	0	0	0	0	0	0	0	0	0
4/27/2024	7:15 AM	0	0	0	0	0	0	0	0	0	0	0	0	0
4/27/2024	7:30 AM	0	0	0	0	0	0	0	0	0	0	0	0	0
4/27/2024	7:45 AM	0	0	0	0	0	0	0	0	0	0	0	0	0
4/27/2024	8:00 AM	0	0	0	0	0	0	0	0	0	0	0	0	0
4/27/2024	8:15 AM	0	0	0	0	0	0	0	0	0	0	0	0	0
4/27/2024	8:30 AM	0	0	0	0	0	0	0	0	0	0	0	0	0
4/27/2024	8:45 AM	0	0	0	0	0	0	0	0	0	0	0	0	0
4/27/2024	9:00 AM	0	0	0	0	0	0	0	0	0	0	0	0	0
4/27/2024	9:15 AM	0	0	0	0	0	0	0	0	0	0	0	0	0
4/27/2024	9:30 AM	0	0	0	0	0	0	0	0	0	0	0	0	0
4/27/2024	9:45 AM	0	0	0	0	0	0	0	0	0	0	0	0	0
4/27/2024	10:00 AM	0	0	0	0	0	0	0	0	0	0	0	0	0
4/27/2024	10:15 AM	0	0	0	0	0	0	0	0	0	0	0	0	0
4/27/2024	10:30 AM	0	0	0	0	0	0	0	0	0	0	0	0	0
4/27/2024	10:45 AM	0	0	0	0	0	0	0	0	0	0	0	0	0
4/27/2024	11:00 AM	0	0	0	0	0	0	0	0	0	0	0	0	0
4/27/2024	11:15 AM	0	0	0	0	0	0	0	0	0	0	0	0	0
4/27/2024	11:30 AM	0	0	0	0	0	0	0	0	0	0	0	0	0
4/27/2024	11:45 AM	0	0	0	0	0	0	0	0	0	0	0	0	0
4/27/2024	12:00 PM	0	0	0	0	0	0	0	0	0	0	0	0	0
4/27/2024	12:15 PM	0	0	0	0	0	0	0	0	0	0	0	0	0
4/27/2024	12:30 PM	0	0	0	0	0	0	0	0	0	0	0	0	0
4/27/2024	12:45 PM	0	0	0	0	0	0	0	0	0	0	0	0	0
4/27/2024	1:00 PM	0	0	0	0	0	0	0	0	0	0	0	0	0
4/27/2024	1:15 PM	0	0	0	0	0	0	0	0	0	0	0	0	0
4/27/2024	1:30 PM	0	0	0	0	0	0	0	0	0	0	0	0	0
4/27/2024	1:45 PM	0	0	0	0	0	0	0	0	0	0	0	0	0
4/27/2024	2:00 PM	0	0	0	0	0	0	0	0	0	0	0	0	0
4/27/2024	2:15 PM	0	0	0	0	0	0	0	0	0	0	0	0	0
4/27/2024	2:30 PM	0	0	0	0	0	0	0	0	0	0	0	0	0
4/27/2024	2:45 PM	0	0	0	0	0	0	0	0	0	0	0	0	0
4/27/2024	3:00 PM	0	0	0	0	0	0	0	0	0	0	0	0	0
4/27/2024	3:15 PM	0	0	0	0	0	0	0	0	0	0	0	0	0
4/27/2024	3:30 PM	0	0	0	0	0	0	0	0	0	0	0	0	0
4/27/2024	3:45 PM	0	0	0	0	0	0	0	0	0	0	0	0	0
4/27/2024	4:00 PM	0	0	0	0	0	0	0	0	0	0	0	0	0
4/27/2024	4:15 PM	0	0	0	0	0	0	0	0	0	0	0	0	0
4/27/2024	4:30 PM	0	0	0	0	0	0	0	0	0	0	0	0	0
4/27/2024	4:45 PM	0	0	0	0	0	0	0	0	0	0	0	0	0
4/27/2024	5:00 PM	0	0	0	0	0	0	0	0	0	0	0	0	0
4/27/2024	5:15 PM	0	0	0	0	0	0	0	0	0	0	0	0	0
4/27/2024	5:30 PM	0	0	0	0	0	0	0	0	0	0	0	0	0
4/27/2024	5:45 PM	0	0	0	0	0	0	0	0	0	0	0	0	0
4/27/2024	6:00 PM	0	0	0	0	0	0	0	0	0	0	0	0	0
4/27/2024	6:15 PM	0	0	0	0	0	0	0	0	0	0	0	0	0
4/27/2024	6:30 PM	0	0	0	0	0	0	0	0	0	0	0	0	0
4/27/2024	6:45 PM	0	0	0	0	0	0	0	0	0	0	0	0	0
4/27/2024	7:00 PM	0	0	0	0	0	0	0	0	0	0	0	0	0
4/27/2024	7:15 PM	0	0	0	0	0	0	0	0	0	0	0	0	0
4/27/2024	7:30 PM	0	0	0	0	0	0	0	0	0	0	0	0	0
4/27/2024	7:45 PM	0	0	0	0	0	0	0	0	0	0	0	0	0
4/27/2024	8:00 PM	0	0	0	0	0	0	0	0	0	0	0	0	0
4/27/2024	8:15 PM	0	0	0	0	0	0	0	0	0	0	0	0	0
4/27/2024	8:30 PM	0	0	0	0	0	0	0	0	0	0	0	0	0
4/27/2024	8:45 PM	0	0	0	0	0	0	0	0	0	0	0	0	0
4/27/2024	9:00 PM	0	0	0	0	0	0	0	0	0	0	0	0	0
4/27/2024	9:15 PM	0	0	0	0	0	0	0	0	0	0	0	0	0
4/27/2024	9:30 PM	0	0	0	0	0	0	0	0	0	0	0	0	0
4/27/2024	9:45 PM	0	0	0	0	0	0	0	0	0	0	0	0	0
4/27/2024	10:00 PM	0	0	0	0	0	0	0	0	0	0	0	0	0
4/27/2024	10:15 PM	0	0	0	0	0	0	0	0	0	0	0	0	0
4/27/2024	10:30 PM	0	0	0	0	0	0	0	0	0	0	0	0	0
4/27/2024	10:45 PM	0	0	0	0	0	0	0	0	0	0	0	0	0
4/27/2024	11:00 PM	0	0	0	0	0	0	0	0	0	0	0	0	0
4/27/2024	11:15 PM	0	0	0	0	0	0	0	0	0	0	0	0	0
4/27/2024	11:30 PM	0	0	0	0	0	0	0	0	0	0	0	0	0
4/27/2024	11:45 PM	0	0	0	0	0	0	0	0	0	0	0	0	0

SB
File Name:
Start Date: 4/21/2024
Start Time: 0
Site Code: 75 Lane 3 SB
Station ID: 1
Location 1: I-20, north of Bush River Rd
Location 2:

Date	Time	1	2	3	4	5	6	7	8	9	10	11	12	13
4/21/2024	12:00 AM	0	178	17	1	2	0	0	0	6	0	0	0	0
4/21/2024	12:15 AM	0	140	16	1	2	0	0	0	7	0	0	0	0
4/21/2024	12:30 AM	0	136	16	1	3	0	0	0	10	0	0	0	0
4/21/2024	12:45 AM	0	128	12	0	2	0	0	0	11	0	0	0	0
4/21/2024	1:00 AM	0	120	14	0	4	0	0	0	9	0	0	0	0
4/21/2024	1:15 AM	0	123	17	0	4	0	0	0	9	0	0	0	0
4/21/2024	1:30 AM	0	106	16	0	3	0	0	0	7	0	0	0	0
4/21/2024	1:45 AM	0	106	14	0	4	0	0	0	8	0	0	0	0
4/21/2024	2:00 AM	1	86	12	0	1	0	0	0	12	0	0	0	0
4/21/2024	2:15 AM	1	73	9	0	1	0	0	0	11	0	0	0	0
4/21/2024	2:30 AM	1	58	8	0	1	0	0	0	10	0	0	0	0
4/21/2024	2:45 AM	1	50	7	0	0	0	0	0	8	0	0	0	0
4/21/2024	3:00 AM	0	48	8	0	0	0	0	0	7	0	0	0	0
4/21/2024	3:15 AM	1	47	6	0	1	0	0	0	7	0	0	0	0
4/21/2024	3:30 AM	1	50	5	0	3	0	0	0	9	0	0	0	0
4/21/2024	3:45 AM	1	48	7	0	3	0	0	0	9	0	1	0	0
4/21/2024	4:00 AM	1	62	5	0	4	0	0	0	6	0	1	0	0
4/21/2024	4:15 AM	0	61	4	0	3	0	0	0	7	0	1	0	0
4/21/2024	4:30 AM	0	63	6	1	2	0	0	0	5	0	1	0	0
4/21/2024	4:45 AM	0	67	3	1	3	0	0	0	9	0	0	0	0
4/21/2024	5:00 AM	0	62	4	1	2	0	0	0	12	0	0	0	0
4/21/2024	5:15 AM	0	71	5	1	2	0	0	0	13	0	0	0	0
4/21/2024	5:30 AM	0	82	9	0	1	0	0	0	12	0	0	0	0
4/21/2024	5:45 AM	1	97	13	0	0	0	0	0	11	0	0	0	0
4/21/2024	6:00 AM	1	108	19	0	0	0	0	0	9	0	0	0	0
4/21/2024	6:15 AM	1	117	24	0	0	0	0	0	10	0	0	0	0
4/21/2024	6:30 AM	1	136	24	0	0	0	0	0	14	0	0	0	0
4/21/2024	6:45 AM	0	149	28	0	0	0	0	0	14	0	0	0	0
4/21/2024	7:00 AM	0	178	31	0	0	0	0	0	17	0	0	0	0
4/21/2024	7:15 AM	0	198	38	0	0	1	0	0	16	0	0	0	0
4/21/2024	7:30 AM	0	204	53	0	1	1	0	0	16	0	0	0	0
4/21/2024	7:45 AM	0	215	55	1	1	1	0	0	18	0	0	0	0
4/21/2024	8:00 AM	0	214	55	1	1	1	0	1	18	0	0	0	0
4/21/2024	8:15 AM	1	233	53	1	4	1	0	1	19	0	0	1	0
4/21/2024	8:30 AM	1	266	41	1	3	2	0	1	21	0	0	1	0
4/21/2024	8:45 AM	1	293	44	0	5	2	0	1	19	0	0	1	0
4/21/2024	9:00 AM	1	340	49	1	7	2	0	0	18	0	0	1	0
4/21/2024	9:15 AM	0	370	60	1	5	1	0	0	19	0	0	0	0
4/21/2024	9:30 AM	0	376	66	1	5	0	0	0	22	0	0	0	0
4/21/2024	9:45 AM	0	378	84	1	4	0	0	1	23	0	0	0	0
4/21/2024	10:00 AM	0	392	85	0	2	0	0	1	21	0	0	0	0
4/21/2024	10:15 AM	0	389	84	0	3	0	0	1	20	0	0	0	0
4/21/2024	10:30 AM	0	389	97	0	6	1	0	1	18	0	0	0	0
4/21/2024	10:45 AM	0	429	92	0	5	1	0	1	18	0	0	1	0
4/21/2024	11:00 AM	0	433	106	0	8	1	0	1	26	0	0	1	0
4/21/2024	11:15 AM	0	471	110	0	8	1	0	1	29	0	0	1	0
4/21/2024	11:30 AM	0	506	113	0	5	0	0	1	26	0	0	1	0
4/21/2024	11:45 AM	0	508	122	0	6	1	0	0	27	0	0	0	0
4/21/2024	12:00 PM	0	519	118	0	4	2	0	0	25	0	0	0	0
4/21/2024	12:15 PM	1	504	123	0	3	2	0	0	28	0	0	0	0
4/21/2024	12:30 PM	1	503	118	0	3	2	0	1	28	0	0	0	0
4/21/2024	12:45 PM	1	504	122	0	2	1	0	1	26	0	0	0	0
4/21/2024	1:00 PM	1	492	126	0	3	0	0	1	24	0	0	0	0
4/21/2024	1:15 PM	0	512	118	0	3	0	0	2	19	0	0	0	0
4/21/2024	1:30 PM	0	523	120	0	4	0	0	1	19	0	0	0	0
4/21/2024	1:45 PM	1	505	106	0	5	1	0	2	21	0	0	0	0
4/21/2024	2:00 PM	1	514	95	0	3	1	0	2	20	0	0	0	0
4/21/2024	2:15 PM	1	499	88	2	2	1	0	1	17	0	0	0	0
4/21/2024	2:30 PM	1	469	80	2	1	1	0	1	16	0	0	0	0
4/21/2024	2:45 PM	0	468	85	2	0	0	0	1	11	0	0	0	0
4/21/2024	3:00 PM	0	455	81	2	1	0	0	1	11	0	0	0	0
4/21/2024	3:15 PM	0	449	88	1	1	0	0	1	18	0	0	0	0
4/21/2024	3:30 PM	0	466	86	1	2	0	0	1	18	0	0	0	0
4/21/2024	3:45 PM	0	465	69	1	3	0	0	2	22	0	0	0	0
4/21/2024	4:00 PM	0	459	67	1	2	0	0	2	22	0	0	0	0
4/21/2024	4:15 PM	0	431	61	0	2	0	0	3	17	0	0	0	0
4/21/2024	4:30 PM	0	411	59	0	2	2	0	3	18	0	0	0	0
4/21/2024	4:45 PM	0	415	59	0	2	2	0	1	20	0	0	0	0
4/21/2024	5:00 PM	0	405	66	0	2	2	0	1	25	0	0	0	0
4/21/2024	5:15 PM	0	426	68	0	2	2	0	0	28	0	0	0	0
4/21/2024	5:30 PM	0	437	70	1	2	0	0	0	31	0	0	0	0
4/21/2024	5:45 PM	0	417	74	1	1	1	0	0	32	0	0	0	0
4/21/2024	6:00 PM	0	408	59	1	1	1	0	0	31	0	0	0	0
4/21/2024	6:15 PM	0	377	58	1	1	1	0	0	34	0	0	0	0
4/21/2024	6:30 PM	0	355	56	0	1	1	0	0	33	0	0	0	0
4/21/2024	6:45 PM	0	365	56	0	1	0	0	0	32	0	0	0	0
4/21/2024	7:00 PM	0	351	62	0	1	0	0	0	31	0	2	0	0
4/21/2024	7:15 PM	0	339	57	0	2	0	0	0	25	0	2	0	0
4/21/2024	7:30 PM	0	319	51	0	1	0	0	0	22	0	2	0	0
4/21/2024	7:45 PM	0	290	41	0	1	0	0	0	22	0	2	0	0
4/21/2024	8:00 PM	0	272	39	0	2	0	0	0	17	0	0	0	0
4/21/2024	8:15 PM	0	273	33	0	2	0	0	1	19	0	0	0	0
4/21/2024	8:30 PM	0	258	29	0	2	0	0	1	19	0	0	0	0
4/21/2024	8:45 PM	0	227	32	0	2	0	0	1	14	0	0	0	0
4/21/2024	9:00 PM	0	214	26	0	1	0	0	1	18	0	0	0	0
4/21/2024	9:15 PM	0	185	24	0	0	0	0	0	23	0	0	0	0
4/21/2024	9:30 PM	0	161	22	0	1	0	0	0	26	0	0	0	0
4/21/2024	9:45 PM	0	150	14	0	3	0	0	0	30	0	0	0	0
4/21/2024	10:00 PM	0	132	15	0	3	2	0	0	26	0	1	0	0
4/21/2024	10:15 PM	0	113	12	0	3	2	0	0	17	0	3	0	0
4/21/2024	10:30 PM	0	102	11	0	3	2	0	0	14	0	3	0	0
4/21/2024	10:45 PM	0	103	11	0	1	4	0	0	11	0	3	0	0
4/21/2024	11:00 PM	0	92	7	0	1	2	0	0	12	0	4	0	0
4/21/2024	11:15 PM	0	70	6	0	1	2	0	0	10	0	2	0	0
4/21/2024	11:30 PM	0	49	3	0	0	2	0	0	7	0	2	0	0
4/21/2024	11:45 PM	0	17	1	0	0	0	0	0	4	0	2	0	0

4/22/2024	12:00 AM	0	49	10	0	2	1	0	0	16	0	1	0	0
4/22/2024	12:15 AM	0	46	11	0	2	0	0	0	15	0	1	0	0
4/22/2024	12:30 AM	0	43	8	0	0	0	0	0	18	0	1	0	0
4/22/2024	12:45 AM	0	41	8	0	0	0	0	0	19	0	1	0	0
4/22/2024	1:00 AM	0	40	6	0	0	0	0	0	15	0	0	0	0
4/22/2024	1:15 AM	0	43	8	1	1	1	0	0	20	0	0	0	0
4/22/2024	1:30 AM	0	40	10	1	1	1	0	0	18	0	0	0	0
4/22/2024	1:45 AM	0	36	11	1	1	2	0	0	18	0	0	0	0
4/22/2024	2:00 AM	0	35	12	1	1	2	0	0	24	0	0	0	0
4/22/2024	2:15 AM	0	30	8	1	0	1	0	0	26	0	0	0	0
4/22/2024	2:30 AM	0	31	5	1	2	2	0	0	31	0	0	0	0
4/22/2024	2:45 AM	0	34	7	1	2	2	0	0	31	0	1	0	0
4/22/2024	3:00 AM	0	34	7	1	4	2	0	0	29	0	1	0	0
4/22/2024	3:15 AM	0	33	7	0	4	4	0	0	27	0	2	0	0
4/22/2024	3:30 AM	0	37	7	0	2	3	0	1	27	0	2	0	0
4/22/2024	3:45 AM	0	46	9	0	4	4	0	2	27	0	1	0	0
4/22/2024	4:00 AM	0	50	12	0	3	4	0	2	35	0	1	0	0
4/22/2024	4:15 AM	0	65	14	0	4	2	0	2	34	0	0	0	0
4/22/2024	4:30 AM	0	80	17	0	4	4	0	1	40	0	0	0	0
4/22/2024	4:45 AM	0	88	17	0	2	2	0	0	49	0	1	0	0
4/22/2024	5:00 AM	0	108	20	0	3	3	0	0	47	0	1	0	0
4/22/2024	5:15 AM	0	122	25	0	3	5	0	0	51	0	2	0	0
4/22/2024	5:30 AM	0	152	39	0	6	5	0	0	45	0	2	0	0
4/22/2024	5:45 AM	0	200	59	0	7	13	0	2	40	1	1	0	0
4/22/2024	6:00 AM	0	242	77	0	11	16	0	5	38	1	1	0	0
4/22/2024	6:15 AM	0	304	98	0	16	21	0	5	43	1	0	0	0
4/22/2024	6:30 AM	0	372	115	0	22	26	0	7	44	1	0	0	0
4/22/2024	6:45 AM	0	433	131	0	32	23	0	5	46	0	0	0	0
4/22/2024	7:00 AM	0	537	145	0	34	22	0	2	42	2	0	0	0
4/22/2024	7:15 AM	0	604	152	1	31	16	0	3	43	3	0	0	0
4/22/2024	7:30 AM	0	664	164	2	27	11	0	2	50	4	0	0	0
4/22/2024	7:45 AM	0	695	152	2	27	9	0	5	48	4	0	0	0
4/22/2024	8:00 AM	0	637	153	2	29	11	0	6	49	3	0	0	0
4/22/2024	8:15 AM	0	574	159	1	35	15	0	6	42	3	0	0	0
4/22/2024	8:30 AM	0	501	144	0	37	17	0	8	41	3	0	1	0
4/22/2024	8:45 AM	0	432	152	0	35	20	1	7	53	3	0	1	0
4/22/2024	9:00 AM	0	404	148	0	31	18	1	9	61	3	0	1	0
4/22/2024	9:15 AM	0	416	144	1	33	17	1	11	70	2	0	1	0
4/22/2024	9:30 AM	1	410	150	5	32	16	5	9	67	1	0	0	0
4/22/2024	9:45 AM	1	431	149	5	28	13	4	8	64	1	0	0	0
4/22/2024	10:00 AM	1	429	148	5	28	15	5	6	76	1	0	0	0
4/22/2024	10:15 AM	1	430	146	4	20	17	5	6	79	2	0	0	0
4/22/2024	10:30 AM	0	423	158	0	18	16	1	6	82	2	0	0	0
4/22/2024	10:45 AM	0	407	166	0	19	17	1	7	83	2	1	0	0
4/22/2024	11:00 AM	0	434	176	0	18	15	0	8	74	1	1	0	0
4/22/2024	11:15 AM	0	434	184	0	19	13	2	8	69	0	1	0	0
4/22/2024	11:30 AM	0	474	182	0	23	13	3	10	67	0	1	0	0
4/22/2024	11:45 AM	0	490	185	0	23	13	3	8	62	0	0	0	0
4/22/2024	12:00 PM	0	490	179	0	25	14	4	8	55	1	0	0	0
4/22/2024	12:15 PM	0	518	166	0	24	15	2	6	56	2	0	0	0
4/22/2024	12:30 PM	0	527	154	0	20	15	2	4	54	2	0	0	0
4/22/2024	12:45 PM	0	542	142	3	17	12	6	5	56	3	0	0	0
4/22/2024	1:00 PM	0	563	129	3	14	10	7	3	60	2	0	0	0
4/22/2024	1:15 PM	0	553	135	3	19	6	7	3	55	1	0	0	0
4/22/2024	1:30 PM	0	553	132	5	21	6	9	3	62	1	0	0	0
4/22/2024	1:45 PM	0	554	131	2	20	5	6	4	62	0	0	0	0
4/22/2024	2:00 PM	0	568	138	3	21	3	7	7	54	1	0	0	0
4/22/2024	2:15 PM	0	590	142	4	18	3	7	7	68	1	0	0	0
4/22/2024	2:30 PM	0	613	145	2	19	3	5	8	61	1	0	0	0
4/22/2024	2:45 PM	0	634	155	2	19	8	4	8	60	1	0	0	0
4/22/2024	3:00 PM	0	641	166	2	21	14	1	5	66	1	0	0	0
4/22/2024	3:15 PM	0	655	160	2	26	15	1	5	59	2	0	0	0
4/22/2024	3:30 PM	1	663	156	2	33	13	1	3	65	2	0	0	0
4/22/2024	3:45 PM	1	694	152	2	32	10	1	2	57	3	0	0	0
4/22/2024	4:00 PM	1	708	143	3	26	8	1	2	55	2	0	0	0
4/22/2024	4:15 PM	1	724	151	2	18	10	1	3	48	1	0	0	0
4/22/2024	4:30 PM	0	744	150	2	5	10	0	3	43	2	0	0	0
4/22/2024	4:45 PM	0	742	155	2	9	9	0	3	48	2	0	0	0
4/22/2024	5:00 PM	0	740	159	0	10	5	0	4	53	3	0	0	0
4/22/2024	5:15 PM	0	680	144	0	11	3	0	2	59	3	0	0	0
4/22/2024	5:30 PM	0	635	145	0	12	3	0	3	63	3	0	0	0
4/22/2024	5:45 PM	0	570	124	0	11	5	0	2	63	2	0	0	0
4/22/2024	6:00 PM	0	516	110	0	14	9	0	2	59	1	0	0	0
4/22/2024	6:15 PM	0	492	101	0	13	7	0	4	51	1	0	0	0
4/22/2024	6:30 PM	0	437	89	0	12	7	0	4	58	1	0	0	0
4/22/2024	6:45 PM	0	383	84	0	10	7	0	5	62	1	0	0	0
4/22/2024	7:00 PM	0	347	76	0	6	3	0	4	67	1	0	0	0
4/22/2024	7:15 PM	0	322	74	0	4	3	0	3	70	1	0	0	0
4/22/2024	7:30 PM	0	291	65	0	4	3	0	2	55	0	0	0	0
4/22/2024	7:45 PM	0	287	61	0	3	0	0	3	47	0	1	0	0
4/22/2024	8:00 PM	1	261	58	0	2	1	0	3	39	0	1	0	0
4/22/2024	8:15 PM	1	241	53	0	2	3	0	2	37	0	2	0	0
4/22/2024	8:30 PM	1	226	57	0	2	4	0	2	41	0	2	0	0
4/22/2024	8:45 PM	1	202	52	0	1	6	0	0	44	0	1	0	0
4/22/2024	9:00 PM	0	193	50	0	1	6	0	0	39	0	2	0	0
4/22/2024	9:15 PM	0	183	50	0	1	4	0	1	39	0	2	0	0
4/22/2024	9:30 PM	0	168	48	0	1	3	0	2	40	0	3	0	0
4/22/2024	9:45 PM	0	164	47	0	4	3	0	3	38	0	7	0	0
4/22/2024	10:00 PM	0	150	44	0	4	4	0	4	50	0	8	0	0
4/22/2024	10:15 PM	0	138	39	0	4	4	0	4	51	0	9	0	0
4/22/2024	10:30 PM	0	131	33	0	3	7	0	4	48	0	11	0	0
4/22/2024	10:45 PM	0	126	27	0	1	8	0	3	51	0	7	0	0
4/22/2024	11:00 PM	0	123	23	0	1	6	0	3	46	0	5	0	0
4/22/2024	11:15 PM	0	89	15	0	1	6	0	2	35	0	3	0	0
4/22/2024	11:30 PM	0	59	9	0	1	3	0	1	24	0	0	0	0
4/22/2024	11:45 PM	0	30	5	0	0	0	0	1	12	0	0	0	0

4/23/2024	12:00 AM	0	50	18	0	6	0	0	2	40	0	7	0	0
4/23/2024	12:15 AM	0	42	17	0	4	0	0	0	29	0	7	0	0
4/23/2024	12:30 AM	0	37	12	0	4	0	0	0	24	0	5	0	0
4/23/2024	12:45 AM	0	35	11	0	5	0	0	0	26	0	4	0	0
4/23/2024	1:00 AM	0	41	8	0	5	0	0	0	27	0	4	0	0
4/23/2024	1:15 AM	0	36	7	0	4	0	0	0	34	0	3	0	0
4/23/2024	1:30 AM	0	30	10	0	4	0	0	0	40	0	3	0	0
4/23/2024	1:45 AM	0	30	9	0	3	0	0	0	43	0	3	0	0
4/23/2024	2:00 AM	0	24	11	0	2	2	0	0	46	0	3	0	0
4/23/2024	2:15 AM	0	24	8	0	1	3	0	0	36	0	4	0	0
4/23/2024	2:30 AM	0	23	3	0	0	3	0	0	34	0	3	0	0
4/23/2024	2:45 AM	0	23	2	0	0	3	0	0	24	0	4	0	0
4/23/2024	3:00 AM	0	19	1	0	1	2	0	0	28	0	4	0	0
4/23/2024	3:15 AM	0	25	5	0	1	1	0	0	39	0	4	0	0
4/23/2024	3:30 AM	0	27	8	0	2	2	0	1	45	0	6	0	0
4/23/2024	3:45 AM	1	44	8	0	3	5	0	1	52	0	5	0	0
4/23/2024	4:00 AM	1	50	13	0	2	4	0	1	52	0	5	0	0
4/23/2024	4:15 AM	1	57	17	0	3	4	0	1	45	0	4	0	0
4/23/2024	4:30 AM	1	79	18	0	7	3	0	0	50	0	2	0	0
4/23/2024	4:45 AM	0	86	23	0	8	0	0	0	56	0	2	0	0
4/23/2024	5:00 AM	0	97	27	0	8	1	0	0	55	0	0	0	0
4/23/2024	5:15 AM	0	112	35	0	8	1	0	0	60	0	0	0	0
4/23/2024	5:30 AM	1	157	54	0	5	4	0	0	59	0	0	0	0
4/23/2024	5:45 AM	1	205	64	0	7	14	0	0	60	0	0	0	0
4/23/2024	6:00 AM	1	258	73	0	10	18	1	1	57	3	0	0	0
4/23/2024	6:15 AM	1	309	90	1	17	22	1	3	63	3	0	0	0
4/23/2024	6:30 AM	0	390	101	1	25	26	1	5	51	5	0	0	0
4/23/2024	6:45 AM	0	472	127	2	25	21	1	7	46	6	0	0	0
4/23/2024	7:00 AM	0	595	138	3	30	19	0	7	44	3	0	0	0
4/23/2024	7:15 AM	0	662	147	2	26	16	0	5	37	3	0	0	0
4/23/2024	7:30 AM	0	697	160	2	23	11	0	4	40	1	0	0	0
4/23/2024	7:45 AM	0	695	145	1	31	11	1	5	43	0	1	0	0
4/23/2024	8:00 AM	0	646	150	0	32	11	1	6	50	0	1	0	0
4/23/2024	8:15 AM	0	611	148	0	35	13	1	6	58	0	2	0	0
4/23/2024	8:30 AM	0	546	130	0	38	13	1	7	66	2	2	0	0
4/23/2024	8:45 AM	0	502	131	0	34	13	0	9	71	2	1	0	0
4/23/2024	9:00 AM	0	464	121	2	32	13	0	10	83	2	1	0	0
4/23/2024	9:15 AM	0	436	104	4	28	12	0	11	85	2	0	0	0
4/23/2024	9:30 AM	0	397	108	4	29	15	0	12	81	0	0	0	0
4/23/2024	9:45 AM	0	368	120	4	25	11	0	11	86	1	0	0	0
4/23/2024	10:00 AM	0	359	130	2	25	12	1	9	78	1	0	0	0
4/23/2024	10:15 AM	0	382	150	0	26	11	1	8	74	1	0	0	0
4/23/2024	10:30 AM	0	434	152	0	19	6	1	8	73	1	0	0	0
4/23/2024	10:45 AM	1	453	151	0	24	9	1	7	64	3	0	0	0
4/23/2024	11:00 AM	1	474	144	0	21	7	0	8	71	3	0	0	0
4/23/2024	11:15 AM	1	474	149	0	20	8	0	11	66	4	0	0	0
4/23/2024	11:30 AM	1	435	156	0	22	10	0	9	72	4	0	0	0
4/23/2024	11:45 AM	0	466	167	0	20	8	0	8	82	1	0	0	0
4/23/2024	12:00 PM	0	453	180	2	23	7	0	7	74	1	0	0	0
4/23/2024	12:15 PM	0	467	162	4	23	9	0	7	89	0	0	0	0
4/23/2024	12:30 PM	0	508	159	7	21	11	0	7	83	1	0	0	0
4/23/2024	12:45 PM	0	515	143	10	20	10	0	7	76	1	0	0	0
4/23/2024	1:00 PM	1	534	141	8	19	11	0	9	80	1	0	0	0
4/23/2024	1:15 PM	1	546	143	6	18	10	0	6	71	1	0	0	0
4/23/2024	1:30 PM	1	554	138	5	22	6	0	6	76	0	0	0	0
4/23/2024	1:45 PM	1	559	143	3	21	7	0	4	83	0	0	0	0
4/23/2024	2:00 PM	0	562	144	3	18	5	1	2	84	0	0	0	0
4/23/2024	2:15 PM	0	582	159	3	24	4	2	9	84	0	0	0	0
4/23/2024	2:30 PM	0	587	176	1	22	5	3	11	83	0	0	0	0
4/23/2024	2:45 PM	0	605	177	0	20	3	4	12	77	0	0	0	0
4/23/2024	3:00 PM	0	634	188	0	22	4	3	14	72	1	0	0	0
4/23/2024	3:15 PM	0	659	186	1	19	2	4	11	65	2	1	0	0
4/23/2024	3:30 PM	0	722	186	1	19	3	3	11	61	3	1	0	0
4/23/2024	3:45 PM	0	753	193	1	26	4	2	12	53	3	1	0	0
4/23/2024	4:00 PM	0	760	168	1	26	5	2	9	47	2	1	0	0
4/23/2024	4:15 PM	0	720	161	0	25	7	0	6	43	1	0	0	0
4/23/2024	4:30 PM	0	727	148	0	21	6	0	3	46	0	0	0	0
4/23/2024	4:45 PM	2	723	149	0	14	6	0	2	49	0	0	0	0
4/23/2024	5:00 PM	4	718	162	1	11	4	0	5	50	1	0	0	0
4/23/2024	5:15 PM	4	722	169	1	9	4	0	4	53	1	0	0	0
4/23/2024	5:30 PM	4	637	155	1	11	3	0	6	53	1	0	0	0
4/23/2024	5:45 PM	2	573	136	1	11	4	0	8	53	1	0	0	0
4/23/2024	6:00 PM	0	493	113	0	10	4	0	7	47	0	0	0	0
4/23/2024	6:15 PM	0	445	89	0	11	2	0	7	43	0	0	0	0
4/23/2024	6:30 PM	1	415	83	0	8	4	0	5	37	0	0	0	0
4/23/2024	6:45 PM	1	388	75	0	5	3	0	3	36	0	0	0	0
4/23/2024	7:00 PM	1	390	75	0	7	5	0	1	40	0	0	0	0
4/23/2024	7:15 PM	1	362	71	0	4	6	0	1	39	0	0	0	0
4/23/2024	7:30 PM	0	332	66	0	4	4	0	1	40	0	0	0	0
4/23/2024	7:45 PM	0	286	60	0	6	3	0	0	36	0	0	0	0
4/23/2024	8:00 PM	0	235	52	0	5	1	0	0	35	0	0	0	0
4/23/2024	8:15 PM	0	203	50	0	6	0	0	0	39	0	0	0	0
4/23/2024	8:30 PM	0	163	46	0	10	0	0	0	34	0	0	0	0
4/23/2024	8:45 PM	0	147	41	0	11	0	0	0	32	0	0	0	0
4/23/2024	9:00 PM	0	148	37	0	10	0	0	0	29	0	0	0	0
4/23/2024	9:15 PM	0	148	27	0	12	0	0	0	25	0	1	0	0
4/23/2024	9:30 PM	0	155	29	0	9	0	0	0	22	0	1	0	0
4/23/2024	9:45 PM	0	151	30	0	6	1	0	0	22	0	2	0	0
4/23/2024	10:00 PM	0	135	29	0	6	1	0	0	17	0	2	0	0
4/23/2024	10:15 PM	0	116	27	0	3	1	0	0	16	0	2	0	0
4/23/2024	10:30 PM	0	94	21	0	5	2	0	0	19	0	2	0	0
4/23/2024	10:45 PM	0	72	14	0	7	2	0	0	16	0	1	0	0
4/23/2024	11:00 PM	0	64	14	0	7	2	0	0	21	0	1	0	0
4/23/2024	11:15 PM	0	45	11	0	7	2	0	0	16	0	0	0	0
4/23/2024	11:30 PM	0	24	6	0	3	1	0	0	10	0	0	0	0
4/23/2024	11:45 PM	0	11	3	0	1	0	0	0	7	0	0	0	0

4/24/2024	12:00 AM	0	74	10	1	6	0	0	0	21	0	0	0	0
4/24/2024	12:15 AM	0	64	9	1	7	0	0	0	19	0	0	0	0
4/24/2024	12:30 AM	0	55	8	0	8	0	0	0	19	0	0	0	0
4/24/2024	12:45 AM	0	44	8	0	9	0	0	0	17	0	0	0	0
4/24/2024	1:00 AM	0	39	9	0	5	0	0	0	14	0	0	0	0
4/24/2024	1:15 AM	0	41	7	0	2	0	0	0	16	0	0	0	0
4/24/2024	1:30 AM	0	41	8	0	2	0	0	0	17	0	0	0	0
4/24/2024	1:45 AM	0	34	7	0	1	0	0	0	16	0	0	0	0
4/24/2024	2:00 AM	0	38	7	0	3	0	0	0	15	0	0	0	0
4/24/2024	2:15 AM	0	41	7	0	3	0	0	0	14	0	0	0	0
4/24/2024	2:30 AM	0	41	5	0	4	0	0	0	16	0	0	0	0
4/24/2024	2:45 AM	0	50	7	0	7	0	0	0	16	0	0	0	0
4/24/2024	3:00 AM	0	54	8	0	6	0	0	0	20	0	0	0	0
4/24/2024	3:15 AM	0	52	8	0	8	0	0	0	26	0	0	0	0
4/24/2024	3:30 AM	0	58	10	0	7	0	0	0	31	0	0	0	0
4/24/2024	3:45 AM	0	79	13	0	6	0	0	0	41	0	1	0	0
4/24/2024	4:00 AM	0	81	14	0	10	0	0	0	46	0	1	0	0
4/24/2024	4:15 AM	0	77	13	0	8	0	0	0	48	0	1	0	0
4/24/2024	4:30 AM	0	86	11	0	9	0	0	0	52	0	2	0	0
4/24/2024	4:45 AM	0	95	12	0	10	0	0	0	50	0	1	0	0
4/24/2024	5:00 AM	0	116	15	0	6	0	0	0	53	0	1	0	0
4/24/2024	5:15 AM	1	150	26	0	12	0	0	0	57	0	1	0	0
4/24/2024	5:30 AM	2	184	43	0	12	1	0	0	47	0	0	0	0
4/24/2024	5:45 AM	2	223	58	0	14	6	0	1	51	0	2	0	0
4/24/2024	6:00 AM	2	274	69	0	21	8	1	3	54	1	2	0	0
4/24/2024	6:15 AM	1	336	94	0	17	13	1	4	50	2	2	0	0
4/24/2024	6:30 AM	0	415	112	0	21	17	1	9	52	3	3	0	0
4/24/2024	6:45 AM	0	494	136	0	26	15	4	11	47	3	1	0	0
4/24/2024	7:00 AM	1	596	164	0	29	15	4	14	39	2	2	0	0
4/24/2024	7:15 AM	1	636	160	0	34	13	4	14	33	1	2	0	0
4/24/2024	7:30 AM	1	670	155	0	44	10	5	9	41	1	1	0	0
4/24/2024	7:45 AM	1	678	156	0	43	9	4	11	47	1	1	0	0
4/24/2024	8:00 AM	0	635	146	0	38	7	4	10	56	1	0	0	0
4/24/2024	8:15 AM	1	590	140	0	38	5	6	10	62	2	0	0	0
4/24/2024	8:30 AM	1	516	137	2	30	4	7	12	59	1	0	0	0
4/24/2024	8:45 AM	1	459	132	2	26	4	7	7	52	1	0	0	0
4/24/2024	9:00 AM	1	422	138	2	26	4	7	6	51	2	0	0	0
4/24/2024	9:15 AM	0	427	146	3	23	5	8	7	57	2	0	0	0
4/24/2024	9:30 AM	0	430	144	1	25	5	12	5	59	3	0	0	0
4/24/2024	9:45 AM	0	438	135	2	24	4	10	6	63	5	0	0	0
4/24/2024	10:00 AM	0	455	141	3	25	4	10	5	62	5	0	0	0
4/24/2024	10:15 AM	0	443	139	3	31	2	8	3	61	5	0	0	0
4/24/2024	10:30 AM	0	438	151	3	25	1	8	4	64	4	0	0	0
4/24/2024	10:45 AM	1	431	159	2	28	1	8	5	70	2	0	0	0
4/24/2024	11:00 AM	1	428	149	2	22	2	8	5	78	2	0	0	0
4/24/2024	11:15 AM	1	436	162	4	15	3	10	6	81	2	0	0	0
4/24/2024	11:30 AM	1	468	160	5	16	4	8	8	80	3	0	0	0
4/24/2024	11:45 AM	0	476	167	8	11	3	9	10	74	3	0	0	0
4/24/2024	12:00 PM	0	501	176	7	15	5	9	9	66	4	0	0	0
4/24/2024	12:15 PM	0	538	172	4	16	5	8	8	63	4	0	0	0
4/24/2024	12:30 PM	0	537	175	3	18	4	7	6	63	3	0	0	0
4/24/2024	12:45 PM	1	557	165	0	20	4	8	5	65	5	0	0	0
4/24/2024	1:00 PM	1	546	156	0	20	1	9	7	65	3	0	0	0
4/24/2024	1:15 PM	1	540	154	0	23	2	8	8	64	3	0	0	0
4/24/2024	1:30 PM	1	567	147	1	21	2	5	8	73	3	0	0	0
4/24/2024	1:45 PM	0	571	146	2	23	4	4	9	69	1	0	0	0
4/24/2024	2:00 PM	0	556	146	4	25	5	3	10	73	1	0	0	0
4/24/2024	2:15 PM	0	588	187	4	22	4	2	12	82	1	0	0	0
4/24/2024	2:30 PM	0	611	202	3	18	4	2	12	78	1	0	0	0
4/24/2024	2:45 PM	0	623	212	3	18	4	1	8	82	1	0	0	0
4/24/2024	3:00 PM	1	663	226	1	24	8	1	5	78	3	0	0	0
4/24/2024	3:15 PM	1	672	200	1	25	11	2	3	73	3	0	0	0
4/24/2024	3:30 PM	1	702	255	1	35	13	2	4	60	3	0	0	0
4/24/2024	3:45 PM	2	717	247	0	32	14	2	8	57	3	0	0	0
4/24/2024	4:00 PM	1	782	228	1	22	12	1	7	54	1	0	0	0
4/24/2024	4:15 PM	1	806	219	1	23	9	0	6	51	2	0	0	0
4/24/2024	4:30 PM	1	792	159	1	22	7	0	4	53	2	0	0	0
4/24/2024	4:45 PM	0	812	165	1	22	5	0	1	44	2	0	0	0
4/24/2024	5:00 PM	0	785	168	0	25	3	0	1	41	2	0	0	0
4/24/2024	5:15 PM	0	731	154	1	24	4	0	1	43	0	0	0	0
4/24/2024	5:30 PM	0	683	143	2	18	6	0	2	45	0	0	0	0
4/24/2024	5:45 PM	0	631	127	2	17	7	0	2	59	0	0	0	0
4/24/2024	6:00 PM	0	552	124	2	13	7	0	2	57	0	0	0	0
4/24/2024	6:15 PM	1	499	121	1	10	5	0	2	48	0	0	0	0
4/24/2024	6:30 PM	1	461	111	1	6	4	0	3	46	1	1	0	0
4/24/2024	6:45 PM	1	412	111	1	5	5	0	2	39	1	1	0	0
4/24/2024	7:00 PM	2	382	103	2	3	5	0	3	42	1	1	0	0
4/24/2024	7:15 PM	1	371	89	2	3	5	0	3	45	1	1	0	0
4/24/2024	7:30 PM	1	343	106	1	4	4	0	1	44	0	0	0	0
4/24/2024	7:45 PM	1	343	89	1	4	1	0	2	49	0	2	0	0
4/24/2024	8:00 PM	0	324	74	0	4	0	0	1	45	0	2	0	0
4/24/2024	8:15 PM	0	320	69	0	2	0	0	1	40	0	2	0	0
4/24/2024	8:30 PM	0	303	45	0	5	0	0	1	41	0	2	0	0
4/24/2024	8:45 PM	0	271	46	0	4	0	0	0	36	0	1	0	0
4/24/2024	9:00 PM	0	265	47	0	4	0	0	0	41	0	1	0	0
4/24/2024	9:15 PM	0	235	49	0	7	0	0	0	39	0	1	0	0
4/24/2024	9:30 PM	0	218	45	0	6	0	0	0	38	0	2	0	0
4/24/2024	9:45 PM	0	238	48	0	7	0	0	0	37	0	1	0	0
4/24/2024	10:00 PM	0	201	44	0	9	0	0	0	33	0	2	0	0
4/24/2024	10:15 PM	0	194	44	0	6	0	0	0	42	0	3	0	0
4/24/2024	10:30 PM	0	188	40	0	3	0	0	0	37	0	2	0	0
4/24/2024	10:45 PM	0	139	30	0	2	0	0	0	33	0	2	0	0
4/24/2024	11:00 PM	0	130	29	0	0	0	0	0	34	0	1	0	0
4/24/2024	11:15 PM	0	90	17	0	0	0	0	0	19	0	0	0	0
4/24/2024	11:30 PM	0	51	11	0	0	0	0	0	13	0	0	0	0
4/24/2024	11:45 PM	0	21	6	0	0	0	0	0	9	0	0	0	0

4/25/2024	12:00 AM	0	60	15	0	5	0	0	0	47	0	1	0	0
4/25/2024	12:15 AM	0	56	13	0	4	0	0	0	43	0	1	0	0
4/25/2024	12:30 AM	0	50	10	0	4	0	0	0	29	0	1	0	0
4/25/2024	12:45 AM	0	39	5	0	4	0	0	0	26	0	0	0	0
4/25/2024	1:00 AM	0	42	4	0	3	0	0	0	21	0	0	0	0
4/25/2024	1:15 AM	0	41	6	0	2	0	0	0	17	0	1	0	0
4/25/2024	1:30 AM	0	38	5	0	3	1	0	0	22	0	1	0	0
4/25/2024	1:45 AM	0	44	8	0	2	1	0	0	25	0	1	0	0
4/25/2024	2:00 AM	0	37	9	0	3	1	0	0	30	0	2	0	0
4/25/2024	2:15 AM	0	33	6	0	4	1	0	0	31	0	1	0	0
4/25/2024	2:30 AM	0	35	8	0	3	0	0	0	37	0	1	0	0
4/25/2024	2:45 AM	0	25	7	0	2	0	0	0	34	0	1	0	0
4/25/2024	3:00 AM	0	25	7	0	1	0	0	0	29	0	0	0	0
4/25/2024	3:15 AM	0	30	8	0	1	0	0	0	28	0	1	0	0
4/25/2024	3:30 AM	0	26	8	0	1	0	0	0	27	0	1	0	0
4/25/2024	3:45 AM	0	34	12	0	1	0	0	0	39	0	1	0	0
4/25/2024	4:00 AM	0	41	14	0	3	0	0	0	48	0	1	0	0
4/25/2024	4:15 AM	0	48	18	0	5	0	0	0	55	0	1	0	0
4/25/2024	4:30 AM	0	63	23	0	7	0	0	0	56	0	2	0	0
4/25/2024	4:45 AM	0	81	26	1	9	0	0	0	54	0	2	0	0
4/25/2024	5:00 AM	0	96	30	1	8	0	0	0	64	0	2	0	0
4/25/2024	5:15 AM	0	115	39	1	5	0	0	0	78	0	1	0	0
4/25/2024	5:30 AM	0	140	50	2	7	3	0	0	83	0	0	0	0
4/25/2024	5:45 AM	0	169	62	1	8	10	0	0	91	0	0	0	0
4/25/2024	6:00 AM	0	219	78	1	9	16	0	0	79	0	0	0	0
4/25/2024	6:15 AM	0	289	79	3	17	20	4	1	65	1	0	0	0
4/25/2024	6:30 AM	0	365	90	3	19	21	6	2	69	1	0	0	0
4/25/2024	6:45 AM	0	433	100	3	21	16	8	4	59	2	0	0	0
4/25/2024	7:00 AM	0	556	107	3	27	14	10	4	56	2	0	0	0
4/25/2024	7:15 AM	0	612	131	1	24	13	7	4	61	2	0	0	0
4/25/2024	7:30 AM	1	659	147	0	20	11	8	6	53	5	1	0	0
4/25/2024	7:45 AM	1	691	163	1	27	10	8	4	49	5	1	0	0
4/25/2024	8:00 AM	1	614	178	1	23	8	8	6	56	6	1	0	0
4/25/2024	8:15 AM	1	548	179	1	26	5	7	6	58	7	1	0	0
4/25/2024	8:30 AM	0	480	162	1	29	5	6	3	59	5	0	0	0
4/25/2024	8:45 AM	1	433	149	1	23	7	7	4	72	4	0	0	0
4/25/2024	9:00 AM	1	432	126	1	22	5	10	4	71	3	0	0	0
4/25/2024	9:15 AM	1	461	123	1	20	8	10	4	63	1	0	0	0
4/25/2024	9:30 AM	1	473	120	2	20	14	9	8	67	1	0	0	0
4/25/2024	9:45 AM	0	460	110	1	19	13	7	8	63	1	0	0	0
4/25/2024	10:00 AM	0	438	125	1	30	18	2	7	68	1	0	0	0
4/25/2024	10:15 AM	0	409	117	2	30	21	2	8	77	2	0	0	0
4/25/2024	10:30 AM	0	406	137	2	35	16	1	4	72	1	1	0	0
4/25/2024	10:45 AM	0	424	153	2	33	17	1	6	75	2	2	0	0
4/25/2024	11:00 AM	0	446	158	3	26	16	1	7	70	2	2	0	0
4/25/2024	11:15 AM	1	474	175	2	28	10	1	6	69	3	2	0	0
4/25/2024	11:30 AM	1	476	179	1	25	13	1	6	72	3	1	0	0
4/25/2024	11:45 AM	2	492	181	1	27	16	0	3	70	2	0	0	0
4/25/2024	12:00 PM	2	507	172	4	25	14	0	2	74	3	0	0	0
4/25/2024	12:15 PM	1	515	167	4	19	18	0	2	68	2	0	0	0
4/25/2024	12:30 PM	2	521	153	6	18	14	0	6	70	4	0	0	0
4/25/2024	12:45 PM	1	514	134	6	18	12	0	9	70	5	0	0	0
4/25/2024	1:00 PM	1	500	132	2	19	11	2	9	68	5	1	0	0
4/25/2024	1:15 PM	1	510	132	2	22	9	3	9	72	5	1	0	0
4/25/2024	1:30 PM	0	544	125	1	18	10	5	8	74	4	1	0	0
4/25/2024	1:45 PM	0	567	137	3	18	7	5	9	73	5	1	0	0
4/25/2024	2:00 PM	1	600	151	3	19	7	4	10	70	4	0	0	0
4/25/2024	2:15 PM	1	620	150	5	22	7	4	10	65	3	0	0	0
4/25/2024	2:30 PM	1	644	171	4	27	6	5	8	59	2	0	0	0
4/25/2024	2:45 PM	1	658	184	4	26	9	5	6	54	1	0	0	0
4/25/2024	3:00 PM	0	680	171	4	26	8	4	7	54	1	0	0	0
4/25/2024	3:15 PM	1	711	184	3	21	8	5	10	54	2	0	0	0
4/25/2024	3:30 PM	1	708	183	4	21	8	2	9	46	2	0	0	0
4/25/2024	3:45 PM	1	751	178	2	20	7	2	7	45	2	0	0	0
4/25/2024	4:00 PM	1	779	183	2	14	12	2	7	41	2	0	0	0
4/25/2024	4:15 PM	1	776	174	3	12	19	0	3	39	1	0	0	0
4/25/2024	4:30 PM	2	790	156	2	6	21	0	4	48	1	0	0	0
4/25/2024	4:45 PM	2	777	152	2	8	22	0	4	40	1	0	0	0
4/25/2024	5:00 PM	2	736	165	2	7	22	0	5	42	1	0	0	0
4/25/2024	5:15 PM	4	707	164	0	7	15	0	7	46	1	0	0	0
4/25/2024	5:30 PM	3	685	166	0	6	12	0	8	37	1	0	0	0
4/25/2024	5:45 PM	3	617	156	1	3	10	0	9	43	0	0	0	0
4/25/2024	6:00 PM	3	573	122	4	7	5	0	5	39	0	0	0	0
4/25/2024	6:15 PM	0	525	97	4	7	3	0	5	42	0	0	0	0
4/25/2024	6:30 PM	0	476	87	4	11	4	0	4	46	0	0	0	0
4/25/2024	6:45 PM	0	464	75	3	11	2	0	3	44	0	0	0	0
4/25/2024	7:00 PM	0	461	71	0	9	3	0	6	53	0	0	0	0
4/25/2024	7:15 PM	0	447	75	0	8	4	0	4	42	0	0	0	0
4/25/2024	7:30 PM	0	401	76	1	5	4	0	3	46	0	0	0	0
4/25/2024	7:45 PM	0	362	79	1	4	5	0	3	52	0	0	0	0
4/25/2024	8:00 PM	0	327	87	1	2	4	0	0	48	0	0	0	0
4/25/2024	8:15 PM	0	301	76	1	5	3	0	0	54	0	0	0	0
4/25/2024	8:30 PM	0	300	66	0	4	1	0	0	53	0	0	0	0
4/25/2024	8:45 PM	0	281	61	0	5	0	0	0	54	0	0	0	0
4/25/2024	9:00 PM	0	275	58	0	9	0	0	0	51	0	0	0	0
4/25/2024	9:15 PM	0	248	57	0	7	1	0	0	45	0	0	0	0
4/25/2024	9:30 PM	0	255	63	0	7	1	0	0	42	0	0	0	0
4/25/2024	9:45 PM	0	258	64	0	6	2	0	0	35	0	0	0	0
4/25/2024	10:00 PM	0	214	55	0	2	2	0	0	36	0	0	0	0
4/25/2024	10:15 PM	0	208	56	0	1	1	0	0	36	0	1	0	0
4/25/2024	10:30 PM	0	151	41	0	2	1	0	0	35	0	2	0	0
4/25/2024	10:45 PM	0	121	33	0	2	0	0	0	33	0	2	0	0
4/25/2024	11:00 PM	0	107	28	0	2	0	0	0	26	0	3	0	0
4/25/2024	11:15 PM	0	68	17	0	2	0	0	0	19	0	2	0	0
4/25/2024	11:30 PM	0	48	12	0	1	0	0	0	10	0	1	0	0
4/25/2024	11:45 PM	0	20	4	0	0	0	0	0	4	0	1	0	0

4/26/2024	12:00 AM	0	68	6	0	6	0	0	0	24	0	4	0	0
4/26/2024	12:15 AM	0	66	5	0	4	0	0	0	26	0	3	0	0
4/26/2024	12:30 AM	0	61	5	0	5	0	0	0	38	0	2	0	0
4/26/2024	12:45 AM	0	59	4	0	4	0	0	0	36	0	1	0	0
4/26/2024	1:00 AM	0	50	2	0	5	0	0	0	35	0	1	0	0
4/26/2024	1:15 AM	0	52	1	0	4	0	0	0	31	0	1	0	0
4/26/2024	1:30 AM	0	50	0	0	4	0	0	0	25	0	1	0	0
4/26/2024	1:45 AM	0	49	1	0	4	0	0	0	28	0	1	0	0
4/26/2024	2:00 AM	0	47	2	0	4	0	0	0	31	0	1	0	0
4/26/2024	2:15 AM	0	47	3	0	5	1	0	0	33	0	2	0	0
4/26/2024	2:30 AM	0	47	3	0	4	2	0	0	34	0	3	0	0
4/26/2024	2:45 AM	0	50	2	0	4	2	0	0	37	0	3	0	0
4/26/2024	3:00 AM	0	52	2	0	4	2	0	0	38	0	3	0	0
4/26/2024	3:15 AM	0	46	1	0	4	1	0	0	39	0	2	0	0
4/26/2024	3:30 AM	0	55	2	0	4	0	0	0	42	0	1	0	0
4/26/2024	3:45 AM	0	56	3	0	5	0	0	0	40	0	1	0	0
4/26/2024	4:00 AM	0	57	3	0	6	0	0	0	50	0	0	0	0
4/26/2024	4:15 AM	0	69	6	0	4	0	0	0	53	0	0	0	0
4/26/2024	4:30 AM	0	80	7	0	3	0	0	0	57	0	0	0	0
4/26/2024	4:45 AM	0	91	8	0	7	1	0	0	54	0	1	0	0
4/26/2024	5:00 AM	0	113	10	0	8	1	0	0	47	0	1	0	0
4/26/2024	5:15 AM	0	124	14	0	13	1	0	0	47	0	1	0	0
4/26/2024	5:30 AM	0	149	34	0	14	2	0	0	40	0	2	0	0
4/26/2024	5:45 AM	0	183	54	0	14	7	0	0	46	0	1	0	0
4/26/2024	6:00 AM	0	201	76	0	13	13	0	0	45	0	2	0	0
4/26/2024	6:15 AM	0	246	95	1	16	16	1	1	47	0	2	0	0
4/26/2024	6:30 AM	0	297	96	2	21	19	6	1	51	0	1	0	0
4/26/2024	6:45 AM	1	360	103	3	22	15	8	1	51	1	2	0	0
4/26/2024	7:00 AM	1	482	112	3	24	14	11	2	49	1	1	0	0
4/26/2024	7:15 AM	1	545	118	2	25	12	10	4	49	1	1	0	0
4/26/2024	7:30 AM	1	587	147	2	25	9	9	5	51	1	1	0	0
4/26/2024	7:45 AM	0	615	162	1	30	10	7	7	50	0	0	0	0
4/26/2024	8:00 AM	0	553	163	3	35	6	5	8	51	0	0	0	0
4/26/2024	8:15 AM	1	503	172	4	30	9	7	7	49	0	0	1	0
4/26/2024	8:30 AM	1	451	155	3	35	11	4	7	46	0	0	1	0
4/26/2024	8:45 AM	1	420	143	3	32	10	6	7	54	1	0	1	0
4/26/2024	9:00 AM	1	393	143	3	30	11	7	8	61	2	0	1	0
4/26/2024	9:15 AM	0	414	147	2	35	7	6	6	64	2	0	0	0
4/26/2024	9:30 AM	0	424	140	2	30	7	6	6	63	3	0	0	0
4/26/2024	9:45 AM	0	414	136	2	28	6	9	4	66	2	0	0	0
4/26/2024	10:00 AM	0	428	135	0	28	6	7	3	63	1	0	0	0
4/26/2024	10:15 AM	0	440	127	2	24	9	7	5	66	2	0	0	0
4/26/2024	10:30 AM	1	467	148	2	25	8	7	5	72	1	0	0	0
4/26/2024	10:45 AM	1	495	168	2	24	10	4	7	66	1	0	0	0
4/26/2024	11:00 AM	1	504	165	3	25	8	4	9	74	2	0	0	0
4/26/2024	11:15 AM	1	515	169	2	26	6	5	9	72	2	0	0	0
4/26/2024	11:30 AM	0	519	162	7	22	4	7	11	71	3	0	0	0
4/26/2024	11:45 AM	1	533	159	12	19	2	7	12	67	3	0	0	0
4/26/2024	12:00 PM	1	570	172	12	18	2	8	10	56	4	0	0	0
4/26/2024	12:15 PM	1	589	168	13	19	3	7	9	49	5	0	0	0
4/26/2024	12:30 PM	1	628	172	8	20	4	5	8	52	4	0	0	0
4/26/2024	12:45 PM	0	637	172	7	22	3	5	6	50	4	0	0	0
4/26/2024	1:00 PM	1	659	164	6	19	4	4	4	45	3	0	0	0
4/26/2024	1:15 PM	1	644	171	4	16	2	4	3	50	1	0	0	0
4/26/2024	1:30 PM	1	631	157	5	16	2	3	3	45	1	0	0	0
4/26/2024	1:45 PM	1	628	157	1	17	7	1	5	49	1	0	0	0
4/26/2024	2:00 PM	1	633	151	1	15	7	1	5	62	0	0	0	0
4/26/2024	2:15 PM	1	663	149	1	15	8	2	5	60	0	0	0	0
4/26/2024	2:30 PM	1	650	166	1	17	10	4	4	56	0	0	0	0
4/26/2024	2:45 PM	1	661	171	1	17	14	4	3	54	0	0	0	0
4/26/2024	3:00 PM	1	681	179	2	20	19	4	4	48	1	0	0	0
4/26/2024	3:15 PM	1	656	185	2	21	26	2	8	53	1	0	0	0
4/26/2024	3:30 PM	1	712	186	1	18	24	0	7	57	2	0	0	0
4/26/2024	3:45 PM	1	728	179	2	17	16	0	6	53	2	0	0	0
4/26/2024	4:00 PM	0	718	177	1	17	11	0	6	52	1	0	0	0
4/26/2024	4:15 PM	1	771	170	1	14	4	0	3	49	1	0	0	0
4/26/2024	4:30 PM	1	762	154	1	13	3	0	6	47	0	0	0	0
4/26/2024	4:45 PM	1	728	148	0	13	2	0	7	53	0	0	0	0
4/26/2024	5:00 PM	1	699	137	0	14	2	0	7	47	0	0	0	0
4/26/2024	5:15 PM	0	647	123	1	16	3	0	7	45	0	0	0	0
4/26/2024	5:30 PM	0	620	115	1	17	3	0	5	47	0	0	0	0
4/26/2024	5:45 PM	0	591	103	1	14	3	0	5	49	0	0	0	0
4/26/2024	6:00 PM	1	570	100	1	9	2	0	5	54	0	0	0	0
4/26/2024	6:15 PM	1	534	106	0	11	1	0	6	47	0	0	0	0
4/26/2024	6:30 PM	1	491	100	0	12	2	0	6	44	0	0	0	0
4/26/2024	6:45 PM	2	489	94	0	12	3	0	4	40	0	0	0	0
4/26/2024	7:00 PM	1	465	83	1	13	3	0	3	33	0	0	0	0
4/26/2024	7:15 PM	1	461	70	2	7	2	0	1	37	0	0	0	0
4/26/2024	7:30 PM	1	429	61	2	4	2	0	0	40	0	0	0	0
4/26/2024	7:45 PM	0	402	45	2	4	1	0	0	33	0	0	0	0
4/26/2024	8:00 PM	0	384	36	1	3	1	0	0	39	0	1	0	0
4/26/2024	8:15 PM	0	374	19	0	4	1	0	0	41	0	2	0	0
4/26/2024	8:30 PM	0	371	10	0	3	0	0	0	40	0	2	0	0
4/26/2024	8:45 PM	0	366	11	0	3	0	0	0	39	0	4	0	0
4/26/2024	9:00 PM	0	374	11	0	3	0	0	0	32	0	3	0	0
4/26/2024	9:15 PM	0	368	10	0	2	0	0	0	30	0	2	0	0
4/26/2024	9:30 PM	0	348	11	0	3	0	0	0	31	0	3	0	0
4/26/2024	9:45 PM	0	335	11	0	2	0	0	0	34	0	3	0	0
4/26/2024	10:00 PM	0	324	13	0	1	0	0	0	36	0	4	0	0
4/26/2024	10:15 PM	0	321	16	0	1	0	0	0	30	0	4	0	0
4/26/2024	10:30 PM	0	313	16	0	0	0	0	0	22	0	3	0	0
4/26/2024	10:45 PM	0	276	14	0	0	0	0	0	29	0	2	0	0
4/26/2024	11:00 PM	0	228	12	0	0	0	0	0	27	0	1	0	0
4/26/2024	11:15 PM	0	142	7	0	0	0	0	0	24	0	1	0	0
4/26/2024	11:30 PM	0	78	4	0	0	0	0	0	19	0	1	0	0
4/26/2024	11:45 PM	0	40	2	0	0	0	0	0	5	0	0	0	0

4/27/2024	12:00 AM	1	120	24	0	6	1	0	0	16	0	2	0	0
4/27/2024	12:15 AM	1	108	25	0	5	1	0	0	18	0	3	0	0
4/27/2024	12:30 AM	2	96	22	0	3	1	0	0	19	0	2	0	0
4/27/2024	12:45 AM	1	85	18	0	2	1	0	1	19	0	1	0	0
4/27/2024	1:00 AM	1	77	13	0	0	0	0	1	18	0	1	0	0
4/27/2024	1:15 AM	1	72	13	0	0	0	0	1	11	0	0	0	0
4/27/2024	1:30 AM	0	67	11	0	1	0	0	1	11	0	1	0	0
4/27/2024	1:45 AM	0	61	10	0	1	0	0	0	13	0	2	0	0
4/27/2024	2:00 AM	0	70	13	0	1	0	0	0	16	0	2	0	0
4/27/2024	2:15 AM	0	69	11	0	2	0	0	0	21	0	2	0	0
4/27/2024	2:30 AM	0	76	13	0	1	0	0	0	23	0	2	0	0
4/27/2024	2:45 AM	0	70	13	0	1	0	0	0	26	0	1	0	0
4/27/2024	3:00 AM	0	61	12	0	1	1	0	0	28	0	1	0	0
4/27/2024	3:15 AM	0	51	10	0	4	1	0	0	31	0	2	0	0
4/27/2024	3:30 AM	0	45	11	0	4	1	0	0	31	0	1	0	0
4/27/2024	3:45 AM	0	47	12	0	5	1	0	0	26	0	1	0	0
4/27/2024	4:00 AM	0	37	14	0	7	0	0	0	25	0	3	0	0
4/27/2024	4:15 AM	0	52	20	0	3	0	0	0	22	0	2	0	0
4/27/2024	4:30 AM	0	54	21	0	3	0	0	0	24	0	3	0	0
4/27/2024	4:45 AM	0	59	25	0	2	0	0	0	29	0	3	0	0
4/27/2024	5:00 AM	0	75	27	0	1	0	0	0	28	0	2	0	0
4/27/2024	5:15 AM	0	83	26	0	3	0	0	0	27	0	2	0	0
4/27/2024	5:30 AM	0	93	26	0	4	0	0	0	25	0	1	0	0
4/27/2024	5:45 AM	0	119	37	0	5	0	0	0	21	0	1	0	0
4/27/2024	6:00 AM	0	128	44	0	5	1	0	1	19	0	0	0	0
4/27/2024	6:15 AM	0	145	47	0	3	2	0	1	29	0	1	0	0
4/27/2024	6:30 AM	0	178	56	0	4	3	1	1	28	1	1	0	0
4/27/2024	6:45 AM	0	188	49	1	5	3	2	3	32	1	2	0	0
4/27/2024	7:00 AM	0	214	54	1	8	2	2	3	36	3	2	0	0
4/27/2024	7:15 AM	0	225	60	1	13	4	2	3	33	3	1	0	0
4/27/2024	7:30 AM	0	235	68	1	14	5	1	3	36	2	1	0	0
4/27/2024	7:45 AM	0	265	69	0	12	6	0	1	39	3	0	0	0
4/27/2024	8:00 AM	0	285	66	0	11	7	0	2	40	1	0	0	0
4/27/2024	8:15 AM	1	298	68	0	7	5	0	3	39	1	1	0	0
4/27/2024	8:30 AM	1	314	62	0	5	3	0	3	44	1	1	0	0
4/27/2024	8:45 AM	1	336	61	0	8	3	1	5	42	0	1	0	0
4/27/2024	9:00 AM	1	363	66	0	9	2	1	3	45	0	1	0	0
4/27/2024	9:15 AM	0	389	69	0	12	1	1	3	46	0	0	0	0
4/27/2024	9:30 AM	0	398	71	1	14	2	1	3	45	1	0	0	0
4/27/2024	9:45 AM	0	420	89	1	13	1	0	1	44	1	0	0	0
4/27/2024	10:00 AM	0	426	101	1	11	2	1	2	39	1	0	0	0
4/27/2024	10:15 AM	0	466	96	1	10	5	1	1	39	1	0	0	0
4/27/2024	10:30 AM	0	491	103	0	11	6	1	1	30	0	0	0	0
4/27/2024	10:45 AM	0	478	94	0	9	6	1	2	27	2	0	0	0
4/27/2024	11:00 AM	0	495	90	0	9	6	0	2	31	2	0	0	0
4/27/2024	11:15 AM	0	496	100	0	7	4	0	2	25	2	0	0	0
4/27/2024	11:30 AM	0	492	111	0	5	2	0	3	31	2	0	0	0
4/27/2024	11:45 AM	1	522	121	0	6	3	0	2	37	0	0	0	0
4/27/2024	12:00 PM	1	514	111	0	10	2	0	1	35	0	0	0	0
4/27/2024	12:15 PM	1	502	118	1	10	1	0	1	38	0	0	0	0
4/27/2024	12:30 PM	1	535	112	1	10	1	0	1	36	0	0	0	0
4/27/2024	12:45 PM	0	533	110	1	10	0	0	1	30	0	0	0	0
4/27/2024	1:00 PM	0	545	119	1	9	0	0	1	31	0	0	0	0
4/27/2024	1:15 PM	2	563	115	0	10	1	0	2	29	0	0	0	0
4/27/2024	1:30 PM	3	564	123	1	11	1	0	4	27	0	0	0	0
4/27/2024	1:45 PM	4	546	116	1	13	1	0	4	29	0	0	0	0
4/27/2024	2:00 PM	6	549	104	1	9	1	0	5	30	0	0	0	0
4/27/2024	2:15 PM	5	543	99	1	9	0	0	4	26	1	0	0	0
4/27/2024	2:30 PM	5	522	92	0	7	0	1	2	28	1	0	0	0
4/27/2024	2:45 PM	7	544	85	0	7	1	1	3	26	2	0	0	0
4/27/2024	3:00 PM	5	557	93	1	7	1	1	2	25	3	0	0	0
4/27/2024	3:15 PM	4	556	94	1	6	2	1	2	29	2	0	0	0
4/27/2024	3:30 PM	3	543	88	1	7	3	0	3	29	2	0	0	0
4/27/2024	3:45 PM	0	523	88	1	6	2	0	2	28	1	0	0	0
4/27/2024	4:00 PM	0	502	85	0	7	2	0	2	23	0	0	0	0
4/27/2024	4:15 PM	0	494	82	0	8	3	0	3	24	0	0	0	0
4/27/2024	4:30 PM	1	519	74	0	7	2	0	2	19	0	0	0	0
4/27/2024	4:45 PM	1	511	87	0	8	2	0	3	20	0	0	0	0
4/27/2024	5:00 PM	1	472	89	1	9	2	0	4	18	0	0	0	0
4/27/2024	5:15 PM	1	439	95	1	10	0	0	5	15	0	0	0	0
4/27/2024	5:30 PM	0	438	95	1	10	0	0	4	16	0	0	0	0
4/27/2024	5:45 PM	0	442	98	2	8	0	0	3	13	0	0	0	0
4/27/2024	6:00 PM	0	470	91	1	5	0	0	2	16	1	0	0	0
4/27/2024	6:15 PM	0	472	84	1	3	0	0	0	13	1	0	0	0
4/27/2024	6:30 PM	0	442	76	1	3	1	0	0	14	1	0	0	0
4/27/2024	6:45 PM	0	436	70	0	3	1	0	1	12	1	0	0	0
4/27/2024	7:00 PM	0	441	66	0	3	1	0	1	10	0	0	0	0
4/27/2024	7:15 PM	0	435	66	0	2	1	0	2	16	0	0	0	0
4/27/2024	7:30 PM	0	404	69	0	1	2	0	2	12	0	0	0	0
4/27/2024	7:45 PM	0	373	61	0	0	2	0	2	16	0	0	0	0
4/27/2024	8:00 PM	0	334	62	0	1	2	0	2	12	0	0	0	0
4/27/2024	8:15 PM	1	309	53	0	2	3	0	1	5	0	0	0	0
4/27/2024	8:30 PM	1	333	51	0	3	1	0	1	7	0	0	0	0
4/27/2024	8:45 PM	1	350	51	0	6	1	0	0	7	0	0	0	0
4/27/2024	9:00 PM	1	355	45	0	5	1	0	0	9	0	0	0	0
4/27/2024	9:15 PM	0	371	44	1	6	0	0	0	9	0	0	0	0
4/27/2024	9:30 PM	0	351	49	1	6	0	0	0	10	0	0	0	0
4/27/2024	9:45 PM	0	325	43	1	3	0	0	0	8	0	0	0	0
4/27/2024	10:00 PM	0	290	47	1	3	0	0	0	10	0	1	0	0
4/27/2024	10:15 PM	0	260	44	0	1	0	0	0	11	0	1	0	0
4/27/2024	10:30 PM	0	215	37	0	0	0	0	0	11	0	1	0	0
4/27/2024	10:45 PM	0	180	36	0	0	0	0	0	13	0	1	0	0
4/27/2024	11:00 PM	0	170	33	0	1	1	0	0	11	0	0	0	0
4/27/2024	11:15 PM	0	118	26	0	1	1	0	0	10	0	0	0	0
4/27/2024	11:30 PM	0	80	17	0	1	1	0	0	7	0	0	0	0
4/27/2024	11:45 PM	0	40	8	0	1	1	0	0	2	0	0	0	0

Bi-Directional Class Count || NB EB 15min

Columbia, SC

Marr Traffic DATA COLLECTION
www.marrtraffic.com

Site 75 Lane 4 NB
I-20,
north of Bush River Rd

Date
Sunday, April 21, 2024

Lat/Long
34.034393°, -81.117736°

Weather
Cloudy
66°F

Click here for Detailed Weather

Click here for Map

0000 - 2400 (Sunday 24h Session) (04-21-2024)
NB EB 15min

	Northbound (Movement 75 Lane 4 NB.1)													15min	60min
Time	1	2	3	4	5	6	7	8	9	10	11	12	13	Total	Total
0000 - 0015	0	22	4	0	0	0	0	0	0	0	0	0	0	**26**	
0015 - 0030	0	16	3	0	0	0	0	0	0	0	0	0	0	**19**	
0030 - 0045	0	15	3	0	0	0	0	0	0	0	0	0	0	**18**	
0045 - 0100	0	11	2	0	1	0	0	0	0	0	0	0	0	**14**	**77**
0100 - 0115	0	10	2	0	0	0	0	0	0	0	0	0	0	**12**	
0115 - 0130	0	9	3	0	0	0	0	0	0	0	0	0	0	**12**	
0130 - 0145	0	11	3	0	0	0	0	0	2	0	0	0	0	**16**	
0145 - 0200	0	8	2	0	1	0	0	0	1	0	0	0	0	**12**	**52**
0200 - 0215	0	4	1	0	0	0	0	0	0	0	0	0	0	**5**	
0215 - 0230	0	6	2	0	0	0	0	0	1	0	0	0	0	**9**	
0230 - 0245	0	3	0	0	0	0	0	0	1	0	0	0	0	**4**	
0245 - 0300	0	4	0	0	1	0	0	0	0	0	0	0	0	**5**	**23**
0300 - 0315	0	5	1	0	1	0	0	0	0	0	0	0	0	**7**	
0315 - 0330	0	4	2	0	0	0	0	0	0	0	0	0	0	**6**	
0330 - 0345	0	4	1	0	0	0	0	0	0	0	1	0	0	**6**	
0345 - 0400	0	5	2	0	0	0	0	0	1	0	0	0	0	**8**	**27**
0400 - 0415	0	4	1	0	0	0	0	0	0	0	0	0	0	**5**	
0415 - 0430	0	3	2	0	0	0	0	0	0	0	0	0	0	**5**	
0430 - 0445	0	5	2	0	0	0	0	0	0	0	0	0	0	**7**	
0445 - 0500	0	6	1	0	0	0	0	0	0	0	0	0	0	**7**	**24**
0500 - 0515	0	5	1	0	0	0	0	0	0	0	0	0	0	**6**	
0515 - 0530	0	8	3	0	0	0	0	0	0	0	0	0	0	**11**	
0530 - 0545	0	10	3	0	0	0	0	0	0	0	0	0	0	**13**	
0545 - 0600	0	10	4	0	0	0	0	0	1	0	0	0	0	**15**	**45**
0600 - 0615	0	13	5	0	0	0	0	0	0	0	0	0	0	**18**	
0615 - 0630	0	21	7	0	0	0	0	0	0	0	1	0	0	**29**	
0630 - 0645	0	43	8	0	0	0	0	0	2	0	0	0	0	**53**	
0645 - 0700	0	29	6	0	0	0	0	0	0	0	0	0	0	**35**	**135**
0700 - 0715	0	24	5	0	0	0	0	0	1	0	0	0	0	**30**	
0715 - 0730	1	32	8	0	0	0	0	0	1	0	0	0	0	**42**	
0730 - 0745	0	32	6	0	0	0	0	0	0	0	0	0	0	**38**	
0745 - 0800	0	46	7	0	0	0	0	0	1	0	0	0	0	**54**	**164**
0800 - 0815	0	49	5	0	1	0	0	0	1	0	0	0	0	**56**	
0815 - 0830	0	41	6	0	1	0	0	0	0	0	0	0	0	**48**	
0830 - 0845	0	46	10	0	0	0	0	0	1	0	0	0	0	**57**	
0845 - 0900	0	80	12	0	0	0	0	0	0	0	0	0	0	**92**	**253**
0900 - 0915	0	70	8	0	0	0	0	0	0	0	0	0	0	**78**	
0915 - 0930	0	62	6	0	0	0	0	0	2	0	0	0	0	**70**	
0930 - 0945	0	70	14	1	0	0	0	0	0	0	0	0	0	**85**	
0945 - 1000	0	74	7	0	1	0	0	0	0	0	0	0	0	**82**	**315**
1000 - 1015	0	89	10	1	0	0	0	0	0	0	0	0	0	**100**	
1015 - 1030	1	84	12	0	2	0	0	0	1	0	0	0	0	**100**	
1030 - 1045	0	88	13	0	1	0	0	0	0	0	0	0	0	**102**	
1045 - 1100	0	99	10	0	0	1	0	0	0	0	0	0	0	**110**	**412**
1100 - 1115	0	62	8	0	1	0	0	0	0	0	0	0	0	**71**	
1115 - 1130	0	72	8	0	1	0	0	0	1	0	0	0	0	**82**	
1130 - 1145	0	64	11	0	0	0	0	0	1	0	0	0	0	**76**	
1145 - 1200	0	82	11	0	0	1	0	0	2	0	0	0	0	**96**	**325**
1200 - 1215	0	96	8	0	0	0	0	0	2	0	0	0	0	**106**	
1215 - 1230	0	98	21	1	0	0	0	0	1	1	0	0	0	**122**	
1230 - 1245	0	105	18	0	0	0	0	0	2	0	0	0	0	**125**	
1245 - 1300	0	98	16	0	1	0	0	0	3	0	0	0	0	**118**	**471**
1300 - 1315	0	92	13	0	2	1	0	0	1	0	0	0	0	**109**	
1315 - 1330	1	91	10	0	0	0	0	0	1	0	0	0	0	**103**	
1330 - 1345	0	106	14	0	2	0	0	0	2	0	0	0	0	**124**	
1345 - 1400	0	101	15	0	2	0	0	0	3	0	0	0	0	**121**	**457**
1400 - 1415	0	85	12	0	0	0	0	0	0	0	0	0	0	**97**	
1415 - 1430	0	90	13	1	1	0	0	0	0	0	0	0	0	**105**	
1430 - 1445	0	101	8	0	0	0	0	0	0	0	0	0	0	**109**	
1445 - 1500	0	108	13	0	1	0	0	0	3	0	0	0	0	**125**	**436**
1500 - 1515	0	97	14	0	0	0	0	0	1	0	0	0	0	**112**	
1515 - 1530	0	70	16	0	0	0	0	0	1	0	0	0	0	**87**	
1530 - 1545	0	94	12	0	0	0	0	0	0	0	0	0	0	**106**	
1545 - 1600	0	93	6	0	0	1	0	0	1	0	0	0	0	**101**	**406**
1600 - 1615	0	85	5	0	0	0	0	0	0	0	0	0	0	**90**	
1615 - 1630	0	66	13	0	0	0	0	1	1	0	0	0	0	**81**	
1630 - 1645	0	87	8	1	0	0	0	0	1	0	0	0	0	**97**	
1645 - 1700	0	83	16	0	2	0	0	0	0	0	0	0	0	**101**	**369**
1700 - 1715	0	94	12	0	0	0	0	0	2	0	0	0	0	**108**	
1715 - 1730	0	96	9	0	0	0	0	0	1	0	0	0	0	**106**	
1730 - 1745	0	91	7	0	0	0	0	0	2	0	0	0	0	**100**	
1745 - 1800	0	74	9	0	0	0	0	0	1	0	0	0	0	**84**	**398**
1800 - 1815	0	71	8	0	1	0	0	0	2	0	0	0	0	**82**	
1815 - 1830	0	92	7	0	2	0	0	0	3	0	0	0	0	**104**	
1830 - 1845	0	100	8	0	0	0	0	0	5	0	0	0	0	**113**	
1845 - 1900	0	58	5	0	0	0	0	0	3	0	1	0	0	**67**	**366**
1900 - 1915	0	57	4	0	0	0	0	0	1	0	0	0	0	**62**	
1915 - 1930	0	59	7	0	0	0	0	0	3	0	0	0	0	**69**	
1930 - 1945	0	72	4	0	0	1	0	0	2	0	0	0	0	**79**	
1945 - 2000	0	69	4	0	1	0	0	1	2	0	0	0	0	**77**	**287**
2000 - 2015	0	60	5	0	0	0	0	0	1	0	0	0	0	**66**	
2015 - 2030	0	55	6	0	0	0	0	0	3	0	0	0	0	**64**	
2030 - 2045	0	61	3	0	0	0	0	0	3	0	0	0	0	**67**	
2045 - 2100	0	53	2	0	0	0	0	0	3	0	0	0	0	**58**	**255**
2100 - 2115	0	59	1	0	1	0	0	0	3	0	0	0	0	**64**	
2115 - 2130	0	49	0	0	0	0	0	0	2	0	0	0	0	**51**	
2130 - 2145	0	33	1	0	0	0	0	0	3	0	0	0	0	**37**	
2145 - 2200	0	36	0	0	2	0	0	0	1	0	0	0	0	**39**	**191**
2200 - 2215	0	38	0	0	0	0	0	0	2	0	0	0	0	**40**	
2215 - 2230	0	23	1	0	0	0	0	0	1	0	0	0	0	**25**	
2230 - 2245	0	31	0	0	0	0	0	0	2	0	0	0	0	**33**	
2245 - 2300	0	20	1	0	1	0	0	0	1	0	0	0	0	**23**	**121**
2300 - 2315	0	22	0	0	1	0	0	0	5	0	0	0	0	**28**	
2315 - 2330	0	21	1	0	1	0	0	0	1	0	1	0	0	**25**	
2330 - 2345	0	14	0	0	0	0	0	0	2	0	0	0	0	**16**	
2345 - 0000	0	13	0	0	0	0	0	0	1	0	0	0	0	**14**	**83**

Session Total	3	4927	607	5	33	5	0	2	105	1	4	0	0	**5692**
Session Average	0.03	51.32	6.32	0.05	0.34	0.05	0.00	0.02	1.09	0.01	0.04	0.00	0.00	**59.29**
Session Percentage	0.05	86.56	10.66	0.09	0.58	0.09	0.00	0.04	1.84	0.02	0.07	0.00	0.00	

AM Peak Hour	0630 - 0730	0945 - 1045	0930 - 1030	0915 - 1015	0945 - 1045	-	-	-	0630 - 0730	-	0530 - 0630	-	-	**0945 - 1045**
AM Peak Volume	1	335	43	2	4	0	0	0	4	0	1	0	0	**384**

Noon Peak Hour	1000 - 1100	1200 - 1300	1215 - 1315	1000 - 1100	1300 - 1400	1000 - 1100	-	-	1200 - 1300	1130 - 1230	-	-	-	**1215 - 1315**
Noon Peak Volume	1	397	68	1	6	1	0	0	8	1	0	0	0	**474**

PM Peak Hour	-	1645 - 1745	1615 - 1715	1545 - 1645	1730 - 1830	1500 - 1600	-	1530 - 1630	1800 - 1900	-	1800 - 1900	-	-	**1645 - 1745**
PM Peak Volume	0	364	49	1	3	1	0	1	13	0	1	0	0	**415**

Site 75 Lane 4 NB
I-20,
north of Bush River Rd

Date
Monday, April 22, 2024

Lat/Long
34.034393°, -81.117736°

Weather
Mostly Cloudy
57°F

Click here for Detailed Weather

0000 - 2400 (Weekday 24h Session) (04-22-2024)
NB EB 15min

	Northbound (Movement 75 Lane 4 NB.1)													15min	60min
Time	1	2	3	4	5	6	7	8	9	10	11	12	13	Total	Total
0000 - 0015	0	6	1	0	0	0	0	0	1	0	0	0	0	**8**	
0015 - 0030	0	10	4	0	0	0	0	0	1	0	0	0	0	**15**	
0030 - 0045	0	8	2	0	0	0	0	0	1	0	1	0	0	**12**	
0045 - 0100	0	6	1	0	0	0	0	0	1	0	0	0	0	**8**	**43**
0100 - 0115	0	5	2	0	0	0	0	0	2	0	0	0	0	**9**	
0115 - 0130	0	6	1	0	0	0	0	0	0	0	0	0	0	**7**	
0130 - 0145	0	3	0	0	0	0	0	0	2	0	0	0	0	**5**	
0145 - 0200	0	3	2	0	0	0	0	0	2	0	0	0	0	**7**	**28**
0200 - 0215	0	4	0	0	0	0	0	0	0	0	0	0	0	**4**	
0215 - 0230	0	3	0	0	0	0	0	0	1	0	0	0	0	**4**	
0230 - 0245	0	3	1	0	0	0	0	0	2	0	0	0	0	**6**	
0245 - 0300	0	4	1	0	0	0	0	0	4	0	0	0	0	**9**	**23**
0300 - 0315	0	3	0	0	0	0	0	0	0	0	0	0	0	**3**	
0315 - 0330	0	2	1	0	0	0	0	0	0	0	0	0	0	**3**	
0330 - 0345	0	4	2	0	0	0	0	0	2	0	0	0	0	**8**	
0345 - 0400	0	5	1	0	0	0	0	0	0	0	0	0	0	**6**	**20**
0400 - 0415	0	7	4	0	0	0	0	0	2	0	0	0	0	**13**	
0415 - 0430	0	7	3	0	1	0	0	0	4	0	0	0	0	**15**	
0430 - 0445	0	11	3	0	0	0	0	0	2	0	0	0	0	**16**	
0445 - 0500	0	18	6	0	0	0	0	0	1	0	0	0	0	**25**	**69**
0500 - 0515	0	15	5	0	0	0	0	0	1	0	0	0	0	**21**	
0515 - 0530	0	30	7	0	2	0	0	0	1	0	0	0	0	**40**	
0530 - 0545	0	49	10	0	0	0	0	0	2	0	0	0	0	**61**	
0545 - 0600	0	46	15	0	0	0	0	0	5	0	0	0	0	**66**	**188**
0600 - 0615	0	48	13	0	0	0	0	0	3	0	0	0	0	**64**	
0615 - 0630	0	76	35	0	3	0	0	0	4	0	0	0	0	**118**	
0630 - 0645	0	149	30	0	1	1	0	0	4	0	0	0	0	**185**	
0645 - 0700	0	166	31	1	2	0	0	0	4	0	0	0	0	**204**	**571**
0700 - 0715	0	222	38	0	3	0	0	1	4	0	0	0	0	**268**	
0715 - 0730	0	286	33	0	2	0	0	1	6	0	0	0	0	**328**	
0730 - 0745	0	312	34	0	2	0	0	0	5	0	0	0	0	**353**	
0745 - 0800	1	294	38	0	2	0	0	1	4	0	0	0	0	**340**	**1289**
0800 - 0815	0	325	51	0	4	0	0	2	6	0	0	0	0	**388**	
0815 - 0830	0	291	47	0	4	0	0	0	5	0	0	0	0	**347**	
0830 - 0845	0	253	30	0	3	0	0	0	5	1	0	0	0	**292**	
0845 - 0900	0	234	43	0	1	0	0	1	5	0	0	0	0	**284**	**1311**
0900 - 0915	0	183	36	0	2	1	0	0	3	0	0	0	0	**225**	
0915 - 0930	0	183	28	0	4	0	0	1	6	0	0	0	0	**222**	
0930 - 0945	0	186	46	3	3	0	0	0	4	0	0	0	0	**242**	
0945 - 1000	0	188	27	4	2	0	0	0	6	0	0	0	0	**227**	**916**
1000 - 1015	0	137	22	0	1	2	0	0	9	0	1	0	0	**172**	
1015 - 1030	0	127	25	0	5	0	0	0	4	0	0	0	0	**161**	
1030 - 1045	0	118	25	1	2	0	0	0	4	0	0	0	0	**150**	
1045 - 1100	1	128	24	0	3	1	0	0	7	0	0	0	0	**164**	**647**
1100 - 1115	0	84	14	0	2	1	0	0	3	0	0	0	0	**104**	
1115 - 1130	0	109	16	0	3	0	0	0	12	0	0	0	0	**140**	
1130 - 1145	0	102	16	0	1	0	0	0	2	0	0	0	0	**121**	
1145 - 1200	0	119	14	0	2	0	0	1	8	0	0	0	0	**144**	**509**
1200 - 1215	0	113	22	0	2	0	0	0	6	0	0	0	0	**143**	
1215 - 1230	0	125	21	0	2	0	0	0	8	0	0	0	0	**156**	
1230 - 1245	0	133	24	0	2	0	0	0	12	0	0	0	0	**171**	
1245 - 1300	0	134	25	0	2	0	0	1	4	0	0	0	0	**166**	**636**
1300 - 1315	0	120	16	0	2	1	0	0	3	0	0	0	0	**142**	
1315 - 1330	0	118	16	0	4	3	0	0	5	0	0	0	0	**146**	
1330 - 1345	0	120	15	0	5	0	0	1	1	0	0	0	0	**142**	
1345 - 1400	0	105	11	0	2	0	0	2	1	0	0	0	0	**121**	**551**
1400 - 1415	0	111	23	0	1	0	1	0	5	0	0	0	0	**141**	
1415 - 1430	0	111	13	0	6	1	0	0	9	0	0	0	0	**140**	
1430 - 1445	0	118	17	0	3	0	0	0	5	0	0	0	0	**143**	
1445 - 1500	0	128	21	0	3	1	0	0	7	0	0	0	0	**160**	**584**
1500 - 1515	0	115	17	0	4	0	0	0	5	0	0	0	0	**141**	
1515 - 1530	0	127	25	0	3	0	0	0	4	0	0	0	0	**159**	
1530 - 1545	0	138	15	0	3	1	0	0	2	0	0	0	0	**159**	
1545 - 1600	0	105	21	0	2	0	0	1	3	0	0	0	0	**132**	**591**
1600 - 1615	0	120	13	0	2	1	0	0	4	0	0	0	0	**140**	
1615 - 1630	0	143	21	0	2	0	0	0	4	0	0	0	0	**170**	
1630 - 1645	0	131	22	1	1	0	0	0	2	0	0	0	0	**157**	
1645 - 1700	0	119	18	1	3	1	0	0	5	0	0	0	0	**147**	**614**
1700 - 1715	0	137	9	2	1	0	0	0	1	0	0	0	0	**150**	
1715 - 1730	1	106	17	0	0	0	0	0	3	0	0	0	0	**127**	
1730 - 1745	0	84	14	0	0	0	0	0	2	0	0	0	0	**100**	
1745 - 1800	1	95	14	0	2	0	0	0	3	0	0	0	0	**115**	**492**
1800 - 1815	0	82	11	0	2	0	0	0	2	0	0	0	0	**97**	
1815 - 1830	0	112	15	0	2	0	0	0	0	0	0	0	0	**129**	
1830 - 1845	0	103	9	0	0	1	0	0	5	0	0	0	0	**118**	
1845 - 1900	0	79	6	0	0	1	0	0	4	0	0	0	0	**90**	**434**
1900 - 1915	0	67	12	0	3	0	0	0	1	0	0	0	0	**83**	
1915 - 1930	0	72	7	0	0	0	0	0	3	0	0	0	0	**82**	
1930 - 1945	0	50	5	0	0	0	0	0	1	0	0	0	0	**56**	
1945 - 2000	0	55	7	0	2	0	0	0	2	0	0	0	0	**66**	**287**
2000 - 2015	0	48	1	0	0	0	0	0	4	0	0	0	0	**53**	
2015 - 2030	0	38	2	0	1	0	0	0	1	0	0	0	0	**42**	
2030 - 2045	0	33	3	0	1	1	0	0	2	0	0	0	0	**40**	
2045 - 2100	0	34	0	0	0	0	0	0	3	0	0	0	0	**37**	**172**
2100 - 2115	0	46	0	0	0	0	0	0	2	0	0	0	0	**48**	
2115 - 2130	0	35	0	0	0	0	0	0	6	0	0	0	0	**41**	
2130 - 2145	0	29	1	0	0	0	0	0	0	0	0	0	0	**30**	
2145 - 2200	0	36	1	0	0	0	0	0	1	0	0	0	0	**38**	**157**
2200 - 2215	0	30	0	0	0	0	0	0	4	0	0	0	0	**34**	
2215 - 2230	0	37	0	0	1	0	0	0	1	0	0	0	0	**39**	
2230 - 2245	0	22	0	0	0	0	0	0	3	0	0	0	0	**25**	
2245 - 2300	0	20	0	0	0	0	0	0	2	0	0	0	0	**22**	**120**
2300 - 2315	0	20	0	0	0	0	0	0	3	0	0	0	0	**23**	
2315 - 2330	0	19	0	0	1	0	0	0	1	0	0	0	0	**21**	
2330 - 2345	0	5	0	0	0	0	0	0	3	0	0	0	0	**8**	
2345 - 0000	0	7	0	0	0	0	0	0	1	0	0	0	0	**8**	**60**

Session Total	4	8513	1298	13	130	18	1	13	319	1	2	0	0	**10312**
Session Average	0.04	88.68	13.52	0.14	1.35	0.19	0.01	0.14	3.32	0.01	0.02	0.00	0.00	**107.42**
Session Percentage	0.04	82.55	12.59	0.13	1.26	0.17	0.01	0.13	3.09	0.01	0.02	0.00	0.00	

AM Peak Hour	0700 - 0800	0730 - 0830	0800 - 0900	0900 - 1000	0745 - 0845	0915 - 1015	-	0715 - 0815	0915 - 1015	0745 - 0845	0915 - 1015	-	-	**0730 - 0830**
AM Peak Volume	1	1222	171	7	13	2	0	4	25	1	1	0	0	**1428**

Noon Peak Hour	1000 - 1100	1215 - 1315	1000 - 1100	1000 - 1100	1415 - 1515	1230 - 1330	1315 - 1415	1300 - 1400	1145 - 1245	-	1000 - 1100	-	-	**1000 - 1100**
Noon Peak Volume	1	512	96	1	16	4	1	3	34	0	1	0	0	**647**

PM Peak Hour	1700 - 1800	1615 - 1715	1500 - 1600	1615 - 1715	1500 - 1600	1515 - 1615	-	1500 - 1600	1600 - 1700	-	-	-	-	**1615 - 1715**
PM Peak Volume	2	530	78	4	12	2	0	1	15	0	0	0	0	**624**

Site 75 Lane 4 NB
I-20,
north of Bush River Rd

Date
Tuesday, April 23, 2024

Lat/Long
34.034393°, -81.117736°

Weather
Fair
58°F

Click here for Detailed Weather

0000 - 2400 (Weekday 24h Session) (04-23-2024)
NB EB 15min

	Northbound (Movement 75 Lane 4 NB.1)													15min	60min
TIME	1	2	3	4	5	6	7	8	9	10	11	12	13	Total	Total
0000 - 0015	0	7	1	0	0	0	0	0	2	0	0	0	0	**10**	
0015 - 0030	0	8	2	0	0	0	0	0	0	0	0	0	0	**10**	
0030 - 0045	0	7	1	0	0	0	0	0	1	0	0	0	0	**9**	
0045 - 0100	0	6	1	0	0	0	0	0	0	0	0	0	0	**7**	**36**
0100 - 0115	0	3	1	0	0	0	0	0	3	0	0	0	0	**7**	
0115 - 0130	0	5	2	0	1	0	0	0	0	0	1	0	0	**9**	
0130 - 0145	0	2	1	0	1	0	0	0	0	0	0	0	0	**4**	
0145 - 0200	0	4	1	0	0	0	0	0	3	0	0	0	0	**8**	**28**
0200 - 0215	0	3	2	0	0	0	0	0	0	0	0	0	0	**5**	
0215 - 0230	0	3	1	0	0	0	0	0	2	0	0	0	0	**6**	
0230 - 0245	0	1	0	0	0	0	0	0	0	0	0	0	0	**1**	
0245 - 0300	0	2	1	0	0	0	0	0	0	0	0	0	0	**3**	**15**
0300 - 0315	0	8	2	0	0	0	0	0	1	0	0	0	0	**11**	
0315 - 0330	0	2	1	0	0	0	0	0	0	0	0	0	0	**3**	
0330 - 0345	0	9	3	0	0	0	0	0	2	0	0	0	0	**14**	
0345 - 0400	0	7	1	0	0	0	0	0	1	0	0	0	0	**9**	**37**
0400 - 0415	0	4	1	0	0	0	0	0	2	0	0	0	0	**7**	
0415 - 0430	0	10	3	0	1	0	0	0	5	0	0	0	0	**19**	
0430 - 0445	0	11	1	0	0	0	0	0	3	0	0	0	0	**15**	
0445 - 0500	0	17	5	0	1	0	0	0	1	0	0	0	0	**24**	**65**
0500 - 0515	0	14	3	0	0	0	0	0	4	0	0	0	0	**21**	
0515 - 0530	0	29	2	0	0	0	0	0	0	0	0	0	0	**31**	
0530 - 0545	0	54	8	0	1	0	0	0	5	0	0	0	0	**68**	
0545 - 0600	0	52	11	0	0	0	0	0	1	0	0	0	0	**64**	**184**
0600 - 0615	0	72	10	0	1	0	0	0	1	0	0	0	0	**84**	
0615 - 0630	0	109	26	0	0	0	0	1	1	0	0	0	0	**137**	
0630 - 0645	0	148	28	0	0	0	0	0	6	0	1	0	0	**183**	
0645 - 0700	0	179	35	0	3	1	0	1	3	0	0	0	0	**222**	**626**
0700 - 0715	0	215	41	0	4	0	0	1	6	0	1	0	0	**268**	
0715 - 0730	1	239	54	0	3	1	0	0	3	0	0	0	0	**301**	
0730 - 0745	0	255	45	0	3	1	0	1	8	0	0	0	0	**313**	
0745 - 0800	0	234	37	0	1	0	0	0	1	0	1	0	0	**274**	**1156**
0800 - 0815	0	244	27	0	3	0	0	0	2	0	0	0	0	**276**	
0815 - 0830	1	310	40	0	1	0	0	1	5	0	0	0	0	**358**	
0830 - 0845	0	294	33	0	2	0	0	1	9	0	0	0	0	**339**	
0845 - 0900	0	255	29	0	7	3	0	0	9	0	0	0	0	**303**	**1276**
0900 - 0915	0	184	28	3	4	0	0	0	5	0	0	0	0	**224**	
0915 - 0930	0	176	35	1	6	2	0	0	4	0	0	0	0	**224**	
0930 - 0945	0	168	32	0	2	0	0	0	11	0	0	0	0	**213**	
0945 - 1000	0	164	23	4	2	0	0	0	4	0	0	0	0	**197**	**858**
1000 - 1015	0	150	25	2	4	0	0	1	3	1	0	0	0	**186**	
1015 - 1030	0	129	17	0	4	1	0	1	6	0	0	0	0	**158**	
1030 - 1045	0	139	20	2	2	0	0	0	6	0	0	0	0	**169**	
1045 - 1100	0	125	23	0	9	1	0	2	5	0	0	0	0	**165**	**678**
1100 - 1115	0	122	15	0	1	1	0	0	7	0	0	0	0	**146**	
1115 - 1130	0	110	16	2	3	2	0	0	8	0	0	0	0	**141**	
1130 - 1145	0	138	21	0	2	2	0	0	4	0	1	0	0	**168**	
1145 - 1200	0	128	17	0	2	0	0	0	6	0	0	0	0	**153**	**608**
1200 - 1215	0	114	19	0	3	0	0	0	4	0	0	0	0	**140**	
1215 - 1230	0	122	14	0	3	2	0	0	2	0	0	0	0	**143**	
1230 - 1245	0	148	21	0	3	0	0	0	3	0	0	0	0	**175**	
1245 - 1300	0	145	23	0	2	0	0	0	4	0	0	0	0	**174**	**632**
1300 - 1315	0	111	14	0	0	0	0	1	3	0	0	0	0	**129**	
1315 - 1330	0	115	17	0	3	0	0	0	6	0	0	0	0	**141**	
1330 - 1345	0	110	19	0	1	0	0	1	5	0	0	0	0	**136**	
1345 - 1400	0	108	22	0	2	1	0	1	4	0	0	0	0	**138**	**544**
1400 - 1415	0	107	13	0	3	1	0	0	9	0	0	0	0	**133**	
1415 - 1430	0	104	16	0	1	0	0	1	3	0	0	0	0	**125**	
1430 - 1445	0	103	14	0	2	0	0	0	7	0	0	0	0	**126**	
1445 - 1500	0	103	17	0	2	0	0	1	3	0	0	0	0	**126**	**510**
1500 - 1515	0	124	23	0	2	0	0	0	3	0	0	0	0	**152**	
1515 - 1530	0	126	25	0	3	1	0	1	5	0	0	0	0	**161**	
1530 - 1545	0	132	29	0	6	0	0	0	4	0	0	0	0	**171**	
1545 - 1600	0	116	23	1	4	0	0	0	6	0	0	0	0	**150**	**634**
1600 - 1615	0	109	28	0	1	0	0	0	11	0	0	0	0	**149**	
1615 - 1630	0	138	37	1	4	0	0	0	2	0	0	0	0	**182**	
1630 - 1645	0	150	18	0	4	0	0	1	2	1	0	0	0	**176**	
1645 - 1700	0	142	17	0	2	0	0	0	2	0	0	0	0	**163**	**670**
1700 - 1715	0	163	30	0	1	1	0	0	3	0	0	0	0	**198**	
1715 - 1730	0	185	30	0	2	1	0	2	1	0	0	0	0	**221**	
1730 - 1745	0	162	30	0	0	0	0	0	3	0	0	0	0	**195**	
1745 - 1800	0	119	24	0	0	0	0	0	3	0	0	0	0	**146**	**760**
1800 - 1815	0	101	16	0	2	0	0	0	7	0	0	0	0	**126**	
1815 - 1830	0	116	27	0	1	0	0	0	2	0	0	0	0	**146**	
1830 - 1845	0	100	13	0	2	0	0	1	2	0	0	0	0	**118**	
1845 - 1900	0	135	22	0	2	0	0	2	3	0	0	0	0	**164**	**554**
1900 - 1915	0	56	9	0	0	0	0	1	2	0	0	0	0	**68**	
1915 - 1930	0	69	8	0	4	0	0	0	3	0	0	0	0	**84**	
1930 - 1945	0	48	8	0	0	0	0	0	4	0	0	0	0	**60**	
1945 - 2000	2	70	9	0	3	0	1	1	2	0	0	0	0	**88**	**300**
2000 - 2015	0	58	10	0	1	0	0	0	2	0	0	0	0	**71**	
2015 - 2030	1	57	6	1	0	0	0	0	2	0	0	0	0	**67**	
2030 - 2045	0	51	6	0	1	0	0	0	4	0	0	0	0	**62**	
2045 - 2100	0	39	3	0	3	0	0	0	0	0	0	0	0	**45**	**245**
2100 - 2115	0	61	8	0	0	0	0	0	0	0	0	0	0	**69**	
2115 - 2130	0	53	6	0	1	0	0	0	2	0	0	0	0	**62**	
2130 - 2145	0	47	2	0	0	0	0	0	0	0	0	0	0	**49**	
2145 - 2200	0	38	2	0	1	0	0	0	1	0	0	0	0	**42**	**222**
2200 - 2215	0	36	2	0	2	0	0	0	4	0	0	0	0	**44**	
2215 - 2230	0	30	1	0	1	0	0	0	5	0	0	0	0	**37**	
2230 - 2245	0	29	2	0	2	0	0	0	1	0	0	0	0	**34**	
2245 - 2300	0	21	2	0	0	0	0	0	3	0	0	0	0	**26**	**141**
2300 - 2315	0	18	1	0	2	0	0	0	3	0	0	0	0	**24**	
2315 - 2330	0	13	0	0	1	0	0	0	2	0	0	0	0	**16**	
2330 - 2345	0	15	4	0	0	0	0	0	0	0	0	0	0	**19**	
2345 - 0000	0	9	1	0	1	0	0	0	1	0	0	0	0	**12**	**71**

Session Total	5	8881	1423	17	158	22	1	24	312	2	5	0	0	**10850**
Session Average	0.05	92.51	14.82	0.18	1.65	0.23	0.01	0.25	3.25	0.02	0.05	0.00	0.00	**113.02**
Session Percentage	0.05	81.85	13.12	0.16	1.46	0.20	0.01	0.22	2.88	0.02	0.05	0.00	0.00	

AM Peak Hour	0630 - 0730	0800 - 0900	0700 - 0800	0900 - 1000	0830 - 0930	0830 - 0930	-	0615 - 0715	0845 - 0945	0915 - 1015	0615 - 0715	-	-	**0800 - 0900**
AM Peak Hour Volume	1	1103	177	8	19	5	0	3	29	1	2	0	0	**1276**

Noon Peak Hour	-	1000 - 1100	1445 - 1545	1000 - 1100	1000 - 1100	1045 - 1145	-	1000 - 1100	1030 - 1130	1000 - 1100	1045 - 1145	-	-	**1000 - 1100**
Noon Peak Hour Volume	0	543	94	4	19	6	0	4	26	1	1	0	0	**678**

PM Peak Hour	1930 - 2030	1645 - 1745	1530 - 1630	1530 - 1630	1500 - 1600	1630 - 1730	1900 - 2000	1815 - 1915	1515 - 1615	1545 - 1645	-	-	-	**1645 - 1745**
PM Peak Hour Volume	3	652	117	2	15	2	1	4	26	1	0	0	0	**777**

Site 75 Lane 4 NB
I-20,
north of Bush River Rd

Date
Wednesday, April 24, 2024

Lat/Long
34.034393°, -81.117736°

Weather
Fair
66°F

Click here for Detailed Weather

0000 - 2400 (Weekday 24h Session) (04-24-2024)
NB EB 15min

	Northbound (Movement 75 Lane 4 NB.1)													15min	60min
TIME	1	2	3	4	5	6	7	8	9	10	11	12	13	Total	Total
0000 - 0015	0	9	1	0	1	0	0	0	0	0	0	0	0	**11**	
0015 - 0030	0	7	2	0	1	0	0	0	0	0	0	0	0	**10**	
0030 - 0045	0	6	0	0	0	0	0	0	2	0	0	0	0	**8**	
0045 - 0100	0	6	0	0	0	0	0	0	2	0	0	0	0	**8**	**37**
0100 - 0115	0	7	1	0	0	0	0	0	0	0	1	0	0	**9**	
0115 - 0130	0	4	0	0	1	0	0	0	0	0	0	0	0	**5**	
0130 - 0145	0	5	0	0	0	0	0	0	1	0	0	0	0	**6**	
0145 - 0200	0	6	1	0	1	1	0	0	3	0	1	0	0	**13**	**33**
0200 - 0215	0	8	2	0	0	0	0	0	2	0	0	0	0	**12**	
0215 - 0230	0	4	0	0	0	0	0	0	1	0	0	0	0	**5**	
0230 - 0245	0	7	1	0	0	0	0	0	2	0	0	0	0	**10**	
0245 - 0300	0	5	0	0	0	0	0	0	0	0	1	0	0	**6**	**33**
0300 - 0315	0	6	0	0	0	0	0	0	2	0	0	0	0	**8**	
0315 - 0330	0	7	0	0	0	0	0	0	1	0	0	0	0	**8**	
0330 - 0345	0	5	1	0	0	0	0	0	3	0	0	0	0	**9**	
0345 - 0400	0	3	1	0	0	0	0	0	0	0	0	0	0	**4**	**29**
0400 - 0415	0	7	2	0	1	0	0	0	3	0	0	0	0	**13**	
0415 - 0430	0	13	3	0	0	0	0	0	2	0	0	0	0	**18**	
0430 - 0445	0	7	1	0	0	0	0	0	2	0	0	0	0	**10**	
0445 - 0500	0	23	5	0	0	0	0	0	2	0	0	0	0	**30**	**71**
0500 - 0515	0	15	3	0	1	0	0	0	0	0	0	0	0	**19**	
0515 - 0530	0	18	4	0	2	0	0	0	2	0	0	0	0	**26**	
0530 - 0545	0	43	8	0	2	1	0	0	2	0	1	0	0	**57**	
0545 - 0600	0	54	9	0	1	0	0	0	2	0	0	0	0	**66**	**168**
0600 - 0615	0	52	7	0	1	0	0	0	4	0	0	0	0	**64**	
0615 - 0630	0	109	15	0	0	1	0	0	4	0	0	0	0	**129**	
0630 - 0645	0	165	40	0	0	2	0	0	3	0	0	0	0	**210**	
0645 - 0700	2	152	63	0	2	0	0	0	5	0	0	0	0	**224**	**627**
0700 - 0715	1	190	49	0	3	1	0	0	3	0	0	0	0	**247**	
0715 - 0730	1	255	67	0	3	0	0	0	6	0	1	0	0	**333**	
0730 - 0745	0	239	48	0	2	2	0	0	6	0	0	0	0	**297**	
0745 - 0800	0	258	46	0	0	2	0	0	6	0	0	0	0	**312**	**1189**
0800 - 0815	0	269	46	1	2	1	0	0	5	0	1	0	0	**325**	
0815 - 0830	1	293	38	0	3	0	0	1	3	0	0	0	0	**339**	
0830 - 0845	0	263	50	0	6	0	0	1	5	0	0	0	0	**325**	
0845 - 0900	1	233	59	0	1	0	0	0	6	0	0	0	0	**300**	**1289**
0900 - 0915	0	167	48	9	4	2	0	1	7	0	0	0	0	**238**	
0915 - 0930	0	157	36	4	0	1	0	0	3	0	0	0	0	**201**	
0930 - 0945	0	163	25	0	1	0	0	0	5	0	0	0	0	**194**	
0945 - 1000	0	147	27	0	5	1	0	2	4	0	0	0	0	**186**	**819**
1000 - 1015	1	126	27	0	1	2	0	0	2	0	0	0	0	**159**	
1015 - 1030	0	127	27	0	0	0	0	1	2	0	0	0	0	**157**	
1030 - 1045	0	128	32	0	6	2	0	0	3	0	0	0	0	**171**	
1045 - 1100	0	121	32	1	6	0	0	1	7	0	0	0	0	**168**	**655**
1100 - 1115	0	104	36	0	4	0	0	0	6	0	0	0	0	**150**	
1115 - 1130	0	133	28	1	5	0	0	0	4	0	0	0	0	**171**	
1130 - 1145	1	111	34	0	5	0	1	1	8	0	0	0	0	**161**	
1145 - 1200	0	99	29	0	2	0	0	0	4	0	0	0	0	**134**	**616**
1200 - 1215	0	83	25	0	6	0	0	0	5	0	0	0	0	**119**	
1215 - 1230	0	114	36	0	6	1	0	1	3	0	0	0	0	**161**	
1230 - 1245	0	112	37	0	4	1	0	1	2	0	0	0	0	**157**	
1245 - 1300	0	126	21	0	4	0	0	0	1	0	0	0	0	**152**	**589**
1300 - 1315	0	108	30	0	2	0	0	0	2	0	0	0	0	**142**	
1315 - 1330	0	92	26	0	0	0	0	1	3	0	0	0	0	**122**	
1330 - 1345	0	98	38	0	5	4	1	0	3	0	0	0	0	**149**	
1345 - 1400	0	118	28	0	1	0	0	0	5	0	0	0	0	**152**	**565**
1400 - 1415	0	107	27	0	3	1	0	0	4	0	0	0	0	**142**	
1415 - 1430	0	124	26	0	2	2	0	1	4	0	0	0	0	**159**	
1430 - 1445	1	106	20	0	2	2	0	0	4	0	0	0	0	**135**	
1445 - 1500	2	119	22	0	4	0	0	0	1	1	0	0	0	**149**	**585**
1500 - 1515	1	111	22	0	3	1	0	0	2	0	0	0	0	**140**	
1515 - 1530	0	139	19	0	5	0	0	1	1	0	0	0	0	**165**	
1530 - 1545	0	120	25	0	4	0	0	0	3	0	0	0	0	**152**	
1545 - 1600	0	125	21	0	2	0	0	0	3	0	0	0	0	**151**	**608**
1600 - 1615	0	134	21	0	1	0	0	1	10	0	0	0	0	**167**	
1615 - 1630	0	143	33	0	2	2	0	0	4	2	0	0	0	**186**	
1630 - 1645	1	157	29	0	1	0	0	0	2	0	0	0	0	**190**	
1645 - 1700	1	172	27	0	2	0	0	1	2	0	0	0	0	**205**	**748**
1700 - 1715	1	177	26	0	1	1	0	0	5	0	0	0	0	**211**	
1715 - 1730	0	171	24	0	2	0	0	1	4	0	0	0	0	**202**	
1730 - 1745	0	141	21	0	1	0	0	0	2	0	0	0	0	**165**	
1745 - 1800	0	138	26	0	3	0	0	1	1	0	0	0	0	**169**	**747**
1800 - 1815	0	135	19	0	2	0	0	0	3	0	0	0	0	**159**	
1815 - 1830	0	123	24	2	1	0	0	1	3	0	0	0	0	**154**	
1830 - 1845	0	127	13	0	1	1	0	0	2	1	0	0	0	**145**	
1845 - 1900	0	102	15	0	0	0	0	0	5	1	0	0	0	**123**	**581**
1900 - 1915	2	64	6	0	0	1	0	0	2	0	0	0	0	**75**	
1915 - 1930	0	83	10	0	1	1	0	0	3	0	0	0	0	**98**	
1930 - 1945	1	66	9	0	2	1	0	0	1	0	0	0	0	**80**	
1945 - 2000	0	56	11	0	0	0	0	0	1	0	0	0	0	**68**	**321**
2000 - 2015	0	67	13	0	1	0	0	0	3	0	0	0	0	**84**	
2015 - 2030	0	60	8	0	1	0	0	0	2	0	0	0	0	**71**	
2030 - 2045	0	49	6	0	0	0	0	0	0	0	0	0	0	**55**	
2045 - 2100	0	40	4	0	1	0	0	0	5	0	0	0	0	**50**	**260**
2100 - 2115	0	50	8	0	0	0	0	0	1	0	0	0	0	**59**	
2115 - 2130	0	49	8	0	0	0	0	0	2	0	0	0	0	**59**	
2130 - 2145	0	34	4	0	0	0	0	0	2	0	0	0	0	**40**	
2145 - 2200	0	36	5	0	0	0	0	0	1	0	0	0	0	**42**	**200**
2200 - 2215	0	40	3	0	0	0	0	0	1	0	0	0	0	**44**	
2215 - 2230	0	32	6	0	1	0	0	0	3	0	0	0	0	**42**	
2230 - 2245	0	32	4	0	0	0	0	0	2	0	0	0	0	**38**	
2245 - 2300	0	14	2	0	0	0	0	0	4	0	0	0	0	**20**	**144**
2300 - 2315	0	13	1	0	0	0	0	0	1	0	1	0	0	**16**	
2315 - 2330	0	15	2	0	1	0	0	0	0	0	1	0	0	**19**	
2330 - 2345	0	18	3	0	0	0	0	0	1	0	1	0	0	**23**	
2345 - 0000	0	18	2	0	0	0	0	0	3	0	0	0	0	**23**	**81**

Session Total	18	8694	1770	18	151	38	2	18	272	5	9	0	0	**10995**
Session Average	0.19	90.56	18.44	0.19	1.57	0.40	0.02	0.19	2.83	0.05	0.09	0.00	0.00	**114.56**
Session Percentage	0.16	79.07	16.10	0.16	1.37	0.35	0.02	0.16	2.47	0.05	0.08	0.00	0.00	

AM Peak Hour	0630 - 0730	0745 - 0845	0645 - 0745	0830 - 0930	0815 - 0915	0700 - 0800	-	0815 - 0915	0715 - 0815	-	0715 - 0815	-	-	**0745 - 0845**
AM Peak Hour Volume	4	1083	227	13	14	5	0	3	23	0	2	0	0	**1301**

Noon Peak Hour	1415 - 1515	1000 - 1100	1045 - 1145	1030 - 1130	1030 - 1130	1330 - 1430	1045 - 1145	1000 - 1100	1045 - 1145	1400 - 1500	-	-	-	**1030 - 1130**
Noon Peak Hour Volume	4	502	130	2	21	7	1	2	25	1	0	0	0	**660**

PM Peak Hour	1615 - 1715	1630 - 1730	1615 - 1715	1730 - 1830	1500 - 1600	1615 - 1715	-	1515 - 1615	1530 - 1630	1530 - 1630	-	-	-	**1630 - 1730**
PM Peak Hour Volume	3	677	115	2	14	3	0	2	20	2	0	0	0	**808**

Site 75 Lane 4 NB
I-20,
north of Bush River Rd

Date
Thursday, April 25, 2024

Lat/Long
34.034393°, -81.117736°

Weather
Fair
67°F

Click here for Detailed Weather

0000 - 2400 (Weekday 24h Session) (04-25-2024)
NB EB 15min

	Northbound (Movement 75 Lane 4 NB.1)													15min	60min
TIME	1	2	3	4	5	6	7	8	9	10	11	12	13	Total	Total
0000 - 0015	0	10	0	0	0	0	0	0	1	0	0	0	0	**11**	
0015 - 0030	0	4	0	0	0	0	0	0	1	0	1	0	0	**6**	
0030 - 0045	0	6	0	0	1	0	0	0	0	0	0	0	0	**7**	
0045 - 0100	0	5	0	0	0	0	0	0	1	0	1	0	0	**7**	**31**
0100 - 0115	0	8	0	0	0	0	0	0	1	0	0	0	0	**9**	
0115 - 0130	0	4	0	0	0	0	0	0	2	0	0	0	0	**6**	
0130 - 0145	0	7	0	0	0	0	0	0	2	0	0	0	0	**9**	
0145 - 0200	0	4	1	0	0	0	0	0	1	0	0	0	0	**6**	**30**
0200 - 0215	0	5	0	0	0	0	0	0	1	0	0	0	0	**6**	
0215 - 0230	0	2	0	0	0	0	0	0	3	0	0	0	0	**5**	
0230 - 0245	0	8	0	0	0	0	0	0	0	0	0	0	0	**8**	
0245 - 0300	0	7	0	0	0	0	0	0	1	0	0	0	0	**8**	**27**
0300 - 0315	0	7	1	0	0	0	0	0	1	0	0	0	0	**9**	
0315 - 0330	0	6	0	0	0	0	0	0	1	0	1	0	0	**8**	
0330 - 0345	0	6	0	0	2	0	0	0	0	0	0	0	0	**8**	
0345 - 0400	0	9	1	0	0	0	0	0	3	0	0	0	0	**13**	**38**
0400 - 0415	0	8	0	0	0	0	0	0	2	0	0	0	0	**10**	
0415 - 0430	0	11	0	0	0	0	0	0	3	0	0	0	0	**14**	
0430 - 0445	0	12	0	0	1	0	0	0	1	0	0	0	0	**14**	
0445 - 0500	0	19	2	0	0	1	0	0	2	0	1	0	0	**25**	**63**
0500 - 0515	0	16	1	0	2	0	0	0	2	0	0	0	0	**21**	
0515 - 0530	0	21	1	0	3	0	0	0	7	0	0	0	0	**32**	
0530 - 0545	0	46	5	0	1	0	0	0	0	0	0	0	0	**52**	
0545 - 0600	0	52	7	0	3	0	0	0	4	0	0	0	0	**66**	**171**
0600 - 0615	0	61	4	0	0	0	0	0	3	0	0	0	0	**68**	
0615 - 0630	0	118	5	0	1	0	0	0	4	0	0	0	0	**128**	
0630 - 0645	0	161	16	0	2	1	0	0	4	0	0	0	0	**184**	
0645 - 0700	0	172	32	0	1	2	0	0	4	0	2	0	0	**213**	**593**
0700 - 0715	0	192	47	0	5	3	0	0	7	0	0	0	0	**254**	
0715 - 0730	1	236	53	0	2	0	0	0	4	0	0	0	0	**296**	
0730 - 0745	0	253	46	0	5	0	0	0	3	0	0	0	0	**307**	
0745 - 0800	0	260	61	0	2	1	0	2	4	0	0	0	0	**330**	**1187**
0800 - 0815	0	285	41	0	3	0	0	0	3	0	0	0	0	**332**	
0815 - 0830	0	299	58	0	4	1	0	1	4	0	0	0	0	**367**	
0830 - 0845	1	260	51	0	6	0	1	1	1	0	0	0	0	**321**	
0845 - 0900	0	243	60	0	3	2	0	1	2	0	0	0	0	**311**	**1331**
0900 - 0915	0	211	38	0	3	0	0	0	8	0	0	0	0	**260**	
0915 - 0930	1	149	34	0	2	1	0	0	4	0	0	0	0	**191**	
0930 - 0945	0	179	28	6	4	0	0	1	8	0	0	0	0	**226**	
0945 - 1000	0	160	30	1	2	0	0	1	4	0	0	0	0	**198**	**875**
1000 - 1015	0	129	32	1	3	1	0	0	5	0	0	0	0	**171**	
1015 - 1030	0	122	35	4	2	1	0	1	3	0	0	0	0	**168**	
1030 - 1045	0	114	27	0	1	1	0	1	2	1	0	0	0	**147**	
1045 - 1100	0	137	22	1	2	0	0	1	4	0	0	0	0	**167**	**653**
1100 - 1115	1	105	13	0	2	0	0	0	7	0	0	0	0	**128**	
1115 - 1130	0	136	30	0	2	0	0	1	11	0	0	0	0	**180**	
1130 - 1145	0	117	21	0	0	0	0	1	9	1	0	0	0	**149**	
1145 - 1200	0	106	40	0	1	0	0	1	6	0	0	0	0	**154**	**611**
1200 - 1215	0	118	23	0	2	1	0	1	3	0	0	0	0	**148**	
1215 - 1230	0	123	27	0	5	3	0	0	6	0	0	0	0	**164**	
1230 - 1245	1	144	34	0	5	2	0	3	7	1	0	0	0	**197**	
1245 - 1300	0	123	22	1	2	1	0	2	3	0	0	0	0	**154**	**663**
1300 - 1315	0	134	29	0	4	2	0	2	4	0	0	0	0	**175**	
1315 - 1330	0	126	22	0	4	1	0	2	0	0	0	0	0	**155**	
1330 - 1345	0	134	36	1	3	0	1	0	7	0	0	0	0	**182**	
1345 - 1400	0	110	23	0	5	1	0	0	5	0	0	0	0	**144**	**656**
1400 - 1415	0	118	30	0	3	1	0	0	3	1	0	0	0	**156**	
1415 - 1430	0	129	18	0	3	0	0	2	4	0	0	0	0	**156**	
1430 - 1445	0	131	23	0	5	0	0	1	3	0	0	0	0	**163**	
1445 - 1500	0	94	32	0	1	2	0	0	4	0	0	0	0	**133**	**608**
1500 - 1515	0	114	18	0	2	0	0	0	4	0	0	0	0	**138**	
1515 - 1530	0	105	27	0	0	0	0	1	5	0	0	0	0	**138**	
1530 - 1545	0	119	30	0	2	0	0	0	5	0	0	0	0	**156**	
1545 - 1600	1	132	29	0	2	0	0	0	4	0	0	0	0	**168**	**600**
1600 - 1615	0	122	25	0	1	0	0	0	3	0	0	0	0	**151**	
1615 - 1630	1	137	23	0	2	0	0	0	5	0	0	0	0	**168**	
1630 - 1645	3	145	29	0	1	1	0	0	4	0	0	0	0	**183**	
1645 - 1700	0	150	29	0	2	0	0	0	3	0	0	0	0	**184**	**686**
1700 - 1715	1	154	36	0	0	0	0	0	4	0	0	0	0	**195**	
1715 - 1730	2	142	23	0	2	1	0	1	3	0	0	0	0	**174**	
1730 - 1745	0	169	24	0	3	0	0	1	5	1	0	0	0	**203**	
1745 - 1800	0	135	31	0	1	1	0	0	4	0	0	0	0	**172**	**744**
1800 - 1815	1	125	25	0	1	0	0	0	3	0	0	0	0	**155**	
1815 - 1830	0	129	16	0	0	1	0	0	5	0	0	0	0	**151**	
1830 - 1845	0	127	21	0	0	0	0	1	1	1	0	0	0	**151**	
1845 - 1900	0	99	25	0	1	0	0	0	3	0	0	0	0	**128**	**585**
1900 - 1915	1	78	11	0	0	0	0	0	2	0	0	0	0	**92**	
1915 - 1930	2	76	11	0	0	0	0	0	0	0	0	0	0	**89**	
1930 - 1945	0	74	11	0	1	0	0	1	0	0	0	0	0	**87**	
1945 - 2000	0	63	9	0	0	0	0	0	1	0	0	0	0	**73**	**341**
2000 - 2015	0	50	8	0	1	0	0	0	1	0	0	0	0	**60**	
2015 - 2030	0	47	5	0	1	0	0	0	3	0	0	0	0	**56**	
2030 - 2045	0	64	8	1	0	0	0	0	3	0	0	0	0	**76**	
2045 - 2100	0	50	4	0	0	0	0	0	3	0	1	0	0	**58**	**250**
2100 - 2115	0	52	6	0	1	0	0	0	1	0	0	0	0	**60**	
2115 - 2130	0	47	3	0	0	1	0	0	2	0	0	0	0	**53**	
2130 - 2145	0	52	0	0	0	0	0	0	1	0	0	0	0	**53**	
2145 - 2200	0	46	3	0	1	0	0	0	2	0	0	0	0	**52**	**218**
2200 - 2215	0	48	4	0	1	0	0	0	0	0	0	0	0	**53**	
2215 - 2230	0	35	4	0	0	0	0	0	0	0	0	0	0	**39**	
2230 - 2245	0	20	1	0	1	0	0	0	0	0	0	0	0	**22**	
2245 - 2300	0	22	2	0	0	0	0	0	1	0	0	0	0	**25**	**139**
2300 - 2315	0	19	0	0	0	0	0	0	2	0	0	0	0	**21**	
2315 - 2330	0	27	0	0	0	0	0	0	1	0	0	0	0	**28**	
2330 - 2345	0	16	0	0	0	0	0	0	1	0	0	0	0	**17**	
2345 - 0000	0	10	0	0	0	0	0	0	1	0	0	0	0	**11**	**77**

Session Total	17	8972	1663	16	140	34	2	31	289	6	7	0	0	**11177**
Session Average	0.18	93.46	17.32	0.17	1.46	0.35	0.02	0.32	3.01	0.06	0.07	0.00	0.00	**116.43**
Session Percentage	0.15	80.27	14.88	0.14	1.25	0.30	0.02	0.28	2.59	0.05	0.06	0.00	0.00	

AM Peak Hour	0830 - 0930	0745 - 0845	0745 - 0845	0930 - 1030	0800 - 0900	0615 - 0715	0745 - 0845	0745 - 0845	0900 - 1000	0945 - 1045	0600 - 0700	-	-	**0745 - 0845**
AM Peak Hour Volume	2	1104	211	12	16	6	1	4	24	1	2	0	0	**1350**

Noon Peak Hour	1015 - 1115	1230 - 1330	1145 - 1245	1000 - 1100	1215 - 1315	1215 - 1315	1245 - 1345	1230 - 1330	1100 - 1200	1000 - 1100	-	-	-	**1215 - 1315**
Noon Peak Hour Volume	1	527	124	6	16	8	1	9	33	1	0	0	0	**690**

PM Peak Hour	1630 - 1730	1645 - 1745	1615 - 1715	1945 - 2045	1530 - 1630	1630 - 1730	-	1645 - 1745	1500 - 1600	1645 - 1745	-	-	-	**1645 - 1745**
PM Peak Hour Volume	6	615	117	1	7	2	0	2	18	1	0	0	0	**756**

Site 75 Lane 4 NB
I-20,
north of Bush River Rd

Date
Friday, April 26, 2024

Lat/Long
34.034393°, -81.117736°

Weather
Cloudy
69°F

Click here for Detailed Weather

0000 - 2400 (Weekday 24h Session) (04-26-2024)
NB EB 15min

	Northbound (Movement 75 Lane 4 NB.1)													15min	60min
TIME	1	2	3	4	5	6	7	8	9	10	11	12	13	Total	Total
0000 - 0015	0	10	2	0	0	0	0	0	3	0	1	0	0	**16**	
0015 - 0030	0	7	2	0	0	0	0	0	3	0	0	0	0	**12**	
0030 - 0045	0	11	0	0	2	0	0	0	0	0	0	0	0	**13**	
0045 - 0100	0	6	0	0	2	0	0	0	1	0	0	0	0	**9**	**50**
0100 - 0115	0	4	0	0	0	0	0	0	2	0	2	0	0	**8**	
0115 - 0130	0	7	1	0	1	2	0	0	1	0	1	0	0	**13**	
0130 - 0145	0	8	0	0	0	0	0	0	1	0	0	0	0	**9**	
0145 - 0200	0	6	0	0	0	0	0	0	1	0	0	0	0	**7**	**37**
0200 - 0215	0	4	0	0	0	0	0	0	1	0	0	0	0	**5**	
0215 - 0230	0	6	0	0	0	0	0	0	0	0	0	0	0	**6**	
0230 - 0245	0	1	1	0	0	0	0	0	1	0	0	0	0	**3**	
0245 - 0300	0	1	0	0	0	0	0	0	3	0	0	0	0	**4**	**18**
0300 - 0315	0	4	0	0	0	0	0	0	1	0	1	0	0	**6**	
0315 - 0330	0	4	0	0	0	0	0	0	2	0	0	0	0	**6**	
0330 - 0345	0	6	0	0	0	0	0	0	4	0	0	0	0	**10**	
0345 - 0400	0	9	0	0	0	0	0	0	1	0	0	0	0	**10**	**32**
0400 - 0415	0	9	0	0	2	1	0	0	0	0	0	0	0	**12**	
0415 - 0430	0	13	2	0	1	0	0	0	0	0	0	0	0	**16**	
0430 - 0445	0	10	0	0	0	0	0	0	0	0	0	0	0	**10**	
0445 - 0500	0	15	3	0	0	0	0	0	0	0	0	0	0	**18**	**56**
0500 - 0515	0	16	2	0	4	0	0	0	2	0	0	0	0	**24**	
0515 - 0530	0	33	4	0	2	0	0	0	3	0	0	0	0	**42**	
0530 - 0545	0	36	2	0	0	1	0	0	2	0	0	0	0	**41**	
0545 - 0600	0	40	1	0	0	0	0	0	2	0	0	0	0	**43**	**150**
0600 - 0615	0	60	7	0	0	0	0	0	2	0	0	0	0	**69**	
0615 - 0630	0	82	14	1	2	0	0	0	6	0	0	0	0	**105**	
0630 - 0645	1	122	33	0	2	0	0	1	2	0	0	0	0	**161**	
0645 - 0700	0	142	45	0	2	0	0	1	7	0	2	0	0	**199**	**534**
0700 - 0715	0	161	45	0	3	0	0	0	6	0	0	0	0	**215**	
0715 - 0730	1	224	56	1	2	2	0	0	2	0	0	0	0	**288**	
0730 - 0745	1	280	48	0	2	0	0	0	7	0	0	0	0	**338**	
0745 - 0800	0	244	47	0	3	1	0	0	2	0	1	0	0	**298**	**1139**
0800 - 0815	0	242	49	0	2	0	0	0	4	0	0	0	0	**297**	
0815 - 0830	0	250	41	0	2	0	0	1	7	0	0	0	0	**301**	
0830 - 0845	0	256	43	3	3	1	0	1	3	0	0	0	0	**310**	
0845 - 0900	0	220	40	4	2	0	0	0	6	0	0	0	0	**272**	**1180**
0900 - 0915	0	168	48	5	2	0	0	1	5	0	0	0	0	**229**	
0915 - 0930	0	154	35	5	4	0	0	2	5	0	0	0	0	**205**	
0930 - 0945	0	164	38	0	3	0	0	0	2	1	0	0	0	**208**	
0945 - 1000	0	144	44	0	3	0	0	2	6	0	0	0	0	**199**	**841**
1000 - 1015	0	134	35	1	2	0	0	3	7	0	0	0	0	**182**	
1015 - 1030	0	127	37	0	7	0	0	2	2	0	0	0	0	**175**	
1030 - 1045	1	131	41	0	2	3	0	0	3	1	0	0	0	**182**	
1045 - 1100	0	128	34	0	6	1	0	2	10	2	0	0	0	**183**	**722**
1100 - 1115	0	115	40	0	2	0	0	0	4	0	0	0	0	**161**	
1115 - 1130	0	119	32	0	4	2	0	1	4	0	0	0	0	**162**	
1130 - 1145	0	155	25	0	1	0	0	0	3	0	0	0	0	**184**	
1145 - 1200	0	116	15	0	5	0	0	0	3	0	0	0	0	**139**	**646**
1200 - 1215	0	129	20	0	1	0	0	2	5	1	0	0	0	**158**	
1215 - 1230	0	120	29	0	5	2	0	2	7	0	0	0	0	**165**	
1230 - 1245	0	140	30	0	5	0	0	2	3	0	0	0	0	**180**	
1245 - 1300	0	118	15	0	5	0	0	0	3	0	0	0	0	**141**	**644**
1300 - 1315	0	128	20	0	1	0	0	2	5	1	0	0	0	**157**	
1315 - 1330	0	121	28	0	5	2	0	2	7	0	0	0	0	**165**	
1330 - 1345	1	148	27	0	5	0	0	2	3	0	0	0	0	**186**	
1345 - 1400	0	108	28	0	2	1	0	2	5	0	0	0	0	**146**	**654**
1400 - 1415	0	113	24	0	5	2	0	1	4	0	0	0	0	**149**	
1415 - 1430	0	103	23	0	2	0	0	0	3	0	0	0	0	**131**	
1430 - 1445	1	109	29	0	2	0	0	1	6	0	0	0	0	**148**	
1445 - 1500	0	89	27	0	0	0	0	1	0	0	0	0	0	**117**	**545**
1500 - 1515	0	109	24	3	2	2	0	0	3	0	0	0	0	**143**	
1515 - 1530	0	116	27	0	1	0	0	0	4	0	0	0	0	**148**	
1530 - 1545	0	138	28	0	8	2	0	1	3	0	0	0	0	**180**	
1545 - 1600	2	138	29	0	3	0	0	0	1	0	0	0	0	**173**	**644**
1600 - 1615	0	118	29	0	3	0	0	0	0	0	0	0	0	**150**	
1615 - 1630	0	124	17	0	3	0	0	0	2	0	0	0	0	**146**	
1630 - 1645	0	134	31	0	5	0	0	1	1	0	0	0	0	**172**	
1645 - 1700	3	150	32	0	2	0	0	0	0	0	0	0	0	**187**	**655**
1700 - 1715	0	161	33	0	3	1	0	1	4	0	0	0	0	**203**	
1715 - 1730	0	163	35	0	1	2	0	1	1	0	0	0	0	**203**	
1730 - 1745	2	131	30	0	1	0	0	0	2	2	0	0	0	**168**	
1745 - 1800	1	161	37	0	1	0	0	0	2	0	0	0	0	**202**	**776**
1800 - 1815	1	154	36	0	2	0	0	0	1	0	0	0	0	**194**	
1815 - 1830	0	178	25	0	2	0	0	0	2	0	0	0	0	**207**	
1830 - 1845	3	146	13	0	3	1	0	1	2	0	0	0	0	**169**	
1845 - 1900	0	111	10	0	2	0	0	2	2	0	0	0	0	**127**	**697**
1900 - 1915	1	85	19	0	1	0	0	0	1	0	0	0	0	**107**	
1915 - 1930	0	89	16	0	1	0	0	0	2	0	0	0	0	**108**	
1930 - 1945	0	73	12	0	1	0	0	0	0	0	0	0	0	**86**	
1945 - 2000	0	69	11	1	1	1	0	0	0	0	0	0	0	**83**	**384**
2000 - 2015	0	71	11	0	1	0	0	0	1	0	0	0	0	**84**	
2015 - 2030	0	50	6	0	1	0	0	0	0	0	0	0	0	**57**	
2030 - 2045	0	68	5	0	1	0	0	0	2	0	0	0	0	**76**	
2045 - 2100	3	70	5	0	0	0	0	0	1	0	1	0	0	**80**	**297**
2100 - 2115	0	61	9	0	0	0	0	0	0	0	0	0	0	**70**	
2115 - 2130	0	58	8	0	0	0	0	0	0	0	0	0	0	**66**	
2130 - 2145	0	45	4	0	0	0	0	0	1	0	0	0	0	**50**	
2145 - 2200	0	48	2	0	0	0	0	0	3	0	0	0	0	**53**	**239**
2200 - 2215	0	42	2	0	1	0	0	0	2	0	0	0	0	**47**	
2215 - 2230	0	50	6	0	0	0	0	0	2	0	0	0	0	**58**	
2230 - 2245	0	39	3	0	0	0	0	0	1	0	0	0	0	**43**	
2245 - 2300	0	40	2	0	1	0	0	0	2	0	0	0	0	**45**	**193**
2300 - 2315	0	35	3	0	1	0	0	0	4	0	0	0	0	**43**	
2315 - 2330	0	30	0	0	0	0	0	0	3	0	0	0	0	**33**	
2330 - 2345	0	20	0	0	1	0	0	0	1	0	0	0	0	**22**	
2345 - 0000	0	22	0	0	2	0	0	0	0	0	0	0	0	**24**	**122**

Session Total	22	8927	1772	24	173	30	0	41	249	8	9	0	0	**11255**
Session Average	0.23	92.99	18.46	0.25	1.80	0.31	0.00	0.43	2.59	0.08	0.09	0.00	0.00	**117.24**
Session Percentage	0.20	79.32	15.74	0.21	1.54	0.27	0.00	0.36	2.21	0.07	0.08	0.00	0.00	

AM Peak Hour	0630 - 0730	0730 - 0830	0715 - 0815	0830 - 0930	0930 - 1030	0700 - 0800	-	0915 - 1015	0645 - 0745	0845 - 0945	0600 - 0700	-	-	**0730 - 0830**
AM Peak Hour Volume	2	1016	200	17	15	3	0	7	22	1	2	0	0	**1234**

Noon Peak Hour	1000 - 1100	1000 - 1100	1015 - 1115	1415 - 1515	1000 - 1100	1030 - 1130	-	1300 - 1400	1000 - 1100	1000 - 1100	-	-	-	**1000 - 1100**
Noon Peak Hour Volume	1	520	152	3	17	6	0	8	22	3	0	0	0	**722**

PM Peak Hour	1645 - 1745	1745 - 1845	1715 - 1815	1500 - 1600	1530 - 1630	1500 - 1600	-	1630 - 1730	1500 - 1600	1645 - 1745	-	-	-	**1700 - 1800**
PM Peak Hour Volume	5	639	138	3	17	4	0	3	11	2	0	0	0	**776**

Site 75 Lane 4 NB
I-20,
north of Bush River Rd

Date
Saturday, April 27, 2024

Lat/Long
34.034393°, -81.117736°

Weather
Mostly Cloudy
69°F

Click here for Detailed Weather

0000 - 2400 (Saturday 24h Session) (04-27-2024)
NB EB 15min

	Northbound (Movement 75 Lane 4 NB.1)													15min	60min
TIME	1	2	3	4	5	6	7	8	9	10	11	12	13	Total	Total
0000 - 0015	0	14	3	0	0	0	0	0	0	0	0	0	0	**17**	
0015 - 0030	0	16	5	0	0	0	0	0	1	0	0	0	0	**22**	
0030 - 0045	0	12	2	0	0	0	0	0	0	0	0	0	0	**14**	
0045 - 0100	0	11	2	0	0	0	0	1	2	0	0	0	0	**16**	**69**
0100 - 0115	0	12	1	0	1	0	0	0	0	0	1	0	0	**15**	
0115 - 0130	0	8	1	0	1	0	0	0	2	0	0	0	0	**12**	
0130 - 0145	0	12	2	0	0	0	0	0	1	0	0	0	0	**15**	
0145 - 0200	0	6	0	0	0	0	0	0	0	0	0	0	0	**6**	**48**
0200 - 0215	0	10	1	0	1	0	0	0	0	0	1	0	0	**13**	
0215 - 0230	0	9	0	0	0	0	0	0	1	0	0	0	0	**10**	
0230 - 0245	0	8	1	0	0	0	0	0	0	0	0	0	0	**9**	
0245 - 0300	0	7	0	0	1	0	0	0	1	0	0	0	0	**9**	**41**
0300 - 0315	0	5	0	0	0	0	0	0	0	0	0	0	0	**5**	
0315 - 0330	0	4	0	0	3	0	0	0	0	0	0	0	0	**7**	
0330 - 0345	0	4	0	0	0	0	0	0	2	0	0	0	0	**6**	
0345 - 0400	0	4	0	0	0	0	0	0	0	0	0	0	0	**4**	**22**
0400 - 0415	0	8	1	0	1	0	0	0	0	0	0	0	0	**10**	
0415 - 0430	0	4	0	0	0	0	0	0	1	0	0	0	0	**5**	
0430 - 0445	0	6	0	0	0	0	0	0	0	0	0	0	0	**6**	
0445 - 0500	0	5	0	0	0	0	0	0	0	0	0	0	0	**5**	**26**
0500 - 0515	0	15	2	0	0	0	0	0	0	0	0	0	0	**17**	
0515 - 0530	0	8	1	0	0	0	0	0	0	0	0	0	0	**9**	
0530 - 0545	0	18	4	0	0	0	0	0	1	0	0	0	0	**23**	
0545 - 0600	0	20	3	0	1	1	0	0	0	0	0	0	0	**25**	**74**
0600 - 0615	0	17	2	0	1	0	0	0	0	0	1	0	0	**21**	
0615 - 0630	0	22	5	0	0	0	0	0	1	0	1	0	0	**29**	
0630 - 0645	1	55	11	0	0	0	0	0	0	0	0	0	0	**67**	
0645 - 0700	0	45	8	0	0	0	0	0	3	0	0	0	0	**56**	**173**
0700 - 0715	0	42	10	0	1	0	0	0	3	0	0	0	0	**56**	
0715 - 0730	0	55	15	0	2	0	0	1	0	0	0	0	0	**73**	
0730 - 0745	0	59	14	0	1	0	1	1	1	0	0	0	0	**77**	
0745 - 0800	0	59	14	0	1	0	0	0	1	0	0	1	0	**76**	**282**
0800 - 0815	0	66	12	0	0	1	0	0	2	0	0	0	0	**81**	
0815 - 0830	0	101	17	0	0	0	0	1	2	0	0	0	0	**121**	
0830 - 0845	0	99	15	0	0	0	0	0	3	0	0	0	0	**117**	
0845 - 0900	0	105	19	0	1	0	0	2	1	0	0	0	0	**128**	**447**
0900 - 0915	0	101	16	0	2	0	0	0	0	0	0	0	0	**119**	
0915 - 0930	0	107	19	0	2	0	0	0	1	0	0	0	0	**129**	
0930 - 0945	0	124	32	0	2	0	0	1	1	0	0	0	0	**160**	
0945 - 1000	0	133	29	0	0	0	0	0	1	0	0	0	0	**163**	**571**
1000 - 1015	1	128	17	0	0	0	0	0	1	0	0	0	0	**147**	
1015 - 1030	0	119	17	0	2	0	0	0	1	0	0	0	0	**139**	
1030 - 1045	4	129	27	0	0	1	0	0	1	0	0	0	0	**162**	
1045 - 1100	0	112	30	1	0	0	0	0	3	0	0	0	0	**146**	**594**
1100 - 1115	1	130	23	0	1	0	0	0	1	0	0	0	0	**156**	
1115 - 1130	0	120	23	0	0	0	0	1	5	0	0	0	0	**149**	
1130 - 1145	0	121	25	0	2	0	0	1	2	0	0	0	0	**151**	
1145 - 1200	0	149	22	0	0	0	0	2	0	0	0	0	0	**173**	**629**
1200 - 1215	0	135	12	0	1	0	0	0	3	0	0	0	0	**151**	
1215 - 1230	0	122	25	0	3	0	0	1	0	0	0	0	0	**151**	
1230 - 1245	1	135	21	0	0	0	0	1	2	0	0	0	0	**160**	
1245 - 1300	0	112	20	0	1	0	0	0	2	0	0	0	0	**135**	**597**
1300 - 1315	0	101	16	0	0	1	0	1	0	0	0	0	0	**119**	
1315 - 1330	1	125	15	0	0	0	0	0	1	0	0	0	0	**142**	
1330 - 1345	0	123	8	0	0	0	0	0	0	0	0	0	0	**131**	
1345 - 1400	0	104	12	0	1	1	0	0	2	0	0	0	0	**120**	**512**
1400 - 1415	0	114	21	0	0	0	0	0	0	0	0	0	0	**135**	
1415 - 1430	0	103	21	0	0	0	0	0	2	0	0	0	0	**126**	
1430 - 1445	1	138	22	1	1	1	0	1	0	0	0	0	0	**165**	
1445 - 1500	0	130	12	0	0	0	0	0	3	0	0	0	0	**145**	**571**
1500 - 1515	0	129	21	0	0	0	0	0	0	0	0	0	0	**150**	
1515 - 1530	0	146	19	0	1	0	0	0	1	0	0	0	0	**167**	
1530 - 1545	0	144	29	1	1	0	0	0	1	0	0	0	0	**176**	
1545 - 1600	0	109	21	0	1	0	0	0	2	0	0	0	0	**133**	**626**
1600 - 1615	0	89	21	0	0	0	0	0	0	0	0	0	0	**110**	
1615 - 1630	0	112	23	0	1	0	0	0	0	0	0	0	0	**136**	
1630 - 1645	0	150	20	0	1	0	0	1	0	0	0	0	0	**172**	
1645 - 1700	0	162	29	0	1	0	0	0	2	0	0	0	0	**194**	**612**
1700 - 1715	0	129	23	0	0	0	0	0	1	0	0	0	0	**153**	
1715 - 1730	0	162	33	0	2	0	0	0	2	0	0	0	0	**199**	
1730 - 1745	0	122	26	0	0	0	0	0	1	0	0	0	0	**149**	
1745 - 1800	1	104	20	0	0	0	0	0	1	0	0	0	0	**126**	**627**
1800 - 1815	0	118	16	0	1	0	0	0	1	0	0	0	0	**136**	
1815 - 1830	0	120	17	0	1	0	0	0	0	0	0	0	0	**138**	
1830 - 1845	0	124	17	0	0	0	0	0	0	0	0	0	0	**141**	
1845 - 1900	0	115	12	0	1	0	0	0	1	0	0	0	0	**129**	**544**
1900 - 1915	0	102	13	0	0	0	0	0	1	0	0	0	0	**116**	
1915 - 1930	0	90	9	0	0	0	0	1	2	0	0	0	0	**102**	
1930 - 1945	0	85	14	0	1	0	0	0	0	0	0	0	0	**100**	
1945 - 2000	0	76	12	0	1	0	0	0	0	0	0	0	0	**89**	**407**
2000 - 2015	0	83	6	0	0	0	0	0	0	0	0	0	0	**89**	
2015 - 2030	1	60	4	0	1	0	0	0	1	0	0	0	0	**67**	
2030 - 2045	0	70	9	0	0	0	0	0	0	0	0	0	0	**79**	
2045 - 2100	0	59	6	0	0	0	0	0	0	0	0	0	0	**65**	**300**
2100 - 2115	0	60	8	0	0	0	0	0	0	0	0	0	0	**68**	
2115 - 2130	0	49	6	0	0	0	0	0	0	0	0	0	0	**55**	
2130 - 2145	0	50	7	0	0	0	0	0	0	0	0	0	0	**57**	
2145 - 2200	0	41	7	0	0	0	0	0	1	0	0	0	0	**49**	**229**
2200 - 2215	0	40	8	0	0	0	0	0	0	0	0	0	0	**48**	
2215 - 2230	0	39	4	1	0	0	0	0	0	0	0	0	0	**44**	
2230 - 2245	0	50	4	0	0	0	0	0	0	0	0	0	0	**54**	
2245 - 2300	0	25	3	1	0	0	0	0	0	0	0	0	0	**29**	**175**
2300 - 2315	0	30	3	1	1	0	0	0	0	0	0	0	0	**35**	
2315 - 2330	0	29	2	0	0	0	0	0	1	0	0	0	0	**32**	
2330 - 2345	0	30	3	0	1	0	0	0	0	0	0	0	0	**34**	
2345 - 0000	0	25	1	0	0	0	0	0	2	0	0	0	0	**28**	**129**

Session Total	12	6994	1132	6	50	6	1	17	82	0	4	1	0	**8305**
Session Average	0.13	72.85	11.79	0.06	0.52	0.06	0.01	0.18	0.85	0.00	0.04	0.01	0.00	**86.51**
Session Percentage	0.14	84.21	13.63	0.07	0.60	0.07	0.01	0.20	0.99	0.00	0.05	0.01	0.00	

AM Peak Hour	0945 - 1045	0945 - 1045	0915 - 1015	-	0845 - 0945	0500 - 0600	0645 - 0745	0800 - 0900	0745 - 0845	-	0530 - 0630	0700 - 0800	-	**0945 - 1045**
AM Peak Hour Volume	5	509	97	0	7	1	1	3	8	0	2	1	0	**611**

Noon Peak Hour	1000 - 1100	1445 - 1545	1030 - 1130	1000 - 1100	1130 - 1230	1300 - 1400	-	1100 - 1200	1045 - 1145	-	-	-	-	**1445 - 1545**
Noon Peak Hour Volume	5	549	103	1	6	2	0	4	11	0	0	0	0	**638**

PM Peak Hour	1700 - 1800	1630 - 1730	1645 - 1745	1500 - 1600	1630 - 1730	-	-	1545 - 1645	1645 - 1745	-	-	-	-	**1630 - 1730**
PM Peak Hour Volume	1	603	111	1	4	0	0	1	6	0	0	0	0	**718**

Bi-Directional Class Count || NB EB Average 15min

Columbia, SC

Marr Traffic DATA COLLECTION
www.marrtraffic.com

Site 75 Lane 4 NB
I-20,
north of Bush River Rd

Date
Sunday, April 21, 2024

Lat/Long
34.034393°, -81.117736°

Weather
Cloudy
66°F

0000 - 2400 (Weekday 24h Session) (All Dates)
NB EB Average 15min

	NB EB Average 15min													15min	60min
Time	1	2	3	4	5	6	7	8	9	10	11	12	13	Total	Total
0000 - 0015	0	11	2	0	0	0	0	0	1	0	0	0	0	**14**	
0015 - 0030	0	10	3	0	0	0	0	0	1	0	0	0	0	**13**	
0030 - 0045	0	9	1	0	0	0	0	0	1	0	0	0	0	**12**	
0045 - 0100	0	7	1	0	0	0	0	0	1	0	0	0	0	**10**	**49**
0100 - 0115	0	7	1	0	0	0	0	0	1	0	1	0	0	**10**	
0115 - 0130	0	6	1	0	1	0	0	0	1	0	0	0	0	**9**	
0130 - 0145	0	7	1	0	0	0	0	0	1	0	0	0	0	**9**	
0145 - 0200	0	5	1	0	0	0	0	0	2	0	0	0	0	**8**	**37**
0200 - 0215	0	5	1	0	0	0	0	0	1	0	0	0	0	**7**	
0215 - 0230	0	5	0	0	0	0	0	0	1	0	0	0	0	**6**	
0230 - 0245	0	4	1	0	0	0	0	0	1	0	0	0	0	**6**	
0245 - 0300	0	4	0	0	0	0	0	0	1	0	0	0	0	**6**	**26**
0300 - 0315	0	5	1	0	0	0	0	0	1	0	0	0	0	**7**	
0315 - 0330	0	4	1	0	0	0	0	0	1	0	0	0	0	**6**	
0330 - 0345	0	5	1	0	0	0	0	0	2	0	0	0	0	**9**	
0345 - 0400	0	6	1	0	0	0	0	0	1	0	0	0	0	**8**	**29**
0400 - 0415	0	7	1	0	1	0	0	0	1	0	0	0	0	**10**	
0415 - 0430	0	9	2	0	0	0	0	0	2	0	0	0	0	**13**	
0430 - 0445	0	9	1	0	0	0	0	0	1	0	0	0	0	**11**	
0445 - 0500	0	15	3	0	0	0	0	0	1	0	0	0	0	**19**	**53**
0500 - 0515	0	14	2	0	1	0	0	0	1	0	0	0	0	**18**	
0515 - 0530	0	21	3	0	1	0	0	0	2	0	0	0	0	**27**	
0530 - 0545	0	37	6	0	1	0	0	0	2	0	0	0	0	**45**	
0545 - 0600	0	39	7	0	1	0	0	0	2	0	0	0	0	**49**	**140**
0600 - 0615	0	46	7	0	0	0	0	0	2	0	0	0	0	**55**	
0615 - 0630	0	77	15	0	1	0	0	0	3	0	0	0	0	**96**	
0630 - 0645	0	120	24	0	1	1	0	0	3	0	0	0	0	**149**	
0645 - 0700	0	126	31	0	1	0	0	0	4	0	1	0	0	**165**	**466**
0700 - 0715	0	149	34	0	3	1	0	0	4	0	0	0	0	**191**	
0715 - 0730	1	190	41	0	2	0	0	0	3	0	0	0	0	**237**	
0730 - 0745	0	204	34	0	2	0	0	0	4	0	0	0	0	**246**	
0745 - 0800	0	199	36	0	1	1	0	0	3	0	0	0	0	**241**	**915**
0800 - 0815	0	211	33	0	2	0	0	0	3	0	0	0	0	**251**	
0815 - 0830	0	226	35	0	2	0	0	1	4	0	0	0	0	**269**	
0830 - 0845	0	210	33	0	3	0	0	1	4	0	0	0	0	**252**	
0845 - 0900	0	196	37	1	2	1	0	1	4	0	0	0	0	**241**	**1012**
0900 - 0915	0	155	32	2	2	0	0	0	4	0	0	0	0	**196**	
0915 - 0930	0	141	28	1	3	1	0	0	4	0	0	0	0	**177**	
0930 - 0945	0	151	31	1	2	0	0	0	4	0	0	0	0	**190**	
0945 - 1000	0	144	27	1	2	0	0	1	4	0	0	0	0	**179**	**742**
1000 - 1015	0	128	24	1	2	1	0	1	4	0	0	0	0	**160**	
1015 - 1030	0	119	24	1	3	0	0	1	3	0	0	0	0	**151**	
1030 - 1045	1	121	26	0	2	1	0	0	3	0	0	0	0	**155**	
1045 - 1100	0	121	25	0	4	1	0	1	5	0	0	0	0	**158**	**623**
1100 - 1115	0	103	21	0	2	0	0	0	4	0	0	0	0	**131**	
1115 - 1130	0	114	22	0	3	1	0	0	6	0	0	0	0	**146**	
1130 - 1145	0	115	22	0	2	0	0	0	4	0	0	0	0	**144**	
1145 - 1200	0	114	21	0	2	0	0	1	4	0	0	0	0	**142**	**563**
1200 - 1215	0	113	18	0	2	0	0	0	4	0	0	0	0	**138**	
1215 - 1230	0	118	25	0	3	1	0	1	4	0	0	0	0	**152**	
1230 - 1245	0	131	26	0	3	0	0	1	4	0	0	0	0	**166**	
1245 - 1300	0	122	20	0	2	0	0	0	3	0	0	0	0	**149**	**605**
1300 - 1315	0	113	20	0	2	1	0	1	3	0	0	0	0	**139**	
1315 - 1330	0	113	19	0	2	1	0	1	3	0	0	0	0	**139**	
1330 - 1345	0	120	22	0	3	1	0	1	3	0	0	0	0	**150**	
1345 - 1400	0	108	20	0	2	1	0	1	4	0	0	0	0	**135**	**563**
1400 - 1415	0	108	21	0	2	1	0	0	4	0	0	0	0	**136**	
1415 - 1430	0	109	19	0	2	0	0	1	4	0	0	0	0	**135**	
1430 - 1445	0	115	19	0	2	0	0	0	4	0	0	0	0	**141**	
1445 - 1500	0	110	21	0	2	0	0	0	3	0	0	0	0	**136**	**548**
1500 - 1515	0	114	20	0	2	0	0	0	3	0	0	0	0	**139**	
1515 - 1530	0	118	23	0	2	0	0	0	3	0	0	0	0	**146**	
1530 - 1545	0	126	24	0	3	0	0	0	3	0	0	0	0	**157**	
1545 - 1600	0	117	21	0	2	0	0	0	3	0	0	0	0	**144**	**587**
1600 - 1615	0	111	20	0	1	0	0	0	4	0	0	0	0	**137**	
1615 - 1630	0	123	24	0	2	0	0	0	3	0	0	0	0	**153**	
1630 - 1645	1	136	22	0	2	0	0	0	2	0	0	0	0	**164**	
1645 - 1700	1	140	24	0	2	0	0	0	2	0	0	0	0	**169**	**622**
1700 - 1715	0	145	24	0	1	0	0	0	3	0	0	0	0	**174**	
1715 - 1730	0	146	24	0	1	1	0	1	2	0	0	0	0	**176**	
1730 - 1745	0	129	22	0	1	0	0	0	2	0	0	0	0	**154**	
1745 - 1800	0	118	23	0	1	0	0	0	2	0	0	0	0	**145**	**649**
1800 - 1815	0	112	19	0	2	0	0	0	3	0	0	0	0	**136**	
1815 - 1830	0	124	19	0	1	0	0	0	2	0	0	0	0	**147**	
1830 - 1845	0	118	13	0	1	0	0	0	2	0	0	0	0	**136**	
1845 - 1900	0	100	14	0	1	0	0	1	3	0	0	0	0	**118**	**537**
1900 - 1915	1	73	11	0	1	0	0	0	1	0	0	0	0	**86**	
1915 - 1930	0	77	10	0	1	0	0	0	2	0	0	0	0	**90**	
1930 - 1945	0	67	9	0	1	0	0	0	1	0	0	0	0	**78**	
1945 - 2000	0	65	9	0	1	0	0	0	1	0	0	0	0	**78**	**332**
2000 - 2015	0	62	8	0	1	0	0	0	2	0	0	0	0	**72**	
2015 - 2030	0	52	5	0	1	0	0	0	2	0	0	0	0	**61**	
2030 - 2045	0	57	6	0	0	0	0	0	2	0	0	0	0	**65**	
2045 - 2100	0	49	3	0	1	0	0	0	2	0	0	0	0	**56**	**254**
2100 - 2115	0	56	6	0	0	0	0	0	1	0	0	0	0	**63**	
2115 - 2130	0	49	4	0	0	0	0	0	2	0	0	0	0	**55**	
2130 - 2145	0	41	3	0	0	0	0	0	1	0	0	0	0	**45**	
2145 - 2200	0	40	3	0	1	0	0	0	1	0	0	0	0	**45**	**208**
2200 - 2215	0	39	3	0	1	0	0	0	2	0	0	0	0	**44**	
2215 - 2230	0	35	3	0	0	0	0	0	2	0	0	0	0	**41**	
2230 - 2245	0	32	2	0	0	0	0	0	1	0	0	0	0	**36**	
2245 - 2300	0	23	2	0	0	0	0	0	2	0	0	0	0	**27**	**148**
2300 - 2315	0	22	1	0	1	0	0	0	3	0	0	0	0	**27**	
2315 - 2330	0	22	1	0	1	0	0	0	1	0	0	0	0	**25**	
2330 - 2345	0	17	1	0	0	0	0	0	1	0	0	0	0	**20**	
2345 - 0000	0	15	1	0	0	0	0	0	1	0	0	0	0	**17**	**89**

Session Total	12	7987	1381	14	119	22	1	21	233	3	6	0	0	**9798**
Session Average	0.12	83.20	14.38	0.15	1.24	0.23	0.01	0.22	2.42	0.03	0.06	0.00	0.00	**102.06**
Session Percentage	0.12	81.52	14.09	0.14	1.22	0.22	0.01	0.21	2.37	0.03	0.06	0.00	0.00	

AM Peak Hour	0630 - 0730	0745 - 0845	0700 - 0800	0900 - 1000	0830 - 0930	0945 - 1045	0645 - 0745	0930 - 1030	0845 - 0945	0945 - 1045	0600 - 0700	0700 - 0800	-	**0800 - 0900**
AM Peak Volume	1	847	145	7	10	2	0	2	16	0	1	0	0	**1012**

Noon Peak Hour	1000 - 1100	1000 - 1100	1000 - 1100	1000 - 1100	1015 - 1115	1300 - 1400	1315 - 1415	1230 - 1330	1045 - 1145	1000 - 1100	1000 - 1100	-	-	**1000 - 1100**
Noon Peak Volume	1	489	100	2	11	3	0	3	20	1	0	0	0	**623**

PM Peak Hour	1630 - 1730	1630 - 1730	1630 - 1730	1615 - 1715	1500 - 1600	1630 - 1730	1900 - 2000	1630 - 1730	1515 - 1615	1545 - 1645	1800 - 1900	-	-	**1630 - 1730**
PM Peak Volume	2	567	95	1	9	1	0	1	12	0	0	0	0	**683**

Bi-Directional Class Count || Volume Summary 15min

Columbia, SC

Marr Traffic DATA COLLECTION

www.marrtraffic.com

Site 75 Lane 4 NB

I-20,
north of Bush River Rd

Date

Sunday, April 21, 2024

Lat/Long

34.034393°, -81.117736°

Weather

Cloudy
66°F

Click here for Detailed Weather

0000 - 2400 (Sunday 24h Session) (04-21-2024)

Volume Summary 15min

TIME	Volume Summary 15min NB	SB	15min Total	60min Total
0000 - 0015	26	0	**26**	
0015 - 0030	19	0	**19**	
0030 - 0045	18	0	**18**	
0045 - 0100	14	0	**14**	**77**
0100 - 0115	12	0	**12**	
0115 - 0130	12	0	**12**	
0130 - 0145	16	0	**16**	
0145 - 0200	12	0	**12**	**52**
0200 - 0215	5	0	**5**	
0215 - 0230	9	0	**9**	
0230 - 0245	4	0	**4**	
0245 - 0300	5	0	**5**	**23**
0300 - 0315	7	0	**7**	
0315 - 0330	6	0	**6**	
0330 - 0345	6	0	**6**	
0345 - 0400	8	0	**8**	**27**
0400 - 0415	5	0	**5**	
0415 - 0430	5	0	**5**	
0430 - 0445	7	0	**7**	
0445 - 0500	7	0	**7**	**24**
0500 - 0515	6	0	**6**	
0515 - 0530	11	0	**11**	
0530 - 0545	13	0	**13**	
0545 - 0600	15	0	**15**	**45**
0600 - 0615	18	0	**18**	
0615 - 0630	29	0	**29**	
0630 - 0645	53	0	**53**	
0645 - 0700	35	0	**35**	**135**
0700 - 0715	30	0	**30**	
0715 - 0730	42	0	**42**	
0730 - 0745	38	0	**38**	
0745 - 0800	54	0	**54**	**164**
0800 - 0815	56	0	**56**	
0815 - 0830	48	0	**48**	
0830 - 0845	57	0	**57**	
0845 - 0900	92	0	**92**	**253**
0900 - 0915	78	0	**78**	
0915 - 0930	70	0	**70**	
0930 - 0945	85	0	**85**	
0945 - 1000	82	0	**82**	**315**
1000 - 1015	100	0	**100**	
1015 - 1030	100	0	**100**	
1030 - 1045	102	0	**102**	
1045 - 1100	110	0	**110**	**412**
1100 - 1115	71	0	**71**	
1115 - 1130	82	0	**82**	
1130 - 1145	76	0	**76**	
1145 - 1200	96	0	**96**	**325**

Time	Volume Summary 15min NB	SB	15min Total	60min Total
1200 - 1215	106	0	**106**	
1215 - 1230	122	0	**122**	
1230 - 1245	125	0	**125**	
1245 - 1300	118	0	**118**	**471**
1300 - 1315	109	0	**109**	
1315 - 1330	103	0	**103**	
1330 - 1345	124	0	**124**	
1345 - 1400	121	0	**121**	**457**
1400 - 1415	97	0	**97**	
1415 - 1430	105	0	**105**	
1430 - 1445	109	0	**109**	
1445 - 1500	125	0	**125**	**436**
1500 - 1515	112	0	**112**	
1515 - 1530	87	0	**87**	
1530 - 1545	106	0	**106**	
1545 - 1600	101	0	**101**	**406**
1600 - 1615	90	0	**90**	
1615 - 1630	81	0	**81**	
1630 - 1645	97	0	**97**	
1645 - 1700	101	0	**101**	**369**
1700 - 1715	108	0	**108**	
1715 - 1730	106	0	**106**	
1730 - 1745	100	0	**100**	
1745 - 1800	84	0	**84**	**398**
1800 - 1815	82	0	**82**	
1815 - 1830	104	0	**104**	
1830 - 1845	113	0	**113**	
1845 - 1900	67	0	**67**	**366**
1900 - 1915	62	0	**62**	
1915 - 1930	69	0	**69**	
1930 - 1945	79	0	**79**	
1945 - 2000	77	0	**77**	**287**
2000 - 2015	66	0	**66**	
2015 - 2030	64	0	**64**	
2030 - 2045	67	0	**67**	
2045 - 2100	58	0	**58**	**255**
2100 - 2115	64	0	**64**	
2115 - 2130	51	0	**51**	
2130 - 2145	37	0	**37**	
2145 - 2200	39	0	**39**	**191**
2200 - 2215	40	0	**40**	
2215 - 2230	25	0	**25**	
2230 - 2245	33	0	**33**	
2245 - 2300	23	0	**23**	**121**
2300 - 2315	28	0	**28**	
2315 - 2330	25	0	**25**	
2330 - 2345	16	0	**16**	
2345 - 0000	14	0	**14**	**83**

Session Total	5692	0	**5692**
Session Average	59.29	0.00	**59.29**
Session Percentage	100.00	0.00	

Site 75 Lane 4 NB

I-20,
north of Bush River Rd

Date

Monday, April 22, 2024

Lat/Long

34.034393°, -81.117736°

Weather

Mostly Cloudy
57°F

Click here for Detailed Weather

0000 - 2400 (Weekday 24h Session) (04-22-2024)

Volume Summary 15min

TIME	Volume Summary 15min NB	Volume Summary 15min SB	15min Total	60min Total
0000 - 0015	8	0	**8**	
0015 - 0030	15	0	**15**	
0030 - 0045	12	0	**12**	
0045 - 0100	8	0	**8**	**43**
0100 - 0115	9	0	**9**	
0115 - 0130	7	0	**7**	
0130 - 0145	5	0	**5**	
0145 - 0200	7	0	**7**	**28**
0200 - 0215	4	0	**4**	
0215 - 0230	4	0	**4**	
0230 - 0245	6	0	**6**	
0245 - 0300	9	0	**9**	**23**
0300 - 0315	3	0	**3**	
0315 - 0330	3	0	**3**	
0330 - 0345	8	0	**8**	
0345 - 0400	6	0	**6**	**20**
0400 - 0415	13	0	**13**	
0415 - 0430	15	0	**15**	
0430 - 0445	16	0	**16**	
0445 - 0500	25	0	**25**	**69**
0500 - 0515	21	0	**21**	
0515 - 0530	40	0	**40**	
0530 - 0545	61	0	**61**	
0545 - 0600	66	0	**66**	**188**
0600 - 0615	64	0	**64**	
0615 - 0630	118	0	**118**	
0630 - 0645	185	0	**185**	
0645 - 0700	204	0	**204**	**571**
0700 - 0715	268	0	**268**	
0715 - 0730	328	0	**328**	
0730 - 0745	353	0	**353**	
0745 - 0800	340	0	**340**	**1289**
0800 - 0815	388	0	**388**	
0815 - 0830	347	0	**347**	
0830 - 0845	292	0	**292**	
0845 - 0900	284	0	**284**	**1311**
0900 - 0915	225	0	**225**	
0915 - 0930	222	0	**222**	
0930 - 0945	242	0	**242**	
0945 - 1000	227	0	**227**	**916**
1000 - 1015	172	0	**172**	
1015 - 1030	161	0	**161**	
1030 - 1045	150	0	**150**	
1045 - 1100	164	0	**164**	**647**
1100 - 1115	104	0	**104**	
1115 - 1130	140	0	**140**	
1130 - 1145	121	0	**121**	
1145 - 1200	144	0	**144**	**509**

Time	Volume Summary 15min NB	Volume Summary 15min SB	15min Total	60min Total
1200 - 1215	143	0	**143**	
1215 - 1230	156	0	**156**	
1230 - 1245	171	0	**171**	
1245 - 1300	166	0	**166**	**636**
1300 - 1315	142	0	**142**	
1315 - 1330	146	0	**146**	
1330 - 1345	142	0	**142**	
1345 - 1400	121	0	**121**	**551**
1400 - 1415	141	0	**141**	
1415 - 1430	140	0	**140**	
1430 - 1445	143	0	**143**	
1445 - 1500	160	0	**160**	**584**
1500 - 1515	141	0	**141**	
1515 - 1530	159	0	**159**	
1530 - 1545	159	0	**159**	
1545 - 1600	132	0	**132**	**591**
1600 - 1615	140	0	**140**	
1615 - 1630	170	0	**170**	
1630 - 1645	157	0	**157**	
1645 - 1700	147	0	**147**	**614**
1700 - 1715	150	0	**150**	
1715 - 1730	127	0	**127**	
1730 - 1745	100	0	**100**	
1745 - 1800	115	0	**115**	**492**
1800 - 1815	97	0	**97**	
1815 - 1830	129	0	**129**	
1830 - 1845	118	0	**118**	
1845 - 1900	90	0	**90**	**434**
1900 - 1915	83	0	**83**	
1915 - 1930	82	0	**82**	
1930 - 1945	56	0	**56**	
1945 - 2000	66	0	**66**	**287**
2000 - 2015	53	0	**53**	
2015 - 2030	42	0	**42**	
2030 - 2045	40	0	**40**	
2045 - 2100	37	0	**37**	**172**
2100 - 2115	48	0	**48**	
2115 - 2130	41	0	**41**	
2130 - 2145	30	0	**30**	
2145 - 2200	38	0	**38**	**157**
2200 - 2215	34	0	**34**	
2215 - 2230	39	0	**39**	
2230 - 2245	25	0	**25**	
2245 - 2300	22	0	**22**	**120**
2300 - 2315	23	0	**23**	
2315 - 2330	21	0	**21**	
2330 - 2345	8	0	**8**	
2345 - 0000	8	0	**8**	**60**

Session Total	10312	0	**10312**
Session Average	107.42	0.00	**107.42**
Session Percentage	100.00	0.00	

Site 75 Lane 4 NB

I-20,
north of Bush River Rd

Date

Tuesday, April 23, 2024

Lat/Long

34.034393°, -81.117736°

Weather

Fair
58°F

Click here for Detailed Weather

0000 - 2400 (Weekday 24h Session) (04-23-2024)

Volume Summary 15min

TIME	Volume Summary 15min NB	Volume Summary 15min SB	15min Total	60min Total
0000 - 0015	10	0	**10**	
0015 - 0030	10	0	**10**	
0030 - 0045	9	0	**9**	
0045 - 0100	7	0	**7**	**36**
0100 - 0115	7	0	**7**	
0115 - 0130	9	0	**9**	
0130 - 0145	4	0	**4**	
0145 - 0200	8	0	**8**	**28**
0200 - 0215	5	0	**5**	
0215 - 0230	6	0	**6**	
0230 - 0245	1	0	**1**	
0245 - 0300	3	0	**3**	**15**
0300 - 0315	11	0	**11**	
0315 - 0330	3	0	**3**	
0330 - 0345	14	0	**14**	
0345 - 0400	9	0	**9**	**37**
0400 - 0415	7	0	**7**	
0415 - 0430	19	0	**19**	
0430 - 0445	15	0	**15**	
0445 - 0500	24	0	**24**	**65**
0500 - 0515	21	0	**21**	
0515 - 0530	31	0	**31**	
0530 - 0545	68	0	**68**	
0545 - 0600	64	0	**64**	**184**
0600 - 0615	84	0	**84**	
0615 - 0630	137	0	**137**	
0630 - 0645	183	0	**183**	
0645 - 0700	222	0	**222**	**626**
0700 - 0715	268	0	**268**	
0715 - 0730	301	0	**301**	
0730 - 0745	313	0	**313**	
0745 - 0800	274	0	**274**	**1156**
0800 - 0815	276	0	**276**	
0815 - 0830	358	0	**358**	
0830 - 0845	339	0	**339**	
0845 - 0900	303	0	**303**	**1276**
0900 - 0915	224	0	**224**	
0915 - 0930	224	0	**224**	
0930 - 0945	213	0	**213**	
0945 - 1000	197	0	**197**	**858**
1000 - 1015	186	0	**186**	
1015 - 1030	158	0	**158**	
1030 - 1045	169	0	**169**	
1045 - 1100	165	0	**165**	**678**
1100 - 1115	146	0	**146**	
1115 - 1130	141	0	**141**	
1130 - 1145	168	0	**168**	
1145 - 1200	153	0	**153**	**608**

Time	Volume Summary 15min NB	Volume Summary 15min SB	15min Total	60min Total
1200 - 1215	140	0	**140**	
1215 - 1230	143	0	**143**	
1230 - 1245	175	0	**175**	
1245 - 1300	174	0	**174**	**632**
1300 - 1315	129	0	**129**	
1315 - 1330	141	0	**141**	
1330 - 1345	136	0	**136**	
1345 - 1400	138	0	**138**	**544**
1400 - 1415	133	0	**133**	
1415 - 1430	125	0	**125**	
1430 - 1445	126	0	**126**	
1445 - 1500	126	0	**126**	**510**
1500 - 1515	152	0	**152**	
1515 - 1530	161	0	**161**	
1530 - 1545	171	0	**171**	
1545 - 1600	150	0	**150**	**634**
1600 - 1615	149	0	**149**	
1615 - 1630	182	0	**182**	
1630 - 1645	176	0	**176**	
1645 - 1700	163	0	**163**	**670**
1700 - 1715	198	0	**198**	
1715 - 1730	221	0	**221**	
1730 - 1745	195	0	**195**	
1745 - 1800	146	0	**146**	**760**
1800 - 1815	126	0	**126**	
1815 - 1830	146	0	**146**	
1830 - 1845	118	0	**118**	
1845 - 1900	164	0	**164**	**554**
1900 - 1915	68	0	**68**	
1915 - 1930	84	0	**84**	
1930 - 1945	60	0	**60**	
1945 - 2000	88	0	**88**	**300**
2000 - 2015	71	0	**71**	
2015 - 2030	67	0	**67**	
2030 - 2045	62	0	**62**	
2045 - 2100	45	0	**45**	**245**
2100 - 2115	69	0	**69**	
2115 - 2130	62	0	**62**	
2130 - 2145	49	0	**49**	
2145 - 2200	42	0	**42**	**222**
2200 - 2215	44	0	**44**	
2215 - 2230	37	0	**37**	
2230 - 2245	34	0	**34**	
2245 - 2300	26	0	**26**	**141**
2300 - 2315	24	0	**24**	
2315 - 2330	16	0	**16**	
2330 - 2345	19	0	**19**	
2345 - 0000	12	0	**12**	**71**

Session Total	10850	0	**10850**
Session Average	113.02	0.00	**113.02**
Session Percentage	100.00	0.00	

Site 75 Lane 4 NB

I-20,
north of Bush River Rd

Date

Wednesday, April 24, 2024

Lat/Long

34.034393°, -81.117736°

Weather

Fair
66°F

Click here for Detailed Weather

0000 - 2400 (Weekday 24h Session) (04-24-2024)

Volume Summary 15min

TIME	Volume Summary 15min NB	SB	15min Total	60min Total
0000 - 0015	11	0	**11**	
0015 - 0030	10	0	**10**	
0030 - 0045	8	0	**8**	
0045 - 0100	8	0	**8**	**37**
0100 - 0115	9	0	**9**	
0115 - 0130	5	0	**5**	
0130 - 0145	6	0	**6**	
0145 - 0200	13	0	**13**	**33**
0200 - 0215	12	0	**12**	
0215 - 0230	5	0	**5**	
0230 - 0245	10	0	**10**	
0245 - 0300	6	0	**6**	**33**
0300 - 0315	8	0	**8**	
0315 - 0330	8	0	**8**	
0330 - 0345	9	0	**9**	
0345 - 0400	4	0	**4**	**29**
0400 - 0415	13	0	**13**	
0415 - 0430	18	0	**18**	
0430 - 0445	10	0	**10**	
0445 - 0500	30	0	**30**	**71**
0500 - 0515	19	0	**19**	
0515 - 0530	26	0	**26**	
0530 - 0545	57	0	**57**	
0545 - 0600	66	0	**66**	**168**
0600 - 0615	64	0	**64**	
0615 - 0630	129	0	**129**	
0630 - 0645	210	0	**210**	
0645 - 0700	224	0	**224**	**627**
0700 - 0715	247	0	**247**	
0715 - 0730	333	0	**333**	
0730 - 0745	297	0	**297**	
0745 - 0800	312	0	**312**	**1189**
0800 - 0815	325	0	**325**	
0815 - 0830	339	0	**339**	
0830 - 0845	325	0	**325**	
0845 - 0900	300	0	**300**	**1289**
0900 - 0915	238	0	**238**	
0915 - 0930	201	0	**201**	
0930 - 0945	194	0	**194**	
0945 - 1000	186	0	**186**	**819**
1000 - 1015	159	0	**159**	
1015 - 1030	157	0	**157**	
1030 - 1045	171	0	**171**	
1045 - 1100	168	0	**168**	**655**
1100 - 1115	150	0	**150**	
1115 - 1130	171	0	**171**	
1130 - 1145	161	0	**161**	
1145 - 1200	134	0	**134**	**616**

Time	Volume Summary 15min NB	SB	15min Total	60min Total
1200 - 1215	119	0	**119**	
1215 - 1230	161	0	**161**	
1230 - 1245	157	0	**157**	
1245 - 1300	152	0	**152**	**589**
1300 - 1315	142	0	**142**	
1315 - 1330	122	0	**122**	
1330 - 1345	149	0	**149**	
1345 - 1400	152	0	**152**	**565**
1400 - 1415	142	0	**142**	
1415 - 1430	159	0	**159**	
1430 - 1445	135	0	**135**	
1445 - 1500	149	0	**149**	**585**
1500 - 1515	140	0	**140**	
1515 - 1530	165	0	**165**	
1530 - 1545	152	0	**152**	
1545 - 1600	151	0	**151**	**608**
1600 - 1615	167	0	**167**	
1615 - 1630	186	0	**186**	
1630 - 1645	190	0	**190**	
1645 - 1700	205	0	**205**	**748**
1700 - 1715	211	0	**211**	
1715 - 1730	202	0	**202**	
1730 - 1745	165	0	**165**	
1745 - 1800	169	0	**169**	**747**
1800 - 1815	159	0	**159**	
1815 - 1830	154	0	**154**	
1830 - 1845	145	0	**145**	
1845 - 1900	123	0	**123**	**581**
1900 - 1915	75	0	**75**	
1915 - 1930	98	0	**98**	
1930 - 1945	80	0	**80**	
1945 - 2000	68	0	**68**	**321**
2000 - 2015	84	0	**84**	
2015 - 2030	71	0	**71**	
2030 - 2045	55	0	**55**	
2045 - 2100	50	0	**50**	**260**
2100 - 2115	59	0	**59**	
2115 - 2130	59	0	**59**	
2130 - 2145	40	0	**40**	
2145 - 2200	42	0	**42**	**200**
2200 - 2215	44	0	**44**	
2215 - 2230	42	0	**42**	
2230 - 2245	38	0	**38**	
2245 - 2300	20	0	**20**	**144**
2300 - 2315	16	0	**16**	
2315 - 2330	19	0	**19**	
2330 - 2345	23	0	**23**	
2345 - 0000	23	0	**23**	**81**

Session Total	10995	0	**10995**
Session Average	114.53	0.00	**114.53**
Session Percentage	100.00	0.00	

Site 75 Lane 4 NB

I-20,
north of Bush River Rd

Date

Thursday, April 25, 2024

Lat/Long

34.034393°, -81.117736°

Weather

Fair
67°F

Click here for Detailed Weather

0000 - 2400 (Weekday 24h Session) (04-25-2024)

Volume Summary 15min

TIME	Volume Summary 15min NB	SB	15min Total	60min Total
0000 - 0015	11	0	**11**	
0015 - 0030	6	0	**6**	
0030 - 0045	7	0	**7**	
0045 - 0100	7	0	**7**	**31**
0100 - 0115	9	0	**9**	
0115 - 0130	6	0	**6**	
0130 - 0145	9	0	**9**	
0145 - 0200	6	0	**6**	**30**
0200 - 0215	6	0	**6**	
0215 - 0230	5	0	**5**	
0230 - 0245	8	0	**8**	
0245 - 0300	8	0	**8**	**27**
0300 - 0315	9	0	**9**	
0315 - 0330	8	0	**8**	
0330 - 0345	8	0	**8**	
0345 - 0400	13	0	**13**	**38**
0400 - 0415	10	0	**10**	
0415 - 0430	14	0	**14**	
0430 - 0445	14	0	**14**	
0445 - 0500	25	0	**25**	**63**
0500 - 0515	21	0	**21**	
0515 - 0530	32	0	**32**	
0530 - 0545	52	0	**52**	
0545 - 0600	66	0	**66**	**171**
0600 - 0615	68	0	**68**	
0615 - 0630	128	0	**128**	
0630 - 0645	184	0	**184**	
0645 - 0700	213	0	**213**	**593**
0700 - 0715	254	0	**254**	
0715 - 0730	296	0	**296**	
0730 - 0745	307	0	**307**	
0745 - 0800	330	0	**330**	**1187**
0800 - 0815	332	0	**332**	
0815 - 0830	367	0	**367**	
0830 - 0845	321	0	**321**	
0845 - 0900	311	0	**311**	**1331**
0900 - 0915	260	0	**260**	
0915 - 0930	191	0	**191**	
0930 - 0945	226	0	**226**	
0945 - 1000	198	0	**198**	**875**
1000 - 1015	171	0	**171**	
1015 - 1030	168	0	**168**	
1030 - 1045	147	0	**147**	
1045 - 1100	167	0	**167**	**653**
1100 - 1115	128	0	**128**	
1115 - 1130	180	0	**180**	
1130 - 1145	149	0	**149**	
1145 - 1200	154	0	**154**	**611**

Time	Volume Summary 15min NB	SB	15min Total	60min Total
1200 - 1215	148	0	**148**	
1215 - 1230	164	0	**164**	
1230 - 1245	197	0	**197**	
1245 - 1300	154	0	**154**	**663**
1300 - 1315	175	0	**175**	
1315 - 1330	155	0	**155**	
1330 - 1345	182	0	**182**	
1345 - 1400	144	0	**144**	**656**
1400 - 1415	156	0	**156**	
1415 - 1430	156	0	**156**	
1430 - 1445	163	0	**163**	
1445 - 1500	133	0	**133**	**608**
1500 - 1515	138	0	**138**	
1515 - 1530	138	0	**138**	
1530 - 1545	156	0	**156**	
1545 - 1600	168	0	**168**	**600**
1600 - 1615	151	0	**151**	
1615 - 1630	168	0	**168**	
1630 - 1645	183	0	**183**	
1645 - 1700	184	0	**184**	**686**
1700 - 1715	195	0	**195**	
1715 - 1730	174	0	**174**	
1730 - 1745	203	0	**203**	
1745 - 1800	172	0	**172**	**744**
1800 - 1815	155	0	**155**	
1815 - 1830	151	0	**151**	
1830 - 1845	151	0	**151**	
1845 - 1900	128	0	**128**	**585**
1900 - 1915	92	0	**92**	
1915 - 1930	89	0	**89**	
1930 - 1945	87	0	**87**	
1945 - 2000	73	0	**73**	**341**
2000 - 2015	60	0	**60**	
2015 - 2030	56	0	**56**	
2030 - 2045	76	0	**76**	
2045 - 2100	58	0	**58**	**250**
2100 - 2115	60	0	**60**	
2115 - 2130	53	0	**53**	
2130 - 2145	53	0	**53**	
2145 - 2200	52	0	**52**	**218**
2200 - 2215	53	0	**53**	
2215 - 2230	39	0	**39**	
2230 - 2245	22	0	**22**	
2245 - 2300	25	0	**25**	**139**
2300 - 2315	21	0	**21**	
2315 - 2330	28	0	**28**	
2330 - 2345	17	0	**17**	
2345 - 0000	11	0	**11**	**77**

Session Total	11177	0	**11177**
Session Average	116.43	0.00	**116.43**
Session Percentage	100.00	0.00	

Site 75 Lane 4 NB

I-20,
north of Bush River Rd

Date

Friday, April 26, 2024

Lat/Long

34.034393°, -81.117736°

Weather

Cloudy
69°F

Click here for Detailed Weather

0000 - 2400 (Weekday 24h Session) (04-26-2024)

Volume Summary 15min

TIME	Volume Summary 15min NB	Volume Summary 15min SB	15min Total	60min Total
0000 - 0015	16	0	**16**	
0015 - 0030	12	0	**12**	
0030 - 0045	13	0	**13**	
0045 - 0100	9	0	**9**	**50**
0100 - 0115	8	0	**8**	
0115 - 0130	13	0	**13**	
0130 - 0145	9	0	**9**	
0145 - 0200	7	0	**7**	**37**
0200 - 0215	5	0	**5**	
0215 - 0230	6	0	**6**	
0230 - 0245	3	0	**3**	
0245 - 0300	4	0	**4**	**18**
0300 - 0315	6	0	**6**	
0315 - 0330	6	0	**6**	
0330 - 0345	10	0	**10**	
0345 - 0400	10	0	**10**	**32**
0400 - 0415	12	0	**12**	
0415 - 0430	16	0	**16**	
0430 - 0445	10	0	**10**	
0445 - 0500	18	0	**18**	**56**
0500 - 0515	24	0	**24**	
0515 - 0530	42	0	**42**	
0530 - 0545	41	0	**41**	
0545 - 0600	43	0	**43**	**150**
0600 - 0615	69	0	**69**	
0615 - 0630	105	0	**105**	
0630 - 0645	161	0	**161**	
0645 - 0700	199	0	**199**	**534**
0700 - 0715	215	0	**215**	
0715 - 0730	288	0	**288**	
0730 - 0745	338	0	**338**	
0745 - 0800	298	0	**298**	**1139**
0800 - 0815	297	0	**297**	
0815 - 0830	301	0	**301**	
0830 - 0845	310	0	**310**	
0845 - 0900	272	0	**272**	**1180**
0900 - 0915	229	0	**229**	
0915 - 0930	205	0	**205**	
0930 - 0945	208	0	**208**	
0945 - 1000	199	0	**199**	**841**
1000 - 1015	182	0	**182**	
1015 - 1030	175	0	**175**	
1030 - 1045	182	0	**182**	
1045 - 1100	183	0	**183**	**722**
1100 - 1115	161	0	**161**	
1115 - 1130	162	0	**162**	
1130 - 1145	184	0	**184**	
1145 - 1200	139	0	**139**	**646**

Time	Volume Summary 15min NB	Volume Summary 15min SB	15min Total	60min Total
1200 - 1215	158	0	**158**	
1215 - 1230	165	0	**165**	
1230 - 1245	180	0	**180**	
1245 - 1300	141	0	**141**	**644**
1300 - 1315	157	0	**157**	
1315 - 1330	165	0	**165**	
1330 - 1345	186	0	**186**	
1345 - 1400	146	0	**146**	**654**
1400 - 1415	149	0	**149**	
1415 - 1430	131	0	**131**	
1430 - 1445	148	0	**148**	
1445 - 1500	117	0	**117**	**545**
1500 - 1515	143	0	**143**	
1515 - 1530	148	0	**148**	
1530 - 1545	180	0	**180**	
1545 - 1600	173	0	**173**	**644**
1600 - 1615	150	0	**150**	
1615 - 1630	146	0	**146**	
1630 - 1645	172	0	**172**	
1645 - 1700	187	0	**187**	**655**
1700 - 1715	203	0	**203**	
1715 - 1730	203	0	**203**	
1730 - 1745	168	0	**168**	
1745 - 1800	202	0	**202**	**776**
1800 - 1815	194	0	**194**	
1815 - 1830	207	0	**207**	
1830 - 1845	169	0	**169**	
1845 - 1900	127	0	**127**	**697**
1900 - 1915	107	0	**107**	
1915 - 1930	108	0	**108**	
1930 - 1945	86	0	**86**	
1945 - 2000	83	0	**83**	**384**
2000 - 2015	84	0	**84**	
2015 - 2030	57	0	**57**	
2030 - 2045	76	0	**76**	
2045 - 2100	80	0	**80**	**297**
2100 - 2115	70	0	**70**	
2115 - 2130	66	0	**66**	
2130 - 2145	50	0	**50**	
2145 - 2200	53	0	**53**	**239**
2200 - 2215	47	0	**47**	
2215 - 2230	58	0	**58**	
2230 - 2245	43	0	**43**	
2245 - 2300	45	0	**45**	**193**
2300 - 2315	43	0	**43**	
2315 - 2330	33	0	**33**	
2330 - 2345	22	0	**22**	
2345 - 0000	24	0	**24**	**122**

Session Total	11255	0	**11255**
Session Average	117.24	0.00	**117.24**
Session Percentage	100.00	0.00	

Site 75 Lane 4 NB

I-20,
north of Bush River Rd

Date

Saturday, April 27, 2024

Lat/Long

34.034393°, -81.117736°

Weather

Mostly Cloudy
69°F

Click here for Detailed Weather

0000 - 2400 (Saturday 24h Session) (04-27-2024)

Volume Summary 15min

TIME	Volume Summary 15min NB	SB	15min Total	60min Total
0000 - 0015	17	0	**17**	
0015 - 0030	22	0	**22**	
0030 - 0045	14	0	**14**	
0045 - 0100	16	0	**16**	**69**
0100 - 0115	15	0	**15**	
0115 - 0130	12	0	**12**	
0130 - 0145	15	0	**15**	
0145 - 0200	6	0	**6**	**48**
0200 - 0215	13	0	**13**	
0215 - 0230	10	0	**10**	
0230 - 0245	9	0	**9**	
0245 - 0300	9	0	**9**	**41**
0300 - 0315	5	0	**5**	
0315 - 0330	7	0	**7**	
0330 - 0345	6	0	**6**	
0345 - 0400	4	0	**4**	**22**
0400 - 0415	10	0	**10**	
0415 - 0430	5	0	**5**	
0430 - 0445	6	0	**6**	
0445 - 0500	5	0	**5**	**26**
0500 - 0515	17	0	**17**	
0515 - 0530	9	0	**9**	
0530 - 0545	23	0	**23**	
0545 - 0600	25	0	**25**	**74**
0600 - 0615	21	0	**21**	
0615 - 0630	29	0	**29**	
0630 - 0645	67	0	**67**	
0645 - 0700	56	0	**56**	**173**
0700 - 0715	56	0	**56**	
0715 - 0730	73	0	**73**	
0730 - 0745	77	0	**77**	
0745 - 0800	76	0	**76**	**282**
0800 - 0815	81	0	**81**	
0815 - 0830	121	0	**121**	
0830 - 0845	117	0	**117**	
0845 - 0900	128	0	**128**	**447**
0900 - 0915	119	0	**119**	
0915 - 0930	129	0	**129**	
0930 - 0945	160	0	**160**	
0945 - 1000	163	0	**163**	**571**
1000 - 1015	147	0	**147**	
1015 - 1030	139	0	**139**	
1030 - 1045	162	0	**162**	
1045 - 1100	146	0	**146**	**594**
1100 - 1115	156	0	**156**	
1115 - 1130	149	0	**149**	
1130 - 1145	151	0	**151**	
1145 - 1200	173	0	**173**	**629**

Time	Volume Summary 15min NB	SB	15min Total	60min Total
1200 - 1215	151	0	**151**	
1215 - 1230	151	0	**151**	
1230 - 1245	160	0	**160**	
1245 - 1300	135	0	**135**	**597**
1300 - 1315	119	0	**119**	
1315 - 1330	142	0	**142**	
1330 - 1345	131	0	**131**	
1345 - 1400	120	0	**120**	**512**
1400 - 1415	135	0	**135**	
1415 - 1430	126	0	**126**	
1430 - 1445	165	0	**165**	
1445 - 1500	145	0	**145**	**571**
1500 - 1515	150	0	**150**	
1515 - 1530	167	0	**167**	
1530 - 1545	176	0	**176**	
1545 - 1600	133	0	**133**	**626**
1600 - 1615	110	0	**110**	
1615 - 1630	136	0	**136**	
1630 - 1645	172	0	**172**	
1645 - 1700	194	0	**194**	**612**
1700 - 1715	153	0	**153**	
1715 - 1730	199	0	**199**	
1730 - 1745	149	0	**149**	
1745 - 1800	126	0	**126**	**627**
1800 - 1815	136	0	**136**	
1815 - 1830	138	0	**138**	
1830 - 1845	141	0	**141**	
1845 - 1900	129	0	**129**	**544**
1900 - 1915	116	0	**116**	
1915 - 1930	102	0	**102**	
1930 - 1945	100	0	**100**	
1945 - 2000	89	0	**89**	**407**
2000 - 2015	89	0	**89**	
2015 - 2030	67	0	**67**	
2030 - 2045	79	0	**79**	
2045 - 2100	65	0	**65**	**300**
2100 - 2115	68	0	**68**	
2115 - 2130	55	0	**55**	
2130 - 2145	57	0	**57**	
2145 - 2200	49	0	**49**	**229**
2200 - 2215	48	0	**48**	
2215 - 2230	44	0	**44**	
2230 - 2245	54	0	**54**	
2245 - 2300	29	0	**29**	**175**
2300 - 2315	35	0	**35**	
2315 - 2330	32	0	**32**	
2330 - 2345	34	0	**34**	
2345 - 0000	28	0	**28**	**129**

Session Total	8305	0	**8305**
Session Average	86.51	0.00	**86.51**
Session Percentage	100.00	0.00	

Bi-Directional Class Count || NB EB 60min

Columbia, SC

Marr Traffic DATA COLLECTION

www.marrtraffic.com

Site 75 Lane 4 NB
I-20,
north of Bush River Rd

Date
Sunday, April 21, 2024

Lat/Long
34.034393°, -81.117736°

Weather
Cloudy
66°F

Click here for Detailed Weather

0000 - 2400 (Sunday 24h Session) (04-21-2024)
NB EB 60min

	Northbound (Movement 75 Lane 4 NB.1)													
TIME	1	2	3	4	5	6	7	8	9	10	11	12	13	**Total**
0000 - 0100	0	64	12	0	1	0	0	0	0	0	0	0	0	**77**
0100 - 0200	0	38	10	0	1	0	0	0	3	0	0	0	0	**52**
0200 - 0300	0	17	3	0	1	0	0	0	2	0	0	0	0	**23**
0300 - 0400	0	18	6	0	1	0	0	0	1	0	1	0	0	**27**
0400 - 0500	0	18	6	0	0	0	0	0	0	0	0	0	0	**24**
0500 - 0600	0	33	11	0	0	0	0	0	1	0	0	0	0	**45**
0600 - 0700	0	106	26	0	0	0	0	0	2	0	1	0	0	**135**
0700 - 0800	1	134	26	0	0	0	0	0	3	0	0	0	0	**164**
0800 - 0900	0	216	33	0	2	0	0	0	2	0	0	0	0	**253**
0900 - 1000	0	276	35	1	1	0	0	0	2	0	0	0	0	**315**
1000 - 1100	1	360	45	1	3	1	0	0	1	0	0	0	0	**412**
1100 - 1200	0	280	38	0	2	1	0	0	4	0	0	0	0	**325**
1200 - 1300	0	397	63	1	1	0	0	0	8	1	0	0	0	**471**
1300 - 1400	1	390	52	0	6	1	0	0	7	0	0	0	0	**457**
1400 - 1500	0	384	46	1	2	0	0	0	3	0	0	0	0	**436**
1500 - 1600	0	354	48	0	0	1	0	0	3	0	0	0	0	**406**
1600 - 1700	0	321	42	1	2	0	0	1	2	0	0	0	0	**369**
1700 - 1800	0	355	37	0	0	0	0	0	6	0	0	0	0	**398**
1800 - 1900	0	321	28	0	3	0	0	0	13	0	1	0	0	**366**
1900 - 2000	0	257	19	0	1	1	0	1	8	0	0	0	0	**287**
2000 - 2100	0	229	16	0	0	0	0	0	10	0	0	0	0	**255**
2100 - 2200	0	177	2	0	3	0	0	0	9	0	0	0	0	**191**
2200 - 2300	0	112	2	0	1	0	0	0	6	0	0	0	0	**121**
2300 - 2400	0	70	1	0	2	0	0	0	9	0	1	0	0	**83**
Session Total	3	4927	607	5	33	5	0	2	105	1	4	0	0	**5692**
Session Average	0.13	205.29	25.29	0.21	1.38	0.21	0.00	0.08	4.38	0.04	0.17	0.00	0.00	**237.17**
Session Percentage	0.05	86.56	10.66	0.09	0.58	0.09	0.00	0.04	1.84	0.02	0.07	0.00	0.00	
AM Peak Hour	0700 - 0800	0900 - 1000	0900 - 1000	0900 - 1000	0800 - 0900	-	-	-	0700 - 0800	-	0600 - 0700	-	-	**0900 - 1000**
AM Peak Volume	1	276	35	1	2	0	0	0	3	0	1	0	0	**315**
Noon Peak Hour	1000 - 1100	1200 - 1300	1200 - 1300	1000 - 1100	1300 - 1400	1000 - 1100	-	-	1200 - 1300	1200 - 1300	-	-	-	**1200 - 1300**
Noon Peak Volume	1	397	63	1	6	1	0	0	8	1	0	0	0	**471**
PM Peak Hour	-	1700 - 1800	1500 - 1600	1600 - 1700	1800 - 1900	1500 - 1600	-	1600 - 1700	1800 - 1900	-	1800 - 1900	-	-	**1500 - 1600**
PM Peak Volume	0	355	48	1	3	1	0	1	13	0	1	0	0	**406**

Site 75 Lane 4 NB

I-20,
north of Bush River Rd

Date

Monday, April 22, 2024

Lat/Long

34.034393°, -81.117736°

Weather

Mostly Cloudy
57°F

Click here for Detailed Weather

0000 - 2400 (Weekday 24h Session) (04-22-2024)

NB EB 60min

	Northbound (Movement 75 Lane 4 NB.1)													
TIME	1	2	3	4	5	6	7	8	9	10	11	12	13	**Total**
0000 - 0100	0	30	8	0	0	0	0	0	4	0	1	0	0	**43**
0100 - 0200	0	17	5	0	0	0	0	0	6	0	0	0	0	**28**
0200 - 0300	0	14	2	0	0	0	0	0	7	0	0	0	0	**23**
0300 - 0400	0	14	4	0	0	0	0	0	2	0	0	0	0	**20**
0400 - 0500	0	43	16	0	1	0	0	0	9	0	0	0	0	**69**
0500 - 0600	0	140	37	0	2	0	0	0	9	0	0	0	0	**188**
0600 - 0700	0	439	109	1	6	1	0	0	15	0	0	0	0	**571**
0700 - 0800	1	1114	143	0	9	0	0	3	19	0	0	0	0	**1289**
0800 - 0900	0	1103	171	0	12	0	0	3	21	1	0	0	0	**1311**
0900 - 1000	0	740	137	7	11	1	0	1	19	0	0	0	0	**916**
1000 - 1100	1	510	96	1	11	3	0	0	24	0	1	0	0	**647**
1100 - 1200	0	414	60	0	8	1	0	1	25	0	0	0	0	**509**
1200 - 1300	0	505	92	0	8	0	0	1	30	0	0	0	0	**636**
1300 - 1400	0	463	58	0	13	4	0	3	10	0	0	0	0	**551**
1400 - 1500	0	468	74	0	13	2	1	0	26	0	0	0	0	**584**
1500 - 1600	0	485	78	0	12	1	0	1	14	0	0	0	0	**591**
1600 - 1700	0	513	74	2	8	2	0	0	15	0	0	0	0	**614**
1700 - 1800	2	422	54	2	3	0	0	0	9	0	0	0	0	**492**
1800 - 1900	0	376	41	0	4	2	0	0	11	0	0	0	0	**434**
1900 - 2000	0	244	31	0	5	0	0	0	7	0	0	0	0	**287**
2000 - 2100	0	153	6	0	2	1	0	0	10	0	0	0	0	**172**
2100 - 2200	0	146	2	0	0	0	0	0	9	0	0	0	0	**157**
2200 - 2300	0	109	0	0	1	0	0	0	10	0	0	0	0	**120**
2300 - 2400	0	51	0	0	1	0	0	0	8	0	0	0	0	**60**

Session Total	4	8513	1298	13	130	18	1	13	319	1	2	0	0	**10312**
Session Average	0.17	354.71	54.08	0.54	5.42	0.75	0.04	0.54	13.29	0.04	0.08	0.00	0.00	**429.67**
Session Percentage	0.04	82.55	12.59	0.13	1.26	0.17	0.01	0.13	3.09	0.01	0.02	0.00	0.00	

AM Peak Hour	0700 - 0800	0700 - 0800	0800 - 0900	0900 - 1000	0800 - 0900	0600 - 0700	-	0700 - 0800	0800 - 0900	0800 - 0900	-	-	-	**0800 - 0900**
AM Peak Volume	1	1114	171	7	12	1	0	3	21	1	0	0	0	**1311**

Noon Peak Hour	1000 - 1100	1000 - 1100	1000 - 1100	1000 - 1100	1300 - 1400	1300 - 1400	1400 - 1500	1300 - 1400	1200 - 1300	-	1000 - 1100	-	-	**1000 - 1100**
Noon Peak Volume	1	510	96	1	13	4	1	3	30	0	1	0	0	**647**

PM Peak Hour	1700 - 1800	1600 - 1700	1500 - 1600	1600 - 1700	1500 - 1600	1600 - 1700	-	1500 - 1600	1600 - 1700	-	-	-	-	**1600 - 1700**
PM Peak Volume	2	513	78	2	12	2	0	1	15	0	0	0	0	**614**

Site 75 Lane 4 NB

I-20,
north of Bush River Rd

Date

Tuesday, April 23, 2024

Lat/Long

34.034393°, -81.117736°

Weather

Fair
58°F

Click here for Detailed Weather

0000 - 2400 (Weekday 24h Session) (04-23-2024)

NB EB 60min

	Northbound (Movement 75 Lane 4 NB.1)													
TIME	1	2	3	4	5	6	7	8	9	10	11	12	13	**Total**
0000 - 0100	0	28	5	0	0	0	0	0	3	0	0	0	0	**36**
0100 - 0200	0	14	5	0	2	0	0	0	6	0	1	0	0	**28**
0200 - 0300	0	9	4	0	0	0	0	0	2	0	0	0	0	**15**
0300 - 0400	0	26	7	0	0	0	0	0	4	0	0	0	0	**37**
0400 - 0500	0	42	10	0	2	0	0	0	11	0	0	0	0	**65**
0500 - 0600	0	149	24	0	1	0	0	0	10	0	0	0	0	**184**
0600 - 0700	0	508	99	0	4	1	0	2	11	0	1	0	0	**626**
0700 - 0800	1	943	177	0	11	2	0	2	18	0	2	0	0	**1156**
0800 - 0900	1	1103	129	0	13	3	0	2	25	0	0	0	0	**1276**
0900 - 1000	0	692	118	8	14	2	0	0	24	0	0	0	0	**858**
1000 - 1100	0	543	85	4	19	2	0	4	20	1	0	0	0	**678**
1100 - 1200	0	498	69	2	8	5	0	0	25	0	1	0	0	**608**
1200 - 1300	0	529	77	0	11	2	0	0	13	0	0	0	0	**632**
1300 - 1400	0	444	72	0	6	1	0	3	18	0	0	0	0	**544**
1400 - 1500	0	417	60	0	8	1	0	2	22	0	0	0	0	**510**
1500 - 1600	0	498	100	1	15	1	0	1	18	0	0	0	0	**634**
1600 - 1700	0	539	100	1	11	0	0	1	17	1	0	0	0	**670**
1700 - 1800	0	629	114	0	3	2	0	2	10	0	0	0	0	**760**
1800 - 1900	0	452	78	0	7	0	0	3	14	0	0	0	0	**554**
1900 - 2000	2	243	34	0	7	0	1	2	11	0	0	0	0	**300**
2000 - 2100	1	205	25	1	5	0	0	0	8	0	0	0	0	**245**
2100 - 2200	0	199	18	0	2	0	0	0	3	0	0	0	0	**222**
2200 - 2300	0	116	7	0	5	0	0	0	13	0	0	0	0	**141**
2300 - 2400	0	55	6	0	4	0	0	0	6	0	0	0	0	**71**

Session Total	5	8881	1423	17	158	22	1	24	312	2	5	0	0	**10850**
Session Average	0.21	370.04	59.29	0.71	6.58	0.92	0.04	1.00	13.00	0.08	0.21	0.00	0.00	**452.08**
Session Percentage	0.05	81.85	13.12	0.16	1.46	0.20	0.01	0.22	2.88	0.02	0.05	0.00	0.00	

AM Peak Hour	0700 - 0800	0800 - 0900	0700 - 0800	0900 - 1000	0900 - 1000	0800 - 0900	-	0600 - 0700	0800 - 0900	-	0700 - 0800	-	-	**0800 - 0900**
AM Peak Hour Volume	1	1103	177	8	14	3	0	2	25	0	2	0	0	**1276**

Noon Peak Hour	-	1000 - 1100	1000 - 1100	1000 - 1100	1000 - 1100	1100 - 1200	-	1000 - 1100	1100 - 1200	1000 - 1100	1100 - 1200	-	-	**1000 - 1100**
Noon Peak Hour Volume	0	543	85	4	19	5	0	4	25	1	1	0	0	**678**

PM Peak Hour	1900 - 2000	1700 - 1800	1700 - 1800	1500 - 1600	1500 - 1600	1700 - 1800	1900 - 2000	1800 - 1900	1500 - 1600	1600 - 1700	-	-	-	**1700 - 1800**
PM Peak Hour Volume	2	629	114	1	15	2	1	3	18	1	0	0	0	**760**

Site 75 Lane 4 NB

I-20,
north of Bush River Rd

Date

Wednesday, April 24, 2024

Lat/Long

34.034393°, -81.117736°

Weather

Fair
66°F

Click here for Detailed Weather

0000 - 2400 (Weekday 24h Session) (04-24-2024)

NB EB 60min

	Northbound (Movement 75 Lane 4 NB.1)													
TIME	1	2	3	4	5	6	7	8	9	10	11	12	13	**Total**
0000 - 0100	0	28	3	0	2	0	0	0	4	0	0	0	0	**37**
0100 - 0200	0	22	2	0	2	1	0	0	4	0	2	0	0	**33**
0200 - 0300	0	24	3	0	0	0	0	0	5	0	1	0	0	**33**
0300 - 0400	0	21	2	0	0	0	0	0	6	0	0	0	0	**29**
0400 - 0500	0	50	11	0	1	0	0	0	9	0	0	0	0	**71**
0500 - 0600	0	130	24	0	6	1	0	0	6	0	1	0	0	**168**
0600 - 0700	2	478	125	0	3	3	0	0	16	0	0	0	0	**627**
0700 - 0800	2	942	210	0	8	5	0	0	21	0	1	0	0	**1189**
0800 - 0900	2	1058	193	1	12	1	0	2	19	0	1	0	0	**1289**
0900 - 1000	0	634	136	13	10	4	0	3	19	0	0	0	0	**819**
1000 - 1100	1	502	118	1	13	4	0	2	14	0	0	0	0	**655**
1100 - 1200	1	447	127	1	16	0	1	1	22	0	0	0	0	**616**
1200 - 1300	0	435	119	0	20	2	0	2	11	0	0	0	0	**589**
1300 - 1400	0	416	122	0	8	4	1	1	13	0	0	0	0	**565**
1400 - 1500	3	456	95	0	11	5	0	1	13	1	0	0	0	**585**
1500 - 1600	1	495	87	0	14	1	0	1	9	0	0	0	0	**608**
1600 - 1700	2	606	110	0	6	2	0	2	18	2	0	0	0	**748**
1700 - 1800	1	627	97	0	7	1	0	2	12	0	0	0	0	**747**
1800 - 1900	0	487	71	2	4	1	0	1	13	2	0	0	0	**581**
1900 - 2000	3	269	36	0	3	3	0	0	7	0	0	0	0	**321**
2000 - 2100	0	216	31	0	3	0	0	0	10	0	0	0	0	**260**
2100 - 2200	0	169	25	0	0	0	0	0	6	0	0	0	0	**200**
2200 - 2300	0	118	15	0	1	0	0	0	10	0	0	0	0	**144**
2300 - 2400	0	64	8	0	1	0	0	0	5	0	3	0	0	**81**

Session Total	18	8694	1770	18	151	38	2	18	272	5	9	0	0	**10995**
Session Average	0.75	362.25	73.75	0.75	6.29	1.58	0.08	0.75	11.33	0.21	0.38	0.00	0.00	**458.13**
Session Percentage	0.16	79.07	16.10	0.16	1.37	0.35	0.02	0.16	2.47	0.05	0.08	0.00	0.00	

AM Peak Hour	0600 - 0700	0800 - 0900	0700 - 0800	0900 - 1000	0800 - 0900	0700 - 0800	-	0900 - 1000	0700 - 0800	-	0500 - 0600	-	-	**0800 - 0900**
AM Peak Hour Volume	2	1058	210	13	12	5	0	3	21	0	1	0	0	**1289**

Noon Peak Hour	1400 - 1500	1000 - 1100	1100 - 1200	1000 - 1100	1200 - 1300	1400 - 1500	1100 - 1200	1000 - 1100	1100 - 1200	1400 - 1500	-	-	-	**1000 - 1100**
Noon Peak Hour Volume	3	502	127	1	20	5	1	2	22	1	0	0	0	**655**

PM Peak Hour	1900 - 2000	1700 - 1800	1600 - 1700	1800 - 1900	1500 - 1600	1900 - 2000	-	1600 - 1700	1600 - 1700	1600 - 1700	-	-	-	**1600 - 1700**
PM Peak Hour Volume	3	627	110	2	14	3	0	2	18	2	0	0	0	**748**

Site 75 Lane 4 NB

I-20,
north of Bush River Rd

Date

Thursday, April 25, 2024

Lat/Long

34.034393°, -81.117736°

Weather

Fair
67°F

Click here for Detailed Weather

0000 - 2400 (Weekday 24h Session) (04-25-2024)

NB EB 60min

	Northbound (Movement 75 Lane 4 NB.1)													
TIME	1	2	3	4	5	6	7	8	9	10	11	12	13	**Total**
0000 - 0100	0	25	0	0	1	0	0	0	3	0	2	0	0	**31**
0100 - 0200	0	23	1	0	0	0	0	0	6	0	0	0	0	**30**
0200 - 0300	0	22	0	0	0	0	0	0	5	0	0	0	0	**27**
0300 - 0400	0	28	2	0	2	0	0	0	5	0	1	0	0	**38**
0400 - 0500	0	50	2	0	1	1	0	0	8	0	1	0	0	**63**
0500 - 0600	0	135	14	0	9	0	0	0	13	0	0	0	0	**171**
0600 - 0700	0	512	57	0	4	3	0	0	15	0	2	0	0	**593**
0700 - 0800	1	941	207	0	14	4	0	2	18	0	0	0	0	**1187**
0800 - 0900	1	1087	210	0	16	3	1	3	10	0	0	0	0	**1331**
0900 - 1000	1	699	130	7	11	1	0	2	24	0	0	0	0	**875**
1000 - 1100	0	502	116	6	8	3	0	3	14	1	0	0	0	**653**
1100 - 1200	1	464	104	0	5	0	0	3	33	1	0	0	0	**611**
1200 - 1300	1	508	106	1	14	7	0	6	19	1	0	0	0	**663**
1300 - 1400	0	504	110	1	16	4	1	4	16	0	0	0	0	**656**
1400 - 1500	0	472	103	0	12	3	0	3	14	1	0	0	0	**608**
1500 - 1600	1	470	104	0	6	0	0	1	18	0	0	0	0	**600**
1600 - 1700	4	554	106	0	6	1	0	0	15	0	0	0	0	**686**
1700 - 1800	3	600	114	0	6	2	0	2	16	1	0	0	0	**744**
1800 - 1900	1	480	87	0	2	1	0	1	12	1	0	0	0	**585**
1900 - 2000	3	291	42	0	1	0	0	1	3	0	0	0	0	**341**
2000 - 2100	0	211	25	1	2	0	0	0	10	0	1	0	0	**250**
2100 - 2200	0	197	12	0	2	1	0	0	6	0	0	0	0	**218**
2200 - 2300	0	125	11	0	2	0	0	0	1	0	0	0	0	**139**
2300 - 2400	0	72	0	0	0	0	0	0	5	0	0	0	0	**77**

Session Total	17	8972	1663	16	140	34	2	31	289	6	7	0	0	**11177**
Session Average	0.71	373.83	69.29	0.67	5.83	1.42	0.08	1.29	12.04	0.25	0.29	0.00	0.00	**465.71**
Session Percentage	0.15	80.27	14.88	0.14	1.25	0.30	0.02	0.28	2.59	0.05	0.06	0.00	0.00	

AM Peak Hour	0700 - 0800	0800 - 0900	0800 - 0900	0900 - 1000	0800 - 0900	0700 - 0800	0800 - 0900	0800 - 0900	0900 - 1000	-	0600 - 0700	-	-	**0800 - 0900**
AM Peak Hour Volume	1	1087	210	7	16	4	1	3	24	0	2	0	0	**1331**

Noon Peak Hour	1100 - 1200	1200 - 1300	1000 - 1100	1000 - 1100	1300 - 1400	1200 - 1300	1300 - 1400	1200 - 1300	1100 - 1200	1000 - 1100	-	-	-	**1200 - 1300**
Noon Peak Hour Volume	1	508	116	6	16	7	1	6	33	1	0	0	0	**663**

PM Peak Hour	1600 - 1700	1700 - 1800	1700 - 1800	-	1500 - 1600	1700 - 1800	-	1700 - 1800	1500 - 1600	1700 - 1800	-	-	-	**1700 - 1800**
PM Peak Hour Volume	4	600	114	0	6	2	0	2	18	1	0	0	0	**744**

Site 75 Lane 4 NB

I-20,
north of Bush River Rd

Date

Friday, April 26, 2024

Lat/Long

34.034393°, -81.117736°

Weather

Cloudy
69°F

Click here for Detailed Weather

0000 - 2400 (Weekday 24h Session) (04-26-2024)

NB EB 60min

	Northbound (Movement 75 Lane 4 NB.1)													
TIME	1	2	3	4	5	6	7	8	9	10	11	12	13	**Total**
0000 - 0100	0	34	4	0	4	0	0	0	7	0	1	0	0	**50**
0100 - 0200	0	25	1	0	1	2	0	0	5	0	3	0	0	**37**
0200 - 0300	0	12	1	0	0	0	0	0	5	0	0	0	0	**18**
0300 - 0400	0	23	0	0	0	0	0	0	8	0	1	0	0	**32**
0400 - 0500	0	47	5	0	3	1	0	0	0	0	0	0	0	**56**
0500 - 0600	0	125	9	0	6	1	0	0	9	0	0	0	0	**150**
0600 - 0700	1	406	99	1	6	0	0	2	17	0	2	0	0	**534**
0700 - 0800	2	909	196	1	10	3	0	0	17	0	1	0	0	**1139**
0800 - 0900	0	968	173	7	9	1	0	2	20	0	0	0	0	**1180**
0900 - 1000	0	630	165	10	12	0	0	5	18	1	0	0	0	**841**
1000 - 1100	1	520	147	1	17	4	0	7	22	3	0	0	0	**722**
1100 - 1200	0	505	112	0	12	2	0	1	14	0	0	0	0	**646**
1200 - 1300	0	507	94	0	16	2	0	6	18	1	0	0	0	**644**
1300 - 1400	1	505	103	0	13	3	0	8	20	1	0	0	0	**654**
1400 - 1500	1	414	103	0	9	2	0	3	13	0	0	0	0	**545**
1500 - 1600	2	501	108	3	14	4	0	1	11	0	0	0	0	**644**
1600 - 1700	3	526	109	0	13	0	0	1	3	0	0	0	0	**655**
1700 - 1800	3	616	135	0	6	3	0	2	9	2	0	0	0	**776**
1800 - 1900	4	589	84	0	9	1	0	3	7	0	0	0	0	**697**
1900 - 2000	1	316	58	1	4	1	0	0	3	0	0	0	0	**384**
2000 - 2100	3	259	27	0	3	0	0	0	4	0	1	0	0	**297**
2100 - 2200	0	212	23	0	0	0	0	0	4	0	0	0	0	**239**
2200 - 2300	0	171	13	0	2	0	0	0	7	0	0	0	0	**193**
2300 - 2400	0	107	3	0	4	0	0	0	8	0	0	0	0	**122**

Session Total	22	8927	1772	24	173	30	0	41	249	8	9	0	0	**11255**
Session Average	0.92	371.96	73.83	1.00	7.21	1.25	0.00	1.71	10.38	0.33	0.38	0.00	0.00	**468.96**
Session Percentage	0.20	79.32	15.74	0.21	1.54	0.27	0.00	0.36	2.21	0.07	0.08	0.00	0.00	

AM Peak Hour	0700 - 0800	0800 - 0900	0700 - 0800	0900 - 1000	0900 - 1000	0700 - 0800	-	0900 - 1000	0800 - 0900	0900 - 1000	0600 - 0700	-	-	**0800 - 0900**
AM Peak Hour Volume	2	968	196	10	12	3	0	5	20	1	2	0	0	**1180**

Noon Peak Hour	1000 - 1100	1000 - 1100	1000 - 1100	1000 - 1100	1000 - 1100	1000 - 1100	-	1300 - 1400	1000 - 1100	1000 - 1100	-	-	-	**1000 - 1100**
Noon Peak Hour Volume	1	520	147	1	17	4	0	8	22	3	0	0	0	**722**

PM Peak Hour	1800 - 1900	1700 - 1800	1700 - 1800	1500 - 1600	1500 - 1600	1500 - 1600	-	1800 - 1900	1500 - 1600	1700 - 1800	-	-	-	**1700 - 1800**
PM Peak Hour Volume	4	616	135	3	14	4	0	3	11	2	0	0	0	**776**

Site 75 Lane 4 NB

I-20,
north of Bush River Rd

Date

Saturday, April 27, 2024

Lat/Long

34.034393°, -81.117736°

Weather

Mostly Cloudy
69°F

Click here for Detailed Weather

0000 - 2400 (Saturday 24h Session) (04-27-2024)

NB EB 60min

	Northbound (Movement 75 Lane 4 NB.1)													
TIME	1	2	3	4	5	6	7	8	9	10	11	12	13	**Total**
0000 - 0100	0	53	12	0	0	0	0	1	3	0	0	0	0	**69**
0100 - 0200	0	38	4	0	2	0	0	0	3	0	1	0	0	**48**
0200 - 0300	0	34	2	0	2	0	0	0	2	0	1	0	0	**41**
0300 - 0400	0	17	0	0	3	0	0	0	2	0	0	0	0	**22**
0400 - 0500	0	23	1	0	1	0	0	0	1	0	0	0	0	**26**
0500 - 0600	0	61	10	0	1	1	0	0	1	0	0	0	0	**74**
0600 - 0700	1	139	26	0	1	0	0	0	4	0	2	0	0	**173**
0700 - 0800	0	215	53	0	5	0	1	2	5	0	0	1	0	**282**
0800 - 0900	0	371	63	0	1	1	0	3	8	0	0	0	0	**447**
0900 - 1000	0	465	96	0	6	0	0	1	3	0	0	0	0	**571**
1000 - 1100	5	488	91	1	2	1	0	0	6	0	0	0	0	**594**
1100 - 1200	1	520	93	0	3	0	0	4	8	0	0	0	0	**629**
1200 - 1300	1	504	78	0	5	0	0	2	7	0	0	0	0	**597**
1300 - 1400	1	453	51	0	1	2	0	1	3	0	0	0	0	**512**
1400 - 1500	1	485	76	1	1	1	0	1	5	0	0	0	0	**571**
1500 - 1600	0	528	90	1	3	0	0	0	4	0	0	0	0	**626**
1600 - 1700	0	513	93	0	3	0	0	1	2	0	0	0	0	**612**
1700 - 1800	1	517	102	0	2	0	0	0	5	0	0	0	0	**627**
1800 - 1900	0	477	62	0	3	0	0	0	2	0	0	0	0	**544**
1900 - 2000	0	353	48	0	2	0	0	1	3	0	0	0	0	**407**
2000 - 2100	1	272	25	0	1	0	0	0	1	0	0	0	0	**300**
2100 - 2200	0	200	28	0	0	0	0	0	1	0	0	0	0	**229**
2200 - 2300	0	154	19	2	0	0	0	0	0	0	0	0	0	**175**
2300 - 2400	0	114	9	1	2	0	0	0	3	0	0	0	0	**129**

Session Total	12	6994	1132	6	50	6	1	17	82	0	4	1	0	**8305**
Session Average	0.50	291.42	47.17	0.25	2.08	0.25	0.04	0.71	3.42	0.00	0.17	0.04	0.00	**346.04**
Session Percentage	0.14	84.21	13.63	0.07	0.60	0.07	0.01	0.20	0.99	0.00	0.05	0.01	0.00	

AM Peak Hour	0600 - 0700	0900 - 1000	0900 - 1000	-	0900 - 1000	0500 - 0600	0700 - 0800	0800 - 0900	0800 - 0900	-	0600 - 0700	0700 - 0800	-	**0900 - 1000**
AM Peak Hour Volume	1	465	96	0	6	1	1	3	8	0	2	1	0	**571**

Noon Peak Hour	1000 - 1100	1100 - 1200	1100 - 1200	1000 - 1100	1200 - 1300	1300 - 1400	-	1100 - 1200	1100 - 1200	-	-	-	-	**1100 - 1200**
Noon Peak Hour Volume	5	520	93	1	5	2	0	4	8	0	0	0	0	**629**

PM Peak Hour	1700 - 1800	1500 - 1600	1700 - 1800	1500 - 1600	1500 - 1600	-	-	1600 - 1700	1700 - 1800	-	-	-	-	**1700 - 1800**
PM Peak Hour Volume	1	528	102	1	3	0	0	1	5	0	0	0	0	**627**

Bi-Directional Class Count || Volume Summary 60min

Columbia, SC

Marr Traffic DATA COLLECTION

www.marrtraffic.com

Site 75 Lane 4 NB

I-20,
north of Bush River Rd

Date

Sunday, April 21, 2024

Lat/Long

34.034393°, -81.117736°

Weather

Cloudy
66°F

Click here for Detailed Weather

0000 - 2400 (Sunday 24h Session) (04-21-2024)

Volume Summary 60min

	Volume Summary 60min		
TIME	NB	SB	**Total**
0000 - 0100	77	0	**77**
0100 - 0200	52	0	**52**
0200 - 0300	23	0	**23**
0300 - 0400	27	0	**27**
0400 - 0500	24	0	**24**
0500 - 0600	45	0	**45**
0600 - 0700	135	0	**135**
0700 - 0800	164	0	**164**
0800 - 0900	253	0	**253**
0900 - 1000	315	0	**315**
1000 - 1100	412	0	**412**
1100 - 1200	325	0	**325**

	Volume Summary 60min		
Time	NB	SB	**Total**
1200 - 1300	471	0	**471**
1300 - 1400	457	0	**457**
1400 - 1500	436	0	**436**
1500 - 1600	406	0	**406**
1600 - 1700	369	0	**369**
1700 - 1800	398	0	**398**
1800 - 1900	366	0	**366**
1900 - 2000	287	0	**287**
2000 - 2100	255	0	**255**
2100 - 2200	191	0	**191**
2200 - 2300	121	0	**121**
2300 - 2400	83	0	**83**

Session Total	5692	0	**5692**
Session Average	237.17	0.00	**237.17**
Session Percentage	100.00	0.00	

Site 75 Lane 4 NB

I-20,
north of Bush River Rd

Date

Monday, April 22, 2024

Lat/Long

34.034393°, -81.117736°

Weather

Mostly Cloudy
57°F

Click here for Detailed Weather

0000 - 2400 (Weekday 24h Session) (04-22-2024)

Volume Summary 60min

	Volume Summary 60min		
TIME	NB	SB	**Total**
0000 - 0100	43	0	**43**
0100 - 0200	28	0	**28**
0200 - 0300	23	0	**23**
0300 - 0400	20	0	**20**
0400 - 0500	69	0	**69**
0500 - 0600	188	0	**188**
0600 - 0700	571	0	**571**
0700 - 0800	1289	0	**1289**
0800 - 0900	1311	0	**1311**
0900 - 1000	916	0	**916**
1000 - 1100	647	0	**647**
1100 - 1200	509	0	**509**

Session Total	10312	0	**10312**
Session Average	429.67	0.00	**429.67**
Session Percentage	100.00	0.00	

	Volume Summary 60min		
Time	NB	SB	**Total**
1200 - 1300	636	0	**636**
1300 - 1400	551	0	**551**
1400 - 1500	584	0	**584**
1500 - 1600	591	0	**591**
1600 - 1700	614	0	**614**
1700 - 1800	492	0	**492**
1800 - 1900	434	0	**434**
1900 - 2000	287	0	**287**
2000 - 2100	172	0	**172**
2100 - 2200	157	0	**157**
2200 - 2300	120	0	**120**
2300 - 2400	60	0	**60**

Site 75 Lane 4 NB

I-20,
north of Bush River Rd

Date

Tuesday, April 23, 2024

Lat/Long

34.034393°, -81.117736°

Weather

Fair
58°F

Click here for Detailed Weather

0000 - 2400 (Weekday 24h Session) (04-23-2024)

Volume Summary 60min

	Volume Summary 60min		
TIME	NB	SB	**Total**
0000 - 0100	36	0	**36**
0100 - 0200	28	0	**28**
0200 - 0300	15	0	**15**
0300 - 0400	37	0	**37**
0400 - 0500	65	0	**65**
0500 - 0600	184	0	**184**
0600 - 0700	626	0	**626**
0700 - 0800	1156	0	**1156**
0800 - 0900	1276	0	**1276**
0900 - 1000	858	0	**858**
1000 - 1100	678	0	**678**
1100 - 1200	608	0	**608**

Session Total	10850	0	**10850**
Session Average	452.08	0.00	**452.08**
Session Percentage	100.00	0.00	

	Volume Summary 60min		
Time	NB	SB	**Total**
1200 - 1300	632	0	**632**
1300 - 1400	544	0	**544**
1400 - 1500	510	0	**510**
1500 - 1600	634	0	**634**
1600 - 1700	670	0	**670**
1700 - 1800	760	0	**760**
1800 - 1900	554	0	**554**
1900 - 2000	300	0	**300**
2000 - 2100	245	0	**245**
2100 - 2200	222	0	**222**
2200 - 2300	141	0	**141**
2300 - 2400	71	0	**71**

Site 75 Lane 4 NB

I-20,
north of Bush River Rd

Date

Wednesday, April 24, 2024

Lat/Long

34.034393°, -81.117736°

Weather

Fair
66°F

Click here for Detailed Weather

0000 - 2400 (Weekday 24h Session) (04-24-2024)

Volume Summary 60min

	Volume Summary 60min		
TIME	NB	SB	**Total**
0000 - 0100	37	0	**37**
0100 - 0200	33	0	**33**
0200 - 0300	33	0	**33**
0300 - 0400	29	0	**29**
0400 - 0500	71	0	**71**
0500 - 0600	168	0	**168**
0600 - 0700	627	0	**627**
0700 - 0800	1189	0	**1189**
0800 - 0900	1289	0	**1289**
0900 - 1000	819	0	**819**
1000 - 1100	655	0	**655**
1100 - 1200	616	0	**616**

Session Total	10995	0	**10995**
Session Average	458.13	0.00	**458.13**
Session Percentage	100.00	0.00	

	Volume Summary 60min		
Time	NB	SB	**Total**
1200 - 1300	589	0	**589**
1300 - 1400	565	0	**565**
1400 - 1500	585	0	**585**
1500 - 1600	608	0	**608**
1600 - 1700	748	0	**748**
1700 - 1800	747	0	**747**
1800 - 1900	581	0	**581**
1900 - 2000	321	0	**321**
2000 - 2100	260	0	**260**
2100 - 2200	200	0	**200**
2200 - 2300	144	0	**144**
2300 - 2400	81	0	**81**

Site 75 Lane 4 NB

I-20,
north of Bush River Rd

Date

Thursday, April 25, 2024

Lat/Long

34.034393°, -81.117736°

Weather

Fair
67°F

Click here for Detailed Weather

0000 - 2400 (Weekday 24h Session) (04-25-2024)

Volume Summary 60min

	Volume Summary 60min		
TIME	NB	SB	**Total**
0000 - 0100	31	0	**31**
0100 - 0200	30	0	**30**
0200 - 0300	27	0	**27**
0300 - 0400	38	0	**38**
0400 - 0500	63	0	**63**
0500 - 0600	171	0	**171**
0600 - 0700	593	0	**593**
0700 - 0800	1187	0	**1187**
0800 - 0900	1331	0	**1331**
0900 - 1000	875	0	**875**
1000 - 1100	653	0	**653**
1100 - 1200	611	0	**611**

Session Total	11177	0	**11177**
Session Average	465.71	0.00	**465.71**
Session Percentage	100.00	0.00	

	Volume Summary 60min		
Time	NB	SB	**Total**
1200 - 1300	663	0	**663**
1300 - 1400	656	0	**656**
1400 - 1500	608	0	**608**
1500 - 1600	600	0	**600**
1600 - 1700	686	0	**686**
1700 - 1800	744	0	**744**
1800 - 1900	585	0	**585**
1900 - 2000	341	0	**341**
2000 - 2100	250	0	**250**
2100 - 2200	218	0	**218**
2200 - 2300	139	0	**139**
2300 - 2400	77	0	**77**

Site 75 Lane 4 NB

I-20,
north of Bush River Rd

Date

Friday, April 26, 2024

Lat/Long

34.034393°, -81.117736°

Weather

Cloudy
69°F

Click here for Detailed Weather

0000 - 2400 (Weekday 24h Session) (04-26-2024)

Volume Summary 60min

	Volume Summary 60min		
TIME	NB	SB	**Total**
0000 - 0100	50	0	**50**
0100 - 0200	37	0	**37**
0200 - 0300	18	0	**18**
0300 - 0400	32	0	**32**
0400 - 0500	56	0	**56**
0500 - 0600	150	0	**150**
0600 - 0700	534	0	**534**
0700 - 0800	1139	0	**1139**
0800 - 0900	1180	0	**1180**
0900 - 1000	841	0	**841**
1000 - 1100	722	0	**722**
1100 - 1200	646	0	**646**
Session Total	11255	0	**11255**
Session Average	468.96	0.00	**468.96**
Session Percentage	100.00	0.00	

	Volume Summary 60min		
Time	NB	SB	**Total**
1200 - 1300	644	0	**644**
1300 - 1400	654	0	**654**
1400 - 1500	545	0	**545**
1500 - 1600	644	0	**644**
1600 - 1700	655	0	**655**
1700 - 1800	776	0	**776**
1800 - 1900	697	0	**697**
1900 - 2000	384	0	**384**
2000 - 2100	297	0	**297**
2100 - 2200	239	0	**239**
2200 - 2300	193	0	**193**
2300 - 2400	122	0	**122**

Site 75 Lane 4 NB

I-20,
north of Bush River Rd

Date

Saturday, April 27, 2024

Lat/Long

34.034393°, -81.117736°

Weather

Mostly Cloudy
69°F

Click here for Detailed Weather

0000 - 2400 (Saturday 24h Session) (04-27-2024)

Volume Summary 60min

	Volume Summary 60min		
TIME	NB	SB	**Total**
0000 - 0100	69	0	**69**
0100 - 0200	48	0	**48**
0200 - 0300	41	0	**41**
0300 - 0400	22	0	**22**
0400 - 0500	26	0	**26**
0500 - 0600	74	0	**74**
0600 - 0700	173	0	**173**
0700 - 0800	282	0	**282**
0800 - 0900	447	0	**447**
0900 - 1000	571	0	**571**
1000 - 1100	594	0	**594**
1100 - 1200	629	0	**629**

	Volume Summary 60min		
Time	NB	SB	**Total**
1200 - 1300	597	0	**597**
1300 - 1400	512	0	**512**
1400 - 1500	571	0	**571**
1500 - 1600	626	0	**626**
1600 - 1700	612	0	**612**
1700 - 1800	627	0	**627**
1800 - 1900	544	0	**544**
1900 - 2000	407	0	**407**
2000 - 2100	300	0	**300**
2100 - 2200	229	0	**229**
2200 - 2300	175	0	**175**
2300 - 2400	129	0	**129**

Session Total	8305	0	**8305**
Session Average	346.04	0.00	**346.04**
Session Percentage	100.00	0.00	

Bi-Directional Class Count || Graphical Analysis NB EB

Columbia, SC

Marr Traffic DATA COLLECTION

www.marrtraffic.com

Site 75 Lane 4 NB

I-20,
north of Bush River Rd

Lat/Long

34.034393°, -81.117736°

0000 - 2400 (Weekday 24h Session)

Graphical Analysis NB EB

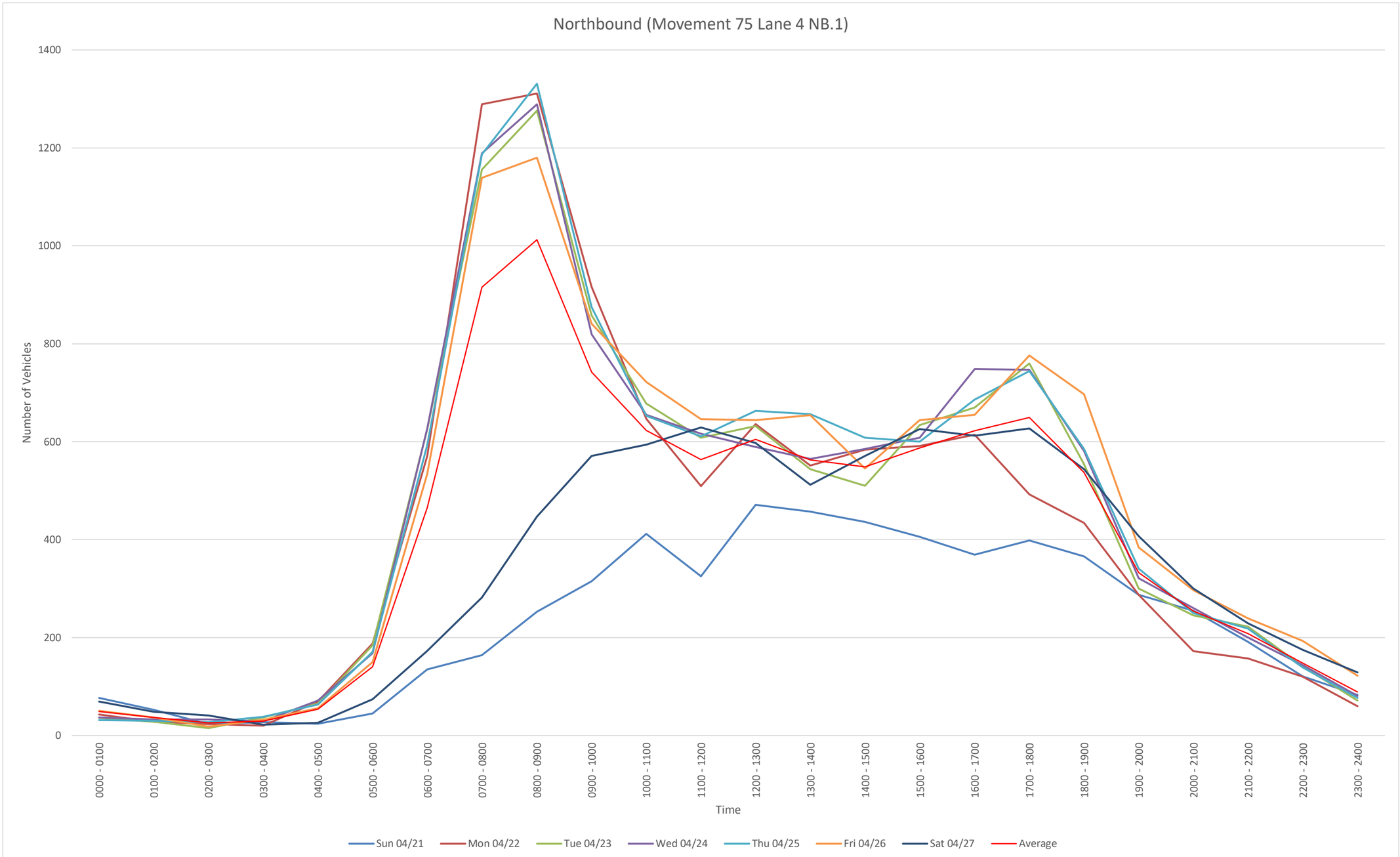

NB
File Name:
Start Date: 4/21/2024
Start Time: 0
Site Code: 75 Lane 4 NB
Station ID: 1
Location 1: I-20, north of Bush River Rd
Location 2:

Date	Time	1	2	3	4	5	6	7	8	9	10	11	12	13
4/21/2024	12:00 AM	0	22	4	0	0	0	0	0	0	0	0	0	0
4/21/2024	12:15 AM	0	16	3	0	0	0	0	0	0	0	0	0	0
4/21/2024	12:30 AM	0	15	3	0	0	0	0	0	0	0	0	0	0
4/21/2024	12:45 AM	0	11	2	0	1	0	0	0	0	0	0	0	0
4/21/2024	1:00 AM	0	10	2	0	0	0	0	0	0	0	0	0	0
4/21/2024	1:15 AM	0	9	3	0	0	0	0	0	0	0	0	0	0
4/21/2024	1:30 AM	0	11	3	0	0	0	0	0	2	0	0	0	0
4/21/2024	1:45 AM	0	8	2	0	1	0	0	0	1	0	0	0	0
4/21/2024	2:00 AM	0	4	1	0	0	0	0	0	0	0	0	0	0
4/21/2024	2:15 AM	0	6	2	0	0	0	0	0	1	0	0	0	0
4/21/2024	2:30 AM	0	3	0	0	0	0	0	0	1	0	0	0	0
4/21/2024	2:45 AM	0	4	0	0	1	0	0	0	0	0	0	0	0
4/21/2024	3:00 AM	0	5	1	0	1	0	0	0	0	0	0	0	0
4/21/2024	3:15 AM	0	4	2	0	0	0	0	0	0	0	0	0	0
4/21/2024	3:30 AM	0	4	1	0	0	0	0	0	0	0	1	0	0
4/21/2024	3:45 AM	0	5	2	0	0	0	0	0	1	0	0	0	0
4/21/2024	4:00 AM	0	4	1	0	0	0	0	0	0	0	0	0	0
4/21/2024	4:15 AM	0	3	2	0	0	0	0	0	0	0	0	0	0
4/21/2024	4:30 AM	0	5	2	0	0	0	0	0	0	0	0	0	0
4/21/2024	4:45 AM	0	6	1	0	0	0	0	0	0	0	0	0	0
4/21/2024	5:00 AM	0	5	1	0	0	0	0	0	0	0	0	0	0
4/21/2024	5:15 AM	0	8	3	0	0	0	0	0	0	0	0	0	0
4/21/2024	5:30 AM	0	10	3	0	0	0	0	0	0	0	0	0	0
4/21/2024	5:45 AM	0	10	4	0	0	0	0	0	1	0	0	0	0
4/21/2024	6:00 AM	0	13	5	0	0	0	0	0	0	0	0	0	0
4/21/2024	6:15 AM	0	21	7	0	0	0	0	0	0	0	1	0	0
4/21/2024	6:30 AM	0	43	8	0	0	0	0	0	2	0	0	0	0
4/21/2024	6:45 AM	0	29	6	0	0	0	0	0	0	0	0	0	0
4/21/2024	7:00 AM	0	24	5	0	0	0	0	0	1	0	0	0	0
4/21/2024	7:15 AM	1	32	8	0	0	0	0	0	1	0	0	0	0
4/21/2024	7:30 AM	0	32	6	0	0	0	0	0	0	0	0	0	0
4/21/2024	7:45 AM	0	46	7	0	0	0	0	0	1	0	0	0	0
4/21/2024	8:00 AM	0	49	5	0	1	0	0	0	1	0	0	0	0
4/21/2024	8:15 AM	0	41	6	0	1	0	0	0	0	0	0	0	0
4/21/2024	8:30 AM	0	46	10	0	0	0	0	0	1	0	0	0	0
4/21/2024	8:45 AM	0	80	12	0	0	0	0	0	0	0	0	0	0
4/21/2024	9:00 AM	0	70	8	0	0	0	0	0	0	0	0	0	0
4/21/2024	9:15 AM	0	62	6	0	0	0	0	0	2	0	0	0	0
4/21/2024	9:30 AM	0	70	14	1	0	0	0	0	0	0	0	0	0
4/21/2024	9:45 AM	0	74	7	0	1	0	0	0	0	0	0	0	0
4/21/2024	10:00 AM	0	89	10	1	0	0	0	0	0	0	0	0	0
4/21/2024	10:15 AM	1	84	12	0	2	0	0	0	1	0	0	0	0
4/21/2024	10:30 AM	0	88	13	0	1	0	0	0	0	0	0	0	0
4/21/2024	10:45 AM	0	99	10	0	0	1	0	0	0	0	0	0	0
4/21/2024	11:00 AM	0	62	8	0	1	0	0	0	0	0	0	0	0
4/21/2024	11:15 AM	0	72	8	0	1	0	0	0	1	0	0	0	0
4/21/2024	11:30 AM	0	64	11	0	0	0	0	0	1	0	0	0	0
4/21/2024	11:45 AM	0	82	11	0	0	1	0	0	2	0	0	0	0
4/21/2024	12:00 PM	0	96	8	0	0	0	0	0	2	0	0	0	0
4/21/2024	12:15 PM	0	98	21	1	0	0	0	0	1	1	0	0	0
4/21/2024	12:30 PM	0	105	18	0	0	0	0	0	2	0	0	0	0
4/21/2024	12:45 PM	0	98	16	0	1	0	0	0	3	0	0	0	0
4/21/2024	1:00 PM	0	92	13	0	2	1	0	0	1	0	0	0	0
4/21/2024	1:15 PM	1	91	10	0	0	0	0	0	1	0	0	0	0
4/21/2024	1:30 PM	0	106	14	0	2	0	0	0	2	0	0	0	0
4/21/2024	1:45 PM	0	101	15	0	2	0	0	0	3	0	0	0	0
4/21/2024	2:00 PM	0	85	12	0	0	0	0	0	0	0	0	0	0
4/21/2024	2:15 PM	0	90	13	1	1	0	0	0	0	0	0	0	0
4/21/2024	2:30 PM	0	101	8	0	0	0	0	0	0	0	0	0	0
4/21/2024	2:45 PM	0	108	13	0	1	0	0	0	3	0	0	0	0
4/21/2024	3:00 PM	0	97	14	0	0	0	0	0	1	0	0	0	0
4/21/2024	3:15 PM	0	70	16	0	0	0	0	0	1	0	0	0	0
4/21/2024	3:30 PM	0	94	12	0	0	0	0	0	0	0	0	0	0
4/21/2024	3:45 PM	0	93	6	0	0	1	0	0	1	0	0	0	0
4/21/2024	4:00 PM	0	85	5	0	0	0	0	0	0	0	0	0	0
4/21/2024	4:15 PM	0	66	13	0	0	0	0	1	1	0	0	0	0
4/21/2024	4:30 PM	0	87	8	1	0	0	0	0	1	0	0	0	0
4/21/2024	4:45 PM	0	83	16	0	2	0	0	0	0	0	0	0	0
4/21/2024	5:00 PM	0	94	12	0	0	0	0	0	2	0	0	0	0
4/21/2024	5:15 PM	0	96	9	0	0	0	0	0	1	0	0	0	0
4/21/2024	5:30 PM	0	91	7	0	0	0	0	0	2	0	0	0	0
4/21/2024	5:45 PM	0	74	9	0	0	0	0	0	1	0	0	0	0
4/21/2024	6:00 PM	0	71	8	0	1	0	0	0	2	0	0	0	0
4/21/2024	6:15 PM	0	92	7	0	2	0	0	0	3	0	0	0	0
4/21/2024	6:30 PM	0	100	8	0	0	0	0	0	5	0	0	0	0
4/21/2024	6:45 PM	0	58	5	0	0	0	0	0	3	0	1	0	0
4/21/2024	7:00 PM	0	57	4	0	0	0	0	0	1	0	0	0	0
4/21/2024	7:15 PM	0	59	7	0	0	0	0	0	3	0	0	0	0
4/21/2024	7:30 PM	0	72	4	0	0	1	0	0	2	0	0	0	0
4/21/2024	7:45 PM	0	69	4	0	1	0	0	1	2	0	0	0	0
4/21/2024	8:00 PM	0	60	5	0	0	0	0	0	1	0	0	0	0
4/21/2024	8:15 PM	0	55	6	0	0	0	0	0	3	0	0	0	0
4/21/2024	8:30 PM	0	61	3	0	0	0	0	0	3	0	0	0	0
4/21/2024	8:45 PM	0	53	2	0	0	0	0	0	3	0	0	0	0
4/21/2024	9:00 PM	0	59	1	0	1	0	0	0	3	0	0	0	0
4/21/2024	9:15 PM	0	49	0	0	0	0	0	0	2	0	0	0	0
4/21/2024	9:30 PM	0	33	1	0	0	0	0	0	3	0	0	0	0
4/21/2024	9:45 PM	0	36	0	0	2	0	0	0	1	0	0	0	0
4/21/2024	10:00 PM	0	38	0	0	0	0	0	0	2	0	0	0	0
4/21/2024	10:15 PM	0	23	1	0	0	0	0	0	1	0	0	0	0
4/21/2024	10:30 PM	0	31	0	0	0	0	0	0	2	0	0	0	0
4/21/2024	10:45 PM	0	20	1	0	1	0	0	0	1	0	0	0	0
4/21/2024	11:00 PM	0	22	0	0	1	0	0	0	5	0	0	0	0
4/21/2024	11:15 PM	0	21	1	0	1	0	0	0	1	0	1	0	0
4/21/2024	11:30 PM	0	14	0	0	0	0	0	0	2	0	0	0	0
4/21/2024	11:45 PM	0	13	0	0	0	0	0	0	1	0	0	0	0

4/22/2024	12:00 AM	0	6	1	0	0	0	0	0	1	0	0	0	0
4/22/2024	12:15 AM	0	10	4	0	0	0	0	0	1	0	0	0	0
4/22/2024	12:30 AM	0	8	2	0	0	0	0	0	1	0	1	0	0
4/22/2024	12:45 AM	0	6	1	0	0	0	0	0	1	0	0	0	0
4/22/2024	1:00 AM	0	5	2	0	0	0	0	0	2	0	0	0	0
4/22/2024	1:15 AM	0	6	1	0	0	0	0	0	0	0	0	0	0
4/22/2024	1:30 AM	0	3	0	0	0	0	0	0	2	0	0	0	0
4/22/2024	1:45 AM	0	3	2	0	0	0	0	0	2	0	0	0	0
4/22/2024	2:00 AM	0	4	0	0	0	0	0	0	0	0	0	0	0
4/22/2024	2:15 AM	0	3	0	0	0	0	0	0	1	0	0	0	0
4/22/2024	2:30 AM	0	3	1	0	0	0	0	0	2	0	0	0	0
4/22/2024	2:45 AM	0	4	1	0	0	0	0	0	4	0	0	0	0
4/22/2024	3:00 AM	0	3	0	0	0	0	0	0	0	0	0	0	0
4/22/2024	3:15 AM	0	2	1	0	0	0	0	0	0	0	0	0	0
4/22/2024	3:30 AM	0	4	2	0	0	0	0	0	2	0	0	0	0
4/22/2024	3:45 AM	0	5	1	0	0	0	0	0	0	0	0	0	0
4/22/2024	4:00 AM	0	7	4	0	0	0	0	0	2	0	0	0	0
4/22/2024	4:15 AM	0	7	3	0	1	0	0	0	4	0	0	0	0
4/22/2024	4:30 AM	0	11	3	0	0	0	0	0	2	0	0	0	0
4/22/2024	4:45 AM	0	18	6	0	0	0	0	0	1	0	0	0	0
4/22/2024	5:00 AM	0	15	5	0	0	0	0	0	1	0	0	0	0
4/22/2024	5:15 AM	0	30	7	0	2	0	0	0	1	0	0	0	0
4/22/2024	5:30 AM	0	49	10	0	0	0	0	0	2	0	0	0	0
4/22/2024	5:45 AM	0	46	15	0	0	0	0	0	5	0	0	0	0
4/22/2024	6:00 AM	0	48	13	0	0	0	0	0	3	0	0	0	0
4/22/2024	6:15 AM	0	76	35	0	3	0	0	0	4	0	0	0	0
4/22/2024	6:30 AM	0	149	30	0	1	1	0	0	4	0	0	0	0
4/22/2024	6:45 AM	0	166	31	1	2	0	0	0	4	0	0	0	0
4/22/2024	7:00 AM	0	222	38	0	3	0	0	1	4	0	0	0	0
4/22/2024	7:15 AM	0	286	33	0	2	0	0	1	6	0	0	0	0
4/22/2024	7:30 AM	0	312	34	0	2	0	0	0	5	0	0	0	0
4/22/2024	7:45 AM	1	294	38	0	2	0	0	1	4	0	0	0	0
4/22/2024	8:00 AM	0	325	51	0	4	0	0	2	6	0	0	0	0
4/22/2024	8:15 AM	0	291	47	0	4	0	0	0	5	0	0	0	0
4/22/2024	8:30 AM	0	253	30	0	3	0	0	0	5	1	0	0	0
4/22/2024	8:45 AM	0	234	43	0	1	0	0	1	5	0	0	0	0
4/22/2024	9:00 AM	0	183	36	0	2	1	0	0	3	0	0	0	0
4/22/2024	9:15 AM	0	183	28	0	4	0	0	1	6	0	0	0	0
4/22/2024	9:30 AM	0	186	46	3	3	0	0	0	4	0	0	0	0
4/22/2024	9:45 AM	0	188	27	4	2	0	0	0	6	0	0	0	0
4/22/2024	10:00 AM	0	137	22	0	1	2	0	0	9	0	1	0	0
4/22/2024	10:15 AM	0	127	25	0	5	0	0	0	4	0	0	0	0
4/22/2024	10:30 AM	0	118	25	1	2	0	0	0	4	0	0	0	0
4/22/2024	10:45 AM	1	128	24	0	3	1	0	0	7	0	0	0	0
4/22/2024	11:00 AM	0	84	14	0	2	1	0	0	3	0	0	0	0
4/22/2024	11:15 AM	0	109	16	0	3	0	0	0	12	0	0	0	0
4/22/2024	11:30 AM	0	102	16	0	1	0	0	0	2	0	0	0	0
4/22/2024	11:45 AM	0	119	14	0	2	0	0	1	8	0	0	0	0
4/22/2024	12:00 PM	0	113	22	0	2	0	0	0	6	0	0	0	0
4/22/2024	12:15 PM	0	125	21	0	2	0	0	0	8	0	0	0	0
4/22/2024	12:30 PM	0	133	24	0	2	0	0	0	12	0	0	0	0
4/22/2024	12:45 PM	0	134	25	0	2	0	0	1	4	0	0	0	0
4/22/2024	1:00 PM	0	120	16	0	2	1	0	0	3	0	0	0	0
4/22/2024	1:15 PM	0	118	16	0	4	3	0	0	5	0	0	0	0
4/22/2024	1:30 PM	0	120	15	0	5	0	0	1	1	0	0	0	0
4/22/2024	1:45 PM	0	105	11	0	2	0	0	2	1	0	0	0	0
4/22/2024	2:00 PM	0	111	23	0	1	0	1	0	5	0	0	0	0
4/22/2024	2:15 PM	0	111	13	0	6	1	0	0	9	0	0	0	0
4/22/2024	2:30 PM	0	118	17	0	3	0	0	0	5	0	0	0	0
4/22/2024	2:45 PM	0	128	21	0	3	1	0	0	7	0	0	0	0
4/22/2024	3:00 PM	0	115	17	0	4	0	0	0	5	0	0	0	0
4/22/2024	3:15 PM	0	127	25	0	3	0	0	0	4	0	0	0	0
4/22/2024	3:30 PM	0	138	15	0	3	1	0	0	2	0	0	0	0
4/22/2024	3:45 PM	0	105	21	0	2	0	0	1	3	0	0	0	0
4/22/2024	4:00 PM	0	120	13	0	2	1	0	0	4	0	0	0	0
4/22/2024	4:15 PM	0	143	21	0	2	0	0	0	4	0	0	0	0
4/22/2024	4:30 PM	0	131	22	1	1	0	0	0	2	0	0	0	0
4/22/2024	4:45 PM	0	119	18	1	3	1	0	0	5	0	0	0	0
4/22/2024	5:00 PM	0	137	9	2	1	0	0	0	1	0	0	0	0
4/22/2024	5:15 PM	1	106	17	0	0	0	0	0	3	0	0	0	0
4/22/2024	5:30 PM	0	84	14	0	0	0	0	0	2	0	0	0	0
4/22/2024	5:45 PM	1	95	14	0	2	0	0	0	3	0	0	0	0
4/22/2024	6:00 PM	0	82	11	0	2	0	0	0	2	0	0	0	0
4/22/2024	6:15 PM	0	112	15	0	2	0	0	0	0	0	0	0	0
4/22/2024	6:30 PM	0	103	9	0	0	1	0	0	5	0	0	0	0
4/22/2024	6:45 PM	0	79	6	0	0	1	0	0	4	0	0	0	0
4/22/2024	7:00 PM	0	67	12	0	3	0	0	0	1	0	0	0	0
4/22/2024	7:15 PM	0	72	7	0	0	0	0	0	3	0	0	0	0
4/22/2024	7:30 PM	0	50	5	0	0	0	0	0	1	0	0	0	0
4/22/2024	7:45 PM	0	55	7	0	2	0	0	0	2	0	0	0	0
4/22/2024	8:00 PM	0	48	1	0	0	0	0	0	4	0	0	0	0
4/22/2024	8:15 PM	0	38	2	0	1	0	0	0	1	0	0	0	0
4/22/2024	8:30 PM	0	33	3	0	1	1	0	0	2	0	0	0	0
4/22/2024	8:45 PM	0	34	0	0	0	0	0	0	3	0	0	0	0
4/22/2024	9:00 PM	0	46	0	0	0	0	0	0	2	0	0	0	0
4/22/2024	9:15 PM	0	35	0	0	0	0	0	0	6	0	0	0	0
4/22/2024	9:30 PM	0	29	1	0	0	0	0	0	0	0	0	0	0
4/22/2024	9:45 PM	0	36	1	0	0	0	0	0	1	0	0	0	0
4/22/2024	10:00 PM	0	30	0	0	0	0	0	0	4	0	0	0	0
4/22/2024	10:15 PM	0	37	0	0	1	0	0	0	1	0	0	0	0
4/22/2024	10:30 PM	0	22	0	0	0	0	0	0	3	0	0	0	0
4/22/2024	10:45 PM	0	20	0	0	0	0	0	0	2	0	0	0	0
4/22/2024	11:00 PM	0	20	0	0	0	0	0	0	3	0	0	0	0
4/22/2024	11:15 PM	0	19	0	0	1	0	0	0	1	0	0	0	0
4/22/2024	11:30 PM	0	5	0	0	0	0	0	0	3	0	0	0	0
4/22/2024	11:45 PM	0	7	0	0	0	0	0	0	1	0	0	0	0

4/23/2024	12:00 AM	0	7	1	0	0	0	0	0	2	0	0	0	0
4/23/2024	12:15 AM	0	8	2	0	0	0	0	0	0	0	0	0	0
4/23/2024	12:30 AM	0	7	1	0	0	0	0	0	1	0	0	0	0
4/23/2024	12:45 AM	0	6	1	0	0	0	0	0	0	0	0	0	0
4/23/2024	1:00 AM	0	3	1	0	0	0	0	0	3	0	0	0	0
4/23/2024	1:15 AM	0	5	2	0	1	0	0	0	0	0	1	0	0
4/23/2024	1:30 AM	0	2	1	0	1	0	0	0	0	0	0	0	0
4/23/2024	1:45 AM	0	4	1	0	0	0	0	0	3	0	0	0	0
4/23/2024	2:00 AM	0	3	2	0	0	0	0	0	0	0	0	0	0
4/23/2024	2:15 AM	0	3	1	0	0	0	0	0	2	0	0	0	0
4/23/2024	2:30 AM	0	1	0	0	0	0	0	0	0	0	0	0	0
4/23/2024	2:45 AM	0	2	1	0	0	0	0	0	0	0	0	0	0
4/23/2024	3:00 AM	0	8	2	0	0	0	0	0	1	0	0	0	0
4/23/2024	3:15 AM	0	2	1	0	0	0	0	0	0	0	0	0	0
4/23/2024	3:30 AM	0	9	3	0	0	0	0	0	2	0	0	0	0
4/23/2024	3:45 AM	0	7	1	0	0	0	0	0	1	0	0	0	0
4/23/2024	4:00 AM	0	4	1	0	0	0	0	0	2	0	0	0	0
4/23/2024	4:15 AM	0	10	3	0	1	0	0	0	5	0	0	0	0
4/23/2024	4:30 AM	0	11	1	0	0	0	0	0	3	0	0	0	0
4/23/2024	4:45 AM	0	17	5	0	1	0	0	0	1	0	0	0	0
4/23/2024	5:00 AM	0	14	3	0	0	0	0	0	4	0	0	0	0
4/23/2024	5:15 AM	0	29	2	0	0	0	0	0	0	0	0	0	0
4/23/2024	5:30 AM	0	54	8	0	1	0	0	0	5	0	0	0	0
4/23/2024	5:45 AM	0	52	11	0	0	0	0	0	1	0	0	0	0
4/23/2024	6:00 AM	0	72	10	0	1	0	0	0	1	0	0	0	0
4/23/2024	6:15 AM	0	109	26	0	0	0	0	1	1	0	0	0	0
4/23/2024	6:30 AM	0	148	28	0	0	0	0	0	6	0	1	0	0
4/23/2024	6:45 AM	0	179	35	0	3	1	0	1	3	0	0	0	0
4/23/2024	7:00 AM	0	215	41	0	4	0	0	1	6	0	1	0	0
4/23/2024	7:15 AM	1	239	54	0	3	1	0	0	3	0	0	0	0
4/23/2024	7:30 AM	0	255	45	0	3	1	0	1	8	0	0	0	0
4/23/2024	7:45 AM	0	234	37	0	1	0	0	0	1	0	1	0	0
4/23/2024	8:00 AM	0	244	27	0	3	0	0	0	2	0	0	0	0
4/23/2024	8:15 AM	1	310	40	0	1	0	0	1	5	0	0	0	0
4/23/2024	8:30 AM	0	294	33	0	2	0	0	1	9	0	0	0	0
4/23/2024	8:45 AM	0	255	29	0	7	3	0	0	9	0	0	0	0
4/23/2024	9:00 AM	0	184	28	3	4	0	0	0	5	0	0	0	0
4/23/2024	9:15 AM	0	176	35	1	6	2	0	0	4	0	0	0	0
4/23/2024	9:30 AM	0	168	32	0	2	0	0	0	11	0	0	0	0
4/23/2024	9:45 AM	0	164	23	4	2	0	0	0	4	0	0	0	0
4/23/2024	10:00 AM	0	150	25	2	4	0	0	1	3	1	0	0	0
4/23/2024	10:15 AM	0	129	17	0	4	1	0	1	6	0	0	0	0
4/23/2024	10:30 AM	0	139	20	2	2	0	0	0	6	0	0	0	0
4/23/2024	10:45 AM	0	125	23	0	9	1	0	2	5	0	0	0	0
4/23/2024	11:00 AM	0	122	15	0	1	1	0	0	7	0	0	0	0
4/23/2024	11:15 AM	0	110	16	2	3	2	0	0	8	0	0	0	0
4/23/2024	11:30 AM	0	138	21	0	2	2	0	0	4	0	1	0	0
4/23/2024	11:45 AM	0	128	17	0	2	0	0	0	6	0	0	0	0
4/23/2024	12:00 PM	0	114	19	0	3	0	0	0	4	0	0	0	0
4/23/2024	12:15 PM	0	122	14	0	3	2	0	0	2	0	0	0	0
4/23/2024	12:30 PM	0	148	21	0	3	0	0	0	3	0	0	0	0
4/23/2024	12:45 PM	0	145	23	0	2	0	0	0	4	0	0	0	0
4/23/2024	1:00 PM	0	111	14	0	0	0	0	1	3	0	0	0	0
4/23/2024	1:15 PM	0	115	17	0	3	0	0	0	6	0	0	0	0
4/23/2024	1:30 PM	0	110	19	0	1	0	0	1	5	0	0	0	0
4/23/2024	1:45 PM	0	108	22	0	2	1	0	1	4	0	0	0	0
4/23/2024	2:00 PM	0	107	13	0	3	1	0	0	9	0	0	0	0
4/23/2024	2:15 PM	0	104	16	0	1	0	0	1	3	0	0	0	0
4/23/2024	2:30 PM	0	103	14	0	2	0	0	0	7	0	0	0	0
4/23/2024	2:45 PM	0	103	17	0	2	0	0	1	3	0	0	0	0
4/23/2024	3:00 PM	0	124	23	0	2	0	0	0	3	0	0	0	0
4/23/2024	3:15 PM	0	126	25	0	3	1	0	1	5	0	0	0	0
4/23/2024	3:30 PM	0	132	29	0	6	0	0	0	4	0	0	0	0
4/23/2024	3:45 PM	0	116	23	1	4	0	0	0	6	0	0	0	0
4/23/2024	4:00 PM	0	109	28	0	1	0	0	0	11	0	0	0	0
4/23/2024	4:15 PM	0	138	37	1	4	0	0	0	2	0	0	0	0
4/23/2024	4:30 PM	0	150	18	0	4	0	0	1	2	1	0	0	0
4/23/2024	4:45 PM	0	142	17	0	2	0	0	0	2	0	0	0	0
4/23/2024	5:00 PM	0	163	30	0	1	1	0	0	3	0	0	0	0
4/23/2024	5:15 PM	0	185	30	0	2	1	0	2	1	0	0	0	0
4/23/2024	5:30 PM	0	162	30	0	0	0	0	0	3	0	0	0	0
4/23/2024	5:45 PM	0	119	24	0	0	0	0	0	3	0	0	0	0
4/23/2024	6:00 PM	0	101	16	0	2	0	0	0	7	0	0	0	0
4/23/2024	6:15 PM	0	116	27	0	1	0	0	0	2	0	0	0	0
4/23/2024	6:30 PM	0	100	13	0	2	0	0	1	2	0	0	0	0
4/23/2024	6:45 PM	0	135	22	0	2	0	0	2	3	0	0	0	0
4/23/2024	7:00 PM	0	56	9	0	0	0	0	1	2	0	0	0	0
4/23/2024	7:15 PM	0	69	8	0	4	0	0	0	3	0	0	0	0
4/23/2024	7:30 PM	0	48	8	0	0	0	0	0	4	0	0	0	0
4/23/2024	7:45 PM	2	70	9	0	3	0	1	1	2	0	0	0	0
4/23/2024	8:00 PM	0	58	10	0	1	0	0	0	2	0	0	0	0
4/23/2024	8:15 PM	1	57	6	1	0	0	0	0	2	0	0	0	0
4/23/2024	8:30 PM	0	51	6	0	1	0	0	0	4	0	0	0	0
4/23/2024	8:45 PM	0	39	3	0	3	0	0	0	0	0	0	0	0
4/23/2024	9:00 PM	0	61	8	0	0	0	0	0	0	0	0	0	0
4/23/2024	9:15 PM	0	53	6	0	1	0	0	0	2	0	0	0	0
4/23/2024	9:30 PM	0	47	2	0	0	0	0	0	0	0	0	0	0
4/23/2024	9:45 PM	0	38	2	0	1	0	0	0	1	0	0	0	0
4/23/2024	10:00 PM	0	36	2	0	2	0	0	0	4	0	0	0	0
4/23/2024	10:15 PM	0	30	1	0	1	0	0	0	5	0	0	0	0
4/23/2024	10:30 PM	0	29	2	0	2	0	0	0	1	0	0	0	0
4/23/2024	10:45 PM	0	21	2	0	0	0	0	0	3	0	0	0	0
4/23/2024	11:00 PM	0	18	1	0	2	0	0	0	3	0	0	0	0
4/23/2024	11:15 PM	0	13	0	0	1	0	0	0	2	0	0	0	0
4/23/2024	11:30 PM	0	15	4	0	0	0	0	0	0	0	0	0	0
4/23/2024	11:45 PM	0	9	1	0	1	0	0	0	1	0	0	0	0

4/24/2024	12:00 AM	0	9	1	0	1	0	0	0	0	0	0	0
4/24/2024	12:15 AM	0	7	2	0	1	0	0	0	0	0	0	0
4/24/2024	12:30 AM	0	6	0	0	0	0	0	0	2	0	0	0
4/24/2024	12:45 AM	0	6	0	0	0	0	0	0	2	0	0	0
4/24/2024	1:00 AM	0	7	1	0	0	0	0	0	0	0	1	0
4/24/2024	1:15 AM	0	4	0	0	1	0	0	0	0	0	0	0
4/24/2024	1:30 AM	0	5	0	0	0	0	0	0	1	0	0	0
4/24/2024	1:45 AM	0	6	1	0	1	1	0	0	3	0	1	0
4/24/2024	2:00 AM	0	8	2	0	0	0	0	0	2	0	0	0
4/24/2024	2:15 AM	0	4	0	0	0	0	0	0	1	0	0	0
4/24/2024	2:30 AM	0	7	1	0	0	0	0	0	2	0	0	0
4/24/2024	2:45 AM	0	5	0	0	0	0	0	0	0	0	1	0
4/24/2024	3:00 AM	0	6	0	0	0	0	0	0	2	0	0	0
4/24/2024	3:15 AM	0	7	0	0	0	0	0	0	1	0	0	0
4/24/2024	3:30 AM	0	5	1	0	0	0	0	0	3	0	0	0
4/24/2024	3:45 AM	0	3	1	0	0	0	0	0	0	0	0	0
4/24/2024	4:00 AM	0	7	2	0	1	0	0	0	3	0	0	0
4/24/2024	4:15 AM	0	13	3	0	0	0	0	0	2	0	0	0
4/24/2024	4:30 AM	0	7	1	0	0	0	0	0	2	0	0	0
4/24/2024	4:45 AM	0	23	5	0	0	0	0	0	2	0	0	0
4/24/2024	5:00 AM	0	15	3	0	1	0	0	0	0	0	0	0
4/24/2024	5:15 AM	0	18	4	0	2	0	0	0	2	0	0	0
4/24/2024	5:30 AM	0	43	8	0	2	1	0	0	2	0	1	0
4/24/2024	5:45 AM	0	54	9	0	1	0	0	0	2	0	0	0
4/24/2024	6:00 AM	0	52	7	0	1	0	0	0	4	0	0	0
4/24/2024	6:15 AM	0	109	15	0	0	1	0	0	4	0	0	0
4/24/2024	6:30 AM	0	165	40	0	0	2	0	0	3	0	0	0
4/24/2024	6:45 AM	2	152	63	0	2	0	0	0	5	0	0	0
4/24/2024	7:00 AM	1	190	49	0	3	1	0	0	3	0	0	0
4/24/2024	7:15 AM	1	255	67	0	3	0	0	0	6	0	1	0
4/24/2024	7:30 AM	0	239	48	0	2	2	0	0	6	0	0	0
4/24/2024	7:45 AM	0	258	46	0	0	2	0	0	6	0	0	0
4/24/2024	8:00 AM	0	269	46	1	2	1	0	0	5	0	1	0
4/24/2024	8:15 AM	1	293	38	0	3	0	0	1	3	0	0	0
4/24/2024	8:30 AM	0	263	50	0	6	0	0	1	5	0	0	0
4/24/2024	8:45 AM	1	233	59	0	1	0	0	0	6	0	0	0
4/24/2024	9:00 AM	0	167	48	9	4	2	0	1	7	0	0	0
4/24/2024	9:15 AM	0	157	36	4	0	1	0	0	3	0	0	0
4/24/2024	9:30 AM	0	163	25	0	1	0	0	0	5	0	0	0
4/24/2024	9:45 AM	0	147	27	0	5	1	0	2	4	0	0	0
4/24/2024	10:00 AM	1	126	27	0	1	2	0	0	2	0	0	0
4/24/2024	10:15 AM	0	127	27	0	0	0	0	1	2	0	0	0
4/24/2024	10:30 AM	0	128	32	0	6	2	0	0	3	0	0	0
4/24/2024	10:45 AM	0	121	32	1	6	0	0	1	7	0	0	0
4/24/2024	11:00 AM	0	104	36	0	4	0	0	0	6	0	0	0
4/24/2024	11:15 AM	0	133	28	1	5	0	0	0	4	0	0	0
4/24/2024	11:30 AM	1	111	34	0	5	0	1	1	8	0	0	0
4/24/2024	11:45 AM	0	99	29	0	2	0	0	0	4	0	0	0
4/24/2024	12:00 PM	0	83	25	0	6	0	0	0	5	0	0	0
4/24/2024	12:15 PM	0	114	36	0	6	1	0	1	3	0	0	0
4/24/2024	12:30 PM	0	112	37	0	4	1	0	1	2	0	0	0
4/24/2024	12:45 PM	0	126	21	0	4	0	0	0	1	0	0	0
4/24/2024	1:00 PM	0	108	30	0	2	0	0	0	2	0	0	0
4/24/2024	1:15 PM	0	92	26	0	0	0	0	1	3	0	0	0
4/24/2024	1:30 PM	0	98	38	0	5	4	1	0	3	0	0	0
4/24/2024	1:45 PM	0	118	28	0	1	0	0	0	5	0	0	0
4/24/2024	2:00 PM	0	107	27	0	3	1	0	0	4	0	0	0
4/24/2024	2:15 PM	0	124	26	0	2	2	0	1	4	0	0	0
4/24/2024	2:30 PM	1	106	20	0	2	2	0	0	4	0	0	0
4/24/2024	2:45 PM	2	119	22	0	4	0	0	0	1	1	0	0
4/24/2024	3:00 PM	1	111	22	0	3	1	0	0	2	0	0	0
4/24/2024	3:15 PM	0	139	19	0	5	0	0	1	1	0	0	0
4/24/2024	3:30 PM	0	120	25	0	4	0	0	0	3	0	0	0
4/24/2024	3:45 PM	0	125	21	0	2	0	0	0	3	0	0	0
4/24/2024	4:00 PM	0	134	21	0	1	0	0	1	10	0	0	0
4/24/2024	4:15 PM	0	143	33	0	2	2	0	0	4	2	0	0
4/24/2024	4:30 PM	1	157	29	0	1	0	0	0	2	0	0	0
4/24/2024	4:45 PM	1	172	27	0	2	0	0	1	2	0	0	0
4/24/2024	5:00 PM	1	177	26	0	1	1	0	0	5	0	0	0
4/24/2024	5:15 PM	0	171	24	0	2	0	0	1	4	0	0	0
4/24/2024	5:30 PM	0	141	21	0	1	0	0	0	2	0	0	0
4/24/2024	5:45 PM	0	138	26	0	3	0	0	1	1	0	0	0
4/24/2024	6:00 PM	0	135	19	0	2	0	0	0	3	0	0	0
4/24/2024	6:15 PM	0	123	24	2	1	0	0	1	3	0	0	0
4/24/2024	6:30 PM	0	127	13	0	1	1	0	0	2	1	0	0
4/24/2024	6:45 PM	0	102	15	0	0	0	0	0	5	1	0	0
4/24/2024	7:00 PM	2	64	6	0	0	1	0	0	2	0	0	0
4/24/2024	7:15 PM	0	83	10	0	1	1	0	0	3	0	0	0
4/24/2024	7:30 PM	1	66	9	0	2	1	0	0	1	0	0	0
4/24/2024	7:45 PM	0	56	11	0	0	0	0	0	1	0	0	0
4/24/2024	8:00 PM	0	67	13	0	1	0	0	0	3	0	0	0
4/24/2024	8:15 PM	0	60	8	0	1	0	0	0	2	0	0	0
4/24/2024	8:30 PM	0	49	6	0	0	0	0	0	0	0	0	0
4/24/2024	8:45 PM	0	40	4	0	1	0	0	0	5	0	0	0
4/24/2024	9:00 PM	0	50	8	0	0	0	0	0	1	0	0	0
4/24/2024	9:15 PM	0	49	8	0	0	0	0	0	2	0	0	0
4/24/2024	9:30 PM	0	34	4	0	0	0	0	0	2	0	0	0
4/24/2024	9:45 PM	0	36	5	0	0	0	0	0	1	0	0	0
4/24/2024	10:00 PM	0	40	3	0	0	0	0	0	1	0	0	0
4/24/2024	10:15 PM	0	32	6	0	1	0	0	0	3	0	0	0
4/24/2024	10:30 PM	0	32	4	0	0	0	0	0	2	0	0	0
4/24/2024	10:45 PM	0	14	2	0	0	0	0	0	4	0	0	0
4/24/2024	11:00 PM	0	13	1	0	0	0	0	0	1	0	1	0
4/24/2024	11:15 PM	0	15	2	0	1	0	0	0	0	0	1	0
4/24/2024	11:30 PM	0	18	3	0	0	0	0	0	1	0	1	0
4/24/2024	11:45 PM	0	18	2	0	0	0	0	0	3	0	0	0

4/25/2024	12:00 AM	0	10	0	0	0	0	0	0	1	0	0	0	0
4/25/2024	12:15 AM	0	4	0	0	0	0	0	0	1	0	1	0	0
4/25/2024	12:30 AM	0	6	0	0	1	0	0	0	0	0	0	0	0
4/25/2024	12:45 AM	0	5	0	0	0	0	0	0	1	0	1	0	0
4/25/2024	1:00 AM	0	8	0	0	0	0	0	0	1	0	0	0	0
4/25/2024	1:15 AM	0	4	0	0	0	0	0	0	2	0	0	0	0
4/25/2024	1:30 AM	0	7	0	0	0	0	0	0	2	0	0	0	0
4/25/2024	1:45 AM	0	4	1	0	0	0	0	0	1	0	0	0	0
4/25/2024	2:00 AM	0	5	0	0	0	0	0	0	1	0	0	0	0
4/25/2024	2:15 AM	0	2	0	0	0	0	0	0	3	0	0	0	0
4/25/2024	2:30 AM	0	8	0	0	0	0	0	0	0	0	0	0	0
4/25/2024	2:45 AM	0	7	0	0	0	0	0	0	1	0	0	0	0
4/25/2024	3:00 AM	0	7	1	0	0	0	0	0	1	0	0	0	0
4/25/2024	3:15 AM	0	6	0	0	0	0	0	0	1	0	1	0	0
4/25/2024	3:30 AM	0	6	0	0	2	0	0	0	0	0	0	0	0
4/25/2024	3:45 AM	0	9	1	0	0	0	0	0	3	0	0	0	0
4/25/2024	4:00 AM	0	8	0	0	0	0	0	0	2	0	0	0	0
4/25/2024	4:15 AM	0	11	0	0	0	0	0	0	3	0	0	0	0
4/25/2024	4:30 AM	0	12	0	0	1	0	0	0	1	0	0	0	0
4/25/2024	4:45 AM	0	19	2	0	0	1	0	0	2	0	1	0	0
4/25/2024	5:00 AM	0	16	1	0	2	0	0	0	2	0	0	0	0
4/25/2024	5:15 AM	0	21	1	0	3	0	0	0	7	0	0	0	0
4/25/2024	5:30 AM	0	46	5	0	1	0	0	0	0	0	0	0	0
4/25/2024	5:45 AM	0	52	7	0	3	0	0	0	4	0	0	0	0
4/25/2024	6:00 AM	0	61	4	0	0	0	0	0	3	0	0	0	0
4/25/2024	6:15 AM	0	118	5	0	1	0	0	0	4	0	0	0	0
4/25/2024	6:30 AM	0	161	16	0	2	1	0	0	4	0	0	0	0
4/25/2024	6:45 AM	0	172	32	0	1	2	0	0	4	0	2	0	0
4/25/2024	7:00 AM	0	192	47	0	5	3	0	0	7	0	0	0	0
4/25/2024	7:15 AM	1	236	53	0	2	0	0	0	4	0	0	0	0
4/25/2024	7:30 AM	0	253	46	0	5	0	0	0	3	0	0	0	0
4/25/2024	7:45 AM	0	260	61	0	2	1	0	2	4	0	0	0	0
4/25/2024	8:00 AM	0	285	41	0	3	0	0	0	3	0	0	0	0
4/25/2024	8:15 AM	0	299	58	0	4	1	0	1	4	0	0	0	0
4/25/2024	8:30 AM	1	260	51	0	6	0	1	1	1	0	0	0	0
4/25/2024	8:45 AM	0	243	60	0	3	2	0	1	2	0	0	0	0
4/25/2024	9:00 AM	0	211	38	0	3	0	0	0	8	0	0	0	0
4/25/2024	9:15 AM	1	149	34	0	2	1	0	0	4	0	0	0	0
4/25/2024	9:30 AM	0	179	28	6	4	0	0	1	8	0	0	0	0
4/25/2024	9:45 AM	0	160	30	1	2	0	0	1	4	0	0	0	0
4/25/2024	10:00 AM	0	129	32	1	3	1	0	0	5	0	0	0	0
4/25/2024	10:15 AM	0	122	35	4	2	1	0	1	3	0	0	0	0
4/25/2024	10:30 AM	0	114	27	0	1	1	0	1	2	1	0	0	0
4/25/2024	10:45 AM	0	137	22	1	2	0	0	1	4	0	0	0	0
4/25/2024	11:00 AM	1	105	13	0	2	0	0	0	7	0	0	0	0
4/25/2024	11:15 AM	0	136	30	0	2	0	0	1	11	0	0	0	0
4/25/2024	11:30 AM	0	117	21	0	0	0	0	1	9	1	0	0	0
4/25/2024	11:45 AM	0	106	40	0	1	0	0	1	6	0	0	0	0
4/25/2024	12:00 PM	0	118	23	0	2	1	0	1	3	0	0	0	0
4/25/2024	12:15 PM	0	123	27	0	5	3	0	0	6	0	0	0	0
4/25/2024	12:30 PM	1	144	34	0	5	2	0	3	7	1	0	0	0
4/25/2024	12:45 PM	0	123	22	1	2	1	0	2	3	0	0	0	0
4/25/2024	1:00 PM	0	134	29	0	4	2	0	2	4	0	0	0	0
4/25/2024	1:15 PM	0	126	22	0	4	1	0	2	0	0	0	0	0
4/25/2024	1:30 PM	0	134	36	1	3	0	1	0	7	0	0	0	0
4/25/2024	1:45 PM	0	110	23	0	5	1	0	0	5	0	0	0	0
4/25/2024	2:00 PM	0	118	30	0	3	1	0	0	3	1	0	0	0
4/25/2024	2:15 PM	0	129	18	0	3	0	0	2	4	0	0	0	0
4/25/2024	2:30 PM	0	131	23	0	5	0	0	1	3	0	0	0	0
4/25/2024	2:45 PM	0	94	32	0	1	2	0	0	4	0	0	0	0
4/25/2024	3:00 PM	0	114	18	0	2	0	0	0	4	0	0	0	0
4/25/2024	3:15 PM	0	105	27	0	0	0	0	1	5	0	0	0	0
4/25/2024	3:30 PM	0	119	30	0	2	0	0	0	5	0	0	0	0
4/25/2024	3:45 PM	1	132	29	0	2	0	0	0	4	0	0	0	0
4/25/2024	4:00 PM	0	122	25	0	1	0	0	0	3	0	0	0	0
4/25/2024	4:15 PM	1	137	23	0	2	0	0	0	5	0	0	0	0
4/25/2024	4:30 PM	3	145	29	0	1	1	0	0	4	0	0	0	0
4/25/2024	4:45 PM	0	150	29	0	2	0	0	0	3	0	0	0	0
4/25/2024	5:00 PM	1	154	36	0	0	0	0	0	4	0	0	0	0
4/25/2024	5:15 PM	2	142	23	0	2	1	0	1	3	0	0	0	0
4/25/2024	5:30 PM	0	169	24	0	3	0	0	1	5	1	0	0	0
4/25/2024	5:45 PM	0	135	31	0	1	1	0	0	4	0	0	0	0
4/25/2024	6:00 PM	1	125	25	0	1	0	0	0	3	0	0	0	0
4/25/2024	6:15 PM	0	129	16	0	0	1	0	0	5	0	0	0	0
4/25/2024	6:30 PM	0	127	21	0	0	0	0	1	1	1	0	0	0
4/25/2024	6:45 PM	0	99	25	0	1	0	0	0	3	0	0	0	0
4/25/2024	7:00 PM	1	78	11	0	0	0	0	0	2	0	0	0	0
4/25/2024	7:15 PM	2	76	11	0	0	0	0	0	0	0	0	0	0
4/25/2024	7:30 PM	0	74	11	0	1	0	0	1	0	0	0	0	0
4/25/2024	7:45 PM	0	63	9	0	0	0	0	0	1	0	0	0	0
4/25/2024	8:00 PM	0	50	8	0	1	0	0	0	1	0	0	0	0
4/25/2024	8:15 PM	0	47	5	0	1	0	0	0	3	0	0	0	0
4/25/2024	8:30 PM	0	64	8	1	0	0	0	0	3	0	0	0	0
4/25/2024	8:45 PM	0	50	4	0	0	0	0	0	3	0	1	0	0
4/25/2024	9:00 PM	0	52	6	0	1	0	0	0	1	0	0	0	0
4/25/2024	9:15 PM	0	47	3	0	0	1	0	0	2	0	0	0	0
4/25/2024	9:30 PM	0	52	0	0	0	0	0	0	1	0	0	0	0
4/25/2024	9:45 PM	0	46	3	0	1	0	0	0	2	0	0	0	0
4/25/2024	10:00 PM	0	48	4	0	1	0	0	0	0	0	0	0	0
4/25/2024	10:15 PM	0	35	4	0	0	0	0	0	0	0	0	0	0
4/25/2024	10:30 PM	0	20	1	0	1	0	0	0	0	0	0	0	0
4/25/2024	10:45 PM	0	22	2	0	0	0	0	0	1	0	0	0	0
4/25/2024	11:00 PM	0	19	0	0	0	0	0	0	2	0	0	0	0
4/25/2024	11:15 PM	0	27	0	0	0	0	0	0	1	0	0	0	0
4/25/2024	11:30 PM	0	16	0	0	0	0	0	0	1	0	0	0	0
4/25/2024	11:45 PM	0	10	0	0	0	0	0	0	1	0	0	0	0

4/26/2024	12:00 AM	0	10	2	0	0	0	0	0	3	0	1	0	0
4/26/2024	12:15 AM	0	7	2	0	0	0	0	0	3	0	0	0	0
4/26/2024	12:30 AM	0	11	0	0	2	0	0	0	0	0	0	0	0
4/26/2024	12:45 AM	0	6	0	0	2	0	0	0	1	0	0	0	0
4/26/2024	1:00 AM	0	4	0	0	0	0	0	0	2	0	2	0	0
4/26/2024	1:15 AM	0	7	1	0	1	2	0	0	1	0	1	0	0
4/26/2024	1:30 AM	0	8	0	0	0	0	0	0	1	0	0	0	0
4/26/2024	1:45 AM	0	6	0	0	0	0	0	0	1	0	0	0	0
4/26/2024	2:00 AM	0	4	0	0	0	0	0	0	1	0	0	0	0
4/26/2024	2:15 AM	0	6	0	0	0	0	0	0	0	0	0	0	0
4/26/2024	2:30 AM	0	1	1	0	0	0	0	0	1	0	0	0	0
4/26/2024	2:45 AM	0	1	0	0	0	0	0	0	3	0	0	0	0
4/26/2024	3:00 AM	0	4	0	0	0	0	0	0	1	0	1	0	0
4/26/2024	3:15 AM	0	4	0	0	0	0	0	0	2	0	0	0	0
4/26/2024	3:30 AM	0	6	0	0	0	0	0	0	4	0	0	0	0
4/26/2024	3:45 AM	0	9	0	0	0	0	0	0	1	0	0	0	0
4/26/2024	4:00 AM	0	9	0	0	2	1	0	0	0	0	0	0	0
4/26/2024	4:15 AM	0	13	2	0	1	0	0	0	0	0	0	0	0
4/26/2024	4:30 AM	0	10	0	0	0	0	0	0	0	0	0	0	0
4/26/2024	4:45 AM	0	15	3	0	0	0	0	0	0	0	0	0	0
4/26/2024	5:00 AM	0	16	2	0	4	0	0	0	2	0	0	0	0
4/26/2024	5:15 AM	0	33	4	0	2	0	0	0	3	0	0	0	0
4/26/2024	5:30 AM	0	36	2	0	0	1	0	0	2	0	0	0	0
4/26/2024	5:45 AM	0	40	1	0	0	0	0	0	2	0	0	0	0
4/26/2024	6:00 AM	0	60	7	0	0	0	0	0	2	0	0	0	0
4/26/2024	6:15 AM	0	82	14	1	2	0	0	0	6	0	0	0	0
4/26/2024	6:30 AM	1	122	33	0	2	0	0	1	2	0	0	0	0
4/26/2024	6:45 AM	0	142	45	0	2	0	0	1	7	0	2	0	0
4/26/2024	7:00 AM	0	161	45	0	3	0	0	0	6	0	0	0	0
4/26/2024	7:15 AM	1	224	56	1	2	2	0	0	2	0	0	0	0
4/26/2024	7:30 AM	1	280	48	0	2	0	0	0	7	0	0	0	0
4/26/2024	7:45 AM	0	244	47	0	3	1	0	0	2	0	1	0	0
4/26/2024	8:00 AM	0	242	49	0	2	0	0	0	4	0	0	0	0
4/26/2024	8:15 AM	0	250	41	0	2	0	0	1	7	0	0	0	0
4/26/2024	8:30 AM	0	256	43	3	3	1	0	1	3	0	0	0	0
4/26/2024	8:45 AM	0	220	40	4	2	0	0	0	6	0	0	0	0
4/26/2024	9:00 AM	0	168	48	5	2	0	0	1	5	0	0	0	0
4/26/2024	9:15 AM	0	154	35	5	4	0	0	2	5	0	0	0	0
4/26/2024	9:30 AM	0	164	38	0	3	0	0	0	2	1	0	0	0
4/26/2024	9:45 AM	0	144	44	0	3	0	0	2	6	0	0	0	0
4/26/2024	10:00 AM	0	134	35	1	2	0	0	3	7	0	0	0	0
4/26/2024	10:15 AM	0	127	37	0	7	0	0	2	2	0	0	0	0
4/26/2024	10:30 AM	1	131	41	0	2	3	0	0	3	1	0	0	0
4/26/2024	10:45 AM	0	128	34	0	6	1	0	2	10	2	0	0	0
4/26/2024	11:00 AM	0	115	40	0	2	0	0	0	4	0	0	0	0
4/26/2024	11:15 AM	0	119	32	0	4	2	0	1	4	0	0	0	0
4/26/2024	11:30 AM	0	155	25	0	1	0	0	0	3	0	0	0	0
4/26/2024	11:45 AM	0	116	15	0	5	0	0	0	3	0	0	0	0
4/26/2024	12:00 PM	0	129	20	0	1	0	0	2	5	1	0	0	0
4/26/2024	12:15 PM	0	120	29	0	5	2	0	2	7	0	0	0	0
4/26/2024	12:30 PM	0	140	30	0	5	0	0	2	3	0	0	0	0
4/26/2024	12:45 PM	0	118	15	0	5	0	0	0	3	0	0	0	0
4/26/2024	1:00 PM	0	128	20	0	1	0	0	2	5	1	0	0	0
4/26/2024	1:15 PM	0	121	28	0	5	2	0	2	7	0	0	0	0
4/26/2024	1:30 PM	1	148	27	0	5	0	0	2	3	0	0	0	0
4/26/2024	1:45 PM	0	108	28	0	2	1	0	2	5	0	0	0	0
4/26/2024	2:00 PM	0	113	24	0	5	2	0	1	4	0	0	0	0
4/26/2024	2:15 PM	0	103	23	0	2	0	0	0	3	0	0	0	0
4/26/2024	2:30 PM	1	109	29	0	2	0	0	1	6	0	0	0	0
4/26/2024	2:45 PM	0	89	27	0	0	0	0	1	0	0	0	0	0
4/26/2024	3:00 PM	0	109	24	3	2	2	0	0	3	0	0	0	0
4/26/2024	3:15 PM	0	116	27	0	1	0	0	0	4	0	0	0	0
4/26/2024	3:30 PM	0	138	28	0	8	2	0	1	3	0	0	0	0
4/26/2024	3:45 PM	2	138	29	0	3	0	0	0	1	0	0	0	0
4/26/2024	4:00 PM	0	118	29	0	3	0	0	0	0	0	0	0	0
4/26/2024	4:15 PM	0	124	17	0	3	0	0	0	2	0	0	0	0
4/26/2024	4:30 PM	0	134	31	0	5	0	0	1	1	0	0	0	0
4/26/2024	4:45 PM	3	150	32	0	2	0	0	0	0	0	0	0	0
4/26/2024	5:00 PM	0	161	33	0	3	1	0	1	4	0	0	0	0
4/26/2024	5:15 PM	0	163	35	0	1	2	0	1	1	0	0	0	0
4/26/2024	5:30 PM	2	131	30	0	1	0	0	0	2	2	0	0	0
4/26/2024	5:45 PM	1	161	37	0	1	0	0	0	2	0	0	0	0
4/26/2024	6:00 PM	1	154	36	0	2	0	0	0	1	0	0	0	0
4/26/2024	6:15 PM	0	178	25	0	2	0	0	0	2	0	0	0	0
4/26/2024	6:30 PM	3	146	13	0	3	1	0	1	2	0	0	0	0
4/26/2024	6:45 PM	0	111	10	0	2	0	0	2	2	0	0	0	0
4/26/2024	7:00 PM	1	85	19	0	1	0	0	0	1	0	0	0	0
4/26/2024	7:15 PM	0	89	16	0	1	0	0	0	2	0	0	0	0
4/26/2024	7:30 PM	0	73	12	0	1	0	0	0	0	0	0	0	0
4/26/2024	7:45 PM	0	69	11	1	1	1	0	0	0	0	0	0	0
4/26/2024	8:00 PM	0	71	11	0	1	0	0	0	1	0	0	0	0
4/26/2024	8:15 PM	0	50	6	0	1	0	0	0	0	0	0	0	0
4/26/2024	8:30 PM	0	68	5	0	1	0	0	0	2	0	0	0	0
4/26/2024	8:45 PM	3	70	5	0	0	0	0	0	1	0	1	0	0
4/26/2024	9:00 PM	0	61	9	0	0	0	0	0	0	0	0	0	0
4/26/2024	9:15 PM	0	58	8	0	0	0	0	0	0	0	0	0	0
4/26/2024	9:30 PM	0	45	4	0	0	0	0	0	1	0	0	0	0
4/26/2024	9:45 PM	0	48	2	0	0	0	0	0	3	0	0	0	0
4/26/2024	10:00 PM	0	42	2	0	1	0	0	0	2	0	0	0	0
4/26/2024	10:15 PM	0	50	6	0	0	0	0	0	2	0	0	0	0
4/26/2024	10:30 PM	0	39	3	0	0	0	0	0	1	0	0	0	0
4/26/2024	10:45 PM	0	40	2	0	1	0	0	0	2	0	0	0	0
4/26/2024	11:00 PM	0	35	3	0	1	0	0	0	4	0	0	0	0
4/26/2024	11:15 PM	0	30	0	0	0	0	0	0	3	0	0	0	0
4/26/2024	11:30 PM	0	20	0	0	1	0	0	0	1	0	0	0	0
4/26/2024	11:45 PM	0	22	0	0	2	0	0	0	0	0	0	0	0

4/27/2024	12:00 AM	0	14	3	0	0	0	0	0	0	0	0	0	0
4/27/2024	12:15 AM	0	16	5	0	0	0	0	0	1	0	0	0	0
4/27/2024	12:30 AM	0	12	2	0	0	0	0	0	0	0	0	0	0
4/27/2024	12:45 AM	0	11	2	0	0	0	0	1	2	0	0	0	0
4/27/2024	1:00 AM	0	12	1	0	1	0	0	0	0	0	1	0	0
4/27/2024	1:15 AM	0	8	1	0	1	0	0	0	2	0	0	0	0
4/27/2024	1:30 AM	0	12	2	0	0	0	0	0	1	0	0	0	0
4/27/2024	1:45 AM	0	6	0	0	0	0	0	0	0	0	0	0	0
4/27/2024	2:00 AM	0	10	1	0	1	0	0	0	0	0	1	0	0
4/27/2024	2:15 AM	0	9	0	0	0	0	0	0	1	0	0	0	0
4/27/2024	2:30 AM	0	8	1	0	0	0	0	0	0	0	0	0	0
4/27/2024	2:45 AM	0	7	0	0	1	0	0	0	1	0	0	0	0
4/27/2024	3:00 AM	0	5	0	0	0	0	0	0	0	0	0	0	0
4/27/2024	3:15 AM	0	4	0	0	3	0	0	0	0	0	0	0	0
4/27/2024	3:30 AM	0	4	0	0	0	0	0	0	2	0	0	0	0
4/27/2024	3:45 AM	0	4	0	0	0	0	0	0	0	0	0	0	0
4/27/2024	4:00 AM	0	8	1	0	1	0	0	0	0	0	0	0	0
4/27/2024	4:15 AM	0	4	0	0	0	0	0	0	1	0	0	0	0
4/27/2024	4:30 AM	0	6	0	0	0	0	0	0	0	0	0	0	0
4/27/2024	4:45 AM	0	5	0	0	0	0	0	0	0	0	0	0	0
4/27/2024	5:00 AM	0	15	2	0	0	0	0	0	0	0	0	0	0
4/27/2024	5:15 AM	0	8	1	0	0	0	0	0	0	0	0	0	0
4/27/2024	5:30 AM	0	18	4	0	0	0	0	0	1	0	0	0	0
4/27/2024	5:45 AM	0	20	3	0	1	1	0	0	0	0	0	0	0
4/27/2024	6:00 AM	0	17	2	0	1	0	0	0	0	0	1	0	0
4/27/2024	6:15 AM	0	22	5	0	0	0	0	0	1	0	1	0	0
4/27/2024	6:30 AM	1	55	11	0	0	0	0	0	0	0	0	0	0
4/27/2024	6:45 AM	0	45	8	0	0	0	0	0	3	0	0	0	0
4/27/2024	7:00 AM	0	42	10	0	1	0	0	0	3	0	0	0	0
4/27/2024	7:15 AM	0	55	15	0	2	0	0	1	0	0	0	0	0
4/27/2024	7:30 AM	0	59	14	0	1	0	1	1	1	0	0	0	0
4/27/2024	7:45 AM	0	59	14	0	1	0	0	0	1	0	0	1	0
4/27/2024	8:00 AM	0	66	12	0	0	1	0	0	2	0	0	0	0
4/27/2024	8:15 AM	0	101	17	0	0	0	0	1	2	0	0	0	0
4/27/2024	8:30 AM	0	99	15	0	0	0	0	0	3	0	0	0	0
4/27/2024	8:45 AM	0	105	19	0	1	0	0	2	1	0	0	0	0
4/27/2024	9:00 AM	0	101	16	0	2	0	0	0	0	0	0	0	0
4/27/2024	9:15 AM	0	107	19	0	2	0	0	0	1	0	0	0	0
4/27/2024	9:30 AM	0	124	32	0	2	0	0	1	1	0	0	0	0
4/27/2024	9:45 AM	0	133	29	0	0	0	0	0	1	0	0	0	0
4/27/2024	10:00 AM	1	128	17	0	0	0	0	0	1	0	0	0	0
4/27/2024	10:15 AM	0	119	17	0	2	0	0	0	1	0	0	0	0
4/27/2024	10:30 AM	4	129	27	0	0	1	0	0	1	0	0	0	0
4/27/2024	10:45 AM	0	112	30	1	0	0	0	0	3	0	0	0	0
4/27/2024	11:00 AM	1	130	23	0	1	0	0	0	1	0	0	0	0
4/27/2024	11:15 AM	0	120	23	0	0	0	0	1	5	0	0	0	0
4/27/2024	11:30 AM	0	121	25	0	2	0	0	1	2	0	0	0	0
4/27/2024	11:45 AM	0	149	22	0	0	0	0	2	0	0	0	0	0
4/27/2024	12:00 PM	0	135	12	0	1	0	0	0	3	0	0	0	0
4/27/2024	12:15 PM	0	122	25	0	3	0	0	1	0	0	0	0	0
4/27/2024	12:30 PM	1	135	21	0	0	0	0	1	2	0	0	0	0
4/27/2024	12:45 PM	0	112	20	0	1	0	0	0	2	0	0	0	0
4/27/2024	1:00 PM	0	101	16	0	0	1	0	1	0	0	0	0	0
4/27/2024	1:15 PM	1	125	15	0	0	0	0	0	1	0	0	0	0
4/27/2024	1:30 PM	0	123	8	0	0	0	0	0	0	0	0	0	0
4/27/2024	1:45 PM	0	104	12	0	1	1	0	0	2	0	0	0	0
4/27/2024	2:00 PM	0	114	21	0	0	0	0	0	0	0	0	0	0
4/27/2024	2:15 PM	0	103	21	0	0	0	0	0	2	0	0	0	0
4/27/2024	2:30 PM	1	138	22	1	1	1	0	1	0	0	0	0	0
4/27/2024	2:45 PM	0	130	12	0	0	0	0	0	3	0	0	0	0
4/27/2024	3:00 PM	0	129	21	0	0	0	0	0	0	0	0	0	0
4/27/2024	3:15 PM	0	146	19	0	1	0	0	0	1	0	0	0	0
4/27/2024	3:30 PM	0	144	29	1	1	0	0	0	1	0	0	0	0
4/27/2024	3:45 PM	0	109	21	0	1	0	0	0	2	0	0	0	0
4/27/2024	4:00 PM	0	89	21	0	0	0	0	0	0	0	0	0	0
4/27/2024	4:15 PM	0	112	23	0	1	0	0	0	0	0	0	0	0
4/27/2024	4:30 PM	0	150	20	0	1	0	0	1	0	0	0	0	0
4/27/2024	4:45 PM	0	162	29	0	1	0	0	0	2	0	0	0	0
4/27/2024	5:00 PM	0	129	23	0	0	0	0	0	1	0	0	0	0
4/27/2024	5:15 PM	0	162	33	0	2	0	0	0	2	0	0	0	0
4/27/2024	5:30 PM	0	122	26	0	0	0	0	0	1	0	0	0	0
4/27/2024	5:45 PM	1	104	20	0	0	0	0	0	1	0	0	0	0
4/27/2024	6:00 PM	0	118	16	0	1	0	0	0	1	0	0	0	0
4/27/2024	6:15 PM	0	120	17	0	1	0	0	0	0	0	0	0	0
4/27/2024	6:30 PM	0	124	17	0	0	0	0	0	0	0	0	0	0
4/27/2024	6:45 PM	0	115	12	0	1	0	0	0	1	0	0	0	0
4/27/2024	7:00 PM	0	102	13	0	0	0	0	0	1	0	0	0	0
4/27/2024	7:15 PM	0	90	9	0	0	0	0	1	2	0	0	0	0
4/27/2024	7:30 PM	0	85	14	0	1	0	0	0	0	0	0	0	0
4/27/2024	7:45 PM	0	76	12	0	1	0	0	0	0	0	0	0	0
4/27/2024	8:00 PM	0	83	6	0	0	0	0	0	0	0	0	0	0
4/27/2024	8:15 PM	1	60	4	0	1	0	0	0	1	0	0	0	0
4/27/2024	8:30 PM	0	70	9	0	0	0	0	0	0	0	0	0	0
4/27/2024	8:45 PM	0	59	6	0	0	0	0	0	0	0	0	0	0
4/27/2024	9:00 PM	0	60	8	0	0	0	0	0	0	0	0	0	0
4/27/2024	9:15 PM	0	49	6	0	0	0	0	0	0	0	0	0	0
4/27/2024	9:30 PM	0	50	7	0	0	0	0	0	0	0	0	0	0
4/27/2024	9:45 PM	0	41	7	0	0	0	0	0	1	0	0	0	0
4/27/2024	10:00 PM	0	40	8	0	0	0	0	0	0	0	0	0	0
4/27/2024	10:15 PM	0	39	4	1	0	0	0	0	0	0	0	0	0
4/27/2024	10:30 PM	0	50	4	0	0	0	0	0	0	0	0	0	0
4/27/2024	10:45 PM	0	25	3	1	0	0	0	0	0	0	0	0	0
4/27/2024	11:00 PM	0	30	3	1	1	0	0	0	0	0	0	0	0
4/27/2024	11:15 PM	0	29	2	0	0	0	0	0	1	0	0	0	0
4/27/2024	11:30 PM	0	30	3	0	1	0	0	0	0	0	0	0	0
4/27/2024	11:45 PM	0	25	1	0	0	0	0	0	2	0	0	0	0

SB
File Name:
Start Date: 4/21/2024
Start Time: 0
Site Code: 75 Lane 4 NB
Station ID: 1
Location 1: I-20, north of Bush River Rd
Location 2:

Date	Time	1	2	3	4	5	6	7	8	9	10	11	12	13
4/21/2024	12:00 AM	0	0	0	0	0	0	0	0	0	0	0	0	0
4/21/2024	12:15 AM	0	0	0	0	0	0	0	0	0	0	0	0	0
4/21/2024	12:30 AM	0	0	0	0	0	0	0	0	0	0	0	0	0
4/21/2024	12:45 AM	0	0	0	0	0	0	0	0	0	0	0	0	0
4/21/2024	1:00 AM	0	0	0	0	0	0	0	0	0	0	0	0	0
4/21/2024	1:15 AM	0	0	0	0	0	0	0	0	0	0	0	0	0
4/21/2024	1:30 AM	0	0	0	0	0	0	0	0	0	0	0	0	0
4/21/2024	1:45 AM	0	0	0	0	0	0	0	0	0	0	0	0	0
4/21/2024	2:00 AM	0	0	0	0	0	0	0	0	0	0	0	0	0
4/21/2024	2:15 AM	0	0	0	0	0	0	0	0	0	0	0	0	0
4/21/2024	2:30 AM	0	0	0	0	0	0	0	0	0	0	0	0	0
4/21/2024	2:45 AM	0	0	0	0	0	0	0	0	0	0	0	0	0
4/21/2024	3:00 AM	0	0	0	0	0	0	0	0	0	0	0	0	0
4/21/2024	3:15 AM	0	0	0	0	0	0	0	0	0	0	0	0	0
4/21/2024	3:30 AM	0	0	0	0	0	0	0	0	0	0	0	0	0
4/21/2024	3:45 AM	0	0	0	0	0	0	0	0	0	0	0	0	0
4/21/2024	4:00 AM	0	0	0	0	0	0	0	0	0	0	0	0	0
4/21/2024	4:15 AM	0	0	0	0	0	0	0	0	0	0	0	0	0
4/21/2024	4:30 AM	0	0	0	0	0	0	0	0	0	0	0	0	0
4/21/2024	4:45 AM	0	0	0	0	0	0	0	0	0	0	0	0	0
4/21/2024	5:00 AM	0	0	0	0	0	0	0	0	0	0	0	0	0
4/21/2024	5:15 AM	0	0	0	0	0	0	0	0	0	0	0	0	0
4/21/2024	5:30 AM	0	0	0	0	0	0	0	0	0	0	0	0	0
4/21/2024	5:45 AM	0	0	0	0	0	0	0	0	0	0	0	0	0
4/21/2024	6:00 AM	0	0	0	0	0	0	0	0	0	0	0	0	0
4/21/2024	6:15 AM	0	0	0	0	0	0	0	0	0	0	0	0	0
4/21/2024	6:30 AM	0	0	0	0	0	0	0	0	0	0	0	0	0
4/21/2024	6:45 AM	0	0	0	0	0	0	0	0	0	0	0	0	0
4/21/2024	7:00 AM	0	0	0	0	0	0	0	0	0	0	0	0	0
4/21/2024	7:15 AM	0	0	0	0	0	0	0	0	0	0	0	0	0
4/21/2024	7:30 AM	0	0	0	0	0	0	0	0	0	0	0	0	0
4/21/2024	7:45 AM	0	0	0	0	0	0	0	0	0	0	0	0	0
4/21/2024	8:00 AM	0	0	0	0	0	0	0	0	0	0	0	0	0
4/21/2024	8:15 AM	0	0	0	0	0	0	0	0	0	0	0	0	0
4/21/2024	8:30 AM	0	0	0	0	0	0	0	0	0	0	0	0	0
4/21/2024	8:45 AM	0	0	0	0	0	0	0	0	0	0	0	0	0
4/21/2024	9:00 AM	0	0	0	0	0	0	0	0	0	0	0	0	0
4/21/2024	9:15 AM	0	0	0	0	0	0	0	0	0	0	0	0	0
4/21/2024	9:30 AM	0	0	0	0	0	0	0	0	0	0	0	0	0
4/21/2024	9:45 AM	0	0	0	0	0	0	0	0	0	0	0	0	0
4/21/2024	10:00 AM	0	0	0	0	0	0	0	0	0	0	0	0	0
4/21/2024	10:15 AM	0	0	0	0	0	0	0	0	0	0	0	0	0
4/21/2024	10:30 AM	0	0	0	0	0	0	0	0	0	0	0	0	0
4/21/2024	10:45 AM	0	0	0	0	0	0	0	0	0	0	0	0	0
4/21/2024	11:00 AM	0	0	0	0	0	0	0	0	0	0	0	0	0
4/21/2024	11:15 AM	0	0	0	0	0	0	0	0	0	0	0	0	0
4/21/2024	11:30 AM	0	0	0	0	0	0	0	0	0	0	0	0	0
4/21/2024	11:45 AM	0	0	0	0	0	0	0	0	0	0	0	0	0
4/21/2024	12:00 PM	0	0	0	0	0	0	0	0	0	0	0	0	0
4/21/2024	12:15 PM	0	0	0	0	0	0	0	0	0	0	0	0	0
4/21/2024	12:30 PM	0	0	0	0	0	0	0	0	0	0	0	0	0
4/21/2024	12:45 PM	0	0	0	0	0	0	0	0	0	0	0	0	0
4/21/2024	1:00 PM	0	0	0	0	0	0	0	0	0	0	0	0	0
4/21/2024	1:15 PM	0	0	0	0	0	0	0	0	0	0	0	0	0
4/21/2024	1:30 PM	0	0	0	0	0	0	0	0	0	0	0	0	0
4/21/2024	1:45 PM	0	0	0	0	0	0	0	0	0	0	0	0	0
4/21/2024	2:00 PM	0	0	0	0	0	0	0	0	0	0	0	0	0
4/21/2024	2:15 PM	0	0	0	0	0	0	0	0	0	0	0	0	0
4/21/2024	2:30 PM	0	0	0	0	0	0	0	0	0	0	0	0	0
4/21/2024	2:45 PM	0	0	0	0	0	0	0	0	0	0	0	0	0
4/21/2024	3:00 PM	0	0	0	0	0	0	0	0	0	0	0	0	0
4/21/2024	3:15 PM	0	0	0	0	0	0	0	0	0	0	0	0	0
4/21/2024	3:30 PM	0	0	0	0	0	0	0	0	0	0	0	0	0
4/21/2024	3:45 PM	0	0	0	0	0	0	0	0	0	0	0	0	0
4/21/2024	4:00 PM	0	0	0	0	0	0	0	0	0	0	0	0	0
4/21/2024	4:15 PM	0	0	0	0	0	0	0	0	0	0	0	0	0
4/21/2024	4:30 PM	0	0	0	0	0	0	0	0	0	0	0	0	0
4/21/2024	4:45 PM	0	0	0	0	0	0	0	0	0	0	0	0	0
4/21/2024	5:00 PM	0	0	0	0	0	0	0	0	0	0	0	0	0
4/21/2024	5:15 PM	0	0	0	0	0	0	0	0	0	0	0	0	0
4/21/2024	5:30 PM	0	0	0	0	0	0	0	0	0	0	0	0	0
4/21/2024	5:45 PM	0	0	0	0	0	0	0	0	0	0	0	0	0
4/21/2024	6:00 PM	0	0	0	0	0	0	0	0	0	0	0	0	0
4/21/2024	6:15 PM	0	0	0	0	0	0	0	0	0	0	0	0	0
4/21/2024	6:30 PM	0	0	0	0	0	0	0	0	0	0	0	0	0
4/21/2024	6:45 PM	0	0	0	0	0	0	0	0	0	0	0	0	0
4/21/2024	7:00 PM	0	0	0	0	0	0	0	0	0	0	0	0	0
4/21/2024	7:15 PM	0	0	0	0	0	0	0	0	0	0	0	0	0
4/21/2024	7:30 PM	0	0	0	0	0	0	0	0	0	0	0	0	0
4/21/2024	7:45 PM	0	0	0	0	0	0	0	0	0	0	0	0	0
4/21/2024	8:00 PM	0	0	0	0	0	0	0	0	0	0	0	0	0
4/21/2024	8:15 PM	0	0	0	0	0	0	0	0	0	0	0	0	0
4/21/2024	8:30 PM	0	0	0	0	0	0	0	0	0	0	0	0	0
4/21/2024	8:45 PM	0	0	0	0	0	0	0	0	0	0	0	0	0
4/21/2024	9:00 PM	0	0	0	0	0	0	0	0	0	0	0	0	0
4/21/2024	9:15 PM	0	0	0	0	0	0	0	0	0	0	0	0	0
4/21/2024	9:30 PM	0	0	0	0	0	0	0	0	0	0	0	0	0
4/21/2024	9:45 PM	0	0	0	0	0	0	0	0	0	0	0	0	0
4/21/2024	10:00 PM	0	0	0	0	0	0	0	0	0	0	0	0	0
4/21/2024	10:15 PM	0	0	0	0	0	0	0	0	0	0	0	0	0
4/21/2024	10:30 PM	0	0	0	0	0	0	0	0	0	0	0	0	0
4/21/2024	10:45 PM	0	0	0	0	0	0	0	0	0	0	0	0	0
4/21/2024	11:00 PM	0	0	0	0	0	0	0	0	0	0	0	0	0
4/21/2024	11:15 PM	0	0	0	0	0	0	0	0	0	0	0	0	0
4/21/2024	11:30 PM	0	0	0	0	0	0	0	0	0	0	0	0	0
4/21/2024	11:45 PM	0	0	0	0	0	0	0	0	0	0	0	0	0

4/22/2024	12:00 AM	0	0	0	0	0	0	0	0	0	0	0	0	0
4/22/2024	12:15 AM	0	0	0	0	0	0	0	0	0	0	0	0	0
4/22/2024	12:30 AM	0	0	0	0	0	0	0	0	0	0	0	0	0
4/22/2024	12:45 AM	0	0	0	0	0	0	0	0	0	0	0	0	0
4/22/2024	1:00 AM	0	0	0	0	0	0	0	0	0	0	0	0	0
4/22/2024	1:15 AM	0	0	0	0	0	0	0	0	0	0	0	0	0
4/22/2024	1:30 AM	0	0	0	0	0	0	0	0	0	0	0	0	0
4/22/2024	1:45 AM	0	0	0	0	0	0	0	0	0	0	0	0	0
4/22/2024	2:00 AM	0	0	0	0	0	0	0	0	0	0	0	0	0
4/22/2024	2:15 AM	0	0	0	0	0	0	0	0	0	0	0	0	0
4/22/2024	2:30 AM	0	0	0	0	0	0	0	0	0	0	0	0	0
4/22/2024	2:45 AM	0	0	0	0	0	0	0	0	0	0	0	0	0
4/22/2024	3:00 AM	0	0	0	0	0	0	0	0	0	0	0	0	0
4/22/2024	3:15 AM	0	0	0	0	0	0	0	0	0	0	0	0	0
4/22/2024	3:30 AM	0	0	0	0	0	0	0	0	0	0	0	0	0
4/22/2024	3:45 AM	0	0	0	0	0	0	0	0	0	0	0	0	0
4/22/2024	4:00 AM	0	0	0	0	0	0	0	0	0	0	0	0	0
4/22/2024	4:15 AM	0	0	0	0	0	0	0	0	0	0	0	0	0
4/22/2024	4:30 AM	0	0	0	0	0	0	0	0	0	0	0	0	0
4/22/2024	4:45 AM	0	0	0	0	0	0	0	0	0	0	0	0	0
4/22/2024	5:00 AM	0	0	0	0	0	0	0	0	0	0	0	0	0
4/22/2024	5:15 AM	0	0	0	0	0	0	0	0	0	0	0	0	0
4/22/2024	5:30 AM	0	0	0	0	0	0	0	0	0	0	0	0	0
4/22/2024	5:45 AM	0	0	0	0	0	0	0	0	0	0	0	0	0
4/22/2024	6:00 AM	0	0	0	0	0	0	0	0	0	0	0	0	0
4/22/2024	6:15 AM	0	0	0	0	0	0	0	0	0	0	0	0	0
4/22/2024	6:30 AM	0	0	0	0	0	0	0	0	0	0	0	0	0
4/22/2024	6:45 AM	0	0	0	0	0	0	0	0	0	0	0	0	0
4/22/2024	7:00 AM	0	0	0	0	0	0	0	0	0	0	0	0	0
4/22/2024	7:15 AM	0	0	0	0	0	0	0	0	0	0	0	0	0
4/22/2024	7:30 AM	0	0	0	0	0	0	0	0	0	0	0	0	0
4/22/2024	7:45 AM	0	0	0	0	0	0	0	0	0	0	0	0	0
4/22/2024	8:00 AM	0	0	0	0	0	0	0	0	0	0	0	0	0
4/22/2024	8:15 AM	0	0	0	0	0	0	0	0	0	0	0	0	0
4/22/2024	8:30 AM	0	0	0	0	0	0	0	0	0	0	0	0	0
4/22/2024	8:45 AM	0	0	0	0	0	0	0	0	0	0	0	0	0
4/22/2024	9:00 AM	0	0	0	0	0	0	0	0	0	0	0	0	0
4/22/2024	9:15 AM	0	0	0	0	0	0	0	0	0	0	0	0	0
4/22/2024	9:30 AM	0	0	0	0	0	0	0	0	0	0	0	0	0
4/22/2024	9:45 AM	0	0	0	0	0	0	0	0	0	0	0	0	0
4/22/2024	10:00 AM	0	0	0	0	0	0	0	0	0	0	0	0	0
4/22/2024	10:15 AM	0	0	0	0	0	0	0	0	0	0	0	0	0
4/22/2024	10:30 AM	0	0	0	0	0	0	0	0	0	0	0	0	0
4/22/2024	10:45 AM	0	0	0	0	0	0	0	0	0	0	0	0	0
4/22/2024	11:00 AM	0	0	0	0	0	0	0	0	0	0	0	0	0
4/22/2024	11:15 AM	0	0	0	0	0	0	0	0	0	0	0	0	0
4/22/2024	11:30 AM	0	0	0	0	0	0	0	0	0	0	0	0	0
4/22/2024	11:45 AM	0	0	0	0	0	0	0	0	0	0	0	0	0
4/22/2024	12:00 PM	0	0	0	0	0	0	0	0	0	0	0	0	0
4/22/2024	12:15 PM	0	0	0	0	0	0	0	0	0	0	0	0	0
4/22/2024	12:30 PM	0	0	0	0	0	0	0	0	0	0	0	0	0
4/22/2024	12:45 PM	0	0	0	0	0	0	0	0	0	0	0	0	0
4/22/2024	1:00 PM	0	0	0	0	0	0	0	0	0	0	0	0	0
4/22/2024	1:15 PM	0	0	0	0	0	0	0	0	0	0	0	0	0
4/22/2024	1:30 PM	0	0	0	0	0	0	0	0	0	0	0	0	0
4/22/2024	1:45 PM	0	0	0	0	0	0	0	0	0	0	0	0	0
4/22/2024	2:00 PM	0	0	0	0	0	0	0	0	0	0	0	0	0
4/22/2024	2:15 PM	0	0	0	0	0	0	0	0	0	0	0	0	0
4/22/2024	2:30 PM	0	0	0	0	0	0	0	0	0	0	0	0	0
4/22/2024	2:45 PM	0	0	0	0	0	0	0	0	0	0	0	0	0
4/22/2024	3:00 PM	0	0	0	0	0	0	0	0	0	0	0	0	0
4/22/2024	3:15 PM	0	0	0	0	0	0	0	0	0	0	0	0	0
4/22/2024	3:30 PM	0	0	0	0	0	0	0	0	0	0	0	0	0
4/22/2024	3:45 PM	0	0	0	0	0	0	0	0	0	0	0	0	0
4/22/2024	4:00 PM	0	0	0	0	0	0	0	0	0	0	0	0	0
4/22/2024	4:15 PM	0	0	0	0	0	0	0	0	0	0	0	0	0
4/22/2024	4:30 PM	0	0	0	0	0	0	0	0	0	0	0	0	0
4/22/2024	4:45 PM	0	0	0	0	0	0	0	0	0	0	0	0	0
4/22/2024	5:00 PM	0	0	0	0	0	0	0	0	0	0	0	0	0
4/22/2024	5:15 PM	0	0	0	0	0	0	0	0	0	0	0	0	0
4/22/2024	5:30 PM	0	0	0	0	0	0	0	0	0	0	0	0	0
4/22/2024	5:45 PM	0	0	0	0	0	0	0	0	0	0	0	0	0
4/22/2024	6:00 PM	0	0	0	0	0	0	0	0	0	0	0	0	0
4/22/2024	6:15 PM	0	0	0	0	0	0	0	0	0	0	0	0	0
4/22/2024	6:30 PM	0	0	0	0	0	0	0	0	0	0	0	0	0
4/22/2024	6:45 PM	0	0	0	0	0	0	0	0	0	0	0	0	0
4/22/2024	7:00 PM	0	0	0	0	0	0	0	0	0	0	0	0	0
4/22/2024	7:15 PM	0	0	0	0	0	0	0	0	0	0	0	0	0
4/22/2024	7:30 PM	0	0	0	0	0	0	0	0	0	0	0	0	0
4/22/2024	7:45 PM	0	0	0	0	0	0	0	0	0	0	0	0	0
4/22/2024	8:00 PM	0	0	0	0	0	0	0	0	0	0	0	0	0
4/22/2024	8:15 PM	0	0	0	0	0	0	0	0	0	0	0	0	0
4/22/2024	8:30 PM	0	0	0	0	0	0	0	0	0	0	0	0	0
4/22/2024	8:45 PM	0	0	0	0	0	0	0	0	0	0	0	0	0
4/22/2024	9:00 PM	0	0	0	0	0	0	0	0	0	0	0	0	0
4/22/2024	9:15 PM	0	0	0	0	0	0	0	0	0	0	0	0	0
4/22/2024	9:30 PM	0	0	0	0	0	0	0	0	0	0	0	0	0
4/22/2024	9:45 PM	0	0	0	0	0	0	0	0	0	0	0	0	0
4/22/2024	10:00 PM	0	0	0	0	0	0	0	0	0	0	0	0	0
4/22/2024	10:15 PM	0	0	0	0	0	0	0	0	0	0	0	0	0
4/22/2024	10:30 PM	0	0	0	0	0	0	0	0	0	0	0	0	0
4/22/2024	10:45 PM	0	0	0	0	0	0	0	0	0	0	0	0	0
4/22/2024	11:00 PM	0	0	0	0	0	0	0	0	0	0	0	0	0
4/22/2024	11:15 PM	0	0	0	0	0	0	0	0	0	0	0	0	0
4/22/2024	11:30 PM	0	0	0	0	0	0	0	0	0	0	0	0	0
4/22/2024	11:45 PM	0	0	0	0	0	0	0	0	0	0	0	0	0

4/23/2024	12:00 AM	0	0	0	0	0	0	0	0	0	0	0	0	0
4/23/2024	12:15 AM	0	0	0	0	0	0	0	0	0	0	0	0	0
4/23/2024	12:30 AM	0	0	0	0	0	0	0	0	0	0	0	0	0
4/23/2024	12:45 AM	0	0	0	0	0	0	0	0	0	0	0	0	0
4/23/2024	1:00 AM	0	0	0	0	0	0	0	0	0	0	0	0	0
4/23/2024	1:15 AM	0	0	0	0	0	0	0	0	0	0	0	0	0
4/23/2024	1:30 AM	0	0	0	0	0	0	0	0	0	0	0	0	0
4/23/2024	1:45 AM	0	0	0	0	0	0	0	0	0	0	0	0	0
4/23/2024	2:00 AM	0	0	0	0	0	0	0	0	0	0	0	0	0
4/23/2024	2:15 AM	0	0	0	0	0	0	0	0	0	0	0	0	0
4/23/2024	2:30 AM	0	0	0	0	0	0	0	0	0	0	0	0	0
4/23/2024	2:45 AM	0	0	0	0	0	0	0	0	0	0	0	0	0
4/23/2024	3:00 AM	0	0	0	0	0	0	0	0	0	0	0	0	0
4/23/2024	3:15 AM	0	0	0	0	0	0	0	0	0	0	0	0	0
4/23/2024	3:30 AM	0	0	0	0	0	0	0	0	0	0	0	0	0
4/23/2024	3:45 AM	0	0	0	0	0	0	0	0	0	0	0	0	0
4/23/2024	4:00 AM	0	0	0	0	0	0	0	0	0	0	0	0	0
4/23/2024	4:15 AM	0	0	0	0	0	0	0	0	0	0	0	0	0
4/23/2024	4:30 AM	0	0	0	0	0	0	0	0	0	0	0	0	0
4/23/2024	4:45 AM	0	0	0	0	0	0	0	0	0	0	0	0	0
4/23/2024	5:00 AM	0	0	0	0	0	0	0	0	0	0	0	0	0
4/23/2024	5:15 AM	0	0	0	0	0	0	0	0	0	0	0	0	0
4/23/2024	5:30 AM	0	0	0	0	0	0	0	0	0	0	0	0	0
4/23/2024	5:45 AM	0	0	0	0	0	0	0	0	0	0	0	0	0
4/23/2024	6:00 AM	0	0	0	0	0	0	0	0	0	0	0	0	0
4/23/2024	6:15 AM	0	0	0	0	0	0	0	0	0	0	0	0	0
4/23/2024	6:30 AM	0	0	0	0	0	0	0	0	0	0	0	0	0
4/23/2024	6:45 AM	0	0	0	0	0	0	0	0	0	0	0	0	0
4/23/2024	7:00 AM	0	0	0	0	0	0	0	0	0	0	0	0	0
4/23/2024	7:15 AM	0	0	0	0	0	0	0	0	0	0	0	0	0
4/23/2024	7:30 AM	0	0	0	0	0	0	0	0	0	0	0	0	0
4/23/2024	7:45 AM	0	0	0	0	0	0	0	0	0	0	0	0	0
4/23/2024	8:00 AM	0	0	0	0	0	0	0	0	0	0	0	0	0
4/23/2024	8:15 AM	0	0	0	0	0	0	0	0	0	0	0	0	0
4/23/2024	8:30 AM	0	0	0	0	0	0	0	0	0	0	0	0	0
4/23/2024	8:45 AM	0	0	0	0	0	0	0	0	0	0	0	0	0
4/23/2024	9:00 AM	0	0	0	0	0	0	0	0	0	0	0	0	0
4/23/2024	9:15 AM	0	0	0	0	0	0	0	0	0	0	0	0	0
4/23/2024	9:30 AM	0	0	0	0	0	0	0	0	0	0	0	0	0
4/23/2024	9:45 AM	0	0	0	0	0	0	0	0	0	0	0	0	0
4/23/2024	10:00 AM	0	0	0	0	0	0	0	0	0	0	0	0	0
4/23/2024	10:15 AM	0	0	0	0	0	0	0	0	0	0	0	0	0
4/23/2024	10:30 AM	0	0	0	0	0	0	0	0	0	0	0	0	0
4/23/2024	10:45 AM	0	0	0	0	0	0	0	0	0	0	0	0	0
4/23/2024	11:00 AM	0	0	0	0	0	0	0	0	0	0	0	0	0
4/23/2024	11:15 AM	0	0	0	0	0	0	0	0	0	0	0	0	0
4/23/2024	11:30 AM	0	0	0	0	0	0	0	0	0	0	0	0	0
4/23/2024	11:45 AM	0	0	0	0	0	0	0	0	0	0	0	0	0
4/23/2024	12:00 PM	0	0	0	0	0	0	0	0	0	0	0	0	0
4/23/2024	12:15 PM	0	0	0	0	0	0	0	0	0	0	0	0	0
4/23/2024	12:30 PM	0	0	0	0	0	0	0	0	0	0	0	0	0
4/23/2024	12:45 PM	0	0	0	0	0	0	0	0	0	0	0	0	0
4/23/2024	1:00 PM	0	0	0	0	0	0	0	0	0	0	0	0	0
4/23/2024	1:15 PM	0	0	0	0	0	0	0	0	0	0	0	0	0
4/23/2024	1:30 PM	0	0	0	0	0	0	0	0	0	0	0	0	0
4/23/2024	1:45 PM	0	0	0	0	0	0	0	0	0	0	0	0	0
4/23/2024	2:00 PM	0	0	0	0	0	0	0	0	0	0	0	0	0
4/23/2024	2:15 PM	0	0	0	0	0	0	0	0	0	0	0	0	0
4/23/2024	2:30 PM	0	0	0	0	0	0	0	0	0	0	0	0	0
4/23/2024	2:45 PM	0	0	0	0	0	0	0	0	0	0	0	0	0
4/23/2024	3:00 PM	0	0	0	0	0	0	0	0	0	0	0	0	0
4/23/2024	3:15 PM	0	0	0	0	0	0	0	0	0	0	0	0	0
4/23/2024	3:30 PM	0	0	0	0	0	0	0	0	0	0	0	0	0
4/23/2024	3:45 PM	0	0	0	0	0	0	0	0	0	0	0	0	0
4/23/2024	4:00 PM	0	0	0	0	0	0	0	0	0	0	0	0	0
4/23/2024	4:15 PM	0	0	0	0	0	0	0	0	0	0	0	0	0
4/23/2024	4:30 PM	0	0	0	0	0	0	0	0	0	0	0	0	0
4/23/2024	4:45 PM	0	0	0	0	0	0	0	0	0	0	0	0	0
4/23/2024	5:00 PM	0	0	0	0	0	0	0	0	0	0	0	0	0
4/23/2024	5:15 PM	0	0	0	0	0	0	0	0	0	0	0	0	0
4/23/2024	5:30 PM	0	0	0	0	0	0	0	0	0	0	0	0	0
4/23/2024	5:45 PM	0	0	0	0	0	0	0	0	0	0	0	0	0
4/23/2024	6:00 PM	0	0	0	0	0	0	0	0	0	0	0	0	0
4/23/2024	6:15 PM	0	0	0	0	0	0	0	0	0	0	0	0	0
4/23/2024	6:30 PM	0	0	0	0	0	0	0	0	0	0	0	0	0
4/23/2024	6:45 PM	0	0	0	0	0	0	0	0	0	0	0	0	0
4/23/2024	7:00 PM	0	0	0	0	0	0	0	0	0	0	0	0	0
4/23/2024	7:15 PM	0	0	0	0	0	0	0	0	0	0	0	0	0
4/23/2024	7:30 PM	0	0	0	0	0	0	0	0	0	0	0	0	0
4/23/2024	7:45 PM	0	0	0	0	0	0	0	0	0	0	0	0	0
4/23/2024	8:00 PM	0	0	0	0	0	0	0	0	0	0	0	0	0
4/23/2024	8:15 PM	0	0	0	0	0	0	0	0	0	0	0	0	0
4/23/2024	8:30 PM	0	0	0	0	0	0	0	0	0	0	0	0	0
4/23/2024	8:45 PM	0	0	0	0	0	0	0	0	0	0	0	0	0
4/23/2024	9:00 PM	0	0	0	0	0	0	0	0	0	0	0	0	0
4/23/2024	9:15 PM	0	0	0	0	0	0	0	0	0	0	0	0	0
4/23/2024	9:30 PM	0	0	0	0	0	0	0	0	0	0	0	0	0
4/23/2024	9:45 PM	0	0	0	0	0	0	0	0	0	0	0	0	0
4/23/2024	10:00 PM	0	0	0	0	0	0	0	0	0	0	0	0	0
4/23/2024	10:15 PM	0	0	0	0	0	0	0	0	0	0	0	0	0
4/23/2024	10:30 PM	0	0	0	0	0	0	0	0	0	0	0	0	0
4/23/2024	10:45 PM	0	0	0	0	0	0	0	0	0	0	0	0	0
4/23/2024	11:00 PM	0	0	0	0	0	0	0	0	0	0	0	0	0
4/23/2024	11:15 PM	0	0	0	0	0	0	0	0	0	0	0	0	0
4/23/2024	11:30 PM	0	0	0	0	0	0	0	0	0	0	0	0	0
4/23/2024	11:45 PM	0	0	0	0	0	0	0	0	0	0	0	0	0

4/24/2024	12:00 AM	0	0	0	0	0	0	0	0	0	0	0	0	0
4/24/2024	12:15 AM	0	0	0	0	0	0	0	0	0	0	0	0	0
4/24/2024	12:30 AM	0	0	0	0	0	0	0	0	0	0	0	0	0
4/24/2024	12:45 AM	0	0	0	0	0	0	0	0	0	0	0	0	0
4/24/2024	1:00 AM	0	0	0	0	0	0	0	0	0	0	0	0	0
4/24/2024	1:15 AM	0	0	0	0	0	0	0	0	0	0	0	0	0
4/24/2024	1:30 AM	0	0	0	0	0	0	0	0	0	0	0	0	0
4/24/2024	1:45 AM	0	0	0	0	0	0	0	0	0	0	0	0	0
4/24/2024	2:00 AM	0	0	0	0	0	0	0	0	0	0	0	0	0
4/24/2024	2:15 AM	0	0	0	0	0	0	0	0	0	0	0	0	0
4/24/2024	2:30 AM	0	0	0	0	0	0	0	0	0	0	0	0	0
4/24/2024	2:45 AM	0	0	0	0	0	0	0	0	0	0	0	0	0
4/24/2024	3:00 AM	0	0	0	0	0	0	0	0	0	0	0	0	0
4/24/2024	3:15 AM	0	0	0	0	0	0	0	0	0	0	0	0	0
4/24/2024	3:30 AM	0	0	0	0	0	0	0	0	0	0	0	0	0
4/24/2024	3:45 AM	0	0	0	0	0	0	0	0	0	0	0	0	0
4/24/2024	4:00 AM	0	0	0	0	0	0	0	0	0	0	0	0	0
4/24/2024	4:15 AM	0	0	0	0	0	0	0	0	0	0	0	0	0
4/24/2024	4:30 AM	0	0	0	0	0	0	0	0	0	0	0	0	0
4/24/2024	4:45 AM	0	0	0	0	0	0	0	0	0	0	0	0	0
4/24/2024	5:00 AM	0	0	0	0	0	0	0	0	0	0	0	0	0
4/24/2024	5:15 AM	0	0	0	0	0	0	0	0	0	0	0	0	0
4/24/2024	5:30 AM	0	0	0	0	0	0	0	0	0	0	0	0	0
4/24/2024	5:45 AM	0	0	0	0	0	0	0	0	0	0	0	0	0
4/24/2024	6:00 AM	0	0	0	0	0	0	0	0	0	0	0	0	0
4/24/2024	6:15 AM	0	0	0	0	0	0	0	0	0	0	0	0	0
4/24/2024	6:30 AM	0	0	0	0	0	0	0	0	0	0	0	0	0
4/24/2024	6:45 AM	0	0	0	0	0	0	0	0	0	0	0	0	0
4/24/2024	7:00 AM	0	0	0	0	0	0	0	0	0	0	0	0	0
4/24/2024	7:15 AM	0	0	0	0	0	0	0	0	0	0	0	0	0
4/24/2024	7:30 AM	0	0	0	0	0	0	0	0	0	0	0	0	0
4/24/2024	7:45 AM	0	0	0	0	0	0	0	0	0	0	0	0	0
4/24/2024	8:00 AM	0	0	0	0	0	0	0	0	0	0	0	0	0
4/24/2024	8:15 AM	0	0	0	0	0	0	0	0	0	0	0	0	0
4/24/2024	8:30 AM	0	0	0	0	0	0	0	0	0	0	0	0	0
4/24/2024	8:45 AM	0	0	0	0	0	0	0	0	0	0	0	0	0
4/24/2024	9:00 AM	0	0	0	0	0	0	0	0	0	0	0	0	0
4/24/2024	9:15 AM	0	0	0	0	0	0	0	0	0	0	0	0	0
4/24/2024	9:30 AM	0	0	0	0	0	0	0	0	0	0	0	0	0
4/24/2024	9:45 AM	0	0	0	0	0	0	0	0	0	0	0	0	0
4/24/2024	10:00 AM	0	0	0	0	0	0	0	0	0	0	0	0	0
4/24/2024	10:15 AM	0	0	0	0	0	0	0	0	0	0	0	0	0
4/24/2024	10:30 AM	0	0	0	0	0	0	0	0	0	0	0	0	0
4/24/2024	10:45 AM	0	0	0	0	0	0	0	0	0	0	0	0	0
4/24/2024	11:00 AM	0	0	0	0	0	0	0	0	0	0	0	0	0
4/24/2024	11:15 AM	0	0	0	0	0	0	0	0	0	0	0	0	0
4/24/2024	11:30 AM	0	0	0	0	0	0	0	0	0	0	0	0	0
4/24/2024	11:45 AM	0	0	0	0	0	0	0	0	0	0	0	0	0
4/24/2024	12:00 PM	0	0	0	0	0	0	0	0	0	0	0	0	0
4/24/2024	12:15 PM	0	0	0	0	0	0	0	0	0	0	0	0	0
4/24/2024	12:30 PM	0	0	0	0	0	0	0	0	0	0	0	0	0
4/24/2024	12:45 PM	0	0	0	0	0	0	0	0	0	0	0	0	0
4/24/2024	1:00 PM	0	0	0	0	0	0	0	0	0	0	0	0	0
4/24/2024	1:15 PM	0	0	0	0	0	0	0	0	0	0	0	0	0
4/24/2024	1:30 PM	0	0	0	0	0	0	0	0	0	0	0	0	0
4/24/2024	1:45 PM	0	0	0	0	0	0	0	0	0	0	0	0	0
4/24/2024	2:00 PM	0	0	0	0	0	0	0	0	0	0	0	0	0
4/24/2024	2:15 PM	0	0	0	0	0	0	0	0	0	0	0	0	0
4/24/2024	2:30 PM	0	0	0	0	0	0	0	0	0	0	0	0	0
4/24/2024	2:45 PM	0	0	0	0	0	0	0	0	0	0	0	0	0
4/24/2024	3:00 PM	0	0	0	0	0	0	0	0	0	0	0	0	0
4/24/2024	3:15 PM	0	0	0	0	0	0	0	0	0	0	0	0	0
4/24/2024	3:30 PM	0	0	0	0	0	0	0	0	0	0	0	0	0
4/24/2024	3:45 PM	0	0	0	0	0	0	0	0	0	0	0	0	0
4/24/2024	4:00 PM	0	0	0	0	0	0	0	0	0	0	0	0	0
4/24/2024	4:15 PM	0	0	0	0	0	0	0	0	0	0	0	0	0
4/24/2024	4:30 PM	0	0	0	0	0	0	0	0	0	0	0	0	0
4/24/2024	4:45 PM	0	0	0	0	0	0	0	0	0	0	0	0	0
4/24/2024	5:00 PM	0	0	0	0	0	0	0	0	0	0	0	0	0
4/24/2024	5:15 PM	0	0	0	0	0	0	0	0	0	0	0	0	0
4/24/2024	5:30 PM	0	0	0	0	0	0	0	0	0	0	0	0	0
4/24/2024	5:45 PM	0	0	0	0	0	0	0	0	0	0	0	0	0
4/24/2024	6:00 PM	0	0	0	0	0	0	0	0	0	0	0	0	0
4/24/2024	6:15 PM	0	0	0	0	0	0	0	0	0	0	0	0	0
4/24/2024	6:30 PM	0	0	0	0	0	0	0	0	0	0	0	0	0
4/24/2024	6:45 PM	0	0	0	0	0	0	0	0	0	0	0	0	0
4/24/2024	7:00 PM	0	0	0	0	0	0	0	0	0	0	0	0	0
4/24/2024	7:15 PM	0	0	0	0	0	0	0	0	0	0	0	0	0
4/24/2024	7:30 PM	0	0	0	0	0	0	0	0	0	0	0	0	0
4/24/2024	7:45 PM	0	0	0	0	0	0	0	0	0	0	0	0	0
4/24/2024	8:00 PM	0	0	0	0	0	0	0	0	0	0	0	0	0
4/24/2024	8:15 PM	0	0	0	0	0	0	0	0	0	0	0	0	0
4/24/2024	8:30 PM	0	0	0	0	0	0	0	0	0	0	0	0	0
4/24/2024	8:45 PM	0	0	0	0	0	0	0	0	0	0	0	0	0
4/24/2024	9:00 PM	0	0	0	0	0	0	0	0	0	0	0	0	0
4/24/2024	9:15 PM	0	0	0	0	0	0	0	0	0	0	0	0	0
4/24/2024	9:30 PM	0	0	0	0	0	0	0	0	0	0	0	0	0
4/24/2024	9:45 PM	0	0	0	0	0	0	0	0	0	0	0	0	0
4/24/2024	10:00 PM	0	0	0	0	0	0	0	0	0	0	0	0	0
4/24/2024	10:15 PM	0	0	0	0	0	0	0	0	0	0	0	0	0
4/24/2024	10:30 PM	0	0	0	0	0	0	0	0	0	0	0	0	0
4/24/2024	10:45 PM	0	0	0	0	0	0	0	0	0	0	0	0	0
4/24/2024	11:00 PM	0	0	0	0	0	0	0	0	0	0	0	0	0
4/24/2024	11:15 PM	0	0	0	0	0	0	0	0	0	0	0	0	0
4/24/2024	11:30 PM	0	0	0	0	0	0	0	0	0	0	0	0	0
4/24/2024	11:45 PM	0	0	0	0	0	0	0	0	0	0	0	0	0

4/25/2024	12:00 AM	0	0	0	0	0	0	0	0	0	0	0	0	0
4/25/2024	12:15 AM	0	0	0	0	0	0	0	0	0	0	0	0	0
4/25/2024	12:30 AM	0	0	0	0	0	0	0	0	0	0	0	0	0
4/25/2024	12:45 AM	0	0	0	0	0	0	0	0	0	0	0	0	0
4/25/2024	1:00 AM	0	0	0	0	0	0	0	0	0	0	0	0	0
4/25/2024	1:15 AM	0	0	0	0	0	0	0	0	0	0	0	0	0
4/25/2024	1:30 AM	0	0	0	0	0	0	0	0	0	0	0	0	0
4/25/2024	1:45 AM	0	0	0	0	0	0	0	0	0	0	0	0	0
4/25/2024	2:00 AM	0	0	0	0	0	0	0	0	0	0	0	0	0
4/25/2024	2:15 AM	0	0	0	0	0	0	0	0	0	0	0	0	0
4/25/2024	2:30 AM	0	0	0	0	0	0	0	0	0	0	0	0	0
4/25/2024	2:45 AM	0	0	0	0	0	0	0	0	0	0	0	0	0
4/25/2024	3:00 AM	0	0	0	0	0	0	0	0	0	0	0	0	0
4/25/2024	3:15 AM	0	0	0	0	0	0	0	0	0	0	0	0	0
4/25/2024	3:30 AM	0	0	0	0	0	0	0	0	0	0	0	0	0
4/25/2024	3:45 AM	0	0	0	0	0	0	0	0	0	0	0	0	0
4/25/2024	4:00 AM	0	0	0	0	0	0	0	0	0	0	0	0	0
4/25/2024	4:15 AM	0	0	0	0	0	0	0	0	0	0	0	0	0
4/25/2024	4:30 AM	0	0	0	0	0	0	0	0	0	0	0	0	0
4/25/2024	4:45 AM	0	0	0	0	0	0	0	0	0	0	0	0	0
4/25/2024	5:00 AM	0	0	0	0	0	0	0	0	0	0	0	0	0
4/25/2024	5:15 AM	0	0	0	0	0	0	0	0	0	0	0	0	0
4/25/2024	5:30 AM	0	0	0	0	0	0	0	0	0	0	0	0	0
4/25/2024	5:45 AM	0	0	0	0	0	0	0	0	0	0	0	0	0
4/25/2024	6:00 AM	0	0	0	0	0	0	0	0	0	0	0	0	0
4/25/2024	6:15 AM	0	0	0	0	0	0	0	0	0	0	0	0	0
4/25/2024	6:30 AM	0	0	0	0	0	0	0	0	0	0	0	0	0
4/25/2024	6:45 AM	0	0	0	0	0	0	0	0	0	0	0	0	0
4/25/2024	7:00 AM	0	0	0	0	0	0	0	0	0	0	0	0	0
4/25/2024	7:15 AM	0	0	0	0	0	0	0	0	0	0	0	0	0
4/25/2024	7:30 AM	0	0	0	0	0	0	0	0	0	0	0	0	0
4/25/2024	7:45 AM	0	0	0	0	0	0	0	0	0	0	0	0	0
4/25/2024	8:00 AM	0	0	0	0	0	0	0	0	0	0	0	0	0
4/25/2024	8:15 AM	0	0	0	0	0	0	0	0	0	0	0	0	0
4/25/2024	8:30 AM	0	0	0	0	0	0	0	0	0	0	0	0	0
4/25/2024	8:45 AM	0	0	0	0	0	0	0	0	0	0	0	0	0
4/25/2024	9:00 AM	0	0	0	0	0	0	0	0	0	0	0	0	0
4/25/2024	9:15 AM	0	0	0	0	0	0	0	0	0	0	0	0	0
4/25/2024	9:30 AM	0	0	0	0	0	0	0	0	0	0	0	0	0
4/25/2024	9:45 AM	0	0	0	0	0	0	0	0	0	0	0	0	0
4/25/2024	10:00 AM	0	0	0	0	0	0	0	0	0	0	0	0	0
4/25/2024	10:15 AM	0	0	0	0	0	0	0	0	0	0	0	0	0
4/25/2024	10:30 AM	0	0	0	0	0	0	0	0	0	0	0	0	0
4/25/2024	10:45 AM	0	0	0	0	0	0	0	0	0	0	0	0	0
4/25/2024	11:00 AM	0	0	0	0	0	0	0	0	0	0	0	0	0
4/25/2024	11:15 AM	0	0	0	0	0	0	0	0	0	0	0	0	0
4/25/2024	11:30 AM	0	0	0	0	0	0	0	0	0	0	0	0	0
4/25/2024	11:45 AM	0	0	0	0	0	0	0	0	0	0	0	0	0
4/25/2024	12:00 PM	0	0	0	0	0	0	0	0	0	0	0	0	0
4/25/2024	12:15 PM	0	0	0	0	0	0	0	0	0	0	0	0	0
4/25/2024	12:30 PM	0	0	0	0	0	0	0	0	0	0	0	0	0
4/25/2024	12:45 PM	0	0	0	0	0	0	0	0	0	0	0	0	0
4/25/2024	1:00 PM	0	0	0	0	0	0	0	0	0	0	0	0	0
4/25/2024	1:15 PM	0	0	0	0	0	0	0	0	0	0	0	0	0
4/25/2024	1:30 PM	0	0	0	0	0	0	0	0	0	0	0	0	0
4/25/2024	1:45 PM	0	0	0	0	0	0	0	0	0	0	0	0	0
4/25/2024	2:00 PM	0	0	0	0	0	0	0	0	0	0	0	0	0
4/25/2024	2:15 PM	0	0	0	0	0	0	0	0	0	0	0	0	0
4/25/2024	2:30 PM	0	0	0	0	0	0	0	0	0	0	0	0	0
4/25/2024	2:45 PM	0	0	0	0	0	0	0	0	0	0	0	0	0
4/25/2024	3:00 PM	0	0	0	0	0	0	0	0	0	0	0	0	0
4/25/2024	3:15 PM	0	0	0	0	0	0	0	0	0	0	0	0	0
4/25/2024	3:30 PM	0	0	0	0	0	0	0	0	0	0	0	0	0
4/25/2024	3:45 PM	0	0	0	0	0	0	0	0	0	0	0	0	0
4/25/2024	4:00 PM	0	0	0	0	0	0	0	0	0	0	0	0	0
4/25/2024	4:15 PM	0	0	0	0	0	0	0	0	0	0	0	0	0
4/25/2024	4:30 PM	0	0	0	0	0	0	0	0	0	0	0	0	0
4/25/2024	4:45 PM	0	0	0	0	0	0	0	0	0	0	0	0	0
4/25/2024	5:00 PM	0	0	0	0	0	0	0	0	0	0	0	0	0
4/25/2024	5:15 PM	0	0	0	0	0	0	0	0	0	0	0	0	0
4/25/2024	5:30 PM	0	0	0	0	0	0	0	0	0	0	0	0	0
4/25/2024	5:45 PM	0	0	0	0	0	0	0	0	0	0	0	0	0
4/25/2024	6:00 PM	0	0	0	0	0	0	0	0	0	0	0	0	0
4/25/2024	6:15 PM	0	0	0	0	0	0	0	0	0	0	0	0	0
4/25/2024	6:30 PM	0	0	0	0	0	0	0	0	0	0	0	0	0
4/25/2024	6:45 PM	0	0	0	0	0	0	0	0	0	0	0	0	0
4/25/2024	7:00 PM	0	0	0	0	0	0	0	0	0	0	0	0	0
4/25/2024	7:15 PM	0	0	0	0	0	0	0	0	0	0	0	0	0
4/25/2024	7:30 PM	0	0	0	0	0	0	0	0	0	0	0	0	0
4/25/2024	7:45 PM	0	0	0	0	0	0	0	0	0	0	0	0	0
4/25/2024	8:00 PM	0	0	0	0	0	0	0	0	0	0	0	0	0
4/25/2024	8:15 PM	0	0	0	0	0	0	0	0	0	0	0	0	0
4/25/2024	8:30 PM	0	0	0	0	0	0	0	0	0	0	0	0	0
4/25/2024	8:45 PM	0	0	0	0	0	0	0	0	0	0	0	0	0
4/25/2024	9:00 PM	0	0	0	0	0	0	0	0	0	0	0	0	0
4/25/2024	9:15 PM	0	0	0	0	0	0	0	0	0	0	0	0	0
4/25/2024	9:30 PM	0	0	0	0	0	0	0	0	0	0	0	0	0
4/25/2024	9:45 PM	0	0	0	0	0	0	0	0	0	0	0	0	0
4/25/2024	10:00 PM	0	0	0	0	0	0	0	0	0	0	0	0	0
4/25/2024	10:15 PM	0	0	0	0	0	0	0	0	0	0	0	0	0
4/25/2024	10:30 PM	0	0	0	0	0	0	0	0	0	0	0	0	0
4/25/2024	10:45 PM	0	0	0	0	0	0	0	0	0	0	0	0	0
4/25/2024	11:00 PM	0	0	0	0	0	0	0	0	0	0	0	0	0
4/25/2024	11:15 PM	0	0	0	0	0	0	0	0	0	0	0	0	0
4/25/2024	11:30 PM	0	0	0	0	0	0	0	0	0	0	0	0	0
4/25/2024	11:45 PM	0	0	0	0	0	0	0	0	0	0	0	0	0

4/26/2024	12:00 AM	0	0	0	0	0	0	0	0	0	0	0	0	0
4/26/2024	12:15 AM	0	0	0	0	0	0	0	0	0	0	0	0	0
4/26/2024	12:30 AM	0	0	0	0	0	0	0	0	0	0	0	0	0
4/26/2024	12:45 AM	0	0	0	0	0	0	0	0	0	0	0	0	0
4/26/2024	1:00 AM	0	0	0	0	0	0	0	0	0	0	0	0	0
4/26/2024	1:15 AM	0	0	0	0	0	0	0	0	0	0	0	0	0
4/26/2024	1:30 AM	0	0	0	0	0	0	0	0	0	0	0	0	0
4/26/2024	1:45 AM	0	0	0	0	0	0	0	0	0	0	0	0	0
4/26/2024	2:00 AM	0	0	0	0	0	0	0	0	0	0	0	0	0
4/26/2024	2:15 AM	0	0	0	0	0	0	0	0	0	0	0	0	0
4/26/2024	2:30 AM	0	0	0	0	0	0	0	0	0	0	0	0	0
4/26/2024	2:45 AM	0	0	0	0	0	0	0	0	0	0	0	0	0
4/26/2024	3:00 AM	0	0	0	0	0	0	0	0	0	0	0	0	0
4/26/2024	3:15 AM	0	0	0	0	0	0	0	0	0	0	0	0	0
4/26/2024	3:30 AM	0	0	0	0	0	0	0	0	0	0	0	0	0
4/26/2024	3:45 AM	0	0	0	0	0	0	0	0	0	0	0	0	0
4/26/2024	4:00 AM	0	0	0	0	0	0	0	0	0	0	0	0	0
4/26/2024	4:15 AM	0	0	0	0	0	0	0	0	0	0	0	0	0
4/26/2024	4:30 AM	0	0	0	0	0	0	0	0	0	0	0	0	0
4/26/2024	4:45 AM	0	0	0	0	0	0	0	0	0	0	0	0	0
4/26/2024	5:00 AM	0	0	0	0	0	0	0	0	0	0	0	0	0
4/26/2024	5:15 AM	0	0	0	0	0	0	0	0	0	0	0	0	0
4/26/2024	5:30 AM	0	0	0	0	0	0	0	0	0	0	0	0	0
4/26/2024	5:45 AM	0	0	0	0	0	0	0	0	0	0	0	0	0
4/26/2024	6:00 AM	0	0	0	0	0	0	0	0	0	0	0	0	0
4/26/2024	6:15 AM	0	0	0	0	0	0	0	0	0	0	0	0	0
4/26/2024	6:30 AM	0	0	0	0	0	0	0	0	0	0	0	0	0
4/26/2024	6:45 AM	0	0	0	0	0	0	0	0	0	0	0	0	0
4/26/2024	7:00 AM	0	0	0	0	0	0	0	0	0	0	0	0	0
4/26/2024	7:15 AM	0	0	0	0	0	0	0	0	0	0	0	0	0
4/26/2024	7:30 AM	0	0	0	0	0	0	0	0	0	0	0	0	0
4/26/2024	7:45 AM	0	0	0	0	0	0	0	0	0	0	0	0	0
4/26/2024	8:00 AM	0	0	0	0	0	0	0	0	0	0	0	0	0
4/26/2024	8:15 AM	0	0	0	0	0	0	0	0	0	0	0	0	0
4/26/2024	8:30 AM	0	0	0	0	0	0	0	0	0	0	0	0	0
4/26/2024	8:45 AM	0	0	0	0	0	0	0	0	0	0	0	0	0
4/26/2024	9:00 AM	0	0	0	0	0	0	0	0	0	0	0	0	0
4/26/2024	9:15 AM	0	0	0	0	0	0	0	0	0	0	0	0	0
4/26/2024	9:30 AM	0	0	0	0	0	0	0	0	0	0	0	0	0
4/26/2024	9:45 AM	0	0	0	0	0	0	0	0	0	0	0	0	0
4/26/2024	10:00 AM	0	0	0	0	0	0	0	0	0	0	0	0	0
4/26/2024	10:15 AM	0	0	0	0	0	0	0	0	0	0	0	0	0
4/26/2024	10:30 AM	0	0	0	0	0	0	0	0	0	0	0	0	0
4/26/2024	10:45 AM	0	0	0	0	0	0	0	0	0	0	0	0	0
4/26/2024	11:00 AM	0	0	0	0	0	0	0	0	0	0	0	0	0
4/26/2024	11:15 AM	0	0	0	0	0	0	0	0	0	0	0	0	0
4/26/2024	11:30 AM	0	0	0	0	0	0	0	0	0	0	0	0	0
4/26/2024	11:45 AM	0	0	0	0	0	0	0	0	0	0	0	0	0
4/26/2024	12:00 PM	0	0	0	0	0	0	0	0	0	0	0	0	0
4/26/2024	12:15 PM	0	0	0	0	0	0	0	0	0	0	0	0	0
4/26/2024	12:30 PM	0	0	0	0	0	0	0	0	0	0	0	0	0
4/26/2024	12:45 PM	0	0	0	0	0	0	0	0	0	0	0	0	0
4/26/2024	1:00 PM	0	0	0	0	0	0	0	0	0	0	0	0	0
4/26/2024	1:15 PM	0	0	0	0	0	0	0	0	0	0	0	0	0
4/26/2024	1:30 PM	0	0	0	0	0	0	0	0	0	0	0	0	0
4/26/2024	1:45 PM	0	0	0	0	0	0	0	0	0	0	0	0	0
4/26/2024	2:00 PM	0	0	0	0	0	0	0	0	0	0	0	0	0
4/26/2024	2:15 PM	0	0	0	0	0	0	0	0	0	0	0	0	0
4/26/2024	2:30 PM	0	0	0	0	0	0	0	0	0	0	0	0	0
4/26/2024	2:45 PM	0	0	0	0	0	0	0	0	0	0	0	0	0
4/26/2024	3:00 PM	0	0	0	0	0	0	0	0	0	0	0	0	0
4/26/2024	3:15 PM	0	0	0	0	0	0	0	0	0	0	0	0	0
4/26/2024	3:30 PM	0	0	0	0	0	0	0	0	0	0	0	0	0
4/26/2024	3:45 PM	0	0	0	0	0	0	0	0	0	0	0	0	0
4/26/2024	4:00 PM	0	0	0	0	0	0	0	0	0	0	0	0	0
4/26/2024	4:15 PM	0	0	0	0	0	0	0	0	0	0	0	0	0
4/26/2024	4:30 PM	0	0	0	0	0	0	0	0	0	0	0	0	0
4/26/2024	4:45 PM	0	0	0	0	0	0	0	0	0	0	0	0	0
4/26/2024	5:00 PM	0	0	0	0	0	0	0	0	0	0	0	0	0
4/26/2024	5:15 PM	0	0	0	0	0	0	0	0	0	0	0	0	0
4/26/2024	5:30 PM	0	0	0	0	0	0	0	0	0	0	0	0	0
4/26/2024	5:45 PM	0	0	0	0	0	0	0	0	0	0	0	0	0
4/26/2024	6:00 PM	0	0	0	0	0	0	0	0	0	0	0	0	0
4/26/2024	6:15 PM	0	0	0	0	0	0	0	0	0	0	0	0	0
4/26/2024	6:30 PM	0	0	0	0	0	0	0	0	0	0	0	0	0
4/26/2024	6:45 PM	0	0	0	0	0	0	0	0	0	0	0	0	0
4/26/2024	7:00 PM	0	0	0	0	0	0	0	0	0	0	0	0	0
4/26/2024	7:15 PM	0	0	0	0	0	0	0	0	0	0	0	0	0
4/26/2024	7:30 PM	0	0	0	0	0	0	0	0	0	0	0	0	0
4/26/2024	7:45 PM	0	0	0	0	0	0	0	0	0	0	0	0	0
4/26/2024	8:00 PM	0	0	0	0	0	0	0	0	0	0	0	0	0
4/26/2024	8:15 PM	0	0	0	0	0	0	0	0	0	0	0	0	0
4/26/2024	8:30 PM	0	0	0	0	0	0	0	0	0	0	0	0	0
4/26/2024	8:45 PM	0	0	0	0	0	0	0	0	0	0	0	0	0
4/26/2024	9:00 PM	0	0	0	0	0	0	0	0	0	0	0	0	0
4/26/2024	9:15 PM	0	0	0	0	0	0	0	0	0	0	0	0	0
4/26/2024	9:30 PM	0	0	0	0	0	0	0	0	0	0	0	0	0
4/26/2024	9:45 PM	0	0	0	0	0	0	0	0	0	0	0	0	0
4/26/2024	10:00 PM	0	0	0	0	0	0	0	0	0	0	0	0	0
4/26/2024	10:15 PM	0	0	0	0	0	0	0	0	0	0	0	0	0
4/26/2024	10:30 PM	0	0	0	0	0	0	0	0	0	0	0	0	0
4/26/2024	10:45 PM	0	0	0	0	0	0	0	0	0	0	0	0	0
4/26/2024	11:00 PM	0	0	0	0	0	0	0	0	0	0	0	0	0
4/26/2024	11:15 PM	0	0	0	0	0	0	0	0	0	0	0	0	0
4/26/2024	11:30 PM	0	0	0	0	0	0	0	0	0	0	0	0	0
4/26/2024	11:45 PM	0	0	0	0	0	0	0	0	0	0	0	0	0

4/27/2024	12:00 AM	0	0	0	0	0	0	0	0	0	0	0	0	0
4/27/2024	12:15 AM	0	0	0	0	0	0	0	0	0	0	0	0	0
4/27/2024	12:30 AM	0	0	0	0	0	0	0	0	0	0	0	0	0
4/27/2024	12:45 AM	0	0	0	0	0	0	0	0	0	0	0	0	0
4/27/2024	1:00 AM	0	0	0	0	0	0	0	0	0	0	0	0	0
4/27/2024	1:15 AM	0	0	0	0	0	0	0	0	0	0	0	0	0
4/27/2024	1:30 AM	0	0	0	0	0	0	0	0	0	0	0	0	0
4/27/2024	1:45 AM	0	0	0	0	0	0	0	0	0	0	0	0	0
4/27/2024	2:00 AM	0	0	0	0	0	0	0	0	0	0	0	0	0
4/27/2024	2:15 AM	0	0	0	0	0	0	0	0	0	0	0	0	0
4/27/2024	2:30 AM	0	0	0	0	0	0	0	0	0	0	0	0	0
4/27/2024	2:45 AM	0	0	0	0	0	0	0	0	0	0	0	0	0
4/27/2024	3:00 AM	0	0	0	0	0	0	0	0	0	0	0	0	0
4/27/2024	3:15 AM	0	0	0	0	0	0	0	0	0	0	0	0	0
4/27/2024	3:30 AM	0	0	0	0	0	0	0	0	0	0	0	0	0
4/27/2024	3:45 AM	0	0	0	0	0	0	0	0	0	0	0	0	0
4/27/2024	4:00 AM	0	0	0	0	0	0	0	0	0	0	0	0	0
4/27/2024	4:15 AM	0	0	0	0	0	0	0	0	0	0	0	0	0
4/27/2024	4:30 AM	0	0	0	0	0	0	0	0	0	0	0	0	0
4/27/2024	4:45 AM	0	0	0	0	0	0	0	0	0	0	0	0	0
4/27/2024	5:00 AM	0	0	0	0	0	0	0	0	0	0	0	0	0
4/27/2024	5:15 AM	0	0	0	0	0	0	0	0	0	0	0	0	0
4/27/2024	5:30 AM	0	0	0	0	0	0	0	0	0	0	0	0	0
4/27/2024	5:45 AM	0	0	0	0	0	0	0	0	0	0	0	0	0
4/27/2024	6:00 AM	0	0	0	0	0	0	0	0	0	0	0	0	0
4/27/2024	6:15 AM	0	0	0	0	0	0	0	0	0	0	0	0	0
4/27/2024	6:30 AM	0	0	0	0	0	0	0	0	0	0	0	0	0
4/27/2024	6:45 AM	0	0	0	0	0	0	0	0	0	0	0	0	0
4/27/2024	7:00 AM	0	0	0	0	0	0	0	0	0	0	0	0	0
4/27/2024	7:15 AM	0	0	0	0	0	0	0	0	0	0	0	0	0
4/27/2024	7:30 AM	0	0	0	0	0	0	0	0	0	0	0	0	0
4/27/2024	7:45 AM	0	0	0	0	0	0	0	0	0	0	0	0	0
4/27/2024	8:00 AM	0	0	0	0	0	0	0	0	0	0	0	0	0
4/27/2024	8:15 AM	0	0	0	0	0	0	0	0	0	0	0	0	0
4/27/2024	8:30 AM	0	0	0	0	0	0	0	0	0	0	0	0	0
4/27/2024	8:45 AM	0	0	0	0	0	0	0	0	0	0	0	0	0
4/27/2024	9:00 AM	0	0	0	0	0	0	0	0	0	0	0	0	0
4/27/2024	9:15 AM	0	0	0	0	0	0	0	0	0	0	0	0	0
4/27/2024	9:30 AM	0	0	0	0	0	0	0	0	0	0	0	0	0
4/27/2024	9:45 AM	0	0	0	0	0	0	0	0	0	0	0	0	0
4/27/2024	10:00 AM	0	0	0	0	0	0	0	0	0	0	0	0	0
4/27/2024	10:15 AM	0	0	0	0	0	0	0	0	0	0	0	0	0
4/27/2024	10:30 AM	0	0	0	0	0	0	0	0	0	0	0	0	0
4/27/2024	10:45 AM	0	0	0	0	0	0	0	0	0	0	0	0	0
4/27/2024	11:00 AM	0	0	0	0	0	0	0	0	0	0	0	0	0
4/27/2024	11:15 AM	0	0	0	0	0	0	0	0	0	0	0	0	0
4/27/2024	11:30 AM	0	0	0	0	0	0	0	0	0	0	0	0	0
4/27/2024	11:45 AM	0	0	0	0	0	0	0	0	0	0	0	0	0
4/27/2024	12:00 PM	0	0	0	0	0	0	0	0	0	0	0	0	0
4/27/2024	12:15 PM	0	0	0	0	0	0	0	0	0	0	0	0	0
4/27/2024	12:30 PM	0	0	0	0	0	0	0	0	0	0	0	0	0
4/27/2024	12:45 PM	0	0	0	0	0	0	0	0	0	0	0	0	0
4/27/2024	1:00 PM	0	0	0	0	0	0	0	0	0	0	0	0	0
4/27/2024	1:15 PM	0	0	0	0	0	0	0	0	0	0	0	0	0
4/27/2024	1:30 PM	0	0	0	0	0	0	0	0	0	0	0	0	0
4/27/2024	1:45 PM	0	0	0	0	0	0	0	0	0	0	0	0	0
4/27/2024	2:00 PM	0	0	0	0	0	0	0	0	0	0	0	0	0
4/27/2024	2:15 PM	0	0	0	0	0	0	0	0	0	0	0	0	0
4/27/2024	2:30 PM	0	0	0	0	0	0	0	0	0	0	0	0	0
4/27/2024	2:45 PM	0	0	0	0	0	0	0	0	0	0	0	0	0
4/27/2024	3:00 PM	0	0	0	0	0	0	0	0	0	0	0	0	0
4/27/2024	3:15 PM	0	0	0	0	0	0	0	0	0	0	0	0	0
4/27/2024	3:30 PM	0	0	0	0	0	0	0	0	0	0	0	0	0
4/27/2024	3:45 PM	0	0	0	0	0	0	0	0	0	0	0	0	0
4/27/2024	4:00 PM	0	0	0	0	0	0	0	0	0	0	0	0	0
4/27/2024	4:15 PM	0	0	0	0	0	0	0	0	0	0	0	0	0
4/27/2024	4:30 PM	0	0	0	0	0	0	0	0	0	0	0	0	0
4/27/2024	4:45 PM	0	0	0	0	0	0	0	0	0	0	0	0	0
4/27/2024	5:00 PM	0	0	0	0	0	0	0	0	0	0	0	0	0
4/27/2024	5:15 PM	0	0	0	0	0	0	0	0	0	0	0	0	0
4/27/2024	5:30 PM	0	0	0	0	0	0	0	0	0	0	0	0	0
4/27/2024	5:45 PM	0	0	0	0	0	0	0	0	0	0	0	0	0
4/27/2024	6:00 PM	0	0	0	0	0	0	0	0	0	0	0	0	0
4/27/2024	6:15 PM	0	0	0	0	0	0	0	0	0	0	0	0	0
4/27/2024	6:30 PM	0	0	0	0	0	0	0	0	0	0	0	0	0
4/27/2024	6:45 PM	0	0	0	0	0	0	0	0	0	0	0	0	0
4/27/2024	7:00 PM	0	0	0	0	0	0	0	0	0	0	0	0	0
4/27/2024	7:15 PM	0	0	0	0	0	0	0	0	0	0	0	0	0
4/27/2024	7:30 PM	0	0	0	0	0	0	0	0	0	0	0	0	0
4/27/2024	7:45 PM	0	0	0	0	0	0	0	0	0	0	0	0	0
4/27/2024	8:00 PM	0	0	0	0	0	0	0	0	0	0	0	0	0
4/27/2024	8:15 PM	0	0	0	0	0	0	0	0	0	0	0	0	0
4/27/2024	8:30 PM	0	0	0	0	0	0	0	0	0	0	0	0	0
4/27/2024	8:45 PM	0	0	0	0	0	0	0	0	0	0	0	0	0
4/27/2024	9:00 PM	0	0	0	0	0	0	0	0	0	0	0	0	0
4/27/2024	9:15 PM	0	0	0	0	0	0	0	0	0	0	0	0	0
4/27/2024	9:30 PM	0	0	0	0	0	0	0	0	0	0	0	0	0
4/27/2024	9:45 PM	0	0	0	0	0	0	0	0	0	0	0	0	0
4/27/2024	10:00 PM	0	0	0	0	0	0	0	0	0	0	0	0	0
4/27/2024	10:15 PM	0	0	0	0	0	0	0	0	0	0	0	0	0
4/27/2024	10:30 PM	0	0	0	0	0	0	0	0	0	0	0	0	0
4/27/2024	10:45 PM	0	0	0	0	0	0	0	0	0	0	0	0	0
4/27/2024	11:00 PM	0	0	0	0	0	0	0	0	0	0	0	0	0
4/27/2024	11:15 PM	0	0	0	0	0	0	0	0	0	0	0	0	0
4/27/2024	11:30 PM	0	0	0	0	0	0	0	0	0	0	0	0	0
4/27/2024	11:45 PM	0	0	0	0	0	0	0	0	0	0	0	0	0

NB
File Name:
Start Date: 4/21/2024
Start Time: 0
Site Code: 75 Lane 4 NB
Station ID: 1
Location 1: I-20, north of Bush River Rd
Location 2:

Date	Time	1	2	3	4	5	6	7	8	9	10	11	12	13
4/21/2024	12:00 AM	0	64	12	0	1	0	0	0	0	0	0	0	0
4/21/2024	12:15 AM	0	52	10	0	1	0	0	0	0	0	0	0	0
4/21/2024	12:30 AM	0	45	10	0	1	0	0	0	0	0	0	0	0
4/21/2024	12:45 AM	0	41	10	0	1	0	0	0	2	0	0	0	0
4/21/2024	1:00 AM	0	38	10	0	1	0	0	0	3	0	0	0	0
4/21/2024	1:15 AM	0	32	9	0	1	0	0	0	3	0	0	0	0
4/21/2024	1:30 AM	0	29	8	0	1	0	0	0	4	0	0	0	0
4/21/2024	1:45 AM	0	21	5	0	1	0	0	0	3	0	0	0	0
4/21/2024	2:00 AM	0	17	3	0	1	0	0	0	2	0	0	0	0
4/21/2024	2:15 AM	0	18	3	0	2	0	0	0	2	0	0	0	0
4/21/2024	2:30 AM	0	16	3	0	2	0	0	0	1	0	0	0	0
4/21/2024	2:45 AM	0	17	4	0	2	0	0	0	0	0	1	0	0
4/21/2024	3:00 AM	0	18	6	0	1	0	0	0	1	0	1	0	0
4/21/2024	3:15 AM	0	17	6	0	0	0	0	0	1	0	1	0	0
4/21/2024	3:30 AM	0	16	6	0	0	0	0	0	1	0	1	0	0
4/21/2024	3:45 AM	0	17	7	0	0	0	0	0	1	0	0	0	0
4/21/2024	4:00 AM	0	18	6	0	0	0	0	0	0	0	0	0	0
4/21/2024	4:15 AM	0	19	6	0	0	0	0	0	0	0	0	0	0
4/21/2024	4:30 AM	0	24	7	0	0	0	0	0	0	0	0	0	0
4/21/2024	4:45 AM	0	29	8	0	0	0	0	0	0	0	0	0	0
4/21/2024	5:00 AM	0	33	11	0	0	0	0	0	1	0	0	0	0
4/21/2024	5:15 AM	0	41	15	0	0	0	0	0	1	0	0	0	0
4/21/2024	5:30 AM	0	54	19	0	0	0	0	0	1	0	1	0	0
4/21/2024	5:45 AM	0	87	24	0	0	0	0	0	3	0	1	0	0
4/21/2024	6:00 AM	0	106	26	0	0	0	0	0	2	0	1	0	0
4/21/2024	6:15 AM	0	117	26	0	0	0	0	0	3	0	1	0	0
4/21/2024	6:30 AM	1	128	27	0	0	0	0	0	4	0	0	0	0
4/21/2024	6:45 AM	1	117	25	0	0	0	0	0	2	0	0	0	0
4/21/2024	7:00 AM	1	134	26	0	0	0	0	0	3	0	0	0	0
4/21/2024	7:15 AM	1	159	26	0	1	0	0	0	3	0	0	0	0
4/21/2024	7:30 AM	0	168	24	0	2	0	0	0	2	0	0	0	0
4/21/2024	7:45 AM	0	182	28	0	2	0	0	0	3	0	0	0	0
4/21/2024	8:00 AM	0	216	33	0	2	0	0	0	2	0	0	0	0
4/21/2024	8:15 AM	0	237	36	0	1	0	0	0	1	0	0	0	0
4/21/2024	8:30 AM	0	258	36	0	0	0	0	0	3	0	0	0	0
4/21/2024	8:45 AM	0	282	40	1	0	0	0	0	2	0	0	0	0
4/21/2024	9:00 AM	0	276	35	1	1	0	0	0	2	0	0	0	0
4/21/2024	9:15 AM	0	295	37	2	1	0	0	0	2	0	0	0	0
4/21/2024	9:30 AM	1	317	43	2	3	0	0	0	1	0	0	0	0
4/21/2024	9:45 AM	1	335	42	1	4	0	0	0	1	0	0	0	0
4/21/2024	10:00 AM	1	360	45	1	3	1	0	0	1	0	0	0	0
4/21/2024	10:15 AM	1	333	43	0	4	1	0	0	1	0	0	0	0
4/21/2024	10:30 AM	0	321	39	0	3	1	0	0	1	0	0	0	0
4/21/2024	10:45 AM	0	297	37	0	2	1	0	0	2	0	0	0	0
4/21/2024	11:00 AM	0	280	38	0	2	1	0	0	4	0	0	0	0
4/21/2024	11:15 AM	0	314	38	0	1	1	0	0	6	0	0	0	0
4/21/2024	11:30 AM	0	340	51	1	0	1	0	0	6	1	0	0	0
4/21/2024	11:45 AM	0	381	58	1	0	1	0	0	7	1	0	0	0
4/21/2024	12:00 PM	0	397	63	1	1	0	0	0	8	1	0	0	0
4/21/2024	12:15 PM	0	393	68	1	3	1	0	0	7	1	0	0	0
4/21/2024	12:30 PM	1	386	57	0	3	1	0	0	7	0	0	0	0
4/21/2024	12:45 PM	1	387	53	0	5	1	0	0	7	0	0	0	0
4/21/2024	1:00 PM	1	390	52	0	6	1	0	0	7	0	0	0	0
4/21/2024	1:15 PM	1	383	51	0	4	0	0	0	6	0	0	0	0
4/21/2024	1:30 PM	0	382	54	1	5	0	0	0	5	0	0	0	0
4/21/2024	1:45 PM	0	377	48	1	3	0	0	0	3	0	0	0	0
4/21/2024	2:00 PM	0	384	46	1	2	0	0	0	3	0	0	0	0
4/21/2024	2:15 PM	0	396	48	1	2	0	0	0	4	0	0	0	0
4/21/2024	2:30 PM	0	376	51	0	1	0	0	0	5	0	0	0	0
4/21/2024	2:45 PM	0	369	55	0	1	0	0	0	5	0	0	0	0
4/21/2024	3:00 PM	0	354	48	0	0	1	0	0	3	0	0	0	0
4/21/2024	3:15 PM	0	342	39	0	0	1	0	0	2	0	0	0	0
4/21/2024	3:30 PM	0	338	36	0	0	1	0	1	2	0	0	0	0
4/21/2024	3:45 PM	0	331	32	1	0	1	0	1	3	0	0	0	0
4/21/2024	4:00 PM	0	321	42	1	2	0	0	1	2	0	0	0	0
4/21/2024	4:15 PM	0	330	49	1	2	0	0	1	4	0	0	0	0
4/21/2024	4:30 PM	0	360	45	1	2	0	0	0	4	0	0	0	0
4/21/2024	4:45 PM	0	364	44	0	2	0	0	0	5	0	0	0	0
4/21/2024	5:00 PM	0	355	37	0	0	0	0	0	6	0	0	0	0
4/21/2024	5:15 PM	0	332	33	0	1	0	0	0	6	0	0	0	0
4/21/2024	5:30 PM	0	328	31	0	3	0	0	0	8	0	0	0	0
4/21/2024	5:45 PM	0	337	32	0	3	0	0	0	11	0	0	0	0
4/21/2024	6:00 PM	0	321	28	0	3	0	0	0	13	0	1	0	0
4/21/2024	6:15 PM	0	307	24	0	2	0	0	0	12	0	1	0	0
4/21/2024	6:30 PM	0	274	24	0	0	0	0	0	12	0	1	0	0
4/21/2024	6:45 PM	0	246	20	0	0	1	0	0	9	0	1	0	0
4/21/2024	7:00 PM	0	257	19	0	1	1	0	1	8	0	0	0	0
4/21/2024	7:15 PM	0	260	20	0	1	1	0	1	8	0	0	0	0
4/21/2024	7:30 PM	0	256	19	0	1	1	0	1	8	0	0	0	0
4/21/2024	7:45 PM	0	245	18	0	1	0	0	1	9	0	0	0	0
4/21/2024	8:00 PM	0	229	16	0	0	0	0	0	10	0	0	0	0
4/21/2024	8:15 PM	0	228	12	0	1	0	0	0	12	0	0	0	0
4/21/2024	8:30 PM	0	222	6	0	1	0	0	0	11	0	0	0	0
4/21/2024	8:45 PM	0	194	4	0	1	0	0	0	11	0	0	0	0
4/21/2024	9:00 PM	0	177	2	0	3	0	0	0	9	0	0	0	0
4/21/2024	9:15 PM	0	156	1	0	2	0	0	0	8	0	0	0	0
4/21/2024	9:30 PM	0	130	2	0	2	0	0	0	7	0	0	0	0
4/21/2024	9:45 PM	0	128	1	0	2	0	0	0	6	0	0	0	0
4/21/2024	10:00 PM	0	112	2	0	1	0	0	0	6	0	0	0	0
4/21/2024	10:15 PM	0	96	2	0	2	0	0	0	9	0	0	0	0
4/21/2024	10:30 PM	0	94	2	0	3	0	0	0	9	0	1	0	0
4/21/2024	10:45 PM	0	77	2	0	3	0	0	0	9	0	1	0	0
4/21/2024	11:00 PM	0	70	1	0	2	0	0	0	9	0	1	0	0
4/21/2024	11:15 PM	0	54	2	0	1	0	0	0	5	0	1	0	0
4/21/2024	11:30 PM	0	43	5	0	0	0	0	0	5	0	0	0	0
4/21/2024	11:45 PM	0	37	7	0	0	0	0	0	4	0	1	0	0

4/22/2024	12:00 AM	0	30	8	0	0	0	0	0	4	0	1	0	0
4/22/2024	12:15 AM	0	29	9	0	0	0	0	0	5	0	1	0	0
4/22/2024	12:30 AM	0	25	6	0	0	0	0	0	4	0	1	0	0
4/22/2024	12:45 AM	0	20	4	0	0	0	0	0	5	0	0	0	0
4/22/2024	1:00 AM	0	17	5	0	0	0	0	0	6	0	0	0	0
4/22/2024	1:15 AM	0	16	3	0	0	0	0	0	4	0	0	0	0
4/22/2024	1:30 AM	0	13	2	0	0	0	0	0	5	0	0	0	0
4/22/2024	1:45 AM	0	13	3	0	0	0	0	0	5	0	0	0	0
4/22/2024	2:00 AM	0	14	2	0	0	0	0	0	7	0	0	0	0
4/22/2024	2:15 AM	0	13	2	0	0	0	0	0	7	0	0	0	0
4/22/2024	2:30 AM	0	12	3	0	0	0	0	0	6	0	0	0	0
4/22/2024	2:45 AM	0	13	4	0	0	0	0	0	6	0	0	0	0
4/22/2024	3:00 AM	0	14	4	0	0	0	0	0	2	0	0	0	0
4/22/2024	3:15 AM	0	18	8	0	0	0	0	0	4	0	0	0	0
4/22/2024	3:30 AM	0	23	10	0	1	0	0	0	8	0	0	0	0
4/22/2024	3:45 AM	0	30	11	0	1	0	0	0	8	0	0	0	0
4/22/2024	4:00 AM	0	43	16	0	1	0	0	0	9	0	0	0	0
4/22/2024	4:15 AM	0	51	17	0	1	0	0	0	8	0	0	0	0
4/22/2024	4:30 AM	0	74	21	0	2	0	0	0	5	0	0	0	0
4/22/2024	4:45 AM	0	112	28	0	2	0	0	0	5	0	0	0	0
4/22/2024	5:00 AM	0	140	37	0	2	0	0	0	9	0	0	0	0
4/22/2024	5:15 AM	0	173	45	0	2	0	0	0	11	0	0	0	0
4/22/2024	5:30 AM	0	219	73	0	3	0	0	0	14	0	0	0	0
4/22/2024	5:45 AM	0	319	93	0	4	1	0	0	16	0	0	0	0
4/22/2024	6:00 AM	0	439	109	1	6	1	0	0	15	0	0	0	0
4/22/2024	6:15 AM	0	613	134	1	9	1	0	1	16	0	0	0	0
4/22/2024	6:30 AM	0	823	132	1	8	1	0	2	18	0	0	0	0
4/22/2024	6:45 AM	0	986	136	1	9	0	0	2	19	0	0	0	0
4/22/2024	7:00 AM	1	1114	143	0	9	0	0	3	19	0	0	0	0
4/22/2024	7:15 AM	1	1217	156	0	10	0	0	4	21	0	0	0	0
4/22/2024	7:30 AM	1	1222	170	0	12	0	0	3	20	0	0	0	0
4/22/2024	7:45 AM	1	1163	166	0	13	0	0	3	20	1	0	0	0
4/22/2024	8:00 AM	0	1103	171	0	12	0	0	3	21	1	0	0	0
4/22/2024	8:15 AM	0	961	156	0	10	1	0	1	18	1	0	0	0
4/22/2024	8:30 AM	0	853	137	0	10	1	0	2	19	1	0	0	0
4/22/2024	8:45 AM	0	786	153	3	10	1	0	2	18	0	0	0	0
4/22/2024	9:00 AM	0	740	137	7	11	1	0	1	19	0	0	0	0
4/22/2024	9:15 AM	0	694	123	7	10	2	0	1	25	0	1	0	0
4/22/2024	9:30 AM	0	638	120	7	11	2	0	0	23	0	1	0	0
4/22/2024	9:45 AM	0	570	99	5	10	2	0	0	23	0	1	0	0
4/22/2024	10:00 AM	1	510	96	1	11	3	0	0	24	0	1	0	0
4/22/2024	10:15 AM	1	457	88	1	12	2	0	0	18	0	0	0	0
4/22/2024	10:30 AM	1	439	79	1	10	2	0	0	26	0	0	0	0
4/22/2024	10:45 AM	1	423	70	0	9	2	0	0	24	0	0	0	0
4/22/2024	11:00 AM	0	414	60	0	8	1	0	1	25	0	0	0	0
4/22/2024	11:15 AM	0	443	68	0	8	0	0	1	28	0	0	0	0
4/22/2024	11:30 AM	0	459	73	0	7	0	0	1	24	0	0	0	0
4/22/2024	11:45 AM	0	490	81	0	8	0	0	1	34	0	0	0	0
4/22/2024	12:00 PM	0	505	92	0	8	0	0	1	30	0	0	0	0
4/22/2024	12:15 PM	0	512	86	0	8	1	0	1	27	0	0	0	0
4/22/2024	12:30 PM	0	505	81	0	10	4	0	1	24	0	0	0	0
4/22/2024	12:45 PM	0	492	72	0	13	4	0	2	13	0	0	0	0
4/22/2024	1:00 PM	0	463	58	0	13	4	0	3	10	0	0	0	0
4/22/2024	1:15 PM	0	454	65	0	12	3	1	3	12	0	0	0	0
4/22/2024	1:30 PM	0	447	62	0	14	1	1	3	16	0	0	0	0
4/22/2024	1:45 PM	0	445	64	0	12	1	1	2	20	0	0	0	0
4/22/2024	2:00 PM	0	468	74	0	13	2	1	0	26	0	0	0	0
4/22/2024	2:15 PM	0	472	68	0	16	2	0	0	26	0	0	0	0
4/22/2024	2:30 PM	0	488	80	0	13	1	0	0	21	0	0	0	0
4/22/2024	2:45 PM	0	508	78	0	13	2	0	0	18	0	0	0	0
4/22/2024	3:00 PM	0	485	78	0	12	1	0	1	14	0	0	0	0
4/22/2024	3:15 PM	0	490	74	0	10	2	0	1	13	0	0	0	0
4/22/2024	3:30 PM	0	506	70	0	9	2	0	1	13	0	0	0	0
4/22/2024	3:45 PM	0	499	77	1	7	1	0	1	13	0	0	0	0
4/22/2024	4:00 PM	0	513	74	2	8	2	0	0	15	0	0	0	0
4/22/2024	4:15 PM	0	530	70	4	7	1	0	0	12	0	0	0	0
4/22/2024	4:30 PM	1	493	66	4	5	1	0	0	11	0	0	0	0
4/22/2024	4:45 PM	1	446	58	3	4	1	0	0	11	0	0	0	0
4/22/2024	5:00 PM	2	422	54	2	3	0	0	0	9	0	0	0	0
4/22/2024	5:15 PM	2	367	56	0	4	0	0	0	10	0	0	0	0
4/22/2024	5:30 PM	1	373	54	0	6	0	0	0	7	0	0	0	0
4/22/2024	5:45 PM	1	392	49	0	6	1	0	0	10	0	0	0	0
4/22/2024	6:00 PM	0	376	41	0	4	2	0	0	11	0	0	0	0
4/22/2024	6:15 PM	0	361	42	0	5	2	0	0	10	0	0	0	0
4/22/2024	6:30 PM	0	321	34	0	3	2	0	0	13	0	0	0	0
4/22/2024	6:45 PM	0	268	30	0	3	1	0	0	9	0	0	0	0
4/22/2024	7:00 PM	0	244	31	0	5	0	0	0	7	0	0	0	0
4/22/2024	7:15 PM	0	225	20	0	2	0	0	0	10	0	0	0	0
4/22/2024	7:30 PM	0	191	15	0	3	0	0	0	8	0	0	0	0
4/22/2024	7:45 PM	0	174	13	0	4	1	0	0	9	0	0	0	0
4/22/2024	8:00 PM	0	153	6	0	2	1	0	0	10	0	0	0	0
4/22/2024	8:15 PM	0	151	5	0	2	1	0	0	8	0	0	0	0
4/22/2024	8:30 PM	0	148	3	0	1	1	0	0	13	0	0	0	0
4/22/2024	8:45 PM	0	144	1	0	0	0	0	0	11	0	0	0	0
4/22/2024	9:00 PM	0	146	2	0	0	0	0	0	9	0	0	0	0
4/22/2024	9:15 PM	0	130	2	0	0	0	0	0	11	0	0	0	0
4/22/2024	9:30 PM	0	132	2	0	1	0	0	0	6	0	0	0	0
4/22/2024	9:45 PM	0	125	1	0	1	0	0	0	9	0	0	0	0
4/22/2024	10:00 PM	0	109	0	0	1	0	0	0	10	0	0	0	0
4/22/2024	10:15 PM	0	99	0	0	1	0	0	0	9	0	0	0	0
4/22/2024	10:30 PM	0	81	0	0	1	0	0	0	9	0	0	0	0
4/22/2024	10:45 PM	0	64	0	0	1	0	0	0	9	0	0	0	0
4/22/2024	11:00 PM	0	51	0	0	1	0	0	0	8	0	0	0	0
4/22/2024	11:15 PM	0	38	1	0	1	0	0	0	7	0	0	0	0
4/22/2024	11:30 PM	0	27	3	0	0	0	0	0	6	0	0	0	0
4/22/2024	11:45 PM	0	29	4	0	0	0	0	0	4	0	0	0	0

4/23/2024	12:00 AM	0	28	5	0	0	0	0	0	3	0	0	0	0
4/23/2024	12:15 AM	0	24	5	0	0	0	0	0	4	0	0	0	0
4/23/2024	12:30 AM	0	21	5	0	1	0	0	0	4	0	1	0	0
4/23/2024	12:45 AM	0	16	5	0	2	0	0	0	3	0	1	0	0
4/23/2024	1:00 AM	0	14	5	0	2	0	0	0	6	0	1	0	0
4/23/2024	1:15 AM	0	14	6	0	2	0	0	0	3	0	1	0	0
4/23/2024	1:30 AM	0	12	5	0	1	0	0	0	5	0	0	0	0
4/23/2024	1:45 AM	0	11	4	0	0	0	0	0	5	0	0	0	0
4/23/2024	2:00 AM	0	9	4	0	0	0	0	0	2	0	0	0	0
4/23/2024	2:15 AM	0	14	4	0	0	0	0	0	3	0	0	0	0
4/23/2024	2:30 AM	0	13	4	0	0	0	0	0	1	0	0	0	0
4/23/2024	2:45 AM	0	21	7	0	0	0	0	0	3	0	0	0	0
4/23/2024	3:00 AM	0	26	7	0	0	0	0	0	4	0	0	0	0
4/23/2024	3:15 AM	0	22	6	0	0	0	0	0	5	0	0	0	0
4/23/2024	3:30 AM	0	30	8	0	1	0	0	0	10	0	0	0	0
4/23/2024	3:45 AM	0	32	6	0	1	0	0	0	11	0	0	0	0
4/23/2024	4:00 AM	0	42	10	0	2	0	0	0	11	0	0	0	0
4/23/2024	4:15 AM	0	52	12	0	2	0	0	0	13	0	0	0	0
4/23/2024	4:30 AM	0	71	11	0	1	0	0	0	8	0	0	0	0
4/23/2024	4:45 AM	0	114	18	0	2	0	0	0	10	0	0	0	0
4/23/2024	5:00 AM	0	149	24	0	1	0	0	0	10	0	0	0	0
4/23/2024	5:15 AM	0	207	31	0	2	0	0	0	7	0	0	0	0
4/23/2024	5:30 AM	0	287	55	0	2	0	0	1	8	0	0	0	0
4/23/2024	5:45 AM	0	381	75	0	1	0	0	1	9	0	1	0	0
4/23/2024	6:00 AM	0	508	99	0	4	1	0	2	11	0	1	0	0
4/23/2024	6:15 AM	0	651	130	0	7	1	0	3	16	0	2	0	0
4/23/2024	6:30 AM	1	781	158	0	10	2	0	2	18	0	2	0	0
4/23/2024	6:45 AM	1	888	175	0	13	3	0	3	20	0	1	0	0
4/23/2024	7:00 AM	1	943	177	0	11	2	0	2	18	0	2	0	0
4/23/2024	7:15 AM	1	972	163	0	10	2	0	1	14	0	1	0	0
4/23/2024	7:30 AM	1	1043	149	0	8	1	0	2	16	0	1	0	0
4/23/2024	7:45 AM	1	1082	137	0	7	0	0	2	17	0	1	0	0
4/23/2024	8:00 AM	1	1103	129	0	13	3	0	2	25	0	0	0	0
4/23/2024	8:15 AM	1	1043	130	3	14	3	0	2	28	0	0	0	0
4/23/2024	8:30 AM	0	909	125	4	19	5	0	1	27	0	0	0	0
4/23/2024	8:45 AM	0	783	124	4	19	5	0	0	29	0	0	0	0
4/23/2024	9:00 AM	0	692	118	8	14	2	0	0	24	0	0	0	0
4/23/2024	9:15 AM	0	658	115	7	14	2	0	1	22	1	0	0	0
4/23/2024	9:30 AM	0	611	97	6	12	1	0	2	24	1	0	0	0
4/23/2024	9:45 AM	0	582	85	8	12	1	0	2	19	1	0	0	0
4/23/2024	10:00 AM	0	543	85	4	19	2	0	4	20	1	0	0	0
4/23/2024	10:15 AM	0	515	75	2	16	3	0	3	24	0	0	0	0
4/23/2024	10:30 AM	0	496	74	4	15	4	0	2	26	0	0	0	0
4/23/2024	10:45 AM	0	495	75	2	15	6	0	2	24	0	1	0	0
4/23/2024	11:00 AM	0	498	69	2	8	5	0	0	25	0	1	0	0
4/23/2024	11:15 AM	0	490	73	2	10	4	0	0	22	0	1	0	0
4/23/2024	11:30 AM	0	502	71	0	10	4	0	0	16	0	1	0	0
4/23/2024	11:45 AM	0	512	71	0	11	2	0	0	15	0	0	0	0
4/23/2024	12:00 PM	0	529	77	0	11	2	0	0	13	0	0	0	0
4/23/2024	12:15 PM	0	526	72	0	8	2	0	1	12	0	0	0	0
4/23/2024	12:30 PM	0	519	75	0	8	0	0	1	16	0	0	0	0
4/23/2024	12:45 PM	0	481	73	0	6	0	0	2	18	0	0	0	0
4/23/2024	1:00 PM	0	444	72	0	6	1	0	3	18	0	0	0	0
4/23/2024	1:15 PM	0	440	71	0	9	2	0	2	24	0	0	0	0
4/23/2024	1:30 PM	0	429	70	0	7	2	0	3	21	0	0	0	0
4/23/2024	1:45 PM	0	422	65	0	8	2	0	2	23	0	0	0	0
4/23/2024	2:00 PM	0	417	60	0	8	1	0	2	22	0	0	0	0
4/23/2024	2:15 PM	0	434	70	0	7	0	0	2	16	0	0	0	0
4/23/2024	2:30 PM	0	456	79	0	9	1	0	2	18	0	0	0	0
4/23/2024	2:45 PM	0	485	94	0	13	1	0	2	15	0	0	0	0
4/23/2024	3:00 PM	0	498	100	1	15	1	0	1	18	0	0	0	0
4/23/2024	3:15 PM	0	483	105	1	14	1	0	1	26	0	0	0	0
4/23/2024	3:30 PM	0	495	117	2	15	0	0	0	23	0	0	0	0
4/23/2024	3:45 PM	0	513	106	2	13	0	0	1	21	1	0	0	0
4/23/2024	4:00 PM	0	539	100	1	11	0	0	1	17	1	0	0	0
4/23/2024	4:15 PM	0	593	102	1	11	1	0	1	9	1	0	0	0
4/23/2024	4:30 PM	0	640	95	0	9	2	0	3	8	1	0	0	0
4/23/2024	4:45 PM	0	652	107	0	5	2	0	2	9	0	0	0	0
4/23/2024	5:00 PM	0	629	114	0	3	2	0	2	10	0	0	0	0
4/23/2024	5:15 PM	0	567	100	0	4	1	0	2	14	0	0	0	0
4/23/2024	5:30 PM	0	498	97	0	3	0	0	0	15	0	0	0	0
4/23/2024	5:45 PM	0	436	80	0	5	0	0	1	14	0	0	0	0
4/23/2024	6:00 PM	0	452	78	0	7	0	0	3	14	0	0	0	0
4/23/2024	6:15 PM	0	407	71	0	5	0	0	4	9	0	0	0	0
4/23/2024	6:30 PM	0	360	52	0	8	0	0	4	10	0	0	0	0
4/23/2024	6:45 PM	0	308	47	0	6	0	0	3	12	0	0	0	0
4/23/2024	7:00 PM	2	243	34	0	7	0	1	2	11	0	0	0	0
4/23/2024	7:15 PM	2	245	35	0	8	0	1	1	11	0	0	0	0
4/23/2024	7:30 PM	3	233	33	1	4	0	1	1	10	0	0	0	0
4/23/2024	7:45 PM	3	236	31	1	5	0	1	1	10	0	0	0	0
4/23/2024	8:00 PM	1	205	25	1	5	0	0	0	8	0	0	0	0
4/23/2024	8:15 PM	1	208	23	1	4	0	0	0	6	0	0	0	0
4/23/2024	8:30 PM	0	204	23	0	5	0	0	0	6	0	0	0	0
4/23/2024	8:45 PM	0	200	19	0	4	0	0	0	2	0	0	0	0
4/23/2024	9:00 PM	0	199	18	0	2	0	0	0	3	0	0	0	0
4/23/2024	9:15 PM	0	174	12	0	4	0	0	0	7	0	0	0	0
4/23/2024	9:30 PM	0	151	7	0	4	0	0	0	10	0	0	0	0
4/23/2024	9:45 PM	0	133	7	0	6	0	0	0	11	0	0	0	0
4/23/2024	10:00 PM	0	116	7	0	5	0	0	0	13	0	0	0	0
4/23/2024	10:15 PM	0	98	6	0	5	0	0	0	12	0	0	0	0
4/23/2024	10:30 PM	0	81	5	0	5	0	0	0	9	0	0	0	0
4/23/2024	10:45 PM	0	67	7	0	3	0	0	0	8	0	0	0	0
4/23/2024	11:00 PM	0	55	6	0	4	0	0	0	6	0	0	0	0
4/23/2024	11:15 PM	0	46	6	0	3	0	0	0	3	0	0	0	0
4/23/2024	11:30 PM	0	40	8	0	3	0	0	0	1	0	0	0	0
4/23/2024	11:45 PM	0	31	4	0	3	0	0	0	3	0	0	0	0

4/24/2024	12:00 AM	0	28	3	0	2	0	0	0	4	0	0	0	0
4/24/2024	12:15 AM	0	26	3	0	1	0	0	0	4	0	1	0	0
4/24/2024	12:30 AM	0	23	1	0	1	0	0	0	4	0	1	0	0
4/24/2024	12:45 AM	0	22	1	0	1	0	0	0	3	0	1	0	0
4/24/2024	1:00 AM	0	22	2	0	2	1	0	0	4	0	2	0	0
4/24/2024	1:15 AM	0	23	3	0	2	1	0	0	6	0	1	0	0
4/24/2024	1:30 AM	0	23	3	0	1	1	0	0	7	0	1	0	0
4/24/2024	1:45 AM	0	25	4	0	1	1	0	0	8	0	1	0	0
4/24/2024	2:00 AM	0	24	3	0	0	0	0	0	5	0	1	0	0
4/24/2024	2:15 AM	0	22	1	0	0	0	0	0	5	0	1	0	0
4/24/2024	2:30 AM	0	25	1	0	0	0	0	0	5	0	1	0	0
4/24/2024	2:45 AM	0	23	1	0	0	0	0	0	6	0	1	0	0
4/24/2024	3:00 AM	0	21	2	0	0	0	0	0	6	0	0	0	0
4/24/2024	3:15 AM	0	22	4	0	1	0	0	0	7	0	0	0	0
4/24/2024	3:30 AM	0	28	7	0	1	0	0	0	8	0	0	0	0
4/24/2024	3:45 AM	0	30	7	0	1	0	0	0	7	0	0	0	0
4/24/2024	4:00 AM	0	50	11	0	1	0	0	0	9	0	0	0	0
4/24/2024	4:15 AM	0	58	12	0	1	0	0	0	6	0	0	0	0
4/24/2024	4:30 AM	0	63	13	0	3	0	0	0	6	0	0	0	0
4/24/2024	4:45 AM	0	99	20	0	5	1	0	0	6	0	1	0	0
4/24/2024	5:00 AM	0	130	24	0	6	1	0	0	6	0	1	0	0
4/24/2024	5:15 AM	0	167	28	0	6	1	0	0	10	0	1	0	0
4/24/2024	5:30 AM	0	258	39	0	4	2	0	0	12	0	1	0	0
4/24/2024	5:45 AM	0	380	71	0	2	3	0	0	13	0	0	0	0
4/24/2024	6:00 AM	2	478	125	0	3	3	0	0	16	0	0	0	0
4/24/2024	6:15 AM	3	616	167	0	5	4	0	0	15	0	0	0	0
4/24/2024	6:30 AM	4	762	219	0	8	3	0	0	17	0	1	0	0
4/24/2024	6:45 AM	4	836	227	0	10	3	0	0	20	0	1	0	0
4/24/2024	7:00 AM	2	942	210	0	8	5	0	0	21	0	1	0	0
4/24/2024	7:15 AM	1	1021	207	1	7	5	0	0	23	0	2	0	0
4/24/2024	7:30 AM	1	1059	178	1	7	5	0	1	20	0	1	0	0
4/24/2024	7:45 AM	1	1083	180	1	11	3	0	2	19	0	1	0	0
4/24/2024	8:00 AM	2	1058	193	1	12	1	0	2	19	0	1	0	0
4/24/2024	8:15 AM	2	956	195	9	14	2	0	3	21	0	0	0	0
4/24/2024	8:30 AM	1	820	193	13	11	3	0	2	21	0	0	0	0
4/24/2024	8:45 AM	1	720	168	13	6	3	0	1	21	0	0	0	0
4/24/2024	9:00 AM	0	634	136	13	10	4	0	3	19	0	0	0	0
4/24/2024	9:15 AM	1	593	115	4	7	4	0	2	14	0	0	0	0
4/24/2024	9:30 AM	1	563	106	0	7	3	0	3	13	0	0	0	0
4/24/2024	9:45 AM	1	528	113	0	12	5	0	3	11	0	0	0	0
4/24/2024	10:00 AM	1	502	118	1	13	4	0	2	14	0	0	0	0
4/24/2024	10:15 AM	0	480	127	1	16	2	0	2	18	0	0	0	0
4/24/2024	10:30 AM	0	486	128	2	21	2	0	1	20	0	0	0	0
4/24/2024	10:45 AM	1	469	130	2	20	0	1	2	25	0	0	0	0
4/24/2024	11:00 AM	1	447	127	1	16	0	1	1	22	0	0	0	0
4/24/2024	11:15 AM	1	426	116	1	18	0	1	1	21	0	0	0	0
4/24/2024	11:30 AM	1	407	124	0	19	1	1	2	20	0	0	0	0
4/24/2024	11:45 AM	0	408	127	0	18	2	0	2	14	0	0	0	0
4/24/2024	12:00 PM	0	435	119	0	20	2	0	2	11	0	0	0	0
4/24/2024	12:15 PM	0	460	124	0	16	2	0	2	8	0	0	0	0
4/24/2024	12:30 PM	0	438	114	0	10	1	0	2	8	0	0	0	0
4/24/2024	12:45 PM	0	424	115	0	11	4	1	1	9	0	0	0	0
4/24/2024	1:00 PM	0	416	122	0	8	4	1	1	13	0	0	0	0
4/24/2024	1:15 PM	0	415	119	0	9	5	1	1	15	0	0	0	0
4/24/2024	1:30 PM	0	447	119	0	11	7	1	1	16	0	0	0	0
4/24/2024	1:45 PM	1	455	101	0	8	5	0	1	17	0	0	0	0
4/24/2024	2:00 PM	3	456	95	0	11	5	0	1	13	1	0	0	0
4/24/2024	2:15 PM	4	460	90	0	11	5	0	1	11	1	0	0	0
4/24/2024	2:30 PM	4	475	83	0	14	3	0	1	8	1	0	0	0
4/24/2024	2:45 PM	3	489	88	0	16	1	0	1	7	1	0	0	0
4/24/2024	3:00 PM	1	495	87	0	14	1	0	1	9	0	0	0	0
4/24/2024	3:15 PM	0	518	86	0	12	0	0	2	17	0	0	0	0
4/24/2024	3:30 PM	0	522	100	0	9	2	0	1	20	2	0	0	0
4/24/2024	3:45 PM	1	559	104	0	6	2	0	1	19	2	0	0	0
4/24/2024	4:00 PM	2	606	110	0	6	2	0	2	18	2	0	0	0
4/24/2024	4:15 PM	3	649	115	0	6	3	0	1	13	2	0	0	0
4/24/2024	4:30 PM	3	677	106	0	6	1	0	2	13	0	0	0	0
4/24/2024	4:45 PM	2	661	98	0	6	1	0	2	13	0	0	0	0
4/24/2024	5:00 PM	1	627	97	0	7	1	0	2	12	0	0	0	0
4/24/2024	5:15 PM	0	585	90	0	8	0	0	2	10	0	0	0	0
4/24/2024	5:30 PM	0	537	90	2	7	0	0	2	9	0	0	0	0
4/24/2024	5:45 PM	0	523	82	2	7	1	0	2	9	1	0	0	0
4/24/2024	6:00 PM	0	487	71	2	4	1	0	1	13	2	0	0	0
4/24/2024	6:15 PM	2	416	58	2	2	2	0	1	12	2	0	0	0
4/24/2024	6:30 PM	2	376	44	0	2	3	0	0	12	2	0	0	0
4/24/2024	6:45 PM	3	315	40	0	3	3	0	0	11	1	0	0	0
4/24/2024	7:00 PM	3	269	36	0	3	3	0	0	7	0	0	0	0
4/24/2024	7:15 PM	1	272	43	0	4	2	0	0	8	0	0	0	0
4/24/2024	7:30 PM	1	249	41	0	4	1	0	0	7	0	0	0	0
4/24/2024	7:45 PM	0	232	38	0	2	0	0	0	6	0	0	0	0
4/24/2024	8:00 PM	0	216	31	0	3	0	0	0	10	0	0	0	0
4/24/2024	8:15 PM	0	199	26	0	2	0	0	0	8	0	0	0	0
4/24/2024	8:30 PM	0	188	26	0	1	0	0	0	8	0	0	0	0
4/24/2024	8:45 PM	0	173	24	0	1	0	0	0	10	0	0	0	0
4/24/2024	9:00 PM	0	169	25	0	0	0	0	0	6	0	0	0	0
4/24/2024	9:15 PM	0	159	20	0	0	0	0	0	6	0	0	0	0
4/24/2024	9:30 PM	0	142	18	0	1	0	0	0	7	0	0	0	0
4/24/2024	9:45 PM	0	140	18	0	1	0	0	0	7	0	0	0	0
4/24/2024	10:00 PM	0	118	15	0	1	0	0	0	10	0	0	0	0
4/24/2024	10:15 PM	0	91	13	0	1	0	0	0	10	0	1	0	0
4/24/2024	10:30 PM	0	74	9	0	1	0	0	0	7	0	2	0	0
4/24/2024	10:45 PM	0	60	8	0	1	0	0	0	6	0	3	0	0
4/24/2024	11:00 PM	0	64	8	0	1	0	0	0	5	0	3	0	0
4/24/2024	11:15 PM	0	61	7	0	1	0	0	0	5	0	2	0	0
4/24/2024	11:30 PM	0	50	5	0	0	0	0	0	6	0	2	0	0
4/24/2024	11:45 PM	0	38	2	0	1	0	0	0	5	0	1	0	0

4/25/2024	12:00 AM	0	25	0	0	1	0	0	0	3	0	2	0	0
4/25/2024	12:15 AM	0	23	0	0	1	0	0	0	3	0	2	0	0
4/25/2024	12:30 AM	0	23	0	0	1	0	0	0	4	0	1	0	0
4/25/2024	12:45 AM	0	24	0	0	0	0	0	0	6	0	1	0	0
4/25/2024	1:00 AM	0	23	1	0	0	0	0	0	6	0	0	0	0
4/25/2024	1:15 AM	0	20	1	0	0	0	0	0	6	0	0	0	0
4/25/2024	1:30 AM	0	18	1	0	0	0	0	0	7	0	0	0	0
4/25/2024	1:45 AM	0	19	1	0	0	0	0	0	5	0	0	0	0
4/25/2024	2:00 AM	0	22	0	0	0	0	0	0	5	0	0	0	0
4/25/2024	2:15 AM	0	24	1	0	0	0	0	0	5	0	0	0	0
4/25/2024	2:30 AM	0	28	1	0	0	0	0	0	3	0	1	0	0
4/25/2024	2:45 AM	0	26	1	0	2	0	0	0	3	0	1	0	0
4/25/2024	3:00 AM	0	28	2	0	2	0	0	0	5	0	1	0	0
4/25/2024	3:15 AM	0	29	1	0	2	0	0	0	6	0	1	0	0
4/25/2024	3:30 AM	0	34	1	0	2	0	0	0	8	0	0	0	0
4/25/2024	3:45 AM	0	40	1	0	1	0	0	0	9	0	0	0	0
4/25/2024	4:00 AM	0	50	2	0	1	1	0	0	8	0	1	0	0
4/25/2024	4:15 AM	0	58	3	0	3	1	0	0	8	0	1	0	0
4/25/2024	4:30 AM	0	68	4	0	6	1	0	0	12	0	1	0	0
4/25/2024	4:45 AM	0	102	9	0	6	1	0	0	11	0	1	0	0
4/25/2024	5:00 AM	0	135	14	0	9	0	0	0	13	0	0	0	0
4/25/2024	5:15 AM	0	180	17	0	7	0	0	0	14	0	0	0	0
4/25/2024	5:30 AM	0	277	21	0	5	0	0	0	11	0	0	0	0
4/25/2024	5:45 AM	0	392	32	0	6	1	0	0	15	0	0	0	0
4/25/2024	6:00 AM	0	512	57	0	4	3	0	0	15	0	2	0	0
4/25/2024	6:15 AM	0	643	100	0	9	6	0	0	19	0	2	0	0
4/25/2024	6:30 AM	1	761	148	0	10	6	0	0	19	0	2	0	0
4/25/2024	6:45 AM	1	853	178	0	13	5	0	0	18	0	2	0	0
4/25/2024	7:00 AM	1	941	207	0	14	4	0	2	18	0	0	0	0
4/25/2024	7:15 AM	1	1034	201	0	12	1	0	2	14	0	0	0	0
4/25/2024	7:30 AM	0	1097	206	0	14	2	0	3	14	0	0	0	0
4/25/2024	7:45 AM	1	1104	211	0	15	2	1	4	12	0	0	0	0
4/25/2024	8:00 AM	1	1087	210	0	16	3	1	3	10	0	0	0	0
4/25/2024	8:15 AM	1	1013	207	0	16	3	1	3	15	0	0	0	0
4/25/2024	8:30 AM	2	863	183	0	14	3	1	2	15	0	0	0	0
4/25/2024	8:45 AM	1	782	160	6	12	3	0	2	22	0	0	0	0
4/25/2024	9:00 AM	1	699	130	7	11	1	0	2	24	0	0	0	0
4/25/2024	9:15 AM	1	617	124	8	11	2	0	2	21	0	0	0	0
4/25/2024	9:30 AM	0	590	125	12	11	2	0	3	20	0	0	0	0
4/25/2024	9:45 AM	0	525	124	6	8	3	0	3	14	1	0	0	0
4/25/2024	10:00 AM	0	502	116	6	8	3	0	3	14	1	0	0	0
4/25/2024	10:15 AM	1	478	97	5	7	2	0	3	16	1	0	0	0
4/25/2024	10:30 AM	1	492	92	1	7	1	0	3	24	1	0	0	0
4/25/2024	10:45 AM	1	495	86	1	6	0	0	3	31	1	0	0	0
4/25/2024	11:00 AM	1	464	104	0	5	0	0	3	33	1	0	0	0
4/25/2024	11:15 AM	0	477	114	0	5	1	0	4	29	1	0	0	0
4/25/2024	11:30 AM	0	464	111	0	8	4	0	3	24	1	0	0	0
4/25/2024	11:45 AM	1	491	124	0	13	6	0	5	22	1	0	0	0
4/25/2024	12:00 PM	1	508	106	1	14	7	0	6	19	1	0	0	0
4/25/2024	12:15 PM	1	524	112	1	16	8	0	7	20	1	0	0	0
4/25/2024	12:30 PM	1	527	107	1	15	6	0	9	14	1	0	0	0
4/25/2024	12:45 PM	0	517	109	2	13	4	1	6	14	0	0	0	0
4/25/2024	1:00 PM	0	504	110	1	16	4	1	4	16	0	0	0	0
4/25/2024	1:15 PM	0	488	111	1	15	3	1	2	15	1	0	0	0
4/25/2024	1:30 PM	0	491	107	1	14	2	1	2	19	1	0	0	0
4/25/2024	1:45 PM	0	488	94	0	16	2	0	3	15	1	0	0	0
4/25/2024	2:00 PM	0	472	103	0	12	3	0	3	14	1	0	0	0
4/25/2024	2:15 PM	0	468	91	0	11	2	0	3	15	0	0	0	0
4/25/2024	2:30 PM	0	444	100	0	8	2	0	2	16	0	0	0	0
4/25/2024	2:45 PM	0	432	107	0	5	2	0	1	18	0	0	0	0
4/25/2024	3:00 PM	1	470	104	0	6	0	0	1	18	0	0	0	0
4/25/2024	3:15 PM	1	478	111	0	5	0	0	1	17	0	0	0	0
4/25/2024	3:30 PM	2	510	107	0	7	0	0	0	17	0	0	0	0
4/25/2024	3:45 PM	5	536	106	0	6	1	0	0	16	0	0	0	0
4/25/2024	4:00 PM	4	554	106	0	6	1	0	0	15	0	0	0	0
4/25/2024	4:15 PM	5	586	117	0	5	1	0	0	16	0	0	0	0
4/25/2024	4:30 PM	6	591	117	0	5	2	0	1	14	0	0	0	0
4/25/2024	4:45 PM	3	615	112	0	7	1	0	2	15	1	0	0	0
4/25/2024	5:00 PM	3	600	114	0	6	2	0	2	16	1	0	0	0
4/25/2024	5:15 PM	3	571	103	0	7	2	0	2	15	1	0	0	0
4/25/2024	5:30 PM	1	558	96	0	5	2	0	1	17	1	0	0	0
4/25/2024	5:45 PM	1	516	93	0	2	2	0	1	13	1	0	0	0
4/25/2024	6:00 PM	1	480	87	0	2	1	0	1	12	1	0	0	0
4/25/2024	6:15 PM	1	433	73	0	1	1	0	1	11	1	0	0	0
4/25/2024	6:30 PM	3	380	68	0	1	0	0	1	6	1	0	0	0
4/25/2024	6:45 PM	3	327	58	0	2	0	0	1	5	0	0	0	0
4/25/2024	7:00 PM	3	291	42	0	1	0	0	1	3	0	0	0	0
4/25/2024	7:15 PM	2	263	39	0	2	0	0	1	2	0	0	0	0
4/25/2024	7:30 PM	0	234	33	0	3	0	0	1	5	0	0	0	0
4/25/2024	7:45 PM	0	224	30	1	2	0	0	0	8	0	0	0	0
4/25/2024	8:00 PM	0	211	25	1	2	0	0	0	10	0	1	0	0
4/25/2024	8:15 PM	0	213	23	1	2	0	0	0	10	0	1	0	0
4/25/2024	8:30 PM	0	213	21	1	1	1	0	0	9	0	1	0	0
4/25/2024	8:45 PM	0	201	13	0	1	1	0	0	7	0	1	0	0
4/25/2024	9:00 PM	0	197	12	0	2	1	0	0	6	0	0	0	0
4/25/2024	9:15 PM	0	193	10	0	2	1	0	0	5	0	0	0	0
4/25/2024	9:30 PM	0	181	11	0	2	0	0	0	3	0	0	0	0
4/25/2024	9:45 PM	0	149	12	0	3	0	0	0	2	0	0	0	0
4/25/2024	10:00 PM	0	125	11	0	2	0	0	0	1	0	0	0	0
4/25/2024	10:15 PM	0	96	7	0	1	0	0	0	3	0	0	0	0
4/25/2024	10:30 PM	0	88	3	0	1	0	0	0	4	0	0	0	0
4/25/2024	10:45 PM	0	84	2	0	0	0	0	0	5	0	0	0	0
4/25/2024	11:00 PM	0	72	0	0	0	0	0	0	5	0	0	0	0
4/25/2024	11:15 PM	0	53	0	0	0	0	0	0	3	0	0	0	0
4/25/2024	11:30 PM	0	26	0	0	0	0	0	0	2	0	0	0	0
4/25/2024	11:45 PM	0	10	0	0	0	0	0	0	1	0	0	0	0

4/26/2024	12:00 AM	0	34	4	0	4	0	0	0	7	0	1	0	0
4/26/2024	12:15 AM	0	28	2	0	4	0	0	0	6	0	2	0	0
4/26/2024	12:30 AM	0	28	1	0	5	2	0	0	4	0	3	0	0
4/26/2024	12:45 AM	0	25	1	0	3	2	0	0	5	0	3	0	0
4/26/2024	1:00 AM	0	25	1	0	1	2	0	0	5	0	3	0	0
4/26/2024	1:15 AM	0	25	1	0	1	2	0	0	4	0	1	0	0
4/26/2024	1:30 AM	0	24	0	0	0	0	0	0	3	0	0	0	0
4/26/2024	1:45 AM	0	17	1	0	0	0	0	0	3	0	0	0	0
4/26/2024	2:00 AM	0	12	1	0	0	0	0	0	5	0	0	0	0
4/26/2024	2:15 AM	0	12	1	0	0	0	0	0	5	0	1	0	0
4/26/2024	2:30 AM	0	10	1	0	0	0	0	0	7	0	1	0	0
4/26/2024	2:45 AM	0	15	0	0	0	0	0	0	10	0	1	0	0
4/26/2024	3:00 AM	0	23	0	0	0	0	0	0	8	0	1	0	0
4/26/2024	3:15 AM	0	28	0	0	2	1	0	0	7	0	0	0	0
4/26/2024	3:30 AM	0	37	2	0	3	1	0	0	5	0	0	0	0
4/26/2024	3:45 AM	0	41	2	0	3	1	0	0	1	0	0	0	0
4/26/2024	4:00 AM	0	47	5	0	3	1	0	0	0	0	0	0	0
4/26/2024	4:15 AM	0	54	7	0	5	0	0	0	2	0	0	0	0
4/26/2024	4:30 AM	0	74	9	0	6	0	0	0	5	0	0	0	0
4/26/2024	4:45 AM	0	100	11	0	6	1	0	0	7	0	0	0	0
4/26/2024	5:00 AM	0	125	9	0	6	1	0	0	9	0	0	0	0
4/26/2024	5:15 AM	0	169	14	0	2	1	0	0	9	0	0	0	0
4/26/2024	5:30 AM	0	218	24	1	2	1	0	0	12	0	0	0	0
4/26/2024	5:45 AM	1	304	55	1	4	0	0	1	12	0	0	0	0
4/26/2024	6:00 AM	1	406	99	1	6	0	0	2	17	0	2	0	0
4/26/2024	6:15 AM	1	507	137	1	9	0	0	2	21	0	2	0	0
4/26/2024	6:30 AM	2	649	179	1	9	2	0	2	17	0	2	0	0
4/26/2024	6:45 AM	2	807	194	1	9	2	0	1	22	0	2	0	0
4/26/2024	7:00 AM	2	909	196	1	10	3	0	0	17	0	1	0	0
4/26/2024	7:15 AM	2	990	200	1	9	3	0	0	15	0	1	0	0
4/26/2024	7:30 AM	1	1016	185	0	9	1	0	1	20	0	1	0	0
4/26/2024	7:45 AM	0	992	180	3	10	2	0	2	16	0	1	0	0
4/26/2024	8:00 AM	0	968	173	7	9	1	0	2	20	0	0	0	0
4/26/2024	8:15 AM	0	894	172	12	9	1	0	3	21	0	0	0	0
4/26/2024	8:30 AM	0	798	166	17	11	1	0	4	19	0	0	0	0
4/26/2024	8:45 AM	0	706	161	14	11	0	0	3	18	1	0	0	0
4/26/2024	9:00 AM	0	630	165	10	12	0	0	5	18	1	0	0	0
4/26/2024	9:15 AM	0	596	152	6	12	0	0	7	20	1	0	0	0
4/26/2024	9:30 AM	0	569	154	1	15	0	0	7	17	1	0	0	0
4/26/2024	9:45 AM	1	536	157	1	14	3	0	7	18	1	0	0	0
4/26/2024	10:00 AM	1	520	147	1	17	4	0	7	22	3	0	0	0
4/26/2024	10:15 AM	1	501	152	0	17	4	0	4	19	3	0	0	0
4/26/2024	10:30 AM	1	493	147	0	14	6	0	3	21	3	0	0	0
4/26/2024	10:45 AM	0	517	131	0	13	3	0	3	21	2	0	0	0
4/26/2024	11:00 AM	0	505	112	0	12	2	0	1	14	0	0	0	0
4/26/2024	11:15 AM	0	519	92	0	11	2	0	3	15	1	0	0	0
4/26/2024	11:30 AM	0	520	89	0	12	2	0	4	18	1	0	0	0
4/26/2024	11:45 AM	0	505	94	0	16	2	0	6	18	1	0	0	0
4/26/2024	12:00 PM	0	507	94	0	16	2	0	6	18	1	0	0	0
4/26/2024	12:15 PM	0	506	94	0	16	2	0	6	18	1	0	0	0
4/26/2024	12:30 PM	0	507	93	0	16	2	0	6	18	1	0	0	0
4/26/2024	12:45 PM	1	515	90	0	16	2	0	6	18	1	0	0	0
4/26/2024	1:00 PM	1	505	103	0	13	3	0	8	20	1	0	0	0
4/26/2024	1:15 PM	1	490	107	0	17	5	0	7	19	0	0	0	0
4/26/2024	1:30 PM	1	472	102	0	14	3	0	5	15	0	0	0	0
4/26/2024	1:45 PM	1	433	104	0	11	3	0	4	18	0	0	0	0
4/26/2024	2:00 PM	1	414	103	0	9	2	0	3	13	0	0	0	0
4/26/2024	2:15 PM	1	410	103	3	6	2	0	2	12	0	0	0	0
4/26/2024	2:30 PM	1	423	107	3	5	2	0	2	13	0	0	0	0
4/26/2024	2:45 PM	0	452	106	3	11	4	0	2	10	0	0	0	0
4/26/2024	3:00 PM	2	501	108	3	14	4	0	1	11	0	0	0	0
4/26/2024	3:15 PM	2	510	113	0	15	2	0	1	8	0	0	0	0
4/26/2024	3:30 PM	2	518	103	0	17	2	0	1	6	0	0	0	0
4/26/2024	3:45 PM	2	514	106	0	14	0	0	1	4	0	0	0	0
4/26/2024	4:00 PM	3	526	109	0	13	0	0	1	3	0	0	0	0
4/26/2024	4:15 PM	3	569	113	0	13	1	0	2	7	0	0	0	0
4/26/2024	4:30 PM	3	608	131	0	11	3	0	3	6	0	0	0	0
4/26/2024	4:45 PM	5	605	130	0	7	3	0	2	7	2	0	0	0
4/26/2024	5:00 PM	3	616	135	0	6	3	0	2	9	2	0	0	0
4/26/2024	5:15 PM	4	609	138	0	5	2	0	1	6	2	0	0	0
4/26/2024	5:30 PM	4	624	128	0	6	0	0	0	7	2	0	0	0
4/26/2024	5:45 PM	5	639	111	0	8	1	0	1	7	0	0	0	0
4/26/2024	6:00 PM	4	589	84	0	9	1	0	3	7	0	0	0	0
4/26/2024	6:15 PM	4	520	67	0	8	1	0	3	7	0	0	0	0
4/26/2024	6:30 PM	4	431	58	0	7	1	0	3	7	0	0	0	0
4/26/2024	6:45 PM	1	358	57	0	5	0	0	2	5	0	0	0	0
4/26/2024	7:00 PM	1	316	58	1	4	1	0	0	3	0	0	0	0
4/26/2024	7:15 PM	0	302	50	1	4	1	0	0	3	0	0	0	0
4/26/2024	7:30 PM	0	263	40	1	4	1	0	0	1	0	0	0	0
4/26/2024	7:45 PM	0	258	33	1	4	1	0	0	3	0	0	0	0
4/26/2024	8:00 PM	3	259	27	0	3	0	0	0	4	0	1	0	0
4/26/2024	8:15 PM	3	249	25	0	2	0	0	0	3	0	1	0	0
4/26/2024	8:30 PM	3	257	27	0	1	0	0	0	3	0	1	0	0
4/26/2024	8:45 PM	3	234	26	0	0	0	0	0	2	0	1	0	0
4/26/2024	9:00 PM	0	212	23	0	0	0	0	0	4	0	0	0	0
4/26/2024	9:15 PM	0	193	16	0	1	0	0	0	6	0	0	0	0
4/26/2024	9:30 PM	0	185	14	0	1	0	0	0	8	0	0	0	0
4/26/2024	9:45 PM	0	179	13	0	1	0	0	0	8	0	0	0	0
4/26/2024	10:00 PM	0	171	13	0	2	0	0	0	7	0	0	0	0
4/26/2024	10:15 PM	0	164	14	0	2	0	0	0	9	0	0	0	0
4/26/2024	10:30 PM	0	144	8	0	2	0	0	0	10	0	0	0	0
4/26/2024	10:45 PM	0	125	5	0	3	0	0	0	10	0	0	0	0
4/26/2024	11:00 PM	0	107	3	0	4	0	0	0	8	0	0	0	0
4/26/2024	11:15 PM	0	72	0	0	3	0	0	0	4	0	0	0	0
4/26/2024	11:30 PM	0	42	0	0	3	0	0	0	1	0	0	0	0
4/26/2024	11:45 PM	0	22	0	0	2	0	0	0	0	0	0	0	0

4/27/2024	12:00 AM	0	53	12	0	0	0	0	1	3	0	0	0	0
4/27/2024	12:15 AM	0	51	10	0	1	0	0	1	3	0	1	0	0
4/27/2024	12:30 AM	0	43	6	0	2	0	0	1	4	0	1	0	0
4/27/2024	12:45 AM	0	43	6	0	2	0	0	1	5	0	1	0	0
4/27/2024	1:00 AM	0	38	4	0	2	0	0	0	3	0	1	0	0
4/27/2024	1:15 AM	0	36	4	0	2	0	0	0	3	0	1	0	0
4/27/2024	1:30 AM	0	37	3	0	1	0	0	0	2	0	1	0	0
4/27/2024	1:45 AM	0	33	2	0	1	0	0	0	1	0	1	0	0
4/27/2024	2:00 AM	0	34	2	0	2	0	0	0	2	0	1	0	0
4/27/2024	2:15 AM	0	29	1	0	1	0	0	0	2	0	0	0	0
4/27/2024	2:30 AM	0	24	1	0	4	0	0	0	1	0	0	0	0
4/27/2024	2:45 AM	0	20	0	0	4	0	0	0	3	0	0	0	0
4/27/2024	3:00 AM	0	17	0	0	3	0	0	0	2	0	0	0	0
4/27/2024	3:15 AM	0	20	1	0	4	0	0	0	2	0	0	0	0
4/27/2024	3:30 AM	0	20	1	0	1	0	0	0	3	0	0	0	0
4/27/2024	3:45 AM	0	22	1	0	1	0	0	0	1	0	0	0	0
4/27/2024	4:00 AM	0	23	1	0	1	0	0	0	1	0	0	0	0
4/27/2024	4:15 AM	0	30	2	0	0	0	0	0	1	0	0	0	0
4/27/2024	4:30 AM	0	34	3	0	0	0	0	0	0	0	0	0	0
4/27/2024	4:45 AM	0	46	7	0	0	0	0	0	1	0	0	0	0
4/27/2024	5:00 AM	0	61	10	0	1	1	0	0	1	0	0	0	0
4/27/2024	5:15 AM	0	63	10	0	2	1	0	0	1	0	1	0	0
4/27/2024	5:30 AM	0	77	14	0	2	1	0	0	2	0	2	0	0
4/27/2024	5:45 AM	1	114	21	0	2	1	0	0	1	0	2	0	0
4/27/2024	6:00 AM	1	139	26	0	1	0	0	0	4	0	2	0	0
4/27/2024	6:15 AM	1	164	34	0	1	0	0	0	7	0	1	0	0
4/27/2024	6:30 AM	1	197	44	0	3	0	0	1	6	0	0	0	0
4/27/2024	6:45 AM	0	201	47	0	4	0	1	2	7	0	0	0	0
4/27/2024	7:00 AM	0	215	53	0	5	0	1	2	5	0	0	1	0
4/27/2024	7:15 AM	0	239	55	0	4	1	1	2	4	0	0	1	0
4/27/2024	7:30 AM	0	285	57	0	2	1	1	2	6	0	0	1	0
4/27/2024	7:45 AM	0	325	58	0	1	1	0	1	8	0	0	1	0
4/27/2024	8:00 AM	0	371	63	0	1	1	0	3	8	0	0	0	0
4/27/2024	8:15 AM	0	406	67	0	3	0	0	3	6	0	0	0	0
4/27/2024	8:30 AM	0	412	69	0	5	0	0	2	5	0	0	0	0
4/27/2024	8:45 AM	0	437	86	0	7	0	0	3	3	0	0	0	0
4/27/2024	9:00 AM	0	465	96	0	6	0	0	1	3	0	0	0	0
4/27/2024	9:15 AM	1	492	97	0	4	0	0	1	4	0	0	0	0
4/27/2024	9:30 AM	1	504	95	0	4	0	0	1	4	0	0	0	0
4/27/2024	9:45 AM	5	509	90	0	2	1	0	0	4	0	0	0	0
4/27/2024	10:00 AM	5	488	91	1	2	1	0	0	6	0	0	0	0
4/27/2024	10:15 AM	5	490	97	1	3	1	0	0	6	0	0	0	0
4/27/2024	10:30 AM	5	491	103	1	1	1	0	1	10	0	0	0	0
4/27/2024	10:45 AM	1	483	101	1	3	0	0	2	11	0	0	0	0
4/27/2024	11:00 AM	1	520	93	0	3	0	0	4	8	0	0	0	0
4/27/2024	11:15 AM	0	525	82	0	3	0	0	4	10	0	0	0	0
4/27/2024	11:30 AM	0	527	84	0	6	0	0	4	5	0	0	0	0
4/27/2024	11:45 AM	1	541	80	0	4	0	0	4	5	0	0	0	0
4/27/2024	12:00 PM	1	504	78	0	5	0	0	2	7	0	0	0	0
4/27/2024	12:15 PM	1	470	82	0	4	1	0	3	4	0	0	0	0
4/27/2024	12:30 PM	2	473	72	0	1	1	0	2	5	0	0	0	0
4/27/2024	12:45 PM	1	461	59	0	1	1	0	1	3	0	0	0	0
4/27/2024	1:00 PM	1	453	51	0	1	2	0	1	3	0	0	0	0
4/27/2024	1:15 PM	1	466	56	0	1	1	0	0	3	0	0	0	0
4/27/2024	1:30 PM	0	444	62	0	1	1	0	0	4	0	0	0	0
4/27/2024	1:45 PM	1	459	76	1	2	2	0	1	4	0	0	0	0
4/27/2024	2:00 PM	1	485	76	1	1	1	0	1	5	0	0	0	0
4/27/2024	2:15 PM	1	500	76	1	1	1	0	1	5	0	0	0	0
4/27/2024	2:30 PM	1	543	74	1	2	1	0	1	4	0	0	0	0
4/27/2024	2:45 PM	0	549	81	1	2	0	0	0	5	0	0	0	0
4/27/2024	3:00 PM	0	528	90	1	3	0	0	0	4	0	0	0	0
4/27/2024	3:15 PM	0	488	90	1	3	0	0	0	4	0	0	0	0
4/27/2024	3:30 PM	0	454	94	1	3	0	0	0	3	0	0	0	0
4/27/2024	3:45 PM	0	460	85	0	3	0	0	1	2	0	0	0	0
4/27/2024	4:00 PM	0	513	93	0	3	0	0	1	2	0	0	0	0
4/27/2024	4:15 PM	0	553	95	0	3	0	0	1	3	0	0	0	0
4/27/2024	4:30 PM	0	603	105	0	4	0	0	1	5	0	0	0	0
4/27/2024	4:45 PM	0	575	111	0	3	0	0	0	6	0	0	0	0
4/27/2024	5:00 PM	1	517	102	0	2	0	0	0	5	0	0	0	0
4/27/2024	5:15 PM	1	506	95	0	3	0	0	0	5	0	0	0	0
4/27/2024	5:30 PM	1	464	79	0	2	0	0	0	3	0	0	0	0
4/27/2024	5:45 PM	1	466	70	0	2	0	0	0	2	0	0	0	0
4/27/2024	6:00 PM	0	477	62	0	3	0	0	0	2	0	0	0	0
4/27/2024	6:15 PM	0	461	59	0	2	0	0	0	2	0	0	0	0
4/27/2024	6:30 PM	0	431	51	0	1	0	0	1	4	0	0	0	0
4/27/2024	6:45 PM	0	392	48	0	2	0	0	1	4	0	0	0	0
4/27/2024	7:00 PM	0	353	48	0	2	0	0	1	3	0	0	0	0
4/27/2024	7:15 PM	0	334	41	0	2	0	0	1	2	0	0	0	0
4/27/2024	7:30 PM	1	304	36	0	3	0	0	0	1	0	0	0	0
4/27/2024	7:45 PM	1	289	31	0	2	0	0	0	1	0	0	0	0
4/27/2024	8:00 PM	1	272	25	0	1	0	0	0	1	0	0	0	0
4/27/2024	8:15 PM	1	249	27	0	1	0	0	0	1	0	0	0	0
4/27/2024	8:30 PM	0	238	29	0	0	0	0	0	0	0	0	0	0
4/27/2024	8:45 PM	0	218	27	0	0	0	0	0	0	0	0	0	0
4/27/2024	9:00 PM	0	200	28	0	0	0	0	0	1	0	0	0	0
4/27/2024	9:15 PM	0	180	28	0	0	0	0	0	1	0	0	0	0
4/27/2024	9:30 PM	0	170	26	1	0	0	0	0	1	0	0	0	0
4/27/2024	9:45 PM	0	170	23	1	0	0	0	0	1	0	0	0	0
4/27/2024	10:00 PM	0	154	19	2	0	0	0	0	0	0	0	0	0
4/27/2024	10:15 PM	0	144	14	3	1	0	0	0	0	0	0	0	0
4/27/2024	10:30 PM	0	134	12	2	1	0	0	0	1	0	0	0	0
4/27/2024	10:45 PM	0	114	11	2	2	0	0	0	1	0	0	0	0
4/27/2024	11:00 PM	0	114	9	1	2	0	0	0	3	0	0	0	0
4/27/2024	11:15 PM	0	84	6	0	1	0	0	0	3	0	0	0	0
4/27/2024	11:30 PM	0	55	4	0	1	0	0	0	2	0	0	0	0
4/27/2024	11:45 PM	0	25	1	0	0	0	0	0	2	0	0	0	0

SB
File Name:
Start Date: 4/21/2024
Start Time: 0
Site Code: 75 Lane 4 NB
Station ID: 1
Location 1: I-20, north of Bush River Rd
Location 2:

Date	Time	1	2	3	4	5	6	7	8	9	10	11	12	13
4/21/2024	12:00 AM	0	0	0	0	0	0	0	0	0	0	0	0	0
4/21/2024	12:15 AM	0	0	0	0	0	0	0	0	0	0	0	0	0
4/21/2024	12:30 AM	0	0	0	0	0	0	0	0	0	0	0	0	0
4/21/2024	12:45 AM	0	0	0	0	0	0	0	0	0	0	0	0	0
4/21/2024	1:00 AM	0	0	0	0	0	0	0	0	0	0	0	0	0
4/21/2024	1:15 AM	0	0	0	0	0	0	0	0	0	0	0	0	0
4/21/2024	1:30 AM	0	0	0	0	0	0	0	0	0	0	0	0	0
4/21/2024	1:45 AM	0	0	0	0	0	0	0	0	0	0	0	0	0
4/21/2024	2:00 AM	0	0	0	0	0	0	0	0	0	0	0	0	0
4/21/2024	2:15 AM	0	0	0	0	0	0	0	0	0	0	0	0	0
4/21/2024	2:30 AM	0	0	0	0	0	0	0	0	0	0	0	0	0
4/21/2024	2:45 AM	0	0	0	0	0	0	0	0	0	0	0	0	0
4/21/2024	3:00 AM	0	0	0	0	0	0	0	0	0	0	0	0	0
4/21/2024	3:15 AM	0	0	0	0	0	0	0	0	0	0	0	0	0
4/21/2024	3:30 AM	0	0	0	0	0	0	0	0	0	0	0	0	0
4/21/2024	3:45 AM	0	0	0	0	0	0	0	0	0	0	0	0	0
4/21/2024	4:00 AM	0	0	0	0	0	0	0	0	0	0	0	0	0
4/21/2024	4:15 AM	0	0	0	0	0	0	0	0	0	0	0	0	0
4/21/2024	4:30 AM	0	0	0	0	0	0	0	0	0	0	0	0	0
4/21/2024	4:45 AM	0	0	0	0	0	0	0	0	0	0	0	0	0
4/21/2024	5:00 AM	0	0	0	0	0	0	0	0	0	0	0	0	0
4/21/2024	5:15 AM	0	0	0	0	0	0	0	0	0	0	0	0	0
4/21/2024	5:30 AM	0	0	0	0	0	0	0	0	0	0	0	0	0
4/21/2024	5:45 AM	0	0	0	0	0	0	0	0	0	0	0	0	0
4/21/2024	6:00 AM	0	0	0	0	0	0	0	0	0	0	0	0	0
4/21/2024	6:15 AM	0	0	0	0	0	0	0	0	0	0	0	0	0
4/21/2024	6:30 AM	0	0	0	0	0	0	0	0	0	0	0	0	0
4/21/2024	6:45 AM	0	0	0	0	0	0	0	0	0	0	0	0	0
4/21/2024	7:00 AM	0	0	0	0	0	0	0	0	0	0	0	0	0
4/21/2024	7:15 AM	0	0	0	0	0	0	0	0	0	0	0	0	0
4/21/2024	7:30 AM	0	0	0	0	0	0	0	0	0	0	0	0	0
4/21/2024	7:45 AM	0	0	0	0	0	0	0	0	0	0	0	0	0
4/21/2024	8:00 AM	0	0	0	0	0	0	0	0	0	0	0	0	0
4/21/2024	8:15 AM	0	0	0	0	0	0	0	0	0	0	0	0	0
4/21/2024	8:30 AM	0	0	0	0	0	0	0	0	0	0	0	0	0
4/21/2024	8:45 AM	0	0	0	0	0	0	0	0	0	0	0	0	0
4/21/2024	9:00 AM	0	0	0	0	0	0	0	0	0	0	0	0	0
4/21/2024	9:15 AM	0	0	0	0	0	0	0	0	0	0	0	0	0
4/21/2024	9:30 AM	0	0	0	0	0	0	0	0	0	0	0	0	0
4/21/2024	9:45 AM	0	0	0	0	0	0	0	0	0	0	0	0	0
4/21/2024	10:00 AM	0	0	0	0	0	0	0	0	0	0	0	0	0
4/21/2024	10:15 AM	0	0	0	0	0	0	0	0	0	0	0	0	0
4/21/2024	10:30 AM	0	0	0	0	0	0	0	0	0	0	0	0	0
4/21/2024	10:45 AM	0	0	0	0	0	0	0	0	0	0	0	0	0
4/21/2024	11:00 AM	0	0	0	0	0	0	0	0	0	0	0	0	0
4/21/2024	11:15 AM	0	0	0	0	0	0	0	0	0	0	0	0	0
4/21/2024	11:30 AM	0	0	0	0	0	0	0	0	0	0	0	0	0
4/21/2024	11:45 AM	0	0	0	0	0	0	0	0	0	0	0	0	0
4/21/2024	12:00 PM	0	0	0	0	0	0	0	0	0	0	0	0	0
4/21/2024	12:15 PM	0	0	0	0	0	0	0	0	0	0	0	0	0
4/21/2024	12:30 PM	0	0	0	0	0	0	0	0	0	0	0	0	0
4/21/2024	12:45 PM	0	0	0	0	0	0	0	0	0	0	0	0	0
4/21/2024	1:00 PM	0	0	0	0	0	0	0	0	0	0	0	0	0
4/21/2024	1:15 PM	0	0	0	0	0	0	0	0	0	0	0	0	0
4/21/2024	1:30 PM	0	0	0	0	0	0	0	0	0	0	0	0	0
4/21/2024	1:45 PM	0	0	0	0	0	0	0	0	0	0	0	0	0
4/21/2024	2:00 PM	0	0	0	0	0	0	0	0	0	0	0	0	0
4/21/2024	2:15 PM	0	0	0	0	0	0	0	0	0	0	0	0	0
4/21/2024	2:30 PM	0	0	0	0	0	0	0	0	0	0	0	0	0
4/21/2024	2:45 PM	0	0	0	0	0	0	0	0	0	0	0	0	0
4/21/2024	3:00 PM	0	0	0	0	0	0	0	0	0	0	0	0	0
4/21/2024	3:15 PM	0	0	0	0	0	0	0	0	0	0	0	0	0
4/21/2024	3:30 PM	0	0	0	0	0	0	0	0	0	0	0	0	0
4/21/2024	3:45 PM	0	0	0	0	0	0	0	0	0	0	0	0	0
4/21/2024	4:00 PM	0	0	0	0	0	0	0	0	0	0	0	0	0
4/21/2024	4:15 PM	0	0	0	0	0	0	0	0	0	0	0	0	0
4/21/2024	4:30 PM	0	0	0	0	0	0	0	0	0	0	0	0	0
4/21/2024	4:45 PM	0	0	0	0	0	0	0	0	0	0	0	0	0
4/21/2024	5:00 PM	0	0	0	0	0	0	0	0	0	0	0	0	0
4/21/2024	5:15 PM	0	0	0	0	0	0	0	0	0	0	0	0	0
4/21/2024	5:30 PM	0	0	0	0	0	0	0	0	0	0	0	0	0
4/21/2024	5:45 PM	0	0	0	0	0	0	0	0	0	0	0	0	0
4/21/2024	6:00 PM	0	0	0	0	0	0	0	0	0	0	0	0	0
4/21/2024	6:15 PM	0	0	0	0	0	0	0	0	0	0	0	0	0
4/21/2024	6:30 PM	0	0	0	0	0	0	0	0	0	0	0	0	0
4/21/2024	6:45 PM	0	0	0	0	0	0	0	0	0	0	0	0	0
4/21/2024	7:00 PM	0	0	0	0	0	0	0	0	0	0	0	0	0
4/21/2024	7:15 PM	0	0	0	0	0	0	0	0	0	0	0	0	0
4/21/2024	7:30 PM	0	0	0	0	0	0	0	0	0	0	0	0	0
4/21/2024	7:45 PM	0	0	0	0	0	0	0	0	0	0	0	0	0
4/21/2024	8:00 PM	0	0	0	0	0	0	0	0	0	0	0	0	0
4/21/2024	8:15 PM	0	0	0	0	0	0	0	0	0	0	0	0	0
4/21/2024	8:30 PM	0	0	0	0	0	0	0	0	0	0	0	0	0
4/21/2024	8:45 PM	0	0	0	0	0	0	0	0	0	0	0	0	0
4/21/2024	9:00 PM	0	0	0	0	0	0	0	0	0	0	0	0	0
4/21/2024	9:15 PM	0	0	0	0	0	0	0	0	0	0	0	0	0
4/21/2024	9:30 PM	0	0	0	0	0	0	0	0	0	0	0	0	0
4/21/2024	9:45 PM	0	0	0	0	0	0	0	0	0	0	0	0	0
4/21/2024	10:00 PM	0	0	0	0	0	0	0	0	0	0	0	0	0
4/21/2024	10:15 PM	0	0	0	0	0	0	0	0	0	0	0	0	0
4/21/2024	10:30 PM	0	0	0	0	0	0	0	0	0	0	0	0	0
4/21/2024	10:45 PM	0	0	0	0	0	0	0	0	0	0	0	0	0
4/21/2024	11:00 PM	0	0	0	0	0	0	0	0	0	0	0	0	0
4/21/2024	11:15 PM	0	0	0	0	0	0	0	0	0	0	0	0	0
4/21/2024	11:30 PM	0	0	0	0	0	0	0	0	0	0	0	0	0
4/21/2024	11:45 PM	0	0	0	0	0	0	0	0	0	0	0	0	0

4/22/2024	12:00 AM	0	0	0	0	0	0	0	0	0	0	0	0	0
4/22/2024	12:15 AM	0	0	0	0	0	0	0	0	0	0	0	0	0
4/22/2024	12:30 AM	0	0	0	0	0	0	0	0	0	0	0	0	0
4/22/2024	12:45 AM	0	0	0	0	0	0	0	0	0	0	0	0	0
4/22/2024	1:00 AM	0	0	0	0	0	0	0	0	0	0	0	0	0
4/22/2024	1:15 AM	0	0	0	0	0	0	0	0	0	0	0	0	0
4/22/2024	1:30 AM	0	0	0	0	0	0	0	0	0	0	0	0	0
4/22/2024	1:45 AM	0	0	0	0	0	0	0	0	0	0	0	0	0
4/22/2024	2:00 AM	0	0	0	0	0	0	0	0	0	0	0	0	0
4/22/2024	2:15 AM	0	0	0	0	0	0	0	0	0	0	0	0	0
4/22/2024	2:30 AM	0	0	0	0	0	0	0	0	0	0	0	0	0
4/22/2024	2:45 AM	0	0	0	0	0	0	0	0	0	0	0	0	0
4/22/2024	3:00 AM	0	0	0	0	0	0	0	0	0	0	0	0	0
4/22/2024	3:15 AM	0	0	0	0	0	0	0	0	0	0	0	0	0
4/22/2024	3:30 AM	0	0	0	0	0	0	0	0	0	0	0	0	0
4/22/2024	3:45 AM	0	0	0	0	0	0	0	0	0	0	0	0	0
4/22/2024	4:00 AM	0	0	0	0	0	0	0	0	0	0	0	0	0
4/22/2024	4:15 AM	0	0	0	0	0	0	0	0	0	0	0	0	0
4/22/2024	4:30 AM	0	0	0	0	0	0	0	0	0	0	0	0	0
4/22/2024	4:45 AM	0	0	0	0	0	0	0	0	0	0	0	0	0
4/22/2024	5:00 AM	0	0	0	0	0	0	0	0	0	0	0	0	0
4/22/2024	5:15 AM	0	0	0	0	0	0	0	0	0	0	0	0	0
4/22/2024	5:30 AM	0	0	0	0	0	0	0	0	0	0	0	0	0
4/22/2024	5:45 AM	0	0	0	0	0	0	0	0	0	0	0	0	0
4/22/2024	6:00 AM	0	0	0	0	0	0	0	0	0	0	0	0	0
4/22/2024	6:15 AM	0	0	0	0	0	0	0	0	0	0	0	0	0
4/22/2024	6:30 AM	0	0	0	0	0	0	0	0	0	0	0	0	0
4/22/2024	6:45 AM	0	0	0	0	0	0	0	0	0	0	0	0	0
4/22/2024	7:00 AM	0	0	0	0	0	0	0	0	0	0	0	0	0
4/22/2024	7:15 AM	0	0	0	0	0	0	0	0	0	0	0	0	0
4/22/2024	7:30 AM	0	0	0	0	0	0	0	0	0	0	0	0	0
4/22/2024	7:45 AM	0	0	0	0	0	0	0	0	0	0	0	0	0
4/22/2024	8:00 AM	0	0	0	0	0	0	0	0	0	0	0	0	0
4/22/2024	8:15 AM	0	0	0	0	0	0	0	0	0	0	0	0	0
4/22/2024	8:30 AM	0	0	0	0	0	0	0	0	0	0	0	0	0
4/22/2024	8:45 AM	0	0	0	0	0	0	0	0	0	0	0	0	0
4/22/2024	9:00 AM	0	0	0	0	0	0	0	0	0	0	0	0	0
4/22/2024	9:15 AM	0	0	0	0	0	0	0	0	0	0	0	0	0
4/22/2024	9:30 AM	0	0	0	0	0	0	0	0	0	0	0	0	0
4/22/2024	9:45 AM	0	0	0	0	0	0	0	0	0	0	0	0	0
4/22/2024	10:00 AM	0	0	0	0	0	0	0	0	0	0	0	0	0
4/22/2024	10:15 AM	0	0	0	0	0	0	0	0	0	0	0	0	0
4/22/2024	10:30 AM	0	0	0	0	0	0	0	0	0	0	0	0	0
4/22/2024	10:45 AM	0	0	0	0	0	0	0	0	0	0	0	0	0
4/22/2024	11:00 AM	0	0	0	0	0	0	0	0	0	0	0	0	0
4/22/2024	11:15 AM	0	0	0	0	0	0	0	0	0	0	0	0	0
4/22/2024	11:30 AM	0	0	0	0	0	0	0	0	0	0	0	0	0
4/22/2024	11:45 AM	0	0	0	0	0	0	0	0	0	0	0	0	0
4/22/2024	12:00 PM	0	0	0	0	0	0	0	0	0	0	0	0	0
4/22/2024	12:15 PM	0	0	0	0	0	0	0	0	0	0	0	0	0
4/22/2024	12:30 PM	0	0	0	0	0	0	0	0	0	0	0	0	0
4/22/2024	12:45 PM	0	0	0	0	0	0	0	0	0	0	0	0	0
4/22/2024	1:00 PM	0	0	0	0	0	0	0	0	0	0	0	0	0
4/22/2024	1:15 PM	0	0	0	0	0	0	0	0	0	0	0	0	0
4/22/2024	1:30 PM	0	0	0	0	0	0	0	0	0	0	0	0	0
4/22/2024	1:45 PM	0	0	0	0	0	0	0	0	0	0	0	0	0
4/22/2024	2:00 PM	0	0	0	0	0	0	0	0	0	0	0	0	0
4/22/2024	2:15 PM	0	0	0	0	0	0	0	0	0	0	0	0	0
4/22/2024	2:30 PM	0	0	0	0	0	0	0	0	0	0	0	0	0
4/22/2024	2:45 PM	0	0	0	0	0	0	0	0	0	0	0	0	0
4/22/2024	3:00 PM	0	0	0	0	0	0	0	0	0	0	0	0	0
4/22/2024	3:15 PM	0	0	0	0	0	0	0	0	0	0	0	0	0
4/22/2024	3:30 PM	0	0	0	0	0	0	0	0	0	0	0	0	0
4/22/2024	3:45 PM	0	0	0	0	0	0	0	0	0	0	0	0	0
4/22/2024	4:00 PM	0	0	0	0	0	0	0	0	0	0	0	0	0
4/22/2024	4:15 PM	0	0	0	0	0	0	0	0	0	0	0	0	0
4/22/2024	4:30 PM	0	0	0	0	0	0	0	0	0	0	0	0	0
4/22/2024	4:45 PM	0	0	0	0	0	0	0	0	0	0	0	0	0
4/22/2024	5:00 PM	0	0	0	0	0	0	0	0	0	0	0	0	0
4/22/2024	5:15 PM	0	0	0	0	0	0	0	0	0	0	0	0	0
4/22/2024	5:30 PM	0	0	0	0	0	0	0	0	0	0	0	0	0
4/22/2024	5:45 PM	0	0	0	0	0	0	0	0	0	0	0	0	0
4/22/2024	6:00 PM	0	0	0	0	0	0	0	0	0	0	0	0	0
4/22/2024	6:15 PM	0	0	0	0	0	0	0	0	0	0	0	0	0
4/22/2024	6:30 PM	0	0	0	0	0	0	0	0	0	0	0	0	0
4/22/2024	6:45 PM	0	0	0	0	0	0	0	0	0	0	0	0	0
4/22/2024	7:00 PM	0	0	0	0	0	0	0	0	0	0	0	0	0
4/22/2024	7:15 PM	0	0	0	0	0	0	0	0	0	0	0	0	0
4/22/2024	7:30 PM	0	0	0	0	0	0	0	0	0	0	0	0	0
4/22/2024	7:45 PM	0	0	0	0	0	0	0	0	0	0	0	0	0
4/22/2024	8:00 PM	0	0	0	0	0	0	0	0	0	0	0	0	0
4/22/2024	8:15 PM	0	0	0	0	0	0	0	0	0	0	0	0	0
4/22/2024	8:30 PM	0	0	0	0	0	0	0	0	0	0	0	0	0
4/22/2024	8:45 PM	0	0	0	0	0	0	0	0	0	0	0	0	0
4/22/2024	9:00 PM	0	0	0	0	0	0	0	0	0	0	0	0	0
4/22/2024	9:15 PM	0	0	0	0	0	0	0	0	0	0	0	0	0
4/22/2024	9:30 PM	0	0	0	0	0	0	0	0	0	0	0	0	0
4/22/2024	9:45 PM	0	0	0	0	0	0	0	0	0	0	0	0	0
4/22/2024	10:00 PM	0	0	0	0	0	0	0	0	0	0	0	0	0
4/22/2024	10:15 PM	0	0	0	0	0	0	0	0	0	0	0	0	0
4/22/2024	10:30 PM	0	0	0	0	0	0	0	0	0	0	0	0	0
4/22/2024	10:45 PM	0	0	0	0	0	0	0	0	0	0	0	0	0
4/22/2024	11:00 PM	0	0	0	0	0	0	0	0	0	0	0	0	0
4/22/2024	11:15 PM	0	0	0	0	0	0	0	0	0	0	0	0	0
4/22/2024	11:30 PM	0	0	0	0	0	0	0	0	0	0	0	0	0
4/22/2024	11:45 PM	0	0	0	0	0	0	0	0	0	0	0	0	0

4/23/2024	12:00 AM	0	0	0	0	0	0	0	0	0	0	0	0	0
4/23/2024	12:15 AM	0	0	0	0	0	0	0	0	0	0	0	0	0
4/23/2024	12:30 AM	0	0	0	0	0	0	0	0	0	0	0	0	0
4/23/2024	12:45 AM	0	0	0	0	0	0	0	0	0	0	0	0	0
4/23/2024	1:00 AM	0	0	0	0	0	0	0	0	0	0	0	0	0
4/23/2024	1:15 AM	0	0	0	0	0	0	0	0	0	0	0	0	0
4/23/2024	1:30 AM	0	0	0	0	0	0	0	0	0	0	0	0	0
4/23/2024	1:45 AM	0	0	0	0	0	0	0	0	0	0	0	0	0
4/23/2024	2:00 AM	0	0	0	0	0	0	0	0	0	0	0	0	0
4/23/2024	2:15 AM	0	0	0	0	0	0	0	0	0	0	0	0	0
4/23/2024	2:30 AM	0	0	0	0	0	0	0	0	0	0	0	0	0
4/23/2024	2:45 AM	0	0	0	0	0	0	0	0	0	0	0	0	0
4/23/2024	3:00 AM	0	0	0	0	0	0	0	0	0	0	0	0	0
4/23/2024	3:15 AM	0	0	0	0	0	0	0	0	0	0	0	0	0
4/23/2024	3:30 AM	0	0	0	0	0	0	0	0	0	0	0	0	0
4/23/2024	3:45 AM	0	0	0	0	0	0	0	0	0	0	0	0	0
4/23/2024	4:00 AM	0	0	0	0	0	0	0	0	0	0	0	0	0
4/23/2024	4:15 AM	0	0	0	0	0	0	0	0	0	0	0	0	0
4/23/2024	4:30 AM	0	0	0	0	0	0	0	0	0	0	0	0	0
4/23/2024	4:45 AM	0	0	0	0	0	0	0	0	0	0	0	0	0
4/23/2024	5:00 AM	0	0	0	0	0	0	0	0	0	0	0	0	0
4/23/2024	5:15 AM	0	0	0	0	0	0	0	0	0	0	0	0	0
4/23/2024	5:30 AM	0	0	0	0	0	0	0	0	0	0	0	0	0
4/23/2024	5:45 AM	0	0	0	0	0	0	0	0	0	0	0	0	0
4/23/2024	6:00 AM	0	0	0	0	0	0	0	0	0	0	0	0	0
4/23/2024	6:15 AM	0	0	0	0	0	0	0	0	0	0	0	0	0
4/23/2024	6:30 AM	0	0	0	0	0	0	0	0	0	0	0	0	0
4/23/2024	6:45 AM	0	0	0	0	0	0	0	0	0	0	0	0	0
4/23/2024	7:00 AM	0	0	0	0	0	0	0	0	0	0	0	0	0
4/23/2024	7:15 AM	0	0	0	0	0	0	0	0	0	0	0	0	0
4/23/2024	7:30 AM	0	0	0	0	0	0	0	0	0	0	0	0	0
4/23/2024	7:45 AM	0	0	0	0	0	0	0	0	0	0	0	0	0
4/23/2024	8:00 AM	0	0	0	0	0	0	0	0	0	0	0	0	0
4/23/2024	8:15 AM	0	0	0	0	0	0	0	0	0	0	0	0	0
4/23/2024	8:30 AM	0	0	0	0	0	0	0	0	0	0	0	0	0
4/23/2024	8:45 AM	0	0	0	0	0	0	0	0	0	0	0	0	0
4/23/2024	9:00 AM	0	0	0	0	0	0	0	0	0	0	0	0	0
4/23/2024	9:15 AM	0	0	0	0	0	0	0	0	0	0	0	0	0
4/23/2024	9:30 AM	0	0	0	0	0	0	0	0	0	0	0	0	0
4/23/2024	9:45 AM	0	0	0	0	0	0	0	0	0	0	0	0	0
4/23/2024	10:00 AM	0	0	0	0	0	0	0	0	0	0	0	0	0
4/23/2024	10:15 AM	0	0	0	0	0	0	0	0	0	0	0	0	0
4/23/2024	10:30 AM	0	0	0	0	0	0	0	0	0	0	0	0	0
4/23/2024	10:45 AM	0	0	0	0	0	0	0	0	0	0	0	0	0
4/23/2024	11:00 AM	0	0	0	0	0	0	0	0	0	0	0	0	0
4/23/2024	11:15 AM	0	0	0	0	0	0	0	0	0	0	0	0	0
4/23/2024	11:30 AM	0	0	0	0	0	0	0	0	0	0	0	0	0
4/23/2024	11:45 AM	0	0	0	0	0	0	0	0	0	0	0	0	0
4/23/2024	12:00 PM	0	0	0	0	0	0	0	0	0	0	0	0	0
4/23/2024	12:15 PM	0	0	0	0	0	0	0	0	0	0	0	0	0
4/23/2024	12:30 PM	0	0	0	0	0	0	0	0	0	0	0	0	0
4/23/2024	12:45 PM	0	0	0	0	0	0	0	0	0	0	0	0	0
4/23/2024	1:00 PM	0	0	0	0	0	0	0	0	0	0	0	0	0
4/23/2024	1:15 PM	0	0	0	0	0	0	0	0	0	0	0	0	0
4/23/2024	1:30 PM	0	0	0	0	0	0	0	0	0	0	0	0	0
4/23/2024	1:45 PM	0	0	0	0	0	0	0	0	0	0	0	0	0
4/23/2024	2:00 PM	0	0	0	0	0	0	0	0	0	0	0	0	0
4/23/2024	2:15 PM	0	0	0	0	0	0	0	0	0	0	0	0	0
4/23/2024	2:30 PM	0	0	0	0	0	0	0	0	0	0	0	0	0
4/23/2024	2:45 PM	0	0	0	0	0	0	0	0	0	0	0	0	0
4/23/2024	3:00 PM	0	0	0	0	0	0	0	0	0	0	0	0	0
4/23/2024	3:15 PM	0	0	0	0	0	0	0	0	0	0	0	0	0
4/23/2024	3:30 PM	0	0	0	0	0	0	0	0	0	0	0	0	0
4/23/2024	3:45 PM	0	0	0	0	0	0	0	0	0	0	0	0	0
4/23/2024	4:00 PM	0	0	0	0	0	0	0	0	0	0	0	0	0
4/23/2024	4:15 PM	0	0	0	0	0	0	0	0	0	0	0	0	0
4/23/2024	4:30 PM	0	0	0	0	0	0	0	0	0	0	0	0	0
4/23/2024	4:45 PM	0	0	0	0	0	0	0	0	0	0	0	0	0
4/23/2024	5:00 PM	0	0	0	0	0	0	0	0	0	0	0	0	0
4/23/2024	5:15 PM	0	0	0	0	0	0	0	0	0	0	0	0	0
4/23/2024	5:30 PM	0	0	0	0	0	0	0	0	0	0	0	0	0
4/23/2024	5:45 PM	0	0	0	0	0	0	0	0	0	0	0	0	0
4/23/2024	6:00 PM	0	0	0	0	0	0	0	0	0	0	0	0	0
4/23/2024	6:15 PM	0	0	0	0	0	0	0	0	0	0	0	0	0
4/23/2024	6:30 PM	0	0	0	0	0	0	0	0	0	0	0	0	0
4/23/2024	6:45 PM	0	0	0	0	0	0	0	0	0	0	0	0	0
4/23/2024	7:00 PM	0	0	0	0	0	0	0	0	0	0	0	0	0
4/23/2024	7:15 PM	0	0	0	0	0	0	0	0	0	0	0	0	0
4/23/2024	7:30 PM	0	0	0	0	0	0	0	0	0	0	0	0	0
4/23/2024	7:45 PM	0	0	0	0	0	0	0	0	0	0	0	0	0
4/23/2024	8:00 PM	0	0	0	0	0	0	0	0	0	0	0	0	0
4/23/2024	8:15 PM	0	0	0	0	0	0	0	0	0	0	0	0	0
4/23/2024	8:30 PM	0	0	0	0	0	0	0	0	0	0	0	0	0
4/23/2024	8:45 PM	0	0	0	0	0	0	0	0	0	0	0	0	0
4/23/2024	9:00 PM	0	0	0	0	0	0	0	0	0	0	0	0	0
4/23/2024	9:15 PM	0	0	0	0	0	0	0	0	0	0	0	0	0
4/23/2024	9:30 PM	0	0	0	0	0	0	0	0	0	0	0	0	0
4/23/2024	9:45 PM	0	0	0	0	0	0	0	0	0	0	0	0	0
4/23/2024	10:00 PM	0	0	0	0	0	0	0	0	0	0	0	0	0
4/23/2024	10:15 PM	0	0	0	0	0	0	0	0	0	0	0	0	0
4/23/2024	10:30 PM	0	0	0	0	0	0	0	0	0	0	0	0	0
4/23/2024	10:45 PM	0	0	0	0	0	0	0	0	0	0	0	0	0
4/23/2024	11:00 PM	0	0	0	0	0	0	0	0	0	0	0	0	0
4/23/2024	11:15 PM	0	0	0	0	0	0	0	0	0	0	0	0	0
4/23/2024	11:30 PM	0	0	0	0	0	0	0	0	0	0	0	0	0
4/23/2024	11:45 PM	0	0	0	0	0	0	0	0	0	0	0	0	0

4/24/2024	12:00 AM	0	0	0	0	0	0	0	0	0	0	0	0	0
4/24/2024	12:15 AM	0	0	0	0	0	0	0	0	0	0	0	0	0
4/24/2024	12:30 AM	0	0	0	0	0	0	0	0	0	0	0	0	0
4/24/2024	12:45 AM	0	0	0	0	0	0	0	0	0	0	0	0	0
4/24/2024	1:00 AM	0	0	0	0	0	0	0	0	0	0	0	0	0
4/24/2024	1:15 AM	0	0	0	0	0	0	0	0	0	0	0	0	0
4/24/2024	1:30 AM	0	0	0	0	0	0	0	0	0	0	0	0	0
4/24/2024	1:45 AM	0	0	0	0	0	0	0	0	0	0	0	0	0
4/24/2024	2:00 AM	0	0	0	0	0	0	0	0	0	0	0	0	0
4/24/2024	2:15 AM	0	0	0	0	0	0	0	0	0	0	0	0	0
4/24/2024	2:30 AM	0	0	0	0	0	0	0	0	0	0	0	0	0
4/24/2024	2:45 AM	0	0	0	0	0	0	0	0	0	0	0	0	0
4/24/2024	3:00 AM	0	0	0	0	0	0	0	0	0	0	0	0	0
4/24/2024	3:15 AM	0	0	0	0	0	0	0	0	0	0	0	0	0
4/24/2024	3:30 AM	0	0	0	0	0	0	0	0	0	0	0	0	0
4/24/2024	3:45 AM	0	0	0	0	0	0	0	0	0	0	0	0	0
4/24/2024	4:00 AM	0	0	0	0	0	0	0	0	0	0	0	0	0
4/24/2024	4:15 AM	0	0	0	0	0	0	0	0	0	0	0	0	0
4/24/2024	4:30 AM	0	0	0	0	0	0	0	0	0	0	0	0	0
4/24/2024	4:45 AM	0	0	0	0	0	0	0	0	0	0	0	0	0
4/24/2024	5:00 AM	0	0	0	0	0	0	0	0	0	0	0	0	0
4/24/2024	5:15 AM	0	0	0	0	0	0	0	0	0	0	0	0	0
4/24/2024	5:30 AM	0	0	0	0	0	0	0	0	0	0	0	0	0
4/24/2024	5:45 AM	0	0	0	0	0	0	0	0	0	0	0	0	0
4/24/2024	6:00 AM	0	0	0	0	0	0	0	0	0	0	0	0	0
4/24/2024	6:15 AM	0	0	0	0	0	0	0	0	0	0	0	0	0
4/24/2024	6:30 AM	0	0	0	0	0	0	0	0	0	0	0	0	0
4/24/2024	6:45 AM	0	0	0	0	0	0	0	0	0	0	0	0	0
4/24/2024	7:00 AM	0	0	0	0	0	0	0	0	0	0	0	0	0
4/24/2024	7:15 AM	0	0	0	0	0	0	0	0	0	0	0	0	0
4/24/2024	7:30 AM	0	0	0	0	0	0	0	0	0	0	0	0	0
4/24/2024	7:45 AM	0	0	0	0	0	0	0	0	0	0	0	0	0
4/24/2024	8:00 AM	0	0	0	0	0	0	0	0	0	0	0	0	0
4/24/2024	8:15 AM	0	0	0	0	0	0	0	0	0	0	0	0	0
4/24/2024	8:30 AM	0	0	0	0	0	0	0	0	0	0	0	0	0
4/24/2024	8:45 AM	0	0	0	0	0	0	0	0	0	0	0	0	0
4/24/2024	9:00 AM	0	0	0	0	0	0	0	0	0	0	0	0	0
4/24/2024	9:15 AM	0	0	0	0	0	0	0	0	0	0	0	0	0
4/24/2024	9:30 AM	0	0	0	0	0	0	0	0	0	0	0	0	0
4/24/2024	9:45 AM	0	0	0	0	0	0	0	0	0	0	0	0	0
4/24/2024	10:00 AM	0	0	0	0	0	0	0	0	0	0	0	0	0
4/24/2024	10:15 AM	0	0	0	0	0	0	0	0	0	0	0	0	0
4/24/2024	10:30 AM	0	0	0	0	0	0	0	0	0	0	0	0	0
4/24/2024	10:45 AM	0	0	0	0	0	0	0	0	0	0	0	0	0
4/24/2024	11:00 AM	0	0	0	0	0	0	0	0	0	0	0	0	0
4/24/2024	11:15 AM	0	0	0	0	0	0	0	0	0	0	0	0	0
4/24/2024	11:30 AM	0	0	0	0	0	0	0	0	0	0	0	0	0
4/24/2024	11:45 AM	0	0	0	0	0	0	0	0	0	0	0	0	0
4/24/2024	12:00 PM	0	0	0	0	0	0	0	0	0	0	0	0	0
4/24/2024	12:15 PM	0	0	0	0	0	0	0	0	0	0	0	0	0
4/24/2024	12:30 PM	0	0	0	0	0	0	0	0	0	0	0	0	0
4/24/2024	12:45 PM	0	0	0	0	0	0	0	0	0	0	0	0	0
4/24/2024	1:00 PM	0	0	0	0	0	0	0	0	0	0	0	0	0
4/24/2024	1:15 PM	0	0	0	0	0	0	0	0	0	0	0	0	0
4/24/2024	1:30 PM	0	0	0	0	0	0	0	0	0	0	0	0	0
4/24/2024	1:45 PM	0	0	0	0	0	0	0	0	0	0	0	0	0
4/24/2024	2:00 PM	0	0	0	0	0	0	0	0	0	0	0	0	0
4/24/2024	2:15 PM	0	0	0	0	0	0	0	0	0	0	0	0	0
4/24/2024	2:30 PM	0	0	0	0	0	0	0	0	0	0	0	0	0
4/24/2024	2:45 PM	0	0	0	0	0	0	0	0	0	0	0	0	0
4/24/2024	3:00 PM	0	0	0	0	0	0	0	0	0	0	0	0	0
4/24/2024	3:15 PM	0	0	0	0	0	0	0	0	0	0	0	0	0
4/24/2024	3:30 PM	0	0	0	0	0	0	0	0	0	0	0	0	0
4/24/2024	3:45 PM	0	0	0	0	0	0	0	0	0	0	0	0	0
4/24/2024	4:00 PM	0	0	0	0	0	0	0	0	0	0	0	0	0
4/24/2024	4:15 PM	0	0	0	0	0	0	0	0	0	0	0	0	0
4/24/2024	4:30 PM	0	0	0	0	0	0	0	0	0	0	0	0	0
4/24/2024	4:45 PM	0	0	0	0	0	0	0	0	0	0	0	0	0
4/24/2024	5:00 PM	0	0	0	0	0	0	0	0	0	0	0	0	0
4/24/2024	5:15 PM	0	0	0	0	0	0	0	0	0	0	0	0	0
4/24/2024	5:30 PM	0	0	0	0	0	0	0	0	0	0	0	0	0
4/24/2024	5:45 PM	0	0	0	0	0	0	0	0	0	0	0	0	0
4/24/2024	6:00 PM	0	0	0	0	0	0	0	0	0	0	0	0	0
4/24/2024	6:15 PM	0	0	0	0	0	0	0	0	0	0	0	0	0
4/24/2024	6:30 PM	0	0	0	0	0	0	0	0	0	0	0	0	0
4/24/2024	6:45 PM	0	0	0	0	0	0	0	0	0	0	0	0	0
4/24/2024	7:00 PM	0	0	0	0	0	0	0	0	0	0	0	0	0
4/24/2024	7:15 PM	0	0	0	0	0	0	0	0	0	0	0	0	0
4/24/2024	7:30 PM	0	0	0	0	0	0	0	0	0	0	0	0	0
4/24/2024	7:45 PM	0	0	0	0	0	0	0	0	0	0	0	0	0
4/24/2024	8:00 PM	0	0	0	0	0	0	0	0	0	0	0	0	0
4/24/2024	8:15 PM	0	0	0	0	0	0	0	0	0	0	0	0	0
4/24/2024	8:30 PM	0	0	0	0	0	0	0	0	0	0	0	0	0
4/24/2024	8:45 PM	0	0	0	0	0	0	0	0	0	0	0	0	0
4/24/2024	9:00 PM	0	0	0	0	0	0	0	0	0	0	0	0	0
4/24/2024	9:15 PM	0	0	0	0	0	0	0	0	0	0	0	0	0
4/24/2024	9:30 PM	0	0	0	0	0	0	0	0	0	0	0	0	0
4/24/2024	9:45 PM	0	0	0	0	0	0	0	0	0	0	0	0	0
4/24/2024	10:00 PM	0	0	0	0	0	0	0	0	0	0	0	0	0
4/24/2024	10:15 PM	0	0	0	0	0	0	0	0	0	0	0	0	0
4/24/2024	10:30 PM	0	0	0	0	0	0	0	0	0	0	0	0	0
4/24/2024	10:45 PM	0	0	0	0	0	0	0	0	0	0	0	0	0
4/24/2024	11:00 PM	0	0	0	0	0	0	0	0	0	0	0	0	0
4/24/2024	11:15 PM	0	0	0	0	0	0	0	0	0	0	0	0	0
4/24/2024	11:30 PM	0	0	0	0	0	0	0	0	0	0	0	0	0
4/24/2024	11:45 PM	0	0	0	0	0	0	0	0	0	0	0	0	0

4/25/2024	12:00 AM	0	0	0	0	0	0	0	0	0	0	0	0	0
4/25/2024	12:15 AM	0	0	0	0	0	0	0	0	0	0	0	0	0
4/25/2024	12:30 AM	0	0	0	0	0	0	0	0	0	0	0	0	0
4/25/2024	12:45 AM	0	0	0	0	0	0	0	0	0	0	0	0	0
4/25/2024	1:00 AM	0	0	0	0	0	0	0	0	0	0	0	0	0
4/25/2024	1:15 AM	0	0	0	0	0	0	0	0	0	0	0	0	0
4/25/2024	1:30 AM	0	0	0	0	0	0	0	0	0	0	0	0	0
4/25/2024	1:45 AM	0	0	0	0	0	0	0	0	0	0	0	0	0
4/25/2024	2:00 AM	0	0	0	0	0	0	0	0	0	0	0	0	0
4/25/2024	2:15 AM	0	0	0	0	0	0	0	0	0	0	0	0	0
4/25/2024	2:30 AM	0	0	0	0	0	0	0	0	0	0	0	0	0
4/25/2024	2:45 AM	0	0	0	0	0	0	0	0	0	0	0	0	0
4/25/2024	3:00 AM	0	0	0	0	0	0	0	0	0	0	0	0	0
4/25/2024	3:15 AM	0	0	0	0	0	0	0	0	0	0	0	0	0
4/25/2024	3:30 AM	0	0	0	0	0	0	0	0	0	0	0	0	0
4/25/2024	3:45 AM	0	0	0	0	0	0	0	0	0	0	0	0	0
4/25/2024	4:00 AM	0	0	0	0	0	0	0	0	0	0	0	0	0
4/25/2024	4:15 AM	0	0	0	0	0	0	0	0	0	0	0	0	0
4/25/2024	4:30 AM	0	0	0	0	0	0	0	0	0	0	0	0	0
4/25/2024	4:45 AM	0	0	0	0	0	0	0	0	0	0	0	0	0
4/25/2024	5:00 AM	0	0	0	0	0	0	0	0	0	0	0	0	0
4/25/2024	5:15 AM	0	0	0	0	0	0	0	0	0	0	0	0	0
4/25/2024	5:30 AM	0	0	0	0	0	0	0	0	0	0	0	0	0
4/25/2024	5:45 AM	0	0	0	0	0	0	0	0	0	0	0	0	0
4/25/2024	6:00 AM	0	0	0	0	0	0	0	0	0	0	0	0	0
4/25/2024	6:15 AM	0	0	0	0	0	0	0	0	0	0	0	0	0
4/25/2024	6:30 AM	0	0	0	0	0	0	0	0	0	0	0	0	0
4/25/2024	6:45 AM	0	0	0	0	0	0	0	0	0	0	0	0	0
4/25/2024	7:00 AM	0	0	0	0	0	0	0	0	0	0	0	0	0
4/25/2024	7:15 AM	0	0	0	0	0	0	0	0	0	0	0	0	0
4/25/2024	7:30 AM	0	0	0	0	0	0	0	0	0	0	0	0	0
4/25/2024	7:45 AM	0	0	0	0	0	0	0	0	0	0	0	0	0
4/25/2024	8:00 AM	0	0	0	0	0	0	0	0	0	0	0	0	0
4/25/2024	8:15 AM	0	0	0	0	0	0	0	0	0	0	0	0	0
4/25/2024	8:30 AM	0	0	0	0	0	0	0	0	0	0	0	0	0
4/25/2024	8:45 AM	0	0	0	0	0	0	0	0	0	0	0	0	0
4/25/2024	9:00 AM	0	0	0	0	0	0	0	0	0	0	0	0	0
4/25/2024	9:15 AM	0	0	0	0	0	0	0	0	0	0	0	0	0
4/25/2024	9:30 AM	0	0	0	0	0	0	0	0	0	0	0	0	0
4/25/2024	9:45 AM	0	0	0	0	0	0	0	0	0	0	0	0	0
4/25/2024	10:00 AM	0	0	0	0	0	0	0	0	0	0	0	0	0
4/25/2024	10:15 AM	0	0	0	0	0	0	0	0	0	0	0	0	0
4/25/2024	10:30 AM	0	0	0	0	0	0	0	0	0	0	0	0	0
4/25/2024	10:45 AM	0	0	0	0	0	0	0	0	0	0	0	0	0
4/25/2024	11:00 AM	0	0	0	0	0	0	0	0	0	0	0	0	0
4/25/2024	11:15 AM	0	0	0	0	0	0	0	0	0	0	0	0	0
4/25/2024	11:30 AM	0	0	0	0	0	0	0	0	0	0	0	0	0
4/25/2024	11:45 AM	0	0	0	0	0	0	0	0	0	0	0	0	0
4/25/2024	12:00 PM	0	0	0	0	0	0	0	0	0	0	0	0	0
4/25/2024	12:15 PM	0	0	0	0	0	0	0	0	0	0	0	0	0
4/25/2024	12:30 PM	0	0	0	0	0	0	0	0	0	0	0	0	0
4/25/2024	12:45 PM	0	0	0	0	0	0	0	0	0	0	0	0	0
4/25/2024	1:00 PM	0	0	0	0	0	0	0	0	0	0	0	0	0
4/25/2024	1:15 PM	0	0	0	0	0	0	0	0	0	0	0	0	0
4/25/2024	1:30 PM	0	0	0	0	0	0	0	0	0	0	0	0	0
4/25/2024	1:45 PM	0	0	0	0	0	0	0	0	0	0	0	0	0
4/25/2024	2:00 PM	0	0	0	0	0	0	0	0	0	0	0	0	0
4/25/2024	2:15 PM	0	0	0	0	0	0	0	0	0	0	0	0	0
4/25/2024	2:30 PM	0	0	0	0	0	0	0	0	0	0	0	0	0
4/25/2024	2:45 PM	0	0	0	0	0	0	0	0	0	0	0	0	0
4/25/2024	3:00 PM	0	0	0	0	0	0	0	0	0	0	0	0	0
4/25/2024	3:15 PM	0	0	0	0	0	0	0	0	0	0	0	0	0
4/25/2024	3:30 PM	0	0	0	0	0	0	0	0	0	0	0	0	0
4/25/2024	3:45 PM	0	0	0	0	0	0	0	0	0	0	0	0	0
4/25/2024	4:00 PM	0	0	0	0	0	0	0	0	0	0	0	0	0
4/25/2024	4:15 PM	0	0	0	0	0	0	0	0	0	0	0	0	0
4/25/2024	4:30 PM	0	0	0	0	0	0	0	0	0	0	0	0	0
4/25/2024	4:45 PM	0	0	0	0	0	0	0	0	0	0	0	0	0
4/25/2024	5:00 PM	0	0	0	0	0	0	0	0	0	0	0	0	0
4/25/2024	5:15 PM	0	0	0	0	0	0	0	0	0	0	0	0	0
4/25/2024	5:30 PM	0	0	0	0	0	0	0	0	0	0	0	0	0
4/25/2024	5:45 PM	0	0	0	0	0	0	0	0	0	0	0	0	0
4/25/2024	6:00 PM	0	0	0	0	0	0	0	0	0	0	0	0	0
4/25/2024	6:15 PM	0	0	0	0	0	0	0	0	0	0	0	0	0
4/25/2024	6:30 PM	0	0	0	0	0	0	0	0	0	0	0	0	0
4/25/2024	6:45 PM	0	0	0	0	0	0	0	0	0	0	0	0	0
4/25/2024	7:00 PM	0	0	0	0	0	0	0	0	0	0	0	0	0
4/25/2024	7:15 PM	0	0	0	0	0	0	0	0	0	0	0	0	0
4/25/2024	7:30 PM	0	0	0	0	0	0	0	0	0	0	0	0	0
4/25/2024	7:45 PM	0	0	0	0	0	0	0	0	0	0	0	0	0
4/25/2024	8:00 PM	0	0	0	0	0	0	0	0	0	0	0	0	0
4/25/2024	8:15 PM	0	0	0	0	0	0	0	0	0	0	0	0	0
4/25/2024	8:30 PM	0	0	0	0	0	0	0	0	0	0	0	0	0
4/25/2024	8:45 PM	0	0	0	0	0	0	0	0	0	0	0	0	0
4/25/2024	9:00 PM	0	0	0	0	0	0	0	0	0	0	0	0	0
4/25/2024	9:15 PM	0	0	0	0	0	0	0	0	0	0	0	0	0
4/25/2024	9:30 PM	0	0	0	0	0	0	0	0	0	0	0	0	0
4/25/2024	9:45 PM	0	0	0	0	0	0	0	0	0	0	0	0	0
4/25/2024	10:00 PM	0	0	0	0	0	0	0	0	0	0	0	0	0
4/25/2024	10:15 PM	0	0	0	0	0	0	0	0	0	0	0	0	0
4/25/2024	10:30 PM	0	0	0	0	0	0	0	0	0	0	0	0	0
4/25/2024	10:45 PM	0	0	0	0	0	0	0	0	0	0	0	0	0
4/25/2024	11:00 PM	0	0	0	0	0	0	0	0	0	0	0	0	0
4/25/2024	11:15 PM	0	0	0	0	0	0	0	0	0	0	0	0	0
4/25/2024	11:30 PM	0	0	0	0	0	0	0	0	0	0	0	0	0
4/25/2024	11:45 PM	0	0	0	0	0	0	0	0	0	0	0	0	0

4/26/2024	12:00 AM	0	0	0	0	0	0	0	0	0	0	0	0	0
4/26/2024	12:15 AM	0	0	0	0	0	0	0	0	0	0	0	0	0
4/26/2024	12:30 AM	0	0	0	0	0	0	0	0	0	0	0	0	0
4/26/2024	12:45 AM	0	0	0	0	0	0	0	0	0	0	0	0	0
4/26/2024	1:00 AM	0	0	0	0	0	0	0	0	0	0	0	0	0
4/26/2024	1:15 AM	0	0	0	0	0	0	0	0	0	0	0	0	0
4/26/2024	1:30 AM	0	0	0	0	0	0	0	0	0	0	0	0	0
4/26/2024	1:45 AM	0	0	0	0	0	0	0	0	0	0	0	0	0
4/26/2024	2:00 AM	0	0	0	0	0	0	0	0	0	0	0	0	0
4/26/2024	2:15 AM	0	0	0	0	0	0	0	0	0	0	0	0	0
4/26/2024	2:30 AM	0	0	0	0	0	0	0	0	0	0	0	0	0
4/26/2024	2:45 AM	0	0	0	0	0	0	0	0	0	0	0	0	0
4/26/2024	3:00 AM	0	0	0	0	0	0	0	0	0	0	0	0	0
4/26/2024	3:15 AM	0	0	0	0	0	0	0	0	0	0	0	0	0
4/26/2024	3:30 AM	0	0	0	0	0	0	0	0	0	0	0	0	0
4/26/2024	3:45 AM	0	0	0	0	0	0	0	0	0	0	0	0	0
4/26/2024	4:00 AM	0	0	0	0	0	0	0	0	0	0	0	0	0
4/26/2024	4:15 AM	0	0	0	0	0	0	0	0	0	0	0	0	0
4/26/2024	4:30 AM	0	0	0	0	0	0	0	0	0	0	0	0	0
4/26/2024	4:45 AM	0	0	0	0	0	0	0	0	0	0	0	0	0
4/26/2024	5:00 AM	0	0	0	0	0	0	0	0	0	0	0	0	0
4/26/2024	5:15 AM	0	0	0	0	0	0	0	0	0	0	0	0	0
4/26/2024	5:30 AM	0	0	0	0	0	0	0	0	0	0	0	0	0
4/26/2024	5:45 AM	0	0	0	0	0	0	0	0	0	0	0	0	0
4/26/2024	6:00 AM	0	0	0	0	0	0	0	0	0	0	0	0	0
4/26/2024	6:15 AM	0	0	0	0	0	0	0	0	0	0	0	0	0
4/26/2024	6:30 AM	0	0	0	0	0	0	0	0	0	0	0	0	0
4/26/2024	6:45 AM	0	0	0	0	0	0	0	0	0	0	0	0	0
4/26/2024	7:00 AM	0	0	0	0	0	0	0	0	0	0	0	0	0
4/26/2024	7:15 AM	0	0	0	0	0	0	0	0	0	0	0	0	0
4/26/2024	7:30 AM	0	0	0	0	0	0	0	0	0	0	0	0	0
4/26/2024	7:45 AM	0	0	0	0	0	0	0	0	0	0	0	0	0
4/26/2024	8:00 AM	0	0	0	0	0	0	0	0	0	0	0	0	0
4/26/2024	8:15 AM	0	0	0	0	0	0	0	0	0	0	0	0	0
4/26/2024	8:30 AM	0	0	0	0	0	0	0	0	0	0	0	0	0
4/26/2024	8:45 AM	0	0	0	0	0	0	0	0	0	0	0	0	0
4/26/2024	9:00 AM	0	0	0	0	0	0	0	0	0	0	0	0	0
4/26/2024	9:15 AM	0	0	0	0	0	0	0	0	0	0	0	0	0
4/26/2024	9:30 AM	0	0	0	0	0	0	0	0	0	0	0	0	0
4/26/2024	9:45 AM	0	0	0	0	0	0	0	0	0	0	0	0	0
4/26/2024	10:00 AM	0	0	0	0	0	0	0	0	0	0	0	0	0
4/26/2024	10:15 AM	0	0	0	0	0	0	0	0	0	0	0	0	0
4/26/2024	10:30 AM	0	0	0	0	0	0	0	0	0	0	0	0	0
4/26/2024	10:45 AM	0	0	0	0	0	0	0	0	0	0	0	0	0
4/26/2024	11:00 AM	0	0	0	0	0	0	0	0	0	0	0	0	0
4/26/2024	11:15 AM	0	0	0	0	0	0	0	0	0	0	0	0	0
4/26/2024	11:30 AM	0	0	0	0	0	0	0	0	0	0	0	0	0
4/26/2024	11:45 AM	0	0	0	0	0	0	0	0	0	0	0	0	0
4/26/2024	12:00 PM	0	0	0	0	0	0	0	0	0	0	0	0	0
4/26/2024	12:15 PM	0	0	0	0	0	0	0	0	0	0	0	0	0
4/26/2024	12:30 PM	0	0	0	0	0	0	0	0	0	0	0	0	0
4/26/2024	12:45 PM	0	0	0	0	0	0	0	0	0	0	0	0	0
4/26/2024	1:00 PM	0	0	0	0	0	0	0	0	0	0	0	0	0
4/26/2024	1:15 PM	0	0	0	0	0	0	0	0	0	0	0	0	0
4/26/2024	1:30 PM	0	0	0	0	0	0	0	0	0	0	0	0	0
4/26/2024	1:45 PM	0	0	0	0	0	0	0	0	0	0	0	0	0
4/26/2024	2:00 PM	0	0	0	0	0	0	0	0	0	0	0	0	0
4/26/2024	2:15 PM	0	0	0	0	0	0	0	0	0	0	0	0	0
4/26/2024	2:30 PM	0	0	0	0	0	0	0	0	0	0	0	0	0
4/26/2024	2:45 PM	0	0	0	0	0	0	0	0	0	0	0	0	0
4/26/2024	3:00 PM	0	0	0	0	0	0	0	0	0	0	0	0	0
4/26/2024	3:15 PM	0	0	0	0	0	0	0	0	0	0	0	0	0
4/26/2024	3:30 PM	0	0	0	0	0	0	0	0	0	0	0	0	0
4/26/2024	3:45 PM	0	0	0	0	0	0	0	0	0	0	0	0	0
4/26/2024	4:00 PM	0	0	0	0	0	0	0	0	0	0	0	0	0
4/26/2024	4:15 PM	0	0	0	0	0	0	0	0	0	0	0	0	0
4/26/2024	4:30 PM	0	0	0	0	0	0	0	0	0	0	0	0	0
4/26/2024	4:45 PM	0	0	0	0	0	0	0	0	0	0	0	0	0
4/26/2024	5:00 PM	0	0	0	0	0	0	0	0	0	0	0	0	0
4/26/2024	5:15 PM	0	0	0	0	0	0	0	0	0	0	0	0	0
4/26/2024	5:30 PM	0	0	0	0	0	0	0	0	0	0	0	0	0
4/26/2024	5:45 PM	0	0	0	0	0	0	0	0	0	0	0	0	0
4/26/2024	6:00 PM	0	0	0	0	0	0	0	0	0	0	0	0	0
4/26/2024	6:15 PM	0	0	0	0	0	0	0	0	0	0	0	0	0
4/26/2024	6:30 PM	0	0	0	0	0	0	0	0	0	0	0	0	0
4/26/2024	6:45 PM	0	0	0	0	0	0	0	0	0	0	0	0	0
4/26/2024	7:00 PM	0	0	0	0	0	0	0	0	0	0	0	0	0
4/26/2024	7:15 PM	0	0	0	0	0	0	0	0	0	0	0	0	0
4/26/2024	7:30 PM	0	0	0	0	0	0	0	0	0	0	0	0	0
4/26/2024	7:45 PM	0	0	0	0	0	0	0	0	0	0	0	0	0
4/26/2024	8:00 PM	0	0	0	0	0	0	0	0	0	0	0	0	0
4/26/2024	8:15 PM	0	0	0	0	0	0	0	0	0	0	0	0	0
4/26/2024	8:30 PM	0	0	0	0	0	0	0	0	0	0	0	0	0
4/26/2024	8:45 PM	0	0	0	0	0	0	0	0	0	0	0	0	0
4/26/2024	9:00 PM	0	0	0	0	0	0	0	0	0	0	0	0	0
4/26/2024	9:15 PM	0	0	0	0	0	0	0	0	0	0	0	0	0
4/26/2024	9:30 PM	0	0	0	0	0	0	0	0	0	0	0	0	0
4/26/2024	9:45 PM	0	0	0	0	0	0	0	0	0	0	0	0	0
4/26/2024	10:00 PM	0	0	0	0	0	0	0	0	0	0	0	0	0
4/26/2024	10:15 PM	0	0	0	0	0	0	0	0	0	0	0	0	0
4/26/2024	10:30 PM	0	0	0	0	0	0	0	0	0	0	0	0	0
4/26/2024	10:45 PM	0	0	0	0	0	0	0	0	0	0	0	0	0
4/26/2024	11:00 PM	0	0	0	0	0	0	0	0	0	0	0	0	0
4/26/2024	11:15 PM	0	0	0	0	0	0	0	0	0	0	0	0	0
4/26/2024	11:30 PM	0	0	0	0	0	0	0	0	0	0	0	0	0
4/26/2024	11:45 PM	0	0	0	0	0	0	0	0	0	0	0	0	0

4/27/2024	12:00 AM	0	0	0	0	0	0	0	0	0	0	0	0	0
4/27/2024	12:15 AM	0	0	0	0	0	0	0	0	0	0	0	0	0
4/27/2024	12:30 AM	0	0	0	0	0	0	0	0	0	0	0	0	0
4/27/2024	12:45 AM	0	0	0	0	0	0	0	0	0	0	0	0	0
4/27/2024	1:00 AM	0	0	0	0	0	0	0	0	0	0	0	0	0
4/27/2024	1:15 AM	0	0	0	0	0	0	0	0	0	0	0	0	0
4/27/2024	1:30 AM	0	0	0	0	0	0	0	0	0	0	0	0	0
4/27/2024	1:45 AM	0	0	0	0	0	0	0	0	0	0	0	0	0
4/27/2024	2:00 AM	0	0	0	0	0	0	0	0	0	0	0	0	0
4/27/2024	2:15 AM	0	0	0	0	0	0	0	0	0	0	0	0	0
4/27/2024	2:30 AM	0	0	0	0	0	0	0	0	0	0	0	0	0
4/27/2024	2:45 AM	0	0	0	0	0	0	0	0	0	0	0	0	0
4/27/2024	3:00 AM	0	0	0	0	0	0	0	0	0	0	0	0	0
4/27/2024	3:15 AM	0	0	0	0	0	0	0	0	0	0	0	0	0
4/27/2024	3:30 AM	0	0	0	0	0	0	0	0	0	0	0	0	0
4/27/2024	3:45 AM	0	0	0	0	0	0	0	0	0	0	0	0	0
4/27/2024	4:00 AM	0	0	0	0	0	0	0	0	0	0	0	0	0
4/27/2024	4:15 AM	0	0	0	0	0	0	0	0	0	0	0	0	0
4/27/2024	4:30 AM	0	0	0	0	0	0	0	0	0	0	0	0	0
4/27/2024	4:45 AM	0	0	0	0	0	0	0	0	0	0	0	0	0
4/27/2024	5:00 AM	0	0	0	0	0	0	0	0	0	0	0	0	0
4/27/2024	5:15 AM	0	0	0	0	0	0	0	0	0	0	0	0	0
4/27/2024	5:30 AM	0	0	0	0	0	0	0	0	0	0	0	0	0
4/27/2024	5:45 AM	0	0	0	0	0	0	0	0	0	0	0	0	0
4/27/2024	6:00 AM	0	0	0	0	0	0	0	0	0	0	0	0	0
4/27/2024	6:15 AM	0	0	0	0	0	0	0	0	0	0	0	0	0
4/27/2024	6:30 AM	0	0	0	0	0	0	0	0	0	0	0	0	0
4/27/2024	6:45 AM	0	0	0	0	0	0	0	0	0	0	0	0	0
4/27/2024	7:00 AM	0	0	0	0	0	0	0	0	0	0	0	0	0
4/27/2024	7:15 AM	0	0	0	0	0	0	0	0	0	0	0	0	0
4/27/2024	7:30 AM	0	0	0	0	0	0	0	0	0	0	0	0	0
4/27/2024	7:45 AM	0	0	0	0	0	0	0	0	0	0	0	0	0
4/27/2024	8:00 AM	0	0	0	0	0	0	0	0	0	0	0	0	0
4/27/2024	8:15 AM	0	0	0	0	0	0	0	0	0	0	0	0	0
4/27/2024	8:30 AM	0	0	0	0	0	0	0	0	0	0	0	0	0
4/27/2024	8:45 AM	0	0	0	0	0	0	0	0	0	0	0	0	0
4/27/2024	9:00 AM	0	0	0	0	0	0	0	0	0	0	0	0	0
4/27/2024	9:15 AM	0	0	0	0	0	0	0	0	0	0	0	0	0
4/27/2024	9:30 AM	0	0	0	0	0	0	0	0	0	0	0	0	0
4/27/2024	9:45 AM	0	0	0	0	0	0	0	0	0	0	0	0	0
4/27/2024	10:00 AM	0	0	0	0	0	0	0	0	0	0	0	0	0
4/27/2024	10:15 AM	0	0	0	0	0	0	0	0	0	0	0	0	0
4/27/2024	10:30 AM	0	0	0	0	0	0	0	0	0	0	0	0	0
4/27/2024	10:45 AM	0	0	0	0	0	0	0	0	0	0	0	0	0
4/27/2024	11:00 AM	0	0	0	0	0	0	0	0	0	0	0	0	0
4/27/2024	11:15 AM	0	0	0	0	0	0	0	0	0	0	0	0	0
4/27/2024	11:30 AM	0	0	0	0	0	0	0	0	0	0	0	0	0
4/27/2024	11:45 AM	0	0	0	0	0	0	0	0	0	0	0	0	0
4/27/2024	12:00 PM	0	0	0	0	0	0	0	0	0	0	0	0	0
4/27/2024	12:15 PM	0	0	0	0	0	0	0	0	0	0	0	0	0
4/27/2024	12:30 PM	0	0	0	0	0	0	0	0	0	0	0	0	0
4/27/2024	12:45 PM	0	0	0	0	0	0	0	0	0	0	0	0	0
4/27/2024	1:00 PM	0	0	0	0	0	0	0	0	0	0	0	0	0
4/27/2024	1:15 PM	0	0	0	0	0	0	0	0	0	0	0	0	0
4/27/2024	1:30 PM	0	0	0	0	0	0	0	0	0	0	0	0	0
4/27/2024	1:45 PM	0	0	0	0	0	0	0	0	0	0	0	0	0
4/27/2024	2:00 PM	0	0	0	0	0	0	0	0	0	0	0	0	0
4/27/2024	2:15 PM	0	0	0	0	0	0	0	0	0	0	0	0	0
4/27/2024	2:30 PM	0	0	0	0	0	0	0	0	0	0	0	0	0
4/27/2024	2:45 PM	0	0	0	0	0	0	0	0	0	0	0	0	0
4/27/2024	3:00 PM	0	0	0	0	0	0	0	0	0	0	0	0	0
4/27/2024	3:15 PM	0	0	0	0	0	0	0	0	0	0	0	0	0
4/27/2024	3:30 PM	0	0	0	0	0	0	0	0	0	0	0	0	0
4/27/2024	3:45 PM	0	0	0	0	0	0	0	0	0	0	0	0	0
4/27/2024	4:00 PM	0	0	0	0	0	0	0	0	0	0	0	0	0
4/27/2024	4:15 PM	0	0	0	0	0	0	0	0	0	0	0	0	0
4/27/2024	4:30 PM	0	0	0	0	0	0	0	0	0	0	0	0	0
4/27/2024	4:45 PM	0	0	0	0	0	0	0	0	0	0	0	0	0
4/27/2024	5:00 PM	0	0	0	0	0	0	0	0	0	0	0	0	0
4/27/2024	5:15 PM	0	0	0	0	0	0	0	0	0	0	0	0	0
4/27/2024	5:30 PM	0	0	0	0	0	0	0	0	0	0	0	0	0
4/27/2024	5:45 PM	0	0	0	0	0	0	0	0	0	0	0	0	0
4/27/2024	6:00 PM	0	0	0	0	0	0	0	0	0	0	0	0	0
4/27/2024	6:15 PM	0	0	0	0	0	0	0	0	0	0	0	0	0
4/27/2024	6:30 PM	0	0	0	0	0	0	0	0	0	0	0	0	0
4/27/2024	6:45 PM	0	0	0	0	0	0	0	0	0	0	0	0	0
4/27/2024	7:00 PM	0	0	0	0	0	0	0	0	0	0	0	0	0
4/27/2024	7:15 PM	0	0	0	0	0	0	0	0	0	0	0	0	0
4/27/2024	7:30 PM	0	0	0	0	0	0	0	0	0	0	0	0	0
4/27/2024	7:45 PM	0	0	0	0	0	0	0	0	0	0	0	0	0
4/27/2024	8:00 PM	0	0	0	0	0	0	0	0	0	0	0	0	0
4/27/2024	8:15 PM	0	0	0	0	0	0	0	0	0	0	0	0	0
4/27/2024	8:30 PM	0	0	0	0	0	0	0	0	0	0	0	0	0
4/27/2024	8:45 PM	0	0	0	0	0	0	0	0	0	0	0	0	0
4/27/2024	9:00 PM	0	0	0	0	0	0	0	0	0	0	0	0	0
4/27/2024	9:15 PM	0	0	0	0	0	0	0	0	0	0	0	0	0
4/27/2024	9:30 PM	0	0	0	0	0	0	0	0	0	0	0	0	0
4/27/2024	9:45 PM	0	0	0	0	0	0	0	0	0	0	0	0	0
4/27/2024	10:00 PM	0	0	0	0	0	0	0	0	0	0	0	0	0
4/27/2024	10:15 PM	0	0	0	0	0	0	0	0	0	0	0	0	0
4/27/2024	10:30 PM	0	0	0	0	0	0	0	0	0	0	0	0	0
4/27/2024	10:45 PM	0	0	0	0	0	0	0	0	0	0	0	0	0
4/27/2024	11:00 PM	0	0	0	0	0	0	0	0	0	0	0	0	0
4/27/2024	11:15 PM	0	0	0	0	0	0	0	0	0	0	0	0	0
4/27/2024	11:30 PM	0	0	0	0	0	0	0	0	0	0	0	0	0
4/27/2024	11:45 PM	0	0	0	0	0	0	0	0	0	0	0	0	0

Bi-Directional Class Count || SB WB 15min

Columbia, SC

Marr Traffic DATA COLLECTION
www.marrtraffic.com

Site 75 Lane 4 SB
I-20,
north of Bush River Rd

Date
Sunday, April 21, 2024

Lat/Long
34.034393°, -81.117736°

Weather
Cloudy
66°F

Click here for Detailed Weather

Click here for Map

0000 - 2400 (Sunday 24h Session) (04-21-2024)
SB WB 15min

	Southbound (Movement 75 Lane 4 SB.1)													15min	60min
Time	1	2	3	4	5	6	7	8	9	10	11	12	13	Total	Total
0000 - 0015	0	29	2	0	0	0	0	0	0	0	0	0	0	**31**	
0015 - 0030	0	24	2	0	0	0	0	0	1	0	0	0	0	**27**	
0030 - 0045	0	23	1	0	0	0	0	0	0	0	0	0	0	**24**	
0045 - 0100	0	30	1	0	0	0	0	0	0	0	0	0	0	**31**	**113**
0100 - 0115	0	23	1	0	1	0	0	0	1	0	0	0	0	**26**	
0115 - 0130	0	21	0	0	0	0	0	0	1	0	0	0	0	**22**	
0130 - 0145	0	15	0	0	0	0	0	0	0	0	0	0	0	**15**	
0145 - 0200	0	19	0	0	0	0	0	0	1	0	0	0	0	**20**	**83**
0200 - 0215	0	10	0	0	0	0	0	0	0	0	0	0	0	**10**	
0215 - 0230	0	13	2	0	0	0	0	0	1	0	0	0	0	**16**	
0230 - 0245	0	10	2	0	0	0	0	0	2	0	0	0	0	**14**	
0245 - 0300	0	9	0	0	0	0	0	1	0	0	0	0	0	**10**	**50**
0300 - 0315	0	9	0	0	0	0	0	0	1	0	0	0	0	**10**	
0315 - 0330	0	8	0	0	0	0	0	0	1	0	0	0	0	**9**	
0330 - 0345	0	9	0	0	0	0	0	0	1	0	0	0	0	**10**	
0345 - 0400	0	9	0	0	0	0	0	0	0	0	0	0	0	**9**	**38**
0400 - 0415	0	11	0	0	1	0	0	0	0	0	0	0	0	**12**	
0415 - 0430	0	5	1	0	0	0	0	0	1	0	0	0	0	**7**	
0430 - 0445	0	10	0	0	0	1	0	0	0	0	0	0	0	**11**	
0445 - 0500	0	4	0	0	0	0	0	0	2	0	0	0	0	**6**	**36**
0500 - 0515	0	4	0	0	0	0	0	0	3	0	0	0	0	**7**	
0515 - 0530	0	4	0	0	0	0	0	0	0	0	0	0	0	**4**	
0530 - 0545	0	15	0	0	0	0	0	0	2	0	0	0	0	**17**	
0545 - 0600	0	11	1	0	0	0	0	1	1	0	0	0	0	**14**	**42**
0600 - 0615	0	14	1	0	0	0	0	0	1	0	0	0	0	**16**	
0615 - 0630	0	28	2	0	0	0	0	0	0	0	0	0	0	**30**	
0630 - 0645	0	19	6	0	0	0	0	0	1	0	0	0	0	**26**	
0645 - 0700	0	19	3	0	0	0	0	0	0	0	0	0	0	**22**	**94**
0700 - 0715	0	19	10	0	0	0	0	0	1	0	0	0	0	**30**	
0715 - 0730	0	22	3	0	0	0	0	0	2	0	0	0	0	**27**	
0730 - 0745	0	30	8	0	0	0	0	0	1	0	0	0	0	**39**	
0745 - 0800	0	19	10	0	0	0	0	0	4	0	0	0	0	**33**	**129**
0800 - 0815	0	29	5	0	0	0	0	0	1	0	0	0	0	**35**	
0815 - 0830	0	31	11	0	0	1	0	0	3	0	0	0	0	**46**	
0830 - 0845	0	45	5	0	0	0	0	0	0	0	0	0	0	**50**	
0845 - 0900	0	42	9	0	0	0	0	0	2	0	0	0	0	**53**	**184**
0900 - 0915	0	41	6	0	0	0	0	0	2	0	0	0	0	**49**	
0915 - 0930	0	64	5	0	0	0	0	0	1	0	0	0	0	**70**	
0930 - 0945	0	57	14	0	0	1	0	1	1	0	0	0	0	**74**	
0945 - 1000	0	67	13	0	0	0	0	0	0	0	0	0	0	**80**	**273**
1000 - 1015	0	56	12	0	0	1	0	0	4	0	0	0	0	**73**	
1015 - 1030	0	83	7	1	0	0	0	0	1	0	0	0	0	**92**	
1030 - 1045	0	97	15	0	0	0	0	1	2	0	0	0	0	**115**	
1045 - 1100	0	93	6	0	0	0	0	0	1	0	0	0	0	**100**	**380**
1100 - 1115	0	77	16	0	0	0	0	0	1	0	0	0	0	**94**	
1115 - 1130	0	84	16	0	0	0	0	0	0	0	0	0	0	**100**	
1130 - 1145	0	102	8	0	1	0	0	0	1	0	0	0	0	**112**	
1145 - 1200	0	128	20	0	0	0	0	0	0	0	0	0	0	**148**	**454**
1200 - 1215	0	118	6	0	0	0	0	0	2	0	0	0	0	**126**	
1215 - 1230	0	168	5	0	0	0	0	0	1	0	0	0	0	**174**	
1230 - 1245	0	124	10	0	0	0	0	0	2	0	0	0	0	**136**	
1245 - 1300	0	149	9	0	1	0	0	0	2	0	0	0	0	**161**	**597**
1300 - 1315	0	147	17	0	0	0	0	0	0	0	0	0	0	**164**	
1315 - 1330	0	143	21	0	1	0	0	1	1	0	0	0	0	**167**	
1330 - 1345	0	160	15	0	0	0	0	0	3	0	0	0	0	**178**	
1345 - 1400	0	133	20	0	0	0	0	0	1	0	0	0	0	**154**	**663**
1400 - 1415	0	113	13	0	0	0	0	0	0	0	0	0	0	**126**	
1415 - 1430	0	141	19	0	0	0	0	0	3	0	0	0	0	**163**	
1430 - 1445	0	137	17	0	1	0	0	0	3	0	0	0	0	**158**	
1445 - 1500	0	143	11	0	2	0	0	0	1	0	0	0	0	**157**	**604**
1500 - 1515	0	131	12	0	1	0	0	0	1	0	0	0	0	**145**	
1515 - 1530	0	126	17	0	0	0	0	0	2	0	0	0	0	**145**	
1530 - 1545	0	124	13	1	0	0	0	0	2	0	0	0	0	**140**	
1545 - 1600	0	133	12	0	0	0	0	0	0	0	0	0	0	**145**	**575**
1600 - 1615	0	129	13	0	0	0	0	0	1	0	0	0	0	**143**	
1615 - 1630	0	118	12	0	1	0	0	0	2	0	0	0	0	**133**	
1630 - 1645	0	130	13	0	0	0	0	0	0	0	0	0	0	**143**	
1645 - 1700	0	119	12	0	1	0	0	0	1	0	0	0	0	**133**	**552**
1700 - 1715	0	115	10	0	0	0	0	0	1	0	0	0	0	**126**	
1715 - 1730	0	135	5	0	0	0	0	0	0	0	0	0	0	**140**	
1730 - 1745	0	110	12	0	0	0	0	0	2	0	0	0	0	**124**	
1745 - 1800	0	114	14	0	0	0	0	0	0	0	0	0	0	**128**	**518**
1800 - 1815	0	119	13	0	0	0	0	0	2	0	0	0	0	**134**	
1815 - 1830	0	130	7	0	0	0	0	0	0	0	0	0	0	**137**	
1830 - 1845	1	100	8	0	0	0	0	0	1	0	0	0	0	**110**	
1845 - 1900	0	99	5	0	0	0	0	0	1	0	0	0	0	**105**	**486**
1900 - 1915	0	99	5	0	0	0	0	0	0	0	0	0	0	**104**	
1915 - 1930	0	70	8	0	0	0	0	0	6	0	0	0	0	**84**	
1930 - 1945	0	81	5	0	0	0	0	0	0	0	0	0	0	**86**	
1945 - 2000	0	59	2	0	0	0	0	0	2	0	0	0	0	**63**	**337**
2000 - 2015	0	62	12	0	0	0	0	0	4	0	0	0	0	**78**	
2015 - 2030	0	58	3	0	0	0	0	1	2	0	0	0	0	**64**	
2030 - 2045	0	69	2	0	0	0	0	0	0	0	0	0	0	**71**	
2045 - 2100	0	60	3	0	0	0	0	0	1	0	0	0	0	**64**	**277**
2100 - 2115	0	53	0	0	1	0	0	0	3	0	0	0	0	**57**	
2115 - 2130	0	59	1	0	0	0	0	0	1	0	0	0	0	**61**	
2130 - 2145	0	51	1	0	0	0	0	0	1	0	0	0	0	**53**	
2145 - 2200	0	37	1	0	0	0	0	0	6	0	0	0	0	**44**	**215**
2200 - 2215	0	39	5	0	0	0	0	0	2	0	0	0	0	**46**	
2215 - 2230	0	38	1	0	0	0	0	0	1	0	0	0	0	**40**	
2230 - 2245	0	23	1	0	0	0	0	0	3	0	0	0	0	**27**	
2245 - 2300	0	21	4	0	0	0	0	0	1	0	0	0	0	**26**	**139**
2300 - 2315	0	28	0	0	0	0	0	0	2	0	0	0	0	**30**	
2315 - 2330	0	15	0	0	0	0	0	0	0	0	0	0	0	**15**	
2330 - 2345	0	11	0	0	0	0	0	0	2	0	0	0	0	**13**	
2345 - 0000	0	11	0	0	0	0	0	0	3	0	0	0	0	**14**	**72**

Session Total	1	6143	619	2	12	4	0	6	124	0	0	0	0	**6911**
Session Average	0.01	63.99	6.45	0.02	0.13	0.04	0.00	0.06	1.29	0.00	0.00	0.00	0.00	**71.99**
Session Percentage	0.01	88.89	8.96	0.03	0.17	0.06	0.00	0.09	1.79	0.00	0.00	0.00	0.00	

AM Peak Hour	-	0945 - 1045	0945 - 1045	0930 - 1030	-	0915 - 1015	-	0500 - 0600	0730 - 0830	-	-	-	-	**0945 - 1045**
AM Peak Volume	0	303	47	1	0	2	0	1	9	0	0	0	0	**360**

Noon Peak Hour	-	1245 - 1345	1300 - 1400	1000 - 1100	1415 - 1515	1000 - 1100	-	1000 - 1100	1000 - 1100	-	-	-	-	**1245 - 1345**
Noon Peak Volume	0	599	73	1	4	1	0	1	8	0	0	0	0	**670**

PM Peak Hour	1745 - 1845	1500 - 1600	1515 - 1615	1500 - 1600	1600 - 1700	-	-	1930 - 2030	1915 - 2015	-	-	-	-	**1500 - 1600**
PM Peak Volume	1	514	55	1	2	0	0	1	12	0	0	0	0	**575**

Site 75 Lane 4 SB
I-20,
north of Bush River Rd

Date
Monday, April 22, 2024

Lat/Long
34.034393°, -81.117736°

Weather
Mostly Cloudy
57°F

Click here for Detailed Weather

0000 - 2400 (Weekday 24h Session) (04-22-2024)
SB WB 15min

	Southbound (Movement 75 Lane 4 SB.1)													15min	60min
Time	1	2	3	4	5	6	7	8	9	10	11	12	13	Total	Total
0000 - 0015	0	9	3	0	0	0	0	0	0	0	0	0	0	**12**	
0015 - 0030	0	7	2	0	0	0	0	0	2	0	0	0	0	**11**	
0030 - 0045	0	6	1	0	0	0	0	0	2	0	0	0	0	**9**	
0045 - 0100	0	8	2	0	0	0	0	0	1	0	0	0	0	**11**	**43**
0100 - 0115	0	5	0	0	0	0	0	0	0	0	0	0	0	**5**	
0115 - 0130	0	4	0	0	1	0	0	0	1	0	0	0	0	**6**	
0130 - 0145	0	7	2	0	0	0	0	0	0	0	0	0	0	**9**	
0145 - 0200	0	3	0	0	0	0	0	0	0	0	0	0	0	**3**	**23**
0200 - 0215	0	7	0	0	1	0	0	0	2	0	0	0	0	**10**	
0215 - 0230	0	2	0	0	0	0	0	0	1	0	0	0	0	**3**	
0230 - 0245	0	5	0	0	0	0	0	0	1	0	0	0	0	**6**	
0245 - 0300	0	9	3	0	0	0	0	0	1	0	0	0	0	**13**	**32**
0300 - 0315	0	5	0	0	0	0	0	0	1	0	0	0	0	**6**	
0315 - 0330	0	9	0	0	0	0	0	0	1	0	0	0	0	**10**	
0330 - 0345	0	8	2	0	0	0	0	0	1	0	0	0	0	**11**	
0345 - 0400	0	7	3	0	0	0	0	0	2	0	0	0	0	**12**	**39**
0400 - 0415	0	10	3	0	1	0	0	0	1	0	0	0	0	**15**	
0415 - 0430	0	10	2	0	0	0	0	0	1	0	0	0	0	**13**	
0430 - 0445	0	5	1	0	0	0	0	0	1	0	0	0	0	**7**	
0445 - 0500	0	11	3	0	1	0	0	0	2	0	0	0	0	**17**	**52**
0500 - 0515	0	15	5	0	0	0	0	0	2	0	0	0	0	**22**	
0515 - 0530	0	20	8	0	0	0	0	0	3	0	0	0	0	**31**	
0530 - 0545	0	34	12	0	0	0	0	0	1	0	0	0	0	**47**	
0545 - 0600	0	35	14	0	1	0	0	0	3	0	0	0	0	**53**	**153**
0600 - 0615	0	50	12	0	0	0	0	0	1	0	1	0	0	**64**	
0615 - 0630	0	66	26	0	0	0	0	0	3	0	0	0	0	**95**	
0630 - 0645	0	80	46	0	1	1	0	0	2	0	0	0	0	**130**	
0645 - 0700	0	110	48	1	2	0	0	0	1	0	0	0	0	**162**	**451**
0700 - 0715	0	119	33	0	2	0	0	1	6	0	0	0	0	**161**	
0715 - 0730	0	150	40	0	0	1	0	0	5	0	0	0	0	**196**	
0730 - 0745	0	143	37	0	1	0	0	0	2	0	0	0	0	**183**	
0745 - 0800	0	113	40	0	1	2	0	0	4	0	0	0	0	**160**	**700**
0800 - 0815	0	100	33	0	0	1	0	0	0	0	0	0	0	**134**	
0815 - 0830	0	95	21	0	0	1	0	1	3	0	0	0	0	**121**	
0830 - 0845	0	104	30	0	4	0	0	0	2	0	0	0	0	**140**	
0845 - 0900	0	85	27	0	5	0	0	0	4	0	0	0	0	**121**	**516**
0900 - 0915	0	86	11	0	3	1	0	0	4	0	0	0	0	**105**	
0915 - 0930	0	89	23	0	3	1	0	0	9	0	0	0	0	**125**	
0930 - 0945	0	75	25	0	1	1	0	0	6	0	0	0	0	**108**	
0945 - 1000	0	76	22	0	2	1	0	1	3	0	0	0	0	**105**	**443**
1000 - 1015	0	67	18	0	4	2	0	0	4	0	0	0	0	**95**	
1015 - 1030	0	74	22	0	2	0	0	0	5	0	0	0	0	**103**	
1030 - 1045	0	80	22	0	3	0	0	1	7	0	0	0	0	**113**	
1045 - 1100	0	84	27	1	4	1	0	0	3	0	0	0	0	**120**	**431**
1100 - 1115	0	93	27	0	2	0	0	1	2	0	0	0	0	**125**	
1115 - 1130	0	75	18	0	4	0	0	0	3	0	0	0	0	**100**	
1130 - 1145	0	95	22	0	3	1	0	1	2	0	0	0	0	**124**	
1145 - 1200	0	90	16	0	1	0	0	0	5	0	0	0	0	**112**	**461**
1200 - 1215	0	95	41	0	2	0	0	0	6	0	0	0	0	**144**	
1215 - 1230	0	102	30	0	0	0	0	0	0	0	0	0	0	**132**	
1230 - 1245	0	114	28	0	0	0	0	1	7	0	0	0	0	**150**	
1245 - 1300	0	117	31	0	1	4	0	0	1	0	0	0	0	**154**	**580**
1300 - 1315	0	104	30	0	2	0	0	0	5	0	0	0	0	**141**	
1315 - 1330	0	101	24	1	3	1	0	0	5	0	0	0	0	**135**	
1330 - 1345	0	120	28	0	3	1	0	0	8	0	0	0	0	**160**	
1345 - 1400	0	126	26	0	1	1	0	1	1	0	0	0	0	**156**	**592**
1400 - 1415	0	129	30	0	1	0	0	0	6	0	0	0	0	**166**	
1415 - 1430	0	108	27	0	1	1	0	0	6	0	0	0	0	**143**	
1430 - 1445	0	130	26	0	0	0	0	0	4	0	0	0	0	**160**	
1445 - 1500	0	114	27	0	3	1	0	0	4	0	0	0	0	**149**	**618**
1500 - 1515	0	147	38	0	1	0	0	1	2	0	0	0	0	**189**	
1515 - 1530	0	133	33	0	0	1	0	0	1	0	0	0	0	**168**	
1530 - 1545	0	146	31	0	3	1	0	0	3	0	0	0	0	**184**	
1545 - 1600	0	126	40	0	0	0	0	0	3	0	0	0	0	**169**	**710**
1600 - 1615	0	196	40	0	0	0	0	0	1	0	0	0	0	**237**	
1615 - 1630	0	146	30	0	1	0	0	0	3	0	0	0	0	**180**	
1630 - 1645	0	177	44	0	2	1	0	0	4	0	0	0	0	**228**	
1645 - 1700	0	141	35	0	0	0	0	0	1	0	0	0	0	**177**	**822**
1700 - 1715	0	178	32	0	1	0	0	1	5	0	0	0	0	**217**	
1715 - 1730	0	173	26	0	3	1	0	0	7	0	0	0	0	**210**	
1730 - 1745	0	142	29	0	0	0	0	0	1	0	0	0	0	**172**	
1745 - 1800	0	124	17	0	0	0	0	0	4	0	0	0	0	**145**	**744**
1800 - 1815	0	133	20	0	0	0	0	0	2	0	0	0	0	**155**	
1815 - 1830	0	105	26	0	1	0	0	0	1	0	0	0	0	**133**	
1830 - 1845	0	108	29	0	0	0	0	0	2	0	0	0	0	**139**	
1845 - 1900	0	90	23	0	0	0	0	0	0	0	0	0	0	**113**	**540**
1900 - 1915	0	112	23	0	1	1	0	0	3	0	0	0	0	**140**	
1915 - 1930	0	72	17	0	1	0	0	0	3	0	0	0	0	**93**	
1930 - 1945	0	85	16	0	2	0	0	0	2	0	0	0	0	**105**	
1945 - 2000	0	88	21	0	1	1	0	0	1	0	0	0	0	**112**	**450**
2000 - 2015	0	60	28	0	2	0	0	0	1	0	0	0	0	**91**	
2015 - 2030	0	69	19	0	0	0	0	0	1	0	0	0	0	**89**	
2030 - 2045	0	59	21	0	0	0	0	0	2	0	0	0	0	**82**	
2045 - 2100	0	62	19	0	0	0	0	0	1	0	0	0	0	**82**	**344**
2100 - 2115	0	56	17	0	2	0	0	0	1	0	0	0	0	**76**	
2115 - 2130	0	42	12	0	0	0	0	0	0	0	0	0	0	**54**	
2130 - 2145	0	49	16	0	1	0	0	0	1	0	0	0	0	**67**	
2145 - 2200	0	33	12	0	0	0	0	0	1	0	0	0	0	**46**	**243**
2200 - 2215	0	26	9	0	0	0	0	0	0	0	0	0	0	**35**	
2215 - 2230	0	26	8	0	0	0	0	0	0	0	0	0	0	**34**	
2230 - 2245	0	25	7	0	0	0	0	0	3	0	0	0	0	**35**	
2245 - 2300	0	27	10	0	0	0	0	0	2	0	1	0	0	**40**	**144**
2300 - 2315	0	24	7	0	1	0	0	0	0	0	0	0	0	**32**	
2315 - 2330	0	8	2	0	0	0	0	0	0	0	0	0	0	**10**	
2330 - 2345	0	15	5	0	0	0	0	0	2	0	1	0	0	**23**	
2345 - 0000	0	7	2	0	0	0	0	0	0	0	0	0	0	**9**	**74**

Session Total	0	7010	1824	3	93	29	0	10	233	0	3	0	0	**9205**
Session Average	0.00	73.02	19.00	0.03	0.97	0.30	0.00	0.10	2.43	0.00	0.03	0.00	0.00	**95.89**
Session Percentage	0.00	76.15	19.82	0.03	1.01	0.32	0.00	0.11	2.53	0.00	0.03	0.00	0.00	

AM Peak Hour	-	0700 - 0800	0630 - 0730	0600 - 0700	0830 - 0930	0915 - 1015	-	0945 - 1045	0845 - 0945	-	0515 - 0615	-	-	**0645 - 0745**
AM Peak Volume	0	525	167	1	15	5	0	2	23	0	1	0	0	**702**

Noon Peak Hour	-	1445 - 1545	1200 - 1300	1000 - 1100	1000 - 1100	1245 - 1345	-	1015 - 1115	1330 - 1430	-	-	-	-	**1445 - 1545**
Noon Peak Volume	0	540	130	1	13	6	0	2	21	0	0	0	0	**690**

PM Peak Hour	-	1630 - 1730	1545 - 1645	-	1630 - 1730	1500 - 1600	-	1500 - 1600	1630 - 1730	-	-	-	-	**1630 - 1730**
PM Peak Volume	0	669	154	0	6	2	0	1	17	0	0	0	0	**832**

Site 75 Lane 4 SB
I-20,
north of Bush River Rd

Date
Tuesday, April 23, 2024

Lat/Long
34.034393°, -81.117736°

Weather
Fair
58°F

Click here for Detailed Weather

0000 - 2400 (Weekday 24h Session) (04-23-2024)
SB WB 15min

	Southbound (Movement 75 Lane 4 SB.1)													15min	60min
TIME	1	2	3	4	5	6	7	8	9	10	11	12	13	Total	Total
0000 - 0015	0	11	3	0	0	0	0	0	0	0	0	0	0	**14**	
0015 - 0030	0	12	2	0	0	0	0	0	0	0	0	0	0	**14**	
0030 - 0045	0	10	0	0	1	0	0	1	0	0	0	0	0	**12**	
0045 - 0100	0	13	1	0	0	0	0	0	3	0	1	0	0	**18**	**58**
0100 - 0115	0	9	2	0	0	0	0	0	1	0	1	0	0	**13**	
0115 - 0130	0	3	0	0	1	0	0	0	3	0	0	0	0	**7**	
0130 - 0145	0	10	2	0	0	0	0	0	0	0	0	0	0	**12**	
0145 - 0200	0	6	0	0	0	0	0	0	0	0	0	0	0	**6**	**38**
0200 - 0215	0	4	0	0	1	0	0	0	1	0	1	0	0	**7**	
0215 - 0230	0	2	0	0	0	0	0	0	2	0	0	0	0	**4**	
0230 - 0245	0	6	1	0	0	0	0	0	2	0	0	0	0	**9**	
0245 - 0300	0	5	0	0	1	0	0	0	1	0	1	0	0	**8**	**28**
0300 - 0315	0	6	0	0	0	0	0	0	2	0	0	0	0	**8**	
0315 - 0330	0	8	0	0	0	2	0	0	1	0	0	0	0	**11**	
0330 - 0345	0	11	1	0	0	0	0	0	1	0	0	0	0	**13**	
0345 - 0400	0	10	3	0	0	0	0	0	0	0	0	0	0	**13**	**45**
0400 - 0415	0	6	0	0	1	0	0	0	2	0	0	0	0	**9**	
0415 - 0430	0	11	1	0	0	0	0	0	3	0	0	0	0	**15**	
0430 - 0445	0	12	3	0	0	1	0	0	2	0	0	0	0	**18**	
0445 - 0500	0	14	2	0	0	0	0	0	2	0	0	0	0	**18**	**60**
0500 - 0515	0	22	3	0	0	0	0	0	3	0	0	0	0	**28**	
0515 - 0530	0	27	3	0	2	0	0	0	3	0	0	0	0	**35**	
0530 - 0545	0	38	2	0	0	0	0	0	4	0	0	0	0	**44**	
0545 - 0600	0	43	1	0	0	0	0	0	2	0	0	0	0	**46**	**153**
0600 - 0615	0	60	4	0	0	1	0	0	1	0	0	0	0	**66**	
0615 - 0630	0	78	11	0	0	0	0	0	2	0	0	0	0	**91**	
0630 - 0645	0	108	20	0	1	0	0	1	1	0	0	0	0	**131**	
0645 - 0700	0	119	42	0	3	0	0	0	5	0	0	0	0	**169**	**457**
0700 - 0715	0	112	47	0	1	0	0	0	4	0	0	0	0	**164**	
0715 - 0730	0	142	52	1	0	0	0	0	4	0	0	0	0	**199**	
0730 - 0745	0	129	27	0	1	2	0	0	2	0	0	0	0	**161**	
0745 - 0800	0	107	20	0	2	0	0	0	1	1	0	0	0	**131**	**655**
0800 - 0815	0	105	28	0	3	0	0	0	5	0	0	0	0	**141**	
0815 - 0830	0	97	20	0	5	1	0	1	3	0	0	0	0	**127**	
0830 - 0845	0	94	21	0	3	1	0	1	4	0	0	0	0	**124**	
0845 - 0900	0	115	23	0	3	0	0	1	4	0	0	0	0	**146**	**538**
0900 - 0915	0	81	16	0	1	0	0	1	3	0	0	0	0	**102**	
0915 - 0930	0	99	18	0	4	1	0	1	8	0	0	0	0	**131**	
0930 - 0945	0	83	20	0	4	0	0	0	4	0	0	0	0	**111**	
0945 - 1000	0	76	20	0	3	0	0	1	6	0	0	0	0	**106**	**450**
1000 - 1015	0	74	24	0	1	1	0	0	4	0	0	0	0	**104**	
1015 - 1030	0	108	18	0	1	1	0	0	3	0	0	0	0	**131**	
1030 - 1045	0	86	15	0	0	0	0	1	3	0	0	0	0	**105**	
1045 - 1100	0	97	18	0	2	1	0	0	7	0	0	0	0	**125**	**465**
1100 - 1115	0	84	25	0	0	3	0	0	4	0	0	0	0	**116**	
1115 - 1130	0	89	23	2	0	0	0	0	0	0	0	0	0	**114**	
1130 - 1145	0	113	18	0	2	0	0	0	4	0	0	0	0	**137**	
1145 - 1200	0	125	21	0	2	0	0	0	3	1	0	0	0	**152**	**519**
1200 - 1215	0	94	13	1	4	0	0	0	4	0	0	0	0	**116**	
1215 - 1230	0	105	24	0	1	1	0	0	4	0	0	0	0	**135**	
1230 - 1245	1	119	23	0	2	0	0	0	3	0	0	0	0	**148**	
1245 - 1300	1	120	22	0	1	1	0	0	7	0	0	0	0	**152**	**551**
1300 - 1315	0	110	23	0	2	2	0	0	6	0	0	0	0	**143**	
1315 - 1330	0	113	17	0	6	1	0	0	6	0	0	0	0	**143**	
1330 - 1345	1	127	24	0	2	0	0	0	7	0	0	0	0	**161**	
1345 - 1400	0	126	30	0	2	1	0	0	6	0	0	0	0	**165**	**612**
1400 - 1415	1	115	25	0	3	2	0	1	5	0	0	0	0	**152**	
1415 - 1430	0	138	23	0	4	0	0	0	2	0	0	0	0	**167**	
1430 - 1445	0	143	35	0	1	0	0	0	5	0	0	0	0	**184**	
1445 - 1500	0	127	28	0	2	1	0	1	4	0	0	0	0	**163**	**666**
1500 - 1515	0	141	44	0	3	3	0	1	2	0	0	0	0	**194**	
1515 - 1530	0	128	37	0	0	1	0	0	6	0	0	0	0	**172**	
1530 - 1545	1	121	41	0	8	2	0	1	6	1	0	0	0	**181**	
1545 - 1600	0	139	41	1	2	0	0	0	3	0	0	0	0	**186**	**733**
1600 - 1615	1	136	44	1	1	0	0	4	4	0	0	0	0	**191**	
1615 - 1630	1	166	51	2	1	1	0	3	6	0	0	0	0	**231**	
1630 - 1645	0	181	42	0	5	1	0	1	5	0	0	0	0	**235**	
1645 - 1700	0	154	36	0	6	3	0	1	1	0	0	0	0	**201**	**858**
1700 - 1715	0	182	32	0	6	0	0	2	2	1	0	0	0	**225**	
1715 - 1730	0	152	39	0	3	0	0	1	1	0	0	0	0	**196**	
1730 - 1745	0	125	48	1	0	2	0	0	3	0	0	0	0	**179**	
1745 - 1800	0	141	42	0	5	3	0	1	4	0	0	0	0	**196**	**796**
1800 - 1815	0	130	36	0	2	0	0	0	2	0	0	0	0	**170**	
1815 - 1830	0	90	26	0	5	0	0	1	3	0	0	0	0	**125**	
1830 - 1845	1	111	17	0	0	2	0	1	1	0	0	0	0	**133**	
1845 - 1900	0	91	18	0	3	0	0	0	3	0	0	0	0	**115**	**543**
1900 - 1915	0	106	23	0	1	0	0	1	1	0	0	0	0	**132**	
1915 - 1930	0	89	20	0	1	0	0	0	3	0	0	0	0	**113**	
1930 - 1945	0	77	14	0	1	2	0	0	3	0	0	0	0	**97**	
1945 - 2000	2	88	13	1	2	0	0	0	2	0	0	0	0	**108**	**450**
2000 - 2015	0	73	15	0	1	0	0	1	5	0	0	0	0	**95**	
2015 - 2030	0	85	14	0	1	0	0	0	3	0	0	0	0	**103**	
2030 - 2045	0	70	12	0	3	0	0	0	1	0	0	0	0	**86**	
2045 - 2100	0	65	9	0	0	0	0	1	1	0	0	0	0	**76**	**360**
2100 - 2115	0	59	6	0	0	0	0	0	1	0	0	0	0	**66**	
2115 - 2130	0	56	7	0	0	0	0	0	1	0	0	0	0	**64**	
2130 - 2145	0	55	6	0	0	0	0	0	1	0	0	0	0	**62**	
2145 - 2200	1	38	5	0	1	0	0	0	2	0	0	0	0	**47**	**239**
2200 - 2215	0	20	3	0	0	0	0	0	3	0	0	0	0	**26**	
2215 - 2230	0	32	9	0	0	0	0	0	4	0	0	0	0	**45**	
2230 - 2245	0	22	7	0	0	0	0	0	2	0	0	0	0	**31**	
2245 - 2300	1	31	9	0	0	0	0	0	2	0	0	0	0	**43**	**145**
2300 - 2315	0	30	12	0	0	0	0	0	0	0	0	0	0	**42**	
2315 - 2330	0	15	6	0	0	0	0	0	0	0	0	0	0	**21**	
2330 - 2345	0	16	5	0	0	0	0	0	1	0	0	0	0	**22**	
2345 - 0000	0	8	3	0	0	0	0	0	1	0	1	0	0	**13**	**98**

Session Total	12	7340	1660	10	140	44	0	31	271	4	5	0	0	**9517**
Session Average	0.13	76.46	17.29	0.10	1.46	0.46	0.00	0.32	2.82	0.04	0.05	0.00	0.00	**99.14**
Session Percentage	0.13	77.13	17.44	0.11	1.47	0.46	0.00	0.33	2.85	0.04	0.05	0.00	0.00	

AM Peak Hour	-	0645 - 0745	0645 - 0745	0630 - 0730	0800 - 0900	0730 - 0830	-	0815 - 0915	0915 - 1015	0700 - 0800	-	-	-	**0645 - 0745**
AM Peak Hour Volume	0	502	168	1	14	3	0	4	22	1	0	0	0	**693**

Noon Peak Hour	1200 - 1300	1415 - 1515	1445 - 1545	1115 - 1215	1315 - 1415	1445 - 1545	-	1445 - 1545	1245 - 1345	1100 - 1200	-	-	-	**1430 - 1530**
Noon Peak Hour Volume	2	549	150	3	13	7	0	3	26	1	0	0	0	**713**

PM Peak Hour	1530 - 1630	1615 - 1715	1545 - 1645	1530 - 1630	1630 - 1730	1500 - 1600	-	1600 - 1700	1515 - 1615	1500 - 1600	-	-	-	**1615 - 1715**
PM Peak Hour Volume	3	683	178	4	20	6	0	9	19	1	0	0	0	**892**

Site 75 Lane 4 SB
I-20,
north of Bush River Rd

Date
Wednesday, April 24, 2024

Lat/Long
34.034393°, -81.117736°

Weather
Fair
66°F

Click here for Detailed Weather

0000 - 2400 (Weekday 24h Session) (04-24-2024)
SB WB 15min

	Southbound (Movement 75 Lane 4 SB.1)													15min	60min
TIME	1	2	3	4	5	6	7	8	9	10	11	12	13	Total	Total
0000 - 0015	0	13	1	0	0	0	0	0	3	0	0	0	0	**17**	
0015 - 0030	0	12	0	1	1	0	0	0	0	0	0	0	0	**14**	
0030 - 0045	0	14	2	0	1	1	0	0	0	0	0	0	0	**18**	
0045 - 0100	0	9	0	0	0	0	0	0	5	0	0	0	0	**14**	**63**
0100 - 0115	0	9	1	0	1	0	0	0	0	0	0	0	0	**11**	
0115 - 0130	0	9	2	0	0	0	0	0	2	0	0	0	0	**13**	
0130 - 0145	0	5	0	0	0	0	0	0	1	0	2	0	0	**8**	
0145 - 0200	0	7	0	0	0	0	0	0	2	0	0	0	0	**9**	**41**
0200 - 0215	0	9	2	0	0	0	0	0	0	0	1	0	0	**12**	
0215 - 0230	0	4	0	0	1	0	0	0	3	0	1	0	0	**9**	
0230 - 0245	0	5	0	0	0	0	0	0	2	0	0	0	0	**7**	
0245 - 0300	0	1	0	0	0	0	0	0	1	0	1	0	0	**3**	**31**
0300 - 0315	0	4	1	0	0	0	0	0	0	0	0	0	0	**5**	
0315 - 0330	0	7	1	0	0	0	0	0	0	0	0	0	0	**8**	
0330 - 0345	0	5	0	0	0	0	0	0	2	0	0	0	0	**7**	
0345 - 0400	0	14	3	0	0	0	0	0	0	0	0	0	0	**17**	**37**
0400 - 0415	0	12	3	0	0	0	0	0	3	0	0	0	0	**18**	
0415 - 0430	0	10	2	0	0	0	0	0	1	0	0	0	0	**13**	
0430 - 0445	0	11	2	0	0	0	0	0	1	0	0	0	0	**14**	
0445 - 0500	0	10	4	0	0	0	0	0	2	0	0	0	0	**16**	**61**
0500 - 0515	0	20	5	0	0	0	0	0	1	0	0	0	0	**26**	
0515 - 0530	0	19	4	0	0	0	0	0	4	0	0	0	0	**27**	
0530 - 0545	0	28	8	0	0	0	0	0	1	0	0	0	0	**37**	
0545 - 0600	0	45	10	0	2	0	0	0	2	0	1	0	0	**60**	**150**
0600 - 0615	0	43	11	0	2	0	0	0	4	0	0	0	0	**60**	
0615 - 0630	0	80	24	0	3	0	0	0	2	0	0	0	0	**109**	
0630 - 0645	0	92	34	0	2	0	0	0	2	0	0	0	0	**130**	
0645 - 0700	0	112	30	0	2	0	0	0	3	0	0	0	0	**147**	**446**
0700 - 0715	0	119	45	0	1	1	0	1	3	0	0	0	0	**170**	
0715 - 0730	0	163	42	0	2	0	0	0	3	0	0	0	0	**210**	
0730 - 0745	0	134	37	0	2	0	0	0	3	0	0	0	0	**176**	
0745 - 0800	0	118	29	0	2	0	0	1	1	0	0	0	0	**151**	**707**
0800 - 0815	0	111	22	0	2	1	0	0	3	0	0	0	0	**139**	
0815 - 0830	0	88	33	0	4	1	0	0	4	0	0	0	0	**130**	
0830 - 0845	0	92	28	0	1	0	0	0	2	1	0	0	0	**124**	
0845 - 0900	1	90	24	0	3	1	0	0	0	0	0	0	0	**119**	**512**
0900 - 0915	0	81	20	0	5	2	0	0	5	0	0	0	0	**113**	
0915 - 0930	0	88	25	0	4	2	0	0	8	0	0	0	0	**127**	
0930 - 0945	0	85	28	2	3	0	0	0	4	0	0	0	0	**122**	
0945 - 1000	1	94	22	1	2	1	0	1	4	0	0	0	0	**126**	**488**
1000 - 1015	0	90	24	0	5	0	0	2	4	0	0	0	0	**125**	
1015 - 1030	1	81	36	0	4	2	0	0	4	0	0	0	0	**128**	
1030 - 1045	0	97	32	0	1	1	0	0	2	0	0	0	0	**133**	
1045 - 1100	0	96	25	0	2	1	0	1	0	0	0	0	0	**125**	**511**
1100 - 1115	0	80	28	0	4	1	0	1	1	0	0	0	0	**115**	
1115 - 1130	0	73	35	0	2	1	0	2	4	0	0	0	0	**117**	
1130 - 1145	0	88	25	0	1	0	0	1	2	0	0	0	0	**117**	
1145 - 1200	0	73	37	0	3	3	0	0	3	0	0	0	0	**119**	**468**
1200 - 1215	0	94	22	0	3	1	0	0	3	0	0	0	0	**123**	
1215 - 1230	1	92	41	0	4	2	0	1	5	0	0	0	0	**146**	
1230 - 1245	0	105	31	2	6	0	0	0	6	1	0	0	0	**151**	
1245 - 1300	0	117	45	0	1	1	0	1	3	0	0	0	0	**168**	**588**
1300 - 1315	0	113	30	0	5	3	0	0	5	1	0	0	0	**157**	
1315 - 1330	0	108	45	0	2	1	0	2	2	0	0	0	0	**160**	
1330 - 1345	1	123	41	0	2	2	0	1	6	0	0	0	0	**176**	
1345 - 1400	0	128	37	5	1	1	0	0	4	0	0	0	0	**176**	**669**
1400 - 1415	0	114	23	0	4	0	0	0	8	0	0	0	0	**149**	
1415 - 1430	0	128	36	0	0	0	0	0	2	0	0	0	0	**166**	
1430 - 1445	0	103	39	0	1	0	0	1	7	0	0	0	0	**151**	
1445 - 1500	3	118	34	0	2	1	0	1	6	0	0	0	0	**165**	**631**
1500 - 1515	0	148	44	0	3	1	0	1	2	0	0	0	0	**199**	
1515 - 1530	1	123	55	0	3	2	0	0	2	0	0	0	0	**186**	
1530 - 1545	2	119	46	0	3	1	0	2	2	0	0	0	0	**175**	
1545 - 1600	0	125	48	1	4	0	0	1	5	0	0	0	0	**184**	**744**
1600 - 1615	1	155	40	0	2	0	0	0	5	0	0	0	0	**203**	
1615 - 1630	0	161	45	0	8	1	0	1	4	0	0	0	0	**220**	
1630 - 1645	0	162	41	0	6	2	0	0	8	0	0	0	0	**219**	
1645 - 1700	0	167	55	0	6	0	0	0	6	0	0	0	0	**234**	**876**
1700 - 1715	1	186	46	0	4	1	0	1	4	0	0	0	0	**243**	
1715 - 1730	0	151	35	0	4	0	0	1	1	0	0	0	0	**192**	
1730 - 1745	0	147	26	0	4	0	0	2	1	0	0	0	0	**180**	
1745 - 1800	0	128	34	0	4	0	2	1	2	1	0	0	0	**172**	**787**
1800 - 1815	1	124	23	0	2	0	0	1	3	0	0	0	0	**154**	
1815 - 1830	0	136	32	0	2	1	0	0	3	0	0	0	0	**174**	
1830 - 1845	0	94	30	0	2	1	0	1	3	0	0	0	0	**131**	
1845 - 1900	0	106	20	0	2	0	0	2	3	0	0	0	0	**133**	**592**
1900 - 1915	0	98	19	0	1	0	0	0	2	0	0	0	0	**120**	
1915 - 1930	0	99	17	0	1	0	0	0	2	0	0	0	0	**119**	
1930 - 1945	0	93	11	0	1	2	0	2	1	0	0	0	0	**110**	
1945 - 2000	0	57	18	0	1	0	0	0	2	0	0	0	0	**78**	**427**
2000 - 2015	0	80	21	0	0	0	0	1	2	0	0	0	0	**104**	
2015 - 2030	0	82	15	0	2	0	0	0	1	0	0	0	0	**100**	
2030 - 2045	1	86	17	0	0	0	0	0	1	0	0	0	0	**105**	
2045 - 2100	0	84	20	0	0	0	0	0	5	0	0	0	0	**109**	**418**
2100 - 2115	0	58	13	0	0	0	0	0	2	0	0	0	0	**73**	
2115 - 2130	0	55	12	0	1	0	0	0	4	0	0	0	0	**72**	
2130 - 2145	0	46	10	0	0	0	0	0	3	0	0	0	0	**59**	
2145 - 2200	0	42	9	0	0	0	0	0	1	0	0	0	0	**52**	**256**
2200 - 2215	0	37	8	0	1	0	0	0	2	0	0	0	0	**48**	
2215 - 2230	0	34	7	0	1	0	0	0	2	0	1	0	0	**45**	
2230 - 2245	0	25	5	0	0	0	0	0	3	0	0	0	0	**33**	
2245 - 2300	0	28	5	0	1	0	0	0	2	0	0	0	0	**36**	**162**
2300 - 2315	0	27	6	0	1	0	0	0	0	0	0	0	0	**34**	
2315 - 2330	0	15	4	0	0	0	0	0	2	0	0	0	0	**21**	
2330 - 2345	0	17	4	0	0	0	0	0	1	0	0	0	0	**22**	
2345 - 0000	0	11	2	0	0	0	0	0	2	0	0	0	0	**15**	**92**

Session Total	15	7199	2014	12	169	43	2	34	258	4	7	0	0	**9757**
Session Average	0.16	74.99	20.98	0.13	1.76	0.45	0.02	0.35	2.69	0.04	0.07	0.00	0.00	**101.64**
Session Percentage	0.15	73.78	20.64	0.12	1.73	0.44	0.02	0.35	2.64	0.04	0.07	0.00	0.00	

AM Peak Hour	0930 - 1030	0700 - 0800	0645 - 0745	0900 - 1000	0845 - 0945	0830 - 0930	-	0915 - 1015	0900 - 1000	0745 - 0845	0500 - 0600	-	-	**0700 - 0800**
AM Peak Hour Volume	2	534	154	3	15	5	0	3	21	1	1	0	0	**707**

Noon Peak Hour	1445 - 1545	1445 - 1545	1445 - 1545	1300 - 1400	1145 - 1245	1245 - 1345	-	1045 - 1145	1400 - 1500	1215 - 1315	-	-	-	**1445 - 1545**
Noon Peak Hour Volume	6	508	179	5	16	7	0	5	23	2	0	0	0	**725**

PM Peak Hour	1515 - 1615	1615 - 1715	1500 - 1600	1500 - 1600	1615 - 1715	1500 - 1600	1700 - 1800	1700 - 1800	1600 - 1700	1700 - 1800	-	-	-	**1615 - 1715**
PM Peak Hour Volume	4	676	193	1	24	4	2	5	23	1	0	0	0	**916**

Site 75 Lane 4 SB
I-20,
north of Bush River Rd

Date
Thursday, April 25, 2024

Lat/Long
34.034393°, -81.117736°

Weather
Fair
67°F

Click here for Detailed Weather

0000 - 2400 (Weekday 24h Session) (04-25-2024)
SB WB 15min

	Southbound (Movement 75 Lane 4 SB.1)													15min	60min
TIME	1	2	3	4	5	6	7	8	9	10	11	12	13	Total	Total
0000 - 0015	0	14	4	0	0	0	0	0	2	0	1	0	0	**21**	
0015 - 0030	0	7	2	1	0	0	0	0	1	0	0	0	0	**11**	
0030 - 0045	0	7	2	0	0	0	0	0	5	0	0	0	0	**14**	
0045 - 0100	0	11	1	0	0	0	0	0	0	0	1	0	0	**13**	**59**
0100 - 0115	0	6	2	0	0	0	0	0	2	0	0	0	0	**10**	
0115 - 0130	0	9	3	0	0	0	0	0	2	0	0	0	0	**14**	
0130 - 0145	0	8	3	0	0	0	0	0	2	0	1	0	0	**14**	
0145 - 0200	0	8	2	0	0	0	0	0	1	0	0	0	0	**11**	**49**
0200 - 0215	0	6	1	0	1	0	0	0	1	0	1	0	0	**10**	
0215 - 0230	0	8	2	0	0	0	0	0	1	0	0	0	0	**11**	
0230 - 0245	0	6	1	0	0	0	0	0	0	0	0	0	0	**7**	
0245 - 0300	0	3	1	0	0	0	0	0	1	0	1	0	0	**6**	**34**
0300 - 0315	0	3	0	0	0	0	0	0	0	0	1	0	0	**4**	
0315 - 0330	0	1	1	0	0	0	0	0	0	0	0	0	0	**2**	
0330 - 0345	0	7	4	0	0	0	0	0	1	0	0	0	0	**12**	
0345 - 0400	0	10	4	0	0	0	0	0	2	0	0	0	0	**16**	**34**
0400 - 0415	0	9	3	0	0	0	0	0	0	0	0	0	0	**12**	
0415 - 0430	0	7	2	0	0	1	0	0	4	0	0	0	0	**14**	
0430 - 0445	0	10	4	0	0	0	0	0	2	0	0	0	0	**16**	
0445 - 0500	0	10	5	0	0	0	0	0	0	0	0	0	0	**15**	**57**
0500 - 0515	0	13	5	0	0	0	0	0	3	0	0	0	0	**21**	
0515 - 0530	1	14	5	0	0	0	0	0	3	0	0	0	0	**23**	
0530 - 0545	0	46	7	0	0	0	0	0	8	0	0	0	0	**61**	
0545 - 0600	0	47	6	0	0	0	0	0	4	0	0	0	0	**57**	**162**
0600 - 0615	0	59	7	0	2	2	0	0	2	0	0	0	0	**72**	
0615 - 0630	0	77	20	0	0	0	0	0	3	0	0	0	0	**100**	
0630 - 0645	0	97	33	0	1	0	0	0	2	0	0	0	0	**133**	
0645 - 0700	0	120	27	0	3	1	0	0	5	0	0	0	0	**156**	**461**
0700 - 0715	1	122	31	0	3	3	0	1	4	0	1	0	0	**166**	
0715 - 0730	0	144	32	0	4	0	0	0	6	0	0	0	0	**186**	
0730 - 0745	0	139	24	0	0	0	0	0	4	0	0	0	0	**167**	
0745 - 0800	0	115	32	0	1	0	0	0	3	0	0	0	0	**151**	**670**
0800 - 0815	0	96	27	0	1	1	0	0	3	0	0	0	0	**128**	
0815 - 0830	0	102	35	0	2	0	0	0	6	0	0	0	0	**145**	
0830 - 0845	0	98	21	0	1	0	0	1	0	1	0	0	0	**122**	
0845 - 0900	1	90	34	0	3	2	0	0	6	0	0	0	0	**136**	**531**
0900 - 0915	1	96	20	0	4	0	0	0	8	0	0	0	0	**129**	
0915 - 0930	0	71	34	0	2	3	0	1	3	0	0	0	0	**114**	
0930 - 0945	0	85	31	0	1	0	0	0	5	0	0	0	0	**122**	
0945 - 1000	0	91	26	0	2	2	0	1	1	0	0	0	0	**123**	**488**
1000 - 1015	0	86	28	0	4	0	0	2	6	0	0	0	0	**126**	
1015 - 1030	0	94	32	0	2	2	0	2	0	0	0	0	0	**132**	
1030 - 1045	0	97	23	0	1	0	0	0	5	0	0	0	0	**126**	
1045 - 1100	1	91	28	0	3	0	0	0	6	0	0	0	0	**129**	**513**
1100 - 1115	0	84	21	0	1	2	0	1	1	0	0	0	0	**110**	
1115 - 1130	0	99	33	0	4	0	1	0	7	0	0	0	0	**144**	
1130 - 1145	0	109	35	0	2	1	0	0	7	0	0	0	0	**154**	
1145 - 1200	1	87	37	0	2	2	0	0	5	0	0	0	0	**134**	**542**
1200 - 1215	2	112	43	0	6	0	0	3	2	0	0	0	0	**168**	
1215 - 1230	0	121	44	0	2	0	0	3	3	0	0	0	0	**173**	
1230 - 1245	1	94	38	0	1	0	0	0	4	0	0	0	0	**138**	
1245 - 1300	0	108	41	0	2	0	0	0	6	0	0	0	0	**157**	**636**
1300 - 1315	1	107	39	0	2	1	0	1	5	0	0	0	0	**156**	
1315 - 1330	0	119	32	0	1	1	0	1	2	0	0	0	0	**156**	
1330 - 1345	1	140	33	0	0	0	0	2	3	0	0	0	0	**179**	
1345 - 1400	0	123	37	0	1	0	0	0	2	2	0	0	0	**165**	**656**
1400 - 1415	0	135	31	0	4	0	0	0	3	0	0	0	0	**173**	
1415 - 1430	0	139	40	0	2	0	0	0	7	1	0	0	0	**189**	
1430 - 1445	0	130	39	0	6	0	0	1	5	0	0	0	0	**181**	
1445 - 1500	0	108	30	0	4	1	0	3	4	1	0	0	0	**151**	**694**
1500 - 1515	0	134	39	0	3	0	0	0	3	0	0	0	0	**179**	
1515 - 1530	0	117	46	0	4	0	0	1	1	0	0	0	0	**169**	
1530 - 1545	1	132	48	0	6	0	0	0	7	0	0	0	0	**194**	
1545 - 1600	0	139	47	1	5	0	0	0	3	0	0	0	0	**195**	**737**
1600 - 1615	0	172	50	0	2	1	0	0	4	1	0	0	0	**230**	
1615 - 1630	0	175	47	1	3	0	0	0	4	0	0	0	0	**230**	
1630 - 1645	1	157	35	0	0	0	0	0	4	0	0	0	0	**197**	
1645 - 1700	0	156	40	0	3	1	0	0	6	0	0	0	0	**206**	**863**
1700 - 1715	0	180	40	0	4	0	0	1	1	0	0	0	0	**226**	
1715 - 1730	0	162	27	0	0	0	0	0	2	0	0	0	0	**191**	
1730 - 1745	2	128	39	0	0	1	0	0	4	0	0	0	0	**174**	
1745 - 1800	1	144	31	0	1	0	0	0	2	0	0	0	0	**179**	**770**
1800 - 1815	1	151	39	0	1	0	0	0	0	0	0	0	0	**192**	
1815 - 1830	1	116	23	0	2	0	0	0	1	0	0	0	0	**143**	
1830 - 1845	0	115	26	0	3	0	0	0	1	0	0	0	0	**145**	
1845 - 1900	0	103	30	0	4	0	0	0	1	0	0	0	0	**138**	**618**
1900 - 1915	2	104	21	0	2	0	0	0	1	0	0	0	0	**130**	
1915 - 1930	0	103	16	1	0	0	0	0	2	0	0	0	0	**122**	
1930 - 1945	0	101	19	0	2	0	0	0	4	0	0	0	0	**126**	
1945 - 2000	0	87	22	0	0	0	0	0	0	0	0	0	0	**109**	**487**
2000 - 2015	1	79	19	0	0	0	0	0	2	0	0	0	0	**101**	
2015 - 2030	0	54	17	0	2	1	0	0	0	0	0	0	0	**74**	
2030 - 2045	0	83	16	0	0	0	0	0	3	0	0	0	0	**102**	
2045 - 2100	0	75	18	0	1	0	0	0	1	0	0	0	0	**95**	**372**
2100 - 2115	0	71	17	0	0	0	0	0	1	0	0	0	0	**89**	
2115 - 2130	1	55	15	1	0	0	0	0	0	0	0	0	0	**72**	
2130 - 2145	0	43	13	0	0	0	0	0	1	0	0	0	0	**57**	
2145 - 2200	0	39	10	0	1	0	0	0	2	0	0	0	0	**52**	**270**
2200 - 2215	0	34	11	0	1	0	0	0	2	0	0	0	0	**48**	
2215 - 2230	0	42	12	0	0	0	0	0	0	0	0	0	0	**54**	
2230 - 2245	0	33	10	0	0	0	0	0	1	0	1	0	0	**45**	
2245 - 2300	0	29	9	1	0	0	0	0	0	0	0	0	0	**39**	**186**
2300 - 2315	0	22	8	0	0	0	0	0	1	0	1	0	0	**32**	
2315 - 2330	0	15	5	0	0	0	0	1	0	0	0	0	0	**21**	
2330 - 2345	0	21	10	0	0	0	0	0	2	0	1	0	0	**34**	
2345 - 0000	0	17	8	0	0	0	0	0	2	0	2	0	0	**29**	**116**

Session Total	22	7443	2071	6	131	29	1	26	258	6	12	0	0	**10005**
Session Average	0.23	77.53	21.57	0.06	1.36	0.30	0.01	0.27	2.69	0.06	0.13	0.00	0.00	**104.22**
Session Percentage	0.22	74.39	20.70	0.06	1.31	0.29	0.01	0.26	2.58	0.06	0.12	0.00	0.00	

AM Peak Hour	0815 - 0915	0645 - 0745	0630 - 0730	-	0630 - 0730	0830 - 0930	-	0930 - 1030	0845 - 0945	0745 - 0845	0615 - 0715	-	-	**0645 - 0745**
AM Peak Hour Volume	2	525	123	0	11	5	0	5	22	1	1	0	0	**675**

Noon Peak Hour	1145 - 1245	1330 - 1430	1200 - 1300	-	1430 - 1530	1100 - 1200	1030 - 1130	1130 - 1230	1045 - 1145	1330 - 1430	-	-	-	**1345 - 1445**
Noon Peak Hour Volume	4	537	166	0	17	5	1	6	21	3	0	0	0	**708**

PM Peak Hour	1730 - 1830	1615 - 1715	1530 - 1630	1530 - 1630	1500 - 1600	1600 - 1700	-	1500 - 1600	1530 - 1630	1515 - 1615	-	-	-	**1600 - 1700**
PM Peak Hour Volume	5	668	192	2	18	2	0	1	18	1	0	0	0	**863**

Site 75 Lane 4 SB
I-20,
north of Bush River Rd

Date
Friday, April 26, 2024

Lat/Long
34.034393°, -81.117736°

Weather
Cloudy
69°F

Click here for Detailed Weather

0000 - 2400 (Weekday 24h Session) (04-26-2024)
SB WB 15min

	Southbound (Movement 75 Lane 4 SB.1)													15min	60min
TIME	1	2	3	4	5	6	7	8	9	10	11	12	13	Total	Total
0000 - 0015	0	12	0	0	1	0	0	0	1	0	1	0	0	**15**	
0015 - 0030	0	8	0	0	0	0	0	0	0	0	0	0	0	**8**	
0030 - 0045	0	17	0	0	0	0	0	0	2	0	0	0	0	**19**	
0045 - 0100	0	7	0	0	0	0	0	0	1	0	0	0	0	**8**	**50**
0100 - 0115	0	9	0	0	1	0	0	0	1	0	1	0	0	**12**	
0115 - 0130	0	6	0	0	0	0	0	0	0	0	0	0	0	**6**	
0130 - 0145	0	17	0	0	0	0	0	0	1	0	1	0	0	**19**	
0145 - 0200	0	8	0	0	0	0	0	0	4	0	0	0	0	**12**	**49**
0200 - 0215	0	8	0	0	0	0	0	0	2	0	0	0	0	**10**	
0215 - 0230	0	7	1	0	0	0	0	0	2	0	0	0	0	**10**	
0230 - 0245	0	3	0	0	0	0	0	0	1	0	1	0	0	**5**	
0245 - 0300	0	5	0	0	0	0	0	0	3	0	0	0	0	**8**	**33**
0300 - 0315	0	6	0	0	0	0	0	0	1	0	0	0	0	**7**	
0315 - 0330	0	7	0	0	0	0	0	0	2	0	0	0	0	**9**	
0330 - 0345	0	4	1	0	0	0	0	0	1	0	0	0	0	**6**	
0345 - 0400	0	8	0	0	3	0	0	0	2	0	0	0	0	**13**	**35**
0400 - 0415	0	8	0	0	1	0	0	0	3	0	0	0	0	**12**	
0415 - 0430	0	12	2	0	0	0	0	0	1	0	0	0	0	**15**	
0430 - 0445	0	11	3	0	0	0	0	0	3	0	0	0	0	**17**	
0445 - 0500	0	13	1	0	0	0	0	0	2	0	0	0	0	**16**	**60**
0500 - 0515	0	14	3	0	0	0	0	0	3	0	0	0	0	**20**	
0515 - 0530	0	19	8	0	0	0	0	0	1	0	0	0	0	**28**	
0530 - 0545	0	31	9	0	2	0	0	0	4	0	0	0	0	**46**	
0545 - 0600	0	39	10	0	2	1	0	0	1	0	0	0	0	**53**	**147**
0600 - 0615	0	40	13	0	1	0	0	0	5	0	0	0	0	**59**	
0615 - 0630	0	51	16	0	1	0	0	0	5	0	0	0	0	**73**	
0630 - 0645	0	106	23	0	0	0	0	0	3	0	0	0	0	**132**	
0645 - 0700	0	103	15	0	2	0	0	0	4	0	0	0	0	**124**	**388**
0700 - 0715	1	115	35	0	5	0	0	0	5	0	0	0	0	**161**	
0715 - 0730	0	131	41	0	3	0	0	0	3	0	0	0	0	**178**	
0730 - 0745	0	137	28	0	5	0	0	0	2	0	0	0	0	**172**	
0745 - 0800	1	123	27	0	1	1	0	0	1	0	0	0	0	**154**	**665**
0800 - 0815	0	91	29	0	0	0	0	0	2	0	0	0	0	**122**	
0815 - 0830	0	88	24	0	3	0	0	0	1	0	0	0	0	**116**	
0830 - 0845	0	99	23	0	3	0	0	0	4	0	0	0	0	**129**	
0845 - 0900	0	103	25	0	3	3	0	0	5	0	0	0	0	**139**	**506**
0900 - 0915	0	82	26	0	3	1	0	0	6	0	0	0	0	**118**	
0915 - 0930	0	73	36	0	1	2	0	0	2	0	0	0	0	**114**	
0930 - 0945	0	91	19	0	6	0	0	0	4	0	0	0	0	**120**	
0945 - 1000	1	95	24	0	2	0	0	1	3	0	0	0	0	**126**	**478**
1000 - 1015	0	78	30	0	4	3	0	2	2	0	0	0	0	**119**	
1015 - 1030	0	84	20	0	3	2	0	0	4	0	0	0	0	**113**	
1030 - 1045	1	106	24	0	3	0	0	1	4	0	0	0	0	**139**	
1045 - 1100	0	94	34	3	4	2	0	1	6	0	0	0	0	**144**	**515**
1100 - 1115	0	102	35	0	1	0	0	1	4	0	0	0	0	**143**	
1115 - 1130	0	106	39	0	1	0	1	0	9	0	0	0	0	**156**	
1130 - 1145	0	110	39	0	5	0	0	0	5	0	0	0	0	**159**	
1145 - 1200	0	119	35	0	2	0	0	0	7	0	0	0	0	**163**	**621**
1200 - 1215	1	121	37	0	1	0	1	1	8	0	0	0	0	**170**	
1215 - 1230	0	119	37	0	4	1	1	0	2	0	0	0	0	**164**	
1230 - 1245	0	123	33	0	6	0	0	0	2	0	0	0	0	**164**	
1245 - 1300	1	133	33	0	4	1	0	0	4	0	0	0	0	**176**	**674**
1300 - 1315	0	157	30	1	3	0	0	1	4	0	0	0	0	**196**	
1315 - 1330	0	129	25	0	2	0	1	0	6	0	0	0	0	**163**	
1330 - 1345	0	131	40	1	4	0	0	0	4	0	0	0	0	**180**	
1345 - 1400	3	102	28	1	4	0	0	0	2	0	0	0	0	**140**	**679**
1400 - 1415	0	93	17	0	1	2	0	0	3	0	0	0	0	**116**	
1415 - 1430	0	114	28	0	2	1	0	2	6	0	0	0	0	**153**	
1430 - 1445	0	115	36	0	0	0	0	0	5	0	0	0	0	**156**	
1445 - 1500	0	123	29	0	2	1	0	1	3	0	0	0	0	**159**	**584**
1500 - 1515	0	136	21	0	0	1	0	0	5	0	0	0	0	**163**	
1515 - 1530	0	115	33	0	3	0	2	1	3	0	0	0	0	**157**	
1530 - 1545	0	117	28	0	3	0	0	2	6	0	0	0	0	**156**	
1545 - 1600	0	145	31	0	2	0	0	0	5	0	0	0	0	**183**	**659**
1600 - 1615	0	103	27	1	5	0	0	1	2	0	0	0	0	**139**	
1615 - 1630	2	132	33	0	1	0	1	0	0	0	0	0	0	**169**	
1630 - 1645	0	134	23	0	3	0	0	1	1	0	0	0	0	**162**	
1645 - 1700	1	139	26	0	1	2	0	1	2	0	0	0	0	**172**	**642**
1700 - 1715	0	159	27	0	3	0	0	0	1	0	0	0	0	**190**	
1715 - 1730	0	187	40	0	3	0	0	0	2	0	0	0	0	**232**	
1730 - 1745	0	149	44	0	3	0	0	0	0	0	0	0	0	**196**	
1745 - 1800	0	127	28	0	3	0	0	1	2	0	0	0	0	**161**	**779**
1800 - 1815	2	162	24	0	3	0	0	1	2	0	0	0	0	**194**	
1815 - 1830	0	138	27	0	2	0	0	1	0	0	0	0	0	**168**	
1830 - 1845	0	127	25	0	2	0	0	0	2	0	0	0	0	**156**	
1845 - 1900	0	90	17	0	1	0	0	0	4	0	0	0	0	**112**	**630**
1900 - 1915	0	97	23	0	4	0	0	1	1	0	0	0	0	**126**	
1915 - 1930	0	98	18	0	0	0	0	0	2	0	0	0	0	**118**	
1930 - 1945	1	101	15	0	1	0	0	0	0	0	0	0	0	**118**	
1945 - 2000	0	119	16	0	0	0	0	1	0	0	0	0	0	**136**	**498**
2000 - 2015	1	106	10	0	0	0	0	0	3	0	0	0	0	**120**	
2015 - 2030	0	101	8	0	0	1	0	0	1	0	0	0	0	**111**	
2030 - 2045	0	79	5	0	0	0	0	0	1	0	0	0	0	**85**	
2045 - 2100	0	66	4	0	0	0	0	0	1	0	0	0	0	**71**	**387**
2100 - 2115	0	80	5	0	0	0	0	0	0	0	0	0	0	**85**	
2115 - 2130	0	79	6	0	2	0	0	0	2	0	0	0	0	**89**	
2130 - 2145	0	68	3	0	1	1	0	0	1	0	0	0	0	**74**	
2145 - 2200	0	66	4	0	3	0	0	0	1	0	0	0	0	**74**	**322**
2200 - 2215	0	53	4	0	0	0	0	0	3	0	0	0	0	**60**	
2215 - 2230	2	62	5	0	0	0	0	0	2	0	0	0	0	**71**	
2230 - 2245	0	56	4	0	1	0	0	0	2	0	0	0	0	**63**	
2245 - 2300	0	52	2	0	0	0	0	0	0	0	0	0	0	**54**	**248**
2300 - 2315	0	47	3	0	4	0	0	0	3	0	0	0	0	**57**	
2315 - 2330	0	35	3	0	0	0	0	0	1	0	0	0	0	**39**	
2330 - 2345	0	27	2	0	0	0	0	0	2	0	0	0	0	**31**	
2345 - 0000	0	28	1	0	0	0	0	0	2	0	0	0	0	**31**	**158**

Session Total	18	7646	1666	7	159	26	7	22	252	0	4	0	0	**9807**
Session Average	0.19	79.65	17.35	0.07	1.66	0.27	0.07	0.23	2.63	0.00	0.04	0.00	0.00	**102.16**
Session Percentage	0.18	77.96	16.99	0.07	1.62	0.27	0.07	0.22	2.57	0.00	0.04	0.00	0.00	

AM Peak Hour	0700 - 0800	0700 - 0800	0700 - 0800	-	0645 - 0745	0830 - 0930	-	0945 - 1045	0600 - 0700	-	-	-	-	**0700 - 0800**
AM Peak Hour Volume	2	506	131	0	15	6	0	4	17	0	0	0	0	**665**

Noon Peak Hour	1300 - 1400	1245 - 1345	1115 - 1215	1000 - 1100	1215 - 1315	1000 - 1100	1115 - 1215	1000 - 1100	1115 - 1215	-	-	-	-	**1245 - 1345**
Noon Peak Hour Volume	3	550	150	3	17	7	2	4	29	0	0	0	0	**715**

PM Peak Hour	1600 - 1700	1645 - 1745	1700 - 1800	1515 - 1615	1515 - 1615	1600 - 1700	1500 - 1600	1515 - 1615	1500 - 1600	-	-	-	-	**1645 - 1745**
PM Peak Hour Volume	3	634	139	1	13	2	2	4	19	0	0	0	0	**790**

Site 75 Lane 4 SB
I-20,
north of Bush River Rd

Date
Saturday, April 27, 2024

Lat/Long
34.034393°, -81.117736°

Weather
Mostly Cloudy
69°F

Click here for Detailed Weather

0000 - 2400 (Saturday 24h Session) (04-27-2024)
SB WB 15min

	Southbound (Movement 75 Lane 4 SB.1)													15min	60min
TIME	1	2	3	4	5	6	7	8	9	10	11	12	13	Total	Total
0000 - 0015	1	24	2	0	0	0	0	0	2	0	1	0	0	**30**	
0015 - 0030	0	25	2	1	0	0	0	0	1	0	0	0	0	**29**	
0030 - 0045	0	10	0	0	0	1	0	0	0	0	1	0	0	**12**	
0045 - 0100	0	8	0	0	0	0	0	0	1	0	1	0	0	**10**	**81**
0100 - 0115	0	15	1	0	0	0	0	0	1	0	0	0	0	**17**	
0115 - 0130	0	19	2	0	0	0	0	0	0	0	0	0	0	**21**	
0130 - 0145	0	8	0	0	0	0	0	0	0	0	0	0	0	**8**	
0145 - 0200	0	10	1	0	1	0	0	0	0	0	0	0	0	**12**	**58**
0200 - 0215	0	11	1	0	0	1	0	0	0	0	1	0	0	**14**	
0215 - 0230	0	10	0	0	0	0	0	0	0	0	0	0	0	**10**	
0230 - 0245	0	7	0	0	0	0	0	0	1	0	0	0	0	**8**	
0245 - 0300	0	5	2	0	0	0	0	0	1	0	0	0	0	**8**	**40**
0300 - 0315	0	3	0	0	0	0	0	0	0	0	0	0	0	**3**	
0315 - 0330	0	8	1	0	0	0	0	0	2	0	0	0	0	**11**	
0330 - 0345	0	4	0	0	0	0	0	0	0	0	0	0	0	**4**	
0345 - 0400	0	3	0	1	0	0	0	0	0	0	1	0	0	**5**	**23**
0400 - 0415	0	5	1	0	0	0	0	0	2	0	1	0	0	**9**	
0415 - 0430	0	7	0	0	0	0	0	0	2	0	0	0	0	**9**	
0430 - 0445	0	8	0	0	0	0	0	0	3	0	1	0	0	**12**	
0445 - 0500	0	4	0	0	0	0	0	0	2	0	0	0	0	**6**	**36**
0500 - 0515	0	10	2	0	0	0	0	0	1	0	0	0	0	**13**	
0515 - 0530	0	11	1	0	0	0	0	0	1	0	0	0	0	**13**	
0530 - 0545	0	15	3	0	0	0	0	0	1	0	0	0	0	**19**	
0545 - 0600	0	18	2	0	0	0	0	0	1	0	1	0	0	**22**	**67**
0600 - 0615	0	16	2	0	0	0	0	0	4	0	0	0	0	**22**	
0615 - 0630	0	23	6	0	1	0	0	0	2	0	0	0	0	**32**	
0630 - 0645	0	29	8	0	0	0	0	0	3	0	0	0	0	**40**	
0645 - 0700	0	38	4	0	1	0	0	0	3	0	0	0	0	**46**	**140**
0700 - 0715	0	31	9	0	0	0	0	0	1	0	0	0	0	**41**	
0715 - 0730	0	50	10	0	1	1	0	0	2	0	0	0	0	**64**	
0730 - 0745	0	41	13	0	4	0	0	0	0	0	0	0	0	**58**	
0745 - 0800	0	47	13	0	2	0	0	0	3	0	0	0	0	**65**	**228**
0800 - 0815	0	60	11	0	1	1	0	0	3	0	0	0	0	**76**	
0815 - 0830	0	49	11	0	3	0	0	0	1	0	0	0	0	**64**	
0830 - 0845	0	63	12	0	0	0	0	0	4	0	0	0	0	**79**	
0845 - 0900	0	68	16	0	0	1	0	1	0	0	0	0	0	**86**	**305**
0900 - 0915	0	54	17	0	2	0	0	0	0	0	0	0	0	**73**	
0915 - 0930	1	63	24	0	2	1	0	0	3	0	0	0	0	**94**	
0930 - 0945	0	87	27	0	1	0	0	0	0	0	0	0	0	**115**	
0945 - 1000	1	82	19	0	2	1	0	0	3	0	0	0	0	**108**	**390**
1000 - 1015	1	87	24	0	3	0	0	3	3	0	0	0	0	**121**	
1015 - 1030	0	77	16	0	1	0	0	0	2	0	0	0	0	**96**	
1030 - 1045	1	109	26	0	1	0	0	0	3	0	0	0	0	**140**	
1045 - 1100	1	95	22	0	0	0	0	0	0	0	0	0	0	**118**	**475**
1100 - 1115	0	98	29	0	1	0	0	0	1	0	0	0	0	**129**	
1115 - 1130	0	97	23	0	0	0	0	0	2	0	0	0	0	**122**	
1130 - 1145	1	106	28	0	2	0	0	0	0	0	0	0	0	**137**	
1145 - 1200	0	111	32	0	1	0	0	0	2	0	0	0	0	**146**	**534**
1200 - 1215	0	139	23	0	3	0	0	0	3	0	0	0	0	**168**	
1215 - 1230	0	132	23	0	1	0	0	1	2	0	0	0	0	**159**	
1230 - 1245	1	108	30	0	3	0	0	0	6	0	0	0	0	**148**	
1245 - 1300	1	132	33	0	0	0	0	0	1	0	0	0	0	**167**	**642**
1300 - 1315	1	121	31	0	0	0	0	2	2	0	0	0	0	**157**	
1315 - 1330	0	134	36	0	3	1	0	0	3	0	0	0	0	**177**	
1330 - 1345	0	145	27	0	0	0	0	0	1	0	0	0	0	**173**	
1345 - 1400	0	145	28	0	2	0	0	1	2	0	0	0	0	**178**	**685**
1400 - 1415	0	140	45	0	1	0	0	0	2	0	0	0	0	**188**	
1415 - 1430	2	137	30	0	1	0	0	1	1	0	0	0	0	**172**	
1430 - 1445	0	168	27	0	2	0	0	0	2	0	0	0	0	**199**	
1445 - 1500	2	147	23	0	2	0	0	0	1	0	0	0	0	**175**	**734**
1500 - 1515	0	149	31	0	1	0	0	1	0	0	0	0	0	**182**	
1515 - 1530	2	158	17	0	0	0	0	0	1	0	0	0	0	**178**	
1530 - 1545	0	164	36	0	2	0	0	0	3	0	0	0	0	**205**	
1545 - 1600	0	138	41	0	2	0	0	0	1	0	0	0	0	**182**	**747**
1600 - 1615	0	179	28	0	6	1	0	0	2	0	0	0	0	**216**	
1615 - 1630	0	134	29	0	1	0	0	0	2	0	0	0	0	**166**	
1630 - 1645	1	135	22	0	0	0	0	0	2	0	0	0	0	**160**	
1645 - 1700	0	142	32	0	2	0	0	1	1	0	0	0	0	**178**	**720**
1700 - 1715	0	140	25	0	2	1	0	0	1	0	0	0	0	**169**	
1715 - 1730	0	147	13	0	0	0	0	0	3	0	0	0	0	**163**	
1730 - 1745	0	128	33	0	2	0	0	0	2	0	0	0	0	**165**	
1745 - 1800	1	125	22	0	0	0	0	0	1	0	0	0	0	**149**	**646**
1800 - 1815	4	152	27	0	1	0	0	0	0	0	0	0	0	**184**	
1815 - 1830	2	115	21	0	0	0	0	0	0	0	0	0	0	**138**	
1830 - 1845	0	123	19	0	0	0	0	0	0	0	0	0	0	**142**	
1845 - 1900	2	108	25	0	1	0	0	0	0	0	0	0	0	**136**	**600**
1900 - 1915	0	112	24	0	2	0	0	0	0	0	0	0	0	**138**	
1915 - 1930	0	118	23	0	2	0	0	0	1	0	0	0	0	**144**	
1930 - 1945	1	88	21	0	0	0	0	0	0	0	0	0	0	**110**	
1945 - 2000	1	94	21	0	0	0	0	0	1	0	0	0	0	**117**	**509**
2000 - 2015	1	93	22	0	0	0	0	0	1	0	0	0	0	**117**	
2015 - 2030	0	84	19	0	1	0	0	0	3	0	0	0	0	**107**	
2030 - 2045	0	88	20	0	0	0	0	0	2	0	0	0	0	**110**	
2045 - 2100	0	92	18	0	0	0	0	0	0	0	0	0	0	**110**	**444**
2100 - 2115	0	90	15	0	0	0	0	0	2	0	0	0	0	**107**	
2115 - 2130	0	89	12	0	0	0	0	0	2	0	0	0	0	**103**	
2130 - 2145	1	85	11	0	0	0	0	0	0	0	0	0	0	**97**	
2145 - 2200	0	88	15	0	0	0	0	0	0	0	0	0	0	**103**	**410**
2200 - 2215	0	62	10	0	0	0	0	0	0	0	0	0	0	**72**	
2215 - 2230	0	64	13	0	0	0	0	0	1	0	0	0	0	**78**	
2230 - 2245	0	50	7	0	0	0	0	0	0	0	0	0	0	**57**	
2245 - 2300	0	45	8	0	0	0	0	0	0	0	0	0	0	**53**	**260**
2300 - 2315	0	32	7	0	0	0	0	0	2	0	0	0	0	**41**	
2315 - 2330	0	40	11	0	0	0	0	0	1	0	0	0	0	**52**	
2330 - 2345	0	20	6	0	0	0	0	0	0	0	0	0	0	**26**	
2345 - 0000	0	23	5	0	1	0	0	0	0	0	0	0	0	**29**	**148**

Session Total	30	7171	1488	2	74	10	0	11	128	0	8	0	0	**8922**
Session Average	0.31	74.70	15.50	0.02	0.77	0.10	0.00	0.11	1.33	0.00	0.08	0.00	0.00	**92.94**
Session Percentage	0.34	80.37	16.68	0.02	0.83	0.11	0.00	0.12	1.43	0.00	0.09	0.00	0.00	

AM Peak Hour	0915 - 1015	0945 - 1045	0915 - 1015	-	0730 - 0830	0715 - 0815	-	0915 - 1015	0600 - 0700	-	0500 - 0600	-	-	**0945 - 1045**
AM Peak Hour Volume	3	355	94	0	10	2	0	3	12	0	1	0	0	**465**

Noon Peak Hour	1400 - 1500	1430 - 1530	1315 - 1415	-	1145 - 1245	1230 - 1330	-	1000 - 1100	1145 - 1245	-	-	-	-	**1445 - 1545**
Noon Peak Hour Volume	4	622	136	0	8	1	0	3	13	0	0	0	0	**740**

PM Peak Hour	1800 - 1900	1515 - 1615	1530 - 1630	-	1530 - 1630	1515 - 1615	-	1500 - 1600	1530 - 1630	-	-	-	-	**1515 - 1615**
PM Peak Hour Volume	8	639	134	0	11	1	0	1	8	0	0	0	0	**781**

Bi-Directional Class Count || SB WB Average 15min

Columbia, SC

Marr Traffic DATA COLLECTION
www.marrtraffic.com

Site 75 Lane 4 SB
I-20,
north of Bush River Rd

Date
Sunday, April 21, 2024

Lat/Long
34.034393°, -81.117736°

Weather
Cloudy
66°F

0000 - 2400 (Weekday 24h Session) (All Dates)
SB WB Average 15min

	SB WB Average 15min													15min	60min
Time	1	2	3	4	5	6	7	8	9	10	11	12	13	Total	Total
0000 - 0015	0	16	2	0	0	0	0	0	1	0	0	0	0	**20**	
0015 - 0030	0	14	1	0	0	0	0	0	1	0	0	0	0	**16**	
0030 - 0045	0	12	1	0	0	0	0	0	1	0	0	0	0	**15**	
0045 - 0100	0	12	1	0	0	0	0	0	2	0	0	0	0	**15**	**67**
0100 - 0115	0	11	1	0	0	0	0	0	1	0	0	0	0	**13**	
0115 - 0130	0	10	1	0	0	0	0	0	1	0	0	0	0	**13**	
0130 - 0145	0	10	1	0	0	0	0	0	1	0	1	0	0	**12**	
0145 - 0200	0	9	0	0	0	0	0	0	1	0	0	0	0	**10**	**49**
0200 - 0215	0	8	1	0	0	0	0	0	1	0	1	0	0	**10**	
0215 - 0230	0	7	1	0	0	0	0	0	1	0	0	0	0	**9**	
0230 - 0245	0	6	1	0	0	0	0	0	1	0	0	0	0	**8**	
0245 - 0300	0	5	1	0	0	0	0	0	1	0	0	0	0	**8**	**35**
0300 - 0315	0	5	0	0	0	0	0	0	1	0	0	0	0	**6**	
0315 - 0330	0	7	0	0	0	0	0	0	1	0	0	0	0	**9**	
0330 - 0345	0	7	1	0	0	0	0	0	1	0	0	0	0	**9**	
0345 - 0400	0	9	2	0	0	0	0	0	1	0	0	0	0	**12**	**36**
0400 - 0415	0	9	1	0	1	0	0	0	2	0	0	0	0	**12**	
0415 - 0430	0	9	1	0	0	0	0	0	2	0	0	0	0	**12**	
0430 - 0445	0	10	2	0	0	0	0	0	2	0	0	0	0	**14**	
0445 - 0500	0	9	2	0	0	0	0	0	2	0	0	0	0	**13**	**52**
0500 - 0515	0	14	3	0	0	0	0	0	2	0	0	0	0	**20**	
0515 - 0530	0	16	4	0	0	0	0	0	2	0	0	0	0	**23**	
0530 - 0545	0	30	6	0	0	0	0	0	3	0	0	0	0	**39**	
0545 - 0600	0	34	6	0	1	0	0	0	2	0	0	0	0	**44**	**125**
0600 - 0615	0	40	7	0	1	0	0	0	3	0	0	0	0	**51**	
0615 - 0630	0	58	15	0	1	0	0	0	2	0	0	0	0	**76**	
0630 - 0645	0	76	24	0	1	0	0	0	2	0	0	0	0	**103**	
0645 - 0700	0	89	24	0	2	0	0	0	3	0	0	0	0	**118**	**348**
0700 - 0715	0	91	30	0	2	1	0	0	3	0	0	0	0	**128**	
0715 - 0730	0	115	31	0	1	0	0	0	4	0	0	0	0	**151**	
0730 - 0745	0	108	25	0	2	0	0	0	2	0	0	0	0	**137**	
0745 - 0800	0	92	24	0	1	0	0	0	2	0	0	0	0	**121**	**536**
0800 - 0815	0	85	22	0	1	1	0	0	2	0	0	0	0	**111**	
0815 - 0830	0	79	22	0	2	1	0	0	3	0	0	0	0	**107**	
0830 - 0845	0	85	20	0	2	0	0	0	2	0	0	0	0	**110**	
0845 - 0900	0	85	23	0	2	1	0	0	3	0	0	0	0	**114**	**442**
0900 - 0915	0	74	17	0	3	1	0	0	4	0	0	0	0	**98**	
0915 - 0930	0	78	24	0	2	1	0	0	5	0	0	0	0	**111**	
0930 - 0945	0	80	23	0	2	0	0	0	3	0	0	0	0	**110**	
0945 - 1000	0	83	21	0	2	1	0	1	3	0	0	0	0	**111**	**430**
1000 - 1015	0	77	23	0	3	1	0	1	4	0	0	0	0	**109**	
1015 - 1030	0	86	22	0	2	1	0	0	3	0	0	0	0	**114**	
1030 - 1045	0	96	22	0	1	0	0	1	4	0	0	0	0	**124**	
1045 - 1100	0	93	23	1	2	1	0	0	3	0	0	0	0	**123**	**470**
1100 - 1115	0	88	26	0	1	1	0	1	2	0	0	0	0	**119**	
1115 - 1130	0	89	27	0	2	0	0	0	4	0	0	0	0	**122**	
1130 - 1145	0	103	25	0	2	0	0	0	3	0	0	0	0	**134**	
1145 - 1200	0	105	28	0	2	1	0	0	4	0	0	0	0	**139**	**514**
1200 - 1215	0	110	26	0	3	0	0	1	4	0	0	0	0	**145**	
1215 - 1230	0	120	29	0	2	1	0	1	2	0	0	0	0	**155**	
1230 - 1245	0	112	28	0	3	0	0	0	4	0	0	0	0	**148**	
1245 - 1300	0	125	31	0	1	1	0	0	3	0	0	0	0	**162**	**610**
1300 - 1315	0	123	29	0	2	1	0	1	4	0	0	0	0	**159**	
1315 - 1330	0	121	29	0	3	1	0	1	4	0	0	0	0	**157**	
1330 - 1345	0	135	30	0	2	0	0	0	5	0	0	0	0	**172**	
1345 - 1400	0	126	29	1	2	0	0	0	3	0	0	0	0	**162**	**651**
1400 - 1415	0	120	26	0	2	1	0	0	4	0	0	0	0	**153**	
1415 - 1430	0	129	29	0	1	0	0	0	4	0	0	0	0	**165**	
1430 - 1445	0	132	31	0	2	0	0	0	4	0	0	0	0	**170**	
1445 - 1500	1	126	26	0	2	1	0	1	3	0	0	0	0	**160**	**647**
1500 - 1515	0	141	33	0	2	1	0	1	2	0	0	0	0	**179**	
1515 - 1530	0	129	34	0	1	1	0	0	2	0	0	0	0	**168**	
1530 - 1545	1	132	35	0	4	1	0	1	4	0	0	0	0	**176**	
1545 - 1600	0	135	37	0	2	0	0	0	3	0	0	0	0	**178**	**701**
1600 - 1615	0	153	35	0	2	0	0	1	3	0	0	0	0	**194**	
1615 - 1630	0	147	35	0	2	0	0	1	3	0	0	0	0	**190**	
1630 - 1645	0	154	31	0	2	1	0	0	3	0	0	0	0	**192**	
1645 - 1700	0	145	34	0	3	1	0	0	3	0	0	0	0	**186**	**762**
1700 - 1715	0	163	30	0	3	0	0	1	2	0	0	0	0	**199**	
1715 - 1730	0	158	26	0	2	0	0	0	2	0	0	0	0	**189**	
1730 - 1745	0	133	33	0	1	0	0	0	2	0	0	0	0	**170**	
1745 - 1800	0	129	27	0	2	0	0	0	2	0	0	0	0	**161**	**720**
1800 - 1815	1	139	26	0	1	0	0	0	2	0	0	0	0	**169**	
1815 - 1830	0	119	23	0	2	0	0	0	1	0	0	0	0	**145**	
1830 - 1845	0	111	22	0	1	0	0	0	1	0	0	0	0	**137**	
1845 - 1900	0	98	20	0	2	0	0	0	2	0	0	0	0	**122**	**573**
1900 - 1915	0	104	20	0	2	0	0	0	1	0	0	0	0	**127**	
1915 - 1930	0	93	17	0	1	0	0	0	3	0	0	0	0	**113**	
1930 - 1945	0	89	14	0	1	1	0	0	1	0	0	0	0	**107**	
1945 - 2000	0	85	16	0	1	0	0	0	1	0	0	0	0	**103**	**451**
2000 - 2015	0	79	18	0	0	0	0	0	3	0	0	0	0	**101**	
2015 - 2030	0	76	14	0	1	0	0	0	2	0	0	0	0	**93**	
2030 - 2045	0	76	13	0	0	0	0	0	1	0	0	0	0	**92**	
2045 - 2100	0	72	13	0	0	0	0	0	1	0	0	0	0	**87**	**372**
2100 - 2115	0	67	10	0	0	0	0	0	1	0	0	0	0	**79**	
2115 - 2130	0	62	9	0	0	0	0	0	1	0	0	0	0	**74**	
2130 - 2145	0	57	9	0	0	0	0	0	1	0	0	0	0	**67**	
2145 - 2200	0	49	8	0	1	0	0	0	2	0	0	0	0	**60**	**279**
2200 - 2215	0	39	7	0	0	0	0	0	2	0	0	0	0	**48**	
2215 - 2230	0	43	8	0	0	0	0	0	1	0	0	0	0	**52**	
2230 - 2245	0	33	6	0	0	0	0	0	2	0	0	0	0	**42**	
2245 - 2300	0	33	7	0	0	0	0	0	1	0	0	0	0	**42**	**183**
2300 - 2315	0	30	6	0	1	0	0	0	1	0	0	0	0	**38**	
2315 - 2330	0	20	4	0	0	0	0	0	1	0	0	0	0	**26**	
2330 - 2345	0	18	5	0	0	0	0	0	1	0	0	0	0	**24**	
2345 - 0000	0	15	3	0	0	0	0	0	1	0	0	0	0	**20**	**108**

Session Total	14	7136	1620	6	111	26	1	20	218	2	6	0	0	**9161**
Session Average	0.15	74.33	16.88	0.06	1.16	0.28	0.01	0.21	2.27	0.02	0.06	0.00	0.00	**95.42**
Session Percentage	0.15	77.90	17.69	0.07	1.21	0.29	0.02	0.22	2.38	0.02	0.06	0.00	0.00	

AM Peak Hour	0945 - 1045	0700 - 0800	0700 - 0800	0930 - 1030	0845 - 0945	0915 - 1015	-	0945 - 1045	0845 - 0945	0745 - 0845	0515 - 0615	-	-	**0700 - 0800**
AM Peak Volume	1	405	111	1	10	3	0	3	15	0	0	0	0	**536**

Noon Peak Hour	1445 - 1545	1415 - 1515	1445 - 1545	1300 - 1400	1445 - 1545	1245 - 1345	1115 - 1215	1000 - 1100	1245 - 1345	1300 - 1400	-	-	-	**1445 - 1545**
Noon Peak Volume	2	528	127	1	9	3	0	2	15	0	0	0	0	**683**

PM Peak Hour	1730 - 1830	1630 - 1730	1530 - 1630	1530 - 1630	1530 - 1630	1600 - 1700	1500 - 1600	1530 - 1630	1530 - 1630	1515 - 1615	-	-	-	**1615 - 1715**
PM Peak Volume	2	620	142	1	10	2	0	2	13	0	0	0	0	**767**

Bi-Directional Class Count || Volume Summary 15min

Columbia, SC

Marr Traffic DATA COLLECTION

www.marrtraffic.com

Site 75 Lane 4 SB

I-20,
north of Bush River Rd

Date

Sunday, April 21, 2024

Lat/Long

34.034393°, -81.117736°

Weather

Cloudy
66°F

Click here for Detailed Weather

0000 - 2400 (Sunday 24h Session) (04-21-2024)

Volume Summary 15min

TIME	Volume Summary 15min NB	Volume Summary 15min SB	15min Total	60min Total
0000 - 0015	0	31	**31**	
0015 - 0030	0	27	**27**	
0030 - 0045	0	24	**24**	
0045 - 0100	0	31	**31**	**113**
0100 - 0115	0	26	**26**	
0115 - 0130	0	22	**22**	
0130 - 0145	0	15	**15**	
0145 - 0200	0	20	**20**	**83**
0200 - 0215	0	10	**10**	
0215 - 0230	0	16	**16**	
0230 - 0245	0	14	**14**	
0245 - 0300	0	10	**10**	**50**
0300 - 0315	0	10	**10**	
0315 - 0330	0	9	**9**	
0330 - 0345	0	10	**10**	
0345 - 0400	0	9	**9**	**38**
0400 - 0415	0	12	**12**	
0415 - 0430	0	7	**7**	
0430 - 0445	0	11	**11**	
0445 - 0500	0	6	**6**	**36**
0500 - 0515	0	7	**7**	
0515 - 0530	0	4	**4**	
0530 - 0545	0	17	**17**	
0545 - 0600	0	14	**14**	**42**
0600 - 0615	0	16	**16**	
0615 - 0630	0	30	**30**	
0630 - 0645	0	26	**26**	
0645 - 0700	0	22	**22**	**94**
0700 - 0715	0	30	**30**	
0715 - 0730	0	27	**27**	
0730 - 0745	0	39	**39**	
0745 - 0800	0	33	**33**	**129**
0800 - 0815	0	35	**35**	
0815 - 0830	0	46	**46**	
0830 - 0845	0	50	**50**	
0845 - 0900	0	53	**53**	**184**
0900 - 0915	0	49	**49**	
0915 - 0930	0	70	**70**	
0930 - 0945	0	74	**74**	
0945 - 1000	0	80	**80**	**273**
1000 - 1015	0	73	**73**	
1015 - 1030	0	92	**92**	
1030 - 1045	0	115	**115**	
1045 - 1100	0	100	**100**	**380**
1100 - 1115	0	94	**94**	
1115 - 1130	0	100	**100**	
1130 - 1145	0	112	**112**	
1145 - 1200	0	148	**148**	**454**

Time	Volume Summary 15min NB	Volume Summary 15min SB	15min Total	60min Total
1200 - 1215	0	126	**126**	
1215 - 1230	0	174	**174**	
1230 - 1245	0	136	**136**	
1245 - 1300	0	161	**161**	**597**
1300 - 1315	0	164	**164**	
1315 - 1330	0	167	**167**	
1330 - 1345	0	178	**178**	
1345 - 1400	0	154	**154**	**663**
1400 - 1415	0	126	**126**	
1415 - 1430	0	163	**163**	
1430 - 1445	0	158	**158**	
1445 - 1500	0	157	**157**	**604**
1500 - 1515	0	145	**145**	
1515 - 1530	0	145	**145**	
1530 - 1545	0	140	**140**	
1545 - 1600	0	145	**145**	**575**
1600 - 1615	0	143	**143**	
1615 - 1630	0	133	**133**	
1630 - 1645	0	143	**143**	
1645 - 1700	0	133	**133**	**552**
1700 - 1715	0	126	**126**	
1715 - 1730	0	140	**140**	
1730 - 1745	0	124	**124**	
1745 - 1800	0	128	**128**	**518**
1800 - 1815	0	134	**134**	
1815 - 1830	0	137	**137**	
1830 - 1845	0	110	**110**	
1845 - 1900	0	105	**105**	**486**
1900 - 1915	0	104	**104**	
1915 - 1930	0	84	**84**	
1930 - 1945	0	86	**86**	
1945 - 2000	0	63	**63**	**337**
2000 - 2015	0	78	**78**	
2015 - 2030	0	64	**64**	
2030 - 2045	0	71	**71**	
2045 - 2100	0	64	**64**	**277**
2100 - 2115	0	57	**57**	
2115 - 2130	0	61	**61**	
2130 - 2145	0	53	**53**	
2145 - 2200	0	44	**44**	**215**
2200 - 2215	0	46	**46**	
2215 - 2230	0	40	**40**	
2230 - 2245	0	27	**27**	
2245 - 2300	0	26	**26**	**139**
2300 - 2315	0	30	**30**	
2315 - 2330	0	15	**15**	
2330 - 2345	0	13	**13**	
2345 - 0000	0	14	**14**	**72**

Session Total	0	6911	**6911**
Session Average	0.00	71.99	**71.99**
Session Percentage	0.00	100.00	

Site 75 Lane 4 SB

I-20,
north of Bush River Rd

Date

Monday, April 22, 2024

Lat/Long

34.034393°, -81.117736°

Weather

Mostly Cloudy
57°F

Click here for Detailed Weather

0000 - 2400 (Weekday 24h Session) (04-22-2024)

Volume Summary 15min

TIME	Volume Summary 15min NB	Volume Summary 15min SB	15min Total	60min Total
0000 - 0015	0	12	**12**	
0015 - 0030	0	11	**11**	
0030 - 0045	0	9	**9**	
0045 - 0100	0	11	**11**	**43**
0100 - 0115	0	5	**5**	
0115 - 0130	0	6	**6**	
0130 - 0145	0	9	**9**	
0145 - 0200	0	3	**3**	**23**
0200 - 0215	0	10	**10**	
0215 - 0230	0	3	**3**	
0230 - 0245	0	6	**6**	
0245 - 0300	0	13	**13**	**32**
0300 - 0315	0	6	**6**	
0315 - 0330	0	10	**10**	
0330 - 0345	0	11	**11**	
0345 - 0400	0	12	**12**	**39**
0400 - 0415	0	15	**15**	
0415 - 0430	0	13	**13**	
0430 - 0445	0	7	**7**	
0445 - 0500	0	17	**17**	**52**
0500 - 0515	0	22	**22**	
0515 - 0530	0	31	**31**	
0530 - 0545	0	47	**47**	
0545 - 0600	0	53	**53**	**153**
0600 - 0615	0	64	**64**	
0615 - 0630	0	95	**95**	
0630 - 0645	0	130	**130**	
0645 - 0700	0	162	**162**	**451**
0700 - 0715	0	161	**161**	
0715 - 0730	0	196	**196**	
0730 - 0745	0	183	**183**	
0745 - 0800	0	160	**160**	**700**
0800 - 0815	0	134	**134**	
0815 - 0830	0	121	**121**	
0830 - 0845	0	140	**140**	
0845 - 0900	0	121	**121**	**516**
0900 - 0915	0	105	**105**	
0915 - 0930	0	125	**125**	
0930 - 0945	0	108	**108**	
0945 - 1000	0	105	**105**	**443**
1000 - 1015	0	95	**95**	
1015 - 1030	0	103	**103**	
1030 - 1045	0	113	**113**	
1045 - 1100	0	120	**120**	**431**
1100 - 1115	0	125	**125**	
1115 - 1130	0	100	**100**	
1130 - 1145	0	124	**124**	
1145 - 1200	0	112	**112**	**461**

Time	Volume Summary 15min NB	Volume Summary 15min SB	15min Total	60min Total
1200 - 1215	0	144	**144**	
1215 - 1230	0	132	**132**	
1230 - 1245	0	150	**150**	
1245 - 1300	0	154	**154**	**580**
1300 - 1315	0	141	**141**	
1315 - 1330	0	135	**135**	
1330 - 1345	0	160	**160**	
1345 - 1400	0	156	**156**	**592**
1400 - 1415	0	166	**166**	
1415 - 1430	0	143	**143**	
1430 - 1445	0	160	**160**	
1445 - 1500	0	149	**149**	**618**
1500 - 1515	0	189	**189**	
1515 - 1530	0	168	**168**	
1530 - 1545	0	184	**184**	
1545 - 1600	0	169	**169**	**710**
1600 - 1615	0	237	**237**	
1615 - 1630	0	180	**180**	
1630 - 1645	0	228	**228**	
1645 - 1700	0	177	**177**	**822**
1700 - 1715	0	217	**217**	
1715 - 1730	0	210	**210**	
1730 - 1745	0	172	**172**	
1745 - 1800	0	145	**145**	**744**
1800 - 1815	0	155	**155**	
1815 - 1830	0	133	**133**	
1830 - 1845	0	139	**139**	
1845 - 1900	0	113	**113**	**540**
1900 - 1915	0	140	**140**	
1915 - 1930	0	93	**93**	
1930 - 1945	0	105	**105**	
1945 - 2000	0	112	**112**	**450**
2000 - 2015	0	91	**91**	
2015 - 2030	0	89	**89**	
2030 - 2045	0	82	**82**	
2045 - 2100	0	82	**82**	**344**
2100 - 2115	0	76	**76**	
2115 - 2130	0	54	**54**	
2130 - 2145	0	67	**67**	
2145 - 2200	0	46	**46**	**243**
2200 - 2215	0	35	**35**	
2215 - 2230	0	34	**34**	
2230 - 2245	0	35	**35**	
2245 - 2300	0	40	**40**	**144**
2300 - 2315	0	32	**32**	
2315 - 2330	0	10	**10**	
2330 - 2345	0	23	**23**	
2345 - 0000	0	9	**9**	**74**

Session Total	0	9205	**9205**
Session Average	0.00	95.89	**95.89**
Session Percentage	0.00	100.00	

Site 75 Lane 4 SB

I-20,
north of Bush River Rd

Date

Tuesday, April 23, 2024

Lat/Long

34.034393°, -81.117736°

Weather

Fair
58°F

Click here for Detailed Weather

0000 - 2400 (Weekday 24h Session) (04-23-2024)

Volume Summary 15min

TIME	Volume Summary 15min NB	Volume Summary 15min SB	15min Total	60min Total
0000 - 0015	0	14	**14**	
0015 - 0030	0	14	**14**	
0030 - 0045	0	12	**12**	
0045 - 0100	0	18	**18**	**58**
0100 - 0115	0	13	**13**	
0115 - 0130	0	7	**7**	
0130 - 0145	0	12	**12**	
0145 - 0200	0	6	**6**	**38**
0200 - 0215	0	7	**7**	
0215 - 0230	0	4	**4**	
0230 - 0245	0	9	**9**	
0245 - 0300	0	8	**8**	**28**
0300 - 0315	0	8	**8**	
0315 - 0330	0	11	**11**	
0330 - 0345	0	13	**13**	
0345 - 0400	0	13	**13**	**45**
0400 - 0415	0	9	**9**	
0415 - 0430	0	15	**15**	
0430 - 0445	0	18	**18**	
0445 - 0500	0	18	**18**	**60**
0500 - 0515	0	28	**28**	
0515 - 0530	0	35	**35**	
0530 - 0545	0	44	**44**	
0545 - 0600	0	46	**46**	**153**
0600 - 0615	0	66	**66**	
0615 - 0630	0	91	**91**	
0630 - 0645	0	131	**131**	
0645 - 0700	0	169	**169**	**457**
0700 - 0715	0	164	**164**	
0715 - 0730	0	199	**199**	
0730 - 0745	0	161	**161**	
0745 - 0800	0	131	**131**	**655**
0800 - 0815	0	141	**141**	
0815 - 0830	0	127	**127**	
0830 - 0845	0	124	**124**	
0845 - 0900	0	146	**146**	**538**
0900 - 0915	0	102	**102**	
0915 - 0930	0	131	**131**	
0930 - 0945	0	111	**111**	
0945 - 1000	0	106	**106**	**450**
1000 - 1015	0	104	**104**	
1015 - 1030	0	131	**131**	
1030 - 1045	0	105	**105**	
1045 - 1100	0	125	**125**	**465**
1100 - 1115	0	116	**116**	
1115 - 1130	0	114	**114**	
1130 - 1145	0	137	**137**	
1145 - 1200	0	152	**152**	**519**

Time	Volume Summary 15min NB	Volume Summary 15min SB	15min Total	60min Total
1200 - 1215	0	116	**116**	
1215 - 1230	0	135	**135**	
1230 - 1245	0	148	**148**	
1245 - 1300	0	152	**152**	**551**
1300 - 1315	0	143	**143**	
1315 - 1330	0	143	**143**	
1330 - 1345	0	161	**161**	
1345 - 1400	0	165	**165**	**612**
1400 - 1415	0	152	**152**	
1415 - 1430	0	167	**167**	
1430 - 1445	0	184	**184**	
1445 - 1500	0	163	**163**	**666**
1500 - 1515	0	194	**194**	
1515 - 1530	0	172	**172**	
1530 - 1545	0	181	**181**	
1545 - 1600	0	186	**186**	**733**
1600 - 1615	0	191	**191**	
1615 - 1630	0	231	**231**	
1630 - 1645	0	235	**235**	
1645 - 1700	0	201	**201**	**858**
1700 - 1715	0	225	**225**	
1715 - 1730	0	196	**196**	
1730 - 1745	0	179	**179**	
1745 - 1800	0	196	**196**	**796**
1800 - 1815	0	170	**170**	
1815 - 1830	0	125	**125**	
1830 - 1845	0	133	**133**	
1845 - 1900	0	115	**115**	**543**
1900 - 1915	0	132	**132**	
1915 - 1930	0	113	**113**	
1930 - 1945	0	97	**97**	
1945 - 2000	0	108	**108**	**450**
2000 - 2015	0	95	**95**	
2015 - 2030	0	103	**103**	
2030 - 2045	0	86	**86**	
2045 - 2100	0	76	**76**	**360**
2100 - 2115	0	66	**66**	
2115 - 2130	0	64	**64**	
2130 - 2145	0	62	**62**	
2145 - 2200	0	47	**47**	**239**
2200 - 2215	0	26	**26**	
2215 - 2230	0	45	**45**	
2230 - 2245	0	31	**31**	
2245 - 2300	0	43	**43**	**145**
2300 - 2315	0	42	**42**	
2315 - 2330	0	21	**21**	
2330 - 2345	0	22	**22**	
2345 - 0000	0	13	**13**	**98**

Session Total	0	9517	**9517**
Session Average	0.00	99.14	**99.14**
Session Percentage	0.00	100.00	

Site 75 Lane 4 SB

I-20,
north of Bush River Rd

Date

Wednesday, April 24, 2024

Lat/Long

34.034393°, -81.117736°

Weather

Fair
66°F

Click here for Detailed Weather

0000 - 2400 (Weekday 24h Session) (04-24-2024)

Volume Summary 15min

TIME	Volume Summary 15min NB	Volume Summary 15min SB	15min Total	60min Total
0000 - 0015	0	17	**17**	
0015 - 0030	0	14	**14**	
0030 - 0045	0	18	**18**	
0045 - 0100	0	14	**14**	**63**
0100 - 0115	0	11	**11**	
0115 - 0130	0	13	**13**	
0130 - 0145	0	8	**8**	
0145 - 0200	0	9	**9**	**41**
0200 - 0215	0	12	**12**	
0215 - 0230	0	9	**9**	
0230 - 0245	0	7	**7**	
0245 - 0300	0	3	**3**	**31**
0300 - 0315	0	5	**5**	
0315 - 0330	0	8	**8**	
0330 - 0345	0	7	**7**	
0345 - 0400	0	17	**17**	**37**
0400 - 0415	0	18	**18**	
0415 - 0430	0	13	**13**	
0430 - 0445	0	14	**14**	
0445 - 0500	0	16	**16**	**61**
0500 - 0515	0	26	**26**	
0515 - 0530	0	27	**27**	
0530 - 0545	0	37	**37**	
0545 - 0600	0	60	**60**	**150**
0600 - 0615	0	60	**60**	
0615 - 0630	0	109	**109**	
0630 - 0645	0	130	**130**	
0645 - 0700	0	147	**147**	**446**
0700 - 0715	0	170	**170**	
0715 - 0730	0	210	**210**	
0730 - 0745	0	176	**176**	
0745 - 0800	0	151	**151**	**707**
0800 - 0815	0	139	**139**	
0815 - 0830	0	130	**130**	
0830 - 0845	0	124	**124**	
0845 - 0900	0	119	**119**	**512**
0900 - 0915	0	113	**113**	
0915 - 0930	0	127	**127**	
0930 - 0945	0	122	**122**	
0945 - 1000	0	126	**126**	**488**
1000 - 1015	0	125	**125**	
1015 - 1030	0	128	**128**	
1030 - 1045	0	133	**133**	
1045 - 1100	0	125	**125**	**511**
1100 - 1115	0	115	**115**	
1115 - 1130	0	117	**117**	
1130 - 1145	0	117	**117**	
1145 - 1200	0	119	**119**	**468**

Time	Volume Summary 15min NB	Volume Summary 15min SB	15min Total	60min Total
1200 - 1215	0	123	**123**	
1215 - 1230	0	146	**146**	
1230 - 1245	0	151	**151**	
1245 - 1300	0	168	**168**	**588**
1300 - 1315	0	157	**157**	
1315 - 1330	0	160	**160**	
1330 - 1345	0	176	**176**	
1345 - 1400	0	176	**176**	**669**
1400 - 1415	0	149	**149**	
1415 - 1430	0	166	**166**	
1430 - 1445	0	151	**151**	
1445 - 1500	0	165	**165**	**631**
1500 - 1515	0	199	**199**	
1515 - 1530	0	186	**186**	
1530 - 1545	0	175	**175**	
1545 - 1600	0	184	**184**	**744**
1600 - 1615	0	203	**203**	
1615 - 1630	0	220	**220**	
1630 - 1645	0	219	**219**	
1645 - 1700	0	234	**234**	**876**
1700 - 1715	0	243	**243**	
1715 - 1730	0	192	**192**	
1730 - 1745	0	180	**180**	
1745 - 1800	0	172	**172**	**787**
1800 - 1815	0	154	**154**	
1815 - 1830	0	174	**174**	
1830 - 1845	0	131	**131**	
1845 - 1900	0	133	**133**	**592**
1900 - 1915	0	120	**120**	
1915 - 1930	0	119	**119**	
1930 - 1945	0	110	**110**	
1945 - 2000	0	78	**78**	**427**
2000 - 2015	0	104	**104**	
2015 - 2030	0	100	**100**	
2030 - 2045	0	105	**105**	
2045 - 2100	0	109	**109**	**418**
2100 - 2115	0	73	**73**	
2115 - 2130	0	72	**72**	
2130 - 2145	0	59	**59**	
2145 - 2200	0	52	**52**	**256**
2200 - 2215	0	48	**48**	
2215 - 2230	0	45	**45**	
2230 - 2245	0	33	**33**	
2245 - 2300	0	36	**36**	**162**
2300 - 2315	0	34	**34**	
2315 - 2330	0	21	**21**	
2330 - 2345	0	22	**22**	
2345 - 0000	0	15	**15**	**92**

Session Total	0	9757	**9757**
Session Average	0.00	101.64	**101.64**
Session Percentage	0.00	100.00	

Site 75 Lane 4 SB

I-20,
north of Bush River Rd

Date

Thursday, April 25, 2024

Lat/Long

34.034393°, -81.117736°

Weather

Fair
67°F

Click here for Detailed Weather

0000 - 2400 (Weekday 24h Session) (04-25-2024)

Volume Summary 15min

TIME	Volume Summary 15min NB	Volume Summary 15min SB	15min Total	60min Total
0000 - 0015	0	21	**21**	
0015 - 0030	0	11	**11**	
0030 - 0045	0	14	**14**	
0045 - 0100	0	13	**13**	**59**
0100 - 0115	0	10	**10**	
0115 - 0130	0	14	**14**	
0130 - 0145	0	14	**14**	
0145 - 0200	0	11	**11**	**49**
0200 - 0215	0	10	**10**	
0215 - 0230	0	11	**11**	
0230 - 0245	0	7	**7**	
0245 - 0300	0	6	**6**	**34**
0300 - 0315	0	4	**4**	
0315 - 0330	0	2	**2**	
0330 - 0345	0	12	**12**	
0345 - 0400	0	16	**16**	**34**
0400 - 0415	0	12	**12**	
0415 - 0430	0	14	**14**	
0430 - 0445	0	16	**16**	
0445 - 0500	0	15	**15**	**57**
0500 - 0515	0	21	**21**	
0515 - 0530	0	23	**23**	
0530 - 0545	0	61	**61**	
0545 - 0600	0	57	**57**	**162**
0600 - 0615	0	72	**72**	
0615 - 0630	0	100	**100**	
0630 - 0645	0	133	**133**	
0645 - 0700	0	156	**156**	**461**
0700 - 0715	0	166	**166**	
0715 - 0730	0	186	**186**	
0730 - 0745	0	167	**167**	
0745 - 0800	0	151	**151**	**670**
0800 - 0815	0	128	**128**	
0815 - 0830	0	145	**145**	
0830 - 0845	0	122	**122**	
0845 - 0900	0	136	**136**	**531**
0900 - 0915	0	129	**129**	
0915 - 0930	0	114	**114**	
0930 - 0945	0	122	**122**	
0945 - 1000	0	123	**123**	**488**
1000 - 1015	0	126	**126**	
1015 - 1030	0	132	**132**	
1030 - 1045	0	126	**126**	
1045 - 1100	0	129	**129**	**513**
1100 - 1115	0	110	**110**	
1115 - 1130	0	144	**144**	
1130 - 1145	0	154	**154**	
1145 - 1200	0	134	**134**	**542**

Time	Volume Summary 15min NB	Volume Summary 15min SB	15min Total	60min Total
1200 - 1215	0	168	**168**	
1215 - 1230	0	173	**173**	
1230 - 1245	0	138	**138**	
1245 - 1300	0	157	**157**	**636**
1300 - 1315	0	156	**156**	
1315 - 1330	0	156	**156**	
1330 - 1345	0	179	**179**	
1345 - 1400	0	165	**165**	**656**
1400 - 1415	0	173	**173**	
1415 - 1430	0	189	**189**	
1430 - 1445	0	181	**181**	
1445 - 1500	0	151	**151**	**694**
1500 - 1515	0	179	**179**	
1515 - 1530	0	169	**169**	
1530 - 1545	0	194	**194**	
1545 - 1600	0	195	**195**	**737**
1600 - 1615	0	230	**230**	
1615 - 1630	0	230	**230**	
1630 - 1645	0	197	**197**	
1645 - 1700	0	206	**206**	**863**
1700 - 1715	0	226	**226**	
1715 - 1730	0	191	**191**	
1730 - 1745	0	174	**174**	
1745 - 1800	0	179	**179**	**770**
1800 - 1815	0	192	**192**	
1815 - 1830	0	143	**143**	
1830 - 1845	0	145	**145**	
1845 - 1900	0	138	**138**	**618**
1900 - 1915	0	130	**130**	
1915 - 1930	0	122	**122**	
1930 - 1945	0	126	**126**	
1945 - 2000	0	109	**109**	**487**
2000 - 2015	0	101	**101**	
2015 - 2030	0	74	**74**	
2030 - 2045	0	102	**102**	
2045 - 2100	0	95	**95**	**372**
2100 - 2115	0	89	**89**	
2115 - 2130	0	72	**72**	
2130 - 2145	0	57	**57**	
2145 - 2200	0	52	**52**	**270**
2200 - 2215	0	48	**48**	
2215 - 2230	0	54	**54**	
2230 - 2245	0	45	**45**	
2245 - 2300	0	39	**39**	**186**
2300 - 2315	0	32	**32**	
2315 - 2330	0	21	**21**	
2330 - 2345	0	34	**34**	
2345 - 0000	0	29	**29**	**116**

Session Total	0	10005	**10005**
Session Average	0.00	104.22	**104.22**
Session Percentage	0.00	100.00	

Site 75 Lane 4 SB

I-20,
north of Bush River Rd

Date

Friday, April 26, 2024

Lat/Long

34.034393°, -81.117736°

Weather

Cloudy
69°F

Click here for Detailed Weather

0000 - 2400 (Weekday 24h Session) (04-26-2024)

Volume Summary 15min

TIME	Volume Summary 15min NB	Volume Summary 15min SB	15min Total	60min Total
0000 - 0015	0	15	**15**	
0015 - 0030	0	8	**8**	
0030 - 0045	0	19	**19**	
0045 - 0100	0	8	**8**	**50**
0100 - 0115	0	12	**12**	
0115 - 0130	0	6	**6**	
0130 - 0145	0	19	**19**	
0145 - 0200	0	12	**12**	**49**
0200 - 0215	0	10	**10**	
0215 - 0230	0	10	**10**	
0230 - 0245	0	5	**5**	
0245 - 0300	0	8	**8**	**33**
0300 - 0315	0	7	**7**	
0315 - 0330	0	9	**9**	
0330 - 0345	0	6	**6**	
0345 - 0400	0	13	**13**	**35**
0400 - 0415	0	12	**12**	
0415 - 0430	0	15	**15**	
0430 - 0445	0	17	**17**	
0445 - 0500	0	16	**16**	**60**
0500 - 0515	0	20	**20**	
0515 - 0530	0	28	**28**	
0530 - 0545	0	46	**46**	
0545 - 0600	0	53	**53**	**147**
0600 - 0615	0	59	**59**	
0615 - 0630	0	73	**73**	
0630 - 0645	0	132	**132**	
0645 - 0700	0	124	**124**	**388**
0700 - 0715	0	161	**161**	
0715 - 0730	0	178	**178**	
0730 - 0745	0	172	**172**	
0745 - 0800	0	154	**154**	**665**
0800 - 0815	0	122	**122**	
0815 - 0830	0	116	**116**	
0830 - 0845	0	129	**129**	
0845 - 0900	0	139	**139**	**506**
0900 - 0915	0	118	**118**	
0915 - 0930	0	114	**114**	
0930 - 0945	0	120	**120**	
0945 - 1000	0	126	**126**	**478**
1000 - 1015	0	119	**119**	
1015 - 1030	0	113	**113**	
1030 - 1045	0	139	**139**	
1045 - 1100	0	144	**144**	**515**
1100 - 1115	0	143	**143**	
1115 - 1130	0	156	**156**	
1130 - 1145	0	159	**159**	
1145 - 1200	0	163	**163**	**621**

Time	Volume Summary 15min NB	Volume Summary 15min SB	15min Total	60min Total
1200 - 1215	0	170	**170**	
1215 - 1230	0	164	**164**	
1230 - 1245	0	164	**164**	
1245 - 1300	0	176	**176**	**674**
1300 - 1315	0	196	**196**	
1315 - 1330	0	163	**163**	
1330 - 1345	0	180	**180**	
1345 - 1400	0	140	**140**	**679**
1400 - 1415	0	116	**116**	
1415 - 1430	0	153	**153**	
1430 - 1445	0	156	**156**	
1445 - 1500	0	159	**159**	**584**
1500 - 1515	0	163	**163**	
1515 - 1530	0	157	**157**	
1530 - 1545	0	156	**156**	
1545 - 1600	0	183	**183**	**659**
1600 - 1615	0	139	**139**	
1615 - 1630	0	169	**169**	
1630 - 1645	0	162	**162**	
1645 - 1700	0	172	**172**	**642**
1700 - 1715	0	190	**190**	
1715 - 1730	0	232	**232**	
1730 - 1745	0	196	**196**	
1745 - 1800	0	161	**161**	**779**
1800 - 1815	0	194	**194**	
1815 - 1830	0	168	**168**	
1830 - 1845	0	156	**156**	
1845 - 1900	0	112	**112**	**630**
1900 - 1915	0	126	**126**	
1915 - 1930	0	118	**118**	
1930 - 1945	0	118	**118**	
1945 - 2000	0	136	**136**	**498**
2000 - 2015	0	120	**120**	
2015 - 2030	0	111	**111**	
2030 - 2045	0	85	**85**	
2045 - 2100	0	71	**71**	**387**
2100 - 2115	0	85	**85**	
2115 - 2130	0	89	**89**	
2130 - 2145	0	74	**74**	
2145 - 2200	0	74	**74**	**322**
2200 - 2215	0	60	**60**	
2215 - 2230	0	71	**71**	
2230 - 2245	0	63	**63**	
2245 - 2300	0	54	**54**	**248**
2300 - 2315	0	57	**57**	
2315 - 2330	0	39	**39**	
2330 - 2345	0	31	**31**	
2345 - 0000	0	31	**31**	**158**

Session Total	0	9807	**9807**
Session Average	0.00	102.16	**102.16**
Session Percentage	0.00	100.00	

Site 75 Lane 4 SB

I-20,
north of Bush River Rd

Date

Saturday, April 27, 2024

Lat/Long

34.034393°, -81.117736°

Weather

Mostly Cloudy
69°F

Click here for Detailed Weather

0000 - 2400 (Saturday 24h Session) (04-27-2024)

Volume Summary 15min

TIME	Volume Summary 15min NB	SB	15min Total	60min Total
0000 - 0015	0	30	**30**	
0015 - 0030	0	29	**29**	
0030 - 0045	0	12	**12**	
0045 - 0100	0	10	**10**	**81**
0100 - 0115	0	17	**17**	
0115 - 0130	0	21	**21**	
0130 - 0145	0	8	**8**	
0145 - 0200	0	12	**12**	**58**
0200 - 0215	0	14	**14**	
0215 - 0230	0	10	**10**	
0230 - 0245	0	8	**8**	
0245 - 0300	0	8	**8**	**40**
0300 - 0315	0	3	**3**	
0315 - 0330	0	11	**11**	
0330 - 0345	0	4	**4**	
0345 - 0400	0	5	**5**	**23**
0400 - 0415	0	9	**9**	
0415 - 0430	0	9	**9**	
0430 - 0445	0	12	**12**	
0445 - 0500	0	6	**6**	**36**
0500 - 0515	0	13	**13**	
0515 - 0530	0	13	**13**	
0530 - 0545	0	19	**19**	
0545 - 0600	0	22	**22**	**67**
0600 - 0615	0	22	**22**	
0615 - 0630	0	32	**32**	
0630 - 0645	0	40	**40**	
0645 - 0700	0	46	**46**	**140**
0700 - 0715	0	41	**41**	
0715 - 0730	0	64	**64**	
0730 - 0745	0	58	**58**	
0745 - 0800	0	65	**65**	**228**
0800 - 0815	0	76	**76**	
0815 - 0830	0	64	**64**	
0830 - 0845	0	79	**79**	
0845 - 0900	0	86	**86**	**305**
0900 - 0915	0	73	**73**	
0915 - 0930	0	94	**94**	
0930 - 0945	0	115	**115**	
0945 - 1000	0	108	**108**	**390**
1000 - 1015	0	121	**121**	
1015 - 1030	0	96	**96**	
1030 - 1045	0	140	**140**	
1045 - 1100	0	118	**118**	**475**
1100 - 1115	0	129	**129**	
1115 - 1130	0	122	**122**	
1130 - 1145	0	137	**137**	
1145 - 1200	0	146	**146**	**534**

Time	Volume Summary 15min NB	SB	15min Total	60min Total
1200 - 1215	0	168	**168**	
1215 - 1230	0	159	**159**	
1230 - 1245	0	148	**148**	
1245 - 1300	0	167	**167**	**642**
1300 - 1315	0	157	**157**	
1315 - 1330	0	177	**177**	
1330 - 1345	0	173	**173**	
1345 - 1400	0	178	**178**	**685**
1400 - 1415	0	188	**188**	
1415 - 1430	0	172	**172**	
1430 - 1445	0	199	**199**	
1445 - 1500	0	175	**175**	**734**
1500 - 1515	0	182	**182**	
1515 - 1530	0	178	**178**	
1530 - 1545	0	205	**205**	
1545 - 1600	0	182	**182**	**747**
1600 - 1615	0	216	**216**	
1615 - 1630	0	166	**166**	
1630 - 1645	0	160	**160**	
1645 - 1700	0	178	**178**	**720**
1700 - 1715	0	169	**169**	
1715 - 1730	0	163	**163**	
1730 - 1745	0	165	**165**	
1745 - 1800	0	149	**149**	**646**
1800 - 1815	0	184	**184**	
1815 - 1830	0	138	**138**	
1830 - 1845	0	142	**142**	
1845 - 1900	0	136	**136**	**600**
1900 - 1915	0	138	**138**	
1915 - 1930	0	144	**144**	
1930 - 1945	0	110	**110**	
1945 - 2000	0	117	**117**	**509**
2000 - 2015	0	117	**117**	
2015 - 2030	0	107	**107**	
2030 - 2045	0	110	**110**	
2045 - 2100	0	110	**110**	**444**
2100 - 2115	0	107	**107**	
2115 - 2130	0	103	**103**	
2130 - 2145	0	97	**97**	
2145 - 2200	0	103	**103**	**410**
2200 - 2215	0	72	**72**	
2215 - 2230	0	78	**78**	
2230 - 2245	0	57	**57**	
2245 - 2300	0	53	**53**	**260**
2300 - 2315	0	41	**41**	
2315 - 2330	0	52	**52**	
2330 - 2345	0	26	**26**	
2345 - 0000	0	29	**29**	**148**

Session Total	0	8922	**8922**
Session Average	0.00	92.94	**92.94**
Session Percentage	0.00	100.00	

Bi-Directional Class Count || SB WB 60min

Columbia, SC

Marr Traffic DATA COLLECTION

www.marrtraffic.com

Site 75 Lane 4 SB
I-20,
north of Bush River Rd

Date
Sunday, April 21, 2024

Lat/Long
34.034393°, -81.117736°

Weather
Cloudy
66°F

Click here for Detailed Weather

0000 - 2400 (Sunday 24h Session) (04-21-2024)
SB WB 60min

	Southbound (Movement 75 Lane 4 SB.1)													
TIME	1	2	3	4	5	6	7	8	9	10	11	12	13	**Total**
0000 - 0100	0	106	6	0	0	0	0	0	1	0	0	0	0	**113**
0100 - 0200	0	78	1	0	1	0	0	0	3	0	0	0	0	**83**
0200 - 0300	0	42	4	0	0	0	0	1	3	0	0	0	0	**50**
0300 - 0400	0	35	0	0	0	0	0	0	3	0	0	0	0	**38**
0400 - 0500	0	30	1	0	1	1	0	0	3	0	0	0	0	**36**
0500 - 0600	0	34	1	0	0	0	0	1	6	0	0	0	0	**42**
0600 - 0700	0	80	12	0	0	0	0	0	2	0	0	0	0	**94**
0700 - 0800	0	90	31	0	0	0	0	0	8	0	0	0	0	**129**
0800 - 0900	0	147	30	0	0	1	0	0	6	0	0	0	0	**184**
0900 - 1000	0	229	38	0	0	1	0	1	4	0	0	0	0	**273**
1000 - 1100	0	329	40	1	0	1	0	1	8	0	0	0	0	**380**
1100 - 1200	0	391	60	0	1	0	0	0	2	0	0	0	0	**454**
1200 - 1300	0	559	30	0	1	0	0	0	7	0	0	0	0	**597**
1300 - 1400	0	583	73	0	1	0	0	1	5	0	0	0	0	**663**
1400 - 1500	0	534	60	0	3	0	0	0	7	0	0	0	0	**604**
1500 - 1600	0	514	54	1	1	0	0	0	5	0	0	0	0	**575**
1600 - 1700	0	496	50	0	2	0	0	0	4	0	0	0	0	**552**
1700 - 1800	0	474	41	0	0	0	0	0	3	0	0	0	0	**518**
1800 - 1900	1	448	33	0	0	0	0	0	4	0	0	0	0	**486**
1900 - 2000	0	309	20	0	0	0	0	0	8	0	0	0	0	**337**
2000 - 2100	0	249	20	0	0	0	0	1	7	0	0	0	0	**277**
2100 - 2200	0	200	3	0	1	0	0	0	11	0	0	0	0	**215**
2200 - 2300	0	121	11	0	0	0	0	0	7	0	0	0	0	**139**
2300 - 2400	0	65	0	0	0	0	0	0	7	0	0	0	0	**72**

Session Total	1	6143	619	2	12	4	0	6	124	0	0	0	0	**6911**
Session Average	0.04	255.96	25.79	0.08	0.50	0.17	0.00	0.25	5.17	0.00	0.00	0.00	0.00	**287.96**
Session Percentage	0.01	88.89	8.96	0.03	0.17	0.06	0.00	0.09	1.79	0.00	0.00	0.00	0.00	

AM Peak Hour	-	0900 - 1000	0900 - 1000	-	-	0800 - 0900	-	0500 - 0600	0700 - 0800	-	-	-	-	**0900 - 1000**
AM Peak Volume	0	229	38	0	0	1	0	1	8	0	0	0	0	**273**

Noon Peak Hour	-	1300 - 1400	1300 - 1400	1000 - 1100	1400 - 1500	1000 - 1100	-	1000 - 1100	1000 - 1100	-	-	-	-	**1300 - 1400**
Noon Peak Volume	0	583	73	1	3	1	0	1	8	0	0	0	0	**663**

PM Peak Hour	1800 - 1900	1500 - 1600	1500 - 1600	1500 - 1600	1600 - 1700	-	-	-	1900 - 2000	-	-	-	-	**1500 - 1600**
PM Peak Volume	1	514	54	1	2	0	0	0	8	0	0	0	0	**575**

Site 75 Lane 4 SB
I-20,
north of Bush River Rd

Date
Monday, April 22, 2024

Lat/Long
34.034393°, -81.117736°

Weather
Mostly Cloudy
57°F

Click here for Detailed Weather

0000 - 2400 (Weekday 24h Session) (04-22-2024)
SB WB 60min

	Southbound (Movement 75 Lane 4 SB.1)													
TIME	1	2	3	4	5	6	7	8	9	10	11	12	13	**Total**
0000 - 0100	0	30	8	0	0	0	0	0	5	0	0	0	0	**43**
0100 - 0200	0	19	2	0	1	0	0	0	1	0	0	0	0	**23**
0200 - 0300	0	23	3	0	1	0	0	0	5	0	0	0	0	**32**
0300 - 0400	0	29	5	0	0	0	0	0	5	0	0	0	0	**39**
0400 - 0500	0	36	9	0	2	0	0	0	5	0	0	0	0	**52**
0500 - 0600	0	104	39	0	1	0	0	0	9	0	0	0	0	**153**
0600 - 0700	0	306	132	1	3	1	0	0	7	0	1	0	0	**451**
0700 - 0800	0	525	150	0	4	3	0	1	17	0	0	0	0	**700**
0800 - 0900	0	384	111	0	9	2	0	1	9	0	0	0	0	**516**
0900 - 1000	0	326	81	0	9	4	0	1	22	0	0	0	0	**443**
1000 - 1100	0	305	89	1	13	3	0	1	19	0	0	0	0	**431**
1100 - 1200	0	353	83	0	10	1	0	2	12	0	0	0	0	**461**
1200 - 1300	0	428	130	0	3	4	0	1	14	0	0	0	0	**580**
1300 - 1400	0	451	108	1	9	3	0	1	19	0	0	0	0	**592**
1400 - 1500	0	481	110	0	5	2	0	0	20	0	0	0	0	**618**
1500 - 1600	0	552	142	0	4	2	0	1	9	0	0	0	0	**710**
1600 - 1700	0	660	149	0	3	1	0	0	9	0	0	0	0	**822**
1700 - 1800	0	617	104	0	4	1	0	1	17	0	0	0	0	**744**
1800 - 1900	0	436	98	0	1	0	0	0	5	0	0	0	0	**540**
1900 - 2000	0	357	77	0	5	2	0	0	9	0	0	0	0	**450**
2000 - 2100	0	250	87	0	2	0	0	0	5	0	0	0	0	**344**
2100 - 2200	0	180	57	0	3	0	0	0	3	0	0	0	0	**243**
2200 - 2300	0	104	34	0	0	0	0	0	5	0	1	0	0	**144**
2300 - 2400	0	54	16	0	1	0	0	0	2	0	1	0	0	**74**
Session Total	0	7010	1824	3	93	29	0	10	233	0	3	0	0	**9205**
Session Average	0.00	292.08	76.00	0.13	3.88	1.21	0.00	0.42	9.71	0.00	0.13	0.00	0.00	**383.54**
Session Percentage	0.00	76.15	19.82	0.03	1.01	0.32	0.00	0.11	2.53	0.00	0.03	0.00	0.00	
AM Peak Hour	-	0700 - 0800	0700 - 0800	0600 - 0700	0800 - 0900	0900 - 1000	-	0700 - 0800	0900 - 1000	-	0600 - 0700	-	-	**0700 - 0800**
AM Peak Volume	0	525	150	1	9	4	0	1	22	0	1	0	0	**700**
Noon Peak Hour	-	1400 - 1500	1200 - 1300	1000 - 1100	1000 - 1100	1200 - 1300	-	1100 - 1200	1400 - 1500	-	-	-	-	**1400 - 1500**
Noon Peak Volume	0	481	130	1	13	4	0	2	20	0	0	0	0	**618**
PM Peak Hour	-	1600 - 1700	1600 - 1700	-	1900 - 2000	1500 - 1600	-	1500 - 1600	1700 - 1800	-	-	-	-	**1600 - 1700**
PM Peak Volume	0	660	149	0	5	2	0	1	17	0	0	0	0	**822**

Site 75 Lane 4 SB
I-20,
north of Bush River Rd

Date
Tuesday, April 23, 2024

Lat/Long
34.034393°, -81.117736°

Weather
Fair
58°F

Click here for Detailed Weather

0000 - 2400 (Weekday 24h Session) (04-23-2024)
SB WB 60min

	Southbound (Movement 75 Lane 4 SB.1)													
TIME	1	2	3	4	5	6	7	8	9	10	11	12	13	**Total**
0000 - 0100	0	46	6	0	1	0	0	1	3	0	1	0	0	**58**
0100 - 0200	0	28	4	0	1	0	0	0	4	0	1	0	0	**38**
0200 - 0300	0	17	1	0	2	0	0	0	6	0	2	0	0	**28**
0300 - 0400	0	35	4	0	0	2	0	0	4	0	0	0	0	**45**
0400 - 0500	0	43	6	0	1	1	0	0	9	0	0	0	0	**60**
0500 - 0600	0	130	9	0	2	0	0	0	12	0	0	0	0	**153**
0600 - 0700	0	365	77	0	4	1	0	1	9	0	0	0	0	**457**
0700 - 0800	0	490	146	1	4	2	0	0	11	1	0	0	0	**655**
0800 - 0900	0	411	92	0	14	2	0	3	16	0	0	0	0	**538**
0900 - 1000	0	339	74	0	12	1	0	3	21	0	0	0	0	**450**
1000 - 1100	0	365	75	0	4	3	0	1	17	0	0	0	0	**465**
1100 - 1200	0	411	87	2	4	3	0	0	11	1	0	0	0	**519**
1200 - 1300	2	438	82	1	8	2	0	0	18	0	0	0	0	**551**
1300 - 1400	1	476	94	0	12	4	0	0	25	0	0	0	0	**612**
1400 - 1500	1	523	111	0	10	3	0	2	16	0	0	0	0	**666**
1500 - 1600	1	529	163	1	13	6	0	2	17	1	0	0	0	**733**
1600 - 1700	2	637	173	3	13	5	0	9	16	0	0	0	0	**858**
1700 - 1800	0	600	161	1	14	5	0	4	10	1	0	0	0	**796**
1800 - 1900	1	422	97	0	10	2	0	2	9	0	0	0	0	**543**
1900 - 2000	2	360	70	1	5	2	0	1	9	0	0	0	0	**450**
2000 - 2100	0	293	50	0	5	0	0	2	10	0	0	0	0	**360**
2100 - 2200	1	208	24	0	1	0	0	0	5	0	0	0	0	**239**
2200 - 2300	1	105	28	0	0	0	0	0	11	0	0	0	0	**145**
2300 - 2400	0	69	26	0	0	0	0	0	2	0	1	0	0	**98**

Session Total	12	7340	1660	10	140	44	0	31	271	4	5	0	0	**9517**
Session Average	0.50	305.83	69.17	0.42	5.83	1.83	0.00	1.29	11.29	0.17	0.21	0.00	0.00	**396.54**
Session Percentage	0.13	77.13	17.44	0.11	1.47	0.46	0.00	0.33	2.85	0.04	0.05	0.00	0.00	

AM Peak Hour	-	0700 - 0800	0700 - 0800	0700 - 0800	0800 - 0900	0700 - 0800	-	0800 - 0900	0900 - 1000	0700 - 0800	-	-	-	**0700 - 0800**
AM Peak Hour Volume	0	490	146	1	14	2	0	3	21	1	0	0	0	**655**

Noon Peak Hour	1200 - 1300	1400 - 1500	1400 - 1500	1100 - 1200	1300 - 1400	1300 - 1400	-	1400 - 1500	1300 - 1400	1100 - 1200	-	-	-	**1400 - 1500**
Noon Peak Hour Volume	2	523	111	2	12	4	0	2	25	1	0	0	0	**666**

PM Peak Hour	1600 - 1700	1600 - 1700	1600 - 1700	1600 - 1700	1700 - 1800	1500 - 1600	-	1600 - 1700	1500 - 1600	1500 - 1600	-	-	-	**1600 - 1700**
PM Peak Hour Volume	2	637	173	3	14	6	0	9	17	1	0	0	0	**858**

Site 75 Lane 4 SB

I-20,
north of Bush River Rd

Date

Wednesday, April 24, 2024

Lat/Long

34.034393°, -81.117736°

Weather

Fair
66°F

Click here for Detailed Weather

0000 - 2400 (Weekday 24h Session) (04-24-2024)

SB WB 60min

	Southbound (Movement 75 Lane 4 SB.1)													
TIME	1	2	3	4	5	6	7	8	9	10	11	12	13	**Total**
0000 - 0100	0	48	3	1	2	1	0	0	8	0	0	0	0	**63**
0100 - 0200	0	30	3	0	1	0	0	0	5	0	2	0	0	**41**
0200 - 0300	0	19	2	0	1	0	0	0	6	0	3	0	0	**31**
0300 - 0400	0	30	5	0	0	0	0	0	2	0	0	0	0	**37**
0400 - 0500	0	43	11	0	0	0	0	0	7	0	0	0	0	**61**
0500 - 0600	0	112	27	0	2	0	0	0	8	0	1	0	0	**150**
0600 - 0700	0	327	99	0	9	0	0	0	11	0	0	0	0	**446**
0700 - 0800	0	534	153	0	7	1	0	2	10	0	0	0	0	**707**
0800 - 0900	1	381	107	0	10	3	0	0	9	1	0	0	0	**512**
0900 - 1000	1	348	95	3	14	5	0	1	21	0	0	0	0	**488**
1000 - 1100	1	364	117	0	12	4	0	3	10	0	0	0	0	**511**
1100 - 1200	0	314	125	0	10	5	0	4	10	0	0	0	0	**468**
1200 - 1300	1	408	139	2	14	4	0	2	17	1	0	0	0	**588**
1300 - 1400	1	472	153	5	10	7	0	3	17	1	0	0	0	**669**
1400 - 1500	3	463	132	0	7	1	0	2	23	0	0	0	0	**631**
1500 - 1600	3	515	193	1	13	4	0	4	11	0	0	0	0	**744**
1600 - 1700	1	645	181	0	22	3	0	1	23	0	0	0	0	**876**
1700 - 1800	1	612	141	0	16	1	2	5	8	1	0	0	0	**787**
1800 - 1900	1	460	105	0	8	2	0	4	12	0	0	0	0	**592**
1900 - 2000	0	347	65	0	4	2	0	2	7	0	0	0	0	**427**
2000 - 2100	1	332	73	0	2	0	0	1	9	0	0	0	0	**418**
2100 - 2200	0	201	44	0	1	0	0	0	10	0	0	0	0	**256**
2200 - 2300	0	124	25	0	3	0	0	0	9	0	1	0	0	**162**
2300 - 2400	0	70	16	0	1	0	0	0	5	0	0	0	0	**92**

Session Total	15	7199	2014	12	169	43	2	34	258	4	7	0	0	**9757**
Session Average	0.63	299.96	83.92	0.50	7.04	1.79	0.08	1.42	10.75	0.17	0.29	0.00	0.00	**406.54**
Session Percentage	0.15	73.78	20.64	0.12	1.73	0.44	0.02	0.35	2.64	0.04	0.07	0.00	0.00	

AM Peak Hour	0800 - 0900	0700 - 0800	0700 - 0800	0900 - 1000	0900 - 1000	0900 - 1000	-	0700 - 0800	0900 - 1000	0800 - 0900	0500 - 0600	-	-	**0700 - 0800**
AM Peak Hour Volume	1	534	153	3	14	5	0	2	21	1	1	0	0	**707**

Noon Peak Hour	1400 - 1500	1300 - 1400	1300 - 1400	1300 - 1400	1200 - 1300	1300 - 1400	-	1100 - 1200	1400 - 1500	1200 - 1300	-	-	-	**1300 - 1400**
Noon Peak Hour Volume	3	472	153	5	14	7	0	4	23	1	0	0	0	**669**

PM Peak Hour	1500 - 1600	1600 - 1700	1500 - 1600	1500 - 1600	1600 - 1700	1500 - 1600	1700 - 1800	1700 - 1800	1600 - 1700	1700 - 1800	-	-	-	**1600 - 1700**
PM Peak Hour Volume	3	645	193	1	22	4	2	5	23	1	0	0	0	**876**

Site 75 Lane 4 SB

I-20,
north of Bush River Rd

Date

Thursday, April 25, 2024

Lat/Long

34.034393°, -81.117736°

Weather

Fair
67°F

Click here for Detailed Weather

0000 - 2400 (Weekday 24h Session) (04-25-2024)

SB WB 60min

	Southbound (Movement 75 Lane 4 SB.1)													
TIME	1	2	3	4	5	6	7	8	9	10	11	12	13	**Total**
0000 - 0100	0	39	9	1	0	0	0	0	8	0	2	0	0	**59**
0100 - 0200	0	31	10	0	0	0	0	0	7	0	1	0	0	**49**
0200 - 0300	0	23	5	0	1	0	0	0	3	0	2	0	0	**34**
0300 - 0400	0	21	9	0	0	0	0	0	3	0	1	0	0	**34**
0400 - 0500	0	36	14	0	0	1	0	0	6	0	0	0	0	**57**
0500 - 0600	1	120	23	0	0	0	0	0	18	0	0	0	0	**162**
0600 - 0700	0	353	87	0	6	3	0	0	12	0	0	0	0	**461**
0700 - 0800	1	520	119	0	8	3	0	1	17	0	1	0	0	**670**
0800 - 0900	1	386	117	0	7	3	0	1	15	1	0	0	0	**531**
0900 - 1000	1	343	111	0	9	5	0	2	17	0	0	0	0	**488**
1000 - 1100	1	368	111	0	10	2	0	4	17	0	0	0	0	**513**
1100 - 1200	1	379	126	0	9	5	1	1	20	0	0	0	0	**542**
1200 - 1300	3	435	166	0	11	0	0	6	15	0	0	0	0	**636**
1300 - 1400	2	489	141	0	4	2	0	4	12	2	0	0	0	**656**
1400 - 1500	0	512	140	0	16	1	0	4	19	2	0	0	0	**694**
1500 - 1600	1	522	180	1	18	0	0	1	14	0	0	0	0	**737**
1600 - 1700	1	660	172	1	8	2	0	0	18	1	0	0	0	**863**
1700 - 1800	3	614	137	0	5	1	0	1	9	0	0	0	0	**770**
1800 - 1900	2	485	118	0	10	0	0	0	3	0	0	0	0	**618**
1900 - 2000	2	395	78	1	4	0	0	0	7	0	0	0	0	**487**
2000 - 2100	1	291	70	0	3	1	0	0	6	0	0	0	0	**372**
2100 - 2200	1	208	55	1	1	0	0	0	4	0	0	0	0	**270**
2200 - 2300	0	138	42	1	1	0	0	0	3	0	1	0	0	**186**
2300 - 2400	0	75	31	0	0	0	0	1	5	0	4	0	0	**116**

Session Total	22	7443	2071	6	131	29	1	26	258	6	12	0	0	**10005**
Session Average	0.92	310.13	86.29	0.25	5.46	1.21	0.04	1.08	10.75	0.25	0.50	0.00	0.00	**416.88**
Session Percentage	0.22	74.39	20.70	0.06	1.31	0.29	0.01	0.26	2.58	0.06	0.12	0.00	0.00	

AM Peak Hour	0500 - 0600	0700 - 0800	0700 - 0800	-	0900 - 1000	0900 - 1000	-	0900 - 1000	0500 - 0600	0800 - 0900	0700 - 0800	-	-	**0700 - 0800**
AM Peak Hour Volume	1	520	119	0	9	5	0	2	18	1	1	0	0	**670**

Noon Peak Hour	1200 - 1300	1400 - 1500	1200 - 1300	-	1400 - 1500	1100 - 1200	1100 - 1200	1200 - 1300	1100 - 1200	1300 - 1400	-	-	-	**1400 - 1500**
Noon Peak Hour Volume	3	512	166	0	16	5	1	6	20	2	0	0	0	**694**

PM Peak Hour	1700 - 1800	1600 - 1700	1500 - 1600	1500 - 1600	1500 - 1600	1600 - 1700	-	1500 - 1600	1600 - 1700	1600 - 1700	-	-	-	**1600 - 1700**
PM Peak Hour Volume	3	660	180	1	18	2	0	1	18	1	0	0	0	**863**

Site 75 Lane 4 SB

I-20,
north of Bush River Rd

Date

Friday, April 26, 2024

Lat/Long

34.034393°, -81.117736°

Weather

Cloudy
69°F

Click here for Detailed Weather

0000 - 2400 (Weekday 24h Session) (04-26-2024)

SB WB 60min

	Southbound (Movement 75 Lane 4 SB.1)													
TIME	1	2	3	4	5	6	7	8	9	10	11	12	13	**Total**
0000 - 0100	0	44	0	0	1	0	0	0	4	0	1	0	0	**50**
0100 - 0200	0	40	0	0	1	0	0	0	6	0	2	0	0	**49**
0200 - 0300	0	23	1	0	0	0	0	0	8	0	1	0	0	**33**
0300 - 0400	0	25	1	0	3	0	0	0	6	0	0	0	0	**35**
0400 - 0500	0	44	6	0	1	0	0	0	9	0	0	0	0	**60**
0500 - 0600	0	103	30	0	4	1	0	0	9	0	0	0	0	**147**
0600 - 0700	0	300	67	0	4	0	0	0	17	0	0	0	0	**388**
0700 - 0800	2	506	131	0	14	1	0	0	11	0	0	0	0	**665**
0800 - 0900	0	381	101	0	9	3	0	0	12	0	0	0	0	**506**
0900 - 1000	1	341	105	0	12	3	0	1	15	0	0	0	0	**478**
1000 - 1100	1	362	108	3	14	7	0	4	16	0	0	0	0	**515**
1100 - 1200	0	437	148	0	9	0	1	1	25	0	0	0	0	**621**
1200 - 1300	2	496	140	0	15	2	2	1	16	0	0	0	0	**674**
1300 - 1400	3	519	123	3	13	0	1	1	16	0	0	0	0	**679**
1400 - 1500	0	445	110	0	5	4	0	3	17	0	0	0	0	**584**
1500 - 1600	0	513	113	0	8	1	2	3	19	0	0	0	0	**659**
1600 - 1700	3	508	109	1	10	2	1	3	5	0	0	0	0	**642**
1700 - 1800	0	622	139	0	12	0	0	1	5	0	0	0	0	**779**
1800 - 1900	2	517	93	0	8	0	0	2	8	0	0	0	0	**630**
1900 - 2000	1	415	72	0	5	0	0	2	3	0	0	0	0	**498**
2000 - 2100	1	352	27	0	0	1	0	0	6	0	0	0	0	**387**
2100 - 2200	0	293	18	0	6	1	0	0	4	0	0	0	0	**322**
2200 - 2300	2	223	15	0	1	0	0	0	7	0	0	0	0	**248**
2300 - 2400	0	137	9	0	4	0	0	0	8	0	0	0	0	**158**

Session Total	18	7646	1666	7	159	26	7	22	252	0	4	0	0	**9807**
Session Average	0.75	318.58	69.42	0.29	6.63	1.08	0.29	0.92	10.50	0.00	0.17	0.00	0.00	**408.63**
Session Percentage	0.18	77.96	16.99	0.07	1.62	0.27	0.07	0.22	2.57	0.00	0.04	0.00	0.00	

AM Peak Hour	0700 - 0800	0700 - 0800	0700 - 0800	-	0700 - 0800	0800 - 0900	-	0900 - 1000	0600 - 0700	-	-	-	-	**0700 - 0800**
AM Peak Hour Volume	2	506	131	0	14	3	0	1	17	0	0	0	0	**665**

Noon Peak Hour	1300 - 1400	1300 - 1400	1100 - 1200	1000 - 1100	1200 - 1300	1000 - 1100	1200 - 1300	1000 - 1100	1100 - 1200	-	-	-	-	**1300 - 1400**
Noon Peak Hour Volume	3	519	148	3	15	7	2	4	25	0	0	0	0	**679**

PM Peak Hour	1600 - 1700	1700 - 1800	1700 - 1800	1600 - 1700	1700 - 1800	1600 - 1700	1500 - 1600	1500 - 1600	1500 - 1600	-	-	-	-	**1700 - 1800**
PM Peak Hour Volume	3	622	139	1	12	2	2	3	19	0	0	0	0	**779**

Site 75 Lane 4 SB

I-20,
north of Bush River Rd

Date

Saturday, April 27, 2024

Lat/Long

34.034393°, -81.117736°

Weather

Mostly Cloudy
69°F

Click here for Detailed Weather

0000 - 2400 (Saturday 24h Session) (04-27-2024)

SB WB 60min

	Southbound (Movement 75 Lane 4 SB.1)													
TIME	1	2	3	4	5	6	7	8	9	10	11	12	13	**Total**
0000 - 0100	1	67	4	1	0	1	0	0	4	0	3	0	0	**81**
0100 - 0200	0	52	4	0	1	0	0	0	1	0	0	0	0	**58**
0200 - 0300	0	33	3	0	0	1	0	0	2	0	1	0	0	**40**
0300 - 0400	0	18	1	1	0	0	0	0	2	0	1	0	0	**23**
0400 - 0500	0	24	1	0	0	0	0	0	9	0	2	0	0	**36**
0500 - 0600	0	54	8	0	0	0	0	0	4	0	1	0	0	**67**
0600 - 0700	0	106	20	0	2	0	0	0	12	0	0	0	0	**140**
0700 - 0800	0	169	45	0	7	1	0	0	6	0	0	0	0	**228**
0800 - 0900	0	240	50	0	4	2	0	1	8	0	0	0	0	**305**
0900 - 1000	2	286	87	0	7	2	0	0	6	0	0	0	0	**390**
1000 - 1100	3	368	88	0	5	0	0	3	8	0	0	0	0	**475**
1100 - 1200	1	412	112	0	4	0	0	0	5	0	0	0	0	**534**
1200 - 1300	2	511	109	0	7	0	0	1	12	0	0	0	0	**642**
1300 - 1400	1	545	122	0	5	1	0	3	8	0	0	0	0	**685**
1400 - 1500	4	592	125	0	6	0	0	1	6	0	0	0	0	**734**
1500 - 1600	2	609	125	0	5	0	0	1	5	0	0	0	0	**747**
1600 - 1700	1	590	111	0	9	1	0	1	7	0	0	0	0	**720**
1700 - 1800	1	540	93	0	4	1	0	0	7	0	0	0	0	**646**
1800 - 1900	8	498	92	0	2	0	0	0	0	0	0	0	0	**600**
1900 - 2000	2	412	89	0	4	0	0	0	2	0	0	0	0	**509**
2000 - 2100	1	357	79	0	1	0	0	0	6	0	0	0	0	**444**
2100 - 2200	1	352	53	0	0	0	0	0	4	0	0	0	0	**410**
2200 - 2300	0	221	38	0	0	0	0	0	1	0	0	0	0	**260**
2300 - 2400	0	115	29	0	1	0	0	0	3	0	0	0	0	**148**

Session Total	30	7171	1488	2	74	10	0	11	128	0	8	0	0	**8922**
Session Average	1.25	298.79	62.00	0.08	3.08	0.42	0.00	0.46	5.33	0.00	0.33	0.00	0.00	**371.75**
Session Percentage	0.34	80.37	16.68	0.02	0.83	0.11	0.00	0.12	1.43	0.00	0.09	0.00	0.00	

AM Peak Hour	0900 - 1000	0900 - 1000	0900 - 1000	-	0700 - 0800	0800 - 0900	-	0800 - 0900	0600 - 0700	-	0500 - 0600	-	-	**0900 - 1000**
AM Peak Hour Volume	2	286	87	0	7	2	0	1	12	0	1	0	0	**390**

Noon Peak Hour	1400 - 1500	1400 - 1500	1400 - 1500	-	1200 - 1300	1300 - 1400	-	1000 - 1100	1200 - 1300	-	-	-	-	**1400 - 1500**
Noon Peak Hour Volume	4	592	125	0	7	1	0	3	12	0	0	0	0	**734**

PM Peak Hour	1800 - 1900	1500 - 1600	1500 - 1600	-	1600 - 1700	1600 - 1700	-	1500 - 1600	1600 - 1700	-	-	-	-	**1500 - 1600**
PM Peak Hour Volume	8	609	125	0	9	1	0	1	7	0	0	0	0	**747**

Bi-Directional Class Count || Volume Summary 60min

Columbia, SC

Marr Traffic DATA COLLECTION

www.marrtraffic.com

Site 75 Lane 4 SB

I-20,
north of Bush River Rd

Date

Sunday, April 21, 2024

Lat/Long

34.034393°, -81.117736°

Weather

Cloudy
66°F

Click here for Detailed Weather

0000 - 2400 (Sunday 24h Session) (04-21-2024)

Volume Summary 60min

	Volume Summary 60min		
TIME	NB	SB	**Total**
0000 - 0100	0	113	**113**
0100 - 0200	0	83	**83**
0200 - 0300	0	50	**50**
0300 - 0400	0	38	**38**
0400 - 0500	0	36	**36**
0500 - 0600	0	42	**42**
0600 - 0700	0	94	**94**
0700 - 0800	0	129	**129**
0800 - 0900	0	184	**184**
0900 - 1000	0	273	**273**
1000 - 1100	0	380	**380**
1100 - 1200	0	454	**454**

	Volume Summary 60min		
Time	NB	SB	**Total**
1200 - 1300	0	597	**597**
1300 - 1400	0	663	**663**
1400 - 1500	0	604	**604**
1500 - 1600	0	575	**575**
1600 - 1700	0	552	**552**
1700 - 1800	0	518	**518**
1800 - 1900	0	486	**486**
1900 - 2000	0	337	**337**
2000 - 2100	0	277	**277**
2100 - 2200	0	215	**215**
2200 - 2300	0	139	**139**
2300 - 2400	0	72	**72**

Session Total	0	6911	**6911**
Session Average	0.00	287.96	**287.96**
Session Percentage	0.00	100.00	

Site 75 Lane 4 SB

I-20,
north of Bush River Rd

Date

Monday, April 22, 2024

Lat/Long

34.034393°, -81.117736°

Weather

Mostly Cloudy
57°F

Click here for Detailed Weather

0000 - 2400 (Weekday 24h Session) (04-22-2024)

Volume Summary 60min

	Volume Summary 60min		
TIME	NB	SB	**Total**
0000 - 0100	0	43	**43**
0100 - 0200	0	23	**23**
0200 - 0300	0	32	**32**
0300 - 0400	0	39	**39**
0400 - 0500	0	52	**52**
0500 - 0600	0	153	**153**
0600 - 0700	0	451	**451**
0700 - 0800	0	700	**700**
0800 - 0900	0	516	**516**
0900 - 1000	0	443	**443**
1000 - 1100	0	431	**431**
1100 - 1200	0	461	**461**

	Volume Summary 60min		
Time	NB	SB	**Total**
1200 - 1300	0	580	**580**
1300 - 1400	0	592	**592**
1400 - 1500	0	618	**618**
1500 - 1600	0	710	**710**
1600 - 1700	0	822	**822**
1700 - 1800	0	744	**744**
1800 - 1900	0	540	**540**
1900 - 2000	0	450	**450**
2000 - 2100	0	344	**344**
2100 - 2200	0	243	**243**
2200 - 2300	0	144	**144**
2300 - 2400	0	74	**74**

Session Total	0	9205	**9205**
Session Average	0.00	383.54	**383.54**
Session Percentage	0.00	100.00	

Site 75 Lane 4 SB

I-20,
north of Bush River Rd

Date

Tuesday, April 23, 2024

Lat/Long

34.034393°, -81.117736°

Weather

Fair
58°F

Click here for Detailed Weather

0000 - 2400 (Weekday 24h Session) (04-23-2024)

Volume Summary 60min

	Volume Summary 60min		
TIME	NB	SB	**Total**
0000 - 0100	0	58	**58**
0100 - 0200	0	38	**38**
0200 - 0300	0	28	**28**
0300 - 0400	0	45	**45**
0400 - 0500	0	60	**60**
0500 - 0600	0	153	**153**
0600 - 0700	0	457	**457**
0700 - 0800	0	655	**655**
0800 - 0900	0	538	**538**
0900 - 1000	0	450	**450**
1000 - 1100	0	465	**465**
1100 - 1200	0	519	**519**

Session Total	0	9517	**9517**
Session Average	0.00	396.54	**396.54**
Session Percentage	0.00	100.00	

	Volume Summary 60min		
Time	NB	SB	**Total**
1200 - 1300	0	551	**551**
1300 - 1400	0	612	**612**
1400 - 1500	0	666	**666**
1500 - 1600	0	733	**733**
1600 - 1700	0	858	**858**
1700 - 1800	0	796	**796**
1800 - 1900	0	543	**543**
1900 - 2000	0	450	**450**
2000 - 2100	0	360	**360**
2100 - 2200	0	239	**239**
2200 - 2300	0	145	**145**
2300 - 2400	0	98	**98**

Site 75 Lane 4 SB

I-20,
north of Bush River Rd

Date

Wednesday, April 24, 2024

Lat/Long

34.034393°, -81.117736°

Weather

Fair
66°F

Click here for Detailed Weather

0000 - 2400 (Weekday 24h Session) (04-24-2024)

Volume Summary 60min

	Volume Summary 60min		
TIME	NB	SB	**Total**
0000 - 0100	0	63	**63**
0100 - 0200	0	41	**41**
0200 - 0300	0	31	**31**
0300 - 0400	0	37	**37**
0400 - 0500	0	61	**61**
0500 - 0600	0	150	**150**
0600 - 0700	0	446	**446**
0700 - 0800	0	707	**707**
0800 - 0900	0	512	**512**
0900 - 1000	0	488	**488**
1000 - 1100	0	511	**511**
1100 - 1200	0	468	**468**

Session Total	0	9757	**9757**
Session Average	0.00	406.54	**406.54**
Session Percentage	0.00	100.00	

	Volume Summary 60min		
Time	NB	SB	**Total**
1200 - 1300	0	588	**588**
1300 - 1400	0	669	**669**
1400 - 1500	0	631	**631**
1500 - 1600	0	744	**744**
1600 - 1700	0	876	**876**
1700 - 1800	0	787	**787**
1800 - 1900	0	592	**592**
1900 - 2000	0	427	**427**
2000 - 2100	0	418	**418**
2100 - 2200	0	256	**256**
2200 - 2300	0	162	**162**
2300 - 2400	0	92	**92**

Site 75 Lane 4 SB

I-20,
north of Bush River Rd

Date

Thursday, April 25, 2024

Lat/Long

34.034393°, -81.117736°

Weather

Fair
67°F

Click here for Detailed Weather

0000 - 2400 (Weekday 24h Session) (04-25-2024)

Volume Summary 60min

	Volume Summary 60min		
TIME	NB	SB	**Total**
0000 - 0100	0	59	**59**
0100 - 0200	0	49	**49**
0200 - 0300	0	34	**34**
0300 - 0400	0	34	**34**
0400 - 0500	0	57	**57**
0500 - 0600	0	162	**162**
0600 - 0700	0	461	**461**
0700 - 0800	0	670	**670**
0800 - 0900	0	531	**531**
0900 - 1000	0	488	**488**
1000 - 1100	0	513	**513**
1100 - 1200	0	542	**542**

	Volume Summary 60min		
Time	NB	SB	**Total**
1200 - 1300	0	636	**636**
1300 - 1400	0	656	**656**
1400 - 1500	0	694	**694**
1500 - 1600	0	737	**737**
1600 - 1700	0	863	**863**
1700 - 1800	0	770	**770**
1800 - 1900	0	618	**618**
1900 - 2000	0	487	**487**
2000 - 2100	0	372	**372**
2100 - 2200	0	270	**270**
2200 - 2300	0	186	**186**
2300 - 2400	0	116	**116**

Session Total	0	10005	**10005**
Session Average	0.00	416.88	**416.88**
Session Percentage	0.00	100.00	

Site 75 Lane 4 SB

I-20,
north of Bush River Rd

Date

Friday, April 26, 2024

Lat/Long

34.034393°, -81.117736°

Weather

Cloudy
69°F

Click here for Detailed Weather

0000 - 2400 (Weekday 24h Session) (04-26-2024)

Volume Summary 60min

	Volume Summary 60min		
TIME	NB	SB	**Total**
0000 - 0100	0	50	**50**
0100 - 0200	0	49	**49**
0200 - 0300	0	33	**33**
0300 - 0400	0	35	**35**
0400 - 0500	0	60	**60**
0500 - 0600	0	147	**147**
0600 - 0700	0	388	**388**
0700 - 0800	0	665	**665**
0800 - 0900	0	506	**506**
0900 - 1000	0	478	**478**
1000 - 1100	0	515	**515**
1100 - 1200	0	621	**621**

	Volume Summary 60min		
Time	NB	SB	**Total**
1200 - 1300	0	674	**674**
1300 - 1400	0	679	**679**
1400 - 1500	0	584	**584**
1500 - 1600	0	659	**659**
1600 - 1700	0	642	**642**
1700 - 1800	0	779	**779**
1800 - 1900	0	630	**630**
1900 - 2000	0	498	**498**
2000 - 2100	0	387	**387**
2100 - 2200	0	322	**322**
2200 - 2300	0	248	**248**
2300 - 2400	0	158	**158**

Session Total	0	9807	**9807**
Session Average	0.00	408.63	**408.63**
Session Percentage	0.00	100.00	

Site 75 Lane 4 SB

I-20,
north of Bush River Rd

Date

Saturday, April 27, 2024

Lat/Long

34.034393°, -81.117736°

Weather

Mostly Cloudy
69°F

Click here for Detailed Weather

0000 - 2400 (Saturday 24h Session) (04-27-2024)

Volume Summary 60min

	Volume Summary 60min		
TIME	NB	SB	**Total**
0000 - 0100	0	81	**81**
0100 - 0200	0	58	**58**
0200 - 0300	0	40	**40**
0300 - 0400	0	23	**23**
0400 - 0500	0	36	**36**
0500 - 0600	0	67	**67**
0600 - 0700	0	140	**140**
0700 - 0800	0	228	**228**
0800 - 0900	0	305	**305**
0900 - 1000	0	390	**390**
1000 - 1100	0	475	**475**
1100 - 1200	0	534	**534**

	Volume Summary 60min		
Time	NB	SB	**Total**
1200 - 1300	0	642	**642**
1300 - 1400	0	685	**685**
1400 - 1500	0	734	**734**
1500 - 1600	0	747	**747**
1600 - 1700	0	720	**720**
1700 - 1800	0	646	**646**
1800 - 1900	0	600	**600**
1900 - 2000	0	509	**509**
2000 - 2100	0	444	**444**
2100 - 2200	0	410	**410**
2200 - 2300	0	260	**260**
2300 - 2400	0	148	**148**

Session Total	0	8922	**8922**
Session Average	0.00	371.75	**371.75**
Session Percentage	0.00	100.00	

Bi-Directional Class Count || Graphical Analysis SB WB

Columbia, SC

Marr Traffic DATA COLLECTION

www.marrtraffic.com

Site 75 Lane 4 SB

I-20,
north of Bush River Rd

Lat/Long

34.034393°, -81.117736°

0000 - 2400 (Weekday 24h Session)

Graphical Analysis SB WB

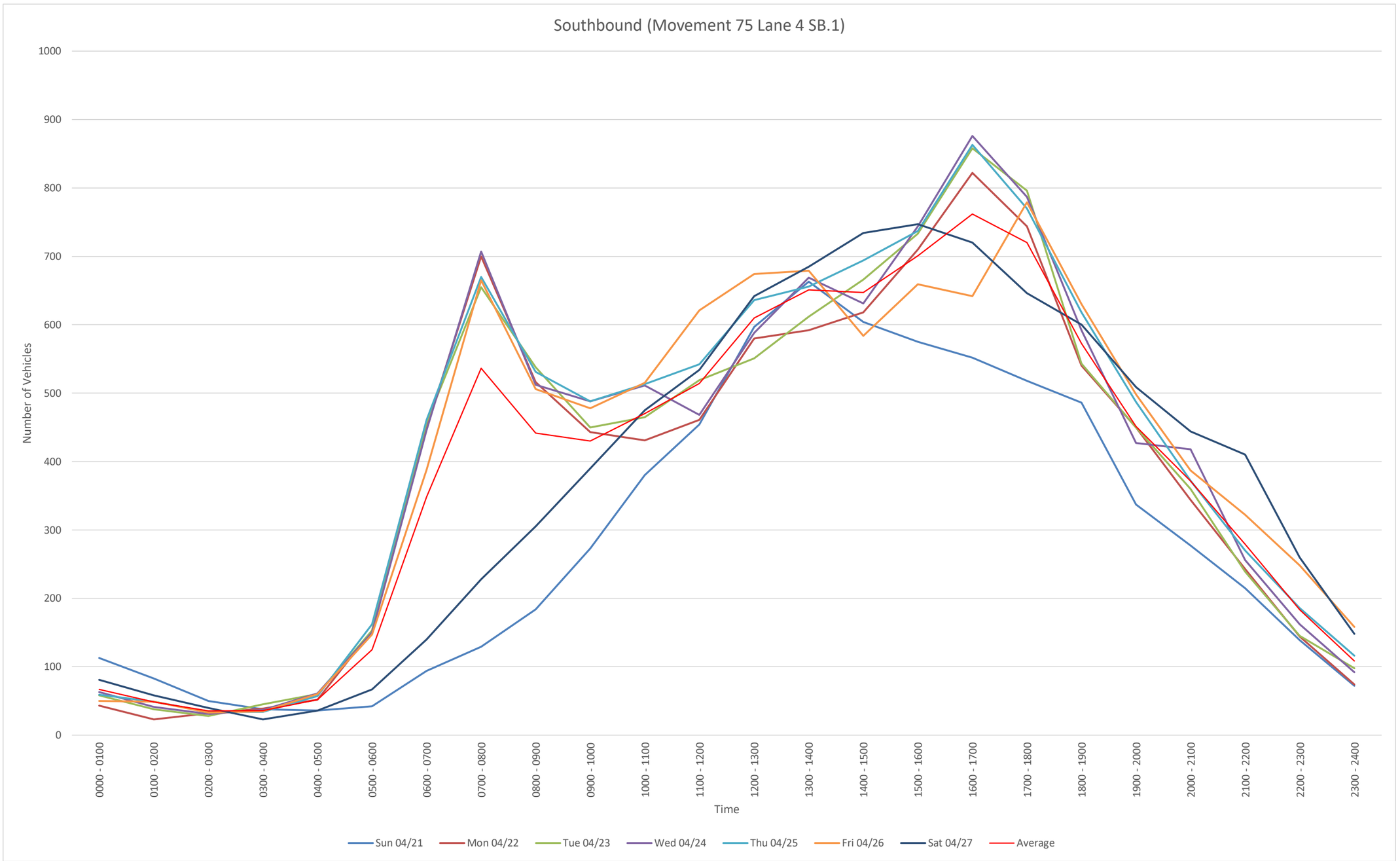

NB
File Name:
Start Date: 4/21/2024
Start Time: 0
Site Code: 75 Lane 4 SB
Station ID: 1
Location 1: I-20, north of Bush River Rd
Location 2:

Date	Time	1	2	3	4	5	6	7	8	9	10	11	12	13
4/21/2024	12:00 AM	0	0	0	0	0	0	0	0	0	0	0	0	0
4/21/2024	12:15 AM	0	0	0	0	0	0	0	0	0	0	0	0	0
4/21/2024	12:30 AM	0	0	0	0	0	0	0	0	0	0	0	0	0
4/21/2024	12:45 AM	0	0	0	0	0	0	0	0	0	0	0	0	0
4/21/2024	1:00 AM	0	0	0	0	0	0	0	0	0	0	0	0	0
4/21/2024	1:15 AM	0	0	0	0	0	0	0	0	0	0	0	0	0
4/21/2024	1:30 AM	0	0	0	0	0	0	0	0	0	0	0	0	0
4/21/2024	1:45 AM	0	0	0	0	0	0	0	0	0	0	0	0	0
4/21/2024	2:00 AM	0	0	0	0	0	0	0	0	0	0	0	0	0
4/21/2024	2:15 AM	0	0	0	0	0	0	0	0	0	0	0	0	0
4/21/2024	2:30 AM	0	0	0	0	0	0	0	0	0	0	0	0	0
4/21/2024	2:45 AM	0	0	0	0	0	0	0	0	0	0	0	0	0
4/21/2024	3:00 AM	0	0	0	0	0	0	0	0	0	0	0	0	0
4/21/2024	3:15 AM	0	0	0	0	0	0	0	0	0	0	0	0	0
4/21/2024	3:30 AM	0	0	0	0	0	0	0	0	0	0	0	0	0
4/21/2024	3:45 AM	0	0	0	0	0	0	0	0	0	0	0	0	0
4/21/2024	4:00 AM	0	0	0	0	0	0	0	0	0	0	0	0	0
4/21/2024	4:15 AM	0	0	0	0	0	0	0	0	0	0	0	0	0
4/21/2024	4:30 AM	0	0	0	0	0	0	0	0	0	0	0	0	0
4/21/2024	4:45 AM	0	0	0	0	0	0	0	0	0	0	0	0	0
4/21/2024	5:00 AM	0	0	0	0	0	0	0	0	0	0	0	0	0
4/21/2024	5:15 AM	0	0	0	0	0	0	0	0	0	0	0	0	0
4/21/2024	5:30 AM	0	0	0	0	0	0	0	0	0	0	0	0	0
4/21/2024	5:45 AM	0	0	0	0	0	0	0	0	0	0	0	0	0
4/21/2024	6:00 AM	0	0	0	0	0	0	0	0	0	0	0	0	0
4/21/2024	6:15 AM	0	0	0	0	0	0	0	0	0	0	0	0	0
4/21/2024	6:30 AM	0	0	0	0	0	0	0	0	0	0	0	0	0
4/21/2024	6:45 AM	0	0	0	0	0	0	0	0	0	0	0	0	0
4/21/2024	7:00 AM	0	0	0	0	0	0	0	0	0	0	0	0	0
4/21/2024	7:15 AM	0	0	0	0	0	0	0	0	0	0	0	0	0
4/21/2024	7:30 AM	0	0	0	0	0	0	0	0	0	0	0	0	0
4/21/2024	7:45 AM	0	0	0	0	0	0	0	0	0	0	0	0	0
4/21/2024	8:00 AM	0	0	0	0	0	0	0	0	0	0	0	0	0
4/21/2024	8:15 AM	0	0	0	0	0	0	0	0	0	0	0	0	0
4/21/2024	8:30 AM	0	0	0	0	0	0	0	0	0	0	0	0	0
4/21/2024	8:45 AM	0	0	0	0	0	0	0	0	0	0	0	0	0
4/21/2024	9:00 AM	0	0	0	0	0	0	0	0	0	0	0	0	0
4/21/2024	9:15 AM	0	0	0	0	0	0	0	0	0	0	0	0	0
4/21/2024	9:30 AM	0	0	0	0	0	0	0	0	0	0	0	0	0
4/21/2024	9:45 AM	0	0	0	0	0	0	0	0	0	0	0	0	0
4/21/2024	10:00 AM	0	0	0	0	0	0	0	0	0	0	0	0	0
4/21/2024	10:15 AM	0	0	0	0	0	0	0	0	0	0	0	0	0
4/21/2024	10:30 AM	0	0	0	0	0	0	0	0	0	0	0	0	0
4/21/2024	10:45 AM	0	0	0	0	0	0	0	0	0	0	0	0	0
4/21/2024	11:00 AM	0	0	0	0	0	0	0	0	0	0	0	0	0
4/21/2024	11:15 AM	0	0	0	0	0	0	0	0	0	0	0	0	0
4/21/2024	11:30 AM	0	0	0	0	0	0	0	0	0	0	0	0	0
4/21/2024	11:45 AM	0	0	0	0	0	0	0	0	0	0	0	0	0
4/21/2024	12:00 PM	0	0	0	0	0	0	0	0	0	0	0	0	0
4/21/2024	12:15 PM	0	0	0	0	0	0	0	0	0	0	0	0	0
4/21/2024	12:30 PM	0	0	0	0	0	0	0	0	0	0	0	0	0
4/21/2024	12:45 PM	0	0	0	0	0	0	0	0	0	0	0	0	0
4/21/2024	1:00 PM	0	0	0	0	0	0	0	0	0	0	0	0	0
4/21/2024	1:15 PM	0	0	0	0	0	0	0	0	0	0	0	0	0
4/21/2024	1:30 PM	0	0	0	0	0	0	0	0	0	0	0	0	0
4/21/2024	1:45 PM	0	0	0	0	0	0	0	0	0	0	0	0	0
4/21/2024	2:00 PM	0	0	0	0	0	0	0	0	0	0	0	0	0
4/21/2024	2:15 PM	0	0	0	0	0	0	0	0	0	0	0	0	0
4/21/2024	2:30 PM	0	0	0	0	0	0	0	0	0	0	0	0	0
4/21/2024	2:45 PM	0	0	0	0	0	0	0	0	0	0	0	0	0
4/21/2024	3:00 PM	0	0	0	0	0	0	0	0	0	0	0	0	0
4/21/2024	3:15 PM	0	0	0	0	0	0	0	0	0	0	0	0	0
4/21/2024	3:30 PM	0	0	0	0	0	0	0	0	0	0	0	0	0
4/21/2024	3:45 PM	0	0	0	0	0	0	0	0	0	0	0	0	0
4/21/2024	4:00 PM	0	0	0	0	0	0	0	0	0	0	0	0	0
4/21/2024	4:15 PM	0	0	0	0	0	0	0	0	0	0	0	0	0
4/21/2024	4:30 PM	0	0	0	0	0	0	0	0	0	0	0	0	0
4/21/2024	4:45 PM	0	0	0	0	0	0	0	0	0	0	0	0	0
4/21/2024	5:00 PM	0	0	0	0	0	0	0	0	0	0	0	0	0
4/21/2024	5:15 PM	0	0	0	0	0	0	0	0	0	0	0	0	0
4/21/2024	5:30 PM	0	0	0	0	0	0	0	0	0	0	0	0	0
4/21/2024	5:45 PM	0	0	0	0	0	0	0	0	0	0	0	0	0
4/21/2024	6:00 PM	0	0	0	0	0	0	0	0	0	0	0	0	0
4/21/2024	6:15 PM	0	0	0	0	0	0	0	0	0	0	0	0	0
4/21/2024	6:30 PM	0	0	0	0	0	0	0	0	0	0	0	0	0
4/21/2024	6:45 PM	0	0	0	0	0	0	0	0	0	0	0	0	0
4/21/2024	7:00 PM	0	0	0	0	0	0	0	0	0	0	0	0	0
4/21/2024	7:15 PM	0	0	0	0	0	0	0	0	0	0	0	0	0
4/21/2024	7:30 PM	0	0	0	0	0	0	0	0	0	0	0	0	0
4/21/2024	7:45 PM	0	0	0	0	0	0	0	0	0	0	0	0	0
4/21/2024	8:00 PM	0	0	0	0	0	0	0	0	0	0	0	0	0
4/21/2024	8:15 PM	0	0	0	0	0	0	0	0	0	0	0	0	0
4/21/2024	8:30 PM	0	0	0	0	0	0	0	0	0	0	0	0	0
4/21/2024	8:45 PM	0	0	0	0	0	0	0	0	0	0	0	0	0
4/21/2024	9:00 PM	0	0	0	0	0	0	0	0	0	0	0	0	0
4/21/2024	9:15 PM	0	0	0	0	0	0	0	0	0	0	0	0	0
4/21/2024	9:30 PM	0	0	0	0	0	0	0	0	0	0	0	0	0
4/21/2024	9:45 PM	0	0	0	0	0	0	0	0	0	0	0	0	0
4/21/2024	10:00 PM	0	0	0	0	0	0	0	0	0	0	0	0	0
4/21/2024	10:15 PM	0	0	0	0	0	0	0	0	0	0	0	0	0
4/21/2024	10:30 PM	0	0	0	0	0	0	0	0	0	0	0	0	0
4/21/2024	10:45 PM	0	0	0	0	0	0	0	0	0	0	0	0	0
4/21/2024	11:00 PM	0	0	0	0	0	0	0	0	0	0	0	0	0
4/21/2024	11:15 PM	0	0	0	0	0	0	0	0	0	0	0	0	0
4/21/2024	11:30 PM	0	0	0	0	0	0	0	0	0	0	0	0	0
4/21/2024	11:45 PM	0	0	0	0	0	0	0	0	0	0	0	0	0

4/22/2024	12:00 AM	0	0	0	0	0	0	0	0	0	0	0	0	0
4/22/2024	12:15 AM	0	0	0	0	0	0	0	0	0	0	0	0	0
4/22/2024	12:30 AM	0	0	0	0	0	0	0	0	0	0	0	0	0
4/22/2024	12:45 AM	0	0	0	0	0	0	0	0	0	0	0	0	0
4/22/2024	1:00 AM	0	0	0	0	0	0	0	0	0	0	0	0	0
4/22/2024	1:15 AM	0	0	0	0	0	0	0	0	0	0	0	0	0
4/22/2024	1:30 AM	0	0	0	0	0	0	0	0	0	0	0	0	0
4/22/2024	1:45 AM	0	0	0	0	0	0	0	0	0	0	0	0	0
4/22/2024	2:00 AM	0	0	0	0	0	0	0	0	0	0	0	0	0
4/22/2024	2:15 AM	0	0	0	0	0	0	0	0	0	0	0	0	0
4/22/2024	2:30 AM	0	0	0	0	0	0	0	0	0	0	0	0	0
4/22/2024	2:45 AM	0	0	0	0	0	0	0	0	0	0	0	0	0
4/22/2024	3:00 AM	0	0	0	0	0	0	0	0	0	0	0	0	0
4/22/2024	3:15 AM	0	0	0	0	0	0	0	0	0	0	0	0	0
4/22/2024	3:30 AM	0	0	0	0	0	0	0	0	0	0	0	0	0
4/22/2024	3:45 AM	0	0	0	0	0	0	0	0	0	0	0	0	0
4/22/2024	4:00 AM	0	0	0	0	0	0	0	0	0	0	0	0	0
4/22/2024	4:15 AM	0	0	0	0	0	0	0	0	0	0	0	0	0
4/22/2024	4:30 AM	0	0	0	0	0	0	0	0	0	0	0	0	0
4/22/2024	4:45 AM	0	0	0	0	0	0	0	0	0	0	0	0	0
4/22/2024	5:00 AM	0	0	0	0	0	0	0	0	0	0	0	0	0
4/22/2024	5:15 AM	0	0	0	0	0	0	0	0	0	0	0	0	0
4/22/2024	5:30 AM	0	0	0	0	0	0	0	0	0	0	0	0	0
4/22/2024	5:45 AM	0	0	0	0	0	0	0	0	0	0	0	0	0
4/22/2024	6:00 AM	0	0	0	0	0	0	0	0	0	0	0	0	0
4/22/2024	6:15 AM	0	0	0	0	0	0	0	0	0	0	0	0	0
4/22/2024	6:30 AM	0	0	0	0	0	0	0	0	0	0	0	0	0
4/22/2024	6:45 AM	0	0	0	0	0	0	0	0	0	0	0	0	0
4/22/2024	7:00 AM	0	0	0	0	0	0	0	0	0	0	0	0	0
4/22/2024	7:15 AM	0	0	0	0	0	0	0	0	0	0	0	0	0
4/22/2024	7:30 AM	0	0	0	0	0	0	0	0	0	0	0	0	0
4/22/2024	7:45 AM	0	0	0	0	0	0	0	0	0	0	0	0	0
4/22/2024	8:00 AM	0	0	0	0	0	0	0	0	0	0	0	0	0
4/22/2024	8:15 AM	0	0	0	0	0	0	0	0	0	0	0	0	0
4/22/2024	8:30 AM	0	0	0	0	0	0	0	0	0	0	0	0	0
4/22/2024	8:45 AM	0	0	0	0	0	0	0	0	0	0	0	0	0
4/22/2024	9:00 AM	0	0	0	0	0	0	0	0	0	0	0	0	0
4/22/2024	9:15 AM	0	0	0	0	0	0	0	0	0	0	0	0	0
4/22/2024	9:30 AM	0	0	0	0	0	0	0	0	0	0	0	0	0
4/22/2024	9:45 AM	0	0	0	0	0	0	0	0	0	0	0	0	0
4/22/2024	10:00 AM	0	0	0	0	0	0	0	0	0	0	0	0	0
4/22/2024	10:15 AM	0	0	0	0	0	0	0	0	0	0	0	0	0
4/22/2024	10:30 AM	0	0	0	0	0	0	0	0	0	0	0	0	0
4/22/2024	10:45 AM	0	0	0	0	0	0	0	0	0	0	0	0	0
4/22/2024	11:00 AM	0	0	0	0	0	0	0	0	0	0	0	0	0
4/22/2024	11:15 AM	0	0	0	0	0	0	0	0	0	0	0	0	0
4/22/2024	11:30 AM	0	0	0	0	0	0	0	0	0	0	0	0	0
4/22/2024	11:45 AM	0	0	0	0	0	0	0	0	0	0	0	0	0
4/22/2024	12:00 PM	0	0	0	0	0	0	0	0	0	0	0	0	0
4/22/2024	12:15 PM	0	0	0	0	0	0	0	0	0	0	0	0	0
4/22/2024	12:30 PM	0	0	0	0	0	0	0	0	0	0	0	0	0
4/22/2024	12:45 PM	0	0	0	0	0	0	0	0	0	0	0	0	0
4/22/2024	1:00 PM	0	0	0	0	0	0	0	0	0	0	0	0	0
4/22/2024	1:15 PM	0	0	0	0	0	0	0	0	0	0	0	0	0
4/22/2024	1:30 PM	0	0	0	0	0	0	0	0	0	0	0	0	0
4/22/2024	1:45 PM	0	0	0	0	0	0	0	0	0	0	0	0	0
4/22/2024	2:00 PM	0	0	0	0	0	0	0	0	0	0	0	0	0
4/22/2024	2:15 PM	0	0	0	0	0	0	0	0	0	0	0	0	0
4/22/2024	2:30 PM	0	0	0	0	0	0	0	0	0	0	0	0	0
4/22/2024	2:45 PM	0	0	0	0	0	0	0	0	0	0	0	0	0
4/22/2024	3:00 PM	0	0	0	0	0	0	0	0	0	0	0	0	0
4/22/2024	3:15 PM	0	0	0	0	0	0	0	0	0	0	0	0	0
4/22/2024	3:30 PM	0	0	0	0	0	0	0	0	0	0	0	0	0
4/22/2024	3:45 PM	0	0	0	0	0	0	0	0	0	0	0	0	0
4/22/2024	4:00 PM	0	0	0	0	0	0	0	0	0	0	0	0	0
4/22/2024	4:15 PM	0	0	0	0	0	0	0	0	0	0	0	0	0
4/22/2024	4:30 PM	0	0	0	0	0	0	0	0	0	0	0	0	0
4/22/2024	4:45 PM	0	0	0	0	0	0	0	0	0	0	0	0	0
4/22/2024	5:00 PM	0	0	0	0	0	0	0	0	0	0	0	0	0
4/22/2024	5:15 PM	0	0	0	0	0	0	0	0	0	0	0	0	0
4/22/2024	5:30 PM	0	0	0	0	0	0	0	0	0	0	0	0	0
4/22/2024	5:45 PM	0	0	0	0	0	0	0	0	0	0	0	0	0
4/22/2024	6:00 PM	0	0	0	0	0	0	0	0	0	0	0	0	0
4/22/2024	6:15 PM	0	0	0	0	0	0	0	0	0	0	0	0	0
4/22/2024	6:30 PM	0	0	0	0	0	0	0	0	0	0	0	0	0
4/22/2024	6:45 PM	0	0	0	0	0	0	0	0	0	0	0	0	0
4/22/2024	7:00 PM	0	0	0	0	0	0	0	0	0	0	0	0	0
4/22/2024	7:15 PM	0	0	0	0	0	0	0	0	0	0	0	0	0
4/22/2024	7:30 PM	0	0	0	0	0	0	0	0	0	0	0	0	0
4/22/2024	7:45 PM	0	0	0	0	0	0	0	0	0	0	0	0	0
4/22/2024	8:00 PM	0	0	0	0	0	0	0	0	0	0	0	0	0
4/22/2024	8:15 PM	0	0	0	0	0	0	0	0	0	0	0	0	0
4/22/2024	8:30 PM	0	0	0	0	0	0	0	0	0	0	0	0	0
4/22/2024	8:45 PM	0	0	0	0	0	0	0	0	0	0	0	0	0
4/22/2024	9:00 PM	0	0	0	0	0	0	0	0	0	0	0	0	0
4/22/2024	9:15 PM	0	0	0	0	0	0	0	0	0	0	0	0	0
4/22/2024	9:30 PM	0	0	0	0	0	0	0	0	0	0	0	0	0
4/22/2024	9:45 PM	0	0	0	0	0	0	0	0	0	0	0	0	0
4/22/2024	10:00 PM	0	0	0	0	0	0	0	0	0	0	0	0	0
4/22/2024	10:15 PM	0	0	0	0	0	0	0	0	0	0	0	0	0
4/22/2024	10:30 PM	0	0	0	0	0	0	0	0	0	0	0	0	0
4/22/2024	10:45 PM	0	0	0	0	0	0	0	0	0	0	0	0	0
4/22/2024	11:00 PM	0	0	0	0	0	0	0	0	0	0	0	0	0
4/22/2024	11:15 PM	0	0	0	0	0	0	0	0	0	0	0	0	0
4/22/2024	11:30 PM	0	0	0	0	0	0	0	0	0	0	0	0	0
4/22/2024	11:45 PM	0	0	0	0	0	0	0	0	0	0	0	0	0

4/23/2024	12:00 AM	0	0	0	0	0	0	0	0	0	0	0	0	0
4/23/2024	12:15 AM	0	0	0	0	0	0	0	0	0	0	0	0	0
4/23/2024	12:30 AM	0	0	0	0	0	0	0	0	0	0	0	0	0
4/23/2024	12:45 AM	0	0	0	0	0	0	0	0	0	0	0	0	0
4/23/2024	1:00 AM	0	0	0	0	0	0	0	0	0	0	0	0	0
4/23/2024	1:15 AM	0	0	0	0	0	0	0	0	0	0	0	0	0
4/23/2024	1:30 AM	0	0	0	0	0	0	0	0	0	0	0	0	0
4/23/2024	1:45 AM	0	0	0	0	0	0	0	0	0	0	0	0	0
4/23/2024	2:00 AM	0	0	0	0	0	0	0	0	0	0	0	0	0
4/23/2024	2:15 AM	0	0	0	0	0	0	0	0	0	0	0	0	0
4/23/2024	2:30 AM	0	0	0	0	0	0	0	0	0	0	0	0	0
4/23/2024	2:45 AM	0	0	0	0	0	0	0	0	0	0	0	0	0
4/23/2024	3:00 AM	0	0	0	0	0	0	0	0	0	0	0	0	0
4/23/2024	3:15 AM	0	0	0	0	0	0	0	0	0	0	0	0	0
4/23/2024	3:30 AM	0	0	0	0	0	0	0	0	0	0	0	0	0
4/23/2024	3:45 AM	0	0	0	0	0	0	0	0	0	0	0	0	0
4/23/2024	4:00 AM	0	0	0	0	0	0	0	0	0	0	0	0	0
4/23/2024	4:15 AM	0	0	0	0	0	0	0	0	0	0	0	0	0
4/23/2024	4:30 AM	0	0	0	0	0	0	0	0	0	0	0	0	0
4/23/2024	4:45 AM	0	0	0	0	0	0	0	0	0	0	0	0	0
4/23/2024	5:00 AM	0	0	0	0	0	0	0	0	0	0	0	0	0
4/23/2024	5:15 AM	0	0	0	0	0	0	0	0	0	0	0	0	0
4/23/2024	5:30 AM	0	0	0	0	0	0	0	0	0	0	0	0	0
4/23/2024	5:45 AM	0	0	0	0	0	0	0	0	0	0	0	0	0
4/23/2024	6:00 AM	0	0	0	0	0	0	0	0	0	0	0	0	0
4/23/2024	6:15 AM	0	0	0	0	0	0	0	0	0	0	0	0	0
4/23/2024	6:30 AM	0	0	0	0	0	0	0	0	0	0	0	0	0
4/23/2024	6:45 AM	0	0	0	0	0	0	0	0	0	0	0	0	0
4/23/2024	7:00 AM	0	0	0	0	0	0	0	0	0	0	0	0	0
4/23/2024	7:15 AM	0	0	0	0	0	0	0	0	0	0	0	0	0
4/23/2024	7:30 AM	0	0	0	0	0	0	0	0	0	0	0	0	0
4/23/2024	7:45 AM	0	0	0	0	0	0	0	0	0	0	0	0	0
4/23/2024	8:00 AM	0	0	0	0	0	0	0	0	0	0	0	0	0
4/23/2024	8:15 AM	0	0	0	0	0	0	0	0	0	0	0	0	0
4/23/2024	8:30 AM	0	0	0	0	0	0	0	0	0	0	0	0	0
4/23/2024	8:45 AM	0	0	0	0	0	0	0	0	0	0	0	0	0
4/23/2024	9:00 AM	0	0	0	0	0	0	0	0	0	0	0	0	0
4/23/2024	9:15 AM	0	0	0	0	0	0	0	0	0	0	0	0	0
4/23/2024	9:30 AM	0	0	0	0	0	0	0	0	0	0	0	0	0
4/23/2024	9:45 AM	0	0	0	0	0	0	0	0	0	0	0	0	0
4/23/2024	10:00 AM	0	0	0	0	0	0	0	0	0	0	0	0	0
4/23/2024	10:15 AM	0	0	0	0	0	0	0	0	0	0	0	0	0
4/23/2024	10:30 AM	0	0	0	0	0	0	0	0	0	0	0	0	0
4/23/2024	10:45 AM	0	0	0	0	0	0	0	0	0	0	0	0	0
4/23/2024	11:00 AM	0	0	0	0	0	0	0	0	0	0	0	0	0
4/23/2024	11:15 AM	0	0	0	0	0	0	0	0	0	0	0	0	0
4/23/2024	11:30 AM	0	0	0	0	0	0	0	0	0	0	0	0	0
4/23/2024	11:45 AM	0	0	0	0	0	0	0	0	0	0	0	0	0
4/23/2024	12:00 PM	0	0	0	0	0	0	0	0	0	0	0	0	0
4/23/2024	12:15 PM	0	0	0	0	0	0	0	0	0	0	0	0	0
4/23/2024	12:30 PM	0	0	0	0	0	0	0	0	0	0	0	0	0
4/23/2024	12:45 PM	0	0	0	0	0	0	0	0	0	0	0	0	0
4/23/2024	1:00 PM	0	0	0	0	0	0	0	0	0	0	0	0	0
4/23/2024	1:15 PM	0	0	0	0	0	0	0	0	0	0	0	0	0
4/23/2024	1:30 PM	0	0	0	0	0	0	0	0	0	0	0	0	0
4/23/2024	1:45 PM	0	0	0	0	0	0	0	0	0	0	0	0	0
4/23/2024	2:00 PM	0	0	0	0	0	0	0	0	0	0	0	0	0
4/23/2024	2:15 PM	0	0	0	0	0	0	0	0	0	0	0	0	0
4/23/2024	2:30 PM	0	0	0	0	0	0	0	0	0	0	0	0	0
4/23/2024	2:45 PM	0	0	0	0	0	0	0	0	0	0	0	0	0
4/23/2024	3:00 PM	0	0	0	0	0	0	0	0	0	0	0	0	0
4/23/2024	3:15 PM	0	0	0	0	0	0	0	0	0	0	0	0	0
4/23/2024	3:30 PM	0	0	0	0	0	0	0	0	0	0	0	0	0
4/23/2024	3:45 PM	0	0	0	0	0	0	0	0	0	0	0	0	0
4/23/2024	4:00 PM	0	0	0	0	0	0	0	0	0	0	0	0	0
4/23/2024	4:15 PM	0	0	0	0	0	0	0	0	0	0	0	0	0
4/23/2024	4:30 PM	0	0	0	0	0	0	0	0	0	0	0	0	0
4/23/2024	4:45 PM	0	0	0	0	0	0	0	0	0	0	0	0	0
4/23/2024	5:00 PM	0	0	0	0	0	0	0	0	0	0	0	0	0
4/23/2024	5:15 PM	0	0	0	0	0	0	0	0	0	0	0	0	0
4/23/2024	5:30 PM	0	0	0	0	0	0	0	0	0	0	0	0	0
4/23/2024	5:45 PM	0	0	0	0	0	0	0	0	0	0	0	0	0
4/23/2024	6:00 PM	0	0	0	0	0	0	0	0	0	0	0	0	0
4/23/2024	6:15 PM	0	0	0	0	0	0	0	0	0	0	0	0	0
4/23/2024	6:30 PM	0	0	0	0	0	0	0	0	0	0	0	0	0
4/23/2024	6:45 PM	0	0	0	0	0	0	0	0	0	0	0	0	0
4/23/2024	7:00 PM	0	0	0	0	0	0	0	0	0	0	0	0	0
4/23/2024	7:15 PM	0	0	0	0	0	0	0	0	0	0	0	0	0
4/23/2024	7:30 PM	0	0	0	0	0	0	0	0	0	0	0	0	0
4/23/2024	7:45 PM	0	0	0	0	0	0	0	0	0	0	0	0	0
4/23/2024	8:00 PM	0	0	0	0	0	0	0	0	0	0	0	0	0
4/23/2024	8:15 PM	0	0	0	0	0	0	0	0	0	0	0	0	0
4/23/2024	8:30 PM	0	0	0	0	0	0	0	0	0	0	0	0	0
4/23/2024	8:45 PM	0	0	0	0	0	0	0	0	0	0	0	0	0
4/23/2024	9:00 PM	0	0	0	0	0	0	0	0	0	0	0	0	0
4/23/2024	9:15 PM	0	0	0	0	0	0	0	0	0	0	0	0	0
4/23/2024	9:30 PM	0	0	0	0	0	0	0	0	0	0	0	0	0
4/23/2024	9:45 PM	0	0	0	0	0	0	0	0	0	0	0	0	0
4/23/2024	10:00 PM	0	0	0	0	0	0	0	0	0	0	0	0	0
4/23/2024	10:15 PM	0	0	0	0	0	0	0	0	0	0	0	0	0
4/23/2024	10:30 PM	0	0	0	0	0	0	0	0	0	0	0	0	0
4/23/2024	10:45 PM	0	0	0	0	0	0	0	0	0	0	0	0	0
4/23/2024	11:00 PM	0	0	0	0	0	0	0	0	0	0	0	0	0
4/23/2024	11:15 PM	0	0	0	0	0	0	0	0	0	0	0	0	0
4/23/2024	11:30 PM	0	0	0	0	0	0	0	0	0	0	0	0	0
4/23/2024	11:45 PM	0	0	0	0	0	0	0	0	0	0	0	0	0

4/24/2024	12:00 AM	0	0	0	0	0	0	0	0	0	0	0	0	0
4/24/2024	12:15 AM	0	0	0	0	0	0	0	0	0	0	0	0	0
4/24/2024	12:30 AM	0	0	0	0	0	0	0	0	0	0	0	0	0
4/24/2024	12:45 AM	0	0	0	0	0	0	0	0	0	0	0	0	0
4/24/2024	1:00 AM	0	0	0	0	0	0	0	0	0	0	0	0	0
4/24/2024	1:15 AM	0	0	0	0	0	0	0	0	0	0	0	0	0
4/24/2024	1:30 AM	0	0	0	0	0	0	0	0	0	0	0	0	0
4/24/2024	1:45 AM	0	0	0	0	0	0	0	0	0	0	0	0	0
4/24/2024	2:00 AM	0	0	0	0	0	0	0	0	0	0	0	0	0
4/24/2024	2:15 AM	0	0	0	0	0	0	0	0	0	0	0	0	0
4/24/2024	2:30 AM	0	0	0	0	0	0	0	0	0	0	0	0	0
4/24/2024	2:45 AM	0	0	0	0	0	0	0	0	0	0	0	0	0
4/24/2024	3:00 AM	0	0	0	0	0	0	0	0	0	0	0	0	0
4/24/2024	3:15 AM	0	0	0	0	0	0	0	0	0	0	0	0	0
4/24/2024	3:30 AM	0	0	0	0	0	0	0	0	0	0	0	0	0
4/24/2024	3:45 AM	0	0	0	0	0	0	0	0	0	0	0	0	0
4/24/2024	4:00 AM	0	0	0	0	0	0	0	0	0	0	0	0	0
4/24/2024	4:15 AM	0	0	0	0	0	0	0	0	0	0	0	0	0
4/24/2024	4:30 AM	0	0	0	0	0	0	0	0	0	0	0	0	0
4/24/2024	4:45 AM	0	0	0	0	0	0	0	0	0	0	0	0	0
4/24/2024	5:00 AM	0	0	0	0	0	0	0	0	0	0	0	0	0
4/24/2024	5:15 AM	0	0	0	0	0	0	0	0	0	0	0	0	0
4/24/2024	5:30 AM	0	0	0	0	0	0	0	0	0	0	0	0	0
4/24/2024	5:45 AM	0	0	0	0	0	0	0	0	0	0	0	0	0
4/24/2024	6:00 AM	0	0	0	0	0	0	0	0	0	0	0	0	0
4/24/2024	6:15 AM	0	0	0	0	0	0	0	0	0	0	0	0	0
4/24/2024	6:30 AM	0	0	0	0	0	0	0	0	0	0	0	0	0
4/24/2024	6:45 AM	0	0	0	0	0	0	0	0	0	0	0	0	0
4/24/2024	7:00 AM	0	0	0	0	0	0	0	0	0	0	0	0	0
4/24/2024	7:15 AM	0	0	0	0	0	0	0	0	0	0	0	0	0
4/24/2024	7:30 AM	0	0	0	0	0	0	0	0	0	0	0	0	0
4/24/2024	7:45 AM	0	0	0	0	0	0	0	0	0	0	0	0	0
4/24/2024	8:00 AM	0	0	0	0	0	0	0	0	0	0	0	0	0
4/24/2024	8:15 AM	0	0	0	0	0	0	0	0	0	0	0	0	0
4/24/2024	8:30 AM	0	0	0	0	0	0	0	0	0	0	0	0	0
4/24/2024	8:45 AM	0	0	0	0	0	0	0	0	0	0	0	0	0
4/24/2024	9:00 AM	0	0	0	0	0	0	0	0	0	0	0	0	0
4/24/2024	9:15 AM	0	0	0	0	0	0	0	0	0	0	0	0	0
4/24/2024	9:30 AM	0	0	0	0	0	0	0	0	0	0	0	0	0
4/24/2024	9:45 AM	0	0	0	0	0	0	0	0	0	0	0	0	0
4/24/2024	10:00 AM	0	0	0	0	0	0	0	0	0	0	0	0	0
4/24/2024	10:15 AM	0	0	0	0	0	0	0	0	0	0	0	0	0
4/24/2024	10:30 AM	0	0	0	0	0	0	0	0	0	0	0	0	0
4/24/2024	10:45 AM	0	0	0	0	0	0	0	0	0	0	0	0	0
4/24/2024	11:00 AM	0	0	0	0	0	0	0	0	0	0	0	0	0
4/24/2024	11:15 AM	0	0	0	0	0	0	0	0	0	0	0	0	0
4/24/2024	11:30 AM	0	0	0	0	0	0	0	0	0	0	0	0	0
4/24/2024	11:45 AM	0	0	0	0	0	0	0	0	0	0	0	0	0
4/24/2024	12:00 PM	0	0	0	0	0	0	0	0	0	0	0	0	0
4/24/2024	12:15 PM	0	0	0	0	0	0	0	0	0	0	0	0	0
4/24/2024	12:30 PM	0	0	0	0	0	0	0	0	0	0	0	0	0
4/24/2024	12:45 PM	0	0	0	0	0	0	0	0	0	0	0	0	0
4/24/2024	1:00 PM	0	0	0	0	0	0	0	0	0	0	0	0	0
4/24/2024	1:15 PM	0	0	0	0	0	0	0	0	0	0	0	0	0
4/24/2024	1:30 PM	0	0	0	0	0	0	0	0	0	0	0	0	0
4/24/2024	1:45 PM	0	0	0	0	0	0	0	0	0	0	0	0	0
4/24/2024	2:00 PM	0	0	0	0	0	0	0	0	0	0	0	0	0
4/24/2024	2:15 PM	0	0	0	0	0	0	0	0	0	0	0	0	0
4/24/2024	2:30 PM	0	0	0	0	0	0	0	0	0	0	0	0	0
4/24/2024	2:45 PM	0	0	0	0	0	0	0	0	0	0	0	0	0
4/24/2024	3:00 PM	0	0	0	0	0	0	0	0	0	0	0	0	0
4/24/2024	3:15 PM	0	0	0	0	0	0	0	0	0	0	0	0	0
4/24/2024	3:30 PM	0	0	0	0	0	0	0	0	0	0	0	0	0
4/24/2024	3:45 PM	0	0	0	0	0	0	0	0	0	0	0	0	0
4/24/2024	4:00 PM	0	0	0	0	0	0	0	0	0	0	0	0	0
4/24/2024	4:15 PM	0	0	0	0	0	0	0	0	0	0	0	0	0
4/24/2024	4:30 PM	0	0	0	0	0	0	0	0	0	0	0	0	0
4/24/2024	4:45 PM	0	0	0	0	0	0	0	0	0	0	0	0	0
4/24/2024	5:00 PM	0	0	0	0	0	0	0	0	0	0	0	0	0
4/24/2024	5:15 PM	0	0	0	0	0	0	0	0	0	0	0	0	0
4/24/2024	5:30 PM	0	0	0	0	0	0	0	0	0	0	0	0	0
4/24/2024	5:45 PM	0	0	0	0	0	0	0	0	0	0	0	0	0
4/24/2024	6:00 PM	0	0	0	0	0	0	0	0	0	0	0	0	0
4/24/2024	6:15 PM	0	0	0	0	0	0	0	0	0	0	0	0	0
4/24/2024	6:30 PM	0	0	0	0	0	0	0	0	0	0	0	0	0
4/24/2024	6:45 PM	0	0	0	0	0	0	0	0	0	0	0	0	0
4/24/2024	7:00 PM	0	0	0	0	0	0	0	0	0	0	0	0	0
4/24/2024	7:15 PM	0	0	0	0	0	0	0	0	0	0	0	0	0
4/24/2024	7:30 PM	0	0	0	0	0	0	0	0	0	0	0	0	0
4/24/2024	7:45 PM	0	0	0	0	0	0	0	0	0	0	0	0	0
4/24/2024	8:00 PM	0	0	0	0	0	0	0	0	0	0	0	0	0
4/24/2024	8:15 PM	0	0	0	0	0	0	0	0	0	0	0	0	0
4/24/2024	8:30 PM	0	0	0	0	0	0	0	0	0	0	0	0	0
4/24/2024	8:45 PM	0	0	0	0	0	0	0	0	0	0	0	0	0
4/24/2024	9:00 PM	0	0	0	0	0	0	0	0	0	0	0	0	0
4/24/2024	9:15 PM	0	0	0	0	0	0	0	0	0	0	0	0	0
4/24/2024	9:30 PM	0	0	0	0	0	0	0	0	0	0	0	0	0
4/24/2024	9:45 PM	0	0	0	0	0	0	0	0	0	0	0	0	0
4/24/2024	10:00 PM	0	0	0	0	0	0	0	0	0	0	0	0	0
4/24/2024	10:15 PM	0	0	0	0	0	0	0	0	0	0	0	0	0
4/24/2024	10:30 PM	0	0	0	0	0	0	0	0	0	0	0	0	0
4/24/2024	10:45 PM	0	0	0	0	0	0	0	0	0	0	0	0	0
4/24/2024	11:00 PM	0	0	0	0	0	0	0	0	0	0	0	0	0
4/24/2024	11:15 PM	0	0	0	0	0	0	0	0	0	0	0	0	0
4/24/2024	11:30 PM	0	0	0	0	0	0	0	0	0	0	0	0	0
4/24/2024	11:45 PM	0	0	0	0	0	0	0	0	0	0	0	0	0

4/25/2024	12:00 AM	0	0	0	0	0	0	0	0	0	0	0	0	0
4/25/2024	12:15 AM	0	0	0	0	0	0	0	0	0	0	0	0	0
4/25/2024	12:30 AM	0	0	0	0	0	0	0	0	0	0	0	0	0
4/25/2024	12:45 AM	0	0	0	0	0	0	0	0	0	0	0	0	0
4/25/2024	1:00 AM	0	0	0	0	0	0	0	0	0	0	0	0	0
4/25/2024	1:15 AM	0	0	0	0	0	0	0	0	0	0	0	0	0
4/25/2024	1:30 AM	0	0	0	0	0	0	0	0	0	0	0	0	0
4/25/2024	1:45 AM	0	0	0	0	0	0	0	0	0	0	0	0	0
4/25/2024	2:00 AM	0	0	0	0	0	0	0	0	0	0	0	0	0
4/25/2024	2:15 AM	0	0	0	0	0	0	0	0	0	0	0	0	0
4/25/2024	2:30 AM	0	0	0	0	0	0	0	0	0	0	0	0	0
4/25/2024	2:45 AM	0	0	0	0	0	0	0	0	0	0	0	0	0
4/25/2024	3:00 AM	0	0	0	0	0	0	0	0	0	0	0	0	0
4/25/2024	3:15 AM	0	0	0	0	0	0	0	0	0	0	0	0	0
4/25/2024	3:30 AM	0	0	0	0	0	0	0	0	0	0	0	0	0
4/25/2024	3:45 AM	0	0	0	0	0	0	0	0	0	0	0	0	0
4/25/2024	4:00 AM	0	0	0	0	0	0	0	0	0	0	0	0	0
4/25/2024	4:15 AM	0	0	0	0	0	0	0	0	0	0	0	0	0
4/25/2024	4:30 AM	0	0	0	0	0	0	0	0	0	0	0	0	0
4/25/2024	4:45 AM	0	0	0	0	0	0	0	0	0	0	0	0	0
4/25/2024	5:00 AM	0	0	0	0	0	0	0	0	0	0	0	0	0
4/25/2024	5:15 AM	0	0	0	0	0	0	0	0	0	0	0	0	0
4/25/2024	5:30 AM	0	0	0	0	0	0	0	0	0	0	0	0	0
4/25/2024	5:45 AM	0	0	0	0	0	0	0	0	0	0	0	0	0
4/25/2024	6:00 AM	0	0	0	0	0	0	0	0	0	0	0	0	0
4/25/2024	6:15 AM	0	0	0	0	0	0	0	0	0	0	0	0	0
4/25/2024	6:30 AM	0	0	0	0	0	0	0	0	0	0	0	0	0
4/25/2024	6:45 AM	0	0	0	0	0	0	0	0	0	0	0	0	0
4/25/2024	7:00 AM	0	0	0	0	0	0	0	0	0	0	0	0	0
4/25/2024	7:15 AM	0	0	0	0	0	0	0	0	0	0	0	0	0
4/25/2024	7:30 AM	0	0	0	0	0	0	0	0	0	0	0	0	0
4/25/2024	7:45 AM	0	0	0	0	0	0	0	0	0	0	0	0	0
4/25/2024	8:00 AM	0	0	0	0	0	0	0	0	0	0	0	0	0
4/25/2024	8:15 AM	0	0	0	0	0	0	0	0	0	0	0	0	0
4/25/2024	8:30 AM	0	0	0	0	0	0	0	0	0	0	0	0	0
4/25/2024	8:45 AM	0	0	0	0	0	0	0	0	0	0	0	0	0
4/25/2024	9:00 AM	0	0	0	0	0	0	0	0	0	0	0	0	0
4/25/2024	9:15 AM	0	0	0	0	0	0	0	0	0	0	0	0	0
4/25/2024	9:30 AM	0	0	0	0	0	0	0	0	0	0	0	0	0
4/25/2024	9:45 AM	0	0	0	0	0	0	0	0	0	0	0	0	0
4/25/2024	10:00 AM	0	0	0	0	0	0	0	0	0	0	0	0	0
4/25/2024	10:15 AM	0	0	0	0	0	0	0	0	0	0	0	0	0
4/25/2024	10:30 AM	0	0	0	0	0	0	0	0	0	0	0	0	0
4/25/2024	10:45 AM	0	0	0	0	0	0	0	0	0	0	0	0	0
4/25/2024	11:00 AM	0	0	0	0	0	0	0	0	0	0	0	0	0
4/25/2024	11:15 AM	0	0	0	0	0	0	0	0	0	0	0	0	0
4/25/2024	11:30 AM	0	0	0	0	0	0	0	0	0	0	0	0	0
4/25/2024	11:45 AM	0	0	0	0	0	0	0	0	0	0	0	0	0
4/25/2024	12:00 PM	0	0	0	0	0	0	0	0	0	0	0	0	0
4/25/2024	12:15 PM	0	0	0	0	0	0	0	0	0	0	0	0	0
4/25/2024	12:30 PM	0	0	0	0	0	0	0	0	0	0	0	0	0
4/25/2024	12:45 PM	0	0	0	0	0	0	0	0	0	0	0	0	0
4/25/2024	1:00 PM	0	0	0	0	0	0	0	0	0	0	0	0	0
4/25/2024	1:15 PM	0	0	0	0	0	0	0	0	0	0	0	0	0
4/25/2024	1:30 PM	0	0	0	0	0	0	0	0	0	0	0	0	0
4/25/2024	1:45 PM	0	0	0	0	0	0	0	0	0	0	0	0	0
4/25/2024	2:00 PM	0	0	0	0	0	0	0	0	0	0	0	0	0
4/25/2024	2:15 PM	0	0	0	0	0	0	0	0	0	0	0	0	0
4/25/2024	2:30 PM	0	0	0	0	0	0	0	0	0	0	0	0	0
4/25/2024	2:45 PM	0	0	0	0	0	0	0	0	0	0	0	0	0
4/25/2024	3:00 PM	0	0	0	0	0	0	0	0	0	0	0	0	0
4/25/2024	3:15 PM	0	0	0	0	0	0	0	0	0	0	0	0	0
4/25/2024	3:30 PM	0	0	0	0	0	0	0	0	0	0	0	0	0
4/25/2024	3:45 PM	0	0	0	0	0	0	0	0	0	0	0	0	0
4/25/2024	4:00 PM	0	0	0	0	0	0	0	0	0	0	0	0	0
4/25/2024	4:15 PM	0	0	0	0	0	0	0	0	0	0	0	0	0
4/25/2024	4:30 PM	0	0	0	0	0	0	0	0	0	0	0	0	0
4/25/2024	4:45 PM	0	0	0	0	0	0	0	0	0	0	0	0	0
4/25/2024	5:00 PM	0	0	0	0	0	0	0	0	0	0	0	0	0
4/25/2024	5:15 PM	0	0	0	0	0	0	0	0	0	0	0	0	0
4/25/2024	5:30 PM	0	0	0	0	0	0	0	0	0	0	0	0	0
4/25/2024	5:45 PM	0	0	0	0	0	0	0	0	0	0	0	0	0
4/25/2024	6:00 PM	0	0	0	0	0	0	0	0	0	0	0	0	0
4/25/2024	6:15 PM	0	0	0	0	0	0	0	0	0	0	0	0	0
4/25/2024	6:30 PM	0	0	0	0	0	0	0	0	0	0	0	0	0
4/25/2024	6:45 PM	0	0	0	0	0	0	0	0	0	0	0	0	0
4/25/2024	7:00 PM	0	0	0	0	0	0	0	0	0	0	0	0	0
4/25/2024	7:15 PM	0	0	0	0	0	0	0	0	0	0	0	0	0
4/25/2024	7:30 PM	0	0	0	0	0	0	0	0	0	0	0	0	0
4/25/2024	7:45 PM	0	0	0	0	0	0	0	0	0	0	0	0	0
4/25/2024	8:00 PM	0	0	0	0	0	0	0	0	0	0	0	0	0
4/25/2024	8:15 PM	0	0	0	0	0	0	0	0	0	0	0	0	0
4/25/2024	8:30 PM	0	0	0	0	0	0	0	0	0	0	0	0	0
4/25/2024	8:45 PM	0	0	0	0	0	0	0	0	0	0	0	0	0
4/25/2024	9:00 PM	0	0	0	0	0	0	0	0	0	0	0	0	0
4/25/2024	9:15 PM	0	0	0	0	0	0	0	0	0	0	0	0	0
4/25/2024	9:30 PM	0	0	0	0	0	0	0	0	0	0	0	0	0
4/25/2024	9:45 PM	0	0	0	0	0	0	0	0	0	0	0	0	0
4/25/2024	10:00 PM	0	0	0	0	0	0	0	0	0	0	0	0	0
4/25/2024	10:15 PM	0	0	0	0	0	0	0	0	0	0	0	0	0
4/25/2024	10:30 PM	0	0	0	0	0	0	0	0	0	0	0	0	0
4/25/2024	10:45 PM	0	0	0	0	0	0	0	0	0	0	0	0	0
4/25/2024	11:00 PM	0	0	0	0	0	0	0	0	0	0	0	0	0
4/25/2024	11:15 PM	0	0	0	0	0	0	0	0	0	0	0	0	0
4/25/2024	11:30 PM	0	0	0	0	0	0	0	0	0	0	0	0	0
4/25/2024	11:45 PM	0	0	0	0	0	0	0	0	0	0	0	0	0

4/26/2024	12:00 AM	0	0	0	0	0	0	0	0	0	0	0	0	0
4/26/2024	12:15 AM	0	0	0	0	0	0	0	0	0	0	0	0	0
4/26/2024	12:30 AM	0	0	0	0	0	0	0	0	0	0	0	0	0
4/26/2024	12:45 AM	0	0	0	0	0	0	0	0	0	0	0	0	0
4/26/2024	1:00 AM	0	0	0	0	0	0	0	0	0	0	0	0	0
4/26/2024	1:15 AM	0	0	0	0	0	0	0	0	0	0	0	0	0
4/26/2024	1:30 AM	0	0	0	0	0	0	0	0	0	0	0	0	0
4/26/2024	1:45 AM	0	0	0	0	0	0	0	0	0	0	0	0	0
4/26/2024	2:00 AM	0	0	0	0	0	0	0	0	0	0	0	0	0
4/26/2024	2:15 AM	0	0	0	0	0	0	0	0	0	0	0	0	0
4/26/2024	2:30 AM	0	0	0	0	0	0	0	0	0	0	0	0	0
4/26/2024	2:45 AM	0	0	0	0	0	0	0	0	0	0	0	0	0
4/26/2024	3:00 AM	0	0	0	0	0	0	0	0	0	0	0	0	0
4/26/2024	3:15 AM	0	0	0	0	0	0	0	0	0	0	0	0	0
4/26/2024	3:30 AM	0	0	0	0	0	0	0	0	0	0	0	0	0
4/26/2024	3:45 AM	0	0	0	0	0	0	0	0	0	0	0	0	0
4/26/2024	4:00 AM	0	0	0	0	0	0	0	0	0	0	0	0	0
4/26/2024	4:15 AM	0	0	0	0	0	0	0	0	0	0	0	0	0
4/26/2024	4:30 AM	0	0	0	0	0	0	0	0	0	0	0	0	0
4/26/2024	4:45 AM	0	0	0	0	0	0	0	0	0	0	0	0	0
4/26/2024	5:00 AM	0	0	0	0	0	0	0	0	0	0	0	0	0
4/26/2024	5:15 AM	0	0	0	0	0	0	0	0	0	0	0	0	0
4/26/2024	5:30 AM	0	0	0	0	0	0	0	0	0	0	0	0	0
4/26/2024	5:45 AM	0	0	0	0	0	0	0	0	0	0	0	0	0
4/26/2024	6:00 AM	0	0	0	0	0	0	0	0	0	0	0	0	0
4/26/2024	6:15 AM	0	0	0	0	0	0	0	0	0	0	0	0	0
4/26/2024	6:30 AM	0	0	0	0	0	0	0	0	0	0	0	0	0
4/26/2024	6:45 AM	0	0	0	0	0	0	0	0	0	0	0	0	0
4/26/2024	7:00 AM	0	0	0	0	0	0	0	0	0	0	0	0	0
4/26/2024	7:15 AM	0	0	0	0	0	0	0	0	0	0	0	0	0
4/26/2024	7:30 AM	0	0	0	0	0	0	0	0	0	0	0	0	0
4/26/2024	7:45 AM	0	0	0	0	0	0	0	0	0	0	0	0	0
4/26/2024	8:00 AM	0	0	0	0	0	0	0	0	0	0	0	0	0
4/26/2024	8:15 AM	0	0	0	0	0	0	0	0	0	0	0	0	0
4/26/2024	8:30 AM	0	0	0	0	0	0	0	0	0	0	0	0	0
4/26/2024	8:45 AM	0	0	0	0	0	0	0	0	0	0	0	0	0
4/26/2024	9:00 AM	0	0	0	0	0	0	0	0	0	0	0	0	0
4/26/2024	9:15 AM	0	0	0	0	0	0	0	0	0	0	0	0	0
4/26/2024	9:30 AM	0	0	0	0	0	0	0	0	0	0	0	0	0
4/26/2024	9:45 AM	0	0	0	0	0	0	0	0	0	0	0	0	0
4/26/2024	10:00 AM	0	0	0	0	0	0	0	0	0	0	0	0	0
4/26/2024	10:15 AM	0	0	0	0	0	0	0	0	0	0	0	0	0
4/26/2024	10:30 AM	0	0	0	0	0	0	0	0	0	0	0	0	0
4/26/2024	10:45 AM	0	0	0	0	0	0	0	0	0	0	0	0	0
4/26/2024	11:00 AM	0	0	0	0	0	0	0	0	0	0	0	0	0
4/26/2024	11:15 AM	0	0	0	0	0	0	0	0	0	0	0	0	0
4/26/2024	11:30 AM	0	0	0	0	0	0	0	0	0	0	0	0	0
4/26/2024	11:45 AM	0	0	0	0	0	0	0	0	0	0	0	0	0
4/26/2024	12:00 PM	0	0	0	0	0	0	0	0	0	0	0	0	0
4/26/2024	12:15 PM	0	0	0	0	0	0	0	0	0	0	0	0	0
4/26/2024	12:30 PM	0	0	0	0	0	0	0	0	0	0	0	0	0
4/26/2024	12:45 PM	0	0	0	0	0	0	0	0	0	0	0	0	0
4/26/2024	1:00 PM	0	0	0	0	0	0	0	0	0	0	0	0	0
4/26/2024	1:15 PM	0	0	0	0	0	0	0	0	0	0	0	0	0
4/26/2024	1:30 PM	0	0	0	0	0	0	0	0	0	0	0	0	0
4/26/2024	1:45 PM	0	0	0	0	0	0	0	0	0	0	0	0	0
4/26/2024	2:00 PM	0	0	0	0	0	0	0	0	0	0	0	0	0
4/26/2024	2:15 PM	0	0	0	0	0	0	0	0	0	0	0	0	0
4/26/2024	2:30 PM	0	0	0	0	0	0	0	0	0	0	0	0	0
4/26/2024	2:45 PM	0	0	0	0	0	0	0	0	0	0	0	0	0
4/26/2024	3:00 PM	0	0	0	0	0	0	0	0	0	0	0	0	0
4/26/2024	3:15 PM	0	0	0	0	0	0	0	0	0	0	0	0	0
4/26/2024	3:30 PM	0	0	0	0	0	0	0	0	0	0	0	0	0
4/26/2024	3:45 PM	0	0	0	0	0	0	0	0	0	0	0	0	0
4/26/2024	4:00 PM	0	0	0	0	0	0	0	0	0	0	0	0	0
4/26/2024	4:15 PM	0	0	0	0	0	0	0	0	0	0	0	0	0
4/26/2024	4:30 PM	0	0	0	0	0	0	0	0	0	0	0	0	0
4/26/2024	4:45 PM	0	0	0	0	0	0	0	0	0	0	0	0	0
4/26/2024	5:00 PM	0	0	0	0	0	0	0	0	0	0	0	0	0
4/26/2024	5:15 PM	0	0	0	0	0	0	0	0	0	0	0	0	0
4/26/2024	5:30 PM	0	0	0	0	0	0	0	0	0	0	0	0	0
4/26/2024	5:45 PM	0	0	0	0	0	0	0	0	0	0	0	0	0
4/26/2024	6:00 PM	0	0	0	0	0	0	0	0	0	0	0	0	0
4/26/2024	6:15 PM	0	0	0	0	0	0	0	0	0	0	0	0	0
4/26/2024	6:30 PM	0	0	0	0	0	0	0	0	0	0	0	0	0
4/26/2024	6:45 PM	0	0	0	0	0	0	0	0	0	0	0	0	0
4/26/2024	7:00 PM	0	0	0	0	0	0	0	0	0	0	0	0	0
4/26/2024	7:15 PM	0	0	0	0	0	0	0	0	0	0	0	0	0
4/26/2024	7:30 PM	0	0	0	0	0	0	0	0	0	0	0	0	0
4/26/2024	7:45 PM	0	0	0	0	0	0	0	0	0	0	0	0	0
4/26/2024	8:00 PM	0	0	0	0	0	0	0	0	0	0	0	0	0
4/26/2024	8:15 PM	0	0	0	0	0	0	0	0	0	0	0	0	0
4/26/2024	8:30 PM	0	0	0	0	0	0	0	0	0	0	0	0	0
4/26/2024	8:45 PM	0	0	0	0	0	0	0	0	0	0	0	0	0
4/26/2024	9:00 PM	0	0	0	0	0	0	0	0	0	0	0	0	0
4/26/2024	9:15 PM	0	0	0	0	0	0	0	0	0	0	0	0	0
4/26/2024	9:30 PM	0	0	0	0	0	0	0	0	0	0	0	0	0
4/26/2024	9:45 PM	0	0	0	0	0	0	0	0	0	0	0	0	0
4/26/2024	10:00 PM	0	0	0	0	0	0	0	0	0	0	0	0	0
4/26/2024	10:15 PM	0	0	0	0	0	0	0	0	0	0	0	0	0
4/26/2024	10:30 PM	0	0	0	0	0	0	0	0	0	0	0	0	0
4/26/2024	10:45 PM	0	0	0	0	0	0	0	0	0	0	0	0	0
4/26/2024	11:00 PM	0	0	0	0	0	0	0	0	0	0	0	0	0
4/26/2024	11:15 PM	0	0	0	0	0	0	0	0	0	0	0	0	0
4/26/2024	11:30 PM	0	0	0	0	0	0	0	0	0	0	0	0	0
4/26/2024	11:45 PM	0	0	0	0	0	0	0	0	0	0	0	0	0

4/27/2024	12:00 AM	0	0	0	0	0	0	0	0	0	0	0	0	0
4/27/2024	12:15 AM	0	0	0	0	0	0	0	0	0	0	0	0	0
4/27/2024	12:30 AM	0	0	0	0	0	0	0	0	0	0	0	0	0
4/27/2024	12:45 AM	0	0	0	0	0	0	0	0	0	0	0	0	0
4/27/2024	1:00 AM	0	0	0	0	0	0	0	0	0	0	0	0	0
4/27/2024	1:15 AM	0	0	0	0	0	0	0	0	0	0	0	0	0
4/27/2024	1:30 AM	0	0	0	0	0	0	0	0	0	0	0	0	0
4/27/2024	1:45 AM	0	0	0	0	0	0	0	0	0	0	0	0	0
4/27/2024	2:00 AM	0	0	0	0	0	0	0	0	0	0	0	0	0
4/27/2024	2:15 AM	0	0	0	0	0	0	0	0	0	0	0	0	0
4/27/2024	2:30 AM	0	0	0	0	0	0	0	0	0	0	0	0	0
4/27/2024	2:45 AM	0	0	0	0	0	0	0	0	0	0	0	0	0
4/27/2024	3:00 AM	0	0	0	0	0	0	0	0	0	0	0	0	0
4/27/2024	3:15 AM	0	0	0	0	0	0	0	0	0	0	0	0	0
4/27/2024	3:30 AM	0	0	0	0	0	0	0	0	0	0	0	0	0
4/27/2024	3:45 AM	0	0	0	0	0	0	0	0	0	0	0	0	0
4/27/2024	4:00 AM	0	0	0	0	0	0	0	0	0	0	0	0	0
4/27/2024	4:15 AM	0	0	0	0	0	0	0	0	0	0	0	0	0
4/27/2024	4:30 AM	0	0	0	0	0	0	0	0	0	0	0	0	0
4/27/2024	4:45 AM	0	0	0	0	0	0	0	0	0	0	0	0	0
4/27/2024	5:00 AM	0	0	0	0	0	0	0	0	0	0	0	0	0
4/27/2024	5:15 AM	0	0	0	0	0	0	0	0	0	0	0	0	0
4/27/2024	5:30 AM	0	0	0	0	0	0	0	0	0	0	0	0	0
4/27/2024	5:45 AM	0	0	0	0	0	0	0	0	0	0	0	0	0
4/27/2024	6:00 AM	0	0	0	0	0	0	0	0	0	0	0	0	0
4/27/2024	6:15 AM	0	0	0	0	0	0	0	0	0	0	0	0	0
4/27/2024	6:30 AM	0	0	0	0	0	0	0	0	0	0	0	0	0
4/27/2024	6:45 AM	0	0	0	0	0	0	0	0	0	0	0	0	0
4/27/2024	7:00 AM	0	0	0	0	0	0	0	0	0	0	0	0	0
4/27/2024	7:15 AM	0	0	0	0	0	0	0	0	0	0	0	0	0
4/27/2024	7:30 AM	0	0	0	0	0	0	0	0	0	0	0	0	0
4/27/2024	7:45 AM	0	0	0	0	0	0	0	0	0	0	0	0	0
4/27/2024	8:00 AM	0	0	0	0	0	0	0	0	0	0	0	0	0
4/27/2024	8:15 AM	0	0	0	0	0	0	0	0	0	0	0	0	0
4/27/2024	8:30 AM	0	0	0	0	0	0	0	0	0	0	0	0	0
4/27/2024	8:45 AM	0	0	0	0	0	0	0	0	0	0	0	0	0
4/27/2024	9:00 AM	0	0	0	0	0	0	0	0	0	0	0	0	0
4/27/2024	9:15 AM	0	0	0	0	0	0	0	0	0	0	0	0	0
4/27/2024	9:30 AM	0	0	0	0	0	0	0	0	0	0	0	0	0
4/27/2024	9:45 AM	0	0	0	0	0	0	0	0	0	0	0	0	0
4/27/2024	10:00 AM	0	0	0	0	0	0	0	0	0	0	0	0	0
4/27/2024	10:15 AM	0	0	0	0	0	0	0	0	0	0	0	0	0
4/27/2024	10:30 AM	0	0	0	0	0	0	0	0	0	0	0	0	0
4/27/2024	10:45 AM	0	0	0	0	0	0	0	0	0	0	0	0	0
4/27/2024	11:00 AM	0	0	0	0	0	0	0	0	0	0	0	0	0
4/27/2024	11:15 AM	0	0	0	0	0	0	0	0	0	0	0	0	0
4/27/2024	11:30 AM	0	0	0	0	0	0	0	0	0	0	0	0	0
4/27/2024	11:45 AM	0	0	0	0	0	0	0	0	0	0	0	0	0
4/27/2024	12:00 PM	0	0	0	0	0	0	0	0	0	0	0	0	0
4/27/2024	12:15 PM	0	0	0	0	0	0	0	0	0	0	0	0	0
4/27/2024	12:30 PM	0	0	0	0	0	0	0	0	0	0	0	0	0
4/27/2024	12:45 PM	0	0	0	0	0	0	0	0	0	0	0	0	0
4/27/2024	1:00 PM	0	0	0	0	0	0	0	0	0	0	0	0	0
4/27/2024	1:15 PM	0	0	0	0	0	0	0	0	0	0	0	0	0
4/27/2024	1:30 PM	0	0	0	0	0	0	0	0	0	0	0	0	0
4/27/2024	1:45 PM	0	0	0	0	0	0	0	0	0	0	0	0	0
4/27/2024	2:00 PM	0	0	0	0	0	0	0	0	0	0	0	0	0
4/27/2024	2:15 PM	0	0	0	0	0	0	0	0	0	0	0	0	0
4/27/2024	2:30 PM	0	0	0	0	0	0	0	0	0	0	0	0	0
4/27/2024	2:45 PM	0	0	0	0	0	0	0	0	0	0	0	0	0
4/27/2024	3:00 PM	0	0	0	0	0	0	0	0	0	0	0	0	0
4/27/2024	3:15 PM	0	0	0	0	0	0	0	0	0	0	0	0	0
4/27/2024	3:30 PM	0	0	0	0	0	0	0	0	0	0	0	0	0
4/27/2024	3:45 PM	0	0	0	0	0	0	0	0	0	0	0	0	0
4/27/2024	4:00 PM	0	0	0	0	0	0	0	0	0	0	0	0	0
4/27/2024	4:15 PM	0	0	0	0	0	0	0	0	0	0	0	0	0
4/27/2024	4:30 PM	0	0	0	0	0	0	0	0	0	0	0	0	0
4/27/2024	4:45 PM	0	0	0	0	0	0	0	0	0	0	0	0	0
4/27/2024	5:00 PM	0	0	0	0	0	0	0	0	0	0	0	0	0
4/27/2024	5:15 PM	0	0	0	0	0	0	0	0	0	0	0	0	0
4/27/2024	5:30 PM	0	0	0	0	0	0	0	0	0	0	0	0	0
4/27/2024	5:45 PM	0	0	0	0	0	0	0	0	0	0	0	0	0
4/27/2024	6:00 PM	0	0	0	0	0	0	0	0	0	0	0	0	0
4/27/2024	6:15 PM	0	0	0	0	0	0	0	0	0	0	0	0	0
4/27/2024	6:30 PM	0	0	0	0	0	0	0	0	0	0	0	0	0
4/27/2024	6:45 PM	0	0	0	0	0	0	0	0	0	0	0	0	0
4/27/2024	7:00 PM	0	0	0	0	0	0	0	0	0	0	0	0	0
4/27/2024	7:15 PM	0	0	0	0	0	0	0	0	0	0	0	0	0
4/27/2024	7:30 PM	0	0	0	0	0	0	0	0	0	0	0	0	0
4/27/2024	7:45 PM	0	0	0	0	0	0	0	0	0	0	0	0	0
4/27/2024	8:00 PM	0	0	0	0	0	0	0	0	0	0	0	0	0
4/27/2024	8:15 PM	0	0	0	0	0	0	0	0	0	0	0	0	0
4/27/2024	8:30 PM	0	0	0	0	0	0	0	0	0	0	0	0	0
4/27/2024	8:45 PM	0	0	0	0	0	0	0	0	0	0	0	0	0
4/27/2024	9:00 PM	0	0	0	0	0	0	0	0	0	0	0	0	0
4/27/2024	9:15 PM	0	0	0	0	0	0	0	0	0	0	0	0	0
4/27/2024	9:30 PM	0	0	0	0	0	0	0	0	0	0	0	0	0
4/27/2024	9:45 PM	0	0	0	0	0	0	0	0	0	0	0	0	0
4/27/2024	10:00 PM	0	0	0	0	0	0	0	0	0	0	0	0	0
4/27/2024	10:15 PM	0	0	0	0	0	0	0	0	0	0	0	0	0
4/27/2024	10:30 PM	0	0	0	0	0	0	0	0	0	0	0	0	0
4/27/2024	10:45 PM	0	0	0	0	0	0	0	0	0	0	0	0	0
4/27/2024	11:00 PM	0	0	0	0	0	0	0	0	0	0	0	0	0
4/27/2024	11:15 PM	0	0	0	0	0	0	0	0	0	0	0	0	0
4/27/2024	11:30 PM	0	0	0	0	0	0	0	0	0	0	0	0	0
4/27/2024	11:45 PM	0	0	0	0	0	0	0	0	0	0	0	0	0

SB
File Name:
Start Date: 4/21/2024
Start Time: 0
Site Code: 75 Lane 4 SB
Station ID: 1
Location 1: I-20, north of Bush River Rd
Location 2:

Date	Time	1	2	3	4	5	6	7	8	9	10	11	12	13
4/21/2024	12:00 AM	0	29	2	0	0	0	0	0	0	0	0	0	0
4/21/2024	12:15 AM	0	24	2	0	0	0	0	0	1	0	0	0	0
4/21/2024	12:30 AM	0	23	1	0	0	0	0	0	0	0	0	0	0
4/21/2024	12:45 AM	0	30	1	0	0	0	0	0	0	0	0	0	0
4/21/2024	1:00 AM	0	23	1	0	1	0	0	0	1	0	0	0	0
4/21/2024	1:15 AM	0	21	0	0	0	0	0	0	1	0	0	0	0
4/21/2024	1:30 AM	0	15	0	0	0	0	0	0	0	0	0	0	0
4/21/2024	1:45 AM	0	19	0	0	0	0	0	0	1	0	0	0	0
4/21/2024	2:00 AM	0	10	0	0	0	0	0	0	0	0	0	0	0
4/21/2024	2:15 AM	0	13	2	0	0	0	0	0	1	0	0	0	0
4/21/2024	2:30 AM	0	10	2	0	0	0	0	0	2	0	0	0	0
4/21/2024	2:45 AM	0	9	0	0	0	0	0	1	0	0	0	0	0
4/21/2024	3:00 AM	0	9	0	0	0	0	0	0	1	0	0	0	0
4/21/2024	3:15 AM	0	8	0	0	0	0	0	0	1	0	0	0	0
4/21/2024	3:30 AM	0	9	0	0	0	0	0	0	1	0	0	0	0
4/21/2024	3:45 AM	0	9	0	0	0	0	0	0	0	0	0	0	0
4/21/2024	4:00 AM	0	11	0	0	1	0	0	0	0	0	0	0	0
4/21/2024	4:15 AM	0	5	1	0	0	0	0	0	1	0	0	0	0
4/21/2024	4:30 AM	0	10	0	0	0	1	0	0	0	0	0	0	0
4/21/2024	4:45 AM	0	4	0	0	0	0	0	0	2	0	0	0	0
4/21/2024	5:00 AM	0	4	0	0	0	0	0	0	3	0	0	0	0
4/21/2024	5:15 AM	0	4	0	0	0	0	0	0	0	0	0	0	0
4/21/2024	5:30 AM	0	15	0	0	0	0	0	0	2	0	0	0	0
4/21/2024	5:45 AM	0	11	1	0	0	0	0	1	1	0	0	0	0
4/21/2024	6:00 AM	0	14	1	0	0	0	0	0	1	0	0	0	0
4/21/2024	6:15 AM	0	28	2	0	0	0	0	0	0	0	0	0	0
4/21/2024	6:30 AM	0	19	6	0	0	0	0	0	1	0	0	0	0
4/21/2024	6:45 AM	0	19	3	0	0	0	0	0	0	0	0	0	0
4/21/2024	7:00 AM	0	19	10	0	0	0	0	0	1	0	0	0	0
4/21/2024	7:15 AM	0	22	3	0	0	0	0	0	2	0	0	0	0
4/21/2024	7:30 AM	0	30	8	0	0	0	0	0	1	0	0	0	0
4/21/2024	7:45 AM	0	19	10	0	0	0	0	0	4	0	0	0	0
4/21/2024	8:00 AM	0	29	5	0	0	0	0	0	1	0	0	0	0
4/21/2024	8:15 AM	0	31	11	0	0	1	0	0	3	0	0	0	0
4/21/2024	8:30 AM	0	45	5	0	0	0	0	0	0	0	0	0	0
4/21/2024	8:45 AM	0	42	9	0	0	0	0	0	2	0	0	0	0
4/21/2024	9:00 AM	0	41	6	0	0	0	0	0	2	0	0	0	0
4/21/2024	9:15 AM	0	64	5	0	0	0	0	0	1	0	0	0	0
4/21/2024	9:30 AM	0	57	14	0	0	1	0	1	1	0	0	0	0
4/21/2024	9:45 AM	0	67	13	0	0	0	0	0	0	0	0	0	0
4/21/2024	10:00 AM	0	56	12	0	0	1	0	0	4	0	0	0	0
4/21/2024	10:15 AM	0	83	7	1	0	0	0	0	1	0	0	0	0
4/21/2024	10:30 AM	0	97	15	0	0	0	0	1	2	0	0	0	0
4/21/2024	10:45 AM	0	93	6	0	0	0	0	0	1	0	0	0	0
4/21/2024	11:00 AM	0	77	16	0	0	0	0	0	1	0	0	0	0
4/21/2024	11:15 AM	0	84	16	0	0	0	0	0	0	0	0	0	0
4/21/2024	11:30 AM	0	102	8	0	1	0	0	0	1	0	0	0	0
4/21/2024	11:45 AM	0	128	20	0	0	0	0	0	0	0	0	0	0
4/21/2024	12:00 PM	0	118	6	0	0	0	0	0	2	0	0	0	0
4/21/2024	12:15 PM	0	168	5	0	0	0	0	0	1	0	0	0	0
4/21/2024	12:30 PM	0	124	10	0	0	0	0	0	2	0	0	0	0
4/21/2024	12:45 PM	0	149	9	0	1	0	0	0	2	0	0	0	0
4/21/2024	1:00 PM	0	147	17	0	0	0	0	0	0	0	0	0	0
4/21/2024	1:15 PM	0	143	21	0	1	0	0	1	1	0	0	0	0
4/21/2024	1:30 PM	0	160	15	0	0	0	0	0	3	0	0	0	0
4/21/2024	1:45 PM	0	133	20	0	0	0	0	0	1	0	0	0	0
4/21/2024	2:00 PM	0	113	13	0	0	0	0	0	0	0	0	0	0
4/21/2024	2:15 PM	0	141	19	0	0	0	0	0	3	0	0	0	0
4/21/2024	2:30 PM	0	137	17	0	1	0	0	0	3	0	0	0	0
4/21/2024	2:45 PM	0	143	11	0	2	0	0	0	1	0	0	0	0
4/21/2024	3:00 PM	0	131	12	0	1	0	0	0	1	0	0	0	0
4/21/2024	3:15 PM	0	126	17	0	0	0	0	0	2	0	0	0	0
4/21/2024	3:30 PM	0	124	13	1	0	0	0	0	2	0	0	0	0
4/21/2024	3:45 PM	0	133	12	0	0	0	0	0	0	0	0	0	0
4/21/2024	4:00 PM	0	129	13	0	0	0	0	0	1	0	0	0	0
4/21/2024	4:15 PM	0	118	12	0	1	0	0	0	2	0	0	0	0
4/21/2024	4:30 PM	0	130	13	0	0	0	0	0	0	0	0	0	0
4/21/2024	4:45 PM	0	119	12	0	1	0	0	0	1	0	0	0	0
4/21/2024	5:00 PM	0	115	10	0	0	0	0	0	1	0	0	0	0
4/21/2024	5:15 PM	0	135	5	0	0	0	0	0	0	0	0	0	0
4/21/2024	5:30 PM	0	110	12	0	0	0	0	0	2	0	0	0	0
4/21/2024	5:45 PM	0	114	14	0	0	0	0	0	0	0	0	0	0
4/21/2024	6:00 PM	0	119	13	0	0	0	0	0	2	0	0	0	0
4/21/2024	6:15 PM	0	130	7	0	0	0	0	0	0	0	0	0	0
4/21/2024	6:30 PM	1	100	8	0	0	0	0	0	1	0	0	0	0
4/21/2024	6:45 PM	0	99	5	0	0	0	0	0	1	0	0	0	0
4/21/2024	7:00 PM	0	99	5	0	0	0	0	0	0	0	0	0	0
4/21/2024	7:15 PM	0	70	8	0	0	0	0	0	6	0	0	0	0
4/21/2024	7:30 PM	0	81	5	0	0	0	0	0	0	0	0	0	0
4/21/2024	7:45 PM	0	59	2	0	0	0	0	0	2	0	0	0	0
4/21/2024	8:00 PM	0	62	12	0	0	0	0	0	4	0	0	0	0
4/21/2024	8:15 PM	0	58	3	0	0	0	0	1	2	0	0	0	0
4/21/2024	8:30 PM	0	69	2	0	0	0	0	0	0	0	0	0	0
4/21/2024	8:45 PM	0	60	3	0	0	0	0	0	1	0	0	0	0
4/21/2024	9:00 PM	0	53	0	0	1	0	0	0	3	0	0	0	0
4/21/2024	9:15 PM	0	59	1	0	0	0	0	0	1	0	0	0	0
4/21/2024	9:30 PM	0	51	1	0	0	0	0	0	1	0	0	0	0
4/21/2024	9:45 PM	0	37	1	0	0	0	0	0	6	0	0	0	0
4/21/2024	10:00 PM	0	39	5	0	0	0	0	0	2	0	0	0	0
4/21/2024	10:15 PM	0	38	1	0	0	0	0	0	1	0	0	0	0
4/21/2024	10:30 PM	0	23	1	0	0	0	0	0	3	0	0	0	0
4/21/2024	10:45 PM	0	21	4	0	0	0	0	0	1	0	0	0	0
4/21/2024	11:00 PM	0	28	0	0	0	0	0	0	2	0	0	0	0
4/21/2024	11:15 PM	0	15	0	0	0	0	0	0	0	0	0	0	0
4/21/2024	11:30 PM	0	11	0	0	0	0	0	0	2	0	0	0	0
4/21/2024	11:45 PM	0	11	0	0	0	0	0	0	3	0	0	0	0

4/22/2024	12:00 AM	0	9	3	0	0	0	0	0	0	0	0	0
4/22/2024	12:15 AM	0	7	2	0	0	0	0	0	2	0	0	0
4/22/2024	12:30 AM	0	6	1	0	0	0	0	0	2	0	0	0
4/22/2024	12:45 AM	0	8	2	0	0	0	0	0	1	0	0	0
4/22/2024	1:00 AM	0	5	0	0	0	0	0	0	0	0	0	0
4/22/2024	1:15 AM	0	4	0	0	1	0	0	0	1	0	0	0
4/22/2024	1:30 AM	0	7	2	0	0	0	0	0	0	0	0	0
4/22/2024	1:45 AM	0	3	0	0	0	0	0	0	0	0	0	0
4/22/2024	2:00 AM	0	7	0	0	1	0	0	0	2	0	0	0
4/22/2024	2:15 AM	0	2	0	0	0	0	0	0	1	0	0	0
4/22/2024	2:30 AM	0	5	0	0	0	0	0	0	1	0	0	0
4/22/2024	2:45 AM	0	9	3	0	0	0	0	0	1	0	0	0
4/22/2024	3:00 AM	0	5	0	0	0	0	0	0	1	0	0	0
4/22/2024	3:15 AM	0	9	0	0	0	0	0	0	1	0	0	0
4/22/2024	3:30 AM	0	8	2	0	0	0	0	0	1	0	0	0
4/22/2024	3:45 AM	0	7	3	0	0	0	0	0	2	0	0	0
4/22/2024	4:00 AM	0	10	3	0	1	0	0	0	1	0	0	0
4/22/2024	4:15 AM	0	10	2	0	0	0	0	0	1	0	0	0
4/22/2024	4:30 AM	0	5	1	0	0	0	0	0	1	0	0	0
4/22/2024	4:45 AM	0	11	3	0	1	0	0	0	2	0	0	0
4/22/2024	5:00 AM	0	15	5	0	0	0	0	0	2	0	0	0
4/22/2024	5:15 AM	0	20	8	0	0	0	0	0	3	0	0	0
4/22/2024	5:30 AM	0	34	12	0	0	0	0	0	1	0	0	0
4/22/2024	5:45 AM	0	35	14	0	1	0	0	0	3	0	0	0
4/22/2024	6:00 AM	0	50	12	0	0	0	0	0	1	0	1	0
4/22/2024	6:15 AM	0	66	26	0	0	0	0	0	3	0	0	0
4/22/2024	6:30 AM	0	80	46	0	1	1	0	0	2	0	0	0
4/22/2024	6:45 AM	0	110	48	1	2	0	0	0	1	0	0	0
4/22/2024	7:00 AM	0	119	33	0	2	0	0	1	6	0	0	0
4/22/2024	7:15 AM	0	150	40	0	0	1	0	0	5	0	0	0
4/22/2024	7:30 AM	0	143	37	0	1	0	0	0	2	0	0	0
4/22/2024	7:45 AM	0	113	40	0	1	2	0	0	4	0	0	0
4/22/2024	8:00 AM	0	100	33	0	0	1	0	0	0	0	0	0
4/22/2024	8:15 AM	0	95	21	0	0	1	0	1	3	0	0	0
4/22/2024	8:30 AM	0	104	30	0	4	0	0	0	2	0	0	0
4/22/2024	8:45 AM	0	85	27	0	5	0	0	0	4	0	0	0
4/22/2024	9:00 AM	0	86	11	0	3	1	0	0	4	0	0	0
4/22/2024	9:15 AM	0	89	23	0	3	1	0	0	9	0	0	0
4/22/2024	9:30 AM	0	75	25	0	1	1	0	0	6	0	0	0
4/22/2024	9:45 AM	0	76	22	0	2	1	0	1	3	0	0	0
4/22/2024	10:00 AM	0	67	18	0	4	2	0	0	4	0	0	0
4/22/2024	10:15 AM	0	74	22	0	2	0	0	0	5	0	0	0
4/22/2024	10:30 AM	0	80	22	0	3	0	0	1	7	0	0	0
4/22/2024	10:45 AM	0	84	27	1	4	1	0	0	3	0	0	0
4/22/2024	11:00 AM	0	93	27	0	2	0	0	1	2	0	0	0
4/22/2024	11:15 AM	0	75	18	0	4	0	0	0	3	0	0	0
4/22/2024	11:30 AM	0	95	22	0	3	1	0	1	2	0	0	0
4/22/2024	11:45 AM	0	90	16	0	1	0	0	0	5	0	0	0
4/22/2024	12:00 PM	0	95	41	0	2	0	0	0	6	0	0	0
4/22/2024	12:15 PM	0	102	30	0	0	0	0	0	0	0	0	0
4/22/2024	12:30 PM	0	114	28	0	0	0	0	1	7	0	0	0
4/22/2024	12:45 PM	0	117	31	0	1	4	0	0	1	0	0	0
4/22/2024	1:00 PM	0	104	30	0	2	0	0	0	5	0	0	0
4/22/2024	1:15 PM	0	101	24	1	3	1	0	0	5	0	0	0
4/22/2024	1:30 PM	0	120	28	0	3	1	0	0	8	0	0	0
4/22/2024	1:45 PM	0	126	26	0	1	1	0	1	1	0	0	0
4/22/2024	2:00 PM	0	129	30	0	1	0	0	0	6	0	0	0
4/22/2024	2:15 PM	0	108	27	0	1	1	0	0	6	0	0	0
4/22/2024	2:30 PM	0	130	26	0	0	0	0	0	4	0	0	0
4/22/2024	2:45 PM	0	114	27	0	3	1	0	0	4	0	0	0
4/22/2024	3:00 PM	0	147	38	0	1	0	0	1	2	0	0	0
4/22/2024	3:15 PM	0	133	33	0	0	1	0	0	1	0	0	0
4/22/2024	3:30 PM	0	146	31	0	3	1	0	0	3	0	0	0
4/22/2024	3:45 PM	0	126	40	0	0	0	0	0	3	0	0	0
4/22/2024	4:00 PM	0	196	40	0	0	0	0	0	1	0	0	0
4/22/2024	4:15 PM	0	146	30	0	1	0	0	0	3	0	0	0
4/22/2024	4:30 PM	0	177	44	0	2	1	0	0	4	0	0	0
4/22/2024	4:45 PM	0	141	35	0	0	0	0	0	1	0	0	0
4/22/2024	5:00 PM	0	178	32	0	1	0	0	1	5	0	0	0
4/22/2024	5:15 PM	0	173	26	0	3	1	0	0	7	0	0	0
4/22/2024	5:30 PM	0	142	29	0	0	0	0	0	1	0	0	0
4/22/2024	5:45 PM	0	124	17	0	0	0	0	0	4	0	0	0
4/22/2024	6:00 PM	0	133	20	0	0	0	0	0	2	0	0	0
4/22/2024	6:15 PM	0	105	26	0	1	0	0	0	1	0	0	0
4/22/2024	6:30 PM	0	108	29	0	0	0	0	0	2	0	0	0
4/22/2024	6:45 PM	0	90	23	0	0	0	0	0	0	0	0	0
4/22/2024	7:00 PM	0	112	23	0	1	1	0	0	3	0	0	0
4/22/2024	7:15 PM	0	72	17	0	1	0	0	0	3	0	0	0
4/22/2024	7:30 PM	0	85	16	0	2	0	0	0	2	0	0	0
4/22/2024	7:45 PM	0	88	21	0	1	1	0	0	1	0	0	0
4/22/2024	8:00 PM	0	60	28	0	2	0	0	0	1	0	0	0
4/22/2024	8:15 PM	0	69	19	0	0	0	0	0	1	0	0	0
4/22/2024	8:30 PM	0	59	21	0	0	0	0	0	2	0	0	0
4/22/2024	8:45 PM	0	62	19	0	0	0	0	0	1	0	0	0
4/22/2024	9:00 PM	0	56	17	0	2	0	0	0	1	0	0	0
4/22/2024	9:15 PM	0	42	12	0	0	0	0	0	0	0	0	0
4/22/2024	9:30 PM	0	49	16	0	1	0	0	0	1	0	0	0
4/22/2024	9:45 PM	0	33	12	0	0	0	0	0	1	0	0	0
4/22/2024	10:00 PM	0	26	9	0	0	0	0	0	0	0	0	0
4/22/2024	10:15 PM	0	26	8	0	0	0	0	0	0	0	0	0
4/22/2024	10:30 PM	0	25	7	0	0	0	0	0	3	0	0	0
4/22/2024	10:45 PM	0	27	10	0	0	0	0	0	2	0	1	0
4/22/2024	11:00 PM	0	24	7	0	1	0	0	0	0	0	0	0
4/22/2024	11:15 PM	0	8	2	0	0	0	0	0	0	0	0	0
4/22/2024	11:30 PM	0	15	5	0	0	0	0	0	2	0	1	0
4/22/2024	11:45 PM	0	7	2	0	0	0	0	0	0	0	0	0

4/23/2024	12:00 AM	0	11	3	0	0	0	0	0	0	0	0	0	0
4/23/2024	12:15 AM	0	12	2	0	0	0	0	0	0	0	0	0	0
4/23/2024	12:30 AM	0	10	0	0	1	0	0	1	0	0	0	0	0
4/23/2024	12:45 AM	0	13	1	0	0	0	0	0	3	0	1	0	0
4/23/2024	1:00 AM	0	9	2	0	0	0	0	0	1	0	1	0	0
4/23/2024	1:15 AM	0	3	0	0	1	0	0	0	3	0	0	0	0
4/23/2024	1:30 AM	0	10	2	0	0	0	0	0	0	0	0	0	0
4/23/2024	1:45 AM	0	6	0	0	0	0	0	0	0	0	0	0	0
4/23/2024	2:00 AM	0	4	0	0	1	0	0	0	1	0	1	0	0
4/23/2024	2:15 AM	0	2	0	0	0	0	0	0	2	0	0	0	0
4/23/2024	2:30 AM	0	6	1	0	0	0	0	0	2	0	0	0	0
4/23/2024	2:45 AM	0	5	0	0	1	0	0	0	1	0	1	0	0
4/23/2024	3:00 AM	0	6	0	0	0	0	0	0	2	0	0	0	0
4/23/2024	3:15 AM	0	8	0	0	0	2	0	0	1	0	0	0	0
4/23/2024	3:30 AM	0	11	1	0	0	0	0	0	1	0	0	0	0
4/23/2024	3:45 AM	0	10	3	0	0	0	0	0	0	0	0	0	0
4/23/2024	4:00 AM	0	6	0	0	1	0	0	0	2	0	0	0	0
4/23/2024	4:15 AM	0	11	1	0	0	0	0	0	3	0	0	0	0
4/23/2024	4:30 AM	0	12	3	0	0	1	0	0	2	0	0	0	0
4/23/2024	4:45 AM	0	14	2	0	0	0	0	0	2	0	0	0	0
4/23/2024	5:00 AM	0	22	3	0	0	0	0	0	3	0	0	0	0
4/23/2024	5:15 AM	0	27	3	0	2	0	0	0	3	0	0	0	0
4/23/2024	5:30 AM	0	38	2	0	0	0	0	0	4	0	0	0	0
4/23/2024	5:45 AM	0	43	1	0	0	0	0	0	2	0	0	0	0
4/23/2024	6:00 AM	0	60	4	0	0	1	0	0	1	0	0	0	0
4/23/2024	6:15 AM	0	78	11	0	0	0	0	0	2	0	0	0	0
4/23/2024	6:30 AM	0	108	20	0	1	0	0	1	1	0	0	0	0
4/23/2024	6:45 AM	0	119	42	0	3	0	0	0	5	0	0	0	0
4/23/2024	7:00 AM	0	112	47	0	1	0	0	0	4	0	0	0	0
4/23/2024	7:15 AM	0	142	52	1	0	0	0	0	4	0	0	0	0
4/23/2024	7:30 AM	0	129	27	0	1	2	0	0	2	0	0	0	0
4/23/2024	7:45 AM	0	107	20	0	2	0	0	0	1	1	0	0	0
4/23/2024	8:00 AM	0	105	28	0	3	0	0	0	5	0	0	0	0
4/23/2024	8:15 AM	0	97	20	0	5	1	0	1	3	0	0	0	0
4/23/2024	8:30 AM	0	94	21	0	3	1	0	1	4	0	0	0	0
4/23/2024	8:45 AM	0	115	23	0	3	0	0	1	4	0	0	0	0
4/23/2024	9:00 AM	0	81	16	0	1	0	0	1	3	0	0	0	0
4/23/2024	9:15 AM	0	99	18	0	4	1	0	1	8	0	0	0	0
4/23/2024	9:30 AM	0	83	20	0	4	0	0	0	4	0	0	0	0
4/23/2024	9:45 AM	0	76	20	0	3	0	0	1	6	0	0	0	0
4/23/2024	10:00 AM	0	74	24	0	1	1	0	0	4	0	0	0	0
4/23/2024	10:15 AM	0	108	18	0	1	1	0	0	3	0	0	0	0
4/23/2024	10:30 AM	0	86	15	0	0	0	0	1	3	0	0	0	0
4/23/2024	10:45 AM	0	97	18	0	2	1	0	0	7	0	0	0	0
4/23/2024	11:00 AM	0	84	25	0	0	3	0	0	4	0	0	0	0
4/23/2024	11:15 AM	0	89	23	2	0	0	0	0	0	0	0	0	0
4/23/2024	11:30 AM	0	113	18	0	2	0	0	0	4	0	0	0	0
4/23/2024	11:45 AM	0	125	21	0	2	0	0	0	3	1	0	0	0
4/23/2024	12:00 PM	0	94	13	1	4	0	0	0	4	0	0	0	0
4/23/2024	12:15 PM	0	105	24	0	1	1	0	0	4	0	0	0	0
4/23/2024	12:30 PM	1	119	23	0	2	0	0	0	3	0	0	0	0
4/23/2024	12:45 PM	1	120	22	0	1	1	0	0	7	0	0	0	0
4/23/2024	1:00 PM	0	110	23	0	2	2	0	0	6	0	0	0	0
4/23/2024	1:15 PM	0	113	17	0	6	1	0	0	6	0	0	0	0
4/23/2024	1:30 PM	1	127	24	0	2	0	0	0	7	0	0	0	0
4/23/2024	1:45 PM	0	126	30	0	2	1	0	0	6	0	0	0	0
4/23/2024	2:00 PM	1	115	25	0	3	2	0	1	5	0	0	0	0
4/23/2024	2:15 PM	0	138	23	0	4	0	0	0	2	0	0	0	0
4/23/2024	2:30 PM	0	143	35	0	1	0	0	0	5	0	0	0	0
4/23/2024	2:45 PM	0	127	28	0	2	1	0	1	4	0	0	0	0
4/23/2024	3:00 PM	0	141	44	0	3	3	0	1	2	0	0	0	0
4/23/2024	3:15 PM	0	128	37	0	0	1	0	0	6	0	0	0	0
4/23/2024	3:30 PM	1	121	41	0	8	2	0	1	6	1	0	0	0
4/23/2024	3:45 PM	0	139	41	1	2	0	0	0	3	0	0	0	0
4/23/2024	4:00 PM	1	136	44	1	1	0	0	4	4	0	0	0	0
4/23/2024	4:15 PM	1	166	51	2	1	1	0	3	6	0	0	0	0
4/23/2024	4:30 PM	0	181	42	0	5	1	0	1	5	0	0	0	0
4/23/2024	4:45 PM	0	154	36	0	6	3	0	1	1	0	0	0	0
4/23/2024	5:00 PM	0	182	32	0	6	0	0	2	2	1	0	0	0
4/23/2024	5:15 PM	0	152	39	0	3	0	0	1	1	0	0	0	0
4/23/2024	5:30 PM	0	125	48	1	0	2	0	0	3	0	0	0	0
4/23/2024	5:45 PM	0	141	42	0	5	3	0	1	4	0	0	0	0
4/23/2024	6:00 PM	0	130	36	0	2	0	0	0	2	0	0	0	0
4/23/2024	6:15 PM	0	90	26	0	5	0	0	1	3	0	0	0	0
4/23/2024	6:30 PM	1	111	17	0	0	2	0	1	1	0	0	0	0
4/23/2024	6:45 PM	0	91	18	0	3	0	0	0	3	0	0	0	0
4/23/2024	7:00 PM	0	106	23	0	1	0	0	1	1	0	0	0	0
4/23/2024	7:15 PM	0	89	20	0	1	0	0	0	3	0	0	0	0
4/23/2024	7:30 PM	0	77	14	0	1	2	0	0	3	0	0	0	0
4/23/2024	7:45 PM	2	88	13	1	2	0	0	0	2	0	0	0	0
4/23/2024	8:00 PM	0	73	15	0	1	0	0	1	5	0	0	0	0
4/23/2024	8:15 PM	0	85	14	0	1	0	0	0	3	0	0	0	0
4/23/2024	8:30 PM	0	70	12	0	3	0	0	0	1	0	0	0	0
4/23/2024	8:45 PM	0	65	9	0	0	0	0	1	1	0	0	0	0
4/23/2024	9:00 PM	0	59	6	0	0	0	0	0	1	0	0	0	0
4/23/2024	9:15 PM	0	56	7	0	0	0	0	0	1	0	0	0	0
4/23/2024	9:30 PM	0	55	6	0	0	0	0	0	1	0	0	0	0
4/23/2024	9:45 PM	1	38	5	0	1	0	0	0	2	0	0	0	0
4/23/2024	10:00 PM	0	20	3	0	0	0	0	0	3	0	0	0	0
4/23/2024	10:15 PM	0	32	9	0	0	0	0	0	4	0	0	0	0
4/23/2024	10:30 PM	0	22	7	0	0	0	0	0	2	0	0	0	0
4/23/2024	10:45 PM	1	31	9	0	0	0	0	0	2	0	0	0	0
4/23/2024	11:00 PM	0	30	12	0	0	0	0	0	0	0	0	0	0
4/23/2024	11:15 PM	0	15	6	0	0	0	0	0	0	0	0	0	0
4/23/2024	11:30 PM	0	16	5	0	0	0	0	0	1	0	0	0	0
4/23/2024	11:45 PM	0	8	3	0	0	0	0	0	1	0	1	0	0

4/24/2024	12:00 AM	0	13	1	0	0	0	0	0	3	0	0	0	0
4/24/2024	12:15 AM	0	12	0	1	1	0	0	0	0	0	0	0	0
4/24/2024	12:30 AM	0	14	2	0	1	1	0	0	0	0	0	0	0
4/24/2024	12:45 AM	0	9	0	0	0	0	0	0	5	0	0	0	0
4/24/2024	1:00 AM	0	9	1	0	1	0	0	0	0	0	0	0	0
4/24/2024	1:15 AM	0	9	2	0	0	0	0	0	2	0	0	0	0
4/24/2024	1:30 AM	0	5	0	0	0	0	0	0	1	0	2	0	0
4/24/2024	1:45 AM	0	7	0	0	0	0	0	0	2	0	0	0	0
4/24/2024	2:00 AM	0	9	2	0	0	0	0	0	0	0	1	0	0
4/24/2024	2:15 AM	0	4	0	0	1	0	0	0	3	0	1	0	0
4/24/2024	2:30 AM	0	5	0	0	0	0	0	0	2	0	0	0	0
4/24/2024	2:45 AM	0	1	0	0	0	0	0	0	1	0	1	0	0
4/24/2024	3:00 AM	0	4	1	0	0	0	0	0	0	0	0	0	0
4/24/2024	3:15 AM	0	7	1	0	0	0	0	0	0	0	0	0	0
4/24/2024	3:30 AM	0	5	0	0	0	0	0	0	2	0	0	0	0
4/24/2024	3:45 AM	0	14	3	0	0	0	0	0	0	0	0	0	0
4/24/2024	4:00 AM	0	12	3	0	0	0	0	0	3	0	0	0	0
4/24/2024	4:15 AM	0	10	2	0	0	0	0	0	1	0	0	0	0
4/24/2024	4:30 AM	0	11	2	0	0	0	0	0	1	0	0	0	0
4/24/2024	4:45 AM	0	10	4	0	0	0	0	0	2	0	0	0	0
4/24/2024	5:00 AM	0	20	5	0	0	0	0	0	1	0	0	0	0
4/24/2024	5:15 AM	0	19	4	0	0	0	0	0	4	0	0	0	0
4/24/2024	5:30 AM	0	28	8	0	0	0	0	0	1	0	0	0	0
4/24/2024	5:45 AM	0	45	10	0	2	0	0	0	2	0	1	0	0
4/24/2024	6:00 AM	0	43	11	0	2	0	0	0	4	0	0	0	0
4/24/2024	6:15 AM	0	80	24	0	3	0	0	0	2	0	0	0	0
4/24/2024	6:30 AM	0	92	34	0	2	0	0	0	2	0	0	0	0
4/24/2024	6:45 AM	0	112	30	0	2	0	0	0	3	0	0	0	0
4/24/2024	7:00 AM	0	119	45	0	1	1	0	1	3	0	0	0	0
4/24/2024	7:15 AM	0	163	42	0	2	0	0	0	3	0	0	0	0
4/24/2024	7:30 AM	0	134	37	0	2	0	0	0	3	0	0	0	0
4/24/2024	7:45 AM	0	118	29	0	2	0	0	1	1	0	0	0	0
4/24/2024	8:00 AM	0	111	22	0	2	1	0	0	3	0	0	0	0
4/24/2024	8:15 AM	0	88	33	0	4	1	0	0	4	0	0	0	0
4/24/2024	8:30 AM	0	92	28	0	1	0	0	0	2	1	0	0	0
4/24/2024	8:45 AM	1	90	24	0	3	1	0	0	0	0	0	0	0
4/24/2024	9:00 AM	0	81	20	0	5	2	0	0	5	0	0	0	0
4/24/2024	9:15 AM	0	88	25	0	4	2	0	0	8	0	0	0	0
4/24/2024	9:30 AM	0	85	28	2	3	0	0	0	4	0	0	0	0
4/24/2024	9:45 AM	1	94	22	1	2	1	0	1	4	0	0	0	0
4/24/2024	10:00 AM	0	90	24	0	5	0	0	2	4	0	0	0	0
4/24/2024	10:15 AM	1	81	36	0	4	2	0	0	4	0	0	0	0
4/24/2024	10:30 AM	0	97	32	0	1	1	0	0	2	0	0	0	0
4/24/2024	10:45 AM	0	96	25	0	2	1	0	1	0	0	0	0	0
4/24/2024	11:00 AM	0	80	28	0	4	1	0	1	1	0	0	0	0
4/24/2024	11:15 AM	0	73	35	0	2	1	0	2	4	0	0	0	0
4/24/2024	11:30 AM	0	88	25	0	1	0	0	1	2	0	0	0	0
4/24/2024	11:45 AM	0	73	37	0	3	3	0	0	3	0	0	0	0
4/24/2024	12:00 PM	0	94	22	0	3	1	0	0	3	0	0	0	0
4/24/2024	12:15 PM	1	92	41	0	4	2	0	1	5	0	0	0	0
4/24/2024	12:30 PM	0	105	31	2	6	0	0	0	6	1	0	0	0
4/24/2024	12:45 PM	0	117	45	0	1	1	0	1	3	0	0	0	0
4/24/2024	1:00 PM	0	113	30	0	5	3	0	0	5	1	0	0	0
4/24/2024	1:15 PM	0	108	45	0	2	1	0	2	2	0	0	0	0
4/24/2024	1:30 PM	1	123	41	0	2	2	0	1	6	0	0	0	0
4/24/2024	1:45 PM	0	128	37	5	1	1	0	0	4	0	0	0	0
4/24/2024	2:00 PM	0	114	23	0	4	0	0	0	8	0	0	0	0
4/24/2024	2:15 PM	0	128	36	0	0	0	0	0	2	0	0	0	0
4/24/2024	2:30 PM	0	103	39	0	1	0	0	1	7	0	0	0	0
4/24/2024	2:45 PM	3	118	34	0	2	1	0	1	6	0	0	0	0
4/24/2024	3:00 PM	0	148	44	0	3	1	0	1	2	0	0	0	0
4/24/2024	3:15 PM	1	123	55	0	3	2	0	0	2	0	0	0	0
4/24/2024	3:30 PM	2	119	46	0	3	1	0	2	2	0	0	0	0
4/24/2024	3:45 PM	0	125	48	1	4	0	0	1	5	0	0	0	0
4/24/2024	4:00 PM	1	155	40	0	2	0	0	0	5	0	0	0	0
4/24/2024	4:15 PM	0	161	45	0	8	1	0	1	4	0	0	0	0
4/24/2024	4:30 PM	0	162	41	0	6	2	0	0	8	0	0	0	0
4/24/2024	4:45 PM	0	167	55	0	6	0	0	0	6	0	0	0	0
4/24/2024	5:00 PM	1	186	46	0	4	1	0	1	4	0	0	0	0
4/24/2024	5:15 PM	0	151	35	0	4	0	0	1	1	0	0	0	0
4/24/2024	5:30 PM	0	147	26	0	4	0	0	2	1	0	0	0	0
4/24/2024	5:45 PM	0	128	34	0	4	0	2	1	2	1	0	0	0
4/24/2024	6:00 PM	1	124	23	0	2	0	0	1	3	0	0	0	0
4/24/2024	6:15 PM	0	136	32	0	2	1	0	0	3	0	0	0	0
4/24/2024	6:30 PM	0	94	30	0	2	1	0	1	3	0	0	0	0
4/24/2024	6:45 PM	0	106	20	0	2	0	0	2	3	0	0	0	0
4/24/2024	7:00 PM	0	98	19	0	1	0	0	0	2	0	0	0	0
4/24/2024	7:15 PM	0	99	17	0	1	0	0	0	2	0	0	0	0
4/24/2024	7:30 PM	0	93	11	0	1	2	0	2	1	0	0	0	0
4/24/2024	7:45 PM	0	57	18	0	1	0	0	0	2	0	0	0	0
4/24/2024	8:00 PM	0	80	21	0	0	0	0	1	2	0	0	0	0
4/24/2024	8:15 PM	0	82	15	0	2	0	0	0	1	0	0	0	0
4/24/2024	8:30 PM	1	86	17	0	0	0	0	0	1	0	0	0	0
4/24/2024	8:45 PM	0	84	20	0	0	0	0	0	5	0	0	0	0
4/24/2024	9:00 PM	0	58	13	0	0	0	0	0	2	0	0	0	0
4/24/2024	9:15 PM	0	55	12	0	1	0	0	0	4	0	0	0	0
4/24/2024	9:30 PM	0	46	10	0	0	0	0	0	3	0	0	0	0
4/24/2024	9:45 PM	0	42	9	0	0	0	0	0	1	0	0	0	0
4/24/2024	10:00 PM	0	37	8	0	1	0	0	0	2	0	0	0	0
4/24/2024	10:15 PM	0	34	7	0	1	0	0	0	2	0	1	0	0
4/24/2024	10:30 PM	0	25	5	0	0	0	0	0	3	0	0	0	0
4/24/2024	10:45 PM	0	28	5	0	1	0	0	0	2	0	0	0	0
4/24/2024	11:00 PM	0	27	6	0	1	0	0	0	0	0	0	0	0
4/24/2024	11:15 PM	0	15	4	0	0	0	0	0	2	0	0	0	0
4/24/2024	11:30 PM	0	17	4	0	0	0	0	0	1	0	0	0	0
4/24/2024	11:45 PM	0	11	2	0	0	0	0	0	2	0	0	0	0

4/25/2024	12:00 AM	0	14	4	0	0	0	0	0	2	0	1	0	0
4/25/2024	12:15 AM	0	7	2	1	0	0	0	0	1	0	0	0	0
4/25/2024	12:30 AM	0	7	2	0	0	0	0	0	5	0	0	0	0
4/25/2024	12:45 AM	0	11	1	0	0	0	0	0	0	0	1	0	0
4/25/2024	1:00 AM	0	6	2	0	0	0	0	0	2	0	0	0	0
4/25/2024	1:15 AM	0	9	3	0	0	0	0	0	2	0	0	0	0
4/25/2024	1:30 AM	0	8	3	0	0	0	0	0	2	0	1	0	0
4/25/2024	1:45 AM	0	8	2	0	0	0	0	0	1	0	0	0	0
4/25/2024	2:00 AM	0	6	1	0	1	0	0	0	1	0	1	0	0
4/25/2024	2:15 AM	0	8	2	0	0	0	0	0	1	0	0	0	0
4/25/2024	2:30 AM	0	6	1	0	0	0	0	0	0	0	0	0	0
4/25/2024	2:45 AM	0	3	1	0	0	0	0	0	1	0	1	0	0
4/25/2024	3:00 AM	0	3	0	0	0	0	0	0	0	0	1	0	0
4/25/2024	3:15 AM	0	1	1	0	0	0	0	0	0	0	0	0	0
4/25/2024	3:30 AM	0	7	4	0	0	0	0	0	1	0	0	0	0
4/25/2024	3:45 AM	0	10	4	0	0	0	0	0	2	0	0	0	0
4/25/2024	4:00 AM	0	9	3	0	0	0	0	0	0	0	0	0	0
4/25/2024	4:15 AM	0	7	2	0	0	1	0	0	4	0	0	0	0
4/25/2024	4:30 AM	0	10	4	0	0	0	0	0	2	0	0	0	0
4/25/2024	4:45 AM	0	10	5	0	0	0	0	0	0	0	0	0	0
4/25/2024	5:00 AM	0	13	5	0	0	0	0	0	3	0	0	0	0
4/25/2024	5:15 AM	1	14	5	0	0	0	0	0	3	0	0	0	0
4/25/2024	5:30 AM	0	46	7	0	0	0	0	0	8	0	0	0	0
4/25/2024	5:45 AM	0	47	6	0	0	0	0	0	4	0	0	0	0
4/25/2024	6:00 AM	0	59	7	0	2	2	0	0	2	0	0	0	0
4/25/2024	6:15 AM	0	77	20	0	0	0	0	0	3	0	0	0	0
4/25/2024	6:30 AM	0	97	33	0	1	0	0	0	2	0	0	0	0
4/25/2024	6:45 AM	0	120	27	0	3	1	0	0	5	0	0	0	0
4/25/2024	7:00 AM	1	122	31	0	3	3	0	1	4	0	1	0	0
4/25/2024	7:15 AM	0	144	32	0	4	0	0	0	6	0	0	0	0
4/25/2024	7:30 AM	0	139	24	0	0	0	0	0	4	0	0	0	0
4/25/2024	7:45 AM	0	115	32	0	1	0	0	0	3	0	0	0	0
4/25/2024	8:00 AM	0	96	27	0	1	1	0	0	3	0	0	0	0
4/25/2024	8:15 AM	0	102	35	0	2	0	0	0	6	0	0	0	0
4/25/2024	8:30 AM	0	98	21	0	1	0	0	1	0	1	0	0	0
4/25/2024	8:45 AM	1	90	34	0	3	2	0	0	6	0	0	0	0
4/25/2024	9:00 AM	1	96	20	0	4	0	0	0	8	0	0	0	0
4/25/2024	9:15 AM	0	71	34	0	2	3	0	1	3	0	0	0	0
4/25/2024	9:30 AM	0	85	31	0	1	0	0	0	5	0	0	0	0
4/25/2024	9:45 AM	0	91	26	0	2	2	0	1	1	0	0	0	0
4/25/2024	10:00 AM	0	86	28	0	4	0	0	2	6	0	0	0	0
4/25/2024	10:15 AM	0	94	32	0	2	2	0	2	0	0	0	0	0
4/25/2024	10:30 AM	0	97	23	0	1	0	0	0	5	0	0	0	0
4/25/2024	10:45 AM	1	91	28	0	3	0	0	0	6	0	0	0	0
4/25/2024	11:00 AM	0	84	21	0	1	2	0	1	1	0	0	0	0
4/25/2024	11:15 AM	0	99	33	0	4	0	1	0	7	0	0	0	0
4/25/2024	11:30 AM	0	109	35	0	2	1	0	0	7	0	0	0	0
4/25/2024	11:45 AM	1	87	37	0	2	2	0	0	5	0	0	0	0
4/25/2024	12:00 PM	2	112	43	0	6	0	0	3	2	0	0	0	0
4/25/2024	12:15 PM	0	121	44	0	2	0	0	3	3	0	0	0	0
4/25/2024	12:30 PM	1	94	38	0	1	0	0	0	4	0	0	0	0
4/25/2024	12:45 PM	0	108	41	0	2	0	0	0	6	0	0	0	0
4/25/2024	1:00 PM	1	107	39	0	2	1	0	1	5	0	0	0	0
4/25/2024	1:15 PM	0	119	32	0	1	1	0	1	2	0	0	0	0
4/25/2024	1:30 PM	1	140	33	0	0	0	0	2	3	0	0	0	0
4/25/2024	1:45 PM	0	123	37	0	1	0	0	0	2	2	0	0	0
4/25/2024	2:00 PM	0	135	31	0	4	0	0	0	3	0	0	0	0
4/25/2024	2:15 PM	0	139	40	0	2	0	0	0	7	1	0	0	0
4/25/2024	2:30 PM	0	130	39	0	6	0	0	1	5	0	0	0	0
4/25/2024	2:45 PM	0	108	30	0	4	1	0	3	4	1	0	0	0
4/25/2024	3:00 PM	0	134	39	0	3	0	0	0	3	0	0	0	0
4/25/2024	3:15 PM	0	117	46	0	4	0	0	1	1	0	0	0	0
4/25/2024	3:30 PM	1	132	48	0	6	0	0	0	7	0	0	0	0
4/25/2024	3:45 PM	0	139	47	1	5	0	0	0	3	0	0	0	0
4/25/2024	4:00 PM	0	172	50	0	2	1	0	0	4	1	0	0	0
4/25/2024	4:15 PM	0	175	47	1	3	0	0	0	4	0	0	0	0
4/25/2024	4:30 PM	1	157	35	0	0	0	0	0	4	0	0	0	0
4/25/2024	4:45 PM	0	156	40	0	3	1	0	0	6	0	0	0	0
4/25/2024	5:00 PM	0	180	40	0	4	0	0	1	1	0	0	0	0
4/25/2024	5:15 PM	0	162	27	0	0	0	0	0	2	0	0	0	0
4/25/2024	5:30 PM	2	128	39	0	0	1	0	0	4	0	0	0	0
4/25/2024	5:45 PM	1	144	31	0	1	0	0	0	2	0	0	0	0
4/25/2024	6:00 PM	1	151	39	0	1	0	0	0	0	0	0	0	0
4/25/2024	6:15 PM	1	116	23	0	2	0	0	0	1	0	0	0	0
4/25/2024	6:30 PM	0	115	26	0	3	0	0	0	1	0	0	0	0
4/25/2024	6:45 PM	0	103	30	0	4	0	0	0	1	0	0	0	0
4/25/2024	7:00 PM	2	104	21	0	2	0	0	0	1	0	0	0	0
4/25/2024	7:15 PM	0	103	16	1	0	0	0	0	2	0	0	0	0
4/25/2024	7:30 PM	0	101	19	0	2	0	0	0	4	0	0	0	0
4/25/2024	7:45 PM	0	87	22	0	0	0	0	0	0	0	0	0	0
4/25/2024	8:00 PM	1	79	19	0	0	0	0	0	2	0	0	0	0
4/25/2024	8:15 PM	0	54	17	0	2	1	0	0	0	0	0	0	0
4/25/2024	8:30 PM	0	83	16	0	0	0	0	0	3	0	0	0	0
4/25/2024	8:45 PM	0	75	18	0	1	0	0	0	1	0	0	0	0
4/25/2024	9:00 PM	0	71	17	0	0	0	0	0	1	0	0	0	0
4/25/2024	9:15 PM	1	55	15	1	0	0	0	0	0	0	0	0	0
4/25/2024	9:30 PM	0	43	13	0	0	0	0	0	1	0	0	0	0
4/25/2024	9:45 PM	0	39	10	0	1	0	0	0	2	0	0	0	0
4/25/2024	10:00 PM	0	34	11	0	1	0	0	0	2	0	0	0	0
4/25/2024	10:15 PM	0	42	12	0	0	0	0	0	0	0	0	0	0
4/25/2024	10:30 PM	0	33	10	0	0	0	0	0	1	0	1	0	0
4/25/2024	10:45 PM	0	29	9	1	0	0	0	0	0	0	0	0	0
4/25/2024	11:00 PM	0	22	8	0	0	0	0	0	1	0	1	0	0
4/25/2024	11:15 PM	0	15	5	0	0	0	0	1	0	0	0	0	0
4/25/2024	11:30 PM	0	21	10	0	0	0	0	0	2	0	1	0	0
4/25/2024	11:45 PM	0	17	8	0	0	0	0	0	2	0	2	0	0

4/26/2024	12:00 AM	0	12	0	0	1	0	0	0	1	0	1	0	0
4/26/2024	12:15 AM	0	8	0	0	0	0	0	0	0	0	0	0	0
4/26/2024	12:30 AM	0	17	0	0	0	0	0	0	2	0	0	0	0
4/26/2024	12:45 AM	0	7	0	0	0	0	0	0	1	0	0	0	0
4/26/2024	1:00 AM	0	9	0	0	1	0	0	0	1	0	1	0	0
4/26/2024	1:15 AM	0	6	0	0	0	0	0	0	0	0	0	0	0
4/26/2024	1:30 AM	0	17	0	0	0	0	0	0	1	0	1	0	0
4/26/2024	1:45 AM	0	8	0	0	0	0	0	0	4	0	0	0	0
4/26/2024	2:00 AM	0	8	0	0	0	0	0	0	2	0	0	0	0
4/26/2024	2:15 AM	0	7	1	0	0	0	0	0	2	0	0	0	0
4/26/2024	2:30 AM	0	3	0	0	0	0	0	0	1	0	1	0	0
4/26/2024	2:45 AM	0	5	0	0	0	0	0	0	3	0	0	0	0
4/26/2024	3:00 AM	0	6	0	0	0	0	0	0	1	0	0	0	0
4/26/2024	3:15 AM	0	7	0	0	0	0	0	0	2	0	0	0	0
4/26/2024	3:30 AM	0	4	1	0	0	0	0	0	1	0	0	0	0
4/26/2024	3:45 AM	0	8	0	0	3	0	0	0	2	0	0	0	0
4/26/2024	4:00 AM	0	8	0	0	1	0	0	0	3	0	0	0	0
4/26/2024	4:15 AM	0	12	2	0	0	0	0	0	1	0	0	0	0
4/26/2024	4:30 AM	0	11	3	0	0	0	0	0	3	0	0	0	0
4/26/2024	4:45 AM	0	13	1	0	0	0	0	0	2	0	0	0	0
4/26/2024	5:00 AM	0	14	3	0	0	0	0	0	3	0	0	0	0
4/26/2024	5:15 AM	0	19	8	0	0	0	0	0	1	0	0	0	0
4/26/2024	5:30 AM	0	31	9	0	2	0	0	0	4	0	0	0	0
4/26/2024	5:45 AM	0	39	10	0	2	1	0	0	1	0	0	0	0
4/26/2024	6:00 AM	0	40	13	0	1	0	0	0	5	0	0	0	0
4/26/2024	6:15 AM	0	51	16	0	1	0	0	0	5	0	0	0	0
4/26/2024	6:30 AM	0	106	23	0	0	0	0	0	3	0	0	0	0
4/26/2024	6:45 AM	0	103	15	0	2	0	0	0	4	0	0	0	0
4/26/2024	7:00 AM	1	115	35	0	5	0	0	0	5	0	0	0	0
4/26/2024	7:15 AM	0	131	41	0	3	0	0	0	3	0	0	0	0
4/26/2024	7:30 AM	0	137	28	0	5	0	0	0	2	0	0	0	0
4/26/2024	7:45 AM	1	123	27	0	1	1	0	0	1	0	0	0	0
4/26/2024	8:00 AM	0	91	29	0	0	0	0	0	2	0	0	0	0
4/26/2024	8:15 AM	0	88	24	0	3	0	0	0	1	0	0	0	0
4/26/2024	8:30 AM	0	99	23	0	3	0	0	0	4	0	0	0	0
4/26/2024	8:45 AM	0	103	25	0	3	3	0	0	5	0	0	0	0
4/26/2024	9:00 AM	0	82	26	0	3	1	0	0	6	0	0	0	0
4/26/2024	9:15 AM	0	73	36	0	1	2	0	0	2	0	0	0	0
4/26/2024	9:30 AM	0	91	19	0	6	0	0	0	4	0	0	0	0
4/26/2024	9:45 AM	1	95	24	0	2	0	0	1	3	0	0	0	0
4/26/2024	10:00 AM	0	78	30	0	4	3	0	2	2	0	0	0	0
4/26/2024	10:15 AM	0	84	20	0	3	2	0	0	4	0	0	0	0
4/26/2024	10:30 AM	1	106	24	0	3	0	0	1	4	0	0	0	0
4/26/2024	10:45 AM	0	94	34	3	4	2	0	1	6	0	0	0	0
4/26/2024	11:00 AM	0	102	35	0	1	0	0	1	4	0	0	0	0
4/26/2024	11:15 AM	0	106	39	0	1	0	1	0	9	0	0	0	0
4/26/2024	11:30 AM	0	110	39	0	5	0	0	0	5	0	0	0	0
4/26/2024	11:45 AM	0	119	35	0	2	0	0	0	7	0	0	0	0
4/26/2024	12:00 PM	1	121	37	0	1	0	1	1	8	0	0	0	0
4/26/2024	12:15 PM	0	119	37	0	4	1	1	0	2	0	0	0	0
4/26/2024	12:30 PM	0	123	33	0	6	0	0	0	2	0	0	0	0
4/26/2024	12:45 PM	1	133	33	0	4	1	0	0	4	0	0	0	0
4/26/2024	1:00 PM	0	157	30	1	3	0	0	1	4	0	0	0	0
4/26/2024	1:15 PM	0	129	25	0	2	0	1	0	6	0	0	0	0
4/26/2024	1:30 PM	0	131	40	1	4	0	0	0	4	0	0	0	0
4/26/2024	1:45 PM	3	102	28	1	4	0	0	0	2	0	0	0	0
4/26/2024	2:00 PM	0	93	17	0	1	2	0	0	3	0	0	0	0
4/26/2024	2:15 PM	0	114	28	0	2	1	0	2	6	0	0	0	0
4/26/2024	2:30 PM	0	115	36	0	0	0	0	0	5	0	0	0	0
4/26/2024	2:45 PM	0	123	29	0	2	1	0	1	3	0	0	0	0
4/26/2024	3:00 PM	0	136	21	0	0	1	0	0	5	0	0	0	0
4/26/2024	3:15 PM	0	115	33	0	3	0	2	1	3	0	0	0	0
4/26/2024	3:30 PM	0	117	28	0	3	0	0	2	6	0	0	0	0
4/26/2024	3:45 PM	0	145	31	0	2	0	0	0	5	0	0	0	0
4/26/2024	4:00 PM	0	103	27	1	5	0	0	1	2	0	0	0	0
4/26/2024	4:15 PM	2	132	33	0	1	0	1	0	0	0	0	0	0
4/26/2024	4:30 PM	0	134	23	0	3	0	0	1	1	0	0	0	0
4/26/2024	4:45 PM	1	139	26	0	1	2	0	1	2	0	0	0	0
4/26/2024	5:00 PM	0	159	27	0	3	0	0	0	1	0	0	0	0
4/26/2024	5:15 PM	0	187	40	0	3	0	0	0	2	0	0	0	0
4/26/2024	5:30 PM	0	149	44	0	3	0	0	0	0	0	0	0	0
4/26/2024	5:45 PM	0	127	28	0	3	0	0	1	2	0	0	0	0
4/26/2024	6:00 PM	2	162	24	0	3	0	0	1	2	0	0	0	0
4/26/2024	6:15 PM	0	138	27	0	2	0	0	1	0	0	0	0	0
4/26/2024	6:30 PM	0	127	25	0	2	0	0	0	2	0	0	0	0
4/26/2024	6:45 PM	0	90	17	0	1	0	0	0	4	0	0	0	0
4/26/2024	7:00 PM	0	97	23	0	4	0	0	1	1	0	0	0	0
4/26/2024	7:15 PM	0	98	18	0	0	0	0	0	2	0	0	0	0
4/26/2024	7:30 PM	1	101	15	0	1	0	0	0	0	0	0	0	0
4/26/2024	7:45 PM	0	119	16	0	0	0	0	1	0	0	0	0	0
4/26/2024	8:00 PM	1	106	10	0	0	0	0	0	3	0	0	0	0
4/26/2024	8:15 PM	0	101	8	0	0	1	0	0	1	0	0	0	0
4/26/2024	8:30 PM	0	79	5	0	0	0	0	0	1	0	0	0	0
4/26/2024	8:45 PM	0	66	4	0	0	0	0	0	1	0	0	0	0
4/26/2024	9:00 PM	0	80	5	0	0	0	0	0	0	0	0	0	0
4/26/2024	9:15 PM	0	79	6	0	2	0	0	0	2	0	0	0	0
4/26/2024	9:30 PM	0	68	3	0	1	1	0	0	1	0	0	0	0
4/26/2024	9:45 PM	0	66	4	0	3	0	0	0	1	0	0	0	0
4/26/2024	10:00 PM	0	53	4	0	0	0	0	0	3	0	0	0	0
4/26/2024	10:15 PM	2	62	5	0	0	0	0	0	2	0	0	0	0
4/26/2024	10:30 PM	0	56	4	0	1	0	0	0	2	0	0	0	0
4/26/2024	10:45 PM	0	52	2	0	0	0	0	0	0	0	0	0	0
4/26/2024	11:00 PM	0	47	3	0	4	0	0	0	3	0	0	0	0
4/26/2024	11:15 PM	0	35	3	0	0	0	0	0	1	0	0	0	0
4/26/2024	11:30 PM	0	27	2	0	0	0	0	0	2	0	0	0	0
4/26/2024	11:45 PM	0	28	1	0	0	0	0	0	2	0	0	0	0

4/27/2024	12:00 AM	1	24	2	0	0	0	0	0	2	0	1	0	0
4/27/2024	12:15 AM	0	25	2	1	0	0	0	0	1	0	0	0	0
4/27/2024	12:30 AM	0	10	0	0	0	1	0	0	0	0	1	0	0
4/27/2024	12:45 AM	0	8	0	0	0	0	0	0	1	0	1	0	0
4/27/2024	1:00 AM	0	15	1	0	0	0	0	0	1	0	0	0	0
4/27/2024	1:15 AM	0	19	2	0	0	0	0	0	0	0	0	0	0
4/27/2024	1:30 AM	0	8	0	0	0	0	0	0	0	0	0	0	0
4/27/2024	1:45 AM	0	10	1	0	1	0	0	0	0	0	0	0	0
4/27/2024	2:00 AM	0	11	1	0	0	1	0	0	0	0	1	0	0
4/27/2024	2:15 AM	0	10	0	0	0	0	0	0	0	0	0	0	0
4/27/2024	2:30 AM	0	7	0	0	0	0	0	0	1	0	0	0	0
4/27/2024	2:45 AM	0	5	2	0	0	0	0	0	1	0	0	0	0
4/27/2024	3:00 AM	0	3	0	0	0	0	0	0	0	0	0	0	0
4/27/2024	3:15 AM	0	8	1	0	0	0	0	0	2	0	0	0	0
4/27/2024	3:30 AM	0	4	0	0	0	0	0	0	0	0	0	0	0
4/27/2024	3:45 AM	0	3	0	1	0	0	0	0	0	0	1	0	0
4/27/2024	4:00 AM	0	5	1	0	0	0	0	0	2	0	1	0	0
4/27/2024	4:15 AM	0	7	0	0	0	0	0	0	2	0	0	0	0
4/27/2024	4:30 AM	0	8	0	0	0	0	0	0	3	0	1	0	0
4/27/2024	4:45 AM	0	4	0	0	0	0	0	0	2	0	0	0	0
4/27/2024	5:00 AM	0	10	2	0	0	0	0	0	1	0	0	0	0
4/27/2024	5:15 AM	0	11	1	0	0	0	0	0	1	0	0	0	0
4/27/2024	5:30 AM	0	15	3	0	0	0	0	0	1	0	0	0	0
4/27/2024	5:45 AM	0	18	2	0	0	0	0	0	1	0	1	0	0
4/27/2024	6:00 AM	0	16	2	0	0	0	0	0	4	0	0	0	0
4/27/2024	6:15 AM	0	23	6	0	1	0	0	0	2	0	0	0	0
4/27/2024	6:30 AM	0	29	8	0	0	0	0	0	3	0	0	0	0
4/27/2024	6:45 AM	0	38	4	0	1	0	0	0	3	0	0	0	0
4/27/2024	7:00 AM	0	31	9	0	0	0	0	0	1	0	0	0	0
4/27/2024	7:15 AM	0	50	10	0	1	1	0	0	2	0	0	0	0
4/27/2024	7:30 AM	0	41	13	0	4	0	0	0	0	0	0	0	0
4/27/2024	7:45 AM	0	47	13	0	2	0	0	0	3	0	0	0	0
4/27/2024	8:00 AM	0	60	11	0	1	1	0	0	3	0	0	0	0
4/27/2024	8:15 AM	0	49	11	0	3	0	0	0	1	0	0	0	0
4/27/2024	8:30 AM	0	63	12	0	0	0	0	0	4	0	0	0	0
4/27/2024	8:45 AM	0	68	16	0	0	1	0	1	0	0	0	0	0
4/27/2024	9:00 AM	0	54	17	0	2	0	0	0	0	0	0	0	0
4/27/2024	9:15 AM	1	63	24	0	2	1	0	0	3	0	0	0	0
4/27/2024	9:30 AM	0	87	27	0	1	0	0	0	0	0	0	0	0
4/27/2024	9:45 AM	1	82	19	0	2	1	0	0	3	0	0	0	0
4/27/2024	10:00 AM	1	87	24	0	3	0	0	3	3	0	0	0	0
4/27/2024	10:15 AM	0	77	16	0	1	0	0	0	2	0	0	0	0
4/27/2024	10:30 AM	1	109	26	0	1	0	0	0	3	0	0	0	0
4/27/2024	10:45 AM	1	95	22	0	0	0	0	0	0	0	0	0	0
4/27/2024	11:00 AM	0	98	29	0	1	0	0	0	1	0	0	0	0
4/27/2024	11:15 AM	0	97	23	0	0	0	0	0	2	0	0	0	0
4/27/2024	11:30 AM	1	106	28	0	2	0	0	0	0	0	0	0	0
4/27/2024	11:45 AM	0	111	32	0	1	0	0	0	2	0	0	0	0
4/27/2024	12:00 PM	0	139	23	0	3	0	0	0	3	0	0	0	0
4/27/2024	12:15 PM	0	132	23	0	1	0	0	1	2	0	0	0	0
4/27/2024	12:30 PM	1	108	30	0	3	0	0	0	6	0	0	0	0
4/27/2024	12:45 PM	1	132	33	0	0	0	0	0	1	0	0	0	0
4/27/2024	1:00 PM	1	121	31	0	0	0	0	2	2	0	0	0	0
4/27/2024	1:15 PM	0	134	36	0	3	1	0	0	3	0	0	0	0
4/27/2024	1:30 PM	0	145	27	0	0	0	0	0	1	0	0	0	0
4/27/2024	1:45 PM	0	145	28	0	2	0	0	1	2	0	0	0	0
4/27/2024	2:00 PM	0	140	45	0	1	0	0	0	2	0	0	0	0
4/27/2024	2:15 PM	2	137	30	0	1	0	0	1	1	0	0	0	0
4/27/2024	2:30 PM	0	168	27	0	2	0	0	0	2	0	0	0	0
4/27/2024	2:45 PM	2	147	23	0	2	0	0	0	1	0	0	0	0
4/27/2024	3:00 PM	0	149	31	0	1	0	0	1	0	0	0	0	0
4/27/2024	3:15 PM	2	158	17	0	0	0	0	0	1	0	0	0	0
4/27/2024	3:30 PM	0	164	36	0	2	0	0	0	3	0	0	0	0
4/27/2024	3:45 PM	0	138	41	0	2	0	0	0	1	0	0	0	0
4/27/2024	4:00 PM	0	179	28	0	6	1	0	0	2	0	0	0	0
4/27/2024	4:15 PM	0	134	29	0	1	0	0	0	2	0	0	0	0
4/27/2024	4:30 PM	1	135	22	0	0	0	0	0	2	0	0	0	0
4/27/2024	4:45 PM	0	142	32	0	2	0	0	1	1	0	0	0	0
4/27/2024	5:00 PM	0	140	25	0	2	1	0	0	1	0	0	0	0
4/27/2024	5:15 PM	0	147	13	0	0	0	0	0	3	0	0	0	0
4/27/2024	5:30 PM	0	128	33	0	2	0	0	0	2	0	0	0	0
4/27/2024	5:45 PM	1	125	22	0	0	0	0	0	1	0	0	0	0
4/27/2024	6:00 PM	4	152	27	0	1	0	0	0	0	0	0	0	0
4/27/2024	6:15 PM	2	115	21	0	0	0	0	0	0	0	0	0	0
4/27/2024	6:30 PM	0	123	19	0	0	0	0	0	0	0	0	0	0
4/27/2024	6:45 PM	2	108	25	0	1	0	0	0	0	0	0	0	0
4/27/2024	7:00 PM	0	112	24	0	2	0	0	0	0	0	0	0	0
4/27/2024	7:15 PM	0	118	23	0	2	0	0	0	1	0	0	0	0
4/27/2024	7:30 PM	1	88	21	0	0	0	0	0	0	0	0	0	0
4/27/2024	7:45 PM	1	94	21	0	0	0	0	0	1	0	0	0	0
4/27/2024	8:00 PM	1	93	22	0	0	0	0	0	1	0	0	0	0
4/27/2024	8:15 PM	0	84	19	0	1	0	0	0	3	0	0	0	0
4/27/2024	8:30 PM	0	88	20	0	0	0	0	0	2	0	0	0	0
4/27/2024	8:45 PM	0	92	18	0	0	0	0	0	0	0	0	0	0
4/27/2024	9:00 PM	0	90	15	0	0	0	0	0	2	0	0	0	0
4/27/2024	9:15 PM	0	89	12	0	0	0	0	0	2	0	0	0	0
4/27/2024	9:30 PM	1	85	11	0	0	0	0	0	0	0	0	0	0
4/27/2024	9:45 PM	0	88	15	0	0	0	0	0	0	0	0	0	0
4/27/2024	10:00 PM	0	62	10	0	0	0	0	0	0	0	0	0	0
4/27/2024	10:15 PM	0	64	13	0	0	0	0	0	1	0	0	0	0
4/27/2024	10:30 PM	0	50	7	0	0	0	0	0	0	0	0	0	0
4/27/2024	10:45 PM	0	45	8	0	0	0	0	0	0	0	0	0	0
4/27/2024	11:00 PM	0	32	7	0	0	0	0	0	2	0	0	0	0
4/27/2024	11:15 PM	0	40	11	0	0	0	0	0	1	0	0	0	0
4/27/2024	11:30 PM	0	20	6	0	0	0	0	0	0	0	0	0	0
4/27/2024	11:45 PM	0	23	5	0	1	0	0	0	0	0	0	0	0

NB
File Name:
Start Date: 4/21/2024
Start Time: 0
Site Code: 75 Lane 4 SB
Station ID: 1
Location 1: I-20, north of Bush River Rd
Location 2:

Date	Time	1	2	3	4	5	6	7	8	9	10	11	12	13
4/21/2024	12:00 AM	0	0	0	0	0	0	0	0	0	0	0	0	0
4/21/2024	12:15 AM	0	0	0	0	0	0	0	0	0	0	0	0	0
4/21/2024	12:30 AM	0	0	0	0	0	0	0	0	0	0	0	0	0
4/21/2024	12:45 AM	0	0	0	0	0	0	0	0	0	0	0	0	0
4/21/2024	1:00 AM	0	0	0	0	0	0	0	0	0	0	0	0	0
4/21/2024	1:15 AM	0	0	0	0	0	0	0	0	0	0	0	0	0
4/21/2024	1:30 AM	0	0	0	0	0	0	0	0	0	0	0	0	0
4/21/2024	1:45 AM	0	0	0	0	0	0	0	0	0	0	0	0	0
4/21/2024	2:00 AM	0	0	0	0	0	0	0	0	0	0	0	0	0
4/21/2024	2:15 AM	0	0	0	0	0	0	0	0	0	0	0	0	0
4/21/2024	2:30 AM	0	0	0	0	0	0	0	0	0	0	0	0	0
4/21/2024	2:45 AM	0	0	0	0	0	0	0	0	0	0	0	0	0
4/21/2024	3:00 AM	0	0	0	0	0	0	0	0	0	0	0	0	0
4/21/2024	3:15 AM	0	0	0	0	0	0	0	0	0	0	0	0	0
4/21/2024	3:30 AM	0	0	0	0	0	0	0	0	0	0	0	0	0
4/21/2024	3:45 AM	0	0	0	0	0	0	0	0	0	0	0	0	0
4/21/2024	4:00 AM	0	0	0	0	0	0	0	0	0	0	0	0	0
4/21/2024	4:15 AM	0	0	0	0	0	0	0	0	0	0	0	0	0
4/21/2024	4:30 AM	0	0	0	0	0	0	0	0	0	0	0	0	0
4/21/2024	4:45 AM	0	0	0	0	0	0	0	0	0	0	0	0	0
4/21/2024	5:00 AM	0	0	0	0	0	0	0	0	0	0	0	0	0
4/21/2024	5:15 AM	0	0	0	0	0	0	0	0	0	0	0	0	0
4/21/2024	5:30 AM	0	0	0	0	0	0	0	0	0	0	0	0	0
4/21/2024	5:45 AM	0	0	0	0	0	0	0	0	0	0	0	0	0
4/21/2024	6:00 AM	0	0	0	0	0	0	0	0	0	0	0	0	0
4/21/2024	6:15 AM	0	0	0	0	0	0	0	0	0	0	0	0	0
4/21/2024	6:30 AM	0	0	0	0	0	0	0	0	0	0	0	0	0
4/21/2024	6:45 AM	0	0	0	0	0	0	0	0	0	0	0	0	0
4/21/2024	7:00 AM	0	0	0	0	0	0	0	0	0	0	0	0	0
4/21/2024	7:15 AM	0	0	0	0	0	0	0	0	0	0	0	0	0
4/21/2024	7:30 AM	0	0	0	0	0	0	0	0	0	0	0	0	0
4/21/2024	7:45 AM	0	0	0	0	0	0	0	0	0	0	0	0	0
4/21/2024	8:00 AM	0	0	0	0	0	0	0	0	0	0	0	0	0
4/21/2024	8:15 AM	0	0	0	0	0	0	0	0	0	0	0	0	0
4/21/2024	8:30 AM	0	0	0	0	0	0	0	0	0	0	0	0	0
4/21/2024	8:45 AM	0	0	0	0	0	0	0	0	0	0	0	0	0
4/21/2024	9:00 AM	0	0	0	0	0	0	0	0	0	0	0	0	0
4/21/2024	9:15 AM	0	0	0	0	0	0	0	0	0	0	0	0	0
4/21/2024	9:30 AM	0	0	0	0	0	0	0	0	0	0	0	0	0
4/21/2024	9:45 AM	0	0	0	0	0	0	0	0	0	0	0	0	0
4/21/2024	10:00 AM	0	0	0	0	0	0	0	0	0	0	0	0	0
4/21/2024	10:15 AM	0	0	0	0	0	0	0	0	0	0	0	0	0
4/21/2024	10:30 AM	0	0	0	0	0	0	0	0	0	0	0	0	0
4/21/2024	10:45 AM	0	0	0	0	0	0	0	0	0	0	0	0	0
4/21/2024	11:00 AM	0	0	0	0	0	0	0	0	0	0	0	0	0
4/21/2024	11:15 AM	0	0	0	0	0	0	0	0	0	0	0	0	0
4/21/2024	11:30 AM	0	0	0	0	0	0	0	0	0	0	0	0	0
4/21/2024	11:45 AM	0	0	0	0	0	0	0	0	0	0	0	0	0
4/21/2024	12:00 PM	0	0	0	0	0	0	0	0	0	0	0	0	0
4/21/2024	12:15 PM	0	0	0	0	0	0	0	0	0	0	0	0	0
4/21/2024	12:30 PM	0	0	0	0	0	0	0	0	0	0	0	0	0
4/21/2024	12:45 PM	0	0	0	0	0	0	0	0	0	0	0	0	0
4/21/2024	1:00 PM	0	0	0	0	0	0	0	0	0	0	0	0	0
4/21/2024	1:15 PM	0	0	0	0	0	0	0	0	0	0	0	0	0
4/21/2024	1:30 PM	0	0	0	0	0	0	0	0	0	0	0	0	0
4/21/2024	1:45 PM	0	0	0	0	0	0	0	0	0	0	0	0	0
4/21/2024	2:00 PM	0	0	0	0	0	0	0	0	0	0	0	0	0
4/21/2024	2:15 PM	0	0	0	0	0	0	0	0	0	0	0	0	0
4/21/2024	2:30 PM	0	0	0	0	0	0	0	0	0	0	0	0	0
4/21/2024	2:45 PM	0	0	0	0	0	0	0	0	0	0	0	0	0
4/21/2024	3:00 PM	0	0	0	0	0	0	0	0	0	0	0	0	0
4/21/2024	3:15 PM	0	0	0	0	0	0	0	0	0	0	0	0	0
4/21/2024	3:30 PM	0	0	0	0	0	0	0	0	0	0	0	0	0
4/21/2024	3:45 PM	0	0	0	0	0	0	0	0	0	0	0	0	0
4/21/2024	4:00 PM	0	0	0	0	0	0	0	0	0	0	0	0	0
4/21/2024	4:15 PM	0	0	0	0	0	0	0	0	0	0	0	0	0
4/21/2024	4:30 PM	0	0	0	0	0	0	0	0	0	0	0	0	0
4/21/2024	4:45 PM	0	0	0	0	0	0	0	0	0	0	0	0	0
4/21/2024	5:00 PM	0	0	0	0	0	0	0	0	0	0	0	0	0
4/21/2024	5:15 PM	0	0	0	0	0	0	0	0	0	0	0	0	0
4/21/2024	5:30 PM	0	0	0	0	0	0	0	0	0	0	0	0	0
4/21/2024	5:45 PM	0	0	0	0	0	0	0	0	0	0	0	0	0
4/21/2024	6:00 PM	0	0	0	0	0	0	0	0	0	0	0	0	0
4/21/2024	6:15 PM	0	0	0	0	0	0	0	0	0	0	0	0	0
4/21/2024	6:30 PM	0	0	0	0	0	0	0	0	0	0	0	0	0
4/21/2024	6:45 PM	0	0	0	0	0	0	0	0	0	0	0	0	0
4/21/2024	7:00 PM	0	0	0	0	0	0	0	0	0	0	0	0	0
4/21/2024	7:15 PM	0	0	0	0	0	0	0	0	0	0	0	0	0
4/21/2024	7:30 PM	0	0	0	0	0	0	0	0	0	0	0	0	0
4/21/2024	7:45 PM	0	0	0	0	0	0	0	0	0	0	0	0	0
4/21/2024	8:00 PM	0	0	0	0	0	0	0	0	0	0	0	0	0
4/21/2024	8:15 PM	0	0	0	0	0	0	0	0	0	0	0	0	0
4/21/2024	8:30 PM	0	0	0	0	0	0	0	0	0	0	0	0	0
4/21/2024	8:45 PM	0	0	0	0	0	0	0	0	0	0	0	0	0
4/21/2024	9:00 PM	0	0	0	0	0	0	0	0	0	0	0	0	0
4/21/2024	9:15 PM	0	0	0	0	0	0	0	0	0	0	0	0	0
4/21/2024	9:30 PM	0	0	0	0	0	0	0	0	0	0	0	0	0
4/21/2024	9:45 PM	0	0	0	0	0	0	0	0	0	0	0	0	0
4/21/2024	10:00 PM	0	0	0	0	0	0	0	0	0	0	0	0	0
4/21/2024	10:15 PM	0	0	0	0	0	0	0	0	0	0	0	0	0
4/21/2024	10:30 PM	0	0	0	0	0	0	0	0	0	0	0	0	0
4/21/2024	10:45 PM	0	0	0	0	0	0	0	0	0	0	0	0	0
4/21/2024	11:00 PM	0	0	0	0	0	0	0	0	0	0	0	0	0
4/21/2024	11:15 PM	0	0	0	0	0	0	0	0	0	0	0	0	0
4/21/2024	11:30 PM	0	0	0	0	0	0	0	0	0	0	0	0	0
4/21/2024	11:45 PM	0	0	0	0	0	0	0	0	0	0	0	0	0

4/22/2024	12:00 AM	0	0	0	0	0	0	0	0	0	0	0	0	0
4/22/2024	12:15 AM	0	0	0	0	0	0	0	0	0	0	0	0	0
4/22/2024	12:30 AM	0	0	0	0	0	0	0	0	0	0	0	0	0
4/22/2024	12:45 AM	0	0	0	0	0	0	0	0	0	0	0	0	0
4/22/2024	1:00 AM	0	0	0	0	0	0	0	0	0	0	0	0	0
4/22/2024	1:15 AM	0	0	0	0	0	0	0	0	0	0	0	0	0
4/22/2024	1:30 AM	0	0	0	0	0	0	0	0	0	0	0	0	0
4/22/2024	1:45 AM	0	0	0	0	0	0	0	0	0	0	0	0	0
4/22/2024	2:00 AM	0	0	0	0	0	0	0	0	0	0	0	0	0
4/22/2024	2:15 AM	0	0	0	0	0	0	0	0	0	0	0	0	0
4/22/2024	2:30 AM	0	0	0	0	0	0	0	0	0	0	0	0	0
4/22/2024	2:45 AM	0	0	0	0	0	0	0	0	0	0	0	0	0
4/22/2024	3:00 AM	0	0	0	0	0	0	0	0	0	0	0	0	0
4/22/2024	3:15 AM	0	0	0	0	0	0	0	0	0	0	0	0	0
4/22/2024	3:30 AM	0	0	0	0	0	0	0	0	0	0	0	0	0
4/22/2024	3:45 AM	0	0	0	0	0	0	0	0	0	0	0	0	0
4/22/2024	4:00 AM	0	0	0	0	0	0	0	0	0	0	0	0	0
4/22/2024	4:15 AM	0	0	0	0	0	0	0	0	0	0	0	0	0
4/22/2024	4:30 AM	0	0	0	0	0	0	0	0	0	0	0	0	0
4/22/2024	4:45 AM	0	0	0	0	0	0	0	0	0	0	0	0	0
4/22/2024	5:00 AM	0	0	0	0	0	0	0	0	0	0	0	0	0
4/22/2024	5:15 AM	0	0	0	0	0	0	0	0	0	0	0	0	0
4/22/2024	5:30 AM	0	0	0	0	0	0	0	0	0	0	0	0	0
4/22/2024	5:45 AM	0	0	0	0	0	0	0	0	0	0	0	0	0
4/22/2024	6:00 AM	0	0	0	0	0	0	0	0	0	0	0	0	0
4/22/2024	6:15 AM	0	0	0	0	0	0	0	0	0	0	0	0	0
4/22/2024	6:30 AM	0	0	0	0	0	0	0	0	0	0	0	0	0
4/22/2024	6:45 AM	0	0	0	0	0	0	0	0	0	0	0	0	0
4/22/2024	7:00 AM	0	0	0	0	0	0	0	0	0	0	0	0	0
4/22/2024	7:15 AM	0	0	0	0	0	0	0	0	0	0	0	0	0
4/22/2024	7:30 AM	0	0	0	0	0	0	0	0	0	0	0	0	0
4/22/2024	7:45 AM	0	0	0	0	0	0	0	0	0	0	0	0	0
4/22/2024	8:00 AM	0	0	0	0	0	0	0	0	0	0	0	0	0
4/22/2024	8:15 AM	0	0	0	0	0	0	0	0	0	0	0	0	0
4/22/2024	8:30 AM	0	0	0	0	0	0	0	0	0	0	0	0	0
4/22/2024	8:45 AM	0	0	0	0	0	0	0	0	0	0	0	0	0
4/22/2024	9:00 AM	0	0	0	0	0	0	0	0	0	0	0	0	0
4/22/2024	9:15 AM	0	0	0	0	0	0	0	0	0	0	0	0	0
4/22/2024	9:30 AM	0	0	0	0	0	0	0	0	0	0	0	0	0
4/22/2024	9:45 AM	0	0	0	0	0	0	0	0	0	0	0	0	0
4/22/2024	10:00 AM	0	0	0	0	0	0	0	0	0	0	0	0	0
4/22/2024	10:15 AM	0	0	0	0	0	0	0	0	0	0	0	0	0
4/22/2024	10:30 AM	0	0	0	0	0	0	0	0	0	0	0	0	0
4/22/2024	10:45 AM	0	0	0	0	0	0	0	0	0	0	0	0	0
4/22/2024	11:00 AM	0	0	0	0	0	0	0	0	0	0	0	0	0
4/22/2024	11:15 AM	0	0	0	0	0	0	0	0	0	0	0	0	0
4/22/2024	11:30 AM	0	0	0	0	0	0	0	0	0	0	0	0	0
4/22/2024	11:45 AM	0	0	0	0	0	0	0	0	0	0	0	0	0
4/22/2024	12:00 PM	0	0	0	0	0	0	0	0	0	0	0	0	0
4/22/2024	12:15 PM	0	0	0	0	0	0	0	0	0	0	0	0	0
4/22/2024	12:30 PM	0	0	0	0	0	0	0	0	0	0	0	0	0
4/22/2024	12:45 PM	0	0	0	0	0	0	0	0	0	0	0	0	0
4/22/2024	1:00 PM	0	0	0	0	0	0	0	0	0	0	0	0	0
4/22/2024	1:15 PM	0	0	0	0	0	0	0	0	0	0	0	0	0
4/22/2024	1:30 PM	0	0	0	0	0	0	0	0	0	0	0	0	0
4/22/2024	1:45 PM	0	0	0	0	0	0	0	0	0	0	0	0	0
4/22/2024	2:00 PM	0	0	0	0	0	0	0	0	0	0	0	0	0
4/22/2024	2:15 PM	0	0	0	0	0	0	0	0	0	0	0	0	0
4/22/2024	2:30 PM	0	0	0	0	0	0	0	0	0	0	0	0	0
4/22/2024	2:45 PM	0	0	0	0	0	0	0	0	0	0	0	0	0
4/22/2024	3:00 PM	0	0	0	0	0	0	0	0	0	0	0	0	0
4/22/2024	3:15 PM	0	0	0	0	0	0	0	0	0	0	0	0	0
4/22/2024	3:30 PM	0	0	0	0	0	0	0	0	0	0	0	0	0
4/22/2024	3:45 PM	0	0	0	0	0	0	0	0	0	0	0	0	0
4/22/2024	4:00 PM	0	0	0	0	0	0	0	0	0	0	0	0	0
4/22/2024	4:15 PM	0	0	0	0	0	0	0	0	0	0	0	0	0
4/22/2024	4:30 PM	0	0	0	0	0	0	0	0	0	0	0	0	0
4/22/2024	4:45 PM	0	0	0	0	0	0	0	0	0	0	0	0	0
4/22/2024	5:00 PM	0	0	0	0	0	0	0	0	0	0	0	0	0
4/22/2024	5:15 PM	0	0	0	0	0	0	0	0	0	0	0	0	0
4/22/2024	5:30 PM	0	0	0	0	0	0	0	0	0	0	0	0	0
4/22/2024	5:45 PM	0	0	0	0	0	0	0	0	0	0	0	0	0
4/22/2024	6:00 PM	0	0	0	0	0	0	0	0	0	0	0	0	0
4/22/2024	6:15 PM	0	0	0	0	0	0	0	0	0	0	0	0	0
4/22/2024	6:30 PM	0	0	0	0	0	0	0	0	0	0	0	0	0
4/22/2024	6:45 PM	0	0	0	0	0	0	0	0	0	0	0	0	0
4/22/2024	7:00 PM	0	0	0	0	0	0	0	0	0	0	0	0	0
4/22/2024	7:15 PM	0	0	0	0	0	0	0	0	0	0	0	0	0
4/22/2024	7:30 PM	0	0	0	0	0	0	0	0	0	0	0	0	0
4/22/2024	7:45 PM	0	0	0	0	0	0	0	0	0	0	0	0	0
4/22/2024	8:00 PM	0	0	0	0	0	0	0	0	0	0	0	0	0
4/22/2024	8:15 PM	0	0	0	0	0	0	0	0	0	0	0	0	0
4/22/2024	8:30 PM	0	0	0	0	0	0	0	0	0	0	0	0	0
4/22/2024	8:45 PM	0	0	0	0	0	0	0	0	0	0	0	0	0
4/22/2024	9:00 PM	0	0	0	0	0	0	0	0	0	0	0	0	0
4/22/2024	9:15 PM	0	0	0	0	0	0	0	0	0	0	0	0	0
4/22/2024	9:30 PM	0	0	0	0	0	0	0	0	0	0	0	0	0
4/22/2024	9:45 PM	0	0	0	0	0	0	0	0	0	0	0	0	0
4/22/2024	10:00 PM	0	0	0	0	0	0	0	0	0	0	0	0	0
4/22/2024	10:15 PM	0	0	0	0	0	0	0	0	0	0	0	0	0
4/22/2024	10:30 PM	0	0	0	0	0	0	0	0	0	0	0	0	0
4/22/2024	10:45 PM	0	0	0	0	0	0	0	0	0	0	0	0	0
4/22/2024	11:00 PM	0	0	0	0	0	0	0	0	0	0	0	0	0
4/22/2024	11:15 PM	0	0	0	0	0	0	0	0	0	0	0	0	0
4/22/2024	11:30 PM	0	0	0	0	0	0	0	0	0	0	0	0	0
4/22/2024	11:45 PM	0	0	0	0	0	0	0	0	0	0	0	0	0

4/23/2024	12:00 AM	0	0	0	0	0	0	0	0	0	0	0	0	0
4/23/2024	12:15 AM	0	0	0	0	0	0	0	0	0	0	0	0	0
4/23/2024	12:30 AM	0	0	0	0	0	0	0	0	0	0	0	0	0
4/23/2024	12:45 AM	0	0	0	0	0	0	0	0	0	0	0	0	0
4/23/2024	1:00 AM	0	0	0	0	0	0	0	0	0	0	0	0	0
4/23/2024	1:15 AM	0	0	0	0	0	0	0	0	0	0	0	0	0
4/23/2024	1:30 AM	0	0	0	0	0	0	0	0	0	0	0	0	0
4/23/2024	1:45 AM	0	0	0	0	0	0	0	0	0	0	0	0	0
4/23/2024	2:00 AM	0	0	0	0	0	0	0	0	0	0	0	0	0
4/23/2024	2:15 AM	0	0	0	0	0	0	0	0	0	0	0	0	0
4/23/2024	2:30 AM	0	0	0	0	0	0	0	0	0	0	0	0	0
4/23/2024	2:45 AM	0	0	0	0	0	0	0	0	0	0	0	0	0
4/23/2024	3:00 AM	0	0	0	0	0	0	0	0	0	0	0	0	0
4/23/2024	3:15 AM	0	0	0	0	0	0	0	0	0	0	0	0	0
4/23/2024	3:30 AM	0	0	0	0	0	0	0	0	0	0	0	0	0
4/23/2024	3:45 AM	0	0	0	0	0	0	0	0	0	0	0	0	0
4/23/2024	4:00 AM	0	0	0	0	0	0	0	0	0	0	0	0	0
4/23/2024	4:15 AM	0	0	0	0	0	0	0	0	0	0	0	0	0
4/23/2024	4:30 AM	0	0	0	0	0	0	0	0	0	0	0	0	0
4/23/2024	4:45 AM	0	0	0	0	0	0	0	0	0	0	0	0	0
4/23/2024	5:00 AM	0	0	0	0	0	0	0	0	0	0	0	0	0
4/23/2024	5:15 AM	0	0	0	0	0	0	0	0	0	0	0	0	0
4/23/2024	5:30 AM	0	0	0	0	0	0	0	0	0	0	0	0	0
4/23/2024	5:45 AM	0	0	0	0	0	0	0	0	0	0	0	0	0
4/23/2024	6:00 AM	0	0	0	0	0	0	0	0	0	0	0	0	0
4/23/2024	6:15 AM	0	0	0	0	0	0	0	0	0	0	0	0	0
4/23/2024	6:30 AM	0	0	0	0	0	0	0	0	0	0	0	0	0
4/23/2024	6:45 AM	0	0	0	0	0	0	0	0	0	0	0	0	0
4/23/2024	7:00 AM	0	0	0	0	0	0	0	0	0	0	0	0	0
4/23/2024	7:15 AM	0	0	0	0	0	0	0	0	0	0	0	0	0
4/23/2024	7:30 AM	0	0	0	0	0	0	0	0	0	0	0	0	0
4/23/2024	7:45 AM	0	0	0	0	0	0	0	0	0	0	0	0	0
4/23/2024	8:00 AM	0	0	0	0	0	0	0	0	0	0	0	0	0
4/23/2024	8:15 AM	0	0	0	0	0	0	0	0	0	0	0	0	0
4/23/2024	8:30 AM	0	0	0	0	0	0	0	0	0	0	0	0	0
4/23/2024	8:45 AM	0	0	0	0	0	0	0	0	0	0	0	0	0
4/23/2024	9:00 AM	0	0	0	0	0	0	0	0	0	0	0	0	0
4/23/2024	9:15 AM	0	0	0	0	0	0	0	0	0	0	0	0	0
4/23/2024	9:30 AM	0	0	0	0	0	0	0	0	0	0	0	0	0
4/23/2024	9:45 AM	0	0	0	0	0	0	0	0	0	0	0	0	0
4/23/2024	10:00 AM	0	0	0	0	0	0	0	0	0	0	0	0	0
4/23/2024	10:15 AM	0	0	0	0	0	0	0	0	0	0	0	0	0
4/23/2024	10:30 AM	0	0	0	0	0	0	0	0	0	0	0	0	0
4/23/2024	10:45 AM	0	0	0	0	0	0	0	0	0	0	0	0	0
4/23/2024	11:00 AM	0	0	0	0	0	0	0	0	0	0	0	0	0
4/23/2024	11:15 AM	0	0	0	0	0	0	0	0	0	0	0	0	0
4/23/2024	11:30 AM	0	0	0	0	0	0	0	0	0	0	0	0	0
4/23/2024	11:45 AM	0	0	0	0	0	0	0	0	0	0	0	0	0
4/23/2024	12:00 PM	0	0	0	0	0	0	0	0	0	0	0	0	0
4/23/2024	12:15 PM	0	0	0	0	0	0	0	0	0	0	0	0	0
4/23/2024	12:30 PM	0	0	0	0	0	0	0	0	0	0	0	0	0
4/23/2024	12:45 PM	0	0	0	0	0	0	0	0	0	0	0	0	0
4/23/2024	1:00 PM	0	0	0	0	0	0	0	0	0	0	0	0	0
4/23/2024	1:15 PM	0	0	0	0	0	0	0	0	0	0	0	0	0
4/23/2024	1:30 PM	0	0	0	0	0	0	0	0	0	0	0	0	0
4/23/2024	1:45 PM	0	0	0	0	0	0	0	0	0	0	0	0	0
4/23/2024	2:00 PM	0	0	0	0	0	0	0	0	0	0	0	0	0
4/23/2024	2:15 PM	0	0	0	0	0	0	0	0	0	0	0	0	0
4/23/2024	2:30 PM	0	0	0	0	0	0	0	0	0	0	0	0	0
4/23/2024	2:45 PM	0	0	0	0	0	0	0	0	0	0	0	0	0
4/23/2024	3:00 PM	0	0	0	0	0	0	0	0	0	0	0	0	0
4/23/2024	3:15 PM	0	0	0	0	0	0	0	0	0	0	0	0	0
4/23/2024	3:30 PM	0	0	0	0	0	0	0	0	0	0	0	0	0
4/23/2024	3:45 PM	0	0	0	0	0	0	0	0	0	0	0	0	0
4/23/2024	4:00 PM	0	0	0	0	0	0	0	0	0	0	0	0	0
4/23/2024	4:15 PM	0	0	0	0	0	0	0	0	0	0	0	0	0
4/23/2024	4:30 PM	0	0	0	0	0	0	0	0	0	0	0	0	0
4/23/2024	4:45 PM	0	0	0	0	0	0	0	0	0	0	0	0	0
4/23/2024	5:00 PM	0	0	0	0	0	0	0	0	0	0	0	0	0
4/23/2024	5:15 PM	0	0	0	0	0	0	0	0	0	0	0	0	0
4/23/2024	5:30 PM	0	0	0	0	0	0	0	0	0	0	0	0	0
4/23/2024	5:45 PM	0	0	0	0	0	0	0	0	0	0	0	0	0
4/23/2024	6:00 PM	0	0	0	0	0	0	0	0	0	0	0	0	0
4/23/2024	6:15 PM	0	0	0	0	0	0	0	0	0	0	0	0	0
4/23/2024	6:30 PM	0	0	0	0	0	0	0	0	0	0	0	0	0
4/23/2024	6:45 PM	0	0	0	0	0	0	0	0	0	0	0	0	0
4/23/2024	7:00 PM	0	0	0	0	0	0	0	0	0	0	0	0	0
4/23/2024	7:15 PM	0	0	0	0	0	0	0	0	0	0	0	0	0
4/23/2024	7:30 PM	0	0	0	0	0	0	0	0	0	0	0	0	0
4/23/2024	7:45 PM	0	0	0	0	0	0	0	0	0	0	0	0	0
4/23/2024	8:00 PM	0	0	0	0	0	0	0	0	0	0	0	0	0
4/23/2024	8:15 PM	0	0	0	0	0	0	0	0	0	0	0	0	0
4/23/2024	8:30 PM	0	0	0	0	0	0	0	0	0	0	0	0	0
4/23/2024	8:45 PM	0	0	0	0	0	0	0	0	0	0	0	0	0
4/23/2024	9:00 PM	0	0	0	0	0	0	0	0	0	0	0	0	0
4/23/2024	9:15 PM	0	0	0	0	0	0	0	0	0	0	0	0	0
4/23/2024	9:30 PM	0	0	0	0	0	0	0	0	0	0	0	0	0
4/23/2024	9:45 PM	0	0	0	0	0	0	0	0	0	0	0	0	0
4/23/2024	10:00 PM	0	0	0	0	0	0	0	0	0	0	0	0	0
4/23/2024	10:15 PM	0	0	0	0	0	0	0	0	0	0	0	0	0
4/23/2024	10:30 PM	0	0	0	0	0	0	0	0	0	0	0	0	0
4/23/2024	10:45 PM	0	0	0	0	0	0	0	0	0	0	0	0	0
4/23/2024	11:00 PM	0	0	0	0	0	0	0	0	0	0	0	0	0
4/23/2024	11:15 PM	0	0	0	0	0	0	0	0	0	0	0	0	0
4/23/2024	11:30 PM	0	0	0	0	0	0	0	0	0	0	0	0	0
4/23/2024	11:45 PM	0	0	0	0	0	0	0	0	0	0	0	0	0

4/24/2024	12:00 AM	0	0	0	0	0	0	0	0	0	0	0	0	0
4/24/2024	12:15 AM	0	0	0	0	0	0	0	0	0	0	0	0	0
4/24/2024	12:30 AM	0	0	0	0	0	0	0	0	0	0	0	0	0
4/24/2024	12:45 AM	0	0	0	0	0	0	0	0	0	0	0	0	0
4/24/2024	1:00 AM	0	0	0	0	0	0	0	0	0	0	0	0	0
4/24/2024	1:15 AM	0	0	0	0	0	0	0	0	0	0	0	0	0
4/24/2024	1:30 AM	0	0	0	0	0	0	0	0	0	0	0	0	0
4/24/2024	1:45 AM	0	0	0	0	0	0	0	0	0	0	0	0	0
4/24/2024	2:00 AM	0	0	0	0	0	0	0	0	0	0	0	0	0
4/24/2024	2:15 AM	0	0	0	0	0	0	0	0	0	0	0	0	0
4/24/2024	2:30 AM	0	0	0	0	0	0	0	0	0	0	0	0	0
4/24/2024	2:45 AM	0	0	0	0	0	0	0	0	0	0	0	0	0
4/24/2024	3:00 AM	0	0	0	0	0	0	0	0	0	0	0	0	0
4/24/2024	3:15 AM	0	0	0	0	0	0	0	0	0	0	0	0	0
4/24/2024	3:30 AM	0	0	0	0	0	0	0	0	0	0	0	0	0
4/24/2024	3:45 AM	0	0	0	0	0	0	0	0	0	0	0	0	0
4/24/2024	4:00 AM	0	0	0	0	0	0	0	0	0	0	0	0	0
4/24/2024	4:15 AM	0	0	0	0	0	0	0	0	0	0	0	0	0
4/24/2024	4:30 AM	0	0	0	0	0	0	0	0	0	0	0	0	0
4/24/2024	4:45 AM	0	0	0	0	0	0	0	0	0	0	0	0	0
4/24/2024	5:00 AM	0	0	0	0	0	0	0	0	0	0	0	0	0
4/24/2024	5:15 AM	0	0	0	0	0	0	0	0	0	0	0	0	0
4/24/2024	5:30 AM	0	0	0	0	0	0	0	0	0	0	0	0	0
4/24/2024	5:45 AM	0	0	0	0	0	0	0	0	0	0	0	0	0
4/24/2024	6:00 AM	0	0	0	0	0	0	0	0	0	0	0	0	0
4/24/2024	6:15 AM	0	0	0	0	0	0	0	0	0	0	0	0	0
4/24/2024	6:30 AM	0	0	0	0	0	0	0	0	0	0	0	0	0
4/24/2024	6:45 AM	0	0	0	0	0	0	0	0	0	0	0	0	0
4/24/2024	7:00 AM	0	0	0	0	0	0	0	0	0	0	0	0	0
4/24/2024	7:15 AM	0	0	0	0	0	0	0	0	0	0	0	0	0
4/24/2024	7:30 AM	0	0	0	0	0	0	0	0	0	0	0	0	0
4/24/2024	7:45 AM	0	0	0	0	0	0	0	0	0	0	0	0	0
4/24/2024	8:00 AM	0	0	0	0	0	0	0	0	0	0	0	0	0
4/24/2024	8:15 AM	0	0	0	0	0	0	0	0	0	0	0	0	0
4/24/2024	8:30 AM	0	0	0	0	0	0	0	0	0	0	0	0	0
4/24/2024	8:45 AM	0	0	0	0	0	0	0	0	0	0	0	0	0
4/24/2024	9:00 AM	0	0	0	0	0	0	0	0	0	0	0	0	0
4/24/2024	9:15 AM	0	0	0	0	0	0	0	0	0	0	0	0	0
4/24/2024	9:30 AM	0	0	0	0	0	0	0	0	0	0	0	0	0
4/24/2024	9:45 AM	0	0	0	0	0	0	0	0	0	0	0	0	0
4/24/2024	10:00 AM	0	0	0	0	0	0	0	0	0	0	0	0	0
4/24/2024	10:15 AM	0	0	0	0	0	0	0	0	0	0	0	0	0
4/24/2024	10:30 AM	0	0	0	0	0	0	0	0	0	0	0	0	0
4/24/2024	10:45 AM	0	0	0	0	0	0	0	0	0	0	0	0	0
4/24/2024	11:00 AM	0	0	0	0	0	0	0	0	0	0	0	0	0
4/24/2024	11:15 AM	0	0	0	0	0	0	0	0	0	0	0	0	0
4/24/2024	11:30 AM	0	0	0	0	0	0	0	0	0	0	0	0	0
4/24/2024	11:45 AM	0	0	0	0	0	0	0	0	0	0	0	0	0
4/24/2024	12:00 PM	0	0	0	0	0	0	0	0	0	0	0	0	0
4/24/2024	12:15 PM	0	0	0	0	0	0	0	0	0	0	0	0	0
4/24/2024	12:30 PM	0	0	0	0	0	0	0	0	0	0	0	0	0
4/24/2024	12:45 PM	0	0	0	0	0	0	0	0	0	0	0	0	0
4/24/2024	1:00 PM	0	0	0	0	0	0	0	0	0	0	0	0	0
4/24/2024	1:15 PM	0	0	0	0	0	0	0	0	0	0	0	0	0
4/24/2024	1:30 PM	0	0	0	0	0	0	0	0	0	0	0	0	0
4/24/2024	1:45 PM	0	0	0	0	0	0	0	0	0	0	0	0	0
4/24/2024	2:00 PM	0	0	0	0	0	0	0	0	0	0	0	0	0
4/24/2024	2:15 PM	0	0	0	0	0	0	0	0	0	0	0	0	0
4/24/2024	2:30 PM	0	0	0	0	0	0	0	0	0	0	0	0	0
4/24/2024	2:45 PM	0	0	0	0	0	0	0	0	0	0	0	0	0
4/24/2024	3:00 PM	0	0	0	0	0	0	0	0	0	0	0	0	0
4/24/2024	3:15 PM	0	0	0	0	0	0	0	0	0	0	0	0	0
4/24/2024	3:30 PM	0	0	0	0	0	0	0	0	0	0	0	0	0
4/24/2024	3:45 PM	0	0	0	0	0	0	0	0	0	0	0	0	0
4/24/2024	4:00 PM	0	0	0	0	0	0	0	0	0	0	0	0	0
4/24/2024	4:15 PM	0	0	0	0	0	0	0	0	0	0	0	0	0
4/24/2024	4:30 PM	0	0	0	0	0	0	0	0	0	0	0	0	0
4/24/2024	4:45 PM	0	0	0	0	0	0	0	0	0	0	0	0	0
4/24/2024	5:00 PM	0	0	0	0	0	0	0	0	0	0	0	0	0
4/24/2024	5:15 PM	0	0	0	0	0	0	0	0	0	0	0	0	0
4/24/2024	5:30 PM	0	0	0	0	0	0	0	0	0	0	0	0	0
4/24/2024	5:45 PM	0	0	0	0	0	0	0	0	0	0	0	0	0
4/24/2024	6:00 PM	0	0	0	0	0	0	0	0	0	0	0	0	0
4/24/2024	6:15 PM	0	0	0	0	0	0	0	0	0	0	0	0	0
4/24/2024	6:30 PM	0	0	0	0	0	0	0	0	0	0	0	0	0
4/24/2024	6:45 PM	0	0	0	0	0	0	0	0	0	0	0	0	0
4/24/2024	7:00 PM	0	0	0	0	0	0	0	0	0	0	0	0	0
4/24/2024	7:15 PM	0	0	0	0	0	0	0	0	0	0	0	0	0
4/24/2024	7:30 PM	0	0	0	0	0	0	0	0	0	0	0	0	0
4/24/2024	7:45 PM	0	0	0	0	0	0	0	0	0	0	0	0	0
4/24/2024	8:00 PM	0	0	0	0	0	0	0	0	0	0	0	0	0
4/24/2024	8:15 PM	0	0	0	0	0	0	0	0	0	0	0	0	0
4/24/2024	8:30 PM	0	0	0	0	0	0	0	0	0	0	0	0	0
4/24/2024	8:45 PM	0	0	0	0	0	0	0	0	0	0	0	0	0
4/24/2024	9:00 PM	0	0	0	0	0	0	0	0	0	0	0	0	0
4/24/2024	9:15 PM	0	0	0	0	0	0	0	0	0	0	0	0	0
4/24/2024	9:30 PM	0	0	0	0	0	0	0	0	0	0	0	0	0
4/24/2024	9:45 PM	0	0	0	0	0	0	0	0	0	0	0	0	0
4/24/2024	10:00 PM	0	0	0	0	0	0	0	0	0	0	0	0	0
4/24/2024	10:15 PM	0	0	0	0	0	0	0	0	0	0	0	0	0
4/24/2024	10:30 PM	0	0	0	0	0	0	0	0	0	0	0	0	0
4/24/2024	10:45 PM	0	0	0	0	0	0	0	0	0	0	0	0	0
4/24/2024	11:00 PM	0	0	0	0	0	0	0	0	0	0	0	0	0
4/24/2024	11:15 PM	0	0	0	0	0	0	0	0	0	0	0	0	0
4/24/2024	11:30 PM	0	0	0	0	0	0	0	0	0	0	0	0	0
4/24/2024	11:45 PM	0	0	0	0	0	0	0	0	0	0	0	0	0

4/25/2024	12:00 AM	0	0	0	0	0	0	0	0	0	0	0	0	0
4/25/2024	12:15 AM	0	0	0	0	0	0	0	0	0	0	0	0	0
4/25/2024	12:30 AM	0	0	0	0	0	0	0	0	0	0	0	0	0
4/25/2024	12:45 AM	0	0	0	0	0	0	0	0	0	0	0	0	0
4/25/2024	1:00 AM	0	0	0	0	0	0	0	0	0	0	0	0	0
4/25/2024	1:15 AM	0	0	0	0	0	0	0	0	0	0	0	0	0
4/25/2024	1:30 AM	0	0	0	0	0	0	0	0	0	0	0	0	0
4/25/2024	1:45 AM	0	0	0	0	0	0	0	0	0	0	0	0	0
4/25/2024	2:00 AM	0	0	0	0	0	0	0	0	0	0	0	0	0
4/25/2024	2:15 AM	0	0	0	0	0	0	0	0	0	0	0	0	0
4/25/2024	2:30 AM	0	0	0	0	0	0	0	0	0	0	0	0	0
4/25/2024	2:45 AM	0	0	0	0	0	0	0	0	0	0	0	0	0
4/25/2024	3:00 AM	0	0	0	0	0	0	0	0	0	0	0	0	0
4/25/2024	3:15 AM	0	0	0	0	0	0	0	0	0	0	0	0	0
4/25/2024	3:30 AM	0	0	0	0	0	0	0	0	0	0	0	0	0
4/25/2024	3:45 AM	0	0	0	0	0	0	0	0	0	0	0	0	0
4/25/2024	4:00 AM	0	0	0	0	0	0	0	0	0	0	0	0	0
4/25/2024	4:15 AM	0	0	0	0	0	0	0	0	0	0	0	0	0
4/25/2024	4:30 AM	0	0	0	0	0	0	0	0	0	0	0	0	0
4/25/2024	4:45 AM	0	0	0	0	0	0	0	0	0	0	0	0	0
4/25/2024	5:00 AM	0	0	0	0	0	0	0	0	0	0	0	0	0
4/25/2024	5:15 AM	0	0	0	0	0	0	0	0	0	0	0	0	0
4/25/2024	5:30 AM	0	0	0	0	0	0	0	0	0	0	0	0	0
4/25/2024	5:45 AM	0	0	0	0	0	0	0	0	0	0	0	0	0
4/25/2024	6:00 AM	0	0	0	0	0	0	0	0	0	0	0	0	0
4/25/2024	6:15 AM	0	0	0	0	0	0	0	0	0	0	0	0	0
4/25/2024	6:30 AM	0	0	0	0	0	0	0	0	0	0	0	0	0
4/25/2024	6:45 AM	0	0	0	0	0	0	0	0	0	0	0	0	0
4/25/2024	7:00 AM	0	0	0	0	0	0	0	0	0	0	0	0	0
4/25/2024	7:15 AM	0	0	0	0	0	0	0	0	0	0	0	0	0
4/25/2024	7:30 AM	0	0	0	0	0	0	0	0	0	0	0	0	0
4/25/2024	7:45 AM	0	0	0	0	0	0	0	0	0	0	0	0	0
4/25/2024	8:00 AM	0	0	0	0	0	0	0	0	0	0	0	0	0
4/25/2024	8:15 AM	0	0	0	0	0	0	0	0	0	0	0	0	0
4/25/2024	8:30 AM	0	0	0	0	0	0	0	0	0	0	0	0	0
4/25/2024	8:45 AM	0	0	0	0	0	0	0	0	0	0	0	0	0
4/25/2024	9:00 AM	0	0	0	0	0	0	0	0	0	0	0	0	0
4/25/2024	9:15 AM	0	0	0	0	0	0	0	0	0	0	0	0	0
4/25/2024	9:30 AM	0	0	0	0	0	0	0	0	0	0	0	0	0
4/25/2024	9:45 AM	0	0	0	0	0	0	0	0	0	0	0	0	0
4/25/2024	10:00 AM	0	0	0	0	0	0	0	0	0	0	0	0	0
4/25/2024	10:15 AM	0	0	0	0	0	0	0	0	0	0	0	0	0
4/25/2024	10:30 AM	0	0	0	0	0	0	0	0	0	0	0	0	0
4/25/2024	10:45 AM	0	0	0	0	0	0	0	0	0	0	0	0	0
4/25/2024	11:00 AM	0	0	0	0	0	0	0	0	0	0	0	0	0
4/25/2024	11:15 AM	0	0	0	0	0	0	0	0	0	0	0	0	0
4/25/2024	11:30 AM	0	0	0	0	0	0	0	0	0	0	0	0	0
4/25/2024	11:45 AM	0	0	0	0	0	0	0	0	0	0	0	0	0
4/25/2024	12:00 PM	0	0	0	0	0	0	0	0	0	0	0	0	0
4/25/2024	12:15 PM	0	0	0	0	0	0	0	0	0	0	0	0	0
4/25/2024	12:30 PM	0	0	0	0	0	0	0	0	0	0	0	0	0
4/25/2024	12:45 PM	0	0	0	0	0	0	0	0	0	0	0	0	0
4/25/2024	1:00 PM	0	0	0	0	0	0	0	0	0	0	0	0	0
4/25/2024	1:15 PM	0	0	0	0	0	0	0	0	0	0	0	0	0
4/25/2024	1:30 PM	0	0	0	0	0	0	0	0	0	0	0	0	0
4/25/2024	1:45 PM	0	0	0	0	0	0	0	0	0	0	0	0	0
4/25/2024	2:00 PM	0	0	0	0	0	0	0	0	0	0	0	0	0
4/25/2024	2:15 PM	0	0	0	0	0	0	0	0	0	0	0	0	0
4/25/2024	2:30 PM	0	0	0	0	0	0	0	0	0	0	0	0	0
4/25/2024	2:45 PM	0	0	0	0	0	0	0	0	0	0	0	0	0
4/25/2024	3:00 PM	0	0	0	0	0	0	0	0	0	0	0	0	0
4/25/2024	3:15 PM	0	0	0	0	0	0	0	0	0	0	0	0	0
4/25/2024	3:30 PM	0	0	0	0	0	0	0	0	0	0	0	0	0
4/25/2024	3:45 PM	0	0	0	0	0	0	0	0	0	0	0	0	0
4/25/2024	4:00 PM	0	0	0	0	0	0	0	0	0	0	0	0	0
4/25/2024	4:15 PM	0	0	0	0	0	0	0	0	0	0	0	0	0
4/25/2024	4:30 PM	0	0	0	0	0	0	0	0	0	0	0	0	0
4/25/2024	4:45 PM	0	0	0	0	0	0	0	0	0	0	0	0	0
4/25/2024	5:00 PM	0	0	0	0	0	0	0	0	0	0	0	0	0
4/25/2024	5:15 PM	0	0	0	0	0	0	0	0	0	0	0	0	0
4/25/2024	5:30 PM	0	0	0	0	0	0	0	0	0	0	0	0	0
4/25/2024	5:45 PM	0	0	0	0	0	0	0	0	0	0	0	0	0
4/25/2024	6:00 PM	0	0	0	0	0	0	0	0	0	0	0	0	0
4/25/2024	6:15 PM	0	0	0	0	0	0	0	0	0	0	0	0	0
4/25/2024	6:30 PM	0	0	0	0	0	0	0	0	0	0	0	0	0
4/25/2024	6:45 PM	0	0	0	0	0	0	0	0	0	0	0	0	0
4/25/2024	7:00 PM	0	0	0	0	0	0	0	0	0	0	0	0	0
4/25/2024	7:15 PM	0	0	0	0	0	0	0	0	0	0	0	0	0
4/25/2024	7:30 PM	0	0	0	0	0	0	0	0	0	0	0	0	0
4/25/2024	7:45 PM	0	0	0	0	0	0	0	0	0	0	0	0	0
4/25/2024	8:00 PM	0	0	0	0	0	0	0	0	0	0	0	0	0
4/25/2024	8:15 PM	0	0	0	0	0	0	0	0	0	0	0	0	0
4/25/2024	8:30 PM	0	0	0	0	0	0	0	0	0	0	0	0	0
4/25/2024	8:45 PM	0	0	0	0	0	0	0	0	0	0	0	0	0
4/25/2024	9:00 PM	0	0	0	0	0	0	0	0	0	0	0	0	0
4/25/2024	9:15 PM	0	0	0	0	0	0	0	0	0	0	0	0	0
4/25/2024	9:30 PM	0	0	0	0	0	0	0	0	0	0	0	0	0
4/25/2024	9:45 PM	0	0	0	0	0	0	0	0	0	0	0	0	0
4/25/2024	10:00 PM	0	0	0	0	0	0	0	0	0	0	0	0	0
4/25/2024	10:15 PM	0	0	0	0	0	0	0	0	0	0	0	0	0
4/25/2024	10:30 PM	0	0	0	0	0	0	0	0	0	0	0	0	0
4/25/2024	10:45 PM	0	0	0	0	0	0	0	0	0	0	0	0	0
4/25/2024	11:00 PM	0	0	0	0	0	0	0	0	0	0	0	0	0
4/25/2024	11:15 PM	0	0	0	0	0	0	0	0	0	0	0	0	0
4/25/2024	11:30 PM	0	0	0	0	0	0	0	0	0	0	0	0	0
4/25/2024	11:45 PM	0	0	0	0	0	0	0	0	0	0	0	0	0

4/26/2024	12:00 AM	0	0	0	0	0	0	0	0	0	0	0	0	0
4/26/2024	12:15 AM	0	0	0	0	0	0	0	0	0	0	0	0	0
4/26/2024	12:30 AM	0	0	0	0	0	0	0	0	0	0	0	0	0
4/26/2024	12:45 AM	0	0	0	0	0	0	0	0	0	0	0	0	0
4/26/2024	1:00 AM	0	0	0	0	0	0	0	0	0	0	0	0	0
4/26/2024	1:15 AM	0	0	0	0	0	0	0	0	0	0	0	0	0
4/26/2024	1:30 AM	0	0	0	0	0	0	0	0	0	0	0	0	0
4/26/2024	1:45 AM	0	0	0	0	0	0	0	0	0	0	0	0	0
4/26/2024	2:00 AM	0	0	0	0	0	0	0	0	0	0	0	0	0
4/26/2024	2:15 AM	0	0	0	0	0	0	0	0	0	0	0	0	0
4/26/2024	2:30 AM	0	0	0	0	0	0	0	0	0	0	0	0	0
4/26/2024	2:45 AM	0	0	0	0	0	0	0	0	0	0	0	0	0
4/26/2024	3:00 AM	0	0	0	0	0	0	0	0	0	0	0	0	0
4/26/2024	3:15 AM	0	0	0	0	0	0	0	0	0	0	0	0	0
4/26/2024	3:30 AM	0	0	0	0	0	0	0	0	0	0	0	0	0
4/26/2024	3:45 AM	0	0	0	0	0	0	0	0	0	0	0	0	0
4/26/2024	4:00 AM	0	0	0	0	0	0	0	0	0	0	0	0	0
4/26/2024	4:15 AM	0	0	0	0	0	0	0	0	0	0	0	0	0
4/26/2024	4:30 AM	0	0	0	0	0	0	0	0	0	0	0	0	0
4/26/2024	4:45 AM	0	0	0	0	0	0	0	0	0	0	0	0	0
4/26/2024	5:00 AM	0	0	0	0	0	0	0	0	0	0	0	0	0
4/26/2024	5:15 AM	0	0	0	0	0	0	0	0	0	0	0	0	0
4/26/2024	5:30 AM	0	0	0	0	0	0	0	0	0	0	0	0	0
4/26/2024	5:45 AM	0	0	0	0	0	0	0	0	0	0	0	0	0
4/26/2024	6:00 AM	0	0	0	0	0	0	0	0	0	0	0	0	0
4/26/2024	6:15 AM	0	0	0	0	0	0	0	0	0	0	0	0	0
4/26/2024	6:30 AM	0	0	0	0	0	0	0	0	0	0	0	0	0
4/26/2024	6:45 AM	0	0	0	0	0	0	0	0	0	0	0	0	0
4/26/2024	7:00 AM	0	0	0	0	0	0	0	0	0	0	0	0	0
4/26/2024	7:15 AM	0	0	0	0	0	0	0	0	0	0	0	0	0
4/26/2024	7:30 AM	0	0	0	0	0	0	0	0	0	0	0	0	0
4/26/2024	7:45 AM	0	0	0	0	0	0	0	0	0	0	0	0	0
4/26/2024	8:00 AM	0	0	0	0	0	0	0	0	0	0	0	0	0
4/26/2024	8:15 AM	0	0	0	0	0	0	0	0	0	0	0	0	0
4/26/2024	8:30 AM	0	0	0	0	0	0	0	0	0	0	0	0	0
4/26/2024	8:45 AM	0	0	0	0	0	0	0	0	0	0	0	0	0
4/26/2024	9:00 AM	0	0	0	0	0	0	0	0	0	0	0	0	0
4/26/2024	9:15 AM	0	0	0	0	0	0	0	0	0	0	0	0	0
4/26/2024	9:30 AM	0	0	0	0	0	0	0	0	0	0	0	0	0
4/26/2024	9:45 AM	0	0	0	0	0	0	0	0	0	0	0	0	0
4/26/2024	10:00 AM	0	0	0	0	0	0	0	0	0	0	0	0	0
4/26/2024	10:15 AM	0	0	0	0	0	0	0	0	0	0	0	0	0
4/26/2024	10:30 AM	0	0	0	0	0	0	0	0	0	0	0	0	0
4/26/2024	10:45 AM	0	0	0	0	0	0	0	0	0	0	0	0	0
4/26/2024	11:00 AM	0	0	0	0	0	0	0	0	0	0	0	0	0
4/26/2024	11:15 AM	0	0	0	0	0	0	0	0	0	0	0	0	0
4/26/2024	11:30 AM	0	0	0	0	0	0	0	0	0	0	0	0	0
4/26/2024	11:45 AM	0	0	0	0	0	0	0	0	0	0	0	0	0
4/26/2024	12:00 PM	0	0	0	0	0	0	0	0	0	0	0	0	0
4/26/2024	12:15 PM	0	0	0	0	0	0	0	0	0	0	0	0	0
4/26/2024	12:30 PM	0	0	0	0	0	0	0	0	0	0	0	0	0
4/26/2024	12:45 PM	0	0	0	0	0	0	0	0	0	0	0	0	0
4/26/2024	1:00 PM	0	0	0	0	0	0	0	0	0	0	0	0	0
4/26/2024	1:15 PM	0	0	0	0	0	0	0	0	0	0	0	0	0
4/26/2024	1:30 PM	0	0	0	0	0	0	0	0	0	0	0	0	0
4/26/2024	1:45 PM	0	0	0	0	0	0	0	0	0	0	0	0	0
4/26/2024	2:00 PM	0	0	0	0	0	0	0	0	0	0	0	0	0
4/26/2024	2:15 PM	0	0	0	0	0	0	0	0	0	0	0	0	0
4/26/2024	2:30 PM	0	0	0	0	0	0	0	0	0	0	0	0	0
4/26/2024	2:45 PM	0	0	0	0	0	0	0	0	0	0	0	0	0
4/26/2024	3:00 PM	0	0	0	0	0	0	0	0	0	0	0	0	0
4/26/2024	3:15 PM	0	0	0	0	0	0	0	0	0	0	0	0	0
4/26/2024	3:30 PM	0	0	0	0	0	0	0	0	0	0	0	0	0
4/26/2024	3:45 PM	0	0	0	0	0	0	0	0	0	0	0	0	0
4/26/2024	4:00 PM	0	0	0	0	0	0	0	0	0	0	0	0	0
4/26/2024	4:15 PM	0	0	0	0	0	0	0	0	0	0	0	0	0
4/26/2024	4:30 PM	0	0	0	0	0	0	0	0	0	0	0	0	0
4/26/2024	4:45 PM	0	0	0	0	0	0	0	0	0	0	0	0	0
4/26/2024	5:00 PM	0	0	0	0	0	0	0	0	0	0	0	0	0
4/26/2024	5:15 PM	0	0	0	0	0	0	0	0	0	0	0	0	0
4/26/2024	5:30 PM	0	0	0	0	0	0	0	0	0	0	0	0	0
4/26/2024	5:45 PM	0	0	0	0	0	0	0	0	0	0	0	0	0
4/26/2024	6:00 PM	0	0	0	0	0	0	0	0	0	0	0	0	0
4/26/2024	6:15 PM	0	0	0	0	0	0	0	0	0	0	0	0	0
4/26/2024	6:30 PM	0	0	0	0	0	0	0	0	0	0	0	0	0
4/26/2024	6:45 PM	0	0	0	0	0	0	0	0	0	0	0	0	0
4/26/2024	7:00 PM	0	0	0	0	0	0	0	0	0	0	0	0	0
4/26/2024	7:15 PM	0	0	0	0	0	0	0	0	0	0	0	0	0
4/26/2024	7:30 PM	0	0	0	0	0	0	0	0	0	0	0	0	0
4/26/2024	7:45 PM	0	0	0	0	0	0	0	0	0	0	0	0	0
4/26/2024	8:00 PM	0	0	0	0	0	0	0	0	0	0	0	0	0
4/26/2024	8:15 PM	0	0	0	0	0	0	0	0	0	0	0	0	0
4/26/2024	8:30 PM	0	0	0	0	0	0	0	0	0	0	0	0	0
4/26/2024	8:45 PM	0	0	0	0	0	0	0	0	0	0	0	0	0
4/26/2024	9:00 PM	0	0	0	0	0	0	0	0	0	0	0	0	0
4/26/2024	9:15 PM	0	0	0	0	0	0	0	0	0	0	0	0	0
4/26/2024	9:30 PM	0	0	0	0	0	0	0	0	0	0	0	0	0
4/26/2024	9:45 PM	0	0	0	0	0	0	0	0	0	0	0	0	0
4/26/2024	10:00 PM	0	0	0	0	0	0	0	0	0	0	0	0	0
4/26/2024	10:15 PM	0	0	0	0	0	0	0	0	0	0	0	0	0
4/26/2024	10:30 PM	0	0	0	0	0	0	0	0	0	0	0	0	0
4/26/2024	10:45 PM	0	0	0	0	0	0	0	0	0	0	0	0	0
4/26/2024	11:00 PM	0	0	0	0	0	0	0	0	0	0	0	0	0
4/26/2024	11:15 PM	0	0	0	0	0	0	0	0	0	0	0	0	0
4/26/2024	11:30 PM	0	0	0	0	0	0	0	0	0	0	0	0	0
4/26/2024	11:45 PM	0	0	0	0	0	0	0	0	0	0	0	0	0

4/27/2024	12:00 AM	0	0	0	0	0	0	0	0	0	0	0	0	0
4/27/2024	12:15 AM	0	0	0	0	0	0	0	0	0	0	0	0	0
4/27/2024	12:30 AM	0	0	0	0	0	0	0	0	0	0	0	0	0
4/27/2024	12:45 AM	0	0	0	0	0	0	0	0	0	0	0	0	0
4/27/2024	1:00 AM	0	0	0	0	0	0	0	0	0	0	0	0	0
4/27/2024	1:15 AM	0	0	0	0	0	0	0	0	0	0	0	0	0
4/27/2024	1:30 AM	0	0	0	0	0	0	0	0	0	0	0	0	0
4/27/2024	1:45 AM	0	0	0	0	0	0	0	0	0	0	0	0	0
4/27/2024	2:00 AM	0	0	0	0	0	0	0	0	0	0	0	0	0
4/27/2024	2:15 AM	0	0	0	0	0	0	0	0	0	0	0	0	0
4/27/2024	2:30 AM	0	0	0	0	0	0	0	0	0	0	0	0	0
4/27/2024	2:45 AM	0	0	0	0	0	0	0	0	0	0	0	0	0
4/27/2024	3:00 AM	0	0	0	0	0	0	0	0	0	0	0	0	0
4/27/2024	3:15 AM	0	0	0	0	0	0	0	0	0	0	0	0	0
4/27/2024	3:30 AM	0	0	0	0	0	0	0	0	0	0	0	0	0
4/27/2024	3:45 AM	0	0	0	0	0	0	0	0	0	0	0	0	0
4/27/2024	4:00 AM	0	0	0	0	0	0	0	0	0	0	0	0	0
4/27/2024	4:15 AM	0	0	0	0	0	0	0	0	0	0	0	0	0
4/27/2024	4:30 AM	0	0	0	0	0	0	0	0	0	0	0	0	0
4/27/2024	4:45 AM	0	0	0	0	0	0	0	0	0	0	0	0	0
4/27/2024	5:00 AM	0	0	0	0	0	0	0	0	0	0	0	0	0
4/27/2024	5:15 AM	0	0	0	0	0	0	0	0	0	0	0	0	0
4/27/2024	5:30 AM	0	0	0	0	0	0	0	0	0	0	0	0	0
4/27/2024	5:45 AM	0	0	0	0	0	0	0	0	0	0	0	0	0
4/27/2024	6:00 AM	0	0	0	0	0	0	0	0	0	0	0	0	0
4/27/2024	6:15 AM	0	0	0	0	0	0	0	0	0	0	0	0	0
4/27/2024	6:30 AM	0	0	0	0	0	0	0	0	0	0	0	0	0
4/27/2024	6:45 AM	0	0	0	0	0	0	0	0	0	0	0	0	0
4/27/2024	7:00 AM	0	0	0	0	0	0	0	0	0	0	0	0	0
4/27/2024	7:15 AM	0	0	0	0	0	0	0	0	0	0	0	0	0
4/27/2024	7:30 AM	0	0	0	0	0	0	0	0	0	0	0	0	0
4/27/2024	7:45 AM	0	0	0	0	0	0	0	0	0	0	0	0	0
4/27/2024	8:00 AM	0	0	0	0	0	0	0	0	0	0	0	0	0
4/27/2024	8:15 AM	0	0	0	0	0	0	0	0	0	0	0	0	0
4/27/2024	8:30 AM	0	0	0	0	0	0	0	0	0	0	0	0	0
4/27/2024	8:45 AM	0	0	0	0	0	0	0	0	0	0	0	0	0
4/27/2024	9:00 AM	0	0	0	0	0	0	0	0	0	0	0	0	0
4/27/2024	9:15 AM	0	0	0	0	0	0	0	0	0	0	0	0	0
4/27/2024	9:30 AM	0	0	0	0	0	0	0	0	0	0	0	0	0
4/27/2024	9:45 AM	0	0	0	0	0	0	0	0	0	0	0	0	0
4/27/2024	10:00 AM	0	0	0	0	0	0	0	0	0	0	0	0	0
4/27/2024	10:15 AM	0	0	0	0	0	0	0	0	0	0	0	0	0
4/27/2024	10:30 AM	0	0	0	0	0	0	0	0	0	0	0	0	0
4/27/2024	10:45 AM	0	0	0	0	0	0	0	0	0	0	0	0	0
4/27/2024	11:00 AM	0	0	0	0	0	0	0	0	0	0	0	0	0
4/27/2024	11:15 AM	0	0	0	0	0	0	0	0	0	0	0	0	0
4/27/2024	11:30 AM	0	0	0	0	0	0	0	0	0	0	0	0	0
4/27/2024	11:45 AM	0	0	0	0	0	0	0	0	0	0	0	0	0
4/27/2024	12:00 PM	0	0	0	0	0	0	0	0	0	0	0	0	0
4/27/2024	12:15 PM	0	0	0	0	0	0	0	0	0	0	0	0	0
4/27/2024	12:30 PM	0	0	0	0	0	0	0	0	0	0	0	0	0
4/27/2024	12:45 PM	0	0	0	0	0	0	0	0	0	0	0	0	0
4/27/2024	1:00 PM	0	0	0	0	0	0	0	0	0	0	0	0	0
4/27/2024	1:15 PM	0	0	0	0	0	0	0	0	0	0	0	0	0
4/27/2024	1:30 PM	0	0	0	0	0	0	0	0	0	0	0	0	0
4/27/2024	1:45 PM	0	0	0	0	0	0	0	0	0	0	0	0	0
4/27/2024	2:00 PM	0	0	0	0	0	0	0	0	0	0	0	0	0
4/27/2024	2:15 PM	0	0	0	0	0	0	0	0	0	0	0	0	0
4/27/2024	2:30 PM	0	0	0	0	0	0	0	0	0	0	0	0	0
4/27/2024	2:45 PM	0	0	0	0	0	0	0	0	0	0	0	0	0
4/27/2024	3:00 PM	0	0	0	0	0	0	0	0	0	0	0	0	0
4/27/2024	3:15 PM	0	0	0	0	0	0	0	0	0	0	0	0	0
4/27/2024	3:30 PM	0	0	0	0	0	0	0	0	0	0	0	0	0
4/27/2024	3:45 PM	0	0	0	0	0	0	0	0	0	0	0	0	0
4/27/2024	4:00 PM	0	0	0	0	0	0	0	0	0	0	0	0	0
4/27/2024	4:15 PM	0	0	0	0	0	0	0	0	0	0	0	0	0
4/27/2024	4:30 PM	0	0	0	0	0	0	0	0	0	0	0	0	0
4/27/2024	4:45 PM	0	0	0	0	0	0	0	0	0	0	0	0	0
4/27/2024	5:00 PM	0	0	0	0	0	0	0	0	0	0	0	0	0
4/27/2024	5:15 PM	0	0	0	0	0	0	0	0	0	0	0	0	0
4/27/2024	5:30 PM	0	0	0	0	0	0	0	0	0	0	0	0	0
4/27/2024	5:45 PM	0	0	0	0	0	0	0	0	0	0	0	0	0
4/27/2024	6:00 PM	0	0	0	0	0	0	0	0	0	0	0	0	0
4/27/2024	6:15 PM	0	0	0	0	0	0	0	0	0	0	0	0	0
4/27/2024	6:30 PM	0	0	0	0	0	0	0	0	0	0	0	0	0
4/27/2024	6:45 PM	0	0	0	0	0	0	0	0	0	0	0	0	0
4/27/2024	7:00 PM	0	0	0	0	0	0	0	0	0	0	0	0	0
4/27/2024	7:15 PM	0	0	0	0	0	0	0	0	0	0	0	0	0
4/27/2024	7:30 PM	0	0	0	0	0	0	0	0	0	0	0	0	0
4/27/2024	7:45 PM	0	0	0	0	0	0	0	0	0	0	0	0	0
4/27/2024	8:00 PM	0	0	0	0	0	0	0	0	0	0	0	0	0
4/27/2024	8:15 PM	0	0	0	0	0	0	0	0	0	0	0	0	0
4/27/2024	8:30 PM	0	0	0	0	0	0	0	0	0	0	0	0	0
4/27/2024	8:45 PM	0	0	0	0	0	0	0	0	0	0	0	0	0
4/27/2024	9:00 PM	0	0	0	0	0	0	0	0	0	0	0	0	0
4/27/2024	9:15 PM	0	0	0	0	0	0	0	0	0	0	0	0	0
4/27/2024	9:30 PM	0	0	0	0	0	0	0	0	0	0	0	0	0
4/27/2024	9:45 PM	0	0	0	0	0	0	0	0	0	0	0	0	0
4/27/2024	10:00 PM	0	0	0	0	0	0	0	0	0	0	0	0	0
4/27/2024	10:15 PM	0	0	0	0	0	0	0	0	0	0	0	0	0
4/27/2024	10:30 PM	0	0	0	0	0	0	0	0	0	0	0	0	0
4/27/2024	10:45 PM	0	0	0	0	0	0	0	0	0	0	0	0	0
4/27/2024	11:00 PM	0	0	0	0	0	0	0	0	0	0	0	0	0
4/27/2024	11:15 PM	0	0	0	0	0	0	0	0	0	0	0	0	0
4/27/2024	11:30 PM	0	0	0	0	0	0	0	0	0	0	0	0	0
4/27/2024	11:45 PM	0	0	0	0	0	0	0	0	0	0	0	0	0

SB
File Name:
Start Date: 4/21/2024
Start Time: 0
Site Code: 75 Lane 4 SB
Station ID: 1
Location 1: I-20, north of Bush River Rd
Location 2:

Date	Time	1	2	3	4	5	6	7	8	9	10	11	12	13
4/21/2024	12:00 AM	0	106	6	0	0	0	0	0	1	0	0	0	0
4/21/2024	12:15 AM	0	100	5	0	1	0	0	0	2	0	0	0	0
4/21/2024	12:30 AM	0	97	3	0	1	0	0	0	2	0	0	0	0
4/21/2024	12:45 AM	0	89	2	0	1	0	0	0	2	0	0	0	0
4/21/2024	1:00 AM	0	78	1	0	1	0	0	0	3	0	0	0	0
4/21/2024	1:15 AM	0	65	0	0	0	0	0	0	2	0	0	0	0
4/21/2024	1:30 AM	0	57	2	0	0	0	0	0	2	0	0	0	0
4/21/2024	1:45 AM	0	52	4	0	0	0	0	0	4	0	0	0	0
4/21/2024	2:00 AM	0	42	4	0	0	0	0	1	3	0	0	0	0
4/21/2024	2:15 AM	0	41	4	0	0	0	0	1	4	0	0	0	0
4/21/2024	2:30 AM	0	36	2	0	0	0	0	1	4	0	0	0	0
4/21/2024	2:45 AM	0	35	0	0	0	0	0	1	3	0	0	0	0
4/21/2024	3:00 AM	0	35	0	0	0	0	0	0	3	0	0	0	0
4/21/2024	3:15 AM	0	37	0	0	1	0	0	0	2	0	0	0	0
4/21/2024	3:30 AM	0	34	1	0	1	0	0	0	2	0	0	0	0
4/21/2024	3:45 AM	0	35	1	0	1	1	0	0	1	0	0	0	0
4/21/2024	4:00 AM	0	30	1	0	1	1	0	0	3	0	0	0	0
4/21/2024	4:15 AM	0	23	1	0	0	1	0	0	6	0	0	0	0
4/21/2024	4:30 AM	0	22	0	0	0	1	0	0	5	0	0	0	0
4/21/2024	4:45 AM	0	27	0	0	0	0	0	0	7	0	0	0	0
4/21/2024	5:00 AM	0	34	1	0	0	0	0	1	6	0	0	0	0
4/21/2024	5:15 AM	0	44	2	0	0	0	0	1	4	0	0	0	0
4/21/2024	5:30 AM	0	68	4	0	0	0	0	1	4	0	0	0	0
4/21/2024	5:45 AM	0	72	10	0	0	0	0	1	3	0	0	0	0
4/21/2024	6:00 AM	0	80	12	0	0	0	0	0	2	0	0	0	0
4/21/2024	6:15 AM	0	85	21	0	0	0	0	0	2	0	0	0	0
4/21/2024	6:30 AM	0	79	22	0	0	0	0	0	4	0	0	0	0
4/21/2024	6:45 AM	0	90	24	0	0	0	0	0	4	0	0	0	0
4/21/2024	7:00 AM	0	90	31	0	0	0	0	0	8	0	0	0	0
4/21/2024	7:15 AM	0	100	26	0	0	0	0	0	8	0	0	0	0
4/21/2024	7:30 AM	0	109	34	0	0	1	0	0	9	0	0	0	0
4/21/2024	7:45 AM	0	124	31	0	0	1	0	0	8	0	0	0	0
4/21/2024	8:00 AM	0	147	30	0	0	1	0	0	6	0	0	0	0
4/21/2024	8:15 AM	0	159	31	0	0	1	0	0	7	0	0	0	0
4/21/2024	8:30 AM	0	192	25	0	0	0	0	0	5	0	0	0	0
4/21/2024	8:45 AM	0	204	34	0	0	1	0	1	6	0	0	0	0
4/21/2024	9:00 AM	0	229	38	0	0	1	0	1	4	0	0	0	0
4/21/2024	9:15 AM	0	244	44	0	0	2	0	1	6	0	0	0	0
4/21/2024	9:30 AM	0	263	46	1	0	2	0	1	6	0	0	0	0
4/21/2024	9:45 AM	0	303	47	1	0	1	0	1	7	0	0	0	0
4/21/2024	10:00 AM	0	329	40	1	0	1	0	1	8	0	0	0	0
4/21/2024	10:15 AM	0	350	44	1	0	0	0	1	5	0	0	0	0
4/21/2024	10:30 AM	0	351	53	0	0	0	0	1	4	0	0	0	0
4/21/2024	10:45 AM	0	356	46	0	1	0	0	0	3	0	0	0	0
4/21/2024	11:00 AM	0	391	60	0	1	0	0	0	2	0	0	0	0
4/21/2024	11:15 AM	0	432	50	0	1	0	0	0	3	0	0	0	0
4/21/2024	11:30 AM	0	516	39	0	1	0	0	0	4	0	0	0	0
4/21/2024	11:45 AM	0	538	41	0	0	0	0	0	5	0	0	0	0
4/21/2024	12:00 PM	0	559	30	0	1	0	0	0	7	0	0	0	0
4/21/2024	12:15 PM	0	588	41	0	1	0	0	0	5	0	0	0	0
4/21/2024	12:30 PM	0	563	57	0	2	0	0	1	5	0	0	0	0
4/21/2024	12:45 PM	0	599	62	0	2	0	0	1	6	0	0	0	0
4/21/2024	1:00 PM	0	583	73	0	1	0	0	1	5	0	0	0	0
4/21/2024	1:15 PM	0	549	69	0	1	0	0	1	5	0	0	0	0
4/21/2024	1:30 PM	0	547	67	0	0	0	0	0	7	0	0	0	0
4/21/2024	1:45 PM	0	524	69	0	1	0	0	0	7	0	0	0	0
4/21/2024	2:00 PM	0	534	60	0	3	0	0	0	7	0	0	0	0
4/21/2024	2:15 PM	0	552	59	0	4	0	0	0	8	0	0	0	0
4/21/2024	2:30 PM	0	537	57	0	4	0	0	0	7	0	0	0	0
4/21/2024	2:45 PM	0	524	53	1	3	0	0	0	6	0	0	0	0
4/21/2024	3:00 PM	0	514	54	1	1	0	0	0	5	0	0	0	0
4/21/2024	3:15 PM	0	512	55	1	0	0	0	0	5	0	0	0	0
4/21/2024	3:30 PM	0	504	50	1	1	0	0	0	5	0	0	0	0
4/21/2024	3:45 PM	0	510	50	0	1	0	0	0	3	0	0	0	0
4/21/2024	4:00 PM	0	496	50	0	2	0	0	0	4	0	0	0	0
4/21/2024	4:15 PM	0	482	47	0	2	0	0	0	4	0	0	0	0
4/21/2024	4:30 PM	0	499	40	0	1	0	0	0	2	0	0	0	0
4/21/2024	4:45 PM	0	479	39	0	1	0	0	0	4	0	0	0	0
4/21/2024	5:00 PM	0	474	41	0	0	0	0	0	3	0	0	0	0
4/21/2024	5:15 PM	0	478	44	0	0	0	0	0	4	0	0	0	0
4/21/2024	5:30 PM	0	473	46	0	0	0	0	0	4	0	0	0	0
4/21/2024	5:45 PM	1	463	42	0	0	0	0	0	3	0	0	0	0
4/21/2024	6:00 PM	1	448	33	0	0	0	0	0	4	0	0	0	0
4/21/2024	6:15 PM	1	428	25	0	0	0	0	0	2	0	0	0	0
4/21/2024	6:30 PM	1	368	26	0	0	0	0	0	8	0	0	0	0
4/21/2024	6:45 PM	0	349	23	0	0	0	0	0	7	0	0	0	0
4/21/2024	7:00 PM	0	309	20	0	0	0	0	0	8	0	0	0	0
4/21/2024	7:15 PM	0	272	27	0	0	0	0	0	12	0	0	0	0
4/21/2024	7:30 PM	0	260	22	0	0	0	0	1	8	0	0	0	0
4/21/2024	7:45 PM	0	248	19	0	0	0	0	1	8	0	0	0	0
4/21/2024	8:00 PM	0	249	20	0	0	0	0	1	7	0	0	0	0
4/21/2024	8:15 PM	0	240	8	0	1	0	0	1	6	0	0	0	0
4/21/2024	8:30 PM	0	241	6	0	1	0	0	0	5	0	0	0	0
4/21/2024	8:45 PM	0	223	5	0	1	0	0	0	6	0	0	0	0
4/21/2024	9:00 PM	0	200	3	0	1	0	0	0	11	0	0	0	0
4/21/2024	9:15 PM	0	186	8	0	0	0	0	0	10	0	0	0	0
4/21/2024	9:30 PM	0	165	8	0	0	0	0	0	10	0	0	0	0
4/21/2024	9:45 PM	0	137	8	0	0	0	0	0	12	0	0	0	0
4/21/2024	10:00 PM	0	121	11	0	0	0	0	0	7	0	0	0	0
4/21/2024	10:15 PM	0	110	6	0	0	0	0	0	7	0	0	0	0
4/21/2024	10:30 PM	0	87	5	0	0	0	0	0	6	0	0	0	0
4/21/2024	10:45 PM	0	75	4	0	0	0	0	0	5	0	0	0	0
4/21/2024	11:00 PM	0	65	0	0	0	0	0	0	7	0	0	0	0
4/21/2024	11:15 PM	0	37	0	0	0	0	0	0	5	0	0	0	0
4/21/2024	11:30 PM	0	22	0	0	0	0	0	0	5	0	0	0	0
4/21/2024	11:45 PM	0	11	0	0	0	0	0	0	3	0	0	0	0

4/22/2024	12:00 AM	0	30	8	0	0	0	0	0	5	0	0	0	0
4/22/2024	12:15 AM	0	26	5	0	0	0	0	0	5	0	0	0	0
4/22/2024	12:30 AM	0	23	3	0	1	0	0	0	4	0	0	0	0
4/22/2024	12:45 AM	0	24	4	0	1	0	0	0	2	0	0	0	0
4/22/2024	1:00 AM	0	19	2	0	1	0	0	0	1	0	0	0	0
4/22/2024	1:15 AM	0	21	2	0	2	0	0	0	3	0	0	0	0
4/22/2024	1:30 AM	0	19	2	0	1	0	0	0	3	0	0	0	0
4/22/2024	1:45 AM	0	17	0	0	1	0	0	0	4	0	0	0	0
4/22/2024	2:00 AM	0	23	3	0	1	0	0	0	5	0	0	0	0
4/22/2024	2:15 AM	0	21	3	0	0	0	0	0	4	0	0	0	0
4/22/2024	2:30 AM	0	28	3	0	0	0	0	0	4	0	0	0	0
4/22/2024	2:45 AM	0	31	5	0	0	0	0	0	4	0	0	0	0
4/22/2024	3:00 AM	0	29	5	0	0	0	0	0	5	0	0	0	0
4/22/2024	3:15 AM	0	34	8	0	1	0	0	0	5	0	0	0	0
4/22/2024	3:30 AM	0	35	10	0	1	0	0	0	5	0	0	0	0
4/22/2024	3:45 AM	0	32	9	0	1	0	0	0	5	0	0	0	0
4/22/2024	4:00 AM	0	36	9	0	2	0	0	0	5	0	0	0	0
4/22/2024	4:15 AM	0	41	11	0	1	0	0	0	6	0	0	0	0
4/22/2024	4:30 AM	0	51	17	0	1	0	0	0	8	0	0	0	0
4/22/2024	4:45 AM	0	80	28	0	1	0	0	0	8	0	0	0	0
4/22/2024	5:00 AM	0	104	39	0	1	0	0	0	9	0	0	0	0
4/22/2024	5:15 AM	0	139	46	0	1	0	0	0	8	0	1	0	0
4/22/2024	5:30 AM	0	185	64	0	1	0	0	0	8	0	1	0	0
4/22/2024	5:45 AM	0	231	98	0	2	1	0	0	9	0	1	0	0
4/22/2024	6:00 AM	0	306	132	1	3	1	0	0	7	0	1	0	0
4/22/2024	6:15 AM	0	375	153	1	5	1	0	1	12	0	0	0	0
4/22/2024	6:30 AM	0	459	167	1	5	2	0	1	14	0	0	0	0
4/22/2024	6:45 AM	0	522	158	1	5	1	0	1	14	0	0	0	0
4/22/2024	7:00 AM	0	525	150	0	4	3	0	1	17	0	0	0	0
4/22/2024	7:15 AM	0	506	150	0	2	4	0	0	11	0	0	0	0
4/22/2024	7:30 AM	0	451	131	0	2	4	0	1	9	0	0	0	0
4/22/2024	7:45 AM	0	412	124	0	5	4	0	1	9	0	0	0	0
4/22/2024	8:00 AM	0	384	111	0	9	2	0	1	9	0	0	0	0
4/22/2024	8:15 AM	0	370	89	0	12	2	0	1	13	0	0	0	0
4/22/2024	8:30 AM	0	364	91	0	15	2	0	0	19	0	0	0	0
4/22/2024	8:45 AM	0	335	86	0	12	3	0	0	23	0	0	0	0
4/22/2024	9:00 AM	0	326	81	0	9	4	0	1	22	0	0	0	0
4/22/2024	9:15 AM	0	307	88	0	10	5	0	1	22	0	0	0	0
4/22/2024	9:30 AM	0	292	87	0	9	4	0	1	18	0	0	0	0
4/22/2024	9:45 AM	0	297	84	0	11	3	0	2	19	0	0	0	0
4/22/2024	10:00 AM	0	305	89	1	13	3	0	1	19	0	0	0	0
4/22/2024	10:15 AM	0	331	98	1	11	1	0	2	17	0	0	0	0
4/22/2024	10:30 AM	0	332	94	1	13	1	0	2	15	0	0	0	0
4/22/2024	10:45 AM	0	347	94	1	13	2	0	2	10	0	0	0	0
4/22/2024	11:00 AM	0	353	83	0	10	1	0	2	12	0	0	0	0
4/22/2024	11:15 AM	0	355	97	0	10	1	0	1	16	0	0	0	0
4/22/2024	11:30 AM	0	382	109	0	6	1	0	1	13	0	0	0	0
4/22/2024	11:45 AM	0	401	115	0	3	0	0	1	18	0	0	0	0
4/22/2024	12:00 PM	0	428	130	0	3	4	0	1	14	0	0	0	0
4/22/2024	12:15 PM	0	437	119	0	3	4	0	1	13	0	0	0	0
4/22/2024	12:30 PM	0	436	113	1	6	5	0	1	18	0	0	0	0
4/22/2024	12:45 PM	0	442	113	1	9	6	0	0	19	0	0	0	0
4/22/2024	1:00 PM	0	451	108	1	9	3	0	1	19	0	0	0	0
4/22/2024	1:15 PM	0	476	108	1	8	3	0	1	20	0	0	0	0
4/22/2024	1:30 PM	0	483	111	0	6	3	0	1	21	0	0	0	0
4/22/2024	1:45 PM	0	493	109	0	3	2	0	1	17	0	0	0	0
4/22/2024	2:00 PM	0	481	110	0	5	2	0	0	20	0	0	0	0
4/22/2024	2:15 PM	0	499	118	0	5	2	0	1	16	0	0	0	0
4/22/2024	2:30 PM	0	524	124	0	4	2	0	1	11	0	0	0	0
4/22/2024	2:45 PM	0	540	129	0	7	3	0	1	10	0	0	0	0
4/22/2024	3:00 PM	0	552	142	0	4	2	0	1	9	0	0	0	0
4/22/2024	3:15 PM	0	601	144	0	3	2	0	0	8	0	0	0	0
4/22/2024	3:30 PM	0	614	141	0	4	1	0	0	10	0	0	0	0
4/22/2024	3:45 PM	0	645	154	0	3	1	0	0	11	0	0	0	0
4/22/2024	4:00 PM	0	660	149	0	3	1	0	0	9	0	0	0	0
4/22/2024	4:15 PM	0	642	141	0	4	1	0	1	13	0	0	0	0
4/22/2024	4:30 PM	0	669	137	0	6	2	0	1	17	0	0	0	0
4/22/2024	4:45 PM	0	634	122	0	4	1	0	1	14	0	0	0	0
4/22/2024	5:00 PM	0	617	104	0	4	1	0	1	17	0	0	0	0
4/22/2024	5:15 PM	0	572	92	0	3	1	0	0	14	0	0	0	0
4/22/2024	5:30 PM	0	504	92	0	1	0	0	0	8	0	0	0	0
4/22/2024	5:45 PM	0	470	92	0	1	0	0	0	9	0	0	0	0
4/22/2024	6:00 PM	0	436	98	0	1	0	0	0	5	0	0	0	0
4/22/2024	6:15 PM	0	415	101	0	2	1	0	0	6	0	0	0	0
4/22/2024	6:30 PM	0	382	92	0	2	1	0	0	8	0	0	0	0
4/22/2024	6:45 PM	0	359	79	0	4	1	0	0	8	0	0	0	0
4/22/2024	7:00 PM	0	357	77	0	5	2	0	0	9	0	0	0	0
4/22/2024	7:15 PM	0	305	82	0	6	1	0	0	7	0	0	0	0
4/22/2024	7:30 PM	0	302	84	0	5	1	0	0	5	0	0	0	0
4/22/2024	7:45 PM	0	276	89	0	3	1	0	0	5	0	0	0	0
4/22/2024	8:00 PM	0	250	87	0	2	0	0	0	5	0	0	0	0
4/22/2024	8:15 PM	0	246	76	0	2	0	0	0	5	0	0	0	0
4/22/2024	8:30 PM	0	219	69	0	2	0	0	0	4	0	0	0	0
4/22/2024	8:45 PM	0	209	64	0	3	0	0	0	3	0	0	0	0
4/22/2024	9:00 PM	0	180	57	0	3	0	0	0	3	0	0	0	0
4/22/2024	9:15 PM	0	150	49	0	1	0	0	0	2	0	0	0	0
4/22/2024	9:30 PM	0	134	45	0	1	0	0	0	2	0	0	0	0
4/22/2024	9:45 PM	0	110	36	0	0	0	0	0	4	0	0	0	0
4/22/2024	10:00 PM	0	104	34	0	0	0	0	0	5	0	1	0	0
4/22/2024	10:15 PM	0	102	32	0	1	0	0	0	5	0	1	0	0
4/22/2024	10:30 PM	0	84	26	0	1	0	0	0	5	0	1	0	0
4/22/2024	10:45 PM	0	74	24	0	1	0	0	0	4	0	2	0	0
4/22/2024	11:00 PM	0	54	16	0	1	0	0	0	2	0	1	0	0
4/22/2024	11:15 PM	0	30	9	0	0	0	0	0	2	0	1	0	0
4/22/2024	11:30 PM	0	22	7	0	0	0	0	0	2	0	1	0	0
4/22/2024	11:45 PM	0	7	2	0	0	0	0	0	0	0	0	0	0

4/23/2024	12:00 AM	0	46	6	0	1	0	0	1	3	0	1	0	0
4/23/2024	12:15 AM	0	44	5	0	1	0	0	1	4	0	2	0	0
4/23/2024	12:30 AM	0	35	3	0	2	0	0	1	7	0	2	0	0
4/23/2024	12:45 AM	0	35	5	0	1	0	0	0	7	0	2	0	0
4/23/2024	1:00 AM	0	28	4	0	1	0	0	0	4	0	1	0	0
4/23/2024	1:15 AM	0	23	2	0	2	0	0	0	4	0	1	0	0
4/23/2024	1:30 AM	0	22	2	0	1	0	0	0	3	0	1	0	0
4/23/2024	1:45 AM	0	18	1	0	1	0	0	0	5	0	1	0	0
4/23/2024	2:00 AM	0	17	1	0	2	0	0	0	6	0	2	0	0
4/23/2024	2:15 AM	0	19	1	0	1	0	0	0	7	0	1	0	0
4/23/2024	2:30 AM	0	25	1	0	1	2	0	0	6	0	1	0	0
4/23/2024	2:45 AM	0	30	1	0	1	2	0	0	5	0	1	0	0
4/23/2024	3:00 AM	0	35	4	0	0	2	0	0	4	0	0	0	0
4/23/2024	3:15 AM	0	35	4	0	1	2	0	0	4	0	0	0	0
4/23/2024	3:30 AM	0	38	5	0	1	0	0	0	6	0	0	0	0
4/23/2024	3:45 AM	0	39	7	0	1	1	0	0	7	0	0	0	0
4/23/2024	4:00 AM	0	43	6	0	1	1	0	0	9	0	0	0	0
4/23/2024	4:15 AM	0	59	9	0	0	1	0	0	10	0	0	0	0
4/23/2024	4:30 AM	0	75	11	0	2	1	0	0	10	0	0	0	0
4/23/2024	4:45 AM	0	101	10	0	2	0	0	0	12	0	0	0	0
4/23/2024	5:00 AM	0	130	9	0	2	0	0	0	12	0	0	0	0
4/23/2024	5:15 AM	0	168	10	0	2	1	0	0	10	0	0	0	0
4/23/2024	5:30 AM	0	219	18	0	0	1	0	0	9	0	0	0	0
4/23/2024	5:45 AM	0	289	36	0	1	1	0	1	6	0	0	0	0
4/23/2024	6:00 AM	0	365	77	0	4	1	0	1	9	0	0	0	0
4/23/2024	6:15 AM	0	417	120	0	5	0	0	1	12	0	0	0	0
4/23/2024	6:30 AM	0	481	161	1	5	0	0	1	14	0	0	0	0
4/23/2024	6:45 AM	0	502	168	1	5	2	0	0	15	0	0	0	0
4/23/2024	7:00 AM	0	490	146	1	4	2	0	0	11	1	0	0	0
4/23/2024	7:15 AM	0	483	127	1	6	2	0	0	12	1	0	0	0
4/23/2024	7:30 AM	0	438	95	0	11	3	0	1	11	1	0	0	0
4/23/2024	7:45 AM	0	403	89	0	13	2	0	2	13	1	0	0	0
4/23/2024	8:00 AM	0	411	92	0	14	2	0	3	16	0	0	0	0
4/23/2024	8:15 AM	0	387	80	0	12	2	0	4	14	0	0	0	0
4/23/2024	8:30 AM	0	389	78	0	11	2	0	4	19	0	0	0	0
4/23/2024	8:45 AM	0	378	77	0	12	1	0	3	19	0	0	0	0
4/23/2024	9:00 AM	0	339	74	0	12	1	0	3	21	0	0	0	0
4/23/2024	9:15 AM	0	332	82	0	12	2	0	2	22	0	0	0	0
4/23/2024	9:30 AM	0	341	82	0	9	2	0	1	17	0	0	0	0
4/23/2024	9:45 AM	0	344	77	0	5	2	0	2	16	0	0	0	0
4/23/2024	10:00 AM	0	365	75	0	4	3	0	1	17	0	0	0	0
4/23/2024	10:15 AM	0	375	76	0	3	5	0	1	17	0	0	0	0
4/23/2024	10:30 AM	0	356	81	2	2	4	0	1	14	0	0	0	0
4/23/2024	10:45 AM	0	383	84	2	4	4	0	0	15	0	0	0	0
4/23/2024	11:00 AM	0	411	87	2	4	3	0	0	11	1	0	0	0
4/23/2024	11:15 AM	0	421	75	3	8	0	0	0	11	1	0	0	0
4/23/2024	11:30 AM	0	437	76	1	9	1	0	0	15	1	0	0	0
4/23/2024	11:45 AM	1	443	81	1	9	1	0	0	14	1	0	0	0
4/23/2024	12:00 PM	2	438	82	1	8	2	0	0	18	0	0	0	0
4/23/2024	12:15 PM	2	454	92	0	6	4	0	0	20	0	0	0	0
4/23/2024	12:30 PM	2	462	85	0	11	4	0	0	22	0	0	0	0
4/23/2024	12:45 PM	2	470	86	0	11	4	0	0	26	0	0	0	0
4/23/2024	1:00 PM	1	476	94	0	12	4	0	0	25	0	0	0	0
4/23/2024	1:15 PM	2	481	96	0	13	4	0	1	24	0	0	0	0
4/23/2024	1:30 PM	2	506	102	0	11	3	0	1	20	0	0	0	0
4/23/2024	1:45 PM	1	522	113	0	10	3	0	1	18	0	0	0	0
4/23/2024	2:00 PM	1	523	111	0	10	3	0	2	16	0	0	0	0
4/23/2024	2:15 PM	0	549	130	0	10	4	0	2	13	0	0	0	0
4/23/2024	2:30 PM	0	539	144	0	6	5	0	2	17	0	0	0	0
4/23/2024	2:45 PM	1	517	150	0	13	7	0	3	18	1	0	0	0
4/23/2024	3:00 PM	1	529	163	1	13	6	0	2	17	1	0	0	0
4/23/2024	3:15 PM	2	524	163	2	11	3	0	5	19	1	0	0	0
4/23/2024	3:30 PM	3	562	177	4	12	3	0	8	19	1	0	0	0
4/23/2024	3:45 PM	2	622	178	4	9	2	0	8	18	0	0	0	0
4/23/2024	4:00 PM	2	637	173	3	13	5	0	9	16	0	0	0	0
4/23/2024	4:15 PM	1	683	161	2	18	5	0	7	14	1	0	0	0
4/23/2024	4:30 PM	0	669	149	0	20	4	0	5	9	1	0	0	0
4/23/2024	4:45 PM	0	613	155	1	15	5	0	4	7	1	0	0	0
4/23/2024	5:00 PM	0	600	161	1	14	5	0	4	10	1	0	0	0
4/23/2024	5:15 PM	0	548	165	1	10	5	0	2	10	0	0	0	0
4/23/2024	5:30 PM	0	486	152	1	12	5	0	2	12	0	0	0	0
4/23/2024	5:45 PM	1	472	121	0	12	5	0	3	10	0	0	0	0
4/23/2024	6:00 PM	1	422	97	0	10	2	0	2	9	0	0	0	0
4/23/2024	6:15 PM	1	398	84	0	9	2	0	3	8	0	0	0	0
4/23/2024	6:30 PM	1	397	78	0	5	2	0	2	8	0	0	0	0
4/23/2024	6:45 PM	0	363	75	0	6	2	0	1	10	0	0	0	0
4/23/2024	7:00 PM	2	360	70	1	5	2	0	1	9	0	0	0	0
4/23/2024	7:15 PM	2	327	62	1	5	2	0	1	13	0	0	0	0
4/23/2024	7:30 PM	2	323	56	1	5	2	0	1	13	0	0	0	0
4/23/2024	7:45 PM	2	316	54	1	7	0	0	1	11	0	0	0	0
4/23/2024	8:00 PM	0	293	50	0	5	0	0	2	10	0	0	0	0
4/23/2024	8:15 PM	0	279	41	0	4	0	0	1	6	0	0	0	0
4/23/2024	8:30 PM	0	250	34	0	3	0	0	1	4	0	0	0	0
4/23/2024	8:45 PM	0	235	28	0	0	0	0	1	4	0	0	0	0
4/23/2024	9:00 PM	1	208	24	0	1	0	0	0	5	0	0	0	0
4/23/2024	9:15 PM	1	169	21	0	1	0	0	0	7	0	0	0	0
4/23/2024	9:30 PM	1	145	23	0	1	0	0	0	10	0	0	0	0
4/23/2024	9:45 PM	1	112	24	0	1	0	0	0	11	0	0	0	0
4/23/2024	10:00 PM	1	105	28	0	0	0	0	0	11	0	0	0	0
4/23/2024	10:15 PM	1	115	37	0	0	0	0	0	8	0	0	0	0
4/23/2024	10:30 PM	1	98	34	0	0	0	0	0	4	0	0	0	0
4/23/2024	10:45 PM	1	92	32	0	0	0	0	0	3	0	0	0	0
4/23/2024	11:00 PM	0	69	26	0	0	0	0	0	2	0	1	0	0
4/23/2024	11:15 PM	0	39	14	0	0	0	0	0	2	0	1	0	0
4/23/2024	11:30 PM	0	24	8	0	0	0	0	0	2	0	1	0	0
4/23/2024	11:45 PM	0	8	3	0	0	0	0	0	1	0	1	0	0

4/24/2024	12:00 AM	0	48	3	1	2	1	0	0	8	0	0	0	0
4/24/2024	12:15 AM	0	44	3	1	3	1	0	0	5	0	0	0	0
4/24/2024	12:30 AM	0	41	5	0	2	1	0	0	7	0	0	0	0
4/24/2024	12:45 AM	0	32	3	0	1	0	0	0	8	0	2	0	0
4/24/2024	1:00 AM	0	30	3	0	1	0	0	0	5	0	2	0	0
4/24/2024	1:15 AM	0	30	4	0	0	0	0	0	5	0	3	0	0
4/24/2024	1:30 AM	0	25	2	0	1	0	0	0	6	0	4	0	0
4/24/2024	1:45 AM	0	25	2	0	1	0	0	0	7	0	2	0	0
4/24/2024	2:00 AM	0	19	2	0	1	0	0	0	6	0	3	0	0
4/24/2024	2:15 AM	0	14	1	0	1	0	0	0	6	0	2	0	0
4/24/2024	2:30 AM	0	17	2	0	0	0	0	0	3	0	1	0	0
4/24/2024	2:45 AM	0	17	2	0	0	0	0	0	3	0	1	0	0
4/24/2024	3:00 AM	0	30	5	0	0	0	0	0	2	0	0	0	0
4/24/2024	3:15 AM	0	38	7	0	0	0	0	0	5	0	0	0	0
4/24/2024	3:30 AM	0	41	8	0	0	0	0	0	6	0	0	0	0
4/24/2024	3:45 AM	0	47	10	0	0	0	0	0	5	0	0	0	0
4/24/2024	4:00 AM	0	43	11	0	0	0	0	0	7	0	0	0	0
4/24/2024	4:15 AM	0	51	13	0	0	0	0	0	5	0	0	0	0
4/24/2024	4:30 AM	0	60	15	0	0	0	0	0	8	0	0	0	0
4/24/2024	4:45 AM	0	77	21	0	0	0	0	0	8	0	0	0	0
4/24/2024	5:00 AM	0	112	27	0	2	0	0	0	8	0	1	0	0
4/24/2024	5:15 AM	0	135	33	0	4	0	0	0	11	0	1	0	0
4/24/2024	5:30 AM	0	196	53	0	7	0	0	0	9	0	1	0	0
4/24/2024	5:45 AM	0	260	79	0	9	0	0	0	10	0	1	0	0
4/24/2024	6:00 AM	0	327	99	0	9	0	0	0	11	0	0	0	0
4/24/2024	6:15 AM	0	403	133	0	8	1	0	1	10	0	0	0	0
4/24/2024	6:30 AM	0	486	151	0	7	1	0	1	11	0	0	0	0
4/24/2024	6:45 AM	0	528	154	0	7	1	0	1	12	0	0	0	0
4/24/2024	7:00 AM	0	534	153	0	7	1	0	2	10	0	0	0	0
4/24/2024	7:15 AM	0	526	130	0	8	1	0	1	10	0	0	0	0
4/24/2024	7:30 AM	0	451	121	0	10	2	0	1	11	0	0	0	0
4/24/2024	7:45 AM	0	409	112	0	9	2	0	1	10	1	0	0	0
4/24/2024	8:00 AM	1	381	107	0	10	3	0	0	9	1	0	0	0
4/24/2024	8:15 AM	1	351	105	0	13	4	0	0	11	1	0	0	0
4/24/2024	8:30 AM	1	351	97	0	13	5	0	0	15	1	0	0	0
4/24/2024	8:45 AM	1	344	97	2	15	5	0	0	17	0	0	0	0
4/24/2024	9:00 AM	1	348	95	3	14	5	0	1	21	0	0	0	0
4/24/2024	9:15 AM	1	357	99	3	14	3	0	3	20	0	0	0	0
4/24/2024	9:30 AM	2	350	110	3	14	3	0	3	16	0	0	0	0
4/24/2024	9:45 AM	2	362	114	1	12	4	0	3	14	0	0	0	0
4/24/2024	10:00 AM	1	364	117	0	12	4	0	3	10	0	0	0	0
4/24/2024	10:15 AM	1	354	121	0	11	5	0	2	7	0	0	0	0
4/24/2024	10:30 AM	0	346	120	0	9	4	0	4	7	0	0	0	0
4/24/2024	10:45 AM	0	337	113	0	9	3	0	5	7	0	0	0	0
4/24/2024	11:00 AM	0	314	125	0	10	5	0	4	10	0	0	0	0
4/24/2024	11:15 AM	0	328	119	0	9	5	0	3	12	0	0	0	0
4/24/2024	11:30 AM	1	347	125	0	11	6	0	2	13	0	0	0	0
4/24/2024	11:45 AM	1	364	131	2	16	6	0	1	17	1	0	0	0
4/24/2024	12:00 PM	1	408	139	2	14	4	0	2	17	1	0	0	0
4/24/2024	12:15 PM	1	427	147	2	16	6	0	2	19	2	0	0	0
4/24/2024	12:30 PM	0	443	151	2	14	5	0	3	16	2	0	0	0
4/24/2024	12:45 PM	1	461	161	0	10	7	0	4	16	1	0	0	0
4/24/2024	1:00 PM	1	472	153	5	10	7	0	3	17	1	0	0	0
4/24/2024	1:15 PM	1	473	146	5	9	4	0	3	20	0	0	0	0
4/24/2024	1:30 PM	1	493	137	5	7	3	0	1	20	0	0	0	0
4/24/2024	1:45 PM	0	473	135	5	6	1	0	1	21	0	0	0	0
4/24/2024	2:00 PM	3	463	132	0	7	1	0	2	23	0	0	0	0
4/24/2024	2:15 PM	3	497	153	0	6	2	0	3	17	0	0	0	0
4/24/2024	2:30 PM	4	492	172	0	9	4	0	3	17	0	0	0	0
4/24/2024	2:45 PM	6	508	179	0	11	5	0	4	12	0	0	0	0
4/24/2024	3:00 PM	3	515	193	1	13	4	0	4	11	0	0	0	0
4/24/2024	3:15 PM	4	522	189	1	12	3	0	3	14	0	0	0	0
4/24/2024	3:30 PM	3	560	179	1	17	2	0	4	16	0	0	0	0
4/24/2024	3:45 PM	1	603	174	1	20	3	0	2	22	0	0	0	0
4/24/2024	4:00 PM	1	645	181	0	22	3	0	1	23	0	0	0	0
4/24/2024	4:15 PM	1	676	187	0	24	4	0	2	22	0	0	0	0
4/24/2024	4:30 PM	1	666	177	0	20	3	0	2	19	0	0	0	0
4/24/2024	4:45 PM	1	651	162	0	18	1	0	4	12	0	0	0	0
4/24/2024	5:00 PM	1	612	141	0	16	1	2	5	8	1	0	0	0
4/24/2024	5:15 PM	1	550	118	0	14	0	2	5	7	1	0	0	0
4/24/2024	5:30 PM	1	535	115	0	12	1	2	4	9	1	0	0	0
4/24/2024	5:45 PM	1	482	119	0	10	2	2	3	11	1	0	0	0
4/24/2024	6:00 PM	1	460	105	0	8	2	0	4	12	0	0	0	0
4/24/2024	6:15 PM	0	434	101	0	7	2	0	3	11	0	0	0	0
4/24/2024	6:30 PM	0	397	86	0	6	1	0	3	10	0	0	0	0
4/24/2024	6:45 PM	0	396	67	0	5	2	0	4	8	0	0	0	0
4/24/2024	7:00 PM	0	347	65	0	4	2	0	2	7	0	0	0	0
4/24/2024	7:15 PM	0	329	67	0	3	2	0	3	7	0	0	0	0
4/24/2024	7:30 PM	0	312	65	0	4	2	0	3	6	0	0	0	0
4/24/2024	7:45 PM	1	305	71	0	3	0	0	1	6	0	0	0	0
4/24/2024	8:00 PM	1	332	73	0	2	0	0	1	9	0	0	0	0
4/24/2024	8:15 PM	1	310	65	0	2	0	0	0	9	0	0	0	0
4/24/2024	8:30 PM	1	283	62	0	1	0	0	0	12	0	0	0	0
4/24/2024	8:45 PM	0	243	55	0	1	0	0	0	14	0	0	0	0
4/24/2024	9:00 PM	0	201	44	0	1	0	0	0	10	0	0	0	0
4/24/2024	9:15 PM	0	180	39	0	2	0	0	0	10	0	0	0	0
4/24/2024	9:30 PM	0	159	34	0	2	0	0	0	8	0	1	0	0
4/24/2024	9:45 PM	0	138	29	0	2	0	0	0	8	0	1	0	0
4/24/2024	10:00 PM	0	124	25	0	3	0	0	0	9	0	1	0	0
4/24/2024	10:15 PM	0	114	23	0	3	0	0	0	7	0	1	0	0
4/24/2024	10:30 PM	0	95	20	0	2	0	0	0	7	0	0	0	0
4/24/2024	10:45 PM	0	87	19	0	2	0	0	0	5	0	0	0	0
4/24/2024	11:00 PM	0	70	16	0	1	0	0	0	5	0	0	0	0
4/24/2024	11:15 PM	0	43	10	0	0	0	0	0	5	0	0	0	0
4/24/2024	11:30 PM	0	28	6	0	0	0	0	0	3	0	0	0	0
4/24/2024	11:45 PM	0	11	2	0	0	0	0	0	2	0	0	0	0

4/25/2024	12:00 AM	0	39	9	1	0	0	0	0	8	0	2	0	0
4/25/2024	12:15 AM	0	31	7	1	0	0	0	0	8	0	1	0	0
4/25/2024	12:30 AM	0	33	8	0	0	0	0	0	9	0	1	0	0
4/25/2024	12:45 AM	0	34	9	0	0	0	0	0	6	0	2	0	0
4/25/2024	1:00 AM	0	31	10	0	0	0	0	0	7	0	1	0	0
4/25/2024	1:15 AM	0	31	9	0	1	0	0	0	6	0	2	0	0
4/25/2024	1:30 AM	0	30	8	0	1	0	0	0	5	0	2	0	0
4/25/2024	1:45 AM	0	28	6	0	1	0	0	0	3	0	1	0	0
4/25/2024	2:00 AM	0	23	5	0	1	0	0	0	3	0	2	0	0
4/25/2024	2:15 AM	0	20	4	0	0	0	0	0	2	0	2	0	0
4/25/2024	2:30 AM	0	13	3	0	0	0	0	0	1	0	2	0	0
4/25/2024	2:45 AM	0	14	6	0	0	0	0	0	2	0	2	0	0
4/25/2024	3:00 AM	0	21	9	0	0	0	0	0	3	0	1	0	0
4/25/2024	3:15 AM	0	27	12	0	0	0	0	0	3	0	0	0	0
4/25/2024	3:30 AM	0	33	13	0	0	1	0	0	7	0	0	0	0
4/25/2024	3:45 AM	0	36	13	0	0	1	0	0	8	0	0	0	0
4/25/2024	4:00 AM	0	36	14	0	0	1	0	0	6	0	0	0	0
4/25/2024	4:15 AM	0	40	16	0	0	1	0	0	9	0	0	0	0
4/25/2024	4:30 AM	1	47	19	0	0	0	0	0	8	0	0	0	0
4/25/2024	4:45 AM	1	83	22	0	0	0	0	0	14	0	0	0	0
4/25/2024	5:00 AM	1	120	23	0	0	0	0	0	18	0	0	0	0
4/25/2024	5:15 AM	1	166	25	0	2	2	0	0	17	0	0	0	0
4/25/2024	5:30 AM	0	229	40	0	2	2	0	0	17	0	0	0	0
4/25/2024	5:45 AM	0	280	66	0	3	2	0	0	11	0	0	0	0
4/25/2024	6:00 AM	0	353	87	0	6	3	0	0	12	0	0	0	0
4/25/2024	6:15 AM	1	416	111	0	7	4	0	1	14	0	1	0	0
4/25/2024	6:30 AM	1	483	123	0	11	4	0	1	17	0	1	0	0
4/25/2024	6:45 AM	1	525	114	0	10	4	0	1	19	0	1	0	0
4/25/2024	7:00 AM	1	520	119	0	8	3	0	1	17	0	1	0	0
4/25/2024	7:15 AM	0	494	115	0	6	1	0	0	16	0	0	0	0
4/25/2024	7:30 AM	0	452	118	0	4	1	0	0	16	0	0	0	0
4/25/2024	7:45 AM	0	411	115	0	5	1	0	1	12	1	0	0	0
4/25/2024	8:00 AM	1	386	117	0	7	3	0	1	15	1	0	0	0
4/25/2024	8:15 AM	2	386	110	0	10	2	0	1	20	1	0	0	0
4/25/2024	8:30 AM	2	355	109	0	10	5	0	2	17	1	0	0	0
4/25/2024	8:45 AM	2	342	119	0	10	5	0	1	22	0	0	0	0
4/25/2024	9:00 AM	1	343	111	0	9	5	0	2	17	0	0	0	0
4/25/2024	9:15 AM	0	333	119	0	9	5	0	4	15	0	0	0	0
4/25/2024	9:30 AM	0	356	117	0	9	4	0	5	12	0	0	0	0
4/25/2024	9:45 AM	0	368	109	0	9	4	0	5	12	0	0	0	0
4/25/2024	10:00 AM	1	368	111	0	10	2	0	4	17	0	0	0	0
4/25/2024	10:15 AM	1	366	104	0	7	4	0	3	12	0	0	0	0
4/25/2024	10:30 AM	1	371	105	0	9	2	1	1	19	0	0	0	0
4/25/2024	10:45 AM	1	383	117	0	10	3	1	1	21	0	0	0	0
4/25/2024	11:00 AM	1	379	126	0	9	5	1	1	20	0	0	0	0
4/25/2024	11:15 AM	3	407	148	0	14	3	1	3	21	0	0	0	0
4/25/2024	11:30 AM	3	429	159	0	12	3	0	6	17	0	0	0	0
4/25/2024	11:45 AM	4	414	162	0	11	2	0	6	14	0	0	0	0
4/25/2024	12:00 PM	3	435	166	0	11	0	0	6	15	0	0	0	0
4/25/2024	12:15 PM	2	430	162	0	7	1	0	4	18	0	0	0	0
4/25/2024	12:30 PM	2	428	150	0	6	2	0	2	17	0	0	0	0
4/25/2024	12:45 PM	2	474	145	0	5	2	0	4	16	0	0	0	0
4/25/2024	1:00 PM	2	489	141	0	4	2	0	4	12	2	0	0	0
4/25/2024	1:15 PM	1	517	133	0	6	1	0	3	10	2	0	0	0
4/25/2024	1:30 PM	1	537	141	0	7	0	0	2	15	3	0	0	0
4/25/2024	1:45 PM	0	527	147	0	13	0	0	1	17	3	0	0	0
4/25/2024	2:00 PM	0	512	140	0	16	1	0	4	19	2	0	0	0
4/25/2024	2:15 PM	0	511	148	0	15	1	0	4	19	2	0	0	0
4/25/2024	2:30 PM	0	489	154	0	17	1	0	5	13	1	0	0	0
4/25/2024	2:45 PM	1	491	163	0	17	1	0	4	15	1	0	0	0
4/25/2024	3:00 PM	1	522	180	1	18	0	0	1	14	0	0	0	0
4/25/2024	3:15 PM	1	560	191	1	17	1	0	1	15	1	0	0	0
4/25/2024	3:30 PM	1	618	192	2	16	1	0	0	18	1	0	0	0
4/25/2024	3:45 PM	1	643	179	2	10	1	0	0	15	1	0	0	0
4/25/2024	4:00 PM	1	660	172	1	8	2	0	0	18	1	0	0	0
4/25/2024	4:15 PM	1	668	162	1	10	1	0	1	15	0	0	0	0
4/25/2024	4:30 PM	1	655	142	0	7	1	0	1	13	0	0	0	0
4/25/2024	4:45 PM	2	626	146	0	7	2	0	1	13	0	0	0	0
4/25/2024	5:00 PM	3	614	137	0	5	1	0	1	9	0	0	0	0
4/25/2024	5:15 PM	4	585	136	0	2	1	0	0	8	0	0	0	0
4/25/2024	5:30 PM	5	539	132	0	4	1	0	0	7	0	0	0	0
4/25/2024	5:45 PM	3	526	119	0	7	0	0	0	4	0	0	0	0
4/25/2024	6:00 PM	2	485	118	0	10	0	0	0	3	0	0	0	0
4/25/2024	6:15 PM	3	438	100	0	11	0	0	0	4	0	0	0	0
4/25/2024	6:30 PM	2	425	93	1	9	0	0	0	5	0	0	0	0
4/25/2024	6:45 PM	2	411	86	1	8	0	0	0	8	0	0	0	0
4/25/2024	7:00 PM	2	395	78	1	4	0	0	0	7	0	0	0	0
4/25/2024	7:15 PM	1	370	76	1	2	0	0	0	8	0	0	0	0
4/25/2024	7:30 PM	1	321	77	0	4	1	0	0	6	0	0	0	0
4/25/2024	7:45 PM	1	303	74	0	2	1	0	0	5	0	0	0	0
4/25/2024	8:00 PM	1	291	70	0	3	1	0	0	6	0	0	0	0
4/25/2024	8:15 PM	0	283	68	0	3	1	0	0	5	0	0	0	0
4/25/2024	8:30 PM	1	284	66	1	1	0	0	0	5	0	0	0	0
4/25/2024	8:45 PM	1	244	63	1	1	0	0	0	3	0	0	0	0
4/25/2024	9:00 PM	1	208	55	1	1	0	0	0	4	0	0	0	0
4/25/2024	9:15 PM	1	171	49	1	2	0	0	0	5	0	0	0	0
4/25/2024	9:30 PM	0	158	46	0	2	0	0	0	5	0	0	0	0
4/25/2024	9:45 PM	0	148	43	0	2	0	0	0	5	0	1	0	0
4/25/2024	10:00 PM	0	138	42	1	1	0	0	0	3	0	1	0	0
4/25/2024	10:15 PM	0	126	39	1	0	0	0	0	2	0	2	0	0
4/25/2024	10:30 PM	0	99	32	1	0	0	0	1	2	0	2	0	0
4/25/2024	10:45 PM	0	87	32	1	0	0	0	1	3	0	2	0	0
4/25/2024	11:00 PM	0	75	31	0	0	0	0	1	5	0	4	0	0
4/25/2024	11:15 PM	0	53	23	0	0	0	0	1	4	0	3	0	0
4/25/2024	11:30 PM	0	38	18	0	0	0	0	0	4	0	3	0	0
4/25/2024	11:45 PM	0	17	8	0	0	0	0	0	2	0	2	0	0

4/26/2024	12:00 AM	0	44	0	0	1	0	0	0	4	0	1	0	0
4/26/2024	12:15 AM	0	41	0	0	1	0	0	0	4	0	1	0	0
4/26/2024	12:30 AM	0	39	0	0	1	0	0	0	4	0	1	0	0
4/26/2024	12:45 AM	0	39	0	0	1	0	0	0	3	0	2	0	0
4/26/2024	1:00 AM	0	40	0	0	1	0	0	0	6	0	2	0	0
4/26/2024	1:15 AM	0	39	0	0	0	0	0	0	7	0	1	0	0
4/26/2024	1:30 AM	0	40	1	0	0	0	0	0	9	0	1	0	0
4/26/2024	1:45 AM	0	26	1	0	0	0	0	0	9	0	1	0	0
4/26/2024	2:00 AM	0	23	1	0	0	0	0	0	8	0	1	0	0
4/26/2024	2:15 AM	0	21	1	0	0	0	0	0	7	0	1	0	0
4/26/2024	2:30 AM	0	21	0	0	0	0	0	0	7	0	1	0	0
4/26/2024	2:45 AM	0	22	1	0	0	0	0	0	7	0	0	0	0
4/26/2024	3:00 AM	0	25	1	0	3	0	0	0	6	0	0	0	0
4/26/2024	3:15 AM	0	27	1	0	4	0	0	0	8	0	0	0	0
4/26/2024	3:30 AM	0	32	3	0	4	0	0	0	7	0	0	0	0
4/26/2024	3:45 AM	0	39	5	0	4	0	0	0	9	0	0	0	0
4/26/2024	4:00 AM	0	44	6	0	1	0	0	0	9	0	0	0	0
4/26/2024	4:15 AM	0	50	9	0	0	0	0	0	9	0	0	0	0
4/26/2024	4:30 AM	0	57	15	0	0	0	0	0	9	0	0	0	0
4/26/2024	4:45 AM	0	77	21	0	2	0	0	0	10	0	0	0	0
4/26/2024	5:00 AM	0	103	30	0	4	1	0	0	9	0	0	0	0
4/26/2024	5:15 AM	0	129	40	0	5	1	0	0	11	0	0	0	0
4/26/2024	5:30 AM	0	161	48	0	6	1	0	0	15	0	0	0	0
4/26/2024	5:45 AM	0	236	62	0	4	1	0	0	14	0	0	0	0
4/26/2024	6:00 AM	0	300	67	0	4	0	0	0	17	0	0	0	0
4/26/2024	6:15 AM	1	375	89	0	8	0	0	0	17	0	0	0	0
4/26/2024	6:30 AM	1	455	114	0	10	0	0	0	15	0	0	0	0
4/26/2024	6:45 AM	1	486	119	0	15	0	0	0	14	0	0	0	0
4/26/2024	7:00 AM	2	506	131	0	14	1	0	0	11	0	0	0	0
4/26/2024	7:15 AM	1	482	125	0	9	1	0	0	8	0	0	0	0
4/26/2024	7:30 AM	1	439	108	0	9	1	0	0	6	0	0	0	0
4/26/2024	7:45 AM	1	401	103	0	7	1	0	0	8	0	0	0	0
4/26/2024	8:00 AM	0	381	101	0	9	3	0	0	12	0	0	0	0
4/26/2024	8:15 AM	0	372	98	0	12	4	0	0	16	0	0	0	0
4/26/2024	8:30 AM	0	357	110	0	10	6	0	0	17	0	0	0	0
4/26/2024	8:45 AM	0	349	106	0	13	6	0	0	17	0	0	0	0
4/26/2024	9:00 AM	1	341	105	0	12	3	0	1	15	0	0	0	0
4/26/2024	9:15 AM	1	337	109	0	13	5	0	3	11	0	0	0	0
4/26/2024	9:30 AM	1	348	93	0	15	5	0	3	13	0	0	0	0
4/26/2024	9:45 AM	2	363	98	0	12	5	0	4	13	0	0	0	0
4/26/2024	10:00 AM	1	362	108	3	14	7	0	4	16	0	0	0	0
4/26/2024	10:15 AM	1	386	113	3	11	4	0	3	18	0	0	0	0
4/26/2024	10:30 AM	1	408	132	3	9	2	1	3	23	0	0	0	0
4/26/2024	10:45 AM	0	412	147	3	11	2	1	2	24	0	0	0	0
4/26/2024	11:00 AM	0	437	148	0	9	0	1	1	25	0	0	0	0
4/26/2024	11:15 AM	1	456	150	0	9	0	2	1	29	0	0	0	0
4/26/2024	11:30 AM	1	469	148	0	12	1	2	1	22	0	0	0	0
4/26/2024	11:45 AM	1	482	142	0	13	1	2	1	19	0	0	0	0
4/26/2024	12:00 PM	2	496	140	0	15	2	2	1	16	0	0	0	0
4/26/2024	12:15 PM	1	532	133	1	17	2	1	1	12	0	0	0	0
4/26/2024	12:30 PM	1	542	121	1	15	1	1	1	16	0	0	0	0
4/26/2024	12:45 PM	1	550	128	2	13	1	1	1	18	0	0	0	0
4/26/2024	1:00 PM	3	519	123	3	13	0	1	1	16	0	0	0	0
4/26/2024	1:15 PM	3	455	110	2	11	2	1	0	15	0	0	0	0
4/26/2024	1:30 PM	3	440	113	2	11	3	0	2	15	0	0	0	0
4/26/2024	1:45 PM	3	424	109	1	7	3	0	2	16	0	0	0	0
4/26/2024	2:00 PM	0	445	110	0	5	4	0	3	17	0	0	0	0
4/26/2024	2:15 PM	0	488	114	0	4	3	0	3	19	0	0	0	0
4/26/2024	2:30 PM	0	489	119	0	5	2	2	2	16	0	0	0	0
4/26/2024	2:45 PM	0	491	111	0	8	2	2	4	17	0	0	0	0
4/26/2024	3:00 PM	0	513	113	0	8	1	2	3	19	0	0	0	0
4/26/2024	3:15 PM	0	480	119	1	13	0	2	4	16	0	0	0	0
4/26/2024	3:30 PM	2	497	119	1	11	0	1	3	13	0	0	0	0
4/26/2024	3:45 PM	2	514	114	1	11	0	1	2	8	0	0	0	0
4/26/2024	4:00 PM	3	508	109	1	10	2	1	3	5	0	0	0	0
4/26/2024	4:15 PM	3	564	109	0	8	2	1	2	4	0	0	0	0
4/26/2024	4:30 PM	1	619	116	0	10	2	0	2	6	0	0	0	0
4/26/2024	4:45 PM	1	634	137	0	10	2	0	1	5	0	0	0	0
4/26/2024	5:00 PM	0	622	139	0	12	0	0	1	5	0	0	0	0
4/26/2024	5:15 PM	2	625	136	0	12	0	0	2	6	0	0	0	0
4/26/2024	5:30 PM	2	576	123	0	11	0	0	3	4	0	0	0	0
4/26/2024	5:45 PM	2	554	104	0	10	0	0	3	6	0	0	0	0
4/26/2024	6:00 PM	2	517	93	0	8	0	0	2	8	0	0	0	0
4/26/2024	6:15 PM	0	452	92	0	9	0	0	2	7	0	0	0	0
4/26/2024	6:30 PM	0	412	83	0	7	0	0	1	9	0	0	0	0
4/26/2024	6:45 PM	1	386	73	0	6	0	0	1	7	0	0	0	0
4/26/2024	7:00 PM	1	415	72	0	5	0	0	2	3	0	0	0	0
4/26/2024	7:15 PM	2	424	59	0	1	0	0	1	5	0	0	0	0
4/26/2024	7:30 PM	2	427	49	0	1	1	0	1	4	0	0	0	0
4/26/2024	7:45 PM	1	405	39	0	0	1	0	1	5	0	0	0	0
4/26/2024	8:00 PM	1	352	27	0	0	1	0	0	6	0	0	0	0
4/26/2024	8:15 PM	0	326	22	0	0	1	0	0	3	0	0	0	0
4/26/2024	8:30 PM	0	304	20	0	2	0	0	0	4	0	0	0	0
4/26/2024	8:45 PM	0	293	18	0	3	1	0	0	4	0	0	0	0
4/26/2024	9:00 PM	0	293	18	0	6	1	0	0	4	0	0	0	0
4/26/2024	9:15 PM	0	266	17	0	6	1	0	0	7	0	0	0	0
4/26/2024	9:30 PM	2	249	16	0	4	1	0	0	7	0	0	0	0
4/26/2024	9:45 PM	2	237	17	0	4	0	0	0	8	0	0	0	0
4/26/2024	10:00 PM	2	223	15	0	1	0	0	0	7	0	0	0	0
4/26/2024	10:15 PM	2	217	14	0	5	0	0	0	7	0	0	0	0
4/26/2024	10:30 PM	0	190	12	0	5	0	0	0	6	0	0	0	0
4/26/2024	10:45 PM	0	161	10	0	4	0	0	0	6	0	0	0	0
4/26/2024	11:00 PM	0	137	9	0	4	0	0	0	8	0	0	0	0
4/26/2024	11:15 PM	0	90	6	0	0	0	0	0	5	0	0	0	0
4/26/2024	11:30 PM	0	55	3	0	0	0	0	0	4	0	0	0	0
4/26/2024	11:45 PM	0	28	1	0	0	0	0	0	2	0	0	0	0

4/27/2024	12:00 AM	1	67	4	1	0	1	0	0	4	0	3	0	0
4/27/2024	12:15 AM	0	58	3	1	0	1	0	0	3	0	2	0	0
4/27/2024	12:30 AM	0	52	3	0	0	1	0	0	2	0	2	0	0
4/27/2024	12:45 AM	0	50	3	0	0	0	0	0	2	0	1	0	0
4/27/2024	1:00 AM	0	52	4	0	1	0	0	0	1	0	0	0	0
4/27/2024	1:15 AM	0	48	4	0	1	1	0	0	0	0	1	0	0
4/27/2024	1:30 AM	0	39	2	0	1	1	0	0	0	0	1	0	0
4/27/2024	1:45 AM	0	38	2	0	1	1	0	0	1	0	1	0	0
4/27/2024	2:00 AM	0	33	3	0	0	1	0	0	2	0	1	0	0
4/27/2024	2:15 AM	0	25	2	0	0	0	0	0	2	0	0	0	0
4/27/2024	2:30 AM	0	23	3	0	0	0	0	0	4	0	0	0	0
4/27/2024	2:45 AM	0	20	3	0	0	0	0	0	3	0	0	0	0
4/27/2024	3:00 AM	0	18	1	1	0	0	0	0	2	0	1	0	0
4/27/2024	3:15 AM	0	20	2	1	0	0	0	0	4	0	2	0	0
4/27/2024	3:30 AM	0	19	1	1	0	0	0	0	4	0	2	0	0
4/27/2024	3:45 AM	0	23	1	1	0	0	0	0	7	0	3	0	0
4/27/2024	4:00 AM	0	24	1	0	0	0	0	0	9	0	2	0	0
4/27/2024	4:15 AM	0	29	2	0	0	0	0	0	8	0	1	0	0
4/27/2024	4:30 AM	0	33	3	0	0	0	0	0	7	0	1	0	0
4/27/2024	4:45 AM	0	40	6	0	0	0	0	0	5	0	0	0	0
4/27/2024	5:00 AM	0	54	8	0	0	0	0	0	4	0	1	0	0
4/27/2024	5:15 AM	0	60	8	0	0	0	0	0	7	0	1	0	0
4/27/2024	5:30 AM	0	72	13	0	1	0	0	0	8	0	1	0	0
4/27/2024	5:45 AM	0	86	18	0	1	0	0	0	10	0	1	0	0
4/27/2024	6:00 AM	0	106	20	0	2	0	0	0	12	0	0	0	0
4/27/2024	6:15 AM	0	121	27	0	2	0	0	0	9	0	0	0	0
4/27/2024	6:30 AM	0	148	31	0	2	1	0	0	9	0	0	0	0
4/27/2024	6:45 AM	0	160	36	0	6	1	0	0	6	0	0	0	0
4/27/2024	7:00 AM	0	169	45	0	7	1	0	0	6	0	0	0	0
4/27/2024	7:15 AM	0	198	47	0	8	2	0	0	8	0	0	0	0
4/27/2024	7:30 AM	0	197	48	0	10	1	0	0	7	0	0	0	0
4/27/2024	7:45 AM	0	219	47	0	6	1	0	0	11	0	0	0	0
4/27/2024	8:00 AM	0	240	50	0	4	2	0	1	8	0	0	0	0
4/27/2024	8:15 AM	0	234	56	0	5	1	0	1	5	0	0	0	0
4/27/2024	8:30 AM	1	248	69	0	4	2	0	1	7	0	0	0	0
4/27/2024	8:45 AM	1	272	84	0	5	2	0	1	3	0	0	0	0
4/27/2024	9:00 AM	2	286	87	0	7	2	0	0	6	0	0	0	0
4/27/2024	9:15 AM	3	319	94	0	8	2	0	3	9	0	0	0	0
4/27/2024	9:30 AM	2	333	86	0	7	1	0	3	8	0	0	0	0
4/27/2024	9:45 AM	3	355	85	0	7	1	0	3	11	0	0	0	0
4/27/2024	10:00 AM	3	368	88	0	5	0	0	3	8	0	0	0	0
4/27/2024	10:15 AM	2	379	93	0	3	0	0	0	6	0	0	0	0
4/27/2024	10:30 AM	2	399	100	0	2	0	0	0	6	0	0	0	0
4/27/2024	10:45 AM	2	396	102	0	3	0	0	0	3	0	0	0	0
4/27/2024	11:00 AM	1	412	112	0	4	0	0	0	5	0	0	0	0
4/27/2024	11:15 AM	1	453	106	0	6	0	0	0	7	0	0	0	0
4/27/2024	11:30 AM	1	488	106	0	7	0	0	1	7	0	0	0	0
4/27/2024	11:45 AM	1	490	108	0	8	0	0	1	13	0	0	0	0
4/27/2024	12:00 PM	2	511	109	0	7	0	0	1	12	0	0	0	0
4/27/2024	12:15 PM	3	493	117	0	4	0	0	3	11	0	0	0	0
4/27/2024	12:30 PM	3	495	130	0	6	1	0	2	12	0	0	0	0
4/27/2024	12:45 PM	2	532	127	0	3	1	0	2	7	0	0	0	0
4/27/2024	1:00 PM	1	545	122	0	5	1	0	3	8	0	0	0	0
4/27/2024	1:15 PM	0	564	136	0	6	1	0	1	8	0	0	0	0
4/27/2024	1:30 PM	2	567	130	0	4	0	0	2	6	0	0	0	0
4/27/2024	1:45 PM	2	590	130	0	6	0	0	2	7	0	0	0	0
4/27/2024	2:00 PM	4	592	125	0	6	0	0	1	6	0	0	0	0
4/27/2024	2:15 PM	4	601	111	0	6	0	0	2	4	0	0	0	0
4/27/2024	2:30 PM	4	622	98	0	5	0	0	1	4	0	0	0	0
4/27/2024	2:45 PM	4	618	107	0	5	0	0	1	5	0	0	0	0
4/27/2024	3:00 PM	2	609	125	0	5	0	0	1	5	0	0	0	0
4/27/2024	3:15 PM	2	639	122	0	10	1	0	0	7	0	0	0	0
4/27/2024	3:30 PM	0	615	134	0	11	1	0	0	8	0	0	0	0
4/27/2024	3:45 PM	1	586	120	0	9	1	0	0	7	0	0	0	0
4/27/2024	4:00 PM	1	590	111	0	9	1	0	1	7	0	0	0	0
4/27/2024	4:15 PM	1	551	108	0	5	1	0	1	6	0	0	0	0
4/27/2024	4:30 PM	1	564	92	0	4	1	0	1	7	0	0	0	0
4/27/2024	4:45 PM	0	557	103	0	6	1	0	1	7	0	0	0	0
4/27/2024	5:00 PM	1	540	93	0	4	1	0	0	7	0	0	0	0
4/27/2024	5:15 PM	5	552	95	0	3	0	0	0	6	0	0	0	0
4/27/2024	5:30 PM	7	520	103	0	3	0	0	0	3	0	0	0	0
4/27/2024	5:45 PM	7	515	89	0	1	0	0	0	1	0	0	0	0
4/27/2024	6:00 PM	8	498	92	0	2	0	0	0	0	0	0	0	0
4/27/2024	6:15 PM	4	458	89	0	3	0	0	0	0	0	0	0	0
4/27/2024	6:30 PM	2	461	91	0	5	0	0	0	1	0	0	0	0
4/27/2024	6:45 PM	3	426	93	0	5	0	0	0	1	0	0	0	0
4/27/2024	7:00 PM	2	412	89	0	4	0	0	0	2	0	0	0	0
4/27/2024	7:15 PM	3	393	87	0	2	0	0	0	3	0	0	0	0
4/27/2024	7:30 PM	3	359	83	0	1	0	0	0	5	0	0	0	0
4/27/2024	7:45 PM	2	359	82	0	1	0	0	0	7	0	0	0	0
4/27/2024	8:00 PM	1	357	79	0	1	0	0	0	6	0	0	0	0
4/27/2024	8:15 PM	0	354	72	0	1	0	0	0	7	0	0	0	0
4/27/2024	8:30 PM	0	359	65	0	0	0	0	0	6	0	0	0	0
4/27/2024	8:45 PM	1	356	56	0	0	0	0	0	4	0	0	0	0
4/27/2024	9:00 PM	1	352	53	0	0	0	0	0	4	0	0	0	0
4/27/2024	9:15 PM	1	324	48	0	0	0	0	0	2	0	0	0	0
4/27/2024	9:30 PM	1	299	49	0	0	0	0	0	1	0	0	0	0
4/27/2024	9:45 PM	0	264	45	0	0	0	0	0	1	0	0	0	0
4/27/2024	10:00 PM	0	221	38	0	0	0	0	0	1	0	0	0	0
4/27/2024	10:15 PM	0	191	35	0	0	0	0	0	3	0	0	0	0
4/27/2024	10:30 PM	0	167	33	0	0	0	0	0	3	0	0	0	0
4/27/2024	10:45 PM	0	137	32	0	0	0	0	0	3	0	0	0	0
4/27/2024	11:00 PM	0	115	29	0	1	0	0	0	3	0	0	0	0
4/27/2024	11:15 PM	0	83	22	0	1	0	0	0	1	0	0	0	0
4/27/2024	11:30 PM	0	43	11	0	1	0	0	0	0	0	0	0	0
4/27/2024	11:45 PM	0	23	5	0	1	0	0	0	0	0	0	0	0

Bi-Directional Class Count || NB EB 15min

Columbia, SC

Marr Traffic DATA COLLECTION
www.marrtraffic.com

Site 76 Lane 1 EB
I-20,
east of Browwing Rd

Date
Sunday, April 21, 2024

Lat/Long
34.038463°, -81.102937°

Weather
Cloudy
66°F

Click here for Detailed Weather

Click here for Map

0000 - 2400 (Sunday 24h Session) (04-21-2024)
NB EB 15min

	Eastbound (Movement 76 Lane 1 EB.1)													15min	60min
Time	1	2	3	4	5	6	7	8	9	10	11	12	13	Total	Total
0000 - 0015	0	35	8	0	0	0	0	0	0	0	0	0	0	**43**	
0015 - 0030	0	55	9	0	0	0	0	0	1	0	0	0	0	**65**	
0030 - 0045	0	50	6	0	0	0	0	0	0	0	0	0	0	**56**	
0045 - 0100	0	52	9	0	0	0	0	0	0	0	0	0	0	**61**	**225**
0100 - 0115	0	29	3	0	0	0	0	0	0	0	0	0	0	**32**	
0115 - 0130	0	25	5	0	0	0	0	0	0	0	0	0	0	**30**	
0130 - 0145	0	34	8	0	0	0	0	0	1	0	0	0	0	**43**	
0145 - 0200	0	29	4	0	0	0	0	0	0	0	0	0	0	**33**	**138**
0200 - 0215	0	13	3	0	1	0	0	0	0	0	0	0	0	**17**	
0215 - 0230	0	10	2	0	0	0	0	0	0	0	0	0	0	**12**	
0230 - 0245	0	11	4	0	0	0	0	0	0	0	0	0	0	**15**	
0245 - 0300	0	14	3	0	0	0	0	0	1	0	0	0	0	**18**	**62**
0300 - 0315	0	18	7	0	0	0	0	0	0	0	0	0	0	**25**	
0315 - 0330	0	9	0	0	0	0	0	0	0	0	0	0	0	**9**	
0330 - 0345	0	9	2	0	0	0	0	0	0	0	0	0	0	**11**	
0345 - 0400	0	11	3	0	0	0	0	0	0	0	0	0	0	**14**	**59**
0400 - 0415	0	10	3	0	0	0	0	0	0	0	0	0	0	**13**	
0415 - 0430	0	6	1	0	0	0	0	0	0	0	0	0	0	**7**	
0430 - 0445	0	11	2	0	0	0	0	0	0	0	0	0	0	**13**	
0445 - 0500	0	8	1	0	0	0	0	0	0	0	0	0	0	**9**	**42**
0500 - 0515	0	5	1	0	0	0	0	0	0	0	0	0	0	**6**	
0515 - 0530	0	11	3	0	0	0	0	0	0	0	0	0	0	**14**	
0530 - 0545	0	11	3	0	0	0	0	0	0	0	0	0	0	**14**	
0545 - 0600	0	22	5	0	0	0	0	0	0	0	0	0	0	**27**	**61**
0600 - 0615	0	16	6	0	0	0	0	0	1	0	0	0	0	**23**	
0615 - 0630	0	14	7	0	0	0	0	0	0	0	0	0	0	**21**	
0630 - 0645	0	17	2	0	0	0	0	0	0	0	0	0	0	**19**	
0645 - 0700	0	20	0	0	1	0	0	0	0	0	0	0	0	**21**	**84**
0700 - 0715	0	30	9	0	0	0	0	0	0	0	0	0	0	**39**	
0715 - 0730	1	36	9	0	0	0	0	0	0	0	0	0	0	**46**	
0730 - 0745	0	45	7	0	2	0	0	0	0	0	0	0	0	**54**	
0745 - 0800	0	58	16	0	0	0	0	0	0	0	0	0	0	**74**	**213**
0800 - 0815	0	36	9	0	0	0	0	0	0	0	0	0	0	**45**	
0815 - 0830	0	49	9	0	0	0	0	0	0	0	0	0	0	**58**	
0830 - 0845	1	53	13	0	0	0	1	0	0	0	0	0	0	**68**	
0845 - 0900	0	63	11	0	0	0	0	0	0	0	0	0	0	**74**	**245**
0900 - 0915	4	70	10	0	0	0	0	0	0	0	0	0	0	**84**	
0915 - 0930	0	72	6	0	2	0	0	0	0	0	0	0	0	**80**	
0930 - 0945	0	87	16	0	0	0	0	0	1	0	0	0	0	**104**	
0945 - 1000	0	102	22	0	0	0	0	0	2	0	0	0	0	**126**	**394**
1000 - 1015	20	139	19	0	1	0	0	0	0	0	0	0	0	**179**	
1015 - 1030	0	102	15	0	1	0	0	0	0	0	0	0	0	**118**	
1030 - 1045	2	119	19	0	1	0	0	0	0	0	0	0	0	**141**	
1045 - 1100	14	98	29	1	0	0	0	0	0	0	0	0	0	**142**	**580**
1100 - 1115	12	97	28	0	0	0	0	0	0	0	0	0	0	**137**	
1115 - 1130	0	107	22	0	1	0	0	0	0	0	0	0	0	**130**	
1130 - 1145	0	141	32	0	0	0	0	0	0	0	0	0	0	**173**	
1145 - 1200	0	142	36	0	0	0	0	0	0	0	0	0	0	**178**	**618**
1200 - 1215	0	144	27	0	0	0	0	0	0	0	0	0	0	**171**	
1215 - 1230	0	141	29	1	0	0	0	1	1	0	0	0	0	**173**	
1230 - 1245	1	175	51	0	0	0	0	0	0	0	0	0	0	**227**	
1245 - 1300	0	152	48	1	0	0	0	1	1	0	0	0	0	**203**	**774**
1300 - 1315	0	162	36	0	0	0	0	0	0	0	0	0	0	**198**	
1315 - 1330	0	152	40	0	0	0	0	0	1	0	0	0	0	**193**	
1330 - 1345	1	206	24	0	0	0	0	1	0	0	0	0	0	**232**	
1345 - 1400	0	203	31	0	0	0	0	0	0	0	0	0	0	**234**	**857**
1400 - 1415	0	153	31	1	0	0	0	0	0	0	0	0	0	**185**	
1415 - 1430	0	179	55	0	0	0	0	0	0	0	0	0	0	**234**	
1430 - 1445	7	194	37	1	0	0	0	0	0	0	0	0	0	**239**	
1445 - 1500	1	175	54	0	0	0	0	1	0	0	0	0	0	**231**	**889**
1500 - 1515	0	155	42	0	0	0	0	0	0	0	0	0	0	**197**	
1515 - 1530	0	140	29	0	0	0	0	0	0	0	0	0	0	**169**	
1530 - 1545	0	174	43	0	0	0	0	1	0	0	0	0	0	**218**	
1545 - 1600	0	147	28	0	0	1	0	0	0	0	0	0	0	**176**	**760**
1600 - 1615	4	204	47	0	0	0	0	0	0	0	0	0	0	**255**	
1615 - 1630	0	185	39	0	0	0	0	1	0	0	0	0	0	**225**	
1630 - 1645	1	215	50	0	1	0	0	1	0	0	0	0	0	**268**	
1645 - 1700	0	197	42	0	1	0	0	0	0	0	0	0	0	**240**	**988**
1700 - 1715	0	193	35	0	0	0	0	2	0	0	0	0	0	**230**	
1715 - 1730	0	173	27	1	0	0	0	0	0	0	0	0	0	**201**	
1730 - 1745	0	189	33	0	0	0	0	0	0	0	0	0	0	**222**	
1745 - 1800	0	174	27	0	0	0	0	0	0	0	0	0	0	**201**	**854**
1800 - 1815	1	184	32	0	0	1	0	0	0	0	0	0	0	**218**	
1815 - 1830	0	164	18	0	0	0	0	2	0	0	0	0	0	**184**	
1830 - 1845	0	139	24	0	0	0	0	0	1	0	0	0	0	**164**	
1845 - 1900	0	111	15	0	0	0	0	0	1	0	0	0	0	**127**	**693**
1900 - 1915	0	198	28	1	0	0	0	0	0	0	0	0	0	**227**	
1915 - 1930	0	164	20	0	0	0	0	0	0	0	0	0	0	**184**	
1930 - 1945	0	154	24	0	0	0	0	0	1	0	0	0	0	**179**	
1945 - 2000	0	144	25	1	0	0	0	0	0	0	0	0	0	**170**	**760**
2000 - 2015	0	122	24	0	0	0	0	3	4	0	0	0	0	**153**	
2015 - 2030	0	125	28	0	0	0	0	1	2	0	1	0	0	**157**	
2030 - 2045	0	126	17	0	0	0	0	1	4	0	0	0	0	**148**	
2045 - 2100	0	126	19	0	0	0	0	0	4	0	0	0	0	**149**	**607**
2100 - 2115	0	101	7	0	0	0	0	0	1	0	0	0	0	**109**	
2115 - 2130	0	102	10	0	0	0	0	0	2	0	0	0	0	**114**	
2130 - 2145	0	123	8	0	1	0	0	3	4	0	1	0	0	**140**	
2145 - 2200	0	128	13	0	0	0	0	1	7	0	0	0	0	**149**	**512**
2200 - 2215	0	110	12	0	0	0	0	0	2	0	0	0	0	**124**	
2215 - 2230	0	120	9	0	0	0	0	0	0	0	0	0	0	**129**	
2230 - 2245	0	97	15	0	0	0	0	0	3	0	0	0	0	**115**	
2245 - 2300	0	105	18	0	0	0	0	0	1	0	0	0	0	**124**	**492**
2300 - 2315	0	44	11	1	0	0	0	1	2	0	0	0	0	**59**	
2315 - 2330	0	33	4	0	0	0	0	0	0	0	0	0	0	**37**	
2330 - 2345	0	54	8	0	0	0	0	0	4	0	0	0	0	**66**	
2345 - 0000	0	59	5	0	0	0	0	0	0	0	0	0	0	**64**	**226**

Session Total	70	9216	1746	9	13	2	1	21	53	0	2	0	0	**11133**
Session Average	0.73	96.00	18.19	0.09	0.14	0.02	0.01	0.22	0.55	0.00	0.02	0.00	0.00	**115.97**
Session Percentage	0.63	82.78	15.68	0.08	0.12	0.02	0.01	0.19	0.48	0.00	0.02	0.00	0.00	

AM Peak Hour	0945 - 1045	0945 - 1045	0945 - 1045	-	0645 - 0745	-	0745 - 0845	-	0900 - 1000	-	-	-	-	**0945 - 1045**
AM Peak Volume	22	462	75	0	3	0	1	0	3	0	0	0	0	**564**

Noon Peak Hour	1000 - 1100	1330 - 1430	1415 - 1515	1200 - 1300	1000 - 1100	-	-	1200 - 1300	1200 - 1300	-	-	-	-	**1415 - 1515**
Noon Peak Volume	36	741	188	2	3	0	0	2	2	0	0	0	0	**901**

PM Peak Hour	1545 - 1645	1600 - 1700	1600 - 1700	1900 - 2000	1600 - 1700	1500 - 1600	-	1945 - 2045	1945 - 2045	-	1930 - 2030	-	-	**1600 - 1700**
PM Peak Volume	5	801	178	2	2	1	0	5	10	0	1	0	0	**988**

Site 76 Lane 1 EB
I-20,
east of Browwing Rd

Date
Monday, April 22, 2024

Lat/Long
34.038463°, -81.102937°

Weather
Mostly Cloudy
57°F

Click here for Detailed Weather

0000 - 2400 (Weekday 24h Session) (04-22-2024)
NB EB 15min

	Eastbound (Movement 76 Lane 1 EB.1)													15min	60min
Time	1	2	3	4	5	6	7	8	9	10	11	12	13	Total	Total
0000 - 0015	0	14	5	0	0	0	0	0	0	0	0	0	0	**19**	
0015 - 0030	0	11	4	0	0	0	0	0	0	0	0	0	0	**15**	
0030 - 0045	0	17	8	0	0	0	0	0	0	0	0	0	0	**25**	
0045 - 0100	0	12	4	0	0	0	0	0	0	0	0	0	0	**16**	**75**
0100 - 0115	0	10	3	0	0	0	0	0	0	0	0	0	0	**13**	
0115 - 0130	0	11	4	0	0	0	0	0	0	0	0	0	0	**15**	
0130 - 0145	0	9	2	0	0	0	0	0	0	0	0	0	0	**11**	
0145 - 0200	0	10	3	0	0	0	0	0	0	0	0	0	0	**13**	**52**
0200 - 0215	0	8	2	0	0	0	0	0	0	0	0	0	0	**10**	
0215 - 0230	0	9	2	0	0	0	0	0	0	0	0	0	0	**11**	
0230 - 0245	0	6	1	0	0	0	0	0	0	0	0	0	0	**7**	
0245 - 0300	0	7	2	0	0	0	0	0	0	0	0	0	0	**9**	**37**
0300 - 0315	0	9	3	0	0	0	0	0	0	0	0	0	0	**12**	
0315 - 0330	0	11	4	0	0	0	0	0	0	0	0	0	0	**15**	
0330 - 0345	0	13	5	0	0	0	0	0	0	0	0	0	0	**18**	
0345 - 0400	0	11	3	0	0	0	0	0	0	0	0	0	0	**14**	**59**
0400 - 0415	0	12	3	0	0	0	0	0	0	0	0	0	0	**15**	
0415 - 0430	0	14	5	0	0	0	0	0	0	0	0	0	0	**19**	
0430 - 0445	0	16	7	0	0	0	0	0	0	0	0	0	0	**23**	
0445 - 0500	0	28	11	0	0	0	0	0	0	0	0	0	0	**39**	**96**
0500 - 0515	0	29	12	0	0	0	0	0	0	0	0	0	0	**41**	
0515 - 0530	0	27	8	0	0	0	0	0	0	0	0	0	0	**35**	
0530 - 0545	0	35	11	0	0	0	0	0	0	0	0	0	0	**46**	
0545 - 0600	0	39	13	0	0	0	0	0	0	0	0	0	0	**52**	**174**
0600 - 0615	0	42	15	0	0	0	0	0	0	0	0	0	0	**57**	
0615 - 0630	0	54	20	0	0	0	0	0	0	0	0	0	0	**74**	
0630 - 0645	0	72	28	0	1	0	0	0	0	0	0	0	0	**101**	
0645 - 0700	0	98	34	0	0	1	0	0	1	0	0	0	0	**134**	**366**
0700 - 0715	1	222	73	0	0	0	0	0	0	0	0	0	0	**296**	
0715 - 0730	0	273	74	0	1	0	0	0	1	0	1	0	0	**350**	
0730 - 0745	0	266	78	0	1	0	0	0	0	0	0	0	0	**345**	
0745 - 0800	2	228	79	0	1	1	0	0	1	0	0	0	0	**312**	**1303**
0800 - 0815	0	247	79	0	1	0	0	0	0	0	0	0	0	**327**	
0815 - 0830	0	206	71	0	1	0	0	0	0	0	0	0	0	**278**	
0830 - 0845	0	193	90	0	0	1	0	0	0	0	0	0	0	**284**	
0845 - 0900	0	169	57	0	0	1	0	0	0	0	0	0	0	**227**	**1116**
0900 - 0915	0	144	46	1	1	1	0	0	0	0	0	0	0	**193**	
0915 - 0930	0	110	49	0	0	0	0	0	2	0	0	0	0	**161**	
0930 - 0945	0	116	46	0	1	1	0	1	0	0	0	0	0	**165**	
0945 - 1000	1	115	40	0	1	0	0	1	2	0	0	0	0	**160**	**679**
1000 - 1015	0	92	36	0	0	0	0	0	0	0	0	0	0	**128**	
1015 - 1030	1	98	34	0	0	0	0	0	0	0	0	0	0	**133**	
1030 - 1045	0	106	32	0	2	2	0	0	0	0	0	0	0	**142**	
1045 - 1100	3	102	48	0	3	0	0	0	0	0	0	0	0	**156**	**559**
1100 - 1115	4	11	43	0	0	0	0	0	0	0	0	0	0	**58**	
1115 - 1130	0	101	40	0	1	0	0	0	0	0	0	0	0	**142**	
1130 - 1145	3	93	45	0	0	0	0	1	0	0	0	0	0	**142**	
1145 - 1200	0	107	54	0	1	1	0	0	0	0	0	0	0	**163**	**505**
1200 - 1215	0	69	31	0	0	0	0	1	1	0	0	0	0	**102**	
1215 - 1230	0	76	31	0	0	0	0	0	0	0	0	0	0	**107**	
1230 - 1245	0	93	34	0	1	0	0	0	0	0	0	0	0	**128**	
1245 - 1300	0	101	33	0	0	0	0	0	0	0	0	0	0	**134**	**471**
1300 - 1315	0	103	34	0	0	0	0	0	2	0	0	0	0	**139**	
1315 - 1330	0	112	33	0	0	0	0	0	0	0	0	0	0	**145**	
1330 - 1345	1	143	36	0	2	0	0	0	0	0	0	0	0	**182**	
1345 - 1400	1	119	42	0	0	1	0	0	0	0	0	0	0	**163**	**629**
1400 - 1415	0	138	45	0	0	0	0	1	3	0	0	0	0	**187**	
1415 - 1430	1	147	46	0	2	0	0	1	3	0	0	0	0	**200**	
1430 - 1445	0	140	53	0	1	1	0	0	0	0	0	0	0	**195**	
1445 - 1500	0	149	41	0	1	0	0	1	0	0	0	0	0	**192**	**774**
1500 - 1515	0	142	57	1	1	0	0	0	0	0	0	0	0	**201**	
1515 - 1530	0	123	43	0	1	1	0	0	0	0	0	0	0	**168**	
1530 - 1545	0	149	42	0	2	0	0	0	0	0	0	0	0	**193**	
1545 - 1600	0	160	47	0	2	2	0	0	3	0	0	0	0	**214**	**776**
1600 - 1615	0	187	52	0	1	0	0	0	0	0	0	0	0	**240**	
1615 - 1630	0	178	56	0	3	0	0	2	2	0	0	0	0	**241**	
1630 - 1645	0	202	60	0	1	0	0	0	0	0	0	0	0	**263**	
1645 - 1700	0	224	66	0	1	0	0	1	2	0	0	0	0	**294**	**1038**
1700 - 1715	0	222	87	0	4	1	0	0	2	0	0	0	0	**316**	
1715 - 1730	0	225	46	0	0	1	0	0	0	0	0	0	0	**272**	
1730 - 1745	0	188	52	0	1	0	0	0	0	0	0	0	0	**241**	
1745 - 1800	1	162	55	0	1	0	0	0	3	0	0	0	0	**222**	**1051**
1800 - 1815	0	119	38	0	0	0	0	0	0	0	1	0	0	**158**	
1815 - 1830	0	107	42	0	0	0	0	0	0	0	0	0	0	**149**	
1830 - 1845	0	92	39	0	0	0	0	0	0	0	0	0	0	**131**	
1845 - 1900	0	84	35	0	0	0	0	0	0	0	0	0	0	**119**	**557**
1900 - 1915	0	89	31	0	0	0	0	0	0	0	0	0	0	**120**	
1915 - 1930	0	81	32	0	0	0	0	0	0	0	0	0	0	**113**	
1930 - 1945	0	79	28	0	0	0	0	0	0	0	0	0	0	**107**	
1945 - 2000	0	67	26	0	0	0	0	0	0	0	0	0	0	**93**	**433**
2000 - 2015	0	77	31	0	0	0	0	0	0	0	0	0	0	**108**	
2015 - 2030	0	63	22	0	1	0	0	0	2	0	0	0	0	**88**	
2030 - 2045	0	52	19	0	0	0	0	0	0	0	0	0	0	**71**	
2045 - 2100	0	50	20	0	0	0	0	0	0	0	0	0	0	**70**	**337**
2100 - 2115	0	46	18	0	0	0	0	0	0	0	0	0	0	**64**	
2115 - 2130	0	43	15	0	0	0	0	0	0	0	0	0	0	**58**	
2130 - 2145	0	38	17	0	0	0	0	0	0	0	0	0	0	**55**	
2145 - 2200	0	35	14	0	0	0	0	0	0	0	0	0	0	**49**	**226**
2200 - 2215	0	37	17	0	0	0	0	0	0	0	0	0	0	**54**	
2215 - 2230	0	30	12	0	0	0	0	0	0	0	0	0	0	**42**	
2230 - 2245	0	34	15	0	0	0	0	0	0	0	0	0	0	**49**	
2245 - 2300	0	39	17	0	0	0	0	0	0	0	0	0	0	**56**	**201**
2300 - 2315	0	35	12	0	0	0	0	0	0	0	0	0	0	**47**	
2315 - 2330	0	29	10	0	0	0	0	0	0	0	0	0	0	**39**	
2330 - 2345	0	19	8	0	0	0	0	0	0	0	0	0	0	**27**	
2345 - 0000	0	17	9	0	0	0	0	0	0	0	0	0	0	**26**	**139**

Session Total	19	8547	2985	2	42	16	0	10	30	0	2	0	0	**11653**
Session Average	0.20	89.03	31.09	0.02	0.44	0.17	0.00	0.10	0.31	0.00	0.02	0.00	0.00	**121.39**
Session Percentage	0.16	73.35	25.62	0.02	0.36	0.14	0.00	0.09	0.26	0.00	0.02	0.00	0.00	

AM Peak Hour	0700 - 0800	0715 - 0815	0745 - 0845	0815 - 0915	0715 - 0815	0815 - 0915	-	0900 - 1000	0900 - 1000	-	0630 - 0730	-	-	**0715 - 0815**
AM Peak Volume	3	1014	319	1	4	3	0	2	4	0	1	0	0	**1334**

Noon Peak Hour	1045 - 1145	1415 - 1515	1415 - 1515	1415 - 1515	1030 - 1130	1000 - 1100	-	1400 - 1500	1330 - 1430	-	-	-	-	**1415 - 1515**
Noon Peak Volume	10	578	197	1	6	2	0	3	6	0	0	0	0	**788**

PM Peak Hour	1700 - 1800	1630 - 1730	1615 - 1715	1500 - 1600	1615 - 1715	1500 - 1600	-	1600 - 1700	1615 - 1715	-	1715 - 1815	-	-	**1630 - 1730**
PM Peak Volume	1	873	269	1	9	3	0	3	6	0	1	0	0	**1145**

Site 76 Lane 1 EB
I-20,
east of Browwing Rd

Date
Tuesday, April 23, 2024

Weather
Fair
58°F

Lat/Long
34.038463°, -81.102937°

Click here for Detailed Weather

0000 - 2400 (Weekday 24h Session) (04-23-2024)
NB EB 15min

	Eastbound (Movement 76 Lane 1 EB.1)													15min	60min
TIME	1	2	3	4	5	6	7	8	9	10	11	12	13	Total	Total
0000 - 0015	0	30	8	0	0	0	0	0	0	0	0	0	0	**38**	
0015 - 0030	0	17	5	0	1	0	0	0	0	0	0	0	0	**23**	
0030 - 0045	0	19	6	0	0	0	0	0	1	0	0	0	0	**26**	
0045 - 0100	0	16	3	1	0	0	0	0	0	0	0	0	0	**20**	**107**
0100 - 0115	0	15	5	0	0	0	0	0	0	0	0	0	0	**20**	
0115 - 0130	0	20	7	0	0	0	0	0	1	0	0	0	0	**28**	
0130 - 0145	0	12	2	0	0	0	0	0	0	0	0	0	0	**14**	
0145 - 0200	0	10	3	0	0	0	0	0	0	0	0	0	0	**13**	**75**
0200 - 0215	0	12	2	0	0	0	0	0	0	0	0	0	0	**14**	
0215 - 0230	0	9	3	0	0	0	0	0	0	0	0	0	0	**12**	
0230 - 0245	0	7	2	0	0	0	0	0	0	0	0	0	0	**9**	
0245 - 0300	0	6	1	0	0	0	0	0	0	0	0	0	0	**7**	**42**
0300 - 0315	0	11	4	0	0	0	0	0	1	0	0	0	0	**16**	
0315 - 0330	0	19	5	0	0	0	0	0	1	0	0	0	0	**25**	
0330 - 0345	0	14	3	0	0	0	0	0	0	0	0	0	0	**17**	
0345 - 0400	0	21	4	0	0	0	0	0	1	0	0	0	0	**26**	**84**
0400 - 0415	0	20	3	0	0	0	0	0	2	0	0	0	0	**25**	
0415 - 0430	0	26	8	0	0	0	0	0	1	0	0	0	0	**35**	
0430 - 0445	0	29	6	0	0	0	0	0	0	0	0	0	0	**35**	
0445 - 0500	0	30	7	0	0	0	0	0	0	0	0	0	0	**37**	**132**
0500 - 0515	0	28	5	0	0	0	0	0	0	0	0	0	0	**33**	
0515 - 0530	0	40	15	0	0	0	0	0	0	0	0	0	0	**55**	
0530 - 0545	0	82	24	0	0	0	0	0	0	0	0	0	0	**106**	
0545 - 0600	0	90	22	0	0	0	0	0	0	0	0	0	0	**112**	**306**
0600 - 0615	0	95	26	0	0	0	0	0	0	0	0	0	0	**121**	
0615 - 0630	0	111	29	0	0	0	0	0	0	0	0	0	0	**140**	
0630 - 0645	0	170	58	0	0	0	0	0	0	0	0	0	0	**228**	
0645 - 0700	0	208	60	0	0	0	0	1	1	0	0	0	0	**270**	**759**
0700 - 0715	1	157	68	0	0	0	0	1	0	0	0	0	0	**227**	
0715 - 0730	1	241	58	0	2	1	0	3	1	0	1	0	0	**308**	
0730 - 0745	0	132	39	0	1	0	0	0	1	0	0	0	0	**173**	
0745 - 0800	0	251	73	0	0	1	0	3	0	0	0	0	0	**328**	**1036**
0800 - 0815	2	222	53	0	1	0	0	3	0	0	0	0	0	**281**	
0815 - 0830	0	233	76	0	3	0	0	3	1	0	0	0	0	**316**	
0830 - 0845	0	235	94	0	2	0	0	5	0	0	1	0	0	**337**	
0845 - 0900	0	166	65	0	0	2	0	1	0	0	0	0	0	**234**	**1168**
0900 - 0915	0	130	45	0	0	1	0	2	0	0	0	0	0	**178**	
0915 - 0930	1	156	41	0	2	0	0	2	0	0	0	0	0	**202**	
0930 - 0945	0	131	55	0	2	0	0	3	0	0	0	0	0	**191**	
0945 - 1000	0	107	43	0	1	0	0	3	0	0	0	0	0	**154**	**725**
1000 - 1015	2	126	54	0	1	1	0	2	0	0	0	0	0	**186**	
1015 - 1030	2	122	39	0	1	0	0	1	0	0	0	0	0	**165**	
1030 - 1045	1	114	50	0	1	0	0	0	0	0	0	0	0	**166**	
1045 - 1100	0	149	38	0	1	0	0	2	1	0	0	0	0	**191**	**708**
1100 - 1115	1	101	32	0	1	0	0	1	0	0	0	0	0	**136**	
1115 - 1130	0	121	29	0	1	1	0	3	1	0	0	0	0	**156**	
1130 - 1145	1	105	35	0	1	0	0	2	0	0	0	0	0	**144**	
1145 - 1200	0	120	31	0	2	1	0	1	0	0	0	0	0	**155**	**591**
1200 - 1215	0	140	39	1	3	0	0	1	3	0	0	0	0	**187**	
1215 - 1230	0	138	43	0	0	0	0	3	3	0	0	0	0	**187**	
1230 - 1245	2	126	37	0	2	1	0	3	1	0	0	0	0	**172**	
1245 - 1300	1	129	42	0	0	0	0	1	0	0	0	0	0	**173**	**719**
1300 - 1315	1	131	29	0	2	0	0	0	0	0	0	0	0	**163**	
1315 - 1330	2	150	35	2	3	2	0	1	0	0	0	0	0	**195**	
1330 - 1345	0	137	28	0	2	0	0	0	1	0	0	0	0	**168**	
1345 - 1400	0	124	37	0	1	0	0	0	0	0	0	0	0	**162**	**688**
1400 - 1415	2	129	37	0	2	1	0	4	0	0	0	0	0	**175**	
1415 - 1430	1	129	43	0	0	1	0	0	0	0	0	0	0	**174**	
1430 - 1445	1	164	37	0	1	0	0	0	1	0	0	0	0	**204**	
1445 - 1500	0	158	39	0	0	0	0	2	2	0	0	0	0	**201**	**754**
1500 - 1515	0	148	45	0	2	1	0	2	1	0	0	0	0	**199**	
1515 - 1530	1	162	48	0	3	0	0	2	0	0	0	0	0	**216**	
1530 - 1545	2	217	58	0	3	0	0	2	1	0	0	0	0	**283**	
1545 - 1600	1	227	54	0	2	0	0	2	1	0	0	0	0	**287**	**985**
1600 - 1615	1	235	74	0	4	0	0	3	1	0	0	0	0	**318**	
1615 - 1630	0	272	79	0	3	1	0	8	3	0	0	0	0	**366**	
1630 - 1645	0	281	63	0	1	1	0	2	0	0	0	0	0	**348**	
1645 - 1700	0	237	67	0	2	0	0	2	2	0	0	0	0	**310**	**1342**
1700 - 1715	0	232	46	0	0	0	0	2	0	0	0	0	0	**280**	
1715 - 1730	0	277	53	0	1	0	0	5	0	0	0	0	0	**336**	
1730 - 1745	0	230	72	0	2	0	0	0	0	0	0	0	0	**304**	
1745 - 1800	0	232	50	0	0	2	0	0	3	0	0	0	0	**287**	**1207**
1800 - 1815	1	158	46	0	1	0	0	0	1	0	0	0	0	**207**	
1815 - 1830	0	160	22	0	2	0	0	1	1	0	0	0	0	**186**	
1830 - 1845	0	133	27	0	0	0	0	0	2	0	0	0	0	**162**	
1845 - 1900	0	107	34	0	0	1	0	3	0	0	0	0	0	**145**	**700**
1900 - 1915	1	127	23	0	0	0	0	1	0	0	0	0	0	**152**	
1915 - 1930	0	134	25	0	0	1	0	0	2	0	0	0	0	**162**	
1930 - 1945	0	110	21	0	1	0	0	1	1	0	0	0	0	**134**	
1945 - 2000	0	114	22	0	0	0	0	0	0	0	1	0	0	**137**	**585**
2000 - 2015	0	116	10	0	0	0	0	0	0	0	0	0	0	**126**	
2015 - 2030	0	120	15	0	0	0	0	0	1	0	0	0	0	**136**	
2030 - 2045	0	101	9	0	0	0	0	0	1	0	0	0	0	**111**	
2045 - 2100	0	98	7	0	0	0	0	0	0	0	0	0	0	**105**	**478**
2100 - 2115	0	90	5	0	0	0	0	0	2	0	0	0	0	**97**	
2115 - 2130	0	84	6	0	0	0	0	0	0	0	0	0	0	**90**	
2130 - 2145	0	74	4	0	0	0	0	0	1	0	0	0	0	**79**	
2145 - 2200	0	80	10	0	0	0	0	0	1	0	0	0	0	**91**	**357**
2200 - 2215	0	40	5	0	0	0	0	0	0	0	0	0	0	**45**	
2215 - 2230	0	27	3	0	0	0	0	0	0	0	0	0	0	**30**	
2230 - 2245	0	1	0	0	0	0	0	0	1	0	0	0	0	**2**	
2245 - 2300	0	3	1	0	0	0	0	0	0	0	0	0	0	**4**	**81**
2300 - 2315	0	0	0	0	0	0	0	0	0	0	0	0	0	**0**	
2315 - 2330	0	1	0	0	0	0	0	0	0	0	0	0	0	**1**	
2330 - 2345	0	1	0	0	0	0	0	0	0	0	0	0	0	**1**	
2345 - 0000	0	0	0	0	0	0	0	0	0	0	0	0	0	**0**	**2**

Session Total	29	10570	2794	4	67	20	0	93	51	0	3	0	0	**13631**
Session Average	0.30	110.10	29.10	0.04	0.70	0.21	0.00	0.97	0.53	0.00	0.03	0.00	0.00	**141.99**
Session Percentage	0.21	77.54	20.50	0.03	0.49	0.15	0.00	0.68	0.37	0.00	0.02	0.00	0.00	

AM Peak Hour	0945 - 1045	0745 - 0845	0745 - 0845	-	0745 - 0845	0815 - 0915	-	0745 - 0845	0645 - 0745	-	0630 - 0730	-	-	**0745 - 0845**
AM Peak Hour Volume	5	941	296	0	6	3	0	14	3	0	1	0	0	**1262**

Noon Peak Hour	1230 - 1330	1445 - 1545	1445 - 1545	1230 - 1330	1300 - 1400	1230 - 1330	-	1045 - 1145	1145 - 1245	-	-	-	-	**1445 - 1545**
Noon Peak Hour Volume	6	685	190	2	8	3	0	8	7	0	0	0	0	**899**

PM Peak Hour	1515 - 1615	1630 - 1730	1600 - 1700	-	1515 - 1615	1545 - 1645	-	1530 - 1630	1745 - 1845	-	1900 - 2000	-	-	**1600 - 1700**
PM Peak Hour Volume	5	1027	283	0	12	2	0	15	7	0	1	0	0	**1342**

Site 76 Lane 1 EB
I-20,
east of Browwing Rd

Date
Wednesday, April 24, 2024

Lat/Long
34.038463°, -81.102937°

Weather
Fair
66°F

Click here for Detailed Weather

0000 - 2400 (Weekday 24h Session) (04-24-2024)
NB EB 15min

	Eastbound (Movement 76 Lane 1 EB.1)													15min	60min
TIME	1	2	3	4	5	6	7	8	9	10	11	12	13	Total	Total
0000 - 0015	0	1	0	0	0	0	0	0	0	0	0	0	0	**1**	
0015 - 0030	0	0	0	0	0	0	0	0	0	0	0	0	0	**0**	
0030 - 0045	0	0	0	0	0	0	0	0	0	0	0	0	0	**0**	
0045 - 0100	0	0	0	0	0	0	0	0	0	0	0	0	0	**0**	**1**
0100 - 0115	0	0	0	0	0	0	0	0	0	0	0	0	0	**0**	
0115 - 0130	0	0	0	0	0	0	0	0	0	0	0	0	0	**0**	
0130 - 0145	0	0	0	0	0	0	0	0	0	0	0	0	0	**0**	
0145 - 0200	0	0	0	0	0	0	0	0	0	0	0	0	0	**0**	**0**
0200 - 0215	1	17	2	0	0	0	0	0	0	0	0	0	0	**20**	
0215 - 0230	0	15	4	0	0	0	0	4	1	0	0	0	0	**24**	
0230 - 0245	0	17	6	0	0	0	0	4	1	0	0	0	0	**28**	
0245 - 0300	0	13	3	0	0	0	0	5	2	0	0	0	0	**23**	**95**
0300 - 0315	0	15	4	0	0	0	0	2	1	0	0	0	0	**22**	
0315 - 0330	0	20	3	0	2	0	0	1	1	0	0	0	0	**27**	
0330 - 0345	1	17	2	0	0	0	0	1	2	0	0	0	0	**23**	
0345 - 0400	0	20	2	0	0	0	0	0	1	0	0	0	0	**23**	**95**
0400 - 0415	1	37	5	0	0	0	0	0	1	0	0	0	0	**44**	
0415 - 0430	0	21	3	0	1	0	0	0	1	0	0	0	0	**26**	
0430 - 0445	0	23	3	0	0	0	0	1	1	0	0	0	0	**28**	
0445 - 0500	0	13	2	0	1	0	0	0	1	0	0	0	0	**17**	**115**
0500 - 0515	0	42	5	0	1	0	0	2	2	0	0	0	0	**52**	
0515 - 0530	0	61	11	0	1	0	0	2	1	0	0	0	0	**76**	
0530 - 0545	0	75	13	0	2	0	0	3	1	0	0	0	0	**94**	
0545 - 0600	0	84	16	0	3	0	0	2	1	0	0	0	0	**106**	**328**
0600 - 0615	0	77	13	0	1	2	0	2	2	0	0	0	0	**97**	
0615 - 0630	0	99	18	0	2	1	0	2	1	0	0	0	0	**123**	
0630 - 0645	1	132	37	0	0	1	0	0	0	0	0	0	0	**171**	
0645 - 0700	0	182	62	0	6	0	0	0	0	0	0	0	0	**250**	**641**
0700 - 0715	4	220	78	0	3	0	0	0	1	0	0	0	0	**306**	
0715 - 0730	1	287	85	0	0	0	0	0	0	0	0	0	0	**373**	
0730 - 0745	1	301	91	0	5	0	0	1	1	0	0	0	0	**400**	
0745 - 0800	1	368	92	0	4	0	0	0	0	0	0	0	0	**465**	**1544**
0800 - 0815	0	306	79	0	2	0	0	0	0	0	0	0	0	**387**	
0815 - 0830	0	233	77	1	1	1	0	0	0	0	0	0	0	**313**	
0830 - 0845	0	226	73	0	1	0	0	0	1	0	0	0	0	**301**	
0845 - 0900	5	167	59	0	3	0	0	0	1	0	0	0	0	**235**	**1236**
0900 - 0915	1	165	58	0	3	0	0	0	0	0	0	0	0	**227**	
0915 - 0930	0	149	46	0	3	1	0	0	0	0	0	0	0	**199**	
0930 - 0945	1	137	47	0	2	0	0	0	0	0	0	0	0	**187**	
0945 - 1000	0	123	34	0	3	1	0	0	0	0	0	0	0	**161**	**774**
1000 - 1015	0	140	34	0	5	0	0	2	0	0	0	0	0	**181**	
1015 - 1030	0	109	32	0	2	0	0	1	2	0	0	0	0	**146**	
1030 - 1045	0	129	30	0	6	1	0	1	1	0	0	0	0	**168**	
1045 - 1100	0	119	33	0	1	1	0	2	0	0	0	0	0	**156**	**651**
1100 - 1115	0	111	39	1	2	0	0	2	0	0	0	0	0	**155**	
1115 - 1130	0	114	31	0	1	0	0	2	0	0	0	0	0	**148**	
1130 - 1145	2	121	41	0	3	0	0	0	2	0	0	0	0	**169**	
1145 - 1200	0	122	24	0	2	1	0	1	1	0	0	0	0	**151**	**623**
1200 - 1215	2	134	37	0	0	0	0	2	1	0	0	0	0	**176**	
1215 - 1230	0	109	23	0	2	1	0	1	0	0	0	0	0	**136**	
1230 - 1245	0	165	39	0	2	0	0	1	1	0	0	0	0	**208**	
1245 - 1300	0	161	52	0	5	0	0	4	1	0	0	0	0	**223**	**743**
1300 - 1315	0	158	49	0	2	0	0	0	0	0	0	0	0	**209**	
1315 - 1330	0	167	50	0	1	0	0	0	0	0	0	0	0	**218**	
1330 - 1345	1	177	60	0	4	0	0	1	1	0	0	0	0	**244**	
1345 - 1400	0	178	52	0	2	0	0	2	0	0	0	0	0	**234**	**905**
1400 - 1415	0	158	44	0	3	1	0	0	0	0	0	0	0	**206**	
1415 - 1430	1	152	42	0	4	0	0	1	0	0	0	0	0	**200**	
1430 - 1445	0	179	50	0	1	0	0	0	1	0	0	0	0	**231**	
1445 - 1500	0	208	60	0	2	0	0	2	1	0	0	0	0	**273**	**910**
1500 - 1515	0	216	66	0	5	1	0	2	1	0	1	0	0	**292**	
1515 - 1530	1	210	56	0	1	0	0	1	1	0	0	0	0	**270**	
1530 - 1545	0	214	59	0	1	2	0	2	1	0	0	0	0	**279**	
1545 - 1600	2	277	75	1	3	0	0	2	0	0	1	0	0	**361**	**1202**
1600 - 1615	0	238	58	0	1	0	0	2	0	0	0	0	0	**299**	
1615 - 1630	0	268	59	0	2	1	0	0	1	0	0	0	0	**331**	
1630 - 1645	0	273	68	0	5	1	0	0	0	1	0	0	0	**348**	
1645 - 1700	0	269	56	0	2	0	0	3	2	1	0	0	0	**333**	**1311**
1700 - 1715	1	295	58	0	1	0	0	2	0	1	1	0	0	**359**	
1715 - 1730	0	309	70	0	3	0	0	1	0	0	0	0	0	**383**	
1730 - 1745	0	229	62	0	3	1	0	1	3	0	0	0	0	**299**	
1745 - 1800	0	180	48	0	3	1	0	0	0	0	0	0	0	**232**	**1273**
1800 - 1815	1	166	53	0	0	0	0	2	1	0	0	0	0	**223**	
1815 - 1830	1	156	38	0	2	0	0	0	1	0	0	0	0	**198**	
1830 - 1845	1	140	51	0	1	0	0	2	0	0	0	0	0	**195**	
1845 - 1900	0	153	37	0	0	0	0	0	2	0	0	0	0	**192**	**808**
1900 - 1915	2	116	25	1	6	0	0	0	0	1	0	0	0	**151**	
1915 - 1930	0	112	24	0	0	0	0	1	1	0	0	0	0	**138**	
1930 - 1945	0	98	20	0	2	0	0	0	0	0	0	0	0	**120**	
1945 - 2000	0	102	25	0	1	1	0	0	1	0	0	0	0	**130**	**539**
2000 - 2015	0	101	10	0	1	0	0	0	1	0	0	0	0	**113**	
2015 - 2030	1	120	15	0	1	1	0	2	1	0	0	0	0	**141**	
2030 - 2045	0	195	19	0	2	3	0	3	4	0	1	0	0	**227**	
2045 - 2100	0	113	18	0	1	2	0	1	1	0	0	0	0	**136**	**617**
2100 - 2115	0	110	17	0	1	3	0	3	0	0	0	0	0	**134**	
2115 - 2130	0	116	26	0	0	1	0	1	3	0	0	0	0	**147**	
2130 - 2145	1	71	19	0	3	0	0	1	0	0	0	0	0	**95**	
2145 - 2200	0	79	15	0	1	1	0	4	1	0	0	0	0	**101**	**477**
2200 - 2215	0	84	21	0	1	0	0	2	2	0	1	0	0	**111**	
2215 - 2230	0	65	6	0	1	0	0	0	3	0	0	0	0	**75**	
2230 - 2245	0	57	6	0	3	0	0	1	1	0	0	0	0	**68**	
2245 - 2300	0	56	5	0	2	2	0	1	3	0	0	0	0	**69**	**323**
2300 - 2315	1	52	5	0	0	1	0	2	3	0	0	0	0	**64**	
2315 - 2330	0	38	2	0	0	0	0	0	1	0	0	0	0	**41**	
2330 - 2345	0	46	4	0	0	0	0	1	1	0	0	0	0	**52**	
2345 - 0000	0	51	6	0	0	1	0	1	2	0	0	0	0	**61**	**218**

Session Total	36	11949	3057	4	159	35	0	101	79	4	5	0	0	**15429**
Session Average	0.38	124.47	31.84	0.04	1.66	0.36	0.00	1.05	0.82	0.04	0.05	0.00	0.00	**160.72**
Session Percentage	0.23	77.45	19.81	0.03	1.03	0.23	0.00	0.65	0.51	0.03	0.03	0.00	0.00	

AM Peak Hour	0700 - 0800	0715 - 0815	0715 - 0815	0730 - 0830	0945 - 1045	0545 - 0645	-	0500 - 0600	0500 - 0600	-	-	-	-	**0715 - 0815**
AM Peak Hour Volume	7	1262	347	1	16	4	0	9	5	0	0	0	0	**1625**

Noon Peak Hour	1115 - 1215	1445 - 1545	1445 - 1545	1015 - 1115	1000 - 1100	1445 - 1545	-	1200 - 1300	1115 - 1215	-	1415 - 1515	-	-	**1445 - 1545**
Noon Peak Hour Volume	4	848	241	1	14	3	0	8	4	0	1	0	0	**1114**

PM Peak Hour	1815 - 1915	1630 - 1730	1545 - 1645	1500 - 1600	1545 - 1645	1945 - 2045	-	1500 - 1600	1945 - 2045	1615 - 1715	1500 - 1600	-	-	**1630 - 1730**
PM Peak Hour Volume	4	1146	260	1	11	5	0	7	7	3	2	0	0	**1423**

Site 76 Lane 1 EB
I-20,
east of Browwing Rd

Date
Thursday, April 25, 2024

Lat/Long
34.038463°, -81.102937°

Weather
Fair
67°F

Click here for Detailed Weather

0000 - 2400 (Weekday 24h Session) (04-25-2024)
NB EB 15min

	Eastbound (Movement 76 Lane 1 EB.1)													15min	60min
TIME	1	2	3	4	5	6	7	8	9	10	11	12	13	Total	Total
0000 - 0015	0	24	3	0	1	0	0	0	1	0	0	0	0	**29**	
0015 - 0030	0	12	3	0	0	0	0	0	1	0	0	0	0	**16**	
0030 - 0045	0	11	2	0	0	0	0	0	0	0	0	0	0	**13**	
0045 - 0100	0	8	0	0	0	0	0	0	0	0	0	0	0	**8**	**66**
0100 - 0115	0	3	0	0	0	0	0	0	0	0	0	0	0	**3**	
0115 - 0130	0	4	1	0	0	0	0	0	0	0	0	0	0	**5**	
0130 - 0145	0	6	0	0	0	0	0	0	0	0	0	0	0	**6**	
0145 - 0200	0	5	1	0	0	0	0	0	0	0	0	0	0	**6**	**20**
0200 - 0215	0	4	0	0	0	0	0	0	0	0	0	0	0	**4**	
0215 - 0230	0	5	0	0	0	0	0	0	0	0	0	0	0	**5**	
0230 - 0245	0	3	0	0	0	0	0	0	0	0	0	0	0	**3**	
0245 - 0300	0	2	0	0	0	0	0	0	0	0	0	0	0	**2**	**14**
0300 - 0315	0	3	1	0	0	0	0	0	0	0	0	0	0	**4**	
0315 - 0330	0	5	0	0	0	0	0	0	0	0	0	0	0	**5**	
0330 - 0345	0	5	1	0	0	0	0	0	0	0	0	0	0	**6**	
0345 - 0400	0	7	1	0	0	0	0	0	0	0	0	0	0	**8**	**23**
0400 - 0415	0	7	1	0	0	0	0	0	1	0	0	0	0	**9**	
0415 - 0430	0	9	2	0	0	0	0	0	0	0	0	0	0	**11**	
0430 - 0445	0	14	2	0	0	0	0	0	0	0	0	0	0	**16**	
0445 - 0500	0	12	3	0	0	0	0	0	0	0	0	0	0	**15**	**51**
0500 - 0515	0	14	2	0	0	0	0	0	0	0	0	0	0	**16**	
0515 - 0530	0	35	7	0	0	0	0	0	0	0	0	0	0	**42**	
0530 - 0545	0	54	11	0	0	0	0	0	0	0	0	0	0	**65**	
0545 - 0600	0	56	10	0	0	0	0	0	0	0	0	0	0	**66**	**189**
0600 - 0615	0	66	15	0	0	0	0	0	0	0	0	0	0	**81**	
0615 - 0630	0	73	21	0	1	0	0	0	1	0	0	0	0	**96**	
0630 - 0645	0	123	54	0	4	0	0	2	0	0	0	0	0	**183**	
0645 - 0700	2	189	58	0	6	0	0	0	0	0	0	0	0	**255**	**615**
0700 - 0715	3	242	84	0	1	0	0	0	2	0	1	0	0	**333**	
0715 - 0730	1	301	87	0	5	0	0	0	0	0	0	0	0	**394**	
0730 - 0745	2	319	83	1	4	1	1	0	0	0	0	0	0	**411**	
0745 - 0800	1	292	71	0	4	0	0	0	2	0	0	0	0	**370**	**1508**
0800 - 0815	0	272	82	0	3	0	0	1	0	0	0	0	0	**358**	
0815 - 0830	2	288	90	0	5	0	0	0	1	0	0	0	0	**386**	
0830 - 0845	3	250	80	1	4	0	0	5	0	0	0	0	0	**343**	
0845 - 0900	0	214	63	0	0	0	0	1	1	0	0	0	0	**279**	**1366**
0900 - 0915	0	183	67	0	2	0	0	1	0	0	0	0	0	**253**	
0915 - 0930	1	165	61	0	0	0	0	3	2	0	0	0	0	**232**	
0930 - 0945	0	151	64	0	3	0	0	1	0	0	0	0	0	**219**	
0945 - 1000	1	118	51	0	2	0	0	0	1	0	0	0	0	**173**	**877**
1000 - 1015	0	119	58	0	1	0	0	1	1	0	0	0	0	**180**	
1015 - 1030	2	117	45	0	1	0	0	0	0	0	0	0	0	**165**	
1030 - 1045	0	118	45	0	4	0	0	2	1	0	0	0	0	**170**	
1045 - 1100	1	135	42	0	3	0	0	0	0	0	0	0	0	**181**	**696**
1100 - 1115	0	102	36	0	4	0	0	0	0	0	0	0	0	**142**	
1115 - 1130	1	165	53	0	1	0	0	0	0	0	0	0	0	**220**	
1130 - 1145	0	150	42	0	1	0	0	0	0	0	0	0	0	**193**	
1145 - 1200	1	133	34	0	2	1	0	0	1	0	0	0	0	**172**	**727**
1200 - 1215	2	157	39	0	1	3	0	0	0	0	0	0	0	**202**	
1215 - 1230	0	121	40	1	1	1	0	1	0	0	0	0	0	**165**	
1230 - 1245	2	171	46	0	2	1	0	1	0	0	0	0	0	**223**	
1245 - 1300	0	157	49	0	4	1	0	3	2	0	0	0	0	**216**	**806**
1300 - 1315	1	160	43	0	4	0	0	1	0	0	0	0	0	**209**	
1315 - 1330	0	175	57	0	3	0	0	0	1	0	0	0	0	**236**	
1330 - 1345	0	176	47	1	3	1	0	2	1	0	1	0	0	**232**	
1345 - 1400	1	173	66	0	3	1	0	1	2	0	0	0	0	**247**	**924**
1400 - 1415	1	189	54	1	2	1	0	1	0	0	0	0	0	**249**	
1415 - 1430	3	163	56	0	2	0	0	0	0	0	0	0	0	**224**	
1430 - 1445	1	177	39	0	1	0	0	1	0	1	0	0	0	**220**	
1445 - 1500	0	179	52	0	0	0	0	0	2	0	0	0	0	**233**	**926**
1500 - 1515	0	181	65	0	5	0	0	1	0	0	0	0	0	**252**	
1515 - 1530	1	219	71	0	6	0	0	0	3	0	0	0	0	**300**	
1530 - 1545	2	213	60	0	4	0	0	0	4	0	0	0	0	**283**	
1545 - 1600	2	244	71	1	4	0	0	0	1	2	0	0	0	**325**	**1160**
1600 - 1615	0	242	62	0	2	0	0	0	2	0	0	0	0	**308**	
1615 - 1630	0	247	57	0	7	0	0	1	1	0	0	0	0	**313**	
1630 - 1645	3	246	63	0	3	0	0	1	0	0	1	0	0	**317**	
1645 - 1700	1	251	65	0	1	0	0	0	0	0	0	0	0	**318**	**1256**
1700 - 1715	3	275	57	0	5	0	0	1	0	0	0	0	0	**341**	
1715 - 1730	0	280	63	0	5	0	0	0	2	0	0	0	0	**350**	
1730 - 1745	1	279	57	1	2	0	0	0	0	0	0	0	0	**340**	
1745 - 1800	2	206	62	0	2	0	0	1	1	0	0	0	0	**274**	**1305**
1800 - 1815	0	174	33	0	2	0	0	1	1	0	0	0	0	**211**	
1815 - 1830	0	140	37	0	0	0	0	2	0	0	0	0	0	**179**	
1830 - 1845	2	173	45	0	1	0	0	1	0	0	0	0	0	**222**	
1845 - 1900	0	143	47	0	2	0	0	2	1	0	0	0	0	**195**	**807**
1900 - 1915	0	144	27	0	1	0	0	0	0	0	0	0	0	**172**	
1915 - 1930	0	167	33	0	3	0	1	2	0	0	1	0	0	**207**	
1930 - 1945	0	130	36	0	0	0	0	1	0	0	0	0	0	**167**	
1945 - 2000	0	131	33	0	1	0	0	1	0	0	0	0	0	**166**	**712**
2000 - 2015	0	114	16	0	1	0	0	1	0	0	0	0	0	**132**	
2015 - 2030	0	137	17	0	0	0	0	0	1	0	0	0	0	**155**	
2030 - 2045	0	106	13	0	0	0	0	0	1	0	0	0	0	**120**	
2045 - 2100	0	130	16	0	0	0	0	0	1	0	0	0	0	**147**	**554**
2100 - 2115	0	76	7	0	0	0	0	0	2	0	0	0	0	**85**	
2115 - 2130	0	73	8	0	0	0	0	0	1	0	0	0	0	**82**	
2130 - 2145	0	54	6	0	0	0	0	0	0	0	0	0	0	**60**	
2145 - 2200	0	52	5	0	0	0	0	2	0	0	0	0	0	**59**	**286**
2200 - 2215	0	35	3	0	0	0	0	0	0	0	0	0	0	**38**	
2215 - 2230	0	45	9	0	0	0	0	0	0	0	0	0	0	**54**	
2230 - 2245	0	34	4	0	0	0	0	0	0	0	0	0	0	**38**	
2245 - 2300	0	37	8	0	0	0	0	0	0	0	0	0	0	**45**	**175**
2300 - 2315	0	23	5	0	0	0	0	0	0	0	0	0	0	**28**	
2315 - 2330	0	22	7	0	0	0	0	0	0	0	0	0	0	**29**	
2330 - 2345	0	26	6	0	0	0	0	0	0	0	0	0	0	**32**	
2345 - 0000	0	19	4	0	0	0	0	0	0	0	0	0	0	**23**	**112**

Session Total	49	11659	3203	7	145	11	2	46	46	3	4	0	0	**15175**
Session Average	0.51	121.45	33.36	0.07	1.51	0.11	0.02	0.48	0.48	0.03	0.04	0.00	0.00	**158.07**
Session Percentage	0.32	76.83	21.11	0.05	0.96	0.07	0.01	0.30	0.30	0.02	0.03	0.00	0.00	

AM Peak Hour	0645 - 0745	0715 - 0815	0730 - 0830	0645 - 0745	0630 - 0730	0645 - 0745	0645 - 0745	0830 - 0930	0700 - 0800	-	0615 - 0715	-	-	**0715 - 0815**
AM Peak Hour Volume	8	1184	326	1	16	1	1	10	4	0	1	0	0	**1533**

Noon Peak Hour	1345 - 1445	1445 - 1545	1445 - 1545	1315 - 1415	1445 - 1545	1145 - 1245	-	1215 - 1315	1445 - 1545	1345 - 1445	1245 - 1345	-	-	**1445 - 1545**
Noon Peak Hour Volume	6	792	248	2	15	6	0	6	9	1	1	0	0	**1068**

PM Peak Hour	1615 - 1715	1645 - 1745	1500 - 1600	1500 - 1600	1500 - 1600	-	1830 - 1930	1800 - 1900	1515 - 1615	1500 - 1600	1545 - 1645	-	-	**1645 - 1745**
PM Peak Hour Volume	7	1085	267	1	19	0	1	6	10	2	1	0	0	**1349**

Site 76 Lane 1 EB
I-20,
east of Browwing Rd

Date
Friday, April 26, 2024

Lat/Long
34.038463°, -81.102937°

Weather
Cloudy
69°F

Click here for Detailed Weather

0000 - 2400 (Weekday 24h Session) (04-26-2024)
NB EB 15min

	Eastbound (Movement 76 Lane 1 EB.1)													15min	60min
TIME	1	2	3	4	5	6	7	8	9	10	11	12	13	Total	Total
0000 - 0015	0	15	7	0	0	0	0	0	0	0	0	0	0	**22**	
0015 - 0030	0	11	6	0	0	0	0	0	0	0	0	0	0	**17**	
0030 - 0045	0	8	5	0	0	0	0	0	1	0	0	0	0	**14**	
0045 - 0100	0	6	3	0	0	0	0	0	0	0	0	0	0	**9**	**62**
0100 - 0115	0	6	3	0	0	0	0	0	0	0	0	0	0	**9**	
0115 - 0130	0	5	4	0	0	0	0	0	0	0	0	0	0	**9**	
0130 - 0145	0	12	6	0	0	0	0	0	1	0	0	0	0	**19**	
0145 - 0200	0	6	5	0	0	0	0	0	0	0	0	0	0	**11**	**48**
0200 - 0215	0	4	3	0	0	0	0	0	0	0	0	0	0	**7**	
0215 - 0230	0	5	2	0	0	0	0	0	0	0	0	0	0	**7**	
0230 - 0245	0	7	3	0	0	0	0	0	0	0	0	0	0	**10**	
0245 - 0300	0	3	3	0	0	0	0	0	1	0	0	0	0	**7**	**31**
0300 - 0315	0	5	4	0	0	0	0	0	0	0	0	0	0	**9**	
0315 - 0330	0	10	6	0	0	0	0	0	0	0	0	0	0	**16**	
0330 - 0345	0	6	5	0	0	0	0	0	1	0	1	0	0	**13**	
0345 - 0400	0	7	3	0	0	0	0	0	0	0	0	0	0	**10**	**48**
0400 - 0415	0	4	2	0	0	0	0	0	0	0	0	0	0	**6**	
0415 - 0430	0	8	3	0	0	0	0	0	0	0	0	0	0	**11**	
0430 - 0445	0	9	5	0	0	0	0	0	0	0	0	0	0	**14**	
0445 - 0500	0	15	10	0	0	0	0	0	0	0	0	0	0	**25**	**56**
0500 - 0515	0	16	10	0	0	0	0	0	1	0	0	0	0	**27**	
0515 - 0530	0	21	11	0	0	0	0	0	1	0	1	0	0	**34**	
0530 - 0545	0	18	10	0	0	0	0	0	0	0	0	0	0	**28**	
0545 - 0600	0	22	13	0	0	0	0	0	0	0	0	0	0	**35**	**124**
0600 - 0615	0	25	14	1	0	0	0	0	0	0	0	0	0	**40**	
0615 - 0630	0	65	38	1	0	0	0	0	1	0	0	0	0	**105**	
0630 - 0645	0	109	56	0	0	0	0	0	0	0	0	0	0	**165**	
0645 - 0700	0	147	68	0	1	2	0	0	0	0	0	0	0	**218**	**528**
0700 - 0715	2	216	74	1	1	0	0	1	0	0	0	0	0	**295**	
0715 - 0730	3	285	87	0	5	0	0	2	0	0	0	0	0	**382**	
0730 - 0745	0	336	92	0	2	0	0	0	0	0	0	0	0	**430**	
0745 - 0800	0	322	91	0	4	0	0	0	0	0	0	0	0	**417**	**1524**
0800 - 0815	1	277	80	0	2	0	0	0	2	0	0	0	0	**362**	
0815 - 0830	2	254	53	3	1	0	0	4	1	0	0	0	0	**318**	
0830 - 0845	0	226	65	0	2	2	0	1	3	0	0	0	0	**299**	
0845 - 0900	0	186	62	3	1	0	0	1	2	0	0	0	0	**255**	**1234**
0900 - 0915	2	181	55	0	3	1	0	1	2	0	0	0	0	**245**	
0915 - 0930	0	157	53	0	3	0	0	0	1	0	0	0	0	**214**	
0930 - 0945	1	183	43	0	3	0	0	3	1	1	0	0	0	**235**	
0945 - 1000	1	159	47	1	4	1	0	0	1	0	0	0	0	**214**	**908**
1000 - 1015	1	161	49	0	4	1	0	1	1	0	0	0	0	**218**	
1015 - 1030	0	184	54	0	2	0	0	0	2	0	0	0	0	**242**	
1030 - 1045	0	147	48	0	1	0	0	0	1	0	0	0	0	**197**	
1045 - 1100	2	148	37	0	0	1	0	3	1	0	0	0	0	**192**	**849**
1100 - 1115	6	194	44	0	7	0	0	0	0	0	0	0	0	**251**	
1115 - 1130	0	192	45	0	1	0	0	0	1	0	0	0	0	**239**	
1130 - 1145	0	172	51	0	1	0	0	0	2	0	0	0	0	**226**	
1145 - 1200	4	216	56	0	2	0	0	3	1	0	0	0	0	**282**	**998**
1200 - 1215	1	195	59	0	0	0	0	1	4	0	0	0	0	**260**	
1215 - 1230	0	211	57	1	7	0	0	0	1	0	0	0	0	**277**	
1230 - 1245	7	214	55	0	4	1	0	0	1	0	0	0	0	**282**	
1245 - 1300	2	221	61	0	2	1	0	2	1	0	0	0	0	**290**	**1109**
1300 - 1315	1	245	57	0	5	0	0	4	1	0	0	0	0	**313**	
1315 - 1330	6	259	61	0	3	0	0	1	1	0	0	0	0	**331**	
1330 - 1345	3	258	60	0	7	0	0	0	2	0	0	0	0	**330**	
1345 - 1400	5	243	59	0	5	0	0	0	1	0	0	0	0	**313**	**1287**
1400 - 1415	2	193	57	0	5	0	0	0	3	0	0	0	0	**260**	
1415 - 1430	2	232	65	0	5	0	0	1	3	0	1	0	0	**309**	
1430 - 1445	2	235	65	0	5	0	0	2	4	0	0	0	0	**313**	
1445 - 1500	1	260	64	0	3	0	0	4	0	0	0	0	0	**332**	**1214**
1500 - 1515	2	270	63	0	10	0	0	3	0	0	0	0	0	**348**	
1515 - 1530	12	298	69	0	4	1	0	1	2	0	0	0	0	**387**	
1530 - 1545	8	345	96	1	5	0	0	2	1	0	0	0	0	**458**	
1545 - 1600	4	360	75	0	6	0	0	5	1	0	0	0	0	**451**	**1644**
1600 - 1615	1	329	76	0	3	0	0	4	2	0	0	0	0	**415**	
1615 - 1630	3	321	73	0	3	1	0	0	0	0	0	0	0	**401**	
1630 - 1645	4	323	88	0	4	0	0	1	1	0	0	0	0	**421**	
1645 - 1700	2	333	74	0	3	0	0	0	1	0	0	0	0	**413**	**1650**
1700 - 1715	7	378	74	0	3	0	0	0	1	0	0	0	0	**463**	
1715 - 1730	2	369	50	0	1	0	0	2	0	0	1	0	0	**425**	
1730 - 1745	1	268	58	0	2	0	0	0	1	0	0	0	0	**330**	
1745 - 1800	2	244	68	0	1	0	0	0	0	0	0	0	0	**315**	**1533**
1800 - 1815	1	242	72	0	4	0	0	2	1	0	0	0	0	**322**	
1815 - 1830	0	252	43	0	1	0	0	0	1	0	0	0	0	**297**	
1830 - 1845	3	230	32	0	1	0	0	0	0	0	0	0	0	**266**	
1845 - 1900	6	199	34	0	1	0	0	0	0	0	0	0	0	**240**	**1125**
1900 - 1915	6	150	29	0	1	1	0	0	0	0	0	0	0	**187**	
1915 - 1930	8	173	40	0	1	1	0	1	2	0	1	0	0	**227**	
1930 - 1945	1	157	34	0	2	0	0	0	0	0	0	0	0	**194**	
1945 - 2000	1	158	24	0	1	0	0	0	0	0	0	0	0	**184**	**792**
2000 - 2015	1	117	39	0	0	0	0	0	0	0	0	0	0	**157**	
2015 - 2030	0	108	52	0	0	0	0	0	0	0	0	0	0	**160**	
2030 - 2045	0	102	50	0	0	0	0	0	0	0	0	0	0	**152**	
2045 - 2100	0	113	54	0	0	0	0	0	1	0	0	0	0	**168**	**637**
2100 - 2115	0	87	33	0	0	0	0	0	0	0	1	0	0	**121**	
2115 - 2130	0	63	27	0	0	0	0	0	0	0	0	0	0	**90**	
2130 - 2145	0	54	24	0	0	0	0	0	0	0	0	0	0	**78**	
2145 - 2200	0	52	22	0	0	0	0	0	0	0	0	0	0	**74**	**363**
2200 - 2215	0	55	20	0	0	0	0	0	0	0	0	0	0	**75**	
2215 - 2230	0	48	17	0	0	0	0	0	1	0	1	0	0	**67**	
2230 - 2245	0	43	19	0	0	0	0	0	0	0	0	0	0	**62**	
2245 - 2300	0	31	15	0	0	0	0	0	1	0	0	0	0	**47**	**251**
2300 - 2315	0	27	16	0	0	0	0	0	0	0	0	0	0	**43**	
2315 - 2330	0	23	14	0	0	0	0	0	1	0	0	0	0	**38**	
2330 - 2345	0	28	15	0	0	0	0	0	0	0	0	0	0	**43**	
2345 - 0000	0	22	10	0	0	0	0	0	0	0	0	0	0	**32**	**156**

Session Total	132	13909	3813	12	158	14	0	56	69	1	7	0	0	**18171**
Session Average	1.38	144.89	39.72	0.13	1.65	0.15	0.00	0.58	0.72	0.01	0.07	0.00	0.00	**189.28**
Session Percentage	0.73	76.55	20.98	0.07	0.87	0.08	0.00	0.31	0.38	0.01	0.04	0.00	0.00	

AM Peak Hour	0630 - 0730	0715 - 0815	0715 - 0815	0800 - 0900	0915 - 1015	0815 - 0915	-	0815 - 0915	0800 - 0900	0845 - 0945	0500 - 0600	-	-	**0715 - 0815**
AM Peak Hour Volume	5	1220	350	6	14	3	0	7	8	1	1	0	0	**1591**

Noon Peak Hour	1445 - 1545	1445 - 1545	1445 - 1545	1130 - 1230	1415 - 1515	1000 - 1100	-	1415 - 1515	1345 - 1445	-	1330 - 1430	-	-	**1445 - 1545**
Noon Peak Hour Volume	23	1173	292	1	23	2	0	10	11	0	1	0	0	**1525**

PM Peak Hour	1500 - 1600	1630 - 1730	1530 - 1630	1500 - 1600	1500 - 1600	1830 - 1930	-	1515 - 1615	1515 - 1615	-	1630 - 1730	-	-	**1530 - 1630**
PM Peak Hour Volume	26	1403	320	1	25	2	0	12	6	0	1	0	0	**1725**

Site 76 Lane 1 EB
I-20,
east of Browwing Rd

Date
Saturday, April 27, 2024

Lat/Long
34.038463°, -81.102937°

Weather
Mostly Cloudy
69°F

Click here for Detailed Weather

0000 - 2400 (Saturday 24h Session) (04-27-2024)
NB EB 15min

	Eastbound (Movement 76 Lane 1 EB.1)													15min	60min
TIME	1	2	3	4	5	6	7	8	9	10	11	12	13	Total	Total
0000 - 0015	0	25	10	0	0	0	0	0	0	0	0	0	0	**35**	
0015 - 0030	0	39	26	0	0	0	0	0	0	0	0	0	0	**65**	
0030 - 0045	0	26	10	0	0	0	0	0	0	0	0	0	0	**36**	
0045 - 0100	0	20	8	0	0	0	0	0	0	0	0	0	0	**28**	**164**
0100 - 0115	0	15	7	0	0	0	0	0	0	0	0	0	0	**22**	
0115 - 0130	0	7	3	0	0	0	0	0	0	0	0	0	0	**10**	
0130 - 0145	0	8	2	0	0	0	0	0	0	0	0	0	0	**10**	
0145 - 0200	0	12	8	0	0	0	0	0	0	0	0	0	0	**20**	**62**
0200 - 0215	0	10	5	0	0	0	0	0	0	0	0	0	0	**15**	
0215 - 0230	0	10	6	0	0	0	0	0	0	0	0	0	0	**16**	
0230 - 0245	0	12	10	0	0	0	0	0	0	0	0	0	0	**22**	
0245 - 0300	0	18	10	0	0	0	0	0	0	0	0	0	0	**28**	**81**
0300 - 0315	0	11	6	0	0	0	0	0	0	0	0	0	0	**17**	
0315 - 0330	0	13	7	0	0	0	0	0	0	0	0	0	0	**20**	
0330 - 0345	0	18	10	0	0	0	0	0	0	0	0	0	0	**28**	
0345 - 0400	0	15	10	0	0	0	0	0	0	0	0	0	0	**25**	**90**
0400 - 0415	0	12	7	0	0	0	0	0	0	0	0	0	0	**19**	
0415 - 0430	0	14	6	0	0	0	0	0	0	0	0	0	0	**20**	
0430 - 0445	0	16	9	0	0	0	0	0	0	0	0	0	0	**25**	
0445 - 0500	0	25	9	0	0	0	0	0	0	0	0	0	0	**34**	**98**
0500 - 0515	0	20	17	0	0	0	0	0	0	0	0	0	0	**37**	
0515 - 0530	0	21	6	0	0	0	0	0	0	0	0	0	0	**27**	
0530 - 0545	0	18	5	0	0	0	0	0	0	0	0	0	0	**23**	
0545 - 0600	0	15	6	0	0	0	0	0	0	0	0	0	0	**21**	**108**
0600 - 0615	0	20	7	0	0	0	0	0	0	0	0	0	0	**27**	
0615 - 0630	0	35	10	0	0	0	0	0	0	0	0	0	0	**45**	
0630 - 0645	0	32	14	0	0	0	0	0	1	0	0	0	0	**47**	
0645 - 0700	0	50	15	0	0	2	0	0	0	0	0	0	0	**67**	**186**
0700 - 0715	0	53	16	0	0	0	0	0	0	0	0	0	0	**69**	
0715 - 0730	0	72	25	0	0	0	0	0	1	0	0	0	0	**98**	
0730 - 0745	1	90	22	0	1	1	0	0	1	0	0	0	0	**116**	
0745 - 0800	0	127	28	0	0	1	0	1	0	0	0	0	0	**157**	**440**
0800 - 0815	0	119	23	0	0	0	0	2	0	0	0	0	0	**144**	
0815 - 0830	1	108	25	0	0	0	0	0	0	0	0	0	0	**134**	
0830 - 0845	0	146	42	0	0	2	0	2	1	0	0	0	0	**193**	
0845 - 0900	0	131	23	0	0	1	0	1	0	0	0	0	0	**156**	**627**
0900 - 0915	0	151	28	0	0	1	0	1	0	0	0	0	0	**181**	
0915 - 0930	1	135	28	0	1	1	0	3	0	0	0	0	0	**169**	
0930 - 0945	0	180	37	0	1	0	0	1	1	0	0	0	0	**220**	
0945 - 1000	0	165	28	0	0	1	0	3	0	0	0	0	0	**197**	**767**
1000 - 1015	4	170	39	0	0	2	0	1	0	0	0	0	0	**216**	
1015 - 1030	3	184	32	0	0	1	0	1	0	0	0	0	0	**221**	
1030 - 1045	12	184	36	0	2	2	0	1	0	0	0	0	0	**237**	
1045 - 1100	6	173	26	0	0	0	0	4	0	0	0	0	0	**209**	**883**
1100 - 1115	1	167	30	0	1	1	0	1	0	0	0	0	0	**201**	
1115 - 1130	0	161	32	0	2	2	0	1	0	0	0	0	0	**198**	
1130 - 1145	18	181	40	0	0	2	0	1	0	0	0	0	0	**242**	
1145 - 1200	21	240	45	0	2	3	0	6	0	0	0	0	0	**317**	**958**
1200 - 1215	1	232	39	1	1	0	5	0	0	0	0	0	0	**279**	
1215 - 1230	13	242	38	0	2	2	0	1	2	0	0	0	0	**300**	
1230 - 1245	4	215	47	0	3	1	0	2	0	0	0	0	0	**272**	
1245 - 1300	8	198	34	0	1	2	0	1	0	0	0	0	0	**244**	**1095**
1300 - 1315	8	249	40	1	1	3	0	1	0	0	0	0	0	**303**	
1315 - 1330	20	192	35	0	2	0	0	1	0	0	0	0	0	**250**	
1330 - 1345	4	198	30	0	1	1	0	4	0	0	0	0	0	**238**	
1345 - 1400	7	223	43	0	1	3	0	1	1	0	0	0	0	**279**	**1070**
1400 - 1415	7	198	29	0	0	4	0	2	1	0	0	0	0	**241**	
1415 - 1430	2	181	36	0	2	1	0	2	0	0	0	0	0	**224**	
1430 - 1445	2	179	27	0	1	1	0	2	0	0	0	0	0	**212**	
1445 - 1500	2	207	27	0	0	5	0	2	0	0	0	0	0	**243**	**920**
1500 - 1515	1	189	38	0	0	2	0	6	0	0	0	0	0	**236**	
1515 - 1530	7	191	36	0	0	0	0	4	0	0	0	0	0	**238**	
1530 - 1545	7	242	45	0	0	2	0	0	0	0	0	0	0	**296**	
1545 - 1600	2	217	37	0	1	0	2	2	0	0	1	0	0	**262**	**1032**
1600 - 1615	7	158	32	0	0	1	0	0	1	0	0	0	0	**199**	
1615 - 1630	3	179	42	0	0	0	0	3	0	0	0	0	0	**227**	
1630 - 1645	1	221	50	0	1	1	0	4	1	0	0	0	0	**279**	
1645 - 1700	15	225	42	0	0	0	0	0	0	0	0	0	0	**282**	**987**
1700 - 1715	1	202	38	0	0	1	0	0	0	0	0	0	0	**242**	
1715 - 1730	2	191	32	0	4	0	0	0	0	0	0	0	0	**229**	
1730 - 1745	1	147	29	0	0	0	0	1	0	0	0	0	0	**178**	
1745 - 1800	1	130	36	0	0	3	0	1	0	0	0	0	0	**171**	**820**
1800 - 1815	0	134	29	1	1	5	0	0	0	0	0	0	0	**170**	
1815 - 1830	3	156	30	1	0	4	0	1	0	0	0	0	0	**195**	
1830 - 1845	0	161	38	0	0	1	0	0	0	0	0	0	0	**200**	
1845 - 1900	0	123	33	0	4	0	0	0	0	0	1	0	0	**161**	**726**
1900 - 1915	0	124	16	0	0	3	0	0	0	0	0	0	0	**143**	
1915 - 1930	2	125	27	0	0	1	0	0	0	0	0	0	0	**155**	
1930 - 1945	0	124	30	0	0	0	0	0	0	0	0	0	0	**154**	
1945 - 2000	5	136	18	0	0	6	0	0	0	0	0	0	0	**165**	**617**
2000 - 2015	0	130	30	0	0	0	0	0	0	0	0	0	0	**160**	
2015 - 2030	0	120	21	0	0	0	0	0	0	0	0	0	0	**141**	
2030 - 2045	0	129	33	0	0	0	0	0	0	0	0	0	0	**162**	
2045 - 2100	0	140	37	0	0	0	0	0	0	0	0	0	0	**177**	**640**
2100 - 2115	0	90	17	0	0	0	0	0	0	0	0	0	0	**107**	
2115 - 2130	0	110	23	0	0	0	0	0	0	0	0	0	0	**133**	
2130 - 2145	0	90	26	0	0	0	0	0	0	0	0	0	0	**116**	
2145 - 2200	0	89	28	0	0	0	0	0	0	0	0	0	0	**117**	**473**
2200 - 2215	0	65	22	0	0	0	0	0	0	0	0	0	0	**87**	
2215 - 2230	0	60	20	0	0	0	0	0	0	0	0	0	0	**80**	
2230 - 2245	0	45	15	0	0	0	0	0	0	0	0	0	0	**60**	
2245 - 2300	0	40	24	0	0	0	0	0	0	0	0	0	0	**64**	**291**
2300 - 2315	0	48	28	0	0	0	0	0	0	0	0	0	0	**76**	
2315 - 2330	0	40	27	0	0	0	0	0	0	0	0	0	0	**67**	
2330 - 2345	0	42	23	0	0	0	0	0	0	0	0	0	0	**65**	
2345 - 0000	0	42	26	0	0	0	0	0	0	0	0	0	0	**68**	**276**

Session Total	204	10643	2357	4	36	76	7	71	11	0	2	0	0	**13411**
Session Average	2.13	110.86	24.55	0.04	0.38	0.79	0.07	0.74	0.11	0.00	0.02	0.00	0.00	**139.70**
Session Percentage	1.52	79.36	17.58	0.03	0.27	0.57	0.05	0.53	0.08	0.00	0.01	0.00	0.00	

AM Peak Hour	0945 - 1045	0945 - 1045	0930 - 1030	-	0845 - 0945	0945 - 1045	-	0900 - 1000	0630 - 0730	-	-	-	-	**0945 - 1045**
AM Peak Hour Volume	19	703	136	0	2	6	0	8	2	0	0	0	0	**871**

Noon Peak Hour	1130 - 1230	1145 - 1245	1145 - 1245	1115 - 1215	1145 - 1245	1400 - 1500	1115 - 1215	1430 - 1530	1130 - 1230	-	-	-	-	**1145 - 1245**
Noon Peak Hour Volume	53	929	169	1	8	11	5	14	2	0	0	0	0	**1168**

PM Peak Hour	1600 - 1700	1500 - 1600	1615 - 1715	1730 - 1830	1630 - 1730	1745 - 1845	1500 - 1600	1500 - 1600	1545 - 1645	-	1500 - 1600	-	-	**1500 - 1600**
PM Peak Hour Volume	26	839	172	2	5	13	2	12	2	0	1	0	0	**1032**

Bi-Directional Class Count || NB EB Average 15min

Columbia, SC

Marr Traffic DATA COLLECTION
www.marrtraffic.com

Site 76 Lane 1 EB
I-20,
east of Browwing Rd

Date
Sunday, April 21, 2024

Weather
Cloudy
66°F

Lat/Long
34.038463°, -81.102937°

0000 - 2400 (Weekday 24h Session) (All Dates)
NB EB Average 15min

	NB EB Average 15min													15min	60min
Time	1	2	3	4	5	6	7	8	9	10	11	12	13	Total	Total
0000 - 0015	0	21	6	0	0	0	0	0	0	0	0	0	0	**27**	
0015 - 0030	0	21	8	0	0	0	0	0	0	0	0	0	0	**29**	
0030 - 0045	0	19	5	0	0	0	0	0	0	0	0	0	0	**24**	
0045 - 0100	0	16	4	0	0	0	0	0	0	0	0	0	0	**20**	**100**
0100 - 0115	0	11	3	0	0	0	0	0	0	0	0	0	0	**14**	
0115 - 0130	0	10	3	0	0	0	0	0	0	0	0	0	0	**14**	
0130 - 0145	0	12	3	0	0	0	0	0	0	0	0	0	0	**15**	
0145 - 0200	0	10	3	0	0	0	0	0	0	0	0	0	0	**14**	**56**
0200 - 0215	0	10	2	0	0	0	0	0	0	0	0	0	0	**12**	
0215 - 0230	0	9	3	0	0	0	0	1	0	0	0	0	0	**12**	
0230 - 0245	0	9	4	0	0	0	0	1	0	0	0	0	0	**13**	
0245 - 0300	0	9	3	0	0	0	0	1	1	0	0	0	0	**13**	**52**
0300 - 0315	0	10	4	0	0	0	0	0	0	0	0	0	0	**15**	
0315 - 0330	0	12	4	0	0	0	0	0	0	0	0	0	0	**17**	
0330 - 0345	0	12	4	0	0	0	0	0	0	0	0	0	0	**17**	
0345 - 0400	0	13	4	0	0	0	0	0	0	0	0	0	0	**17**	**65**
0400 - 0415	0	15	3	0	0	0	0	0	1	0	0	0	0	**19**	
0415 - 0430	0	14	4	0	0	0	0	0	0	0	0	0	0	**18**	
0430 - 0445	0	17	5	0	0	0	0	0	0	0	0	0	0	**22**	
0445 - 0500	0	19	6	0	0	0	0	0	0	0	0	0	0	**25**	**84**
0500 - 0515	0	22	7	0	0	0	0	0	0	0	0	0	0	**30**	
0515 - 0530	0	31	9	0	0	0	0	0	0	0	0	0	0	**40**	
0530 - 0545	0	42	11	0	0	0	0	0	0	0	0	0	0	**54**	
0545 - 0600	0	47	12	0	0	0	0	0	0	0	0	0	0	**60**	**184**
0600 - 0615	0	49	14	0	0	0	0	0	0	0	0	0	0	**64**	
0615 - 0630	0	64	20	0	0	0	0	0	0	0	0	0	0	**86**	
0630 - 0645	0	94	36	0	1	0	0	0	0	0	0	0	0	**131**	
0645 - 0700	0	128	42	0	2	1	0	0	0	0	0	0	0	**174**	**454**
0700 - 0715	2	163	57	0	1	0	0	0	0	0	0	0	0	**224**	
0715 - 0730	1	214	61	0	2	0	0	1	0	0	0	0	0	**279**	
0730 - 0745	1	213	59	0	2	0	0	0	0	0	0	0	0	**276**	
0745 - 0800	1	235	64	0	2	0	0	1	0	0	0	0	0	**303**	**1081**
0800 - 0815	0	211	58	0	1	0	0	1	0	0	0	0	0	**272**	
0815 - 0830	1	196	57	1	2	0	0	1	0	0	0	0	0	**258**	
0830 - 0845	1	190	65	0	1	1	0	2	1	0	0	0	0	**261**	
0845 - 0900	1	157	49	0	1	1	0	1	1	0	0	0	0	**209**	**999**
0900 - 0915	1	146	44	0	1	1	0	1	0	0	0	0	0	**194**	
0915 - 0930	0	135	41	0	2	0	0	1	1	0	0	0	0	**180**	
0930 - 0945	0	141	44	0	2	0	0	1	0	0	0	0	0	**189**	
0945 - 1000	0	127	38	0	2	0	0	1	1	0	0	0	0	**169**	**732**
1000 - 1015	4	135	41	0	2	1	0	1	0	0	0	0	0	**184**	
1015 - 1030	1	131	36	0	1	0	0	0	1	0	0	0	0	**170**	
1030 - 1045	2	131	37	0	2	1	0	1	0	0	0	0	0	**174**	
1045 - 1100	4	132	36	0	1	0	0	2	0	0	0	0	0	**175**	**704**
1100 - 1115	3	112	36	0	2	0	0	1	0	0	0	0	0	**154**	
1115 - 1130	0	137	36	0	1	0	0	1	0	0	0	0	0	**176**	
1130 - 1145	3	138	41	0	1	0	0	1	1	0	0	0	0	**184**	
1145 - 1200	4	154	40	0	2	1	0	2	0	0	0	0	0	**203**	**717**
1200 - 1215	1	153	39	0	1	0	1	1	1	0	0	0	0	**197**	
1215 - 1230	2	148	37	0	2	1	0	1	1	0	0	0	0	**192**	
1230 - 1245	2	166	44	0	2	1	0	1	0	0	0	0	0	**216**	
1245 - 1300	2	160	46	0	2	1	0	2	1	0	0	0	0	**212**	**817**
1300 - 1315	2	173	41	0	2	0	0	1	0	0	0	0	0	**219**	
1315 - 1330	4	172	44	0	2	0	0	0	0	0	0	0	0	**224**	
1330 - 1345	1	185	41	0	3	0	0	1	1	0	0	0	0	**232**	
1345 - 1400	2	180	47	0	2	1	0	1	1	0	0	0	0	**233**	**909**
1400 - 1415	2	165	42	0	2	1	0	1	1	0	0	0	0	**215**	
1415 - 1430	1	169	49	0	2	0	0	1	1	0	0	0	0	**224**	
1430 - 1445	2	181	44	0	1	0	0	1	1	0	0	0	0	**231**	
1445 - 1500	1	191	48	0	1	1	0	2	1	0	0	0	0	**244**	**912**
1500 - 1515	0	186	54	0	3	1	0	2	0	0	0	0	0	**246**	
1515 - 1530	3	192	50	0	2	0	0	1	1	0	0	0	0	**250**	
1530 - 1545	3	222	58	0	2	1	0	1	1	0	0	0	0	**287**	
1545 - 1600	2	233	55	0	3	0	0	2	1	0	0	0	0	**297**	**1080**
1600 - 1615	2	228	57	0	2	0	0	1	1	0	0	0	0	**291**	
1615 - 1630	1	236	58	0	3	0	0	2	1	0	0	0	0	**301**	
1630 - 1645	1	252	63	0	2	0	0	1	0	0	0	0	0	**321**	
1645 - 1700	3	248	59	0	1	0	0	1	1	0	0	0	0	**313**	**1225**
1700 - 1715	2	257	56	0	2	0	0	1	0	0	0	0	0	**319**	
1715 - 1730	1	261	49	0	2	0	0	1	0	0	0	0	0	**314**	
1730 - 1745	0	219	52	0	1	0	0	0	1	0	0	0	0	**273**	
1745 - 1800	1	190	49	0	1	1	0	0	1	0	0	0	0	**243**	**1149**
1800 - 1815	1	168	43	0	1	1	0	1	1	0	0	0	0	**216**	
1815 - 1830	1	162	33	0	1	1	0	1	0	0	0	0	0	**198**	
1830 - 1845	1	153	37	0	0	0	0	0	0	0	0	0	0	**191**	
1845 - 1900	1	131	34	0	1	0	0	1	1	0	0	0	0	**168**	**774**
1900 - 1915	1	135	26	0	1	1	0	0	0	0	0	0	0	**165**	
1915 - 1930	1	137	29	0	1	0	0	1	1	0	0	0	0	**169**	
1930 - 1945	0	122	28	0	1	0	0	0	0	0	0	0	0	**151**	
1945 - 2000	1	122	25	0	0	1	0	0	0	0	0	0	0	**149**	**634**
2000 - 2015	0	111	23	0	0	0	0	1	1	0	0	0	0	**136**	
2015 - 2030	0	113	24	0	0	0	0	0	1	0	0	0	0	**140**	
2030 - 2045	0	116	23	0	0	0	0	1	1	0	0	0	0	**142**	
2045 - 2100	0	110	24	0	0	0	0	0	1	0	0	0	0	**136**	**553**
2100 - 2115	0	86	15	0	0	0	0	0	1	0	0	0	0	**102**	
2115 - 2130	0	84	16	0	0	0	0	0	1	0	0	0	0	**102**	
2130 - 2145	0	72	15	0	1	0	0	1	1	0	0	0	0	**89**	
2145 - 2200	0	74	15	0	0	0	0	1	1	0	0	0	0	**91**	**385**
2200 - 2215	0	61	14	0	0	0	0	0	1	0	0	0	0	**76**	
2215 - 2230	0	56	11	0	0	0	0	0	1	0	0	0	0	**68**	
2230 - 2245	0	44	11	0	0	0	0	0	1	0	0	0	0	**56**	
2245 - 2300	0	44	13	0	0	0	0	0	1	0	0	0	0	**58**	**259**
2300 - 2315	0	33	11	0	0	0	0	0	1	0	0	0	0	**45**	
2315 - 2330	0	27	9	0	0	0	0	0	0	0	0	0	0	**36**	
2330 - 2345	0	31	9	0	0	0	0	0	1	0	0	0	0	**41**	
2345 - 0000	0	30	9	0	0	0	0	0	0	0	0	0	0	**39**	**161**

Session Total	77	10928	2851	6	89	25	1	57	48	1	4	0	0	**14086**
Session Average	0.80	113.83	29.69	0.06	0.92	0.26	0.01	0.59	0.50	0.01	0.04	0.00	0.00	**146.73**
Session Percentage	0.55	77.58	20.24	0.04	0.63	0.18	0.01	0.40	0.34	0.01	0.03	0.00	0.00	

AM Peak Hour	0945 - 1045	0715 - 0815	0745 - 0845	0815 - 0915	0715 - 0815	0830 - 0930	0645 - 0745	0915 - 1015	0830 - 0930	0845 - 0945	0630 - 0730	-	-	**0715 - 0815**
AM Peak Volume	8	873	245	1	7	2	0	4	2	0	0	0	0	**1130**

Noon Peak Hour	1000 - 1100	1445 - 1545	1445 - 1545	1200 - 1300	1445 - 1545	1145 - 1245	1115 - 1215	1445 - 1545	1400 - 1500	1345 - 1445	1330 - 1430	-	-	**1445 - 1545**
Noon Peak Volume	11	791	210	1	8	3	1	6	3	0	0	0	0	**1027**

PM Peak Hour	1515 - 1615	1630 - 1730	1600 - 1700	1500 - 1600	1500 - 1600	1730 - 1830	1500 - 1600	1545 - 1645	1530 - 1630	1545 - 1645	1500 - 1600	-	-	**1630 - 1730**
PM Peak Volume	9	1017	237	1	10	2	0	6	4	0	0	0	0	**1266**

Bi-Directional Class Count || Volume Summary 15min

Columbia, SC

Marr Traffic DATA COLLECTION

www.marrtraffic.com

Site 76 Lane 1 EB

I-20,
east of Browwing Rd

Date

Sunday, April 21, 2024

Lat/Long

34.038463°, -81.102937°

Weather

Cloudy
66°F

Click here for Detailed Weather

0000 - 2400 (Sunday 24h Session) (04-21-2024)

Volume Summary 15min

	Volume Summary 15min		15min	60min
TIME	EB	WB	Total	Total
0000 - 0015	43	0	**43**	
0015 - 0030	65	0	**65**	
0030 - 0045	56	0	**56**	
0045 - 0100	61	0	**61**	**225**
0100 - 0115	32	0	**32**	
0115 - 0130	30	0	**30**	
0130 - 0145	43	0	**43**	
0145 - 0200	33	0	**33**	**138**
0200 - 0215	17	0	**17**	
0215 - 0230	12	0	**12**	
0230 - 0245	15	0	**15**	
0245 - 0300	18	0	**18**	**62**
0300 - 0315	25	0	**25**	
0315 - 0330	9	0	**9**	
0330 - 0345	11	0	**11**	
0345 - 0400	14	0	**14**	**59**
0400 - 0415	13	0	**13**	
0415 - 0430	7	0	**7**	
0430 - 0445	13	0	**13**	
0445 - 0500	9	0	**9**	**42**
0500 - 0515	6	0	**6**	
0515 - 0530	14	0	**14**	
0530 - 0545	14	0	**14**	
0545 - 0600	27	0	**27**	**61**
0600 - 0615	23	0	**23**	
0615 - 0630	21	0	**21**	
0630 - 0645	19	0	**19**	
0645 - 0700	21	0	**21**	**84**
0700 - 0715	39	0	**39**	
0715 - 0730	46	0	**46**	
0730 - 0745	54	0	**54**	
0745 - 0800	74	0	**74**	**213**
0800 - 0815	45	0	**45**	
0815 - 0830	58	0	**58**	
0830 - 0845	68	0	**68**	
0845 - 0900	74	0	**74**	**245**
0900 - 0915	84	0	**84**	
0915 - 0930	80	0	**80**	
0930 - 0945	104	0	**104**	
0945 - 1000	126	0	**126**	**394**
1000 - 1015	179	0	**179**	
1015 - 1030	118	0	**118**	
1030 - 1045	141	0	**141**	
1045 - 1100	142	0	**142**	**580**
1100 - 1115	137	0	**137**	
1115 - 1130	130	0	**130**	
1130 - 1145	173	0	**173**	
1145 - 1200	178	0	**178**	**618**

	Volume Summary 15min		15min	60min
Time	EB	WB	Total	Total
1200 - 1215	171	0	**171**	
1215 - 1230	173	0	**173**	
1230 - 1245	227	0	**227**	
1245 - 1300	203	0	**203**	**774**
1300 - 1315	198	0	**198**	
1315 - 1330	193	0	**193**	
1330 - 1345	232	0	**232**	
1345 - 1400	234	0	**234**	**857**
1400 - 1415	185	0	**185**	
1415 - 1430	234	0	**234**	
1430 - 1445	239	0	**239**	
1445 - 1500	231	0	**231**	**889**
1500 - 1515	197	0	**197**	
1515 - 1530	169	0	**169**	
1530 - 1545	218	0	**218**	
1545 - 1600	176	0	**176**	**760**
1600 - 1615	255	0	**255**	
1615 - 1630	225	0	**225**	
1630 - 1645	268	0	**268**	
1645 - 1700	240	0	**240**	**988**
1700 - 1715	230	0	**230**	
1715 - 1730	201	0	**201**	
1730 - 1745	222	0	**222**	
1745 - 1800	201	0	**201**	**854**
1800 - 1815	218	0	**218**	
1815 - 1830	184	0	**184**	
1830 - 1845	164	0	**164**	
1845 - 1900	127	0	**127**	**693**
1900 - 1915	227	0	**227**	
1915 - 1930	184	0	**184**	
1930 - 1945	179	0	**179**	
1945 - 2000	170	0	**170**	**760**
2000 - 2015	153	0	**153**	
2015 - 2030	157	0	**157**	
2030 - 2045	148	0	**148**	
2045 - 2100	149	0	**149**	**607**
2100 - 2115	109	0	**109**	
2115 - 2130	114	0	**114**	
2130 - 2145	140	0	**140**	
2145 - 2200	149	0	**149**	**512**
2200 - 2215	124	0	**124**	
2215 - 2230	129	0	**129**	
2230 - 2245	115	0	**115**	
2245 - 2300	124	0	**124**	**492**
2300 - 2315	59	0	**59**	
2315 - 2330	37	0	**37**	
2330 - 2345	66	0	**66**	
2345 - 0000	64	0	**64**	**226**

Session Total	11133	0	**11133**
Session Average	115.97	0.00	**115.97**
Session Percentage	100.00	0.00	

Site 76 Lane 1 EB

I-20,
east of Browwing Rd

Date

Monday, April 22, 2024

Lat/Long

34.038463°, -81.102937°

Weather

Mostly Cloudy
57°F

Click here for Detailed Weather

0000 - 2400 (Weekday 24h Session) (04-22-2024)

Volume Summary 15min

TIME	Volume Summary 15min EB	WB	15min Total	60min Total
0000 - 0015	19	0	**19**	
0015 - 0030	15	0	**15**	
0030 - 0045	25	0	**25**	
0045 - 0100	16	0	**16**	**75**
0100 - 0115	13	0	**13**	
0115 - 0130	15	0	**15**	
0130 - 0145	11	0	**11**	
0145 - 0200	13	0	**13**	**52**
0200 - 0215	10	0	**10**	
0215 - 0230	11	0	**11**	
0230 - 0245	7	0	**7**	
0245 - 0300	9	0	**9**	**37**
0300 - 0315	12	0	**12**	
0315 - 0330	15	0	**15**	
0330 - 0345	18	0	**18**	
0345 - 0400	14	0	**14**	**59**
0400 - 0415	15	0	**15**	
0415 - 0430	19	0	**19**	
0430 - 0445	23	0	**23**	
0445 - 0500	39	0	**39**	**96**
0500 - 0515	41	0	**41**	
0515 - 0530	35	0	**35**	
0530 - 0545	46	0	**46**	
0545 - 0600	52	0	**52**	**174**
0600 - 0615	57	0	**57**	
0615 - 0630	74	0	**74**	
0630 - 0645	101	0	**101**	
0645 - 0700	134	0	**134**	**366**
0700 - 0715	296	0	**296**	
0715 - 0730	350	0	**350**	
0730 - 0745	345	0	**345**	
0745 - 0800	312	0	**312**	**1303**
0800 - 0815	327	0	**327**	
0815 - 0830	278	0	**278**	
0830 - 0845	284	0	**284**	
0845 - 0900	227	0	**227**	**1116**
0900 - 0915	193	0	**193**	
0915 - 0930	161	0	**161**	
0930 - 0945	165	0	**165**	
0945 - 1000	160	0	**160**	**679**
1000 - 1015	128	0	**128**	
1015 - 1030	133	0	**133**	
1030 - 1045	142	0	**142**	
1045 - 1100	156	0	**156**	**559**
1100 - 1115	58	0	**58**	
1115 - 1130	142	0	**142**	
1130 - 1145	142	0	**142**	
1145 - 1200	163	0	**163**	**505**

Time	Volume Summary 15min EB	WB	15min Total	60min Total
1200 - 1215	102	0	**102**	
1215 - 1230	107	0	**107**	
1230 - 1245	128	0	**128**	
1245 - 1300	134	0	**134**	**471**
1300 - 1315	139	0	**139**	
1315 - 1330	145	0	**145**	
1330 - 1345	182	0	**182**	
1345 - 1400	163	0	**163**	**629**
1400 - 1415	187	0	**187**	
1415 - 1430	200	0	**200**	
1430 - 1445	195	0	**195**	
1445 - 1500	192	0	**192**	**774**
1500 - 1515	201	0	**201**	
1515 - 1530	168	0	**168**	
1530 - 1545	193	0	**193**	
1545 - 1600	214	0	**214**	**776**
1600 - 1615	240	0	**240**	
1615 - 1630	241	0	**241**	
1630 - 1645	263	0	**263**	
1645 - 1700	294	0	**294**	**1038**
1700 - 1715	316	0	**316**	
1715 - 1730	272	0	**272**	
1730 - 1745	241	0	**241**	
1745 - 1800	222	0	**222**	**1051**
1800 - 1815	158	0	**158**	
1815 - 1830	149	0	**149**	
1830 - 1845	131	0	**131**	
1845 - 1900	119	0	**119**	**557**
1900 - 1915	120	0	**120**	
1915 - 1930	113	0	**113**	
1930 - 1945	107	0	**107**	
1945 - 2000	93	0	**93**	**433**
2000 - 2015	108	0	**108**	
2015 - 2030	88	0	**88**	
2030 - 2045	71	0	**71**	
2045 - 2100	70	0	**70**	**337**
2100 - 2115	64	0	**64**	
2115 - 2130	58	0	**58**	
2130 - 2145	55	0	**55**	
2145 - 2200	49	0	**49**	**226**
2200 - 2215	54	0	**54**	
2215 - 2230	42	0	**42**	
2230 - 2245	49	0	**49**	
2245 - 2300	56	0	**56**	**201**
2300 - 2315	47	0	**47**	
2315 - 2330	39	0	**39**	
2330 - 2345	27	0	**27**	
2345 - 0000	26	0	**26**	**139**

Session Total	11653	0	**11653**
Session Average	121.39	0.00	**121.39**
Session Percentage	100.00	0.00	

Site 76 Lane 1 EB

I-20,
east of Browwing Rd

Date

Tuesday, April 23, 2024

Lat/Long

34.038463°, -81.102937°

Weather

Fair
58°F

Click here for Detailed Weather

0000 - 2400 (Weekday 24h Session) (04-23-2024)

Volume Summary 15min

TIME	Volume Summary 15min EB	Volume Summary 15min WB	15min Total	60min Total
0000 - 0015	38	0	**38**	
0015 - 0030	23	0	**23**	
0030 - 0045	26	0	**26**	
0045 - 0100	20	0	**20**	**107**
0100 - 0115	20	0	**20**	
0115 - 0130	28	0	**28**	
0130 - 0145	14	0	**14**	
0145 - 0200	13	0	**13**	**75**
0200 - 0215	14	0	**14**	
0215 - 0230	12	0	**12**	
0230 - 0245	9	0	**9**	
0245 - 0300	7	0	**7**	**42**
0300 - 0315	16	0	**16**	
0315 - 0330	25	0	**25**	
0330 - 0345	17	0	**17**	
0345 - 0400	26	0	**26**	**84**
0400 - 0415	25	0	**25**	
0415 - 0430	35	0	**35**	
0430 - 0445	35	0	**35**	
0445 - 0500	37	0	**37**	**132**
0500 - 0515	33	0	**33**	
0515 - 0530	55	0	**55**	
0530 - 0545	106	0	**106**	
0545 - 0600	112	0	**112**	**306**
0600 - 0615	121	0	**121**	
0615 - 0630	140	0	**140**	
0630 - 0645	228	0	**228**	
0645 - 0700	270	0	**270**	**759**
0700 - 0715	227	0	**227**	
0715 - 0730	308	0	**308**	
0730 - 0745	173	0	**173**	
0745 - 0800	328	0	**328**	**1036**
0800 - 0815	281	0	**281**	
0815 - 0830	316	0	**316**	
0830 - 0845	337	0	**337**	
0845 - 0900	234	0	**234**	**1168**
0900 - 0915	178	0	**178**	
0915 - 0930	202	0	**202**	
0930 - 0945	191	0	**191**	
0945 - 1000	154	0	**154**	**725**
1000 - 1015	186	0	**186**	
1015 - 1030	165	0	**165**	
1030 - 1045	166	0	**166**	
1045 - 1100	191	0	**191**	**708**
1100 - 1115	136	0	**136**	
1115 - 1130	156	0	**156**	
1130 - 1145	144	0	**144**	
1145 - 1200	155	0	**155**	**591**

Time	Volume Summary 15min EB	Volume Summary 15min WB	15min Total	60min Total
1200 - 1215	187	0	**187**	
1215 - 1230	187	0	**187**	
1230 - 1245	172	0	**172**	
1245 - 1300	173	0	**173**	**719**
1300 - 1315	163	0	**163**	
1315 - 1330	195	0	**195**	
1330 - 1345	168	0	**168**	
1345 - 1400	162	0	**162**	**688**
1400 - 1415	175	0	**175**	
1415 - 1430	174	0	**174**	
1430 - 1445	204	0	**204**	
1445 - 1500	201	0	**201**	**754**
1500 - 1515	199	0	**199**	
1515 - 1530	216	0	**216**	
1530 - 1545	283	0	**283**	
1545 - 1600	287	0	**287**	**985**
1600 - 1615	318	0	**318**	
1615 - 1630	366	0	**366**	
1630 - 1645	348	0	**348**	
1645 - 1700	310	0	**310**	**1342**
1700 - 1715	280	0	**280**	
1715 - 1730	336	0	**336**	
1730 - 1745	304	0	**304**	
1745 - 1800	287	0	**287**	**1207**
1800 - 1815	207	0	**207**	
1815 - 1830	186	0	**186**	
1830 - 1845	162	0	**162**	
1845 - 1900	145	0	**145**	**700**
1900 - 1915	152	0	**152**	
1915 - 1930	162	0	**162**	
1930 - 1945	134	0	**134**	
1945 - 2000	137	0	**137**	**585**
2000 - 2015	126	0	**126**	
2015 - 2030	136	0	**136**	
2030 - 2045	111	0	**111**	
2045 - 2100	105	0	**105**	**478**
2100 - 2115	97	0	**97**	
2115 - 2130	90	0	**90**	
2130 - 2145	79	0	**79**	
2145 - 2200	91	0	**91**	**357**
2200 - 2215	45	0	**45**	
2215 - 2230	30	0	**30**	
2230 - 2245	2	0	**2**	
2245 - 2300	4	0	**4**	**81**
2300 - 2315	0	0	**0**	
2315 - 2330	1	0	**1**	
2330 - 2345	1	0	**1**	
2345 - 0000	0	0	**0**	**2**

Session Total	13631	0	**13631**
Session Average	141.99	0.00	**141.99**
Session Percentage	100.00	0.00	

Site 76 Lane 1 EB

I-20,
east of Browwing Rd

Date

Wednesday, April 24, 2024

Lat/Long

34.038463°, -81.102937°

Weather

Fair
66°F

Click here for Detailed Weather

0000 - 2400 (Weekday 24h Session) (04-24-2024)

Volume Summary 15min

TIME	Volume Summary 15min EB	Volume Summary 15min WB	15min Total	60min Total
0000 - 0015	1	0	**1**	
0015 - 0030	0	0	**0**	
0030 - 0045	0	0	**0**	
0045 - 0100	0	0	**0**	**1**
0100 - 0115	0	0	**0**	
0115 - 0130	0	0	**0**	
0130 - 0145	0	0	**0**	
0145 - 0200	0	0	**0**	**0**
0200 - 0215	20	0	**20**	
0215 - 0230	24	0	**24**	
0230 - 0245	28	0	**28**	
0245 - 0300	23	0	**23**	**95**
0300 - 0315	22	0	**22**	
0315 - 0330	27	0	**27**	
0330 - 0345	23	0	**23**	
0345 - 0400	23	0	**23**	**95**
0400 - 0415	44	0	**44**	
0415 - 0430	26	0	**26**	
0430 - 0445	28	0	**28**	
0445 - 0500	17	0	**17**	**115**
0500 - 0515	52	0	**52**	
0515 - 0530	76	0	**76**	
0530 - 0545	94	0	**94**	
0545 - 0600	106	0	**106**	**328**
0600 - 0615	97	0	**97**	
0615 - 0630	123	0	**123**	
0630 - 0645	171	0	**171**	
0645 - 0700	250	0	**250**	**641**
0700 - 0715	306	0	**306**	
0715 - 0730	373	0	**373**	
0730 - 0745	400	0	**400**	
0745 - 0800	465	0	**465**	**1544**
0800 - 0815	387	0	**387**	
0815 - 0830	313	0	**313**	
0830 - 0845	301	0	**301**	
0845 - 0900	235	0	**235**	**1236**
0900 - 0915	227	0	**227**	
0915 - 0930	199	0	**199**	
0930 - 0945	187	0	**187**	
0945 - 1000	161	0	**161**	**774**
1000 - 1015	181	0	**181**	
1015 - 1030	146	0	**146**	
1030 - 1045	168	0	**168**	
1045 - 1100	156	0	**156**	**651**
1100 - 1115	155	0	**155**	
1115 - 1130	148	0	**148**	
1130 - 1145	169	0	**169**	
1145 - 1200	151	0	**151**	**623**

Time	Volume Summary 15min EB	Volume Summary 15min WB	15min Total	60min Total
1200 - 1215	176	0	**176**	
1215 - 1230	136	0	**136**	
1230 - 1245	208	0	**208**	
1245 - 1300	223	0	**223**	**743**
1300 - 1315	209	0	**209**	
1315 - 1330	218	0	**218**	
1330 - 1345	244	0	**244**	
1345 - 1400	234	0	**234**	**905**
1400 - 1415	206	0	**206**	
1415 - 1430	200	0	**200**	
1430 - 1445	231	0	**231**	
1445 - 1500	273	0	**273**	**910**
1500 - 1515	292	0	**292**	
1515 - 1530	270	0	**270**	
1530 - 1545	279	0	**279**	
1545 - 1600	361	0	**361**	**1202**
1600 - 1615	299	0	**299**	
1615 - 1630	331	0	**331**	
1630 - 1645	348	0	**348**	
1645 - 1700	333	0	**333**	**1311**
1700 - 1715	359	0	**359**	
1715 - 1730	383	0	**383**	
1730 - 1745	299	0	**299**	
1745 - 1800	232	0	**232**	**1273**
1800 - 1815	223	0	**223**	
1815 - 1830	198	0	**198**	
1830 - 1845	195	0	**195**	
1845 - 1900	192	0	**192**	**808**
1900 - 1915	151	0	**151**	
1915 - 1930	138	0	**138**	
1930 - 1945	120	0	**120**	
1945 - 2000	130	0	**130**	**539**
2000 - 2015	113	0	**113**	
2015 - 2030	141	0	**141**	
2030 - 2045	227	0	**227**	
2045 - 2100	136	0	**136**	**617**
2100 - 2115	134	0	**134**	
2115 - 2130	147	0	**147**	
2130 - 2145	95	0	**95**	
2145 - 2200	101	0	**101**	**477**
2200 - 2215	111	0	**111**	
2215 - 2230	75	0	**75**	
2230 - 2245	68	0	**68**	
2245 - 2300	69	0	**69**	**323**
2300 - 2315	64	0	**64**	
2315 - 2330	41	0	**41**	
2330 - 2345	52	0	**52**	
2345 - 0000	61	0	**61**	**218**

Session Total	15429	0	**15429**
Session Average	160.72	0.00	**160.72**
Session Percentage	100.00	0.00	

Site 76 Lane 1 EB

I-20,
east of Browwing Rd

Date

Thursday, April 25, 2024

Lat/Long

34.038463°, -81.102937°

Weather

Fair
67°F

Click here for Detailed Weather

0000 - 2400 (Weekday 24h Session) (04-25-2024)

Volume Summary 15min

TIME	Volume Summary 15min EB	Volume Summary 15min WB	15min Total	60min Total
0000 - 0015	29	0	**29**	
0015 - 0030	16	0	**16**	
0030 - 0045	13	0	**13**	
0045 - 0100	8	0	**8**	**66**
0100 - 0115	3	0	**3**	
0115 - 0130	5	0	**5**	
0130 - 0145	6	0	**6**	
0145 - 0200	6	0	**6**	**20**
0200 - 0215	4	0	**4**	
0215 - 0230	5	0	**5**	
0230 - 0245	3	0	**3**	
0245 - 0300	2	0	**2**	**14**
0300 - 0315	4	0	**4**	
0315 - 0330	5	0	**5**	
0330 - 0345	6	0	**6**	
0345 - 0400	8	0	**8**	**23**
0400 - 0415	9	0	**9**	
0415 - 0430	11	0	**11**	
0430 - 0445	16	0	**16**	
0445 - 0500	15	0	**15**	**51**
0500 - 0515	16	0	**16**	
0515 - 0530	42	0	**42**	
0530 - 0545	65	0	**65**	
0545 - 0600	66	0	**66**	**189**
0600 - 0615	81	0	**81**	
0615 - 0630	96	0	**96**	
0630 - 0645	183	0	**183**	
0645 - 0700	255	0	**255**	**615**
0700 - 0715	333	0	**333**	
0715 - 0730	394	0	**394**	
0730 - 0745	411	0	**411**	
0745 - 0800	370	0	**370**	**1508**
0800 - 0815	358	0	**358**	
0815 - 0830	386	0	**386**	
0830 - 0845	343	0	**343**	
0845 - 0900	279	0	**279**	**1366**
0900 - 0915	253	0	**253**	
0915 - 0930	232	0	**232**	
0930 - 0945	219	0	**219**	
0945 - 1000	173	0	**173**	**877**
1000 - 1015	180	0	**180**	
1015 - 1030	165	0	**165**	
1030 - 1045	170	0	**170**	
1045 - 1100	181	0	**181**	**696**
1100 - 1115	142	0	**142**	
1115 - 1130	220	0	**220**	
1130 - 1145	193	0	**193**	
1145 - 1200	172	0	**172**	**727**

Time	Volume Summary 15min EB	Volume Summary 15min WB	15min Total	60min Total
1200 - 1215	202	0	**202**	
1215 - 1230	165	0	**165**	
1230 - 1245	223	0	**223**	
1245 - 1300	216	0	**216**	**806**
1300 - 1315	209	0	**209**	
1315 - 1330	236	0	**236**	
1330 - 1345	232	0	**232**	
1345 - 1400	247	0	**247**	**924**
1400 - 1415	249	0	**249**	
1415 - 1430	224	0	**224**	
1430 - 1445	220	0	**220**	
1445 - 1500	233	0	**233**	**926**
1500 - 1515	252	0	**252**	
1515 - 1530	300	0	**300**	
1530 - 1545	283	0	**283**	
1545 - 1600	325	0	**325**	**1160**
1600 - 1615	308	0	**308**	
1615 - 1630	313	0	**313**	
1630 - 1645	317	0	**317**	
1645 - 1700	318	0	**318**	**1256**
1700 - 1715	341	0	**341**	
1715 - 1730	350	0	**350**	
1730 - 1745	340	0	**340**	
1745 - 1800	274	0	**274**	**1305**
1800 - 1815	211	0	**211**	
1815 - 1830	179	0	**179**	
1830 - 1845	222	0	**222**	
1845 - 1900	195	0	**195**	**807**
1900 - 1915	172	0	**172**	
1915 - 1930	207	0	**207**	
1930 - 1945	167	0	**167**	
1945 - 2000	166	0	**166**	**712**
2000 - 2015	132	0	**132**	
2015 - 2030	155	0	**155**	
2030 - 2045	120	0	**120**	
2045 - 2100	147	0	**147**	**554**
2100 - 2115	85	0	**85**	
2115 - 2130	82	0	**82**	
2130 - 2145	60	0	**60**	
2145 - 2200	59	0	**59**	**286**
2200 - 2215	38	0	**38**	
2215 - 2230	54	0	**54**	
2230 - 2245	38	0	**38**	
2245 - 2300	45	0	**45**	**175**
2300 - 2315	28	0	**28**	
2315 - 2330	29	0	**29**	
2330 - 2345	32	0	**32**	
2345 - 0000	23	0	**23**	**112**

Session Total	15175	0	**15175**
Session Average	158.07	0.00	**158.07**
Session Percentage	100.00	0.00	

Site 76 Lane 1 EB

I-20,
east of Browwing Rd

Date

Friday, April 26, 2024

Lat/Long

34.038463°, -81.102937°

Weather

Cloudy
69°F

Click here for Detailed Weather

0000 - 2400 (Weekday 24h Session) (04-26-2024)

Volume Summary 15min

TIME	Volume Summary 15min EB	Volume Summary 15min WB	15min Total	60min Total
0000 - 0015	22	0	**22**	
0015 - 0030	17	0	**17**	
0030 - 0045	14	0	**14**	
0045 - 0100	9	0	**9**	**62**
0100 - 0115	9	0	**9**	
0115 - 0130	9	0	**9**	
0130 - 0145	19	0	**19**	
0145 - 0200	11	0	**11**	**48**
0200 - 0215	7	0	**7**	
0215 - 0230	7	0	**7**	
0230 - 0245	10	0	**10**	
0245 - 0300	7	0	**7**	**31**
0300 - 0315	9	0	**9**	
0315 - 0330	16	0	**16**	
0330 - 0345	13	0	**13**	
0345 - 0400	10	0	**10**	**48**
0400 - 0415	6	0	**6**	
0415 - 0430	11	0	**11**	
0430 - 0445	14	0	**14**	
0445 - 0500	25	0	**25**	**56**
0500 - 0515	27	0	**27**	
0515 - 0530	34	0	**34**	
0530 - 0545	28	0	**28**	
0545 - 0600	35	0	**35**	**124**
0600 - 0615	40	0	**40**	
0615 - 0630	105	0	**105**	
0630 - 0645	165	0	**165**	
0645 - 0700	218	0	**218**	**528**
0700 - 0715	295	0	**295**	
0715 - 0730	382	0	**382**	
0730 - 0745	430	0	**430**	
0745 - 0800	417	0	**417**	**1524**
0800 - 0815	362	0	**362**	
0815 - 0830	318	0	**318**	
0830 - 0845	299	0	**299**	
0845 - 0900	255	0	**255**	**1234**
0900 - 0915	245	0	**245**	
0915 - 0930	214	0	**214**	
0930 - 0945	235	0	**235**	
0945 - 1000	214	0	**214**	**908**
1000 - 1015	218	0	**218**	
1015 - 1030	242	0	**242**	
1030 - 1045	197	0	**197**	
1045 - 1100	192	0	**192**	**849**
1100 - 1115	251	0	**251**	
1115 - 1130	239	0	**239**	
1130 - 1145	226	0	**226**	
1145 - 1200	282	0	**282**	**998**

Time	Volume Summary 15min EB	Volume Summary 15min WB	15min Total	60min Total
1200 - 1215	260	0	**260**	
1215 - 1230	277	0	**277**	
1230 - 1245	282	0	**282**	
1245 - 1300	290	0	**290**	**1109**
1300 - 1315	313	0	**313**	
1315 - 1330	331	0	**331**	
1330 - 1345	330	0	**330**	
1345 - 1400	313	0	**313**	**1287**
1400 - 1415	260	0	**260**	
1415 - 1430	309	0	**309**	
1430 - 1445	313	0	**313**	
1445 - 1500	332	0	**332**	**1214**
1500 - 1515	348	0	**348**	
1515 - 1530	387	0	**387**	
1530 - 1545	458	0	**458**	
1545 - 1600	451	0	**451**	**1644**
1600 - 1615	415	0	**415**	
1615 - 1630	401	0	**401**	
1630 - 1645	421	0	**421**	
1645 - 1700	413	0	**413**	**1650**
1700 - 1715	463	0	**463**	
1715 - 1730	425	0	**425**	
1730 - 1745	330	0	**330**	
1745 - 1800	315	0	**315**	**1533**
1800 - 1815	322	0	**322**	
1815 - 1830	297	0	**297**	
1830 - 1845	266	0	**266**	
1845 - 1900	240	0	**240**	**1125**
1900 - 1915	187	0	**187**	
1915 - 1930	227	0	**227**	
1930 - 1945	194	0	**194**	
1945 - 2000	184	0	**184**	**792**
2000 - 2015	157	0	**157**	
2015 - 2030	160	0	**160**	
2030 - 2045	152	0	**152**	
2045 - 2100	168	0	**168**	**637**
2100 - 2115	121	0	**121**	
2115 - 2130	90	0	**90**	
2130 - 2145	78	0	**78**	
2145 - 2200	74	0	**74**	**363**
2200 - 2215	75	0	**75**	
2215 - 2230	67	0	**67**	
2230 - 2245	62	0	**62**	
2245 - 2300	47	0	**47**	**251**
2300 - 2315	43	0	**43**	
2315 - 2330	38	0	**38**	
2330 - 2345	43	0	**43**	
2345 - 0000	32	0	**32**	**156**

Session Total	18171	0	**18171**
Session Average	189.28	0.00	**189.28**
Session Percentage	100.00	0.00	

Site 76 Lane 1 EB

I-20,
east of Browwing Rd

Date

Saturday, April 27, 2024

Lat/Long

34.038463°, -81.102937°

Weather

Mostly Cloudy
69°F

Click here for Detailed Weather

0000 - 2400 (Saturday 24h Session) (04-27-2024)

Volume Summary 15min

TIME	Volume Summary 15min EB	WB	15min Total	60min Total
0000 - 0015	35	0	**35**	
0015 - 0030	65	0	**65**	
0030 - 0045	36	0	**36**	
0045 - 0100	28	0	**28**	**164**
0100 - 0115	22	0	**22**	
0115 - 0130	10	0	**10**	
0130 - 0145	10	0	**10**	
0145 - 0200	20	0	**20**	**62**
0200 - 0215	15	0	**15**	
0215 - 0230	16	0	**16**	
0230 - 0245	22	0	**22**	
0245 - 0300	28	0	**28**	**81**
0300 - 0315	17	0	**17**	
0315 - 0330	20	0	**20**	
0330 - 0345	28	0	**28**	
0345 - 0400	25	0	**25**	**90**
0400 - 0415	19	0	**19**	
0415 - 0430	20	0	**20**	
0430 - 0445	25	0	**25**	
0445 - 0500	34	0	**34**	**98**
0500 - 0515	37	0	**37**	
0515 - 0530	27	0	**27**	
0530 - 0545	23	0	**23**	
0545 - 0600	21	0	**21**	**108**
0600 - 0615	27	0	**27**	
0615 - 0630	45	0	**45**	
0630 - 0645	47	0	**47**	
0645 - 0700	67	0	**67**	**186**
0700 - 0715	69	0	**69**	
0715 - 0730	98	0	**98**	
0730 - 0745	116	0	**116**	
0745 - 0800	157	0	**157**	**440**
0800 - 0815	144	0	**144**	
0815 - 0830	134	0	**134**	
0830 - 0845	193	0	**193**	
0845 - 0900	156	0	**156**	**627**
0900 - 0915	181	0	**181**	
0915 - 0930	169	0	**169**	
0930 - 0945	220	0	**220**	
0945 - 1000	197	0	**197**	**767**
1000 - 1015	216	0	**216**	
1015 - 1030	221	0	**221**	
1030 - 1045	237	0	**237**	
1045 - 1100	209	0	**209**	**883**
1100 - 1115	201	0	**201**	
1115 - 1130	198	0	**198**	
1130 - 1145	242	0	**242**	
1145 - 1200	317	0	**317**	**958**

Time	Volume Summary 15min EB	WB	15min Total	60min Total
1200 - 1215	279	0	**279**	
1215 - 1230	300	0	**300**	
1230 - 1245	272	0	**272**	
1245 - 1300	244	0	**244**	**1095**
1300 - 1315	303	0	**303**	
1315 - 1330	250	0	**250**	
1330 - 1345	238	0	**238**	
1345 - 1400	279	0	**279**	**1070**
1400 - 1415	241	0	**241**	
1415 - 1430	224	0	**224**	
1430 - 1445	212	0	**212**	
1445 - 1500	243	0	**243**	**920**
1500 - 1515	236	0	**236**	
1515 - 1530	238	0	**238**	
1530 - 1545	296	0	**296**	
1545 - 1600	262	0	**262**	**1032**
1600 - 1615	199	0	**199**	
1615 - 1630	227	0	**227**	
1630 - 1645	279	0	**279**	
1645 - 1700	282	0	**282**	**987**
1700 - 1715	242	0	**242**	
1715 - 1730	229	0	**229**	
1730 - 1745	178	0	**178**	
1745 - 1800	171	0	**171**	**820**
1800 - 1815	170	0	**170**	
1815 - 1830	195	0	**195**	
1830 - 1845	200	0	**200**	
1845 - 1900	161	0	**161**	**726**
1900 - 1915	143	0	**143**	
1915 - 1930	155	0	**155**	
1930 - 1945	154	0	**154**	
1945 - 2000	165	0	**165**	**617**
2000 - 2015	160	0	**160**	
2015 - 2030	141	0	**141**	
2030 - 2045	162	0	**162**	
2045 - 2100	177	0	**177**	**640**
2100 - 2115	107	0	**107**	
2115 - 2130	133	0	**133**	
2130 - 2145	116	0	**116**	
2145 - 2200	117	0	**117**	**473**
2200 - 2215	87	0	**87**	
2215 - 2230	80	0	**80**	
2230 - 2245	60	0	**60**	
2245 - 2300	64	0	**64**	**291**
2300 - 2315	76	0	**76**	
2315 - 2330	67	0	**67**	
2330 - 2345	65	0	**65**	
2345 - 0000	68	0	**68**	**276**

Session Total	13411	0	**13411**
Session Average	139.70	0.00	**139.70**
Session Percentage	100.00	0.00	

Bi-Directional Class Count || NB EB 60min

Columbia, SC

Marr Traffic DATA COLLECTION

www.marrtraffic.com

Site 76 Lane 1 EB
I-20,
east of Browwing Rd

Date
Sunday, April 21, 2024

Lat/Long
34.038463°, -81.102937°

Weather
Cloudy
66°F

Click here for Detailed Weather

0000 - 2400 (Sunday 24h Session) (04-21-2024)
NB EB 60min

	Eastbound (Movement 76 Lane 1 EB.1)													
TIME	1	2	3	4	5	6	7	8	9	10	11	12	13	**Total**
0000 - 0100	0	192	32	0	0	0	0	0	1	0	0	0	0	**225**
0100 - 0200	0	117	20	0	0	0	0	0	1	0	0	0	0	**138**
0200 - 0300	0	48	12	0	1	0	0	0	1	0	0	0	0	**62**
0300 - 0400	0	47	12	0	0	0	0	0	0	0	0	0	0	**59**
0400 - 0500	0	35	7	0	0	0	0	0	0	0	0	0	0	**42**
0500 - 0600	0	49	12	0	0	0	0	0	0	0	0	0	0	**61**
0600 - 0700	0	67	15	0	1	0	0	0	1	0	0	0	0	**84**
0700 - 0800	1	169	41	0	2	0	0	0	0	0	0	0	0	**213**
0800 - 0900	1	201	42	0	0	0	1	0	0	0	0	0	0	**245**
0900 - 1000	4	331	54	0	2	0	0	0	3	0	0	0	0	**394**
1000 - 1100	36	458	82	1	3	0	0	0	0	0	0	0	0	**580**
1100 - 1200	12	487	118	0	1	0	0	0	0	0	0	0	0	**618**
1200 - 1300	1	612	155	2	0	0	0	2	2	0	0	0	0	**774**
1300 - 1400	1	723	131	0	0	0	0	1	1	0	0	0	0	**857**
1400 - 1500	8	701	177	2	0	0	0	1	0	0	0	0	0	**889**
1500 - 1600	0	616	142	0	0	1	0	1	0	0	0	0	0	**760**
1600 - 1700	5	801	178	0	2	0	0	2	0	0	0	0	0	**988**
1700 - 1800	0	729	122	1	0	0	0	2	0	0	0	0	0	**854**
1800 - 1900	1	598	89	0	0	1	0	2	2	0	0	0	0	**693**
1900 - 2000	0	660	97	2	0	0	0	0	1	0	0	0	0	**760**
2000 - 2100	0	499	88	0	0	0	0	5	14	0	1	0	0	**607**
2100 - 2200	0	454	38	0	1	0	0	4	14	0	1	0	0	**512**
2200 - 2300	0	432	54	0	0	0	0	0	6	0	0	0	0	**492**
2300 - 2400	0	190	28	1	0	0	0	1	6	0	0	0	0	**226**

Session Total	70	9216	1746	9	13	2	1	21	53	0	2	0	0	**11133**
Session Average	2.92	384.00	72.75	0.38	0.54	0.08	0.04	0.88	2.21	0.00	0.08	0.00	0.00	**463.88**
Session Percentage	0.63	82.78	15.68	0.08	0.12	0.02	0.01	0.19	0.48	0.00	0.02	0.00	0.00	

AM Peak Hour	0900 - 1000	0900 - 1000	0900 - 1000	-	0700 - 0800	-	0800 - 0900	-	0900 - 1000	-	-	-	-	**0900 - 1000**
AM Peak Volume	4	331	54	0	2	0	1	0	3	0	0	0	0	**394**

Noon Peak Hour	1000 - 1100	1300 - 1400	1400 - 1500	1200 - 1300	1000 - 1100	-	-	1200 - 1300	1200 - 1300	-	-	-	-	**1400 - 1500**
Noon Peak Volume	36	723	177	2	3	0	0	2	2	0	0	0	0	**889**

PM Peak Hour	1600 - 1700	1600 - 1700	1600 - 1700	1900 - 2000	1600 - 1700	1500 - 1600	-	1600 - 1700	1800 - 1900	-	-	-	-	**1600 - 1700**
PM Peak Volume	5	801	178	2	2	1	0	2	2	0	0	0	0	**988**

Site 76 Lane 1 EB
I-20,
east of Browwing Rd

Date
Monday, April 22, 2024

Lat/Long
34.038463°, -81.102937°

Weather
Mostly Cloudy
57°F

Click here for Detailed Weather

0000 - 2400 (Weekday 24h Session) (04-22-2024)
NB EB 60min

	Eastbound (Movement 76 Lane 1 EB.1)													
TIME	1	2	3	4	5	6	7	8	9	10	11	12	13	**Total**
0000 - 0100	0	54	21	0	0	0	0	0	0	0	0	0	0	**75**
0100 - 0200	0	40	12	0	0	0	0	0	0	0	0	0	0	**52**
0200 - 0300	0	30	7	0	0	0	0	0	0	0	0	0	0	**37**
0300 - 0400	0	44	15	0	0	0	0	0	0	0	0	0	0	**59**
0400 - 0500	0	70	26	0	0	0	0	0	0	0	0	0	0	**96**
0500 - 0600	0	130	44	0	0	0	0	0	0	0	0	0	0	**174**
0600 - 0700	0	266	97	0	1	1	0	0	1	0	0	0	0	**366**
0700 - 0800	3	989	304	0	3	1	0	0	2	0	1	0	0	**1303**
0800 - 0900	0	815	297	0	2	2	0	0	0	0	0	0	0	**1116**
0900 - 1000	1	485	181	1	3	2	0	2	4	0	0	0	0	**679**
1000 - 1100	4	398	150	0	5	2	0	0	0	0	0	0	0	**559**
1100 - 1200	7	312	182	0	2	1	0	1	0	0	0	0	0	**505**
1200 - 1300	0	339	129	0	1	0	0	1	1	0	0	0	0	**471**
1300 - 1400	2	477	145	0	2	1	0	0	2	0	0	0	0	**629**
1400 - 1500	1	574	185	0	4	1	0	3	6	0	0	0	0	**774**
1500 - 1600	0	574	189	1	6	3	0	0	3	0	0	0	0	**776**
1600 - 1700	0	791	234	0	6	0	0	3	4	0	0	0	0	**1038**
1700 - 1800	1	797	240	0	6	2	0	0	5	0	0	0	0	**1051**
1800 - 1900	0	402	154	0	0	0	0	0	0	0	1	0	0	**557**
1900 - 2000	0	316	117	0	0	0	0	0	0	0	0	0	0	**433**
2000 - 2100	0	242	92	0	1	0	0	0	2	0	0	0	0	**337**
2100 - 2200	0	162	64	0	0	0	0	0	0	0	0	0	0	**226**
2200 - 2300	0	140	61	0	0	0	0	0	0	0	0	0	0	**201**
2300 - 2400	0	100	39	0	0	0	0	0	0	0	0	0	0	**139**

Session Total	19	8547	2985	2	42	16	0	10	30	0	2	0	0	**11653**
Session Average	0.79	356.13	124.38	0.08	1.75	0.67	0.00	0.42	1.25	0.00	0.08	0.00	0.00	**485.54**
Session Percentage	0.16	73.35	25.62	0.02	0.36	0.14	0.00	0.09	0.26	0.00	0.02	0.00	0.00	

AM Peak Hour	0700 - 0800	0700 - 0800	0700 - 0800	0900 - 1000	0700 - 0800	0800 - 0900	-	0900 - 1000	0900 - 1000	-	0700 - 0800	-	-	**0700 - 0800**
AM Peak Volume	3	989	304	1	3	2	0	2	4	0	1	0	0	**1303**

Noon Peak Hour	1100 - 1200	1400 - 1500	1400 - 1500	-	1000 - 1100	1000 - 1100	-	1400 - 1500	1400 - 1500	-	-	-	-	**1400 - 1500**
Noon Peak Volume	7	574	185	0	5	2	0	3	6	0	0	0	0	**774**

PM Peak Hour	1700 - 1800	1700 - 1800	1700 - 1800	1500 - 1600	1500 - 1600	1500 - 1600	-	1600 - 1700	1700 - 1800	-	1800 - 1900	-	-	**1700 - 1800**
PM Peak Volume	1	797	240	1	6	3	0	3	5	0	1	0	0	**1051**

Site 76 Lane 1 EB
I-20,
east of Browwing Rd

Date
Tuesday, April 23, 2024

Lat/Long
34.038463°, -81.102937°

Weather
Fair
58°F

Click here for Detailed Weather

0000 - 2400 (Weekday 24h Session) (04-23-2024)
NB EB 60min

	Eastbound (Movement 76 Lane 1 EB.1)													
TIME	1	2	3	4	5	6	7	8	9	10	11	12	13	**Total**
0000 - 0100	0	82	22	1	1	0	0	0	1	0	0	0	0	**107**
0100 - 0200	0	57	17	0	0	0	0	0	1	0	0	0	0	**75**
0200 - 0300	0	34	8	0	0	0	0	0	0	0	0	0	0	**42**
0300 - 0400	0	65	16	0	0	0	0	0	3	0	0	0	0	**84**
0400 - 0500	0	105	24	0	0	0	0	0	3	0	0	0	0	**132**
0500 - 0600	0	240	66	0	0	0	0	0	0	0	0	0	0	**306**
0600 - 0700	0	584	173	0	0	0	0	1	1	0	0	0	0	**759**
0700 - 0800	2	781	238	0	3	2	0	7	2	0	1	0	0	**1036**
0800 - 0900	2	856	288	0	6	2	0	12	1	0	1	0	0	**1168**
0900 - 1000	1	524	184	0	5	1	0	10	0	0	0	0	0	**725**
1000 - 1100	5	511	181	0	4	1	0	5	1	0	0	0	0	**708**
1100 - 1200	2	447	127	0	5	2	0	7	1	0	0	0	0	**591**
1200 - 1300	3	533	161	1	5	1	0	8	7	0	0	0	0	**719**
1300 - 1400	3	542	129	2	8	2	0	1	1	0	0	0	0	**688**
1400 - 1500	4	580	156	0	3	2	0	6	3	0	0	0	0	**754**
1500 - 1600	4	754	205	0	10	1	0	8	3	0	0	0	0	**985**
1600 - 1700	1	1025	283	0	10	2	0	15	6	0	0	0	0	**1342**
1700 - 1800	0	971	221	0	3	2	0	7	3	0	0	0	0	**1207**
1800 - 1900	1	558	129	0	3	1	0	4	4	0	0	0	0	**700**
1900 - 2000	1	485	91	0	1	1	0	2	3	0	1	0	0	**585**
2000 - 2100	0	435	41	0	0	0	0	0	2	0	0	0	0	**478**
2100 - 2200	0	328	25	0	0	0	0	0	4	0	0	0	0	**357**
2200 - 2300	0	71	9	0	0	0	0	0	1	0	0	0	0	**81**
2300 - 2400	0	2	0	0	0	0	0	0	0	0	0	0	0	**2**
Session Total	29	10570	2794	4	67	20	0	93	51	0	3	0	0	**13631**
Session Average	1.21	440.42	116.42	0.17	2.79	0.83	0.00	3.88	2.13	0.00	0.13	0.00	0.00	**567.96**
Session Percentage	0.21	77.54	20.50	0.03	0.49	0.15	0.00	0.68	0.37	0.00	0.02	0.00	0.00	
AM Peak Hour	0700 - 0800	0800 - 0900	0800 - 0900	-	0800 - 0900	0700 - 0800	-	0800 - 0900	0700 - 0800	-	0700 - 0800	-	-	**0800 - 0900**
AM Peak Hour Volume	2	856	288	0	6	2	0	12	2	0	1	0	0	**1168**
Noon Peak Hour	1000 - 1100	1400 - 1500	1000 - 1100	1300 - 1400	1300 - 1400	1100 - 1200	-	1200 - 1300	1200 - 1300	-	-	-	-	**1400 - 1500**
Noon Peak Hour Volume	5	580	181	2	8	2	0	8	7	0	0	0	0	**754**
PM Peak Hour	1500 - 1600	1600 - 1700	1600 - 1700	-	1500 - 1600	1600 - 1700	-	1600 - 1700	1600 - 1700	-	1900 - 2000	-	-	**1600 - 1700**
PM Peak Hour Volume	4	1025	283	0	10	2	0	15	6	0	1	0	0	**1342**

Site 76 Lane 1 EB
I-20,
east of Browwing Rd

Date
Wednesday, April 24, 2024

Lat/Long
34.038463°, -81.102937°

Weather
Fair
66°F

Click here for Detailed Weather

0000 - 2400 (Weekday 24h Session) (04-24-2024)
NB EB 60min

	Eastbound (Movement 76 Lane 1 EB.1)													
TIME	1	2	3	4	5	6	7	8	9	10	11	12	13	**Total**
0000 - 0100	0	1	0	0	0	0	0	0	0	0	0	0	0	**1**
0100 - 0200	0	0	0	0	0	0	0	0	0	0	0	0	0	**0**
0200 - 0300	1	62	15	0	0	0	0	13	4	0	0	0	0	**95**
0300 - 0400	1	72	11	0	2	0	0	4	5	0	0	0	0	**95**
0400 - 0500	1	94	13	0	2	0	0	1	4	0	0	0	0	**115**
0500 - 0600	0	262	45	0	7	0	0	9	5	0	0	0	0	**328**
0600 - 0700	1	490	130	0	9	4	0	4	3	0	0	0	0	**641**
0700 - 0800	7	1176	346	0	12	0	0	1	2	0	0	0	0	**1544**
0800 - 0900	5	932	288	1	7	1	0	0	2	0	0	0	0	**1236**
0900 - 1000	2	574	185	0	11	2	0	0	0	0	0	0	0	**774**
1000 - 1100	0	497	129	0	14	2	0	6	3	0	0	0	0	**651**
1100 - 1200	2	468	135	1	8	1	0	5	3	0	0	0	0	**623**
1200 - 1300	2	569	151	0	9	1	0	8	3	0	0	0	0	**743**
1300 - 1400	1	680	211	0	9	0	0	3	1	0	0	0	0	**905**
1400 - 1500	1	697	196	0	10	1	0	3	2	0	0	0	0	**910**
1500 - 1600	3	917	256	1	10	3	0	7	3	0	2	0	0	**1202**
1600 - 1700	0	1048	241	0	10	2	0	5	3	2	0	0	0	**1311**
1700 - 1800	1	1013	238	0	10	2	0	4	3	1	1	0	0	**1273**
1800 - 1900	3	615	179	0	3	0	0	4	4	0	0	0	0	**808**
1900 - 2000	2	428	94	1	9	1	0	1	2	1	0	0	0	**539**
2000 - 2100	1	529	62	0	5	6	0	6	7	0	1	0	0	**617**
2100 - 2200	1	376	77	0	5	5	0	9	4	0	0	0	0	**477**
2200 - 2300	0	262	38	0	7	2	0	4	9	0	1	0	0	**323**
2300 - 2400	1	187	17	0	0	2	0	4	7	0	0	0	0	**218**

Session Total	36	11949	3057	4	159	35	0	101	79	4	5	0	0	**15429**
Session Average	1.50	497.88	127.38	0.17	6.63	1.46	0.00	4.21	3.29	0.17	0.21	0.00	0.00	**642.88**
Session Percentage	0.23	77.45	19.81	0.03	1.03	0.23	0.00	0.65	0.51	0.03	0.03	0.00	0.00	

AM Peak Hour	0700 - 0800	0700 - 0800	0700 - 0800	0800 - 0900	0700 - 0800	0600 - 0700	-	0500 - 0600	0500 - 0600	-	-	-	-	**0700 - 0800**
AM Peak Hour Volume	7	1176	346	1	12	4	0	9	5	0	0	0	0	**1544**

Noon Peak Hour	1100 - 1200	1400 - 1500	1300 - 1400	1100 - 1200	1000 - 1100	1000 - 1100	-	1200 - 1300	1000 - 1100	-	-	-	-	**1400 - 1500**
Noon Peak Hour Volume	2	697	211	1	14	2	0	8	3	0	0	0	0	**910**

PM Peak Hour	1500 - 1600	1600 - 1700	1500 - 1600	1500 - 1600	1500 - 1600	1500 - 1600	-	1500 - 1600	1800 - 1900	1600 - 1700	1500 - 1600	-	-	**1600 - 1700**
PM Peak Hour Volume	3	1048	256	1	10	3	0	7	4	2	2	0	0	**1311**

Site 76 Lane 1 EB
I-20,
east of Browwing Rd

Date
Thursday, April 25, 2024

Weather
Fair
67°F

Lat/Long
34.038463°, -81.102937°

Click here for Detailed Weather

0000 - 2400 (Weekday 24h Session) (04-25-2024)
NB EB 60min

	Eastbound (Movement 76 Lane 1 EB.1)													
TIME	1	2	3	4	5	6	7	8	9	10	11	12	13	**Total**
0000 - 0100	0	55	8	0	1	0	0	0	2	0	0	0	0	**66**
0100 - 0200	0	18	2	0	0	0	0	0	0	0	0	0	0	**20**
0200 - 0300	0	14	0	0	0	0	0	0	0	0	0	0	0	**14**
0300 - 0400	0	20	3	0	0	0	0	0	0	0	0	0	0	**23**
0400 - 0500	0	42	8	0	0	0	0	0	1	0	0	0	0	**51**
0500 - 0600	0	159	30	0	0	0	0	0	0	0	0	0	0	**189**
0600 - 0700	2	451	148	0	11	0	0	2	1	0	0	0	0	**615**
0700 - 0800	7	1154	325	1	14	1	1	0	4	0	1	0	0	**1508**
0800 - 0900	5	1024	315	1	12	0	0	7	2	0	0	0	0	**1366**
0900 - 1000	2	617	243	0	7	0	0	5	3	0	0	0	0	**877**
1000 - 1100	3	489	190	0	9	0	0	3	2	0	0	0	0	**696**
1100 - 1200	2	550	165	0	8	1	0	0	1	0	0	0	0	**727**
1200 - 1300	4	606	174	1	8	6	0	5	2	0	0	0	0	**806**
1300 - 1400	2	684	213	1	13	2	0	4	4	0	1	0	0	**924**
1400 - 1500	5	708	201	1	5	1	0	2	2	1	0	0	0	**926**
1500 - 1600	5	857	267	1	19	0	0	1	8	2	0	0	0	**1160**
1600 - 1700	4	986	247	0	13	0	0	2	3	0	1	0	0	**1256**
1700 - 1800	6	1040	239	1	14	0	0	2	3	0	0	0	0	**1305**
1800 - 1900	2	630	162	0	5	0	0	6	2	0	0	0	0	**807**
1900 - 2000	0	572	129	0	5	0	1	4	0	0	1	0	0	**712**
2000 - 2100	0	487	62	0	1	0	0	1	3	0	0	0	0	**554**
2100 - 2200	0	255	26	0	0	0	0	2	3	0	0	0	0	**286**
2200 - 2300	0	151	24	0	0	0	0	0	0	0	0	0	0	**175**
2300 - 2400	0	90	22	0	0	0	0	0	0	0	0	0	0	**112**

Session Total	49	11659	3203	7	145	11	2	46	46	3	4	0	0	**15175**
Session Average	2.04	485.79	133.46	0.29	6.04	0.46	0.08	1.92	1.92	0.13	0.17	0.00	0.00	**632.29**
Session Percentage	0.32	76.83	21.11	0.05	0.96	0.07	0.01	0.30	0.30	0.02	0.03	0.00	0.00	

AM Peak Hour	0700 - 0800	0700 - 0800	0700 - 0800	0700 - 0800	0700 - 0800	0700 - 0800	0700 - 0800	0800 - 0900	0700 - 0800	-	0700 - 0800	-	-	**0700 - 0800**
AM Peak Hour Volume	7	1154	325	1	14	1	1	7	4	0	1	0	0	**1508**

Noon Peak Hour	1400 - 1500	1400 - 1500	1300 - 1400	1200 - 1300	1300 - 1400	1200 - 1300	-	1200 - 1300	1300 - 1400	1400 - 1500	1300 - 1400	-	-	**1400 - 1500**
Noon Peak Hour Volume	5	708	213	1	13	6	0	5	4	1	1	0	0	**926**

PM Peak Hour	1700 - 1800	1700 - 1800	1500 - 1600	1500 - 1600	1500 - 1600	-	1900 - 2000	1800 - 1900	1500 - 1600	1500 - 1600	1600 - 1700	-	-	**1700 - 1800**
PM Peak Hour Volume	6	1040	267	1	19	0	1	6	8	2	1	0	0	**1305**

Site 76 Lane 1 EB
I-20,
east of Browwing Rd

Date
Friday, April 26, 2024

Lat/Long
34.038463°, -81.102937°

Weather
Cloudy
69°F

Click here for Detailed Weather

0000 - 2400 (Weekday 24h Session) (04-26-2024)
NB EB 60min

	Eastbound (Movement 76 Lane 1 EB.1)													
TIME	1	2	3	4	5	6	7	8	9	10	11	12	13	**Total**
0000 - 0100	0	40	21	0	0	0	0	0	1	0	0	0	0	**62**
0100 - 0200	0	29	18	0	0	0	0	0	1	0	0	0	0	**48**
0200 - 0300	0	19	11	0	0	0	0	0	1	0	0	0	0	**31**
0300 - 0400	0	28	18	0	0	0	0	0	1	0	1	0	0	**48**
0400 - 0500	0	36	20	0	0	0	0	0	0	0	0	0	0	**56**
0500 - 0600	0	77	44	0	0	0	0	0	2	0	1	0	0	**124**
0600 - 0700	0	346	176	2	1	2	0	0	1	0	0	0	0	**528**
0700 - 0800	5	1159	344	1	12	0	0	3	0	0	0	0	0	**1524**
0800 - 0900	3	943	260	6	6	2	0	6	8	0	0	0	0	**1234**
0900 - 1000	4	680	198	1	13	2	0	4	5	1	0	0	0	**908**
1000 - 1100	3	640	188	0	7	2	0	4	5	0	0	0	0	**849**
1100 - 1200	10	774	196	0	11	0	0	3	4	0	0	0	0	**998**
1200 - 1300	10	841	232	1	13	2	0	3	7	0	0	0	0	**1109**
1300 - 1400	15	1005	237	0	20	0	0	5	5	0	0	0	0	**1287**
1400 - 1500	7	920	251	0	18	0	0	7	10	0	1	0	0	**1214**
1500 - 1600	26	1273	303	1	25	1	0	11	4	0	0	0	0	**1644**
1600 - 1700	10	1306	311	0	13	1	0	5	4	0	0	0	0	**1650**
1700 - 1800	12	1259	250	0	7	0	0	2	2	0	1	0	0	**1533**
1800 - 1900	10	923	181	0	7	0	0	2	2	0	0	0	0	**1125**
1900 - 2000	16	638	127	0	5	2	0	1	2	0	1	0	0	**792**
2000 - 2100	1	440	195	0	0	0	0	0	1	0	0	0	0	**637**
2100 - 2200	0	256	106	0	0	0	0	0	0	0	1	0	0	**363**
2200 - 2300	0	177	71	0	0	0	0	0	2	0	1	0	0	**251**
2300 - 2400	0	100	55	0	0	0	0	0	1	0	0	0	0	**156**

Session Total	132	13909	3813	12	158	14	0	56	69	1	7	0	0	**18171**
Session Average	5.50	579.54	158.88	0.50	6.58	0.58	0.00	2.33	2.88	0.04	0.29	0.00	0.00	**757.13**
Session Percentage	0.73	76.55	20.98	0.07	0.87	0.08	0.00	0.31	0.38	0.01	0.04	0.00	0.00	

AM Peak Hour	0700 - 0800	0700 - 0800	0700 - 0800	0800 - 0900	0900 - 1000	0600 - 0700	-	0800 - 0900	0800 - 0900	0900 - 1000	0500 - 0600	-	-	**0700 - 0800**
AM Peak Hour Volume	5	1159	344	6	13	2	0	6	8	1	1	0	0	**1524**

Noon Peak Hour	1300 - 1400	1300 - 1400	1400 - 1500	1200 - 1300	1300 - 1400	1000 - 1100	-	1400 - 1500	1400 - 1500	-	1400 - 1500	-	-	**1300 - 1400**
Noon Peak Hour Volume	15	1005	251	1	20	2	0	7	10	0	1	0	0	**1287**

PM Peak Hour	1500 - 1600	1600 - 1700	1600 - 1700	1500 - 1600	1500 - 1600	1900 - 2000	-	1500 - 1600	1500 - 1600	-	1700 - 1800	-	-	**1600 - 1700**
PM Peak Hour Volume	26	1306	311	1	25	2	0	11	4	0	1	0	0	**1650**

Site 76 Lane 1 EB
I-20,
east of Browwing Rd

Date
Saturday, April 27, 2024

Lat/Long
34.038463°, -81.102937°

Weather
Mostly Cloudy
69°F

Click here for Detailed Weather

0000 - 2400 (Saturday 24h Session) (04-27-2024)
NB EB 60min

	Eastbound (Movement 76 Lane 1 EB.1)													
TIME	1	2	3	4	5	6	7	8	9	10	11	12	13	**Total**
0000 - 0100	0	110	54	0	0	0	0	0	0	0	0	0	0	**164**
0100 - 0200	0	42	20	0	0	0	0	0	0	0	0	0	0	**62**
0200 - 0300	0	50	31	0	0	0	0	0	0	0	0	0	0	**81**
0300 - 0400	0	57	33	0	0	0	0	0	0	0	0	0	0	**90**
0400 - 0500	0	67	31	0	0	0	0	0	0	0	0	0	0	**98**
0500 - 0600	0	74	34	0	0	0	0	0	0	0	0	0	0	**108**
0600 - 0700	0	137	46	0	0	2	0	0	1	0	0	0	0	**186**
0700 - 0800	1	342	91	0	1	2	0	1	2	0	0	0	0	**440**
0800 - 0900	1	504	113	0	0	3	0	5	1	0	0	0	0	**627**
0900 - 1000	1	631	121	0	2	3	0	8	1	0	0	0	0	**767**
1000 - 1100	25	711	133	0	2	5	0	7	0	0	0	0	0	**883**
1100 - 1200	40	749	147	0	5	8	0	9	0	0	0	0	0	**958**
1200 - 1300	26	887	158	1	7	5	5	4	2	0	0	0	0	**1095**
1300 - 1400	39	862	148	1	5	7	0	7	1	0	0	0	0	**1070**
1400 - 1500	13	765	119	0	3	11	0	8	1	0	0	0	0	**920**
1500 - 1600	17	839	156	0	1	4	2	12	0	0	1	0	0	**1032**
1600 - 1700	26	783	166	0	1	2	0	7	2	0	0	0	0	**987**
1700 - 1800	5	670	135	0	4	4	0	2	0	0	0	0	0	**820**
1800 - 1900	3	574	130	2	5	10	0	1	0	0	1	0	0	**726**
1900 - 2000	7	509	91	0	0	10	0	0	0	0	0	0	0	**617**
2000 - 2100	0	519	121	0	0	0	0	0	0	0	0	0	0	**640**
2100 - 2200	0	379	94	0	0	0	0	0	0	0	0	0	0	**473**
2200 - 2300	0	210	81	0	0	0	0	0	0	0	0	0	0	**291**
2300 - 2400	0	172	104	0	0	0	0	0	0	0	0	0	0	**276**

Session Total	204	10643	2357	4	36	76	7	71	11	0	2	0	0	**13411**
Session Average	8.50	443.46	98.21	0.17	1.50	3.17	0.29	2.96	0.46	0.00	0.08	0.00	0.00	**558.79**
Session Percentage	1.52	79.36	17.58	0.03	0.27	0.57	0.05	0.53	0.08	0.00	0.01	0.00	0.00	

AM Peak Hour	0700 - 0800	0900 - 1000	0900 - 1000	-	0900 - 1000	0800 - 0900	-	0900 - 1000	0700 - 0800	-	-	-	-	**0900 - 1000**
AM Peak Hour Volume	1	631	121	0	2	3	0	8	2	0	0	0	0	**767**

Noon Peak Hour	1100 - 1200	1200 - 1300	1200 - 1300	1200 - 1300	1200 - 1300	1400 - 1500	1200 - 1300	1100 - 1200	1200 - 1300	-	-	-	-	**1200 - 1300**
Noon Peak Hour Volume	40	887	158	1	7	11	5	9	2	0	0	0	0	**1095**

PM Peak Hour	1600 - 1700	1500 - 1600	1600 - 1700	1800 - 1900	1800 - 1900	1800 - 1900	1500 - 1600	1500 - 1600	1600 - 1700	-	1500 - 1600	-	-	**1500 - 1600**
PM Peak Hour Volume	26	839	166	2	5	10	2	12	2	0	1	0	0	**1032**

Bi-Directional Class Count || Volume Summary 60min

Columbia, SC

Marr Traffic DATA COLLECTION

www.marrtraffic.com

Site 76 Lane 1 EB

I-20,
east of Browwing Rd

Date

Sunday, April 21, 2024

Lat/Long

34.038463°, -81.102937°

Weather

Cloudy
66°F

Click here for Detailed Weather

0000 - 2400 (Sunday 24h Session) (04-21-2024)

Volume Summary 60min

	Volume Summary 60min		
TIME	EB	WB	**Total**
0000 - 0100	225	0	**225**
0100 - 0200	138	0	**138**
0200 - 0300	62	0	**62**
0300 - 0400	59	0	**59**
0400 - 0500	42	0	**42**
0500 - 0600	61	0	**61**
0600 - 0700	84	0	**84**
0700 - 0800	213	0	**213**
0800 - 0900	245	0	**245**
0900 - 1000	394	0	**394**
1000 - 1100	580	0	**580**
1100 - 1200	618	0	**618**

	Volume Summary 60min		
Time	EB	WB	**Total**
1200 - 1300	774	0	**774**
1300 - 1400	857	0	**857**
1400 - 1500	889	0	**889**
1500 - 1600	760	0	**760**
1600 - 1700	988	0	**988**
1700 - 1800	854	0	**854**
1800 - 1900	693	0	**693**
1900 - 2000	760	0	**760**
2000 - 2100	607	0	**607**
2100 - 2200	512	0	**512**
2200 - 2300	492	0	**492**
2300 - 2400	226	0	**226**

Session Total	11133	0	**11133**
Session Average	463.88	0.00	**463.88**
Session Percentage	100.00	0.00	

Site 76 Lane 1 EB

I-20,
east of Browwing Rd

Date

Monday, April 22, 2024

Lat/Long

34.038463°, -81.102937°

Weather

Mostly Cloudy
57°F

Click here for Detailed Weather

0000 - 2400 (Weekday 24h Session) (04-22-2024)

Volume Summary 60min

	Volume Summary 60min		
TIME	EB	WB	**Total**
0000 - 0100	75	0	**75**
0100 - 0200	52	0	**52**
0200 - 0300	37	0	**37**
0300 - 0400	59	0	**59**
0400 - 0500	96	0	**96**
0500 - 0600	174	0	**174**
0600 - 0700	366	0	**366**
0700 - 0800	1303	0	**1303**
0800 - 0900	1116	0	**1116**
0900 - 1000	679	0	**679**
1000 - 1100	559	0	**559**
1100 - 1200	505	0	**505**

	Volume Summary 60min		
Time	EB	WB	**Total**
1200 - 1300	471	0	**471**
1300 - 1400	629	0	**629**
1400 - 1500	774	0	**774**
1500 - 1600	776	0	**776**
1600 - 1700	1038	0	**1038**
1700 - 1800	1051	0	**1051**
1800 - 1900	557	0	**557**
1900 - 2000	433	0	**433**
2000 - 2100	337	0	**337**
2100 - 2200	226	0	**226**
2200 - 2300	201	0	**201**
2300 - 2400	139	0	**139**

Session Total	11653	0	**11653**
Session Average	485.54	0.00	**485.54**
Session Percentage	100.00	0.00	

Site 76 Lane 1 EB

I-20,
east of Browwing Rd

Date

Tuesday, April 23, 2024

Lat/Long

34.038463°, -81.102937°

Weather

Fair
58°F

Click here for Detailed Weather

0000 - 2400 (Weekday 24h Session) (04-23-2024)

Volume Summary 60min

	Volume Summary 60min		
TIME	EB	WB	**Total**
0000 - 0100	107	0	**107**
0100 - 0200	75	0	**75**
0200 - 0300	42	0	**42**
0300 - 0400	84	0	**84**
0400 - 0500	132	0	**132**
0500 - 0600	306	0	**306**
0600 - 0700	759	0	**759**
0700 - 0800	1036	0	**1036**
0800 - 0900	1168	0	**1168**
0900 - 1000	725	0	**725**
1000 - 1100	708	0	**708**
1100 - 1200	591	0	**591**

Session Total	13631	0	**13631**
Session Average	567.96	0.00	**567.96**
Session Percentage	100.00	0.00	

	Volume Summary 60min		
Time	EB	WB	**Total**
1200 - 1300	719	0	**719**
1300 - 1400	688	0	**688**
1400 - 1500	754	0	**754**
1500 - 1600	985	0	**985**
1600 - 1700	1342	0	**1342**
1700 - 1800	1207	0	**1207**
1800 - 1900	700	0	**700**
1900 - 2000	585	0	**585**
2000 - 2100	478	0	**478**
2100 - 2200	357	0	**357**
2200 - 2300	81	0	**81**
2300 - 2400	2	0	**2**

Site 76 Lane 1 EB

I-20,
east of Browwing Rd

Date

Wednesday, April 24, 2024

Lat/Long

34.038463°, -81.102937°

Weather

Fair
66°F

Click here for Detailed Weather

0000 - 2400 (Weekday 24h Session) (04-24-2024)

Volume Summary 60min

	Volume Summary 60min		
TIME	EB	WB	**Total**
0000 - 0100	1	0	**1**
0100 - 0200	0	0	**0**
0200 - 0300	95	0	**95**
0300 - 0400	95	0	**95**
0400 - 0500	115	0	**115**
0500 - 0600	328	0	**328**
0600 - 0700	641	0	**641**
0700 - 0800	1544	0	**1544**
0800 - 0900	1236	0	**1236**
0900 - 1000	774	0	**774**
1000 - 1100	651	0	**651**
1100 - 1200	623	0	**623**

	Volume Summary 60min		
Time	EB	WB	**Total**
1200 - 1300	743	0	**743**
1300 - 1400	905	0	**905**
1400 - 1500	910	0	**910**
1500 - 1600	1202	0	**1202**
1600 - 1700	1311	0	**1311**
1700 - 1800	1273	0	**1273**
1800 - 1900	808	0	**808**
1900 - 2000	539	0	**539**
2000 - 2100	617	0	**617**
2100 - 2200	477	0	**477**
2200 - 2300	323	0	**323**
2300 - 2400	218	0	**218**

Session Total	15429	0	**15429**
Session Average	642.88	0.00	**642.88**
Session Percentage	100.00	0.00	

Site 76 Lane 1 EB

I-20,
east of Browwing Rd

Date

Thursday, April 25, 2024

Lat/Long

34.038463°, -81.102937°

Weather

Fair
67°F

Click here for Detailed Weather

0000 - 2400 (Weekday 24h Session) (04-25-2024)

Volume Summary 60min

	Volume Summary 60min		
TIME	EB	WB	**Total**
0000 - 0100	66	0	**66**
0100 - 0200	20	0	**20**
0200 - 0300	14	0	**14**
0300 - 0400	23	0	**23**
0400 - 0500	51	0	**51**
0500 - 0600	189	0	**189**
0600 - 0700	615	0	**615**
0700 - 0800	1508	0	**1508**
0800 - 0900	1366	0	**1366**
0900 - 1000	877	0	**877**
1000 - 1100	696	0	**696**
1100 - 1200	727	0	**727**

Session Total	15175	0	**15175**
Session Average	632.29	0.00	**632.29**
Session Percentage	100.00	0.00	

	Volume Summary 60min		
Time	EB	WB	**Total**
1200 - 1300	806	0	**806**
1300 - 1400	924	0	**924**
1400 - 1500	926	0	**926**
1500 - 1600	1160	0	**1160**
1600 - 1700	1256	0	**1256**
1700 - 1800	1305	0	**1305**
1800 - 1900	807	0	**807**
1900 - 2000	712	0	**712**
2000 - 2100	554	0	**554**
2100 - 2200	286	0	**286**
2200 - 2300	175	0	**175**
2300 - 2400	112	0	**112**

Site 76 Lane 1 EB

I-20,
east of Browwing Rd

Date

Friday, April 26, 2024

Lat/Long

34.038463°, -81.102937°

Weather

Cloudy
69°F

Click here for Detailed Weather

0000 - 2400 (Weekday 24h Session) (04-26-2024)

Volume Summary 60min

	Volume Summary 60min		
TIME	EB	WB	**Total**
0000 - 0100	62	0	**62**
0100 - 0200	48	0	**48**
0200 - 0300	31	0	**31**
0300 - 0400	48	0	**48**
0400 - 0500	56	0	**56**
0500 - 0600	124	0	**124**
0600 - 0700	528	0	**528**
0700 - 0800	1524	0	**1524**
0800 - 0900	1234	0	**1234**
0900 - 1000	908	0	**908**
1000 - 1100	849	0	**849**
1100 - 1200	998	0	**998**

	Volume Summary 60min		
Time	EB	WB	**Total**
1200 - 1300	1109	0	**1109**
1300 - 1400	1287	0	**1287**
1400 - 1500	1214	0	**1214**
1500 - 1600	1644	0	**1644**
1600 - 1700	1650	0	**1650**
1700 - 1800	1533	0	**1533**
1800 - 1900	1125	0	**1125**
1900 - 2000	792	0	**792**
2000 - 2100	637	0	**637**
2100 - 2200	363	0	**363**
2200 - 2300	251	0	**251**
2300 - 2400	156	0	**156**

Session Total	18171	0	**18171**
Session Average	757.13	0.00	**757.13**
Session Percentage	100.00	0.00	

Site 76 Lane 1 EB

I-20,
east of Browwing Rd

Date

Saturday, April 27, 2024

Lat/Long

34.038463°, -81.102937°

Weather

Mostly Cloudy
69°F

Click here for Detailed Weather

0000 - 2400 (Saturday 24h Session) (04-27-2024)

Volume Summary 60min

	Volume Summary 60min		
TIME	EB	WB	**Total**
0000 - 0100	164	0	**164**
0100 - 0200	62	0	**62**
0200 - 0300	81	0	**81**
0300 - 0400	90	0	**90**
0400 - 0500	98	0	**98**
0500 - 0600	108	0	**108**
0600 - 0700	186	0	**186**
0700 - 0800	440	0	**440**
0800 - 0900	627	0	**627**
0900 - 1000	767	0	**767**
1000 - 1100	883	0	**883**
1100 - 1200	958	0	**958**
1200 - 1300	1095	0	**1095**
1300 - 1400	1070	0	**1070**
1400 - 1500	920	0	**920**
1500 - 1600	1032	0	**1032**
1600 - 1700	987	0	**987**
1700 - 1800	820	0	**820**
1800 - 1900	726	0	**726**
1900 - 2000	617	0	**617**
2000 - 2100	640	0	**640**
2100 - 2200	473	0	**473**
2200 - 2300	291	0	**291**
2300 - 2400	276	0	**276**
Session Total	13411	0	**13411**
Session Average	558.79	0.00	**558.79**
Session Percentage	100.00	0.00	

Bi-Directional Class Count || Graphical Analysis NB EB

Columbia, SC

Marr Traffic DATA COLLECTION

www.marrtraffic.com

Site 76 Lane 1 EB

I-20,
east of Browwing Rd

Lat/Long

34.038463°, -81.102937°

0000 - 2400 (Weekday 24h Session)

Graphical Analysis NB EB

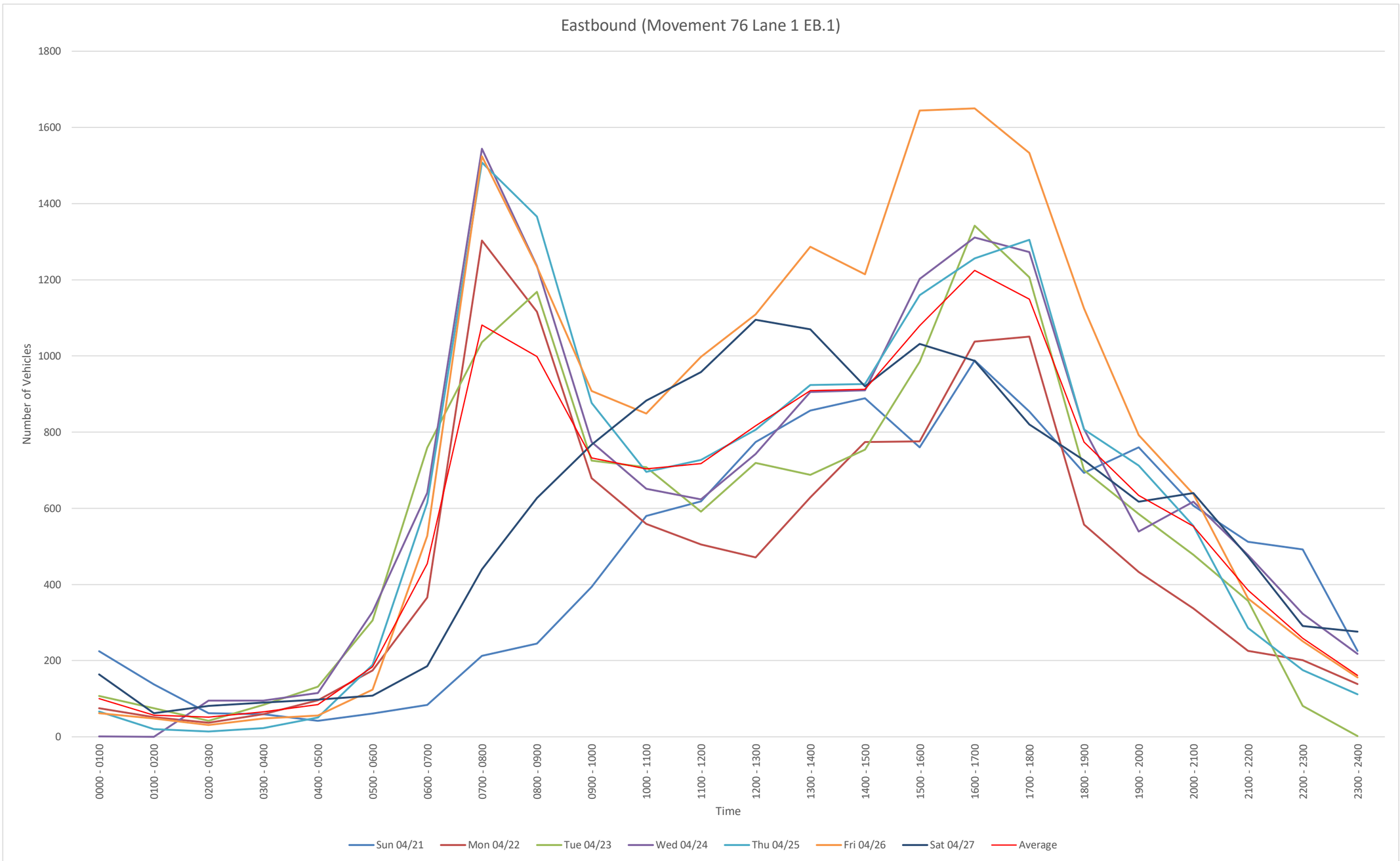

EB
File Name:
Start Date: 4/21/2024
Start Time: 0
Site Code: 76 Lane 1 EB
Station ID: 1
Location 1: I-20, east of Browwing Rd
Location 2:

Date	Time	1	2	3	4	5	6	7	8	9	10	11	12	13
4/21/2024	12:00 AM	0	35	8	0	0	0	0	0	0	0	0	0	0
4/21/2024	12:15 AM	0	55	9	0	0	0	0	0	1	0	0	0	0
4/21/2024	12:30 AM	0	50	6	0	0	0	0	0	0	0	0	0	0
4/21/2024	12:45 AM	0	52	9	0	0	0	0	0	0	0	0	0	0
4/21/2024	1:00 AM	0	29	3	0	0	0	0	0	0	0	0	0	0
4/21/2024	1:15 AM	0	25	5	0	0	0	0	0	0	0	0	0	0
4/21/2024	1:30 AM	0	34	8	0	0	0	0	0	1	0	0	0	0
4/21/2024	1:45 AM	0	29	4	0	0	0	0	0	0	0	0	0	0
4/21/2024	2:00 AM	0	13	3	0	1	0	0	0	0	0	0	0	0
4/21/2024	2:15 AM	0	10	2	0	0	0	0	0	0	0	0	0	0
4/21/2024	2:30 AM	0	11	4	0	0	0	0	0	0	0	0	0	0
4/21/2024	2:45 AM	0	14	3	0	0	0	0	0	1	0	0	0	0
4/21/2024	3:00 AM	0	18	7	0	0	0	0	0	0	0	0	0	0
4/21/2024	3:15 AM	0	9	0	0	0	0	0	0	0	0	0	0	0
4/21/2024	3:30 AM	0	9	2	0	0	0	0	0	0	0	0	0	0
4/21/2024	3:45 AM	0	11	3	0	0	0	0	0	0	0	0	0	0
4/21/2024	4:00 AM	0	10	3	0	0	0	0	0	0	0	0	0	0
4/21/2024	4:15 AM	0	6	1	0	0	0	0	0	0	0	0	0	0
4/21/2024	4:30 AM	0	11	2	0	0	0	0	0	0	0	0	0	0
4/21/2024	4:45 AM	0	8	1	0	0	0	0	0	0	0	0	0	0
4/21/2024	5:00 AM	0	5	1	0	0	0	0	0	0	0	0	0	0
4/21/2024	5:15 AM	0	11	3	0	0	0	0	0	0	0	0	0	0
4/21/2024	5:30 AM	0	11	3	0	0	0	0	0	0	0	0	0	0
4/21/2024	5:45 AM	0	22	5	0	0	0	0	0	0	0	0	0	0
4/21/2024	6:00 AM	0	16	6	0	0	0	0	0	1	0	0	0	0
4/21/2024	6:15 AM	0	14	7	0	0	0	0	0	0	0	0	0	0
4/21/2024	6:30 AM	0	17	2	0	0	0	0	0	0	0	0	0	0
4/21/2024	6:45 AM	0	20	0	0	1	0	0	0	0	0	0	0	0
4/21/2024	7:00 AM	0	30	9	0	0	0	0	0	0	0	0	0	0
4/21/2024	7:15 AM	1	36	9	0	0	0	0	0	0	0	0	0	0
4/21/2024	7:30 AM	0	45	7	0	2	0	0	0	0	0	0	0	0
4/21/2024	7:45 AM	0	58	16	0	0	0	0	0	0	0	0	0	0
4/21/2024	8:00 AM	0	36	9	0	0	0	0	0	0	0	0	0	0
4/21/2024	8:15 AM	0	49	9	0	0	0	0	0	0	0	0	0	0
4/21/2024	8:30 AM	1	53	13	0	0	0	1	0	0	0	0	0	0
4/21/2024	8:45 AM	0	63	11	0	0	0	0	0	0	0	0	0	0
4/21/2024	9:00 AM	4	70	10	0	0	0	0	0	0	0	0	0	0
4/21/2024	9:15 AM	0	72	6	0	2	0	0	0	0	0	0	0	0
4/21/2024	9:30 AM	0	87	16	0	0	0	0	0	1	0	0	0	0
4/21/2024	9:45 AM	0	102	22	0	0	0	0	0	2	0	0	0	0
4/21/2024	10:00 AM	20	139	19	0	1	0	0	0	0	0	0	0	0
4/21/2024	10:15 AM	0	102	15	0	1	0	0	0	0	0	0	0	0
4/21/2024	10:30 AM	2	119	19	0	1	0	0	0	0	0	0	0	0
4/21/2024	10:45 AM	14	98	29	1	0	0	0	0	0	0	0	0	0
4/21/2024	11:00 AM	12	97	28	0	0	0	0	0	0	0	0	0	0
4/21/2024	11:15 AM	0	107	22	0	1	0	0	0	0	0	0	0	0
4/21/2024	11:30 AM	0	141	32	0	0	0	0	0	0	0	0	0	0
4/21/2024	11:45 AM	0	142	36	0	0	0	0	0	0	0	0	0	0
4/21/2024	12:00 PM	0	144	27	0	0	0	0	0	0	0	0	0	0
4/21/2024	12:15 PM	0	141	29	1	0	0	0	1	1	0	0	0	0
4/21/2024	12:30 PM	1	175	51	0	0	0	0	0	0	0	0	0	0
4/21/2024	12:45 PM	0	152	48	1	0	0	0	1	1	0	0	0	0
4/21/2024	1:00 PM	0	162	36	0	0	0	0	0	0	0	0	0	0
4/21/2024	1:15 PM	0	152	40	0	0	0	0	0	1	0	0	0	0
4/21/2024	1:30 PM	1	206	24	0	0	0	0	1	0	0	0	0	0
4/21/2024	1:45 PM	0	203	31	0	0	0	0	0	0	0	0	0	0
4/21/2024	2:00 PM	0	153	31	1	0	0	0	0	0	0	0	0	0
4/21/2024	2:15 PM	0	179	55	0	0	0	0	0	0	0	0	0	0
4/21/2024	2:30 PM	7	194	37	1	0	0	0	0	0	0	0	0	0
4/21/2024	2:45 PM	1	175	54	0	0	0	0	1	0	0	0	0	0
4/21/2024	3:00 PM	0	155	42	0	0	0	0	0	0	0	0	0	0
4/21/2024	3:15 PM	0	140	29	0	0	0	0	0	0	0	0	0	0
4/21/2024	3:30 PM	0	174	43	0	0	0	0	1	0	0	0	0	0
4/21/2024	3:45 PM	0	147	28	0	0	1	0	0	0	0	0	0	0
4/21/2024	4:00 PM	4	204	47	0	0	0	0	0	0	0	0	0	0
4/21/2024	4:15 PM	0	185	39	0	0	0	0	1	0	0	0	0	0
4/21/2024	4:30 PM	1	215	50	0	1	0	0	1	0	0	0	0	0
4/21/2024	4:45 PM	0	197	42	0	1	0	0	0	0	0	0	0	0
4/21/2024	5:00 PM	0	193	35	0	0	0	0	2	0	0	0	0	0
4/21/2024	5:15 PM	0	173	27	1	0	0	0	0	0	0	0	0	0
4/21/2024	5:30 PM	0	189	33	0	0	0	0	0	0	0	0	0	0
4/21/2024	5:45 PM	0	174	27	0	0	0	0	0	0	0	0	0	0
4/21/2024	6:00 PM	1	184	32	0	0	1	0	0	0	0	0	0	0
4/21/2024	6:15 PM	0	164	18	0	0	0	0	2	0	0	0	0	0
4/21/2024	6:30 PM	0	139	24	0	0	0	0	0	1	0	0	0	0
4/21/2024	6:45 PM	0	111	15	0	0	0	0	0	1	0	0	0	0
4/21/2024	7:00 PM	0	198	28	1	0	0	0	0	0	0	0	0	0
4/21/2024	7:15 PM	0	164	20	0	0	0	0	0	0	0	0	0	0
4/21/2024	7:30 PM	0	154	24	0	0	0	0	0	1	0	0	0	0
4/21/2024	7:45 PM	0	144	25	1	0	0	0	0	0	0	0	0	0
4/21/2024	8:00 PM	0	122	24	0	0	0	0	3	4	0	0	0	0
4/21/2024	8:15 PM	0	125	28	0	0	0	0	1	2	0	1	0	0
4/21/2024	8:30 PM	0	126	17	0	0	0	0	1	4	0	0	0	0
4/21/2024	8:45 PM	0	126	19	0	0	0	0	0	4	0	0	0	0
4/21/2024	9:00 PM	0	101	7	0	0	0	0	0	1	0	0	0	0
4/21/2024	9:15 PM	0	102	10	0	0	0	0	0	2	0	0	0	0
4/21/2024	9:30 PM	0	123	8	0	1	0	0	3	4	0	1	0	0
4/21/2024	9:45 PM	0	128	13	0	0	0	0	1	7	0	0	0	0
4/21/2024	10:00 PM	0	110	12	0	0	0	0	0	2	0	0	0	0
4/21/2024	10:15 PM	0	120	9	0	0	0	0	0	0	0	0	0	0
4/21/2024	10:30 PM	0	97	15	0	0	0	0	0	3	0	0	0	0
4/21/2024	10:45 PM	0	105	18	0	0	0	0	0	1	0	0	0	0
4/21/2024	11:00 PM	0	44	11	1	0	0	0	1	2	0	0	0	0
4/21/2024	11:15 PM	0	33	4	0	0	0	0	0	0	0	0	0	0
4/21/2024	11:30 PM	0	54	8	0	0	0	0	0	4	0	0	0	0
4/21/2024	11:45 PM	0	59	5	0	0	0	0	0	0	0	0	0	0

4/22/2024	12:00 AM	0	14	5	0	0	0	0	0	0	0	0	0
4/22/2024	12:15 AM	0	11	4	0	0	0	0	0	0	0	0	0
4/22/2024	12:30 AM	0	17	8	0	0	0	0	0	0	0	0	0
4/22/2024	12:45 AM	0	12	4	0	0	0	0	0	0	0	0	0
4/22/2024	1:00 AM	0	10	3	0	0	0	0	0	0	0	0	0
4/22/2024	1:15 AM	0	11	4	0	0	0	0	0	0	0	0	0
4/22/2024	1:30 AM	0	9	2	0	0	0	0	0	0	0	0	0
4/22/2024	1:45 AM	0	10	3	0	0	0	0	0	0	0	0	0
4/22/2024	2:00 AM	0	8	2	0	0	0	0	0	0	0	0	0
4/22/2024	2:15 AM	0	9	2	0	0	0	0	0	0	0	0	0
4/22/2024	2:30 AM	0	6	1	0	0	0	0	0	0	0	0	0
4/22/2024	2:45 AM	0	7	2	0	0	0	0	0	0	0	0	0
4/22/2024	3:00 AM	0	9	3	0	0	0	0	0	0	0	0	0
4/22/2024	3:15 AM	0	11	4	0	0	0	0	0	0	0	0	0
4/22/2024	3:30 AM	0	13	5	0	0	0	0	0	0	0	0	0
4/22/2024	3:45 AM	0	11	3	0	0	0	0	0	0	0	0	0
4/22/2024	4:00 AM	0	12	3	0	0	0	0	0	0	0	0	0
4/22/2024	4:15 AM	0	14	5	0	0	0	0	0	0	0	0	0
4/22/2024	4:30 AM	0	16	7	0	0	0	0	0	0	0	0	0
4/22/2024	4:45 AM	0	28	11	0	0	0	0	0	0	0	0	0
4/22/2024	5:00 AM	0	29	12	0	0	0	0	0	0	0	0	0
4/22/2024	5:15 AM	0	27	8	0	0	0	0	0	0	0	0	0
4/22/2024	5:30 AM	0	35	11	0	0	0	0	0	0	0	0	0
4/22/2024	5:45 AM	0	39	13	0	0	0	0	0	0	0	0	0
4/22/2024	6:00 AM	0	42	15	0	0	0	0	0	0	0	0	0
4/22/2024	6:15 AM	0	54	20	0	0	0	0	0	0	0	0	0
4/22/2024	6:30 AM	0	72	28	0	1	0	0	0	0	0	0	0
4/22/2024	6:45 AM	0	98	34	0	0	1	0	0	1	0	0	0
4/22/2024	7:00 AM	1	222	73	0	0	0	0	0	0	0	0	0
4/22/2024	7:15 AM	0	273	74	0	1	0	0	0	1	0	1	0
4/22/2024	7:30 AM	0	266	78	0	1	0	0	0	0	0	0	0
4/22/2024	7:45 AM	2	228	79	0	1	1	0	0	1	0	0	0
4/22/2024	8:00 AM	0	247	79	0	1	0	0	0	0	0	0	0
4/22/2024	8:15 AM	0	206	71	0	1	0	0	0	0	0	0	0
4/22/2024	8:30 AM	0	193	90	0	0	1	0	0	0	0	0	0
4/22/2024	8:45 AM	0	169	57	0	0	1	0	0	0	0	0	0
4/22/2024	9:00 AM	0	144	46	1	1	1	0	0	0	0	0	0
4/22/2024	9:15 AM	0	110	49	0	0	0	0	0	2	0	0	0
4/22/2024	9:30 AM	0	116	46	0	1	1	0	1	0	0	0	0
4/22/2024	9:45 AM	1	115	40	0	1	0	0	1	2	0	0	0
4/22/2024	10:00 AM	0	92	36	0	0	0	0	0	0	0	0	0
4/22/2024	10:15 AM	1	98	34	0	0	0	0	0	0	0	0	0
4/22/2024	10:30 AM	0	106	32	0	2	2	0	0	0	0	0	0
4/22/2024	10:45 AM	3	102	48	0	3	0	0	0	0	0	0	0
4/22/2024	11:00 AM	4	11	43	0	0	0	0	0	0	0	0	0
4/22/2024	11:15 AM	0	101	40	0	1	0	0	0	0	0	0	0
4/22/2024	11:30 AM	3	93	45	0	0	0	0	1	0	0	0	0
4/22/2024	11:45 AM	0	107	54	0	1	1	0	0	0	0	0	0
4/22/2024	12:00 PM	0	69	31	0	0	0	0	1	1	0	0	0
4/22/2024	12:15 PM	0	76	31	0	0	0	0	0	0	0	0	0
4/22/2024	12:30 PM	0	93	34	0	1	0	0	0	0	0	0	0
4/22/2024	12:45 PM	0	101	33	0	0	0	0	0	0	0	0	0
4/22/2024	1:00 PM	0	103	34	0	0	0	0	0	2	0	0	0
4/22/2024	1:15 PM	0	112	33	0	0	0	0	0	0	0	0	0
4/22/2024	1:30 PM	1	143	36	0	2	0	0	0	0	0	0	0
4/22/2024	1:45 PM	1	119	42	0	0	1	0	0	0	0	0	0
4/22/2024	2:00 PM	0	138	45	0	0	0	0	1	3	0	0	0
4/22/2024	2:15 PM	1	147	46	0	2	0	0	1	3	0	0	0
4/22/2024	2:30 PM	0	140	53	0	1	1	0	0	0	0	0	0
4/22/2024	2:45 PM	0	149	41	0	1	0	0	1	0	0	0	0
4/22/2024	3:00 PM	0	142	57	1	1	0	0	0	0	0	0	0
4/22/2024	3:15 PM	0	123	43	0	1	1	0	0	0	0	0	0
4/22/2024	3:30 PM	0	149	42	0	2	0	0	0	0	0	0	0
4/22/2024	3:45 PM	0	160	47	0	2	2	0	0	3	0	0	0
4/22/2024	4:00 PM	0	187	52	0	1	0	0	0	0	0	0	0
4/22/2024	4:15 PM	0	178	56	0	3	0	0	2	2	0	0	0
4/22/2024	4:30 PM	0	202	60	0	1	0	0	0	0	0	0	0
4/22/2024	4:45 PM	0	224	66	0	1	0	0	1	2	0	0	0
4/22/2024	5:00 PM	0	222	87	0	4	1	0	0	2	0	0	0
4/22/2024	5:15 PM	0	225	46	0	0	1	0	0	0	0	0	0
4/22/2024	5:30 PM	0	188	52	0	1	0	0	0	0	0	0	0
4/22/2024	5:45 PM	1	162	55	0	1	0	0	0	3	0	0	0
4/22/2024	6:00 PM	0	119	38	0	0	0	0	0	0	0	1	0
4/22/2024	6:15 PM	0	107	42	0	0	0	0	0	0	0	0	0
4/22/2024	6:30 PM	0	92	39	0	0	0	0	0	0	0	0	0
4/22/2024	6:45 PM	0	84	35	0	0	0	0	0	0	0	0	0
4/22/2024	7:00 PM	0	89	31	0	0	0	0	0	0	0	0	0
4/22/2024	7:15 PM	0	81	32	0	0	0	0	0	0	0	0	0
4/22/2024	7:30 PM	0	79	28	0	0	0	0	0	0	0	0	0
4/22/2024	7:45 PM	0	67	26	0	0	0	0	0	0	0	0	0
4/22/2024	8:00 PM	0	77	31	0	0	0	0	0	0	0	0	0
4/22/2024	8:15 PM	0	63	22	0	1	0	0	0	2	0	0	0
4/22/2024	8:30 PM	0	52	19	0	0	0	0	0	0	0	0	0
4/22/2024	8:45 PM	0	50	20	0	0	0	0	0	0	0	0	0
4/22/2024	9:00 PM	0	46	18	0	0	0	0	0	0	0	0	0
4/22/2024	9:15 PM	0	43	15	0	0	0	0	0	0	0	0	0
4/22/2024	9:30 PM	0	38	17	0	0	0	0	0	0	0	0	0
4/22/2024	9:45 PM	0	35	14	0	0	0	0	0	0	0	0	0
4/22/2024	10:00 PM	0	37	17	0	0	0	0	0	0	0	0	0
4/22/2024	10:15 PM	0	30	12	0	0	0	0	0	0	0	0	0
4/22/2024	10:30 PM	0	34	15	0	0	0	0	0	0	0	0	0
4/22/2024	10:45 PM	0	39	17	0	0	0	0	0	0	0	0	0
4/22/2024	11:00 PM	0	35	12	0	0	0	0	0	0	0	0	0
4/22/2024	11:15 PM	0	29	10	0	0	0	0	0	0	0	0	0
4/22/2024	11:30 PM	0	19	8	0	0	0	0	0	0	0	0	0
4/22/2024	11:45 PM	0	17	9	0	0	0	0	0	0	0	0	0

4/23/2024	12:00 AM	0	30	8	0	0	0	0	0	0	0	0	0	0
4/23/2024	12:15 AM	0	17	5	0	1	0	0	0	0	0	0	0	0
4/23/2024	12:30 AM	0	19	6	0	0	0	0	0	1	0	0	0	0
4/23/2024	12:45 AM	0	16	3	1	0	0	0	0	0	0	0	0	0
4/23/2024	1:00 AM	0	15	5	0	0	0	0	0	0	0	0	0	0
4/23/2024	1:15 AM	0	20	7	0	0	0	0	0	1	0	0	0	0
4/23/2024	1:30 AM	0	12	2	0	0	0	0	0	0	0	0	0	0
4/23/2024	1:45 AM	0	10	3	0	0	0	0	0	0	0	0	0	0
4/23/2024	2:00 AM	0	12	2	0	0	0	0	0	0	0	0	0	0
4/23/2024	2:15 AM	0	9	3	0	0	0	0	0	0	0	0	0	0
4/23/2024	2:30 AM	0	7	2	0	0	0	0	0	0	0	0	0	0
4/23/2024	2:45 AM	0	6	1	0	0	0	0	0	0	0	0	0	0
4/23/2024	3:00 AM	0	11	4	0	0	0	0	0	1	0	0	0	0
4/23/2024	3:15 AM	0	19	5	0	0	0	0	0	1	0	0	0	0
4/23/2024	3:30 AM	0	14	3	0	0	0	0	0	0	0	0	0	0
4/23/2024	3:45 AM	0	21	4	0	0	0	0	0	1	0	0	0	0
4/23/2024	4:00 AM	0	20	3	0	0	0	0	0	2	0	0	0	0
4/23/2024	4:15 AM	0	26	8	0	0	0	0	0	1	0	0	0	0
4/23/2024	4:30 AM	0	29	6	0	0	0	0	0	0	0	0	0	0
4/23/2024	4:45 AM	0	30	7	0	0	0	0	0	0	0	0	0	0
4/23/2024	5:00 AM	0	28	5	0	0	0	0	0	0	0	0	0	0
4/23/2024	5:15 AM	0	40	15	0	0	0	0	0	0	0	0	0	0
4/23/2024	5:30 AM	0	82	24	0	0	0	0	0	0	0	0	0	0
4/23/2024	5:45 AM	0	90	22	0	0	0	0	0	0	0	0	0	0
4/23/2024	6:00 AM	0	95	26	0	0	0	0	0	0	0	0	0	0
4/23/2024	6:15 AM	0	111	29	0	0	0	0	0	0	0	0	0	0
4/23/2024	6:30 AM	0	170	58	0	0	0	0	0	0	0	0	0	0
4/23/2024	6:45 AM	0	208	60	0	0	0	0	1	1	0	0	0	0
4/23/2024	7:00 AM	1	157	68	0	0	0	0	1	0	0	0	0	0
4/23/2024	7:15 AM	1	241	58	0	2	1	0	3	1	0	1	0	0
4/23/2024	7:30 AM	0	132	39	0	1	0	0	0	1	0	0	0	0
4/23/2024	7:45 AM	0	251	73	0	0	1	0	3	0	0	0	0	0
4/23/2024	8:00 AM	2	222	53	0	1	0	0	3	0	0	0	0	0
4/23/2024	8:15 AM	0	233	76	0	3	0	0	3	1	0	0	0	0
4/23/2024	8:30 AM	0	235	94	0	2	0	0	5	0	0	1	0	0
4/23/2024	8:45 AM	0	166	65	0	0	2	0	1	0	0	0	0	0
4/23/2024	9:00 AM	0	130	45	0	0	1	0	2	0	0	0	0	0
4/23/2024	9:15 AM	1	156	41	0	2	0	0	2	0	0	0	0	0
4/23/2024	9:30 AM	0	131	55	0	2	0	0	3	0	0	0	0	0
4/23/2024	9:45 AM	0	107	43	0	1	0	0	3	0	0	0	0	0
4/23/2024	10:00 AM	2	126	54	0	1	1	0	2	0	0	0	0	0
4/23/2024	10:15 AM	2	122	39	0	1	0	0	1	0	0	0	0	0
4/23/2024	10:30 AM	1	114	50	0	1	0	0	0	0	0	0	0	0
4/23/2024	10:45 AM	0	149	38	0	1	0	0	2	1	0	0	0	0
4/23/2024	11:00 AM	1	101	32	0	1	0	0	1	0	0	0	0	0
4/23/2024	11:15 AM	0	121	29	0	1	1	0	3	1	0	0	0	0
4/23/2024	11:30 AM	1	105	35	0	1	0	0	2	0	0	0	0	0
4/23/2024	11:45 AM	0	120	31	0	2	1	0	1	0	0	0	0	0
4/23/2024	12:00 PM	0	140	39	1	3	0	0	1	3	0	0	0	0
4/23/2024	12:15 PM	0	138	43	0	0	0	0	3	3	0	0	0	0
4/23/2024	12:30 PM	2	126	37	0	2	1	0	3	1	0	0	0	0
4/23/2024	12:45 PM	1	129	42	0	0	0	0	1	0	0	0	0	0
4/23/2024	1:00 PM	1	131	29	0	2	0	0	0	0	0	0	0	0
4/23/2024	1:15 PM	2	150	35	2	3	2	0	1	0	0	0	0	0
4/23/2024	1:30 PM	0	137	28	0	2	0	0	0	1	0	0	0	0
4/23/2024	1:45 PM	0	124	37	0	1	0	0	0	0	0	0	0	0
4/23/2024	2:00 PM	2	129	37	0	2	1	0	4	0	0	0	0	0
4/23/2024	2:15 PM	1	129	43	0	0	1	0	0	0	0	0	0	0
4/23/2024	2:30 PM	1	164	37	0	1	0	0	0	1	0	0	0	0
4/23/2024	2:45 PM	0	158	39	0	0	0	0	2	2	0	0	0	0
4/23/2024	3:00 PM	0	148	45	0	2	1	0	2	1	0	0	0	0
4/23/2024	3:15 PM	1	162	48	0	3	0	0	2	0	0	0	0	0
4/23/2024	3:30 PM	2	217	58	0	3	0	0	2	1	0	0	0	0
4/23/2024	3:45 PM	1	227	54	0	2	0	0	2	1	0	0	0	0
4/23/2024	4:00 PM	1	235	74	0	4	0	0	3	1	0	0	0	0
4/23/2024	4:15 PM	0	272	79	0	3	1	0	8	3	0	0	0	0
4/23/2024	4:30 PM	0	281	63	0	1	1	0	2	0	0	0	0	0
4/23/2024	4:45 PM	0	237	67	0	2	0	0	2	2	0	0	0	0
4/23/2024	5:00 PM	0	232	46	0	0	0	0	2	0	0	0	0	0
4/23/2024	5:15 PM	0	277	53	0	1	0	0	5	0	0	0	0	0
4/23/2024	5:30 PM	0	230	72	0	2	0	0	0	0	0	0	0	0
4/23/2024	5:45 PM	0	232	50	0	0	2	0	0	3	0	0	0	0
4/23/2024	6:00 PM	1	158	46	0	1	0	0	0	1	0	0	0	0
4/23/2024	6:15 PM	0	160	22	0	2	0	0	1	1	0	0	0	0
4/23/2024	6:30 PM	0	133	27	0	0	0	0	0	2	0	0	0	0
4/23/2024	6:45 PM	0	107	34	0	0	1	0	3	0	0	0	0	0
4/23/2024	7:00 PM	1	127	23	0	0	0	0	1	0	0	0	0	0
4/23/2024	7:15 PM	0	134	25	0	0	1	0	0	2	0	0	0	0
4/23/2024	7:30 PM	0	110	21	0	1	0	0	1	1	0	0	0	0
4/23/2024	7:45 PM	0	114	22	0	0	0	0	0	0	0	1	0	0
4/23/2024	8:00 PM	0	116	10	0	0	0	0	0	0	0	0	0	0
4/23/2024	8:15 PM	0	120	15	0	0	0	0	0	1	0	0	0	0
4/23/2024	8:30 PM	0	101	9	0	0	0	0	0	1	0	0	0	0
4/23/2024	8:45 PM	0	98	7	0	0	0	0	0	0	0	0	0	0
4/23/2024	9:00 PM	0	90	5	0	0	0	0	0	2	0	0	0	0
4/23/2024	9:15 PM	0	84	6	0	0	0	0	0	0	0	0	0	0
4/23/2024	9:30 PM	0	74	4	0	0	0	0	0	1	0	0	0	0
4/23/2024	9:45 PM	0	80	10	0	0	0	0	0	1	0	0	0	0
4/23/2024	10:00 PM	0	40	5	0	0	0	0	0	0	0	0	0	0
4/23/2024	10:15 PM	0	27	3	0	0	0	0	0	0	0	0	0	0
4/23/2024	10:30 PM	0	1	0	0	0	0	0	0	1	0	0	0	0
4/23/2024	10:45 PM	0	3	1	0	0	0	0	0	0	0	0	0	0
4/23/2024	11:00 PM	0	0	0	0	0	0	0	0	0	0	0	0	0
4/23/2024	11:15 PM	0	1	0	0	0	0	0	0	0	0	0	0	0
4/23/2024	11:30 PM	0	1	0	0	0	0	0	0	0	0	0	0	0
4/23/2024	11:45 PM	0	0	0	0	0	0	0	0	0	0	0	0	0

4/24/2024	12:00 AM	0	1	0	0	0	0	0	0	0	0	0	0
4/24/2024	12:15 AM	0	0	0	0	0	0	0	0	0	0	0	0
4/24/2024	12:30 AM	0	0	0	0	0	0	0	0	0	0	0	0
4/24/2024	12:45 AM	0	0	0	0	0	0	0	0	0	0	0	0
4/24/2024	1:00 AM	0	0	0	0	0	0	0	0	0	0	0	0
4/24/2024	1:15 AM	0	0	0	0	0	0	0	0	0	0	0	0
4/24/2024	1:30 AM	0	0	0	0	0	0	0	0	0	0	0	0
4/24/2024	1:45 AM	0	0	0	0	0	0	0	0	0	0	0	0
4/24/2024	2:00 AM	1	17	2	0	0	0	0	0	0	0	0	0
4/24/2024	2:15 AM	0	15	4	0	0	0	0	4	1	0	0	0
4/24/2024	2:30 AM	0	17	6	0	0	0	0	4	1	0	0	0
4/24/2024	2:45 AM	0	13	3	0	0	0	0	5	2	0	0	0
4/24/2024	3:00 AM	0	15	4	0	0	0	0	2	1	0	0	0
4/24/2024	3:15 AM	0	20	3	0	2	0	0	1	1	0	0	0
4/24/2024	3:30 AM	1	17	2	0	0	0	0	1	2	0	0	0
4/24/2024	3:45 AM	0	20	2	0	0	0	0	0	1	0	0	0
4/24/2024	4:00 AM	1	37	5	0	0	0	0	0	1	0	0	0
4/24/2024	4:15 AM	0	21	3	0	1	0	0	0	1	0	0	0
4/24/2024	4:30 AM	0	23	3	0	0	0	0	1	1	0	0	0
4/24/2024	4:45 AM	0	13	2	0	1	0	0	0	1	0	0	0
4/24/2024	5:00 AM	0	42	5	0	1	0	0	2	2	0	0	0
4/24/2024	5:15 AM	0	61	11	0	1	0	0	2	1	0	0	0
4/24/2024	5:30 AM	0	75	13	0	2	0	0	3	1	0	0	0
4/24/2024	5:45 AM	0	84	16	0	3	0	0	2	1	0	0	0
4/24/2024	6:00 AM	0	77	13	0	1	2	0	2	2	0	0	0
4/24/2024	6:15 AM	0	99	18	0	2	1	0	2	1	0	0	0
4/24/2024	6:30 AM	1	132	37	0	0	1	0	0	0	0	0	0
4/24/2024	6:45 AM	0	182	62	0	6	0	0	0	0	0	0	0
4/24/2024	7:00 AM	4	220	78	0	3	0	0	0	1	0	0	0
4/24/2024	7:15 AM	1	287	85	0	0	0	0	0	0	0	0	0
4/24/2024	7:30 AM	1	301	91	0	5	0	0	1	1	0	0	0
4/24/2024	7:45 AM	1	368	92	0	4	0	0	0	0	0	0	0
4/24/2024	8:00 AM	0	306	79	0	2	0	0	0	0	0	0	0
4/24/2024	8:15 AM	0	233	77	1	1	1	0	0	0	0	0	0
4/24/2024	8:30 AM	0	226	73	0	1	0	0	0	1	0	0	0
4/24/2024	8:45 AM	5	167	59	0	3	0	0	0	1	0	0	0
4/24/2024	9:00 AM	1	165	58	0	3	0	0	0	0	0	0	0
4/24/2024	9:15 AM	0	149	46	0	3	1	0	0	0	0	0	0
4/24/2024	9:30 AM	1	137	47	0	2	0	0	0	0	0	0	0
4/24/2024	9:45 AM	0	123	34	0	3	1	0	0	0	0	0	0
4/24/2024	10:00 AM	0	140	34	0	5	0	0	2	0	0	0	0
4/24/2024	10:15 AM	0	109	32	0	2	0	0	1	2	0	0	0
4/24/2024	10:30 AM	0	129	30	0	6	1	0	1	1	0	0	0
4/24/2024	10:45 AM	0	119	33	0	1	1	0	2	0	0	0	0
4/24/2024	11:00 AM	0	111	39	1	2	0	0	2	0	0	0	0
4/24/2024	11:15 AM	0	114	31	0	1	0	0	2	0	0	0	0
4/24/2024	11:30 AM	2	121	41	0	3	0	0	0	2	0	0	0
4/24/2024	11:45 AM	0	122	24	0	2	1	0	1	1	0	0	0
4/24/2024	12:00 PM	2	134	37	0	0	0	0	2	1	0	0	0
4/24/2024	12:15 PM	0	109	23	0	2	1	0	1	0	0	0	0
4/24/2024	12:30 PM	0	165	39	0	2	0	0	1	1	0	0	0
4/24/2024	12:45 PM	0	161	52	0	5	0	0	4	1	0	0	0
4/24/2024	1:00 PM	0	158	49	0	2	0	0	0	0	0	0	0
4/24/2024	1:15 PM	0	167	50	0	1	0	0	0	0	0	0	0
4/24/2024	1:30 PM	1	177	60	0	4	0	0	1	1	0	0	0
4/24/2024	1:45 PM	0	178	52	0	2	0	0	2	0	0	0	0
4/24/2024	2:00 PM	0	158	44	0	3	1	0	0	0	0	0	0
4/24/2024	2:15 PM	1	152	42	0	4	0	0	1	0	0	0	0
4/24/2024	2:30 PM	0	179	50	0	1	0	0	0	1	0	0	0
4/24/2024	2:45 PM	0	208	60	0	2	0	0	2	1	0	0	0
4/24/2024	3:00 PM	0	216	66	0	5	1	0	2	1	0	1	0
4/24/2024	3:15 PM	1	210	56	0	1	0	0	1	1	0	0	0
4/24/2024	3:30 PM	0	214	59	0	1	2	0	2	1	0	0	0
4/24/2024	3:45 PM	2	277	75	1	3	0	0	2	0	0	1	0
4/24/2024	4:00 PM	0	238	58	0	1	0	0	2	0	0	0	0
4/24/2024	4:15 PM	0	268	59	0	2	1	0	0	1	0	0	0
4/24/2024	4:30 PM	0	273	68	0	5	1	0	0	0	1	0	0
4/24/2024	4:45 PM	0	269	56	0	2	0	0	3	2	1	0	0
4/24/2024	5:00 PM	1	295	58	0	1	0	0	2	0	1	1	0
4/24/2024	5:15 PM	0	309	70	0	3	0	0	1	0	0	0	0
4/24/2024	5:30 PM	0	229	62	0	3	1	0	1	3	0	0	0
4/24/2024	5:45 PM	0	180	48	0	3	1	0	0	0	0	0	0
4/24/2024	6:00 PM	1	166	53	0	0	0	0	2	1	0	0	0
4/24/2024	6:15 PM	1	156	38	0	2	0	0	0	1	0	0	0
4/24/2024	6:30 PM	1	140	51	0	1	0	0	2	0	0	0	0
4/24/2024	6:45 PM	0	153	37	0	0	0	0	0	2	0	0	0
4/24/2024	7:00 PM	2	116	25	1	6	0	0	0	0	1	0	0
4/24/2024	7:15 PM	0	112	24	0	0	0	0	1	1	0	0	0
4/24/2024	7:30 PM	0	98	20	0	2	0	0	0	0	0	0	0
4/24/2024	7:45 PM	0	102	25	0	1	1	0	0	1	0	0	0
4/24/2024	8:00 PM	0	101	10	0	1	0	0	0	1	0	0	0
4/24/2024	8:15 PM	1	120	15	0	1	1	0	2	1	0	0	0
4/24/2024	8:30 PM	0	195	19	0	2	3	0	3	4	0	1	0
4/24/2024	8:45 PM	0	113	18	0	1	2	0	1	1	0	0	0
4/24/2024	9:00 PM	0	110	17	0	1	3	0	3	0	0	0	0
4/24/2024	9:15 PM	0	116	26	0	0	1	0	1	3	0	0	0
4/24/2024	9:30 PM	1	71	19	0	3	0	0	1	0	0	0	0
4/24/2024	9:45 PM	0	79	15	0	1	1	0	4	1	0	0	0
4/24/2024	10:00 PM	0	84	21	0	1	0	0	2	2	0	1	0
4/24/2024	10:15 PM	0	65	6	0	1	0	0	0	3	0	0	0
4/24/2024	10:30 PM	0	57	6	0	3	0	0	1	1	0	0	0
4/24/2024	10:45 PM	0	56	5	0	2	2	0	1	3	0	0	0
4/24/2024	11:00 PM	1	52	5	0	0	1	0	2	3	0	0	0
4/24/2024	11:15 PM	0	38	2	0	0	0	0	0	1	0	0	0
4/24/2024	11:30 PM	0	46	4	0	0	0	0	1	1	0	0	0
4/24/2024	11:45 PM	0	51	6	0	0	1	0	1	2	0	0	0

4/25/2024	12:00 AM	0	24	3	0	1	0	0	0	1	0	0	0	0
4/25/2024	12:15 AM	0	12	3	0	0	0	0	0	1	0	0	0	0
4/25/2024	12:30 AM	0	11	2	0	0	0	0	0	0	0	0	0	0
4/25/2024	12:45 AM	0	8	0	0	0	0	0	0	0	0	0	0	0
4/25/2024	1:00 AM	0	3	0	0	0	0	0	0	0	0	0	0	0
4/25/2024	1:15 AM	0	4	1	0	0	0	0	0	0	0	0	0	0
4/25/2024	1:30 AM	0	6	0	0	0	0	0	0	0	0	0	0	0
4/25/2024	1:45 AM	0	5	1	0	0	0	0	0	0	0	0	0	0
4/25/2024	2:00 AM	0	4	0	0	0	0	0	0	0	0	0	0	0
4/25/2024	2:15 AM	0	5	0	0	0	0	0	0	0	0	0	0	0
4/25/2024	2:30 AM	0	3	0	0	0	0	0	0	0	0	0	0	0
4/25/2024	2:45 AM	0	2	0	0	0	0	0	0	0	0	0	0	0
4/25/2024	3:00 AM	0	3	1	0	0	0	0	0	0	0	0	0	0
4/25/2024	3:15 AM	0	5	0	0	0	0	0	0	0	0	0	0	0
4/25/2024	3:30 AM	0	5	1	0	0	0	0	0	0	0	0	0	0
4/25/2024	3:45 AM	0	7	1	0	0	0	0	0	0	0	0	0	0
4/25/2024	4:00 AM	0	7	1	0	0	0	0	0	1	0	0	0	0
4/25/2024	4:15 AM	0	9	2	0	0	0	0	0	0	0	0	0	0
4/25/2024	4:30 AM	0	14	2	0	0	0	0	0	0	0	0	0	0
4/25/2024	4:45 AM	0	12	3	0	0	0	0	0	0	0	0	0	0
4/25/2024	5:00 AM	0	14	2	0	0	0	0	0	0	0	0	0	0
4/25/2024	5:15 AM	0	35	7	0	0	0	0	0	0	0	0	0	0
4/25/2024	5:30 AM	0	54	11	0	0	0	0	0	0	0	0	0	0
4/25/2024	5:45 AM	0	56	10	0	0	0	0	0	0	0	0	0	0
4/25/2024	6:00 AM	0	66	15	0	0	0	0	0	0	0	0	0	0
4/25/2024	6:15 AM	0	73	21	0	1	0	0	0	1	0	0	0	0
4/25/2024	6:30 AM	0	123	54	0	4	0	0	2	0	0	0	0	0
4/25/2024	6:45 AM	2	189	58	0	6	0	0	0	0	0	0	0	0
4/25/2024	7:00 AM	3	242	84	0	1	0	0	0	2	0	1	0	0
4/25/2024	7:15 AM	1	301	87	0	5	0	0	0	0	0	0	0	0
4/25/2024	7:30 AM	2	319	83	1	4	1	1	0	0	0	0	0	0
4/25/2024	7:45 AM	1	292	71	0	4	0	0	0	2	0	0	0	0
4/25/2024	8:00 AM	0	272	82	0	3	0	0	1	0	0	0	0	0
4/25/2024	8:15 AM	2	288	90	0	5	0	0	0	1	0	0	0	0
4/25/2024	8:30 AM	3	250	80	1	4	0	0	5	0	0	0	0	0
4/25/2024	8:45 AM	0	214	63	0	0	0	0	1	1	0	0	0	0
4/25/2024	9:00 AM	0	183	67	0	2	0	0	1	0	0	0	0	0
4/25/2024	9:15 AM	1	165	61	0	0	0	0	3	2	0	0	0	0
4/25/2024	9:30 AM	0	151	64	0	3	0	0	1	0	0	0	0	0
4/25/2024	9:45 AM	1	118	51	0	2	0	0	0	1	0	0	0	0
4/25/2024	10:00 AM	0	119	58	0	1	0	0	1	1	0	0	0	0
4/25/2024	10:15 AM	2	117	45	0	1	0	0	0	0	0	0	0	0
4/25/2024	10:30 AM	0	118	45	0	4	0	0	2	1	0	0	0	0
4/25/2024	10:45 AM	1	135	42	0	3	0	0	0	0	0	0	0	0
4/25/2024	11:00 AM	0	102	36	0	4	0	0	0	0	0	0	0	0
4/25/2024	11:15 AM	1	165	53	0	1	0	0	0	0	0	0	0	0
4/25/2024	11:30 AM	0	150	42	0	1	0	0	0	0	0	0	0	0
4/25/2024	11:45 AM	1	133	34	0	2	1	0	0	1	0	0	0	0
4/25/2024	12:00 PM	2	157	39	0	1	3	0	0	0	0	0	0	0
4/25/2024	12:15 PM	0	121	40	1	1	1	0	1	0	0	0	0	0
4/25/2024	12:30 PM	2	171	46	0	2	1	0	1	0	0	0	0	0
4/25/2024	12:45 PM	0	157	49	0	4	1	0	3	2	0	0	0	0
4/25/2024	1:00 PM	1	160	43	0	4	0	0	1	0	0	0	0	0
4/25/2024	1:15 PM	0	175	57	0	3	0	0	0	1	0	0	0	0
4/25/2024	1:30 PM	0	176	47	1	3	1	0	2	1	0	1	0	0
4/25/2024	1:45 PM	1	173	66	0	3	1	0	1	2	0	0	0	0
4/25/2024	2:00 PM	1	189	54	1	2	1	0	1	0	0	0	0	0
4/25/2024	2:15 PM	3	163	56	0	2	0	0	0	0	0	0	0	0
4/25/2024	2:30 PM	1	177	39	0	1	0	0	1	0	1	0	0	0
4/25/2024	2:45 PM	0	179	52	0	0	0	0	0	2	0	0	0	0
4/25/2024	3:00 PM	0	181	65	0	5	0	0	1	0	0	0	0	0
4/25/2024	3:15 PM	1	219	71	0	6	0	0	0	3	0	0	0	0
4/25/2024	3:30 PM	2	213	60	0	4	0	0	0	4	0	0	0	0
4/25/2024	3:45 PM	2	244	71	1	4	0	0	0	1	2	0	0	0
4/25/2024	4:00 PM	0	242	62	0	2	0	0	0	2	0	0	0	0
4/25/2024	4:15 PM	0	247	57	0	7	0	0	1	1	0	0	0	0
4/25/2024	4:30 PM	3	246	63	0	3	0	0	1	0	0	1	0	0
4/25/2024	4:45 PM	1	251	65	0	1	0	0	0	0	0	0	0	0
4/25/2024	5:00 PM	3	275	57	0	5	0	0	1	0	0	0	0	0
4/25/2024	5:15 PM	0	280	63	0	5	0	0	0	2	0	0	0	0
4/25/2024	5:30 PM	1	279	57	1	2	0	0	0	0	0	0	0	0
4/25/2024	5:45 PM	2	206	62	0	2	0	0	1	1	0	0	0	0
4/25/2024	6:00 PM	0	174	33	0	2	0	0	1	1	0	0	0	0
4/25/2024	6:15 PM	0	140	37	0	0	0	0	2	0	0	0	0	0
4/25/2024	6:30 PM	2	173	45	0	1	0	0	1	0	0	0	0	0
4/25/2024	6:45 PM	0	143	47	0	2	0	0	2	1	0	0	0	0
4/25/2024	7:00 PM	0	144	27	0	1	0	0	0	0	0	0	0	0
4/25/2024	7:15 PM	0	167	33	0	3	0	1	2	0	0	1	0	0
4/25/2024	7:30 PM	0	130	36	0	0	0	0	1	0	0	0	0	0
4/25/2024	7:45 PM	0	131	33	0	1	0	0	1	0	0	0	0	0
4/25/2024	8:00 PM	0	114	16	0	1	0	0	1	0	0	0	0	0
4/25/2024	8:15 PM	0	137	17	0	0	0	0	0	1	0	0	0	0
4/25/2024	8:30 PM	0	106	13	0	0	0	0	0	1	0	0	0	0
4/25/2024	8:45 PM	0	130	16	0	0	0	0	0	1	0	0	0	0
4/25/2024	9:00 PM	0	76	7	0	0	0	0	0	2	0	0	0	0
4/25/2024	9:15 PM	0	73	8	0	0	0	0	0	1	0	0	0	0
4/25/2024	9:30 PM	0	54	6	0	0	0	0	0	0	0	0	0	0
4/25/2024	9:45 PM	0	52	5	0	0	0	0	2	0	0	0	0	0
4/25/2024	10:00 PM	0	35	3	0	0	0	0	0	0	0	0	0	0
4/25/2024	10:15 PM	0	45	9	0	0	0	0	0	0	0	0	0	0
4/25/2024	10:30 PM	0	34	4	0	0	0	0	0	0	0	0	0	0
4/25/2024	10:45 PM	0	37	8	0	0	0	0	0	0	0	0	0	0
4/25/2024	11:00 PM	0	23	5	0	0	0	0	0	0	0	0	0	0
4/25/2024	11:15 PM	0	22	7	0	0	0	0	0	0	0	0	0	0
4/25/2024	11:30 PM	0	26	6	0	0	0	0	0	0	0	0	0	0
4/25/2024	11:45 PM	0	19	4	0	0	0	0	0	0	0	0	0	0

4/26/2024	12:00 AM	0	15	7	0	0	0	0	0	0	0	0	0
4/26/2024	12:15 AM	0	11	6	0	0	0	0	0	0	0	0	0
4/26/2024	12:30 AM	0	8	5	0	0	0	0	0	1	0	0	0
4/26/2024	12:45 AM	0	6	3	0	0	0	0	0	0	0	0	0
4/26/2024	1:00 AM	0	6	3	0	0	0	0	0	0	0	0	0
4/26/2024	1:15 AM	0	5	4	0	0	0	0	0	0	0	0	0
4/26/2024	1:30 AM	0	12	6	0	0	0	0	0	1	0	0	0
4/26/2024	1:45 AM	0	6	5	0	0	0	0	0	0	0	0	0
4/26/2024	2:00 AM	0	4	3	0	0	0	0	0	0	0	0	0
4/26/2024	2:15 AM	0	5	2	0	0	0	0	0	0	0	0	0
4/26/2024	2:30 AM	0	7	3	0	0	0	0	0	0	0	0	0
4/26/2024	2:45 AM	0	3	3	0	0	0	0	0	1	0	0	0
4/26/2024	3:00 AM	0	5	4	0	0	0	0	0	0	0	0	0
4/26/2024	3:15 AM	0	10	6	0	0	0	0	0	0	0	0	0
4/26/2024	3:30 AM	0	6	5	0	0	0	0	0	1	0	1	0
4/26/2024	3:45 AM	0	7	3	0	0	0	0	0	0	0	0	0
4/26/2024	4:00 AM	0	4	2	0	0	0	0	0	0	0	0	0
4/26/2024	4:15 AM	0	8	3	0	0	0	0	0	0	0	0	0
4/26/2024	4:30 AM	0	9	5	0	0	0	0	0	0	0	0	0
4/26/2024	4:45 AM	0	15	10	0	0	0	0	0	0	0	0	0
4/26/2024	5:00 AM	0	16	10	0	0	0	0	0	1	0	0	0
4/26/2024	5:15 AM	0	21	11	0	0	0	0	0	1	0	1	0
4/26/2024	5:30 AM	0	18	10	0	0	0	0	0	0	0	0	0
4/26/2024	5:45 AM	0	22	13	0	0	0	0	0	0	0	0	0
4/26/2024	6:00 AM	0	25	14	1	0	0	0	0	0	0	0	0
4/26/2024	6:15 AM	0	65	38	1	0	0	0	0	1	0	0	0
4/26/2024	6:30 AM	0	109	56	0	0	0	0	0	0	0	0	0
4/26/2024	6:45 AM	0	147	68	0	1	2	0	0	0	0	0	0
4/26/2024	7:00 AM	2	216	74	1	1	0	0	1	0	0	0	0
4/26/2024	7:15 AM	3	285	87	0	5	0	0	2	0	0	0	0
4/26/2024	7:30 AM	0	336	92	0	2	0	0	0	0	0	0	0
4/26/2024	7:45 AM	0	322	91	0	4	0	0	0	0	0	0	0
4/26/2024	8:00 AM	1	277	80	0	2	0	0	0	2	0	0	0
4/26/2024	8:15 AM	2	254	53	3	1	0	0	4	1	0	0	0
4/26/2024	8:30 AM	0	226	65	0	2	2	0	1	3	0	0	0
4/26/2024	8:45 AM	0	186	62	3	1	0	0	1	2	0	0	0
4/26/2024	9:00 AM	2	181	55	0	3	1	0	1	2	0	0	0
4/26/2024	9:15 AM	0	157	53	0	3	0	0	0	1	0	0	0
4/26/2024	9:30 AM	1	183	43	0	3	0	0	3	1	1	0	0
4/26/2024	9:45 AM	1	159	47	1	4	1	0	0	1	0	0	0
4/26/2024	10:00 AM	1	161	49	0	4	1	0	1	1	0	0	0
4/26/2024	10:15 AM	0	184	54	0	2	0	0	0	2	0	0	0
4/26/2024	10:30 AM	0	147	48	0	1	0	0	0	1	0	0	0
4/26/2024	10:45 AM	2	148	37	0	0	1	0	3	1	0	0	0
4/26/2024	11:00 AM	6	194	44	0	7	0	0	0	0	0	0	0
4/26/2024	11:15 AM	0	192	45	0	1	0	0	0	1	0	0	0
4/26/2024	11:30 AM	0	172	51	0	1	0	0	0	2	0	0	0
4/26/2024	11:45 AM	4	216	56	0	2	0	0	3	1	0	0	0
4/26/2024	12:00 PM	1	195	59	0	0	0	0	1	4	0	0	0
4/26/2024	12:15 PM	0	211	57	1	7	0	0	0	1	0	0	0
4/26/2024	12:30 PM	7	214	55	0	4	1	0	0	1	0	0	0
4/26/2024	12:45 PM	2	221	61	0	2	1	0	2	1	0	0	0
4/26/2024	1:00 PM	1	245	57	0	5	0	0	4	1	0	0	0
4/26/2024	1:15 PM	6	259	61	0	3	0	0	1	1	0	0	0
4/26/2024	1:30 PM	3	258	60	0	7	0	0	0	2	0	0	0
4/26/2024	1:45 PM	5	243	59	0	5	0	0	0	1	0	0	0
4/26/2024	2:00 PM	2	193	57	0	5	0	0	0	3	0	0	0
4/26/2024	2:15 PM	2	232	65	0	5	0	0	1	3	0	1	0
4/26/2024	2:30 PM	2	235	65	0	5	0	0	2	4	0	0	0
4/26/2024	2:45 PM	1	260	64	0	3	0	0	4	0	0	0	0
4/26/2024	3:00 PM	2	270	63	0	10	0	0	3	0	0	0	0
4/26/2024	3:15 PM	12	298	69	0	4	1	0	1	2	0	0	0
4/26/2024	3:30 PM	8	345	96	1	5	0	0	2	1	0	0	0
4/26/2024	3:45 PM	4	360	75	0	6	0	0	5	1	0	0	0
4/26/2024	4:00 PM	1	329	76	0	3	0	0	4	2	0	0	0
4/26/2024	4:15 PM	3	321	73	0	3	1	0	0	0	0	0	0
4/26/2024	4:30 PM	4	323	88	0	4	0	0	1	1	0	0	0
4/26/2024	4:45 PM	2	333	74	0	3	0	0	0	1	0	0	0
4/26/2024	5:00 PM	7	378	74	0	3	0	0	0	1	0	0	0
4/26/2024	5:15 PM	2	369	50	0	1	0	0	2	0	0	1	0
4/26/2024	5:30 PM	1	268	58	0	2	0	0	0	1	0	0	0
4/26/2024	5:45 PM	2	244	68	0	1	0	0	0	0	0	0	0
4/26/2024	6:00 PM	1	242	72	0	4	0	0	2	1	0	0	0
4/26/2024	6:15 PM	0	252	43	0	1	0	0	0	1	0	0	0
4/26/2024	6:30 PM	3	230	32	0	1	0	0	0	0	0	0	0
4/26/2024	6:45 PM	6	199	34	0	1	0	0	0	0	0	0	0
4/26/2024	7:00 PM	6	150	29	0	1	1	0	0	0	0	0	0
4/26/2024	7:15 PM	8	173	40	0	1	1	0	1	2	0	1	0
4/26/2024	7:30 PM	1	157	34	0	2	0	0	0	0	0	0	0
4/26/2024	7:45 PM	1	158	24	0	1	0	0	0	0	0	0	0
4/26/2024	8:00 PM	1	117	39	0	0	0	0	0	0	0	0	0
4/26/2024	8:15 PM	0	108	52	0	0	0	0	0	0	0	0	0
4/26/2024	8:30 PM	0	102	50	0	0	0	0	0	0	0	0	0
4/26/2024	8:45 PM	0	113	54	0	0	0	0	0	1	0	0	0
4/26/2024	9:00 PM	0	87	33	0	0	0	0	0	0	0	1	0
4/26/2024	9:15 PM	0	63	27	0	0	0	0	0	0	0	0	0
4/26/2024	9:30 PM	0	54	24	0	0	0	0	0	0	0	0	0
4/26/2024	9:45 PM	0	52	22	0	0	0	0	0	0	0	0	0
4/26/2024	10:00 PM	0	55	20	0	0	0	0	0	0	0	0	0
4/26/2024	10:15 PM	0	48	17	0	0	0	0	0	1	0	1	0
4/26/2024	10:30 PM	0	43	19	0	0	0	0	0	0	0	0	0
4/26/2024	10:45 PM	0	31	15	0	0	0	0	0	1	0	0	0
4/26/2024	11:00 PM	0	27	16	0	0	0	0	0	0	0	0	0
4/26/2024	11:15 PM	0	23	14	0	0	0	0	0	1	0	0	0
4/26/2024	11:30 PM	0	28	15	0	0	0	0	0	0	0	0	0
4/26/2024	11:45 PM	0	22	10	0	0	0	0	0	0	0	0	0

4/27/2024	12:00 AM	0	25	10	0	0	0	0	0	0	0	0	0	0
4/27/2024	12:15 AM	0	39	26	0	0	0	0	0	0	0	0	0	0
4/27/2024	12:30 AM	0	26	10	0	0	0	0	0	0	0	0	0	0
4/27/2024	12:45 AM	0	20	8	0	0	0	0	0	0	0	0	0	0
4/27/2024	1:00 AM	0	15	7	0	0	0	0	0	0	0	0	0	0
4/27/2024	1:15 AM	0	7	3	0	0	0	0	0	0	0	0	0	0
4/27/2024	1:30 AM	0	8	2	0	0	0	0	0	0	0	0	0	0
4/27/2024	1:45 AM	0	12	8	0	0	0	0	0	0	0	0	0	0
4/27/2024	2:00 AM	0	10	5	0	0	0	0	0	0	0	0	0	0
4/27/2024	2:15 AM	0	10	6	0	0	0	0	0	0	0	0	0	0
4/27/2024	2:30 AM	0	12	10	0	0	0	0	0	0	0	0	0	0
4/27/2024	2:45 AM	0	18	10	0	0	0	0	0	0	0	0	0	0
4/27/2024	3:00 AM	0	11	6	0	0	0	0	0	0	0	0	0	0
4/27/2024	3:15 AM	0	13	7	0	0	0	0	0	0	0	0	0	0
4/27/2024	3:30 AM	0	18	10	0	0	0	0	0	0	0	0	0	0
4/27/2024	3:45 AM	0	15	10	0	0	0	0	0	0	0	0	0	0
4/27/2024	4:00 AM	0	12	7	0	0	0	0	0	0	0	0	0	0
4/27/2024	4:15 AM	0	14	6	0	0	0	0	0	0	0	0	0	0
4/27/2024	4:30 AM	0	16	9	0	0	0	0	0	0	0	0	0	0
4/27/2024	4:45 AM	0	25	9	0	0	0	0	0	0	0	0	0	0
4/27/2024	5:00 AM	0	20	17	0	0	0	0	0	0	0	0	0	0
4/27/2024	5:15 AM	0	21	6	0	0	0	0	0	0	0	0	0	0
4/27/2024	5:30 AM	0	18	5	0	0	0	0	0	0	0	0	0	0
4/27/2024	5:45 AM	0	15	6	0	0	0	0	0	0	0	0	0	0
4/27/2024	6:00 AM	0	20	7	0	0	0	0	0	0	0	0	0	0
4/27/2024	6:15 AM	0	35	10	0	0	0	0	0	0	0	0	0	0
4/27/2024	6:30 AM	0	32	14	0	0	0	0	0	1	0	0	0	0
4/27/2024	6:45 AM	0	50	15	0	0	2	0	0	0	0	0	0	0
4/27/2024	7:00 AM	0	53	16	0	0	0	0	0	0	0	0	0	0
4/27/2024	7:15 AM	0	72	25	0	0	0	0	0	1	0	0	0	0
4/27/2024	7:30 AM	1	90	22	0	1	1	0	0	1	0	0	0	0
4/27/2024	7:45 AM	0	127	28	0	0	1	0	1	0	0	0	0	0
4/27/2024	8:00 AM	0	119	23	0	0	0	0	2	0	0	0	0	0
4/27/2024	8:15 AM	1	108	25	0	0	0	0	0	0	0	0	0	0
4/27/2024	8:30 AM	0	146	42	0	0	2	0	2	1	0	0	0	0
4/27/2024	8:45 AM	0	131	23	0	0	1	0	1	0	0	0	0	0
4/27/2024	9:00 AM	0	151	28	0	0	1	0	1	0	0	0	0	0
4/27/2024	9:15 AM	1	135	28	0	1	1	0	3	0	0	0	0	0
4/27/2024	9:30 AM	0	180	37	0	1	0	0	1	1	0	0	0	0
4/27/2024	9:45 AM	0	165	28	0	0	1	0	3	0	0	0	0	0
4/27/2024	10:00 AM	4	170	39	0	0	2	0	1	0	0	0	0	0
4/27/2024	10:15 AM	3	184	32	0	0	1	0	1	0	0	0	0	0
4/27/2024	10:30 AM	12	184	36	0	2	2	0	1	0	0	0	0	0
4/27/2024	10:45 AM	6	173	26	0	0	0	0	4	0	0	0	0	0
4/27/2024	11:00 AM	1	167	30	0	1	1	0	1	0	0	0	0	0
4/27/2024	11:15 AM	0	161	32	0	2	2	0	1	0	0	0	0	0
4/27/2024	11:30 AM	18	181	40	0	0	2	0	1	0	0	0	0	0
4/27/2024	11:45 AM	21	240	45	0	2	3	0	6	0	0	0	0	0
4/27/2024	12:00 PM	1	232	39	1	1	0	5	0	0	0	0	0	0
4/27/2024	12:15 PM	13	242	38	0	2	2	0	1	2	0	0	0	0
4/27/2024	12:30 PM	4	215	47	0	3	1	0	2	0	0	0	0	0
4/27/2024	12:45 PM	8	198	34	0	1	2	0	1	0	0	0	0	0
4/27/2024	1:00 PM	8	249	40	1	1	3	0	1	0	0	0	0	0
4/27/2024	1:15 PM	20	192	35	0	2	0	0	1	0	0	0	0	0
4/27/2024	1:30 PM	4	198	30	0	1	1	0	4	0	0	0	0	0
4/27/2024	1:45 PM	7	223	43	0	1	3	0	1	1	0	0	0	0
4/27/2024	2:00 PM	7	198	29	0	0	4	0	2	1	0	0	0	0
4/27/2024	2:15 PM	2	181	36	0	2	1	0	2	0	0	0	0	0
4/27/2024	2:30 PM	2	179	27	0	1	1	0	2	0	0	0	0	0
4/27/2024	2:45 PM	2	207	27	0	0	5	0	2	0	0	0	0	0
4/27/2024	3:00 PM	1	189	38	0	0	2	0	6	0	0	0	0	0
4/27/2024	3:15 PM	7	191	36	0	0	0	0	4	0	0	0	0	0
4/27/2024	3:30 PM	7	242	45	0	0	2	0	0	0	0	0	0	0
4/27/2024	3:45 PM	2	217	37	0	1	0	2	2	0	0	1	0	0
4/27/2024	4:00 PM	7	158	32	0	0	1	0	0	1	0	0	0	0
4/27/2024	4:15 PM	3	179	42	0	0	0	0	3	0	0	0	0	0
4/27/2024	4:30 PM	1	221	50	0	1	1	0	4	1	0	0	0	0
4/27/2024	4:45 PM	15	225	42	0	0	0	0	0	0	0	0	0	0
4/27/2024	5:00 PM	1	202	38	0	0	1	0	0	0	0	0	0	0
4/27/2024	5:15 PM	2	191	32	0	4	0	0	0	0	0	0	0	0
4/27/2024	5:30 PM	1	147	29	0	0	0	0	1	0	0	0	0	0
4/27/2024	5:45 PM	1	130	36	0	0	3	0	1	0	0	0	0	0
4/27/2024	6:00 PM	0	134	29	1	1	5	0	0	0	0	0	0	0
4/27/2024	6:15 PM	3	156	30	1	0	4	0	1	0	0	0	0	0
4/27/2024	6:30 PM	0	161	38	0	0	1	0	0	0	0	0	0	0
4/27/2024	6:45 PM	0	123	33	0	4	0	0	0	0	0	1	0	0
4/27/2024	7:00 PM	0	124	16	0	0	3	0	0	0	0	0	0	0
4/27/2024	7:15 PM	2	125	27	0	0	1	0	0	0	0	0	0	0
4/27/2024	7:30 PM	0	124	30	0	0	0	0	0	0	0	0	0	0
4/27/2024	7:45 PM	5	136	18	0	0	6	0	0	0	0	0	0	0
4/27/2024	8:00 PM	0	130	30	0	0	0	0	0	0	0	0	0	0
4/27/2024	8:15 PM	0	120	21	0	0	0	0	0	0	0	0	0	0
4/27/2024	8:30 PM	0	129	33	0	0	0	0	0	0	0	0	0	0
4/27/2024	8:45 PM	0	140	37	0	0	0	0	0	0	0	0	0	0
4/27/2024	9:00 PM	0	90	17	0	0	0	0	0	0	0	0	0	0
4/27/2024	9:15 PM	0	110	23	0	0	0	0	0	0	0	0	0	0
4/27/2024	9:30 PM	0	90	26	0	0	0	0	0	0	0	0	0	0
4/27/2024	9:45 PM	0	89	28	0	0	0	0	0	0	0	0	0	0
4/27/2024	10:00 PM	0	65	22	0	0	0	0	0	0	0	0	0	0
4/27/2024	10:15 PM	0	60	20	0	0	0	0	0	0	0	0	0	0
4/27/2024	10:30 PM	0	45	15	0	0	0	0	0	0	0	0	0	0
4/27/2024	10:45 PM	0	40	24	0	0	0	0	0	0	0	0	0	0
4/27/2024	11:00 PM	0	48	28	0	0	0	0	0	0	0	0	0	0
4/27/2024	11:15 PM	0	40	27	0	0	0	0	0	0	0	0	0	0
4/27/2024	11:30 PM	0	42	23	0	0	0	0	0	0	0	0	0	0
4/27/2024	11:45 PM	0	42	26	0	0	0	0	0	0	0	0	0	0

WB
File Name:
Start Date: 4/21/2024
Start Time: 0
Site Code: 76 Lane 1 EB
Station ID: 1
Location 1: I-20, east of Browwing Rd
Location 2:

Date	Time	1	2	3	4	5	6	7	8	9	10	11	12	13
4/21/2024	12:00 AM	0	0	0	0	0	0	0	0	0	0	0	0	0
4/21/2024	12:15 AM	0	0	0	0	0	0	0	0	0	0	0	0	0
4/21/2024	12:30 AM	0	0	0	0	0	0	0	0	0	0	0	0	0
4/21/2024	12:45 AM	0	0	0	0	0	0	0	0	0	0	0	0	0
4/21/2024	1:00 AM	0	0	0	0	0	0	0	0	0	0	0	0	0
4/21/2024	1:15 AM	0	0	0	0	0	0	0	0	0	0	0	0	0
4/21/2024	1:30 AM	0	0	0	0	0	0	0	0	0	0	0	0	0
4/21/2024	1:45 AM	0	0	0	0	0	0	0	0	0	0	0	0	0
4/21/2024	2:00 AM	0	0	0	0	0	0	0	0	0	0	0	0	0
4/21/2024	2:15 AM	0	0	0	0	0	0	0	0	0	0	0	0	0
4/21/2024	2:30 AM	0	0	0	0	0	0	0	0	0	0	0	0	0
4/21/2024	2:45 AM	0	0	0	0	0	0	0	0	0	0	0	0	0
4/21/2024	3:00 AM	0	0	0	0	0	0	0	0	0	0	0	0	0
4/21/2024	3:15 AM	0	0	0	0	0	0	0	0	0	0	0	0	0
4/21/2024	3:30 AM	0	0	0	0	0	0	0	0	0	0	0	0	0
4/21/2024	3:45 AM	0	0	0	0	0	0	0	0	0	0	0	0	0
4/21/2024	4:00 AM	0	0	0	0	0	0	0	0	0	0	0	0	0
4/21/2024	4:15 AM	0	0	0	0	0	0	0	0	0	0	0	0	0
4/21/2024	4:30 AM	0	0	0	0	0	0	0	0	0	0	0	0	0
4/21/2024	4:45 AM	0	0	0	0	0	0	0	0	0	0	0	0	0
4/21/2024	5:00 AM	0	0	0	0	0	0	0	0	0	0	0	0	0
4/21/2024	5:15 AM	0	0	0	0	0	0	0	0	0	0	0	0	0
4/21/2024	5:30 AM	0	0	0	0	0	0	0	0	0	0	0	0	0
4/21/2024	5:45 AM	0	0	0	0	0	0	0	0	0	0	0	0	0
4/21/2024	6:00 AM	0	0	0	0	0	0	0	0	0	0	0	0	0
4/21/2024	6:15 AM	0	0	0	0	0	0	0	0	0	0	0	0	0
4/21/2024	6:30 AM	0	0	0	0	0	0	0	0	0	0	0	0	0
4/21/2024	6:45 AM	0	0	0	0	0	0	0	0	0	0	0	0	0
4/21/2024	7:00 AM	0	0	0	0	0	0	0	0	0	0	0	0	0
4/21/2024	7:15 AM	0	0	0	0	0	0	0	0	0	0	0	0	0
4/21/2024	7:30 AM	0	0	0	0	0	0	0	0	0	0	0	0	0
4/21/2024	7:45 AM	0	0	0	0	0	0	0	0	0	0	0	0	0
4/21/2024	8:00 AM	0	0	0	0	0	0	0	0	0	0	0	0	0
4/21/2024	8:15 AM	0	0	0	0	0	0	0	0	0	0	0	0	0
4/21/2024	8:30 AM	0	0	0	0	0	0	0	0	0	0	0	0	0
4/21/2024	8:45 AM	0	0	0	0	0	0	0	0	0	0	0	0	0
4/21/2024	9:00 AM	0	0	0	0	0	0	0	0	0	0	0	0	0
4/21/2024	9:15 AM	0	0	0	0	0	0	0	0	0	0	0	0	0
4/21/2024	9:30 AM	0	0	0	0	0	0	0	0	0	0	0	0	0
4/21/2024	9:45 AM	0	0	0	0	0	0	0	0	0	0	0	0	0
4/21/2024	10:00 AM	0	0	0	0	0	0	0	0	0	0	0	0	0
4/21/2024	10:15 AM	0	0	0	0	0	0	0	0	0	0	0	0	0
4/21/2024	10:30 AM	0	0	0	0	0	0	0	0	0	0	0	0	0
4/21/2024	10:45 AM	0	0	0	0	0	0	0	0	0	0	0	0	0
4/21/2024	11:00 AM	0	0	0	0	0	0	0	0	0	0	0	0	0
4/21/2024	11:15 AM	0	0	0	0	0	0	0	0	0	0	0	0	0
4/21/2024	11:30 AM	0	0	0	0	0	0	0	0	0	0	0	0	0
4/21/2024	11:45 AM	0	0	0	0	0	0	0	0	0	0	0	0	0
4/21/2024	12:00 PM	0	0	0	0	0	0	0	0	0	0	0	0	0
4/21/2024	12:15 PM	0	0	0	0	0	0	0	0	0	0	0	0	0
4/21/2024	12:30 PM	0	0	0	0	0	0	0	0	0	0	0	0	0
4/21/2024	12:45 PM	0	0	0	0	0	0	0	0	0	0	0	0	0
4/21/2024	1:00 PM	0	0	0	0	0	0	0	0	0	0	0	0	0
4/21/2024	1:15 PM	0	0	0	0	0	0	0	0	0	0	0	0	0
4/21/2024	1:30 PM	0	0	0	0	0	0	0	0	0	0	0	0	0
4/21/2024	1:45 PM	0	0	0	0	0	0	0	0	0	0	0	0	0
4/21/2024	2:00 PM	0	0	0	0	0	0	0	0	0	0	0	0	0
4/21/2024	2:15 PM	0	0	0	0	0	0	0	0	0	0	0	0	0
4/21/2024	2:30 PM	0	0	0	0	0	0	0	0	0	0	0	0	0
4/21/2024	2:45 PM	0	0	0	0	0	0	0	0	0	0	0	0	0
4/21/2024	3:00 PM	0	0	0	0	0	0	0	0	0	0	0	0	0
4/21/2024	3:15 PM	0	0	0	0	0	0	0	0	0	0	0	0	0
4/21/2024	3:30 PM	0	0	0	0	0	0	0	0	0	0	0	0	0
4/21/2024	3:45 PM	0	0	0	0	0	0	0	0	0	0	0	0	0
4/21/2024	4:00 PM	0	0	0	0	0	0	0	0	0	0	0	0	0
4/21/2024	4:15 PM	0	0	0	0	0	0	0	0	0	0	0	0	0
4/21/2024	4:30 PM	0	0	0	0	0	0	0	0	0	0	0	0	0
4/21/2024	4:45 PM	0	0	0	0	0	0	0	0	0	0	0	0	0
4/21/2024	5:00 PM	0	0	0	0	0	0	0	0	0	0	0	0	0
4/21/2024	5:15 PM	0	0	0	0	0	0	0	0	0	0	0	0	0
4/21/2024	5:30 PM	0	0	0	0	0	0	0	0	0	0	0	0	0
4/21/2024	5:45 PM	0	0	0	0	0	0	0	0	0	0	0	0	0
4/21/2024	6:00 PM	0	0	0	0	0	0	0	0	0	0	0	0	0
4/21/2024	6:15 PM	0	0	0	0	0	0	0	0	0	0	0	0	0
4/21/2024	6:30 PM	0	0	0	0	0	0	0	0	0	0	0	0	0
4/21/2024	6:45 PM	0	0	0	0	0	0	0	0	0	0	0	0	0
4/21/2024	7:00 PM	0	0	0	0	0	0	0	0	0	0	0	0	0
4/21/2024	7:15 PM	0	0	0	0	0	0	0	0	0	0	0	0	0
4/21/2024	7:30 PM	0	0	0	0	0	0	0	0	0	0	0	0	0
4/21/2024	7:45 PM	0	0	0	0	0	0	0	0	0	0	0	0	0
4/21/2024	8:00 PM	0	0	0	0	0	0	0	0	0	0	0	0	0
4/21/2024	8:15 PM	0	0	0	0	0	0	0	0	0	0	0	0	0
4/21/2024	8:30 PM	0	0	0	0	0	0	0	0	0	0	0	0	0
4/21/2024	8:45 PM	0	0	0	0	0	0	0	0	0	0	0	0	0
4/21/2024	9:00 PM	0	0	0	0	0	0	0	0	0	0	0	0	0
4/21/2024	9:15 PM	0	0	0	0	0	0	0	0	0	0	0	0	0
4/21/2024	9:30 PM	0	0	0	0	0	0	0	0	0	0	0	0	0
4/21/2024	9:45 PM	0	0	0	0	0	0	0	0	0	0	0	0	0
4/21/2024	10:00 PM	0	0	0	0	0	0	0	0	0	0	0	0	0
4/21/2024	10:15 PM	0	0	0	0	0	0	0	0	0	0	0	0	0
4/21/2024	10:30 PM	0	0	0	0	0	0	0	0	0	0	0	0	0
4/21/2024	10:45 PM	0	0	0	0	0	0	0	0	0	0	0	0	0
4/21/2024	11:00 PM	0	0	0	0	0	0	0	0	0	0	0	0	0
4/21/2024	11:15 PM	0	0	0	0	0	0	0	0	0	0	0	0	0
4/21/2024	11:30 PM	0	0	0	0	0	0	0	0	0	0	0	0	0
4/21/2024	11:45 PM	0	0	0	0	0	0	0	0	0	0	0	0	0

4/22/2024	12:00 AM	0	0	0	0	0	0	0	0	0	0	0	0	0
4/22/2024	12:15 AM	0	0	0	0	0	0	0	0	0	0	0	0	0
4/22/2024	12:30 AM	0	0	0	0	0	0	0	0	0	0	0	0	0
4/22/2024	12:45 AM	0	0	0	0	0	0	0	0	0	0	0	0	0
4/22/2024	1:00 AM	0	0	0	0	0	0	0	0	0	0	0	0	0
4/22/2024	1:15 AM	0	0	0	0	0	0	0	0	0	0	0	0	0
4/22/2024	1:30 AM	0	0	0	0	0	0	0	0	0	0	0	0	0
4/22/2024	1:45 AM	0	0	0	0	0	0	0	0	0	0	0	0	0
4/22/2024	2:00 AM	0	0	0	0	0	0	0	0	0	0	0	0	0
4/22/2024	2:15 AM	0	0	0	0	0	0	0	0	0	0	0	0	0
4/22/2024	2:30 AM	0	0	0	0	0	0	0	0	0	0	0	0	0
4/22/2024	2:45 AM	0	0	0	0	0	0	0	0	0	0	0	0	0
4/22/2024	3:00 AM	0	0	0	0	0	0	0	0	0	0	0	0	0
4/22/2024	3:15 AM	0	0	0	0	0	0	0	0	0	0	0	0	0
4/22/2024	3:30 AM	0	0	0	0	0	0	0	0	0	0	0	0	0
4/22/2024	3:45 AM	0	0	0	0	0	0	0	0	0	0	0	0	0
4/22/2024	4:00 AM	0	0	0	0	0	0	0	0	0	0	0	0	0
4/22/2024	4:15 AM	0	0	0	0	0	0	0	0	0	0	0	0	0
4/22/2024	4:30 AM	0	0	0	0	0	0	0	0	0	0	0	0	0
4/22/2024	4:45 AM	0	0	0	0	0	0	0	0	0	0	0	0	0
4/22/2024	5:00 AM	0	0	0	0	0	0	0	0	0	0	0	0	0
4/22/2024	5:15 AM	0	0	0	0	0	0	0	0	0	0	0	0	0
4/22/2024	5:30 AM	0	0	0	0	0	0	0	0	0	0	0	0	0
4/22/2024	5:45 AM	0	0	0	0	0	0	0	0	0	0	0	0	0
4/22/2024	6:00 AM	0	0	0	0	0	0	0	0	0	0	0	0	0
4/22/2024	6:15 AM	0	0	0	0	0	0	0	0	0	0	0	0	0
4/22/2024	6:30 AM	0	0	0	0	0	0	0	0	0	0	0	0	0
4/22/2024	6:45 AM	0	0	0	0	0	0	0	0	0	0	0	0	0
4/22/2024	7:00 AM	0	0	0	0	0	0	0	0	0	0	0	0	0
4/22/2024	7:15 AM	0	0	0	0	0	0	0	0	0	0	0	0	0
4/22/2024	7:30 AM	0	0	0	0	0	0	0	0	0	0	0	0	0
4/22/2024	7:45 AM	0	0	0	0	0	0	0	0	0	0	0	0	0
4/22/2024	8:00 AM	0	0	0	0	0	0	0	0	0	0	0	0	0
4/22/2024	8:15 AM	0	0	0	0	0	0	0	0	0	0	0	0	0
4/22/2024	8:30 AM	0	0	0	0	0	0	0	0	0	0	0	0	0
4/22/2024	8:45 AM	0	0	0	0	0	0	0	0	0	0	0	0	0
4/22/2024	9:00 AM	0	0	0	0	0	0	0	0	0	0	0	0	0
4/22/2024	9:15 AM	0	0	0	0	0	0	0	0	0	0	0	0	0
4/22/2024	9:30 AM	0	0	0	0	0	0	0	0	0	0	0	0	0
4/22/2024	9:45 AM	0	0	0	0	0	0	0	0	0	0	0	0	0
4/22/2024	10:00 AM	0	0	0	0	0	0	0	0	0	0	0	0	0
4/22/2024	10:15 AM	0	0	0	0	0	0	0	0	0	0	0	0	0
4/22/2024	10:30 AM	0	0	0	0	0	0	0	0	0	0	0	0	0
4/22/2024	10:45 AM	0	0	0	0	0	0	0	0	0	0	0	0	0
4/22/2024	11:00 AM	0	0	0	0	0	0	0	0	0	0	0	0	0
4/22/2024	11:15 AM	0	0	0	0	0	0	0	0	0	0	0	0	0
4/22/2024	11:30 AM	0	0	0	0	0	0	0	0	0	0	0	0	0
4/22/2024	11:45 AM	0	0	0	0	0	0	0	0	0	0	0	0	0
4/22/2024	12:00 PM	0	0	0	0	0	0	0	0	0	0	0	0	0
4/22/2024	12:15 PM	0	0	0	0	0	0	0	0	0	0	0	0	0
4/22/2024	12:30 PM	0	0	0	0	0	0	0	0	0	0	0	0	0
4/22/2024	12:45 PM	0	0	0	0	0	0	0	0	0	0	0	0	0
4/22/2024	1:00 PM	0	0	0	0	0	0	0	0	0	0	0	0	0
4/22/2024	1:15 PM	0	0	0	0	0	0	0	0	0	0	0	0	0
4/22/2024	1:30 PM	0	0	0	0	0	0	0	0	0	0	0	0	0
4/22/2024	1:45 PM	0	0	0	0	0	0	0	0	0	0	0	0	0
4/22/2024	2:00 PM	0	0	0	0	0	0	0	0	0	0	0	0	0
4/22/2024	2:15 PM	0	0	0	0	0	0	0	0	0	0	0	0	0
4/22/2024	2:30 PM	0	0	0	0	0	0	0	0	0	0	0	0	0
4/22/2024	2:45 PM	0	0	0	0	0	0	0	0	0	0	0	0	0
4/22/2024	3:00 PM	0	0	0	0	0	0	0	0	0	0	0	0	0
4/22/2024	3:15 PM	0	0	0	0	0	0	0	0	0	0	0	0	0
4/22/2024	3:30 PM	0	0	0	0	0	0	0	0	0	0	0	0	0
4/22/2024	3:45 PM	0	0	0	0	0	0	0	0	0	0	0	0	0
4/22/2024	4:00 PM	0	0	0	0	0	0	0	0	0	0	0	0	0
4/22/2024	4:15 PM	0	0	0	0	0	0	0	0	0	0	0	0	0
4/22/2024	4:30 PM	0	0	0	0	0	0	0	0	0	0	0	0	0
4/22/2024	4:45 PM	0	0	0	0	0	0	0	0	0	0	0	0	0
4/22/2024	5:00 PM	0	0	0	0	0	0	0	0	0	0	0	0	0
4/22/2024	5:15 PM	0	0	0	0	0	0	0	0	0	0	0	0	0
4/22/2024	5:30 PM	0	0	0	0	0	0	0	0	0	0	0	0	0
4/22/2024	5:45 PM	0	0	0	0	0	0	0	0	0	0	0	0	0
4/22/2024	6:00 PM	0	0	0	0	0	0	0	0	0	0	0	0	0
4/22/2024	6:15 PM	0	0	0	0	0	0	0	0	0	0	0	0	0
4/22/2024	6:30 PM	0	0	0	0	0	0	0	0	0	0	0	0	0
4/22/2024	6:45 PM	0	0	0	0	0	0	0	0	0	0	0	0	0
4/22/2024	7:00 PM	0	0	0	0	0	0	0	0	0	0	0	0	0
4/22/2024	7:15 PM	0	0	0	0	0	0	0	0	0	0	0	0	0
4/22/2024	7:30 PM	0	0	0	0	0	0	0	0	0	0	0	0	0
4/22/2024	7:45 PM	0	0	0	0	0	0	0	0	0	0	0	0	0
4/22/2024	8:00 PM	0	0	0	0	0	0	0	0	0	0	0	0	0
4/22/2024	8:15 PM	0	0	0	0	0	0	0	0	0	0	0	0	0
4/22/2024	8:30 PM	0	0	0	0	0	0	0	0	0	0	0	0	0
4/22/2024	8:45 PM	0	0	0	0	0	0	0	0	0	0	0	0	0
4/22/2024	9:00 PM	0	0	0	0	0	0	0	0	0	0	0	0	0
4/22/2024	9:15 PM	0	0	0	0	0	0	0	0	0	0	0	0	0
4/22/2024	9:30 PM	0	0	0	0	0	0	0	0	0	0	0	0	0
4/22/2024	9:45 PM	0	0	0	0	0	0	0	0	0	0	0	0	0
4/22/2024	10:00 PM	0	0	0	0	0	0	0	0	0	0	0	0	0
4/22/2024	10:15 PM	0	0	0	0	0	0	0	0	0	0	0	0	0
4/22/2024	10:30 PM	0	0	0	0	0	0	0	0	0	0	0	0	0
4/22/2024	10:45 PM	0	0	0	0	0	0	0	0	0	0	0	0	0
4/22/2024	11:00 PM	0	0	0	0	0	0	0	0	0	0	0	0	0
4/22/2024	11:15 PM	0	0	0	0	0	0	0	0	0	0	0	0	0
4/22/2024	11:30 PM	0	0	0	0	0	0	0	0	0	0	0	0	0
4/22/2024	11:45 PM	0	0	0	0	0	0	0	0	0	0	0	0	0

4/23/2024	12:00 AM	0	0	0	0	0	0	0	0	0	0	0	0	0
4/23/2024	12:15 AM	0	0	0	0	0	0	0	0	0	0	0	0	0
4/23/2024	12:30 AM	0	0	0	0	0	0	0	0	0	0	0	0	0
4/23/2024	12:45 AM	0	0	0	0	0	0	0	0	0	0	0	0	0
4/23/2024	1:00 AM	0	0	0	0	0	0	0	0	0	0	0	0	0
4/23/2024	1:15 AM	0	0	0	0	0	0	0	0	0	0	0	0	0
4/23/2024	1:30 AM	0	0	0	0	0	0	0	0	0	0	0	0	0
4/23/2024	1:45 AM	0	0	0	0	0	0	0	0	0	0	0	0	0
4/23/2024	2:00 AM	0	0	0	0	0	0	0	0	0	0	0	0	0
4/23/2024	2:15 AM	0	0	0	0	0	0	0	0	0	0	0	0	0
4/23/2024	2:30 AM	0	0	0	0	0	0	0	0	0	0	0	0	0
4/23/2024	2:45 AM	0	0	0	0	0	0	0	0	0	0	0	0	0
4/23/2024	3:00 AM	0	0	0	0	0	0	0	0	0	0	0	0	0
4/23/2024	3:15 AM	0	0	0	0	0	0	0	0	0	0	0	0	0
4/23/2024	3:30 AM	0	0	0	0	0	0	0	0	0	0	0	0	0
4/23/2024	3:45 AM	0	0	0	0	0	0	0	0	0	0	0	0	0
4/23/2024	4:00 AM	0	0	0	0	0	0	0	0	0	0	0	0	0
4/23/2024	4:15 AM	0	0	0	0	0	0	0	0	0	0	0	0	0
4/23/2024	4:30 AM	0	0	0	0	0	0	0	0	0	0	0	0	0
4/23/2024	4:45 AM	0	0	0	0	0	0	0	0	0	0	0	0	0
4/23/2024	5:00 AM	0	0	0	0	0	0	0	0	0	0	0	0	0
4/23/2024	5:15 AM	0	0	0	0	0	0	0	0	0	0	0	0	0
4/23/2024	5:30 AM	0	0	0	0	0	0	0	0	0	0	0	0	0
4/23/2024	5:45 AM	0	0	0	0	0	0	0	0	0	0	0	0	0
4/23/2024	6:00 AM	0	0	0	0	0	0	0	0	0	0	0	0	0
4/23/2024	6:15 AM	0	0	0	0	0	0	0	0	0	0	0	0	0
4/23/2024	6:30 AM	0	0	0	0	0	0	0	0	0	0	0	0	0
4/23/2024	6:45 AM	0	0	0	0	0	0	0	0	0	0	0	0	0
4/23/2024	7:00 AM	0	0	0	0	0	0	0	0	0	0	0	0	0
4/23/2024	7:15 AM	0	0	0	0	0	0	0	0	0	0	0	0	0
4/23/2024	7:30 AM	0	0	0	0	0	0	0	0	0	0	0	0	0
4/23/2024	7:45 AM	0	0	0	0	0	0	0	0	0	0	0	0	0
4/23/2024	8:00 AM	0	0	0	0	0	0	0	0	0	0	0	0	0
4/23/2024	8:15 AM	0	0	0	0	0	0	0	0	0	0	0	0	0
4/23/2024	8:30 AM	0	0	0	0	0	0	0	0	0	0	0	0	0
4/23/2024	8:45 AM	0	0	0	0	0	0	0	0	0	0	0	0	0
4/23/2024	9:00 AM	0	0	0	0	0	0	0	0	0	0	0	0	0
4/23/2024	9:15 AM	0	0	0	0	0	0	0	0	0	0	0	0	0
4/23/2024	9:30 AM	0	0	0	0	0	0	0	0	0	0	0	0	0
4/23/2024	9:45 AM	0	0	0	0	0	0	0	0	0	0	0	0	0
4/23/2024	10:00 AM	0	0	0	0	0	0	0	0	0	0	0	0	0
4/23/2024	10:15 AM	0	0	0	0	0	0	0	0	0	0	0	0	0
4/23/2024	10:30 AM	0	0	0	0	0	0	0	0	0	0	0	0	0
4/23/2024	10:45 AM	0	0	0	0	0	0	0	0	0	0	0	0	0
4/23/2024	11:00 AM	0	0	0	0	0	0	0	0	0	0	0	0	0
4/23/2024	11:15 AM	0	0	0	0	0	0	0	0	0	0	0	0	0
4/23/2024	11:30 AM	0	0	0	0	0	0	0	0	0	0	0	0	0
4/23/2024	11:45 AM	0	0	0	0	0	0	0	0	0	0	0	0	0
4/23/2024	12:00 PM	0	0	0	0	0	0	0	0	0	0	0	0	0
4/23/2024	12:15 PM	0	0	0	0	0	0	0	0	0	0	0	0	0
4/23/2024	12:30 PM	0	0	0	0	0	0	0	0	0	0	0	0	0
4/23/2024	12:45 PM	0	0	0	0	0	0	0	0	0	0	0	0	0
4/23/2024	1:00 PM	0	0	0	0	0	0	0	0	0	0	0	0	0
4/23/2024	1:15 PM	0	0	0	0	0	0	0	0	0	0	0	0	0
4/23/2024	1:30 PM	0	0	0	0	0	0	0	0	0	0	0	0	0
4/23/2024	1:45 PM	0	0	0	0	0	0	0	0	0	0	0	0	0
4/23/2024	2:00 PM	0	0	0	0	0	0	0	0	0	0	0	0	0
4/23/2024	2:15 PM	0	0	0	0	0	0	0	0	0	0	0	0	0
4/23/2024	2:30 PM	0	0	0	0	0	0	0	0	0	0	0	0	0
4/23/2024	2:45 PM	0	0	0	0	0	0	0	0	0	0	0	0	0
4/23/2024	3:00 PM	0	0	0	0	0	0	0	0	0	0	0	0	0
4/23/2024	3:15 PM	0	0	0	0	0	0	0	0	0	0	0	0	0
4/23/2024	3:30 PM	0	0	0	0	0	0	0	0	0	0	0	0	0
4/23/2024	3:45 PM	0	0	0	0	0	0	0	0	0	0	0	0	0
4/23/2024	4:00 PM	0	0	0	0	0	0	0	0	0	0	0	0	0
4/23/2024	4:15 PM	0	0	0	0	0	0	0	0	0	0	0	0	0
4/23/2024	4:30 PM	0	0	0	0	0	0	0	0	0	0	0	0	0
4/23/2024	4:45 PM	0	0	0	0	0	0	0	0	0	0	0	0	0
4/23/2024	5:00 PM	0	0	0	0	0	0	0	0	0	0	0	0	0
4/23/2024	5:15 PM	0	0	0	0	0	0	0	0	0	0	0	0	0
4/23/2024	5:30 PM	0	0	0	0	0	0	0	0	0	0	0	0	0
4/23/2024	5:45 PM	0	0	0	0	0	0	0	0	0	0	0	0	0
4/23/2024	6:00 PM	0	0	0	0	0	0	0	0	0	0	0	0	0
4/23/2024	6:15 PM	0	0	0	0	0	0	0	0	0	0	0	0	0
4/23/2024	6:30 PM	0	0	0	0	0	0	0	0	0	0	0	0	0
4/23/2024	6:45 PM	0	0	0	0	0	0	0	0	0	0	0	0	0
4/23/2024	7:00 PM	0	0	0	0	0	0	0	0	0	0	0	0	0
4/23/2024	7:15 PM	0	0	0	0	0	0	0	0	0	0	0	0	0
4/23/2024	7:30 PM	0	0	0	0	0	0	0	0	0	0	0	0	0
4/23/2024	7:45 PM	0	0	0	0	0	0	0	0	0	0	0	0	0
4/23/2024	8:00 PM	0	0	0	0	0	0	0	0	0	0	0	0	0
4/23/2024	8:15 PM	0	0	0	0	0	0	0	0	0	0	0	0	0
4/23/2024	8:30 PM	0	0	0	0	0	0	0	0	0	0	0	0	0
4/23/2024	8:45 PM	0	0	0	0	0	0	0	0	0	0	0	0	0
4/23/2024	9:00 PM	0	0	0	0	0	0	0	0	0	0	0	0	0
4/23/2024	9:15 PM	0	0	0	0	0	0	0	0	0	0	0	0	0
4/23/2024	9:30 PM	0	0	0	0	0	0	0	0	0	0	0	0	0
4/23/2024	9:45 PM	0	0	0	0	0	0	0	0	0	0	0	0	0
4/23/2024	10:00 PM	0	0	0	0	0	0	0	0	0	0	0	0	0
4/23/2024	10:15 PM	0	0	0	0	0	0	0	0	0	0	0	0	0
4/23/2024	10:30 PM	0	0	0	0	0	0	0	0	0	0	0	0	0
4/23/2024	10:45 PM	0	0	0	0	0	0	0	0	0	0	0	0	0
4/23/2024	11:00 PM	0	0	0	0	0	0	0	0	0	0	0	0	0
4/23/2024	11:15 PM	0	0	0	0	0	0	0	0	0	0	0	0	0
4/23/2024	11:30 PM	0	0	0	0	0	0	0	0	0	0	0	0	0
4/23/2024	11:45 PM	0	0	0	0	0	0	0	0	0	0	0	0	0

4/24/2024	12:00 AM	0	0	0	0	0	0	0	0	0	0	0	0	0
4/24/2024	12:15 AM	0	0	0	0	0	0	0	0	0	0	0	0	0
4/24/2024	12:30 AM	0	0	0	0	0	0	0	0	0	0	0	0	0
4/24/2024	12:45 AM	0	0	0	0	0	0	0	0	0	0	0	0	0
4/24/2024	1:00 AM	0	0	0	0	0	0	0	0	0	0	0	0	0
4/24/2024	1:15 AM	0	0	0	0	0	0	0	0	0	0	0	0	0
4/24/2024	1:30 AM	0	0	0	0	0	0	0	0	0	0	0	0	0
4/24/2024	1:45 AM	0	0	0	0	0	0	0	0	0	0	0	0	0
4/24/2024	2:00 AM	0	0	0	0	0	0	0	0	0	0	0	0	0
4/24/2024	2:15 AM	0	0	0	0	0	0	0	0	0	0	0	0	0
4/24/2024	2:30 AM	0	0	0	0	0	0	0	0	0	0	0	0	0
4/24/2024	2:45 AM	0	0	0	0	0	0	0	0	0	0	0	0	0
4/24/2024	3:00 AM	0	0	0	0	0	0	0	0	0	0	0	0	0
4/24/2024	3:15 AM	0	0	0	0	0	0	0	0	0	0	0	0	0
4/24/2024	3:30 AM	0	0	0	0	0	0	0	0	0	0	0	0	0
4/24/2024	3:45 AM	0	0	0	0	0	0	0	0	0	0	0	0	0
4/24/2024	4:00 AM	0	0	0	0	0	0	0	0	0	0	0	0	0
4/24/2024	4:15 AM	0	0	0	0	0	0	0	0	0	0	0	0	0
4/24/2024	4:30 AM	0	0	0	0	0	0	0	0	0	0	0	0	0
4/24/2024	4:45 AM	0	0	0	0	0	0	0	0	0	0	0	0	0
4/24/2024	5:00 AM	0	0	0	0	0	0	0	0	0	0	0	0	0
4/24/2024	5:15 AM	0	0	0	0	0	0	0	0	0	0	0	0	0
4/24/2024	5:30 AM	0	0	0	0	0	0	0	0	0	0	0	0	0
4/24/2024	5:45 AM	0	0	0	0	0	0	0	0	0	0	0	0	0
4/24/2024	6:00 AM	0	0	0	0	0	0	0	0	0	0	0	0	0
4/24/2024	6:15 AM	0	0	0	0	0	0	0	0	0	0	0	0	0
4/24/2024	6:30 AM	0	0	0	0	0	0	0	0	0	0	0	0	0
4/24/2024	6:45 AM	0	0	0	0	0	0	0	0	0	0	0	0	0
4/24/2024	7:00 AM	0	0	0	0	0	0	0	0	0	0	0	0	0
4/24/2024	7:15 AM	0	0	0	0	0	0	0	0	0	0	0	0	0
4/24/2024	7:30 AM	0	0	0	0	0	0	0	0	0	0	0	0	0
4/24/2024	7:45 AM	0	0	0	0	0	0	0	0	0	0	0	0	0
4/24/2024	8:00 AM	0	0	0	0	0	0	0	0	0	0	0	0	0
4/24/2024	8:15 AM	0	0	0	0	0	0	0	0	0	0	0	0	0
4/24/2024	8:30 AM	0	0	0	0	0	0	0	0	0	0	0	0	0
4/24/2024	8:45 AM	0	0	0	0	0	0	0	0	0	0	0	0	0
4/24/2024	9:00 AM	0	0	0	0	0	0	0	0	0	0	0	0	0
4/24/2024	9:15 AM	0	0	0	0	0	0	0	0	0	0	0	0	0
4/24/2024	9:30 AM	0	0	0	0	0	0	0	0	0	0	0	0	0
4/24/2024	9:45 AM	0	0	0	0	0	0	0	0	0	0	0	0	0
4/24/2024	10:00 AM	0	0	0	0	0	0	0	0	0	0	0	0	0
4/24/2024	10:15 AM	0	0	0	0	0	0	0	0	0	0	0	0	0
4/24/2024	10:30 AM	0	0	0	0	0	0	0	0	0	0	0	0	0
4/24/2024	10:45 AM	0	0	0	0	0	0	0	0	0	0	0	0	0
4/24/2024	11:00 AM	0	0	0	0	0	0	0	0	0	0	0	0	0
4/24/2024	11:15 AM	0	0	0	0	0	0	0	0	0	0	0	0	0
4/24/2024	11:30 AM	0	0	0	0	0	0	0	0	0	0	0	0	0
4/24/2024	11:45 AM	0	0	0	0	0	0	0	0	0	0	0	0	0
4/24/2024	12:00 PM	0	0	0	0	0	0	0	0	0	0	0	0	0
4/24/2024	12:15 PM	0	0	0	0	0	0	0	0	0	0	0	0	0
4/24/2024	12:30 PM	0	0	0	0	0	0	0	0	0	0	0	0	0
4/24/2024	12:45 PM	0	0	0	0	0	0	0	0	0	0	0	0	0
4/24/2024	1:00 PM	0	0	0	0	0	0	0	0	0	0	0	0	0
4/24/2024	1:15 PM	0	0	0	0	0	0	0	0	0	0	0	0	0
4/24/2024	1:30 PM	0	0	0	0	0	0	0	0	0	0	0	0	0
4/24/2024	1:45 PM	0	0	0	0	0	0	0	0	0	0	0	0	0
4/24/2024	2:00 PM	0	0	0	0	0	0	0	0	0	0	0	0	0
4/24/2024	2:15 PM	0	0	0	0	0	0	0	0	0	0	0	0	0
4/24/2024	2:30 PM	0	0	0	0	0	0	0	0	0	0	0	0	0
4/24/2024	2:45 PM	0	0	0	0	0	0	0	0	0	0	0	0	0
4/24/2024	3:00 PM	0	0	0	0	0	0	0	0	0	0	0	0	0
4/24/2024	3:15 PM	0	0	0	0	0	0	0	0	0	0	0	0	0
4/24/2024	3:30 PM	0	0	0	0	0	0	0	0	0	0	0	0	0
4/24/2024	3:45 PM	0	0	0	0	0	0	0	0	0	0	0	0	0
4/24/2024	4:00 PM	0	0	0	0	0	0	0	0	0	0	0	0	0
4/24/2024	4:15 PM	0	0	0	0	0	0	0	0	0	0	0	0	0
4/24/2024	4:30 PM	0	0	0	0	0	0	0	0	0	0	0	0	0
4/24/2024	4:45 PM	0	0	0	0	0	0	0	0	0	0	0	0	0
4/24/2024	5:00 PM	0	0	0	0	0	0	0	0	0	0	0	0	0
4/24/2024	5:15 PM	0	0	0	0	0	0	0	0	0	0	0	0	0
4/24/2024	5:30 PM	0	0	0	0	0	0	0	0	0	0	0	0	0
4/24/2024	5:45 PM	0	0	0	0	0	0	0	0	0	0	0	0	0
4/24/2024	6:00 PM	0	0	0	0	0	0	0	0	0	0	0	0	0
4/24/2024	6:15 PM	0	0	0	0	0	0	0	0	0	0	0	0	0
4/24/2024	6:30 PM	0	0	0	0	0	0	0	0	0	0	0	0	0
4/24/2024	6:45 PM	0	0	0	0	0	0	0	0	0	0	0	0	0
4/24/2024	7:00 PM	0	0	0	0	0	0	0	0	0	0	0	0	0
4/24/2024	7:15 PM	0	0	0	0	0	0	0	0	0	0	0	0	0
4/24/2024	7:30 PM	0	0	0	0	0	0	0	0	0	0	0	0	0
4/24/2024	7:45 PM	0	0	0	0	0	0	0	0	0	0	0	0	0
4/24/2024	8:00 PM	0	0	0	0	0	0	0	0	0	0	0	0	0
4/24/2024	8:15 PM	0	0	0	0	0	0	0	0	0	0	0	0	0
4/24/2024	8:30 PM	0	0	0	0	0	0	0	0	0	0	0	0	0
4/24/2024	8:45 PM	0	0	0	0	0	0	0	0	0	0	0	0	0
4/24/2024	9:00 PM	0	0	0	0	0	0	0	0	0	0	0	0	0
4/24/2024	9:15 PM	0	0	0	0	0	0	0	0	0	0	0	0	0
4/24/2024	9:30 PM	0	0	0	0	0	0	0	0	0	0	0	0	0
4/24/2024	9:45 PM	0	0	0	0	0	0	0	0	0	0	0	0	0
4/24/2024	10:00 PM	0	0	0	0	0	0	0	0	0	0	0	0	0
4/24/2024	10:15 PM	0	0	0	0	0	0	0	0	0	0	0	0	0
4/24/2024	10:30 PM	0	0	0	0	0	0	0	0	0	0	0	0	0
4/24/2024	10:45 PM	0	0	0	0	0	0	0	0	0	0	0	0	0
4/24/2024	11:00 PM	0	0	0	0	0	0	0	0	0	0	0	0	0
4/24/2024	11:15 PM	0	0	0	0	0	0	0	0	0	0	0	0	0
4/24/2024	11:30 PM	0	0	0	0	0	0	0	0	0	0	0	0	0
4/24/2024	11:45 PM	0	0	0	0	0	0	0	0	0	0	0	0	0

4/25/2024	12:00 AM	0	0	0	0	0	0	0	0	0	0	0	0	0
4/25/2024	12:15 AM	0	0	0	0	0	0	0	0	0	0	0	0	0
4/25/2024	12:30 AM	0	0	0	0	0	0	0	0	0	0	0	0	0
4/25/2024	12:45 AM	0	0	0	0	0	0	0	0	0	0	0	0	0
4/25/2024	1:00 AM	0	0	0	0	0	0	0	0	0	0	0	0	0
4/25/2024	1:15 AM	0	0	0	0	0	0	0	0	0	0	0	0	0
4/25/2024	1:30 AM	0	0	0	0	0	0	0	0	0	0	0	0	0
4/25/2024	1:45 AM	0	0	0	0	0	0	0	0	0	0	0	0	0
4/25/2024	2:00 AM	0	0	0	0	0	0	0	0	0	0	0	0	0
4/25/2024	2:15 AM	0	0	0	0	0	0	0	0	0	0	0	0	0
4/25/2024	2:30 AM	0	0	0	0	0	0	0	0	0	0	0	0	0
4/25/2024	2:45 AM	0	0	0	0	0	0	0	0	0	0	0	0	0
4/25/2024	3:00 AM	0	0	0	0	0	0	0	0	0	0	0	0	0
4/25/2024	3:15 AM	0	0	0	0	0	0	0	0	0	0	0	0	0
4/25/2024	3:30 AM	0	0	0	0	0	0	0	0	0	0	0	0	0
4/25/2024	3:45 AM	0	0	0	0	0	0	0	0	0	0	0	0	0
4/25/2024	4:00 AM	0	0	0	0	0	0	0	0	0	0	0	0	0
4/25/2024	4:15 AM	0	0	0	0	0	0	0	0	0	0	0	0	0
4/25/2024	4:30 AM	0	0	0	0	0	0	0	0	0	0	0	0	0
4/25/2024	4:45 AM	0	0	0	0	0	0	0	0	0	0	0	0	0
4/25/2024	5:00 AM	0	0	0	0	0	0	0	0	0	0	0	0	0
4/25/2024	5:15 AM	0	0	0	0	0	0	0	0	0	0	0	0	0
4/25/2024	5:30 AM	0	0	0	0	0	0	0	0	0	0	0	0	0
4/25/2024	5:45 AM	0	0	0	0	0	0	0	0	0	0	0	0	0
4/25/2024	6:00 AM	0	0	0	0	0	0	0	0	0	0	0	0	0
4/25/2024	6:15 AM	0	0	0	0	0	0	0	0	0	0	0	0	0
4/25/2024	6:30 AM	0	0	0	0	0	0	0	0	0	0	0	0	0
4/25/2024	6:45 AM	0	0	0	0	0	0	0	0	0	0	0	0	0
4/25/2024	7:00 AM	0	0	0	0	0	0	0	0	0	0	0	0	0
4/25/2024	7:15 AM	0	0	0	0	0	0	0	0	0	0	0	0	0
4/25/2024	7:30 AM	0	0	0	0	0	0	0	0	0	0	0	0	0
4/25/2024	7:45 AM	0	0	0	0	0	0	0	0	0	0	0	0	0
4/25/2024	8:00 AM	0	0	0	0	0	0	0	0	0	0	0	0	0
4/25/2024	8:15 AM	0	0	0	0	0	0	0	0	0	0	0	0	0
4/25/2024	8:30 AM	0	0	0	0	0	0	0	0	0	0	0	0	0
4/25/2024	8:45 AM	0	0	0	0	0	0	0	0	0	0	0	0	0
4/25/2024	9:00 AM	0	0	0	0	0	0	0	0	0	0	0	0	0
4/25/2024	9:15 AM	0	0	0	0	0	0	0	0	0	0	0	0	0
4/25/2024	9:30 AM	0	0	0	0	0	0	0	0	0	0	0	0	0
4/25/2024	9:45 AM	0	0	0	0	0	0	0	0	0	0	0	0	0
4/25/2024	10:00 AM	0	0	0	0	0	0	0	0	0	0	0	0	0
4/25/2024	10:15 AM	0	0	0	0	0	0	0	0	0	0	0	0	0
4/25/2024	10:30 AM	0	0	0	0	0	0	0	0	0	0	0	0	0
4/25/2024	10:45 AM	0	0	0	0	0	0	0	0	0	0	0	0	0
4/25/2024	11:00 AM	0	0	0	0	0	0	0	0	0	0	0	0	0
4/25/2024	11:15 AM	0	0	0	0	0	0	0	0	0	0	0	0	0
4/25/2024	11:30 AM	0	0	0	0	0	0	0	0	0	0	0	0	0
4/25/2024	11:45 AM	0	0	0	0	0	0	0	0	0	0	0	0	0
4/25/2024	12:00 PM	0	0	0	0	0	0	0	0	0	0	0	0	0
4/25/2024	12:15 PM	0	0	0	0	0	0	0	0	0	0	0	0	0
4/25/2024	12:30 PM	0	0	0	0	0	0	0	0	0	0	0	0	0
4/25/2024	12:45 PM	0	0	0	0	0	0	0	0	0	0	0	0	0
4/25/2024	1:00 PM	0	0	0	0	0	0	0	0	0	0	0	0	0
4/25/2024	1:15 PM	0	0	0	0	0	0	0	0	0	0	0	0	0
4/25/2024	1:30 PM	0	0	0	0	0	0	0	0	0	0	0	0	0
4/25/2024	1:45 PM	0	0	0	0	0	0	0	0	0	0	0	0	0
4/25/2024	2:00 PM	0	0	0	0	0	0	0	0	0	0	0	0	0
4/25/2024	2:15 PM	0	0	0	0	0	0	0	0	0	0	0	0	0
4/25/2024	2:30 PM	0	0	0	0	0	0	0	0	0	0	0	0	0
4/25/2024	2:45 PM	0	0	0	0	0	0	0	0	0	0	0	0	0
4/25/2024	3:00 PM	0	0	0	0	0	0	0	0	0	0	0	0	0
4/25/2024	3:15 PM	0	0	0	0	0	0	0	0	0	0	0	0	0
4/25/2024	3:30 PM	0	0	0	0	0	0	0	0	0	0	0	0	0
4/25/2024	3:45 PM	0	0	0	0	0	0	0	0	0	0	0	0	0
4/25/2024	4:00 PM	0	0	0	0	0	0	0	0	0	0	0	0	0
4/25/2024	4:15 PM	0	0	0	0	0	0	0	0	0	0	0	0	0
4/25/2024	4:30 PM	0	0	0	0	0	0	0	0	0	0	0	0	0
4/25/2024	4:45 PM	0	0	0	0	0	0	0	0	0	0	0	0	0
4/25/2024	5:00 PM	0	0	0	0	0	0	0	0	0	0	0	0	0
4/25/2024	5:15 PM	0	0	0	0	0	0	0	0	0	0	0	0	0
4/25/2024	5:30 PM	0	0	0	0	0	0	0	0	0	0	0	0	0
4/25/2024	5:45 PM	0	0	0	0	0	0	0	0	0	0	0	0	0
4/25/2024	6:00 PM	0	0	0	0	0	0	0	0	0	0	0	0	0
4/25/2024	6:15 PM	0	0	0	0	0	0	0	0	0	0	0	0	0
4/25/2024	6:30 PM	0	0	0	0	0	0	0	0	0	0	0	0	0
4/25/2024	6:45 PM	0	0	0	0	0	0	0	0	0	0	0	0	0
4/25/2024	7:00 PM	0	0	0	0	0	0	0	0	0	0	0	0	0
4/25/2024	7:15 PM	0	0	0	0	0	0	0	0	0	0	0	0	0
4/25/2024	7:30 PM	0	0	0	0	0	0	0	0	0	0	0	0	0
4/25/2024	7:45 PM	0	0	0	0	0	0	0	0	0	0	0	0	0
4/25/2024	8:00 PM	0	0	0	0	0	0	0	0	0	0	0	0	0
4/25/2024	8:15 PM	0	0	0	0	0	0	0	0	0	0	0	0	0
4/25/2024	8:30 PM	0	0	0	0	0	0	0	0	0	0	0	0	0
4/25/2024	8:45 PM	0	0	0	0	0	0	0	0	0	0	0	0	0
4/25/2024	9:00 PM	0	0	0	0	0	0	0	0	0	0	0	0	0
4/25/2024	9:15 PM	0	0	0	0	0	0	0	0	0	0	0	0	0
4/25/2024	9:30 PM	0	0	0	0	0	0	0	0	0	0	0	0	0
4/25/2024	9:45 PM	0	0	0	0	0	0	0	0	0	0	0	0	0
4/25/2024	10:00 PM	0	0	0	0	0	0	0	0	0	0	0	0	0
4/25/2024	10:15 PM	0	0	0	0	0	0	0	0	0	0	0	0	0
4/25/2024	10:30 PM	0	0	0	0	0	0	0	0	0	0	0	0	0
4/25/2024	10:45 PM	0	0	0	0	0	0	0	0	0	0	0	0	0
4/25/2024	11:00 PM	0	0	0	0	0	0	0	0	0	0	0	0	0
4/25/2024	11:15 PM	0	0	0	0	0	0	0	0	0	0	0	0	0
4/25/2024	11:30 PM	0	0	0	0	0	0	0	0	0	0	0	0	0
4/25/2024	11:45 PM	0	0	0	0	0	0	0	0	0	0	0	0	0

4/26/2024	12:00 AM	0	0	0	0	0	0	0	0	0	0	0	0	0
4/26/2024	12:15 AM	0	0	0	0	0	0	0	0	0	0	0	0	0
4/26/2024	12:30 AM	0	0	0	0	0	0	0	0	0	0	0	0	0
4/26/2024	12:45 AM	0	0	0	0	0	0	0	0	0	0	0	0	0
4/26/2024	1:00 AM	0	0	0	0	0	0	0	0	0	0	0	0	0
4/26/2024	1:15 AM	0	0	0	0	0	0	0	0	0	0	0	0	0
4/26/2024	1:30 AM	0	0	0	0	0	0	0	0	0	0	0	0	0
4/26/2024	1:45 AM	0	0	0	0	0	0	0	0	0	0	0	0	0
4/26/2024	2:00 AM	0	0	0	0	0	0	0	0	0	0	0	0	0
4/26/2024	2:15 AM	0	0	0	0	0	0	0	0	0	0	0	0	0
4/26/2024	2:30 AM	0	0	0	0	0	0	0	0	0	0	0	0	0
4/26/2024	2:45 AM	0	0	0	0	0	0	0	0	0	0	0	0	0
4/26/2024	3:00 AM	0	0	0	0	0	0	0	0	0	0	0	0	0
4/26/2024	3:15 AM	0	0	0	0	0	0	0	0	0	0	0	0	0
4/26/2024	3:30 AM	0	0	0	0	0	0	0	0	0	0	0	0	0
4/26/2024	3:45 AM	0	0	0	0	0	0	0	0	0	0	0	0	0
4/26/2024	4:00 AM	0	0	0	0	0	0	0	0	0	0	0	0	0
4/26/2024	4:15 AM	0	0	0	0	0	0	0	0	0	0	0	0	0
4/26/2024	4:30 AM	0	0	0	0	0	0	0	0	0	0	0	0	0
4/26/2024	4:45 AM	0	0	0	0	0	0	0	0	0	0	0	0	0
4/26/2024	5:00 AM	0	0	0	0	0	0	0	0	0	0	0	0	0
4/26/2024	5:15 AM	0	0	0	0	0	0	0	0	0	0	0	0	0
4/26/2024	5:30 AM	0	0	0	0	0	0	0	0	0	0	0	0	0
4/26/2024	5:45 AM	0	0	0	0	0	0	0	0	0	0	0	0	0
4/26/2024	6:00 AM	0	0	0	0	0	0	0	0	0	0	0	0	0
4/26/2024	6:15 AM	0	0	0	0	0	0	0	0	0	0	0	0	0
4/26/2024	6:30 AM	0	0	0	0	0	0	0	0	0	0	0	0	0
4/26/2024	6:45 AM	0	0	0	0	0	0	0	0	0	0	0	0	0
4/26/2024	7:00 AM	0	0	0	0	0	0	0	0	0	0	0	0	0
4/26/2024	7:15 AM	0	0	0	0	0	0	0	0	0	0	0	0	0
4/26/2024	7:30 AM	0	0	0	0	0	0	0	0	0	0	0	0	0
4/26/2024	7:45 AM	0	0	0	0	0	0	0	0	0	0	0	0	0
4/26/2024	8:00 AM	0	0	0	0	0	0	0	0	0	0	0	0	0
4/26/2024	8:15 AM	0	0	0	0	0	0	0	0	0	0	0	0	0
4/26/2024	8:30 AM	0	0	0	0	0	0	0	0	0	0	0	0	0
4/26/2024	8:45 AM	0	0	0	0	0	0	0	0	0	0	0	0	0
4/26/2024	9:00 AM	0	0	0	0	0	0	0	0	0	0	0	0	0
4/26/2024	9:15 AM	0	0	0	0	0	0	0	0	0	0	0	0	0
4/26/2024	9:30 AM	0	0	0	0	0	0	0	0	0	0	0	0	0
4/26/2024	9:45 AM	0	0	0	0	0	0	0	0	0	0	0	0	0
4/26/2024	10:00 AM	0	0	0	0	0	0	0	0	0	0	0	0	0
4/26/2024	10:15 AM	0	0	0	0	0	0	0	0	0	0	0	0	0
4/26/2024	10:30 AM	0	0	0	0	0	0	0	0	0	0	0	0	0
4/26/2024	10:45 AM	0	0	0	0	0	0	0	0	0	0	0	0	0
4/26/2024	11:00 AM	0	0	0	0	0	0	0	0	0	0	0	0	0
4/26/2024	11:15 AM	0	0	0	0	0	0	0	0	0	0	0	0	0
4/26/2024	11:30 AM	0	0	0	0	0	0	0	0	0	0	0	0	0
4/26/2024	11:45 AM	0	0	0	0	0	0	0	0	0	0	0	0	0
4/26/2024	12:00 PM	0	0	0	0	0	0	0	0	0	0	0	0	0
4/26/2024	12:15 PM	0	0	0	0	0	0	0	0	0	0	0	0	0
4/26/2024	12:30 PM	0	0	0	0	0	0	0	0	0	0	0	0	0
4/26/2024	12:45 PM	0	0	0	0	0	0	0	0	0	0	0	0	0
4/26/2024	1:00 PM	0	0	0	0	0	0	0	0	0	0	0	0	0
4/26/2024	1:15 PM	0	0	0	0	0	0	0	0	0	0	0	0	0
4/26/2024	1:30 PM	0	0	0	0	0	0	0	0	0	0	0	0	0
4/26/2024	1:45 PM	0	0	0	0	0	0	0	0	0	0	0	0	0
4/26/2024	2:00 PM	0	0	0	0	0	0	0	0	0	0	0	0	0
4/26/2024	2:15 PM	0	0	0	0	0	0	0	0	0	0	0	0	0
4/26/2024	2:30 PM	0	0	0	0	0	0	0	0	0	0	0	0	0
4/26/2024	2:45 PM	0	0	0	0	0	0	0	0	0	0	0	0	0
4/26/2024	3:00 PM	0	0	0	0	0	0	0	0	0	0	0	0	0
4/26/2024	3:15 PM	0	0	0	0	0	0	0	0	0	0	0	0	0
4/26/2024	3:30 PM	0	0	0	0	0	0	0	0	0	0	0	0	0
4/26/2024	3:45 PM	0	0	0	0	0	0	0	0	0	0	0	0	0
4/26/2024	4:00 PM	0	0	0	0	0	0	0	0	0	0	0	0	0
4/26/2024	4:15 PM	0	0	0	0	0	0	0	0	0	0	0	0	0
4/26/2024	4:30 PM	0	0	0	0	0	0	0	0	0	0	0	0	0
4/26/2024	4:45 PM	0	0	0	0	0	0	0	0	0	0	0	0	0
4/26/2024	5:00 PM	0	0	0	0	0	0	0	0	0	0	0	0	0
4/26/2024	5:15 PM	0	0	0	0	0	0	0	0	0	0	0	0	0
4/26/2024	5:30 PM	0	0	0	0	0	0	0	0	0	0	0	0	0
4/26/2024	5:45 PM	0	0	0	0	0	0	0	0	0	0	0	0	0
4/26/2024	6:00 PM	0	0	0	0	0	0	0	0	0	0	0	0	0
4/26/2024	6:15 PM	0	0	0	0	0	0	0	0	0	0	0	0	0
4/26/2024	6:30 PM	0	0	0	0	0	0	0	0	0	0	0	0	0
4/26/2024	6:45 PM	0	0	0	0	0	0	0	0	0	0	0	0	0
4/26/2024	7:00 PM	0	0	0	0	0	0	0	0	0	0	0	0	0
4/26/2024	7:15 PM	0	0	0	0	0	0	0	0	0	0	0	0	0
4/26/2024	7:30 PM	0	0	0	0	0	0	0	0	0	0	0	0	0
4/26/2024	7:45 PM	0	0	0	0	0	0	0	0	0	0	0	0	0
4/26/2024	8:00 PM	0	0	0	0	0	0	0	0	0	0	0	0	0
4/26/2024	8:15 PM	0	0	0	0	0	0	0	0	0	0	0	0	0
4/26/2024	8:30 PM	0	0	0	0	0	0	0	0	0	0	0	0	0
4/26/2024	8:45 PM	0	0	0	0	0	0	0	0	0	0	0	0	0
4/26/2024	9:00 PM	0	0	0	0	0	0	0	0	0	0	0	0	0
4/26/2024	9:15 PM	0	0	0	0	0	0	0	0	0	0	0	0	0
4/26/2024	9:30 PM	0	0	0	0	0	0	0	0	0	0	0	0	0
4/26/2024	9:45 PM	0	0	0	0	0	0	0	0	0	0	0	0	0
4/26/2024	10:00 PM	0	0	0	0	0	0	0	0	0	0	0	0	0
4/26/2024	10:15 PM	0	0	0	0	0	0	0	0	0	0	0	0	0
4/26/2024	10:30 PM	0	0	0	0	0	0	0	0	0	0	0	0	0
4/26/2024	10:45 PM	0	0	0	0	0	0	0	0	0	0	0	0	0
4/26/2024	11:00 PM	0	0	0	0	0	0	0	0	0	0	0	0	0
4/26/2024	11:15 PM	0	0	0	0	0	0	0	0	0	0	0	0	0
4/26/2024	11:30 PM	0	0	0	0	0	0	0	0	0	0	0	0	0
4/26/2024	11:45 PM	0	0	0	0	0	0	0	0	0	0	0	0	0

4/27/2024	12:00 AM	0	0	0	0	0	0	0	0	0	0	0	0	0
4/27/2024	12:15 AM	0	0	0	0	0	0	0	0	0	0	0	0	0
4/27/2024	12:30 AM	0	0	0	0	0	0	0	0	0	0	0	0	0
4/27/2024	12:45 AM	0	0	0	0	0	0	0	0	0	0	0	0	0
4/27/2024	1:00 AM	0	0	0	0	0	0	0	0	0	0	0	0	0
4/27/2024	1:15 AM	0	0	0	0	0	0	0	0	0	0	0	0	0
4/27/2024	1:30 AM	0	0	0	0	0	0	0	0	0	0	0	0	0
4/27/2024	1:45 AM	0	0	0	0	0	0	0	0	0	0	0	0	0
4/27/2024	2:00 AM	0	0	0	0	0	0	0	0	0	0	0	0	0
4/27/2024	2:15 AM	0	0	0	0	0	0	0	0	0	0	0	0	0
4/27/2024	2:30 AM	0	0	0	0	0	0	0	0	0	0	0	0	0
4/27/2024	2:45 AM	0	0	0	0	0	0	0	0	0	0	0	0	0
4/27/2024	3:00 AM	0	0	0	0	0	0	0	0	0	0	0	0	0
4/27/2024	3:15 AM	0	0	0	0	0	0	0	0	0	0	0	0	0
4/27/2024	3:30 AM	0	0	0	0	0	0	0	0	0	0	0	0	0
4/27/2024	3:45 AM	0	0	0	0	0	0	0	0	0	0	0	0	0
4/27/2024	4:00 AM	0	0	0	0	0	0	0	0	0	0	0	0	0
4/27/2024	4:15 AM	0	0	0	0	0	0	0	0	0	0	0	0	0
4/27/2024	4:30 AM	0	0	0	0	0	0	0	0	0	0	0	0	0
4/27/2024	4:45 AM	0	0	0	0	0	0	0	0	0	0	0	0	0
4/27/2024	5:00 AM	0	0	0	0	0	0	0	0	0	0	0	0	0
4/27/2024	5:15 AM	0	0	0	0	0	0	0	0	0	0	0	0	0
4/27/2024	5:30 AM	0	0	0	0	0	0	0	0	0	0	0	0	0
4/27/2024	5:45 AM	0	0	0	0	0	0	0	0	0	0	0	0	0
4/27/2024	6:00 AM	0	0	0	0	0	0	0	0	0	0	0	0	0
4/27/2024	6:15 AM	0	0	0	0	0	0	0	0	0	0	0	0	0
4/27/2024	6:30 AM	0	0	0	0	0	0	0	0	0	0	0	0	0
4/27/2024	6:45 AM	0	0	0	0	0	0	0	0	0	0	0	0	0
4/27/2024	7:00 AM	0	0	0	0	0	0	0	0	0	0	0	0	0
4/27/2024	7:15 AM	0	0	0	0	0	0	0	0	0	0	0	0	0
4/27/2024	7:30 AM	0	0	0	0	0	0	0	0	0	0	0	0	0
4/27/2024	7:45 AM	0	0	0	0	0	0	0	0	0	0	0	0	0
4/27/2024	8:00 AM	0	0	0	0	0	0	0	0	0	0	0	0	0
4/27/2024	8:15 AM	0	0	0	0	0	0	0	0	0	0	0	0	0
4/27/2024	8:30 AM	0	0	0	0	0	0	0	0	0	0	0	0	0
4/27/2024	8:45 AM	0	0	0	0	0	0	0	0	0	0	0	0	0
4/27/2024	9:00 AM	0	0	0	0	0	0	0	0	0	0	0	0	0
4/27/2024	9:15 AM	0	0	0	0	0	0	0	0	0	0	0	0	0
4/27/2024	9:30 AM	0	0	0	0	0	0	0	0	0	0	0	0	0
4/27/2024	9:45 AM	0	0	0	0	0	0	0	0	0	0	0	0	0
4/27/2024	10:00 AM	0	0	0	0	0	0	0	0	0	0	0	0	0
4/27/2024	10:15 AM	0	0	0	0	0	0	0	0	0	0	0	0	0
4/27/2024	10:30 AM	0	0	0	0	0	0	0	0	0	0	0	0	0
4/27/2024	10:45 AM	0	0	0	0	0	0	0	0	0	0	0	0	0
4/27/2024	11:00 AM	0	0	0	0	0	0	0	0	0	0	0	0	0
4/27/2024	11:15 AM	0	0	0	0	0	0	0	0	0	0	0	0	0
4/27/2024	11:30 AM	0	0	0	0	0	0	0	0	0	0	0	0	0
4/27/2024	11:45 AM	0	0	0	0	0	0	0	0	0	0	0	0	0
4/27/2024	12:00 PM	0	0	0	0	0	0	0	0	0	0	0	0	0
4/27/2024	12:15 PM	0	0	0	0	0	0	0	0	0	0	0	0	0
4/27/2024	12:30 PM	0	0	0	0	0	0	0	0	0	0	0	0	0
4/27/2024	12:45 PM	0	0	0	0	0	0	0	0	0	0	0	0	0
4/27/2024	1:00 PM	0	0	0	0	0	0	0	0	0	0	0	0	0
4/27/2024	1:15 PM	0	0	0	0	0	0	0	0	0	0	0	0	0
4/27/2024	1:30 PM	0	0	0	0	0	0	0	0	0	0	0	0	0
4/27/2024	1:45 PM	0	0	0	0	0	0	0	0	0	0	0	0	0
4/27/2024	2:00 PM	0	0	0	0	0	0	0	0	0	0	0	0	0
4/27/2024	2:15 PM	0	0	0	0	0	0	0	0	0	0	0	0	0
4/27/2024	2:30 PM	0	0	0	0	0	0	0	0	0	0	0	0	0
4/27/2024	2:45 PM	0	0	0	0	0	0	0	0	0	0	0	0	0
4/27/2024	3:00 PM	0	0	0	0	0	0	0	0	0	0	0	0	0
4/27/2024	3:15 PM	0	0	0	0	0	0	0	0	0	0	0	0	0
4/27/2024	3:30 PM	0	0	0	0	0	0	0	0	0	0	0	0	0
4/27/2024	3:45 PM	0	0	0	0	0	0	0	0	0	0	0	0	0
4/27/2024	4:00 PM	0	0	0	0	0	0	0	0	0	0	0	0	0
4/27/2024	4:15 PM	0	0	0	0	0	0	0	0	0	0	0	0	0
4/27/2024	4:30 PM	0	0	0	0	0	0	0	0	0	0	0	0	0
4/27/2024	4:45 PM	0	0	0	0	0	0	0	0	0	0	0	0	0
4/27/2024	5:00 PM	0	0	0	0	0	0	0	0	0	0	0	0	0
4/27/2024	5:15 PM	0	0	0	0	0	0	0	0	0	0	0	0	0
4/27/2024	5:30 PM	0	0	0	0	0	0	0	0	0	0	0	0	0
4/27/2024	5:45 PM	0	0	0	0	0	0	0	0	0	0	0	0	0
4/27/2024	6:00 PM	0	0	0	0	0	0	0	0	0	0	0	0	0
4/27/2024	6:15 PM	0	0	0	0	0	0	0	0	0	0	0	0	0
4/27/2024	6:30 PM	0	0	0	0	0	0	0	0	0	0	0	0	0
4/27/2024	6:45 PM	0	0	0	0	0	0	0	0	0	0	0	0	0
4/27/2024	7:00 PM	0	0	0	0	0	0	0	0	0	0	0	0	0
4/27/2024	7:15 PM	0	0	0	0	0	0	0	0	0	0	0	0	0
4/27/2024	7:30 PM	0	0	0	0	0	0	0	0	0	0	0	0	0
4/27/2024	7:45 PM	0	0	0	0	0	0	0	0	0	0	0	0	0
4/27/2024	8:00 PM	0	0	0	0	0	0	0	0	0	0	0	0	0
4/27/2024	8:15 PM	0	0	0	0	0	0	0	0	0	0	0	0	0
4/27/2024	8:30 PM	0	0	0	0	0	0	0	0	0	0	0	0	0
4/27/2024	8:45 PM	0	0	0	0	0	0	0	0	0	0	0	0	0
4/27/2024	9:00 PM	0	0	0	0	0	0	0	0	0	0	0	0	0
4/27/2024	9:15 PM	0	0	0	0	0	0	0	0	0	0	0	0	0
4/27/2024	9:30 PM	0	0	0	0	0	0	0	0	0	0	0	0	0
4/27/2024	9:45 PM	0	0	0	0	0	0	0	0	0	0	0	0	0
4/27/2024	10:00 PM	0	0	0	0	0	0	0	0	0	0	0	0	0
4/27/2024	10:15 PM	0	0	0	0	0	0	0	0	0	0	0	0	0
4/27/2024	10:30 PM	0	0	0	0	0	0	0	0	0	0	0	0	0
4/27/2024	10:45 PM	0	0	0	0	0	0	0	0	0	0	0	0	0
4/27/2024	11:00 PM	0	0	0	0	0	0	0	0	0	0	0	0	0
4/27/2024	11:15 PM	0	0	0	0	0	0	0	0	0	0	0	0	0
4/27/2024	11:30 PM	0	0	0	0	0	0	0	0	0	0	0	0	0
4/27/2024	11:45 PM	0	0	0	0	0	0	0	0	0	0	0	0	0

EB
File Name:
Start Date: 4/21/2024
Start Time: 0
Site Code: 76 Lane 1 EB
Station ID: 1
Location 1: I-20, east of Browwing Rd
Location 2:

Date	Time	1	2	3	4	5	6	7	8	9	10	11	12	13
4/21/2024	12:00 AM	0	192	32	0	0	0	0	0	1	0	0	0	0
4/21/2024	12:15 AM	0	186	27	0	0	0	0	0	1	0	0	0	0
4/21/2024	12:30 AM	0	156	23	0	0	0	0	0	0	0	0	0	0
4/21/2024	12:45 AM	0	140	25	0	0	0	0	0	1	0	0	0	0
4/21/2024	1:00 AM	0	117	20	0	0	0	0	0	1	0	0	0	0
4/21/2024	1:15 AM	0	101	20	0	1	0	0	0	1	0	0	0	0
4/21/2024	1:30 AM	0	86	17	0	1	0	0	0	1	0	0	0	0
4/21/2024	1:45 AM	0	63	13	0	1	0	0	0	0	0	0	0	0
4/21/2024	2:00 AM	0	48	12	0	1	0	0	0	1	0	0	0	0
4/21/2024	2:15 AM	0	53	16	0	0	0	0	0	1	0	0	0	0
4/21/2024	2:30 AM	0	52	14	0	0	0	0	0	1	0	0	0	0
4/21/2024	2:45 AM	0	50	12	0	0	0	0	0	1	0	0	0	0
4/21/2024	3:00 AM	0	47	12	0	0	0	0	0	0	0	0	0	0
4/21/2024	3:15 AM	0	39	8	0	0	0	0	0	0	0	0	0	0
4/21/2024	3:30 AM	0	36	9	0	0	0	0	0	0	0	0	0	0
4/21/2024	3:45 AM	0	38	9	0	0	0	0	0	0	0	0	0	0
4/21/2024	4:00 AM	0	35	7	0	0	0	0	0	0	0	0	0	0
4/21/2024	4:15 AM	0	30	5	0	0	0	0	0	0	0	0	0	0
4/21/2024	4:30 AM	0	35	7	0	0	0	0	0	0	0	0	0	0
4/21/2024	4:45 AM	0	35	8	0	0	0	0	0	0	0	0	0	0
4/21/2024	5:00 AM	0	49	12	0	0	0	0	0	0	0	0	0	0
4/21/2024	5:15 AM	0	60	17	0	0	0	0	0	1	0	0	0	0
4/21/2024	5:30 AM	0	63	21	0	0	0	0	0	1	0	0	0	0
4/21/2024	5:45 AM	0	69	20	0	0	0	0	0	1	0	0	0	0
4/21/2024	6:00 AM	0	67	15	0	1	0	0	0	1	0	0	0	0
4/21/2024	6:15 AM	0	81	18	0	1	0	0	0	0	0	0	0	0
4/21/2024	6:30 AM	1	103	20	0	1	0	0	0	0	0	0	0	0
4/21/2024	6:45 AM	1	131	25	0	3	0	0	0	0	0	0	0	0
4/21/2024	7:00 AM	1	169	41	0	2	0	0	0	0	0	0	0	0
4/21/2024	7:15 AM	1	175	41	0	2	0	0	0	0	0	0	0	0
4/21/2024	7:30 AM	0	188	41	0	2	0	0	0	0	0	0	0	0
4/21/2024	7:45 AM	1	196	47	0	0	0	1	0	0	0	0	0	0
4/21/2024	8:00 AM	1	201	42	0	0	0	1	0	0	0	0	0	0
4/21/2024	8:15 AM	5	235	43	0	0	0	1	0	0	0	0	0	0
4/21/2024	8:30 AM	5	258	40	0	2	0	1	0	0	0	0	0	0
4/21/2024	8:45 AM	4	292	43	0	2	0	0	0	1	0	0	0	0
4/21/2024	9:00 AM	4	331	54	0	2	0	0	0	3	0	0	0	0
4/21/2024	9:15 AM	20	400	63	0	3	0	0	0	3	0	0	0	0
4/21/2024	9:30 AM	20	430	72	0	2	0	0	0	3	0	0	0	0
4/21/2024	9:45 AM	22	462	75	0	3	0	0	0	2	0	0	0	0
4/21/2024	10:00 AM	36	458	82	1	3	0	0	0	0	0	0	0	0
4/21/2024	10:15 AM	28	416	91	1	2	0	0	0	0	0	0	0	0
4/21/2024	10:30 AM	28	421	98	1	2	0	0	0	0	0	0	0	0
4/21/2024	10:45 AM	26	443	111	1	1	0	0	0	0	0	0	0	0
4/21/2024	11:00 AM	12	487	118	0	1	0	0	0	0	0	0	0	0
4/21/2024	11:15 AM	0	534	117	0	1	0	0	0	0	0	0	0	0
4/21/2024	11:30 AM	0	568	124	1	0	0	0	1	1	0	0	0	0
4/21/2024	11:45 AM	1	602	143	1	0	0	0	1	1	0	0	0	0
4/21/2024	12:00 PM	1	612	155	2	0	0	0	2	2	0	0	0	0
4/21/2024	12:15 PM	1	630	164	2	0	0	0	2	2	0	0	0	0
4/21/2024	12:30 PM	1	641	175	1	0	0	0	1	2	0	0	0	0
4/21/2024	12:45 PM	1	672	148	1	0	0	0	2	2	0	0	0	0
4/21/2024	1:00 PM	1	723	131	0	0	0	0	1	1	0	0	0	0
4/21/2024	1:15 PM	1	714	126	1	0	0	0	1	1	0	0	0	0
4/21/2024	1:30 PM	1	741	141	1	0	0	0	1	0	0	0	0	0
4/21/2024	1:45 PM	7	729	154	2	0	0	0	0	0	0	0	0	0
4/21/2024	2:00 PM	8	701	177	2	0	0	0	1	0	0	0	0	0
4/21/2024	2:15 PM	8	703	188	1	0	0	0	1	0	0	0	0	0
4/21/2024	2:30 PM	8	664	162	1	0	0	0	1	0	0	0	0	0
4/21/2024	2:45 PM	1	644	168	0	0	0	0	2	0	0	0	0	0
4/21/2024	3:00 PM	0	616	142	0	0	1	0	1	0	0	0	0	0
4/21/2024	3:15 PM	4	665	147	0	0	1	0	1	0	0	0	0	0
4/21/2024	3:30 PM	4	710	157	0	0	1	0	2	0	0	0	0	0
4/21/2024	3:45 PM	5	751	164	0	1	1	0	2	0	0	0	0	0
4/21/2024	4:00 PM	5	801	178	0	2	0	0	2	0	0	0	0	0
4/21/2024	4:15 PM	1	790	166	0	2	0	0	4	0	0	0	0	0
4/21/2024	4:30 PM	1	778	154	1	2	0	0	3	0	0	0	0	0
4/21/2024	4:45 PM	0	752	137	1	1	0	0	2	0	0	0	0	0
4/21/2024	5:00 PM	0	729	122	1	0	0	0	2	0	0	0	0	0
4/21/2024	5:15 PM	1	720	119	1	0	1	0	0	0	0	0	0	0
4/21/2024	5:30 PM	1	711	110	0	0	1	0	2	0	0	0	0	0
4/21/2024	5:45 PM	1	661	101	0	0	1	0	2	1	0	0	0	0
4/21/2024	6:00 PM	1	598	89	0	0	1	0	2	2	0	0	0	0
4/21/2024	6:15 PM	0	612	85	1	0	0	0	2	2	0	0	0	0
4/21/2024	6:30 PM	0	612	87	1	0	0	0	0	2	0	0	0	0
4/21/2024	6:45 PM	0	627	87	1	0	0	0	0	2	0	0	0	0
4/21/2024	7:00 PM	0	660	97	2	0	0	0	0	1	0	0	0	0
4/21/2024	7:15 PM	0	584	93	1	0	0	0	3	5	0	0	0	0
4/21/2024	7:30 PM	0	545	101	1	0	0	0	4	7	0	1	0	0
4/21/2024	7:45 PM	0	517	94	1	0	0	0	5	10	0	1	0	0
4/21/2024	8:00 PM	0	499	88	0	0	0	0	5	14	0	1	0	0
4/21/2024	8:15 PM	0	478	71	0	0	0	0	2	11	0	1	0	0
4/21/2024	8:30 PM	0	455	53	0	0	0	0	1	11	0	0	0	0
4/21/2024	8:45 PM	0	452	44	0	1	0	0	3	11	0	1	0	0
4/21/2024	9:00 PM	0	454	38	0	1	0	0	4	14	0	1	0	0
4/21/2024	9:15 PM	0	463	43	0	1	0	0	4	15	0	1	0	0
4/21/2024	9:30 PM	0	481	42	0	1	0	0	4	13	0	1	0	0
4/21/2024	9:45 PM	0	455	49	0	0	0	0	1	12	0	0	0	0
4/21/2024	10:00 PM	0	432	54	0	0	0	0	0	6	0	0	0	0
4/21/2024	10:15 PM	0	366	53	1	0	0	0	1	6	0	0	0	0
4/21/2024	10:30 PM	0	279	48	1	0	0	0	1	6	0	0	0	0
4/21/2024	10:45 PM	0	236	41	1	0	0	0	1	7	0	0	0	0
4/21/2024	11:00 PM	0	190	28	1	0	0	0	1	6	0	0	0	0
4/21/2024	11:15 PM	0	160	22	0	0	0	0	0	4	0	0	0	0
4/21/2024	11:30 PM	0	138	22	0	0	0	0	0	4	0	0	0	0
4/21/2024	11:45 PM	0	101	22	0	0	0	0	0	0	0	0	0	0

4/22/2024	12:00 AM	0	54	21	0	0	0	0	0	0	0	0	0
4/22/2024	12:15 AM	0	50	19	0	0	0	0	0	0	0	0	0
4/22/2024	12:30 AM	0	50	19	0	0	0	0	0	0	0	0	0
4/22/2024	12:45 AM	0	42	13	0	0	0	0	0	0	0	0	0
4/22/2024	1:00 AM	0	40	12	0	0	0	0	0	0	0	0	0
4/22/2024	1:15 AM	0	38	11	0	0	0	0	0	0	0	0	0
4/22/2024	1:30 AM	0	36	9	0	0	0	0	0	0	0	0	0
4/22/2024	1:45 AM	0	33	8	0	0	0	0	0	0	0	0	0
4/22/2024	2:00 AM	0	30	7	0	0	0	0	0	0	0	0	0
4/22/2024	2:15 AM	0	31	8	0	0	0	0	0	0	0	0	0
4/22/2024	2:30 AM	0	33	10	0	0	0	0	0	0	0	0	0
4/22/2024	2:45 AM	0	40	14	0	0	0	0	0	0	0	0	0
4/22/2024	3:00 AM	0	44	15	0	0	0	0	0	0	0	0	0
4/22/2024	3:15 AM	0	47	15	0	0	0	0	0	0	0	0	0
4/22/2024	3:30 AM	0	50	16	0	0	0	0	0	0	0	0	0
4/22/2024	3:45 AM	0	53	18	0	0	0	0	0	0	0	0	0
4/22/2024	4:00 AM	0	70	26	0	0	0	0	0	0	0	0	0
4/22/2024	4:15 AM	0	87	35	0	0	0	0	0	0	0	0	0
4/22/2024	4:30 AM	0	100	38	0	0	0	0	0	0	0	0	0
4/22/2024	4:45 AM	0	119	42	0	0	0	0	0	0	0	0	0
4/22/2024	5:00 AM	0	130	44	0	0	0	0	0	0	0	0	0
4/22/2024	5:15 AM	0	143	47	0	0	0	0	0	0	0	0	0
4/22/2024	5:30 AM	0	170	59	0	0	0	0	0	0	0	0	0
4/22/2024	5:45 AM	0	207	76	0	1	0	0	0	0	0	0	0
4/22/2024	6:00 AM	0	266	97	0	1	1	0	0	1	0	0	0
4/22/2024	6:15 AM	1	446	155	0	1	1	0	0	1	0	0	0
4/22/2024	6:30 AM	1	665	209	0	2	1	0	0	2	0	1	0
4/22/2024	6:45 AM	1	859	259	0	2	1	0	0	2	0	1	0
4/22/2024	7:00 AM	3	989	304	0	3	1	0	0	2	0	1	0
4/22/2024	7:15 AM	2	1014	310	0	4	1	0	0	2	0	1	0
4/22/2024	7:30 AM	2	947	307	0	4	1	0	0	1	0	0	0
4/22/2024	7:45 AM	2	874	319	0	3	2	0	0	1	0	0	0
4/22/2024	8:00 AM	0	815	297	0	2	2	0	0	0	0	0	0
4/22/2024	8:15 AM	0	712	264	1	2	3	0	0	0	0	0	0
4/22/2024	8:30 AM	0	616	242	1	1	3	0	0	2	0	0	0
4/22/2024	8:45 AM	0	539	198	1	2	3	0	1	2	0	0	0
4/22/2024	9:00 AM	1	485	181	1	3	2	0	2	4	0	0	0
4/22/2024	9:15 AM	1	433	171	0	2	1	0	2	4	0	0	0
4/22/2024	9:30 AM	2	421	156	0	2	1	0	2	2	0	0	0
4/22/2024	9:45 AM	2	411	142	0	3	2	0	1	2	0	0	0
4/22/2024	10:00 AM	4	398	150	0	5	2	0	0	0	0	0	0
4/22/2024	10:15 AM	8	317	157	0	5	2	0	0	0	0	0	0
4/22/2024	10:30 AM	7	320	163	0	6	2	0	0	0	0	0	0
4/22/2024	10:45 AM	10	307	176	0	4	0	0	1	0	0	0	0
4/22/2024	11:00 AM	7	312	182	0	2	1	0	1	0	0	0	0
4/22/2024	11:15 AM	3	370	170	0	2	1	0	2	1	0	0	0
4/22/2024	11:30 AM	3	345	161	0	1	1	0	2	1	0	0	0
4/22/2024	11:45 AM	0	345	150	0	2	1	0	1	1	0	0	0
4/22/2024	12:00 PM	0	339	129	0	1	0	0	1	1	0	0	0
4/22/2024	12:15 PM	0	373	132	0	1	0	0	0	2	0	0	0
4/22/2024	12:30 PM	0	409	134	0	1	0	0	0	2	0	0	0
4/22/2024	12:45 PM	1	459	136	0	2	0	0	0	2	0	0	0
4/22/2024	1:00 PM	2	477	145	0	2	1	0	0	2	0	0	0
4/22/2024	1:15 PM	2	512	156	0	2	1	0	1	3	0	0	0
4/22/2024	1:30 PM	3	547	169	0	4	1	0	2	6	0	0	0
4/22/2024	1:45 PM	2	544	186	0	3	2	0	2	6	0	0	0
4/22/2024	2:00 PM	1	574	185	0	4	1	0	3	6	0	0	0
4/22/2024	2:15 PM	1	578	197	1	5	1	0	2	3	0	0	0
4/22/2024	2:30 PM	0	554	194	1	4	2	0	1	0	0	0	0
4/22/2024	2:45 PM	0	563	183	1	5	1	0	1	0	0	0	0
4/22/2024	3:00 PM	0	574	189	1	6	3	0	0	3	0	0	0
4/22/2024	3:15 PM	0	619	184	0	6	3	0	0	3	0	0	0
4/22/2024	3:30 PM	0	674	197	0	8	2	0	2	5	0	0	0
4/22/2024	3:45 PM	0	727	215	0	7	2	0	2	5	0	0	0
4/22/2024	4:00 PM	0	791	234	0	6	0	0	3	4	0	0	0
4/22/2024	4:15 PM	0	826	269	0	9	1	0	3	6	0	0	0
4/22/2024	4:30 PM	0	873	259	0	6	2	0	1	4	0	0	0
4/22/2024	4:45 PM	0	859	251	0	6	2	0	1	4	0	0	0
4/22/2024	5:00 PM	1	797	240	0	6	2	0	0	5	0	0	0
4/22/2024	5:15 PM	1	694	191	0	2	1	0	0	3	0	1	0
4/22/2024	5:30 PM	1	576	187	0	2	0	0	0	3	0	1	0
4/22/2024	5:45 PM	1	480	174	0	1	0	0	0	3	0	1	0
4/22/2024	6:00 PM	0	402	154	0	0	0	0	0	0	0	1	0
4/22/2024	6:15 PM	0	372	147	0	0	0	0	0	0	0	0	0
4/22/2024	6:30 PM	0	346	137	0	0	0	0	0	0	0	0	0
4/22/2024	6:45 PM	0	333	126	0	0	0	0	0	0	0	0	0
4/22/2024	7:00 PM	0	316	117	0	0	0	0	0	0	0	0	0
4/22/2024	7:15 PM	0	304	117	0	0	0	0	0	0	0	0	0
4/22/2024	7:30 PM	0	286	107	0	1	0	0	0	2	0	0	0
4/22/2024	7:45 PM	0	259	98	0	1	0	0	0	2	0	0	0
4/22/2024	8:00 PM	0	242	92	0	1	0	0	0	2	0	0	0
4/22/2024	8:15 PM	0	211	79	0	1	0	0	0	2	0	0	0
4/22/2024	8:30 PM	0	191	72	0	0	0	0	0	0	0	0	0
4/22/2024	8:45 PM	0	177	70	0	0	0	0	0	0	0	0	0
4/22/2024	9:00 PM	0	162	64	0	0	0	0	0	0	0	0	0
4/22/2024	9:15 PM	0	153	63	0	0	0	0	0	0	0	0	0
4/22/2024	9:30 PM	0	140	60	0	0	0	0	0	0	0	0	0
4/22/2024	9:45 PM	0	136	58	0	0	0	0	0	0	0	0	0
4/22/2024	10:00 PM	0	140	61	0	0	0	0	0	0	0	0	0
4/22/2024	10:15 PM	0	138	56	0	0	0	0	0	0	0	0	0
4/22/2024	10:30 PM	0	137	54	0	0	0	0	0	0	0	0	0
4/22/2024	10:45 PM	0	122	47	0	0	0	0	0	0	0	0	0
4/22/2024	11:00 PM	0	100	39	0	0	0	0	0	0	0	0	0
4/22/2024	11:15 PM	0	95	35	0	0	0	0	0	0	0	0	0
4/22/2024	11:30 PM	0	83	30	0	1	0	0	0	0	0	0	0
4/22/2024	11:45 PM	0	83	28	0	1	0	0	0	1	0	0	0

4/23/2024	12:00 AM	0	82	22	1	1	0	0	0	1	0	0	0	0
4/23/2024	12:15 AM	0	67	19	1	1	0	0	0	1	0	0	0	0
4/23/2024	12:30 AM	0	70	21	1	0	0	0	0	2	0	0	0	0
4/23/2024	12:45 AM	0	63	17	1	0	0	0	0	1	0	0	0	0
4/23/2024	1:00 AM	0	57	17	0	0	0	0	0	1	0	0	0	0
4/23/2024	1:15 AM	0	54	14	0	0	0	0	0	1	0	0	0	0
4/23/2024	1:30 AM	0	43	10	0	0	0	0	0	0	0	0	0	0
4/23/2024	1:45 AM	0	38	10	0	0	0	0	0	0	0	0	0	0
4/23/2024	2:00 AM	0	34	8	0	0	0	0	0	0	0	0	0	0
4/23/2024	2:15 AM	0	33	10	0	0	0	0	0	1	0	0	0	0
4/23/2024	2:30 AM	0	43	12	0	0	0	0	0	2	0	0	0	0
4/23/2024	2:45 AM	0	50	13	0	0	0	0	0	2	0	0	0	0
4/23/2024	3:00 AM	0	65	16	0	0	0	0	0	3	0	0	0	0
4/23/2024	3:15 AM	0	74	15	0	0	0	0	0	4	0	0	0	0
4/23/2024	3:30 AM	0	81	18	0	0	0	0	0	4	0	0	0	0
4/23/2024	3:45 AM	0	96	21	0	0	0	0	0	4	0	0	0	0
4/23/2024	4:00 AM	0	105	24	0	0	0	0	0	3	0	0	0	0
4/23/2024	4:15 AM	0	113	26	0	0	0	0	0	1	0	0	0	0
4/23/2024	4:30 AM	0	127	33	0	0	0	0	0	0	0	0	0	0
4/23/2024	4:45 AM	0	180	51	0	0	0	0	0	0	0	0	0	0
4/23/2024	5:00 AM	0	240	66	0	0	0	0	0	0	0	0	0	0
4/23/2024	5:15 AM	0	307	87	0	0	0	0	0	0	0	0	0	0
4/23/2024	5:30 AM	0	378	101	0	0	0	0	0	0	0	0	0	0
4/23/2024	5:45 AM	0	466	135	0	0	0	0	0	0	0	0	0	0
4/23/2024	6:00 AM	0	584	173	0	0	0	0	1	1	0	0	0	0
4/23/2024	6:15 AM	1	646	215	0	0	0	0	2	1	0	0	0	0
4/23/2024	6:30 AM	2	776	244	0	2	1	0	5	2	0	1	0	0
4/23/2024	6:45 AM	2	738	225	0	3	1	0	5	3	0	1	0	0
4/23/2024	7:00 AM	2	781	238	0	3	2	0	7	2	0	1	0	0
4/23/2024	7:15 AM	3	846	223	0	4	2	0	9	2	0	1	0	0
4/23/2024	7:30 AM	2	838	241	0	5	1	0	9	2	0	0	0	0
4/23/2024	7:45 AM	2	941	296	0	6	1	0	14	1	0	1	0	0
4/23/2024	8:00 AM	2	856	288	0	6	2	0	12	1	0	1	0	0
4/23/2024	8:15 AM	0	764	280	0	5	3	0	11	1	0	1	0	0
4/23/2024	8:30 AM	1	687	245	0	4	3	0	10	0	0	1	0	0
4/23/2024	8:45 AM	1	583	206	0	4	3	0	8	0	0	0	0	0
4/23/2024	9:00 AM	1	524	184	0	5	1	0	10	0	0	0	0	0
4/23/2024	9:15 AM	3	520	193	0	6	1	0	10	0	0	0	0	0
4/23/2024	9:30 AM	4	486	191	0	5	1	0	9	0	0	0	0	0
4/23/2024	9:45 AM	5	469	186	0	4	1	0	6	0	0	0	0	0
4/23/2024	10:00 AM	5	511	181	0	4	1	0	5	1	0	0	0	0
4/23/2024	10:15 AM	4	486	159	0	4	0	0	4	1	0	0	0	0
4/23/2024	10:30 AM	2	485	149	0	4	1	0	6	2	0	0	0	0
4/23/2024	10:45 AM	2	476	134	0	4	1	0	8	2	0	0	0	0
4/23/2024	11:00 AM	2	447	127	0	5	2	0	7	1	0	0	0	0
4/23/2024	11:15 AM	1	486	134	1	7	2	0	7	4	0	0	0	0
4/23/2024	11:30 AM	1	503	148	1	6	1	0	7	6	0	0	0	0
4/23/2024	11:45 AM	2	524	150	1	7	2	0	8	7	0	0	0	0
4/23/2024	12:00 PM	3	533	161	1	5	1	0	8	7	0	0	0	0
4/23/2024	12:15 PM	4	524	151	0	4	1	0	7	4	0	0	0	0
4/23/2024	12:30 PM	6	536	143	2	7	3	0	5	1	0	0	0	0
4/23/2024	12:45 PM	4	547	134	2	7	2	0	2	1	0	0	0	0
4/23/2024	1:00 PM	3	542	129	2	8	2	0	1	1	0	0	0	0
4/23/2024	1:15 PM	4	540	137	2	8	3	0	5	1	0	0	0	0
4/23/2024	1:30 PM	3	519	145	0	5	2	0	4	1	0	0	0	0
4/23/2024	1:45 PM	4	546	154	0	4	2	0	4	1	0	0	0	0
4/23/2024	2:00 PM	4	580	156	0	3	2	0	6	3	0	0	0	0
4/23/2024	2:15 PM	2	599	164	0	3	2	0	4	4	0	0	0	0
4/23/2024	2:30 PM	2	632	169	0	6	1	0	6	4	0	0	0	0
4/23/2024	2:45 PM	3	685	190	0	8	1	0	8	4	0	0	0	0
4/23/2024	3:00 PM	4	754	205	0	10	1	0	8	3	0	0	0	0
4/23/2024	3:15 PM	5	841	234	0	12	0	0	9	3	0	0	0	0
4/23/2024	3:30 PM	4	951	265	0	12	1	0	15	6	0	0	0	0
4/23/2024	3:45 PM	2	1015	270	0	10	2	0	15	5	0	0	0	0
4/23/2024	4:00 PM	1	1025	283	0	10	2	0	15	6	0	0	0	0
4/23/2024	4:15 PM	0	1022	255	0	6	2	0	14	5	0	0	0	0
4/23/2024	4:30 PM	0	1027	229	0	4	1	0	11	2	0	0	0	0
4/23/2024	4:45 PM	0	976	238	0	5	0	0	9	2	0	0	0	0
4/23/2024	5:00 PM	0	971	221	0	3	2	0	7	3	0	0	0	0
4/23/2024	5:15 PM	1	897	221	0	4	2	0	5	4	0	0	0	0
4/23/2024	5:30 PM	1	780	190	0	5	2	0	1	5	0	0	0	0
4/23/2024	5:45 PM	1	683	145	0	3	2	0	1	7	0	0	0	0
4/23/2024	6:00 PM	1	558	129	0	3	1	0	4	4	0	0	0	0
4/23/2024	6:15 PM	1	527	106	0	2	1	0	5	3	0	0	0	0
4/23/2024	6:30 PM	1	501	109	0	0	2	0	4	4	0	0	0	0
4/23/2024	6:45 PM	1	478	103	0	1	2	0	5	3	0	0	0	0
4/23/2024	7:00 PM	1	485	91	0	1	1	0	2	3	0	1	0	0
4/23/2024	7:15 PM	0	474	78	0	1	1	0	1	3	0	1	0	0
4/23/2024	7:30 PM	0	460	68	0	1	0	0	1	2	0	1	0	0
4/23/2024	7:45 PM	0	451	56	0	0	0	0	0	2	0	1	0	0
4/23/2024	8:00 PM	0	435	41	0	0	0	0	0	2	0	0	0	0
4/23/2024	8:15 PM	0	409	36	0	0	0	0	0	4	0	0	0	0
4/23/2024	8:30 PM	0	373	27	0	0	0	0	0	3	0	0	0	0
4/23/2024	8:45 PM	0	346	22	0	0	0	0	0	3	0	0	0	0
4/23/2024	9:00 PM	0	328	25	0	0	0	0	0	4	0	0	0	0
4/23/2024	9:15 PM	0	278	25	0	0	0	0	0	2	0	0	0	0
4/23/2024	9:30 PM	0	221	22	0	0	0	0	0	2	0	0	0	0
4/23/2024	9:45 PM	0	148	18	0	0	0	0	0	2	0	0	0	0
4/23/2024	10:00 PM	0	71	9	0	0	0	0	0	1	0	0	0	0
4/23/2024	10:15 PM	0	31	4	0	0	0	0	0	1	0	0	0	0
4/23/2024	10:30 PM	0	5	1	0	0	0	0	0	1	0	0	0	0
4/23/2024	10:45 PM	0	5	1	0	0	0	0	0	0	0	0	0	0
4/23/2024	11:00 PM	0	2	0	0	0	0	0	0	0	0	0	0	0
4/23/2024	11:15 PM	0	3	0	0	0	0	0	0	0	0	0	0	0
4/23/2024	11:30 PM	0	2	0	0	0	0	0	0	0	0	0	0	0
4/23/2024	11:45 PM	0	1	0	0	0	0	0	0	0	0	0	0	0

4/24/2024	12:00 AM	0	1	0	0	0	0	0	0	0	0	0	0
4/24/2024	12:15 AM	0	0	0	0	0	0	0	0	0	0	0	0
4/24/2024	12:30 AM	0	0	0	0	0	0	0	0	0	0	0	0
4/24/2024	12:45 AM	0	0	0	0	0	0	0	0	0	0	0	0
4/24/2024	1:00 AM	0	0	0	0	0	0	0	0	0	0	0	0
4/24/2024	1:15 AM	1	17	2	0	0	0	0	0	0	0	0	0
4/24/2024	1:30 AM	1	32	6	0	0	0	0	4	1	0	0	0
4/24/2024	1:45 AM	1	49	12	0	0	0	0	8	2	0	0	0
4/24/2024	2:00 AM	1	62	15	0	0	0	0	13	4	0	0	0
4/24/2024	2:15 AM	0	60	17	0	0	0	0	15	5	0	0	0
4/24/2024	2:30 AM	0	65	16	0	2	0	0	12	5	0	0	0
4/24/2024	2:45 AM	1	65	12	0	2	0	0	9	6	0	0	0
4/24/2024	3:00 AM	1	72	11	0	2	0	0	4	5	0	0	0
4/24/2024	3:15 AM	2	94	12	0	2	0	0	2	5	0	0	0
4/24/2024	3:30 AM	2	95	12	0	1	0	0	1	5	0	0	0
4/24/2024	3:45 AM	1	101	13	0	1	0	0	1	4	0	0	0
4/24/2024	4:00 AM	1	94	13	0	2	0	0	1	4	0	0	0
4/24/2024	4:15 AM	0	99	13	0	3	0	0	3	5	0	0	0
4/24/2024	4:30 AM	0	139	21	0	3	0	0	5	5	0	0	0
4/24/2024	4:45 AM	0	191	31	0	5	0	0	7	5	0	0	0
4/24/2024	5:00 AM	0	262	45	0	7	0	0	9	5	0	0	0
4/24/2024	5:15 AM	0	297	53	0	7	2	0	9	5	0	0	0
4/24/2024	5:30 AM	0	335	60	0	8	3	0	9	5	0	0	0
4/24/2024	5:45 AM	1	392	84	0	6	4	0	6	4	0	0	0
4/24/2024	6:00 AM	1	490	130	0	9	4	0	4	3	0	0	0
4/24/2024	6:15 AM	5	633	195	0	11	2	0	2	2	0	0	0
4/24/2024	6:30 AM	6	821	262	0	9	1	0	0	1	0	0	0
4/24/2024	6:45 AM	6	990	316	0	14	0	0	1	2	0	0	0
4/24/2024	7:00 AM	7	1176	346	0	12	0	0	1	2	0	0	0
4/24/2024	7:15 AM	3	1262	347	0	11	0	0	1	1	0	0	0
4/24/2024	7:30 AM	2	1208	339	1	12	1	0	1	1	0	0	0
4/24/2024	7:45 AM	1	1133	321	1	8	1	0	0	1	0	0	0
4/24/2024	8:00 AM	5	932	288	1	7	1	0	0	2	0	0	0
4/24/2024	8:15 AM	6	791	267	1	8	1	0	0	2	0	0	0
4/24/2024	8:30 AM	6	707	236	0	10	1	0	0	2	0	0	0
4/24/2024	8:45 AM	7	618	210	0	11	1	0	0	1	0	0	0
4/24/2024	9:00 AM	2	574	185	0	11	2	0	0	0	0	0	0
4/24/2024	9:15 AM	1	549	161	0	13	2	0	2	0	0	0	0
4/24/2024	9:30 AM	1	509	147	0	12	1	0	3	2	0	0	0
4/24/2024	9:45 AM	0	501	130	0	16	2	0	4	3	0	0	0
4/24/2024	10:00 AM	0	497	129	0	14	2	0	6	3	0	0	0
4/24/2024	10:15 AM	0	468	134	1	11	2	0	6	3	0	0	0
4/24/2024	10:30 AM	0	473	133	1	10	2	0	7	1	0	0	0
4/24/2024	10:45 AM	2	465	144	1	7	1	0	6	2	0	0	0
4/24/2024	11:00 AM	2	468	135	1	8	1	0	5	3	0	0	0
4/24/2024	11:15 AM	4	491	133	0	6	1	0	5	4	0	0	0
4/24/2024	11:30 AM	4	486	125	0	7	2	0	4	4	0	0	0
4/24/2024	11:45 AM	2	530	123	0	6	2	0	5	3	0	0	0
4/24/2024	12:00 PM	2	569	151	0	9	1	0	8	3	0	0	0
4/24/2024	12:15 PM	0	593	163	0	11	1	0	6	2	0	0	0
4/24/2024	12:30 PM	0	651	190	0	10	0	0	5	2	0	0	0
4/24/2024	12:45 PM	1	663	211	0	12	0	0	5	2	0	0	0
4/24/2024	1:00 PM	1	680	211	0	9	0	0	3	1	0	0	0
4/24/2024	1:15 PM	1	680	206	0	10	1	0	3	1	0	0	0
4/24/2024	1:30 PM	2	665	198	0	13	1	0	4	1	0	0	0
4/24/2024	1:45 PM	1	667	188	0	10	1	0	3	1	0	0	0
4/24/2024	2:00 PM	1	697	196	0	10	1	0	3	2	0	0	0
4/24/2024	2:15 PM	1	755	218	0	12	1	0	5	3	0	1	0
4/24/2024	2:30 PM	1	813	232	0	9	1	0	5	4	0	1	0
4/24/2024	2:45 PM	1	848	241	0	9	3	0	7	4	0	1	0
4/24/2024	3:00 PM	3	917	256	1	10	3	0	7	3	0	2	0
4/24/2024	3:15 PM	3	939	248	1	6	2	0	7	2	0	1	0
4/24/2024	3:30 PM	2	997	251	1	7	3	0	6	2	0	1	0
4/24/2024	3:45 PM	2	1056	260	1	11	2	0	4	1	1	1	0
4/24/2024	4:00 PM	0	1048	241	0	10	2	0	5	3	2	0	0
4/24/2024	4:15 PM	1	1105	241	0	10	2	0	5	3	3	1	0
4/24/2024	4:30 PM	1	1146	252	0	11	1	0	6	2	3	1	0
4/24/2024	4:45 PM	1	1102	246	0	9	1	0	7	5	2	1	0
4/24/2024	5:00 PM	1	1013	238	0	10	2	0	4	3	1	1	0
4/24/2024	5:15 PM	1	884	233	0	9	2	0	4	4	0	0	0
4/24/2024	5:30 PM	2	731	201	0	8	2	0	3	5	0	0	0
4/24/2024	5:45 PM	3	642	190	0	6	1	0	4	2	0	0	0
4/24/2024	6:00 PM	3	615	179	0	3	0	0	4	4	0	0	0
4/24/2024	6:15 PM	4	565	151	1	9	0	0	2	3	1	0	0
4/24/2024	6:30 PM	3	521	137	1	7	0	0	3	3	1	0	0
4/24/2024	6:45 PM	2	479	106	1	8	0	0	1	3	1	0	0
4/24/2024	7:00 PM	2	428	94	1	9	1	0	1	2	1	0	0
4/24/2024	7:15 PM	0	413	79	0	4	1	0	1	3	0	0	0
4/24/2024	7:30 PM	1	421	70	0	5	2	0	2	3	0	0	0
4/24/2024	7:45 PM	1	518	69	0	5	5	0	5	7	0	1	0
4/24/2024	8:00 PM	1	529	62	0	5	6	0	6	7	0	1	0
4/24/2024	8:15 PM	1	538	69	0	5	9	0	9	6	0	1	0
4/24/2024	8:30 PM	0	534	80	0	4	9	0	8	8	0	1	0
4/24/2024	8:45 PM	1	410	80	0	5	6	0	6	4	0	0	0
4/24/2024	9:00 PM	1	376	77	0	5	5	0	9	4	0	0	0
4/24/2024	9:15 PM	1	350	81	0	5	2	0	8	6	0	1	0
4/24/2024	9:30 PM	1	299	61	0	6	1	0	7	6	0	1	0
4/24/2024	9:45 PM	0	285	48	0	6	1	0	7	7	0	1	0
4/24/2024	10:00 PM	0	262	38	0	7	2	0	4	9	0	1	0
4/24/2024	10:15 PM	1	230	22	0	6	3	0	4	10	0	0	0
4/24/2024	10:30 PM	1	203	18	0	5	3	0	4	8	0	0	0
4/24/2024	10:45 PM	1	192	16	0	2	3	0	4	8	0	0	0
4/24/2024	11:00 PM	1	187	17	0	0	2	0	4	7	0	0	0
4/24/2024	11:15 PM	0	159	15	0	1	1	0	2	5	0	0	0
4/24/2024	11:30 PM	0	133	16	0	1	1	0	2	5	0	0	0
4/24/2024	11:45 PM	0	98	14	0	1	1	0	1	4	0	0	0

4/25/2024	12:00 AM	0	55	8	0	1	0	0	0	2	0	0	0	0
4/25/2024	12:15 AM	0	34	5	0	0	0	0	0	1	0	0	0	0
4/25/2024	12:30 AM	0	26	3	0	0	0	0	0	0	0	0	0	0
4/25/2024	12:45 AM	0	21	1	0	0	0	0	0	0	0	0	0	0
4/25/2024	1:00 AM	0	18	2	0	0	0	0	0	0	0	0	0	0
4/25/2024	1:15 AM	0	19	2	0	0	0	0	0	0	0	0	0	0
4/25/2024	1:30 AM	0	20	1	0	0	0	0	0	0	0	0	0	0
4/25/2024	1:45 AM	0	17	1	0	0	0	0	0	0	0	0	0	0
4/25/2024	2:00 AM	0	14	0	0	0	0	0	0	0	0	0	0	0
4/25/2024	2:15 AM	0	13	1	0	0	0	0	0	0	0	0	0	0
4/25/2024	2:30 AM	0	13	1	0	0	0	0	0	0	0	0	0	0
4/25/2024	2:45 AM	0	15	2	0	0	0	0	0	0	0	0	0	0
4/25/2024	3:00 AM	0	20	3	0	0	0	0	0	0	0	0	0	0
4/25/2024	3:15 AM	0	24	3	0	0	0	0	0	1	0	0	0	0
4/25/2024	3:30 AM	0	28	5	0	0	0	0	0	1	0	0	0	0
4/25/2024	3:45 AM	0	37	6	0	0	0	0	0	1	0	0	0	0
4/25/2024	4:00 AM	0	42	8	0	0	0	0	0	1	0	0	0	0
4/25/2024	4:15 AM	0	49	9	0	0	0	0	0	0	0	0	0	0
4/25/2024	4:30 AM	0	75	14	0	0	0	0	0	0	0	0	0	0
4/25/2024	4:45 AM	0	115	23	0	0	0	0	0	0	0	0	0	0
4/25/2024	5:00 AM	0	159	30	0	0	0	0	0	0	0	0	0	0
4/25/2024	5:15 AM	0	211	43	0	0	0	0	0	0	0	0	0	0
4/25/2024	5:30 AM	0	249	57	0	1	0	0	0	1	0	0	0	0
4/25/2024	5:45 AM	0	318	100	0	5	0	0	2	1	0	0	0	0
4/25/2024	6:00 AM	2	451	148	0	11	0	0	2	1	0	0	0	0
4/25/2024	6:15 AM	5	627	217	0	12	0	0	2	3	0	1	0	0
4/25/2024	6:30 AM	6	855	283	0	16	0	0	2	2	0	1	0	0
4/25/2024	6:45 AM	8	1051	312	1	16	1	1	0	2	0	1	0	0
4/25/2024	7:00 AM	7	1154	325	1	14	1	1	0	4	0	1	0	0
4/25/2024	7:15 AM	4	1184	323	1	16	1	1	1	2	0	0	0	0
4/25/2024	7:30 AM	5	1171	326	1	16	1	1	1	3	0	0	0	0
4/25/2024	7:45 AM	6	1102	323	1	16	0	0	6	3	0	0	0	0
4/25/2024	8:00 AM	5	1024	315	1	12	0	0	7	2	0	0	0	0
4/25/2024	8:15 AM	5	935	300	1	11	0	0	7	2	0	0	0	0
4/25/2024	8:30 AM	4	812	271	1	6	0	0	10	3	0	0	0	0
4/25/2024	8:45 AM	1	713	255	0	5	0	0	6	3	0	0	0	0
4/25/2024	9:00 AM	2	617	243	0	7	0	0	5	3	0	0	0	0
4/25/2024	9:15 AM	2	553	234	0	6	0	0	5	4	0	0	0	0
4/25/2024	9:30 AM	3	505	218	0	7	0	0	2	2	0	0	0	0
4/25/2024	9:45 AM	3	472	199	0	8	0	0	3	3	0	0	0	0
4/25/2024	10:00 AM	3	489	190	0	9	0	0	3	2	0	0	0	0
4/25/2024	10:15 AM	3	472	168	0	12	0	0	2	1	0	0	0	0
4/25/2024	10:30 AM	2	520	176	0	12	0	0	2	1	0	0	0	0
4/25/2024	10:45 AM	2	552	173	0	9	0	0	0	0	0	0	0	0
4/25/2024	11:00 AM	2	550	165	0	8	1	0	0	1	0	0	0	0
4/25/2024	11:15 AM	4	605	168	0	5	4	0	0	1	0	0	0	0
4/25/2024	11:30 AM	3	561	155	1	5	5	0	1	1	0	0	0	0
4/25/2024	11:45 AM	5	582	159	1	6	6	0	2	1	0	0	0	0
4/25/2024	12:00 PM	4	606	174	1	8	6	0	5	2	0	0	0	0
4/25/2024	12:15 PM	3	609	178	1	11	3	0	6	2	0	0	0	0
4/25/2024	12:30 PM	3	663	195	0	13	2	0	5	3	0	0	0	0
4/25/2024	12:45 PM	1	668	196	1	14	2	0	6	4	0	1	0	0
4/25/2024	1:00 PM	2	684	213	1	13	2	0	4	4	0	1	0	0
4/25/2024	1:15 PM	2	713	224	2	11	3	0	4	4	0	1	0	0
4/25/2024	1:30 PM	5	701	223	2	10	3	0	4	3	0	1	0	0
4/25/2024	1:45 PM	6	702	215	1	8	2	0	3	2	1	0	0	0
4/25/2024	2:00 PM	5	708	201	1	5	1	0	2	2	1	0	0	0
4/25/2024	2:15 PM	4	700	212	0	8	0	0	2	2	1	0	0	0
4/25/2024	2:30 PM	2	756	227	0	12	0	0	2	5	1	0	0	0
4/25/2024	2:45 PM	3	792	248	0	15	0	0	1	9	0	0	0	0
4/25/2024	3:00 PM	5	857	267	1	19	0	0	1	8	2	0	0	0
4/25/2024	3:15 PM	5	918	264	1	16	0	0	0	10	2	0	0	0
4/25/2024	3:30 PM	4	946	250	1	17	0	0	1	8	2	0	0	0
4/25/2024	3:45 PM	5	979	253	1	16	0	0	2	4	2	1	0	0
4/25/2024	4:00 PM	4	986	247	0	13	0	0	2	3	0	1	0	0
4/25/2024	4:15 PM	7	1019	242	0	16	0	0	3	1	0	1	0	0
4/25/2024	4:30 PM	7	1052	248	0	14	0	0	2	2	0	1	0	0
4/25/2024	4:45 PM	5	1085	242	1	13	0	0	1	2	0	0	0	0
4/25/2024	5:00 PM	6	1040	239	1	14	0	0	2	3	0	0	0	0
4/25/2024	5:15 PM	3	939	215	1	11	0	0	2	4	0	0	0	0
4/25/2024	5:30 PM	3	799	189	1	6	0	0	4	2	0	0	0	0
4/25/2024	5:45 PM	4	693	177	0	5	0	0	5	2	0	0	0	0
4/25/2024	6:00 PM	2	630	162	0	5	0	0	6	2	0	0	0	0
4/25/2024	6:15 PM	2	600	156	0	4	0	0	5	1	0	0	0	0
4/25/2024	6:30 PM	2	627	152	0	7	0	1	5	1	0	1	0	0
4/25/2024	6:45 PM	0	584	143	0	6	0	1	5	1	0	1	0	0
4/25/2024	7:00 PM	0	572	129	0	5	0	1	4	0	0	1	0	0
4/25/2024	7:15 PM	0	542	118	0	5	0	1	5	0	0	1	0	0
4/25/2024	7:30 PM	0	512	102	0	2	0	0	3	1	0	0	0	0
4/25/2024	7:45 PM	0	488	79	0	2	0	0	2	2	0	0	0	0
4/25/2024	8:00 PM	0	487	62	0	1	0	0	1	3	0	0	0	0
4/25/2024	8:15 PM	0	449	53	0	0	0	0	0	5	0	0	0	0
4/25/2024	8:30 PM	0	385	44	0	0	0	0	0	5	0	0	0	0
4/25/2024	8:45 PM	0	333	37	0	0	0	0	0	4	0	0	0	0
4/25/2024	9:00 PM	0	255	26	0	0	0	0	2	3	0	0	0	0
4/25/2024	9:15 PM	0	214	22	0	0	0	0	2	1	0	0	0	0
4/25/2024	9:30 PM	0	186	23	0	0	0	0	2	0	0	0	0	0
4/25/2024	9:45 PM	0	166	21	0	0	0	0	2	0	0	0	0	0
4/25/2024	10:00 PM	0	151	24	0	0	0	0	0	0	0	0	0	0
4/25/2024	10:15 PM	0	139	26	0	0	0	0	0	0	0	0	0	0
4/25/2024	10:30 PM	0	116	24	0	0	0	0	0	0	0	0	0	0
4/25/2024	10:45 PM	0	108	26	0	0	0	0	0	0	0	0	0	0
4/25/2024	11:00 PM	0	90	22	0	0	0	0	0	0	0	0	0	0
4/25/2024	11:15 PM	0	67	17	0	0	0	0	0	0	0	0	0	0
4/25/2024	11:30 PM	0	45	10	0	0	0	0	0	0	0	0	0	0
4/25/2024	11:45 PM	0	19	4	0	0	0	0	0	0	0	0	0	0

4/26/2024	12:00 AM	0	40	21	0	0	0	0	0	1	0	0	0	0
4/26/2024	12:15 AM	0	31	17	0	0	0	0	0	1	0	0	0	0
4/26/2024	12:30 AM	0	25	15	0	0	0	0	0	1	0	0	0	0
4/26/2024	12:45 AM	0	29	16	0	0	0	0	0	1	0	0	0	0
4/26/2024	1:00 AM	0	29	18	0	0	0	0	0	1	0	0	0	0
4/26/2024	1:15 AM	0	27	18	0	0	0	0	0	1	0	0	0	0
4/26/2024	1:30 AM	0	27	16	0	0	0	0	0	1	0	0	0	0
4/26/2024	1:45 AM	0	22	13	0	0	0	0	0	0	0	0	0	0
4/26/2024	2:00 AM	0	19	11	0	0	0	0	0	1	0	0	0	0
4/26/2024	2:15 AM	0	20	12	0	0	0	0	0	1	0	0	0	0
4/26/2024	2:30 AM	0	25	16	0	0	0	0	0	1	0	0	0	0
4/26/2024	2:45 AM	0	24	18	0	0	0	0	0	2	0	1	0	0
4/26/2024	3:00 AM	0	28	18	0	0	0	0	0	1	0	1	0	0
4/26/2024	3:15 AM	0	27	16	0	0	0	0	0	1	0	1	0	0
4/26/2024	3:30 AM	0	25	13	0	0	0	0	0	1	0	1	0	0
4/26/2024	3:45 AM	0	28	13	0	0	0	0	0	0	0	0	0	0
4/26/2024	4:00 AM	0	36	20	0	0	0	0	0	0	0	0	0	0
4/26/2024	4:15 AM	0	48	28	0	0	0	0	0	1	0	0	0	0
4/26/2024	4:30 AM	0	61	36	0	0	0	0	0	2	0	1	0	0
4/26/2024	4:45 AM	0	70	41	0	0	0	0	0	2	0	1	0	0
4/26/2024	5:00 AM	0	77	44	0	0	0	0	0	2	0	1	0	0
4/26/2024	5:15 AM	0	86	48	1	0	0	0	0	1	0	1	0	0
4/26/2024	5:30 AM	0	130	75	2	0	0	0	0	1	0	0	0	0
4/26/2024	5:45 AM	0	221	121	2	0	0	0	0	1	0	0	0	0
4/26/2024	6:00 AM	0	346	176	2	1	2	0	0	1	0	0	0	0
4/26/2024	6:15 AM	2	537	236	2	2	2	0	1	1	0	0	0	0
4/26/2024	6:30 AM	5	757	285	1	7	2	0	3	0	0	0	0	0
4/26/2024	6:45 AM	5	984	321	1	9	2	0	3	0	0	0	0	0
4/26/2024	7:00 AM	5	1159	344	1	12	0	0	3	0	0	0	0	0
4/26/2024	7:15 AM	4	1220	350	0	13	0	0	2	2	0	0	0	0
4/26/2024	7:30 AM	3	1189	316	3	9	0	0	4	3	0	0	0	0
4/26/2024	7:45 AM	3	1079	289	3	9	2	0	5	6	0	0	0	0
4/26/2024	8:00 AM	3	943	260	6	6	2	0	6	8	0	0	0	0
4/26/2024	8:15 AM	4	847	235	6	7	3	0	7	8	0	0	0	0
4/26/2024	8:30 AM	2	750	235	3	9	3	0	3	8	0	0	0	0
4/26/2024	8:45 AM	3	707	213	3	10	1	0	5	6	1	0	0	0
4/26/2024	9:00 AM	4	680	198	1	13	2	0	4	5	1	0	0	0
4/26/2024	9:15 AM	3	660	192	1	14	2	0	4	4	1	0	0	0
4/26/2024	9:30 AM	3	687	193	1	13	2	0	4	5	1	0	0	0
4/26/2024	9:45 AM	2	651	198	1	11	2	0	1	5	0	0	0	0
4/26/2024	10:00 AM	3	640	188	0	7	2	0	4	5	0	0	0	0
4/26/2024	10:15 AM	8	673	183	0	10	1	0	3	4	0	0	0	0
4/26/2024	10:30 AM	8	681	174	0	9	1	0	3	3	0	0	0	0
4/26/2024	10:45 AM	8	706	177	0	9	1	0	3	4	0	0	0	0
4/26/2024	11:00 AM	10	774	196	0	11	0	0	3	4	0	0	0	0
4/26/2024	11:15 AM	5	775	211	0	4	0	0	4	8	0	0	0	0
4/26/2024	11:30 AM	5	794	223	1	10	0	0	4	8	0	0	0	0
4/26/2024	11:45 AM	12	836	227	1	13	1	0	4	7	0	0	0	0
4/26/2024	12:00 PM	10	841	232	1	13	2	0	3	7	0	0	0	0
4/26/2024	12:15 PM	10	891	230	1	18	2	0	6	4	0	0	0	0
4/26/2024	12:30 PM	16	939	234	0	14	2	0	7	4	0	0	0	0
4/26/2024	12:45 PM	12	983	239	0	17	1	0	7	5	0	0	0	0
4/26/2024	1:00 PM	15	1005	237	0	20	0	0	5	5	0	0	0	0
4/26/2024	1:15 PM	16	953	237	0	20	0	0	1	7	0	0	0	0
4/26/2024	1:30 PM	12	926	241	0	22	0	0	1	9	0	1	0	0
4/26/2024	1:45 PM	11	903	246	0	20	0	0	3	11	0	1	0	0
4/26/2024	2:00 PM	7	920	251	0	18	0	0	7	10	0	1	0	0
4/26/2024	2:15 PM	7	997	257	0	23	0	0	10	7	0	1	0	0
4/26/2024	2:30 PM	17	1063	261	0	22	1	0	10	6	0	0	0	0
4/26/2024	2:45 PM	23	1173	292	1	22	1	0	10	3	0	0	0	0
4/26/2024	3:00 PM	26	1273	303	1	25	1	0	11	4	0	0	0	0
4/26/2024	3:15 PM	25	1332	316	1	18	1	0	12	6	0	0	0	0
4/26/2024	3:30 PM	16	1355	320	1	17	1	0	11	4	0	0	0	0
4/26/2024	3:45 PM	12	1333	312	0	16	1	0	10	4	0	0	0	0
4/26/2024	4:00 PM	10	1306	311	0	13	1	0	5	4	0	0	0	0
4/26/2024	4:15 PM	16	1355	309	0	13	1	0	1	3	0	0	0	0
4/26/2024	4:30 PM	15	1403	286	0	11	0	0	3	3	0	1	0	0
4/26/2024	4:45 PM	12	1348	256	0	9	0	0	2	3	0	1	0	0
4/26/2024	5:00 PM	12	1259	250	0	7	0	0	2	2	0	1	0	0
4/26/2024	5:15 PM	6	1123	248	0	8	0	0	4	2	0	1	0	0
4/26/2024	5:30 PM	4	1006	241	0	8	0	0	2	3	0	0	0	0
4/26/2024	5:45 PM	6	968	215	0	7	0	0	2	2	0	0	0	0
4/26/2024	6:00 PM	10	923	181	0	7	0	0	2	2	0	0	0	0
4/26/2024	6:15 PM	15	831	138	0	4	1	0	0	1	0	0	0	0
4/26/2024	6:30 PM	23	752	135	0	4	2	0	1	2	0	1	0	0
4/26/2024	6:45 PM	21	679	137	0	5	2	0	1	2	0	1	0	0
4/26/2024	7:00 PM	16	638	127	0	5	2	0	1	2	0	1	0	0
4/26/2024	7:15 PM	11	605	137	0	4	1	0	1	2	0	1	0	0
4/26/2024	7:30 PM	3	540	149	0	3	0	0	0	0	0	0	0	0
4/26/2024	7:45 PM	2	485	165	0	1	0	0	0	0	0	0	0	0
4/26/2024	8:00 PM	1	440	195	0	0	0	0	0	1	0	0	0	0
4/26/2024	8:15 PM	0	410	189	0	0	0	0	0	1	0	1	0	0
4/26/2024	8:30 PM	0	365	164	0	0	0	0	0	1	0	1	0	0
4/26/2024	8:45 PM	0	317	138	0	0	0	0	0	1	0	1	0	0
4/26/2024	9:00 PM	0	256	106	0	0	0	0	0	0	0	1	0	0
4/26/2024	9:15 PM	0	224	93	0	0	0	0	0	0	0	0	0	0
4/26/2024	9:30 PM	0	209	83	0	0	0	0	0	1	0	1	0	0
4/26/2024	9:45 PM	0	198	78	0	0	0	0	0	1	0	1	0	0
4/26/2024	10:00 PM	0	177	71	0	0	0	0	0	2	0	1	0	0
4/26/2024	10:15 PM	0	149	67	0	0	0	0	0	2	0	1	0	0
4/26/2024	10:30 PM	0	124	64	0	0	0	0	0	2	0	0	0	0
4/26/2024	10:45 PM	0	109	60	0	0	0	0	0	2	0	0	0	0
4/26/2024	11:00 PM	0	100	55	0	0	0	0	0	1	0	0	0	0
4/26/2024	11:15 PM	0	73	39	0	0	0	0	0	1	0	0	0	0
4/26/2024	11:30 PM	0	50	25	0	0	0	0	0	0	0	0	0	0
4/26/2024	11:45 PM	0	22	10	0	0	0	0	0	0	0	0	0	0

4/27/2024	12:00 AM	0	110	54	0	0	0	0	0	0	0	0	0	0
4/27/2024	12:15 AM	0	100	51	0	0	0	0	0	0	0	0	0	0
4/27/2024	12:30 AM	0	68	28	0	0	0	0	0	0	0	0	0	0
4/27/2024	12:45 AM	0	50	20	0	0	0	0	0	0	0	0	0	0
4/27/2024	1:00 AM	0	42	20	0	0	0	0	0	0	0	0	0	0
4/27/2024	1:15 AM	0	37	18	0	0	0	0	0	0	0	0	0	0
4/27/2024	1:30 AM	0	40	21	0	0	0	0	0	0	0	0	0	0
4/27/2024	1:45 AM	0	44	29	0	0	0	0	0	0	0	0	0	0
4/27/2024	2:00 AM	0	50	31	0	0	0	0	0	0	0	0	0	0
4/27/2024	2:15 AM	0	51	32	0	0	0	0	0	0	0	0	0	0
4/27/2024	2:30 AM	0	54	33	0	0	0	0	0	0	0	0	0	0
4/27/2024	2:45 AM	0	60	33	0	0	0	0	0	0	0	0	0	0
4/27/2024	3:00 AM	0	57	33	0	0	0	0	0	0	0	0	0	0
4/27/2024	3:15 AM	0	58	34	0	0	0	0	0	0	0	0	0	0
4/27/2024	3:30 AM	0	59	33	0	0	0	0	0	0	0	0	0	0
4/27/2024	3:45 AM	0	57	32	0	0	0	0	0	0	0	0	0	0
4/27/2024	4:00 AM	0	67	31	0	0	0	0	0	0	0	0	0	0
4/27/2024	4:15 AM	0	75	41	0	0	0	0	0	0	0	0	0	0
4/27/2024	4:30 AM	0	82	41	0	0	0	0	0	0	0	0	0	0
4/27/2024	4:45 AM	0	84	37	0	0	0	0	0	0	0	0	0	0
4/27/2024	5:00 AM	0	74	34	0	0	0	0	0	0	0	0	0	0
4/27/2024	5:15 AM	0	74	24	0	0	0	0	0	0	0	0	0	0
4/27/2024	5:30 AM	0	88	28	0	0	0	0	0	0	0	0	0	0
4/27/2024	5:45 AM	0	102	37	0	0	0	0	0	1	0	0	0	0
4/27/2024	6:00 AM	0	137	46	0	0	2	0	0	1	0	0	0	0
4/27/2024	6:15 AM	0	170	55	0	0	2	0	0	1	0	0	0	0
4/27/2024	6:30 AM	0	207	70	0	0	2	0	0	2	0	0	0	0
4/27/2024	6:45 AM	1	265	78	0	1	3	0	0	2	0	0	0	0
4/27/2024	7:00 AM	1	342	91	0	1	2	0	1	2	0	0	0	0
4/27/2024	7:15 AM	1	408	98	0	1	2	0	3	2	0	0	0	0
4/27/2024	7:30 AM	2	444	98	0	1	2	0	3	1	0	0	0	0
4/27/2024	7:45 AM	1	500	118	0	0	3	0	5	1	0	0	0	0
4/27/2024	8:00 AM	1	504	113	0	0	3	0	5	1	0	0	0	0
4/27/2024	8:15 AM	1	536	118	0	0	4	0	4	1	0	0	0	0
4/27/2024	8:30 AM	1	563	121	0	1	5	0	7	1	0	0	0	0
4/27/2024	8:45 AM	1	597	116	0	2	3	0	6	1	0	0	0	0
4/27/2024	9:00 AM	1	631	121	0	2	3	0	8	1	0	0	0	0
4/27/2024	9:15 AM	5	650	132	0	2	4	0	8	1	0	0	0	0
4/27/2024	9:30 AM	7	699	136	0	1	4	0	6	1	0	0	0	0
4/27/2024	9:45 AM	19	703	135	0	2	6	0	6	0	0	0	0	0
4/27/2024	10:00 AM	25	711	133	0	2	5	0	7	0	0	0	0	0
4/27/2024	10:15 AM	22	708	124	0	3	4	0	7	0	0	0	0	0
4/27/2024	10:30 AM	19	685	124	0	5	5	0	7	0	0	0	0	0
4/27/2024	10:45 AM	25	682	128	0	3	5	0	7	0	0	0	0	0
4/27/2024	11:00 AM	40	749	147	0	5	8	0	9	0	0	0	0	0
4/27/2024	11:15 AM	40	814	156	1	5	7	5	8	0	0	0	0	0
4/27/2024	11:30 AM	53	895	162	1	5	7	5	8	2	0	0	0	0
4/27/2024	11:45 AM	39	929	169	1	8	6	5	9	2	0	0	0	0
4/27/2024	12:00 PM	26	887	158	1	7	5	5	4	2	0	0	0	0
4/27/2024	12:15 PM	33	904	159	1	7	8	0	5	2	0	0	0	0
4/27/2024	12:30 PM	40	854	156	1	7	6	0	5	0	0	0	0	0
4/27/2024	12:45 PM	40	837	139	1	5	6	0	7	0	0	0	0	0
4/27/2024	1:00 PM	39	862	148	1	5	7	0	7	1	0	0	0	0
4/27/2024	1:15 PM	38	811	137	0	4	8	0	8	2	0	0	0	0
4/27/2024	1:30 PM	20	800	138	0	4	9	0	9	2	0	0	0	0
4/27/2024	1:45 PM	18	781	135	0	4	9	0	7	2	0	0	0	0
4/27/2024	2:00 PM	13	765	119	0	3	11	0	8	1	0	0	0	0
4/27/2024	2:15 PM	7	756	128	0	3	9	0	12	0	0	0	0	0
4/27/2024	2:30 PM	12	766	128	0	1	8	0	14	0	0	0	0	0
4/27/2024	2:45 PM	17	829	146	0	0	9	0	12	0	0	0	0	0
4/27/2024	3:00 PM	17	839	156	0	1	4	2	12	0	0	1	0	0
4/27/2024	3:15 PM	23	808	150	0	1	3	2	6	1	0	1	0	0
4/27/2024	3:30 PM	19	796	156	0	1	3	2	5	1	0	1	0	0
4/27/2024	3:45 PM	13	775	161	0	2	2	2	9	2	0	1	0	0
4/27/2024	4:00 PM	26	783	166	0	1	2	0	7	2	0	0	0	0
4/27/2024	4:15 PM	20	827	172	0	1	2	0	7	1	0	0	0	0
4/27/2024	4:30 PM	19	839	162	0	5	2	0	4	1	0	0	0	0
4/27/2024	4:45 PM	19	765	141	0	4	1	0	1	0	0	0	0	0
4/27/2024	5:00 PM	5	670	135	0	4	4	0	2	0	0	0	0	0
4/27/2024	5:15 PM	4	602	126	1	5	8	0	2	0	0	0	0	0
4/27/2024	5:30 PM	5	567	124	2	1	12	0	3	0	0	0	0	0
4/27/2024	5:45 PM	4	581	133	2	1	13	0	2	0	0	0	0	0
4/27/2024	6:00 PM	3	574	130	2	5	10	0	1	0	0	1	0	0
4/27/2024	6:15 PM	3	564	117	1	4	8	0	1	0	0	1	0	0
4/27/2024	6:30 PM	2	533	114	0	4	5	0	0	0	0	1	0	0
4/27/2024	6:45 PM	2	496	106	0	4	4	0	0	0	0	1	0	0
4/27/2024	7:00 PM	7	509	91	0	0	10	0	0	0	0	0	0	0
4/27/2024	7:15 PM	7	515	105	0	0	7	0	0	0	0	0	0	0
4/27/2024	7:30 PM	5	510	99	0	0	6	0	0	0	0	0	0	0
4/27/2024	7:45 PM	5	515	102	0	0	6	0	0	0	0	0	0	0
4/27/2024	8:00 PM	0	519	121	0	0	0	0	0	0	0	0	0	0
4/27/2024	8:15 PM	0	479	108	0	0	0	0	0	0	0	0	0	0
4/27/2024	8:30 PM	0	469	110	0	0	0	0	0	0	0	0	0	0
4/27/2024	8:45 PM	0	430	103	0	0	0	0	0	0	0	0	0	0
4/27/2024	9:00 PM	0	379	94	0	0	0	0	0	0	0	0	0	0
4/27/2024	9:15 PM	0	354	99	0	0	0	0	0	0	0	0	0	0
4/27/2024	9:30 PM	0	304	96	0	0	0	0	0	0	0	0	0	0
4/27/2024	9:45 PM	0	259	85	0	0	0	0	0	0	0	0	0	0
4/27/2024	10:00 PM	0	210	81	0	0	0	0	0	0	0	0	0	0
4/27/2024	10:15 PM	0	193	87	0	0	0	0	0	0	0	0	0	0
4/27/2024	10:30 PM	0	173	94	0	0	0	0	0	0	0	0	0	0
4/27/2024	10:45 PM	0	170	102	0	0	0	0	0	0	0	0	0	0
4/27/2024	11:00 PM	0	172	104	0	0	0	0	0	0	0	0	0	0
4/27/2024	11:15 PM	0	124	76	0	0	0	0	0	0	0	0	0	0
4/27/2024	11:30 PM	0	84	49	0	0	0	0	0	0	0	0	0	0
4/27/2024	11:45 PM	0	42	26	0	0	0	0	0	0	0	0	0	0

WB
File Name:
Start Date: 4/21/2024
Start Time: 0
Site Code: 76 Lane 1 EB
Station ID: 1
Location 1: I-20, east of Browwing Rd
Location 2:

Date	Time	1	2	3	4	5	6	7	8	9	10	11	12	13
4/21/2024	12:00 AM	0	0	0	0	0	0	0	0	0	0	0	0	0
4/21/2024	12:15 AM	0	0	0	0	0	0	0	0	0	0	0	0	0
4/21/2024	12:30 AM	0	0	0	0	0	0	0	0	0	0	0	0	0
4/21/2024	12:45 AM	0	0	0	0	0	0	0	0	0	0	0	0	0
4/21/2024	1:00 AM	0	0	0	0	0	0	0	0	0	0	0	0	0
4/21/2024	1:15 AM	0	0	0	0	0	0	0	0	0	0	0	0	0
4/21/2024	1:30 AM	0	0	0	0	0	0	0	0	0	0	0	0	0
4/21/2024	1:45 AM	0	0	0	0	0	0	0	0	0	0	0	0	0
4/21/2024	2:00 AM	0	0	0	0	0	0	0	0	0	0	0	0	0
4/21/2024	2:15 AM	0	0	0	0	0	0	0	0	0	0	0	0	0
4/21/2024	2:30 AM	0	0	0	0	0	0	0	0	0	0	0	0	0
4/21/2024	2:45 AM	0	0	0	0	0	0	0	0	0	0	0	0	0
4/21/2024	3:00 AM	0	0	0	0	0	0	0	0	0	0	0	0	0
4/21/2024	3:15 AM	0	0	0	0	0	0	0	0	0	0	0	0	0
4/21/2024	3:30 AM	0	0	0	0	0	0	0	0	0	0	0	0	0
4/21/2024	3:45 AM	0	0	0	0	0	0	0	0	0	0	0	0	0
4/21/2024	4:00 AM	0	0	0	0	0	0	0	0	0	0	0	0	0
4/21/2024	4:15 AM	0	0	0	0	0	0	0	0	0	0	0	0	0
4/21/2024	4:30 AM	0	0	0	0	0	0	0	0	0	0	0	0	0
4/21/2024	4:45 AM	0	0	0	0	0	0	0	0	0	0	0	0	0
4/21/2024	5:00 AM	0	0	0	0	0	0	0	0	0	0	0	0	0
4/21/2024	5:15 AM	0	0	0	0	0	0	0	0	0	0	0	0	0
4/21/2024	5:30 AM	0	0	0	0	0	0	0	0	0	0	0	0	0
4/21/2024	5:45 AM	0	0	0	0	0	0	0	0	0	0	0	0	0
4/21/2024	6:00 AM	0	0	0	0	0	0	0	0	0	0	0	0	0
4/21/2024	6:15 AM	0	0	0	0	0	0	0	0	0	0	0	0	0
4/21/2024	6:30 AM	0	0	0	0	0	0	0	0	0	0	0	0	0
4/21/2024	6:45 AM	0	0	0	0	0	0	0	0	0	0	0	0	0
4/21/2024	7:00 AM	0	0	0	0	0	0	0	0	0	0	0	0	0
4/21/2024	7:15 AM	0	0	0	0	0	0	0	0	0	0	0	0	0
4/21/2024	7:30 AM	0	0	0	0	0	0	0	0	0	0	0	0	0
4/21/2024	7:45 AM	0	0	0	0	0	0	0	0	0	0	0	0	0
4/21/2024	8:00 AM	0	0	0	0	0	0	0	0	0	0	0	0	0
4/21/2024	8:15 AM	0	0	0	0	0	0	0	0	0	0	0	0	0
4/21/2024	8:30 AM	0	0	0	0	0	0	0	0	0	0	0	0	0
4/21/2024	8:45 AM	0	0	0	0	0	0	0	0	0	0	0	0	0
4/21/2024	9:00 AM	0	0	0	0	0	0	0	0	0	0	0	0	0
4/21/2024	9:15 AM	0	0	0	0	0	0	0	0	0	0	0	0	0
4/21/2024	9:30 AM	0	0	0	0	0	0	0	0	0	0	0	0	0
4/21/2024	9:45 AM	0	0	0	0	0	0	0	0	0	0	0	0	0
4/21/2024	10:00 AM	0	0	0	0	0	0	0	0	0	0	0	0	0
4/21/2024	10:15 AM	0	0	0	0	0	0	0	0	0	0	0	0	0
4/21/2024	10:30 AM	0	0	0	0	0	0	0	0	0	0	0	0	0
4/21/2024	10:45 AM	0	0	0	0	0	0	0	0	0	0	0	0	0
4/21/2024	11:00 AM	0	0	0	0	0	0	0	0	0	0	0	0	0
4/21/2024	11:15 AM	0	0	0	0	0	0	0	0	0	0	0	0	0
4/21/2024	11:30 AM	0	0	0	0	0	0	0	0	0	0	0	0	0
4/21/2024	11:45 AM	0	0	0	0	0	0	0	0	0	0	0	0	0
4/21/2024	12:00 PM	0	0	0	0	0	0	0	0	0	0	0	0	0
4/21/2024	12:15 PM	0	0	0	0	0	0	0	0	0	0	0	0	0
4/21/2024	12:30 PM	0	0	0	0	0	0	0	0	0	0	0	0	0
4/21/2024	12:45 PM	0	0	0	0	0	0	0	0	0	0	0	0	0
4/21/2024	1:00 PM	0	0	0	0	0	0	0	0	0	0	0	0	0
4/21/2024	1:15 PM	0	0	0	0	0	0	0	0	0	0	0	0	0
4/21/2024	1:30 PM	0	0	0	0	0	0	0	0	0	0	0	0	0
4/21/2024	1:45 PM	0	0	0	0	0	0	0	0	0	0	0	0	0
4/21/2024	2:00 PM	0	0	0	0	0	0	0	0	0	0	0	0	0
4/21/2024	2:15 PM	0	0	0	0	0	0	0	0	0	0	0	0	0
4/21/2024	2:30 PM	0	0	0	0	0	0	0	0	0	0	0	0	0
4/21/2024	2:45 PM	0	0	0	0	0	0	0	0	0	0	0	0	0
4/21/2024	3:00 PM	0	0	0	0	0	0	0	0	0	0	0	0	0
4/21/2024	3:15 PM	0	0	0	0	0	0	0	0	0	0	0	0	0
4/21/2024	3:30 PM	0	0	0	0	0	0	0	0	0	0	0	0	0
4/21/2024	3:45 PM	0	0	0	0	0	0	0	0	0	0	0	0	0
4/21/2024	4:00 PM	0	0	0	0	0	0	0	0	0	0	0	0	0
4/21/2024	4:15 PM	0	0	0	0	0	0	0	0	0	0	0	0	0
4/21/2024	4:30 PM	0	0	0	0	0	0	0	0	0	0	0	0	0
4/21/2024	4:45 PM	0	0	0	0	0	0	0	0	0	0	0	0	0
4/21/2024	5:00 PM	0	0	0	0	0	0	0	0	0	0	0	0	0
4/21/2024	5:15 PM	0	0	0	0	0	0	0	0	0	0	0	0	0
4/21/2024	5:30 PM	0	0	0	0	0	0	0	0	0	0	0	0	0
4/21/2024	5:45 PM	0	0	0	0	0	0	0	0	0	0	0	0	0
4/21/2024	6:00 PM	0	0	0	0	0	0	0	0	0	0	0	0	0
4/21/2024	6:15 PM	0	0	0	0	0	0	0	0	0	0	0	0	0
4/21/2024	6:30 PM	0	0	0	0	0	0	0	0	0	0	0	0	0
4/21/2024	6:45 PM	0	0	0	0	0	0	0	0	0	0	0	0	0
4/21/2024	7:00 PM	0	0	0	0	0	0	0	0	0	0	0	0	0
4/21/2024	7:15 PM	0	0	0	0	0	0	0	0	0	0	0	0	0
4/21/2024	7:30 PM	0	0	0	0	0	0	0	0	0	0	0	0	0
4/21/2024	7:45 PM	0	0	0	0	0	0	0	0	0	0	0	0	0
4/21/2024	8:00 PM	0	0	0	0	0	0	0	0	0	0	0	0	0
4/21/2024	8:15 PM	0	0	0	0	0	0	0	0	0	0	0	0	0
4/21/2024	8:30 PM	0	0	0	0	0	0	0	0	0	0	0	0	0
4/21/2024	8:45 PM	0	0	0	0	0	0	0	0	0	0	0	0	0
4/21/2024	9:00 PM	0	0	0	0	0	0	0	0	0	0	0	0	0
4/21/2024	9:15 PM	0	0	0	0	0	0	0	0	0	0	0	0	0
4/21/2024	9:30 PM	0	0	0	0	0	0	0	0	0	0	0	0	0
4/21/2024	9:45 PM	0	0	0	0	0	0	0	0	0	0	0	0	0
4/21/2024	10:00 PM	0	0	0	0	0	0	0	0	0	0	0	0	0
4/21/2024	10:15 PM	0	0	0	0	0	0	0	0	0	0	0	0	0
4/21/2024	10:30 PM	0	0	0	0	0	0	0	0	0	0	0	0	0
4/21/2024	10:45 PM	0	0	0	0	0	0	0	0	0	0	0	0	0
4/21/2024	11:00 PM	0	0	0	0	0	0	0	0	0	0	0	0	0
4/21/2024	11:15 PM	0	0	0	0	0	0	0	0	0	0	0	0	0
4/21/2024	11:30 PM	0	0	0	0	0	0	0	0	0	0	0	0	0
4/21/2024	11:45 PM	0	0	0	0	0	0	0	0	0	0	0	0	0

4/22/2024	12:00 AM	0	0	0	0	0	0	0	0	0	0	0	0	0
4/22/2024	12:15 AM	0	0	0	0	0	0	0	0	0	0	0	0	0
4/22/2024	12:30 AM	0	0	0	0	0	0	0	0	0	0	0	0	0
4/22/2024	12:45 AM	0	0	0	0	0	0	0	0	0	0	0	0	0
4/22/2024	1:00 AM	0	0	0	0	0	0	0	0	0	0	0	0	0
4/22/2024	1:15 AM	0	0	0	0	0	0	0	0	0	0	0	0	0
4/22/2024	1:30 AM	0	0	0	0	0	0	0	0	0	0	0	0	0
4/22/2024	1:45 AM	0	0	0	0	0	0	0	0	0	0	0	0	0
4/22/2024	2:00 AM	0	0	0	0	0	0	0	0	0	0	0	0	0
4/22/2024	2:15 AM	0	0	0	0	0	0	0	0	0	0	0	0	0
4/22/2024	2:30 AM	0	0	0	0	0	0	0	0	0	0	0	0	0
4/22/2024	2:45 AM	0	0	0	0	0	0	0	0	0	0	0	0	0
4/22/2024	3:00 AM	0	0	0	0	0	0	0	0	0	0	0	0	0
4/22/2024	3:15 AM	0	0	0	0	0	0	0	0	0	0	0	0	0
4/22/2024	3:30 AM	0	0	0	0	0	0	0	0	0	0	0	0	0
4/22/2024	3:45 AM	0	0	0	0	0	0	0	0	0	0	0	0	0
4/22/2024	4:00 AM	0	0	0	0	0	0	0	0	0	0	0	0	0
4/22/2024	4:15 AM	0	0	0	0	0	0	0	0	0	0	0	0	0
4/22/2024	4:30 AM	0	0	0	0	0	0	0	0	0	0	0	0	0
4/22/2024	4:45 AM	0	0	0	0	0	0	0	0	0	0	0	0	0
4/22/2024	5:00 AM	0	0	0	0	0	0	0	0	0	0	0	0	0
4/22/2024	5:15 AM	0	0	0	0	0	0	0	0	0	0	0	0	0
4/22/2024	5:30 AM	0	0	0	0	0	0	0	0	0	0	0	0	0
4/22/2024	5:45 AM	0	0	0	0	0	0	0	0	0	0	0	0	0
4/22/2024	6:00 AM	0	0	0	0	0	0	0	0	0	0	0	0	0
4/22/2024	6:15 AM	0	0	0	0	0	0	0	0	0	0	0	0	0
4/22/2024	6:30 AM	0	0	0	0	0	0	0	0	0	0	0	0	0
4/22/2024	6:45 AM	0	0	0	0	0	0	0	0	0	0	0	0	0
4/22/2024	7:00 AM	0	0	0	0	0	0	0	0	0	0	0	0	0
4/22/2024	7:15 AM	0	0	0	0	0	0	0	0	0	0	0	0	0
4/22/2024	7:30 AM	0	0	0	0	0	0	0	0	0	0	0	0	0
4/22/2024	7:45 AM	0	0	0	0	0	0	0	0	0	0	0	0	0
4/22/2024	8:00 AM	0	0	0	0	0	0	0	0	0	0	0	0	0
4/22/2024	8:15 AM	0	0	0	0	0	0	0	0	0	0	0	0	0
4/22/2024	8:30 AM	0	0	0	0	0	0	0	0	0	0	0	0	0
4/22/2024	8:45 AM	0	0	0	0	0	0	0	0	0	0	0	0	0
4/22/2024	9:00 AM	0	0	0	0	0	0	0	0	0	0	0	0	0
4/22/2024	9:15 AM	0	0	0	0	0	0	0	0	0	0	0	0	0
4/22/2024	9:30 AM	0	0	0	0	0	0	0	0	0	0	0	0	0
4/22/2024	9:45 AM	0	0	0	0	0	0	0	0	0	0	0	0	0
4/22/2024	10:00 AM	0	0	0	0	0	0	0	0	0	0	0	0	0
4/22/2024	10:15 AM	0	0	0	0	0	0	0	0	0	0	0	0	0
4/22/2024	10:30 AM	0	0	0	0	0	0	0	0	0	0	0	0	0
4/22/2024	10:45 AM	0	0	0	0	0	0	0	0	0	0	0	0	0
4/22/2024	11:00 AM	0	0	0	0	0	0	0	0	0	0	0	0	0
4/22/2024	11:15 AM	0	0	0	0	0	0	0	0	0	0	0	0	0
4/22/2024	11:30 AM	0	0	0	0	0	0	0	0	0	0	0	0	0
4/22/2024	11:45 AM	0	0	0	0	0	0	0	0	0	0	0	0	0
4/22/2024	12:00 PM	0	0	0	0	0	0	0	0	0	0	0	0	0
4/22/2024	12:15 PM	0	0	0	0	0	0	0	0	0	0	0	0	0
4/22/2024	12:30 PM	0	0	0	0	0	0	0	0	0	0	0	0	0
4/22/2024	12:45 PM	0	0	0	0	0	0	0	0	0	0	0	0	0
4/22/2024	1:00 PM	0	0	0	0	0	0	0	0	0	0	0	0	0
4/22/2024	1:15 PM	0	0	0	0	0	0	0	0	0	0	0	0	0
4/22/2024	1:30 PM	0	0	0	0	0	0	0	0	0	0	0	0	0
4/22/2024	1:45 PM	0	0	0	0	0	0	0	0	0	0	0	0	0
4/22/2024	2:00 PM	0	0	0	0	0	0	0	0	0	0	0	0	0
4/22/2024	2:15 PM	0	0	0	0	0	0	0	0	0	0	0	0	0
4/22/2024	2:30 PM	0	0	0	0	0	0	0	0	0	0	0	0	0
4/22/2024	2:45 PM	0	0	0	0	0	0	0	0	0	0	0	0	0
4/22/2024	3:00 PM	0	0	0	0	0	0	0	0	0	0	0	0	0
4/22/2024	3:15 PM	0	0	0	0	0	0	0	0	0	0	0	0	0
4/22/2024	3:30 PM	0	0	0	0	0	0	0	0	0	0	0	0	0
4/22/2024	3:45 PM	0	0	0	0	0	0	0	0	0	0	0	0	0
4/22/2024	4:00 PM	0	0	0	0	0	0	0	0	0	0	0	0	0
4/22/2024	4:15 PM	0	0	0	0	0	0	0	0	0	0	0	0	0
4/22/2024	4:30 PM	0	0	0	0	0	0	0	0	0	0	0	0	0
4/22/2024	4:45 PM	0	0	0	0	0	0	0	0	0	0	0	0	0
4/22/2024	5:00 PM	0	0	0	0	0	0	0	0	0	0	0	0	0
4/22/2024	5:15 PM	0	0	0	0	0	0	0	0	0	0	0	0	0
4/22/2024	5:30 PM	0	0	0	0	0	0	0	0	0	0	0	0	0
4/22/2024	5:45 PM	0	0	0	0	0	0	0	0	0	0	0	0	0
4/22/2024	6:00 PM	0	0	0	0	0	0	0	0	0	0	0	0	0
4/22/2024	6:15 PM	0	0	0	0	0	0	0	0	0	0	0	0	0
4/22/2024	6:30 PM	0	0	0	0	0	0	0	0	0	0	0	0	0
4/22/2024	6:45 PM	0	0	0	0	0	0	0	0	0	0	0	0	0
4/22/2024	7:00 PM	0	0	0	0	0	0	0	0	0	0	0	0	0
4/22/2024	7:15 PM	0	0	0	0	0	0	0	0	0	0	0	0	0
4/22/2024	7:30 PM	0	0	0	0	0	0	0	0	0	0	0	0	0
4/22/2024	7:45 PM	0	0	0	0	0	0	0	0	0	0	0	0	0
4/22/2024	8:00 PM	0	0	0	0	0	0	0	0	0	0	0	0	0
4/22/2024	8:15 PM	0	0	0	0	0	0	0	0	0	0	0	0	0
4/22/2024	8:30 PM	0	0	0	0	0	0	0	0	0	0	0	0	0
4/22/2024	8:45 PM	0	0	0	0	0	0	0	0	0	0	0	0	0
4/22/2024	9:00 PM	0	0	0	0	0	0	0	0	0	0	0	0	0
4/22/2024	9:15 PM	0	0	0	0	0	0	0	0	0	0	0	0	0
4/22/2024	9:30 PM	0	0	0	0	0	0	0	0	0	0	0	0	0
4/22/2024	9:45 PM	0	0	0	0	0	0	0	0	0	0	0	0	0
4/22/2024	10:00 PM	0	0	0	0	0	0	0	0	0	0	0	0	0
4/22/2024	10:15 PM	0	0	0	0	0	0	0	0	0	0	0	0	0
4/22/2024	10:30 PM	0	0	0	0	0	0	0	0	0	0	0	0	0
4/22/2024	10:45 PM	0	0	0	0	0	0	0	0	0	0	0	0	0
4/22/2024	11:00 PM	0	0	0	0	0	0	0	0	0	0	0	0	0
4/22/2024	11:15 PM	0	0	0	0	0	0	0	0	0	0	0	0	0
4/22/2024	11:30 PM	0	0	0	0	0	0	0	0	0	0	0	0	0
4/22/2024	11:45 PM	0	0	0	0	0	0	0	0	0	0	0	0	0

4/23/2024	12:00 AM	0	0	0	0	0	0	0	0	0	0	0	0	0
4/23/2024	12:15 AM	0	0	0	0	0	0	0	0	0	0	0	0	0
4/23/2024	12:30 AM	0	0	0	0	0	0	0	0	0	0	0	0	0
4/23/2024	12:45 AM	0	0	0	0	0	0	0	0	0	0	0	0	0
4/23/2024	1:00 AM	0	0	0	0	0	0	0	0	0	0	0	0	0
4/23/2024	1:15 AM	0	0	0	0	0	0	0	0	0	0	0	0	0
4/23/2024	1:30 AM	0	0	0	0	0	0	0	0	0	0	0	0	0
4/23/2024	1:45 AM	0	0	0	0	0	0	0	0	0	0	0	0	0
4/23/2024	2:00 AM	0	0	0	0	0	0	0	0	0	0	0	0	0
4/23/2024	2:15 AM	0	0	0	0	0	0	0	0	0	0	0	0	0
4/23/2024	2:30 AM	0	0	0	0	0	0	0	0	0	0	0	0	0
4/23/2024	2:45 AM	0	0	0	0	0	0	0	0	0	0	0	0	0
4/23/2024	3:00 AM	0	0	0	0	0	0	0	0	0	0	0	0	0
4/23/2024	3:15 AM	0	0	0	0	0	0	0	0	0	0	0	0	0
4/23/2024	3:30 AM	0	0	0	0	0	0	0	0	0	0	0	0	0
4/23/2024	3:45 AM	0	0	0	0	0	0	0	0	0	0	0	0	0
4/23/2024	4:00 AM	0	0	0	0	0	0	0	0	0	0	0	0	0
4/23/2024	4:15 AM	0	0	0	0	0	0	0	0	0	0	0	0	0
4/23/2024	4:30 AM	0	0	0	0	0	0	0	0	0	0	0	0	0
4/23/2024	4:45 AM	0	0	0	0	0	0	0	0	0	0	0	0	0
4/23/2024	5:00 AM	0	0	0	0	0	0	0	0	0	0	0	0	0
4/23/2024	5:15 AM	0	0	0	0	0	0	0	0	0	0	0	0	0
4/23/2024	5:30 AM	0	0	0	0	0	0	0	0	0	0	0	0	0
4/23/2024	5:45 AM	0	0	0	0	0	0	0	0	0	0	0	0	0
4/23/2024	6:00 AM	0	0	0	0	0	0	0	0	0	0	0	0	0
4/23/2024	6:15 AM	0	0	0	0	0	0	0	0	0	0	0	0	0
4/23/2024	6:30 AM	0	0	0	0	0	0	0	0	0	0	0	0	0
4/23/2024	6:45 AM	0	0	0	0	0	0	0	0	0	0	0	0	0
4/23/2024	7:00 AM	0	0	0	0	0	0	0	0	0	0	0	0	0
4/23/2024	7:15 AM	0	0	0	0	0	0	0	0	0	0	0	0	0
4/23/2024	7:30 AM	0	0	0	0	0	0	0	0	0	0	0	0	0
4/23/2024	7:45 AM	0	0	0	0	0	0	0	0	0	0	0	0	0
4/23/2024	8:00 AM	0	0	0	0	0	0	0	0	0	0	0	0	0
4/23/2024	8:15 AM	0	0	0	0	0	0	0	0	0	0	0	0	0
4/23/2024	8:30 AM	0	0	0	0	0	0	0	0	0	0	0	0	0
4/23/2024	8:45 AM	0	0	0	0	0	0	0	0	0	0	0	0	0
4/23/2024	9:00 AM	0	0	0	0	0	0	0	0	0	0	0	0	0
4/23/2024	9:15 AM	0	0	0	0	0	0	0	0	0	0	0	0	0
4/23/2024	9:30 AM	0	0	0	0	0	0	0	0	0	0	0	0	0
4/23/2024	9:45 AM	0	0	0	0	0	0	0	0	0	0	0	0	0
4/23/2024	10:00 AM	0	0	0	0	0	0	0	0	0	0	0	0	0
4/23/2024	10:15 AM	0	0	0	0	0	0	0	0	0	0	0	0	0
4/23/2024	10:30 AM	0	0	0	0	0	0	0	0	0	0	0	0	0
4/23/2024	10:45 AM	0	0	0	0	0	0	0	0	0	0	0	0	0
4/23/2024	11:00 AM	0	0	0	0	0	0	0	0	0	0	0	0	0
4/23/2024	11:15 AM	0	0	0	0	0	0	0	0	0	0	0	0	0
4/23/2024	11:30 AM	0	0	0	0	0	0	0	0	0	0	0	0	0
4/23/2024	11:45 AM	0	0	0	0	0	0	0	0	0	0	0	0	0
4/23/2024	12:00 PM	0	0	0	0	0	0	0	0	0	0	0	0	0
4/23/2024	12:15 PM	0	0	0	0	0	0	0	0	0	0	0	0	0
4/23/2024	12:30 PM	0	0	0	0	0	0	0	0	0	0	0	0	0
4/23/2024	12:45 PM	0	0	0	0	0	0	0	0	0	0	0	0	0
4/23/2024	1:00 PM	0	0	0	0	0	0	0	0	0	0	0	0	0
4/23/2024	1:15 PM	0	0	0	0	0	0	0	0	0	0	0	0	0
4/23/2024	1:30 PM	0	0	0	0	0	0	0	0	0	0	0	0	0
4/23/2024	1:45 PM	0	0	0	0	0	0	0	0	0	0	0	0	0
4/23/2024	2:00 PM	0	0	0	0	0	0	0	0	0	0	0	0	0
4/23/2024	2:15 PM	0	0	0	0	0	0	0	0	0	0	0	0	0
4/23/2024	2:30 PM	0	0	0	0	0	0	0	0	0	0	0	0	0
4/23/2024	2:45 PM	0	0	0	0	0	0	0	0	0	0	0	0	0
4/23/2024	3:00 PM	0	0	0	0	0	0	0	0	0	0	0	0	0
4/23/2024	3:15 PM	0	0	0	0	0	0	0	0	0	0	0	0	0
4/23/2024	3:30 PM	0	0	0	0	0	0	0	0	0	0	0	0	0
4/23/2024	3:45 PM	0	0	0	0	0	0	0	0	0	0	0	0	0
4/23/2024	4:00 PM	0	0	0	0	0	0	0	0	0	0	0	0	0
4/23/2024	4:15 PM	0	0	0	0	0	0	0	0	0	0	0	0	0
4/23/2024	4:30 PM	0	0	0	0	0	0	0	0	0	0	0	0	0
4/23/2024	4:45 PM	0	0	0	0	0	0	0	0	0	0	0	0	0
4/23/2024	5:00 PM	0	0	0	0	0	0	0	0	0	0	0	0	0
4/23/2024	5:15 PM	0	0	0	0	0	0	0	0	0	0	0	0	0
4/23/2024	5:30 PM	0	0	0	0	0	0	0	0	0	0	0	0	0
4/23/2024	5:45 PM	0	0	0	0	0	0	0	0	0	0	0	0	0
4/23/2024	6:00 PM	0	0	0	0	0	0	0	0	0	0	0	0	0
4/23/2024	6:15 PM	0	0	0	0	0	0	0	0	0	0	0	0	0
4/23/2024	6:30 PM	0	0	0	0	0	0	0	0	0	0	0	0	0
4/23/2024	6:45 PM	0	0	0	0	0	0	0	0	0	0	0	0	0
4/23/2024	7:00 PM	0	0	0	0	0	0	0	0	0	0	0	0	0
4/23/2024	7:15 PM	0	0	0	0	0	0	0	0	0	0	0	0	0
4/23/2024	7:30 PM	0	0	0	0	0	0	0	0	0	0	0	0	0
4/23/2024	7:45 PM	0	0	0	0	0	0	0	0	0	0	0	0	0
4/23/2024	8:00 PM	0	0	0	0	0	0	0	0	0	0	0	0	0
4/23/2024	8:15 PM	0	0	0	0	0	0	0	0	0	0	0	0	0
4/23/2024	8:30 PM	0	0	0	0	0	0	0	0	0	0	0	0	0
4/23/2024	8:45 PM	0	0	0	0	0	0	0	0	0	0	0	0	0
4/23/2024	9:00 PM	0	0	0	0	0	0	0	0	0	0	0	0	0
4/23/2024	9:15 PM	0	0	0	0	0	0	0	0	0	0	0	0	0
4/23/2024	9:30 PM	0	0	0	0	0	0	0	0	0	0	0	0	0
4/23/2024	9:45 PM	0	0	0	0	0	0	0	0	0	0	0	0	0
4/23/2024	10:00 PM	0	0	0	0	0	0	0	0	0	0	0	0	0
4/23/2024	10:15 PM	0	0	0	0	0	0	0	0	0	0	0	0	0
4/23/2024	10:30 PM	0	0	0	0	0	0	0	0	0	0	0	0	0
4/23/2024	10:45 PM	0	0	0	0	0	0	0	0	0	0	0	0	0
4/23/2024	11:00 PM	0	0	0	0	0	0	0	0	0	0	0	0	0
4/23/2024	11:15 PM	0	0	0	0	0	0	0	0	0	0	0	0	0
4/23/2024	11:30 PM	0	0	0	0	0	0	0	0	0	0	0	0	0
4/23/2024	11:45 PM	0	0	0	0	0	0	0	0	0	0	0	0	0

4/24/2024	12:00 AM	0	0	0	0	0	0	0	0	0	0	0	0	0
4/24/2024	12:15 AM	0	0	0	0	0	0	0	0	0	0	0	0	0
4/24/2024	12:30 AM	0	0	0	0	0	0	0	0	0	0	0	0	0
4/24/2024	12:45 AM	0	0	0	0	0	0	0	0	0	0	0	0	0
4/24/2024	1:00 AM	0	0	0	0	0	0	0	0	0	0	0	0	0
4/24/2024	1:15 AM	0	0	0	0	0	0	0	0	0	0	0	0	0
4/24/2024	1:30 AM	0	0	0	0	0	0	0	0	0	0	0	0	0
4/24/2024	1:45 AM	0	0	0	0	0	0	0	0	0	0	0	0	0
4/24/2024	2:00 AM	0	0	0	0	0	0	0	0	0	0	0	0	0
4/24/2024	2:15 AM	0	0	0	0	0	0	0	0	0	0	0	0	0
4/24/2024	2:30 AM	0	0	0	0	0	0	0	0	0	0	0	0	0
4/24/2024	2:45 AM	0	0	0	0	0	0	0	0	0	0	0	0	0
4/24/2024	3:00 AM	0	0	0	0	0	0	0	0	0	0	0	0	0
4/24/2024	3:15 AM	0	0	0	0	0	0	0	0	0	0	0	0	0
4/24/2024	3:30 AM	0	0	0	0	0	0	0	0	0	0	0	0	0
4/24/2024	3:45 AM	0	0	0	0	0	0	0	0	0	0	0	0	0
4/24/2024	4:00 AM	0	0	0	0	0	0	0	0	0	0	0	0	0
4/24/2024	4:15 AM	0	0	0	0	0	0	0	0	0	0	0	0	0
4/24/2024	4:30 AM	0	0	0	0	0	0	0	0	0	0	0	0	0
4/24/2024	4:45 AM	0	0	0	0	0	0	0	0	0	0	0	0	0
4/24/2024	5:00 AM	0	0	0	0	0	0	0	0	0	0	0	0	0
4/24/2024	5:15 AM	0	0	0	0	0	0	0	0	0	0	0	0	0
4/24/2024	5:30 AM	0	0	0	0	0	0	0	0	0	0	0	0	0
4/24/2024	5:45 AM	0	0	0	0	0	0	0	0	0	0	0	0	0
4/24/2024	6:00 AM	0	0	0	0	0	0	0	0	0	0	0	0	0
4/24/2024	6:15 AM	0	0	0	0	0	0	0	0	0	0	0	0	0
4/24/2024	6:30 AM	0	0	0	0	0	0	0	0	0	0	0	0	0
4/24/2024	6:45 AM	0	0	0	0	0	0	0	0	0	0	0	0	0
4/24/2024	7:00 AM	0	0	0	0	0	0	0	0	0	0	0	0	0
4/24/2024	7:15 AM	0	0	0	0	0	0	0	0	0	0	0	0	0
4/24/2024	7:30 AM	0	0	0	0	0	0	0	0	0	0	0	0	0
4/24/2024	7:45 AM	0	0	0	0	0	0	0	0	0	0	0	0	0
4/24/2024	8:00 AM	0	0	0	0	0	0	0	0	0	0	0	0	0
4/24/2024	8:15 AM	0	0	0	0	0	0	0	0	0	0	0	0	0
4/24/2024	8:30 AM	0	0	0	0	0	0	0	0	0	0	0	0	0
4/24/2024	8:45 AM	0	0	0	0	0	0	0	0	0	0	0	0	0
4/24/2024	9:00 AM	0	0	0	0	0	0	0	0	0	0	0	0	0
4/24/2024	9:15 AM	0	0	0	0	0	0	0	0	0	0	0	0	0
4/24/2024	9:30 AM	0	0	0	0	0	0	0	0	0	0	0	0	0
4/24/2024	9:45 AM	0	0	0	0	0	0	0	0	0	0	0	0	0
4/24/2024	10:00 AM	0	0	0	0	0	0	0	0	0	0	0	0	0
4/24/2024	10:15 AM	0	0	0	0	0	0	0	0	0	0	0	0	0
4/24/2024	10:30 AM	0	0	0	0	0	0	0	0	0	0	0	0	0
4/24/2024	10:45 AM	0	0	0	0	0	0	0	0	0	0	0	0	0
4/24/2024	11:00 AM	0	0	0	0	0	0	0	0	0	0	0	0	0
4/24/2024	11:15 AM	0	0	0	0	0	0	0	0	0	0	0	0	0
4/24/2024	11:30 AM	0	0	0	0	0	0	0	0	0	0	0	0	0
4/24/2024	11:45 AM	0	0	0	0	0	0	0	0	0	0	0	0	0
4/24/2024	12:00 PM	0	0	0	0	0	0	0	0	0	0	0	0	0
4/24/2024	12:15 PM	0	0	0	0	0	0	0	0	0	0	0	0	0
4/24/2024	12:30 PM	0	0	0	0	0	0	0	0	0	0	0	0	0
4/24/2024	12:45 PM	0	0	0	0	0	0	0	0	0	0	0	0	0
4/24/2024	1:00 PM	0	0	0	0	0	0	0	0	0	0	0	0	0
4/24/2024	1:15 PM	0	0	0	0	0	0	0	0	0	0	0	0	0
4/24/2024	1:30 PM	0	0	0	0	0	0	0	0	0	0	0	0	0
4/24/2024	1:45 PM	0	0	0	0	0	0	0	0	0	0	0	0	0
4/24/2024	2:00 PM	0	0	0	0	0	0	0	0	0	0	0	0	0
4/24/2024	2:15 PM	0	0	0	0	0	0	0	0	0	0	0	0	0
4/24/2024	2:30 PM	0	0	0	0	0	0	0	0	0	0	0	0	0
4/24/2024	2:45 PM	0	0	0	0	0	0	0	0	0	0	0	0	0
4/24/2024	3:00 PM	0	0	0	0	0	0	0	0	0	0	0	0	0
4/24/2024	3:15 PM	0	0	0	0	0	0	0	0	0	0	0	0	0
4/24/2024	3:30 PM	0	0	0	0	0	0	0	0	0	0	0	0	0
4/24/2024	3:45 PM	0	0	0	0	0	0	0	0	0	0	0	0	0
4/24/2024	4:00 PM	0	0	0	0	0	0	0	0	0	0	0	0	0
4/24/2024	4:15 PM	0	0	0	0	0	0	0	0	0	0	0	0	0
4/24/2024	4:30 PM	0	0	0	0	0	0	0	0	0	0	0	0	0
4/24/2024	4:45 PM	0	0	0	0	0	0	0	0	0	0	0	0	0
4/24/2024	5:00 PM	0	0	0	0	0	0	0	0	0	0	0	0	0
4/24/2024	5:15 PM	0	0	0	0	0	0	0	0	0	0	0	0	0
4/24/2024	5:30 PM	0	0	0	0	0	0	0	0	0	0	0	0	0
4/24/2024	5:45 PM	0	0	0	0	0	0	0	0	0	0	0	0	0
4/24/2024	6:00 PM	0	0	0	0	0	0	0	0	0	0	0	0	0
4/24/2024	6:15 PM	0	0	0	0	0	0	0	0	0	0	0	0	0
4/24/2024	6:30 PM	0	0	0	0	0	0	0	0	0	0	0	0	0
4/24/2024	6:45 PM	0	0	0	0	0	0	0	0	0	0	0	0	0
4/24/2024	7:00 PM	0	0	0	0	0	0	0	0	0	0	0	0	0
4/24/2024	7:15 PM	0	0	0	0	0	0	0	0	0	0	0	0	0
4/24/2024	7:30 PM	0	0	0	0	0	0	0	0	0	0	0	0	0
4/24/2024	7:45 PM	0	0	0	0	0	0	0	0	0	0	0	0	0
4/24/2024	8:00 PM	0	0	0	0	0	0	0	0	0	0	0	0	0
4/24/2024	8:15 PM	0	0	0	0	0	0	0	0	0	0	0	0	0
4/24/2024	8:30 PM	0	0	0	0	0	0	0	0	0	0	0	0	0
4/24/2024	8:45 PM	0	0	0	0	0	0	0	0	0	0	0	0	0
4/24/2024	9:00 PM	0	0	0	0	0	0	0	0	0	0	0	0	0
4/24/2024	9:15 PM	0	0	0	0	0	0	0	0	0	0	0	0	0
4/24/2024	9:30 PM	0	0	0	0	0	0	0	0	0	0	0	0	0
4/24/2024	9:45 PM	0	0	0	0	0	0	0	0	0	0	0	0	0
4/24/2024	10:00 PM	0	0	0	0	0	0	0	0	0	0	0	0	0
4/24/2024	10:15 PM	0	0	0	0	0	0	0	0	0	0	0	0	0
4/24/2024	10:30 PM	0	0	0	0	0	0	0	0	0	0	0	0	0
4/24/2024	10:45 PM	0	0	0	0	0	0	0	0	0	0	0	0	0
4/24/2024	11:00 PM	0	0	0	0	0	0	0	0	0	0	0	0	0
4/24/2024	11:15 PM	0	0	0	0	0	0	0	0	0	0	0	0	0
4/24/2024	11:30 PM	0	0	0	0	0	0	0	0	0	0	0	0	0
4/24/2024	11:45 PM	0	0	0	0	0	0	0	0	0	0	0	0	0

4/25/2024	12:00 AM	0	0	0	0	0	0	0	0	0	0	0	0	0
4/25/2024	12:15 AM	0	0	0	0	0	0	0	0	0	0	0	0	0
4/25/2024	12:30 AM	0	0	0	0	0	0	0	0	0	0	0	0	0
4/25/2024	12:45 AM	0	0	0	0	0	0	0	0	0	0	0	0	0
4/25/2024	1:00 AM	0	0	0	0	0	0	0	0	0	0	0	0	0
4/25/2024	1:15 AM	0	0	0	0	0	0	0	0	0	0	0	0	0
4/25/2024	1:30 AM	0	0	0	0	0	0	0	0	0	0	0	0	0
4/25/2024	1:45 AM	0	0	0	0	0	0	0	0	0	0	0	0	0
4/25/2024	2:00 AM	0	0	0	0	0	0	0	0	0	0	0	0	0
4/25/2024	2:15 AM	0	0	0	0	0	0	0	0	0	0	0	0	0
4/25/2024	2:30 AM	0	0	0	0	0	0	0	0	0	0	0	0	0
4/25/2024	2:45 AM	0	0	0	0	0	0	0	0	0	0	0	0	0
4/25/2024	3:00 AM	0	0	0	0	0	0	0	0	0	0	0	0	0
4/25/2024	3:15 AM	0	0	0	0	0	0	0	0	0	0	0	0	0
4/25/2024	3:30 AM	0	0	0	0	0	0	0	0	0	0	0	0	0
4/25/2024	3:45 AM	0	0	0	0	0	0	0	0	0	0	0	0	0
4/25/2024	4:00 AM	0	0	0	0	0	0	0	0	0	0	0	0	0
4/25/2024	4:15 AM	0	0	0	0	0	0	0	0	0	0	0	0	0
4/25/2024	4:30 AM	0	0	0	0	0	0	0	0	0	0	0	0	0
4/25/2024	4:45 AM	0	0	0	0	0	0	0	0	0	0	0	0	0
4/25/2024	5:00 AM	0	0	0	0	0	0	0	0	0	0	0	0	0
4/25/2024	5:15 AM	0	0	0	0	0	0	0	0	0	0	0	0	0
4/25/2024	5:30 AM	0	0	0	0	0	0	0	0	0	0	0	0	0
4/25/2024	5:45 AM	0	0	0	0	0	0	0	0	0	0	0	0	0
4/25/2024	6:00 AM	0	0	0	0	0	0	0	0	0	0	0	0	0
4/25/2024	6:15 AM	0	0	0	0	0	0	0	0	0	0	0	0	0
4/25/2024	6:30 AM	0	0	0	0	0	0	0	0	0	0	0	0	0
4/25/2024	6:45 AM	0	0	0	0	0	0	0	0	0	0	0	0	0
4/25/2024	7:00 AM	0	0	0	0	0	0	0	0	0	0	0	0	0
4/25/2024	7:15 AM	0	0	0	0	0	0	0	0	0	0	0	0	0
4/25/2024	7:30 AM	0	0	0	0	0	0	0	0	0	0	0	0	0
4/25/2024	7:45 AM	0	0	0	0	0	0	0	0	0	0	0	0	0
4/25/2024	8:00 AM	0	0	0	0	0	0	0	0	0	0	0	0	0
4/25/2024	8:15 AM	0	0	0	0	0	0	0	0	0	0	0	0	0
4/25/2024	8:30 AM	0	0	0	0	0	0	0	0	0	0	0	0	0
4/25/2024	8:45 AM	0	0	0	0	0	0	0	0	0	0	0	0	0
4/25/2024	9:00 AM	0	0	0	0	0	0	0	0	0	0	0	0	0
4/25/2024	9:15 AM	0	0	0	0	0	0	0	0	0	0	0	0	0
4/25/2024	9:30 AM	0	0	0	0	0	0	0	0	0	0	0	0	0
4/25/2024	9:45 AM	0	0	0	0	0	0	0	0	0	0	0	0	0
4/25/2024	10:00 AM	0	0	0	0	0	0	0	0	0	0	0	0	0
4/25/2024	10:15 AM	0	0	0	0	0	0	0	0	0	0	0	0	0
4/25/2024	10:30 AM	0	0	0	0	0	0	0	0	0	0	0	0	0
4/25/2024	10:45 AM	0	0	0	0	0	0	0	0	0	0	0	0	0
4/25/2024	11:00 AM	0	0	0	0	0	0	0	0	0	0	0	0	0
4/25/2024	11:15 AM	0	0	0	0	0	0	0	0	0	0	0	0	0
4/25/2024	11:30 AM	0	0	0	0	0	0	0	0	0	0	0	0	0
4/25/2024	11:45 AM	0	0	0	0	0	0	0	0	0	0	0	0	0
4/25/2024	12:00 PM	0	0	0	0	0	0	0	0	0	0	0	0	0
4/25/2024	12:15 PM	0	0	0	0	0	0	0	0	0	0	0	0	0
4/25/2024	12:30 PM	0	0	0	0	0	0	0	0	0	0	0	0	0
4/25/2024	12:45 PM	0	0	0	0	0	0	0	0	0	0	0	0	0
4/25/2024	1:00 PM	0	0	0	0	0	0	0	0	0	0	0	0	0
4/25/2024	1:15 PM	0	0	0	0	0	0	0	0	0	0	0	0	0
4/25/2024	1:30 PM	0	0	0	0	0	0	0	0	0	0	0	0	0
4/25/2024	1:45 PM	0	0	0	0	0	0	0	0	0	0	0	0	0
4/25/2024	2:00 PM	0	0	0	0	0	0	0	0	0	0	0	0	0
4/25/2024	2:15 PM	0	0	0	0	0	0	0	0	0	0	0	0	0
4/25/2024	2:30 PM	0	0	0	0	0	0	0	0	0	0	0	0	0
4/25/2024	2:45 PM	0	0	0	0	0	0	0	0	0	0	0	0	0
4/25/2024	3:00 PM	0	0	0	0	0	0	0	0	0	0	0	0	0
4/25/2024	3:15 PM	0	0	0	0	0	0	0	0	0	0	0	0	0
4/25/2024	3:30 PM	0	0	0	0	0	0	0	0	0	0	0	0	0
4/25/2024	3:45 PM	0	0	0	0	0	0	0	0	0	0	0	0	0
4/25/2024	4:00 PM	0	0	0	0	0	0	0	0	0	0	0	0	0
4/25/2024	4:15 PM	0	0	0	0	0	0	0	0	0	0	0	0	0
4/25/2024	4:30 PM	0	0	0	0	0	0	0	0	0	0	0	0	0
4/25/2024	4:45 PM	0	0	0	0	0	0	0	0	0	0	0	0	0
4/25/2024	5:00 PM	0	0	0	0	0	0	0	0	0	0	0	0	0
4/25/2024	5:15 PM	0	0	0	0	0	0	0	0	0	0	0	0	0
4/25/2024	5:30 PM	0	0	0	0	0	0	0	0	0	0	0	0	0
4/25/2024	5:45 PM	0	0	0	0	0	0	0	0	0	0	0	0	0
4/25/2024	6:00 PM	0	0	0	0	0	0	0	0	0	0	0	0	0
4/25/2024	6:15 PM	0	0	0	0	0	0	0	0	0	0	0	0	0
4/25/2024	6:30 PM	0	0	0	0	0	0	0	0	0	0	0	0	0
4/25/2024	6:45 PM	0	0	0	0	0	0	0	0	0	0	0	0	0
4/25/2024	7:00 PM	0	0	0	0	0	0	0	0	0	0	0	0	0
4/25/2024	7:15 PM	0	0	0	0	0	0	0	0	0	0	0	0	0
4/25/2024	7:30 PM	0	0	0	0	0	0	0	0	0	0	0	0	0
4/25/2024	7:45 PM	0	0	0	0	0	0	0	0	0	0	0	0	0
4/25/2024	8:00 PM	0	0	0	0	0	0	0	0	0	0	0	0	0
4/25/2024	8:15 PM	0	0	0	0	0	0	0	0	0	0	0	0	0
4/25/2024	8:30 PM	0	0	0	0	0	0	0	0	0	0	0	0	0
4/25/2024	8:45 PM	0	0	0	0	0	0	0	0	0	0	0	0	0
4/25/2024	9:00 PM	0	0	0	0	0	0	0	0	0	0	0	0	0
4/25/2024	9:15 PM	0	0	0	0	0	0	0	0	0	0	0	0	0
4/25/2024	9:30 PM	0	0	0	0	0	0	0	0	0	0	0	0	0
4/25/2024	9:45 PM	0	0	0	0	0	0	0	0	0	0	0	0	0
4/25/2024	10:00 PM	0	0	0	0	0	0	0	0	0	0	0	0	0
4/25/2024	10:15 PM	0	0	0	0	0	0	0	0	0	0	0	0	0
4/25/2024	10:30 PM	0	0	0	0	0	0	0	0	0	0	0	0	0
4/25/2024	10:45 PM	0	0	0	0	0	0	0	0	0	0	0	0	0
4/25/2024	11:00 PM	0	0	0	0	0	0	0	0	0	0	0	0	0
4/25/2024	11:15 PM	0	0	0	0	0	0	0	0	0	0	0	0	0
4/25/2024	11:30 PM	0	0	0	0	0	0	0	0	0	0	0	0	0
4/25/2024	11:45 PM	0	0	0	0	0	0	0	0	0	0	0	0	0

4/26/2024	12:00 AM	0	0	0	0	0	0	0	0	0	0	0	0	0
4/26/2024	12:15 AM	0	0	0	0	0	0	0	0	0	0	0	0	0
4/26/2024	12:30 AM	0	0	0	0	0	0	0	0	0	0	0	0	0
4/26/2024	12:45 AM	0	0	0	0	0	0	0	0	0	0	0	0	0
4/26/2024	1:00 AM	0	0	0	0	0	0	0	0	0	0	0	0	0
4/26/2024	1:15 AM	0	0	0	0	0	0	0	0	0	0	0	0	0
4/26/2024	1:30 AM	0	0	0	0	0	0	0	0	0	0	0	0	0
4/26/2024	1:45 AM	0	0	0	0	0	0	0	0	0	0	0	0	0
4/26/2024	2:00 AM	0	0	0	0	0	0	0	0	0	0	0	0	0
4/26/2024	2:15 AM	0	0	0	0	0	0	0	0	0	0	0	0	0
4/26/2024	2:30 AM	0	0	0	0	0	0	0	0	0	0	0	0	0
4/26/2024	2:45 AM	0	0	0	0	0	0	0	0	0	0	0	0	0
4/26/2024	3:00 AM	0	0	0	0	0	0	0	0	0	0	0	0	0
4/26/2024	3:15 AM	0	0	0	0	0	0	0	0	0	0	0	0	0
4/26/2024	3:30 AM	0	0	0	0	0	0	0	0	0	0	0	0	0
4/26/2024	3:45 AM	0	0	0	0	0	0	0	0	0	0	0	0	0
4/26/2024	4:00 AM	0	0	0	0	0	0	0	0	0	0	0	0	0
4/26/2024	4:15 AM	0	0	0	0	0	0	0	0	0	0	0	0	0
4/26/2024	4:30 AM	0	0	0	0	0	0	0	0	0	0	0	0	0
4/26/2024	4:45 AM	0	0	0	0	0	0	0	0	0	0	0	0	0
4/26/2024	5:00 AM	0	0	0	0	0	0	0	0	0	0	0	0	0
4/26/2024	5:15 AM	0	0	0	0	0	0	0	0	0	0	0	0	0
4/26/2024	5:30 AM	0	0	0	0	0	0	0	0	0	0	0	0	0
4/26/2024	5:45 AM	0	0	0	0	0	0	0	0	0	0	0	0	0
4/26/2024	6:00 AM	0	0	0	0	0	0	0	0	0	0	0	0	0
4/26/2024	6:15 AM	0	0	0	0	0	0	0	0	0	0	0	0	0
4/26/2024	6:30 AM	0	0	0	0	0	0	0	0	0	0	0	0	0
4/26/2024	6:45 AM	0	0	0	0	0	0	0	0	0	0	0	0	0
4/26/2024	7:00 AM	0	0	0	0	0	0	0	0	0	0	0	0	0
4/26/2024	7:15 AM	0	0	0	0	0	0	0	0	0	0	0	0	0
4/26/2024	7:30 AM	0	0	0	0	0	0	0	0	0	0	0	0	0
4/26/2024	7:45 AM	0	0	0	0	0	0	0	0	0	0	0	0	0
4/26/2024	8:00 AM	0	0	0	0	0	0	0	0	0	0	0	0	0
4/26/2024	8:15 AM	0	0	0	0	0	0	0	0	0	0	0	0	0
4/26/2024	8:30 AM	0	0	0	0	0	0	0	0	0	0	0	0	0
4/26/2024	8:45 AM	0	0	0	0	0	0	0	0	0	0	0	0	0
4/26/2024	9:00 AM	0	0	0	0	0	0	0	0	0	0	0	0	0
4/26/2024	9:15 AM	0	0	0	0	0	0	0	0	0	0	0	0	0
4/26/2024	9:30 AM	0	0	0	0	0	0	0	0	0	0	0	0	0
4/26/2024	9:45 AM	0	0	0	0	0	0	0	0	0	0	0	0	0
4/26/2024	10:00 AM	0	0	0	0	0	0	0	0	0	0	0	0	0
4/26/2024	10:15 AM	0	0	0	0	0	0	0	0	0	0	0	0	0
4/26/2024	10:30 AM	0	0	0	0	0	0	0	0	0	0	0	0	0
4/26/2024	10:45 AM	0	0	0	0	0	0	0	0	0	0	0	0	0
4/26/2024	11:00 AM	0	0	0	0	0	0	0	0	0	0	0	0	0
4/26/2024	11:15 AM	0	0	0	0	0	0	0	0	0	0	0	0	0
4/26/2024	11:30 AM	0	0	0	0	0	0	0	0	0	0	0	0	0
4/26/2024	11:45 AM	0	0	0	0	0	0	0	0	0	0	0	0	0
4/26/2024	12:00 PM	0	0	0	0	0	0	0	0	0	0	0	0	0
4/26/2024	12:15 PM	0	0	0	0	0	0	0	0	0	0	0	0	0
4/26/2024	12:30 PM	0	0	0	0	0	0	0	0	0	0	0	0	0
4/26/2024	12:45 PM	0	0	0	0	0	0	0	0	0	0	0	0	0
4/26/2024	1:00 PM	0	0	0	0	0	0	0	0	0	0	0	0	0
4/26/2024	1:15 PM	0	0	0	0	0	0	0	0	0	0	0	0	0
4/26/2024	1:30 PM	0	0	0	0	0	0	0	0	0	0	0	0	0
4/26/2024	1:45 PM	0	0	0	0	0	0	0	0	0	0	0	0	0
4/26/2024	2:00 PM	0	0	0	0	0	0	0	0	0	0	0	0	0
4/26/2024	2:15 PM	0	0	0	0	0	0	0	0	0	0	0	0	0
4/26/2024	2:30 PM	0	0	0	0	0	0	0	0	0	0	0	0	0
4/26/2024	2:45 PM	0	0	0	0	0	0	0	0	0	0	0	0	0
4/26/2024	3:00 PM	0	0	0	0	0	0	0	0	0	0	0	0	0
4/26/2024	3:15 PM	0	0	0	0	0	0	0	0	0	0	0	0	0
4/26/2024	3:30 PM	0	0	0	0	0	0	0	0	0	0	0	0	0
4/26/2024	3:45 PM	0	0	0	0	0	0	0	0	0	0	0	0	0
4/26/2024	4:00 PM	0	0	0	0	0	0	0	0	0	0	0	0	0
4/26/2024	4:15 PM	0	0	0	0	0	0	0	0	0	0	0	0	0
4/26/2024	4:30 PM	0	0	0	0	0	0	0	0	0	0	0	0	0
4/26/2024	4:45 PM	0	0	0	0	0	0	0	0	0	0	0	0	0
4/26/2024	5:00 PM	0	0	0	0	0	0	0	0	0	0	0	0	0
4/26/2024	5:15 PM	0	0	0	0	0	0	0	0	0	0	0	0	0
4/26/2024	5:30 PM	0	0	0	0	0	0	0	0	0	0	0	0	0
4/26/2024	5:45 PM	0	0	0	0	0	0	0	0	0	0	0	0	0
4/26/2024	6:00 PM	0	0	0	0	0	0	0	0	0	0	0	0	0
4/26/2024	6:15 PM	0	0	0	0	0	0	0	0	0	0	0	0	0
4/26/2024	6:30 PM	0	0	0	0	0	0	0	0	0	0	0	0	0
4/26/2024	6:45 PM	0	0	0	0	0	0	0	0	0	0	0	0	0
4/26/2024	7:00 PM	0	0	0	0	0	0	0	0	0	0	0	0	0
4/26/2024	7:15 PM	0	0	0	0	0	0	0	0	0	0	0	0	0
4/26/2024	7:30 PM	0	0	0	0	0	0	0	0	0	0	0	0	0
4/26/2024	7:45 PM	0	0	0	0	0	0	0	0	0	0	0	0	0
4/26/2024	8:00 PM	0	0	0	0	0	0	0	0	0	0	0	0	0
4/26/2024	8:15 PM	0	0	0	0	0	0	0	0	0	0	0	0	0
4/26/2024	8:30 PM	0	0	0	0	0	0	0	0	0	0	0	0	0
4/26/2024	8:45 PM	0	0	0	0	0	0	0	0	0	0	0	0	0
4/26/2024	9:00 PM	0	0	0	0	0	0	0	0	0	0	0	0	0
4/26/2024	9:15 PM	0	0	0	0	0	0	0	0	0	0	0	0	0
4/26/2024	9:30 PM	0	0	0	0	0	0	0	0	0	0	0	0	0
4/26/2024	9:45 PM	0	0	0	0	0	0	0	0	0	0	0	0	0
4/26/2024	10:00 PM	0	0	0	0	0	0	0	0	0	0	0	0	0
4/26/2024	10:15 PM	0	0	0	0	0	0	0	0	0	0	0	0	0
4/26/2024	10:30 PM	0	0	0	0	0	0	0	0	0	0	0	0	0
4/26/2024	10:45 PM	0	0	0	0	0	0	0	0	0	0	0	0	0
4/26/2024	11:00 PM	0	0	0	0	0	0	0	0	0	0	0	0	0
4/26/2024	11:15 PM	0	0	0	0	0	0	0	0	0	0	0	0	0
4/26/2024	11:30 PM	0	0	0	0	0	0	0	0	0	0	0	0	0
4/26/2024	11:45 PM	0	0	0	0	0	0	0	0	0	0	0	0	0

4/27/2024	12:00 AM	0	0	0	0	0	0	0	0	0	0	0	0	0
4/27/2024	12:15 AM	0	0	0	0	0	0	0	0	0	0	0	0	0
4/27/2024	12:30 AM	0	0	0	0	0	0	0	0	0	0	0	0	0
4/27/2024	12:45 AM	0	0	0	0	0	0	0	0	0	0	0	0	0
4/27/2024	1:00 AM	0	0	0	0	0	0	0	0	0	0	0	0	0
4/27/2024	1:15 AM	0	0	0	0	0	0	0	0	0	0	0	0	0
4/27/2024	1:30 AM	0	0	0	0	0	0	0	0	0	0	0	0	0
4/27/2024	1:45 AM	0	0	0	0	0	0	0	0	0	0	0	0	0
4/27/2024	2:00 AM	0	0	0	0	0	0	0	0	0	0	0	0	0
4/27/2024	2:15 AM	0	0	0	0	0	0	0	0	0	0	0	0	0
4/27/2024	2:30 AM	0	0	0	0	0	0	0	0	0	0	0	0	0
4/27/2024	2:45 AM	0	0	0	0	0	0	0	0	0	0	0	0	0
4/27/2024	3:00 AM	0	0	0	0	0	0	0	0	0	0	0	0	0
4/27/2024	3:15 AM	0	0	0	0	0	0	0	0	0	0	0	0	0
4/27/2024	3:30 AM	0	0	0	0	0	0	0	0	0	0	0	0	0
4/27/2024	3:45 AM	0	0	0	0	0	0	0	0	0	0	0	0	0
4/27/2024	4:00 AM	0	0	0	0	0	0	0	0	0	0	0	0	0
4/27/2024	4:15 AM	0	0	0	0	0	0	0	0	0	0	0	0	0
4/27/2024	4:30 AM	0	0	0	0	0	0	0	0	0	0	0	0	0
4/27/2024	4:45 AM	0	0	0	0	0	0	0	0	0	0	0	0	0
4/27/2024	5:00 AM	0	0	0	0	0	0	0	0	0	0	0	0	0
4/27/2024	5:15 AM	0	0	0	0	0	0	0	0	0	0	0	0	0
4/27/2024	5:30 AM	0	0	0	0	0	0	0	0	0	0	0	0	0
4/27/2024	5:45 AM	0	0	0	0	0	0	0	0	0	0	0	0	0
4/27/2024	6:00 AM	0	0	0	0	0	0	0	0	0	0	0	0	0
4/27/2024	6:15 AM	0	0	0	0	0	0	0	0	0	0	0	0	0
4/27/2024	6:30 AM	0	0	0	0	0	0	0	0	0	0	0	0	0
4/27/2024	6:45 AM	0	0	0	0	0	0	0	0	0	0	0	0	0
4/27/2024	7:00 AM	0	0	0	0	0	0	0	0	0	0	0	0	0
4/27/2024	7:15 AM	0	0	0	0	0	0	0	0	0	0	0	0	0
4/27/2024	7:30 AM	0	0	0	0	0	0	0	0	0	0	0	0	0
4/27/2024	7:45 AM	0	0	0	0	0	0	0	0	0	0	0	0	0
4/27/2024	8:00 AM	0	0	0	0	0	0	0	0	0	0	0	0	0
4/27/2024	8:15 AM	0	0	0	0	0	0	0	0	0	0	0	0	0
4/27/2024	8:30 AM	0	0	0	0	0	0	0	0	0	0	0	0	0
4/27/2024	8:45 AM	0	0	0	0	0	0	0	0	0	0	0	0	0
4/27/2024	9:00 AM	0	0	0	0	0	0	0	0	0	0	0	0	0
4/27/2024	9:15 AM	0	0	0	0	0	0	0	0	0	0	0	0	0
4/27/2024	9:30 AM	0	0	0	0	0	0	0	0	0	0	0	0	0
4/27/2024	9:45 AM	0	0	0	0	0	0	0	0	0	0	0	0	0
4/27/2024	10:00 AM	0	0	0	0	0	0	0	0	0	0	0	0	0
4/27/2024	10:15 AM	0	0	0	0	0	0	0	0	0	0	0	0	0
4/27/2024	10:30 AM	0	0	0	0	0	0	0	0	0	0	0	0	0
4/27/2024	10:45 AM	0	0	0	0	0	0	0	0	0	0	0	0	0
4/27/2024	11:00 AM	0	0	0	0	0	0	0	0	0	0	0	0	0
4/27/2024	11:15 AM	0	0	0	0	0	0	0	0	0	0	0	0	0
4/27/2024	11:30 AM	0	0	0	0	0	0	0	0	0	0	0	0	0
4/27/2024	11:45 AM	0	0	0	0	0	0	0	0	0	0	0	0	0
4/27/2024	12:00 PM	0	0	0	0	0	0	0	0	0	0	0	0	0
4/27/2024	12:15 PM	0	0	0	0	0	0	0	0	0	0	0	0	0
4/27/2024	12:30 PM	0	0	0	0	0	0	0	0	0	0	0	0	0
4/27/2024	12:45 PM	0	0	0	0	0	0	0	0	0	0	0	0	0
4/27/2024	1:00 PM	0	0	0	0	0	0	0	0	0	0	0	0	0
4/27/2024	1:15 PM	0	0	0	0	0	0	0	0	0	0	0	0	0
4/27/2024	1:30 PM	0	0	0	0	0	0	0	0	0	0	0	0	0
4/27/2024	1:45 PM	0	0	0	0	0	0	0	0	0	0	0	0	0
4/27/2024	2:00 PM	0	0	0	0	0	0	0	0	0	0	0	0	0
4/27/2024	2:15 PM	0	0	0	0	0	0	0	0	0	0	0	0	0
4/27/2024	2:30 PM	0	0	0	0	0	0	0	0	0	0	0	0	0
4/27/2024	2:45 PM	0	0	0	0	0	0	0	0	0	0	0	0	0
4/27/2024	3:00 PM	0	0	0	0	0	0	0	0	0	0	0	0	0
4/27/2024	3:15 PM	0	0	0	0	0	0	0	0	0	0	0	0	0
4/27/2024	3:30 PM	0	0	0	0	0	0	0	0	0	0	0	0	0
4/27/2024	3:45 PM	0	0	0	0	0	0	0	0	0	0	0	0	0
4/27/2024	4:00 PM	0	0	0	0	0	0	0	0	0	0	0	0	0
4/27/2024	4:15 PM	0	0	0	0	0	0	0	0	0	0	0	0	0
4/27/2024	4:30 PM	0	0	0	0	0	0	0	0	0	0	0	0	0
4/27/2024	4:45 PM	0	0	0	0	0	0	0	0	0	0	0	0	0
4/27/2024	5:00 PM	0	0	0	0	0	0	0	0	0	0	0	0	0
4/27/2024	5:15 PM	0	0	0	0	0	0	0	0	0	0	0	0	0
4/27/2024	5:30 PM	0	0	0	0	0	0	0	0	0	0	0	0	0
4/27/2024	5:45 PM	0	0	0	0	0	0	0	0	0	0	0	0	0
4/27/2024	6:00 PM	0	0	0	0	0	0	0	0	0	0	0	0	0
4/27/2024	6:15 PM	0	0	0	0	0	0	0	0	0	0	0	0	0
4/27/2024	6:30 PM	0	0	0	0	0	0	0	0	0	0	0	0	0
4/27/2024	6:45 PM	0	0	0	0	0	0	0	0	0	0	0	0	0
4/27/2024	7:00 PM	0	0	0	0	0	0	0	0	0	0	0	0	0
4/27/2024	7:15 PM	0	0	0	0	0	0	0	0	0	0	0	0	0
4/27/2024	7:30 PM	0	0	0	0	0	0	0	0	0	0	0	0	0
4/27/2024	7:45 PM	0	0	0	0	0	0	0	0	0	0	0	0	0
4/27/2024	8:00 PM	0	0	0	0	0	0	0	0	0	0	0	0	0
4/27/2024	8:15 PM	0	0	0	0	0	0	0	0	0	0	0	0	0
4/27/2024	8:30 PM	0	0	0	0	0	0	0	0	0	0	0	0	0
4/27/2024	8:45 PM	0	0	0	0	0	0	0	0	0	0	0	0	0
4/27/2024	9:00 PM	0	0	0	0	0	0	0	0	0	0	0	0	0
4/27/2024	9:15 PM	0	0	0	0	0	0	0	0	0	0	0	0	0
4/27/2024	9:30 PM	0	0	0	0	0	0	0	0	0	0	0	0	0
4/27/2024	9:45 PM	0	0	0	0	0	0	0	0	0	0	0	0	0
4/27/2024	10:00 PM	0	0	0	0	0	0	0	0	0	0	0	0	0
4/27/2024	10:15 PM	0	0	0	0	0	0	0	0	0	0	0	0	0
4/27/2024	10:30 PM	0	0	0	0	0	0	0	0	0	0	0	0	0
4/27/2024	10:45 PM	0	0	0	0	0	0	0	0	0	0	0	0	0
4/27/2024	11:00 PM	0	0	0	0	0	0	0	0	0	0	0	0	0
4/27/2024	11:15 PM	0	0	0	0	0	0	0	0	0	0	0	0	0
4/27/2024	11:30 PM	0	0	0	0	0	0	0	0	0	0	0	0	0
4/27/2024	11:45 PM	0	0	0	0	0	0	0	0	0	0	0	0	0

Appendix D – Existing Year 2024 Peak Hour Volumes

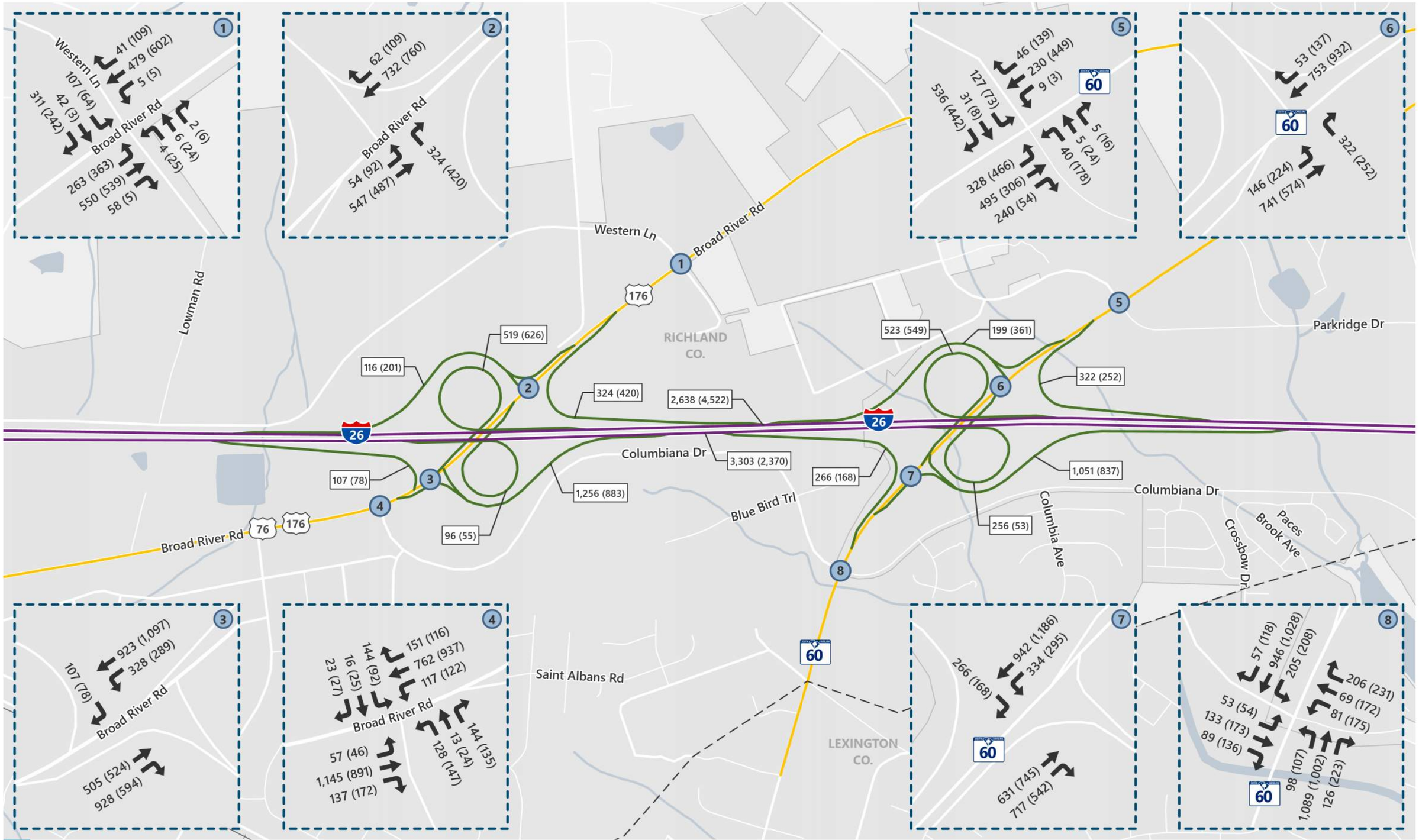

EXISTING PEAK HOUR VOLUMES - 2024

CAROLINA CROSSROADS PROJECT

F:\SCDOT_CAROLINA_CROSSROADS_CORRIDOR\MAP_DOCS\PRO_PROJECT\TRAFFIC_MAPS.APRX DATE: 1/10/2025

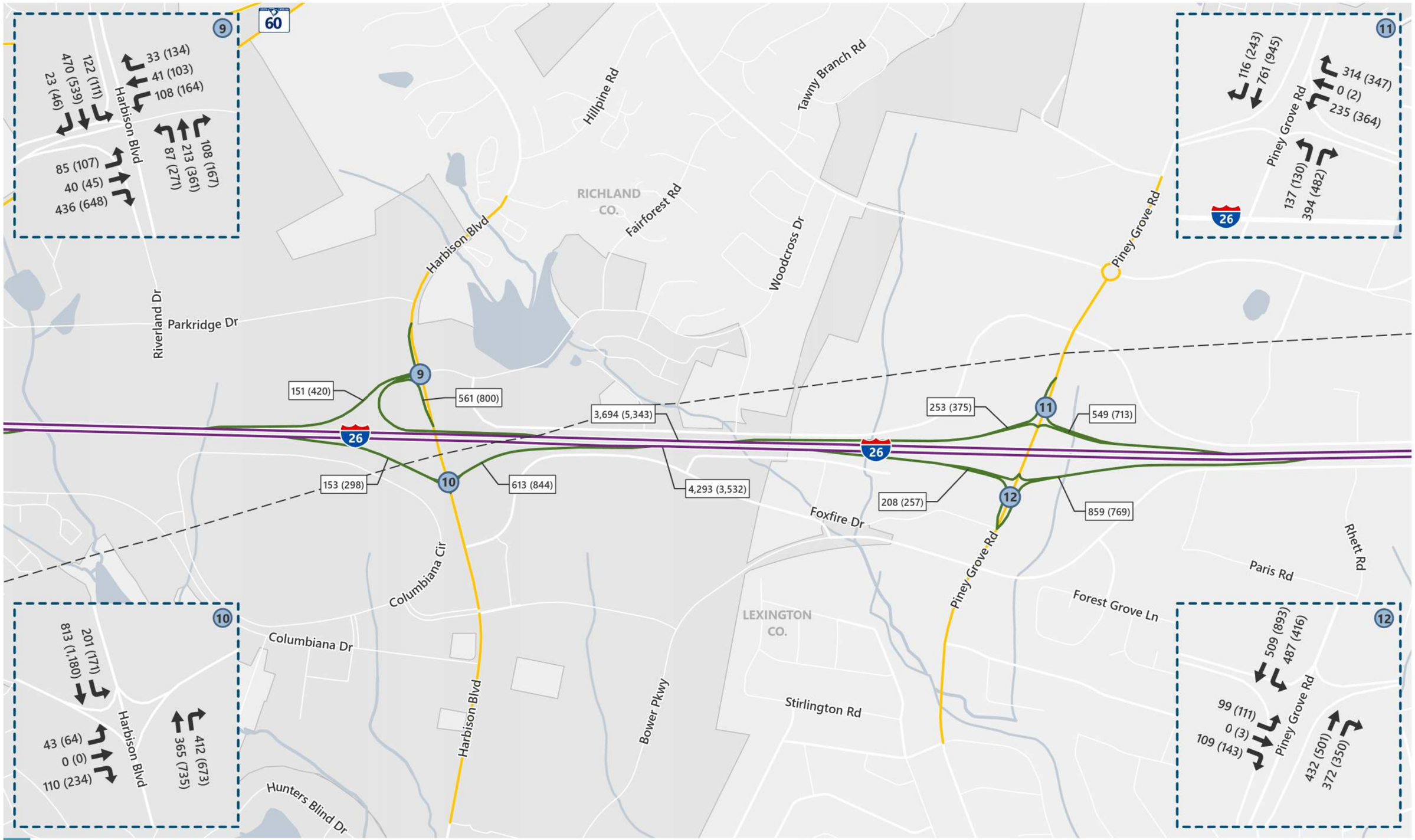

EXISTING PEAK HOUR VOLUMES - 2024

CAROLINA CROSSROADS PROJECT

F:\SCDOT_CAROLINA_CROSSROADS_CORRIDOR\MAP_DOCS\PRO_PROJECT\TRAFFIC_MAPS.APRX DATE: 1/10/2025



EXISTING PEAK HOUR VOLUMES - 2024

CAROLINA CROSSROADS PROJECT

F:\SCDOT_CAROLINA_CROSSROADS_CORRIDOR\MAP_DOCS\PRO_PROJECT\TRAFFIC_MAPS.APRX DATE: 1/10/2025

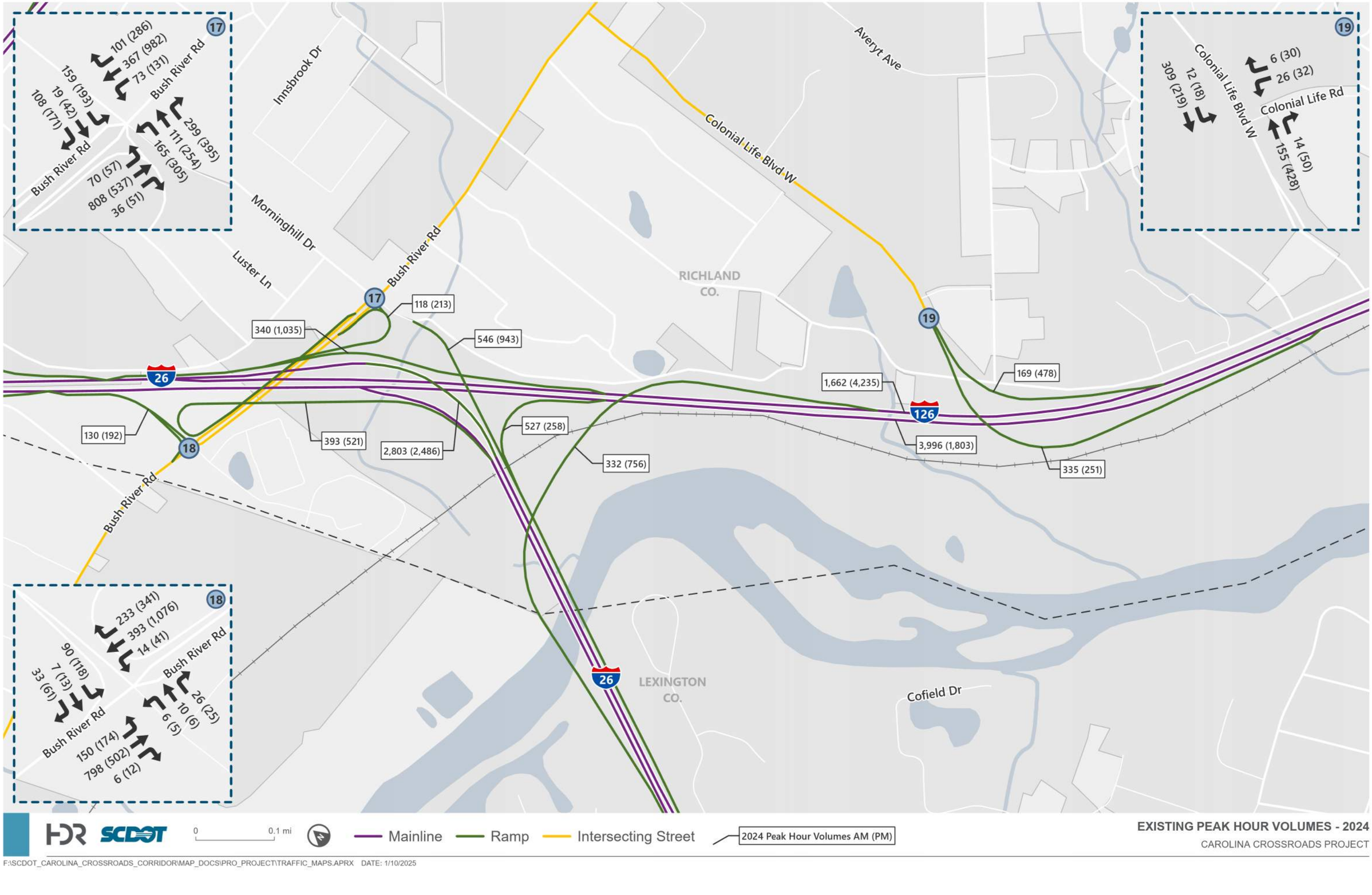

EXISTING PEAK HOUR VOLUMES - 2024

CAROLINA CROSSROADS PROJECT

F:\SCDOT_CAROLINA_CROSSROADS_CORRIDOR\MAP_DOCS\PRO_PROJECT\TRAFFIC_MAPS.APRX DATE: 1/10/2025

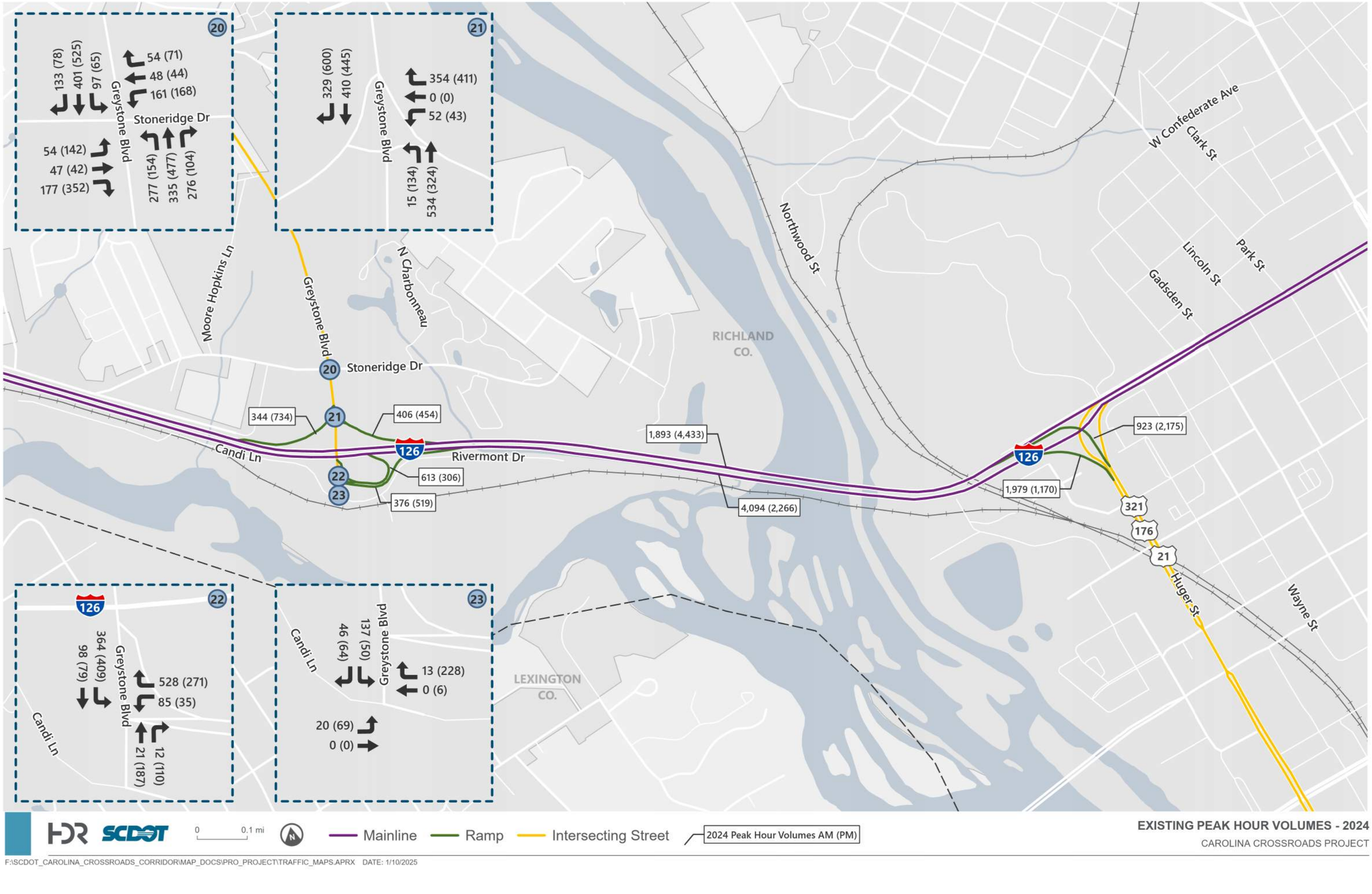

EXISTING PEAK HOUR VOLUMES - 2024

CAROLINA CROSSROADS PROJECT

F:\SCDOT_CAROLINA_CROSSROADS_CORRIDOR\MAP_DOCS\PRO_PROJECT\TRAFFIC_MAPS.APRX DATE: 1/10/2025

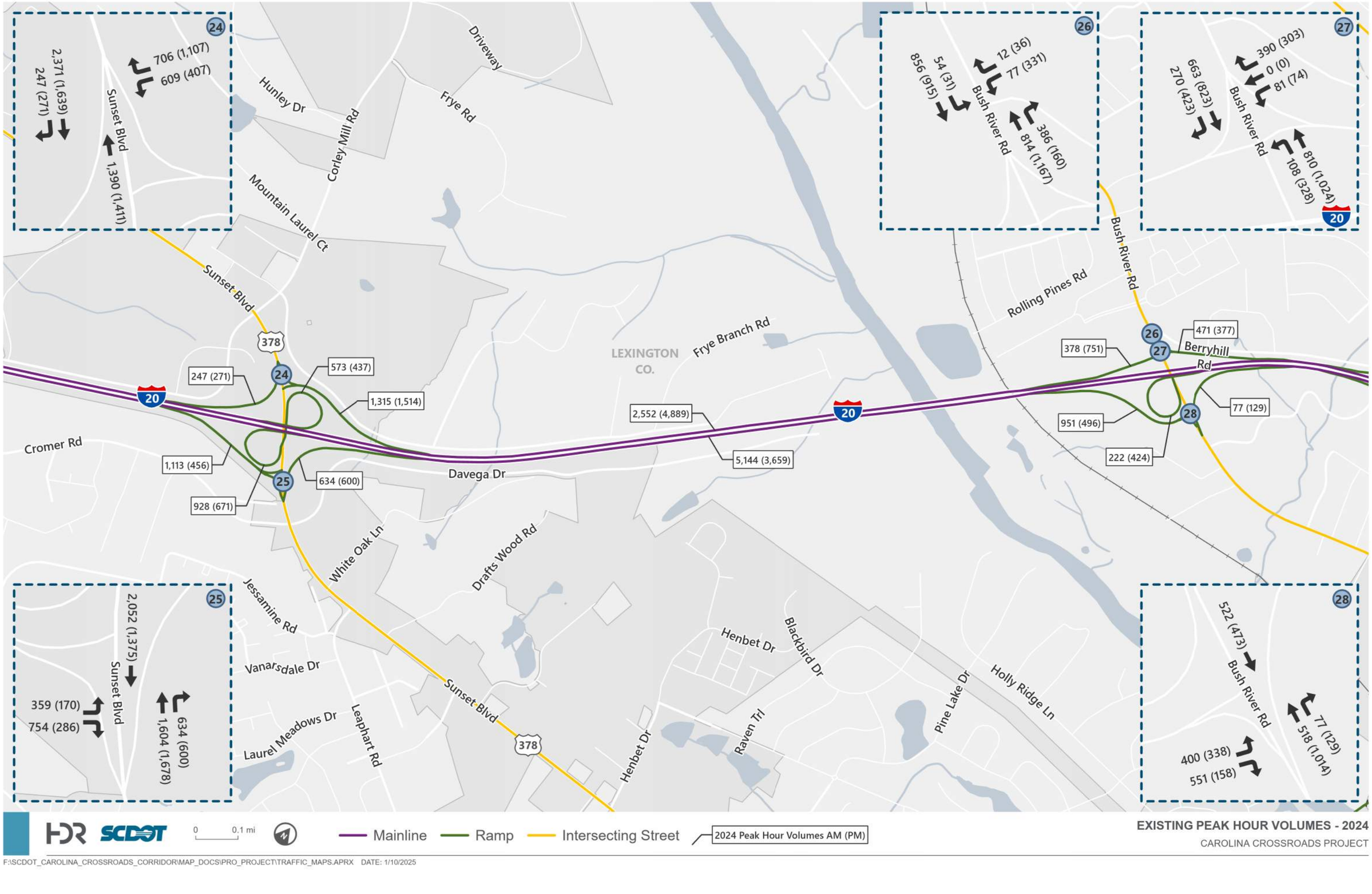

EXISTING PEAK HOUR VOLUMES - 2024

CAROLINA CROSSROADS PROJECT

F:\SCDOT_CAROLINA_CROSSROADS_CORRIDOR\MAP_DOCS\PRO_PROJECT\TRAFFIC_MAPS.APRX DATE: 1/10/2025

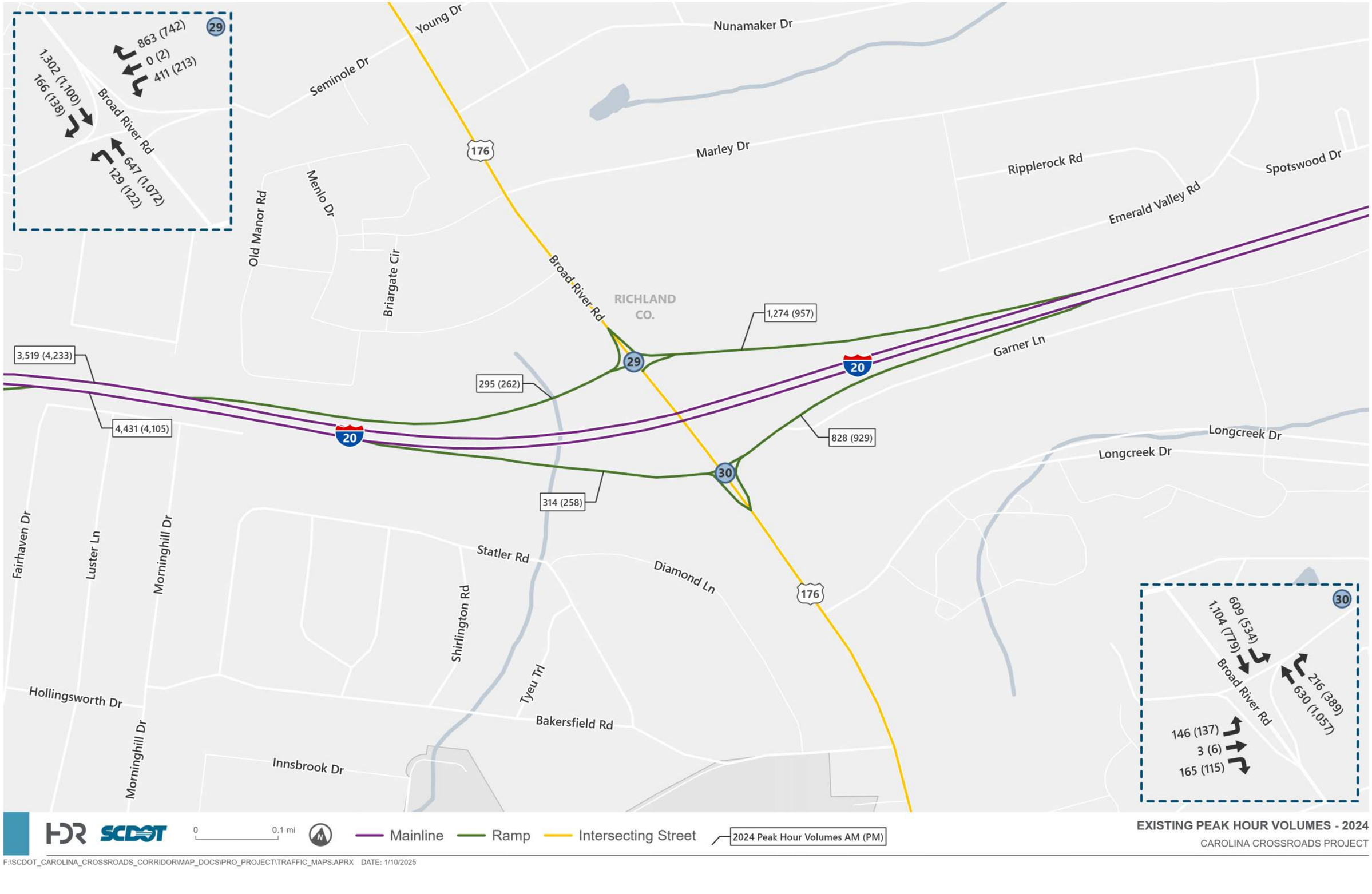

EXISTING PEAK HOUR VOLUMES - 2024

CAROLINA CROSSROADS PROJECT

F:\SCDOT_CAROLINA_CROSSROADS_CORRIDOR\MAP_DOCS\PRO_PROJECT\TRAFFIC_MAPS.APRX DATE: 1/10/2025

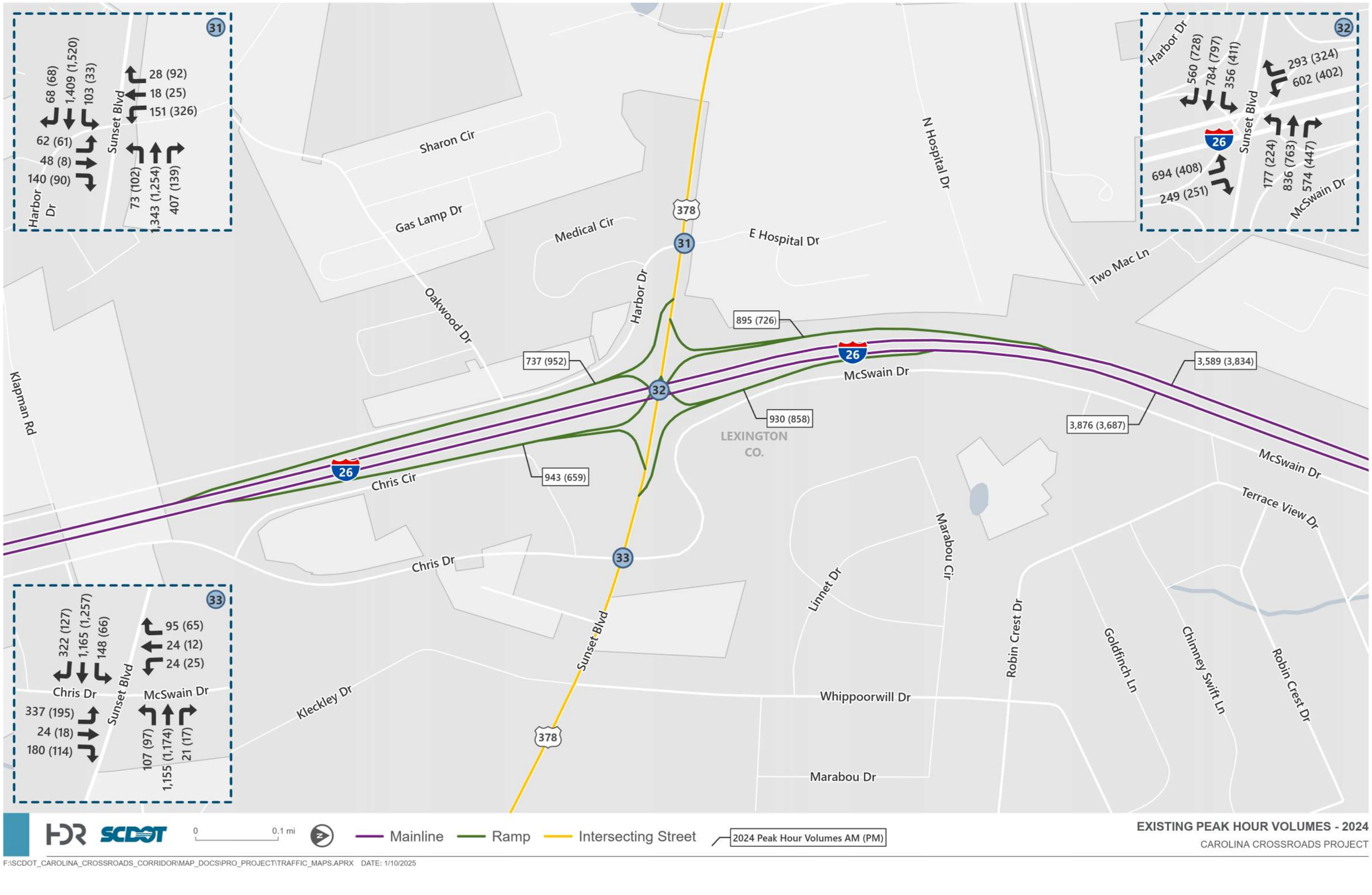

EXISTING PEAK HOUR VOLUMES - 2024

CAROLINA CROSSROADS PROJECT

F:\SCDOT_CAROLINA_CROSSROADS_CORRIDOR\MAP_DOCS\PRO_PROJECT\TRAFFIC_MAPS.APRX DATE: 1/10/2025

Appendix E – Forecasts

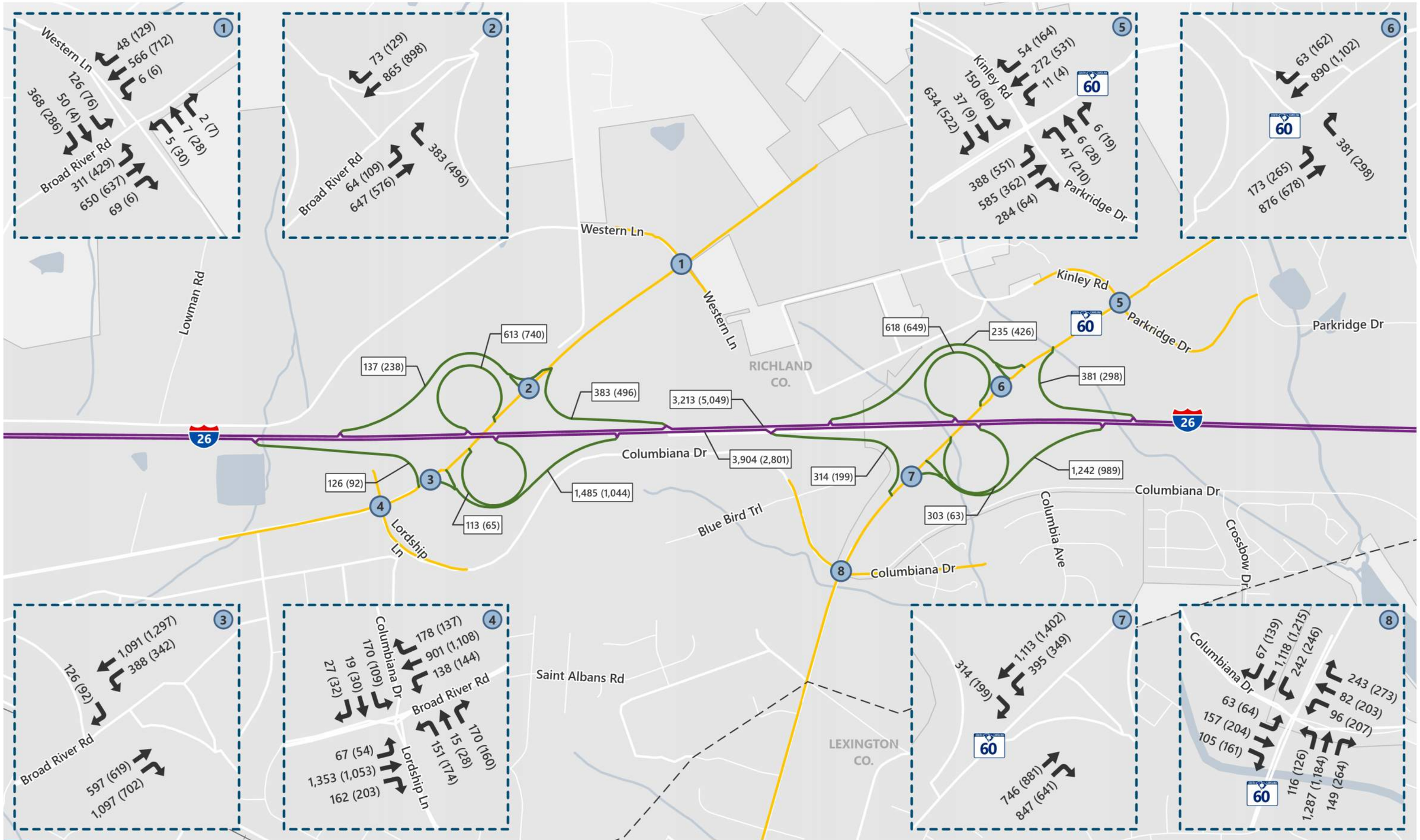

SELECTED ALTERNATIVE PEAK HOUR VOLUMES -2050
CAROLINA CROSSROADS PROJECT

F:\SCDOT_CAROLINA_CROSSROADS_CORRIDOR\MAP_DOCS\PRO_PROJECT\TRAFFIC_MAPS.APRX DATE: 1/10/2025

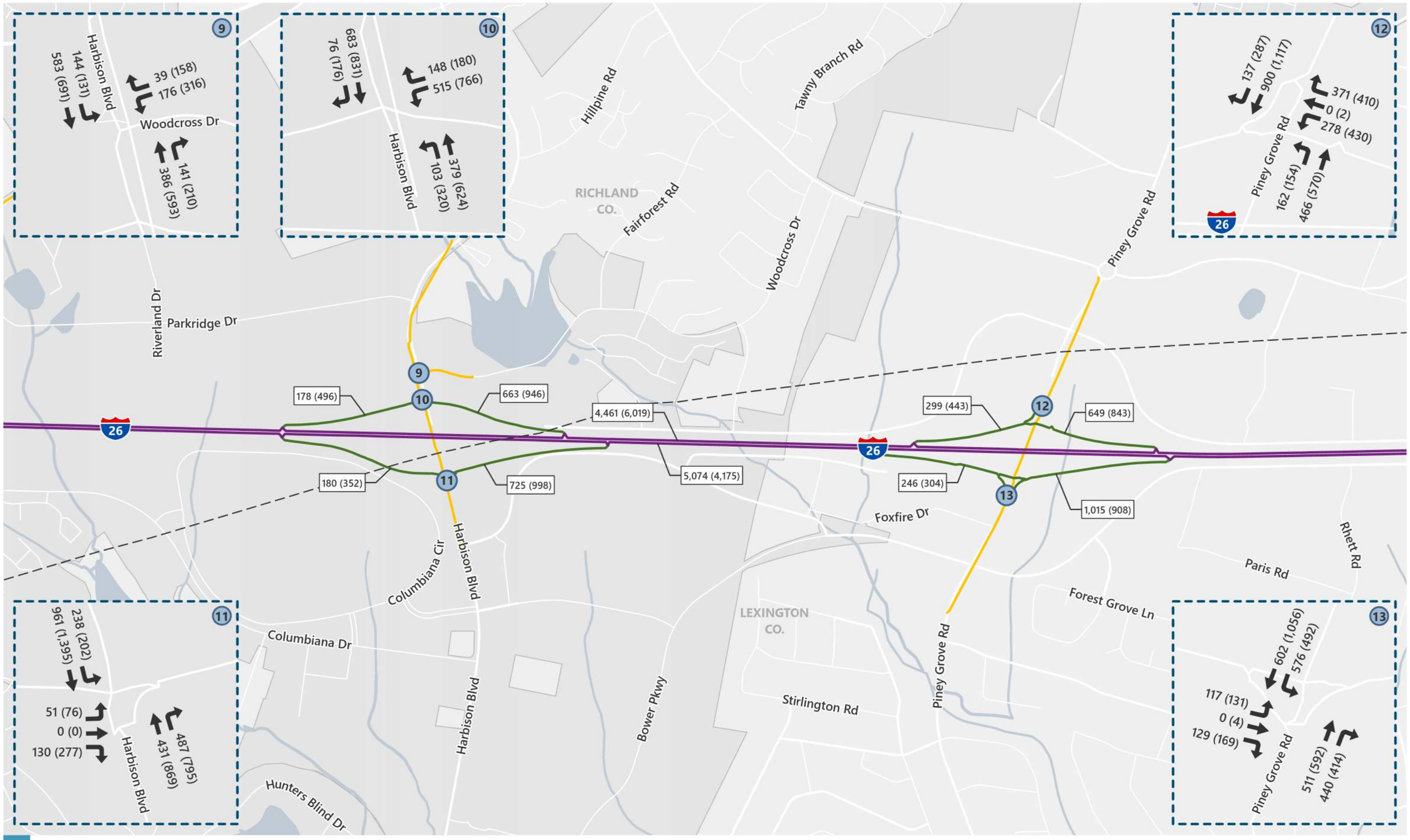

SELECTED ALTERNATIVE PEAK HOUR VOLUMES -2050
CAROLINA CROSSROADS PROJECT

F:\SCDOT_CAROLINA_CROSSROADS_CORRIDOR\MAP_DOCS\PRO_PROJECT\TRAFFIC_MAPS.APRX DATE: 1/10/2025

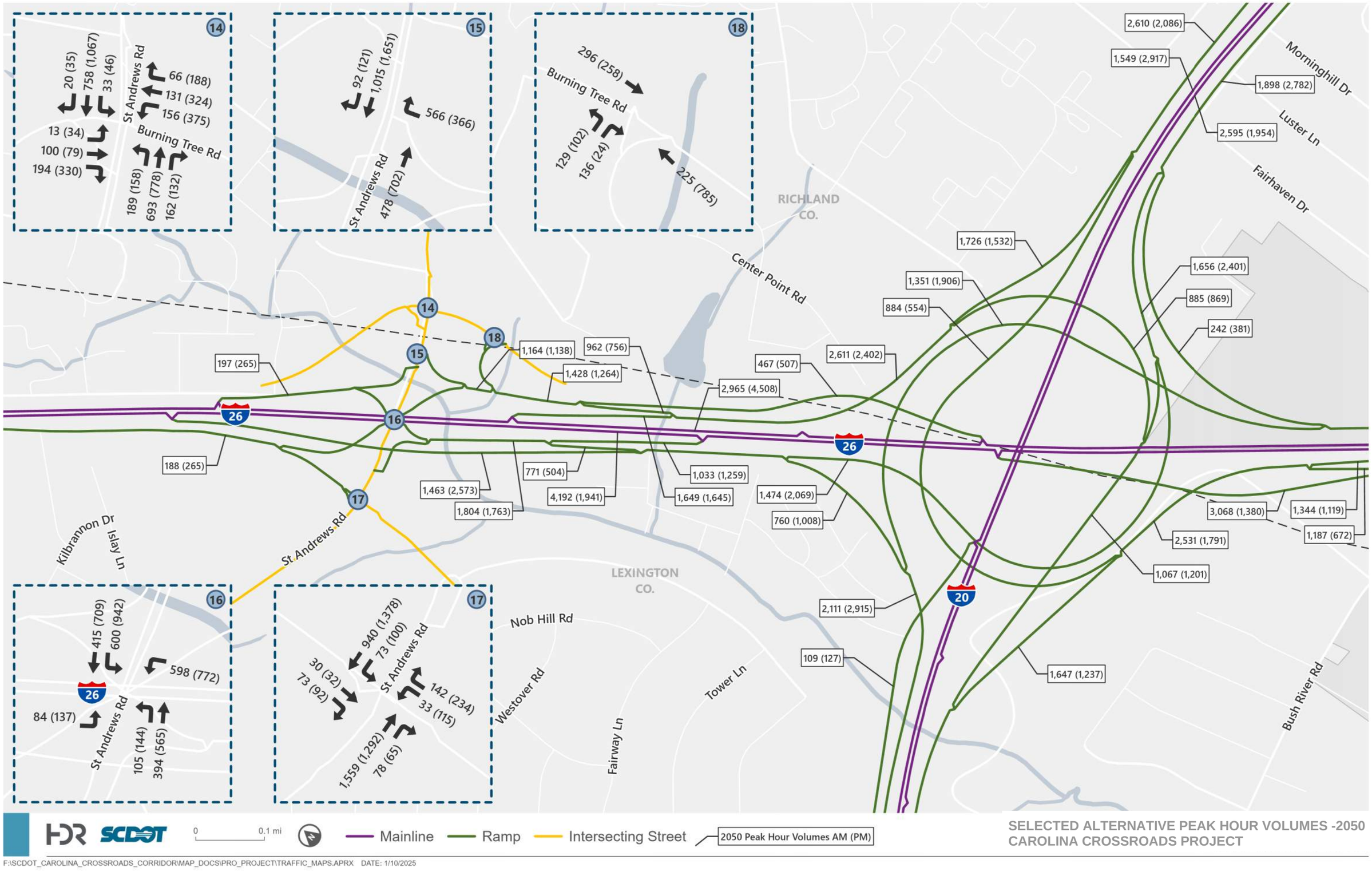

SELECTED ALTERNATIVE PEAK HOUR VOLUMES -2050
CAROLINA CROSSROADS PROJECT

F:\SCDOT_CAROLINA_CROSSROADS_CORRIDOR\MAP_DOCS\PRO_PROJECT\TRAFFIC_MAPS.APRX DATE: 1/10/2025

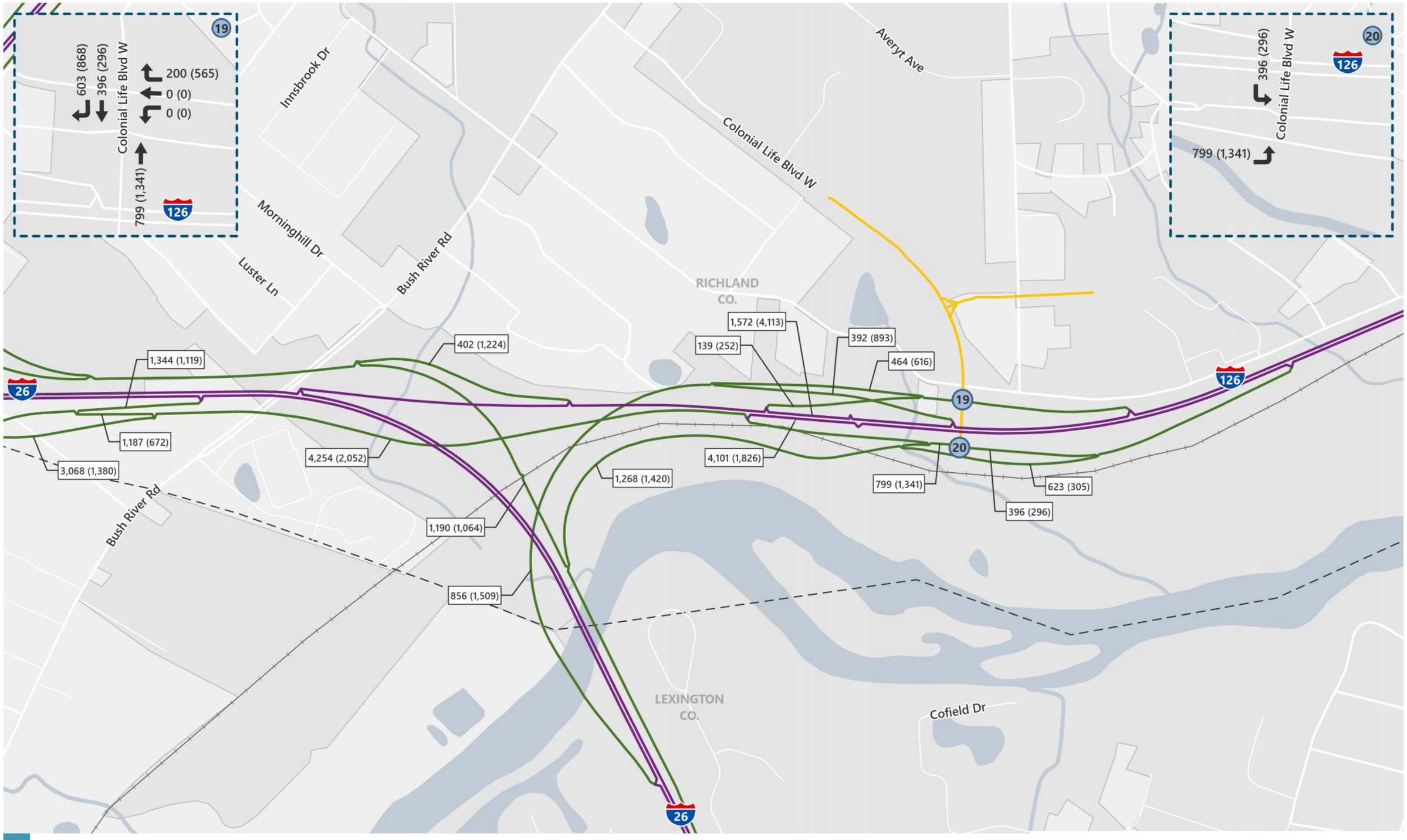

SELECTED ALTERNATIVE PEAK HOUR VOLUMES -2050
CAROLINA CROSSROADS PROJECT

F:\SCDOT_CAROLINA_CROSSROADS_CORRIDOR\MAP_DOCS\PRO_PROJECT\TRAFFIC_MAPS.APRX DATE: 1/10/2025

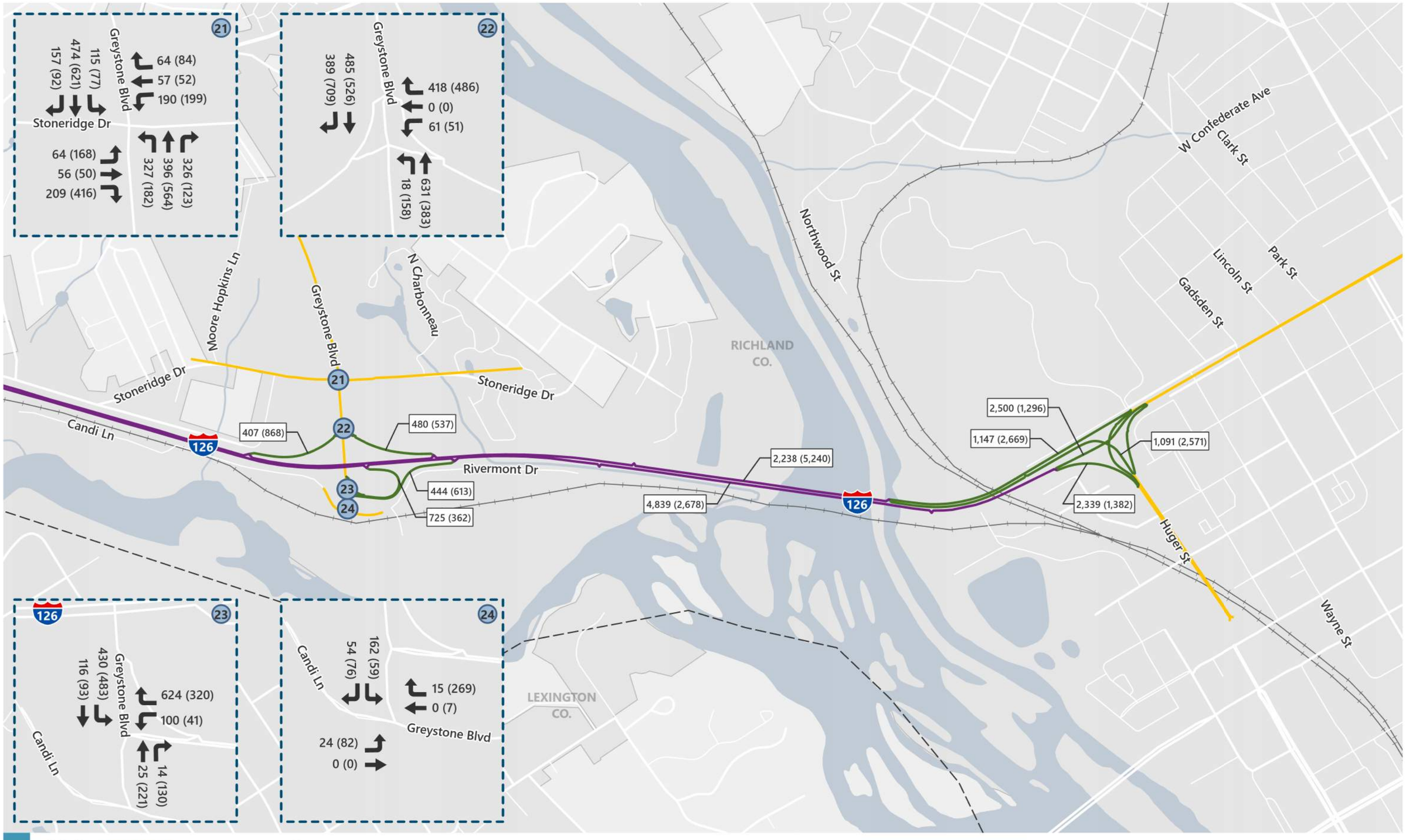

SELECTED ALTERNATIVE PEAK HOUR VOLUMES -2050
CAROLINA CROSSROADS PROJECT

F:\SCDOT_CAROLINA_CROSSROADS_CORRIDOR\MAP_DOCS\PRO_PROJECT\TRAFFIC_MAPS.APRX DATE: 1/10/2025

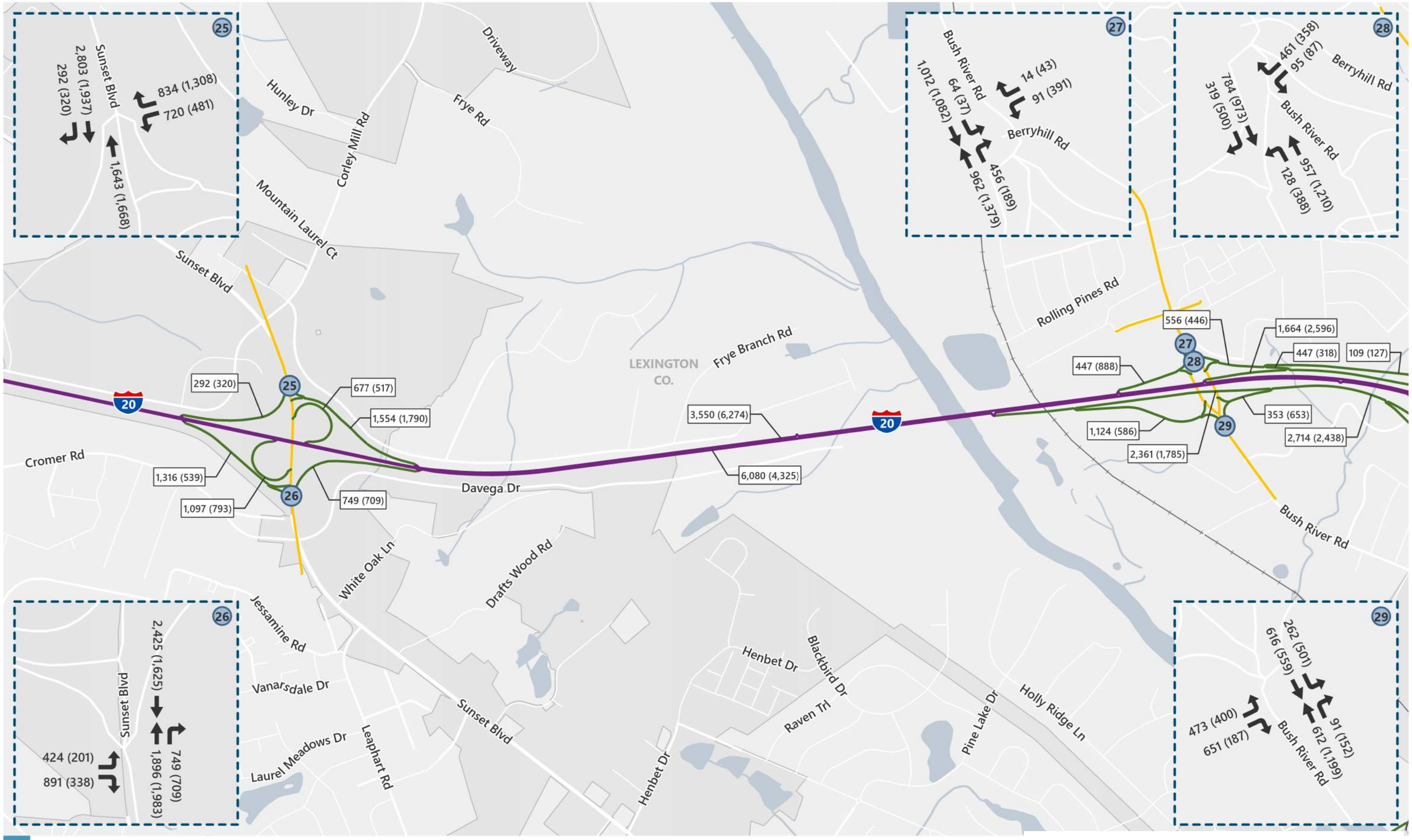

SELECTED ALTERNATIVE PEAK HOUR VOLUMES -2050
CAROLINA CROSSROADS PROJECT

F:\SCDOT_CAROLINA_CROSSROADS_CORRIDOR\MAP_DOCS\PRO_PROJECT\TRAFFIC_MAPS.APRX DATE: 1/10/2025

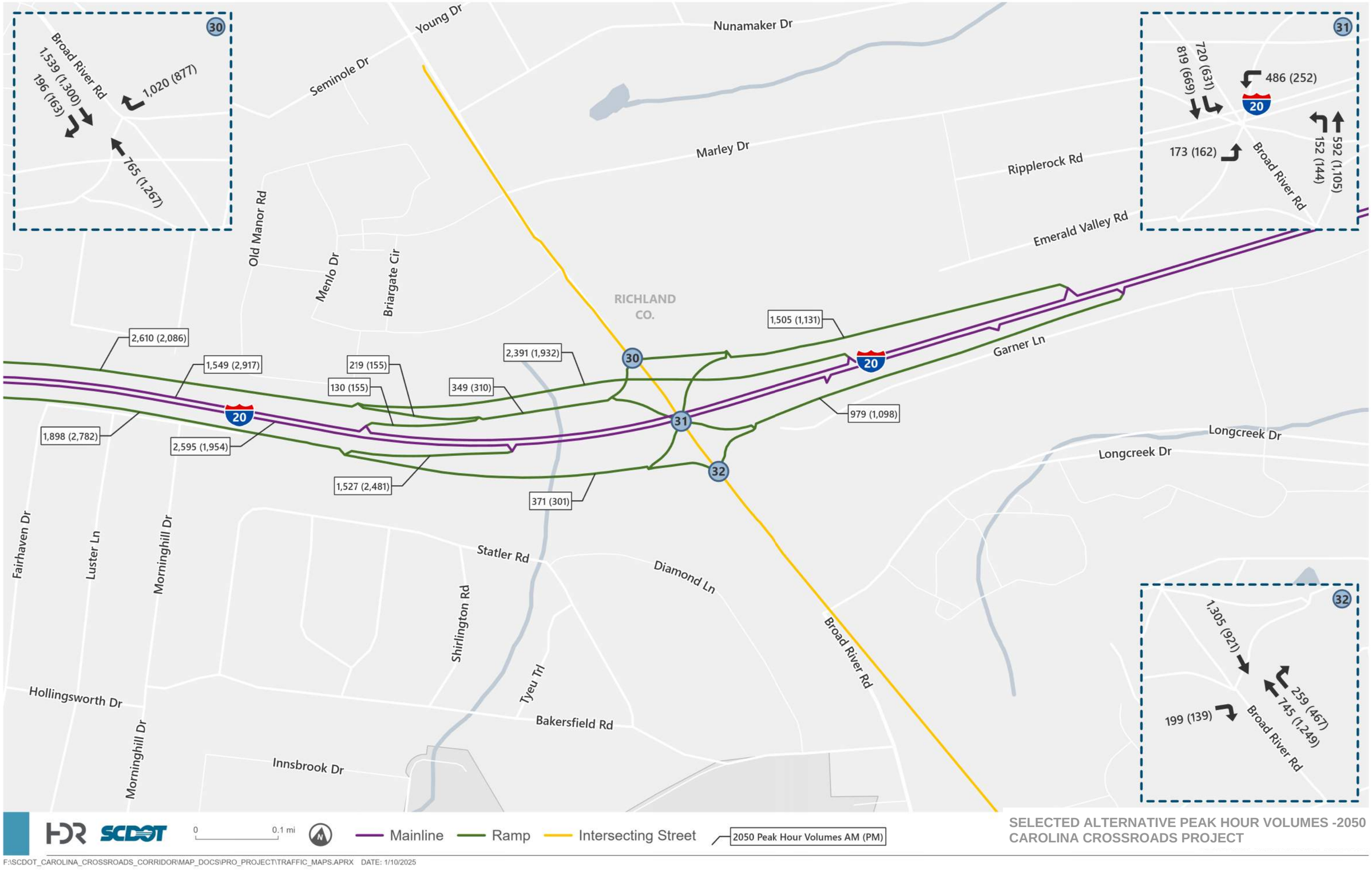

SELECTED ALTERNATIVE PEAK HOUR VOLUMES -2050
CAROLINA CROSSROADS PROJECT

F:\SCDOT_CAROLINA_CROSSROADS_CORRIDOR\MAP_DOCS\PRO_PROJECT\TRAFFIC_MAPS.APRX DATE: 1/10/2025

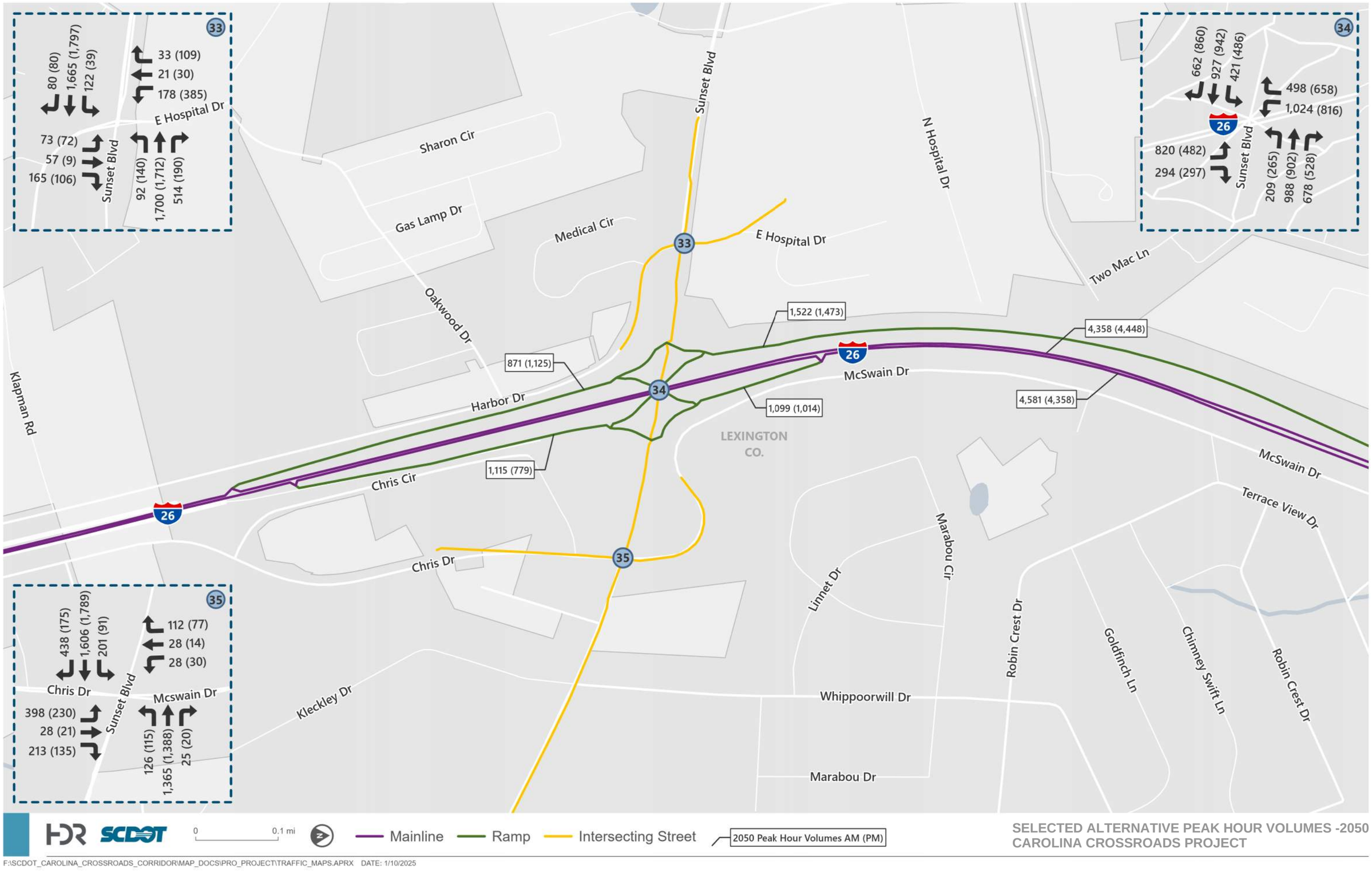

SELECTED ALTERNATIVE PEAK HOUR VOLUMES -2050
CAROLINA CROSSROADS PROJECT

F:\SCDOT_CAROLINA_CROSSROADS_CORRIDOR\MAP_DOCS\PRO_PROJECT\TRAFFIC_MAPS.APRX DATE: 1/10/2025

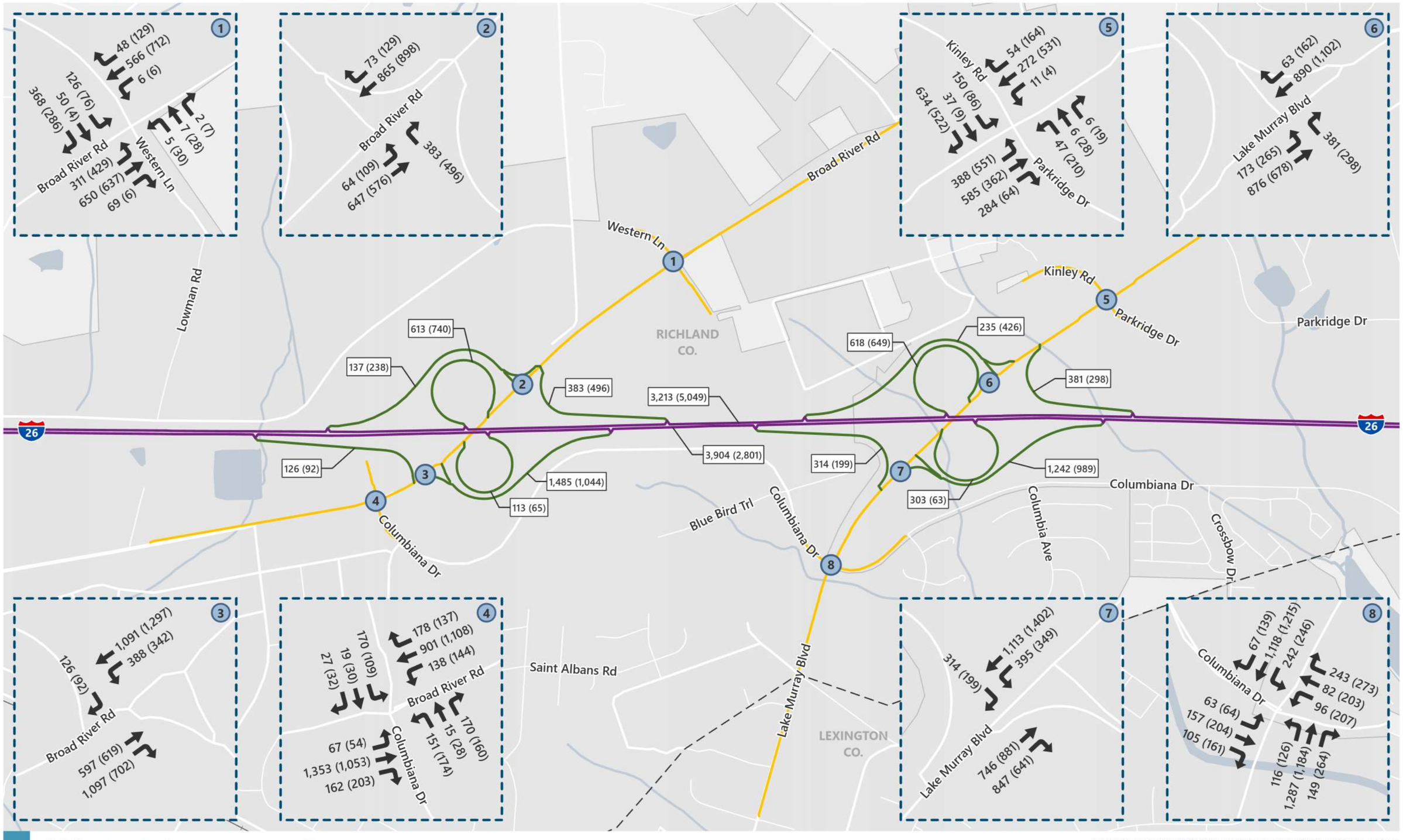

BUILD ALTERNATIVE PEAK HOUR VOLUMES - 2050

CAROLINA CROSSROADS PROJECT

F:\SCDOT_CAROLINA_CROSSROADS_CORRIDOR\MAP_DOCS\PRO_PROJECT\TRAFFIC_MAPS.APRX DATE: 1/24/2025

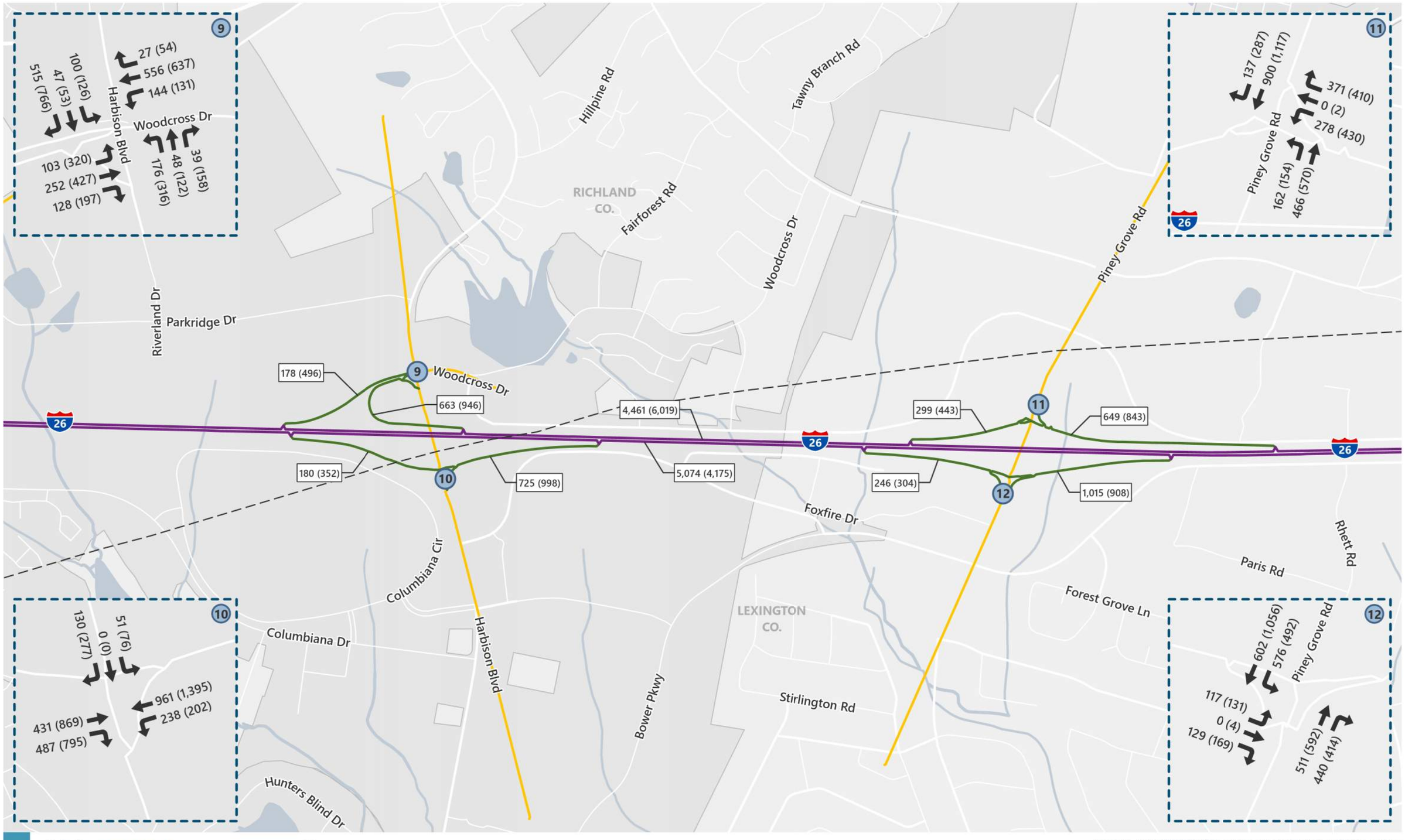

BUILD ALTERNATIVE PEAK HOUR VOLUMES - 2050

CAROLINA CROSSROADS PROJECT

F:\SCDOT_CAROLINA_CROSSROADS_CORRIDOR\MAP_DOCS\PRO_PROJECT\TRAFFIC_MAPS.APRX DATE: 1/24/2025

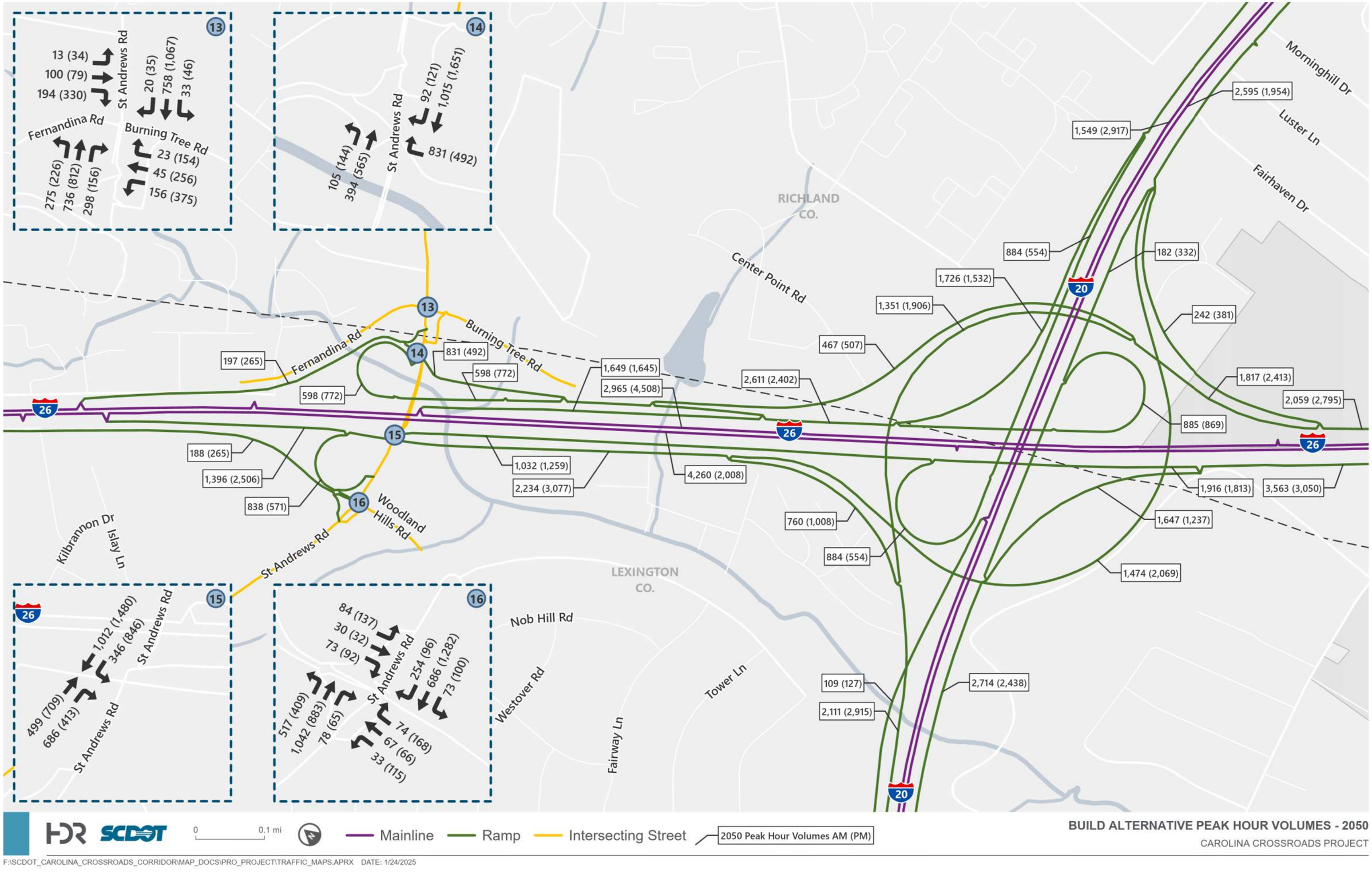

BUILD ALTERNATIVE PEAK HOUR VOLUMES - 2050

CAROLINA CROSSROADS PROJECT

F:\SCDOT_CAROLINA_CROSSROADS_CORRIDOR\MAP_DOCS\PRO_PROJECT\TRAFFIC_MAPS.APRX DATE: 1/24/2025

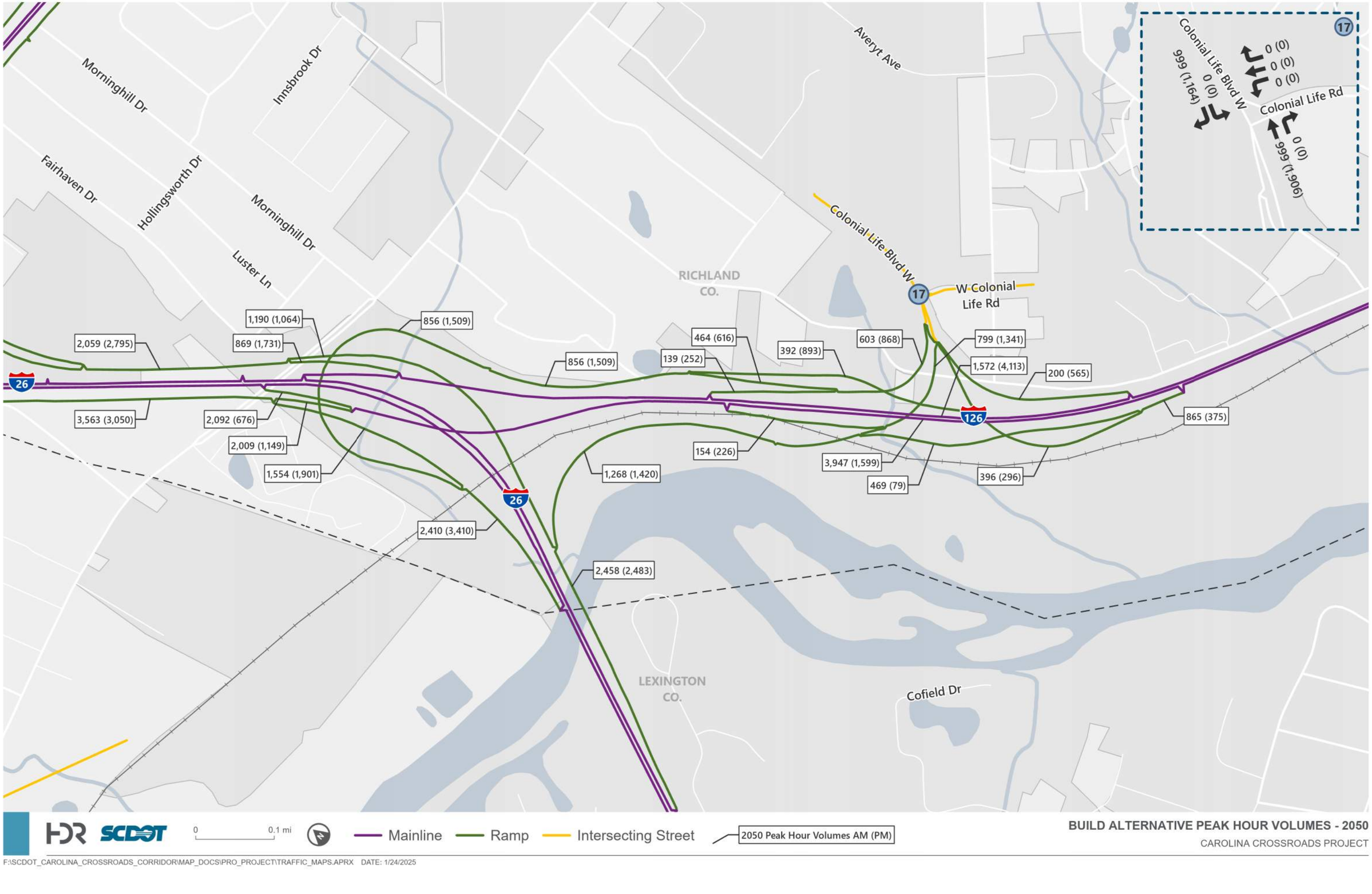

BUILD ALTERNATIVE PEAK HOUR VOLUMES - 2050

CAROLINA CROSSROADS PROJECT

F:\SCDOT_CAROLINA_CROSSROADS_CORRIDOR\MAP_DOCS\PRO_PROJECT\TRAFFIC_MAPS.APRX DATE: 1/24/2025

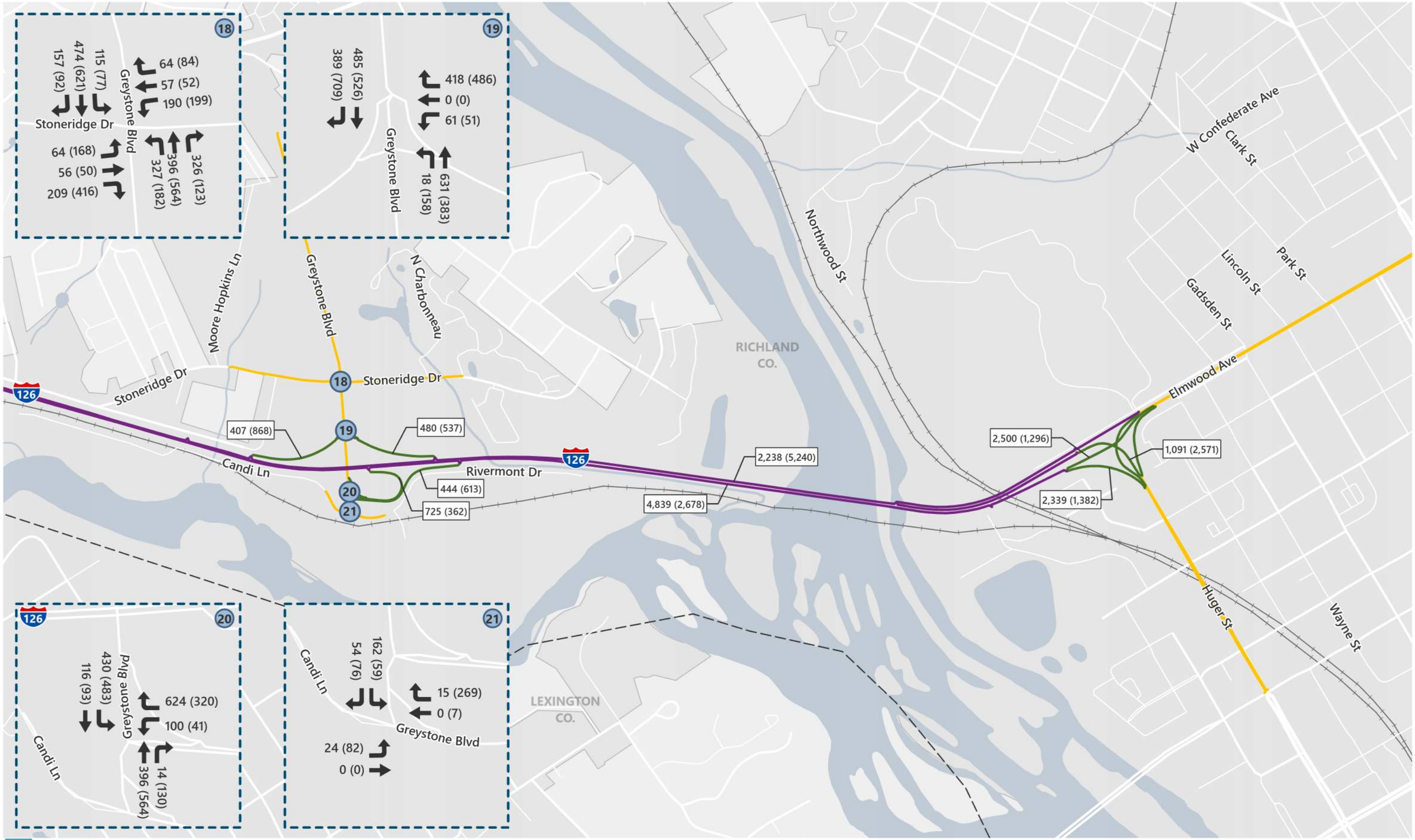

BUILD ALTERNATIVE PEAK HOUR VOLUMES - 2050

CAROLINA CROSSROADS PROJECT

F:\SCDOT_CAROLINA_CROSSROADS_CORRIDOR\MAP_DOCS\PRO_PROJECT\TRAFFIC_MAPS.APRX DATE: 1/24/2025

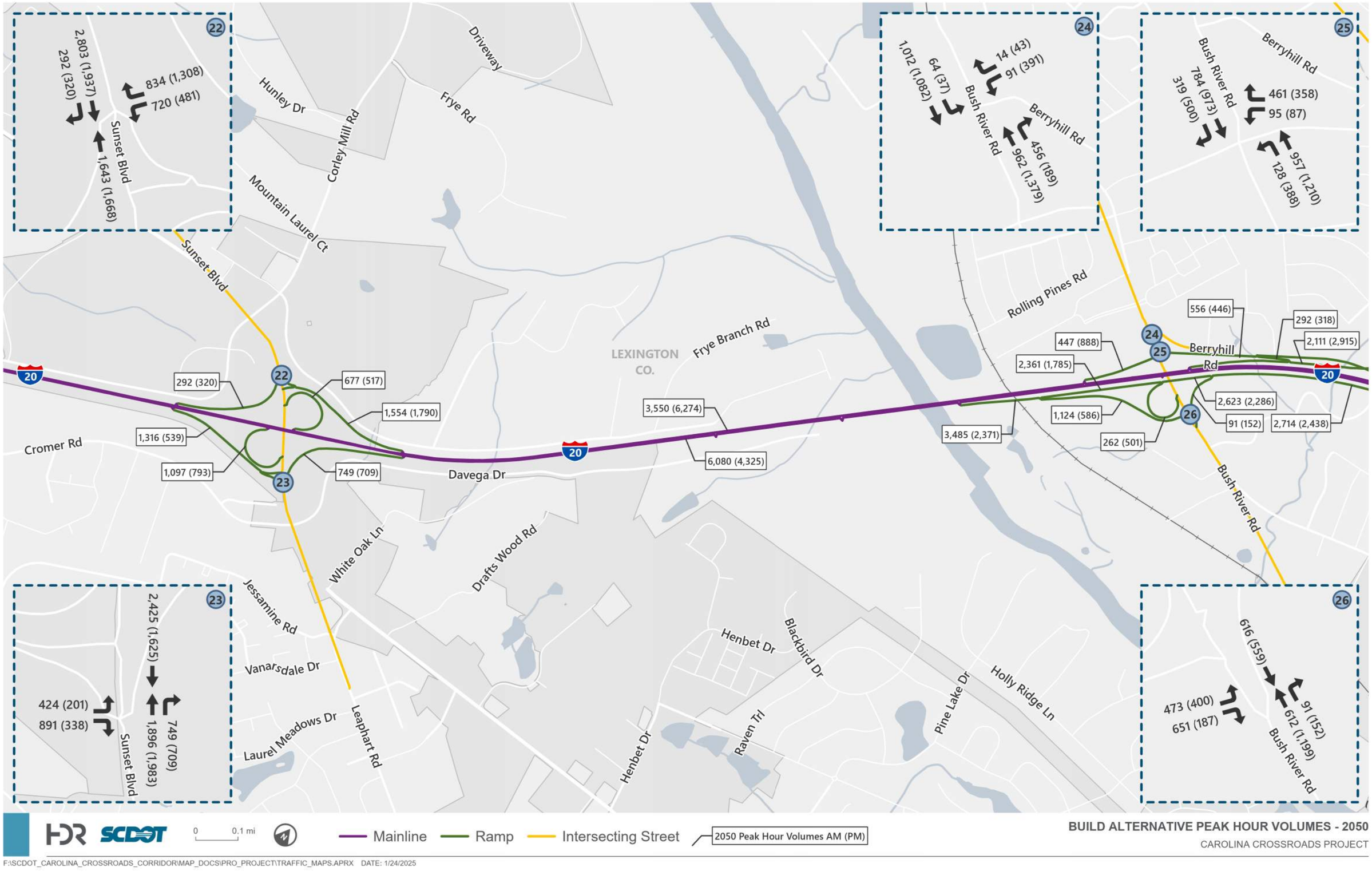

BUILD ALTERNATIVE PEAK HOUR VOLUMES - 2050

CAROLINA CROSSROADS PROJECT

F:\SCDOT_CAROLINA_CROSSROADS_CORRIDOR\MAP_DOCS\PRO_PROJECT\TRAFFIC_MAPS.APRX DATE: 1/24/2025

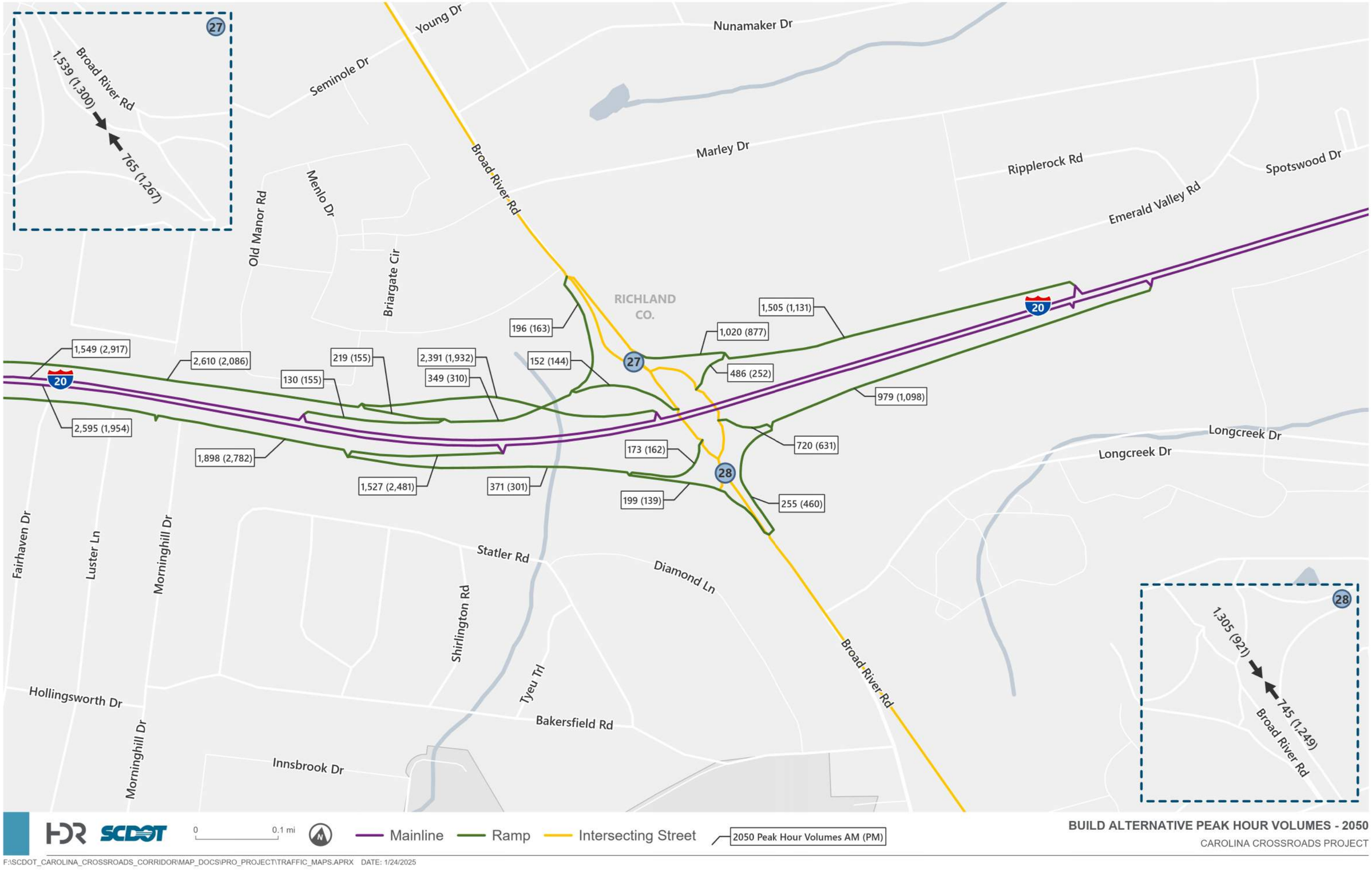

BUILD ALTERNATIVE PEAK HOUR VOLUMES - 2050

CAROLINA CROSSROADS PROJECT

F:\SCDOT_CAROLINA_CROSSROADS_CORRIDOR\MAP_DOCS\PRO_PROJECT\TRAFFIC_MAPS.APRX DATE: 1/24/2025



BUILD ALTERNATIVE PEAK HOUR VOLUMES - 2050

CAROLINA CROSSROADS PROJECT

F:\SCDOT_CAROLINA_CROSSROADS_CORRIDOR\MAP_DOCS\PRO_PROJECT\TRAFFIC_MAPS.APRX DATE: 1/24/2025

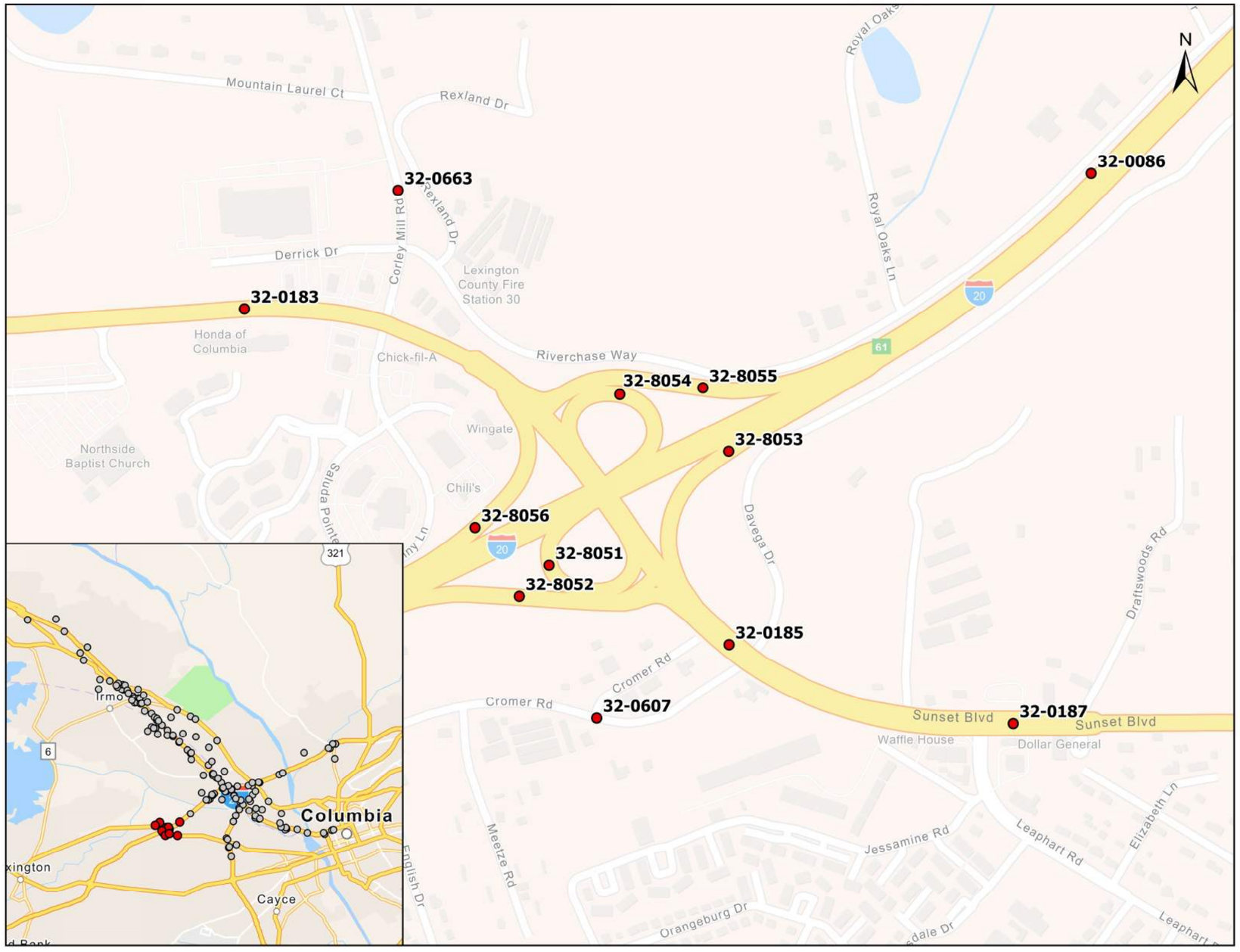
N
32-0663
32-0086
32-0183
32-8054
32-8055
32-8053
32-8056
32-8051
32-8052
32-0185
32-0607
32-0187
Mountain Laurel Ct
Rexland Dr
Corley Mill Rd
Derrick Dr
Lexington County Fire Station 30
Royal Oaks
Royal Oaks Ln
Honda of Columbia
Chick-fil-A
Riverchase Way
Wingate
Northside Baptist Church
Chili's
Davega Dr
Draftswoods Rd
Cromer Rd
Sunset Blvd
Waffle House
Dollar General
Jessamine Rd
Leaphart Rd
Elizabeth Ln
Meetze Rd
English Dr
Orangeburg Dr
20
61
321
6
Irmo
Columbia
Cayce

Station ID 32-0607
County Lexington
Location click here

	Year	AADT	%Change
1	1987	3,400	
2	1988	3,900	14.7%
3	1989	3,600	-7.7%
4	1990	3,400	-5.6%
5	1991	3,500	2.9%
6	1992	4,500	28.6%
7	1993	4,200	-6.7%
8	1994	4,300	2.4%
9	1995	4,500	4.7%
10	1996	4,700	4.4%
11	1997	4,900	4.3%
12	1998	4,700	-4.1%
13	1999	4,500	-4.3%
14	2000	5,000	11.1%
15	2001	5,100	2.0%
16	2002	4,800	-5.9%
17	2003	5,300	10.4%
18	2004	5,500	3.8%
19	2005	5,500	0.0%
20	2006	5,800	5.5%
21	2007	5,900	1.7%
22	2008	5,600	-5.1%
23	2009	5,800	3.6%
24	2010	5,900	1.7%
25	2011	5,500	-6.8%
26	2012	5,600	1.8%
27	2013	5,700	1.8%
28	2014	5,800	1.8%
29	2015	7,000	20.7%
30	2016	7,300	4.3%
31	2017	8,500	16.4%
32	2018	9,200	8.2%
33	2019	9,000	-2.2%
34	2020	7,800	-13.3%
35	2021	7,600	-2.6%
36	2022	8,900	17.1%
37	2023	8,800	-1.1%
		Avg=	3.018%

For Reference
1% Annual Growth Rate

Year	Volume	Growth Rate
2023	8,800	Present
2050	11,176	Linear
2050	11,512	Compound

Calculations based on 30YR Growth Rates

Year	Volume	Estimate		
2023	8,800	N/A		
2050	12,850	13,000	*Linear*	3.49%
2050	16,765	17,000	*Compound*	2.42%
2050	15,594	16,000	*Average Annual*	2.76%

Travel Demand Model

COATS

	2018	2045		
Model	5,846	6,855	*Linear*	0.64%
Acual/Est.	9,200	10,788		

Year	Volume	Estimate
2050	11,082	11,000

SCSWM

	2019	2050		
Model	7,152	5,929	*Linear*	-0.55%
Acual/Est.	9,000	7,461		

Year	Volume	Estimate
2050	7,461	7,500

Demographic Data

Population

Employment

Calculations based on 20YR Growth Rates

Year	Volume	Estimate		
2023	8,800	N/A		
2050	13,255	13,000	*Linear*	3.00%
2050	16,598	17,000	*Compound*	2.38%
2050	15,742	16,000	*Average Annual*	2.82%

Calculations based on 10YR Growth Rates

Year	Volume	Estimate		
2023	8,800	N/A		
2050	16,900	17,000	*Linear*	5.17%
2050	27,123	27,000	*Compound*	4.26%
2050	21,821	22,000	*Average Annual*	5.28%

Trend Analysis

Linear

R-Square	AGR (Historical)	AGR (Design Year)	Annual Increase	2050 Estimate
85.8%	4.7%	1.7%	142	12,100

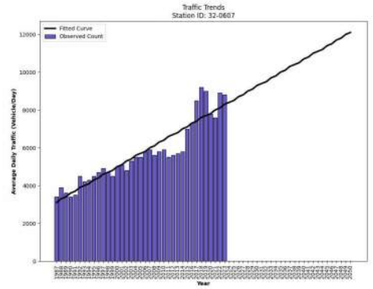

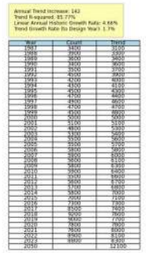

Trend Analysis *(*2015-2023)*

Linear

R-Square	AGR (Historical)	AGR (Design Year)	Annual Increase	2050 Estimate
24.2%	2.0%	1.7%	147	12,800

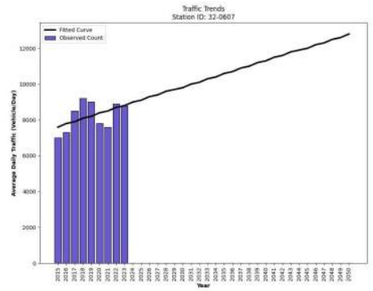



Year	Count	Trend
2015	7000	7600
2016	7300	7800
2017	8500	7900
2018	9200	8100
2019	9600	8200
2020	7800	8400
2021	7600	8500
2022	8900	8700
2023	8800	8800
2050		12800

S-387 : US 378 (SUNSET BLVD) TO S- 386 (OAK DR)



Station ID 32-8055
County Lexington
Location click here

	Year	AADT	%Change
1	1987		
2	1988		#DIV/0!
3	1989		#DIV/0!
4	1990		#DIV/0!
5	1991		#DIV/0!
6	1992		#DIV/0!
7	1993		#DIV/0!
8	1994		#DIV/0!
9	1995		#DIV/0!
10	1996		#DIV/0!
11	1997		#DIV/0!
12	1998		#DIV/0!
13	1999		#DIV/0!
14	2000		#DIV/0!
15	2001		#DIV/0!
16	2002		#DIV/0!
17	2003		#DIV/0!
18	2004		#DIV/0!
19	2005		#DIV/0!
20	2006		#DIV/0!
21	2007		#DIV/0!
22	2008		#DIV/0!
23	2009		#DIV/0!
24	2010		#DIV/0!
25	2011		#DIV/0!
26	2012		#DIV/0!
27	2013		#DIV/0!
28	2014		#DIV/0!
29	2015		#DIV/0!
30	2016		#DIV/0!
31	2017		#DIV/0!
32	2018		#DIV/0!
33	2019		#DIV/0!
34	2020	10,500	#DIV/0!
35	2021	14,100	34.3%
36	2022	15,200	7.8%
37	2023	15,800	3.9%
		Avg=	#DIV/0!

For Reference
1% Annual Growth Rate

Year	Volume	Growth Rate
2023	15,800	Present
2050	20,066	Linear
2050	20,670	Compound

Calculations based on 30YR Growth Rates

Year	Volume	Estimate		
2023	15,800	N/A	*Linear*	#DIV/0!
2050	#DIV/0!	#DIV/0!		
Year	**Volume**	**Estimate**		
2023	15,800	N/A	*Compound*	#DIV/0!
2050	#DIV/0!	#DIV/0!		
Year	**Volume**	**Estimate**		
2023	15,800	N/A	*Average Annual*	#DIV/0!
2050	#DIV/0!	#DIV/0!		

Travel Demand Model

COATS

	2018	2045		
Model	15,018	16,608	*Linear*	0.39%
Acual/Est.	0	0		

Year	Volume	Estimate
2050	0	0

SCSWM

	2019	2050		
Model	11,132	14,026	*Linear*	0.84%
Acual/Est.	0	0		

Year	Volume	Estimate
2050	0	0

Demographic Data

Population

Employment

Calculations based on 20YR Growth Rates

Year	Volume	Estimate		
2023	15,800	N/A	*Linear*	#DIV/0!
2050	#DIV/0!	#DIV/0!		
Year	**Volume**	**Estimate**		
2023	15,800	N/A	*Compound*	#DIV/0!
2050	#DIV/0!	#DIV/0!		
Year	**Volume**	**Estimate**		
2023	15,800	N/A	*Average Annual*	#DIV/0!
2050	#DIV/0!	#DIV/0!		

Calculations based on 10YR Growth Rates

Year	Volume	Estimate		
2023	15,800	N/A	*Linear*	#DIV/0!
2050	#DIV/0!	#DIV/0!		
Year	**Volume**	**Estimate**		
2023	15,800	N/A	*Compound*	#DIV/0!
2050	#DIV/0!	#DIV/0!		
Year	**Volume**	**Estimate**		
2023	15,800	N/A	*Average Annual*	#DIV/0!
2050	#DIV/0!	#DIV/0!		

Trend Analysis
Linear

R-Square	AGR (Historical)	AGR (Design Year)	Annual Increase	2050 Estimate
85.5%	14.9%	10.3%	1,700	62,400

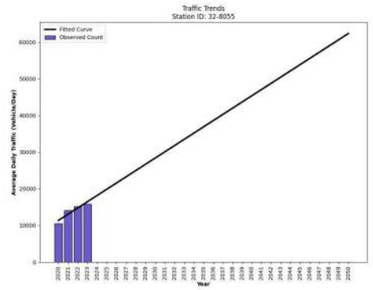

Annual Trend Increase: 1700
Trend R-squared: 85.5%
Linear Annual Historic Growth Rate: 14.91%
Trend Growth Rate Its Design Year1: 10.3%

Year	Count	Trend
2020	10500	11400
2021	14100	13100
2022	15200	14800
2023	15800	16500
2050		62400

Trend Analysis *(*2015-2023)*
Linear

R-Square	AGR (Historical)	AGR (Design Year)	Annual Increase	2050 Estimate
85.5%	14.9%	10.3%	1,700	62,400

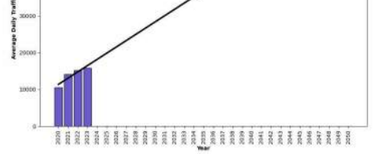

Annual Trend Increase: 1700
Trend R-squared: 85.5%
Linear Annual Historic Growth Rate: 14.91%
Trend Growth Rate Its Design Year1: 10.3%

Year	Count	Trend
2020	10500	11400
2021	14100	13100
2022	15200	14800
2023	15800	16500
2050		62400

R-8055 3E1 : I- 20 TO US 378

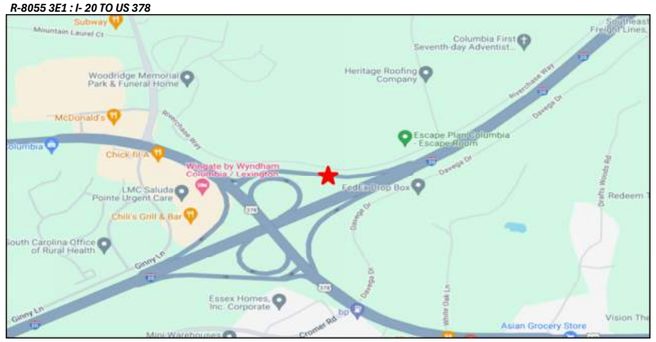

Station ID 32-8054
County Lexington
Location click here

	Year	AADT	%Change
1	1987		
2	1988		#DIV/0!
3	1989		#DIV/0!
4	1990		#DIV/0!
5	1991		#DIV/0!
6	1992		#DIV/0!
7	1993		#DIV/0!
8	1994		#DIV/0!
9	1995		#DIV/0!
10	1996		#DIV/0!
11	1997		#DIV/0!
12	1998		#DIV/0!
13	1999		#DIV/0!
14	2000		#DIV/0!
15	2001		#DIV/0!
16	2002		#DIV/0!
17	2003		#DIV/0!
18	2004		#DIV/0!
19	2005		#DIV/0!
20	2006		#DIV/0!
21	2007		#DIV/0!
22	2008		#DIV/0!
23	2009		#DIV/0!
24	2010		#DIV/0!
25	2011		#DIV/0!
26	2012		#DIV/0!
27	2013		#DIV/0!
28	2014		#DIV/0!
29	2015		#DIV/0!
30	2016		#DIV/0!
31	2017		#DIV/0!
32	2018		#DIV/0!
33	2019		#DIV/0!
34	2020	3,600	#DIV/0!
35	2021	2,500	-30.6%
36	2022	3,100	24.0%
37	2023	4,300	38.7%
		Avg=	#DIV/0!

For Reference
1% Annual Growth Rate

Year	Volume	Growth Rate
2023	4,300	Present
2050	5,461	Linear
2050	5,625	Compound

Calculations based on 30YR Growth Rates

Year	Volume	Estimate		
2023	4,300	N/A	*Linear*	#DIV/0!
2050	#DIV/0!	#DIV/0!		
Year	**Volume**	**Estimate**		
2023	4,300	N/A	*Compound*	#DIV/0!
2050	#DIV/0!	#DIV/0!		
Year	**Volume**	**Estimate**		
2023	4,300	N/A	*Average Annual*	#DIV/0!
2050	#DIV/0!	#DIV/0!		

Travel Demand Model

COATS

	2018	2045		
Model	4,086	5,120	*Linear*	0.94%
Acual/Est.	0	0		
Year	**Volume**	**Estimate**		
2050	0	0		

SCSWM

	2019	2050		
Model	1,920	384	*Linear*	-2.58%
Acual/Est.	0	0		
Year	**Volume**	**Estimate**		
2050	0	0		

Demographic Data

Population

Employment

R-8054 3O1 : US 378 TO I- 20



Calculations based on 20YR Growth Rates

Year	Volume	Estimate		
2023	4,300	N/A	*Linear*	#DIV/0!
2050	#DIV/0!	#DIV/0!		
Year	**Volume**	**Estimate**		
2023	4,300	N/A	*Compound*	#DIV/0!
2050	#DIV/0!	#DIV/0!		
Year	**Volume**	**Estimate**		
2023	4,300	N/A	*Average Annual*	#DIV/0!
2050	#DIV/0!	#DIV/0!		

Calculations based on 10YR Growth Rates

Year	Volume	Estimate		
2023	4,300	N/A	*Linear*	#DIV/0!
2050	#DIV/0!	#DIV/0!		
Year	**Volume**	**Estimate**		
2023	4,300	N/A	*Compound*	#DIV/0!
2050	#DIV/0!	#DIV/0!		
Year	**Volume**	**Estimate**		
2023	4,300	N/A	*Average Annual*	#DIV/0!
2050	#DIV/0!	#DIV/0!		

Trend Analysis
Linear

R-Square	AGR (Historical)	AGR (Design Year)	Annual Increase	2050 Estimate
20.9%	8.9%	7.1%	270	11,100

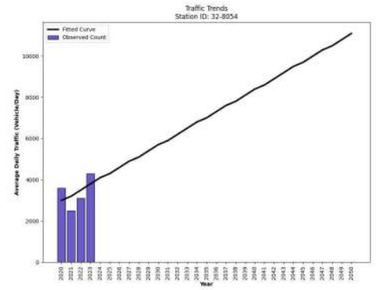

Annual Trend Increase: 270
Trend R-squared: 20.90%
Linear Annual Historic Growth Rate: 8.89%
Trend Growth Rate fro Design Year1: 7.12%

Year	Count	Trend
2020	3600	3000
2021	2500	3200
2022	3100	3500
2023	4300	3800
2050		11100

Trend Analysis *(*2015-2023)*
Linear

R-Square	AGR (Historical)	AGR (Design Year)	Annual Increase	2050 Estimate
20.9%	8.9%	7.1%	270	11,100

Annual Trend Increase: 270
Trend R-squared: 20.90%
Linear Annual Historic Growth Rate: 8.89%
Trend Growth Rate fro Design Year1: 7.12%

Year	Count	Trend
2020	3600	3000
2021	2500	3200
2022	3100	3500
2023	4300	3800
2050		11100

Station ID 32-0663
County Lexington
Location click here

	Year	AADT	%Change
1	1987	3,500	
2	1988	3,900	11.4%
3	1989	3,800	-2.6%
4	1990	3,400	-10.5%
5	1991	3,700	8.8%
6	1992	3,200	-13.5%
7	1993	3,600	12.5%
8	1994	3,500	-2.8%
9	1995	3,800	8.6%
10	1996	4,200	10.5%
11	1997	4,200	0.0%
12	1998	4,300	2.4%
13	1999	5,000	16.3%
14	2000	4,600	-8.0%
15	2001	5,000	8.7%
16	2002	4,900	-2.0%
17	2003	5,900	20.4%
18	2004	5,800	-1.7%
19	2005	5,900	1.7%
20	2006	6,700	13.6%
21	2007	7,200	7.5%
22	2008	7,700	6.9%
23	2009	8,000	3.9%
24	2010	8,200	2.5%
25	2011	8,300	1.2%
26	2012	8,900	7.2%
27	2013	9,100	2.2%
28	2014	9,300	2.2%
29	2015	9,500	2.2%
30	2016	9,700	2.1%
31	2017	9,900	2.1%
32	2018	10,700	8.1%
33	2019	10,400	-2.8%
34	2020	10,000	-3.8%
35	2021	9,800	-2.0%
36	2022	13,800	40.8%
37	2023	13,600	-1.4%
		Avg=	4.240%

For Reference
1% Annual Growth Rate

Year	Volume	Growth Rate
2023	13,600	Present
2050	17,272	Linear
2050	17,792	Compound

Calculations based on 30YR Growth Rates

Year	Volume	Estimate		
2023	13,600	N/A	*Linear*	9.62%
2050	22,690	23,000		
Year	**Volume**	**Estimate**	*Compound*	4.63%
2023	13,600	N/A		
2050	46,138	46,000		
Year	**Volume**	**Estimate**	*Average Annual*	5.15%
2023	13,600	N/A		
2050	33,200	33,000		

Travel Demand Model

COATS

	2018	2045	
Model	13,431	19,617	*Linear* 1.71%
Acual/Est.	10,700	15,628	

Year	Volume	Estimate
2050	16,541	17,000

SCSWM

	2019	2050	
Model	11,430	20,085	*Linear* 2.44%
Acual/Est.	10,400	18,275	

Year	Volume	Estimate
2050	18,275	18,000

Demographic Data

Population

Employment

Calculations based on 20YR Growth Rates

Year	Volume	Estimate		
2023	13,600	N/A	*Linear*	6.72%
2050	24,130	24,000		
Year	**Volume**	**Estimate**	*Compound*	4.35%
2023	13,600	N/A		
2050	42,972	43,000		
Year	**Volume**	**Estimate**	*Average Annual*	4.95%
2023	13,600	N/A		
2050	32,459	32,000		

Calculations based on 10YR Growth Rates

Year	Volume	Estimate		
2023	13,600	N/A	*Linear*	4.62%
2050	25,210	25,000		
Year	**Volume**	**Estimate**	*Compound*	3.87%
2023	13,600	N/A		
2050	37,948	38,000		
Year	**Volume**	**Estimate**	*Average Annual*	5.01%
2023	13,600	N/A		
2050	32,689	33,000		

Trend Analysis
Linear

R-Square	AGR (Historical)	AGR (Design Year)	Annual Increase	2050 Estimate
92.2%	12.6%	2.3%	265	18,700

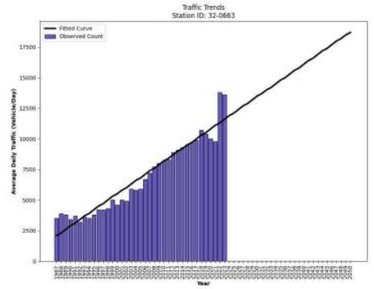

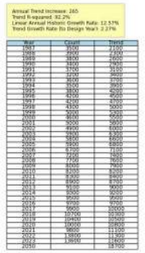

Year	Count	Trend
1987	3500	2100
1988	3900	2400
1989	3800	2700
1990	3400	3000
1991	3700	3300
1992	3200	3600
1993	3600	3900
1994	3500	4200
1995	3800	4500
1996	4200	4800
1997	4200	5100
1998	4300	5400
1999	5000	5700
2000	4600	6000
2001	5000	6300
2002	4900	6600
2003	5900	6900
2004	5800	7200
2005	5900	7500
2006	6700	7800
2007	7200	8100
2008	7700	8400
2009	8000	8700
2010	8200	9000
2011	8300	9300
2012	8900	9600
2013	9100	9900
2014	9300	10200
2015	9500	10500
2016	9700	10800
2017	9900	11100
2018	10700	11400
2019	10400	11700
2020	10000	12000
2021	9800	12300
2022	13800	12600
2023	13600	12900
2050		25700

Trend Analysis *(*2015-2023)*
Linear

R-Square	AGR (Historical)	AGR (Design Year)	Annual Increase	2050 Estimate
57.6%	5.1%	3.7%	463	25,200

Year	Count	Trend
2015	9500	9000
2016	9700	9400
2017	9900	9900
2018	10700	10400
2019	10400	10800
2020	10000	11300
2021	9800	11700
2022	13800	12200
2023	13600	12700
2050		25200

S-68 : US 378 (SUNSET BLVD) TO S- 916 (MILL STREAM RD)



Station ID 32-8053
County Lexington
Location click here

	Year	AADT	%Change
1	1987		
2	1988		#DIV/0!
3	1989		#DIV/0!
4	1990		#DIV/0!
5	1991		#DIV/0!
6	1992		#DIV/0!
7	1993		#DIV/0!
8	1994		#DIV/0!
9	1995		#DIV/0!
10	1996		#DIV/0!
11	1997		#DIV/0!
12	1998		#DIV/0!
13	1999		#DIV/0!
14	2000		#DIV/0!
15	2001		#DIV/0!
16	2002		#DIV/0!
17	2003		#DIV/0!
18	2004		#DIV/0!
19	2005		#DIV/0!
20	2006		#DIV/0!
21	2007		#DIV/0!
22	2008		#DIV/0!
23	2009		#DIV/0!
24	2010		#DIV/0!
25	2011		#DIV/0!
26	2012		#DIV/0!
27	2013		#DIV/0!
28	2014		#DIV/0!
29	2015		#DIV/0!
30	2016		#DIV/0!
31	2017		#DIV/0!
32	2018		#DIV/0!
33	2019		#DIV/0!
34	2020	5,800	#DIV/0!
35	2021	4,600	-20.7%
36	2022	5,300	15.2%
37	2023	5,900	11.3%
		Avg=	#DIV/0!

For Reference
1% Annual Growth Rate

Year	Volume	Growth Rate
2023	5,900	Present
2050	7,493	Linear
2050	7,718	Compound

Calculations based on 30YR Growth Rates

Year	Volume	Estimate		
2023	5,900	N/A	*Linear*	#DIV/0!
2050	#DIV/0!	#DIV/0!		
Year	**Volume**	**Estimate**		
2023	5,900	N/A	*Compound*	#DIV/0!
2050	#DIV/0!	#DIV/0!		
Year	**Volume**	**Estimate**		
2023	5,900	N/A	*Average Annual*	#DIV/0!
2050	#DIV/0!	#DIV/0!		

Travel Demand Model

COATS

	2018	2045		
Model	3,065	3,548	*Linear*	0.58%
Acual/Est.	0	0		

Year	Volume	Estimate
2050	0	0

SCSWM

	2019	2050		
Model	2,574	9,908	*Linear*	9.19%
Acual/Est.	0	0		

Year	Volume	Estimate
2050	0	0

Demographic Data

Population

Employment

Calculations based on 20YR Growth Rates

Year	Volume	Estimate		
2023	5,900	N/A	*Linear*	#DIV/0!
2050	#DIV/0!	#DIV/0!		
Year	**Volume**	**Estimate**		
2023	5,900	N/A	*Compound*	#DIV/0!
2050	#DIV/0!	#DIV/0!		
Year	**Volume**	**Estimate**		
2023	5,900	N/A	*Average Annual*	#DIV/0!
2050	#DIV/0!	#DIV/0!		

Calculations based on 10YR Growth Rates

Year	Volume	Estimate		
2023	5,900	N/A	*Linear*	#DIV/0!
2050	#DIV/0!	#DIV/0!		
Year	**Volume**	**Estimate**		
2023	5,900	N/A	*Compound*	#DIV/0!
2050	#DIV/0!	#DIV/0!		
Year	**Volume**	**Estimate**		
2023	5,900	N/A	*Average Annual*	#DIV/0!
2050	#DIV/0!	#DIV/0!		

Trend Analysis

Linear

R-Square	AGR (Historical)	AGR (Design Year)	Annual Increase	2050 Estimate
4.7%	1.9%	1.8%	100	8,300

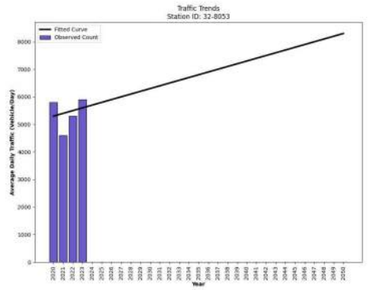

Annual Trend Increase: 100
Trend R-squared: 4.72%
Linear Annual Historic Growth Rate: 1.89%
Trend Growth Rate fro Design Year1: 1.79%

Year	Count	Trend
2020	5800	5300
2021	4600	5400
2022	5300	5500
2023	5900	5600
2050		8300

Trend Analysis *(*2015-2023)*

Linear

R-Square	AGR (Historical)	AGR (Design Year)	Annual Increase	2050 Estimate
4.7%	1.9%	1.8%	100	8,300

Annual Trend Increase: 100
Trend R-squared: 4.72%
Linear Annual Historic Growth Rate: 1.89%
Trend Growth Rate fro Design Year1: 1.79%

Year	Count	Trend
2020	5800	5300
2021	4600	5400
2022	5300	5500
2023	5900	5600
2050		8300

R-8053 2O1 : US 378 TO I- 20



Station ID 32-0086
County Lexington
Location click here

	Year	AADT	%Change
1	1987		
2	1988		#DIV/0!
3	1989	39,900	#DIV/0!
4	1990	44,100	10.5%
5	1991	42,700	-3.2%
6	1992	43,000	0.7%
7	1993	44,500	3.5%
8	1994	50,100	12.6%
9	1995	50,700	1.2%
10	1996	53,600	5.7%
11	1997	55,700	3.9%
12	1998	62,100	11.5%
13	1999	63,000	1.4%
14	2000	65,900	4.6%
15	2001	66,300	0.6%
16	2002	66,700	0.6%
17	2003	69,400	4.0%
18	2004	72,200	4.0%
19	2005	72,600	0.6%
20	2006	74,500	2.6%
21	2007	76,300	2.4%
22	2008	74,100	-2.9%
23	2009	73,800	-0.4%
24	2010	76,000	3.0%
25	2011	76,000	0.0%
26	2012	75,000	-1.3%
27	2013	76,500	2.0%
28	2014	76,900	0.5%
29	2015	80,100	4.2%
30	2016	83,400	4.1%
31	2017	83,700	0.4%
32	2018	83,500	-0.2%
33	2019	84,000	0.6%
34	2020	69,200	-17.6%
35	2021	77,500	12.0%
36	2022	77,400	-0.1%
37	2023	88,300	14.1%
		Avg=	#DIV/0!

For Reference
1% Annual Growth Rate

Year	Volume	Growth Rate
2023	88,300	Present
2050	112,141	Linear
2050	115,515	Compound

Calculations based on 30YR Growth Rates

Year	Volume	Estimate		
2023	88,300	N/A		
2050	122,680	123,000	*Linear*	2.54%
Year	**Volume**	**Estimate**		
2023	88,300	N/A		
2050	147,052	147,000	*Compound*	1.91%
Year	**Volume**	**Estimate**		
2023	88,300	N/A		
2050	140,721	141,000	*Average Annual*	2.12%

Travel Demand Model

COATS

	2018	2045		
Model	98,071	127,033	*Linear*	1.09%
Acual/Est.	83,500	108,159		
Year	**Volume**	**Estimate**		
2050	112,725	113,000		

SCSWM

	2019	2050		
Model	87,268	171,783	*Linear*	3.12%
Acual/Est.	84,000	165,350		
Year	**Volume**	**Estimate**		
2050	165,350	165,000		

Demographic Data

Population

Employment

Calculations based on 20YR Growth Rates

Year	Volume	Estimate		
2023	88,300	N/A		
2050	110,035	110,000	*Linear*	1.11%
Year	**Volume**	**Estimate**		
2023	88,300	N/A		
2050	115,873	116,000	*Compound*	1.01%
Year	**Volume**	**Estimate**		
2023	88,300	N/A		
2050	119,292	119,000	*Average Annual*	1.25%

Calculations based on 10YR Growth Rates

Year	Volume	Estimate		
2023	88,300	N/A		
2050	119,080	119,000	*Linear*	1.48%
Year	**Volume**	**Estimate**		
2023	88,300	N/A		
2050	128,249	128,000	*Compound*	1.39%
Year	**Volume**	**Estimate**		
2023	88,300	N/A		
2050	135,906	136,000	*Average Annual*	1.93%

Trend Analysis
Linear

R-Square	AGR (Historical)	AGR (Design Year)	Annual Increase	2050 Estimate
84.0%	2.7%	1.4%	1,236	122,100

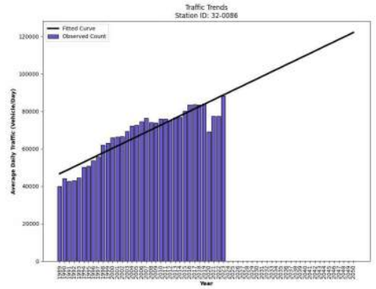

Trend Analysis *(*2015-2023)*
Linear

R-Square	AGR (Historical)	AGR (Design Year)	Annual Increase	2050 Estimate
1.0%	-0.3%	-0.3%	-198	74,600

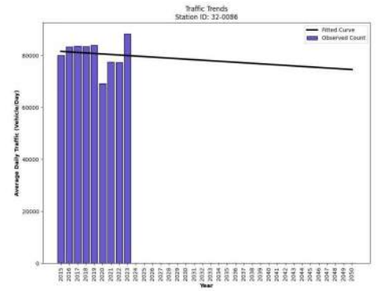

I- 20 : US 378 (SUNSET BLVD) TO S- 273 (BUSH RIVER RD), MP61.27



Station ID 32-0187
County Lexington
Location click here

	Year	AADT	%Change
1	1987	15,900	
2	1988	20,217	27.2%
3	1989	17,700	-12.4%
4	1990	22,700	28.2%
5	1991	16,417	-27.7%
6	1992	17,100	4.2%
7	1993	16,400	-4.1%
8	1994	17,300	5.5%
9	1995	18,300	5.8%
10	1996	20,000	9.3%
11	1997	21,100	5.5%
12	1998	22,500	6.6%
13	1999	23,200	3.1%
14	2000	24,500	5.6%
15	2001	26,800	9.4%
16	2002	29,000	8.2%
17	2003	26,500	-8.6%
18	2004	24,800	-6.4%
19	2005	25,600	3.2%
20	2006	27,000	5.5%
21	2007	27,700	2.6%
22	2008	26,900	-2.9%
23	2009	27,800	3.3%
24	2010	26,400	-5.0%
25	2011	26,600	0.8%
26	2012	26,600	0.0%
27	2013	27,200	2.3%
28	2014	27,800	2.2%
29	2015	25,700	-7.6%
30	2016	26,300	2.3%
31	2017	27,000	2.7%
32	2018	28,100	4.1%
33	2019	28,600	1.8%
34	2020	29,000	1.4%
35	2021	30,200	4.1%
36	2022	31,900	5.6%
37	2023	33,500	5.0%
		Avg=	2.520%

For Reference
1% Annual Growth Rate

Year	Volume	Growth Rate
2023	33,500	Present
2050	42,545	Linear
2050	43,825	Compound

Calculations based on 30YR Growth Rates

Year	Volume	Estimate		
2023	33,500	N/A		
2050	48,080	48,000	*Linear*	3.12%
2050	60,722	61,000	*Compound*	2.23%
2050	56,104	56,000	*Average Annual*	2.41%

Travel Demand Model

COATS

	2018	2045		
Model	30,253	37,532	*Linear*	0.89%
Acual/Est.	28,100	34,861		

Year	Volume	Estimate
2050	36,113	36,000

SCSWM

	2019	2050		
Model	24,009	40,618	*Linear*	2.23%
Acual/Est.	28,600	48,385		

Year	Volume	Estimate
2050	48,385	48,000

Demographic Data

Population

Employment

Calculations based on 20YR Growth Rates

Year	Volume	Estimate		
2023	33,500	N/A		
2050	45,245	45,000	*Linear*	1.75%
2050	50,274	50,000	*Compound*	1.51%
2050	49,004	49,000	*Average Annual*	1.65%

Calculations based on 10YR Growth Rates

Year	Volume	Estimate		
2023	33,500	N/A		
2050	48,890	49,000	*Linear*	2.05%
2050	55,430	55,000	*Compound*	1.88%
2050	53,799	54,000	*Average Annual*	2.16%

Trend Analysis
Linear

R-Square	AGR (Historical)	AGR (Design Year)	Annual Increase	2050 Estimate
78.3%	2.1%	1.2%	380	41,700

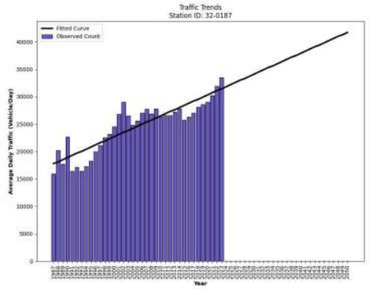

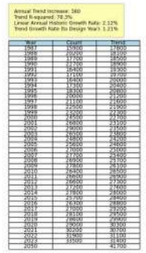

Year	Count	Trend
1987	15900	15900
1988	20217	16280
1989	17700	16659
1990	22700	17039
1991	16417	17419
1992	17100	17798
1993	16400	18178
1994	17300	18558
1995	18300	18937
1996	20000	19317
1997	21100	19696
1998	22500	20076
1999	23200	20456
2000	24500	20835
2001	26800	21215
2002	29000	21594
2003	26500	21974
2004	24800	22354
2005	25600	22733
2006	27000	23113
2007	27700	23492
2008	26900	23872
2009	27800	24252
2010	26400	24631
2011	26600	25011
2012	26600	25390
2013	27200	25770
2014	27800	26150
2015	25700	26529
2016	26300	26909
2017	27000	27288
2018	28100	27668
2019	28600	28048
2020	29000	28427
2021	30200	28807
2022	31900	29186
2023	33500	29566
2050		41700

Trend Analysis *(*2015-2023)*
Linear

R-Square	AGR (Historical)	AGR (Design Year)	Annual Increase	2050 Estimate
95.8%	3.7%	2.8%	922	57,500

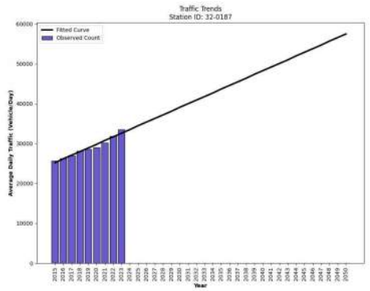



Year	Count	Trend
2015	25700	25200
2016	26300	26200
2017	27000	27100
2018	28100	28000
2019	28600	28900
2020	29000	29800
2021	30200	30800
2022	31900	31700
2023	33500	32600
2050		57500

US378 : S- 30 (LEAPHART RD) TO I- 26 (INTERSTATE 26)



Station ID 32-0183
County Lexington
Location click here

	Year	AADT	%Change
1	1987	13,900	
2	1988	15,700	12.9%
3	1989	16,800	7.0%
4	1990	19,400	15.5%
5	1991	18,500	-4.6%
6	1992	19,500	5.4%
7	1993	21,600	10.8%
8	1994	20,900	-3.2%
9	1995	22,300	6.7%
10	1996	22,500	0.9%
11	1997	25,200	12.0%
12	1998	26,800	6.3%
13	1999	26,400	-1.5%
14	2000	27,200	3.0%
15	2001	26,500	-2.6%
16	2002	29,100	9.8%
17	2003	27,800	-4.5%
18	2004	27,600	-0.7%
19	2005	29,700	7.6%
20	2006	31,600	6.4%
21	2007	31,300	-0.9%
22	2008	29,600	-5.4%
23	2009	31,100	5.1%
24	2010	29,600	-4.8%
25	2011	31,100	5.1%
26	2012	30,900	-0.6%
27	2013	31,600	2.3%
28	2014	32,400	2.5%
29	2015	29,400	-9.3%
30	2016	31,300	6.5%
31	2017	32,000	2.2%
32	2018	33,200	3.8%
33	2019	33,800	1.8%
34	2020	33,800	0.0%
35	2021	35,200	4.1%
36	2022	31,400	-10.8%
37	2023	33,000	5.1%
		Avg=	2.605%

For Reference
1% Annual Growth Rate

Year	Volume	Growth Rate
2023	33,000	Present
2050	41,910	Linear
2050	43,171	Compound

Calculations based on 30YR Growth Rates

Year	Volume	Estimate		
2023	33,000	N/A	*Linear*	1.93%
2050	43,890	44,000		
Year	**Volume**	**Estimate**	*Compound*	1.53%
2023	33,000	N/A		
2050	49,779	50,000		
Year	**Volume**	**Estimate**	*Average Annual*	1.73%
2023	33,000	N/A		
2050	48,951	49,000		

Travel Demand Model

COATS

	2018	2045	*Linear*	0.44%
Model	44,594	49,949		
Acual/Est.	33,200	37,187		
Year	Volume	Estimate		
2050	37,925	38,000		

SCSWM

	2019	2050	*Linear*	3.00%
Model	33,497	64,631		
Acual/Est.	33,800	65,216		
Year	Volume	Estimate		
2050	65,216	65,000		

Demographic Data

Population

Employment

Calculations based on 20YR Growth Rates

Year	Volume	Estimate		
2023	33,000	N/A	*Linear*	0.98%
2050	40,290	40,000		
Year	**Volume**	**Estimate**	*Compound*	0.90%
2023	33,000	N/A		
2050	42,003	42,000		
Year	**Volume**	**Estimate**	*Average Annual*	1.08%
2023	33,000	N/A		
2050	42,984	43,000		

Calculations based on 10YR Growth Rates

Year	Volume	Estimate		
2023	33,000	N/A	*Linear*	0.19%
2050	34,620	35,000		
Year	**Volume**	**Estimate**	*Compound*	0.18%
2023	33,000	N/A		
2050	34,676	35,000		
Year	**Volume**	**Estimate**	*Average Annual*	0.38%
2023	33,000	N/A		
2050	36,531	37,000		

Trend Analysis

Linear

R-Square	AGR (Historical)	AGR (Design Year)	Annual Increase	2050 Estimate
86.5%	2.6%	1.4%	489	49,300

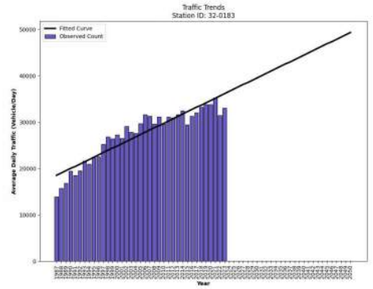

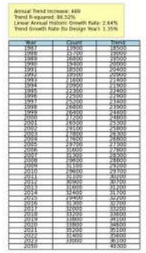

Year	Count	Trend
1987	13900	19000
1988	15700	19500
1989	16800	20000
1990	19400	20500
1991	18500	21000
1992	19500	21500
1993	21600	22000
1994	20900	22500
1995	22300	23000
1996	22500	23500
1997	25200	24000
1998	26800	24500
1999	26400	25000
2000	27200	25500
2001	26500	26000
2002	29100	26500
2003	27800	27000
2004	27600	27500
2005	29700	28000
2006	31600	28500
2007	31300	29000
2008	29600	29500
2009	31100	30000
2010	29600	30500
2011	31100	31000
2012	30900	31500
2013	31600	32000
2014	32400	32500
2015	29400	33000
2016	31300	33500
2017	32000	34000
2018	33200	34500
2019	33800	35000
2020	33800	35500
2021	35200	36000
2022	31400	36500
2023	33000	37000
2050		49300

Trend Analysis *(*2015-2023)*

Linear

R-Square	AGR (Historical)	AGR (Design Year)	Annual Increase	2050 Estimate
32.9%	1.2%	1.1%	362	43,800

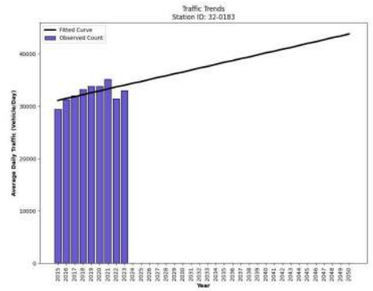

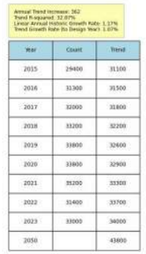

Year	Count	Trend
2015	29400	31100
2016	31300	31500
2017	32000	31800
2018	33200	32200
2019	33800	32400
2020	33800	32900
2021	35200	33300
2022	31400	33700
2023	33000	34000
2050		43800

US378 : S- 28 (HOPE FERRY RD), L- 6517 TO I- 20 (INTERSTATE 20)



Station ID 32-8052
County Lexington
Location click here

	Year	AADT	%Change
1	1987		
2	1988		#DIV/0!
3	1989		#DIV/0!
4	1990		#DIV/0!
5	1991		#DIV/0!
6	1992		#DIV/0!
7	1993		#DIV/0!
8	1994		#DIV/0!
9	1995		#DIV/0!
10	1996		#DIV/0!
11	1997		#DIV/0!
12	1998		#DIV/0!
13	1999		#DIV/0!
14	2000		#DIV/0!
15	2001		#DIV/0!
16	2002		#DIV/0!
17	2003		#DIV/0!
18	2004		#DIV/0!
19	2005		#DIV/0!
20	2006		#DIV/0!
21	2007		#DIV/0!
22	2008		#DIV/0!
23	2009		#DIV/0!
24	2010		#DIV/0!
25	2011		#DIV/0!
26	2012		#DIV/0!
27	2013		#DIV/0!
28	2014		#DIV/0!
29	2015		#DIV/0!
30	2016		#DIV/0!
31	2017		#DIV/0!
32	2018		#DIV/0!
33	2019		#DIV/0!
34	2020	4,600	#DIV/0!
35	2021	5,200	13.0%
36	2022	6,000	15.4%
37	2023	6,800	13.3%
		Avg=	#DIV/0!

For Reference
1% Annual Growth Rate

Year	Volume	Growth Rate
2023	6,800	Present
2050	8,636	Linear
2050	8,896	Compound

Calculations based on 30YR Growth Rates

Year	Volume	Estimate		
2023	6,800	N/A	*Linear*	#DIV/0!
2050	#DIV/0!	#DIV/0!		
Year	**Volume**	**Estimate**		
2023	6,800	N/A	*Compound*	#DIV/0!
2050	#DIV/0!	#DIV/0!		
Year	**Volume**	**Estimate**		
2023	6,800	N/A	*Average Annual*	#DIV/0!
2050	#DIV/0!	#DIV/0!		

Travel Demand Model

COATS

	2018	2045		
Model	6,380	10,654	*Linear*	2.48%
Acual/Est.	0	0		
Year	**Volume**	**Estimate**		
2050	0	0		

SCSWM

	2019	2050		
Model	3,608	4,406	*Linear*	0.71%
Acual/Est.	0	0		
Year	**Volume**	**Estimate**		
2050	0	0		

Demographic Data

Population

Employment

R-8052 1E1 : I- 20 TO US 378



Calculations based on 20YR Growth Rates

Year	Volume	Estimate		
2023	6,800	N/A	*Linear*	#DIV/0!
2050	#DIV/0!	#DIV/0!		
Year	**Volume**	**Estimate**		
2023	6,800	N/A	*Compound*	#DIV/0!
2050	#DIV/0!	#DIV/0!		
Year	**Volume**	**Estimate**		
2023	6,800	N/A	*Average Annual*	#DIV/0!
2050	#DIV/0!	#DIV/0!		

Calculations based on 10YR Growth Rates

Year	Volume	Estimate		
2023	6,800	N/A	*Linear*	#DIV/0!
2050	#DIV/0!	#DIV/0!		
Year	**Volume**	**Estimate**		
2023	6,800	N/A	*Compound*	#DIV/0!
2050	#DIV/0!	#DIV/0!		
Year	**Volume**	**Estimate**		
2023	6,800	N/A	*Average Annual*	#DIV/0!
2050	#DIV/0!	#DIV/0!		

Trend Analysis

Linear

R-Square	AGR (Historical)	AGR (Design Year)	Annual Increase	2050 Estimate
99.6%	17.0%	10.8%	740	26,700

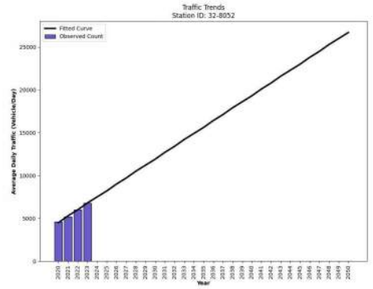

Year	Count	Trend
2020	4600	4500
2021	5200	5300
2022	6000	6000
2023	6800	6800
2050		26700

Trend Analysis *(*2015-2023)*

Linear

R-Square	AGR (Historical)	AGR (Design Year)	Annual Increase	2050 Estimate
99.6%	17.0%	10.8%	740	26,700

Year	Count	Trend
2020	4600	4500
2021	5200	5300
2022	6000	6000
2023	6800	6800
2050		26700

Station ID 32-8056
County Lexington
Location click here

	Year	AADT	%Change
1	1987		
2	1988		#DIV/0!
3	1989		#DIV/0!
4	1990		#DIV/0!
5	1991		#DIV/0!
6	1992		#DIV/0!
7	1993		#DIV/0!
8	1994		#DIV/0!
9	1995		#DIV/0!
10	1996		#DIV/0!
11	1997		#DIV/0!
12	1998		#DIV/0!
13	1999		#DIV/0!
14	2000		#DIV/0!
15	2001		#DIV/0!
16	2002		#DIV/0!
17	2003		#DIV/0!
18	2004		#DIV/0!
19	2005		#DIV/0!
20	2006		#DIV/0!
21	2007		#DIV/0!
22	2008		#DIV/0!
23	2009		#DIV/0!
24	2010		#DIV/0!
25	2011		#DIV/0!
26	2012		#DIV/0!
27	2013		#DIV/0!
28	2014		#DIV/0!
29	2015		#DIV/0!
30	2016		#DIV/0!
31	2017		#DIV/0!
32	2018		#DIV/0!
33	2019		#DIV/0!
34	2020	2,100	#DIV/0!
35	2021	1,450	-31.0%
36	2022	2,100	44.8%
37	2023	2,600	23.8%
		Avg=	#DIV/0!

For Reference
1% Annual Growth Rate

Year	Volume	Growth Rate
2023	2,600	Present
2050	3,302	Linear
2050	3,401	Compound

Calculations based on 30YR Growth Rates

Year	Volume	Estimate		
2023	2,600	N/A	*Linear*	#DIV/0!
2050	#DIV/0!	#DIV/0!		
Year	**Volume**	**Estimate**		
2023	2,600	N/A	*Compound*	#DIV/0!
2050	#DIV/0!	#DIV/0!		
Year	**Volume**	**Estimate**		
2023	2,600	N/A	*Average Annual*	#DIV/0!
2050	#DIV/0!	#DIV/0!		

Travel Demand Model

COATS

	2018	2045		
Model	1,473	2,694	*Linear*	3.07%
Acual/Est.	0	0		

Year	Volume	Estimate
2050	0	0

SCSWM

	2019	2050		
Model	296	388	*Linear*	1.00%
Acual/Est.	0	0		

Year	Volume	Estimate
2050	0	0

Demographic Data

Population

Employment

Calculations based on 20YR Growth Rates

Year	Volume	Estimate		
2023	2,600	N/A	*Linear*	#DIV/0!
2050	#DIV/0!	#DIV/0!		
Year	**Volume**	**Estimate**		
2023	2,600	N/A	*Compound*	#DIV/0!
2050	#DIV/0!	#DIV/0!		
Year	**Volume**	**Estimate**		
2023	2,600	N/A	*Average Annual*	#DIV/0!
2050	#DIV/0!	#DIV/0!		

Calculations based on 10YR Growth Rates

Year	Volume	Estimate		
2023	2,600	N/A	*Linear*	#DIV/0!
2050	#DIV/0!	#DIV/0!		
Year	**Volume**	**Estimate**		
2023	2,600	N/A	*Compound*	#DIV/0!
2050	#DIV/0!	#DIV/0!		
Year	**Volume**	**Estimate**		
2023	2,600	N/A	*Average Annual*	#DIV/0!
2050	#DIV/0!	#DIV/0!		

Trend Analysis
Linear

R-Square	AGR (Historical)	AGR (Design Year)	Annual Increase	2050 Estimate
36.3%	11.1%	8.8%	210	8,100

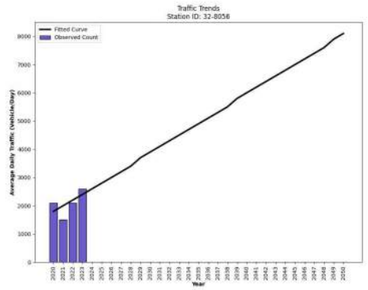

Year	Count	Trend
2020	2100	1800
2021	1500	2000
2022	2100	2200
2023	2600	2400
2050		8100

Trend Analysis *(*2015-2023)*
Linear

R-Square	AGR (Historical)	AGR (Design Year)	Annual Increase	2050 Estimate
36.3%	11.1%	8.8%	210	8,100

Year	Count	Trend
2020	2100	1800
2021	1500	2000
2022	2100	2200
2023	2600	2400
2050		8100

R-8056 4O1 : US 378 TO I- 20



Station ID 32-0185
County Lexington
Location click here

	Year	AADT	%Change
1	1987	17,600	
2	1988	19,700	11.9%
3	1989	21,400	8.6%
4	1990	23,100	7.9%
5	1991	21,500	-6.9%
6	1992	25,200	17.2%
7	1993	22,100	-12.3%
8	1994	22,600	2.3%
9	1995	26,100	15.5%
10	1996	28,400	8.8%
11	1997	29,300	3.2%
12	1998	30,100	2.7%
13	1999	33,300	10.6%
14	2000	33,400	0.3%
15	2001	32,400	-3.0%
16	2002	34,300	5.9%
17	2003	36,800	7.3%
18	2004	35,400	-3.8%
19	2005	36,400	2.8%
20	2006	36,800	1.1%
21	2007	37,900	3.0%
22	2008	36,600	-3.4%
23	2009	38,700	5.7%
24	2010	36,800	-4.9%
25	2011	34,600	-6.0%
26	2012	34,600	0.0%
27	2013	35,400	2.3%
28	2014	36,200	2.3%
29	2015	39,700	9.7%
30	2016	39,500	-0.5%
31	2017	42,300	7.1%
32	2018	43,900	3.8%
33	2019	44,700	1.8%
34	2020	41,400	-7.4%
35	2021	43,100	4.1%
36	2022	42,300	-1.9%
37	2023	44,500	5.2%
		Avg=	2.807%

For Reference
1% Annual Growth Rate

Year	Volume	Growth Rate
2023	44,500	Present
2050	56,515	Linear
2050	58,215	Compound

Calculations based on 30YR Growth Rates

Year	Volume	Estimate		
2023	44,500	N/A		
2050	64,210	64,000	*Linear*	3.23%
2023	44,500	N/A		
2050	81,882	82,000	*Compound*	2.28%
2023	44,500	N/A		
2050	75,571	76,000	*Average Annual*	2.49%

Travel Demand Model

COATS

	2018	2045		
Model	39,355	50,401	*Linear*	1.04%
Acual/Est.	43,900	56,222		

Year	Volume	Estimate
2050	58,503	59,000

SCSWM

	2019	2050		
Model	35,144	53,557	*Linear*	1.69%
Acual/Est.	44,700	68,120		

Year	Volume	Estimate
2050	68,120	68,000

Demographic Data

Population

Employment

Calculations based on 20YR Growth Rates

Year	Volume	Estimate		
2023	44,500	N/A		
2050	56,785	57,000	*Linear*	1.29%
2023	44,500	N/A		
2050	60,603	61,000	*Compound*	1.15%
2023	44,500	N/A		
2050	60,784	61,000	*Average Annual*	1.31%

Calculations based on 10YR Growth Rates

Year	Volume	Estimate		
2023	44,500	N/A		
2050	66,910	67,000	*Linear*	2.29%
2023	44,500	N/A		
2050	77,700	78,000	*Compound*	2.09%
2023	44,500	N/A		
2050	74,856	75,000	*Average Annual*	2.44%

Trend Analysis
Linear

R-Square	AGR (Historical)	AGR (Design Year)	Annual Increase	2050 Estimate
89.6%	3.1%	1.5%	672	63,700

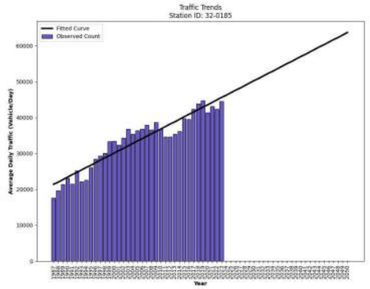

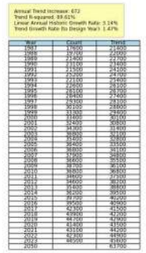

Trend Analysis *(*2015-2023)*
Linear

R-Square	AGR (Historical)	AGR (Design Year)	Annual Increase	2050 Estimate
40.8%	1.1%	1.0%	445	56,200

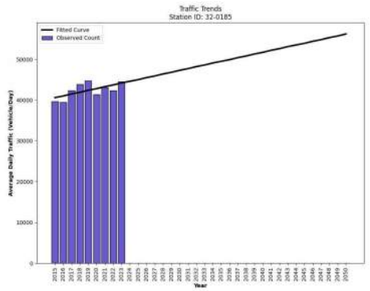



Year	Count	Trend
2015	39700	40600
2016	39500	41000
2017	42300	41500
2018	43900	41900
2019	44700	42400
2020	41400	42800
2021	43100	43300
2022	42300	43700
2023	44500	44200
2050		56200

US378 : I- 20 (INTERSTATE 20) TO S- 30 (LEAPHART RD)



Station ID 32-8051
County Lexington
Location click here

	Year	AADT	%Change
1	1987		
2	1988		#DIV/0!
3	1989		#DIV/0!
4	1990		#DIV/0!
5	1991		#DIV/0!
6	1992		#DIV/0!
7	1993		#DIV/0!
8	1994		#DIV/0!
9	1995		#DIV/0!
10	1996		#DIV/0!
11	1997		#DIV/0!
12	1998		#DIV/0!
13	1999		#DIV/0!
14	2000		#DIV/0!
15	2001		#DIV/0!
16	2002		#DIV/0!
17	2003		#DIV/0!
18	2004		#DIV/0!
19	2005		#DIV/0!
20	2006		#DIV/0!
21	2007		#DIV/0!
22	2008		#DIV/0!
23	2009		#DIV/0!
24	2010		#DIV/0!
25	2011		#DIV/0!
26	2012		#DIV/0!
27	2013		#DIV/0!
28	2014		#DIV/0!
29	2015		#DIV/0!
30	2016		#DIV/0!
31	2017		#DIV/0!
32	2018		#DIV/0!
33	2019		#DIV/0!
34	2020	10,100	#DIV/0!
35	2021	8,100	-19.8%
36	2022	9,500	17.3%
37	2023	9,300	-2.1%
		Avg=	#DIV/0!

For Reference
1% Annual Growth Rate

Year	Volume	Growth Rate
2023	9,300	Present
2050	11,811	Linear
2050	12,166	Compound

Calculations based on 30YR Growth Rates

Year	Volume	Estimate		
2023	9,300	N/A	*Linear*	#DIV/0!
2050	#DIV/0!	#DIV/0!		
Year	**Volume**	**Estimate**		
2023	9,300	N/A	*Compound*	#DIV/0!
2050	#DIV/0!	#DIV/0!		
Year	**Volume**	**Estimate**		
2023	9,300	N/A	*Average Annual*	#DIV/0!
2050	#DIV/0!	#DIV/0!		

Travel Demand Model

COATS

	2018	2045		
Model	14,377	14,515	*Linear*	0.04%
Acual/Est.	0	0		

Year	Volume	Estimate
2050	0	0

SCSWM

	2019	2050		
Model	9,976	12,385	*Linear*	0.78%
Acual/Est.	0	0		

Year	Volume	Estimate
2050	0	0

Demographic Data

Population

Employment

Calculations based on 20YR Growth Rates

Year	Volume	Estimate		
2023	9,300	N/A	*Linear*	#DIV/0!
2050	#DIV/0!	#DIV/0!		
Year	**Volume**	**Estimate**		
2023	9,300	N/A	*Compound*	#DIV/0!
2050	#DIV/0!	#DIV/0!		
Year	**Volume**	**Estimate**		
2023	9,300	N/A	*Average Annual*	#DIV/0!
2050	#DIV/0!	#DIV/0!		

Calculations based on 10YR Growth Rates

Year	Volume	Estimate		
2023	9,300	N/A	*Linear*	#DIV/0!
2050	#DIV/0!	#DIV/0!		
Year	**Volume**	**Estimate**		
2023	9,300	N/A	*Compound*	#DIV/0!
2050	#DIV/0!	#DIV/0!		
Year	**Volume**	**Estimate**		
2023	9,300	N/A	*Average Annual*	#DIV/0!
2050	#DIV/0!	#DIV/0!		

Trend Analysis
Linear

R-Square	AGR (Historical)	AGR (Design Year)	Annual Increase	2050 Estimate
2.4%	-1.1%	-1.1%	-100	6,400

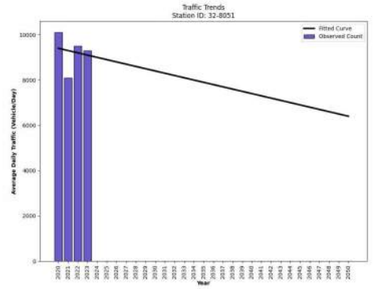

Annual Trend Increase: -100
Trend R-squared: 2.37%
Linear Annual Historic Growth Rate: -1.06%
Trend Growth Rate Its Design Year: -1.1%

Year	Count	Trend
2020	10100	9400
2021	8100	9300
2022	9500	9200
2023	9300	9100
2050		6400

Trend Analysis *(*2015-2023)*
Linear

R-Square	AGR (Historical)	AGR (Design Year)	Annual Increase	2050 Estimate
2.4%	-1.1%	-1.1%	-100	6,400

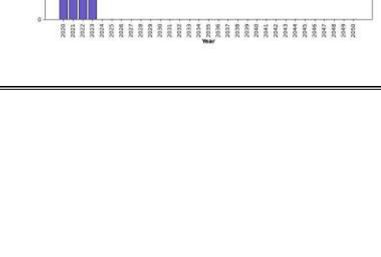

Annual Trend Increase: -100
Trend R-squared: 2.37%
Linear Annual Historic Growth Rate: -1.06%
Trend Growth Rate Its Design Year: -1.1%

Year	Count	Trend
2020	10100	9400
2021	8100	9300
2022	9500	9200
2023	9300	9100
2050		6400

R-8051 1O1 : US 378 TO I- 20



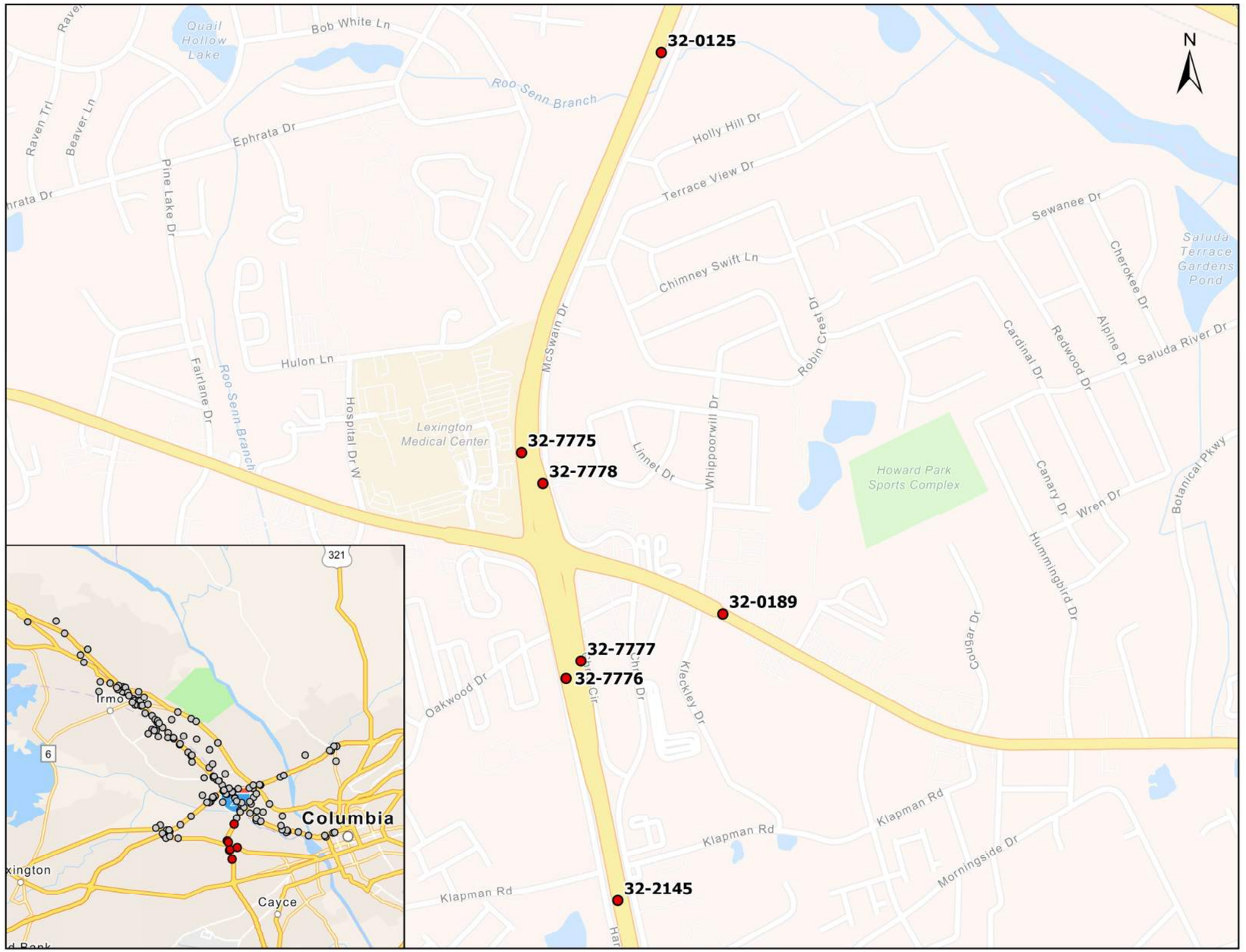
32-0125
32-7775
32-7778
32-0189
32-7777
32-7776
32-2145
N
Quail Hollow Lake
Bob White Ln
Roo Senn Branch
Holly Hill Dr
Terrace View Dr
Ephrata Dr
Raven Trl
Beaver Ln
Pine Lake Dr
Chimney Swift Ln
Sewanee Dr
Cherokee Dr
Saluda Terrace Gardens Pond
Alpine Dr
Saluda River Dr
Redwood Dr
Cardinal Dr
Robin Crest Dr
McSwain Dr
Hulon Ln
Fairlane Dr
Hospital Dr W
Lexington Medical Center
Linnet Dr
Whippoorwill Dr
Howard Park Sports Complex
Canary Dr
Wren Dr
Botanical Pkwy
Hummingbird Dr
Cougar Dr
Oakwood Dr
Kleckley Dr
Klapman Rd
Morningside Dr
321
6
Irmo
Columbia
Cayce
xington

Station ID 32-2145
County Lexington
Location click here

	Year	AADT	%Change
1	1987		
2	1988		#DIV/0!
3	1989	62,600	#DIV/0!
4	1990	67,800	8.3%
5	1991	61,200	-9.7%
6	1992	69,600	13.7%
7	1993	81,400	17.0%
8	1994	82,100	0.9%
9	1995	72,200	-12.1%
10	1996	68,600	-5.0%
11	1997	70,000	2.0%
12	1998	70,600	0.9%
13	1999	74,300	5.2%
14	2000	80,000	7.7%
15	2001	77,800	-2.8%
16	2002	79,000	1.5%
17	2003	78,800	-0.3%
18	2004	79,300	0.6%
19	2005	79,000	-0.4%
20	2006	78,300	-0.9%
21	2007	79,100	1.0%
22	2008	75,600	-4.4%
23	2009	75,700	0.1%
24	2010	76,400	0.9%
25	2011	75,800	-0.8%
26	2012	74,800	-1.3%
27	2013	77,400	3.5%
28	2014	77,600	0.3%
29	2015	86,300	11.2%
30	2016	89,400	3.6%
31	2017	92,700	3.7%
32	2018	90,400	-2.5%
33	2019	89,900	-0.6%
34	2020	83,200	-7.5%
35	2021	86,500	4.0%
36	2022	89,300	3.2%
37	2023	87,500	-2.0%
		Avg=	#DIV/0!

For Reference
1% Annual Growth Rate

Year	Volume	Growth Rate
2023	87,500	Present
2050	111,125	Linear
2050	114,468	Compound

Calculations based on 30YR Growth Rates

Year	Volume	Estimate		
2023	87,500	N/A		
2050	92,360	92,000	*Linear*	0.22%
Year	**Volume**	**Estimate**		
2023	87,500	N/A		
2050	92,663	93,000	*Compound*	0.21%
Year	**Volume**	**Estimate**		
2023	87,500	N/A		
2050	95,234	95,000	*Average Annual*	0.32%

Travel Demand Model

COATS

	2018	2045		
Model	98,239	114,277	*Linear*	0.60%
Acual/Est.	90,400	105,158		

Year	Volume	Estimate
2050	107,891	108,000

SCSWM

	2019	2050		
Model	78,035	99,645	*Linear*	0.89%
Acual/Est.	89,900	114,796		

Year	Volume	Estimate
2050	114,796	115,000

Calculations based on 20YR Growth Rates

Year	Volume	Estimate		
2023	87,500	N/A		
2050	98,570	99,000	*Linear*	0.52%
Year	**Volume**	**Estimate**		
2023	87,500	N/A		
2050	99,931	100,000	*Compound*	0.49%
Year	**Volume**	**Estimate**		
2023	87,500	N/A		
2050	101,961	102,000	*Average Annual*	0.59%

Calculations based on 10YR Growth Rates

Year	Volume	Estimate		
2023	87,500	N/A		
2050	114,230	114,000	*Linear*	1.28%
Year	**Volume**	**Estimate**		
2023	87,500	N/A		
2050	121,005	121,000	*Compound*	1.21%
Year	**Volume**	**Estimate**		
2023	87,500	N/A		
2050	123,421	123,000	*Average Annual*	1.47%

Trend Analysis
Linear

R-Square	AGR (Historical)	AGR (Design Year)	Annual Increase	2050 Estimate
62.7%	0.9%	0.7%	599	104,600

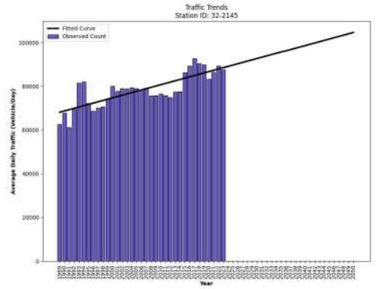

Trend Analysis *(*2015-2023)*
Linear

R-Square	AGR (Historical)	AGR (Design Year)	Annual Increase	2050 Estimate
6.1%	-0.3%	-0.3%	-252	80,600

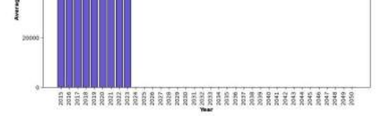

Demographic Data

Population

Employment

I-26 : US 378 (SUNSET BLVD) TO US 1 (AUGUSTA RD)

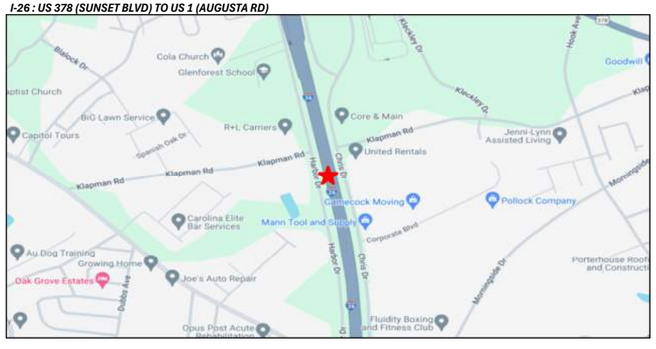

Station ID 32-7775
County Lexington
Location click here

	Year	AADT	%Change
1	1987		
2	1988		#DIV/0!
3	1989		#DIV/0!
4	1990		#DIV/0!
5	1991		#DIV/0!
6	1992		#DIV/0!
7	1993		#DIV/0!
8	1994		#DIV/0!
9	1995		#DIV/0!
10	1996		#DIV/0!
11	1997		#DIV/0!
12	1998		#DIV/0!
13	1999		#DIV/0!
14	2000		#DIV/0!
15	2001		#DIV/0!
16	2002		#DIV/0!
17	2003		#DIV/0!
18	2004		#DIV/0!
19	2005		#DIV/0!
20	2006		#DIV/0!
21	2007		#DIV/0!
22	2008		#DIV/0!
23	2009		#DIV/0!
24	2010		#DIV/0!
25	2011		#DIV/0!
26	2012		#DIV/0!
27	2013		#DIV/0!
28	2014		#DIV/0!
29	2015		#DIV/0!
30	2016		#DIV/0!
31	2017		#DIV/0!
32	2018		#DIV/0!
33	2019		#DIV/0!
34	2020	10,600	#DIV/0!
35	2021	10,000	-5.7%
36	2022	9,700	-3.0%
37	2023	10,600	9.3%
		Avg=	#DIV/0!

For Reference
1% Annual Growth Rate

Year	Volume	Growth Rate
2023	10,600	Present
2050	13,462	Linear
2050	13,867	Compound

Calculations based on 30YR Growth Rates

Year	Volume	Estimate		
2023	10,600	N/A	*Linear*	#DIV/0!
2050	#DIV/0!	#DIV/0!		
Year	**Volume**	**Estimate**	*Compound*	#DIV/0!
2023	10,600	N/A		
2050	#DIV/0!	#DIV/0!		
Year	**Volume**	**Estimate**	*Average Annual*	#DIV/0!
2023	10,600	N/A		
2050	#DIV/0!	#DIV/0!		

Travel Demand Model

COATS

	2018	2045		
Model	20,226	21,585	*Linear*	0.25%
Acual/Est.	0	0		
Year	**Volume**	**Estimate**		
2050	0	0		

SCSWM

	2019	2050		
Model	11,919	13,662	*Linear*	0.47%
Acual/Est.	0	0		
Year	**Volume**	**Estimate**		
2050	0	0		

Demographic Data

Population

Employment

Calculations based on 20YR Growth Rates

Year	Volume	Estimate		
2023	10,600	N/A	*Linear*	#DIV/0!
2050	#DIV/0!	#DIV/0!		
Year	**Volume**	**Estimate**	*Compound*	#DIV/0!
2023	10,600	N/A		
2050	#DIV/0!	#DIV/0!		
Year	**Volume**	**Estimate**	*Average Annual*	#DIV/0!
2023	10,600	N/A		
2050	#DIV/0!	#DIV/0!		

Calculations based on 10YR Growth Rates

Year	Volume	Estimate		
2023	10,600	N/A	*Linear*	#DIV/0!
2050	#DIV/0!	#DIV/0!		
Year	**Volume**	**Estimate**	*Compound*	#DIV/0!
2023	10,600	N/A		
2050	#DIV/0!	#DIV/0!		
Year	**Volume**	**Estimate**	*Average Annual*	#DIV/0!
2023	10,600	N/A		
2050	#DIV/0!	#DIV/0!		

Trend Analysis
Linear

R-Square	AGR (Historical)	AGR (Design Year)	Annual Increase	2050 Estimate
0.7%	-0.3%	-0.3%	-30	9,400

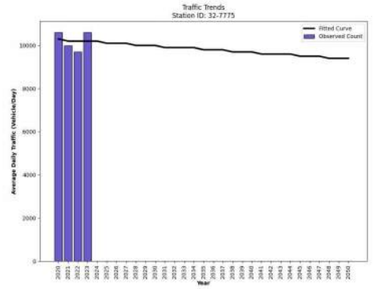

Year	Count	Trend
2020	10600	10300
2021	10000	10200
2022	9700	10200
2023	10600	10200
2050		9400

Trend Analysis *(*2015-2023)*
Linear

R-Square	AGR (Historical)	AGR (Design Year)	Annual Increase	2050 Estimate
0.7%	-0.3%	-0.3%	-30	9,400



Year	Count	Trend
2020	10600	10300
2021	10000	10200
2022	9700	10200
2023	10600	10200
2050		9400

R-7775 1E1 : I- 26 TO US 378, RS 7775 1E1



Station ID 32-7776
County Lexington
Location click here

	Year	AADT	%Change
1	1987		
2	1988		#DIV/0!
3	1989		#DIV/0!
4	1990		#DIV/0!
5	1991		#DIV/0!
6	1992		#DIV/0!
7	1993		#DIV/0!
8	1994		#DIV/0!
9	1995		#DIV/0!
10	1996		#DIV/0!
11	1997		#DIV/0!
12	1998		#DIV/0!
13	1999		#DIV/0!
14	2000		#DIV/0!
15	2001		#DIV/0!
16	2002		#DIV/0!
17	2003		#DIV/0!
18	2004		#DIV/0!
19	2005		#DIV/0!
20	2006		#DIV/0!
21	2007		#DIV/0!
22	2008		#DIV/0!
23	2009		#DIV/0!
24	2010		#DIV/0!
25	2011		#DIV/0!
26	2012		#DIV/0!
27	2013		#DIV/0!
28	2014		#DIV/0!
29	2015		#DIV/0!
30	2016		#DIV/0!
31	2017		#DIV/0!
32	2018		#DIV/0!
33	2019		#DIV/0!
34	2020	8,400	#DIV/0!
35	2021	8,800	4.8%
36	2022	8,200	-6.8%
37	2023	8,800	7.3%
		Avg=	#DIV/0!

For Reference
1% Annual Growth Rate

Year	Volume	Growth Rate
2023	8,800	Present
2050	11,176	Linear
2050	11,512	Compound

Calculations based on 30YR Growth Rates

Year	Volume	Estimate		
2023	8,800	N/A	*Linear*	#DIV/0!
2050	#DIV/0!	#DIV/0!		
Year	**Volume**	**Estimate**		
2023	8,800	N/A	*Compound*	#DIV/0!
2050	#DIV/0!	#DIV/0!		
Year	**Volume**	**Estimate**		
2023	8,800	N/A	*Average Annual*	#DIV/0!
2050	#DIV/0!	#DIV/0!		

Travel Demand Model

COATS

	2018	2045		
Model	9,240	10,278	*Linear*	0.42%
Acual/Est.	0	0		
Year	**Volume**	**Estimate**		
2050	0	0		

SCSWM

	2019	2050		
Model	7,907	7,193	*Linear*	-0.29%
Acual/Est.	0	0		
Year	**Volume**	**Estimate**		
2050	0	0		

Demographic Data

Population

Employment

Calculations based on 20YR Growth Rates

Year	Volume	Estimate		
2023	8,800	N/A	*Linear*	#DIV/0!
2050	#DIV/0!	#DIV/0!		
Year	**Volume**	**Estimate**		
2023	8,800	N/A	*Compound*	#DIV/0!
2050	#DIV/0!	#DIV/0!		
Year	**Volume**	**Estimate**		
2023	8,800	N/A	*Average Annual*	#DIV/0!
2050	#DIV/0!	#DIV/0!		

Calculations based on 10YR Growth Rates

Year	Volume	Estimate		
2023	8,800	N/A	*Linear*	#DIV/0!
2050	#DIV/0!	#DIV/0!		
Year	**Volume**	**Estimate**		
2023	8,800	N/A	*Compound*	#DIV/0!
2050	#DIV/0!	#DIV/0!		
Year	**Volume**	**Estimate**		
2023	8,800	N/A	*Average Annual*	#DIV/0!
2050	#DIV/0!	#DIV/0!		

Trend Analysis

Linear

R-Square	AGR (Historical)	AGR (Design Year)	Annual Increase	2050 Estimate
6.7%	0.4%	0.7%	60	10,300

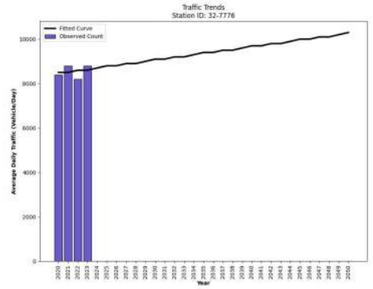

Annual Trend Increase: 60
Trend R-squared: 6.67%
Linear Annual Historic Growth Rate: 0.39%
Trend Growth Rate Its Design Year: 0.73%

Year	Count	Trend
2020	8400	8500
2021	8800	8500
2022	8200	8600
2023	8800	8600
2050		10300

Trend Analysis *(*2015-2023)*

Linear

R-Square	AGR (Historical)	AGR (Design Year)	Annual Increase	2050 Estimate
6.7%	0.4%	0.7%	60	10,300

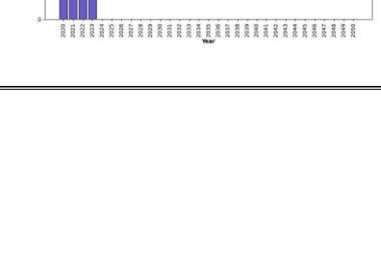

Annual Trend Increase: 60
Trend R-squared: 6.67%
Linear Annual Historic Growth Rate: 0.39%
Trend Growth Rate Its Design Year: 0.73%

Year	Count	Trend
2020	8400	8500
2021	8800	8500
2022	8200	8600
2023	8800	8600
2050		10300

R-7776 2O1 : US 378 TO I- 26, RS 7776 2O1



Station ID 32-7777
County Lexington
Location click here

	Year	AADT	%Change
1	1987		
2	1988		#DIV/0!
3	1989		#DIV/0!
4	1990		#DIV/0!
5	1991		#DIV/0!
6	1992		#DIV/0!
7	1993		#DIV/0!
8	1994		#DIV/0!
9	1995		#DIV/0!
10	1996		#DIV/0!
11	1997		#DIV/0!
12	1998		#DIV/0!
13	1999		#DIV/0!
14	2000		#DIV/0!
15	2001		#DIV/0!
16	2002		#DIV/0!
17	2003		#DIV/0!
18	2004		#DIV/0!
19	2005		#DIV/0!
20	2006		#DIV/0!
21	2007		#DIV/0!
22	2008		#DIV/0!
23	2009		#DIV/0!
24	2010		#DIV/0!
25	2011		#DIV/0!
26	2012		#DIV/0!
27	2013		#DIV/0!
28	2014		#DIV/0!
29	2015		#DIV/0!
30	2016		#DIV/0!
31	2017		#DIV/0!
32	2018		#DIV/0!
33	2019		#DIV/0!
34	2020	9,200	#DIV/0!
35	2021	9,700	5.4%
36	2022	8,700	-10.3%
37	2023	9,300	6.9%
		Avg=	#DIV/0!

For Reference
1% Annual Growth Rate

Year	Volume	Growth Rate
2023	9,300	Present
2050	11,811	Linear
2050	12,166	Compound

Calculations based on 30YR Growth Rates

Year	Volume	Estimate		
2023	9,300	N/A	*Linear*	#DIV/0!
2050	#DIV/0!	#DIV/0!		
Year	**Volume**	**Estimate**		
2023	9,300	N/A	*Compound*	#DIV/0!
2050	#DIV/0!	#DIV/0!		
Year	**Volume**	**Estimate**		
2023	9,300	N/A	*Average Annual*	#DIV/0!
2050	#DIV/0!	#DIV/0!		

Travel Demand Model

COATS

	2018	2045		
Model	10,723	11,641	*Linear*	0.32%
Acual/Est.	0	0		
Year	**Volume**	**Estimate**		
2050	0	0		

SCSWM

	2019	2050		
Model	9,484	8,978	*Linear*	-0.17%
Acual/Est.	0	0		
Year	**Volume**	**Estimate**		
2050	0	0		

Demographic Data

Population

Employment

Calculations based on 20YR Growth Rates

Year	Volume	Estimate		
2023	9,300	N/A	*Linear*	#DIV/0!
2050	#DIV/0!	#DIV/0!		
Year	**Volume**	**Estimate**		
2023	9,300	N/A	*Compound*	#DIV/0!
2050	#DIV/0!	#DIV/0!		
Year	**Volume**	**Estimate**		
2023	9,300	N/A	*Average Annual*	#DIV/0!
2050	#DIV/0!	#DIV/0!		

Calculations based on 10YR Growth Rates

Year	Volume	Estimate		
2023	9,300	N/A	*Linear*	#DIV/0!
2050	#DIV/0!	#DIV/0!		
Year	**Volume**	**Estimate**		
2023	9,300	N/A	*Compound*	#DIV/0!
2050	#DIV/0!	#DIV/0!		
Year	**Volume**	**Estimate**		
2023	9,300	N/A	*Average Annual*	#DIV/0!
2050	#DIV/0!	#DIV/0!		

Trend Analysis
Linear

R-Square	AGR (Historical)	AGR (Design Year)	Annual Increase	2050 Estimate
4.8%	-0.7%	-0.8%	-70	7,200

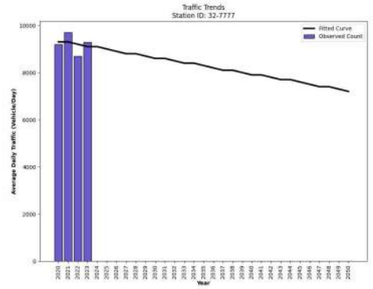

Annual Trend Increase: -70
Trend R-squared: 4.83%
Linear Annual Historic Growth Rate: -0.72%
Trend Growth Rate Its Design Year: -0.77%

Year	Count	Trend
2020	9200	9300
2021	9700	9300
2022	8700	9200
2023	9300	9100
2050		7200

Trend Analysis *(*2015-2023)*
Linear

R-Square	AGR (Historical)	AGR (Design Year)	Annual Increase	2050 Estimate
4.8%	-0.7%	-0.8%	-70	7,200

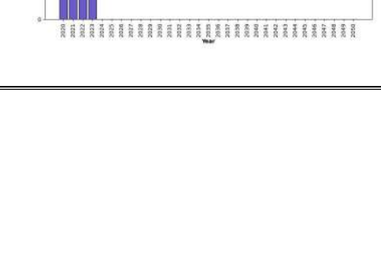

Annual Trend Increase: -70
Trend R-squared: 4.83%
Linear Annual Historic Growth Rate: -0.72%
Trend Growth Rate Its Design Year: -0.77%

Year	Count	Trend
2020	9200	9300
2021	9700	9300
2022	8700	9200
2023	9300	9100
2050		7200

R-7777 3E1 : I- 26 TO US 378, RS 7777 3E1



Station ID 32-7778
County Lexington
Location click here

	Year	AADT	%Change
1	1987		
2	1988		#DIV/0!
3	1989		#DIV/0!
4	1990		#DIV/0!
5	1991		#DIV/0!
6	1992		#DIV/0!
7	1993		#DIV/0!
8	1994		#DIV/0!
9	1995		#DIV/0!
10	1996		#DIV/0!
11	1997		#DIV/0!
12	1998		#DIV/0!
13	1999		#DIV/0!
14	2000		#DIV/0!
15	2001		#DIV/0!
16	2002		#DIV/0!
17	2003		#DIV/0!
18	2004		#DIV/0!
19	2005		#DIV/0!
20	2006		#DIV/0!
21	2007		#DIV/0!
22	2008		#DIV/0!
23	2009		#DIV/0!
24	2010		#DIV/0!
25	2011		#DIV/0!
26	2012		#DIV/0!
27	2013		#DIV/0!
28	2014		#DIV/0!
29	2015		#DIV/0!
30	2016		#DIV/0!
31	2017		#DIV/0!
32	2018		#DIV/0!
33	2019		#DIV/0!
34	2020	9,500	#DIV/0!
35	2021	10,700	12.6%
36	2022	10,100	-5.6%
37	2023	10,400	3.0%
		Avg=	#DIV/0!

For Reference
1% Annual Growth Rate

Year	Volume	Growth Rate
2023	10,400	Present
2050	13,208	Linear
2050	13,605	Compound

Calculations based on 30YR Growth Rates

Year	Volume	Estimate		
2023	10,400	N/A	*Linear*	#DIV/0!
2050	#DIV/0!	#DIV/0!		
Year	**Volume**	**Estimate**		
2023	10,400	N/A	*Compound*	#DIV/0!
2050	#DIV/0!	#DIV/0!		
Year	**Volume**	**Estimate**		
2023	10,400	N/A	*Average Annual*	#DIV/0!
2050	#DIV/0!	#DIV/0!		

Travel Demand Model

COATS

	2018	2045		
Model	19,761	20,819	*Linear*	0.20%
Acual/Est.	0	0		
Year	**Volume**	**Estimate**		
2050	0	0		

SCSWM

	2019	2050		
Model	12,284	13,436	*Linear*	0.30%
Acual/Est.	0	0		
Year	**Volume**	**Estimate**		
2050	0	0		

Demographic Data

Population

Employment

Calculations based on 20YR Growth Rates

Year	Volume	Estimate		
2023	10,400	N/A	*Linear*	#DIV/0!
2050	#DIV/0!	#DIV/0!		
Year	**Volume**	**Estimate**		
2023	10,400	N/A	*Compound*	#DIV/0!
2050	#DIV/0!	#DIV/0!		
Year	**Volume**	**Estimate**		
2023	10,400	N/A	*Average Annual*	#DIV/0!
2050	#DIV/0!	#DIV/0!		

Calculations based on 10YR Growth Rates

Year	Volume	Estimate		
2023	10,400	N/A	*Linear*	#DIV/0!
2050	#DIV/0!	#DIV/0!		
Year	**Volume**	**Estimate**		
2023	10,400	N/A	*Compound*	#DIV/0!
2050	#DIV/0!	#DIV/0!		
Year	**Volume**	**Estimate**		
2023	10,400	N/A	*Average Annual*	#DIV/0!
2050	#DIV/0!	#DIV/0!		

Trend Analysis

Linear

R-Square	AGR (Historical)	AGR (Design Year)	Annual Increase	2050 Estimate
28.0%	2.0%	2.0%	210	16,200

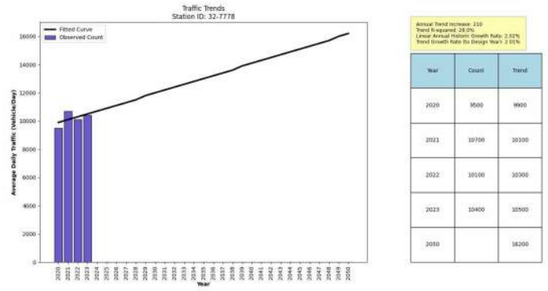

Year	Count	Trend
2020	9500	9900
2021	10700	10100
2022	10100	10300
2023	10400	10500
2050		16200

Trend Analysis *(*2015-2023)*

Linear

R-Square	AGR (Historical)	AGR (Design Year)	Annual Increase	2050 Estimate
28.0%	2.0%	2.0%	210	16,200

Year	Count	Trend
2020	9500	9900
2021	10700	10100
2022	10100	10300
2023	10400	10500
2050		16200

R-7778 4O1 : US 378 TO I- 26, RS 7778 4O1

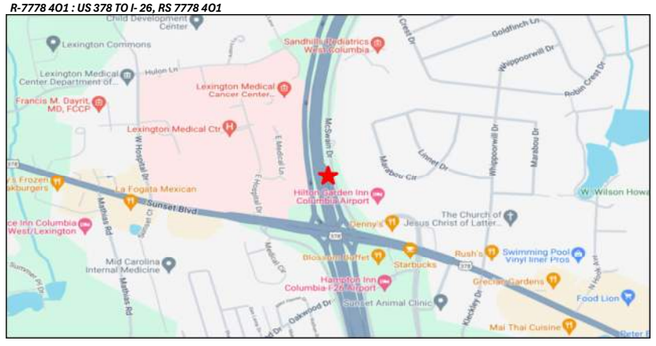

Station ID 32-0189
County Lexington
Location click here

	Year	AADT	%Change
1	1987	25,200	
2	1988	30,900	22.6%
3	1989	29,800	-3.6%
4	1990	25,900	-13.1%
5	1991	26,100	0.8%
6	1992	29,600	13.4%
7	1993	25,500	-13.9%
8	1994	24,500	-3.9%
9	1995	29,600	20.8%
10	1996	26,200	-11.5%
11	1997	26,500	1.1%
12	1998	28,400	7.2%
13	1999	25,900	-8.8%
14	2000	26,700	3.1%
15	2001	26,900	0.7%
16	2002	26,800	-0.4%
17	2003	26,700	-0.4%
18	2004	27,000	1.1%
19	2005	25,600	-5.2%
20	2006	26,300	2.7%
21	2007	28,100	6.8%
22	2008	26,500	-5.7%
23	2009	25,800	-2.6%
24	2010	27,200	5.4%
25	2011	26,000	-4.4%
26	2012	26,000	0.0%
27	2013	26,600	2.3%
28	2014	27,100	1.9%
29	2015	26,000	-4.1%
30	2016	25,900	-0.4%
31	2017	26,500	2.3%
32	2018	27,500	3.8%
33	2019	28,000	1.8%
34	2020	26,200	-6.4%
35	2021	27,300	4.2%
36	2022	29,800	9.2%
37	2023	31,300	5.0%
		Avg=	0.892%

For Reference
1% Annual Growth Rate

Year	Volume	Growth Rate
2023	31,300	Present
2050	39,751	Linear
2050	40,947	Compound

Calculations based on 30YR Growth Rates

Year	Volume	Estimate		
2023	31,300	N/A	*Linear*	0.93%
2050	37,420	37,000		
Year	**Volume**	**Estimate**		
2023	31,300	N/A	*Compound*	0.82%
2050	39,020	39,000		
Year	**Volume**	**Estimate**		
2023	31,300	N/A	*Average Annual*	1.03%
2050	40,289	40,000		

Travel Demand Model

COATS

	2018	2045		
Model	35,336	41,464	*Linear*	0.64%
Acual/Est.	27,500	32,269		
Year	**Volume**	**Estimate**		
2050	33,152	33,000		

SCSWM

	2019	2050		
Model	23,112	39,279	*Linear*	2.26%
Acual/Est.	28,000	47,586		
Year	**Volume**	**Estimate**		
2050	47,586	48,000		

Demographic Data

Population

Employment

Calculations based on 20YR Growth Rates

Year	Volume	Estimate		
2023	31,300	N/A	*Linear*	0.80%
2050	37,105	37,000		
Year	**Volume**	**Estimate**		
2023	31,300	N/A	*Compound*	0.74%
2050	38,211	38,000		
Year	**Volume**	**Estimate**		
2023	31,300	N/A	*Average Annual*	0.88%
2050	38,996	39,000		

Calculations based on 10YR Growth Rates

Year	Volume	Estimate		
2023	31,300	N/A	*Linear*	1.55%
2050	42,640	43,000		
Year	**Volume**	**Estimate**		
2023	31,300	N/A	*Compound*	1.45%
2050	46,185	46,000		
Year	**Volume**	**Estimate**		
2023	31,300	N/A	*Average Annual*	1.71%
2050	46,321	46,000		

Trend Analysis

Linear

R-Square	AGR (Historical)	AGR (Design Year)	Annual Increase	2050 Estimate
0.4%	0.0%	0.0%	9	27,500

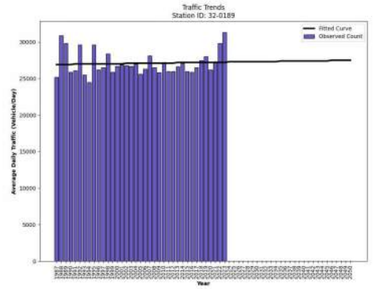

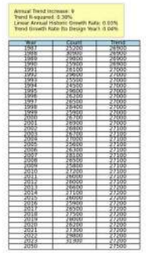

Trend Analysis *(*2015-2023)*

Linear

R-Square	AGR (Historical)	AGR (Design Year)	Annual Increase	2050 Estimate
67.0%	2.2%	1.9%	553	44,800

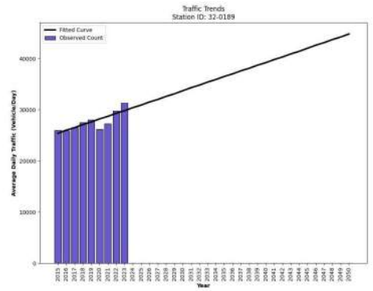



Year	Count	Trend
2015	26000	25400
2016	25900	26000
2017	26500	26500
2018	27500	27100
2019	28000	27600
2020	26200	28200
2021	27300	28700
2022	29800	29300
2023	31300	29800
2050		44800

US378 : I- 26 (INTERSTATE 26) TO S- 285 (HOOK AVE)



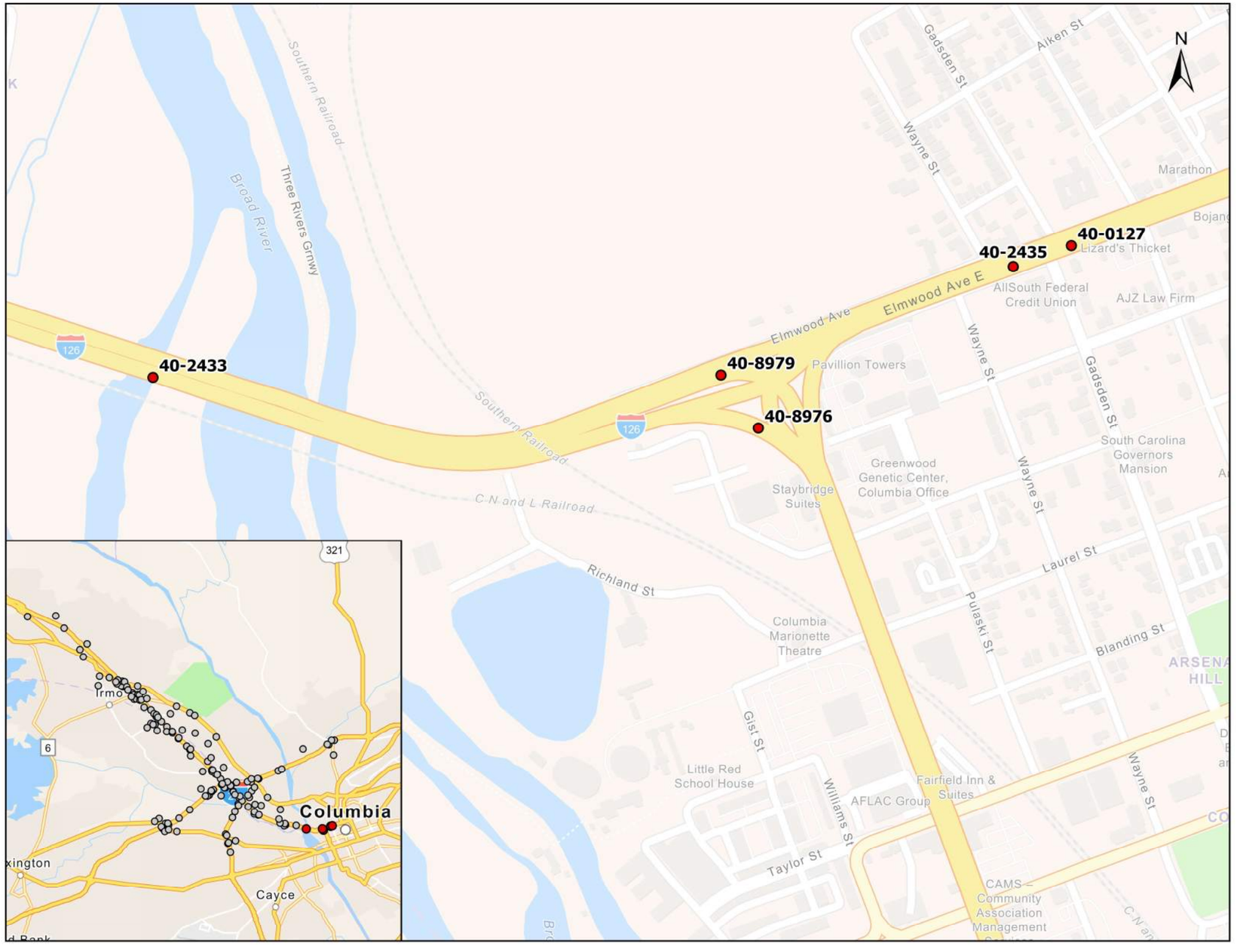
N
40-2433
40-8979
40-8976
40-2435
40-0127
Elmwood Ave
Elmwood Ave E
Wayne St
Gadsden St
Alken St
Laurel St
Pulaski St
Blanding St
Gist St
Williams St
Taylor St
Richland St
Southern Railroad
C N and L Railroad
Three Rivers Grnwy
Broad River
Pavillion Towers
Staybridge Suites
Greenwood Genetic Center, Columbia Office
Columbia Marionette Theatre
Little Red School House
AFLAC Group
Fairfield Inn & Suites
AllSouth Federal Credit Union
AJZ Law Firm
Lizard's Thicket
Marathon
South Carolina Governors Mansion
CAMS – Community Association Management
Columbia
Irmo
Cayce
126
321
6

Station ID 40-8979
County Richland
Location click here

	Year	AADT	%Change
1	1987		
2	1988		#DIV/0!
3	1989		#DIV/0!
4	1990		#DIV/0!
5	1991		#DIV/0!
6	1992		#DIV/0!
7	1993		#DIV/0!
8	1994		#DIV/0!
9	1995		#DIV/0!
10	1996		#DIV/0!
11	1997		#DIV/0!
12	1998		#DIV/0!
13	1999		#DIV/0!
14	2000		#DIV/0!
15	2001		#DIV/0!
16	2002		#DIV/0!
17	2003		#DIV/0!
18	2004		#DIV/0!
19	2005		#DIV/0!
20	2006		#DIV/0!
21	2007		#DIV/0!
22	2008		#DIV/0!
23	2009		#DIV/0!
24	2010		#DIV/0!
25	2011		#DIV/0!
26	2012		#DIV/0!
27	2013		#DIV/0!
28	2014		#DIV/0!
29	2015		#DIV/0!
30	2016		#DIV/0!
31	2017		#DIV/0!
32	2018		#DIV/0!
33	2019		#DIV/0!
34	2020	15,500	#DIV/0!
35	2021	15,800	1.9%
36	2022	20,900	32.3%
37	2023	18,700	-10.5%
		Avg=	#DIV/0!

For Reference
1% Annual Growth Rate

Year	Volume	Growth Rate
2023	18,700	Present
2050	23,749	Linear
2050	24,464	Compound

Calculations based on 30YR Growth Rates

Year	Volume	Estimate		
2023	18,700	N/A	*Linear*	#DIV/0!
2050	#DIV/0!	#DIV/0!		
Year	**Volume**	**Estimate**		
2023	18,700	N/A	*Compound*	#DIV/0!
2050	#DIV/0!	#DIV/0!		
Year	**Volume**	**Estimate**		
2023	18,700	N/A	*Average Annual*	#DIV/0!
2050	#DIV/0!	#DIV/0!		

Travel Demand Model

COATS

	2018	2045		
Model	17,987	20,104	*Linear*	0.44%
Acual/Est.	0	0		

Year	Volume	Estimate
2050	0	0

SCSWM

	2019	2050		
Model	17,631	24,851	*Linear*	1.32%
Acual/Est.	0	0		

Year	Volume	Estimate
2050	0	0

Demographic Data

Population

Employment

Calculations based on 20YR Growth Rates

Year	Volume	Estimate		
2023	18,700	N/A	*Linear*	#DIV/0!
2050	#DIV/0!	#DIV/0!		
Year	**Volume**	**Estimate**		
2023	18,700	N/A	*Compound*	#DIV/0!
2050	#DIV/0!	#DIV/0!		
Year	**Volume**	**Estimate**		
2023	18,700	N/A	*Average Annual*	#DIV/0!
2050	#DIV/0!	#DIV/0!		

Calculations based on 10YR Growth Rates

Year	Volume	Estimate		
2023	18,700	N/A	*Linear*	#DIV/0!
2050	#DIV/0!	#DIV/0!		
Year	**Volume**	**Estimate**		
2023	18,700	N/A	*Compound*	#DIV/0!
2050	#DIV/0!	#DIV/0!		
Year	**Volume**	**Estimate**		
2023	18,700	N/A	*Average Annual*	#DIV/0!
2050	#DIV/0!	#DIV/0!		

Trend Analysis

Linear

R-Square	AGR (Historical)	AGR (Design Year)	Annual Increase	2050 Estimate
54.9%	9.5%	7.4%	1,470	59,600

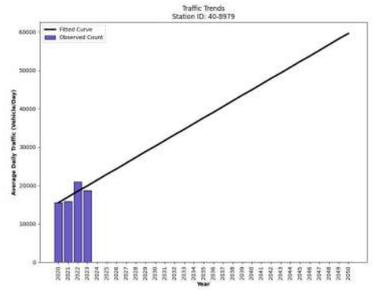

Annual Trend Increase: 1470
Trend R-squared: 54.89%
Linear Annual Historic Growth Rate: 9.46%
Trend Growth Rate fro Design Year1: 7.39%

Year	Count	Trend
2020	15500	15500
2021	15800	17000
2022	20900	18500
2023	18700	19900
2050		59600

Trend Analysis *(*2015-2023)*

Linear

R-Square	AGR (Historical)	AGR (Design Year)	Annual Increase	2050 Estimate
54.9%	9.5%	7.4%	1,470	59,600

Annual Trend Increase: 1470
Trend R-squared: 54.89%
Linear Annual Historic Growth Rate: 9.46%
Trend Growth Rate fro Design Year1: 7.39%

Year	Count	Trend
2020	15500	15500
2021	15800	17000
2022	20900	18500
2023	18700	19900
2050		59600

R-8979 4O1 : US 21 TO I- 126



Station ID 40-2435
County Richland
Location click here

	Year	AADT	%Change
1	1987		
2	1988		#DIV/0!
3	1989	57,900	#DIV/0!
4	1990	57,000	-1.6%
5	1991	54,600	-4.2%
6	1992	53,000	-2.9%
7	1993	49,800	-6.0%
8	1994	45,700	-8.2%
9	1995	46,100	0.9%
10	1996	47,600	3.3%
11	1997	50,900	6.9%
12	1998	52,300	2.8%
13	1999	52,400	0.2%
14	2000	52,300	-0.2%
15	2001	49,300	-5.7%
16	2002	46,100	-6.5%
17	2003	47,700	3.5%
18	2004	48,700	2.1%
19	2005	51,400	5.5%
20	2006	50,500	-1.8%
21	2007	47,600	-5.7%
22	2008	47,300	-0.6%
23	2009	45,700	-3.4%
24	2010	44,600	-2.4%
25	2011	46,400	4.0%
26	2012	46,300	-0.2%
27	2013	47,000	1.5%
28	2014	45,300	-3.6%
29	2015	47,400	4.6%
30	2016	49,700	4.9%
31	2017	50,200	1.0%
32	2018	55,100	9.8%
33	2019	50,800	-7.8%
34	2020	31,200	-38.6%
35	2021	45,000	44.2%
36	2022	49,300	9.6%
37	2023	43,700	-11.4%
		Avg=	#DIV/0!

For Reference
1% Annual Growth Rate

Year	Volume	Growth Rate
2023	43,700	Present
2050	55,499	Linear
2050	57,169	Compound

Calculations based on 30YR Growth Rates

Year	Volume	Estimate		
2023	43,700	N/A		
2050	41,900	42,000	*Linear*	-0.15%
2050	41,975	42,000	*Compound*	-0.15%
2050	50,786	51,000	*Average Annual*	0.58%

Travel Demand Model

COATS

	2018	2045		
Model	53,474	55,929	*Linear*	0.17%
Acual/Est.	55,100	57,630		

Year	Volume	Estimate
2050	58,098	58,000

SCSWM

	2019	2050		
Model	44,539	65,924	*Linear*	1.55%
Acual/Est.	50,800	75,191		

Year	Volume	Estimate
2050	75,191	75,000

Demographic Data

Population

Employment

I-126 : US 21 (ELMWOOD AVE) TO L- 106 (GADSDEN ST), L- 133



Calculations based on 20YR Growth Rates

Year	Volume	Estimate		
2023	43,700	N/A		
2050	36,950	37,000	*Linear*	-0.51%
2050	37,754	38,000	*Compound*	-0.54%
2050	49,909	50,000	*Average Annual*	0.51%

Calculations based on 10YR Growth Rates

Year	Volume	Estimate		
2023	43,700	N/A		
2050	39,380	39,000	*Linear*	-0.35%
2050	39,657	40,000	*Compound*	-0.36%
2050	65,855	66,000	*Average Annual*	1.81%

Trend Analysis

Linear

R-Square	AGR (Historical)	AGR (Design Year)	Annual Increase	2050 Estimate
25.3%	-0.4%	-0.5%	-229	38,700

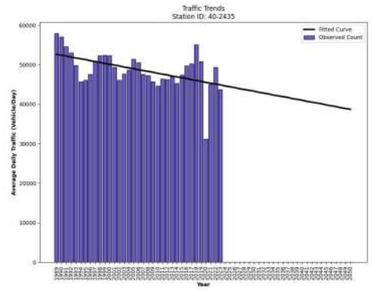

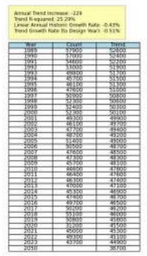

Trend Analysis *(*2015-2023)*

Linear

R-Square	AGR (Historical)	AGR (Design Year)	Annual Increase	2050 Estimate
11.5%	-1.7%	-1.9%	-838	20,900

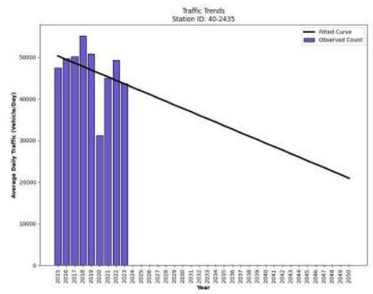



Year	Count	Trend
2015	47400	50300
2016	49700	49400
2017	50200	48600
2018	55100	47800
2019	50800	46900
2020	31200	46100
2021	45000	45300
2022	49300	44400
2023	43700	43600
2050		20900

Station ID 40-2433
County Richland
Location click here

	Year	AADT	%Change
1	1987		
2	1988		#DIV/0!
3	1989	70,400	#DIV/0!
4	1990	70,800	0.6%
5	1991	70,000	-1.1%
6	1992	70,100	0.1%
7	1993	71,700	2.3%
8	1994	70,400	-1.8%
9	1995	69,900	-0.7%
10	1996	70,400	0.7%
11	1997	73,500	4.4%
12	1998	74,600	1.5%
13	1999	75,900	1.7%
14	2000	77,400	2.0%
15	2001	76,400	-1.3%
16	2002	77,000	0.8%
17	2003	76,700	-0.4%
18	2004	77,100	0.5%
19	2005	76,500	-0.8%
20	2006	76,800	0.4%
21	2007	75,300	-2.0%
22	2008	73,000	-3.1%
23	2009	73,200	0.3%
24	2010	72,100	-1.5%
25	2011	71,200	-1.2%
26	2012	71,500	0.4%
27	2013	71,700	0.3%
28	2014	70,800	-1.3%
29	2015	71,700	1.3%
30	2016	72,500	1.1%
31	2017	74,100	2.2%
32	2018	75,600	2.0%
33	2019	71,800	-5.0%
34	2020	54,900	-23.5%
35	2021	62,800	14.4%
36	2022	63,500	1.1%
37	2023	65,000	2.4%
		Avg=	#DIV/0!

For Reference
1% Annual Growth Rate

Year	Volume	Growth Rate
2023	65,000	Present
2050	82,550	Linear
2050	85,034	Compound

Calculations based on 30YR Growth Rates

Year	Volume	Estimate		
2023	65,000	N/A	*Linear*	-0.26%
2050	60,140	60,000		
Year	**Volume**	**Estimate**	*Compound*	-0.27%
2023	65,000	N/A		
2050	60,495	60,000		
Year	**Volume**	**Estimate**	*Average Annual*	-0.11%
2023	65,000	N/A		
2050	62,957	63,000		

Travel Demand Model

COATS

	2018	2045		
Model	103,593	108,179	*Linear*	0.16%
Acual/Est.	75,600	78,947		
Year	Volume	Estimate		
2050	79,567	80,000		

SCSWM

	2019	2050		
Model	73,067	103,560	*Linear*	1.35%
Acual/Est.	71,800	101,764		
Year	Volume	Estimate		
2050	101,764	102,000		

Demographic Data

Population

Employment

Calculations based on 20YR Growth Rates

Year	Volume	Estimate		
2023	65,000	N/A	*Linear*	-0.78%
2050	48,665	49,000		
Year	**Volume**	**Estimate**	*Compound*	-0.85%
2023	65,000	N/A		
2050	51,621	52,000		
Year	**Volume**	**Estimate**	*Average Annual*	-0.66%
2023	65,000	N/A		
2050	53,022	53,000		

Calculations based on 10YR Growth Rates

Year	Volume	Estimate		
2023	65,000	N/A	*Linear*	-0.82%
2050	49,340	49,000		
Year	**Volume**	**Estimate**	*Compound*	-0.85%
2023	65,000	N/A		
2050	51,605	52,000		
Year	**Volume**	**Estimate**	*Average Annual*	-0.45%
2023	65,000	N/A		
2050	56,751	57,000		

Trend Analysis

Linear

R-Square	AGR (Historical)	AGR (Design Year)	Annual Increase	2050 Estimate
12.5%	-0.2%	-0.2%	-161	64,800

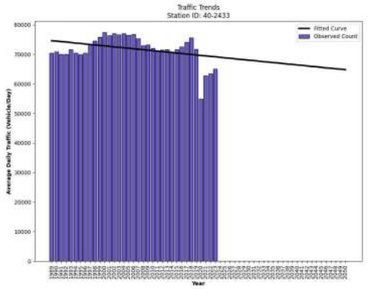

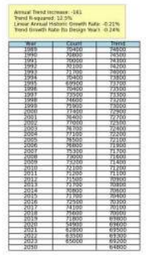

Trend Analysis *(*2015-2023)*

Linear

R-Square	AGR (Historical)	AGR (Design Year)	Annual Increase	2050 Estimate
42.3%	-2.2%	-2.6%	-1,618	17,800

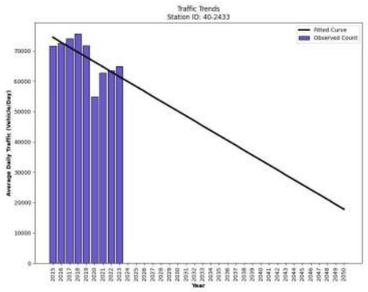



Year	Count	Trend
2015	71700	74500
2016	72500	72800
2017	74100	71200
2018	75600	69600
2019	71800	68000
2020	54900	66400
2021	62800	64800
2022	63500	63100
2023	65000	61500
2050		17800

I-126 : S- 3020 (GREYSTONE BLVD) TO US 21 (ELMWOOD AVE)



Station ID 40-8976
County Richland
Location click here

	Year	AADT	%Change
1	1987		
2	1988		#DIV/0!
3	1989		#DIV/0!
4	1990		#DIV/0!
5	1991		#DIV/0!
6	1992		#DIV/0!
7	1993		#DIV/0!
8	1994		#DIV/0!
9	1995		#DIV/0!
10	1996		#DIV/0!
11	1997		#DIV/0!
12	1998		#DIV/0!
13	1999		#DIV/0!
14	2000		#DIV/0!
15	2001		#DIV/0!
16	2002		#DIV/0!
17	2003		#DIV/0!
18	2004		#DIV/0!
19	2005		#DIV/0!
20	2006		#DIV/0!
21	2007		#DIV/0!
22	2008		#DIV/0!
23	2009		#DIV/0!
24	2010		#DIV/0!
25	2011		#DIV/0!
26	2012		#DIV/0!
27	2013		#DIV/0!
28	2014		#DIV/0!
29	2015		#DIV/0!
30	2016		#DIV/0!
31	2017		#DIV/0!
32	2018		#DIV/0!
33	2019		#DIV/0!
34	2020	20,000	#DIV/0!
35	2021	16,400	-18.0%
36	2022	16,600	1.2%
37	2023	18,100	9.0%
		Avg=	#DIV/0!

For Reference
1% Annual Growth Rate

Year	Volume	Growth Rate
2023	18,100	Present
2050	22,987	Linear
2050	23,679	Compound

Calculations based on 30YR Growth Rates

Year	Volume	Estimate		
2023	18,100	N/A	*Linear*	#DIV/0!
2050	#DIV/0!	#DIV/0!		
Year	**Volume**	**Estimate**		
2023	18,100	N/A	*Compound*	#DIV/0!
2050	#DIV/0!	#DIV/0!		
Year	**Volume**	**Estimate**		
2023	18,100	N/A	*Average Annual*	#DIV/0!
2050	#DIV/0!	#DIV/0!		

Travel Demand Model

COATS

	2018	2045		
Model	29,750	26,504	*Linear*	-0.40%
Acual/Est.	0	0		
Year	**Volume**	**Estimate**		
2050	0	0		

SCSWM

	2019	2050		
Model	18,805	25,935	*Linear*	1.22%
Acual/Est.	0	0		
Year	**Volume**	**Estimate**		
2050	0	0		

Demographic Data

Population

Employment

Calculations based on 20YR Growth Rates

Year	Volume	Estimate		
2023	18,100	N/A	*Linear*	#DIV/0!
2050	#DIV/0!	#DIV/0!		
Year	**Volume**	**Estimate**		
2023	18,100	N/A	*Compound*	#DIV/0!
2050	#DIV/0!	#DIV/0!		
Year	**Volume**	**Estimate**		
2023	18,100	N/A	*Average Annual*	#DIV/0!
2050	#DIV/0!	#DIV/0!		

Calculations based on 10YR Growth Rates

Year	Volume	Estimate		
2023	18,100	N/A	*Linear*	#DIV/0!
2050	#DIV/0!	#DIV/0!		
Year	**Volume**	**Estimate**		
2023	18,100	N/A	*Compound*	#DIV/0!
2050	#DIV/0!	#DIV/0!		
Year	**Volume**	**Estimate**		
2023	18,100	N/A	*Average Annual*	#DIV/0!
2050	#DIV/0!	#DIV/0!		

Trend Analysis
Linear

R-Square	AGR (Historical)	AGR (Design Year)	Annual Increase	2050 Estimate
18.2%	-2.9%	-3.3%	-550	2,100

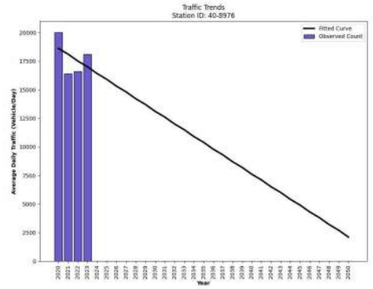

Annual Trend Increase: -550
Trend R-squared: 18.16%
Linear Annual Historic Growth Rate: -2.87%
Trend Growth Rate Its Design Year: -3.25%

Year	Count	Trend
2020	20000	18600
2021	16400	18100
2022	16600	17500
2023	18100	17000
2050		2100

Trend Analysis *(*2015-2023)*
Linear

R-Square	AGR (Historical)	AGR (Design Year)	Annual Increase	2050 Estimate
18.2%	-2.9%	-3.3%	-550	2,100

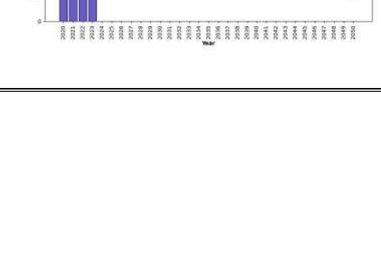

Annual Trend Increase: -550
Trend R-squared: 18.16%
Linear Annual Historic Growth Rate: -2.87%
Trend Growth Rate Its Design Year: -3.25%

Year	Count	Trend
2020	20000	18600
2021	16400	18100
2022	16600	17500
2023	18100	17000
2050		2100

R-8976 1E1 : I- 126 TO US 21



Station ID 40-0127
County Richland
Location click here

	Year	AADT	%Change
1	1987	44,300	
2	1988	46,800	5.6%
3	1989	51,900	10.9%
4	1990	51,600	-0.6%
5	1991	52,400	1.6%
6	1992	51,000	-2.7%
7	1993	45,900	-10.0%
8	1994	45,700	-0.4%
9	1995	50,100	9.6%
10	1996	52,000	3.8%
11	1997	50,900	-2.1%
12	1998	48,900	-3.9%
13	1999	46,900	-4.1%
14	2000	49,000	4.5%
15	2001	49,600	1.2%
16	2002	46,600	-6.0%
17	2003	47,200	1.3%
18	2004	49,400	4.7%
19	2005	49,100	-0.6%
20	2006	45,700	-6.9%
21	2007	45,000	-1.5%
22	2008	49,300	9.6%
23	2009	44,800	-9.1%
24	2010	44,200	-1.3%
25	2011	46,300	4.8%
26	2012	47,400	2.4%
27	2013	48,500	2.3%
28	2014	48,500	0.0%
29	2015	48,000	-1.0%
30	2016	47,800	-0.4%
31	2017	45,200	-5.4%
32	2018	47,000	4.0%
33	2019	50,700	7.9%
34	2020	46,900	-7.5%
35	2021	46,600	-0.6%
36	2022	48,600	4.3%
37	2023	51,100	5.1%
		Avg=	0.529%

For Reference
1% Annual Growth Rate

Year	Volume	Growth Rate
2023	51,100	Present
2050	64,897	Linear
2050	66,849	Compound

Calculations based on 30YR Growth Rates

Year	Volume	Estimate		
2023	51,100	N/A	*Linear*	0.39%
2050	55,960	56,000		
Year	Volume	Estimate	*Compound*	0.37%
2023	51,100	N/A		
2050	56,503	57,000		
Year	Volume	Estimate	*Average Annual*	0.50%
2023	51,100	N/A		
2050	58,318	58,000		

Travel Demand Model

COATS

	2018	2045		
Model	53,508	57,151	*Linear*	0.25%
Acual/Est.	47,000	50,200		
Year	Volume	Estimate		
2050	50,792	51,000		

SCSWM

	2019	2050		
Model	44,297	65,077	*Linear*	1.51%
Acual/Est.	50,700	74,484		
Year	Volume	Estimate		
2050	74,484	74,000		

Demographic Data

Population

Employment

Calculations based on 20YR Growth Rates

Year	Volume	Estimate		
2023	51,100	N/A	*Linear*	0.17%
2050	53,395	53,000		
Year	Volume	Estimate	*Compound*	0.17%
2023	51,100	N/A		
2050	53,488	53,000		
Year	Volume	Estimate	*Average Annual*	0.30%
2023	51,100	N/A		
2050	55,424	55,000		

Calculations based on 10YR Growth Rates

Year	Volume	Estimate		
2023	51,100	N/A	*Linear*	0.54%
2050	58,120	58,000		
Year	Volume	Estimate	*Compound*	0.52%
2023	51,100	N/A		
2050	58,838	59,000		
Year	Volume	Estimate	*Average Annual*	0.70%
2023	51,100	N/A		
2050	61,066	61,000		

Trend Analysis
Linear

R-Square	AGR (Historical)	AGR (Design Year)	Annual Increase	2050 Estimate
4.5%	-0.1%	-0.1%	-46	46,100

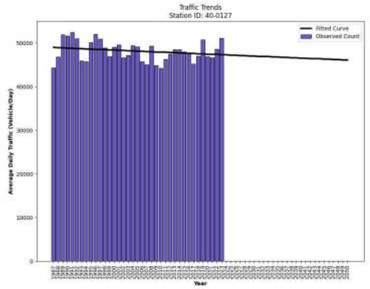

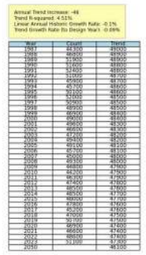

Trend Analysis *(*2015-2023)*
Linear

R-Square	AGR (Historical)	AGR (Design Year)	Annual Increase	2050 Estimate
17.4%	0.6%	0.6%	292	57,000

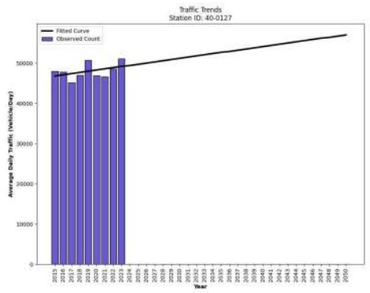



Year	Count	Trend
2015	48000	46800
2016	47800	47100
2017	45200	47400
2018	47000	47700
2019	50700	48000
2020	46900	48300
2021	46600	48600
2022	48600	48900
2023	51100	49200
2050		57000

US21 : L- 106 (GADSDEN ST), L- 133 TO L- 3336 (MAIN ST)



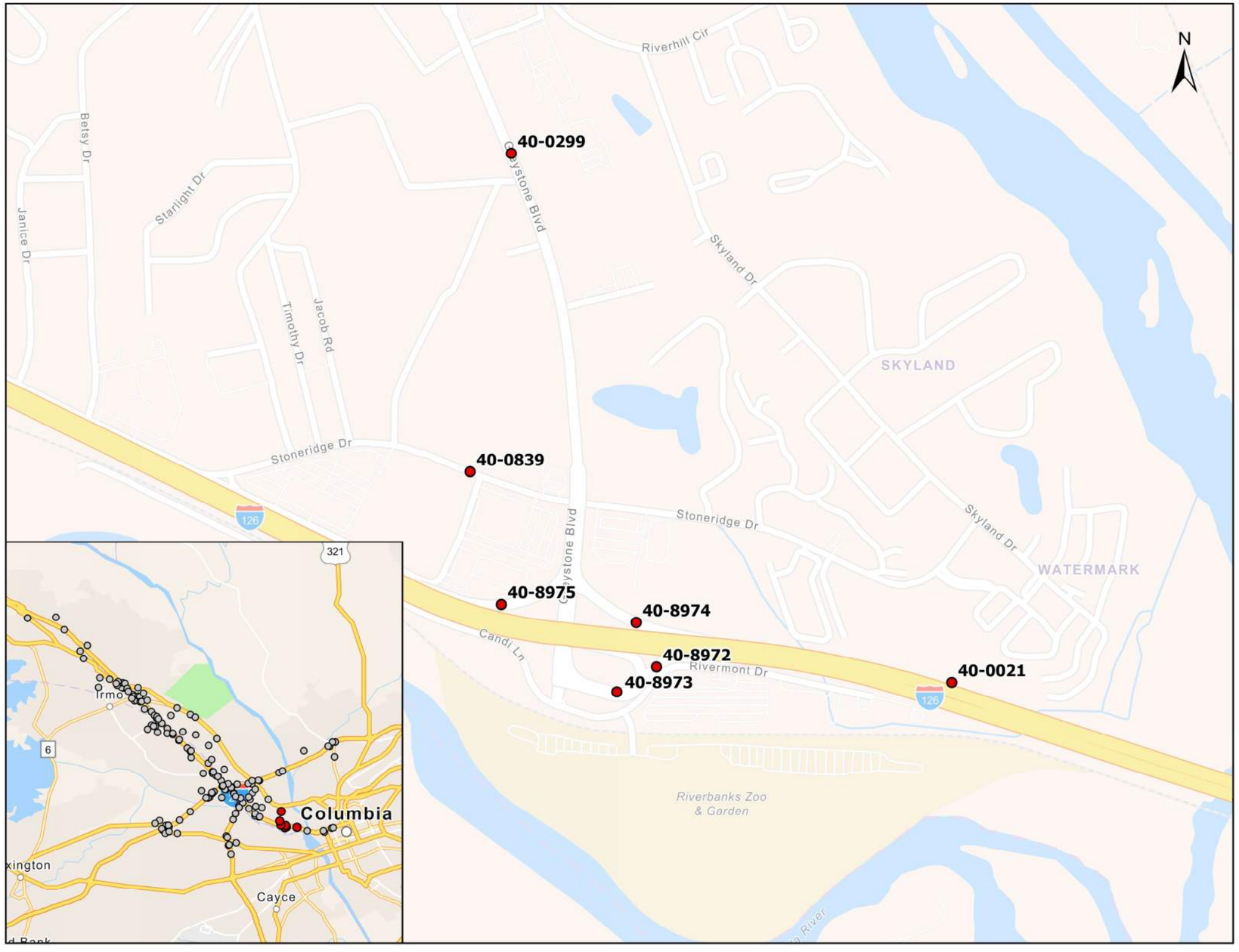
N
Riverhill Cir
Betsy Dr
Starlight Dr
Janice Dr
Timothy Dr
Jacob Rd
Keystone Blvd
Skyland Dr
SKYLAND
Stoneridge Dr
Stoneridge Dr
Skyland Dr
WATERMARK
40-0299
40-0839
40-8975
40-8974
40-8972
40-8973
40-0021
Candi Ln
Rivermont Dr
126
Riverbanks Zoo
& Garden
321
Irmo
6
Columbia
Cayce
xington

Station ID 40-0021
County Richland
Location click here

	Year	AADT	%Change
1	1987		
2	1988		#DIV/0!
3	1989	70,400	#DIV/0!
4	1990	70,800	0.6%
5	1991	70,000	-1.1%
6	1992	70,100	0.1%
7	1993	71,700	2.3%
8	1994	70,400	-1.8%
9	1995	69,900	-0.7%
10	1996	70,400	0.7%
11	1997	73,500	4.4%
12	1998	74,600	1.5%
13	1999	75,900	1.7%
14	2000	77,400	2.0%
15	2001	76,400	-1.3%
16	2002	77,000	0.8%
17	2003	76,700	-0.4%
18	2004	77,100	0.5%
19	2005	76,500	-0.8%
20	2006	76,800	0.4%
21	2007	75,300	-2.0%
22	2008	73,000	-3.1%
23	2009	73,200	0.3%
24	2010	72,100	-1.5%
25	2011	71,200	-1.2%
26	2012	71,500	0.4%
27	2013	71,700	0.3%
28	2014	70,800	-1.3%
29	2015	71,700	1.3%
30	2016	72,500	1.1%
31	2017	74,100	2.2%
32	2018	75,600	2.0%
33	2019	71,800	-5.0%
34	2020	54,900	-23.5%
35	2021	62,800	14.4%
36	2022	63,500	1.1%
37	2023	65,000	2.4%
		Avg=	#DIV/0!

For Reference
1% Annual Growth Rate

Year	Volume	Growth Rate
2023	65,000	Present
2050	82,550	Linear
2050	85,034	Compound

Calculations based on 30YR Growth Rates

Year	Volume	Estimate		
2023	65,000	N/A		
2050	60,140	60,000	*Linear*	-0.26%
2050	60,495	60,000	*Compound*	-0.27%
2050	62,957	63,000	*Average Annual*	-0.11%

Calculations based on 20YR Growth Rates

Year	Volume	Estimate		
2023	65,000	N/A		
2050	48,665	49,000	*Linear*	-0.78%
2050	51,621	52,000	*Compound*	-0.85%
2050	53,022	53,000	*Average Annual*	-0.66%

Calculations based on 10YR Growth Rates

Year	Volume	Estimate		
2023	65,000	N/A		
2050	49,340	49,000	*Linear*	-0.82%
2050	51,605	52,000	*Compound*	-0.85%
2050	56,751	57,000	*Average Annual*	-0.45%

Travel Demand Model

COATS

	2018	2045		
Model	103,593	108,179	*Linear*	0.16%
Acual/Est.	75,600	78,947		

Year	Volume	Estimate
2050	79,567	80,000

SCSWM

	2019	2050		
Model	73,067	103,560	*Linear*	1.35%
Acual/Est.	71,800	101,764		

Year	Volume	Estimate
2050	101,764	102,000

Demographic Data

Population

Employment

Trend Analysis

Linear

R-Square	AGR (Historical)	AGR (Design Year)	Annual Increase	2050 Estimate
12.5%	-0.2%	-0.2%	-161	64,800

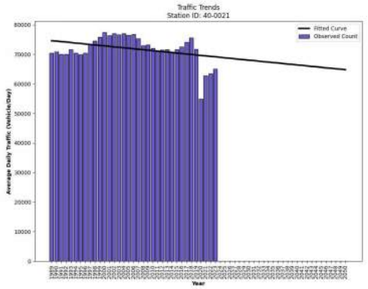

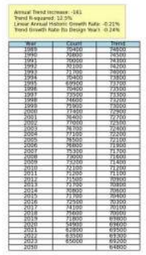

Trend Analysis *(*2015-2023)*

Linear

R-Square	AGR (Historical)	AGR (Design Year)	Annual Increase	2050 Estimate
42.3%	-2.2%	-2.6%	-1,618	17,800

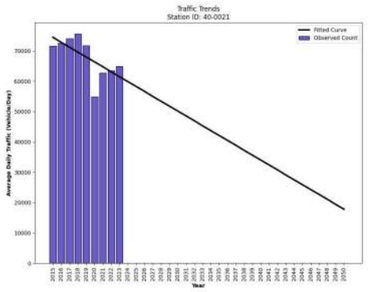



Year	Count	Trend
2015	71700	74500
2016	72500	72800
2017	74100	71200
2018	75600	69600
2019	71800	68000
2020	54900	66400
2021	62800	64800
2022	63500	63100
2023	65000	61500
2050		17800

I- 126 : S- 3020 (GREYSTONE BLVD) TO US 21 (ELMWOOD AVE), MP1.85



Station ID 40-8973
County Richland
Location click here

	Year	AADT	%Change
1	1987		
2	1988		#DIV/0!
3	1989		#DIV/0!
4	1990		#DIV/0!
5	1991		#DIV/0!
6	1992		#DIV/0!
7	1993		#DIV/0!
8	1994		#DIV/0!
9	1995		#DIV/0!
10	1996		#DIV/0!
11	1997		#DIV/0!
12	1998		#DIV/0!
13	1999		#DIV/0!
14	2000		#DIV/0!
15	2001		#DIV/0!
16	2002		#DIV/0!
17	2003		#DIV/0!
18	2004		#DIV/0!
19	2005		#DIV/0!
20	2006		#DIV/0!
21	2007		#DIV/0!
22	2008		#DIV/0!
23	2009		#DIV/0!
24	2010		#DIV/0!
25	2011		#DIV/0!
26	2012		#DIV/0!
27	2013		#DIV/0!
28	2014		#DIV/0!
29	2015		#DIV/0!
30	2016		#DIV/0!
31	2017		#DIV/0!
32	2018		#DIV/0!
33	2019		#DIV/0!
34	2020	4,200	#DIV/0!
35	2021	6,500	54.8%
36	2022	7,000	7.7%
37	2023	5,200	-25.7%
		Avg=	#DIV/0!

For Reference
1% Annual Growth Rate

Year	Volume	Growth Rate
2023	5,200	Present
2050	6,604	Linear
2050	6,803	Compound

Calculations based on 30YR Growth Rates

Year	Volume	Estimate		
2023	5,200	N/A	*Linear*	#DIV/0!
2050	#DIV/0!	#DIV/0!		
Year	**Volume**	**Estimate**	*Compound*	#DIV/0!
2023	5,200	N/A		
2050	#DIV/0!	#DIV/0!		
Year	**Volume**	**Estimate**	*Average Annual*	#DIV/0!
2023	5,200	N/A		
2050	#DIV/0!	#DIV/0!		

Travel Demand Model

COATS

	2018	2045		
Model	4,737	4,914	*Linear*	0.14%
Acual/Est.	0	0		

Year	Volume	Estimate
2050	0	0

SCSWM

	2019	2050		
Model	7,385	9,306	*Linear*	0.84%
Acual/Est.	0	0		

Year	Volume	Estimate
2050	0	0

Demographic Data

Population

Employment

Calculations based on 20YR Growth Rates

Year	Volume	Estimate		
2023	5,200	N/A	*Linear*	#DIV/0!
2050	#DIV/0!	#DIV/0!		
Year	**Volume**	**Estimate**	*Compound*	#DIV/0!
2023	5,200	N/A		
2050	#DIV/0!	#DIV/0!		
Year	**Volume**	**Estimate**	*Average Annual*	#DIV/0!
2023	5,200	N/A		
2050	#DIV/0!	#DIV/0!		

Calculations based on 10YR Growth Rates

Year	Volume	Estimate		
2023	5,200	N/A	*Linear*	#DIV/0!
2050	#DIV/0!	#DIV/0!		
Year	**Volume**	**Estimate**	*Compound*	#DIV/0!
2023	5,200	N/A		
2050	#DIV/0!	#DIV/0!		
Year	**Volume**	**Estimate**	*Average Annual*	#DIV/0!
2023	5,200	N/A		
2050	#DIV/0!	#DIV/0!		

Trend Analysis
Linear

R-Square	AGR (Historical)	AGR (Design Year)	Annual Increase	2050 Estimate
12.7%	7.1%	5.5%	350	15,700

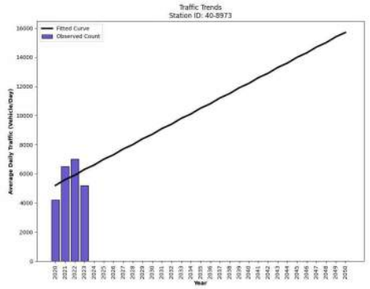

Annual Trend Increase: 350
Trend R-squared: 12.69%
Linear Annual Historic Growth Rate: 7.05%
Trend Growth Rate fro Design Year's: 5.50%

Year	Count	Trend
2020	4200	5200
2021	6500	5600
2022	7000	5960
2023	5200	6300
2050		15700

Trend Analysis *(*2015-2023)*
Linear

R-Square	AGR (Historical)	AGR (Design Year)	Annual Increase	2050 Estimate
12.7%	7.1%	5.5%	350	15,700

Annual Trend Increase: 350
Trend R-squared: 12.69%
Linear Annual Historic Growth Rate: 7.05%
Trend Growth Rate fro Design Year's: 5.50%

Year	Count	Trend
2020	4200	5200
2021	6500	5600
2022	7000	5960
2023	5200	6300
2050		15700

R-8973 2E1 : I- 126 TO S- 3020, RS 8973 2E1



Station ID 40-8972
County Richland
Location click here

	Year	AADT	%Change
1	1987		
2	1988		#DIV/0!
3	1989		#DIV/0!
4	1990		#DIV/0!
5	1991		#DIV/0!
6	1992		#DIV/0!
7	1993		#DIV/0!
8	1994		#DIV/0!
9	1995		#DIV/0!
10	1996		#DIV/0!
11	1997		#DIV/0!
12	1998		#DIV/0!
13	1999		#DIV/0!
14	2000		#DIV/0!
15	2001		#DIV/0!
16	2002		#DIV/0!
17	2003		#DIV/0!
18	2004		#DIV/0!
19	2005		#DIV/0!
20	2006		#DIV/0!
21	2007		#DIV/0!
22	2008		#DIV/0!
23	2009		#DIV/0!
24	2010		#DIV/0!
25	2011		#DIV/0!
26	2012		#DIV/0!
27	2013		#DIV/0!
28	2014		#DIV/0!
29	2015		#DIV/0!
30	2016		#DIV/0!
31	2017		#DIV/0!
32	2018		#DIV/0!
33	2019		#DIV/0!
34	2020	4,800	#DIV/0!
35	2021	4,800	0.0%
36	2022	4,800	0.0%
37	2023	4,700	-2.1%
		Avg=	#DIV/0!

For Reference
1% Annual Growth Rate

Year	Volume	Growth Rate
2023	4,700	Present
2050	5,969	Linear
2050	6,149	Compound

Calculations based on 30YR Growth Rates

Year	Volume	Estimate		
2023	4,700	N/A	*Linear*	#DIV/0!
2050	#DIV/0!	#DIV/0!		
Year	**Volume**	**Estimate**		
2023	4,700	N/A	*Compound*	#DIV/0!
2050	#DIV/0!	#DIV/0!		
Year	**Volume**	**Estimate**		
2023	4,700	N/A	*Average Annual*	#DIV/0!
2050	#DIV/0!	#DIV/0!		

Travel Demand Model

COATS

	2018	2045		
Model	8,913	7,555	*Linear*	-0.56%
Acual/Est.	0	0		
Year	**Volume**	**Estimate**		
2050	0	0		

SCSWM

	2019	2050		
Model	7,054	7,038	*Linear*	-0.01%
Acual/Est.	0	0		
Year	**Volume**	**Estimate**		
2050	0	0		

Demographic Data

Population

Employment

Calculations based on 20YR Growth Rates

Year	Volume	Estimate		
2023	4,700	N/A	*Linear*	#DIV/0!
2050	#DIV/0!	#DIV/0!		
Year	**Volume**	**Estimate**		
2023	4,700	N/A	*Compound*	#DIV/0!
2050	#DIV/0!	#DIV/0!		
Year	**Volume**	**Estimate**		
2023	4,700	N/A	*Average Annual*	#DIV/0!
2050	#DIV/0!	#DIV/0!		

Calculations based on 10YR Growth Rates

Year	Volume	Estimate		
2023	4,700	N/A	*Linear*	#DIV/0!
2050	#DIV/0!	#DIV/0!		
Year	**Volume**	**Estimate**		
2023	4,700	N/A	*Compound*	#DIV/0!
2050	#DIV/0!	#DIV/0!		
Year	**Volume**	**Estimate**		
2023	4,700	N/A	*Average Annual*	#DIV/0!
2050	#DIV/0!	#DIV/0!		

Trend Analysis
Linear

R-Square	AGR (Historical)	AGR (Design Year)	Annual Increase	2050 Estimate
60.0%	-0.7%	-0.6%	-30	3,900

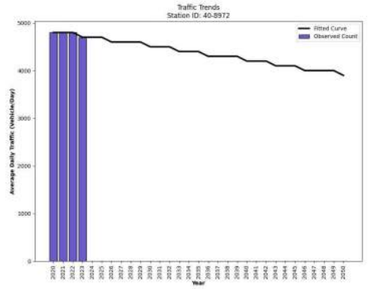

Year	Count	Trend
2020	4800	4800
2021	4800	4800
2022	4800	4800
2023	4700	4700
2050		3900

Trend Analysis *(*2015-2023)*
Linear

R-Square	AGR (Historical)	AGR (Design Year)	Annual Increase	2050 Estimate
60.0%	-0.7%	-0.6%	-30	3,900

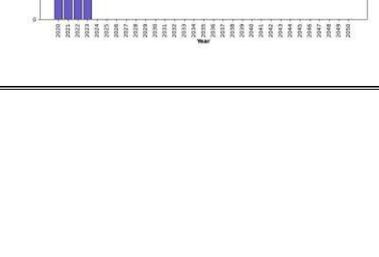

Year	Count	Trend
2020	4800	4800
2021	4800	4800
2022	4800	4800
2023	4700	4700
2050		3900

R-8972 2O1 : S- 3020 TO I- 126

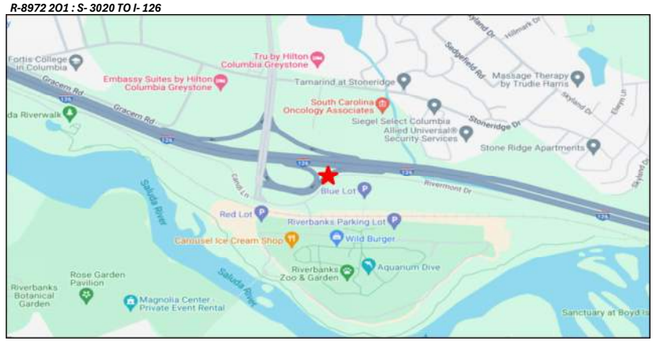

Station ID 40-8974
County Richland
Location click here

	Year	AADT	%Change
1	1987		
2	1988		#DIV/0!
3	1989		#DIV/0!
4	1990		#DIV/0!
5	1991		#DIV/0!
6	1992		#DIV/0!
7	1993		#DIV/0!
8	1994		#DIV/0!
9	1995		#DIV/0!
10	1996		#DIV/0!
11	1997		#DIV/0!
12	1998		#DIV/0!
13	1999		#DIV/0!
14	2000		#DIV/0!
15	2001		#DIV/0!
16	2002		#DIV/0!
17	2003		#DIV/0!
18	2004		#DIV/0!
19	2005		#DIV/0!
20	2006		#DIV/0!
21	2007		#DIV/0!
22	2008		#DIV/0!
23	2009		#DIV/0!
24	2010		#DIV/0!
25	2011		#DIV/0!
26	2012		#DIV/0!
27	2013		#DIV/0!
28	2014		#DIV/0!
29	2015		#DIV/0!
30	2016		#DIV/0!
31	2017		#DIV/0!
32	2018		#DIV/0!
33	2019		#DIV/0!
34	2020	4,600	#DIV/0!
35	2021	4,500	-2.2%
36	2022	4,600	2.2%
37	2023	4,600	0.0%
		Avg=	#DIV/0!

For Reference
1% Annual Growth Rate

Year	Volume	Growth Rate
2023	4,600	Present
2050	5,842	Linear
2050	6,018	Compound

Calculations based on 30YR Growth Rates

Year	Volume	Estimate		
2023	4,600	N/A	*Linear*	#DIV/0!
2050	#DIV/0!	#DIV/0!		
Year	**Volume**	**Estimate**	*Compound*	#DIV/0!
2023	4,600	N/A		
2050	#DIV/0!	#DIV/0!		
Year	**Volume**	**Estimate**	*Average Annual*	#DIV/0!
2023	4,600	N/A		
2050	#DIV/0!	#DIV/0!		

Travel Demand Model

COATS

	2018	2045		
Model	7,207	8,590	*Linear*	0.71%
Acual/Est.	0	0		

Year	Volume	Estimate
2050	0	0

SCSWM

	2019	2050		
Model	9,707	9,241	*Linear*	-0.15%
Acual/Est.	0	0		

Year	Volume	Estimate
2050	0	0

Demographic Data

Population

Employment

Calculations based on 20YR Growth Rates

Year	Volume	Estimate		
2023	4,600	N/A	*Linear*	#DIV/0!
2050	#DIV/0!	#DIV/0!		
Year	**Volume**	**Estimate**	*Compound*	#DIV/0!
2023	4,600	N/A		
2050	#DIV/0!	#DIV/0!		
Year	**Volume**	**Estimate**	*Average Annual*	#DIV/0!
2023	4,600	N/A		
2050	#DIV/0!	#DIV/0!		

Calculations based on 10YR Growth Rates

Year	Volume	Estimate		
2023	4,600	N/A	*Linear*	#DIV/0!
2050	#DIV/0!	#DIV/0!		
Year	**Volume**	**Estimate**	*Compound*	#DIV/0!
2023	4,600	N/A		
2050	#DIV/0!	#DIV/0!		
Year	**Volume**	**Estimate**	*Average Annual*	#DIV/0!
2023	4,600	N/A		
2050	#DIV/0!	#DIV/0!		

Trend Analysis
Linear

R-Square	AGR (Historical)	AGR (Design Year)	Annual Increase	2050 Estimate
6.7%	0.0%	0.2%	10	4,900

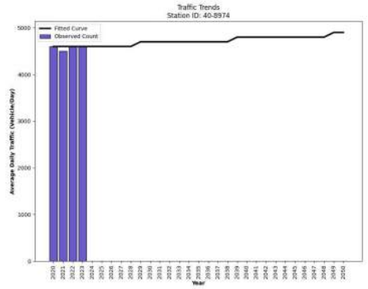

Year	Count	Trend
2020	4600	4600
2021	4500	4600
2022	4600	4600
2023	4600	4600
2050		4900

Trend Analysis *(*2015-2023)*
Linear

R-Square	AGR (Historical)	AGR (Design Year)	Annual Increase	2050 Estimate
6.7%	0.0%	0.2%	10	4,900

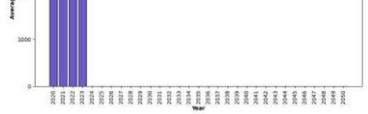

Year	Count	Trend
2020	4600	4600
2021	4500	4600
2022	4600	4600
2023	4600	4600
2050		4900

R-8974 3E1 : I- 126 TO S- 3020, RS 8974 3E1

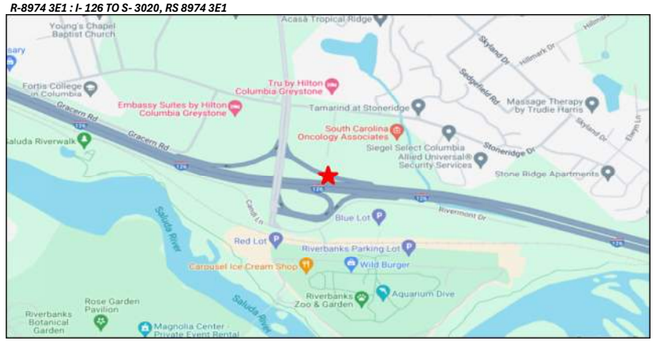

Station ID 40-0839
County Richland
Location click here

	Year	AADT	%Change
1	1987		
2	1988		#DIV/0!
3	1989		#DIV/0!
4	1990		#DIV/0!
5	1991		#DIV/0!
6	1992		#DIV/0!
7	1993		#DIV/0!
8	1994		#DIV/0!
9	1995		#DIV/0!
10	1996		#DIV/0!
11	1997		#DIV/0!
12	1998		#DIV/0!
13	1999	6,500	#DIV/0!
14	2000	6,900	6.2%
15	2001	6,100	-11.6%
16	2002	5,600	-8.2%
17	2003	5,600	0.0%
18	2004	5,400	-3.6%
19	2005	5,300	-1.9%
20	2006	5,200	-1.9%
21	2007	5,000	-3.8%
22	2008	4,900	-2.0%
23	2009	5,400	10.2%
24	2010	4,700	-13.0%
25	2011	4,600	-2.1%
26	2012	4,700	2.2%
27	2013	4,800	2.1%
28	2014	5,100	6.3%
29	2015	5,200	2.0%
30	2016	4,800	-7.7%
31	2017	4,600	-4.2%
32	2018	5,000	8.7%
33	2019	4,600	-8.0%
34	2020	4,400	-4.3%
35	2021	3,000	-31.8%
36	2022	3,500	16.7%
37	2023	3,600	2.9%
		Avg=	#DIV/0!

For Reference
1% Annual Growth Rate

Year	Volume	Growth Rate
2023	3,600	Present
2050	4,572	Linear
2050	4,710	Compound

Calculations based on 30YR Growth Rates

Year	Volume	Estimate		
2023	3,600	N/A	*Linear*	#DIV/0!
2050	#DIV/0!	#DIV/0!		
Year	**Volume**	**Estimate**		
2023	3,600	N/A	*Compound*	#DIV/0!
2050	#DIV/0!	#DIV/0!		
Year	**Volume**	**Estimate**		
2023	3,600	N/A	*Average Annual*	#DIV/0!
2050	#DIV/0!	#DIV/0!		

Travel Demand Model

COATS

	2018	2045	
Model	5,839	6,465	*Linear* 0.40%
Acual/Est.	5,000	5,536	

Year	Volume	Estimate
2050	5,635	5,600

SCSWM

	2019	2050	
Model	5,541	5,366	*Linear* -0.10%
Acual/Est.	4,600	4,455	

Year	Volume	Estimate
2050	4,455	4,500

Demographic Data

Population

Employment

Calculations based on 20YR Growth Rates

Year	Volume	Estimate		
2023	3,600	N/A	*Linear*	-1.67%
2050	1,170	1,200		
Year	**Volume**	**Estimate**		
2023	3,600	N/A	*Compound*	-2.01%
2050	2,082	2,100		
Year	**Volume**	**Estimate**		
2023	3,600	N/A	*Average Annual*	-1.57%
2050	2,021	2,000		

Calculations based on 10YR Growth Rates

Year	Volume	Estimate		
2023	3,600	N/A	*Linear*	-2.94%
2050	-450	-450		
Year	**Volume**	**Estimate**		
2023	3,600	N/A	*Compound*	-3.42%
2050	1,406	1,400		
Year	**Volume**	**Estimate**		
2023	3,600	N/A	*Average Annual*	-2.87%
2050	705	710		

Trend Analysis
Linear

R-Square	AGR (Historical)	AGR (Design Year)	Annual Increase	2050 Estimate
74.8%	-1.6%	-2.6%	-101	1,100

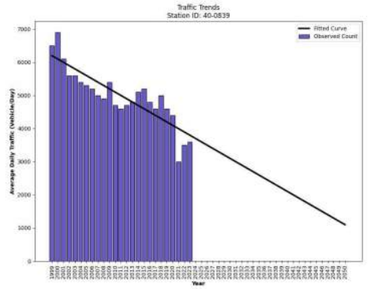



Year	Count	Trend
1999	6500	6200
2000	6900	6100
2001	6100	6000
2002	5600	5900
2003	5600	5800
2004	5400	5700
2005	5300	5600
2006	5200	5500
2007	5000	5400
2008	4900	5300
2009	5400	5200
2010	4700	5100
2011	4600	5000
2012	4700	4900
2013	4800	4800
2014	5100	4700
2015	5200	4600
2016	4800	4500
2017	4600	4400
2018	5000	4300
2019	4600	4200
2020	4400	4100
2021	3000	4000
2022	3500	3900
2023	3600	3800
2050		1100

Trend Analysis *(*2015-2023)*
Linear

R-Square	AGR (Historical)	AGR (Design Year)	Annual Increase	2050 Estimate
72.7%	-4.3%	-7.0%	-235	-3,000

Year	Count	Trend
2015	5200	5200
2016	4800	5000
2017	4600	4800
2018	5000	4500
2019	4600	4300
2020	4400	4100
2021	3000	3800
2022	3500	3600
2023	3600	3400
2050		-3000

S-2262 : S- 835 (SALUDA RIVER RD) TO S- 3020 (GREYSTONE BLVD)



Station ID 40-8975
County Richland
Location click here

	Year	AADT	%Change
1	1987		
2	1988		#DIV/0!
3	1989		#DIV/0!
4	1990		#DIV/0!
5	1991		#DIV/0!
6	1992		#DIV/0!
7	1993		#DIV/0!
8	1994		#DIV/0!
9	1995		#DIV/0!
10	1996		#DIV/0!
11	1997		#DIV/0!
12	1998		#DIV/0!
13	1999		#DIV/0!
14	2000		#DIV/0!
15	2001		#DIV/0!
16	2002		#DIV/0!
17	2003		#DIV/0!
18	2004		#DIV/0!
19	2005		#DIV/0!
20	2006		#DIV/0!
21	2007		#DIV/0!
22	2008		#DIV/0!
23	2009		#DIV/0!
24	2010		#DIV/0!
25	2011		#DIV/0!
26	2012		#DIV/0!
27	2013		#DIV/0!
28	2014		#DIV/0!
29	2015		#DIV/0!
30	2016		#DIV/0!
31	2017		#DIV/0!
32	2018		#DIV/0!
33	2019		#DIV/0!
34	2020	5,600	#DIV/0!
35	2021	5,600	0.0%
36	2022	5,600	0.0%
37	2023	6,300	12.5%
		Avg=	#DIV/0!

For Reference
1% Annual Growth Rate

Year	Volume	Growth Rate
2023	6,300	Present
2050	8,001	Linear
2050	8,242	Compound

Calculations based on 30YR Growth Rates

Year	Volume	Estimate		
2023	6,300	N/A	*Linear*	#DIV/0!
2050	#DIV/0!	#DIV/0!		
Year	**Volume**	**Estimate**	*Compound*	#DIV/0!
2023	6,300	N/A		
2050	#DIV/0!	#DIV/0!		
Year	**Volume**	**Estimate**	*Average Annual*	#DIV/0!
2023	6,300	N/A		
2050	#DIV/0!	#DIV/0!		

Travel Demand Model

COATS

	2018	2045		
Model	8,446	9,980	*Linear*	0.67%
Acual/Est.	0	0		

Year	Volume	Estimate
2050	0	0

SCSWM

	2019	2050		
Model	8,573	11,252	*Linear*	1.01%
Acual/Est.	0	0		

Year	Volume	Estimate
2050	0	0

Demographic Data

Population

Employment

Calculations based on 20YR Growth Rates

Year	Volume	Estimate		
2023	6,300	N/A	*Linear*	#DIV/0!
2050	#DIV/0!	#DIV/0!		
Year	**Volume**	**Estimate**	*Compound*	#DIV/0!
2023	6,300	N/A		
2050	#DIV/0!	#DIV/0!		
Year	**Volume**	**Estimate**	*Average Annual*	#DIV/0!
2023	6,300	N/A		
2050	#DIV/0!	#DIV/0!		

Calculations based on 10YR Growth Rates

Year	Volume	Estimate		
2023	6,300	N/A	*Linear*	#DIV/0!
2050	#DIV/0!	#DIV/0!		
Year	**Volume**	**Estimate**	*Compound*	#DIV/0!
2023	6,300	N/A		
2050	#DIV/0!	#DIV/0!		
Year	**Volume**	**Estimate**	*Average Annual*	#DIV/0!
2023	6,300	N/A		
2050	#DIV/0!	#DIV/0!		

Trend Analysis

Linear

R-Square	AGR (Historical)	AGR (Design Year)	Annual Increase	2050 Estimate
60.0%	3.6%	3.5%	210	11,800

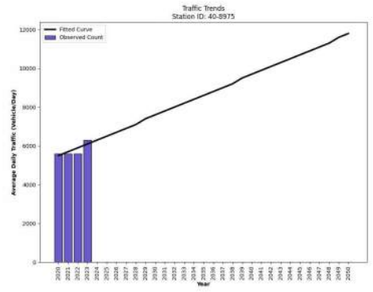

Annual Trend Increase: 210
Trend R-squared: 60.0%
Linear Annual Historic Growth Rate: 3.64%
Trend Growth Rate fro Design Year's: 3.46%

Year	Count	Trend
2020	5600	5500
2021	5600	5700
2022	5600	5900
2023	6300	6100
2050		11800

Trend Analysis *(*2015-2023)*

Linear

R-Square	AGR (Historical)	AGR (Design Year)	Annual Increase	2050 Estimate
60.0%	3.6%	3.5%	210	11,800

Annual Trend Increase: 210
Trend R-squared: 60.0%
Linear Annual Historic Growth Rate: 3.64%
Trend Growth Rate fro Design Year's: 3.46%

Year	Count	Trend
2020	5600	5500
2021	5600	5700
2022	5600	5900
2023	6300	6100
2050		11800

R-8975 4O1 : S- 3020 TO I- 126, RS 8975 4O1



Station ID 40-0299
County Richland
Location click here

	Year	AADT	%Change
1	1987		
2	1988		#DIV/0!
3	1989		#DIV/0!
4	1990		#DIV/0!
5	1991		#DIV/0!
6	1992		#DIV/0!
7	1993		#DIV/0!
8	1994	17,600	#DIV/0!
9	1995	19,100	8.5%
10	1996	18,800	-1.6%
11	1997	17,800	-5.3%
12	1998	18,700	5.1%
13	1999	19,400	3.7%
14	2000	19,600	1.0%
15	2001	18,600	-5.1%
16	2002	19,800	6.5%
17	2003	19,400	-2.0%
18	2004	18,100	-6.7%
19	2005	18,600	2.8%
20	2006	17,000	-8.6%
21	2007	17,200	1.2%
22	2008	15,500	-9.9%
23	2009	15,800	1.9%
24	2010	15,300	-3.2%
25	2011	15,600	2.0%
26	2012	15,900	1.9%
27	2013	16,200	1.9%
28	2014	16,000	-1.2%
29	2015	13,600	-15.0%
30	2016	14,300	5.1%
31	2017	13,900	-2.8%
32	2018	14,400	3.6%
33	2019	14,300	-0.7%
34	2020	13,200	-7.7%
35	2021	12,600	-4.5%
36	2022	13,100	4.0%
37	2023	14,100	7.6%
		Avg=	#DIV/0!

For Reference
1% Annual Growth Rate

Year	Volume	Growth Rate
2023	14,100	Present
2050	17,907	Linear
2050	18,446	Compound

Calculations based on 30YR Growth Rates

Year	Volume	Estimate		
2023	14,100	N/A	*Linear*	-0.66%
2050	10,950	11,000		
Year	**Volume**	**Estimate**	*Compound*	-0.74%
2023	14,100	N/A		
2050	11,549	12,000		
Year	**Volume**	**Estimate**	*Average Annual*	-0.60%
2023	14,100	N/A		
2050	11,713	12,000		

Travel Demand Model

COATS

	2018	2045	
Model	15,260	16,578	*Linear* 0.32%
Acual/Est.	14,400	15,644	
Year	**Volume**	**Estimate**	
2050	15,874	16,000	

SCSWM

	2019	2050	
Model	13,149	13,195	*Linear* 0.01%
Acual/Est.	14,300	14,350	
Year	**Volume**	**Estimate**	
2050	14,350	14,000	

Demographic Data

Population

Employment

Calculations based on 20YR Growth Rates

Year	Volume	Estimate		
2023	14,100	N/A	*Linear*	-1.10%
2050	8,700	8,700		
Year	**Volume**	**Estimate**	*Compound*	-1.24%
2023	14,100	N/A		
2050	10,065	10,000		
Year	**Volume**	**Estimate**	*Average Annual*	-1.14%
2023	14,100	N/A		
2050	9,607	9,600		

Calculations based on 10YR Growth Rates

Year	Volume	Estimate		
2023	14,100	N/A	*Linear*	-1.19%
2050	8,970	9,000		
Year	**Volume**	**Estimate**	*Compound*	-1.26%
2023	14,100	N/A		
2050	10,023	10,000		
Year	**Volume**	**Estimate**	*Average Annual*	-1.15%
2023	14,100	N/A		
2050	9,545	9,500		

Trend Analysis
Linear

R-Square	AGR (Historical)	AGR (Design Year)	Annual Increase	2050 Estimate
82.2%	-1.2%	-1.8%	-231	6,900

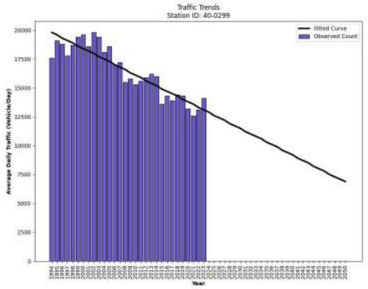

Annual Trend Increase: -231
Trend R-squared: 82.17%
Linear Annual Historic Growth Rate: -1.17%
Trend Growth Rate Its Design Year: -1.76%

Year	Count	Trend
1994	17600	19800
1995	19100	19800
1996	18800	19300
1997	17800	19100
1998	18700	18900
1999	19400	18800
2000	19600	18400
2001	18600	18200
2002	19800	18000
2003	19400	17700
2004	18100	17600
2005	18600	17300
2006	17000	17000
2007	17200	16800
2008	15500	16600
2009	15800	16300
2010	15300	16100
2011	15600	15900
2012	15900	15800
2013	16200	15400
2014	16000	15200
2015	13600	14900
2016	14300	14700
2017	13900	14500
2018	14400	14300
2019	14300	14000
2020	13200	13800
2021	12600	13600
2022	13100	13300
2023	14100	13100
2050		6900

Trend Analysis *(*2015-2023)*
Linear

R-Square	AGR (Historical)	AGR (Design Year)	Annual Increase	2050 Estimate
15.0%	-0.6%	-0.7%	-90	10,900

Annual Trend Increase: -90
Trend R-squared: 15.00%
Linear Annual Historic Growth Rate: -0.62%
Trend Growth Rate Its Design Year: -0.66%

Year	Count	Trend
2015	13600	14100
2016	14300	14000
2017	13900	13900
2018	14400	13800
2019	14300	13700
2020	13200	13600
2021	12600	13500
2022	13100	13500
2023	14100	13400
2050		10900

S-3020 : US 176 (BROAD RIVER RD) TO S- 2888



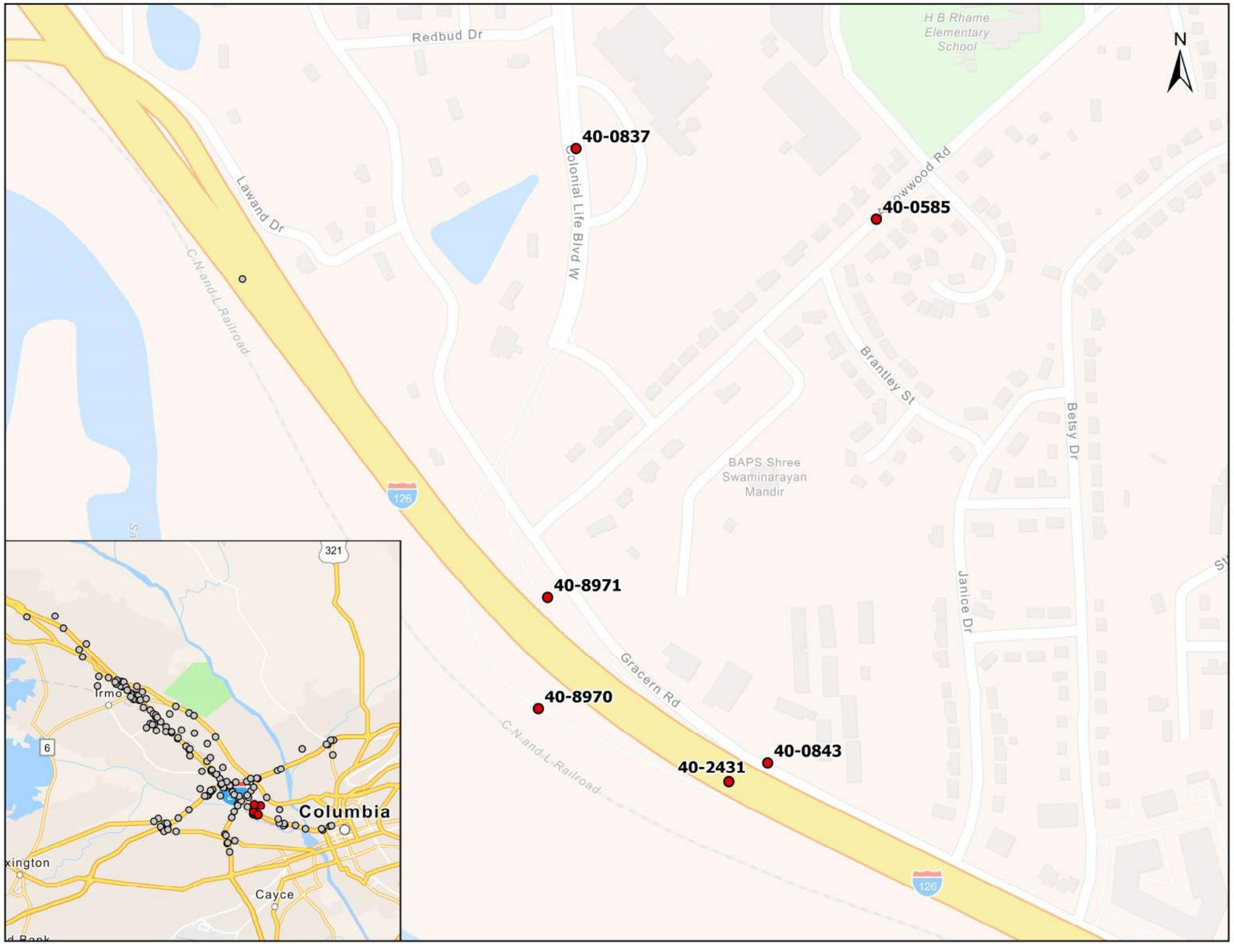

Redbud Dr
H B Rhame Elementary School
N
40-0837
Colonial Life Blvd W
Lawand Dr
40-0585
C N and L Railroad
Brantley St
Betsy Dr
BAPS Shree Swaminarayan Mandir
126
40-8971
Janice Dr
Gracern Rd
40-8970
40-0843
40-2431
C N and L Railroad
126
321
Irmo
6
Columbia
xington
Cayce

Station ID 40-0843
County Richland
Location click here

Year	AADT	%Change
1987		
1988		#DIV/0!
1989		#DIV/0!
1990		#DIV/0!
1991		#DIV/0!
1992		#DIV/0!
1993		#DIV/0!
1994		#DIV/0!
1995		#DIV/0!
1996		#DIV/0!
1997		#DIV/0!
1998		#DIV/0!
1999	4,800	#DIV/0!
2000	4,900	2.1%
2001	4,600	-6.1%
2002	4,500	-2.2%
2003	4,400	-2.2%
2004	4,100	-6.8%
2005	4,200	2.4%
2006	4,000	-4.8%
2007	3,900	-2.5%
2008	3,900	0.0%
2009	4,000	2.6%
2010	3,700	-7.5%
2011	3,600	-2.7%
2012	3,700	2.8%
2013	3,800	2.7%
2014	3,700	-2.6%
2015	3,300	-10.8%
2016	3,000	-9.1%
2017	2,900	-3.3%
2018	3,100	6.9%
2019	3,100	0.0%
2020	3,000	-3.2%
2021	2,400	-20.0%
2022	2,800	16.7%
2023	1,800	-35.7%
	Avg=	#DIV/0!

For Reference
1% Annual Growth Rate

Year	Volume	Growth Rate
2023	1,800	Present
2050	2,286	Linear
2050	2,355	Compound

Calculations based on 30YR Growth Rates

Year	Volume	Estimate		
2023	1,800	N/A	*Linear*	#DIV/0!
2050	#DIV/0!	#DIV/0!		
Year	**Volume**	**Estimate**		
2023	1,800	N/A	*Compound*	#DIV/0!
2050	#DIV/0!	#DIV/0!		
Year	**Volume**	**Estimate**		
2023	1,800	N/A	*Average Annual*	#DIV/0!
2050	#DIV/0!	#DIV/0!		

Travel Demand Model

COATS

	2018	2045		
Model	0	0	*Linear*	#DIV/0!
Acual/Est.	3,100	#DIV/0!		
Year	**Volume**	**Estimate**		
2050	#DIV/0!	#DIV/0!		

SCSWM

	2019	2050		
Model	3,093	3,713	*Linear*	0.65%
Acual/Est.	3,100	3,721		
Year	**Volume**	**Estimate**		
2050	3,721	3,700		

Demographic Data

Population

Employment

Calculations based on 20YR Growth Rates

Year	Volume	Estimate		
2023	1,800	N/A	*Linear*	-2.80%
2050	-1,305	-1,310		
Year	**Volume**	**Estimate**		
2023	1,800	N/A	*Compound*	-4.03%
2050	592	590		
Year	**Volume**	**Estimate**		
2023	1,800	N/A	*Average Annual*	-3.59%
2050	-10	-10		

Calculations based on 10YR Growth Rates

Year	Volume	Estimate		
2023	1,800	N/A	*Linear*	-5.14%
2050	-3,330	-3,330		
Year	**Volume**	**Estimate**		
2023	1,800	N/A	*Compound*	-6.95%
2050	257	260		
Year	**Volume**	**Estimate**		
2023	1,800	N/A	*Average Annual*	-6.51%
2050	-1,482	-1,480		

Trend Analysis

Linear

R-Square	AGR (Historical)	AGR (Design Year)	Annual Increase	2050 Estimate
91.5%	-2.0%	-4.0%	-99	-200

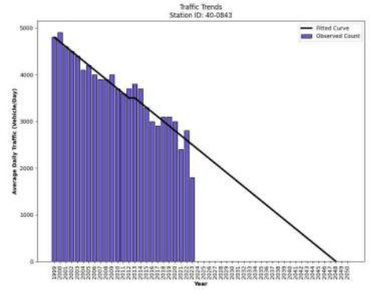



Trend Analysis *(*2015-2023)*

Linear

R-Square	AGR (Historical)	AGR (Design Year)	Annual Increase	2050 Estimate
59.0%	-3.8%	-5.6%	-128	-1,200

S-2890 : S- 835 (STONERIDGE DR) TO S- 287 (ARROWWOOD RD)



Station ID 40-0837
County Richland
Location click here

	Year	AADT	%Change
1	1987		
2	1988		#DIV/0!
3	1989		#DIV/0!
4	1990		#DIV/0!
5	1991		#DIV/0!
6	1992	14,000	#DIV/0!
7	1993	14,500	3.6%
8	1994	15,000	3.4%
9	1995	11,000	-26.7%
10	1996	10,100	-8.2%
11	1997	10,400	3.0%
12	1998	10,300	-1.0%
13	1999	10,300	0.0%
14	2000	9,600	-6.8%
15	2001	9,700	1.0%
16	2002	9,700	0.0%
17	2003	10,900	12.4%
18	2004	10,300	-5.5%
19	2005	9,500	-7.8%
20	2006	8,700	-8.4%
21	2007	9,400	8.0%
22	2008	9,100	-3.2%
23	2009	9,600	5.5%
24	2010	9,300	-3.1%
25	2011	8,800	-5.4%
26	2012	9,000	2.3%
27	2013	9,200	2.2%
28	2014	7,800	-15.2%
29	2015	7,900	1.3%
30	2016	8,400	6.3%
31	2017	7,900	-6.0%
32	2018	8,200	3.8%
33	2019	7,800	-4.9%
34	2020	7,200	-7.7%
35	2021	4,600	-36.1%
36	2022	4,800	4.3%
37	2023	7,400	54.2%
	Avg=		#DIV/0!

For Reference
1% Annual Growth Rate

Year	Volume	Growth Rate
2023	7,400	Present
2050	9,398	Linear
2050	9,681	Compound

Calculations based on 30YR Growth Rates

Year	Volume	Estimate		
2023	7,400	N/A		
2050	560	560	*Linear*	-1.69%
Year	**Volume**	**Estimate**		
2023	7,400	N/A		
2050	3,918	3,900	*Compound*	-2.33%
Year	**Volume**	**Estimate**		
2023	7,400	N/A		
2050	4,435	4,400	*Average Annual*	-1.43%

Travel Demand Model

COATS

	2018	2045		
Model	11,458	13,980	*Linear*	0.82%
Acual/Est.	8,200	10,005		
Year	**Volume**	**Estimate**		
2050	10,339	10,000		

SCSWM

	2019	2050		
Model	7,608	9,207	*Linear*	0.68%
Acual/Est.	7,800	9,439		
Year	**Volume**	**Estimate**		
2050	9,439	9,400		

Demographic Data

Population

Employment

Calculations based on 20YR Growth Rates

Year	Volume	Estimate		
2023	7,400	N/A		
2050	3,485	3,500	*Linear*	-1.41%
Year	**Volume**	**Estimate**		
2023	7,400	N/A		
2050	4,735	4,700	*Compound*	-1.64%
Year	**Volume**	**Estimate**		
2023	7,400	N/A		
2050	6,334	6,300	*Average Annual*	-0.51%

Calculations based on 10YR Growth Rates

Year	Volume	Estimate		
2023	7,400	N/A		
2050	6,320	6,300	*Linear*	-0.51%
Year	**Volume**	**Estimate**		
2023	7,400	N/A		
2050	6,420	6,400	*Compound*	-0.53%
Year	**Volume**	**Estimate**		
2023	7,400	N/A		
2050	10,920	11,000	*Average Annual*	1.70%

Trend Analysis

Linear

R-Square	AGR (Historical)	AGR (Design Year)	Annual Increase	2050 Estimate
74.8%	-1.6%	-3.3%	-205	700

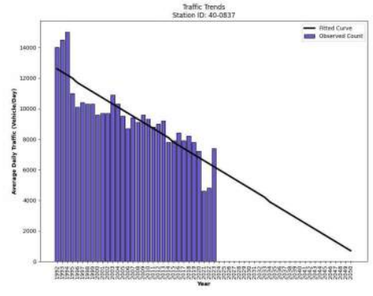

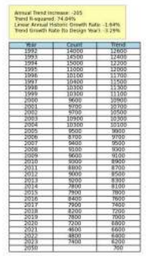

Trend Analysis *(*2015-2023)*

Linear

R-Square	AGR (Historical)	AGR (Design Year)	Annual Increase	2050 Estimate
42.6%	-4.0%	-5.9%	-340	-3,400

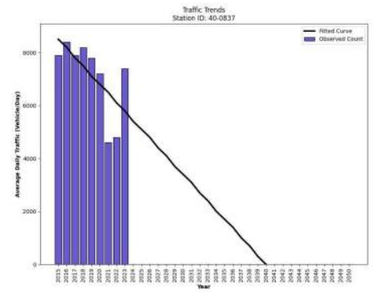



S-2963 : S- 31 (BUSH RIVER RD) TO R- 8970 201 (Ramp to I-126)

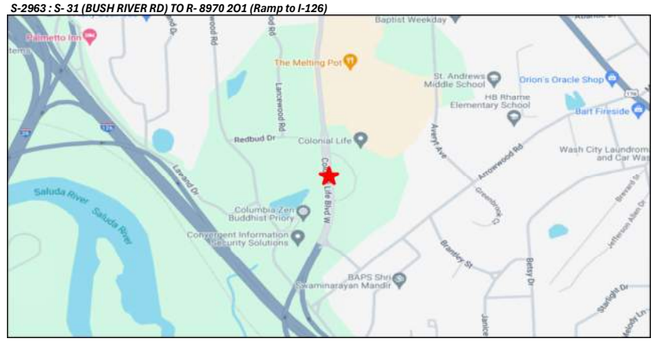

Station ID 40-8971
County Richland
Location click here

	Year	AADT	%Change
1	1987		
2	1988		#DIV/0!
3	1989		#DIV/0!
4	1990		#DIV/0!
5	1991		#DIV/0!
6	1992		#DIV/0!
7	1993		#DIV/0!
8	1994		#DIV/0!
9	1995		#DIV/0!
10	1996		#DIV/0!
11	1997		#DIV/0!
12	1998		#DIV/0!
13	1999		#DIV/0!
14	2000		#DIV/0!
15	2001		#DIV/0!
16	2002		#DIV/0!
17	2003		#DIV/0!
18	2004		#DIV/0!
19	2005		#DIV/0!
20	2006		#DIV/0!
21	2007		#DIV/0!
22	2008		#DIV/0!
23	2009		#DIV/0!
24	2010		#DIV/0!
25	2011		#DIV/0!
26	2012		#DIV/0!
27	2013		#DIV/0!
28	2014		#DIV/0!
29	2015		#DIV/0!
30	2016		#DIV/0!
31	2017		#DIV/0!
32	2018		#DIV/0!
33	2019		#DIV/0!
34	2020	2,400	#DIV/0!
35	2021	2,300	-4.2%
36	2022	2,500	8.7%
37	2023	2,900	16.0%
		Avg=	#DIV/0!

For Reference
1% Annual Growth Rate

Year	Volume	Growth Rate
2023	2,900	Present
2050	3,683	Linear
2050	3,794	Compound

Calculations based on 30YR Growth Rates

Year	Volume	Estimate		
2023	2,900	N/A	*Linear*	#DIV/0!
2050	#DIV/0!	#DIV/0!		
Year	**Volume**	**Estimate**		
2023	2,900	N/A	*Compound*	#DIV/0!
2050	#DIV/0!	#DIV/0!		
Year	**Volume**	**Estimate**		
2023	2,900	N/A	*Average Annual*	#DIV/0!
2050	#DIV/0!	#DIV/0!		

Travel Demand Model

COATS

	2018	2045		
Model	3,135	3,595	*Linear*	0.54%
Acual/Est.	0	0		
Year	**Volume**	**Estimate**		
2050	0	0		

SCSWM

	2019	2050		
Model	3,335	4,572	*Linear*	1.20%
Acual/Est.	0	0		
Year	**Volume**	**Estimate**		
2050	0	0		

Demographic Data

Population

Employment

Calculations based on 20YR Growth Rates

Year	Volume	Estimate		
2023	2,900	N/A	*Linear*	#DIV/0!
2050	#DIV/0!	#DIV/0!		
Year	**Volume**	**Estimate**		
2023	2,900	N/A	*Compound*	#DIV/0!
2050	#DIV/0!	#DIV/0!		
Year	**Volume**	**Estimate**		
2023	2,900	N/A	*Average Annual*	#DIV/0!
2050	#DIV/0!	#DIV/0!		

Calculations based on 10YR Growth Rates

Year	Volume	Estimate		
2023	2,900	N/A	*Linear*	#DIV/0!
2050	#DIV/0!	#DIV/0!		
Year	**Volume**	**Estimate**		
2023	2,900	N/A	*Compound*	#DIV/0!
2050	#DIV/0!	#DIV/0!		
Year	**Volume**	**Estimate**		
2023	2,900	N/A	*Average Annual*	#DIV/0!
2050	#DIV/0!	#DIV/0!		

Trend Analysis

Linear

R-Square	AGR (Historical)	AGR (Design Year)	Annual Increase	2050 Estimate
69.6%	7.3%	6.1%	170	7,400

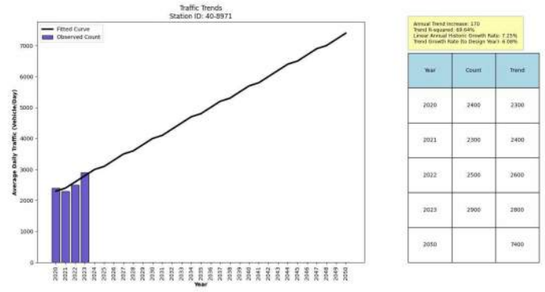

Year	Count	Trend
2020	2400	2300
2021	2300	2400
2022	2500	2600
2023	2900	2800
2050		7400

Trend Analysis *(*2015-2023)*

Linear

R-Square	AGR (Historical)	AGR (Design Year)	Annual Increase	2050 Estimate
69.6%	7.3%	6.1%	170	7,400

Year	Count	Trend
2020	2400	2300
2021	2300	2400
2022	2500	2600
2023	2900	2800
2050		7400

R-8971 3E1 : I- 126 TO S- 2963



Station ID 40-8970
County Richland
Location click here

	Year	AADT	%Change
1	1987		
2	1988		#DIV/0!
3	1989		#DIV/0!
4	1990		#DIV/0!
5	1991		#DIV/0!
6	1992		#DIV/0!
7	1993		#DIV/0!
8	1994		#DIV/0!
9	1995		#DIV/0!
10	1996		#DIV/0!
11	1997		#DIV/0!
12	1998		#DIV/0!
13	1999		#DIV/0!
14	2000		#DIV/0!
15	2001		#DIV/0!
16	2002		#DIV/0!
17	2003		#DIV/0!
18	2004		#DIV/0!
19	2005		#DIV/0!
20	2006		#DIV/0!
21	2007		#DIV/0!
22	2008		#DIV/0!
23	2009		#DIV/0!
24	2010		#DIV/0!
25	2011		#DIV/0!
26	2012		#DIV/0!
27	2013		#DIV/0!
28	2014		#DIV/0!
29	2015		#DIV/0!
30	2016		#DIV/0!
31	2017		#DIV/0!
32	2018		#DIV/0!
33	2019		#DIV/0!
34	2020	1,950	#DIV/0!
35	2021	2,000	2.6%
36	2022	2,100	5.0%
37	2023	3,000	42.9%
		Avg=	#DIV/0!

For Reference
1% Annual Growth Rate

Year	Volume	Growth Rate
2023	3,000	Present
2050	3,810	Linear
2050	3,925	Compound

Calculations based on 30YR Growth Rates

Year	Volume	Estimate		
2023	3,000	N/A	*Linear*	#DIV/0!
2050	#DIV/0!	#DIV/0!		
Year	**Volume**	**Estimate**		
2023	3,000	N/A	*Compound*	#DIV/0!
2050	#DIV/0!	#DIV/0!		
Year	**Volume**	**Estimate**		
2023	3,000	N/A	*Average Annual*	#DIV/0!
2050	#DIV/0!	#DIV/0!		

Travel Demand Model

COATS

	2018	2045		
Model	2,720	3,439	*Linear*	0.98%
Acual/Est.	0	0		
Year	**Volume**	**Estimate**		
2050	0	0		

SCSWM

	2019	2050		
Model	3,325	4,020	*Linear*	0.67%
Acual/Est.	0	0		
Year	**Volume**	**Estimate**		
2050	0	0		

Demographic Data

Population

Employment

R-8970 2O1 : S- 2963 TO I- 126



Calculations based on 20YR Growth Rates

Year	Volume	Estimate		
2023	3,000	N/A	*Linear*	#DIV/0!
2050	#DIV/0!	#DIV/0!		
Year	**Volume**	**Estimate**		
2023	3,000	N/A	*Compound*	#DIV/0!
2050	#DIV/0!	#DIV/0!		
Year	**Volume**	**Estimate**		
2023	3,000	N/A	*Average Annual*	#DIV/0!
2050	#DIV/0!	#DIV/0!		

Calculations based on 10YR Growth Rates

Year	Volume	Estimate		
2023	3,000	N/A	*Linear*	#DIV/0!
2050	#DIV/0!	#DIV/0!		
Year	**Volume**	**Estimate**		
2023	3,000	N/A	*Compound*	#DIV/0!
2050	#DIV/0!	#DIV/0!		
Year	**Volume**	**Estimate**		
2023	3,000	N/A	*Average Annual*	#DIV/0!
2050	#DIV/0!	#DIV/0!		

Trend Analysis

Linear

R-Square	AGR (Historical)	AGR (Design Year)	Annual Increase	2050 Estimate
67.9%	16.7%	11.5%	310	11,100

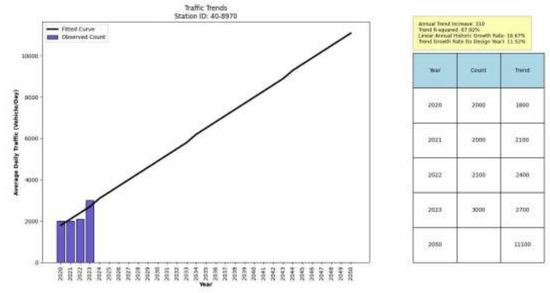

Annual Trend Increase: 310
Trend R-squared: 67.92%
Linear Annual Historic Growth Rate: 16.67%
Trend Growth Rate Its Design Year's: 11.52%

Year	Count	Trend
2020	2000	1800
2021	2000	2100
2022	2100	2400
2023	3000	2700
2050		11100

Trend Analysis *(*2015-2023)*

Linear

R-Square	AGR (Historical)	AGR (Design Year)	Annual Increase	2050 Estimate
67.9%	16.7%	11.5%	310	11,100

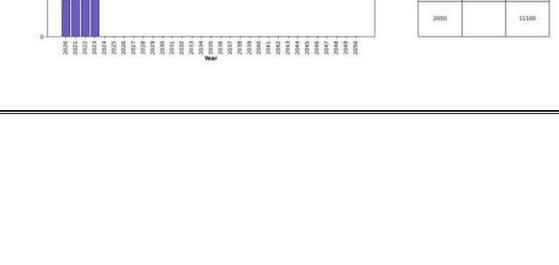

Annual Trend Increase: 310
Trend R-squared: 67.92%
Linear Annual Historic Growth Rate: 16.67%
Trend Growth Rate Its Design Year's: 11.52%

Year	Count	Trend
2020	2000	1800
2021	2000	2100
2022	2100	2400
2023	3000	2700
2050		11100

Station ID 40-2431
County Richland
Location click here

Year	AADT	%Change
1987		
1988		#DIV/0!
1989	69,100	#DIV/0!
1990	68,500	-0.9%
1991	69,100	0.9%
1992	69,100	0.0%
1993	69,200	0.1%
1994	70,000	1.2%
1995	68,300	-2.4%
1996	68,500	0.3%
1997	72,700	6.1%
1998	77,300	6.3%
1999	78,900	2.1%
2000	80,700	2.3%
2001	76,800	-4.8%
2002	77,800	1.3%
2003	77,300	-0.6%
2004	77,700	0.5%
2005	78,000	0.4%
2006	78,000	0.0%
2007	75,600	-3.1%
2008	73,500	-2.8%
2009	73,400	-0.1%
2010	71,800	-2.2%
2011	71,000	-1.1%
2012	70,800	-0.3%
2013	71,400	0.8%
2014	71,100	-0.4%
2015	71,900	1.1%
2016	73,100	1.7%
2017	74,800	2.3%
2018	77,400	3.5%
2019	68,900	-11.0%
2020	56,500	-18.0%
2021	62,200	10.1%
2022	62,300	0.2%
2023	66,400	6.6%
	Avg=	#DIV/0!

For Reference
1% Annual Growth Rate

Year	Volume	Growth Rate
2023	66,400	Present
2050	84,328	Linear
2050	86,865	Compound

Calculations based on 30YR Growth Rates

Year	Volume	Estimate		
2023	66,400	N/A		
2050	63,160	63,000	*Linear*	-0.17%
2050	63,319	63,000	*Compound*	-0.18%
2050	65,574	66,000	*Average Annual*	-0.04%

Travel Demand Model

COATS

	2018	2045		
Model	97,936	103,488	*Linear*	0.21%
Acual/Est.	77,400	81,788		

Year	Volume	Estimate
2050	82,600	83,000

SCSWM

	2019	2050		
Model	68,937	103,819	*Linear*	1.63%
Acual/Est.	68,900	103,763		

Year	Volume	Estimate
2050	103,763	104,000

Demographic Data

Population

Employment

I-126 : R- 8970 2O1 (Ramp to I-126) TO S- 3020 (GREYSTONE BLVD)



Calculations based on 20YR Growth Rates

Year	Volume	Estimate		
2023	66,400	N/A		
2050	51,145	51,000	*Linear*	-0.73%
2050	53,706	54,000	*Compound*	-0.78%
2050	54,358	54,000	*Average Annual*	-0.65%

Calculations based on 10YR Growth Rates

Year	Volume	Estimate		
2023	66,400	N/A		
2050	53,710	54,000	*Linear*	-0.66%
2050	55,204	55,000	*Compound*	-0.68%
2050	59,060	59,000	*Average Annual*	-0.39%

Trend Analysis

Linear

R-Square	AGR (Historical)	AGR (Design Year)	Annual Increase	2050 Estimate
6.5%	-0.2%	-0.2%	-131	66,200

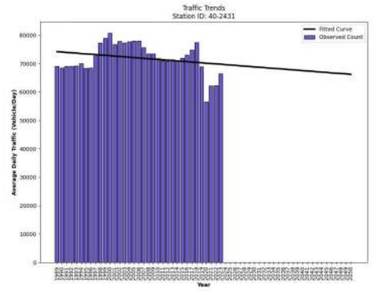

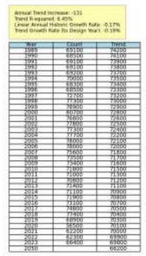

Year	Count	Trend
1987	68100	74200
1988	68100	74100
1989	69100	73900
1990	68500	73800
1991	69100	73700
1992	69000	73600
1993	69200	73500
1994	69800	73300
1995	68300	73200
1996	68500	73100
1997	72700	73000
1998	77300	72800
1999	78900	72700
2000	80700	72600
2001	76800	72500
2002	77800	72300
2003	77300	72200
2004	77700	72100
2005	78000	72000
2006	78000	71900
2007	75600	71700
2008	73500	71600
2009	73400	71500
2010	71800	71400
2011	71000	71300
2012	70800	71100
2013	71400	71000
2014	71100	70900
2015	71900	70800
2016	73100	70700
2017	74800	70500
2018	77400	70400
2019	68900	70300
2020	56500	70200
2021	62200	70000
2022	62300	69900
2023	66400	69800
2050		66200

Trend Analysis ***(*2015-2023)***

Linear

R-Square	AGR (Historical)	AGR (Design Year)	Annual Increase	2050 Estimate
44.6%	-2.2%	-2.7%	-1,675	16,200

Year	Count	Trend
2015	71900	74900
2016	73100	73200
2017	74800	71500
2018	77400	69800
2019	68900	68200
2020	56500	66500
2021	62200	64800
2022	62300	63100
2023	66400	61500
2050		16200

Station ID 40-0585
County Richland
Location click here

	Year	AADT	%Change
1	1987		
2	1988		#DIV/0!
3	1989		#DIV/0!
4	1990	1,150	#DIV/0!
5	1991	900	-21.7%
6	1992	1,000	11.1%
7	1993	1,100	10.0%
8	1994	1,100	0.0%
9	1995	1,050	-4.5%
10	1996	850	-19.0%
11	1997	1,000	17.6%
12	1998	1,050	5.0%
13	1999	800	-23.8%
14	2000	900	12.5%
15	2001	800	-11.1%
16	2002	800	0.0%
17	2003	950	18.8%
18	2004	950	0.0%
19	2005	1,000	5.3%
20	2006	750	-25.0%
21	2007	900	20.0%
22	2008	950	5.6%
23	2009	1,000	5.3%
24	2010	900	-10.0%
25	2011	800	-11.1%
26	2012	800	0.0%
27	2013	800	0.0%
28	2014	900	12.5%
29	2015	800	-11.1%
30	2016	750	-6.3%
31	2017	850	13.3%
32	2018	900	5.9%
33	2019	900	0.0%
34	2020	850	-5.6%
35	2021	650	-23.5%
36	2022	750	15.4%
37	2023	900	20.0%
	Avg=		#DIV/0!

For Reference
1% Annual Growth Rate

Year	Volume	Growth Rate
2023	900	Present
2050	1,143	Linear
2050	1,177	Compound

Calculations based on 30YR Growth Rates

Year	Volume	Estimate		
2023	900	N/A	*Linear*	-0.61%
2050	720	720		
Year	**Volume**	**Estimate**	*Compound*	-0.67%
2023	900	N/A		
2050	751	750		
Year	**Volume**	**Estimate**	*Average Annual*	0.21%
2023	900	N/A		
2050	952	950		

Travel Demand Model

COATS

	2018	2045	*Linear*	#DIV/0!
Model	0	0		
Acual/Est.	900	#DIV/0!		

Year	Volume	Estimate
2050	#DIV/0!	#DIV/0!

SCSWM

	2019	2050	*Linear*	#DIV/0!
Model	0	0		
Acual/Est.	900	#DIV/0!		

Year	Volume	Estimate
2050	#DIV/0!	#DIV/0!

Demographic Data

Population

Employment

Calculations based on 20YR Growth Rates

Year	Volume	Estimate		
2023	900	N/A	*Linear*	-0.26%
2050	833	830		
Year	**Volume**	**Estimate**	*Compound*	-0.27%
2023	900	N/A		
2050	837	840		
Year	**Volume**	**Estimate**	*Average Annual*	0.56%
2023	900	N/A		
2050	1,041	1,000		

Calculations based on 10YR Growth Rates

Year	Volume	Estimate		
2023	900	N/A	*Linear*	0.00%
2050	900	900		
Year	**Volume**	**Estimate**	*Compound*	0.00%
2023	900	N/A		
2050	900	900		
Year	**Volume**	**Estimate**	*Average Annual*	0.91%
2023	900	N/A		
2050	1,128	1,100		

Trend Analysis

Linear

R-Square	AGR (Historical)	AGR (Design Year)	Annual Increase	2050 Estimate
36.0%	-0.6%	-0.9%	-7	600

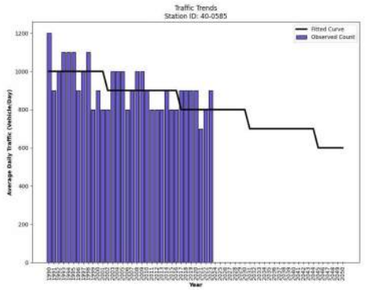

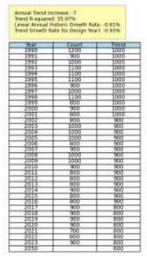

Trend Analysis *(*2015-2023)*

Linear

R-Square	AGR (Historical)	AGR (Design Year)	Annual Increase	2050 Estimate
0.0%	0.0%	0.0%	0	800

S-287 : US 176 (BROAD RIVER RD) TO S- 2890 (GRACERN RD)

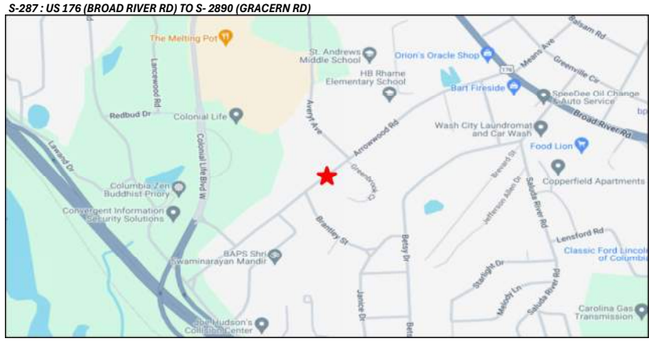

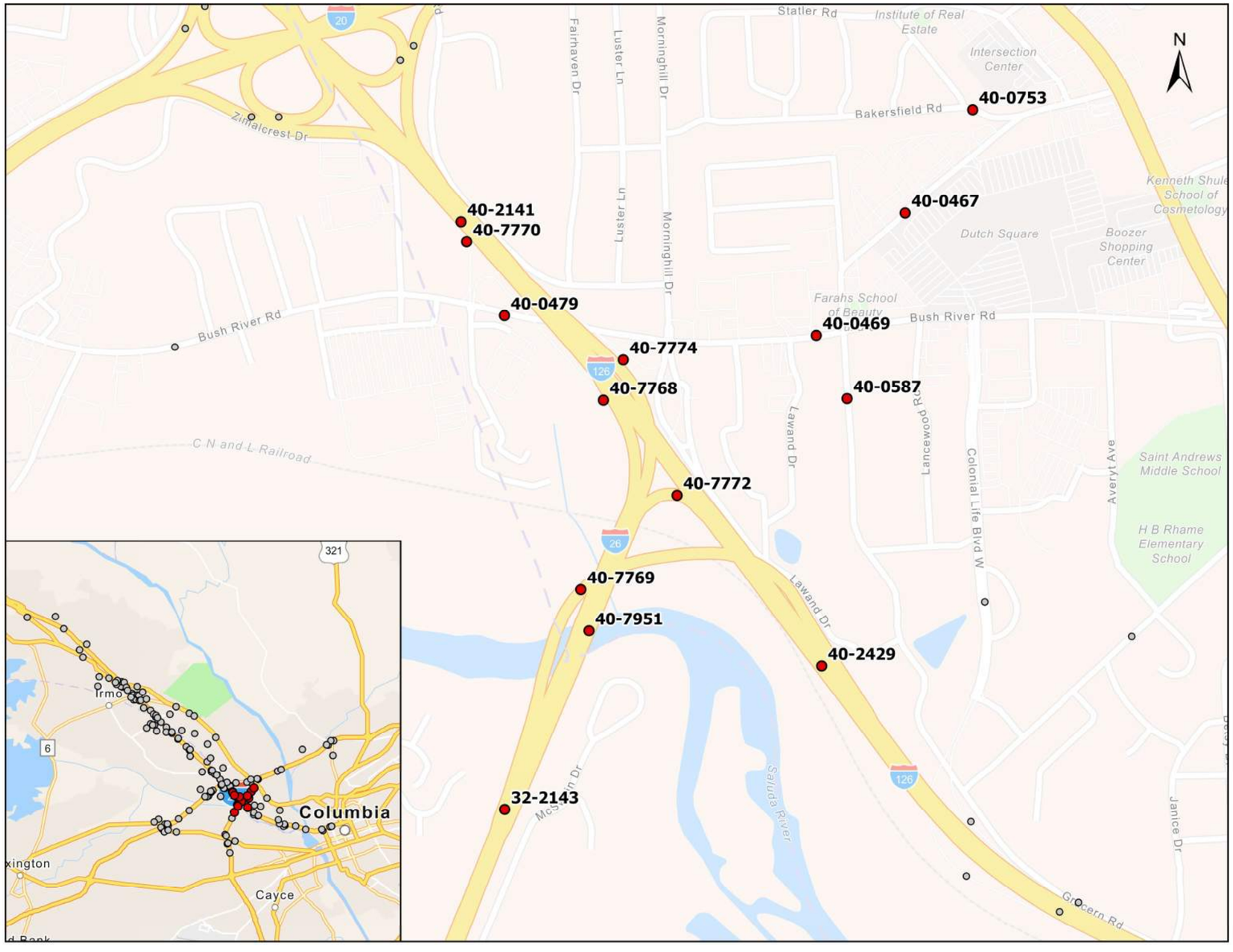
Statler Rd
Institute of Real Estate
Intersection Center
N
Fairhaven Dr
Luster Ln
Morninghill Dr
Bakersfield Rd
40-0753
Zimalcrest Dr
40-2141
40-7770
40-0467
Kenneth Shuler School of Cosmetology
Dutch Square
Boozer Shopping Center
40-0479
Farahs School of Beauty
40-0469
Bush River Rd
Bush River Rd
40-7774
126
40-7768
40-0587
Lawand Dr
Lancewood Rd
Colonial Life Blvd W
Averyt Ave
C N and L Railroad
40-7772
Saint Andrews Middle School
H B Rhame Elementary School
26
40-7769
40-7951
Lawand Dr
40-2429
126
32-2143
McCrorin Dr
Saluda River
Janice Dr
Grocern Rd
321
Irmo
6
Columbia
Cayce
xington

Station ID 40-0587
County Richland
Location click here

Year	AADT	%Change
1987		
1988		#DIV/0!
1989		#DIV/0!
1990	3,400	#DIV/0!
1991	3,600	5.9%
1992	3,200	-11.1%
1993	3,300	3.1%
1994	3,300	0.0%
1995	3,200	-3.0%
1996	3,100	-3.1%
1997	3,100	0.0%
1998	3,000	-3.2%
1999	3,200	6.7%
2000	3,200	0.0%
2001	3,100	-3.1%
2002	3,100	0.0%
2003	3,000	-3.2%
2004	3,000	0.0%
2005	3,000	0.0%
2006	2,800	-6.7%
2007	3,100	10.7%
2008	2,900	-6.5%
2009	3,100	6.9%
2010	2,900	-6.5%
2011	2,800	-3.4%
2012	2,800	0.0%
2013	2,800	0.0%
2014	2,500	-10.7%
2015	2,600	4.0%
2016	2,500	-3.8%
2017	2,900	16.0%
2018	3,100	6.9%
2019	2,300	-25.8%
2020	2,200	-4.3%
2021	1,850	-15.9%
2022	2,100	13.5%
2023	2,100	0.0%
	Avg=	#DIV/0!

For Reference
1% Annual Growth Rate

Year	Volume	Growth Rate
2023	2,100	Present
2050	2,667	Linear
2050	2,747	Compound

Calculations based on 30YR Growth Rates

Year	Volume	Estimate		
2023	2,100	N/A		
2050	1,020	1,000	*Linear*	-1.21%
2050	1,398	1,400	*Compound*	-1.50%
2050	2,100	1,400	*Average Annual*	-1.20%

Travel Demand Model

COATS

	2018	2045		
Model	7,421	8,453	*Linear*	0.52%
Acual/Est.	3,100	3,531		

Year	Volume	Estimate
2050	3,611	3,600

SCSWM

	2019	2050		
Model	2,858	4,349	*Linear*	1.68%
Acual/Est.	2,300	3,500		

Year	Volume	Estimate
2050	3,500	3,500

Demographic Data

Population

Employment

Calculations based on 20YR Growth Rates

Year	Volume	Estimate		
2023	2,100	N/A		
2050	885	890	*Linear*	-1.50%
2050	1,297	1,300	*Compound*	-1.77%
2050	2,100	1,300	*Average Annual*	-1.35%

Calculations based on 10YR Growth Rates

Year	Volume	Estimate		
2023	2,100	N/A		
2050	1,020	1,000	*Linear*	-1.60%
2050	1,312	1,300	*Compound*	-1.73%
2023	2,100	N/A	*Average Annual*	-1.06%
2050	1,479	1,500		

Trend Analysis

Linear

R-Square	AGR (Historical)	AGR (Design Year)	Annual Increase	2050 Estimate
75.0%	-1.0%	-1.5%	-35	1,400

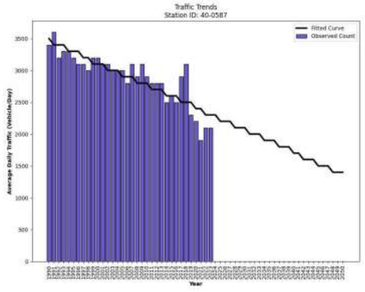

Trend Analysis *(*2015-2023)*

Linear

R-Square	AGR (Historical)	AGR (Design Year)	Annual Increase	2050 Estimate
48.9%	-3.6%	-5.0%	-102	-700

S-287 : S- 2890 (GRACERN RD) TO L- 3053 (INNSBROOK DR)



Station ID 40-7951
County Richland
Location click here

	Year	AADT	%Change
1	1987		
2	1988		#DIV/0!
3	1989		#DIV/0!
4	1990		#DIV/0!
5	1991		#DIV/0!
6	1992		#DIV/0!
7	1993		#DIV/0!
8	1994		#DIV/0!
9	1995		#DIV/0!
10	1996		#DIV/0!
11	1997		#DIV/0!
12	1998		#DIV/0!
13	1999		#DIV/0!
14	2000		#DIV/0!
15	2001		#DIV/0!
16	2002		#DIV/0!
17	2003		#DIV/0!
18	2004		#DIV/0!
19	2005		#DIV/0!
20	2006		#DIV/0!
21	2007		#DIV/0!
22	2008		#DIV/0!
23	2009		#DIV/0!
24	2010		#DIV/0!
25	2011		#DIV/0!
26	2012		#DIV/0!
27	2013		#DIV/0!
28	2014		#DIV/0!
29	2015		#DIV/0!
30	2016		#DIV/0!
31	2017		#DIV/0!
32	2018		#DIV/0!
33	2019		#DIV/0!
34	2020	5,700	#DIV/0!
35	2021		-100.0%
36	2022	6,000	#DIV/0!
37	2023	6,000	0.0%
		Avg=	#DIV/0!

For Reference
1% Annual Growth Rate

Year	Volume	Growth Rate
2023	6,000	Present
2050	7,620	Linear
2050	7,849	Compound

Calculations based on 30YR Growth Rates

Year	Volume	Estimate		
2023	6,000	N/A	*Linear*	#DIV/0!
2050	#DIV/0!	#DIV/0!		
Year	**Volume**	**Estimate**		
2023	6,000	N/A	*Compound*	#DIV/0!
2050	#DIV/0!	#DIV/0!		
Year	**Volume**	**Estimate**		
2023	6,000	N/A	*Average Annual*	#DIV/0!
2050	#DIV/0!	#DIV/0!		

Travel Demand Model

COATS

	2018	2045		
Model	13,306	17,574	*Linear*	1.19%
Acual/Est.	0	0		
Year	**Volume**	**Estimate**		
2050	0	0		

SCSWM

	2019	2050		
Model	9,077	11,018	*Linear*	0.69%
Acual/Est.	0	0		
Year	**Volume**	**Estimate**		
2050	0	0		

Demographic Data

Population

Employment

Calculations based on 20YR Growth Rates

Year	Volume	Estimate		
2023	6,000	N/A	*Linear*	#DIV/0!
2050	#DIV/0!	#DIV/0!		
Year	**Volume**	**Estimate**		
2023	6,000	N/A	*Compound*	#DIV/0!
2050	#DIV/0!	#DIV/0!		
Year	**Volume**	**Estimate**		
2023	6,000	N/A	*Average Annual*	#DIV/0!
2050	#DIV/0!	#DIV/0!		

Calculations based on 10YR Growth Rates

Year	Volume	Estimate		
2023	6,000	N/A	*Linear*	#DIV/0!
2050	#DIV/0!	#DIV/0!		
Year	**Volume**	**Estimate**		
2023	6,000	N/A	*Compound*	#DIV/0!
2050	#DIV/0!	#DIV/0!		
Year	**Volume**	**Estimate**		
2023	6,000	N/A	*Average Annual*	#DIV/0!
2050	#DIV/0!	#DIV/0!		

Trend Analysis

Linear

R-Square	AGR (Historical)	AGR (Design Year)	Annual Increase	2050 Estimate
89.3%	1.8%	1.8%	107	8,900

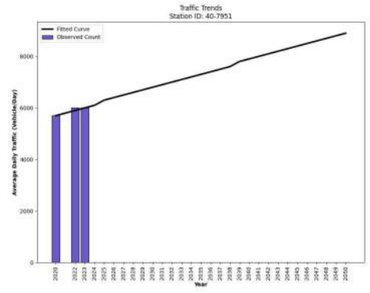

Year	Count	Trend
2020	5700	5700
2022	6000	5900
2023	6000	6000
2050		8900

Trend Analysis *(*2015-2023)*

Linear

R-Square	AGR (Historical)	AGR (Design Year)	Annual Increase	2050 Estimate
89.3%	1.8%	1.8%	107	8,900

Year	Count	Trend
2020	5700	5700
2022	6000	5900
2023	6000	6000
2050		8900

R-7951 3E1 : I- 26 TO S- 31, S- 2891

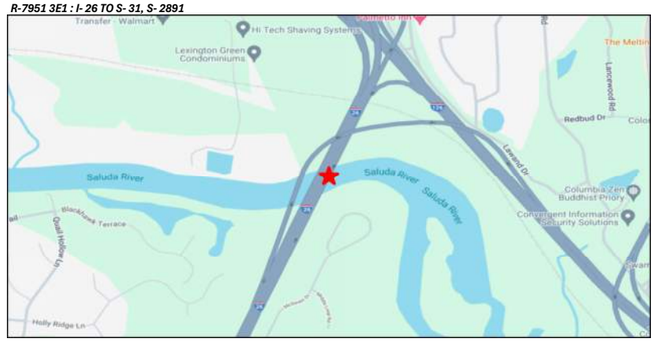

Station ID 40-2141
County Richland
Location click here

Year	AADT	%Change
1987		
1988		#DIV/0!
1989	97,400	#DIV/0!
1990	108,200	11.1%
1991	112,400	3.9%
1992	111,000	-1.2%
1993	114,300	3.0%
1994	119,000	4.1%
1995	106,000	-10.9%
1996	102,500	-3.3%
1997	106,800	4.2%
1998	109,300	2.3%
1999	115,300	5.5%
2000	117,100	1.6%
2001	117,900	0.7%
2002	115,600	-2.0%
2003	118,000	2.1%
2004	119,600	1.4%
2005	117,900	-1.4%
2006	118,700	0.7%
2007	116,900	-1.5%
2008	112,500	-3.8%
2009	110,600	-1.7%
2010	111,300	0.6%
2011	110,100	-1.1%
2012	111,700	1.5%
2013	111,000	-0.6%
2014	112,500	1.4%
2015	118,700	5.5%
2016	120,400	1.4%
2017	124,800	3.7%
2018	134,700	7.9%
2019	135,700	0.7%
2020	117,300	-13.6%
2021	127,400	8.6%
2022	127,600	0.2%
2023	130,700	2.4%
	Avg=	#DIV/0!

For Reference
1% Annual Growth Rate

Year	Volume	Growth Rate
2023	130,700	Present
2050	165,989	Linear
2050	170,983	Compound

Calculations based on 30YR Growth Rates

Year	Volume	Estimate		
2023	130,700	N/A		
2050	141,230	141,000	*Linear*	0.33%
2050	142,210	142,000	*Compound*	0.31%
2050	146,418	146,000	*Average Annual*	0.43%

Travel Demand Model

COATS

	2018	2045		
Model	157,127	166,085	*Linear*	0.21%
Acual/Est.	134,700	142,379		

Year	Volume	Estimate
2050	143,802	144,000

SCSWM

	2019	2050		
Model	115,351	162,783	*Linear*	1.33%
Acual/Est.	135,700	191,499		

Year	Volume	Estimate
2050	191,499	191,000

Demographic Data

Population

Employment

Calculations based on 20YR Growth Rates

Year	Volume	Estimate		
2023	130,700	N/A		
2050	145,685	146,000	*Linear*	0.46%
2050	147,337	147,000	*Compound*	0.44%
2050	151,754	152,000	*Average Annual*	0.58%

Calculations based on 10YR Growth Rates

Year	Volume	Estimate		
2023	130,700	N/A		
2050	179,840	180,000	*Linear*	1.62%
2050	195,933	196,000	*Compound*	1.51%
2050	199,461	199,000	*Average Annual*	1.88%

Trend Analysis

Linear

R-Square	AGR (Historical)	AGR (Design Year)	Annual Increase	2050 Estimate
48.0%	0.5%	0.5%	565	140,900

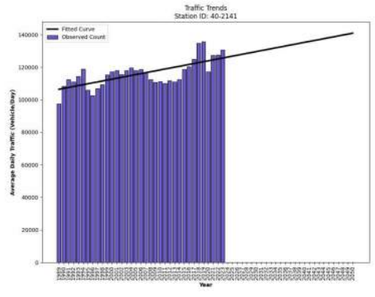

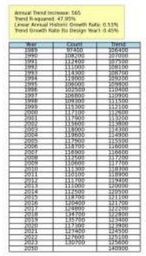

Year	Count	Trend
1987		106400
1988		107000
1989	97400	107500
1990	108200	108100
1991	112400	108700
1992	111000	109200
1993	114300	109800
1994	119000	110400
1995	106000	110900
1996	102500	111500
1997	106800	112100
1998	109300	112600
1999	115300	113200
2000	117100	113800
2001	117900	114300
2002	115600	114900
2003	118000	115400
2004	119600	116000
2005	117900	116500
2006	118700	117100
2007	116900	117700
2008	112500	118200
2009	110600	118800
2010	111300	119300
2011	110100	119900
2012	111700	120400
2013	111000	121000
2014	112500	121500
2015	118700	122100
2016	120400	122700
2017	124800	123200
2018	134700	123800
2019	135700	124300
2020	117300	124900
2021	127400	125400
2022	127600	126000
2023	130700	126500
2050		140900

Trend Analysis *(*2015-2023)*

Linear

R-Square	AGR (Historical)	AGR (Design Year)	Annual Increase	2050 Estimate
15.4%	0.8%	0.7%	957	156,000

Year	Count	Trend
2015	118700	122500
2016	120400	123500
2017	124800	124500
2018	134700	125400
2019	135700	126400
2020	117300	127300
2021	127400	128300
2022	127600	129200
2023	130700	130200
2050		156000

I-26 : I- 20 (INTERSTATE 20) TO I- 126 (INTERSTATE 126)



Station ID 40-7774
County Richland
Location click here

	Year	AADT	%Change
1	1987		
2	1988		#DIV/0!
3	1989		#DIV/0!
4	1990		#DIV/0!
5	1991		#DIV/0!
6	1992		#DIV/0!
7	1993		#DIV/0!
8	1994		#DIV/0!
9	1995		#DIV/0!
10	1996		#DIV/0!
11	1997		#DIV/0!
12	1998		#DIV/0!
13	1999		#DIV/0!
14	2000		#DIV/0!
15	2001		#DIV/0!
16	2002		#DIV/0!
17	2003		#DIV/0!
18	2004		#DIV/0!
19	2005		#DIV/0!
20	2006		#DIV/0!
21	2007		#DIV/0!
22	2008		#DIV/0!
23	2009		#DIV/0!
24	2010		#DIV/0!
25	2011		#DIV/0!
26	2012		#DIV/0!
27	2013		#DIV/0!
28	2014		#DIV/0!
29	2015		#DIV/0!
30	2016		#DIV/0!
31	2017		#DIV/0!
32	2018		#DIV/0!
33	2019		#DIV/0!
34	2020	7,700	#DIV/0!
35	2021	8,800	14.3%
36	2022	8,300	-5.7%
37	2023	9,000	8.4%
		Avg=	#DIV/0!

For Reference
1% Annual Growth Rate

Year	Volume	Growth Rate
2023	9,000	Present
2050	11,430	Linear
2050	11,774	Compound

Calculations based on 30YR Growth Rates

Year	Volume	Estimate		
2023	9,000	N/A	*Linear*	#DIV/0!
2050	#DIV/0!	#DIV/0!		
Year	**Volume**	**Estimate**		
2023	9,000	N/A	*Compound*	#DIV/0!
2050	#DIV/0!	#DIV/0!		
Year	**Volume**	**Estimate**		
2023	9,000	N/A	*Average Annual*	#DIV/0!
2050	#DIV/0!	#DIV/0!		

Travel Demand Model

COATS

	2018	2045		
Model	10,097	13,491	*Linear*	1.24%
Acual/Est.	0	0		
Year	**Volume**	**Estimate**		
2050	0	0		

SCSWM

	2019	2050		
Model	0	0	*Linear*	#DIV/0!
Acual/Est.	0	#DIV/0!		
Year	**Volume**	**Estimate**		
2050	#DIV/0!	#DIV/0!		
Year	**Volume**	**Estimate**		
2050	#DIV/0!	#DIV/0!		

Demographic Data

Population

Employment

Calculations based on 20YR Growth Rates

Year	Volume	Estimate		
2023	9,000	N/A	*Linear*	#DIV/0!
2050	#DIV/0!	#DIV/0!		
Year	**Volume**	**Estimate**		
2023	9,000	N/A	*Compound*	#DIV/0!
2050	#DIV/0!	#DIV/0!		
Year	**Volume**	**Estimate**		
2023	9,000	N/A	*Average Annual*	#DIV/0!
2050	#DIV/0!	#DIV/0!		

Calculations based on 10YR Growth Rates

Year	Volume	Estimate		
2023	9,000	N/A	*Linear*	#DIV/0!
2050	#DIV/0!	#DIV/0!		
Year	**Volume**	**Estimate**		
2023	9,000	N/A	*Compound*	#DIV/0!
2050	#DIV/0!	#DIV/0!		
Year	**Volume**	**Estimate**		
2023	9,000	N/A	*Average Annual*	#DIV/0!
2050	#DIV/0!	#DIV/0!		

Trend Analysis

Linear

R-Square	AGR (Historical)	AGR (Design Year)	Annual Increase	2050 Estimate
57.2%	4.6%	3.7%	340	18,100

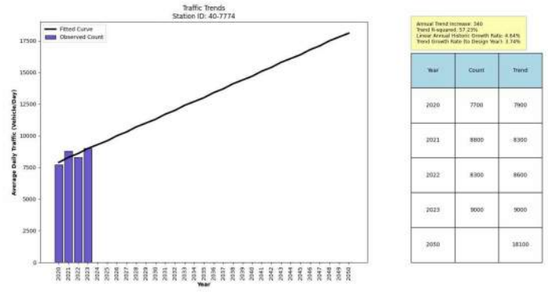

Annual Trend Increase: 340
Trend R-squared: 57.23%
Linear Annual Historic Growth Rate: 4.64%
Trend Growth Rate Its Design Year's: 3.74%

Year	Count	Trend
2020	7700	7900
2021	8800	8300
2022	8300	8600
2023	9000	9000
2050		18100

Trend Analysis *(*2015-2023)*

Linear

R-Square	AGR (Historical)	AGR (Design Year)	Annual Increase	2050 Estimate
57.2%	4.6%	3.7%	340	18,100

Annual Trend Increase: 340
Trend R-squared: 57.23%
Linear Annual Historic Growth Rate: 4.64%
Trend Growth Rate Its Design Year's: 3.74%

Year	Count	Trend
2020	7700	7900
2021	8800	8300
2022	8300	8600
2023	9000	9000
2050		18100

R-7774 4O2 : R- 5230 4O3, R- 8980 3E2 TO I- 26



Station ID 40-7772
County Richland
Location click here

	Year	AADT	%Change
1	1987		
2	1988		#DIV/0!
3	1989		#DIV/0!
4	1990		#DIV/0!
5	1991		#DIV/0!
6	1992		#DIV/0!
7	1993		#DIV/0!
8	1994		#DIV/0!
9	1995		#DIV/0!
10	1996		#DIV/0!
11	1997		#DIV/0!
12	1998		#DIV/0!
13	1999		#DIV/0!
14	2000		#DIV/0!
15	2001		#DIV/0!
16	2002		#DIV/0!
17	2003		#DIV/0!
18	2004		#DIV/0!
19	2005		#DIV/0!
20	2006		#DIV/0!
21	2007		#DIV/0!
22	2008		#DIV/0!
23	2009		#DIV/0!
24	2010		#DIV/0!
25	2011		#DIV/0!
26	2012		#DIV/0!
27	2013		#DIV/0!
28	2014		#DIV/0!
29	2015		#DIV/0!
30	2016		#DIV/0!
31	2017		#DIV/0!
32	2018		#DIV/0!
33	2019		#DIV/0!
34	2020	4,000	#DIV/0!
35	2021	4,500	12.5%
36	2022	4,000	-11.1%
37	2023	5,100	27.5%
		Avg=	#DIV/0!

For Reference
1% Annual Growth Rate

Year	Volume	Growth Rate
2023	5,100	Present
2050	6,477	Linear
2050	6,672	Compound

Calculations based on 30YR Growth Rates

Year	Volume	Estimate		
2023	5,100	N/A	*Linear*	#DIV/0!
2050	#DIV/0!	#DIV/0!		
Year	**Volume**	**Estimate**	*Compound*	#DIV/0!
2023	5,100	N/A		
2050	#DIV/0!	#DIV/0!		
Year	**Volume**	**Estimate**	*Average Annual*	#DIV/0!
2023	5,100	N/A		
2050	#DIV/0!	#DIV/0!		

Travel Demand Model

COATS

	2018	2045		
Model	7,113	6,030	*Linear*	-0.56%
Acual/Est.	0	0		
Year	**Volume**	**Estimate**		
2050	0	0		

SCSWM

	2019	2050		
Model	4,204	6,032	*Linear*	1.40%
Acual/Est.	0	0		
Year	**Volume**	**Estimate**		
2050	0	0		

Demographic Data

Population

Employment

Calculations based on 20YR Growth Rates

Year	Volume	Estimate		
2023	5,100	N/A	*Linear*	#DIV/0!
2050	#DIV/0!	#DIV/0!		
Year	**Volume**	**Estimate**	*Compound*	#DIV/0!
2023	5,100	N/A		
2050	#DIV/0!	#DIV/0!		
Year	**Volume**	**Estimate**	*Average Annual*	#DIV/0!
2023	5,100	N/A		
2050	#DIV/0!	#DIV/0!		

Calculations based on 10YR Growth Rates

Year	Volume	Estimate		
2023	5,100	N/A	*Linear*	#DIV/0!
2050	#DIV/0!	#DIV/0!		
Year	**Volume**	**Estimate**	*Compound*	#DIV/0!
2023	5,100	N/A		
2050	#DIV/0!	#DIV/0!		
Year	**Volume**	**Estimate**	*Average Annual*	#DIV/0!
2023	5,100	N/A		
2050	#DIV/0!	#DIV/0!		

Trend Analysis

Linear

R-Square	AGR (Historical)	AGR (Design Year)	Annual Increase	2050 Estimate
47.8%	6.7%	5.9%	280	12,400

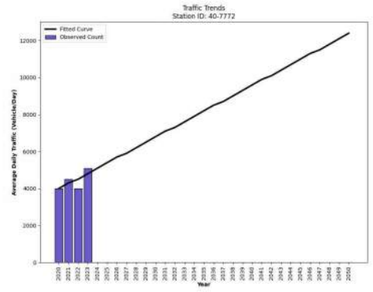

Year	Count	Trend
2020	4000	4000
2021	4500	4300
2022	4000	4580
2023	5100	4860
2050		12400

Trend Analysis *(*2015-2023)*

Linear

R-Square	AGR (Historical)	AGR (Design Year)	Annual Increase	2050 Estimate
47.8%	6.7%	5.9%	280	12,400

Year	Count	Trend
2020	4000	4000
2021	4500	4300
2022	4000	4580
2023	5100	4860
2050		12400

R-7772 3E2 : R- 7951 3E1 TO I- 126

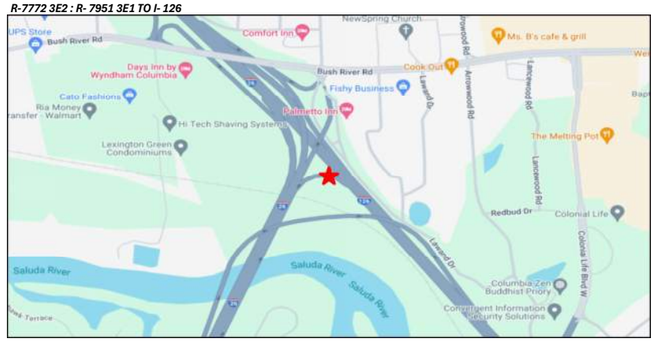

Station ID 40-7770
County Richland
Location click here

	Year	AADT	%Change
1	1987		
2	1988		#DIV/0!
3	1989		#DIV/0!
4	1990		#DIV/0!
5	1991		#DIV/0!
6	1992		#DIV/0!
7	1993		#DIV/0!
8	1994		#DIV/0!
9	1995		#DIV/0!
10	1996		#DIV/0!
11	1997		#DIV/0!
12	1998		#DIV/0!
13	1999		#DIV/0!
14	2000		#DIV/0!
15	2001		#DIV/0!
16	2002		#DIV/0!
17	2003		#DIV/0!
18	2004		#DIV/0!
19	2005		#DIV/0!
20	2006		#DIV/0!
21	2007		#DIV/0!
22	2008		#DIV/0!
23	2009		#DIV/0!
24	2010		#DIV/0!
25	2011		#DIV/0!
26	2012		#DIV/0!
27	2013		#DIV/0!
28	2014		#DIV/0!
29	2015		#DIV/0!
30	2016		#DIV/0!
31	2017		#DIV/0!
32	2018		#DIV/0!
33	2019		#DIV/0!
34	2020	3,400	#DIV/0!
35	2021	2,600	-23.5%
36	2022	2,700	3.8%
37	2023	2,400	-11.1%
		Avg=	#DIV/0!

For Reference
1% Annual Growth Rate

Year	Volume	Growth Rate
2023	2,400	Present
2050	3,048	Linear
2050	3,140	Compound

Calculations based on 30YR Growth Rates

Year	Volume	Estimate		
2023	2,400	N/A	*Linear*	#DIV/0!
2050	#DIV/0!	#DIV/0!		
Year	**Volume**	**Estimate**		
2023	2,400	N/A	*Compound*	#DIV/0!
2050	#DIV/0!	#DIV/0!		
Year	**Volume**	**Estimate**		
2023	2,400	N/A	*Average Annual*	#DIV/0!
2050	#DIV/0!	#DIV/0!		

Travel Demand Model

COATS

	2018	2045		
Model	9,877	10,520	*Linear*	0.24%
Acual/Est.	0	0		
Year	**Volume**	**Estimate**		
2050	0	0		

SCSWM

	2019	2050		
Model	6,322	5,958	*Linear*	-0.19%
Acual/Est.	0	0		
Year	**Volume**	**Estimate**		
2050	0	0		

Demographic Data

Population

Employment

Calculations based on 20YR Growth Rates

Year	Volume	Estimate		
2023	2,400	N/A	*Linear*	#DIV/0!
2050	#DIV/0!	#DIV/0!		
Year	**Volume**	**Estimate**		
2023	2,400	N/A	*Compound*	#DIV/0!
2050	#DIV/0!	#DIV/0!		
Year	**Volume**	**Estimate**		
2023	2,400	N/A	*Average Annual*	#DIV/0!
2050	#DIV/0!	#DIV/0!		

Calculations based on 10YR Growth Rates

Year	Volume	Estimate		
2023	2,400	N/A	*Linear*	#DIV/0!
2050	#DIV/0!	#DIV/0!		
Year	**Volume**	**Estimate**		
2023	2,400	N/A	*Compound*	#DIV/0!
2050	#DIV/0!	#DIV/0!		
Year	**Volume**	**Estimate**		
2023	2,400	N/A	*Average Annual*	#DIV/0!
2050	#DIV/0!	#DIV/0!		

Trend Analysis

Linear

R-Square	AGR (Historical)	AGR (Design Year)	Annual Increase	2050 Estimate
74.1%	-9.4%	-12.6%	-290	-5,500

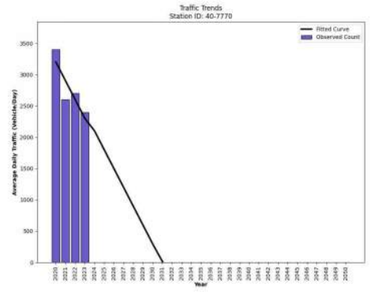

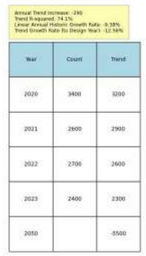

Trend Analysis *(*2015-2023)*

Linear

R-Square	AGR (Historical)	AGR (Design Year)	Annual Increase	2050 Estimate
74.1%	-9.4%	-12.6%	-290	-5,500

R-7770 1E1 : I- 26 TO S- 31



Station ID 40-7769
County Richland
Location click here

	Year	AADT	%Change
1	1987		
2	1988		#DIV/0!
3	1989		#DIV/0!
4	1990		#DIV/0!
5	1991		#DIV/0!
6	1992		#DIV/0!
7	1993		#DIV/0!
8	1994		#DIV/0!
9	1995		#DIV/0!
10	1996		#DIV/0!
11	1997		#DIV/0!
12	1998		#DIV/0!
13	1999		#DIV/0!
14	2000		#DIV/0!
15	2001		#DIV/0!
16	2002		#DIV/0!
17	2003		#DIV/0!
18	2004		#DIV/0!
19	2005		#DIV/0!
20	2006		#DIV/0!
21	2007		#DIV/0!
22	2008		#DIV/0!
23	2009		#DIV/0!
24	2010		#DIV/0!
25	2011		#DIV/0!
26	2012		#DIV/0!
27	2013		#DIV/0!
28	2014		#DIV/0!
29	2015		#DIV/0!
30	2016		#DIV/0!
31	2017		#DIV/0!
32	2018		#DIV/0!
33	2019		#DIV/0!
34	2020	4,500	#DIV/0!
35	2021	5,300	17.8%
36	2022	4,800	-9.4%
37	2023	5,300	10.4%
		Avg=	#DIV/0!

For Reference
1% Annual Growth Rate

Year	Volume	Growth Rate
2023	5,300	Present
2050	6,731	Linear
2050	6,934	Compound

Calculations based on 30YR Growth Rates

Year	Volume	Estimate		
2023	5,300	N/A	*Linear*	#DIV/0!
2050	#DIV/0!	#DIV/0!		
Year	**Volume**	**Estimate**		
2023	5,300	N/A	*Compound*	#DIV/0!
2050	#DIV/0!	#DIV/0!		
Year	**Volume**	**Estimate**		
2023	5,300	N/A	*Average Annual*	#DIV/0!
2050	#DIV/0!	#DIV/0!		

Travel Demand Model

COATS

	2018	2045		
Model	11,663	13,940	*Linear*	0.72%
Acual/Est.	0	0		
Year	**Volume**	**Estimate**		
2050	0	0		

SCSWM

	2019	2050		
Model	5,840	8,475	*Linear*	1.46%
Acual/Est.	0	0		
Year	**Volume**	**Estimate**		
2050	0	0		

Demographic Data

Population

Employment

Calculations based on 20YR Growth Rates

Year	Volume	Estimate		
2023	5,300	N/A	*Linear*	#DIV/0!
2050	#DIV/0!	#DIV/0!		
Year	**Volume**	**Estimate**		
2023	5,300	N/A	*Compound*	#DIV/0!
2050	#DIV/0!	#DIV/0!		
Year	**Volume**	**Estimate**		
2023	5,300	N/A	*Average Annual*	#DIV/0!
2050	#DIV/0!	#DIV/0!		

Calculations based on 10YR Growth Rates

Year	Volume	Estimate		
2023	5,300	N/A	*Linear*	#DIV/0!
2050	#DIV/0!	#DIV/0!		
Year	**Volume**	**Estimate**		
2023	5,300	N/A	*Compound*	#DIV/0!
2050	#DIV/0!	#DIV/0!		
Year	**Volume**	**Estimate**		
2023	5,300	N/A	*Average Annual*	#DIV/0!
2050	#DIV/0!	#DIV/0!		

Trend Analysis

Linear

R-Square	AGR (Historical)	AGR (Design Year)	Annual Increase	2050 Estimate
38.6%	4.3%	3.6%	190	10,400

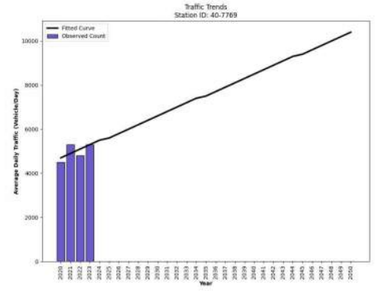

Annual Trend Increase: 190
Trend R-squared: 38.61%
Linear Annual Historic Growth Rate: 4.29%
Trend Growth Rate to Design Year's: 3.56%

Year	Count	Trend
2020	4500	4700
2021	5300	4900
2022	4800	5100
2023	5300	5300
2050		10400

Trend Analysis *(*2015-2023)*

Linear

R-Square	AGR (Historical)	AGR (Design Year)	Annual Increase	2050 Estimate
38.6%	4.3%	3.6%	190	10,400

Annual Trend Increase: 190
Trend R-squared: 38.61%
Linear Annual Historic Growth Rate: 4.29%
Trend Growth Rate to Design Year's: 3.56%

Year	Count	Trend
2020	4500	4700
2021	5300	4900
2022	4800	5100
2023	5300	5300
2050		10400

R-7769 1O2 : I- 126 TO I- 26



Station ID 40-7768
County Richland
Location click here

	Year	AADT	%Change
1	1987		
2	1988		#DIV/0!
3	1989		#DIV/0!
4	1990		#DIV/0!
5	1991		#DIV/0!
6	1992		#DIV/0!
7	1993		#DIV/0!
8	1994		#DIV/0!
9	1995		#DIV/0!
10	1996		#DIV/0!
11	1997		#DIV/0!
12	1998		#DIV/0!
13	1999		#DIV/0!
14	2000		#DIV/0!
15	2001		#DIV/0!
16	2002		#DIV/0!
17	2003		#DIV/0!
18	2004		#DIV/0!
19	2005		#DIV/0!
20	2006		#DIV/0!
21	2007		#DIV/0!
22	2008		#DIV/0!
23	2009		#DIV/0!
24	2010		#DIV/0!
25	2011		#DIV/0!
26	2012		#DIV/0!
27	2013		#DIV/0!
28	2014		#DIV/0!
29	2015		#DIV/0!
30	2016		#DIV/0!
31	2017		#DIV/0!
32	2018		#DIV/0!
33	2019		#DIV/0!
34	2020	7,800	#DIV/0!
35	2021	4,200	-46.2%
36	2022	4,700	11.9%
37	2023	4,500	-4.3%
		Avg=	#DIV/0!

For Reference
1% Annual Growth Rate

Year	Volume	Growth Rate
2023	4,500	Present
2050	5,715	Linear
2050	5,887	Compound

Calculations based on 30YR Growth Rates

Year	Volume	Estimate		
2023	4,500	N/A	*Linear*	#DIV/0!
2050	#DIV/0!	#DIV/0!		
Year	**Volume**	**Estimate**		
2023	4,500	N/A	*Compound*	#DIV/0!
2050	#DIV/0!	#DIV/0!		
Year	**Volume**	**Estimate**		
2023	4,500	N/A	*Average Annual*	#DIV/0!
2050	#DIV/0!	#DIV/0!		

Travel Demand Model

COATS

	2018	2045		
Model	11,612	15,902	*Linear*	1.37%
Acual/Est.	0	0		
Year	**Volume**	**Estimate**		
2050	0	0		

SCSWM

	2019	2050		
Model	8,898	10,364	*Linear*	0.53%
Acual/Est.	0	0		
Year	**Volume**	**Estimate**		
2050	0	0		

Demographic Data

Population

Employment

Calculations based on 20YR Growth Rates

Year	Volume	Estimate		
2023	4,500	N/A	*Linear*	#DIV/0!
2050	#DIV/0!	#DIV/0!		
Year	**Volume**	**Estimate**		
2023	4,500	N/A	*Compound*	#DIV/0!
2050	#DIV/0!	#DIV/0!		
Year	**Volume**	**Estimate**		
2023	4,500	N/A	*Average Annual*	#DIV/0!
2050	#DIV/0!	#DIV/0!		

Calculations based on 10YR Growth Rates

Year	Volume	Estimate		
2023	4,500	N/A	*Linear*	#DIV/0!
2050	#DIV/0!	#DIV/0!		
Year	**Volume**	**Estimate**		
2023	4,500	N/A	*Compound*	#DIV/0!
2050	#DIV/0!	#DIV/0!		
Year	**Volume**	**Estimate**		
2023	4,500	N/A	*Average Annual*	#DIV/0!
2050	#DIV/0!	#DIV/0!		

Trend Analysis

Linear

R-Square	AGR (Historical)	AGR (Design Year)	Annual Increase	2050 Estimate
52.2%	-13.9%	-24.1%	-940	-21,500

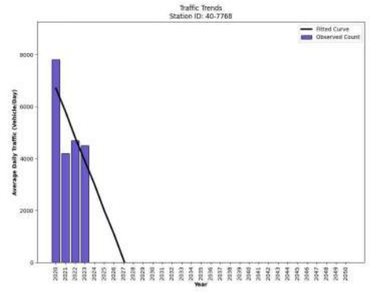

Year	Count	Trend
2020	7800	6700
2021	4200	5800
2022	4700	4800
2023	4500	3900
2050		-21500

Trend Analysis *(*2015-2023)*

Linear

R-Square	AGR (Historical)	AGR (Design Year)	Annual Increase	2050 Estimate
52.2%	-13.9%	-24.1%	-940	-21,500

Year	Count	Trend
2020	7800	6700
2021	4200	5800
2022	4700	4800
2023	4500	3900
2050		-21500

R-7768 1O1 : S- 31 TO I- 26

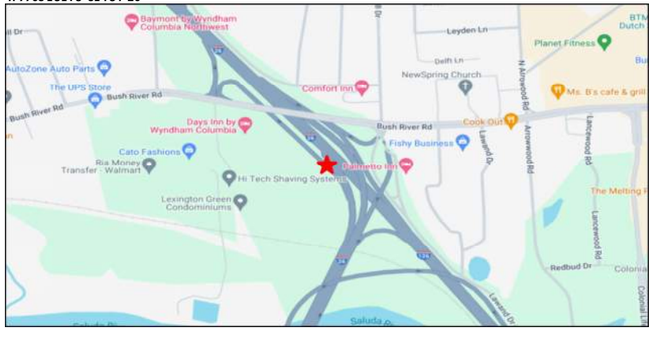

Station ID 40-2429
County Richland
Location click here

Year	AADT	%Change
1987		
1988		#DIV/0!
1989	58,300	#DIV/0!
1990	57,500	-1.4%
1991	57,000	-0.9%
1992	58,000	1.8%
1993	58,200	0.3%
1994	58,500	0.5%
1995	57,400	-1.9%
1996	58,000	1.0%
1997	62,700	8.1%
1998	66,900	6.7%
1999	68,700	2.7%
2000	70,100	2.0%
2001	66,600	-5.0%
2002	67,100	0.8%
2003	67,100	0.0%
2004	68,100	1.5%
2005	68,400	0.4%
2006	68,300	-0.1%
2007	65,800	-3.7%
2008	63,700	-3.2%
2009	63,300	-0.6%
2010	62,200	-1.7%
2011	61,800	-0.6%
2012	62,100	0.5%
2013	62,900	1.3%
2014	62,200	-1.1%
2015	63,900	2.7%
2016	65,000	1.7%
2017	66,400	2.2%
2018	76,700	15.5%
2019	68,300	-11.0%
2020	56,100	-17.9%
2021	61,900	10.3%
2022	61,900	0.0%
2023	66,500	7.4%
	Avg=	#DIV/0!

For Reference
1% Annual Growth Rate

Year	Volume	Growth Rate
2023	66,500	Present
2050	84,455	Linear
2050	86,996	Compound

Calculations based on 30YR Growth Rates

Year	Volume	Estimate		
2023	66,500	N/A	*Linear*	0.46%
2050	73,700	74,000		
Year	**Volume**	**Estimate**	*Compound*	0.43%
2023	66,500	N/A		
2050	74,631	75,000		
Year	**Volume**	**Estimate**	*Average Annual*	0.62%
2023	66,500	N/A		
2050	78,131	78,000		

Travel Demand Model

COATS

	2018	2045		
Model	83,138	85,954	*Linear*	0.13%
Acual/Est.	76,700	79,298		
Year	Volume	Estimate		
2050	79,779	80,000		

SCSWM

	2019	2050		
Model	59,762	90,772	*Linear*	1.67%
Acual/Est.	68,300	103,740		
Year	Volume	Estimate		
2050	103,740	104,000		

Demographic Data

Population

Employment

Calculations based on 20YR Growth Rates

Year	Volume	Estimate		
2023	66,500	N/A	*Linear*	-0.12%
2050	64,340	64,000		
Year	**Volume**	**Estimate**	*Compound*	-0.12%
2023	66,500	N/A		
2050	64,399	64,000		
Year	**Volume**	**Estimate**	*Average Annual*	0.11%
2023	66,500	N/A		
2050	68,627	69,000		

Calculations based on 10YR Growth Rates

Year	Volume	Estimate		
2023	66,500	N/A	*Linear*	0.69%
2050	78,110	78,000		
Year	**Volume**	**Estimate**	*Compound*	0.67%
2023	66,500	N/A		
2050	79,654	80,000		
Year	**Volume**	**Estimate**	*Average Annual*	1.23%
2023	66,500	N/A		
2050	89,416	89,000		

Trend Analysis

Linear

R-Square	AGR (Historical)	AGR (Design Year)	Annual Increase	2050 Estimate
13.5%	0.3%	0.3%	166	71,000

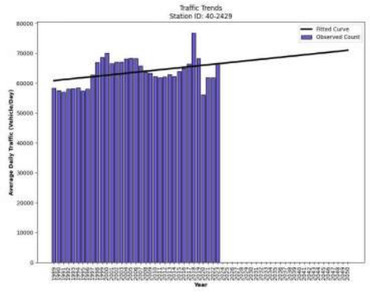

Trend Analysis *(*2015-2023)*

Linear

R-Square	AGR (Historical)	AGR (Design Year)	Annual Increase	2050 Estimate
5.4%	-0.7%	-0.8%	-475	50,500

I-126 : I- 26 (INTERSTATE 26) TO R- 8970 2O1 (Ramp to I-126)

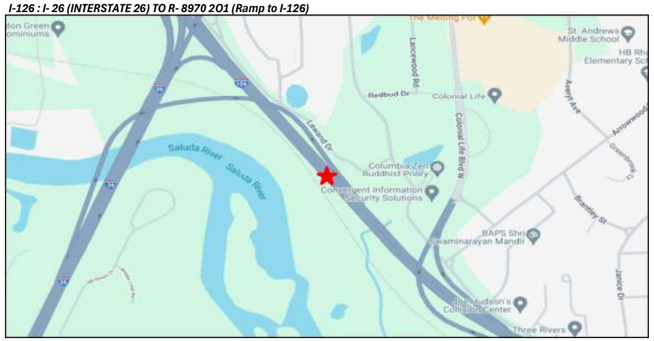

Station ID 32-2143
County Lexington
Location click here

Year	AADT	%Change
1987		
1988	67,600	#DIV/0!
1989	69,900	3.4%
1990	78,900	12.9%
1991	70,700	-10.4%
1992	79,700	12.7%
1993	82,500	3.5%
1994	90,600	9.8%
1995	79,700	-12.0%
1996	76,200	-4.4%
1997	78,500	3.0%
1998	78,400	-0.1%
1999	82,900	5.7%
2000	83,900	1.2%
2001	84,400	0.6%
2002	84,400	0.0%
2003	85,200	0.9%
2004	85,000	-0.2%
2005	83,400	-1.9%
2006	83,100	-0.4%
2007	83,900	1.0%
2008	79,900	-4.8%
2009	79,800	-0.1%
2010	79,500	-0.4%
2011	78,200	-1.6%
2012	78,200	0.0%
2013	79,800	2.0%
2014	81,000	1.5%
2015	89,300	10.2%
2016	91,800	2.8%
2017	94,100	2.5%
2018	93,800	-0.3%
2019	95,400	1.7%
2020	85,900	-10.0%
2021	90,200	5.0%
2022	91,600	1.6%
2023	91,400	-0.2%
	Avg=	#DIV/0!

For Reference
1% Annual Growth Rate

Year	Volume	Growth Rate
2023	91,400	Present
2050	116,078	Linear
2050	119,570	Compound

Calculations based on 30YR Growth Rates

Year	Volume	Estimate		
2023	91,400	N/A		
2050	92,120	92,000	*Linear*	0.03%
2023	91,400	N/A		
2050	92,126	92,000	*Compound*	0.03%
2023	91,400	N/A		
2050	94,410	94,000	*Average Annual*	0.12%

Travel Demand Model

COATS

	2018	2045		
Model	118,262	134,763	*Linear*	0.52%
Acual/Est.	93,800	106,888		

Year	Volume	Estimate
2050	109,312	109,000

SCSWM

	2019	2050		
Model	84,846	110,574	*Linear*	0.98%
Acual/Est.	95,400	124,328		

Year	Volume	Estimate
2050	124,328	124,000

Demographic Data

Population

Employment

Calculations based on 20YR Growth Rates

Year	Volume	Estimate		
2023	91,400	N/A		
2050	100,040	100,000	*Linear*	0.38%
2023	91,400	N/A		
2050	100,811	101,000	*Compound*	0.36%
2023	91,400	N/A		
2050	103,101	103,000	*Average Annual*	0.46%

Calculations based on 10YR Growth Rates

Year	Volume	Estimate		
2023	91,400	N/A		
2050	119,480	119,000	*Linear*	1.28%
2023	91,400	N/A		
2050	126,646	127,000	*Compound*	1.22%
2023	91,400	N/A		
2050	129,277	129,000	*Average Annual*	1.48%

Trend Analysis

Linear

R-Square	AGR (Historical)	AGR (Design Year)	Annual Increase	2050 Estimate
49.3%	0.6%	0.5%	446	102,900

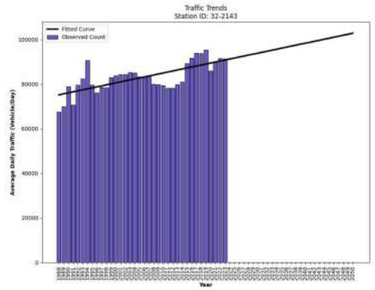

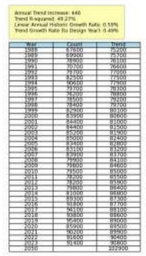

Year	Count	Trend
1988	67600	76900
1989	69900	76700
1990	78900	76500
1991	70700	76300
1992	79700	76000
1993	82500	75800
1994	90600	75600
1995	79700	75400
1996	76200	75200
1997	78500	75000
1998	78400	74700
1999	82900	74500
2000	83900	74300
2001	84400	74100
2002	84400	73900
2003	85200	73700
2004	85000	73500
2005	83400	73300
2006	83100	73100
2007	83900	72900
2008	79900	72700
2009	79800	72500
2010	79500	72300
2011	78200	72100
2012	78200	71900
2013	79800	71700
2014	81000	71500
2015	89300	71300
2016	91800	71100
2017	94100	70900
2018	93800	70700
2019	95400	70500
2020	85900	70300
2021	90200	70100
2022	91600	69900
2023	91400	69700
2050		67300

Trend Analysis *(*2015-2023)*

Linear

R-Square	AGR (Historical)	AGR (Design Year)	Annual Increase	2050 Estimate
1.6%	-0.1%	-0.2%	-132	87,400

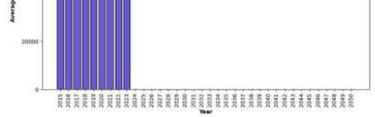



Year	Count	Trend
2015	89300	92000
2016	91800	91900
2017	94100	91800
2018	93800	91600
2019	95400	91500
2020	85900	91400
2021	90200	91200
2022	91600	91100
2023	91400	91000
2050		87400

I-26 : I- 126 (INTERSTATE 126) (RICHLAND) TO US 378 (SUNSET BLVD)



Station ID 40-0467
County Richland
Location click here

Year	AADT	%Change
1987		
1988	11,700	#DIV/0!
1989	11,200	-4.3%
1990	11,400	1.8%
1991	12,700	11.4%
1992	11,500	-9.4%
1993	12,000	4.3%
1994	11,100	-7.5%
1995	10,900	-1.8%
1996	10,200	-6.4%
1997	9,700	-4.9%
1998	10,100	4.1%
1999	10,200	1.0%
2000	9,700	-4.9%
2001	9,600	-1.0%
2002	10,500	9.4%
2003	9,500	-9.5%
2004	8,900	-6.3%
2005	8,500	-4.5%
2006	8,900	4.7%
2007	8,800	-1.1%
2008	7,900	-10.2%
2009	8,300	5.1%
2010	8,000	-3.6%
2011	7,700	-3.8%
2012	7,800	1.3%
2013	7,900	1.3%
2014	7,500	-5.1%
2015	7,600	1.3%
2016	7,000	-7.9%
2017	7,500	7.1%
2018	8,100	8.0%
2019	6,800	-16.0%
2020	6,500	-4.4%
2021	5,100	-21.5%
2022	5,900	15.7%
2023	4,800	-18.6%
	Avg=	#DIV/0!

For Reference
1% Annual Growth Rate

Year	Volume	Growth Rate
2023	4,800	Present
2050	6,096	Linear
2050	6,279	Compound

Calculations based on 30YR Growth Rates

Year	Volume	Estimate		
2023	4,800	N/A		
2050	-870	-870	*Linear*	-1.89%
2023	4,800	N/A		
2050	2,257	2,300	*Compound*	-2.76%
2023	4,800	N/A		
2050	1,430	1,400	*Average Annual*	-2.51%

Travel Demand Model

COATS

	2018	2045		
Model	2,901	3,189	*Linear*	0.37%
Acual/Est.	8,100	8,904		

Year	Volume	Estimate
2050	9,053	9,100

SCSWM

	2019	2050		
Model	7,748	8,567	*Linear*	0.34%
Acual/Est.	6,800	7,519		

Year	Volume	Estimate
2050	7,519	7,500

Demographic Data

Population

Employment

Calculations based on 20YR Growth Rates

Year	Volume	Estimate		
2023	4,800	N/A		
2050	-735	-740	*Linear*	-2.30%
2023	4,800	N/A		
2050	2,086	2,100	*Compound*	-3.04%
2023	4,800	N/A		
2050	1,101	1,100	*Average Annual*	-2.75%

Calculations based on 10YR Growth Rates

Year	Volume	Estimate		
2023	4,800	N/A		
2050	-2,490	-2,490	*Linear*	-3.60%
2023	4,800	N/A		
2050	1,439	1,400	*Compound*	-4.36%
2023	4,800	N/A		
2050	-632	-630	*Average Annual*	-4.04%

Trend Analysis

Linear

R-Square	AGR (Historical)	AGR (Design Year)	Annual Increase	2050 Estimate
92.4%	-1.5%	-3.1%	-179	1,000

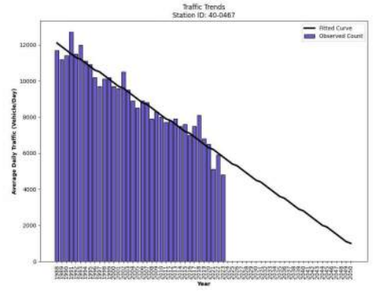

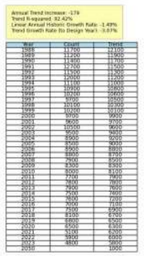

Trend Analysis *(*2015-2023)*

Linear

R-Square	AGR (Historical)	AGR (Design Year)	Annual Increase	2050 Estimate
71.0%	-4.4%	-6.7%	-348	-4,200

L-3051 : S- 287 (N ARROWWOOD RD) TO S- 1380 (BAKERSFIELD RD)

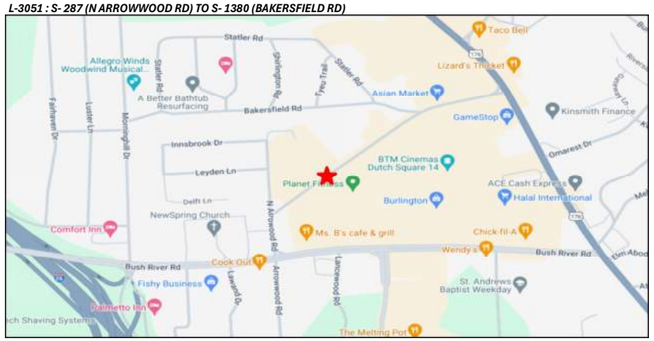

Station ID 40-0753
County Richland
Location click here

Year	AADT	%Change
1987		
1988		#DIV/0!
1989		#DIV/0!
1990	1,550	#DIV/0!
1991	1,450	-6.5%
1992	1,300	-10.3%
1993	1,400	7.7%
1994	1,250	-10.7%
1995	1,350	8.0%
1996	1,200	-11.1%
1997	1,250	4.2%
1998	1,250	0.0%
1999	1,100	-12.0%
2000	1,200	9.1%
2001	1,200	0.0%
2002	1,150	-4.2%
2003	1,250	8.7%
2004	1,050	-16.0%
2005	1,150	9.5%
2006	1,100	-4.3%
2007	1,300	18.2%
2008	1,150	-11.5%
2009	1,250	8.7%
2010	1,400	12.0%
2011	1,200	-14.3%
2012	1,200	0.0%
2013	1,200	0.0%
2014	1,100	-8.3%
2015	1,350	22.7%
2016	1,150	-14.8%
2017	1,300	13.0%
2018	1,350	3.8%
2019	1,200	-11.1%
2020	1,200	0.0%
2021	800	-33.3%
2022	850	6.3%
2023	950	11.8%
	Avg=	#DIV/0!

For Reference
1% Annual Growth Rate

Year	Volume	Growth Rate
2023	950	Present
2050	1,207	Linear
2050	1,243	Compound

Calculations based on 30YR Growth Rates

Year	Volume	Estimate		
2023	950	N/A		
2050	680	680	*Linear*	-0.80%
2023	950	N/A		
2050	742	740	*Compound*	-0.91%
2023	950	N/A		
2050	904	900	*Average Annual*	-0.17%

Travel Demand Model

COATS

	2018	2045		
Model	392	700	*Linear*	2.91%
Acual/Est.	1,350	2,411		

Year	Volume	Estimate
2050	2,607	2,600

SCSWM

	2019	2050		
Model	1,492	2,381	*Linear*	1.92%
Acual/Est.	1,200	1,915		

Year	Volume	Estimate
2050	1,915	1,900

Demographic Data

Population

Employment

Calculations based on 20YR Growth Rates

Year	Volume	Estimate		
2023	950	N/A		
2050	815	820	*Linear*	-0.48%
2023	950	N/A		
2050	830	830	*Compound*	-0.50%
2023	950	N/A		
2050	1,066	1,100	*Average Annual*	0.44%

Calculations based on 10YR Growth Rates

Year	Volume	Estimate		
2023	950	N/A		
2050	545	550	*Linear*	-1.36%
2023	950	N/A		
2050	639	640	*Compound*	-1.46%
2023	950	N/A		
2050	902	900	*Average Annual*	-0.18%

Trend Analysis

Linear

R-Square	AGR (Historical)	AGR (Design Year)	Annual Increase	2050 Estimate
30.4%	-0.7%	-0.7%	-9	900

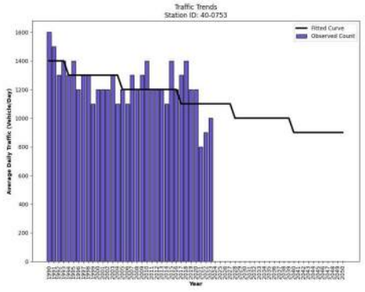

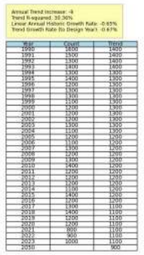

Trend Analysis *(*2015-2023)*

Linear

R-Square	AGR (Historical)	AGR (Design Year)	Annual Increase	2050 Estimate
63.0%	-4.5%	-7.0%	-62	-800

S-1380 : S- 1276 (MORNINGHILL DR) TO US 176 (BROAD RIVER RD)



Station ID 40-0479
County Richland
Location click here

Year	AADT	%Change
1987		
1988		#DIV/0!
1989		#DIV/0!
1990		#DIV/0!
1991	32,000	#DIV/0!
1992	32,050	0.2%
1993	33,000	3.0%
1994	35,000	6.1%
1995	23,100	-34.0%
1996	22,800	-1.3%
1997	22,000	-3.5%
1998	21,900	-0.5%
1999	21,000	-4.1%
2000	18,900	-10.0%
2001	20,600	9.0%
2002	20,800	1.0%
2003	21,300	2.4%
2004	19,200	-9.9%
2005	18,800	-2.1%
2006	19,100	1.6%
2007	22,600	18.3%
2008	21,700	-4.0%
2009	23,300	7.4%
2010	24,200	3.9%
2011	23,300	-3.7%
2012	23,700	1.7%
2013	24,100	1.7%
2014	23,700	-1.7%
2015	25,900	9.3%
2016	25,800	-0.4%
2017	26,300	1.9%
2018	27,300	3.8%
2019	24,900	-8.8%
2020	23,100	-7.2%
2021	20,100	-13.0%
2022	21,000	4.5%
2023	18,600	-11.4%
	Avg=	#DIV/0!

For Reference
1% Annual Growth Rate

Year	Volume	Growth Rate
2023	18,600	Present
2050	23,622	Linear
2050	24,333	Compound

Calculations based on 30YR Growth Rates

Year	Volume	Estimate		
2023	18,600	N/A	*Linear*	-1.56%
2050	3,840	3,800		
Year	**Volume**	**Estimate**		
2023	18,600	N/A	*Compound*	-2.09%
2050	10,530	11,000		
Year	**Volume**	**Estimate**		
2023	18,600	N/A	*Average Annual*	-1.69%
2050	9,788	9,800		

Travel Demand Model

COATS

	2018	2045		
Model	22,892	30,392	*Linear*	1.21%
Acual/Est.	27,300	36,244		
Year	**Volume**	**Estimate**		
2050	37,901	38,000		

SCSWM

	2019	2050		
Model	27,083	34,864	*Linear*	0.93%
Acual/Est.	24,900	32,054		
Year	**Volume**	**Estimate**		
2050	32,054	32,000		

Demographic Data

Population

Employment

Calculations based on 20YR Growth Rates

Year	Volume	Estimate		
2023	18,600	N/A	*Linear*	-0.16%
2050	17,790	18,000		
Year	**Volume**	**Estimate**		
2023	18,600	N/A	*Compound*	-0.16%
2050	17,820	18,000		
Year	**Volume**	**Estimate**		
2023	18,600	N/A	*Average Annual*	0.09%
2050	19,092	19,000		

Calculations based on 10YR Growth Rates

Year	Volume	Estimate		
2023	18,600	N/A	*Linear*	-2.15%
2050	4,830	4,800		
Year	**Volume**	**Estimate**		
2023	18,600	N/A	*Compound*	-2.39%
2050	9,669	9,700		
Year	**Volume**	**Estimate**		
2023	18,600	N/A	*Average Annual*	-2.37%
2050	6,262	6,300		

Trend Analysis

Linear

R-Square	AGR (Historical)	AGR (Design Year)	Annual Increase	2050 Estimate
10.7%	-0.5%	-0.7%	-142	17,600

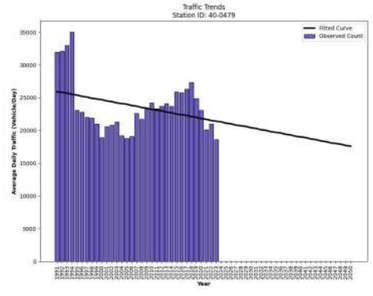

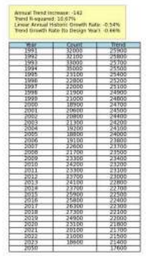

Trend Analysis *(*2015-2023)*

Linear

R-Square	AGR (Historical)	AGR (Design Year)	Annual Increase	2050 Estimate
78.4%	-3.6%	-5.1%	-1,003	-7,400

S-31 : County Line - LEXINGTON TO I- 26 (INTERSTATE 26)



Station ID 40-0469
County Richland
Location click here

Year	AADT	%Change
1987	18,588	
1988	22,000	18.4%
1989	34,200	55.5%
1990	33,000	-3.5%
1991	36,800	11.5%
1992	36,600	-0.5%
1993	37,000	1.1%
1994	38,500	4.1%
1995	35,400	-8.1%
1996	35,200	-0.6%
1997	34,700	-1.4%
1998	36,500	5.2%
1999	33,300	-8.8%
2000	31,800	-4.5%
2001	31,800	0.0%
2002	33,700	6.0%
2003	34,300	1.8%
2004	31,000	-9.6%
2005	29,200	-5.8%
2006	20,800	-28.8%
2007	31,700	52.4%
2008	31,700	0.0%
2009	31,700	0.0%
2010	32,100	1.3%
2011	30,700	-4.4%
2012	31,300	2.0%
2013	31,900	1.9%
2014	31,500	-1.3%
2015	26,700	-15.2%
2016	28,000	4.9%
2017	27,600	-1.4%
2018	28,700	4.0%
2019	28,600	-0.3%
2020	26,500	-7.3%
2021	21,300	-19.6%
2022	22,200	4.2%
2023	22,900	3.2%
	Avg=	1.556%

For Reference
1% Annual Growth Rate

Year	Volume	Growth Rate
2023	22,900	Present
2050	29,083	Linear
2050	29,958	Compound

Calculations based on 30YR Growth Rates

Year	Volume	Estimate		
2023	22,900	N/A	*Linear*	-1.35%
2050	8,860	8,900		
Year	**Volume**	**Estimate**		
2023	22,900	N/A	*Compound*	-1.72%
2050	14,347	14,000		
Year	**Volume**	**Estimate**		
2023	22,900	N/A	*Average Annual*	-1.05%
2050	16,181	16,000		

Travel Demand Model

COATS

	2018	2045		
Model	32,077	35,598	*Linear*	0.41%
Acual/Est.	28,700	31,850		
Year	**Volume**	**Estimate**		
2050	32,434	32,000		

SCSWM

	2019	2050		
Model	25,101	31,211	*Linear*	0.79%
Acual/Est.	28,600	35,562		
Year	**Volume**	**Estimate**		
2050	35,562	36,000		

Demographic Data

Population

Employment

Calculations based on 20YR Growth Rates

Year	Volume	Estimate		
2023	22,900	N/A	*Linear*	-1.31%
2050	11,965	12,000		
Year	**Volume**	**Estimate**		
2023	22,900	N/A	*Compound*	-1.50%
2050	15,215	15,000		
Year	**Volume**	**Estimate**		
2023	22,900	N/A	*Average Annual*	-0.55%
2050	19,391	19,000		

Calculations based on 10YR Growth Rates

Year	Volume	Estimate		
2023	22,900	N/A	*Linear*	-2.73%
2050	-320	-320		
Year	**Volume**	**Estimate**		
2023	22,900	N/A	*Compound*	-3.14%
2050	9,682	9,700		
Year	**Volume**	**Estimate**		
2023	22,900	N/A	*Average Annual*	-3.08%
2050	3,131	3,100		

Trend Analysis

Linear

R-Square	AGR (Historical)	AGR (Design Year)	Annual Increase	2050 Estimate
20.1%	-0.6%	-0.8%	-210	21,100

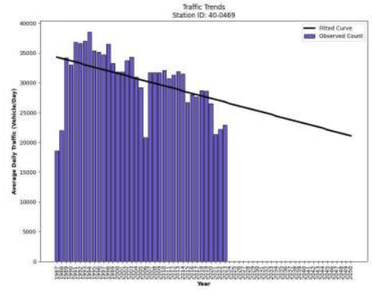

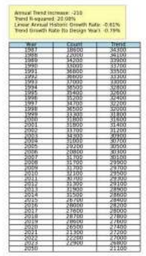

Trend Analysis *(*2015-2023)*

Linear

R-Square	AGR (Historical)	AGR (Design Year)	Annual Increase	2050 Estimate
55.7%	-2.7%	-3.5%	-790	1,300

S-31 : I- 26 (INTERSTATE 26) TO US 176 (BROAD RIVER RD)

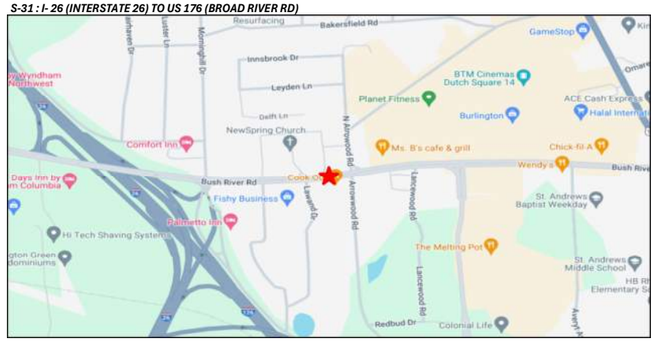

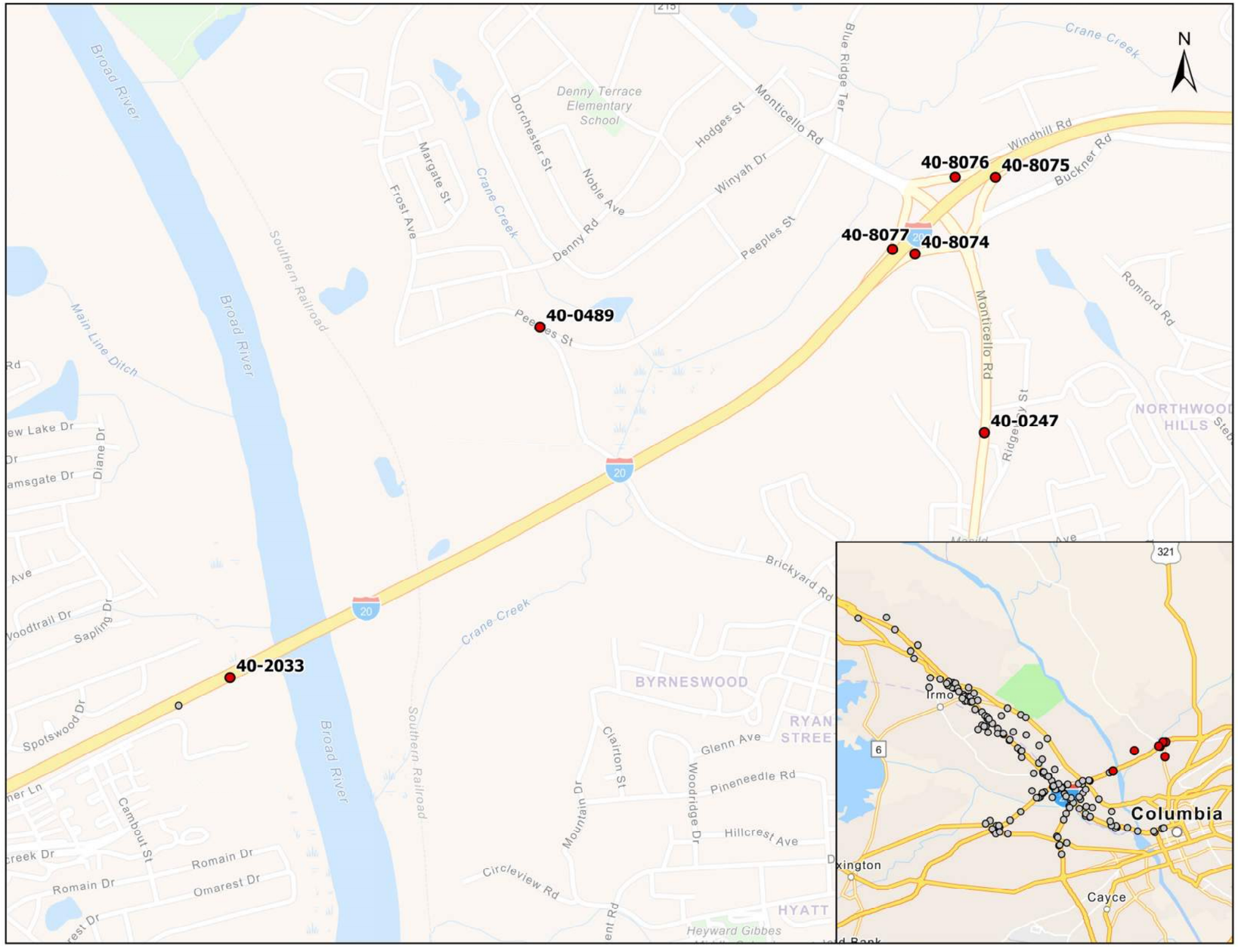

N
40-8076
40-8075
40-8077
40-8074
40-0489
40-0247
40-2033
Denny Terrace Elementary School
Broad River
Southern Railroad
Crane Creek
Main Line Ditch
Monticello Rd
Blue Ridge Ter
Windhill Rd
Buckner Rd
Hodges St
Winyah Dr
Peeples St
Denny Rd
Noble Ave
Dorchester St
Margate St
Frost Ave
Romford Rd
Brickyard Rd
BYRNESWOOD
Glenn Ave
Pineneedle Rd
Hillcrest Ave
Woodridge Dr
Clairton St
Mountain Dr
Circleview Rd
Romain Dr
Omarest Dr
Cambout St
Spotswood Dr
Sapling Dr
Woodtrail Dr
Diane Dr
Heyward Gibbes
Irmo
Columbia
Cayce
321
6

Station ID 40-0247
County Richland
Location click here

	Year	AADT	%Change
1	1987	13,200	
2	1988	12,800	-3.0%
3	1989	13,300	3.9%
4	1990	13,800	3.8%
5	1991	12,800	-7.2%
6	1992	11,800	-7.8%
7	1993	11,200	-5.1%
8	1994	11,900	6.3%
9	1995	10,900	-8.4%
10	1996	11,600	6.4%
11	1997	11,700	0.9%
12	1998	12,600	7.7%
13	1999	12,100	-4.0%
14	2000	12,200	0.8%
15	2001	10,900	-10.7%
16	2002	12,000	10.1%
17	2003	11,200	-6.7%
18	2004	11,100	-0.9%
19	2005	11,200	0.9%
20	2006	11,300	0.9%
21	2007	11,000	-2.7%
22	2008	10,800	-1.8%
23	2009	10,500	-2.8%
24	2010	11,500	9.5%
25	2011	10,900	-5.2%
26	2012	11,200	2.8%
27	2013	11,500	2.7%
28	2014	11,800	2.6%
29	2015	12,200	3.4%
30	2016	11,000	-9.8%
31	2017	11,700	6.4%
32	2018	12,200	4.3%
33	2019	12,800	4.9%
34	2020	11,900	-7.0%
35	2021	11,700	-1.7%
36	2022	12,200	4.3%
37	2023	12,800	4.9%
		Avg=	0.070%

For Reference
1% Annual Growth Rate

Year	Volume	Growth Rate
2023	12,800	Present
2050	16,256	Linear
2050	16,745	Compound

Calculations based on 30YR Growth Rates

Year	Volume	Estimate		
2023	12,800	N/A	*Linear*	0.25%
2050	13,610	14,000		
Year	**Volume**	**Estimate**		
2023	12,800	N/A	*Compound*	0.24%
2050	13,668	14,000		
Year	**Volume**	**Estimate**		
2023	12,800	N/A	*Average Annual*	0.41%
2050	14,256	14,000		

Travel Demand Model

COATS

	2018	2045		
Model	6,009	7,000	*Linear*	0.61%
Acual/Est.	12,200	14,212		
Year	**Volume**	**Estimate**		
2050	14,585	15,000		

SCSWM

	2019	2050		
Model	12,491	15,825	*Linear*	0.86%
Acual/Est.	12,800	16,216		
Year	**Volume**	**Estimate**		
2050	16,216	16,000		

Demographic Data

Population

Employment

SC215 : US 21 (N MAIN ST) TO I- 20 (INTERSTATE 20)

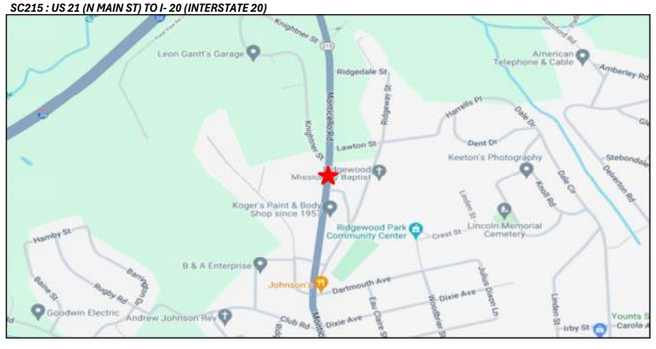

Calculations based on 20YR Growth Rates

Year	Volume	Estimate		
2023	12,800	N/A	*Linear*	0.77%
2050	15,095	15,000		
Year	**Volume**	**Estimate**		
2023	12,800	N/A	*Compound*	0.72%
2050	15,515	16,000		
Year	**Volume**	**Estimate**		
2023	12,800	N/A	*Average Annual*	0.87%
2050	15,908	16,000		

Calculations based on 10YR Growth Rates

Year	Volume	Estimate		
2023	12,800	N/A	*Linear*	0.85%
2050	15,500	16,000		
Year	**Volume**	**Estimate**		
2023	12,800	N/A	*Compound*	0.82%
2050	15,944	16,000		
Year	**Volume**	**Estimate**		
2023	12,800	N/A	*Average Annual*	1.07%
2050	16,618	17,000		

Trend Analysis

Linear

R-Square	AGR (Historical)	AGR (Design Year)	Annual Increase	2050 Estimate
7.3%	-0.2%	-0.2%	-20	10,900

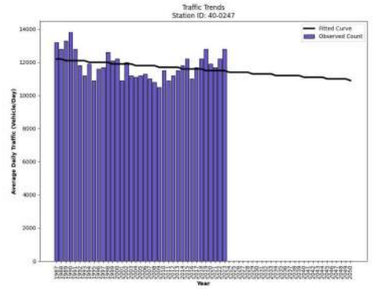

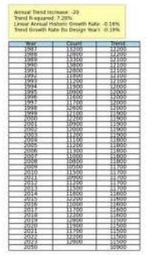

Trend Analysis ***(*2015-2023)***

Linear

R-Square	AGR (Historical)	AGR (Design Year)	Annual Increase	2050 Estimate
21.1%	0.8%	0.8%	95	15,000

Station ID 40-0489
County Richland
Location click here

	Year	AADT	%Change
1	1987		
2	1988		#DIV/0!
3	1989		#DIV/0!
4	1990	1,800	#DIV/0!
5	1991	1,650	-8.3%
6	1992	1,650	0.0%
7	1993	1,900	15.2%
8	1994	2,100	10.5%
9	1995	1,950	-7.1%
10	1996	1,850	-5.1%
11	1997	2,000	8.1%
12	1998	1,900	-5.0%
13	1999	1,800	-5.3%
14	2000	2,000	11.1%
15	2001	1,950	-2.5%
16	2002	2,000	2.6%
17	2003	1,850	-7.5%
18	2004	1,850	0.0%
19	2005	1,750	-5.4%
20	2006	1,650	-5.7%
21	2007	1,700	3.0%
22	2008	1,450	-14.7%
23	2009	1,200	-17.2%
24	2010	1,050	-12.5%
25	2011	1,200	14.3%
26	2012	1,200	0.0%
27	2013	1,200	0.0%
28	2014	1,000	-16.7%
29	2015	1,150	15.0%
30	2016	850	-26.1%
31	2017	1,100	29.4%
32	2018	1,200	9.1%
33	2019	900	-25.0%
34	2020	850	-5.6%
35	2021	800	-5.9%
36	2022	950	18.8%
37	2023	900	-5.3%
		Avg=	#DIV/0!

For Reference
1% Annual Growth Rate

Year	Volume	Growth Rate
2023	900	Present
2050	1,143	Linear
2050	1,177	Compound

Calculations based on 30YR Growth Rates

Year	Volume	Estimate		
2023	900	N/A	*Linear*	-1.90%
2050	-180	-180		

Year	Volume	Estimate		
2023	900	N/A	*Compound*	-2.78%
2050	420	420		

Year	Volume	Estimate		
2023	900	N/A	*Average Annual*	-2.11%
2050	368	370		

Travel Demand Model

COATS

	2018	2045		
Model	2,234	2,683	*Linear*	0.74%
Acual/Est.	1,200	1,441		

Year	Volume	Estimate
2050	1,486	1,500

SCSWM

	2019	2050		
Model	1,130	1,061	*Linear*	-0.20%
Acual/Est.	900	845		

Year	Volume	Estimate
2050	845	850

Demographic Data

Population

Employment

Calculations based on 20YR Growth Rates

Year	Volume	Estimate		
2023	900	N/A	*Linear*	-2.57%
2050	-383	-380		

Year	Volume	Estimate		
2023	900	N/A	*Compound*	-3.54%
2050	340	340		

Year	Volume	Estimate		
2023	900	N/A	*Average Annual*	-2.66%
2050	231	230		

Calculations based on 10YR Growth Rates

Year	Volume	Estimate		
2023	900	N/A	*Linear*	-1.00%
2050	630	630		

Year	Volume	Estimate		
2023	900	N/A	*Compound*	-1.05%
2050	677	680		

Year	Volume	Estimate		
2023	900	N/A	*Average Annual*	0.50%
2050	1,025	1,000		

Trend Analysis

Linear

R-Square	AGR (Historical)	AGR (Design Year)	Annual Increase	2050 Estimate
78.5%	-1.7%	-4.5%	-38	-200

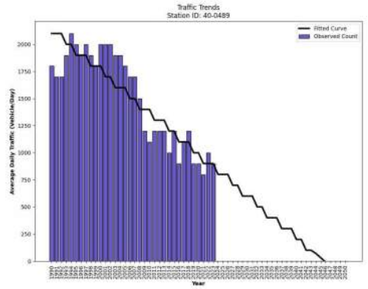

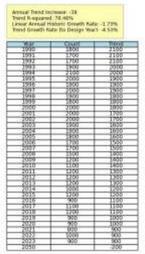

Trend Analysis *(*2015-2023)*

Linear

R-Square	AGR (Historical)	AGR (Design Year)	Annual Increase	2050 Estimate
32.0%	-2.3%	-3.5%	-30	60

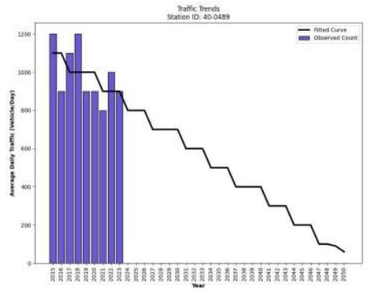



Year	Count	Trend
2015	1200	1100
2016	900	1100
2017	1100	1000
2018	1200	1000
2019	900	1000
2020	900	1000
2021	800	900
2022	1000	900
2023	900	900
2050		60

S-43 : SC 215 (MONTICELLO RD) TO SC 215 (MONTICELLO RD)



Station ID 40-2033
County Richland
Location click here

	Year	AADT	%Change
1	1987		
2	1988		#DIV/0!
3	1989	71,900	#DIV/0!
4	1990	75,800	5.4%
5	1991	78,200	3.2%
6	1992	74,900	-4.2%
7	1993	78,700	5.1%
8	1994	88,000	11.8%
9	1995	84,600	-3.9%
10	1996	80,500	-4.8%
11	1997	84,700	5.2%
12	1998	88,200	4.1%
13	1999	91,000	3.2%
14	2000	94,700	4.1%
15	2001	94,800	0.1%
16	2002	95,700	0.9%
17	2003	95,600	-0.1%
18	2004	96,800	1.3%
19	2005	97,200	0.4%
20	2006	100,000	2.9%
21	2007	102,000	2.0%
22	2008	98,000	-3.9%
23	2009	98,700	0.7%
24	2010	100,700	2.0%
25	2011	100,100	-0.6%
26	2012	100,500	0.4%
27	2013	102,700	2.2%
28	2014	103,700	1.0%
29	2015	105,800	2.0%
30	2016	108,100	2.2%
31	2017	109,900	1.7%
32	2018	116,700	6.2%
33	2019	119,100	2.1%
34	2020	101,700	-14.6%
35	2021	113,900	12.0%
36	2022	113,600	-0.3%
37	2023	123,700	8.9%
		Avg=	#DIV/0!

For Reference
1% Annual Growth Rate

Year	Volume	Growth Rate
2023	123,700	Present
2050	157,099	Linear
2050	161,825	Compound

Calculations based on 30YR Growth Rates

Year	Volume	Estimate		
2023	123,700	N/A		
2050	155,830	156,000	*Linear*	1.35%
2050	168,061	168,000	*Compound*	1.14%
2050	168,234	168,000	*Average Annual*	1.29%

Travel Demand Model

COATS

	2018	2045	
Model	114,541	135,310	*Linear* 0.67%
Acual/Est.	116,700	137,860	

Year	Volume	Estimate
2050	141,779	142,000

SCSWM

	2019	2050	
Model	108,316	153,244	*Linear* 1.34%
Acual/Est.	119,100	168,501	

Year	Volume	Estimate
2050	168,501	169,000

Demographic Data

Population

Employment

Calculations based on 20YR Growth Rates

Year	Volume	Estimate		
2023	123,700	N/A		
2050	160,015	160,000	*Linear*	1.39%
2050	172,241	172,000	*Compound*	1.23%
2050	173,287	173,000	*Average Annual*	1.43%

Calculations based on 10YR Growth Rates

Year	Volume	Estimate		
2023	123,700	N/A		
2050	177,700	178,000	*Linear*	1.93%
2050	199,143	199,000	*Compound*	1.78%
2050	201,139	201,000	*Average Annual*	2.24%

Trend Analysis

Linear

R-Square	AGR (Historical)	AGR (Design Year)	Annual Increase	2050 Estimate
90.9%	1.6%	1.0%	1,208	150,000

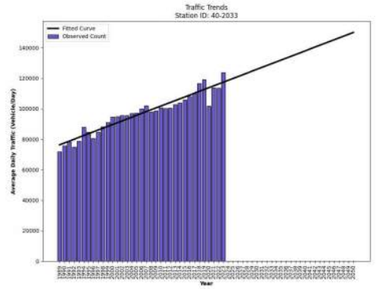

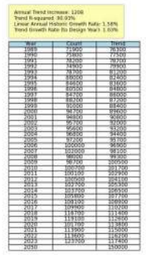

Trend Analysis *(*2015-2023)*

Linear

R-Square	AGR (Historical)	AGR (Design Year)	Annual Increase	2050 Estimate
29.0%	1.3%	1.2%	1,352	154,400

Year	Count	Trend
2015	105800	107100
2016	108100	108400
2017	109900	109800
2018	116700	111100
2019	119100	112500
2020	101700	113900
2021	113900	115200
2022	113600	116600
2023	123700	117900
2050		154400

I-20 : US 176 (BROAD RIVER RD) TO SC 215 (MONTICELLO RD)



Station ID 40-8076
County Richland
Location click here

	Year	AADT	%Change
1	1987		
2	1988		#DIV/0!
3	1989		#DIV/0!
4	1990		#DIV/0!
5	1991		#DIV/0!
6	1992		#DIV/0!
7	1993		#DIV/0!
8	1994		#DIV/0!
9	1995		#DIV/0!
10	1996		#DIV/0!
11	1997		#DIV/0!
12	1998		#DIV/0!
13	1999		#DIV/0!
14	2000		#DIV/0!
15	2001		#DIV/0!
16	2002		#DIV/0!
17	2003		#DIV/0!
18	2004		#DIV/0!
19	2005		#DIV/0!
20	2006		#DIV/0!
21	2007		#DIV/0!
22	2008		#DIV/0!
23	2009		#DIV/0!
24	2010		#DIV/0!
25	2011		#DIV/0!
26	2012		#DIV/0!
27	2013		#DIV/0!
28	2014		#DIV/0!
29	2015		#DIV/0!
30	2016		#DIV/0!
31	2017		#DIV/0!
32	2018		#DIV/0!
33	2019		#DIV/0!
34	2020	4,000	#DIV/0!
35	2021	4,100	2.5%
36	2022	4,900	19.5%
37	2023	4,000	-18.4%
		Avg=	#DIV/0!

For Reference
1% Annual Growth Rate

Year	Volume	Growth Rate
2023	4,000	Present
2050	5,080	Linear
2050	5,233	Compound

Calculations based on 30YR Growth Rates

Year	Volume	Estimate		
2023	4,000	N/A	*Linear*	#DIV/0!
2050	#DIV/0!	#DIV/0!		
Year	**Volume**	**Estimate**		
2023	4,000	N/A	*Compound*	#DIV/0!
2050	#DIV/0!	#DIV/0!		
Year	**Volume**	**Estimate**		
2023	4,000	N/A	*Average Annual*	#DIV/0!
2050	#DIV/0!	#DIV/0!		

Travel Demand Model

COATS

	2018	2045		
Model	3,924	4,730	*Linear*	0.76%
Acual/Est.	0	0		

Year	Volume	Estimate
2050	0	0

SCSWM

	2019	2050		
Model	3,399	1,522	*Linear*	-1.78%
Acual/Est.	0	0		

Year	Volume	Estimate
2050	0	0

Demographic Data

Population

Employment

Calculations based on 20YR Growth Rates

Year	Volume	Estimate		
2023	4,000	N/A	*Linear*	#DIV/0!
2050	#DIV/0!	#DIV/0!		
Year	**Volume**	**Estimate**		
2023	4,000	N/A	*Compound*	#DIV/0!
2050	#DIV/0!	#DIV/0!		
Year	**Volume**	**Estimate**		
2023	4,000	N/A	*Average Annual*	#DIV/0!
2050	#DIV/0!	#DIV/0!		

Calculations based on 10YR Growth Rates

Year	Volume	Estimate		
2023	4,000	N/A	*Linear*	#DIV/0!
2050	#DIV/0!	#DIV/0!		
Year	**Volume**	**Estimate**		
2023	4,000	N/A	*Compound*	#DIV/0!
2050	#DIV/0!	#DIV/0!		
Year	**Volume**	**Estimate**		
2023	4,000	N/A	*Average Annual*	#DIV/0!
2050	#DIV/0!	#DIV/0!		

Trend Analysis

Linear

R-Square	AGR (Historical)	AGR (Design Year)	Annual Increase	2050 Estimate
5.6%	2.4%	1.8%	80	6,500

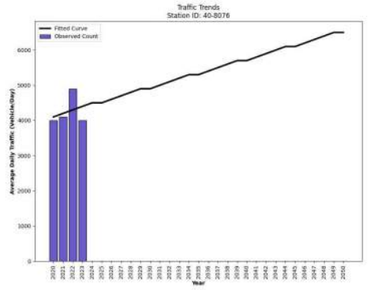

Year	Count	Trend
2020	4000	4100
2021	4100	4200
2022	4900	4300
2023	4000	4400
2050		6500

Trend Analysis *(*2015-2023)*

Linear

R-Square	AGR (Historical)	AGR (Design Year)	Annual Increase	2050 Estimate
5.6%	2.4%	1.8%	80	6,500

Year	Count	Trend
2020	4000	4100
2021	4100	4200
2022	4900	4300
2023	4000	4400
2050		6500

R-8076 3E1 : I- 20 TO SC 215, S- 2907



Station ID 40-8075
County Richland
Location click here

	Year	AADT	%Change
1	1987		
2	1988		#DIV/0!
3	1989		#DIV/0!
4	1990		#DIV/0!
5	1991		#DIV/0!
6	1992		#DIV/0!
7	1993		#DIV/0!
8	1994		#DIV/0!
9	1995		#DIV/0!
10	1996		#DIV/0!
11	1997		#DIV/0!
12	1998		#DIV/0!
13	1999		#DIV/0!
14	2000		#DIV/0!
15	2001		#DIV/0!
16	2002		#DIV/0!
17	2003		#DIV/0!
18	2004		#DIV/0!
19	2005		#DIV/0!
20	2006		#DIV/0!
21	2007		#DIV/0!
22	2008		#DIV/0!
23	2009		#DIV/0!
24	2010		#DIV/0!
25	2011		#DIV/0!
26	2012		#DIV/0!
27	2013		#DIV/0!
28	2014		#DIV/0!
29	2015		#DIV/0!
30	2016		#DIV/0!
31	2017		#DIV/0!
32	2018		#DIV/0!
33	2019		#DIV/0!
34	2020	4,300	#DIV/0!
35	2021	4,200	-2.3%
36	2022	4,400	4.8%
37	2023	4,200	-4.5%
		Avg=	#DIV/0!

For Reference
1% Annual Growth Rate

Year	Volume	Growth Rate
2023	4,200	Present
2050	5,334	Linear
2050	5,494	Compound

Calculations based on 30YR Growth Rates

Year	Volume	Estimate		
2023	4,200	N/A		
2050	#DIV/0!	#DIV/0!	*Linear*	#DIV/0!
2050	#DIV/0!	#DIV/0!	*Compound*	#DIV/0!
2050	#DIV/0!	#DIV/0!	*Average Annual*	#DIV/0!

Travel Demand Model

COATS

	2018	2045		
Model	4,710	5,273	*Linear*	0.44%
Acual/Est.	0	0		

Year	Volume	Estimate
2050	0	0

SCSWM

	2019	2050		
Model	3,184	150	*Linear*	-3.07%
Acual/Est.	0	0		

Year	Volume	Estimate
2050	0	0

Demographic Data

Population

Employment

Calculations based on 20YR Growth Rates

Year	Volume	Estimate		
2023	4,200	N/A		
2050	#DIV/0!	#DIV/0!	*Linear*	#DIV/0!
2050	#DIV/0!	#DIV/0!	*Compound*	#DIV/0!
2050	#DIV/0!	#DIV/0!	*Average Annual*	#DIV/0!

Calculations based on 10YR Growth Rates

Year	Volume	Estimate		
2023	4,200	N/A		
2050	#DIV/0!	#DIV/0!	*Linear*	#DIV/0!
2050	#DIV/0!	#DIV/0!	*Compound*	#DIV/0!
2050	#DIV/0!	#DIV/0!	*Average Annual*	#DIV/0!

Trend Analysis

Linear

R-Square	AGR (Historical)	AGR (Design Year)	Annual Increase	2050 Estimate
1.8%	0.0%	-0.3%	-10	4,000

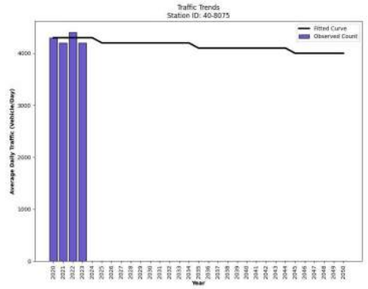

Annual Trend Increase: -10
Trend R-squared: 1.82%
Linear Annual Historic Growth Rate: 0.0%
Trend Growth Rate fro Design Year1: -0.26%

Year	Count	Trend
2020	4300	4300
2021	4200	4300
2022	4400	4300
2023	4200	4300
2050		4000

Trend Analysis *(*2015-2023)*

Linear

R-Square	AGR (Historical)	AGR (Design Year)	Annual Increase	2050 Estimate
1.8%	0.0%	-0.3%	-10	4,000

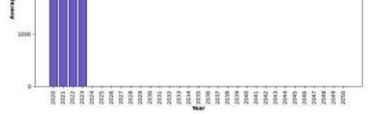

Annual Trend Increase: -10
Trend R-squared: 1.82%
Linear Annual Historic Growth Rate: 0.0%
Trend Growth Rate fro Design Year1: -0.26%

Year	Count	Trend
2020	4300	4300
2021	4200	4300
2022	4400	4300
2023	4200	4300
2050		4000

R-8075 2O1 : SC 215 TO I- 20



Station ID 40-8074
County Richland
Location click here

	Year	AADT	%Change
1	1987		
2	1988		#DIV/0!
3	1989		#DIV/0!
4	1990		#DIV/0!
5	1991		#DIV/0!
6	1992		#DIV/0!
7	1993		#DIV/0!
8	1994		#DIV/0!
9	1995		#DIV/0!
10	1996		#DIV/0!
11	1997		#DIV/0!
12	1998		#DIV/0!
13	1999		#DIV/0!
14	2000		#DIV/0!
15	2001		#DIV/0!
16	2002		#DIV/0!
17	2003		#DIV/0!
18	2004		#DIV/0!
19	2005		#DIV/0!
20	2006		#DIV/0!
21	2007		#DIV/0!
22	2008		#DIV/0!
23	2009		#DIV/0!
24	2010		#DIV/0!
25	2011		#DIV/0!
26	2012		#DIV/0!
27	2013		#DIV/0!
28	2014		#DIV/0!
29	2015		#DIV/0!
30	2016		#DIV/0!
31	2017		#DIV/0!
32	2018		#DIV/0!
33	2019		#DIV/0!
34	2020	6,800	#DIV/0!
35	2021	6,800	0.0%
36	2022	7,200	5.9%
37	2023	7,900	9.7%
		Avg=	#DIV/0!

For Reference
1% Annual Growth Rate

Year	Volume	Growth Rate
2023	7,900	Present
2050	10,033	Linear
2050	10,335	Compound

Calculations based on 30YR Growth Rates

Year	Volume	Estimate		
2023	7,900	N/A	*Linear*	#DIV/0!
2050	#DIV/0!	#DIV/0!		
Year	**Volume**	**Estimate**		
2023	7,900	N/A	*Compound*	#DIV/0!
2050	#DIV/0!	#DIV/0!		
Year	**Volume**	**Estimate**		
2023	7,900	N/A	*Average Annual*	#DIV/0!
2050	#DIV/0!	#DIV/0!		

Travel Demand Model

COATS

	2018	2045		
Model	7,842	9,400	*Linear*	0.74%
Acual/Est.	0	0		
Year	**Volume**	**Estimate**		
2050	0	0		

SCSWM

	2019	2050		
Model	5,353	11,037	*Linear*	3.43%
Acual/Est.	0	0		
Year	**Volume**	**Estimate**		
2050	0	0		

Demographic Data

Population

Employment

R-8074 1E1 : I- 20 TO SC 215



Calculations based on 20YR Growth Rates

Year	Volume	Estimate		
2023	7,900	N/A	*Linear*	#DIV/0!
2050	#DIV/0!	#DIV/0!		
Year	**Volume**	**Estimate**		
2023	7,900	N/A	*Compound*	#DIV/0!
2050	#DIV/0!	#DIV/0!		
Year	**Volume**	**Estimate**		
2023	7,900	N/A	*Average Annual*	#DIV/0!
2050	#DIV/0!	#DIV/0!		

Calculations based on 10YR Growth Rates

Year	Volume	Estimate		
2023	7,900	N/A	*Linear*	#DIV/0!
2050	#DIV/0!	#DIV/0!		
Year	**Volume**	**Estimate**		
2023	7,900	N/A	*Compound*	#DIV/0!
2050	#DIV/0!	#DIV/0!		
Year	**Volume**	**Estimate**		
2023	7,900	N/A	*Average Annual*	#DIV/0!
2050	#DIV/0!	#DIV/0!		

Trend Analysis

Linear

R-Square	AGR (Historical)	AGR (Design Year)	Annual Increase	2050 Estimate
84.8%	5.6%	4.8%	370	17,700

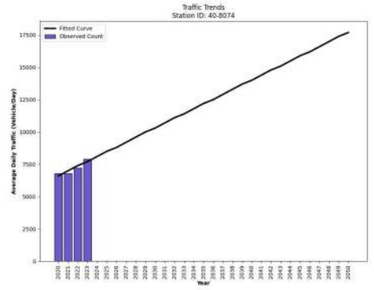

Year	Count	Trend
2020	6800	6600
2021	6800	7000
2022	7200	7400
2023	7900	7700
2050		17700

Trend Analysis *(*2015-2023)*

Linear

R-Square	AGR (Historical)	AGR (Design Year)	Annual Increase	2050 Estimate
84.8%	5.6%	4.8%	370	17,700

Year	Count	Trend
2020	6800	6600
2021	6800	7000
2022	7200	7400
2023	7900	7700
2050		17700

Station ID 40-8077
County Richland
Location click here

	Year	AADT	%Change
1	1987		
2	1988		#DIV/0!
3	1989		#DIV/0!
4	1990		#DIV/0!
5	1991		#DIV/0!
6	1992		#DIV/0!
7	1993		#DIV/0!
8	1994		#DIV/0!
9	1995		#DIV/0!
10	1996		#DIV/0!
11	1997		#DIV/0!
12	1998		#DIV/0!
13	1999		#DIV/0!
14	2000		#DIV/0!
15	2001		#DIV/0!
16	2002		#DIV/0!
17	2003		#DIV/0!
18	2004		#DIV/0!
19	2005		#DIV/0!
20	2006		#DIV/0!
21	2007		#DIV/0!
22	2008		#DIV/0!
23	2009		#DIV/0!
24	2010		#DIV/0!
25	2011		#DIV/0!
26	2012		#DIV/0!
27	2013		#DIV/0!
28	2014		#DIV/0!
29	2015		#DIV/0!
30	2016		#DIV/0!
31	2017		#DIV/0!
32	2018		#DIV/0!
33	2019		#DIV/0!
34	2020	6,900	#DIV/0!
35	2021	6,300	-8.7%
36	2022	5,800	-7.9%
37	2023	6,700	15.5%
		Avg=	#DIV/0!

For Reference
1% Annual Growth Rate

Year	Volume	Growth Rate
2023	6,700	Present
2050	8,509	Linear
2050	8,765	Compound

Calculations based on 30YR Growth Rates

Year	Volume	Estimate		
2023	6,700	N/A	*Linear*	#DIV/0!
2050	#DIV/0!	#DIV/0!		
Year	**Volume**	**Estimate**	*Compound*	#DIV/0!
2023	6,700	N/A		
2050	#DIV/0!	#DIV/0!		
Year	**Volume**	**Estimate**	*Average Annual*	#DIV/0!
2023	6,700	N/A		
2050	#DIV/0!	#DIV/0!		

Travel Demand Model

COATS

	2018	2045		
Model	8,856	10,863	*Linear*	0.84%
Acual/Est.	0	0		
Year	**Volume**	**Estimate**		
2050	0	0		

SCSWM

	2019	2050		
Model	5,028	10,500	*Linear*	3.51%
Acual/Est.	0	0		
Year	**Volume**	**Estimate**		
2050	0	0		

Demographic Data

Population

Employment

Calculations based on 20YR Growth Rates

Year	Volume	Estimate		
2023	6,700	N/A	*Linear*	#DIV/0!
2050	#DIV/0!	#DIV/0!		
Year	**Volume**	**Estimate**	*Compound*	#DIV/0!
2023	6,700	N/A		
2050	#DIV/0!	#DIV/0!		
Year	**Volume**	**Estimate**	*Average Annual*	#DIV/0!
2023	6,700	N/A		
2050	#DIV/0!	#DIV/0!		

Calculations based on 10YR Growth Rates

Year	Volume	Estimate		
2023	6,700	N/A	*Linear*	#DIV/0!
2050	#DIV/0!	#DIV/0!		
Year	**Volume**	**Estimate**	*Compound*	#DIV/0!
2023	6,700	N/A		
2050	#DIV/0!	#DIV/0!		
Year	**Volume**	**Estimate**	*Average Annual*	#DIV/0!
2023	6,700	N/A		
2050	#DIV/0!	#DIV/0!		

Trend Analysis

Linear

R-Square	AGR (Historical)	AGR (Design Year)	Annual Increase	2050 Estimate
8.6%	-1.5%	-1.8%	-110	3,300

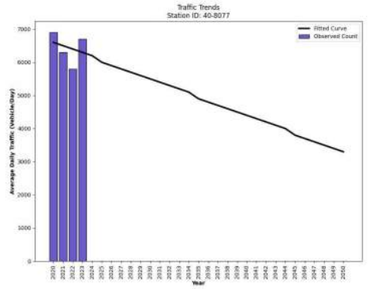

Annual Trend Increase: -110
Trend R-squared: 8.55%
Linear Annual Historic Growth Rate: -1.52%
Trend Growth Rate Its Design Year: -1.76%

Year	Count	Trend
2020	6900	6600
2021	6300	6500
2022	5800	6400
2023	6700	6300
2050		3300

Trend Analysis *(*2015-2023)*

Linear

R-Square	AGR (Historical)	AGR (Design Year)	Annual Increase	2050 Estimate
8.6%	-1.5%	-1.8%	-110	3,300

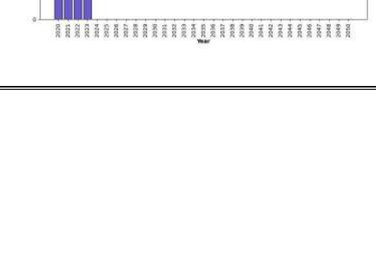

Annual Trend Increase: -110
Trend R-squared: 8.55%
Linear Annual Historic Growth Rate: -1.52%
Trend Growth Rate Its Design Year: -1.76%

Year	Count	Trend
2020	6900	6600
2021	6300	6500
2022	5800	6400
2023	6700	6300
2050		3300

R-8077 4O1 : SC 215 TO I- 20

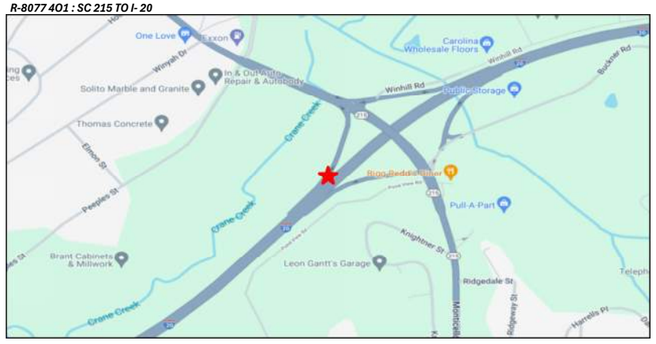

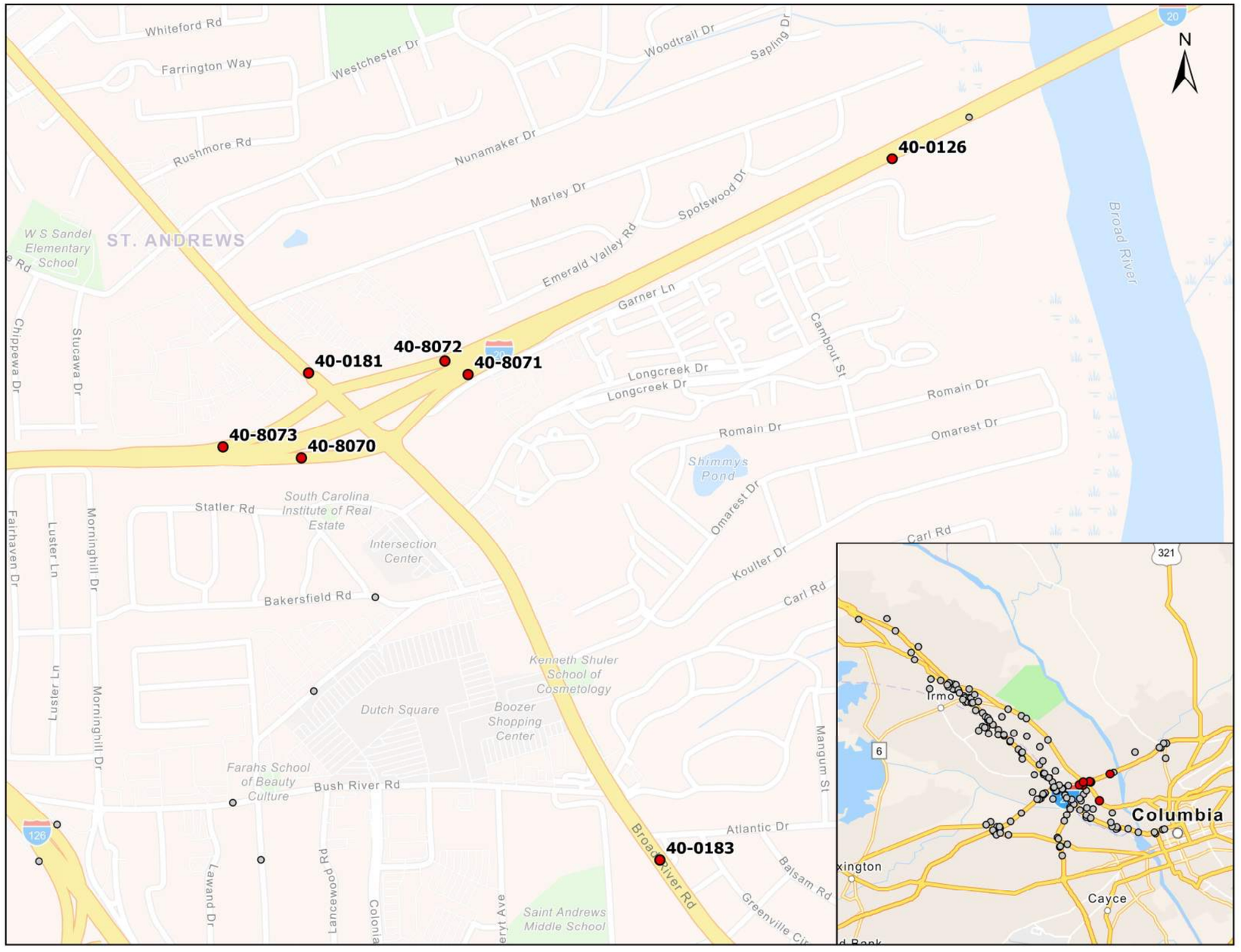
N
40-0126
40-0181
40-8072
40-8071
40-8073
40-8070
40-0183
Whiteford Rd
Farrington Way
Westchester Dr
Woodtrail Dr
Sapling Dr
Rushmore Rd
Nunamaker Dr
Marley Dr
Emerald Valley Rd
Spotswood Dr
Garner Ln
Longcreek Dr
Longcreek Dr
Cambout St
Romain Dr
Romain Dr
Omarest Dr
Shimmys Pond
Omarest Dr
Koulter Dr
Carl Rd
Carl Rd
Broad River
ST. ANDREWS
W S Sandel Elementary School
Chippewa Dr
Stucawa Dr
Statler Rd
South Carolina Institute of Real Estate
Intersection Center
Bakersfield Rd
Fairhaven Dr
Luster Ln
Luster Ln
Morninghill Dr
Morninghill Dr
Dutch Square
Boozer Shopping Center
Kenneth Shuler School of Cosmetology
Farahs School of Beauty Culture
Bush River Rd
Lawand Dr
Lancewood Rd
Broad River Rd
Atlantic Dr
Balsam Rd
Greenville Cir
Mangum St
Saint Andrews Middle School
Irmo
Columbia
Cayce
321
6
126
20

Station ID 40-8072
County Richland
Location click here

	Year	AADT	%Change
1	1987		
2	1988		#DIV/0!
3	1989		#DIV/0!
4	1990		#DIV/0!
5	1991		#DIV/0!
6	1992		#DIV/0!
7	1993		#DIV/0!
8	1994		#DIV/0!
9	1995		#DIV/0!
10	1996		#DIV/0!
11	1997		#DIV/0!
12	1998		#DIV/0!
13	1999		#DIV/0!
14	2000		#DIV/0!
15	2001		#DIV/0!
16	2002		#DIV/0!
17	2003		#DIV/0!
18	2004		#DIV/0!
19	2005		#DIV/0!
20	2006		#DIV/0!
21	2007		#DIV/0!
22	2008		#DIV/0!
23	2009		#DIV/0!
24	2010		#DIV/0!
25	2011		#DIV/0!
26	2012		#DIV/0!
27	2013		#DIV/0!
28	2014		#DIV/0!
29	2015		#DIV/0!
30	2016		#DIV/0!
31	2017		#DIV/0!
32	2018		#DIV/0!
33	2019		#DIV/0!
34	2020	13,600	#DIV/0!
35	2021	10,400	-23.5%
36	2022	10,500	1.0%
37	2023	10,500	0.0%
		Avg=	#DIV/0!

For Reference
1% Annual Growth Rate

Year	Volume	Growth Rate
2023	10,500	Present
2050	13,335	Linear
2050	13,736	Compound

Calculations based on 30YR Growth Rates

Year	Volume	Estimate		
2023	10,500	N/A	*Linear*	#DIV/0!
2050	#DIV/0!	#DIV/0!		
Year	**Volume**	**Estimate**		
2023	10,500	N/A	*Compound*	#DIV/0!
2050	#DIV/0!	#DIV/0!		
Year	**Volume**	**Estimate**		
2023	10,500	N/A	*Average Annual*	#DIV/0!
2050	#DIV/0!	#DIV/0!		

Travel Demand Model

COATS

	2018	2045		
Model	12,357	13,967	*Linear*	0.48%
Acual/Est.	0	0		
Year	**Volume**	**Estimate**		
2050	0	0		

SCSWM

	2019	2050		
Model	10,588	7,949	*Linear*	-0.80%
Acual/Est.	0	0		
Year	**Volume**	**Estimate**		
2050	0	0		

Demographic Data

Population

Employment

Calculations based on 20YR Growth Rates

Year	Volume	Estimate		
2023	10,500	N/A	*Linear*	#DIV/0!
2050	#DIV/0!	#DIV/0!		
Year	**Volume**	**Estimate**		
2023	10,500	N/A	*Compound*	#DIV/0!
2050	#DIV/0!	#DIV/0!		
Year	**Volume**	**Estimate**		
2023	10,500	N/A	*Average Annual*	#DIV/0!
2050	#DIV/0!	#DIV/0!		

Calculations based on 10YR Growth Rates

Year	Volume	Estimate		
2023	10,500	N/A	*Linear*	#DIV/0!
2050	#DIV/0!	#DIV/0!		
Year	**Volume**	**Estimate**		
2023	10,500	N/A	*Compound*	#DIV/0!
2050	#DIV/0!	#DIV/0!		
Year	**Volume**	**Estimate**		
2023	10,500	N/A	*Average Annual*	#DIV/0!
2050	#DIV/0!	#DIV/0!		

Trend Analysis

Linear

R-Square	AGR (Historical)	AGR (Design Year)	Annual Increase	2050 Estimate
57.4%	-7.1%	-9.3%	-920	-15,000

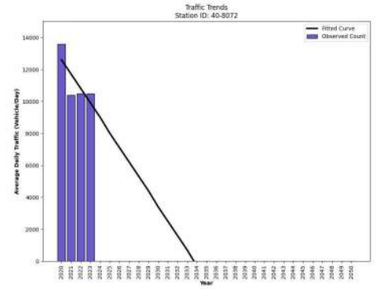

Year	Count	Trend
2020	13600	12600
2021	10400	11700
2022	10500	10800
2023	10500	9900
2050		-15000

Trend Analysis *(*2015-2023)*

Linear

R-Square	AGR (Historical)	AGR (Design Year)	Annual Increase	2050 Estimate
57.4%	-7.1%	-9.3%	-920	-15,000

Year	Count	Trend
2020	13600	12600
2021	10400	11700
2022	10500	10800
2023	10500	9900
2050		-15000

R-8072 3E1 : I- 20 TO US 176



Station ID 40-0183
County Richland
Location click here

	Year	AADT	%Change
1	1987	33,200	
2	1988	31,500	-5.1%
3	1989	30,300	-3.8%
4	1990	29,700	-2.0%
5	1991	26,900	-9.4%
6	1992	25,400	-5.6%
7	1993	25,000	-1.6%
8	1994	26,500	6.0%
9	1995	26,700	0.8%
10	1996	25,200	-5.6%
11	1997	27,600	9.5%
12	1998	26,200	-5.1%
13	1999	31,700	21.0%
14	2000	26,500	-16.4%
15	2001	25,200	-4.9%
16	2002	24,600	-2.4%
17	2003	25,900	5.3%
18	2004	27,200	5.0%
19	2005	26,100	-4.0%
20	2006	25,400	-2.7%
21	2007	27,300	7.5%
22	2008	26,100	-4.4%
23	2009	26,000	-0.4%
24	2010	27,300	5.0%
25	2011	25,900	-5.1%
26	2012	26,500	2.3%
27	2013	27,100	2.3%
28	2014	27,100	0.0%
29	2015	29,700	9.6%
30	2016	30,400	2.4%
31	2017	31,000	2.0%
32	2018	32,200	3.9%
33	2019	25,700	-20.2%
34	2020	23,800	-7.4%
35	2021	25,700	8.0%
36	2022	26,800	4.3%
37	2023	28,300	5.6%
		Avg=	-0.161%

For Reference
1% Annual Growth Rate

Year	Volume	Growth Rate
2023	28,300	Present
2050	35,941	Linear
2050	37,022	Compound

Calculations based on 30YR Growth Rates

Year	Volume	Estimate		
2023	28,300	N/A	*Linear*	0.23%
2050	29,920	30,000		
Year	**Volume**	**Estimate**	*Compound*	0.22%
2023	28,300	N/A		
2050	30,024	30,000		
Year	**Volume**	**Estimate**	*Average Annual*	0.54%
2023	28,300	N/A		
2050	32,590	33,000		

Travel Demand Model

COATS

	2018	2045		
Model	38,358	44,414	*Linear*	0.58%
Acual/Est.	32,200	37,284		
Year	**Volume**	**Estimate**		
2050	38,225	38,000		

SCSWM

	2019	2050		
Model	29,671	42,448	*Linear*	1.39%
Acual/Est.	25,700	36,767		
Year	**Volume**	**Estimate**		
2050	36,767	37,000		

Demographic Data

Population

Employment

US176 : S- 31 (BUSH RIVER RD) TO S- 3020 (GREYSTONE BLVD)



Calculations based on 20YR Growth Rates

Year	Volume	Estimate		
2023	28,300	N/A	*Linear*	0.20%
2050	29,785	30,000		
Year	**Volume**	**Estimate**	*Compound*	0.20%
2023	28,300	N/A		
2050	29,856	30,000		
Year	**Volume**	**Estimate**	*Average Annual*	0.45%
2023	28,300	N/A		
2050	31,847	32,000		

Calculations based on 10YR Growth Rates

Year	Volume	Estimate		
2023	28,300	N/A	*Linear*	0.44%
2050	31,540	32,000		
Year	**Volume**	**Estimate**	*Compound*	0.43%
2023	28,300	N/A		
2050	31,812	32,000		
Year	**Volume**	**Estimate**	*Average Annual*	0.90%
2023	28,300	N/A		
2050	35,411	35,000		

Trend Analysis

Linear

R-Square	AGR (Historical)	AGR (Design Year)	Annual Increase	2050 Estimate
1.7%	-0.1%	-0.1%	-29	26,100

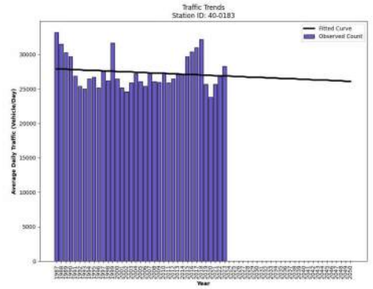

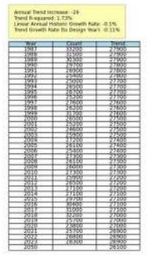

Trend Analysis *(*2015-2023)*

Linear

R-Square	AGR (Historical)	AGR (Design Year)	Annual Increase	2050 Estimate
32.3%	-1.9%	-2.3%	-590	9,900

Year	Count	Trend
2015	29706	30500
2016	30400	29900
2017	31000	29400
2018	32200	28800
2019	25700	28200
2020	23800	27600
2021	25700	27000
2022	26800	26400
2023	28300	25800
2050		9900

Station ID 40-0181
County Richland
Location click here

	Year	AADT	%Change
1	1987	32,700	
2	1988	34,500	5.5%
3	1989	39,000	13.0%
4	1990	46,000	17.9%
5	1991	46,200	0.4%
6	1992	41,500	-10.2%
7	1993	42,000	1.2%
8	1994	43,300	3.1%
9	1995	43,900	1.4%
10	1996	38,700	-11.8%
11	1997	42,100	8.8%
12	1998	42,500	1.0%
13	1999	39,400	-7.3%
14	2000	38,400	-2.5%
15	2001	39,800	3.6%
16	2002	43,500	9.3%
17	2003	39,200	-9.9%
18	2004	39,200	0.0%
19	2005	36,800	-6.1%
20	2006	36,800	0.0%
21	2007	34,400	-6.5%
22	2008	34,600	0.6%
23	2009	37,800	9.2%
24	2010	36,700	-2.9%
25	2011	34,900	-4.9%
26	2012	35,700	2.3%
27	2013	36,500	2.2%
28	2014	36,000	-1.4%
29	2015	36,800	2.2%
30	2016	38,800	5.4%
31	2017	36,800	-5.2%
32	2018	38,200	3.8%
33	2019	37,600	-1.6%
34	2020	34,800	-7.4%
35	2021	38,000	9.2%
36	2022	39,600	4.2%
37	2023	41,600	5.1%
		Avg=	0.884%

For Reference
1% Annual Growth Rate

Year	Volume	Growth Rate
2023	41,600	Present
2050	52,832	Linear
2050	54,421	Compound

Calculations based on 30YR Growth Rates

Year	Volume	Estimate		
2023	41,600	N/A		
2050	40,070	40,000	*Linear*	-0.13%
2050	40,127	40,000	*Compound*	-0.13%
2050	41,914	42,000	*Average Annual*	0.03%

Calculations based on 20YR Growth Rates

Year	Volume	Estimate		
2023	41,600	N/A		
2050	44,840	45,000	*Linear*	0.31%
2050	45,075	45,000	*Compound*	0.30%
2050	46,676	47,000	*Average Annual*	0.44%

Calculations based on 10YR Growth Rates

Year	Volume	Estimate		
2023	41,600	N/A		
2050	56,720	57,000	*Linear*	1.56%
2050	61,465	61,000	*Compound*	1.46%
2050	61,978	62,000	*Average Annual*	1.75%

Travel Demand Model

COATS

	2018	2045		
Model	41,303	49,657	*Linear*	0.75%
Acual/Est.	38,200	45,926		

Year	Volume	Estimate
2050	47,357	47,000

SCSWM

	2019	2050		
Model	41,898	48,852	*Linear*	0.54%
Acual/Est.	37,600	43,841		

Year	Volume	Estimate
2050	43,841	44,000

Demographic Data

Population

Employment

Trend Analysis
Linear

R-Square	AGR (Historical)	AGR (Design Year)	Annual Increase	2050 Estimate
13.9%	-0.3%	-0.3%	-114	33,600

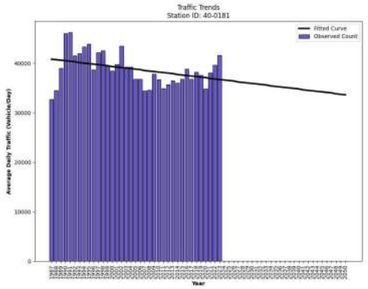

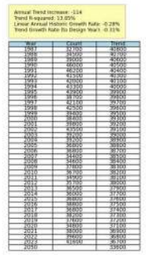

Trend Analysis *(*2015-2023)*
Linear

R-Square	AGR (Historical)	AGR (Design Year)	Annual Increase	2050 Estimate
24.0%	1.0%	0.9%	343	48,700

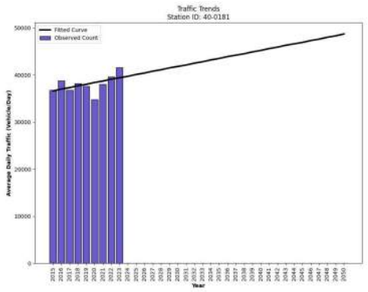



Year	Count	Trend
2015	36800	36400
2016	38800	37000
2017	36800	37300
2018	38200	37700
2019	37600	38000
2020	34800	38400
2021	38000	38700
2022	39600	39100
2023	41600	39400
2050		46700

US176 : S- 42 (SAINT ANDREWS RD), L- 42 TO S- 31 (BUSH RIVER RD)

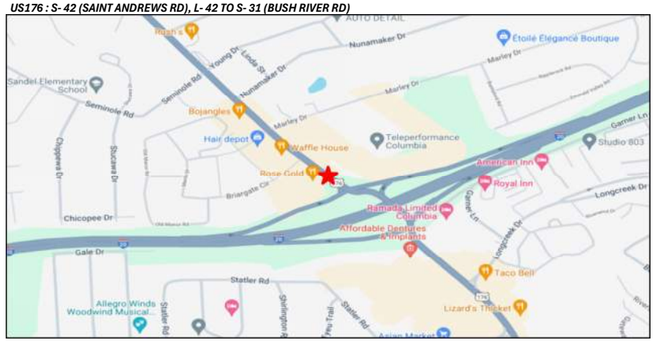

Station ID 40-8073
County Richland
Location click here

	Year	AADT	%Change
1	1987		
2	1988		#DIV/0!
3	1989		#DIV/0!
4	1990		#DIV/0!
5	1991		#DIV/0!
6	1992		#DIV/0!
7	1993		#DIV/0!
8	1994		#DIV/0!
9	1995		#DIV/0!
10	1996		#DIV/0!
11	1997		#DIV/0!
12	1998		#DIV/0!
13	1999		#DIV/0!
14	2000		#DIV/0!
15	2001		#DIV/0!
16	2002		#DIV/0!
17	2003		#DIV/0!
18	2004		#DIV/0!
19	2005		#DIV/0!
20	2006		#DIV/0!
21	2007		#DIV/0!
22	2008		#DIV/0!
23	2009		#DIV/0!
24	2010		#DIV/0!
25	2011		#DIV/0!
26	2012		#DIV/0!
27	2013		#DIV/0!
28	2014		#DIV/0!
29	2015		#DIV/0!
30	2016		#DIV/0!
31	2017		#DIV/0!
32	2018		#DIV/0!
33	2019		#DIV/0!
34	2020	3,600	#DIV/0!
35	2021	4,000	11.1%
36	2022	4,200	5.0%
37	2023	4,200	0.0%
		Avg=	#DIV/0!

For Reference
1% Annual Growth Rate

Year	Volume	Growth Rate
2023	4,200	Present
2050	5,334	Linear
2050	5,494	Compound

Calculations based on 30YR Growth Rates

Year	Volume	Estimate		
2023	4,200	N/A	*Linear*	#DIV/0!
2050	#DIV/0!	#DIV/0!		
Year	**Volume**	**Estimate**		
2023	4,200	N/A	*Compound*	#DIV/0!
2050	#DIV/0!	#DIV/0!		
Year	**Volume**	**Estimate**		
2023	4,200	N/A	*Average Annual*	#DIV/0!
2050	#DIV/0!	#DIV/0!		

Travel Demand Model

COATS

	2018	2045		
Model	9,152	11,041	*Linear*	0.76%
Acual/Est.	0	0		
Year	**Volume**	**Estimate**		
2050	0	0		

SCSWM

	2019	2050		
Model	5,910	7,824	*Linear*	1.04%
Acual/Est.	0	0		
Year	**Volume**	**Estimate**		
2050	0	0		

Demographic Data

Population

Employment

Calculations based on 20YR Growth Rates

Year	Volume	Estimate		
2023	4,200	N/A	*Linear*	#DIV/0!
2050	#DIV/0!	#DIV/0!		
Year	**Volume**	**Estimate**		
2023	4,200	N/A	*Compound*	#DIV/0!
2050	#DIV/0!	#DIV/0!		
Year	**Volume**	**Estimate**		
2023	4,200	N/A	*Average Annual*	#DIV/0!
2050	#DIV/0!	#DIV/0!		

Calculations based on 10YR Growth Rates

Year	Volume	Estimate		
2023	4,200	N/A	*Linear*	#DIV/0!
2050	#DIV/0!	#DIV/0!		
Year	**Volume**	**Estimate**		
2023	4,200	N/A	*Compound*	#DIV/0!
2050	#DIV/0!	#DIV/0!		
Year	**Volume**	**Estimate**		
2023	4,200	N/A	*Average Annual*	#DIV/0!
2050	#DIV/0!	#DIV/0!		

Trend Analysis
Linear

R-Square	AGR (Historical)	AGR (Design Year)	Annual Increase	2050 Estimate
83.3%	5.4%	4.7%	200	9,700

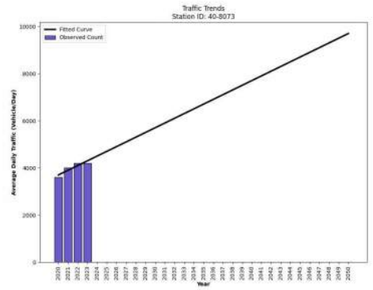

Annual Trend Increase: 200
Trend R-squared: 83.33%
Linear Annual Historic Growth Rate: 5.41%
Trend Growth Rate fro Design Year: 4.65%

Year	Count	Trend
2020	3600	3700
2021	4000	3900
2022	4200	4100
2023	4200	4300
2050		9700

Trend Analysis *(*2015-2023)*
Linear

R-Square	AGR (Historical)	AGR (Design Year)	Annual Increase	2050 Estimate
83.3%	5.4%	4.7%	200	9,700

Annual Trend Increase: 200
Trend R-squared: 83.33%
Linear Annual Historic Growth Rate: 5.41%
Trend Growth Rate fro Design Year: 4.65%

Year	Count	Trend
2020	3600	3700
2021	4000	3900
2022	4200	4100
2023	4200	4300
2050		9700

R-8073 4O1 : US 176 TO I- 20

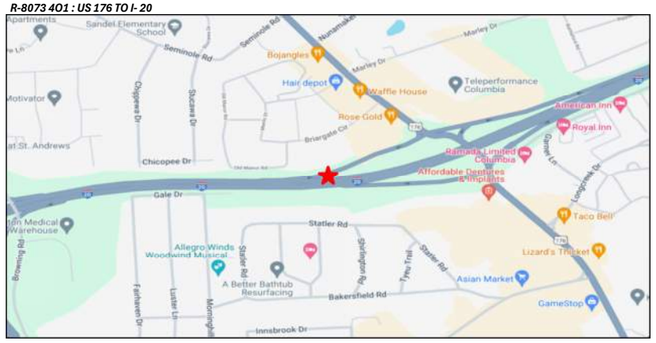

Station ID 40-8070
County Richland
Location click here

	Year	AADT	%Change
1	1987		
2	1988		#DIV/0!
3	1989		#DIV/0!
4	1990		#DIV/0!
5	1991		#DIV/0!
6	1992		#DIV/0!
7	1993		#DIV/0!
8	1994		#DIV/0!
9	1995		#DIV/0!
10	1996		#DIV/0!
11	1997		#DIV/0!
12	1998		#DIV/0!
13	1999		#DIV/0!
14	2000		#DIV/0!
15	2001		#DIV/0!
16	2002		#DIV/0!
17	2003		#DIV/0!
18	2004		#DIV/0!
19	2005		#DIV/0!
20	2006		#DIV/0!
21	2007		#DIV/0!
22	2008		#DIV/0!
23	2009		#DIV/0!
24	2010		#DIV/0!
25	2011		#DIV/0!
26	2012		#DIV/0!
27	2013		#DIV/0!
28	2014		#DIV/0!
29	2015		#DIV/0!
30	2016		#DIV/0!
31	2017		#DIV/0!
32	2018		#DIV/0!
33	2019		#DIV/0!
34	2020	4,600	#DIV/0!
35	2021	3,600	-21.7%
36	2022	3,900	8.3%
37	2023	4,300	10.3%
		Avg=	#DIV/0!

For Reference
1% Annual Growth Rate

Year	Volume	Growth Rate
2023	4,300	Present
2050	5,461	Linear
2050	5,625	Compound

Calculations based on 30YR Growth Rates

Year	Volume	Estimate		
2023	4,300	N/A	*Linear*	#DIV/0!
2050	#DIV/0!	#DIV/0!		
Year	**Volume**	**Estimate**		
2023	4,300	N/A	*Compound*	#DIV/0!
2050	#DIV/0!	#DIV/0!		
Year	**Volume**	**Estimate**		
2023	4,300	N/A	*Average Annual*	#DIV/0!
2050	#DIV/0!	#DIV/0!		

Travel Demand Model

COATS

	2018	2045		
Model	10,277	12,790	*Linear*	0.91%
Acual/Est.	0	0		
Year	**Volume**	**Estimate**		
2050	0	0		

SCSWM

	2019	2050		
Model	5,047	8,723	*Linear*	2.35%
Acual/Est.	0	0		
Year	**Volume**	**Estimate**		
2050	0	0		

Demographic Data

Population

Employment

Calculations based on 20YR Growth Rates

Year	Volume	Estimate		
2023	4,300	N/A	*Linear*	#DIV/0!
2050	#DIV/0!	#DIV/0!		
Year	**Volume**	**Estimate**		
2023	4,300	N/A	*Compound*	#DIV/0!
2050	#DIV/0!	#DIV/0!		
Year	**Volume**	**Estimate**		
2023	4,300	N/A	*Average Annual*	#DIV/0!
2050	#DIV/0!	#DIV/0!		

Calculations based on 10YR Growth Rates

Year	Volume	Estimate		
2023	4,300	N/A	*Linear*	#DIV/0!
2050	#DIV/0!	#DIV/0!		
Year	**Volume**	**Estimate**		
2023	4,300	N/A	*Compound*	#DIV/0!
2050	#DIV/0!	#DIV/0!		
Year	**Volume**	**Estimate**		
2023	4,300	N/A	*Average Annual*	#DIV/0!
2050	#DIV/0!	#DIV/0!		

Trend Analysis

Linear

R-Square	AGR (Historical)	AGR (Design Year)	Annual Increase	2050 Estimate
3.1%	-1.6%	-1.5%	-60	2,400

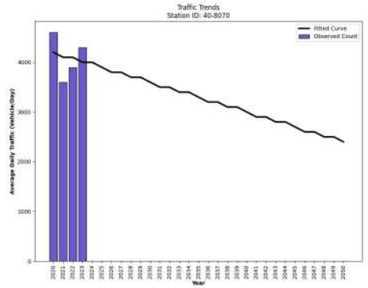

Annual Trend Increase: -60
Trend R-squared: 3.1%
Linear Annual Historic Growth Rate: -1.59%
Trend Growth Rate fro Design Year1: -1.48%

Year	Count	Trend
2020	4600	4200
2021	3600	4100
2022	3900	4100
2023	4300	4000
2050		2400

Trend Analysis *(*2015-2023)*

Linear

R-Square	AGR (Historical)	AGR (Design Year)	Annual Increase	2050 Estimate
3.1%	-1.6%	-1.5%	-60	2,400

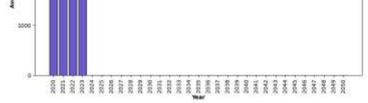

Annual Trend Increase: -60
Trend R-squared: 3.1%
Linear Annual Historic Growth Rate: -1.59%
Trend Growth Rate fro Design Year1: -1.48%

Year	Count	Trend
2020	4600	4200
2021	3600	4100
2022	3900	4100
2023	4300	4000
2050		2400

R-8070 1E1 : I- 20 TO US 176

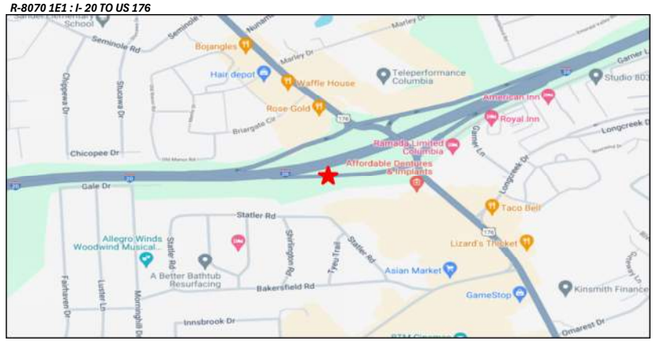

Station ID 40-0126
County Richland
Location click here

	Year	AADT	%Change
1	1987		
2	1988		#DIV/0!
3	1989	71,900	#DIV/0!
4	1990	75,800	5.4%
5	1991	78,200	3.2%
6	1992	74,900	-4.2%
7	1993	78,700	5.1%
8	1994	88,000	11.8%
9	1995	84,600	-3.9%
10	1996	80,500	-4.8%
11	1997	84,700	5.2%
12	1998	88,200	4.1%
13	1999	91,000	3.2%
14	2000	94,700	4.1%
15	2001	94,800	0.1%
16	2002	95,700	0.9%
17	2003	95,600	-0.1%
18	2004	96,800	1.3%
19	2005	97,200	0.4%
20	2006	100,000	2.9%
21	2007	102,000	2.0%
22	2008	98,000	-3.9%
23	2009	98,700	0.7%
24	2010	100,700	2.0%
25	2011	100,100	-0.6%
26	2012	100,500	0.4%
27	2013	102,700	2.2%
28	2014	103,700	1.0%
29	2015	105,800	2.0%
30	2016	108,100	2.2%
31	2017	109,900	1.7%
32	2018	116,700	6.2%
33	2019	119,100	2.1%
34	2020	101,700	-14.6%
35	2021	113,900	12.0%
36	2022	113,600	-0.3%
37	2023	123,700	8.9%
		Avg=	#DIV/0!

For Reference
1% Annual Growth Rate

Year	Volume	Growth Rate
2023	123,700	Present
2050	157,099	Linear
2050	161,825	Compound

Calculations based on 30YR Growth Rates

Year	Volume	Estimate		
2023	123,700	N/A	*Linear*	1.35%
2050	155,830	156,000		
Year	**Volume**	**Estimate**	*Compound*	1.14%
2023	123,700	N/A		
2050	168,061	168,000		
Year	**Volume**	**Estimate**	*Average Annual*	1.29%
2023	123,700	N/A		
2050	168,234	168,000		

Travel Demand Model

COATS

	2018	2045	
Model	114,541	135,310	*Linear* 0.67%
Acual/Est.	116,700	137,860	

Year	Volume	Estimate
2050	141,779	142,000

SCSWM

	2019	2050	
Model	108,316	153,244	*Linear* 1.34%
Acual/Est.	119,100	168,501	

Year	Volume	Estimate
2050	168,501	169,000

Demographic Data

Population

Employment

Calculations based on 20YR Growth Rates

Year	Volume	Estimate		
2023	123,700	N/A	*Linear*	1.39%
2050	160,015	160,000		
Year	**Volume**	**Estimate**	*Compound*	1.23%
2023	123,700	N/A		
2050	172,241	172,000		
Year	**Volume**	**Estimate**	*Average Annual*	1.43%
2023	123,700	N/A		
2050	173,287	173,000		

Calculations based on 10YR Growth Rates

Year	Volume	Estimate		
2023	123,700	N/A	*Linear*	1.93%
2050	177,700	178,000		
Year	**Volume**	**Estimate**	*Compound*	1.78%
2023	123,700	N/A		
2050	199,143	199,000		
Year	**Volume**	**Estimate**	*Average Annual*	2.24%
2023	123,700	N/A		
2050	201,139	201,000		

Trend Analysis

Linear

R-Square	AGR (Historical)	AGR (Design Year)	Annual Increase	2050 Estimate
90.9%	1.6%	1.0%	1,208	150,000

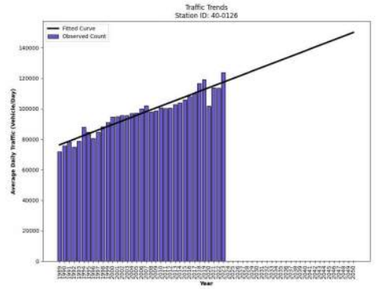

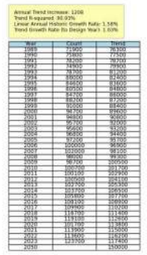

Trend Analysis *(*2015-2023)*

Linear

R-Square	AGR (Historical)	AGR (Design Year)	Annual Increase	2050 Estimate
29.0%	1.3%	1.2%	1,352	154,400

I- 20 : US 176 (BROAD RIVER RD) TO SC 215 (MONTICELLO RD), MP65.13



Station ID 40-8071
County Richland
Location click here

	Year	AADT	%Change
1	1987		
2	1988		#DIV/0!
3	1989		#DIV/0!
4	1990		#DIV/0!
5	1991		#DIV/0!
6	1992		#DIV/0!
7	1993		#DIV/0!
8	1994		#DIV/0!
9	1995		#DIV/0!
10	1996		#DIV/0!
11	1997		#DIV/0!
12	1998		#DIV/0!
13	1999		#DIV/0!
14	2000		#DIV/0!
15	2001		#DIV/0!
16	2002		#DIV/0!
17	2003		#DIV/0!
18	2004		#DIV/0!
19	2005		#DIV/0!
20	2006		#DIV/0!
21	2007		#DIV/0!
22	2008		#DIV/0!
23	2009		#DIV/0!
24	2010		#DIV/0!
25	2011		#DIV/0!
26	2012		#DIV/0!
27	2013		#DIV/0!
28	2014		#DIV/0!
29	2015		#DIV/0!
30	2016		#DIV/0!
31	2017		#DIV/0!
32	2018		#DIV/0!
33	2019		#DIV/0!
34	2020	8,600	#DIV/0!
35	2021	9,400	9.3%
36	2022	10,100	7.4%
37	2023	10,100	0.0%
		Avg=	#DIV/0!

For Reference
1% Annual Growth Rate

Year	Volume	Growth Rate
2023	10,100	Present
2050	12,827	Linear
2050	13,213	Compound

Calculations based on 30YR Growth Rates

Year	Volume	Estimate		
2023	10,100	N/A	*Linear*	#DIV/0!
2050	#DIV/0!	#DIV/0!		
Year	**Volume**	**Estimate**		
2023	10,100	N/A	*Compound*	#DIV/0!
2050	#DIV/0!	#DIV/0!		
Year	**Volume**	**Estimate**		
2023	10,100	N/A	*Average Annual*	#DIV/0!
2050	#DIV/0!	#DIV/0!		

Travel Demand Model

COATS

	2018	2045		
Model	12,962	14,853	*Linear*	0.54%
Acual/Est.	0	0		

Year	Volume	Estimate
2050	0	0

SCSWM

	2019	2050		
Model	11,752	10,305	*Linear*	-0.40%
Acual/Est.	0	0		

Year	Volume	Estimate
2050	0	0

Demographic Data

Population

Employment

Calculations based on 20YR Growth Rates

Year	Volume	Estimate		
2023	10,100	N/A	*Linear*	#DIV/0!
2050	#DIV/0!	#DIV/0!		
Year	**Volume**	**Estimate**		
2023	10,100	N/A	*Compound*	#DIV/0!
2050	#DIV/0!	#DIV/0!		
Year	**Volume**	**Estimate**		
2023	10,100	N/A	*Average Annual*	#DIV/0!
2050	#DIV/0!	#DIV/0!		

Calculations based on 10YR Growth Rates

Year	Volume	Estimate		
2023	10,100	N/A	*Linear*	#DIV/0!
2050	#DIV/0!	#DIV/0!		
Year	**Volume**	**Estimate**		
2023	10,100	N/A	*Compound*	#DIV/0!
2050	#DIV/0!	#DIV/0!		
Year	**Volume**	**Estimate**		
2023	10,100	N/A	*Average Annual*	#DIV/0!
2050	#DIV/0!	#DIV/0!		

Trend Analysis
Linear

R-Square	AGR (Historical)	AGR (Design Year)	Annual Increase	2050 Estimate
88.4%	5.7%	5.1%	520	24,400

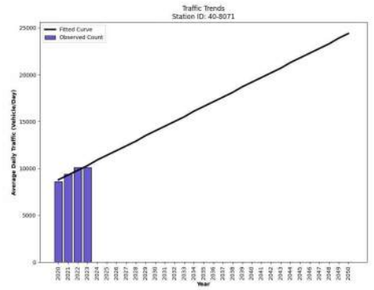

Year	Count	Trend
2020	8600	8800
2021	9400	9350
2022	10100	9900
2023	10100	10300
2050		24400

Trend Analysis *(*2015-2023)*
Linear

R-Square	AGR (Historical)	AGR (Design Year)	Annual Increase	2050 Estimate
88.4%	5.7%	5.1%	520	24,400

Year	Count	Trend
2020	8600	8800
2021	9400	9350
2022	10100	9900
2023	10100	10300
2050		24400

R-8071 2O1 : US 176 TO I- 20



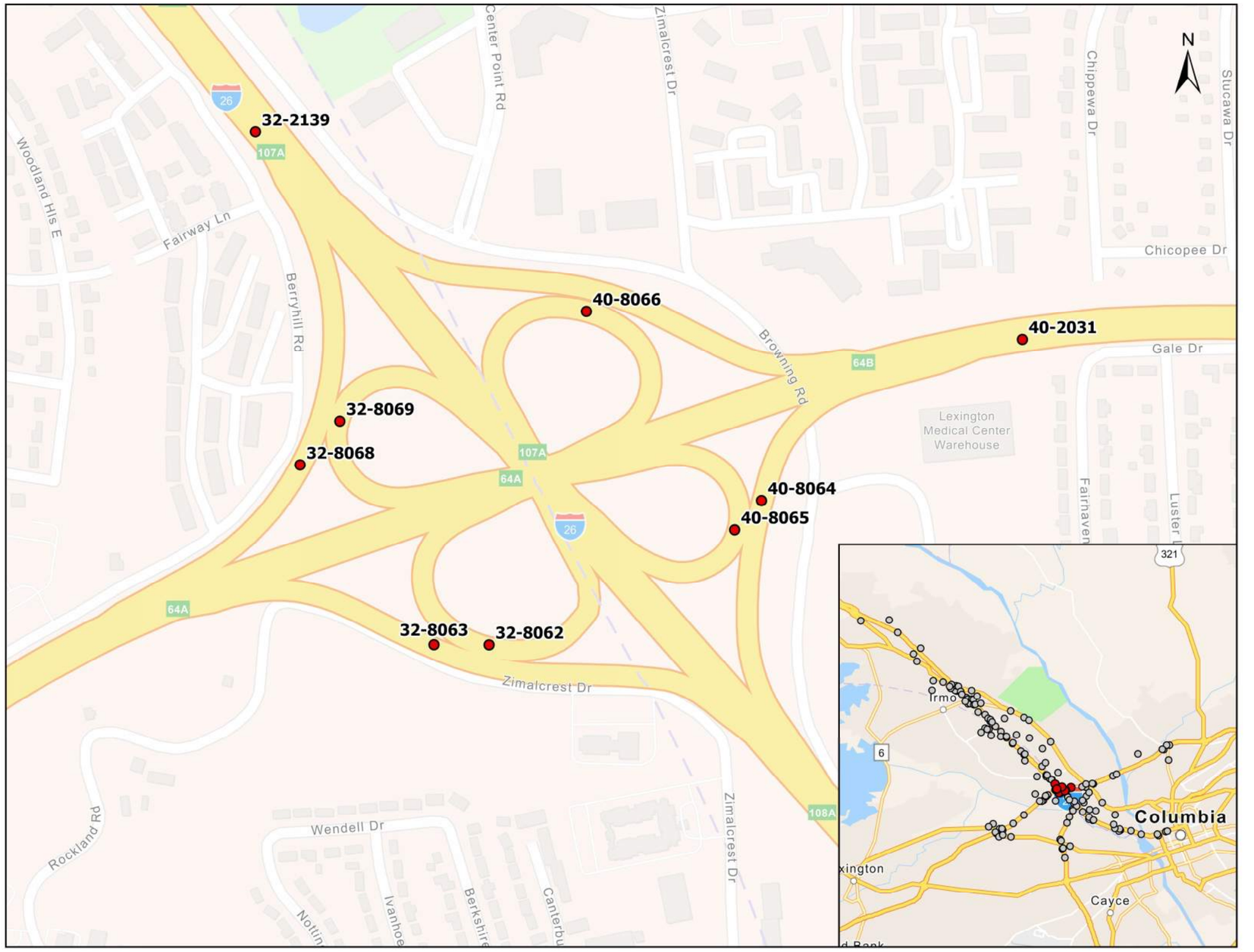
32-2139
40-8066
40-2031
32-8069
32-8068
40-8064
40-8065
32-8063
32-8062
Center Point Rd
Zimalcrest Dr
Chippewa Dr
Stucawa Dr
Chicopee Dr
Gale Dr
Browning Rd
Woodland Hls E
Fairway Ln
Berryhill Rd
Lexington Medical Center Warehouse
Zimalcrest Dr
Wendell Dr
Rockland Rd
Columbia
Irmo
Cayce
N

Station ID 32-8068
County Lexington
Location click here

	Year	AADT	%Change
1	1987		
2	1988		#DIV/0!
3	1989		#DIV/0!
4	1990		#DIV/0!
5	1991		#DIV/0!
6	1992		#DIV/0!
7	1993		#DIV/0!
8	1994		#DIV/0!
9	1995		#DIV/0!
10	1996		#DIV/0!
11	1997		#DIV/0!
12	1998		#DIV/0!
13	1999		#DIV/0!
14	2000		#DIV/0!
15	2001		#DIV/0!
16	2002		#DIV/0!
17	2003		#DIV/0!
18	2004		#DIV/0!
19	2005		#DIV/0!
20	2006		#DIV/0!
21	2007		#DIV/0!
22	2008		#DIV/0!
23	2009		#DIV/0!
24	2010		#DIV/0!
25	2011		#DIV/0!
26	2012		#DIV/0!
27	2013		#DIV/0!
28	2014		#DIV/0!
29	2015		#DIV/0!
30	2016		#DIV/0!
31	2017		#DIV/0!
32	2018		#DIV/0!
33	2019		#DIV/0!
34	2020	6,700	#DIV/0!
35	2021	7,400	10.4%
36	2022	8,600	16.2%
37	2023	9,900	15.1%
		Avg=	#DIV/0!

For Reference
1% Annual Growth Rate

Year	Volume	Growth Rate
2023	9,900	Present
2050	12,573	Linear
2050	12,951	Compound

Calculations based on 30YR Growth Rates

Year	Volume	Estimate		
2023	9,900	N/A	*Linear*	#DIV/0!
2050	#DIV/0!	#DIV/0!		
Year	**Volume**	**Estimate**		
2023	9,900	N/A	*Compound*	#DIV/0!
2050	#DIV/0!	#DIV/0!		
Year	**Volume**	**Estimate**		
2023	9,900	N/A	*Average Annual*	#DIV/0!
2050	#DIV/0!	#DIV/0!		

Travel Demand Model

COATS

	2018	2045		
Model	11,284	16,554	*Linear*	1.73%
Acual/Est.	0	0		
Year	**Volume**	**Estimate**		
2050	0	0		

SCSWM

	2019	2050		
Model	8,848	9,985	*Linear*	0.41%
Acual/Est.	0	0		
Year	**Volume**	**Estimate**		
2050	0	0		

Demographic Data

Population

Employment

R-8068 4O1 : I- 26 TO I- 20



Calculations based on 20YR Growth Rates

Year	Volume	Estimate		
2023	9,900	N/A	*Linear*	#DIV/0!
2050	#DIV/0!	#DIV/0!		
Year	**Volume**	**Estimate**		
2023	9,900	N/A	*Compound*	#DIV/0!
2050	#DIV/0!	#DIV/0!		
Year	**Volume**	**Estimate**		
2023	9,900	N/A	*Average Annual*	#DIV/0!
2050	#DIV/0!	#DIV/0!		

Calculations based on 10YR Growth Rates

Year	Volume	Estimate		
2023	9,900	N/A	*Linear*	#DIV/0!
2050	#DIV/0!	#DIV/0!		
Year	**Volume**	**Estimate**		
2023	9,900	N/A	*Compound*	#DIV/0!
2050	#DIV/0!	#DIV/0!		
Year	**Volume**	**Estimate**		
2023	9,900	N/A	*Average Annual*	#DIV/0!
2050	#DIV/0!	#DIV/0!		

Trend Analysis
Linear

R-Square	AGR (Historical)	AGR (Design Year)	Annual Increase	2050 Estimate
98.4%	16.9%	11.0%	1,080	38,900

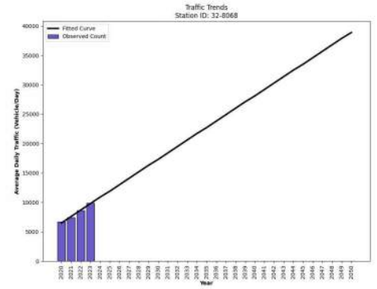

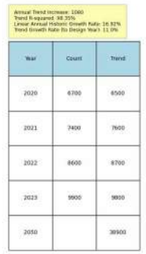

Trend Analysis *(*2015-2023)*
Linear

R-Square	AGR (Historical)	AGR (Design Year)	Annual Increase	2050 Estimate
98.4%	16.9%	11.0%	1,080	38,900

Station ID 40-8065
County Richland
Location click here

	Year	AADT	%Change
1	1987		
2	1988		#DIV/0!
3	1989		#DIV/0!
4	1990		#DIV/0!
5	1991		#DIV/0!
6	1992		#DIV/0!
7	1993		#DIV/0!
8	1994		#DIV/0!
9	1995		#DIV/0!
10	1996		#DIV/0!
11	1997		#DIV/0!
12	1998		#DIV/0!
13	1999		#DIV/0!
14	2000		#DIV/0!
15	2001		#DIV/0!
16	2002		#DIV/0!
17	2003		#DIV/0!
18	2004		#DIV/0!
19	2005		#DIV/0!
20	2006		#DIV/0!
21	2007		#DIV/0!
22	2008		#DIV/0!
23	2009		#DIV/0!
24	2010		#DIV/0!
25	2011		#DIV/0!
26	2012		#DIV/0!
27	2013		#DIV/0!
28	2014		#DIV/0!
29	2015		#DIV/0!
30	2016		#DIV/0!
31	2017		#DIV/0!
32	2018		#DIV/0!
33	2019		#DIV/0!
34	2020	8,700	#DIV/0!
35	2021	6,900	-20.7%
36	2022	8,400	21.7%
37	2023	8,800	4.8%
		Avg=	#DIV/0!

For Reference
1% Annual Growth Rate

Year	Volume	Growth Rate
2023	8,800	Present
2050	11,176	Linear
2050	11,512	Compound

Calculations based on 30YR Growth Rates

Year	Volume	Estimate		
2023	8,800	N/A	*Linear*	#DIV/0!
2050	#DIV/0!	#DIV/0!		
Year	**Volume**	**Estimate**	*Compound*	#DIV/0!
2023	8,800	N/A		
2050	#DIV/0!	#DIV/0!		
Year	**Volume**	**Estimate**	*Average Annual*	#DIV/0!
2023	8,800	N/A		
2050	#DIV/0!	#DIV/0!		

Travel Demand Model

COATS

	2018	2045		
Model	8,470	11,606	*Linear*	1.37%
Acual/Est.	0	0		

Year	Volume	Estimate
2050	0	0

SCSWM

	2019	2050		
Model	8,737	10,229	*Linear*	0.55%
Acual/Est.	0	0		

Year	Volume	Estimate
2050	0	0

Demographic Data

Population

Employment

Calculations based on 20YR Growth Rates

Year	Volume	Estimate		
2023	8,800	N/A	*Linear*	#DIV/0!
2050	#DIV/0!	#DIV/0!		
Year	**Volume**	**Estimate**	*Compound*	#DIV/0!
2023	8,800	N/A		
2050	#DIV/0!	#DIV/0!		
Year	**Volume**	**Estimate**	*Average Annual*	#DIV/0!
2023	8,800	N/A		
2050	#DIV/0!	#DIV/0!		

Calculations based on 10YR Growth Rates

Year	Volume	Estimate		
2023	8,800	N/A	*Linear*	#DIV/0!
2050	#DIV/0!	#DIV/0!		
Year	**Volume**	**Estimate**	*Compound*	#DIV/0!
2023	8,800	N/A		
2050	#DIV/0!	#DIV/0!		
Year	**Volume**	**Estimate**	*Average Annual*	#DIV/0!
2023	8,800	N/A		
2050	#DIV/0!	#DIV/0!		

Trend Analysis

Linear

R-Square	AGR (Historical)	AGR (Design Year)	Annual Increase	2050 Estimate
6.9%	2.5%	2.1%	180	13,300

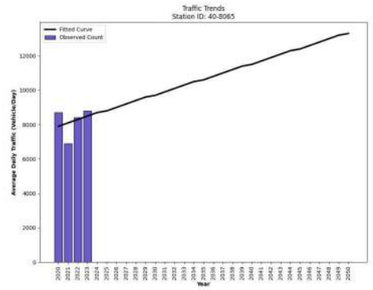

Year	Count	Trend
2020	8700	7900
2021	6900	8100
2022	8400	8300
2023	8800	8500
2050		13300

Trend Analysis *(*2015-2023)*

Linear

R-Square	AGR (Historical)	AGR (Design Year)	Annual Increase	2050 Estimate
6.9%	2.5%	2.1%	180	13,300

Year	Count	Trend
2020	8700	7900
2021	6900	8100
2022	8400	8300
2023	8800	8500
2050		13300

R-8065 2E1 : I- 20 TO I- 26

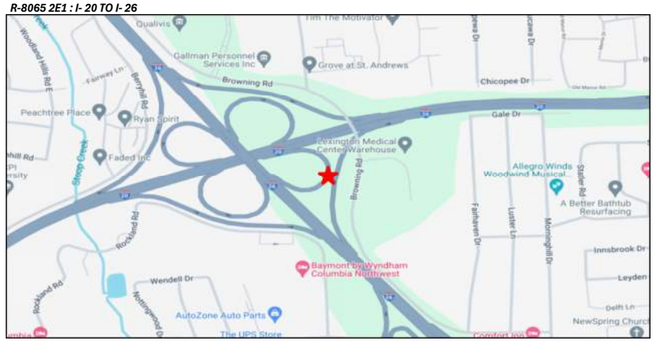

Station ID 40-8066
County Richland
Location click here

	Year	AADT	%Change
1	1987		
2	1988		#DIV/0!
3	1989		#DIV/0!
4	1990		#DIV/0!
5	1991		#DIV/0!
6	1992		#DIV/0!
7	1993		#DIV/0!
8	1994		#DIV/0!
9	1995		#DIV/0!
10	1996		#DIV/0!
11	1997		#DIV/0!
12	1998		#DIV/0!
13	1999		#DIV/0!
14	2000		#DIV/0!
15	2001		#DIV/0!
16	2002		#DIV/0!
17	2003		#DIV/0!
18	2004		#DIV/0!
19	2005		#DIV/0!
20	2006		#DIV/0!
21	2007		#DIV/0!
22	2008		#DIV/0!
23	2009		#DIV/0!
24	2010		#DIV/0!
25	2011		#DIV/0!
26	2012		#DIV/0!
27	2013		#DIV/0!
28	2014		#DIV/0!
29	2015		#DIV/0!
30	2016		#DIV/0!
31	2017		#DIV/0!
32	2018		#DIV/0!
33	2019		#DIV/0!
34	2020	7,300	#DIV/0!
35	2021	8,200	12.3%
36	2022	9,900	20.7%
37	2023	12,600	27.3%
		Avg=	#DIV/0!

For Reference
1% Annual Growth Rate

Year	Volume	Growth Rate
2023	12,600	Present
2050	16,002	Linear
2050	16,483	Compound

Calculations based on 30YR Growth Rates

Year	Volume	Estimate		
2023	12,600	N/A	*Linear*	#DIV/0!
2050	#DIV/0!	#DIV/0!		
Year	**Volume**	**Estimate**		
2023	12,600	N/A	*Compound*	#DIV/0!
2050	#DIV/0!	#DIV/0!		
Year	**Volume**	**Estimate**		
2023	12,600	N/A	*Average Annual*	#DIV/0!
2050	#DIV/0!	#DIV/0!		

Travel Demand Model

COATS

	2018	2045		
Model	10,831	11,368	*Linear*	0.18%
Acual/Est.	0	0		
Year	**Volume**	**Estimate**		
2050	0	0		

SCSWM

	2019	2050		
Model	6,438	6,953	*Linear*	0.26%
Acual/Est.	0	0		
Year	**Volume**	**Estimate**		
2050	0	0		

Demographic Data

Population

Employment

R-8066 3O1 : I- 26 TO I- 20



Calculations based on 20YR Growth Rates

Year	Volume	Estimate		
2023	12,600	N/A	*Linear*	#DIV/0!
2050	#DIV/0!	#DIV/0!		
Year	**Volume**	**Estimate**		
2023	12,600	N/A	*Compound*	#DIV/0!
2050	#DIV/0!	#DIV/0!		
Year	**Volume**	**Estimate**		
2023	12,600	N/A	*Average Annual*	#DIV/0!
2050	#DIV/0!	#DIV/0!		

Calculations based on 10YR Growth Rates

Year	Volume	Estimate		
2023	12,600	N/A	*Linear*	#DIV/0!
2050	#DIV/0!	#DIV/0!		
Year	**Volume**	**Estimate**		
2023	12,600	N/A	*Compound*	#DIV/0!
2050	#DIV/0!	#DIV/0!		
Year	**Volume**	**Estimate**		
2023	12,600	N/A	*Average Annual*	#DIV/0!
2050	#DIV/0!	#DIV/0!		

Trend Analysis

Linear

R-Square	AGR (Historical)	AGR (Design Year)	Annual Increase	2050 Estimate
95.0%	25.1%	14.6%	1,760	59,700

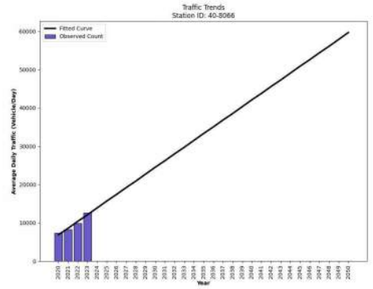

Year	Count	Trend
2020	7300	6900
2021	8200	8600
2022	9900	10400
2023	12600	12100
2050		59700

Trend Analysis *(*2015-2023)*

Linear

R-Square	AGR (Historical)	AGR (Design Year)	Annual Increase	2050 Estimate
95.0%	25.1%	14.6%	1,760	59,700

Year	Count	Trend
2020	7300	6900
2021	8200	8600
2022	9900	10400
2023	12600	12100
2050		59700

Station ID 32-8069
County Lexington
Location click here

	Year	AADT	%Change
1	1987		
2	1988		#DIV/0!
3	1989		#DIV/0!
4	1990		#DIV/0!
5	1991		#DIV/0!
6	1992		#DIV/0!
7	1993		#DIV/0!
8	1994		#DIV/0!
9	1995		#DIV/0!
10	1996		#DIV/0!
11	1997		#DIV/0!
12	1998		#DIV/0!
13	1999		#DIV/0!
14	2000		#DIV/0!
15	2001		#DIV/0!
16	2002		#DIV/0!
17	2003		#DIV/0!
18	2004		#DIV/0!
19	2005		#DIV/0!
20	2006		#DIV/0!
21	2007		#DIV/0!
22	2008		#DIV/0!
23	2009		#DIV/0!
24	2010		#DIV/0!
25	2011		#DIV/0!
26	2012		#DIV/0!
27	2013		#DIV/0!
28	2014		#DIV/0!
29	2015		#DIV/0!
30	2016		#DIV/0!
31	2017		#DIV/0!
32	2018		#DIV/0!
33	2019		#DIV/0!
34	2020	10,500	#DIV/0!
35	2021	9,800	-6.7%
36	2022	9,800	0.0%
37	2023	9,400	-4.1%
		Avg=	#DIV/0!

For Reference
1% Annual Growth Rate

Year	Volume	Growth Rate
2023	9,400	Present
2050	11,938	Linear
2050	12,297	Compound

Calculations based on 30YR Growth Rates

Year	Volume	Estimate		
2023	9,400	N/A	*Linear*	#DIV/0!
2050	#DIV/0!	#DIV/0!		
Year	**Volume**	**Estimate**		
2023	9,400	N/A	*Compound*	#DIV/0!
2050	#DIV/0!	#DIV/0!		
Year	**Volume**	**Estimate**		
2023	9,400	N/A	*Average Annual*	#DIV/0!
2050	#DIV/0!	#DIV/0!		

Travel Demand Model

COATS

	2018	2045		
Model	12,514	13,273	*Linear*	0.22%
Acual/Est.	0	0		
Year	**Volume**	**Estimate**		
2050	0	0		

SCSWM

	2019	2050		
Model	4,950	3,003	*Linear*	-1.27%
Acual/Est.	0	0		
Year	**Volume**	**Estimate**		
2050	0	0		

Demographic Data

Population

Employment

R-8069 4E1 : I- 20 TO I- 26



Calculations based on 20YR Growth Rates

Year	Volume	Estimate		
2023	9,400	N/A	*Linear*	#DIV/0!
2050	#DIV/0!	#DIV/0!		
Year	**Volume**	**Estimate**		
2023	9,400	N/A	*Compound*	#DIV/0!
2050	#DIV/0!	#DIV/0!		
Year	**Volume**	**Estimate**		
2023	9,400	N/A	*Average Annual*	#DIV/0!
2050	#DIV/0!	#DIV/0!		

Calculations based on 10YR Growth Rates

Year	Volume	Estimate		
2023	9,400	N/A	*Linear*	#DIV/0!
2050	#DIV/0!	#DIV/0!		
Year	**Volume**	**Estimate**		
2023	9,400	N/A	*Compound*	#DIV/0!
2050	#DIV/0!	#DIV/0!		
Year	**Volume**	**Estimate**		
2023	9,400	N/A	*Average Annual*	#DIV/0!
2050	#DIV/0!	#DIV/0!		

Trend Analysis
Linear

R-Square	AGR (Historical)	AGR (Design Year)	Annual Increase	2050 Estimate
86.8%	-3.2%	-3.5%	-330	500

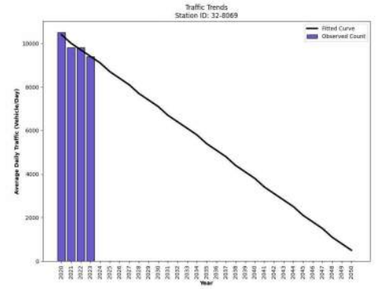

Annual Trend Increase: -330
Trend R-squared: 86.77%
Linear Annual Historic Growth Rate: -3.21%
Trend Growth Rate fro Design Year1: -3.51%

Year	Count	Trend
2020	10500	10400
2021	9800	10000
2022	9800	9700
2023	9400	9400
2050		500

Trend Analysis *(*2015-2023)*
Linear

R-Square	AGR (Historical)	AGR (Design Year)	Annual Increase	2050 Estimate
86.8%	-3.2%	-3.5%	-330	500

Annual Trend Increase: -330
Trend R-squared: 86.77%
Linear Annual Historic Growth Rate: -3.21%
Trend Growth Rate fro Design Year1: -3.51%

Year	Count	Trend
2020	10500	10400
2021	9800	10000
2022	9800	9700
2023	9400	9400
2050		500

Station ID 40-8064
County Richland
Location click here

	Year	AADT	%Change
1	1987		
2	1988		#DIV/0!
3	1989		#DIV/0!
4	1990		#DIV/0!
5	1991		#DIV/0!
6	1992		#DIV/0!
7	1993		#DIV/0!
8	1994		#DIV/0!
9	1995		#DIV/0!
10	1996		#DIV/0!
11	1997		#DIV/0!
12	1998		#DIV/0!
13	1999		#DIV/0!
14	2000		#DIV/0!
15	2001		#DIV/0!
16	2002		#DIV/0!
17	2003		#DIV/0!
18	2004		#DIV/0!
19	2005		#DIV/0!
20	2006		#DIV/0!
21	2007		#DIV/0!
22	2008		#DIV/0!
23	2009		#DIV/0!
24	2010		#DIV/0!
25	2011		#DIV/0!
26	2012		#DIV/0!
27	2013		#DIV/0!
28	2014		#DIV/0!
29	2015		#DIV/0!
30	2016		#DIV/0!
31	2017		#DIV/0!
32	2018		#DIV/0!
33	2019		#DIV/0!
34	2020	7,500	#DIV/0!
35	2021	8,400	12.0%
36	2022	8,800	4.8%
37	2023	9,500	8.0%
		Avg=	#DIV/0!

For Reference
1% Annual Growth Rate

Year	Volume	Growth Rate
2023	9,500	Present
2050	12,065	Linear
2050	12,428	Compound

Calculations based on 30YR Growth Rates

Year	Volume	Estimate		
2023	9,500	N/A	*Linear*	#DIV/0!
2050	#DIV/0!	#DIV/0!		
Year	**Volume**	**Estimate**		
2023	9,500	N/A	*Compound*	#DIV/0!
2050	#DIV/0!	#DIV/0!		
Year	**Volume**	**Estimate**		
2023	9,500	N/A	*Average Annual*	#DIV/0!
2050	#DIV/0!	#DIV/0!		

Travel Demand Model

COATS

	2018	2045		
Model	11,780	12,541	*Linear*	0.24%
Acual/Est.	0	0		

Year	Volume	Estimate
2050	0	0

SCSWM

	2019	2050		
Model	5,674	2,558	*Linear*	-1.77%
Acual/Est.	0	0		

Year	Volume	Estimate
2050	0	0

Demographic Data

Population

Employment

Calculations based on 20YR Growth Rates

Year	Volume	Estimate		
2023	9,500	N/A	*Linear*	#DIV/0!
2050	#DIV/0!	#DIV/0!		
Year	**Volume**	**Estimate**		
2023	9,500	N/A	*Compound*	#DIV/0!
2050	#DIV/0!	#DIV/0!		
Year	**Volume**	**Estimate**		
2023	9,500	N/A	*Average Annual*	#DIV/0!
2050	#DIV/0!	#DIV/0!		

Calculations based on 10YR Growth Rates

Year	Volume	Estimate		
2023	9,500	N/A	*Linear*	#DIV/0!
2050	#DIV/0!	#DIV/0!		
Year	**Volume**	**Estimate**		
2023	9,500	N/A	*Compound*	#DIV/0!
2050	#DIV/0!	#DIV/0!		
Year	**Volume**	**Estimate**		
2023	9,500	N/A	*Average Annual*	#DIV/0!
2050	#DIV/0!	#DIV/0!		

Trend Analysis
Linear

R-Square	AGR (Historical)	AGR (Design Year)	Annual Increase	2050 Estimate
98.0%	8.3%	6.7%	640	26,800

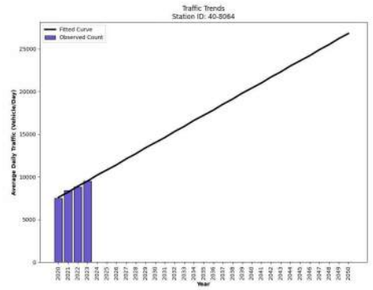

Year	Count	Trend
2020	7500	7860
2021	8400	8200
2022	8800	8900
2023	9500	9560
2050		26800

Trend Analysis *(*2015-2023)*
Linear

R-Square	AGR (Historical)	AGR (Design Year)	Annual Increase	2050 Estimate
98.0%	8.3%	6.7%	640	26,800

Year	Count	Trend
2020	7500	7860
2021	8400	8200
2022	8800	8900
2023	9500	9560
2050		26800

R-8064 2O1 : I- 26 TO I- 20

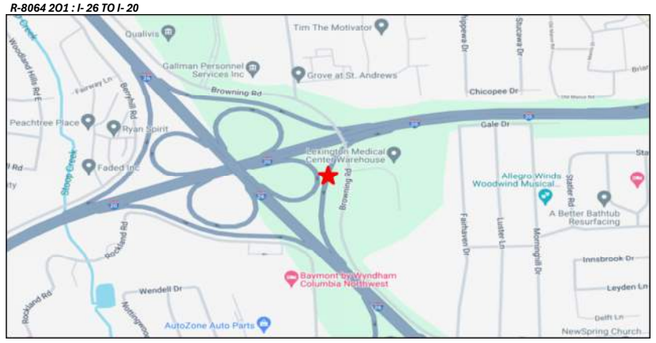

Station ID 32-8062
County Lexington
Location click here

	Year	AADT	%Change
1	1987		
2	1988		#DIV/0!
3	1989		#DIV/0!
4	1990		#DIV/0!
5	1991		#DIV/0!
6	1992		#DIV/0!
7	1993		#DIV/0!
8	1994		#DIV/0!
9	1995		#DIV/0!
10	1996		#DIV/0!
11	1997		#DIV/0!
12	1998		#DIV/0!
13	1999		#DIV/0!
14	2000		#DIV/0!
15	2001		#DIV/0!
16	2002		#DIV/0!
17	2003		#DIV/0!
18	2004		#DIV/0!
19	2005		#DIV/0!
20	2006		#DIV/0!
21	2007		#DIV/0!
22	2008		#DIV/0!
23	2009		#DIV/0!
24	2010		#DIV/0!
25	2011		#DIV/0!
26	2012		#DIV/0!
27	2013		#DIV/0!
28	2014		#DIV/0!
29	2015		#DIV/0!
30	2016		#DIV/0!
31	2017		#DIV/0!
32	2018		#DIV/0!
33	2019		#DIV/0!
34	2020	14,800	#DIV/0!
35	2021	19,100	29.1%
36	2022	18,700	-2.1%
37	2023	17,700	-5.3%
		Avg=	#DIV/0!

For Reference
1% Annual Growth Rate

Year	Volume	Growth Rate
2023	17,700	Present
2050	22,479	Linear
2050	23,155	Compound

Calculations based on 30YR Growth Rates

Year	Volume	Estimate		
2023	17,700	N/A	*Linear*	#DIV/0!
2050	#DIV/0!	#DIV/0!		
Year	**Volume**	**Estimate**		
2023	17,700	N/A	*Compound*	#DIV/0!
2050	#DIV/0!	#DIV/0!		
Year	**Volume**	**Estimate**		
2023	17,700	N/A	*Average Annual*	#DIV/0!
2050	#DIV/0!	#DIV/0!		

Travel Demand Model

COATS

	2018	2045		
Model	13,973	16,253	*Linear*	0.60%
Acual/Est.	0	0		
Year	**Volume**	**Estimate**		
2050	0	0		

SCSWM

	2019	2050		
Model	10,973	8,842	*Linear*	-0.63%
Acual/Est.	0	0		
Year	**Volume**	**Estimate**		
2050	0	0		

Demographic Data

Population

Employment

R-8062 1O1 : I- 26 TO I- 20

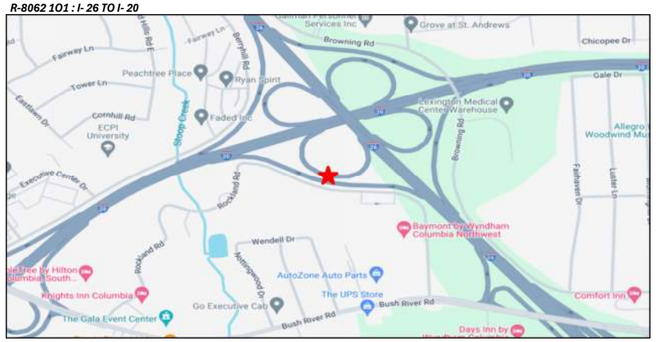

Calculations based on 20YR Growth Rates

Year	Volume	Estimate		
2023	17,700	N/A	*Linear*	#DIV/0!
2050	#DIV/0!	#DIV/0!		
Year	**Volume**	**Estimate**		
2023	17,700	N/A	*Compound*	#DIV/0!
2050	#DIV/0!	#DIV/0!		
Year	**Volume**	**Estimate**		
2023	17,700	N/A	*Average Annual*	#DIV/0!
2050	#DIV/0!	#DIV/0!		

Calculations based on 10YR Growth Rates

Year	Volume	Estimate		
2023	17,700	N/A	*Linear*	#DIV/0!
2050	#DIV/0!	#DIV/0!		
Year	**Volume**	**Estimate**		
2023	17,700	N/A	*Compound*	#DIV/0!
2050	#DIV/0!	#DIV/0!		
Year	**Volume**	**Estimate**		
2023	17,700	N/A	*Average Annual*	#DIV/0!
2050	#DIV/0!	#DIV/0!		

Trend Analysis

Linear

R-Square	AGR (Historical)	AGR (Design Year)	Annual Increase	2050 Estimate
30.5%	5.1%	4.4%	830	41,200

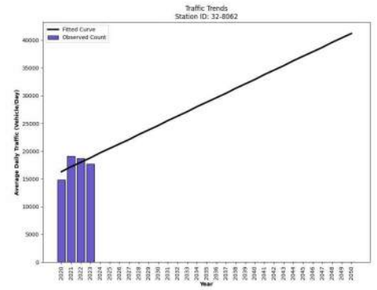

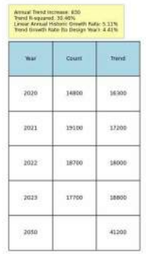

Trend Analysis *(*2015-2023)*

Linear

R-Square	AGR (Historical)	AGR (Design Year)	Annual Increase	2050 Estimate
30.5%	5.1%	4.4%	830	41,200

Station ID 32-8063
County Lexington
Location click here

	Year	AADT	%Change
1	1987		
2	1988		#DIV/0!
3	1989		#DIV/0!
4	1990		#DIV/0!
5	1991		#DIV/0!
6	1992		#DIV/0!
7	1993		#DIV/0!
8	1994		#DIV/0!
9	1995		#DIV/0!
10	1996		#DIV/0!
11	1997		#DIV/0!
12	1998		#DIV/0!
13	1999		#DIV/0!
14	2000		#DIV/0!
15	2001		#DIV/0!
16	2002		#DIV/0!
17	2003		#DIV/0!
18	2004		#DIV/0!
19	2005		#DIV/0!
20	2006		#DIV/0!
21	2007		#DIV/0!
22	2008		#DIV/0!
23	2009		#DIV/0!
24	2010		#DIV/0!
25	2011		#DIV/0!
26	2012		#DIV/0!
27	2013		#DIV/0!
28	2014		#DIV/0!
29	2015		#DIV/0!
30	2016		#DIV/0!
31	2017		#DIV/0!
32	2018		#DIV/0!
33	2019		#DIV/0!
34	2020	9,300	#DIV/0!
35	2021	8,600	-7.5%
36	2022	8,900	3.5%
37	2023	12,000	34.8%
		Avg=	#DIV/0!

For Reference
1% Annual Growth Rate

Year	Volume	Growth Rate
2023	12,000	Present
2050	15,240	Linear
2050	15,699	Compound

Calculations based on 30YR Growth Rates

Year	Volume	Estimate		
2023	12,000	N/A	*Linear*	#DIV/0!
2050	#DIV/0!	#DIV/0!		
Year	**Volume**	**Estimate**		
2023	12,000	N/A	*Compound*	#DIV/0!
2050	#DIV/0!	#DIV/0!		
Year	**Volume**	**Estimate**		
2023	12,000	N/A	*Average Annual*	#DIV/0!
2050	#DIV/0!	#DIV/0!		

Travel Demand Model

COATS

	2018	2045		
Model	14,218	14,613	*Linear*	0.10%
Acual/Est.	0	0		
Year	**Volume**	**Estimate**		
2050	0	0		

SCSWM

	2019	2050		
Model	6,584	8,728	*Linear*	1.05%
Acual/Est.	0	0		
Year	**Volume**	**Estimate**		
2050	0	0		

Demographic Data

Population

Employment

Calculations based on 20YR Growth Rates

Year	Volume	Estimate		
2023	12,000	N/A	*Linear*	#DIV/0!
2050	#DIV/0!	#DIV/0!		
Year	**Volume**	**Estimate**		
2023	12,000	N/A	*Compound*	#DIV/0!
2050	#DIV/0!	#DIV/0!		
Year	**Volume**	**Estimate**		
2023	12,000	N/A	*Average Annual*	#DIV/0!
2050	#DIV/0!	#DIV/0!		

Calculations based on 10YR Growth Rates

Year	Volume	Estimate		
2023	12,000	N/A	*Linear*	#DIV/0!
2050	#DIV/0!	#DIV/0!		
Year	**Volume**	**Estimate**		
2023	12,000	N/A	*Compound*	#DIV/0!
2050	#DIV/0!	#DIV/0!		
Year	**Volume**	**Estimate**		
2023	12,000	N/A	*Average Annual*	#DIV/0!
2050	#DIV/0!	#DIV/0!		

Trend Analysis

Linear

R-Square	AGR (Historical)	AGR (Design Year)	Annual Increase	2050 Estimate
48.3%	10.3%	7.6%	840	33,600

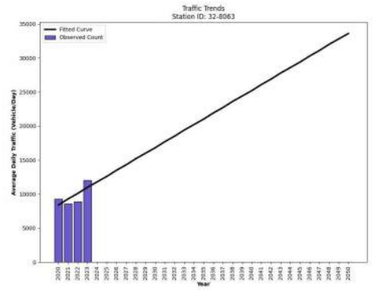

Year	Count	Trend
2020	9300	8400
2021	8600	9300
2022	8900	10100
2023	12000	11000
2050		33600

Trend Analysis *(*2015-2023)*

Linear

R-Square	AGR (Historical)	AGR (Design Year)	Annual Increase	2050 Estimate
48.3%	10.3%	7.6%	840	33,600

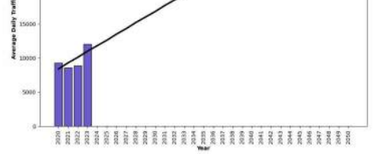

Year	Count	Trend
2020	9300	8400
2021	8600	9300
2022	8900	10100
2023	12000	11000
2050		33600

R-8063 1E1 : I- 20 TO I- 26

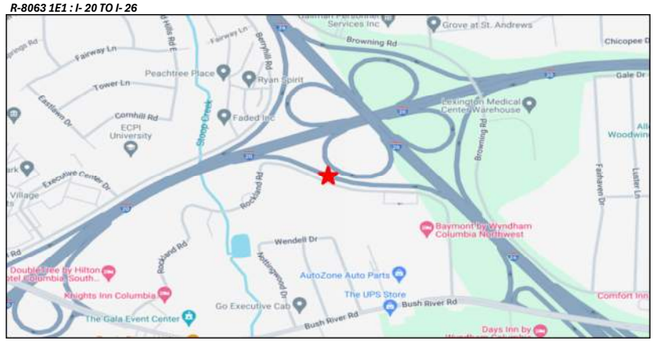

Station ID 40-2031
County Richland
Location click here

	Year	AADT	%Change
1	1987		
2	1988	71,600	#DIV/0!
3	1989	63,100	-11.9%
4	1990	67,200	6.5%
5	1991	72,300	7.6%
6	1992	72,600	0.4%
7	1993	71,400	-1.7%
8	1994	78,600	10.1%
9	1995	76,500	-2.7%
10	1996	70,600	-7.7%
11	1997	73,300	3.8%
12	1998	76,200	4.0%
13	1999	79,300	4.1%
14	2000	80,700	1.8%
15	2001	81,300	0.7%
16	2002	81,700	0.5%
17	2003	82,100	0.5%
18	2004	83,200	1.3%
19	2005	83,500	0.4%
20	2006	86,500	3.6%
21	2007	87,700	1.4%
22	2008	84,200	-4.0%
23	2009	84,500	0.4%
24	2010	86,700	2.6%
25	2011	85,700	-1.2%
26	2012	86,000	0.4%
27	2013	87,600	1.9%
28	2014	90,900	3.8%
29	2015	90,800	-0.1%
30	2016	92,900	2.3%
31	2017	95,700	3.0%
32	2018	100,800	5.3%
33	2019	103,500	2.7%
34	2020	87,600	-15.4%
35	2021	101,900	16.3%
36	2022	100,100	-1.8%
37	2023	106,300	6.2%
		Avg=	#DIV/0!

For Reference
1% Annual Growth Rate

Year	Volume	Growth Rate
2023	106,300	Present
2050	135,001	Linear
2050	139,063	Compound

Calculations based on 30YR Growth Rates

Year	Volume	Estimate		
2023	106,300	N/A		
2050	131,230	131,000	*Linear*	1.17%
2050	139,487	139,000	*Compound*	1.01%
2050	141,240	141,000	*Average Annual*	1.17%

Travel Demand Model

COATS

	2018	2045	
Model	108,652	130,320	*Linear* 0.74%
Acual/Est.	100,800	120,902	

Year	Volume	Estimate
2050	124,625	125,000

SCSWM

	2019	2050	
Model	96,932	151,537	*Linear* 1.82%
Acual/Est.	103,500	161,805	

Year	Volume	Estimate
2050	161,805	162,000

Demographic Data

Population

Employment

Calculations based on 20YR Growth Rates

Year	Volume	Estimate		
2023	106,300	N/A		
2050	137,485	137,000	*Linear*	1.39%
2050	147,974	148,000	*Compound*	1.23%
2050	149,767	150,000	*Average Annual*	1.46%

Calculations based on 10YR Growth Rates

Year	Volume	Estimate		
2023	106,300	N/A		
2050	147,880	148,000	*Linear*	1.69%
2050	162,200	162,000	*Compound*	1.58%
2050	167,858	168,000	*Average Annual*	2.07%

Year	Volume	Estimate
2023	106,300	N/A

Trend Analysis

Linear

R-Square	AGR (Historical)	AGR (Design Year)	Annual Increase	2050 Estimate
89.3%	1.4%	0.9%	946	126,100

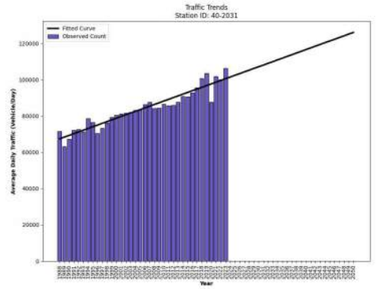

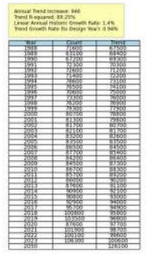

Trend Analysis *(*2015-2023)*

Linear

R-Square	AGR (Historical)	AGR (Design Year)	Annual Increase	2050 Estimate
36.0%	1.5%	1.3%	1,380	140,500

Year	Count	Trend
2015	90800	92200
2016	92900	93600
2017	95700	95000
2018	100800	96400
2019	103500	97700
2020	87600	99100
2021	101900	100500
2022	100100	101900
2023	106300	103300
2050		140500

I-20 : I- 26 TO US 176

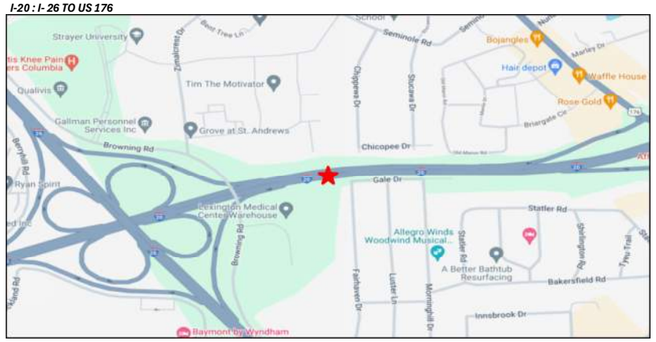

Station ID 32-2139
County Lexington
Location click here

	Year	AADT	%Change
1	1987		
2	1988		#DIV/0!
3	1989	85,300	#DIV/0!
4	1990	98,600	15.6%
5	1991	103,900	5.4%
6	1992	101,600	-2.2%
7	1993	105,600	3.9%
8	1994	112,000	6.1%
9	1995	111,200	-0.7%
10	1996	114,200	2.7%
11	1997	118,900	4.1%
12	1998	123,500	3.9%
13	1999	129,800	5.1%
14	2000	131,900	1.6%
15	2001	133,400	1.1%
16	2002	133,800	0.3%
17	2003	137,000	2.4%
18	2004	138,900	1.4%
19	2005	138,300	-0.4%
20	2006	142,100	2.7%
21	2007	137,700	-3.1%
22	2008	133,300	-3.2%
23	2009	132,900	-0.3%
24	2010	131,700	-0.9%
25	2011	130,000	-1.3%
26	2012	128,800	-0.9%
27	2013	130,900	1.6%
28	2014	133,600	2.1%
29	2015	138,200	3.4%
30	2016	141,400	2.3%
31	2017	144,900	2.5%
32	2018	144,700	-0.1%
33	2019	148,400	2.6%
34	2020	132,800	-10.5%
35	2021	143,800	8.3%
36	2022	143,800	0.0%
37	2023	143,200	-0.4%
		Avg=	#DIV/0!

For Reference
1% Annual Growth Rate

Year	Volume	Growth Rate
2023	143,200	Present
2050	181,864	Linear
2050	187,336	Compound

Calculations based on 30YR Growth Rates

Year	Volume	Estimate		
2023	143,200	N/A		
2050	171,280	171,000	*Linear*	0.93%
2050	178,647	179,000	*Compound*	0.82%
2050	179,438	179,000	*Average Annual*	0.90%

Travel Demand Model

COATS

	2018	2045	
Model	156,552	171,879	*Linear* 0.36%
Acual/Est.	144,700	158,867	

Year	Volume	Estimate
2050	161,490	161,000

SCSWM

	2019	2050	
Model	128,936	176,220	*Linear* 1.18%
Acual/Est.	148,400	202,822	

Year	Volume	Estimate
2050	202,822	203,000

Demographic Data

Population

Employment

Calculations based on 20YR Growth Rates

Year	Volume	Estimate		
2023	143,200	N/A		
2050	149,005	149,000	*Linear*	0.15%
2050	149,217	149,000	*Compound*	0.15%
2050	152,288	152,000	*Average Annual*	0.23%

Calculations based on 10YR Growth Rates

Year	Volume	Estimate		
2023	143,200	N/A		
2050	169,120	169,000	*Linear*	0.72%
2050	172,708	173,000	*Compound*	0.70%
2050	178,870	179,000	*Average Annual*	0.89%

Trend Analysis

Linear

R-Square	AGR (Historical)	AGR (Design Year)	Annual Increase	2050 Estimate
71.0%	1.2%	0.9%	1,268	184,400

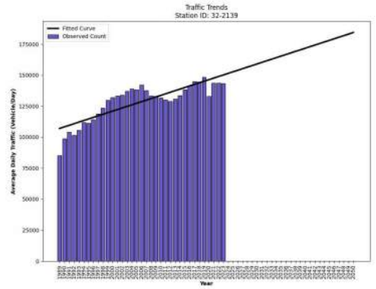

Trend Analysis *(*2015-2023)*

Linear

R-Square	AGR (Historical)	AGR (Design Year)	Annual Increase	2050 Estimate
1.8%	0.2%	0.2%	218	149,100

Year	Count	Trend
2015	138200	141500
2016	141400	141700
2017	144900	141900
2018	144700	142100
2019	148400	142400
2020	132800	142600
2021	143800	142800
2022	143800	143000
2023	143200	143200
2050		149100

I-26 : S- 36 (SAINT ANDREWS RD) TO I- 20 (INTERSTATE 20) (RICHLAND)



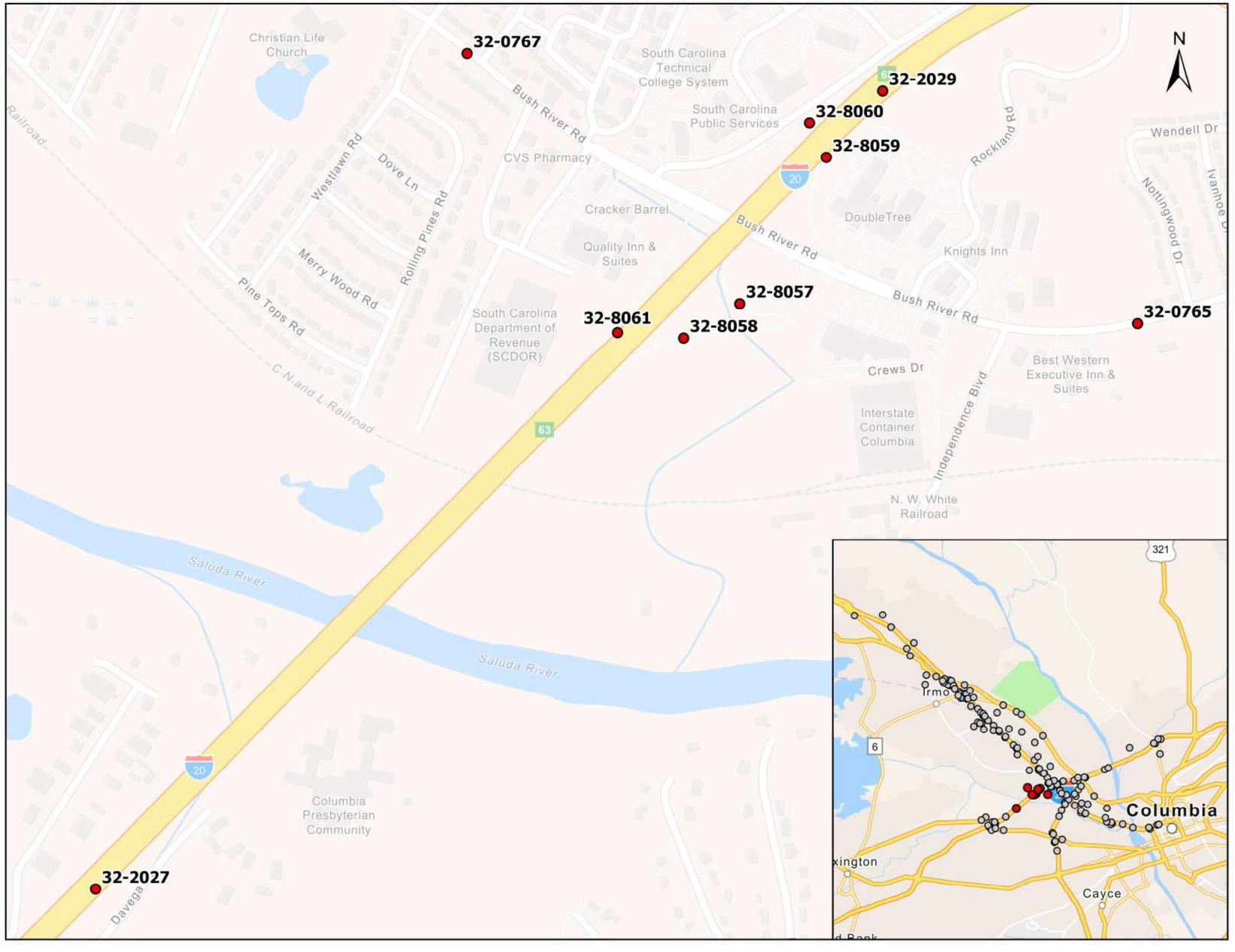
32-0767
32-2029
32-8060
32-8059
32-8057
32-8061
32-8058
32-0765
32-2027
Christian Life Church
South Carolina Technical College System
South Carolina Public Services
CVS Pharmacy
Cracker Barrel
Quality Inn & Suites
DoubleTree
Knights Inn
South Carolina Department of Revenue (SCDOR)
Best Western Executive Inn & Suites
Interstate Container Columbia
N. W. White Railroad
Columbia Presbyterian Community
Bush River Rd
Westlawn Rd
Dove Ln
Rolling Pines Rd
Merry Wood Rd
Pine Tops Rd
Rockland Rd
Wendell Dr
Nottingwood Dr
Crews Dr
Independence Blvd
C.N.and L.Railroad
Saluda River
Davega
N
Irmo
Cayce
Columbia

Station ID 32-8059
County Lexington
Location click here

	Year	AADT	%Change
1	1987		
2	1988		#DIV/0!
3	1989		#DIV/0!
4	1990		#DIV/0!
5	1991		#DIV/0!
6	1992		#DIV/0!
7	1993		#DIV/0!
8	1994		#DIV/0!
9	1995		#DIV/0!
10	1996		#DIV/0!
11	1997		#DIV/0!
12	1998		#DIV/0!
13	1999		#DIV/0!
14	2000		#DIV/0!
15	2001		#DIV/0!
16	2002		#DIV/0!
17	2003		#DIV/0!
18	2004		#DIV/0!
19	2005		#DIV/0!
20	2006		#DIV/0!
21	2007		#DIV/0!
22	2008		#DIV/0!
23	2009		#DIV/0!
24	2010		#DIV/0!
25	2011		#DIV/0!
26	2012		#DIV/0!
27	2013		#DIV/0!
28	2014		#DIV/0!
29	2015		#DIV/0!
30	2016		#DIV/0!
31	2017		#DIV/0!
32	2018		#DIV/0!
33	2019		#DIV/0!
34	2020	950	#DIV/0!
35	2021	1,050	10.5%
36	2022	1,200	14.3%
37	2023	1,200	0.0%
		Avg=	#DIV/0!

For Reference
1% Annual Growth Rate

Year	Volume	Growth Rate
2023	1,200	Present
2050	1,524	Linear
2050	1,570	Compound

Calculations based on 30YR Growth Rates

Year	Volume	Estimate		
2023	1,200	N/A	*Linear*	#DIV/0!
2050	#DIV/0!	#DIV/0!		
Year	**Volume**	**Estimate**		
2023	1,200	N/A	*Compound*	#DIV/0!
2050	#DIV/0!	#DIV/0!		
Year	**Volume**	**Estimate**		
2023	1,200	N/A	*Average Annual*	#DIV/0!
2050	#DIV/0!	#DIV/0!		

Travel Demand Model

COATS

	2018	2045		
Model	1,320	2,273	*Linear*	2.67%
Acual/Est.	0	0		
Year	**Volume**	**Estimate**		
2050	0	0		

SCSWM

	2019	2050		
Model	1,836	1,899	*Linear*	0.11%
Acual/Est.	0	0		
Year	**Volume**	**Estimate**		
2050	0	0		

Demographic Data

Population

Employment

Calculations based on 20YR Growth Rates

Year	Volume	Estimate		
2023	1,200	N/A	*Linear*	#DIV/0!
2050	#DIV/0!	#DIV/0!		
Year	**Volume**	**Estimate**		
2023	1,200	N/A	*Compound*	#DIV/0!
2050	#DIV/0!	#DIV/0!		
Year	**Volume**	**Estimate**		
2023	1,200	N/A	*Average Annual*	#DIV/0!
2050	#DIV/0!	#DIV/0!		

Calculations based on 10YR Growth Rates

Year	Volume	Estimate		
2023	1,200	N/A	*Linear*	#DIV/0!
2050	#DIV/0!	#DIV/0!		
Year	**Volume**	**Estimate**		
2023	1,200	N/A	*Compound*	#DIV/0!
2050	#DIV/0!	#DIV/0!		
Year	**Volume**	**Estimate**		
2023	1,200	N/A	*Average Annual*	#DIV/0!
2050	#DIV/0!	#DIV/0!		

Trend Analysis
Linear

R-Square	AGR (Historical)	AGR (Design Year)	Annual Increase	2050 Estimate
89.1%	6.7%	5.9%	70	3,100

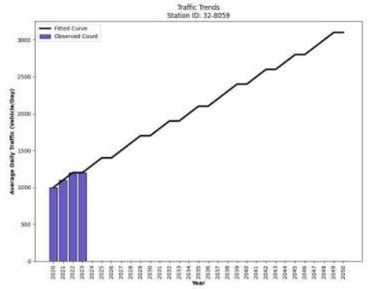

Year	Count	Trend
2020	1000	1000
2021	1100	1100
2022	1200	1200
2023	1200	1200
2050		3100

Trend Analysis *(*2015-2023)*
Linear

R-Square	AGR (Historical)	AGR (Design Year)	Annual Increase	2050 Estimate
89.1%	6.7%	5.9%	70	3,100

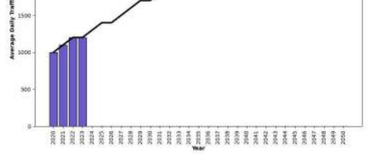

Year	Count	Trend
2020	1000	1000
2021	1100	1100
2022	1200	1200
2023	1200	1200
2050		3100

R-8059 2O1 : S- 273 TO I- 20



Station ID 32-8060
County Lexington
Location click here

	Year	AADT	%Change
1	1987		
2	1988		#DIV/0!
3	1989		#DIV/0!
4	1990		#DIV/0!
5	1991		#DIV/0!
6	1992		#DIV/0!
7	1993		#DIV/0!
8	1994		#DIV/0!
9	1995		#DIV/0!
10	1996		#DIV/0!
11	1997		#DIV/0!
12	1998		#DIV/0!
13	1999		#DIV/0!
14	2000		#DIV/0!
15	2001		#DIV/0!
16	2002		#DIV/0!
17	2003		#DIV/0!
18	2004		#DIV/0!
19	2005		#DIV/0!
20	2006		#DIV/0!
21	2007		#DIV/0!
22	2008		#DIV/0!
23	2009		#DIV/0!
24	2010		#DIV/0!
25	2011		#DIV/0!
26	2012		#DIV/0!
27	2013		#DIV/0!
28	2014		#DIV/0!
29	2015		#DIV/0!
30	2016		#DIV/0!
31	2017		#DIV/0!
32	2018		#DIV/0!
33	2019		#DIV/0!
34	2020	4,400	#DIV/0!
35	2021	3,900	-11.4%
36	2022	4,500	15.4%
37	2023	4,700	4.4%
		Avg=	#DIV/0!

For Reference
1% Annual Growth Rate

Year	Volume	Growth Rate
2023	4,700	Present
2050	5,969	Linear
2050	6,149	Compound

Calculations based on 30YR Growth Rates

Year	Volume	Estimate		
2023	4,700	N/A	*Linear*	#DIV/0!
2050	#DIV/0!	#DIV/0!		
Year	**Volume**	**Estimate**	*Compound*	#DIV/0!
2023	4,700	N/A		
2050	#DIV/0!	#DIV/0!		
Year	**Volume**	**Estimate**	*Average Annual*	#DIV/0!
2023	4,700	N/A		
2050	#DIV/0!	#DIV/0!		

Travel Demand Model

COATS

	2018	2045		
Model	8,962	9,508	*Linear*	0.23%
Acual/Est.	0	0		
Year	**Volume**	**Estimate**		
2050	0	0		

SCSWM

	2019	2050		
Model	7,142	4,829	*Linear*	-1.04%
Acual/Est.	0	0		
Year	**Volume**	**Estimate**		
2050	0	0		

Demographic Data

Population

Employment

Calculations based on 20YR Growth Rates

Year	Volume	Estimate		
2023	4,700	N/A	*Linear*	#DIV/0!
2050	#DIV/0!	#DIV/0!		
Year	**Volume**	**Estimate**	*Compound*	#DIV/0!
2023	4,700	N/A		
2050	#DIV/0!	#DIV/0!		
Year	**Volume**	**Estimate**	*Average Annual*	#DIV/0!
2023	4,700	N/A		
2050	#DIV/0!	#DIV/0!		

Calculations based on 10YR Growth Rates

Year	Volume	Estimate		
2023	4,700	N/A	*Linear*	#DIV/0!
2050	#DIV/0!	#DIV/0!		
Year	**Volume**	**Estimate**	*Compound*	#DIV/0!
2023	4,700	N/A		
2050	#DIV/0!	#DIV/0!		
Year	**Volume**	**Estimate**	*Average Annual*	#DIV/0!
2023	4,700	N/A		
2050	#DIV/0!	#DIV/0!		

Trend Analysis

Linear

R-Square	AGR (Historical)	AGR (Design Year)	Annual Increase	2050 Estimate
32.4%	3.2%	3.3%	150	8,700

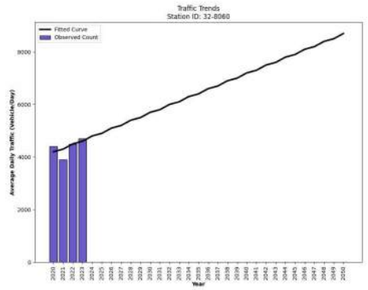

Year	Count	Trend
2020	4400	4200
2021	3900	4350
2022	4500	4500
2023	4700	4650
2050		8700

Trend Analysis *(*2015-2023)*

Linear

R-Square	AGR (Historical)	AGR (Design Year)	Annual Increase	2050 Estimate
32.4%	3.2%	3.3%	150	8,700

Year	Count	Trend
2020	4400	4200
2021	3900	4350
2022	4500	4500
2023	4700	4650
2050		8700

R-8060 3E1 : I- 20 TO S- 273



Station ID 32-8061
County Lexington
Location click here

	Year	AADT	%Change
1	1987		
2	1988		#DIV/0!
3	1989		#DIV/0!
4	1990		#DIV/0!
5	1991		#DIV/0!
6	1992		#DIV/0!
7	1993		#DIV/0!
8	1994		#DIV/0!
9	1995		#DIV/0!
10	1996		#DIV/0!
11	1997		#DIV/0!
12	1998		#DIV/0!
13	1999		#DIV/0!
14	2000		#DIV/0!
15	2001		#DIV/0!
16	2002		#DIV/0!
17	2003		#DIV/0!
18	2004		#DIV/0!
19	2005		#DIV/0!
20	2006		#DIV/0!
21	2007		#DIV/0!
22	2008		#DIV/0!
23	2009		#DIV/0!
24	2010		#DIV/0!
25	2011		#DIV/0!
26	2012		#DIV/0!
27	2013		#DIV/0!
28	2014		#DIV/0!
29	2015		#DIV/0!
30	2016		#DIV/0!
31	2017		#DIV/0!
32	2018		#DIV/0!
33	2019		#DIV/0!
34	2020	3,800	#DIV/0!
35	2021	4,100	7.9%
36	2022	4,400	7.3%
37	2023	6,100	38.6%
		Avg=	#DIV/0!

For Reference
1% Annual Growth Rate

Year	Volume	Growth Rate
2023	6,100	Present
2050	7,747	Linear
2050	7,980	Compound

Calculations based on 30YR Growth Rates

Year	Volume	Estimate		
2023	6,100	N/A	*Linear*	#DIV/0!
2050	#DIV/0!	#DIV/0!		
Year	**Volume**	**Estimate**		
2023	6,100	N/A	*Compound*	#DIV/0!
2050	#DIV/0!	#DIV/0!		
Year	**Volume**	**Estimate**		
2023	6,100	N/A	*Average Annual*	#DIV/0!
2050	#DIV/0!	#DIV/0!		

Travel Demand Model

COATS

	2018	2045		
Model	5,903	8,943	*Linear*	1.91%
Acual/Est.	0	0		
Year	**Volume**	**Estimate**		
2050	0	0		

SCSWM

	2019	2050		
Model	2,827	8,470	*Linear*	6.44%
Acual/Est.	0	0		
Year	**Volume**	**Estimate**		
2050	0	0		

Demographic Data

Population

Employment

Calculations based on 20YR Growth Rates

Year	Volume	Estimate		
2023	6,100	N/A	*Linear*	#DIV/0!
2050	#DIV/0!	#DIV/0!		
Year	**Volume**	**Estimate**		
2023	6,100	N/A	*Compound*	#DIV/0!
2050	#DIV/0!	#DIV/0!		
Year	**Volume**	**Estimate**		
2023	6,100	N/A	*Average Annual*	#DIV/0!
2050	#DIV/0!	#DIV/0!		

Calculations based on 10YR Growth Rates

Year	Volume	Estimate		
2023	6,100	N/A	*Linear*	#DIV/0!
2050	#DIV/0!	#DIV/0!		
Year	**Volume**	**Estimate**		
2023	6,100	N/A	*Compound*	#DIV/0!
2050	#DIV/0!	#DIV/0!		
Year	**Volume**	**Estimate**		
2023	6,100	N/A	*Average Annual*	#DIV/0!
2050	#DIV/0!	#DIV/0!		

Trend Analysis

Linear

R-Square	AGR (Historical)	AGR (Design Year)	Annual Increase	2050 Estimate
81.5%	21.0%	12.6%	720	25,100

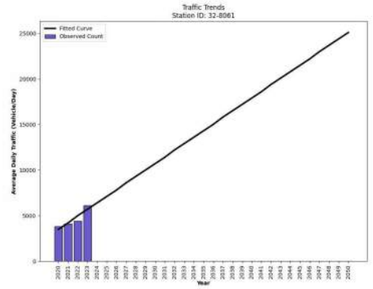

Year	Count	Trend
2020	3800	3500
2021	4100	4200
2022	4400	5000
2023	6100	5700
2050		25100

Trend Analysis *(*2015-2023)*

Linear

R-Square	AGR (Historical)	AGR (Design Year)	Annual Increase	2050 Estimate
81.5%	21.0%	12.6%	720	25,100

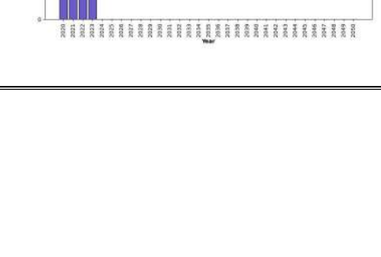

Year	Count	Trend
2020	3800	3500
2021	4100	4200
2022	4400	5000
2023	6100	5700
2050		25100

R-8061 4O1 : S- 273 TO I- 20

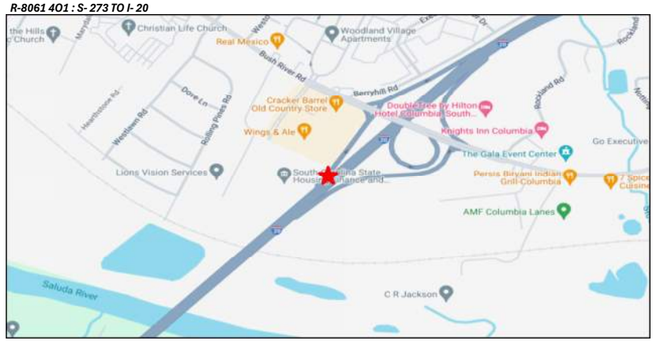

Station ID 32-8057
County Lexington
Location click here

	Year	AADT	%Change
1	1987		
2	1988		#DIV/0!
3	1989		#DIV/0!
4	1990		#DIV/0!
5	1991		#DIV/0!
6	1992		#DIV/0!
7	1993		#DIV/0!
8	1994		#DIV/0!
9	1995		#DIV/0!
10	1996		#DIV/0!
11	1997		#DIV/0!
12	1998		#DIV/0!
13	1999		#DIV/0!
14	2000		#DIV/0!
15	2001		#DIV/0!
16	2002		#DIV/0!
17	2003		#DIV/0!
18	2004		#DIV/0!
19	2005		#DIV/0!
20	2006		#DIV/0!
21	2007		#DIV/0!
22	2008		#DIV/0!
23	2009		#DIV/0!
24	2010		#DIV/0!
25	2011		#DIV/0!
26	2012		#DIV/0!
27	2013		#DIV/0!
28	2014		#DIV/0!
29	2015		#DIV/0!
30	2016		#DIV/0!
31	2017		#DIV/0!
32	2018		#DIV/0!
33	2019		#DIV/0!
34	2020	2,500	#DIV/0!
35	2021	3,000	20.0%
36	2022	3,200	6.7%
37	2023	3,400	6.3%
		Avg=	#DIV/0!

For Reference
1% Annual Growth Rate

Year	Volume	Growth Rate
2023	3,400	Present
2050	4,318	Linear
2050	4,448	Compound

Calculations based on 30YR Growth Rates

Year	Volume	Estimate		
2023	3,400	N/A	*Linear*	#DIV/0!
2050	#DIV/0!	#DIV/0!		
Year	**Volume**	**Estimate**		
2023	3,400	N/A	*Compound*	#DIV/0!
2050	#DIV/0!	#DIV/0!		
Year	**Volume**	**Estimate**		
2023	3,400	N/A	*Average Annual*	#DIV/0!
2050	#DIV/0!	#DIV/0!		

Travel Demand Model

COATS

	2018	2045		
Model	5,380	5,348	*Linear*	-0.02%
Acual/Est.	0	0		
Year	**Volume**	**Estimate**		
2050	0	0		

SCSWM

	2019	2050		
Model	5,417	3,578	*Linear*	-1.10%
Acual/Est.	0	0		
Year	**Volume**	**Estimate**		
2050	0	0		

Demographic Data

Population

Employment

Calculations based on 20YR Growth Rates

Year	Volume	Estimate		
2023	3,400	N/A	*Linear*	#DIV/0!
2050	#DIV/0!	#DIV/0!		
Year	**Volume**	**Estimate**		
2023	3,400	N/A	*Compound*	#DIV/0!
2050	#DIV/0!	#DIV/0!		
Year	**Volume**	**Estimate**		
2023	3,400	N/A	*Average Annual*	#DIV/0!
2050	#DIV/0!	#DIV/0!		

Calculations based on 10YR Growth Rates

Year	Volume	Estimate		
2023	3,400	N/A	*Linear*	#DIV/0!
2050	#DIV/0!	#DIV/0!		
Year	**Volume**	**Estimate**		
2023	3,400	N/A	*Compound*	#DIV/0!
2050	#DIV/0!	#DIV/0!		
Year	**Volume**	**Estimate**		
2023	3,400	N/A	*Average Annual*	#DIV/0!
2050	#DIV/0!	#DIV/0!		

Trend Analysis
Linear

R-Square	AGR (Historical)	AGR (Design Year)	Annual Increase	2050 Estimate
94.0%	11.5%	8.3%	290	11,300

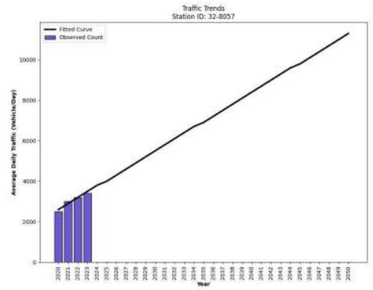

Annual Trend Increase: 290
Trend R-squared: 93.97%
Linear Annual Historic Growth Rate: 11.54%
Trend Growth Rate Its Design Year: 8.25%

Year	Count	Trend
2020	2500	2600
2021	3000	2900
2022	3200	3200
2023	3400	3500
2050		11300

Trend Analysis *(*2015-2023)*
Linear

R-Square	AGR (Historical)	AGR (Design Year)	Annual Increase	2050 Estimate
94.0%	11.5%	8.3%	290	11,300

Annual Trend Increase: 290
Trend R-squared: 93.97%
Linear Annual Historic Growth Rate: 11.54%
Trend Growth Rate Its Design Year: 8.25%

Year	Count	Trend
2020	2500	2600
2021	3000	2900
2022	3200	3200
2023	3400	3500
2050		11300

R-8057 1O1 : S- 273 TO I- 20



Station ID 32-2029
County Lexington
Location click here

	Year	AADT	%Change
1	1987		
2	1988		#DIV/0!
3	1989	37,900	#DIV/0!
4	1990	42,800	12.9%
5	1991	42,200	-1.4%
6	1992	42,400	0.5%
7	1993	45,100	6.4%
8	1994	50,400	11.8%
9	1995	49,700	-1.4%
10	1996	53,500	7.6%
11	1997	55,900	4.5%
12	1998	60,100	7.5%
13	1999	61,800	2.8%
14	2000	62,000	0.3%
15	2001	64,700	4.4%
16	2002	64,700	0.0%
17	2003	66,900	3.4%
18	2004	68,700	2.7%
19	2005	69,400	1.0%
20	2006	86,500	24.6%
21	2007	73,500	-15.0%
22	2008	71,300	-3.0%
23	2009	70,900	-0.6%
24	2010	73,200	3.2%
25	2011	73,200	0.0%
26	2012	72,800	-0.5%
27	2013	74,800	2.7%
28	2014	74,500	-0.4%
29	2015	77,400	3.9%
30	2016	80,700	4.3%
31	2017	80,900	0.2%
32	2018	84,700	4.7%
33	2019	82,700	-2.4%
34	2020	67,500	-18.4%
35	2021	76,400	13.2%
36	2022	77,000	0.8%
37	2023	86,700	12.6%
		Avg=	#DIV/0!

For Reference
1% Annual Growth Rate

Year	Volume	Growth Rate
2023	86,700	Present
2050	110,109	Linear
2050	113,422	Compound

Calculations based on 30YR Growth Rates

Year	Volume	Estimate		
2023	86,700	N/A		
2050	119,370	119,000	*Linear*	2.40%
Year	**Volume**	**Estimate**		
2023	86,700	N/A		
2050	141,270	141,000	*Compound*	1.82%
Year	**Volume**	**Estimate**		
2023	86,700	N/A		
2050	139,355	139,000	*Average Annual*	2.17%

Travel Demand Model

COATS

	2018	2045	
Model	88,462	111,404	*Linear* 0.96%
Acual/Est.	84,700	106,666	

Year	Volume	Estimate
2050	110,734	111,000

SCSWM

	2019	2050	
Model	85,765	156,652	*Linear* 2.67%
Acual/Est.	82,700	151,054	

Year	Volume	Estimate
2050	151,054	151,000

Demographic Data

Population

Employment

Calculations based on 20YR Growth Rates

Year	Volume	Estimate		
2023	86,700	N/A		
2050	111,000	111,000	*Linear*	1.31%
Year	**Volume**	**Estimate**		
2023	86,700	N/A		
2050	118,701	119,000	*Compound*	1.17%
Year	**Volume**	**Estimate**		
2023	86,700	N/A		
2050	126,369	126,000	*Average Annual*	1.63%

Calculations based on 10YR Growth Rates

Year	Volume	Estimate		
2023	86,700	N/A		
2050	119,640	120,000	*Linear*	1.64%
Year	**Volume**	**Estimate**		
2023	86,700	N/A		
2050	130,572	131,000	*Compound*	1.53%
Year	**Volume**	**Estimate**		
2023	86,700	N/A		
2050	137,756	138,000	*Average Annual*	2.10%

Trend Analysis

Linear

R-Square	AGR (Historical)	AGR (Design Year)	Annual Increase	2050 Estimate
81.3%	2.6%	1.4%	1,210	119,600

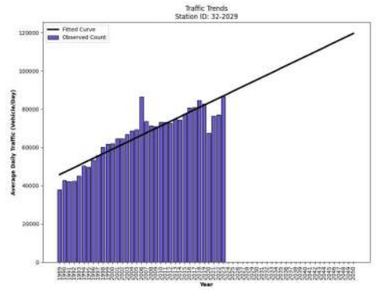

Trend Analysis *(*2015-2023)*

Linear

R-Square	AGR (Historical)	AGR (Design Year)	Annual Increase	2050 Estimate
0.0%	0.0%	0.0%	-2	79,300

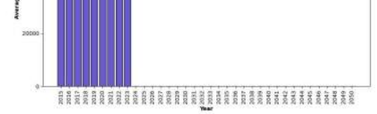

Year	Count	Trend
2015	77400	79300
2016	80700	79300
2017	80900	79300
2018	84700	79300
2019	82700	79300
2020	67500	79300
2021	76400	79300
2022	77050	79300
2023	86700	79300
2050		79300

I-20 : S- 273 TO I- 26



Station ID 32-2027
County Lexington
Location click here

	Year	AADT	%Change
1	1987		
2	1988		#DIV/0!
3	1989	39,900	#DIV/0!
4	1990	44,100	10.5%
5	1991	42,700	-3.2%
6	1992	43,000	0.7%
7	1993	44,500	3.5%
8	1994	50,100	12.6%
9	1995	50,700	1.2%
10	1996	53,600	5.7%
11	1997	55,700	3.9%
12	1998	62,100	11.5%
13	1999	63,000	1.4%
14	2000	65,900	4.6%
15	2001	66,300	0.6%
16	2002	66,700	0.6%
17	2003	69,400	4.0%
18	2004	72,200	4.0%
19	2005	72,600	0.6%
20	2006	74,500	2.6%
21	2007	76,300	2.4%
22	2008	74,100	-2.9%
23	2009	73,800	-0.4%
24	2010	76,000	3.0%
25	2011	76,000	0.0%
26	2012	75,000	-1.3%
27	2013	76,500	2.0%
28	2014	76,900	0.5%
29	2015	80,100	4.2%
30	2016	83,400	4.1%
31	2017	83,700	0.4%
32	2018	83,500	-0.2%
33	2019	84,000	0.6%
34	2020	69,200	-17.6%
35	2021	77,500	12.0%
36	2022	77,400	-0.1%
37	2023	88,300	14.1%
		Avg=	#DIV/0!

For Reference
1% Annual Growth Rate

Year	Volume	Growth Rate
2023	88,300	Present
2050	112,141	Linear
2050	115,515	Compound

Calculations based on 30YR Growth Rates

Year	Volume	Estimate		
2023	88,300	N/A		
2050	122,680	123,000	*Linear*	2.54%
Year	**Volume**	**Estimate**		
2023	88,300	N/A		
2050	147,052	147,000	*Compound*	1.91%
Year	**Volume**	**Estimate**		
2023	88,300	N/A		
2050	140,721	141,000	*Average Annual*	2.12%

Travel Demand Model

COATS

	2018	2045		
Model	98,071	127,033	*Linear*	1.09%
Acual/Est.	83,500	108,159		
Year	**Volume**	**Estimate**		
2050	112,725	113,000		

SCSWM

	2019	2050		
Model	87,268	171,783	*Linear*	3.12%
Acual/Est.	84,000	165,350		
Year	**Volume**	**Estimate**		
2050	165,350	165,000		

Demographic Data

Population

Employment

Calculations based on 20YR Growth Rates

Year	Volume	Estimate		
2023	88,300	N/A		
2050	110,035	110,000	*Linear*	1.11%
Year	**Volume**	**Estimate**		
2023	88,300	N/A		
2050	115,873	116,000	*Compound*	1.01%
Year	**Volume**	**Estimate**		
2023	88,300	N/A		
2050	119,292	119,000	*Average Annual*	1.25%

Calculations based on 10YR Growth Rates

Year	Volume	Estimate		
2023	88,300	N/A		
2050	119,080	119,000	*Linear*	1.48%
Year	**Volume**	**Estimate**		
2023	88,300	N/A		
2050	128,249	128,000	*Compound*	1.39%
Year	**Volume**	**Estimate**		
2023	88,300	N/A		
2050	135,906	136,000	*Average Annual*	1.93%

Trend Analysis

Linear

R-Square	AGR (Historical)	AGR (Design Year)	Annual Increase	2050 Estimate
84.0%	2.7%	1.4%	1,236	122,100

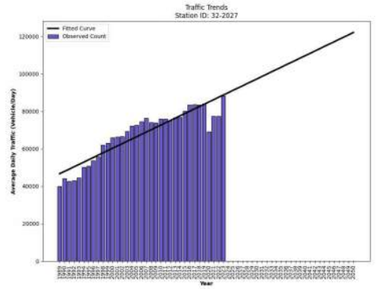

Trend Analysis *(*2015-2023)*

Linear

R-Square	AGR (Historical)	AGR (Design Year)	Annual Increase	2050 Estimate
1.0%	-0.3%	-0.3%	-198	74,600

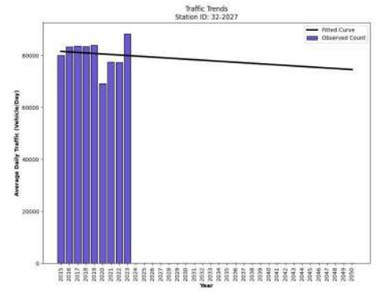

I-20 : US 378 (SUNSET BLVD) TO S- 273 (BUSH RIVER RD)



Station ID 32-8058
County Lexington
Location click here

	Year	AADT	%Change
1	1987		
2	1988		#DIV/0!
3	1989		#DIV/0!
4	1990		#DIV/0!
5	1991		#DIV/0!
6	1992		#DIV/0!
7	1993		#DIV/0!
8	1994		#DIV/0!
9	1995		#DIV/0!
10	1996		#DIV/0!
11	1997		#DIV/0!
12	1998		#DIV/0!
13	1999		#DIV/0!
14	2000		#DIV/0!
15	2001		#DIV/0!
16	2002		#DIV/0!
17	2003		#DIV/0!
18	2004		#DIV/0!
19	2005		#DIV/0!
20	2006		#DIV/0!
21	2007		#DIV/0!
22	2008		#DIV/0!
23	2009		#DIV/0!
24	2010		#DIV/0!
25	2011		#DIV/0!
26	2012		#DIV/0!
27	2013		#DIV/0!
28	2014		#DIV/0!
29	2015		#DIV/0!
30	2016		#DIV/0!
31	2017		#DIV/0!
32	2018		#DIV/0!
33	2019		#DIV/0!
34	2020	5,900	#DIV/0!
35	2021	4,800	-18.6%
36	2022	5,500	14.6%
37	2023	6,700	21.8%
		Avg=	#DIV/0!

For Reference
1% Annual Growth Rate

Year	Volume	Growth Rate
2023	6,700	Present
2050	8,509	Linear
2050	8,765	Compound

Calculations based on 30YR Growth Rates

Year	Volume	Estimate		
2023	6,700	N/A	*Linear*	#DIV/0!
2050	#DIV/0!	#DIV/0!		
Year	**Volume**	**Estimate**		
2023	6,700	N/A	*Compound*	#DIV/0!
2050	#DIV/0!	#DIV/0!		
Year	**Volume**	**Estimate**		
2023	6,700	N/A	*Average Annual*	#DIV/0!
2050	#DIV/0!	#DIV/0!		

Travel Demand Model

COATS

	2018	2045		
Model	9,087	12,034	*Linear*	1.20%
Acual/Est.	0	0		

Year	Volume	Estimate
2050	0	0

SCSWM

	2019	2050		
Model	4,093	10,241	*Linear*	4.85%
Acual/Est.	0	0		

Year	Volume	Estimate
2050	0	0

Demographic Data

Population

Employment

Calculations based on 20YR Growth Rates

Year	Volume	Estimate		
2023	6,700	N/A	*Linear*	#DIV/0!
2050	#DIV/0!	#DIV/0!		
Year	**Volume**	**Estimate**		
2023	6,700	N/A	*Compound*	#DIV/0!
2050	#DIV/0!	#DIV/0!		
Year	**Volume**	**Estimate**		
2023	6,700	N/A	*Average Annual*	#DIV/0!
2050	#DIV/0!	#DIV/0!		

Calculations based on 10YR Growth Rates

Year	Volume	Estimate		
2023	6,700	N/A	*Linear*	#DIV/0!
2050	#DIV/0!	#DIV/0!		
Year	**Volume**	**Estimate**		
2023	6,700	N/A	*Compound*	#DIV/0!
2050	#DIV/0!	#DIV/0!		
Year	**Volume**	**Estimate**		
2023	6,700	N/A	*Average Annual*	#DIV/0!
2050	#DIV/0!	#DIV/0!		

Trend Analysis
Linear

R-Square	AGR (Historical)	AGR (Design Year)	Annual Increase	2050 Estimate
25.5%	5.7%	5.0%	310	14,600

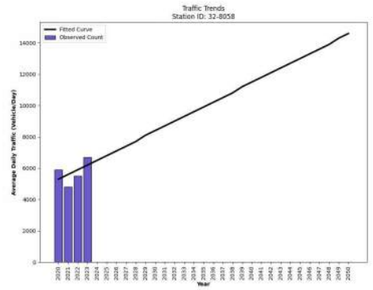

Year	Count	Trend
2020	5900	5300
2021	4800	5600
2022	5500	5960
2023	6700	6200
2050		14600

Trend Analysis *(*2015-2023)*
Linear

R-Square	AGR (Historical)	AGR (Design Year)	Annual Increase	2050 Estimate
25.5%	5.7%	5.0%	310	14,600

Year	Count	Trend
2020	5900	5300
2021	4800	5600
2022	5500	5960
2023	6700	6200
2050		14600

R-8058 1E1 : I- 20 TO S- 273



Station ID 32-0767
County Lexington
Location click here

	Year	AADT	%Change
1	1987	14,800	
2	1988	17,698	19.6%
3	1989	20,000	13.0%
4	1990	14,000	-30.0%
5	1991	14,500	3.6%
6	1992	15,000	3.4%
7	1993	14,400	-4.0%
8	1994	15,300	6.3%
9	1995	14,600	-4.6%
10	1996	15,900	8.9%
11	1997	13,900	-12.6%
12	1998	13,500	-2.9%
13	1999	15,300	13.3%
14	2000	13,200	-13.7%
15	2001	13,400	1.5%
16	2002	13,500	0.7%
17	2003	15,100	11.9%
18	2004	14,800	-2.0%
19	2005	13,900	-6.1%
20	2006	13,900	0.0%
21	2007	15,800	13.7%
22	2008	15,900	0.6%
23	2009	13,800	-13.2%
24	2010	14,500	5.1%
25	2011	13,900	-4.1%
26	2012	14,200	2.2%
27	2013	14,500	2.1%
28	2014	14,800	2.1%
29	2015	13,400	-9.5%
30	2016	13,900	3.7%
31	2017	15,400	10.8%
32	2018	15,800	2.6%
33	2019	16,100	1.9%
34	2020	15,500	-3.7%
35	2021	16,100	3.9%
36	2022	16,800	4.3%
37	2023	17,700	5.4%
		Avg=	0.949%

For Reference
1% Annual Growth Rate

Year	Volume	Growth Rate
2023	17,700	Present
2050	22,479	Linear
2050	23,155	Compound

Calculations based on 30YR Growth Rates

Year	Volume	Estimate		
2023	17,700	N/A	*Linear*	0.52%
2050	19,860	20,000		
Year	**Volume**	**Estimate**		
2023	17,700	N/A	*Compound*	0.49%
2050	20,180	20,000		
Year	**Volume**	**Estimate**		
2023	17,700	N/A	*Average Annual*	0.77%
2050	21,512	22,000		

Travel Demand Model

COATS

	2018	2045		
Model	31,738	39,316	*Linear*	0.88%
Acual/Est.	15,800	19,573		
Year	**Volume**	**Estimate**		
2050	20,271	20,000		

SCSWM

	2019	2050		
Model	18,313	23,898	*Linear*	0.98%
Acual/Est.	16,100	21,010		
Year	**Volume**	**Estimate**		
2050	21,010	21,000		

Demographic Data

Population

Employment

Calculations based on 20YR Growth Rates

Year	Volume	Estimate		
2023	17,700	N/A	*Linear*	0.98%
2050	21,615	22,000		
Year	**Volume**	**Estimate**		
2023	17,700	N/A	*Compound*	0.90%
2050	22,536	23,000		
Year	**Volume**	**Estimate**		
2023	17,700	N/A	*Average Annual*	1.14%
2050	23,359	23,000		

Calculations based on 10YR Growth Rates

Year	Volume	Estimate		
2023	17,700	N/A	*Linear*	1.96%
2050	25,530	26,000		
Year	**Volume**	**Estimate**		
2023	17,700	N/A	*Compound*	1.81%
2050	28,694	29,000		
Year	**Volume**	**Estimate**		
2023	17,700	N/A	*Average Annual*	2.16%
2050	28,388	28,000		

Trend Analysis

Linear

R-Square	AGR (Historical)	AGR (Design Year)	Annual Increase	2050 Estimate
0.2%	0.0%	0.0%	5	15,200

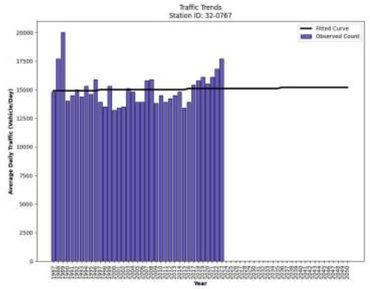

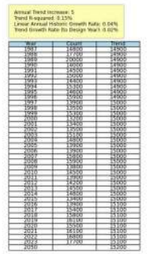

Trend Analysis *(*2015-2023)*

Linear

R-Square	AGR (Historical)	AGR (Design Year)	Annual Increase	2050 Estimate
85.8%	3.3%	2.6%	450	29,600

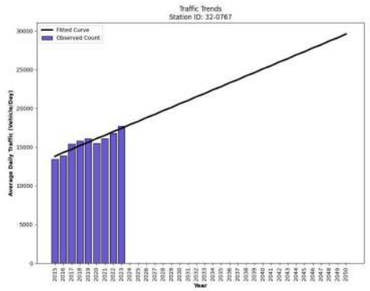



Year	Count	Trend
2015	13400	13800
2016	13900	14300
2017	15400	14700
2018	15800	15200
2019	16100	15600
2020	15500	16100
2021	16100	16500
2022	16800	17000
2023	17700	17400
2050		29600

S-273 : I- 20 (INTERSTATE 20) TO S- 946 (ASHLAND RD), S- 1496



Station ID 32-0765
County Lexington
Location click here

	Year	AADT	%Change
1	1987	24,200	
2	1988	27,200	12.4%
3	1989	24,600	-9.6%
4	1990	22,600	-8.1%
5	1991	20,600	-8.8%
6	1992	20,700	0.5%
7	1993	19,400	-6.3%
8	1994	20,400	5.2%
9	1995	19,200	-5.9%
10	1996	21,500	12.0%
11	1997	21,500	0.0%
12	1998	20,300	-5.6%
13	1999	22,000	8.4%
14	2000	19,500	-11.4%
15	2001	18,500	-5.1%
16	2002	17,400	-5.9%
17	2003	19,000	9.2%
18	2004	19,100	0.5%
19	2005	18,100	-5.2%
20	2006	18,300	1.1%
21	2007	20,100	9.8%
22	2008	20,800	3.5%
23	2009	19,100	-8.2%
24	2010	17,600	-7.9%
25	2011	16,800	-4.5%
26	2012	17,100	1.8%
27	2013	17,400	1.8%
28	2014	17,700	1.7%
29	2015	15,900	-10.2%
30	2016	16,800	5.7%
31	2017	17,900	6.5%
32	2018	18,600	3.9%
33	2019	18,900	1.6%
34	2020	12,800	-32.3%
35	2021	13,300	3.9%
36	2022	14,900	12.0%
37	2023	15,700	5.4%
		Avg=	-0.782%

For Reference
1% Annual Growth Rate

Year	Volume	Growth Rate
2023	15,700	Present
2050	19,939	Linear
2050	20,539	Compound

Calculations based on 30YR Growth Rates

Year	Volume	Estimate		
2023	15,700	N/A	*Linear*	-0.77%
2050	11,470	11,000		
Year	**Volume**	**Estimate**	*Compound*	-0.87%
2023	15,700	N/A		
2050	12,403	12,000		
Year	**Volume**	**Estimate**	*Average Annual*	-0.46%
2023	15,700	N/A		
2050	13,676	14,000		

Travel Demand Model

COATS

	2018	2045		
Model	14,585	24,506	*Linear*	2.52%
Acual/Est.	18,600	31,252		
Year	**Volume**	**Estimate**		
2050	33,595	34,000		

SCSWM

	2019	2050		
Model	16,407	20,981	*Linear*	0.90%
Acual/Est.	18,900	24,169		
Year	**Volume**	**Estimate**		
2050	24,169	24,000		

Calculations based on 20YR Growth Rates

Year	Volume	Estimate		
2023	15,700	N/A	*Linear*	-0.89%
2050	11,110	11,000		
Year	**Volume**	**Estimate**	*Compound*	-0.98%
2023	15,700	N/A		
2050	12,050	12,000		
Year	**Volume**	**Estimate**	*Average Annual*	-0.50%
2023	15,700	N/A		
2050	13,496	13,000		

Calculations based on 10YR Growth Rates

Year	Volume	Estimate		
2023	15,700	N/A	*Linear*	-1.13%
2050	10,300	10,000		
Year	**Volume**	**Estimate**	*Compound*	-1.19%
2023	15,700	N/A		
2050	11,358	11,000		
Year	**Volume**	**Estimate**	*Average Annual*	-0.38%
2023	15,700	N/A		
2050	14,036	14,000		

Demographic Data

Population

Employment

Trend Analysis
Linear

R-Square	AGR (Historical)	AGR (Design Year)	Annual Increase	2050 Estimate
69.3%	-1.0%	-1.5%	-225	9,000

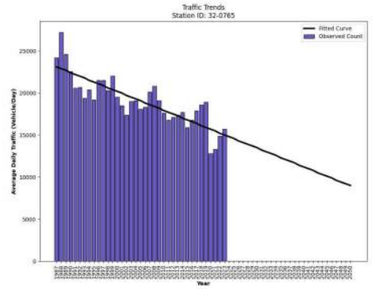

Trend Analysis *(*2015-2023)*
Linear

R-Square	AGR (Historical)	AGR (Design Year)	Annual Increase	2050 Estimate
20.2%	-2.0%	-2.4%	-358	5,000

S-273 : County Line - RICHLAND TO I- 20 (INTERSTATE 20)



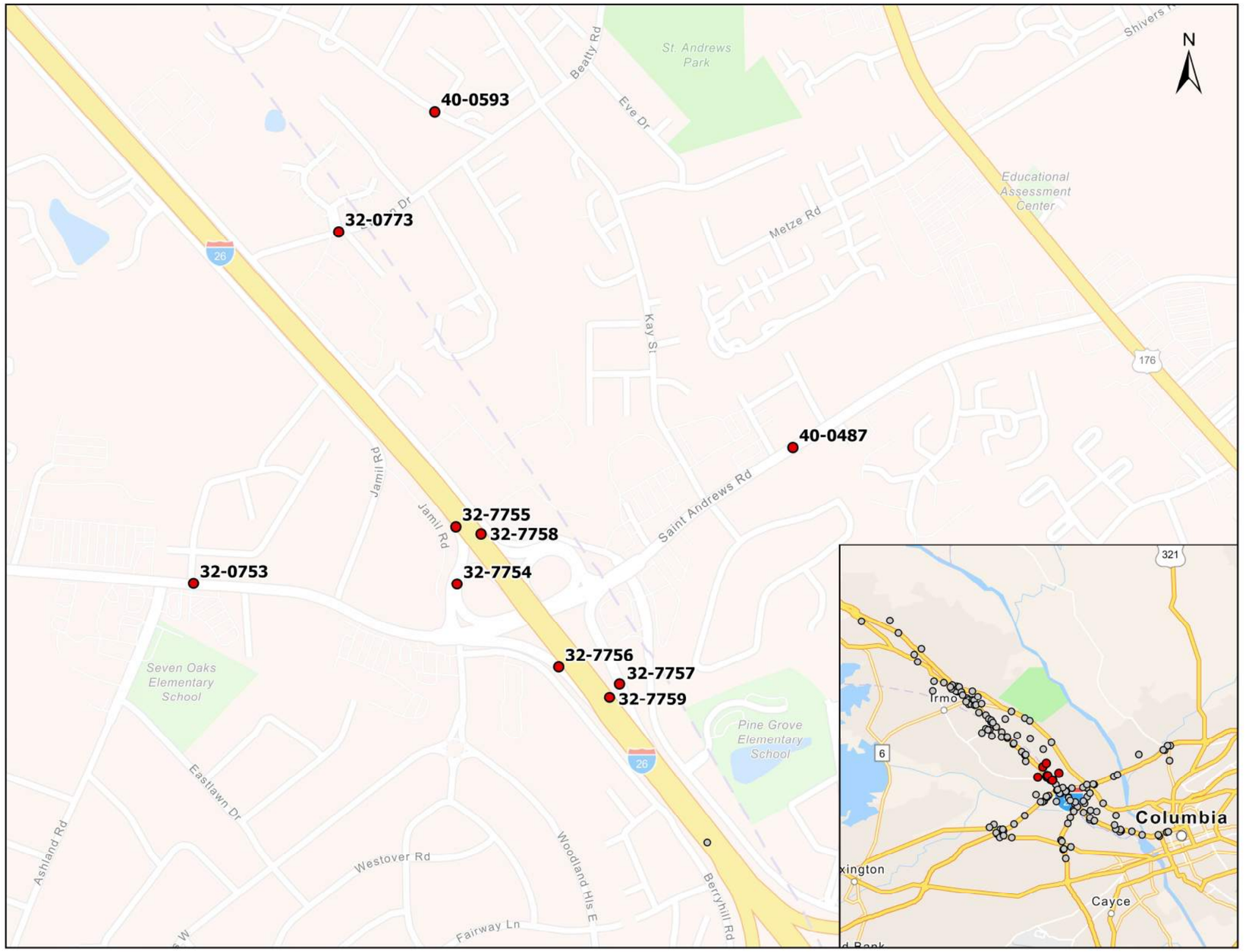

N
40-0593
32-0773
40-0487
32-7755
32-7758
32-0753
32-7754
32-7756
32-7757
32-7759
St. Andrews Park
Beatty Rd
Eve Dr
Shivers
Educational Assessment Center
Metze Rd
Kay St
176
26
Jamil Rd
Saint Andrews Rd
Seven Oaks Elementary School
Pine Grove Elementary School
Eastlawn Dr
Ashland Rd
Westover Rd
Woodland Hls E
Berryhill Rd
Fairway Ln
321
Irmo
6
Columbia
Cayce

Station ID 40-0487
County Richland
Location click here

	Year	AADT	%Change
1	1987		
2	1988		#DIV/0!
3	1989		#DIV/0!
4	1990	20,700	#DIV/0!
5	1991	19,000	-8.2%
6	1992	21,400	12.6%
7	1993	22,000	2.8%
8	1994	22,400	1.8%
9	1995	24,300	8.5%
10	1996	22,600	-7.0%
11	1997	21,400	-5.3%
12	1998	21,900	2.3%
13	1999	20,400	-6.8%
14	2000	19,600	-3.9%
15	2001	21,100	7.7%
16	2002	23,000	9.0%
17	2003	21,700	-5.7%
18	2004	19,700	-9.2%
19	2005	17,900	-9.1%
20	2006	18,400	2.8%
21	2007	19,200	4.3%
22	2008	19,000	-1.0%
23	2009	17,400	-8.4%
24	2010	18,100	4.0%
25	2011	17,000	-6.1%
26	2012	17,300	1.8%
27	2013	17,600	1.7%
28	2014	16,300	-7.4%
29	2015	16,400	0.6%
30	2016	18,100	10.4%
31	2017	16,600	-8.3%
32	2018	17,200	3.6%
33	2019	15,900	-7.6%
34	2020	14,700	-7.5%
35	2021	15,300	4.1%
36	2022	16,000	4.6%
37	2023	16,300	1.9%
		Avg=	#DIV/0!

For Reference
1% Annual Growth Rate

Year	Volume	Growth Rate
2023	16,300	Present
2050	20,701	Linear
2050	21,324	Compound

Calculations based on 30YR Growth Rates

Year	Volume	Estimate		
2023	16,300	N/A	*Linear*	-0.91%
2050	10,810	11,000		
Year	**Volume**	**Estimate**		
2023	16,300	N/A	*Compound*	-1.05%
2050	12,244	12,000		
Year	**Volume**	**Estimate**		
2023	16,300	N/A	*Average Annual*	-0.90%
2050	12,187	12,000		

Travel Demand Model

COATS

	2018	2045		
Model	21,294	22,823	*Linear*	0.27%
Acual/Est.	17,200	18,435		
Year	**Volume**	**Estimate**		
2050	18,664	19,000		

SCSWM

	2019	2050		
Model	16,578	18,562	*Linear*	0.39%
Acual/Est.	15,900	17,803		
Year	**Volume**	**Estimate**		
2050	17,803	18,000		

Demographic Data

Population

Employment

Calculations based on 20YR Growth Rates

Year	Volume	Estimate		
2023	16,300	N/A	*Linear*	-0.86%
2050	11,710	12,000		
Year	**Volume**	**Estimate**		
2023	16,300	N/A	*Compound*	-0.94%
2050	12,622	13,000		
Year	**Volume**	**Estimate**		
2023	16,300	N/A	*Average Annual*	-0.82%
2050	12,536	13,000		

Calculations based on 10YR Growth Rates

Year	Volume	Estimate		
2023	16,300	N/A	*Linear*	0.00%
2050	16,300	16,000		
Year	**Volume**	**Estimate**		
2023	16,300	N/A	*Compound*	0.00%
2050	16,300	16,000		
Year	**Volume**	**Estimate**		
2023	16,300	N/A	*Average Annual*	0.19%
2050	17,179	17,000		

Trend Analysis
Linear

R-Square	AGR (Historical)	AGR (Design Year)	Annual Increase	2050 Estimate
74.8%	-1.0%	-1.4%	-219	9,500

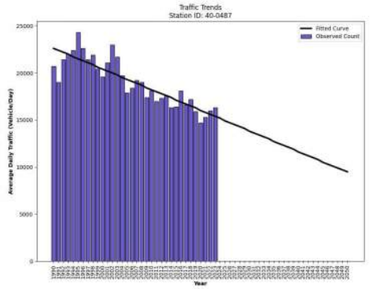

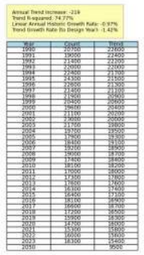

Trend Analysis *(*2015-2023)*
Linear

R-Square	AGR (Historical)	AGR (Design Year)	Annual Increase	2050 Estimate
29.2%	-1.2%	-1.3%	-197	10,200

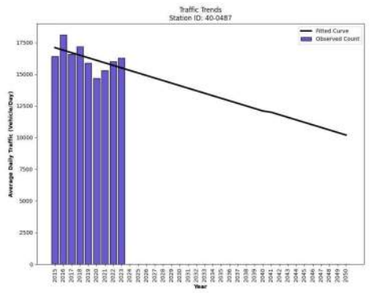



Year	Count	Trend
2015	16400	17100
2016	18100	16900
2017	16600	16700
2018	17200	16500
2019	15900	16300
2020	14700	16100
2021	15300	15900
2022	16000	15700
2023	16300	15500
2050		10200

S-42 : County Line - LEXINGTON TO US 176 (BROAD RIVER RD)



Station ID 32-0753
County Lexington
Location click here

	Year	AADT	%Change
1	1987	25,900	
2	1988	29,200	12.7%
3	1989	32,603	11.7%
4	1990	26,700	-18.1%
5	1991	25,400	-4.9%
6	1992	31,100	22.4%
7	1993	28,400	-8.7%
8	1994	29,100	2.5%
9	1995	27,600	-5.2%
10	1996	26,300	-4.7%
11	1997	25,400	-3.4%
12	1998	24,600	-3.1%
13	1999	25,600	4.1%
14	2000	23,400	-8.6%
15	2001	22,400	-4.3%
16	2002	22,500	0.4%
17	2003	24,700	9.8%
18	2004	24,100	-2.4%
19	2005	21,900	-9.1%
20	2006	23,600	7.8%
21	2007	23,500	-0.4%
22	2008	24,400	3.8%
23	2009	22,300	-8.6%
24	2010	23,000	3.1%
25	2011	21,800	-5.2%
26	2012	21,300	-2.3%
27	2013	21,700	1.9%
28	2014	22,100	1.8%
29	2015	20,500	-7.2%
30	2016	20,300	-1.0%
31	2017	21,500	5.9%
32	2018	22,300	3.7%
33	2019	22,700	1.8%
34	2020	20,000	-11.9%
35	2021	20,800	4.0%
36	2022	23,000	10.6%
37	2023	24,200	5.2%
		Avg=	0.114%

For Reference
1% Annual Growth Rate

Year	Volume	Growth Rate
2023	24,200	Present
2050	30,734	Linear
2050	31,659	Compound

Calculations based on 30YR Growth Rates

Year	Volume	Estimate		
2023	24,200	N/A	*Linear*	-0.56%
2050	19,790	20,000		
Year	**Volume**	**Estimate**		
2023	24,200	N/A	*Compound*	-0.61%
2050	20,500	20,000		
Year	**Volume**	**Estimate**		
2023	24,200	N/A	*Average Annual*	-0.47%
2050	21,034	21,000		

Travel Demand Model

COATS

	2018	2045		
Model	28,153	32,090	*Linear*	0.52%
Acual/Est.	22,300	25,418		
Year	**Volume**	**Estimate**		
2050	25,996	26,000		

SCSWM

	2019	2050		
Model	19,106	23,554	*Linear*	0.75%
Acual/Est.	22,700	27,985		
Year	**Volume**	**Estimate**		
2050	27,985	28,000		

Demographic Data

Population

Employment

Calculations based on 20YR Growth Rates

Year	Volume	Estimate		
2023	24,200	N/A	*Linear*	0.02%
2050	24,335	24,000		
Year	**Volume**	**Estimate**		
2023	24,200	N/A	*Compound*	0.02%
2050	24,336	24,000		
Year	**Volume**	**Estimate**		
2023	24,200	N/A	*Average Annual*	0.20%
2050	25,588	26,000		

Calculations based on 10YR Growth Rates

Year	Volume	Estimate		
2023	24,200	N/A	*Linear*	0.95%
2050	29,870	30,000		
Year	**Volume**	**Estimate**		
2023	24,200	N/A	*Compound*	0.91%
2050	30,921	31,000		
Year	**Volume**	**Estimate**		
2023	24,200	N/A	*Average Annual*	1.23%
2050	32,565	33,000		

Trend Analysis

Linear

R-Square	AGR (Historical)	AGR (Design Year)	Annual Increase	2050 Estimate
63.5%	-0.8%	-1.1%	-223	14,200

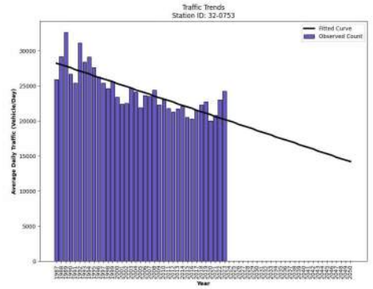

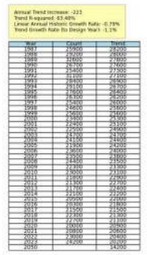

Trend Analysis *(*2015-2023)*

Linear

R-Square	AGR (Historical)	AGR (Design Year)	Annual Increase	2050 Estimate
37.4%	1.6%	1.4%	320	31,600

Year	Count	Trend
2015	20500	20400
2016	20300	20700
2017	21500	21100
2018	22300	21400
2019	22700	21700
2020	20000	22000
2021	20800	22300
2022	23000	22700
2023	24200	23000
2050		31600

S-36 : County Line - RICHLAND TO S- 173 (SIDNEY RD)



Station ID 40-0593
County Richland
Location click here

	Year	AADT	%Change
1	1987		
2	1988		#DIV/0!
3	1989		#DIV/0!
4	1990	2,400	#DIV/0!
5	1991	2,100	-12.5%
6	1992	2,100	0.0%
7	1993	2,200	4.8%
8	1994	2,300	4.5%
9	1995	2,500	8.7%
10	1996	2,600	4.0%
11	1997	2,500	-3.8%
12	1998	2,500	0.0%
13	1999	2,800	12.0%
14	2000	2,400	-14.3%
15	2001	2,600	8.3%
16	2002	2,800	7.7%
17	2003	2,400	-14.3%
18	2004	2,500	4.2%
19	2005	2,500	0.0%
20	2006	2,700	8.0%
21	2007	2,700	0.0%
22	2008	2,600	-3.7%
23	2009	2,600	0.0%
24	2010	2,400	-7.7%
25	2011	2,300	-4.2%
26	2012	2,300	0.0%
27	2013	2,300	0.0%
28	2014	2,300	0.0%
29	2015	2,100	-8.7%
30	2016	2,300	9.5%
31	2017	2,300	0.0%
32	2018	2,500	8.7%
33	2019	2,100	-16.0%
34	2020	2,000	-4.8%
35	2021	2,500	25.0%
36	2022	2,900	16.0%
37	2023	2,000	-31.0%
		Avg=	#DIV/0!

For Reference
1% Annual Growth Rate

Year	Volume	Growth Rate
2023	2,000	Present
2050	2,540	Linear
2050	2,616	Compound

Calculations based on 30YR Growth Rates

Year	Volume	Estimate		
2023	2,000	N/A	*Linear*	-0.43%
2050	1,730	1,700		

Year	Volume	Estimate		
2023	2,000	N/A	*Compound*	-0.46%
2050	1,764	1,800		

Year	Volume	Estimate		
2023	2,000	N/A	*Average Annual*	0.13%
2050	2,070	2,100		

Travel Demand Model

COATS

	2018	2045		
Model	2,833	3,483	*Linear*	0.85%
Acual/Est.	2,500	3,074		

Year	Volume	Estimate
2050	3,180	3,200

SCSWM

	2019	2050		
Model	2,069	2,927	*Linear*	1.34%
Acual/Est.	2,100	2,971		

Year	Volume	Estimate
2050	2,971	3,000

Demographic Data

Population

Employment

Calculations based on 20YR Growth Rates

Year	Volume	Estimate		
2023	2,000	N/A	*Linear*	-1.00%
2050	1,325	1,300		

Year	Volume	Estimate		
2023	2,000	N/A	*Compound*	-1.11%
2050	1,480	1,500		

Year	Volume	Estimate		
2023	2,000	N/A	*Average Annual*	-0.47%
2050	1,740	1,700		

Calculations based on 10YR Growth Rates

Year	Volume	Estimate		
2023	2,000	N/A	*Linear*	-1.30%
2050	1,190	1,200		

Year	Volume	Estimate		
2023	2,000	N/A	*Compound*	-1.39%
2050	1,371	1,400		

Year	Volume	Estimate		
2023	2,000	N/A	*Average Annual*	-0.14%
2050	1,921	1,900		

Trend Analysis

Linear

R-Square	AGR (Historical)	AGR (Design Year)	Annual Increase	2050 Estimate
1.7%	-0.1%	-0.2%	-3	2,300

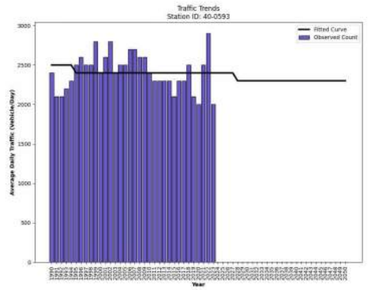

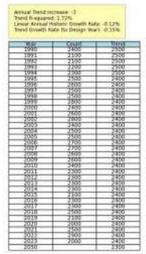

Trend Analysis *(*2015-2023)*

Linear

R-Square	AGR (Historical)	AGR (Design Year)	Annual Increase	2050 Estimate
4.0%	1.1%	0.9%	22	3,000

Year	Count	Trend
2015	2100	2200
2016	2300	2200
2017	2300	2300
2018	2500	2300
2019	2100	2300
2020	2000	2300
2021	2500	2300
2022	2900	2400
2023	2000	2400
2050		3000

S-311 : US 176 (BROAD RIVER RD) TO County Line - LEXINGTON



Station ID 32-0773
County Lexington
Location click here

	Year	AADT	%Change
1	1987	1,550	
2	1988	1,650	6.5%
3	1989	1,850	12.1%
4	1990	1,850	0.0%
5	1991	2,479	34.0%
6	1992	2,700	8.9%
7	1993	2,400	-11.1%
8	1994	2,800	16.7%
9	1995	2,700	-3.6%
10	1996	3,000	11.1%
11	1997	2,800	-6.7%
12	1998	2,900	3.6%
13	1999	2,600	-10.3%
14	2000	2,800	7.7%
15	2001	2,600	-7.1%
16	2002	2,600	0.0%
17	2003	2,300	-11.5%
18	2004	2,300	0.0%
19	2005	2,500	8.7%
20	2006	2,100	-16.0%
21	2007	1,950	-7.1%
22	2008	1,800	-7.7%
23	2009	1,800	0.0%
24	2010	1,800	0.0%
25	2011	1,700	-5.6%
26	2012	1,750	2.9%
27	2013	1,800	2.9%
28	2014	1,850	2.8%
29	2015	1,600	-13.5%
30	2016	1,450	-9.4%
31	2017	1,700	17.2%
32	2018	1,550	-8.8%
33	2019	1,550	0.0%
34	2020	1,300	-16.1%
35	2021	1,250	-3.8%
36	2022	1,000	-20.0%
37	2023	1,000	0.0%
		Avg=	-0.650%

For Reference
1% Annual Growth Rate

Year	Volume	Growth Rate
2023	1,000	Present
2050	1,270	Linear
2050	1,308	Compound

Calculations based on 30YR Growth Rates

Year	Volume	Estimate		
2023	1,000	N/A	*Linear*	-2.14%
2050	-620	-620		
Year	Volume	Estimate	*Compound*	-3.37%
2023	1,000	N/A		
2050	396	400		
Year	Volume	Estimate	*Average Annual*	-3.12%
2023	1,000	N/A		
2050	127	130		

Travel Demand Model

COATS

	2018	2045		
Model	7,393	7,542	*Linear*	0.07%
Acual/Est.	1,550	1,581		

Year	Volume	Estimate
2050	1,587	1,600

SCSWM

	2019	2050		
Model	1,621	2,431	*Linear*	1.61%
Acual/Est.	1,550	2,325		

Year	Volume	Estimate
2050	2,325	2,300

Demographic Data

Population

Employment

Calculations based on 20YR Growth Rates

Year	Volume	Estimate		
2023	1,000	N/A	*Linear*	-2.83%
2050	-755	-760		
Year	Volume	Estimate	*Compound*	-4.08%
2023	1,000	N/A		
2050	325	320		
Year	Volume	Estimate	*Average Annual*	-3.87%
2023	1,000	N/A		
2050	-84	-80		

Calculations based on 10YR Growth Rates

Year	Volume	Estimate		
2023	1,000	N/A	*Linear*	-4.59%
2050	-1,295	-1,300		
Year	Volume	Estimate	*Compound*	-5.97%
2023	1,000	N/A		
2050	190	190		
Year	Volume	Estimate	*Average Annual*	-6.05%
2023	1,000	N/A		
2050	-694	-690		

Trend Analysis
Linear

R-Square	AGR (Historical)	AGR (Design Year)	Annual Increase	2050 Estimate
45.2%	-1.3%	-2.4%	-34	500

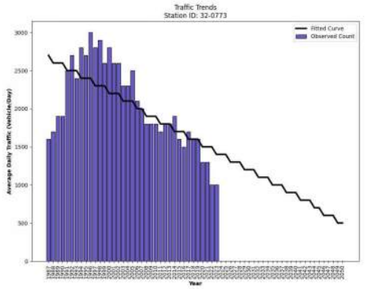

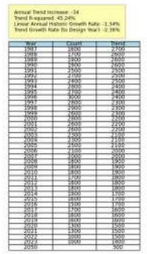

Trend Analysis *(*2015-2023)*
Linear

R-Square	AGR (Historical)	AGR (Design Year)	Annual Increase	2050 Estimate
74.4%	-4.4%	-7.7%	-83	-1,200

Year	Count	Trend
2015	1600	1700
2016	1500	1700
2017	1700	1600
2018	1800	1500
2019	1800	1400
2020	1300	1300
2021	1300	1200
2022	1000	1200
2023	1000	1100
2050		-1200

S-1079 : County Line - RICHLAND TO S- 1842 (FERNANDINA RD)



Station ID 32-7756
County Lexington
Location click here

	Year	AADT	%Change
1	1987		
2	1988		#DIV/0!
3	1989		#DIV/0!
4	1990		#DIV/0!
5	1991		#DIV/0!
6	1992		#DIV/0!
7	1993		#DIV/0!
8	1994		#DIV/0!
9	1995		#DIV/0!
10	1996		#DIV/0!
11	1997		#DIV/0!
12	1998		#DIV/0!
13	1999		#DIV/0!
14	2000		#DIV/0!
15	2001		#DIV/0!
16	2002		#DIV/0!
17	2003		#DIV/0!
18	2004		#DIV/0!
19	2005		#DIV/0!
20	2006		#DIV/0!
21	2007		#DIV/0!
22	2008		#DIV/0!
23	2009		#DIV/0!
24	2010		#DIV/0!
25	2011		#DIV/0!
26	2012		#DIV/0!
27	2013		#DIV/0!
28	2014		#DIV/0!
29	2015		#DIV/0!
30	2016		#DIV/0!
31	2017		#DIV/0!
32	2018		#DIV/0!
33	2019		#DIV/0!
34	2020	7,700	#DIV/0!
35	2021	8,300	7.8%
36	2022	9,500	14.5%
37	2023	9,400	-1.1%
		Avg=	#DIV/0!

For Reference
1% Annual Growth Rate

Year	Volume	Growth Rate
2023	9,400	Present
2050	11,938	Linear
2050	12,297	Compound

Calculations based on 30YR Growth Rates

Year	Volume	Estimate		
2023	9,400	N/A	*Linear*	#DIV/0!
2050	#DIV/0!	#DIV/0!		
Year	**Volume**	**Estimate**		
2023	9,400	N/A	*Compound*	#DIV/0!
2050	#DIV/0!	#DIV/0!		
Year	**Volume**	**Estimate**		
2023	9,400	N/A	*Average Annual*	#DIV/0!
2050	#DIV/0!	#DIV/0!		

Travel Demand Model

COATS

	2018	2045		
Model	12,386	13,943	*Linear*	0.47%
Acual/Est.	0	0		
Year	**Volume**	**Estimate**		
2050	0	0		

SCSWM

	2019	2050		
Model	10,769	11,830	*Linear*	0.32%
Acual/Est.	0	0		
Year	**Volume**	**Estimate**		
2050	0	0		

Demographic Data

Population

Employment

Calculations based on 20YR Growth Rates

Year	Volume	Estimate		
2023	9,400	N/A	*Linear*	#DIV/0!
2050	#DIV/0!	#DIV/0!		
Year	**Volume**	**Estimate**		
2023	9,400	N/A	*Compound*	#DIV/0!
2050	#DIV/0!	#DIV/0!		
Year	**Volume**	**Estimate**		
2023	9,400	N/A	*Average Annual*	#DIV/0!
2050	#DIV/0!	#DIV/0!		

Calculations based on 10YR Growth Rates

Year	Volume	Estimate		
2023	9,400	N/A	*Linear*	#DIV/0!
2050	#DIV/0!	#DIV/0!		
Year	**Volume**	**Estimate**		
2023	9,400	N/A	*Compound*	#DIV/0!
2050	#DIV/0!	#DIV/0!		
Year	**Volume**	**Estimate**		
2023	9,400	N/A	*Average Annual*	#DIV/0!
2050	#DIV/0!	#DIV/0!		

Trend Analysis
Linear

R-Square	AGR (Historical)	AGR (Design Year)	Annual Increase	2050 Estimate
86.8%	8.1%	6.5%	630	26,700

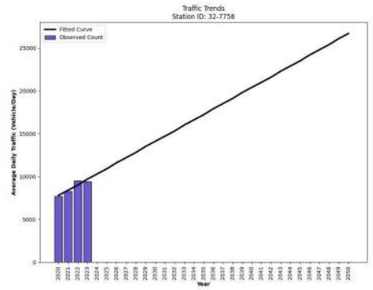

Year	Count	Trend
2020	7700	7800
2021	8300	8400
2022	9500	9000
2023	9400	9700
2050		26700

Trend Analysis *(*2015-2023)*
Linear

R-Square	AGR (Historical)	AGR (Design Year)	Annual Increase	2050 Estimate
86.8%	8.1%	6.5%	630	26,700

Year	Count	Trend
2020	7700	7800
2021	8300	8400
2022	9500	9000
2023	9400	9700
2050		26700

R-7756 2O1 : S- 36 TO I- 26, S- 1302

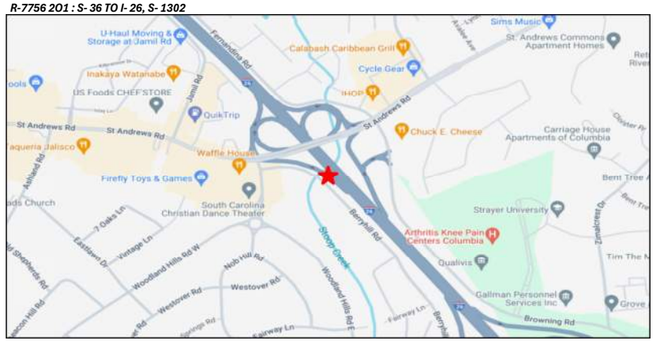

Station ID 32-7755
County Lexington
Location click here

	Year	AADT	%Change
1	1987		
2	1988		#DIV/0!
3	1989		#DIV/0!
4	1990		#DIV/0!
5	1991		#DIV/0!
6	1992		#DIV/0!
7	1993		#DIV/0!
8	1994		#DIV/0!
9	1995		#DIV/0!
10	1996		#DIV/0!
11	1997		#DIV/0!
12	1998		#DIV/0!
13	1999		#DIV/0!
14	2000		#DIV/0!
15	2001		#DIV/0!
16	2002		#DIV/0!
17	2003		#DIV/0!
18	2004		#DIV/0!
19	2005		#DIV/0!
20	2006		#DIV/0!
21	2007		#DIV/0!
22	2008		#DIV/0!
23	2009		#DIV/0!
24	2010		#DIV/0!
25	2011		#DIV/0!
26	2012		#DIV/0!
27	2013		#DIV/0!
28	2014		#DIV/0!
29	2015		#DIV/0!
30	2016		#DIV/0!
31	2017		#DIV/0!
32	2018		#DIV/0!
33	2019		#DIV/0!
34	2020	3,000	#DIV/0!
35	2021	2,900	-3.3%
36	2022	2,700	-6.9%
37	2023	2,800	3.7%
		Avg=	#DIV/0!

For Reference
1% Annual Growth Rate

Year	Volume	Growth Rate
2023	2,800	Present
2050	3,556	Linear
2050	3,663	Compound

Calculations based on 30YR Growth Rates

Year	Volume	Estimate		
2023	2,800	N/A		
2050	#DIV/0!	#DIV/0!	*Linear*	#DIV/0!
			Compound	#DIV/0!
			Average Annual	#DIV/0!

Calculations based on 20YR Growth Rates

Year	Volume	Estimate		
2023	2,800	N/A		
2050	#DIV/0!	#DIV/0!	*Linear*	#DIV/0!
			Compound	#DIV/0!
			Average Annual	#DIV/0!

Calculations based on 10YR Growth Rates

Year	Volume	Estimate		
2023	2,800	N/A		
2050	#DIV/0!	#DIV/0!	*Linear*	#DIV/0!
			Compound	#DIV/0!
			Average Annual	#DIV/0!

Travel Demand Model

COATS

	2018	2045		
Model	5,210	7,371	*Linear*	1.54%
Acual/Est.	0	0		

Year	Volume	Estimate
2050	0	0

SCSWM

	2019	2050		
Model	3,192	2,877	*Linear*	-0.32%
Acual/Est.	0	0		

Year	Volume	Estimate
2050	0	0

Demographic Data

Population

Employment

Trend Analysis
Linear

R-Square	AGR (Historical)	AGR (Design Year)	Annual Increase	2050 Estimate
64.0%	-3.3%	-2.9%	-80	600

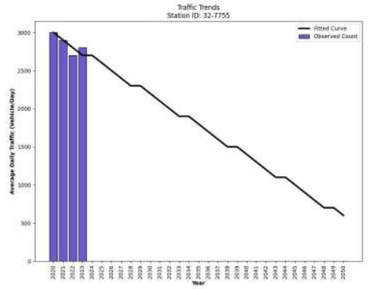

Year	Count	Trend
2020	3000	3000
2021	2900	2900
2022	2700	2800
2023	2800	2700
2050		600

Trend Analysis *(*2015-2023)*
Linear

R-Square	AGR (Historical)	AGR (Design Year)	Annual Increase	2050 Estimate
64.0%	-3.3%	-2.9%	-80	600

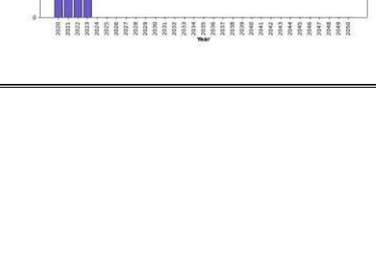

Year	Count	Trend
2020	3000	3000
2021	2900	2900
2022	2700	2800
2023	2800	2700
2050		600

R-7755 1E1 : I- 26 TO S- 36, RS 7755 1E1

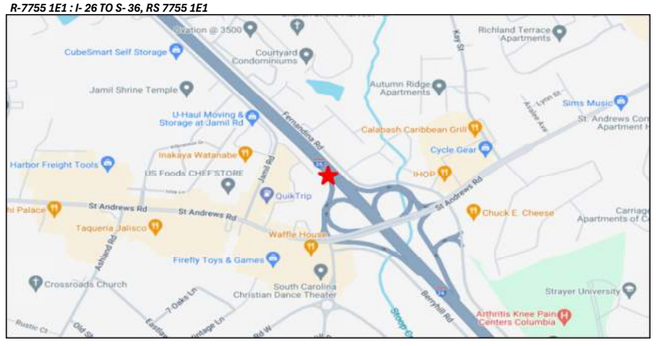

Station ID 32-7759
County Lexington
Location click here

	Year	AADT	%Change
1	1987		
2	1988		#DIV/0!
3	1989		#DIV/0!
4	1990		#DIV/0!
5	1991		#DIV/0!
6	1992		#DIV/0!
7	1993		#DIV/0!
8	1994		#DIV/0!
9	1995		#DIV/0!
10	1996		#DIV/0!
11	1997		#DIV/0!
12	1998		#DIV/0!
13	1999		#DIV/0!
14	2000		#DIV/0!
15	2001		#DIV/0!
16	2002		#DIV/0!
17	2003		#DIV/0!
18	2004		#DIV/0!
19	2005		#DIV/0!
20	2006		#DIV/0!
21	2007		#DIV/0!
22	2008		#DIV/0!
23	2009		#DIV/0!
24	2010		#DIV/0!
25	2011		#DIV/0!
26	2012		#DIV/0!
27	2013		#DIV/0!
28	2014		#DIV/0!
29	2015		#DIV/0!
30	2016		#DIV/0!
31	2017		#DIV/0!
32	2018		#DIV/0!
33	2019		#DIV/0!
34	2020	6,700	#DIV/0!
35	2021	6,700	0.0%
36	2022	8,400	25.4%
37	2023	8,800	4.8%
		Avg=	#DIV/0!

For Reference
1% Annual Growth Rate

Year	Volume	Growth Rate
2023	8,800	Present
2050	11,176	Linear
2050	11,512	Compound

Calculations based on 30YR Growth Rates

Year	Volume	Estimate		
2023	8,800	N/A	*Linear*	#DIV/0!
2050	#DIV/0!	#DIV/0!		
Year	**Volume**	**Estimate**		
2023	8,800	N/A	*Compound*	#DIV/0!
2050	#DIV/0!	#DIV/0!		
Year	**Volume**	**Estimate**		
2023	8,800	N/A	*Average Annual*	#DIV/0!
2050	#DIV/0!	#DIV/0!		

Travel Demand Model

COATS

	2018	2045		
Model	9,225	8,677	*Linear*	-0.22%
Acual/Est.	0	0		
Year	**Volume**	**Estimate**		
2050	0	0		

SCSWM

	2019	2050		
Model	9,459	10,493	*Linear*	0.35%
Acual/Est.	0	0		
Year	**Volume**	**Estimate**		
2050	0	0		

Demographic Data

Population

Employment

Calculations based on 20YR Growth Rates

Year	Volume	Estimate		
2023	8,800	N/A	*Linear*	#DIV/0!
2050	#DIV/0!	#DIV/0!		
Year	**Volume**	**Estimate**		
2023	8,800	N/A	*Compound*	#DIV/0!
2050	#DIV/0!	#DIV/0!		
Year	**Volume**	**Estimate**		
2023	8,800	N/A	*Average Annual*	#DIV/0!
2050	#DIV/0!	#DIV/0!		

Calculations based on 10YR Growth Rates

Year	Volume	Estimate		
2023	8,800	N/A	*Linear*	#DIV/0!
2050	#DIV/0!	#DIV/0!		
Year	**Volume**	**Estimate**		
2023	8,800	N/A	*Compound*	#DIV/0!
2050	#DIV/0!	#DIV/0!		
Year	**Volume**	**Estimate**		
2023	8,800	N/A	*Average Annual*	#DIV/0!
2050	#DIV/0!	#DIV/0!		

Trend Analysis
Linear

R-Square	AGR (Historical)	AGR (Design Year)	Annual Increase	2050 Estimate
86.7%	12.3%	9.0%	800	30,500

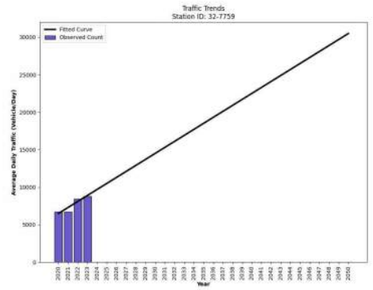

Annual Trend Increase: 600
Trend R-squared: 86.72%
Linear Annual Historic Growth Rate: 12.31%
Trend Growth Rate Its Design Year: 8.99%

Year	Count	Trend
2020	6700	6500
2021	6700	7300
2022	8400	8100
2023	8800	8900
2050		30500

Trend Analysis *(*2015-2023)*
Linear

R-Square	AGR (Historical)	AGR (Design Year)	Annual Increase	2050 Estimate
86.7%	12.3%	9.0%	800	30,500

Annual Trend Increase: 600
Trend R-squared: 86.72%
Linear Annual Historic Growth Rate: 12.31%
Trend Growth Rate Its Design Year: 8.99%

Year	Count	Trend
2020	6700	6500
2021	6700	7300
2022	8400	8100
2023	8800	8900
2050		30500

R-7759 4E1 : I- 26 TO S- 36

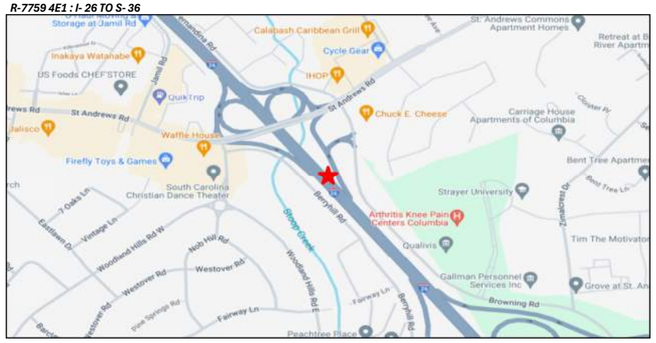

Station ID 32-7754
County Lexington
Location click here

	Year	AADT	%Change
1	1987		
2	1988		#DIV/0!
3	1989		#DIV/0!
4	1990		#DIV/0!
5	1991		#DIV/0!
6	1992		#DIV/0!
7	1993		#DIV/0!
8	1994		#DIV/0!
9	1995		#DIV/0!
10	1996		#DIV/0!
11	1997		#DIV/0!
12	1998		#DIV/0!
13	1999		#DIV/0!
14	2000		#DIV/0!
15	2001		#DIV/0!
16	2002		#DIV/0!
17	2003		#DIV/0!
18	2004		#DIV/0!
19	2005		#DIV/0!
20	2006		#DIV/0!
21	2007		#DIV/0!
22	2008		#DIV/0!
23	2009		#DIV/0!
24	2010		#DIV/0!
25	2011		#DIV/0!
26	2012		#DIV/0!
27	2013		#DIV/0!
28	2014		#DIV/0!
29	2015		#DIV/0!
30	2016		#DIV/0!
31	2017		#DIV/0!
32	2018		#DIV/0!
33	2019		#DIV/0!
34	2020	5,400	#DIV/0!
35	2021	6,300	16.7%
36	2022	5,600	-11.1%
37	2023	6,200	10.7%
		Avg=	#DIV/0!

For Reference
1% Annual Growth Rate

Year	Volume	Growth Rate
2023	6,200	Present
2050	7,874	Linear
2050	8,111	Compound

Calculations based on 30YR Growth Rates

Year	Volume	Estimate		
2023	6,200	N/A	*Linear*	#DIV/0!
2050	#DIV/0!	#DIV/0!		
Year	**Volume**	**Estimate**	*Compound*	#DIV/0!
2023	6,200	N/A		
2050	#DIV/0!	#DIV/0!		
Year	**Volume**	**Estimate**	*Average Annual*	#DIV/0!
2023	6,200	N/A		
2050	#DIV/0!	#DIV/0!		

Travel Demand Model

COATS

	2018	2045		
Model	10,532	7,930	*Linear*	-0.92%
Acual/Est.	0	0		

Year	Volume	Estimate
2050	0	0

SCSWM

	2019	2050		
Model	9,833	10,931	*Linear*	0.36%
Acual/Est.	0	0		

Year	Volume	Estimate
2050	0	0

Demographic Data

Population

Employment

Calculations based on 20YR Growth Rates

Year	Volume	Estimate		
2023	6,200	N/A	*Linear*	#DIV/0!
2050	#DIV/0!	#DIV/0!		
Year	**Volume**	**Estimate**	*Compound*	#DIV/0!
2023	6,200	N/A		
2050	#DIV/0!	#DIV/0!		
Year	**Volume**	**Estimate**	*Average Annual*	#DIV/0!
2023	6,200	N/A		
2050	#DIV/0!	#DIV/0!		

Calculations based on 10YR Growth Rates

Year	Volume	Estimate		
2023	6,200	N/A	*Linear*	#DIV/0!
2050	#DIV/0!	#DIV/0!		
Year	**Volume**	**Estimate**	*Compound*	#DIV/0!
2023	6,200	N/A		
2050	#DIV/0!	#DIV/0!		
Year	**Volume**	**Estimate**	*Average Annual*	#DIV/0!
2023	6,200	N/A		
2050	#DIV/0!	#DIV/0!		

Trend Analysis

Linear

R-Square	AGR (Historical)	AGR (Design Year)	Annual Increase	2050 Estimate
24.6%	3.0%	2.8%	170	10,700

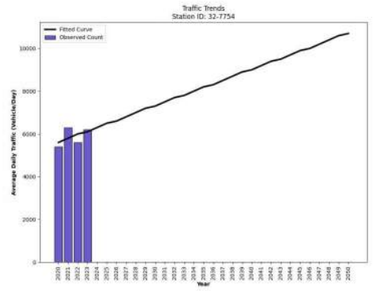



Year	Count	Trend
2020	5400	5600
2021	6300	5800
2022	5600	6000
2023	6200	6100
2050		10700

Trend Analysis *(*2015-2023)*

Linear

R-Square	AGR (Historical)	AGR (Design Year)	Annual Increase	2050 Estimate
24.6%	3.0%	2.8%	170	10,700

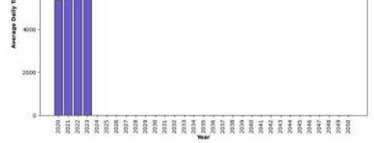



Year	Count	Trend
2020	5400	5600
2021	6300	5800
2022	5600	6000
2023	6200	6100
2050		10700

R-7754 101 : S- 36 TO I- 26

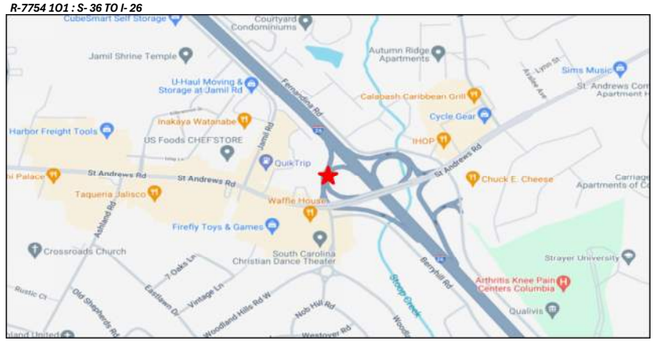

Station ID 32-7758
County Lexington
Location click here

	Year	AADT	%Change
1	1987		
2	1988		#DIV/0!
3	1989		#DIV/0!
4	1990		#DIV/0!
5	1991		#DIV/0!
6	1992		#DIV/0!
7	1993		#DIV/0!
8	1994		#DIV/0!
9	1995		#DIV/0!
10	1996		#DIV/0!
11	1997		#DIV/0!
12	1998		#DIV/0!
13	1999		#DIV/0!
14	2000		#DIV/0!
15	2001		#DIV/0!
16	2002		#DIV/0!
17	2003		#DIV/0!
18	2004		#DIV/0!
19	2005		#DIV/0!
20	2006		#DIV/0!
21	2007		#DIV/0!
22	2008		#DIV/0!
23	2009		#DIV/0!
24	2010		#DIV/0!
25	2011		#DIV/0!
26	2012		#DIV/0!
27	2013		#DIV/0!
28	2014		#DIV/0!
29	2015		#DIV/0!
30	2016		#DIV/0!
31	2017		#DIV/0!
32	2018		#DIV/0!
33	2019		#DIV/0!
34	2020	2,600	#DIV/0!
35	2021	4,000	53.8%
36	2022	2,100	-47.5%
37	2023	2,600	23.8%
		Avg=	#DIV/0!

For Reference
1% Annual Growth Rate

Year	Volume	Growth Rate
2023	2,600	Present
2050	3,302	Linear
2050	3,401	Compound

Calculations based on 30YR Growth Rates

Year	Volume	Estimate		
2023	2,600	N/A	*Linear*	#DIV/0!
2050	#DIV/0!	#DIV/0!		
Year	**Volume**	**Estimate**	*Compound*	#DIV/0!
2023	2,600	N/A		
2050	#DIV/0!	#DIV/0!		
Year	**Volume**	**Estimate**	*Average Annual*	#DIV/0!
2023	2,600	N/A		
2050	#DIV/0!	#DIV/0!		

Travel Demand Model

COATS

	2018	2045		
Model	5,493	8,493	*Linear*	2.02%
Acual/Est.	0	0		

Year	Volume	Estimate
2050	0	0

SCSWM

	2019	2050		
Model	5,287	4,450	*Linear*	-0.51%
Acual/Est.	0	0		

Year	Volume	Estimate
2050	0	0

Demographic Data

Population

Employment

Calculations based on 20YR Growth Rates

Year	Volume	Estimate		
2023	2,600	N/A	*Linear*	#DIV/0!
2050	#DIV/0!	#DIV/0!		
Year	**Volume**	**Estimate**	*Compound*	#DIV/0!
2023	2,600	N/A		
2050	#DIV/0!	#DIV/0!		
Year	**Volume**	**Estimate**	*Average Annual*	#DIV/0!
2023	2,600	N/A		
2050	#DIV/0!	#DIV/0!		

Calculations based on 10YR Growth Rates

Year	Volume	Estimate		
2023	2,600	N/A	*Linear*	#DIV/0!
2050	#DIV/0!	#DIV/0!		
Year	**Volume**	**Estimate**	*Compound*	#DIV/0!
2023	2,600	N/A		
2050	#DIV/0!	#DIV/0!		
Year	**Volume**	**Estimate**	*Average Annual*	#DIV/0!
2023	2,600	N/A		
2050	#DIV/0!	#DIV/0!		

Trend Analysis

Linear

R-Square	AGR (Historical)	AGR (Design Year)	Annual Increase	2050 Estimate
9.0%	-6.5%	-7.6%	-190	-2,600

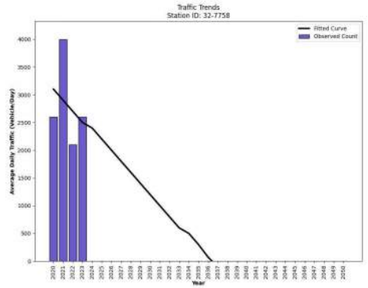



Trend Analysis *(*2015-2023)*

Linear

R-Square	AGR (Historical)	AGR (Design Year)	Annual Increase	2050 Estimate
9.0%	-6.5%	-7.6%	-190	-2,600

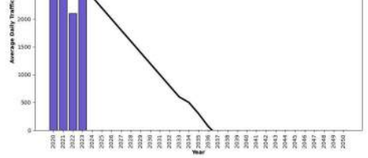



R-7758 401 : S- 42 TO I- 26, S- 2893, RS 7758 401

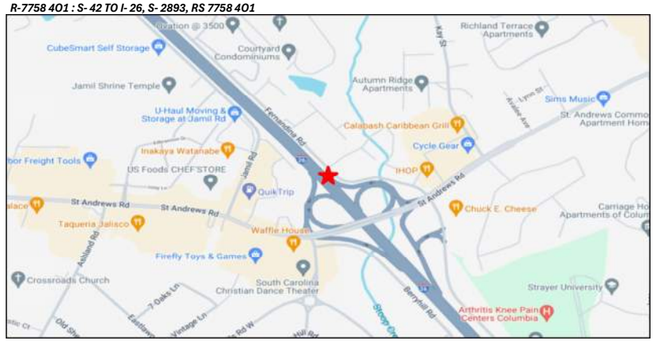

Station ID 32-7757
County Lexington
Location click here

	Year	AADT	%Change
1	1987		
2	1988		#DIV/0!
3	1989		#DIV/0!
4	1990		#DIV/0!
5	1991		#DIV/0!
6	1992		#DIV/0!
7	1993		#DIV/0!
8	1994		#DIV/0!
9	1995		#DIV/0!
10	1996		#DIV/0!
11	1997		#DIV/0!
12	1998		#DIV/0!
13	1999		#DIV/0!
14	2000		#DIV/0!
15	2001		#DIV/0!
16	2002		#DIV/0!
17	2003		#DIV/0!
18	2004		#DIV/0!
19	2005		#DIV/0!
20	2006		#DIV/0!
21	2007		#DIV/0!
22	2008		#DIV/0!
23	2009		#DIV/0!
24	2010		#DIV/0!
25	2011		#DIV/0!
26	2012		#DIV/0!
27	2013		#DIV/0!
28	2014		#DIV/0!
29	2015		#DIV/0!
30	2016		#DIV/0!
31	2017		#DIV/0!
32	2018		#DIV/0!
33	2019		#DIV/0!
34	2020	6,100	#DIV/0!
35	2021	6,400	4.9%
36	2022	6,100	-4.7%
37	2023	6,300	3.3%
		Avg=	#DIV/0!

For Reference
1% Annual Growth Rate

Year	Volume	Growth Rate
2023	6,300	Present
2050	8,001	Linear
2050	8,242	Compound

Calculations based on 30YR Growth Rates

Year	Volume	Estimate		
2023	6,300	N/A		
2050	#DIV/0!	#DIV/0!	*Linear*	#DIV/0!
2023	6,300	N/A		
2050	#DIV/0!	#DIV/0!	*Compound*	#DIV/0!
2023	6,300	N/A		
2050	#DIV/0!	#DIV/0!	*Average Annual*	#DIV/0!

Travel Demand Model

COATS

	2018	2045		
Model	12,143	12,629	*Linear*	0.15%
Acual/Est.	0	0		

Year	Volume	Estimate
2050	0	0

SCSWM

	2019	2050		
Model	8,895	10,184	*Linear*	0.47%
Acual/Est.	0	0		

Year	Volume	Estimate
2050	0	0

Demographic Data

Population

Employment

Calculations based on 20YR Growth Rates

Year	Volume	Estimate		
2023	6,300	N/A		
2050	#DIV/0!	#DIV/0!	*Linear*	#DIV/0!
2023	6,300	N/A		
2050	#DIV/0!	#DIV/0!	*Compound*	#DIV/0!
2023	6,300	N/A		
2050	#DIV/0!	#DIV/0!	*Average Annual*	#DIV/0!

Calculations based on 10YR Growth Rates

Year	Volume	Estimate		
2023	6,300	N/A		
2050	#DIV/0!	#DIV/0!	*Linear*	#DIV/0!
2023	6,300	N/A		
2050	#DIV/0!	#DIV/0!	*Compound*	#DIV/0!
2023	6,300	N/A		
2050	#DIV/0!	#DIV/0!	*Average Annual*	#DIV/0!

Trend Analysis
Linear

R-Square	AGR (Historical)	AGR (Design Year)	Annual Increase	2050 Estimate
6.7%	0.5%	0.5%	30	7,100

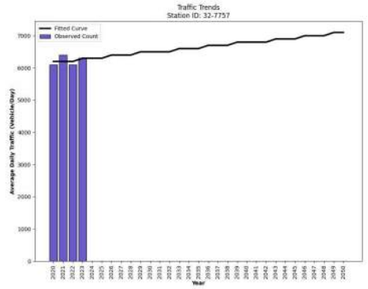

Year	Count	Trend
2020	6100	6200
2021	6400	6200
2022	6100	6200
2023	6300	6300
2050		7100

Trend Analysis *(*2015-2023)*
Linear

R-Square	AGR (Historical)	AGR (Design Year)	Annual Increase	2050 Estimate
6.7%	0.5%	0.5%	30	7,100

Year	Count	Trend
2020	6100	6200
2021	6400	6200
2022	6100	6200
2023	6300	6300
2050		7100

R-7757 3E1 : I- 26 TO S- 42, S- 2893, RS 7757 3E1



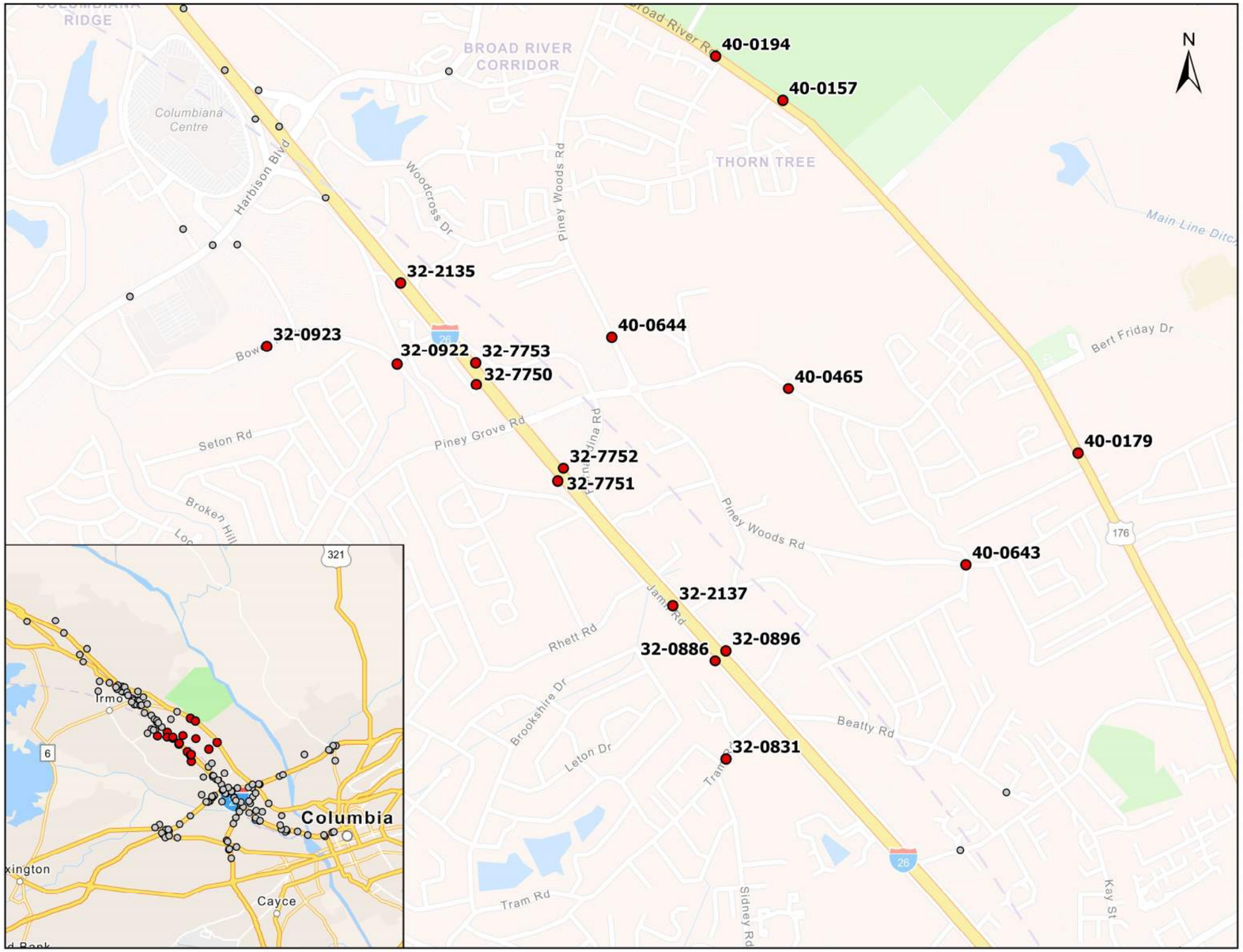
N
40-0194
40-0157
32-2135
32-0923
32-0922
32-7753
32-7750
40-0644
40-0465
40-0179
32-7752
32-7751
40-0643
32-2137
32-0886
32-0896
32-0831
BROAD RIVER CORRIDOR
THORN TREE
Columbiana Centre
Harbison Blvd
Woodcross Dr
Piney Woods Rd
Main Line Ditch
Bert Friday Dr
Seton Rd
Piney Grove Rd
Rhett Rd
Brookshire Dr
Leton Dr
Beatty Rd
Tram Rd
Sidney Rd
Kay St
Columbia
Cayce
Irmo
26
176
321
6

Station ID 40-0179
County Richland
Location click here

	Year	AADT	%Change
1	1987	12,700	
2	1988	13,900	9.4%
3	1989	19,400	39.6%
4	1990	19,300	-0.5%
5	1991	18,700	-3.1%
6	1992	19,700	5.3%
7	1993	20,000	1.5%
8	1994	21,600	8.0%
9	1995	22,300	3.2%
10	1996	20,400	-8.5%
11	1997	20,700	1.5%
12	1998	22,300	7.7%
13	1999	20,600	-7.6%
14	2000	19,800	-3.9%
15	2001	19,100	-3.5%
16	2002	20,600	7.9%
17	2003	21,400	3.9%
18	2004	20,600	-3.7%
19	2005	19,500	-5.3%
20	2006	19,300	-1.0%
21	2007	20,600	6.7%
22	2008	21,100	2.4%
23	2009	19,200	-9.0%
24	2010	22,000	14.6%
25	2011	20,300	-7.7%
26	2012	20,800	2.5%
27	2013	21,300	2.4%
28	2014	20,300	-4.7%
29	2015	19,300	-4.9%
30	2016	21,000	8.8%
31	2017	17,500	-16.7%
32	2018	17,200	-1.7%
33	2019	17,300	0.6%
34	2020	20,900	20.8%
35	2021	19,500	-6.7%
36	2022	20,300	4.1%
37	2023	22,700	11.8%
		Avg=	2.058%

Calculations based on 30YR Growth Rates

Year	Volume	Estimate		
2023	22,700	N/A	*Linear*	0.17%
2050	23,690	24,000		

Year	Volume	Estimate		
2023	22,700	N/A	*Compound*	0.17%
2050	23,738	24,000		

Year	Volume	Estimate		
2023	22,700	N/A	*Average Annual*	0.48%
2050	25,728	26,000		

Travel Demand Model

COATS

	2018	2045		
Model	22,021	25,847	*Linear*	0.64%
Acual/Est.	17,200	20,188		

Year	Volume	Estimate
2050	20,742	21,000

SCSWM

	2019	2050		
Model	19,446	26,925	*Linear*	1.24%
Acual/Est.	17,300	23,954		

Year	Volume	Estimate
2050	23,954	24,000

For Reference
1% Annual Growth Rate

Year	Volume	Growth Rate
2023	22,700	Present
2050	28,829	Linear
2050	29,696	Compound

Demographic Data

Population

Employment

Calculations based on 20YR Growth Rates

Year	Volume	Estimate		
2023	22,700	N/A	*Linear*	0.51%
2050	25,535	26,000		

Year	Volume	Estimate		
2023	22,700	N/A	*Compound*	0.49%
2050	25,879	26,000		

Year	Volume	Estimate		
2023	22,700	N/A	*Average Annual*	0.89%
2050	28,367	28,000		

Calculations based on 10YR Growth Rates

Year	Volume	Estimate		
2023	22,700	N/A	*Linear*	1.18%
2050	29,180	29,000		

Year	Volume	Estimate		
2023	22,700	N/A	*Compound*	1.12%
2050	30,694	31,000		

Year	Volume	Estimate		
2023	22,700	N/A	*Average Annual*	1.79%
2050	34,083	34,000		

Trend Analysis

Linear

R-Square	AGR (Historical)	AGR (Design Year)	Annual Increase	2050 Estimate
6.1%	0.3%	0.2%	47	21,900

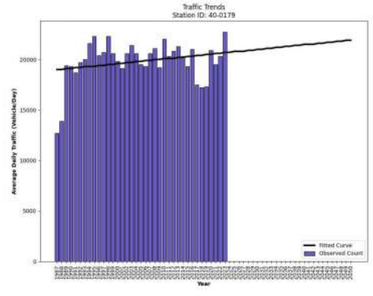

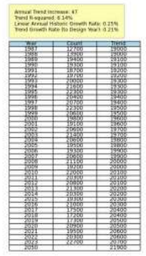

Trend Analysis *(*2015-2023)*

Linear

R-Square	AGR (Historical)	AGR (Design Year)	Annual Increase	2050 Estimate
21.0%	1.8%	1.5%	320	29,400

Year	Count	Trend
2015	19300	18200
2016	21000	18600
2017	17500	18900
2018	17200	19200
2019	17300	19500
2020	20900	19800
2021	19500	20200
2022	20300	20500
2023	22700	20800
2050		29400

US176 : S- 1280 (PINEY GROVE RD) TO S- 42 (SAINT ANDREWS RD), L- 42



Station ID 32-7752
County Lexington
Location click here

	Year	AADT	%Change
1	1987		
2	1988		#DIV/0!
3	1989		#DIV/0!
4	1990		#DIV/0!
5	1991		#DIV/0!
6	1992		#DIV/0!
7	1993		#DIV/0!
8	1994		#DIV/0!
9	1995		#DIV/0!
10	1996		#DIV/0!
11	1997		#DIV/0!
12	1998		#DIV/0!
13	1999		#DIV/0!
14	2000		#DIV/0!
15	2001		#DIV/0!
16	2002		#DIV/0!
17	2003		#DIV/0!
18	2004		#DIV/0!
19	2005		#DIV/0!
20	2006		#DIV/0!
21	2007		#DIV/0!
22	2008		#DIV/0!
23	2009		#DIV/0!
24	2010		#DIV/0!
25	2011		#DIV/0!
26	2012		#DIV/0!
27	2013		#DIV/0!
28	2014		#DIV/0!
29	2015		#DIV/0!
30	2016		#DIV/0!
31	2017		#DIV/0!
32	2018		#DIV/0!
33	2019		#DIV/0!
34	2020	10,000	#DIV/0!
35	2021	10,000	0.0%
36	2022	9,100	-9.0%
37	2023	9,800	7.7%
		Avg=	#DIV/0!

For Reference
1% Annual Growth Rate

Year	Volume	Growth Rate
2023	9,800	Present
2050	12,446	Linear
2050	12,820	Compound

Calculations based on 30YR Growth Rates

Year	Volume	Estimate		
2023	9,800	N/A	*Linear*	#DIV/0!
2050	#DIV/0!	#DIV/0!		
Year	**Volume**	**Estimate**		
2023	9,800	N/A	*Compound*	#DIV/0!
2050	#DIV/0!	#DIV/0!		
Year	**Volume**	**Estimate**		
2023	9,800	N/A	*Average Annual*	#DIV/0!
2050	#DIV/0!	#DIV/0!		

Travel Demand Model

COATS

	2018	2045		
Model	10,108	10,812	*Linear*	0.26%
Acual/Est.	0	0		
Year	**Volume**	**Estimate**		
2050	0	0		

SCSWM

	2019	2050		
Model	5,600	5,647	*Linear*	0.03%
Acual/Est.	0	0		
Year	**Volume**	**Estimate**		
2050	0	0		

Demographic Data

Population

Employment

Calculations based on 20YR Growth Rates

Year	Volume	Estimate		
2023	9,800	N/A	*Linear*	#DIV/0!
2050	#DIV/0!	#DIV/0!		
Year	**Volume**	**Estimate**		
2023	9,800	N/A	*Compound*	#DIV/0!
2050	#DIV/0!	#DIV/0!		
Year	**Volume**	**Estimate**		
2023	9,800	N/A	*Average Annual*	#DIV/0!
2050	#DIV/0!	#DIV/0!		

Calculations based on 10YR Growth Rates

Year	Volume	Estimate		
2023	9,800	N/A	*Linear*	#DIV/0!
2050	#DIV/0!	#DIV/0!		
Year	**Volume**	**Estimate**		
2023	9,800	N/A	*Compound*	#DIV/0!
2050	#DIV/0!	#DIV/0!		
Year	**Volume**	**Estimate**		
2023	9,800	N/A	*Average Annual*	#DIV/0!
2050	#DIV/0!	#DIV/0!		

Trend Analysis

Linear

R-Square	AGR (Historical)	AGR (Design Year)	Annual Increase	2050 Estimate
20.6%	-1.7%	-1.6%	-150	5,500

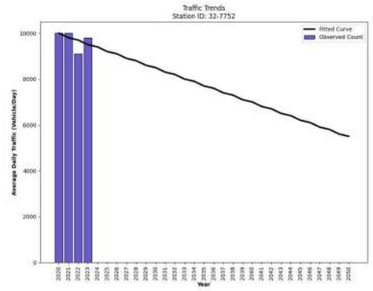

Annual Trend Increase: -150
Trend R-squared: 20.55%
Linear Annual Historic Growth Rate: -1.67%
Trend Growth Rate Its Design Year's: -1.56%

Year	Count	Trend
2020	10000	10000
2021	10000	9800
2022	9100	9700
2023	9800	9500
2050		5500

Trend Analysis *(*2015-2023)*

Linear

R-Square	AGR (Historical)	AGR (Design Year)	Annual Increase	2050 Estimate
20.6%	-1.7%	-1.6%	-150	5,500

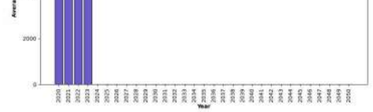

Annual Trend Increase: -150
Trend R-squared: 20.55%
Linear Annual Historic Growth Rate: -1.67%
Trend Growth Rate Its Design Year's: -1.56%

Year	Count	Trend
2020	10000	10000
2021	10000	9800
2022	9100	9700
2023	9800	9500
2050		5500

R-7752 3E1 : I- 26 TO S- 671, RS 7752 3E1



Station ID 32-2135
County Lexington
Location click here

	Year	AADT	%Change
1	1987		
2	1988		#DIV/0!
3	1989	56,000	#DIV/0!
4	1990	59,900	7.0%
5	1991	67,200	12.2%
6	1992	76,100	13.2%
7	1993	70,600	-7.2%
8	1994	73,400	4.0%
9	1995	75,300	2.6%
10	1996	77,600	3.1%
11	1997	80,400	3.6%
12	1998	83,600	4.0%
13	1999	89,300	6.8%
14	2000	91,700	2.7%
15	2001	91,700	0.0%
16	2002	95,600	4.3%
17	2003	98,400	2.9%
18	2004	101,900	3.6%
19	2005	102,200	0.3%
20	2006	105,800	3.5%
21	2007	104,300	-1.4%
22	2008	101,600	-2.6%
23	2009	100,900	-0.7%
24	2010	100,900	0.0%
25	2011	100,400	-0.5%
26	2012	100,100	-0.3%
27	2013	102,300	2.2%
28	2014	104,700	2.3%
29	2015	106,600	1.8%
30	2016	109,500	2.7%
31	2017	111,600	1.9%
32	2018	109,700	-1.7%
33	2019	115,100	4.9%
34	2020	100,500	-12.7%
35	2021	109,700	9.2%
36	2022	108,100	-1.5%
37	2023	107,000	-1.0%
		Avg=	#DIV/0!

For Reference
1% Annual Growth Rate

Year	Volume	Growth Rate
2023	107,000	Present
2050	135,890	Linear
2050	139,978	Compound

Calculations based on 30YR Growth Rates

Year	Volume	Estimate		
2023	107,000	N/A		
2050	137,240	137,000	*Linear*	1.53%
2023	107,000	N/A		
2050	150,211	150,000	*Compound*	1.26%
2023	107,000	N/A		
2050	148,338	148,000	*Average Annual*	1.38%

Travel Demand Model

COATS

	2018	2045		
Model	125,431	152,954	*Linear*	0.81%
Acual/Est.	109,700	133,771		

Year	Volume	Estimate
2050	138,229	138,000

SCSWM

	2019	2050		
Model	102,858	143,884	*Linear*	1.29%
Acual/Est.	115,100	161,009		

Year	Volume	Estimate
2050	161,009	161,000

Demographic Data

Population

Employment

Calculations based on 20YR Growth Rates

Year	Volume	Estimate		
2023	107,000	N/A		
2050	113,885	114,000	*Linear*	0.25%
2023	107,000	N/A		
2050	114,292	114,000	*Compound*	0.24%
2023	107,000	N/A		
2050	117,309	117,000	*Average Annual*	0.34%

Calculations based on 10YR Growth Rates

Year	Volume	Estimate		
2023	107,000	N/A		
2050	113,210	113,000	*Linear*	0.22%
2023	107,000	N/A		
2050	113,466	113,000	*Compound*	0.22%
2023	107,000	N/A		
2050	119,205	119,000	*Average Annual*	0.41%

Trend Analysis

Linear

R-Square	AGR (Historical)	AGR (Design Year)	Annual Increase	2050 Estimate
82.1%	2.0%	1.2%	1,392	155,200

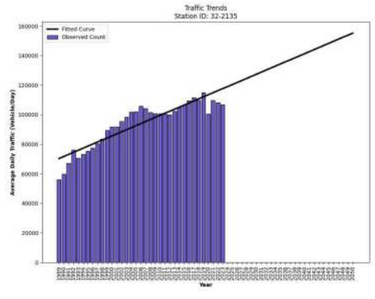

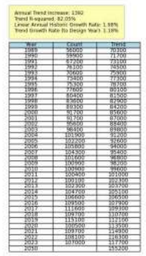

Year	Count	Trend
1987	56000	70300
1988	59900	71700
1989	67200	73100
1990	76100	74500
1991	70600	75900
1992	73400	77300
1993	75300	78700
1994	77600	80100
1995	80400	81500
1996	83600	82900
1997	89300	84300
1998	91700	85700
1999	91700	87000
2000	95600	88400
2001	98400	89800
2002	101900	91200
2003	102200	92600
2004	105800	94000
2005	104300	95400
2006	101600	96800
2007	100900	98200
2008	100900	99600
2009	100400	101000
2010	100100	102400
2011	102300	103800
2012	104700	105200
2013	106600	106500
2014	109500	107900
2015	111600	109300
2016	109700	110700
2017	115100	112100
2018	100500	113500
2019	109700	114900
2020	108100	116300
2021	107000	117700
2022		119100

Trend Analysis *(*2015-2023)*

Linear

R-Square	AGR (Historical)	AGR (Design Year)	Annual Increase	2050 Estimate
3.2%	-0.2%	-0.2%	-260	100,600

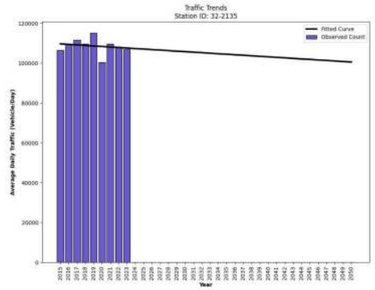



Year	Count	Trend
2015	106600	109700
2016	109500	109400
2017	111600	109200
2018	109700	108900
2019	115100	108600
2020	100500	108400
2021	109700	108100
2022	108100	107900
2023	107000	107600
2050		100600

I-26 : S- 757 (HARBISON BLVD) (RICHLAND) TO S- 671 (PINEY GROVE RD)



Station ID 32-0896
County Lexington
Location click here

	Year	AADT	%Change
1	1987		
2	1988		#DIV/0!
3	1989		#DIV/0!
4	1990		#DIV/0!
5	1991		#DIV/0!
6	1992		#DIV/0!
7	1993		#DIV/0!
8	1994		#DIV/0!
9	1995		#DIV/0!
10	1996		#DIV/0!
11	1997		#DIV/0!
12	1998		#DIV/0!
13	1999		#DIV/0!
14	2000		#DIV/0!
15	2001		#DIV/0!
16	2002		#DIV/0!
17	2003		#DIV/0!
18	2004		#DIV/0!
19	2005		#DIV/0!
20	2006		#DIV/0!
21	2007		#DIV/0!
22	2008	6,800	#DIV/0!
23	2009	6,000	-11.8%
24	2010	6,000	0.0%
25	2011	5,700	-5.0%
26	2012	6,000	5.3%
27	2013	6,100	1.7%
28	2014	6,200	1.6%
29	2015	5,600	-9.7%
30	2016	6,100	8.9%
31	2017	6,500	6.6%
32	2018	6,200	-4.6%
33	2019	6,000	-3.2%
34	2020	5,400	-10.0%
35	2021	5,300	-1.9%
36	2022	5,600	5.7%
37	2023	5,500	-1.8%
		Avg=	#DIV/0!

For Reference
1% Annual Growth Rate

Year	Volume	Growth Rate
2023	5,500	Present
2050	6,985	Linear
2050	7,195	Compound

Calculations based on 30YR Growth Rates

Year	Volume	Estimate		
2023	5,500	N/A	*Linear*	#DIV/0!
2050	#DIV/0!	#DIV/0!		
Year	**Volume**	**Estimate**		
2023	5,500	N/A	*Compound*	#DIV/0!
2050	#DIV/0!	#DIV/0!		
Year	**Volume**	**Estimate**		
2023	5,500	N/A	*Average Annual*	#DIV/0!
2050	#DIV/0!	#DIV/0!		

Travel Demand Model

COATS

	2018	2045		
Model	6,636	6,850	*Linear*	0.12%
Acual/Est.	6,200	6,400		

Year	Volume	Estimate
2050	6,437	6,400

SCSWM

	2019	2050		
Model	5,027	5,443	*Linear*	0.27%
Acual/Est.	6,000	6,497		

Year	Volume	Estimate
2050	6,497	6,500

Demographic Data

Population

Employment

Calculations based on 20YR Growth Rates

Year	Volume	Estimate		
2023	5,500	N/A	*Linear*	#DIV/0!
2050	#DIV/0!	#DIV/0!		
Year	**Volume**	**Estimate**		
2023	5,500	N/A	*Compound*	#DIV/0!
2050	#DIV/0!	#DIV/0!		
Year	**Volume**	**Estimate**		
2023	5,500	N/A	*Average Annual*	#DIV/0!
2050	#DIV/0!	#DIV/0!		

Calculations based on 10YR Growth Rates

Year	Volume	Estimate		
2023	5,500	N/A	*Linear*	-1.13%
2050	3,610	3,600		
Year	**Volume**	**Estimate**		
2023	5,500	N/A	*Compound*	-1.19%
2050	3,980	4,000		
Year	**Volume**	**Estimate**		
2023	5,500	N/A	*Average Annual*	-1.11%
2050	3,787	3,800		

Trend Analysis

Linear

R-Square	AGR (Historical)	AGR (Design Year)	Annual Increase	2050 Estimate
33.3%	-0.7%	-0.9%	-49	4,300

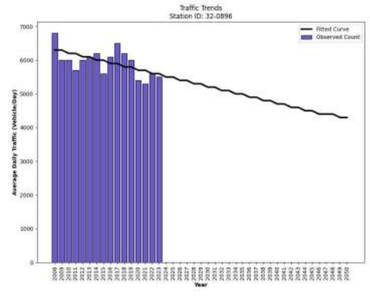

Annual Trend Increase: -49
Trend R-squared: 33.25%
Linear Annual Historic Growth Rate: -0.74%
Trend Growth Rate for Design Year's: -0.86%

Year	Count	Trend
2008	6800	6300
2009	6000	6300
2010	6000	6200
2011	5700	6200
2012	6000	6100
2013	6100	6100
2014	6200	6000
2015	5600	6000
2016	6100	5900
2017	6500	5900
2018	6200	5800
2019	6000	5800
2020	5400	5700
2021	5300	5700
2022	5600	5600
2023	5500	5600
2050		4300

Trend Analysis *(*2015-2023)*

Linear

R-Square	AGR (Historical)	AGR (Design Year)	Annual Increase	2050 Estimate
31.9%	-1.2%	-1.6%	-85	3,200

Annual Trend Increase: -85
Trend R-squared: 31.99%
Linear Annual Historic Growth Rate: -1.23%
Trend Growth Rate for Design Year's: -1.55%

Year	Count	Trend
2015	5600	6100
2016	6100	6100
2017	6500	6000
2018	6200	5900
2019	6000	5800
2020	5400	5700
2021	5300	5600
2022	5600	5500
2023	5500	5500
2050		3200

S-1842 : County Line - RICHLAND TO County Line - RICHLAND

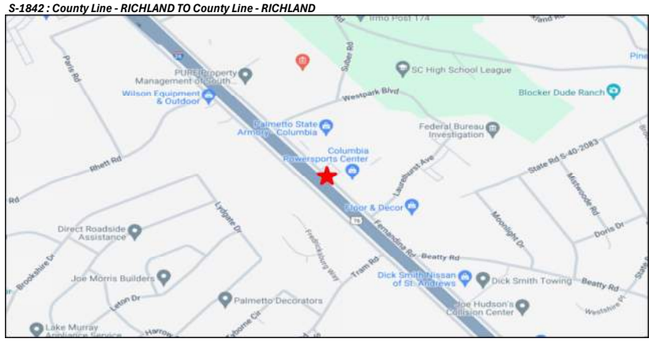

Station ID 32-0886
County Lexington
Location click here

	Year	AADT	%Change
1	1987		
2	1988		#DIV/0!
3	1989		#DIV/0!
4	1990		#DIV/0!
5	1991		#DIV/0!
6	1992		#DIV/0!
7	1993		#DIV/0!
8	1994		#DIV/0!
9	1995		#DIV/0!
10	1996		#DIV/0!
11	1997		#DIV/0!
12	1998		#DIV/0!
13	1999	3,900	#DIV/0!
14	2000	4,100	5.1%
15	2001	4,200	2.4%
16	2002	4,500	7.1%
17	2003	4,900	8.9%
18	2004	5,000	2.0%
19	2005	5,200	4.0%
20	2006	5,200	0.0%
21	2007	5,200	0.0%
22	2008	5,100	-1.9%
23	2009	4,400	-13.7%
24	2010	5,000	13.6%
25	2011	4,000	-20.0%
26	2012	3,900	-2.5%
27	2013	4,000	2.6%
28	2014	4,100	2.5%
29	2015	4,600	12.2%
30	2016	4,900	6.5%
31	2017	5,400	10.2%
32	2018	5,000	-7.4%
33	2019	4,900	-2.0%
34	2020	4,200	-14.3%
35	2021	4,100	-2.4%
36	2022	4,700	14.6%
37	2023	4,600	-2.1%
		Avg=	#DIV/0!

For Reference
1% Annual Growth Rate

Year	Volume	Growth Rate
2023	4,600	Present
2050	5,842	Linear
2050	6,018	Compound

Calculations based on 30YR Growth Rates

Year	Volume	Estimate		
2023	4,600	N/A	*Linear*	#DIV/0!
2050	#DIV/0!	#DIV/0!		
Year	**Volume**	**Estimate**		
2023	4,600	N/A	*Compound*	#DIV/0!
2050	#DIV/0!	#DIV/0!		
Year	**Volume**	**Estimate**		
2023	4,600	N/A	*Average Annual*	#DIV/0!
2050	#DIV/0!	#DIV/0!		

Travel Demand Model

COATS

	2018	2045		
Model	1,705	1,751	*Linear*	0.10%
Acual/Est.	5,000	5,135		
Year	**Volume**	**Estimate**		
2050	5,160	5,200		

SCSWM

	2019	2050		
Model	4,622	5,386	*Linear*	0.53%
Acual/Est.	4,900	5,710		
Year	**Volume**	**Estimate**		
2050	5,710	5,700		

Demographic Data

Population

Employment

Calculations based on 20YR Growth Rates

Year	Volume	Estimate		
2023	4,600	N/A	*Linear*	-0.40%
2050	4,060	4,100		
Year	**Volume**	**Estimate**		
2023	4,600	N/A	*Compound*	-0.42%
2050	4,110	4,100		
Year	**Volume**	**Estimate**		
2023	4,600	N/A	*Average Annual*	0.00%
2050	4,594	4,600		

Calculations based on 10YR Growth Rates

Year	Volume	Estimate		
2023	4,600	N/A	*Linear*	1.22%
2050	5,950	6,000		
Year	**Volume**	**Estimate**		
2023	4,600	N/A	*Compound*	1.16%
2050	6,276	6,300		
Year	**Volume**	**Estimate**		
2023	4,600	N/A	*Average Annual*	1.71%
2050	6,797	6,800		

Trend Analysis

Linear

R-Square	AGR (Historical)	AGR (Design Year)	Annual Increase	2050 Estimate
0.2%	0.0%	0.1%	3	4,700

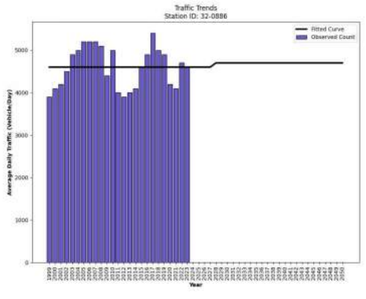



Trend Analysis *(*2015-2023)*

Linear

R-Square	AGR (Historical)	AGR (Design Year)	Annual Increase	2050 Estimate
20.7%	-1.5%	-1.5%	-67	2,600

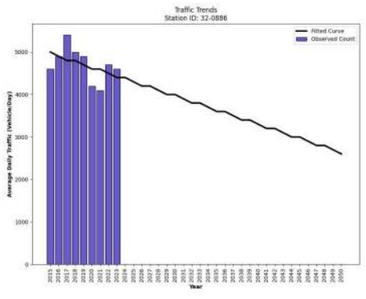



S-1791 : S- 36 (SAINT ANDREWS RD) TO S- 671 (PINEY GROVE RD)

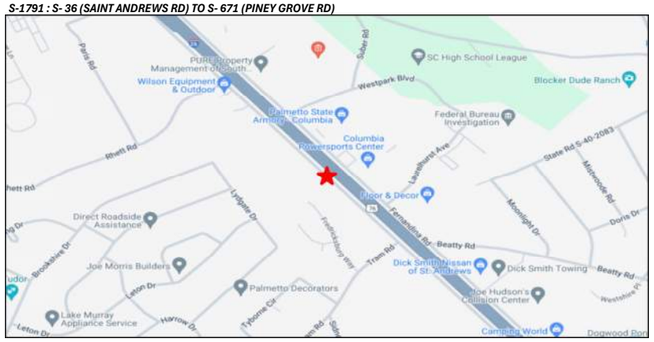

Station ID 32-0831
County Lexington
Location click here

	Year	AADT	%Change
1	1987		
2	1988		#DIV/0!
3	1989		#DIV/0!
4	1990	1,150	#DIV/0!
5	1991	2,300	100.0%
6	1992	2,200	-4.3%
7	1993	2,100	-4.5%
8	1994	1,850	-11.9%
9	1995	2,100	13.5%
10	1996	2,500	19.0%
11	1997	2,800	12.0%
12	1998	2,400	-14.3%
13	1999	2,800	16.7%
14	2000	2,500	-10.7%
15	2001	2,500	0.0%
16	2002	2,800	12.0%
17	2003	2,800	0.0%
18	2004	2,700	-3.6%
19	2005	2,600	-3.7%
20	2006	2,500	-3.8%
21	2007	2,600	4.0%
22	2008	2,600	0.0%
23	2009	2,300	-11.5%
24	2010	2,300	0.0%
25	2011	2,100	-8.7%
26	2012	2,000	-4.8%
27	2013	2,000	0.0%
28	2014	2,000	0.0%
29	2015	1,950	-2.5%
30	2016	2,100	7.7%
31	2017	2,100	0.0%
32	2018	2,100	0.0%
33	2019	2,000	-4.8%
34	2020	2,000	0.0%
35	2021	1,950	-2.5%
36	2022	2,000	2.6%
37	2023	1,950	-2.5%
		Avg=	#DIV/0!

For Reference
1% Annual Growth Rate

Year	Volume	Growth Rate
2023	1,950	Present
2050	2,477	Linear
2050	2,551	Compound

Calculations based on 30YR Growth Rates

Year	Volume	Estimate		
2023	1,950	N/A		
2050	2,040	2,000	*Linear*	0.18%
2050	2,045	2,000	*Compound*	0.18%
2023	1,950	N/A		
2050	2,216	2,200	*Average Annual*	0.49%

Travel Demand Model

COATS

	2018	2045		
Model	948	832	*Linear*	-0.45%
Acual/Est.	2,100	1,843		

Year	Volume	Estimate
2050	1,795	1,800

SCSWM

	2019	2050		
Model	1,931	1,992	*Linear*	0.10%
Acual/Est.	2,000	2,063		

Year	Volume	Estimate
2050	2,063	2,100

Demographic Data

Population

Employment

Calculations based on 20YR Growth Rates

Year	Volume	Estimate		
2023	1,950	N/A		
2050	938	940	*Linear*	-1.39%
2050	1,257	1,300	*Compound*	-1.61%
2023	1,950	N/A		
2050	1,072	1,100	*Average Annual*	-1.61%

Calculations based on 10YR Growth Rates

Year	Volume	Estimate		
2023	1,950	N/A		
2050	1,815	1,800	*Linear*	-0.25%
2050	1,821	1,800	*Compound*	-0.25%
2023	1,950	N/A		
2050	1,828	1,800	*Average Annual*	-0.22%
2023	1,950	N/A		

Trend Analysis

Linear

R-Square	AGR (Historical)	AGR (Design Year)	Annual Increase	2050 Estimate
5.4%	-0.4%	-0.4%	-8	1,900

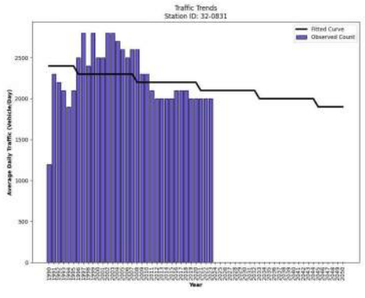

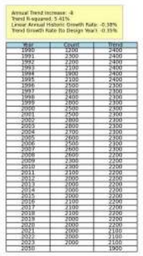

Trend Analysis *(*2015-2023)*

Linear

R-Square	AGR (Historical)	AGR (Design Year)	Annual Increase	2050 Estimate
30.0%	-0.6%	-0.6%	-10	1,700

S-173 : S- 1791 (JAMIL RD) TO S- 273 (TRAM RD)

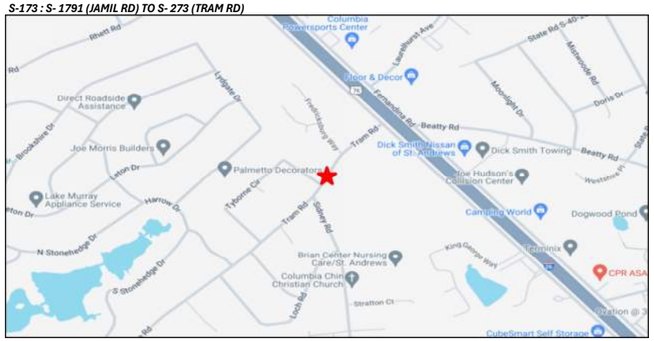

Station ID 32-2137
County Lexington
Location click here

Year	AADT	%Change
1987		
1988		#DIV/0!
1989	69,500	#DIV/0!
1990	70,500	1.4%
1991	74,200	5.2%
1992	85,500	15.2%
1993	79,300	-7.3%
1994	82,500	4.0%
1995	83,800	1.6%
1996	87,500	4.4%
1997	91,300	4.3%
1998	95,600	4.7%
1999	101,800	6.5%
2000	106,300	4.4%
2001	107,200	0.8%
2002	110,500	3.1%
2003	112,800	2.1%
2004	116,100	2.9%
2005	115,800	-0.3%
2006	120,100	3.7%
2007	116,800	-2.7%
2008	113,800	-2.6%
2009	113,800	0.0%
2010	113,000	-0.7%
2011	111,100	-1.7%
2012	111,600	0.5%
2013	112,600	0.9%
2014	115,500	2.6%
2015	118,700	2.8%
2016	120,400	1.4%
2017	123,700	2.7%
2018	121,900	-1.5%
2019	126,800	4.0%
2020	112,400	-11.4%
2021	122,300	8.8%
2022	118,800	-2.9%
2023	118,500	-0.3%
	Avg=	#DIV/0!

For Reference
1% Annual Growth Rate

Year	Volume	Growth Rate
2023	118,500	Present
2050	150,495	Linear
2050	155,023	Compound

Calculations based on 30YR Growth Rates

Year	Volume	Estimate		
2023	118,500	N/A	*Linear*	1.45%
2050	150,900	151,000		
Year	**Volume**	**Estimate**		
2023	118,500	N/A	*Compound*	1.21%
2050	164,156	164,000		
Year	**Volume**	**Estimate**		
2023	118,500	N/A	*Average Annual*	1.32%
2050	162,438	162,000		

Travel Demand Model

COATS

	2018	2045		
Model	134,252	161,116	*Linear*	0.74%
Acual/Est.	121,900	146,292		
Year	Volume	Estimate		
2050	150,809	151,000		

SCSWM

	2019	2050		
Model	107,306	150,095	*Linear*	1.29%
Acual/Est.	126,800	177,362		
Year	Volume	Estimate		
2050	177,362	177,000		

Demographic Data

Population

Employment

Calculations based on 20YR Growth Rates

Year	Volume	Estimate		
2023	118,500	N/A	*Linear*	0.10%
2050	121,740	122,000		
Year	**Volume**	**Estimate**		
2023	118,500	N/A	*Compound*	0.10%
2050	121,819	122,000		
Year	**Volume**	**Estimate**		
2023	118,500	N/A	*Average Annual*	0.19%
2050	124,649	125,000		

Calculations based on 10YR Growth Rates

Year	Volume	Estimate		
2023	118,500	N/A	*Linear*	0.26%
2050	126,600	127,000		
Year	**Volume**	**Estimate**		
2023	118,500	N/A	*Compound*	0.26%
2050	126,995	127,000		
Year	**Volume**	**Estimate**		
2023	118,500	N/A	*Average Annual*	0.43%
2050	132,676	133,000		

Trend Analysis

Linear

R-Square	AGR (Historical)	AGR (Design Year)	Annual Increase	2050 Estimate
77.6%	1.8%	1.1%	1,430	168,700

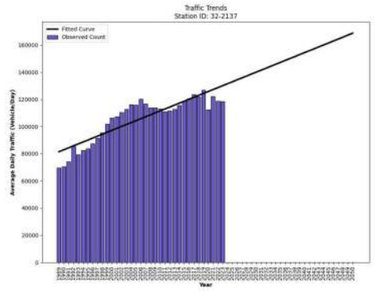

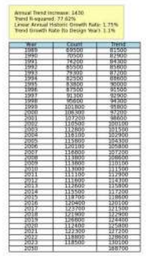

Trend Analysis *(*2015-2023)*

Linear

R-Square	AGR (Historical)	AGR (Design Year)	Annual Increase	2050 Estimate
4.1%	-0.3%	-0.3%	-298	111,100

I-26 : S- 671 (PINEY GROVE RD) TO S- 36 (SAINT ANDREWS RD)



Station ID 32-7751
County Lexington
Location click here

	Year	AADT	%Change
1	1987		
2	1988		#DIV/0!
3	1989		#DIV/0!
4	1990		#DIV/0!
5	1991		#DIV/0!
6	1992		#DIV/0!
7	1993		#DIV/0!
8	1994		#DIV/0!
9	1995		#DIV/0!
10	1996		#DIV/0!
11	1997		#DIV/0!
12	1998		#DIV/0!
13	1999		#DIV/0!
14	2000		#DIV/0!
15	2001		#DIV/0!
16	2002		#DIV/0!
17	2003		#DIV/0!
18	2004		#DIV/0!
19	2005		#DIV/0!
20	2006		#DIV/0!
21	2007		#DIV/0!
22	2008		#DIV/0!
23	2009		#DIV/0!
24	2010		#DIV/0!
25	2011		#DIV/0!
26	2012		#DIV/0!
27	2013		#DIV/0!
28	2014		#DIV/0!
29	2015		#DIV/0!
30	2016		#DIV/0!
31	2017		#DIV/0!
32	2018		#DIV/0!
33	2019		#DIV/0!
34	2020	8,600	#DIV/0!
35	2021	8,700	1.2%
36	2022	8,400	-3.4%
37	2023	9,600	14.3%
		Avg=	#DIV/0!

For Reference
1% Annual Growth Rate

Year	Volume	Growth Rate
2023	9,600	Present
2050	12,192	Linear
2050	12,559	Compound

Calculations based on 30YR Growth Rates

Year	Volume	Estimate		
2023	9,600	N/A	*Linear*	#DIV/0!
2050	#DIV/0!	#DIV/0!		
Year	**Volume**	**Estimate**		
2023	9,600	N/A	*Compound*	#DIV/0!
2050	#DIV/0!	#DIV/0!		
Year	**Volume**	**Estimate**		
2023	9,600	N/A	*Average Annual*	#DIV/0!
2050	#DIV/0!	#DIV/0!		

Travel Demand Model

COATS

	2018	2045		
Model	7,494	8,338	*Linear*	0.42%
Acual/Est.	0	0		
Year	**Volume**	**Estimate**		
2050	0	0		

SCSWM

	2019	2050		
Model	4,752	6,421	*Linear*	1.13%
Acual/Est.	0	0		
Year	**Volume**	**Estimate**		
2050	0	0		

Demographic Data

Population

Employment

Calculations based on 20YR Growth Rates

Year	Volume	Estimate		
2023	9,600	N/A	*Linear*	#DIV/0!
2050	#DIV/0!	#DIV/0!		
Year	**Volume**	**Estimate**		
2023	9,600	N/A	*Compound*	#DIV/0!
2050	#DIV/0!	#DIV/0!		
Year	**Volume**	**Estimate**		
2023	9,600	N/A	*Average Annual*	#DIV/0!
2050	#DIV/0!	#DIV/0!		

Calculations based on 10YR Growth Rates

Year	Volume	Estimate		
2023	9,600	N/A	*Linear*	#DIV/0!
2050	#DIV/0!	#DIV/0!		
Year	**Volume**	**Estimate**		
2023	9,600	N/A	*Compound*	#DIV/0!
2050	#DIV/0!	#DIV/0!		
Year	**Volume**	**Estimate**		
2023	9,600	N/A	*Average Annual*	#DIV/0!
2050	#DIV/0!	#DIV/0!		

Trend Analysis

Linear

R-Square	AGR (Historical)	AGR (Design Year)	Annual Increase	2050 Estimate
43.0%	3.2%	2.9%	270	16,500

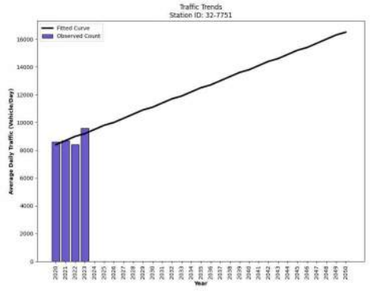

Annual Trend Increase: 270
Trend R-squared: 43.01%
Linear Annual Historic Growth Rate: 3.17%
Trend Growth Rate Its Design Year's: 2.94%

Year	Count	Trend
2020	8600	8400
2021	8700	8700
2022	8400	9000
2023	9600	9200
2050		16500

Trend Analysis *(*2015-2023)*

Linear

R-Square	AGR (Historical)	AGR (Design Year)	Annual Increase	2050 Estimate
43.0%	3.2%	2.9%	270	16,500

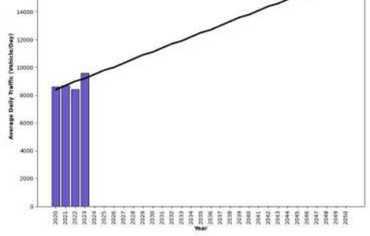

Annual Trend Increase: 270
Trend R-squared: 43.01%
Linear Annual Historic Growth Rate: 3.17%
Trend Growth Rate Its Design Year's: 2.94%

Year	Count	Trend
2020	8600	8400
2021	8700	8700
2022	8400	9000
2023	9600	9200
2050		16500

R-7751 201 : S- 671 TO I- 26, RS 7751 201



Station ID 40-0643
County Richland
Location click here

Year	AADT	%Change
1987		
1988		#DIV/0!
1989		#DIV/0!
1990	1,400	#DIV/0!
1991	1,450	3.6%
1992	1,450	0.0%
1993	1,500	3.4%
1994	1,850	23.3%
1995	1,400	-24.3%
1996	1,350	-3.6%
1997	1,400	3.7%
1998	1,350	-3.6%
1999	1,050	-22.2%
2000	1,350	28.6%
2001	1,450	7.4%
2002	1,550	6.9%
2003	1,450	-6.5%
2004	1,400	-3.4%
2005	1,300	-7.1%
2006	1,100	-15.4%
2007	1,400	27.3%
2008	1,450	3.6%
2009	1,450	0.0%
2010	1,450	0.0%
2011	1,400	-3.4%
2012	1,450	3.6%
2013	1,500	3.4%
2014	1,650	10.0%
2015	1,650	0.0%
2016	1,650	0.0%
2017	1,750	6.1%
2018	1,900	8.6%
2019	1,950	2.6%
2020	1,850	-5.1%
2021	1,800	-2.7%
2022	2,100	16.7%
2023	1,900	-9.5%
	Avg=	#DIV/0!

For Reference
1% Annual Growth Rate

Year	Volume	Growth Rate
2023	1,900	Present
2050	2,413	Linear
2050	2,486	Compound

Calculations based on 30YR Growth Rates

Year	Volume	Estimate		
2023	1,900	N/A		
2050	1,945	1,900	*Linear*	0.09%
2023	1,900	N/A		
2050	1,946	1,900	*Compound*	0.09%
2023	1,900	N/A		
2050	2,294	2,300	*Average Annual*	0.74%

Travel Demand Model

COATS

	2018	2045		
Model	1,618	1,942	*Linear*	0.74%
Acual/Est.	1,900	2,280		

Year	Volume	Estimate
2050	2,351	2,400

SCSWM

	2019	2050		
Model	3,019	3,364	*Linear*	0.37%
Acual/Est.	1,950	2,173		

Year	Volume	Estimate
2050	2,173	2,200

Demographic Data

Population

Employment

Calculations based on 20YR Growth Rates

Year	Volume	Estimate		
2023	1,900	N/A		
2050	2,575	2,600	*Linear*	1.79%
2023	1,900	N/A		
2050	2,869	2,900	*Compound*	1.54%
2023	1,900	N/A		
2050	2,977	3,000	*Average Annual*	2.02%

Calculations based on 10YR Growth Rates

Year	Volume	Estimate		
2023	1,900	N/A		
2050	2,575	2,600	*Linear*	1.52%
2023	1,900	N/A		
2050	2,781	2,800	*Compound*	1.42%
2023	1,900	N/A		
2050	2,880	2,900	*Average Annual*	1.84%

Trend Analysis

Linear

R-Square	AGR (Historical)	AGR (Design Year)	Annual Increase	2050 Estimate
38.8%	1.2%	0.8%	15	2,200

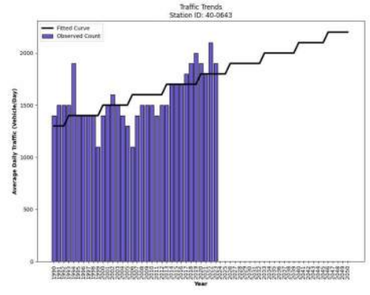

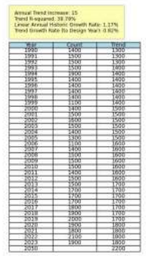

Trend Analysis *(*2015-2023)*

Linear

R-Square	AGR (Historical)	AGR (Design Year)	Annual Increase	2050 Estimate
47.6%	2.2%	1.7%	33	2,900

S-674 : S- 1280 (PINEY GROVE RD) TO US 176 (BROAD RIVER RD)



Station ID 40-0194
County Richland
Location click here

	Year	AADT	%Change
1	1987		
2	1988		#DIV/0!
3	1989		#DIV/0!
4	1990		#DIV/0!
5	1991		#DIV/0!
6	1992		#DIV/0!
7	1993		#DIV/0!
8	1994		#DIV/0!
9	1995		#DIV/0!
10	1996		#DIV/0!
11	1997		#DIV/0!
12	1998		#DIV/0!
13	1999		#DIV/0!
14	2000		#DIV/0!
15	2001		#DIV/0!
16	2002		#DIV/0!
17	2003		#DIV/0!
18	2004		#DIV/0!
19	2005		#DIV/0!
20	2006		#DIV/0!
21	2007		#DIV/0!
22	2008		#DIV/0!
23	2009		#DIV/0!
24	2010		#DIV/0!
25	2011		#DIV/0!
26	2012	15,400	#DIV/0!
27	2013	15,800	2.6%
28	2014	14,800	-6.3%
29	2015	14,400	-2.7%
30	2016	15,500	7.6%
31	2017	15,400	-0.6%
32	2018	16,000	3.9%
33	2019	16,400	2.5%
34	2020	14,700	-10.4%
35	2021	16,600	12.9%
36	2022	15,900	-4.2%
37	2023	16,200	1.9%
		Avg=	#DIV/0!

For Reference
1% Annual Growth Rate

Year	Volume	Growth Rate
2023	16,200	Present
2050	20,574	Linear
2050	21,193	Compound

Calculations based on 30YR Growth Rates

Year	Volume	Estimate		
2023	16,200	N/A	*Linear*	#DIV/0!
2050	#DIV/0!	#DIV/0!		
Year	**Volume**	**Estimate**		
2023	16,200	N/A	*Compound*	#DIV/0!
2050	#DIV/0!	#DIV/0!		
Year	**Volume**	**Estimate**		
2023	16,200	N/A	*Average Annual*	#DIV/0!
2050	#DIV/0!	#DIV/0!		

Travel Demand Model

COATS

	2018	2045		
Model	18,760	21,849	*Linear*	0.61%
Acual/Est.	16,000	18,635		
Year	**Volume**	**Estimate**		
2050	19,122	19,000		

SCSWM

	2019	2050		
Model	22,380	29,406	*Linear*	1.01%
Acual/Est.	16,400	21,549		
Year	**Volume**	**Estimate**		
2050	21,549	22,000		

Demographic Data

Population

Employment

Calculations based on 20YR Growth Rates

Year	Volume	Estimate		
2023	16,200	N/A	*Linear*	#DIV/0!
2050	#DIV/0!	#DIV/0!		
Year	**Volume**	**Estimate**		
2023	16,200	N/A	*Compound*	#DIV/0!
2050	#DIV/0!	#DIV/0!		
Year	**Volume**	**Estimate**		
2023	16,200	N/A	*Average Annual*	#DIV/0!
2050	#DIV/0!	#DIV/0!		

Calculations based on 10YR Growth Rates

Year	Volume	Estimate		
2023	16,200	N/A	*Linear*	0.95%
2050	19,980	20,000		
Year	**Volume**	**Estimate**		
2023	16,200	N/A	*Compound*	0.91%
2050	20,678	21,000		
Year	**Volume**	**Estimate**		
2023	16,200	N/A	*Average Annual*	1.21%
2050	21,702	22,000		

Trend Analysis

Linear

R-Square	AGR (Historical)	AGR (Design Year)	Annual Increase	2050 Estimate
24.4%	0.6%	0.6%	95	18,700

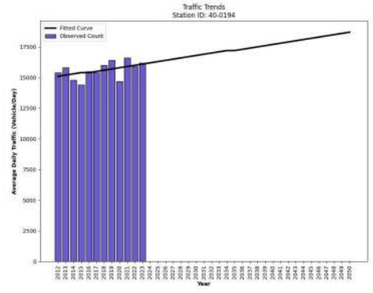

Year	Count	Trend
2012	15400	15100
2013	15800	15200
2014	14800	15300
2015	14400	15400
2016	15500	15400
2017	15400	15500
2018	16000	15600
2019	16400	15700
2020	14700	15800
2021	16600	15900
2022	15900	16000
2023	16200	16100
2050		18700

Trend Analysis *(*2015-2023)*

Linear

R-Square	AGR (Historical)	AGR (Design Year)	Annual Increase	2050 Estimate
33.5%	1.1%	1.0%	158	20,600

Year	Count	Trend
2015	14400	15000
2016	15500	15200
2017	15400	15400
2018	16000	15500
2019	16400	15700
2020	14700	15800
2021	16600	16000
2022	15900	16200
2023	16200	16300
2050		20600

US176 : S- 674 (LOST CREEK DR) TO S- 1280 (PINEY GROVE RD)

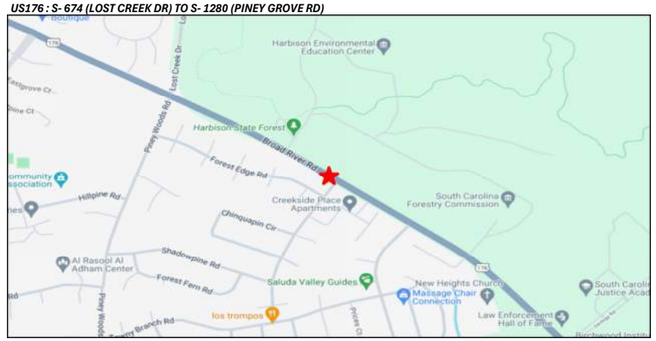

Station ID 40-0644
County Richland
Location click here

	Year	AADT	%Change
1	1987		
2	1988		#DIV/0!
3	1989		#DIV/0!
4	1990		#DIV/0!
5	1991		#DIV/0!
6	1992		#DIV/0!
7	1993		#DIV/0!
8	1994		#DIV/0!
9	1995		#DIV/0!
10	1996		#DIV/0!
11	1997		#DIV/0!
12	1998		#DIV/0!
13	1999		#DIV/0!
14	2000		#DIV/0!
15	2001		#DIV/0!
16	2002		#DIV/0!
17	2003		#DIV/0!
18	2004		#DIV/0!
19	2005		#DIV/0!
20	2006		#DIV/0!
21	2007		#DIV/0!
22	2008		#DIV/0!
23	2009		#DIV/0!
24	2010		#DIV/0!
25	2011		#DIV/0!
26	2012	4,300	#DIV/0!
27	2013	4,400	2.3%
28	2014	4,300	-2.3%
29	2015	4,500	4.7%
30	2016	3,600	-20.0%
31	2017	4,500	25.0%
32	2018	4,900	8.9%
33	2019	4,700	-4.1%
34	2020	4,500	-4.3%
35	2021	4,200	-6.7%
36	2022	4,900	16.7%
37	2023	4,800	-2.0%
		Avg=	#DIV/0!

For Reference
1% Annual Growth Rate

Year	Volume	Growth Rate
2023	4,800	Present
2050	6,096	Linear
2050	6,279	Compound

Calculations based on 30YR Growth Rates

Year	Volume	Estimate		
2023	4,800	N/A	*Linear*	#DIV/0!
2050	#DIV/0!	#DIV/0!		
Year	**Volume**	**Estimate**		
2023	4,800	N/A	*Compound*	#DIV/0!
2050	#DIV/0!	#DIV/0!		
Year	**Volume**	**Estimate**		
2023	4,800	N/A	*Average Annual*	#DIV/0!
2050	#DIV/0!	#DIV/0!		

Travel Demand Model

COATS

	2018	2045		
Model	2,071	2,789	*Linear*	1.28%
Acual/Est.	4,900	6,599		
Year	**Volume**	**Estimate**		
2050	6,913	6,900		

SCSWM

	2019	2050		
Model	5,456	5,912	*Linear*	0.27%
Acual/Est.	4,700	5,093		
Year	**Volume**	**Estimate**		
2050	5,093	5,100		

Demographic Data

Population

Employment

Calculations based on 20YR Growth Rates

Year	Volume	Estimate		
2023	4,800	N/A	*Linear*	#DIV/0!
2050	#DIV/0!	#DIV/0!		
Year	**Volume**	**Estimate**		
2023	4,800	N/A	*Compound*	#DIV/0!
2050	#DIV/0!	#DIV/0!		
Year	**Volume**	**Estimate**		
2023	4,800	N/A	*Average Annual*	#DIV/0!
2050	#DIV/0!	#DIV/0!		

Calculations based on 10YR Growth Rates

Year	Volume	Estimate		
2023	4,800	N/A	*Linear*	1.16%
2050	6,150	6,200		
Year	**Volume**	**Estimate**		
2023	4,800	N/A	*Compound*	1.11%
2050	6,460	6,500		
Year	**Volume**	**Estimate**		
2023	4,800	N/A	*Average Annual*	2.02%
2050	7,512	7,500		

Trend Analysis

Linear

R-Square	AGR (Historical)	AGR (Design Year)	Annual Increase	2050 Estimate
20.7%	1.1%	1.0%	45	5,900

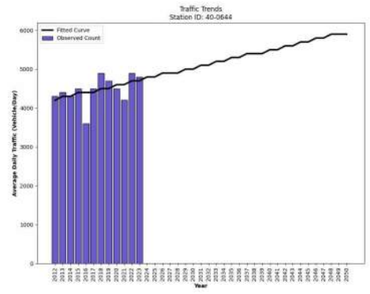

Annual Trend Increase: 45
Trend R-squared: 20.71%
Linear Annual Historic Growth Rate: 1.08%
Trend Growth Rate Its Design Year's: 0.95%

Year	Count	Trend
2012	4300	4200
2013	4400	4300
2014	4300	4300
2015	4500	4400
2016	3600	4400
2017	4500	4400
2018	4900	4500
2019	4700	4500
2020	4500	4600
2021	4200	4600
2022	4900	4700
2023	4800	4700
2050		5900

Trend Analysis *(*2015-2023)*

Linear

R-Square	AGR (Historical)	AGR (Design Year)	Annual Increase	2050 Estimate
20.8%	1.8%	1.4%	68	6,600

Annual Trend Increase: 68
Trend R-squared: 20.77%
Linear Annual Historic Growth Rate: 1.79%
Trend Growth Rate Its Design Year's: 1.38%

Year	Count	Trend
2015	4500	4200
2016	3600	4300
2017	4500	4400
2018	4900	4400
2019	4700	4500
2020	4500	4600
2021	4200	4600
2022	4900	4700
2023	4800	4800
2050		8400

S-674 : US 176 (BROAD RIVER RD) TO S- 1280 (PINEY GROVE RD)

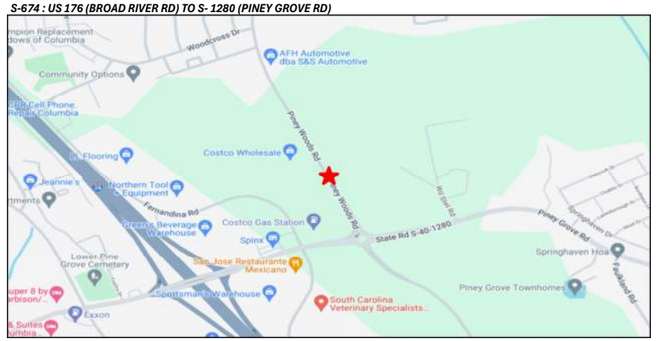

Station ID 40-0157
County Richland
Location click here

	Year	AADT	%Change
1	1987		
2	1988		#DIV/0!
3	1989		#DIV/0!
4	1990		#DIV/0!
5	1991		#DIV/0!
6	1992		#DIV/0!
7	1993		#DIV/0!
8	1994		#DIV/0!
9	1995		#DIV/0!
10	1996		#DIV/0!
11	1997		#DIV/0!
12	1998		#DIV/0!
13	1999		#DIV/0!
14	2000		#DIV/0!
15	2001		#DIV/0!
16	2002		#DIV/0!
17	2003		#DIV/0!
18	2004		#DIV/0!
19	2005		#DIV/0!
20	2006		#DIV/0!
21	2007		#DIV/0!
22	2008		#DIV/0!
23	2009		#DIV/0!
24	2010		#DIV/0!
25	2011		#DIV/0!
26	2012	15,400	#DIV/0!
27	2013	15,800	2.6%
28	2014	14,800	-6.3%
29	2015	14,400	-2.7%
30	2016	15,500	7.6%
31	2017	15,400	-0.6%
32	2018	16,000	3.9%
33	2019	16,400	2.5%
34	2020	14,700	-10.4%
35	2021	16,600	12.9%
36	2022	15,900	-4.2%
37	2023	16,200	1.9%
		Avg=	#DIV/0!

For Reference
1% Annual Growth Rate

Year	Volume	Growth Rate
2023	16,200	Present
2050	20,574	Linear
2050	21,193	Compound

Calculations based on 30YR Growth Rates

Year	Volume	Estimate		
2023	16,200	N/A	*Linear*	#DIV/0!
2050	#DIV/0!	#DIV/0!		
Year	**Volume**	**Estimate**		
2023	16,200	N/A	*Compound*	#DIV/0!
2050	#DIV/0!	#DIV/0!		
Year	**Volume**	**Estimate**		
2023	16,200	N/A	*Average Annual*	#DIV/0!
2050	#DIV/0!	#DIV/0!		

Travel Demand Model

COATS

	2018	2045		
Model	18,760	21,849	*Linear*	0.61%
Acual/Est.	16,000	18,635		
Year	**Volume**	**Estimate**		
2050	19,122	19,000		

SCSWM

	2019	2050		
Model	22,380	29,406	*Linear*	1.01%
Acual/Est.	16,400	21,549		
Year	**Volume**	**Estimate**		
2050	21,549	22,000		

Demographic Data

Population

Employment

Calculations based on 20YR Growth Rates

Year	Volume	Estimate		
2023	16,200	N/A	*Linear*	#DIV/0!
2050	#DIV/0!	#DIV/0!		
Year	**Volume**	**Estimate**		
2023	16,200	N/A	*Compound*	#DIV/0!
2050	#DIV/0!	#DIV/0!		
Year	**Volume**	**Estimate**		
2023	16,200	N/A	*Average Annual*	#DIV/0!
2050	#DIV/0!	#DIV/0!		

Calculations based on 10YR Growth Rates

Year	Volume	Estimate		
2023	16,200	N/A	*Linear*	0.95%
2050	19,980	20,000		
Year	**Volume**	**Estimate**		
2023	16,200	N/A	*Compound*	0.91%
2050	20,678	21,000		
Year	**Volume**	**Estimate**		
2023	16,200	N/A	*Average Annual*	1.21%
2050	21,702	22,000		

Trend Analysis

Linear

R-Square	AGR (Historical)	AGR (Design Year)	Annual Increase	2050 Estimate
24.4%	0.6%	0.6%	95	18,700

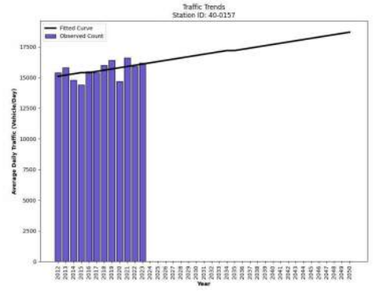

Year	Count	Trend
2012	15400	15100
2013	15800	15200
2014	14800	15300
2015	14400	15400
2016	15500	15400
2017	15400	15500
2018	16000	15600
2019	16400	15700
2020	14700	15800
2021	16600	15900
2022	15900	16000
2023	16200	16100
2050		18700

Trend Analysis *(*2015-2023)*

Linear

R-Square	AGR (Historical)	AGR (Design Year)	Annual Increase	2050 Estimate
33.5%	1.1%	1.0%	158	20,600

Year	Count	Trend
2015	14400	15000
2016	15500	15200
2017	15400	15400
2018	16000	15500
2019	16400	15700
2020	14700	15800
2021	16600	16000
2022	15900	16200
2023	16200	16300
2050		20600

US 176 : S- 674 (LOST CREEK DR) TO S- 1280 (PINEY GROVE RD)

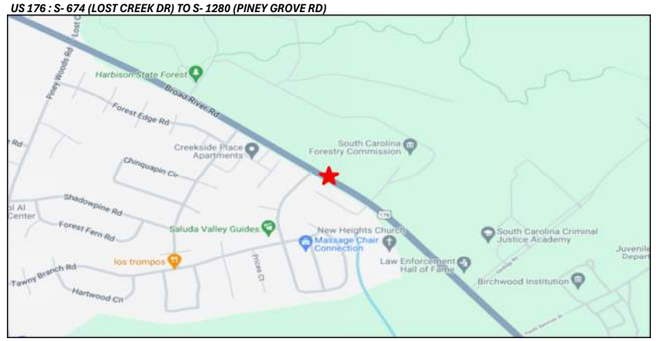

Station ID 32-7753
County Lexington
Location click here

	Year	AADT	%Change
1	1987		
2	1988		#DIV/0!
3	1989		#DIV/0!
4	1990		#DIV/0!
5	1991		#DIV/0!
6	1992		#DIV/0!
7	1993		#DIV/0!
8	1994		#DIV/0!
9	1995		#DIV/0!
10	1996		#DIV/0!
11	1997		#DIV/0!
12	1998		#DIV/0!
13	1999		#DIV/0!
14	2000		#DIV/0!
15	2001		#DIV/0!
16	2002		#DIV/0!
17	2003		#DIV/0!
18	2004		#DIV/0!
19	2005		#DIV/0!
20	2006		#DIV/0!
21	2007		#DIV/0!
22	2008		#DIV/0!
23	2009		#DIV/0!
24	2010		#DIV/0!
25	2011		#DIV/0!
26	2012		#DIV/0!
27	2013		#DIV/0!
28	2014		#DIV/0!
29	2015		#DIV/0!
30	2016		#DIV/0!
31	2017		#DIV/0!
32	2018		#DIV/0!
33	2019		#DIV/0!
34	2020	3,400	#DIV/0!
35	2021	3,500	2.9%
36	2022	3,800	8.6%
37	2023	3,700	-2.6%
		Avg=	#DIV/0!

For Reference
1% Annual Growth Rate

Year	Volume	Growth Rate
2023	3,700	Present
2050	4,699	Linear
2050	4,840	Compound

Calculations based on 30YR Growth Rates

Year	Volume	Estimate		
2023	3,700	N/A	*Linear*	#DIV/0!
2050	#DIV/0!	#DIV/0!		
Year	**Volume**	**Estimate**	*Compound*	#DIV/0!
2023	3,700	N/A		
2050	#DIV/0!	#DIV/0!		
Year	**Volume**	**Estimate**	*Average Annual*	#DIV/0!
2023	3,700	N/A		
2050	#DIV/0!	#DIV/0!		

Travel Demand Model

COATS

	2018	2045		
Model	4,116	4,848	*Linear*	0.66%
Acual/Est.	0	0		
Year	**Volume**	**Estimate**		
2050	0	0		

SCSWM

	2019	2050		
Model	4,328	4,108	*Linear*	-0.16%
Acual/Est.	0	0		
Year	**Volume**	**Estimate**		
2050	0	0		

Demographic Data

Population

Employment

Calculations based on 20YR Growth Rates

Year	Volume	Estimate		
2023	3,700	N/A	*Linear*	#DIV/0!
2050	#DIV/0!	#DIV/0!		
Year	**Volume**	**Estimate**	*Compound*	#DIV/0!
2023	3,700	N/A		
2050	#DIV/0!	#DIV/0!		
Year	**Volume**	**Estimate**	*Average Annual*	#DIV/0!
2023	3,700	N/A		
2050	#DIV/0!	#DIV/0!		

Calculations based on 10YR Growth Rates

Year	Volume	Estimate		
2023	3,700	N/A	*Linear*	#DIV/0!
2050	#DIV/0!	#DIV/0!		
Year	**Volume**	**Estimate**	*Compound*	#DIV/0!
2023	3,700	N/A		
2050	#DIV/0!	#DIV/0!		
Year	**Volume**	**Estimate**	*Average Annual*	#DIV/0!
2023	3,700	N/A		
2050	#DIV/0!	#DIV/0!		

Trend Analysis

Linear

R-Square	AGR (Historical)	AGR (Design Year)	Annual Increase	2050 Estimate
72.0%	3.9%	3.1%	120	7,000

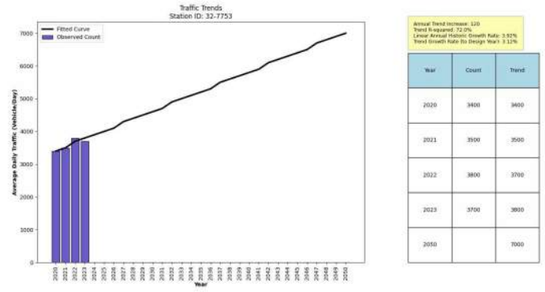

Year	Count	Trend
2020	3400	3400
2021	3500	3500
2022	3800	3700
2023	3700	3800
2050		7000

Trend Analysis *(*2015-2023)*

Linear

R-Square	AGR (Historical)	AGR (Design Year)	Annual Increase	2050 Estimate
72.0%	3.9%	3.1%	120	7,000

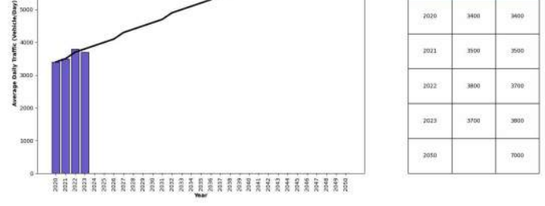

Year	Count	Trend
2020	3400	3400
2021	3500	3500
2022	3800	3700
2023	3700	3800
2050		7000

R-7753 401 : S- 671 TO I- 26, RS 7753 401



Station ID 32-0923
County Lexington
Location click here

	Year	AADT	%Change
1	1987		
2	1988		#DIV/0!
3	1989		#DIV/0!
4	1990		#DIV/0!
5	1991		#DIV/0!
6	1992		#DIV/0!
7	1993		#DIV/0!
8	1994		#DIV/0!
9	1995		#DIV/0!
10	1996		#DIV/0!
11	1997		#DIV/0!
12	1998		#DIV/0!
13	1999		#DIV/0!
14	2000		#DIV/0!
15	2001		#DIV/0!
16	2002	11,900	#DIV/0!
17	2003	13,500	13.4%
18	2004	12,900	-4.4%
19	2005	13,300	3.1%
20	2006	14,200	6.8%
21	2007	12,500	-12.0%
22	2008	10,800	-13.6%
23	2009	9,600	-11.1%
24	2010	10,200	6.3%
25	2011	9,600	-5.9%
26	2012	9,800	2.1%
27	2013	10,000	2.0%
28	2014	10,200	2.0%
29	2015	9,400	-7.8%
30	2016	11,200	19.1%
31	2017	9,700	-13.4%
32	2018	10,200	5.2%
33	2019	9,900	-2.9%
34	2020	9,400	-5.1%
35	2021	9,200	-2.1%
36	2022	10,600	15.2%
37	2023	10,500	-0.9%
		Avg=	#DIV/0!

For Reference
1% Annual Growth Rate

Year	Volume	Growth Rate
2023	10,500	Present
2050	13,335	Linear
2050	13,736	Compound

Calculations based on 30YR Growth Rates

Year	Volume	Estimate		
2023	10,500	N/A	*Linear*	#DIV/0!
2050	#DIV/0!	#DIV/0!		
Year	**Volume**	**Estimate**		
2023	10,500	N/A	*Compound*	#DIV/0!
2050	#DIV/0!	#DIV/0!		
Year	**Volume**	**Estimate**		
2023	10,500	N/A	*Average Annual*	#DIV/0!
2050	#DIV/0!	#DIV/0!		

Travel Demand Model

COATS

	2018	2045		
Model	1,385	1,571	*Linear*	0.50%
Acual/Est.	10,200	11,570		
Year	**Volume**	**Estimate**		
2050	11,823	12,000		

SCSWM

	2019	2050		
Model	5,681	6,833	*Linear*	0.65%
Acual/Est.	9,900	11,908		
Year	**Volume**	**Estimate**		
2050	11,908	12,000		

Demographic Data

Population

Employment

Calculations based on 20YR Growth Rates

Year	Volume	Estimate		
2023	10,500	N/A	*Linear*	-0.93%
2050	7,260	7,300		
Year	**Volume**	**Estimate**		
2023	10,500	N/A	*Compound*	-1.02%
2050	7,952	8,000		
Year	**Volume**	**Estimate**		
2023	10,500	N/A	*Average Annual*	-0.69%
2050	8,473	8,500		

Calculations based on 10YR Growth Rates

Year	Volume	Estimate		
2023	10,500	N/A	*Linear*	0.29%
2050	11,310	11,000		
Year	**Volume**	**Estimate**		
2023	10,500	N/A	*Compound*	0.29%
2050	11,355	11,000		
Year	**Volume**	**Estimate**		
2023	10,500	N/A	*Average Annual*	0.80%
2050	12,859	13,000		

Trend Analysis

Linear

R-Square	AGR (Historical)	AGR (Design Year)	Annual Increase	2050 Estimate
48.8%	-1.3%	-1.8%	-163	4,800

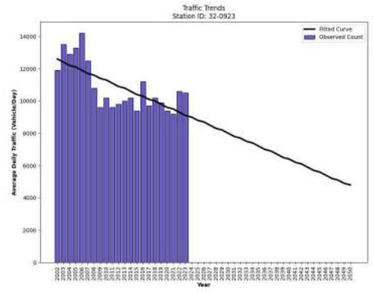



Trend Analysis *(*2015-2023)*

Linear

R-Square	AGR (Historical)	AGR (Design Year)	Annual Increase	2050 Estimate
0.3%	0.1%	0.1%	13	10,400

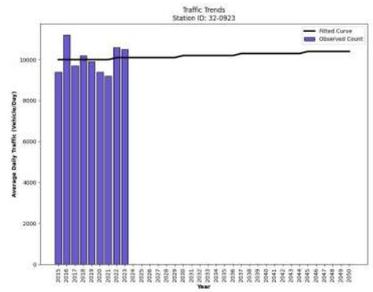

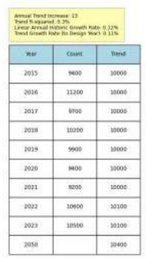

L-3634 : S- 757 (HARBISON BLVD) TO L- 1946 (PARK TERRACE DR)



Station ID 32-0922
County Lexington
Location click here

	Year	AADT	%Change
1	1987		
2	1988		#DIV/0!
3	1989		#DIV/0!
4	1990		#DIV/0!
5	1991		#DIV/0!
6	1992		#DIV/0!
7	1993		#DIV/0!
8	1994		#DIV/0!
9	1995		#DIV/0!
10	1996		#DIV/0!
11	1997		#DIV/0!
12	1998		#DIV/0!
13	1999		#DIV/0!
14	2000		#DIV/0!
15	2001		#DIV/0!
16	2002	9,200	#DIV/0!
17	2003	10,500	14.1%
18	2004	9,900	-5.7%
19	2005	10,500	6.1%
20	2006	11,200	6.7%
21	2007	13,400	19.6%
22	2008	12,400	-7.5%
23	2009	11,500	-7.3%
24	2010	12,400	7.8%
25	2011	11,600	-6.5%
26	2012	12,100	4.3%
27	2013	12,300	1.7%
28	2014	12,500	1.6%
29	2015	12,000	-4.0%
30	2016	13,700	14.2%
31	2017	12,100	-11.7%
32	2018	12,500	3.3%
33	2019	12,200	-2.4%
34	2020	14,100	15.6%
35	2021	13,800	-2.1%
36	2022	11,700	-15.2%
37	2023	11,500	-1.7%
		Avg=	#DIV/0!

For Reference
1% Annual Growth Rate

Year	Volume	Growth Rate
2023	11,500	Present
2050	14,605	Linear
2050	15,044	Compound

Calculations based on 30YR Growth Rates

Year	Volume	Estimate		
2023	11,500	N/A	*Linear*	#DIV/0!
2050	#DIV/0!	#DIV/0!		
Year	**Volume**	**Estimate**		
2023	11,500	N/A	*Compound*	#DIV/0!
2050	#DIV/0!	#DIV/0!		
Year	**Volume**	**Estimate**		
2023	11,500	N/A	*Average Annual*	#DIV/0!
2050	#DIV/0!	#DIV/0!		

Travel Demand Model

COATS

	2018	2045		
Model	2,294	2,563	*Linear*	0.43%
Acual/Est.	12,500	13,966		
Year	**Volume**	**Estimate**		
2050	14,237	14,000		

SCSWM

	2019	2050		
Model	11,994	13,665	*Linear*	0.45%
Acual/Est.	12,200	13,900		
Year	**Volume**	**Estimate**		
2050	13,900	14,000		

Demographic Data

Population

Employment

Calculations based on 20YR Growth Rates

Year	Volume	Estimate		
2023	11,500	N/A	*Linear*	0.81%
2050	13,660	14,000		
Year	**Volume**	**Estimate**		
2023	11,500	N/A	*Compound*	0.75%
2050	14,078	14,000		
Year	**Volume**	**Estimate**		
2023	11,500	N/A	*Average Annual*	1.19%
2050	15,318	15,000		

Calculations based on 10YR Growth Rates

Year	Volume	Estimate		
2023	11,500	N/A	*Linear*	-0.80%
2050	8,800	8,800		
Year	**Volume**	**Estimate**		
2023	11,500	N/A	*Compound*	-0.83%
2050	9,182	9,200		
Year	**Volume**	**Estimate**		
2023	11,500	N/A	*Average Annual*	-0.45%
2050	10,038	10,000		

Trend Analysis

Linear

R-Square	AGR (Historical)	AGR (Design Year)	Annual Increase	2050 Estimate
38.7%	1.1%	0.9%	118	16,400

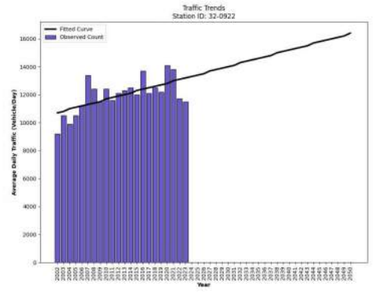



Trend Analysis *(*2015-2023)*

Linear

R-Square	AGR (Historical)	AGR (Design Year)	Annual Increase	2050 Estimate
2.0%	-0.4%	-0.4%	-50	11,100

L-3634 : L- 1946 (PARK TERRACE DR) TO S- 1792 (BOWER PKWY)



Station ID 32-7750
County Lexington
Location click here

	Year	AADT	%Change
1	1987		
2	1988		#DIV/0!
3	1989		#DIV/0!
4	1990		#DIV/0!
5	1991		#DIV/0!
6	1992		#DIV/0!
7	1993		#DIV/0!
8	1994		#DIV/0!
9	1995		#DIV/0!
10	1996		#DIV/0!
11	1997		#DIV/0!
12	1998		#DIV/0!
13	1999		#DIV/0!
14	2000		#DIV/0!
15	2001		#DIV/0!
16	2002		#DIV/0!
17	2003		#DIV/0!
18	2004		#DIV/0!
19	2005		#DIV/0!
20	2006		#DIV/0!
21	2007		#DIV/0!
22	2008		#DIV/0!
23	2009		#DIV/0!
24	2010		#DIV/0!
25	2011		#DIV/0!
26	2012		#DIV/0!
27	2013		#DIV/0!
28	2014		#DIV/0!
29	2015		#DIV/0!
30	2016		#DIV/0!
31	2017		#DIV/0!
32	2018		#DIV/0!
33	2019		#DIV/0!
34	2020	3,300	#DIV/0!
35	2021	3,200	-3.0%
36	2022	3,200	0.0%
37	2023	3,700	15.6%
		Avg=	#DIV/0!

For Reference
1% Annual Growth Rate

Year	Volume	Growth Rate
2023	3,700	Present
2050	4,699	Linear
2050	4,840	Compound

Calculations based on 30YR Growth Rates

Year	Volume	Estimate		
2023	3,700	N/A	*Linear*	#DIV/0!
2050	#DIV/0!	#DIV/0!		
Year	**Volume**	**Estimate**		
2023	3,700	N/A	*Compound*	#DIV/0!
2050	#DIV/0!	#DIV/0!		
Year	**Volume**	**Estimate**		
2023	3,700	N/A	*Average Annual*	#DIV/0!
2050	#DIV/0!	#DIV/0!		

Travel Demand Model

COATS

	2018	2045		
Model	4,665	6,139	*Linear*	1.17%
Acual/Est.	0	0		
Year	**Volume**	**Estimate**		
2050	0	0		

SCSWM

	2019	2050		
Model	1,575	1,750	*Linear*	0.36%
Acual/Est.	0	0		
Year	**Volume**	**Estimate**		
2050	0	0		

Year	Volume	Estimate
2050	0	0

Demographic Data

Population

Employment

Calculations based on 20YR Growth Rates

Year	Volume	Estimate		
2023	3,700	N/A	*Linear*	#DIV/0!
2050	#DIV/0!	#DIV/0!		
Year	**Volume**	**Estimate**		
2023	3,700	N/A	*Compound*	#DIV/0!
2050	#DIV/0!	#DIV/0!		
Year	**Volume**	**Estimate**		
2023	3,700	N/A	*Average Annual*	#DIV/0!
2050	#DIV/0!	#DIV/0!		

Calculations based on 10YR Growth Rates

Year	Volume	Estimate		
2023	3,700	N/A	*Linear*	#DIV/0!
2050	#DIV/0!	#DIV/0!		
Year	**Volume**	**Estimate**		
2023	3,700	N/A	*Compound*	#DIV/0!
2050	#DIV/0!	#DIV/0!		
Year	**Volume**	**Estimate**		
2023	3,700	N/A	*Average Annual*	#DIV/0!
2050	#DIV/0!	#DIV/0!		

Trend Analysis

Linear

R-Square	AGR (Historical)	AGR (Design Year)	Annual Increase	2050 Estimate
42.4%	3.1%	3.5%	120	6,800

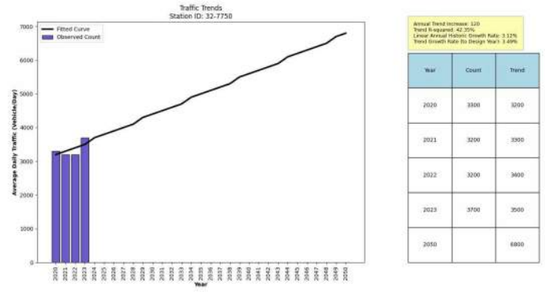

Annual Trend Increase: 120
Trend R-squared: 42.35%
Linear Annual Historic Growth Rate: 3.12%
Trend Growth Rate Its Design Year's: 3.49%

Year	Count	Trend
2020	3300	3200
2021	3200	3300
2022	3200	3400
2023	3700	3500
2050		6800

Trend Analysis *(*2015-2023)*

Linear

R-Square	AGR (Historical)	AGR (Design Year)	Annual Increase	2050 Estimate
42.4%	3.1%	3.5%	120	6,800

Annual Trend Increase: 120
Trend R-squared: 42.35%
Linear Annual Historic Growth Rate: 3.12%
Trend Growth Rate Its Design Year's: 3.49%

Year	Count	Trend
2020	3300	3200
2021	3200	3300
2022	3200	3400
2023	3700	3500
2050		6800

R-7750 1E1 : I- 26 TO S- 671, RS 7750 1E1



Station ID 40-0465
County Richland
Location click here

	Year	AADT	%Change
1	1987	5,200	
2	1988	4,900	-5.8%
3	1989	4,500	-8.2%
4	1990	5,300	17.8%
5	1991	4,100	-22.6%
6	1992	4,500	9.8%
7	1993	4,700	4.4%
8	1994	4,300	-8.5%
9	1995	4,500	4.7%
10	1996	5,300	17.8%
11	1997	5,900	11.3%
12	1998	5,800	-1.7%
13	1999	6,400	10.3%
14	2000	6,100	-4.7%
15	2001	6,500	6.6%
16	2002	6,900	6.2%
17	2003	6,900	0.0%
18	2004	5,700	-17.4%
19	2005	5,300	-7.0%
20	2006	5,900	11.3%
21	2007	5,900	0.0%
22	2008	6,000	1.7%
23	2009	5,600	-6.7%
24	2010	5,900	5.4%
25	2011	5,500	-6.8%
26	2012	5,600	1.8%
27	2013	5,700	1.8%
28	2014	4,700	-17.5%
29	2015	5,200	10.6%
30	2016	4,800	-7.7%
31	2017	4,700	-2.1%
32	2018	4,900	4.3%
33	2019	4,400	-10.2%
34	2020	4,100	-6.8%
35	2021	3,900	-4.9%
36	2022	4,100	5.1%
37	2023	4,000	-2.4%
		Avg=	-0.283%

For Reference
1% Annual Growth Rate

Year	Volume	Growth Rate
2023	4,000	Present
2050	5,080	Linear
2050	5,233	Compound

Calculations based on 30YR Growth Rates

Year	Volume	Estimate		
2023	4,000	N/A		
2050	3,730	3,700	*Linear*	-0.23%
2023	4,000	N/A		
2050	3,748	3,700	*Compound*	-0.24%
2023	4,000	N/A		
2050	4,112	4,100	*Average Annual*	0.10%

Travel Demand Model

COATS

	2018	2045		
Model	3,475	5,097	*Linear*	1.73%
Acual/Est.	4,900	7,187		

Year	Volume	Estimate
2050	7,611	7,600

SCSWM

	2019	2050		
Model	4,663	5,860	*Linear*	0.83%
Acual/Est.	4,400	5,529		

Year	Volume	Estimate
2050	5,529	5,500

Demographic Data

Population

Employment

Calculations based on 20YR Growth Rates

Year	Volume	Estimate		
2023	4,000	N/A		
2050	1,705	1,700	*Linear*	-1.49%
2023	4,000	N/A		
2050	2,480	2,500	*Compound*	-1.76%
2023	4,000	N/A		
2050	2,224	2,200	*Average Annual*	-1.59%

Calculations based on 10YR Growth Rates

Year	Volume	Estimate		
2023	4,000	N/A		
2050	2,110	2,100	*Linear*	-1.49%
2023	4,000	N/A		
2050	2,588	2,600	*Compound*	-1.60%
2023	4,000	N/A		
2050	2,246	2,200	*Average Annual*	-1.57%

Trend Analysis

Linear

R-Square	AGR (Historical)	AGR (Design Year)	Annual Increase	2050 Estimate
4.0%	-0.3%	-0.3%	-15	4,600

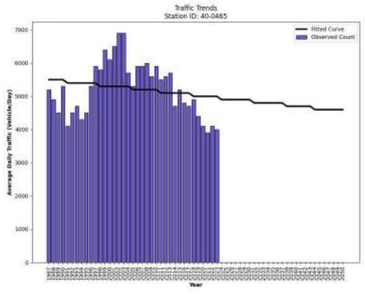

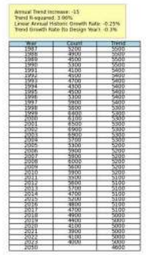

Trend Analysis *(*2015-2023)*

Linear

R-Square	AGR (Historical)	AGR (Design Year)	Annual Increase	2050 Estimate
84.7%	-3.2%	-4.0%	-155	-300

Year	Count	Trend
2015	5200	5100
2016	4800	4900
2017	4700	4800
2018	4900	4600
2019	4400	4500
2020	4100	4300
2021	3900	4100
2022	4100	4000
2023	4000	3800
2050		-300

S-1280 : County Line - LEXINGTON TO US 176 (BROAD RIVER RD)

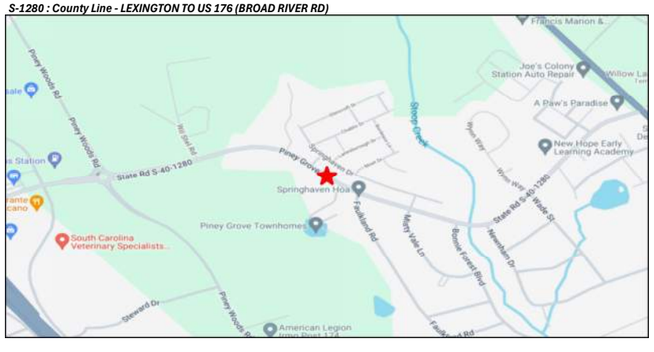

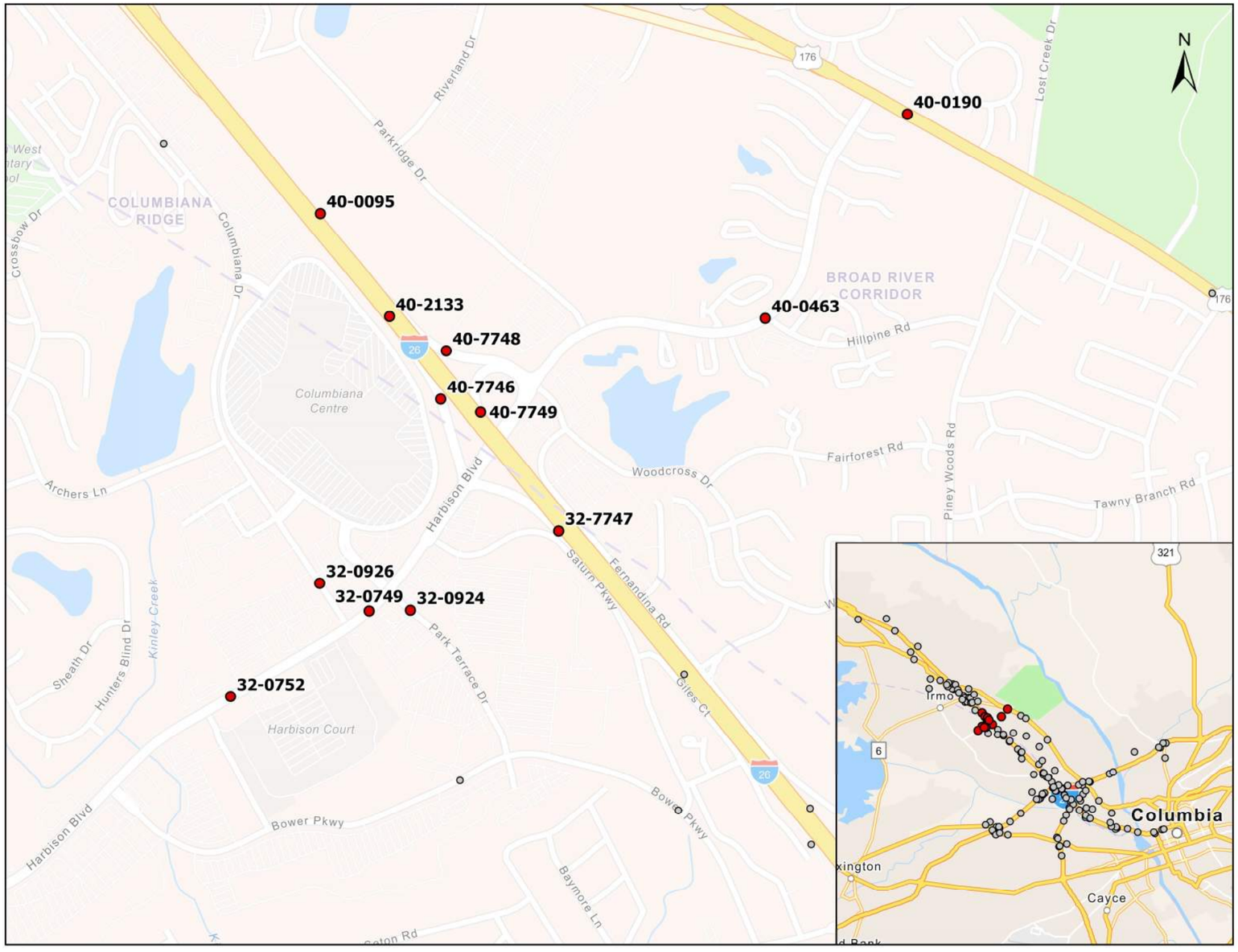
40-0190
40-0095
40-2133
40-7748
40-7746
40-7749
40-0463
32-7747
32-0926
32-0749
32-0924
32-0752
N
176
Lost Creek Dr
Riverland Dr
Parkridge Dr
COLUMBIANA RIDGE
Columbiana Dr
Crossbow Dr
BROAD RIVER CORRIDOR
Hillpine Rd
Columbiana Centre
Archers Ln
Harbison Blvd
Woodcross Dr
Fairforest Rd
Piney Woods Rd
Tawny Branch Rd
Saturn Pkwy
Fernandina Rd
Gilles Ct
Sheath Dr
Hunters Blind Dr
Kinley Creek
Park Terrace Dr
Harbison Court
Bower Pkwy
Baymore Ln
26
321
6
Irmo
Columbia
Cayce

Station ID 32-0752
County Lexington
Location click here

	Year	AADT	%Change
1	1987		
2	1988		#DIV/0!
3	1989		#DIV/0!
4	1990		#DIV/0!
5	1991		#DIV/0!
6	1992		#DIV/0!
7	1993		#DIV/0!
8	1994		#DIV/0!
9	1995		#DIV/0!
10	1996		#DIV/0!
11	1997		#DIV/0!
12	1998		#DIV/0!
13	1999		#DIV/0!
14	2000		#DIV/0!
15	2001		#DIV/0!
16	2002		#DIV/0!
17	2003		#DIV/0!
18	2004		#DIV/0!
19	2005		#DIV/0!
20	2006		#DIV/0!
21	2007		#DIV/0!
22	2008		#DIV/0!
23	2009		#DIV/0!
24	2010		#DIV/0!
25	2011		#DIV/0!
26	2012		#DIV/0!
27	2013		#DIV/0!
28	2014	24,700	#DIV/0!
29	2015	25,200	2.0%
30	2016	26,000	3.2%
31	2017	26,500	1.9%
32	2018	27,500	3.8%
33	2019	28,000	1.8%
34	2020	24,000	-14.3%
35	2021	25,000	4.2%
36	2022	18,800	-24.8%
37	2023	19,800	5.3%
		Avg=	#DIV/0!

For Reference
1% Annual Growth Rate

Year	Volume	Growth Rate
2023	19,800	Present
2050	25,146	Linear
2050	25,903	Compound

Calculations based on 30YR Growth Rates

Year	Volume	Estimate		
2023	19,800	N/A	*Linear*	#DIV/0!
2050	#DIV/0!	#DIV/0!		
Year	**Volume**	**Estimate**		
2023	19,800	N/A	*Compound*	#DIV/0!
2050	#DIV/0!	#DIV/0!		
Year	**Volume**	**Estimate**		
2023	19,800	N/A	*Average Annual*	#DIV/0!
2050	#DIV/0!	#DIV/0!		

Travel Demand Model

COATS

	2018	2045		
Model	17,628	22,291	*Linear*	0.98%
Acual/Est.	27,500	34,774		
Year	**Volume**	**Estimate**		
2050	36,121	36,000		

SCSWM

	2019	2050		
Model	27,063	31,863	*Linear*	0.57%
Acual/Est.	28,000	32,966		
Year	**Volume**	**Estimate**		
2050	32,966	33,000		

Demographic Data

Population

Employment

Calculations based on 20YR Growth Rates

Year	Volume	Estimate		
2023	19,800	N/A	*Linear*	#DIV/0!
2050	#DIV/0!	#DIV/0!		
Year	**Volume**	**Estimate**		
2023	19,800	N/A	*Compound*	#DIV/0!
2050	#DIV/0!	#DIV/0!		
Year	**Volume**	**Estimate**		
2023	19,800	N/A	*Average Annual*	#DIV/0!
2050	#DIV/0!	#DIV/0!		

Calculations based on 10YR Growth Rates

Year	Volume	Estimate		
2023	19,800	N/A	*Linear*	-1.98%
2050	6,570	6,600		
Year	**Volume**	**Estimate**		
2023	19,800	N/A	*Compound*	-2.19%
2050	10,899	11,000		
Year	**Volume**	**Estimate**		
2023	19,800	N/A	*Average Annual*	-1.88%
2050	9,398	9,400		

Trend Analysis

Linear

R-Square	AGR (Historical)	AGR (Design Year)	Annual Increase	2050 Estimate
37.1%	-2.2%	-2.8%	-612	5,300

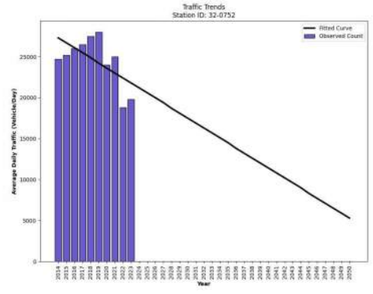

Year	Count	Trend
2014	24700	27300
2015	25200	26700
2016	26000	26100
2017	26500	25500
2018	27500	24900
2019	28000	24200
2020	24000	23600
2021	25000	23000
2022	18800	22400
2023	19800	21800
2050		5300

Trend Analysis *(*2015-2023)*

Linear

R-Square	AGR (Historical)	AGR (Design Year)	Annual Increase	2050 Estimate
49.6%	-3.0%	-3.9%	-828	-1,100

Year	Count	Trend
2015	25200	27800
2016	26000	27000
2017	26500	26200
2018	27500	25400
2019	28000	24500
2020	24000	23700
2021	25000	22900
2022	18800	22000
2023	19800	21200
2050		-1100

S-757 : L- 3634 (BOWER PKWY) TO L- 5883 (COLUMBIANA DR)



Station ID 32-0749
County Lexington
Location click here

Year	AADT	%Change
1987		
1988	3,561	#DIV/0!
1989		-100.0%
1990	19,300	#DIV/0!
1991	16,008	-17.1%
1992	30,200	88.7%
1993	32,300	7.0%
1994	33,600	4.0%
1995	34,900	3.9%
1996	43,100	23.5%
1997	41,800	-3.0%
1998	44,000	5.3%
1999	42,800	-2.7%
2000	38,600	-9.8%
2001	38,300	-0.8%
2002	37,200	-2.9%
2003	40,900	9.9%
2004	42,100	2.9%
2005	38,200	-9.3%
2006	38,600	1.0%
2007	42,200	9.3%
2008	40,600	-3.8%
2009	38,700	-4.7%
2010	35,500	-8.3%
2011	33,500	-5.6%
2012	33,500	0.0%
2013	34,100	1.8%
2014	34,700	1.8%
2015	27,500	-20.7%
2016	30,200	9.8%
2017	30,800	2.0%
2018	32,000	3.9%
2019	32,600	1.9%
2020	27,000	-17.2%
2021	28,100	4.1%
2022	29,500	5.0%
2023	31,000	5.1%
	Avg=	#DIV/0!

For Reference
1% Annual Growth Rate

Year	Volume	Growth Rate
2023	31,000	Present
2050	39,370	Linear
2050	40,554	Compound

Calculations based on 30YR Growth Rates

Year	Volume	Estimate		
2023	31,000	N/A	*Linear*	-0.26%
2050	28,660	29,000		
Year	**Volume**	**Estimate**	*Compound*	-0.27%
2023	31,000	N/A		
2050	28,832	29,000		
Year	**Volume**	**Estimate**	*Average Annual*	0.08%
2023	31,000	N/A		
2050	31,712	32,000		

Travel Demand Model

COATS

	2018	2045		
Model	38,699	43,063	*Linear*	0.42%
Acual/Est.	32,000	35,609		
Year	Volume	Estimate		
2050	36,277	36,000		

SCSWM

	2019	2050		
Model	30,916	35,191	*Linear*	0.45%
Acual/Est.	32,600	37,108		
Year	Volume	Estimate		
2050	37,108	37,000		

Demographic Data

Population

Employment

Calculations based on 20YR Growth Rates

Year	Volume	Estimate		
2023	31,000	N/A	*Linear*	-1.32%
2050	16,015	16,000		
Year	**Volume**	**Estimate**	*Compound*	-1.52%
2023	31,000	N/A		
2050	20,508	21,000		
Year	**Volume**	**Estimate**	*Average Annual*	-1.26%
2023	31,000	N/A		
2050	20,071	20,000		

Calculations based on 10YR Growth Rates

Year	Volume	Estimate		
2023	31,000	N/A	*Linear*	-1.07%
2050	21,010	21,000		
Year	**Volume**	**Estimate**	*Compound*	-1.12%
2023	31,000	N/A		
2050	22,864	23,000		
Year	**Volume**	**Estimate**	*Average Annual*	-0.69%
2023	31,000	N/A		
2050	25,011	25,000		

Trend Analysis

Linear

R-Square	AGR (Historical)	AGR (Design Year)	Annual Increase	2050 Estimate
0.9%	0.2%	0.2%	76	37,000

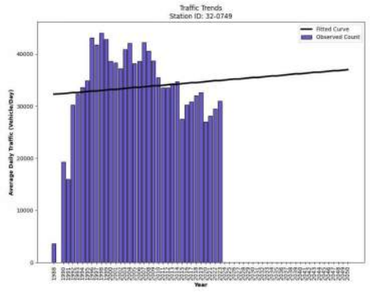

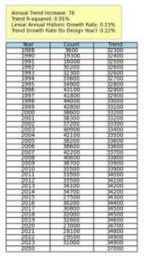

Trend Analysis *(*2015-2023)*

Linear

R-Square	AGR (Historical)	AGR (Design Year)	Annual Increase	2050 Estimate
0.1%	0.1%	0.1%	25	30,600

S-757 : L- 5883 (COLUMBIANA DR) TO County Line - RICHLAND



Station ID 40-0463
County Richland
Location click here

Year	AADT	%Change
1987		
1988	3,000	#DIV/0!
1989	6,800	126.7%
1990	7,700	13.2%
1991	8,400	9.1%
1992	9,600	14.3%
1993	10,000	4.2%
1994	9,500	-5.0%
1995	11,300	18.9%
1996	10,100	-10.6%
1997	12,000	18.8%
1998	10,500	-12.5%
1999	9,900	-5.7%
2000	9,100	-8.1%
2001	9,700	6.6%
2002	10,400	7.2%
2003	10,200	-1.9%
2004	12,100	18.6%
2005	8,700	-28.1%
2006	8,800	1.1%
2007	9,100	3.4%
2008	8,900	-2.2%
2009	8,500	-4.5%
2010	9,300	9.4%
2011	8,400	-9.7%
2012	8,600	2.4%
2013	8,800	2.3%
2014	8,000	-9.1%
2015	8,800	10.0%
2016	9,200	4.5%
2017	9,100	-1.1%
2018	9,500	4.4%
2019	8,800	-7.4%
2020	8,100	-8.0%
2021	8,400	3.7%
2022	8,800	4.8%
2023	9,200	4.5%
	Avg=	#DIV/0!

For Reference
1% Annual Growth Rate

Year	Volume	Growth Rate
2023	9,200	Present
2050	11,684	Linear
2050	12,036	Compound

Calculations based on 30YR Growth Rates

Year	Volume	Estimate		
2023	9,200	N/A	*Linear*	-0.11%
2050	8,930	8,900		
Year	**Volume**	**Estimate**	*Compound*	-0.11%
2023	9,200	N/A		
2050	8,938	8,900		
Year	**Volume**	**Estimate**	*Average Annual*	0.41%
2023	9,200	N/A		
2050	10,268	10,000		

Travel Demand Model

COATS

	2018	2045		
Model	22,388	25,191	*Linear*	0.46%
Acual/Est.	9,500	10,689		
Year	Volume	Estimate		
2050	10,910	11,000		

SCSWM

	2019	2050		
Model	8,171	11,605	*Linear*	1.36%
Acual/Est.	8,800	12,498		
Year	Volume	Estimate		
2050	12,498	12,000		

Demographic Data

Population

Employment

Calculations based on 20YR Growth Rates

Year	Volume	Estimate		
2023	9,200	N/A	*Linear*	-1.20%
2050	5,285	5,300		
Year	**Volume**	**Estimate**	*Compound*	-1.36%
2023	9,200	N/A		
2050	6,355	6,400		
Year	**Volume**	**Estimate**	*Average Annual*	-1.02%
2023	9,200	N/A		
2050	6,578	6,600		

Calculations based on 10YR Growth Rates

Year	Volume	Estimate		
2023	9,200	N/A	*Linear*	1.50%
2050	12,440	12,000		
Year	**Volume**	**Estimate**	*Compound*	1.41%
2023	9,200	N/A		
2050	13,418	13,000		
Year	**Volume**	**Estimate**	*Average Annual*	1.73%
2023	9,200	N/A		
2050	13,649	14,000		

Trend Analysis

Linear

R-Square	AGR (Historical)	AGR (Design Year)	Annual Increase	2050 Estimate
0.1%	0.1%	0.0%	4	9,300

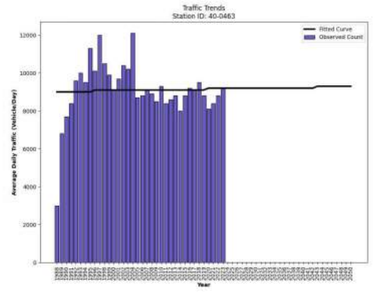

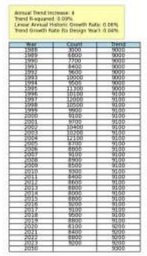

Trend Analysis *(*2015-2023)*

Linear

R-Square	AGR (Historical)	AGR (Design Year)	Annual Increase	2050 Estimate
6.4%	-0.4%	-0.5%	-40	7,600

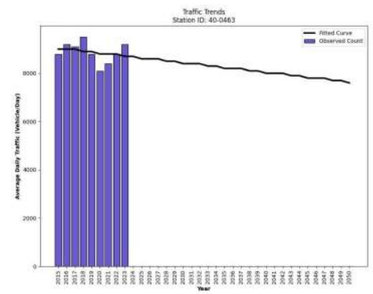



S-757 : US 176 (BROAD RIVER RD) TO County Line - LEXINGTON



Station ID 32-0924
County Lexington
Location click here

	Year	AADT	%Change
1	1987		
2	1988		#DIV/0!
3	1989		#DIV/0!
4	1990		#DIV/0!
5	1991		#DIV/0!
6	1992		#DIV/0!
7	1993		#DIV/0!
8	1994		#DIV/0!
9	1995		#DIV/0!
10	1996		#DIV/0!
11	1997		#DIV/0!
12	1998		#DIV/0!
13	1999		#DIV/0!
14	2000		#DIV/0!
15	2001		#DIV/0!
16	2002	17,100	#DIV/0!
17	2003	9,500	-44.4%
18	2004	9,100	-4.2%
19	2005	9,400	3.3%
20	2006	9,800	4.3%
21	2007	9,400	-4.1%
22	2008	9,400	0.0%
23	2009	8,300	-11.7%
24	2010	9,000	8.4%
25	2011	9,000	0.0%
26	2012	7,800	-13.3%
27	2013	7,900	1.3%
28	2014	8,000	1.3%
29	2015	8,800	10.0%
30	2016	8,600	-2.3%
31	2017	9,300	8.1%
32	2018	9,700	4.3%
33	2019	9,700	0.0%
34	2020	8,700	-10.3%
35	2021	8,500	-2.3%
36	2022	8,900	4.7%
37	2023	8,800	-1.1%
		Avg=	#DIV/0!

For Reference
1% Annual Growth Rate

Year	Volume	Growth Rate
2023	8,800	Present
2050	11,176	Linear
2050	11,512	Compound

Calculations based on 30YR Growth Rates

Year	Volume	Estimate		
2023	8,800	N/A	*Linear*	#DIV/0!
2050	#DIV/0!	#DIV/0!		
Year	**Volume**	**Estimate**		
2023	8,800	N/A	*Compound*	#DIV/0!
2050	#DIV/0!	#DIV/0!		
Year	**Volume**	**Estimate**		
2023	8,800	N/A	*Average Annual*	#DIV/0!
2050	#DIV/0!	#DIV/0!		

Travel Demand Model

COATS

	2018	2045		
Model	909	992	*Linear*	0.34%
Acual/Est.	9,700	10,586		
Year	**Volume**	**Estimate**		
2050	10,750	11,000		

SCSWM

	2019	2050		
Model	6,312	6,833	*Linear*	0.27%
Acual/Est.	9,700	10,501		
Year	**Volume**	**Estimate**		
2050	10,501	11,000		

Demographic Data

Population

Employment

Calculations based on 20YR Growth Rates

Year	Volume	Estimate		
2023	8,800	N/A	*Linear*	-0.16%
2050	8,395	8,400		
Year	**Volume**	**Estimate**		
2023	8,800	N/A	*Compound*	-0.17%
2050	8,411	8,400		
Year	**Volume**	**Estimate**		
2023	8,800	N/A	*Average Annual*	0.03%
2050	8,872	8,900		

Calculations based on 10YR Growth Rates

Year	Volume	Estimate		
2023	8,800	N/A	*Linear*	1.00%
2050	10,960	11,000		
Year	**Volume**	**Estimate**		
2023	8,800	N/A	*Compound*	0.96%
2050	11,383	11,000		
Year	**Volume**	**Estimate**		
2023	8,800	N/A	*Average Annual*	1.24%
2050	11,850	12,000		

Trend Analysis

Linear

R-Square	AGR (Historical)	AGR (Design Year)	Annual Increase	2050 Estimate
17.1%	-1.1%	-1.5%	-117	4,900

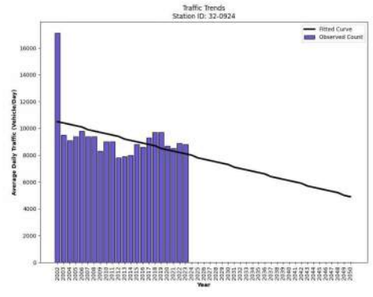



Trend Analysis *(*2015-2023)*

Linear

R-Square	AGR (Historical)	AGR (Design Year)	Annual Increase	2050 Estimate
2.9%	-0.3%	-0.3%	-28	8,100

S-1946 : S- 757 (HARBISON BLVD) TO L- 3634 (BOWER PKWY)

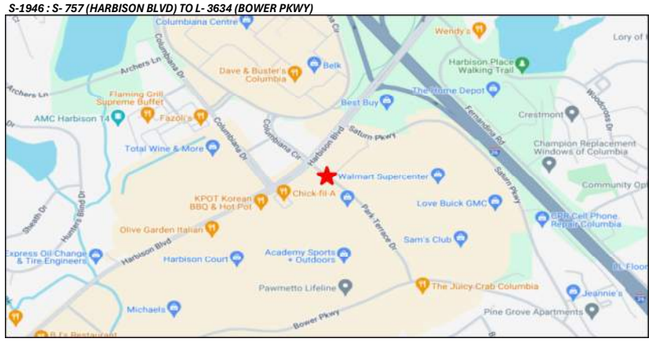

Station ID 40-2133
County Richland
Location click here

Year	AADT	%Change
1987		
1988		#DIV/0!
1989	48,200	#DIV/0!
1990	52,100	8.1%
1991	55,800	7.1%
1992	58,200	4.3%
1993	56,300	-3.3%
1994	57,400	2.0%
1995	58,700	2.3%
1996	60,600	3.2%
1997	62,800	3.6%
1998	65,800	4.8%
1999	71,100	8.1%
2000	74,900	5.3%
2001	74,900	0.0%
2002	79,400	6.0%
2003	83,000	4.5%
2004	86,000	3.6%
2005	87,700	2.0%
2006	93,200	6.3%
2007	92,000	-1.3%
2008	89,200	-3.0%
2009	89,100	-0.1%
2010	89,000	-0.1%
2011	88,400	-0.7%
2012	89,900	1.7%
2013	91,500	1.8%
2014	93,200	1.9%
2015	95,600	2.6%
2016	98,000	2.5%
2017	99,400	1.4%
2018	96,900	-2.5%
2019	101,000	4.2%
2020	88,600	-12.3%
2021	97,100	9.6%
2022	95,800	-1.3%
2023	94,200	-1.7%
	Avg=	#DIV/0!

For Reference
1% Annual Growth Rate

Year	Volume	Growth Rate
2023	94,200	Present
2050	119,634	Linear
2050	123,233	Compound

Calculations based on 30YR Growth Rates

Year	Volume	Estimate		
2023	94,200	N/A	*Linear*	2.14%
2050	127,320	127,000		
Year	**Volume**	**Estimate**	*Compound*	1.66%
2023	94,200	N/A		
2050	147,121	147,000		
Year	**Volume**	**Estimate**	*Average Annual*	1.81%
2023	94,200	N/A		
2050	141,818	142,000		

Travel Demand Model

COATS

	2018	2045		
Model	111,475	137,426	*Linear*	0.86%
Acual/Est.	96,900	119,458		
Year	**Volume**	**Estimate**		
2050	123,635	124,000		

SCSWM

	2019	2050		
Model	86,033	127,866	*Linear*	1.57%
Acual/Est.	101,000	150,111		
Year	**Volume**	**Estimate**		
2050	150,111	150,000		

Calculations based on 20YR Growth Rates

Year	Volume	Estimate		
2023	94,200	N/A	*Linear*	0.48%
2050	105,270	105,000		
Year	**Volume**	**Estimate**	*Compound*	0.46%
2023	94,200	N/A		
2050	106,524	107,000		
Year	**Volume**	**Estimate**	*Average Annual*	0.57%
2023	94,200	N/A		
2050	109,319	109,000		

Calculations based on 10YR Growth Rates

Year	Volume	Estimate		
2023	94,200	N/A	*Linear*	0.11%
2050	96,900	97,000		
Year	**Volume**	**Estimate**	*Compound*	0.11%
2023	94,200	N/A		
2050	96,954	97,000		
Year	**Volume**	**Estimate**	*Average Annual*	0.28%
2023	94,200	N/A		
2050	101,637	102,000		

Demographic Data

Population

Employment

Trend Analysis

Linear

R-Square	AGR (Historical)	AGR (Design Year)	Annual Increase	2050 Estimate
86.8%	2.7%	1.4%	1,480	145,600

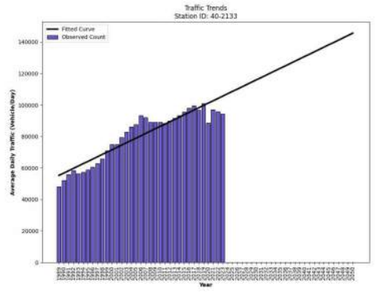

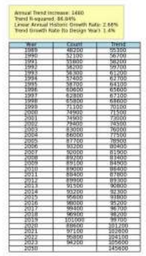

Trend Analysis *(*2015-2023)*

Linear

R-Square	AGR (Historical)	AGR (Design Year)	Annual Increase	2050 Estimate
10.5%	-0.4%	-0.4%	-418	83,300

I-26 : SC 60 (LAKE MURRAY BLVD) TO S- 757 (HARBISON BLVD)



Station ID 40-0190
County Richland
Location click here

	Year	AADT	%Change
1	1987		
2	1988		#DIV/0!
3	1989		#DIV/0!
4	1990		#DIV/0!
5	1991		#DIV/0!
6	1992		#DIV/0!
7	1993		#DIV/0!
8	1994		#DIV/0!
9	1995		#DIV/0!
10	1996		#DIV/0!
11	1997		#DIV/0!
12	1998	16,500	#DIV/0!
13	1999	15,300	-7.3%
14	2000	16,900	10.5%
15	2001	16,900	0.0%
16	2002	18,400	8.9%
17	2003	17,300	-6.0%
18	2004	16,700	-3.5%
19	2005	15,300	-8.4%
20	2006	15,700	2.6%
21	2007	17,100	8.9%
22	2008	17,100	0.0%
23	2009	15,600	-8.8%
24	2010	16,000	2.6%
25	2011	15,400	-3.8%
26	2012	15,800	2.6%
27	2013	16,200	2.5%
28	2014	16,200	0.0%
29	2015	17,300	6.8%
30	2016	18,000	4.0%
31	2017	17,500	-2.8%
32	2018	18,200	4.0%
33	2019	18,700	2.7%
34	2020	17,300	-7.5%
35	2021	15,400	-11.0%
36	2022	16,100	4.5%
37	2023	21,000	30.4%
		Avg=	#DIV/0!

For Reference
1% Annual Growth Rate

Year	Volume	Growth Rate
2023	21,000	Present
2050	26,670	Linear
2050	27,472	Compound

Calculations based on 30YR Growth Rates

Year	Volume	Estimate		
2023	21,000	N/A	*Linear*	#DIV/0!
2050	#DIV/0!	#DIV/0!		
Year	**Volume**	**Estimate**		
2023	21,000	N/A	*Compound*	#DIV/0!
2050	#DIV/0!	#DIV/0!		
Year	**Volume**	**Estimate**		
2023	21,000	N/A	*Average Annual*	#DIV/0!
2050	#DIV/0!	#DIV/0!		

Travel Demand Model

COATS

	2018	2045		
Model	15,799	19,104	*Linear*	0.77%
Acual/Est.	18,200	22,007		
Year	**Volume**	**Estimate**		
2050	22,712	23,000		

SCSWM

	2019	2050		
Model	16,884	20,742	*Linear*	0.74%
Acual/Est.	18,700	22,973		
Year	**Volume**	**Estimate**		
2050	22,973	23,000		

Demographic Data

Population

Employment

Calculations based on 20YR Growth Rates

Year	Volume	Estimate		
2023	21,000	N/A	*Linear*	1.29%
2050	26,805	27,000		
Year	**Volume**	**Estimate**		
2023	21,000	N/A	*Compound*	1.15%
2050	28,612	29,000		
Year	**Volume**	**Estimate**		
2023	21,000	N/A	*Average Annual*	1.56%
2050	30,172	30,000		

Calculations based on 10YR Growth Rates

Year	Volume	Estimate		
2023	21,000	N/A	*Linear*	2.96%
2050	33,960	34,000		
Year	**Volume**	**Estimate**		
2023	21,000	N/A	*Compound*	2.63%
2050	42,318	42,000		
Year	**Volume**	**Estimate**		
2023	21,000	N/A	*Average Annual*	3.48%
2050	41,460	41,000		

Trend Analysis

Linear

R-Square	AGR (Historical)	AGR (Design Year)	Annual Increase	2050 Estimate
11.5%	0.4%	0.3%	58	19,100

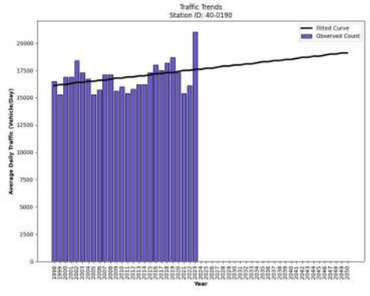



Trend Analysis *(*2015-2023)*

Linear

R-Square	AGR (Historical)	AGR (Design Year)	Annual Increase	2050 Estimate
1.3%	0.4%	0.4%	67	19,800

US176 : SC 60 (LAKE MURRAY BLVD) TO S- 674 (LOST CREEK DR)



Station ID 40-0095
County Richland
Location click here

Year	AADT	%Change
1987		
1988		#DIV/0!
1989	48,200	#DIV/0!
1990	52,100	8.1%
1991	55,800	7.1%
1992	58,200	4.3%
1993	56,300	-3.3%
1994	57,400	2.0%
1995	58,700	2.3%
1996	60,600	3.2%
1997	62,800	3.6%
1998	65,800	4.8%
1999	71,100	8.1%
2000	74,900	5.3%
2001	74,900	0.0%
2002	79,400	6.0%
2003	83,000	4.5%
2004	86,000	3.6%
2005	87,700	2.0%
2006	93,200	6.3%
2007	92,000	-1.3%
2008	89,200	-3.0%
2009	89,100	-0.1%
2010	89,000	-0.1%
2011	88,400	-0.7%
2012	89,900	1.7%
2013	91,500	1.8%
2014	93,200	1.9%
2015	95,600	2.6%
2016	98,000	2.5%
2017	99,400	1.4%
2018	96,900	-2.5%
2019	101,000	4.2%
2020	88,600	-12.3%
2021	97,100	9.6%
2022	95,800	-1.3%
2023	94,200	-1.7%
	Avg=	#DIV/0!

For Reference
1% Annual Growth Rate

Year	Volume	Growth Rate
2023	94,200	Present
2050	119,634	Linear
2050	123,233	Compound

Calculations based on 30YR Growth Rates

Year	Volume	Estimate		
2023	94,200	N/A		
2050	127,320	127,000	*Linear*	2.14%
2023	94,200	N/A		
2050	147,121	147,000	*Compound*	1.66%
2023	94,200	N/A		
2050	141,818	142,000	*Average Annual*	1.81%

Travel Demand Model

COATS

	2018	2045		
Model	111,475	137,426	*Linear*	0.86%
Acual/Est.	96,900	119,458		

Year	Volume	Estimate
2050	123,635	124,000

SCSWM

	2019	2050		
Model	86,033	127,866	*Linear*	1.57%
Acual/Est.	101,000	150,111		

Year	Volume	Estimate
2050	150,111	150,000

Demographic Data

Population

Employment

Calculations based on 20YR Growth Rates

Year	Volume	Estimate		
2023	94,200	N/A		
2050	105,270	105,000	*Linear*	0.48%
2023	94,200	N/A		
2050	106,524	107,000	*Compound*	0.46%
2023	94,200	N/A		
2050	109,319	109,000	*Average Annual*	0.57%

Calculations based on 10YR Growth Rates

Year	Volume	Estimate		
2023	94,200	N/A		
2050	96,900	97,000	*Linear*	0.11%
2023	94,200	N/A		
2050	96,954	97,000	*Compound*	0.11%
2023	94,200	N/A		
2050	101,637	102,000	*Average Annual*	0.28%

Trend Analysis

Linear

R-Square	AGR (Historical)	AGR (Design Year)	Annual Increase	2050 Estimate
86.8%	2.7%	1.4%	1,480	145,600

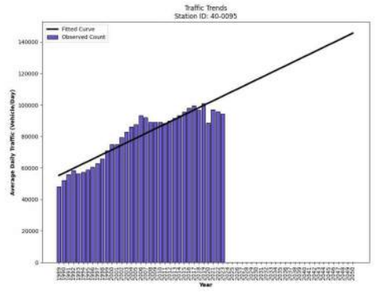

Trend Analysis *(*2015-2023)*

Linear

R-Square	AGR (Historical)	AGR (Design Year)	Annual Increase	2050 Estimate
10.5%	-0.4%	-0.4%	-418	83,300

I- 26 : SC 60 (LAKE MURRAY BLVD) TO S- 757 (HARBISON BLVD), MP102.25

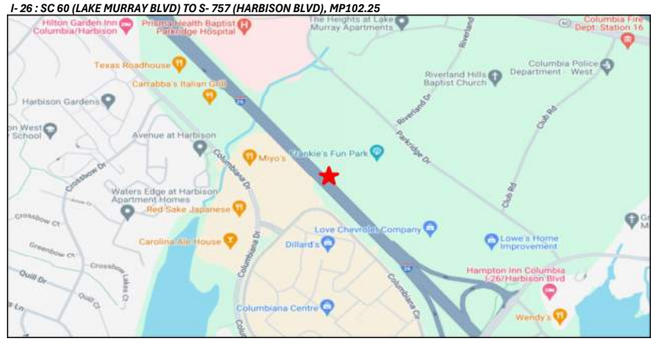

Station ID 40-7746
County Richland
Location click here

	Year	AADT	%Change
1	1987		
2	1988		#DIV/0!
3	1989		#DIV/0!
4	1990		#DIV/0!
5	1991		#DIV/0!
6	1992		#DIV/0!
7	1993		#DIV/0!
8	1994		#DIV/0!
9	1995		#DIV/0!
10	1996		#DIV/0!
11	1997		#DIV/0!
12	1998		#DIV/0!
13	1999		#DIV/0!
14	2000		#DIV/0!
15	2001		#DIV/0!
16	2002		#DIV/0!
17	2003		#DIV/0!
18	2004		#DIV/0!
19	2005		#DIV/0!
20	2006		#DIV/0!
21	2007		#DIV/0!
22	2008		#DIV/0!
23	2009		#DIV/0!
24	2010		#DIV/0!
25	2011		#DIV/0!
26	2012		#DIV/0!
27	2013		#DIV/0!
28	2014		#DIV/0!
29	2015		#DIV/0!
30	2016		#DIV/0!
31	2017		#DIV/0!
32	2018		#DIV/0!
33	2019		#DIV/0!
34	2020	3,700	#DIV/0!
35	2021	3,500	-5.4%
36	2022	3,500	0.0%
37	2023	3,900	11.4%
		Avg=	#DIV/0!

For Reference
1% Annual Growth Rate

Year	Volume	Growth Rate
2023	3,900	Present
2050	4,953	Linear
2050	5,102	Compound

Calculations based on 30YR Growth Rates

Year	Volume	Estimate		
2023	3,900	N/A	*Linear*	#DIV/0!
2050	#DIV/0!	#DIV/0!		
Year	**Volume**	**Estimate**		
2023	3,900	N/A	*Compound*	#DIV/0!
2050	#DIV/0!	#DIV/0!		
Year	**Volume**	**Estimate**		
2023	3,900	N/A	*Average Annual*	#DIV/0!
2050	#DIV/0!	#DIV/0!		

Travel Demand Model

COATS

	2018	2045		
Model	9,096	10,621	*Linear*	0.62%
Acual/Est.	0	0		
Year	**Volume**	**Estimate**		
2050	0	0		

SCSWM

	2019	2050		
Model	2,421	2,964	*Linear*	0.72%
Acual/Est.	0	0		
Year	**Volume**	**Estimate**		
2050	0	0		

Demographic Data

Population

Employment

Calculations based on 20YR Growth Rates

Year	Volume	Estimate		
2023	3,900	N/A	*Linear*	#DIV/0!
2050	#DIV/0!	#DIV/0!		
Year	**Volume**	**Estimate**		
2023	3,900	N/A	*Compound*	#DIV/0!
2050	#DIV/0!	#DIV/0!		
Year	**Volume**	**Estimate**		
2023	3,900	N/A	*Average Annual*	#DIV/0!
2050	#DIV/0!	#DIV/0!		

Calculations based on 10YR Growth Rates

Year	Volume	Estimate		
2023	3,900	N/A	*Linear*	#DIV/0!
2050	#DIV/0!	#DIV/0!		
Year	**Volume**	**Estimate**		
2023	3,900	N/A	*Compound*	#DIV/0!
2050	#DIV/0!	#DIV/0!		
Year	**Volume**	**Estimate**		
2023	3,900	N/A	*Average Annual*	#DIV/0!
2050	#DIV/0!	#DIV/0!		

Trend Analysis

Linear

R-Square	AGR (Historical)	AGR (Design Year)	Annual Increase	2050 Estimate
16.4%	0.9%	1.7%	60	5,400

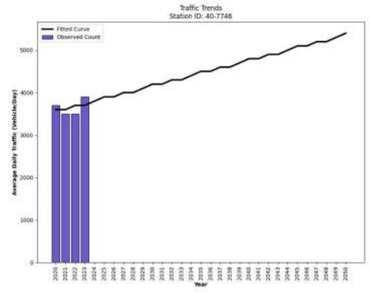

Annual Trend Increase: 60
Trend R-squared: 16.36%
Linear Annual Historic Growth Rate: 0.93%
Trend Growth Rate Its Design Year's: 1.7%

Year	Count	Trend
2020	3700	3600
2021	3500	3600
2022	3500	3700
2023	3900	3700
2050		5400

Trend Analysis *(*2015-2023)*

Linear

R-Square	AGR (Historical)	AGR (Design Year)	Annual Increase	2050 Estimate
16.4%	0.9%	1.7%	60	5,400



Annual Trend Increase: 60
Trend R-squared: 16.36%
Linear Annual Historic Growth Rate: 0.93%
Trend Growth Rate Its Design Year's: 1.7%

Year	Count	Trend
2020	3700	3600
2021	3500	3600
2022	3500	3700
2023	3900	3700
2050		5400

R-7746 1E1 : I- 26 TO S- 757, RS 7746 1E1



Station ID 32-7747
County Lexington
Location click here

	Year	AADT	%Change
1	1987		
2	1988		#DIV/0!
3	1989		#DIV/0!
4	1990		#DIV/0!
5	1991		#DIV/0!
6	1992		#DIV/0!
7	1993		#DIV/0!
8	1994		#DIV/0!
9	1995		#DIV/0!
10	1996		#DIV/0!
11	1997		#DIV/0!
12	1998		#DIV/0!
13	1999		#DIV/0!
14	2000		#DIV/0!
15	2001		#DIV/0!
16	2002		#DIV/0!
17	2003		#DIV/0!
18	2004		#DIV/0!
19	2005		#DIV/0!
20	2006		#DIV/0!
21	2007		#DIV/0!
22	2008		#DIV/0!
23	2009		#DIV/0!
24	2010		#DIV/0!
25	2011		#DIV/0!
26	2012		#DIV/0!
27	2013		#DIV/0!
28	2014		#DIV/0!
29	2015		#DIV/0!
30	2016		#DIV/0!
31	2017		#DIV/0!
32	2018		#DIV/0!
33	2019		#DIV/0!
34	2020	9,900	#DIV/0!
35	2021	10,100	2.0%
36	2022	10,300	2.0%
37	2023	11,000	6.8%
		Avg=	#DIV/0!

For Reference
1% Annual Growth Rate

Year	Volume	Growth Rate
2023	11,000	Present
2050	13,970	Linear
2050	14,390	Compound

Calculations based on 30YR Growth Rates

Year	Volume	Estimate		
2023	11,000	N/A	*Linear*	#DIV/0!
2050	#DIV/0!	#DIV/0!		
Year	**Volume**	**Estimate**		
2023	11,000	N/A	*Compound*	#DIV/0!
2050	#DIV/0!	#DIV/0!		
Year	**Volume**	**Estimate**		
2023	11,000	N/A	*Average Annual*	#DIV/0!
2050	#DIV/0!	#DIV/0!		

Travel Demand Model

COATS

	2018	2045		
Model	12,271	14,043	*Linear*	0.53%
Acual/Est.	0	0		
Year	**Volume**	**Estimate**		
2050	0	0		

SCSWM

	2019	2050		
Model	11,158	11,821	*Linear*	0.19%
Acual/Est.	0	0		
Year	**Volume**	**Estimate**		
2050	0	0		

Demographic Data

Population

Employment

Calculations based on 20YR Growth Rates

Year	Volume	Estimate		
2023	11,000	N/A	*Linear*	#DIV/0!
2050	#DIV/0!	#DIV/0!		
Year	**Volume**	**Estimate**		
2023	11,000	N/A	*Compound*	#DIV/0!
2050	#DIV/0!	#DIV/0!		
Year	**Volume**	**Estimate**		
2023	11,000	N/A	*Average Annual*	#DIV/0!
2050	#DIV/0!	#DIV/0!		

Calculations based on 10YR Growth Rates

Year	Volume	Estimate		
2023	11,000	N/A	*Linear*	#DIV/0!
2050	#DIV/0!	#DIV/0!		
Year	**Volume**	**Estimate**		
2023	11,000	N/A	*Compound*	#DIV/0!
2050	#DIV/0!	#DIV/0!		
Year	**Volume**	**Estimate**		
2023	11,000	N/A	*Average Annual*	#DIV/0!
2050	#DIV/0!	#DIV/0!		

Trend Analysis

Linear

R-Square	AGR (Historical)	AGR (Design Year)	Annual Increase	2050 Estimate
89.1%	3.7%	3.2%	350	20,300

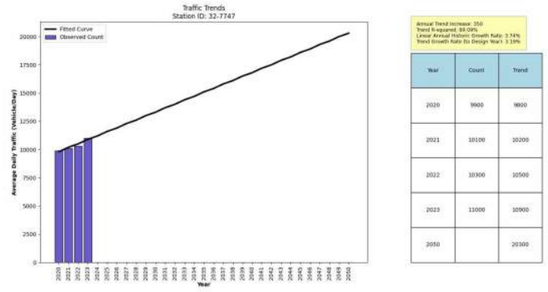

Year	Count	Trend
2020	9900	9800
2021	10100	10200
2022	10300	10500
2023	11000	10900
2050		20300

Trend Analysis *(*2015-2023)*

Linear

R-Square	AGR (Historical)	AGR (Design Year)	Annual Increase	2050 Estimate
89.1%	3.7%	3.2%	350	20,300

Year	Count	Trend
2020	9900	9800
2021	10100	10200
2022	10300	10500
2023	11000	10900
2050		20300

R-7747 201 : S- 757 TO I- 26, RS 7747 201



Station ID 40-7748
County Richland
Location click here

	Year	AADT	%Change
1	1987		
2	1988		#DIV/0!
3	1989		#DIV/0!
4	1990		#DIV/0!
5	1991		#DIV/0!
6	1992		#DIV/0!
7	1993		#DIV/0!
8	1994		#DIV/0!
9	1995		#DIV/0!
10	1996		#DIV/0!
11	1997		#DIV/0!
12	1998		#DIV/0!
13	1999		#DIV/0!
14	2000		#DIV/0!
15	2001		#DIV/0!
16	2002		#DIV/0!
17	2003		#DIV/0!
18	2004		#DIV/0!
19	2005		#DIV/0!
20	2006		#DIV/0!
21	2007		#DIV/0!
22	2008		#DIV/0!
23	2009		#DIV/0!
24	2010		#DIV/0!
25	2011		#DIV/0!
26	2012		#DIV/0!
27	2013		#DIV/0!
28	2014		#DIV/0!
29	2015		#DIV/0!
30	2016		#DIV/0!
31	2017		#DIV/0!
32	2018		#DIV/0!
33	2019		#DIV/0!
34	2020	4,200	#DIV/0!
35	2021	3,800	-9.5%
36	2022	4,000	5.3%
37	2023	4,300	7.5%
		Avg=	#DIV/0!

For Reference
1% Annual Growth Rate

Year	Volume	Growth Rate
2023	4,300	Present
2050	5,461	Linear
2050	5,625	Compound

Calculations based on 30YR Growth Rates

Year	Volume	Estimate		
2023	4,300	N/A	*Linear*	#DIV/0!
2050	#DIV/0!	#DIV/0!		
Year	**Volume**	**Estimate**		
2023	4,300	N/A	*Compound*	#DIV/0!
2050	#DIV/0!	#DIV/0!		
Year	**Volume**	**Estimate**		
2023	4,300	N/A	*Average Annual*	#DIV/0!
2050	#DIV/0!	#DIV/0!		

Travel Demand Model

COATS

	2018	2045		
Model	5,044	5,883	*Linear*	0.62%
Acual/Est.	0	0		
Year	**Volume**	**Estimate**		
2050	0	0		

SCSWM

	2019	2050		
Model	3,435	4,176	*Linear*	0.70%
Acual/Est.	0	0		
Year	**Volume**	**Estimate**		
2050	0	0		

Demographic Data

Population

Employment

Calculations based on 20YR Growth Rates

Year	Volume	Estimate		
2023	4,300	N/A	*Linear*	#DIV/0!
2050	#DIV/0!	#DIV/0!		
Year	**Volume**	**Estimate**		
2023	4,300	N/A	*Compound*	#DIV/0!
2050	#DIV/0!	#DIV/0!		
Year	**Volume**	**Estimate**		
2023	4,300	N/A	*Average Annual*	#DIV/0!
2050	#DIV/0!	#DIV/0!		

Calculations based on 10YR Growth Rates

Year	Volume	Estimate		
2023	4,300	N/A	*Linear*	#DIV/0!
2050	#DIV/0!	#DIV/0!		
Year	**Volume**	**Estimate**		
2023	4,300	N/A	*Compound*	#DIV/0!
2050	#DIV/0!	#DIV/0!		
Year	**Volume**	**Estimate**		
2023	4,300	N/A	*Average Annual*	#DIV/0!
2050	#DIV/0!	#DIV/0!		

Trend Analysis

Linear

R-Square	AGR (Historical)	AGR (Design Year)	Annual Increase	2050 Estimate
8.5%	1.7%	1.2%	50	5,500

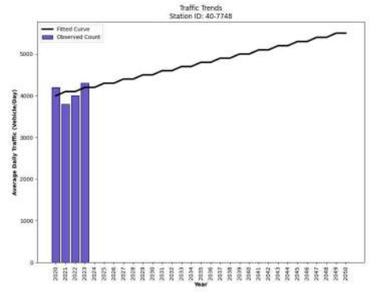

Annual Trend Increase: 50
Trend R-squared: 8.47%
Linear Annual Historic Growth Rate: 1.67%
Trend Growth Rate Its Design Year's: 1.15%

Year	Count	Trend
2020	4200	4000
2021	3800	4100
2022	4000	4100
2023	4300	4200
2050		5500

Trend Analysis *(*2015-2023)*

Linear

R-Square	AGR (Historical)	AGR (Design Year)	Annual Increase	2050 Estimate
8.5%	1.7%	1.2%	50	5,500

Annual Trend Increase: 50
Trend R-squared: 8.47%
Linear Annual Historic Growth Rate: 1.67%
Trend Growth Rate Its Design Year's: 1.15%

Year	Count	Trend
2020	4200	4000
2021	3800	4100
2022	4000	4100
2023	4300	4200
2050		5500

R-7748 401 : S- 757 TO I- 26, RS 7748 401



Station ID 40-7749
County Richland
Location click here

	Year	AADT	%Change
1	1987		
2	1988		#DIV/0!
3	1989		#DIV/0!
4	1990		#DIV/0!
5	1991		#DIV/0!
6	1992		#DIV/0!
7	1993		#DIV/0!
8	1994		#DIV/0!
9	1995		#DIV/0!
10	1996		#DIV/0!
11	1997		#DIV/0!
12	1998		#DIV/0!
13	1999		#DIV/0!
14	2000		#DIV/0!
15	2001		#DIV/0!
16	2002		#DIV/0!
17	2003		#DIV/0!
18	2004		#DIV/0!
19	2005		#DIV/0!
20	2006		#DIV/0!
21	2007		#DIV/0!
22	2008		#DIV/0!
23	2009		#DIV/0!
24	2010		#DIV/0!
25	2011		#DIV/0!
26	2012		#DIV/0!
27	2013		#DIV/0!
28	2014		#DIV/0!
29	2015		#DIV/0!
30	2016		#DIV/0!
31	2017		#DIV/0!
32	2018		#DIV/0!
33	2019		#DIV/0!
34	2020	9,900	#DIV/0!
35	2021	9,300	-6.1%
36	2022	9,300	0.0%
37	2023	10,600	14.0%
		Avg=	#DIV/0!

For Reference
1% Annual Growth Rate

Year	Volume	Growth Rate
2023	10,600	Present
2050	13,462	Linear
2050	13,867	Compound

Calculations based on 30YR Growth Rates

Year	Volume	Estimate		
2023	10,600	N/A	*Linear*	#DIV/0!
2050	#DIV/0!	#DIV/0!		
Year	**Volume**	**Estimate**		
2023	10,600	N/A	*Compound*	#DIV/0!
2050	#DIV/0!	#DIV/0!		
Year	**Volume**	**Estimate**		
2023	10,600	N/A	*Average Annual*	#DIV/0!
2050	#DIV/0!	#DIV/0!		

Travel Demand Model

COATS

	2018	2045		
Model	15,826	17,989	*Linear*	0.51%
Acual/Est.	0	0		
Year	**Volume**	**Estimate**		
2050	0	0		

SCSWM

	2019	2050		
Model	11,523	11,335	*Linear*	-0.05%
Acual/Est.	0	0		
Year	**Volume**	**Estimate**		
2050	0	0		

Demographic Data

Population

Employment

Calculations based on 20YR Growth Rates

Year	Volume	Estimate		
2023	10,600	N/A	*Linear*	#DIV/0!
2050	#DIV/0!	#DIV/0!		
Year	**Volume**	**Estimate**		
2023	10,600	N/A	*Compound*	#DIV/0!
2050	#DIV/0!	#DIV/0!		
Year	**Volume**	**Estimate**		
2023	10,600	N/A	*Average Annual*	#DIV/0!
2050	#DIV/0!	#DIV/0!		

Calculations based on 10YR Growth Rates

Year	Volume	Estimate		
2023	10,600	N/A	*Linear*	#DIV/0!
2050	#DIV/0!	#DIV/0!		
Year	**Volume**	**Estimate**		
2023	10,600	N/A	*Compound*	#DIV/0!
2050	#DIV/0!	#DIV/0!		
Year	**Volume**	**Estimate**		
2023	10,600	N/A	*Average Annual*	#DIV/0!
2050	#DIV/0!	#DIV/0!		

Trend Analysis

Linear

R-Square	AGR (Historical)	AGR (Design Year)	Annual Increase	2050 Estimate
19.2%	2.1%	2.1%	210	15,800

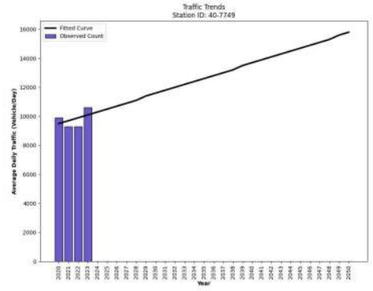

Annual Trend Increase: 210
Trend R-squared: 19.22%
Linear Annual Historic Growth Rate: 2.11%
Trend Growth Rate Its Design Year: 2.09%

Year	Count	Trend
2020	9900	9500
2021	9300	9700
2022	9300	9900
2023	10600	10100
2050		15800

Trend Analysis *(*2015-2023)*

Linear

R-Square	AGR (Historical)	AGR (Design Year)	Annual Increase	2050 Estimate
19.2%	2.1%	2.1%	210	15,800

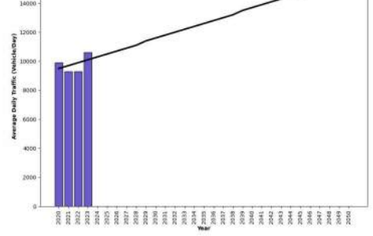

Annual Trend Increase: 210
Trend R-squared: 19.22%
Linear Annual Historic Growth Rate: 2.11%
Trend Growth Rate Its Design Year: 2.09%

Year	Count	Trend
2020	9900	9500
2021	9300	9700
2022	9300	9900
2023	10600	10100
2050		15800

R-7749 4E1 : I- 26 TO S- 757, RS 7749 4E1



Station ID 32-0926
County Lexington
Location click here

	Year	AADT	%Change
1	1987		
2	1988		#DIV/0!
3	1989		#DIV/0!
4	1990		#DIV/0!
5	1991		#DIV/0!
6	1992		#DIV/0!
7	1993		#DIV/0!
8	1994		#DIV/0!
9	1995		#DIV/0!
10	1996		#DIV/0!
11	1997		#DIV/0!
12	1998		#DIV/0!
13	1999		#DIV/0!
14	2000		#DIV/0!
15	2001		#DIV/0!
16	2002		#DIV/0!
17	2003	16,400	#DIV/0!
18	2004	16,100	-1.8%
19	2005	16,100	0.0%
20	2006	16,900	5.0%
21	2007	16,500	-2.4%
22	2008	15,500	-6.1%
23	2009	13,600	-12.3%
24	2010	14,800	8.8%
25	2011	13,500	-8.8%
26	2012	13,200	-2.2%
27	2013	13,400	1.5%
28	2014	13,600	1.5%
29	2015	13,500	-0.7%
30	2016	13,000	-3.7%
31	2017	13,100	0.8%
32	2018	14,000	6.9%
33	2019	13,600	-2.9%
34	2020	12,600	-7.4%
35	2021	12,300	-2.4%
36	2022	13,000	5.7%
37	2023	12,800	-1.5%
		Avg=	#DIV/0!

For Reference
1% Annual Growth Rate

Year	Volume	Growth Rate
2023	12,800	Present
2050	16,256	Linear
2050	16,745	Compound

Calculations based on 30YR Growth Rates

Year	Volume	Estimate		
2023	12,800	N/A	*Linear*	#DIV/0!
2050	#DIV/0!	#DIV/0!		
Year	**Volume**	**Estimate**		
2023	12,800	N/A	*Compound*	#DIV/0!
2050	#DIV/0!	#DIV/0!		
Year	**Volume**	**Estimate**		
2023	12,800	N/A	*Average Annual*	#DIV/0!
2050	#DIV/0!	#DIV/0!		

Travel Demand Model

COATS

	2018	2045		
Model	8,418	8,367	*Linear*	-0.02%
Acual/Est.	14,000	13,915		
Year	**Volume**	**Estimate**		
2050	13,899	14,000		

SCSWM

	2019	2050		
Model	13,876	13,301	*Linear*	-0.13%
Acual/Est.	13,600	13,036		
Year	**Volume**	**Estimate**		
2050	13,036	13,000		

Demographic Data

Population

Employment

Calculations based on 20YR Growth Rates

Year	Volume	Estimate		
2023	12,800	N/A	*Linear*	-1.02%
2050	8,345	8,300		
Year	**Volume**	**Estimate**		
2023	12,800	N/A	*Compound*	-1.14%
2050	9,391	9,400		
Year	**Volume**	**Estimate**		
2023	12,800	N/A	*Average Annual*	-1.06%
2050	9,003	9,000		

Calculations based on 10YR Growth Rates

Year	Volume	Estimate		
2023	12,800	N/A	*Linear*	-0.59%
2050	10,640	11,000		
Year	**Volume**	**Estimate**		
2023	12,800	N/A	*Compound*	-0.60%
2050	10,867	11,000		
Year	**Volume**	**Estimate**		
2023	12,800	N/A	*Average Annual*	-0.58%
2050	10,714	11,000		

Trend Analysis

Linear

R-Square	AGR (Historical)	AGR (Design Year)	Annual Increase	2050 Estimate
74.4%	-1.3%	-1.7%	-203	6,700

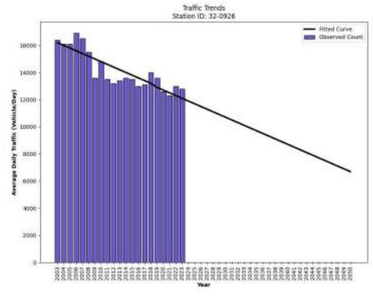



Year	Count	Trend
2003	16400	16200
2004	16100	16000
2005	16100	15800
2006	16900	15600
2007	16500	15400
2008	15500	15200
2009	13600	15000
2010	14800	14800
2011	13500	14600
2012	13200	14400
2013	13400	14200
2014	13600	14000
2015	13500	13800
2016	13000	13600
2017	13100	13400
2018	14000	13200
2019	13600	12900
2020	12600	12700
2021	12300	12500
2022	13000	12300
2023	12800	12100
2050		6700

Trend Analysis *(*2015-2023)*

Linear

R-Square	AGR (Historical)	AGR (Design Year)	Annual Increase	2050 Estimate
25.3%	-0.7%	-0.8%	-97	10,100

Year	Count	Trend
2015	13500	13500
2016	13000	13400
2017	13100	13300
2018	14000	13200
2019	13600	13100
2020	12600	13000
2021	12300	12900
2022	13000	12800
2023	12800	12700
2050		10100

L-5883 : S- 757 (HARBISON BLVD) TO County Line - RICHLAND



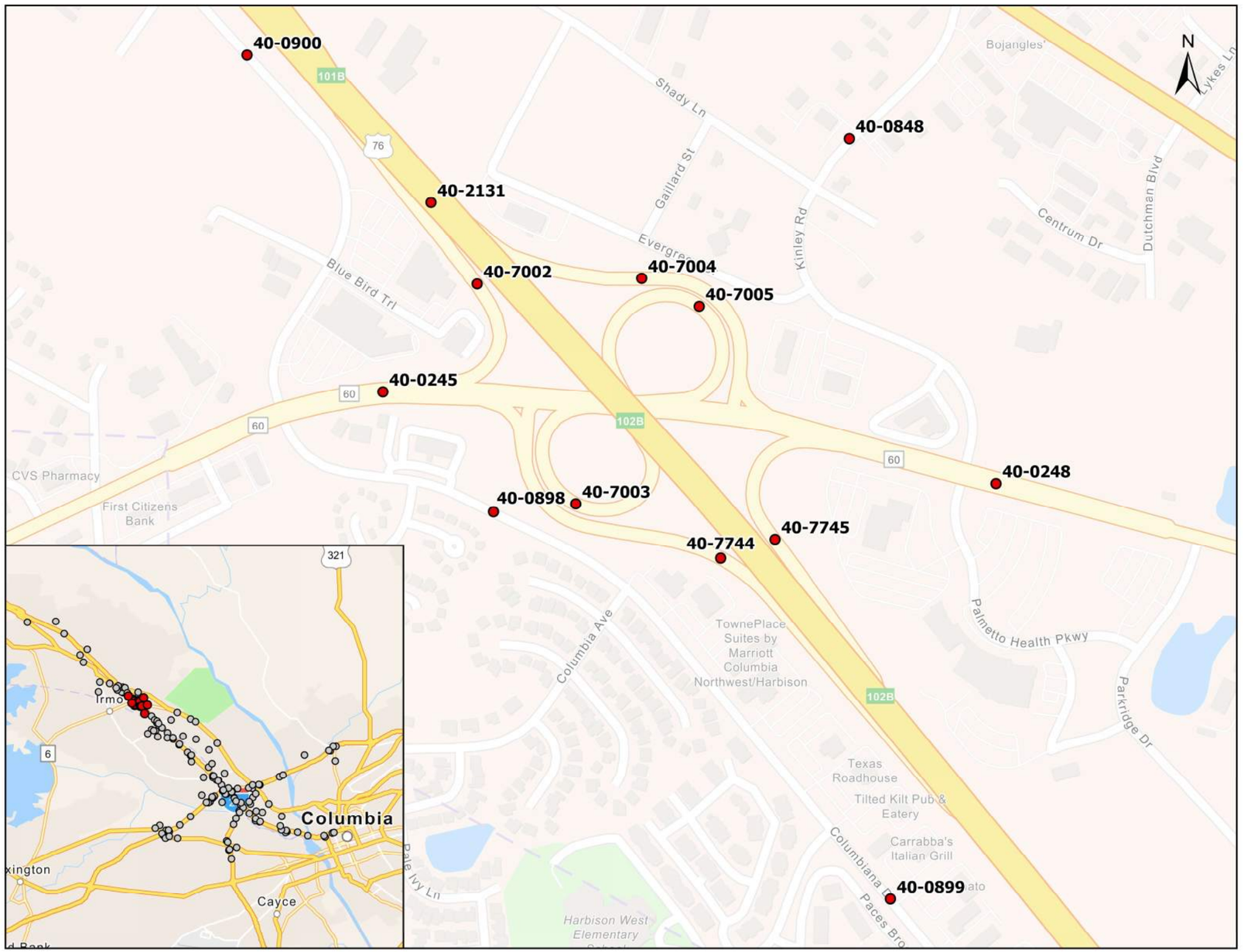
40-0900
40-2131
40-7002
40-7004
40-7005
40-0245
40-0898
40-7003
40-7744
40-7745
40-0848
40-0248
40-0899
101B
102B
76
60
321
6
Shady Ln
Gaillard St
Kinley Rd
Centrum Dr
Dutchman Blvd
Blue Bird Trl
Bojangles'
CVS Pharmacy
First Citizens Bank
TownePlace Suites by Marriott Columbia Northwest/Harbison
Columbia Ave
Palmetto Health Pkwy
Parkridge Dr
Texas Roadhouse
Tilted Kilt Pub & Eatery
Carrabba's Italian Grill
Harbison West Elementary
Columbia
Cayce
N

Station ID 40-0245
County Richland
Location click here

Year	AADT	%Change
1987	11,200	
1988	12,000	7.1%
1989	12,600	5.0%
1990	14,000	11.1%
1991	15,500	10.7%
1992	17,400	12.3%
1993	17,700	1.7%
1994	17,000	-4.0%
1995	12,500	-26.5%
1996	23,300	86.4%
1997	23,900	2.6%
1998	25,200	5.4%
1999	23,800	-5.6%
2000	29,600	24.4%
2001	28,700	-3.0%
2002	31,400	9.4%
2003	30,000	-4.5%
2004	27,300	-9.0%
2005	27,900	2.2%
2006	28,300	1.4%
2007	29,300	3.5%
2008	29,100	-0.7%
2009	27,500	-5.5%
2010	29,300	6.5%
2011	29,600	1.0%
2012	30,200	2.0%
2013	30,800	2.0%
2014	31,800	3.2%
2015	29,700	-6.6%
2016	32,000	7.7%
2017	31,200	-2.5%
2018	32,400	3.8%
2019	24,600	-24.1%
2020	22,800	-7.3%
2021	29,700	30.3%
2022	31,000	4.4%
2023	32,600	5.2%
	Avg=	4.177%

For Reference
1% Annual Growth Rate

Year	Volume	Growth Rate
2023	32,600	Present
2050	41,402	Linear
2050	42,648	Compound

Calculations based on 30YR Growth Rates

Year	Volume	Estimate		
2023	32,600	N/A		
2050	46,640	47,000	*Linear*	3.06%
2050	58,575	59,000	*Compound*	2.19%
2050	66,083	66,000	*Average Annual*	3.67%

Travel Demand Model

COATS

	2018	2045		
Model	36,634	47,532	*Linear*	1.10%
Acual/Est.	32,400	42,038		

Year	Volume	Estimate
2050	43,823	44,000

SCSWM

	2019	2050		
Model	35,192	40,051	*Linear*	0.45%
Acual/Est.	24,600	27,997		

Year	Volume	Estimate
2050	27,997	28,000

Demographic Data

Population

Employment

Calculations based on 20YR Growth Rates

Year	Volume	Estimate		
2023	32,600	N/A		
2050	39,755	40,000	*Linear*	0.97%
2050	41,423	41,000	*Compound*	0.89%
2050	45,433	45,000	*Average Annual*	1.41%

Calculations based on 10YR Growth Rates

Year	Volume	Estimate		
2023	32,600	N/A		
2050	34,760	35,000	*Linear*	0.25%
2050	34,862	35,000	*Compound*	0.25%
2050	43,652	44,000	*Average Annual*	1.21%

Trend Analysis
Linear

R-Square	AGR (Historical)	AGR (Design Year)	Annual Increase	2050 Estimate
64.4%	3.1%	1.5%	503	47,900

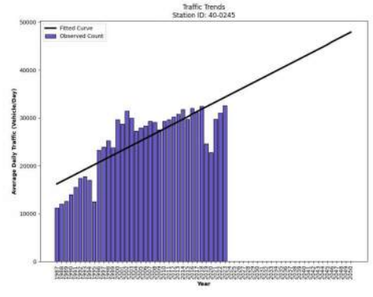

Trend Analysis *(*2015-2023)*
Linear

R-Square	AGR (Historical)	AGR (Design Year)	Annual Increase	2050 Estimate
0.3%	-0.2%	-0.2%	-67	27,500

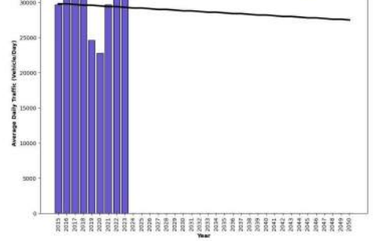

SC60 : County Line - LEXINGTON TO I- 26 (INTERSTATE 26)



Station ID 40-0248
County Richland
Location click here

	Year	AADT	%Change
1	1987		
2	1988		#DIV/0!
3	1989		#DIV/0!
4	1990		#DIV/0!
5	1991		#DIV/0!
6	1992		#DIV/0!
7	1993		#DIV/0!
8	1994		#DIV/0!
9	1995		#DIV/0!
10	1996		#DIV/0!
11	1997	2,900	#DIV/0!
12	1998	3,500	20.7%
13	1999	3,500	0.0%
14	2000	4,300	22.9%
15	2001	4,100	-4.7%
16	2002	4,700	14.6%
17	2003	4,500	-4.3%
18	2004	4,500	0.0%
19	2005	4,700	4.4%
20	2006	4,800	2.1%
21	2007	5,500	14.6%
22	2008	5,500	0.0%
23	2009	4,900	-10.9%
24	2010	5,400	10.2%
25	2011	5,300	-1.9%
26	2012	5,400	1.9%
27	2013	5,500	1.9%
28	2014	7,800	41.8%
29	2015	10,000	28.2%
30	2016	11,200	12.0%
31	2017	11,000	-1.8%
32	2018	11,400	3.6%
33	2019	10,900	-4.4%
34	2020	10,100	-7.3%
35	2021	10,000	-1.0%
36	2022	10,400	4.0%
37	2023	11,500	10.6%
		Avg=	#DIV/0!

For Reference
1% Annual Growth Rate

Year	Volume	Growth Rate
2023	11,500	Present
2050	14,605	Linear
2050	15,044	Compound

Calculations based on 30YR Growth Rates

Year	Volume	Estimate		
2023	11,500	N/A	*Linear*	#DIV/0!
2050	#DIV/0!	#DIV/0!		
Year	**Volume**	**Estimate**	*Compound*	#DIV/0!
2023	11,500	N/A		
2050	#DIV/0!	#DIV/0!		
Year	**Volume**	**Estimate**	*Average Annual*	#DIV/0!
2023	11,500	N/A		
2050	#DIV/0!	#DIV/0!		

Travel Demand Model

COATS

	2018	2045		
Model	15,952	17,849	*Linear*	0.44%
Acual/Est.	11,400	12,756		
Year	**Volume**	**Estimate**		
2050	13,007	13,000		

SCSWM

	2019	2050		
Model	8,249	9,035	*Linear*	0.31%
Acual/Est.	10,900	11,939		
Year	**Volume**	**Estimate**		
2050	11,939	12,000		

Demographic Data

Population

Employment

Calculations based on 20YR Growth Rates

Year	Volume	Estimate		
2023	11,500	N/A	*Linear*	7.78%
2050	20,950	21,000		
Year	**Volume**	**Estimate**	*Compound*	4.80%
2023	11,500	N/A		
2050	40,813	41,000		
Year	**Volume**	**Estimate**	*Average Annual*	5.69%
2023	11,500	N/A		
2050	29,815	30,000		

Calculations based on 10YR Growth Rates

Year	Volume	Estimate		
2023	11,500	N/A	*Linear*	4.74%
2050	21,490	21,000		
Year	**Volume**	**Estimate**	*Compound*	3.96%
2023	11,500	N/A		
2050	32,804	33,000		
Year	**Volume**	**Estimate**	*Average Annual*	4.88%
2023	11,500	N/A		
2050	27,213	27,000		

Trend Analysis

Linear

R-Square	AGR (Historical)	AGR (Design Year)	Annual Increase	2050 Estimate
83.8%	15.1%	3.0%	344	20,500

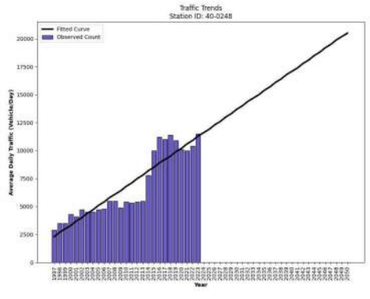

Trend Analysis *(*2015-2023)*

Linear

R-Square	AGR (Historical)	AGR (Design Year)	Annual Increase	2050 Estimate
0.1%	0.0%	0.1%	5	10,900

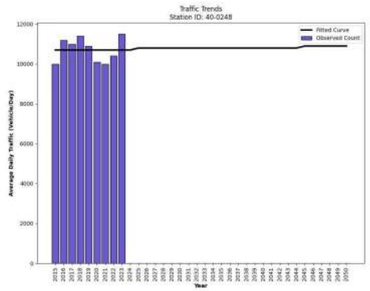

SC60 : I- 26 (INTERSTATE 26) TO US 176 (BROAD RIVER RD)

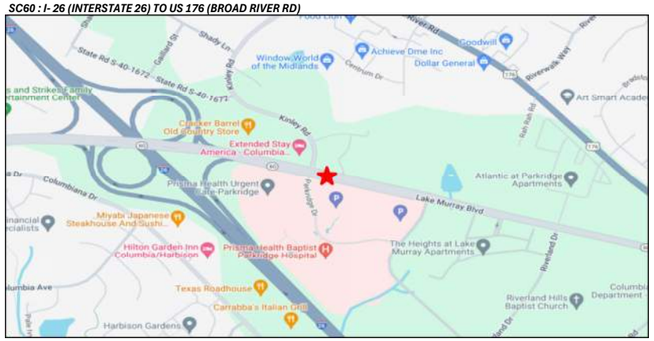

Station ID 40-0848
County Richland
Location click here

	Year	AADT	%Change
1	1987		
2	1988		#DIV/0!
3	1989		#DIV/0!
4	1990		#DIV/0!
5	1991		#DIV/0!
6	1992		#DIV/0!
7	1993		#DIV/0!
8	1994		#DIV/0!
9	1995		#DIV/0!
10	1996		#DIV/0!
11	1997		#DIV/0!
12	1998		#DIV/0!
13	1999		#DIV/0!
14	2000		#DIV/0!
15	2001	12,900	#DIV/0!
16	2002	13,900	7.8%
17	2003	13,600	-2.2%
18	2004	12,500	-8.1%
19	2005	12,400	-0.8%
20	2006	12,800	3.2%
21	2007	12,500	-2.3%
22	2008	12,400	-0.8%
23	2009	12,300	-0.8%
24	2010	12,400	0.8%
25	2011	11,800	-4.8%
26	2012	12,000	1.7%
27	2013	12,200	1.7%
28	2014	11,200	-8.2%
29	2015	12,200	8.9%
30	2016	13,300	9.0%
31	2017	11,700	-12.0%
32	2018	12,600	7.7%
33	2019	11,500	-8.7%
34	2020	10,900	-5.2%
35	2021	10,800	-0.9%
36	2022	12,500	15.7%
37	2023	12,000	-4.0%
		Avg=	#DIV/0!

For Reference
1% Annual Growth Rate

Year	Volume	Growth Rate
2023	12,000	Present
2050	15,240	Linear
2050	15,699	Compound

Calculations based on 30YR Growth Rates

Year	Volume	Estimate		
2023	12,000	N/A	*Linear*	#DIV/0!
2050	#DIV/0!	#DIV/0!		
Year	**Volume**	**Estimate**		
2023	12,000	N/A	*Compound*	#DIV/0!
2050	#DIV/0!	#DIV/0!		
Year	**Volume**	**Estimate**		
2023	12,000	N/A	*Average Annual*	#DIV/0!
2050	#DIV/0!	#DIV/0!		

Travel Demand Model

COATS

	2018	2045		
Model	7,608	9,052	*Linear*	0.70%
Acual/Est.	12,600	14,991		
Year	**Volume**	**Estimate**		
2050	15,434	15,000		

SCSWM

	2019	2050		
Model	9,149	10,158	*Linear*	0.36%
Acual/Est.	11,500	12,768		
Year	**Volume**	**Estimate**		
2050	12,768	13,000		

Demographic Data

Population

Employment

Calculations based on 20YR Growth Rates

Year	Volume	Estimate		
2023	12,000	N/A	*Linear*	-0.20%
2050	11,325	11,000		
Year	**Volume**	**Estimate**		
2023	12,000	N/A	*Compound*	-0.20%
2050	11,357	11,000		
Year	**Volume**	**Estimate**		
2023	12,000	N/A	*Average Annual*	0.01%
2050	12,017	12,000		

Calculations based on 10YR Growth Rates

Year	Volume	Estimate		
2023	12,000	N/A	*Linear*	0.71%
2050	14,160	14,000		
Year	**Volume**	**Estimate**		
2023	12,000	N/A	*Compound*	0.69%
2050	14,457	14,000		
Year	**Volume**	**Estimate**		
2023	12,000	N/A	*Average Annual*	1.16%
2050	15,914	16,000		

Trend Analysis

Linear

R-Square	AGR (Historical)	AGR (Design Year)	Annual Increase	2050 Estimate
39.6%	-0.6%	-0.6%	-71	9,600

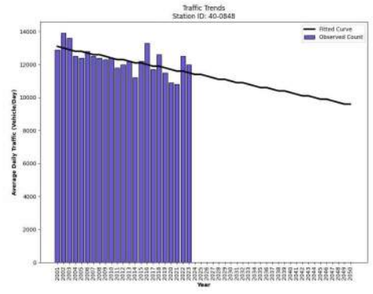

Annual Trend Increase: -71
Trend R-squared: 39.64%
Linear Annual Historic Growth Rate: -0.58%
Trend Growth Rate for Design Year's: -0.61%

Year	Count	Trend
2001	12900	13100
2002	13900	13000
2003	13600	12900
2004	12500	12800
2005	12400	12800
2006	12800	12700
2007	12500	12600
2008	12400	12600
2009	12300	12500
2010	12400	12400
2011	11800	12300
2012	12000	12300
2013	12200	12200
2014	11200	12100
2015	12200	12100
2016	13300	12000
2017	11700	11900
2018	12850	11900
2019	11500	11800
2020	10900	11700
2021	10800	11600
2022	12500	11600
2023	12000	11500
2050		9600

Trend Analysis *(*2015-2023)*

Linear

R-Square	AGR (Historical)	AGR (Design Year)	Annual Increase	2050 Estimate
14.1%	-0.9%	-1.0%	-112	8,500

Annual Trend Increase: -112
Trend R-squared: 14.11%
Linear Annual Historic Growth Rate: -0.91%
Trend Growth Rate for Design Year's: -0.97%

Year	Count	Trend
2015	12200	12400
2016	13300	12300
2017	11700	12200
2018	12600	12100
2019	11500	11900
2020	10900	11800
2021	10800	11700
2022	12500	11600
2023	12000	11500
2050		8500

S-670 : SC 60 (LAKE MURRAY BLVD), L- 1460 TO US 176 (BROAD RIVER RD)



Station ID 40-7002
County Richland
Location click here

	Year	AADT	%Change
1	1987		
2	1988		#DIV/0!
3	1989		#DIV/0!
4	1990		#DIV/0!
5	1991		#DIV/0!
6	1992		#DIV/0!
7	1993		#DIV/0!
8	1994		#DIV/0!
9	1995		#DIV/0!
10	1996		#DIV/0!
11	1997		#DIV/0!
12	1998		#DIV/0!
13	1999		#DIV/0!
14	2000		#DIV/0!
15	2001		#DIV/0!
16	2002		#DIV/0!
17	2003		#DIV/0!
18	2004		#DIV/0!
19	2005		#DIV/0!
20	2006		#DIV/0!
21	2007		#DIV/0!
22	2008		#DIV/0!
23	2009		#DIV/0!
24	2010		#DIV/0!
25	2011		#DIV/0!
26	2012		#DIV/0!
27	2013		#DIV/0!
28	2014		#DIV/0!
29	2015		#DIV/0!
30	2016		#DIV/0!
31	2017		#DIV/0!
32	2018		#DIV/0!
33	2019		#DIV/0!
34	2020	2,100	#DIV/0!
35	2021	1,900	-9.5%
36	2022	1,850	-2.6%
37	2023	1,700	-8.1%
		Avg=	#DIV/0!

For Reference
1% Annual Growth Rate

Year	Volume	Growth Rate
2023	1,700	Present
2050	2,159	Linear
2050	2,224	Compound

Calculations based on 30YR Growth Rates

Year	Volume	Estimate		
2023	1,700	N/A	*Linear*	#DIV/0!
2050	#DIV/0!	#DIV/0!		
Year	**Volume**	**Estimate**		
2023	1,700	N/A	*Compound*	#DIV/0!
2050	#DIV/0!	#DIV/0!		
Year	**Volume**	**Estimate**		
2023	1,700	N/A	*Average Annual*	#DIV/0!
2050	#DIV/0!	#DIV/0!		

Travel Demand Model

COATS

	2018	2045		
Model	3,677	6,246	*Linear*	2.59%
Acual/Est.	0	0		
Year	**Volume**	**Estimate**		
2050	0	0		

SCSWM

	2019	2050		
Model	1,563	2,386	*Linear*	1.70%
Acual/Est.	0	0		
Year	**Volume**	**Estimate**		
2050	0	0		

Demographic Data

Population

Employment

Calculations based on 20YR Growth Rates

Year	Volume	Estimate		
2023	1,700	N/A	*Linear*	#DIV/0!
2050	#DIV/0!	#DIV/0!		
Year	**Volume**	**Estimate**		
2023	1,700	N/A	*Compound*	#DIV/0!
2050	#DIV/0!	#DIV/0!		
Year	**Volume**	**Estimate**		
2023	1,700	N/A	*Average Annual*	#DIV/0!
2050	#DIV/0!	#DIV/0!		

Calculations based on 10YR Growth Rates

Year	Volume	Estimate		
2023	1,700	N/A	*Linear*	#DIV/0!
2050	#DIV/0!	#DIV/0!		
Year	**Volume**	**Estimate**		
2023	1,700	N/A	*Compound*	#DIV/0!
2050	#DIV/0!	#DIV/0!		
Year	**Volume**	**Estimate**		
2023	1,700	N/A	*Average Annual*	#DIV/0!
2050	#DIV/0!	#DIV/0!		

Trend Analysis

Linear

R-Square	AGR (Historical)	AGR (Design Year)	Annual Increase	2050 Estimate
90.0%	-6.4%	-7.0%	-120	-1,500

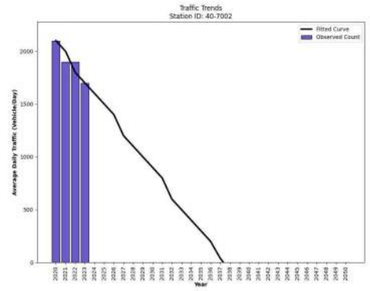

Annual Trend Increase: -120
Trend R-squared: 90.0%
Linear Annual Historic Growth Rate: -6.35%
Trend Growth Rate Its Design Year: -6.97%

Year	Count	Trend
2020	2100	2100
2021	1900	2000
2022	1900	1800
2023	1700	1700
2050		-1500

Trend Analysis *(*2015-2023)*

Linear

R-Square	AGR (Historical)	AGR (Design Year)	Annual Increase	2050 Estimate
90.0%	-6.4%	-7.0%	-120	-1,500

Annual Trend Increase: -120
Trend R-squared: 90.0%
Linear Annual Historic Growth Rate: -6.35%
Trend Growth Rate Its Design Year: -6.97%

Year	Count	Trend
2020	2100	2100
2021	1900	2000
2022	1900	1800
2023	1700	1700
2050		-1500

R-7002 1E1 : I- 26 TO SC 60

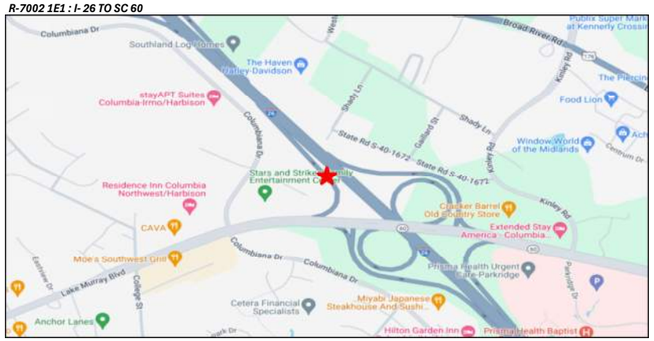

Station ID 40-7745
County Richland
Location click here

	Year	AADT	%Change
1	1987		
2	1988		#DIV/0!
3	1989		#DIV/0!
4	1990		#DIV/0!
5	1991		#DIV/0!
6	1992		#DIV/0!
7	1993		#DIV/0!
8	1994		#DIV/0!
9	1995		#DIV/0!
10	1996		#DIV/0!
11	1997		#DIV/0!
12	1998		#DIV/0!
13	1999		#DIV/0!
14	2000		#DIV/0!
15	2001		#DIV/0!
16	2002		#DIV/0!
17	2003		#DIV/0!
18	2004		#DIV/0!
19	2005		#DIV/0!
20	2006		#DIV/0!
21	2007		#DIV/0!
22	2008		#DIV/0!
23	2009		#DIV/0!
24	2010		#DIV/0!
25	2011		#DIV/0!
26	2012		#DIV/0!
27	2013		#DIV/0!
28	2014		#DIV/0!
29	2015		#DIV/0!
30	2016		#DIV/0!
31	2017		#DIV/0!
32	2018		#DIV/0!
33	2019		#DIV/0!
34	2020	3,800	#DIV/0!
35	2021	3,500	-7.9%
36	2022	3,700	5.7%
37	2023	3,800	2.7%
		Avg=	#DIV/0!

For Reference
1% Annual Growth Rate

Year	Volume	Growth Rate
2023	3,800	Present
2050	4,826	Linear
2050	4,971	Compound

Calculations based on 30YR Growth Rates

Year	Volume	Estimate		
2023	3,800	N/A	*Linear*	#DIV/0!
2050	#DIV/0!	#DIV/0!		
Year	**Volume**	**Estimate**		
2023	3,800	N/A	*Compound*	#DIV/0!
2050	#DIV/0!	#DIV/0!		
Year	**Volume**	**Estimate**		
2023	3,800	N/A	*Average Annual*	#DIV/0!
2050	#DIV/0!	#DIV/0!		

Travel Demand Model

COATS

	2018	2045		
Model	1,201	984	*Linear*	-0.67%
Acual/Est.	0	0		
Year	**Volume**	**Estimate**		
2050	0	0		

SCSWM

	2019	2050		
Model	0	10	*Linear*	#DIV/0!
Acual/Est.	0	#DIV/0!		
Year	**Volume**	**Estimate**		
2050	#DIV/0!	#DIV/0!		

Demographic Data

Population

Employment

Calculations based on 20YR Growth Rates

Year	Volume	Estimate		
2023	3,800	N/A	*Linear*	#DIV/0!
2050	#DIV/0!	#DIV/0!		
Year	**Volume**	**Estimate**		
2023	3,800	N/A	*Compound*	#DIV/0!
2050	#DIV/0!	#DIV/0!		
Year	**Volume**	**Estimate**		
2023	3,800	N/A	*Average Annual*	#DIV/0!
2050	#DIV/0!	#DIV/0!		

Calculations based on 10YR Growth Rates

Year	Volume	Estimate		
2023	3,800	N/A	*Linear*	#DIV/0!
2050	#DIV/0!	#DIV/0!		
Year	**Volume**	**Estimate**		
2023	3,800	N/A	*Compound*	#DIV/0!
2050	#DIV/0!	#DIV/0!		
Year	**Volume**	**Estimate**		
2023	3,800	N/A	*Average Annual*	#DIV/0!
2050	#DIV/0!	#DIV/0!		

Trend Analysis

Linear

R-Square	AGR (Historical)	AGR (Design Year)	Annual Increase	2050 Estimate
3.3%	0.0%	0.6%	20	4,300

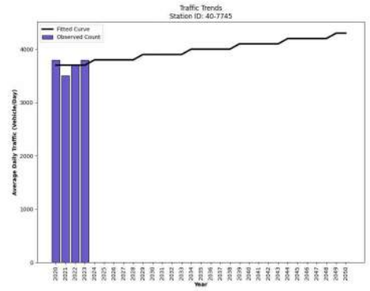

Year	Count	Trend
2020	3800	3700
2021	3500	3700
2022	3700	3700
2023	3800	3700
2050		4300

Trend Analysis *(*2015-2023)*

Linear

R-Square	AGR (Historical)	AGR (Design Year)	Annual Increase	2050 Estimate
3.3%	0.0%	0.6%	20	4,300



Year	Count	Trend
2020	3800	3700
2021	3500	3700
2022	3700	3700
2023	3800	3700
2050		4300

R-7745 3E1 : I- 26 TO SC 60



Station ID 40-2131
County Richland
Location click here

Year	AADT	%Change
1987		
1988		#DIV/0!
1989	39,700	#DIV/0!
1990	41,400	4.3%
1991	44,100	6.5%
1992	45,700	3.6%
1993	43,400	-5.0%
1994	42,900	-1.2%
1995	44,100	2.8%
1996	45,600	3.4%
1997	47,100	3.3%
1998	49,500	5.1%
1999	53,600	8.3%
2000	55,600	3.7%
2001	54,600	-1.8%
2002	57,200	4.8%
2003	60,800	6.3%
2004	63,800	4.9%
2005	65,300	2.4%
2006	69,100	5.8%
2007	69,000	-0.1%
2008	67,000	-2.9%
2009	67,000	0.0%
2010	67,200	0.3%
2011	67,200	0.0%
2012	68,200	1.5%
2013	69,800	2.3%
2014	71,500	2.4%
2015	71,700	0.3%
2016	75,400	5.2%
2017	76,800	1.9%
2018	82,600	7.6%
2019	85,700	3.8%
2020	75,000	-12.5%
2021	82,000	9.3%
2022	80,100	-2.3%
2023	81,600	1.9%
	Avg=	#DIV/0!

For Reference
1% Annual Growth Rate

Year	Volume	Growth Rate
2023	81,600	Present
2050	103,632	Linear
2050	106,750	Compound

Calculations based on 30YR Growth Rates

Year	Volume	Estimate		
2023	81,600	N/A		
2050	116,430	116,000	*Linear*	3.01%
2050	145,546	146,000	*Compound*	2.17%
2050	134,773	135,000	*Average Annual*	2.33%

Travel Demand Model

COATS

	2018	2045		
Model	102,063	126,368	*Linear*	0.88%
Acual/Est.	82,600	102,270		

Year	Volume	Estimate
2050	105,913	106,000

SCSWM

	2019	2050		
Model	71,679	112,314	*Linear*	1.83%
Acual/Est.	85,700	134,284		

Year	Volume	Estimate
2050	134,284	134,000

Demographic Data

Population

Employment

Calculations based on 20YR Growth Rates

Year	Volume	Estimate		
2023	81,600	N/A		
2050	105,630	106,000	*Linear*	1.39%
2050	113,753	114,000	*Compound*	1.24%
2050	113,708	114,000	*Average Annual*	1.41%

Calculations based on 10YR Growth Rates

Year	Volume	Estimate		
2023	81,600	N/A		
2050	108,870	109,000	*Linear*	1.41%
2050	116,581	117,000	*Compound*	1.33%
2050	119,694	120,000	*Average Annual*	1.67%

Year	Volume	Estimate
2023	81,600	N/A

Trend Analysis

Linear

R-Square	AGR (Historical)	AGR (Design Year)	Annual Increase	2050 Estimate
95.1%	3.3%	1.6%	1,320	120,400

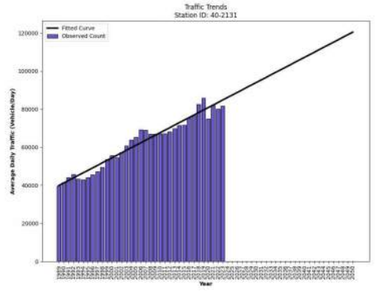

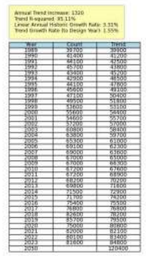

Year	Count	Trend
1989	39700	39920
1990	41400	41240
1991	44100	42560
1992	45700	43880
1993	43400	45200
1994	42900	46520
1995	44100	47840
1996	45600	49160
1997	47100	50480
1998	49500	51800
1999	53600	53120
2000	55600	54440
2001	54600	55760
2002	57200	57080
2003	60800	58400
2004	63800	59720
2005	65300	61040
2006	69100	62360
2007	69000	63680
2008	67000	65000
2009	67000	66320
2010	67200	67640
2011	67200	68960
2012	68200	70280
2013	69800	71600
2014	71500	72920
2015	71700	74240
2016	75400	75560
2017	76800	76880
2018	82600	78200
2019	85700	79520
2020	75000	80840
2021	82000	82160
2022	80100	83480
2023	81600	84800
2050		107600

Trend Analysis *(*2015-2023)*

Linear

R-Square	AGR (Historical)	AGR (Design Year)	Annual Increase	2050 Estimate
32.9%	1.3%	1.1%	942	108,200

Year	Count	Trend
2015	71700	75200
2016	75400	76200
2017	76800	77100
2018	82600	78000
2019	85700	79000
2020	75000	79900
2021	82000	80900
2022	80100	81800
2023	81600	82800
2050		108200

I-26 : US 76 (BROAD RIVER RD) TO SC 60 (LAKE MURRAY BLVD)



Station ID 40-0899
County Richland
Location click here

	Year	AADT	%Change
1	1987		
2	1988		#DIV/0!
3	1989		#DIV/0!
4	1990		#DIV/0!
5	1991		#DIV/0!
6	1992		#DIV/0!
7	1993		#DIV/0!
8	1994		#DIV/0!
9	1995		#DIV/0!
10	1996		#DIV/0!
11	1997		#DIV/0!
12	1998		#DIV/0!
13	1999		#DIV/0!
14	2000		#DIV/0!
15	2001		#DIV/0!
16	2002		#DIV/0!
17	2003	13,600	#DIV/0!
18	2004	12,600	-7.4%
19	2005	13,100	4.0%
20	2006	14,000	6.9%
21	2007	13,600	-2.9%
22	2008	12,900	-5.1%
23	2009	12,300	-4.7%
24	2010	12,900	4.9%
25	2011	12,500	-3.1%
26	2012	12,700	1.6%
27	2013	12,900	1.6%
28	2014	12,800	-0.8%
29	2015	13,400	4.7%
30	2016	13,900	3.7%
31	2017	12,900	-7.2%
32	2018	13,900	7.8%
33	2019	12,800	-7.9%
34	2020	12,200	-4.7%
35	2021	10,800	-11.5%
36	2022	12,500	15.7%
37	2023	12,700	1.6%
		Avg=	#DIV/0!

For Reference
1% Annual Growth Rate

Year	Volume	Growth Rate
2023	12,700	Present
2050	16,129	Linear
2050	16,614	Compound

Calculations based on 30YR Growth Rates

Year	Volume	Estimate		
2023	12,700	N/A	*Linear*	#DIV/0!
2050	#DIV/0!	#DIV/0!		
Year	**Volume**	**Estimate**	*Compound*	#DIV/0!
2023	12,700	N/A		
2050	#DIV/0!	#DIV/0!		
Year	**Volume**	**Estimate**	*Average Annual*	#DIV/0!
2023	12,700	N/A		
2050	#DIV/0!	#DIV/0!		

Travel Demand Model

COATS

	2018	2045		
Model	14,755	14,823	*Linear*	0.02%
Acual/Est.	13,900	13,964		
Year	Volume	Estimate		
2050	13,976	14,000		

SCSWM

	2019	2050		
Model	27,926	28,874	*Linear*	0.11%
Acual/Est.	12,800	13,235		
Year	Volume	Estimate		
2050	13,235	13,000		

Demographic Data

Population

Employment

Calculations based on 20YR Growth Rates

Year	Volume	Estimate		
2023	12,700	N/A	*Linear*	0.04%
2050	12,835	13,000		
Year	**Volume**	**Estimate**	*Compound*	0.04%
2023	12,700	N/A		
2050	12,836	13,000		
Year	**Volume**	**Estimate**	*Average Annual*	0.24%
2023	12,700	N/A		
2050	13,561	14,000		

Calculations based on 10YR Growth Rates

Year	Volume	Estimate		
2023	12,700	N/A	*Linear*	-0.08%
2050	12,430	12,000		
Year	**Volume**	**Estimate**	*Compound*	-0.08%
2023	12,700	N/A		
2050	12,434	12,000		
Year	**Volume**	**Estimate**	*Average Annual*	0.25%
2023	12,700	N/A		
2050	13,585	14,000		

Trend Analysis

Linear

R-Square	AGR (Historical)	AGR (Design Year)	Annual Increase	2050 Estimate
14.1%	-0.3%	-0.4%	-43	11,300

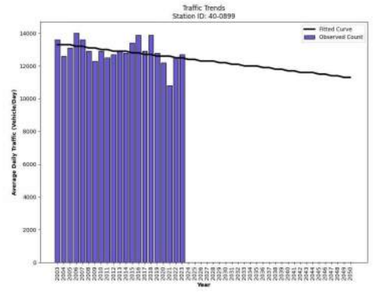



Trend Analysis *(*2015-2023)*

Linear

R-Square	AGR (Historical)	AGR (Design Year)	Annual Increase	2050 Estimate
38.3%	-1.6%	-1.8%	-215	6,100

L-4698 : L- 670 (COLUMBIA AVE) TO County Line - LEXINGTON



Station ID 40-0900
County Richland
Location click here

Year	AADT	%Change
1987		
1988		#DIV/0!
1989		#DIV/0!
1990		#DIV/0!
1991		#DIV/0!
1992		#DIV/0!
1993		#DIV/0!
1994		#DIV/0!
1995		#DIV/0!
1996		#DIV/0!
1997		#DIV/0!
1998		#DIV/0!
1999		#DIV/0!
2000		#DIV/0!
2001		#DIV/0!
2002		#DIV/0!
2003	4,800	#DIV/0!
2004	4,700	-2.1%
2005	5,500	17.0%
2006	4,200	-23.6%
2007	7,900	88.1%
2008	8,200	3.8%
2009	8,200	0.0%
2010	8,200	0.0%
2011	9,200	12.2%
2012	9,400	2.2%
2013	9,600	2.1%
2014	9,500	-1.0%
2015	6,900	-27.4%
2016	6,800	-1.4%
2017	6,900	1.5%
2018	7,500	8.7%
2019	7,200	-4.0%
2020	6,900	-4.2%
2021	6,600	-4.3%
2022	7,600	15.2%
2023	6,800	-10.5%
	Avg=	#DIV/0!

For Reference
1% Annual Growth Rate

Year	Volume	Growth Rate
2023	6,800	Present
2050	8,636	Linear
2050	8,896	Compound

Calculations based on 30YR Growth Rates

Year	Volume	Estimate		
2023	6,800	N/A	*Linear*	#DIV/0!
2050	#DIV/0!	#DIV/0!		
Year	**Volume**	**Estimate**		
2023	6,800	N/A	*Compound*	#DIV/0!
2050	#DIV/0!	#DIV/0!		
Year	**Volume**	**Estimate**		
2023	6,800	N/A	*Average Annual*	#DIV/0!
2050	#DIV/0!	#DIV/0!		

Travel Demand Model

COATS

	2018	2045		
Model	331	480	*Linear*	1.67%
Acual/Est.	7,500	10,876		
Year	**Volume**	**Estimate**		
2050	11,501	12,000		

SCSWM

	2019	2050		
Model	5,298	5,077	*Linear*	-0.13%
Acual/Est.	7,200	6,900		
Year	**Volume**	**Estimate**		
2050	6,900	6,900		

Demographic Data

Population

Employment

Calculations based on 20YR Growth Rates

Year	Volume	Estimate		
2023	6,800	N/A	*Linear*	2.23%
2050	9,635	9,600		
Year	**Volume**	**Estimate**		
2023	6,800	N/A	*Compound*	1.86%
2050	11,196	11,000		
Year	**Volume**	**Estimate**		
2023	6,800	N/A	*Average Annual*	3.90%
2050	14,235	14,000		

Calculations based on 10YR Growth Rates

Year	Volume	Estimate		
2023	6,800	N/A	*Linear*	-2.84%
2050	-490	-490		
Year	**Volume**	**Estimate**		
2023	6,800	N/A	*Compound*	-3.29%
2050	2,757	2,800		
Year	**Volume**	**Estimate**		
2023	6,800	N/A	*Average Annual*	-2.95%
2050	1,185	1,200		

Trend Analysis

Linear

R-Square	AGR (Historical)	AGR (Design Year)	Annual Increase	2050 Estimate
7.3%	1.0%	0.9%	68	9,800

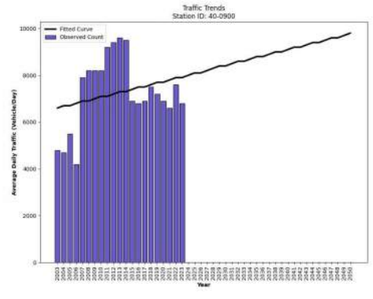



Year	Count	Trend
2003	4800	6600
2004	4700	6700
2005	5500	6700
2006	4200	6800
2007	7900	6900
2008	8200	6900
2009	8200	7000
2010	8200	7100
2011	9200	7100
2012	9400	7200
2013	9600	7300
2014	9500	7300
2015	6900	7400
2016	6800	7500
2017	6900	7500
2018	7500	7600
2019	7200	7700
2020	6900	7700
2021	6600	7800
2022	7600	7900
2023	6800	7900
2050		9800

Trend Analysis *(*2015-2023)*

Linear

R-Square	AGR (Historical)	AGR (Design Year)	Annual Increase	2050 Estimate
1.2%	0.2%	0.2%	13	7,400

Year	Count	Trend
2015	6900	7000
2016	6800	7000
2017	6900	7000
2018	7500	7000
2019	7200	7000
2020	6900	7000
2021	6600	7000
2022	7600	7100
2023	6800	7100
2050		7400

S-3048 : S- 2602 (CHARING CROSS RD), S- 2603 TO SC 60 (LAKE MURRAY BLVD), L- 469

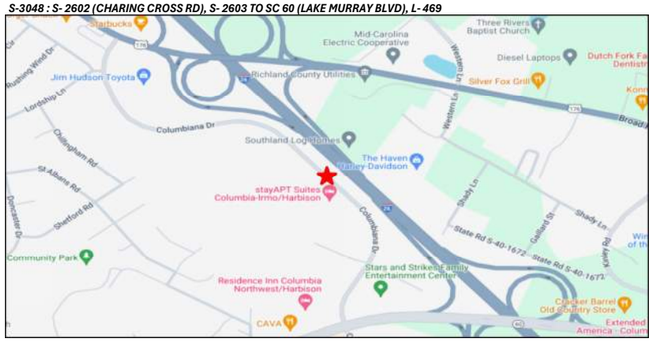

Station ID 40-0898
County Richland
Location click here

	Year	AADT	%Change
1	1987		
2	1988		#DIV/0!
3	1989		#DIV/0!
4	1990		#DIV/0!
5	1991		#DIV/0!
6	1992		#DIV/0!
7	1993		#DIV/0!
8	1994		#DIV/0!
9	1995		#DIV/0!
10	1996		#DIV/0!
11	1997		#DIV/0!
12	1998		#DIV/0!
13	1999		#DIV/0!
14	2000		#DIV/0!
15	2001		#DIV/0!
16	2002		#DIV/0!
17	2003	14,600	#DIV/0!
18	2004	13,200	-9.6%
19	2005	13,800	4.5%
20	2006	14,600	5.8%
21	2007	14,200	-2.7%
22	2008	13,500	-4.9%
23	2009	12,700	-5.9%
24	2010	14,600	15.0%
25	2011	12,800	-12.3%
26	2012	13,000	1.6%
27	2013	13,200	1.5%
28	2014	13,400	1.5%
29	2015	13,000	-3.0%
30	2016	12,700	-2.3%
31	2017	13,200	3.9%
32	2018	14,300	8.3%
33	2019	13,500	-5.6%
34	2020	12,900	-4.4%
35	2021	11,300	-12.4%
36	2022	13,100	15.9%
37	2023	12,900	-1.5%
		Avg=	#DIV/0!

For Reference
1% Annual Growth Rate

Year	Volume	Growth Rate
2023	12,900	Present
2050	16,383	Linear
2050	16,876	Compound

Calculations based on 30YR Growth Rates

Year	Volume	Estimate		
2023	12,900	N/A	*Linear*	#DIV/0!
2050	#DIV/0!	#DIV/0!		
Year	**Volume**	**Estimate**	*Compound*	#DIV/0!
2023	12,900	N/A		
2050	#DIV/0!	#DIV/0!		
Year	**Volume**	**Estimate**	*Average Annual*	#DIV/0!
2023	12,900	N/A		
2050	#DIV/0!	#DIV/0!		

Travel Demand Model

COATS

	2018	2045		
Model	7,690	7,878	*Linear*	0.09%
Acual/Est.	14,300	14,650		
Year	Volume	Estimate		
2050	14,714	15,000		

SCSWM

	2019	2050		
Model	12,955	12,934	*Linear*	-0.01%
Acual/Est.	13,500	13,478		
Year	Volume	Estimate		
2050	13,478	13,000		

Demographic Data

Population

Employment

Calculations based on 20YR Growth Rates

Year	Volume	Estimate		
2023	12,900	N/A	*Linear*	-0.11%
2050	12,495	12,000		
Year	**Volume**	**Estimate**	*Compound*	-0.11%
2023	12,900	N/A		
2050	12,506	13,000		
Year	**Volume**	**Estimate**	*Average Annual*	0.15%
2023	12,900	N/A		
2050	13,458	13,000		

Calculations based on 10YR Growth Rates

Year	Volume	Estimate		
2023	12,900	N/A	*Linear*	-0.37%
2050	11,550	12,000		
Year	**Volume**	**Estimate**	*Compound*	-0.38%
2023	12,900	N/A		
2050	11,641	12,000		
Year	**Volume**	**Estimate**	*Average Annual*	-0.12%
2023	12,900	N/A		
2050	12,474	12,000		

Trend Analysis

Linear

R-Square	AGR (Historical)	AGR (Design Year)	Annual Increase	2050 Estimate
28.6%	-0.5%	-0.6%	-69	10,800

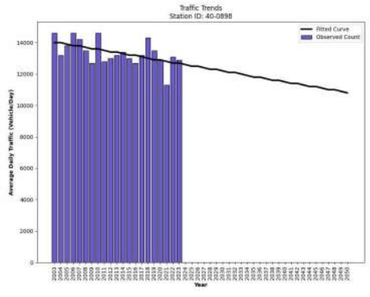



Trend Analysis *(*2015-2023)*

Linear

R-Square	AGR (Historical)	AGR (Design Year)	Annual Increase	2050 Estimate
6.5%	-0.6%	-0.6%	-73	10,700

L-4698 : SC 60 (LAKE MURRAY BLVD), S- 3048 TO L- 670 (COLUMBIA AVE)

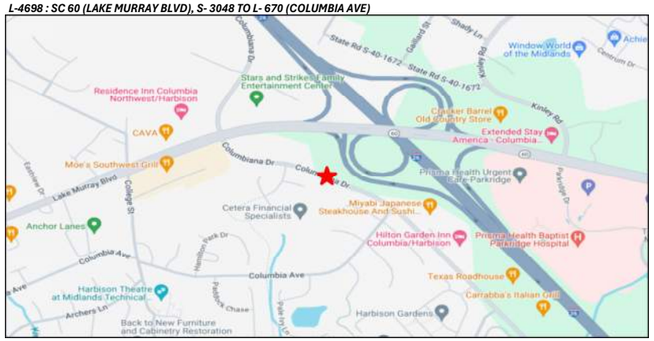

Station ID 40-7003
County Richland
Location click here

	Year	AADT	%Change
1	1987		
2	1988		#DIV/0!
3	1989		#DIV/0!
4	1990		#DIV/0!
5	1991		#DIV/0!
6	1992		#DIV/0!
7	1993		#DIV/0!
8	1994		#DIV/0!
9	1995		#DIV/0!
10	1996		#DIV/0!
11	1997		#DIV/0!
12	1998		#DIV/0!
13	1999		#DIV/0!
14	2000		#DIV/0!
15	2001		#DIV/0!
16	2002		#DIV/0!
17	2003		#DIV/0!
18	2004		#DIV/0!
19	2005		#DIV/0!
20	2006		#DIV/0!
21	2007		#DIV/0!
22	2008		#DIV/0!
23	2009		#DIV/0!
24	2010		#DIV/0!
25	2011		#DIV/0!
26	2012		#DIV/0!
27	2013		#DIV/0!
28	2014		#DIV/0!
29	2015		#DIV/0!
30	2016		#DIV/0!
31	2017		#DIV/0!
32	2018		#DIV/0!
33	2019		#DIV/0!
34	2020	1,100	#DIV/0!
35	2021	850	-22.7%
36	2022	1,050	23.5%
37	2023	850	-19.0%
		Avg=	#DIV/0!

For Reference
1% Annual Growth Rate

Year	Volume	Growth Rate
2023	850	Present
2050	1,080	Linear
2050	1,112	Compound

Calculations based on 30YR Growth Rates

Year	Volume	Estimate		
2023	850	N/A	*Linear*	#DIV/0!
2050	#DIV/0!	#DIV/0!		
Year	**Volume**	**Estimate**	*Compound*	#DIV/0!
2023	850	N/A		
2050	#DIV/0!	#DIV/0!		
Year	**Volume**	**Estimate**	*Average Annual*	#DIV/0!
2023	850	N/A		
2050	#DIV/0!	#DIV/0!		

Travel Demand Model

COATS

	2018	2045		
Model	4,213	5,087	*Linear*	0.77%
Acual/Est.	0	0		
Year	**Volume**	**Estimate**		
2050	0	0		

SCSWM

	2019	2050		
Model	0	426	*Linear*	#DIV/0!
Acual/Est.	0	#DIV/0!		
Year	**Volume**	**Estimate**		
2050	#DIV/0!	#DIV/0!		

Demographic Data

Population

Employment

Calculations based on 20YR Growth Rates

Year	Volume	Estimate		
2023	850	N/A	*Linear*	#DIV/0!
2050	#DIV/0!	#DIV/0!		
Year	**Volume**	**Estimate**	*Compound*	#DIV/0!
2023	850	N/A		
2050	#DIV/0!	#DIV/0!		
Year	**Volume**	**Estimate**	*Average Annual*	#DIV/0!
2023	850	N/A		
2050	#DIV/0!	#DIV/0!		

Calculations based on 10YR Growth Rates

Year	Volume	Estimate		
2023	850	N/A	*Linear*	#DIV/0!
2050	#DIV/0!	#DIV/0!		
Year	**Volume**	**Estimate**	*Compound*	#DIV/0!
2023	850	N/A		
2050	#DIV/0!	#DIV/0!		
Year	**Volume**	**Estimate**	*Average Annual*	#DIV/0!
2023	850	N/A		
2050	#DIV/0!	#DIV/0!		

Trend Analysis

Linear

R-Square	AGR (Historical)	AGR (Design Year)	Annual Increase	2050 Estimate
20.0%	-6.1%	-4.1%	-40	-100

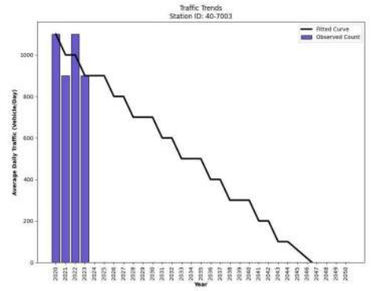

Annual Trend Increase: -40
Trend R-squared: 20.0%
Linear Annual Historic Growth Rate: -6.06%
Trend Growth Rate Its Design Year's: -4.12%

Year	Count	Trend
2020	1100	1100
2021	900	1060
2022	1100	1020
2023	900	980
2050		-100

Trend Analysis *(*2015-2023)*

Linear

R-Square	AGR (Historical)	AGR (Design Year)	Annual Increase	2050 Estimate
20.0%	-6.1%	-4.1%	-40	-100

Annual Trend Increase: -40
Trend R-squared: 20.0%
Linear Annual Historic Growth Rate: -6.06%
Trend Growth Rate Its Design Year's: -4.12%

Year	Count	Trend
2020	1100	1100
2021	900	1060
2022	1100	1020
2023	900	980
2050		-100

R-7003 2E1 : I- 26 TO SC 60

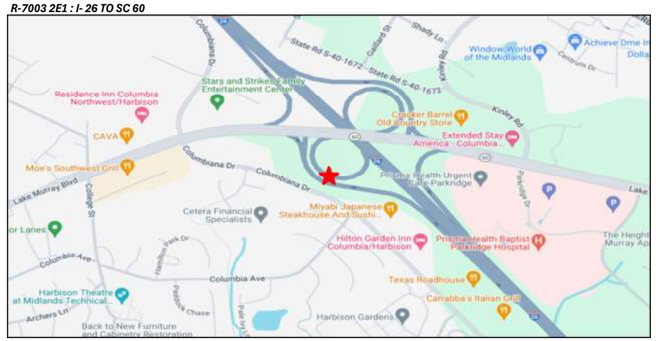

Station ID 40-7004
County Richland
Location click here

	Year	AADT	%Change
1	1987		
2	1988		#DIV/0!
3	1989		#DIV/0!
4	1990		#DIV/0!
5	1991		#DIV/0!
6	1992		#DIV/0!
7	1993		#DIV/0!
8	1994		#DIV/0!
9	1995		#DIV/0!
10	1996		#DIV/0!
11	1997		#DIV/0!
12	1998		#DIV/0!
13	1999		#DIV/0!
14	2000		#DIV/0!
15	2001		#DIV/0!
16	2002		#DIV/0!
17	2003		#DIV/0!
18	2004		#DIV/0!
19	2005		#DIV/0!
20	2006		#DIV/0!
21	2007		#DIV/0!
22	2008		#DIV/0!
23	2009		#DIV/0!
24	2010		#DIV/0!
25	2011		#DIV/0!
26	2012		#DIV/0!
27	2013		#DIV/0!
28	2014		#DIV/0!
29	2015		#DIV/0!
30	2016		#DIV/0!
31	2017		#DIV/0!
32	2018		#DIV/0!
33	2019		#DIV/0!
34	2020	2,600	#DIV/0!
35	2021	2,600	0.0%
36	2022	2,600	0.0%
37	2023	2,300	-11.5%
		Avg=	#DIV/0!

For Reference
1% Annual Growth Rate

Year	Volume	Growth Rate
2023	2,300	Present
2050	2,921	Linear
2050	3,009	Compound

Calculations based on 30YR Growth Rates

Year	Volume	Estimate		
2023	2,300	N/A	*Linear*	#DIV/0!
2050	#DIV/0!	#DIV/0!		
Year	**Volume**	**Estimate**		
2023	2,300	N/A	*Compound*	#DIV/0!
2050	#DIV/0!	#DIV/0!		
Year	**Volume**	**Estimate**		
2023	2,300	N/A	*Average Annual*	#DIV/0!
2050	#DIV/0!	#DIV/0!		

Travel Demand Model

COATS

	2018	2045		
Model	5,495	7,404	*Linear*	1.29%
Acual/Est.	0	0		
Year	**Volume**	**Estimate**		
2050	0	0		

SCSWM

	2019	2050		
Model	1,205	1,783	*Linear*	1.55%
Acual/Est.	0	0		
Year	**Volume**	**Estimate**		
2050	0	0		

Demographic Data

Population

Employment

Calculations based on 20YR Growth Rates

Year	Volume	Estimate		
2023	2,300	N/A	*Linear*	#DIV/0!
2050	#DIV/0!	#DIV/0!		
Year	**Volume**	**Estimate**		
2023	2,300	N/A	*Compound*	#DIV/0!
2050	#DIV/0!	#DIV/0!		
Year	**Volume**	**Estimate**		
2023	2,300	N/A	*Average Annual*	#DIV/0!
2050	#DIV/0!	#DIV/0!		

Calculations based on 10YR Growth Rates

Year	Volume	Estimate		
2023	2,300	N/A	*Linear*	#DIV/0!
2050	#DIV/0!	#DIV/0!		
Year	**Volume**	**Estimate**		
2023	2,300	N/A	*Compound*	#DIV/0!
2050	#DIV/0!	#DIV/0!		
Year	**Volume**	**Estimate**		
2023	2,300	N/A	*Average Annual*	#DIV/0!
2050	#DIV/0!	#DIV/0!		

Trend Analysis

Linear

R-Square	AGR (Historical)	AGR (Design Year)	Annual Increase	2050 Estimate
60.0%	-3.7%	-3.8%	-90	-40

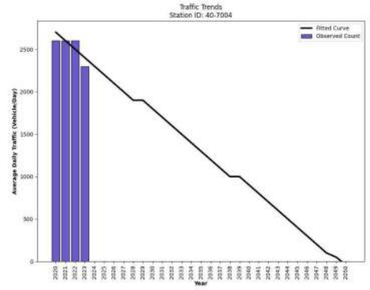

Annual Trend Increase: -90
Trend R-squared: 60.0%
Linear Annual Historic Growth Rate: -3.7%
Trend Growth Rate Its Design Year's: -3.77%

Year	Count	Trend
2020	2600	2700
2021	2600	2600
2022	2600	2500
2023	2300	2400
2050		-40

Trend Analysis *(*2015-2023)*

Linear

R-Square	AGR (Historical)	AGR (Design Year)	Annual Increase	2050 Estimate
60.0%	-3.7%	-3.8%	-90	-40

Annual Trend Increase: -90
Trend R-squared: 60.0%
Linear Annual Historic Growth Rate: -3.7%
Trend Growth Rate Its Design Year's: -3.77%

Year	Count	Trend
2020	2600	2700
2021	2600	2600
2022	2600	2500
2023	2300	2400
2050		-40

R-7004 4O1 : SC 60 TO I- 26, RS 7004 4O1



Station ID 40-7744
County Richland
Location click here

	Year	AADT	%Change
1	1987		
2	1988		#DIV/0!
3	1989		#DIV/0!
4	1990		#DIV/0!
5	1991		#DIV/0!
6	1992		#DIV/0!
7	1993		#DIV/0!
8	1994		#DIV/0!
9	1995		#DIV/0!
10	1996		#DIV/0!
11	1997		#DIV/0!
12	1998		#DIV/0!
13	1999		#DIV/0!
14	2000		#DIV/0!
15	2001		#DIV/0!
16	2002		#DIV/0!
17	2003		#DIV/0!
18	2004		#DIV/0!
19	2005		#DIV/0!
20	2006		#DIV/0!
21	2007		#DIV/0!
22	2008		#DIV/0!
23	2009		#DIV/0!
24	2010		#DIV/0!
25	2011		#DIV/0!
26	2012		#DIV/0!
27	2013		#DIV/0!
28	2014		#DIV/0!
29	2015		#DIV/0!
30	2016		#DIV/0!
31	2017		#DIV/0!
32	2018		#DIV/0!
33	2019		#DIV/0!
34	2020	8,300	#DIV/0!
35	2021	9,800	18.1%
36	2022	10,200	4.1%
37	2023	9,200	-9.8%
		Avg=	#DIV/0!

For Reference
1% Annual Growth Rate

Year	Volume	Growth Rate
2023	9,200	Present
2050	11,684	Linear
2050	12,036	Compound

Calculations based on 30YR Growth Rates

Year	Volume	Estimate		
2023	9,200	N/A	*Linear*	#DIV/0!
2050	#DIV/0!	#DIV/0!		
Year	**Volume**	**Estimate**		
2023	9,200	N/A	*Compound*	#DIV/0!
2050	#DIV/0!	#DIV/0!		
Year	**Volume**	**Estimate**		
2023	9,200	N/A	*Average Annual*	#DIV/0!
2050	#DIV/0!	#DIV/0!		

Travel Demand Model

COATS

	2018	2045		
Model	11,042	13,033	*Linear*	0.67%
Acual/Est.	0	0		
Year	**Volume**	**Estimate**		
2050	0	0		

SCSWM

	2019	2050		
Model	7,427	8,774	*Linear*	0.59%
Acual/Est.	0	0		
Year	**Volume**	**Estimate**		
2050	0	0		

Demographic Data

Population

Employment

Calculations based on 20YR Growth Rates

Year	Volume	Estimate		
2023	9,200	N/A	*Linear*	#DIV/0!
2050	#DIV/0!	#DIV/0!		
Year	**Volume**	**Estimate**		
2023	9,200	N/A	*Compound*	#DIV/0!
2050	#DIV/0!	#DIV/0!		
Year	**Volume**	**Estimate**		
2023	9,200	N/A	*Average Annual*	#DIV/0!
2050	#DIV/0!	#DIV/0!		

Calculations based on 10YR Growth Rates

Year	Volume	Estimate		
2023	9,200	N/A	*Linear*	#DIV/0!
2050	#DIV/0!	#DIV/0!		
Year	**Volume**	**Estimate**		
2023	9,200	N/A	*Compound*	#DIV/0!
2050	#DIV/0!	#DIV/0!		
Year	**Volume**	**Estimate**		
2023	9,200	N/A	*Average Annual*	#DIV/0!
2050	#DIV/0!	#DIV/0!		

Trend Analysis

Linear

R-Square	AGR (Historical)	AGR (Design Year)	Annual Increase	2050 Estimate
23.5%	3.4%	3.2%	310	18,200

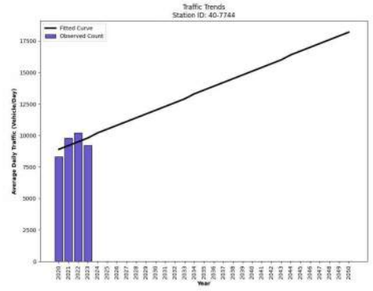

Annual Trend Increase: 310
Trend R-squared: 23.47%
Linear Annual Historic Growth Rate: 3.37%
Trend Growth Rate Its Design Year's: 3.17%

Year	Count	Trend
2020	8300	8900
2021	9800	9200
2022	10200	9500
2023	9200	9800
2050		18200

Trend Analysis *(*2015-2023)*

Linear

R-Square	AGR (Historical)	AGR (Design Year)	Annual Increase	2050 Estimate
23.5%	3.4%	3.2%	310	18,200

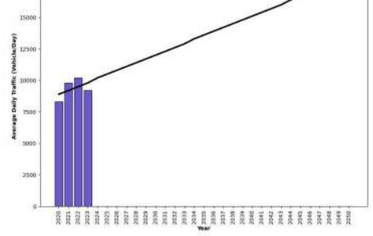

Annual Trend Increase: 310
Trend R-squared: 23.47%
Linear Annual Historic Growth Rate: 3.37%
Trend Growth Rate Its Design Year's: 3.17%

Year	Count	Trend
2020	8300	8900
2021	9800	9200
2022	10200	9500
2023	9200	9800
2050		18200

R-7744 201 : SC 60 TO I- 26, RS 7744 201



Station ID 40-7005
County Richland
Location click here

	Year	AADT	%Change
1	1987		
2	1988		#DIV/0!
3	1989		#DIV/0!
4	1990		#DIV/0!
5	1991		#DIV/0!
6	1992		#DIV/0!
7	1993		#DIV/0!
8	1994		#DIV/0!
9	1995		#DIV/0!
10	1996		#DIV/0!
11	1997		#DIV/0!
12	1998		#DIV/0!
13	1999		#DIV/0!
14	2000		#DIV/0!
15	2001		#DIV/0!
16	2002		#DIV/0!
17	2003		#DIV/0!
18	2004		#DIV/0!
19	2005		#DIV/0!
20	2006		#DIV/0!
21	2007		#DIV/0!
22	2008		#DIV/0!
23	2009		#DIV/0!
24	2010		#DIV/0!
25	2011		#DIV/0!
26	2012		#DIV/0!
27	2013		#DIV/0!
28	2014		#DIV/0!
29	2015		#DIV/0!
30	2016		#DIV/0!
31	2017		#DIV/0!
32	2018		#DIV/0!
33	2019		#DIV/0!
34	2020	7,400	#DIV/0!
35	2021	6,900	-6.8%
36	2022	6,600	-4.3%
37	2023	5,000	-24.2%
		Avg=	#DIV/0!

For Reference
1% Annual Growth Rate

Year	Volume	Growth Rate
2023	5,000	Present
2050	6,350	Linear
2050	6,541	Compound

Calculations based on 30YR Growth Rates

Year	Volume	Estimate		
2023	5,000	N/A	*Linear*	#DIV/0!
2050	#DIV/0!	#DIV/0!		
Year	**Volume**	**Estimate**		
2023	5,000	N/A	*Compound*	#DIV/0!
2050	#DIV/0!	#DIV/0!		
Year	**Volume**	**Estimate**		
2023	5,000	N/A	*Average Annual*	#DIV/0!
2050	#DIV/0!	#DIV/0!		

Travel Demand Model

COATS

	2018	2045		
Model	6,877	9,532	*Linear*	1.43%
Acual/Est.	0	0		
Year	**Volume**	**Estimate**		
2050	0	0		

SCSWM

	2019	2050		
Model	8,132	8,978	*Linear*	0.34%
Acual/Est.	0	0		
Year	**Volume**	**Estimate**		
2050	0	0		

Demographic Data

Population

Employment

Calculations based on 20YR Growth Rates

Year	Volume	Estimate		
2023	5,000	N/A	*Linear*	#DIV/0!
2050	#DIV/0!	#DIV/0!		
Year	**Volume**	**Estimate**		
2023	5,000	N/A	*Compound*	#DIV/0!
2050	#DIV/0!	#DIV/0!		
Year	**Volume**	**Estimate**		
2023	5,000	N/A	*Average Annual*	#DIV/0!
2050	#DIV/0!	#DIV/0!		

Calculations based on 10YR Growth Rates

Year	Volume	Estimate		
2023	5,000	N/A	*Linear*	#DIV/0!
2050	#DIV/0!	#DIV/0!		
Year	**Volume**	**Estimate**		
2023	5,000	N/A	*Compound*	#DIV/0!
2050	#DIV/0!	#DIV/0!		
Year	**Volume**	**Estimate**		
2023	5,000	N/A	*Average Annual*	#DIV/0!
2050	#DIV/0!	#DIV/0!		

Trend Analysis

Linear

R-Square	AGR (Historical)	AGR (Design Year)	Annual Increase	2050 Estimate
87.1%	-9.7%	-13.9%	-750	-14,900

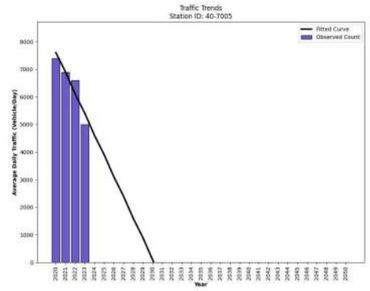

Annual Trend Increase: -750
Trend R-squared: 87.14%
Linear Annual Historic Growth Rate: -9.65%
Trend Growth Rate Its Design Year's: -13.92%

Year	Count	Trend
2020	7400	7600
2021	6900	6900
2022	6600	6100
2023	5000	5400
2050		-14900

Trend Analysis *(*2015-2023)*

Linear

R-Square	AGR (Historical)	AGR (Design Year)	Annual Increase	2050 Estimate
87.1%	-9.7%	-13.9%	-750	-14,900

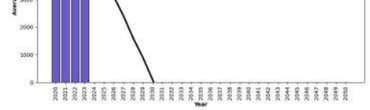

Annual Trend Increase: -750
Trend R-squared: 87.14%
Linear Annual Historic Growth Rate: -9.65%
Trend Growth Rate Its Design Year's: -13.92%

Year	Count	Trend
2020	7400	7600
2021	6900	6900
2022	6600	6100
2023	5000	5400
2050		-14900

R-7005 4E1 : I- 26 TO SC 60



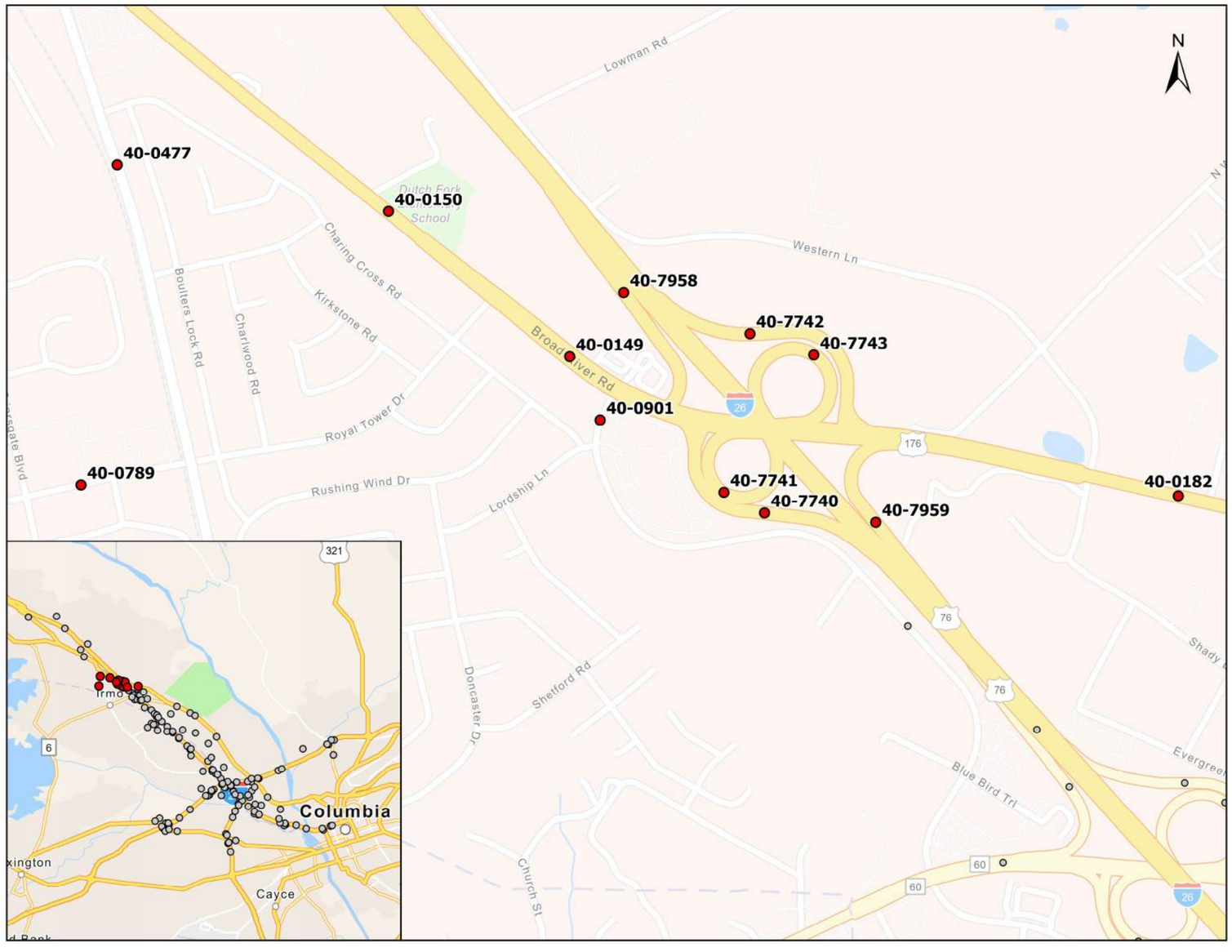
N
40-0477
40-0150
40-7958
40-7742
40-7743
40-0149
40-0901
40-0789
40-7741
40-7740
40-7959
40-0182
Lowman Rd
Dutch Fork School
Western Ln
Charing Cross Rd
Kirkstone Rd
Broad River Rd
Boulters Lock Rd
Charlwood Rd
Royal Tower Dr
Rushing Wind Dr
Lordship Ln
Doncaster Dr
Shefford Rd
Church St
Blue Bird Trl
Shady
Evergreen
26
176
76
60
321
6
Columbia
Cayce
xington

Station ID 40-7743
County Richland
Location click here

	Year	AADT	%Change
1	1987		
2	1988		#DIV/0!
3	1989		#DIV/0!
4	1990		#DIV/0!
5	1991		#DIV/0!
6	1992		#DIV/0!
7	1993		#DIV/0!
8	1994		#DIV/0!
9	1995		#DIV/0!
10	1996		#DIV/0!
11	1997		#DIV/0!
12	1998		#DIV/0!
13	1999		#DIV/0!
14	2000		#DIV/0!
15	2001		#DIV/0!
16	2002		#DIV/0!
17	2003		#DIV/0!
18	2004		#DIV/0!
19	2005		#DIV/0!
20	2006		#DIV/0!
21	2007		#DIV/0!
22	2008		#DIV/0!
23	2009		#DIV/0!
24	2010		#DIV/0!
25	2011		#DIV/0!
26	2012		#DIV/0!
27	2013		#DIV/0!
28	2014		#DIV/0!
29	2015		#DIV/0!
30	2016		#DIV/0!
31	2017		#DIV/0!
32	2018		#DIV/0!
33	2019		#DIV/0!
34	2020	6,900	#DIV/0!
35	2021	7,800	13.0%
36	2022	7,400	-5.1%
37	2023	7,100	-4.1%
		Avg=	#DIV/0!

For Reference
1% Annual Growth Rate

Year	Volume	Growth Rate
2023	7,100	Present
2050	9,017	Linear
2050	9,288	Compound

R-7743 4E1 : I- 26 TO US 76

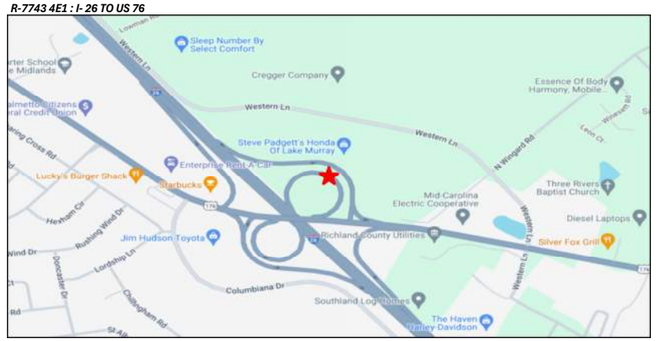

Calculations based on 30YR Growth Rates

Year	Volume	Estimate		
2023	7,100	N/A	*Linear*	#DIV/0!
2050	#DIV/0!	#DIV/0!		
Year	**Volume**	**Estimate**	*Compound*	#DIV/0!
2023	7,100	N/A		
2050	#DIV/0!	#DIV/0!		
Year	**Volume**	**Estimate**	*Average Annual*	#DIV/0!
2023	7,100	N/A		
2050	#DIV/0!	#DIV/0!		

Travel Demand Model

COATS

	2018	2045		
Model	9,852	11,067	*Linear*	0.46%
Acual/Est.	0	0		

Year	Volume	Estimate
2050	0	0

SCSWM

	2019	2050		
Model	3,437	7,845	*Linear*	4.14%
Acual/Est.	0	0		

Year	Volume	Estimate
2050	0	0

Demographic Data

Population

Employment

Calculations based on 20YR Growth Rates

Year	Volume	Estimate		
2023	7,100	N/A	*Linear*	#DIV/0!
2050	#DIV/0!	#DIV/0!		
Year	**Volume**	**Estimate**	*Compound*	#DIV/0!
2023	7,100	N/A		
2050	#DIV/0!	#DIV/0!		
Year	**Volume**	**Estimate**	*Average Annual*	#DIV/0!
2023	7,100	N/A		
2050	#DIV/0!	#DIV/0!		

Calculations based on 10YR Growth Rates

Year	Volume	Estimate		
2023	7,100	N/A	*Linear*	#DIV/0!
2050	#DIV/0!	#DIV/0!		
Year	**Volume**	**Estimate**	*Compound*	#DIV/0!
2023	7,100	N/A		
2050	#DIV/0!	#DIV/0!		
Year	**Volume**	**Estimate**	*Average Annual*	#DIV/0!
2023	7,100	N/A		
2050	#DIV/0!	#DIV/0!		

Trend Analysis

Linear

R-Square	AGR (Historical)	AGR (Design Year)	Annual Increase	2050 Estimate
0.4%	0.0%	0.3%	20	7,900

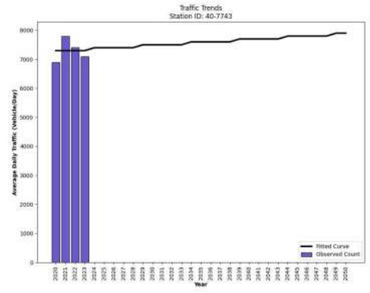

Year	Count	Trend
2020	6900	7300
2021	7800	7300
2022	7400	7300
2023	7100	7300
2050		7900

Trend Analysis *(*2015-2023)*

Linear

R-Square	AGR (Historical)	AGR (Design Year)	Annual Increase	2050 Estimate
0.4%	0.0%	0.3%	20	7,900

Year	Count	Trend
2020	6900	7300
2021	7800	7300
2022	7400	7300
2023	7100	7300
2050		7900

Station ID 40-0182
County Richland
Location click here

	Year	AADT	%Change
1	1987		
2	1988		#DIV/0!
3	1989		#DIV/0!
4	1990		#DIV/0!
5	1991		#DIV/0!
6	1992		#DIV/0!
7	1993		#DIV/0!
8	1994		#DIV/0!
9	1995		#DIV/0!
10	1996		#DIV/0!
11	1997		#DIV/0!
12	1998	8,400	#DIV/0!
13	1999	7,100	-15.5%
14	2000	7,600	7.0%
15	2001	7,100	-6.6%
16	2002	8,500	19.7%
17	2003	9,800	15.3%
18	2004	10,400	6.1%
19	2005	11,000	5.8%
20	2006	11,400	3.6%
21	2007	12,000	5.3%
22	2008	11,800	-1.7%
23	2009	12,800	8.5%
24	2010	13,200	3.1%
25	2011	12,300	-6.8%
26	2012	12,600	2.4%
27	2013	12,900	2.4%
28	2014	12,900	0.0%
29	2015	13,800	7.0%
30	2016	14,500	5.1%
31	2017	13,500	-6.9%
32	2018	14,000	3.7%
33	2019	13,300	-5.0%
34	2020	12,300	-7.5%
35	2021	13,300	8.1%
36	2022	13,900	4.5%
37	2023	14,600	5.0%
		Avg=	#DIV/0!

For Reference
1% Annual Growth Rate

Year	Volume	Growth Rate
2023	14,600	Present
2050	18,542	Linear
2050	19,100	Compound

Calculations based on 30YR Growth Rates

Year	Volume	Estimate		
2023	14,600	N/A	*Linear*	#DIV/0!
2050	#DIV/0!	#DIV/0!		
Year	**Volume**	**Estimate**	*Compound*	#DIV/0!
2023	14,600	N/A		
2050	#DIV/0!	#DIV/0!		
Year	**Volume**	**Estimate**	*Average Annual*	#DIV/0!
2023	14,600	N/A		
2050	#DIV/0!	#DIV/0!		

Travel Demand Model

COATS

	2018	2045		
Model	17,500	25,782	*Linear*	1.75%
Acual/Est.	14,000	20,626		
Year	**Volume**	**Estimate**		
2050	21,853	22,000		

SCSWM

	2019	2050		
Model	11,304	11,685	*Linear*	0.11%
Acual/Est.	13,300	13,748		
Year	**Volume**	**Estimate**		
2050	13,748	14,000		

Demographic Data

Population

Employment

Calculations based on 20YR Growth Rates

Year	Volume	Estimate		
2023	14,600	N/A	*Linear*	2.02%
2050	20,270	20,000		
Year	**Volume**	**Estimate**	*Compound*	1.71%
2023	14,600	N/A		
2050	23,080	23,000		
Year	**Volume**	**Estimate**	*Average Annual*	1.93%
2023	14,600	N/A		
2050	22,479	22,000		

Calculations based on 10YR Growth Rates

Year	Volume	Estimate		
2023	14,600	N/A	*Linear*	1.32%
2050	19,190	19,000		
Year	**Volume**	**Estimate**	*Compound*	1.25%
2023	14,600	N/A		
2050	20,395	20,000		
Year	**Volume**	**Estimate**	*Average Annual*	1.56%
2023	14,600	N/A		
2050	20,966	21,000		

Trend Analysis

Linear

R-Square	AGR (Historical)	AGR (Design Year)	Annual Increase	2050 Estimate
79.1%	3.2%	1.8%	268	22,300

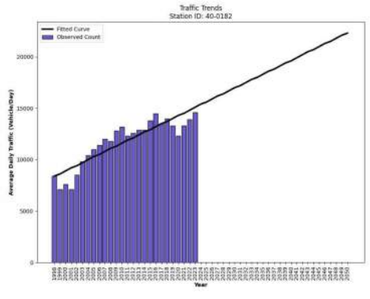



Trend Analysis *(*2015-2023)*

Linear

R-Square	AGR (Historical)	AGR (Design Year)	Annual Increase	2050 Estimate
0.2%	-0.1%	-0.1%	-12	13,300

US176 : US 76 (BROAD RIVER RD) TO SC 60 (LAKE MURRAY BLVD)



Station ID 40-7742
County Richland
Location click here

	Year	AADT	%Change
1	1987		
2	1988		#DIV/0!
3	1989		#DIV/0!
4	1990		#DIV/0!
5	1991		#DIV/0!
6	1992		#DIV/0!
7	1993		#DIV/0!
8	1994		#DIV/0!
9	1995		#DIV/0!
10	1996		#DIV/0!
11	1997		#DIV/0!
12	1998		#DIV/0!
13	1999		#DIV/0!
14	2000		#DIV/0!
15	2001		#DIV/0!
16	2002		#DIV/0!
17	2003		#DIV/0!
18	2004		#DIV/0!
19	2005		#DIV/0!
20	2006		#DIV/0!
21	2007		#DIV/0!
22	2008		#DIV/0!
23	2009		#DIV/0!
24	2010		#DIV/0!
25	2011		#DIV/0!
26	2012		#DIV/0!
27	2013		#DIV/0!
28	2014		#DIV/0!
29	2015		#DIV/0!
30	2016		#DIV/0!
31	2017		#DIV/0!
32	2018		#DIV/0!
33	2019		#DIV/0!
34	2020	1,750	#DIV/0!
35	2021	1,800	2.9%
36	2022	1,950	8.3%
37	2023	1,700	-12.8%
		Avg=	#DIV/0!

For Reference
1% Annual Growth Rate

Year	Volume	Growth Rate
2023	1,700	Present
2050	2,159	Linear
2050	2,224	Compound

Calculations based on 30YR Growth Rates

Year	Volume	Estimate		
2023	1,700	N/A	*Linear*	#DIV/0!
2050	#DIV/0!	#DIV/0!		
Year	**Volume**	**Estimate**		
2023	1,700	N/A	*Compound*	#DIV/0!
2050	#DIV/0!	#DIV/0!		
Year	**Volume**	**Estimate**		
2023	1,700	N/A	*Average Annual*	#DIV/0!
2050	#DIV/0!	#DIV/0!		

Travel Demand Model

COATS

	2018	2045		
Model	2,165	3,255	*Linear*	1.86%
Acual/Est.	0	0		
Year	**Volume**	**Estimate**		
2050	0	0		

SCSWM

	2019	2050		
Model	1,994	2,567	*Linear*	0.93%
Acual/Est.	0	0		
Year	**Volume**	**Estimate**		
2050	0	0		

Demographic Data

Population

Employment

Calculations based on 20YR Growth Rates

Year	Volume	Estimate		
2023	1,700	N/A	*Linear*	#DIV/0!
2050	#DIV/0!	#DIV/0!		
Year	**Volume**	**Estimate**		
2023	1,700	N/A	*Compound*	#DIV/0!
2050	#DIV/0!	#DIV/0!		
Year	**Volume**	**Estimate**		
2023	1,700	N/A	*Average Annual*	#DIV/0!
2050	#DIV/0!	#DIV/0!		

Calculations based on 10YR Growth Rates

Year	Volume	Estimate		
2023	1,700	N/A	*Linear*	#DIV/0!
2050	#DIV/0!	#DIV/0!		
Year	**Volume**	**Estimate**		
2023	1,700	N/A	*Compound*	#DIV/0!
2050	#DIV/0!	#DIV/0!		
Year	**Volume**	**Estimate**		
2023	1,700	N/A	*Average Annual*	#DIV/0!
2050	#DIV/0!	#DIV/0!		

Trend Analysis

Linear

R-Square	AGR (Historical)	AGR (Design Year)	Annual Increase	2050 Estimate
1.1%	0.0%	-0.6%	-10	1,500

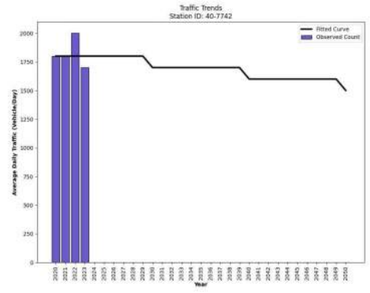

Annual Trend Increase: -10
Trend R-squared: 1.05%
Linear Annual Historic Growth Rate: 0.0%
Trend Growth Rate Its Design Year's: -0.62%

Year	Count	Trend
2020	1800	1800
2021	1800	1800
2022	2000	1800
2023	1700	1800
2050		1500

Trend Analysis *(*2015-2023)*

Linear

R-Square	AGR (Historical)	AGR (Design Year)	Annual Increase	2050 Estimate
1.1%	0.0%	-0.6%	-10	1,500



Annual Trend Increase: -10
Trend R-squared: 1.05%
Linear Annual Historic Growth Rate: 0.0%
Trend Growth Rate Its Design Year's: -0.62%

Year	Count	Trend
2020	1800	1800
2021	1800	1800
2022	2000	1800
2023	1700	1800
2050		1500

R-7742 401 : US 176 TO I- 26, RS 7742 401



Station ID 40-7741
County Richland
Location click here

	Year	AADT	%Change
1	1987		
2	1988		#DIV/0!
3	1989		#DIV/0!
4	1990		#DIV/0!
5	1991		#DIV/0!
6	1992		#DIV/0!
7	1993		#DIV/0!
8	1994		#DIV/0!
9	1995		#DIV/0!
10	1996		#DIV/0!
11	1997		#DIV/0!
12	1998		#DIV/0!
13	1999		#DIV/0!
14	2000		#DIV/0!
15	2001		#DIV/0!
16	2002		#DIV/0!
17	2003		#DIV/0!
18	2004		#DIV/0!
19	2005		#DIV/0!
20	2006		#DIV/0!
21	2007		#DIV/0!
22	2008		#DIV/0!
23	2009		#DIV/0!
24	2010		#DIV/0!
25	2011		#DIV/0!
26	2012		#DIV/0!
27	2013		#DIV/0!
28	2014		#DIV/0!
29	2015		#DIV/0!
30	2016		#DIV/0!
31	2017		#DIV/0!
32	2018		#DIV/0!
33	2019		#DIV/0!
34	2020	1,050	#DIV/0!
35	2021	850	-19.0%
36	2022	1,050	23.5%
37	2023	750	-28.6%
		Avg=	#DIV/0!

For Reference
1% Annual Growth Rate

Year	Volume	Growth Rate
2023	750	Present
2050	953	Linear
2050	981	Compound

Calculations based on 30YR Growth Rates

Year	Volume	Estimate		
2023	750	N/A	*Linear*	#DIV/0!
2050	#DIV/0!	#DIV/0!		
Year	**Volume**	**Estimate**	*Compound*	#DIV/0!
2023	750	N/A		
2050	#DIV/0!	#DIV/0!		
Year	**Volume**	**Estimate**	*Average Annual*	#DIV/0!
2023	750	N/A		
2050	#DIV/0!	#DIV/0!		

Travel Demand Model

COATS

	2018	2045		
Model	1,964	3,615	*Linear*	3.11%
Acual/Est.	0	0		

Year	Volume	Estimate
2050	0	0

SCSWM

	2019	2050		
Model	697	1,465	*Linear*	3.55%
Acual/Est.	0	0		

Year	Volume	Estimate
2050	0	0

Demographic Data

Population

Employment

Calculations based on 20YR Growth Rates

Year	Volume	Estimate		
2023	750	N/A	*Linear*	#DIV/0!
2050	#DIV/0!	#DIV/0!		
Year	**Volume**	**Estimate**	*Compound*	#DIV/0!
2023	750	N/A		
2050	#DIV/0!	#DIV/0!		
Year	**Volume**	**Estimate**	*Average Annual*	#DIV/0!
2023	750	N/A		
2050	#DIV/0!	#DIV/0!		

Calculations based on 10YR Growth Rates

Year	Volume	Estimate		
2023	750	N/A	*Linear*	#DIV/0!
2050	#DIV/0!	#DIV/0!		
Year	**Volume**	**Estimate**	*Compound*	#DIV/0!
2023	750	N/A		
2050	#DIV/0!	#DIV/0!		
Year	**Volume**	**Estimate**	*Average Annual*	#DIV/0!
2023	750	N/A		
2050	#DIV/0!	#DIV/0!		

Trend Analysis

Linear

R-Square	AGR (Historical)	AGR (Design Year)	Annual Increase	2050 Estimate
36.3%	-6.1%	-7.8%	-70	-1,000

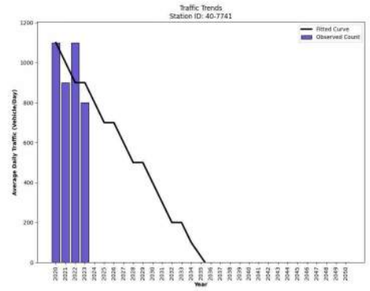

Annual Trend Increase: -70
Trend R-squared: 36.3%
Linear Annual Historic Growth Rate: -6.06%
Trend Growth Rate Its Design Year: -7.82%

Year	Count	Trend
2020	1100	1100
2021	900	1000
2022	1100	900
2023	800	900
2050		-1000

Trend Analysis *(*2015-2023)*

Linear

R-Square	AGR (Historical)	AGR (Design Year)	Annual Increase	2050 Estimate
36.3%	-6.1%	-7.8%	-70	-1,000

Annual Trend Increase: -70
Trend R-squared: 36.3%
Linear Annual Historic Growth Rate: -6.06%
Trend Growth Rate Its Design Year: -7.82%

Year	Count	Trend
2020	1100	1100
2021	900	1000
2022	1100	900
2023	800	900
2050		-1000

R-7741 2E1 : I- 26 TO US 176



Station ID 40-7740
County Richland
Location click here

	Year	AADT	%Change
1	1987		
2	1988		#DIV/0!
3	1989		#DIV/0!
4	1990		#DIV/0!
5	1991		#DIV/0!
6	1992		#DIV/0!
7	1993		#DIV/0!
8	1994		#DIV/0!
9	1995		#DIV/0!
10	1996		#DIV/0!
11	1997		#DIV/0!
12	1998		#DIV/0!
13	1999		#DIV/0!
14	2000		#DIV/0!
15	2001		#DIV/0!
16	2002		#DIV/0!
17	2003		#DIV/0!
18	2004		#DIV/0!
19	2005		#DIV/0!
20	2006		#DIV/0!
21	2007		#DIV/0!
22	2008		#DIV/0!
23	2009		#DIV/0!
24	2010		#DIV/0!
25	2011		#DIV/0!
26	2012		#DIV/0!
27	2013		#DIV/0!
28	2014		#DIV/0!
29	2015		#DIV/0!
30	2016		#DIV/0!
31	2017		#DIV/0!
32	2018		#DIV/0!
33	2019		#DIV/0!
34	2020	9,100	#DIV/0!
35	2021	10,800	18.7%
36	2022	10,600	-1.9%
37	2023	12,500	17.9%
		Avg=	#DIV/0!

For Reference
1% Annual Growth Rate

Year	Volume	Growth Rate
2023	12,500	Present
2050	15,875	Linear
2050	16,353	Compound

Calculations based on 30YR Growth Rates

Year	Volume	Estimate		
2023	12,500	N/A	*Linear*	#DIV/0!
2050	#DIV/0!	#DIV/0!		
Year	**Volume**	**Estimate**		
2023	12,500	N/A	*Compound*	#DIV/0!
2050	#DIV/0!	#DIV/0!		
Year	**Volume**	**Estimate**		
2023	12,500	N/A	*Average Annual*	#DIV/0!
2050	#DIV/0!	#DIV/0!		

Travel Demand Model

COATS

	2018	2045		
Model	18,626	21,034	*Linear*	0.48%
Acual/Est.	0	0		
Year	**Volume**	**Estimate**		
2050	0	0		

SCSWM

	2019	2050		
Model	9,706	12,049	*Linear*	0.78%
Acual/Est.	0	0		
Year	**Volume**	**Estimate**		
2050	0	0		

Demographic Data

Population

Employment

Calculations based on 20YR Growth Rates

Year	Volume	Estimate		
2023	12,500	N/A	*Linear*	#DIV/0!
2050	#DIV/0!	#DIV/0!		
Year	**Volume**	**Estimate**		
2023	12,500	N/A	*Compound*	#DIV/0!
2050	#DIV/0!	#DIV/0!		
Year	**Volume**	**Estimate**		
2023	12,500	N/A	*Average Annual*	#DIV/0!
2050	#DIV/0!	#DIV/0!		

Calculations based on 10YR Growth Rates

Year	Volume	Estimate		
2023	12,500	N/A	*Linear*	#DIV/0!
2050	#DIV/0!	#DIV/0!		
Year	**Volume**	**Estimate**		
2023	12,500	N/A	*Compound*	#DIV/0!
2050	#DIV/0!	#DIV/0!		
Year	**Volume**	**Estimate**		
2023	12,500	N/A	*Average Annual*	#DIV/0!
2050	#DIV/0!	#DIV/0!		

Trend Analysis

Linear

R-Square	AGR (Historical)	AGR (Design Year)	Annual Increase	2050 Estimate
86.1%	10.8%	8.1%	1,000	39,300

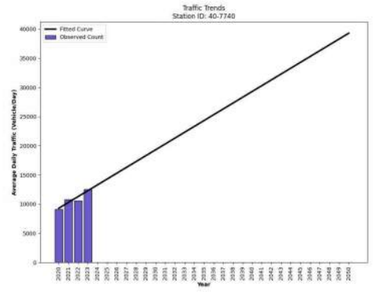

Annual Trend Increase: 1000
Trend R-squared: 86.06%
Linear Annual Historic Growth Rate: 10.75%
Trend Growth Rate Its Design Year's: 8.13%

Year	Count	Trend
2020	9100	9300
2021	10800	10300
2022	10600	11300
2023	12500	12300
2050		39300

Trend Analysis *(*2015-2023)*

Linear

R-Square	AGR (Historical)	AGR (Design Year)	Annual Increase	2050 Estimate
86.1%	10.8%	8.1%	1,000	39,300

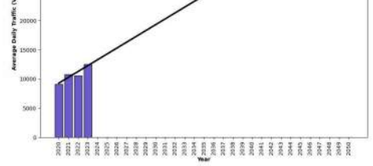

Annual Trend Increase: 1000
Trend R-squared: 86.06%
Linear Annual Historic Growth Rate: 10.75%
Trend Growth Rate Its Design Year's: 8.13%

Year	Count	Trend
2020	9100	9300
2021	10800	10300
2022	10600	11300
2023	12500	12300
2050		39300

R-7740 2O1 : US 76 TO I- 26, RS 7740 2O1



Station ID 40-0789
County Richland
Location click here

Year	AADT	%Change
1987		
1988		#DIV/0!
1989		#DIV/0!
1990	11,300	#DIV/0!
1991	11,700	3.5%
1992	11,300	-3.4%
1993	10,900	-3.5%
1994	11,000	0.9%
1995	11,100	0.9%
1996	10,500	-5.4%
1997	12,200	16.2%
1998	12,100	-0.8%
1999	11,800	-2.5%
2000	11,900	0.8%
2001	11,700	-1.7%
2002	10,900	-6.8%
2003	11,200	2.8%
2004	10,700	-4.5%
2005	10,900	1.9%
2006	10,700	-1.8%
2007	9,500	-11.2%
2008	10,400	9.5%
2009	10,000	-3.8%
2010	10,100	1.0%
2011	11,300	11.9%
2012	11,500	1.8%
2013	11,700	1.7%
2014	11,000	-6.0%
2015	9,800	-10.9%
2016	9,400	-4.1%
2017	9,900	5.3%
2018	10,700	8.1%
2019	9,500	-11.2%
2020	9,000	-5.3%
2021	9,900	10.0%
2022	11,500	16.2%
2023	9,600	-16.5%
	Avg=	#DIV/0!

For Reference
1% Annual Growth Rate

Year	Volume	Growth Rate
2023	9,600	Present
2050	12,192	Linear
2050	12,559	Compound

Calculations based on 30YR Growth Rates

Year	Volume	Estimate		
2023	9,600	N/A		
2050	8,340	8,300	*Linear*	-0.42%
2050	8,493	8,500	*Compound*	-0.45%
2050	9,177	9,200	*Average Annual*	-0.16%

Travel Demand Model

COATS

	2018	2045		
Model	8,993	9,859	*Linear*	0.36%
Acual/Est.	10,700	11,730		

Year	Volume	Estimate
2050	11,921	12,000

SCSWM

	2019	2050		
Model	9,356	9,755	*Linear*	0.14%
Acual/Est.	9,500	9,905		

Year	Volume	Estimate
2050	9,905	9,900

Demographic Data

Population

Employment

Calculations based on 20YR Growth Rates

Year	Volume	Estimate		
2023	9,600	N/A		
2050	8,115	8,100	*Linear*	-0.51%
2050	8,292	8,300	*Compound*	-0.54%
2050	9,094	9,100	*Average Annual*	-0.19%

Calculations based on 10YR Growth Rates

Year	Volume	Estimate		
2023	9,600	N/A		
2050	5,820	5,800	*Linear*	-1.27%
2050	6,647	6,600	*Compound*	-1.35%
2023	9,600	N/A	*Average Annual*	-0.94%
2050	7,083	7,100		

Trend Analysis

Linear

R-Square	AGR (Historical)	AGR (Design Year)	Annual Increase	2050 Estimate
34.7%	-0.4%	-0.5%	-51	8,600

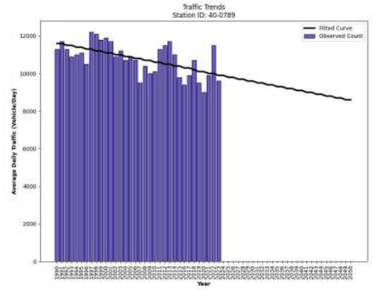

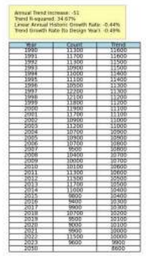

Year	Count	Trend
1987	12200	11800
1988	12100	11700
1989	11800	11600
1990	11300	11500
1991	11700	11400
1992	11300	11350
1993	10900	11300
1994	11000	11250
1995	11100	11200
1996	10500	11150
1997	12200	11100
1998	12100	11050
1999	11800	11000
2000	11900	10950
2001	11700	10900
2002	10900	10850
2003	11200	10800
2004	10700	10750
2005	10900	10700
2006	10700	10650
2007	9500	10600
2008	10400	10550
2009	10000	10500
2010	10100	10450
2011	11300	10400
2012	11500	10350
2013	11700	10300
2014	11000	10250
2015	9800	10200
2016	9400	10150
2017	9900	10100
2018	10700	10050
2019	9500	10000
2020	9000	9950
2021	9900	9900
2022	11500	9850
2023	9600	9800

Trend Analysis *(*2015-2023)*

Linear

R-Square	AGR (Historical)	AGR (Design Year)	Annual Increase	2050 Estimate
5.3%	0.6%	0.6%	63	11,900

Year	Count	Trend
2015	9800	9700
2016	9400	9700
2017	9900	9800
2018	10700	9900
2019	9500	9900
2020	9000	10000
2021	9900	10000
2022	11500	10100
2023	9600	10200
2050		11900

S-1862 : US 76 (BROAD RIVER RD) TO County Line - LEXINGTON



Station ID 40-7959
County Richland
Location click here

	Year	AADT	%Change
1	1987		
2	1988		#DIV/0!
3	1989		#DIV/0!
4	1990		#DIV/0!
5	1991		#DIV/0!
6	1992		#DIV/0!
7	1993		#DIV/0!
8	1994		#DIV/0!
9	1995		#DIV/0!
10	1996		#DIV/0!
11	1997		#DIV/0!
12	1998		#DIV/0!
13	1999		#DIV/0!
14	2000		#DIV/0!
15	2001		#DIV/0!
16	2002		#DIV/0!
17	2003		#DIV/0!
18	2004		#DIV/0!
19	2005		#DIV/0!
20	2006		#DIV/0!
21	2007		#DIV/0!
22	2008		#DIV/0!
23	2009		#DIV/0!
24	2010		#DIV/0!
25	2011		#DIV/0!
26	2012		#DIV/0!
27	2013		#DIV/0!
28	2014		#DIV/0!
29	2015		#DIV/0!
30	2016		#DIV/0!
31	2017		#DIV/0!
32	2018		#DIV/0!
33	2019		#DIV/0!
34	2020	3,400	#DIV/0!
35	2021	3,400	0.0%
36	2022	2,600	-23.5%
37	2023	3,300	26.9%
		Avg=	#DIV/0!

For Reference
1% Annual Growth Rate

Year	Volume	Growth Rate
2023	3,300	Present
2050	4,191	Linear
2050	4,317	Compound

Calculations based on 30YR Growth Rates

Year	Volume	Estimate		
2023	3,300	N/A	*Linear*	#DIV/0!
2050	#DIV/0!	#DIV/0!		
Year	**Volume**	**Estimate**		
2023	3,300	N/A	*Compound*	#DIV/0!
2050	#DIV/0!	#DIV/0!		
Year	**Volume**	**Estimate**		
2023	3,300	N/A	*Average Annual*	#DIV/0!
2050	#DIV/0!	#DIV/0!		

Travel Demand Model

COATS

	2018	2045		
Model	5,632	7,842	*Linear*	1.45%
Acual/Est.	0	0		
Year	**Volume**	**Estimate**		
2050	0	0		

SCSWM

	2019	2050		
Model	6,342	8,079	*Linear*	0.88%
Acual/Est.	0	0		
Year	**Volume**	**Estimate**		
2050	0	0		

Demographic Data

Population

Employment

Calculations based on 20YR Growth Rates

Year	Volume	Estimate		
2023	3,300	N/A	*Linear*	#DIV/0!
2050	#DIV/0!	#DIV/0!		
Year	**Volume**	**Estimate**		
2023	3,300	N/A	*Compound*	#DIV/0!
2050	#DIV/0!	#DIV/0!		
Year	**Volume**	**Estimate**		
2023	3,300	N/A	*Average Annual*	#DIV/0!
2050	#DIV/0!	#DIV/0!		

Calculations based on 10YR Growth Rates

Year	Volume	Estimate		
2023	3,300	N/A	*Linear*	#DIV/0!
2050	#DIV/0!	#DIV/0!		
Year	**Volume**	**Estimate**		
2023	3,300	N/A	*Compound*	#DIV/0!
2050	#DIV/0!	#DIV/0!		
Year	**Volume**	**Estimate**		
2023	3,300	N/A	*Average Annual*	#DIV/0!
2050	#DIV/0!	#DIV/0!		

Trend Analysis

Linear

R-Square	AGR (Historical)	AGR (Design Year)	Annual Increase	2050 Estimate
13.5%	-3.0%	-3.7%	-110	40

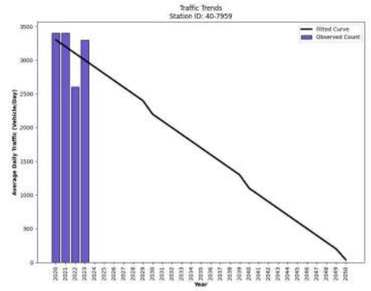

Annual Trend Increase: -110
Trend R-squared: 13.52%
Linear Annual Historic Growth Rate: -3.03%
Trend Growth Rate Its Design Year's: -3.66%

Year	Count	Trend
2020	3400	3300
2021	3400	3200
2022	2600	3100
2023	3300	3000
2050		40

Trend Analysis *(*2015-2023)*

Linear

R-Square	AGR (Historical)	AGR (Design Year)	Annual Increase	2050 Estimate
13.5%	-3.0%	-3.7%	-110	40

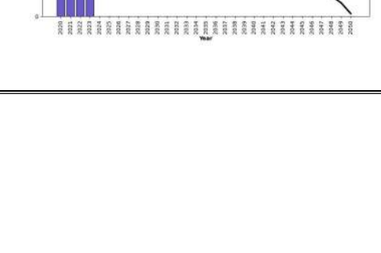

Annual Trend Increase: -110
Trend R-squared: 13.52%
Linear Annual Historic Growth Rate: -3.03%
Trend Growth Rate Its Design Year's: -3.66%

Year	Count	Trend
2020	3400	3300
2021	3400	3200
2022	2600	3100
2023	3300	3000
2050		40

R-7959 3E1 : I- 26 TO US 176



Station ID 40-0150
County Richland
Location click here

	Year	AADT	%Change
1	1987		
2	1988		#DIV/0!
3	1989		#DIV/0!
4	1990		#DIV/0!
5	1991		#DIV/0!
6	1992		#DIV/0!
7	1993		#DIV/0!
8	1994		#DIV/0!
9	1995		#DIV/0!
10	1996		#DIV/0!
11	1997	8,100	#DIV/0!
12	1998	8,600	6.2%
13	1999	9,300	8.1%
14	2000	9,800	5.4%
15	2001	9,900	1.0%
16	2002	9,900	0.0%
17	2003	11,200	13.1%
18	2004	9,500	-15.2%
19	2005	10,900	14.7%
20	2006	11,500	5.5%
21	2007	11,400	-0.9%
22	2008	13,500	18.4%
23	2009	13,800	2.2%
24	2010	15,100	9.4%
25	2011	14,100	-6.6%
26	2012	14,400	2.1%
27	2013	14,700	2.1%
28	2014	14,700	0.0%
29	2015	15,900	8.2%
30	2016	15,800	-0.6%
31	2017	15,500	-1.9%
32	2018	16,100	3.9%
33	2019	16,200	0.6%
34	2020	15,000	-7.4%
35	2021	15,400	2.7%
36	2022	16,100	4.5%
37	2023	17,200	6.8%
		Avg=	#DIV/0!

For Reference
1% Annual Growth Rate

Year	Volume	Growth Rate
2023	17,200	Present
2050	21,844	Linear
2050	22,501	Compound

Calculations based on 30YR Growth Rates

Year	Volume	Estimate		
2023	17,200	N/A	*Linear*	#DIV/0!
2050	#DIV/0!	#DIV/0!		

Year	Volume	Estimate		
2023	17,200	N/A	*Compound*	#DIV/0!
2050	#DIV/0!	#DIV/0!		

Year	Volume	Estimate		
2023	17,200	N/A	*Average Annual*	#DIV/0!
2050	#DIV/0!	#DIV/0!		

Travel Demand Model

COATS

	2018	2045		
Model	21,930	24,055	*Linear*	0.36%
Acual/Est.	16,100	17,660		

Year	Volume	Estimate
2050	17,949	18,000

SCSWM

	2019	2050		
Model	14,696	29,229	*Linear*	3.19%
Acual/Est.	16,200	32,220		

Year	Volume	Estimate
2050	32,220	32,000

Calculations based on 20YR Growth Rates

Year	Volume	Estimate		
2023	17,200	N/A	*Linear*	4.05%
2050	27,595	28,000		

Year	Volume	Estimate		
2023	17,200	N/A	*Compound*	3.01%
2050	38,332	38,000		

Year	Volume	Estimate		
2023	17,200	N/A	*Average Annual*	3.36%
2050	33,369	33,000		

Calculations based on 10YR Growth Rates

Year	Volume	Estimate		
2023	17,200	N/A	*Linear*	1.70%
2050	23,950	24,000		

Year	Volume	Estimate		
2023	17,200	N/A	*Compound*	1.58%
2050	26,284	26,000		

Year	Volume	Estimate		
2023	17,200	N/A	*Average Annual*	1.86%
2050	26,171	26,000		

Trend Analysis

Linear

R-Square	AGR (Historical)	AGR (Design Year)	Annual Increase	2050 Estimate
90.7%	3.9%	1.9%	337	26,600

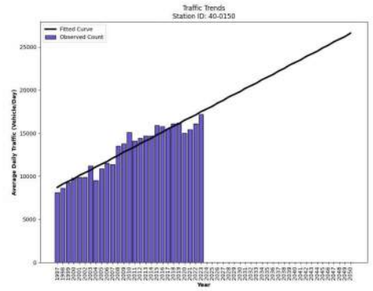



Trend Analysis *(*2015-2023)*

Linear

R-Square	AGR (Historical)	AGR (Design Year)	Annual Increase	2050 Estimate
12.4%	0.5%	0.5%	80	18,400

Demographic Data

Population

Employment

US76 : S- 27 (N WOODROW ST) TO S- 1862 (ROYAL TOWER DR)



Station ID 40-0901
County Richland
Location click here

	Year	AADT	%Change
1	1987		
2	1988		#DIV/0!
3	1989		#DIV/0!
4	1990		#DIV/0!
5	1991		#DIV/0!
6	1992		#DIV/0!
7	1993		#DIV/0!
8	1994		#DIV/0!
9	1995		#DIV/0!
10	1996		#DIV/0!
11	1997		#DIV/0!
12	1998		#DIV/0!
13	1999		#DIV/0!
14	2000		#DIV/0!
15	2001		#DIV/0!
16	2002		#DIV/0!
17	2003	4,200	#DIV/0!
18	2004	4,200	0.0%
19	2005	5,200	23.8%
20	2006	6,300	21.2%
21	2007	6,400	1.6%
22	2008	6,900	7.8%
23	2009	6,900	0.0%
24	2010	7,300	5.8%
25	2011	7,200	-1.4%
26	2012	7,300	1.4%
27	2013	7,400	1.4%
28	2014	7,100	-4.1%
29	2015	7,100	0.0%
30	2016	6,600	-7.0%
31	2017	7,400	12.1%
32	2018	8,000	8.1%
33	2019	7,800	-2.5%
34	2020	7,400	-5.1%
35	2021	6,400	-13.5%
36	2022	7,400	15.6%
37	2023	8,100	9.5%
		Avg=	#DIV/0!

For Reference
1% Annual Growth Rate

Year	Volume	Growth Rate
2023	8,100	Present
2050	10,287	Linear
2050	10,596	Compound

Calculations based on 30YR Growth Rates

Year	Volume	Estimate		
2023	8,100	N/A	*Linear*	#DIV/0!
2050	#DIV/0!	#DIV/0!		
Year	**Volume**	**Estimate**		
2023	8,100	N/A	*Compound*	#DIV/0!
2050	#DIV/0!	#DIV/0!		
Year	**Volume**	**Estimate**		
2023	8,100	N/A	*Average Annual*	#DIV/0!
2050	#DIV/0!	#DIV/0!		

Travel Demand Model

COATS

	2018	2045		
Model	331	480	*Linear*	1.67%
Acual/Est.	8,000	11,601		
Year	**Volume**	**Estimate**		
2050	12,268	12,000		

SCSWM

	2019	2050		
Model	5,298	5,077	*Linear*	-0.13%
Acual/Est.	7,800	7,475		
Year	**Volume**	**Estimate**		
2050	7,475	7,500		

Demographic Data

Population

Employment

Calculations based on 20YR Growth Rates

Year	Volume	Estimate		
2023	8,100	N/A	*Linear*	4.64%
2050	13,365	13,000		
Year	**Volume**	**Estimate**		
2023	8,100	N/A	*Compound*	3.34%
2050	19,659	20,000		
Year	**Volume**	**Estimate**		
2023	8,100	N/A	*Average Annual*	3.93%
2050	17,008	17,000		

Calculations based on 10YR Growth Rates

Year	Volume	Estimate		
2023	8,100	N/A	*Linear*	1.41%
2050	10,800	11,000		
Year	**Volume**	**Estimate**		
2023	8,100	N/A	*Compound*	1.33%
2050	11,561	12,000		
Year	**Volume**	**Estimate**		
2023	8,100	N/A	*Average Annual*	1.90%
2050	12,417	12,000		

Trend Analysis

Linear

R-Square	AGR (Historical)	AGR (Design Year)	Annual Increase	2050 Estimate
54.5%	2.4%	1.6%	128	11,500

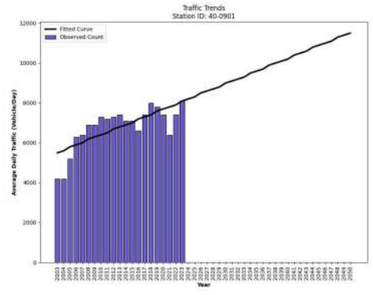



Year	Count	Trend
2003	4200	5500
2004	4200	5600
2005	5200	5800
2006	6300	5900
2007	6400	6000
2008	6900	6200
2009	6900	6300
2010	7300	6400
2011	7200	6500
2012	7300	6700
2013	7400	6800
2014	7100	6900
2015	7100	7000
2016	6600	7200
2017	7400	7300
2018	8000	7400
2019	7800	7600
2020	7400	7700
2021	6400	7800
2022	7400	7900
2023	8100	8100
2050		11500

Trend Analysis *(*2015-2023)*

Linear

R-Square	AGR (Historical)	AGR (Design Year)	Annual Increase	2050 Estimate
8.8%	0.9%	0.8%	63	9,300

Year	Count	Trend
2015	7100	7100
2016	6600	7200
2017	7400	7200
2018	8000	7300
2019	7800	7400
2020	7400	7400
2021	6400	7500
2022	7400	7500
2023	8100	7600
2050		9300

S-3048 : US 76 (BROAD RIVER RD) TO S- 2602 (CHARING CROSS RD), S- 2603



Station ID 40-0149
County Richland
Location click here

	Year	AADT	%Change
1	1987	12,900	
2	1988	11,900	-7.8%
3	1989	12,500	5.0%
4	1990	14,000	12.0%
5	1991	14,800	5.7%
6	1992	14,200	-4.1%
7	1993	15,400	8.5%
8	1994	16,000	3.9%
9	1995	15,500	-3.1%
10	1996	15,400	-0.6%
11	1997	8,100	-47.4%
12	1998	17,700	118.5%
13	1999	18,900	6.8%
14	2000	19,000	0.5%
15	2001	19,700	3.7%
16	2002	18,600	-5.6%
17	2003	20,400	9.7%
18	2004	22,400	9.8%
19	2005	22,500	0.4%
20	2006	24,000	6.7%
21	2007	22,100	-7.9%
22	2008	23,000	4.1%
23	2009	23,000	0.0%
24	2010	24,900	8.3%
25	2011	23,400	-6.0%
26	2012	23,800	1.7%
27	2013	24,200	1.7%
28	2014	22,100	-8.7%
29	2015	24,200	9.5%
30	2016	25,100	3.7%
31	2017	24,500	-2.4%
32	2018	25,500	4.1%
33	2019	24,000	-5.9%
34	2020	22,200	-7.5%
35	2021	23,100	4.1%
36	2022	24,100	4.3%
37	2023	28,100	16.6%
		Avg=	3.952%

For Reference
1% Annual Growth Rate

Year	Volume	Growth Rate
2023	28,100	Present
2050	35,687	Linear
2050	36,761	Compound

Calculations based on 30YR Growth Rates

Year	Volume	Estimate		
2023	28,100	N/A	*Linear*	2.52%
2050	38,990	39,000		
Year	**Volume**	**Estimate**	*Compound*	1.90%
2023	28,100	N/A		
2050	46,648	47,000		
Year	**Volume**	**Estimate**	*Average Annual*	4.10%
2023	28,100	N/A		
2050	60,376	60,000		

Travel Demand Model

COATS

	2018	2045		
Model	29,950	33,668	*Linear*	0.46%
Acual/Est.	25,500	28,666		
Year	**Volume**	**Estimate**		
2050	29,252	29,000		

SCSWM

	2019	2050		
Model	24,220	33,492	*Linear*	1.23%
Acual/Est.	24,000	33,188		
Year	**Volume**	**Estimate**		
2050	33,188	33,000		

Demographic Data

Population

Employment

Calculations based on 20YR Growth Rates

Year	Volume	Estimate		
2023	28,100	N/A	*Linear*	1.27%
2050	35,795	36,000		
Year	**Volume**	**Estimate**	*Compound*	1.14%
2023	28,100	N/A		
2050	38,161	38,000		
Year	**Volume**	**Estimate**	*Average Annual*	1.41%
2023	28,100	N/A		
2050	39,168	39,000		

Calculations based on 10YR Growth Rates

Year	Volume	Estimate		
2023	28,100	N/A	*Linear*	2.71%
2050	44,300	44,000		
Year	**Volume**	**Estimate**	*Compound*	2.43%
2023	28,100	N/A		
2050	53,747	54,000		
Year	**Volume**	**Estimate**	*Average Annual*	2.95%
2023	28,100	N/A		
2050	51,276	51,000		

Trend Analysis

Linear

R-Square	AGR (Historical)	AGR (Design Year)	Annual Increase	2050 Estimate
79.4%	3.1%	1.5%	395	37,800

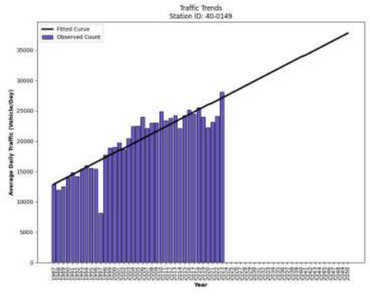

Trend Analysis *(*2015-2023)*

Linear

R-Square	AGR (Historical)	AGR (Design Year)	Annual Increase	2050 Estimate
3.2%	0.5%	0.4%	108	27,900

US76 : S- 1862 (ROYAL TOWER DR) TO I- 26 (INTERSTATE 26), US 176



Station ID 40-7958
County Richland
Location click here

	Year	AADT	%Change
1	1987		
2	1988		#DIV/0!
3	1989		#DIV/0!
4	1990		#DIV/0!
5	1991		#DIV/0!
6	1992		#DIV/0!
7	1993		#DIV/0!
8	1994		#DIV/0!
9	1995		#DIV/0!
10	1996		#DIV/0!
11	1997		#DIV/0!
12	1998		#DIV/0!
13	1999		#DIV/0!
14	2000		#DIV/0!
15	2001		#DIV/0!
16	2002		#DIV/0!
17	2003		#DIV/0!
18	2004		#DIV/0!
19	2005		#DIV/0!
20	2006		#DIV/0!
21	2007		#DIV/0!
22	2008		#DIV/0!
23	2009		#DIV/0!
24	2010		#DIV/0!
25	2011		#DIV/0!
26	2012		#DIV/0!
27	2013		#DIV/0!
28	2014		#DIV/0!
29	2015		#DIV/0!
30	2016		#DIV/0!
31	2017		#DIV/0!
32	2018		#DIV/0!
33	2019		#DIV/0!
34	2020	1,150	#DIV/0!
35	2021	950	-17.4%
36	2022	1,000	5.3%
37	2023	750	-25.0%
		Avg=	#DIV/0!

For Reference
1% Annual Growth Rate

Year	Volume	Growth Rate
2023	750	Present
2050	953	Linear
2050	981	Compound

Calculations based on 30YR Growth Rates

Year	Volume	Estimate		
2023	750	N/A	*Linear*	#DIV/0!
2050	#DIV/0!	#DIV/0!		
Year	**Volume**	**Estimate**	*Compound*	#DIV/0!
2023	750	N/A		
2050	#DIV/0!	#DIV/0!		
Year	**Volume**	**Estimate**	*Average Annual*	#DIV/0!
2023	750	N/A		
2050	#DIV/0!	#DIV/0!		

Travel Demand Model

COATS

	2018	2045		
Model	760	1,717	*Linear*	4.66%
Acual/Est.	0	0		
Year	**Volume**	**Estimate**		
2050	0	0		

SCSWM

	2019	2050		
Model	281	1	*Linear*	-3.21%
Acual/Est.	0	0		
Year	**Volume**	**Estimate**		
2050	0	0		

Demographic Data

Population

Employment

Calculations based on 20YR Growth Rates

Year	Volume	Estimate		
2023	750	N/A	*Linear*	#DIV/0!
2050	#DIV/0!	#DIV/0!		
Year	**Volume**	**Estimate**	*Compound*	#DIV/0!
2023	750	N/A		
2050	#DIV/0!	#DIV/0!		
Year	**Volume**	**Estimate**	*Average Annual*	#DIV/0!
2023	750	N/A		
2050	#DIV/0!	#DIV/0!		

Calculations based on 10YR Growth Rates

Year	Volume	Estimate		
2023	750	N/A	*Linear*	#DIV/0!
2050	#DIV/0!	#DIV/0!		
Year	**Volume**	**Estimate**	*Compound*	#DIV/0!
2023	750	N/A		
2050	#DIV/0!	#DIV/0!		
Year	**Volume**	**Estimate**	*Average Annual*	#DIV/0!
2023	750	N/A		
2050	#DIV/0!	#DIV/0!		

Trend Analysis

Linear

R-Square	AGR (Historical)	AGR (Design Year)	Annual Increase	2050 Estimate
90.0%	-11.1%	-14.8%	-120	-2,400

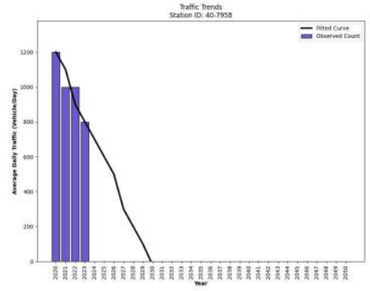

Year	Count	Trend
2020	1200	1200
2021	1000	1100
2022	1000	900
2023	800	800
2050		-2400

Trend Analysis *(*2015-2023)*

Linear

R-Square	AGR (Historical)	AGR (Design Year)	Annual Increase	2050 Estimate
90.0%	-11.1%	-14.8%	-120	-2,400

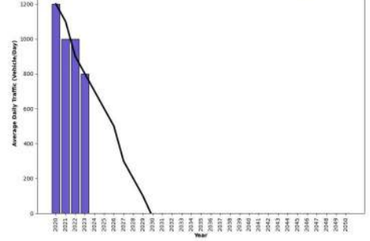

Year	Count	Trend
2020	1200	1200
2021	1000	1100
2022	1000	900
2023	800	800
2050		-2400

R-7958 1E1 : I- 26 TO US 76

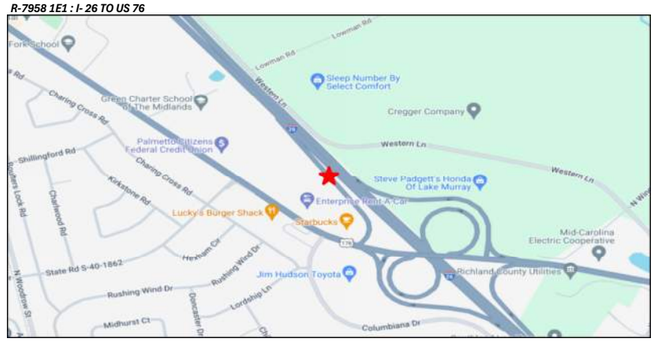

Station ID 40-0477
County Richland
Location click here

	Year	AADT	%Change
1	1987		
2	1988		#DIV/0!
3	1989		#DIV/0!
4	1990	5,200	#DIV/0!
5	1991	5,100	-1.9%
6	1992	5,200	2.0%
7	1993	5,400	3.8%
8	1994	5,600	3.7%
9	1995	6,100	8.9%
10	1996	5,200	-14.8%
11	1997	6,400	23.1%
12	1998	7,300	14.1%
13	1999	6,600	-9.6%
14	2000	7,900	19.7%
15	2001	9,300	17.7%
16	2002	7,100	-23.7%
17	2003	7,800	9.9%
18	2004	6,700	-14.1%
19	2005	6,500	-3.0%
20	2006	6,900	6.2%
21	2007	5,200	-24.6%
22	2008	6,900	32.7%
23	2009	7,200	4.3%
24	2010	7,100	-1.4%
25	2011	6,100	-14.1%
26	2012	6,200	1.6%
27	2013	6,300	1.6%
28	2014	6,500	3.2%
29	2015	7,200	10.8%
30	2016	7,300	1.4%
31	2017	7,200	-1.4%
32	2018	7,500	4.2%
33	2019	7,100	-5.3%
34	2020	6,600	-7.0%
35	2021	6,500	-1.5%
36	2022	6,800	4.6%
37	2023	6,400	-5.9%
		Avg=	#DIV/0!

For Reference
1% Annual Growth Rate

Year	Volume	Growth Rate
2023	6,400	Present
2050	8,128	Linear
2050	8,373	Compound

Calculations based on 30YR Growth Rates

Year	Volume	Estimate		
2023	6,400	N/A	*Linear*	0.48%
2050	7,120	7,100		
Year	**Volume**	**Estimate**	*Compound*	0.45%
2023	6,400	N/A		
2050	7,217	7,200		
Year	**Volume**	**Estimate**	*Average Annual*	1.30%
2023	6,400	N/A		
2050	8,721	8,700		

Travel Demand Model

COATS

	2018	2045	*Linear*	1.20%
Model	8,014	10,604		
Acual/Est.	7,500	9,924		
Year	**Volume**	**Estimate**		
2050	10,373	10,000		

SCSWM

	2019	2050	*Linear*	3.52%
Model	8,296	17,341		
Acual/Est.	7,100	14,841		
Year	**Volume**	**Estimate**		
2050	14,841	15,000		

Demographic Data

Population

Employment

Calculations based on 20YR Growth Rates

Year	Volume	Estimate		
2023	6,400	N/A	*Linear*	-0.22%
2050	5,995	6,000		
Year	**Volume**	**Estimate**	*Compound*	-0.23%
2023	6,400	N/A		
2050	6,016	6,000		
Year	**Volume**	**Estimate**	*Average Annual*	0.33%
2023	6,400	N/A		
2050	6,996	7,000		

Calculations based on 10YR Growth Rates

Year	Volume	Estimate		
2023	6,400	N/A	*Linear*	-0.15%
2050	6,130	6,100		
Year	**Volume**	**Estimate**	*Compound*	-0.15%
2023	6,400	N/A		
2050	6,138	6,100		
Year	**Volume**	**Estimate**	*Average Annual*	-0.02%
2023	6,400	N/A		
2050	6,360	6,400		

Trend Analysis

Linear

R-Square	AGR (Historical)	AGR (Design Year)	Annual Increase	2050 Estimate
13.5%	0.6%	0.5%	34	8,100

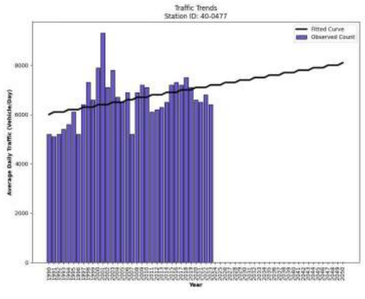

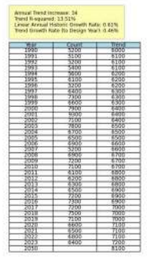

Trend Analysis *(*2015-2023)*

Linear

R-Square	AGR (Historical)	AGR (Design Year)	Annual Increase	2050 Estimate
66.8%	-1.5%	-1.8%	-117	3,300

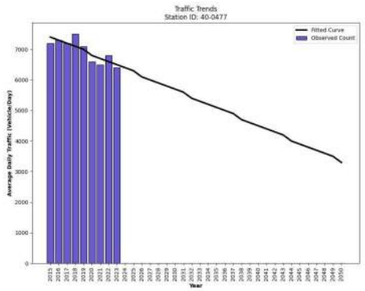



S-27 : US 76 (BROAD RIVER RD) TO County Line - LEXINGTON



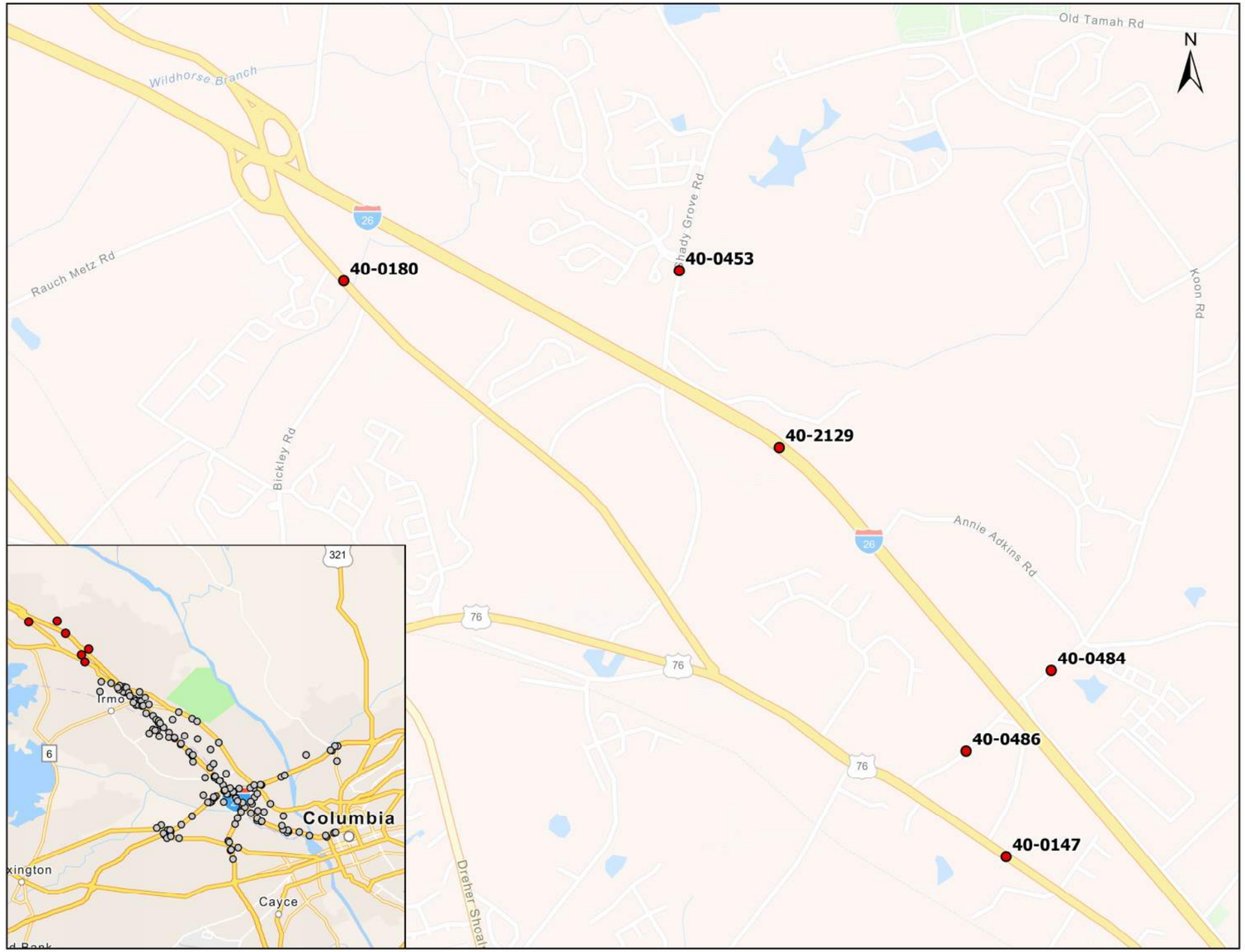
Old Tamah Rd
N
Wildhorse Branch
Rauch Metz Rd
Bickley Rd
Shady Grove Rd
Koon Rd
Annie Adkins Rd
Dreher Shoal
40-0180
40-0453
40-2129
40-0484
40-0486
40-0147
26
76
321
6
Irmo
Columbia
Cayce
xington

Station ID 40-0486
County Richland
Location click here

	Year	AADT	%Change
1	1987		
2	1988		#DIV/0!
3	1989		#DIV/0!
4	1990		#DIV/0!
5	1991		#DIV/0!
6	1992		#DIV/0!
7	1993		#DIV/0!
8	1994		#DIV/0!
9	1995		#DIV/0!
10	1996		#DIV/0!
11	1997		#DIV/0!
12	1998		#DIV/0!
13	1999		#DIV/0!
14	2000		#DIV/0!
15	2001		#DIV/0!
16	2002		#DIV/0!
17	2003		#DIV/0!
18	2004		#DIV/0!
19	2005		#DIV/0!
20	2006		#DIV/0!
21	2007		#DIV/0!
22	2008		#DIV/0!
23	2009	6,300	#DIV/0!
24	2010	6,000	-4.8%
25	2011	5,600	-6.7%
26	2012	5,700	1.8%
27	2013	5,800	1.8%
28	2014	6,200	6.9%
29	2015	5,800	-6.5%
30	2016	5,900	1.7%
31	2017	6,700	13.6%
32	2018	7,200	7.5%
33	2019	6,900	-4.2%
34	2020	6,600	-4.3%
35	2021	6,300	-4.5%
36	2022	7,300	15.9%
37	2023	5,700	-21.9%
		Avg=	#DIV/0!

For Reference
1% Annual Growth Rate

Year	Volume	Growth Rate
2023	5,700	Present
2050	7,239	Linear
2050	7,457	Compound

Calculations based on 30YR Growth Rates

Year	Volume	Estimate		
2023	5,700	N/A	*Linear*	#DIV/0!
2050	#DIV/0!	#DIV/0!		
Year	**Volume**	**Estimate**		
2023	5,700	N/A	*Compound*	#DIV/0!
2050	#DIV/0!	#DIV/0!		
Year	**Volume**	**Estimate**		
2023	5,700	N/A	*Average Annual*	#DIV/0!
2050	#DIV/0!	#DIV/0!		

Travel Demand Model

COATS

	2018	2045		
Model	14,773	20,354	*Linear*	1.40%
Acual/Est.	7,200	9,920		
Year	**Volume**	**Estimate**		
2050	10,424	10,000		

SCSWM

	2019	2050		
Model	9,270	18,376	*Linear*	3.17%
Acual/Est.	6,900	13,678		
Year	**Volume**	**Estimate**		
2050	13,678	14,000		

Demographic Data

Population

Employment

Calculations based on 20YR Growth Rates

Year	Volume	Estimate		
2023	5,700	N/A	*Linear*	#DIV/0!
2050	#DIV/0!	#DIV/0!		
Year	**Volume**	**Estimate**		
2023	5,700	N/A	*Compound*	#DIV/0!
2050	#DIV/0!	#DIV/0!		
Year	**Volume**	**Estimate**		
2023	5,700	N/A	*Average Annual*	#DIV/0!
2050	#DIV/0!	#DIV/0!		

Calculations based on 10YR Growth Rates

Year	Volume	Estimate		
2023	5,700	N/A	*Linear*	-0.81%
2050	4,350	4,400		
Year	**Volume**	**Estimate**		
2023	5,700	N/A	*Compound*	-0.84%
2050	4,542	4,500		
Year	**Volume**	**Estimate**		
2023	5,700	N/A	*Average Annual*	-0.31%
2050	5,202	5,200		

Trend Analysis

Linear

R-Square	AGR (Historical)	AGR (Design Year)	Annual Increase	2050 Estimate
23.3%	1.1%	0.9%	60	8,300

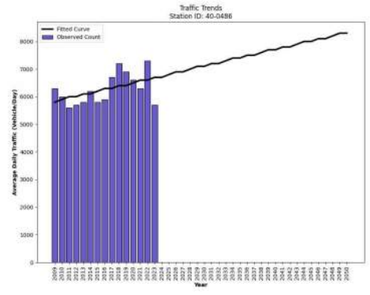

Annual Trend Increase: 60
Trend R-squared: 23.31%
Linear Annual Historic Growth Rate: 1.11%
Trend Growth Rate By Design Year's: 0.98%

Year	Count	Trend
2009	6300	5800
2010	6000	5860
2011	5600	6000
2012	5700	6000
2013	5800	6100
2014	6200	6100
2015	5800	6200
2016	5900	6300
2017	6700	6300
2018	7200	6400
2019	6900	6400
2020	6600	6500
2021	6300	6600
2022	7300	6600
2023	5700	6700
2050		8300

Trend Analysis *(*2015-2023)*

Linear

R-Square	AGR (Historical)	AGR (Design Year)	Annual Increase	2050 Estimate
3.4%	0.6%	0.6%	40	7,700

Annual Trend Increase: 40
Trend R-squared: 3.35%
Linear Annual Historic Growth Rate: 0.6%
Trend Growth Rate By Design Year's: 0.62%

Year	Count	Trend
2015	5800	6300
2016	5900	6400
2017	6700	6400
2018	7200	6400
2019	6900	6500
2020	6600	6500
2021	6300	6600
2022	7300	6600
2023	5700	6600
2050		7700

S-58 : S- 2894 (WESTERN LN) TO US 76 (BROAD RIVER RD)



Station ID 40-0180
County Richland
Location click here

	Year	AADT	%Change
1	1987		
2	1988		#DIV/0!
3	1989		#DIV/0!
4	1990		#DIV/0!
5	1991		#DIV/0!
6	1992		#DIV/0!
7	1993		#DIV/0!
8	1994		#DIV/0!
9	1995		#DIV/0!
10	1996		#DIV/0!
11	1997	4,000	#DIV/0!
12	1998	4,300	7.5%
13	1999	4,300	0.0%
14	2000	4,200	-2.3%
15	2001	4,800	14.3%
16	2002	5,100	6.3%
17	2003	5,200	2.0%
18	2004	5,700	9.6%
19	2005	6,300	10.5%
20	2006	6,500	3.2%
21	2007	5,400	-16.9%
22	2008	6,700	24.1%
23	2009	7,100	6.0%
24	2010	7,900	11.3%
25	2011	8,400	6.3%
26	2012	8,600	2.4%
27	2013	8,800	2.3%
28	2014	10,800	22.7%
29	2015	11,500	6.5%
30	2016	12,900	12.2%
31	2017	12,500	-3.1%
32	2018	13,000	4.0%
33	2019	7,700	-40.8%
34	2020	7,100	-7.8%
35	2021	12,400	74.6%
36	2022	12,900	4.0%
37	2023	13,600	5.4%
		Avg=	#DIV/0!

For Reference
1% Annual Growth Rate

Year	Volume	Growth Rate
2023	13,600	Present
2050	17,272	Linear
2050	17,792	Compound

Calculations based on 30YR Growth Rates

Year	Volume	Estimate		
2023	13,600	N/A	*Linear*	#DIV/0!
2050	#DIV/0!	#DIV/0!		
Year	**Volume**	**Estimate**		
2023	13,600	N/A	*Compound*	#DIV/0!
2050	#DIV/0!	#DIV/0!		
Year	**Volume**	**Estimate**		
2023	13,600	N/A	*Average Annual*	#DIV/0!
2050	#DIV/0!	#DIV/0!		

Travel Demand Model

COATS

	2018	2045		
Model	13,508	19,908	*Linear*	1.75%
Acual/Est.	13,000	19,159		
Year	**Volume**	**Estimate**		
2050	20,300	20,000		

SCSWM

	2019	2050		
Model	14,718	17,387	*Linear*	0.58%
Acual/Est.	7,700	9,096		
Year	**Volume**	**Estimate**		
2050	9,096	9,100		

Demographic Data

Population

Employment

Calculations based on 20YR Growth Rates

Year	Volume	Estimate		
2023	13,600	N/A	*Linear*	6.93%
2050	24,265	24,000		
Year	**Volume**	**Estimate**		
2023	13,600	N/A	*Compound*	4.44%
2050	43,993	44,000		
Year	**Volume**	**Estimate**		
2023	13,600	N/A	*Average Annual*	6.68%
2050	39,044	39,000		

Calculations based on 10YR Growth Rates

Year	Volume	Estimate		
2023	13,600	N/A	*Linear*	2.59%
2050	21,160	21,000		
Year	**Volume**	**Estimate**		
2023	13,600	N/A	*Compound*	2.33%
2050	25,343	25,000		
Year	**Volume**	**Estimate**		
2023	13,600	N/A	*Average Annual*	6.12%
2050	36,913	37,000		

Trend Analysis

Linear

R-Square	AGR (Historical)	AGR (Design Year)	Annual Increase	2050 Estimate
78.2%	10.5%	2.8%	359	22,400

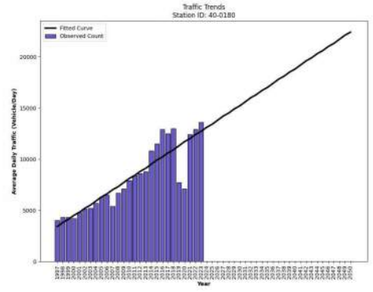

Trend Analysis *(*2015-2023)*

Linear

R-Square	AGR (Historical)	AGR (Design Year)	Annual Increase	2050 Estimate
0.2%	0.3%	0.3%	38	12,700

US176 : I- 26 (INTERSTATE 26) TO US 76 (BROAD RIVER RD)



Station ID 40-0453
County Richland
Location click here

	Year	AADT	%Change
1	1987	600	
2	1988	600	0.0%
3	1989	600	0.0%
4	1990	425	-29.2%
5	1991	300	-29.4%
6	1992	325	8.3%
7	1993	425	30.8%
8	1994	500	17.6%
9	1995	400	-20.0%
10	1996	500	25.0%
11	1997	425	-15.0%
12	1998	550	29.4%
13	1999	550	0.0%
14	2000	700	27.3%
15	2001	850	21.4%
16	2002	900	5.9%
17	2003	1,000	11.1%
18	2004	900	-10.0%
19	2005	900	0.0%
20	2006	900	0.0%
21	2007	800	-11.1%
22	2008	1,000	25.0%
23	2009	5,500	450.0%
24	2010	5,500	0.0%
25	2011	5,900	7.3%
26	2012	6,000	1.7%
27	2013	6,100	1.7%
28	2014	5,500	-9.8%
29	2015	6,400	16.4%
30	2016	6,000	-6.3%
31	2017	6,100	1.7%
32	2018	6,600	8.2%
33	2019	6,100	-7.6%
34	2020	5,800	-4.9%
35	2021	7,100	22.4%
36	2022	8,200	15.5%
37	2023	7,100	-13.4%
		Avg=	15.832%

For Reference
1% Annual Growth Rate

Year	Volume	Growth Rate
2023	7,100	Present
2050	9,017	Linear
2050	9,288	Compound

Calculations based on 30YR Growth Rates

Year	Volume	Estimate		
2023	7,100	N/A		
2050	13,040	13,000	*Linear*	44.00%
Year	**Volume**	**Estimate**		
2023	7,100	N/A		
2050	77,325	77,000	*Compound*	9.25%
Year	**Volume**	**Estimate**		
2023	7,100	N/A		
2050	46,296	46,000	*Average Annual*	19.72%

Travel Demand Model

COATS

	2018	2045		
Model	9,497	14,123	*Linear*	1.80%
Acual/Est.	6,600	9,815		

Year	Volume	Estimate
2050	10,410	10,000

SCSWM

	2019	2050		
Model	5,856	12,204	*Linear*	3.50%
Acual/Est.	6,100	12,713		

Year	Volume	Estimate
2050	12,713	13,000

Demographic Data

Population

Employment

Calculations based on 20YR Growth Rates

Year	Volume	Estimate		
2023	7,100	N/A		
2050	15,470	15,000	*Linear*	34.44%
Year	**Volume**	**Estimate**		
2023	7,100	N/A		
2050	115,406	115,000	*Compound*	10.88%
Year	**Volume**	**Estimate**		
2023	7,100	N/A		
2050	59,067	59,000	*Average Annual*	26.14%

Calculations based on 10YR Growth Rates

Year	Volume	Estimate		
2023	7,100	N/A		
2050	11,420	11,000	*Linear*	2.91%
Year	**Volume**	**Estimate**		
2023	7,100	N/A		
2050	14,147	14,000	*Compound*	2.59%
Year	**Volume**	**Estimate**		
2023	7,100	N/A		
2050	14,163	14,000	*Average Annual*	3.55%

Trend Analysis

Linear

R-Square	AGR (Historical)	AGR (Design Year)	Annual Increase	2050 Estimate
79.5%	-18.0%	3.3%	234	13,400

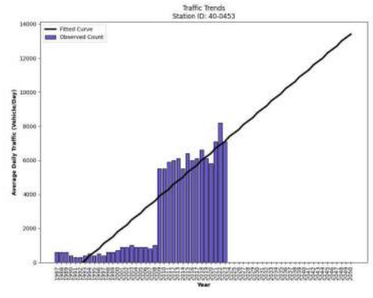

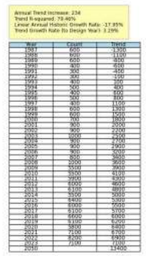

Trend Analysis *(*2015-2023)*

Linear

R-Square	AGR (Historical)	AGR (Design Year)	Annual Increase	2050 Estimate
40.7%	3.0%	2.4%	177	12,100

Year	Count	Trend
2015	6400	5900
2016	6000	6100
2017	6100	6200
2018	6600	6400
2019	6100	6600
2020	5800	6800
2021	7100	7000
2022	8200	7100
2023	7100	7300
2050		12100

S-80 : US 176 (BROAD RIVER RD) TO S- 244 (OLD TAMAH RD)



Station ID 40-2129
County Richland
Location click here

Year	AADT	%Change
1987		
1988		#DIV/0!
1989	28,800	#DIV/0!
1990	31,100	8.0%
1991	33,400	7.4%
1992	33,000	-1.2%
1993	33,100	0.3%
1994	31,900	-3.6%
1995	32,900	3.1%
1996	33,400	1.5%
1997	35,100	5.1%
1998	36,000	2.6%
1999	38,400	6.7%
2000	38,400	0.0%
2001	39,700	3.4%
2002	42,100	6.0%
2003	44,100	4.8%
2004	45,300	2.7%
2005	46,300	2.2%
2006	48,700	5.2%
2007	49,600	1.8%
2008	47,700	-3.8%
2009	47,600	-0.2%
2010	47,800	0.4%
2011	47,700	-0.2%
2012	48,800	2.3%
2013	50,400	3.3%
2014	51,400	2.0%
2015	52,300	1.8%
2016	56,300	7.6%
2017	57,500	2.1%
2018	67,000	16.5%
2019	68,100	1.6%
2020	59,600	-12.5%
2021	63,400	6.4%
2022	62,800	-0.9%
2023	62,500	-0.5%
	Avg=	#DIV/0!

For Reference
1% Annual Growth Rate

Year	Volume	Growth Rate
2023	62,500	Present
2050	79,375	Linear
2050	81,763	Compound

Calculations based on 30YR Growth Rates

Year	Volume	Estimate		
2023	62,500	N/A	*Linear*	3.20%
2050	90,040	90,000		
Year	**Volume**	**Estimate**	*Compound*	2.27%
2023	62,500	N/A		
2050	114,488	114,000		
Year	**Volume**	**Estimate**	*Average Annual*	2.45%
2023	62,500	N/A		
2050	105,357	105,000		

Travel Demand Model

COATS

	2018	2045		
Model	76,519	101,257	*Linear*	1.20%
Acual/Est.	67,000	88,661		
Year	**Volume**	**Estimate**		
2050	92,672	93,000		

SCSWM

	2019	2050		
Model	56,729	90,761	*Linear*	1.94%
Acual/Est.	68,100	108,954		
Year	**Volume**	**Estimate**		
2050	108,954	109,000		

Demographic Data

Population

Employment

Calculations based on 20YR Growth Rates

Year	Volume	Estimate		
2023	62,500	N/A	*Linear*	1.90%
2050	85,720	86,000		
Year	**Volume**	**Estimate**	*Compound*	1.62%
2023	62,500	N/A		
2050	96,513	97,000		
Year	**Volume**	**Estimate**	*Average Annual*	1.85%
2023	62,500	N/A		
2050	94,869	95,000		

Calculations based on 10YR Growth Rates

Year	Volume	Estimate		
2023	62,500	N/A	*Linear*	2.16%
2050	92,470	92,000		
Year	**Volume**	**Estimate**	*Compound*	1.97%
2023	62,500	N/A		
2050	105,963	106,000		
Year	**Volume**	**Estimate**	*Average Annual*	2.46%
2023	62,500	N/A		
2050	105,597	106,000		

Trend Analysis

Linear

R-Square	AGR (Historical)	AGR (Design Year)	Annual Increase	2050 Estimate
93.9%	3.8%	1.7%	1,060	92,700

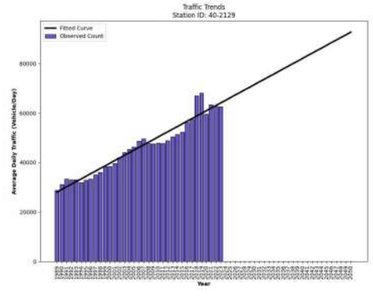

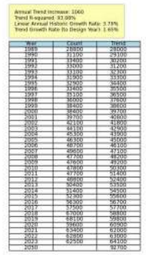

Year	Count	Trend
1987		28000
1988	28800	29100
1989	31100	30200
1990	33400	31300
1991	33000	32400
1992	33100	33500
1993	31900	34600
1994	32900	35700
1995	33400	36800
1996	35100	37900
1997	36000	39000
1998	38400	40100
1999	38400	41200
2000	39700	42300
2001	42100	43400
2002	44100	44500
2003	45300	45600
2004	46300	46700
2005	48700	47800
2006	49600	48900
2007	47700	50000
2008	47600	51100
2009	47800	52200
2010	47700	53300
2011	48800	54400
2012	50400	55500
2013	51400	56600
2014	52300	57700
2015	56300	58800
2016	57500	59900
2017	67000	61000
2018	68100	62100
2019	59600	63200
2020	63400	64300
2021	62800	65400
2022	62500	66500
2023		67600

Trend Analysis *(*2015-2023)*

Linear

R-Square	AGR (Historical)	AGR (Design Year)	Annual Increase	2050 Estimate
33.3%	1.9%	1.7%	1,078	94,500

Year	Count	Trend
2015	52300	56700
2016	56300	57800
2017	57500	58900
2018	67000	60000
2019	68100	61100
2020	59600	62100
2021	63400	63200
2022	62800	64300
2023	62500	65400
2050		94500

I-26 : US 176 (BROAD RIVER RD) TO US 76 (BROAD RIVER RD)



Station ID 40-0484
County Richland
Location click here

	Year	AADT	%Change
1	1987		
2	1988		#DIV/0!
3	1989		#DIV/0!
4	1990		#DIV/0!
5	1991		#DIV/0!
6	1992		#DIV/0!
7	1993		#DIV/0!
8	1994		#DIV/0!
9	1995		#DIV/0!
10	1996		#DIV/0!
11	1997		#DIV/0!
12	1998		#DIV/0!
13	1999		#DIV/0!
14	2000		#DIV/0!
15	2001		#DIV/0!
16	2002		#DIV/0!
17	2003		#DIV/0!
18	2004		#DIV/0!
19	2005		#DIV/0!
20	2006		#DIV/0!
21	2007		#DIV/0!
22	2008		#DIV/0!
23	2009	7,800	#DIV/0!
24	2010	7,300	-6.4%
25	2011	6,600	-9.6%
26	2012	6,700	1.5%
27	2013	6,800	1.5%
28	2014	7,400	8.8%
29	2015	7,100	-4.1%
30	2016	6,300	-11.3%
31	2017	7,000	11.1%
32	2018	7,600	8.6%
33	2019	8,000	5.3%
34	2020	7,600	-5.0%
35	2021	7,400	-2.6%
36	2022	8,600	16.2%
37	2023	7,700	-10.5%
		Avg=	#DIV/0!

For Reference
1% Annual Growth Rate

Year	Volume	Growth Rate
2023	7,700	Present
2050	9,779	Linear
2050	10,073	Compound

Calculations based on 30YR Growth Rates

Year	Volume	Estimate		
2023	7,700	N/A	*Linear*	#DIV/0!
2050	#DIV/0!	#DIV/0!		
Year	**Volume**	**Estimate**		
2023	7,700	N/A	*Compound*	#DIV/0!
2050	#DIV/0!	#DIV/0!		
Year	**Volume**	**Estimate**		
2023	7,700	N/A	*Average Annual*	#DIV/0!
2050	#DIV/0!	#DIV/0!		

Travel Demand Model

COATS

	2018	2045		
Model	14,773	20,354	*Linear*	1.40%
Acual/Est.	7,600	10,471		
Year	**Volume**	**Estimate**		
2050	11,003	11,000		

SCSWM

	2019	2050		
Model	9,270	18,376	*Linear*	3.17%
Acual/Est.	8,000	15,858		
Year	**Volume**	**Estimate**		
2050	15,858	16,000		

Demographic Data

Population

Employment

Calculations based on 20YR Growth Rates

Year	Volume	Estimate		
2023	7,700	N/A	*Linear*	#DIV/0!
2050	#DIV/0!	#DIV/0!		
Year	**Volume**	**Estimate**		
2023	7,700	N/A	*Compound*	#DIV/0!
2050	#DIV/0!	#DIV/0!		
Year	**Volume**	**Estimate**		
2023	7,700	N/A	*Average Annual*	#DIV/0!
2050	#DIV/0!	#DIV/0!		

Calculations based on 10YR Growth Rates

Year	Volume	Estimate		
2023	7,700	N/A	*Linear*	0.41%
2050	8,510	8,500		
Year	**Volume**	**Estimate**		
2023	7,700	N/A	*Compound*	0.40%
2050	8,572	8,600		
Year	**Volume**	**Estimate**		
2023	7,700	N/A	*Average Annual*	0.86%
2050	9,555	9,600		

Trend Analysis

Linear

R-Square	AGR (Historical)	AGR (Design Year)	Annual Increase	2050 Estimate
24.7%	0.9%	0.9%	66	9,600

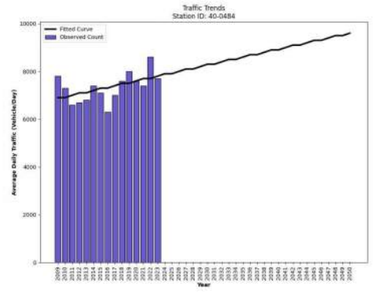

Year	Count	Trend
2009	7800	6900
2010	7300	6900
2011	6600	7000
2012	6700	7100
2013	6800	7100
2014	7400	7200
2015	7100	7300
2016	6300	7300
2017	7000	7400
2018	7600	7500
2019	8000	7500
2020	7600	7600
2021	7400	7700
2022	8600	7700
2023	7700	7800
2050		9600

Trend Analysis *(*2015-2023)*

Linear

R-Square	AGR (Historical)	AGR (Design Year)	Annual Increase	2050 Estimate
50.4%	2.6%	2.0%	168	12,700

Year	Count	Trend
2015	7100	6800
2016	6300	7000
2017	7000	7100
2018	7600	7300
2019	8000	7500
2020	7600	7600
2021	7400	7800
2022	8600	8000
2023	7700	8200
2050		12700

S-58 : S- 498 (KOON RD), L- 653 TO S- 2894 (WESTERN LN)



Station ID 40-0147
County Richland
Location click here

Year	AADT	%Change
1987	9,400	
1988	8,700	-7.4%
1989	9,400	8.0%
1990	9,500	1.1%
1991	9,400	-1.1%
1992	9,600	2.1%
1993	10,600	10.4%
1994	9,900	-6.6%
1995	11,200	13.1%
1996	9,300	-17.0%
1997	11,500	23.7%
1998	12,400	7.8%
1999	13,300	7.3%
2000	12,700	-4.5%
2001	12,300	-3.1%
2002	13,400	8.9%
2003	15,400	14.9%
2004	15,600	1.3%
2005	15,100	-3.2%
2006	16,400	8.6%
2007	15,100	-7.9%
2008	16,100	6.6%
2009	17,200	6.8%
2010	17,900	4.1%
2011	18,500	3.4%
2012	18,800	1.6%
2013	19,200	2.1%
2014	18,500	-3.6%
2015	20,700	11.9%
2016	19,900	-3.9%
2017	19,500	-2.0%
2018	20,300	4.1%
2019	20,000	-1.5%
2020	18,500	-7.5%
2021	21,200	14.6%
2022	22,100	4.2%
2023	21,600	-2.3%
	Avg=	2.643%

For Reference
1% Annual Growth Rate

Year	Volume	Growth Rate
2023	21,600	Present
2050	27,432	Linear
2050	28,257	Compound

Calculations based on 30YR Growth Rates

Year	Volume	Estimate		
2023	21,600	N/A		
2050	32,130	32,000	*Linear*	3.94%
2023	21,600	N/A		
2050	43,590	44,000	*Compound*	2.63%
2023	21,600	N/A		
2050	40,076	40,000	*Average Annual*	3.05%

Travel Demand Model

COATS

	2018	2045		
Model	27,081	30,622	*Linear*	0.48%
Acual/Est.	20,300	22,954		
Year	Volume	Estimate		
2050	23,446	23,000		

SCSWM

	2019	2050		
Model	19,478	43,079	*Linear*	3.91%
Acual/Est.	20,000	44,233		
Year	Volume	Estimate		
2050	44,233	44,000		

Demographic Data

Population

Employment

Calculations based on 20YR Growth Rates

Year	Volume	Estimate		
2023	21,600	N/A		
2050	29,700	30,000	*Linear*	1.92%
2023	21,600	N/A		
2050	33,516	34,000	*Compound*	1.64%
2023	21,600	N/A		
2050	33,116	33,000	*Average Annual*	1.90%

Calculations based on 10YR Growth Rates

Year	Volume	Estimate		
2023	21,600	N/A		
2050	29,970	30,000	*Linear*	1.68%
2023	21,600	N/A		
2050	32,818	33,000	*Compound*	1.56%
2023	21,600	N/A		
2050	33,507	34,000	*Average Annual*	1.97%

Trend Analysis

Linear

R-Square	AGR (Historical)	AGR (Design Year)	Annual Increase	2050 Estimate
95.8%	4.8%	1.8%	390	32,700

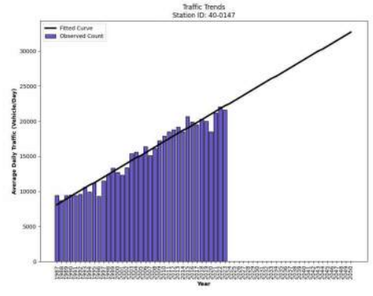

Trend Analysis *(*2015-2023)*

Linear

R-Square	AGR (Historical)	AGR (Design Year)	Annual Increase	2050 Estimate
23.5%	1.0%	0.9%	197	26,500

US76 : SC 6 (DREHER SHOALS RD) TO S- 27 (N WOODROW ST)



Appendix F – 2050 TransModeler Detailed Results

SCDOT
U.S. Department of Transportation
Federal Highway Administration

BA Result

Freeway	Location	Type	Average Density AM	Average Density PM	Average LOS AM	Average LOS PM
I-26 EB	Columbia Ave to Broad River Rd	Basic	9.8	7.1	A	A
I-26 EB	Broad River Rd Off-Ramp	Diverge	10.0	7.2	A	A
I-26 EB	Broad River Rd Interchange-Between Ramps	Basic	9.9	7.2	A	A
I-26 EB	Broad River Rd Off-Ramp (Loop)	Diverge	9.6	6.9	A	A
I-26 EB	Broad River Rd Interchange-Between Ramps	Basic	9.6	7.0	A	A
I-26 EB	Broad River Rd to Lake Murray Blvd	Weaving	13.9	9.3	B	A
I-26 EB	Lake Murray Blvd Off-Ramp (Loop)	Diverge	15.3	10.1	B	A
I-26 EB	Lake Murray Blvd Interchange-Between Ramps	Basic	14.1	10.4	B	A
I-26 EB	Lake Murray Blvd (On-Ramp)	Merge	15.9	11.8	B	B
I-26 EB	Lake Murray Blvd to Harbison Blvd	Basic	20.3	14.2	C	B
I-26 EB	Harbison Blvd Off-Ramp	Diverge	21.2	14.4	C	B
I-26 EB	Harbison Blvd Interchange-Between Ramps	Basic	18.3	12.5	C	B
I-26 EB	Harbison Blvd to Piney Grove Rd	Weaving	18.5	14.3	B	B
I-26 EB	Piney Grove Rd Interchange-Between Ramps	Basic	20.2	16.2	C	B
I-26 EB	Piney Grove Rd On-Ramp	Merge	15.9	13.2	B	B
I-26 EB	Piney Grove Rd to St Andrews Rd	Basic	15.9	13.3	B	B
I-26 EB	St Andrews Rd Off-Ramp	Diverge	14.9	13.0	B	B
I-26 EB	I-126 EB CD Off-Ramp	Diverge	14.5	12.2	B	B
I-26 EB	St Andrews Rd Interchange-Between Ramps	Basic	16.1	7.4	B	A
I-26 EB	St Andrews Rd to I-126	Basic	16.5	7.5	B	A
I-26 EB	I-126 EB Off-Ramp	Diverge	16.6	7.6	B	A
I-26 EB	I-126 to Sunset Blvd	Basic	8.4	5.2	A	A
I-26 EB	I-20 EB CD to Sunset Blvd	Weaving	14.6	15.6	B	B
I-26 EB	Sunset Blvd Interchange-Between Ramps	Basic	14.5	16.0	B	B
I-26 EB	Sunset Blvd On-Ramp	Merge	15.8	18.8	B	B
I-26 EB	Sunset Blvd to Leaphart Rd	Basic	18.8	21.9	C	C
I-26 WB	Leaphart Rd to Sunset Blvd	Basic	24.9	22.0	C	C
I-26 WB	Sunset Blvd Off-Ramp	Diverge	24.5	21.6	C	C
I-26 WB	Sunset Blvd Interchange-Between Ramps	Basic	18.8	18.1	C	C
I-26 WB	Sunset Blvd On-Ramp	Merge	16.8	16.7	B	B
I-26 WB	Sunset Blvd to I-126	Basic	16.6	16.6	B	B
I-26 WB	I-126 CD Off-Ramp	Diverge	16.5	16.9	B	B
I-26 WB	I-126 to St Andrews Rd	Basic	13.4	11.8	B	A
I-26 WB	I-126 WB On-Ramp	Merge	8.7	14.7	A	B
I-26 WB	I-126 to St Andrews Rd	Basic	11.0	17.9	A	B
I-26 WB	I-20 CD On-Ramp	Merge	13.1	18.6	B	B
I-26 WB	St Andrews Rd Interchange-Between Ramps	Basic	14.8	20.8	B	C
I-26 WB	St Andrews Rd On-Ramp	Merge	14.4	20.3	B	C
I-26 WB	St Andrews Rd to Piney Grove Rd	Basic	15.6	22.1	B	C
I-26 WB	Piney Grove Rd Off-Ramp	Diverge	15.6	22.2	B	C
I-26 WB	Piney Grove Rd Interchange-Between Ramps	Basic	16.3	23.1	B	C
I-26 WB	Piney Grove Rd to Harbison Blvd	Weaving	15.0	21.6	B	C
I-26 WB	Harbison Blvd Interchange-Between Ramps	Basic	14.6	21.3	B	C
I-26 WB	Harbison Blvd On-Ramp	Merge	17.3	27.8	B	C
I-26 WB	Harbison Blvd to Lake Murray Blvd	Basic	15.2	22.8	B	C
I-26 WB	Lake Murray Blvd Off-Ramp	Diverge	15.3	23.1	B	C
I-26 WB	Lake Murray Blvd Off-Ramp (Loop)	Diverge	14.7	25.4	B	C
I-26 WB	Lake Murray Blvd Interchange-Between Ramps	Basic	11.4	19.1	A	C
I-26 WB	Lake Murray Blvd to Broad River Rd	Weaving	10.6	17.7	B	B
I-26 WB	Broad River Rd Off-Ramp (Loop)	Diverge	10.5	17.9	A	B
I-26 WB	Broad River Rd Interchange-Between Ramps	Basic	8.1	15.0	A	B
I-26 WB	Broad River Rd On-Ramp	Merge	6.9	12.7	A	B
I-26 WB	Broad River Rd to Columbia Ave	Basic	8.4	15.7	A	B

BA Result

I-20 EB	Augusta Rd to Sunset Blvd	Basic	28.2	16.5	D	B
I-20 EB	Sunset Blvd Off-Ramp	Diverge	30.2	17.3	D	B
I-20 EB	Sunset Blvd Interchange- Between Ramps	Basic	22.9	15.1	C	B
I-20 EB	Sunset Blvd On-Ramp (Loop)	Merge	27.6	18.5	C	B
I-20 EB	Sunset Blvd On-Ramp	Merge	25.7	18.2	C	B
I-20 EB	Sunset Blvd to Bush River Rd	Basic	23.6	16.9	C	B
I-20 EB	Bush River Rd Off-Ramp	Diverge	16.7	12.0	B	B
I-20 EB	Bush River Rd to Broad River Rd	Basic	13.3	10.2	B	A
I-20 EB	I-26 CD On-Ramp	Merge	14.6	16.1	B	B
I-20 EB	Broad River Rd Interchange- Between Ramps	Basic	16.0	18.0	B	B
I-20 EB	Broad River Rd On-Ramp	Merge	19.2	22.2	B	C
I-20 EB	Broad River Rd to Broad River Bridge	Basic	23.8	29.2	C	D
I-20 WB	Broad River Bridge to Broad River Rd	Basic	21.4	23.5	C	C
I-20 WB	Broad River Rd Off-Ramp	Diverge	13.8	14.9	B	B
I-20 WB	Broad River Rd Interchange- Between Ramps	Basic	10.5	12.8	A	B
I-20 WB	I-26 CD Off-Ramp	Diverge	10.6	12.9	A	B
I-20 WB	Broad River Rd Interchange- Between Ramps	Basic	5.5	11.1	A	A
I-20 WB	Broad River Rd On-Ramp	Merge	5.6	10.9	A	A
I-20 WB	Broad River Rd to Bush River Rd	Basic	6.1	11.9	A	A
I-20 WB	Bush River Rd Off-Ramp	Diverge	6.1	12.0	A	B
I-20 WB	Bush River Rd Interchange- Between Ramps	Basic	7.5	15.1	A	B
I-20 WB	I-26 CD On-Ramp	Merge	11.0	21.5	B	C
I-20 WB	Bush River Rd On-Ramp	Merge	12.2	24.3	B	C
I-20 WB	Bush River Rd to Sunset Blvd	Basic	14.1	27.8	B	D
I-20 WB	Sunset Blvd Off-Ramp	Diverge	14.7	27.3	B	C
I-20 WB	Sunset Blvd Interchange- Between Ramps	Basic	10.2	24.8	A	C
I-20 WB	Sunset Blvd On-Ramp (Loop)	Merge	12.9	26.4	B	C
I-20 WB	Sunset Blvd On-Ramp	Merge	13.8	26.8	B	C
I-20 WB	Sunset Blvd to Augusta Rd	Basic	14.3	27.5	B	D
I-126 WB	Huger St to Greystone Blvd	Basic	8.5	20.8	A	C
I-126 WB	Huger St On-Ramp	Merge	8.5	21.4	A	C
I-126 WB	Huger St to Greystone Blvd	Basic	8.6	21.5	A	C
I-126 WB	Greystone Blvd Off-Ramp	Diverge	8.7	21.9	A	C
I-126 WB	Greystone Blvd Interchange- Between Ramps	Basic	6.8	19.3	A	C
I-126 WB	Greystone Blvd On-Ramp	Merge	7.6	21.3	A	C
I-126 WB	Greystone Blvd to Colonial Life Blvd	Basic	8.3	23.2	A	C
I-126 WB	Colonial Life Blvd Off-Ramp	Diverge	7.6	21.0	A	C
I-126 WB	I-26 CD Off-Ramp	Diverge	7.2	19.7	A	B
I-126 WB	Colonial Life Blvd Interchange- Between Ramps	Basic	5.9	16.7	A	B
I-126 WB	Colonial Life Blvd to I-26	Weaving	5.9	16.7	A	B
I-126 EB	I-26 CD to Colonial Life Blvd	Weaving	15.4	7.3	B	A
I-126 EB	Colonial Life Blvd Interchange- Between Ramps	Basic	16.0	7.1	B	A
I-126 EB	Colonial Life Blvd On-Ramp	Merge	15.8	7.3	B	A
I-126 EB	Colonial Life Blvd to Greystone Blvd	Basic	19.4	9.1	C	A
I-126 EB	Greystone Blvd Off-Ramp	Diverge	19.5	9.3	B	A
I-126 EB	Greystone Blvd Interchange- Between Ramps	Basic	17.2	8.2	B	A
I-126 EB	Greystone Blvd On-Ramp	Merge	18.2	10.1	B	A
I-126 EB	Greystone Blvd to Huger St	Basic	19.3	10.7	C	A

Build Alternative (2050)

Intersection	Approach	Lane Group	Delay (s) AM	Delay (s) PM	Level of Service AM	Level of Service PM	Maximum Queue Length (ft) AM	Maximum Queue Length (ft) PM
PINEY GROVE RD & I-26 EB RAMP	*Overall*		***19.9***	***19.1***	***B***	***B***		
	PINEY GROVE RD WB	L	30.2	42.8	C	D	537	665
	PINEY GROVE RD WB	T	1.0	4.7	A	A	537	665
	PINEY GROVE RD EB	T	41.2	32.9	D	C	73	2
	PINEY GROVE RD EB	R	0.1	0.1	A	A	73	2
	I-26 EB OFF RAMP TO P	L	69.1	68.9	E	E	68	67
	I-26 EB OFF RAMP TO P	R	0.3	0.3	A	A	68	67
PINEY GROVE RD & I-26 WB RAMP	*Overall*		***13.0***	***16.6***	***B***	***B***		
	PINEY GROVE RD SWB	T	10.4	16.7	B	B	227	116
	PINEY GROVE RD SWB	R	2.0	2.8	A	A	227	116
	I-26 WB OFF RAMP TO F	L	62.1	58.8	E	E	0	189
	I-26 WB OFF RAMP TO F	R	0.2	0.8	A	A	0	189
	PINEY GROVE RD NEB	L	17.6	24.5	B	C	97	139
	PINEY GROVE RD NEB	T	1.0	0.3	A	A	97	139
ST ANDREWS RD & I-26 EB Ramp	*Overall*		***23.3***	***29.0***	***C***	***C***		
	I-26 EB OFF RAMP TO S	L	61.5	72.8	E	E	94	160
	I-26 EB OFF RAMP TO S	T	66.0	69.5	E	E	94	160
	I-26 EB OFF RAMP TO S	R	0.7	0.8	A	A	94	160
	ST ANDREWS RD WB	L	22.1	39.8	C	D	446	531
	ST ANDREWS RD WB	T	31.7	24.9	C	C	446	531
	ST ANDREWS RD WB	R	0.3	1.1	A	A	446	531
	WOODLAND HILLS RD N	LT	65.5	108.9	E	F	84	247
	WOODLAND HILLS RD N	R	23.8	39.3	C	D	84	247
	ST ANDREWS RD EB	L	34.5	30.2	C	C	130	148
	ST ANDREWS RD EB	T	14.0	26.8	B	C	130	148
	ST ANDREWS RD EB	R	5.2	11.2	A	B	130	148
ST ANDREWS RD & C-D ROAD EB Ramp	*Overall*		***5.9***	***11.5***	***A***	***B***		
	ST ANDREWS RD WB	L	32.6	35.4	C	D	141	203
	ST ANDREWS RD WB	T	2.2	5.1	A	A	141	203
	ST ANDREWS RD EB	T	4.1	7.7	A	A	123	340
	ST ANDREWS RD EB	TR	3.7	13.2	A	B	123	340
			2.1	10.0	A	A	123	340
ST ANDREWS RD & C-D ROAD WB Ramp	*Overall*		***9.9***	***15.0***	***A***	***B***		
	ST ANDREWS RD SWB	T	8.4	6.2	A	A	319	369
	ST ANDREWS RD SWB	R	1.2	0.8	A	A	319	369
	C-D ROAD WB Off-Ramp	R	19.3	61.6	B	E	229	372
	ST ANDREWS RD NEB	L	26.7	43.8	C	D	116	222
	ST ANDREWS RD NEB	T	7.4	15.2	A	B	116	222
	C-D ROAD WB LOOP OF	T	0.0	0.3	A	A	3	2
	Overall		***40.2***	***72.9***	***D***	***E***		

Build Alternative (2050)

Intersection	Approach	Lane Group	Delay (s)		Level of Service		Maximum Queue Length (ft)	
			AM	PM	AM	PM	AM	PM
ST ANDREWS RD & FERNANDINA RD/ BURNING TREE RD	ST ANDREWS RD SWB	L	80.4	81.4	F	F	159	454
	ST ANDREWS RD SWB	T	29.2	64.1	C	E	159	454
	ST ANDREWS RD SWB	TR	25.6	57.0	C	E	159	454
	BURNING TREE RD NWI	L	72.0	214.3	E	F	68	826
	BURNING TREE RD NWI	T	46.9	60.2	D	E	68	826
	BURNING TREE RD NWI	R	11.3	44.3	B	D	68	826
	ST ANDREWS RD NEB	L	81.8	91.6	F	F	360	642
	ST ANDREWS RD NEB	T	25.3	44.7	C	D	360	642
	FERNANDINA RD SEB	L	47.4	31.9	D	C	150	193
	FERNANDINA RD SEB	T	58.0	49.7	E	D	150	193
	FERNANDINA RD SEB	R	41.9	36.8	D	D	150	193
	Overall		***39.3***	***42.0***	***D***	***D***		
SUNSET BLVD & I-26 EB & WB RAMPS	SUNSET BLVD WB	L	115.3	50.5	F	D	208	386
	SUNSET BLVD WB	T	24.9	41.1	C	D	208	386
	SUNSET BLVD WB	R	0.3	2.5	A	A	208	386
	I-26 WB OFF RAMP TO S	T	36.7	51.1	D	D	341	231
	SUNSET BLVD EB	L	187.2	59.3	F	E	1230	1272
	SUNSET BLVD EB	T	28.1	74.2	C	E	1230	1272
	SUNSET BLVD EB	R	0.3	3.4	A	A	1230	1272
	I-26 EB OFF RAMP TO S	T	46.4	54.5	D	D	264	915
	Overall		***106.0***	***34.5***	***F***	***C***		
SUNSET BLVD & CHRIS DR/ MCSWAIN DR	MCSWAIN DR SB	L	54.2	58.0	D	E	62	68
	MCSWAIN DR SB	TR	31.4	34.1	C	C	62	68
	SUNSET BLVD WB	L	208.1	57.0	F	E	958	349
	SUNSET BLVD WB	T	63.5	20.0	E	C	958	349
	SUNSET BLVD WB	TR	68.2	21.0	E	C	958	349
	CHRIS DR NB	L	778.6	201.2	F	F	2676	482
	CHRIS DR NB	TR	491.4	38.6	F	D	2676	482
	SUNSET BLVD EB	L	33.2	25.8	C	C	985	999
	SUNSET BLVD EB	T	23.4	23.5	C	C	985	999
	SUNSET BLVD EB	TR	28.9	24.6	C	C	985	999
	Overall		***14.1***	***15.7***	***B***	***B***		
W COLONIAL LIFE Rd & I-126 WB RAMP	I-126 WB OFF RAMP TO	T	7.6	13.2	A	B	35	91
	I-26 WB OFF RAMP TO C	T	15.9	16.8	B	B	101	263
	Overall		***20.7***	***30.8***	***C***	***C***		

Build Alternative (2050)

Intersection	Approach	Lane Group	Delay (s) AM	Delay (s) PM	Level of Service AM	Level of Service PM	Maximum Queue Length (ft) AM	Maximum Queue Length (ft) PM
GREYSTONE BLVD & STONERIDGE DR	GREYSTONE BLVD SB	L	47.2	49.8	D	D	174	267
	GREYSTONE BLVD SB	T	20.1	25.0	C	C	174	267
	GREYSTONE BLVD SB	TR	24.5	37.2	C	D	174	267
	STONERIDGE DR WB	L	31.9	40.0	C	D	96	142
	STONERIDGE DR WB	T	22.1	17.7	C	B	96	142
	STONERIDGE DR WB	R	4.4	4.4	A	A	96	142
	GREYSTONE BLVD NB	L	29.5	59.0	C	E	136	175
	GREYSTONE BLVD NB	T	8.3	15.2	A	B	136	175
	GREYSTONE BLVD NB	R	4.7	5.8	A	A	136	175
	STONERIDGE DR EB	L	38.4	40.7	D	D	79	237
	STONERIDGE DR EB	T	34.4	29.6	C	C	79	237
	STONERIDGE DR EB	R	19.6	40.4	B	D	79	237
		Overall	***37.0***	***8.2***	***D***	***A***		
SUNSET BLVD & I-20 WB RAMP	I-20 WB OFF RAMP TO S	L	33.6	34.3	C	C	200	105
	I-20 WB OFF RAMP TO S	R	0.0	0.0	A	A	200	105
	SUNSET BLVD NWB	T	13.2	6.8	B	A	232	165
	SUNSET BLVD SEB	T	63.1	8.4	E	A	1002	227
		Overall	***22.5***	***7.3***	***C***	***A***		
SUNSET BLVD & I-20 EB RAMP	SUNSET BLVD NWB	T	13.9	7.8	B	A	227	266
	I-20 EB OFF RAMP TO S	L	34.9	38.8	C	D	175	132
	I-20 EB OFF RAMP TO S	R	0.0	0.0	A	A	175	132
	SUNSET BLVD SEB	T	35.7	4.3	D	A	449	181
		Overall	***6.5***	***37.6***	***A***	***D***		
BUSH RIVER RD & BERRYHILL RD	BERRYHILL RD SWB	L	74.0	190.1	E	F	111	710
	BERRYHILL RD SWB	LR	94.4	244.4	F	F	111	710
	BUSH RIVER RD NWB	T	2.2	5.8	A	A	81	929
	BUSH RIVER RD NWB	R	0.2	14.2	A	B	81	929
	BUSH RIVER RD SEB	L	41.8	56.0	D	E	89	164
	BUSH RIVER RD SEB	T	2.8	7.5	A	A	89	164
		Overall	***43.7***	***45.2***	***D***	***D***		
BUSH RIVER RD & I-20 WB RAMP	I-20 WB OFF RAMP TO E	L	106.1	109.2	F	F	1044	1046
	I-20 WB OFF RAMP TO E	R	216.1	326.0	F	F	1044	1046
	BUSH RIVER RD NWB	L	58.1	49.3	E	D	83	188
	BUSH RIVER RD NWB	T	2.3	7.0	A	A	83	188
	BUSH RIVER RD SEB	T	14.7	13.8	B	B	322	703
	BUSH RIVER RD SEB	R	0.2	1.4	A	A	322	703
		Overall	***20.3***	***15.2***	***C***	***B***		
BUSH RIVER RD & I-20 EB RAMP	BUSH RIVER RD WB	T	7.4	6.3	A	A	89	138
	I-20 EB OFF RAMP TO B	L	57.7	64.0	E	E	236	194
	I-20 EB OFF RAMP TO B	R	18.8	6.5	B	A	236	194
	BUSH RIVER RD SEB	T	5.9	1.2	A	A	45	0
		Overall	***9.7***	***10.4***	***A***	***B***		
	I-20 WB OFF RAMP TO E	L	23.4	17.4	C	B	176	87

Build Alternative (2050)

Intersection	Approach	Lane Group	Delay (s)		Level of Service		Maximum Queue Length (ft)	
			AM	PM	AM	PM	AM	PM
Broad River Rd & I-20 WB	I-20 WB OFF RAMP TO E	R	13.3	14.4	B	B	130	133
	BROAD RIVER RD NWB	T	8.3	11.7	A	B	83	148
	BROAD RIVER RD EB	T	14.7	17.6	B	B	262	276
	BROAD RIVER RD SB SI	T	0.6	2.3	A	A	91	62
		Overall	***13.8***	***5.8***	***B***	***A***		
Broad River Rd & C-D ROAD EB/ I-20 EB	BROAD RIVER RD SB SI	T	5.3	5.7	A	A	112	128
	BROAD RIVER RD NB N	T	7.9	7.1	A	A	51	94
	C-D ROAD EB Off-RAMP	T	15.0	19.6	B	B	91	94
	C-D ROAD EB Off-RAMP	T	15.6	11.2	B	B	68	42

Build Alternative (2050)

Intersection	Approach	Lane Group	Delay (s) AM	Delay (s) PM	Level of Service AM	Level of Service PM	Maximum Queue Length (ft) AM	Maximum Queue Length (ft) PM
Unsignalized Intersections								
BROAD RIVER RD & I-26 EB OFF RAMP TO BROAD RIVER RD	I-26 EB OFF RAMP TO B	R	8.1	7.8	A	A	26	14
	BROAD RIVER RD WB	T	0.6	0.9	A	A	14	0
	BROAD RIVER RD EB	T	0.1	0.2	A	A	67	0
GREYSTONE BLVD & CANDI LN	GREYSTONE BLVD SB	LR	0.0	0.0	A	A	0	0
	GREYSTONE BLVD WB	T	0.0	4.6	A	A	0	0
	GREYSTONE BLVD WB	R	0.0	0.0	A	A	0	0
	CANDI LN SEB	LT	5.9	5.2	A	A	5	12
GREYSTONE BLVD & I-26 EB RAMP	GREYSTONE BLVD SB	L	0.4	10.1	A	B	6	100
	GREYSTONE BLVD SB	T	0.0	0.0	A	A	6	100
	I-126 EB ON RAMP FROI	L	7.5	41.6	A	E	20	44
	I-126 EB ON RAMP FROI	R	0.0	0.0	A	A	20	44
	GREYSTONE BLVD NB	TR	0.0	0.0	A	A	0	0
GREYSTONE BLVD & I-126 WB RAMP	GREYSTONE BLVD SB	T	0.0	0.0	A	A	0	0
	GREYSTONE BLVD SB	R	0.0	0.0	A	A	0	0
	I-126 WB OFF RAMP TO GRE	L	10.2	16.6	B	C	2	2
	I-126 WB OFF RAMP TO GRE	R	0.1	0.4	A	A	0	0
	GREYSTONE BLVD NB	L	1.5	2.6	A	A	0	18
	GREYSTONE BLVD NB	T	0.2	0.3	A	A	0	18

SA Result

Freeway	Location	Type	Average Density AM	Average Density PM	LOS AM AVG	LOS PM AVG
I-26 WB	Leaphart Rd to Sunset Blvd	Basic	25.0	22.2	C	C
I-26 WB	Sunset Blvd Off-Ramp	Diverge	25.1	22.2	C	C
I-26 WB	Sunset Blvd Interchange-Between Ramps	Basic	18.9	18.4	C	C
I-26 WB	Sunset Blvd On-Ramp	Merge	17.1	16.7	B	B
I-26 WB	Sunset Blvd to I-126	Basic	16.7	16.2	B	B
I-26 WB	I-126 CD Off-Ramp	Diverge	17.0	16.7	B	B
I-26 WB	I-126 Off-Ramp	Diverge	17.3	17.5	B	B
I-26 WB	I-126 to St Andrews Rd	Basic	17.9	16.2	B	B
I-26 WB	I-126 to St Andrews Rd	Weaving	9.7	14.9	A	B
I-26 WB	I-126 to St Andrews Rd	Basic	11.5	18.3	A	C
I-26 WB	I-126 WB On-Ramp	Merge	12.4	17.2	B	B
I-26 WB	I-20 WB on-Ramp	Merge	13.4	18.7	B	B
I-26 WB	St Andrews Rd Interchange-Between Ramps	Basic	14.7	20.6	B	C
I-26 WB	St Andrews Rd On-Ramp	Merge	14.0	19.6	B	B
I-26 WB	St Andrews Rd to Piney Grove Rd	Basic	15.5	21.7	B	C
I-26 WB	Piney Grove Rd Off-Ramp	Diverge	15.3	21.4	B	C
I-26 WB	Piney Grove Rd Interchange-Between Ramps	Basic	16.3	23.1	B	C
I-26 WB	Piney Grove Rd to Harbison Blvd	Weaving	14.8	21.1	B	C
I-26 WB	Harbison Blvd Interchange-Between Ramps	Basic	14.7	20.9	B	C
I-26 WB	Harbison Blvd On-Ramp	Merge	12.4	18.9	B	B
I-26 WB	Harbison Blvd Off-Ramp	Merge	15.2	22.5	B	C
I-26 WB	Harbison Blvd to Lake Murray Blvd	Basic	15.6	22.9	B	C
I-26 WB	Lake Murray Blvd Off-Ramp	Diverge	15.8	23.3	B	C
I-26 WB	Lake Murray Blvd Off-Ramp (Loop)	Diverge	13.2	20.4	B	C
I-26 WB	Lake Murray Blvd Interchange-Between Ramps	Basic	11.4	18.9	A	C
I-26 WB	Lake Murray Blvd to Broad River Rd	Weaving	10.6	17.6	B	B
I-26 WB	Broad River Rd Off-Ramp (Loop)	Diverge	10.9	18.7	A	B
I-26 WB	Broad River Road Off-Ramp (Loop)	Diverge	10.1	17.2	A	B
I-26 WB	Broad River Rd Interchange-Between Ramps	Basic	8.0	14.8	A	B
I-26 WB	Broad River Rd On-Ramp	Merge	6.8	12.5	A	B
I-26 WB	Broad River Rd to Columbia Ave	Basic	8.4	15.7	A	B
I-20 EB	Augusta Rd to Sunset Blvd	Basic	28.2	16.5	D	B
I-20 EB	Sunset Blvd Off-Ramp	Diverge	31.1	17.7	D	B
I-20 EB	Sunset Blvd Interchange- Between Ramps	Basic	22.9	15.3	C	B
I-20 EB	Sunset Blvd On-Ramp (Loop)	Merge	28.1	18.8	D	B
I-20 EB	Sunset Blvd On-Ramp	Merge	25.9	18.4	C	B
I-20 EB	Sunset Blvd to Bush River Rd	Basic	23.8	17.0	C	B
I-20 EB	Bush River Rd Off-Ramp	Diverge	16.5	11.8	B	B
I-20 EB	Bush River Rd to Broad River Rd	Basic	13.6	10.5	B	A
I-20 EB	I-26 CD On-Ramp	Merge	15.8	16.4	B	B
I-20 EB	I-26 WB On-Ramp	Merge	14.4	15.7	B	B
I-20 EB	Broad River Rd Interchange- Between Ramps	Basic	13.5	15.0	B	B
I-20 EB	Broad River Rd Interchange- Between Ramps	Basic	16.3	18.0	B	B
I-20 EB	Broad River Rd On-Ramp	Merge	19.0	21.6	B	C
I-20 EB	Broad River Rd to Broad River Bridge	Basic	20.1	22.4	C	C
I-20 WB	Broad River Bridge To Broad River Rd	Basic	14.4	15.7	B	B
I-20 WB	Broad River Rd Off-Ramp	Diverge	13.9	15.0	B	B
I-20 WB	I-26 CD Off-Ramp	Diverge	10.5	12.9	A	B
I-20 WB	Broad River Rd Interchange-Between Ramps	Basic	5.5	11.1	A	A
I-20 WB	Broad River Rd Interchange- Between Ramps	Basic	5.5	11.1	A	A
I-20 WB	Broad River Rd On-Ramp	Merge	5.4	10.5	A	A
I-20 WB	Broad River Rd to Bush River Rd	Basic	6.0	11.7	A	A
I-20 WB	Bush River Rd Off-Ramp	Diverge	5.6	10.8	A	A
I-20 WB	Broad River Rd to Bush River Rd	Basic	5.7	11.4	A	A
I-20 WB	Bush River Rd Interchange- Between Ramps	Basic	7.4	15.2	A	B

SA Result

I-20 WB	I-26 CD On-Ramp	Merge	10.1	19.9	A	B
I-20 WB	I-26 EB On-Ramp	Merge	11.7	22.6	B	C
I-20 WB	Bush River Rd On-Ramp	Merge	12.3	23.8	B	C
I-20 WB	Bush River Rd to Sunset Blvd	Basic	16.8	39.3	B	E
I-20 WB	Sunset Blvd Off-Ramp	Diverge	19.5	43.4	B	E
I-20 WB	Sunset Blvd Interchange- Between Ramps	Basic	10.8	24.9	A	C
I-20 WB	Sunset Blvd On-Ramp (Loop)	Merge	12.9	25.5	B	C
I-20 WB	Sunset Blvd On-Ramp	Merge	13.7	26.2	B	C
I-20 WB	Sunset Blvd to Augusta Rd	Basic	14.3	27.3	B	D
I-126 WB	Huger St On-Ramp	Merge	8.6	21.7	A	C
I-126 WB	Huger St To Greystone Blvd	Basic	8.6	21.6	A	C
I-126 WB	Greystone Blvd Off-Ramp	Diverge	8.7	21.8	A	C
I-126 WB	Greystone Blvd Interchange- Between Ramps	Basic	6.8	19.4	A	C
I-126 WB	Greystone Blvd On-Ramp	Merge	7.6	21.3	A	C
I-126 WB	Greystone Blvd to Colonial Life Blvd	Basic	8.3	23.2	A	C
I-126 WB	Colonial Life Blvd Off-Ramp	Diverge	6.9	19.0	A	B
I-126 WB	I-26 CD Off-Ramp	Diverge	7.1	19.5	A	B
I-126 WB	Colonial Life Blvd to I-26	Basic	5.9	16.9	A	B
I-126 WB	Colonial Life Blvd to I-26	Weaving	6.1	16.7	A	B
I-126 WB	Colonial Life Blvd to I-26	Basic	6.5	17.1	A	B
I-126 EB	I-26 CD To Colonial Life Blvd	Weaving	18.2	8.4	B	A
I-126 EB	Colonial Life Blvd Interchange- Between Ramps	Basic	15.8	6.9	B	A
I-126 EB	Colonial Life Blvd On-Ramp	Merge	19.0	8.5	B	A
I-126 EB	Colonial Life Blvd to Greystone Blvd	Basic	20.0	9.1	C	A
I-126 EB	Greystone Blvd Off-Ramp (Loop)	Diverge	19.2	8.8	B	A
I-126 EB	Greystone Blvd Interchange- Between Ramps	Basic	16.9	7.7	B	A
I-126 EB	Greystone Blvd On-Ramp	Merge	17.9	9.7	B	A
I-126 EB	Greystone Blvd to Huger St	Basic	19.2	10.3	C	A
I-26 EB	Columbia Ave to Broad River Rd	Basic	9.8	7.0	A	A
I-26 EB	Broad River Rd Off-Ramp	Diverge	9.9	7.2	A	A
I-26 EB	Broad River Rd Interchange-Between Ramps	Basic	10.0	7.3	A	A
I-26 EB	Broad River Rd Off-Ramp (Loop)	Diverge	9.6	7.0	A	A
I-26 EB	Broad River Rd Interchange-Between Ramps	Basic	9.5	7.0	A	A
I-26 EB	Broad River Rd to Lake Murray Blvd	Weaving	13.2	9.6	B	A
I-26 EB	Lake Murray Blvd Off-Ramp (Loop)	Diverge	14.6	10.5	B	A
I-26 EB	Lake Murray Blvd Interchange-Between Ramps	Basic	13.3	10.7	B	A
I-26 EB	Lake Murray Blvd (On-Ramp)	Merge	14.6	11.6	B	B
I-26 EB	Lake Murray Blvd On-Ramp	Merge	15.4	12.3	B	B
I-26 EB	Lake Murray Blvd to Harbison Blvd	Basic	17.9	14.6	B	B
I-26 EB	Harbison Blvd Off-Ramp	Diverge	19.7	16.6	B	B
I-26 EB	Harbison Blvd Interchange-Between Ramps	Basic	17.6	13.1	B	B
I-26 EB	Harbison Blvd to Piney Grove Rd	Weaving	17.7	14.4	B	B
I-26 EB	Piney Grove Rd Interchange-Between Ramps	Basic	19.4	16.2	C	B
I-26 EB	Piney Grove Rd On-Ramp	Merge	15.4	13.2	B	B
I-26 EB	Piney Grove Rd to St Andrews Rd	Basic	15.0	12.8	B	B
I-26 EB	St Andrews Rd Off-Ramp	Diverge	13.3	11.5	B	B
I-26 EB	I-126 EB CD Off-Ramp	Diverge	14.7	12.3	B	B
I-26 EB	System Ramp at I-126	Diverge	14.5	11.6	B	B
I-26 EB	St Andrews Rd Interchange-Between Ramps	Basic	16.3	7.5	B	A
I-26 EB	St Andrews Rd to I-126	Weaving	14.2	8.0	B	A
I-26 EB	I-126 to Sunset Blvd	Basic	8.0	6.9	A	A
I-26 EB	I-20 EB On-Ramp	Merge	10.3	8.7	A	A
I-26 EB	I-126 to Sunset Blvd	Basic	11.7	10.0	A	A
I-26 EB	I-126 to Sunset Blvd	Weaving	15.9	16.2	B	B
I-26 EB	Sunset Blvd Interchange-Between Ramps	Basic	14.4	15.2	B	B
I-26 EB	Sunset Blvd On-Ramp	Merge	16.2	18.4	B	B
I-26 EB	Sunset Blvd to Leaphart Rd	Basic	19.1	21.5	C	C

Intersection	Approach	Lane Group	Delay (s)		Level of Service		Average Queue Length (ft)	
			AM	PM	AM	PM	AM	PM
PINEY GROVE RD & I-26 EB RAMP	*Overall*		***21.1***	***16.8***	***C***	***B***		
	PINEY GROVE RD WB	L	35.4	27.1	D	C	62	35
	PINEY GROVE RD WB	T	3.4	7.2	A	A	3	7
	PINEY GROVE RD EB	T	21.2	19.4	C	B	26	26
	I-26 EB OFF RAMP TO PINEY GROVE RD SEB	L	64.5	64.7	E	E	17	20
	I-26 EB OFF RAMP TO PINEY GROVE RD SEB	R	0.2	0.3	A	A	0	0
PINEY GROVE RD & I-26 WB RAMP	*Overall*		***12.2***	***16.4***	***B***	***B***		
	PINEY GROVE RD SWB	T	10.2	13.8	B	B	16	23
	PINEY GROVE RD SWB	R	7.6	2.8	A	A	4	2
	I-26 WB OFF RAMP TO PINEY GROVE RD NWB	L	56.6	61.5	E	E	37	56
	I-26 WB OFF RAMP TO PINEY GROVE RD NB	R	0.1	0.4	A	A	2	3
	PINEY GROVE RD NEB	L	15.4	28.5	B	C	8	16
	PINEY GROVE RD NEB	T	0.4	2.1	A	A	0	1
ST ANDREWS RD & I-26 EB OFF RAMP	*Overall*		***6.0***	***15.2***	***A***	***B***		
	I-26 EB OFF RAMP TO ST ANDREWS RD SB	T	62.1	62.4	E	E	7	10
	ST ANDREWS RD WB	L	32.6	72.1	C	E	11	31
	ST ANDREWS RD WB	T	0.4	16.5	A	B	1	47
	WOODLAND HILLS RD NB	L	53.9	41.2	D	D	8	24
	WOODLAND HILLS RD NB	R	32.4	14.7	C	B	25	18
	ST ANDREWS RD EB	T	5.6	9.6	A	A	6	13
	ST ANDREWS RD EB	TR	2.3	4.5	A	A	10	15
ST ANDREWS RD & I-26 RAMPS	*Overall*		***51.9***	***47.5***	***D***	***D***		
	ST ANDREWS RD SWB	L	73.3	50.1	E	D	112	96
	ST ANDREWS RD SWB	T	37.1	34.6	D	C	42	62
	I-26 WB OFF RAMP TO ST ANDREWS RD WB	T	56.1	61.9	E	E	80	91
	ST ANDREWS RD NEB	T	34.8	41.3	C	D	26	51
	I-26 EB OFF RAMP TO ST ANDREWS RD SEB	T	48.0	48.3	D	D	8	11
ST. ANDREWS RD & FERNANDINA/BURNING TREE RD	*Overall*		***24.3***	***29.9***	***C***	***C***		
	ST ANDREWS RD SWB	L	39.0	40.9	D	D	4	6
	ST ANDREWS RD SWB	T	32.0	30.2	C	C	40	44
	ST ANDREWS RD SWB	TR	23.7	24.9	C	C	19	37
	BURNING TREE RD NWB	L	58.5	54.0	E	D	20	45
	BURNING TREE RD NWB	T	48.2	51.5	D	D	3	54
	BURNING TREE RD NWB	R	49.3	62.4	D	E	14	47
	ST ANDREWS RD NEB	L	17.5	21.8	B	C	22	21
	ST ANDREWS RD NEB	T	7.3	5.7	A	A	12	10
	ST ANDREWS RD NEB	TR	6.0	5.3	A	A	12	9
	FERNANDINA RD SEB	L	69.2	2002.3	E	F	4	1570
	FERNANDINA RD SEB	T	64.6	681.2	E	F	30	0
BUSH RIVER RD & I-20 EB RAMPS	*Overall*		***11.9***	***8.7***	***B***	***A***		
	BUSH RIVER RD WB	T	6.4	4.8	A	A	5	6
	I-20 EB OFF RAMP TO BUSH RIVER RD NWB	T	31.7	38.4	C	D	35	38
	I-20 EB OFF RAMP TO BUSH RIVER RD EB	T	12.2	7.6	B	A	15	3
	BUSH RIVER RD SEB	T	9.3	12.4	A	B	12	15
BUSH RIVER RD & I-20 WB RAMPS	*Overall*		***6.8***	***6.7***	***A***	***A***		
	I-20 WB OFF RAMP TO BUSH RIVER RD SB	L	15.5	17.4	B	B	3	3
	I-20 WB OFF RAMP TO BUSH RIVER RD WB	T	14.9	16.0	B	B	13	11
	BUSH RIVER RD NWB	T	6.5	5.8	A	A	11	11
	BUSH RIVER RD EB	T	7.5	9.6	A	A	7	12
BUSH RIVER RD & MEADOW CT	*Overall*		***7.2***	***23.9***	***A***	***C***		
	MEADOW CT SWB	LR	25.6	61.5	C	E	12	127
	BUSH RIVER RD NWB	T	6.1	17.2	A	B	8	40
	BUSH RIVER RD NWB	TR	6.5	18.3	A	B	10	40
	BUSH RIVER RD SEB	LT	10.4	25.3	B	C	10	42
	BUSH RIVER RD SEB	T	5.0	15.1	A	B	8	32
SUNSET BLVD & I-20 WB RAMP	*Overall*		***31.0***	***13.1***	***C***	***B***		
	I-20 WB OFF RAMP TO SUNSET BLVD SWB	L	22.2	28.4	C	C	43	41

Intersection	Approach	Lane Group	Delay (s)		Level of Service		Average Queue Length (ft)	
			AM	PM	AM	PM	AM	PM
[illegible]	SUNSET BLVD NWB	T	12.6	13.6	B	B	43	49
	SUNSET BLVD SEB	T	44.0	8.8	D	A	85	25
SUNSET BLVD & I-20 EB RAMP		*Overall*	***17.2***	***9.4***	***B***	***A***		
	SUNSET BLVD NWB	T	11.0	9.0	B	A	8	35
	I-20 EB OFF RAMP TO SUNSET BLVD NEB	L	45.2	38.0	D	D	122	39
	SUNSET BLVD SEB	T	17.3	6.3	B	A	5	22

Intersection	Approach	Lane Group	Delay (s)		Level of Service		Average Queue Length (ft)	
			AM	PM	AM	PM	AM	PM
SUNSET BLVD & I-26 EB & WB RAMPS	*Overall*		***62.5***	***38.8***	***E***	***D***		
	SUNSET BLVD WB	L	51.5	49.3	D	D	22	30
	SUNSET BLVD WB	T	29.1	23.0	C	C	55	49
	I-26 WB OFF RAMP TO SUNSET BLVD NWB	T	48.4	40.0	D	D	53	51
	SUNSET BLVD EB	L	43.7	31.7	D	C	50	42
	SUNSET BLVD EB	T	20.2	19.3	C	B	36	41
	I-26 EB OFF RAMP TO SUNSET BLVD SEB	T	149.9	50.5	F	D	253	91
	I-26 EB OFF RAMP TO SUNSET BLVD SEB	R	86.7	76.0	F	E	152.8	194.6
BROAD RIVER RD & I-20 RAMPS	*Overall*		***25.9***	***27.6***	***C***	***C***		
	I-20 WB OFF RAMP TO BROAD RIVER RD SB	T	49.7	50.1	D	D	58	30
	I-20 WB OFF RAMP TO BROAD RIVER RD SB	R	0.0	0.0	A	A	1	9
	BROAD RIVER RD NWB	L	48.1	49.7	D	D	16	15
	BROAD RIVER RD NWB	T	33.1	34.8	C	C	46	83
	I-20 EB OFF RAMP TO BROAD RIVER RD NB	T	47.2	51.3	D	D	37	42
	BROAD RIVER RD SEB	L	37.9	41.5	D	D	58	57
	BROAD RIVER RD SEB	T	20.4	19.6	C	B	35	28
COLONIAL LIFE BLVD & I-26 WB RAMPS	*Overall*		***7.2***	***31.2***	***A***	***C***		
	COLONIAL LIFE BLVD SWB	T	8.9	41.2	A	D	4	14
	COLONIAL LIFE BLVD SWB	R	10.3	63.6	B	E	14	664
	I-126 WB OFF RAMP TO COLONIAL LIFE BLVD NWB	TR	10.8	23.6	B	C	5	24
	COLONIAL LIFE BLVD NEB	T	2.6	15.1	A	B	7	50
COLONIAL LIFE BLVD W & I-20 EB RAMPS	*Overall*		***21.3***	***21.5***	***C***	***C***		
	COLONIAL LIFE BLVD SWB	L	9.4	33.0	A	C	11	53
	I-26 WB EXIT RAMP TO I-126 EB SEB	L	28.0	19.3	C	B	37	17
GREYSTONE BLVD & STONERIDGE DR	*Overall*		***43.5***	***38.4***	***D***	***D***		
	GREYSTONE BLVD SB	L	95.0	71.5	F	E	56	14
	GREYSTONE BLVD SB	T	34.1	58.5	C	E	25	72
	GREYSTONE BLVD SB	TR	40.2	116.5	D	F	71	182
	STONERIDGE DR WB	L	33.3	28.4	C	C	29	24
	STONERIDGE DR WB	T	25.1	17.7	C	B	6	4
	STONERIDGE DR WB	R	4.1	4.5	A	A	1.0	1.3
	GREYSTONE BLVD NB	L	40.3	31.1	D	C	55.2	23.8
	GREYSTONE BLVD NB	T	11.8	11.5	B	B	10.7	14.0
	GREYSTONE BLVD NB	R	5.4	3.7	A	A	4.7	1.3
	STONERIDGE DR EB	L	43.4	33.0	D	C	12.9	26.2
	STONERIDGE DR EB	T	45.4	21.7	D	C	11.8	4.5
	STONERIDGE DR EB	R	8.8	9.2	A	A	7.4	14.7

Intersection	Approach	Lane Group	Delay (s)		Level of Service		Average Queue Length (ft)	
			AM	PM	AM	PM	AM	PM
Unsignalized Intersections								
Intersection	Approach	Lane Group	Delay (s)		Level of Service		Average Queue Length (ft)	
			AM	PM	AM	PM	AM	PM
BROAD RIVER RD & I-26 EB OFF RAMP	I-26 EB OFF RAMP TO BROAD RIVER RD SWB	R	8.2	8.0	A	A	2	2
	BROAD RIVER RD WB	T	2.6	3.8	A	A	1	2
	BROAD RIVER RD EB	T	0.2	0.3	A	A	0	0
GREYSTONE BLVD & I-126 WB RAMP	GREYSTONE BLVD SB	T	0.0	0.0	A	A	0	0
	GREYSTONE BLVD SB	R	0.0	0.0	A	A	0	2
	I-126 WB OFF RAMP TO GREYSTONE BLVD WB	L	12.2	17.7	B	C	0	0
	I-126 WB OFF RAMP TO GREYSTONE BLVD WB	R	0.1	0.0	A	A	0	0
	GREYSTONE BLVD NB	L	1.4	2.7	A	A	0	1
	GREYSTONE BLVD NB	T	0.2	0.2	A	A	0	0
GREYSTONE BLVD & I-26 EB RAMP	GREYSTONE BLVD SB	L	0.5	12.6	A	B	0	8
	GREYSTONE BLVD SB	T	0.0	0.0	A	A	0	0
	I-26 EB OFF RAMP TO GREYSTONE BLVD (LOOP) WB	L	7.2	51.9	A	F	3	8
	I-26 EB OFF RAMP TO GREYSTONE BLVD (LOOP) WB	R	0.0	0.0	A	A	0	0
	GREYSTONE BLVD NB	TR	0.0	0.0	A	A	0	0
GREYSTONE BLVD & CANDI LN	GREYSTONE BLVD SB	LR	0.0	0.0	A	A	0	0
	GREYSTONE BLVD NWB	T	0.0	4.7	A	A	0	0
	CANDI LN SEB	LT	5.1	5.0	A	A	0	1

Appendix G – 2050 ISATe Outputs

Output Summary

General Information

Project description:	Sample Data				
Analyst:	HDR	Date:	1/21/2025	Area type:	Urban
First year of analysis:	2050				
Last year of analysis	2050				

Crash Data Description

Freeway segments	Segment crash data available	No	First year of crash data	
	Project-level crash data available?	No	Last year of crash data:	
Ramp segments	Segment crash data available?	No	First year of crash data:	
	Project-level crash data available?	No	Last year of crash data:	
Ramp terminals	Segment crash data available?	No	First year of crash data:	
	Project-level crash data available	No	Last year of crash data	

Estimated Crash Statistics

Crashes for Entire Facility		**Total**	**K**	**A**	**B**	**C**	**PDO**
Estimated number of crashes during Study Period, crashes:		28.2	0.2	0.4	2.5	4.7	20.4
Estimated average crash freq. during Study Period, crashes/yr:		28.2	0.2	0.4	2.5	4.7	20.4
Crashes by Facility Component	**Nbr. Sites**	**Total**	**K**	**A**	**B**	**C**	**PDO**
Freeway segments, crashes:	4	28.2	0.2	0.4	2.5	4.7	20.4
Ramp segments, crashes:	0	0.0	0.0	0.0	0.0	0.0	0.0
Crossroad ramp terminals, crashes	0	0.0	0.0	0.0	0.0	0.0	0.0
Crashes for Entire Facility by Year	**Year**	**Total**	**K**	**A**	**B**	**C**	**PDO**
Estimated number of crashes during the Study Period, crashes:	2050	28.2	0.2	0.4	2.5	4.7	20.4
	2051						
	2052						
	2053						
	2054						
	2055						
	2056						
	2057						
	2058						
	2059						
	2060						
	2061						
	2062						
	2063						
	2064						
	2065						
	2066						
	2067						
	2068						
	2069						
	2070						
	2071						
	2072						
	2073						

Distribution of Crashes for Entire Facility

Crash Type	**Crash Type Category**	**Estimated Number of Crashes During the Study Period**					
		Total	**K**	**A**	**B**	**C**	**PDO**
Multiple vehicle	Head-on crashes:	0.1	0.0	0.0	0.0	0.0	0.0
	Right-angle crashes:	0.4	0.0	0.0	0.0	0.1	0.2
	Rear-end crashes:	11.7	0.1	0.2	1.2	2.3	8.0
	Sideswipe crashes	4.0	0.0	0.1	0.3	0.5	3.1
	Other multiple-vehicle crashes	0.4	0.0	0.0	0.0	0.1	0.3
	Total multiple-vehicle crashes:	16.6	0.1	0.3	1.6	3.0	11.6
Single vehicle	Crashes with animal:	0.2	0.0	0.0	0.0	0.0	0.2
	Crashes with fixed object:	8.3	0.0	0.1	0.6	1.2	6.3
	Crashes with other object:	1.4	0.0	0.0	0.0	0.1	1.2
	Crashes with parked vehicle:	0.2	0.0	0.0	0.0	0.0	0.1
	Other single-vehicle crashes	1.5	0.0	0.0	0.2	0.3	0.9
	Total single-vehicle crashes:	11.6	0.1	0.2	0.9	1.7	8.9
	Total crashes:	28.2	0.2	0.4	2.5	4.7	20.4

Evaluation Site Summary

General Information

Project description:	Sample Data				
Analyst:	HDR	Date:	1/21/2025	Area type:	Urban
First year of analysis:	2050	Total length of freeway segments for Study Period (mi):		0.780	
Last year of analysis	2050				

Site Description

Freeway Segments

Number	Lanes	Study Period Length (mi)	Study Period Description
1	10	0.028	0
2	10	0.157	0
3	10	0.085	0
4	10	0.510	0
5	0	0.000	0
6	0	0.000	0
7	0	0.000	0
8	0	0.000	0
9	0	0.000	0
10	0	0.000	0
11	0	0.000	0
12	0	0.000	0
13	0	0.000	0
14	0	0.000	0
15	0	0.000	0
16	0	0.000	0
17	0	0.000	0
18	0	0.000	0
19	0	0.000	0
20	0	0.000	0

Ramp Segments

Number	Study Period Description	Number	Study Period Description
1	0	21	0
2	0	22	0
3	0	23	0
4	0	24	0
5	0	25	0
6	0	26	0
7	0	27	0
8	0	28	0
9	0	29	0
10	0	30	0
11	0	31	0
12	0	32	0
13	0	33	0
14	0	34	0
15	0	35	0
16	0	36	0
17	0	37	0
18	0	38	0
19	0	39	0
20	0	40	0

Crossroad Ramp Terminals

Number	Config.	Control	Study Period Description
1	0	0	0
2	0	0	0
3	0	0	0
4	0	0	0
5	0	0	0
6	0	0	0

Output Summary

General Information

Project description:	Sample Data				
Analyst:	HDR	Date:	1/21/2025	Area type:	Urban
First year of analysis:	2050				
Last year of analysis	2050				

Crash Data Description

Freeway segments	Segment crash data available	No	First year of crash data	
	Project-level crash data available?	No	Last year of crash data:	
Ramp segments	Segment crash data available?	No	First year of crash data:	
	Project-level crash data available?	No	Last year of crash data:	
Ramp terminals	Segment crash data available?	No	First year of crash data:	
	Project-level crash data available	No	Last year of crash data	

Estimated Crash Statistics

Crashes for Entire Facility		**Total**	**K**	**A**	**B**	**C**	**PDO**
Estimated number of crashes during Study Period, crashes:		96.2	0.6	1.5	8.8	16.8	68.7
Estimated average crash freq. during Study Period, crashes/yr:		96.2	0.6	1.5	8.8	16.8	68.7
Crashes by Facility Component	**Nbr. Sites**	**Total**	**K**	**A**	**B**	**C**	**PDO**
Freeway segments, crashes:	16	96.2	0.6	1.5	8.8	16.8	68.7
Ramp segments, crashes:	0	0.0	0.0	0.0	0.0	0.0	0.0
Crossroad ramp terminals, crashes	0	0.0	0.0	0.0	0.0	0.0	0.0
Crashes for Entire Facility by Year	**Year**	**Total**	**K**	**A**	**B**	**C**	**PDO**
Estimated number of crashes during the Study Period, crashes:	2050	96.2	0.6	1.5	8.8	16.8	68.7
	2051						
	2052						
	2053						
	2054						
	2055						
	2056						
	2057						
	2058						
	2059						
	2060						
	2061						
	2062						
	2063						
	2064						
	2065						
	2066						
	2067						
	2068						
	2069						
	2070						
	2071						
	2072						
	2073						

Distribution of Crashes for Entire Facility

Crash Type	**Crash Type Category**	**Estimated Number of Crashes During the Study Period**					
		Total	**K**	**A**	**B**	**C**	**PDO**
Multiple vehicle	Head-on crashes:	0.2	0.0	0.0	0.0	0.1	0.1
	Right-angle crashes:	1.2	0.0	0.0	0.2	0.3	0.7
	Rear-end crashes:	39.6	0.3	0.7	4.2	8.0	26.5
	Sideswipe crashes	13.4	0.1	0.2	1.0	1.9	10.3
	Other multiple-vehicle crashes	1.5	0.0	0.0	0.2	0.3	0.9
	Total multiple-vehicle crashes:	56.0	0.4	0.9	5.6	10.6	38.5
Single vehicle	Crashes with animal:	0.7	0.0	0.0	0.0	0.0	0.7
	Crashes with fixed object:	28.9	0.1	0.4	2.3	4.4	21.6
	Crashes with other object:	4.7	0.0	0.0	0.2	0.3	4.2
	Crashes with parked vehicle:	0.6	0.0	0.0	0.0	0.1	0.5
	Other single-vehicle crashes	5.3	0.0	0.1	0.7	1.3	3.2
	Total single-vehicle crashes:	40.3	0.2	0.5	3.2	6.1	30.2
	Total crashes:	96.2	0.6	1.5	8.8	16.8	68.7

Evaluation Site Summary

General Information

Project description:	Sample Data				
Analyst:	HDR	Date:	1/21/2025	Area type:	Urban
First year of analysis:	2050	Total length of freeway segments for Study Period (mi):	3.569		
Last year of analysis	2050				

Site Description

Freeway Segments

Number	Lanes	Study Period Length (mi)	Study Period Description
1	10	0.488	1
2	10	0.123	2
3	10	0.042	3
4	10	0.119	4
5	10	0.054	5
6	10	0.141	6a
7	10	0.178	6b
8	8	0.783	7
9	9	0.388	8
10	10	0.034	9
11	9	0.062	10
12	6	0.436	11
13	9	0.099	12
14	8	0.192	13
15	8	0.109	14
16	8	0.321	15
17	0	0.000	0
18	0	0.000	0
19	0	0.000	0
20	0	0.000	0

Ramp Segments

Number	Study Period Description		Number	Study Period Description
1	0		21	0
2	0		22	0
3	0		23	0
4	0		24	0
5	0		25	0
6	0		26	0
7	0		27	0
8	0		28	0
9	0		29	0
10	0		30	0
11	0		31	0
12	0		32	0
13	0		33	0
14	0		34	0
15	0		35	0
16	0		36	0
17	0		37	0
18	0		38	0
19	0		39	0
20	0		40	0

Crossroad Ramp Terminals

Number	Config.	Control	Study Period Description
1	0	0	0
2	0	0	0
3	0	0	0
4	0	0	0
5	0	0	0
6	0	0	0

Output Summary

General Information

Project description:	Sample Data				
Analyst:	HDR	Date:	1/21/2025	Area type:	Urban
First year of analysis:	2050				
Last year of analysis	2050				

Crash Data Description

Freeway segments	Segment crash data available	No	First year of crash data	
	Project-level crash data available?	No	Last year of crash data:	
Ramp segments	Segment crash data available?	No	First year of crash data:	
	Project-level crash data available?	No	Last year of crash data:	
Ramp terminals	Segment crash data available?	No	First year of crash data:	
	Project-level crash data available	No	Last year of crash data	

Estimated Crash Statistics

Crashes for Entire Facility		**Total**	**K**	**A**	**B**	**C**	**PDO**
Estimated number of crashes during Study Period, crashes:		22.2	0.2	0.4	2.2	3.8	15.6
Estimated average crash freq. during Study Period, crashes/yr:		22.2	0.2	0.4	2.2	3.8	15.6
Crashes by Facility Component	**Nbr. Sites**	**Total**	**K**	**A**	**B**	**C**	**PDO**
Freeway segments, crashes:	7	22.2	0.2	0.4	2.2	3.8	15.6
Ramp segments, crashes:	0	0.0	0.0	0.0	0.0	0.0	0.0
Crossroad ramp terminals, crashes	0	0.0	0.0	0.0	0.0	0.0	0.0
Crashes for Entire Facility by Year	**Year**	**Total**	**K**	**A**	**B**	**C**	**PDO**
Estimated number of crashes during the Study Period, crashes:	2050	22.2	0.2	0.4	2.2	3.8	15.6
	2051						
	2052						
	2053						
	2054						
	2055						
	2056						
	2057						
	2058						
	2059						
	2060						
	2061						
	2062						
	2063						
	2064						
	2065						
	2066						
	2067						
	2068						
	2069						
	2070						
	2071						
	2072						
	2073						

Distribution of Crashes for Entire Facility

Crash Type	**Crash Type Category**	**Estimated Number of Crashes During the Study Period**					
		Total	**K**	**A**	**B**	**C**	**PDO**
Multiple vehicle	Head-on crashes:	0.1	0.0	0.0	0.0	0.0	0.0
	Right-angle crashes:	0.3	0.0	0.0	0.0	0.1	0.2
	Rear-end crashes:	9.1	0.1	0.2	1.0	1.8	6.0
	Sideswipe crashes	2.9	0.0	0.0	0.3	0.4	2.2
	Other multiple-vehicle crashes	0.3	0.0	0.0	0.0	0.1	0.2
	Total multiple-vehicle crashes:	12.7	0.1	0.3	1.4	2.4	8.5
Single vehicle	Crashes with animal:	0.2	0.0	0.0	0.0	0.0	0.2
	Crashes with fixed object:	6.8	0.0	0.1	0.6	1.0	5.1
	Crashes with other object:	1.1	0.0	0.0	0.0	0.1	1.0
	Crashes with parked vehicle:	0.1	0.0	0.0	0.0	0.0	0.1
	Other single-vehicle crashes	1.2	0.0	0.0	0.2	0.3	0.7
	Total single-vehicle crashes:	9.5	0.1	0.1	0.8	1.4	7.1
	Total crashes:	22.2	0.2	0.4	2.2	3.8	15.6

Evaluation Site Summary

General Information

Project description:	Sample Data				
Analyst:	HDR	Date:	1/21/2025	Area type:	Urban
First year of analysis:	2050	Total length of freeway segments for Study Period (mi):		1.080	
Last year of analysis	2050				

Site Description

Freeway Segments

Number	Lanes	Study Period Length (mi)	Study Period Description
1	8	0.021	0
2	8	0.019	0
3	8	0.150	0
4	8	0.139	0
5	8	0.213	0
6	8	0.068	0
7	8	0.470	0
8	0	0.000	0
9	0	0.000	0
10	0	0.000	0
11	0	0.000	0
12	0	0.000	0
13	0	0.000	0
14	0	0.000	0
15	0	0.000	0
16	0	0.000	0
17	0	0.000	0
18	0	0.000	0
19	0	0.000	0
20	0	0.000	0

Ramp Segments

Number	Study Period Description	Number	Study Period Description
1	0	21	0
2	0	22	0
3	0	23	0
4	0	24	0
5	0	25	0
6	0	26	0
7	0	27	0
8	0	28	0
9	0	29	0
10	0	30	0
11	0	31	0
12	0	32	0
13	0	33	0
14	0	34	0
15	0	35	0
16	0	36	0
17	0	37	0
18	0	38	0
19	0	39	0
20	0	40	0

Crossroad Ramp Terminals

Number	Config.	Control	Study Period Description
1	0	0	0
2	0	0	0
3	0	0	0
4	0	0	0
5	0	0	0
6	0	0	0

Output Summary

General Information

Project description:	Sample Data				
Analyst:	HDR	Date:	1/21/2025	Area type:	Urban
First year of analysis:	2050				
Last year of analysis	2050				

Crash Data Description

Freeway segments	Segment crash data available	No	First year of crash data	
	Project-level crash data available?	No	Last year of crash data:	
Ramp segments	Segment crash data available?	No	First year of crash data:	
	Project-level crash data available?	No	Last year of crash data:	
Ramp terminals	Segment crash data available?	No	First year of crash data:	
	Project-level crash data available	No	Last year of crash data	

Estimated Crash Statistics

Crashes for Entire Facility		**Total**	**K**	**A**	**B**	**C**	**PDO**
Estimated number of crashes during Study Period, crashes:		123.6	0.9	2.4	12.8	23.8	83.7
Estimated average crash freq. during Study Period, crashes/yr:		123.6	0.9	2.4	12.8	23.8	83.7
Crashes by Facility Component	**Nbr. Sites**	**Total**	**K**	**A**	**B**	**C**	**PDO**
Freeway segments, crashes:	20	97.1	0.7	1.8	9.5	16.4	68.7
Ramp segments, crashes:	18	26.5	0.2	0.6	3.3	7.4	15.0
Crossroad ramp terminals, crashes	0	0.0	0.0	0.0	0.0	0.0	0.0
Crashes for Entire Facility by Year	**Year**	**Total**	**K**	**A**	**B**	**C**	**PDO**
Estimated number of crashes during the Study Period, crashes:	2050	123.6	0.9	2.4	12.8	23.8	83.7
	2051						
	2052						
	2053						
	2054						
	2055						
	2056						
	2057						
	2058						
	2059						
	2060						
	2061						
	2062						
	2063						
	2064						
	2065						
	2066						
	2067						
	2068						
	2069						
	2070						
	2071						
	2072						
	2073						

Distribution of Crashes for Entire Facility

Crash Type	**Crash Type Category**	**Estimated Number of Crashes During the Study Period**					
		Total	**K**	**A**	**B**	**C**	**PDO**
Multiple vehicle	Head-on crashes:	0.5	0.0	0.0	0.1	0.2	0.2
	Right-angle crashes:	1.4	0.0	0.0	0.2	0.4	0.8
	Rear-end crashes:	54.0	0.4	1.2	6.4	12.1	33.9
	Sideswipe crashes	19.0	0.1	0.3	1.4	2.7	14.5
	Other multiple-vehicle crashes	3.8	0.0	0.1	0.5	1.1	2.1
	Total multiple-vehicle crashes:	78.7	0.6	1.6	8.6	16.5	51.4
Single vehicle	Crashes with animal:	0.7	0.0	0.0	0.0	0.0	0.6
	Crashes with fixed object:	32.7	0.2	0.6	3.0	5.3	23.6
	Crashes with other object:	4.6	0.0	0.0	0.2	0.3	4.0
	Crashes with parked vehicle:	0.7	0.0	0.0	0.1	0.1	0.5
	Other single-vehicle crashes	6.3	0.1	0.2	0.9	1.6	3.5
	Total single-vehicle crashes:	44.9	0.3	0.8	4.2	7.3	32.3
	Total crashes:	123.6	0.9	2.4	12.8	23.8	83.7

Evaluation Site Summary

General Information

Project description:	Sample Data				
Analyst:	HDR	Date:	1/21/2025	Area type:	Urban
First year of analysis:	2050	Total length of freeway segments for Study Period (mi):	4.223		
Last year of analysis	2050				

Site Description

Freeway Segments

Number	Lanes	Study Period Length (mi)	Study Period Description
1	7	0.188	0
2	7	0.068	0
3	8	0.878	0
4	8	0.111	0
5	8	0.079	0
6	8	0.031	0
7	8	0.030	0
8	9	0.298	0
9	7	0.119	0
10	7	0.029	0
11	7	0.029	0
12	7	0.055	0
13	7	0.269	0
14	6	0.549	0
15	7	0.777	0
16	7	0.131	0
17	9	0.146	0
18	10	0.179	0
19	10	0.220	0
20	10	0.037	0

Ramp Segments

Number	Study Period Description	Number	Study Period Description
1	US378-I20EB On	21	0
2	I20EB-I26 1	22	0
3	I20EB-BushR Off 1	23	0
4	I20EB-BushR Off 2	24	0
5	BushR So-I20EB I26 On	25	0
6	I20EB-I26 2	26	0
7	I20EB-I26 3	27	0
8	BushR No-I20 I26 On	28	0
9	I20EB-I26 4	29	0
10	I26-I20EB 10	30	0
11	I26-I20EB 11	31	0
12	I26 I20EB-BroadR Off	32	0
13	I26 I20EB-BroadRSo Off	33	0
14	I26 I20EB-BroadRNo Off	34	0
15	BroadRNo-I20 On	35	0
16	BroadRSo-I20 On	36	0
17	BroadR-I20 On 1	37	0
18	BroadR-I20 On 2	38	0
19	0	39	0
20	0	40	0

Crossroad Ramp Terminals

Number	Config.	Control	Study Period Description
1	0	0	0
2	0	0	0
3	0	0	0
4	0	0	0
5	0	0	0
6	0	0	0

Output Summary

General Information

Project description:	Sample Data				
Analyst:	HDR	Date:	1/21/2025	Area type:	Urban
First year of analysis:	2050				
Last year of analysis	2050				

Crash Data Description

Freeway segments	Segment crash data available	No	First year of crash data	
	Project-level crash data available?	No	Last year of crash data:	
Ramp segments	Segment crash data available?	No	First year of crash data:	
	Project-level crash data available?	No	Last year of crash data:	
Ramp terminals	Segment crash data available?	No	First year of crash data:	
	Project-level crash data available	No	Last year of crash data	

Estimated Crash Statistics

Crashes for Entire Facility		**Total**	**K**	**A**	**B**	**C**	**PDO**
Estimated number of crashes during Study Period, crashes:		45.5	0.3	0.8	4.3	8.9	31.2
Estimated average crash freq. during Study Period, crashes/yr:		45.5	0.3	0.8	4.3	8.9	31.2
Crashes by Facility Component	**Nbr. Sites**	**Total**	**K**	**A**	**B**	**C**	**PDO**
Freeway segments, crashes:	4	27.9	0.2	0.4	2.4	4.6	20.3
Ramp segments, crashes:	18	17.7	0.1	0.4	2.0	4.4	10.8
Crossroad ramp terminals, crashes	0	0.0	0.0	0.0	0.0	0.0	0.0
Crashes for Entire Facility by Year	**Year**	**Total**	**K**	**A**	**B**	**C**	**PDO**
Estimated number of crashes during the Study Period, crashes:	2050	45.5	0.3	0.8	4.3	8.9	31.2
	2051						
	2052						
	2053						
	2054						
	2055						
	2056						
	2057						
	2058						
	2059						
	2060						
	2061						
	2062						
	2063						
	2064						
	2065						
	2066						
	2067						
	2068						
	2069						
	2070						
	2071						
	2072						
	2073						

Distribution of Crashes for Entire Facility

Crash Type	**Crash Type Category**	**Estimated Number of Crashes During the Study Period**					
		Total	**K**	**A**	**B**	**C**	**PDO**
Multiple vehicle	Head-on crashes:	0.2	0.0	0.0	0.0	0.1	0.1
	Right-angle crashes:	0.5	0.0	0.0	0.1	0.1	0.3
	Rear-end crashes:	20.0	0.1	0.4	2.2	4.5	12.8
	Sideswipe crashes	7.5	0.0	0.1	0.5	1.0	5.9
	Other multiple-vehicle crashes	1.9	0.0	0.0	0.2	0.5	1.1
	Total multiple-vehicle crashes:	30.0	0.2	0.5	2.9	6.2	20.1
Single vehicle	Crashes with animal:	0.2	0.0	0.0	0.0	0.0	0.2
	Crashes with fixed object:	11.5	0.1	0.2	1.0	2.0	8.3
	Crashes with other object:	1.3	0.0	0.0	0.0	0.1	1.2
	Crashes with parked vehicle:	0.2	0.0	0.0	0.0	0.0	0.2
	Other single-vehicle crashes	2.3	0.0	0.1	0.3	0.6	1.2
	Total single-vehicle crashes:	15.5	0.1	0.3	1.4	2.7	11.0
	Total crashes:	45.5	0.3	0.8	4.3	8.9	31.2

Evaluation Site Summary

General Information

Project description:	Sample Data				
Analyst:	HDR	Date:	1/21/2025	Area type:	Urban
First year of analysis:	2050	Total length of freeway segments for Study Period (mi):		0.751	
Last year of analysis	2050				

Site Description

Freeway Segments

Number	Lanes	Study Period Length (mi)	Study Period Description
1	10	0.374	21
2	9	0.188	22
3	8	0.050	23
4	7	0.139	24
5	0	0.000	0
6	0	0.000	0
7	0	0.000	0
8	0	0.000	0
9	0	0.000	0
10	0	0.000	0
11	0	0.000	0
12	0	0.000	0
13	0	0.000	0
14	0	0.000	0
15	0	0.000	0
16	0	0.000	0
17	0	0.000	0
18	0	0.000	0
19	0	0.000	0
20	0	0.000	0

Ramp Segments

Number	Study Period Description	Number	Study Period Description
1	I20WB-BroadR Off	21	0
2	I20WB-BroadRSo Off	22	0
3	I20WB-BroadRNo Off	23	0
4	BroadRSo On	24	0
5	BroadRNo On	25	0
6	BroadR-I20WB I26	26	0
7	BroadR-I20 WB	27	0
8	BroadR-I26	28	0
9	I20WB-I26 1	29	0
10	I20WB-I26 2	30	0
11	I26-I20WB 11	31	0
12	I26-I20WB 2	32	0
13	I26-BushR Off	33	0
14	I20WB-BushR Off	34	0
15	BushR Off 1	35	0
16	BushR Off 2	36	0
17	Bush R On 1	37	0
18	Bush R On 2	38	0
19	0	39	0
20	0	40	0

Crossroad Ramp Terminals

Number	Config.	Control	Study Period Description
1	0	0	0
2	0	0	0
3	0	0	0
4	0	0	0
5	0	0	0
6	0	0	0

Output Summary

General Information

Project description:	Sample Data				
Analyst:	JAB	Date:	1/21/2025	Area type:	Urban
First year of analysis:	2050				
Last year of analysis	2050				

Crash Data Description

Freeway segments	Segment crash data available	No	First year of crash data	
	Project-level crash data available?	No	Last year of crash data:	
Ramp segments	Segment crash data available?	No	First year of crash data:	
	Project-level crash data available?	No	Last year of crash data:	
Ramp terminals	Segment crash data available?	No	First year of crash data:	
	Project-level crash data available	No	Last year of crash data	

Estimated Crash Statistics

Crashes for Entire Facility	**Total**	**K**	**A**	**B**	**C**	**PDO**
Estimated number of crashes during Study Period, crashes:	77.4	0.7	2.0	10.6	26.8	37.4
Estimated average crash freq. during Study Period, crashes/yr:	77.4	0.7	2.0	10.6	26.8	37.4

Crashes by Facility Component	**Nbr. Sites**	**Total**	**K**	**A**	**B**	**C**	**PDO**
Freeway segments, crashes:	0	0.0	0.0	0.0	0.0	0.0	0.0
Ramp segments, crashes:	31	77.4	0.7	2.0	10.6	26.8	37.4
Crossroad ramp terminals, crashes	0	0.0	0.0	0.0	0.0	0.0	0.0

Crashes for Entire Facility by Year	**Year**	**Total**	**K**	**A**	**B**	**C**	**PDO**
Estimated number of crashes during the Study Period, crashes:	2050	77.4	0.7	2.0	10.6	26.8	37.4
	2051						
	2052						
	2053						
	2054						
	2055						
	2056						
	2057						
	2058						
	2059						
	2060						
	2061						
	2062						
	2063						
	2064						
	2065						
	2066						
	2067						
	2068						
	2069						
	2070						
	2071						
	2072						
	2073						

Distribution of Crashes for Entire Facility

Crash Type	**Crash Type Category**	**Estimated Number of Crashes During the Study Period**					
		Total	**K**	**A**	**B**	**C**	**PDO**
Multiple vehicle	Head-on crashes:	0.8	0.0	0.0	0.1	0.3	0.3
	Right-angle crashes:	0.5	0.0	0.0	0.1	0.2	0.1
	Rear-end crashes:	39.9	0.4	1.2	6.3	16.4	15.6
	Sideswipe crashes	13.9	0.1	0.2	1.2	3.0	9.5
	Other multiple-vehicle crashes	7.6	0.1	0.2	1.2	3.2	2.9
	Total multiple-vehicle crashes:	62.7	0.6	1.7	9.0	23.2	28.3
Single vehicle	Crashes with animal:	0.1	0.0	0.0	0.0	0.0	0.0
	Crashes with fixed object:	11.6	0.1	0.2	1.2	2.5	7.6
	Crashes with other object:	0.3	0.0	0.0	0.0	0.1	0.2
	Crashes with parked vehicle:	0.2	0.0	0.0	0.0	0.0	0.1
	Other single-vehicle crashes	2.6	0.0	0.1	0.4	0.9	1.1
	Total single-vehicle crashes:	14.7	0.1	0.3	1.6	3.5	9.1
	Total crashes:	77.4	0.7	2.0	10.6	26.8	37.4

Evaluation Site Summary

General Information

Project description:	Sample Data				
Analyst:	JAB	Date:	1/21/2025	Area type:	Urban
First year of analysis:	2050	Total length of freeway segments for Study Period (mi):		0.000	
Last year of analysis	2050				

Site Description

Freeway Segments

Number	Lanes	Study Period Length (mi)	Study Period Description
1	0	0.000	0
2	0	0.000	0
3	0	0.000	0
4	0	0.000	0
5	0	0.000	0
6	0	0.000	0
7	0	0.000	0
8	0	0.000	0
9	0	0.000	0
10	0	0.000	0
11	0	0.000	0
12	0	0.000	0
13	0	0.000	0
14	0	0.000	0
15	0	0.000	0
16	0	0.000	0
17	0	0.000	0
18	0	0.000	0
19	0	0.000	0
20	0	0.000	0

Ramp Segments

Number	Study Period Description	Number	Study Period Description
1	EB I-26 to St A - 1	21	EB I-26 CD - 7
2	EB I-26 to St A - 2	22	NB I-26 to WB I-26 CD and
3	SB St A to I-20	23	NB I-26 to WB I-26 CD and
4	EB I-26 to I-20 - 1	24	NB I-26 to EB I-126 CD - 3
5	EB I-26 to I-20 - 2	25	NB I-26 to EB I-126 CD - 4
6	EB I-26 to I-20 - 3	26	EB I-126 CD to Colonial Lif
7	EB I-26 CD to SB I-20	27	EB I-126 to Colonial Life
8	EB I-26 CD to NB I-20 - 1	28	Ramp to Colonial Life
9	EB I-26 CD to NB I-20 - 2	29	EB I-126 CD to EB I-126
10	EB I-26 CD to NB I-20 - 3	30	Colonial Life to EB I-126
11	EB I-26 CD - 1	31	Ramp to EB I-126
12	EB I-26 CD - 2	32	0
13	EB I-26 CD - 3	33	0
14	EB I-26 CD - 4	34	0
15	EB I-26 CD to SB I-26	35	0
16	I-26 CDs to SB I-20 - 1	36	0
17	I-26 CDs to SB I-20 - 2	37	0
18	EB I-26 CD - 5	38	0
19	EB I-26 to EB I-26 CD	39	0
20	EB I-26 CD - 6	40	0

Crossroad Ramp Terminals

Number	Config.	Control	Study Period Description
1	0	0	0
2	0	0	0
3	0	0	0
4	0	0	0
5	0	0	0
6	0	0	0

Output Summary

General Information

Project description:	Sample Data				
Analyst:	JAB	Date:	1/21/2025	Area type:	Urban
First year of analysis:	2050				
Last year of analysis	2050				

Crash Data Description

Freeway segments	Segment crash data available	No	First year of crash data	
	Project-level crash data available?	No	Last year of crash data:	
Ramp segments	Segment crash data available?	No	First year of crash data:	
	Project-level crash data available?	No	Last year of crash data:	
Ramp terminals	Segment crash data available?	No	First year of crash data:	
	Project-level crash data available	No	Last year of crash data	

Estimated Crash Statistics

Crashes for Entire Facility		**Total**	**K**	**A**	**B**	**C**	**PDO**
Estimated number of crashes during Study Period, crashes:		38.5	0.2	0.7	3.7	8.0	25.9
Estimated average crash freq. during Study Period, crashes/yr:		38.5	0.2	0.7	3.7	8.0	25.9
Crashes by Facility Component	**Nbr. Sites**	**Total**	**K**	**A**	**B**	**C**	**PDO**
Freeway segments, crashes:	0	0.0	0.0	0.0	0.0	0.0	0.0
Ramp segments, crashes:	40	38.5	0.2	0.7	3.7	8.0	25.9
Crossroad ramp terminals, crashes	0	0.0	0.0	0.0	0.0	0.0	0.0
Crashes for Entire Facility by Year	**Year**	**Total**	**K**	**A**	**B**	**C**	**PDO**
Estimated number of crashes during the Study Period, crashes:	2050	38.5	0.2	0.7	3.7	8.0	25.9
	2051						
	2052						
	2053						
	2054						
	2055						
	2056						
	2057						
	2058						
	2059						
	2060						
	2061						
	2062						
	2063						
	2064						
	2065						
	2066						
	2067						
	2068						
	2069						
	2070						
	2071						
	2072						
	2073						

Distribution of Crashes for Entire Facility

Crash Type	**Crash Type Category**	**Estimated Number of Crashes During the Study Period**					
		Total	**K**	**A**	**B**	**C**	**PDO**
Multiple vehicle	Head-on crashes:	0.3	0.0	0.0	0.0	0.1	0.2
	Right-angle crashes:	0.2	0.0	0.0	0.0	0.0	0.1
	Rear-end crashes:	14.7	0.1	0.3	1.5	3.5	9.4
	Sideswipe crashes	6.7	0.0	0.0	0.3	0.6	5.7
	Other multiple-vehicle crashes	2.8	0.0	0.1	0.3	0.7	1.7
	Total multiple-vehicle crashes:	24.6	0.1	0.4	2.1	4.9	17.1
Single vehicle	Crashes with animal:	0.1	0.0	0.0	0.0	0.0	0.0
	Crashes with fixed object:	11.0	0.1	0.2	1.1	2.2	7.4
	Crashes with other object:	0.3	0.0	0.0	0.0	0.0	0.2
	Crashes with parked vehicle:	0.2	0.0	0.0	0.0	0.0	0.1
	Other single-vehicle crashes	2.4	0.0	0.1	0.4	0.8	1.1
	Total single-vehicle crashes:	13.9	0.1	0.3	1.6	3.1	8.9
	Total crashes:	38.5	0.2	0.7	3.7	8.0	25.9

Evaluation Site Summary

General Information

Project description:	Sample Data				
Analyst:	JAB	Date:	1/21/2025	Area type:	Urban
First year of analysis:	2050	Total length of freeway segments for Study Period (mi):		0.000	
Last year of analysis	2050				

Site Description

Freeway Segments

Number	Lanes	Study Period Length (mi)	Study Period Description
1	0	0.000	0
2	0	0.000	0
3	0	0.000	0
4	0	0.000	0
5	0	0.000	0
6	0	0.000	0
7	0	0.000	0
8	0	0.000	0
9	0	0.000	0
10	0	0.000	0
11	0	0.000	0
12	0	0.000	0
13	0	0.000	0
14	0	0.000	0
15	0	0.000	0
16	0	0.000	0
17	0	0.000	0
18	0	0.000	0
19	0	0.000	0
20	0	0.000	0

Ramp Segments

Number	Study Period Description	Number	Study Period Description
1	WB I-126 to Colonial Life	21	WB I-26 CD to SB I-20 - 2
2	Colonial Life to WB I-126/W	22	WB I-26 CD to SB I-20 - 3
3	Colonial Life to WB I-126	23	WB I-26 CD to SB I-20 - 4
4	Colonial Life to WB I-20 CD	24	WB I-26 CD - 5
5	WB I-126 to I-20 CD - 1	25	WB I-26 CD - 6
6	WB I-126 to I-20 CD - 2	26	NB I-20 CD to EB I-26 CD
7	WB I-126 to I-20 CD - 3	27	NB I-20 CD - 1
8	WB I-126 to I-20 CD - 4	28	NB I-20 CD - 2
9	WB I-126 to I-20 CD - 5	29	NB I-20 CD - 3
10	WB I-126 to I-20 CD - 6	30	NB I-20 CD to WB I-26 CD
11	WB I-126 to I-20 CD - 7	31	NB I-20 CD to WB I-26 CD
12	WB I-126 to WB I-26 - 1	32	SB I-20 CD to EB I-26 CD -
13	WB I-126 to WB I-26 - 2	33	SB I-20 CD to EB I-26 CD -
14	WB I-126 to WB I-26 - 3	34	SB I-20 CD to EB I-26 CD -
15	WB I-126 to WB I-126 CD	35	SB I-20 CD to WB I-26 CD
16	NB I-26 to WB I-26 CD - 1	36	SB I-20 CD to WB I-26 CD
17	NB I-26 to WB I-26 CD - 2	37	WB I-26 CD to WB I-26
18	WB I-26 CD - 1	38	WB I-26 CD to St Andrews
19	WB I-26 CD to NB I-20 - 1	39	WB I-26 CD - 7
20	WB I-26 CD to NB I-20 - 2	40	WB I-26 CD to St Andrews

Crossroad Ramp Terminals

Number	Config.	Control	Study Period Description
1	0	0	0
2	0	0	0
3	0	0	0
4	0	0	0
5	0	0	0
6	0	0	0

Output Summary

General Information

Project description:	Sample Data				
Analyst:	JAB	Date:	1/21/2025	Area type:	Urban
First year of analysis:	2050				
Last year of analysis	2050				

Crash Data Description

Freeway segments	Segment crash data available	No	First year of crash data	
	Project-level crash data available?	No	Last year of crash data:	
Ramp segments	Segment crash data available?	No	First year of crash data:	
	Project-level crash data available?	No	Last year of crash data:	
Ramp terminals	Segment crash data available?	No	First year of crash data:	
	Project-level crash data available	No	Last year of crash data	

Estimated Crash Statistics

Crashes for Entire Facility	**Total**	**K**	**A**	**B**	**C**	**PDO**
Estimated number of crashes during Study Period, crashes:	3.6	0.0	0.1	0.5	0.7	2.2
Estimated average crash freq. during Study Period, crashes/yr:	3.6	0.0	0.1	0.5	0.7	2.2

Crashes by Facility Component	**Nbr. Sites**	**Total**	**K**	**A**	**B**	**C**	**PDO**
Freeway segments, crashes:	0	0.0	0.0	0.0	0.0	0.0	0.0
Ramp segments, crashes:	4	3.6	0.0	0.1	0.5	0.7	2.2
Crossroad ramp terminals, crashes	0	0.0	0.0	0.0	0.0	0.0	0.0

Crashes for Entire Facility by Year	**Year**	**Total**	**K**	**A**	**B**	**C**	**PDO**
Estimated number of crashes during the Study Period, crashes:	2050	3.6	0.0	0.1	0.5	0.7	2.2
	2051						
	2052						
	2053						
	2054						
	2055						
	2056						
	2057						
	2058						
	2059						
	2060						
	2061						
	2062						
	2063						
	2064						
	2065						
	2066						
	2067						
	2068						
	2069						
	2070						
	2071						
	2072						
	2073						

Distribution of Crashes for Entire Facility

Crash Type	**Crash Type Category**	**Estimated Number of Crashes During the Study Period**					
		Total	**K**	**A**	**B**	**C**	**PDO**
Multiple vehicle	Head-on crashes:	0.0	0.0	0.0	0.0	0.0	0.0
	Right-angle crashes:	0.0	0.0	0.0	0.0	0.0	0.0
	Rear-end crashes:	0.2	0.0	0.0	0.0	0.0	0.1
	Sideswipe crashes	0.1	0.0	0.0	0.0	0.0	0.1
	Other multiple-vehicle crashes	0.0	0.0	0.0	0.0	0.0	0.0
	Total multiple-vehicle crashes:	0.3	0.0	0.0	0.0	0.0	0.2
Single vehicle	Crashes with animal:	0.0	0.0	0.0	0.0	0.0	0.0
	Crashes with fixed object:	2.6	0.0	0.1	0.3	0.5	1.7
	Crashes with other object:	0.1	0.0	0.0	0.0	0.0	0.0
	Crashes with parked vehicle:	0.0	0.0	0.0	0.0	0.0	0.0
	Other single-vehicle crashes	0.6	0.0	0.0	0.1	0.2	0.3
	Total single-vehicle crashes:	3.3	0.0	0.1	0.5	0.7	2.0
	Total crashes:	3.6	0.0	0.1	0.5	0.7	2.2

Evaluation Site Summary

General Information

Project description:	Sample Data				
Analyst:	JAB	Date:	1/21/2025	Area type:	Urban
First year of analysis:	2050	Total length of freeway segments for Study Period (mi):		0.000	
Last year of analysis	2050				

Site Description

Freeway Segments

Number	Lanes	Study Period Length (mi)	Study Period Description
1	0	0.000	0
2	0	0.000	0
3	0	0.000	0
4	0	0.000	0
5	0	0.000	0
6	0	0.000	0
7	0	0.000	0
8	0	0.000	0
9	0	0.000	0
10	0	0.000	0
11	0	0.000	0
12	0	0.000	0
13	0	0.000	0
14	0	0.000	0
15	0	0.000	0
16	0	0.000	0
17	0	0.000	0
18	0	0.000	0
19	0	0.000	0
20	0	0.000	0

Ramp Segments

Number	Study Period Description	Number	Study Period Description
1	WB I-26 CD to St Andrews	21	0
2	WB I-26 CD to St Andrews	22	0
3	WB I-26 CD to St Andrews	23	0
4	St Andrews to WB I-26	24	0
5	0	25	0
6	0	26	0
7	0	27	0
8	0	28	0
9	0	29	0
10	0	30	0
11	0	31	0
12	0	32	0
13	0	33	0
14	0	34	0
15	0	35	0
16	0	36	0
17	0	37	0
18	0	38	0
19	0	39	0
20	0	40	0

Crossroad Ramp Terminals

Number	Config.	Control	Study Period Description
1	0	0	0
2	0	0	0
3	0	0	0
4	0	0	0
5	0	0	0
6	0	0	0

Output Summary

General Information

Project description:	Sample Data				
Analyst:	HDR	Date:	1/21/2025	Area type:	Urban
First year of analysis:	2050				
Last year of analysis	2050				

Crash Data Description

Freeway segments	Segment crash data available	No	First year of crash data	
	Project-level crash data available?	No	Last year of crash data:	
Ramp segments	Segment crash data available?	No	First year of crash data:	
	Project-level crash data available?	No	Last year of crash data:	
Ramp terminals	Segment crash data available?	No	First year of crash data:	
	Project-level crash data available	No	Last year of crash data	

Estimated Crash Statistics

Crashes for Entire Facility	**Total**	**K**	**A**	**B**	**C**	**PDO**
Estimated number of crashes during Study Period, crashes:	52.9	0.3	0.8	4.6	8.8	38.5
Estimated average crash freq. during Study Period, crashes/yr:	52.9	0.3	0.8	4.6	8.8	38.5

Crashes by Facility Component	**Nbr. Sites**	**Total**	**K**	**A**	**B**	**C**	**PDO**
Freeway segments, crashes:	5	52.9	0.3	0.8	4.6	8.8	38.5
Ramp segments, crashes:	0	0.0	0.0	0.0	0.0	0.0	0.0
Crossroad ramp terminals, crashes	0	0.0	0.0	0.0	0.0	0.0	0.0

Crashes for Entire Facility by Year	**Year**	**Total**	**K**	**A**	**B**	**C**	**PDO**
Estimated number of crashes during the Study Period, crashes:	2050	52.9	0.3	0.8	4.6	8.8	38.5
	2051						
	2052						
	2053						
	2054						
	2055						
	2056						
	2057						
	2058						
	2059						
	2060						
	2061						
	2062						
	2063						
	2064						
	2065						
	2066						
	2067						
	2068						
	2069						
	2070						
	2071						
	2072						
	2073						

Distribution of Crashes for Entire Facility

Crash Type	**Crash Type Category**	**Estimated Number of Crashes During the Study Period**					
		Total	**K**	**A**	**B**	**C**	**PDO**
Multiple vehicle	Head-on crashes:	0.1	0.0	0.0	0.0	0.0	0.0
	Right-angle crashes:	0.7	0.0	0.0	0.1	0.2	0.4
	Rear-end crashes:	22.0	0.1	0.4	2.2	4.3	15.0
	Sideswipe crashes	7.5	0.0	0.1	0.5	1.0	5.8
	Other multiple-vehicle crashes	0.8	0.0	0.0	0.1	0.2	0.5
	Total multiple-vehicle crashes:	31.1	0.2	0.5	3.0	5.7	21.7
Single vehicle	Crashes with animal:	0.4	0.0	0.0	0.0	0.0	0.4
	Crashes with fixed object:	15.7	0.1	0.2	1.2	2.2	12.0
	Crashes with other object:	2.6	0.0	0.0	0.1	0.2	2.3
	Crashes with parked vehicle:	0.3	0.0	0.0	0.0	0.0	0.3
	Other single-vehicle crashes	2.8	0.0	0.1	0.3	0.6	1.8
	Total single-vehicle crashes:	21.8	0.1	0.3	1.6	3.1	16.7
	Total crashes:	52.9	0.3	0.8	4.6	8.8	38.5

Evaluation Site Summary

General Information

Project description:	Sample Data				
Analyst:	HDR	Date:	1/21/2025	Area type:	Urban
First year of analysis:	2050	Total length of freeway segments for Study Period (mi):		1.450	
Last year of analysis	2050				

Site Description

Freeway Segments

Number	Lanes	Study Period Length (mi)	Study Period Description
1	10	0.028	0
2	10	0.157	0
3	10	0.085	0
4	10	0.510	0
5	10	0.670	0
6	0	0.000	0
7	0	0.000	0
8	0	0.000	0
9	0	0.000	0
10	0	0.000	0
11	0	0.000	0
12	0	0.000	0
13	0	0.000	0
14	0	0.000	0
15	0	0.000	0
16	0	0.000	0
17	0	0.000	0
18	0	0.000	0
19	0	0.000	0
20	0	0.000	0

Ramp Segments

Number	Study Period Description	Number	Study Period Description
1	0	21	0
2	0	22	0
3	0	23	0
4	0	24	0
5	0	25	0
6	0	26	0
7	0	27	0
8	0	28	0
9	0	29	0
10	0	30	0
11	0	31	0
12	0	32	0
13	0	33	0
14	0	34	0
15	0	35	0
16	0	36	0
17	0	37	0
18	0	38	0
19	0	39	0
20	0	40	0

Crossroad Ramp Terminals

Number	Config.	Control	Study Period Description
1	0	0	0
2	0	0	0
3	0	0	0
4	0	0	0
5	0	0	0
6	0	0	0

Output Summary

General Information

Project description:	Sample Data				
Analyst:	HDR	Date:	1/21/2025	Area type:	Urban
First year of analysis:	2050				
Last year of analysis	2050				

Crash Data Description

Freeway segments	Segment crash data available	No	First year of crash data	
	Project-level crash data available?	No	Last year of crash data:	
Ramp segments	Segment crash data available?	No	First year of crash data:	
	Project-level crash data available?	No	Last year of crash data:	
Ramp terminals	Segment crash data available?	No	First year of crash data:	
	Project-level crash data available	No	Last year of crash data	

Estimated Crash Statistics

Crashes for Entire Facility	**Total**	**K**	**A**	**B**	**C**	**PDO**
Estimated number of crashes during Study Period, crashes:	71.5	0.5	1.2	6.9	12.6	50.4
Estimated average crash freq. during Study Period, crashes/yr:	71.5	0.5	1.2	6.9	12.6	50.4

Crashes by Facility Component	**Nbr. Sites**	**Total**	**K**	**A**	**B**	**C**	**PDO**
Freeway segments, crashes:	20	71.5	0.5	1.2	6.9	12.6	50.4
Ramp segments, crashes:	0	0.0	0.0	0.0	0.0	0.0	0.0
Crossroad ramp terminals, crashes	0	0.0	0.0	0.0	0.0	0.0	0.0

Crashes for Entire Facility by Year	**Year**	**Total**	**K**	**A**	**B**	**C**	**PDO**
Estimated number of crashes during the Study Period, crashes:	2050	71.5	0.5	1.2	6.9	12.6	50.4
	2051						
	2052						
	2053						
	2054						
	2055						
	2056						
	2057						
	2058						
	2059						
	2060						
	2061						
	2062						
	2063						
	2064						
	2065						
	2066						
	2067						
	2068						
	2069						
	2070						
	2071						
	2072						
	2073						

Distribution of Crashes for Entire Facility

Crash Type	**Crash Type Category**	**Estimated Number of Crashes During the Study Period**					
		Total	**K**	**A**	**B**	**C**	**PDO**
Multiple vehicle	Head-on crashes:	0.2	0.0	0.0	0.0	0.1	0.1
	Right-angle crashes:	0.9	0.0	0.0	0.1	0.2	0.5
	Rear-end crashes:	28.7	0.2	0.6	3.2	5.9	18.9
	Sideswipe crashes	9.7	0.1	0.1	0.8	1.4	7.4
	Other multiple-vehicle crashes	1.1	0.0	0.0	0.1	0.2	0.6
	Total multiple-vehicle crashes:	40.5	0.3	0.8	4.3	7.8	27.4
Single vehicle	Crashes with animal:	0.5	0.0	0.0	0.0	0.0	0.5
	Crashes with fixed object:	22.2	0.1	0.3	1.9	3.5	16.4
	Crashes with other object:	3.6	0.0	0.0	0.1	0.2	3.2
	Crashes with parked vehicle:	0.5	0.0	0.0	0.0	0.1	0.4
	Other single-vehicle crashes	4.1	0.0	0.1	0.6	1.0	2.4
	Total single-vehicle crashes:	31.0	0.2	0.5	2.6	4.8	22.9
	Total crashes:	71.5	0.5	1.2	6.9	12.6	50.4

Evaluation Site Summary

General Information

Project description:	Sample Data				
Analyst:	HDR	Date:	1/21/2025	Area type:	Urban
First year of analysis:	2050	Total length of freeway segments for Study Period (mi):		2.887	
Last year of analysis	2050				

Site Description

Freeway Segments

Number	Lanes	Study Period Length (mi)	Study Period Description
1	10	0.133	0
2	10	0.079	0
3	9	0.043	0
4	9	0.225	0
5	9	0.110	0
6	8	0.139	0
7	8	0.038	0
8	10	0.314	0
9	10	0.027	0
10	10	0.469	0
11	10	0.137	0
12	9	0.010	0
13	8	0.104	0
14	8	0.341	0
15	7	0.133	0
16	7	0.090	0
17	7	0.095	0
18	9	0.028	0
19	9	0.055	0
20	9	0.317	0

Ramp Segments

Number	Study Period Description	Number	Study Period Description
1	0	21	0
2	0	22	0
3	0	23	0
4	0	24	0
5	0	25	0
6	0	26	0
7	0	27	0
8	0	28	0
9	0	29	0
10	0	30	0
11	0	31	0
12	0	32	0
13	0	33	0
14	0	34	0
15	0	35	0
16	0	36	0
17	0	37	0
18	0	38	0
19	0	39	0
20	0	40	0

Crossroad Ramp Terminals

Number	Config.	Control	Study Period Description
1	0	0	0
2	0	0	0
3	0	0	0
4	0	0	0
5	0	0	0
6	0	0	0

Output Summary

General Information

Project description:	Sample Data				
Analyst:	HDR	Date:	1/21/2025	Area type:	Urban
First year of analysis:	2050				
Last year of analysis	2050				

Crash Data Description

Freeway segments	Segment crash data available	No	First year of crash data	
	Project-level crash data available?	No	Last year of crash data:	
Ramp segments	Segment crash data available?	No	First year of crash data:	
	Project-level crash data available?	No	Last year of crash data:	
Ramp terminals	Segment crash data available?	No	First year of crash data:	
	Project-level crash data available	No	Last year of crash data	

Estimated Crash Statistics

Crashes for Entire Facility	**Total**	**K**	**A**	**B**	**C**	**PDO**
Estimated number of crashes during Study Period, crashes:	21.5	0.1	0.4	2.1	3.7	15.2
Estimated average crash freq. during Study Period, crashes/yr:	21.5	0.1	0.4	2.1	3.7	15.2

Crashes by Facility Component	**Nbr. Sites**	**Total**	**K**	**A**	**B**	**C**	**PDO**
Freeway segments, crashes:	6	21.5	0.1	0.4	2.1	3.7	15.2
Ramp segments, crashes:	0	0.0	0.0	0.0	0.0	0.0	0.0
Crossroad ramp terminals, crashes	0	0.0	0.0	0.0	0.0	0.0	0.0

Crashes for Entire Facility by Year	**Year**	**Total**	**K**	**A**	**B**	**C**	**PDO**
Estimated number of crashes during the Study Period, crashes:	2050	21.5	0.1	0.4	2.1	3.7	15.2
	2051						
	2052						
	2053						
	2054						
	2055						
	2056						
	2057						
	2058						
	2059						
	2060						
	2061						
	2062						
	2063						
	2064						
	2065						
	2066						
	2067						
	2068						
	2069						
	2070						
	2071						
	2072						
	2073						

Distribution of Crashes for Entire Facility

Crash Type	**Crash Type Category**	**Estimated Number of Crashes During the Study Period**					
		Total	**K**	**A**	**B**	**C**	**PDO**
Multiple vehicle	Head-on crashes:	0.1	0.0	0.0	0.0	0.0	0.0
	Right-angle crashes:	0.3	0.0	0.0	0.0	0.1	0.2
	Rear-end crashes:	9.8	0.1	0.2	1.1	1.9	6.6
	Sideswipe crashes	3.1	0.0	0.0	0.3	0.5	2.3
	Other multiple-vehicle crashes	0.3	0.0	0.0	0.0	0.1	0.2
	Total multiple-vehicle crashes:	13.6	0.1	0.3	1.4	2.5	9.3
Single vehicle	Crashes with animal:	0.1	0.0	0.0	0.0	0.0	0.1
	Crashes with fixed object:	5.7	0.0	0.1	0.5	0.9	4.2
	Crashes with other object:	0.9	0.0	0.0	0.0	0.1	0.8
	Crashes with parked vehicle:	0.1	0.0	0.0	0.0	0.0	0.1
	Other single-vehicle crashes	1.0	0.0	0.0	0.1	0.2	0.6
	Total single-vehicle crashes:	7.9	0.0	0.1	0.7	1.2	5.9
	Total crashes:	21.5	0.1	0.4	2.1	3.7	15.2

Evaluation Site Summary

General Information

Project description:	Sample Data				
Analyst:	HDR	Date:	1/21/2025	Area type:	Urban
First year of analysis:	2050	Total length of freeway segments for Study Period (mi):		1.046	
Last year of analysis	2050				

Site Description

Freeway Segments

Number	Lanes	Study Period Length (mi)	Study Period Description
1	6	0.039	0
2	8	0.031	0
3	8	0.215	0
4	8	0.263	0
5	8	0.196	0
6	8	0.302	0
7	0	0.000	0
8	0	0.000	0
9	0	0.000	0
10	0	0.000	0
11	0	0.000	0
12	0	0.000	0
13	0	0.000	0
14	0	0.000	0
15	0	0.000	0
16	0	0.000	0
17	0	0.000	0
18	0	0.000	0
19	0	0.000	0
20	0	0.000	0

Ramp Segments

Number	Study Period Description	Number	Study Period Description
1	0	21	0
2	0	22	0
3	0	23	0
4	0	24	0
5	0	25	0
6	0	26	0
7	0	27	0
8	0	28	0
9	0	29	0
10	0	30	0
11	0	31	0
12	0	32	0
13	0	33	0
14	0	34	0
15	0	35	0
16	0	36	0
17	0	37	0
18	0	38	0
19	0	39	0
20	0	40	0

Crossroad Ramp Terminals

Number	Config.	Control	Study Period Description
1	0	0	0
2	0	0	0
3	0	0	0
4	0	0	0
5	0	0	0
6	0	0	0

Output Summary

General Information

Project description:	Sample Data				
Analyst:	HDR	Date:	1/21/2025	Area type:	Urban
First year of analysis:	2050				
Last year of analysis	2050				

Crash Data Description

Freeway segments	Segment crash data available	No	First year of crash data	
	Project-level crash data available?	No	Last year of crash data:	
Ramp segments	Segment crash data available?	No	First year of crash data:	
	Project-level crash data available?	No	Last year of crash data:	
Ramp terminals	Segment crash data available?	No	First year of crash data:	
	Project-level crash data available	No	Last year of crash data	

Estimated Crash Statistics

Crashes for Entire Facility		**Total**	**K**	**A**	**B**	**C**	**PDO**
Estimated number of crashes during Study Period, crashes:		113.4	0.8	2.1	11.3	21.5	77.8
Estimated average crash freq. during Study Period, crashes/yr:		113.4	0.8	2.1	11.3	21.5	77.8
Crashes by Facility Component	**Nbr. Sites**	**Total**	**K**	**A**	**B**	**C**	**PDO**
Freeway segments, crashes:	10	82.0	0.5	1.4	7.7	13.7	58.7
Ramp segments, crashes:	25	31.4	0.2	0.7	3.6	7.9	19.0
Crossroad ramp terminals, crashes	0	0.0	0.0	0.0	0.0	0.0	0.0
Crashes for Entire Facility by Year	**Year**	**Total**	**K**	**A**	**B**	**C**	**PDO**
Estimated number of crashes during the Study Period, crashes:	2050	113.4	0.8	2.1	11.3	21.5	77.8
	2051						
	2052						
	2053						
	2054						
	2055						
	2056						
	2057						
	2058						
	2059						
	2060						
	2061						
	2062						
	2063						
	2064						
	2065						
	2066						
	2067						
	2068						
	2069						
	2070						
	2071						
	2072						
	2073						

Distribution of Crashes for Entire Facility

Crash Type	**Crash Type Category**	**Estimated Number of Crashes During the Study Period**					
		Total	**K**	**A**	**B**	**C**	**PDO**
Multiple vehicle	Head-on crashes:	0.4	0.0	0.0	0.1	0.2	0.2
	Right-angle crashes:	1.3	0.0	0.0	0.2	0.3	0.7
	Rear-end crashes:	49.7	0.4	1.0	5.6	10.9	31.9
	Sideswipe crashes	17.9	0.1	0.2	1.2	2.4	14.0
	Other multiple-vehicle crashes	3.9	0.0	0.1	0.5	1.1	2.2
	Total multiple-vehicle crashes:	73.3	0.5	1.4	7.6	14.8	49.0
Single vehicle	Crashes with animal:	0.6	0.0	0.0	0.0	0.0	0.5
	Crashes with fixed object:	29.5	0.2	0.5	2.7	4.8	21.3
	Crashes with other object:	3.9	0.0	0.0	0.2	0.3	3.4
	Crashes with parked vehicle:	0.6	0.0	0.0	0.1	0.1	0.4
	Other single-vehicle crashes	5.7	0.1	0.2	0.8	1.5	3.2
	Total single-vehicle crashes:	40.2	0.3	0.7	3.7	6.7	28.8
	Total crashes:	113.4	0.8	2.1	11.3	21.5	77.8

Evaluation Site Summary

General Information

Project description:	Sample Data				
Analyst:	HDR	Date:	1/21/2025	Area type:	Urban
First year of analysis:	2050	Total length of freeway segments for Study Period (mi):		3.553	
Last year of analysis	2050				

Site Description

Freeway Segments

Number	Lanes	Study Period Length (mi)	Study Period Description
1	6	0.255	0
2	7	0.694	0
3	8	0.220	0
4	9	0.086	0
5	10	0.249	0
6	7	0.384	0
7	7	0.207	0
8	6	0.220	0
9	7	0.376	0
10	7	0.862	0
11	0	0.000	0
12	0	0.000	0
13	0	0.000	0
14	0	0.000	0
15	0	0.000	0
16	0	0.000	0
17	0	0.000	0
18	0	0.000	0
19	0	0.000	0
20	0	0.000	0

Ramp Segments

Number	Study Period Description	Number	Study Period Description
1	US378-I20EB On	21	I26 I20EB-BroadRNo Off
2	I20EB-I26 1	22	BroadRNo-I20EB On
3	I20EB-BushR Off 1	23	BroadRSo-I20EB On
4	I20EB-BushR Off 2	24	BroadR-I20EB On 1
5	I20EB-BushRSo Off	25	BroadR-I20EB On 2
6	I20EB-BushRNo Off	26	0
7	BushRNo-I20EB I26 On	27	0
8	BushRSo-I20EB I26 On	28	0
9	BushR-I20EB I26 On	29	0
10	I20EB-I26 2	30	0
11	I20EB-I26 3	31	0
12	I20EB-I26EB 1	32	0
13	I20EB-I26WB 1	33	0
14	I20EB-I26WB 2	34	0
15	I20EB-I20EB	35	0
16	I26EB-I20EB 10	36	0
17	I26-I20EB 1	37	0
18	I26-I20EB 2	38	0
19	I26 I20EB-BroadR Off	39	0
20	I26 I20EB-BroadRSo Off	40	0

Crossroad Ramp Terminals

Number	Config.	Control	Study Period Description
1	0	0	0
2	0	0	0
3	0	0	0
4	0	0	0
5	0	0	0
6	0	0	0

Output Summary

General Information

Project description:	Sample Data				
Analyst:	HDR	Date:	1/21/2025	Area type:	Urban
First year of analysis:	2050				
Last year of analysis	2050				

Crash Data Description

Freeway segments	Segment crash data available	No	First year of crash data	
	Project-level crash data available?	No	Last year of crash data:	
Ramp segments	Segment crash data available?	No	First year of crash data:	
	Project-level crash data available?	No	Last year of crash data:	
Ramp terminals	Segment crash data available?	No	First year of crash data:	
	Project-level crash data available	No	Last year of crash data	

Estimated Crash Statistics

Crashes for Entire Facility		**Total**	**K**	**A**	**B**	**C**	**PDO**
Estimated number of crashes during Study Period, crashes:		40.0	0.2	0.6	3.6	6.8	28.7
Estimated average crash freq. during Study Period, crashes/yr:		40.0	0.2	0.6	3.6	6.8	28.7
Crashes by Facility Component	**Nbr. Sites**	**Total**	**K**	**A**	**B**	**C**	**PDO**
Freeway segments, crashes:	8	40.0	0.2	0.6	3.6	6.8	28.7
Ramp segments, crashes:	0	0.0	0.0	0.0	0.0	0.0	0.0
Crossroad ramp terminals, crashes	0	0.0	0.0	0.0	0.0	0.0	0.0
Crashes for Entire Facility by Year	**Year**	**Total**	**K**	**A**	**B**	**C**	**PDO**
Estimated number of crashes during the Study Period, crashes:	2050	40.0	0.2	0.6	3.6	6.8	28.7
	2051						
	2052						
	2053						
	2054						
	2055						
	2056						
	2057						
	2058						
	2059						
	2060						
	2061						
	2062						
	2063						
	2064						
	2065						
	2066						
	2067						
	2068						
	2069						
	2070						
	2071						
	2072						
	2073						

Distribution of Crashes for Entire Facility

Crash Type	**Crash Type Category**	**Estimated Number of Crashes During the Study Period**					
		Total	**K**	**A**	**B**	**C**	**PDO**
Multiple vehicle	Head-on crashes:	0.1	0.0	0.0	0.0	0.0	0.0
	Right-angle crashes:	0.5	0.0	0.0	0.1	0.1	0.3
	Rear-end crashes:	17.4	0.1	0.3	1.8	3.4	11.8
	Sideswipe crashes	6.0	0.0	0.1	0.4	0.8	4.6
	Other multiple-vehicle crashes	0.6	0.0	0.0	0.1	0.1	0.4
	Total multiple-vehicle crashes:	24.7	0.2	0.4	2.4	4.5	17.2
Single vehicle	Crashes with animal:	0.3	0.0	0.0	0.0	0.0	0.3
	Crashes with fixed object:	11.0	0.1	0.2	0.9	1.6	8.3
	Crashes with other object:	1.8	0.0	0.0	0.1	0.1	1.6
	Crashes with parked vehicle:	0.2	0.0	0.0	0.0	0.0	0.2
	Other single-vehicle crashes	2.0	0.0	0.0	0.3	0.5	1.2
	Total single-vehicle crashes:	15.3	0.1	0.2	1.2	2.3	11.6
	Total crashes:	40.0	0.2	0.6	3.6	6.8	28.7

Evaluation Site Summary

General Information

Project description:	Sample Data				
Analyst:	HDR	Date:	1/21/2025	Area type:	Urban
First year of analysis:	2050	Total length of freeway segments for Study Period (mi):		1.412	
Last year of analysis	2050				

Site Description

Freeway Segments

Number	Lanes	Study Period Length (mi)	Study Period Description
1	7	0.077	0
2	9	0.344	0
3	8	0.209	0
4	10	0.011	0
5	10	0.393	0
6	9	0.190	0
7	8	0.047	0
8	7	0.141	0
9	0	0.000	0
10	0	0.000	0
11	0	0.000	0
12	0	0.000	0
13	0	0.000	0
14	0	0.000	0
15	0	0.000	0
16	0	0.000	0
17	0	0.000	0
18	0	0.000	0
19	0	0.000	0
20	0	0.000	0

Ramp Segments

Number	Study Period Description	Number	Study Period Description
1	0	21	0
2	0	22	0
3	0	23	0
4	0	24	0
5	0	25	0
6	0	26	0
7	0	27	0
8	0	28	0
9	0	29	0
10	0	30	0
11	0	31	0
12	0	32	0
13	0	33	0
14	0	34	0
15	0	35	0
16	0	36	0
17	0	37	0
18	0	38	0
19	0	39	0
20	0	40	0

Crossroad Ramp Terminals

Number	Config.	Control	Study Period Description
1	0	0	0
2	0	0	0
3	0	0	0
4	0	0	0
5	0	0	0
6	0	0	0

Output Summary

General Information

Project description:	Sample Data				
Analyst:	HDR	Date:	1/21/2025	Area type:	Urban
First year of analysis:	2050				
Last year of analysis	2050				

Crash Data Description

Freeway segments	Segment crash data available	No	First year of crash data	
	Project-level crash data available?	No	Last year of crash data:	
Ramp segments	Segment crash data available?	No	First year of crash data:	
	Project-level crash data available?	No	Last year of crash data:	
Ramp terminals	Segment crash data available?	No	First year of crash data:	
	Project-level crash data available	No	Last year of crash data	

Estimated Crash Statistics

Crashes for Entire Facility	**Total**	**K**	**A**	**B**	**C**	**PDO**
Estimated number of crashes during Study Period, crashes:	25.3	0.2	0.5	2.8	6.0	15.8
Estimated average crash freq. during Study Period, crashes/yr:	25.3	0.2	0.5	2.8	6.0	15.8

Crashes by Facility Component	**Nbr. Sites**	**Total**	**K**	**A**	**B**	**C**	**PDO**
Freeway segments, crashes:	0	0.0	0.0	0.0	0.0	0.0	0.0
Ramp segments, crashes:	23	25.3	0.2	0.5	2.8	6.0	15.8
Crossroad ramp terminals, crashes	0	0.0	0.0	0.0	0.0	0.0	0.0

Crashes for Entire Facility by Year	**Year**	**Total**	**K**	**A**	**B**	**C**	**PDO**
Estimated number of crashes during the Study Period, crashes:	2050	25.3	0.2	0.5	2.8	6.0	15.8
	2051						
	2052						
	2053						
	2054						
	2055						
	2056						
	2057						
	2058						
	2059						
	2060						
	2061						
	2062						
	2063						
	2064						
	2065						
	2066						
	2067						
	2068						
	2069						
	2070						
	2071						
	2072						
	2073						

Distribution of Crashes for Entire Facility

Crash Type	**Crash Type Category**	**Estimated Number of Crashes During the Study Period**					
		Total	**K**	**A**	**B**	**C**	**PDO**
Multiple vehicle	Head-on crashes:	0.2	0.0	0.0	0.0	0.1	0.1
	Right-angle crashes:	0.1	0.0	0.0	0.0	0.0	0.1
	Rear-end crashes:	10.6	0.1	0.2	1.3	2.9	6.0
	Sideswipe crashes	4.5	0.0	0.0	0.2	0.5	3.7
	Other multiple-vehicle crashes	2.0	0.0	0.0	0.3	0.6	1.1
	Total multiple-vehicle crashes:	17.4	0.1	0.3	1.9	4.2	11.0
Single vehicle	Crashes with animal:	0.0	0.0	0.0	0.0	0.0	0.0
	Crashes with fixed object:	6.2	0.0	0.1	0.7	1.3	4.0
	Crashes with other object:	0.2	0.0	0.0	0.0	0.0	0.1
	Crashes with parked vehicle:	0.1	0.0	0.0	0.0	0.0	0.1
	Other single-vehicle crashes	1.4	0.0	0.0	0.2	0.5	0.6
	Total single-vehicle crashes:	7.8	0.1	0.2	0.9	1.8	4.8
	Total crashes:	25.3	0.2	0.5	2.8	6.0	15.8

Evaluation Site Summary

General Information

Project description:	Sample Data				
Analyst:	HDR	Date:	1/21/2025	Area type:	Urban
First year of analysis:	2050	Total length of freeway segments for Study Period (mi):		0.000	
Last year of analysis	2050				

Site Description

Freeway Segments

Number	Lanes	Study Period Length (mi)	Study Period Description
1	0	0.000	0
2	0	0.000	0
3	0	0.000	0
4	0	0.000	0
5	0	0.000	0
6	0	0.000	0
7	0	0.000	0
8	0	0.000	0
9	0	0.000	0
10	0	0.000	0
11	0	0.000	0
12	0	0.000	0
13	0	0.000	0
14	0	0.000	0
15	0	0.000	0
16	0	0.000	0
17	0	0.000	0
18	0	0.000	0
19	0	0.000	0
20	0	0.000	0

Ramp Segments

Number	Study Period Description	Number	Study Period Description
1	I20WB-BroadR Off 1	21	BushRSo-I20WB On
2	I20WB-BroadR Off 2	22	BushRNo-I20WB On
3	I20WB-BroadRNo Off	23	BushR-I20WB On
4	I20WB-BroadRSo Off	24	0
5	BroadRNo-I20WB On	25	0
6	BroadRSo-I20WB On	26	0
7	BroadR-I20WB 1	27	0
8	BroadR-I20WB 2	28	0
9	BroadR-I20WB I26	29	0
10	I20WB-I26 1	30	0
11	I20WB-I26 2	31	0
12	I20WB-I26WB	32	0
13	I20WB-I26EB	33	0
14	I20WB-BushR Off	34	0
15	I26-I20WB 10	35	0
16	I-26-I20WB 11	36	0
17	I26-BushR	37	0
18	I20WB I26-BushR	38	0
19	I20WB I26-BushRNo Off	39	0
20	I20WB I26-BushRSo Off	40	0

Crossroad Ramp Terminals

Number	Config.	Control	Study Period Description
1	0	0	0
2	0	0	0
3	0	0	0
4	0	0	0
5	0	0	0
6	0	0	0

Output Summary

General Information

Project description:	Sample Data				
Analyst:	HDR	Date:	1/21/2025	Area type:	Urban
First year of analysis:	2050				
Last year of analysis	2050				

Crash Data Description

Freeway segments	Segment crash data available	No	First year of crash data	
	Project-level crash data available?	No	Last year of crash data:	
Ramp segments	Segment crash data available?	No	First year of crash data:	
	Project-level crash data available?	No	Last year of crash data:	
Ramp terminals	Segment crash data available?	No	First year of crash data:	
	Project-level crash data available	No	Last year of crash data	

Estimated Crash Statistics

Crashes for Entire Facility	**Total**	**K**	**A**	**B**	**C**	**PDO**
Estimated number of crashes during Study Period, crashes:	18.1	0.1	0.3	1.7	3.9	12.1
Estimated average crash freq. during Study Period, crashes/yr:	18.1	0.1	0.3	1.7	3.9	12.1

Crashes by Facility Component	**Nbr. Sites**	**Total**	**K**	**A**	**B**	**C**	**PDO**
Freeway segments, crashes:	0	0.0	0.0	0.0	0.0	0.0	0.0
Ramp segments, crashes:	16	18.1	0.1	0.3	1.7	3.9	12.1
Crossroad ramp terminals, crashes	0	0.0	0.0	0.0	0.0	0.0	0.0

Crashes for Entire Facility by Year	**Year**	**Total**	**K**	**A**	**B**	**C**	**PDO**
Estimated number of crashes during the Study Period, crashes:	2050	18.1	0.1	0.3	1.7	3.9	12.1
	2051						
	2052						
	2053						
	2054						
	2055						
	2056						
	2057						
	2058						
	2059						
	2060						
	2061						
	2062						
	2063						
	2064						
	2065						
	2066						
	2067						
	2068						
	2069						
	2070						
	2071						
	2072						
	2073						

Distribution of Crashes for Entire Facility

Crash Type	**Crash Type Category**	**Estimated Number of Crashes During the Study Period**					
		Total	**K**	**A**	**B**	**C**	**PDO**
Multiple vehicle	Head-on crashes:	0.1	0.0	0.0	0.0	0.0	0.1
	Right-angle crashes:	0.1	0.0	0.0	0.0	0.0	0.0
	Rear-end crashes:	7.9	0.1	0.2	0.8	2.0	4.9
	Sideswipe crashes	3.6	0.0	0.0	0.2	0.4	3.0
	Other multiple-vehicle crashes	1.5	0.0	0.0	0.2	0.4	0.9
	Total multiple-vehicle crashes:	13.2	0.1	0.2	1.2	2.8	9.0
Single vehicle	Crashes with animal:	0.0	0.0	0.0	0.0	0.0	0.0
	Crashes with fixed object:	3.9	0.0	0.1	0.4	0.8	2.6
	Crashes with other object:	0.1	0.0	0.0	0.0	0.0	0.1
	Crashes with parked vehicle:	0.1	0.0	0.0	0.0	0.0	0.0
	Other single-vehicle crashes	0.8	0.0	0.0	0.1	0.3	0.4
	Total single-vehicle crashes:	4.9	0.0	0.1	0.5	1.1	3.1
	Total crashes:	18.1	0.1	0.3	1.7	3.9	12.1

Evaluation Site Summary

General Information

Project description:	Sample Data				
Analyst:	HDR	Date:	1/21/2025	Area type:	Urban
First year of analysis:	2050	Total length of freeway segments for Study Period (mi):		0.000	
Last year of analysis	2050				

Site Description

Freeway Segments

Number	Lanes	Study Period Length (mi)	Study Period Description
1	0	0.000	0
2	0	0.000	0
3	0	0.000	0
4	0	0.000	0
5	0	0.000	0
6	0	0.000	0
7	0	0.000	0
8	0	0.000	0
9	0	0.000	0
10	0	0.000	0
11	0	0.000	0
12	0	0.000	0
13	0	0.000	0
14	0	0.000	0
15	0	0.000	0
16	0	0.000	0
17	0	0.000	0
18	0	0.000	0
19	0	0.000	0
20	0	0.000	0

Ramp Segments

Number	Study Period Description	Number	Study Period Description
1	I26EB-St Andrews Off 1	21	0
2	I26EB-St Andrews Off 2	22	0
3	I26EB-St Andrews Off 3	23	0
4	I26EB-St Andrews Off 4	24	0
5	I26EB to I-20 Ramp CD1	25	0
6	I26EB to I-20 Ramp CD2	26	0
7	I-26 EB to I-20 WB Ramp	27	0
8	I-26 EB to I-20 EB Ramp	28	0
9	St AndrewsNo On-I26EB	29	0
10	St AndrewsSo-I26EB On	30	0
11	St Andrews On-I26EB I20	31	0
12	St Andrews On-I26EB I20 2	32	0
13	St Andrews On-I26 EB	33	0
14	I20-I126 I26EB 1	34	0
15	I20-I126 2	35	0
16	I20-I26EB	36	0
17	0	37	0
18	0	38	0
19	0	39	0
20	0	40	0

Crossroad Ramp Terminals

Number	Config.	Control	Study Period Description
1	0	0	0
2	0	0	0
3	0	0	0
4	0	0	0
5	0	0	0
6	0	0	0

Output Summary

General Information

Project description:	Sample Data				
Analyst:	HDR	Date:	1/21/2025	Area type:	Urban
First year of analysis:	2050				
Last year of analysis	2050				

Crash Data Description

Freeway segments	Segment crash data available	No	First year of crash data	
	Project-level crash data available?	No	Last year of crash data:	
Ramp segments	Segment crash data available?	No	First year of crash data:	
	Project-level crash data available?	No	Last year of crash data:	
Ramp terminals	Segment crash data available?	No	First year of crash data:	
	Project-level crash data available	No	Last year of crash data	

Estimated Crash Statistics

Crashes for Entire Facility	**Total**	**K**	**A**	**B**	**C**	**PDO**
Estimated number of crashes during Study Period, crashes:	45.1	0.5	1.5	7.8	18.6	16.8
Estimated average crash freq. during Study Period, crashes/yr:	45.1	0.5	1.5	7.8	18.6	16.8

Crashes by Facility Component	**Nbr. Sites**	**Total**	**K**	**A**	**B**	**C**	**PDO**
Freeway segments, crashes:	0	0.0	0.0	0.0	0.0	0.0	0.0
Ramp segments, crashes:	12	45.1	0.5	1.5	7.8	18.6	16.8
Crossroad ramp terminals, crashes	0	0.0	0.0	0.0	0.0	0.0	0.0

Crashes for Entire Facility by Year	**Year**	**Total**	**K**	**A**	**B**	**C**	**PDO**
Estimated number of crashes during the Study Period, crashes:	2050	45.1	0.5	1.5	7.8	18.6	16.8
	2051						
	2052						
	2053						
	2054						
	2055						
	2056						
	2057						
	2058						
	2059						
	2060						
	2061						
	2062						
	2063						
	2064						
	2065						
	2066						
	2067						
	2068						
	2069						
	2070						
	2071						
	2072						
	2073						

Distribution of Crashes for Entire Facility

Crash Type	**Crash Type Category**	**Estimated Number of Crashes During the Study Period**					
		Total	**K**	**A**	**B**	**C**	**PDO**
Multiple vehicle	Head-on crashes:	0.5	0.0	0.0	0.1	0.3	0.1
	Right-angle crashes:	0.3	0.0	0.0	0.1	0.2	0.1
	Rear-end crashes:	26.8	0.3	1.0	5.2	12.5	7.8
	Sideswipe crashes	8.2	0.1	0.2	0.9	2.3	4.8
	Other multiple-vehicle crashes	5.2	0.1	0.2	1.0	2.4	1.4
	Total multiple-vehicle crashes:	41.0	0.5	1.4	7.4	17.6	14.2
Single vehicle	Crashes with animal:	0.0	0.0	0.0	0.0	0.0	0.0
	Crashes with fixed object:	3.2	0.0	0.1	0.3	0.7	2.2
	Crashes with other object:	0.1	0.0	0.0	0.0	0.0	0.1
	Crashes with parked vehicle:	0.0	0.0	0.0	0.0	0.0	0.0
	Other single-vehicle crashes	0.7	0.0	0.0	0.1	0.2	0.3
	Total single-vehicle crashes:	4.1	0.0	0.1	0.5	0.9	2.6
	Total crashes:	45.1	0.5	1.5	7.8	18.6	16.8

Evaluation Site Summary

General Information

Project description:	Sample Data				
Analyst:	HDR	Date:	1/21/2025	Area type:	Urban
First year of analysis:	2050	Total length of freeway segments for Study Period (mi):		0.000	
Last year of analysis	2050				

Site Description

Freeway Segments

Number	Lanes	Study Period Length (mi)	Study Period Description
1	0	0.000	0
2	0	0.000	0
3	0	0.000	0
4	0	0.000	0
5	0	0.000	0
6	0	0.000	0
7	0	0.000	0
8	0	0.000	0
9	0	0.000	0
10	0	0.000	0
11	0	0.000	0
12	0	0.000	0
13	0	0.000	0
14	0	0.000	0
15	0	0.000	0
16	0	0.000	0
17	0	0.000	0
18	0	0.000	0
19	0	0.000	0
20	0	0.000	0

Ramp Segments

Number	Study Period Description	Number	Study Period Description
1	I-126 EB CD1	21	0
2	I-126 EB CD2	22	0
3	I-126 EB CD3	23	0
4	I-126 EB ColLife Off	24	0
5	I-26 WB CD Ramp to I-126	25	0
6	I-26 WB CD Ramp to I-126	26	0
7	I-26 WB CD Ramp to I-126	27	0
8	I-26 WB CD Ramp to I-126	28	0
9	I-26 WB CD Ramp to I-126	29	0
10	I-26WB CD to ColLife Off	30	0
11	ColLife EB Off Ramp	31	0
12	ColLife EB On Ramp	32	0
13	0	33	0
14	0	34	0
15	0	35	0
16	0	36	0
17	0	37	0
18	0	38	0
19	0	39	0
20	0	40	0

Crossroad Ramp Terminals

Number	Config.	Control	Study Period Description
1	0	0	0
2	0	0	0
3	0	0	0
4	0	0	0
5	0	0	0
6	0	0	0

Output Summary

General Information

Project description:	Sample Data				
Analyst:	HDR	Date:	1/21/2025	Area type:	Urban
First year of analysis:	2050				
Last year of analysis	2050				

Crash Data Description

Freeway segments	Segment crash data available	No	First year of crash data	
	Project-level crash data available?	No	Last year of crash data:	
Ramp segments	Segment crash data available?	No	First year of crash data:	
	Project-level crash data available?	No	Last year of crash data:	
Ramp terminals	Segment crash data available?	No	First year of crash data:	
	Project-level crash data available	No	Last year of crash data	

Estimated Crash Statistics

Crashes for Entire Facility		**Total**	**K**	**A**	**B**	**C**	**PDO**
Estimated number of crashes during Study Period, crashes:		26.7	0.2	0.5	2.8	5.8	17.5
Estimated average crash freq. during Study Period, crashes/yr:		26.7	0.2	0.5	2.8	5.8	17.5
Crashes by Facility Component	**Nbr. Sites**	**Total**	**K**	**A**	**B**	**C**	**PDO**
Freeway segments, crashes:	0	0.0	0.0	0.0	0.0	0.0	0.0
Ramp segments, crashes:	26	26.7	0.2	0.5	2.8	5.8	17.5
Crossroad ramp terminals, crashes	0	0.0	0.0	0.0	0.0	0.0	0.0

Crashes for Entire Facility by Year	**Year**	**Total**	**K**	**A**	**B**	**C**	**PDO**
Estimated number of crashes during the Study Period, crashes:	2050	26.7	0.2	0.5	2.8	5.8	17.5
	2051						
	2052						
	2053						
	2054						
	2055						
	2056						
	2057						
	2058						
	2059						
	2060						
	2061						
	2062						
	2063						
	2064						
	2065						
	2066						
	2067						
	2068						
	2069						
	2070						
	2071						
	2072						
	2073						

Distribution of Crashes for Entire Facility

Crash Type	**Crash Type Category**	**Estimated Number of Crashes During the Study Period**					
		Total	**K**	**A**	**B**	**C**	**PDO**
Multiple vehicle	Head-on crashes:	0.2	0.0	0.0	0.0	0.1	0.1
	Right-angle crashes:	0.1	0.0	0.0	0.0	0.0	0.1
	Rear-end crashes:	11.7	0.1	0.2	1.3	2.9	7.1
	Sideswipe crashes	5.2	0.0	0.0	0.2	0.5	4.3
	Other multiple-vehicle crashes	2.2	0.0	0.0	0.3	0.6	1.3
	Total multiple-vehicle crashes:	19.4	0.1	0.4	1.9	4.1	12.9
Single vehicle	Crashes with animal:	0.0	0.0	0.0	0.0	0.0	0.0
	Crashes with fixed object:	5.8	0.0	0.1	0.6	1.2	3.8
	Crashes with other object:	0.1	0.0	0.0	0.0	0.0	0.1
	Crashes with parked vehicle:	0.1	0.0	0.0	0.0	0.0	0.1
	Other single-vehicle crashes	1.3	0.0	0.0	0.2	0.4	0.6
	Total single-vehicle crashes:	7.3	0.1	0.2	0.9	1.7	4.5
	Total crashes:	26.7	0.2	0.5	2.8	5.8	17.5

Evaluation Site Summary

General Information

Project description:	Sample Data				
Analyst:	HDR	Date:	1/21/2025	Area type:	Urban
First year of analysis:	2050	Total length of freeway segments for Study Period (mi):		0.000	
Last year of analysis	2050				

Site Description

Freeway Segments

Number	Lanes	Study Period Length (mi)	Study Period Description
1	0	0.000	0
2	0	0.000	0
3	0	0.000	0
4	0	0.000	0
5	0	0.000	0
6	0	0.000	0
7	0	0.000	0
8	0	0.000	0
9	0	0.000	0
10	0	0.000	0
11	0	0.000	0
12	0	0.000	0
13	0	0.000	0
14	0	0.000	0
15	0	0.000	0
16	0	0.000	0
17	0	0.000	0
18	0	0.000	0
19	0	0.000	0
20	0	0.000	0

Ramp Segments

Number	Study Period Description	Number	Study Period Description
1	I126WB-ColLife Off	21	Burning Tree Off
2	ColLife On 1	22	0
3	ColLife On 2	23	St AndrewsSo Off
4	ColLife-I26EB	24	St AndrewsSo On
5	I126-I26EB 1	25	St AndrewsNo On
6	I126-I26EB 2	26	St Andrews On
7	I126-I26WB I20	27	St AndrewsNo Off
8	I126-I26WB	28	0
9	I126-I20	29	0
10	I26WB-I20	30	0
11	I26WB I126-I20 1	31	0
12	I26WB I126-I20 2	32	0
13	I26WB I126-I20WB	33	0
14	I26WB I126-I20EB	34	0
15	I20-I26WB 11	35	0
16	I20-I26WB 12	36	0
17	I20-St Andrews Off	37	0
18	I26WB-St Andrews Off	38	0
19	St Andrews Off 1	39	0
20	St Andrews Off 2	40	0

Crossroad Ramp Terminals

Number	Config.	Control	Study Period Description
1	0	0	0
2	0	0	0
3	0	0	0
4	0	0	0
5	0	0	0
6	0	0	0

Appendix H – Conceptual Signage Plan

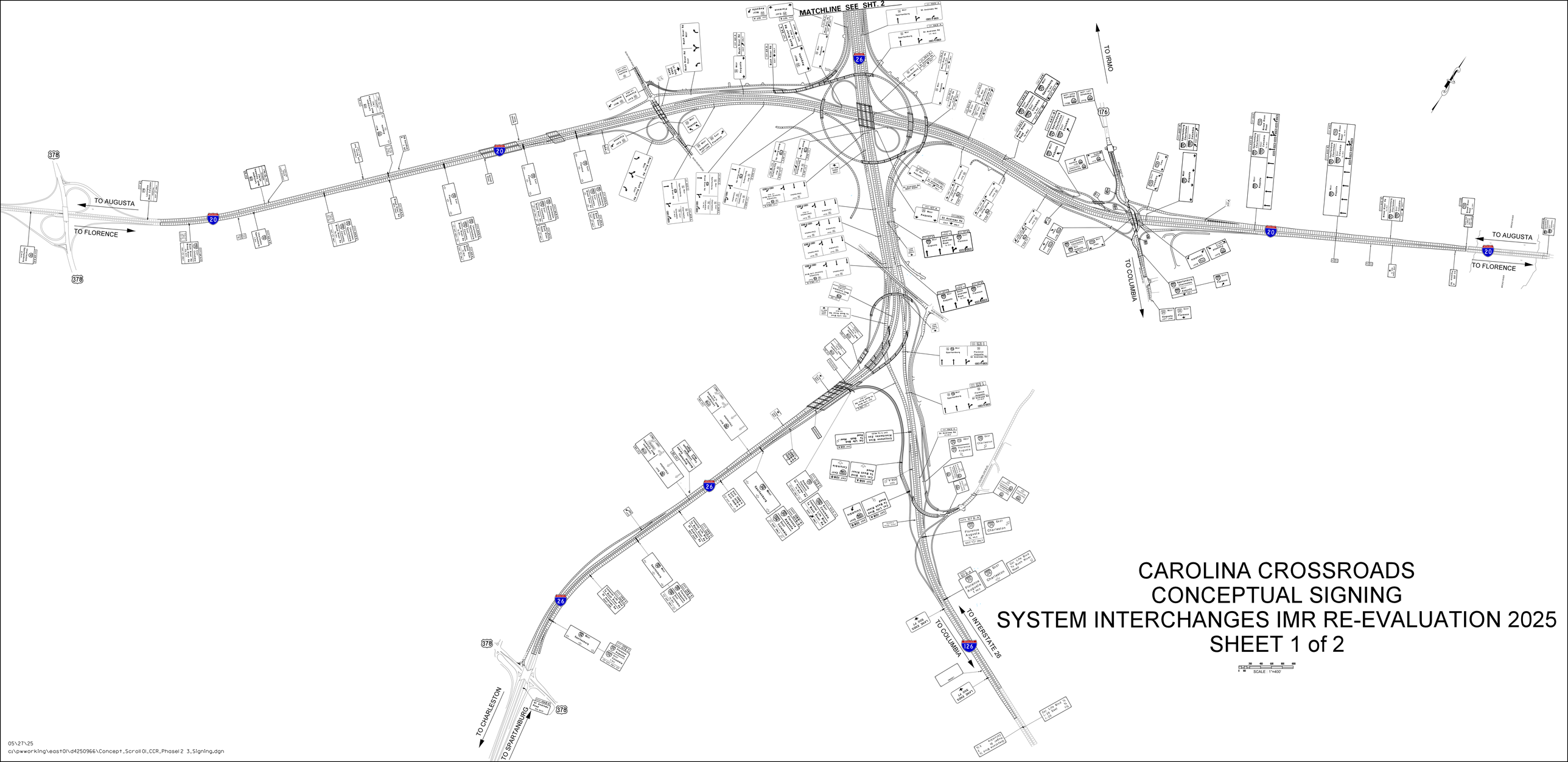

CAROLINA CROSSROADS
CONCEPTUAL SIGNING
SYSTEM INTERCHANGES IMR RE-EVALUATION 2025
SHEET 1 of 2

SCALE : 1"=400'

05\27\25
c:\pwworking\east01\d4250966\Concept_Scroll01_CCR_Phase1 2 3_Signing.dgn

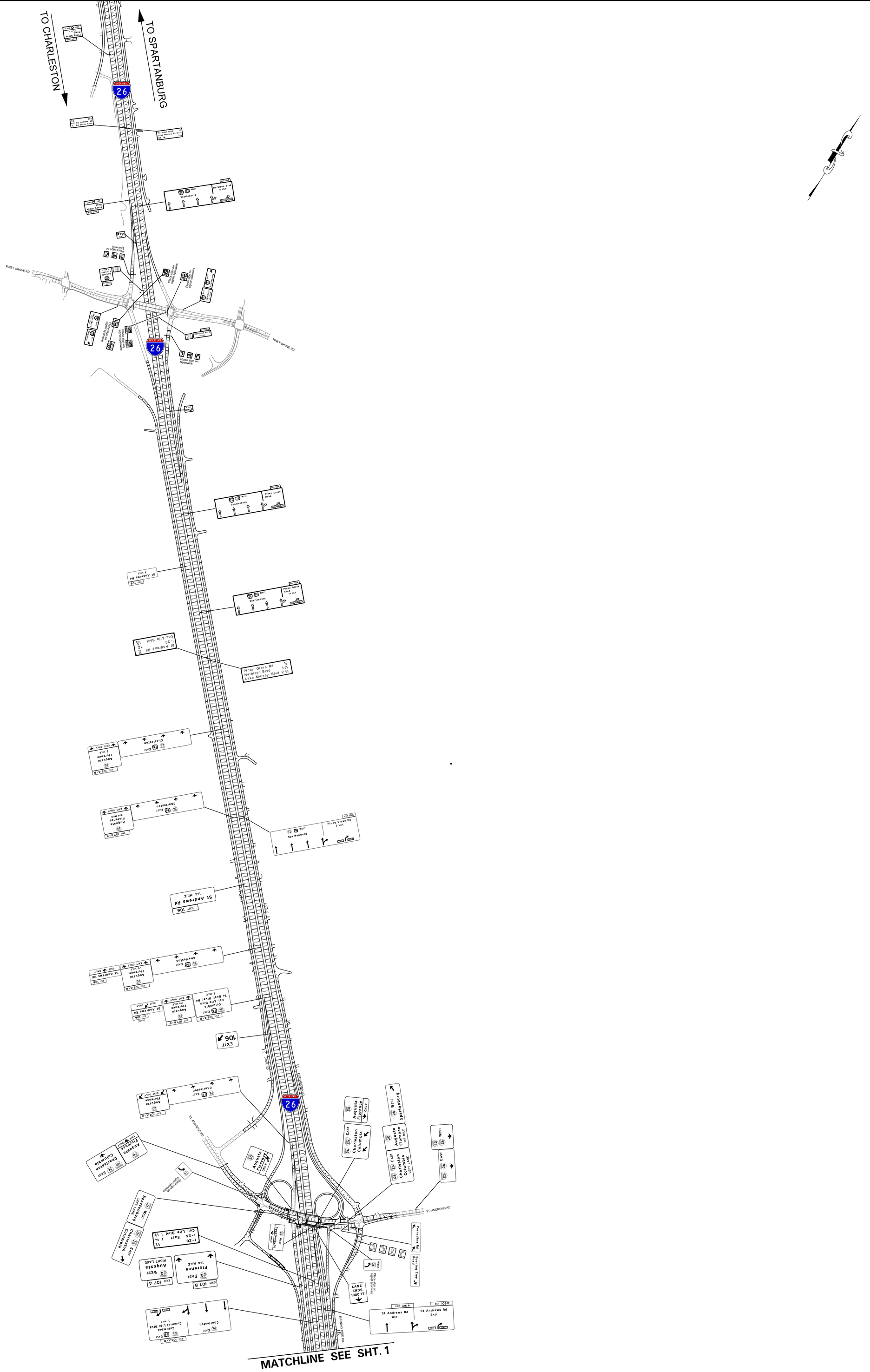
TO CHARLESTON
TO SPARTANBURG
INTERSTATE 26
PINEY GROVE RD
ST ANDREWS RD
Exit 107
Augusta
Florence
1/4 MILE
Exit 106
St Andrews Rd
1 MILE
Harbison Blvd
Lake Murray Blvd
1/2 MILE
Spartanburg
Piney Grove Road
1/4 MILE
Exit 107A-B
Augusta
Florence
1/2 MILE
Exit 106A-B
Col. Life Blvd
To Bush River Rd
1 MILE
Exit 106
St Andrews Rd
1/4 MILE
Exit 107
Augusta
Florence
1/4 MILE
Exit 107A-B
Augusta
Florence
1/2 MILE
Exit 107A
Augusta
Florence
RIGHT LANE
Exit 107B
Augusta
Florence
1/4 MILE
Exit 106A
St Andrews Rd
WEST
Exit 106B
St Andrews Rd
EAST
Piney Grove Rd 1/2
Harbison Blvd 1 3/4
Lake Murray Blvd 2 3/4
St Andrews Rd 3/4
I-20 1/4
Col. Life Blvd 1/2
I-26 East 1 1/2
Col. Life Blvd 1 1/2
Place sign on Spanwire
Place sign on signal backplate
Place sign on signal backplate
Place sign on signal backplate

Appendix I – Design Exceptions and Variations

Submitted By: Chris Lacy Date: 1 / 15 / 19 Recommended: Chris Lacy Date: 3 / 1 / 19

Engineer of Record

To: Brian Klauk

Program / Project Manager

BASIS OF DESIGN EXCEPTION

- [■] Request for Approval of Design Exceptions to AASHTO Guidelines
- [■] Request for Approval of Design Exceptions from Standard SCDOT Procedures

PROJECT CHARACTERISTICS

County: Richland Rd./Route: I-126 Const. Pin: P039718

From: MM 0 To: 2

Length: 2 miles MPO / COG: COATS

Work Type: Additional lane being added to I-126

Functional Classification: Interstate

Group Designation: (1 [ ] / 2 [ ] / 3 [ ] / 4 [ ]) (if applicable)

Type of Terrain: (Level [ ] / Rolling [■] / Mountainous [ ])

Design Speed: 60 (mph)

2020 ADT 67,800

2040 ADT 78,000

TRUCKS 5 %

CRASH ANALYSIS

(Attach additional sheets with accident history data)

TOTAL PROJECT ESTIMATE ($) 110M

CHECK APPROPRIATE BOX(ES) FOR DESIGN EXCEPTION(S)

- [ ] Design Speed
- [ ] Horizontal Alignment
  - [ ] Minimum Radii
- [ ] Vertical Alignment
  - [ ] Level SSD K-Values
- [ ] Maximum Grade
- [ ] Vertical Clearance
- [ ] Bridge Width
- [ ] Structural Capacity
- [ ] Superelevation Rate
- [ ] Cross Slope
  - [ ] Travel Lanes
  - [ ] Shoulders
- [ ] Travel Lane Width
- [■] Shoulder Width
- [ ] Horizontal Clearance
- [ ] Stopping Sight Distance

DESCRIBE ELEMENT(S) FOR DESIGN EXCEPTION(S)

(Attach additional sheets as needed)

See Attachment A

JUSTIFICATION FOR DESIGN EXCEPTION(S)

(Attach additional sheets as needed)

See Attachment A

DESCRIBE STEPS TO ELEMINATE DESIGN EXCEPTION(S), INCLUDE COST

(Attach additional sheets as needed)

See Attachment A

HOW WILL FUTURE CONSTRUCTION IMPACT DESIGN EXCEPTION(S)?

(Attach additional sheets as needed)

See Attachment A

RECORD OF DECISION

☑ For	☑ For	☑ Approved
☐ Against	☐ Against	☐ Denied
8/5/20	08/06/20	08/06/2020
(Regional Design Manager / Program Manager / DEA) Date	~~(Regional Production Engineer)~~ Date PROJECT MANAGER FOR CAROLINA CROSSROADS	~~(Director of Preconstruction)~~ Date ACTING DIRECTOR OF MEGA PROJECTS

X Concur

Thaddeus Kitowicz 09/24/2020

FHWA (NHS > $50 million & All Interstate)

cc:
Director of Preconstruction
FHWA
Preconstruction Support Engineer
Regional Production Group Engineer
District Engineering Administrator
Director of Traffic Engineering

Attachment A – Design Exception

Describe Elements for Design Exception:

Bridges along I-126 within the project limits of Carolina Crossroads would be reconstructed as part of the Carolina Crossroads project. The existing inside shoulder width along I-126 is approximately 4.75'. The proposed inside shoulder width is 10'. For bridges constructed with assumed 4’ diameter columns the inside shoulder width would be reduced from 10’ to 6.25’.

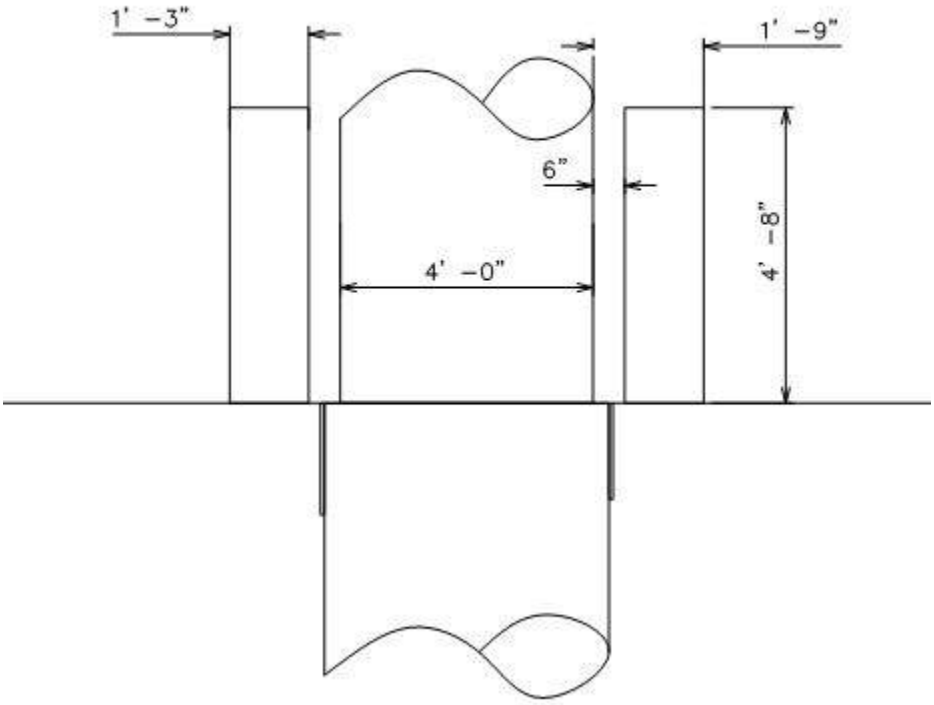

Justification for Design Exception:

The design exception is requested to allow spot locations where the inside shoulder would be less than 10' (approximately 6.25’) but greater than the existing 4.75'. Stopping sight distance would still be provided per the contract documents for the design-build project.

A predictive crash analysis was performed by the Traffic Safety office and found no substantial increase in crash volumes between a 10’ shoulder and 6’ shoulder in either a 5-lane or a 4-lane section. See Attachment C.

Describe Steps to Eliminate Design Exception (include Costs):

To provide a 10' inside shoulder, the crown point of I-126 in both directions would need to be shifted approximately 3.75’. This would then result in deflections of the horizontal alignment and introduce curves or tapers into the mainline geometry which is undesirable. The span length would also increase in order to provide the necessary clear width. Due to the proximity of Arrowwood Road under-passing Colonial Life Blvd., retaining walls would be constructed to minimize the distance the ramps would be realigned away from the I-126 end bents.

Another strategy to eliminate the exception could be to construct the Colonial Life Blvd. bridge over I-126 with a single span. A single span bridge would require the grade of Colonial Life Blvd. to be raised over I-126 due to the depth of the bridge structure. The interchange of I-126 at Colonial Life Blvd. is constrained between the CSX Railroad tracts to the west and a fully developed residential community on the east. The estimated cost of a single span bridge including the roadway approach work is $3.0M. Based on the cost schedule risk assessment (CSRA), the estimated cost of the bridge proposed is $2.2M. Due to the constraints of the railroad, residential neighborhood and the increase in cost, a design exception is warranted at this location.

Other strategies such as reduction in lane width to provide shoulder width was ruled out due to the nature of the volume and truck percentage. Providing 12’ lanes on the interstate is more desirable in this location.

How will future Construction Impact Design Exception?

Due to constraints of roadside development to the east and the CSX Railroad, this project is considered the ultimate build-out for the corridor and no future lanes are anticipated.

FED. RDAD DIV. NO.	STATE	COUNTY	PROJECT ID	RTE. NO.	SHEET NO.
3	S.C.	LEXINGTON RICHLAND	XX.XXXX		

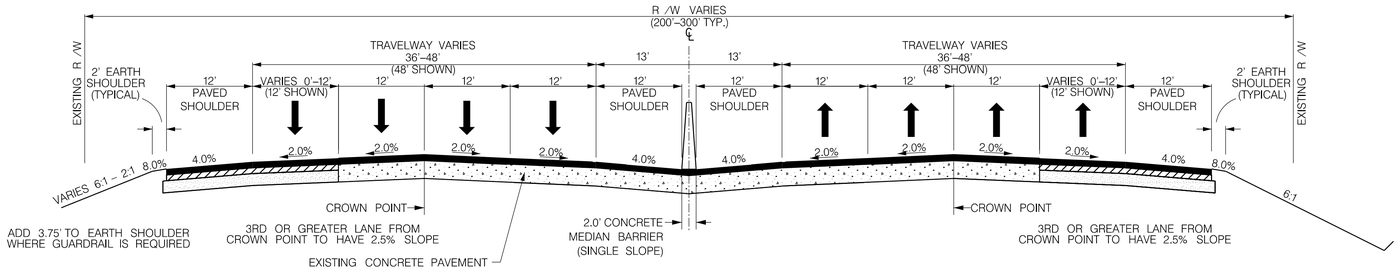

INTERSTATE MAINLINE WITH MEDIAN BARRIER WALL

INTERSTATE I–26 FC= URBAN INTERSTATE DS= 60 MPH

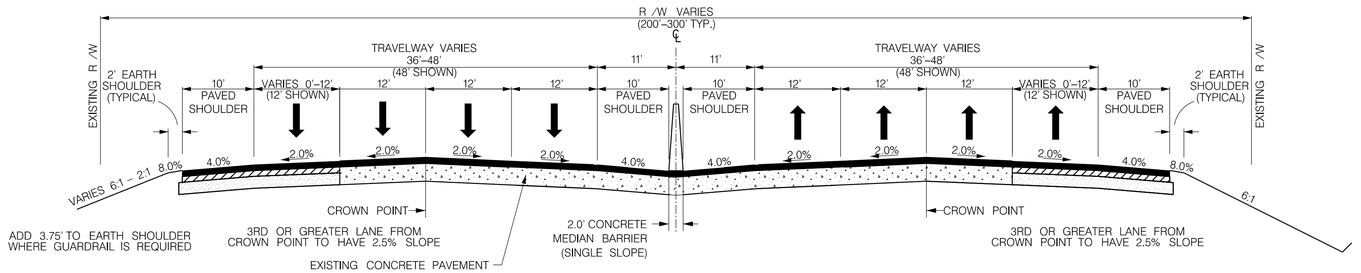

INTERSTATE MAINLINE WITH MEDIAN BARRIER WALL

INTERSTATE I–126 FC= URBAN INTERSTATE DS= 60 MPH

RTE.	DESIGN SPEED	
MPH	FROM STA.	TO STA.

PAVEMENT DESIGN

APPROVED BY

DATE

SOUTH CAROLINA
DEPARTMENT OF TRANSPORTATION
ROAD DESIGN COLUMBIA, S.C.

CAROLINA CROSSROADS
I–26/I–126/I–20

TYPICAL SECTIONS

SCALE: RTE. DWG. NO.

5/20/2020
HDR Engineering, Inc. of the Carolinas
Carolina Crossroads_Typical Sections_PREFERRED_ALT.dgn

Crash Summary

I- 126 (EB Only) from MPT 0.000 to MPT 1.500

RICHLAND COUNTY

01/01/2015 - 09/30/2018 (3.7 years)

Length = 1.500 miles

AADT = 77,026

Functional Class = Urban -- Principal Arterial - Interstate

Crashes by Injury Class

Fatality Crashes	1
Injury Crashes	8
PDO Crashes	22
Total Crashes	**31**

Crashes by Manner Of Collision

Rear End	11
Angle	2
Sideswipe	8
Head On	0
Run Off Road	9
Animal	1
Bicycle	0
Pedestrian	0
Other	0
Total Crashes	**31**

Special Contributing Factors

Night	7
Day	24
Wet	4
Dry	27

I- 126 (EB Only) from MPT 0.000 to MPT 1.500

RICHLAND COUNTY

01/01/2015 - 09/30/2018 (3.7 years)

Length = 1.500 miles AADT = 77,026

Functional Class = Urban -- Principal Arterial - Interstate



I- 126 (EB Only) from MPT 0.000 to MPT 1.500

RICHLAND COUNTY

01/01/2015 - 09/30/2018 (3.7 years)

Length = 1.500 miles AADT = 77,026

Functional Class = Urban -- Principal Arterial - Interstate

Year	2015	2016	2017	2018	Total
Rear End	3	3	4	1	11
Angle	0	1	1	0	2
Sideswipe	2	2	3	1	8
Head On	0	0	0	0	0
Run Off Road	1	5	2	1	9
Animal	0	0	0	1	1
Bicycle	0	0	0	0	0
Pedestrian	0	0	0	0	0
Other	0	0	0	0	0
	6	11	10	4	31

Day of the Week

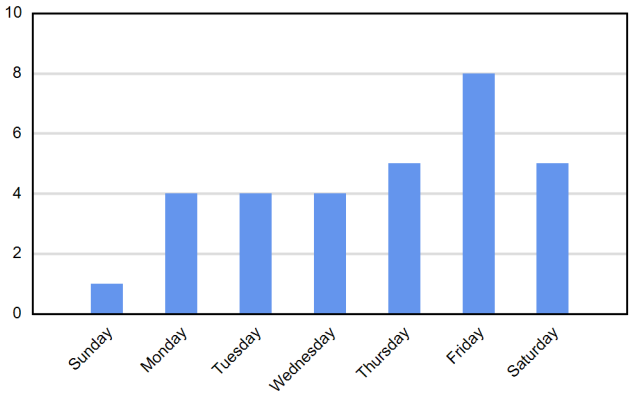

Time of Day

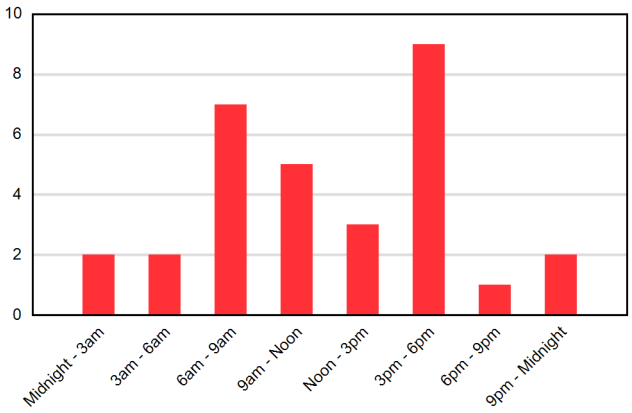

Month of the Year

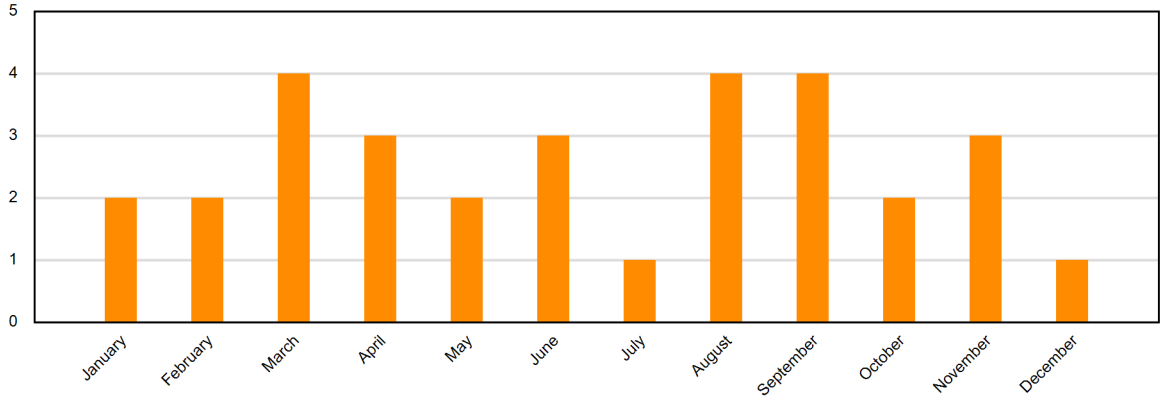

Section Crashes

MPT 0.000 to 0.100 (Stack #1)

Total Crashes: 4 Light: 3 Dark: 1 Dry: 3 Wet: 1 Fatalities: 0 Injuries: 2 PDO: 2

1	15528611	0.096	INJ0	DAY	WET	MOTOR VEHICLE (IN TRANSPORT)	REAR END
2	17531925	0.000	INJ2	DARK	DRY	MEDIAN BARRIER	NO COLLISION W/MV
3	17605277	0.075	INJ1	DAY	DRY	MEDIAN BARRIER	ANGLE
4	18563447	0.096	INJ0	DAY	DRY	MOTOR VEHICLE (IN TRANSPORT)	SIDESWIPE SAME

MPT 0.100 to 0.200 (Stack #2)

Total Crashes: 4 Light: 3 Dark: 1 Dry: 3 Wet: 1 Fatalities: 0 Injuries: 1 PDO: 3

1	15514819	0.170	INJ0	DARK	DRY	MOTOR VEHICLE (IN TRANSPORT)	SIDESWIPE SAME
2	17551639	0.149	INJ1	DAY	WET	MOTOR VEHICLE (IN TRANSPORT)	REAR END
3	17605816	0.100	INJ0	DAY	DRY	MOTOR VEHICLE (IN TRANSPORT)	SIDESWIPE SAME
4	17664595	0.100	INJ0	DAY	DRY	OVERTURN/ROLLOVER	NO COLLISION W/MV

MPT 0.200 to 0.300 (Stack #3)

Total Crashes: 3 Light: 3 Dark: 0 Dry: 3 Wet: 0 Fatalities: 0 Injuries: 0 PDO: 3

1	16599310	0.260	INJ0	DAY	DRY	OVERTURN/ROLLOVER	NO COLLISION W/MV
2	17550075	0.260	INJ0	DAY	DRY	MOTOR VEHICLE (IN TRANSPORT)	REAR END
3	17677577	0.232	INJ0	DAY	DRY	MOTOR VEHICLE (IN TRANSPORT)	SIDESWIPE SAME

MPT 0.300 to 0.400 (Stack #4)

Total Crashes: 5 Light: 3 Dark: 2 Dry: 4 Wet: 1 Fatalities: 0 Injuries: 2 PDO: 3

1	15503665	0.321	INJ1	DAY	DRY	MOTOR VEHICLE (IN TRANSPORT)	SIDESWIPE SAME
2	16524832	0.359	INJ0	DAY	DRY	MOTOR VEHICLE (IN TRANSPORT)	REAR END
3	16607270	0.339	INJ0	DAY	DRY	MEDIAN BARRIER	NO COLLISION W/MV
4	16679553	0.353	INJ0	DAWN	WET	MOTOR VEHICLE (IN TRANSPORT)	SIDESWIPE SAME
5	18541424	0.379	INJ2	DARK	DRY	MOTOR VEHICLE (IN TRANSPORT)	REAR END

MPT 0.400 to 0.500 (Stack #5)

Total Crashes: 1 Light: 0 Dark: 1 Dry: 1 Wet: 0 Fatalities: 0 Injuries: 0 PDO: 1

1	16639063	0.452	INJ0	DARK	DRY	MEDIAN BARRIER	NO COLLISION W/MV

MPT 0.500 to 0.600 (Stack #6)

Total Crashes: 2 Light: 2 Dark: 0 Dry: 2 Wet: 0 Fatalities: 1 Injuries: 0 PDO: 1

1	16548296	0.534	INJ4	DAY	DRY	MEDIAN BARRIER	NO COLLISION W/MV
2	17580375	0.500	INJ0	DAY	DRY	MOTOR VEHICLE (IN TRANSPORT)	REAR END

Section Crashes

MPT 0.600 to 0.700 (Stack #7)

Total Crashes: 1 Light: 1 Dark: 0 Dry: 1 Wet: 0 Fatalities: 0 Injuries: 0 PDO: 1

1	16620590	0.653	INJ0	DAY	DRY	MOTOR VEHICLE (IN TRANSPORT)	ANGLE

MPT 0.800 to 0.900 (Stack #9)

Total Crashes: 1 Light: 1 Dark: 0 Dry: 1 Wet: 0 Fatalities: 0 Injuries: 0 PDO: 1

1	15601594	0.852	INJ0	DAY	DRY	MOTOR VEHICLE (STOPPED)	REAR END

MPT 0.900 to 1.000 (Stack #10)

Total Crashes: 4 Light: 3 Dark: 1 Dry: 3 Wet: 1 Fatalities: 0 Injuries: 3 PDO: 1

1	16638513	0.941	INJ0	DAY	DRY	MOTOR VEHICLE (IN TRANSPORT)	SIDESWIPE SAME
2	16652760	0.970	INJ2	DAY	WET	MEDIAN BARRIER	NO COLLISION W/MV
3	17571868	0.901	INJ2	DAY	DRY	MOTOR VEHICLE (IN TRANSPORT)	SIDESWIPE SAME
4	18505079	0.936	INJ1	DARK	DRY	MEDIAN BARRIER	NO COLLISION W/MV

MPT 1.300 to 1.400 (Stack #14)

Total Crashes: 5 Light: 4 Dark: 1 Dry: 5 Wet: 0 Fatalities: 0 Injuries: 0 PDO: 5

1	15561524	1.396	INJ0	DAY	DRY	MEDIAN BARRIER	NO COLLISION W/MV
2	15603487	1.331	INJ0	DAY	DRY	MOTOR VEHICLE (IN TRANSPORT)	REAR END
3	16660293	1.372	INJ0	DAY	DRY	MOTOR VEHICLE (IN TRANSPORT)	REAR END
4	17634997	1.350	INJ0	DAY	DRY	MOTOR VEHICLE (IN TRANSPORT)	REAR END
5	18560012	1.385	INJ0	DARK	DRY	ANIMAL (DEER ONLY)	NO COLLISION W/MV

MPT 1.400 to 1.500 (Stack #15)

Total Crashes: 1 Light: 1 Dark: 0 Dry: 1 Wet: 0 Fatalities: 0 Injuries: 0 PDO: 1

1	16650422	1.475	INJ0	DAY	DRY	MOTOR VEHICLE (STOPPED)	REAR END

Crash Summary

I- 126 (WB Only) from MPT 0.000 to MPT 1.500

RICHLAND COUNTY

01/01/2015 - 09/30/2018 (3.7 years)

Length = 1.500 miles

AADT = 77,026

Functional Class = Urban -- Principal Arterial - Interstate

Crashes by Injury Class

Fatality Crashes	1
Injury Crashes	16
PDO Crashes	56
Total Crashes	**73**

Crashes by Manner Of Collision

Rear End	49
Angle	6
Sideswipe	7
Head On	0
Run Off Road	9
Animal	1
Bicycle	0
Pedestrian	0
Other	1
Total Crashes	**73**

Special Contributing Factors

Night	19
Day	54
Wet	9
Dry	64

I- 126 (WB Only) from MPT 0.000 to MPT 1.500

RICHLAND COUNTY

01/01/2015 - 09/30/2018 (3.7 years)

Length = 1.500 miles AADT = 77,026

Functional Class = Urban -- Principal Arterial - Interstate

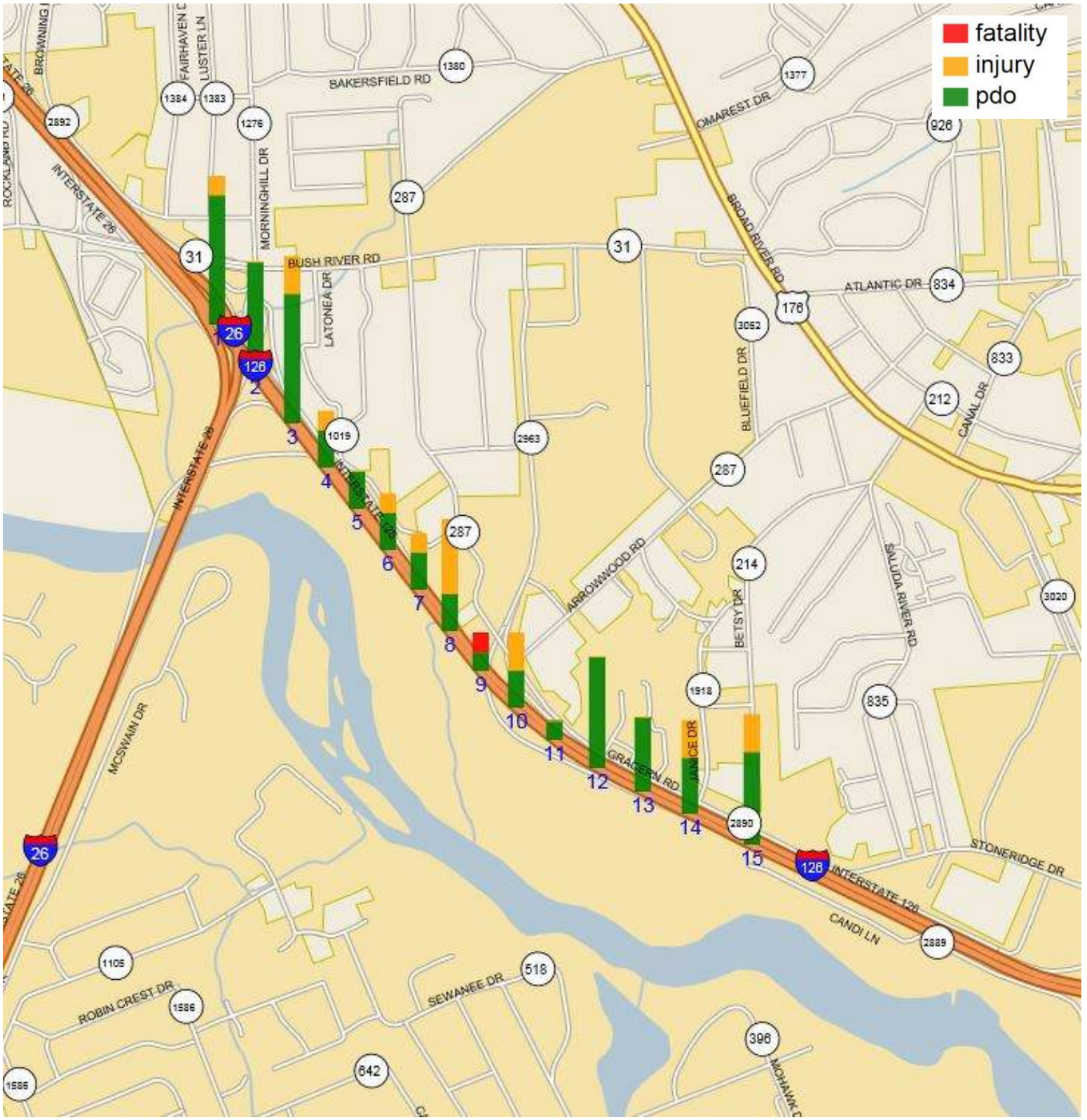

I- 126 (WB Only) from MPT 0.000 to MPT 1.500

RICHLAND COUNTY

01/01/2015 - 09/30/2018 (3.7 years)

Length = 1.500 miles AADT = 77,026

Functional Class = Urban -- Principal Arterial - Interstate

Year	2015	2016	2017	2018	Total
Rear End	14	14	11	10	49
Angle	2	1	1	2	6
Sideswipe	2	1	3	1	7
Head On	0	0	0	0	0
Run Off Road	2	5	2	0	9
Animal	0	0	1	0	1
Bicycle	0	0	0	0	0
Pedestrian	0	0	0	0	0
Other	0	0	0	1	1
	20	21	18	14	73

Day of the Week

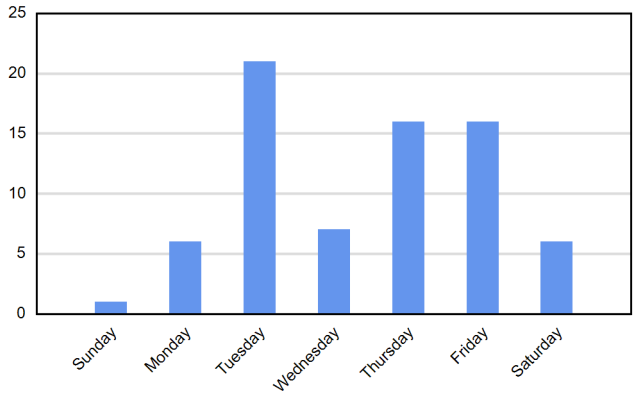

Time of Day

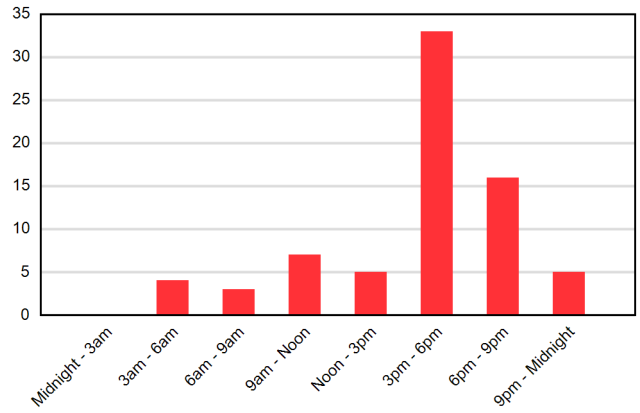

Month of the Year

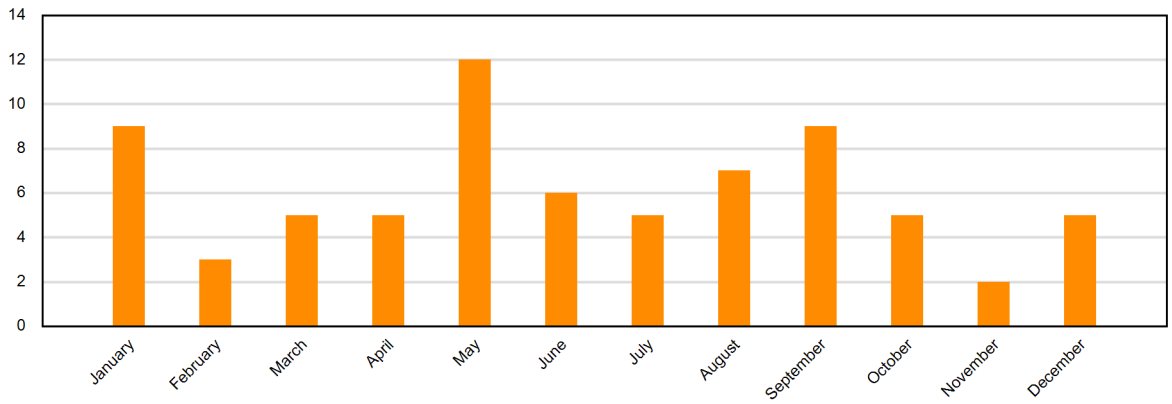

Section Crashes

MPT 0.000 to 0.100 (Stack #1)

Total Crashes: 8 Light: 8 Dark: 0 Dry: 8 Wet: 0 Fatalities: 0 Injuries: 1 PDO: 7

1	15009693	0.000	INJ1	DAY	DRY	MOTOR VEHICLE (IN TRANSPORT)	ANGLE
2	15560719	0.000	INJ0	DAY	DRY	MOTOR VEHICLE (IN TRANSPORT)	REAR END
3	15591025	0.099	INJ0	DAY	DRY	MOTOR VEHICLE (STOPPED)	REAR END
4	15598922	0.000	INJ0	DAY	DRY	MOTOR VEHICLE (IN TRANSPORT)	REAR END
5	17595363	0.000	INJ0	DAY	DRY	MOTOR VEHICLE (IN TRANSPORT)	REAR END
6	17597412	0.065	INJ0	DAY	DRY	HIGHWAY TRAFFIC SIGN POST	NO COLLISION W/MV
7	17653284	0.000	INJ0	DAY	DRY	MOTOR VEHICLE (IN TRANSPORT)	SIDESWIPE SAME
8	18583481	0.000	INJ0	DAY	DRY	MOTOR VEHICLE (IN TRANSPORT)	REAR END

MPT 0.100 to 0.200 (Stack #2)

Total Crashes: 10 Light: 5 Dark: 5 Dry: 9 Wet: 1 Fatalities: 0 Injuries: 0 PDO: 10

1	16011494	0.100	INJ0	DUSK	WET	HIGHWAY TRAFFIC SIGN POST	NO COLLISION W/MV
2	16547070	0.136	INJ0	DAY	DRY	MOTOR VEHICLE (STOPPED)	REAR END
3	16592870	0.135	INJ0	DAY	DRY	MOTOR VEHICLE (IN TRANSPORT)	REAR END
4	16637342	0.140	INJ0	DAY	DRY	MOTOR VEHICLE (IN TRANSPORT)	REAR END
5	16656179	0.160	INJ0	DARK	DRY	MOTOR VEHICLE (IN TRANSPORT)	REAR END
6	17560949	0.138	INJ0	DARK	DRY	MOTOR VEHICLE (STOPPED)	REAR END
7	17560953	0.114	INJ0	DARK	DRY	MEDIAN BARRIER	NO COLLISION W/MV
8	17561460	0.116	INJ0	DARK	DRY	MOTOR VEHICLE (PARKED)	REAR END
9	17617998	0.120	INJ0	DAY	DRY	MOTOR VEHICLE (IN TRANSPORT)	REAR END
10	17624623	0.150	INJ0	DAY	DRY	MOTOR VEHICLE (STOPPED)	REAR END

MPT 0.200 to 0.300 (Stack #3)

Total Crashes: 9 Light: 7 Dark: 2 Dry: 7 Wet: 2 Fatalities: 0 Injuries: 2 PDO: 7

1	15582477	0.202	INJ0	DAY	DRY	MOTOR VEHICLE (STOPPED)	REAR END
2	16012783	0.254	INJ3	DAY	DRY	MEDIAN BARRIER	NO COLLISION W/MV
3	16505035	0.268	INJ0	DARK	WET	MOTOR VEHICLE (STOPPED)	REAR END
4	17503777	0.268	INJ2	DAY	DRY	MOTOR VEHICLE (IN TRANSPORT)	REAR END
5	17526378	0.253	INJ0	DAY	DRY	MOTOR VEHICLE (STOPPED)	REAR END
6	17672971	0.250	INJ0	DARK	WET	MOTOR VEHICLE (IN TRANSPORT)	SIDESWIPE SAME
7	18572328	0.290	INJ0	DAY	DRY	MOTOR VEHICLE (IN TRANSPORT)	ANGLE
8	18623810	0.208	INJ0	DAY	DRY	MOTOR VEHICLE (IN TRANSPORT)	ANGLE
9	18629988	0.266	INJ0	DAY	DRY	MOTOR VEHICLE (IN TRANSPORT)	REAR END

Section Crashes

MPT 0.300 to 0.400 (Stack #4)

Total Crashes: 3 Light: 2 Dark: 1 Dry: 2 Wet: 1 Fatalities: 0 Injuries: 1 PDO: 2

1	15607249	0.353	INJ0	DAY	WET	MEDIAN BARRIER	NO COLLISION W/MV
2	16502800	0.301	INJ0	DAY	DRY	MOTOR VEHICLE (IN TRANSPORT)	REAR END
3	16641672	0.375	INJ1	DARK	DRY	OTHER (WALL, BUILDING, TUNNEL, ETC)	NO COLLISION W/MV

MPT 0.400 to 0.500 (Stack #5)

Total Crashes: 2 Light: 2 Dark: 0 Dry: 2 Wet: 0 Fatalities: 0 Injuries: 0 PDO: 2

1	15542149	0.485	INJ0	DAY	DRY	MOTOR VEHICLE (STOPPED)	REAR END
2	16606673	0.405	INJ0	DAY	DRY	MOTOR VEHICLE (IN TRANSPORT)	REAR END

MPT 0.500 to 0.600 (Stack #6)

Total Crashes: 3 Light: 1 Dark: 2 Dry: 2 Wet: 1 Fatalities: 0 Injuries: 1 PDO: 2

1	15574772	0.551	INJ0	DARK	DRY	GUARDRAIL END	NO COLLISION W/MV
2	16503016	0.522	INJ2	DAY	DRY	MOTOR VEHICLE (IN TRANSPORT)	REAR END
3	17642144	0.520	INJ0	DARK	WET	MOTOR VEHICLE (IN TRANSPORT)	REAR END

MPT 0.600 to 0.700 (Stack #7)

Total Crashes: 3 Light: 2 Dark: 1 Dry: 2 Wet: 1 Fatalities: 0 Injuries: 1 PDO: 2

1	15631464	0.605	INJ0	DAY	DRY	MOTOR VEHICLE (IN TRANSPORT)	REAR END
2	16567920	0.602	INJ3	DAWN	WET	CARGO/EQUIP LOSS OR SHIFT	NO COLLISION W/MV
3	17641276	0.659	INJ0	DAY	DRY	MOTOR VEHICLE (IN TRANSPORT)	REAR END

MPT 0.700 to 0.800 (Stack #8)

Total Crashes: 6 Light: 5 Dark: 1 Dry: 6 Wet: 0 Fatalities: 0 Injuries: 4 PDO: 2

1	15564638	0.749	INJ1	DAY	DRY	OTHER (WALL, BUILDING, TUNNEL, ETC)	ANGLE
2	16549929	0.711	INJ0	DAY	DRY	MOTOR VEHICLE (STOPPED)	REAR END
3	16562742	0.796	INJ0	DAY	DRY	MOTOR VEHICLE (IN TRANSPORT)	REAR END
4	16622082	0.708	INJ1	DAY	DRY	MOTOR VEHICLE (IN TRANSPORT)	REAR END
5	16639966	0.709	INJ1	DARK	DRY	FENCE	NO COLLISION W/MV
6	16649531	0.720	INJ1	DAY	DRY	MOTOR VEHICLE (IN TRANSPORT)	REAR END

MPT 0.800 to 0.900 (Stack #9)

Total Crashes: 2 Light: 2 Dark: 0 Dry: 2 Wet: 0 Fatalities: 1 Injuries: 0 PDO: 1

1	15650695	0.850	INJ4	DAY	DRY	MOTOR VEHICLE (IN TRANSPORT)	REAR END
2	15668266	0.840	INJ0	DAY	DRY	MOTOR VEHICLE (STOPPED)	REAR END

Section Crashes

MPT 0.900 to 1.000 (Stack #10)

Total Crashes: 4 Light: 3 Dark: 1 Dry: 3 Wet: 1 Fatalities: 0 Injuries: 2 PDO: 2

1	15005203	0.970	INJ0	DAY	DRY	MOTOR VEHICLE (IN TRANSPORT)	REAR END
2	17625474	0.987	INJ1	DAY	DRY	MOTOR VEHICLE (IN TRANSPORT)	SIDESWIPE SAME
3	18512562	0.934	INJ0	DARK	WET	MOTOR VEHICLE (IN TRANSPORT)	REAR END
4	18590967	0.983	INJ1	DAY	DRY	MOTOR VEHICLE (IN TRANSPORT)	REAR END

MPT 1.000 to 1.100 (Stack #11)

Total Crashes: 1 Light: 1 Dark: 0 Dry: 0 Wet: 1 Fatalities: 0 Injuries: 0 PDO: 1

1	15573409	1.045	INJ0	DAY	WET	MOTOR VEHICLE (STOPPED)	REAR END

MPT 1.100 to 1.200 (Stack #12)

Total Crashes: 6 Light: 6 Dark: 0 Dry: 6 Wet: 0 Fatalities: 0 Injuries: 0 PDO: 6

1	15581387	1.160	INJ0	DAY	DRY	MOTOR VEHICLE (IN TRANSPORT)	SIDESWIPE SAME
2	15654992	1.198	INJ0	DAY	DRY	MOTOR VEHICLE (IN TRANSPORT)	REAR END
3	16635900	1.189	INJ0	DAY	DRY	MOTOR VEHICLE (STOPPED)	REAR END
4	17000366	1.160	INJ0	DAY	DRY	MOTOR VEHICLE (STOPPED)	REAR END
5	18539340	1.164	INJ0	DAY	DRY	MOTOR VEHICLE (IN TRANSPORT)	SIDESWIPE SAME
6	18560460	1.171	INJ0	DAY	DRY	MOTOR VEHICLE (IN TRANSPORT)	REAR END

MPT 1.200 to 1.300 (Stack #13)

Total Crashes: 4 Light: 2 Dark: 2 Dry: 4 Wet: 0 Fatalities: 0 Injuries: 0 PDO: 4

1	15638319	1.241	INJ0	DARK	DRY	PEDALCYCLE	REAR END
2	15639766	1.202	INJ0	DARK	DRY	MOTOR VEHICLE (IN TRANSPORT)	REAR END
3	18502638	1.231	INJ0	DAY	DRY	MOTOR VEHICLE (IN TRANSPORT)	REAR END
4	18579372	1.291	INJ0	DAY	DRY	MOTOR VEHICLE (IN TRANSPORT)	REAR END

MPT 1.300 to 1.400 (Stack #14)

Total Crashes: 5 Light: 3 Dark: 2 Dry: 5 Wet: 0 Fatalities: 0 Injuries: 2 PDO: 3

1	15005170	1.350	INJ1	DARK	DRY	MOTOR VEHICLE (IN TRANSPORT)	REAR END
2	16007767	1.360	INJ1	DAY	DRY	MOTOR VEHICLE (IN TRANSPORT)	REAR END
3	16607187	1.396	INJ0	DAY	DRY	MOTOR VEHICLE (IN TRANSPORT)	ANGLE
4	18511036	1.393	INJ0	DAY	DRY	CARGO/EQUIP LOSS OR SHIFT	NO COLLISION W/MV
5	18515494	1.349	INJ0	DUSK	DRY	MOTOR VEHICLE (IN TRANSPORT)	REAR END

Section Crashes

MPT 1.400 to 1.500 (Stack #15)

Total Crashes: 7 Light: 5 Dark: 2 Dry: 6 Wet: 1 Fatalities: 0 Injuries: 2 PDO: 5

1	15010848	1.495	INJ0	DARK	DRY	MOTOR VEHICLE (IN TRANSPORT)	SIDESWIPE SAME
2	16544802	1.432	INJ0	DAY	DRY	MOTOR VEHICLE (IN TRANSPORT)	SIDESWIPE SAME
3	17544733	1.436	INJ0	DAY	DRY	MOTOR VEHICLE (IN TRANSPORT)	ANGLE
4	17603309	1.416	INJ3	DARK	DRY	MOTOR VEHICLE (IN TRANSPORT)	REAR END
5	17638736	1.412	INJ0	DAY	DRY	ANIMAL (DEER ONLY)	NO COLLISION W/MV
6	18603607	1.409	INJ0	DAY	WET	MOTOR VEHICLE (IN TRANSPORT)	REAR END
7	18621345	1.478	INJ1	DAY	DRY	MOTOR VEHICLE (STOPPED)	REAR END

2017 FREEWAY SEGMENT AADT

Year 2017

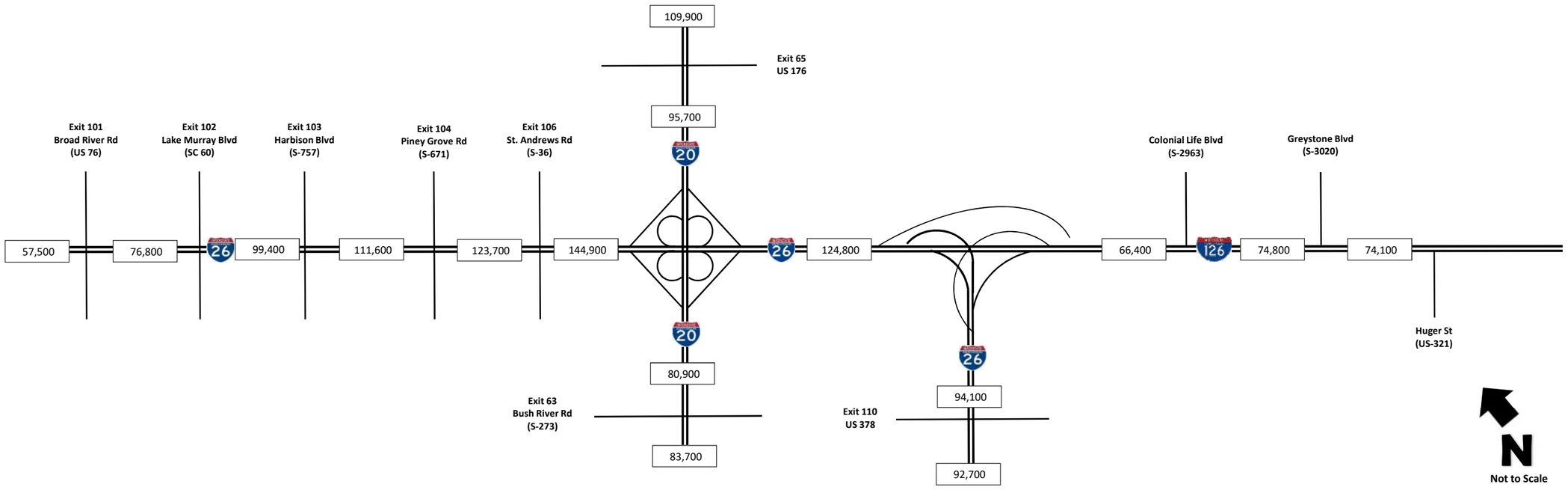

2020 ESTIMATED FREEWAY SEGMENT AADT

Design Year 2020
Growth Rate 0.70%

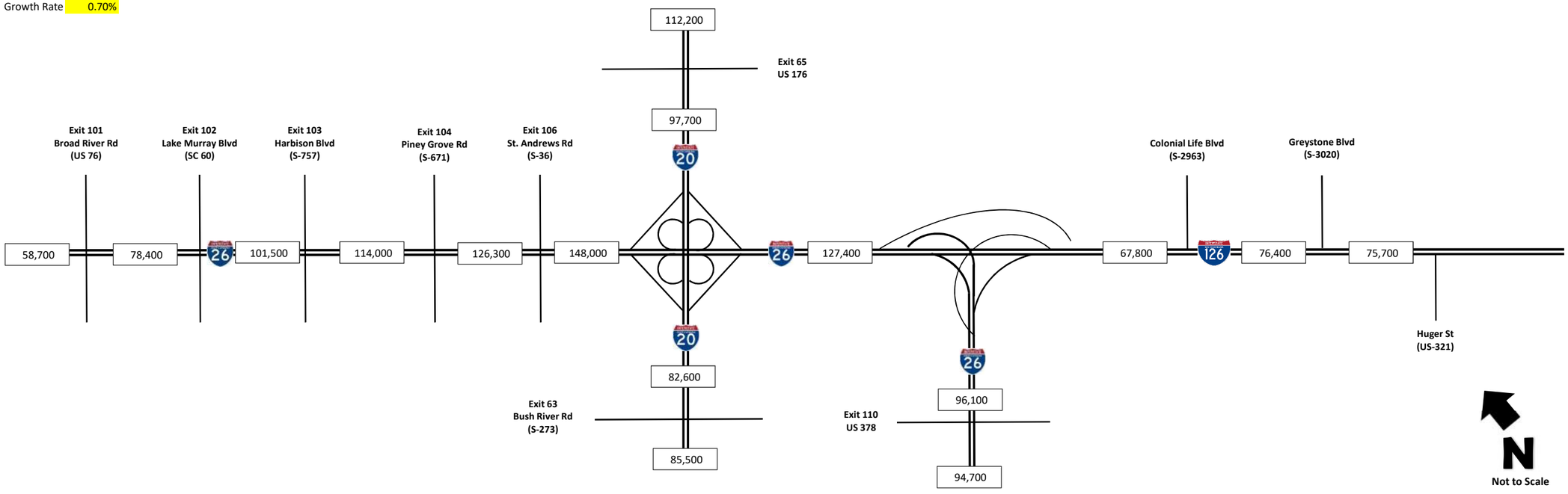

2040 ESTIMATED FREEWAY SEGMENT AADT

Design Year 2040
Growth Rate 0.70%

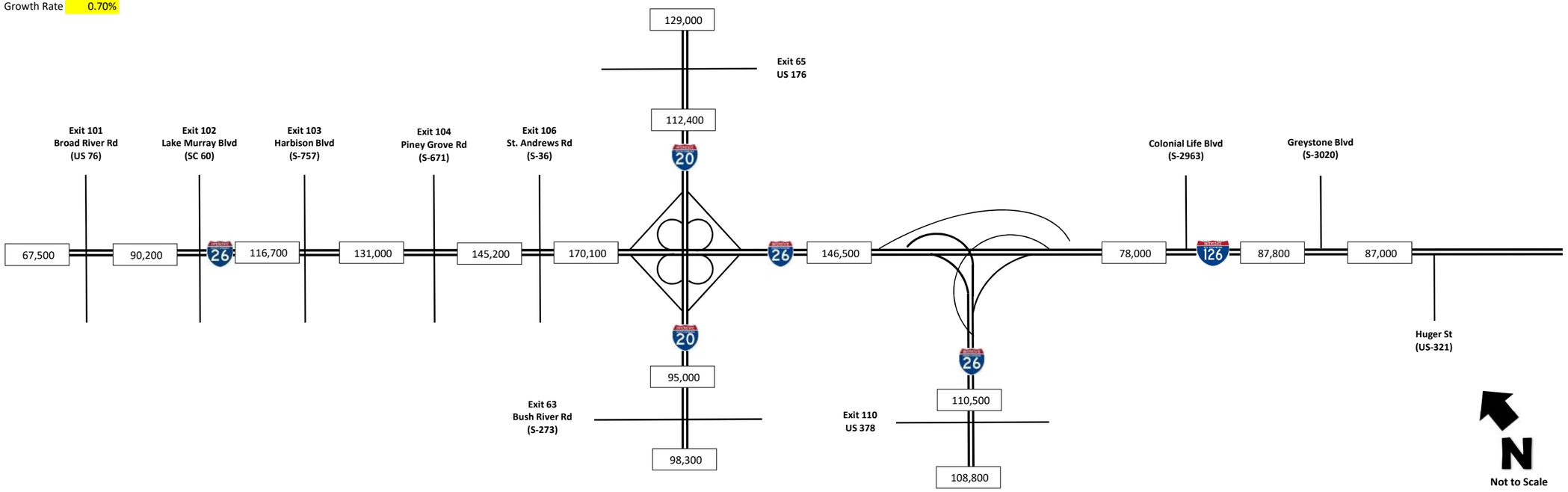

Submitted By: Chris Lacy Date: 6 / 15 / 20 Recommended: Chris Lacy Date: 7 / 1 / 20

Engineer of Record

To: Brian Klauk

Program / Project Manager

BASIS OF DESIGN EXCEPTION

- [x] Request for Approval of Design Exceptions to AASHTO Guidelines
- [x] Request for Approval of Design Exceptions from Standard SCDOT Procedures

PROJECT CHARACTERISTICS

County: Richland Rd./Route: I-20 Const. Pin: P039719

From: MM 64.2 To: 66.3

Length: 2 miles MPO / COG: COATS

Work Type: Additional lane being added to I-20

Functional Classification: Interstate

Group Designation: (1 ☐ / 2 ☐ / 3 ☐ / 4 ☐) (if applicable)

Type of Terrain: (Level ☐ / Rolling ☒ / Mountainous ☐)

Design Speed: 60 (mph)

2020 ADT 112,200

2040 ADT 129,000

TRUCKS 5 %

CRASH ANALYSIS

(Attach additional sheets with accident history data)

TOTAL PROJECT ESTIMATE ($) 95M

CHECK APPROPRIATE BOX(ES) FOR DESIGN EXCEPTION(S)

- ☐ Design Speed
- ☐ Horizontal Alignment
  - ☐ Minimum Radii
- ☐ Vertical Alignment
  - ☐ Level SSD K-Values
- ☐ Maximum Grade
- ☐ Vertical Clearance
- ☐ Bridge Width
- ☐ Structural Capacity
- ☐ Superelevation Rate
- ☐ Cross Slope
  - ☐ Travel Lanes
  - ☐ Shoulders
- ☐ Travel Lane Width
- ☒ Shoulder Width
- ☐ Horizontal Clearance
- ☐ Stopping Sight Distance

DESCRIBE ELEMENT(S) FOR DESIGN EXCEPTION(S)

(Attach additional sheets as needed)

See Attachment A

JUSTIFICATION FOR DESIGN EXCEPTION(S)

(Attach additional sheets as needed)

See Attachment A

DESCRIBE STEPS TO ELEMINATE DESIGN EXCEPTION(S), INCLUDE COST

(Attach additional sheets as needed)

See Attachment A

HOW WILL FUTURE CONSTRUCTION IMPACT DESIGN EXCEPTION(S)?

(Attach additional sheets as needed)

See Attachment A

RECORD OF DECISION

- [x] For
- [ ] Against

8/5/20
(Regional Design Manager / Program Manager / DEA) Date

- [x] For
- [ ] Against

09/30/2020
~~(Regional Production Engineer)~~ PROJECT MANAGER Date

- [x] Approved
- [ ] Denied

9/30/2020
~~(Director of Preconstruction)~~ ACTING DIRECTOR FOR MEGA PROJECTS Date

X Concur

Thaddeus Kitowicz
FHWA (NHS > $50 million & All Interstate)

December 8, 2020

cc:
Director of Preconstruction
FHWA
Preconstruction Support Engineer
Regional Production Group Engineer
District Engineering Administrator
Director of Traffic Engineering

Attachment A – Design Exception

Describe Elements for Design Exception:

Bridges along I-20 within the project limits of Carolina Crossroads would be reconstructed as part of the Carolina Crossroads project. The existing inside shoulder width along I-20 is approximately 4.75'. The proposed inside shoulder width is 12'. The minimum inside shoulder width for interstates with 3 or more lanes is 10’. For overpassing bridges constructed with assumed 4’ diameter columns the inside shoulder width would be reduced from 12’ to 9.25’.

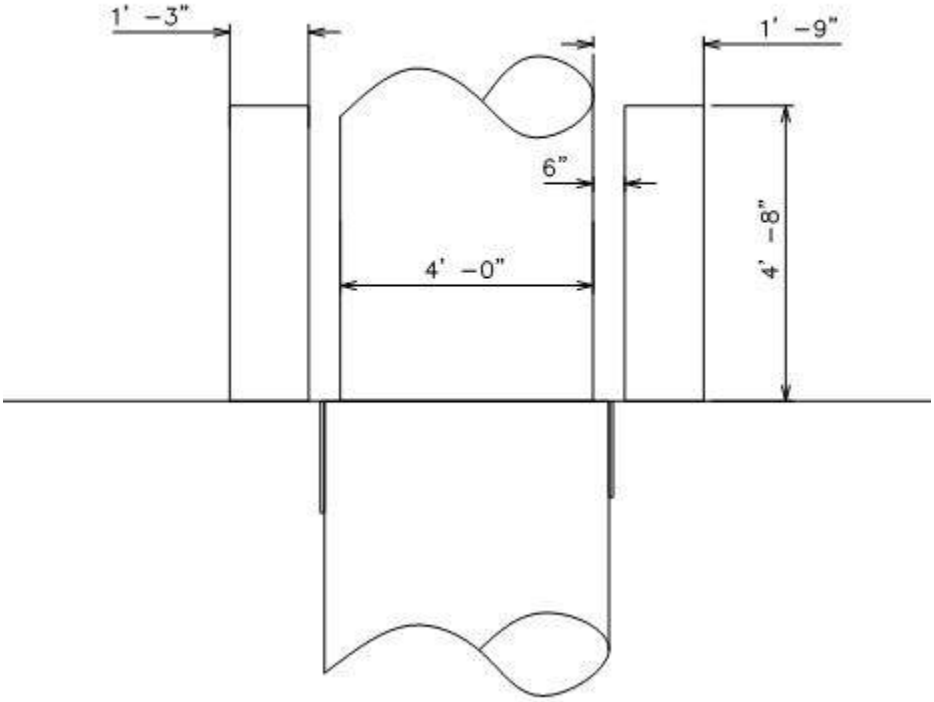

Justification for Design Exception:

The design exception is requested to allow spot locations where the inside shoulder would be less than 10' (approximately 9.25’) but greater than the existing 4.75'. Stopping sight distance would still be provided per the contract documents for the design-build project.

A predictive crash analysis was performed by the Traffic Safety office and found no substantial increase in crash volumes between a 10’ shoulder and 9’ shoulder in either a 5-lane or a 4-lane section.

Describe Steps to Eliminate Design Exception (include Costs):

To provide a 10' inside shoulder, the crown point of I-20 in both directions would need to be shifted approximately 0.75’. This would then result in deflections of the horizontal alignment and introduce curves or tapers into the mainline geometry which is undesirable. The span length would also increase in order to provide the necessary clear width. As part of I-20 improvements, the additional lanes entering from and exiting to I-26 will require longer bridge spans potentially increasing the vertical grade on US 176 (Broad River Road). Any increase to the vertical alignment of Broad River Road may create additional impacts for roadside access. Broad River Road is a very urbanized corridor and providing access along the route is an important consideration so minimizing impacts is a goal of the project.

A strategy to eliminate the exception could be to construct the Broad River Road bridge over I-20 and the additional ramp lanes with a single span. A single span bridge would require the grade of Broad River Road to be raised due to the depth of the bridge structure. As mentioned above, the grade change may cause additional impacts along the crossing route. The estimated cost of a single span bridge including the roadway approach work is $13.6M. This does not include costs for purchasing additional right of way or total parcels due to change in access to accommodate the vertical alignment that would result by using longer span bridges. Based on the cost schedule risk assessment (CSRA), the estimated cost of the multi span bridges proposed is $11.6M. Due to the urban location of the interchange and the desire to minimize impacts, a design exception is warranted at this location.

Other strategies such as reduction in lane width to provide shoulder width was ruled out due to the functional classification of the route and the percentage of trucks. Providing 12’ lanes on the interstate is more desirable in this location.

How will future Construction Impact Design Exception?

This project is being built in advance of reconstructing the system interchange of I-20 at I-26. The bridge constructed as part of this project accommodates requirements of future construction. Future construction of the system interchange will not impact this design exception.

October 14, 2019

TRAFFIC ENGINEERING SAFETY REVIEW

FROM: **State Traffic Safety Engineer Smith**

TO: **Christopher Lacy**

SUBJECT: Carolina Crossroads Project
Project ID P027662

Safety Comments

The Traffic Safety Office has completed an analysis of predicted crashes in regards to reduced shoulder widths at point locations along the interstate corridors that comprise the Carolina Crossroads project. The analysis was conducted to provide data driven decisions regarding the safety impacts for various inside shoulder widths at interchanges and overpasses where guidance may be needed to save or replace existing structures.

As Carolina Crossroads is proceeding as a design build project, exact design elements and geometrics are not currently known, but a high level alternatives analysis using the IHSDM software could be conducted to determine impacts. A reduced inside shoulder width at a bridge was considered to be a 'point' along the corridor. It is understood that trying to determine the exact predicted crash rate at a single point along a corridor will not yield accurate results, and should only be used as a guide to review the trends as variables are changed. The results are not considered a full predicted analysis and lack the full input of data to complete a project specific HSM analysis. Additionally, results are for internal SCDOT use only in relation to this project and analysis only. These results should not be used to solely justify decisions on this project, or any project, without full review of all contextual elements involved within.

In order to complete the requested review, a sample interstate corridor similar to the proposed cross sections provided with the request was modeled. This sample model consisted of a 0.25 mile section of 4-lane interstate and 5-lane interstate. Projected AADT's were input as 90,000 and 100,000 VPD in the years 2020 and 2040 for the 4-lane section; along with 120,000 and 130,000 VPD for the 5-lane section. In order to get a baseline prediction of crashes for comparison, a maximum straight shoulder width of 12' was used to estimate a total number of crashes over a ten year period for the given conditions of each theoretical corridor. Subsequent crash totals were modeled by reducing the inside shoulder width for a section of the corridor to estimate the effects of a narrower inside shoulder at a point on the interstate due to interchange bridge piers and or barriers. The reduced shoulder widths were modeled for a length of approximately 225', of which 95' was the length of the fully reduced width, along with variable widths before and after this reduced width due to the leading and trailing tapers. These taper lengths started from a full 12' width shoulder, and tapered for a length of approximately 65'. The reduced shoulder widths that were sampled are as follows; 4.75', 6', 7', 8', 9', 9.75', 10', & 11' and are shown in the table below. Also shown is a sample plan view produced from the IHSDM software.

5-lane 12'-4.75' taper shoulders

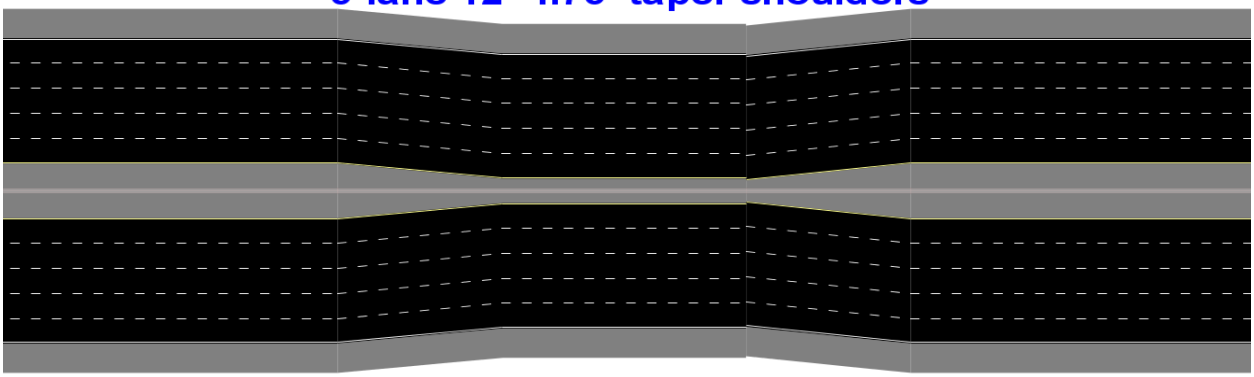

Results from the Crash Prediction Module* of the IHSDM are as follows**:

5-Lane Interstate Corridor									
Reduced Shoulder Width at Bridge	**4.75' (Existing)**	**6.0'**	**7.0'**	**8.0'**	**9.0'**	**9.75' (Proposed)**	**10.0' (Required)**	**11'**	**12' No reduction in shoulder width**
Total Crashes (10 years)	70.9	70.7	70.6	70.5	70.4	70.3	70.2	70.1	69.9

4-Lane Interstate Corridor									
Reduced Shoulder Width at Bridge	**4.75' (Existing)**	**6.0'**	**7.0'**	**8.0'**	**9.0'**	**9.75' (Proposed)**	**10.0' (Required)**	**11'**	**12' (No change)**
Total Crashes (10 years)	55.8	55.6	55.5	55.4	55.3	55.2	55.2	55.1	55.0

*Complete Crash Prediction Module Reports showing further details and additional results are provided with this summary document for further review. **Based on SCDOT calibration and crash distributions

Summary

For the conditions outlined above and used in the IHSDM, results predict that there would be approximately 1 additional crash every 10 years in the worst case scenario of reducing the inside shoulder width from 12' to 4.75' for approximately 225'. There was practically no additional crash experience between the proposed 9.75' and minimum required width of 10.0'

Based upon these results with the provided input values, there does not appear to be any adverse safety effects at these point locations due to a reduction in shoulder widths.

Duncan Smith

FOR INFORMATION ONLY

FED. ROAD DIV. NO.	STATE	COUNTY	PROJECT ID	RTE. NO.	SHEET NO.
3	S.C.	LEXINGTON RICHLAND	XX.XXXX		

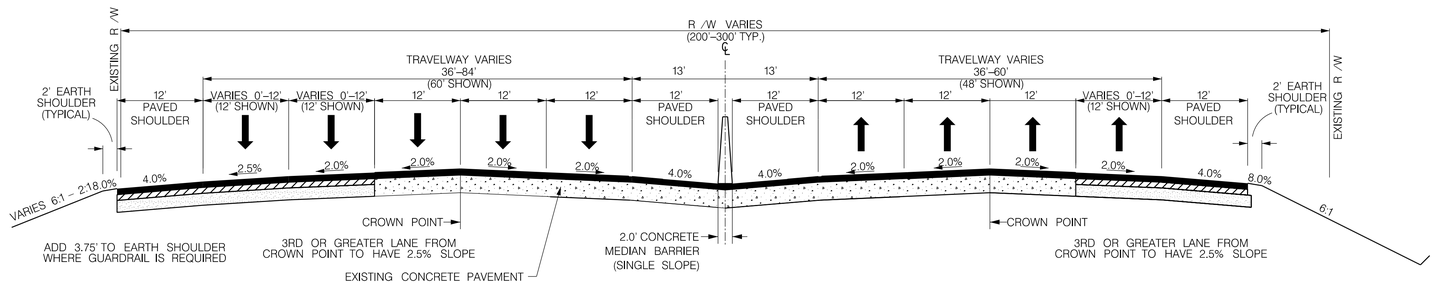

INTERSTATE MAINLINE WITH MEDIAN BARRIER WALL

INTERSTATE I–20 FC= URBAN INTERSTATE DS= 60 MPH

STA. XXX+XX.XX – XXX+XX.XX

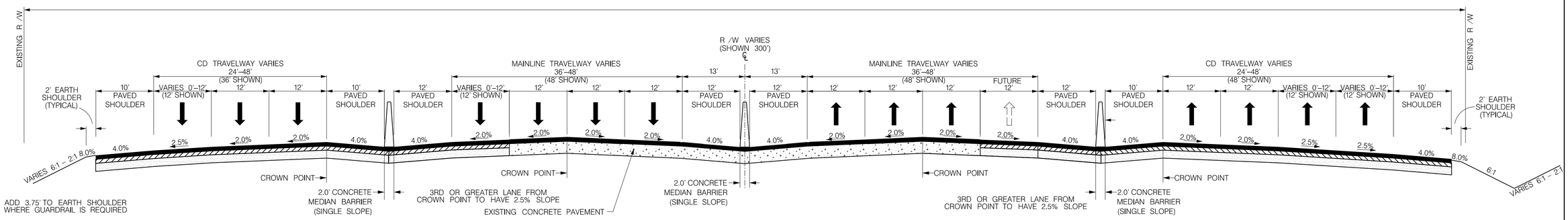

INTERSTATE MAINLINE WITH COLLECTOR–DISTRIBUTOR LANES

INTERSTATE I–20 FC= URBAN INTERSTATE DS= 60 MPH

STA. XXX+XX.XX – XXX+XX.XX

RTE.	DESIGN SPEED	
MPH	FROM STA.	TO STA.

PAVEMENT DESIGN

APPROVED BY

DATE

SOUTH CAROLINA
DEPARTMENT OF TRANSPORTATION
ROAD DESIGN COLUMBIA, S.C.

CAROLINA CROSSROADS
I–26/I–126/I–20

TYPICAL SECTIONS

SCALE: NTS RTE. DWG. NO.

7/8/2020
HDR Engineering, Inc. of the Carolinas
Carolina Crossroads_Typical Sections_PREFERRED_ALT.dgn

FOR INFORMATION ONLY

FED. ROAD DIV. NO.	STATE	COUNTY	PROJECT ID	RTE. NO.	SHEET NO.
3	S.C.	LEXINGTON RICHLAND	XX.XXXX		

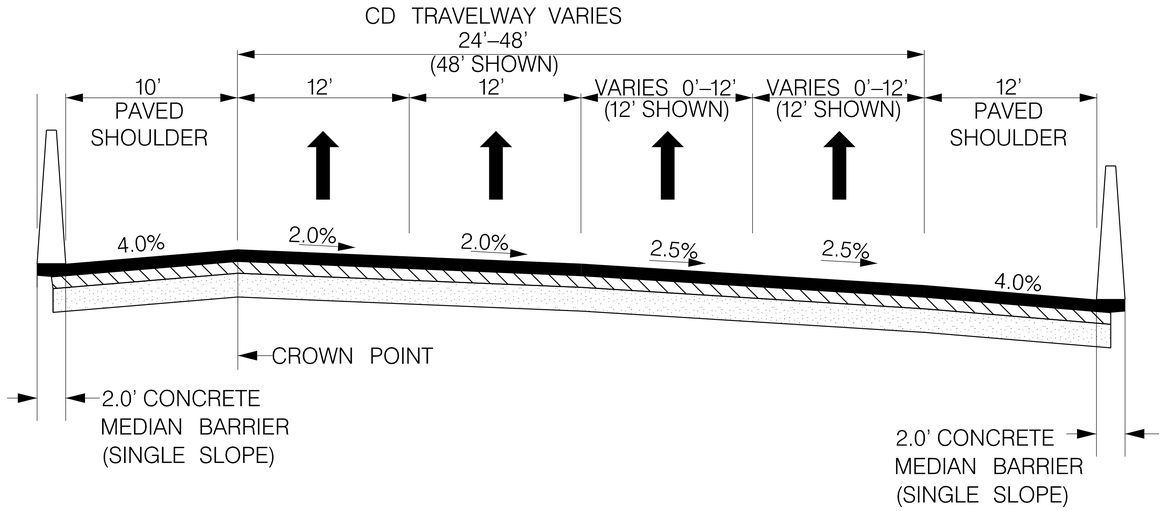

C–D ROADWAY – MULTILANE WITH BARRIER WALL
FC = URBAN INTERSTATE DS = 50 MPH

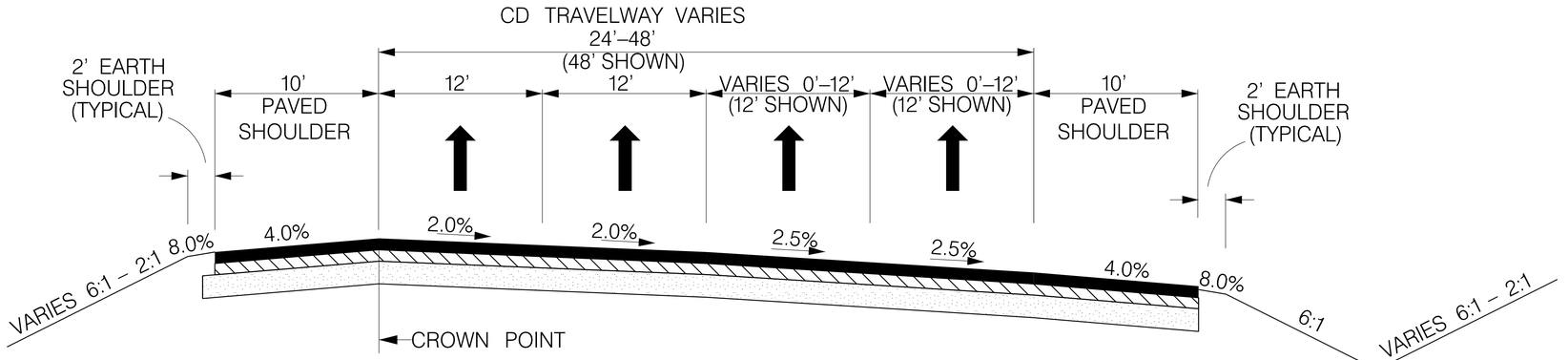

ADD 3.75' TO EARTH SHOULDER
WHERE GUARDRAIL IS REQUIRED

C–D ROADWAY – MULTILANE
FILL/DITCH SECTION
FC = URBAN INTERSTATE DS = 50 MPH

RTE.	DESIGN SPEED	
MPH	FROM STA.	TO STA.

PAVEMENT DESIGN

APPROVED BY

DATE

SOUTH CAROLINA
DEPARTMENT OF TRANSPORTATION
ROAD DESIGN COLUMBIA, S.C.

CAROLINA CROSSROADS
I–26/I–126/I–20

TYPICAL SECTIONS

SCALE: NTS RTE. DWG. NO.

7/8/2020
HDR Engineering, Inc. of the Carolinas
Carolina Crossroads_Typical Sections_PREFERRED_ALT.dgn

2017 FREEWAY SEGMENT AADT

Year 2017

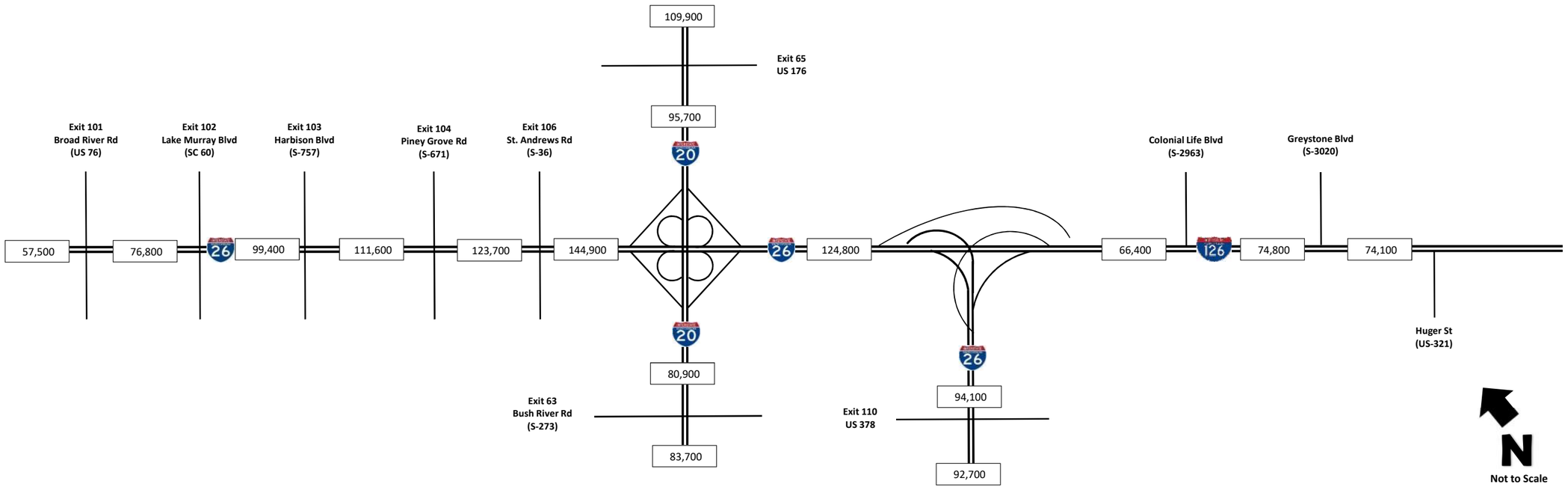

2020 ESTIMATED FREEWAY SEGMENT AADT

Design Year 2020
Growth Rate 0.70%

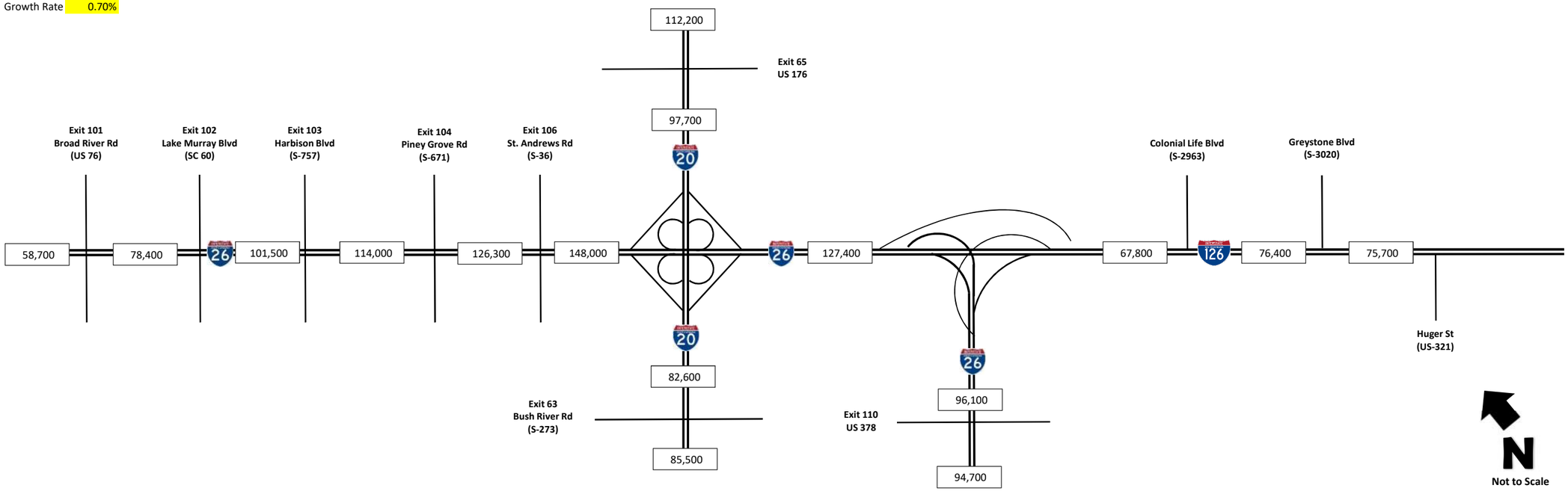

2040 ESTIMATED FREEWAY SEGMENT AADT

Design Year 2040
Growth Rate 0.70%

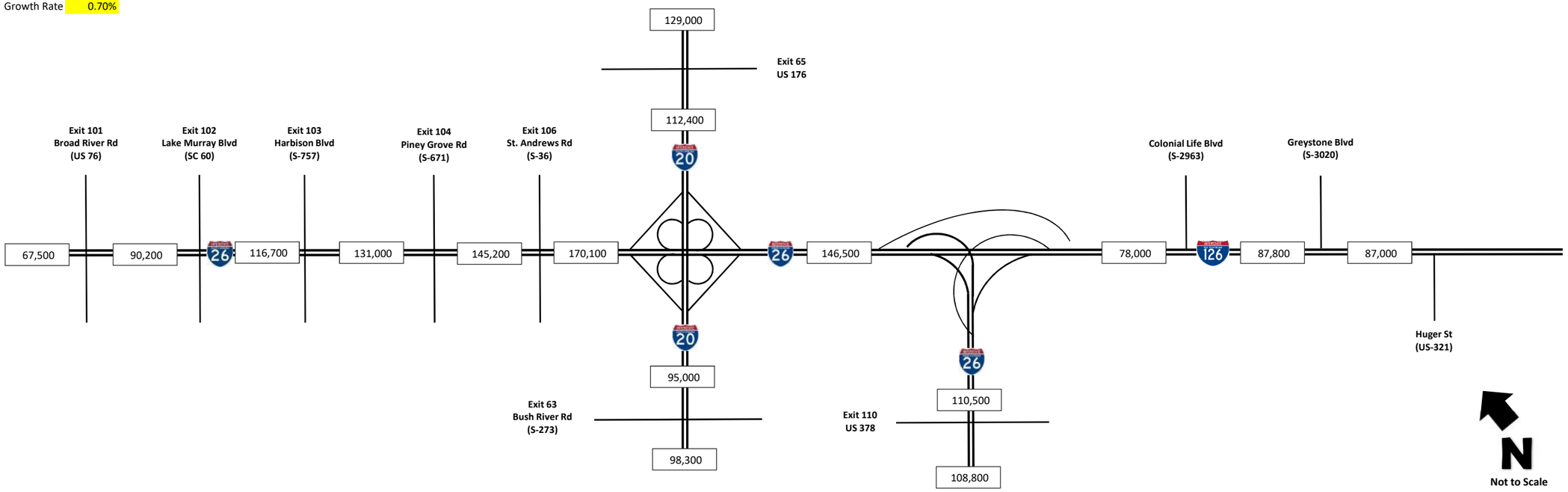

Appendix J – Project Area Design Roll Plots

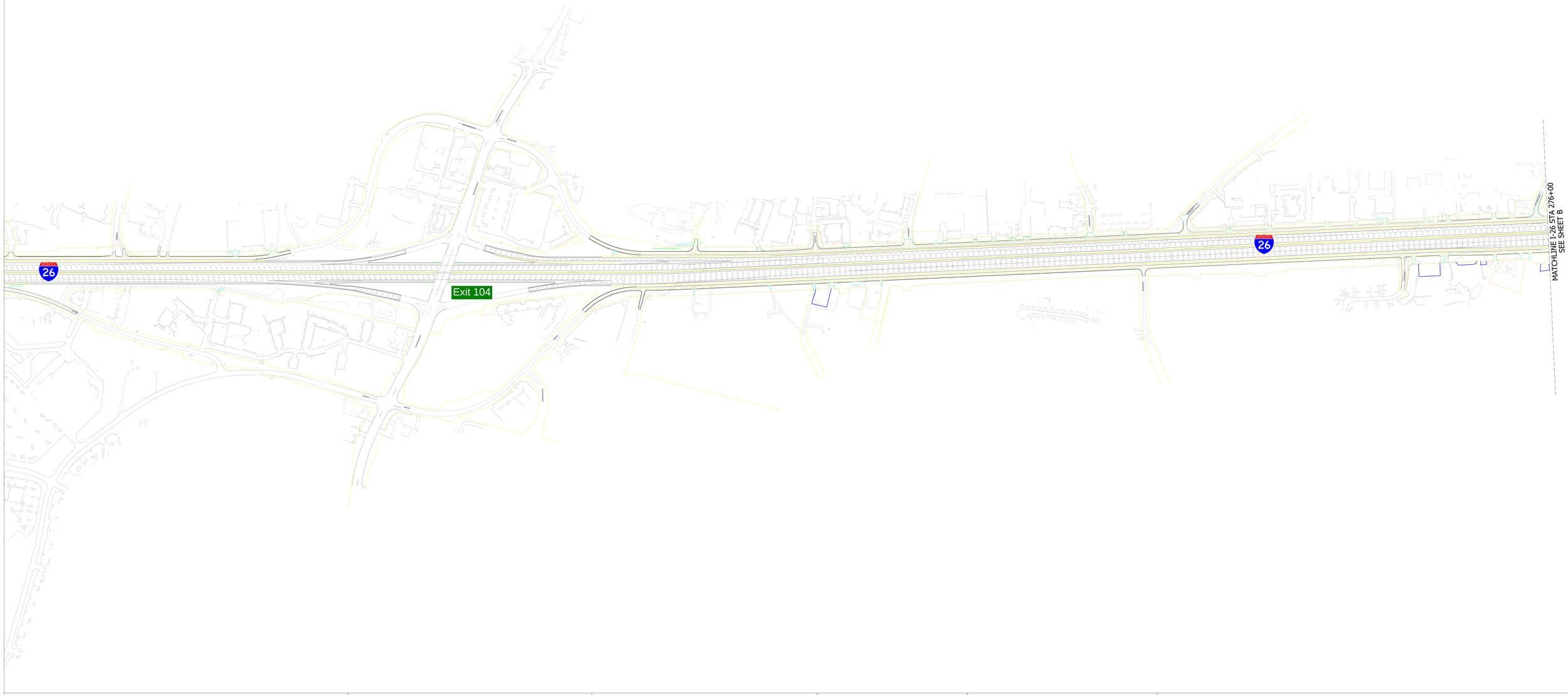

South Carolina Department of Transportation

CAROLINA CROSSROADS

LEGEND

ROADWAY
LANE LINES
NEW R/W
EX R/W
TEMP R/W
RAILROAD
CONCRETE BARRIER
BRIDGES

SCALE : 1"=200'

0 100 200 400 600 800 1000

SHEET A
CCR PROGRAM
SCHEMATIC DESIGN
AS OF NOVEMBER 07, 2025
I-26 EXIT 104

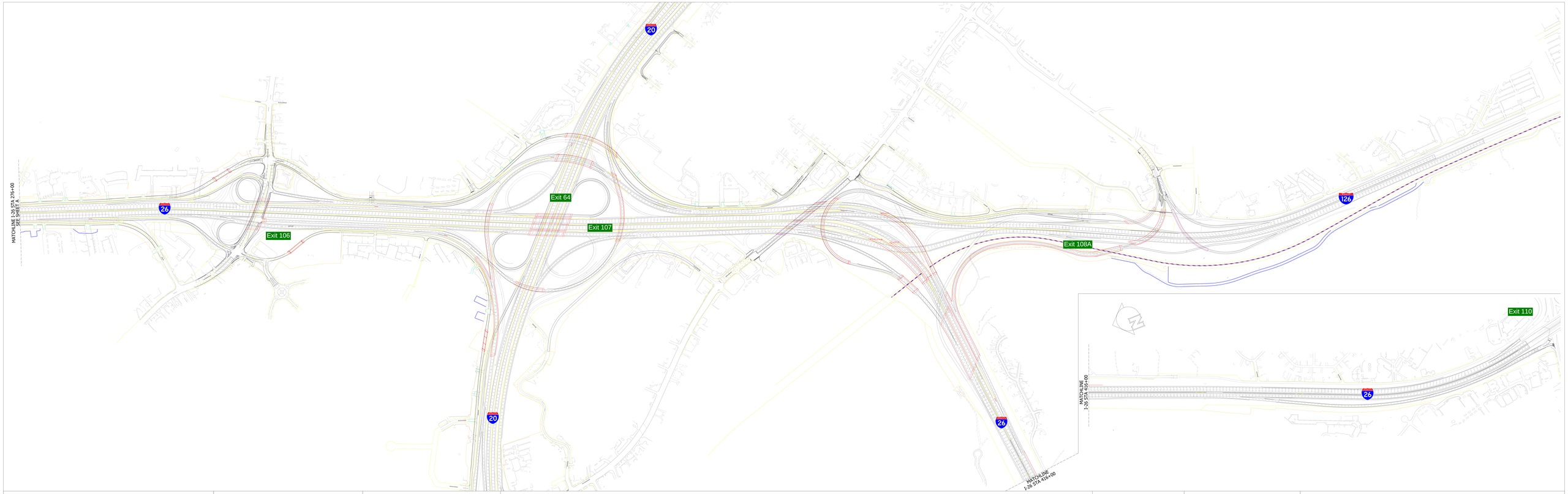

SCDOT
South Carolina Department of Transportation

CAROLINA CROSSROADS

LEGEND

ROADWAY	RAILROAD
LANE LINES	CONCRETE BARRIER
NEW R/W	
EX R/W	BRIDGES
TEMP R/W	

SCALE : 1"=200'

0 200 400 600 800 1000

SHHET B
CCR PROGRAM
SCHEMATIC DESIGN
AS OF NOVEMBER 07, 2025
I-26 EXITS 106-110 & I-126

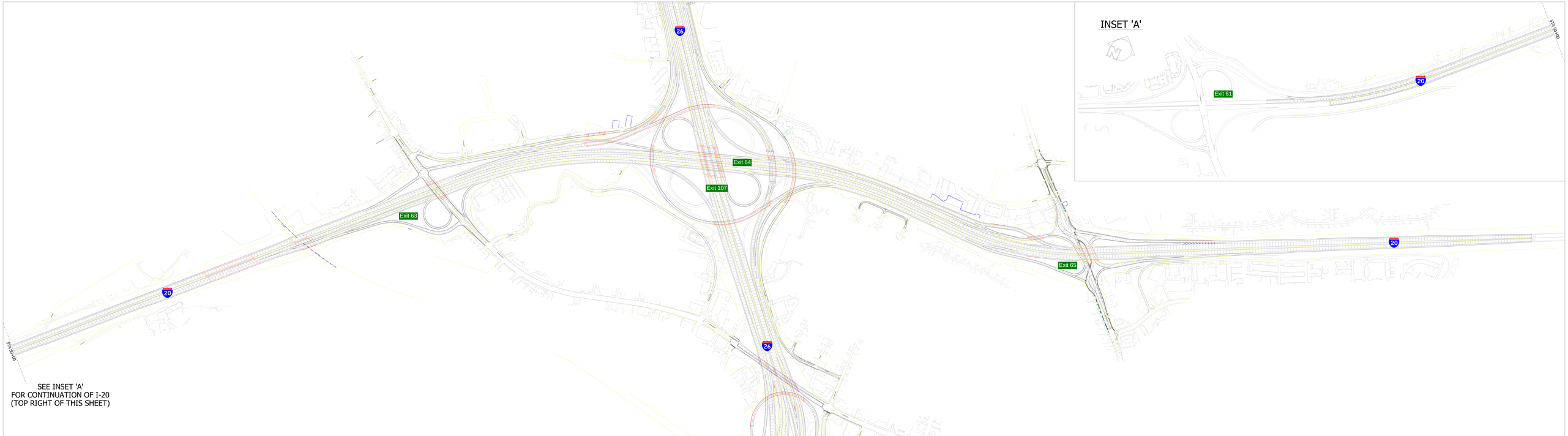

SCDOT
South Carolina Department of Transportation

CAROLINA CROSSROADS

LEGEND

ROADWAY	RAILROAD
LANE LINES	CONCRETE BARRIER
NEW R/W	
EX R/W	BRIDGES
TEMP R/W	

SCALE : 1"=200'

SHEET C
CCR PROGRAM
SCHEMATIC DESIGN
AS OF NOVEMBER 07, 2025
I-20 EXITS 63-65